FEN01947-00

Parts Book

DEZEMBRO 2011

RUTHZIL TRATOR COMERCIAL DE PEÇAS LTDA 11 97083-6812 ROLANDO

D155AX-6

CRAWLER DOZER

SERIAL NUMBERS D155AX-6 81279 and up

ENGINE SAA6D140E-5

KOMATSU®

www.KomatsuAmerica.com

California
Proposition 65 Warning

This machine may contain mercury in two areas:
a.) The display monitor contains mercury if it has a mercury label attached.
b.) Optional HID bulbs contain mercury (if the machine is so equipped).
There is no risk of exposure unless the bulbs are broken. However, the monitor and/or lamps must be reused, recycled or properly disposed of in accordance with Local, State and Federal Laws at the end of their useful lives.

FEN01947-00

Parts Book

D155AX-6

CRAWLER DOZER

SERIAL NUMBERS D155AX-6 81279 and up

ENGINE SAA6D140E-5

This material is proprietary to Komatsu America Corp. and is not to be reproduced, used, or disclosed except in accordance with written authorization from Komatsu America Corp.

It is our policy to improve our products whenever it is possible and practical to do so. We reserve the right to make changes or improvements at any time without incurring any obligation to install such changes on products sold previously.

Due to this continuous program of research and development, revisions may be made to this publication. It is recommended that customers contact their distributor for information on the latest revision.

Copyright 2011 Komatsu
Printed in U.S.A.
Komatsu America Corp.

December 2011

FEN01947-00

PARTS BOOK

D155AX-6
Serial No. 81279 and up

SAA6D140E-5G
Serial No. 537636 and up

CALIFORNIA

Proposition 65 Warning

Mercury and mercury compounds are known to the State of California to cause developmental problems. Mercury in this machine is sealed in non-removable backlight bulbs in the monitor display and/or HID lamps. There is no risk of exposure unless the lamps are broken. However, the monitor and lamps must be reused, recycled or properly disposed of in accordance with Local, State and Federal Laws at the end of their useful lives.

FOREWORD

When ordering a spare part, specify the part number, part name, and quantity required, and also specify your machine model code, machine serial number, engine serial number and the service meter reading.

This Parts Book describes not only standard items but also optional equipment and attachments. To order a part, please contact your nearest Komatsu distributor.

This Parts Book contains the information and special codes as follows:

ILLUSTRATION AND PARTS LIST

When you open this Parts Book, you will find an illustration following its figure number (FIG.) Each individual part in the illustration is given an index number. Following the illustration, the component parts of the unit are listed in the order of the index numbers shown in the illustration. The part number, part name, quantity and applicable serial number are given for each part as a parts list.

FIGURE NUMBER (FIG.)

The figure number (FIG.) is the number which shows the figure of the page. It is not the spare part number. The numbers are not always continuous.

PARTS LIST

Spare parts information are listed in the parts list page as follows:

Index:

This is the same as the index number in the illustration. The parts are listed in index number order.

Code:

Codes are used in this column and represent as follows:

A1 This part and the part specified in the line immediately above are interchangeable.

A2 The part specified in the line above can be used instead of this part.

A3 This part can be used instead of the part specified in the line immediately above.

A4 The part specified in the description column can be used instead of this part if it is used as a set.

B1 This shows discontinued part. The part specified in the above line is supplied instead.

B2 This shows a discontinued part. The part specified in the description column is supplied instead as a set.

C1 This part cannot be supplied as an individual part. It is supplied as an assembly.

C2 This part is supplied for authorized Komatsu distributors only. It cannot be supplied as an individual part. It is supplied as an assembly.

C3 This indicates a part supplied as semi-finished. It requires additional work before installation.

Part Number:

The number given in the part number column is the part number for the part shown. It is the identification code used when ordering that part. It is important that there be no mistake in this code number when ordering.

Description:

This gives the name of part that has the part number listed. The mark "･" is put in front of the component part name of an assembly part and the item is entered following the assembly. If a part marked with "･" is a sub assembly, its components are marked with "･･".

Example: Tank Assembly
･Tank
･Cap
･･Packing

Furthermore, the following marks and abbreviations are used in this column.

Kit	This indicates kit parts. For kit parts, refer to the section FIELD REPAIR SERVICE PARTS in this Parts Book.
D	Diameter
L	Length
LHS	Left-hand side
RHS	Right-hand side
T	Thickness
W	Width

Quantity (Qty):

This specifies the number of pieces used for one machine. However, if a part is included in the assembly and/or component, the quantity per such assembly and/or component is specified.
Code AR (as required) shall be used in the Quantity column if the part cannot be specified numbers requires per machine and/or component. In such case, any number of quantities may be ordered depend on the field service requirement.

Serial Numbers:

Applicable engine serial number is indicated for the engine volume. In the chassis volume, this indicates the machine serial number in which the part is used.

If the serial number is enclosed in parenthesis, it shows that it is the applicable serial number for exclusive use of the equipment of figure number (FIG.)

AVANT-PROPOS

Lorsque vous passez une commande d'une pièce de rechange, vous êtes prié de spécifier le numéro de la pièce, la désignation de la pièce et la quantité requise et d'indiquer également le code du modèle de la machine, le numéro de série de la machine, le numéro de série du moteur et la lecture du compteur de service du véhicule.

Sur le présent catalogue des pièces figurent non seulement les équipements standard, mais également les équipements et accessoires en option. Si vous désirez un équipement ou une pièce quelconque, vous êtes prié de prendre contact avec le concessionnaire Komatsu le plus proche.

Ce catalogue des pièces comprend les informations et codes spéciaux de la manière suivante:

FIGURES ET LISTES DES PIÈCES

Lorsque vous ouvrez le présent catalogue, vous pouvez rechercher les figures en fonction du numéro de figure (FIG.). Chaque pièce individuelle dans la figure est fournie d'un numéro de référence. D'après la figure, les éléments de l'unité sont énumérés dans l'ordre des numéros de référence montrés sur la figure. Le numéro de la pièce, la désignation de la pièce, la quantité et le numéro de série utilisés sont indiqués pour chaque pièce comme liste des pièces.

NUMÉRO DE FIGURE (FIG.)

Le numéro de figure (FIG.) est un numéro qui permet d'identifier une figure sur une page. Il ne représente pas le numéro de la pièce de rechange. Les numéros ne sont pas toujours séquentiels.

LISTE DES PIÈCES DE RECHANGE

Les informations des pièces de rechange sont données dans la page de la liste des pièces comme ci-après:

Numéro de référence (Index):

Les numéros de référence correspondent aux numéros de référence notés sur la figure et sont énumérés dans l'ordre des numéros de référence.

Codification (Code):

Les codes sont utilisés dans cette colonne et représentent comme ci-après:

A1 Cette pièce et la pièce qui figure sur la ligne juste au-dessus sont interchangeables.

A2 La pièce indiquée sur la ligne au-dessus peut être utilisée au lieu de cette pièce.

A3 Cette pièce peut être utilisée au lieu de la pièce indiquée sur la ligne juste au-dessus.

A4 La pièce indiquée dans la colonne de description peut être utilisée au lieu de cette pièce si elle est utilisée comme ensemble.

B1 Ceci montre la pièce dont la production est interrompue. La pièce indiquée dans la ligne au-dessus est fournie à sa place.

B2 Ceci montre la pièce dont la production est interrompue. La pièce indiquée dans la colonne de description est fournie à sa place comme ensemble.

C1 Cette pièce ne peut pas être fournie comme pièce individuelle. Elle est fournie en tant qu'ensemble.

C2 Cette pièce est fournie pour les distributeurs autorisés de Komatsu seulement. Elle ne peut pas être fournie comme pièce individuelle. Elle est fournie en tant qu'ensemble.

C3 Ceci indique une pièce fournie à l'état semi-fini. Ceci exige un travail additionnel avant l'installation.

Numéros de pièce (Part Number):

Les numéros indiqués dans cette colonne correspondent aux numéros des pièces représentées et constituent les codes à spécifier pour toute commande de pièce. Il est important de ne pas faire d'erreur avec ce code au moment de la commande.

Description (Description):

Ceci indique le nom de la pièce qui montre le numéro de la pièce énumérée. La marque "·" est placée devant le nom de la pièce du composant d'une pièce d'ensemble et l'item est introduit suivant l'ensemble. Si une pièce marquée avec "·" est un sous-ensemble, ses composants sont marqués avec "· ·".
Exemple: Tank Assembly (Ensemble de réservoir)
· Tank
· Cap
· · Packing

En outre, les marques et abréviations suivantes sont utilisées dans cette colonne.

Kit Ceci indique les pièces de kit. Pour les pièces de kit, se référer à la Section FIELD REPAIR SERVICE PARTS de ce Catalogue des Pièces.
D Diamètre
L Longueur
LHS Côté gauche
RHS Côté droit
T Épaisseur
W Largeur

Quantité (Qty):

Ceci spécifie le nombre de pièces nécessaires pour l'équipement en question. S'il s'agit de pièces comprises dans un ensemble et/ou composant, et la quantité indiquée est le nombre de pièces nécessaires pour l'ensemble et/ou le composant en question.
Le code AR (comme requis) sera utilisé dans la colonne de Quantité si la pièce ne peut pas se présenter en nombres indiqués comme requis par machine et/ou composant. Dans ce cas, tout nombre de quantités peut être commandé selon la condition de service de champ.

Numéros de série (Serial Numbers):

Le numéro de série du moteur applicable est indiqué pour le volume du moteur. Dans le volume de la carrosserie, ceci indique le numéro de série de l'équipement sur lequel la pièce est utilisée.

Si le numéro de série est placé entre parenthèses, cela signifie qu'il s'agit d'un numéro de série destiné exclusivement à l'utilisation de l'équipement mentionné dans le numéro de figure (FIG.).

PREFAZIONE

Quando fate un ordinazione di una parte di ricambio, siete pregati di precisare il numero della parte, la designazione della parte e la quantità necessaria ed indicare anche il codice del modello della macchina, il numero di serie della macchina, il numero di serie del motore e la lettura dell'indicatore di servizio del veicolo.

Sul presente catalogo delle parti appaiono non solo le attrezzature standard, ma anche le attrezzature ed accessori in opzione. Se desiderate un'attrezzatura o una parte qualunque, siete pregati di prendere contatto con il concessionario Komatsu più vicino.

Questo catalogo delle parti comprende le informazioni ed i codici speciali nel modo seguente:

ILLUSTRAZIONI ED ELENCO DELLE PARTI

Quando aprite il presente catalogo, troverete una figura secondo il suo numero di figura (FIG.). Ogni parte individuale nella figura è fornita di un numero di riferimento. Secondo la figura, gli elementi dell'unità sono enumerati nell'ordine dei numeri di riferimento mostrati sulla figura. Il numero della parte, la designazione della parte, la quantità ed il numero di serie utilizzati sono indicati per ogni parte come elenco delle parti.

NUMERO DI FIGURA (FIG.)

Il numero di figura (FIG.) è il numero che indica la figura della pagina. Non rappresenta il numero della parte di ricambio. I numeri non sono sempre continui.

ELENCO DELLE PARTI DI RICAMBIO

Le informazioni dei pezzi di ricambio sono elencate nella pagina dell'elenco dei pezzi come segue:

Numero di riferimento (Index):

I numeri di riferimento corrispondono ai numeri di riferimento notati sulla figura e sono enumerati nell'ordine dei numeri di riferimento.

Codice (Code):

I codici sono usati in questa colonna e rappresentano come segue:

A1 Questa parte ed la parte specificata nella linea immediatamente sopra sono intercambiabili.

A2 La parte specificata nella linea sopra può essere usata anziché questa parte.

A3 Questa parte può essere usata anziché la parte specificata nella linea immediatamente sopra.

A4 La parte specificata nella colonna di descrizione può essere usata anziché questa parte se è usata come insieme.

B1 Ciò mostra la parte non più in produzione. La parte specificata nella suddetta linea è invece fornita.

B2 Ciò mostra una parte non più in produzione. La parte specificata nella colonna di descrizione è fornita invece come insieme.

C1 Questa parte non può essere fornita come pezzo individuale. È fornita come insieme.

C2 Questa parte è destinata solo ai distributori autorizzati Komatsu. Non può essere fornita come parte individuale. È fornita come insieme.

C3 Ciò indica una parte fornita come semifinito. Richiede un lavoro supplementare prima dell'installazione.

Numeri di parte (Part Number):

I numeri indicati in questa colonna corrispondono ai numeri delle parti rappresentate e costituiscono i codici da precisare per qualsiasi ordinazione di parte. È importante non fare un errore con questo codice al momento dell'ordinazione.

Descrizione (Description):

Ciò dà il nome della parte che presenta il numero di parte elencato. Il contrassegno "·" è messo davanti al nome della parte componente di una parte di gruppo e l'articolo è inserito dopo il gruppo. Se un pezzo segnato con "·" è un sotto-gruppo, i suoi componenti sono segnati con "· ·".

Esempio: Tank Assembly
· Tank
· Cap
· · Packing

Inoltre, i seguenti contrassegni ed abbreviazioni sono usati in questa colonna.

Kit Ciò indica le parti di kit. Per le parti di kit, riferirsi alla sezione PARTI DI RICAMBIO PER SERVIZIO DI RIPARAZIONE IN SEDE in questo Catalogo delle Parti.
D Diametro
L Lunghezza
LHS Lato a sinistra
RHS Lato a destra
T Spessore
W Larghezza

Quantità (Qty):

Questo precisa il numero di parti necessarie per l'attrezzatura in questione. Se si tratta di parti comprese in un insieme e/o componente, e la quantità indicata è il numero di parti necessarie per l'insieme e/o il componente in questione.
Il codice AR (come richiesto) sarà utilizzato nella colonna di Quantità se la parte non può presentarsi in numeri indicati come richiesto per macchina e/o componente. In questo caso, qualsiasi numero di quantità può essere ordinato secondo la condizione di servizio di campo.

Numeri di serie (Serial Numbers):

Il numero di serie del motore applicabile è indicato per il volume del motore. Nel volume della carrozzeria, questo indica il numero di serie dell'attrezzatura sulla quale la parte è utilizzata.

Se il numero seriale è racchiuso tra parentesi, indica che è il numero di serie applicabile per uso esclusivo dell'attrezzatura del numero di figura (FIG.)

Bei der Bestellung von Teilen bitte die Teilenummer, die Teilebezeichnung und die Menge des jeweiligen Teils sowie die Modellnummer, die Seriennummer der Maschine, die Seriennummer des Motors und den Stand des Betriebsstundenzählers angeben.

In dieser Ersatzteilliste ist nicht nur das Standardzubehör aufgeführt, sondern auch als Sonderausstattung erhältliche Teile und Einrichtungen. Bestellungen nimmt Ihr zuständiger Komatsu-Händler entgegen.

Die folgenden Informationen und Kodes sind in der Ersatzteilliste enthalten:

Bilder und Ersatzteilliste

Beim Aufschlagen des Ersatzteilkatalogs finden Sie nach der Bildnummer (BILD) geordnete Bilder. Jedes Einzelteil einer Baugruppe ist mit einer Kennzahl versehen. Ausgehend von den Bildern sind die Bauteile der Baugruppe aufgeführt, und zwar geordnet nach den in den Bildern angegebenen Kennzahlen. Jedes Einzelteil wird mit Teilenummer, Teilebezeichnung und entsprechender Seriennummer angegeben.

Bildnummer (BILD)

Mit der Bildnummer (BILD) können Bilder auf einer Seite identifiziert werden. Es handelt sich dabei nicht um die Nummer des Lieferteils. Auch sind die Bilder nicht fortlaufend nummeriert.

Ersatzteilliste

Angaben zu den Ersatzteilen sind auf der Auflistungsseite wie folgt dargestellt::

Kennzahl (Index):

Hierbei handelt es sich um die Kennzahlen aus den Bildern. Die Bauteile sind nach diesen Kennzahlen geordnet aufgeführt.

Kode (Code):

In dieser Spalte werden Kodes mit den folgenden Bedeutungen benutzt:

A1 Dieses Teil ist mit dem in der vorangegangenen Zeile aufgeführten Teil austauschbar.

A2 Das in der vorangegangen Zeile aufgeführte Teil kann anstelle dieses Teils verwendet werden.

A3 Dieses Teil kann anstelle des in der vorangegangenen Zeile aufgeführten Teils verwendet werden.

A4 Anstelle dieses Teils kann das in der Spalte „Beschreibung“ aufgeführte Teil verwendet werden, wenn das Teil zusammen mit anderen Teilen als ein Bauteilsatz verwendet wird.

B1 Dieses Teil kann nicht mehr geliefert werden. Stattdessen wird das in der vorangegangenen Zeile aufgeführte Teil geliefert.

B2 Dieses Teil kann nicht mehr geliefert werden. Stattdessen wird das in der Spalte „Beschreibung“ aufgeführte Teil als ein Bauteilsatz geliefert.

C1 Dieses Teil kann nicht als Einzelteil, sondern nur als Baugruppe geliefert werden.

C2 Dieses Teil wird nur an autorisierte Komatsu-Händler geliefert. Es kann nicht als Einzelteil, sondern nur als Baugruppe geliefert werden.

C3 Hiermit werden Teile gekennzeichnet, die in vorbearbeitetem Zustand geliefert werden und für den Einbau nachbearbeitet werden müssen.

Teilenummer (Part Number):

Die in der Spalte „Teilenummer“ aufgeführte Nummer entspricht der Teilenummer für das betreffende Teil. Diese Nummer dient zur Identifizierung des Teils bei einer Bestellung. Deshalb sollte bei der Bestellung stets auf die genaue Angabe der Teilenummer geachtet werden.

Beschreibung (Description):

Hierunter wird die Bezeichnung des Teils mit der aufgeführten Teilenummer angegeben. Jedes Baugruppen-Bauteil ist mit dem vorangestellten Symbol „·“ gekennzeichnet und wird hinter der entsprechenden Baugruppe aufgeführt. Handelt es sich bei dem mit „·“ gekennzeichneten Bauteil um eine Baugruppe, sind die Bauteile dieser Baugruppe mit „· ·“ gekennzeichnet.
Beispiel: Tank Assembly
· Tank
· Cap
· · Packing

Zusätzlich werden die folgenden Zeichen und Abkürzungen in dieser Spalte verwendet:

Kit Hiermit werden Teile gekennzeichnet, die nur als Satz erhältlich sind. Siehe dazu den Abschnitt „FIELD REPAIR SERVICE PARTS“ dieses Ersatzteilkatalogs.
D Durchmesser
L Länge
LHS linke Seite
RHS Rechte Seite
T Dicke
W Breite

Menge (Qty):

Hierunter wird die Anzahl der Bauteile für eine Maschine angegeben. Im Falle einer Baugruppe oder eines Aggregats wird allerdings die Anzahl der Teile pro Baugruppe angegeben.
Der Kode AR (nach Bedarf) wird in dieser Spalte dann benutzt, wenn keine genaue Angabe darüber möglich ist, wie groß der Mengenbedarf pro Maschine und/oder Baugruppe ist. In diesem Fall kann eine beliebige Menge je nach Bedarf bestellt werden.

Serial Numbers (Seriennummern):

Im Ersatzteilkatalog für den Motor versteht man hierunter die Seriennummer des Motors, in den das betreffende Teil eingebaut ist. Im Ersatzteilkatalog für die Maschine versteht man hierunter die Seriennummer der Maschine, in die das entsprechende Teil eingebaut ist.
Wenn die Seriennummer in Klammern angegeben ist, ist diese Seriennummer ausschließlich für das in der Bildnummer (BILD) angegebene Zubehör bestimmt.

Ao solicitar uma peça, informe o número, nome e quantidade da peça necessária, bem como o código de modelo da máquina e seu número de série, o número do motor e a leitura do medidor de serviço.

Este catálogo de peças não somente especifica os acessórios padrões mas também as peças opcionais e aditamentos. Para pedir uma peça, entre em contato com o revendedor Komatsu mais próximo.

Este catálogo de peças contém as seguintes informações e códigos especiais:

LISTA DE PEÇAS E ILUSTRAÇÕES

Ao abrir este catálogo de peças, encontrar-se-á uma ilustração seguida do número da figura (FIG.). A cada peça individual na ilustração corresponde um número de índice. Seguindo a ilustração, as peças componentes da unidade são listadas na ordem dos números de índice nela indicados. O número, nome, quantidade e número de série aplicável da peça são aprsentados como uma lista de peças.

NÚMERO DA FIGURA (FIG.)

O número da figura (FIG.) é o número que mostra a ilustração da página. Não é um número para fornecimento de peças sobressalentes. Os números nem sempre são contínuos.ebene Zubehör bestimmt.

LISTA DE PEÇAS

As informações das peças sobressalentes são relacionadas na página com a lista de peças de acordo com o seguinte:

Índice (Index):

Este é o mesmo que o número de índice na ilustração. As peças são relacionadas na ordem dos números de índice.

Código (Code):

Códigos são utilizados nesta coluna e significam o seguinte:

A1 Esta peça e a peça especificada na linha imediatamente acima são intercambiáveis.

A2 A peça especificada na linha acima pode ser utilizada no lugar desta peça.

A3 Esta peça pode ser utilizada no lugar da peça especificada na linha imediatamente acima.

A4 A peça especificada na coluna “Descrição” pode ser utilizada no lugar desta peça se usada como um conjunto.

B1 Indica peça descontinuada. A peça especificada na linha acima é fornecida em seu lugar.

B2 Indica peça descontinuada. A peça especificada na coluna “Descrição” é fornecida em seu lugar como um conjunto.

C1 Esta peça não pode ser fornecida como peça individual. Ela é fornecida como um conjunto.

C2 Esta peça é fornecida somente para revendedores Komatsu autorizados. Não pode ser fornecida como peça individual. Ela é fornecida como um conjunto.

C3 Indica peça fornecida em condição semiacabada. Requer trabalho adicional antes da instalação.

Número da peça (Part Number):

O número indicado na coluna de números de peça corresponde ao número da peça exibida. É o código de identificação usado para o pedido da peça. É importante não enganar-se de número de código ao pedir a peça.

Descrição (Description):

Indica o nome da peça que tem o seu número de peça relacionado. O símbolo "·" é colocado na frente do nome peça do componente de uma peça de conjunto, e o item é lançado seguindo o conjunto. Se uma peça indicada com "·" é um subconjunto, os seus componentes são indicados por "· ·".

Exemplo: Tank Assembly
· Tank
· Cap
· · Packing

Além disso, os seguintes símbolos e abreviações são usados nesta coluna.

Kit Indica peças de um jogo. Para peças de jogo, referir-se à seção "FIELD REPAIR SERVICE PARTS" neste catálogo de peças.

D Diâmetro
L Comprimento
LHS Lado esquerdo
RHS Lado direito
T Espessura
W Largura

Quantidade (Qty):

Indica o número de peças utilizadas em uma máquina. Contudo, se uma peça é incluída no conjunto e/ou componente, a quantidade por conjunto e/ou componente é especificada.
O código AR (como requerido) usar-se-á na coluna "Quantitade" caso o número de peças por máquina e/ou componente não possa ser especificado. Em tal caso, qualquer número de peças pode ser pedido dependendo dos requisitos de serviço em campo.

Números de série (Serial Numbers):

O número de série do motor aplicável é indicado para o volume do motor. No volume da carroceria, indica o número de série da máquina na qual a peça é utilizada.

Se o número de série está entre parêntesis, mostra que é o número de série aplicável para uso exclusivo do equipamento do número da figura (FIG.)

订购零件时，请注明需要零件的货号、品名、数量以及使用机器的车辆编号、发动机型号和系列号、工作时数。

此零件明细表上不仅记载了标准装备零件，还记载了选购零件、附件零件。如果您需要订货，请与最近的小松代理店联系。

为了清楚明了，零件手册中有如下规定：

图表

打开此零件清单后，可以看到附带图号（FIG.）的零件明细表图示。在图示上标有各种零件的索引号码。除图之外，还按索引号码的顺序列表表示货号、品名、数量、适用机型。

图号（FIG.）

图号表示该页图的号码。它不是补充零件用的货号。此号码不一定是连续号码。

零件表

从左栏开始按以下顺序显示零件的明细。

索引 (Index):

与图的索引号码一致，按索引号码顺序编制为表格形式。

代号 (Code):

此栏使用的代号如下所示：

A1　此行零件可与紧挨着的上一行零件互换使用。

A2　上一行的零件可取代此行零件来使用。

A3　此行零件可代替紧挨着的上一行零件使用。

A4　品名栏内的零件配套后，可取代此行零件来使用。

B1　该行零件已停止供应，用上一行的零件代替使用。

B2　该行零件已停止供应，品名栏内的零件配套后代替此行零件供应。

C1　此行零件拟成套供应，不以单一零件供应。

C2　此行零件主要面向特定的代理。不以单一零件供应，只拟成套供应。

C3　此行零件以半成品的形式供应，使用前必需再加工。

货号 (Part Number):

此栏所示的编号是图示零件的货号。它是在订货时需要标明的特定代号，是非常重要的。

品名 (Description):

表示相当于货号的零件名称。构成组装品的零件，在品名的前面有 “·”标记，记载在组装品之后。另外，如果标记 “·”的零件是组装品，则该构成零件的品名前标有 “· ·”标记。

例： TANK ASSEMBLY
· TANK
· CAP
· · PACKING

另外，说明栏可能显示以下代号。

Kit 表示修理包。关于修理包构件详情，请参考此零件清单中 “现场修理服务零件”部分的内容。
D 直径
L 全长
LHS 左侧
RHS 右侧
T 厚度
W 全宽

数量 (Qty):

表示一台机器中需要使用的该零件数量。但是，如果是组装零件的构成零件时，表示其组装件的件数。如果不能指定每个机器以及（或者）组装零件中必须的零件数量时，可以在零件数量栏中使用代码 AR。此时，数量由现场的服务要件决定，然后进行定购。

适用机型 (Serial Numbers):

发动机篇中表示该使用零件的发动机型号，在机体篇中表示该使用零件的车辆号码。

如果适用机型位于括号中，表明该适用机型专门用于图号 (FIG.) 中所指的设备。

При заказе запчасти укажите номер части, наименование части и нужное количество; кроме того, укажите код модели вашей машины, серийный номер машины, серийный номер двигателя и показания счетчика мото-часов.

В Каталоге приведены не только стандартные изделия, но и дополнительное оборудование и принадлежности. Для заказа запчасти пожалуйста обратитесь к ближайшему дилеру "Комацу".

Содержащаяся в Каталоге информация и специальные коды разъясняются ниже:

РИСУНОК И ПЕРЕЧЕНЬ ЧАСТЕЙ

Раскрыв Каталог, вы увидите рисунок после номера рисунка (ПОЗ). Каждой отдельной части на рисунке присвоен позиционный номер. За рисунком следует перечень составных частей устройства в порядке номеров позиций рисунка. Перечень частей указывает для каждой части ее номер, наименование, количество и применимый серийный номер.

НОМЕР РИСУНКА (ПОЗ)

Номер рисунка (ПОЗ) – это номер, который указывает рисунок на странице. Он не является номером запчасти. Последовательность номеров не обязательно непрерывна.

ПЕРЕЧЕНЬ ЧАСТЕЙ

Данные запасных частей приведены на странице перечня частей следующим образом:

Индекс (Index):

То же, что номер позиции на рисунке. Части перечислены в порядке их позиционных номеров.

Код: (Code):

В этой колонке находятся коды, обозначающие следующее:

A1 Данная часть и часть, указанная в предыдущей строке, взаимозаменяемы.

A2 Вместо данной части можно использовать часть, указанную в предыдущей строке.

A3 Данную часть можно использовать вместо части, указанной в предыдущей строке.

A4 В комплекте, вместо данной части можно использовать указанную в колонке описания.

B1 Поставки этой части прекращены. Взамен поставляется часть, указанная в предыдущей строке.

B2 Поставки этой части прекращены. Взамен комплектом поставляется часть, указанная в колонке описания.

C1 Данная часть отдельно не поставляется. Она поставляется с узлом.

C2 Данная часть поставляется лишь уполномоченным дилерам "Комацу". Отдельно не поставляется. Поставляется с узлом.

C3 Обозначает часть, поставляемую без доводки. Требует предустановочной подготовки.

Номер части (Part Number):

Приведенный в колонке номеров частей номер является номером изображенной части. Это код-идентификатор для заказа данной части. Важно, чтобы при заказе этот кодовый номер был указан без ошибок.

Описание (Description):

Здесь приводится наименование части, обозначенной номером в перечне. Значок "·" ставится перед наименованием детали компонента, причем деталь записана после узла. Если помеченная "·" часть является подсборкой узла, то ее составные части обозначаются значком "··".

Пример: Tank Assembly
·Tank
·Cap
··Packing

Далее, в этой колонке используются следующие обозначения и сокращения.

Kit	Указывает на элементы комплекта. Элементы комплекта смотри в разделе ЗАПАСНЫЕ ЧАСТИ ДЛЯ РЕМОНТА В УСЛОВИЯХ ЭКСПЛУАТАЦИИ данного Каталога.
D	Диаметр
L	Длина
LHS	Левая сторона
RHS	Правая сторона
T	Толщина
W	Ширина

Количество (Qty):

Указывает общее число изделий в одной машине. Если же изделие является частью узла и/или устройства, то указывается количество в таком узле и/или устройстве.
При невозможности указать количество частей на машину и/или устройство, в колонке Количество проставляется код AR (по потребности). В таком случае можно заказывать любые количества в зависимости от потребностей обслуживания на месте.

Серийные номера (Serial Numbers):

В книге по двигателю приводится соответствующий серийный номер двигателя. В книге по шасси указывает на серийный номер машины, где используется данная часть.

Серийный номер, заключенный в круглые скобки означает, что он применяется только для оборудования с номером рисунка (ПОЗ.)

. رقم القطعة (Part Number)

الرقم الوارد في عمود رقم القطعة هو رقم القطعة الخاص بالقطعة المبينة. وهو الرمز المستخدم لطلب تلك القطعة. ومن الضروري عدم ارتكاب اي خطأ في تحديد هذا الرقم عند طلب القطع.

. الوصف (Description)

يعطي اسم القطعة المدرج رقهما في القائمة. توضع العلامة "٠" امام اسم المكون لمجموعة ما ويدرج البند بعد المجموعة. اذا كانت القطعة المشار اليها بالعلامة "٠" هي نفسها عبارة عن مجموعة مكونات, فان كلا من مكوناتها يشار اليها بالعلامة "٠٠".
مثال

Tank Assembly
٠Tank
٠Cap
٠٠Packing

بالاضافة الى ذلك, العلامات والمختصرات التالية تستخدم في هذا العمود.

Kit	هذا يشير الى قطع الطقم. حول قطع الطقم, راجع قسم "قطع غيار خدمة الإصلاح الميداني" في كتاب القطع هذا.
D	قطر
L	طول
LHS	جانب اليد اليسارى
RHS	جانب اليد اليمنى
T	السمك
W	العرض

. الكمية (Qty)

هذا هو عدد القطع المستخدمة لآلية واحدة. اما بالنسبة لمجموعات المكونات ومجموعات القطع فانه يتم تحديد عدد القطع لكل مجموعة.
الرمز AR (حسب الطلب) سوف يستخدم في عمود الكمية اذا لم يتم تحديد عدد القطع المطلوبة لكل مانكة و/او للمجموعة. في مثل هذه الحالة, فان اي عدد من الكميات ربما يتم طلبه بشكل يعتمد على متطلبات مجال الخدمة.

. الرقم التسلسلي (Serial Numbers)

في كتاب قطع المحرك يشير هذا الرقم الى الرقم التسلسلي للمحرك الذي تستخدم فيه القطعة. قي كتاب قطع الآلية, يشير هذا الرقم الى الرقم التسلسلي للآلية التي تستخدم فيها القطع.

في حالة وضع الرقم التسلسلي بين الأقواس، فهذا يعني أن هذا هو الرقم التسلسلي الساري للاستخدام الحصري للقطعة الموضحة بالشكل.

عند طلب القطع, يرجى تحديد رقم القطعة واسم القطعة والكمية المطلوبة من القطعة, مع تحديد رقم الموديل والرقم التسلسلي وقراءة عداد الخدمة.

قائمة القطع هذه لا تقتصر على الكميات القياسية فقط بل تشمل ايضاً القطع والملحقات الاختيارية. لطلب القطع, يرجى الاتصال باقرب موزع لمنتجات كوماتسو.

كتاب القطع هذا يحتوي على المعلومات ورموز التخصيص وكما مبين ادناه:

الشكل والقائمة

عندما تفتح كتاب القطع هذا, سوف تجد رسومًا توضيحية تتضمن رقم الشكل (الشكل). كل قطعة مفردة في الرسم يعطى لها رقم فهرس. في الرسم التالي, قطع المجموعة للوحدة تم ادراجها حسب ترتيب ارقام الفهرس المبينة في الرسم.. رقم القطعة, اسم القطعة, الكمية والرقم التسلسلي المطابق يعطى لكل قطعة حسب تسلسل القطع في القائمة.

رقم الشكل (الشكل)

رقم الشكل (الشكل) هو الرقم الذي يميز شكل ما داخل الصفحة. إنه ليس رقم القطعة. وليست الأرقام متتابعة دائمًا.

قائمة القطع

معلومات قطع الغيار مثبتة في صفحة قائمة القطع وكلاتي:

. الفهرست (Index)

هذا الرقم هو نفس رقم الفهرس الوارد في الشكل التوضيحي. تدرج القطع في القائمة مرتبة تبعاً لارقام الفهرس.

. الرمز (Code)

الرموز تستخدم في هذا العمود وتوصف كلاتي:

A1 هذه القطعة والقطعة المذكورة في السطر السابق مباشرة يمكن لكل منهما ان تحل محل الاخرى.

A2 القطعة المذكورة في السطر السابق يمكن استعمالها بدلاً من هذه القطعة.

A3 هذه القطعة يمكن استعمالها بدلاً من القطعة المذكورة في السطر السابق مباشرة.

A4 القطعة المذكورة في عمود الوصف يمكن استعمالها بدلاً من هذه القطعة اذا استخدمت كطقم.

B1 هذه القطعة توقف توريدها. يتم توريد القطعة المذكورة في السطر السابق بدلاً منها.

B2 هذه القطعة توقف توريدها. يتم توريد القطعة المذكورة في عمود "الوصف" بدلاً منها كطقم.

C1 هذه القطعة لا يمكن توريدها كقطعة منفردة. يتم توريدها كمجموعة.

C2 هذه القطعة يتم تجهيزها من قبل موزعين كوماتسو المرخصين فقط. لا يمكن تجهيزها كقطعة مفردة. يتم تجهيزها كمجموعة.

C3 هذا يشير الى قطعة موردة شبه مكتملة التصنيع. تتطلب استكمال تصنيعها قبل الاستعمال.

CONTENTS

	FIG No.	PAGE
FOREWORD		2
ENGINE CYLINDER HEAD AND ITS RELATED PARTS		
Cylinder Head	(X16-0471460)	
	A1010-001001	62
Cylinder Head Cover	(X16-0450030)	
	A1110-001001	64
Head Cover Mounting Bolt	(X16-0430040)	
	A1111-001001	65
Air Intake Manifold	(X16-0468130)	
	A1310-001001	66
Air Intake Manifold, Landfill Specification	(X16-0471640)	
	A1310-002001	68
Exhaust Manifold	(X16-0464050)	
	A1510-001001	70
Turbocharger	(X16-0468190)	
Mounting Parts	A1530-001001	71
Inner Parts	A1530-001002	72
Lubrication Piping	A1530-001003	73
Water Piping	A1530-001004	74
Turbocharger, Landfill Specification	(X16-0471660)	
Mounting Parts	A1530-002001	75
Inner Parts	A1530-002002	76
Lubrication Piping	A1530-002003	77
Water Piping	A1530-002004	78
Exhaust Muffler	(X16-0468270)	
	A1610-001001	79
Exhaust Muffler, Landfill Specification	(X16-0471880)	
	A1610-002001	80
Heat Shield	(X16-0468230)	
	A1570-001001	81
Heat Shield, For 90Amp. Alternator	(X16-0470480)	
	A1570-002001	83
Heat Shield, Landfill Specification	(X16-0471770)	
(1/3)	A1570-003001	85
(2/3)	A1570-003002	87
(3/3)	A1570-003003	89
Exhaust Gas Re-circulation (EGR) Valve	(X16-0468221)	
Gasket	A1550-002001	91
Inner Parts, EGR Valve	A1550-002002	92
Inner Parts, Bypass Valve	A1550-002003	94
EGR Valve and Cooler Mounting	A1550-002004	96
EGR Cooler Piping and Air Vent	A1550-002005	98
EGR By-Pass Valve Piping	A1550-002006	99
Inner Parts, EGR Oil Pump	A1550-002007	100
EGR Valve Lubricating Oil Piping	A1550-002008	101
Return Piping	A1550-002009	102
Front Hanger	A1550-002010	103
Exhaust Gas Re-circulation (EGR) Valve, Landfill Specification	(X16-0471720)	
Gasket	A1550-003001	104
Inner Parts, EGR Valve	A1550-003002	105
Inner Parts, Bypass Valve	A1550-003003	107
EGR Valve and Cooler Mounting	A1550-003004	109
EGR Cooler Piping and Air Vent	A1550-003005	111
EGR By-Pass Valve Piping	A1550-003006	112

Inner Parts, EGR Oil Pump A1550-003007 113
EGR Valve Lubricating Oil Piping A1550-003008 114
Return Piping A1550-003009 115
Front Hanger A1550-003010 116
ENGINE CYLINDER BLOCK AND ITS RELATED PARTS
Lubrication Oil Pump ..... (X16-0464480)
A3010-001001 118
Front Power Take Off, With Hardened Pulley ..... (X16-0452700)
A2610-001001 119
Camshaft ..... (X16-0431570)
A2410-001001 120
Camshaft Related Parts ..... (X16-0464470)
Cam Follower A2411-001001 121
Road Liner A2411-001002 122
Cam Follower Cover ..... (X16-0468400)
A2060-001001 123
Front Cover Accessory ..... (X16-0468370)
A2041-001001 124
Front Cover Accessory, For Slag Handling ..... (X16-0473720)
A2041-002001 125
Front Cover ..... (X16-0468350)
A2040-001001 126
Idle Gears ..... (X16-2409620)
A2050-001001 127
Flywheel Housing ..... (X16-0468440)
A2210-001001 128
Flywheel ..... (X16-0464410)
A2230-001001 129
Power Takeoff, Non Drive Type ..... (X16-0454210)
A2610-002001 130
Engine Oil Pan ..... (X16-0468420)
A2110-001001 131
Engine Oil Pan, With Coolant Heater ..... (X16-0469730)
A2110-002001 132
Engine Mounting ..... (X16-0468460)
A2250-001001 134
Cylinder Block ..... (X16-0464210)
A2010-001001 135
Cylinder Block Accessory ..... (X16-0468330)
A2011-001001 136
Cylinder Block Accessory, With Coolant Heater ..... (X16-0469720)
A2011-002001 137
Crankshaft ..... (X16-0469000)
A2310-002001 139
Damper Flange ..... (X16-0456900)
A2370-001001 140
Vibration Damper ..... (X16-0468080)
A2330-002001 141
Piston and Connecting Rod ..... (X16-0469750)
A2350-001001 142
Engine Oil Filler ..... (X16-0472680)
A3110-001001 143
ENGINE LUBRICATING SYSTEM
Oil Cooler ..... (X16-0464530)
A3310-001001 146
ENGINE FUEL SYSTEM

Fuel Injection Bracket and Piping .....(X16-0464640)
Bracket A4030-001001 148
A4030-001002 150
Fuel Supply Pump .....(X16-0465800)
Drive Gear A4010-001001 151
Inner Parts, Pump A4010-001002A 152
Inner Parts, Feed Pump A4010-001003 154
Common Rail A4010-001004 155
Fuel Piping A4010-001005 156
Fuel Supply Pump Lubricator .....(X16-0465560)
A4060-001001 157
Fuel Injection Controller .....(X16-0468551)
A4710-002001 158
Fuel Injection Controller, For Slag Handling .....(X16-0480090)
A4710-003001 159
Fuel Injection Nozzle .....(X16-0466360)
A4210-001001 160
Fuel Return .....(X16-0464750)
A4230-001001 161
Fuel Filter Cartridge, Provision For Bad Fuel and Poor Fuel Arrangement, Water+Dust, Turkey, Slag Handling .....(X16-0394140)
A4119-002001 162
Fuel Filter .....(X16-0474410)
A4110-003001 163
Pre Filter .....(X16-0468540)
A4150-001001 165
Pre Filter Cartridge .....(X16-0459030)
Service Only A4159-001001 166
ENGINE COOLING SYSTEM
Water Pump .....(X16-0468590)
Air Vent and Thermostat A5010-001001 168
A5010-001002 169
Water Pump, For Air Conditioner .....(X16-0468760)
Air Vent and Thermostat A5010-002001 170
A5010-002002 171
Water Pump, Landfill Specification .....(X16-0471920)
Air Vent and Thermostat A5010-003001 172
A5010-003002 173
Electric Wiring Harness, For 75Amp. Alternator .....(X16-0468981)
(1/4) A6810-002001 174
(2/4) A6810-002002 176
(3/4) A6810-002003 177
(4/4) A6810-002004 179
Electric Wiring Harness, For 90Amp. Alternator .....(X16-0472220)
(1/4) A6810-003001 180
(2/4) A6810-003002 182
(3/4) A6810-003003 183
(4/4) A6810-003004 185
Electric Wiring Harness, For 75Amp. Alternator, For Slag Handling .....(X16-0473740)
(1/4) A6810-004001 186
(2/4) A6810-004002 188
(3/4) A6810-004003 189
(4/4) A6810-004004 191
Corrosion Resistor .....(X16-0468610)
A5210-001001 192
Corrosion Resistor, Without Corrosion Resistor .....(X16-0468630)
A5210-002001 193

ENGINE ELECTRICAL SYSTEM
Alternator, For 75Amp, EU Safety Regulation ..... (X16-0468641)
Inner Parts A6010-008001 196
Mounting Parts A6010-008002 197
Alternator, For 60Amp, EU Safety Regulation ..... (X16-0468651)
Inner Parts A6010-009001 198
Mounting Parts A6010-009002 199
Alternator, For 60Amp, Sandy and Dusty Terrain Arrangement, EU Safety Regulation ..... (X16-0470341)
Inner Parts A6010-010001 200
Mounting Parts A6010-010002 201
Alternator, 90Amp., Landfill Specification ..... (X16-0471950)
Inner Parts A6010-005001 202
Mounting Parts A6010-005002 203
Starting Motor, 11KW ..... (X16-0467980)
Inner Parts A6210-001001 204
Mounting Parts A6210-001002 206
ENGINE MARKS AND PLATES
Name Plate and Caution Plate, Japanese-English ..... (X16-0374360)
A9810-001001 208
Name Plate and Caution Plate, English ..... (X16-0465580)
A9810-002001 209
Name Plate and Caution Plate, For EU Safety Regulation ..... (X16-0474750)
A9810-005001 210
Name Plate and Caution Plate, For Korea EX-Gas Regulation Arrangement ..... (X16-0474830)
A9810-006001 211
Name Plate and Caution Plate, For EU Exhaust Emissions 3rd Regulations, EU Safety Regulation ..... (X16-0475830)
A9810-015001 212
Name Plate and Caution Plate, For China 2nd EX-Gas Regulation Arrangement ..... (X16-0475881)
A9810-016001 213
Name Plate and Caution Plate, For EU Safety Regulation ..... (X16-0475891)
A9810-017001 214
Name Plate and Caution Plate, For Korea EX-Gas Regulation Arrangement ..... (X16-0475901)
A9810-018001 215
Name Plate and Caution Plate, For EPA Regulations TPEM ..... (X16-0476090)
A9810-011001 216
Name Plate and Caution Plate, For EU Safety Regulation, Non EU Territory ..... (X16-0476140)
A9810-013001 217
Name Plate and Caution Plate, For EU Safety Regulation, Turkey Exhaust Emissions 3rd Regulations (X16-0476200)
A9810-014001 218
Name Plate and Caution Plate, For Except Japan ..... (X16-0476330)
A9810-020001 219
Name Plate and Caution Plate, For Canada EPA Regulations TPEM ..... (X16-0476400)
A9810-021001 220
ENGINE RELATED PARTS
Engine Mounting ..... (X21-1039401)
B0100-001001 222
Exhaust Muffler ..... (X21-1059941)
B0300-001001 223
Electric Wiring Harness ..... (X21-1097951)
B0500-001001A 224
Damper ..... (X21-1094262)
B0600-001001 225
Air Compressor ..... (X21-1059591)
Compressor B0710-001001 227
Mounting B0710-001002 228
Duct and Wiring Harness B0710-001003 230

Air Compressor, Landfill Specification .....(X21-1238971)
Compressor B0710-002001 231
Hose B0710-002002 232
Mounting B0710-002003 234
Duct and Wiring Harness B0710-002004 235
Air Compressor, Salt Industries Specification .....(X21-1830950)
Compressor B0710-004001 236
Mounting B0710-004002 237
Duct and Wiring Harness B0710-004003 239
Air Compressor, With Air Conditioner, Sandy and Dusty Terrain Arrangement .....(X21-2106050)
Compressor B0710-007001 240
Mounting B0710-007002 241
Duct and Wiring Harness B0710-007003 243
Cab Heater Piping, With Engine Oil Pan and Coolant Heater .....(X21-1258530)
B0720-001001 244
Cab Heater Piping .....(X21-1326950)
B0720-002001 245
COOLING SYSTEM
Cooling System .....(X21-1039743)
Radiator Core and Aftercooler C0110-005001 248
Oil Cooler C0110-005002 249
Radiator Piping C0110-005003 250
Radiator Mounting C0110-005004 251
Reserve Tank C0110-005005 252
Cooling System, Landfill Specification .....(X21-1241802)
Radiator Core and Aftercooler C0110-006001 253
Bracket C0110-006002 254
Radiator Piping C0110-006003 255
Radiator Mounting C0110-006004 256
Reserve Tank C0110-006005 257
Cooling Piping .....(X21-1228471)
C0120-001001 258
Cooling Fan .....(X21-1039821)
Fan C0200-001001 260
Fan Motor (1/3) C0200-001002 261
Fan Motor (2/3) C0200-001003 262
Fan Motor (3/3) C0200-001004 263
Fan Piping and Shroud C0200-001005 264
Cooling Fan, Noise Suppression Type .....(X21-1199890)
Fan C0200-002001 265
Fan Motor (1/3) C0200-002002 266
Fan Motor (2/3) C0200-002003 267
Fan Motor (3/3) C0200-002004 268
Fan Piping and Shroud C0200-002005 269
Cooling Fan Guard .....(X21-1059962)
C0310-001001 270
Cooling Fan Guard, Noise Suppression Type .....(X21-1224190)
C0310-002001 271
Cooling Fan Guard, Landfill Specification .....(X21-1295680)
C0310-003001 272
Power Train Oil Cooler Piping .....(X21-1059971)
C0400-001001 273
Power Train Oil Cooler Piping, Landfill Specification .....(X21-1300640)
C0400-002001 274
Hydraulic Oil Cooler Piping .....(X21-1059991)
C0610-001001 275

Hydraulic Oil Cooler Piping, Landfill Specification ....(X21-1233680)
(1/2) C0610-002001 276
(2/2) C0610-002002 278
FUEL SYSTEM
Fuel Tank ....(X21-1195140)
Tank D0100-001001 280
Fuel Piping D0100-001002 281
Working Lamp, Rear D0100-001003 283
Fuel Tank, With Fuel Quick Charge ....(X21-1195150)
Tank D0100-002001 284
Fuel Piping D0100-002002 285
Working Lamp, Rear D0100-002003 287
Fuel Tank, With Fuel Quick Charge, Landfill Specification ....(X21-1245650)
Tank D0100-003001 288
Fuel Piping D0100-002002 285
Working Lamp, Rear D0100-003003 289
Fuel Piping ....(X21-1060011)
D0200-001001 290
ELECTRICAL SYSTEM
Battery, Large Capacity ....(X21-0072670)
E0110-001001 294
Battery ....(X21-0072680)
E0110-002001 295
Electric Wiring Harness ....(X21-1098241)
Radiator E0200-001001 296
Fender E0200-001002 297
KOMTRAX Controller ....(X21-1191000)
E0201-002001 299
Front Working Lamp and Rear side Working Lamp ....(X21-1190980)
E0300-001001 300
Front Working Lamp and Rear side Working Lamp, With Rearview Camera ....(X21-1263580)
E0300-002001 301
Rearview Camera ....(X21-1259280)
E0450-001001 302
POWER TRANSMITTING SYSTEM
Universal Joint ....(X21-0330840)
F2200-001001 304
Power Train ....(X21-1039411)
Pump and Turbine F2300-001001 305
Input shaft and Drive Case F2300-001002 307
Torque Converter Case (1/2) F2300-001003 308
Power takeoff Gear F2300-001004 310
Torque Converter Valve (1/2) F2300-001005 311
Torque Converter Valve (2/2) F2300-001006 312
1st, 2nd and 3rd Housing F2300-001007 313
Forward and Reverse Housing F2300-001008 314
1st and 2nd Carrier F2300-001009 316
3rd, Forward and Reverse Carrier F2300-001010 317
Transmission Case F2300-001011 319
Input and Output Shaft F2300-001012 320
Filter and Wiring Harness F2300-001013 321
Transmission Upper Valve F2300-001014 322
Transmission Lower Valve F2300-001015 323
Transmission Main Relief Valve F2300-001016 324
Valve Cover F2300-001017 325
Bevel Gear and Shaft F2300-001018 326
Brake (1/2) F2300-001019 328

Brake (2/2) F2300-001020 329
H.S.S. Gear F2300-001021 330
Torque Converter Case (2/2) F2300-001022 332
Inner Parts, Steering Valve (1/3) F2300-001023 334
Inner Parts, Steering Valve (2/3) F2300-001024 336
Inner Parts, Steering Valve (3/3) F2300-001025 337
Main Steering Shaft F2300-001026 338
Accessory F2300-001027 339
Valve Piping F2300-001028 340
Inner Parts, Hydraulic Pump (1/2) F2300-001029 341
Inner Parts, Hydraulic Pump (2/2) F2300-001030 342
Hydraulic Pump Piping F2300-001031 343
Inner Parts, Scavenging Pump F2300-001032 344
Scavenging Pump Mounting F2300-001033 345
Suction Piping F2300-001034 346
Piping F2300-001035 348
Hydraulic Piping F2300-001036 350
Concentrated Piping F2300-001037 351
Mounting Parts F2300-001038 353
Sensor F2300-001039 354
Power Train Button F2300-001040 355
Final Drive ..... (X21-1202350)
Sprocket Hub, LHS F2380-001001A 356
Final Gear Case LHS F2380-001002A 357
Sprocket Hub, RHS F2380-001003A 359
Final Gear Case RHS F2380-001004A 360
Final Drive, Landfill Specification ..... (X21-1239351)
Sprocket Hub, LHS F2380-002001A 362
Gear Case (1/2) F2380-002002A 363
Sprocket Hub, RHS F2380-002003A 365
Gear Case (2/2) F2380-002004A 366
Final Drive, Segmented Full Track Roller Guard ..... (X21-1319080)
Sprocket Hub, LHS F2380-003001A 368
Gear Case (1/2) F2380-003002A 369
Sprocket Hub, RHS F2380-003003A 371
Gear Case (2/2) F2380-003004A 372
Power Train Piping ..... (X21-1101291)
F2700-001001 374
Power Train Hydraulic Oil Piping, For Scraper ..... (X21-1060072)
Inner Parts, HSS Pump (1/5) F2720-001001 376
Inner Parts, HSS Pump (2/5) F2720-001002 377
Inner Parts, HSS Pump (3/5) F2720-001003A 379
Inner Parts, HSS Pump (4/5) F2720-001004 380
Inner Parts, HSS Pump (5/5) F2720-001005 381
HSS Pump Piping F2720-001006 382
Inner Parts, Fan Pump (1/5) F2720-001007 384
Inner Parts, Fan Pump (2/5) F2720-001008 385
Inner Parts, Fan Pump (3/5) F2720-001009 386
Inner Parts, Fan Pump (4/5) F2720-001010 387
Inner Parts, Fan Pump (5/5) F2720-001011 388
Fan Pump Piping F2720-001012 389
Valve Bracket F2720-001013 390
Pilot Valve F2720-001014 391
Valve Piping F2720-001015 392
Filter Piping F2720-001016 393
Inner Parts, HSS Motor (1/2) F2720-001017 394
Inner Parts, HSS Motor (2/2) F2720-001018 396

Motor Mounting F2720-001019 397
Boom Cylinder Lock Valve Piping F2720-001020 398
Accumulator F2720-001021 399
Drain Piping F2720-001022 400
Concentrated Piping F2720-001023 401
Power Train Hydraulic Oil Piping, For Scraper ..... (X21-1060074)
Inner Parts, HSS Pump (1/5) F2720-004001 402
Inner Parts, HSS Pump (2/5) F2720-004002 403
Inner Parts, HSS Pump (3/5) F2720-004003 405
Inner Parts, HSS Pump (4/5) F2720-004004 406
Inner Parts, HSS Pump (5/5) F2720-004005 407
HSS Pump Piping F2720-004006 408
Inner Parts, Fan Pump (1/5) F2720-004007 410
Inner Parts, Fan Pump (2/5) F2720-004008 411
Inner Parts, Fan Pump (3/5) F2720-004009 412
Inner Parts, Fan Pump (4/5) F2720-004010 413
Inner Parts, Fan Pump (5/5) F2720-004011 414
Fan Pump Piping F2720-004012 415
Valve Bracket F2720-004013 416
Pilot Valve F2720-004014 417
Valve Piping F2720-004015 418
Filter Piping F2720-004016 419
Inner Parts, HSS Motor (1/2) F2720-004017 420
Inner Parts, HSS Motor (2/2) F2720-004018 422
Motor Mounting F2720-004019 423
Boom Cylinder Lock Valve Piping F2720-004020 424
Accumulator F2720-004021 425
Drain Piping F2720-004022 426
Concentrated Piping F2720-004023 427
Power Train Mounting ..... (X21-1044111)
F2810-001001 428
Power Train Wiring Harness ..... (X21-1095741)
(1/2) F2830-001001 429
(2/2) F2830-001002 430
HYDRAULIC SYSTEM
Hydraulic Oil Pump Piping ..... (X21-1060081)
H0310-001001 432
Blade Lift Piping ..... (X21-1060091)
Drain Piping H2210-001001 433
Hose H2210-001002 434
Tube (1/2) H2210-001003 435
Quick Drop Valve H2210-001004 436
Tube (2/2) H2210-001005 437
Plugs H2210-001006 438
Blade Lift Piping, Cylinder Less ..... (X21-1344560)
Drain Piping H2210-002001 439
Cylinder Less H2210-002002 440
Tube (1/2) H2210-002003 441
Quick Drop Valve H2210-002004 442
Tube (2/2) H2210-002005 443
Blade Tilt Piping, For Dual Tilt Pitch Dozer ..... (X21-1060101)
H2220-001001 444
Blade Tilt Piping ..... (X21-1196600)
H2220-002001 446
Ripper Piping, For Dual Tilt Pitch Dozer ..... (X21-1060111)
(1/2) H2250-001001 447
(2/2) H2250-001002 448

Ripper Piping ..... (X21-1203510)
(1/2) H2250-002001 449
(2/2) H2250-002002 450
Ripper Pin Puller Piping, For Giant Ripper ..... (X21-1060121)
H2252-001001 451
Ripper Pin Puller Piping, For Multi Ripper ..... (X21-1202530)
H2252-002001 452
Cooling Fan Drive Piping, For Scraper ..... (X21-1060131)
Fan Motor Delivery Piping H2260-001001 453
Fan Motor Return and Drain Piping H2260-001002 454
Cooling Fan Drive Piping, Without Scraper ..... (X21-1060132)
Fan Motor Delivery Piping H2260-001001 453
Fan Motor Return and Drain Piping H2260-004002A 455
Cooling Fan Drive Piping, Landfill Specification ..... (X21-1241380)
Fan Motor Delivery Piping H2260-001001 453
Fan Motor Return and Drain Piping H2260-002002 457
FRAME AND ITS RELATED PARTS
Main Frame ..... (X21-1039282)
J2100-001001 460
Main Frame, Landfill Specification ..... (X21-1231390)
J2100-002001 461
Level Gauge Piping ..... (X21-1060141)
J2112-001001 462
Level Gauge Piping, Landfill Specification ..... (X21-1245680)
J2112-002001 463
Suspension, For Dual Tilt Pitch Dozer ..... (X21-1039471)
Equalizer Bar J2700-001001 464
Pivot Shaft J2700-001002 465
Suspension ..... (X21-1189800)
Equalizer Bar J2700-002001 466
Pivot Shaft J2700-002002 467
Equalizer Bar and Pivot Shaft, For Strengthened Track Frame ..... (X21-1228831)
Equalizer Bar J2700-004001 468
Pivot Shaft J2700-004002 469
Equalizer Bar and Pivot Shaft, For Dual Tilt Dozer, Strengthened Track Frame ..... (X21-1911790)
Equalizer Bar J2700-004001 468
Pivot Shaft J2700-001002 465
OPERATOR'S COMPARTMENT AND CONTROL SYSTEM
Operator's Seat, Operator's Seat Turn Type, Fabric Type ..... (X21-0754890)
Inner Parts K0110-001001 472
Mounting K0110-001002 474
Operator's Seat, Turn and Reclining Type, Suspension Type ..... (X21-0754900)
Inner Parts K0110-002001 475
Mounting K0110-001002 474
Operator's Seat, Operator's Seat Turn Type, Fabric Type, With Headrest ..... (X21-0755480)
Inner Parts K0110-001001 472
Mounting K0110-003002 476
Operator's Seat, Hi-Back Type Operator's Seat, Fabric Type ..... (X21-0785840)
Inner Parts K0110-001001 472
Mounting K0110-004002 477
Operator's Seat, Hi-Back Type Operator's Seat, With Headrest ..... (X21-0785850)
Inner Parts K0110-001001 472
Mounting K0110-005002 478
Operator's Seat, Air Suspension Type, Hi-Back Type Operator's Seat, With Headrest ..... (X21-1198730)
Inner Parts K0110-006001 479
Mounting K0110-006002 480

Operator's Seat, Air Suspension Type, Operator's Seat Turn Type, For KAB Made Operator's Seat .....(X21-1339020)
Inner Parts K0110-008001 481
Mounting K0110-008002 482
Operator's Seat, Air Suspension Type, Operator's Seat Turn Type, Hi-Back Type Operator's Seat, For KAB Made Operator's Seat .....(X21-1339030)
K0110-009001 483
Operator's Seat, Air Suspension Type, Operator's Seat Turn Type, For KAB Made Operator's Seat, With Headrest .....(X21-1351910)
K0110-010001 484
Operator's Seat, Air Suspension Type, Operator's Seat Turn Type, Hi-Back Type Operator's Seat, For KAB Made Operator's Seat, With Headrest .....(X21-1351920)
K0110-011001 485
Seat Belt, 50mm Width .....(X21-0775330)
K0160-001001 486
Seat Belt, 78mm Width .....(X21-0775340)
K0160-002001 487
Seat Belt, 50mm Width, Air Suspension Type, Hi-Back Type Operator's Seat .....(X21-1186770)
K0160-003001 488
Seat Belt, 78mm Width, Air Suspension Type, Hi-Back Type Operator's Seat .....(X22-0913600)
K0160-004001 489
Cab, ROPS .....(X21-1190610)
Cab K0210-003001 490
Door Lock, LHS K0210-003002A 491
Door Dumper, Window and Wiper, LHS K0210-003003 493
Door, LHS K0210-003004 495
Door Lock, RHS K0210-003005A 497
Door Dumper, Window and Wiper, RHS K0210-003006 499
Door, RHS K0210-003007 501
Door Hinge K0210-003008 503
Bracket K0210-003009 504
Door Open Lock, LHS K0210-003010 505
Door Open Lock, RHS K0210-003011 507
Window Sash K0210-003012A 509
Sash type Glass Windows, LHS K0210-003013A 510
Sash type Glass Windows, RHS K0210-003014A 512
Switch Panel K0210-003015 514
Radio K0210-003016 516
Roof Cover K0210-003017 517
Rearview Mirror K0210-003018 519
Envelope Parts K0210-003019 520
Grip K0210-003020 522
Plate K0210-003021 523
Cab, ROPS, With AM-FM Stereo Radio With Cassette For North America .....(X21-1190630)
Cab K0210-003001 490
Door Lock, LHS K0210-003002A 491
Door Dumper, Window and Wiper, LHS K0210-003003 493
Door, LHS K0210-003004 495
Door Lock, RHS K0210-003005A 497
Door Dumper, Window and Wiper, RHS K0210-003006 499
Door, RHS K0210-003007 501
Door Hinge K0210-003008 503
Bracket K0210-003009 504
Door Open Lock, LHS K0210-003010 505
Door Open Lock, RHS K0210-003011 507
Window Sash K0210-003012A 509
Sash type Glass Windows, LHS K0210-003013A 510
Sash type Glass Windows, RHS K0210-003014A 512

Switch Panel K0210-003015 514
AM-FM Radio and Cassette Stereo K0210-004016 524
Roof Cover K0210-003017 517
Rearview Mirror K0210-003018 519
Envelope Parts K0210-003019 520
Grip K0210-003020 522
Plate K0210-003021 523
Cab, ROPS, With AM-FM Stereo Radio With Cassette For Europe and Asia ..... (X21-1190690)
Cab K0210-003001 490
Door Lock, LHS K0210-003002A 491
Door Dumper, Window and Wiper, LHS K0210-003003 493
Door, LHS K0210-003004 495
Door Lock, RHS K0210-003005A 497
Door Dumper, Window and Wiper, RHS K0210-003006 499
Door, RHS K0210-003007 501
Door Hinge K0210-003008 503
Bracket K0210-003009 504
Door Open Lock, LHS K0210-003010 505
Door Open Lock, RHS K0210-003011 507
Window Sash K0210-003012A 509
Sash type Glass Windows, LHS K0210-003013A 510
Sash type Glass Windows, RHS K0210-003014A 512
Switch Panel K0210-006015 525
AM-FM Radio and Cassette Stereo K0210-006016 527
Roof Cover K0210-003017 517
Rearview Mirror K0210-006018A 528
Envelope Parts K0210-003019 520
Grip K0210-003020 522
Plate K0210-003021 523
Cab, ROPS, With AM-FM Stereo Radio With Cassette For North America, For KOMTRAX ..... (X21-1241320)
Cab K0210-003001 490
Door Lock, LHS K0210-003002A 491
Door Dumper, Window and Wiper, LHS K0210-003003 493
Door, LHS K0210-003004 495
Door Lock, RHS K0210-003005A 497
Door Dumper, Window and Wiper, RHS K0210-003006 499
Door, RHS K0210-003007 501
Door Hinge K0210-003008 503
Bracket K0210-003009 504
Door Open Lock, LHS K0210-003010 505
Door Open Lock, RHS K0210-003011 507
Window Sash K0210-003012A 509
Sash type Glass Windows, LHS K0210-003013A 510
Sash type Glass Windows, RHS K0210-003014A 512
Switch Panel K0210-003015 514
AM-FM Radio and Cassette Stereo K0210-004016 524
Roof Cover K0210-003017 517
Rearview Mirror K0210-007018 529
Envelope Parts K0210-003019 520
Grip K0210-003020 522
Plate K0210-003021 523
Cab, ROPS, With AM-FM Stereo Radio With Cassette For Europe and Asia, For KOMTRAX ..... (X21-1241340)
Cab K0210-003001 490
Door Lock, LHS K0210-003002A 491
Door Dumper, Window and Wiper, LHS K0210-003003 493
Door, LHS K0210-003004 495
Door Lock, RHS K0210-003005A 497

Door Dumper, Window and Wiper, RHS K0210-003006 499
Door, RHS K0210-003007 501
Door Hinge K0210-003008 503
Bracket K0210-003009 504
Door Open Lock, LHS K0210-003010 505
Door Open Lock, RHS K0210-003011 507
Window Sash K0210-003012A 509
Sash type Glass Windows, LHS K0210-003013A 510
Sash type Glass Windows, RHS K0210-003014A 512
Switch Panel K0210-006015 525
AM-FM Radio and Cassette Stereo K0210-006016 527
Roof Cover K0210-003017 517
Rearview Mirror K0210-008018A 530
Envelope Parts K0210-003019 520
Grip K0210-003020 522
Plate K0210-003021 523
Cab, ROPS, For KOMTRAX ..... (X21-1241390)
Cab K0210-003001 490
Door Lock, LHS K0210-003002A 491
Door Dumper, Window and Wiper, LHS K0210-003003 493
Door, LHS K0210-003004 495
Door Lock, RHS K0210-003005A 497
Door Dumper, Window and Wiper, RHS K0210-003006 499
Door, RHS K0210-003007 501
Door Hinge K0210-003008 503
Bracket K0210-003009 504
Door Open Lock, LHS K0210-003010 505
Door Open Lock, RHS K0210-003011 507
Window Sash K0210-003012A 509
Sash type Glass Windows, LHS K0210-003013A 510
Sash type Glass Windows, RHS K0210-003014A 512
Switch Panel K0210-003015 514
Radio K0210-003016 516
Roof Cover K0210-003017 517
Rearview Mirror K0210-007018 529
Envelope Parts K0210-003019 520
Grip K0210-003020 522
Plate K0210-003021 523
Cab, ROPS, Rearview Monitoring System ..... (X21-1259210)
Cab K0210-003001 490
Door Lock, LHS K0210-003002A 491
Door Dumper, Window and Wiper, LHS K0210-003003 493
Door, LHS K0210-003004 495
Door Lock, RHS K0210-003005A 497
Door Dumper, Window and Wiper, RHS K0210-003006 499
Door, RHS K0210-003007 501
Door Hinge K0210-003008 503
Bracket K0210-003009 504
Door Open Lock, LHS K0210-003010 505
Door Open Lock, RHS K0210-003011 507
Window Sash K0210-003012A 509
Sash type Glass Windows, LHS K0210-003013A 510
Sash type Glass Windows, RHS K0210-003014A 512
Switch Panel K0210-003015 514
Radio K0210-003016 516
Roof Cover K0210-003017 517
Rearview Mirror K0210-003018 519

Rear Camera K0210-012019 531
Envelope Parts K0210-003019 520
Grip K0210-003020 522
Plate K0210-003021 523
Cab, ROPS, Rearview Monitoring System, With AM-FM Stereo Radio With Cassette For North America ..... (X21-1259220)
Cab K0210-003001 490
Door Lock, LHS K0210-003002A 491
Door Dumper, Window and Wiper, LHS K0210-003003 493
Door, LHS K0210-003004 495
Door Lock, RHS K0210-003005A 497
Door Dumper, Window and Wiper, RHS K0210-003006 499
Door, RHS K0210-003007 501
Door Hinge K0210-003008 503
Bracket K0210-003009 504
Door Open Lock, LHS K0210-003010 505
Door Open Lock, RHS K0210-003011 507
Window Sash K0210-003012A 509
Sash type Glass Windows, LHS K0210-003013A 510
Sash type Glass Windows, RHS K0210-003014A 512
Switch Panel K0210-003015 514
AM-FM Radio and Cassette Stereo K0210-004016 524
Roof Cover K0210-003017 517
Rearview Mirror K0210-003018 519
Rear Camera K0210-012019 531
Envelope Parts K0210-003019 520
Grip K0210-003020 522
Plate K0210-003021 523
Cab, ROPS, Rearview Monitoring System, With AM-FM Stereo Radio With Cassette For Europe and Asia ..... (X21-1259240)
Cab K0210-003001 490
Door Lock, LHS K0210-003002A 491
Door Dumper, Window and Wiper, LHS K0210-003003 493
Door, LHS K0210-003004 495
Door Lock, RHS K0210-003005A 497
Door Dumper, Window and Wiper, RHS K0210-003006 499
Door, RHS K0210-003007 501
Door Hinge K0210-003008 503
Bracket K0210-003009 504
Door Open Lock, LHS K0210-003010 505
Door Open Lock, RHS K0210-003011 507
Window Sash K0210-003012A 509
Sash type Glass Windows, LHS K0210-003013A 510
Sash type Glass Windows, RHS K0210-003014A 512
Switch Panel K0210-006015 525
AM-FM Radio and Cassette Stereo K0210-006016 527
Roof Cover K0210-003017 517
Rearview Mirror K0210-003018 519
Rear Camera K0210-015019A 532
Envelope Parts K0210-003019 520
Grip K0210-003020 522
Plate K0210-003021 523
Cab, ROPS, Rearview Monitoring System, With AM-FM Stereo Radio With Cassette For North America, For KOMTRAX ..... (X21-1259250)
Cab K0210-003001 490
Door Lock, LHS K0210-003002A 491
Door Dumper, Window and Wiper, LHS K0210-003003 493

Door, LHS K0210-003004 495
Door Lock, RHS K0210-003005A 497
Door Dumper, Window and Wiper, RHS K0210-003006 499
Door, RHS K0210-003007 501
Door Hinge K0210-003008 503
Bracket K0210-003009 504
Door Open Lock, LHS K0210-003010 505
Door Open Lock, RHS K0210-003011 507
Window Sash K0210-003012A 509
Sash type Glass Windows, LHS K0210-003013A 510
Sash type Glass Windows, RHS K0210-003014A 512
Switch Panel K0210-003015 514
AM-FM Radio and Cassette Stereo K0210-004016 524
Roof Cover K0210-003017 517
Rearview Mirror K0210-007018 529
Rear Camera K0210-012019 531
Envelope Parts K0210-003019 520
Grip K0210-003020 522
Plate K0210-003021 523
Cab, ROPS, Rearview Monitoring System, With AM-FM Stereo Radio With Cassette For Europe and Asia, For KOMTRAX ..... (X21-1259260)
Cab K0210-003001 490
Door Lock, LHS K0210-003002A 491
Door Dumper, Window and Wiper, LHS K0210-003003 493
Door, LHS K0210-003004 495
Door Lock, RHS K0210-003005A 497
Door Dumper, Window and Wiper, RHS K0210-003006 499
Door, RHS K0210-003007 501
Door Hinge K0210-003008 503
Bracket K0210-003009 504
Door Open Lock, LHS K0210-003010 505
Door Open Lock, RHS K0210-003011 507
Window Sash K0210-003012A 509
Sash type Glass Windows, LHS K0210-003013A 510
Sash type Glass Windows, RHS K0210-003014A 512
Switch Panel K0210-006015 525
AM-FM Radio and Cassette Stereo K0210-006016 527
Roof Cover K0210-003017 517
Rearview Mirror K0210-007018 529
Rear Camera K0210-015019A 532
Envelope Parts K0210-003019 520
Grip K0210-003020 522
Plate K0210-003021 523
Cab, ROPS, Rearview Monitoring System, For KOMTRAX ..... (X21-1259270)
Cab K0210-003001 490
Door Lock, LHS K0210-003002A 491
Door Dumper, Window and Wiper, LHS K0210-003003 493
Door, LHS K0210-003004 495
Door Lock, RHS K0210-003005A 497
Door Dumper, Window and Wiper, RHS K0210-003006 499
Door, RHS K0210-003007 501
Door Hinge K0210-003008 503
Bracket K0210-003009 504
Door Open Lock, LHS K0210-003010 505
Door Open Lock, RHS K0210-003011 507
Window Sash K0210-003012A 509
Sash type Glass Windows, LHS K0210-003013A 510

Sash type Glass Windows, RHS K0210-003014A 512
Switch Panel K0210-003015 514
Radio K0210-003016 516
Roof Cover K0210-003017 517
Rearview Mirror K0210-007018 529
Rear Camera K0210-012019 531
Envelope Parts K0210-003019 520
Grip K0210-003020 522
Plate K0210-003021 523
Cab, ROPS Cab, EU Safety Regulation, Rear View Monitoring System, AM-FM Stereo Radio, Cassette, Europe, Asia, KOMTRAX ..... (X21-2091900)
Cab K0210-003001 490
Door Lock, LHS K0210-035002 533
Door Dumper, Window and Wiper, LHS K0210-003003 493
Door, LHS K0210-003004 495
Door Lock, RHS K0210-035005 535
Door Dumper, Window and Wiper, RHS K0210-003006 499
Door, RHS K0210-003007 501
Door Hinge K0210-003008 503
Bracket K0210-003009 504
Door Open Lock, LHS K0210-003010 505
Door Open Lock, RHS K0210-003011 507
Window Sash K0210-035012 537
Sash type Glass Windows, LHS K0210-035013 538
Sash type Glass Windows, RHS K0210-035014 539
Switch Panel K0210-003015 514
AM-FM Radio and Cassette Stereo K0210-006016 527
Roof Cover K0210-003017 517
Rearview Mirror K0210-007018 529
Rear Camera K0210-012019 531
Envelope Parts K0210-003019 520
Grip K0210-003020 522
Plate K0210-003021 523
Floor Mat ..... (X21-1096811)
K0310-001001 540
Fire Extinguisher, English ..... (X21-1198560)
K0830-001001 541
Fire Extinguisher, Chinese ..... (X21-1452940)
K0830-004001 542
Fire Extinguisher, Portuguese ..... (X21-1444230)
K0830-003001 543
Fire Extinguisher, Spanish ..... (X21-2118890)
K0830-005001 544
First Aid Box ..... (X21-0971750)
K0840-001001 545
Thermos Bottle ..... (X21-0347260)
K0850-001001 546
Floor Frame, For Variable Giant Ripper, MSHA Dust Regulation ..... (X21-1206980)
Frame K2110-009001 547
Parking Brake Lever K2110-009002 548
Horn Switch and Controller K2110-009003 550
Floor, Wiring Harness K2110-009004 551
Floor Wiring Harness Clamp (1/2) K2110-009005 552
Floor Wiring Harness Clamp (2/2) K2110-009006 554
Fuse Box and Relay K2110-009007 556
Pin Puller Switch K2110-009008 558
Console Box K2110-009009 559

Travel Control Lever K2110-009010A 560
Console K2110-009011 561
Lift and Slider K2110-009012 563
Blade Control Lever K2110-009013 565
PPC Valve for Blade K2110-009014 566
PPC Valve Mounting (1/2) K2110-009015 567
Blade Lock Lever K2110-009016 568
Ripper Control Lever K2110-009017 570
PPC Valve for Ripper K2110-009018 571
PPC Valve Mounting (2/2) K2110-009019 572
Armrest, RHS K2110-009020 573
Air Conditioner Unit K2110-009021 574
Air Conditioner Condenser Unit Mounting K2110-009022 576
Air Conditioner Cover K2110-009023 578
Air Conditioner Duct K2110-009024 580
Air Conditioner Piping K2110-009025 582
Floor, Window Washer Hose K2110-009026 584
Decal K2110-009027 585
Floor Frame, For Variable Multi Ripper, For Dual Tilt Pitch Dozer, MSHA Dust Regulation ..... (X21-1206990)
Frame K2110-009001 547
Parking Brake Lever K2110-009002 548
Horn Switch and Controller K2110-009003 550
Floor, Wiring Harness K2110-009004 551
Floor Wiring Harness Clamp (1/2) K2110-009005 552
Floor Wiring Harness Clamp (2/2) K2110-009006 554
Fuse Box and Relay K2110-009007 556
Without Pin Puller Switch K2110-010008 586
Console Box K2110-009009 559
Travel Control Lever K2110-009010A 560
Console K2110-009011 561
Lift and Slider K2110-009012 563
Blade Control Lever K2110-010013 587
PPC Valve for Blade K2110-009014 566
PPC Valve Mounting (1/2) K2110-009015 567
Blade Lock Lever K2110-009016 568
Ripper Control Lever K2110-009017 570
PPC Valve for Ripper K2110-009018 571
PPC Valve Mounting (2/2) K2110-009019 572
Armrest, RHS K2110-009020 573
Air Conditioner Unit K2110-009021 574
Air Conditioner Condenser Unit Mounting K2110-009022 576
Air Conditioner Cover K2110-009023 578
Air Conditioner Duct K2110-009024 580
Air Conditioner Piping K2110-009025 582
Floor, Window Washer Hose K2110-009026 584
Decal K2110-010027 588
Floor Frame, For Variable Giant Ripper, For Dual Tilt Pitch Dozer, MSHA Dust Regulation ..... (X21-1207000)
Frame K2110-009001 547
Parking Brake Lever K2110-009002 548
Horn Switch and Controller K2110-009003 550
Floor, Wiring Harness K2110-009004 551
Floor Wiring Harness Clamp (1/2) K2110-009005 552
Floor Wiring Harness Clamp (2/2) K2110-009006 554
Fuse Box and Relay K2110-009007 556
Pin Puller Switch K2110-009008 558
Console Box K2110-009009 559
Travel Control Lever K2110-009010A 560

Console K2110-009011 561
Lift and Slider K2110-009012 563
Blade Control Lever K2110-010013 587
PPC Valve for Blade K2110-009014 566
PPC Valve Mounting (1/2) K2110-009015 567
Blade Lock Lever K2110-009016 568
Ripper Control Lever K2110-009017 570
PPC Valve for Ripper K2110-009018 571
PPC Valve Mounting (2/2) K2110-009019 572
Armrest, RHS K2110-009020 573
Air Conditioner Unit K2110-009021 574
Air Conditioner Condenser Unit Mounting K2110-009022 576
Air Conditioner Cover K2110-009023 578
Air Conditioner Duct K2110-009024 580
Air Conditioner Piping K2110-009025 582
Floor, Window Washer Hose K2110-009026 584
Decal K2110-011027 589
Floor Frame, Without Rear Work Equipment, MSHA Dust Regulation ..... (X21-1207010)
Frame K2110-009001 547
Parking Brake Lever K2110-009002 548
Horn Switch and Controller K2110-009003 550
Floor, Wiring Harness K2110-009004 551
Floor Wiring Harness Clamp (1/2) K2110-009005 552
Floor Wiring Harness Clamp (2/2) K2110-009006 554
Fuse Box and Relay K2110-009007 556
Without Pin Puller Switch K2110-012008 590
Console Box K2110-009009 559
Travel Control Lever K2110-009010A 560
Console K2110-009011 561
Lift and Slider K2110-009012 563
Blade Control Lever K2110-009013 565
PPC Valve for Blade K2110-009014 566
PPC Valve Mounting (1/2) K2110-009015 567
Blade Lock Lever K2110-009016 568
PPC Valve for Ripper K2110-009018 571
PPC Valve Mounting (2/2) K2110-009019 572
Armrest, RHS K2110-012019 591
Air Conditioner Unit K2110-009021 574
Air Conditioner Condenser Unit Mounting K2110-009022 576
Air Conditioner Cover K2110-009023 578
Air Conditioner Duct K2110-009024 580
Air Conditioner Piping K2110-009025 582
Floor, Window Washer Hose K2110-009026 584
Decal K2110-012026 592
Floor Frame, Without Rear Work Equipment, For Dual Tilt Pitch Dozer, MSHA Dust Regulation ..... (X21-1207020)
Frame K2110-009001 547
Parking Brake Lever K2110-009002 548
Horn Switch and Controller K2110-009003 550
Floor, Wiring Harness K2110-009004 551
Floor Wiring Harness Clamp (1/2) K2110-009005 552
Floor Wiring Harness Clamp (2/2) K2110-009006 554
Fuse Box and Relay K2110-009007 556
Without Pin Puller Switch K2110-012008 590
Console Box K2110-009009 559
Travel Control Lever K2110-009010A 560
Console K2110-009011 561
Lift and Slider K2110-009012 563

Blade Control Lever K2110-010013 587
PPC Valve for Blade K2110-009014 566
PPC Valve Mounting (1/2) K2110-009015 567
Blade Lock Lever K2110-009016 568
PPC Valve for Ripper K2110-009018 571
PPC Valve Mounting (2/2) K2110-009019 572
Armrest, RHS K2110-012019 591
Air Conditioner Unit K2110-009021 574
Air Conditioner Condenser Unit Mounting K2110-009022 576
Air Conditioner Cover K2110-009023 578
Air Conditioner Duct K2110-009024 580
Air Conditioner Piping K2110-009025 582
Floor, Window Washer Hose K2110-009026 584
Decal K2110-013026 593
Floor Frame, For Mechanical Angle Dozer, For Variable Multi Ripper, MSHA Dust Regulation ..... (X21-1340030)
Frame K2110-009001 547
Parking Brake Lever K2110-009002 548
Horn Switch and Controller K2110-009003 550
Floor, Wiring Harness K2110-009004 551
Floor Wiring Harness Clamp (1/2) K2110-009005 552
Floor Wiring Harness Clamp (2/2) K2110-009006 554
Fuse Box and Relay K2110-009007 556
Without Pin Puller Switch K2110-010008 586
Console Box K2110-009009 559
Travel Control Lever K2110-009010A 560
Console K2110-009011 561
Lift and Slider K2110-009012 563
Blade Control Lever K2110-009013 565
PPC Valve for Blade K2110-009014 566
PPC Valve Mounting (1/2) K2110-018015 594
Blade Lock Lever K2110-009016 568
Ripper Control Lever K2110-009017 570
PPC Valve for Ripper K2110-009018 571
PPC Valve Mounting (2/2) K2110-009019 572
Armrest, RHS K2110-009020 573
Air Conditioner Unit K2110-009021 574
Air Conditioner Condenser Unit Mounting K2110-009022 576
Air Conditioner Cover K2110-009023 578
Air Conditioner Duct K2110-009024 580
Air Conditioner Piping K2110-009025 582
Floor, Window Washer Hose K2110-009026 584
Decal K2110-018027 595
Floor Frame, For Mechanical Angle Dozer, For Variable Giant Ripper, MSHA Dust Regulation ..... (X21-1340040)
Frame K2110-009001 547
Parking Brake Lever K2110-009002 548
Horn Switch and Controller K2110-009003 550
Floor, Wiring Harness K2110-009004 551
Floor Wiring Harness Clamp (1/2) K2110-009005 552
Floor Wiring Harness Clamp (2/2) K2110-009006 554
Fuse Box and Relay K2110-009007 556
Pin Puller Switch K2110-009008 558
Console Box K2110-009009 559
Travel Control Lever K2110-009010A 560
Console K2110-009011 561
Lift and Slider K2110-009012 563
Blade Control Lever K2110-009013 565
PPC Valve for Blade K2110-009014 566

PPC Valve Mounting (1/2) K2110-018015 594
Blade Lock Lever K2110-009016 568
Ripper Control Lever K2110-009017 570
PPC Valve for Ripper K2110-009018 571
PPC Valve Mounting (2/2) K2110-009019 572
Armrest, RHS K2110-009020 573
Air Conditioner Unit K2110-009021 574
Air Conditioner Condenser Unit Mounting K2110-009022 576
Air Conditioner Cover K2110-009023 578
Air Conditioner Duct K2110-009024 580
Air Conditioner Piping K2110-009025 582
Floor, Window Washer Hose K2110-009026 584
Decal K2110-019027 596
Floor Frame, For Mechanical Angle Dozer, Without Rear Work Equipment, MSHA Dust Regulation ..... (X21-1340050)
Frame K2110-009001 547
Parking Brake Lever K2110-009002 548
Horn Switch and Controller K2110-009003 550
Floor, Wiring Harness K2110-009004 551
Floor Wiring Harness Clamp (1/2) K2110-009005 552
Floor Wiring Harness Clamp (2/2) K2110-009006 554
Fuse Box and Relay K2110-009007 556
Without Pin Puller Switch K2110-012008 590
Console Box K2110-009009 559
Travel Control Lever K2110-009010A 560
Console K2110-009011 561
Lift and Slider K2110-009012 563
Blade Control Lever K2110-009013 565
PPC Valve for Blade K2110-009014 566
PPC Valve Mounting (1/2) K2110-018015 594
Blade Lock Lever K2110-009016 568
PPC Valve for Ripper K2110-009018 571
PPC Valve Mounting (2/2) K2110-009019 572
Armrest, RHS K2110-012019 591
Air Conditioner Unit K2110-009021 574
Air Conditioner Condenser Unit Mounting K2110-009022 576
Air Conditioner Cover K2110-009023 578
Air Conditioner Duct K2110-009024 580
Air Conditioner Piping K2110-009025 582
Floor, Window Washer Hose K2110-009026 584
Decal K2110-020026 597
Floor Frame, For Variable Giant Ripper, For Dual Tilt Pitch Dozer, MSHA Dust Regulation, Landfill Specification ..... (X21-1347960)
Frame K2110-022001 598
Parking Brake Lever K2110-009002 548
Horn Switch and Controller K2110-009003 550
Floor, Wiring Harness K2110-009004 551
Floor Wiring Harness Clamp (1/2) K2110-009005 552
Floor Wiring Harness Clamp (2/2) K2110-009006 554
Fuse Box and Relay K2110-009007 556
Pin Puller Switch K2110-009008 558
Console Box K2110-009009 559
Travel Control Lever K2110-009010A 560
Console K2110-009011 561
Lift and Slider K2110-009012 563
Blade Control Lever K2110-010013 587
PPC Valve for Blade K2110-009014 566
PPC Valve Mounting (1/2) K2110-009015 567

Blade Lock Lever K2110-009016 568
Ripper Control Lever K2110-009017 570
PPC Valve for Ripper K2110-009018 571
PPC Valve Mounting (2/2) K2110-009019 572
Armrest, RHS K2110-009020 573
Air Conditioner Unit K2110-009021 574
Air Conditioner Condenser Unit Mounting K2110-009022 576
Air Conditioner Cover K2110-009023 578
Air Conditioner Duct K2110-009024 580
Air Conditioner Piping K2110-009025 582
Floor, Window Washer Hose K2110-009026 584
Decal K2110-011027 589
Floor Frame, Dual Tilt Dozer, With Variable Digging Angle Giant Ripper, Variable Digging Angle Giant Ripper Without Push Block, Variable Giant Ripper ..... (X21-1041082)
Frame K2110-027001 599
Parking Brake Lever K2110-027002 600
Horn Switch and Controller K2110-027003 602
Floor, Wiring Harness K2110-027004 603
Floor Wiring Harness Clamp (1/2) K2110-027005 604
Floor Wiring Harness Clamp (2/2) K2110-027006 606
Fuse Box and Relay K2110-027007 608
Pin Puller Switch K2110-027008 610
Console Box K2110-027009 611
Travel Control Lever K2110-027010 612
Console K2110-027011 613
Lift and Slider K2110-027012 615
Blade Control Lever K2110-027013 617
PPC Valve for Blade K2110-027014 619
PPC Valve Mounting (1/2) K2110-027015 620
Blade Lock Lever K2110-027016 621
Ripper Control Lever K2110-027017 623
PPC Valve for Ripper K2110-027018 624
PPC Valve Mounting (2/2) K2110-027019 625
Armrest, RHS K2110-027020 626
Air Conditioner Unit K2110-027021 628
Air Conditioner Condenser Unit Mounting K2110-027022 630
Air Conditioner Cover K2110-027023 632
Air Conditioner Duct K2110-027024 634
Air Conditioner Piping K2110-027025 636
Floor, Window Washer Hose K2110-027026 638
Decal K2110-027027 639
Floor Frame, Dual Tilt Dozer, With Variable Digging Angle Multi Ripper, Variable Multi Ripper ..... (X21-1196901)
Frame K2110-027001 599
Parking Brake Lever K2110-027002 600
Horn Switch and Controller K2110-027003 602
Floor, Wiring Harness K2110-027004 603
Floor Wiring Harness Clamp (1/2) K2110-027005 604
Floor Wiring Harness Clamp (2/2) K2110-027006 606
Fuse Box and Relay K2110-027007 608
Without Pin Puller Switch K2110-028008 640
Console Box K2110-027009 611
Travel Control Lever K2110-027010 612
Console K2110-027011 613
Lift and Slider K2110-027012 615
Blade Control Lever K2110-027013 617
PPC Valve for Blade K2110-027014 619
PPC Valve Mounting (1/2) K2110-027015 620

Blade Lock Lever K2110-027016 621
Ripper Control Lever K2110-027017 623
PPC Valve for Ripper K2110-027018 624
PPC Valve Mounting (2/2) K2110-027019 625
Armrest, RHS K2110-027020 626
Air Conditioner Unit K2110-027021 628
Air Conditioner Condenser Unit Mounting K2110-027022 630
Air Conditioner Cover K2110-027023 632
Air Conditioner Duct K2110-027024 634
Air Conditioner Piping K2110-027025 636
Floor, Window Washer Hose K2110-027026 638
Decal K2110-028027 641
Floor Frame, Without Rear Equipment ..... (X21-1196911)
Frame K2110-027001 599
Parking Brake Lever K2110-027002 600
Horn Switch and Controller K2110-027003 602
Floor, Wiring Harness K2110-027004 603
Floor Wiring Harness Clamp (1/2) K2110-027005 604
Floor Wiring Harness Clamp (2/2) K2110-027006 606
Fuse Box and Relay K2110-027007 608
Without Pin Puller Switch K2110-029008 642
Console Box K2110-027009 611
Travel Control Lever K2110-027010 612
Console K2110-027011 613
Lift and Slider K2110-027012 615
Blade Control Lever K2110-029013 643
PPC Valve for Blade K2110-027014 619
PPC Valve Mounting (1/2) K2110-027015 620
Blade Lock Lever K2110-027016 621
PPC Valve for Ripper K2110-027018 624
PPC Valve Mounting (2/2) K2110-027019 625
Armrest, RHS K2110-029019 645
Air Conditioner Unit K2110-027021 628
Air Conditioner Condenser Unit Mounting K2110-027022 630
Air Conditioner Cover K2110-027023 632
Air Conditioner Duct K2110-027024 634
Air Conditioner Piping K2110-027025 636
Floor, Window Washer Hose K2110-027026 638
Decal K2110-029026 646
Floor Frame, Dual Tilt Dozer, Without Rear Equipment ..... (X21-1196921)
Frame K2110-027001 599
Parking Brake Lever K2110-027002 600
Horn Switch and Controller K2110-027003 602
Floor, Wiring Harness K2110-027004 603
Floor Wiring Harness Clamp (1/2) K2110-027005 604
Floor Wiring Harness Clamp (2/2) K2110-027006 606
Fuse Box and Relay K2110-027007 608
Without Pin Puller Switch K2110-029008 642
Console Box K2110-027009 611
Travel Control Lever K2110-027010 612
Console K2110-027011 613
Lift and Slider K2110-027012 615
Blade Control Lever K2110-027013 617
PPC Valve for Blade K2110-027014 619
PPC Valve Mounting (1/2) K2110-027015 620
Blade Lock Lever K2110-027016 621
PPC Valve for Ripper K2110-027018 624

PPC Valve Mounting (2/2) K2110-027019 625
Armrest, RHS K2110-029019 645
Air Conditioner Unit K2110-027021 628
Air Conditioner Condenser Unit Mounting K2110-027022 630
Air Conditioner Cover K2110-027023 632
Air Conditioner Duct K2110-027024 634
Air Conditioner Piping K2110-027025 636
Floor, Window Washer Hose K2110-027026 638
Floor Frame, With Variable Digging Angle Multi Ripper, Variable Multi Ripper ..... (X21-1199341)
Frame K2110-027001 599
Parking Brake Lever K2110-027002 600
Horn Switch and Controller K2110-027003 602
Floor, Wiring Harness K2110-027004 603
Floor Wiring Harness Clamp (1/2) K2110-027005 604
Floor Wiring Harness Clamp (2/2) K2110-027006 606
Fuse Box and Relay K2110-027007 608
Without Pin Puller Switch K2110-028008 640
Console Box K2110-027009 611
Travel Control Lever K2110-027010 612
Console K2110-027011 613
Lift and Slider K2110-027012 615
Blade Control Lever K2110-029013 643
PPC Valve for Blade K2110-027014 619
PPC Valve Mounting (1/2) K2110-027015 620
Blade Lock Lever K2110-027016 621
Ripper Control Lever K2110-027017 623
PPC Valve for Ripper K2110-027018 624
PPC Valve Mounting (2/2) K2110-027019 625
Armrest, RHS K2110-027020 626
Air Conditioner Unit K2110-027021 628
Air Conditioner Condenser Unit Mounting K2110-027022 630
Air Conditioner Cover K2110-027023 632
Air Conditioner Duct K2110-027024 634
Air Conditioner Piping K2110-027025 636
Floor, Window Washer Hose K2110-027026 638
Decal K2110-031027 647
Floor Frame, With Variable Digging Angle Giant Ripper, Variable Digging Angle Giant Ripper Without Push Block, Variable Giant Ripper ..... (X21-1199351)
Frame K2110-027001 599
Parking Brake Lever K2110-027002 600
Horn Switch and Controller K2110-027003 602
Floor, Wiring Harness K2110-027004 603
Floor Wiring Harness Clamp (1/2) K2110-027005 604
Floor Wiring Harness Clamp (2/2) K2110-027006 606
Fuse Box and Relay K2110-027007 608
Pin Puller Switch K2110-027008 610
Console Box K2110-027009 611
Travel Control Lever K2110-027010 612
Console K2110-027011 613
Lift and Slider K2110-027012 615
Blade Control Lever K2110-029013 643
PPC Valve for Blade K2110-027014 619
PPC Valve Mounting (1/2) K2110-027015 620
Blade Lock Lever K2110-027016 621
Ripper Control Lever K2110-027017 623
PPC Valve for Ripper K2110-027018 624
PPC Valve Mounting (2/2) K2110-027019 625

Armrest, RHS K2110-027020 626
Air Conditioner Unit K2110-027021 628
Air Conditioner Condenser Unit Mounting K2110-027022 630
Air Conditioner Cover K2110-027023 632
Air Conditioner Duct K2110-027024 634
Air Conditioner Piping K2110-027025 636
Floor, Window Washer Hose K2110-027026 638
Decal K2110-032027 648
Floor Frame, With MSHA Dust Regulation Arrangement, Variable Digging Angle Multi Ripper, Variable Multi Ripper ..... (X21-1206971)
Frame K2110-027001 599
Parking Brake Lever K2110-027002 600
Horn Switch and Controller K2110-027003 602
Floor, Wiring Harness K2110-027004 603
Floor Wiring Harness Clamp (1/2) K2110-027005 604
Floor Wiring Harness Clamp (2/2) K2110-027006 606
Fuse Box and Relay K2110-027007 608
Without Pin Puller Switch K2110-028008 640
Console Box K2110-027009 611
Travel Control Lever K2110-027010 612
Console K2110-027011 613
Lift and Slider K2110-027012 615
Blade Control Lever K2110-029013 643
PPC Valve for Blade K2110-027014 619
PPC Valve Mounting (1/2) K2110-027015 620
Blade Lock Lever K2110-027016 621
Ripper Control Lever K2110-027017 623
PPC Valve for Ripper K2110-027018 624
PPC Valve Mounting (2/2) K2110-027019 625
Armrest, RHS K2110-027020 626
Air Conditioner Unit K2110-027021 628
Air Conditioner Condenser Unit Mounting K2110-027022 630
Air Conditioner Cover K2110-033023 649
Air Conditioner Duct K2110-027024 634
Air Conditioner Piping K2110-027025 636
Floor, Window Washer Hose K2110-027026 638
Decal K2110-031027 647
Floor Frame, With MSHA Dust Regulation Arrangement, Variable Digging Angle Giant Ripper, Variable Digging Angle Giant Ripper Without Push Block, Variable Giant Ripper ..... (X21-1206981)
Frame K2110-027001 599
Parking Brake Lever K2110-027002 600
Horn Switch and Controller K2110-027003 602
Floor, Wiring Harness K2110-027004 603
Floor Wiring Harness Clamp (1/2) K2110-027005 604
Floor Wiring Harness Clamp (2/2) K2110-027006 606
Fuse Box and Relay K2110-027007 608
Pin Puller Switch K2110-027008 610
Console Box K2110-027009 611
Travel Control Lever K2110-027010 612
Console K2110-027011 613
Lift and Slider K2110-027012 615
Blade Control Lever K2110-029013 643
PPC Valve for Blade K2110-027014 619
PPC Valve Mounting (1/2) K2110-027015 620
Blade Lock Lever K2110-027016 621
Ripper Control Lever K2110-027017 623
PPC Valve for Ripper K2110-027018 624

PPC Valve Mounting (2/2) K2110-027019 625
Armrest, RHS K2110-027020 626
Air Conditioner Unit K2110-027021 628
Air Conditioner Condenser Unit Mounting K2110-027022 630
Air Conditioner Cover K2110-033023 649
Air Conditioner Duct K2110-027024 634
Air Conditioner Piping K2110-027025 636
Floor, Window Washer Hose K2110-027026 638
Decal K2110-032027 648
Floor Frame, Dual Tilt Dozer, With MSHA Dust Regulation Arrangement, Variable Digging Angle Multi Ripper, Variable Multi Ripper ..... (X21-1206991)
Frame K2110-027001 599
Parking Brake Lever K2110-027002 600
Horn Switch and Controller K2110-027003 602
Floor, Wiring Harness K2110-027004 603
Floor Wiring Harness Clamp (1/2) K2110-027005 604
Floor Wiring Harness Clamp (2/2) K2110-027006 606
Fuse Box and Relay K2110-027007 608
Without Pin Puller Switch K2110-028008 640
Console Box K2110-027009 611
Travel Control Lever K2110-027010 612
Console K2110-027011 613
Lift and Slider K2110-027012 615
Blade Control Lever K2110-027013 617
PPC Valve for Blade K2110-027014 619
PPC Valve Mounting (1/2) K2110-027015 620
Blade Lock Lever K2110-027016 621
Ripper Control Lever K2110-027017 623
PPC Valve for Ripper K2110-027018 624
PPC Valve Mounting (2/2) K2110-027019 625
Armrest, RHS K2110-027020 626
Air Conditioner Unit K2110-027021 628
Air Conditioner Condenser Unit Mounting K2110-027022 630
Air Conditioner Cover K2110-033023 649
Air Conditioner Duct K2110-027024 634
Air Conditioner Piping K2110-027025 636
Floor, Window Washer Hose K2110-027026 638
Decal K2110-028027 641
Floor Frame, Dual Tilt Dozer, With MSHA Dust Regulation Arrangement, Variable Digging Angle Giant Ripper, Variable Digging Angle Giant Ripper Without Push Block, Variable Giant Ripper ..... (X21-1207001)
Frame K2110-027001 599
Parking Brake Lever K2110-027002 600
Horn Switch and Controller K2110-027003 602
Floor, Wiring Harness K2110-027004 603
Floor Wiring Harness Clamp (1/2) K2110-027005 604
Floor Wiring Harness Clamp (2/2) K2110-027006 606
Fuse Box and Relay K2110-027007 608
Pin Puller Switch K2110-027008 610
Console Box K2110-027009 611
Travel Control Lever K2110-027010 612
Console K2110-027011 613
Lift and Slider K2110-027012 615
Blade Control Lever K2110-027013 617
PPC Valve for Blade K2110-027014 619
PPC Valve Mounting (1/2) K2110-027015 620
Blade Lock Lever K2110-027016 621
Ripper Control Lever K2110-027017 623

PPC Valve for Ripper K2110-027018 624
PPC Valve Mounting (2/2) K2110-027019 625
Armrest, RHS K2110-027020 626
Air Conditioner Unit K2110-027021 628
Air Conditioner Condenser Unit Mounting K2110-027022 630
Air Conditioner Cover K2110-033023 649
Air Conditioner Duct K2110-027024 634
Air Conditioner Piping K2110-027025 636
Floor, Window Washer Hose K2110-027026 638
Decal K2110-027027 639
Floor Frame, With MSHA Dust Regulation Arrangement, Without Rear Equipment ..... (X21-1207011)
Frame K2110-037001 651
Parking Brake Lever K2110-037002 652
Horn Switch and Controller K2110-037003 654
Floor, Wiring Harness K2110-037004 655
Floor Wiring Harness Clamp (1/2) K2110-037005 656
Floor Wiring Harness Clamp (2/2) K2110-037006 658
Fuse Box and Relay K2110-037007 660
Without Pin Puller Switch K2110-029008 642
Console Box K2110-037009 662
Travel Control Lever K2110-037010 663
Console K2110-037011 664
Lift and Slider K2110-037012 666
Blade Control Lever K2110-029013 643
PPC Valve for Blade K2110-037014 668
PPC Valve Mounting (1/2) K2110-037015 669
Blade Lock Lever K2110-037016 670
PPC Valve for Ripper K2110-037017 672
PPC Valve Mounting (2/2) K2110-037018 673
Armrest, RHS K2110-029019 645
Air Conditioner Unit K2110-037020 674
Air Conditioner Condenser Unit Mounting K2110-037021 676
Air Conditioner Cover K2110-033023 649
Air Conditioner Duct K2110-037023 678
Air Conditioner Piping K2110-037024 680
Floor, Window Washer Hose K2110-037025 682
Decal K2110-029026 646
Floor Frame, Dual Tilt Dozer, With MSHA Dust Regulation Arrangement, Without Rear Equipment ..... (X21-1207021)
Frame K2110-037001 651
Parking Brake Lever K2110-037002 652
Horn Switch and Controller K2110-037003 654
Floor, Wiring Harness K2110-037004 655
Floor Wiring Harness Clamp (1/2) K2110-037005 656
Floor Wiring Harness Clamp (2/2) K2110-037006 658
Fuse Box and Relay K2110-037007 660
Without Pin Puller Switch K2110-029008 642
Console Box K2110-037009 662
Travel Control Lever K2110-037010 663
Console K2110-037011 664
Lift and Slider K2110-037012 666
Blade Control Lever K2110-027013 617
PPC Valve for Blade K2110-037014 668
PPC Valve Mounting (1/2) K2110-037015 669
Blade Lock Lever K2110-037016 670
PPC Valve for Ripper K2110-037017 672
PPC Valve Mounting (2/2) K2110-037018 673
Armrest, RHS K2110-029019 645

Air Conditioner Unit K2110-037020 674
Air Conditioner Condenser Unit Mounting K2110-037021 676
Air Conditioner Cover K2110-033023 649
Air Conditioner Duct K2110-037023 678
Air Conditioner Piping K2110-037024 680
Floor, Window Washer Hose K2110-037025 682
Decal K2110-038026 683
Floor Frame, With MSHA Dust Regulation Arrangement, Variable Giant Ripper, Provision For Landfill Specification ..... (X21-1259131)
Frame K2110-039001 684
Parking Brake Lever K2110-037002 652
Horn Switch and Controller K2110-037003 654
Floor, Wiring Harness K2110-037004 655
Floor Wiring Harness Clamp (1/2) K2110-037005 656
Floor Wiring Harness Clamp (2/2) K2110-037006 658
Fuse Box and Relay K2110-037007 660
Pin Puller Switch K2110-027008 610
Console Box K2110-037009 662
Travel Control Lever K2110-037010 663
Console K2110-037011 664
Lift and Slider K2110-037012 666
Blade Control Lever K2110-029013 643
PPC Valve for Blade K2110-037014 668
PPC Valve Mounting (1/2) K2110-037015 669
Blade Lock Lever K2110-037016 670
Ripper Control Lever K2110-027017 623
PPC Valve for Ripper K2110-037017 672
PPC Valve Mounting (2/2) K2110-037018 673
Armrest, RHS K2110-027020 626
Air Conditioner Unit K2110-037020 674
Air Conditioner Condenser Unit Mounting K2110-037021 676
Air Conditioner Cover K2110-033023 649
Air Conditioner Duct K2110-037023 678
Air Conditioner Piping K2110-037024 680
Floor, Window Washer Hose K2110-037025 682
Decal K2110-032027 648
Floor Frame, Angle Dozer, With Variable Digging Angle Multi Ripper, Variable Multi Ripper ..... (X21-1340001)
Frame K2110-037001 651
Parking Brake Lever K2110-037002 652
Horn Switch and Controller K2110-037003 654
Floor, Wiring Harness K2110-037004 655
Floor Wiring Harness Clamp (1/2) K2110-037005 656
Floor Wiring Harness Clamp (2/2) K2110-037006 658
Fuse Box and Relay K2110-037007 660
Without Pin Puller Switch K2110-028008 640
Console Box K2110-037009 662
Travel Control Lever K2110-037010 663
Console K2110-037011 664
Lift and Slider K2110-037012 666
Blade Control Lever K2110-029013 643
PPC Valve for Blade K2110-037014 668
PPC Valve Mounting (1/2) K2110-040015 685
Blade Lock Lever K2110-037016 670
Ripper Control Lever K2110-040017 686
PPC Valve for Ripper K2110-037017 672
PPC Valve Mounting (2/2) K2110-037018 673
Armrest, RHS K2110-040020 687

Air Conditioner Unit K2110-037020 674
Air Conditioner Condenser Unit Mounting K2110-037021 676
Air Conditioner Cover K2110-027023 632
Air Conditioner Duct K2110-037023 678
Air Conditioner Piping K2110-037024 680
Floor, Window Washer Hose K2110-037025 682
Decal K2110-040027 688
Floor Frame, Angle Dozer, With Variable Digging Angle Giant Ripper, Variable Digging Angle Giant Ripper Without Push Block, Variable Giant Ripper ..... (X21-1340011)
Frame K2110-037001 651
Parking Brake Lever K2110-037002 652
Horn Switch and Controller K2110-037003 654
Floor, Wiring Harness K2110-037004 655
Floor Wiring Harness Clamp (1/2) K2110-037005 656
Floor Wiring Harness Clamp (2/2) K2110-037006 658
Fuse Box and Relay K2110-037007 660
Pin Puller Switch K2110-027008 610
Console Box K2110-037009 662
Travel Control Lever K2110-037010 663
Console K2110-037011 664
Lift and Slider K2110-037012 666
Blade Control Lever K2110-029013 643
PPC Valve for Blade K2110-037014 668
PPC Valve Mounting (1/2) K2110-040015 685
Blade Lock Lever K2110-037016 670
Ripper Control Lever K2110-040017 686
PPC Valve for Ripper K2110-037017 672
PPC Valve Mounting (2/2) K2110-037018 673
Armrest, RHS K2110-040020 687
Air Conditioner Unit K2110-037020 674
Air Conditioner Condenser Unit Mounting K2110-037021 676
Air Conditioner Cover K2110-027023 632
Air Conditioner Duct K2110-037023 678
Air Conditioner Piping K2110-037024 680
Floor, Window Washer Hose K2110-037025 682
Decal K2110-041027 689
Floor Frame, Angle Dozer, Without Rear Equipment ..... (X21-1340021)
Frame K2110-037001 651
Parking Brake Lever K2110-037002 652
Horn Switch and Controller K2110-037003 654
Floor, Wiring Harness K2110-037004 655
Floor Wiring Harness Clamp (1/2) K2110-037005 656
Floor Wiring Harness Clamp (2/2) K2110-037006 658
Fuse Box and Relay K2110-037007 660
Without Pin Puller Switch K2110-029008 642
Console Box K2110-037009 662
Travel Control Lever K2110-037010 663
Console K2110-037011 664
Lift and Slider K2110-037012 666
Blade Control Lever K2110-029013 643
PPC Valve for Blade K2110-037014 668
PPC Valve Mounting (1/2) K2110-040015 685
Blade Lock Lever K2110-037016 670
PPC Valve for Ripper K2110-037017 672
PPC Valve Mounting (2/2) K2110-037018 673
Armrest, RHS K2110-029019 645
Air Conditioner Unit K2110-037020 674

Air Conditioner Condenser Unit Mounting K2110-037021 676
Air Conditioner Cover K2110-027023 632
Air Conditioner Duct K2110-037023 678
Air Conditioner Piping K2110-037024 680
Floor, Window Washer Hose K2110-037025 682
Decal K2110-042026 690
Floor Frame, Angle Dozer, With MSHA Dust Regulation Arrangement, Variable Digging Angle Multi Ripper, Variable Multi Ripper ..... (X21-1340031)
Frame K2110-037001 651
Parking Brake Lever K2110-037002 652
Horn Switch and Controller K2110-037003 654
Floor, Wiring Harness K2110-037004 655
Floor Wiring Harness Clamp (1/2) K2110-037005 656
Floor Wiring Harness Clamp (2/2) K2110-037006 658
Fuse Box and Relay K2110-037007 660
Without Pin Puller Switch K2110-028008 640
Console Box K2110-037009 662
Travel Control Lever K2110-037010 663
Console K2110-037011 664
Lift and Slider K2110-037012 666
Blade Control Lever K2110-029013 643
PPC Valve for Blade K2110-037014 668
PPC Valve Mounting (1/2) K2110-040015 685
Blade Lock Lever K2110-037016 670
Ripper Control Lever K2110-040017 686
PPC Valve for Ripper K2110-037017 672
PPC Valve Mounting (2/2) K2110-037018 673
Armrest, RHS K2110-040020 687
Air Conditioner Unit K2110-037020 674
Air Conditioner Condenser Unit Mounting K2110-037021 676
Air Conditioner Cover K2110-033023 649
Air Conditioner Duct K2110-037023 678
Air Conditioner Piping K2110-037024 680
Floor, Window Washer Hose K2110-037025 682
Decal K2110-040027 688
Floor Frame, Angle Dozer, With MSHA Dust Regulation Arrangement, Without Rear Equipment ..... (X21-1340051)
Frame K2110-037001 651
Parking Brake Lever K2110-037002 652
Horn Switch and Controller K2110-037003 654
Floor, Wiring Harness K2110-037004 655
Floor Wiring Harness Clamp (1/2) K2110-037005 656
Floor Wiring Harness Clamp (2/2) K2110-037006 658
Fuse Box and Relay K2110-037007 660
Without Pin Puller Switch K2110-029008 642
Console Box K2110-037009 662
Travel Control Lever K2110-037010 663
Console K2110-037011 664
Lift and Slider K2110-037012 666
Blade Control Lever K2110-045013 691
PPC Valve for Blade K2110-037014 668
PPC Valve Mounting (1/2) K2110-040015 685
Blade Lock Lever K2110-037016 670
PPC Valve for Ripper K2110-037017 672
PPC Valve Mounting (2/2) K2110-037018 673
Armrest, RHS K2110-029019 645
Air Conditioner Unit K2110-037020 674
Air Conditioner Condenser Unit Mounting K2110-037021 676

Air Conditioner Cover K2110-033023 649
Air Conditioner Duct K2110-037023 678
Air Conditioner Piping K2110-037024 680
Floor, Window Washer Hose K2110-037025 682
Decal K2110-042026 690
Floor Frame, Dual Tilt Dozer, With MSHA Dust Regulation Arrangement, Variable Giant Ripper, For Landfill Specification ..... (X21-1347961)
Frame K2110-039001 684
Parking Brake Lever K2110-037002 652
Horn Switch and Controller K2110-037003 654
Floor, Wiring Harness K2110-037004 655
Floor Wiring Harness Clamp (1/2) K2110-037005 656
Floor Wiring Harness Clamp (2/2) K2110-037006 658
Fuse Box and Relay K2110-037007 660
Pin Puller Switch K2110-027008 610
Console Box K2110-037009 662
Travel Control Lever K2110-037010 663
Console K2110-037011 664
Lift and Slider K2110-037012 666
Blade Control Lever K2110-027013 617
PPC Valve for Blade K2110-037014 668
PPC Valve Mounting (1/2) K2110-037015 669
Blade Lock Lever K2110-037016 670
Ripper Control Lever K2110-040017 686
PPC Valve for Ripper K2110-037017 672
PPC Valve Mounting (2/2) K2110-037018 673
Armrest, RHS K2110-040020 687
Air Conditioner Unit K2110-037020 674
Air Conditioner Condenser Unit Mounting K2110-037021 676
Air Conditioner Cover K2110-046023 692
Air Conditioner Duct K2110-037023 678
Air Conditioner Piping K2110-037024 680
Floor, Window Washer Hose K2110-037025 682
Decal K2110-027027 639
Floor Frame, With Variable Digging Angle Giant Ripper, For Angle Dozer ..... (X21-1340041)
Frame K2110-037001 651
Parking Brake Lever K2110-037002 652
Horn Switch and Controller K2110-037003 654
Floor, Wiring Harness K2110-037004 655
Floor Wiring Harness Clamp (1/2) K2110-037005 656
Floor Wiring Harness Clamp (2/2) K2110-037006 658
Fuse Box and Relay K2110-037007 660
Pin Puller Switch K2110-027008 610
Console Box K2110-037009 662
Travel Control Lever K2110-037010 663
Console K2110-037011 664
Lift and Slider K2110-037012 666
Blade Control Lever K2110-045013 691
PPC Valve for Blade K2110-037014 668
PPC Valve Mounting (1/2) K2110-040015 685
Blade Lock Lever K2110-037016 670
Ripper Control Lever K2110-040017 686
PPC Valve for Ripper K2110-037017 672
PPC Valve Mounting (2/2) K2110-037018 673
Armrest, RHS K2110-040020 687
Air Conditioner Unit K2110-037020 674
Air Conditioner Condenser Unit Mounting K2110-037021 676

Air Conditioner Cover K2110-046023 692
Air Conditioner Duct K2110-037023 678
Air Conditioner Piping K2110-037024 680
Floor, Window Washer Hose K2110-037025 682
Decal K2110-041027 689
Floor Frame Mounting ..... (X21-1095842)
Mounting K2120-001001 693
Stopper K2120-001002 694
Bracket K2120-001003 695
Plugs K2120-001004 696
Floor Frame Cover ..... (X21-1096442)
Air Conditioner Duct K2130-003001 697
Footrest K2130-003002 698
Foot cover K2130-003003 699
Duct K2130-003004 700
LHS K2130-003005 701
RHS K2130-003006 702
Dashboard, With Air Conditioner ..... (X21-1191010)
Duct and Cover K2210-001001 703
Monitor K2210-001002 704
Wiring Harness and Switch K2210-001003 705
Footrest K2210-001004 706
Control Pedal (1/3) K2210-001005 707
Control Pedal (2/3) K2210-001006 708
Control Pedal (3/3) K2210-001007 710
Mounting K2210-001008 711
Duct K2210-001009 712
Dashboard, With Air Conditioner, For KOMTRAX ..... (X21-1191020)
Duct and Cover K2210-001001 703
KOMTRAX Related Parts K2210-002002 713
Monitor K2210-001002 704
Wiring Harness and Switch K2210-001003 705
Footrest K2210-001004 706
Control Pedal (1/3) K2210-001005 707
Control Pedal (2/3) K2210-001006 708
Control Pedal (3/3) K2210-001007 710
Mounting K2210-001008 711
Duct K2210-001009 712
Floor Frame Electric Wiring Harness ..... (X21-1096471)
K2290-001001 714
Dashboard Bracket ..... (X21-1190971)
K2910-001001 715
GUARDS AND COVERS
Dozer Blade Lift Cylinder Support Parts ..... (X21-1045701)
M2111-001001 718
Dozer Blade Lift Cylinder Support Parts, Cylinder Less ..... (X21-1344580)
M2111-002001 719
Radiator Guard Related Parts ..... (X21-1085482)
Head Lamp M2113-001001 720
Bracket M2113-001002 722
Shipping Lock Bracket M2113-001003 723
Radiator Guard Related Parts, Landfill Specification ..... (X21-1241260)
Head Lamp M2113-002001 724
Bracket M2113-002002 725
Shipping Lock Bracket M2113-002003 726
Striker M2113-002004 727

Radiator Mask, Lattice Type ..... (X21-1040021)
M2120-001001 728
Radiator Mask, Perforated Type ..... (X21-1094281)
M2120-002001 729
Radiator Mask, Perforated Type, Landfill Specification ..... (X21-1232910)
M2120-004001 730
Radiator Mask, Perforated Type, Reinforced Type ..... (X21-1369070)
M2120-005001 731
Engine Hood and Side Cover Group, Perforated Type ..... (X21-1040051)
Hood M2140-001001 732
Inner Parts M2140-001002 733
Air Cleaner M2140-001003 734
Wiring Harness M2140-001004 735
Side Cover Bottom and Mounting M2140-001005 736
Air Cleaner Hose M2140-001006 738
Engine Hood and Side Cover Group, Perforated Type, Landfill Specification ..... (X21-1245290)
Hood M2140-001001 732
Inner Parts M2140-001002 733
Air Cleaner M2140-001003 734
Wiring Harness M2140-001004 735
Side Cover M2140-003005 739
Side Cover Bottom and Mounting M2140-003006 740
Air Cleaner Hose M2140-001006 738
Engine Hood and Side Cover Group, Perforated Type, For Engine With Coolant Heater ..... (X21-1406320)
Hood M2140-001001 732
Inner Parts M2140-001002 733
Air Cleaner M2140-001003 734
Wiring Harness M2140-001004 735
Side Cover Bottom and Mounting M2140-006005 741
Air Cleaner Hose M2140-001006 738
Engine Hood and Side Cover Group, Sandy and Dusty Terrain Arrangement ..... (X21-2106060)
Hood M2140-009001 742
Inner Parts M2140-009002 743
Air Cleaner M2140-009003 744
Wiring Harness M2140-009004 745
Side Cover Bottom and Mounting M2140-009005 746
Air Cleaner Hose M2140-009006 748
Engine Hood Mounting Bracket ..... (X21-1042971)
M2143-001001 749
Engine Hood Mounting Bracket, Landfill Specification ..... (X21-1259380)
M2143-002001 750
Pre Cleaner Hood ..... (X21-1060171)
M2190-001001 751
Pre Cleaner Hood, With Pre-cleaner ..... (X21-1223450)
M2190-002001 752
Fender, With Battery ..... (X21-1197192)
Starting Wiring Harness M2210-025001 753
Main Wiring Harness (1/2) M2210-025002 755
Main Wiring Harness (2/2) M2210-025003 756
Heater Relay Wiring Harness M2210-025004 757
Backup Alarm M2210-025005 758
Hood Mounting M2210-025006 759
Inner Parts M2210-025007 760
Pilot Filter M2210-025008 761
Fender M2210-025009 762
Battery M2210-025010 763
Hydraulic Tank M2210-025011 764

Control Valve (1/9) M2210-025012 766
Control Valve (2/9) M2210-025013 767
Control Valve (3/9) M2210-025014 769
Control Valve (4/9) M2210-025015 771
Control Valve (5/9) M2210-025016 773
Control Valve (6/9) M2210-025017 775
Control Valve (7/9) M2210-025018 776
Control Valve (8/9) M2210-025019 778
Control Valve (9/9) M2210-025020 780
C.L.S.S Valve M2210-025021 781
Hose and Bracket M2210-025022 782
Window Washer Tank M2210-025023A 784
Step M2210-025024 785
Receiver Tank M2210-025025 786
Mounting Bolt M2210-025026 787
Clamp, Washer Hose M2210-025027 788
Fender, With Battery, For Dual Tilt Dozer ..... (X21-1197202)
Starting Wiring Harness M2210-025001 753
Main Wiring Harness (1/2) M2210-025002 755
Main Wiring Harness (2/2) M2210-025003 756
Heater Relay Wiring Harness M2210-025004 757
Backup Alarm M2210-025005 758
Hood Mounting M2210-025006 759
Inner Parts M2210-025007 760
Pilot Filter M2210-025008 761
Fender M2210-025009 762
Battery M2210-025010 763
Hydraulic Tank M2210-025011 764
Control Valve (1/10) M2210-026012 789
Control Valve (2/10) M2210-025013 767
Control Valve (3/10) M2210-025014 769
Control Valve (4/10) M2210-025015 771
Control Valve (5/10) M2210-025016 773
Control Valve (6/10) M2210-025017 775
Control Valve (7/10) M2210-026018 790
Control Valve (8/10) M2210-026019 792
Control Valve (9/10) M2210-026020 794
Control Valve (10/10) M2210-026021 796
C.L.S.S Valve M2210-026022 797
Hose and Bracket M2210-025022 782
Window Washer Tank M2210-025023A 784
Step M2210-025024 785
Receiver Tank M2210-025025 786
Mounting Bolt M2210-025026 787
Clamp, Washer Hose M2210-026028 798
Fender, With Large Capacity Battery ..... (X21-1197212)
Starting Wiring Harness M2210-027001 799
Main Wiring Harness (1/2) M2210-025002 755
Main Wiring Harness (2/2) M2210-025003 756
Heater Relay Wiring Harness M2210-025004 757
Backup Alarm M2210-025005 758
Hood Mounting M2210-025006 759
Inner Parts M2210-025007 760
Pilot Filter M2210-025008 761
Fender M2210-025009 762
Battery M2210-027010 801
Hydraulic Tank M2210-025011 764

Control Valve (1/9) M2210-025012 766
Control Valve (2/9) M2210-025013 767
Control Valve (3/9) M2210-025014 769
Control Valve (4/9) M2210-025015 771
Control Valve (5/9) M2210-025016 773
Control Valve (6/9) M2210-025017 775
Control Valve (7/9) M2210-025018 776
Control Valve (8/9) M2210-025019 778
Control Valve (9/9) M2210-025020 780
C.L.S.S Valve M2210-025021 781
Hose and Bracket M2210-025022 782
Window Washer Tank M2210-025023A 784
Step M2210-025024 785
Receiver Tank M2210-025025 786
Mounting Bolt M2210-025026 787
Clamp, Washer Hose M2210-026028 798
Fender, With Large Capacity Battery, For Dual Tilt Dozer ..... (X21-1197222)
Starting Wiring Harness M2210-027001 799
Main Wiring Harness (1/2) M2210-025002 755
Main Wiring Harness (2/2) M2210-025003 756
Heater Relay Wiring Harness M2210-025004 757
Backup Alarm M2210-025005 758
Hood Mounting M2210-025006 759
Inner Parts M2210-025007 760
Pilot Filter M2210-025008 761
Fender M2210-025009 762
Battery M2210-027010 801
Hydraulic Tank M2210-025011 764
Control Valve (1/10) M2210-026012 789
Control Valve (2/10) M2210-025013 767
Control Valve (3/10) M2210-025014 769
Control Valve (4/10) M2210-025015 771
Control Valve (5/10) M2210-025016 773
Control Valve (6/10) M2210-025017 775
Control Valve (7/10) M2210-026018 790
Control Valve (8/10) M2210-026019 792
Control Valve (9/10) M2210-026020 794
Control Valve (10/10) M2210-026021 796
C.L.S.S Valve M2210-026022 797
Hose and Bracket M2210-025022 782
Window Washer Tank M2210-025023A 784
Step M2210-025024 785
Receiver Tank M2210-025025 786
Mounting Bolt M2210-025026 787
Clamp, Washer Hose M2210-026028 798
Fender, With Large Capacity Batteries, Landfill Specification ..... (X21-1232361)
Starting Wiring Harness M2210-009001 802
Main Wiring Harness (1/2) M2210-009002 804
Main Wiring Harness (2/2) M2210-009003 805
Heater Relay Wiring Harness M2210-009004 806
Backup Alarm M2210-009005 807
Hood Mounting M2210-009006 808
Inner Parts M2210-009007 809
Pilot Filter M2210-009008 810
Fender M2210-009009 811
Battery M2210-009010 812
Hydraulic Tank M2210-009011 813

Control Valve (1/9) M2210-009012 815
Control Valve (2/9) M2210-009013 816
Control Valve (3/9) M2210-009014 817
Control Valve (4/9) M2210-009015 818
Control Valve (5/9) M2210-009016 819
Control Valve (6/9) M2210-009017 820
Control Valve (7/9) M2210-009018 821
Control Valve (8/9) M2210-009019 823
Control Valve (9/9) M2210-009020 825
C.L.S.S Valve M2210-009021 826
Hose and Bracket M2210-009022 827
Window Washer Tank M2210-009023A 828
Step M2210-009024 829
Receiver Tank M2210-009025 830
Mounting Bolt M2210-009026 831
Clamp, Washer Hose M2210-009027 832
Fender, With Large Capacity Battery, Tool Box, Fender RHS ..... (X21-1322742)
Starting Wiring Harness M2210-027001 799
Main Wiring Harness (1/2) M2210-025002 755
Main Wiring Harness (2/2) M2210-025003 756
Heater Relay Wiring Harness M2210-025004 757
Backup Alarm M2210-025005 758
Hood Mounting M2210-025006 759
Inner Parts M2210-025007 760
Pilot Filter M2210-025008 761
Fender M2210-025009 762
Battery M2210-027010 801
Hydraulic Tank M2210-025011 764
Control Valve (1/9) M2210-025012 766
Control Valve (2/9) M2210-025013 767
Control Valve (3/9) M2210-025014 769
Control Valve (4/9) M2210-025015 771
Control Valve (5/9) M2210-025016 773
Control Valve (6/9) M2210-025017 775
Control Valve (7/9) M2210-025018 776
Control Valve (8/9) M2210-025019 778
Control Valve (9/9) M2210-025020 780
C.L.S.S Valve M2210-025021 781
Hose and Bracket M2210-025022 782
Window Washer Tank M2210-025023A 784
Steps and Lunch Box Fixed Belts M2210-033024 833
Receiver Tank M2210-025025 786
Mounting Bolt M2210-025026 787
Clamp, Washer Hose M2210-026028 798
Fender, With Large Capacity Battery, Tool Box, Fender RHS, For Dual Tilt Dozer ..... (X21-1325272)
Starting Wiring Harness M2210-027001 799
Main Wiring Harness (1/2) M2210-025002 755
Main Wiring Harness (2/2) M2210-025003 756
Heater Relay Wiring Harness M2210-025004 757
Backup Alarm M2210-025005 758
Hood Mounting M2210-025006 759
Inner Parts M2210-025007 760
Pilot Filter M2210-025008 761
Fender M2210-025009 762
Battery M2210-027010 801
Hydraulic Tank M2210-025011 764
Control Valve (1/10) M2210-026012 789

Control Valve (2/10) M2210-025013 767
Control Valve (3/10) M2210-025014 769
Control Valve (4/10) M2210-025015 771
Control Valve (5/10) M2210-025016 773
Control Valve (6/10) M2210-025017 775
Control Valve (7/10) M2210-026018 790
Control Valve (8/10) M2210-026019 792
Control Valve (9/10) M2210-026020 794
Control Valve (10/10) M2210-026021 796
C.L.S.S Valve M2210-026022 797
Hose and Bracket M2210-025022 782
Window Washer Tank M2210-025023A 784
Steps and Lunch Box Fixed Belts M2210-033024 833
Receiver Tank M2210-025025 786
Mounting Bolt M2210-025026 787
Clamp, Washer Hose M2210-026028 798
Fender, With Large Capacity Batteries, For Dual Tilt Pitch Dozer, Landfill Specification ..... (X21-1347981)
Starting Wiring Harness M2210-009001 802
Main Wiring Harness (1/2) M2210-009002 804
Main Wiring Harness (2/2) M2210-009003 805
Heater Relay Wiring Harness M2210-009004 806
Backup Alarm M2210-009005 807
Hood Mounting M2210-009006 808
Inner Parts M2210-009007 809
Pilot Filter M2210-009008 810
Fender M2210-009009 811
Battery M2210-009010 812
Hydraulic Tank M2210-009011 813
Control Valve (1/10) M2210-014012 834
Control Valve (2/10) M2210-009013 816
Control Valve (3/10) M2210-009014 817
Control Valve (4/10) M2210-009015 818
Control Valve (5/10) M2210-009016 819
Control Valve (6/10) M2210-009017 820
Control Valve (7/10) M2210-014018 835
Control Valve (8/10) M2210-014019 837
Control Valve (9/10) M2210-014020 839
Control Valve (10/10) M2210-014021 841
C.L.S.S Valve M2210-014022 842
Hose and Bracket M2210-009022 827
Window Washer Tank M2210-009023A 828
Step M2210-009024 829
Receiver Tank M2210-009025 830
Mounting Bolt M2210-009026 831
Clamp, Washer Hose M2210-009027 832
Fender Related Parts ..... (X21-1195160)
Fender Cover,LHS M2214-001001 843
Step M2214-001002 845
Fender Cover,RHS M2214-001003 846
Fender Related Parts, With Air Intake For Air Conditioner, MSHA Dust Regulation ..... (X21-1198010)
Fender Cover,LHS M2214-002001 847
Step M2214-002002 849
Fender Cover,RHS M2214-002003 850
Fender Related Parts, MSHA Dust Regulation ..... (X21-1202260)
Fender Cover,LHS M2214-003001 851
Step M2214-003002 853
Fender Cover,RHS M2214-002003 850

Fender Related Parts, MSHA Dust Regulation, Landfill Specification ..... (X21-1232340)
Fender Cover,LHS M2214-004001 854
Step M2214-004002 856
Fender Cover,RHS M2214-004003 857
Tank Related Parts M2214-004004 858
Fender Related Parts, With Air Intake For Air Conditioner ..... (X21-1322770)
Fender Cover,LHS M2214-005001 859
Step M2214-005002 861
Fender Cover,RHS M2214-002003 850
Rear Cover ..... (X21-1060181)
M2240-001001A 862
Rear Cover, Landfill Specification ..... (X21-1233990)
M2240-002001 863
Rear Cover, Without Rear Work Equipment ..... (X21-1240310)
M2240-003001A 864
Under Guard ..... (X21-1042453)
M2810-001001 865
Under Guard, Landfill Specification ..... (X21-1245260)
M2810-002001 866
UNDERCARRIAGE
Track Shoe Assembly, Single Shoe Grouser, 560mm Width, Sealed & Lubricated Link and Master Link, Rigid Type ..... (X21-0974742)
R0500-001001 868
Track Shoe Assembly, Single Shoe Grouser, 610mm Width, Sealed & Lubricated Link and Master Link, Rigid Type ..... (X21-0974752)
R0500-018001 869
Track Shoe Assembly, Single Shoe Grouser, 660mm Wide, Sealed & Lubricated Link and Master Link, Rigid Type ..... (X21-0974762)
R0500-019001 870
Track Shoe Assembly, Single Shoe Grouser, 710mm Width, Sealed & Lubricated Link and Master Link, Rigid Type ..... (X21-0974772)
R0500-020001 871
Track Shoe Assembly, Heavy Duty, 560mm Width, Sealed & Lubricated Link and Master Link, Boggy Type ..... (X21-1058161)
R0500-003001 872
Track Shoe Assembly, Single Shoe Grouser, 610mm Width, Sealed & Lubricated Link and Master Link, 84-SET, Boggy Type ..... (X21-1087031)
R0500-004001 873
Track Shoe Assembly, Single Shoe Grouser, 560mm Width, Sealed & Lubricated Link and Master Link, 84-SET, Boggy Type ..... (X21-1189910)
R0500-005001 874
Track Shoe Assembly, Single Shoe Grouser, 660mm Wide, Sealed & Lubricated Link and Master Link, 84-SET, Boggy Type ..... (X21-1189920)
R0500-006001 875
Track Shoe Assembly, Single Shoe Grouser, 710mm Width, Sealed & Lubricated Link and Master Link, Boggy Type ..... (X21-1189930)
R0500-007001 876
Track Shoe Assembly, Heavy Duty, 610mm Width, Sealed & Lubricated Link and Master Link, Boggy Type ..... (X21-1189940)
R0500-008001 877
Track Shoe Assembly, Heavy Duty, 660mm Wide, Sealed & Lubricated Link and Master Link, Boggy Type ..... (X21-1189950)
R0500-009001 878
Track Shoe Assembly, Single Shoe Grouser, 560mm Width, Sealed Dry Link and Master Pin, Boggy Type ..... (X21-1189960)
R0500-010001 879

Track Shoe Assembly, Single Shoe Grouser, 610mm Width, Sealed Dry Link and Master Pin, Boggy Type ..... (X21-1189970)
R0500-011001 880
Track Shoe Assembly, Single Shoe Grouser, 660mm Wide, Sealed Dry Link and Master Pin, Boggy Type ..... (X21-1189980)
R0500-012001 881
Track Shoe Assembly, Single Shoe Grouser, 710mm Width, Sealed Dry Link and Master Pin, Boggy Type ..... (X21-1189990)
R0500-013001 882
Track Shoe Assembly, Heavy Duty, 560mm Width, Sealed Dry Link and Master Pin, Boggy Type ..... (X21-1190000)
R0500-014001 883
Track Shoe Assembly, Heavy Single Grouser, With Large Holed, 560mm Width, Sealed & Lubricated Link and Master Link, Boggy Type ..... (X21-1271640)
R0500-015001 884
Track Shoe Assembly, Heavy Single Grouser, With Large Holed, 610mm Width, Sealed & Lubricated Link and Master Link, Boggy Type ..... (X21-1271650)
R0500-016001 885
Track Shoe Assembly, Heavy Single Grouser, With Large Holed, 660mm Wide, Sealed & Lubricated Link and Master Link, Boggy Type ..... (X21-1271660)
R0500-017001 886
Track Link Assembly, Lubrication Type, Rigid Type ..... (X21-0975052)
R0501-001001 887
Track Link Assembly, Lubrication Type, 84-SET, Boggy Type ..... (X21-1241980)
R0501-003001 888
Track Link Assembly, Sealed Dry Link, Boggy Type ..... (X21-1241990)
R0501-004001 889
Track Frame, With Track Roller Guard ..... (X21-1058171)
Frame LHS R2100-001001 890
Front Bogie, LHS R2100-001002 891
Front Idler, LHS R2100-001003 892
Recoil Spring, LHS R2100-001004 893
Guide Plate, LHS R2100-001005 894
Bogie Mounting, LHS R2100-001006 895
Bogie, LHS R2100-001007 896
Track Roller, LHS (1/2) R2100-001008 897
Track Roller, LHS (2/2) R2100-001009 898
Carrier Roller, LHS R2100-001010 899
Rear Cover (1/2) R2100-001011 900
Frame RHS R2100-001012 901
Front Bogie, RHS R2100-001013 902
Front Idler, RHS R2100-001014 903
Recoil Spring, RHS R2100-001015 904
Guide Plate, RHS R2100-001016 905
Bogie Mounting, RHS R2100-001017 906
Bogie, RHS R2100-001018 907
Track Roller, RHS (1/2) R2100-001019 908
Track Roller, RHS (2/2) R2100-001020 909
Carrier Roller, RHS R2100-001021 910
Rear Cover (2/2) R2100-001022 911
Track Frame, Heavy Duty, With Full Length Track Roller Guard, Segmented ..... (X21-1081452)
Frame LHS R2100-002001 912
Front Idler, LHS R2100-002002 913
Recoil Spring, LHS R2100-002003 914
Track Roller, LHS (1/2) R2100-002004 915
Track Roller, LHS (2/2) R2100-002005 916
Carrier Roller, LHS R2100-002006 917
Rear Cover (1/2) R2100-002007 918

Frame RHS R2100-002008 919
Front Idler, RHS R2100-002009 920
Recoil Spring, RHS R2100-002010 921
Track Roller, RHS (1/2) R2100-002011 922
Track Roller, RHS (2/2) R2100-002012 923
Carrier Roller, RHS R2100-002013 924
Rear Cover (2/2) R2100-002014 925
Track Frame, With Full Length Track Roller Guard, Landfill Specification ..... (X21-1259501)
Frame LHS R2100-004001 926
Front Bogie, LHS R2100-001002 891
Front Idler, LHS R2100-004003 927
Recoil Spring, LHS R2100-001004 893
Guide Plate, LHS R2100-001005 894
Bogie Mounting, LHS R2100-001006 895
Bogie, LHS R2100-004007 928
Track Roller, LHS (1/2) R2100-001008 897
Track Roller, LHS (2/2) R2100-004009 929
Carrier Roller, LHS R2100-001010 899
Rear Cover (1/2) R2100-004011 930
Guard (1/2) R2100-004012 931
Frame RHS R2100-004013 932
Front Bogie, RHS R2100-001013 902
Front Idler, RHS R2100-004015 933
Recoil Spring, RHS R2100-001015 904
Guide Plate, RHS R2100-001016 905
Bogie Mounting, RHS R2100-001017 906
Bogie, RHS R2100-004019 934
Track Roller, RHS (1/2) R2100-001019 908
Track Roller, RHS (2/2) R2100-004021 935
Carrier Roller, RHS R2100-001021 910
Rear Cover (2/2) R2100-004023 936
Guard (2/2) R2100-004024 937
Track Frame, With Track Roller Guard, Landfill Specification ..... (X21-1301520)
Frame LHS R2100-001001 890
Front Bogie, LHS R2100-001002 891
Front Idler, LHS R2100-004003 927
Recoil Spring, LHS R2100-001004 893
Guide Plate, LHS R2100-001005 894
Bogie Mounting, LHS R2100-001006 895
Bogie, LHS R2100-001007 896
Track Roller, LHS (1/2) R2100-001008 897
Track Roller, LHS (2/2) R2100-001009 898
Carrier Roller, LHS R2100-001010 899
Rear Cover (1/2) R2100-001011 900
Frame RHS R2100-001012 901
Front Bogie, RHS R2100-001013 902
Front Idler, RHS R2100-004015 933
Recoil Spring, RHS R2100-001015 904
Guide Plate, RHS R2100-001016 905
Bogie Mounting, RHS R2100-001017 906
Bogie, RHS R2100-001018 907
Track Roller, RHS (1/2) R2100-001019 908
Track Roller, RHS (2/2) R2100-001020 909
Carrier Roller, RHS R2100-001021 910
Rear Cover (2/2) R2100-001022 911
Track Frame, With Full Length Track Roller Guard ..... (X21-1227812)
Frame LHS R2100-009001 938

Front Bogie, LHS R2100-009002 939
Front Idler, LHS R2100-009003 940
Recoil Spring, LHS R2100-009004 941
Guide Plate, LHS R2100-009005 942
Bogie Mounting, LHS R2100-009006 943
Bogie, LHS R2100-009007 944
Track Roller, LHS (1/2) R2100-009008 945
Track Roller, LHS (2/2) R2100-009009 946
Carrier Roller, LHS R2100-009010 947
Rear Cover (1/2) R2100-009011 948
Guard (1/2) R2100-009012 949
Frame RHS R2100-009013 950
Front Bogie, RHS R2100-009014 951
Front Idler, RHS R2100-009015 952
Recoil Spring, RHS R2100-009016 953
Guide Plate, RHS R2100-009017 954
Bogie Mounting, RHS R2100-009018 955
Bogie, RHS R2100-009019 956
Track Roller, RHS (1/2) R2100-009020 957
Track Roller, RHS (2/2) R2100-009021 958
Carrier Roller, RHS R2100-009022 959
Rear Cover (2/2) R2100-009023 960
Guard (2/2) R2100-009024 961

WORK EQUIPMENT

Dozer Frame, For Dual Tilt Pitch Dozer, Reinforced Type ..... (X21-1039901)
Frame T2110-001001 964
Blade Tilt Piping T2110-001002 966
Arm and Trunnion T2110-001003 968
Dozer Frame, For Straight Tilt Dozer ..... (X21-1189480)
Frame T2110-002001 969
Blade Tilt Piping T2110-002002 971
Arm and Trunnion T2110-002003 972
Dozer Frame, For Dual Tilt Pitch Dozer ..... (X21-1198790)
Frame T2110-002001 969
Blade Tilt Piping T2110-001002 966
Arm and Trunnion T2110-001003 968
Dozer Frame, For Strengthened Semi U Dozer ..... (X21-1198800)
Frame T2110-001001 964
Blade Piping T2110-004002 973
Arm and Trunnion T2110-002003 972
Dozer Frame, For Coal Dozer, For Straight Tilt Dozer ..... (X21-1288800)
Frame T2110-005001 974
Blade Tilt Piping T2110-005002 975
Arm and Trunnion T2110-005003 976
Dozer Frame, For Mechanical Angle Dozer ..... (X21-1337840)
T2110-006001 977
Dozer Frame, For Heavy Duty Semi U Dozer, With Bushing ..... (X21-1870510)
Frame T2110-010001A 978
Blade Piping T2110-004002 973
Arm and Trunnion T2110-002003 972
Dozer Frame, For Strengthened Dual Tilt Pitch Semi U Dozer, Heavy Duty Semi U Dozer, With Bushing ..... (X21-1870430)
Frame T2110-010001A 978
Blade Tilt Piping T2110-001002 966
Arm and Trunnion T2110-001003 968
Dozer Blade, For Mechanical Angle Dozer ..... (X21-0061170)
T2120-001001 980

Dozer Blade, For Coal Dozer ..... (X21-1288840)
T2120-012001 982
Dozer Blade, For Strengthened Dual Tilt Pitch Semi U Dozer, Heavy Duty Semi U Dozer, With Bushing ..... (X21-1870480)
T2120-027001 984
Dozer Blade, For Dual Tilt Pitch Dozer, SIGMADOZER With Superhard Bit and Edge ..... (X21-1039913)
Blade T2120-029001 986
Dozer Blade, Semi U Dozer, Dual Tilt Pitch Semi U Dozer ..... (X21-1078392)
T2120-030001 988
Dozer Blade, Semi U Dozer, With Pusher Plate ..... (X21-1189541)
T2120-031001 990
Dozer Blade, Strengthened Semi U Dozer ..... (X21-1189551)
T2120-032001 992
Dozer Blade, Strengthened Semi U Dozer, With Pusher Plate ..... (X21-1189561)
T2120-033001 994
Dozer Blade, For Dual Tilt Pitch Dozer, For SIGMADOZER ..... (X21-1198721)
T2120-034001 996
Dozer Blade, For Dual Tilt Pitch Dozer, SIGMADOZER With Push Plate ..... (X21-1228661)
T2120-035001 998
Dozer Blade, For Dual Tilt Pitch Dozer, SIGMADOZER With Push Plate, With Superhard Bit and Edge (X21-1228672)
Blade T2120-036001 1000
Dozer Blade, U Dozer, Dual Tilt Pitch U Dozer ..... (X21-1248102)
T2120-037001 1002
Dozer Blade, Strengthened U Dozer, Strengthened Dual Tilt Pitch U Dozer ..... (X21-1280361)
T2120-038001 1004
Dozer Blade, For Dual Tilt Pitch Dozer, SIGMADOZER, Strengthened With Superhard Bit and Edge .... (X21-1334271)
Blade T2120-039001 1006
Dozer Blade, For Dual Tilt Pitch Dozer, SIGMADOZER, Strengthened With Push Plate, With Superhard Bit and Edge ..... (X21-1394741)
T2120-041001 1008
Dozer Blade, Strengthened SIGMADOZER, With Pusher Plate, Superhard Bit and Edge ..... (X21-1395821)
Blade T2120-036001 1000
Spacer T2120-042002 1010
Dozer Blade, Strengthened SIGMADOZER, With Superhard Bit and Edge ..... (X21-1395831)
Blade T2120-039001 1006
Spacer T2120-042002 1010
Dozer Blade, SIGMADOZER, With Superhard Bit and Edge ..... (X21-1395841)
Blade T2120-044001 1011
Spacer T2120-042002 1010
Dozer Blade, SIGMADOZER, With Pusher Plate, Superhard Bit and Edge ..... (X21-1395851)
Blade T2120-045001 1013
Spacer T2120-042002 1010
Dozer Blade, SIGMADOZER, With Pusher Plate ..... (X21-1395861)
Blade T2120-046001 1015
Spacer T2120-042002 1010
Dozer Blade, SIGMADOZER ..... (X21-1395871)
Blade T2120-047001 1017
Spacer T2120-042002 1010
Dozer Blade Lift Cylinder ..... (X21-1039921)
LHS T2140-001001 1019
RHS T2140-001002 1021
Dozer Blade Lift Cylinder, Landfill Specification ..... (X21-1241110)
LHS T2140-002001 1023
RHS T2140-002002 1025
Working Lamp T2140-002003 1027
Dozer Blade Tilt Cylinder, For Semi U and U Dozer ..... (X21-1079211)
LHS T2150-002001 1028

Brace T2150-002002 1029
Dozer Blade Tilt Cylinder, For SIGMADOZER ..... (X21-1197550)
LHS T2150-003001 1030
Brace T2150-003002 1031
Dozer Blade Tilt Cylinder, For Coal Dozer ..... (X21-1288850)
LHS T2150-004001 1032
Brace T2150-004002 1033
Dozer Blade Tilt Cylinder, For Dual Tilt Pitch Dozer ..... (X21-1335860)
T2150-006001 1034
Dozer Blade Tilt Piping, For Dual Tilt Pitch Dozer, For SIGMADOZER ..... (X21-1096911)
T2160-001001 1035
Dozer Blade Tilt Piping, For Straight Tilt Dozer, For SIGMADOZER ..... (X21-1189580)
T2160-002001 1036
Dozer Blade Tilt Piping, For Coal Dozer ..... (X21-1288860)
T2160-003001 1037
Dozer Blade Tilt Piping, Blade Less ..... (X21-1359470)
T2160-004001 1038
Ripper Beam and Arm, For Variable Digging Angle Multi Ripper ..... (X21-1051392)
Beam and Arm T2400-005001 1039
Shank and Ripper Point T2400-005002 1040
Inner Parts, Lift Cylinder T2400-005003 1041
Inner Parts, Tilt Cylinder T2400-005004 1043
Plate T2400-005005 1045
Ripper Beam and Arm, For Variable Digging Angle Giant Ripper Without Push Block ..... (X21-1189611)
Beam and Arm T2400-006001 1046
Shank and Ripper Point T2400-006002 1047
Inner Parts, Pin Puller Cylinder T2400-006003 1048
Inner Parts, Lift Cylinder T2400-005003 1041
Inner Parts, Tilt Cylinder T2400-005004 1043
Plate T2400-006006 1049
Piping T2400-006007 1050
Bracket T2400-006008 1051
Ripper Beam and Arm, For Variable Digging Angle Giant Ripper, With Pusher Plate ..... (X21-1202241)
Beam and Arm T2400-007001 1052
Shank and Ripper Point T2400-006002 1047
Inner Parts, Pin Puller Cylinder T2400-006003 1048
Inner Parts, Lift Cylinder T2400-005003 1041
Inner Parts, Tilt Cylinder T2400-005004 1043
Plate T2400-007006 1053
Piping T2400-006007 1050
Bracket T2400-006008 1051
Ripper Mounting ..... (X21-1085471)
T2440-001001 1054
Ripper Hydraulic Piping, Variable Gauge Type ..... (X21-1054911)
T2460-001001 1055
Ripper Point Lamp ..... (X21-1198690)
T2470-001001 1056
Drawbar ..... (X21-0071590)
T2810-001001 1057
Counterweight ..... (X21-1190450)
T2820-001001 1058
Counterweight, For Coal Dozer ..... (X21-1335510)
T2820-002001 1059
Additional Rear Working Lamp ..... (X21-1326970)
T2850-001001 1060
MARKS AND PLATES

Marks and Plates, English, Text Type, English, USA and Puerto Rico ....(X21-1197743)
U0100-049001 1062
Marks and Plates, English ....(X21-1197773)
U0100-051001 1063
Marks and Plates, French-English ....(X21-1217203)
U0100-052001 1064
Marks and Plates, German-English ....(X21-1217213)
U0100-053001 1065
Marks and Plates, Spanish-English ....(X21-1217223)
U0100-054001 1066
Marks and Plates, Russian-English ....(X21-1217233)
U0100-055001 1067
Marks and Plates, Persian-English ....(X21-1217253)
U0100-056001 1068
Marks and Plates, Portuguese-English ....(X21-1217263)
U0100-057001 1069
Marks and Plates, Spanish ....(X21-1217273)
U0100-058001 1070
Marks and Plates, Provision For Portuguese, Text Type ....(X21-1217283)
U0100-059001 1071
Marks and Plates, Chinese ....(X21-1620852)
U0100-060001 1072
Marks and Plates, Rear ....(X21-1197790)
U0150-001001 1073
Caution Plates, KOMTRAX ....(X21-2010690)
U0205-001001 1074
Mercurial Component Indication Plate ....(X21-2100210)
U0207-001001 1075
Marks and Plates, Battery, For U.S.A ....(X21-1197800)
U0220-001001 1076
Caution Plates, Portuguese, Text Type ....(X21-1940480)
U0220-005001 1077
Caution Plates, English, Text Type ....(X21-2118610)
U0220-006001 1078
Balancing Mark ....(X21-0073001)
U0400-001001 1079
Marks and Plates ....(X21-1197830)
U0410-001001 1080
Name Plate, ROPS, Italian ....(X21-1197630)
U0520-001001 1081
Name Plate, ROPS, Persian ....(X21-1197640)
U0520-002001 1082
Name Plate, ROPS, Spanish ....(X21-1197650)
U0520-003001 1083
Name Plate, ROPS, Germany ....(X21-1197660)
U0520-004001 1084
Name Plate, ROPS, Russian ....(X21-1197670)
U0520-005001 1085
Name Plate, ROPS, French ....(X21-1197680)
U0520-006001 1086
Name Plate, ROPS, Portuguese ....(X21-1197690)
U0520-007001 1087
Name Plate, ROPS, Estonian ....(X21-1225380)
U0520-009001 1088
Name Plate, ROPS, Turkish ....(X21-1225390)
U0520-010001 1089

Name Plate, Chinese .....(X21-1326840)
U0520-011001 1090
Name Plate, For EU Safety Regulation .....(X21-1860110)
U0520-013001 1091
Name Plate, For Portuguese, Text Type .....(X21-1753310)
U0520-012001 1092
Marks and Plates, Seat Belt, Italian .....(X21-0560160)
U0630-001001 1093
Marks and Plates, Seat Belt, Turkish .....(X21-0576720)
U0630-002001 1094
Marks and Plates, Seat Belt, English .....(X21-1264520)
U0630-003001 1095
Marks and Plates, Seat Belt, Spanish .....(X21-1264530)
U0630-004001 1096
Marks and Plates, Seat Belt, Germany .....(X21-1264540)
U0630-005001 1097
Marks and Plates, Seat Belt, Russian .....(X21-1264560)
U0630-007001 1098
Marks and Plates, Seat Belt, Persian .....(X21-1264590)
U0630-008001 1099
Marks and Plates, Seat Belt, French .....(X21-1264610)
U0630-009001 1100
Marks and Plates, Seat Belt, Portuguese .....(X21-1264620)
U0630-010001 1101
Marks and Plates, Seat Belt, Estonian .....(X21-1264640)
U0630-011001 1102
Marks and Plates, Seat Belt, Chinese .....(X21-1452960)
U0630-012001 1103
Marks and Plates, For Portuguese, Text Type, 50mm Seat Belt, 2-point Type, Suspension Type Operator's Seat, 78mm Seat Belt, 2-point Type, Suspension Type Operator's Seat .....(X21-1753320)
U0630-013001 1104
Name Plate, Blade .....(X21-1279020)
U0640-001001 1105
AUXILIARY PARTS AND TOOL
Spare Parts .....(X21-1197410)
Fuel Filter (1-5/8) V0100-001001 1108
Spare Parts .....(X21-1197411)
V0100-002001 1109
Cap and Overall .....(X21-0291910)
V0200-001001 1110
Tool .....(X21-0937760)
V0300-001001 1111
Emergency Tool .....(X21-1197400)
V0305-001001 1112
OTHER EQUIPMENT
Vandalism Protection Lock .....(X21-1241100)
W2111-001001 1114
Vandalism Protection Lock, Landfill Specification .....(X21-1443180)
W2111-002001 1115
Pre Heater, For Coolant and Engine Oil Pan Heater .....(X21-1230451)
W2121-001001 1116
Service Kit Parts .....(X21-1362790)
W9950-001001 1117
FIELD REPAIR SERVICE PARTS
Service Kit Parts .....(Y99-0000002)
KIT 1120

ENGINE CYLINDER HEAD AND ITS RELATED PARTS

FIG. A1010-001001 Cylinder Head

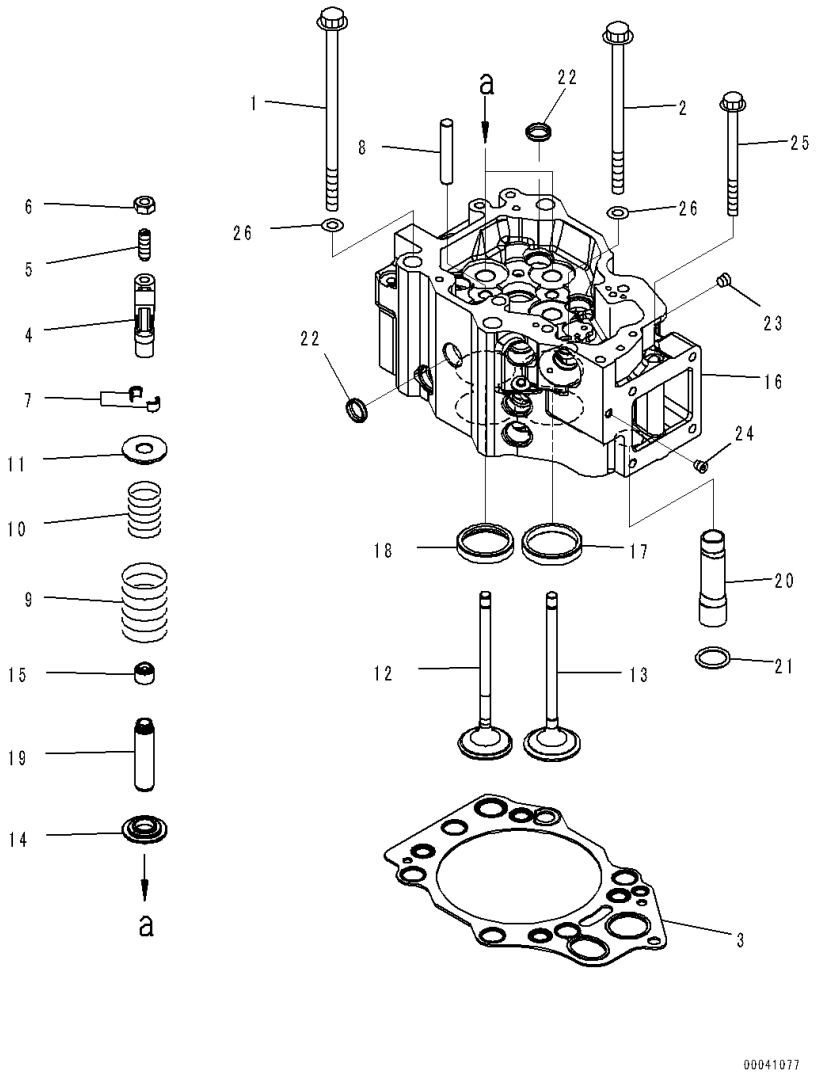

Index	Code	Part Number	Description	Qty	Serial Number
1		6217-11-1610	Bolt	18	535751-
2		6217-11-1620	Bolt	18	535751-
3		6210-17-1814	Gasket, Head, Standard	6	535751-
		6210-19-1814	Gasket, Head, Oversize 0.40mm	6	535751-
		6210-11-1820	• Grommet, Oil, Standard	1	535751-
		6210-19-1820	• Grommet, Oil, Oversize 0.40mm	1	535751-
		6210-11-1831	• Grommet, Oil, Standard	1	535751-
		6210-19-1831	• Grommet, Oil, Oversize 0.40mm	1	535751-
		6210-11-1840	• Grommet, Oil, Standard	1	535751-
		6210-19-1840	• Grommet, Oil, Oversize 0.40mm	1	535751-
		6210-11-1962	• Grommet, Water, Standard	1	535751-
		6210-19-1962	• Grommet, Water, Oversize 0.40mm	1	535751-
	C1		• Grommet, Water, Standard	4	535751-
	C1		• Grommet, Water, Oversize 0.40mm	4	535751-
		6210-11-1940	• Grommet, Water, Standard	4	535751-
		6210-11-1940	• Grommet, Water, Standard	4	535751-
4		6210-41-5620	Crosshead	12	535751-
5		6210-41-5641	Screw	12	535751-
6		6162-43-5630	Nut, Lock	12	535751-
7		6136-41-4520	Cotter	48	535751-
8		6210-11-1140	Guide	12	535751-
9		6210-41-4430	Spring	24	535751-
10		6210-41-4440	Spring	24	535751-
11		6210-41-4510	Seat	24	535751-
12		6215-41-4220	Valve, Exhaust	12	535751-
13		6217-41-4110	Valve, Intake	12	535751-
14		6217-41-4531	Seat	24	535751-
15		6217-41-4540	Seal	24	535751-
		6261-11-1100	Cylinder Head Assembly	6	535751-
16	C1		• Head	1	535751-
17		6261-11-1380	• Insert, Intake Valve, Standard	2	535751-
		6261-19-1380	• Insert, Intake Valve, Oversized 0.25mm	2	535751-
		6261-18-1380	• Insert, Intake Valve, Oversized 0.50mm	2	535751-
		6261-17-1380	• Insert, Intake Valve, Oversized 0.75mm	2	535751-
		6261-16-1380	• Insert, Intake Valve, Oversized 1.00mm	2	535751-
18		6217-11-1321	• Insert, Exhaust Valve, Standard	2	535751-
		6217-19-1321	• Insert, Exhaust Valve, Oversize 0.25mm	2	535751-
		6217-18-1321	• Insert, Exhaust Valve, Oversize 0.50mm	2	535751-
		6217-17-1321	• Insert, Exhaust Valve, Oversize 0.75mm	2	535751-
		6217-16-1321	• Insert, Exhaust Valve, Oversize 1.00mm	2	535751-

FIG. A1010-001001 Cylinder Head

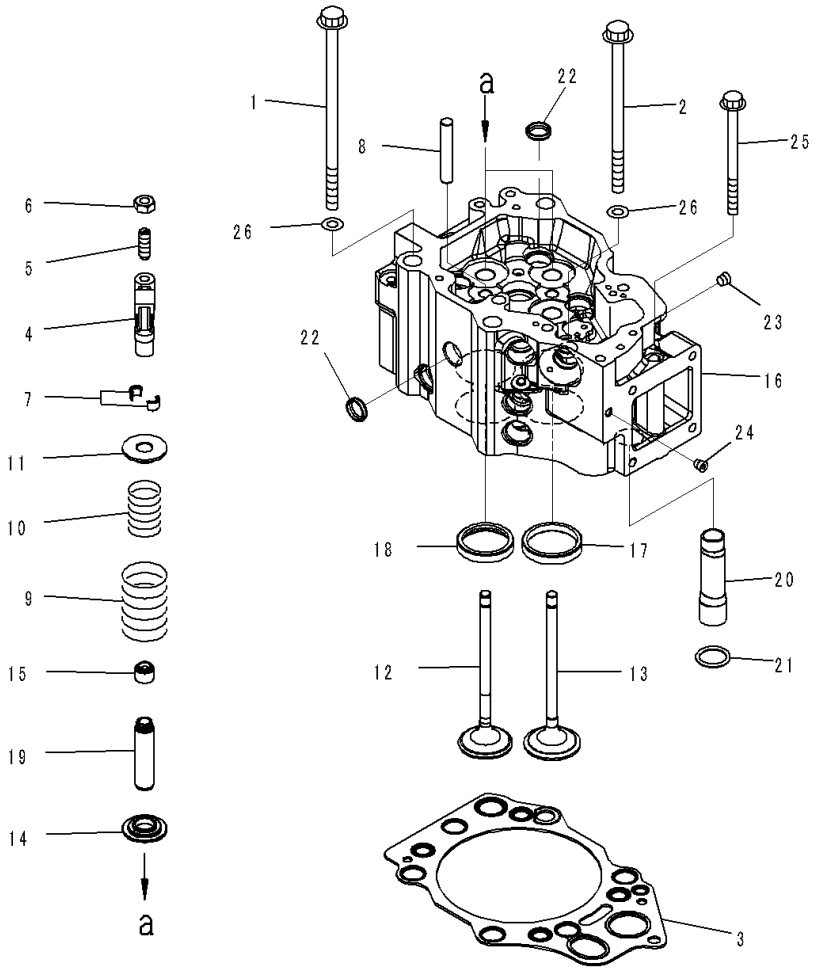

Index	Code	Part Number	Description	Qty	Serial Number
19		6217-11-1441	• Guide	4	535751-
20		6210-11-1150	• Pipe	1	535751-
21		07000-73025	• O-ring	1	535751-
22		6162-13-1150	• Plug, Expansion	13	535751-
23		07043-50108	• Plug, Taper	1	535751-
24		708-21-12541	• Plug	2	535751-
25		01438-01020	Bolt	6	535751-
26		01643-51645	Washer	36	535751-

FIG. A1110-001001 Cylinder Head Cover

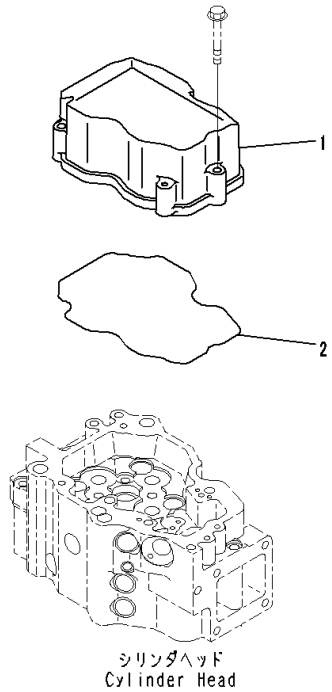

PV6B635

Index	Code	Part Number	Description	Qty	Serial Number
		6217-11-8100	Cover Assembly	6	535751-
1		6217-11-8110	• Cover	1	535751-
2		6217-11-8830	• Gasket	1	535751-

FIG. A1111-001001 Head Cover Mounting Bolt

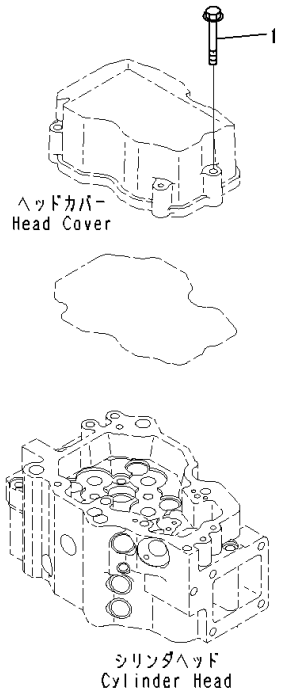

PV6B636

Index	Code	Part Number	Description	Qty	Serial Number
1		01435-00855	Bolt	18	535751-

FIG. A1310-001001 Air Intake Manifold

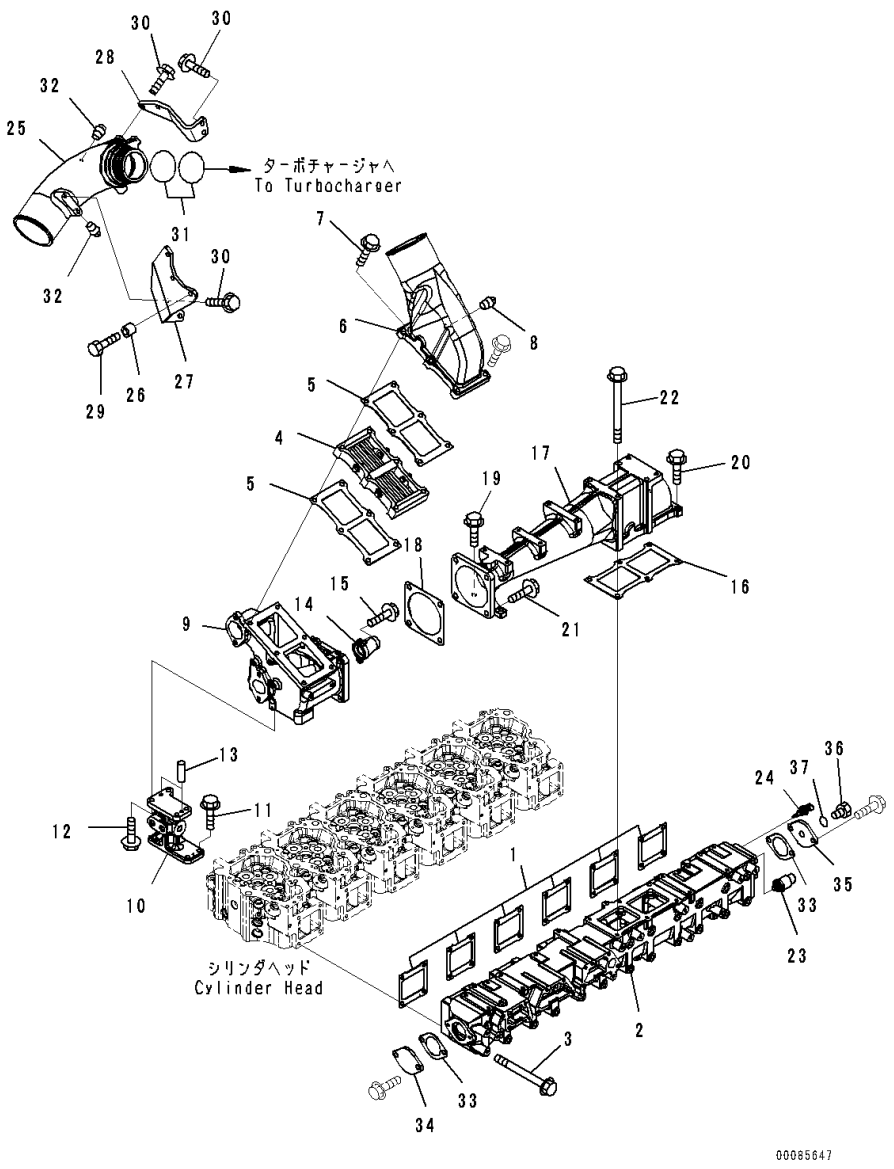

Index	Code	Part Number	Description	Qty	Serial Number
1		6210-11-4811	Gasket	6	535751-
2		6261-11-4111	Manifold	1	536666-
3		01436-01070	Bolt	20	535751-
4		600-815-4280	Heater	1	535751-
5		6211-11-4821	Gasket	2	535751-
6		6261-11-4310	Connector	1	535751-
7		01435-01070	Bolt	5	535751-
8		07042-A0108	Plug	1	535751-
9		6261-11-7210	Housing	1	535751-
10		6261-11-7220	Bracket	1	535751-
11		01435-01025	Bolt	4	535751-
12		01435-01030	Bolt	4	535751-
13		04020-00820	Pin, Dowel	2	535751-
14		6261-11-2150	Nozzle, Venturi	1	535751-
15		01437-10816	Bolt	2	535751-
16		6211-11-4821	Gasket	1	535751-
17		6261-11-7410	Connector	1	535751-
18		6261-11-7450	Gasket	1	535751-
19		01435-01030	Bolt	2	535751-
20		01435-01035	Bolt	2	535751-
21		01435-01235	Bolt	4	535751-
22		01436-01080	Bolt	2	535751-
23		6560-61-7201	Sensor Assembly	1	535751-
		6560-61-7211	• Sensor	1	535751-
		6216-54-6320	• O-ring	1	535751-
24		6560-61-7300	Sensor Assembly	1	535751-
		6560-61-7310	• Sensor	1	535751-
		6735-21-1930	• O-ring	1	535751-
25		6261-11-4420	Connector	1	535751-
26		6631-11-5630	Spacer	3	535751-
27		6261-11-4451	Bracket	1	535751-
28		6261-11-4460	Bracket	1	535751-
29		01020-11040	Bolt	3	535751-
30		01435-01030	Bolt	6	535751-
31		02895-77075	O-ring	2	535751-
32		07042-A0108	Plug	2	535751-
33		6212-61-6662	Gasket	2	535751-
34		6215-61-6670	Plate	1	535751-
35		6261-11-4120	Plate	1	535751-
36		07040-11409	Plug	1	535751-

FIG. A1310-001001 Air Intake Manifold

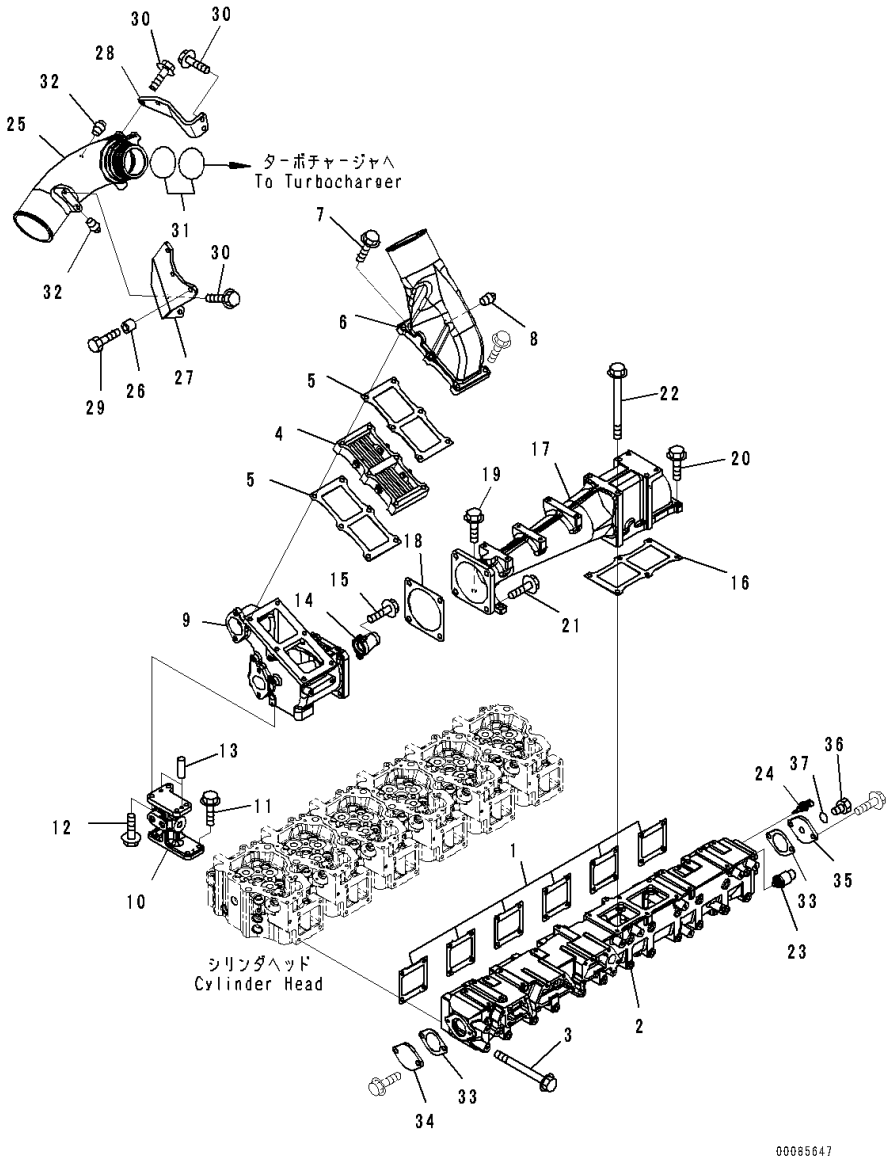

Index	Code	Part Number	Description	Qty	Serial Number
37		07002-21423	O-ring	1	535751-

FIG. A1310-002001 Air Intake Manifold, Landfill Specification

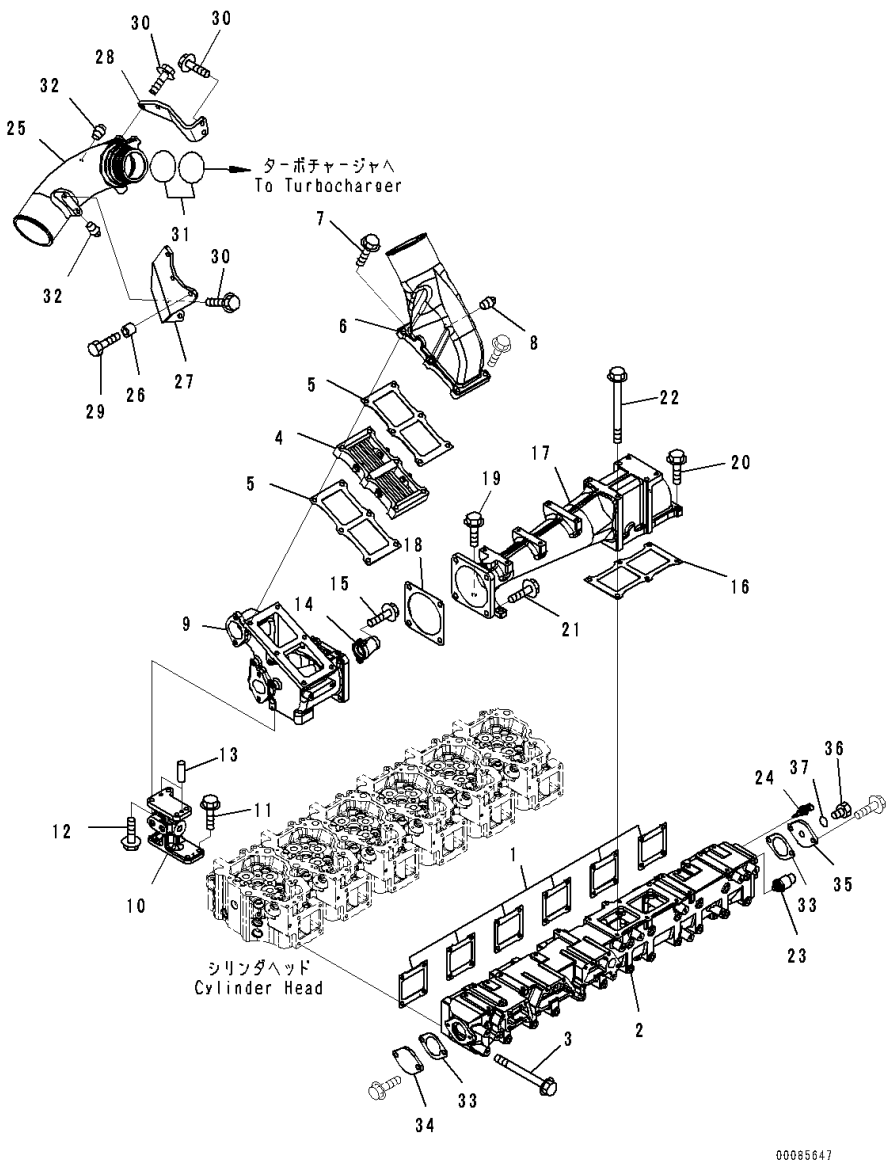

Index	Code	Part Number	Description	Qty	Serial Number
1		6210-11-4811	Gasket	6	535751-
2		6261-11-4111	Manifold	1	536666-
3		01436-01070	Bolt	20	535751-
4		600-815-4280	Heater	1	535751-
5		6211-11-4821	Gasket	2	535751-
6		6261-11-4310	Connector	1	535751-
7		01435-01070	Bolt	5	535751-
8		07042-A0108	Plug	1	535751-
9		6261-11-7210	Housing	1	535751-
10		6261-11-7220	Bracket	1	535751-
11		01435-01025	Bolt	4	535751-
12		01435-01030	Bolt	4	535751-
13		04020-00820	Pin, Dowel	2	535751-
14		6261-11-2150	Nozzle, Venturi	1	535751-
15		01437-10816	Bolt	2	535751-
16		6211-11-4821	Gasket	1	535751-
17		6261-11-7410	Connector	1	535751-
18		6261-11-7450	Gasket	1	535751-
19		01435-01030	Bolt	2	535751-
20		01435-01035	Bolt	2	535751-
21		01435-01235	Bolt	4	535751-
22		01436-01080	Bolt	2	535751-
23		6560-61-7201	Sensor Assembly	1	535751-
		6560-61-7211	• Sensor	1	535751-
		6216-54-6320	• O-ring	1	535751-
24		6560-61-7300	Sensor Assembly	1	535751-
		6560-61-7310	• Sensor	1	535751-
		6735-21-1930	• O-ring	1	535751-
25		6261-11-4420	Connector	1	535751-
26		6631-11-5630	Spacer	3	535751-
27		6261-11-4590	Bracket	1	535751-
28		6261-11-4460	Bracket	1	535751-
29		01020-11050	Bolt	3	535751-
30		01435-01030	Bolt	6	535751-
31		02895-77075	O-ring	2	535751-
32		07042-A0108	Plug	2	535751-
33		6212-61-6662	Gasket	2	535751-
34		6215-61-6670	Plate	1	535751-
35		6261-11-4120	Plate	1	535751-
36		07040-11409	Plug	1	535751-

FIG. A1310-002001 Air Intake Manifold, Landfill Specification

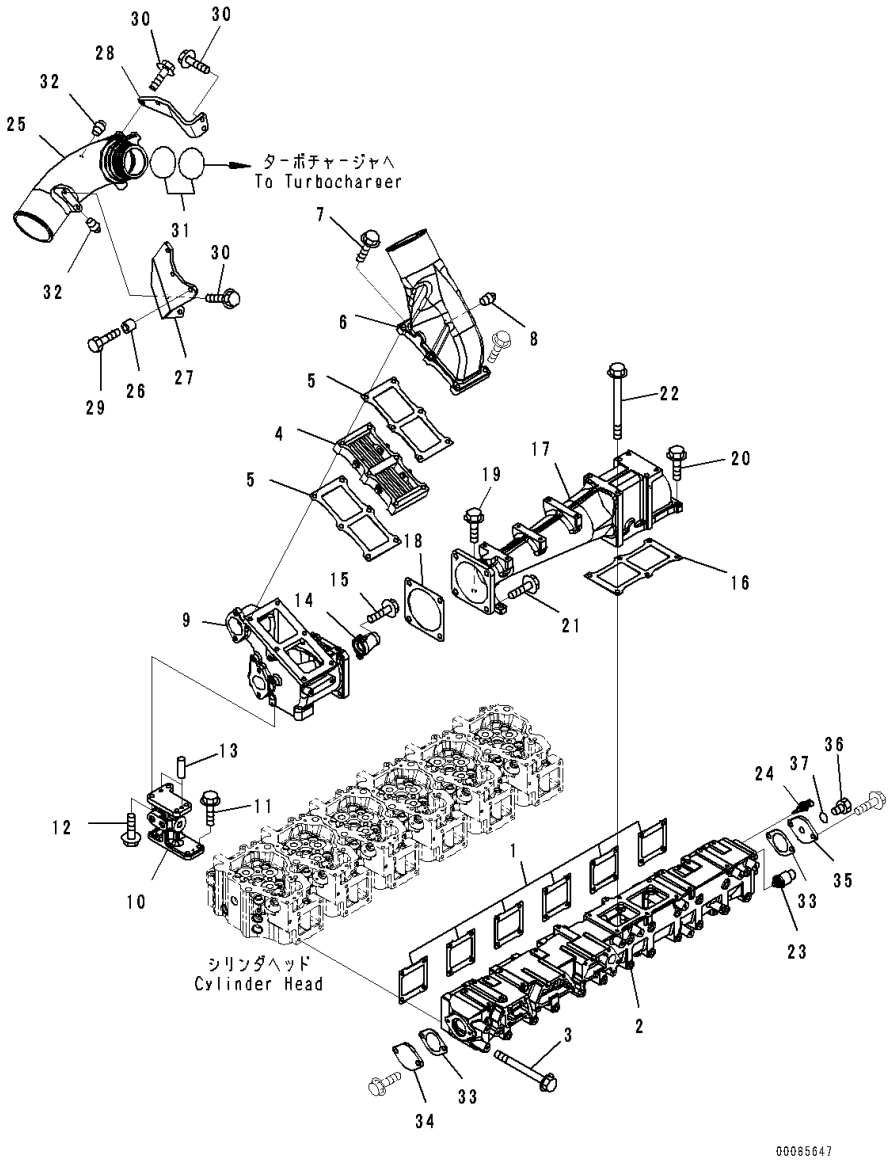

Index	Code	Part Number	Description	Qty	Serial Number
37		07002-21423	O-ring	1	535751-

FIG. A1510-001001 Exhaust Manifold

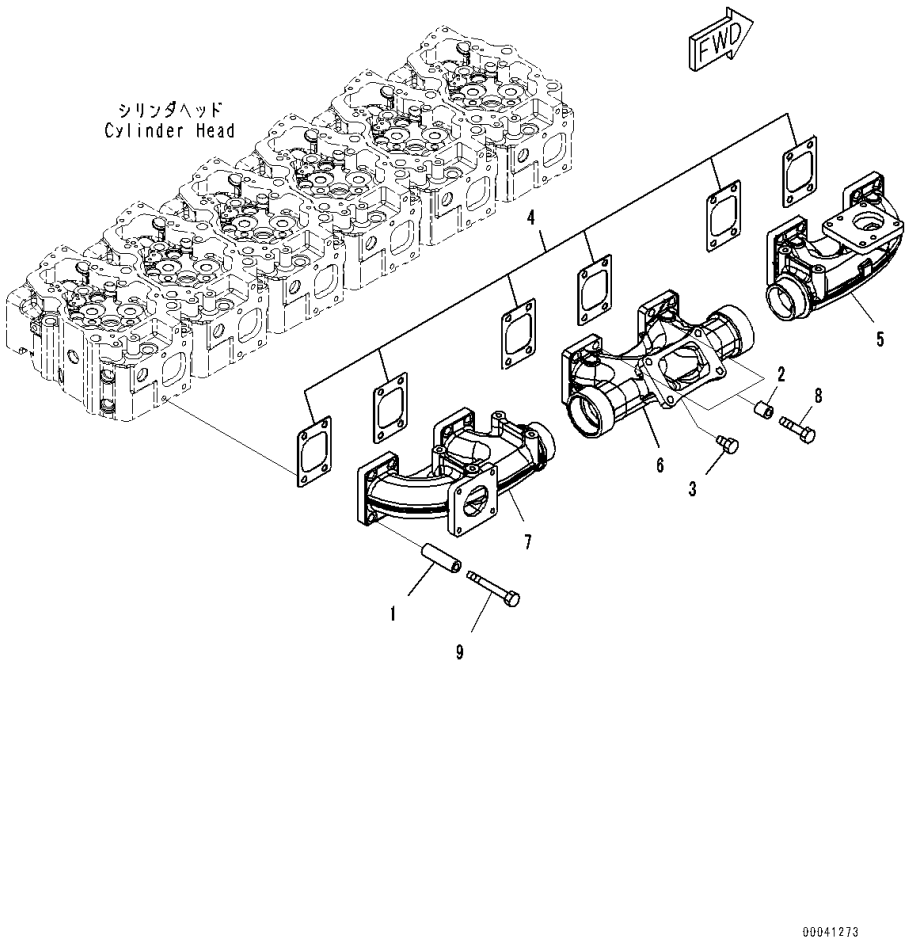

Index	Code	Part Number	Description	Qty	Serial Number
1		6136-11-5120	Spacer	22	535751-
2		6210-11-5820	Spacer	2	535751-
3		6215-11-5920	Plug	2	535751-
4		6261-11-5880	Gasket	6	535751-
5		6261-11-5110	Manifold,Front	1	535751-
6		6261-11-5120	Manifold,Center	1	535751-
7		6261-11-5130	Manifold,Rear	1	535751-
8		01010-E1055	Bolt	2	535751-
9		01011-E1000	Bolt	22	535751-

FIG. A1530-001001 Turbocharger, Mounting Parts

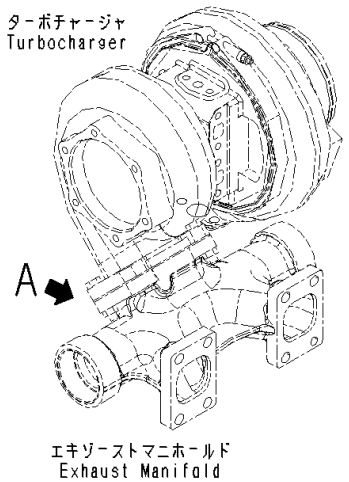

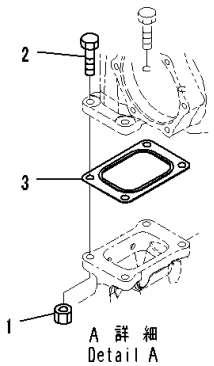

JD011674

Index	Code	Part Number	Description	Qty	Serial Number
1		6114-11-5590	Nut	3	535751-
2		6138-13-4510	Bolt	3	535751-
3		6261-11-5850	Gasket	1	535751-

FIG. A1530-001002 Turbocharger, Inner Parts

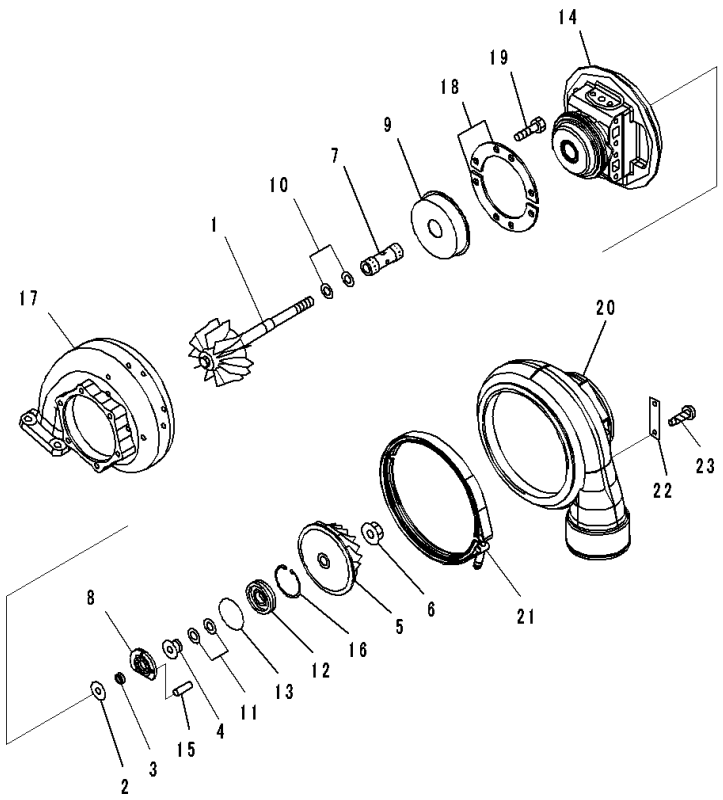

Index	Code	Part Number	Description	Qty	Serial Number
		6505-71-5550	Turbocharger	1	535751-
		6505-71-5950	• Core Assembly	1	535751-
1	C1		• • Rotor, Turbine	1	535751-
2	C1		• • Plate	1	535751-
3	C1		• • Spacer	1	535751-
4	C1		• • Flinger	1	535751-
5	C1		• • Impeller, Blower	1	535751-
6	C1		• • Nut, Lock	1	535751-
7	C1		• • Bearing	1	535751-
8	C1		• • Bearing, Thrust	1	535751-
9	C1		• • Shield, Heat	1	535751-
10	C1		• • Seal Ring	2	535751-
11	C1		• • Seal Ring	2	535751-
12	C1		• • Insert	1	535751-
13	C1		• • O-ring	1	535751-
14	C1		• • Housing	1	535751-
15	C1		• • Pin, Dowel	1	535751-
16	C1		• • Ring, Snap	1	535751-
17		6505-71-4920	• Housing, Center	1	535751-
18		6505-11-0520	• Plate	2	535751-
19		01020-01016	• Bolt	8	535751-
20		6505-71-2050	• Housing, Blower	1	535751-
21		6505-11-0450	• V-band	1	535751-
22		6505-99-9011	• Plate, Name	1	535751-
23		04418-02550	• Screw	2	535751-

FIG. A1530-001003 Turbocharger, Lubrication Piping

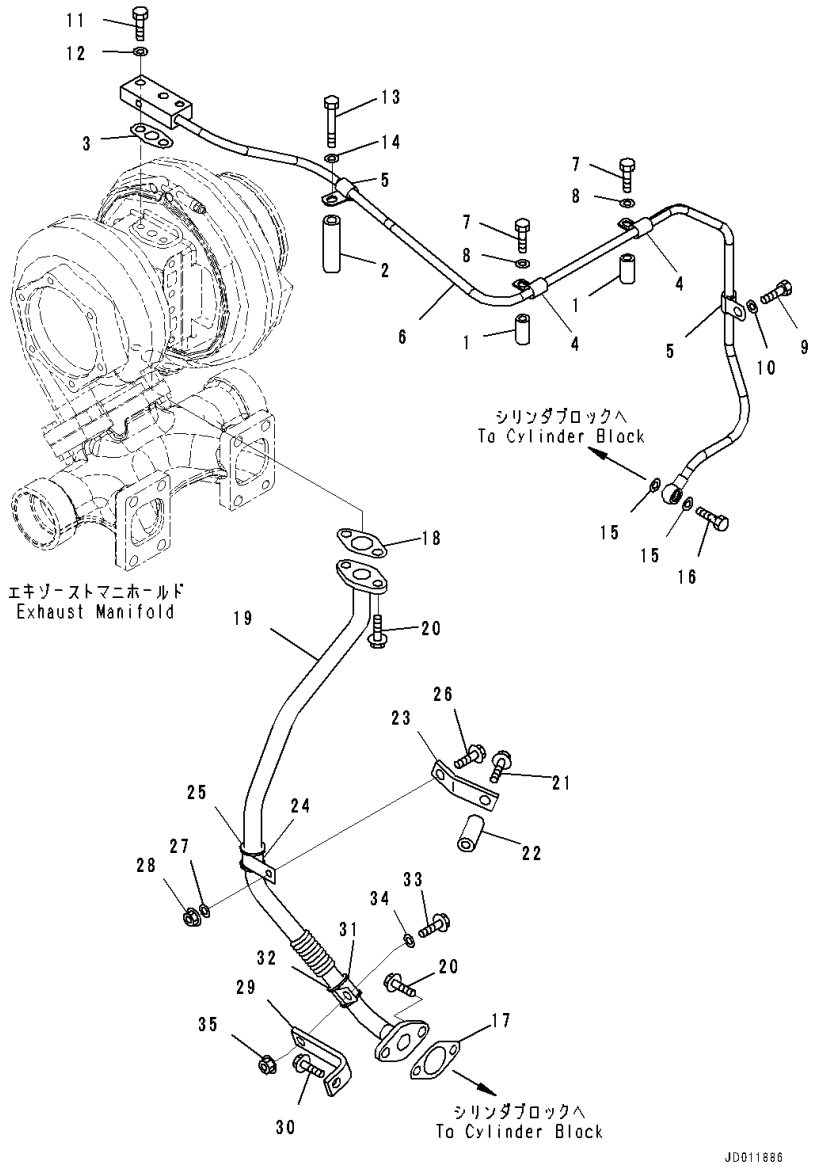

Index	Code	Part Number	Description	Qty	Serial Number
1		207-62-32890	Collar	2	535751-
2		6136-11-5120	Spacer	1	535751-
3		6151-51-8161	Gasket	1	535751-
4		6215-71-4930	Clamp	2	535751-
5		6215-71-4940	Clamp	2	535751-
6		6261-51-8160	Tube	1	535751-
7		01010-80850	Bolt	2	535751-
8		01643-30823	Washer	2	535751-
9		01010-81020	Bolt	1	535751-
10		01643-31032	Washer	1	535751-
11		01010-81035	Bolt	2	535751-
12		01643-31032	Washer	2	535751-
13		01010-81090	Bolt	1	535751-
14		01643-31032	Washer	1	535751-
15		07005-01412	Seal, Washer	2	535751-
16		07206-31014	Bolt, Joint	1	535751-
17		6127-51-6822	Gasket	1	535751-
18		6151-51-8151	Gasket	1	535751-
19		6261-51-8110	Tube	1	535751-
20		01435-01025	Bolt	4	535751-
21		01435-01055	Bolt	1	535751-
22		6142-22-4640	Spacer	1	535751-
23		6261-51-8380	Bracket	1	535751-
24		04434-52711	Clip	1	535751-
25		6261-51-8370	Cushion	1	535751-
26		01435-01025	Bolt	1	535751-
27		01643-31032	Washer	1	535751-
28		01584-01008	Nut	1	535751-
29		6261-51-8390	Bracket	1	535751-
30		01435-01025	Bolt	1	535751-
31		04434-52711	Clip	1	535751-
32		6261-51-8370	Cushion	1	535751-
33		01435-01025	Bolt	1	535751-
34		01643-31032	Washer	1	535751-
35		01584-01008	Nut	1	535751-

FIG. A1530-001004 Turbocharger, Water Piping

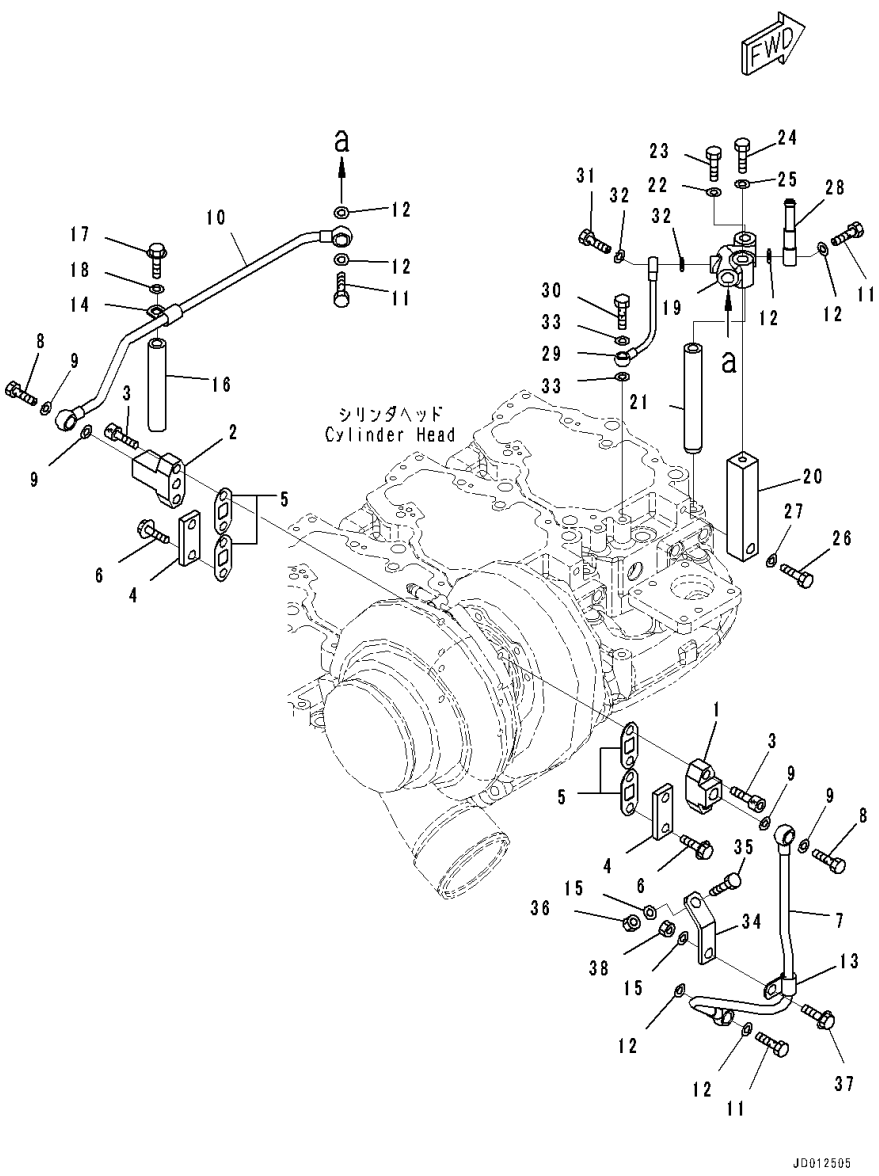

Index	Code	Part Number	Description	Qty	Serial Number
1		6261-61-8670	Joint, Inlet,Inlet	1	535751-
2		6261-61-8680	Joint,Outlet	1	535751-
3		01252-61035	Bolt, Hexagon Socket Head	4	535751-
4		6164-62-8230	Plate	2	535751-
5		6164-62-8241	Gasket	4	535751-
6		01435-01025	Bolt	4	535751-
7		6261-61-8730	Tube, Inlet,Inlet	1	535751-
8		07206-31014	Bolt, Joint	2	535751-
9		07005-01412	Seal, Washer	4	535751-
10		6261-61-8720	Tube	1	535751-
11		07206-31014	Bolt, Joint	3	535751-
12		07005-01412	Seal, Washer	6	535751-
13		6215-71-4940	Clamp	1	535751-
14		6215-71-4940	Clamp	1	535751-
15		01643-31032	Washer	2	535751-
16		6151-51-5490	Spacer	1	535751-
17		01436-01040	Bolt	1	535751-
18		01643-31032	Washer	1	535751-
19		6261-61-8740	Block, Junction	1	535751-
20		6218-61-8730	Block, Mast	1	535751-
21		6261-61-8750	Spacer	1	535751-
22		01643-31032	Washer	1	535751-
23		01011-81095	Bolt	1	535751-
24		01010-81050	Bolt	1	535751-
25		01643-31032	Washer	1	535751-
26		01010-81045	Bolt	1	535751-
27		01643-31032	Washer	1	535751-
28		6141-71-1710	Joint	1	535751-
29		6261-11-6670	Tube	1	535751-
30		6215-11-6560	Bolt, Joint	1	535751-
31		07206-30710	Bolt, Joint	1	535751-
32		07005-01012	Seal, Washer	2	535751-
33		07003-01015	Gasket	2	535751-
34		6217-11-9540	Bracket	1	535751-
35		6217-11-5910	Bolt	1	535751-
36		6114-11-5590	Nut	1	535751-
37		01435-01025	Bolt	1	535751-
38		01584-01008	Nut	1	535751-

FIG. A1530-002001 Turbocharger, Landfill Specification, Mounting Parts

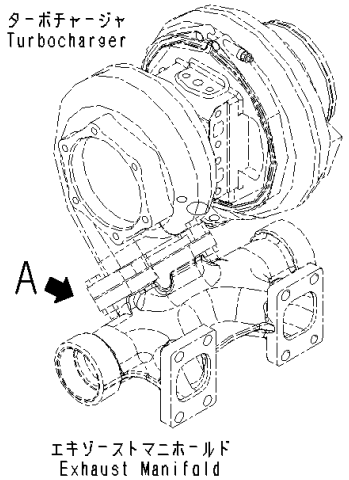

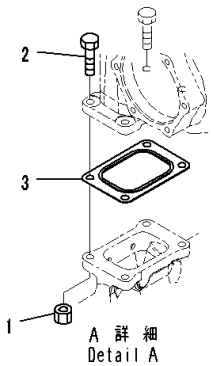

JD011674

Index	Code	Part Number	Description	Qty	Serial Number
1		6114-11-5590	Nut	4	535751-
2		6138-13-4510	Bolt	4	535751-
3		6261-11-5850	Gasket	1	535751-

FIG. A1530-002002 Turbocharger, Landfill Specification, Inner Parts

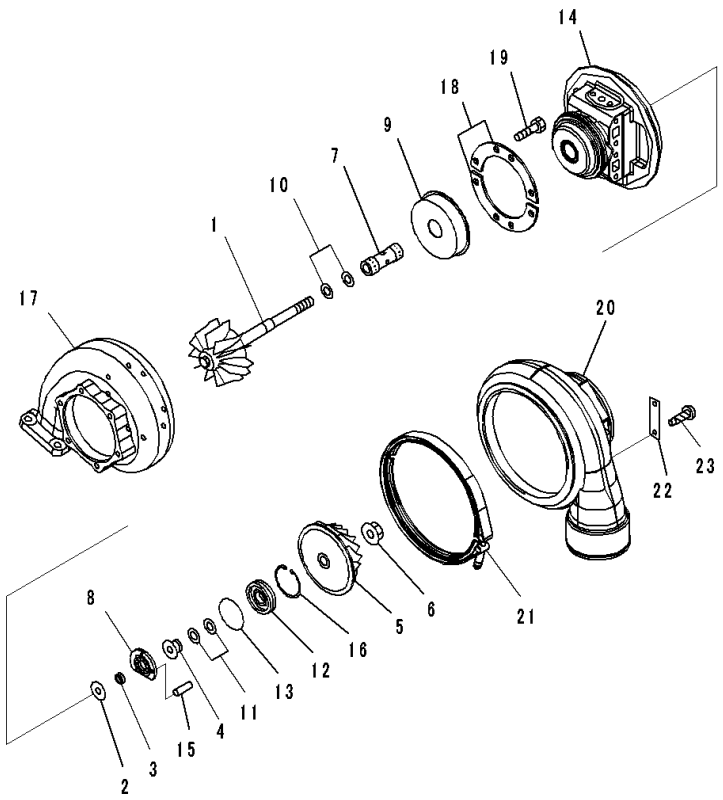

Index	Code	Part Number	Description	Qty	Serial Number
		6505-71-5550	Turbocharger	1	535751-
		6505-71-5950	• Core Assembly	1	535751-
1	C1		• • Rotor, Turbine	1	535751-
2	C1		• • Plate	1	535751-
3	C1		• • Spacer	1	535751-
4	C1		• • Flinger	1	535751-
5	C1		• • Impeller, Blower	1	535751-
6	C1		• • Nut, Lock	1	535751-
7	C1		• • Bearing	1	535751-
8	C1		• • Bearing, Thrust	1	535751-
9	C1		• • Shield, Heat	1	535751-
10	C1		• • Seal Ring	2	535751-
11	C1		• • Seal Ring	2	535751-
12	C1		• • Insert	1	535751-
13	C1		• • O-ring	1	535751-
14	C1		• • Housing	1	535751-
15	C1		• • Pin, Dowel	1	535751-
16	C1		• • Ring, Snap	1	535751-
17		6505-71-4920	• Housing, Center	1	535751-
18		6505-11-0520	• Plate	2	535751-
19		01020-01016	• Bolt	8	535751-
20		6505-71-2050	• Housing, Blower	1	535751-
21		6505-11-0450	• V-band	1	535751-
22		6505-99-9011	• Plate, Name	1	535751-
23		04418-02550	• Screw	2	535751-

FIG. A1530-002003 Turbocharger, Landfill Specification, Lubrication Piping

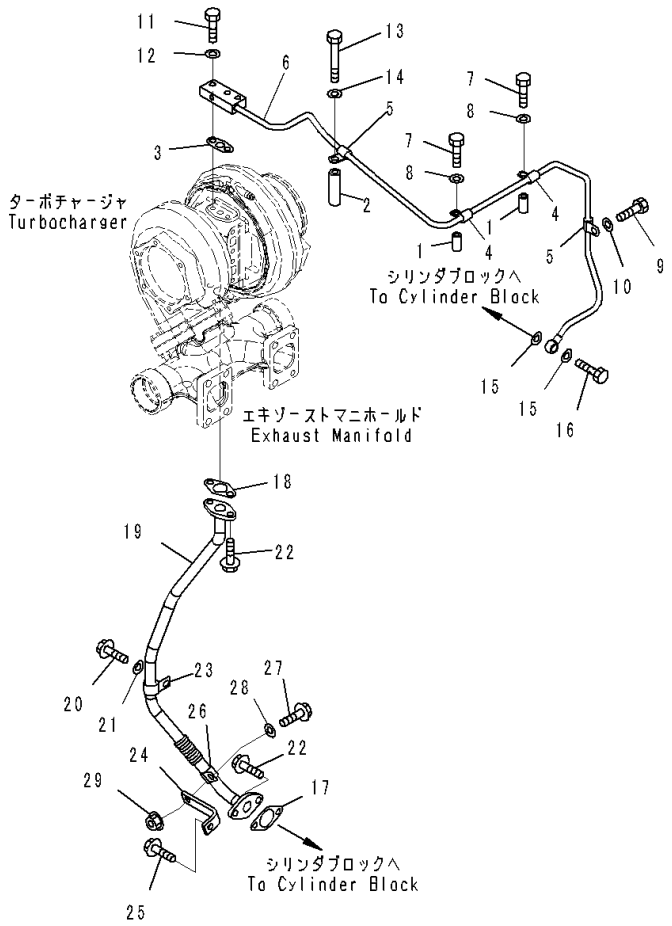

Index	Code	Part Number	Description	Qty	Serial Number
1		207-62-32890	Collar	2	535751-
2		6136-11-5120	Spacer	1	535751-
3		6151-51-8161	Gasket	1	535751-
4		6215-71-4930	Clamp	2	535751-
5		6215-71-4940	Clamp	2	535751-
6		6261-51-8311	Tube, Supply	1	535751-
7		01010-80850	Bolt	2	535751-
8		01643-30823	Washer	2	535751-
9		01010-81020	Bolt	1	535751-
10		01643-31032	Washer	1	535751-
11		01010-81035	Bolt	2	535751-
12		01643-31032	Washer	2	535751-
13		01010-81090	Bolt	1	535751-
14		01643-31032	Washer	1	535751-
15		07005-01412	Seal, Washer	2	535751-
16		07206-31014	Bolt, Joint	1	535751-
17		6127-51-6822	Gasket	1	535751-
18		6151-51-8151	Gasket	1	535751-
19		6261-51-8320	Tube, Return	1	535751-
20		01435-01020	Bolt	1	535751-
21		01643-31032	Washer	1	535751-
22		01435-01025	Bolt	4	535751-
23		04434-51910	Clip	1	535751-
24		6261-51-8130	Bracket	1	535751-
25		01435-01025	Bolt	1	535751-
26		04434-51910	Clip	1	535751-
27		01435-01025	Bolt	1	535751-
28		01643-31032	Washer	1	535751-
29		01584-01008	Nut	1	535751-

FIG. A1530-002004 Turbocharger, Landfill Specification, Water Piping

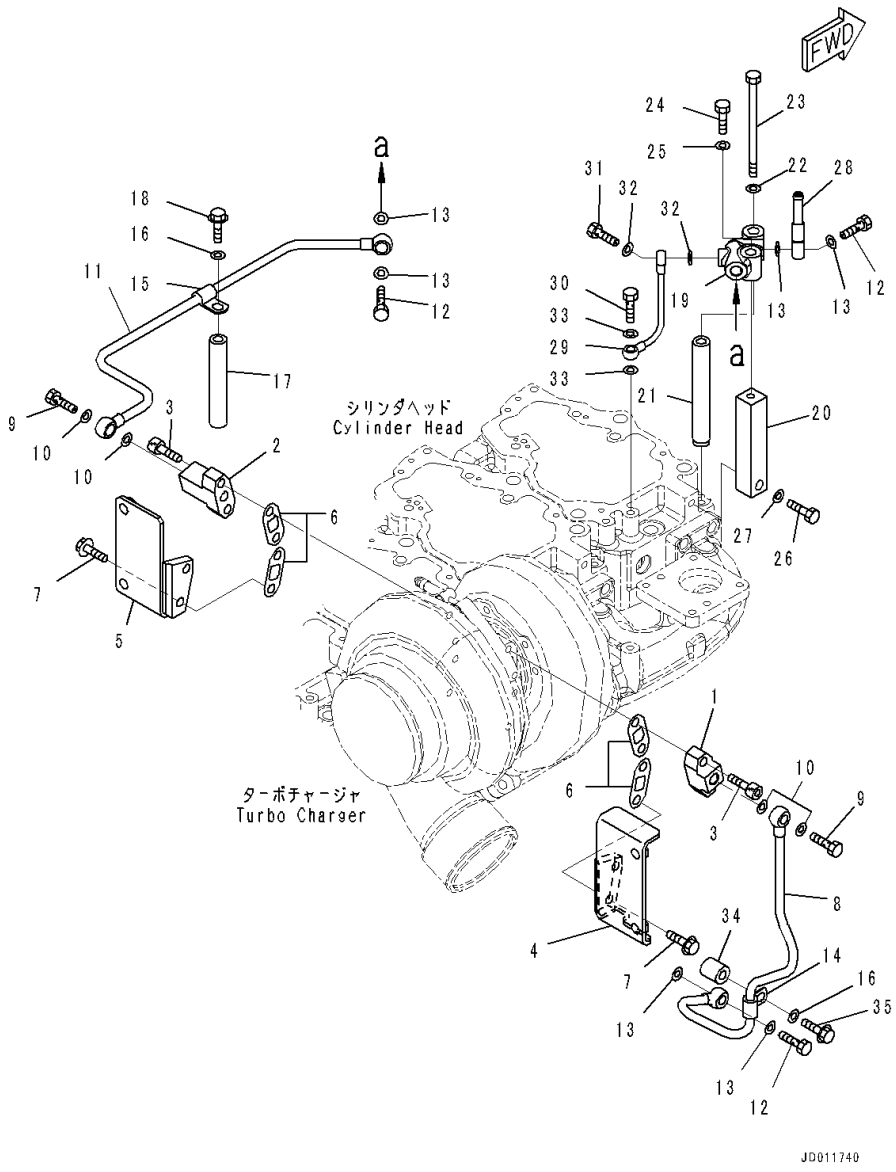

Index	Code	Part Number	Description	Qty	Serial Number
1		6261-61-8670	Joint, Inlet,Inlet	1	535751-
2		6261-61-8680	Joint,Outlet	1	535751-
3		01252-61035	Bolt, Hexagon Socket Head	4	535751-
4		6261-61-8220	Bracket	1	535751-
5		6261-61-8230	Bracket	1	535751-
6		6164-62-8241	Gasket	4	535751-
7		01435-01025	Bolt	4	535751-
8		6261-61-8880	Tube,Inlet	1	535751-
9		07206-31014	Bolt, Joint	2	535751-
10		07005-01412	Seal, Washer	4	535751-
11		6261-61-8891	Tube	1	535751-
12		07206-31014	Bolt, Joint	3	535751-
13		07005-01412	Seal, Washer	6	535751-
14		6215-71-4940	Clamp	1	535751-
15		6215-71-4940	Clamp	1	535751-
16		01643-31032	Washer	2	535751-
17		6151-51-5490	Spacer	1	535751-
18		01436-01040	Bolt	1	535751-
19		6261-61-8740	Block, Junction	1	535751-
20		6218-61-8730	Block, Mast	1	535751-
21		6261-61-8750	Spacer	1	535751-
22		01643-31032	Washer	1	535751-
23		01011-81095	Bolt	1	535751-
24		01010-81050	Bolt	1	535751-
25		01643-31032	Washer	1	535751-
26		01010-81045	Bolt	1	535751-
27		01643-31032	Washer	1	535751-
28		6141-71-1710	Joint	1	535751-
29		6261-11-6670	Tube	1	535751-
30		6215-11-6560	Bolt, Joint	1	535751-
31		07206-30710	Bolt, Joint	1	535751-
32		07005-01012	Seal, Washer	2	535751-
33		07003-01015	Gasket	2	535751-
34		144-874-7470	Boss	1	535751-
35		01435-01050	Bolt	1	535751-

FIG. A1610-001001 Exhaust Muffler

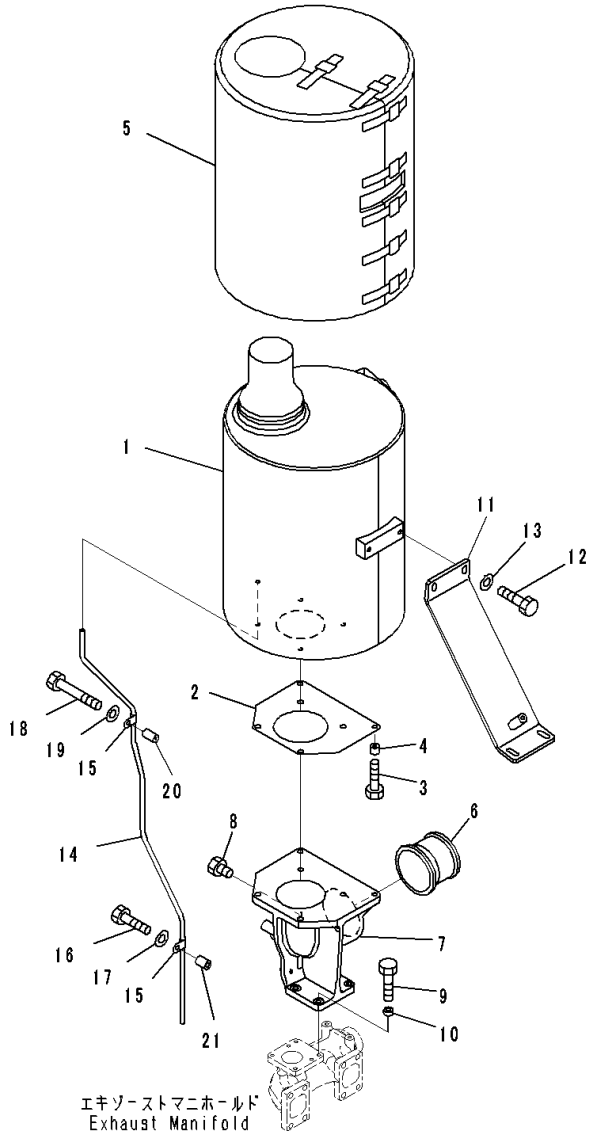

Index	Code	Part Number	Description	Qty	Serial Number
1		6261-11-5631	Muffler	1	535751-
2		6261-11-5550	Gasket	1	535751-
3		01010-E1050	Bolt	6	535751-
4		6631-11-5630	Spacer	6	535751-
5		6261-11-5910	Cover, Shield Heat	1	535751-
6		6261-11-5770	Connector	1	535751-
7		6261-11-5540	Elbow, Exhaust	1	535751-
8		6215-11-5920	Plug	1	535751-
9		01010-E1045	Bolt	4	535751-
10		6151-61-3781	Spacer	4	535751-
11		6261-11-5650	Bracket	1	535751-
12		01010-81025	Bolt	4	535751-
13		203-54-56970	Washer	4	535751-
14		6261-11-5640	Tube, Drain	1	535751-
15		6991-11-5990	Clamp	2	535751-
16		01010-81055	Bolt	1	535751-
17		01643-31032	Washer	1	535751-
18		01011-81070	Bolt	1	535751-
19		01643-31032	Washer	1	535751-
20		203-54-11170	Spacer	1	535751-
21		6164-11-5590	Spacer	1	535751-

FIG. A1610-002001 Exhaust Muffler, Landfill Specification

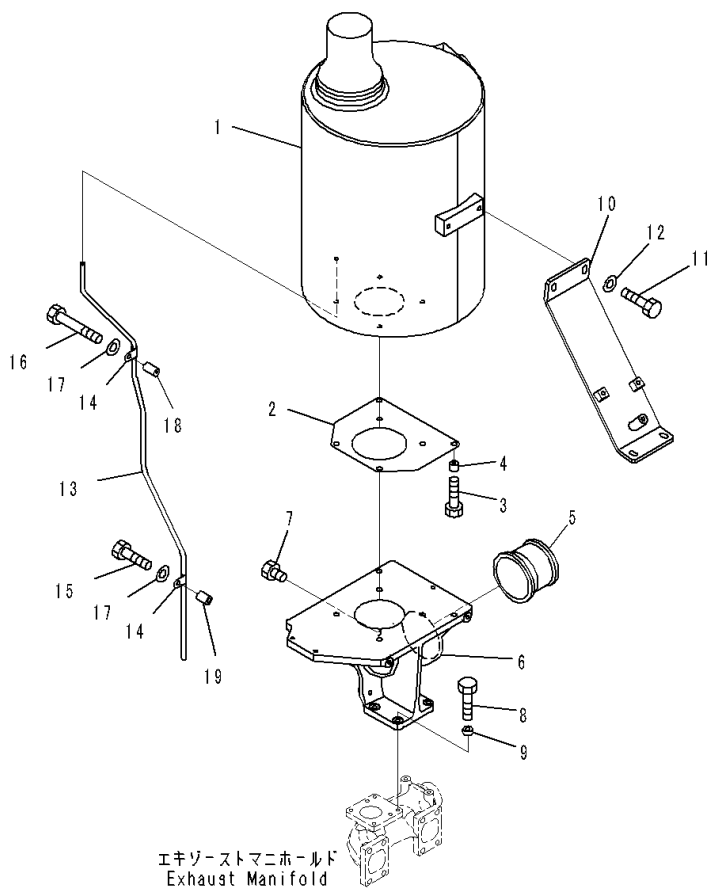

Index	Code	Part Number	Description	Qty	Serial Number
1		6261-11-5461	Muffler	1	535751-
2		6261-11-5550	Gasket	1	535751-
3		01010-E1050	Bolt	6	535751-
4		6631-11-5630	Spacer	6	535751-
5		6261-11-5770	Connector	1	535751-
6		6261-11-5570	Elbow, Exhaust	1	535751-
7		6215-11-5920	Plug	1	535751-
8		01010-E1045	Bolt	4	535751-
9		6151-61-3781	Spacer	4	535751-
10		6261-11-5650	Bracket	1	535751-
11		01010-81025	Bolt	4	535751-
12		203-54-56970	Washer	4	535751-
13		6261-11-5790	Tube, Drain	1	535751-
14		6991-11-5990	Clamp	2	535751-
15		01010-81055	Bolt	1	535751-
16		01010-81060	Bolt	1	535751-
17		01643-31032	Washer	2	535751-
18		6144-11-5630	Spacer	1	535751-
19		6164-11-5590	Spacer	1	535751-

FIG. A1570-001001 Heat Shield

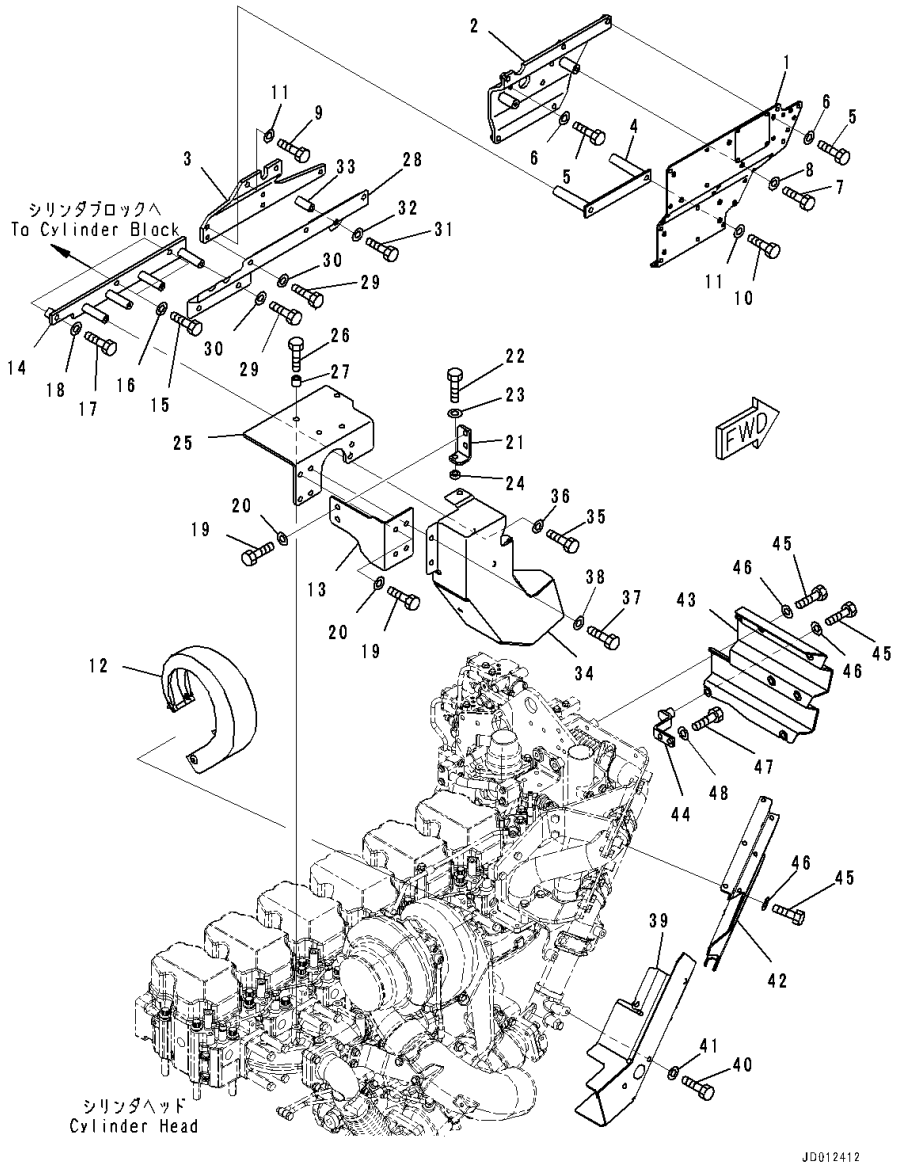

Index	Code	Part Number	Description	Qty	Serial Number
1		6261-11-8190	Cover	1	535751-
2		6261-11-8180	Bracket	1	535751-
3		6261-11-8640	Bracket	1	535751-
4		6261-11-8660	Bracket	1	535751-
5		01010-81030	Bolt	5	535751-
6		01643-31032	Washer	5	535751-
7		01010-81025	Bolt	2	535751-
8		01643-31032	Washer	2	535751-
9		01010-E1025	Bolt	6	535751-
10		01011-81030	Bolt	1	535751-
11		01643-31032	Washer	7	535751-
12		6261-11-8430	Cover	1	535751-
13		6261-11-8880	Cover	1	535751-
14		6261-11-8420	Bracket	1	535751-
15		01010-81025	Bolt	2	535751-
16		01643-31032	Washer	2	535751-
17		01010-81045	Bolt	1	535751-
18		01643-31032	Washer	1	535751-
19		01010-81025	Bolt	4	535751-
20		01643-31032	Washer	4	535751-
21		6261-11-8490	Bracket	1	535751-
22		01010-81040	Bolt	1	535751-
23		01643-31032	Washer	1	535751-
24		6132-21-4630	Spacer	1	535751-
25		6261-11-8540	Bracket	1	535751-
26		01010-E1040	Bolt	3	535751-
27		6631-11-5630	Spacer	3	535751-
28		6261-11-8620	Cover	1	535751-
29		01010-81025	Bolt	5	535751-
30		01643-31032	Washer	5	535751-
31		01011-81020	Bolt	1	535751-
32		01643-31032	Washer	1	535751-
33		6143-11-4290	Spacer	1	535751-
34		6261-11-8551	Cover	1	535751-
35		01010-81025	Bolt	5	535751-
36		01643-31032	Washer	5	535751-
37		01010-81030	Bolt	2	535751-
38		01643-31032	Washer	2	535751-
39		6261-11-8710	Cover	1	535751-
40		01010-81025	Bolt	4	535751-

FIG. A1570-001001 Heat Shield

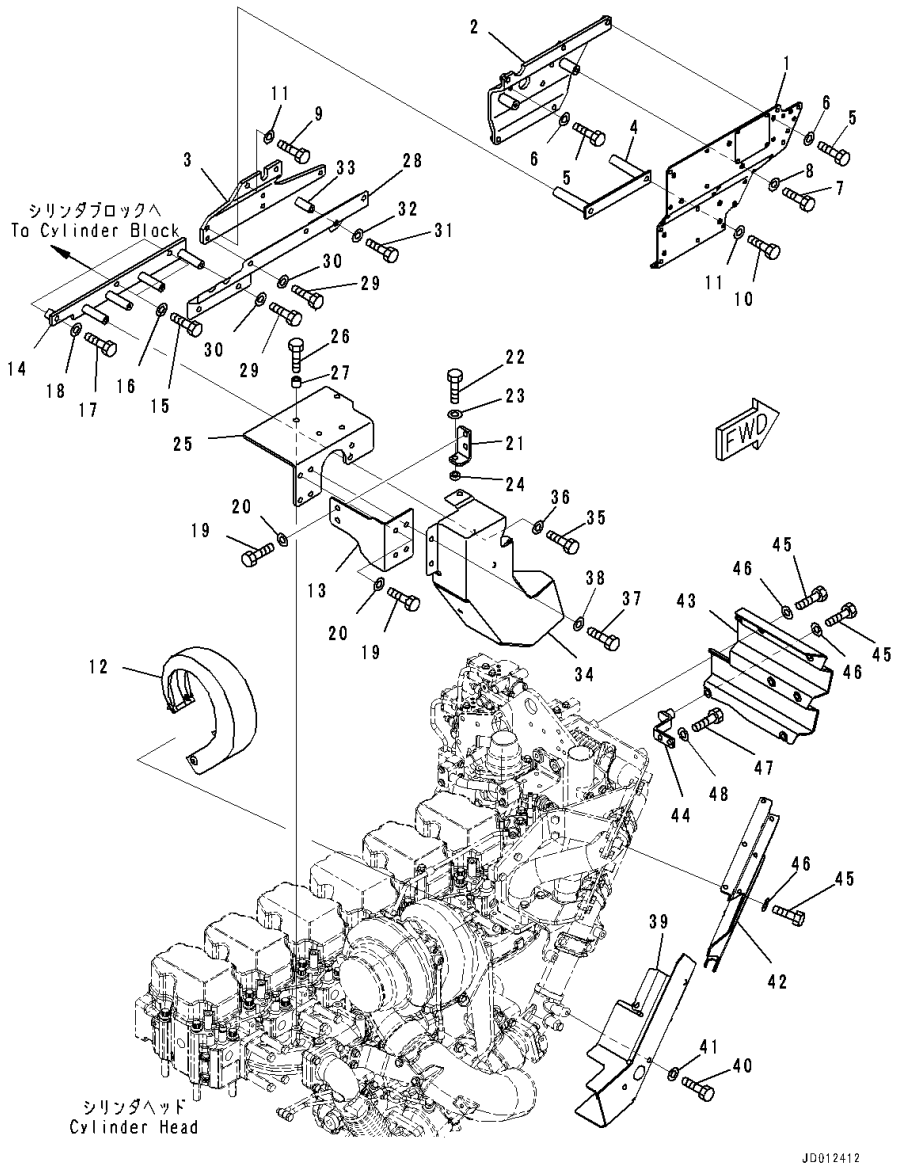

Index	Code	Part Number	Description	Qty	Serial Number
41		01643-31032	Washer	4	535751-
42		6261-11-8770	Cover	1	535751-
43		6261-11-8330	Cover	1	535751-
44		6261-11-8740	Bracket	1	535751-
45		01010-81025	Bolt	12	535751-
46		01643-31032	Washer	12	535751-
47		01010-81020	Bolt	2	535751-
48		01643-31032	Washer	2	535751-

FIG. A1570-002001 Heat Shield, For 90Amp. Alternator

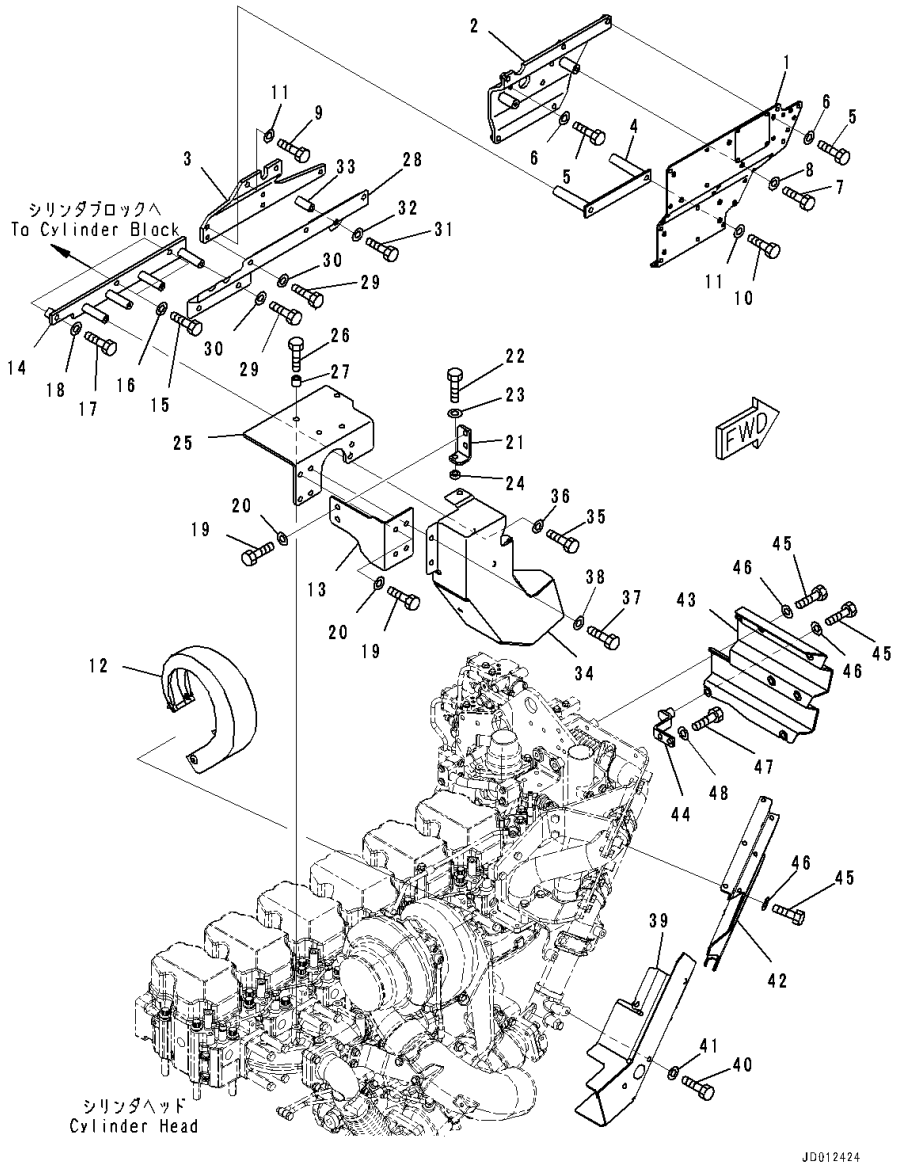

Index	Code	Part Number	Description	Qty	Serial Number
1		6261-11-8190	Cover	1	535751-
2		6261-11-8180	Bracket	1	535751-
3		6261-11-8640	Bracket	1	535751-
4		6261-11-8660	Bracket	1	535751-
5		01010-81030	Bolt	5	535751-
6		01643-31032	Washer	5	535751-
7		01010-81025	Bolt	2	535751-
8		01643-31032	Washer	2	535751-
9		01010-E1025	Bolt	6	535751-
10		01011-81030	Bolt	1	535751-
11		01643-31032	Washer	7	535751-
12		6261-11-8430	Cover	1	535751-
13		6261-11-8880	Cover	1	535751-
14		6261-11-8420	Bracket	1	535751-
15		01010-81025	Bolt	2	535751-
16		01643-31032	Washer	2	535751-
17		01010-81045	Bolt	1	535751-
18		01643-31032	Washer	1	535751-
19		01010-81025	Bolt	4	535751-
20		01643-31032	Washer	4	535751-
21		6261-11-8490	Bracket	1	535751-
22		01010-81040	Bolt	1	535751-
23		01643-31032	Washer	1	535751-
24		6132-21-4630	Spacer	1	535751-
25		6261-11-8540	Bracket	1	535751-
26		01010-E1040	Bolt	3	535751-
27		6631-11-5630	Spacer	3	535751-
28		6261-11-7930	Cover	1	535751-
29		01010-81025	Bolt	5	535751-
30		01643-31032	Washer	5	535751-
31		01010-81095	Bolt	1	535751-
32		01643-31032	Washer	1	535751-
33		207-54-15180	Boss	1	535751-
34		6261-11-8551	Cover	1	535751-
35		01010-81025	Bolt	5	535751-
36		01643-31032	Washer	5	535751-
37		01010-81030	Bolt	2	535751-
38		01643-31032	Washer	2	535751-
39		6261-11-8710	Cover	1	535751-
40		01010-81025	Bolt	4	535751-

FIG. A1570-002001 Heat Shield, For 90Amp. Alternator

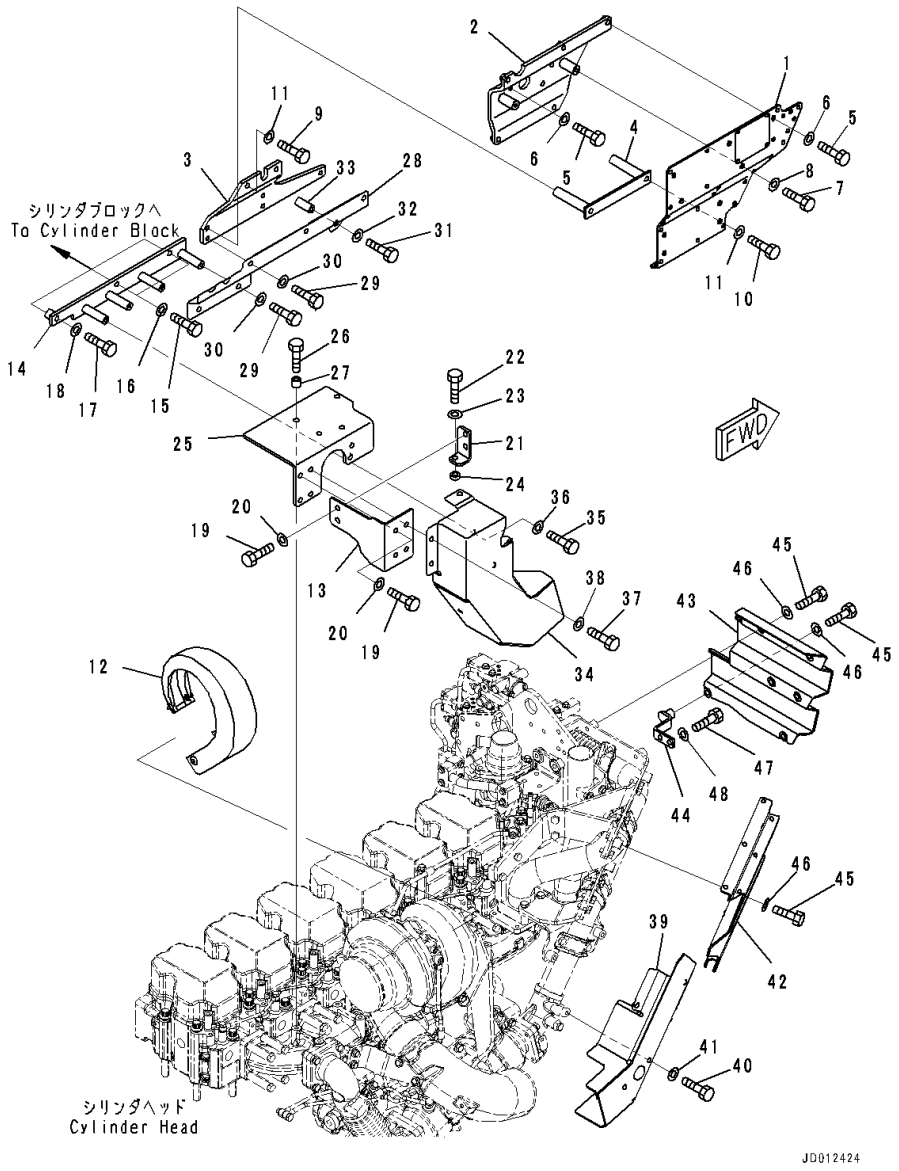

Index	Code	Part Number	Description	Qty	Serial Number
41		01643-31032	Washer	4	535751-
42		6261-11-8770	Cover	1	535751-
43		6261-11-8330	Cover	1	535751-
44		6261-11-8740	Bracket	1	535751-
45		01010-81025	Bolt	12	535751-
46		01643-31032	Washer	12	535751-
47		01010-81020	Bolt	2	535751-
48		01643-31032	Washer	2	535751-

FIG. A1570-003001 Heat Shield, Landfill Specification, (1/3)

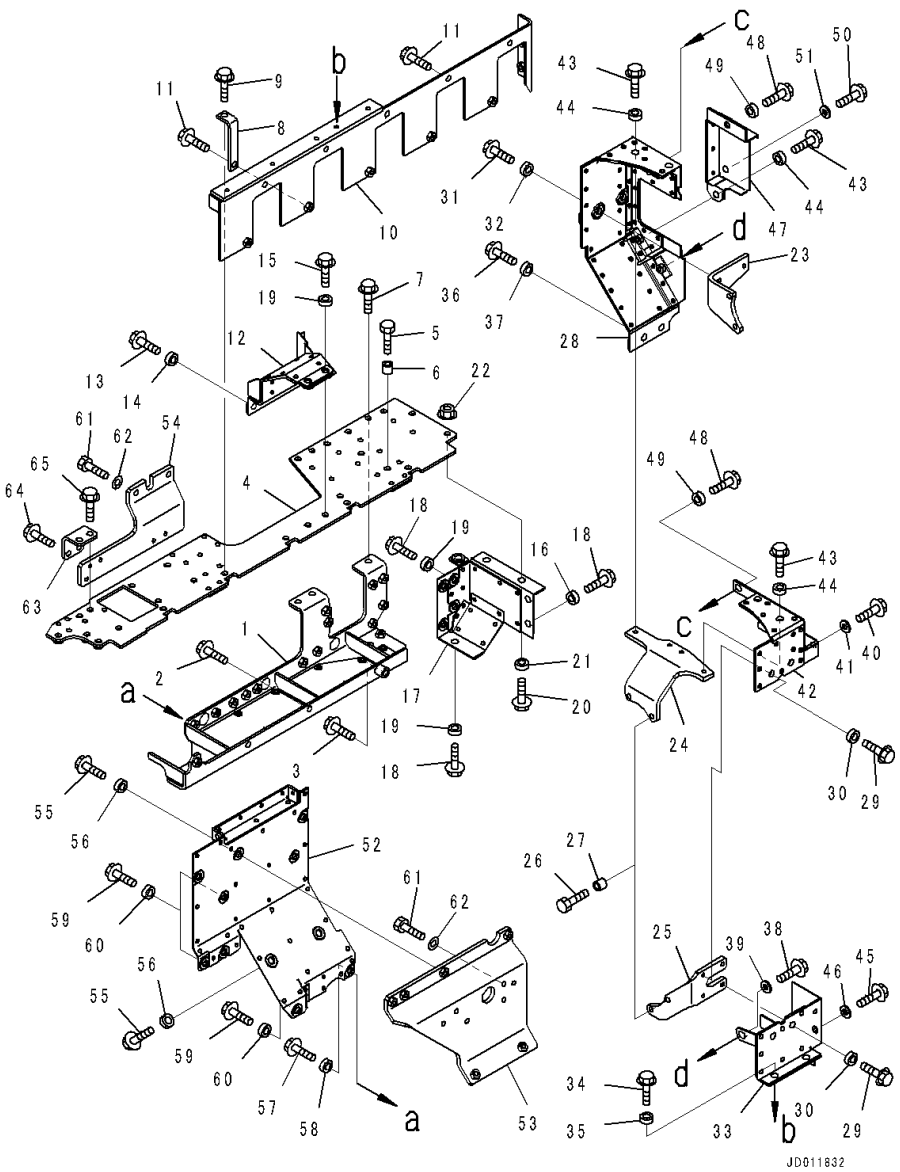

Index	Code	Part Number	Description	Qty	Serial Number
1		6261-11-2550	Bracket	1	535751-
2		01435-01020	Bolt	2	535751-
3		01435-01040	Bolt	1	535751-
4		6261-11-2560	Plate	1	535751-
5		01010-E1040	Bolt	3	535751-
6		6631-11-5630	Spacer	3	535751-
7		01435-01025	Bolt	3	535751-
8		6261-11-2580	Bracket	5	535751-
9		01435-01025	Bolt	5	535751-
10		6261-11-2570	Bracket	1	535751-
11		01435-01020	Bolt	10	535751-
12		6261-11-2761	Cover	1	535751-
13		01435-01030	Bolt	2	535751-
14		6164-11-9190	Spacer	2	535751-
15		01435-01040	Bolt	2	535751-
16		6164-11-9190	Spacer	2	535751-
17		6261-11-2770	Cover	1	535751-
18		01435-01030	Bolt	5	535751-
19		6164-11-9190	Spacer	5	535751-
20		01435-01035	Bolt	3	535751-
21		6164-11-9190	Spacer	3	535751-
22		01584-01008	Nut	3	535751-
23		6261-11-2610	Bracket	1	535751-
24		6261-11-2410	Bracket	1	535751-
25		6261-11-2590	Bracket	1	535751-
26		01020-11040	Bolt	3	535751-
27		6631-11-5630	Spacer	3	535751-
28		6261-11-2630	Cover	1	535751-
29		01435-01030	Bolt	4	535751-
30		6164-11-9190	Spacer	4	535751-
31		01435-01035	Bolt	2	535751-
32		6164-11-9190	Spacer	2	535751-
33		6261-11-2640	Cover	1	535751-
34		01435-01025	Bolt	2	535751-
35		6164-11-9190	Spacer	2	535751-
36		01435-01030	Bolt	2	535751-
37		6164-11-9190	Spacer	2	535751-
38		01435-01025	Bolt	1	535751-
39		203-54-56970	Washer	1	535751-
40		01435-01020	Bolt	1	535751-

FIG. A1570-003001 Heat Shield, Landfill Specification, (1/3)

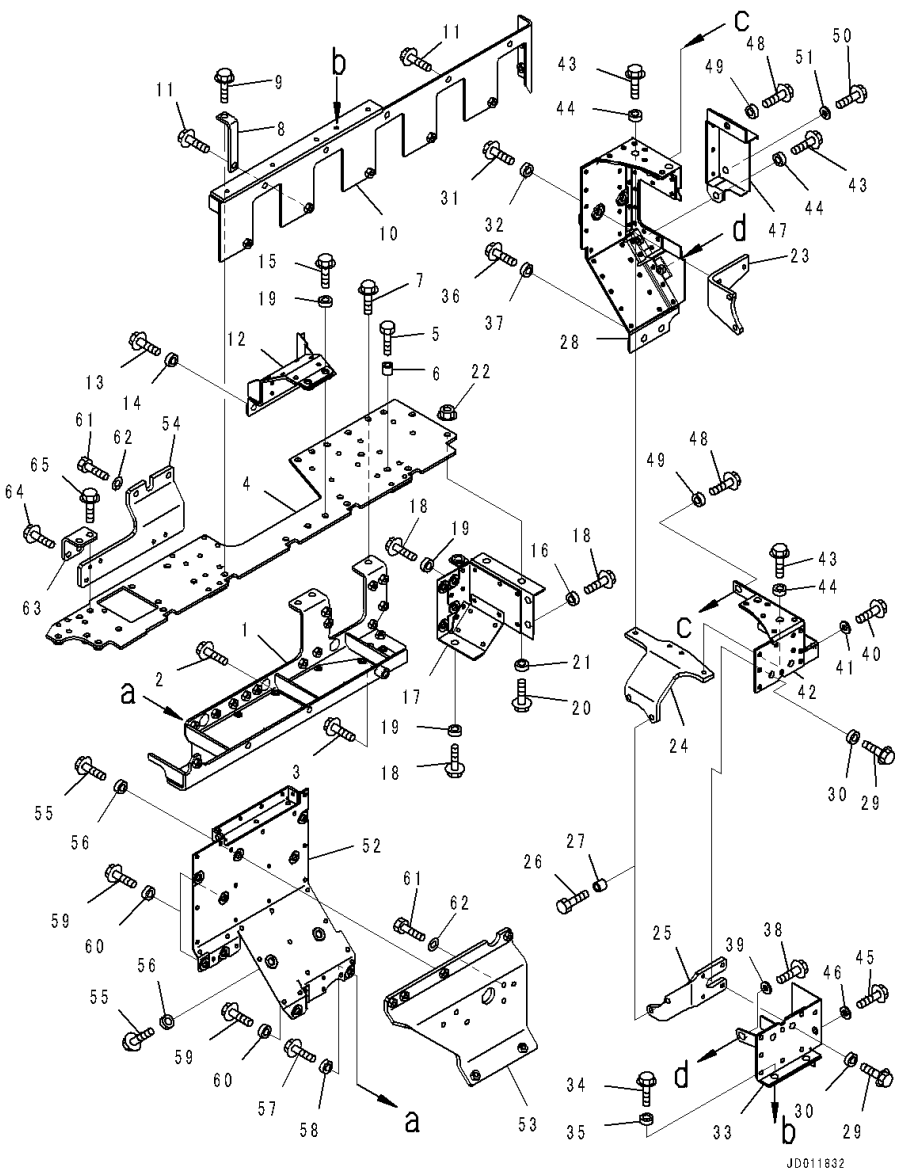

Index	Code	Part Number	Description	Qty	Serial Number
41		203-54-56970	Washer	1	535751-
42		6261-11-2650	Cover	1	535751-
43		01435-01030	Bolt	5	535751-
44		6164-11-9190	Spacer	5	535751-
45		01435-01020	Bolt	1	535751-
46		203-54-56970	Washer	1	535751-
47		6261-11-2660	Cover	1	535751-
48		01435-01030	Bolt	2	535751-
49		6164-11-9190	Spacer	2	535751-
50		01435-01025	Bolt	2	535751-
51		203-54-56970	Washer	2	535751-
52		6261-11-2440	Cover	1	535751-
53		6261-11-2670	Bracket	1	535751-
54		6261-11-2680	Bracket	1	535751-
55		01435-01035	Bolt	5	535751-
56		6164-11-9190	Spacer	5	535751-
57		01435-01030	Bolt	1	535751-
58		6164-11-9190	Spacer	1	535751-
59		01435-01030	Bolt	4	535751-
60		6164-11-9190	Spacer	4	535751-
61		01010-E1025	Bolt	6	535751-
62		01643-31032	Washer	6	535751-
63		6261-11-2690	Bracket	1	535751-
64		01435-01020	Bolt	2	535751-
65		01435-01025	Bolt	2	535751-

FIG. A1570-003002 Heat Shield, Landfill Specification, (2/3)

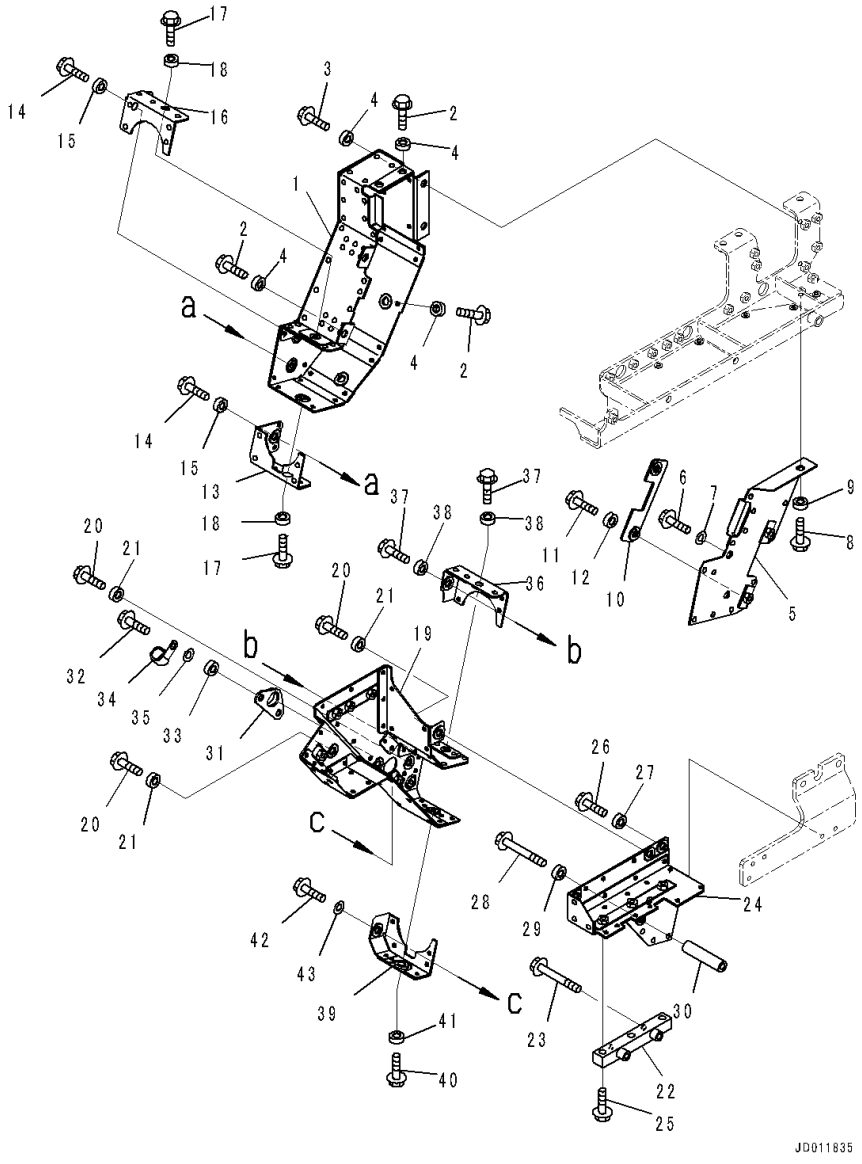

Index	Code	Part Number	Description	Qty	Serial Number
1		6261-11-2820	Cover	1	535751-
2		01435-01030	Bolt	6	535751-
3		01435-01035	Bolt	2	535751-
4		6164-11-9190	Spacer	8	535751-
5		6261-11-2810	Cover	1	535751-
6		01435-01025	Bolt	2	535751-
7		203-54-56970	Washer	2	535751-
8		01435-01030	Bolt	1	535751-
9		6164-11-9190	Spacer	1	535751-
10		6261-11-2790	Cover	1	535751-
11		01435-01030	Bolt	2	535751-
12		6164-11-9190	Spacer	2	535751-
13		6261-11-2830	Cover	1	535751-
14		01435-01025	Bolt	2	535751-
15		6164-11-9190	Spacer	2	535751-
16		6261-11-2840	Cover	1	535751-
17		01435-01025	Bolt	2	535751-
18		6164-11-9190	Spacer	2	535751-
19		6261-11-2860	Cover	1	535751-
20		01435-01030	Bolt	3	535751-
21		6164-11-9190	Spacer	3	535751-
22		6261-11-2850	Bracket	1	535751-
23		01438-01010	Bolt	2	535751-
24		6261-11-2890	Cover	1	535751-
25		01435-01040	Bolt	3	535751-
26		01435-01025	Bolt	2	535751-
27		6164-11-9190	Spacer	2	535751-
28		01436-01040	Bolt	2	535751-
29		6164-11-9190	Spacer	2	535751-
30		195-01-16420	Collar	2	535751-
31		6261-11-2990	Cover	1	535751-
32		01435-01030	Bolt	2	535751-
33		6164-11-9190	Spacer	2	535751-
34		600-051-2180	Clip	1	535751-
35		01643-31032	Washer	1	535751-
36		6261-11-2870	Cover	1	535751-
37		01435-01025	Bolt	2	535751-
38		6164-11-9190	Spacer	2	535751-
39		6261-11-2880	Cover	1	535751-
40		01435-01025	Bolt	1	535751-

FIG. A1570-003002 Heat Shield, Landfill Specification, (2/3)

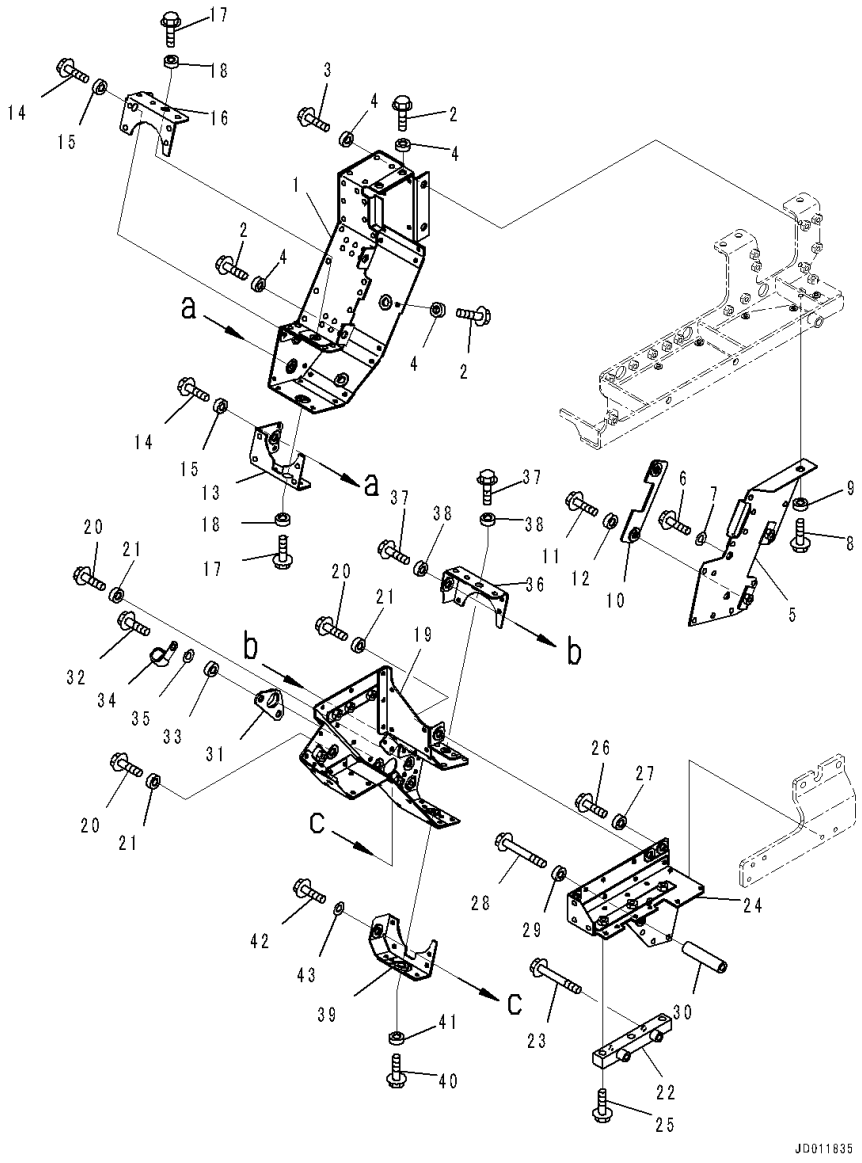

Index	Code	Part Number	Description	Qty	Serial Number
41		6164-11-9190	Spacer	1	535751-
42		01435-01020	Bolt	1	535751-
43		203-54-56970	Washer	1	535751-

FIG. A1570-003003 Heat Shield, Landfill Specification, (3/3)

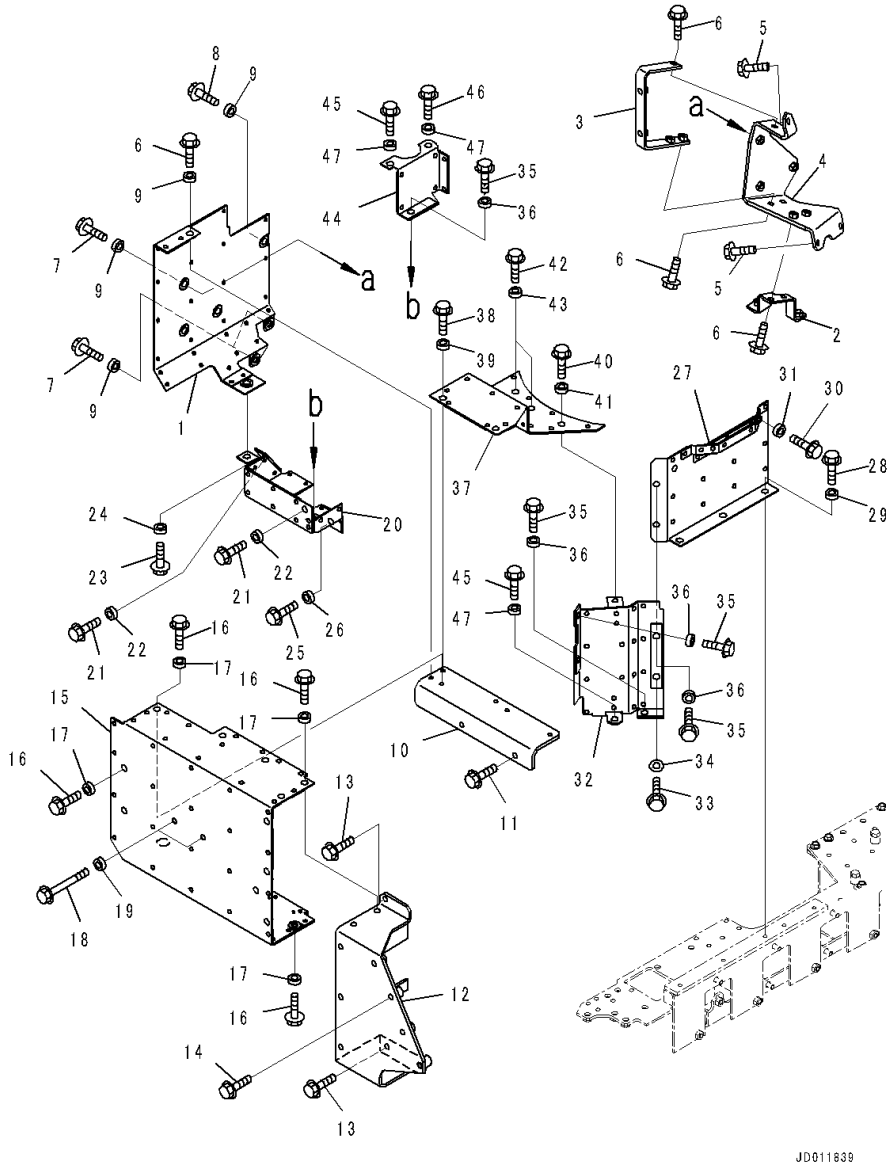

Index	Code	Part Number	Description	Qty	Serial Number
1		6261-11-2940	Plate	1	535751-
2		6261-11-2911	Bracket	1	535751-
3		6261-11-2920	Bracket	1	535751-
4		6261-11-2930	Bracket	1	535751-
5		01435-01020	Bolt	3	535751-
6		01435-01025	Bolt	6	535751-
7		01435-01030	Bolt	5	535751-
8		01435-01035	Bolt	1	535751-
9		6164-11-9190	Spacer	7	535751-
10		6261-11-2970	Plate	1	535751-
11		01435-01025	Bolt	2	535751-
12		6261-11-2980	Bracket	1	535751-
13		01435-01020	Bolt	3	535751-
14		01435-01040	Bolt	4	535751-
15		6261-11-2950	Cover	1	535751-
16		01435-01030	Bolt	14	535751-
17		6164-11-9190	Spacer	14	535751-
18		01435-01080	Bolt	2	535751-
19		6164-11-9190	Spacer	2	535751-
20		6261-11-2960	Cover	1	535751-
21		01435-01030	Bolt	2	535751-
22		6164-11-9190	Spacer	2	535751-
23		01435-01035	Bolt	1	535751-
24		6164-11-9190	Spacer	1	535751-
25		01435-01240	Bolt	1	535751-
26		6164-11-9190	Spacer	1	535751-
27		6261-11-2450	Cover	1	535751-
28		01435-01025	Bolt	3	535751-
29		6164-11-9190	Spacer	3	535751-
30		01435-01030	Bolt	2	535751-
31		6164-11-9190	Spacer	2	535751-
32		6261-11-2731	Cover	1	535751-
33		01435-01025	Bolt	1	535751-
34		203-54-56970	Washer	1	535751-
35		01435-01030	Bolt	5	535751-
36		6164-11-9190	Spacer	5	535751-
37		6261-11-2742	Cover	1	535751-
38		01435-01025	Bolt	2	535751-
39		6164-11-9190	Spacer	2	535751-
40		01435-01030	Bolt	1	535751-

FIG. A1570-003003 Heat Shield, Landfill Specification, (3/3)

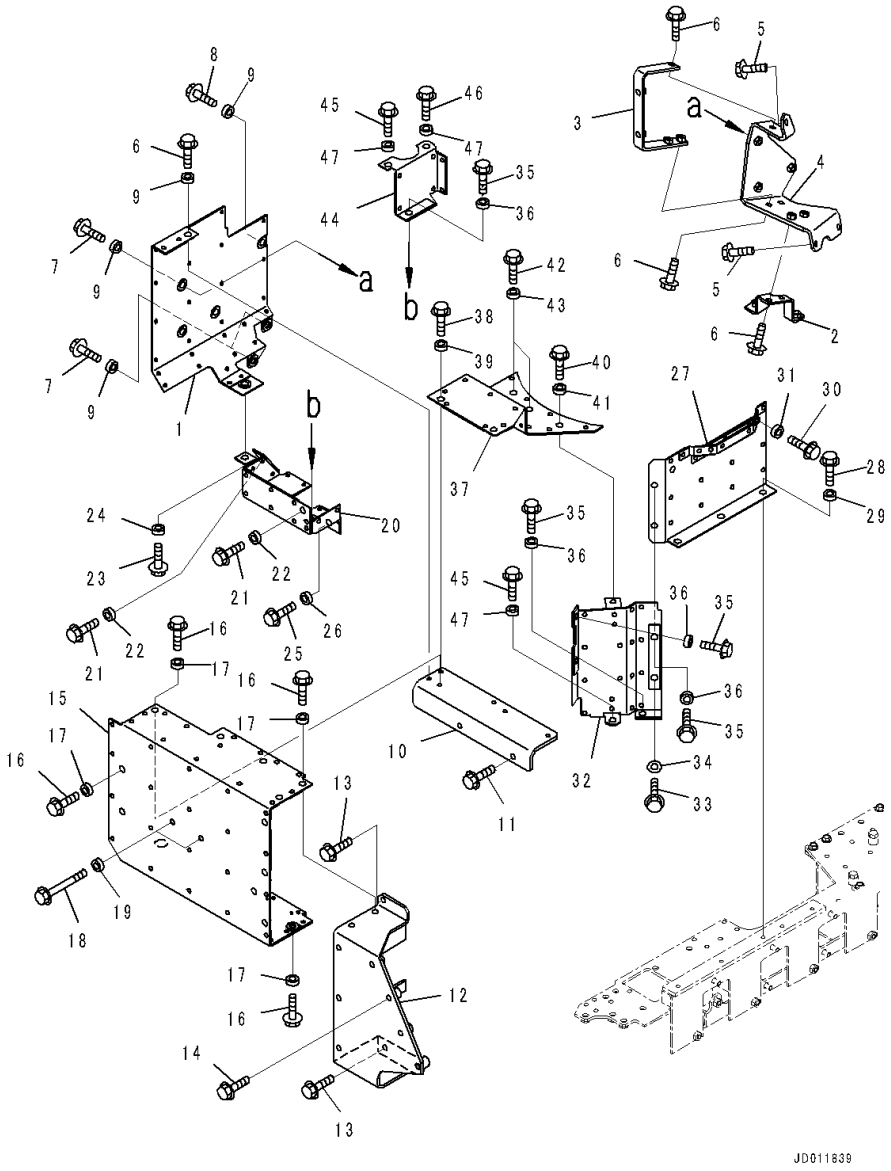

Index	Code	Part Number	Description	Qty	Serial Number
41		6164-11-9190	Spacer	1	535751-
42		01435-01050	Bolt	2	535751-
43		6164-11-9190	Spacer	2	535751-
44		6261-11-2750	Cover	1	535751-
45		01435-01030	Bolt	2	535751-
46		01435-01035	Bolt	1	535751-
47		6164-11-9190	Spacer	3	535751-

FIG. A1550-002001 Exhaust Gas Re-circulation (EGR) Valve, Gasket

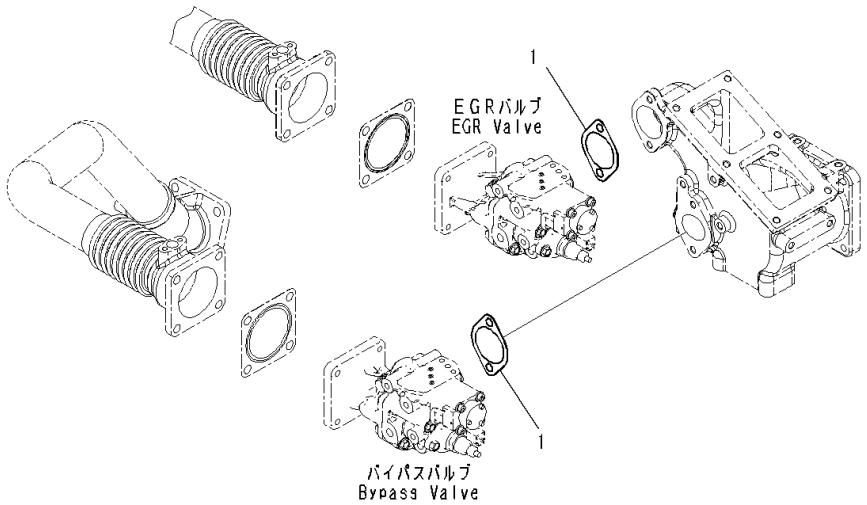

Index	Code	Part Number	Description	Qty	Serial Number
1		6166-61-6341	Gasket	2	535751-

FIG. A1550-002002 Exhaust Gas Re-circulation (EGR) Valve, Inner Parts, EGR Valve

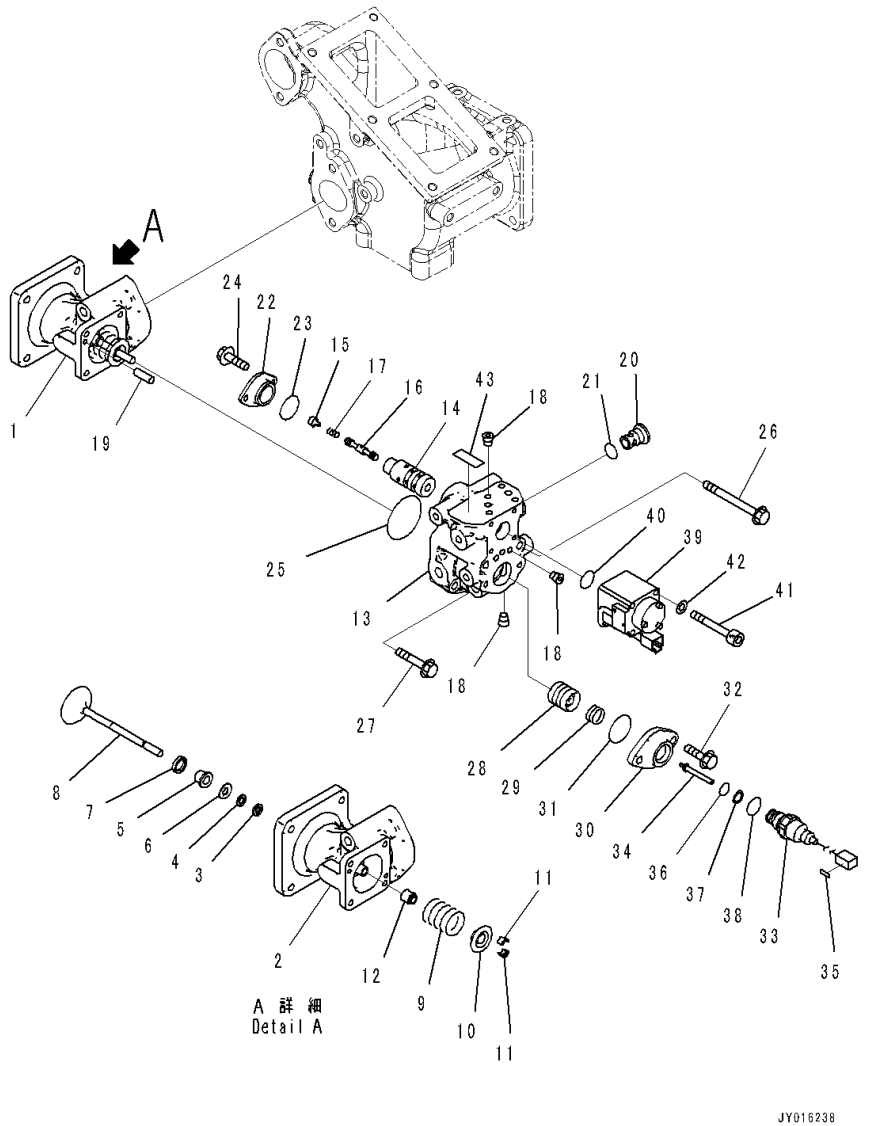

Index	Code	Part Number	Description	Qty	Serial Number
		6261-41-4900	Valve Assembly	1	535751-
1		6261-41-4910	• Valve Assembly	1	535751-
2		6261-41-4920	• • Case	1	535751-
3		6261-41-4810	• • Seal	1	535751-
4		6261-41-4820	• • Insulator	1	535751-
5		6261-41-4830	• • Cover	1	535751-
6		6261-41-4840	• • Plate	1	535751-
7		6261-41-4851	• • Ring	1	535751-
8		6261-41-9650	• • Valve	1	535751-
9		6261-41-9610	• • Spring	1	535751-
10		6204-41-4510	• • Seat	1	535751-
11		6204-41-4520	• • Cotter	2	535751-
12		6204-41-4541	• • Seal	1	535751-
		6261-41-9530	• Case Assembly	1	535751-
13		6261-41-9540	• • Case	1	535751-
14		6553-51-2110	• • Bushing	1	535751-
15		6553-51-2820	• • Seat, T=50mm	1	535751-
16		6553-51-3110	• • Spool	1	535751-
17		6553-51-3511	• • Spring	1	535751-
18		708-21-12541	• • Plug	7	535751-
19		04020-00514	• • Pin, Dowel	2	535751-
20		6261-41-9640	• • Filter	1	535751-
21		07002-61823	• • O-ring	1	535751-
22		6261-41-4960	• Cover	1	535751-
23		07000-E2025	• O-ring	1	535751-
24		01435-00612	• Bolt	2	535751-
25		07000-E2055	• O-ring	1	535751-
26		01435-00895	• Bolt	2	535751-
27		01435-00845	• Bolt	2	535751-
28		6261-41-9580	• Piston	1	535751-
29		6261-41-9620	• Spring	1	535751-
30		6261-41-9550	• Cover	1	535751-
31		07000-A2035	• O-ring	1	535751-
32		01435-00820	• Bolt	2	535751-
		729-12-11001	• Sensor Assembly	1	535751-
33		729-12-11100	• • Sensor Assembly	1	535751-
34		729-12-11700	• • Core Assembly	1	537198-
		729-12-11201	• • Core Assembly	1	535751-539197
35		729-11-11180	• • Plate	1	535751-
36		07000-B2012	• • O-ring	1	535751-

FIG. A1550-002002 Exhaust Gas Re-circulation (EGR) Valve, Inner Parts, EGR Valve

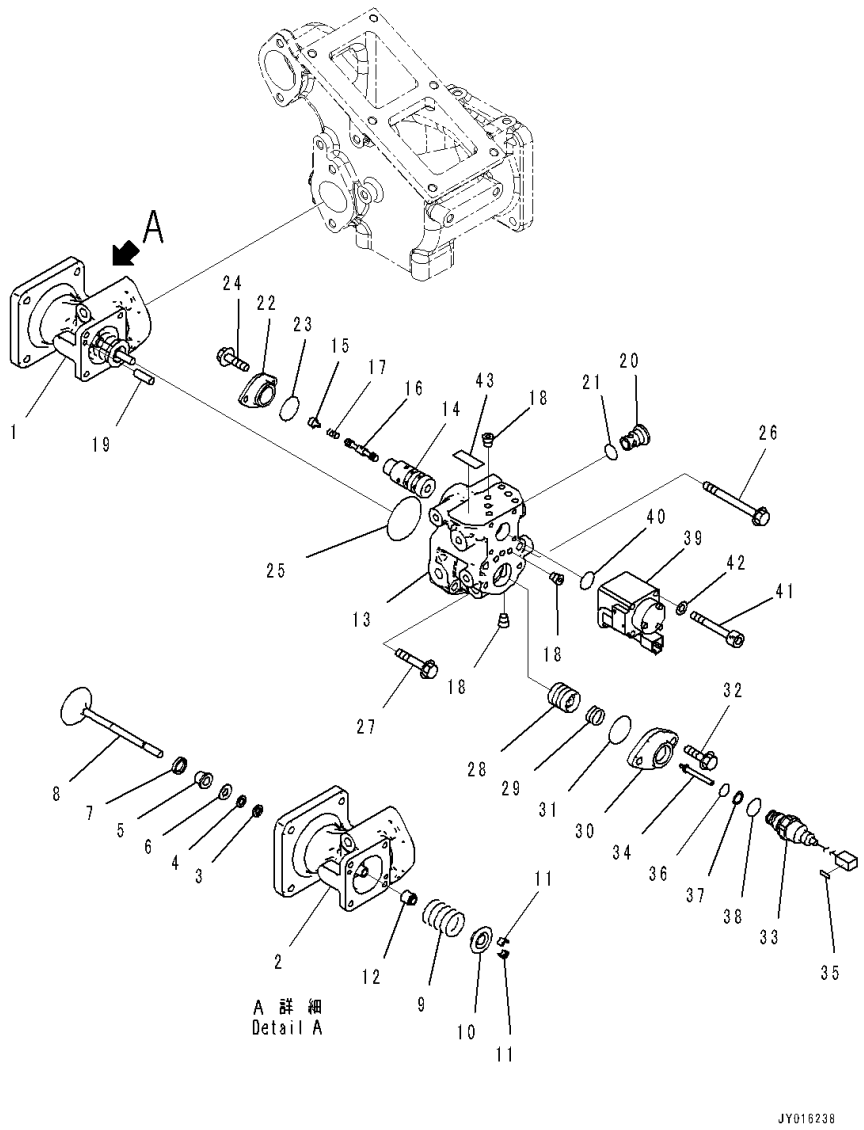

Index	Code	Part Number	Description	Qty	Serial Number
37		07001-02012	• • Ring, Back-up	1	535751-
38		07002-62034	• • O-ring	1	535751-
39		6261-41-9590	• Solenoid Assembly	1	535751-
40		07000-A2016	• O-ring	1	535751-
41		6553-81-7110	• Bolt	4	535751-
42		01643-30623	• Washer	4	535751-
43		6261-41-9690	• Plate	1	535751-

FIG. A1550-002003 Exhaust Gas Re-circulation (EGR) Valve, Inner Parts, Bypass Valve

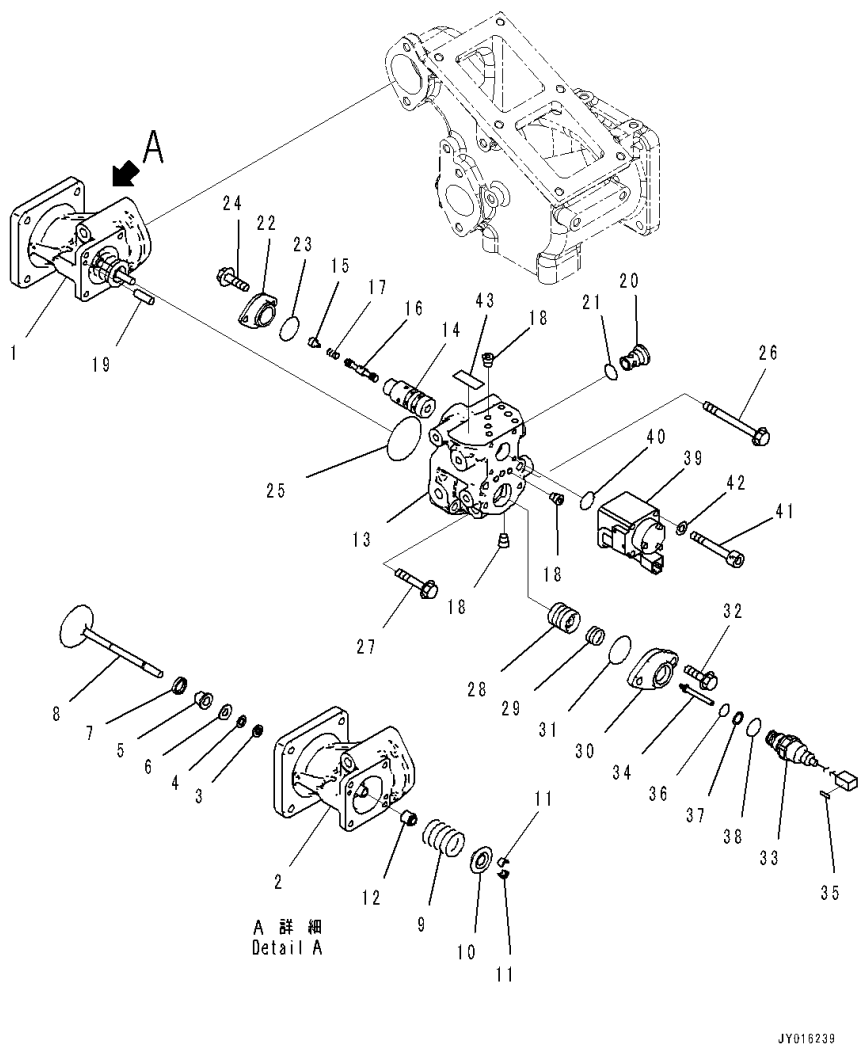

Index	Code	Part Number	Description	Qty	Serial Number
		6261-41-9500	Valve Assembly	1	535751-
1		6261-41-9510	• Valve Assembly	1	535751-
2		6261-41-9520	• • Case	1	535751-
3		6261-41-4810	• • Seal	1	535751-
4		6261-41-4820	• • Insulator	1	535751-
5		6261-41-4830	• • Cover	1	535751-
6		6261-41-4840	• • Plate	1	535751-
7		6261-41-4851	• • Ring	1	535751-
8		6261-41-9660	• • Valve	1	535751-
9		6261-41-9610	• • Spring	1	535751-
10		6204-41-4510	• • Seat	1	535751-
11		6204-41-4520	• • Cotter	2	535751-
12		6204-41-4541	• • Seal	1	535751-
		6261-41-9530	• Case Assembly	1	535751-
13		6261-41-9540	• • Case	1	535751-
14		6553-51-2110	• • Bushing	1	535751-
15		6553-51-2820	• • Seat, T=50mm	1	535751-
16		6553-51-3110	• • Spool	1	535751-
17		6553-51-3511	• • Spring	1	535751-
18		708-21-12541	• • Plug	7	535751-
19		04020-00514	• • Pin, Dowel	2	535751-
20		6261-41-9640	• • Filter	1	535751-
21		07002-61823	• • O-ring	1	535751-
22		6261-41-4960	• Cover	1	535751-
23		07000-E2025	• O-ring	1	535751-
24		01435-00612	• Bolt	2	535751-
25		07000-E2055	• O-ring	1	535751-
26		01435-00895	• Bolt	2	535751-
27		01435-00845	• Bolt	2	535751-
28		6261-41-9580	• Piston	1	535751-
29		6261-41-9620	• Spring	1	535751-
30		6261-41-9550	• Cover	1	535751-
31		07000-A2035	• O-ring	1	535751-
32		01435-00820	• Bolt	2	535751-
		729-12-11001	• Sensor Assembly	1	535751-
33		729-12-11100	• • Sensor Assembly	1	535751-
34		729-12-11700	• • Core Assembly	1	537198-
35		729-11-11180	• • Plate	1	535751-
36		07000-B2012	• • O-ring	1	535751-
37		07001-02012	• • Ring, Back-up	1	535751-

FIG. A1550-002003 Exhaust Gas Re-circulation (EGR) Valve, Inner Parts, Bypass Valve

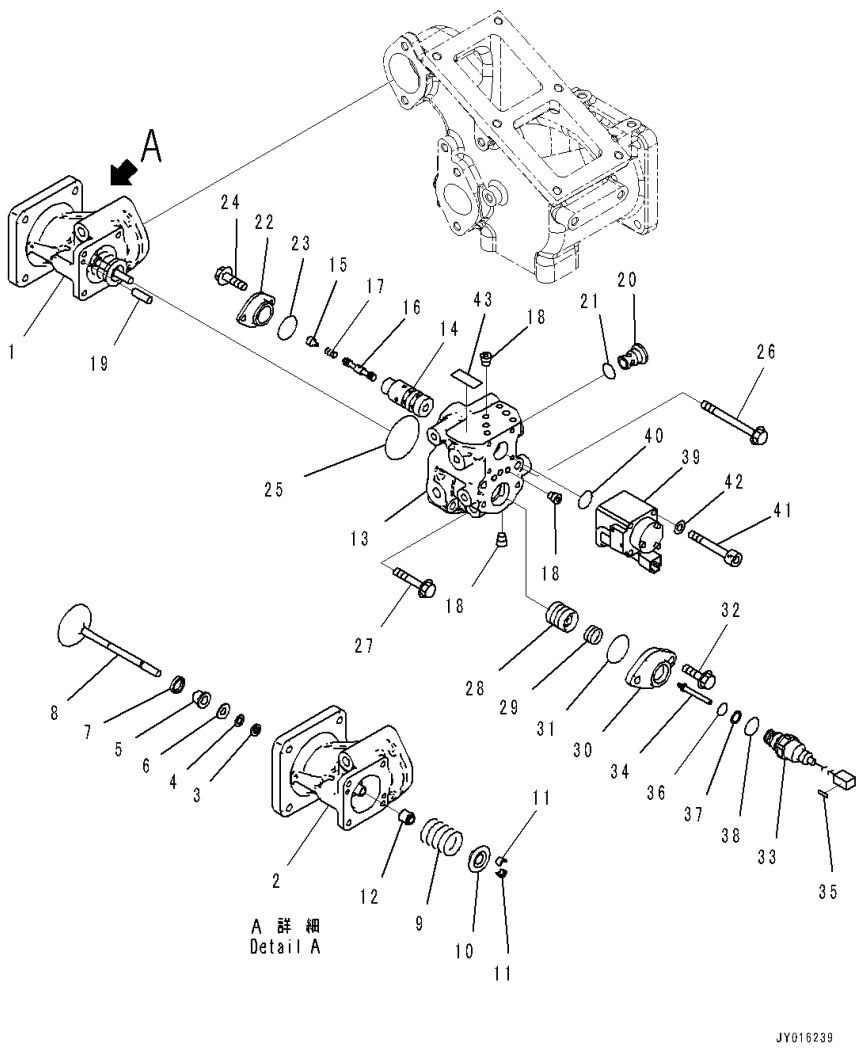

Index	Code	Part Number	Description	Qty	Serial Number
38		07002-62034	• • O-ring	1	535751-
39		6261-41-9590	• Solenoid Assembly	1	535751-
40		07000-A2016	• O-ring	1	535751-
41		6553-81-7110	• Bolt	4	535751-
42		01643-30623	• Washer	4	535751-
43		6261-41-9690	• Plate	1	535751-

FIG. A1550-002004 Exhaust Gas Re-circulation (EGR) Valve, EGR Valve and Cooler Mounting

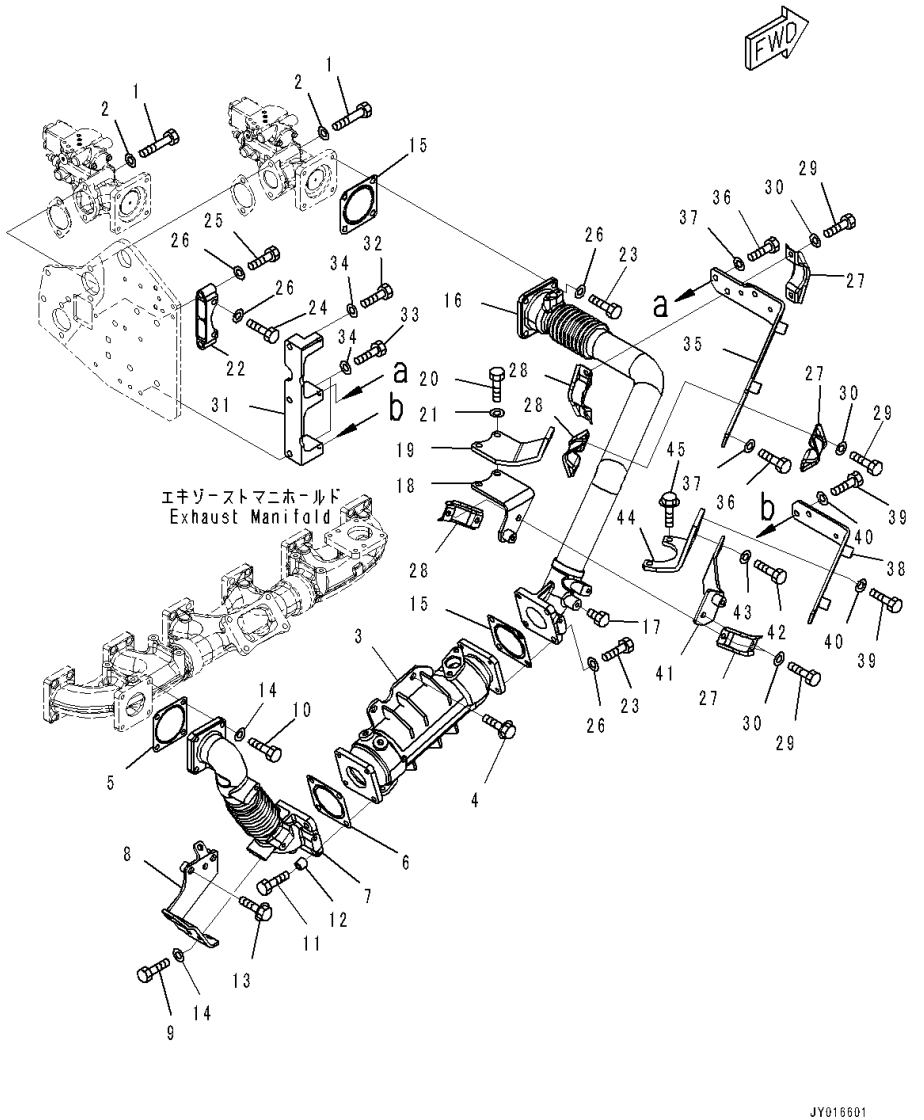

Index	Code	Part Number	Description	Qty	Serial Number
1		01011-E1005	Bolt	4	535751-
2		01643-31032	Washer	4	535751-
3		6261-61-7110	Cooler Assembly	1	535751-
4		01435-01220	Bolt	4	535751-
5		6138-13-4240	Gasket	1	535751-
6		6207-11-5390	Gasket	1	535751-
7		6261-11-9120	Tube	1	535751-
8		6261-11-9150	Bracket	1	535751-
9		01010-E1025	Bolt	2	535751-
10		01020-11040	Bolt	4	535751-
11		01010-E1050	Bolt	4	535751-
12		6631-11-5630	Spacer	4	535751-
13		01435-01035	Bolt	2	535751-
14		01643-31032	Washer	6	535751-
15		6207-11-5390	Gasket	2	535751-
16		6261-11-9422	Tube	1	535751-
17		6215-11-5920	Plug	1	535751-
18		6261-11-9840	Bracket	1	535751-
19		6261-11-9750	Bracket	1	535751-
20		01020-11060	Bolt, Stainless	2	535751-
21		01643-31032	Washer	2	535751-
22		6251-11-9150	Plate	1	535751-
23		01010-E1030	Bolt	6	535751-
24		01010-E1060	Bolt	2	535751-
25		01010-E1050	Bolt	2	535751-
26		01643-31032	Washer	10	535751-
27		6261-11-9870	Clamp	3	535751-
28		6261-11-9880	Clamp	3	535751-
29		01010-E1025	Bolt	6	535751-
30		01643-31032	Washer	6	535751-
31		6261-11-9740	Bracket	1	535751-
32		01010-E1050	Bolt	1	535751-
33		01010-E1075	Bolt	2	535751-
34		01643-31032	Washer	3	535751-
35		6261-11-9970	Bracket	1	535751-
36		01010-E1025	Bolt	3	535751-
37		01643-31032	Washer	3	535751-
38		6261-11-9730	Bracket	1	535751-
39		01010-E1025	Bolt	3	535751-
40		01643-31032	Washer	3	535751-

FIG. A1550-002004 Exhaust Gas Re-circulation (EGR) Valve, EGR Valve and Cooler Mounting

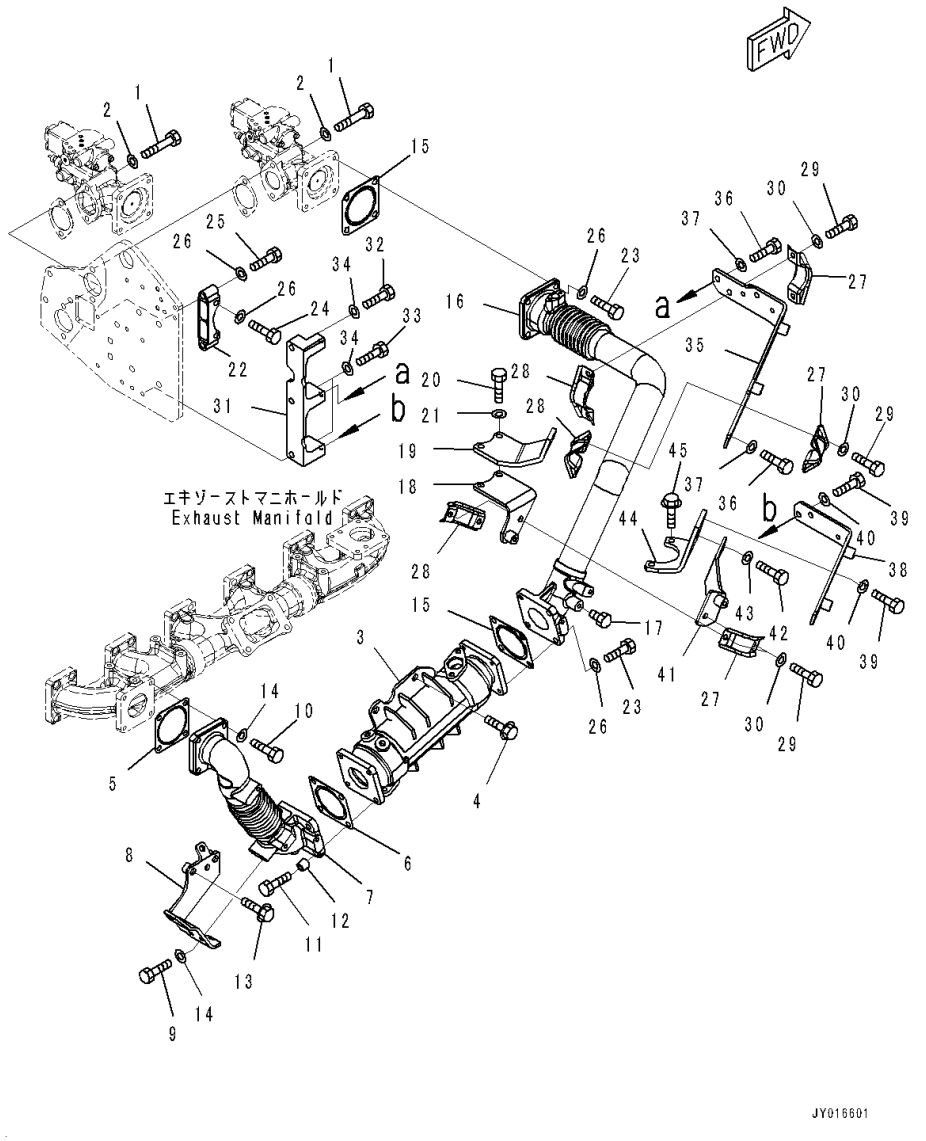

Index	Code	Part Number	Description	Qty	Serial Number
41		6261-11-9760	Bracket	1	535751-
42		01010-E1025	Bolt	2	535751-
43		01643-31032	Washer	2	535751-
44		6261-11-9960	Bracket	1	535751-
45		01435-01035	Bolt	2	535751-

FIG. A1550-002005 Exhaust Gas Re-circulation (EGR) Valve, EGR Cooler Piping and Air Vent

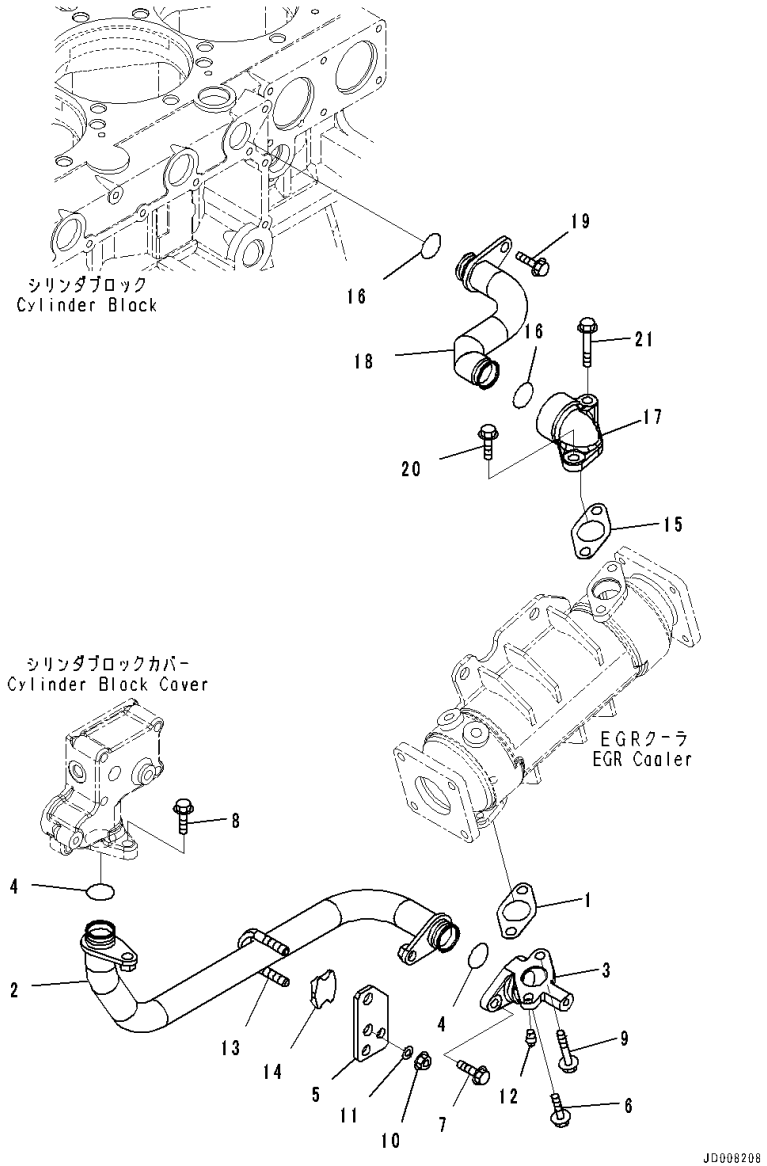

Index	Code	Part Number	Description	Qty	Serial Number
1		6210-61-6551	Gasket	1	535751-
2		6261-61-7210	Tube,Inlet	1	535751-
3		6261-61-7250	Connector	1	535751-
4		6261-61-7260	O-ring	2	535751-
5		6261-61-7270	Plate	1	535751-
6		01435-01025	Bolt	1	535751-
7		01435-01030	Bolt	1	535751-
8		01435-01035	Bolt	1	535751-
9		01435-01055	Bolt	2	535751-
10		01597-01009	Nut	2	535751-
11		01643-31032	Washer	2	535751-
12		07042-A0108	Plug	1	535751-
13		07283-33450	Clip	1	535751-
14		07283-53444	Seat	1	535751-
15		6210-61-6551	Gasket	1	535751-
16		6261-61-7260	O-ring	2	535751-
17		6261-61-7431	Connector	1	535751-
18		6261-61-7410	Tube	1	535751-
19		01435-01020	Bolt	1	535751-
20		01435-01025	Bolt	1	535751-
21		01435-01055	Bolt	1	535751-

FIG. A1550-002006 Exhaust Gas Re-circulation (EGR) Valve, EGR By-Pass Valve Piping

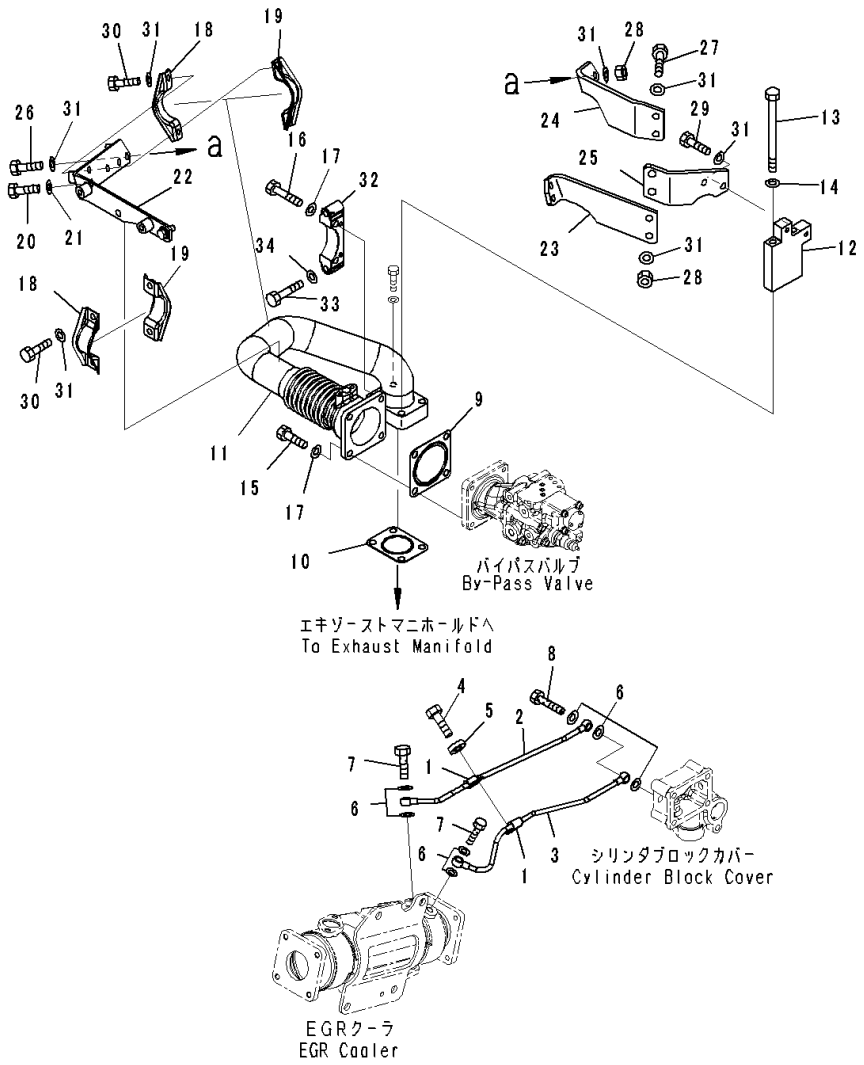

Index	Code	Part Number	Description	Qty	Serial Number
1		6210-51-8320	Clip	2	535751-
2		6261-61-7310	Tube	1	535751-
3		6261-61-7320	Tube	1	535751-
4		01435-01025	Bolt	1	535751-
5		6162-73-5940	Spacer	1	535751-
6		07005-01212	Seal, Washer	7	535751-
7		07206-30812	Bolt, Joint	2	535751-
8		6354-71-5560	Bolt, Joint	1	535751-
9		6207-11-5390	Gasket	1	535751-
10		6261-11-9520	Gasket	1	535751-
11		6261-11-9412	Tube, Bypass Valve	1	535751-
12		6261-11-4880	Bracket	1	535751-
13		6261-11-4780	Bolt	2	535751-
14		01643-31032	Washer	2	535751-
15		01010-E1030	Bolt	2	535751-
16		01010-E1060	Bolt	2	535751-
17		01643-31032	Washer	4	535751-
18		6261-11-9870	Clamp	2	535751-
19		6261-11-9880	Clamp	2	535751-
20		01010-E1025	Bolt	4	535751-
21		01643-31032	Washer	4	535751-
22		6261-11-4870	Bracket	1	535751-
23		6261-11-4891	Bracket	1	535751-
24		6261-11-4791	Bracket	1	535751-
25		6261-11-5990	Bracket	1	535751-
26		01010-E1035	Bolt	4	535751-
27		01010-E1045	Bolt	2	535751-
28		01580-01008	Nut	6	535751-
29		01010-E1030	Bolt	2	535751-
30		01010-E1025	Bolt	1	535751-
31		01643-31032	Washer	15	535751-
32		6251-11-9150	Plate	1	535751-
33		01010-E1050	Bolt	2	535751-
34		01643-31032	Washer	2	535751-

FIG. A1550-002007 Exhaust Gas Re-circulation (EGR) Valve, Inner Parts, EGR Oil Pump

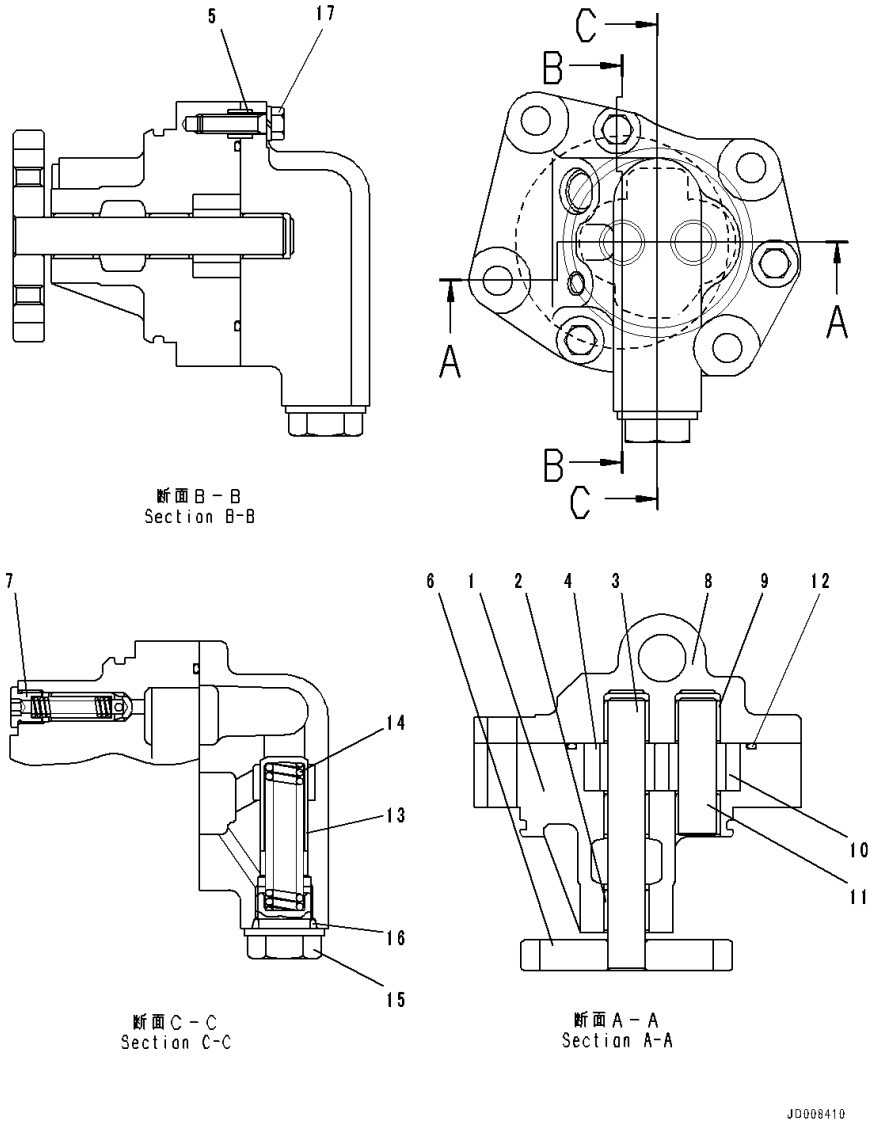

Index	Code	Part Number	Description	Qty	Serial Number
		6261-51-9101	Pump Assembly	1	535751-
		PML160-11201	• Case Assembly	1	535751-
	C1		• • Case Assembly	1	535751-
1	C1		• • • Case	1	535751-
2	C1		• • • Bushing	3	535751-
	C1		• • Gear Assembly	1	535751-
3	C1		• • • Shaft	1	535751-
4	C1		• • • Gear, Driven	1	535751-
5	C1		• • Pin, Dowel	2	535751-
6	C1		• • Gear	1	535751-
7	C1		• • Plug	1	535751-
		PML152-07002	• Cover Assembly	1	535751-
8	C1		• • Cover	1	535751-
9	C1		• • Bushing	2	535751-
		PML156-07200	• Gear Assembly	1	535751-
10	C1		• • Gear, Driven	1	535751-
11	C1		• • Shaft	1	535751-
12		PML172-00900	• O-ring	1	535751-
13		PML136-00201	• Valve	1	535751-
14		PML137-05901	• Spring	1	535751-
15		PML139-01700	• Plug	1	535751-
16		07002-22434	• O-ring	1	535751-
17		PML199-00210	• Bolt	3	535751-

FIG. A1550-002008 Exhaust Gas Re-circulation (EGR) Valve, EGR Valve Lubricating Oil Piping

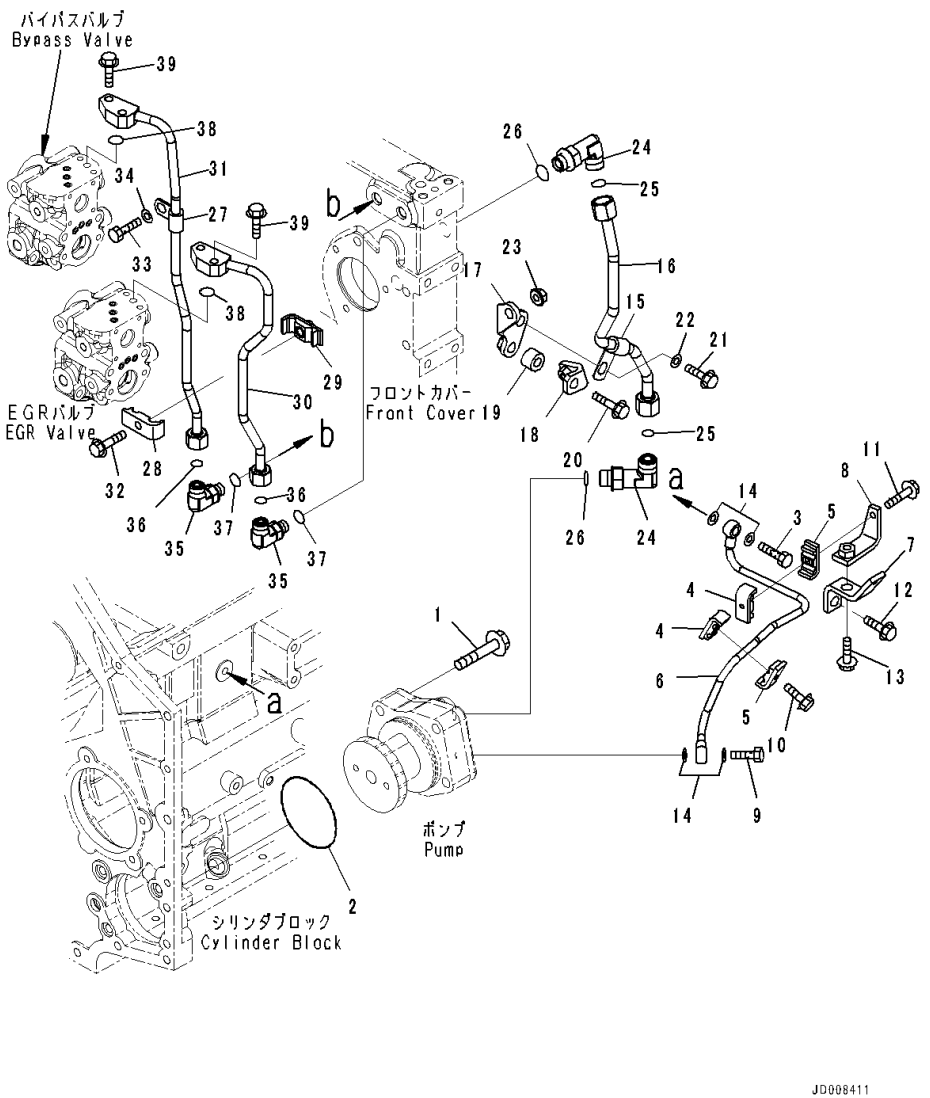

Index	Code	Part Number	Description	Qty	Serial Number
1		01435-01255	Bolt	4	535751-
2		07000-72085	O-ring	1	535751-
3		6215-11-6560	Bolt, Joint	1	535751-
4		6217-71-6640	Clamp	2	535751-
5		6217-71-6650	Clamp	2	535751-
6		6261-51-9210	Tube, Oil	1	535751-
7		6261-71-5420	Bracket	1	535751-
8		6261-71-5430	Bracket	1	535751-
9		6934-72-7190	Bolt, Joint	1	535751-
10		01435-00625	Bolt	1	535751-
11		01435-00630	Bolt	1	535751-
12		01435-01020	Bolt	1	535751-
13		01435-01025	Bolt	1	535751-
14		07005-01012	Seal, Washer	4	535751-
15		6162-63-8820	Clip	1	535751-
16		6261-51-9310	Tube, Supply	1	535751-
17		6261-51-9450	Bracket	1	535751-
18		6261-51-9460	Bracket	1	535751-
19		195-01-14540	Collar	1	535751-
20		01435-01040	Bolt	1	535751-
21		01435-01025	Bolt	1	535751-
22		01643-31032	Washer	1	535751-
23		01584-01008	Nut	1	535751-
24		02782-1042A	Elbow	2	535751-
25		02896-21012	O-ring	2	535751-
26		07002-21823	O-ring	2	535751-
27		6151-51-8540	Clip	1	535751-
28		6166-75-6821	Clamp, half	1	535751-
29		6261-51-9481	Clamp, half	1	535751-
30		6261-51-9320	Tube, Supply	1	535751-
31		6261-51-9410	Tube, Supply	1	535751-
32		01435-00835	Bolt	1	535751-
33		01010-81030	Bolt	1	535751-
34		01643-31032	Washer	1	535751-
35		02782-10311	Elbow	2	535751-
36		02896-21009	O-ring	2	535751-
37		07002-21423	O-ring	2	535751-
38		07000-E2012	O-ring	2	535751-
39		01435-00825	Bolt	4	535751-

FIG. A1550-002009 Exhaust Gas Re-circulation (EGR) Valve, Return Piping

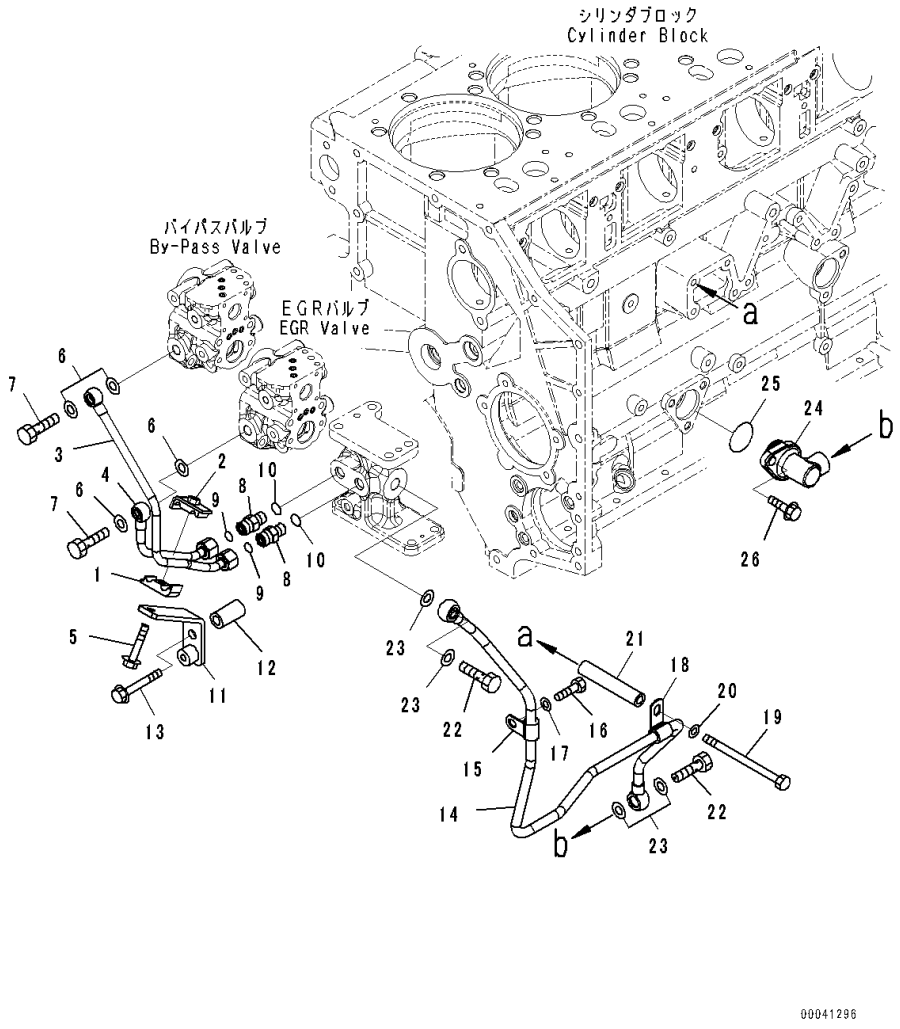

Index	Code	Part Number	Description	Qty	Serial Number
1		6166-75-6821	Clamp, half	1	535751-
2		6261-51-9481	Clamp, half	1	535751-
3		6261-51-9610	Tube, Bypass Valve	1	535751-
4		6261-51-9510	Tube, Main Valve	1	535751-
5		01435-00840	Bolt	1	535751-
6		07005-01412	Seal, Washer	4	535751-
7		07206-31014	Bolt, Joint	2	535751-
8		02781-0031D	Union	2	535751-
9		02896-21009	O-ring	2	535751-
10		07002-21423	O-ring	2	535751-
11		6261-51-9630	Bracket	1	535751-
12		6206-11-4490	Spacer	1	535751-
13		01435-01060	Bolt	1	535751-
14		6261-51-9530	Tube, Return	1	535751-
15		600-051-6120	Clip	1	535751-
16		01010-81020	Bolt	1	535751-
17		01643-31032	Washer	1	535751-
18		6162-63-8820	Clip	1	535751-
19		01011-81020	Bolt	1	535751-
20		01643-31032	Washer	1	535751-
21		6217-11-9841	Spacer	1	535751-
22		07206-31216	Bolt, Joint	2	535751-
23		07005-01612	Seal, Washer	4	535751-
24		6261-51-9540	Connector	1	535751-
25		07000-73034	O-ring	1	535751-
26		01435-01025	Bolt	1	535751-

FIG. A1550-002010 Exhaust Gas Re-circulation (EGR) Valve, Front Hanger

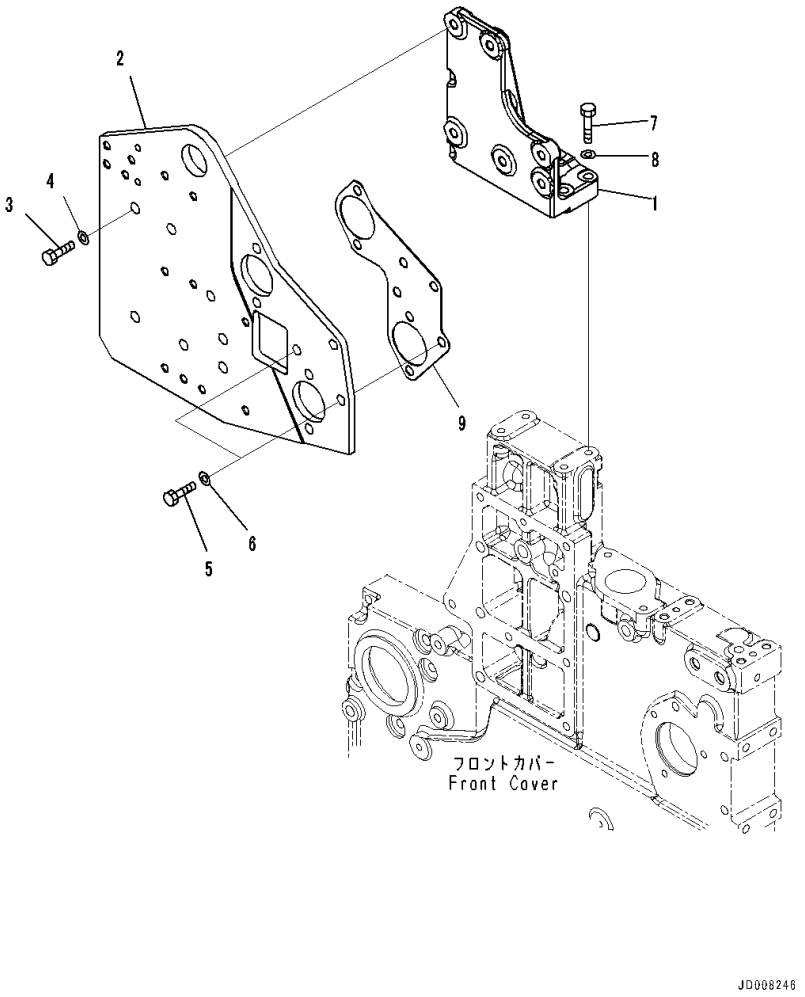

Index	Code	Part Number	Description	Qty	Serial Number
1		6261-61-3842	Bracket	1	535751-
2		6261-21-3920	Plate	1	535751-
3		01010-81235	Bolt	6	535751-
4		01643-31232	Washer	6	535751-
5		01010-81030	Bolt	3	535751-
6		01643-31032	Washer	3	535751-
7		01010-81045	Bolt	4	535751-
8		01643-31032	Washer	4	535751-
9		6261-21-3970	Gasket	1	535751-

FIG. A1550-003001 Exhaust Gas Re-circulation (EGR) Valve, Landfill Specification, Gasket

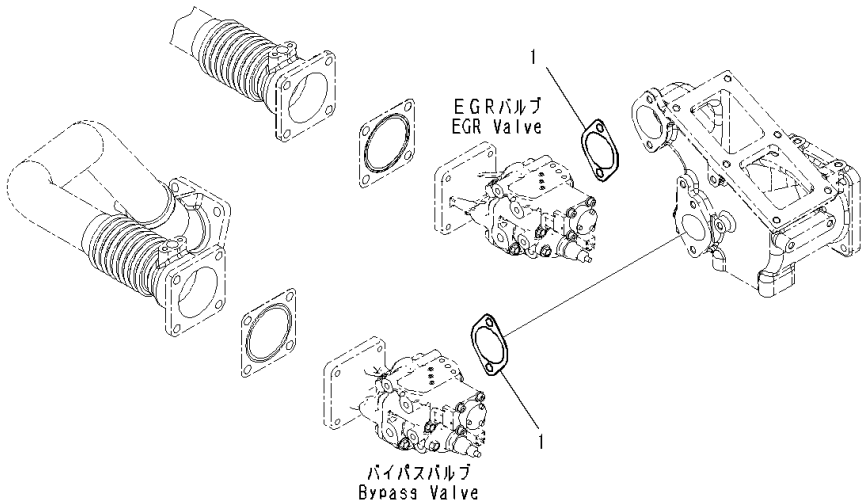

Index	Code	Part Number	Description	Qty	Serial Number
1		6166-61-6341	Gasket	2	535751-

FIG. A1550-003002 Exhaust Gas Re-circulation (EGR) Valve, Landfill Specification, Inner Parts, EGR Valve

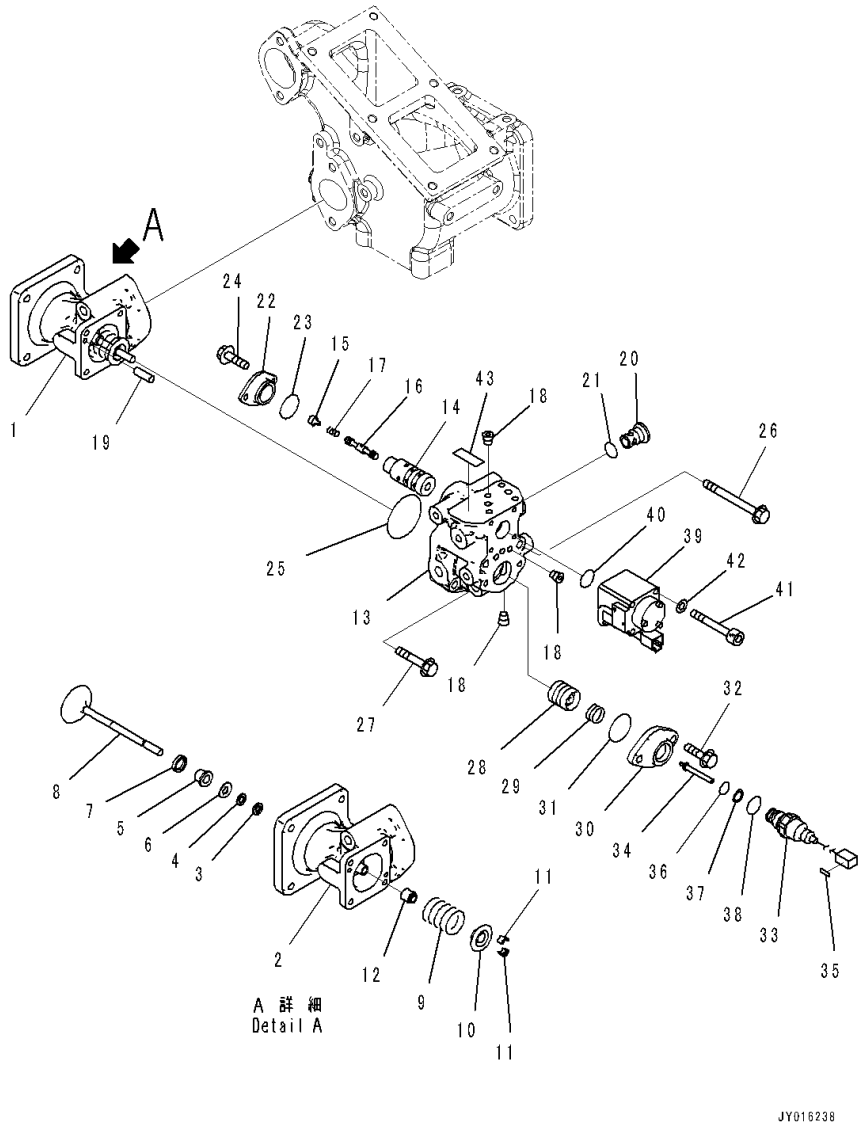

Index	Code	Part Number	Description	Qty	Serial Number
		6261-41-4900	Valve Assembly	1	535751-
1		6261-41-4910	• Valve Assembly	1	535751-
2		6261-41-4920	• • Case	1	535751-
3		6261-41-4810	• • Seal	1	535751-
4		6261-41-4820	• • Insulator	1	535751-
5		6261-41-4830	• • Cover	1	535751-
6		6261-41-4840	• • Plate	1	535751-
7		6261-41-4851	• • Ring	1	535751-
8		6261-41-9650	• • Valve	1	535751-
9		6261-41-9610	• • Spring	1	535751-
10		6204-41-4510	• • Seat	1	535751-
11		6204-41-4520	• • Cotter	2	535751-
12		6204-41-4541	• • Seal	1	535751-
		6261-41-9530	• Case Assembly	1	535751-
13		6261-41-9540	• • Case	1	535751-
14		6553-51-2110	• • Bushing	1	535751-
15		6553-51-2820	• • Seat, T=50mm	1	535751-
16		6553-51-3110	• • Spool	1	535751-
17		6553-51-3511	• • Spring	1	535751-
18		708-21-12541	• • Plug	7	535751-
19		04020-00514	• • Pin, Dowel	2	535751-
20		6261-41-9640	• • Filter	1	535751-
21		07002-61823	• • O-ring	1	535751-
22		6261-41-4960	• Cover	1	535751-
23		07000-E2025	• O-ring	1	535751-
24		01435-00612	• Bolt	2	535751-
25		07000-E2055	• O-ring	1	535751-
26		01435-00895	• Bolt	2	535751-
27		01435-00845	• Bolt	2	535751-
28		6261-41-9580	• Piston	1	535751-
29		6261-41-9620	• Spring	1	535751-
30		6261-41-9550	• Cover	1	535751-
31		07000-A2035	• O-ring	1	535751-
32		01435-00820	• Bolt	2	535751-
		729-12-11001	• Sensor Assembly	1	535751-
33		729-12-11100	• • Sensor Assembly	1	535751-
34		729-12-11700	• • Core Assembly	1	537198-
35		729-11-11180	• • Plate	1	535751-
36		07000-B2012	• • O-ring	1	535751-
37		07001-02012	• • Ring, Back-up	1	535751-

FIG. A1550-003002 Exhaust Gas Re-circulation (EGR) Valve, Landfill Specification, Inner Parts, EGR Valve

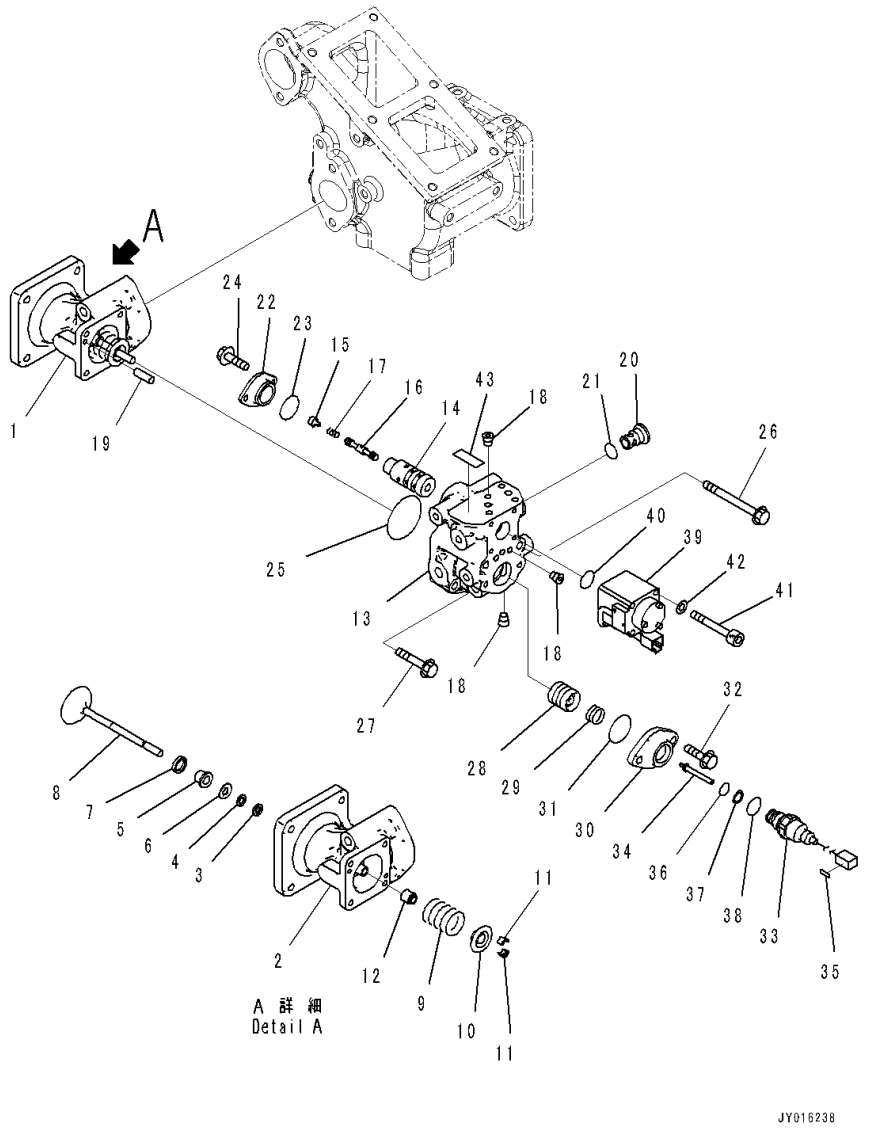

Index	Code	Part Number	Description	Qty	Serial Number
38		07002-62034	• • O-ring	1	535751-
39		6261-41-9590	• Solenoid Assembly	1	535751-
40		07000-A2016	• O-ring	1	535751-
41		6553-81-7110	• Bolt	4	535751-
42		01643-30623	• Washer	4	535751-
43		6261-41-9690	• Plate	1	535751-

FIG. A1550-003003 Exhaust Gas Re-circulation (EGR) Valve, Landfill Specification, Inner Parts, Bypass Valve

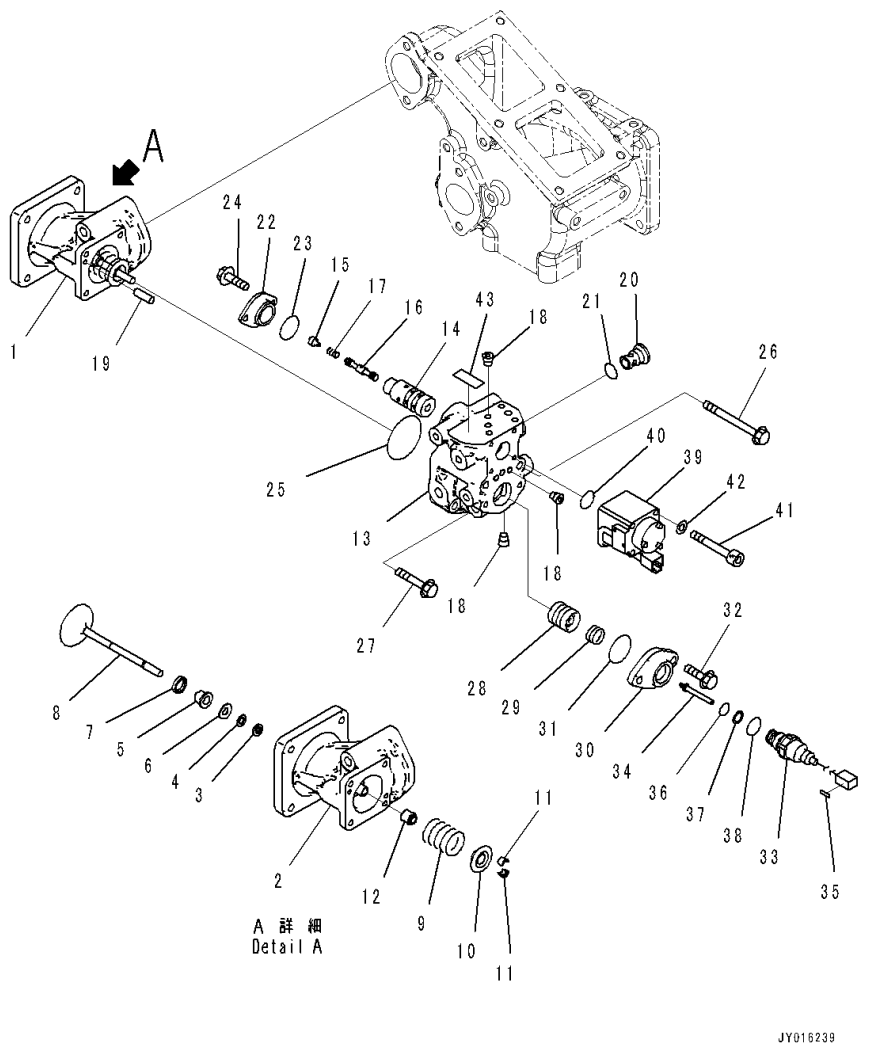

Index	Code	Part Number	Description	Qty	Serial Number
		6261-41-9500	Valve Assembly	1	535751-
1		6261-41-9510	• Valve Assembly	1	535751-
2		6261-41-9520	• • Case	1	535751-
3		6261-41-4810	• • Seal	1	535751-
4		6261-41-4820	• • Insulator	1	535751-
5		6261-41-4830	• • Cover	1	535751-
6		6261-41-4840	• • Plate	1	535751-
7		6261-41-4851	• • Ring	1	535751-
8		6261-41-9660	• • Valve	1	535751-
9		6261-41-9610	• • Spring	1	535751-
10		6204-41-4510	• • Seat	1	535751-
11		6204-41-4520	• • Cotter	2	535751-
12		6204-41-4541	• • Seal	1	535751-
		6261-41-9530	• Case Assembly	1	535751-
13		6261-41-9540	• • Case	1	535751-
14		6553-51-2110	• • Bushing	1	535751-
15		6553-51-2820	• • Seat, T=50mm	1	535751-
16		6553-51-3110	• • Spool	1	535751-
17		6553-51-3511	• • Spring	1	535751-
18		708-21-12541	• • Plug	7	535751-
19		04020-00514	• • Pin, Dowel	2	535751-
20		6261-41-9640	• • Filter	1	535751-
21		07002-61823	• • O-ring	1	535751-
22		6261-41-4960	• Cover	1	535751-
23		07000-E2025	• O-ring	1	535751-
24		01435-00612	• Bolt	2	535751-
25		07000-E2055	• O-ring	1	535751-
26		01435-00895	• Bolt	2	535751-
27		01435-00845	• Bolt	2	535751-
28		6261-41-9580	• Piston	1	535751-
29		6261-41-9620	• Spring	1	535751-
30		6261-41-9550	• Cover	1	535751-
31		07000-A2035	• O-ring	1	535751-
32		01435-00820	• Bolt	2	535751-
		729-12-11001	• Sensor Assembly	1	535751-
33		729-12-11100	• • Sensor Assembly	1	535751-
34		729-12-11700	• • Core Assembly	1	537198-
35		729-11-11180	• • Plate	1	535751-
36		07000-B2012	• • O-ring	1	535751-
37		07001-02012	• • Ring, Back-up	1	535751-

FIG. A1550-003003 Exhaust Gas Re-circulation (EGR) Valve, Landfill Specification, Inner Parts, Bypass Valve

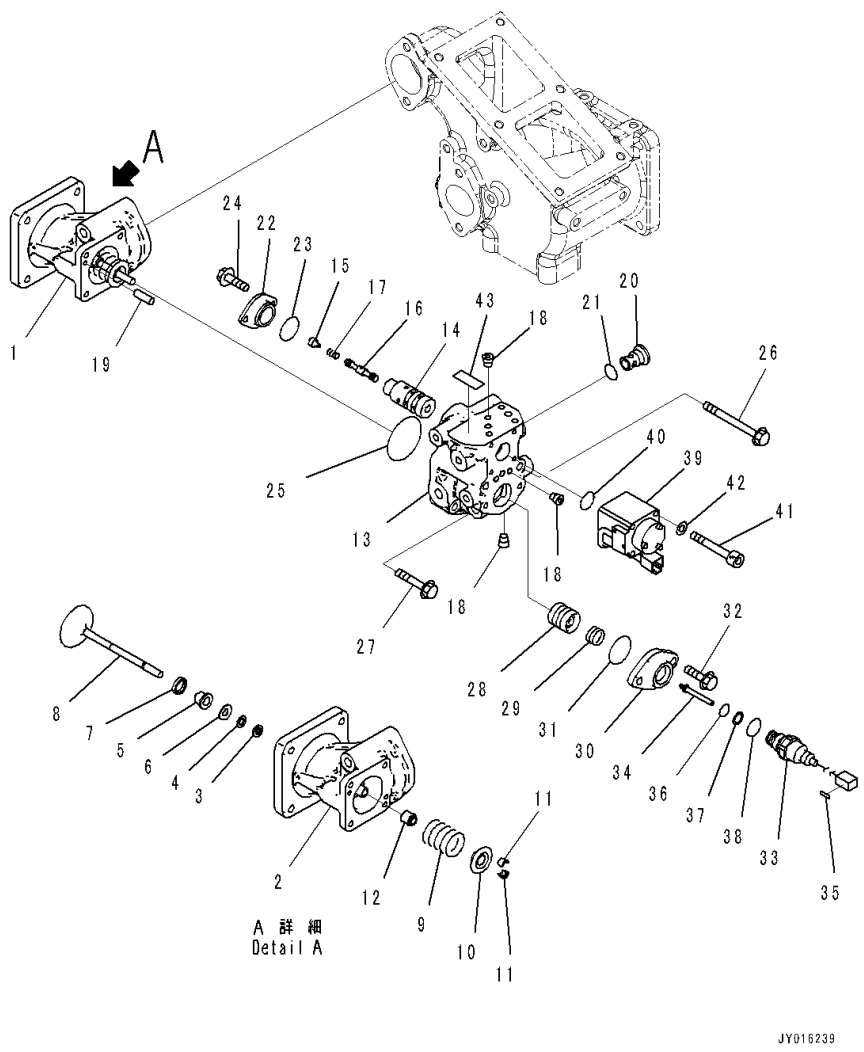

Index	Code	Part Number	Description	Qty	Serial Number
38		07002-62034	• • O-ring	1	535751-
39		6261-41-9590	• Solenoid Assembly	1	535751-
40		07000-A2016	• O-ring	1	535751-
41		6553-81-7110	• Bolt	4	535751-
42		01643-30623	• Washer	4	535751-
43		6261-41-9690	• Plate	1	535751-

FIG. A1550-003004 Exhaust Gas Re-circulation (EGR) Valve, Landfill Specification, EGR Valve and Cooler Mounting

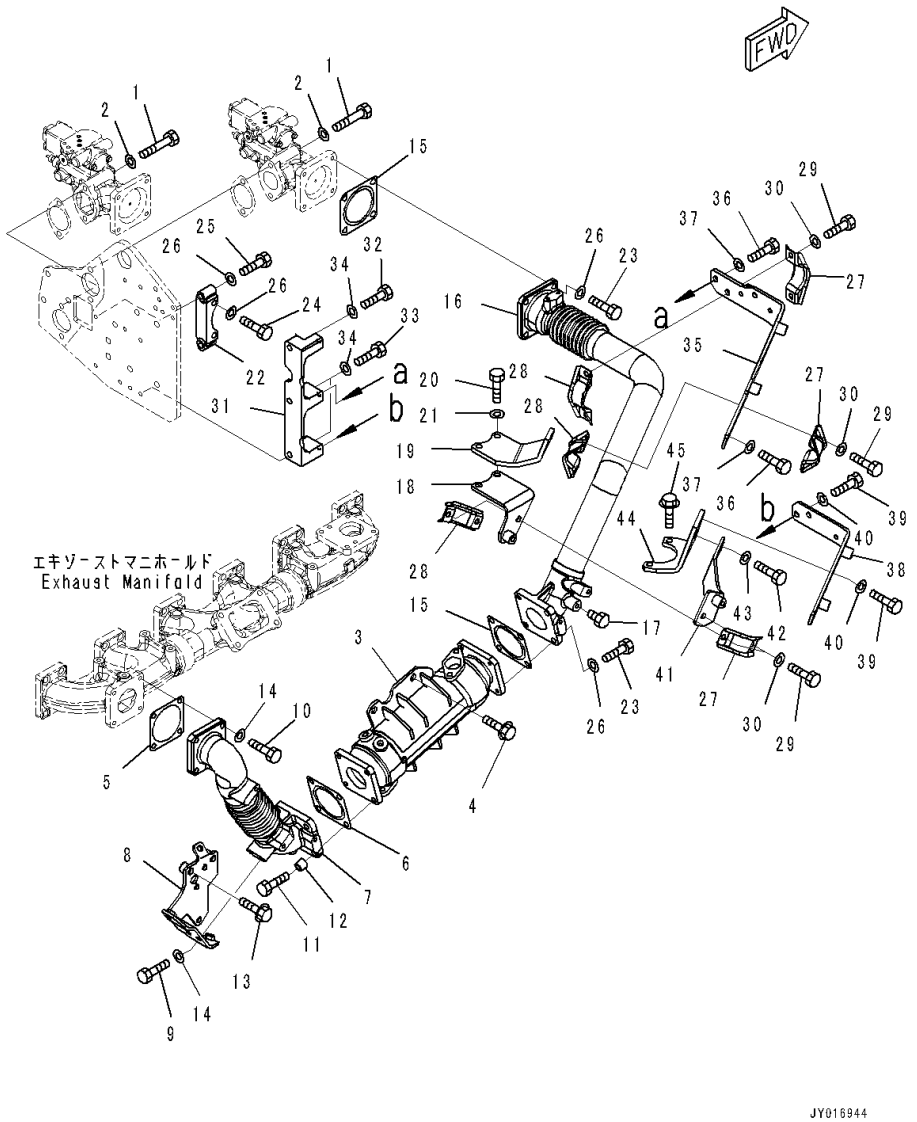

Index	Code	Part Number	Description	Qty	Serial Number
1		01011-E1005	Bolt	4	535751-
2		01643-31032	Washer	4	535751-
3		6261-61-7110	Cooler Assembly	1	535751-
4		01435-01220	Bolt	4	535751-
5		6138-13-4240	Gasket	1	535751-
6		6207-11-5390	Gasket	1	535751-
7		6261-11-9120	Tube	1	535751-
8		6261-11-2780	Bracket	1	535751-
9		01010-E1025	Bolt	2	535751-
10		01020-11040	Bolt	4	535751-
11		01010-E1050	Bolt	4	535751-
12		6631-11-5630	Spacer	4	535751-
13		01435-01035	Bolt	2	535751-
14		01643-31032	Washer	6	535751-
15		6207-11-5390	Gasket	2	535751-
16		6261-11-9422	Tube	1	535751-
17		6215-11-5920	Plug	1	535751-
18		6261-11-9840	Bracket	1	535751-
19		6261-11-9750	Bracket	1	535751-
20		01020-11060	Bolt, Stainless	2	535751-
21		01643-31032	Washer	2	535751-
22		6251-11-9150	Plate	1	535751-
23		01010-E1030	Bolt	6	535751-
24		01010-E1060	Bolt	2	535751-
25		01010-E1050	Bolt	2	535751-
26		01643-31032	Washer	10	535751-
27		6261-11-9870	Clamp	3	535751-
28		6261-11-9880	Clamp	3	535751-
29		01010-E1025	Bolt	6	535751-
30		01643-31032	Washer	6	535751-
31		6261-11-9740	Bracket	1	535751-
32		01010-E1050	Bolt	1	535751-
33		01010-E1075	Bolt	2	535751-
34		01643-31032	Washer	3	535751-
35		6261-11-9970	Bracket	1	535751-
36		01010-E1025	Bolt	3	535751-
37		01643-31032	Washer	3	535751-
38		6261-11-9730	Bracket	1	535751-
39		01010-E1025	Bolt	3	535751-
40		01643-31032	Washer	3	535751-

FIG. A1550-003004 Exhaust Gas Re-circulation (EGR) Valve, Landfill Specification, EGR Valve and Cooler Mounting

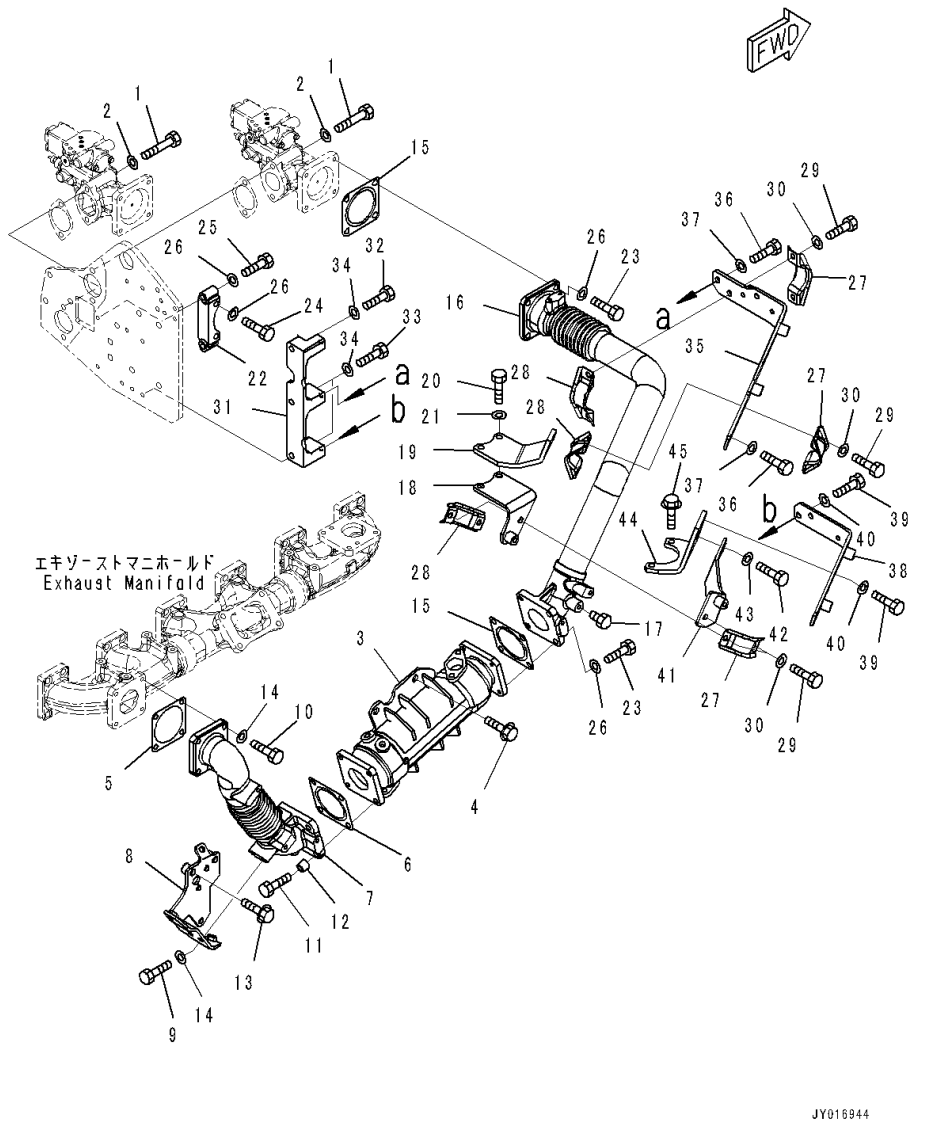

Index	Code	Part Number	Description	Qty	Serial Number
41		6261-11-2490	Bracket	1	535751-
42		01010-E1025	Bolt	2	535751-
43		01643-31032	Washer	2	535751-
44		6261-11-9960	Bracket	1	535751-
45		01435-01035	Bolt	2	535751-

FIG. A1550-003005 Exhaust Gas Re-circulation (EGR) Valve, Landfill Specification, EGR Cooler Piping and Air Vent

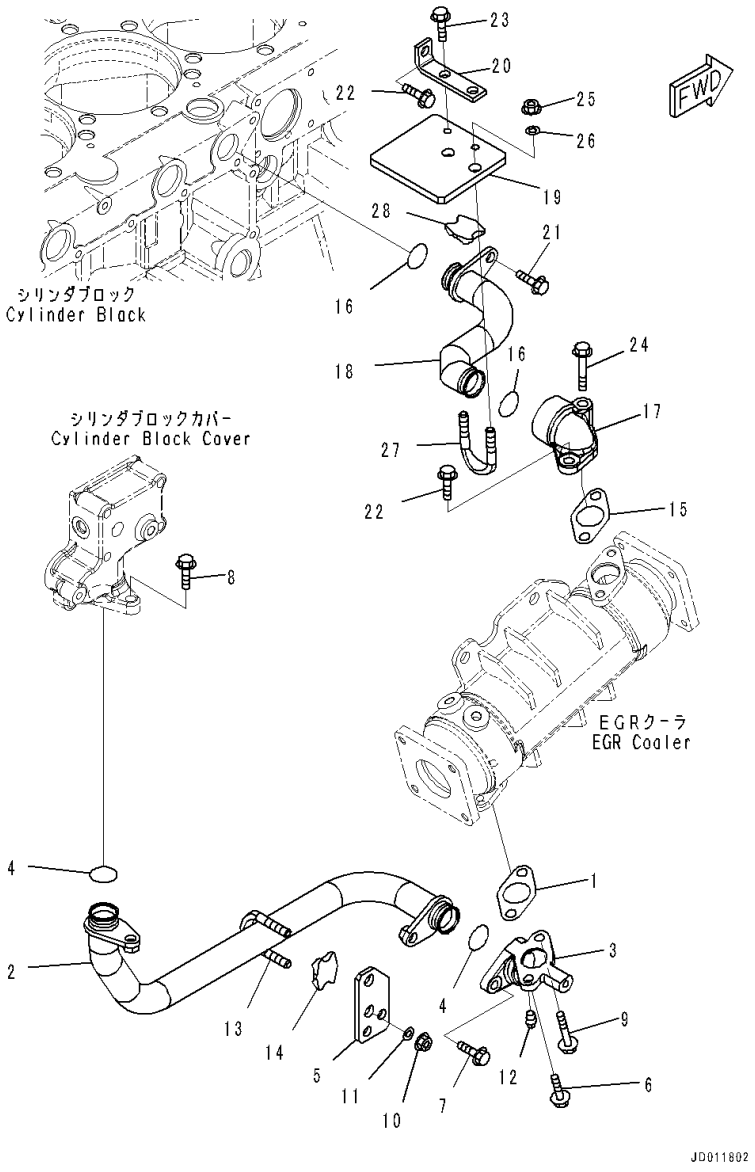

Index	Code	Part Number	Description	Qty	Serial Number
1		6210-61-6551	Gasket	1	535751-
2		6261-61-7210	Tube	1	535751-
3		6261-61-7250	Connector	1	535751-
4		6261-61-7260	O-ring	2	535751-
5		6261-61-7270	Plate	1	535751-
6		01435-01025	Bolt	1	535751-
7		01435-01030	Bolt	1	535751-
8		01435-01035	Bolt	1	535751-
9		01435-01055	Bolt	2	535751-
10		01597-01009	Nut	2	535751-
11		01643-31032	Washer	2	535751-
12		07042-A0108	Plug	1	535751-
13		07283-33450	Clip	1	535751-
14		07283-53444	Seat	1	535751-
15		6210-61-6551	Gasket	1	535751-
16		6261-61-7260	O-ring	2	535751-
17		6261-61-7431	Connector	1	535751-
18		6261-61-7410	Tube	1	535751-
19		6261-61-7440	Bracket	1	535751-
20		6215-72-1890	Bracket	1	535751-
21		01435-01020	Bolt	1	535751-
22		01435-01025	Bolt	2	535751-
23		01435-01016	Bolt	2	535751-
24		01435-01055	Bolt	1	535751-
25		01597-01009	Nut	2	535751-
26		01643-31032	Washer	2	535751-
27		07283-33450	Clip	1	535751-
28		07283-53444	Seat	1	535751-

FIG. A1550-003006 Exhaust Gas Re-circulation (EGR) Valve, Landfill Specification, EGR By-Pass Valve Piping

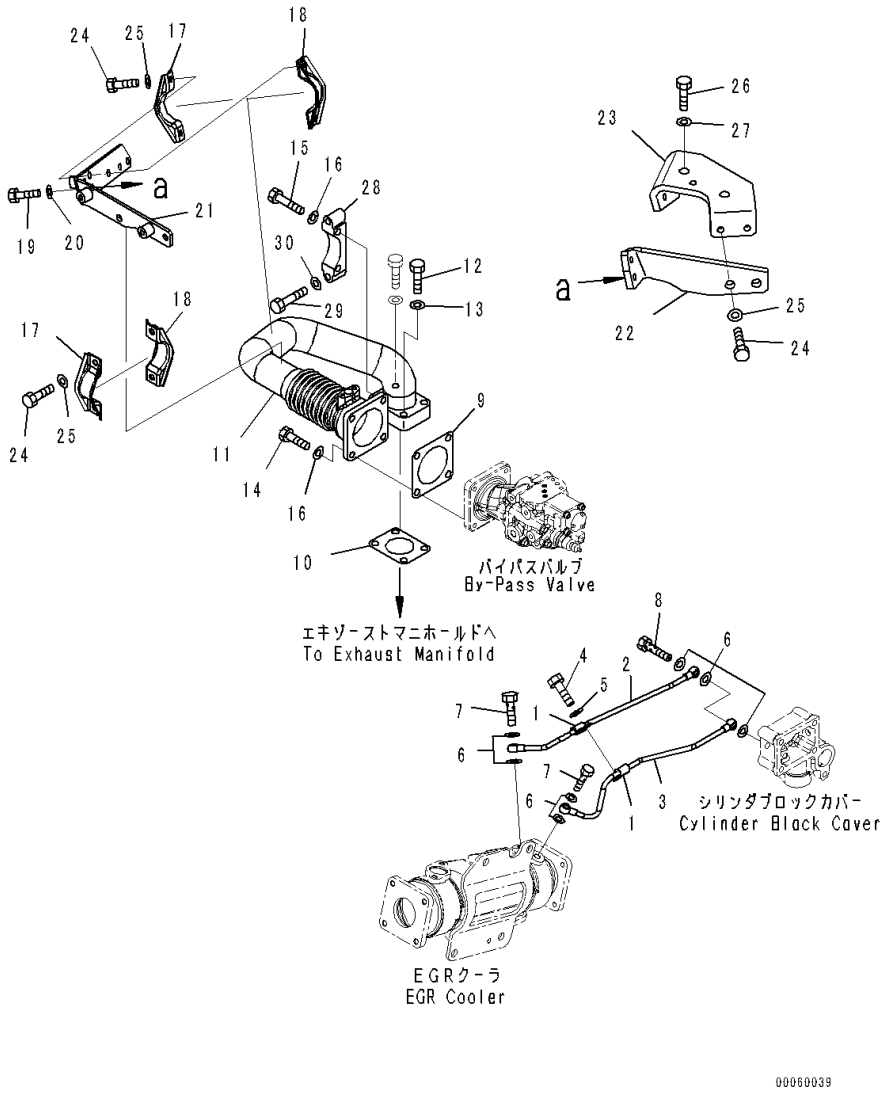

Index	Code	Part Number	Description	Qty	Serial Number
1		6210-51-8320	Clip	2	535751-
2		6261-61-7310	Tube	1	535751-
3		6261-61-7320	Tube	1	535751-
4		01435-01025	Bolt	1	535751-
5		6162-73-5940	Spacer	1	535751-
6		07005-01212	Seal, Washer	7	535751-
7		07206-30812	Bolt, Joint	2	535751-
8		6354-71-5560	Bolt, Joint	1	535751-
9		6207-11-5390	Gasket	1	535751-
10		6261-11-9520	Gasket	1	535751-
11		6261-11-9412	Tube, Bypass Valve	1	535751-
12		01020-11050	Bolt	2	535751-
13		01643-31032	Washer	2	535751-
14		01010-E1030	Bolt	2	535751-
15		01010-E1060	Bolt	2	535751-
16		01643-31032	Washer	4	535751-
17		6261-11-9870	Clamp	2	535751-
18		6261-11-9880	Clamp	2	535751-
19		01010-E1025	Bolt	4	535751-
20		01643-31032	Washer	4	535751-
21		6261-11-2480	Bracket	1	535751-
22		6261-11-4290	Bracket	1	535751-
23		6261-11-4280	Bracket	1	535751-
24		01010-E1025	Bolt	7	535751-
25		01643-31032	Washer	7	535751-
26		01010-E1040	Bolt	2	535751-
27		01643-31032	Washer	2	535751-
28		6251-11-9150	Plate	1	535751-
29		01010-E1050	Bolt	2	535751-
30		01643-31032	Washer	2	535751-

FIG. A1550-003007 Exhaust Gas Re-circulation (EGR) Valve, Landfill Specification, Inner Parts, EGR Oil Pump

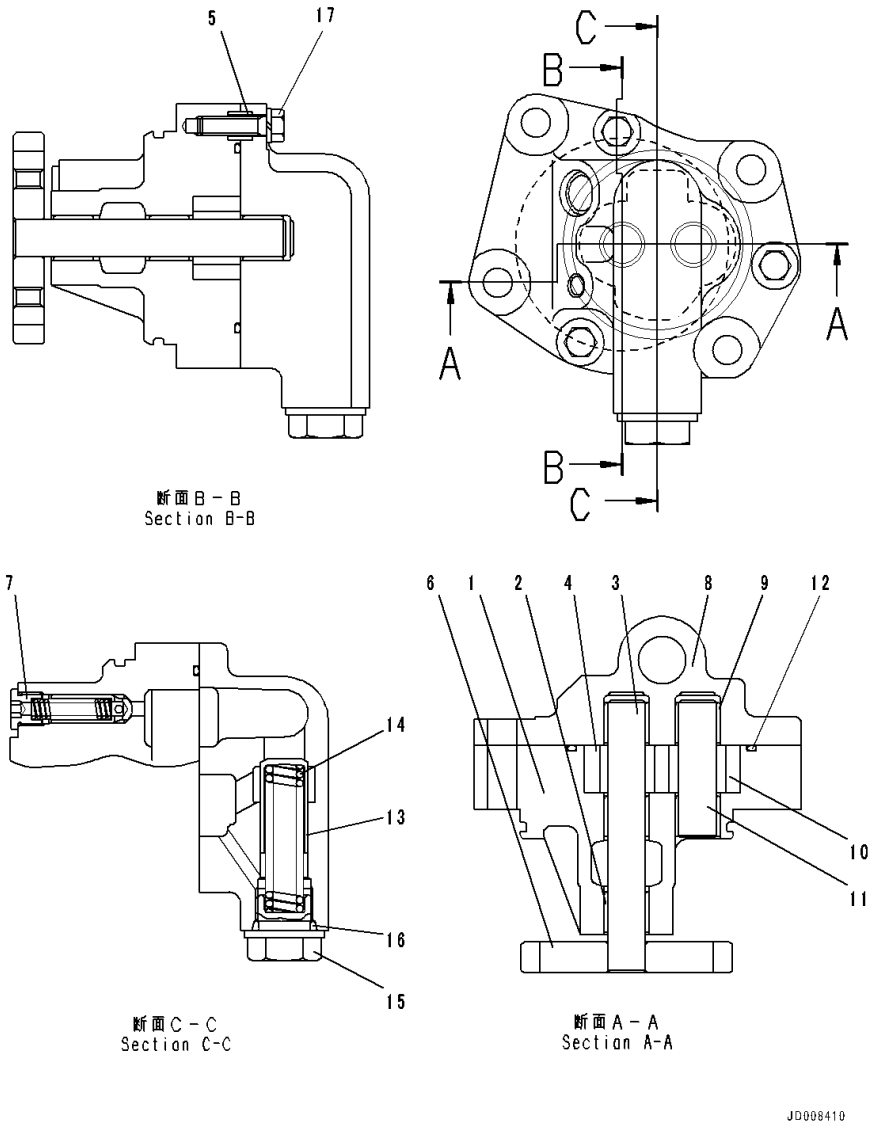

Index	Code	Part Number	Description	Qty	Serial Number
		6261-51-9101	Pump Assembly	1	535751-
		PML160-11201	• Case Assembly	1	535751-
	C1		• • Case Assembly	1	535751-
1	C1		• • • Case	1	535751-
2	C1		• • • Bushing	3	535751-
	C1		• • Gear Assembly	1	535751-
3	C1		• • • Shaft	1	535751-
4	C1		• • • Gear, Driven	1	535751-
5	C1		• • Pin, Dowel	2	535751-
6	C1		• • Gear	1	535751-
7	C1		• • Plug	1	535751-
		PML152-07002	• Cover Assembly	1	535751-
8	C1		• • Cover	1	535751-
9	C1		• • Bushing	2	535751-
		PML156-07200	• Gear Assembly	1	535751-
10	C1		• • Gear, Driven	1	535751-
11	C1		• • Shaft	1	535751-
12		PML172-00900	• O-ring	1	535751-
13		PML136-00201	• Valve	1	535751-
14		PML137-05901	• Spring	1	535751-
15		PML139-01700	• Plug	1	535751-
16		07002-22434	• O-ring	1	535751-
17		PML199-00210	• Bolt	3	535751-

FIG. A1550-003008 Exhaust Gas Re-circulation (EGR) Valve, Landfill Specification, EGR Valve Lubricating Oil Piping

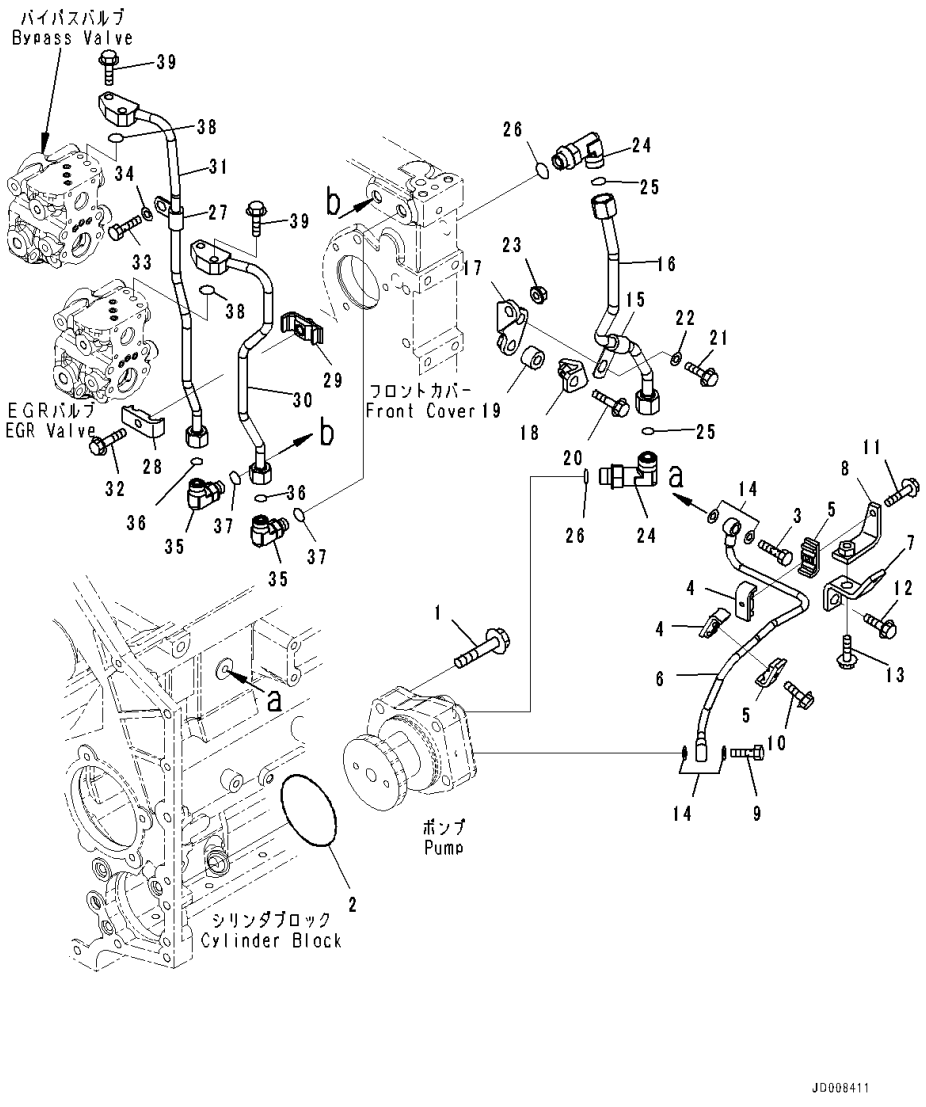

Index	Code	Part Number	Description	Qty	Serial Number
1		01435-01255	Bolt	4	535751-
2		07000-72085	O-ring	1	535751-
3		6215-11-6560	Bolt, Joint	1	535751-
4		6217-71-6640	Clamp	2	535751-
5		6217-71-6650	Clamp	2	535751-
6		6261-51-9210	Tube, Oil	1	535751-
7		6261-71-5420	Bracket	1	535751-
8		6261-71-5430	Bracket	1	535751-
9		6934-72-7190	Bolt, Joint	1	535751-
10		01435-00625	Bolt	1	535751-
11		01435-00630	Bolt	1	535751-
12		01435-01020	Bolt	1	535751-
13		01435-01025	Bolt	1	535751-
14		07005-01012	Seal, Washer	4	535751-
15		6162-63-8820	Clip	1	535751-
16		6261-51-9310	Tube, Supply	1	535751-
17		6261-51-9450	Bracket	1	535751-
18		6261-51-9460	Bracket	1	535751-
19		195-01-14540	Collar	1	535751-
20		01435-01040	Bolt	1	535751-
21		01435-01025	Bolt	1	535751-
22		01643-31032	Washer	1	535751-
23		01584-01008	Nut	1	535751-
24		02782-1042A	Elbow	2	535751-
25		02896-21012	O-ring	2	535751-
26		07002-21823	O-ring	2	535751-
27		6151-51-8540	Clip	1	535751-
28		6166-75-6821	Clamp, half	1	535751-
29		6261-51-9481	Clamp, half	1	535751-
30		6261-51-9320	Tube, Supply	1	535751-
31		6261-51-9410	Tube, Supply	1	535751-
32		01435-00835	Bolt	1	535751-
33		01010-81030	Bolt	1	535751-
34		01643-31032	Washer	1	535751-
35		02782-10311	Elbow	2	535751-
36		02896-21009	O-ring	2	535751-
37		07002-21423	O-ring	2	535751-
38		07000-E2012	O-ring	2	535751-
39		01435-00825	Bolt	4	535751-

FIG. A1550-003009 Exhaust Gas Re-circulation (EGR) Valve, Landfill Specification, Return Piping

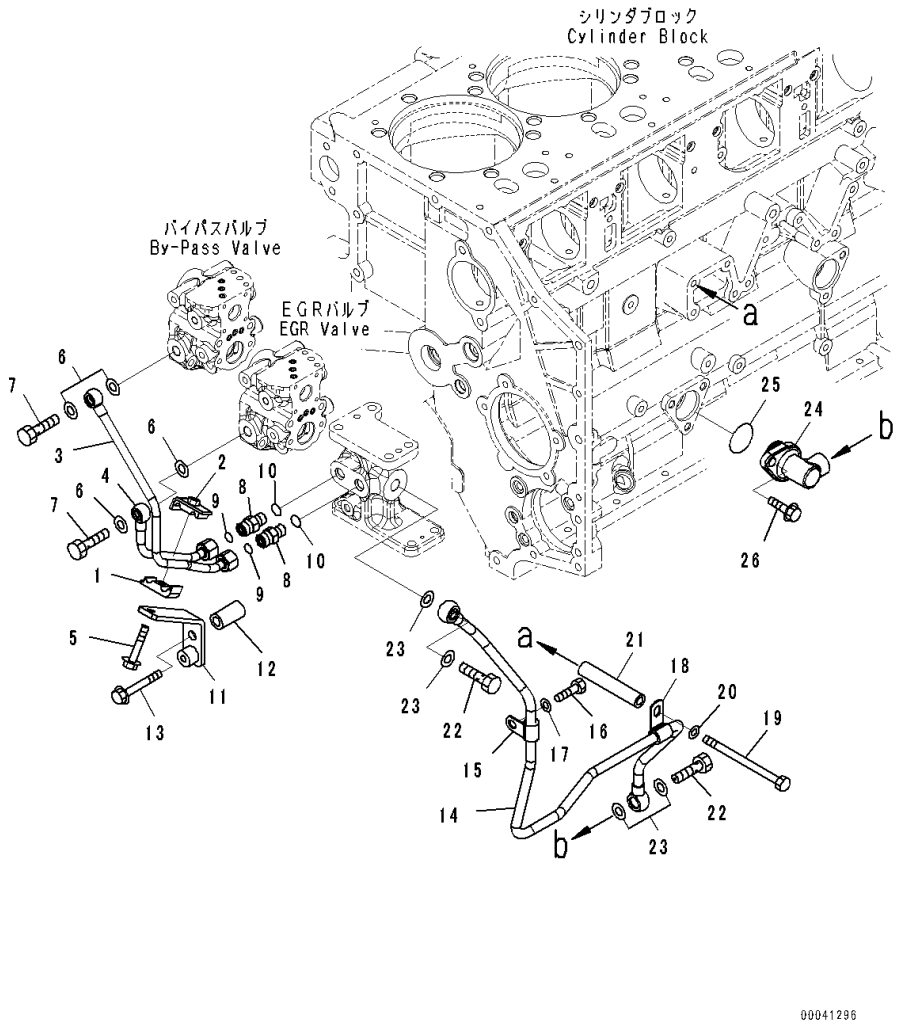

Index	Code	Part Number	Description	Qty	Serial Number
1		6166-75-6821	Clamp, half	1	535751-
2		6261-51-9481	Clamp, half	1	535751-
3		6261-51-9610	Tube, Bypass Valve	1	535751-
4		6261-51-9510	Tube, Main Valve	1	535751-
5		01435-00840	Bolt	1	535751-
6		07005-01412	Seal, Washer	4	535751-
7		07206-31014	Bolt, Joint	2	535751-
8		02781-0031D	Union	2	535751-
9		02896-21009	O-ring	2	535751-
10		07002-21423	O-ring	2	535751-
11		6261-51-9630	Bracket	1	535751-
12		6206-11-4490	Spacer	1	535751-
13		01435-01060	Bolt	1	535751-
14		6261-51-9530	Tube, Return	1	535751-
15		600-051-6120	Clip	1	535751-
16		01010-81020	Bolt	1	535751-
17		01643-31032	Washer	1	535751-
18		6162-63-8820	Clip	1	535751-
19		01011-81020	Bolt	1	535751-
20		01643-31032	Washer	1	535751-
21		6217-11-9841	Spacer	1	535751-
22		07206-31216	Bolt, Joint	2	535751-
23		07005-01612	Seal, Washer	4	535751-
24		6261-51-9540	Connector	1	535751-
25		07000-73034	O-ring	1	535751-
26		01435-01025	Bolt	1	535751-

FIG. A1550-003010 Exhaust Gas Re-circulation (EGR) Valve, Landfill Specification, Front Hanger

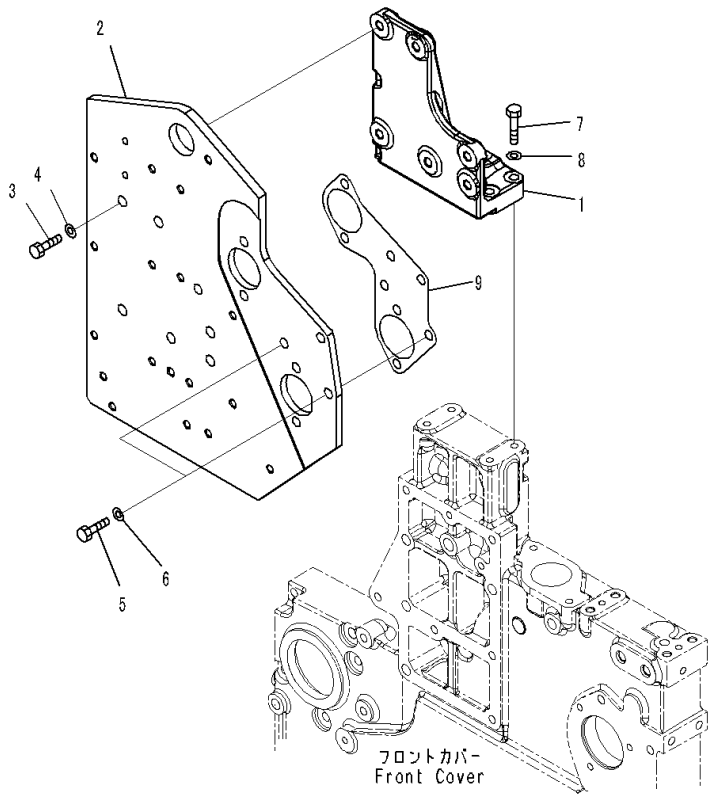

Index	Code	Part Number	Description	Qty	Serial Number
1		6261-61-3842	Bracket	1	535751-
2		6261-21-3940	Plate	1	535751-
3		01010-81235	Bolt	6	535751-
4		01643-31232	Washer	6	535751-
5		01010-81030	Bolt	3	535751-
6		01643-31032	Washer	3	535751-
7		01010-81045	Bolt	4	535751-
8		01643-31032	Washer	4	535751-
9		6261-21-3970	Gasket	1	535751-

ENGINE CYLINDER BLOCK AND ITS RELATED PARTS

FIG. A3010-001001 Lubrication Oil Pump

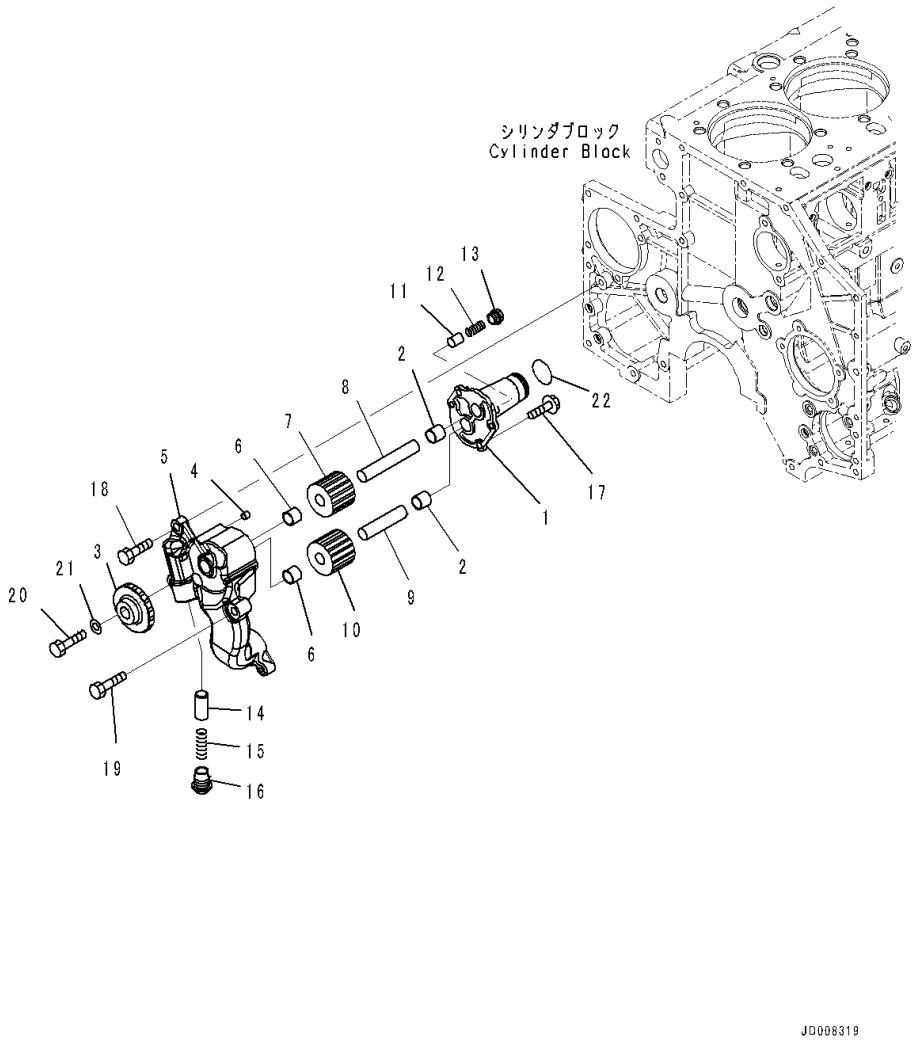

Index	Code	Part Number	Description	Qty	Serial Number
		6261-51-2000	Oil Pump Assembly	1	535751-
		PML152-07110	• Cover Assembly	1	535751-
1	C1		• • Cover	1	535751-
2		PML130-03300	• • Bushing	1	535751-
		PML160-11301	• Gear Assembly	1	535751-
3	C1		• • Gear	1	535751-
4	C1		• • Pin, Dowel	2	535751-
		PML150-08501	• • Cover Assembly	1	535751-
5	C1		• • • Body	1	535751-
6		PML130-03300	• • • Bushing	2	535751-
		PML154-09200	• • Shaft Assembly	1	535751-
7	C1		• • • Gear, Driven	1	535751-
8	C1		• • • Shaft	1	535751-
		PML156-07400	• Shaft Assembly	1	535751-
9	C1		• • Shaft	1	535751-
10	C1		• • Gear, Driven	1	535751-
11		PML136-00501	• Valve	1	535751-
12		PML137-05800	• Spring	1	535751-
13		PML139-01300	• Plug	1	535751-
14		PML136-00201	• Valve	1	535751-
15		PML137-04800	• Spring	1	535751-
16		PML139-01520	• Plug	1	535751-
17		PMMF14-0229	• Bolt	4	535751-
18		01010-81235	Bolt	1	535751-
19		01010-81245	Bolt	1	535751-
20		01010-81245	Bolt	1	535751-
21		01643-31232	Washer	1	535751-
22		07000-73038	O-ring	1	535751-

FIG. A2610-001001 Front Power Take Off, With Hardened Pulley

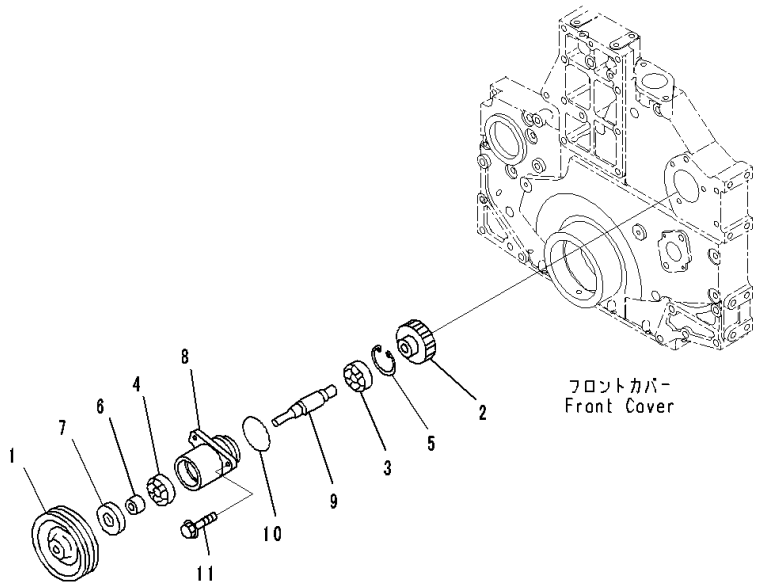

Index	Code	Part Number	Description	Qty	Serial Number
		6217-21-3603	PTO Assembly	1	535842-
1		6218-21-3871	• Pulley	1	535751-
2		6217-21-3540	• Gear	1	535751-
3		06340-06204	• Bearing, Ball	1	535751-
4		06340-06304	• Bearing, Ball	1	535751-
5		04065-04718	• Ring, Snap	1	535751-
6		6218-21-3831	• Spacer	1	535751-
7		6261-21-3880	• Seal, Oil	1	535842-
8		6218-21-3811	• Housing	1	535751-
9		6218-21-3820	• Shaft	1	535751-
10		07000-02060	O-ring	1	535751-
11		01435-01030	Bolt	3	535751-

FIG. A2410-001001 Camshaft

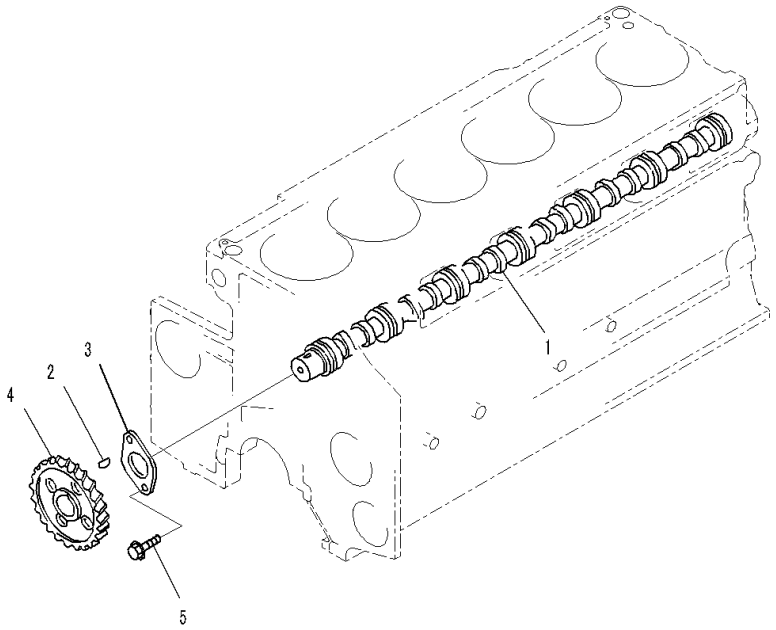

Index	Code	Part Number	Description	Qty	Serial Number
		6210-41-1012	Camshaft Assembly	1	535751-
1	C1		• Camshaft	1	535751-
2		04010-00725	• Key, Woodruff	1	535751-
3		6210-41-1131	• Plate, Thrust	1	535751-
4		6210-41-1120	• Gear	1	535751-
5		01437-01220	Bolt	2	535751-

FIG. A2411-001001 Camshaft Related Parts, Cam Follower

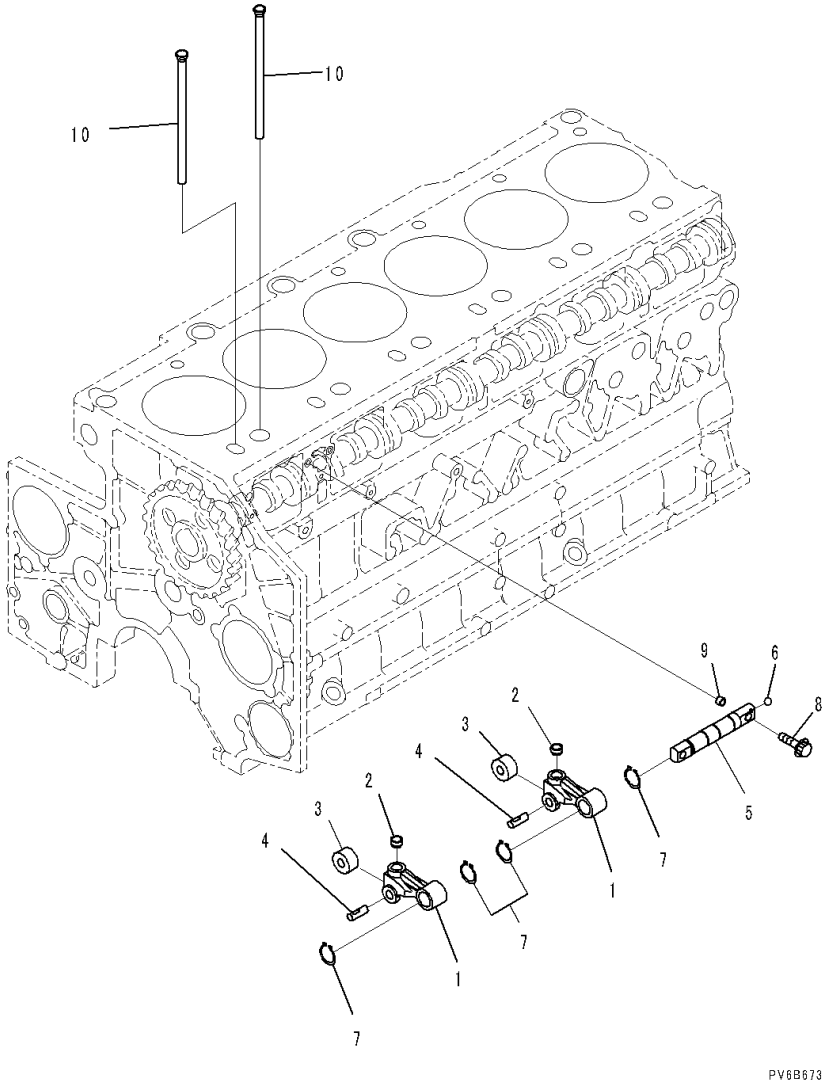

Index	Code	Part Number	Description	Qty	Serial Number
		6210-41-2320	Lever Assembly	12	535751-
1	C1		• Lever	1	535751-
2	C1		• Socket	1	535751-
3	C1		• Roller	1	535751-
4	C1		• Pin	1	535751-
		6210-41-2400	Shaft Assembly	6	535751-
5	C1		• Shaft	1	535751-
6		6150-81-8420	• Ball	1	535751-
7		04064-02212	Ring, Snap	24	535751-
8		6210-41-2450	Bolt	12	535751-
9		6150-41-2430	Pin	12	535751-
10		6210-41-3120	Rod ,Push	12	535751-

FIG. A2411-001002 Camshaft Related Parts, Road Liner

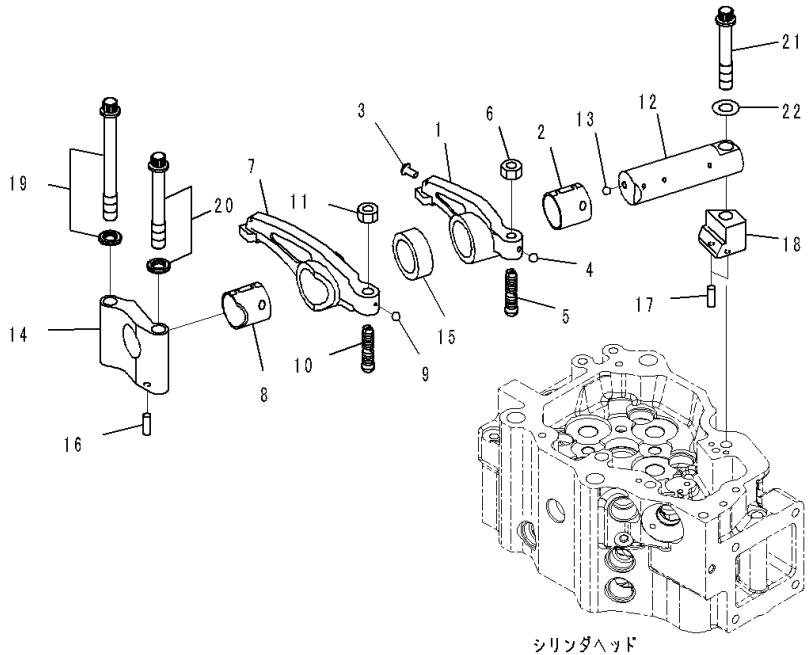

Index	Code	Part Number	Description	Qty	Serial Number
		6261-41-5040	Rocker Arm Assembly	6	535751-
		6261-41-5400	• Arm Assembly	1	535751-
1	C1		• • Arm Assembly, Rocker	1	535751-
2		6261-41-5420	• • Bushing	1	535751-
3		6162-43-5340	• • Rivet	1	535751-
4		04260-00317	• • Ball, Steel	1	535751-
5		6217-41-5550	• Screw	1	535751-
6		01582-01008	• Nut	1	535751-
		6261-41-5050	Rocker Arm Assembly	6	535751-
		6261-41-5500	• Arm Assembly	1	535751-
7	C1		• • Arm	1	535751-
8		6261-41-5520	• • Bushing	1	535751-
9		04260-00317	• • Ball, Steel	1	535751-
10		6217-41-5550	• Screw	1	535751-
11		01582-01008	• Nut	1	535751-
		6934-42-5300	Shaft Assembly	6	535751-
12	C1		• Shaft	1	535751-
13		04260-00635	• Ball, Steel	1	535751-
14		6261-41-5530	Bracket	6	535751-
15		6210-41-5440	Collar	6	535751-
16		04020-00514	Pin, Dowel	6	535751-
17		04020-00514	Pin, Dowel	12	535751-
18		6217-41-5540	Spacer	6	535751-
19		6217-41-5570	Bolt	6	535751-
20		6217-41-5560	Bolt	6	535751-
21		6217-81-8311	Bolt	6	535751-
22		01643-51232	Washer	6	535751-

FIG. A2060-001001 Cam Follower Cover

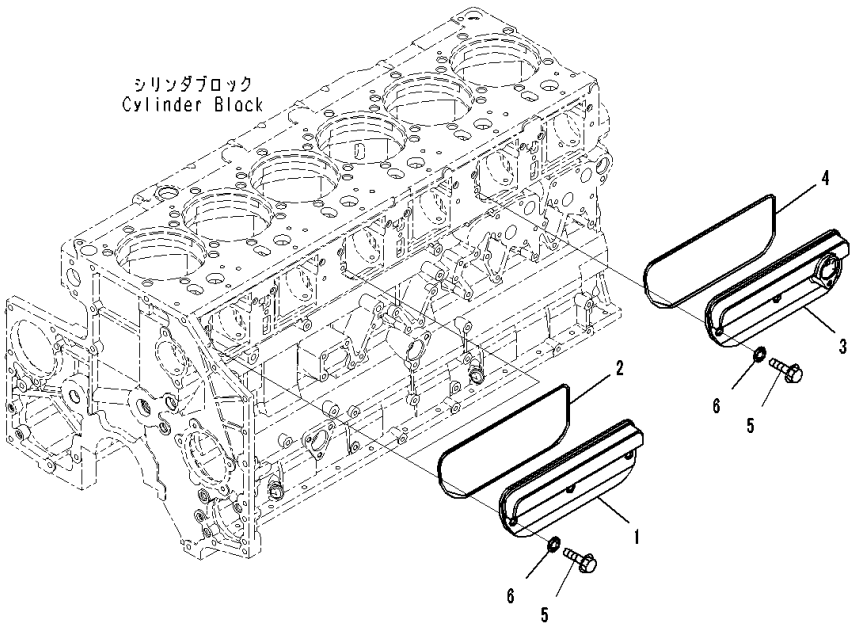

Index	Code	Part Number	Description	Qty	Serial Number
		6210-21-6400	Cover Assembly	2	535751-
1		6210-21-6410	• Cover	1	535751-
2		6217-21-6880	• O-ring	1	535751-
3		6261-21-6410	Cover, Camfollower, With Flange	1	535751-
4		6217-21-6880	O-ring	1	535751-
5		6210-21-6471	Bolt	9	535751-
6		6150-21-6391	Packing	9	535751-

FIG. A2041-001001 Front Cover Accessory

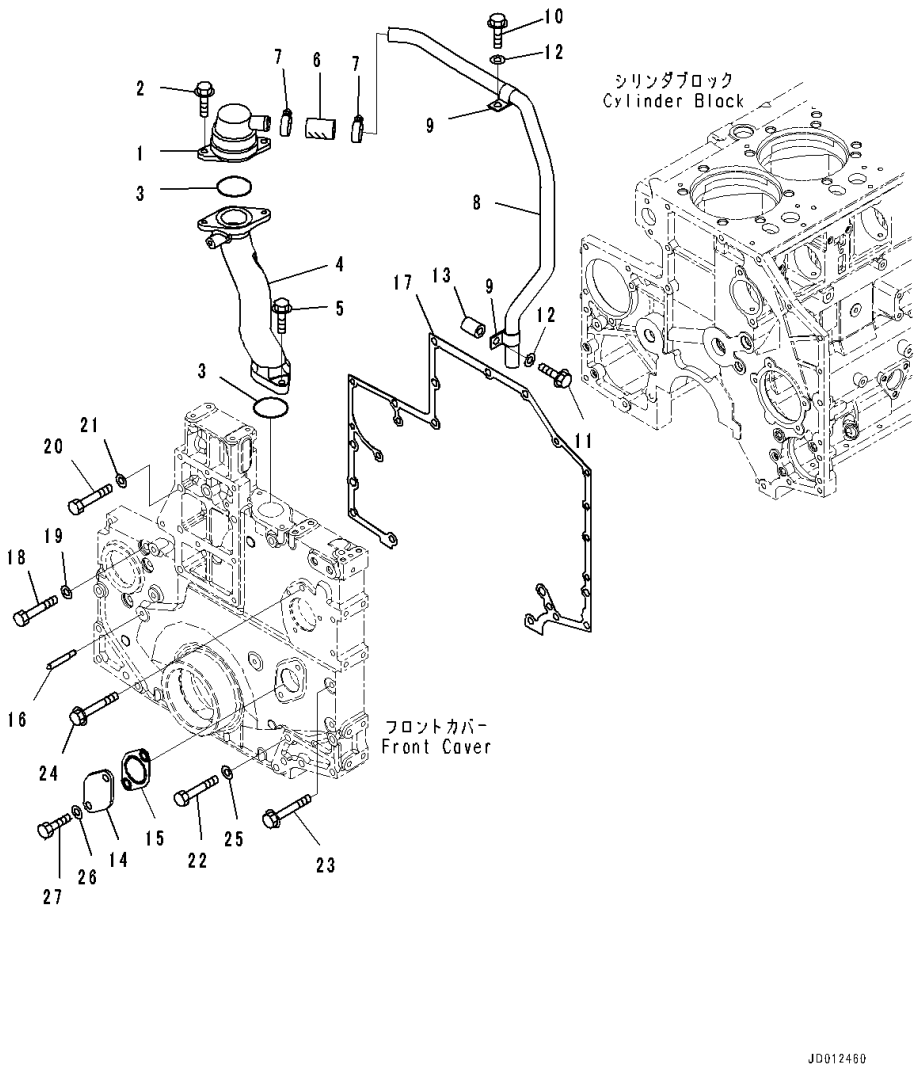

Index	Code	Part Number	Description	Qty	Serial Number
1		6212-25-8710	Breather	1	535751-
2		01435-01025	Bolt	2	535751-
3		07000-72060	O-ring	2	535751-
4		6261-21-8610	Connector	1	535751-
5		01435-01035	Bolt	2	535751-
6		6141-64-7841	Hose	1	535751-
7		07281-00419	Clamp, Hose	2	535751-
8		6261-21-8711	Tube, Breather	1	535751-
9		154-04-12420	Clamp	2	535751-
10		01435-01020	Bolt	1	535751-
11		01435-01050	Bolt	1	535751-
12		01643-31032	Washer	2	535751-
13		6166-11-5391	Spacer	1	535751-
14		6251-21-3211	Plate	1	535751-
15		6251-21-3231	Gasket	1	535751-
16		6210-22-3910	Pointer	1	535751-
17		6217-21-3251	Gasket	1	535751-
18		01010-81275	Bolt	1	535751-
19		01643-31232	Washer	1	535751-
20		01010-81290	Bolt	12	535751-
21		01643-31232	Washer	12	535751-
22		01011-81200	Bolt	2	535751-
23		01436-01010	Bolt	1	535751-
24		01435-01090	Bolt	3	535751-
25		01640-21223	Washer, Flat	2	535751-
26		6251-21-3250	Gasket	2	535751-
27		01050-51225	Bolt	2	535751-

FIG. A2041-002001 Front Cover Accessory, For Slag Handling

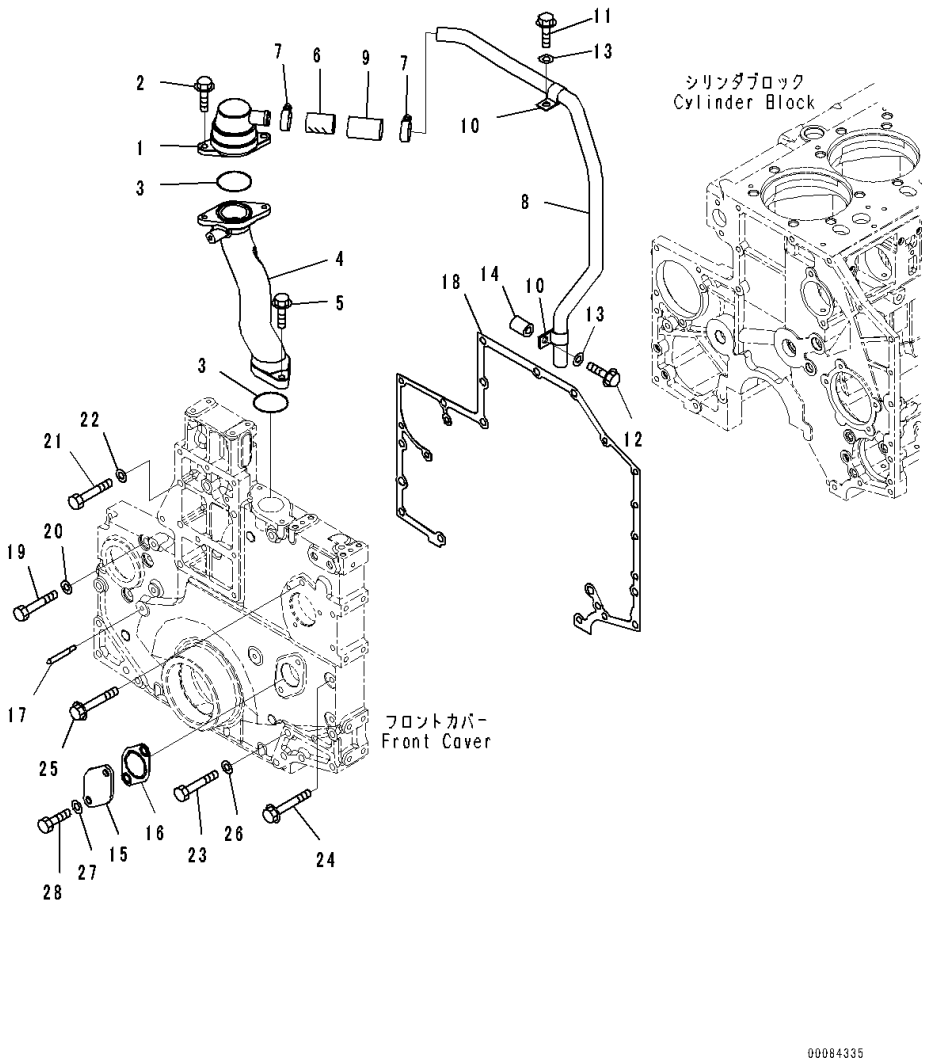

Index	Code	Part Number	Description	Qty	Serial Number
1		6212-25-8710	Breather	1	535751-
2		01435-01025	Bolt	2	535751-
3		07000-72060	O-ring	2	535751-
4		6261-21-8610	Connector	1	535751-
5		01435-01035	Bolt	2	535751-
6		6141-64-7841	Hose	1	535751-
7		07281-00489	Clamp, Hose	2	535751-
8		6261-21-8711	Tube, Breather	1	535751-
9		6128-11-5630	Cover	1	535751-
10		154-04-12420	Clamp	2	535751-
11		01435-01020	Bolt	1	535751-
12		01435-01050	Bolt	1	535751-
13		01643-31032	Washer	2	535751-
14		6166-11-5391	Spacer	1	535751-
15		6251-21-3211	Plate	1	535751-
16		6251-21-3231	Gasket	1	535751-
17		6210-22-3910	Pointer	1	535751-
18		6217-21-3251	Gasket	1	535751-
19		01010-81275	Bolt	1	535751-
20		01643-31232	Washer	1	535751-
21		01010-81290	Bolt	12	535751-
22		01643-31232	Washer	12	535751-
23		01011-81200	Bolt	2	535751-
24		01436-01010	Bolt	1	535751-
25		01435-01090	Bolt	3	535751-
26		01640-21223	Washer, Flat	2	535751-
27		6251-21-3250	Gasket	2	535751-
28		01050-51225	Bolt	2	535751-

FIG. A2040-001001 Front Cover

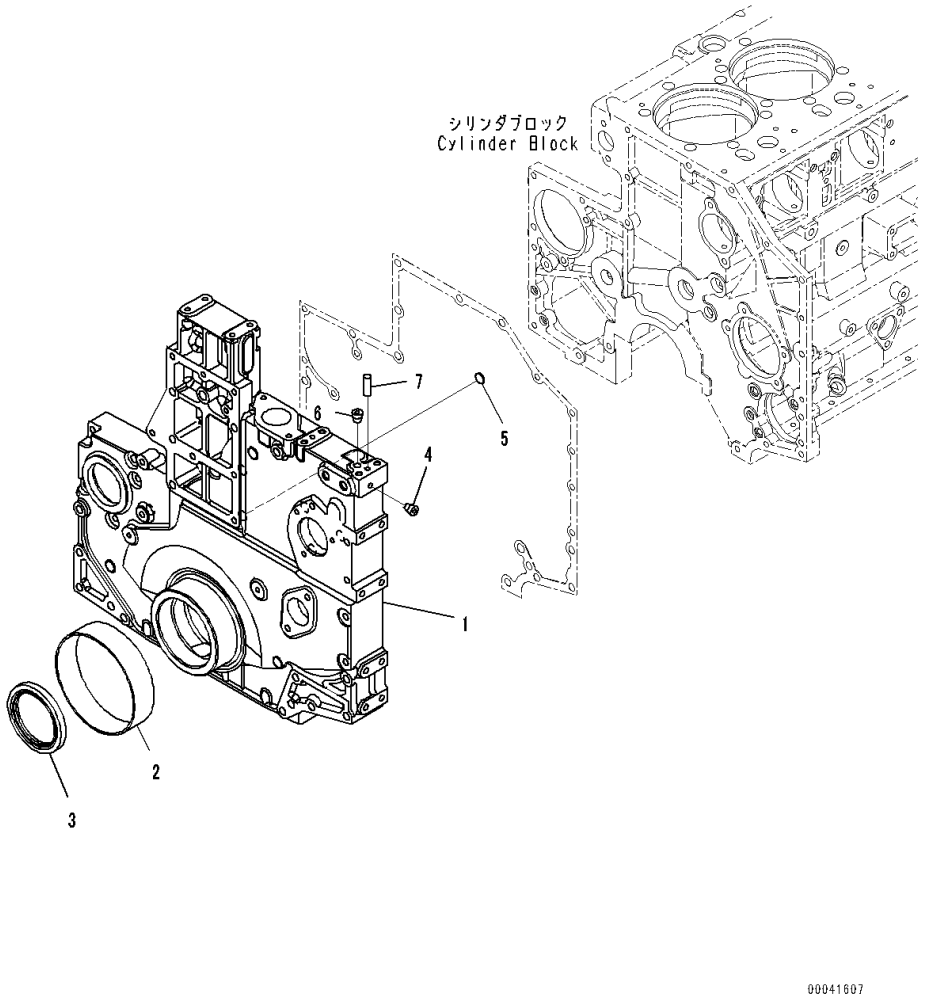

Index	Code	Part Number	Description	Qty	Serial Number
1		6261-21-3210	Cover,Front	1	535751-
2		6210-21-3170	Sleeve	1	535751-
3		6711-21-3521	Seal	1	535751-
4		07043-70108	Plug	1	535751-
5		07046-11816	Plug, Expansion	6	535751-
6		07043-70211	Plug	1	535751-
7		04020-00820	Pin, Dowel	2	535751-

FIG. A2050-001001 Idle Gears

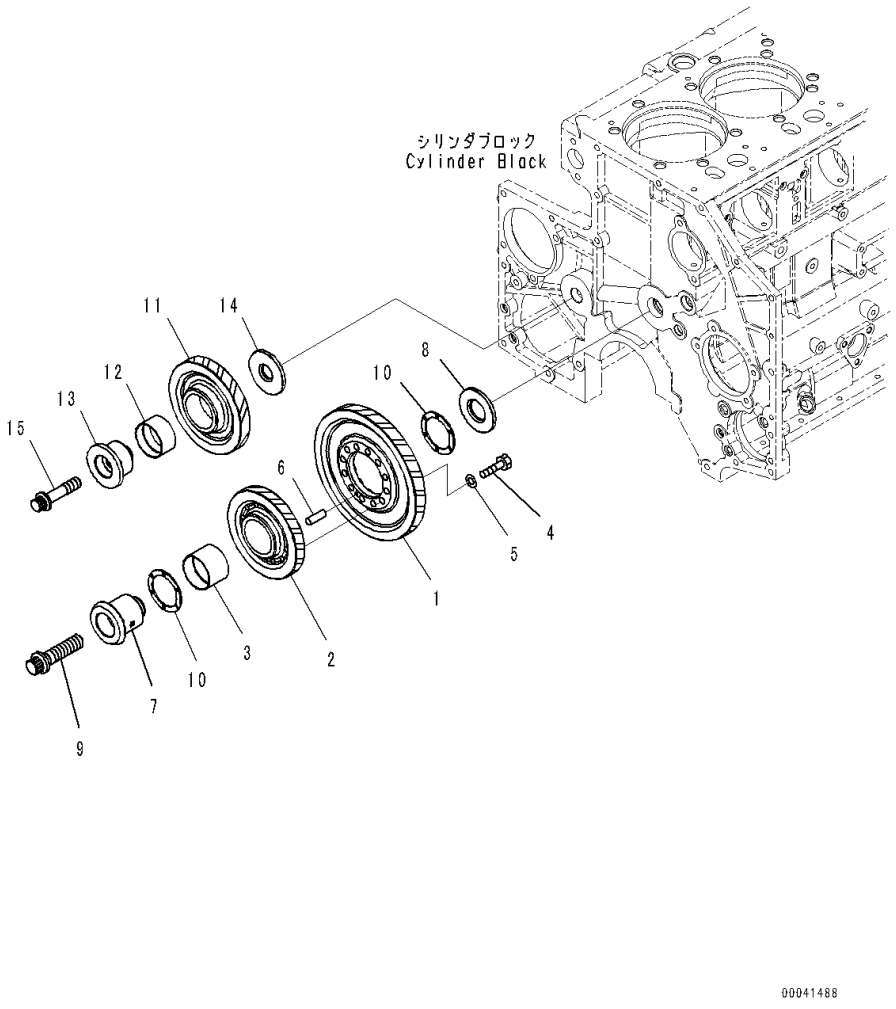

Index	Code	Part Number	Description	Qty	Serial Number
1		6212-31-6440	Gear	1	535751-
		6212-31-6420	Gear Assembly	1	535751-
2	C1		• Gear	1	535751-
3		6212-31-6130	• Bushing	1	535751-
4		22X-22-12670	Bolt	12	535751-
5		6212-31-6490	Washer	12	535751-
6		04020-00514	Pin, Dowel	1	535751-
7		6210-22-2410	Shaft	1	535751-
8		6210-22-2420	Plate	1	535751-
9		6162-33-5322	Bolt	1	535751-
10		6212-31-6140	Bearing	2	535751-
		6212-31-6100	Gear Assembly	1	535751-
11	C1		• Gear	1	535751-
12		6212-31-6120	• Bushing	1	535751-
13		6212-21-2511	Shaft	1	535751-
14		6210-21-2422	Plate	1	535751-
15		6212-21-2450	Bolt	1	535751-

FIG. A2210-001001 Flywheel Housing

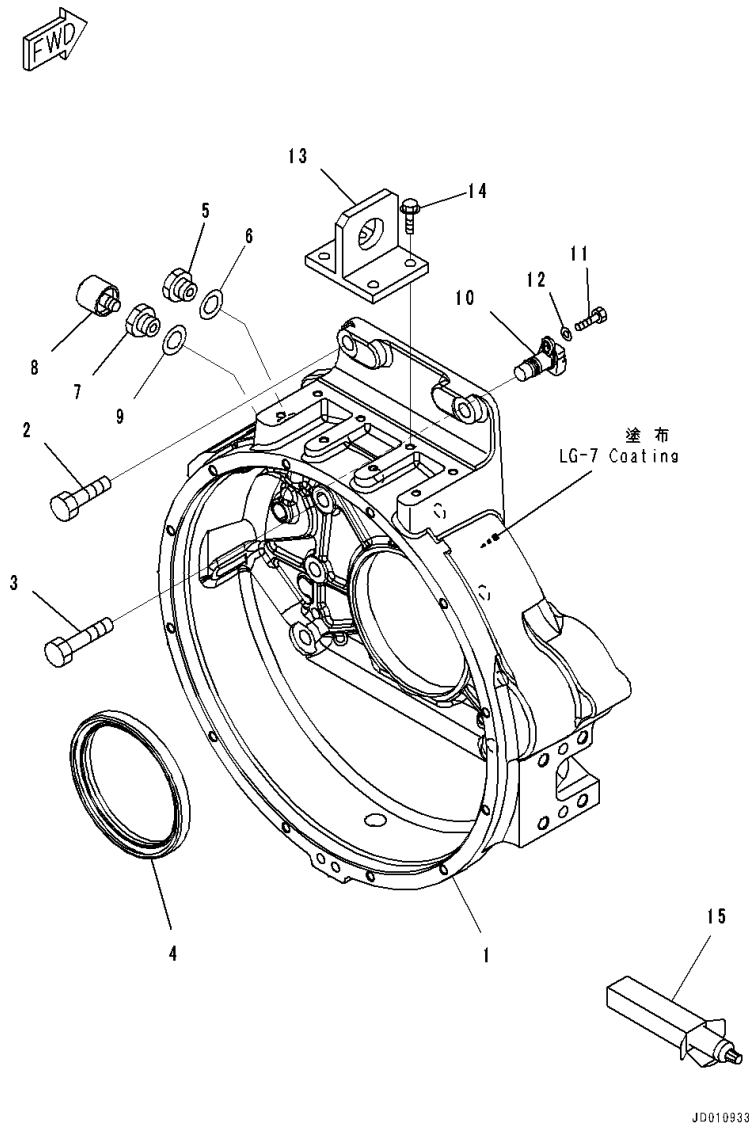

Index	Code	Part Number	Description	Qty	Serial Number
1		6261-21-4740	Housing, Flywheel	1	535751-
2		01010-61650	Bolt	8	535751-
3		01010-61665	Bolt	2	535751-
4		6151-21-4150	Seal	1	535751-
5		6114-11-8910	Plug	1	535751-
6		07005-02216	Gasket	1	535751-
7		6151-21-4960	Nipple	1	535751-
8		07030-00252	Breather	1	535751-
9		07005-02216	Gasket	1	535751-
10		6261-81-2902	Sensor Assembly, Speed, Revolution	1	535933-
	C1		• Sensor	1	535751-
		6271-81-9220	• O-ring	1	535751-
11		01010-80820	Bolt	1	535751-
12		01643-30823	Washer	1	535751-
13		6210-21-4770	Hanger, Rear	1	535751-
14		01435-01025	Bolt	4	535751-
15		09920-00150	Liquid gasket, LG-7, 150G	AR	535751-

FIG. A2230-001001 Flywheel

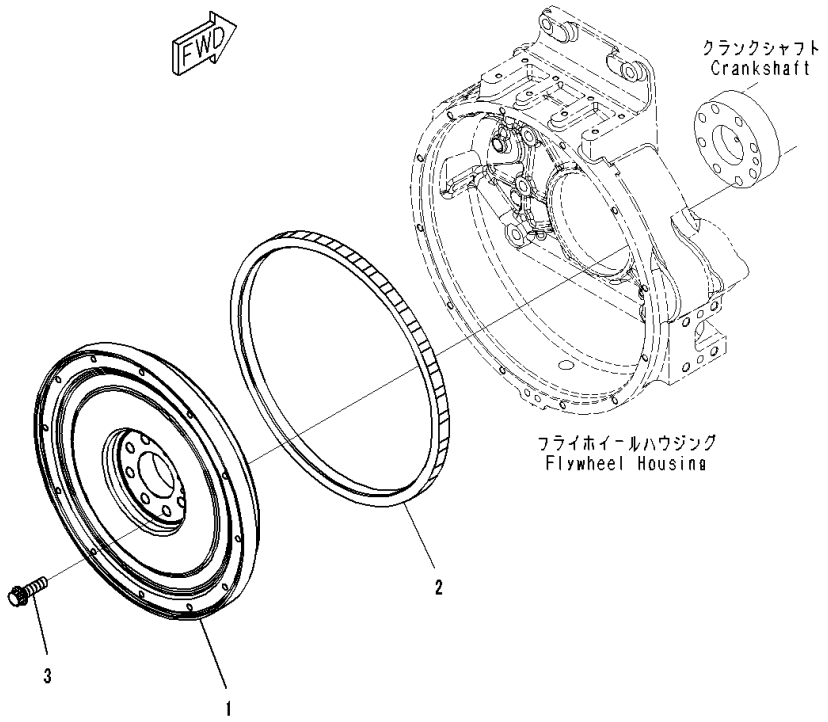

Index	Code	Part Number	Description	Qty	Serial Number
		6261-31-4100	Flywheel Assembly	1	535751-
1	C1		• Flywheel	1	535751-
2		6150-31-1351	• Gear, Ring	1	535751-
3		6210-31-1350	Bolt	8	535751-

FIG. A2610-002001 Power Takeoff, Non Drive Type

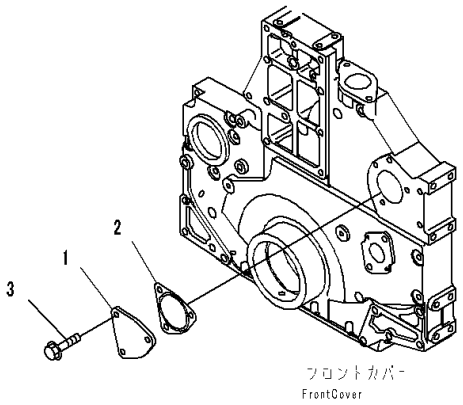

PJ6D284

Index	Code	Part Number	Description	Qty	Serial Number
1		6217-21-3440	Plate	1	535751-
2		6217-21-3430	Gasket	1	535751-
3		01435-01020	Bolt	3	535751-

FIG. A2110-001001 Engine Oil Pan

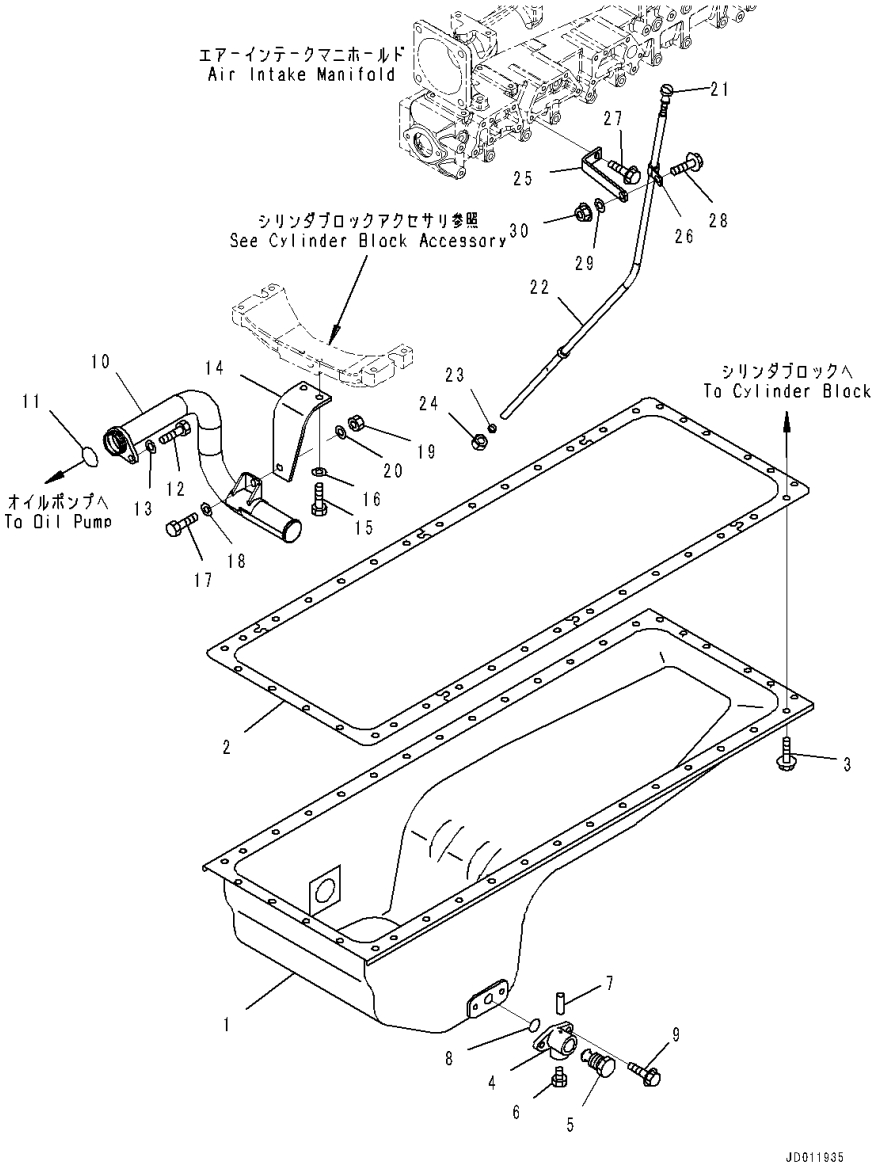

Index	Code	Part Number	Description	Qty	Serial Number
1		6210-21-5290	Pan	1	535751-
2		6210-21-5820	Gasket	1	535751-
3		01435-01025	Bolt	38	535751-
		6693-22-5600	Valve Assembly	1	535751-
4	C1		• Body	1	535751-
5	C1		• Valve	1	535751-
6		07040-02412	• Plug	1	535751-
7		04020-00514	• Pin, Dowel	1	535751-
8		07000-73028	O-ring	1	535751-
9		01435-01025	Bolt	2	535751-
10		6261-51-6540	Strainer	1	535751-
11		07000-73040	O-ring	1	535751-
12		01010-81025	Bolt	1	535751-
13		01643-31032	Washer	1	535751-
14		6261-51-6550	Bracket	1	535751-
15		01010-81025	Bolt	2	535751-
16		01643-31032	Washer	2	535751-
17		01010-81030	Bolt	1	535751-
18		01643-31032	Washer	1	535751-
19		01580-01008	Nut	1	535751-
20		01643-31032	Washer	1	535751-
21		6261-21-5310	Gauge, Oil Level	1	535751-
22		6261-21-5430	Guide, Oil Gauge	1	535751-
23		6150-21-5920	Collar	1	535751-
24		6150-21-5930	Nut	1	535751-
25		6261-21-5420	Bracket	1	535751-
26		04434-51310	Clip	1	535751-
27		01435-01020	Bolt	1	535751-
28		01435-01025	Bolt	1	535751-
29		01643-31032	Washer	1	535751-
30		01584-01008	Nut	1	535751-

FIG. A2110-002001 Engine Oil Pan, With Coolant Heater

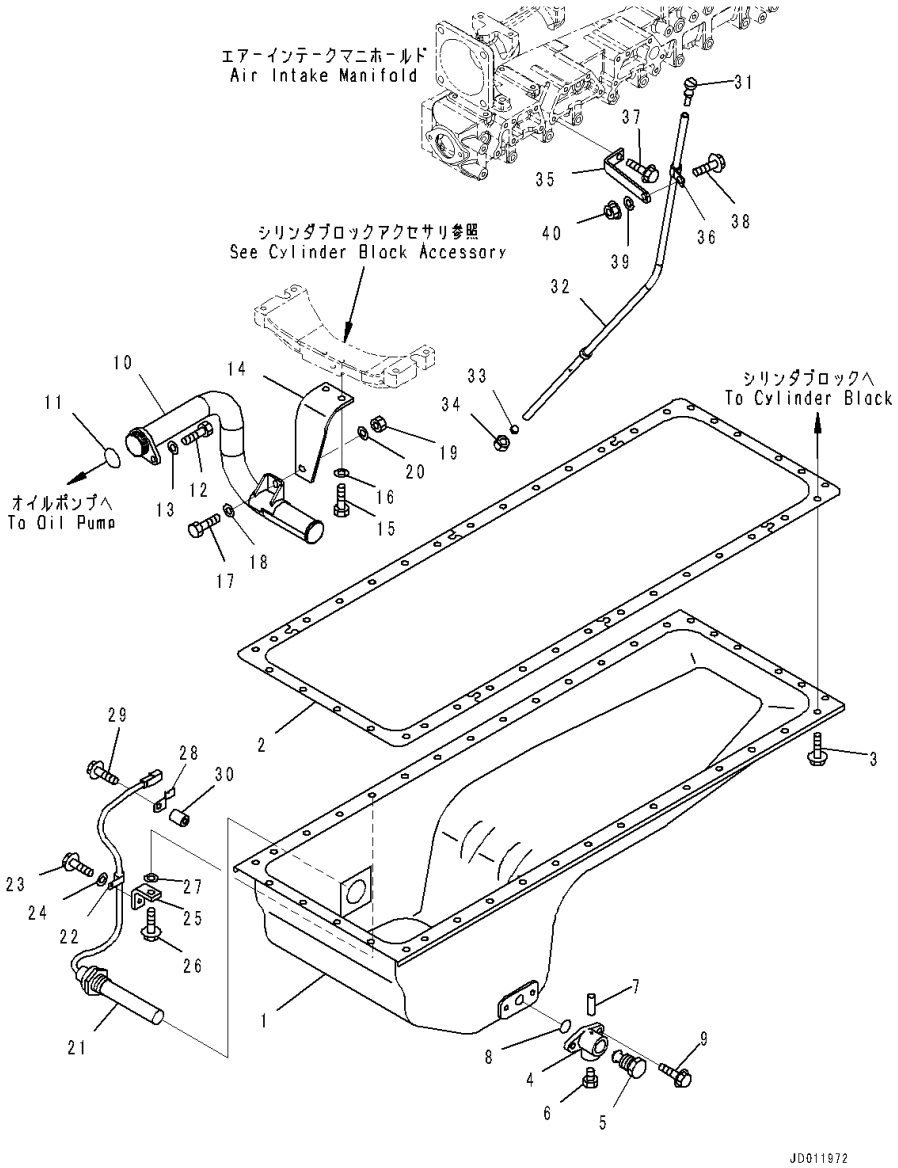

Index	Code	Part Number	Description	Qty	Serial Number
1		6210-21-5250	Pan, Oil	1	535751-
2		6210-21-5820	Gasket	1	535751-
3		01435-01025	Bolt	38	535751-
		6693-22-5600	Valve Assembly	1	535751-
4	C1		• Body	1	535751-
5	C1		• Valve	1	535751-
6		07040-02412	• Plug	1	535751-
7		04020-00514	• Pin, Dowel	1	535751-
8		07000-73028	O-ring	1	535751-
9		01435-01025	Bolt	2	535751-
10		6261-51-6540	Strainer	1	535751-
11		07000-73040	O-ring	1	535751-
12		01010-81025	Bolt	1	535751-
13		01643-31032	Washer	1	535751-
14		6261-51-6550	Bracket	1	535751-
15		01010-81025	Bolt	2	535751-
16		01643-31032	Washer	2	535751-
17		01010-81030	Bolt	1	535751-
18		01643-31032	Washer	1	535751-
19		01580-01008	Nut	1	535751-
20		01643-31032	Washer	1	535751-
21		600-815-9250	Heater	1	535751-
22		600-051-2100	Clip	1	535751-
23		01435-01020	Bolt	1	535751-
24		01643-31032	Washer	1	535751-
25		6222-83-6620	Bracket	1	535751-
26		01435-01040	Bolt	1	535751-
27		6110-23-6490	Spacer	1	535751-
28		08193-20010	Clip	1	535751-
29		01435-01080	Bolt	1	535751-
30		6164-11-5590	Spacer	1	535751-
31		6261-21-5310	Gauge, Oil Level	1	535751-
32		6261-21-5430	Guide, Oil Gauge	1	535751-
33		6150-21-5920	Collar	1	535751-
34		6150-21-5930	Nut	1	535751-
35		6261-21-5420	Bracket	1	535751-
36		04434-51310	Clip	1	535751-
37		01435-01020	Bolt	1	535751-
38		01435-01025	Bolt	1	535751-
39		01643-31032	Washer	1	535751-

FIG. A2110-002001 Engine Oil Pan, With Coolant Heater

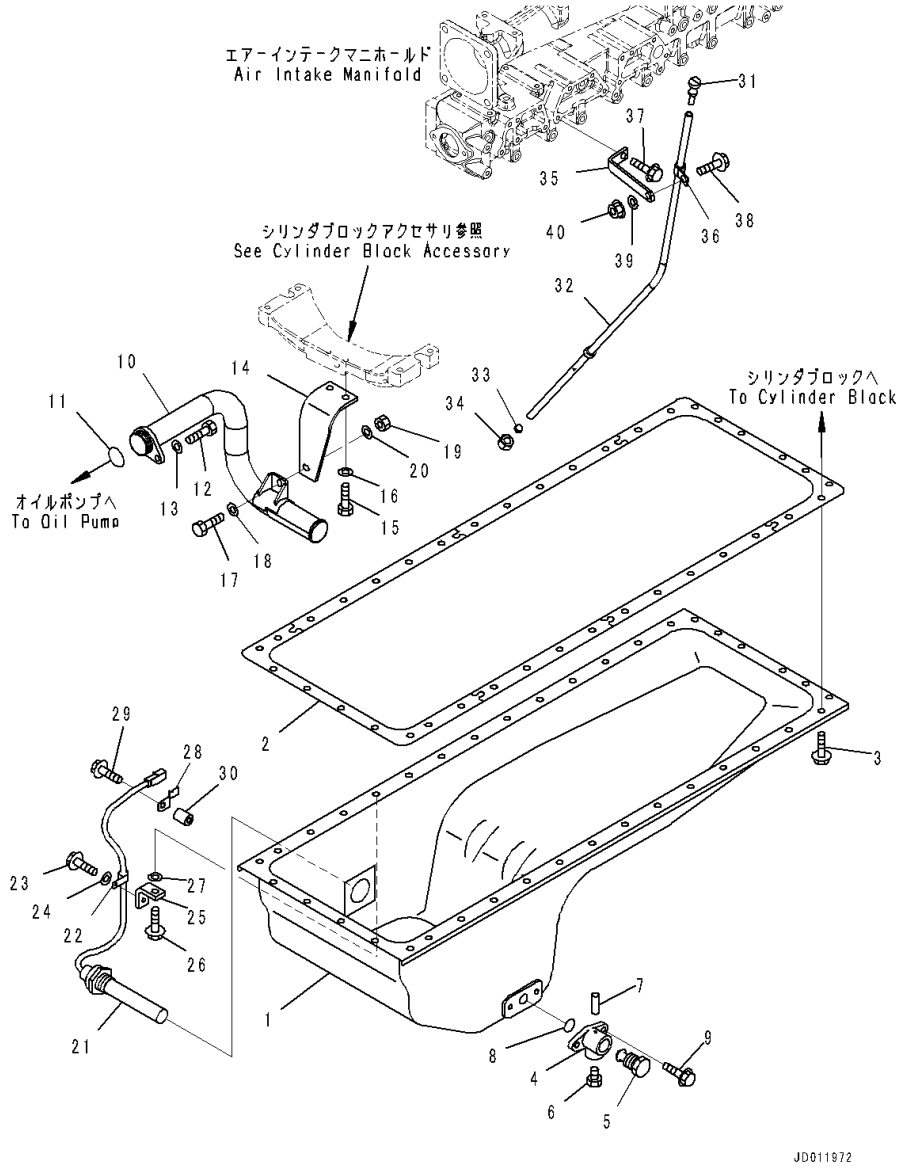

Index	Code	Part Number	Description	Qty	Serial Number
40		01584-01008	Nut	1	535751-

FIG. A2250-001001 Engine Mounting

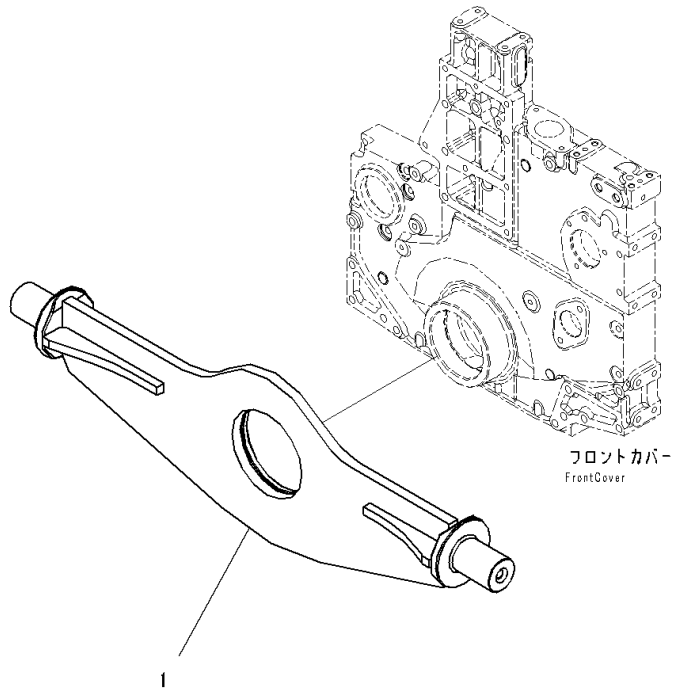

Index	Code	Part Number	Description	Qty	Serial Number
1		17A-01-41110	Support, Front,Front	1	535751-

FIG. A2010-001001 Cylinder Block

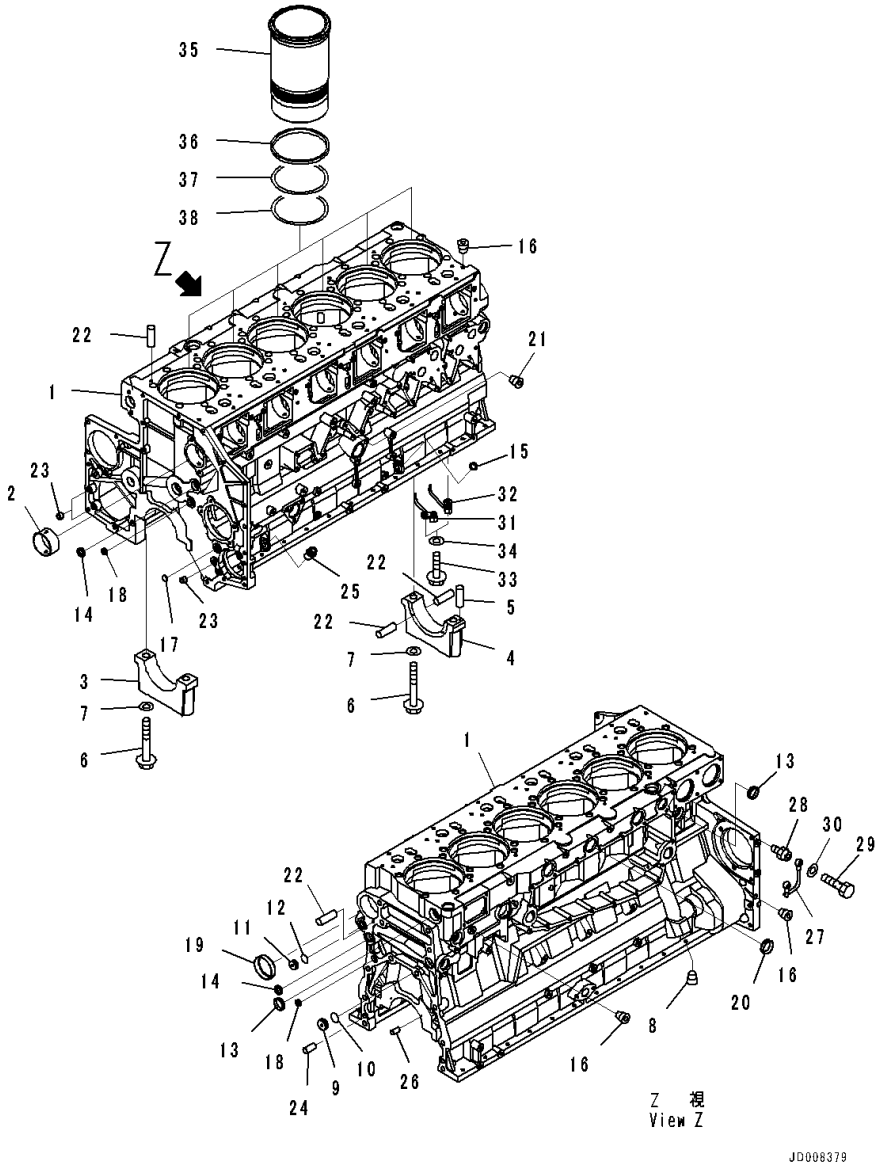

Index	Code	Part Number	Description	Qty	Serial Number
		6261-21-1100	Cylinder Block Assembly	1	535751-
	C1		• Block Subassembly	1	535751-
1	C1		• • Block, Cylinder	1	535751-
2		6210-21-1491	• • Bushing	7	535751-
3	C1		• • Cap, Main Metal, No.1,2,3,4,5,6	6	535751-
4	C1		• • Cap, Main Metal, No.7	1	535751-
5		04020-00514	• • Pin, Dowel	2	535751-
6		6217-21-1710	• • Bolt	14	535751-
7		01643-31845	• • Washer	14	535751-
8		07043-01019	• Plug, Taper	1	535751-
9		6217-21-1980	• Plug	1	535751-
10		07000-72025	• O-ring	1	535751-
11		6217-21-1990	• Plug	1	535751-
12		07000-72021	• O-ring	1	535751-
13		07046-43516	• Plug	2	535751-
14		07046-42516	• Plug	2	535751-
15		07046-42010	• Plug	1	535751-
16		07043-70108	• Plug	11	535751-
17		07046-11816	• Plug, Expansion	3	535751-
18		07046-41810	• Plug	2	535751-
19		07046-47020	• Plug	1	535751-
20		07046-44016	• Plug	3	535751-
21		07043-70211	• Plug	2	535751-
22		04020-00820	• Pin, Dowel	12	535751-
23		6210-21-1910	• Pin, Ring	3	535751-
24		6150-21-4770	• Pin, Dowel	2	535751-
25		6150-21-5910	• Bushing	1	535751-
26		6210-21-1390	• Pin	6	535751-
27		6261-21-1611	Tube	1	535751-
28		6132-21-4620	Nipple	2	535751-
29		6934-72-7190	Bolt, Joint	2	535751-
30		07005-01012	Seal, Washer	4	535751-
31		6261-21-1910	Nozzle	6	535751-
32		6261-21-1920	Nozzle	6	535751-
33		01437-01025	Bolt	12	535751-
34		01643-51032	Washer	12	535751-
35		6211-22-2220	Liner	6	535751-
36		6210-21-2270	Seal	6	535751-
37		6210-21-2240	O-ring	6	535751-
38		6210-21-2230	O-ring	6	535751-

FIG. A2011-001001 Cylinder Block Accessory

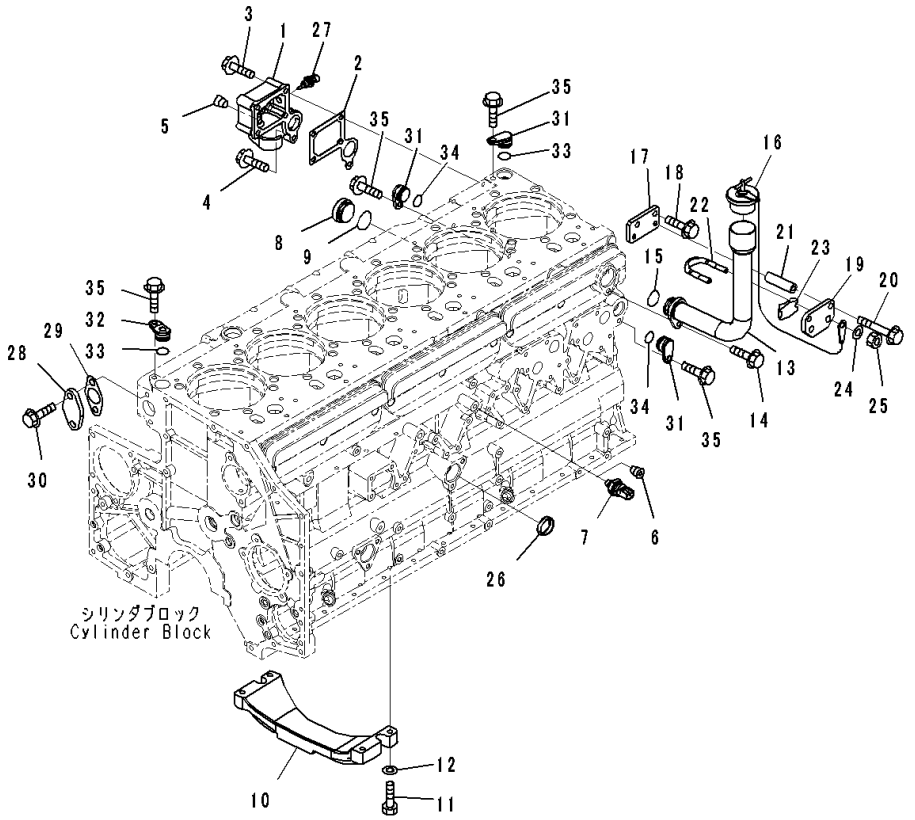

Index	Code	Part Number	Description	Qty	Serial Number
1		6261-21-1990	Cover	1	535751-
2		6261-21-1970	Gasket	1	535751-
3		01435-01065	Bolt	4	535751-
4		01435-01035	Bolt	1	535751-
5		07043-A0415	Plug	1	535751-
6		07043-70108	Plug	2	535751-
7		6219-81-1961	Sensor Assembly	1	535751-
		6219-81-1991	• O-ring	1	535751-
8		6150-21-1180	Plug	1	535751-
9		6150-21-1190	O-ring	1	535751-
10		6217-21-1220	Bracket	1	535751-
11		01010-81050	Bolt	4	535751-
12		01643-31032	Washer	4	535751-
13		6261-21-7130	Filler, Oil	1	535751-
14		01435-01030	Bolt	1	535751-
15		07000-73034	O-ring	1	535751-
16		07025-00100	Cap, Oil Filler	1	535751-
17		6261-21-7210	Plate	1	535751-
18		01435-01025	Bolt	2	535751-
19		6261-21-7290	Plate	1	535751-
20		01435-01090	Bolt	2	535751-
21		6221-81-6940	Spacer	2	535751-
22		07283-34354	Clip, Pipe	1	535751-
23		07283-54353	Seat	1	535751-
24		01643-31032	Washer	2	535751-
25		01597-01009	Nut	2	535751-
26		07046-44016	Plug	1	535751-
27		6261-81-6901	Sensor Assembly, Water Temperature	1	535751-
		6216-84-9740	• Seal	1	535751-
28		6210-21-1950	Flange	1	535751-
29		6696-61-9921	Gasket	1	535751-
30		01435-01225	Bolt	2	535751-
31		6217-21-1940	Cover	3	535751-
32		6218-21-1940	Cover	1	535751-
33		6215-61-6630	O-ring	2	535751-
34		07000-73025	O-ring	2	535751-
35		01435-01020	Bolt	4	535751-

FIG. A2011-002001 Cylinder Block Accessory, With Coolant Heater

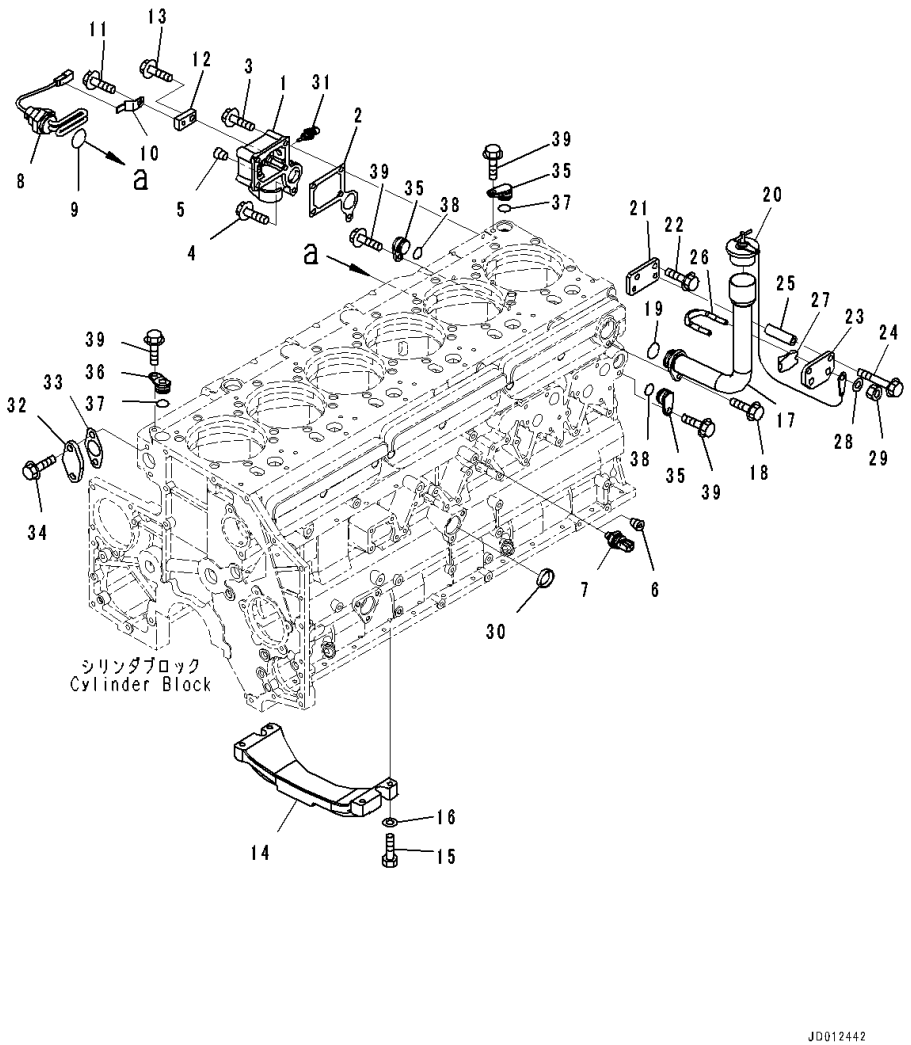

Index	Code	Part Number	Description	Qty	Serial Number
1		6261-21-1990	Cover	1	535751-
2		6261-21-1970	Gasket	1	535751-
3		01435-01065	Bolt	4	535751-
4		01435-01035	Bolt	1	535751-
5		07043-A0415	Plug	1	535751-
6		07043-70108	Plug	2	535751-
7		6219-81-1961	Sensor Assembly	1	535751-
		6219-81-1991	• O-ring	1	535751-
8		600-815-9240	Heater, Water	1	535751-
9		6150-21-1190	O-ring	1	535751-
10		08193-20010	Clip	1	535751-
11		01435-01016	Bolt	1	535751-
12		6218-61-8750	Plate	1	535751-
13		01435-01030	Bolt	1	535751-
14		6217-21-1220	Bracket	1	535751-
15		01010-81050	Bolt	4	535751-
16		01643-31032	Washer	4	535751-
17		6261-21-7130	Filler, Oil	1	535751-
18		01435-01030	Bolt	1	535751-
19		07000-73034	O-ring	1	535751-
20		07025-00100	Cap, Oil Filler	1	535751-
21		6261-21-7210	Plate	1	535751-
22		01435-01025	Bolt	2	535751-
23		6261-21-7290	Plate	1	535751-
24		01435-01090	Bolt	2	535751-
25		6221-81-6940	Spacer	2	535751-
26		07283-34354	Clip, Pipe	1	535751-
27		07283-54353	Seat	1	535751-
28		01643-31032	Washer	2	535751-
29		01597-01009	Nut	2	535751-
30		07046-44016	Plug	1	535751-
31		6261-81-6901	Sensor Assembly, Water Temperature	1	535751-
		6216-84-9740	• Seal	1	535751-
32		6210-21-1950	Flange	1	535751-
33		6696-61-9921	Gasket	1	535751-
34		01435-01225	Bolt	2	535751-
35		6217-21-1940	Cover	3	535751-
36		6218-21-1940	Cover	1	535751-
37		6215-61-6630	O-ring	2	535751-
38		07000-73025	O-ring	2	535751-

FIG. A2011-002001 Cylinder Block Accessory, With Coolant Heater

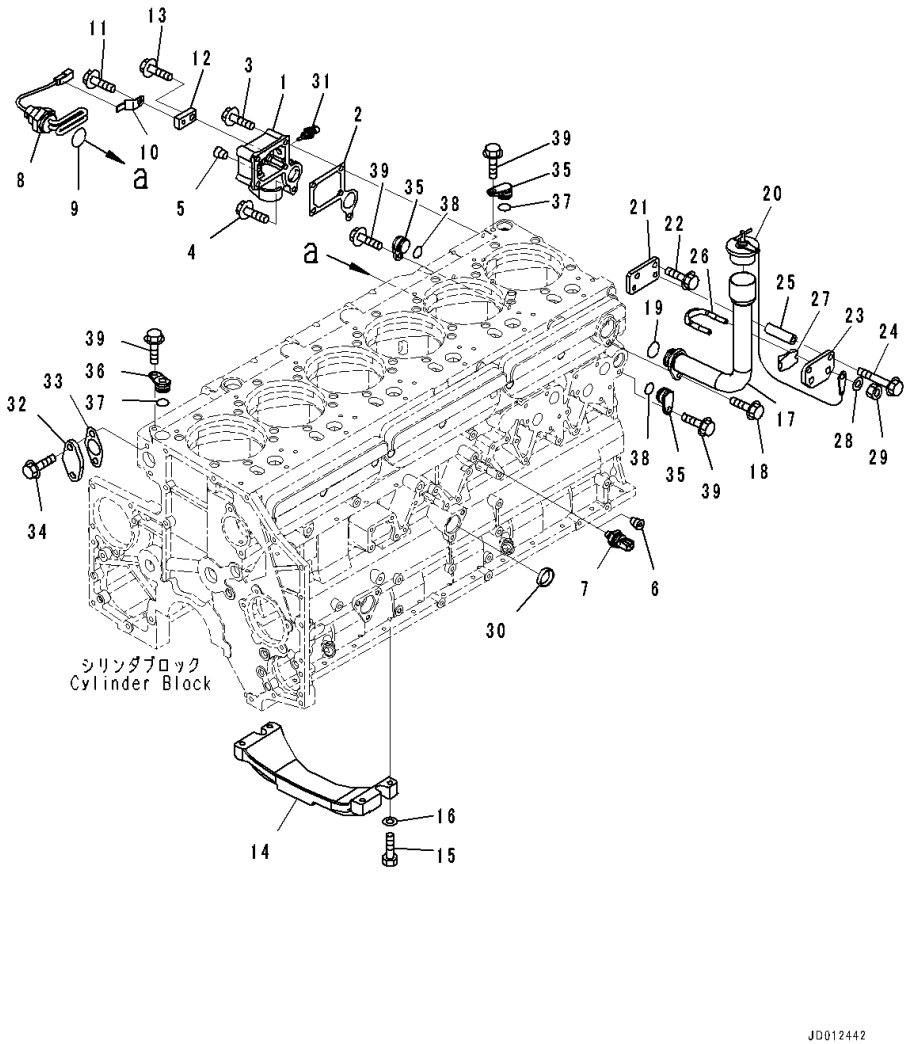

Index	Code	Part Number	Description	Qty	Serial Number
39		01435-01020	Bolt	4	535751-

FIG. A2310-002001 Crankshaft

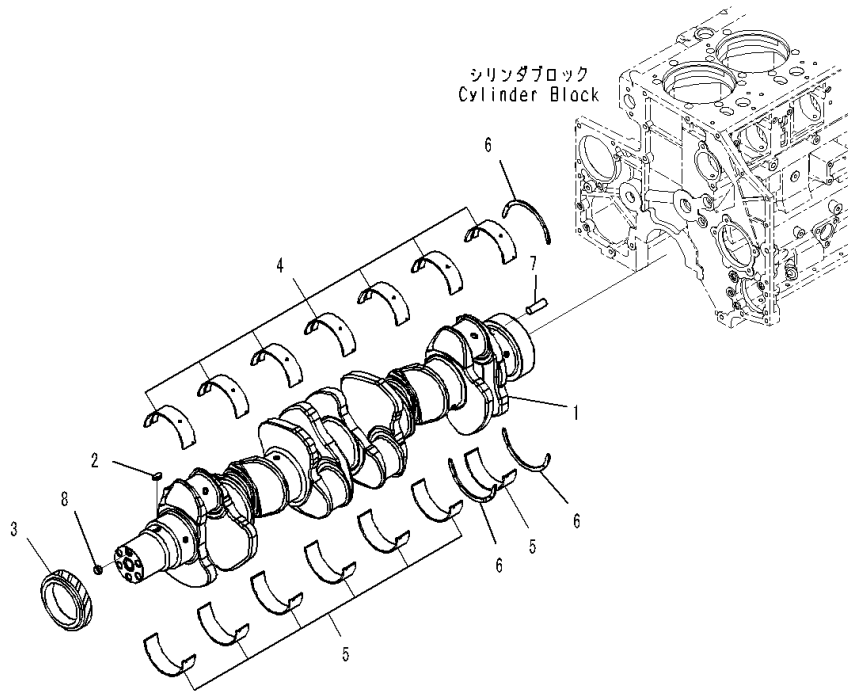

Index	Code	Part Number	Description	Qty	Serial Number
		6261-31-1200	Crankshaft Assembly	1	535751-
1	C1		• Crankshaft	1	535751-
2		6150-31-1130	• Key	1	535751-
3		6210-31-1120	• Gear	1	535751-
		6210-21-8000	Metal Assembly	1	535751-
		6210-21-8010	• Main Metal Assembly	7	535751-
		6210-29-8010	• Main Metal Assembly, Undersize 0.25mm	7	535751-
		6210-28-8010	• Main Metal Assembly, Undersize 0.50mm	7	535751-
		6210-27-8010	• Main Metal Assembly, Undersize 0.75mm	7	535751-
		6210-26-8010	• Main Metal Assembly, Undersize 1.00mm	7	535751-
4	C1		• • Metal, Upper, Standard	1	535751-
	C1		• • Metal, Upper, Undersize 0.25mm	1	535751-
	C1		• • Metal, Upper, Undersize 0.50mm	1	535751-
	C1		• • Metal, Upper, Undersize 0.75mm	1	535751-
	C1		• • Metal, Upper, Undersize 1.00mm	1	535751-
5	C1		• • Metal	1	535751-
	C1		• • Metal, Lower, Undersize 0.25mm	1	535751-
	C1		• • Metal, Lower, Undersize 0.50mm	1	535751-
	C1		• • Metal, Lower, Undersize 0.75mm	1	535751-
	C1		• • Metal, Lower, Undersize 1.00mm	1	535751-
		6210-21-8050	• Thrust Metal Assembly, Standard	1	535751-
		6210-29-8050	• Thrust Metal Assembly, Oversize 0.25mm	1	535751-
		6210-28-8050	• Thrust Metal Assembly, Oversize 0.50mm	1	535751-
		6210-27-8050	• Thrust Metal Assembly, Oversize 0.75mm	1	535751-
		6210-26-8050	• Thrust Metal Assembly, Oversize 1.00mm	1	535751-
6	C1		• • Metal, Thrust, Standard	3	535751-
	C1		• • Metal, Thrust, Oversize 0.25mm	3	535751-
	C1		• • Metal, Thrust, Oversize 0.50mm	3	535751-
	C1		• • Metal, Thrust, Oversize 0.75mm	3	535751-
	C1		• • Metal, Thrust, Oversize 1.00mm	3	535751-
7		04020-01228	Pin, Dowel	1	535751-
8		6211-31-1420	Pin	1	535751-

FIG. A2370-001001 Damper Flange

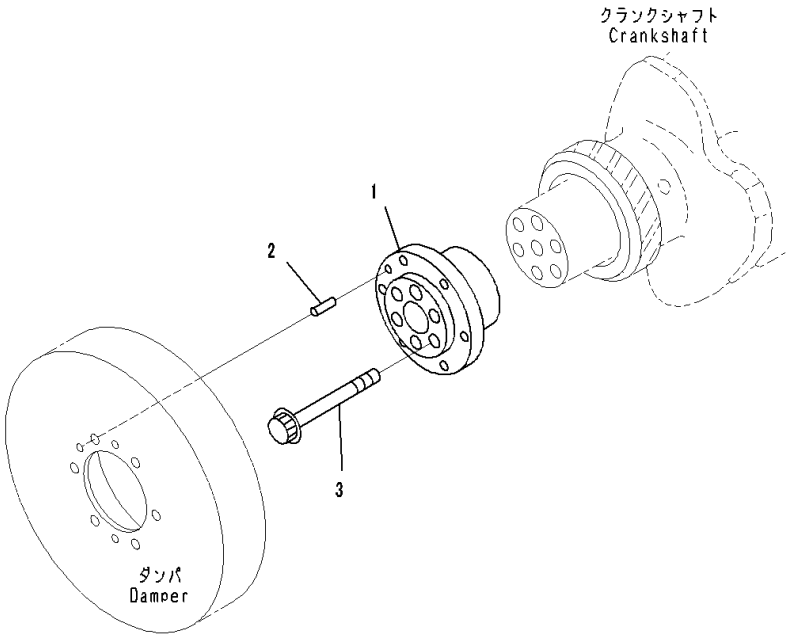

Index	Code	Part Number	Description	Qty	Serial Number
1		6218-31-1530	Flange	1	535751-
2		04020-01024	Pin, Dowel	1	535751-
3		6164-21-2490	Bolt	6	535751-

FIG. A2330-002001 Vibration Damper

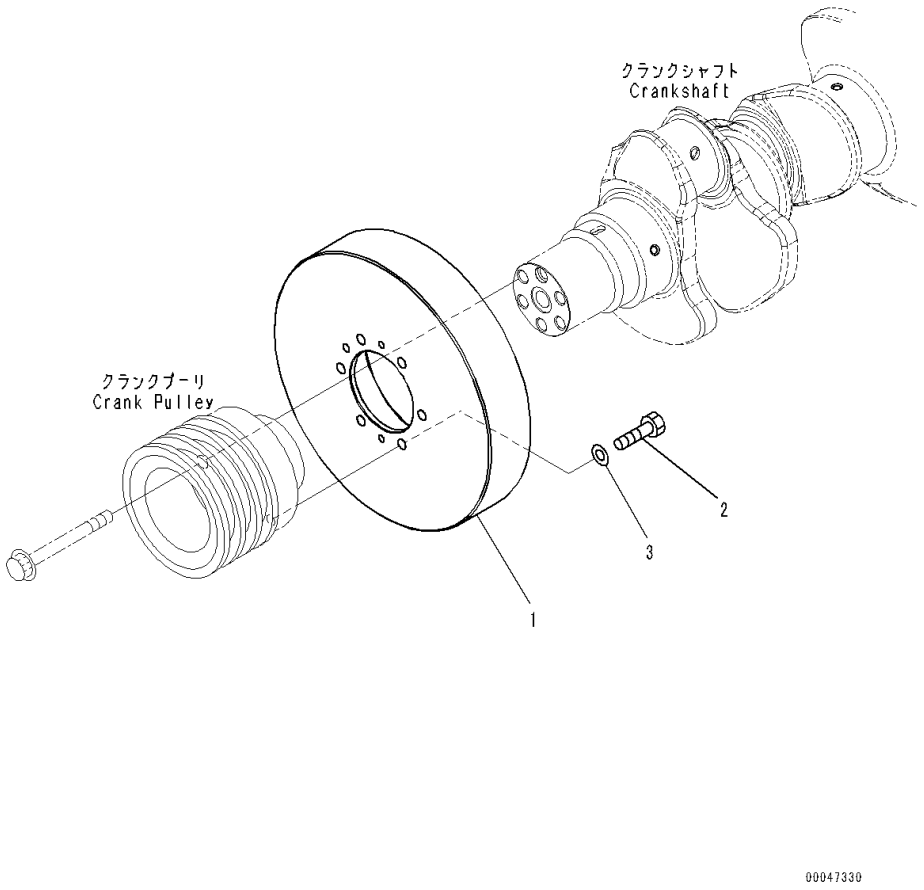

Index	Code	Part Number	Description	Qty	Serial Number
1		6261-31-8300	Damper Assembly	1	535751-
2		01010-81230	Bolt	6	535751-
3		01643-31232	Washer	6	535751-

FIG. A2350-001001 Piston and Connecting Rod

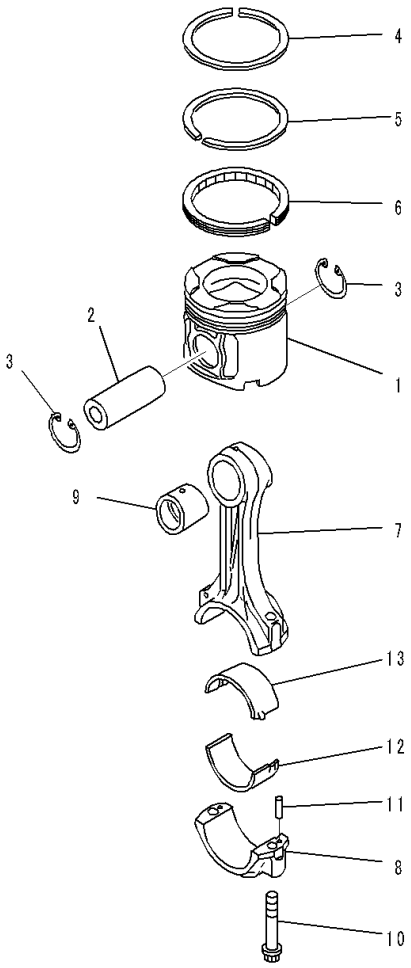

00041249

Index	Code	Part Number	Description	Qty	Serial Number
1		6261-31-2130	Piston	6	535751-
2		6211-31-2410	Pin	6	535751-
3		04065-05220	Ring, Snap	12	535751-
		6261-31-2040	Ring Assembly, PER Cylinder	6	535751-
4	C1		• Ring	1	535751-
5	C1		• Ring	1	535751-
6	C1		• Ring	1	535751-
		6261-31-3100	Connecting Rod Assembly	6	535751-
7	C1		• Rod	1	535751-
8	C1		• Cap	1	535751-
9		6261-31-3130	• Bushing	1	535751-
10		6210-31-3310	• Bolt	2	535751-
11		02400-10413	• Pin, Dowel	2	535751-
		6210-32-3040	Metal Assembly, Standard	6	535751-
		6210-39-3040	Metal Assembly, Undersize 0.25mm	6	535751-
		6210-38-3040	Metal Assembly, Undersize 0.50mm	6	535751-
		6210-37-3040	Metal Assembly, Undersize 0.75mm	6	535751-
		6210-36-3040	Metal Assembly, Undersize 1.00mm	6	535751-
12	C1		• Metal, Lower	1	535751-
	C1		• Metal, Lower, Undersize 0.25mm	1	535751-
	C1		• Metal, Lower, Undersize 0.50mm	1	535751-
	C1		• Metal, Lower, Undersize 0.75mm	1	535751-
	C1		• Metal, Lower, Undersize 1.00mm	1	535751-
13	C1		• Metal, Upper	1	535751-
	C1		• Metal, Upper, Undersize 0.25mm	1	535751-
	C1		• Metal, Upper, Undersize 0.50mm	1	535751-
	C1		• Metal, Upper, Undersize 0.75mm	1	535751-
	C1		• Metal, Upper, Undersize 1.00mm	1	535751-

FIG. A3110-001001 Engine Oil Filler

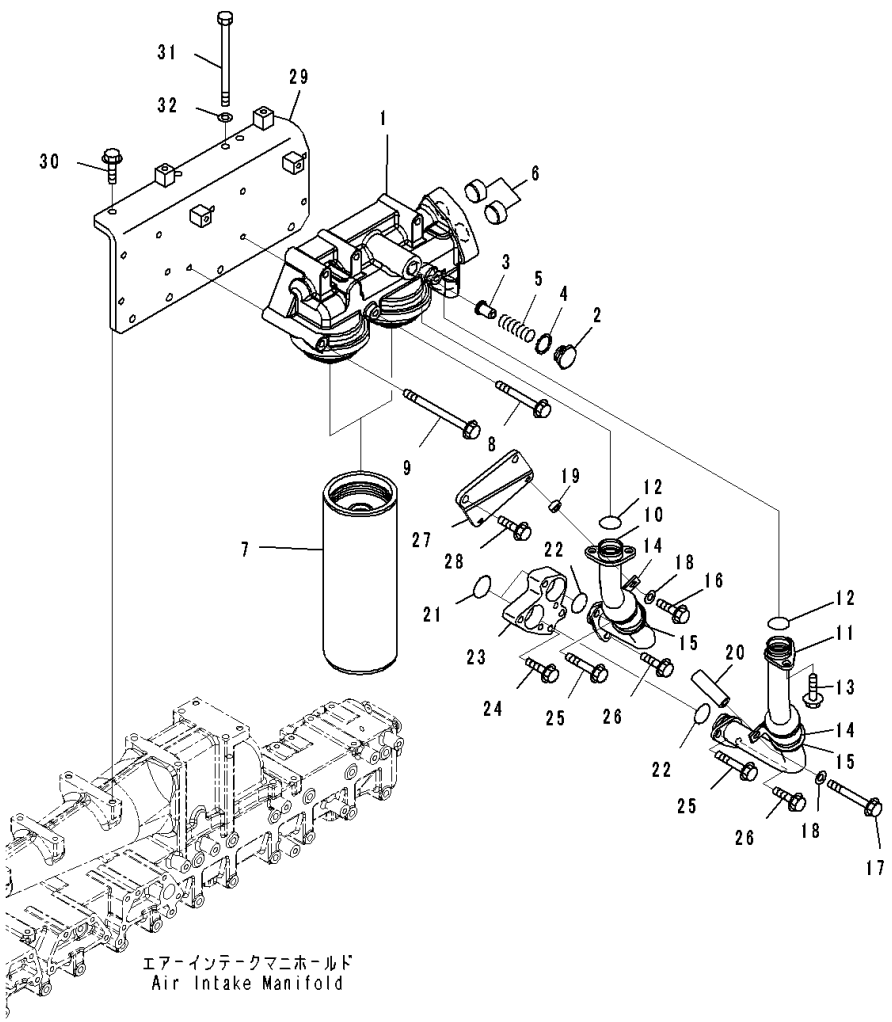

Index	Code	Part Number	Description	Qty	Serial Number
		6261-51-6601	Head Assembly, Oil Filter	1	535751-
1		6261-51-6611	• Head	1	535751-
2		6217-51-5660	• Cap	1	535751-
3		6162-55-5230	• Valve	1	535751-
4		6162-53-5430	• Packing	1	535751-
5		600-211-1890	• Spring	1	535751-
6		6261-51-6620	• Plug	2	535751-
7		600-211-1340	Cartridge	2	535751-
8		01435-01095	Bolt	3	535751-
9		01436-01040	Bolt	3	535751-
10		6261-51-6120	Tube, Inlet	1	535751-
11		6261-51-6130	Tube, Outlet	1	535751-
12		07000-73034	O-ring	2	535751-
13		01435-01025	Bolt	4	535751-
14		6165-61-6770	Clip	2	535751-
15		6261-51-5751	Cushion	2	535751-
16		01435-01025	Bolt	1	535751-
17		01435-01085	Bolt	1	535751-
18		01643-31032	Washer	2	535751-
19		417-823-1460	Spacer	1	535751-
20		6211-11-9790	Spacer	1	535751-
21		07000-73038	O-ring	2	535751-
22		07000-73034	O-ring	2	535751-
23		6261-51-5180	Flange	1	535751-
24		01435-01045	Bolt	2	535751-
25		01435-01050	Bolt	2	535751-
26		01435-01020	Bolt	2	535751-
27		6261-51-6140	Bracket	1	535751-
28		01435-01025	Bolt	2	535751-
29		6261-51-5840	Bracket	1	535751-
30		01435-01025	Bolt	6	535751-
31		01011-81095	Bolt	2	535751-
32		01643-31032	Washer	2	535751-

ENGINE LUBRICATING SYSTEM

FIG. A3310-001001 Oil Cooler

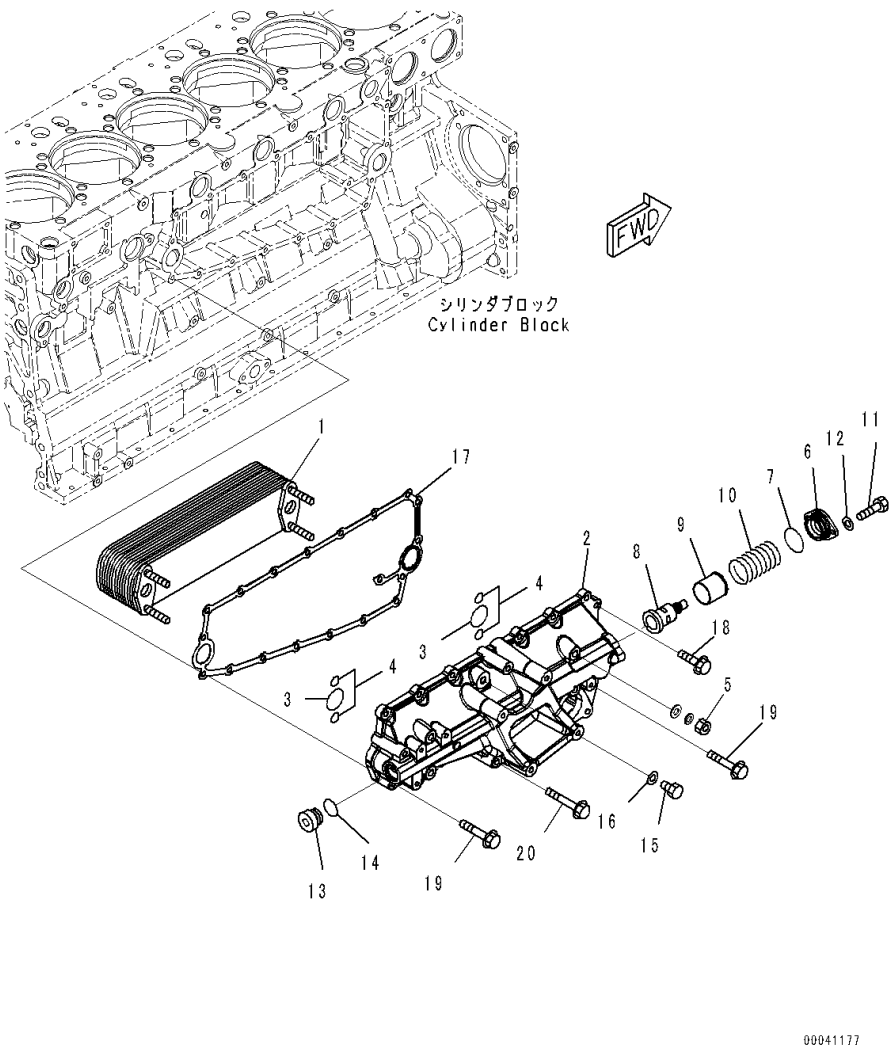

Index	Code	Part Number	Description	Qty	Serial Number
1		6261-61-2110	Element	1	535751-
2		6261-61-2120	Cover	1	535751-
3		6210-61-2520	O-ring	2	535751-
4		07000-A2016	O-ring	4	535751-
5		6215-61-2580	Nut	4	535751-
6		6210-61-2130	Cover	1	535751-
7		07000-73042	O-ring	1	535751-
8		6261-61-2610	Thermostat	1	535751-
9		6218-61-2620	Collar	1	535751-
10		6210-61-2160	Spring	1	535751-
11		01010-80820	Bolt	2	535751-
12		01640-20816	Washer	2	535751-
13		07040-13016	Plug	1	535751-
14		6210-61-2550	O-ring	1	535751-
15		07040-11409	Plug	1	535751-
16		07005-01412	Seal, Washer	1	535751-
17		6210-61-2811	Gasket	1	535751-
18		01435-01030	Bolt	10	535751-
19		01435-01060	Bolt	3	535751-
20		01435-01090	Bolt	3	535751-

ENGINE FUEL SYSTEM

FIG. A4030-001001 Fuel Injection Bracket and Piping, Bracket

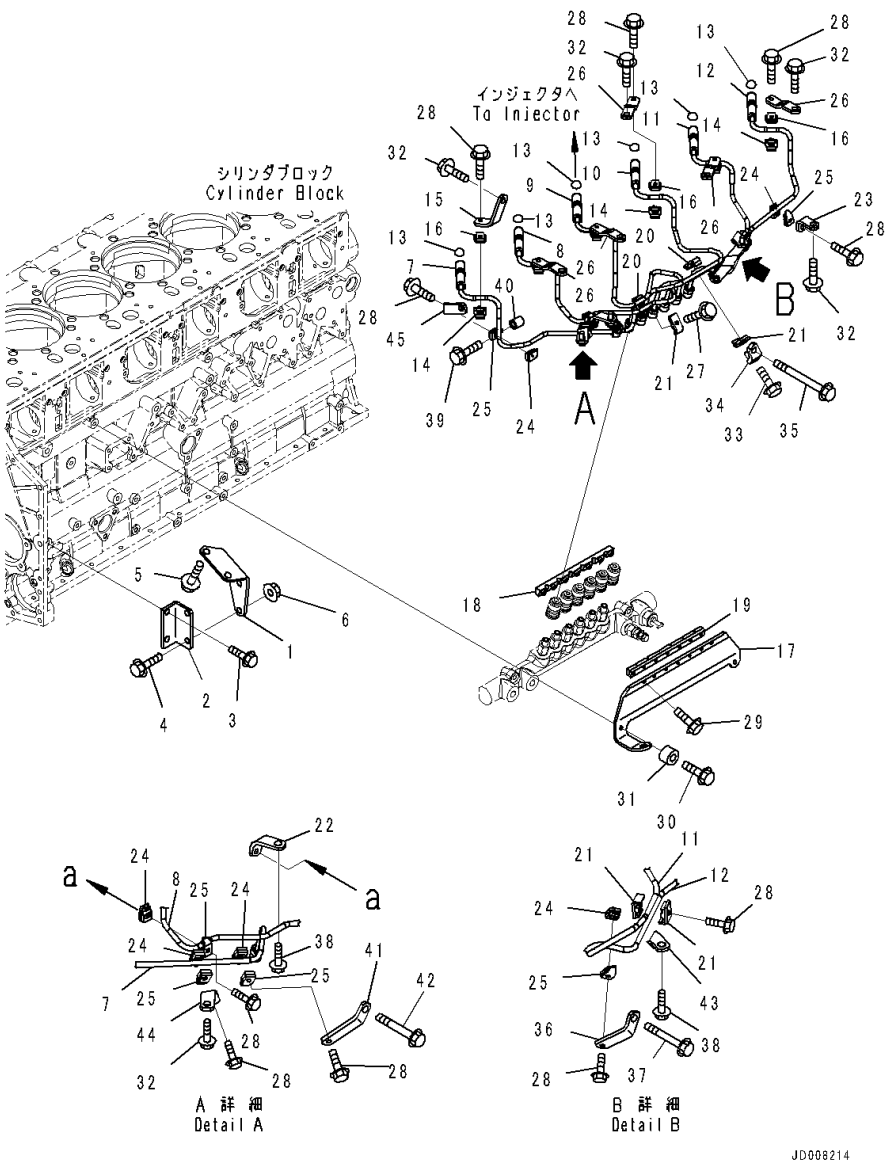

Index	Code	Part Number	Description	Qty	Serial Number
1		6217-21-6110	Bracket	1	535501-
2		6217-21-6120	Bracket	1	535501-
3		01435-01020	Bolt	2	535501-
4		01435-01025	Bolt	2	535501-
5		01435-01220	Bolt	2	535501-
6		01584-01008	Nut	2	535501-
7		6261-71-5112	Tube, Injection, No.1	1	535929-
8		6261-71-5122	Tube, Injection, No.2	1	535929-
9		6261-71-5132	Tube, Injection, No.3	1	535929-
10		6261-71-5142	Tube, Injection, No.4	1	535929-
11		6261-71-5152	Tube, Injection, No.5	1	535929-
12		6261-71-5162	Tube, Injection, No.6	1	535929-
13		07000-E2015	O-ring	6	535501-
14		6261-71-6660	Clamp	6	535501-
15		6261-71-5190	Bracket	1	535501-
16		6261-71-6670	Clamp	6	535501-
17		6217-71-5740	Bracket	1	535501-
18		6217-71-5261	Clamp	1	536263-
19		6217-71-5761	Clamp	1	536263-
20		6217-71-6640	Clamp	2	535501-
21		6217-71-6650	Clamp	4	535501-
22		6261-71-5610	Bracket	1	535501-
23		6261-71-5630	Bracket	1	535501-
24		6217-71-6660	Clamp	6	535501-
25		6217-71-6670	Clamp	6	535501-
26		6261-71-5650	Bracket	5	535501-
27		01435-00625	Bolt	1	535501-
28		01435-00630	Bolt	13	535501-
29		01435-00635	Bolt	7	535501-
30		01010-80830	Bolt	2	535501-
31		198-920-1530	Collar	2	535501-
32		01435-01020	Bolt	8	535501-
33		01435-00650	Bolt	1	535501-
34		6261-71-5660	Bracket	1	535501-
35		01436-01080	Bolt	1	535501-
36		6261-71-5741	Bracket	1	535501-
37		01436-01075	Bolt	1	535501-
38		01435-01020	Bolt	2	535501-
39		01435-01050	Bolt	1	535501-
40		6210-11-5820	Spacer	1	535501-

FIG. A4030-001001 Fuel Injection Bracket and Piping, Bracket

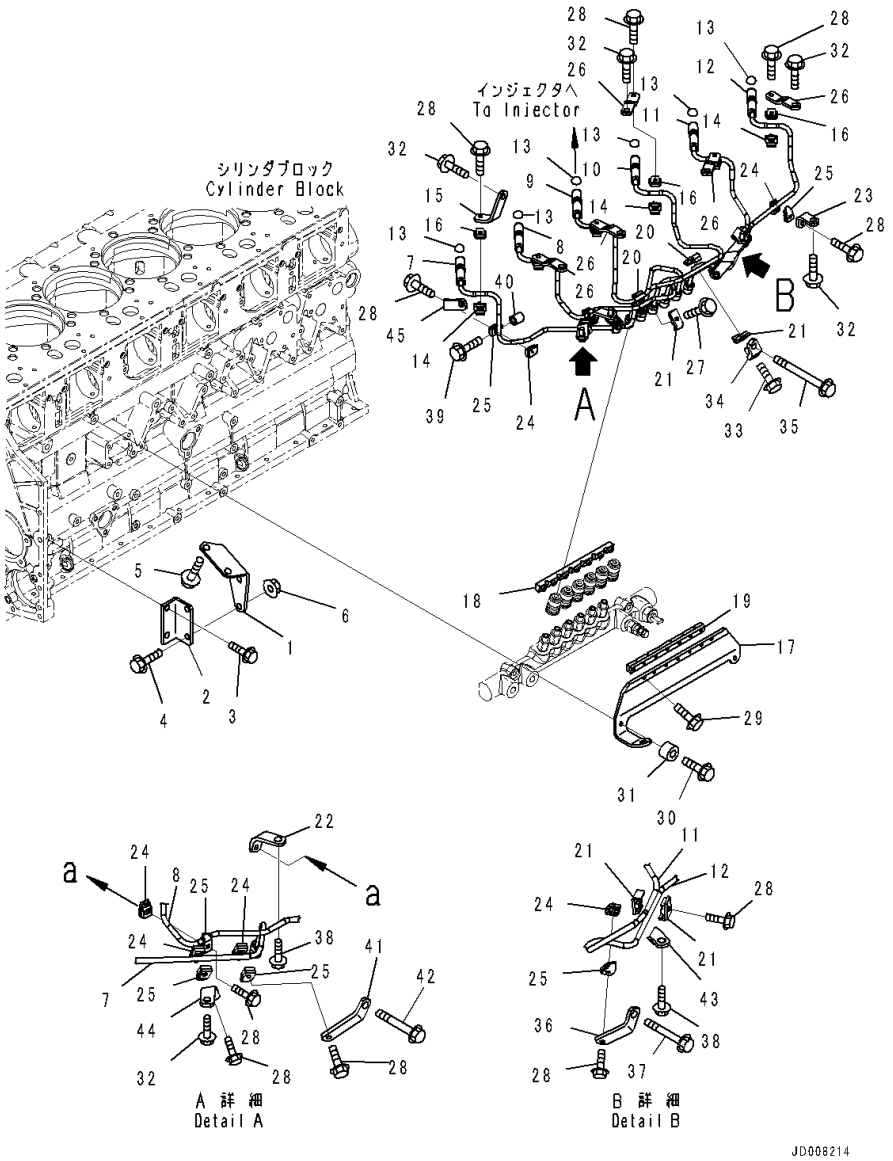

Index	Code	Part Number	Description	Qty	Serial Number
41		6261-71-5751	Bracket	1	535501-
42		01436-01075	Bolt	1	535501-
43		6261-71-5760	Bracket	1	535501-
44		6261-71-5720	Bracket	1	535501-
45		6261-71-5710	Bracket	1	535501-

FIG. A4030-001002 Fuel Injection Bracket and Piping

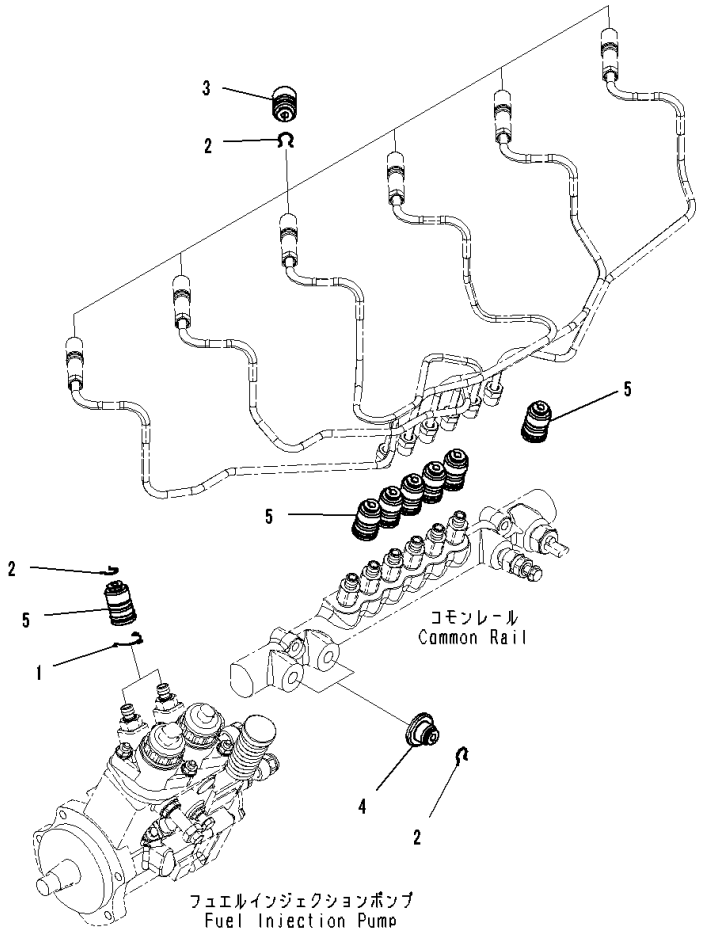

Index	Code	Part Number	Description	Qty	Serial Number
1		6156-71-9730	Clip	2	535751-
2		6217-71-5770	Clamp	10	535751-
3		6217-71-9770	Cap	6	535751-
4		6217-71-9780	Cap	2	535751-
5		6217-71-9791	Cover	8	535751-

FIG. A4010-001001 Fuel Supply Pump, Drive Gear

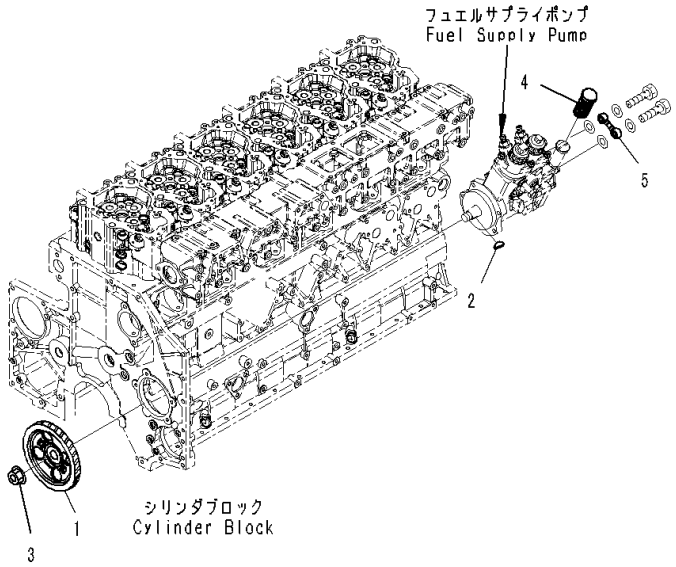

Index	Code	Part Number	Description	Qty	Serial Number
1		6261-71-3220	Gear	1	535751-
2		04010-00519	Key, Woodruff	1	535751-
3		6219-71-3150	Nut	1	535751-
4		6217-71-1910	Cover	1	535751-
5		6217-71-5910	Tube	1	535751-

FIG. A4010-001002A Fuel Supply Pump, Inner Parts, Pump

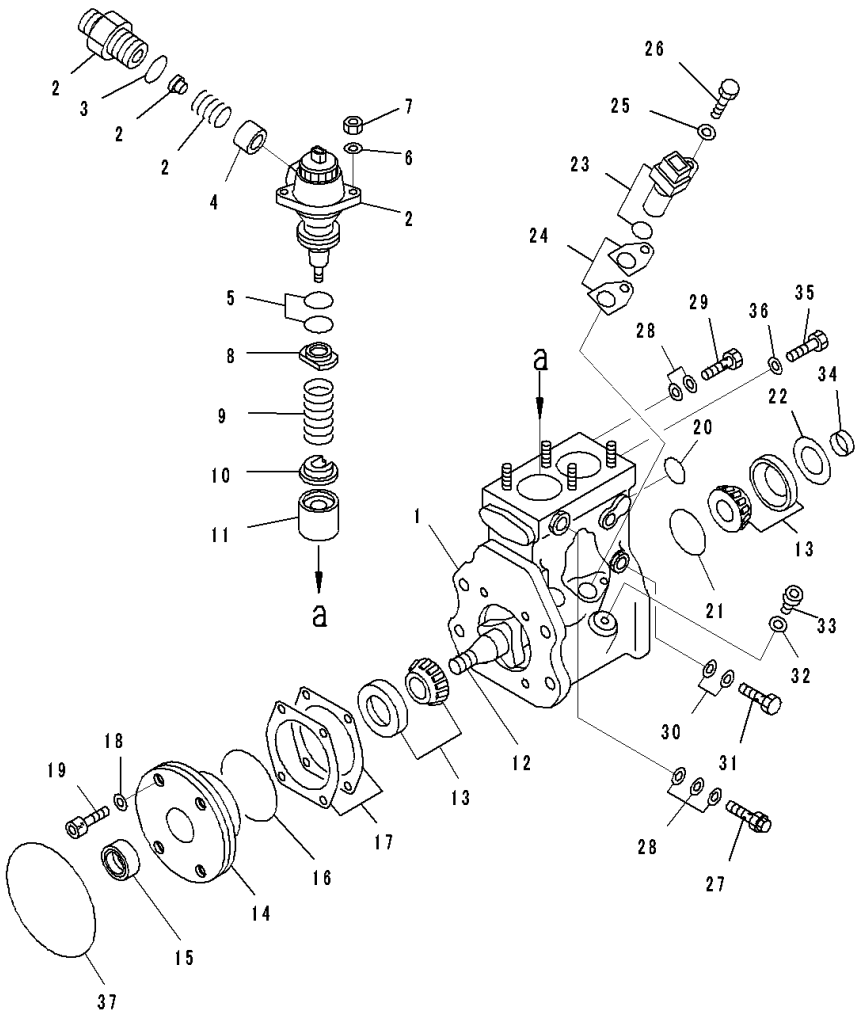

Index	Code	Part Number	Description	Qty	Serial Number
		6261-71-1111	Pump, Supply	1	535912-
	C2	ND094100-0472	• Body Assembly	1	535751-
1	C2	ND094110-0230	• • Housing Assembly	1	535751-
2	C2	ND094040-0380	• • Element Assembly	2	535912-
3	C2	ND094086-0090	• • • O-ring	2	535751-
4	C2	ND094140-0040	• • • Valve Assembly	2	535751-
5	C2	ND094086-0100	• • O-ring	4	535751-
6	C2	ND949013-5880	• • Washer	4	535751-
7	C2	ND92156-08081	• • Nut	4	535751-
8	C2	ND094162-0031	• • Seat, Spring	2	535751-
9	C2	ND094164-0030	• • Spring	2	535751-
10	C2	ND094165-0031	• • Seat, Spring	2	535751-
11	C2	ND094170-0110	• • Tappet Assembly	2	535751-
12	C2	ND094191-0590	• • Camshaft	1	535751-
13	C2	ND949101-0250	• • Bearing, Roller	2	535751-
14	C2	ND094104-0160	• • Cover	1	535751-
15	C2	ND949150-3200	• • Seal, Oil	1	535751-
16	C2	ND094086-0150	• • O-ring	1	535751-
17	C2	ND094095-0330	• • Shim, T=0.05mm	AR	535751-
	C2	ND094095-0340	• • Shim, T=0.10mm	AR	535751-
	C2	ND094095-0350	• • Shim, T=0.20mm	AR	535751-
	C2	ND094095-0360	• • Shim, T=0.30mm	AR	535751-
	C2	ND094095-0370	• • Shim, T=0.50mm	AR	535751-
18	C2	ND094092-0010	• • Washer	4	535751-
19	C2	ND949044-3320	• • Bolt	4	535751-
20	C2	ND094086-0160	• • O-ring	1	535751-
21	C2	ND094086-0170	• • O-ring	1	535751-
22	C2	ND094093-0090	• • Shim, T=0.40mm	AR	535751-
	C2	ND094093-0100	• • Shim, T=0.60mm	AR	535751-
	C2	ND094093-0110	• • Shim, T=0.80mm	AR	535751-
	C2	ND094093-0120	• • Shim, T=1.00mm	AR	535751-
23	C2	ND949979-1300	• • Sensor Assembly	1	535751-
	C2	ND949140-6310	• • • O-ring	1	535751-
24	C2	ND094096-0050	• • Shim, T=0.15mm	AR	535751-
	C2	ND094096-0060	• • Shim, T=0.20mm	AR	535751-
	C2	ND094096-0070	• • Shim, T=0.25mm	AR	535751-
	C2	ND094096-0080	• • Shim, T=0.40mm	AR	535751-
25	C2	ND90200-06081	• • Washer	1	535751-
26	C2	ND90107-06161	• • Bolt	1	535751-
27		ND090310-0500	• • Valve Assembly	1	535751-

FIG. A4010-001002A Fuel Supply Pump, Inner Parts, Pump

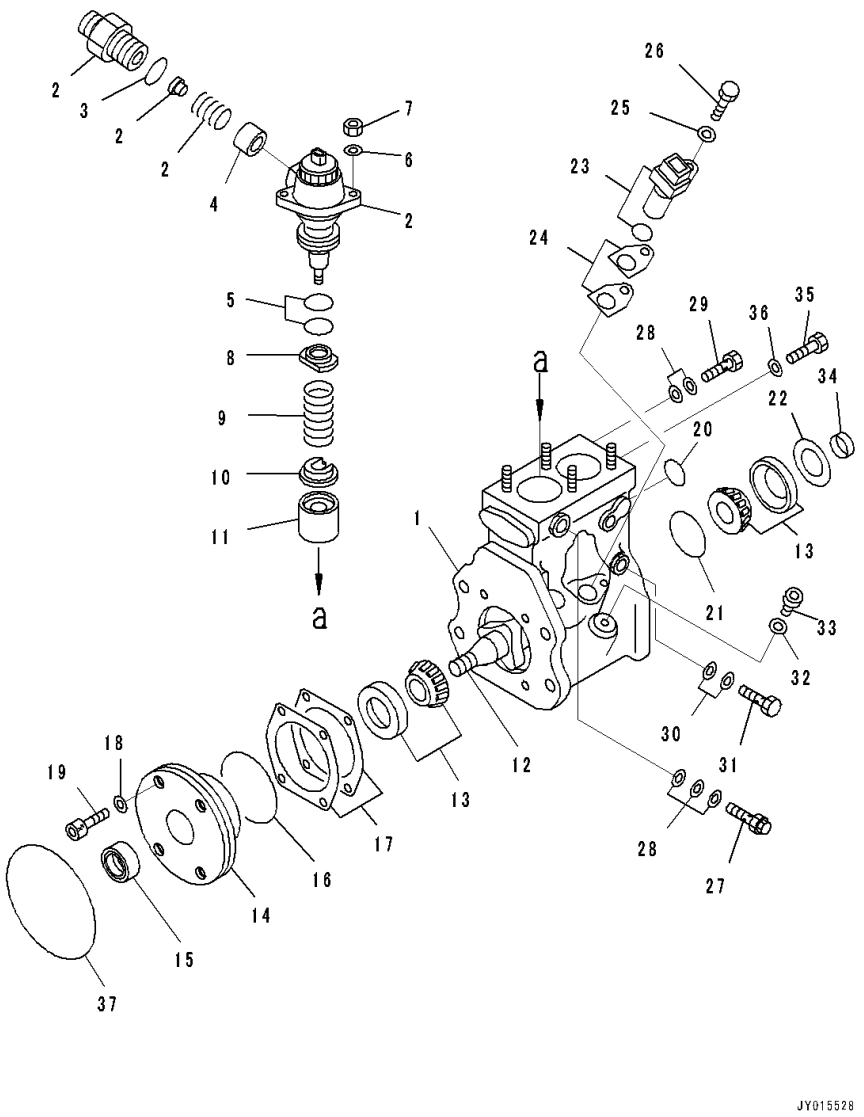

Index	Code	Part Number	Description	Qty	Serial Number
28		ND090222-0070	• • Washer	5	535751-
29		ND949180-0310	• • Screw	1	535751-
30		ND090222-0120	• • Washer	2	535751-
31		ND949180-0060	• • Screw	1	535751-
32		ND949018-0350	• • Washer	1	535751-
33		ND090317-0480	• • Plug	1	535751-
34	C2	ND090207-0100	• • Ring	1	535751-
35		ND090244-0010	• • Screw	1	535751-
36		ND949010-3020	• • Washer	1	535751-
37		ND094086-0210	• O-ring	1	535751-

FIG. A4010-001003 Fuel Supply Pump, Inner Parts, Feed Pump

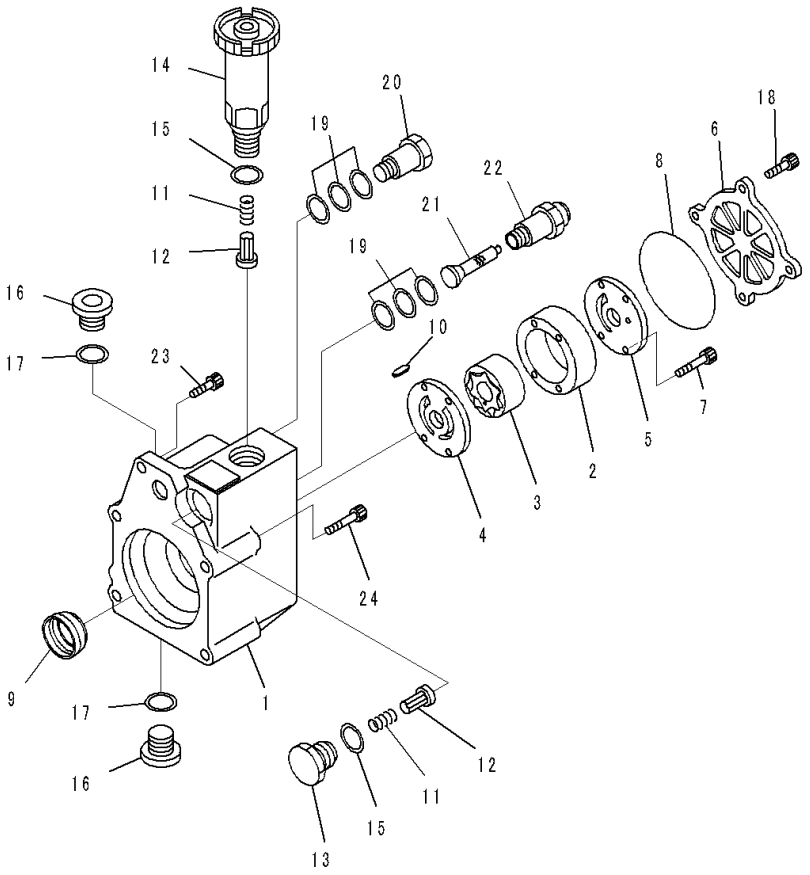

Index	Code	Part Number	Description	Qty	Serial Number
		6261-71-1111	Pump, Supply	1	535912-
	C2	ND094200-0400	• Feeder Assembly	1	535751-
1	C2	ND094210-0090	• • Housing Assembly	1	535751-
2	C2	ND094231-0060	• • Case	1	535751-
3	C2	ND094230-0080	• • Pump Subassembly	1	535751-
4	C2	ND094241-0040	• • Plate	1	535751-
5	C2	ND094244-0040	• • Plate	1	535751-
6	C2	ND094251-0050	• • Cover	1	535751-
7	C2	ND094082-0040	• • Screw	4	535751-
8	C2	ND094086-0200	• • O-ring	1	535751-
9	C2	ND094087-0050	• • Seal, Oil	1	535751-
10	C2	ND094205-0060	• • Key	1	535751-
11		ND092124-0010	• • Spring, Check Valve	2	535751-
12		ND092121-0011	• • Valve, Check	2	535751-
13	C2	ND092126-0010	• • Plug, Chamber	1	535751-
14		ND092130-0360	• • Pump, Fuel Priming	1	535751-
15		ND092125-0010	• • Gasket	2	535751-
16	C2	ND090317-0060	• • Plug, Screw	2	535751-
17	C2	ND949018-1500	• • Washer, T=1.0mm	2	535751-
18	C2	ND949044-3320	• • Bolt	4	535751-
19		ND090222-0070	• • Washer	6	535751-
20		ND090310-0490	• • Valve, Overflow	1	535751-
21		ND092220-0040	• • Filter	1	535751-
22		ND092223-0042	• • Screw	1	535751-
23	C2	ND949044-3320	• Bolt	1	535751-
24		ND096449-0070	• Bolt, Socet	4	535751-

FIG. A4010-001004 Fuel Supply Pump, Common Rail

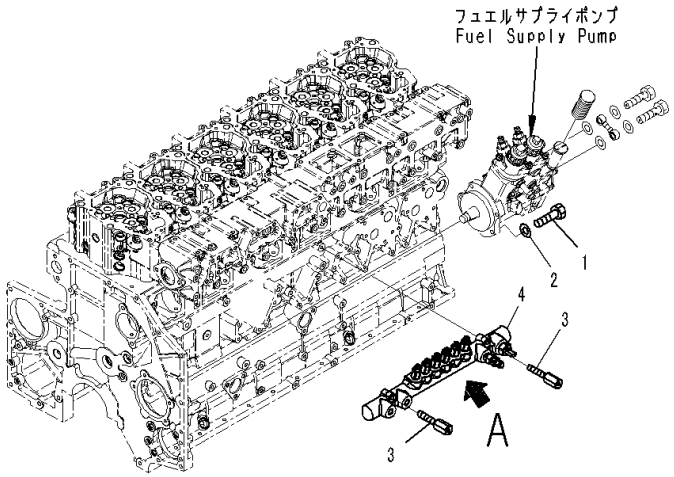

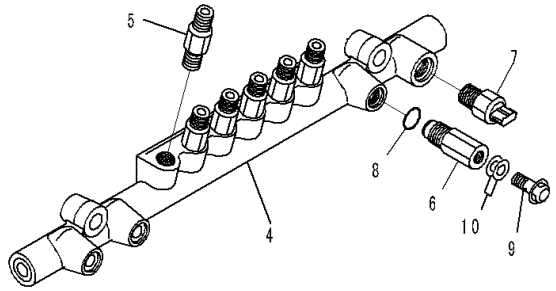

JD008179

Index	Code	Part Number	Description	Qty	Serial Number
1		01010-81035	Bolt	4	535751-
2		01643-31032	Washer	4	535751-
3		6217-71-5251	Bolt	2	535751-
4		6261-71-1220	Common Rail Assembly	1	535751-
5		ND095400-0310	• Limiter Assembly	6	535751-
6		ND095420-0440	• Limiter Assembly	1	535751-
7		ND499000-6160	• Sensor Assembly	1	535751-
8		ND095444-0020	• Ring	1	535751-
9		ND095438-0090	• Bolt, Joint	1	535751-
10		ND949010-2530	• Gasket	2	535751-

FIG. A4010-001005 Fuel Supply Pump, Fuel Piping

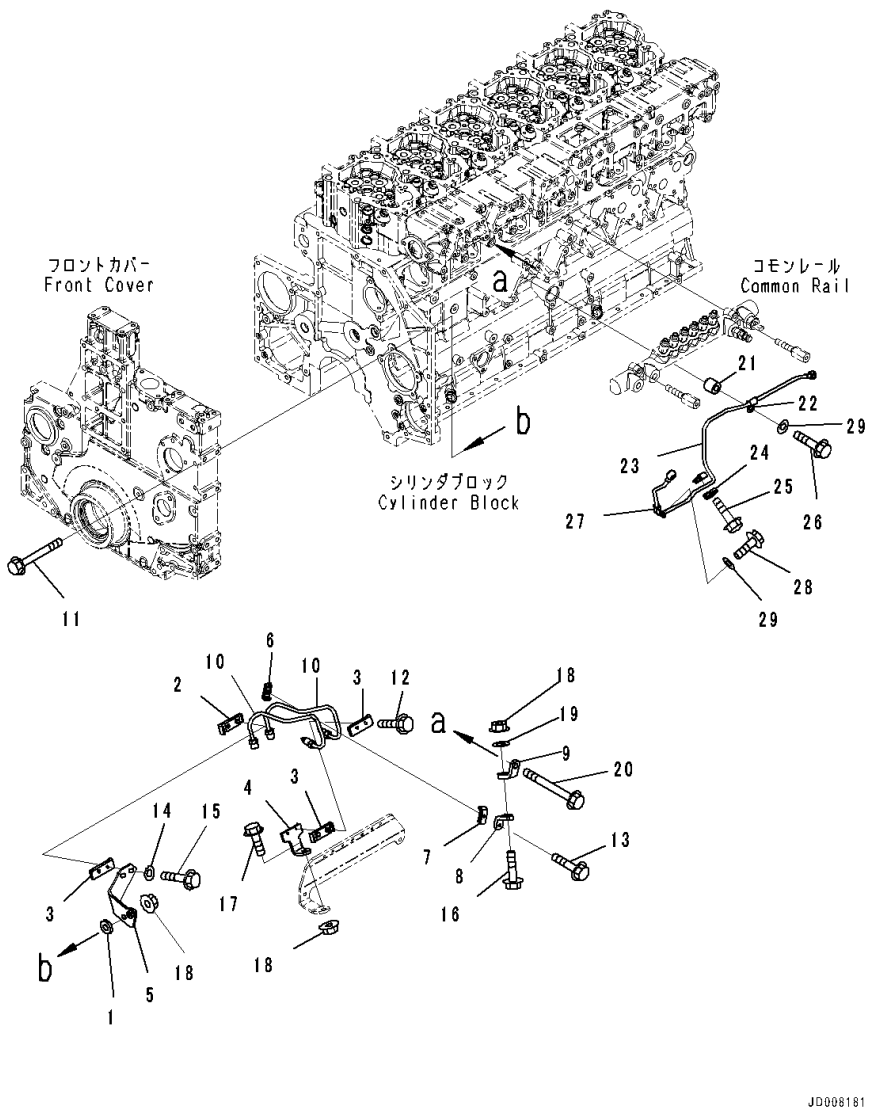

Index	Code	Part Number	Description	Qty	Serial Number
1		6110-23-6490	Spacer	1	535751-
2		6217-71-5171	Clamp	1	535820-
3		6217-71-5211	Clamp	3	535820-
4		6217-71-5281	Bracket	1	535751-
5		6261-71-5910	Bracket	1	535751-
6		6217-71-6640	Clamp	1	535751-
7		6217-71-6650	Clamp	1	535751-
8		6261-71-5670	Bracket	1	535751-
9		6261-71-5690	Bracket	1	535751-
10		6261-71-4112	Tube, Supply	2	535912-
11		01436-01010	Bolt	1	535751-
12		01435-00630	Bolt	2	535751-
13		01435-00635	Bolt	1	535751-
14		01643-30823	Washer	2	535751-
15		01435-00640	Bolt	2	535751-
16		01435-01035	Bolt	1	535751-
17		01435-01025	Bolt	1	535751-
18		01584-01008	Nut	3	535751-
19		01643-31032	Washer	1	535751-
20		01436-01080	Bolt	1	535751-
21		175-79-83760	Spacer	1	535751-
22		6210-51-8320	Clip	1	535751-
23		6261-71-5411	Tube, Over Flow	1	535751-
24		6217-71-6650	Clamp	2	535751-
25		01435-00630	Bolt	1	535751-
26		01435-01040	Bolt	1	535751-
27		6210-51-8320	Clip	1	535751-
28		01435-01020	Bolt	1	535751-
29		01643-31032	Washer	2	535751-

FIG. A4060-001001 Fuel Supply Pump Lubricator

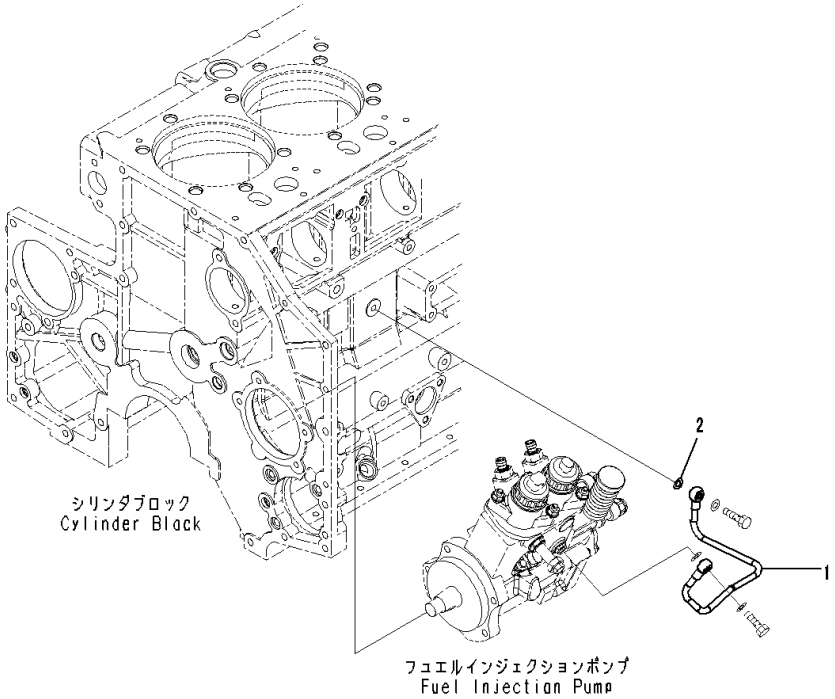

Index	Code	Part Number	Description	Qty	Serial Number
1		6261-51-7110	Tube, Supply	1	535751-
2		07005-01012	Seal, Washer	1	535751-

FIG. A4710-002001 Fuel Injection Controller

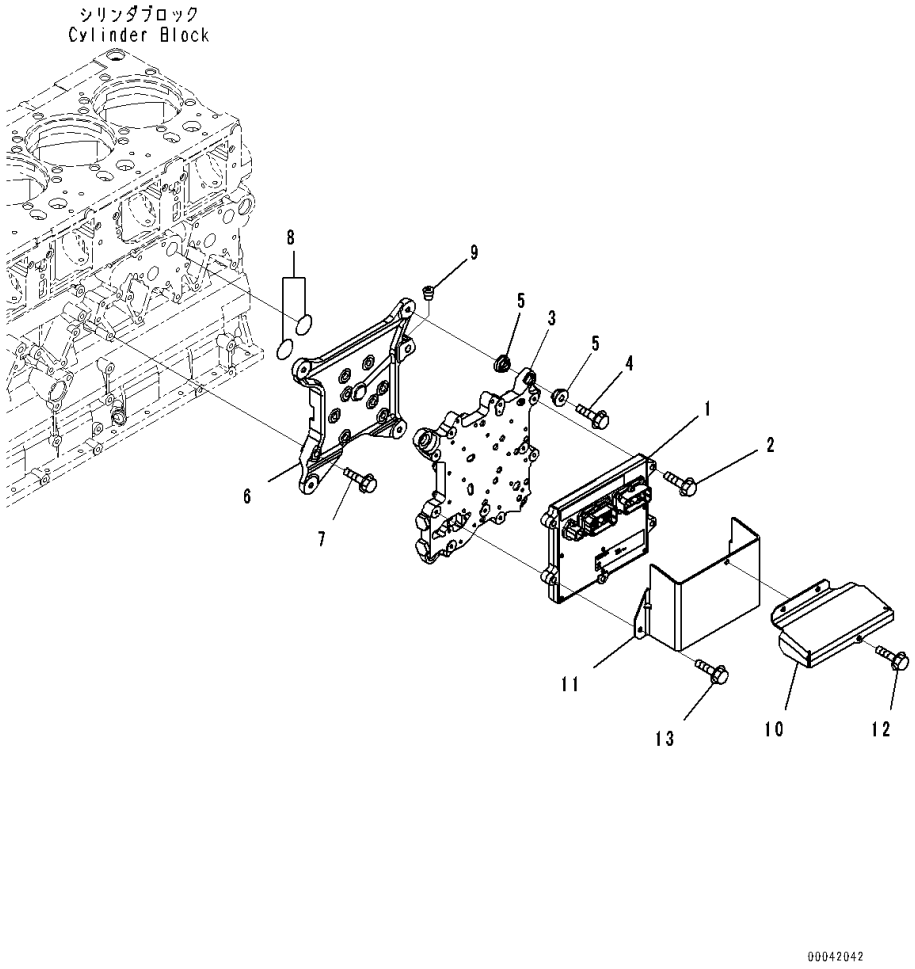

Index	Code	Part Number	Description	Qty	Serial Number
1		600-462-1702	Controller Assembly	1	535751-
2		01435-00840	Bolt	3	535751-
3		6261-81-7200	Cooler Assembly	1	535751-
4		01435-01045	Bolt	4	535751-
5		6251-81-7210	Cushion	8	535751-
6		6261-81-7310	Bracket	1	535751-
7		01435-01045	Bolt	9	535751-
8		07000-73038	O-ring	2	535751-
9		07043-70211	Plug	1	535751-
10		6261-81-9820	Cover	1	535751-
11		6261-81-9830	Cover	1	535751-
12		01435-00820	Bolt	3	535751-
13		01435-00845	Bolt	2	535751-

FIG. A4710-003001 Fuel Injection Controller, For Slag Handling

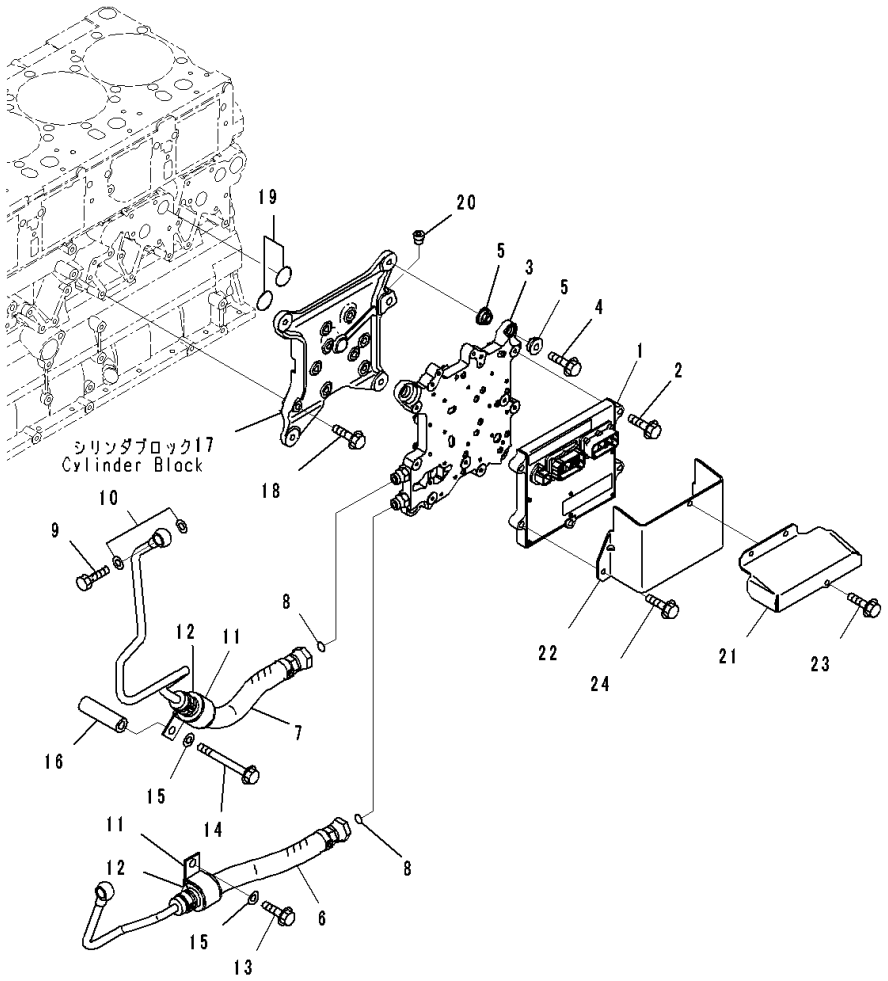

Index	Code	Part Number	Description	Qty	Serial Number
1		600-462-1702	Controller Assembly	1	535751-
2		01435-00840	Bolt	3	535751-
3		6261-81-7100	Cooler	1	535751-
4		01435-01045	Bolt	4	535751-
5		6251-81-7210	Cushion	8	535751-
6		6261-71-6390	Hose	1	535751-
7		6261-71-6380	Hose	1	535751-
8		02896-21012	O-ring	2	535751-
9		07206-31014	Bolt, Joint	1	535751-
10		07005-01412	Seal, Washer	2	535751-
11		04434-53411	Clip	2	535751-
12		6245-71-6550	Cushion	2	535751-
13		01435-01020	Bolt	1	535751-
14		01435-01090	Bolt	1	535751-
15		01643-31032	Washer	2	535751-
16		6136-11-5120	Spacer	1	535751-
17		6261-81-7310	Bracket	1	535751-
18		01435-01045	Bolt	9	535751-
19		07000-73038	O-ring	2	535751-
20		07043-70211	Plug	1	535751-
21		6261-81-9820	Cover	1	535751-
22		6261-81-9830	Cover	1	535751-
23		01435-00820	Bolt	3	535751-
24		01435-00845	Bolt	2	535751-

FIG. A4210-001001 Fuel Injection Nozzle

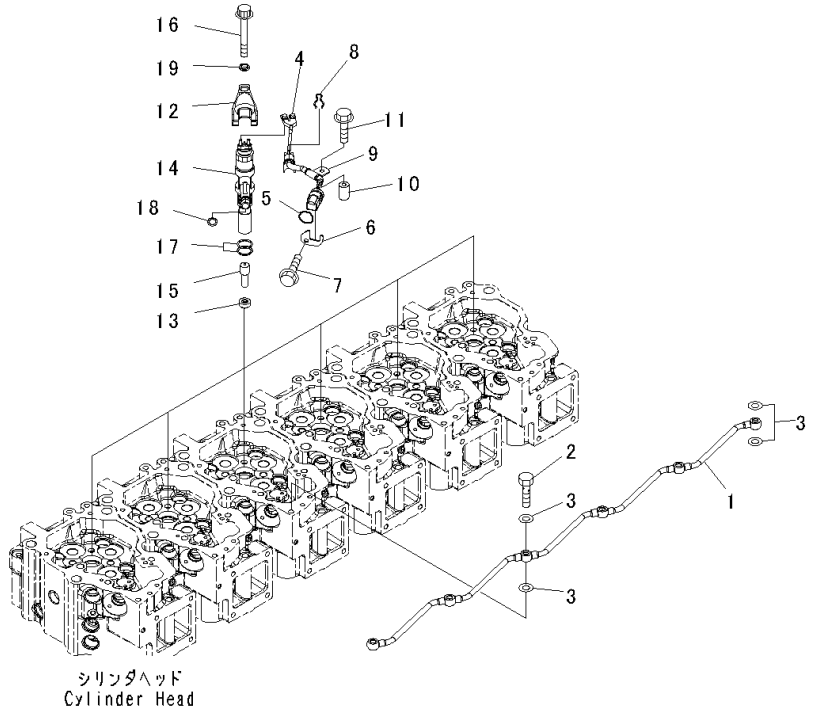

Index	Code	Part Number	Description	Qty	Serial Number
1		6217-71-7110	Tube	1	535751-
2		6934-72-7190	Bolt, Joint	5	535751-
3		07005-01012	Seal, Washer	12	535751-
4		6261-81-9280	Wiring Harness	6	535751-
5		07000-E2018	O-ring	6	535751-
6		6217-71-5320	Plate	6	535751-
7		01435-00610	Bolt	6	535751-
8		6217-71-5340	Clamp	6	535751-
9		6217-71-1150	Clamp	6	535751-
10		6217-71-1170	Spacer	6	535751-
11		01435-00635	Bolt	6	535751-
12		6217-71-1161	Holder	6	535751-
13		6261-71-6150	Gasket	6	535751-
		6261-11-3200	Injector Assembly	6	535751-
14	C1		• Holder	1	535751-
15	C1		• Nozzle	1	535751-
16		01437-01070	Bolt	6	535751-
17		6219-71-1150	O-ring	12	535751-
18		6219-71-1160	O-ring	6	535751-
19		6217-71-1140	Washer	6	535751-

FIG. A4230-001001 Fuel Return

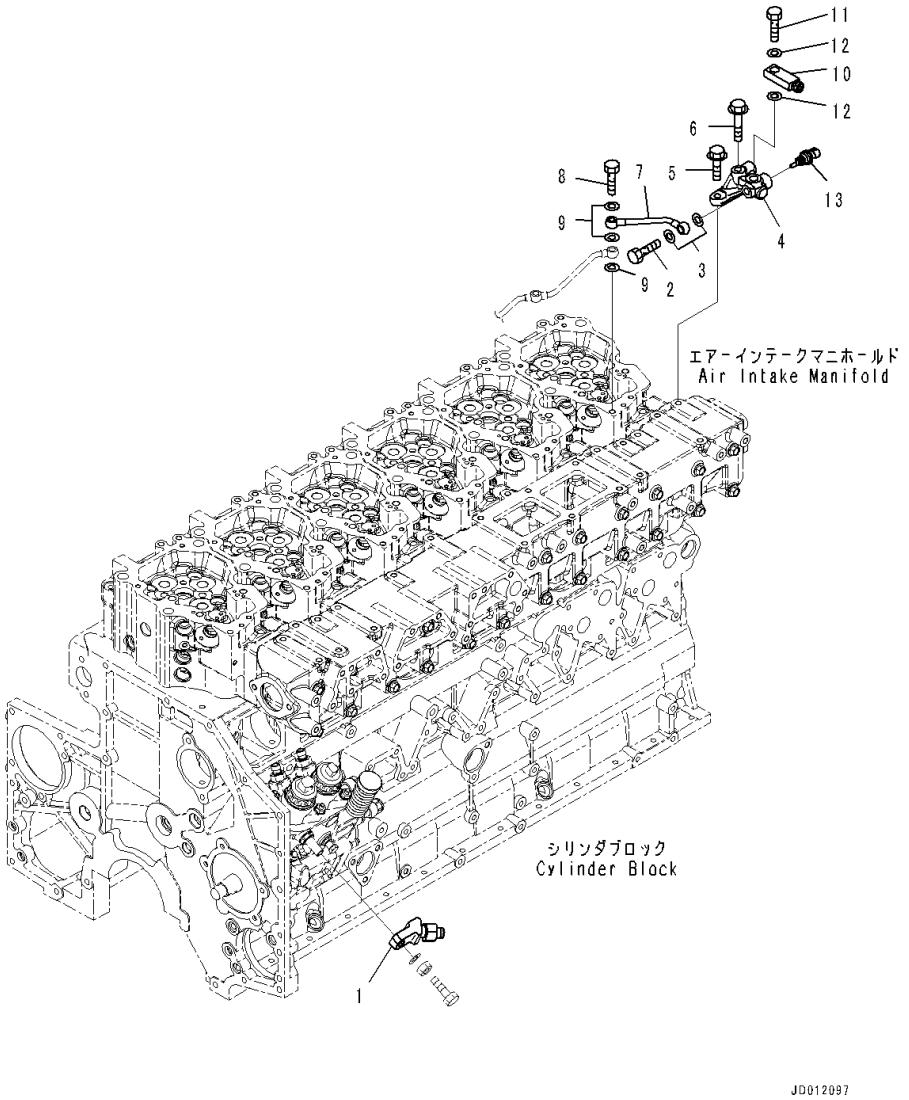

Index	Code	Part Number	Description	Qty	Serial Number
1		6261-71-8820	Joint	1	535751-
2		07206-30812	Bolt, Joint	1	535751-
3		07005-01212	Seal, Washer	2	535751-
4		6261-71-8651	Block	1	535751-
5		01435-01025	Bolt	1	535751-
6		01435-01055	Bolt	1	535751-
7		6261-71-5810	Tube	1	535751-
8		6215-11-6560	Bolt, Joint	1	535751-
9		07005-01012	Seal, Washer	1	535751-
10		6156-71-5370	Joint	1	535751-
11		07206-31014	Bolt, Joint	1	535751-
12		07005-01412	Seal, Washer	2	535751-
13		6261-81-6901	Sensor Assembly	1	535751-
		6216-84-9740	• Seal	1	535751-

FIG. A4119-002001 Fuel Filter Cartridge, Provision For Bad Fuel and Poor Fuel Arrangement, Water+Dust, Turkey, Slag Handling

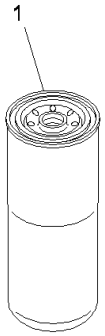

00042185

Index	Code	Part Number	Description	Qty	Serial Number
1		600-319-3841	Cartridge, (1-3/8)	1	535905-

FIG. A4110-003001 Fuel Filter

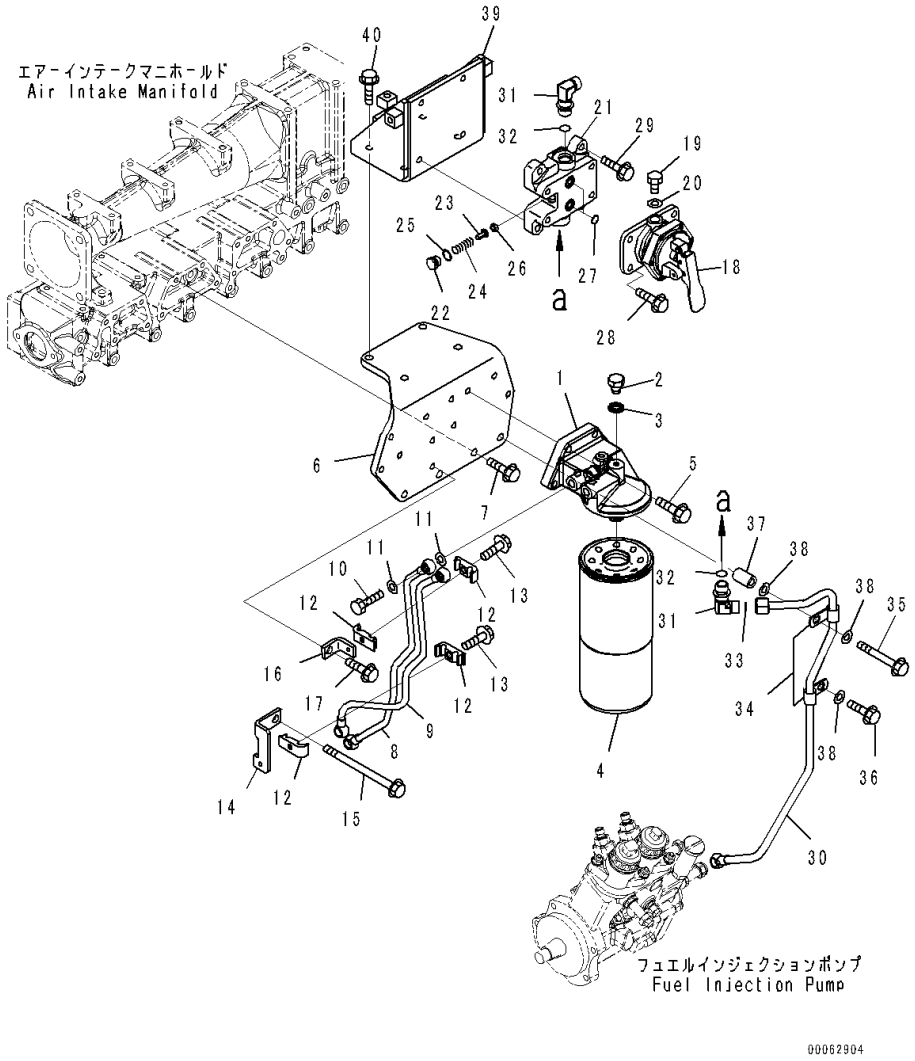

Index	Code	Part Number	Description	Qty	Serial Number
		6261-71-7710	Head Assembly	1	535751-
1		6261-71-7720	• Head	1	535751-
2		6110-73-6231	• Plug	2	535751-
3		07005-00812	• Gasket	2	535751-
4	C1		Cartridge	1	535892-
5		01435-01035	Bolt	4	535751-
6		6261-71-5310	Bracket	1	535751-
7		01435-01025	Bolt	4	535751-
8		6261-71-5360	Tube, Supply	1	535751-
9		6261-71-5330	Tube, Return	1	535751-
10		07206-31014	Bolt, Joint	2	535751-
11		07005-01412	Seal, Washer	4	535751-
12		6166-75-6821	Clamp, half	4	535768-
13		01435-00830	Bolt	2	535751-
14		6218-71-5790	Bracket	1	535751-
15		01436-01085	Bolt	1	535751-
16		6261-71-5390	Stay	1	535751-
17		01435-01020	Bolt	1	535751-
18		6261-71-8240	Pump Assembly, Priming	1	535751-
19		07040-11409	Plug	2	535751-
20		07005-01412	Seal, Washer	2	535751-
		6261-71-8100	Block Assembly	1	535751-
21		6261-71-8110	• Block	1	535751-
22		6217-71-6850	• Plug	1	535751-
23		6217-71-6820	• Valve	1	535751-
24		6217-71-6830	• Spring	1	535751-
25		6217-71-6840	• Washer	1	535751-
26		6217-71-6870	• Pin	1	535751-
27		07000-12014	O-ring	2	535751-
28		01435-01025	Bolt	4	535751-
29		01435-01030	Bolt	3	535751-
30		6261-71-5350	Tube	1	535751-
31		02782-10422	Elbow	2	535751-
32		07002-22034	O-ring	2	535751-
33		02896-21012	O-ring	1	535751-
34		6162-63-8820	Clip	2	535751-
35		01435-01075	Bolt	1	535751-
36		01435-01025	Bolt	1	535751-
37		113-03-21170	Spacer	1	535751-
38		01643-31032	Washer	3	535751-

FIG. A4110-003001 Fuel Filter

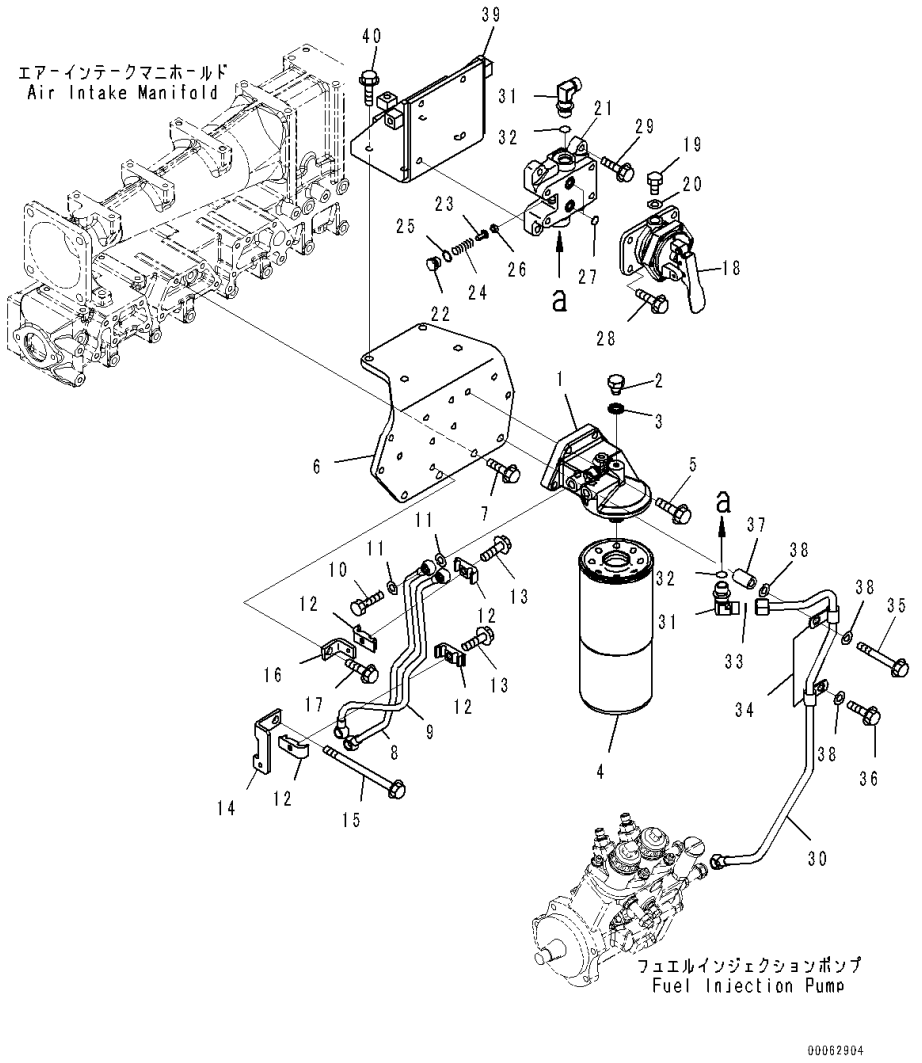

Index	Code	Part Number	Description	Qty	Serial Number
39		6261-71-5320	Bracket	1	535751-
40		01435-01035	Bolt	4	535751-

FIG. A4150-001001 Pre Filter

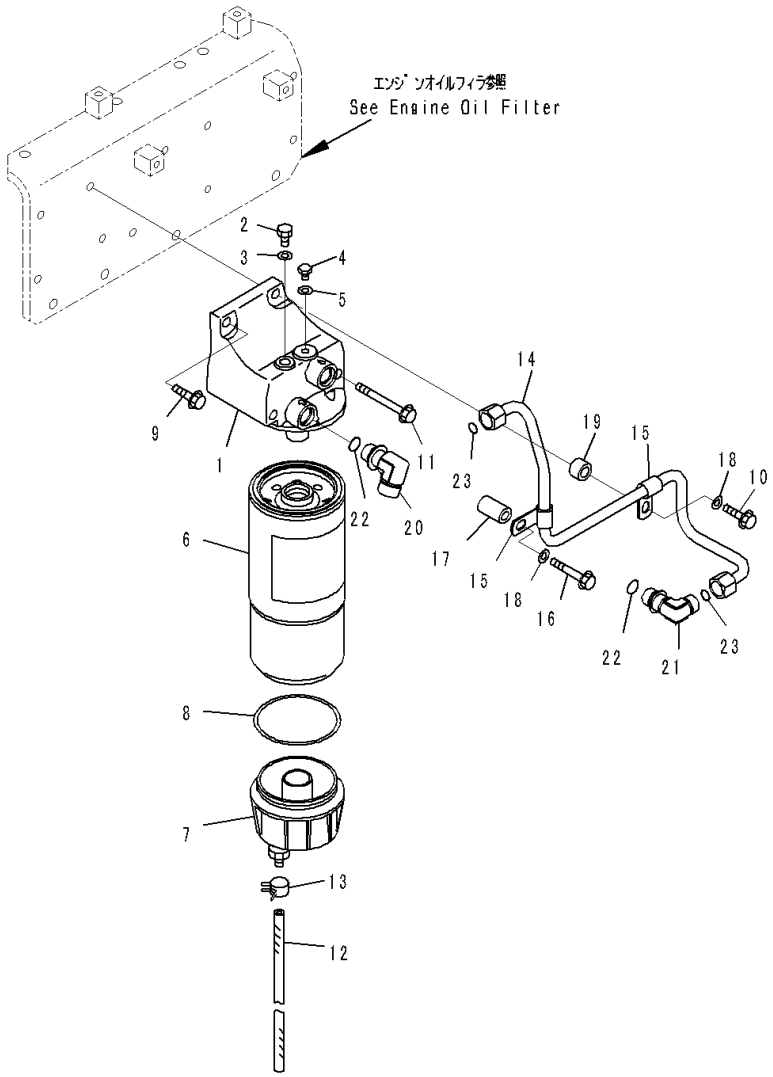

Index	Code	Part Number	Description	Qty	Serial Number
		6251-71-7100	Head Assembly	1	535751-
1		6251-71-7110	• Head	1	535751-
2		07040-11209	• Plug	1	535751-
3		07005-01212	• Seal, Washer	1	535751-
4		6110-73-6231	• Plug	1	535751-
5		07005-00812	• Gasket	1	535751-
		600-311-4500	Filter Assembly, (1-1/4)	1	535751-
6	C1		• Cartridge, (1-1/4)	1	535751-
7	C1		• Cap	1	535751-
8	C1		• Seal	1	535751-
9		01435-01030	Bolt	1	535751-
10		01435-01050	Bolt	1	535751-
11		01436-01010	Bolt	2	535751-
12		07286-00860	Hose	1	535751-
13		07285-00125	Clip	1	535751-
14		6261-71-5340	Tube, Outlet	1	535751-
15		6162-63-8820	Clip	2	535751-
16		01435-01070	Bolt	1	535751-
17		113-03-21170	Spacer	1	535751-
18		01643-31032	Washer	2	535751-
19		6206-11-4590	Spacer	1	535751-
20		02782-10516	Elbow	1	535751-
21		02782-10422	Elbow	1	535751-
22		07002-22034	O-ring	2	535751-
23		02896-21012	O-ring	2	535751-

FIG. A4159-001001 Pre Filter Cartridge, Service Only

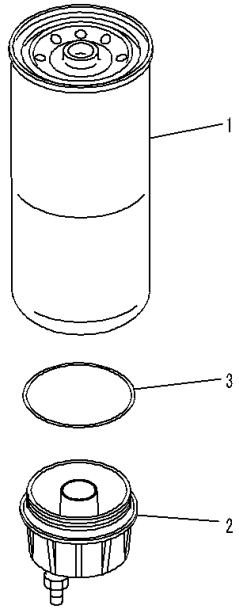

00042186

Index	Code	Part Number	Description	Qty	Serial Number
		600-319-4500	Cartridge Assembly	1	535751-
		600-311-4500	• Filter Assembly, (1-1/4)	1	535751-
1		600-319-4540	Cartridge	1	535751-
2		600-311-4510	• Cartridge, (1-1/4)	1	535751-
3		600-311-3230	• Seal	1	535751-

ENGINE COOLING SYSTEM

FIG. A5010-001001 Water Pump, Air Vent and Thermostat

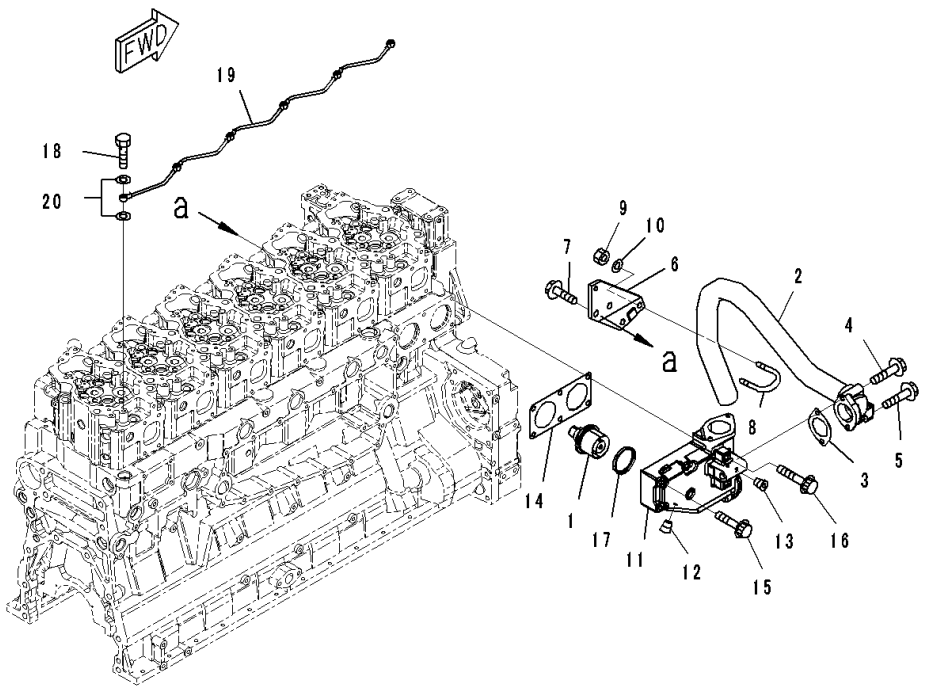

Index	Code	Part Number	Description	Qty	Serial Number
1		600-421-6630	Thermostat	2	535751-
2		6261-61-6810	Tube, Bypass	1	535751-
3		6210-61-6870	Gasket	1	535751-
4		01435-01070	Bolt	1	535751-
5		01435-01085	Bolt	1	535751-
6		6261-61-6820	Bracket	1	535751-
7		01435-01225	Bolt	2	535751-
8		07283-34957	Clip	1	535751-
9		01597-01009	Nut	2	535751-
10		01643-31032	Washer	2	535751-
11		6211-61-6410	Housing, Thermostat	1	535751-
12		02720-20204	Plug	1	535751-
13		07043-00108	Plug, Taper	1	535751-
14		6210-61-6421	Gasket	1	535751-
15		01437-01065	Bolt	3	535751-
16		01438-01005	Bolt	2	535751-
17		6162-13-6440	Seal	2	535751-
18		07206-30710	Bolt, Joint	5	535751-
19		6217-11-6520	Tube	1	535751-
20		07003-01015	Gasket	11	535751-

FIG. A5010-001002 Water Pump

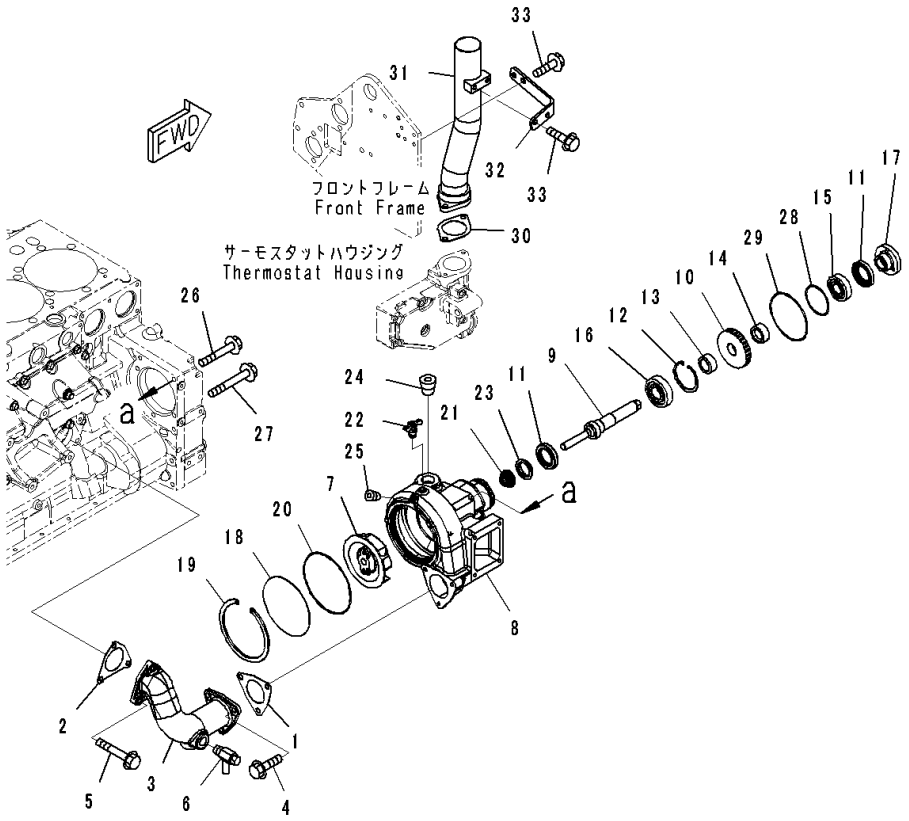

Index	Code	Part Number	Description	Qty	Serial Number
1		6217-61-6330	Gasket	1	535751-
2		6217-61-6340	Gasket	1	535751-
3		6217-61-6350	Elbow	1	535751-
4		01437-01025	Bolt	3	535751-
5		01437-11080	Bolt	3	535751-
6		07730-50004	Valve	1	535751-
		6261-61-1201	Water Pump Assembly	1	535751-
7		6261-61-1210	• Impeller	1	535751-
8	C1		• Case	1	535751-
9		6261-61-1310	• Shaft	1	535751-
10		6212-61-1410	• Gear	1	535751-
11		6210-61-1520	• Seal	2	535751-
12		04065-07225	• Ring, Snap	1	535751-
13		6212-61-1370	• Spacer	1	535751-
14		6212-61-1380	• Spacer	1	535751-
15		06000-06305	• Bearing, Ball	1	535751-
16		06030-06306	• Bearing, Ball	1	535751-
17		6210-61-1350	• Flange	1	535751-
18		6261-61-1150	• Cover	1	535751-
19		6261-61-1190	• Ring, Snap	1	535751-
20		6261-61-1170	• O-ring	1	535751-
21		6211-61-1533	• Seal	1	535751-
22		07062-00000	• Valve	1	535751-
23		6212-61-1330	• Ring	1	535751-
24		07043-01019	• Plug, Taper	1	536502-
25		02720-10104	• Plug, Tapered	1	535751-
26		01435-01075	Bolt	1	535751-
27		01435-01095	Bolt	3	535751-
28		07000-72070	O-ring	1	535751-
29		07000-72115	O-ring	1	535751-
30		6210-61-6441	Gasket	1	535751-
31		6261-61-6260	Tube	1	535751-
32		6261-61-6270	Bracket	1	535751-
33		01435-01020	Bolt	4	535751-

FIG. A5010-002001 Water Pump, For Air Conditioner, Air Vent and Thermostat

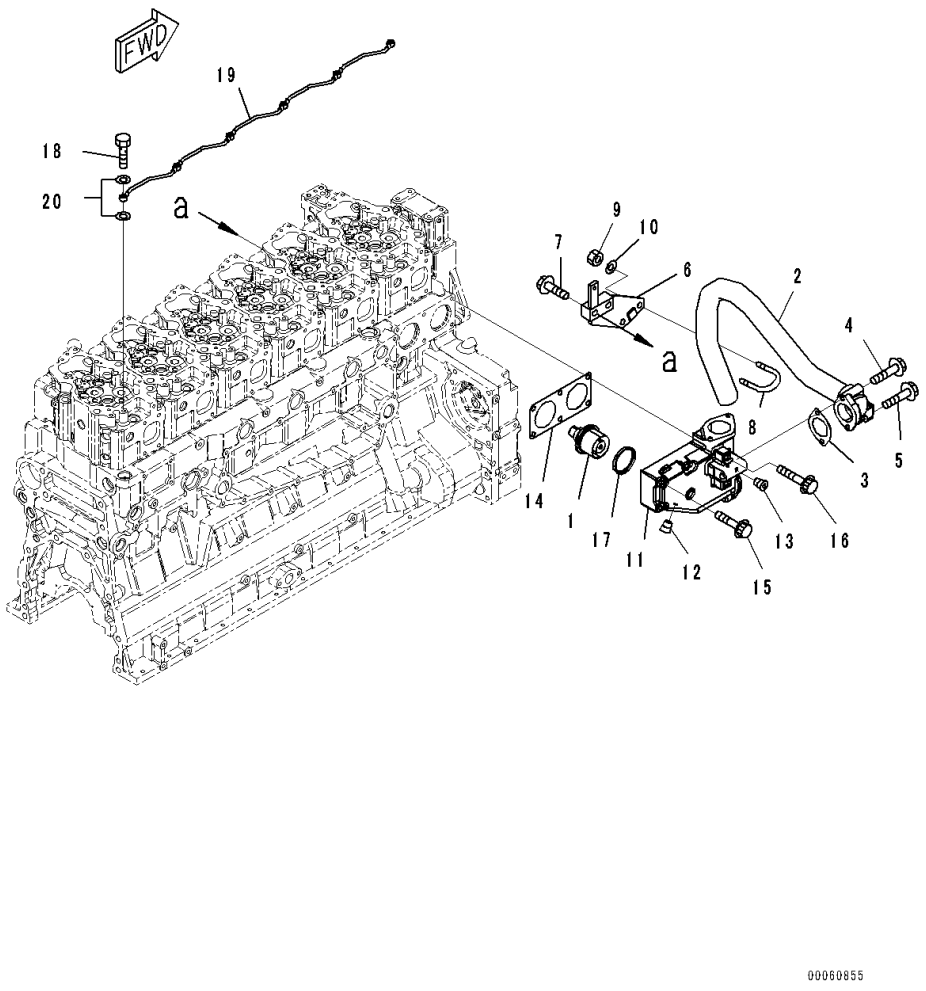

Index	Code	Part Number	Description	Qty	Serial Number
1		600-421-6630	Thermostat	2	535751-
2		6261-61-6810	Tube, Bypass	1	535751-
3		6210-61-6870	Gasket	1	535751-
4		01435-01070	Bolt	1	535751-
5		01435-01085	Bolt	1	535751-
6		17A-911-4772	Bracket	1	535751-
7		01435-01245	Bolt	2	535751-
8		07283-34957	Clip	1	535751-
9		01597-01009	Nut	2	535751-
10		01643-31032	Washer	2	535751-
11		6211-61-6410	Housing, Thermostat	1	535751-
12		02720-20204	Plug	1	535751-
13		07043-00108	Plug, Taper	1	535751-
14		6210-61-6421	Gasket	1	535751-
15		01437-01065	Bolt	3	535751-
16		01438-01005	Bolt	2	535751-
17		6162-13-6440	Seal	2	535751-
18		07206-30710	Bolt, Joint	5	535751-
19		6217-11-6520	Tube	1	535751-
20		07003-01015	Gasket	11	535751-

FIG. A5010-002002 Water Pump, For Air Conditioner

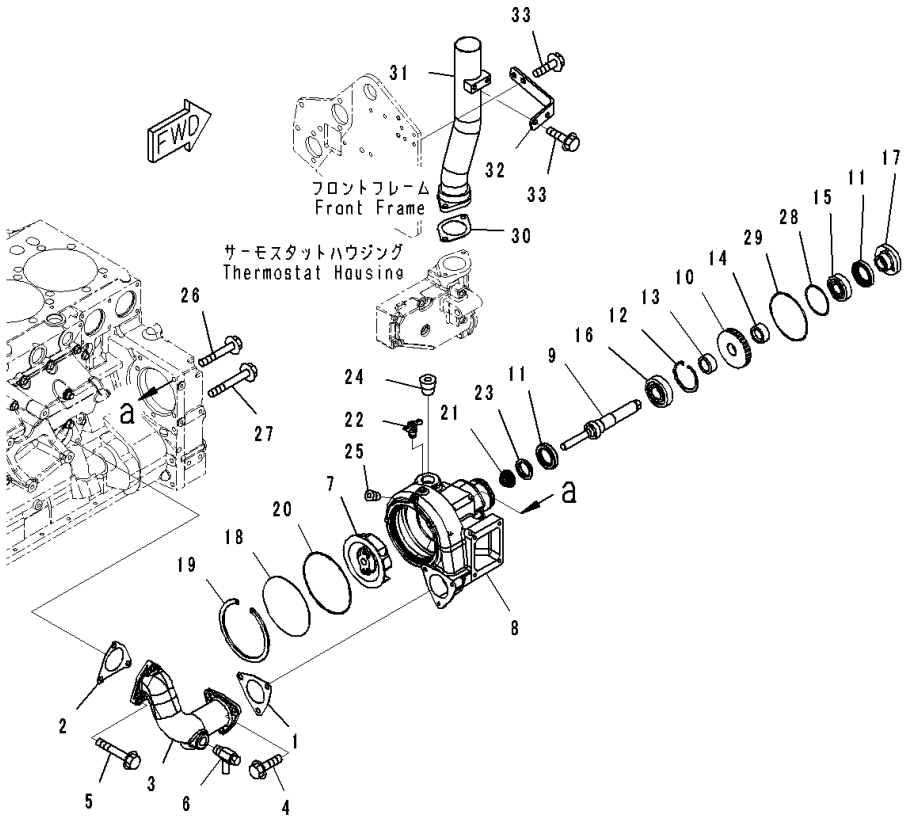

Index	Code	Part Number	Description	Qty	Serial Number
1		6217-61-6330	Gasket	1	535751-
2		6217-61-6340	Gasket	1	535751-
3		6217-61-6350	Elbow	1	535751-
4		01437-01025	Bolt	3	535751-
5		01437-11080	Bolt	3	535751-
6		07730-50004	Valve	1	535751-
		6261-61-1201	Water Pump Assembly	1	535751-
7		6261-61-1210	• Impeller	1	535751-
8	C1		• Case	1	535751-
9		6261-61-1310	• Shaft	1	535751-
10		6212-61-1410	• Gear	1	535751-
11		6210-61-1520	• Seal	2	535751-
12		04065-07225	• Ring, Snap	1	535751-
13		6212-61-1370	• Spacer	1	535751-
14		6212-61-1380	• Spacer	1	535751-
15		06000-06305	• Bearing, Ball	1	535751-
16		06030-06306	• Bearing, Ball	1	535751-
17		6210-61-1350	• Flange	1	535751-
18		6261-61-1150	• Cover	1	535751-
19		6261-61-1190	• Ring, Snap	1	535751-
20		6261-61-1170	• O-ring	1	535751-
21		6211-61-1533	• Seal	1	535751-
22		07062-00000	• Valve	1	535751-
23		6212-61-1330	• Ring	1	535751-
24		07043-01019	• Plug, Taper	1	536502-
25		02720-10104	• Plug, Tapered	1	535751-
26		01435-01075	Bolt	1	535751-
27		01435-01095	Bolt	3	535751-
28		07000-72070	O-ring	1	535751-
29		07000-72115	O-ring	1	535751-
30		6210-61-6441	Gasket	1	535751-
31		6261-61-6260	Tube	1	535751-
32		6261-61-6270	Bracket	1	535751-
33		01435-01020	Bolt	4	535751-

FIG. A5010-003001 Water Pump, Landfill Specification, Air Vent and Thermostat

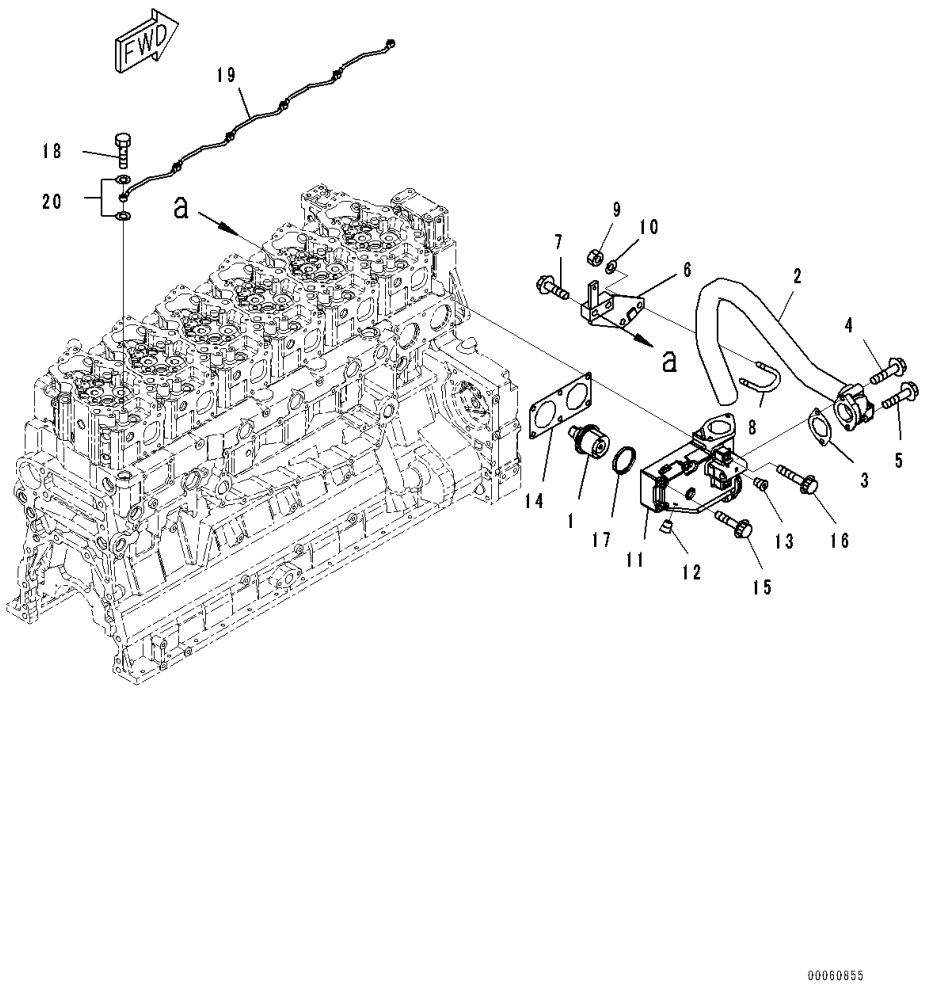

Index	Code	Part Number	Description	Qty	Serial Number
1		600-421-6630	Thermostat	2	535751-
2		6261-61-6810	Tube, Bypass	1	535751-
3		6210-61-6870	Gasket	1	535751-
4		01435-01070	Bolt	1	535751-
5		01435-01085	Bolt	1	535751-
6		17A-911-4772	Bracket	1	535751-
7		01435-01245	Bolt	2	535751-
8		07283-34957	Clip	1	535751-
9		01597-01009	Nut	2	535751-
10		01643-31032	Washer	2	535751-
11		6211-61-6410	Housing, Thermostat	1	535751-
12		02720-20204	Plug	1	535751-
13		07043-00108	Plug, Taper	1	535751-
14		6210-61-6421	Gasket	1	535751-
15		01437-01065	Bolt	3	535751-
16		01438-01005	Bolt	2	535751-
17		6162-13-6440	Seal	2	535751-
18		07206-30710	Bolt, Joint	5	535751-
19		6261-11-6520	Tube	1	535751-
20		07003-01015	Gasket	11	535751-

FIG. A5010-003002 Water Pump, Landfill Specification

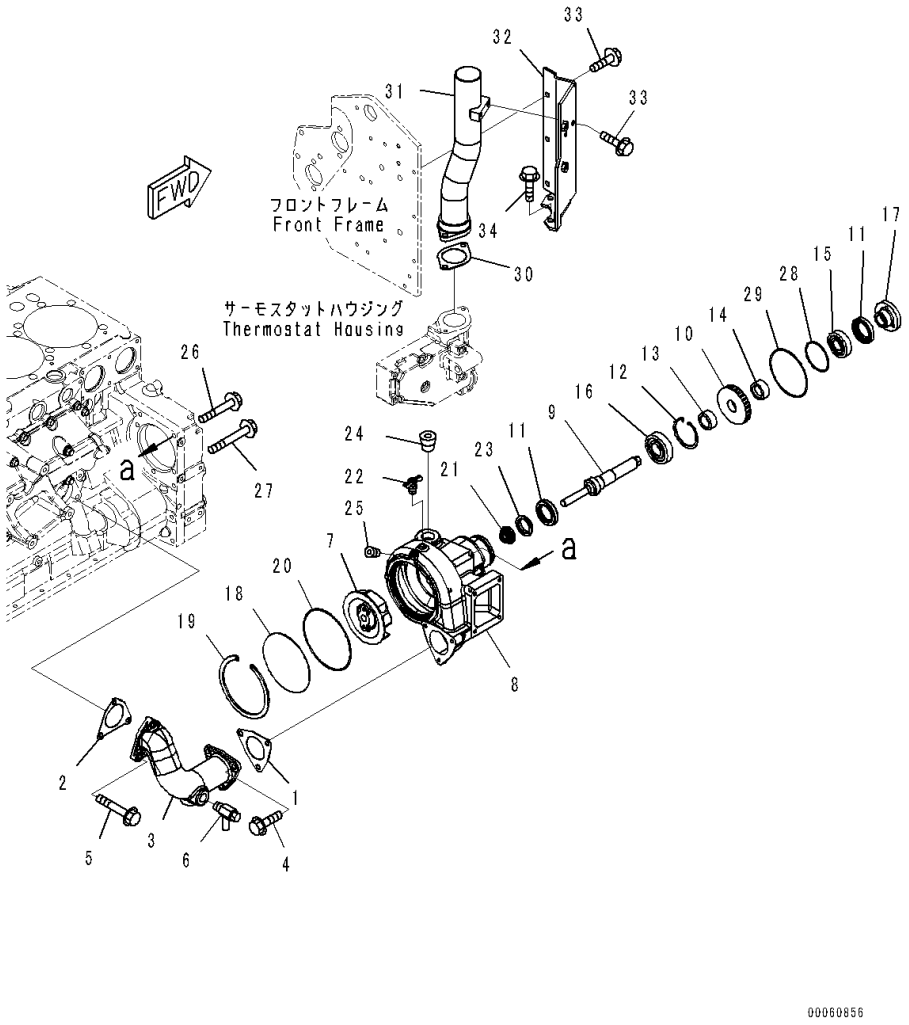

Index	Code	Part Number	Description	Qty	Serial Number
1		6217-61-6330	Gasket	1	535751-
2		6217-61-6340	Gasket	1	535751-
3		6217-61-6350	Elbow	1	535751-
4		01437-01025	Bolt	3	535751-
5		01437-11080	Bolt	3	535751-
6		07730-50004	Valve	1	535751-
		6261-61-1201	Water Pump Assembly	1	535751-
7		6261-61-1210	• Impeller	1	535751-
8	C1		• Case	1	535751-
9		6261-61-1310	• Shaft	1	535751-
10		6212-61-1410	• Gear	1	535751-
11		6210-61-1520	• Seal	2	535751-
12		04065-07225	• Ring, Snap	1	535751-
13		6212-61-1370	• Spacer	1	535751-
14		6212-61-1380	• Spacer	1	535751-
15		06000-06305	• Bearing, Ball	1	535751-
16		06030-06306	• Bearing, Ball	1	535751-
17		6210-61-1350	• Flange	1	535751-
18		6261-61-1150	• Cover	1	535751-
19		6261-61-1190	• Ring, Snap	1	535751-
20		6261-61-1170	• O-ring	1	535751-
21		6211-61-1533	• Seal	1	535751-
22		07062-00000	• Valve	1	535751-
23		6212-61-1330	• Ring	1	535751-
24		07043-01019	• Plug, Taper	1	536502-
25		02720-10104	• Plug, Tapered	1	535751-
26		01435-01075	Bolt	1	535751-
27		01435-01095	Bolt	3	535751-
28		07000-72070	O-ring	1	535751-
29		07000-72115	O-ring	1	535751-
30		6210-61-6441	Gasket	1	535751-
31		6261-61-6210	Tube	1	535751-
32		6261-61-6220	Bracket	1	535751-
33		01435-01020	Bolt	5	535751-
34		01435-01025	Bolt	1	535751-

FIG. A6810-002001 Electric Wiring Harness, For 75Amp. Alternator, (1/4)

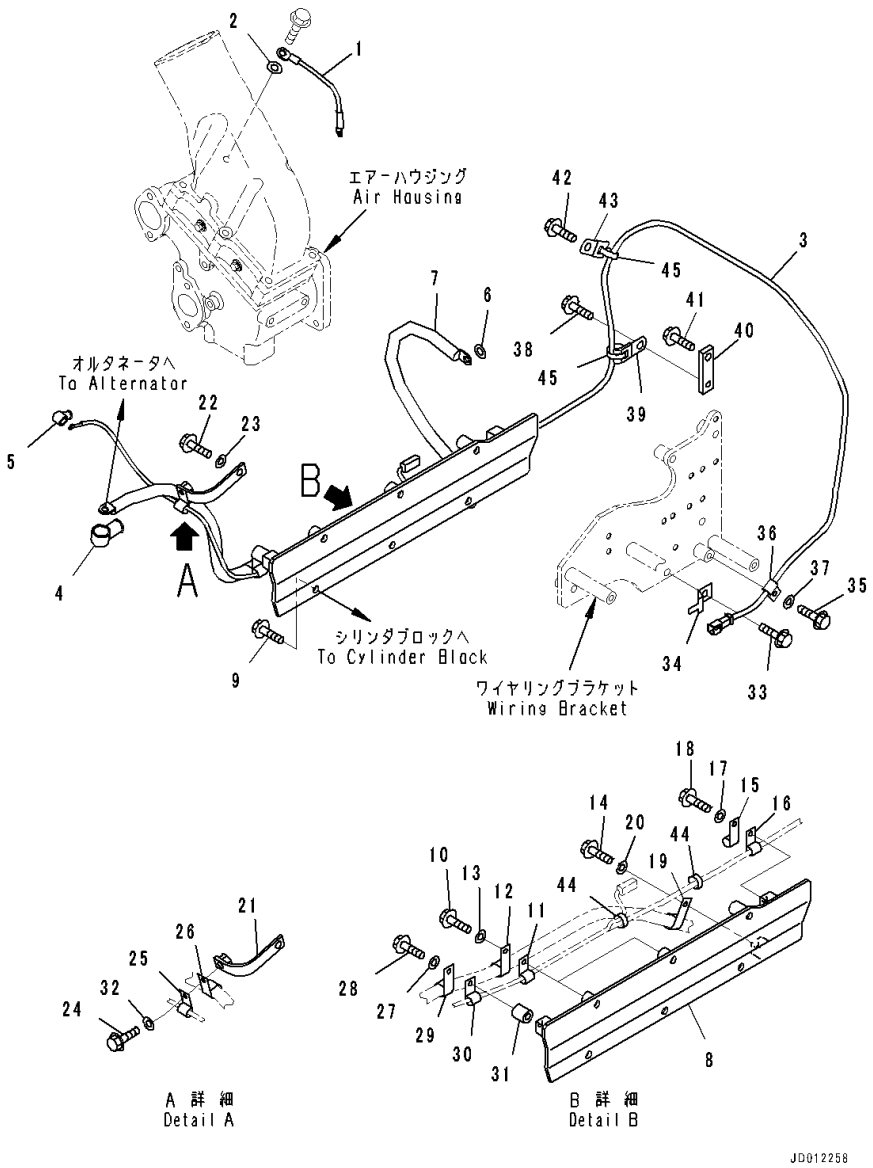

Index	Code	Part Number	Description	Qty	Serial Number
1		6211-81-4280	Wire, L=220mm	1	535751-
2		01643-51032	Washer	1	535751-
3		6261-81-8330	Wiring Harness	1	535751-
4		6218-81-8160	Cap	1	535751-
5		08038-00519	Cap	1	535751-
6		01643-31032	Washer	1	535751-
7		6261-81-8190	Wiring Harness	1	535751-
8		6261-81-8540	Cover	1	535751-
9		01435-01020	Bolt	2	535751-
10		01435-01045	Bolt	2	535751-
11		600-051-2060	Clip	2	535751-
12		600-051-2180	Clip	2	535751-
13		01643-31032	Washer	2	535751-
14		01435-01020	Bolt	1	535751-
15		600-051-2080	Clip	1	535751-
16		600-051-2060	Clip	1	535751-
17		01643-31032	Washer	1	535751-
18		01435-01020	Bolt	1	535751-
19		600-051-2180	Clip	1	535751-
20		01643-31032	Washer	1	535751-
21		6204-21-5571	Bracket	1	535751-
22		01435-01020	Bolt	1	535751-
23		01643-31032	Washer	1	535751-
24		01435-01025	Bolt	1	535751-
25		600-051-2060	Clip	1	535751-
26		600-051-2180	Clip	1	535751-
27		01643-31032	Washer	1	535751-
28		01435-01045	Bolt	1	535751-
29		600-051-2180	Clip	1	535751-
30		600-051-2060	Clip	1	535751-
31		144-874-7470	Boss	1	535751-
32		01643-31032	Washer	1	535751-
33		01435-01025	Bolt	1	535751-
34		08193-20010	Clip	1	535751-
35		01435-01020	Bolt	1	535751-
36		600-051-2080	Clip	1	535751-
37		01643-31032	Washer	1	535751-
38		01435-01016	Bolt	1	535751-
39		6218-81-8430	Clamp	1	535751-
40		6261-81-8660	Plate	1	535751-

FIG. A6810-002001 Electric Wiring Harness, For 75Amp. Alternator, (1/4)

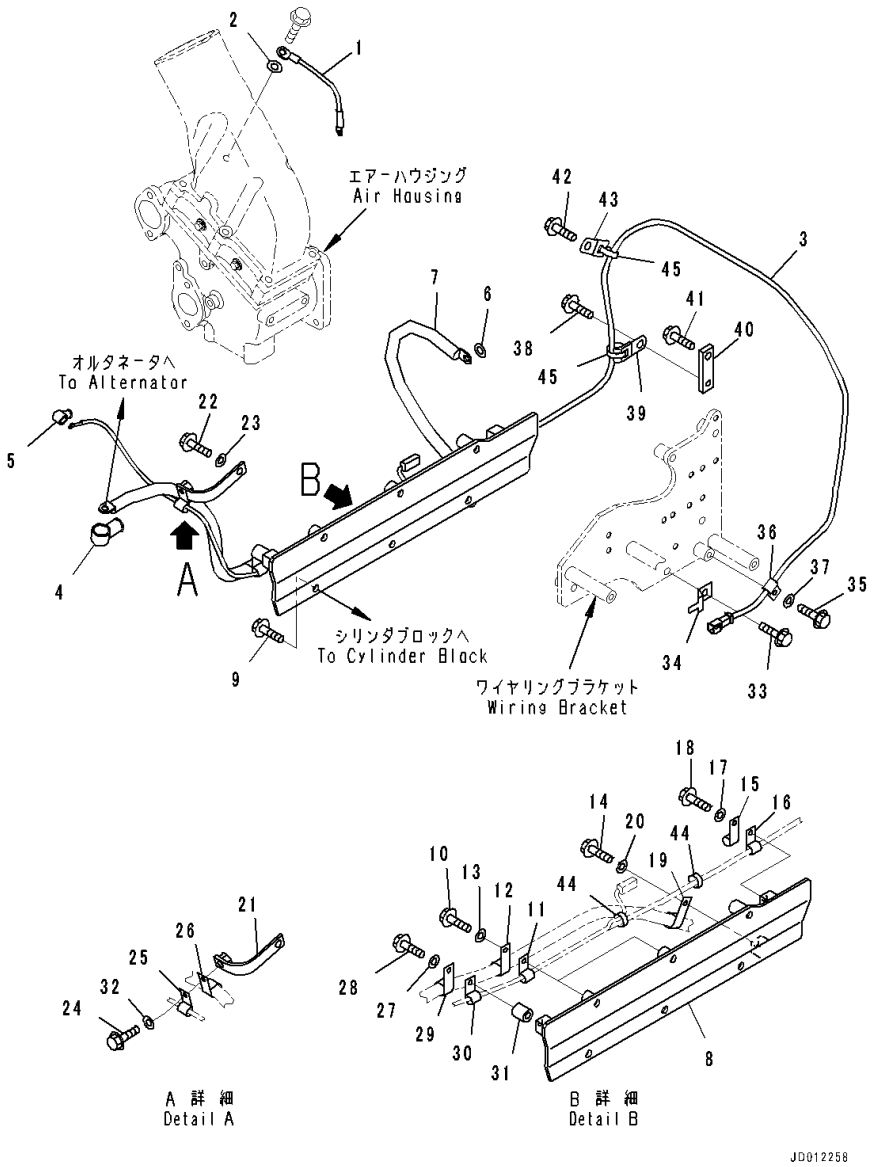

Index	Code	Part Number	Description	Qty	Serial Number
41		01435-01030	Bolt	1	535751-
42		01435-01016	Bolt	1	535751-
43		6218-81-8430	Clamp	1	535751-
44		6218-81-8490	Band	2	535751-
45		6218-81-8490	Band	3	535751-

FIG. A6810-002002 Electric Wiring Harness, For 75Amp. Alternator, (2/4)

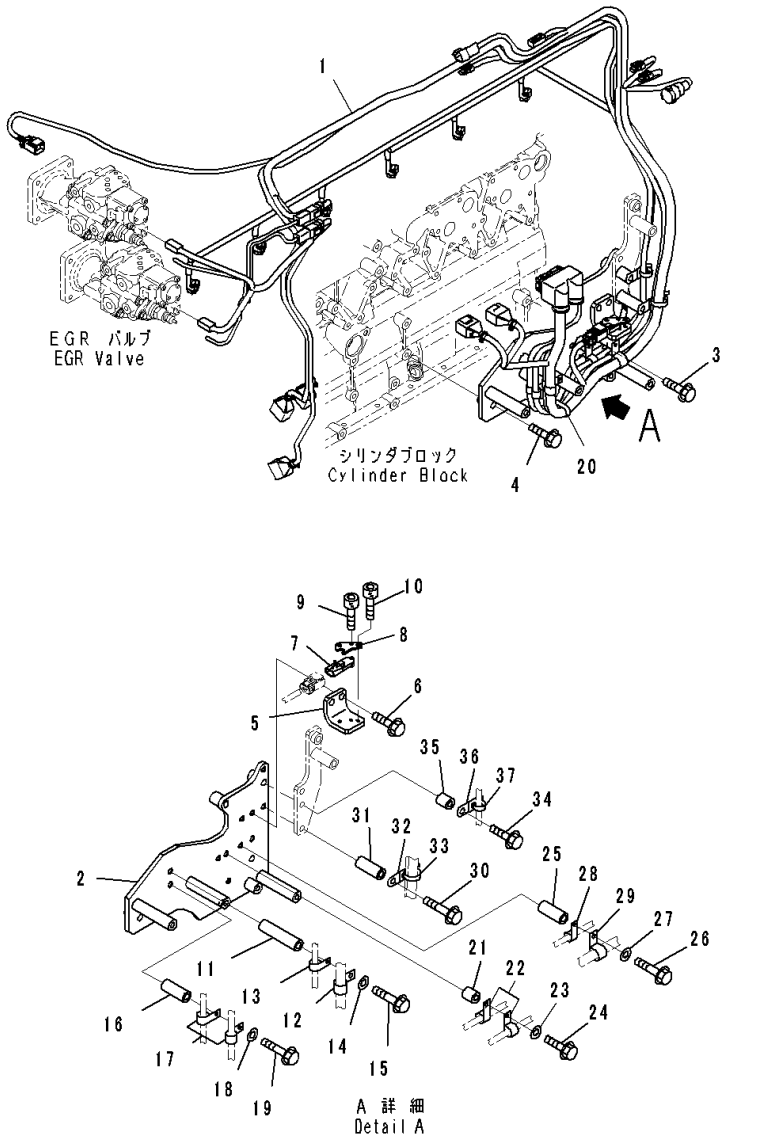

Index	Code	Part Number	Description	Qty	Serial Number
1		6261-81-8411	Wiring Harness	1	535751-
2		6261-81-8920	Bracket	1	535751-
3		01435-01025	Bolt	1	535751-
4		01435-01045	Bolt	2	535751-
5		6261-81-1350	Bracket	1	535751-
6		01435-01020	Bolt	2	535751-
7		6261-81-1900	Sensor, Ambient Air Pressure	1	535751-
8		6261-81-1360	Plate	1	535751-
9		01252-60525	Bolt	1	535751-
10		01252-60625	Bolt, Hexagon Socket Head	2	535751-
11		195-01-16420	Collar	1	535751-
12		600-051-2180	Clip	1	535751-
13		600-051-2080	Clip	1	535751-
14		01643-31032	Washer	1	535751-
15		01436-01015	Bolt	1	535751-
16		6150-81-6940	Spacer	1	535751-
17		600-051-2100	Clip	2	535751-
18		01643-31032	Washer	1	535751-
19		01435-01075	Bolt	1	535751-
20		6218-81-8490	Band	1	535751-
21		144-874-7470	Boss	1	535751-
22		600-051-2100	Clip	2	535751-
23		01643-31032	Washer	1	535751-
24		01435-01045	Bolt	1	535751-
25		6150-81-6940	Spacer	1	535751-
26		01435-01075	Bolt	1	535751-
27		01643-31032	Washer	1	535751-
28		600-051-2080	Clip	1	535751-
29		600-051-2180	Clip	1	535751-
30		01435-01080	Bolt	1	535751-
31		6150-81-6940	Spacer	1	535751-
32		6218-81-8440	Clamp	1	535751-
33		6218-81-8490	Band	1	535751-
34		01435-01085	Bolt	1	535751-
35		144-874-7470	Boss	1	535751-
36		6218-81-8430	Clamp	1	535751-
37		6218-81-8490	Band	1	535751-

FIG. A6810-002003 Electric Wiring Harness, For 75Amp. Alternator, (3/4)

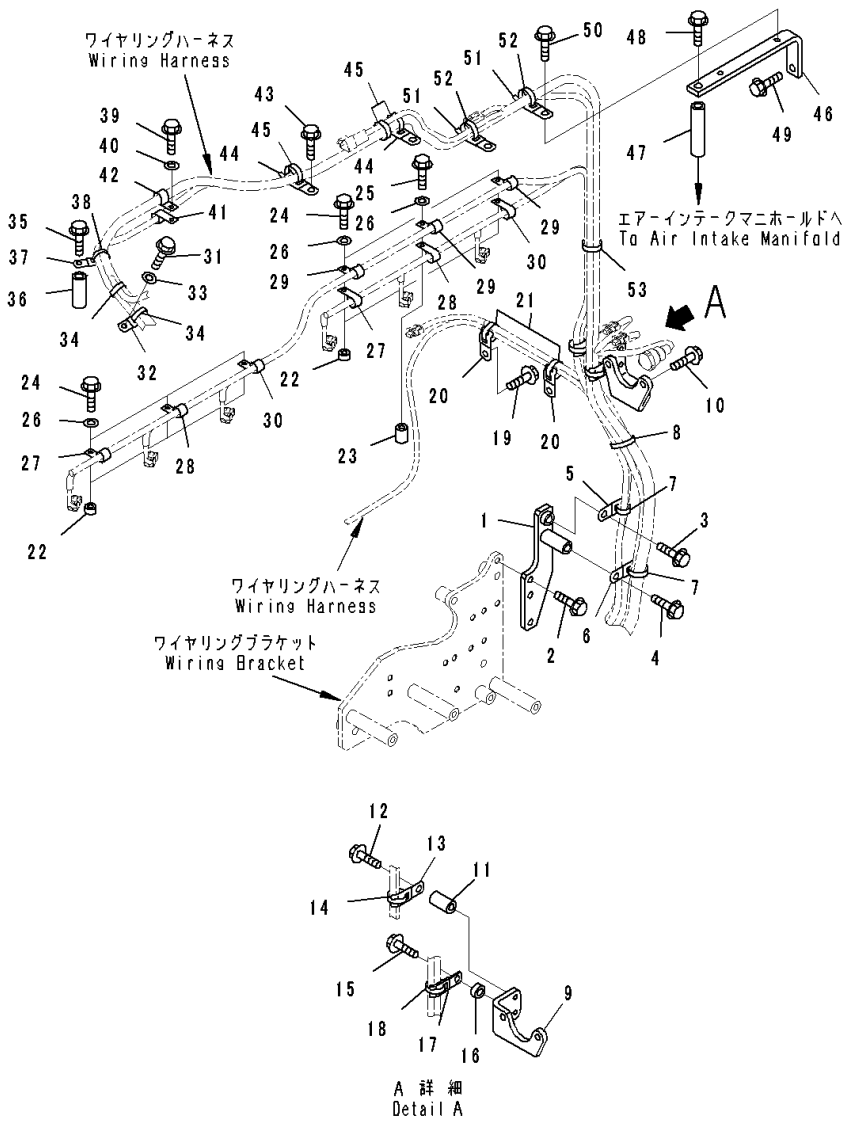

Index	Code	Part Number	Description	Qty	Serial Number
1		6261-81-8210	Bracket	1	535751-
2		01435-01020	Bolt	1	535751-
3		01435-01025	Bolt	1	535751-
4		01435-01065	Bolt	1	535751-
5		6218-81-8430	Clamp	1	535751-
6		6218-81-8440	Clamp	1	535751-
7		6218-81-8490	Band	2	535751-
8		6218-81-8490	Band	1	535751-
9		6261-81-9440	Bracket	1	535751-
10		01435-01035	Bolt	2	535751-
11		6150-81-6920	Spacer	1	535751-
12		01435-01050	Bolt	1	535751-
13		6218-81-8440	Clamp	1	535751-
14		6218-81-8490	Band	1	535751-
15		01435-01025	Bolt	1	535751-
16		6132-21-4630	Spacer	1	535751-
17		6218-81-8440	Clamp	1	535751-
18		6218-81-8490	Band	1	535751-
19		01435-01016	Bolt	2	535751-
20		6218-81-8430	Clamp	2	535751-
21		6218-81-8490	Band	2	535751-
22		6691-41-8230	Spacer	5	535751-
23		6162-13-8670	Spacer	1	535751-
24		01435-00830	Bolt	5	535751-
25		01435-00845	Bolt	1	535751-
26		01643-30823	Washer	6	535751-
27		600-051-2120	Clip	2	535751-
28		600-051-2140	Clip	2	535751-
29		600-051-2100	Clip	3	535751-
30		600-051-2160	Clip	2	535751-
31		01435-01075	Bolt	1	535751-
32		6218-81-8440	Clamp	1	535751-
33		01643-51032	Washer	1	535751-
34		6218-81-8490	Band	2	535751-
35		01435-01075	Bolt	1	535751-
36		6150-81-6940	Spacer	1	535751-
37		6218-81-8440	Clamp	1	535751-
38		6218-81-8490	Band	1	535751-
39		01435-01020	Bolt	1	535751-
40		01643-31032	Washer	1	535751-

FIG. A6810-002003 Electric Wiring Harness, For 75Amp. Alternator, (3/4)

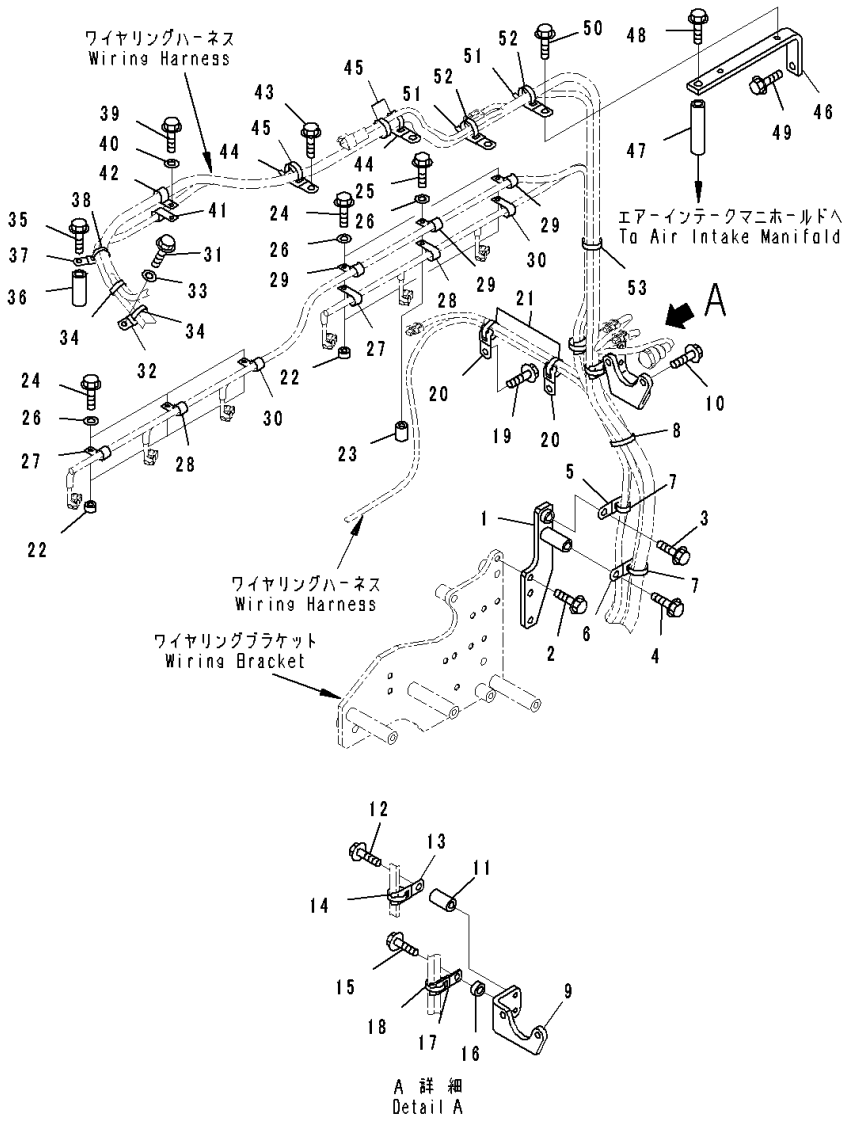

Index	Code	Part Number	Description	Qty	Serial Number
41		600-051-2100	Clip	1	535751-
42		600-051-2140	Clip	1	535751-
43		01435-01016	Bolt	3	535751-
44		6218-81-8440	Clamp	3	535751-
45		6218-81-8490	Band	3	535751-
46		6261-81-8450	Bracket	1	535751-
47		195-01-16420	Collar	1	535751-
48		01436-01015	Bolt	1	535751-
49		01435-01025	Bolt	1	535751-
50		01435-01016	Bolt	2	535751-
51		6218-81-8440	Clamp	2	535751-
52		6218-81-8490	Band	2	535751-
53		6218-81-8490	Band	2	535751-

FIG. A6810-002004 Electric Wiring Harness, For 75Amp. Alternator, (4/4)

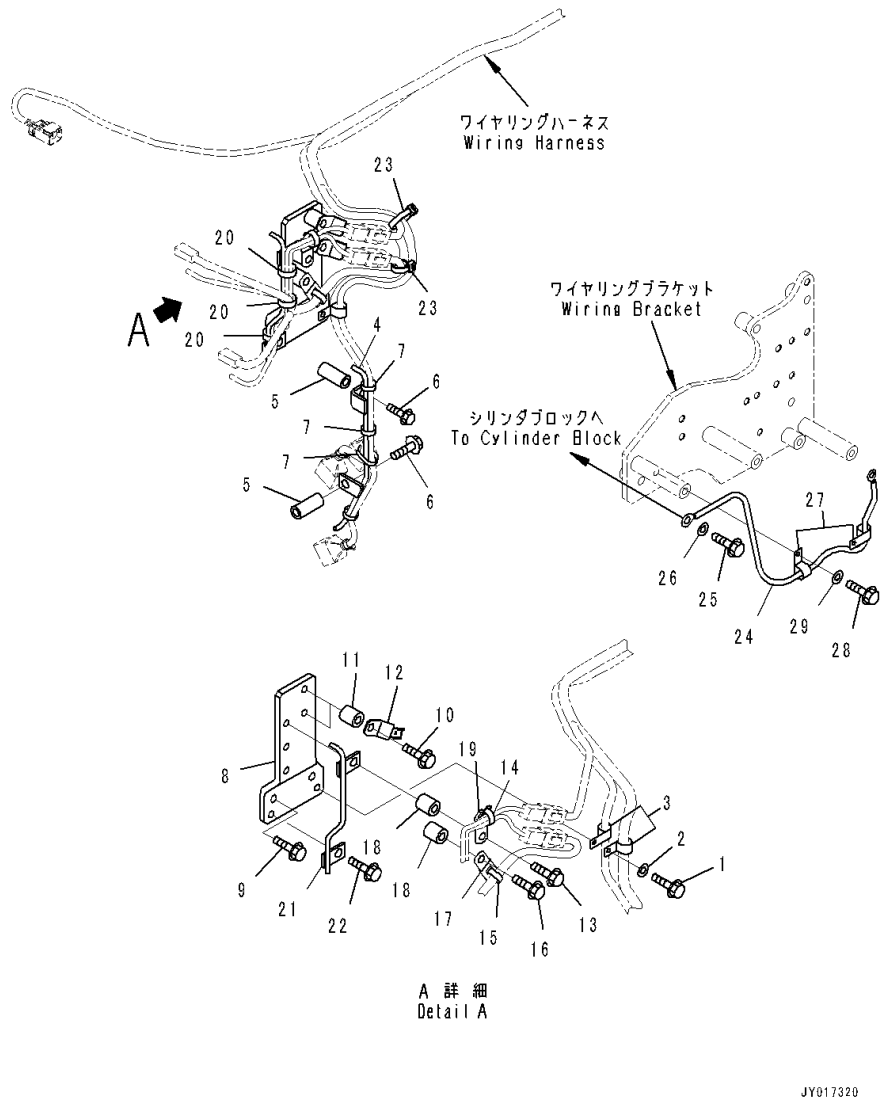

Index	Code	Part Number	Description	Qty	Serial Number
1		01435-01020	Bolt	1	535751-
2		01643-31032	Washer	1	535751-
3		600-051-2080	Clip	2	535751-
4		6261-81-8650	Bracket	1	535751-
5		6143-11-4290	Spacer	2	535751-
6		01435-01065	Bolt	2	535751-
7		6218-81-8490	Band	4	535751-
8		6261-81-8460	Bracket	1	535751-
9		01435-01025	Bolt	2	535751-
10		01435-01040	Bolt	2	535751-
11		144-874-7470	Boss	2	535751-
12		08193-20010	Clip	2	535751-
13		01435-01045	Bolt	1	535751-
14		6218-81-8430	Clamp	1	535751-
15		6218-81-8490	Band	1	535751-
16		01435-01040	Bolt	1	535751-
17		6218-81-8430	Clamp	1	535751-
18		144-874-7470	Boss	2	535751-
19		6218-81-8490	Band	1	535751-
20		6218-81-8490	Band	3	535751-
21		6261-81-8150	Bracket	1	535751-
22		01435-01016	Bolt	1	535751-
23		6218-81-8490	Band	2	537108-
24		6261-81-8560	Wiring Harness	1	535751-
25		01435-01020	Bolt	1	535751-
26		01643-31032	Washer	1	535751-
27		600-051-2060	Clip	2	535751-
28		01435-01016	Bolt	1	535751-
29		01643-31032	Washer	1	535751-

FIG. A6810-003001 Electric Wiring Harness, For 90Amp. Alternator, (1/4)

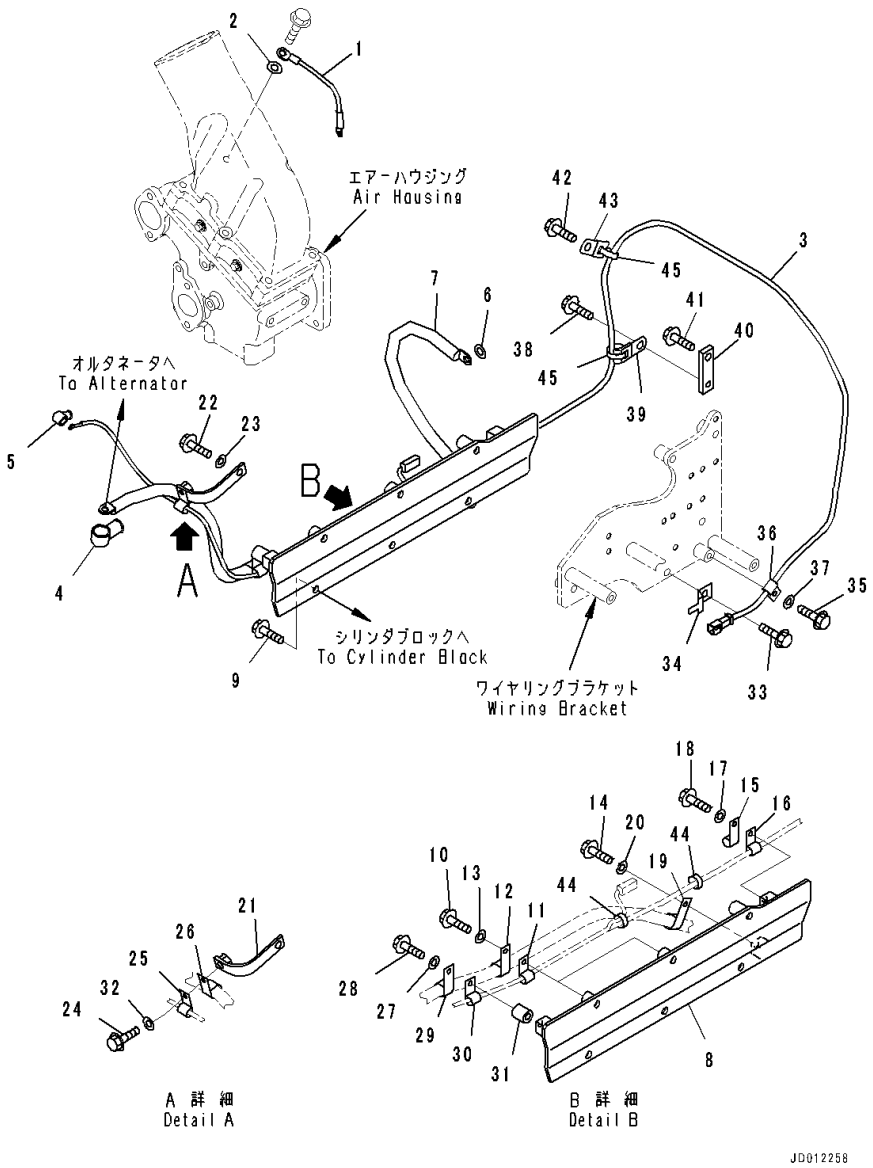

Index	Code	Part Number	Description	Qty	Serial Number
1		6211-81-4280	Wire, L=220mm	1	535751-
2		01643-51032	Washer	1	535751-
3		6261-81-8330	Wiring Harness	1	535751-
4		6218-81-8160	Cap	1	535751-
5		08038-00519	Cap	1	535751-
6		01643-31032	Washer	1	535751-
7		6261-81-8241	Wiring Harness	1	535751-
8		6261-81-8540	Cover	1	535751-
9		01435-01020	Bolt	2	535751-
10		01435-01045	Bolt	2	535751-
11		600-051-2060	Clip	2	535751-
12		600-051-2180	Clip	2	535751-
13		01643-31032	Washer	2	535751-
14		01435-01020	Bolt	1	535751-
15		600-051-2080	Clip	1	535751-
16		600-051-2060	Clip	1	535751-
17		01643-31032	Washer	1	535751-
18		01435-01020	Bolt	1	535751-
19		600-051-2180	Clip	1	535751-
20		01643-31032	Washer	1	535751-
21		6204-21-5571	Bracket	1	535751-
22		01435-01020	Bolt	1	535751-
23		01643-31032	Washer	1	535751-
24		01435-01025	Bolt	1	535751-
25		600-051-2060	Clip	1	535751-
26		600-051-2180	Clip	1	535751-
27		01643-31032	Washer	1	535751-
28		01435-01045	Bolt	1	535751-
29		600-051-2180	Clip	1	535751-
30		600-051-2060	Clip	1	535751-
31		144-874-7470	Boss	1	535751-
32		01643-31032	Washer	1	535751-
33		01435-01025	Bolt	1	535751-
34		08193-20010	Clip	1	535751-
35		01435-01020	Bolt	1	535751-
36		600-051-2080	Clip	1	535751-
37		01643-31032	Washer	1	535751-
38		01435-01016	Bolt	1	535751-
39		6218-81-8430	Clamp	1	535751-
40		6261-81-8660	Plate	1	535751-

FIG. A6810-003001 Electric Wiring Harness, For 90Amp. Alternator, (1/4)

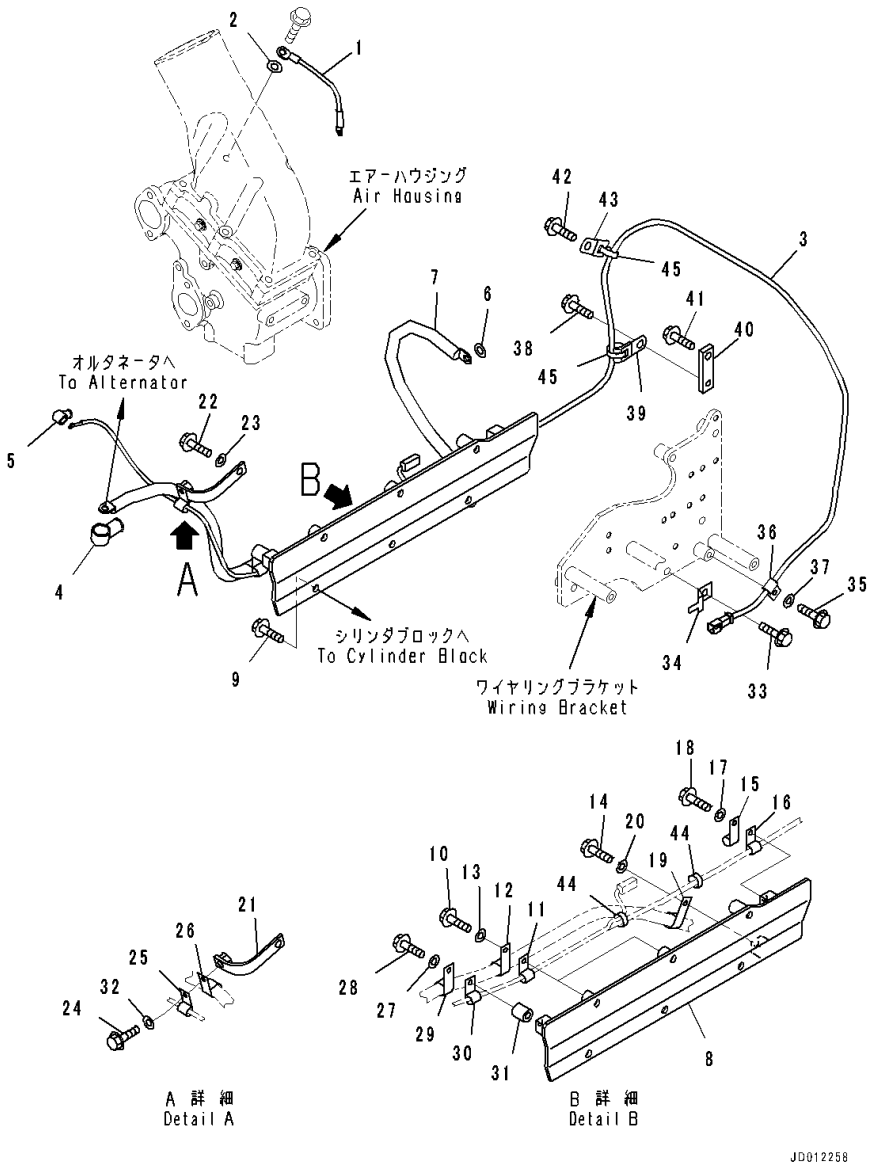

Index	Code	Part Number	Description	Qty	Serial Number
41		01435-01030	Bolt	1	535751-
42		01435-01016	Bolt	1	535751-
43		6218-81-8430	Clamp	1	535751-
44		6218-81-8490	Band	2	535751-
45		6218-81-8490	Band	3	535751-

FIG. A6810-003002 Electric Wiring Harness, For 90Amp. Alternator, (2/4)

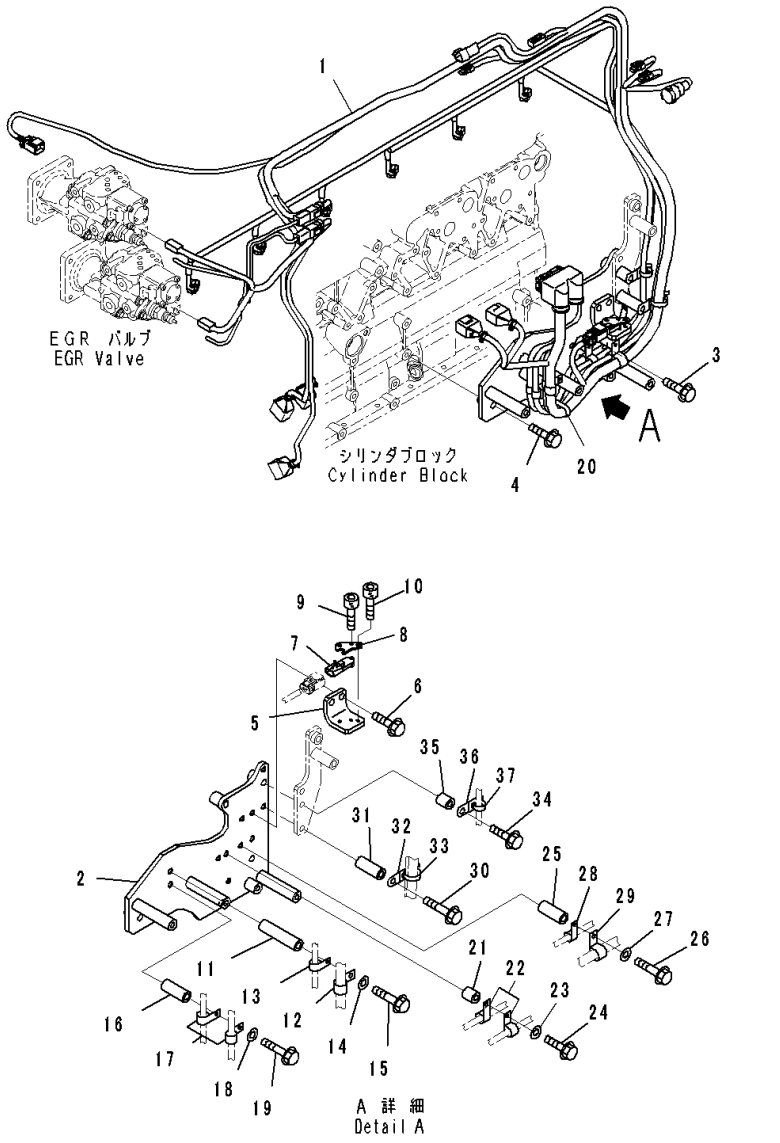

Index	Code	Part Number	Description	Qty	Serial Number
1		6261-81-8411	Wiring Harness	1	535751-
2		6261-81-8920	Bracket	1	535751-
3		01435-01025	Bolt	1	535751-
4		01435-01045	Bolt	2	535751-
5		6261-81-1350	Bracket	1	535751-
6		01435-01020	Bolt	2	535751-
7		6261-81-1900	Sensor	1	535751-
8		6261-81-1360	Plate	1	535751-
9		01252-60525	Bolt	1	535751-
10		01252-60625	Bolt, Hexagon Socket Head	2	535751-
11		195-01-16420	Collar	1	535751-
12		600-051-2180	Clip	1	535751-
13		600-051-2080	Clip	1	535751-
14		01643-31032	Washer	1	535751-
15		01436-01015	Bolt	1	535751-
16		6150-81-6940	Spacer	1	535751-
17		600-051-2100	Clip	2	535751-
18		01643-31032	Washer	1	535751-
19		01435-01075	Bolt	1	535751-
20		6218-81-8490	Band	1	535751-
21		144-874-7470	Boss	1	535751-
22		600-051-2100	Clip	2	535751-
23		01643-31032	Washer	1	535751-
24		01435-01045	Bolt	1	535751-
25		6150-81-6940	Spacer	1	535751-
26		01435-01075	Bolt	1	535751-
27		01643-31032	Washer	1	535751-
28		600-051-2080	Clip	1	535751-
29		600-051-2180	Clip	1	535751-
30		01435-01080	Bolt	1	535751-
31		6150-81-6940	Spacer	1	535751-
32		6218-81-8440	Clamp	1	535751-
33		6218-81-8490	Band	1	535751-
34		01435-01085	Bolt	1	535751-
35		144-874-7470	Boss	1	535751-
36		6218-81-8430	Clamp	1	535751-
37		6218-81-8490	Band	1	535751-

FIG. A6810-003003 Electric Wiring Harness, For 90Amp. Alternator, (3/4)

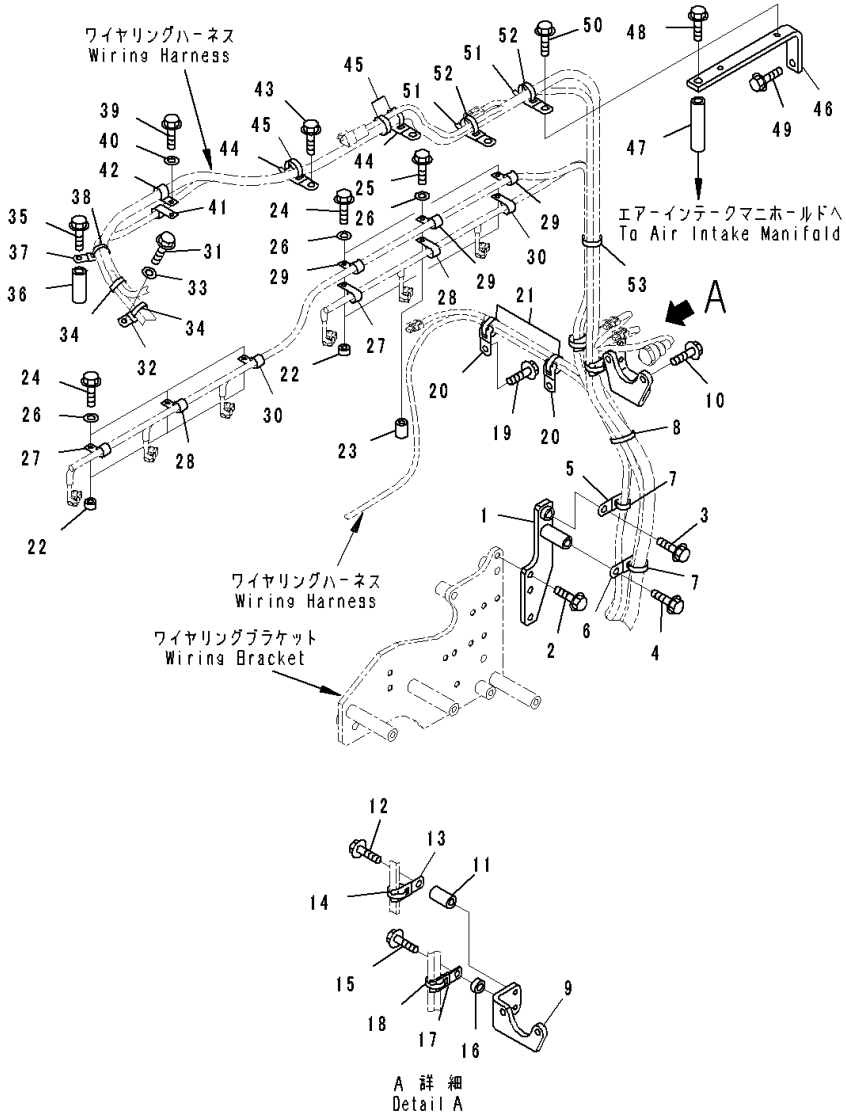

Index	Code	Part Number	Description	Qty	Serial Number
1		6261-81-8210	Bracket	1	535751-
2		01435-01020	Bolt	1	535751-
3		01435-01025	Bolt	1	535751-
4		01435-01065	Bolt	1	535751-
5		6218-81-8430	Clamp	1	535751-
6		6218-81-8440	Clamp	1	535751-
7		6218-81-8490	Band	2	535751-
8		6218-81-8490	Band	1	535751-
9		6261-81-9440	Bracket	1	535751-
10		01435-01035	Bolt	2	535751-
11		6150-81-6920	Spacer	1	535751-
12		01435-01050	Bolt	1	535751-
13		6218-81-8440	Clamp	1	535751-
14		6218-81-8490	Band	1	535751-
15		01435-01025	Bolt	1	535751-
16		6132-21-4630	Spacer	1	535751-
17		6218-81-8440	Clamp	1	535751-
18		6218-81-8490	Band	1	535751-
19		01435-01016	Bolt	2	535751-
20		6218-81-8430	Clamp	2	535751-
21		6218-81-8490	Band	2	535751-
22		6691-41-8230	Spacer	5	535751-
23		6162-13-8670	Spacer	1	535751-
24		01435-00830	Bolt	5	535751-
25		01435-00845	Bolt	1	535751-
26		01643-30823	Washer	6	535751-
27		600-051-2120	Clip	2	535751-
28		600-051-2140	Clip	2	535751-
29		600-051-2100	Clip	3	535751-
30		600-051-2160	Clip	2	535751-
31		01435-01075	Bolt	1	535751-
32		6218-81-8440	Clamp	1	535751-
33		01643-51032	Washer	1	535751-
34		6218-81-8490	Band	2	535751-
35		01435-01075	Bolt	1	535751-
36		6150-81-6940	Spacer	1	535751-
37		6218-81-8440	Clamp	1	535751-
38		6218-81-8490	Band	1	535751-
39		01435-01020	Bolt	1	535751-
40		01643-31032	Washer	1	535751-

FIG. A6810-003003 Electric Wiring Harness, For 90Amp. Alternator, (3/4)

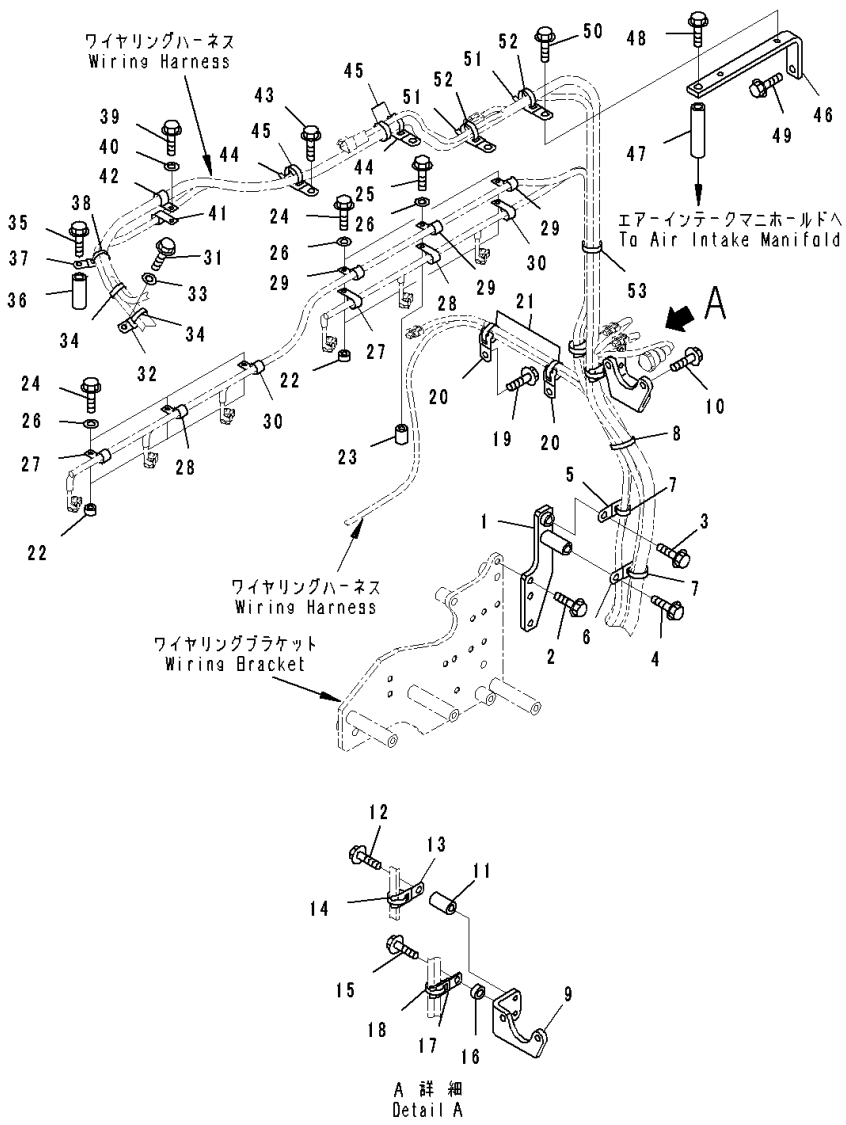

Index	Code	Part Number	Description	Qty	Serial Number
41		600-051-2100	Clip	1	535751-
42		600-051-2140	Clip	1	535751-
43		01435-01016	Bolt	3	535751-
44		6218-81-8440	Clamp	3	535751-
45		6218-81-8490	Band	3	535751-
46		6261-81-8450	Bracket	1	535751-
47		195-01-16420	Collar	1	535751-
48		01436-01015	Bolt	1	535751-
49		01435-01025	Bolt	1	535751-
50		01435-01016	Bolt	2	535751-
51		6218-81-8440	Clamp	2	535751-
52		6218-81-8490	Band	2	535751-
53		6218-81-8490	Band	2	535751-

FIG. A6810-003004 Electric Wiring Harness, For 90Amp. Alternator, (4/4)

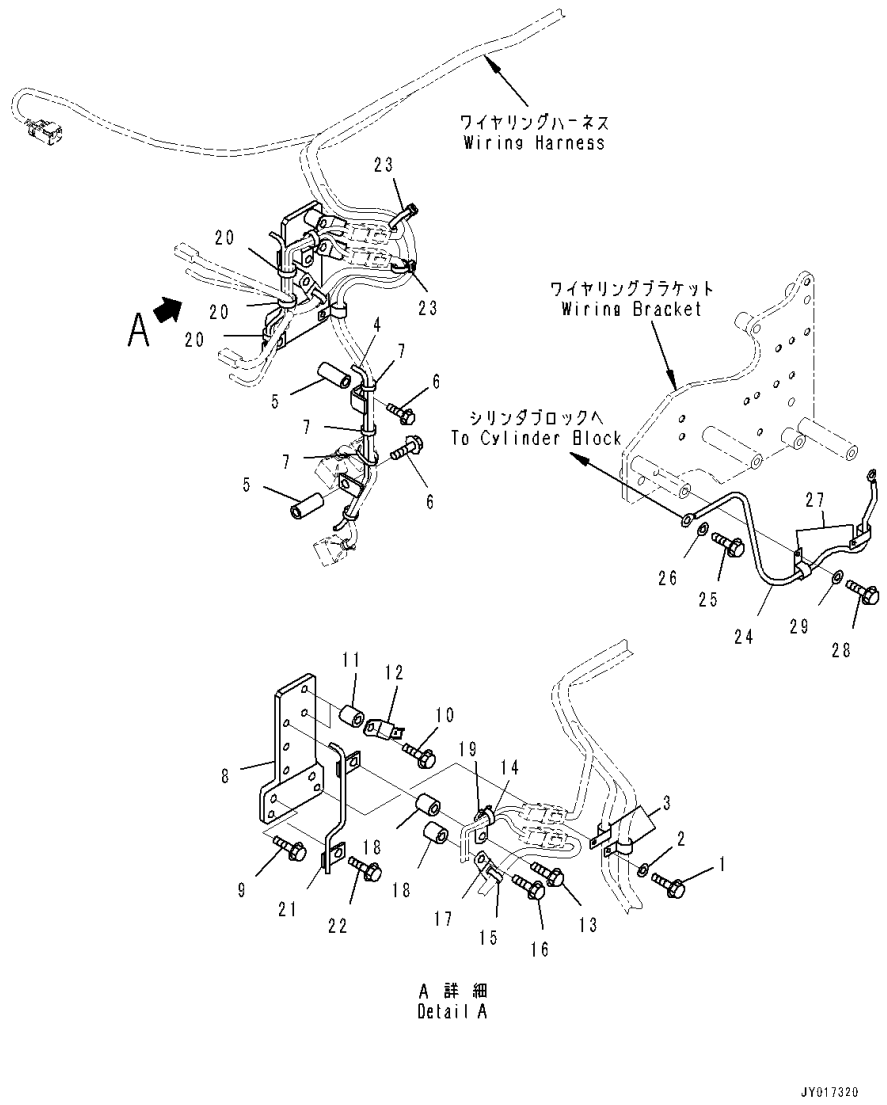

Index	Code	Part Number	Description	Qty	Serial Number
1		01435-01020	Bolt	1	535751-
2		01643-31032	Washer	1	535751-
3		600-051-2080	Clip	2	535751-
4		6261-81-8650	Bracket	1	535751-
5		6143-11-4290	Spacer	2	535751-
6		01435-01065	Bolt	2	535751-
7		6218-81-8490	Band	4	535751-
8		6261-81-8460	Bracket	1	535751-
9		01435-01025	Bolt	2	535751-
10		01435-01040	Bolt	2	535751-
11		144-874-7470	Boss	2	535751-
12		08193-20010	Clip	2	535751-
13		01435-01045	Bolt	1	535751-
14		6218-81-8430	Clamp	1	535751-
15		6218-81-8490	Band	1	535751-
16		01435-01040	Bolt	1	535751-
17		6218-81-8430	Clamp	1	535751-
18		144-874-7470	Boss	2	535751-
19		6218-81-8490	Band	1	535751-
20		6218-81-8490	Band	3	535751-
21		6261-81-8150	Bracket	1	535751-
22		01435-01016	Bolt	1	535751-
23		6218-81-8490	Band	2	537108-
24		6261-81-8560	Wiring Harness	1	535751-
25		01435-01020	Bolt	1	535751-
26		01643-31032	Washer	1	535751-
27		600-051-2060	Clip	2	535751-
28		01435-01016	Bolt	1	535751-
29		01643-31032	Washer	1	535751-

FIG. A6810-004001 Electric Wiring Harness, For 75Amp. Alternator, For Slag Handling, (1/4)

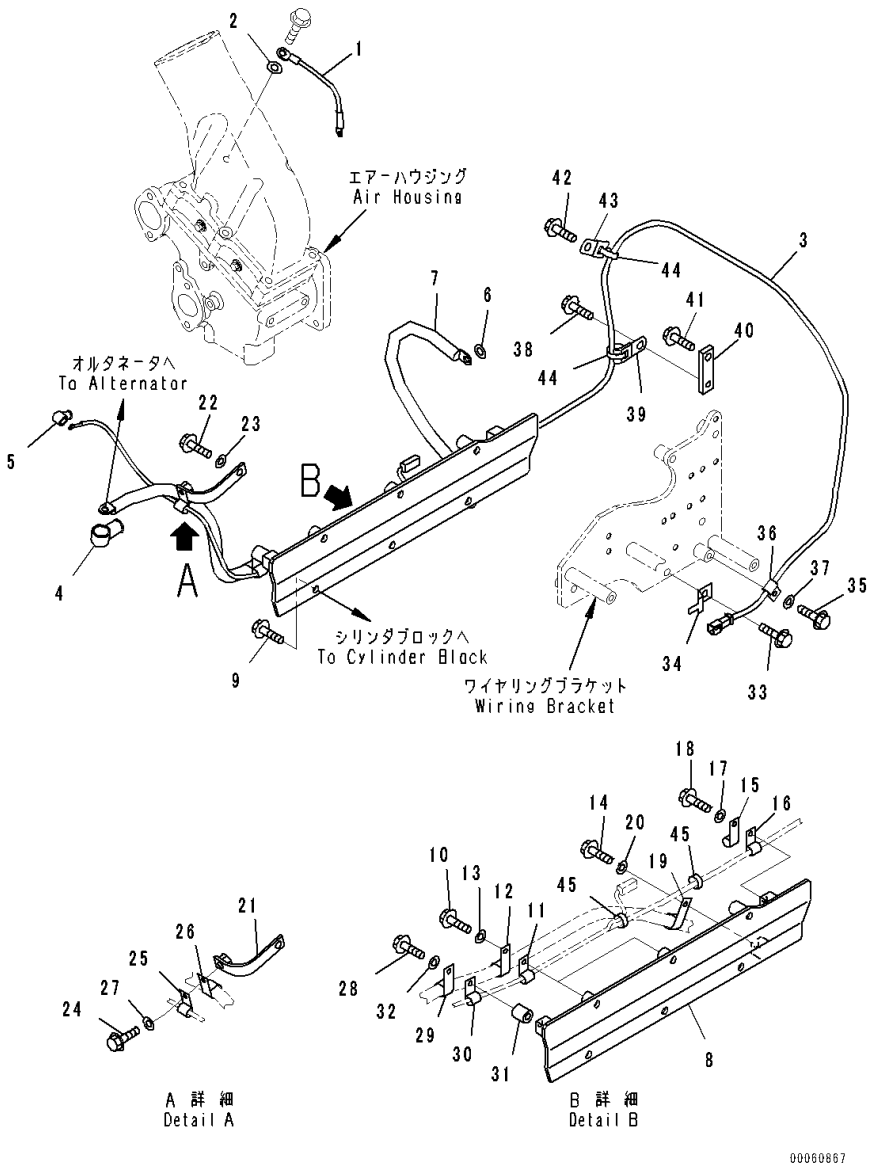

Index	Code	Part Number	Description	Qty	Serial Number
1		6211-81-4280	Wire, L=220mm	1	535751-
2		01643-51032	Washer	1	535751-
3		6261-81-9370	Wiring Harness	1	535751-
4		6218-81-8160	Cap	1	535751-
5		08038-00519	Cap	1	535751-
6		01643-31032	Washer	1	535751-
7		6261-81-9410	Wire	1	535751-
8		6261-81-8540	Cover	1	535751-
9		01435-01020	Bolt	2	535751-
10		01435-01045	Bolt	2	535751-
11		600-051-2080	Clip	2	535751-
12		600-051-2200	Clip	2	535751-
13		01643-31032	Washer	2	535751-
14		01435-01020	Bolt	1	535751-
15		600-051-2060	Clip	1	535751-
16		600-051-2080	Clip	1	535751-
17		01643-31032	Washer	1	535751-
18		01435-01020	Bolt	1	535751-
19		600-051-2200	Clip	1	535751-
20		01643-31032	Washer	1	535751-
21		6204-21-5571	Bracket	1	535751-
22		01435-01020	Bolt	1	535751-
23		01643-31032	Washer	1	535751-
24		01435-01025	Bolt	1	535751-
25		600-051-2080	Clip	1	535751-
26		600-051-2200	Clip	1	535751-
27		01643-31032	Washer	1	535751-
28		01435-01045	Bolt	1	535751-
29		600-051-2200	Clip	1	535751-
30		600-051-2080	Clip	1	535751-
31		144-874-7470	Boss	1	535751-
32		01643-31032	Washer	1	535751-
33		01435-01025	Bolt	1	535751-
34		08193-20010	Clip	1	535751-
35		01435-01020	Bolt	1	535751-
36		600-051-2100	Clip	1	535751-
37		01643-31032	Washer	1	535751-
38		01435-01016	Bolt	1	535751-
39		6218-81-8430	Clamp	1	535751-
40		6261-81-8660	Plate	1	535751-

FIG. A6810-004001 Electric Wiring Harness, For 75Amp. Alternator, For Slag Handling, (1/4)

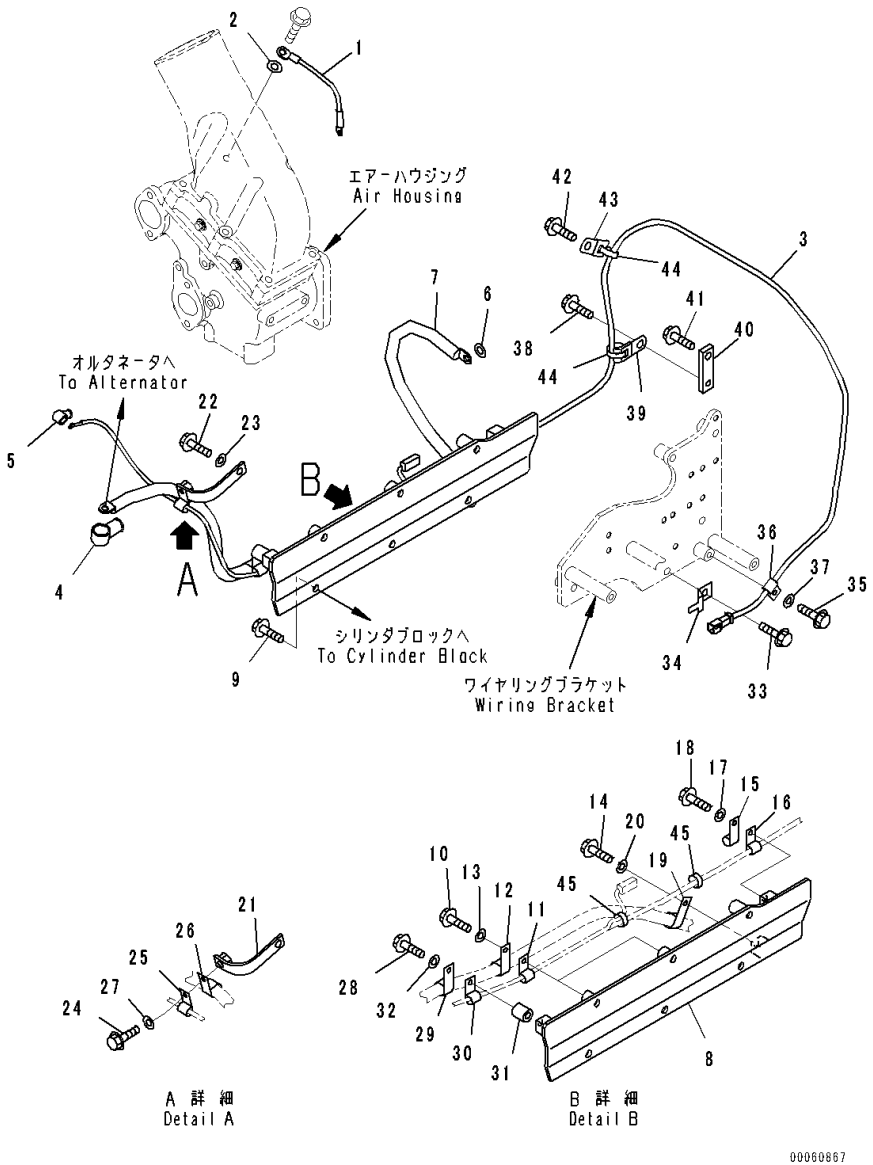

Index	Code	Part Number	Description	Qty	Serial Number
41		01435-01030	Bolt	1	535751-
42		01435-01016	Bolt	1	535751-
43		6218-81-8430	Clamp	1	535751-
44		6218-81-8490	Band	2	535751-
45		6218-81-8490	Band	3	535751-

FIG. A6810-004002 Electric Wiring Harness, For 75Amp. Alternator, For Slag Handling, (2/4)

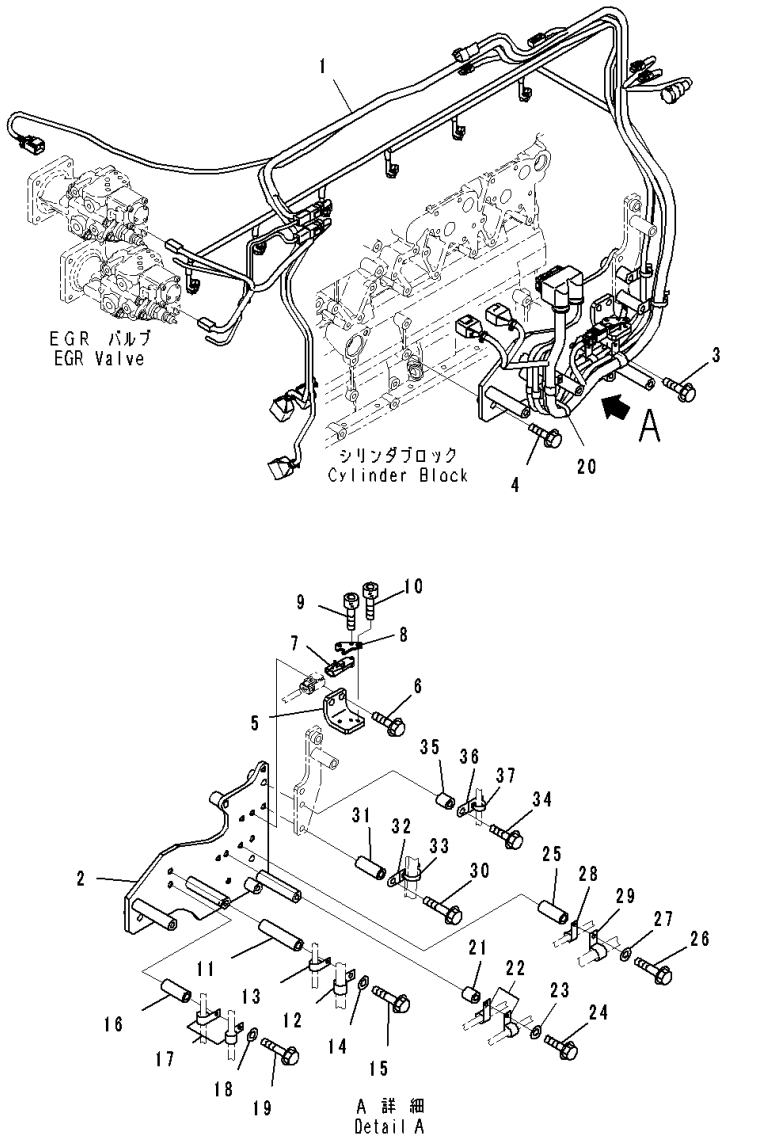

Index	Code	Part Number	Description	Qty	Serial Number
1		6261-81-9360	Wiring Harness	1	535751-
2		6261-81-8920	Bracket	1	535751-
3		01435-01025	Bolt	1	535751-
4		01435-01045	Bolt	2	535751-
5		6261-81-1350	Bracket	1	535751-
6		01435-01020	Bolt	2	535751-
7		6261-81-1900	Sensor	1	535751-
8		6261-81-1360	Plate	1	535751-
9		01252-60525	Bolt	1	535751-
10		01252-60625	Bolt, Hexagon Socket Head	2	535751-
11		195-01-16420	Collar	1	535751-
12		600-051-2180	Clip	1	535751-
13		600-051-2100	Clip	1	535751-
14		01643-31032	Washer	1	535751-
15		01436-01015	Bolt	1	535751-
16		6150-81-6940	Spacer	1	535751-
17		600-051-2120	Clip	2	535751-
18		01643-31032	Washer	1	535751-
19		01435-01075	Bolt	1	535751-
20		6218-81-8490	Band	1	535751-
21		144-874-7470	Boss	1	535751-
22		600-051-2120	Clip	2	535751-
23		01643-31032	Washer	1	535751-
24		01435-01045	Bolt	1	535751-
25		6150-81-6940	Spacer	1	535751-
26		01435-01075	Bolt	1	535751-
27		01643-31032	Washer	1	535751-
28		600-051-2100	Clip	1	535751-
29		600-051-2200	Clip	1	535751-
30		01435-01080	Bolt	1	535751-
31		6150-81-6940	Spacer	1	535751-
32		6218-81-8440	Clamp	1	535751-
33		6218-81-8490	Band	1	535751-
34		01435-01085	Bolt	1	535751-
35		144-874-7470	Boss	1	535751-
36		6218-81-8430	Clamp	1	535751-
37		6218-81-8490	Band	1	535751-

FIG. A6810-004003 Electric Wiring Harness, For 75Amp. Alternator, For Slag Handling, (3/4)

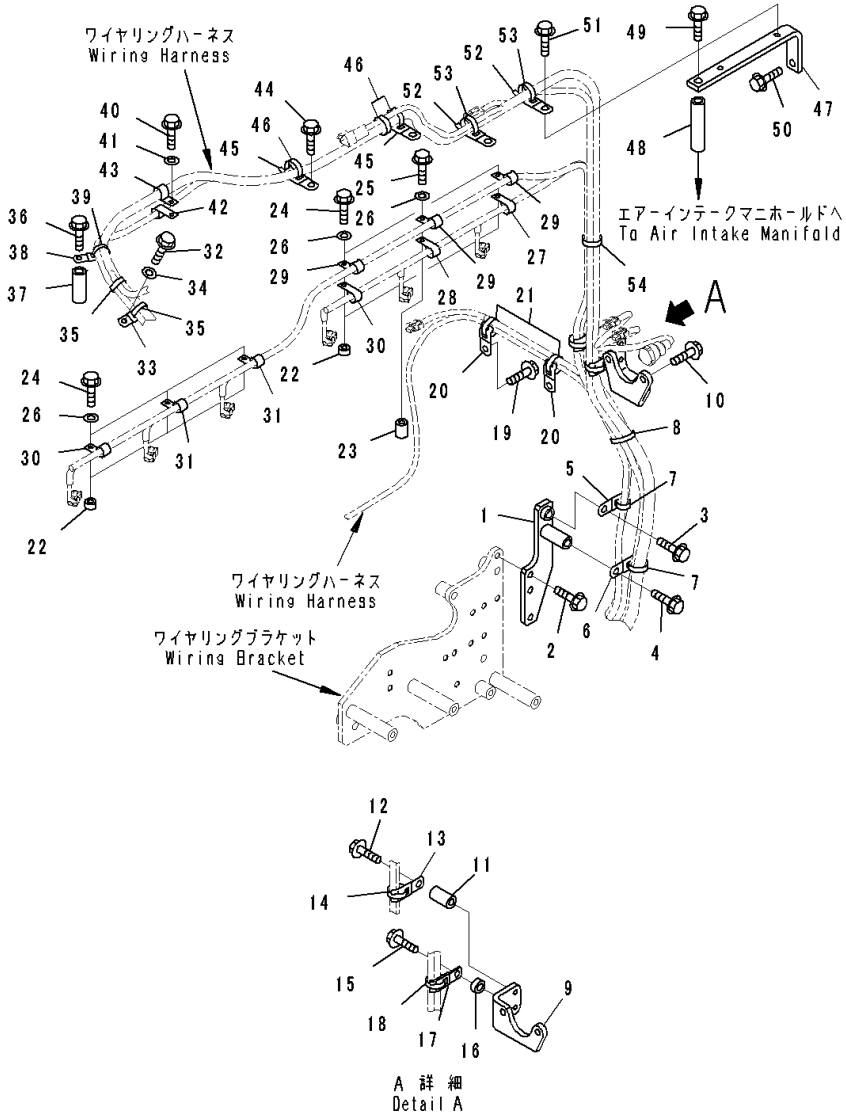

Index	Code	Part Number	Description	Qty	Serial Number
1		6261-81-8210	Bracket	1	535751-
2		01435-01020	Bolt	1	535751-
3		01435-01025	Bolt	1	535751-
4		01435-01065	Bolt	1	535751-
5		6218-81-8430	Clamp	1	535751-
6		6218-81-8440	Clamp	1	535751-
7		6218-81-8490	Band	2	535751-
8		6218-81-8490	Band	1	535751-
9		6261-81-9440	Bracket	1	535751-
10		01435-01035	Bolt	2	535751-
11		6150-81-6920	Spacer	1	535751-
12		01435-01050	Bolt	1	535751-
13		6218-81-8440	Clamp	1	535751-
14		6218-81-8490	Band	1	535751-
15		01435-01025	Bolt	1	535751-
16		6132-21-4630	Spacer	1	535751-
17		6218-81-8440	Clamp	1	535751-
18		6218-81-8490	Band	1	535751-
19		01435-01016	Bolt	2	535751-
20		6218-81-8430	Clamp	2	535751-
21		6218-81-8490	Band	2	535751-
22		6691-41-8230	Spacer	5	535751-
23		6162-13-8670	Spacer	1	535751-
24		01435-00830	Bolt	5	535751-
25		01435-00845	Bolt	1	535751-
26		01643-30823	Washer	6	535751-
27		600-051-2120	Clip	1	535751-
28		600-051-2140	Clip	1	535751-
29		600-051-2120	Clip	3	535751-
30		600-051-2160	Clip	2	535751-
31		600-051-2180	Clip	2	535751-
32		01435-01075	Bolt	1	535751-
33		6218-81-8440	Clamp	1	535751-
34		01643-51032	Washer	1	535751-
35		6218-81-8490	Band	2	535751-
36		01435-01075	Bolt	1	535751-
37		6150-81-6940	Spacer	1	535751-
38		6218-81-8440	Clamp	1	535751-
39		6218-81-8490	Band	1	535751-
40		01435-01020	Bolt	1	535751-

FIG. A6810-004003 Electric Wiring Harness, For 75Amp. Alternator, For Slag Handling, (3/4)

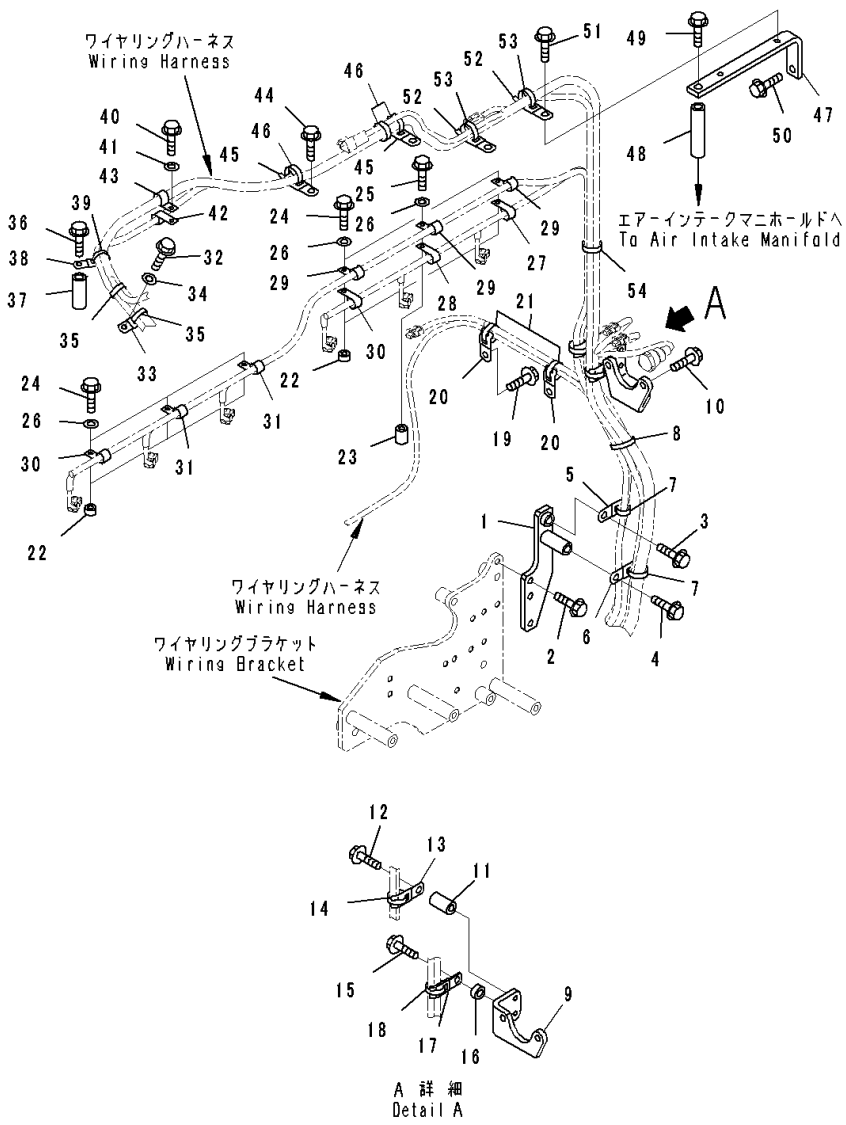

Index	Code	Part Number	Description	Qty	Serial Number
41		01643-31032	Washer	1	535751-
42		600-051-2120	Clip	1	535751-
43		600-051-2160	Clip	1	535751-
44		01435-01016	Bolt	2	535751-
45		6218-81-8440	Clamp	2	535751-
46		6218-81-8490	Band	3	535751-
47		6261-81-8450	Bracket	1	535751-
48		195-01-16420	Collar	1	535751-
49		01436-01015	Bolt	1	535751-
50		01435-01025	Bolt	1	535751-
51		01435-01016	Bolt	2	535751-
52		6218-81-8440	Clamp	2	535751-
53		6218-81-8490	Band	2	535751-
54		6218-81-8490	Band	2	535751-

FIG. A6810-004004 Electric Wiring Harness, For 75Amp. Alternator, For Slag Handling, (4/4)

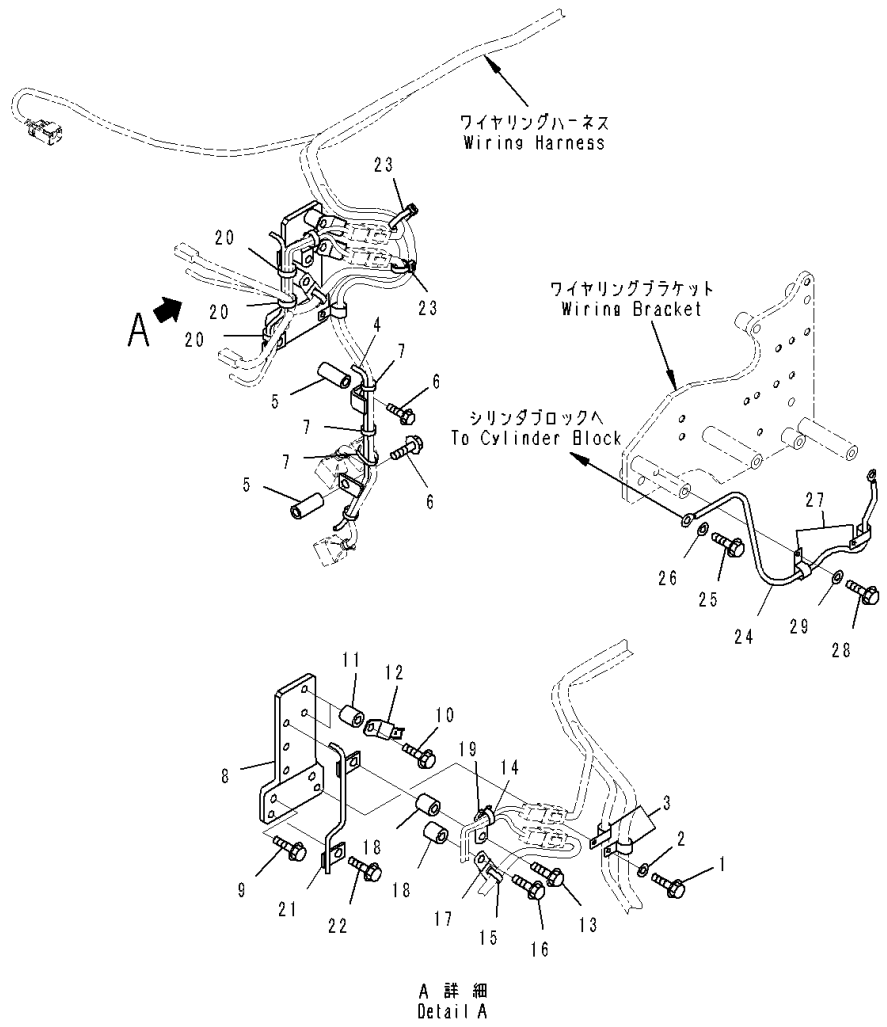

Index	Code	Part Number	Description	Qty	Serial Number
1		01435-01020	Bolt	1	535751-
2		01643-31032	Washer	1	535751-
3		600-051-2100	Clip	2	535751-
4		6261-81-8650	Bracket	1	535751-
5		6143-11-4290	Spacer	2	535751-
6		01435-01065	Bolt	2	535751-
7		6218-81-8490	Band	4	535751-
8		6261-81-8460	Bracket	1	535751-
9		01435-01025	Bolt	2	535751-
10		01435-01040	Bolt	2	535751-
11		144-874-7470	Boss	2	535751-
12		08193-20010	Clip	2	535751-
13		01435-01045	Bolt	1	535751-
14		6218-81-8430	Clamp	1	535751-
15		6218-81-8490	Band	1	535751-
16		01435-01040	Bolt	1	535751-
17		6218-81-8430	Clamp	1	535751-
18		144-874-7470	Boss	2	535751-
19		6218-81-8490	Band	1	535751-
20		6218-81-8490	Band	3	535751-
21		6261-81-8150	Bracket	1	535751-
22		01435-01016	Bolt	1	535751-
23		6218-81-8490	Band	2	537108-
24		6261-81-9380	Wire	1	535751-
25		01435-01020	Bolt	1	535751-
26		01643-31032	Washer	1	535751-
27		600-051-2080	Clip	2	535751-
28		01435-01016	Bolt	1	535751-
29		01643-31032	Washer	1	535751-

FIG. A5210-001001 Corrosion Resistor

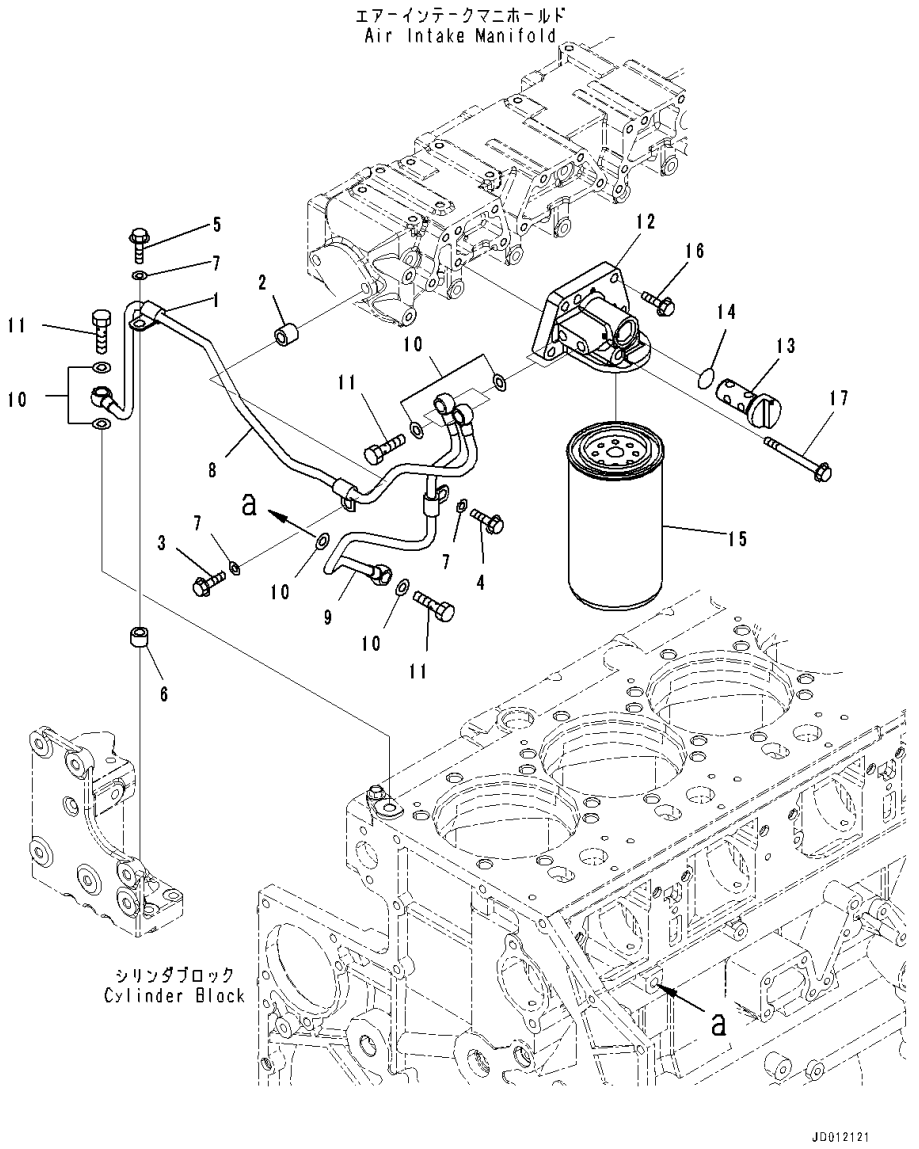

Index	Code	Part Number	Description	Qty	Serial Number
1		6215-71-4940	Clamp	3	535751-
2		6631-11-5630	Spacer	1	535751-
3		01435-01045	Bolt	1	535751-
4		01435-01020	Bolt	1	535751-
5		01435-01035	Bolt	1	535751-
6		6631-11-6390	Spacer	1	535751-
7		01643-31032	Washer	3	535751-
8		6261-61-8620	Tube, Return	1	535751-
9		6261-61-8610	Tube, Inlet	1	535751-
10		07005-01412	Seal, Washer	8	535751-
11		07206-31014	Bolt, Joint	4	535751-
		6217-61-8170	Corrosion Resistor Assembly	1	535751-
		6217-61-8231	• Head Assembly	1	535751-
12		6217-61-8211	• • Head	1	535751-
13		6217-61-8221	• • Valve	1	535751-
14		07000-A2021	• • O-ring	1	535751-
15		600-411-1161	• Cartridge, Corrosion	1	535751-
16		01435-01035	Bolt	4	535751-
17		01436-01000	Bolt	1	535751-

FIG. A5210-002001 Corrosion Resistor, Without Corrosion Resistor

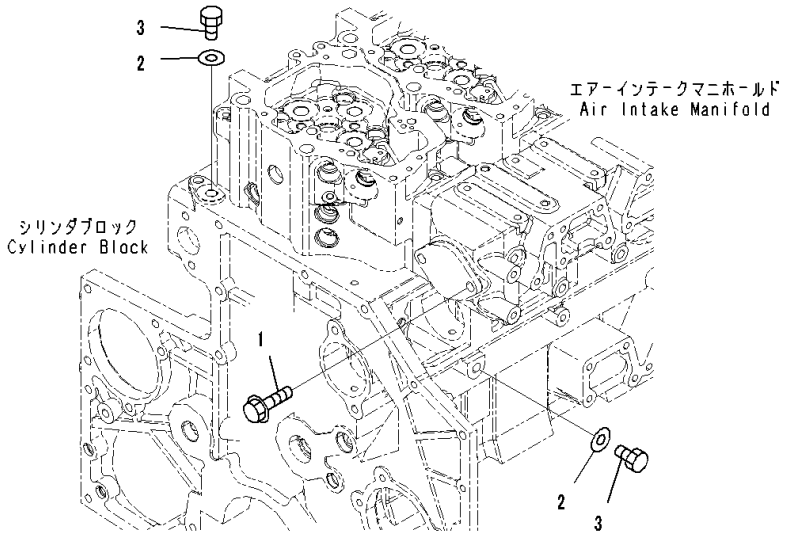

Index	Code	Part Number	Description	Qty	Serial Number
1		01435-01025	Bolt	1	535751-
2		07005-01412	Seal, Washer	2	535751-
3		600-311-7520	Plug	2	535751-

ENGINE ELECTRICAL SYSTEM

FIG. A6010-008001 Alternator, For 75Amp, EU Safety Regulation, Inner Parts

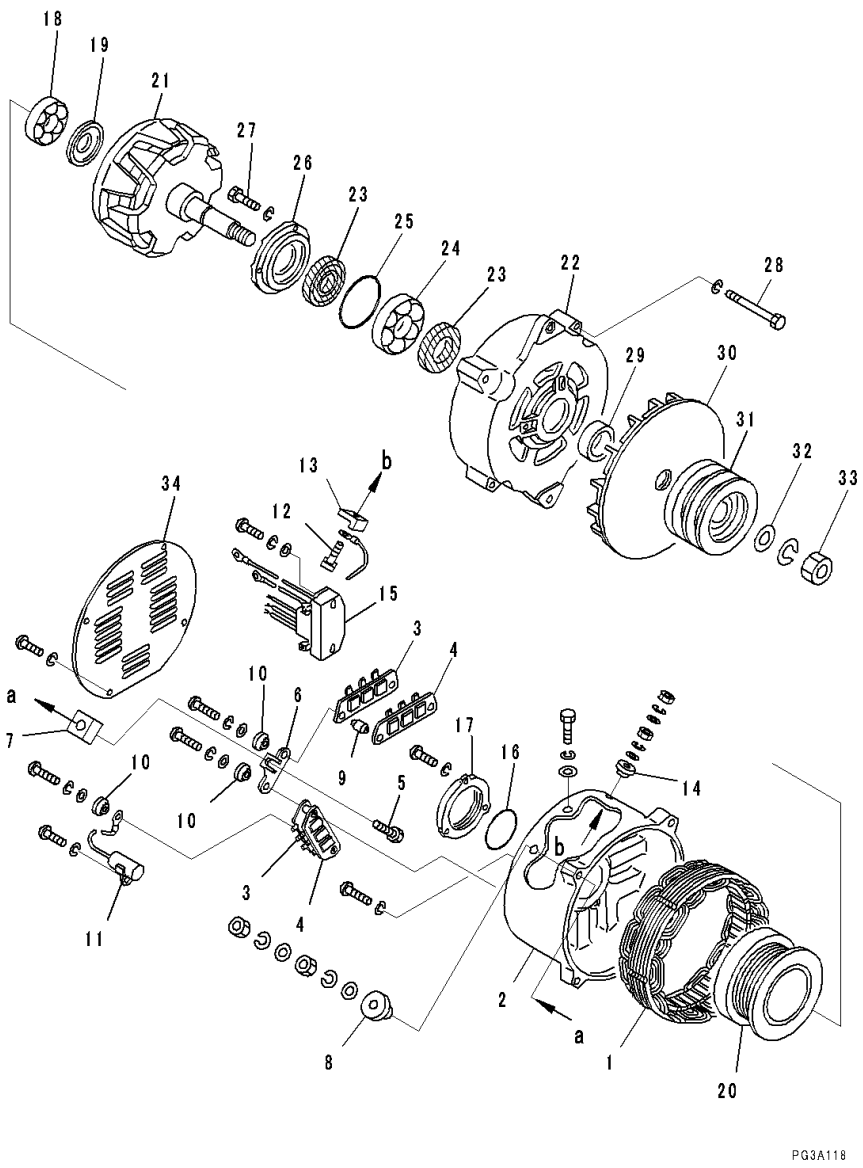

Index	Code	Part Number	Description	Qty	Serial Number
		600-825-7111	Alternator Assembly, 75Amp.	1	535856-
1		SD1211-40300X0	• Stator Assembly	1	535856-
		SD1230-18803X0	• Bracket Assembly	1	535856-
2		SD2240-19500X0	• • Bracket	1	535856-
3		SD1235-06400X0	• • Heat Sink Assembly, (+)	2	535856-
4		SD1235-06410X0	• • Heat Sink Assembly, (-)	2	535856-
5		SD5010-26400X0	• • Bolt	1	535856-
6		SD3220-38800X0	• • Support	1	535856-
7		SD4215-04000X0	• • Insulator	1	535856-
8		SD4041-07500X0	• • Bushing	1	535856-
9		SD4215-03900X0	• • Insulator	4	535856-
10		SD4041-00900X0	• • Bushing	4	535856-
11		SD6060-11920X0	• • Condenser	1	535856-
12		SD8140-0503010	• • Bolt	1	535856-
13		SD4215-01300X0	• • Insulator	1	535856-
14		SD4041-05700X0	• • Bushing	1	535856-
15		SD1510-02911X0	• • Regulator Assembly	1	535856-
16		SD4142-01000X0	• O-ring	1	535856-
17		SD2202-01401X0	• Cover	1	535856-
18		SD6206-01660X0	• Bearing, Ball	1	535856-
19		SD3409-00300X0	• Cover	1	535856-
20		SD1251-00700X0	• Coil Assembly	1	535856-
21		SD1221-15100X0	• Rotor Assembly	1	535856-
		SD1240-07200X0	• Bracket Assembly	1	535856-
22		SD2242-08600X0	• • Bracket	1	535856-
23		SD6410-02000X0	• • Seal, Oil	2	535856-
24		SD6206-04100X0	• • Bearing, Ball	1	535856-
25		SD4142-00900X0	• • O-ring	1	535856-
26		SD2202-02200X0	• • Cover	1	535856-
27		SD5010-21500X0	• • Bolt	3	535856-
28		SD5010-04750X0	• Bolt	4	535856-
29		SD3600-17300X0	• Collar	1	535856-
30		SD1982-03200X0	• Fan Assembly	1	535856-
31		SD2080-28900X0	• Pulley	1	535856-
32		SD3000-07800X0	• Washer	1	535856-
33		SD8264-1830010	• Nut	1	535856-
34		SD3002-04600X0	• Cover	1	535856-

FIG. A6010-008002 Alternator, For 75Amp, EU Safety Regulation, Mounting Parts

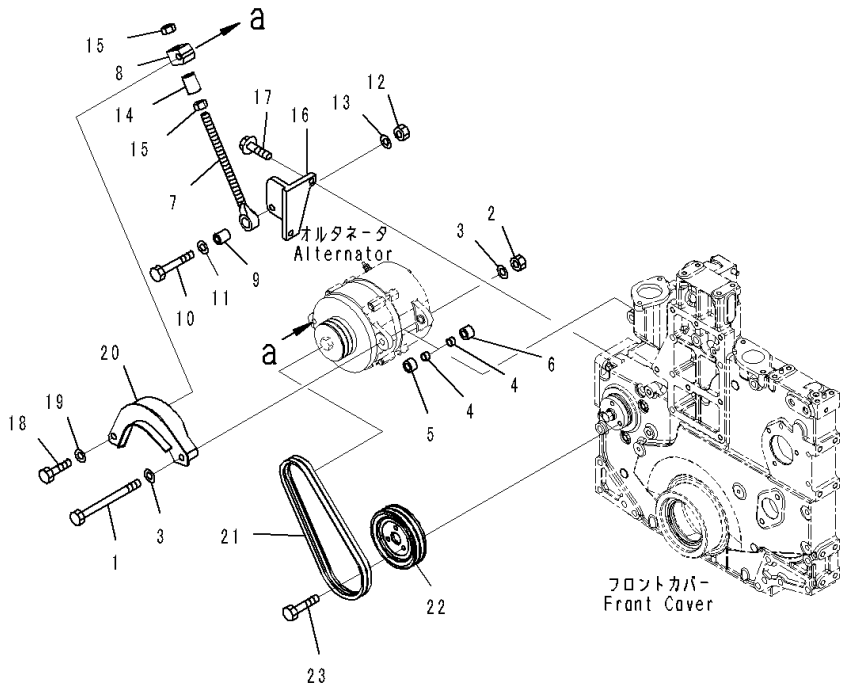

Index	Code	Part Number	Description	Qty	Serial Number
1		6210-81-6490	Bolt	1	535856-
2		01582-01210	Nut	1	535856-
3		01643-31232	Washer	2	535856-
4		6210-61-6530	Pin	2	535856-
5		6210-81-6750	Spacer	1	535856-
6		6217-81-6550	Spacer	1	535856-
7		6240-81-8611	Rod, Adjusting	1	535856-
8		6261-81-8340	Plate	1	535856-
9		6215-81-6150	Pin	1	535856-
10		01010-81260	Bolt	1	535856-
11		01643-31232	Washer	1	535856-
12		01580-11210	Nut	1	535856-
13		01643-31232	Washer	1	535856-
14		6261-81-8350	Spacer	1	535856-
15		01580-11613	Nut	2	535856-
16		6210-82-6570	Bracket	1	535856-
17		01435-01025	Bolt	2	535856-
18		01050-51260	Bolt	1	535856-
19		01643-31232	Washer	1	535856-
20		6261-81-6420	Cover	1	535856-
21		6261-81-6810	V-belt Set	1	535856-
22		6210-82-6840	Pulley	1	535856-
23		01010-80820	Bolt	3	535856-

FIG. A6010-009001 Alternator, For 60Amp, EU Safety Regulation, Inner Parts

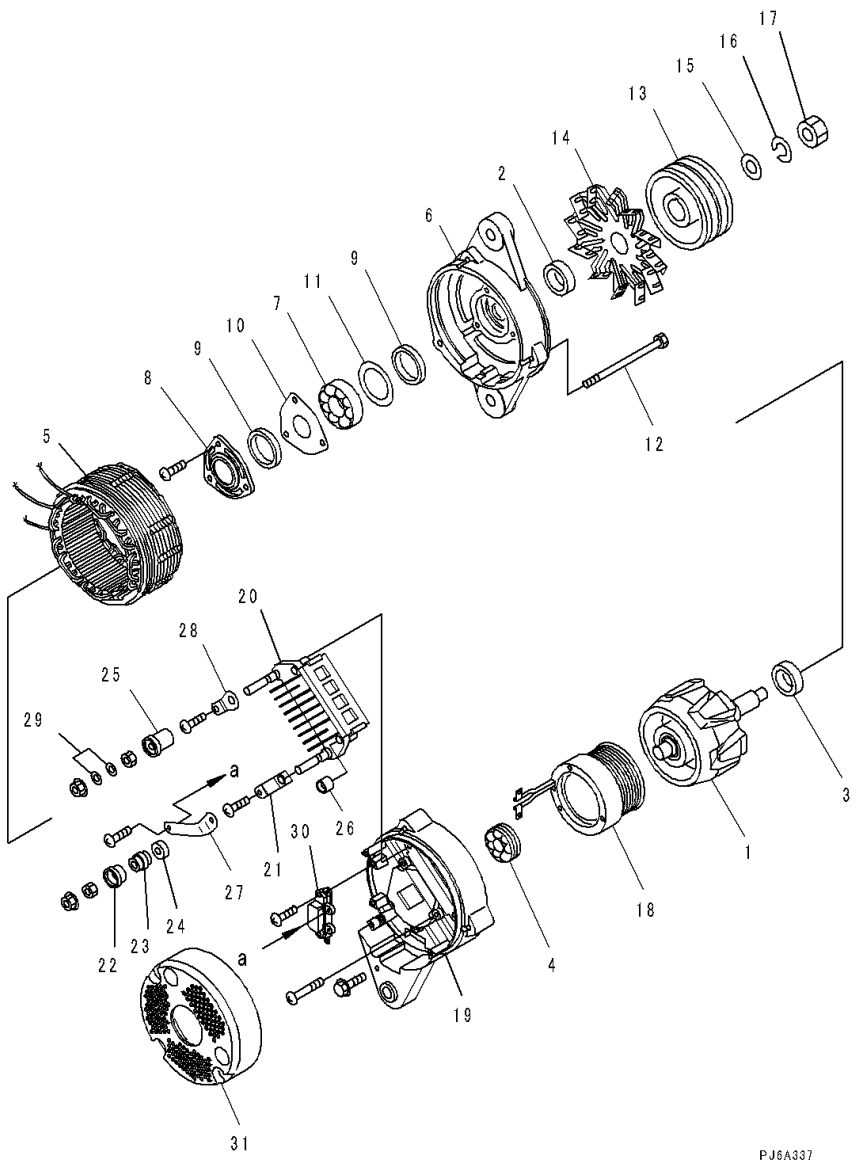

Index	Code	Part Number	Description	Qty	Serial Number
		600-825-6110	Alternator Assembly	1	535892-
1		KD0-35100-0300	• Rotor Assembly	1	535892-
2		KD1-33923-0790	• Collar	1	535892-
3		KD0-35923-0160	• Collar	1	535892-
4		KD0-09201-0980	• Bearing, Ball	1	535892-
5		KD0-35200-0460	• Stator Assembly	1	535892-
6		KD0-35300-0350	• Bracket Assembly	1	535892-
7		KD0-09201-1140	• • Bearing, Ball	1	535892-
8		KD0-35926-0070	• • Retainer	1	535892-
9		KD0-35951-0060	• • Packing	2	535892-
10		KD0-35926-0090	• • Retainer	1	535892-
11		KD1-33926-0730	• • Retainer	1	535892-
12		KD0-0275-06802	• Bolt	3	535892-
13		KD0-35411-0630	• Pulley	1	535892-
14		KD0-35421-0230	• Fan	1	535892-
15		KD0-0330-16012	• Washer	1	535892-
16		KD1-0335-16002	• Washer, Spring	1	535892-
17		KD0-0280-16022	• Nut	1	535892-
18		KD0-35120-0290	• Coil, Field	1	535892-
		KD0-35700-0920	• Bracket Assembly	1	535892-
19		KD0-35710-1010	• • Bracket	1	535892-
20		KD0-35730-0700	• • Rectifier Assembly	1	535892-
21		KD0-09170-2501	• • Condenser	1	535892-
22		KD0-35943-0140	• • Bushing, Insulate	1	535892-
23		KD0-35943-0150	• • Bushing, Insulate	1	535892-
24		KD0-35943-0160	• • Bushing, Insulate	1	535892-
25		KD0-35943-0170	• • Bushing, Insulate	1	535892-
26		KD0-35923-0130	• • Collar	1	535892-
27		KD0-35784-0210	• • Bar, Connect	1	535892-
28		KD0-35784-0290	• • Bar, Plate	1	535892-
29		KD0-09057-0220	• • Washer	2	535892-
30		KD0-35719-0210	• • Regulator Assembly	1	535892-
31		KD0-35761-0250	• Cover	1	535892-

FIG. A6010-009002 Alternator, For 60Amp, EU Safety Regulation, Mounting Parts

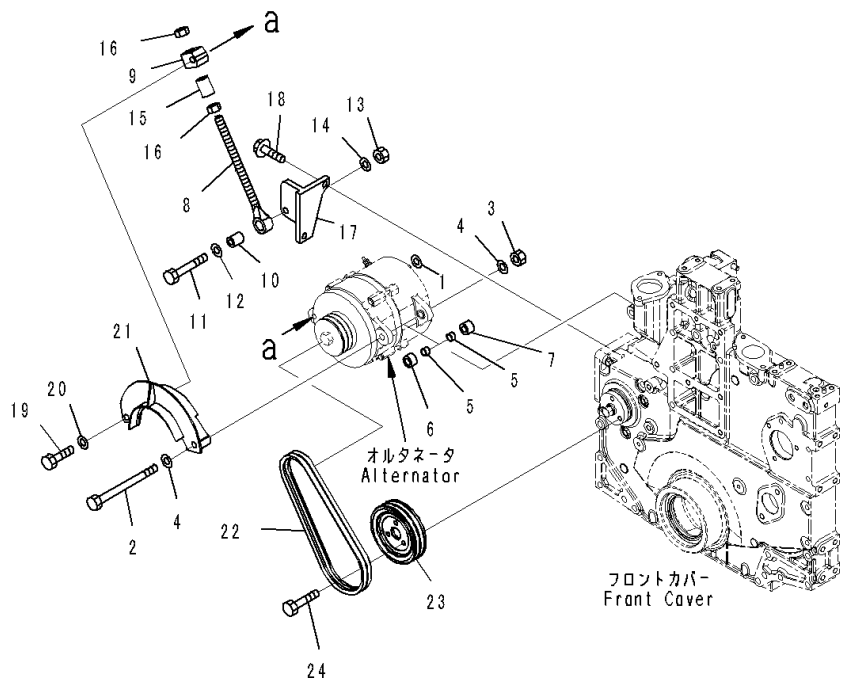

Index	Code	Part Number	Description	Qty	Serial Number
1		600-815-9980	Washer	1	535892-
2		6210-81-6490	Bolt	1	535892-
3		01582-01210	Nut	1	535892-
4		01643-31232	Washer	2	535892-
5		6210-61-6530	Pin	2	535892-
6		6210-81-6750	Spacer	1	535892-
7		6217-81-6550	Spacer	1	535892-
8		6240-81-8611	Rod, Adjusting	1	535892-
9		6261-81-8340	Plate	1	535892-
10		6215-81-6150	Pin	1	535892-
11		01010-81260	Bolt	1	535892-
12		01643-31232	Washer	1	535892-
13		01580-11210	Nut	1	535892-
14		01643-31232	Washer	1	535892-
15		6261-81-8350	Spacer	1	535892-
16		01580-11613	Nut	2	535892-
17		6210-82-6570	Bracket	1	535892-
18		01435-01025	Bolt	2	535892-
19		01050-51260	Bolt	1	535892-
20		01643-31232	Washer	1	535892-
21		6261-81-6520	Cover	1	535892-
22		6261-81-6810	V-belt Set	1	535892-
23		6210-82-6840	Pulley	1	535892-
24		01010-80820	Bolt	3	535892-

FIG. A6010-010001 Alternator, For 60Amp, Sandy and Dusty Terrain Arrangement, EU Safety Regulation, Inner Parts

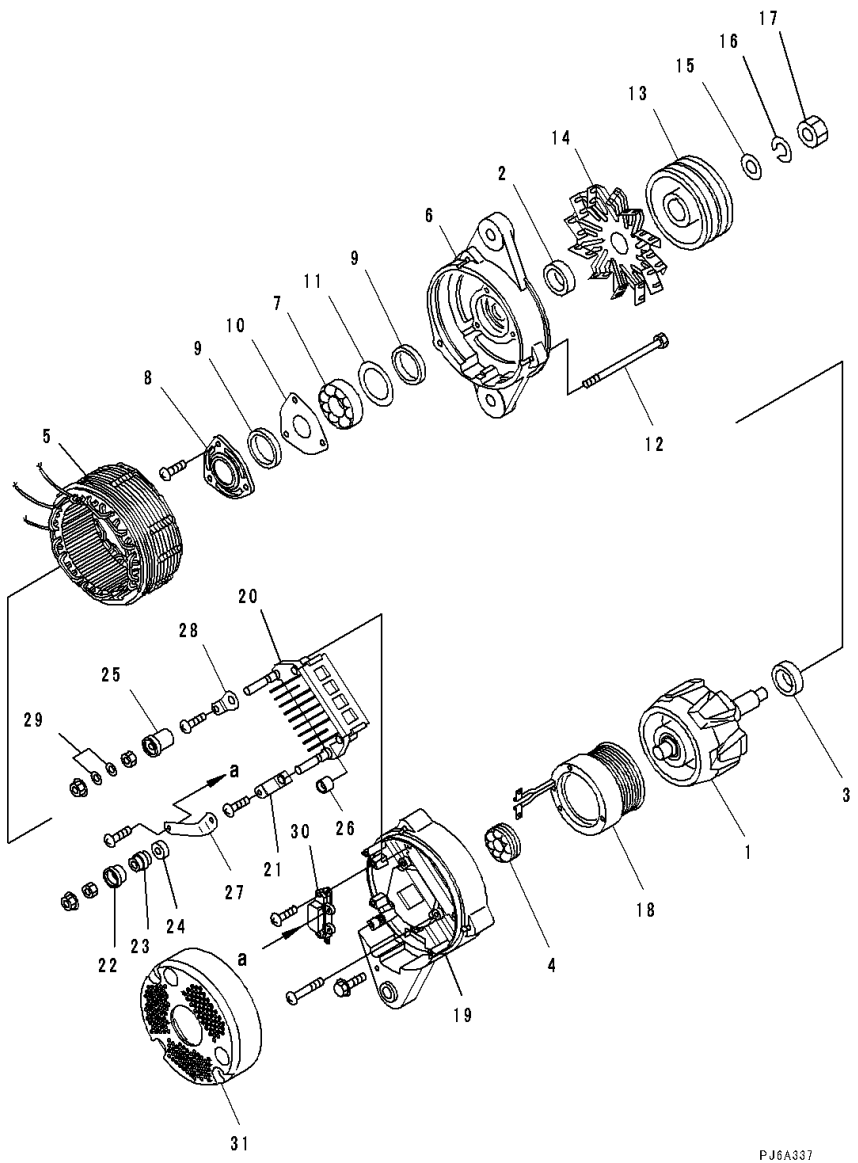

Index	Code	Part Number	Description	Qty	Serial Number
		600-825-6270	Alternator	1	535892-
1		KD0-35100-0300	• Rotor Assembly	1	535892-
2		KD1-33923-0790	• Collar	1	535892-
3		KD0-35923-0160	• Collar	1	535892-
4		KD0-09201-0980	• Bearing, Ball	1	535892-
5		KD0-35200-0460	• Stator Assembly	1	535892-
6		KD0-35300-0350	• Bracket Assembly	1	535892-
7		KD0-09201-1140	• • Bearing, Ball	1	535892-
8		KD0-35926-0070	• • Retainer	1	535892-
9		KD0-35951-0060	• • Packing	2	535892-
10		KD0-35926-0090	• • Retainer	1	535892-
11		KD1-33926-0730	• • Retainer	1	535892-
12		KD0-0275-06802	• Bolt	3	535892-
13		KD0-35411-0700	• Pulley, Hardened	1	535892-
14		KD0-35421-0230	• Fan	1	535892-
15		KD0-0330-16012	• Washer	1	535892-
16		KD1-0335-16002	• Washer, Spring	1	535892-
17		KD0-0280-16022	• Nut	1	535892-
18		KD0-35120-0290	• Coil, Field	1	535892-
		KD0-35700-0920	• Bracket Assembly	1	535892-
19		KD0-35710-1010	• • Bracket	1	535892-
20		KD0-35730-0700	• • Rectifier Assembly	1	535892-
21		KD0-09170-2501	• • Condenser	1	535892-
22		KD0-35943-0140	• • Bushing, Insulate	1	535892-
23		KD0-35943-0150	• • Bushing, Insulate	1	535892-
24		KD0-35943-0160	• • Bushing, Insulate	1	535892-
25		KD0-35943-0170	• • Bushing, Insulate	2	535892-
26		KD0-35923-0130	• • Collar	1	535892-
27		KD0-35784-0210	• • Bar, Connect	1	535892-
28		KD0-35784-0290	• • Bar, Plate	1	535892-
29		KD0-09057-0220	• • Washer	2	535892-
30		KD0-35719-0210	• • Regulator Assembly	1	535892-
31		KD0-35761-0250	• Cover	1	535892-

FIG. A6010-010002 Alternator, For 60Amp, Sandy and Dusty Terrain Arrangement, EU Safety Regulation, Mounting Parts

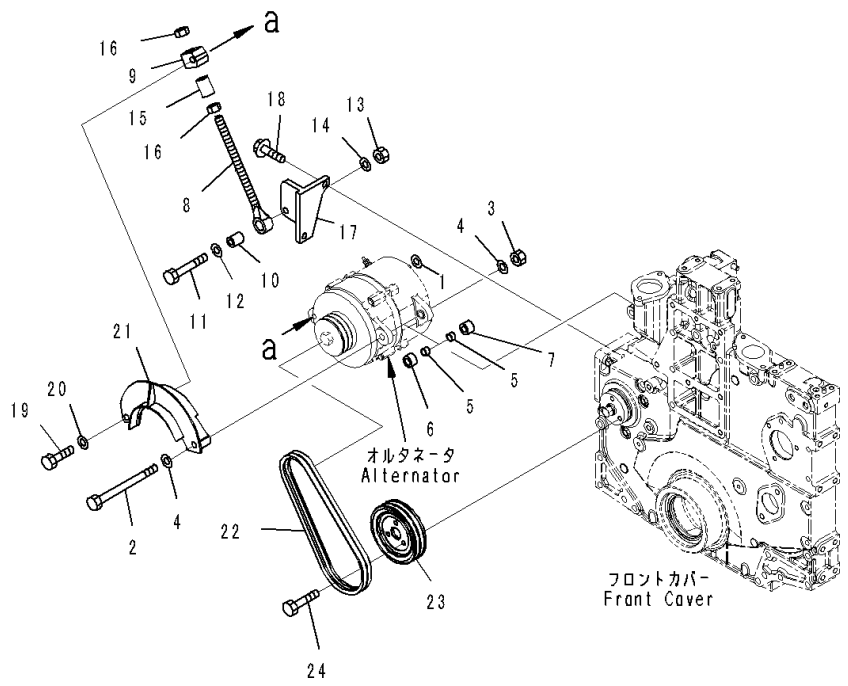

Index	Code	Part Number	Description	Qty	Serial Number
1		600-815-9980	Washer	1	535892-
2		6210-81-6490	Bolt	1	535892-
3		01582-01210	Nut	1	535892-
4		01643-31232	Washer	2	535892-
5		6210-61-6530	Pin	2	535892-
6		6210-81-6750	Spacer	1	535892-
7		6217-81-6550	Spacer	1	535892-
8		6240-81-8611	Rod, Adjusting	1	535892-
9		6261-81-8340	Plate	1	535892-
10		6215-81-6150	Pin	1	535892-
11		01010-81260	Bolt	1	535892-
12		01643-31232	Washer	1	535892-
13		01580-11210	Nut	1	535892-
14		01643-31232	Washer	1	535892-
15		6261-81-8350	Spacer	1	535892-
16		01580-11613	Nut	2	535892-
17		6210-82-6570	Bracket	1	535892-
18		01435-01025	Bolt	2	535892-
19		01050-51260	Bolt	1	535892-
20		01643-31232	Washer	1	535892-
21		6261-81-6520	Cover	1	535892-
22		6261-81-6810	V-belt Set	1	535892-
23		6210-82-6840	Pulley	1	535892-
24		01010-80820	Bolt	3	535892-

FIG. A6010-005001 Alternator, 90Amp., Landfill Specification, Inner Parts

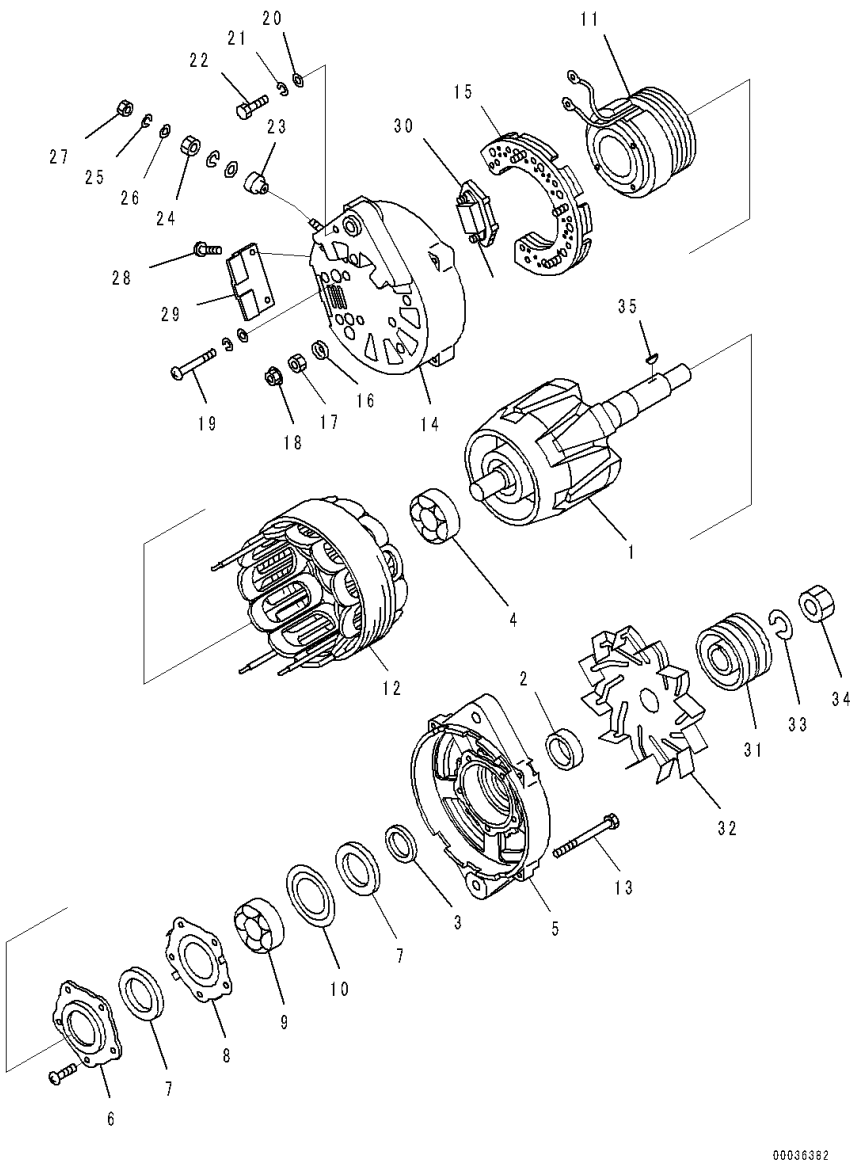

Index	Code	Part Number	Description	Qty	Serial Number
		600-825-9110	Alternator Assembly	1	535751-
1		KD0-35100-0230	• Rotor Assembly	1	535751-
2		KD1-33923-0890	• Collar	1	535751-
3		KD1-33923-0030	• Collar	1	535751-
4		KD0-09201-0770	• Bearing, Ball	1	535751-
5		KD0-35300-0200	• Bracket Assembly	1	535751-
6		KD0-35926-0080	• Retainer	1	535751-
7		KD0-35951-0080	• Packing	2	535751-
8		KD1-33926-0660	• Retainer	1	535751-
9		KD0-09201-0760	• Bearing, Ball	1	535751-
10		KD1-33926-0790	• Retainer	1	535751-
11		KD0-35120-0250	• Coil Assembly, Field	1	535751-
12		KD0-35200-0320	• Stator Assembly	1	535751-
13		KD0-0083-00802	• Bolt	4	535751-
		KD0-35700-0760	• Bracket Assembly	1	535751-
14		KD0-35710-0890	• Bracket	1	535751-
15		KD0-35730-0162	• Rectifier Assembly	1	535751-
16		KD0-35943-0210	• Bushing	1	535751-
17		KD0-33902-0090	• Nut	1	535751-
18		KD0-33902-0080	• Nut	6	535751-
19		KD1-0020-06452	• Screw	4	535751-
20		KD1-0330-06012	• Washer, Prain	5	535751-
21		KD1-0335-06002	• Washer, Spring	5	535751-
22		KD0-0080-06142	• Bolt	1	535751-
23		KD0-35943-0100	• Bushing	1	535751-
24		KD0-33902-0100	• Nut	1	535751-
25		KD1-0335-08002	• Washer, Spring	2	535751-
26		KD1-0331-08020	• Washer	2	535751-
27		KD0-0291-08010	• Nut	1	535751-
28		KD0-0055-05122	• Screw	2	535751-
29		KD0-35761-0190	• Cover	1	535751-
30		KD7-35719-0181	• Regulator Assembly	1	535751-
31		KD0-35411-0680	• Pulley	1	535751-
32		KD1-35421-0180	• Fan	1	535751-
33		KD1-0335-22002	• Washer, Spring	1	535751-
34		KD0-0290-20022	• Nut	1	535751-
35		KD1-0416-04160	• Key	1	535751-

FIG. A6010-005002 Alternator, 90Amp., Landfill Specification, Mounting Parts

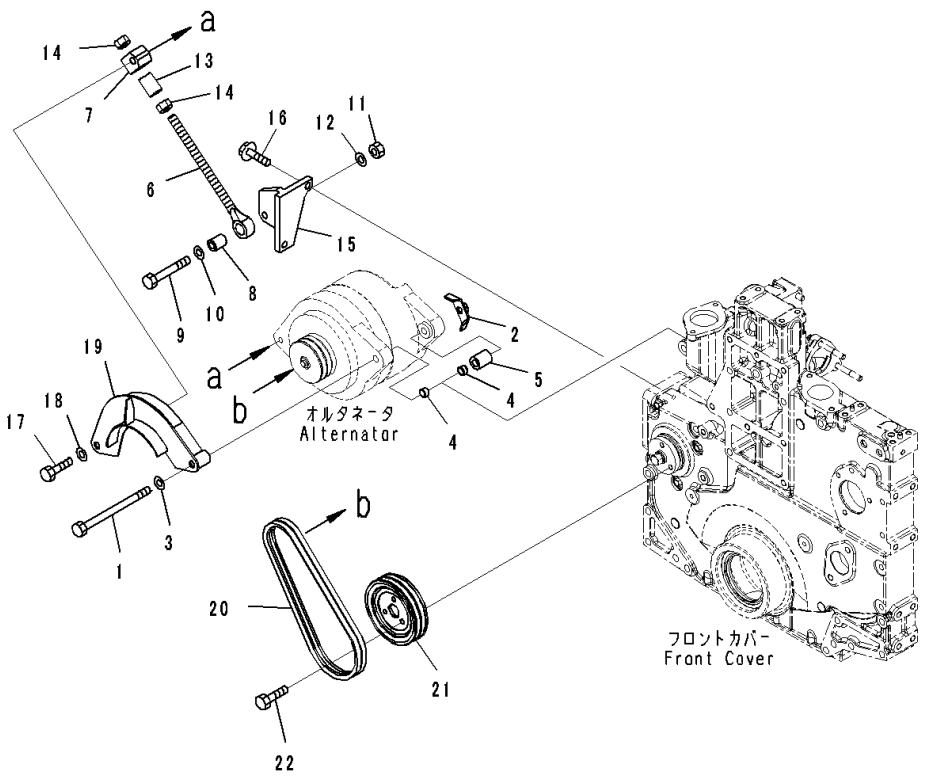

Index	Code	Part Number	Description	Qty	Serial Number
1		6217-81-6840	Bolt	1	535751-
2		6261-81-6890	Bracket	1	535751-
3		01640-21323	Washer	1	535751-
4		6210-61-6530	Pin	2	535751-
5		205-30-62650	Collar	1	535751-
6		6240-81-8611	Rod, Adjusting	1	535751-
7		6261-81-8340	Plate	1	535751-
8		6215-81-6150	Pin	1	535751-
9		01010-81260	Bolt	1	535751-
10		01643-31232	Washer	1	535751-
11		01580-11210	Nut	1	535751-
12		01643-31232	Washer	1	535751-
13		6261-81-8350	Spacer	1	535751-
14		01580-11613	Nut	2	535751-
15		6210-82-6370	Bracket	1	535751-
16		01435-01025	Bolt	2	535751-
17		01050-51260	Bolt	1	535751-
18		01643-31232	Washer	1	535751-
19		6210-82-6550	Cover	1	535751-
20		6261-81-6810	V-belt Set	1	535751-
21		6210-82-6840	Pulley	1	535751-
22		01010-80820	Bolt	3	535751-

FIG. A6210-001001 Starting Motor, 11KW, Inner Parts

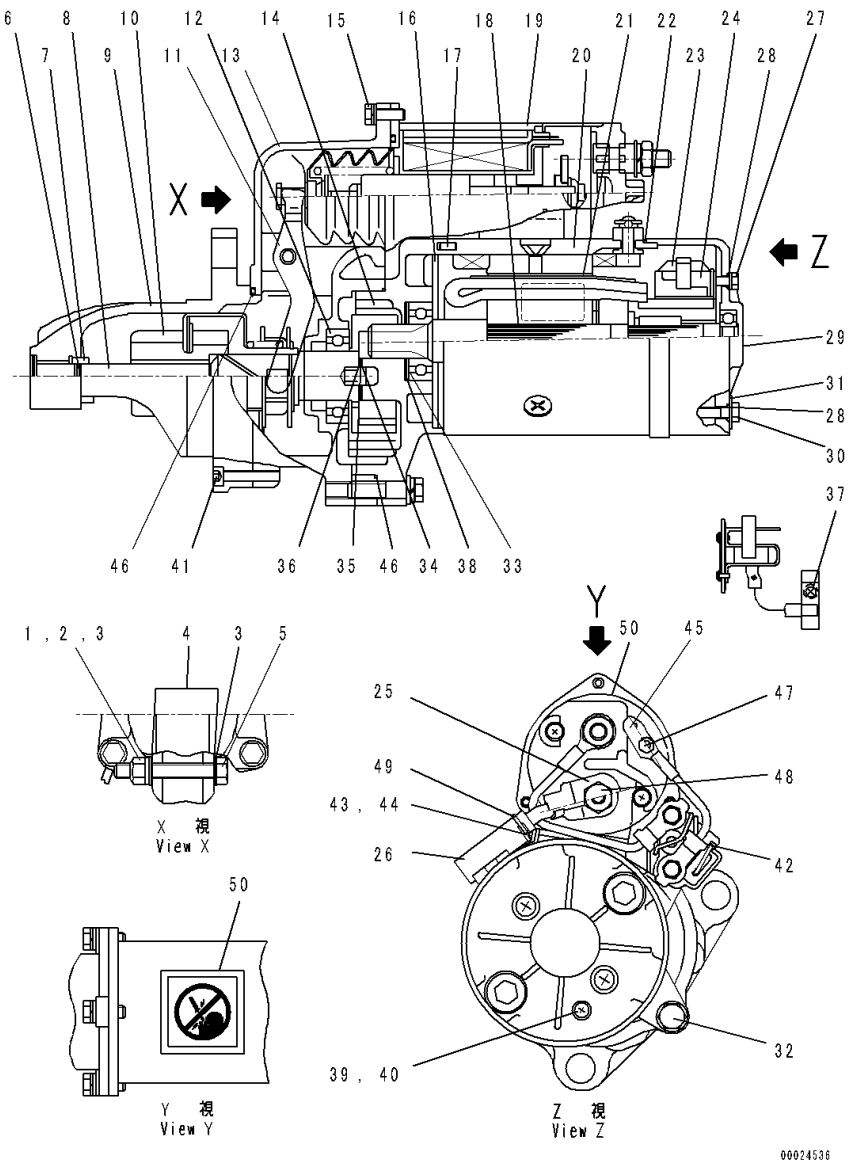

Index	Code	Part Number	Description	Qty	Serial Number
		600-813-9322	Starting Motor Assembly	1	535751-
1		KD1-09279-0090	• Nut	1	535751-
2		KD1-0335-08002	• Washer, Spring	4	535751-
3		KD1-0330-08022	• Washer	5	535751-
4		KD1-0345-08001	• Washer, Seal	2	535751-
5		KD0-23303-0020	• Pin	1	535751-
6		KD1-23914-0020	• Ring	1	535751-
7		KD1-23181-0020	• Stopper	1	535751-
8		KD0-23120-0180	• Shaft Assembly	1	535751-
9		KD0-23310-1670	• Bracket Assembly	1	535751-
10		KD1-23500-0970	• Clutch Assembly	1	535751-
11		KD1-23320-0290	• Lever Assembly	1	535751-
12		KD0-09201-0850	• Bearing, Ball	1	535751-
13		KD0-23500-0410	• Bracket Assembly	1	535751-
14		KD0-23511-1101	• Bracket	1	535751-
15		KD0-0270-06202	• Bolt	3	535751-
16		KD1-23951-0051	• Packing	1	535751-
17		KD1-0400-30100	• Pin	1	535751-
18		KD0-23100-0430	• Armature Assembly	1	535751-
19		KD0-47100-4651	• Switch Assembly	1	535751-
20		KD0-23200-0671	• Yoke Assembly	1	535751-
21		KD0-09271-3620	• Name Plate	1	535751-
22		KD1-09211-1120	• O-ring	1	535751-
23		KD0-23740-0351	• Brush Assembly	2	535751-
24		KD0-23750-0490	• Holder Assembly	1	535751-
25		KD0-47761-2681	• Cover	1	535751-
26		KD0-47761-2691	• Cover	1	535751-
27		KD0-09011-3140	• Screw	2	535751-
28		KD1-09211-0081	• O-ring	2	535751-
29		KD0-23710-0221	• Bracket	1	535751-
30		KD0-09001-4380	• Bolt	2	535751-
31		KD1-47921-0790	• Washer	2	535751-
32		KD0-0276-08402	• Bolt	3	535751-
33		KD0-09057-0110	• Washer	1	535751-
34		KD1-23941-0040	• Washer, Insulate	1	535751-
35		KD1-23921-0140	• Washer	1	535751-
36		KD1-23921-0130	• Washer	1	535751-
37		KD0-0055-05082	• Screw, Rear	2	535751-
38		KD0-09057-0190	• Washer	1	535751-
39		KD0-0020-05062	• Screw	1	535751-

FIG. A6210-001001 Starting Motor, 11KW, Inner Parts

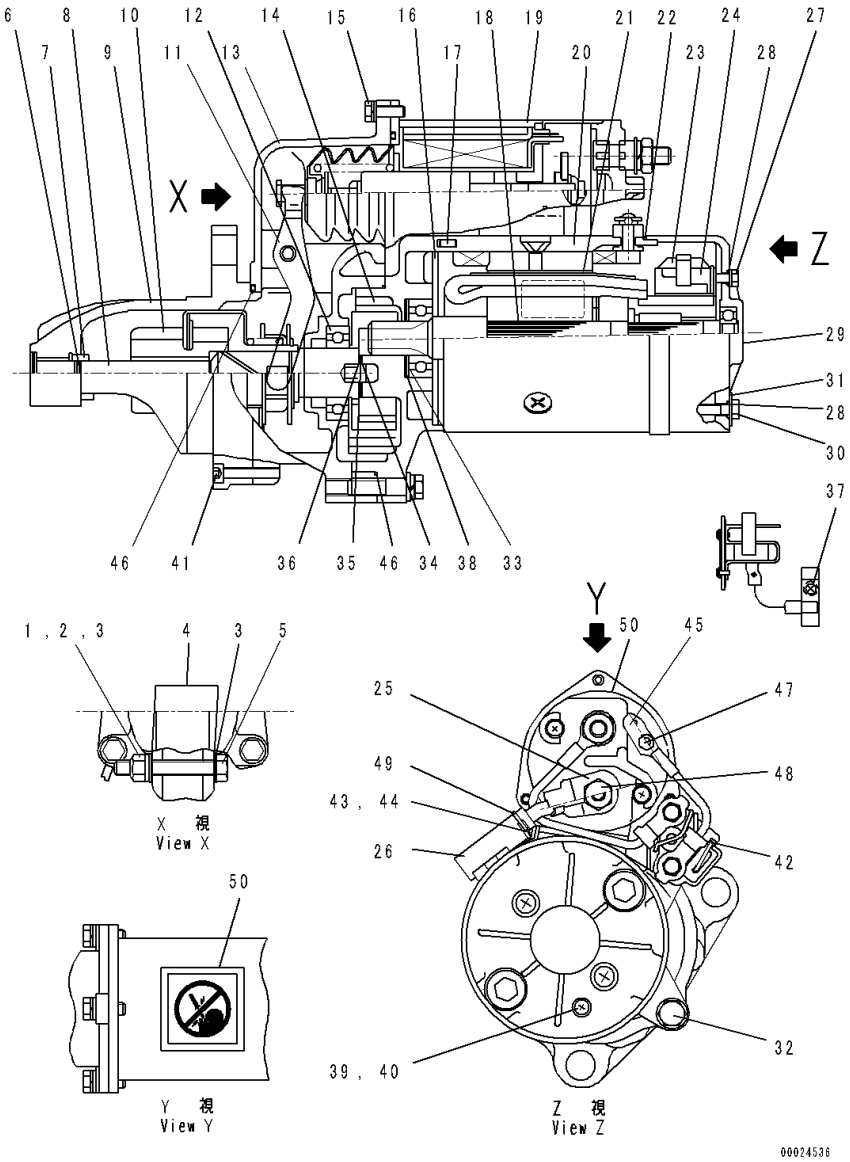

Index	Code	Part Number	Description	Qty	Serial Number
40		KD1-0345-05001	• Washer, Seal	1	535751-
41		KD1-0240-06305	• Bolt	6	535751-
42		KD0-25000-8332	• Switch Assembly	1	535751-
43		KD0-0270-06602	• Bolt	1	535751-
44		KD0-47927-1390	• Holder	1	535751-
45		KD0-47761-2671	• Cover	1	535751-
46		KD1-09211-0981	• O-ring	2	535751-
47		KD0-09006-0660	• Nut	1	535751-
48		KD0-09006-0670	• Nut	1	535751-
49		KD1-09257-0050	• Band	1	535751-
50		KD0-09275-1430	• Plate, Caution	1	535751-

FIG. A6210-001002 Starting Motor, 11KW, Mounting Parts

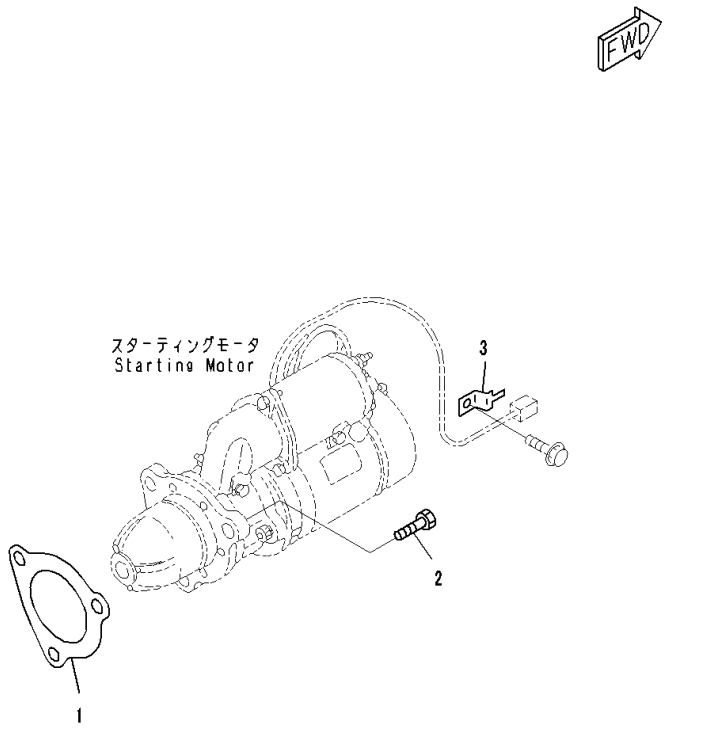

Index	Code	Part Number	Description	Qty	Serial Number
1		6221-81-6810	Gasket	1	535751-
2		01010-61640	Bolt	3	535751-
3		08193-20010	Clip	1	535751-

ENGINE MARKS AND PLATES

FIG. A9810-001001 Name Plate and Caution Plate, Japanese-English

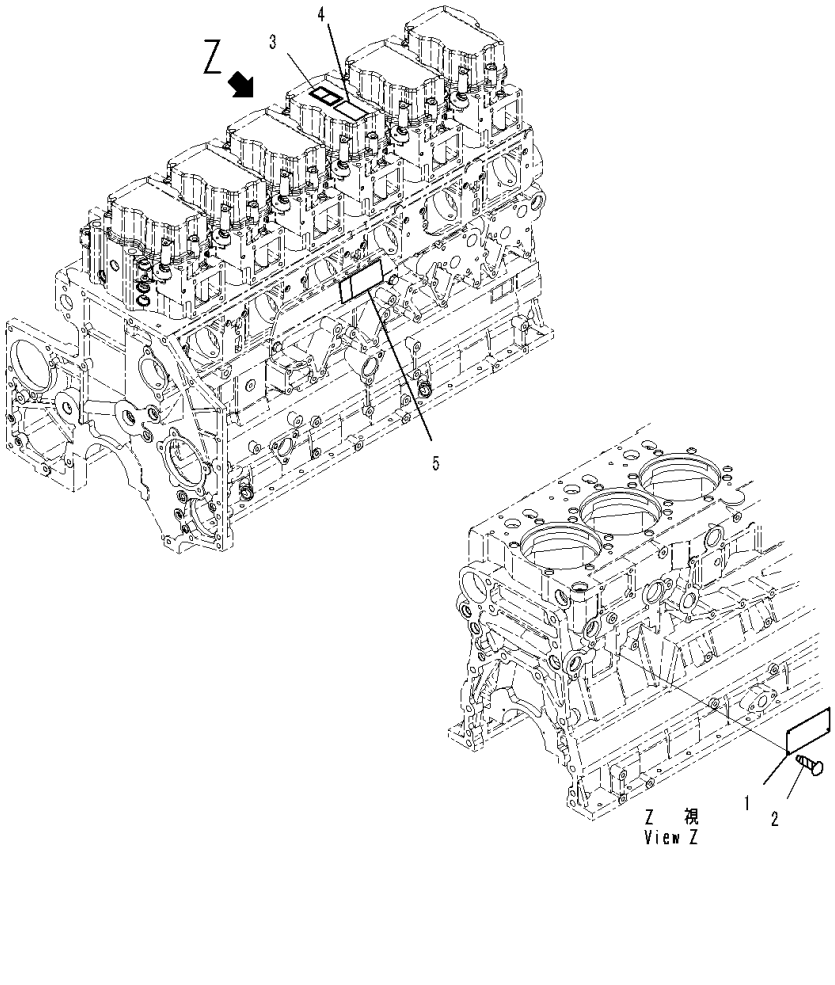

Index	Code	Part Number	Description	Qty	Serial Number
1		600-023-2340	Plate, Name (Limited Supply)	1	535751-
2		04418-02550	Screw	4	535751-
3		6217-81-9270	Plate, Caution	1	535751-
4		6217-81-9280	Plate, Caution	1	535751-
5		6217-71-9331	Plate, Caution	1	535751-

FIG. A9810-002001 Name Plate and Caution Plate, English

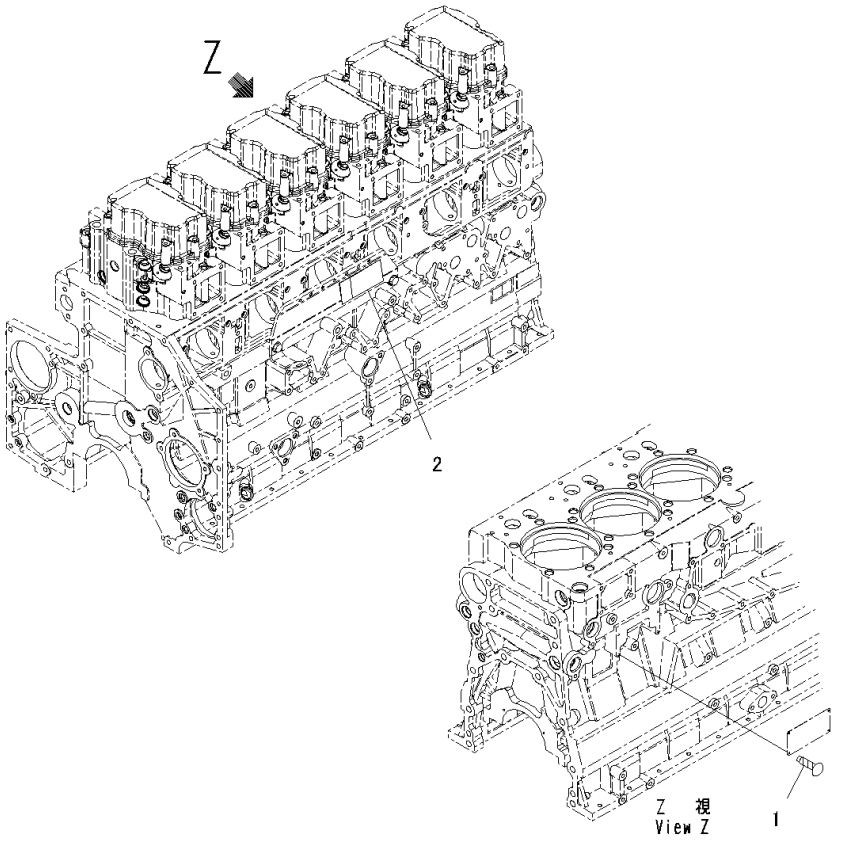

Index	Code	Part Number	Description	Qty	Serial Number
1		04418-02550	Screw	4	535751-
2		6217-71-9331	Plate, Caution	1	535751-

FIG. A9810-005001 Name Plate and Caution Plate, For EU Safety Regulation

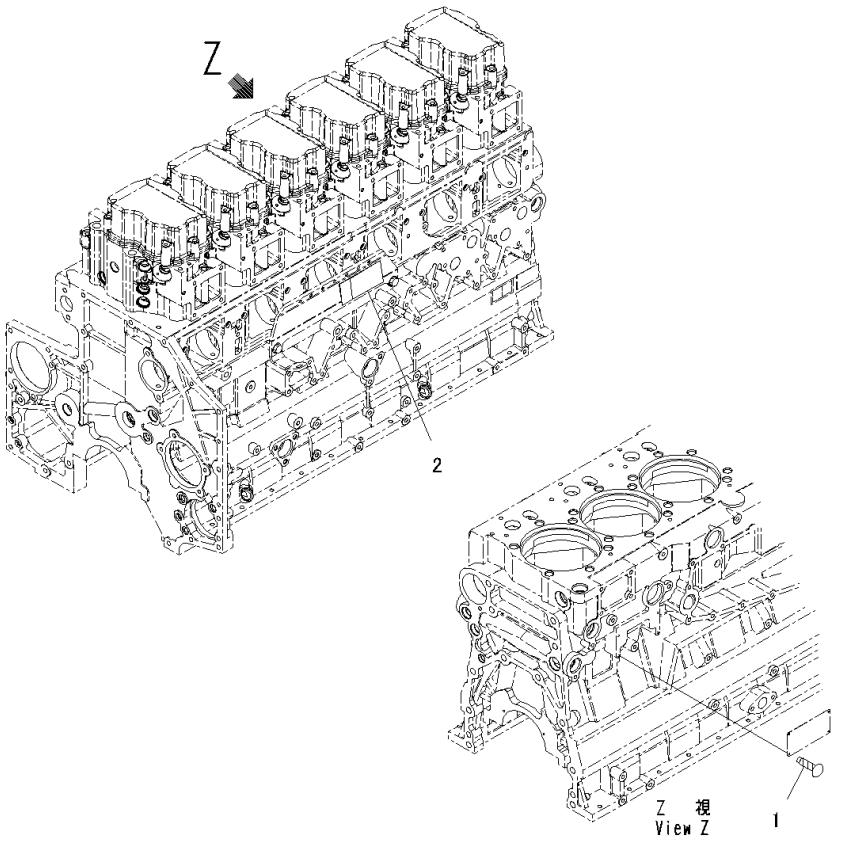

Index	Code	Part Number	Description	Qty	Serial Number
1		04418-02550	Screw	4	535860-
2		6271-81-2980	Plate, Caution	1	535860-

FIG. A9810-006001 Name Plate and Caution Plate, For Korea EX-Gas Regulation Arrangement

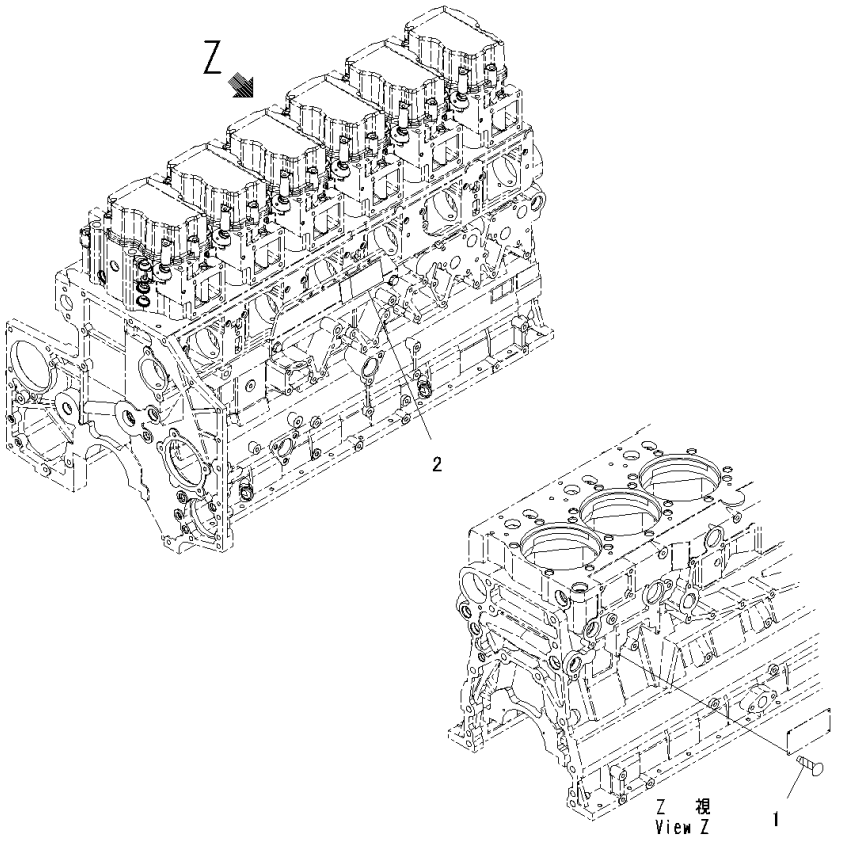

Index	Code	Part Number	Description	Qty	Serial Number
1		04418-02550	Screw	4	535892-
2		6217-71-9331	Plate, Caution	1	535892-

FIG. A9810-015001 Name Plate and Caution Plate, For EU Exhaust Emissions 3rd Regulations, EU Safety Regulation

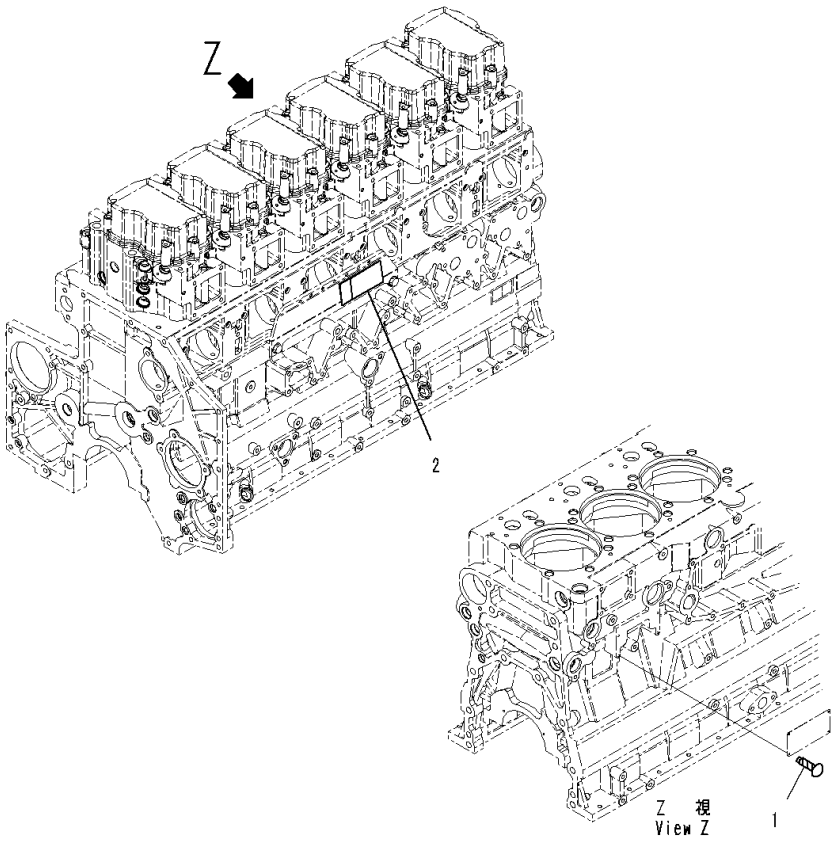

Index	Code	Part Number	Description	Qty	Serial Number
1		04418-02550	Screw	4	536263-
2		6271-81-2980	Plate, Caution	1	536263-

FIG. A9810-016001 Name Plate and Caution Plate, For China 2nd EX-Gas Regulation Arrangement

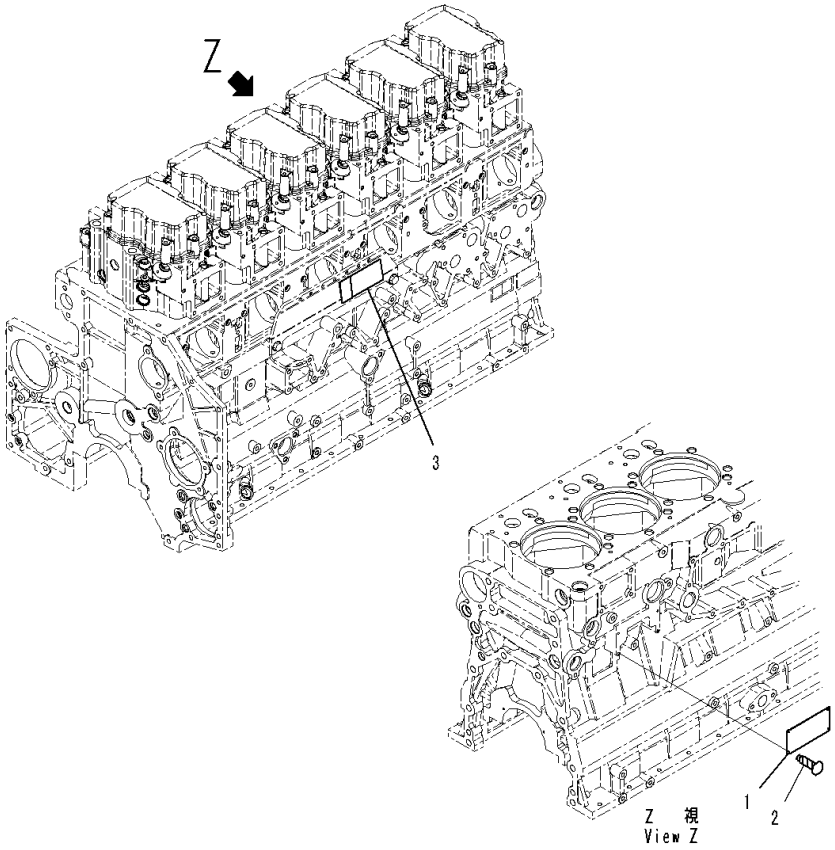

Index	Code	Part Number	Description	Qty	Serial Number
1		600-023-2340	Plate, Name (Limited Supply)	1	537608-
2		04418-02550	Screw	4	537608-
3		6217-71-9331	Plate, Caution	1	537608-

FIG. A9810-017001 Name Plate and Caution Plate, For EU Safety Regulation

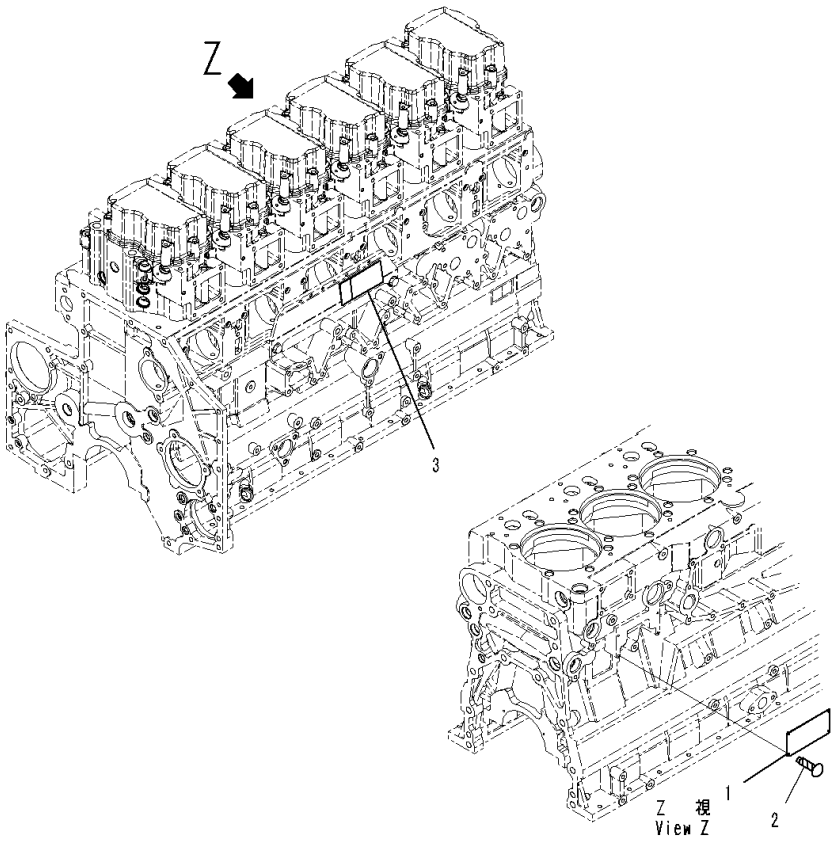

Index	Code	Part Number	Description	Qty	Serial Number
1		600-023-2340	Plate, Name (Limited Supply)	1	537608-
2		04418-02550	Screw	4	537608-
3		6271-81-2980	Plate, Caution	1	537608-

FIG. A9810-018001 Name Plate and Caution Plate, For Korea EX-Gas Regulation Arrangement

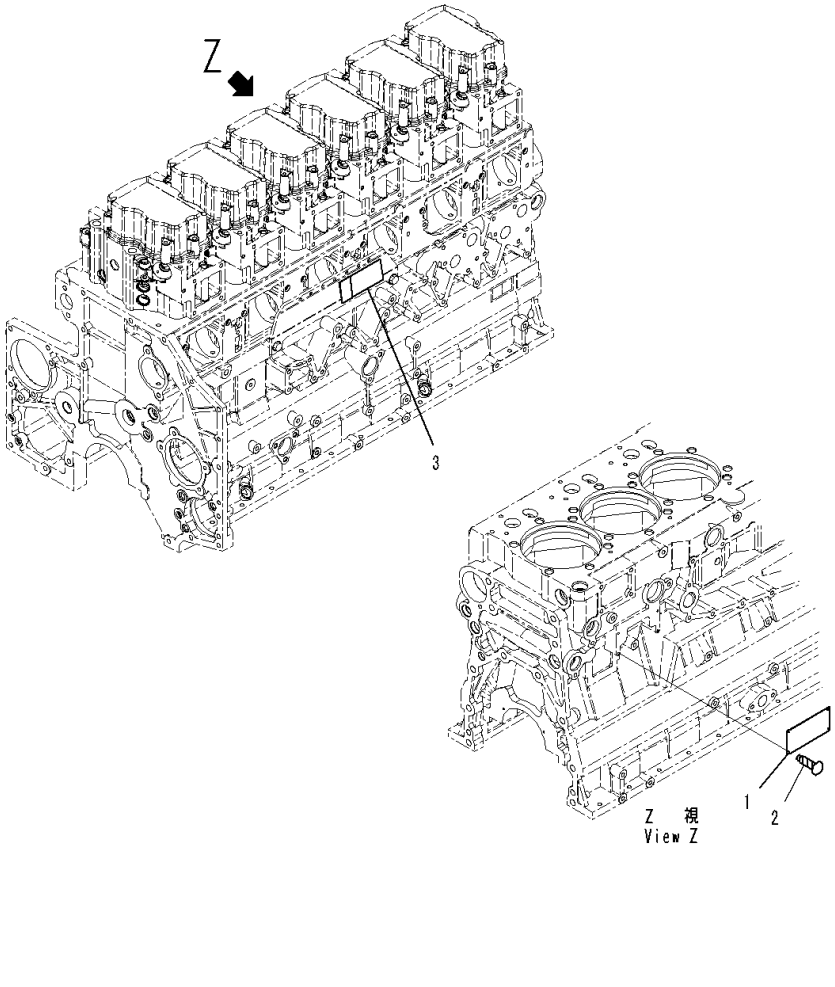

Index	Code	Part Number	Description	Qty	Serial Number
1		600-023-2340	Plate, Name (Limited Supply)	1	537608-
2		04418-02550	Screw	4	537608-
3		6217-71-9331	Plate, Caution	1	537608-

FIG. A9810-011001 Name Plate and Caution Plate, For EPA Regulations TPEM

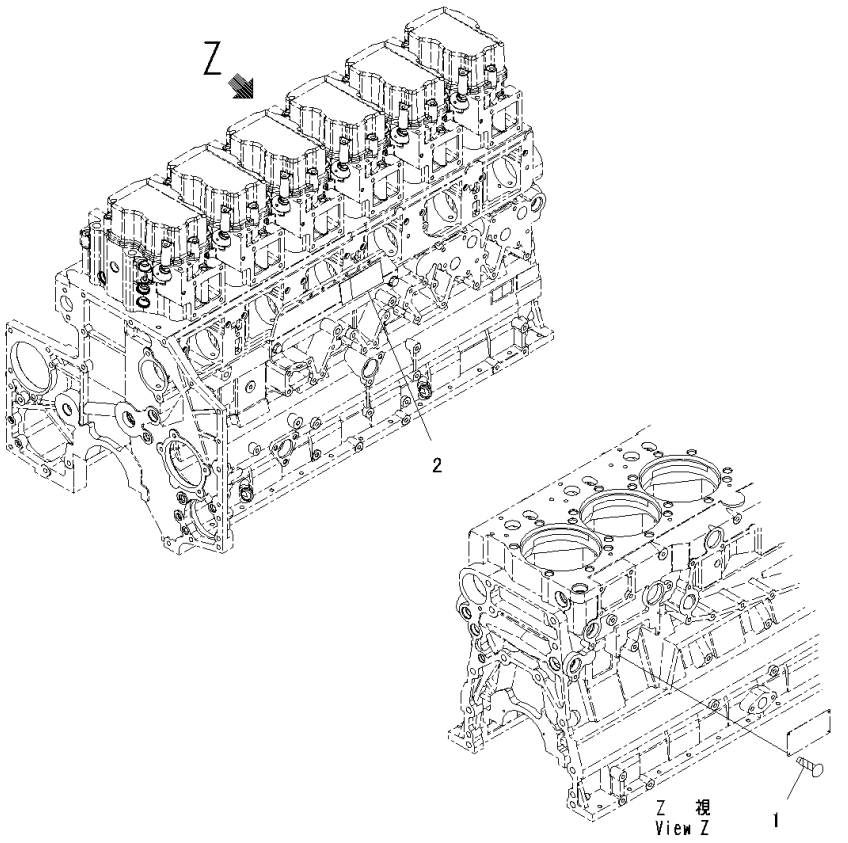

Index	Code	Part Number	Description	Qty	Serial Number
1		04418-02550	Screw	4	537011-
2		6217-71-9331	Plate, Caution	1	537011-

FIG. A9810-013001 Name Plate and Caution Plate, For EU Safety Regulation, Non EU Territory

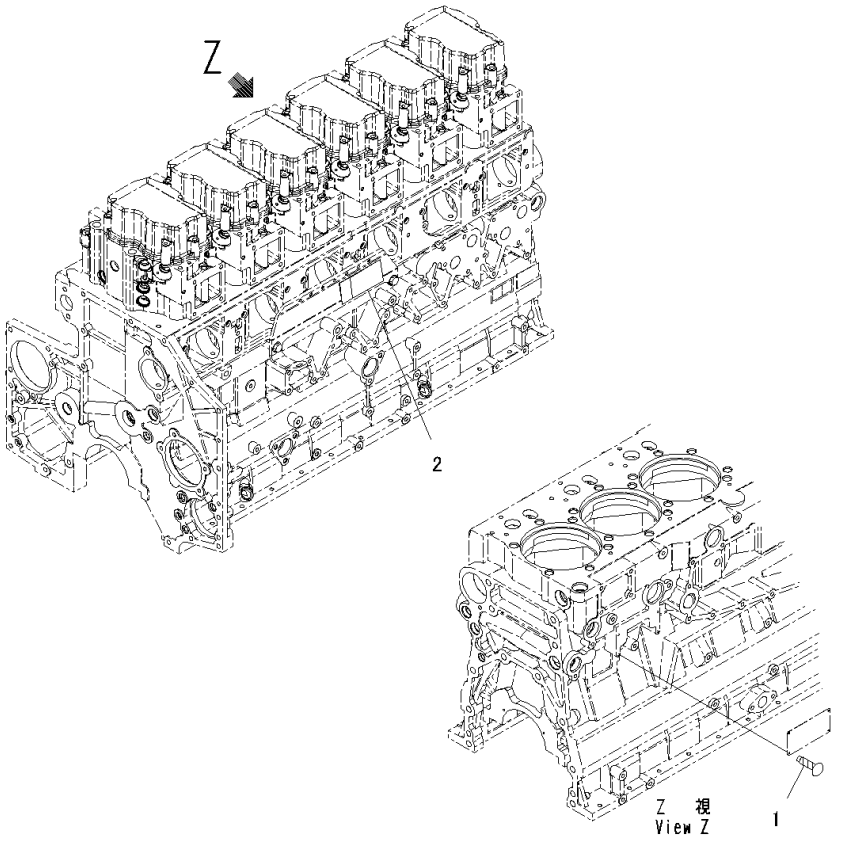

Index	Code	Part Number	Description	Qty	Serial Number
1		04418-02550	Screw	4	536935-
2		6271-81-2980	Plate, Caution	1	536935-

FIG. A9810-014001 Name Plate and Caution Plate, For EU Safety Regulation, Turkey Exhaust Emissions 3rd Regulations

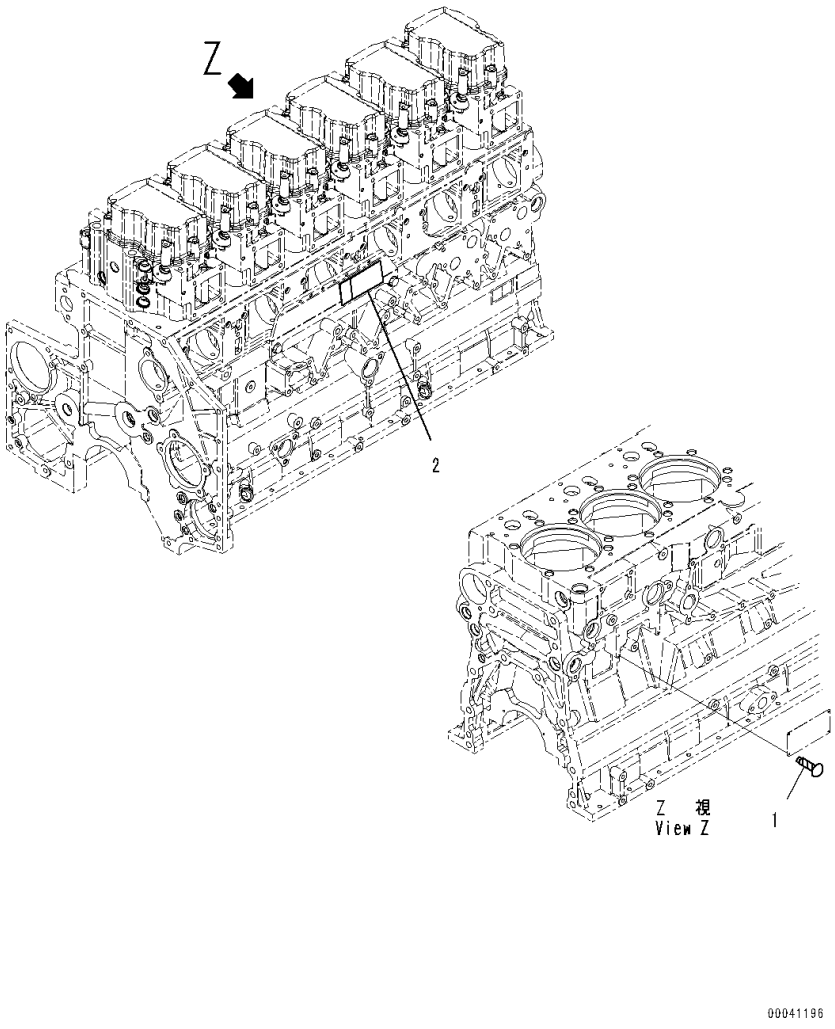

Index	Code	Part Number	Description	Qty	Serial Number
1		04418-02550	Screw	4	537128-
2		6271-81-2980	Plate, Caution	1	537128-

FIG. A9810-020001 Name Plate and Caution Plate, For Except Japan

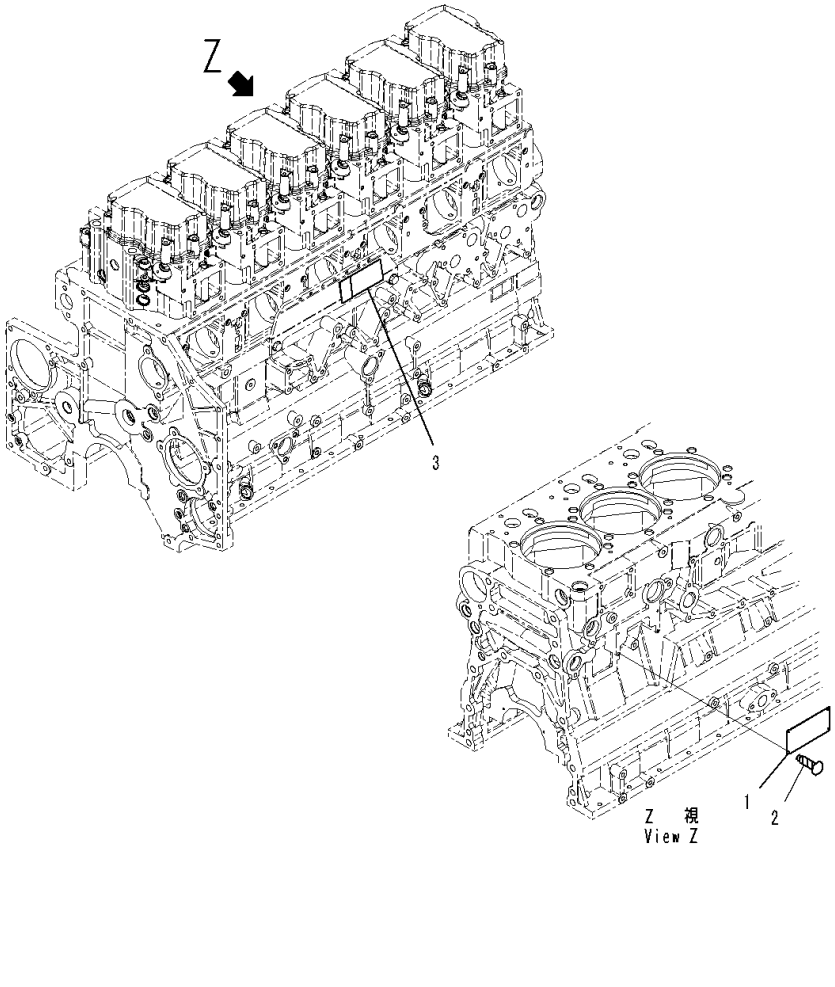

Index	Code	Part Number	Description	Qty	Serial Number
1		600-023-2340	Plate, Name (Limited Supply)	1	537608-
2		04418-02550	Screw	4	537608-
3		6217-71-9331	Plate, Caution	1	537608-

FIG. A9810-021001 Name Plate and Caution Plate, For Canada EPA Regulations TPEM

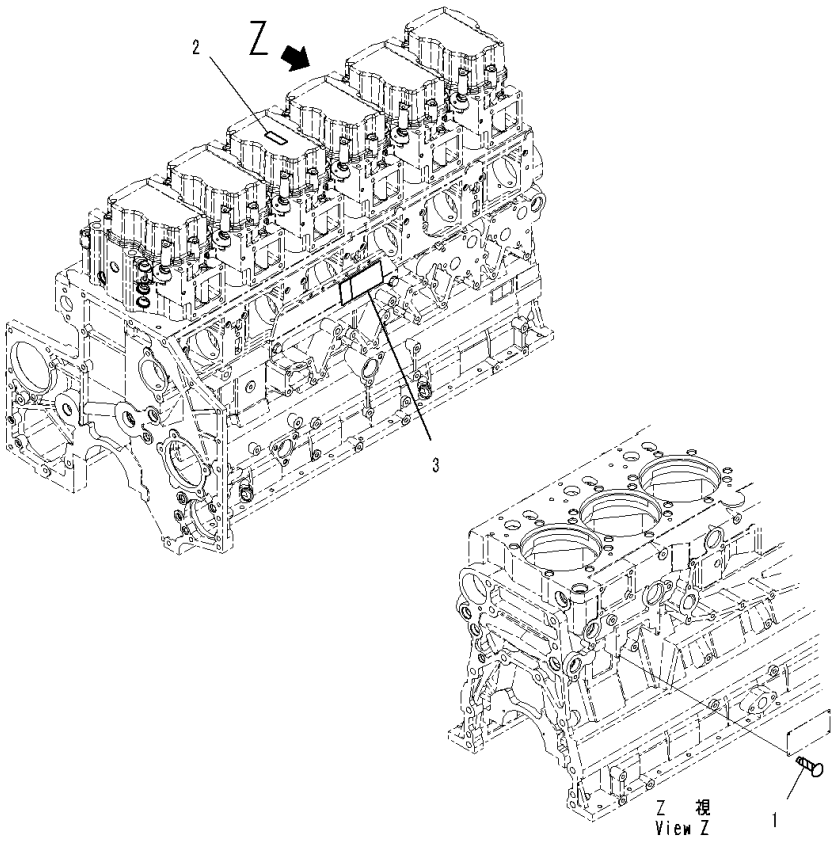

Index	Code	Part Number	Description	Qty	Serial Number
1		04418-02550	Screw	4	537636-
2		600-023-3510	Plate	1	537636-
3		6217-71-9331	Plate, Caution	1	537636-

ENGINE RELATED PARTS

FIG. B0100-001001 Engine Mounting

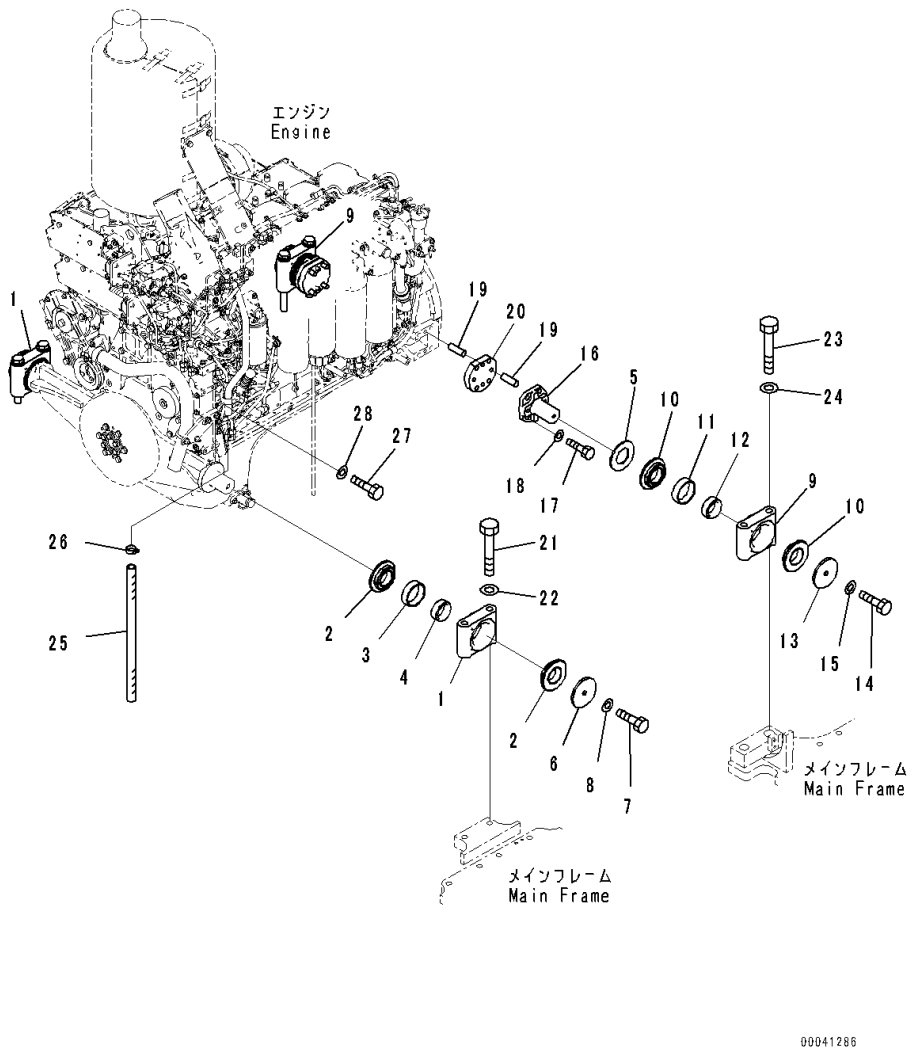

Index	Code	Part Number	Description	Qty	Serial Number
1		17A-21-12151	Cap	2	81028-
2		154-01-21310	Cushion	4	81028-
3		154-01-21320	Cushion	2	81028-
4		154-01-21330	Cushion	2	81028-
5		14X-01-11140	Spacer	2	81028-
6		14X-01-11150	Plate	2	81028-
7		01010-81645	Bolt	2	81028-
8		01643-31645	Washer	2	81028-
9		17A-21-12151	Cap	2	81028-
10		154-01-21310	Cushion	4	81028-
11		154-01-21320	Cushion	2	81028-
12		154-01-21330	Cushion	2	81028-
13		14X-01-11150	Plate	2	81028-
14		01010-81645	Bolt	2	81028-
15		01643-31645	Washer	2	81028-
16		17A-01-41120	Pin	2	81028-
17		01010-81670	Bolt	8	81028-
18		01643-31645	Washer	8	81028-
19		04020-01434	Pin, Dowel	8	81028-
20		17A-01-41131	Plate	2	81028-
21		01011-82485	Bolt	4	81028-
22		01643-32460	Washer	4	81028-
23		203-09-21110	Bolt	4	81028-
24		01643-32460	Washer	4	81028-
25		07286-02660	Hose	1	81028-
26		07281-00359	Clamp	1	81028-
27		01010-81025	Bolt	1	81028-
28		01643-31032	Washer	1	81028-

FIG. B0300-001001 Exhaust Muffler

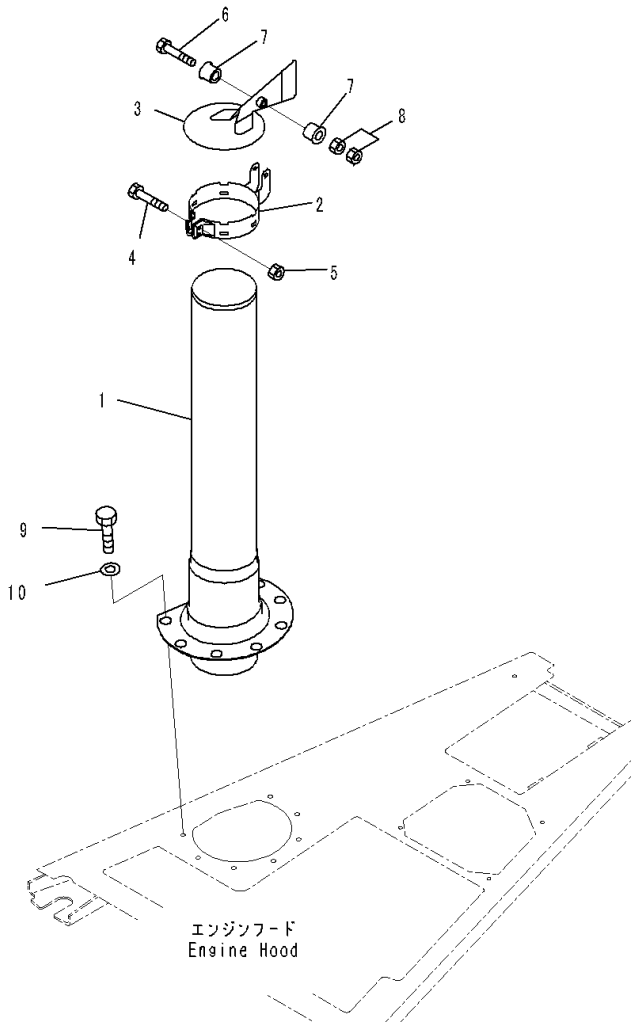

Index	Code	Part Number	Description	Qty	Serial Number
1		17A-01-41210	Pipe	1	81028-
		20Y-01-12300	Rain Cap	1	81028-
2		205-01-85160	• Band	1	81028-
3		20Y-01-12310	• Plate	1	81028-
4		6715-11-5290	• Bolt	2	81028-
5		01580-10605	• Nut	2	81028-
6		6715-11-5270	• Bolt	1	81028-
7		6715-11-5280	• Bushing	2	81028-
8		01580-11008	• Nut	2	81028-
9		195-54-43210	Bolt	8	81028-
10		175-54-34170	Washer	8	81028-

FIG. B0500-001001A Electric Wiring Harness

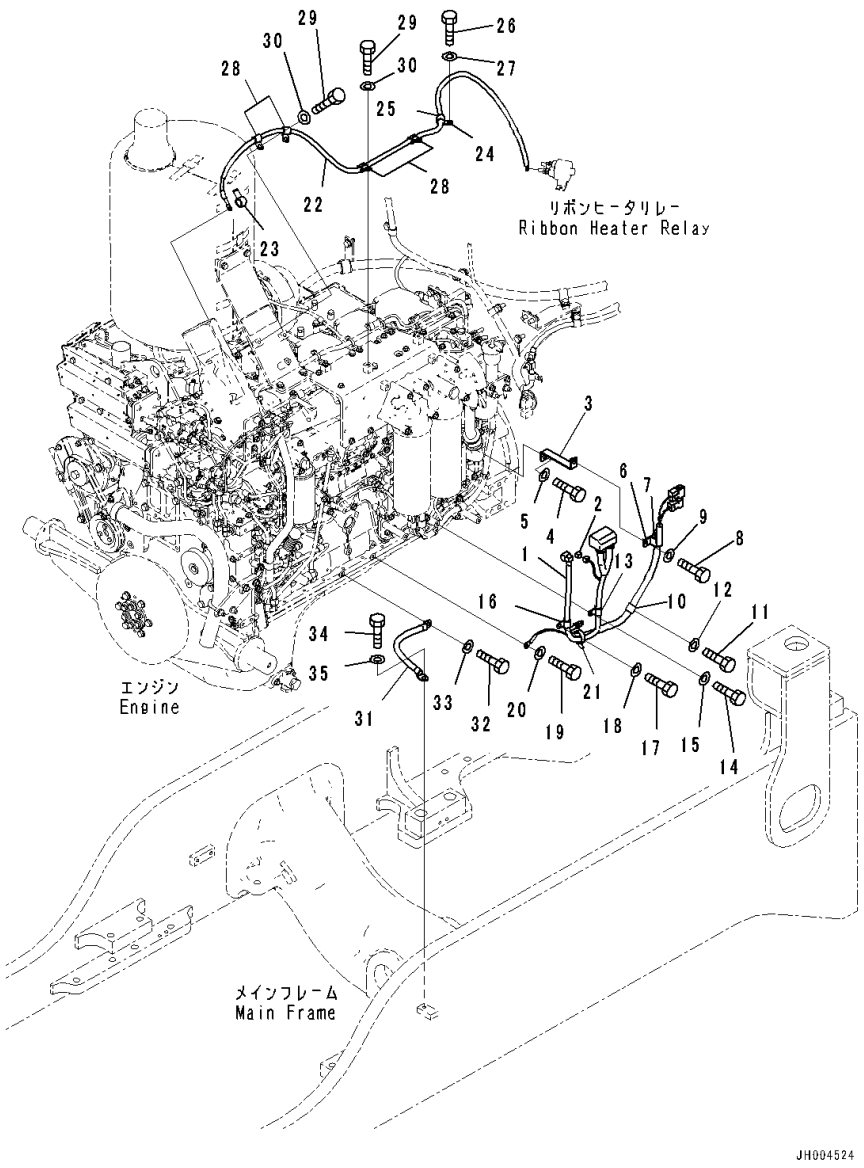

Index	Code	Part Number	Description	Qty	Serial Number
1		17A-06-41191	Wiring Harness	1	81028-
2		19M-06-31720	• Resistor	1	81028-
3		17A-911-4391	Bracket	1	81028-
4		01010-81030	Bolt	1	81028-
5		01643-31032	Washer	1	81028-
6		04434-52711	Clip	1	81028-
7		07095-20419	Cushion	1	81028-
8		01010-81020	Bolt	1	81028-
9		01643-31032	Washer	1	81028-
10		600-051-2190	Clip	1	81028-
11		01010-81020	Bolt	1	81028-
12		01643-31032	Washer	1	81028-
13		600-051-2140	Clip	1	81028-
14		01010-81020	Bolt	1	81028-
15		01643-31032	Washer	1	81028-
16		600-051-2140	Clip	1	81028-
17		01010-81020	Bolt	1	81028-
18		01643-31032	Washer	1	81028-
19		01010-81020	Bolt	1	81028-
20		01643-31032	Washer	1	81028-
21		08034-20519	Band	1	81082-
22		17A-06-41292	Wiring Harness	1	81028-
23		08038-02027	Cap	1	81028-
24		04434-51910	Clip	1	81028-
25		07095-20213	Cushion	1	81028-
26		01010-81020	Bolt	1	81028-
27		01643-31032	Washer	1	81028-
28		600-051-2140	Clip	4	81028-
29		01010-81020	Bolt	4	81028-
30		01643-31032	Washer	4	81028-
31		175-06-51440	Wire	1	81028-
32		01010-81020	Bolt	1	81028-
33		01643-31032	Washer	1	81028-
34		01010-81225	Bolt	1	81028-
35		01643-31232	Washer	1	81028-

FIG. B0600-001001 Damper

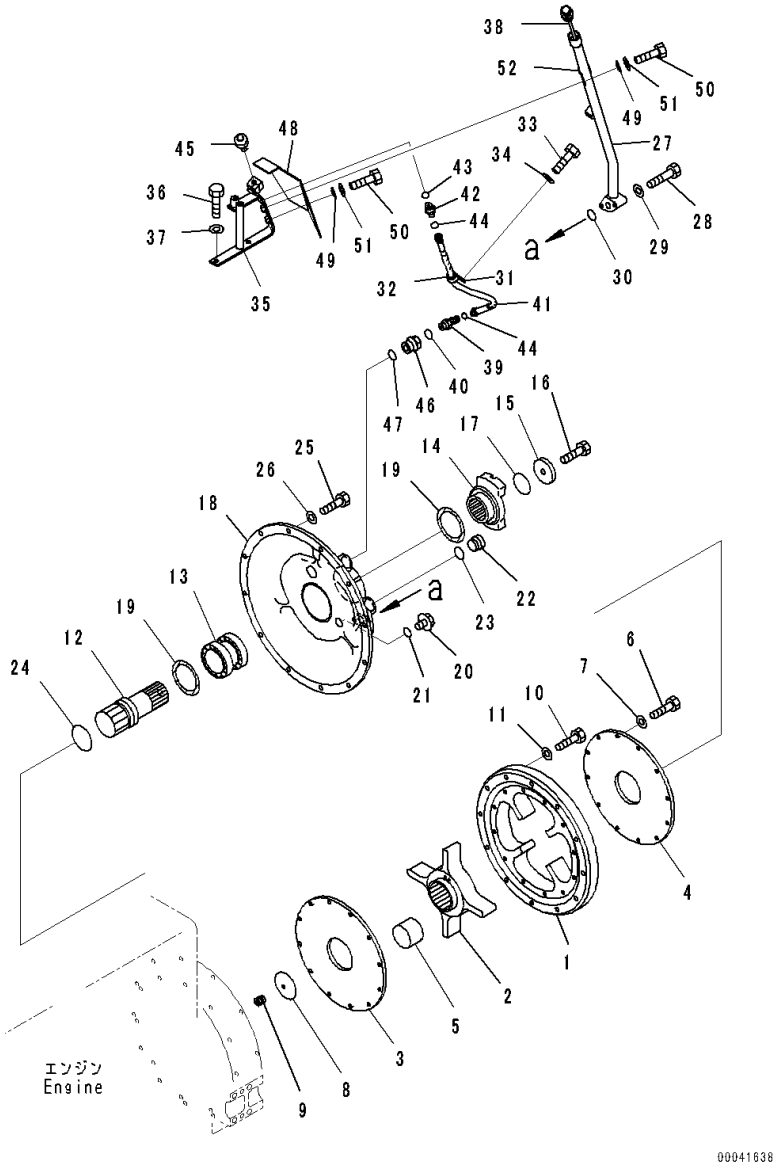

Index	Code	Part Number	Description	Qty	Serial Number
1		154-12-71231	Body	1	81028-
2		17A-12-11151	Body	1	81028-
3		17A-12-11161	Flange	1	81028-
4		17A-12-11171	Flange	1	81028-
5		287-01-12180	Cushion	8	81028-
6		01010-81085	Bolt	12	81028-
7		01643-31032	Washer	12	81028-
8		17A-12-11230	Plug	1	81028-
9		07029-00000	Valve, Relief	1	81028-
10		01010-81255	Bolt	12	81028-
11		01643-31232	Washer	12	81028-
12		154-12-71220	Shaft	1	81028-
13		17A-12-12181	Bearing	1	81028-
14		17A-12-11221	Coupling	1	81028-
15		17A-12-11260	Holder	1	81028-
16		01010-81680	Bolt	1	81028-
17		07000-75060	O-ring	1	81028-
18		17A-12-12111	Cover	1	81028-
19		17A-12-11270	Seal	2	81028-
20		07044-12412	Plug	1	81028-
21		07002-02434	O-ring	1	81028-
22		07041-13612	Plug	2	81028-
23		07002-13634	O-ring	3	81028-
24		07000-E5075	O-ring	1	81028-
25		01010-81235	Bolt	12	81028-
26		01643-31232	Washer	12	81028-
27		17A-12-41111	Tube	1	81028-
28		01010-81060	Bolt	2	81028-
29		01643-31032	Washer	2	81028-
30		07000-73028	O-ring	1	81028-
31		04434-52112	Clip	1	81028-
32		07095-20314	Cushion	1	81028-
33		01010-81230	Bolt	1	81028-
34		01643-31232	Washer	1	81028-
35		17A-12-41121	Bracket	1	81028-
36		01010-81025	Bolt	2	81028-
37		01643-31032	Washer	2	81028-
38		17A-12-41160	Gauge	1	81028-
39		02782-10315	Elbow	1	81028-
40		07002-12034	O-ring	1	81028-

FIG. B0600-001001 Damper

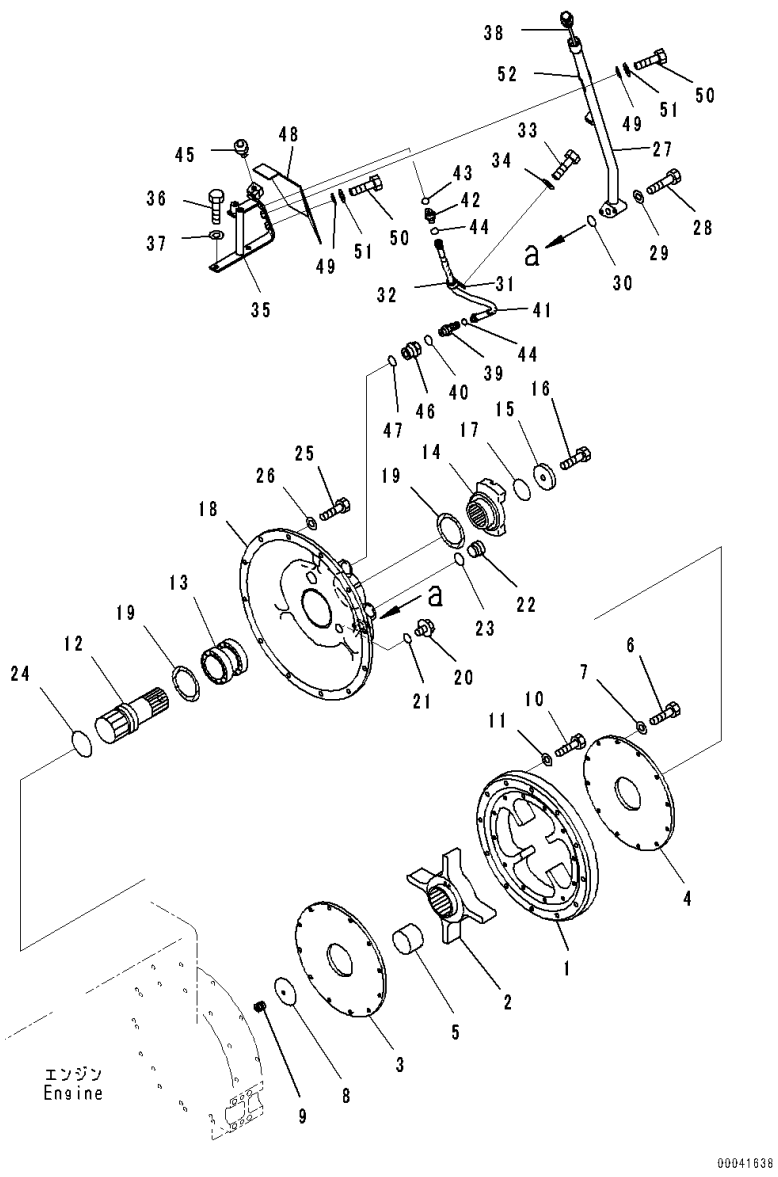

Index	Code	Part Number	Description	Qty	Serial Number
41		02760-003A6	Hose	1	81028-
42		02781-00315	Union	1	81028-
43		07002-12034	O-ring	1	81028-
44		02896-11009	O-ring	2	81028-
45		07030-00252	Breather	1	81028-
46		17A-12-41140	Plug	1	81028-
47		07002-13634	O-ring	1	81028-
48		17A-12-41153	Sheet	1	81028-
49		103-54-24440	Washer	2	81028-
50		01010-81230	Bolt	2	81028-
51		01643-31232	Washer	2	81028-
52		04434-52712	Clip	1	81028-

FIG. B0710-001001 Air Compressor, Compressor

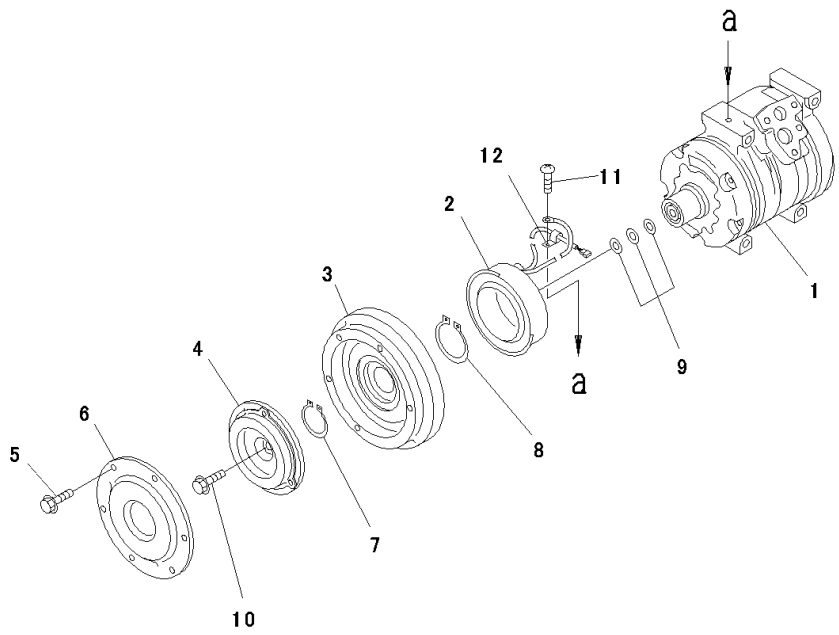

Index	Code	Part Number	Description	Qty	Serial Number
		17A-911-4810	Compressor Assembly	1	81028-
1		ND447220-4781	• Compressor Assembly	1	81028-
		ND247300-5320	• Clutch Assembly, Magnetic	1	81028-
2		ND147310-0110	• • Stator	1	81028-
3		ND147350-1640	• • Rotor	1	81028-
4		ND047410-1570	• • Hub	10	81028-
		ND047410-1580	• • Hub	10	81028-
5		ND949047-2950	• • Bolt and Washer	6	81028-
6		ND047372-0660	• • Dust Cover	1	81028-
7		ND949070-1360	• Ring, Snap	1	81028-
8		ND949070-0640	• Ring, Snap	1	81028-
9		ND949013-7480	• Washer, T=0.1mm	1	81028-
		ND949013-7500	• Washer, T=0.3mm	1	81028-
		ND949013-7510	• Washer, T=0.5mm	1	81028-
10		ND949048-0430	• Bolt	1	81028-
11		ND91310-05081	• Screw	1	81028-
12		ND146691-4470	• Clamp	1	81028-

FIG. B0710-001002 Air Compressor, Mounting

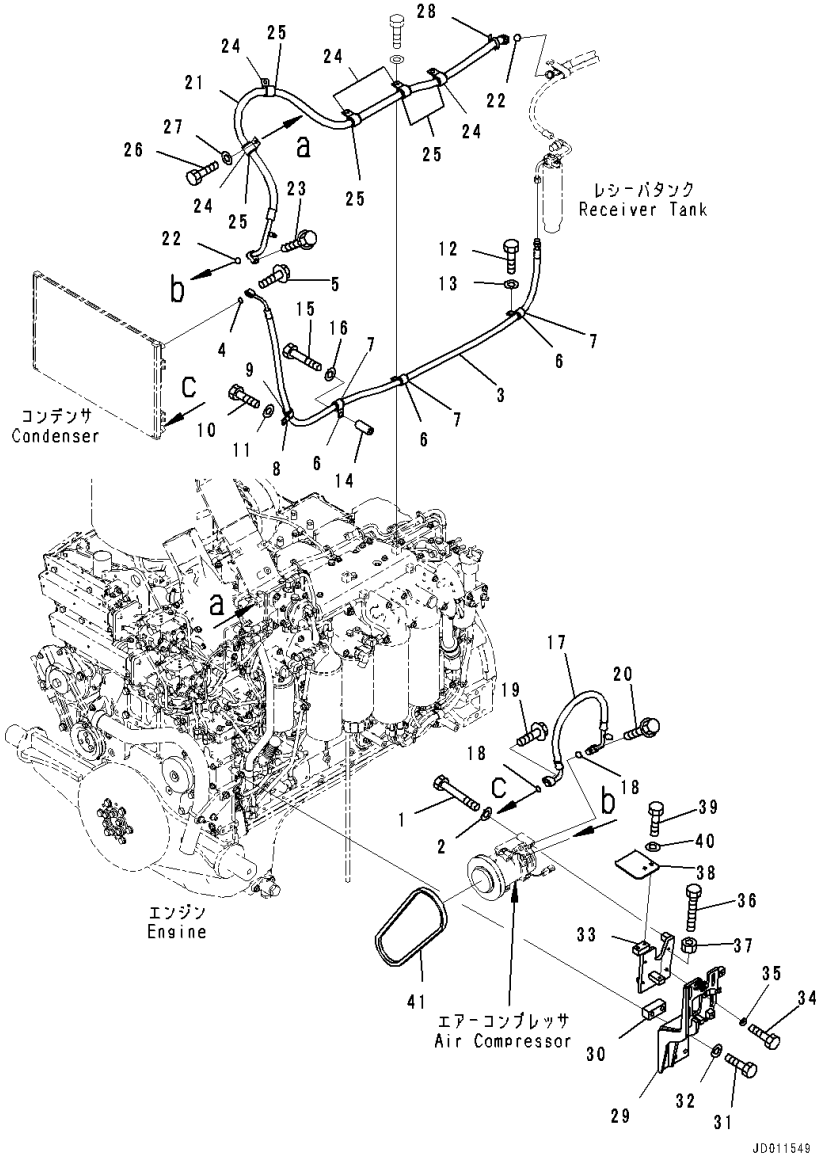

Index	Code	Part Number	Description	Qty	Serial Number
1		01010-80875	Bolt	4	81028-
2		01643-30823	Washer	4	81028-
3		17A-911-4361	Hose	1	81028-
4		20Y-979-3150	• O-ring	1	81028-
5		01435-00630	Bolt	1	81028-
6		04434-52112	Clip	3	81028-
7		07095-20314	Cushion	3	81028-
8		04434-52112	Clip	1	81028-
9		07095-20314	Cushion	1	81028-
10		01010-81225	Bolt	1	81028-
11		01643-31232	Washer	1	81028-
12		01010-81225	Bolt	2	81028-
13		01643-31232	Washer	2	81028-
14		175-61-17240	Collar	1	81028-
15		01010-81280	Bolt	1	81028-
16		01643-31232	Washer	1	81028-
17		17A-911-4351	Hose	1	81028-
18		20Y-979-3140	• O-ring	2	81028-
19		01435-00630	Bolt	1	81028-
20		01435-00630	Bolt	1	81028-
21		17A-911-4341	Hose	1	81028-
22		20Y-979-3130	• O-ring	2	81028-
23		01435-00630	Bolt	1	81028-
24		04434-52711	Clip	5	81028-
25		07095-20420	Cushion	5	81028-
26		01010-81020	Bolt	1	81028-
27		01643-31032	Washer	1	81028-
28		08034-20536	Band	1	81028-
29		17A-911-4663	Bracket	1	81028-
30		17A-911-4762	Spacer	1	81028-
31		01010-81260	Bolt	4	81028-
32		01643-31232	Washer	4	81028-
33		17A-911-4674	Bracket	1	81028-
34		01010-81025	Bolt	4	81028-
35		203-54-56970	Washer	4	81028-
36		01016-51090	Bolt	1	81028-
37		01580-11008	Nut	1	81028-
38		17A-911-4432	Plate	1	81028-
39		01010-81020	Bolt	2	81028-
40		01643-31032	Washer	2	81028-

FIG. B0710-001002 Air Compressor, Mounting

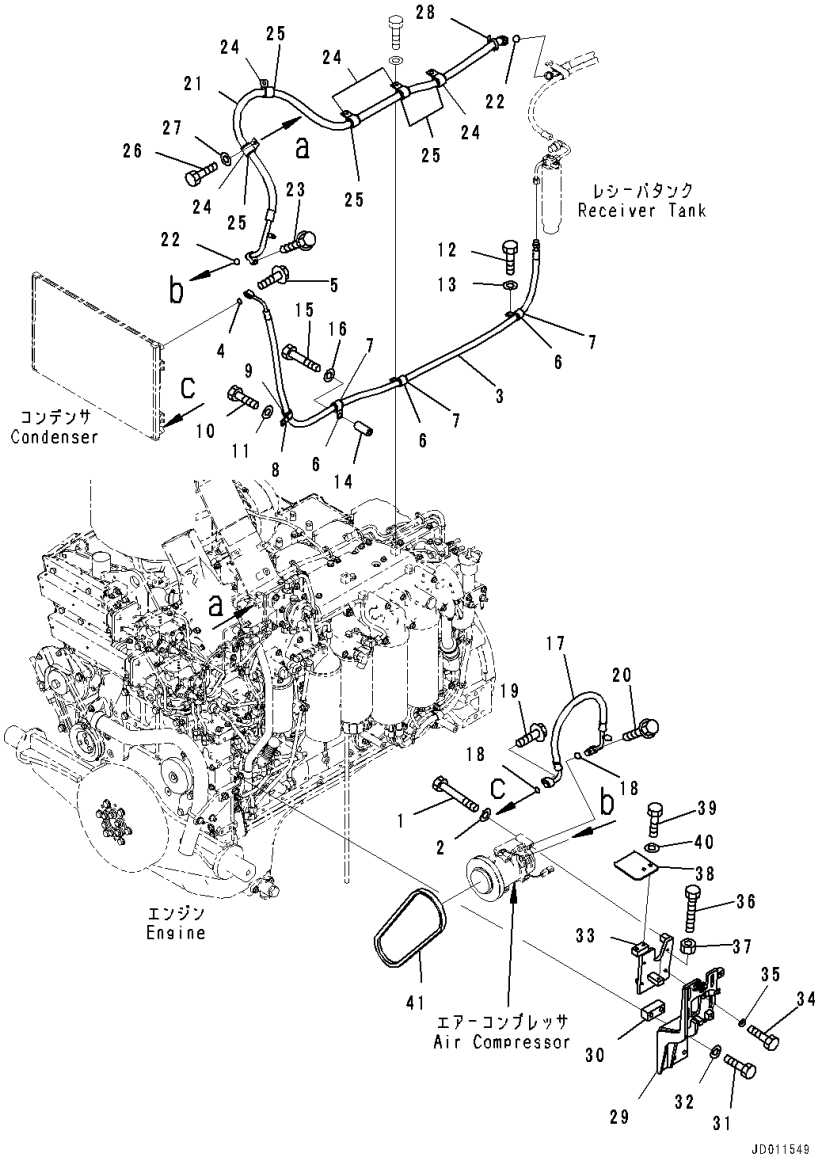

Index	Code	Part Number	Description	Qty	Serial Number
41		17A-911-4680	V-belt	1	81028-

FIG. B0710-001003 Air Compressor, Duct and Wiring Harness

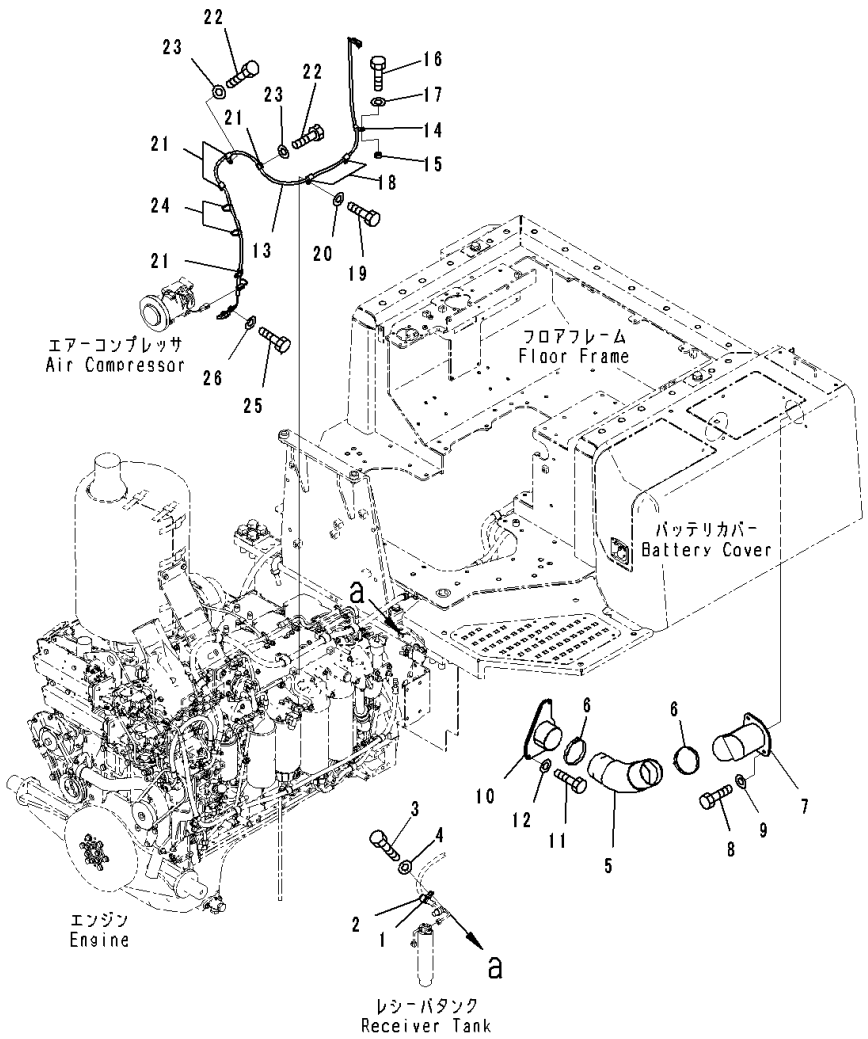

Index	Code	Part Number	Description	Qty	Serial Number
1		04434-52112	Clip	1	81028-
2		07095-20314	Cushion	1	81028-
3		01010-81220	Bolt	1	81028-
4		01643-31232	Washer	1	81028-
5		142-979-3470	Hose	1	81028-
6		07281-01159	Clamp	2	81028-
7		17A-911-4244	Duct	1	81028-
8		01010-81020	Bolt	2	81028-
9		01643-31032	Washer	2	81028-
10		17A-979-2222	Duct	1	81028-
11		01010-81030	Bolt	3	81028-
12		01643-31032	Washer	3	81028-
13		17A-06-41360	Wiring Harness	1	81028-
14		600-051-2100	Clip	1	81028-
15		208-01-11270	Washer	1	81028-
16		01010-81030	Bolt	1	81028-
17		01643-31032	Washer	1	81028-
18		600-051-2100	Clip	2	81028-
19		01010-81020	Bolt	2	81028-
20		01643-31032	Washer	2	81028-
21		600-051-2100	Clip	4	81028-
22		01010-81020	Bolt	3	81028-
23		01643-31032	Washer	3	81028-
24		08034-20414	Band	2	81028-
25		01010-81020	Bolt	1	81028-
26		01643-31032	Washer	1	81028-

FIG. B0710-002001 Air Compressor, Landfill Specification, Compressor

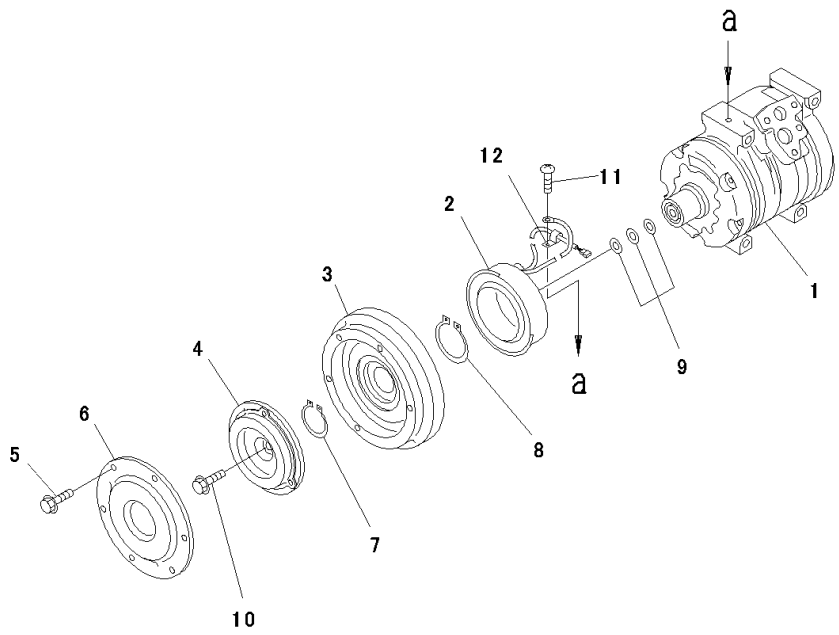

Index	Code	Part Number	Description	Qty	Serial Number
		17A-911-4810	Compressor Assembly	1	81028-
1		ND447220-4781	• Compressor Assembly	1	81028-
		ND247300-5320	• Clutch Assembly, Magnetic	1	81028-
2		ND147310-0110	• • Stator	1	81028-
3		ND147350-1640	• • Rotor	1	81028-
4		ND047410-1570	• • Hub	10	81028-
		ND047410-1580	• • Hub	10	81028-
5		ND949047-2950	• • Bolt and Washer	6	81028-
6		ND047372-0660	• • Dust Cover	1	81028-
7		ND949070-1360	• Ring, Snap	1	81028-
8		ND949070-0640	• Ring, Snap	1	81028-
9		ND949013-7480	• Washer, T=0.1mm	1	81028-
		ND949013-7500	• Washer, T=0.3mm	1	81028-
		ND949013-7510	• Washer, T=0.5mm	1	81028-
10		ND949048-0430	• Bolt	1	81028-
11		ND91310-05081	• Screw	1	81028-
12		ND146691-4470	• Clamp	1	81028-

FIG. B0710-002002 Air Compressor, Landfill Specification, Hose

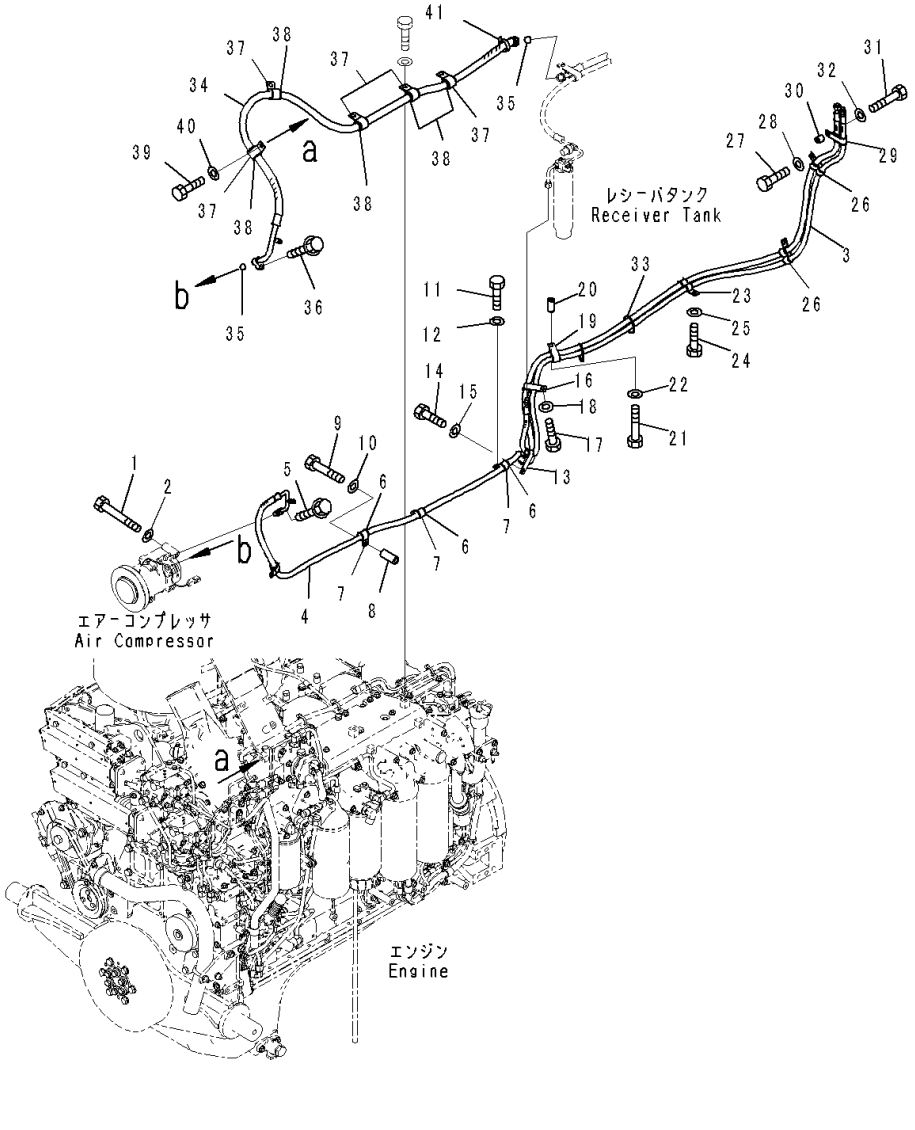

Index	Code	Part Number	Description	Qty	Serial Number
1		01010-80875	Bolt	4	81028-
2		01643-30823	Washer	4	81028-
3		17A-911-4621	Hose	1	81028-
4		17A-911-4611	Hose	1	81028-
5		01435-00630	Bolt	1	81028-
6		07095-20318	Cushion	4	81028-
7		04434-52512	Clip	4	81028-
8		195-979-3570	Collar	1	81028-
9		01010-81290	Bolt	1	81028-
10		01643-31232	Washer	1	81028-
11		01010-81225	Bolt	3	81028-
12		01643-31232	Washer	3	81028-
13		195-Z11-7250	Clip	1	81028-
14		01010-81225	Bolt	1	81028-
15		01643-31232	Washer	1	81028-
16		17A-911-4421	Clip	1	81028-
17		01010-81225	Bolt	1	81028-
18		01643-31232	Washer	1	81028-
19		195-Z11-7250	Clip	1	81028-
20		175-40-22540	Spacer	1	81028-
21		01010-81270	Bolt	1	81028-
22		01643-31232	Washer	1	81028-
23		17A-911-4421	Clip	1	81028-
24		01010-81220	Bolt	1	81028-
25		01643-31232	Washer	1	81028-
26		195-Z11-7250	Clip	2	81028-
27		01010-81225	Bolt	1	81028-
28		01643-31232	Washer	1	81028-
29		195-Z11-7250	Clip	1	81028-
30		195-33-11220	Spacer	1	81028-
31		01010-81250	Bolt	1	81028-
32		01643-31232	Washer	1	81028-
33		08034-20519	Band	2	81028-
34		17A-911-4341	Hose	1	81028-
35		20Y-979-3130	• O-ring	2	81028-
36		01435-00630	Bolt	1	81028-
37		04434-52711	Clip	5	81028-
38		07095-20420	Cushion	5	81028-
39		01010-81020	Bolt	1	81028-
40		01643-31032	Washer	1	81028-

FIG. B0710-002002 Air Compressor, Landfill Specification, Hose

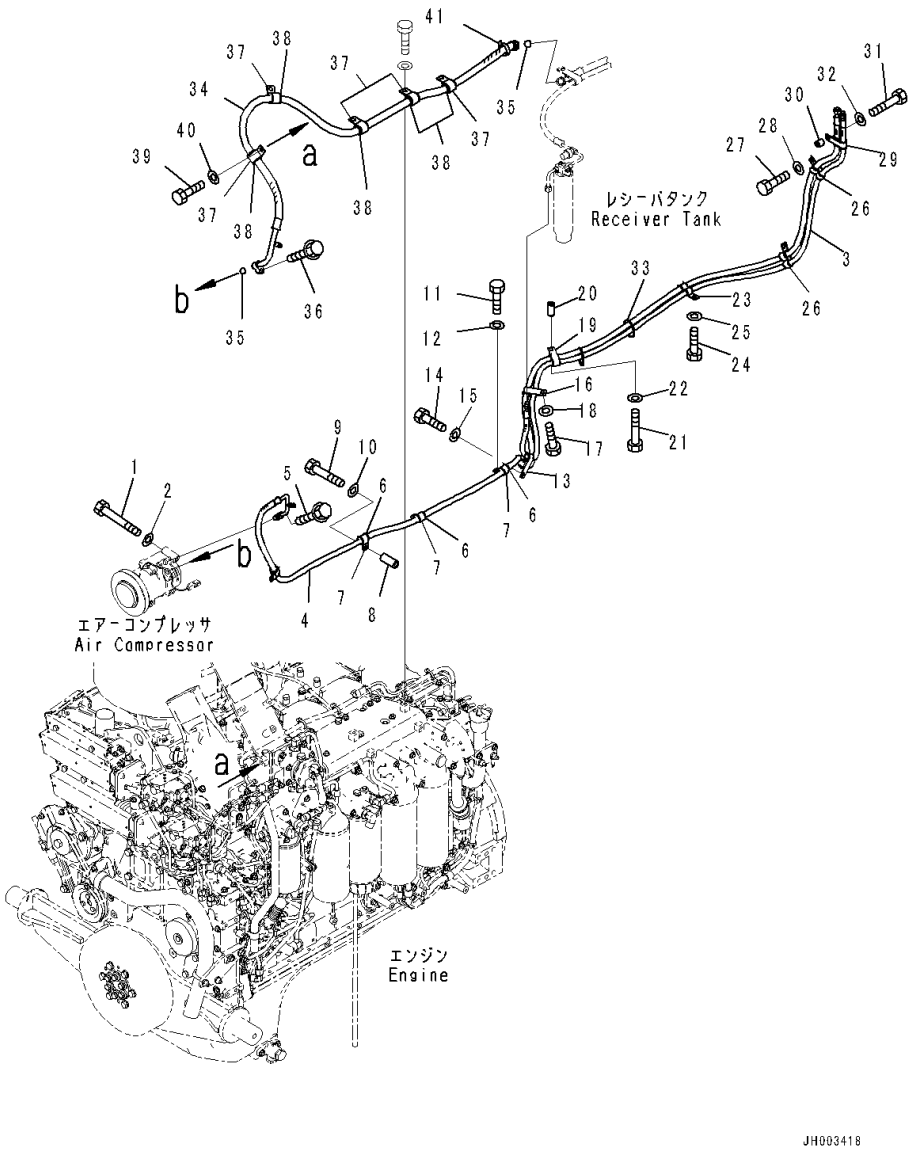

Index	Code	Part Number	Description	Qty	Serial Number
41		08034-20536	Band	1	81028-

FIG. B0710-002003 Air Compressor, Landfill Specification, Mounting

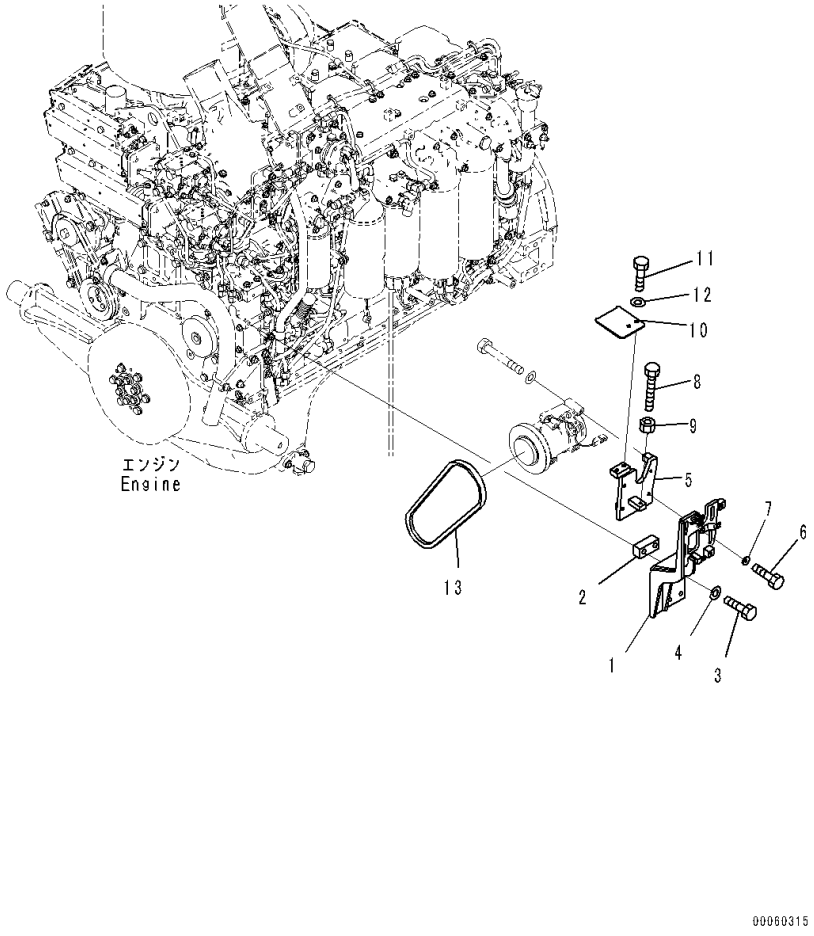

Index	Code	Part Number	Description	Qty	Serial Number
1		17A-911-4663	Bracket	1	81028-
2		17A-911-4762	Spacer	1	81028-
3		01010-81260	Bolt	4	81028-
4		01643-31232	Washer	4	81028-
5		17A-911-4674	Bracket	1	81028-
6		01010-81025	Bolt	4	81028-
7		203-54-56970	Washer	4	81028-
8		01016-51090	Bolt	1	81028-
9		01580-11008	Nut	1	81028-
10		17A-911-4432	Plate	1	81028-
11		01010-81020	Bolt	2	81028-
12		01643-31032	Washer	2	81028-
13		17A-911-4680	V-belt	1	81028-

FIG. B0710-002004 Air Compressor, Landfill Specification, Duct and Wiring Harness

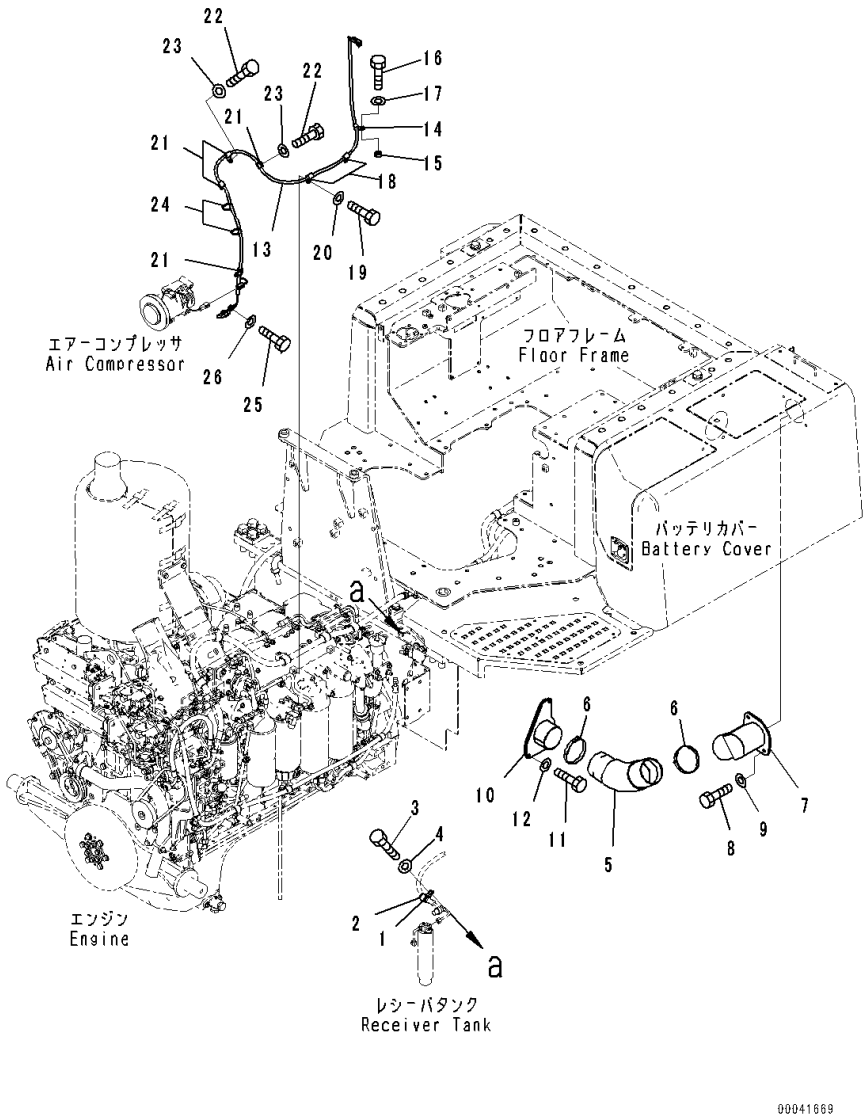

Index	Code	Part Number	Description	Qty	Serial Number
1		04434-52112	Clip	1	81028-
2		07095-20314	Cushion	1	81028-
3		01010-81220	Bolt	1	81028-
4		01643-31232	Washer	1	81028-
5		142-979-3470	Hose	1	81028-
6		07281-01159	Clamp	2	81028-
7		17A-911-4244	Duct	1	81028-
8		01010-81020	Bolt	2	81028-
9		01643-31032	Washer	2	81028-
10		17A-979-2222	Duct	1	81028-
11		01010-81030	Bolt	3	81028-
12		01643-31032	Washer	3	81028-
13		17A-06-41360	Wiring Harness	1	81028-
14		600-051-2100	Clip	1	81028-
15		208-01-11270	Washer	1	81028-
16		01010-81030	Bolt	1	81028-
17		01643-31032	Washer	1	81028-
18		600-051-2100	Clip	2	81028-
19		01010-81020	Bolt	2	81028-
20		01643-31032	Washer	2	81028-
21		600-051-2100	Clip	4	81028-
22		01010-81020	Bolt	3	81028-
23		01643-31032	Washer	3	81028-
24		08034-20414	Band	2	81028-
25		01010-81020	Bolt	1	81028-
26		01643-31032	Washer	1	81028-

FIG. B0710-004001 Air Compressor, Salt Industries Specification, Compressor

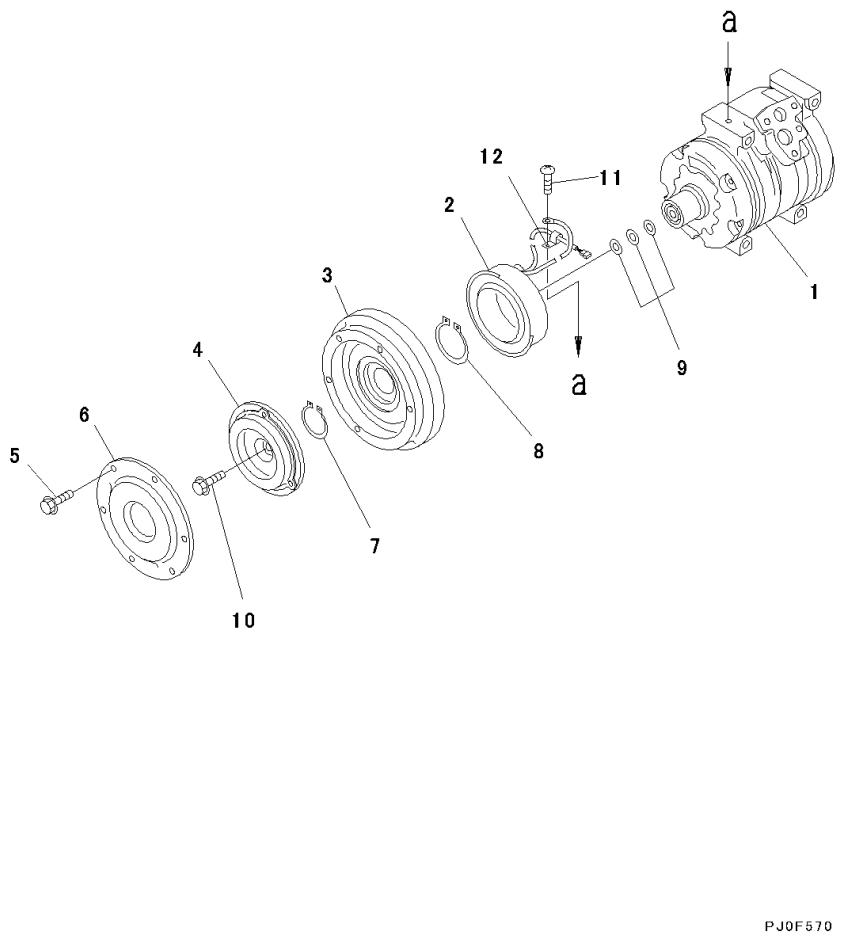

Index	Code	Part Number	Description	Qty	Serial Number
		17A-911-4810	Compressor Assembly	1	81046-
1		ND447220-4781	• Compressor Assembly	1	81046-
		ND247300-5320	• Clutch Assembly, Magnetic	1	81046-
2		ND147310-0110	• • Stator	1	81046-
3		ND147350-1640	• • Rotor	1	81046-
4		ND047410-1570	• • Hub	10	81046-
		ND047410-1580	• • Hub	10	81046-
5		ND949047-2950	• • Bolt and Washer	6	81046-
6		ND047372-0660	• • Dust Cover	1	81046-
7		ND949070-1360	• Ring, Snap	1	81046-
8		ND949070-0640	• Ring, Snap	1	81046-
9		ND949013-7480	• Washer, T=0.1mm	1	81046-
		ND949013-7500	• Washer, T=0.3mm	1	81046-
		ND949013-7510	• Washer, T=0.5mm	1	81046-
10		ND949048-0430	• Bolt	1	81046-
11		ND91310-05081	• Screw	1	81046-
12		ND146691-4470	• Clamp	1	81046-

FIG. B0710-004002 Air Compressor, Salt Industries Specification, Mounting

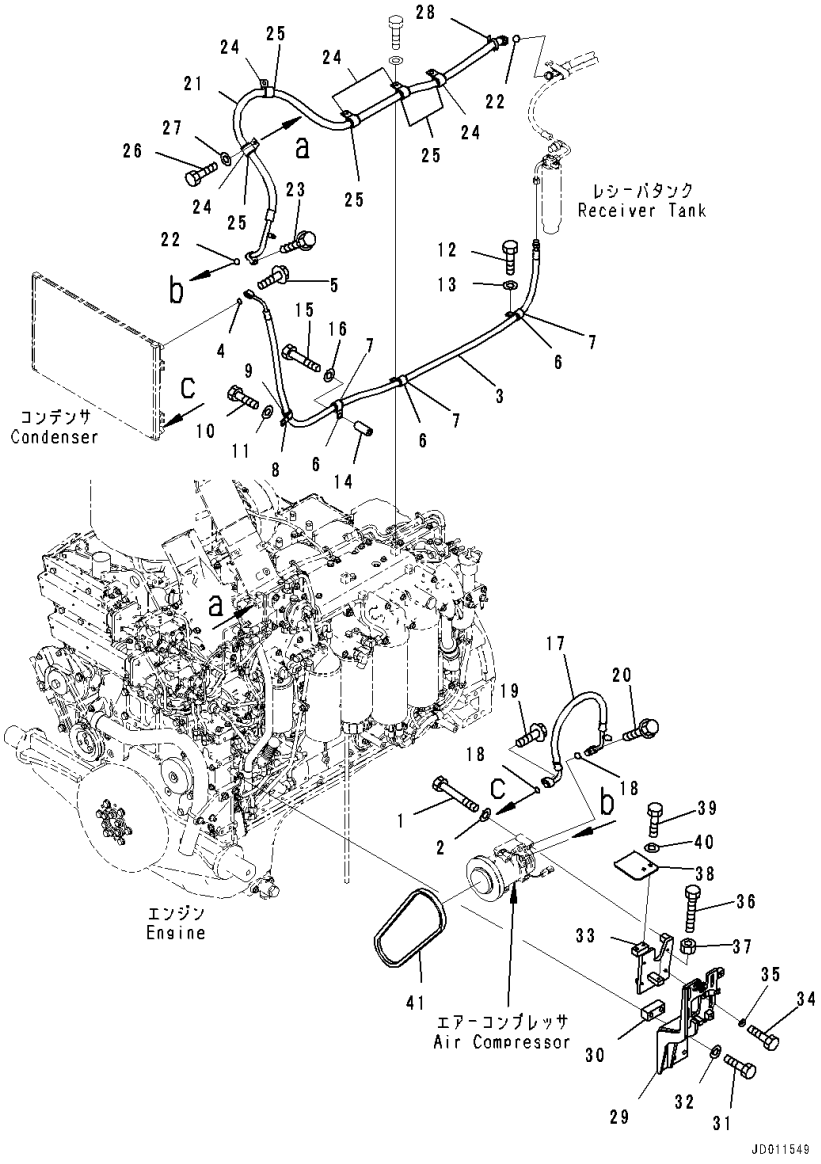

Index	Code	Part Number	Description	Qty	Serial Number
1		01010-80875	Bolt	4	81046-
2		01643-30823	Washer	4	81046-
3		17A-911-4361	Hose	1	81046-
4		20Y-979-3150	• O-ring	1	81046-
5		01435-00630	Bolt	1	81046-
6		04434-52112	Clip	3	81046-
7		07095-20314	Cushion	3	81046-
8		04434-52112	Clip	1	81046-
9		07095-20314	Cushion	1	81046-
10		01010-81225	Bolt	1	81046-
11		01643-31232	Washer	1	81046-
12		01010-81225	Bolt	2	81046-
13		01643-31232	Washer	2	81046-
14		175-61-17240	Collar	1	81046-
15		01010-81280	Bolt	1	81046-
16		01643-31232	Washer	1	81046-
17		17A-911-4351	Hose	1	81046-
18		20Y-979-3140	• O-ring	2	81046-
19		01435-00630	Bolt	1	81046-
20		01435-00630	Bolt	1	81046-
21		17A-911-4341	Hose	1	81046-
22		20Y-979-3130	• O-ring	2	81046-
23		01435-00630	Bolt	1	81046-
24		04434-52711	Clip	5	81046-
25		07095-20420	Cushion	5	81046-
26		01010-81020	Bolt	1	81046-
27		01643-31032	Washer	1	81046-
28		08034-20536	Band	1	81046-
29		17A-911-4663	Bracket	1	81046-
30		17A-911-4762	Spacer	1	81046-
31		01010-81260	Bolt	4	81046-
32		01643-31232	Washer	4	81046-
33		17A-911-4674	Bracket	1	81046-
34		01010-81025	Bolt	4	81046-
35		203-54-56970	Washer	4	81046-
36		01016-51090	Bolt	1	81046-
37		01580-11008	Nut	1	81046-
38		17A-911-4432	Plate	1	81046-
39		01010-81020	Bolt	2	81046-
40		01643-31032	Washer	2	81046-

FIG. B0710-004002 Air Compressor, Salt Industries Specification, Mounting

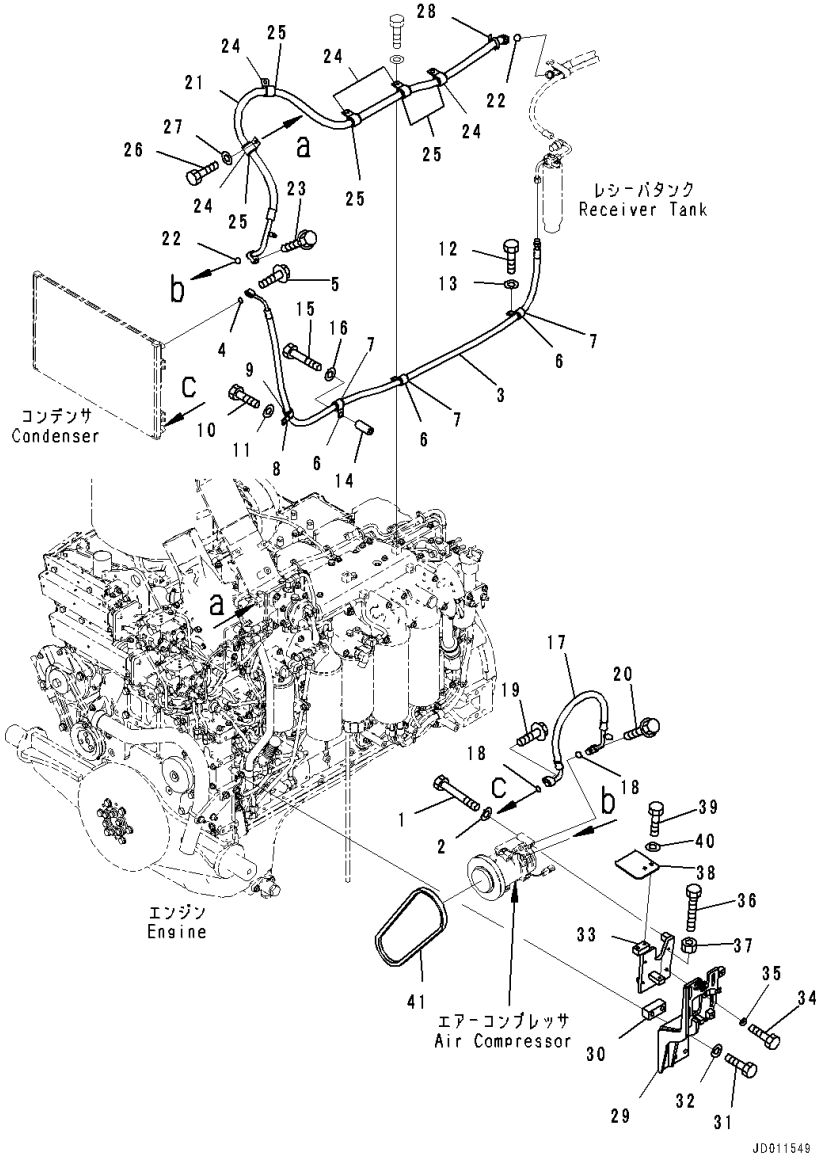

Index	Code	Part Number	Description	Qty	Serial Number
41		17A-911-4680	V-belt	1	81046-

FIG. B0710-004003 Air Compressor, Salt Industries Specification, Duct and Wiring Harness

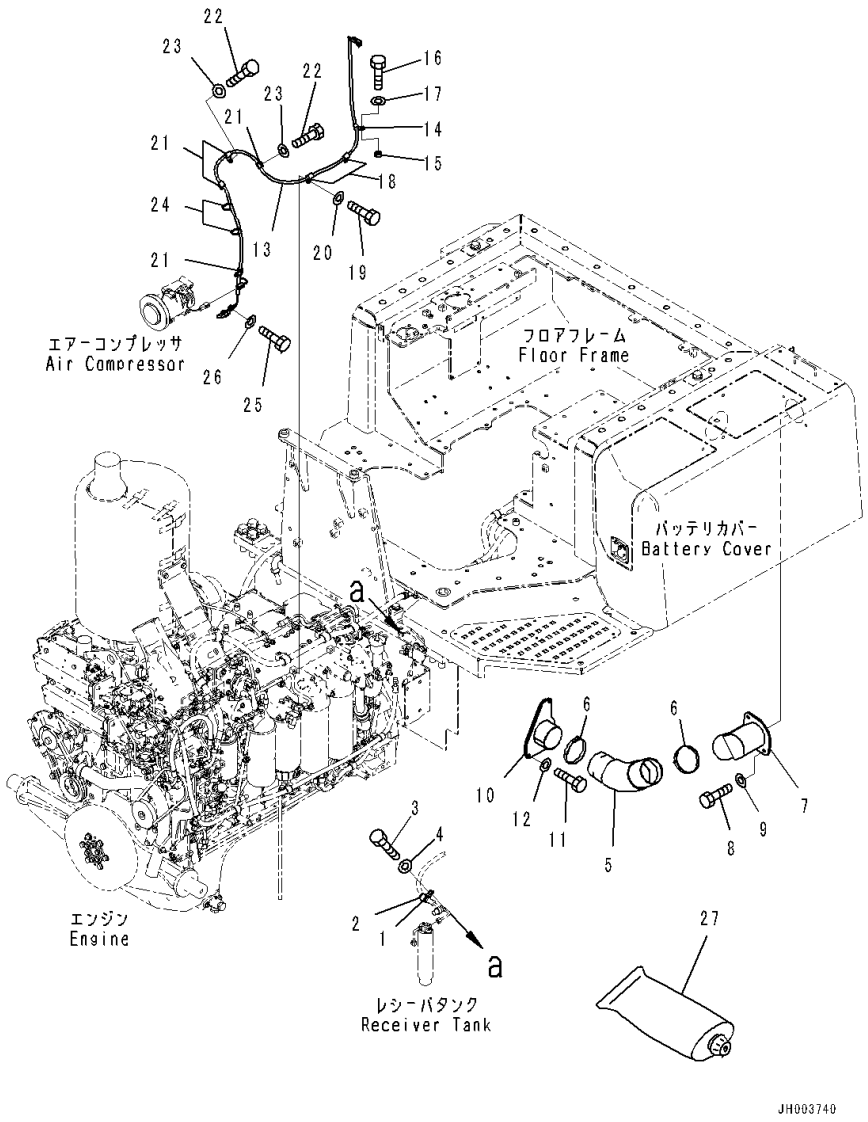

Index	Code	Part Number	Description	Qty	Serial Number
1		04434-52112	Clip	1	81046-
2		07095-20314	Cushion	1	81046-
3		01010-81220	Bolt	1	81046-
4		01643-31232	Washer	1	81046-
5		142-979-3470	Hose	1	81046-
6		07281-01159	Clamp	2	81046-
7		17A-911-4244	Duct	1	81046-
8		01010-81020	Bolt	2	81046-
9		01643-31032	Washer	2	81046-
10		17A-979-2222	Duct	1	81046-
11		01010-81030	Bolt	3	81046-
12		01643-31032	Washer	3	81046-
13		17A-06-49240	Wiring Harness	1	81046-
14		600-051-2100	Clip	1	81046-
15		208-01-11270	Washer	1	81046-
16		01010-81030	Bolt	1	81046-
17		01643-31032	Washer	1	81046-
18		600-051-2100	Clip	2	81046-
19		01010-81020	Bolt	2	81046-
20		01643-31032	Washer	2	81046-
21		600-051-2100	Clip	4	81046-
22		01010-81020	Bolt	3	81046-
23		01643-31032	Washer	3	81046-
24		08034-20414	Band	2	81046-
25		01010-81020	Bolt	1	81046-
26		01643-31032	Washer	1	81046-
27		195-06-24570	Sealant	1	81046-

FIG. B0710-007001 Air Compressor, With Air Conditioner, Sandy and Dusty Terrain Arrangement, Compressor

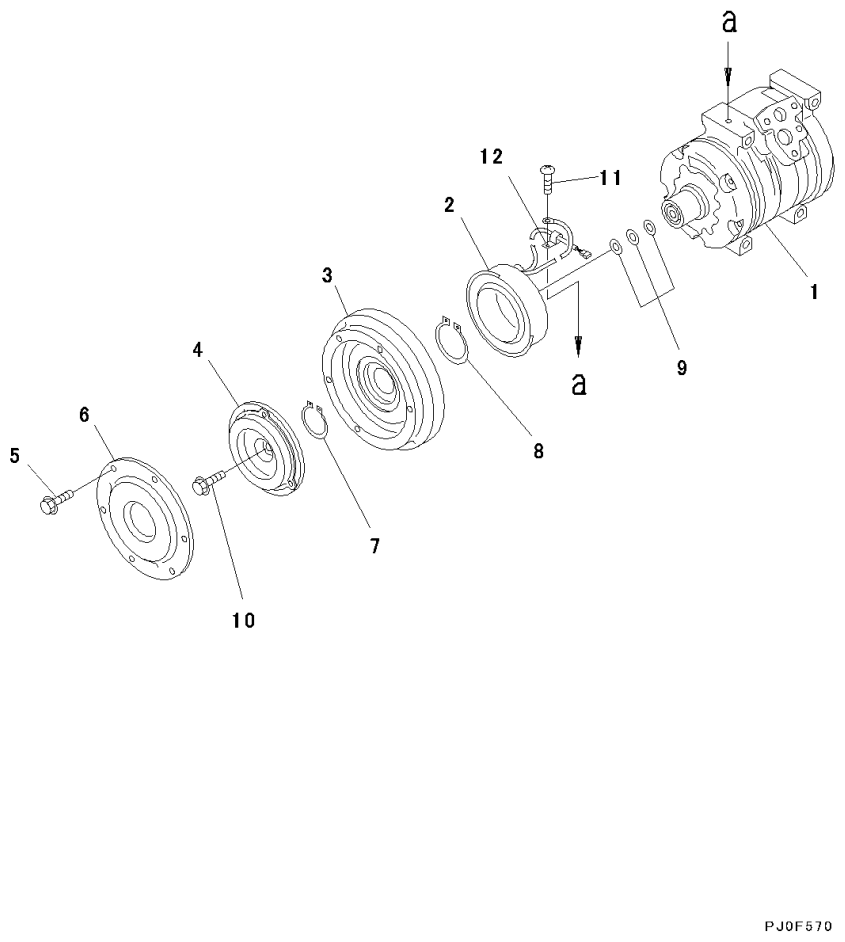

Index	Code	Part Number	Description	Qty	Serial Number
		154-911-7842	Compressor Assembly	1	81176-
1		ND447220-4781	• Compressor Assembly	1	81176-
		ND247300-4152	• Clutch Assembly, Magnetic	1	81176-
2		ND147310-1750	• • Stator	1	81176-
3		ND147350-1640	• • Rotor	1	81176-
4		ND047410-1570	• • Hub	10	81176-
		ND047410-1580	• • Hub	10	81176-
5		ND949047-2950	• • Bolt and Washer	6	81176-
6		ND047372-0660	• • Dust Cover	1	81176-
7		ND949070-1360	• Ring, Snap	1	81176-
8		ND949070-0640	• Ring, Snap	1	81176-
9		ND949013-7480	• Washer, T=0.1mm	1	81176-
		ND949013-7500	• Washer, T=0.3mm	1	81176-
		ND949013-7510	• Washer, T=0.5mm	1	81176-
10		ND949048-0430	• Bolt	1	81176-
11		ND91310-05081	• Screw	1	81176-
12		ND146691-4470	• Clamp	1	81176-

FIG. B0710-007002 Air Compressor, With Air Conditioner, Sandy and Dusty Terrain Arrangement, Mounting

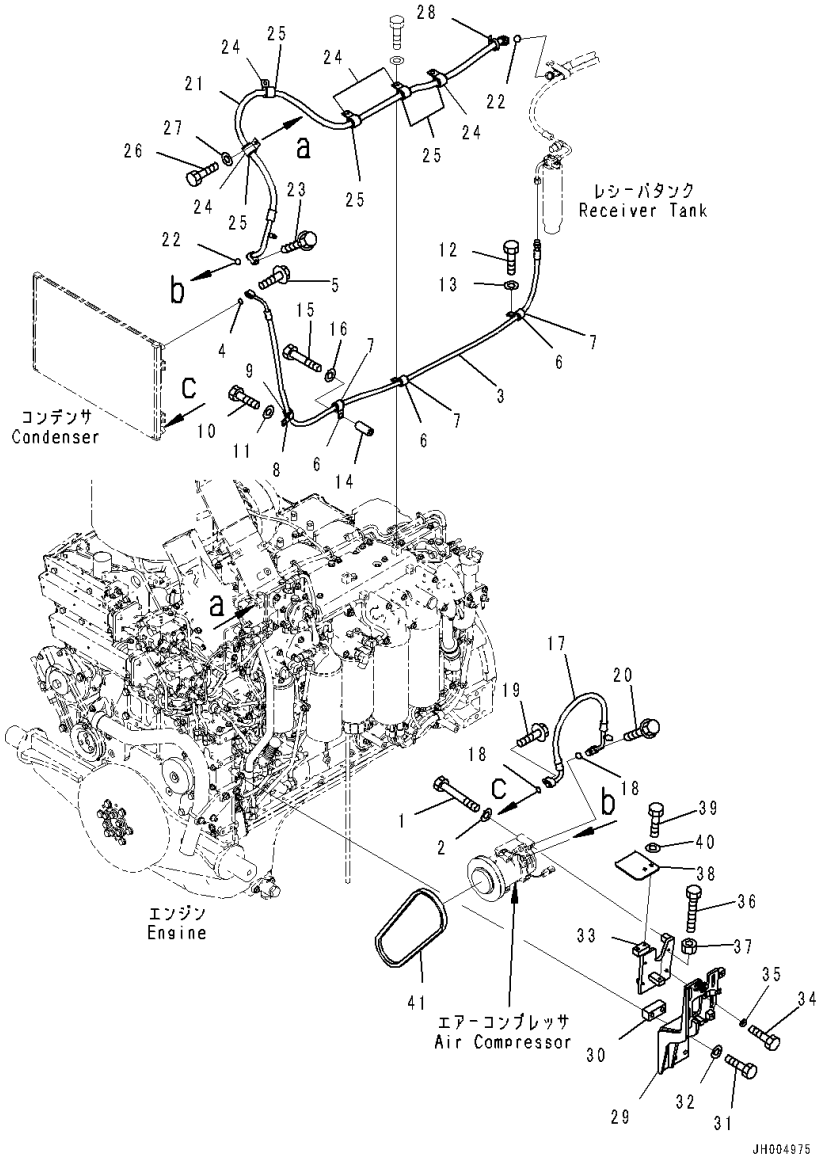

Index	Code	Part Number	Description	Qty	Serial Number
1		01010-80875	Bolt	4	81176-
2		01643-30823	Washer	4	81176-
3		17A-911-4361	Hose	1	81176-
4		20Y-979-3150	• O-ring	1	81176-
5		01435-00630	Bolt	1	81176-
6		04434-52112	Clip	3	81176-
7		07095-20314	Cushion	3	81176-
8		04434-52112	Clip	1	81176-
9		07095-20314	Cushion	1	81176-
10		01010-81225	Bolt	1	81176-
11		01643-31232	Washer	1	81176-
12		01010-81225	Bolt	2	81176-
13		01643-31232	Washer	2	81176-
14		175-61-17240	Collar	1	81176-
15		01010-81280	Bolt	1	81176-
16		01643-31232	Washer	1	81176-
17		17A-911-4351	Hose	1	81176-
18		20Y-979-3140	• O-ring	2	81176-
19		01435-00630	Bolt	1	81176-
20		01435-00630	Bolt	1	81176-
21		17A-911-4341	Hose	1	81176-
22		20Y-979-3130	• O-ring	2	81176-
23		01435-00630	Bolt	1	81176-
24		04434-52711	Clip	5	81176-
25		07095-20420	Cushion	5	81176-
26		01010-81020	Bolt	1	81176-
27		01643-31032	Washer	1	81176-
28		08034-20536	Band	1	81176-
29		17A-911-4663	Bracket	1	81176-
30		17A-911-4762	Spacer	1	81176-
31		01010-81260	Bolt	4	81176-
32		01643-31232	Washer	4	81176-
33		17A-911-4674	Bracket	1	81176-
34		01010-81025	Bolt	4	81176-
35		203-54-56970	Washer	4	81176-
36		01016-51090	Bolt	1	81176-
37		01580-11008	Nut	1	81176-
38		17A-911-4432	Plate	1	81176-
39		01010-81020	Bolt	2	81176-
40		01643-31032	Washer	2	81176-

FIG. B0710-007002 Air Compressor, With Air Conditioner, Sandy and Dusty Terrain Arrangement, Mounting

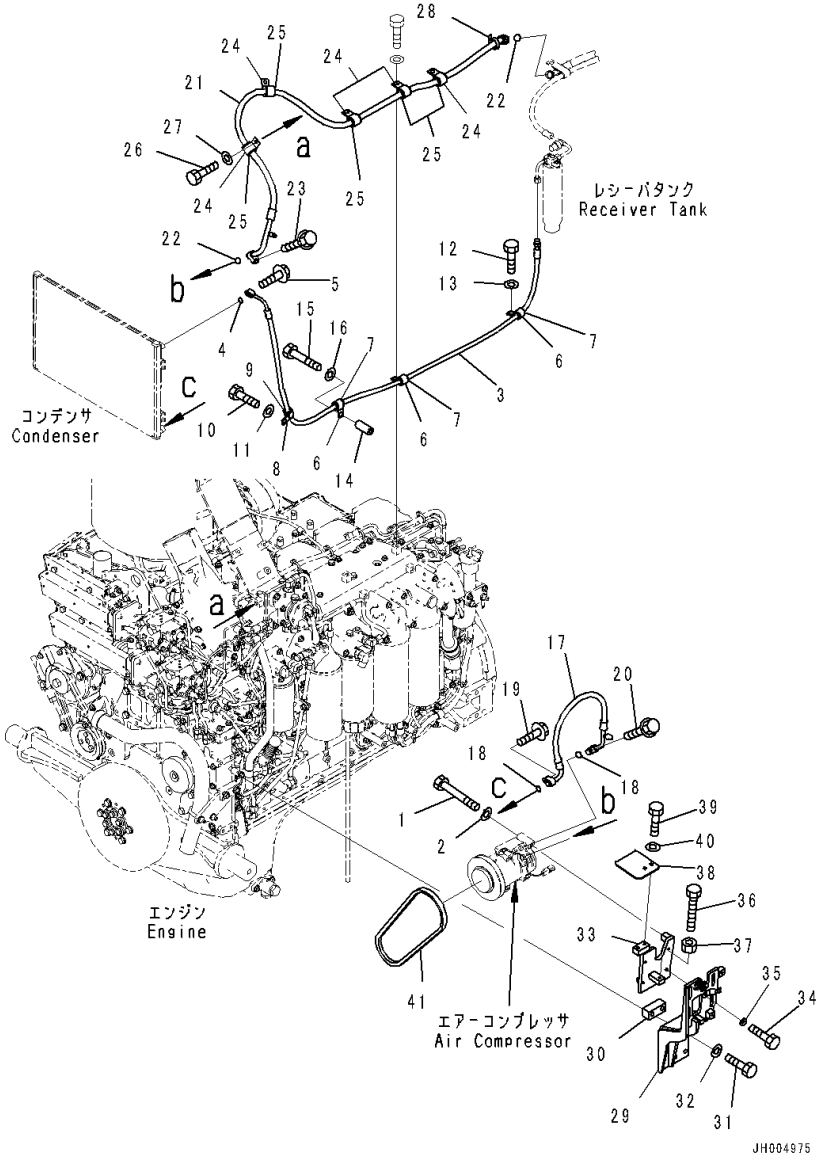

Index	Code	Part Number	Description	Qty	Serial Number
41		17A-911-4680	V-belt	1	81176-

FIG. B0710-007003 Air Compressor, With Air Conditioner, Sandy and Dusty Terrain Arrangement, Duct and Wiring Harness

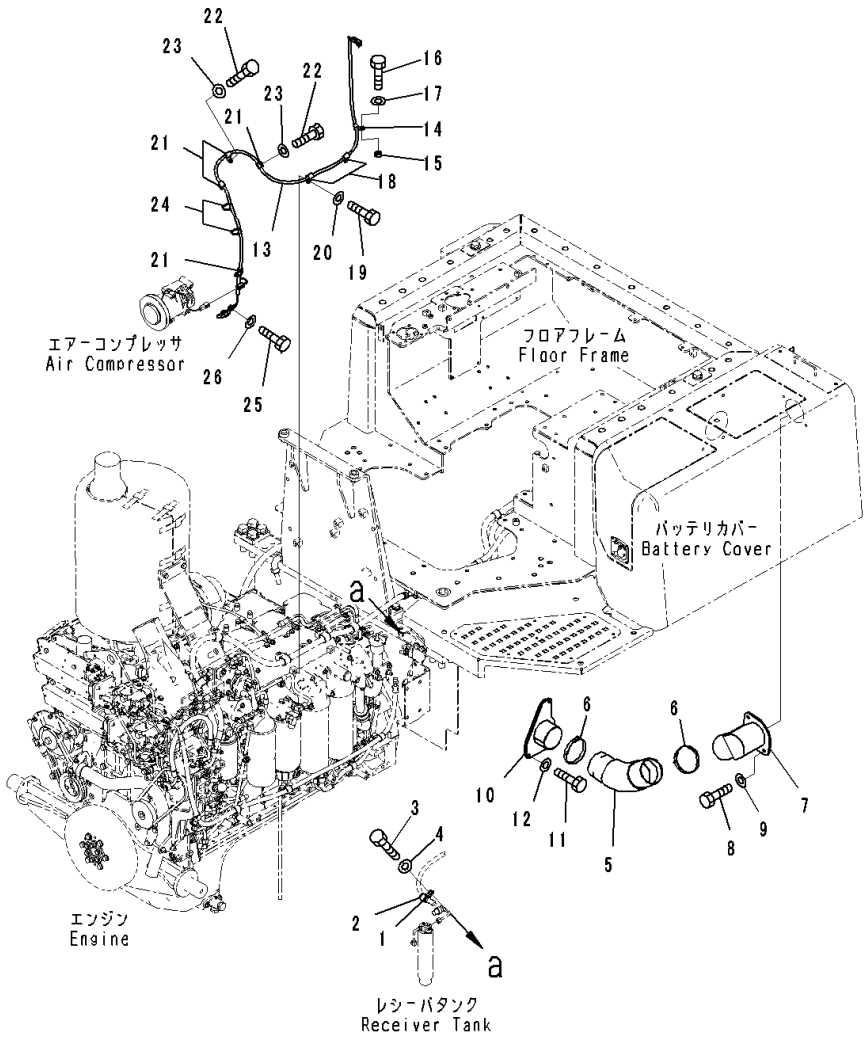

Index	Code	Part Number	Description	Qty	Serial Number
1		04434-52112	Clip	1	81176-
2		07095-20314	Cushion	1	81176-
3		01010-81220	Bolt	1	81176-
4		01643-31232	Washer	1	81176-
5		142-979-3470	Hose	1	81176-
6		07281-01159	Clamp	2	81176-
7		17A-911-4244	Duct	1	81176-
8		01010-81020	Bolt	2	81176-
9		01643-31032	Washer	2	81176-
10		17A-979-2222	Duct	1	81176-
11		01010-81030	Bolt	3	81176-
12		01643-31032	Washer	3	81176-
13		17A-06-41360	Wiring Harness	1	81176-
14		600-051-2100	Clip	1	81176-
15		208-01-11270	Washer	1	81176-
16		01010-81030	Bolt	1	81176-
17		01643-31032	Washer	1	81176-
18		600-051-2100	Clip	2	81176-
19		01010-81020	Bolt	2	81176-
20		01643-31032	Washer	2	81176-
21		600-051-2100	Clip	4	81176-
22		01010-81020	Bolt	3	81176-
23		01643-31032	Washer	3	81176-
24		08034-20414	Band	2	81176-
25		01010-81020	Bolt	1	81176-
26		01643-31032	Washer	1	81176-

FIG. B0720-001001 Cab Heater Piping, With Engine Oil Pan and Coolant Heater

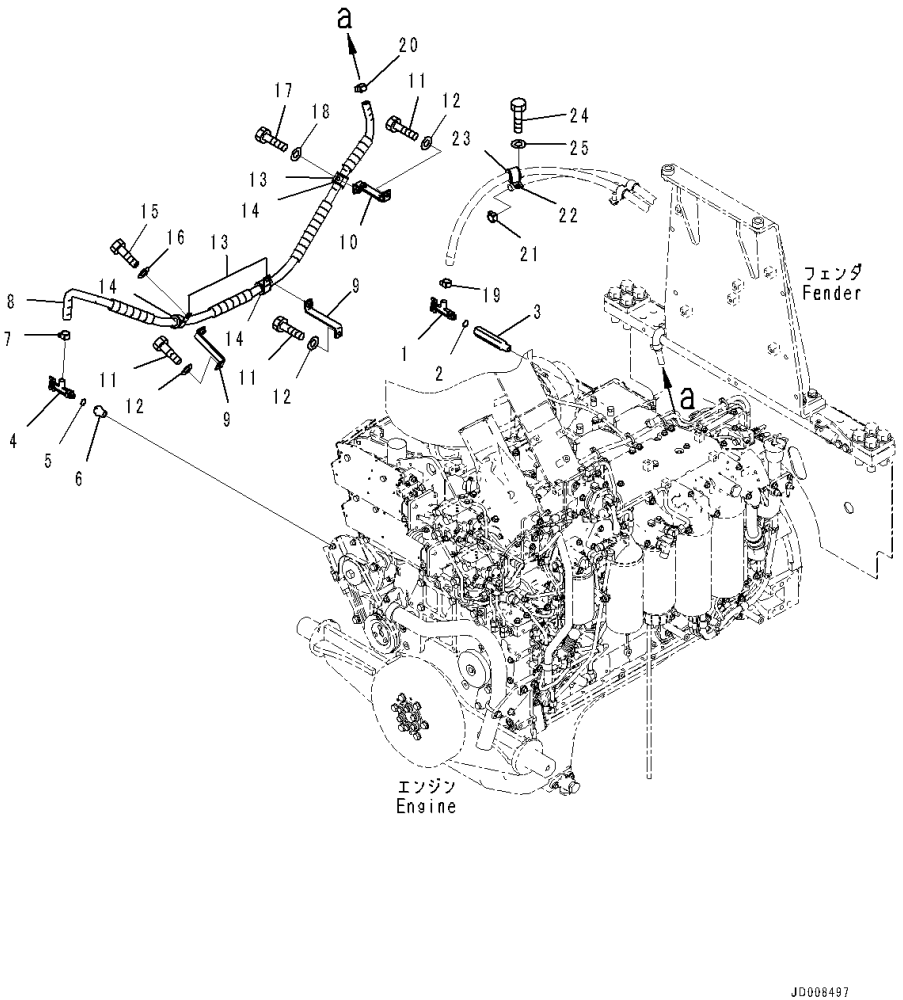

Index	Code	Part Number	Description	Qty	Serial Number
1		17A-911-4510	Valve	1	81028-
2		07002-11623	O-ring	1	81028-
3		17A-911-4520	Joint	1	81028-
4		17A-911-4510	Valve	1	81028-
5		07002-11623	O-ring	1	81028-
6		17A-911-4530	Joint	1	81028-
7		09479-02400	Clamp	1	81028-
8		17A-911-4383	Hose	1	81028-
9		17A-911-4391	Bracket	2	81028-
10		17A-911-4470	Bracket	1	81028-
11		01010-81020	Bolt	3	81028-
12		01643-31032	Washer	3	81028-
13		04434-53211	Clip	3	81028-
14		07095-20523	Cushion	3	81028-
15		01010-81020	Bolt	2	81028-
16		01643-31032	Washer	2	81028-
17		01010-81025	Bolt	1	81028-
18		01643-31032	Washer	1	81028-
19		09479-02400	Clamp	1	81028-
20		09479-02400	Clamp	1	81028-
21		09479-02400	Clamp	1	81028-
22		04434-53412	Clip	1	81028-
23		07095-20625	Cushion	1	81028-
24		01010-81220	Bolt	1	81028-
25		01643-31232	Washer	1	81028-

FIG. B0720-002001 Cab Heater Piping

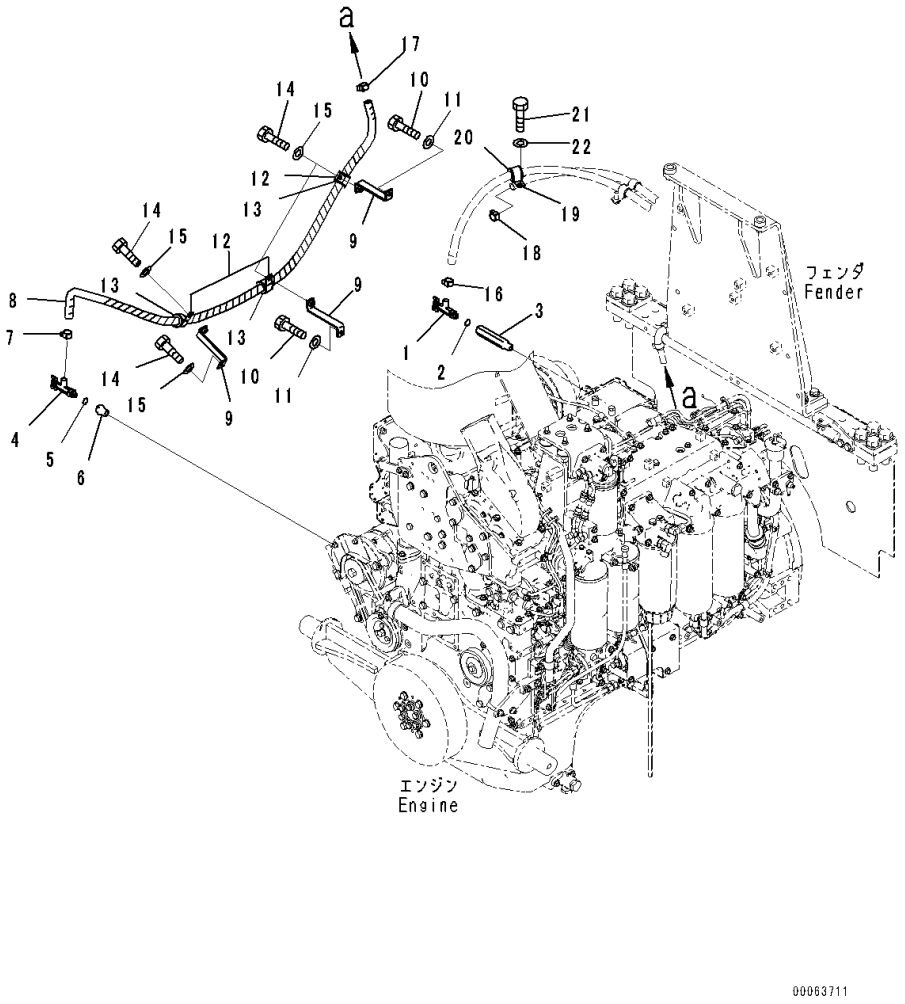

Index	Code	Part Number	Description	Qty	Serial Number
1		17A-911-4510	Valve	1	81028-
2		07002-11623	O-ring	1	81028-
3		17A-911-4520	Joint	1	81028-
4		17A-911-4510	Valve	1	81028-
5		07002-11623	O-ring	1	81028-
6		17A-911-4530	Joint	1	81028-
7		09479-02400	Clamp	1	81028-
8		17A-911-4383	Hose	1	81028-
9		17A-911-4391	Bracket	3	81028-
10		01010-81020	Bolt	3	81028-
11		01643-31032	Washer	3	81028-
12		04434-53211	Clip	3	81028-
13		07095-20523	Cushion	3	81028-
14		01010-81020	Bolt	3	81028-
15		01643-31032	Washer	3	81028-
16		09479-02400	Clamp	1	81028-
17		09479-02400	Clamp	1	81028-
18		09479-02400	Clamp	1	81028-
19		04434-53412	Clip	1	81028-
20		07095-20625	Cushion	1	81028-
21		01010-81220	Bolt	1	81028-
22		01643-31232	Washer	1	81028-

COOLING SYSTEM

FIG. C0110-005001 Cooling System, Radiator Core and Aftercooler

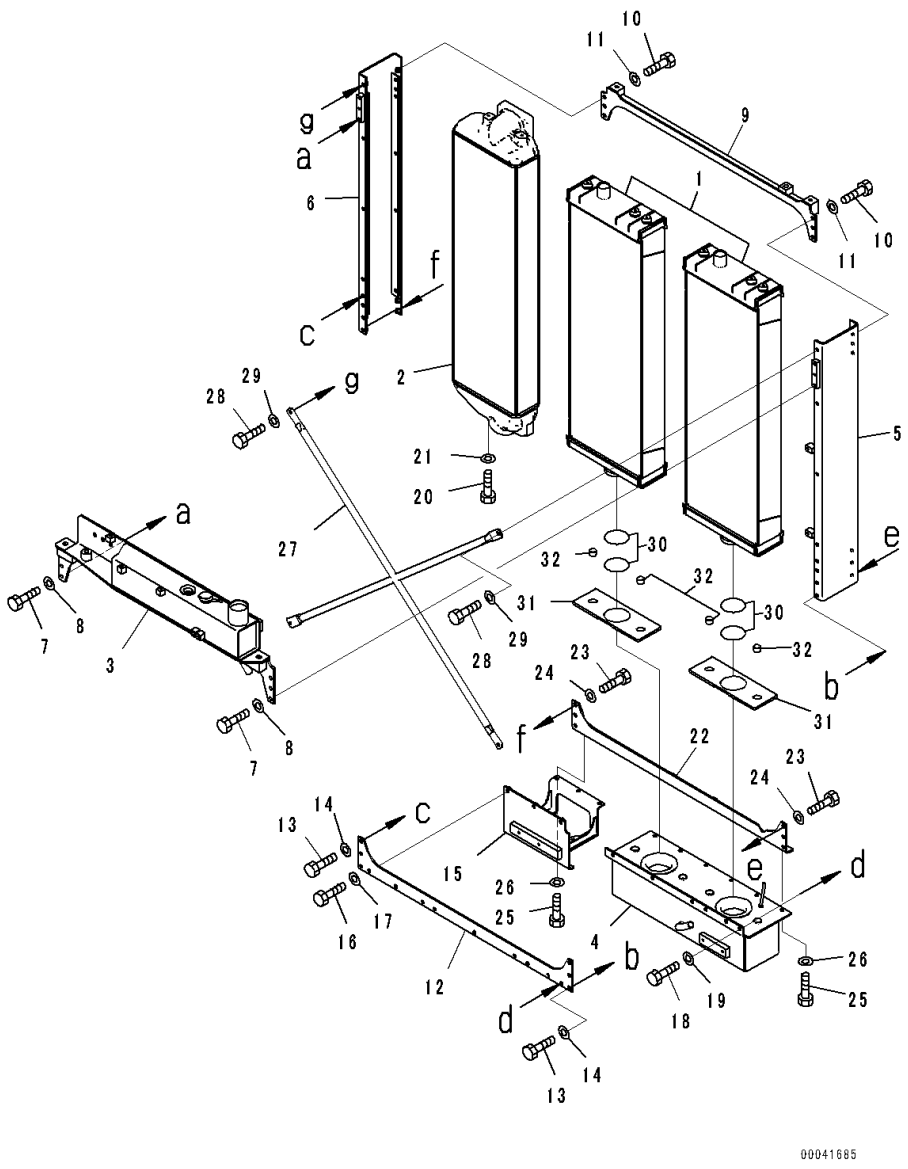

Index	Code	Part Number	Description	Qty	Serial Number
1		17A-03-41112	Core Assembly	2	81267-
2		17A-03-41122	Aftercooler Assembly	1	81267-
3		17A-03-41132	Tank	1	81267-
4		17A-03-41142	Tank	1	81267-
5		17A-03-44151	Frame	1	81267-
6		17A-03-44161	Frame	1	81267-
7		01010-81230	Bolt	6	81267-
8		01643-31232	Washer	6	81267-
9		17A-03-41171	Frame	1	81267-
10		01010-81225	Bolt	6	81267-
11		01643-31232	Washer	6	81267-
12		17A-03-41181	Bracket	1	81267-
13		01010-81230	Bolt	6	81267-
14		01643-31232	Washer	6	81267-
15		17A-03-41380	Bracket	1	81267-
16		01010-81230	Bolt	3	81267-
17		01643-31232	Washer	3	81267-
18		01010-81230	Bolt	6	81267-
19		01643-31232	Washer	6	81267-
20		01010-81235	Bolt	2	81267-
21		01643-31232	Washer	2	81267-
22		17A-03-41441	Frame	1	81267-
23		01010-81230	Bolt	6	81267-
24		01643-31232	Washer	6	81267-
25		01010-81230	Bolt	9	81267-
26		01643-31232	Washer	9	81267-
27		17A-03-41251	Stay	1	81267-
28		01010-81225	Bolt	4	81267-
29		01643-31232	Washer	4	81267-
30		17A-03-41220	O-ring	4	81267-
31		17A-03-41231	Cushion	2	81267-
32		22B-03-12590	Cushion	4	81267-

FIG. C0110-005002 Cooling System, Oil Cooler

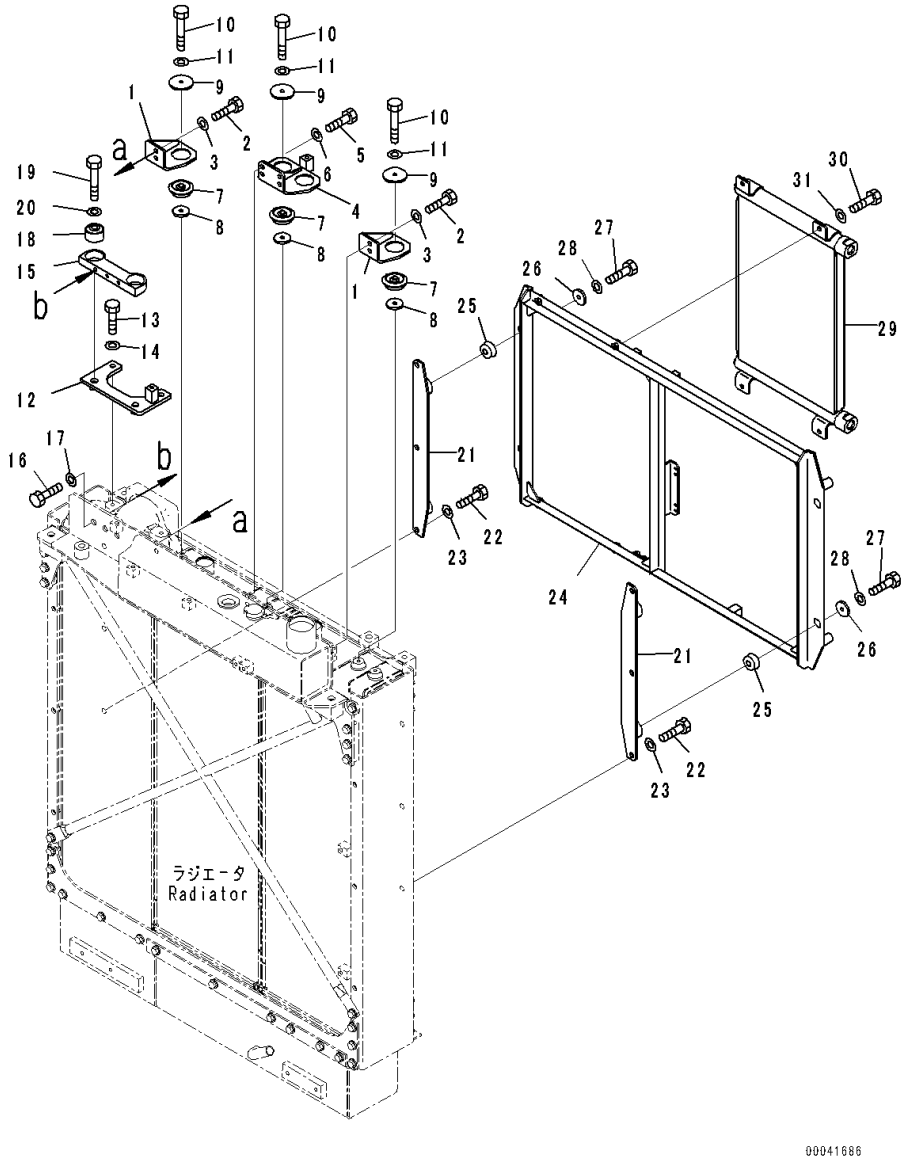

Index	Code	Part Number	Description	Qty	Serial Number
1		17A-03-41311	Bracket	2	81267-
2		01010-81025	Bolt	4	81267-
3		01643-31032	Washer	4	81267-
4		17A-03-41271	Bracket	1	81267-
5		01010-81025	Bolt	4	81267-
6		01643-31032	Washer	4	81267-
7		17A-03-41361	Cushion	4	81267-
8		178-60-12250	Collar	4	81267-
9		17A-03-41371	Plate	4	81267-
10		01010-81065	Bolt	4	81267-
11		01643-31032	Washer	4	81267-
12		17A-03-41281	Bracket	1	81267-
13		01010-81240	Bolt	2	81267-
14		01643-31232	Washer	2	81267-
15		17A-03-41291	Bracket	1	81267-
16		01010-81225	Bolt	3	81267-
17		01643-31232	Washer	3	81267-
18		135-03-12110	Damper	2	81267-
19		01010-81465	Bolt	2	81267-
20		01643-31445	Washer	2	81267-
21		17A-03-41531	Bracket	2	81267-
22		01010-81225	Bolt	6	81267-
23		01643-31232	Washer	6	81267-
24		17A-03-41521	Bracket	1	81267-
25		195-03-41380	Cushion	4	81267-
26		178-60-12250	Collar	4	81267-
27		01010-81050	Bolt	4	81267-
28		01643-31032	Washer	4	81267-
29		17A-03-41510	Cooler	1	81267-
30		01010-81025	Bolt	4	81267-
31		01643-31032	Washer	4	81267-

FIG. C0110-005003 Cooling System, Radiator Piping

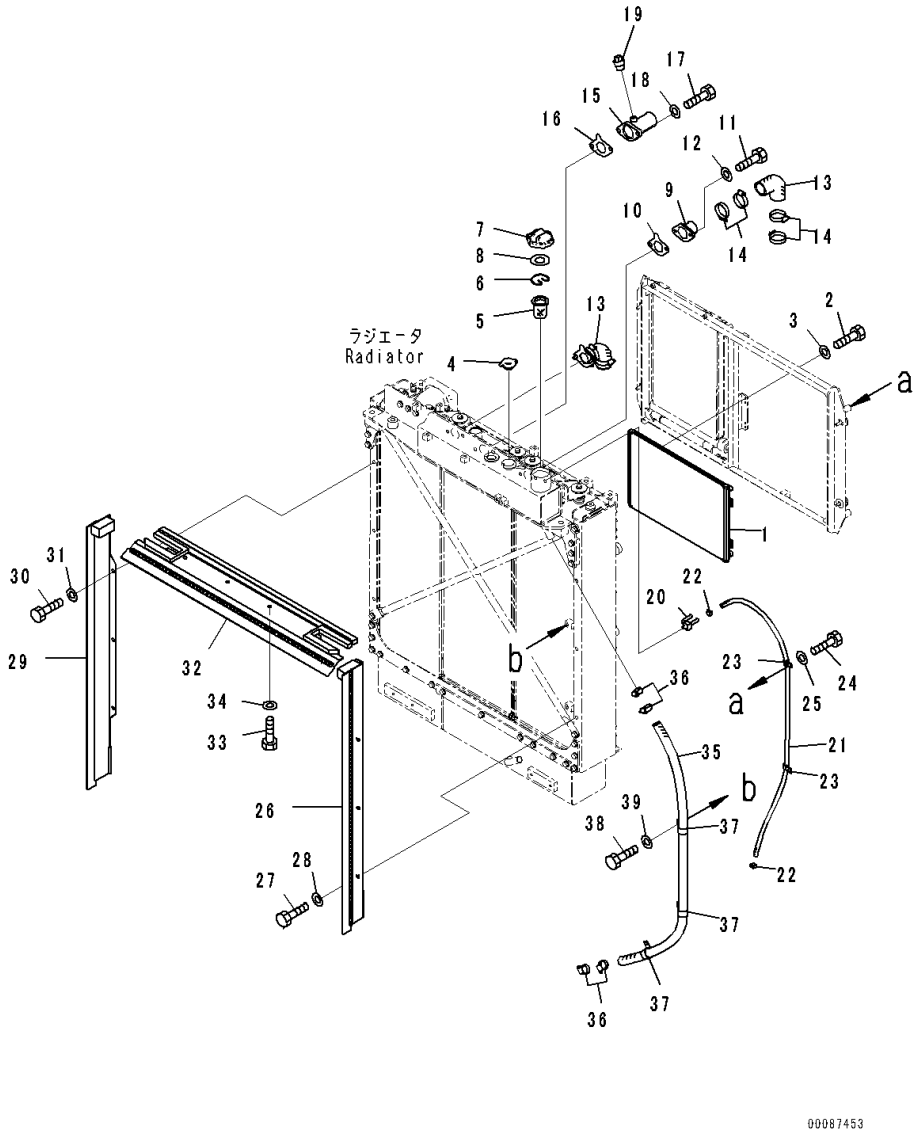

Index	Code	Part Number	Description	Qty	Serial Number
1		208-979-7520	Condenser Assembly	1	81267-
2		01010-80616	Bolt	8	81267-
3		01643-30623	Washer	8	81267-
4		569-03-81510	Cap	1	81267-
5		07056-00048	Strainer	1	81267-
6		07057-03271	Ring, Snap	1	81267-
7		07053-10000	Cap	1	81267-
8		07053-00002	• Gasket	1	81267-
9		17A-03-41321	Tube	2	81267-
10		17A-03-41240	Gasket	2	81267-
11		01010-81030	Bolt	4	81267-
12		01643-31032	Washer	4	81267-
13		17A-03-41212	Hose	2	81267-
14		07289-00055	Clamp	8	81267-
15		17A-03-41341	Tube	1	81267-
16		17A-03-41351	Gasket	1	81267-
17		01010-81235	Bolt	2	81267-
18		01643-31232	Washer	2	81267-
19		07042-70108	Plug	1	81267-
20		17A-03-41930	Tube	1	81267-
21		17A-03-41981	Hose	1	81267-
22		07281-00197	Clamp	2	81267-
23		04434-51612	Clip	2	81267-
24		01010-81230	Bolt	2	81267-
25		01643-31232	Washer	2	81267-
26		17A-03-41463	Baffle	1	81267-
27		01010-81225	Bolt	3	81267-
28		01643-31232	Washer	3	81267-
29		17A-03-41473	Baffle	1	81267-
30		01010-81225	Bolt	3	81267-
31		01643-31232	Washer	3	81267-
32		17A-03-41413	Baffle	1	81267-
33		01010-81225	Bolt	4	81267-
34		01643-31232	Washer	4	81267-
35		17A-03-41331	Hose	1	81267-
36		07289-00035	Clamp	4	81267-
37		04434-53412	Clip	3	81267-
38		01010-81220	Bolt	2	81267-
39		01643-31232	Washer	2	81267-

FIG. C0110-005004 Cooling System, Radiator Mounting

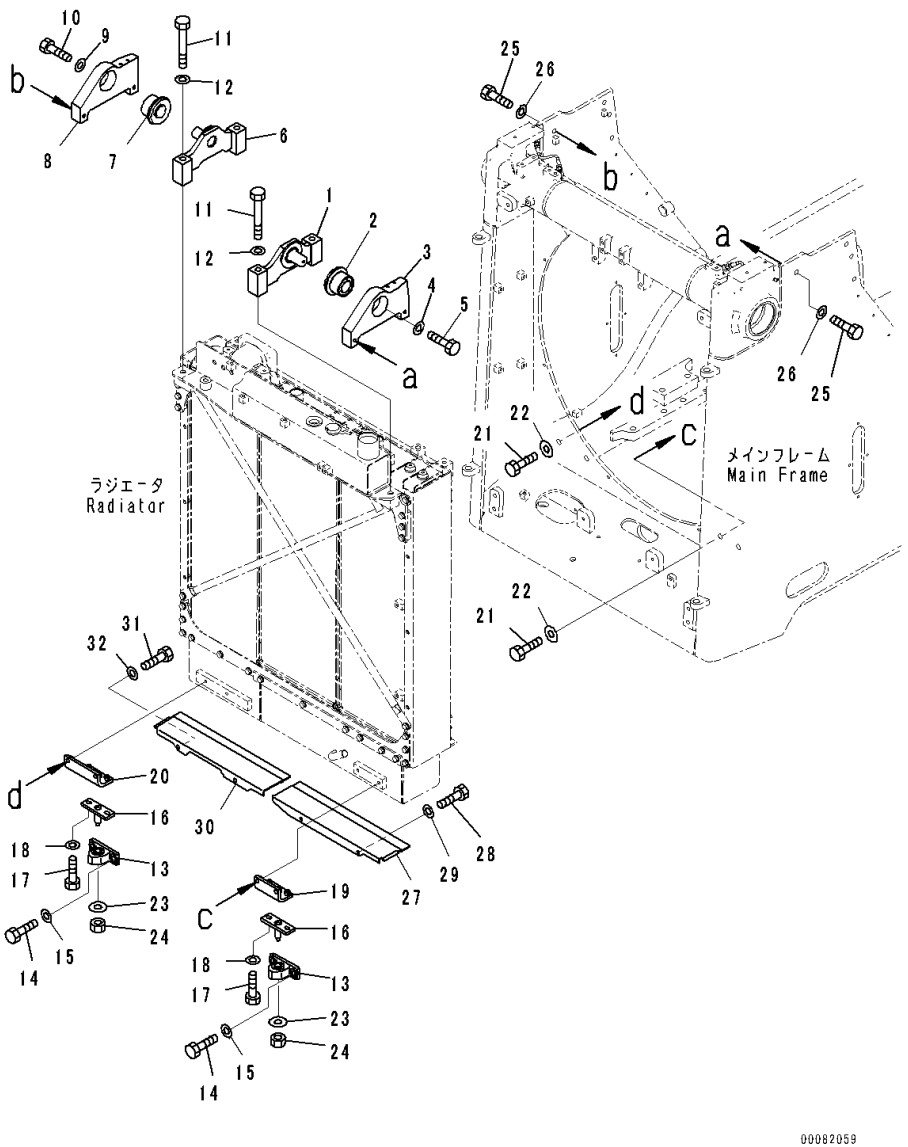

Index	Code	Part Number	Description	Qty	Serial Number
1		17A-03-41550	Bracket,LHS	1	81267-
2		17A-03-11281	Rubber	1	81267-
3		17A-03-41651	Bracket,LHS	1	81267-
4		205-70-65890	Washer	1	81267-
5		01010-81225	Bolt	1	81267-
6		17A-03-41560	Bracket,RHS	1	81267-
7		17A-03-11281	Rubber	1	81267-
8		17A-03-41661	Bracket,RHS	1	81267-
9		205-70-65890	Washer	1	81267-
10		01010-81225	Bolt	1	81267-
11		01011-81630	Bolt	4	81267-
12		01643-31645	Washer	4	81267-
13		17A-03-42601	Isolator Assembly	2	81267-
14		01010-81230	Bolt	4	81267-
15		01643-31232	Washer	4	81267-
16		17A-03-11271	Bracket	2	81267-
17		01010-81240	Bolt	4	81267-
18		01643-31232	Washer	4	81267-
19		17A-03-41831	Bracket,LHS	1	81267-
20		17A-03-41950	Bracket,RHS	1	81267-
21		01010-81250	Bolt	4	81267-
22		175-54-34170	Washer	4	81267-
23		175-54-34170	Washer	2	81267-
24		01580-11210	Nut	2	81267-
25		01010-81645	Bolt	4	81267-
26		01643-31645	Washer	4	81267-
27		17A-03-41421	Baffle,LHS	1	81267-
28		01010-81225	Bolt	2	81267-
29		01643-31232	Washer	2	81267-
30		17A-03-41431	Baffle,RHS	1	81267-
31		01010-81225	Bolt	2	81267-
32		01643-31232	Washer	2	81267-

FIG. C0110-005005 Cooling System, Reserve Tank

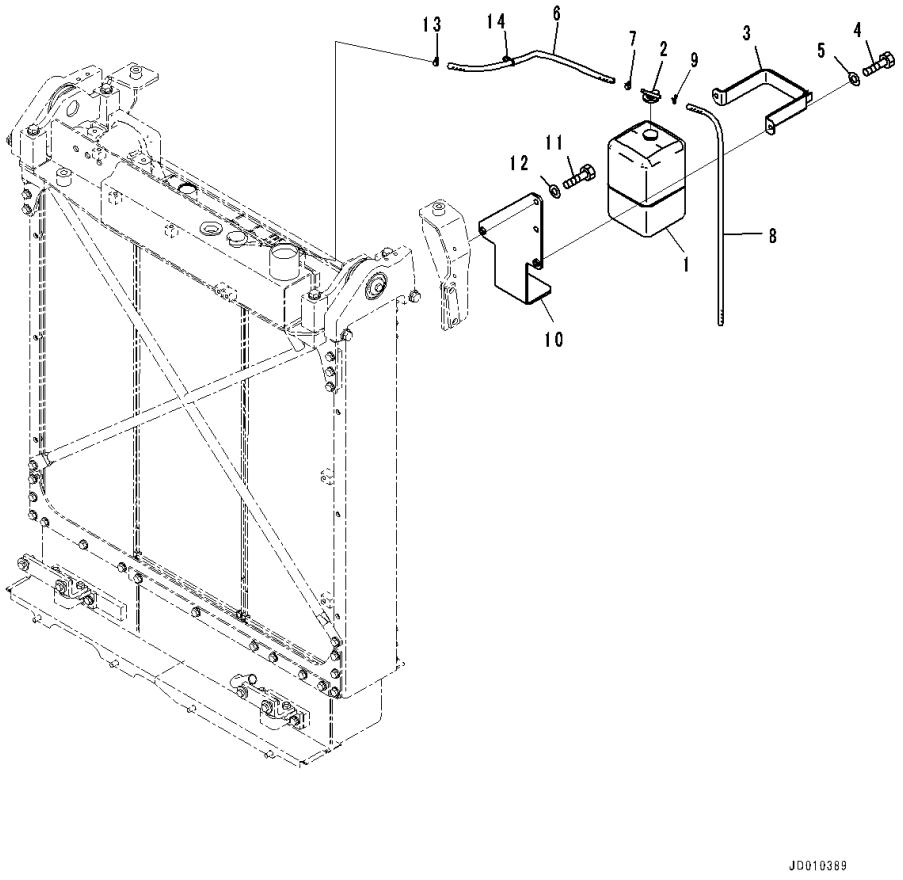

Index	Code	Part Number	Description	Qty	Serial Number
1		17A-03-14111	Tank	1	81267-
2		17A-03-14120	• Cap	1	81267-
3		17A-03-41970	Bracket	1	81267-
4		01010-81025	Bolt	2	81267-
5		01643-31032	Washer	2	81267-
6		17A-03-41960	Hose	1	81267-
7		11Y-09-11170	Clip	1	81267-
8		20Y-03-32610	Hose	1	81267-
9		11Y-09-11120	Clip	1	81267-
10		17A-03-41911	Bracket	1	81267-
11		01010-81225	Bolt	2	81267-
12		01643-31232	Washer	2	81267-
13		11Y-09-11170	Clip	1	81267-
14		08034-20823	Band	1	81267-

FIG. C0110-006001 Cooling System, Landfill Specification, Radiator Core and Aftercooler

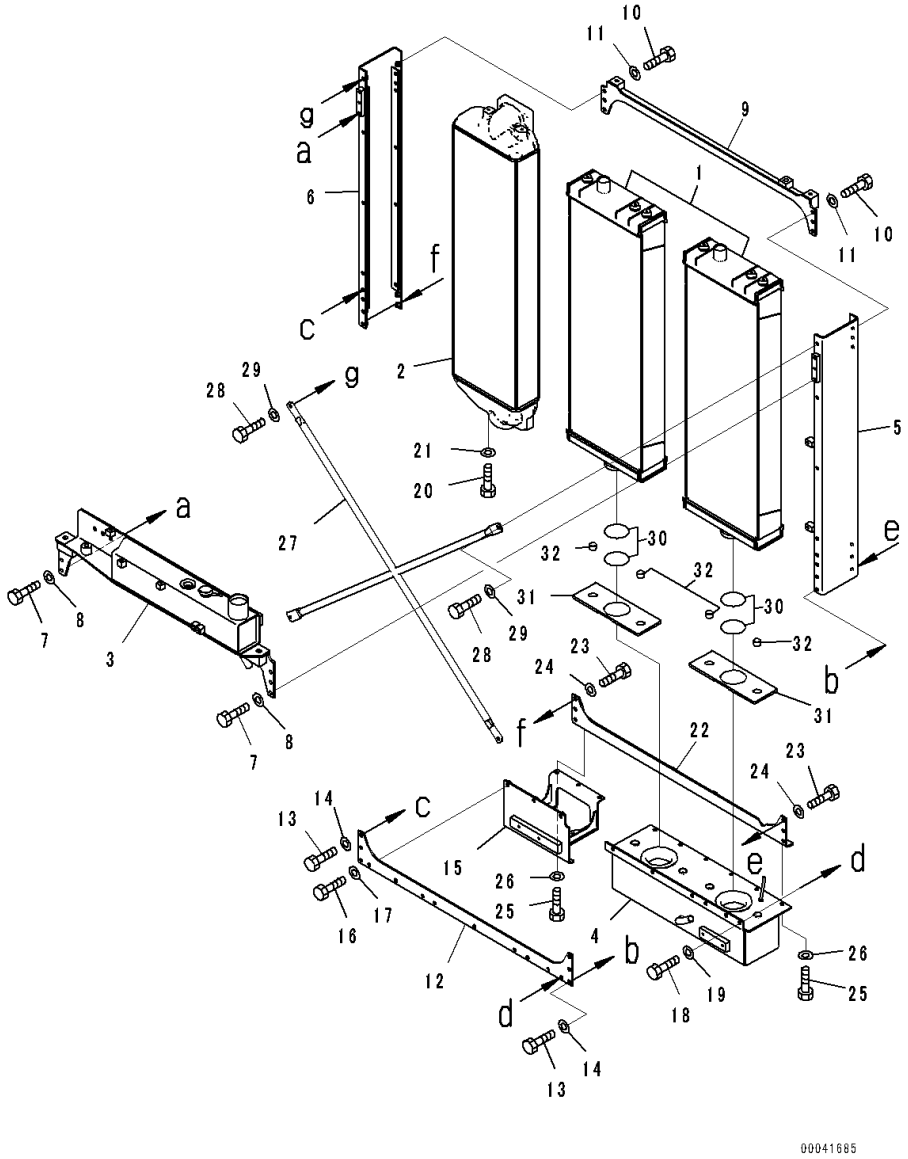

Index	Code	Part Number	Description	Qty	Serial Number
1		17A-03-41112	Core Assembly	2	81267-
2		17A-03-41122	Aftercooler Assembly	1	81267-
3		17A-03-41132	Tank	1	81267-
4		17A-03-41142	Tank	1	81267-
5		17A-03-44151	Frame	1	81267-
6		17A-03-44161	Frame	1	81267-
7		01010-81230	Bolt	6	81267-
8		01643-31232	Washer	6	81267-
9		17A-03-41171	Frame	1	81267-
10		01010-81225	Bolt	6	81267-
11		01643-31232	Washer	6	81267-
12		17A-03-41181	Bracket	1	81267-
13		01010-81230	Bolt	6	81267-
14		01643-31232	Washer	6	81267-
15		17A-03-41380	Bracket	1	81267-
16		01010-81230	Bolt	3	81267-
17		01643-31232	Washer	3	81267-
18		01010-81230	Bolt	6	81267-
19		01643-31232	Washer	6	81267-
20		01010-81235	Bolt	2	81267-
21		01643-31232	Washer	2	81267-
22		17A-03-41441	Frame	1	81267-
23		01010-81230	Bolt	6	81267-
24		01643-31232	Washer	6	81267-
25		01010-81230	Bolt	9	81267-
26		01643-31232	Washer	9	81267-
27		17A-03-41251	Stay	1	81267-
28		01010-81225	Bolt	4	81267-
29		01643-31232	Washer	4	81267-
30		17A-03-41220	O-ring	4	81267-
31		17A-03-41231	Cushion	2	81267-
32		22B-03-12590	Cushion	4	81267-

FIG. C0110-006002 Cooling System, Landfill Specification, Bracket

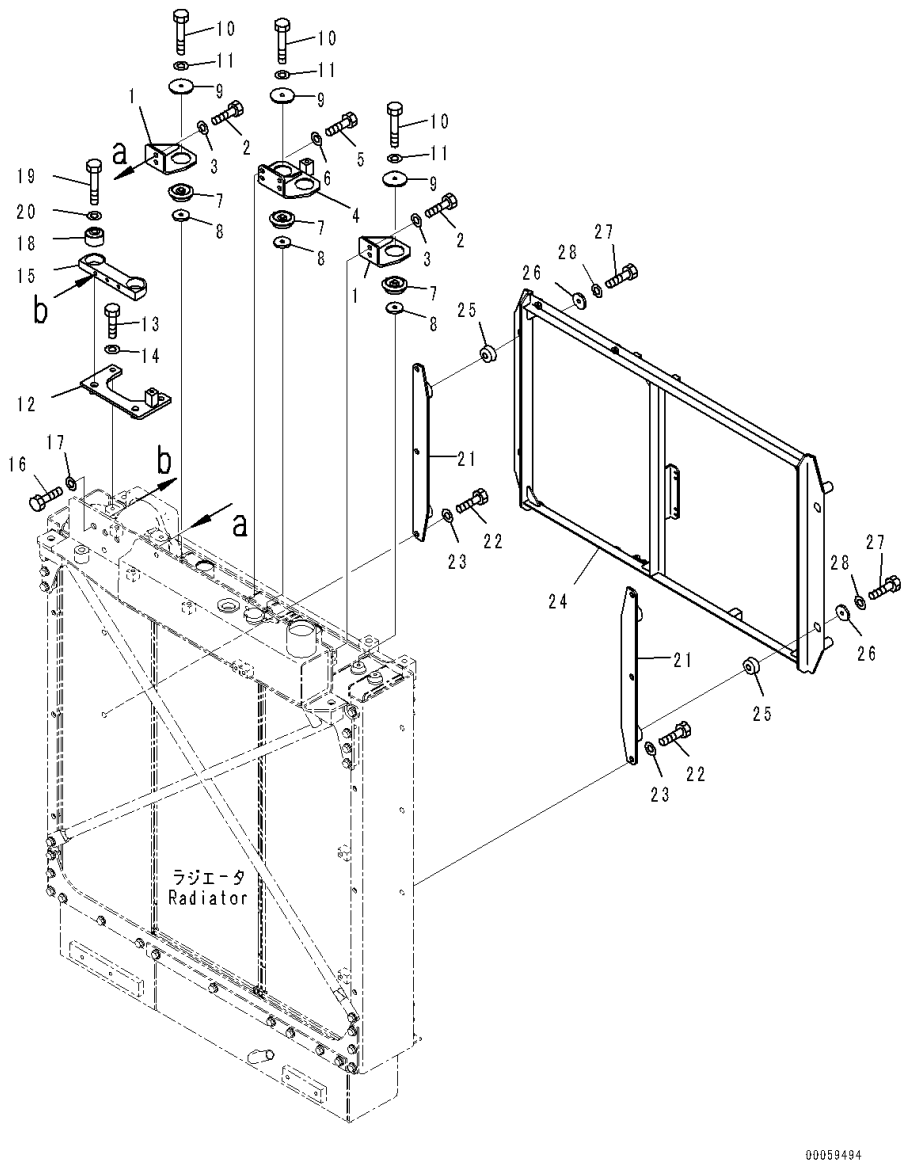

Index	Code	Part Number	Description	Qty	Serial Number
1		17A-03-41311	Bracket	2	81267-
2		01010-81025	Bolt	4	81267-
3		01643-31032	Washer	4	81267-
4		17A-03-41271	Bracket	1	81267-
5		01010-81025	Bolt	4	81267-
6		01643-31032	Washer	4	81267-
7		17A-03-41361	Cushion	4	81267-
8		178-60-12250	Collar	4	81267-
9		17A-03-41371	Plate	4	81267-
10		01010-81065	Bolt	4	81267-
11		01643-31032	Washer	4	81267-
12		17A-03-41281	Bracket	1	81267-
13		01010-81240	Bolt	2	81267-
14		01643-31232	Washer	2	81267-
15		17A-03-41291	Bracket	1	81267-
16		01010-81225	Bolt	3	81267-
17		01643-31232	Washer	3	81267-
18		135-03-12110	Damper	2	81267-
19		01010-81465	Bolt	2	81267-
20		01643-31445	Washer	2	81267-
21		17A-03-41531	Bracket	2	81267-
22		01010-81225	Bolt	6	81267-
23		01643-31232	Washer	6	81267-
24		17A-03-41521	Bracket	1	81267-
25		195-03-41380	Cushion	4	81267-
26		178-60-12250	Collar	4	81267-
27		01010-81050	Bolt	4	81267-
28		01643-31032	Washer	4	81267-

FIG. C0110-006003 Cooling System, Landfill Specification, Radiator Piping

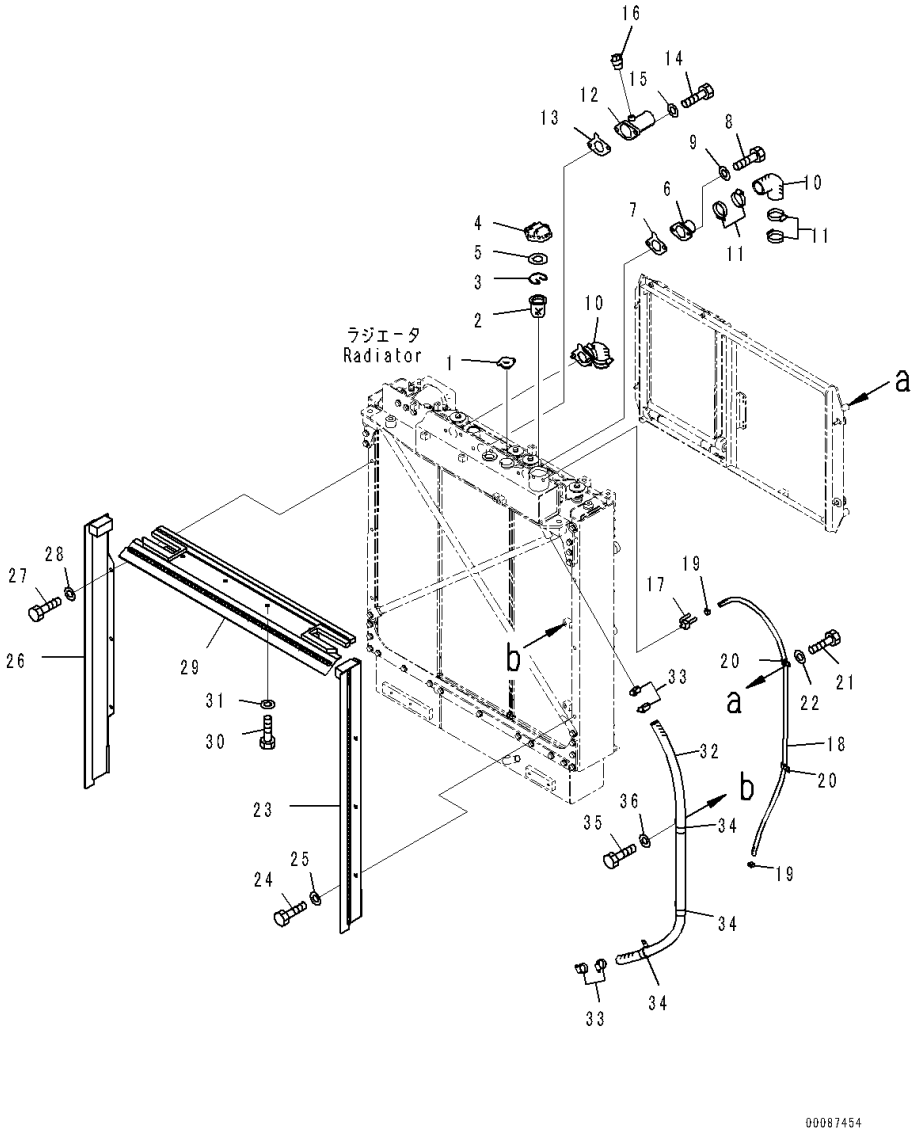

Index	Code	Part Number	Description	Qty	Serial Number
1		569-03-81510	Cap	1	81267-
2		07056-00048	Strainer	1	81267-
3		07057-03271	Ring, Snap	1	81267-
4		07053-10000	Cap	1	81267-
5		07053-00002	• Gasket	1	81267-
6		17A-03-41321	Tube	2	81267-
7		17A-03-41240	Gasket	2	81267-
8		01010-81030	Bolt	4	81267-
9		01643-31032	Washer	4	81267-
10		17A-03-41212	Hose	2	81267-
11		07289-00055	Clamp	8	81267-
12		17A-03-41341	Tube	1	81267-
13		17A-03-41351	Gasket	1	81267-
14		01010-81235	Bolt	2	81267-
15		01643-31232	Washer	2	81267-
16		07042-70108	Plug	1	81267-
17		17A-03-41930	Tube	1	81267-
18		17A-03-41981	Hose	1	81267-
19		07281-00197	Clamp	2	81267-
20		04434-51612	Clip	2	81267-
21		01010-81230	Bolt	2	81267-
22		01643-31232	Washer	2	81267-
23		17A-03-41463	Baffle	1	81267-
24		01010-81225	Bolt	3	81267-
25		01643-31232	Washer	3	81267-
26		17A-03-41473	Baffle	1	81267-
27		01010-81225	Bolt	3	81267-
28		01643-31232	Washer	3	81267-
29		17A-03-41413	Baffle	1	81267-
30		01010-81225	Bolt	4	81267-
31		01643-31232	Washer	4	81267-
32		17A-03-41331	Hose	1	81267-
33		07289-00035	Clamp	4	81267-
34		04434-53412	Clip	3	81267-
35		01010-81220	Bolt	2	81267-
36		01643-31232	Washer	2	81267-

FIG. C0110-006004 Cooling System, Landfill Specification, Radiator Mounting

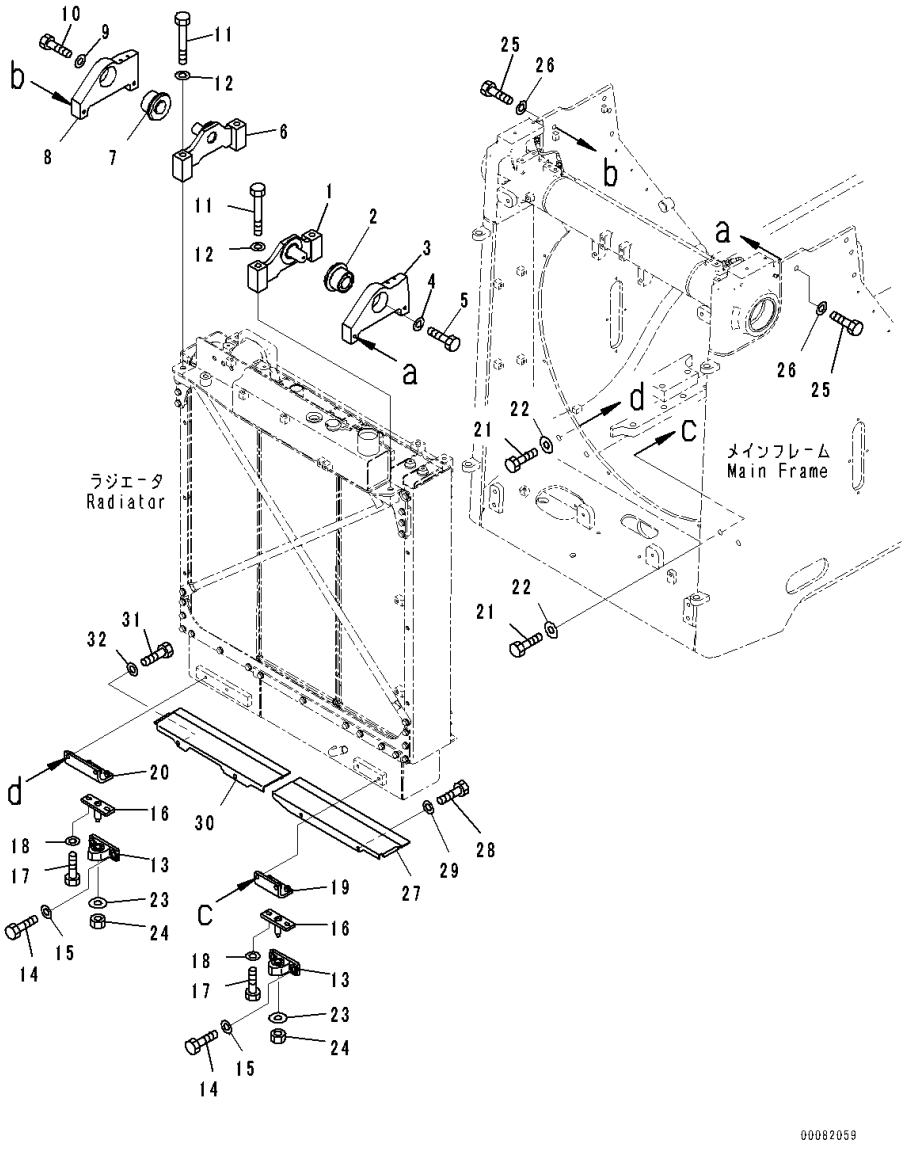

Index	Code	Part Number	Description	Qty	Serial Number
1		17A-03-41550	Bracket,LHS	1	81267-
2		17A-03-11281	Rubber	1	81267-
3		17A-03-41651	Bracket,LHS	1	81267-
4		205-70-65890	Washer	1	81267-
5		01010-81225	Bolt	1	81267-
6		17A-03-41560	Bracket,RHS	1	81267-
7		17A-03-11281	Rubber	1	81267-
8		17A-03-41661	Bracket,RHS	1	81267-
9		205-70-65890	Washer	1	81267-
10		01010-81225	Bolt	1	81267-
11		01011-81630	Bolt	4	81267-
12		01643-31645	Washer	4	81267-
13		17A-03-42601	Isolator Assembly	2	81267-
14		01010-81230	Bolt	4	81267-
15		01643-31232	Washer	4	81267-
16		17A-03-11271	Bracket	2	81267-
17		01010-81240	Bolt	4	81267-
18		01643-31232	Washer	4	81267-
19		17A-03-41831	Bracket,LHS	1	81267-
20		17A-03-41950	Bracket,RHS	1	81267-
21		01010-81250	Bolt	4	81267-
22		175-54-34170	Washer	4	81267-
23		175-54-34170	Washer	2	81267-
24		01580-11210	Nut	2	81267-
25		01010-81645	Bolt	4	81267-
26		01643-31645	Washer	4	81267-
27		17A-03-41421	Baffle,LHS	1	81267-
28		01010-81225	Bolt	2	81267-
29		01643-31232	Washer	2	81267-
30		17A-03-41431	Baffle,RHS	1	81267-
31		01010-81225	Bolt	2	81267-
32		01643-31232	Washer	2	81267-

FIG. C0110-006005 Cooling System, Landfill Specification, Reserve Tank

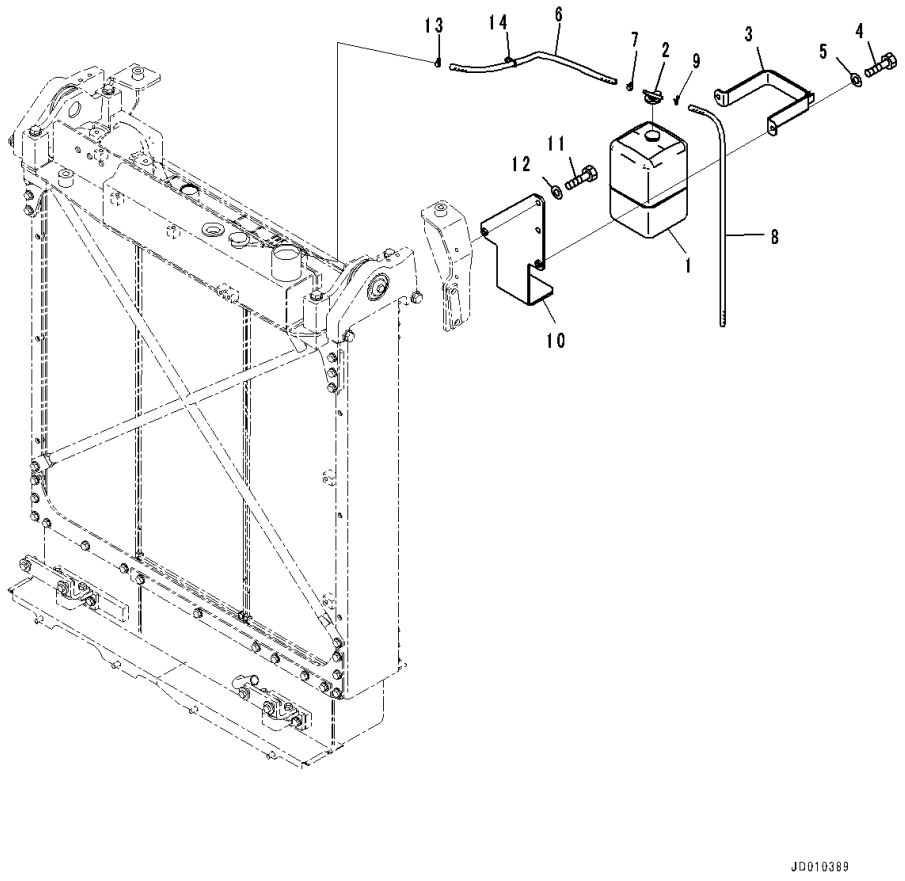

Index	Code	Part Number	Description	Qty	Serial Number
1		17A-03-14111	Tank	1	81267-
2		17A-03-14120	• Cap	1	81267-
3		17A-03-41970	Bracket	1	81267-
4		01010-81025	Bolt	2	81267-
5		01643-31032	Washer	2	81267-
6		17A-03-41960	Hose	1	81267-
7		11Y-09-11170	Clip	1	81267-
8		20Y-03-32610	Hose	1	81267-
9		11Y-09-11120	Clip	1	81267-
10		17A-03-41911	Bracket	1	81267-
11		01010-81225	Bolt	2	81267-
12		01643-31232	Washer	2	81267-
13		11Y-09-11170	Clip	1	81267-
14		08034-20823	Band	1	81267-

FIG. C0120-001001 Cooling Piping

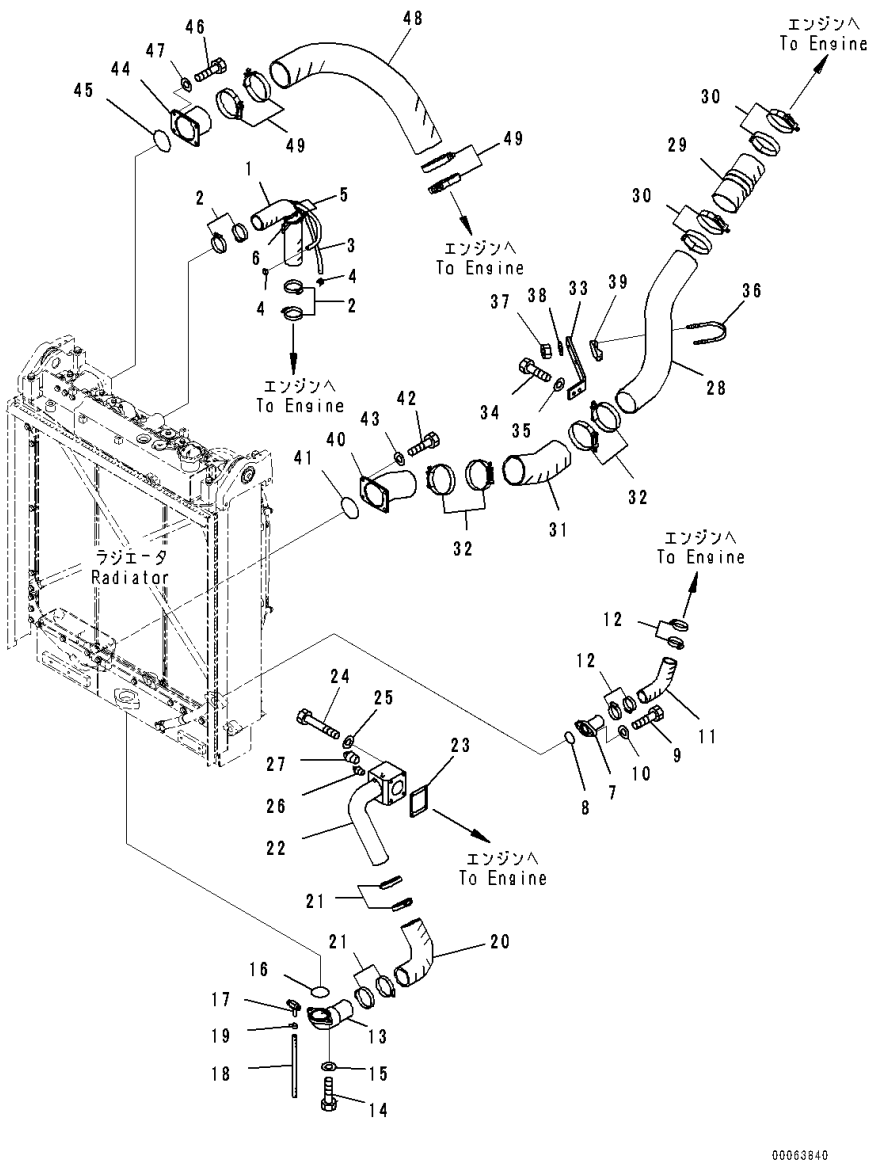

Index	Code	Part Number	Description	Qty	Serial Number
1		17A-03-41612	Hose	1	81028-
2		07289-00070	Clamp	4	81028-
3		09483-10312	Hose	1	81028-
4		07281-00197	Clamp	2	81028-
5		205-62-72140	Cover	2	81028-
6		08034-20536	Band	4	81028-
7		17A-03-23441	Tube	1	81028-
8		07000-G3045	O-ring	1	81028-
9		01010-81235	Bolt	2	81028-
10		01643-31232	Washer	2	81028-
11		17A-03-41641	Hose	1	81028-
12		07289-00055	Clamp	4	81028-
13		17A-03-41621	Tube	1	81028-
14		01010-81235	Bolt	2	81028-
15		01643-31232	Washer	2	81028-
16		07000-G2075	O-ring	1	81028-
17		07730-50004	Valve	1	81028-
18		175-03-31530	Hose	1	81028-
19		07285-00155	Clip	1	81028-
20		17A-03-44690	Hose	1	81028-
21		07289-00095	Clamp	4	81028-
22		17A-03-44631	Tube	1	81028-
23		17A-03-13170	Gasket	1	81028-
24		01011-81035	Bolt	4	81028-
25		01643-31032	Washer	4	81028-
26		07042-30108	Plug	1	81028-
27		07042-70415	Plug	1	81028-
28		17A-03-41711	Tube	1	81028-
29		209-03-41711	Hose	1	81028-
30		208-62-73910	Clamp	4	81028-
31		17A-03-41771	Hose	1	81028-
32		208-62-73910	Clamp	4	81028-
33		17A-03-41751	Bracket	1	81028-
34		01010-81225	Bolt	2	81028-
35		01643-31232	Washer	2	81028-
36		07283-31193	Clip	1	81028-
37		01597-01211	Nut	2	81028-
38		01643-31232	Washer	2	81028-
39		17A-03-41791	Seat	1	81028-
40		17A-03-41722	Tube	1	81028-

FIG. C0120-001001 Cooling Piping

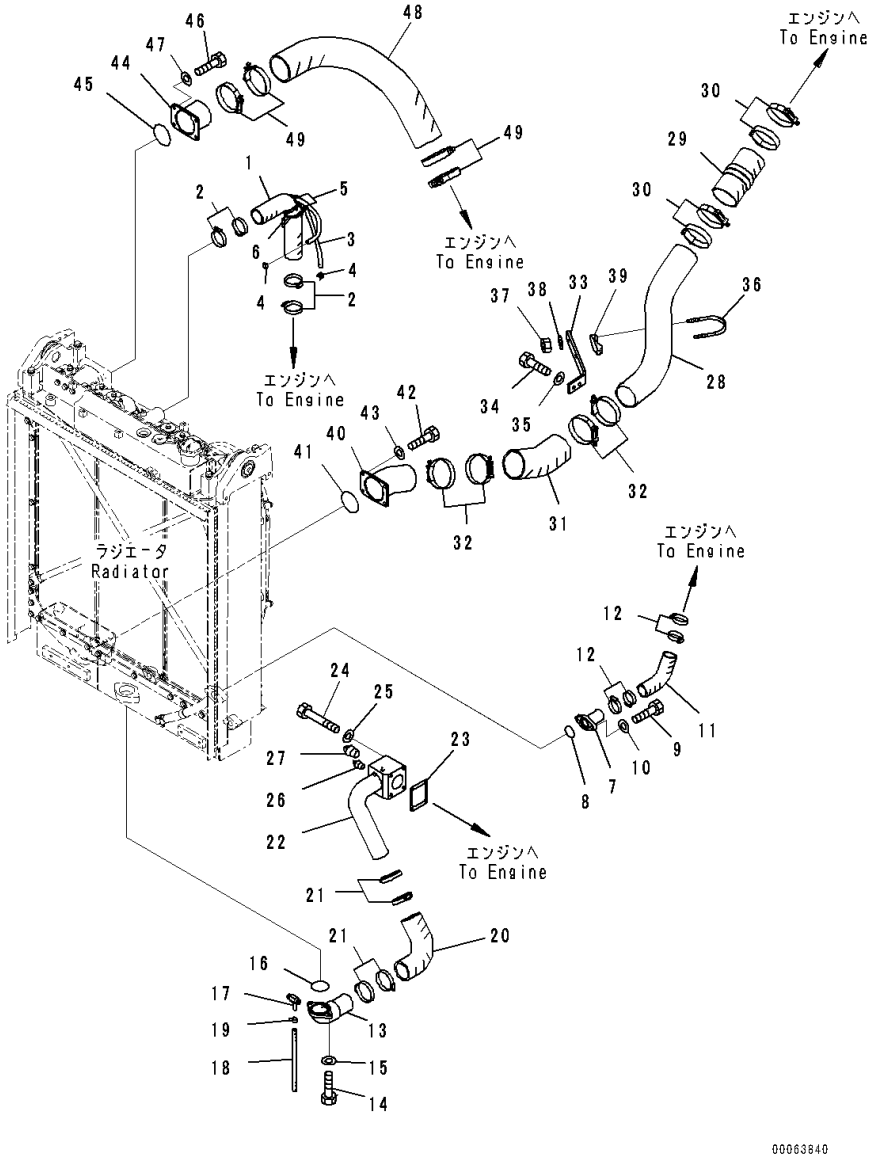

Index	Code	Part Number	Description	Qty	Serial Number
41		07000-E2110	O-ring	1	81028-
42		01010-81230	Bolt	4	81028-
43		01643-31232	Washer	4	81028-
44		17A-03-41742	Tube	1	81028-
45		07000-E2110	O-ring	1	81028-
46		01010-81230	Bolt	4	81028-
47		01643-31232	Washer	4	81028-
48		17A-03-41731	Hose	1	81028-
49		208-62-73910	Clamp	4	81028-

FIG. C0200-001001 Cooling Fan, Fan

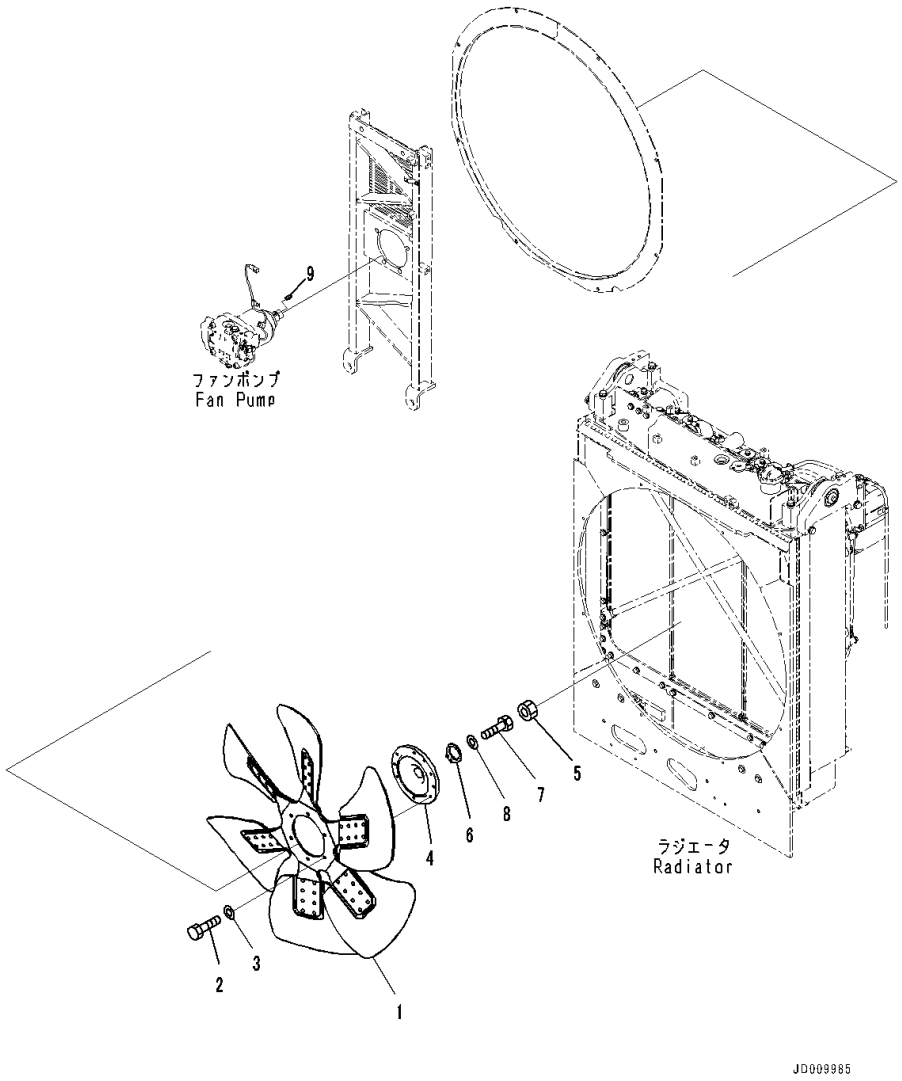

Index	Code	Part Number	Description	Qty	Serial Number
1		600-645-7120	Fan	1	81028-
2		01010-81240	Bolt	6	81028-
3		01643-31232	Washer	6	81028-
4		17A-03-42121	Boss	1	81028-
5		01583-13621	Nut	1	81028-
6		01660-03650	Lock	1	81028-
7		01010-81020	Bolt	1	81028-
8		01643-31032	Washer	1	81028-
9		04010-01032	Key	1	81028-

FIG. C0200-001002 Cooling Fan, Fan Motor (1/3)

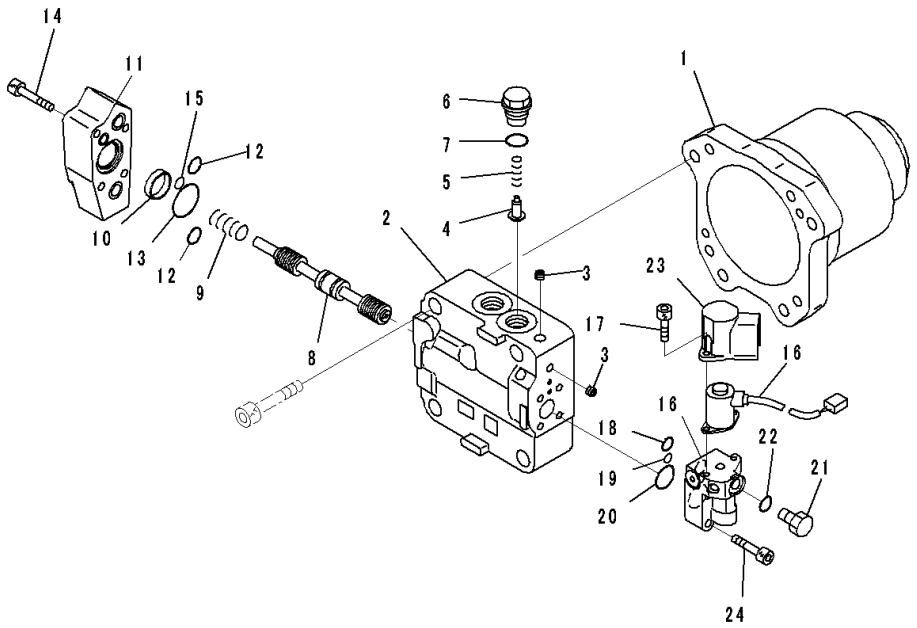

Index	Code	Part Number	Description	Qty	Serial Number
		708-7W-00140	Motor Assembly	1	81028-
1	C2	708-7W-11190	• Case	1	81028-
	C2	708-7W-01050	• Cover Subassembly	1	81028-
2	C1		• • Cover	1	81028-
3	C1		• • Plug	3	81028-
4	C2	709-25-11650	• Valve, Check	1	81028-
5	C2	709-25-11361	• Spring	1	81028-
6	C2	708-7S-21610	• Plug	1	81028-
7		07002-12434	• O-ring	1	81028-
8	C1		• Spool	1	81028-
9	C2	708-7W-18150	• Spring	1	81028-
10	C2	708-7W-18160	• Spacer	1	81028-
11	C2	708-7W-18170	• Cover	1	81028-
12		07000-12016	• O-ring	2	81028-
13		07000-12035	• O-ring	1	81028-
14		01252-60845	• Bolt, Hexagon Socket Head	4	81028-
15		07000-12010	• O-ring	1	81028-
16		708-7R-01631	• Valve Assembly, Pilot	1	81028-
17		01252-60616	• • Bolt, Hexagon Socket Head	2	81028-
18		708-2L-25490	• • O-ring	1	81028-
19		07000-11008	• • O-ring	1	81028-
20		723-11-18430	• • O-ring	1	81028-
21		07040-11007	• • Plug	1	81028-
22		07002-11023	• • O-ring	1	81028-
23		708-1S-18180	• • Cover	1	81028-
24		01252-60835	• Bolt, Hexagon Socket Head	4	81028-

FIG. C0200-001003 Cooling Fan, Fan Motor (2/3)

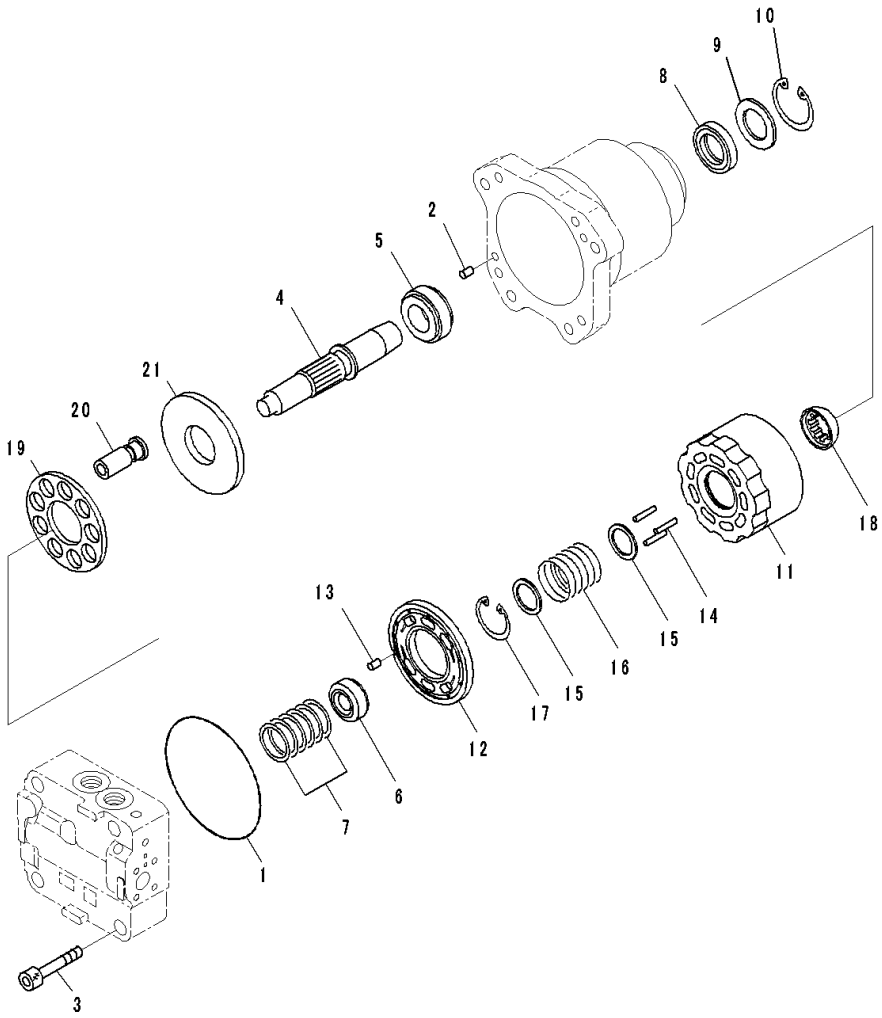

Index	Code	Part Number	Description	Qty	Serial Number
		708-7W-00140	Motor Assembly	1	81028-
1		2907-21-6160	• O-ring	1	81028-
2		04020-01024	• Pin, Dowel	2	81028-
3		01252-61480	• Bolt	4	81028-
4	C2	708-7W-12130	• Shaft	1	81028-
5	C2	708-7W-12120	• Bearing	1	81028-
6	C2	708-7L-12140	• Bearing	1	81028-
7	C2	708-7L-05010	• Spacer Kit	1	81028-
	C1		• • Spacer, T=1.5mm	1	81028-
	C1		• • Spacer, T=1.6mm	1	81028-
	C1		• • Spacer, T=1.7mm	1	81028-
	C1		• • Spacer, T=1.8mm	1	81028-
	C1		• • Spacer, T=1.9mm	1	81028-
	C1		• • Spacer, T=2.0mm	1	81028-
8	C2	708-25-52861	• Seal, Oil	1	81028-
9	C2	708-2L-22160	• Spacer	1	81028-
10		04065-06825	• Ring, Snap	1	81028-
11	C2	708-8F-33121	• Block, Cylinder	1	81028-
12	C2	708-8F-33230	• Plate	1	81028-
13	C2	720-68-19610	• Pin	1	81028-
14	C2	708-8F-33360	• Pin	3	81028-
15	C2	708-7L-13140	• Seat	2	81028-
16	C2	708-8F-33160	• Spring	1	81028-
17		04065-04818	• Ring, Snap	1	81028-
18	C2	708-8F-33350	• Guide, Retainer	1	81028-
19	C2	708-2L-33350	• Retainer	1	81028-
20	C2	708-8F-33310	• Piston Subassembly	9	81028-
21	C2	708-7L-13410	• Plate, Thrust	1	81028-

FIG. C0200-001004 Cooling Fan, Fan Motor (3/3)

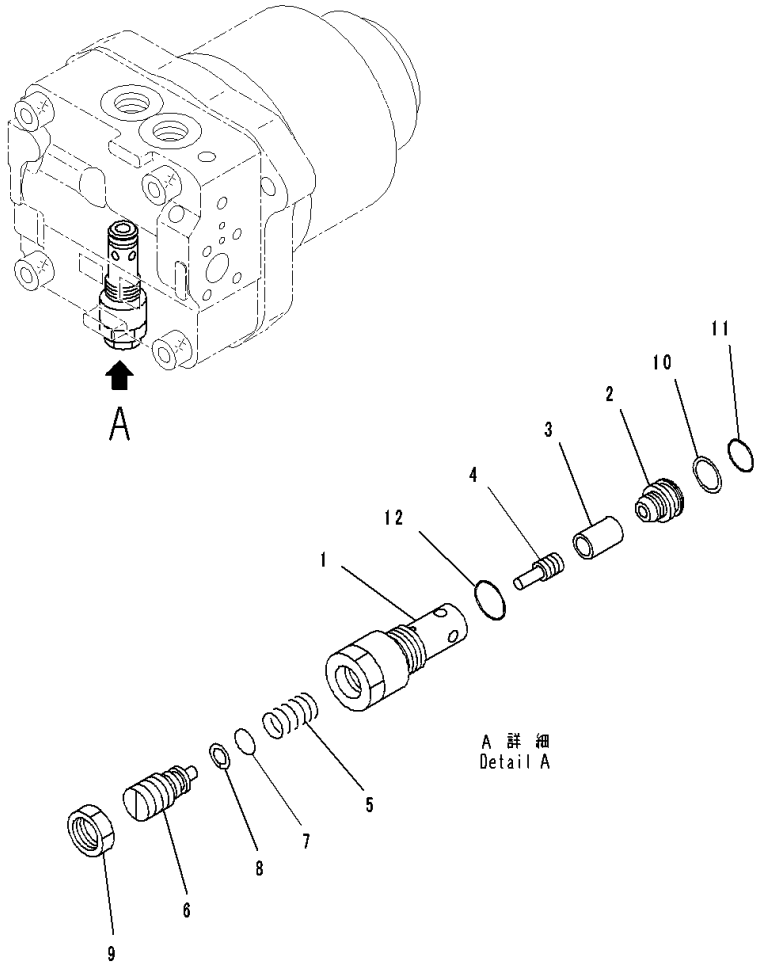

Index	Code	Part Number	Description	Qty	Serial Number
		708-7W-00140	Motor Assembly	1	81028-
		702-73-01580	• Valve Assembly, Relief	1	81028-
1	C2	702-73-11810	• • Sleeve	1	81028-
2	C2	702-73-11820	• • Seat	1	81028-
3	C2	702-73-11830	• • Valve	1	81028-
4	C2	706-75-75280	• • Piston	1	81028-
5	C2	702-73-11840	• • Spring	1	81028-
6	C2	702-73-11850	• • Screw	1	81028-
7	C2	07000-12010	• • O-ring	1	81028-
8	C2	07001-02010	• • Ring	1	81028-
9	C2	702-73-11860	• • Nut	1	81028-
10		723-60-22230	• • Ring, Back-up	1	81028-
11		07000-F2016	• • O-ring	1	81028-
12		07002-12434	• • O-ring	1	81028-

FIG. C0200-001005 Cooling Fan, Fan Piping and Shroud

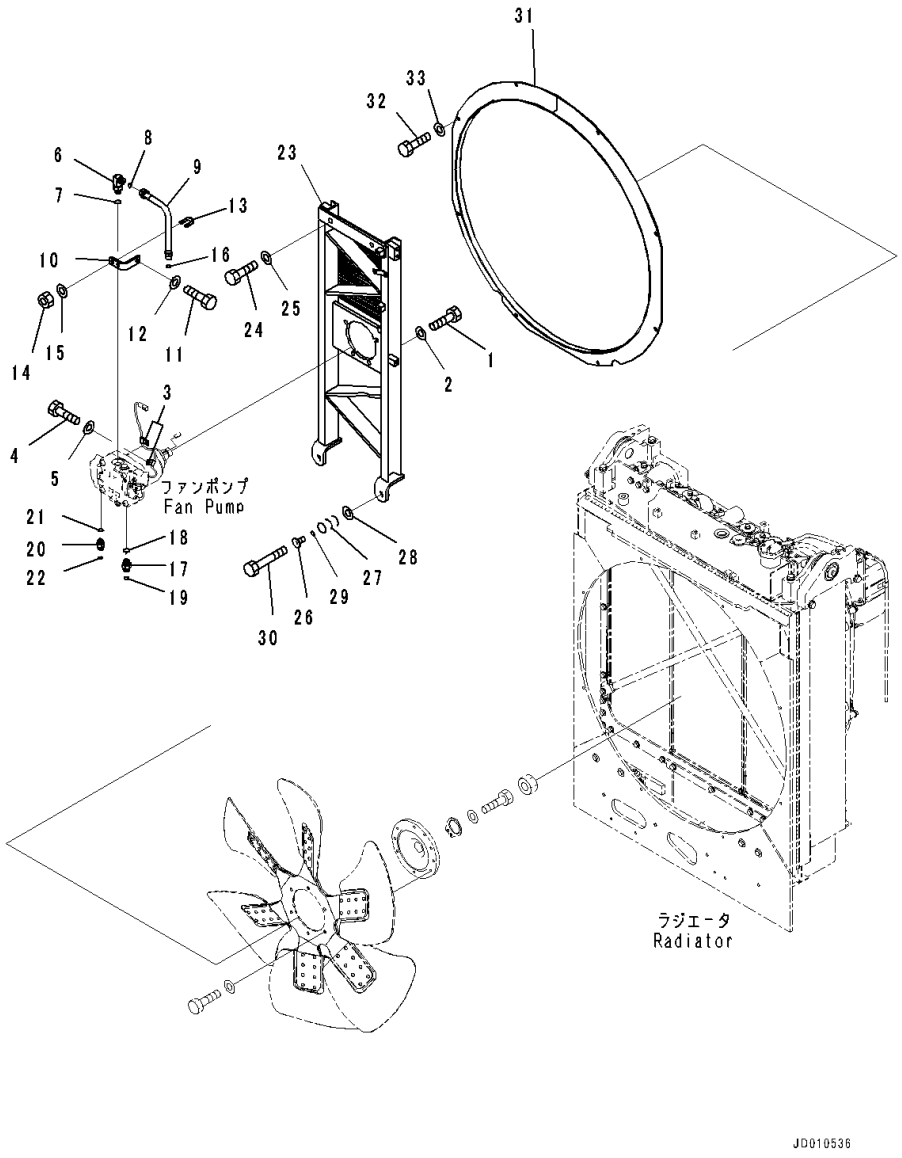

Index	Code	Part Number	Description	Qty	Serial Number
1		01010-81640	Bolt	4	81028-
2		01643-31645	Washer	4	81028-
3		04434-50612	Clip	2	81028-
4		01010-81225	Bolt	2	81028-
5		01643-31232	Washer	2	81028-
6		02782-1052A	Elbow	1	81028-
7		07002-12434	O-ring	1	81028-
8		02896-11015	O-ring	1	81028-
9		17A-03-23221	Tube	1	81028-
10		17A-03-42132	Bracket	1	81028-
11		01010-81225	Bolt	1	81028-
12		01643-31232	Washer	1	81028-
13		07283-32236	Clip, Pipe	1	81028-
14		01597-01009	Nut	2	81028-
15		01643-31032	Washer	2	81028-
16		02896-11015	O-ring	1	81028-
17		02781-00522	Union	1	81028-
18		07002-12434	O-ring	1	81028-
19		02896-11015	O-ring	1	81028-
20		02781-00422	Union	1	81028-
21		07002-12034	O-ring	1	81028-
22		02896-11012	O-ring	1	81028-
23		17A-03-42111	Support	1	81028-
24		01010-81640	Bolt	2	81028-
25		01643-31645	Washer	2	81028-
26		198-03-61550	Spacer	2	81028-
27		175-54-27350	Spring	8	81028-
28		154-30-51460	Washer	2	81028-
29		175-54-28770	Ring	2	81028-
30		01010-81260	Bolt	2	81028-
31		17A-03-42211	Shroud	1	81028-
32		01010-81225	Bolt	8	81028-
33		01643-31232	Washer	8	81028-

FIG. C0200-002001 Cooling Fan, Noise Suppression Type, Fan

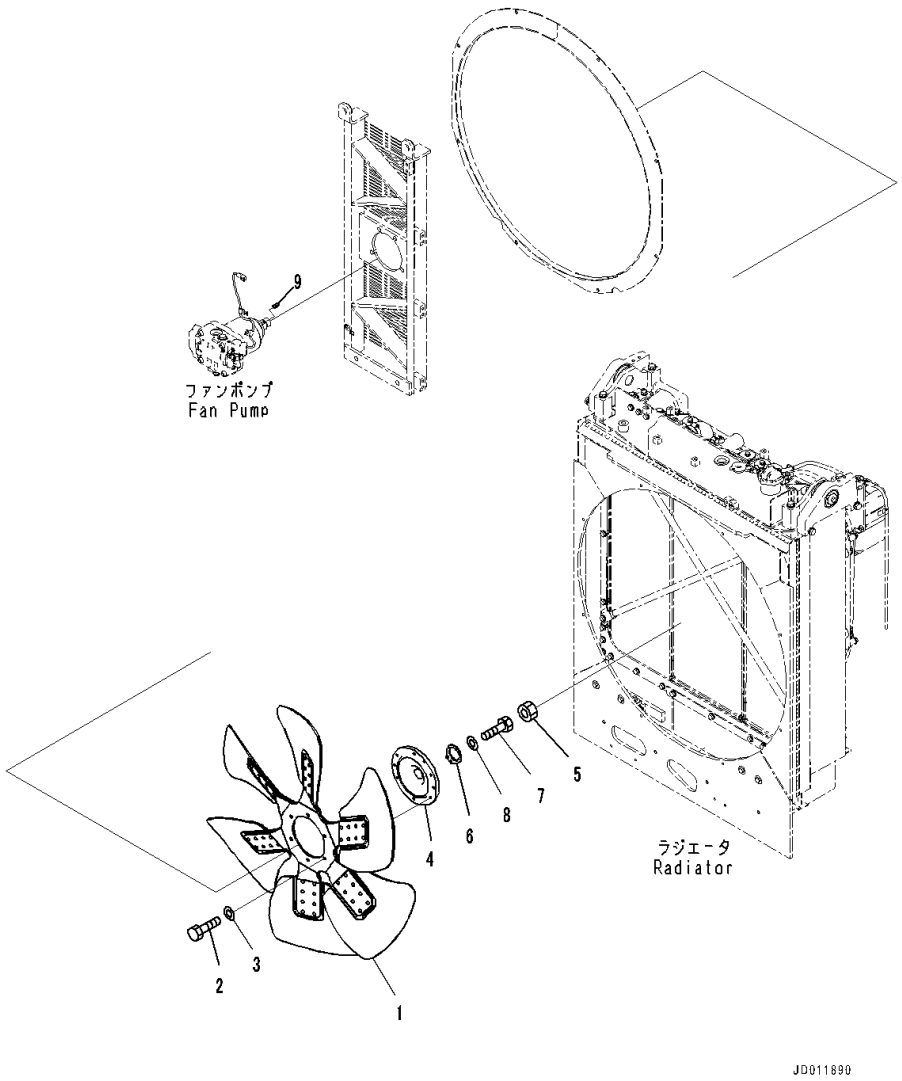

Index	Code	Part Number	Description	Qty	Serial Number
1		600-645-7120	Fan	1	81028-
2		01010-81240	Bolt	6	81028-
3		01643-31232	Washer	6	81028-
4		17A-03-42121	Boss	1	81028-
5		01583-13621	Nut	1	81028-
6		01660-03650	Lock	1	81028-
7		01010-81020	Bolt	1	81028-
8		01643-31032	Washer	1	81028-
9		04010-01032	Key	1	81028-

FIG. C0200-002002 Cooling Fan, Noise Suppression Type, Fan Motor (1/3)

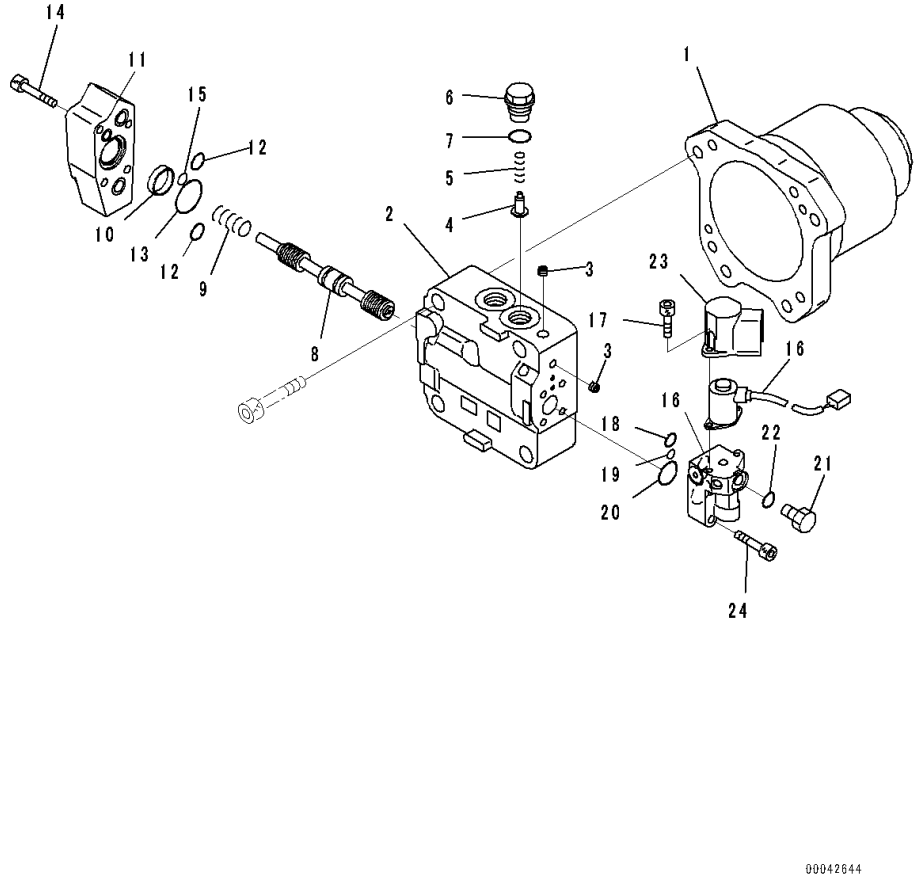

Index	Code	Part Number	Description	Qty	Serial Number
		708-7W-00140	Motor Assembly	1	81028-
1	C2	708-7W-11190	• Case	1	81028-
	C2	708-7W-01050	• Cover Subassembly	1	81028-
2	C1		• • Cover	1	81028-
3	C1		• • Plug	3	81028-
4	C2	709-25-11650	• Valve, Check	1	81028-
5	C2	709-25-11361	• Spring	1	81028-
6	C2	708-7S-21610	• Plug	1	81028-
7		07002-12434	• O-ring	1	81028-
8	C1		• Spool	1	81028-
9	C2	708-7W-18150	• Spring	1	81028-
10	C2	708-7W-18160	• Spacer	1	81028-
11	C2	708-7W-18170	• Cover	1	81028-
12		07000-12016	• O-ring	2	81028-
13		07000-12035	• O-ring	1	81028-
14		01252-60845	• Bolt, Hexagon Socket Head	4	81028-
15		07000-12010	• O-ring	1	81028-
16		708-7R-01631	• Valve Assembly, Pilot	1	81028-
17		01252-60616	• • Bolt, Hexagon Socket Head	2	81028-
18		708-2L-25490	• • O-ring	1	81028-
19		07000-11008	• • O-ring	1	81028-
20		723-11-18430	• • O-ring	1	81028-
21		07040-11007	• • Plug	1	81028-
22		07002-11023	• • O-ring	1	81028-
23		708-1S-18180	• • Cover	1	81028-
24		01252-60835	• Bolt, Hexagon Socket Head	4	81028-

FIG. C0200-002003 Cooling Fan, Noise Suppression Type, Fan Motor (2/3)

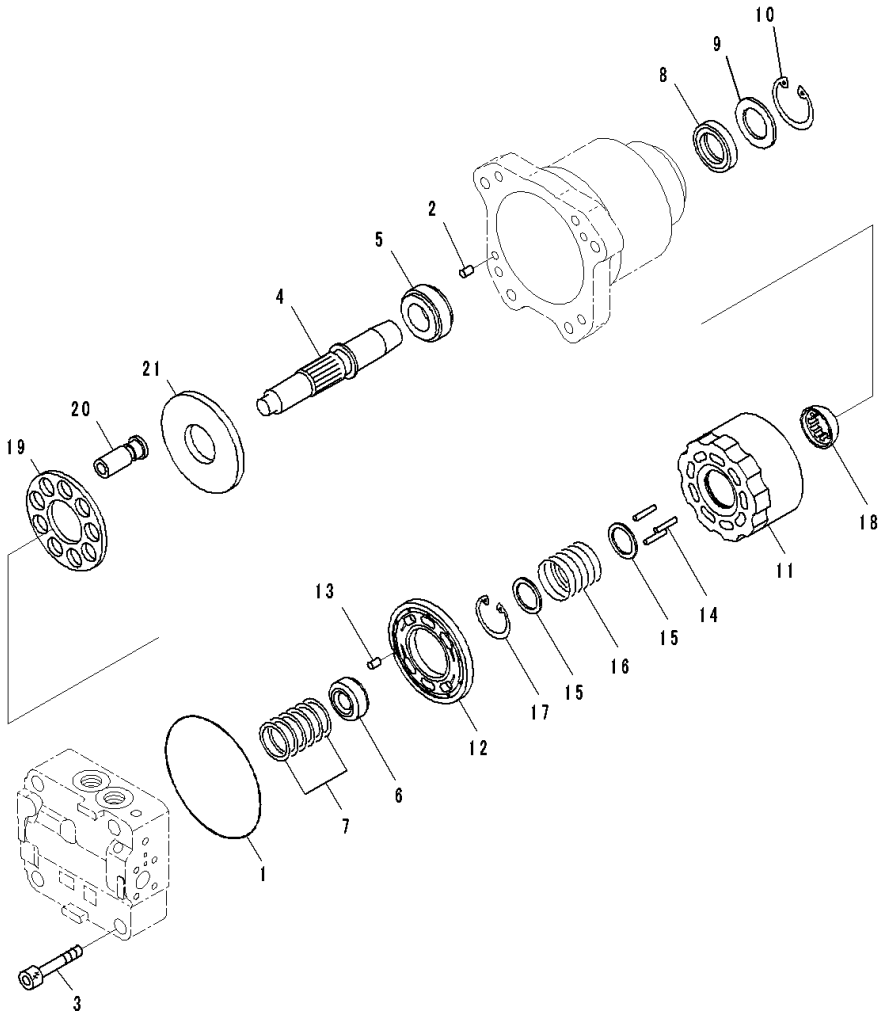

Index	Code	Part Number	Description	Qty	Serial Number
		708-7W-00140	Motor Assembly	1	81028-
1		2907-21-6160	• O-ring	1	81028-
2		04020-01024	• Pin, Dowel	2	81028-
3		01252-61480	• Bolt	4	81028-
4	C2	708-7W-12130	• Shaft	1	81028-
5	C2	708-7W-12120	• Bearing	1	81028-
6	C2	708-7L-12140	• Bearing	1	81028-
7	C2	708-7L-05010	• Spacer Kit	1	81028-
	C1		• • Spacer, T=1.5mm	1	81028-
	C1		• • Spacer, T=1.6mm	1	81028-
	C1		• • Spacer, T=1.7mm	1	81028-
	C1		• • Spacer, T=1.8mm	1	81028-
	C1		• • Spacer, T=1.9mm	1	81028-
	C1		• • Spacer, T=2.0mm	1	81028-
8	C2	708-25-52861	• Seal, Oil	1	81028-
9	C2	708-2L-22160	• Spacer	1	81028-
10		04065-06825	• Ring, Snap	1	81028-
11	C2	708-8F-33121	• Block, Cylinder	1	81028-
12	C2	708-8F-33230	• Plate	1	81028-
13	C2	720-68-19610	• Pin	1	81028-
14	C2	708-8F-33360	• Pin	3	81028-
15	C2	708-7L-13140	• Seat	2	81028-
16	C2	708-8F-33160	• Spring	1	81028-
17		04065-04818	• Ring, Snap	1	81028-
18	C2	708-8F-33350	• Guide, Retainer	1	81028-
19	C2	708-2L-33350	• Retainer	1	81028-
20	C2	708-8F-33310	• Piston Subassembly	9	81028-
21	C2	708-7L-13410	• Plate, Thrust	1	81028-

FIG. C0200-002004 Cooling Fan, Noise Suppression Type, Fan Motor (3/3)

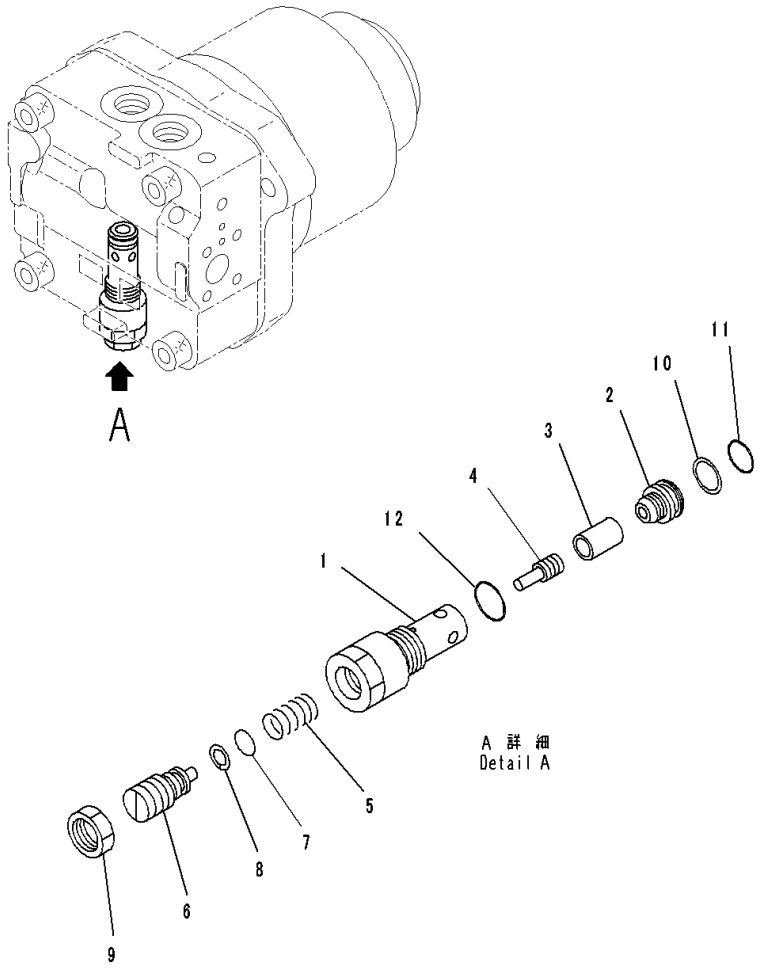

Index	Code	Part Number	Description	Qty	Serial Number
		708-7W-00140	Motor Assembly	1	81028-
		702-73-01580	• Valve Assembly, Relief	1	81028-
1	C2	702-73-11810	• • Sleeve	1	81028-
2	C2	702-73-11820	• • Seat	1	81028-
3	C2	702-73-11830	• • Valve	1	81028-
4	C2	706-75-75280	• • Piston	1	81028-
5	C2	702-73-11840	• • Spring	1	81028-
6	C2	702-73-11850	• • Screw	1	81028-
7	C2	07000-12010	• • O-ring	1	81028-
8	C2	07001-02010	• • Ring	1	81028-
9	C2	702-73-11860	• • Nut	1	81028-
10		723-60-22230	• • Ring, Back-up	1	81028-
11		07000-F2016	• • O-ring	1	81028-
12		07002-12434	• • O-ring	1	81028-

FIG. C0200-002005 Cooling Fan, Noise Suppression Type, Fan Piping and Shroud

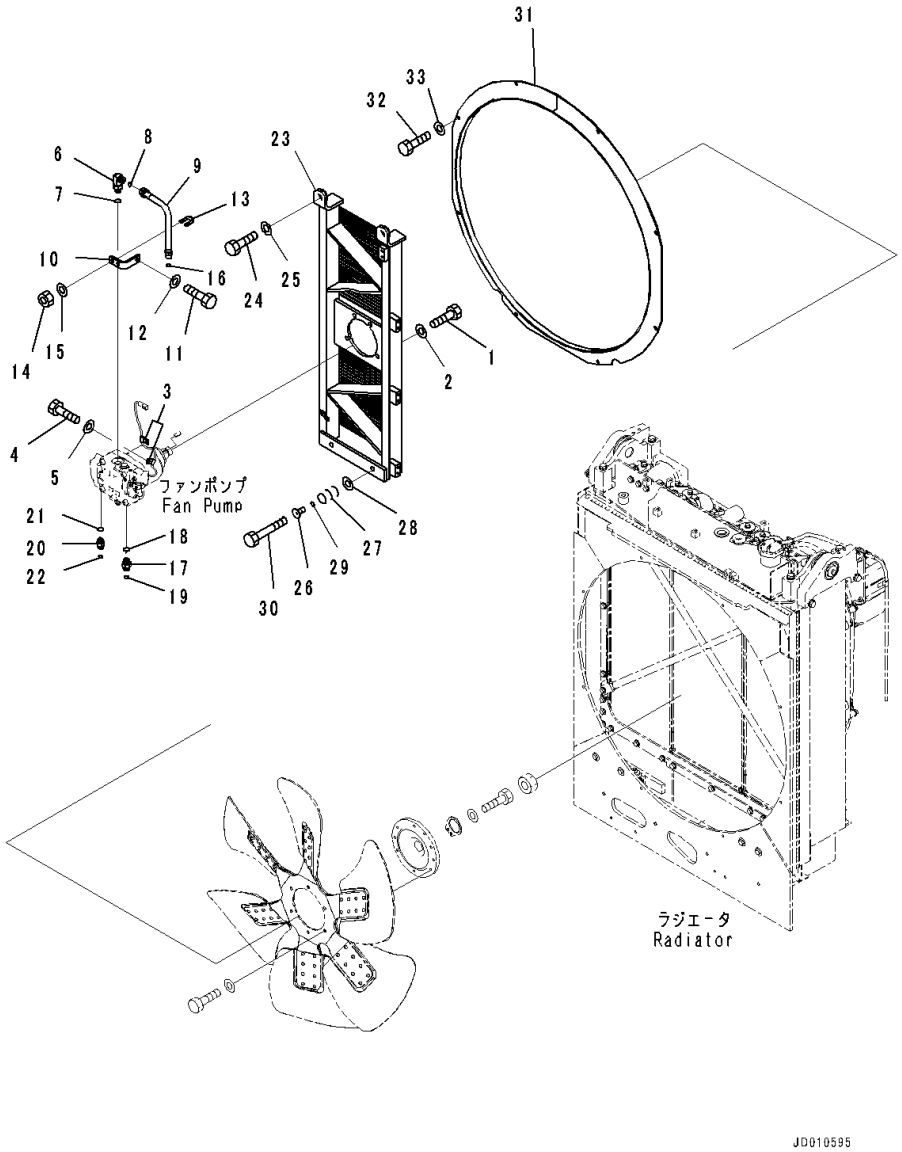

Index	Code	Part Number	Description	Qty	Serial Number
1		01010-81640	Bolt	4	81028-
2		01643-31645	Washer	4	81028-
3		04434-50612	Clip	2	81028-
4		01010-81225	Bolt	2	81028-
5		01643-31232	Washer	2	81028-
6		02782-1052A	Elbow	1	81028-
7		07002-12434	O-ring	1	81028-
8		02896-11015	O-ring	1	81028-
9		17A-03-23221	Tube	1	81028-
10		17A-03-42132	Bracket	1	81028-
11		01010-81225	Bolt	1	81028-
12		01643-31232	Washer	1	81028-
13		07283-32236	Clip, Pipe	1	81028-
14		01597-01009	Nut	2	81028-
15		01643-31032	Washer	2	81028-
16		02896-11015	O-ring	1	81028-
17		02781-00522	Union	1	81028-
18		07002-12434	O-ring	1	81028-
19		02896-11015	O-ring	1	81028-
20		02781-00422	Union	1	81028-
21		07002-12034	O-ring	1	81028-
22		02896-11012	O-ring	1	81028-
23		17A-03-42310	Support	1	81028-
24		01010-81640	Bolt	2	81028-
25		01643-31645	Washer	2	81028-
26		198-03-61550	Spacer	2	81028-
27		175-54-27350	Spring	8	81028-
28		154-30-51460	Washer	2	81028-
29		175-54-28770	Ring	2	81028-
30		01010-81260	Bolt	2	81028-
31		17A-03-42211	Shroud	1	81028-
32		01010-81225	Bolt	8	81028-
33		01643-31232	Washer	8	81028-

FIG. C0310-001001 Cooling Fan Guard

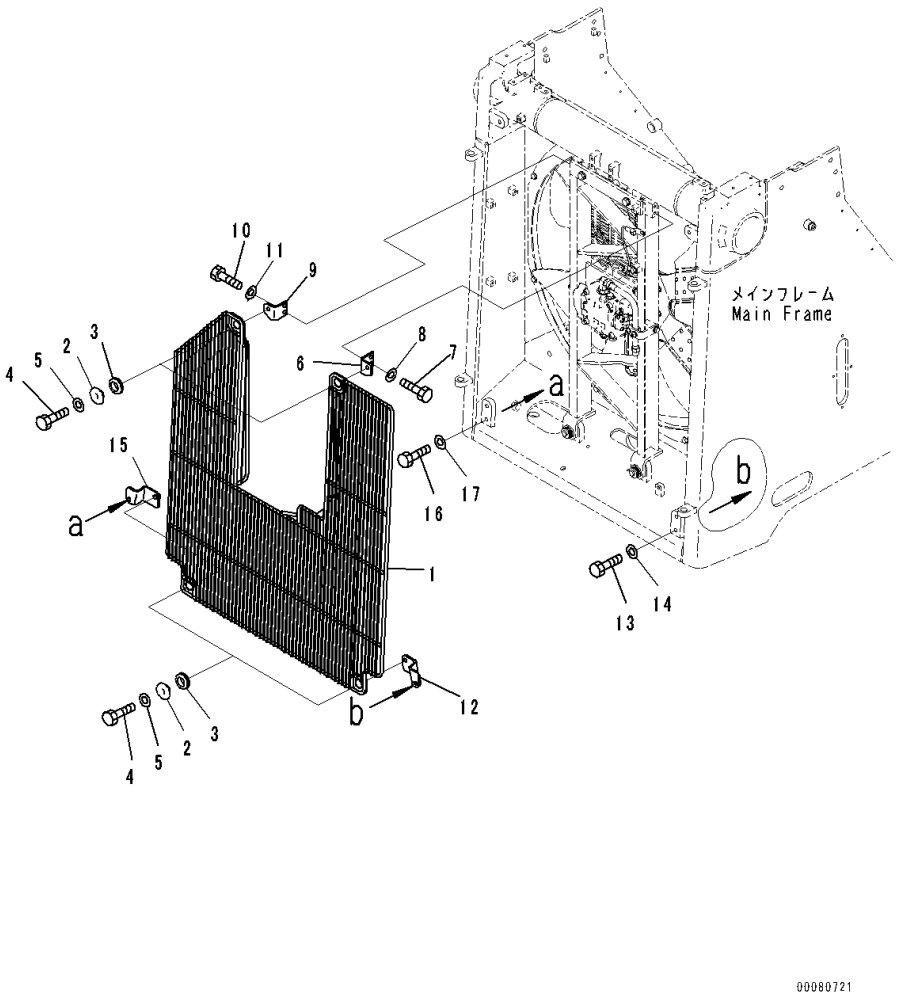

Index	Code	Part Number	Description	Qty	Serial Number
1		17A-03-43312	Net	1	81028-
2		203-54-14330	Collar	4	81028-
3		175-03-42140	Rubber	4	81028-
4		01010-81245	Bolt	4	81028-
5		01643-31232	Washer	4	81028-
6		17A-03-43321	Bracket,LHS	1	81028-
7		01010-81225	Bolt	2	81028-
8		01643-31232	Washer	2	81028-
9		17A-03-43331	Bracket,RHS	1	81028-
10		01010-81225	Bolt	2	81028-
11		01643-31232	Washer	2	81028-
12		17A-03-43341	Bracket	1	81028-
13		01010-81245	Bolt	1	81028-
14		01643-31232	Washer	1	81028-
15		17A-03-43352	Bracket	1	81028-
16		01010-81245	Bolt	1	81028-
17		01643-31232	Washer	1	81028-

FIG. C0310-002001 Cooling Fan Guard, Noise Suppression Type

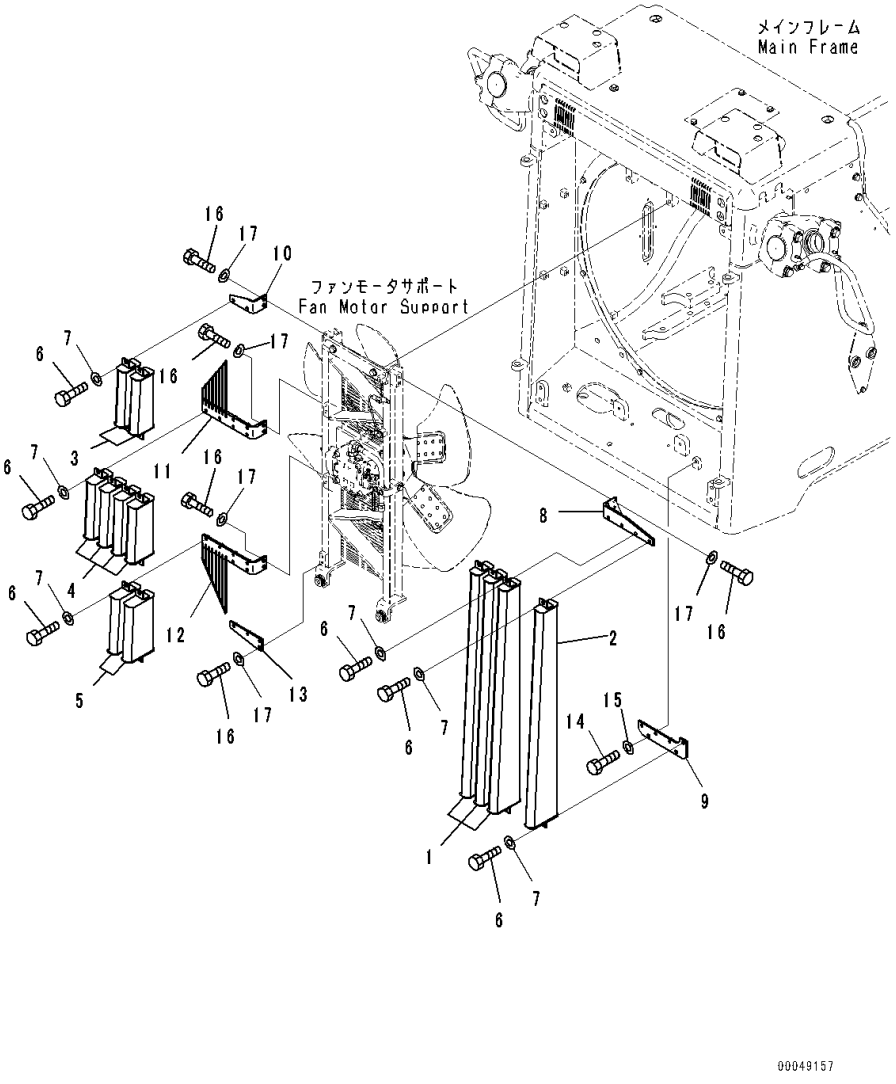

Index	Code	Part Number	Description	Qty	Serial Number
1		17A-862-4711	Blade	3	81028-
2		17A-862-4721	Blade	1	81028-
3		17A-862-4731	Blade	2	81028-
4		17A-862-4741	Blade	4	81028-
5		17A-862-4751	Blade	2	81028-
6		01010-81025	Bolt	24	81028-
7		01643-31032	Washer	24	81028-
8		17A-862-4760	Bracket	1	81028-
9		17A-862-4770	Bracket	1	81028-
10		17A-862-4780	Bracket	1	81028-
11		17A-862-4790	Bracket	1	81028-
12		17A-862-4810	Bracket	1	81028-
13		17A-862-4820	Bracket	1	81028-
14		01010-81225	Bolt	2	81028-
15		01643-31232	Washer	2	81028-
16		01010-81230	Bolt	10	81028-
17		01643-31232	Washer	10	81028-

FIG. C0310-003001 Cooling Fan Guard, Landfill Specification

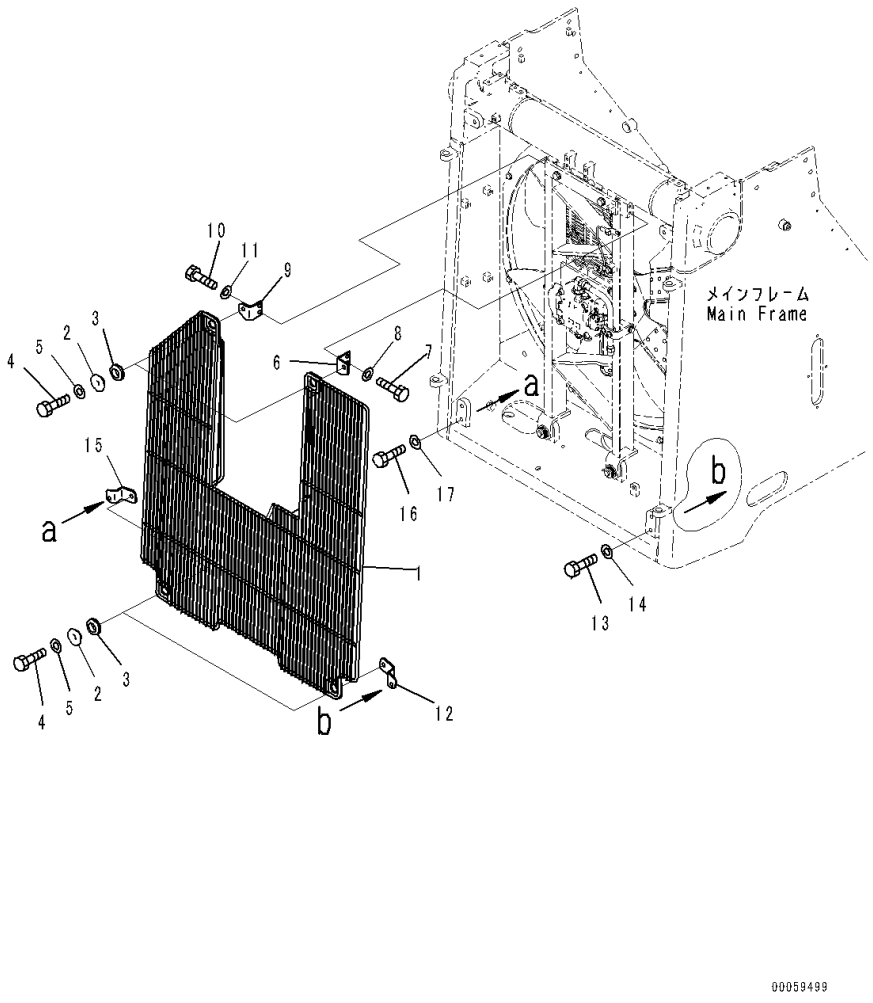

Index	Code	Part Number	Description	Qty	Serial Number
1		17A-03-43510	Net	1	81028-
2		203-54-14330	Collar	4	81028-
3		175-03-42140	Rubber	4	81028-
4		01010-81245	Bolt	4	81028-
5		01643-31232	Washer	4	81028-
6		17A-03-43321	Bracket,LHS	1	81028-
7		01010-81225	Bolt	2	81028-
8		01643-31232	Washer	2	81028-
9		17A-03-43331	Bracket,RHS	1	81028-
10		01010-81225	Bolt	2	81028-
11		01643-31232	Washer	2	81028-
12		17A-03-43340	Bracket	1	81028-
13		01010-81245	Bolt	1	81028-
14		01643-31232	Washer	1	81028-
15		17A-03-43351	Bracket	1	81028-
16		01010-81245	Bolt	1	81028-
17		01643-31232	Washer	1	81028-

FIG. C0400-001001 Power Train Oil Cooler Piping

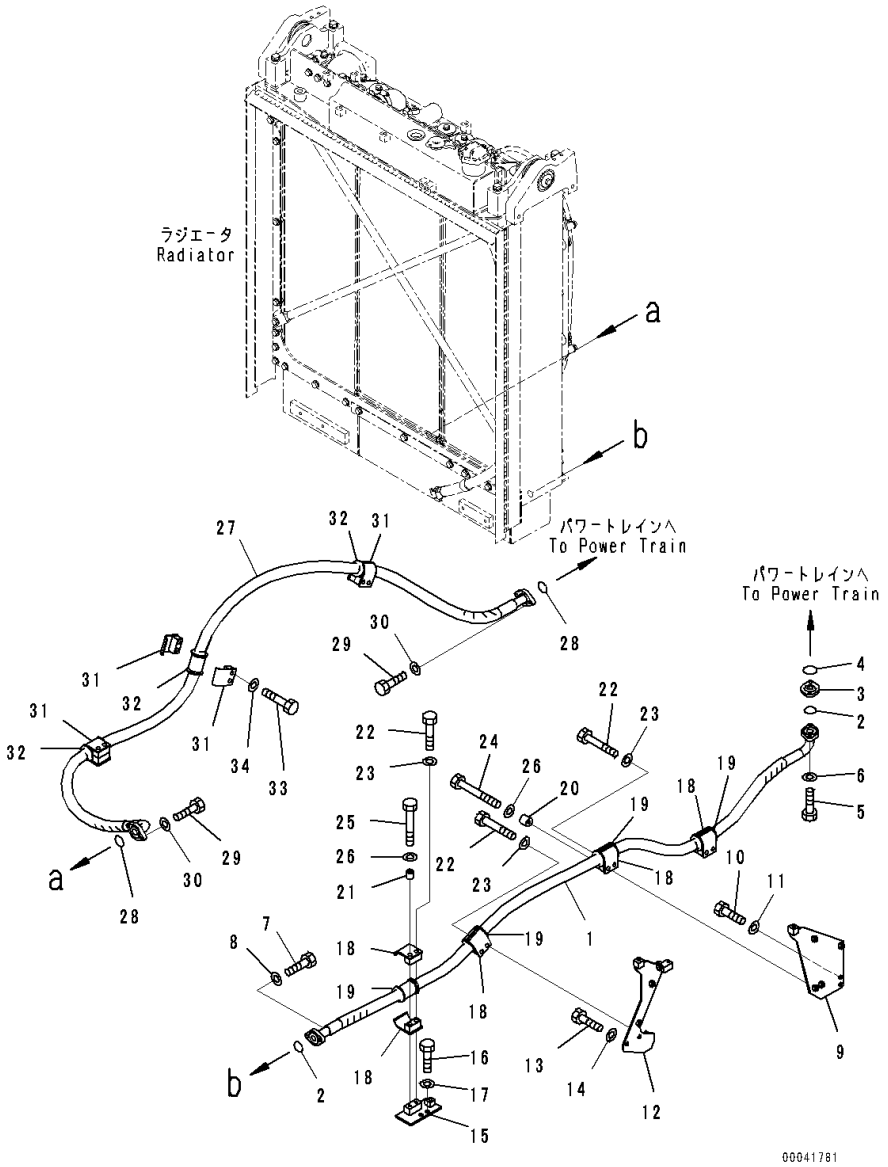

Index	Code	Part Number	Description	Qty	Serial Number
1		17A-49-41542	Hose	1	81028-
2		07000-73032	O-ring	2	81028-
3		17A-49-41811	Plate	1	81028-
4		07000-73038	O-ring	1	81028-
5		01010-81045	Bolt	2	81028-
6		01643-31032	Washer	2	81028-
7		01010-81035	Bolt	2	81028-
8		01643-31032	Washer	2	81028-
9		17A-49-41471	Bracket	1	81028-
10		01010-81225	Bolt	2	81028-
11		01643-31232	Washer	2	81028-
12		17A-49-41482	Bracket	1	81028-
13		01010-81225	Bolt	2	81028-
14		01643-31232	Washer	2	81028-
15		17A-61-41622	Bracket	1	81028-
16		01010-81230	Bolt	2	81028-
17		01643-31232	Washer	2	81028-
18		07094-11024	Clamp	8	81028-
19		07095-01038	Cushion	4	81028-
20		113-99-21890	Spacer	1	81028-
21		195-33-11220	Spacer	1	81028-
22		01010-81280	Bolt	6	81028-
23		01643-31232	Washer	6	81028-
24		01011-81215	Bolt	1	81028-
25		01011-81205	Bolt	1	81028-
26		01643-31232	Washer	2	81028-
27		17A-49-41752	Hose	1	81028-
28		07000-73032	O-ring	2	81028-
29		01010-81035	Bolt	4	81028-
30		01643-31032	Washer	4	81028-
31		07094-11024	Clamp	6	81028-
32		07095-01038	Cushion	3	81028-
33		01010-81280	Bolt	6	81028-
34		01643-31232	Washer	6	81028-

FIG. C0400-002001 Power Train Oil Cooler Piping, Landfill Specification

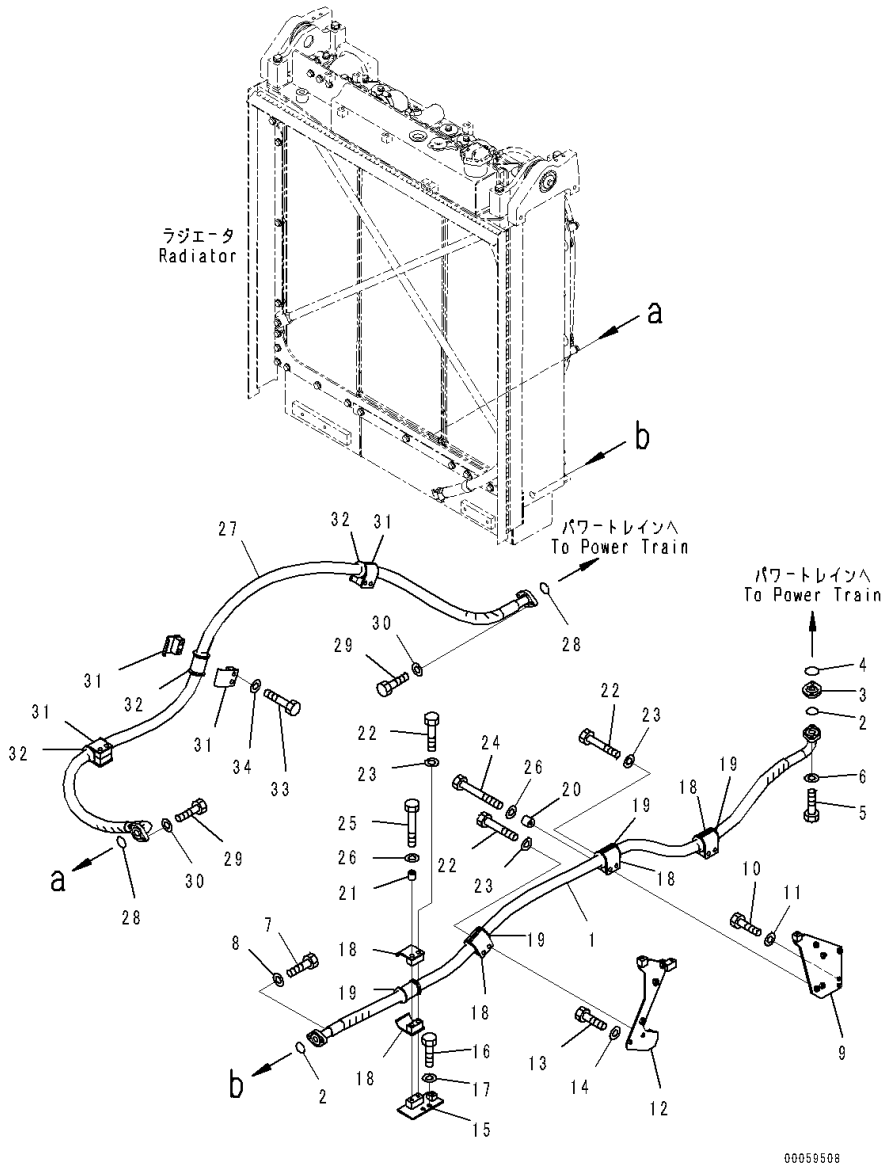

Index	Code	Part Number	Description	Qty	Serial Number
1		17A-49-41542	Hose	1	81028-
2		07000-73032	O-ring	2	81028-
3		17A-49-41811	Plate	1	81028-
4		07000-73038	O-ring	1	81028-
5		01010-81045	Bolt	2	81028-
6		01643-31032	Washer	2	81028-
7		01010-81035	Bolt	2	81028-
8		01643-31032	Washer	2	81028-
9		17A-49-41870	Bracket	1	81028-
10		01010-81225	Bolt	2	81028-
11		01643-31232	Washer	2	81028-
12		17A-49-41482	Bracket	1	81028-
13		01010-81225	Bolt	2	81028-
14		01643-31232	Washer	2	81028-
15		17A-61-41622	Bracket	1	81028-
16		01010-81230	Bolt	2	81028-
17		01643-31232	Washer	2	81028-
18		07094-11024	Clamp	8	81028-
19		07095-01038	Cushion	4	81028-
20		113-99-21890	Spacer	1	81028-
21		195-33-11220	Spacer	1	81028-
22		01010-81280	Bolt	6	81028-
23		01643-31232	Washer	6	81028-
24		01011-81215	Bolt	1	81028-
25		01011-81205	Bolt	1	81028-
26		01643-31232	Washer	2	81028-
27		17A-49-41752	Hose	1	81028-
28		07000-73032	O-ring	2	81028-
29		01010-81035	Bolt	4	81028-
30		01643-31032	Washer	4	81028-
31		07094-11024	Clamp	6	81028-
32		07095-01038	Cushion	3	81028-
33		01010-81280	Bolt	6	81028-
34		01643-31232	Washer	6	81028-

FIG. C0610-001001 Hydraulic Oil Cooler Piping

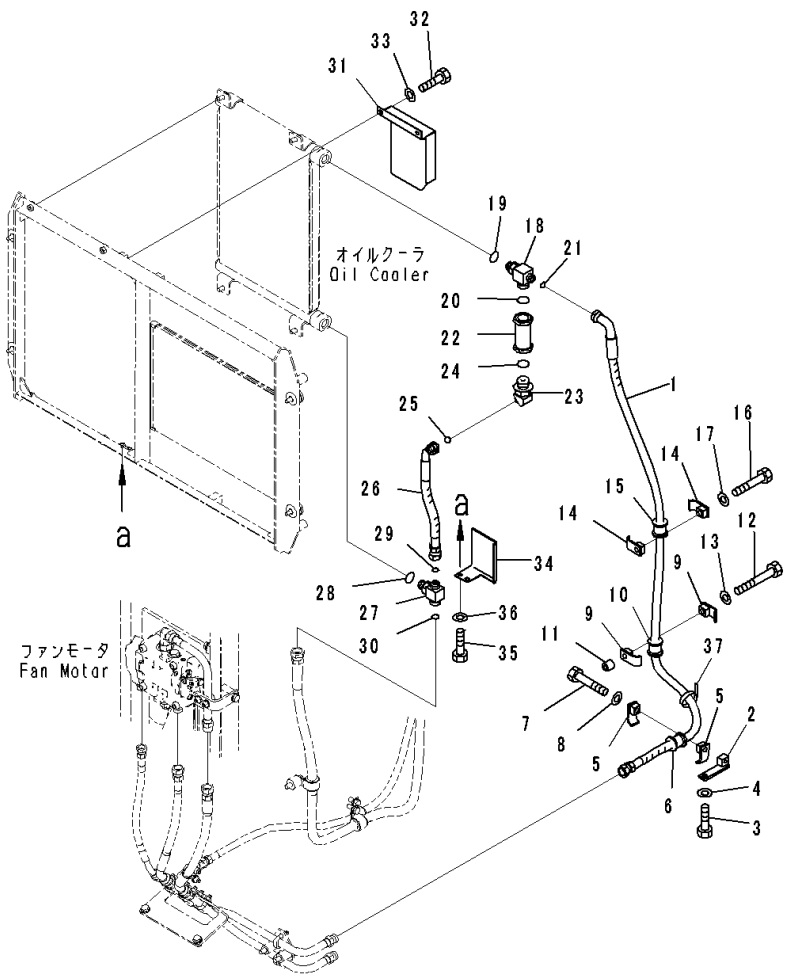

Index	Code	Part Number	Description	Qty	Serial Number
1		02763-00518	Hose	1	81028-
2		17A-49-41491	Bracket	1	81028-
3		01010-81225	Bolt	1	81028-
4		01643-31232	Washer	1	81028-
5		07094-10417	Clamp	2	81028-
6		07095-00423	Cushion	1	81028-
7		01010-81265	Bolt	1	81028-
8		01643-31232	Washer	1	81028-
9		07094-10417	Clamp	2	81028-
10		07095-00423	Cushion	1	81028-
11		195-33-11220	Spacer	1	81028-
12		01010-81295	Bolt	1	81028-
13		01643-31232	Washer	1	81028-
14		07094-10417	Clamp	2	81028-
15		07095-00423	Cushion	1	81028-
16		01010-81265	Bolt	1	81028-
17		01643-31232	Washer	1	81028-
18		17A-03-41861	Tee	1	81028-
19		07002-12434	O-ring	1	81028-
20		07002-13334	O-ring	1	81028-
21		02896-11015	O-ring	1	81028-
22		20S-62-16160	Valve Assembly	1	81028-
23		17A-03-41871	Elbow	1	81028-
24		07002-13334	O-ring	1	81028-
25		02896-11015	O-ring	1	81028-
26		17A-03-41891	Hose	1	81028-
27		17A-03-41881	Tee	1	81028-
28		07002-12434	O-ring	1	81028-
29		02896-11015	O-ring	1	81028-
30		02896-11018	O-ring	1	81028-
31		17A-03-41841	Plate	1	81028-
32		01010-81020	Bolt	2	81028-
33		01643-31032	Washer	2	81028-
34		17A-03-41851	Plate	1	81028-
35		01010-81020	Bolt	2	81028-
36		01643-31032	Washer	2	81028-
37		08034-20536	Band	2	81028-

FIG. C0610-002001 Hydraulic Oil Cooler Piping, Landfill Specification, (1/2)

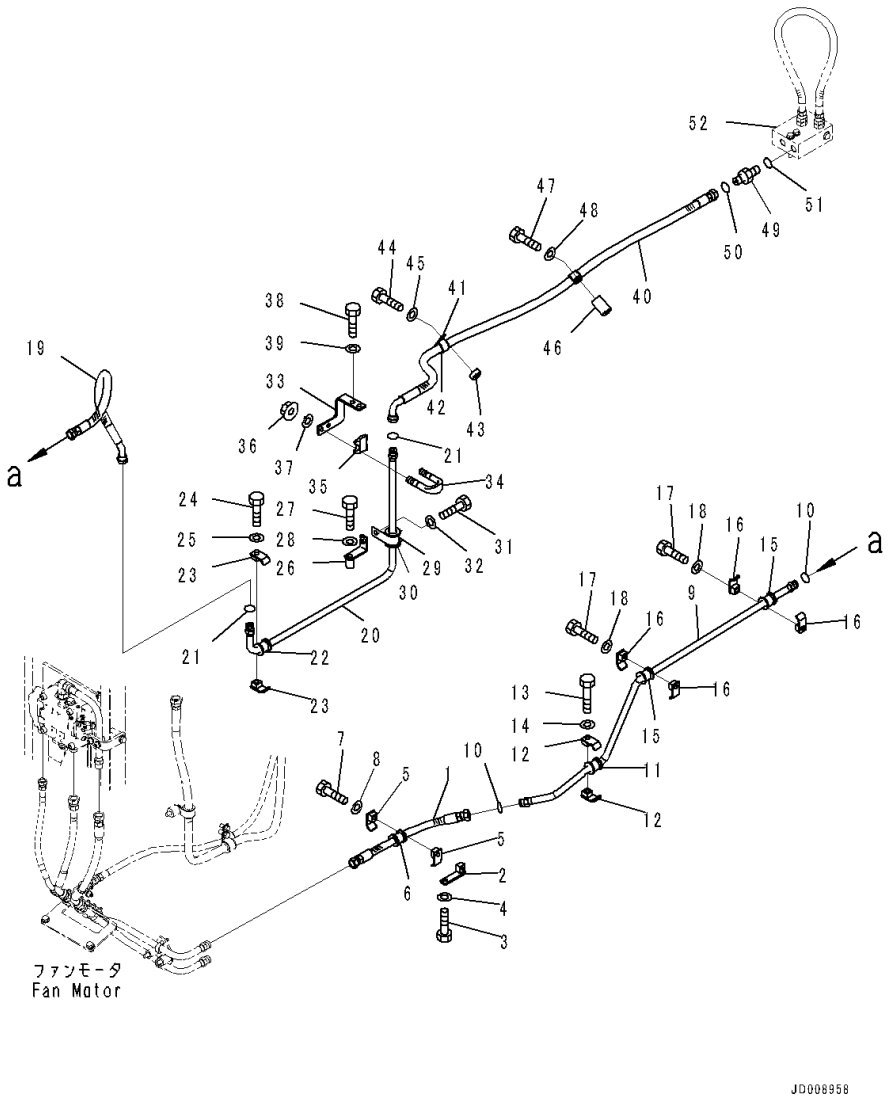

Index	Code	Part Number	Description	Qty	Serial Number
1		02762-005A4	Hose	1	81028-
2		17A-49-41491	Bracket	1	81028-
3		01010-81225	Bolt	1	81028-
4		01643-31232	Washer	1	81028-
5		07094-10417	Clamp	2	81028-
6		07095-00423	Cushion	1	81028-
7		01010-81265	Bolt	1	81028-
8		01643-31232	Washer	1	81028-
9		17A-61-42721	Tube	1	81028-
10		02896-11015	O-ring	2	81028-
11		07095-00421	Cushion	1	81028-
12		07094-10417	Clamp	2	81028-
13		01011-81205	Bolt	1	81028-
14		01643-31232	Washer	1	81028-
15		07095-00421	Cushion	2	81028-
16		07094-10417	Clamp	4	81028-
17		01010-81265	Bolt	2	81028-
18		01643-31232	Washer	2	81028-
19		02764-00505	Hose	1	81028-
20		17A-61-42730	Tube	1	81028-
21		02896-11015	O-ring	2	81028-
22		07095-00421	Cushion	1	81028-
23		07094-10417	Clamp	2	81028-
24		01010-81265	Bolt	1	81028-
25		01643-31232	Washer	1	81028-
26		17A-54-45970	Bracket	1	81028-
27		01010-81265	Bolt	1	81028-
28		01643-31232	Washer	1	81028-
29		04434-52712	Clip	1	81028-
30		07095-20420	Cushion	1	81028-
31		01010-81225	Bolt	1	81028-
32		01643-31232	Washer	1	81028-
33		17A-61-42750	Bracket	1	81028-
34		07283-32244	Clip	1	81028-
35		07283-52232	Seat	1	81028-
36		01597-01009	Nut	2	81028-
37		01643-31032	Washer	2	81028-
38		01010-81225	Bolt	2	81028-
39		01643-31232	Washer	2	81028-
40		17A-61-42740	Hose	1	81028-

FIG. C0610-002001 Hydraulic Oil Cooler Piping, Landfill Specification, (1/2)

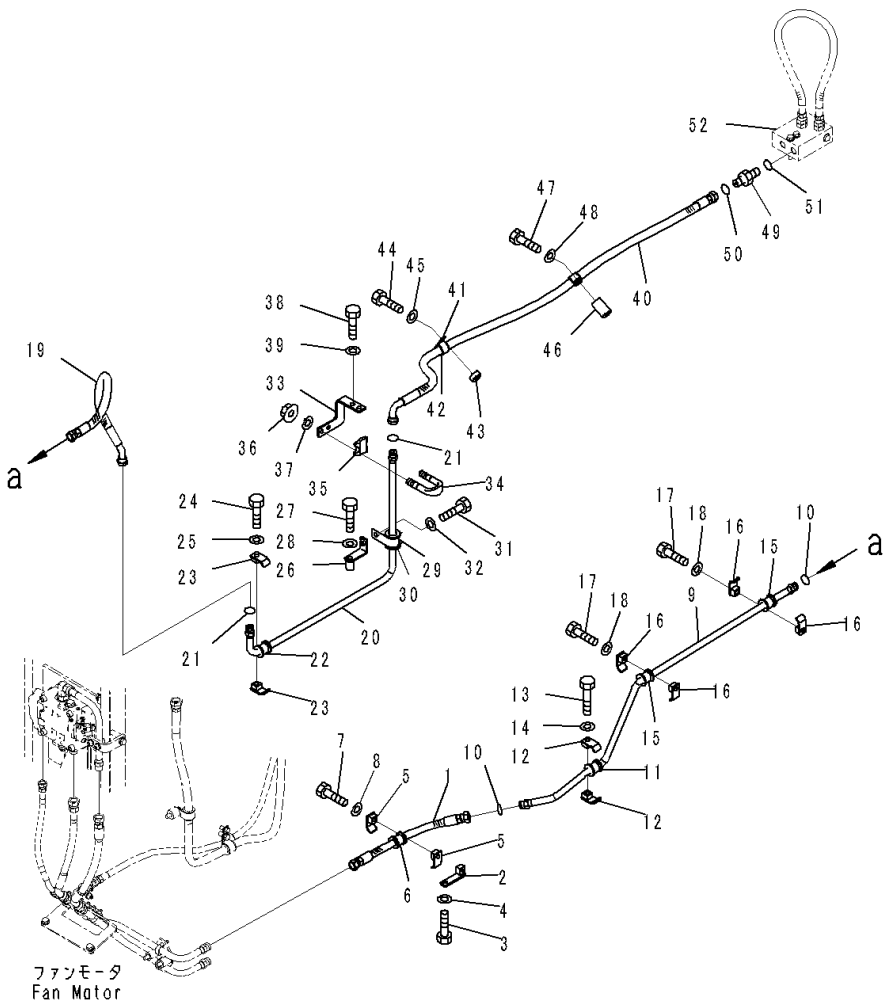

Index	Code	Part Number	Description	Qty	Serial Number
41		04434-53212	Clip	2	81028-
42		07095-20522	Cushion	2	81028-
43		198-43-15310	Collar	1	81028-
44		01010-81235	Bolt	1	81028-
45		01643-31232	Washer	1	81028-
46		205-03-71330	Collar	1	81028-
47		01010-81270	Bolt	1	81028-
48		01643-31232	Washer	1	81028-
49		02781-00522	Union	1	81028-
50		02896-11015	O-ring	1	81028-
51		07002-12434	O-ring	1	81028-
52		(17A-61-42710)	Body(Refer to Page 278)		-

FIG. C0610-002002 Hydraulic Oil Cooler Piping, Landfill Specification, (2/2)

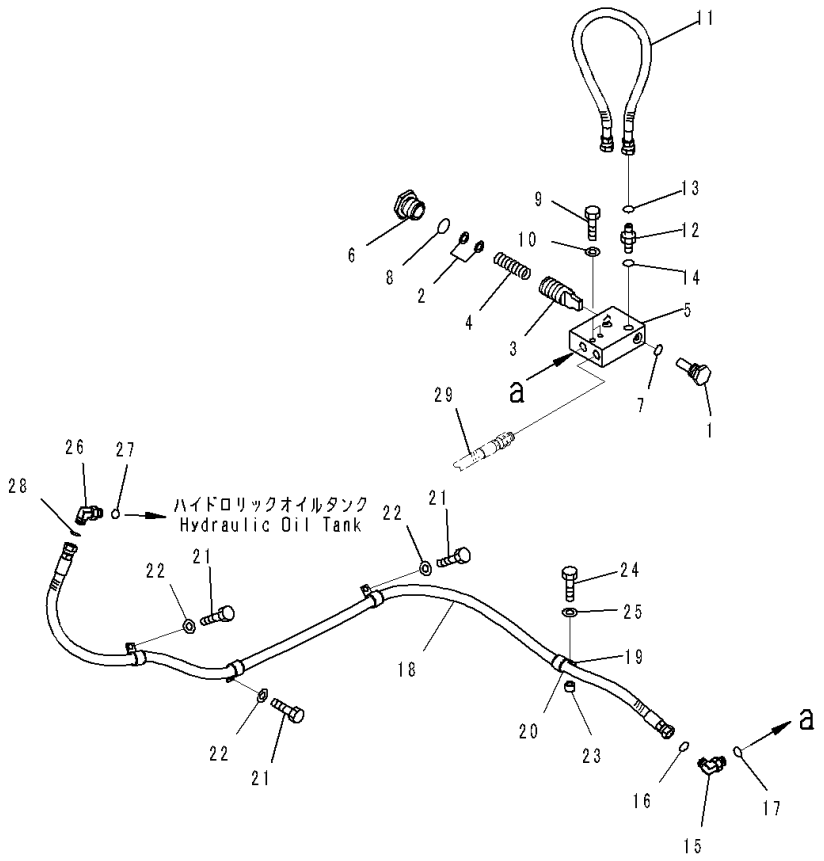

Index	Code	Part Number	Description	Qty	Serial Number
		17A-61-42700	Valve Assembly	1	81028-
1		104-15-25460	• Plug	1	81028-
2		175-15-56470	• Shim, T=0.50mm	2	81028-
3		17A-49-15261	• Valve	1	81028-
4		17A-49-15831	• Spring	1	81028-
5		17A-61-42710	• Body	1	81028-
6		232-15-14280	• Plug	1	81028-
7		07002-11623	• O-ring	1	81028-
8		07002-12434	• O-ring	1	81028-
9		01010-81290	Bolt	2	81028-
10		01643-31232	Washer	2	81028-
11		02762-00510	Hose, Face Seal Type	1	81028-
12		02781-00522	Union	2	81028-
13		02896-11015	O-ring	2	81028-
14		07002-12434	O-ring	2	81028-
15		02782-10522	Elbow	1	81028-
16		02896-11015	O-ring	1	81028-
17		07002-12434	O-ring	1	81028-
18		02762-00526	Hose	1	81028-
19		04434-53212	Clip	4	81028-
20		07095-20522	Cushion	4	81028-
21		01010-81225	Bolt	3	81028-
22		01643-31232	Washer	3	81028-
23		144-947-3490	Spacer	1	81028-
24		01010-81240	Bolt	1	81028-
25		01643-31232	Washer	1	81028-
26		02782-10524	Elbow	1	81028-
27		07002-12434	O-ring	1	81028-
28		02896-11015	O-ring	1	81028-
29		(17A-61-42740)	Hose(Refer to Page 276)		-

FUEL SYSTEM

FIG. D0100-001001 Fuel Tank, Tank

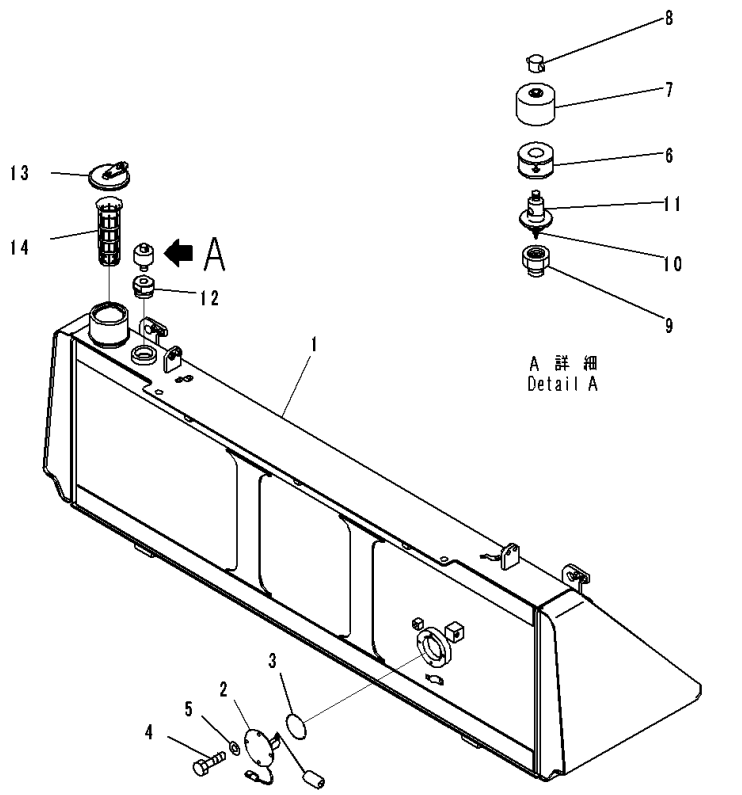

Index	Code	Part Number	Description	Qty	Serial Number
1		17A-04-41211	Tank	1	81028-
2		7861-93-4940	Sensor	1	81028-
3		07000-12085	O-ring	1	81028-
4		01010-81016	Bolt	4	81028-
5		01643-31032	Washer	4	81028-
		22U-60-21520	Breather	1	81028-
6		421-60-35170	• Element	1	81028-
7		421-60-35180	• Cover	1	81028-
8		421-60-35190	• Nut	1	81028-
9	C1		• Body	1	81028-
10	C1		• Valve Assembly	1	81028-
11	C1		• Case	1	81028-
12		17A-04-42150	Adapter	1	81028-
13		17A-04-41411	Cap	1	81028-
14		07056-18422	Strainer	1	81028-

FIG. D0100-001002 Fuel Tank, Fuel Piping

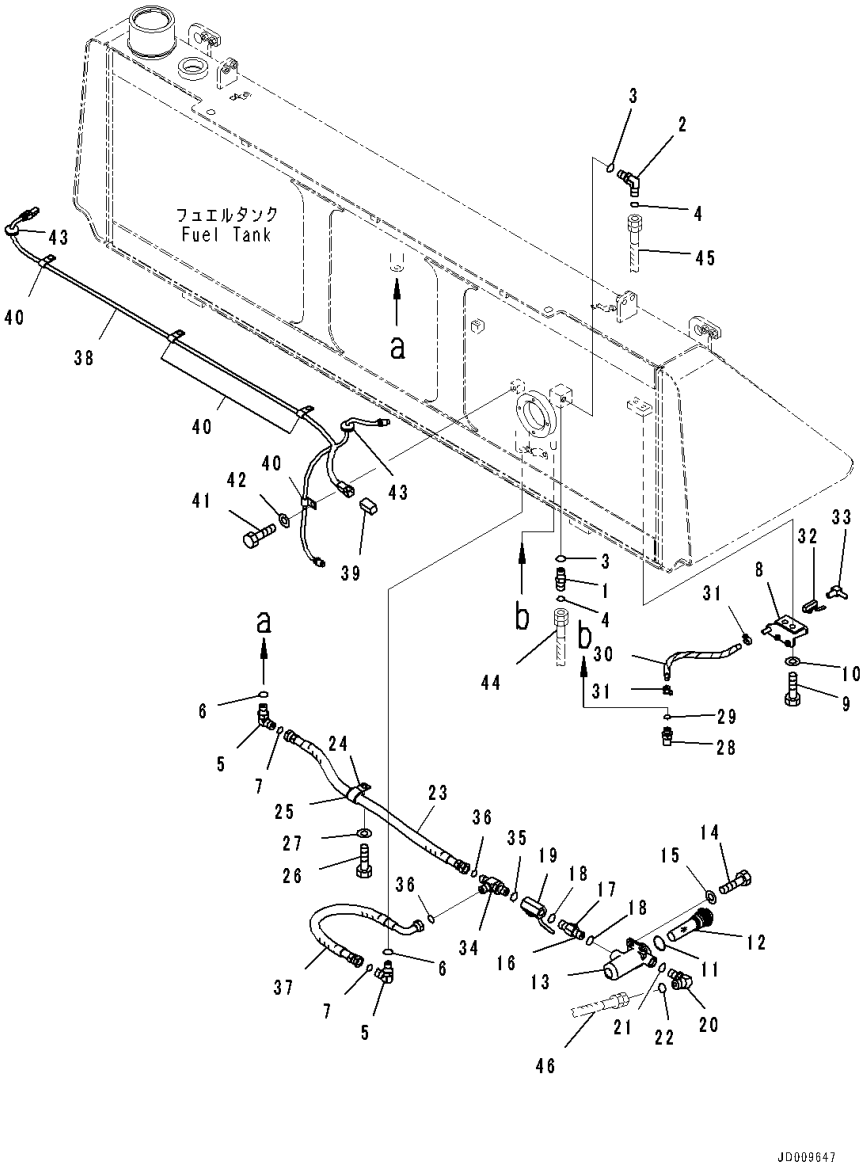

Index	Code	Part Number	Description	Qty	Serial Number
1		02781-0031D	Union	1	81028-
2		02782-10311	Elbow	1	81028-
3		07002-11423	O-ring	2	81028-
4		02896-11009	O-ring	2	81028-
5		02782-10420	Elbow	2	81028-
6		07002-11823	O-ring	2	81028-
7		02896-11012	O-ring	2	81028-
8		17A-04-41311	Bracket	1	81028-
9		01010-81225	Bolt	2	81028-
10		01643-31232	Washer	2	81028-
		17A-04-41190	Filter Assembly	1	81028-
11		07002-14234	• O-ring	1	81028-
12		07058-00010	• Element Assembly	1	81028-
13		14X-04-21660	• Case	1	81028-
14		01010-80825	Bolt	2	81028-
15		01643-30823	Washer	2	81028-
16		17A-04-41331	Connector	1	81028-
17		01583-52012	• Nut	1	81028-
18		07002-12034	O-ring	2	81028-
19		14X-04-21620	Valve	1	81028-
20		02782-10516	Elbow	1	81028-
21		07002-12034	O-ring	1	81028-
22		02896-11015	O-ring	1	81028-
23		02762-00407	Hose	1	81028-
24		04434-52712	Clip	1	81028-
25		07095-20419	Cushion	1	81028-
26		01010-81225	Bolt	1	81028-
27		01643-31232	Washer	1	81028-
28		17A-04-42640	Elbow	1	81028-
29		07002-11823	O-ring	1	81028-
30		07270-21030	Tube	1	81028-
31		07281-00167	Clamp	2	81028-
32		07700-40240	Valve	1	81028-
33		205-04-62130	Elbow	1	81028-
34		21N-64-36690	Tee	1	81028-
35		07002-12034	O-ring	1	81028-
36		02896-11012	O-ring	2	81028-
37		02763-004A4	Hose	1	81028-
38		17A-06-41253	Wiring Harness	1	81028-
39		08192-22830	• Connector	1	81028-

FIG. D0100-001002 Fuel Tank, Fuel Piping

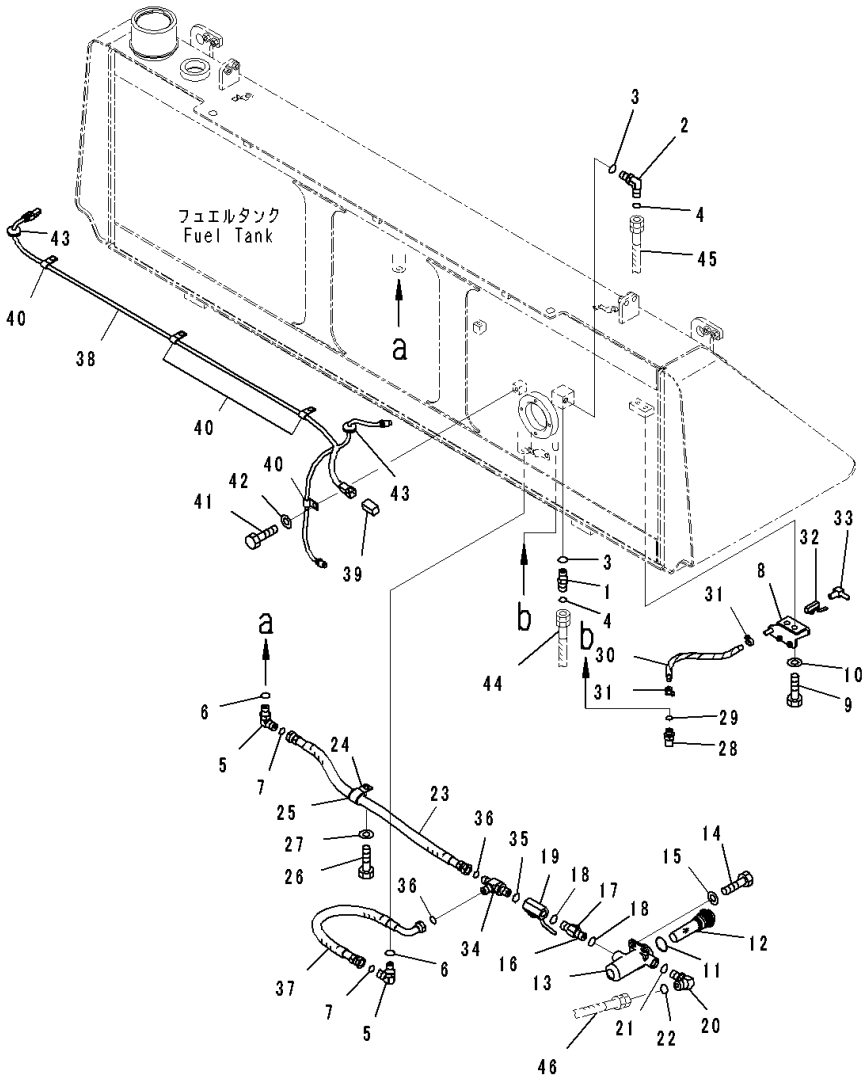

Index	Code	Part Number	Description	Qty	Serial Number
40		04434-51012	Clip	4	81028-
41		01010-81225	Bolt	4	81028-
42		01643-31232	Washer	4	81028-
43		135-06-34260	Grommet	2	81028-
44		(02762-00337)	Hose(Refer to Page 290)		-
45		(02762-00338)	Hose(Refer to Page 290)		-
46		(02762-00540)	Hose(Refer to Page 290)		-

FIG. D0100-001003 Fuel Tank, Working Lamp, Rear

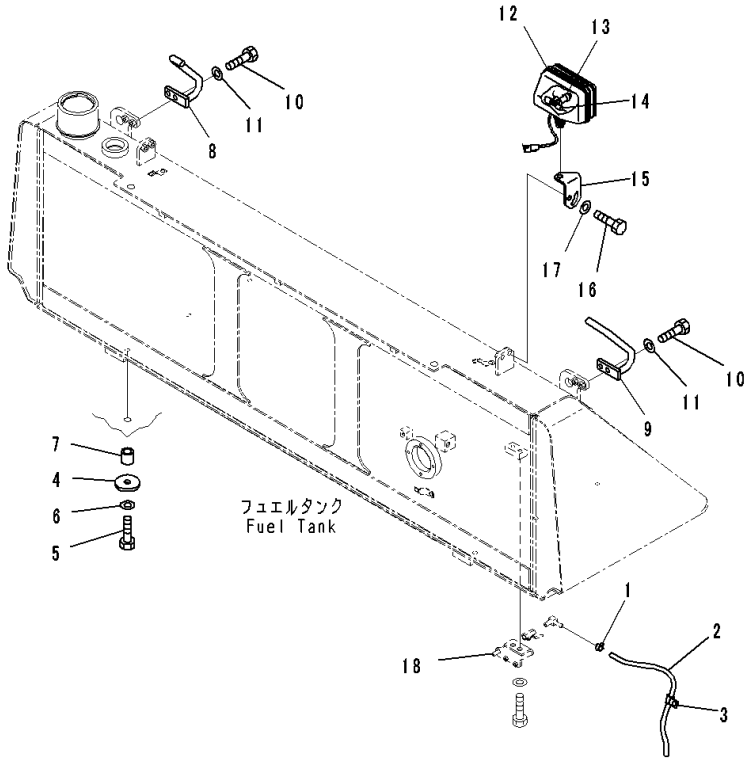

Index	Code	Part Number	Description	Qty	Serial Number
1		07285-00115	Clip	1	81028-
2		07270-01060	Tube	1	81028-
3		04434-51312	Clip	1	81028-
4		17A-04-11191	Plate	6	81028-
5		01010-81675	Bolt	6	81028-
6		01643-31645	Washer	6	81028-
7		195-54-42560	Boss	6	81028-
8		17A-04-41161	Grip,RHS	1	81028-
9		17A-04-41181	Grip,LHS	1	81028-
10		01010-81240	Bolt	4	81028-
11		01643-31232	Washer	4	81028-
12		17A-06-17931	Lamp Assembly, Working	1	81028-
13		17A-06-17970	• Bulb, 70watt	1	81028-
14		17A-06-17980	• Sleeve	1	81028-
15		17A-06-41611	Plate	1	81028-
16		01010-81235	Bolt	2	81028-
17		01643-31232	Washer	2	81028-
18		(17A-04-41311)	Bracket(Refer to Page 281)		-

FIG. D0100-002001 Fuel Tank, With Fuel Quick Charge, Tank

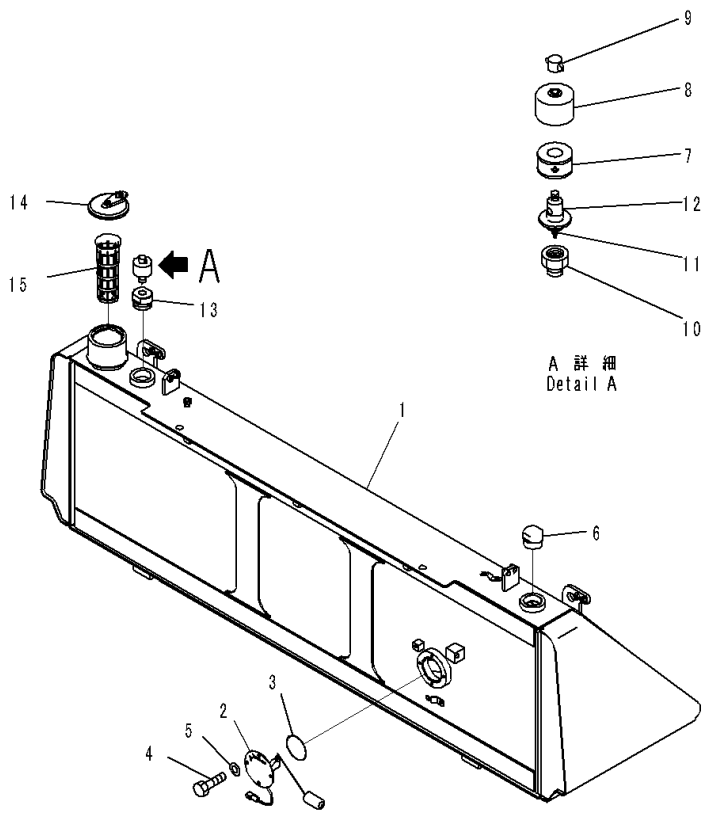

Index	Code	Part Number	Description	Qty	Serial Number
1		17A-04-41112	Tank	1	81028-
2		7861-93-4940	Sensor	1	81028-
3		07000-12085	O-ring	1	81028-
4		01010-81016	Bolt	4	81028-
5		01643-31032	Washer	4	81028-
6		195-04-14130	Plug	1	81028-
		22U-60-21520	Breather	1	81028-
7		421-60-35170	• Element	1	81028-
8		421-60-35180	• Cover	1	81028-
9		421-60-35190	• Nut	1	81028-
10	C1		• Body	1	81028-
11	C1		• Valve Assembly	1	81028-
12	C1		• Case	1	81028-
13		17A-04-42150	Adapter	1	81028-
14		17A-04-41411	Cap	1	81028-
15		07056-18422	Strainer	1	81028-

FIG. D0100-002002 Fuel Tank, Fuel Piping

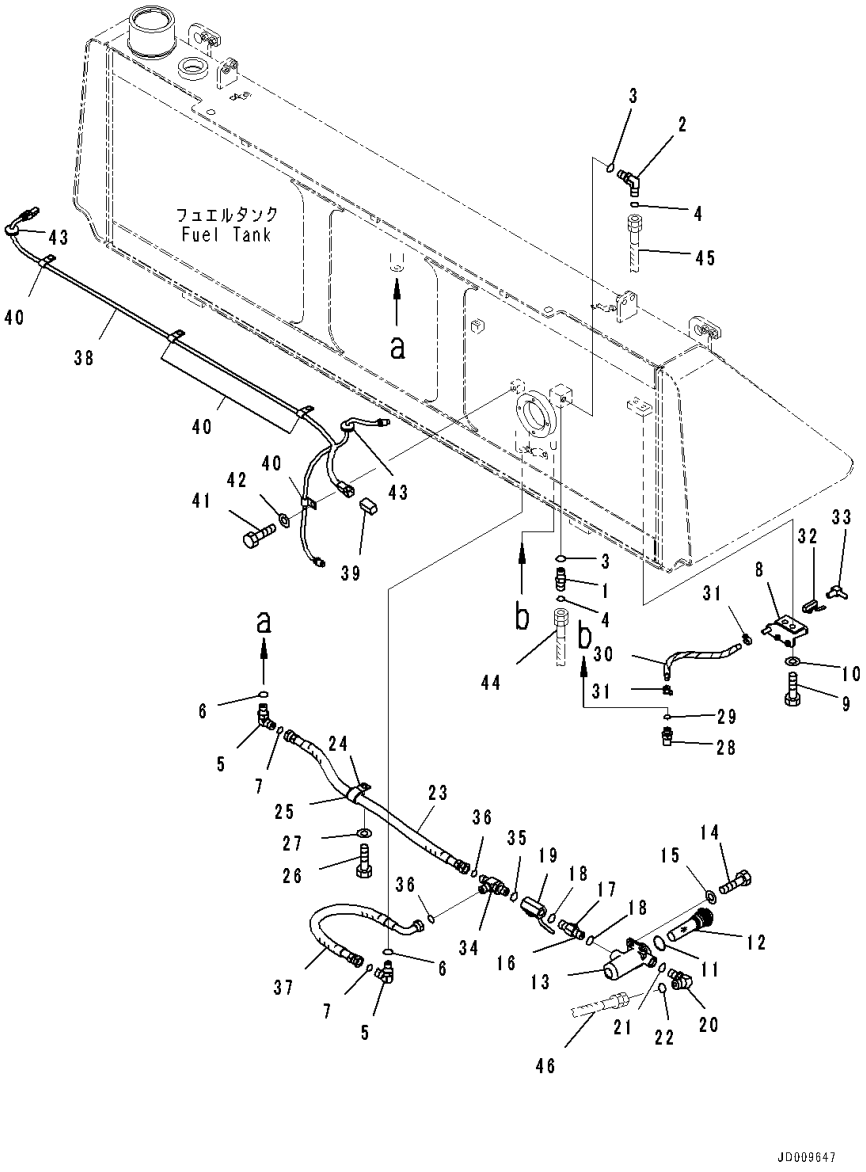

Index	Code	Part Number	Description	Qty	Serial Number
		Note: This list covers following specifications.			
		With Fuel Quick Charge			
		With Fuel Quick Charge, Landfill Specification			
1		02781-0031D	Union	1	81028-
2		02782-10311	Elbow	1	81028-
3		07002-11423	O-ring	2	81028-
4		02896-11009	O-ring	2	81028-
5		02782-10420	Elbow	2	81028-
6		07002-11823	O-ring	2	81028-
7		02896-11012	O-ring	2	81028-
8		17A-04-41311	Bracket	1	81028-
9		01010-81225	Bolt	2	81028-
10		01643-31232	Washer	2	81028-
		17A-04-41190	Filter Assembly	1	81028-
11		07002-14234	• O-ring	1	81028-
12		07058-00010	• Element Assembly	1	81028-
13		14X-04-21660	• Case	1	81028-
14		01010-80825	Bolt	2	81028-
15		01643-30823	Washer	2	81028-
16		17A-04-41331	Connector	1	81028-
17		01583-52012	• Nut	1	81028-
18		07002-12034	O-ring	2	81028-
19		14X-04-21620	Valve	1	81028-
20		02782-10516	Elbow	1	81028-
21		07002-12034	O-ring	1	81028-
22		02896-11015	O-ring	1	81028-
23		02762-00407	Hose	1	81028-
24		04434-52712	Clip	1	81028-
25		07095-20419	Cushion	1	81028-
26		01010-81225	Bolt	1	81028-
27		01643-31232	Washer	1	81028-
28		17A-04-42640	Elbow	1	81028-
29		07002-11823	O-ring	1	81028-
30		07270-21030	Tube	1	81028-
31		07281-00167	Clamp	2	81028-
32		07700-40240	Valve	1	81028-
33		205-04-62130	Elbow	1	81028-
34		21N-64-36690	Tee	1	81028-
35		07002-12034	O-ring	1	81028-
36		02896-11012	O-ring	2	81028-

FIG. D0100-002002 Fuel Tank, Fuel Piping

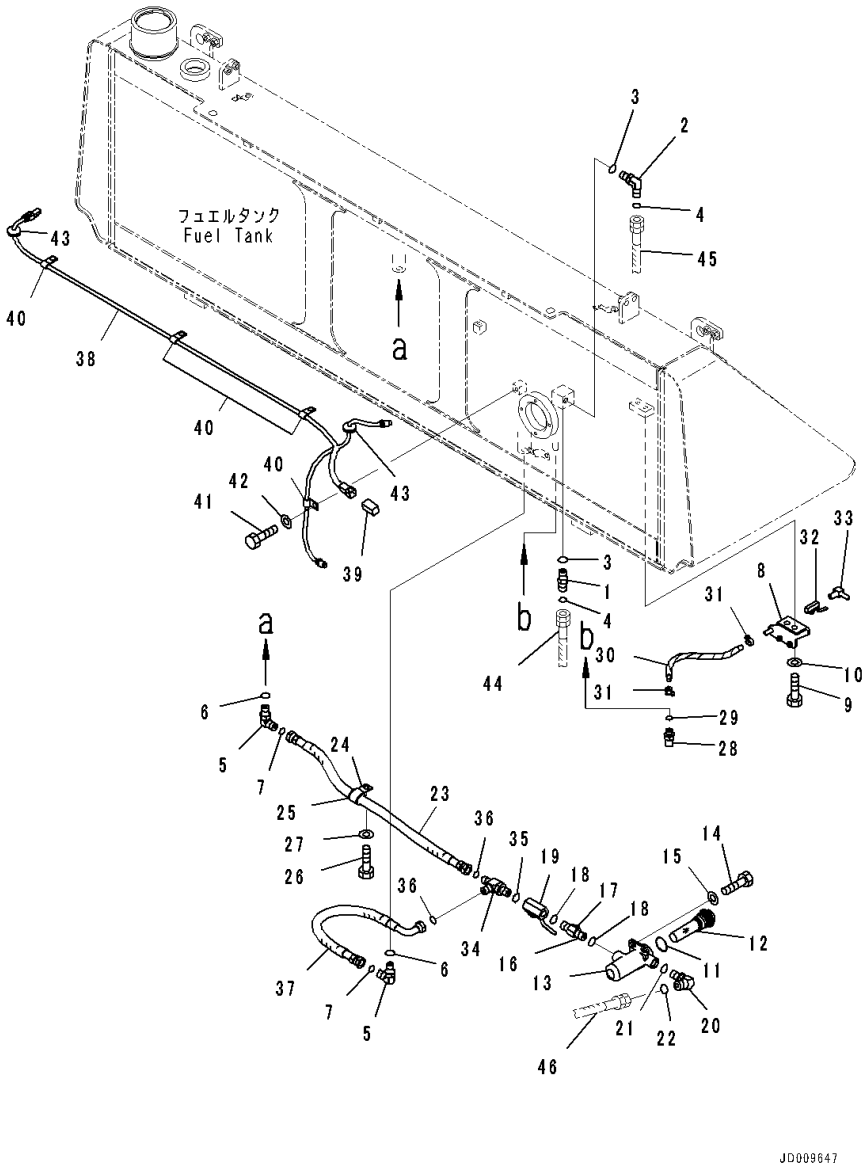

Index	Code	Part Number	Description	Qty	Serial Number
37		02763-004A4	Hose	1	81028-
38		17A-06-41253	Wiring Harness	1	81028-
39		08192-22830	• Connector	1	81028-
40		04434-51012	Clip	4	81028-
41		01010-81225	Bolt	4	81028-
42		01643-31232	Washer	4	81028-
43		135-06-34260	Grommet	2	81028-
44		(02762-00337)	Hose(Refer to Page 290)		-
45		(02762-00338)	Hose(Refer to Page 290)		-
46		(02762-00540)	Hose(Refer to Page 290)		-

FIG. D0100-002003 Fuel Tank, With Fuel Quick Charge, Working Lamp, Rear

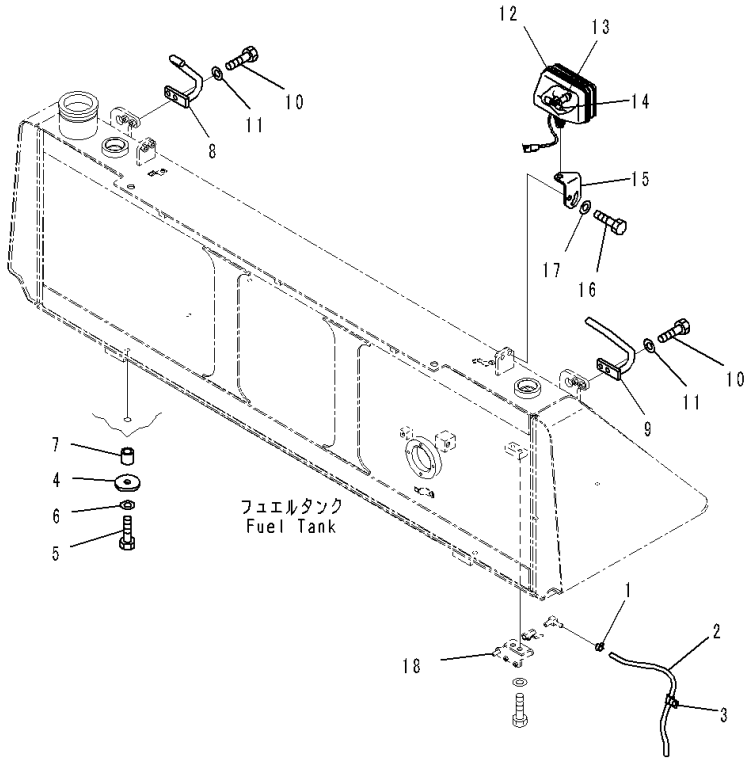

Index	Code	Part Number	Description	Qty	Serial Number
1		07285-00115	Clip	1	81028-
2		07270-01060	Tube	1	81028-
3		04434-51312	Clip	1	81028-
4		17A-04-11191	Plate	6	81028-
5		01010-81675	Bolt	6	81028-
6		01643-31645	Washer	6	81028-
7		195-54-42560	Boss	6	81028-
8		17A-04-41161	Grip,RHS	1	81028-
9		17A-04-41181	Grip,LHS	1	81028-
10		01010-81240	Bolt	4	81028-
11		01643-31232	Washer	4	81028-
12		17A-06-17931	Lamp Assembly, Working	1	81028-
13		17A-06-17970	• Bulb, 70watt	1	81028-
14		17A-06-17980	• Sleeve	1	81028-
15		17A-06-41611	Plate	1	81028-
16		01010-81235	Bolt	2	81028-
17		01643-31232	Washer	2	81028-
18		(17A-04-41311)	Bracket(Refer to Page 285)		-

FIG. D0100-003001 Fuel Tank, With Fuel Quick Charge, Landfill Specification, Tank

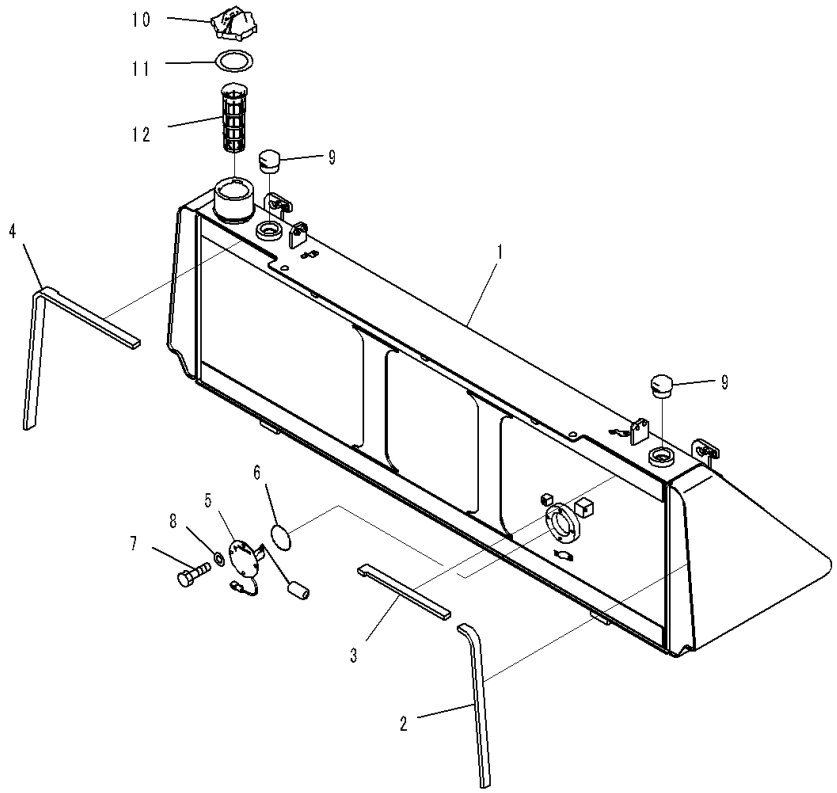

Index	Code	Part Number	Description	Qty	Serial Number
1		17A-04-41611	Tank	1	81028-
2		17A-04-41620	• Seal	1	81028-
3		17A-04-41630	• Seal	1	81028-
4		17A-04-41641	• Seal	1	81028-
5		7861-93-4940	Sensor	1	81028-
6		07000-12085	O-ring	1	81028-
7		01010-81016	Bolt	4	81028-
8		01643-31032	Washer	4	81028-
9		195-04-14130	Plug	2	81028-
10		07050-41200	Cap	1	81028-
11		07050-21202	• Gasket	1	81028-
12		07056-18422	Strainer	1	81028-

FIG. D0100-003003 Fuel Tank, With Fuel Quick Charge, Landfill Specification, Working Lamp, Rear

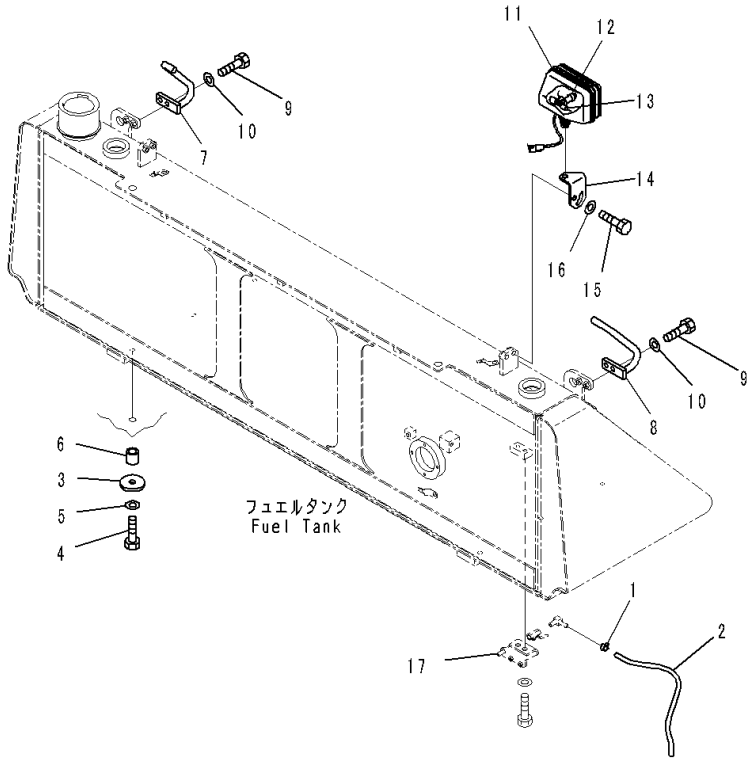

Index	Code	Part Number	Description	Qty	Serial Number
1		07285-00115	Clip	1	81028-
2		07270-01060	Tube	1	81028-
3		17A-04-11191	Plate	6	81028-
4		01010-81675	Bolt	6	81028-
5		01643-31645	Washer	6	81028-
6		195-54-42560	Boss	6	81028-
7		17A-04-41161	Grip,RHS	1	81028-
8		17A-04-41181	Grip,LHS	1	81028-
9		01010-81240	Bolt	4	81028-
10		01643-31232	Washer	4	81028-
11		17A-06-17931	Lamp Assembly, Working	1	81028-
12		17A-06-17970	• Bulb, 70watt	1	81028-
13		17A-06-17980	• Sleeve	1	81028-
14		17A-06-41611	Plate	1	81028-
15		01010-81235	Bolt	2	81028-
16		01643-31232	Washer	2	81028-
17		(17A-04-41311)	Bracket(Refer to Page 285)		-

FIG. D0200-001001 Fuel Piping

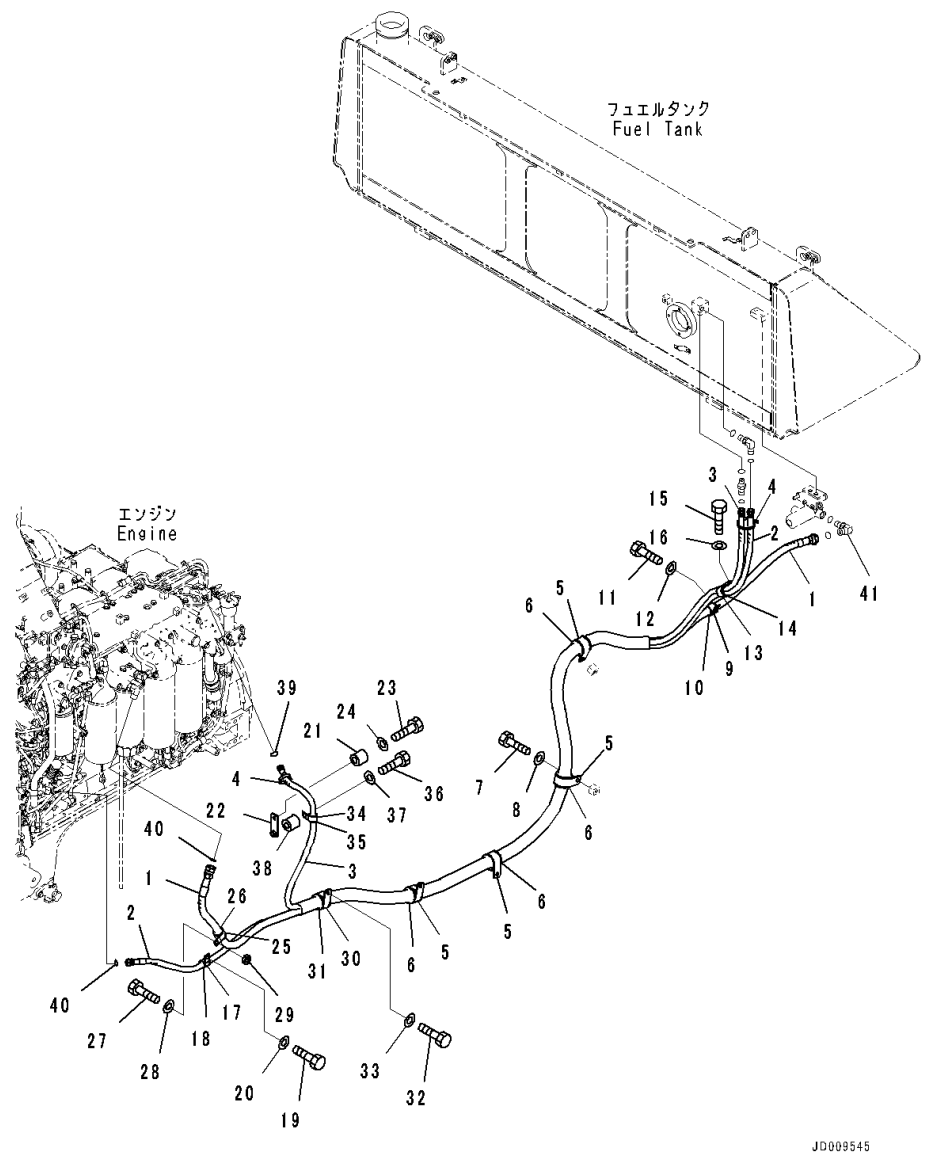

Index	Code	Part Number	Description	Qty	Serial Number
1		02762-00540	Hose	1	81028-
2		02762-00338	Hose	1	81028-
3		02762-00337	Hose	1	81028-
4		20Y-62-22790	Band, Red	2	81028-
5		21T-62-76830	Clip	4	81028-
6		198-04-41210	Cushion	4	81028-
7		01010-81230	Bolt	4	81028-
8		01643-31232	Washer	4	81028-
9		04434-53212	Clip	1	81028-
10		07095-20522	Cushion	1	81028-
11		01010-81225	Bolt	1	81028-
12		01643-31232	Washer	1	81028-
13		04434-53412	Clip	1	81028-
14		07095-20627	Cushion	1	81028-
15		01010-81225	Bolt	1	81028-
16		01643-31232	Washer	1	81028-
17		04434-52112	Clip	1	81028-
18		07095-20314	Cushion	1	81028-
19		01010-81250	Bolt	1	81028-
20		01643-31232	Washer	1	81028-
21		195-33-11220	Spacer	1	81028-
22		154-Z11-5340	Bracket	1	81028-
23		01010-81025	Bolt	1	81028-
24		01643-31032	Washer	1	81028-
25		04434-53212	Clip	1	81028-
26		07095-20523	Cushion	1	81028-
27		01010-81235	Bolt	1	81028-
28		01643-31232	Washer	1	81028-
29		198-43-15310	Collar	1	81028-
30		21T-62-76830	Clip	1	81028-
31		198-04-41210	Cushion	1	81028-
32		01010-81230	Bolt	1	81028-
33		01643-31232	Washer	1	81028-
34		04434-52112	Clip	1	81028-
35		07095-20314	Cushion	1	81028-
36		01010-81250	Bolt	1	81028-
37		01643-31232	Washer	1	81028-
38		195-33-11220	Spacer	1	81028-
39		02896-11015	O-ring	1	81028-
40		02896-11009	O-ring	2	81028-

FIG. D0200-001001 Fuel Piping

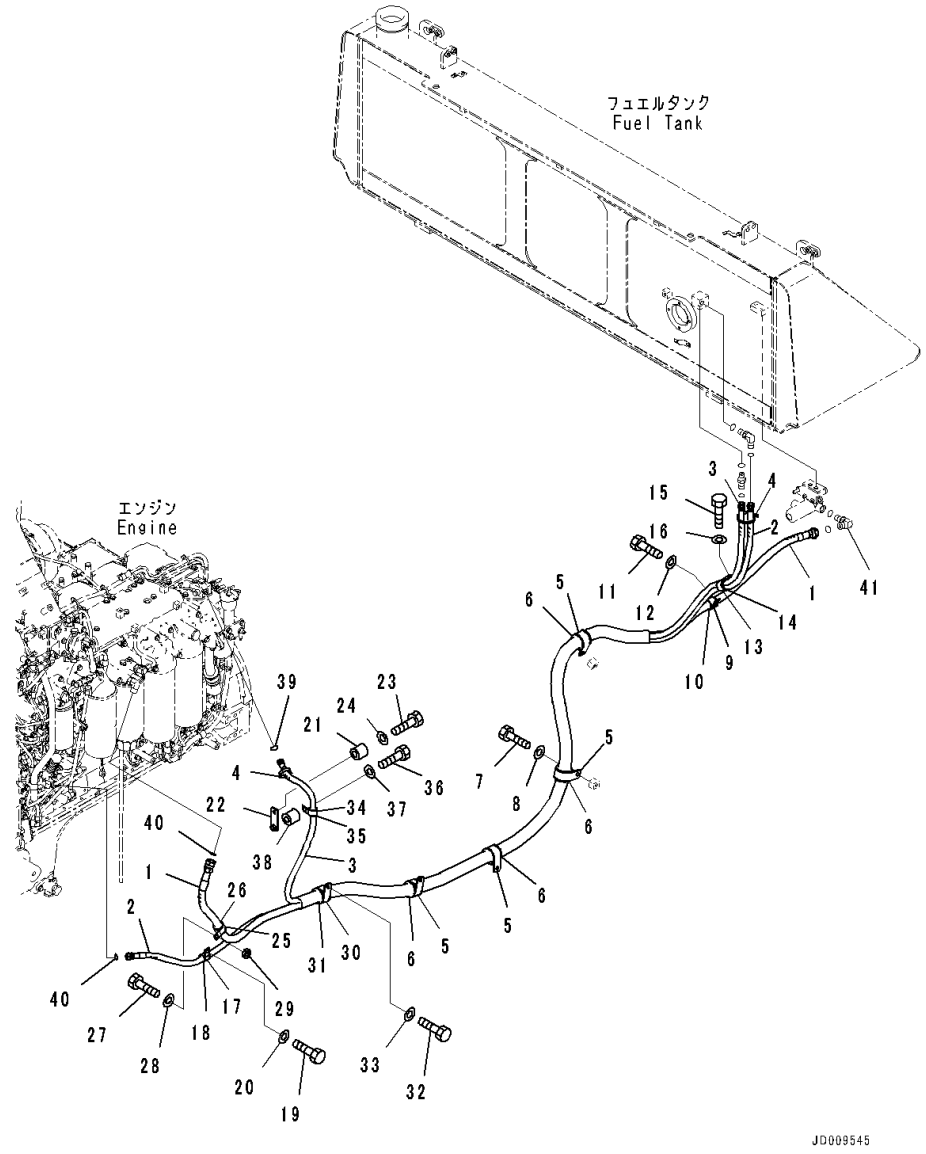

Index	Code	Part Number	Description	Qty	Serial Number
41		(02782-10516)	Elbow(Refer to Page 281)		-
		(02782-10516)	Elbow(Refer to Page 285)		-

ELECTRICAL SYSTEM

FIG. E0110-001001 Battery, Large Capacity

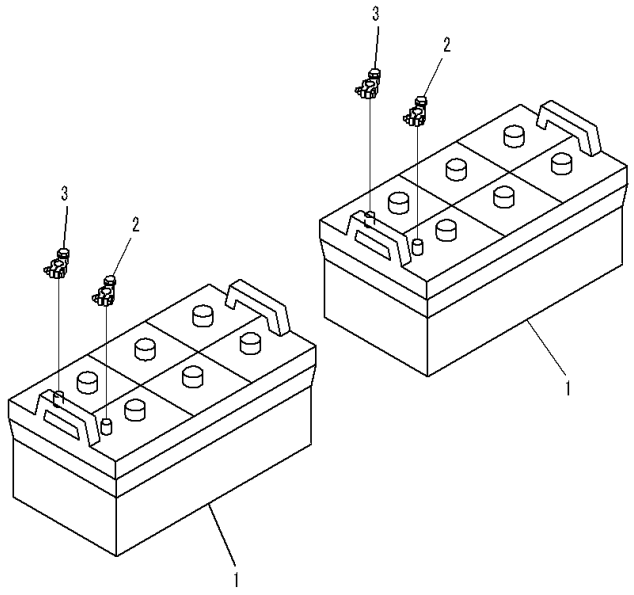

00089541

Index	Code	Part Number	Description	Qty	Serial Number
1		08000-12221	Battery, Dry, (C200)	2	81028-
2		08000-00000	Terminal	2	81028-
3		08000-00001	Terminal	2	81028-

FIG. E0110-002001 Battery

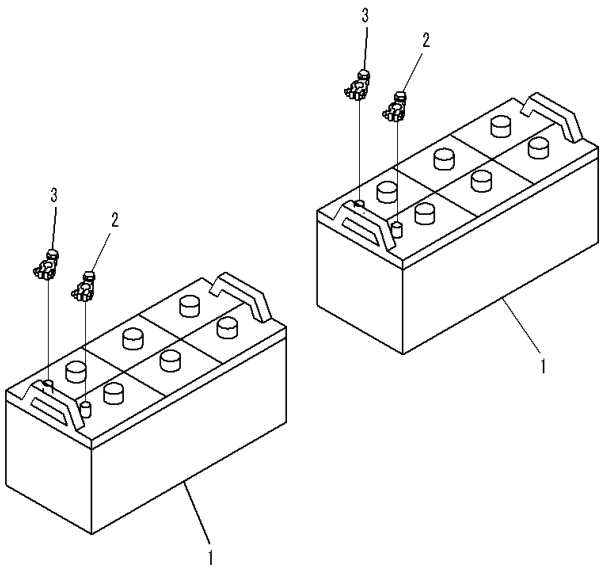

00089542

Index	Code	Part Number	Description	Qty	Serial Number
1		08000-42220	Battery, Dry, (165G51)	2	81028-
2		08000-00000	Terminal	2	81028-
3		08000-00001	Terminal	2	81028-

FIG. E0200-001001 Electric Wiring Harness, Radiator

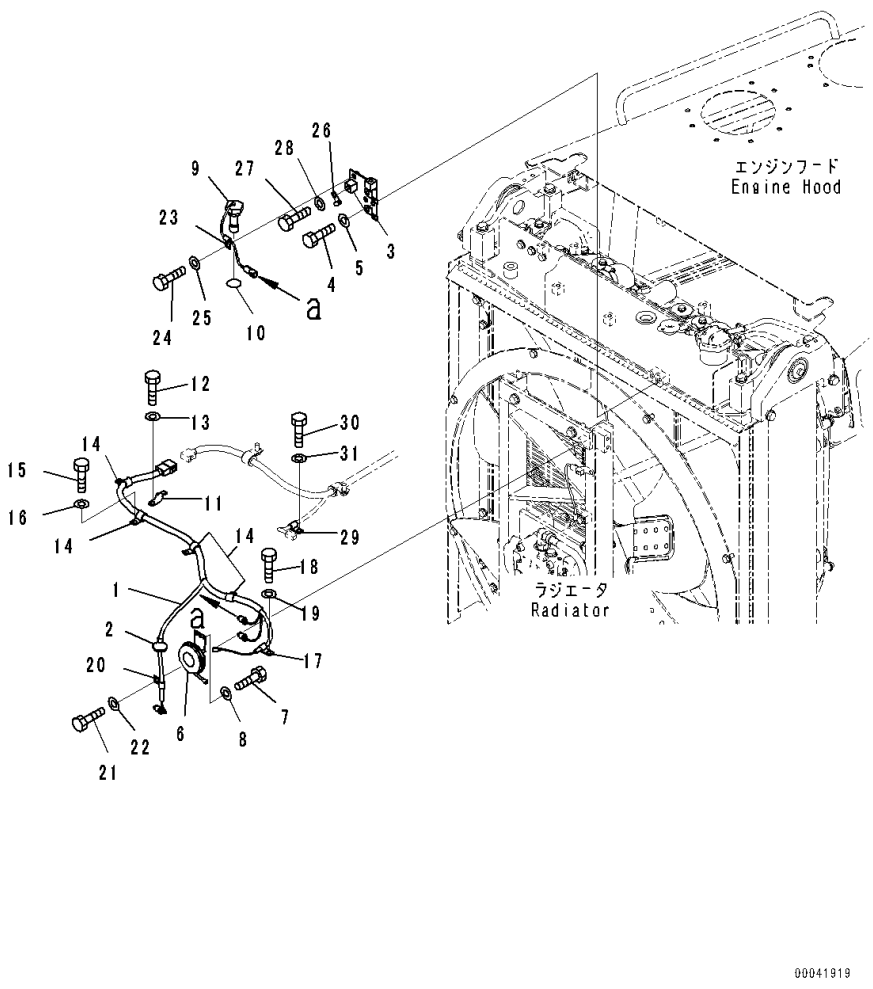

Index	Code	Part Number	Description	Qty	Serial Number
1		17A-06-41242	Wiring Harness	1	81028-
2		08037-11025	• Grommet	1	81028-
3		17A-06-41711	Bracket	1	81028-
4		01010-81225	Bolt	2	81028-
5		01643-31232	Washer	2	81028-
6		19M-06-18220	Horn	1	81028-
7		01010-80820	Bolt	2	81028-
8		01643-30823	Washer	2	81028-
9		7861-93-4520	Sensor	1	81028-
10		07002-13634	O-ring	1	81028-
11		08193-21012	Clip	1	81028-
12		01010-81225	Bolt	1	81028-
13		01643-31232	Washer	1	81028-
14		04434-51712	Clip	4	81028-
15		01010-81225	Bolt	4	81028-
16		01643-31232	Washer	4	81028-
17		04434-51012	Clip	1	81028-
18		01010-81225	Bolt	1	81028-
19		01643-31232	Washer	1	81028-
20		04434-51012	Clip	1	81028-
21		01010-81225	Bolt	1	81028-
22		01643-31232	Washer	1	81028-
23		04434-50612	Clip	1	81028-
24		01010-81225	Bolt	1	81028-
25		01643-31232	Washer	1	81028-
26		04434-50612	Clip	1	81028-
27		01010-81225	Bolt	1	81028-
28		01643-31232	Washer	1	81028-
29		600-051-3100	Clip	1	81028-
30		01010-81225	Bolt	1	81028-
31		01643-31232	Washer	1	81028-

FIG. E0200-001002 Electric Wiring Harness, Fender

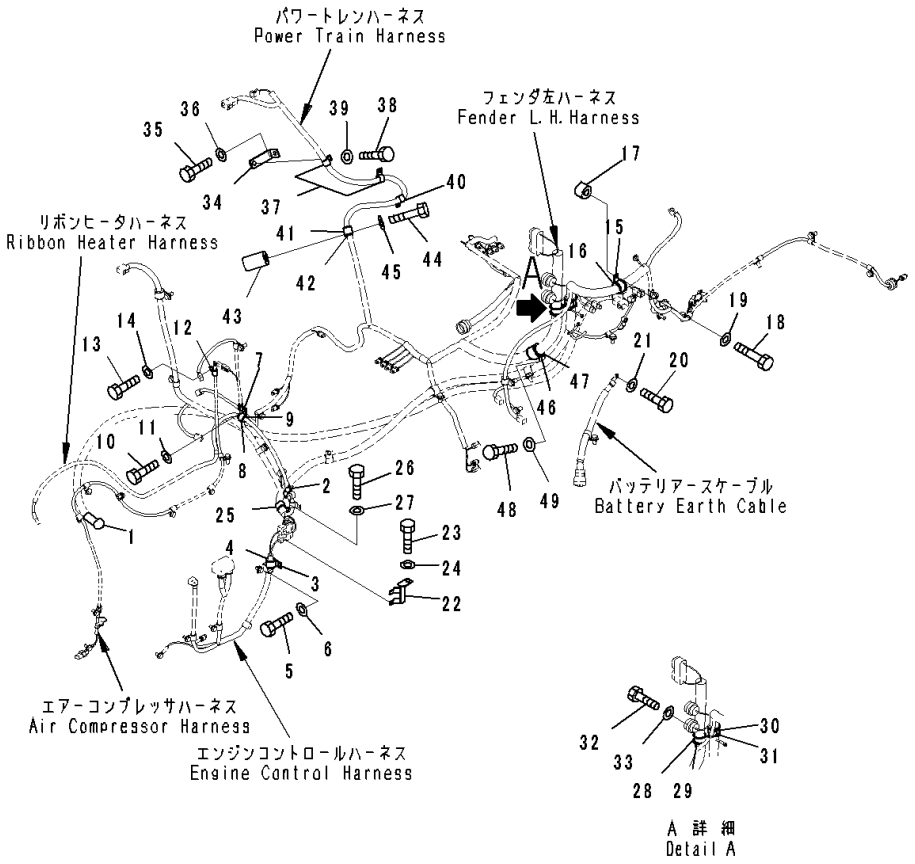

Index	Code	Part Number	Description	Qty	Serial Number
1		17A-06-41540	Cap	1	81028-
2		08038-02027	Cap	1	81028-
3		04434-52712	Clip	1	81028-
4		07095-20419	Cushion	1	81028-
5		01010-81225	Bolt	1	81028-
6		01643-31232	Washer	1	81028-
7		04434-51012	Clip	1	81028-
8		04434-51912	Clip	1	81028-
9		07095-20213	Cushion	1	81028-
10		01010-81225	Bolt	1	81028-
11		01643-31232	Washer	1	81028-
12		600-051-3100	Clip	1	81028-
13		01010-81225	Bolt	1	81028-
14		01643-31232	Washer	1	81028-
15		155-61-15350	Clip	1	81028-
16		22M-62-13660	Cushion	1	81028-
17		144-947-3490	Spacer	1	81028-
18		01010-81240	Bolt	1	81028-
19		01643-31232	Washer	1	81028-
20		01010-81220	Bolt	2	81028-
21		01643-31232	Washer	2	81028-
22		17A-06-41951	Bracket	1	81028-
23		01010-81225	Bolt	1	81028-
24		01643-31232	Washer	1	81028-
25		04434-52712	Clip	1	81028-
26		01010-81225	Bolt	1	81028-
27		01643-31232	Washer	1	81028-
28		23T-62-12160	Clip	1	81028-
29		20T-62-71831	Cushion	1	81028-
30		155-61-15350	Clip	1	81028-
31		22M-62-13660	Cushion	1	81028-
32		01010-81225	Bolt	1	81028-
33		01643-31232	Washer	1	81028-
34		203-06-61730	Bracket	1	81028-
35		01010-81225	Bolt	1	81028-
36		01643-31232	Washer	1	81028-
37		04434-51912	Clip	2	81028-
38		01010-81225	Bolt	2	81028-
39		01643-31232	Washer	2	81028-
40		04434-51912	Clip	1	81028-

FIG. E0200-001002 Electric Wiring Harness, Fender

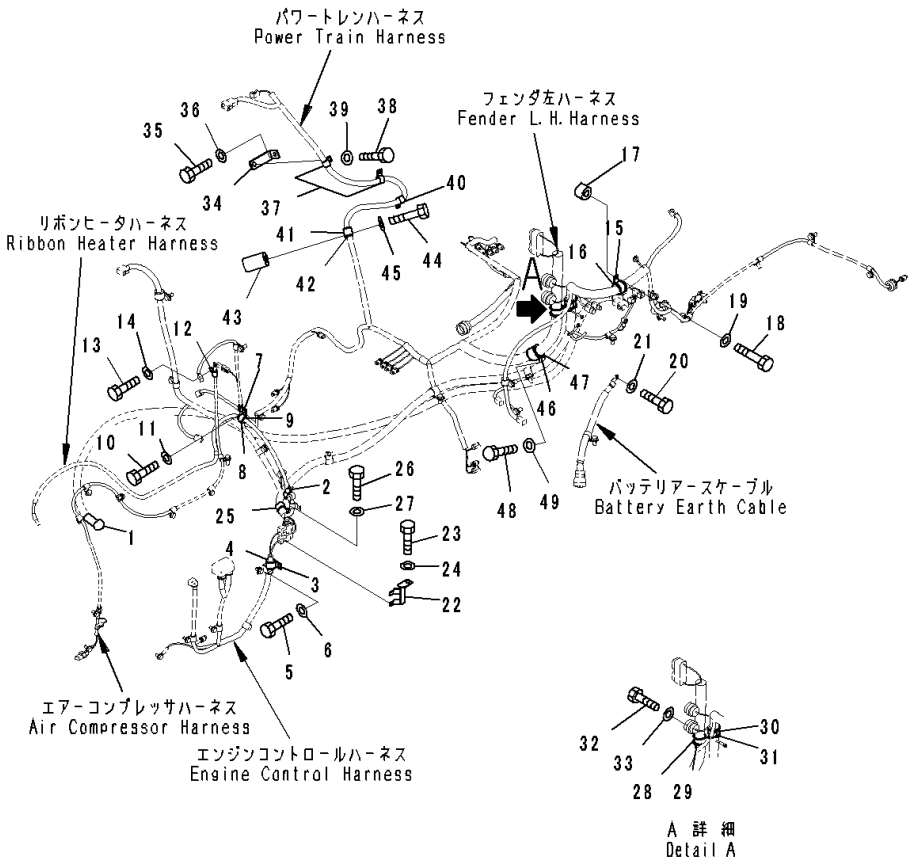

Index	Code	Part Number	Description	Qty	Serial Number
41		04434-52512	Clip	1	81028-
42		07095-20318	Cushion	1	81028-
43		20Y-03-11220	Collar	1	81028-
44		01010-81260	Bolt	1	81028-
45		01643-31232	Washer	1	81028-
46		23T-62-12160	Clip	1	81028-
47		20T-62-71831	Cushion	1	81028-
48		01010-81225	Bolt	1	81028-
49		01643-31232	Washer	1	81028-

FIG. E0201-002001 KOMTRAX Controller

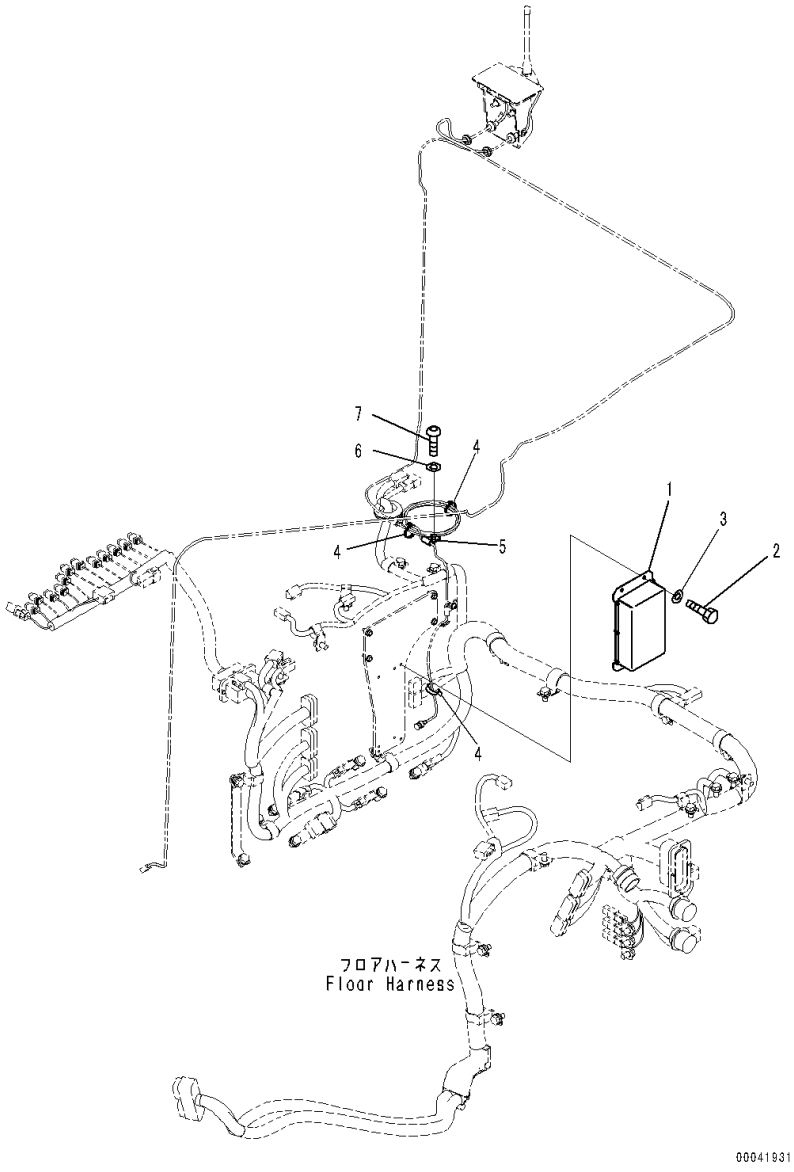

Index	Code	Part Number	Description	Qty	Serial Number
1		7826-23-3012	Controller	1	81051-
2		01010-80612	Bolt	4	81028-
3		01643-30623	Washer	4	81028-
4		08034-20414	Band	3	81028-
5		04434-50508	Clip	3	81028-
6		01643-70823	Washer	3	81028-
7		01245-00820	Screw	3	81028-

FIG. E0300-001001 Front Working Lamp and Rear side Working Lamp

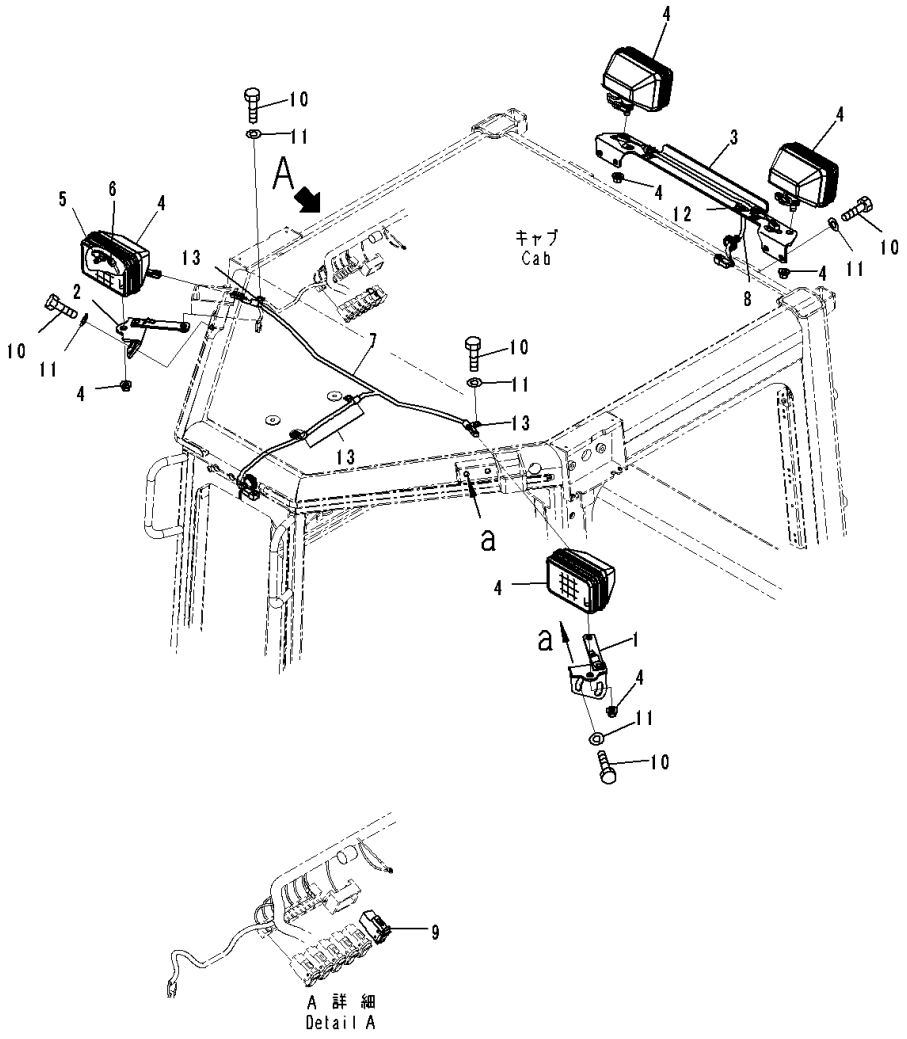

Index	Code	Part Number	Description	Qty	Serial Number
1		17A-979-1880	Bracket,LHS	1	81028-
2		17A-979-1890	Bracket,RHS	1	81028-
3		17A-979-2930	Bracket	1	81028-
4		17A-06-17931	Lamp Assembly, Working	4	81028-
5		17A-06-17970	• Bulb, 70watt	1	81028-
6		17A-06-17980	• Sleeve	1	81028-
7		17A-979-2921	Wiring Harness	1	81028-
8		17A-979-2941	Wiring Harness	1	81028-
9		17A-06-42230	Switch, Rear Light	1	81028-
10		01010-D1225	Bolt	12	81028-
11		01643-71232	Washer	12	81028-
12		205-977-7310	Grommet	1	81028-
13		04434-51012	Clip	4	81028-

FIG. E0300-002001 Front Working Lamp and Rear side Working Lamp, With Rearview Camera

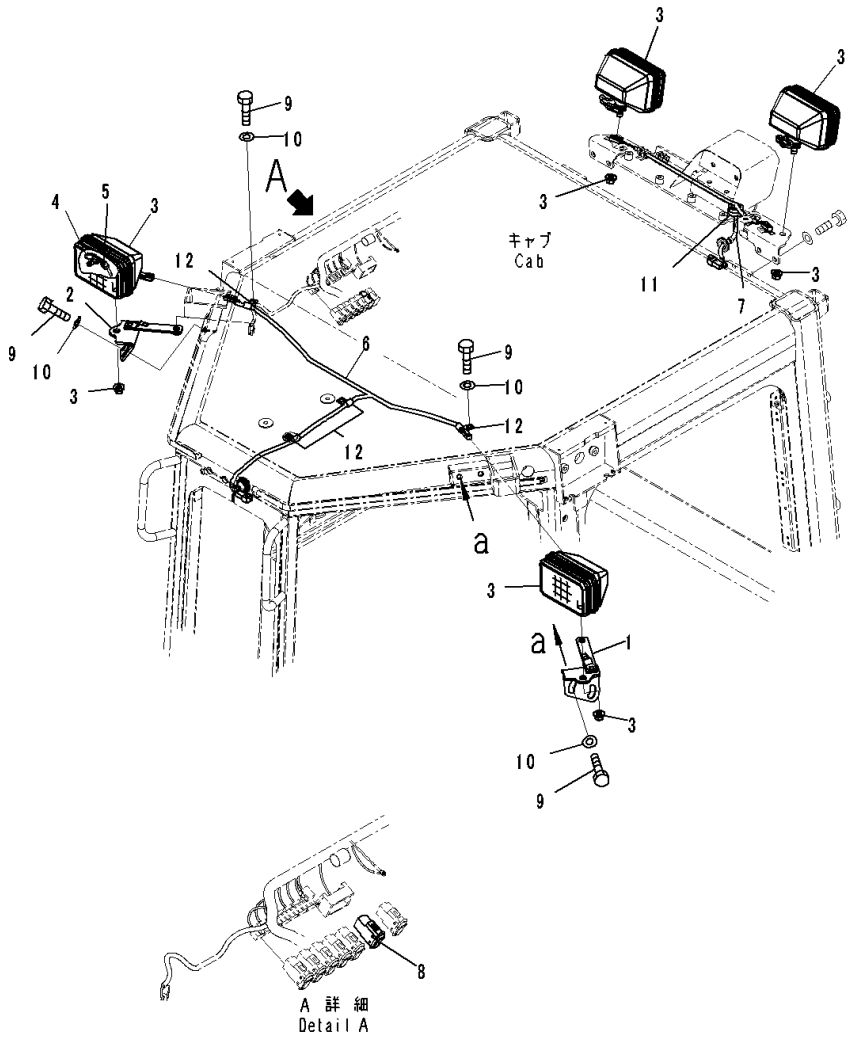

Index	Code	Part Number	Description	Qty	Serial Number
1		17A-979-1880	Bracket,LHS	1	81028-
2		17A-979-1890	Bracket,RHS	1	81028-
3		17A-06-17931	Lamp Assembly, Working	4	81028-
4		17A-06-17970	• Bulb, 70watt	1	81028-
5		17A-06-17980	• Sleeve	1	81028-
6		17A-979-2921	Wiring Harness	1	81028-
7		17A-979-2941	Wiring Harness	1	81028-
8		17A-06-42230	Switch, Rear Light	1	81028-
9		01010-D1225	Bolt	8	81028-
10		01643-71232	Washer	8	81028-
11		205-977-7310	Grommet	1	81028-
12		04434-51012	Clip	4	81028-

FIG. E0450-001001 Rearview Camera

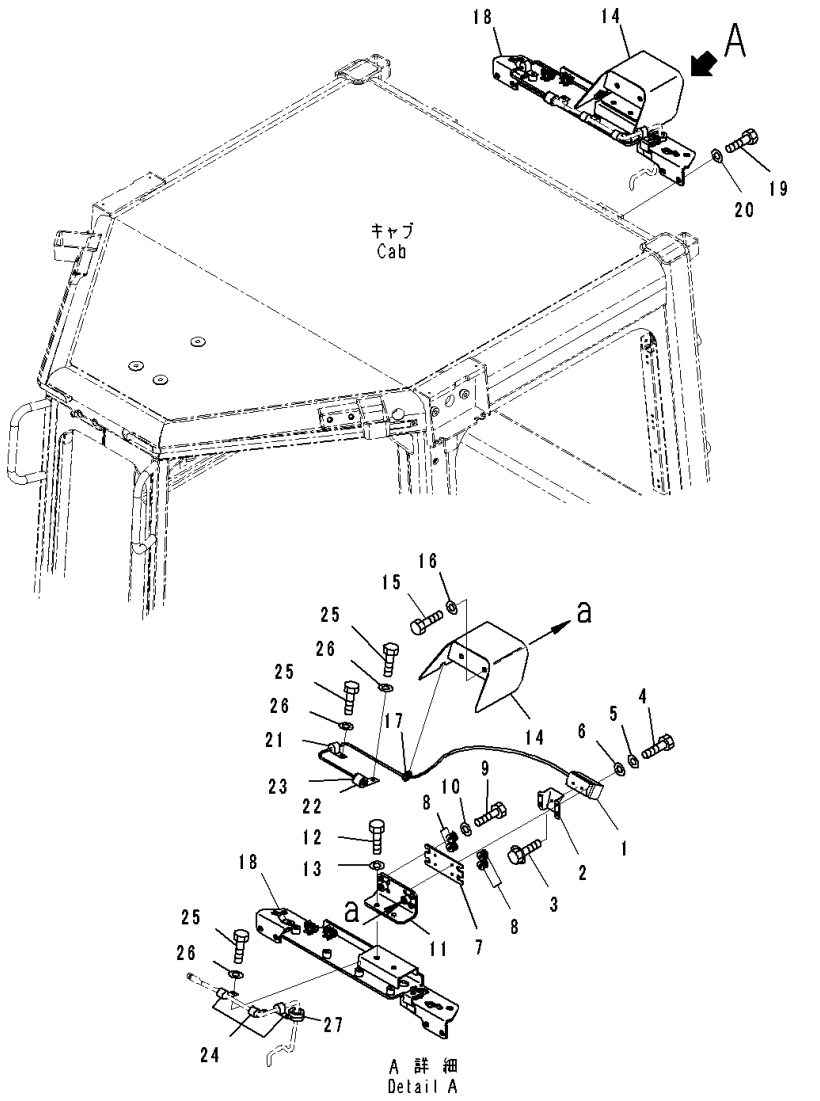

Index	Code	Part Number	Description	Qty	Serial Number
		7835-33-1001	Camera Assembly	1	81028-
1		7835-33-1100	• Camera	1	81028-
2		7835-33-1201	• Bracket	1	81028-
3		7835-33-1310	• Bolt	2	81028-
4		7835-33-1320	• Bolt	4	81028-
5		7835-33-1330	• Washer	4	81028-
6		7835-33-1340	• Washer	4	81028-
7		20Y-06-41670	Bracket	1	81028-
8		20Y-810-1240	Cushion	4	81028-
9		01010-D0835	Bolt	4	81028-
10		01643-70823	Washer	4	81028-
11		20Y-06-41661	Bracket	1	81028-
12		01010-D1025	Bolt	2	81028-
13		01643-71032	Washer	2	81028-
14		20Y-06-41681	Cover	1	81028-
15		01010-D1020	Bolt	2	81028-
16		01643-71032	Washer	2	81028-
17		201-54-13210	Grommet	1	81028-
18		17A-979-3870	Bracket	1	81028-
19		01010-D1225	Bolt	4	81028-
20		01643-71232	Washer	4	81028-
21		04434-50610	Clip	1	81028-
22		04434-53211	Clip	1	81028-
23		07095-00317	Cushion	1	81028-
24		04434-51010	Clip	3	81028-
25		01010-D1020	Bolt	5	81028-
26		01643-71032	Washer	5	81028-
27		205-977-7310	Grommet	1	81028-

POWER TRANSMITTING SYSTEM

FIG. F2200-001001 Universal Joint

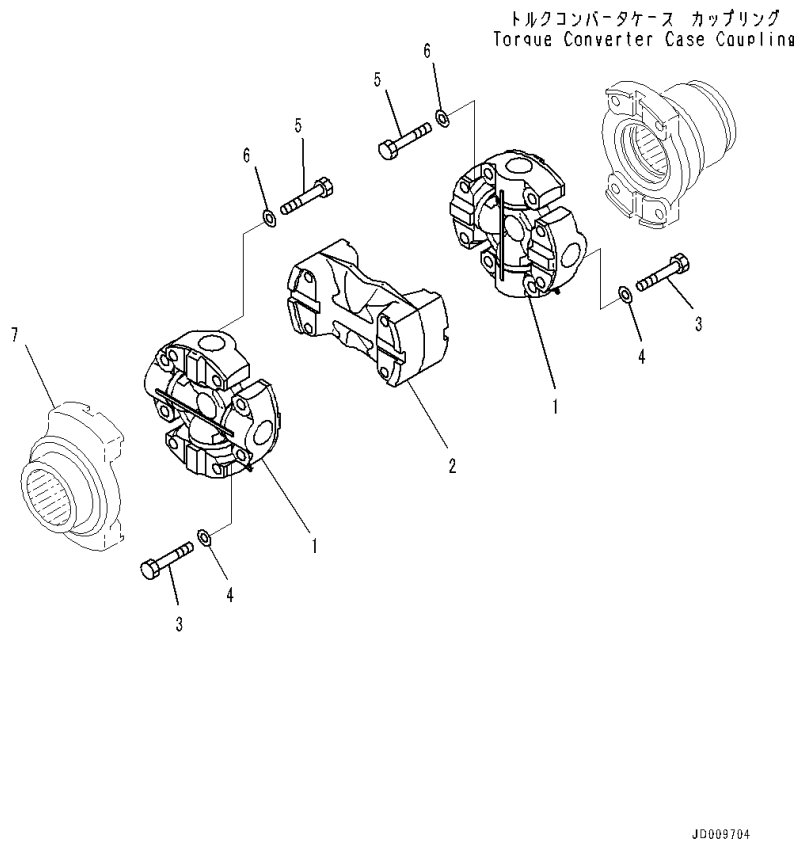

Index	Code	Part Number	Description	Qty	Serial Number
		17A-20-11201	Universal Joint	1	81028-
1		17A-20-11211	• Spider	2	81028-
2		175-20-11130	• Plate	1	81028-
3		01010-81260	• Bolt	8	81028-
4		01643-31232	• Washer	8	81028-
5		01010-81260	Bolt	8	81028-
6		01643-51232	Washer	8	81028-
7		(17A-12-11221)	Coupling(Refer to Page 225)		-

FIG. F2300-001001 Power Train, Pump and Turbine

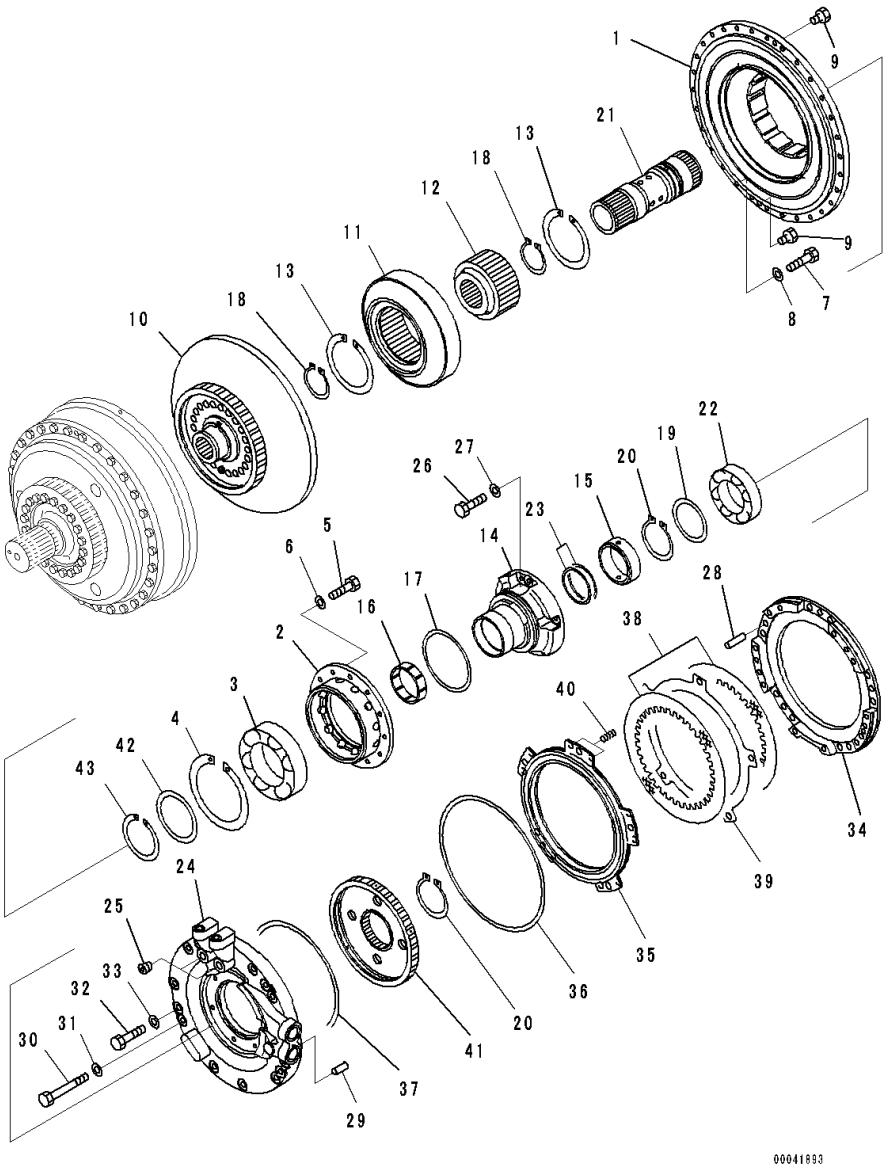

Index	Code	Part Number	Description	Qty	Serial Number
		17A-13-41000	Torque Converter Assembly	1	81028-
1		17A-13-21121	• Pump	1	81028-
2		17A-13-41140	• Retainer	1	81028-
3		17A-13-31160	• Bearing	1	81028-
4		04071-00180	• Ring, Snap	1	81028-
5		01010-81035	• Bolt	12	81028-
6		01643-31032	• Washer	12	81028-
7		01010-81040	• Bolt	30	81028-
8		01643-31032	• Washer	30	81028-
9		07040-11209	• Plug	2	81028-
10		17A-13-41510	• Turbine	1	81028-
11		17A-13-42110	• Stator	1	81028-
12		17A-13-42130	• Race	1	81028-
13		04071-00150	• Ring	2	81028-
14		17A-13-44211	• Shaft	1	81028-
15		17A-13-43220	• Sleeve	1	81028-
16		150-15-11680	• Bushing	1	81028-
17		195-13-12711	• Seal Ring, (Kit : K01)	1	81028-
18		04064-08530	• Ring, Snap	2	81028-
19		17A-13-43210	• Spacer	1	81028-
20		04064-09030	• Ring, Snap	2	81028-
21		17A-13-48520	• Shaft	1	81028-
22		06043-06018	• Bearing	1	81028-
23		07018-20904	• Seal Ring	2	81028-
24		17A-13-44110	• Housing	1	81028-
25		07043-70312	• Plug	2	81028-
26		01010-81030	• Bolt	6	81028-
27		01643-31032	• Washer	6	81028-
28		711-68-18130	• Pin	5	81028-
29		04020-01228	• Pin, Dowel	1	81028-
30		01010-81290	• Bolt	10	81028-
31		01643-31232	• Washer	10	81028-
32		01252-71250	• Bolt	3	81028-
33		01643-31232	• Washer	3	81028-
34		17A-13-48120	• Housing	1	81028-
35		424-15-12750	• Piston	1	81028-
36		568-15-12850	• Seal Ring, (Kit : K01)	1	81028-
37		113-15-12870	• Ring, (Kit : K01)	1	81028-
38		424-15-12711	• Disc	2	81028-
39		424-15-12720	• Plate	1	81028-

FIG. F2300-001001 Power Train, Pump and Turbine

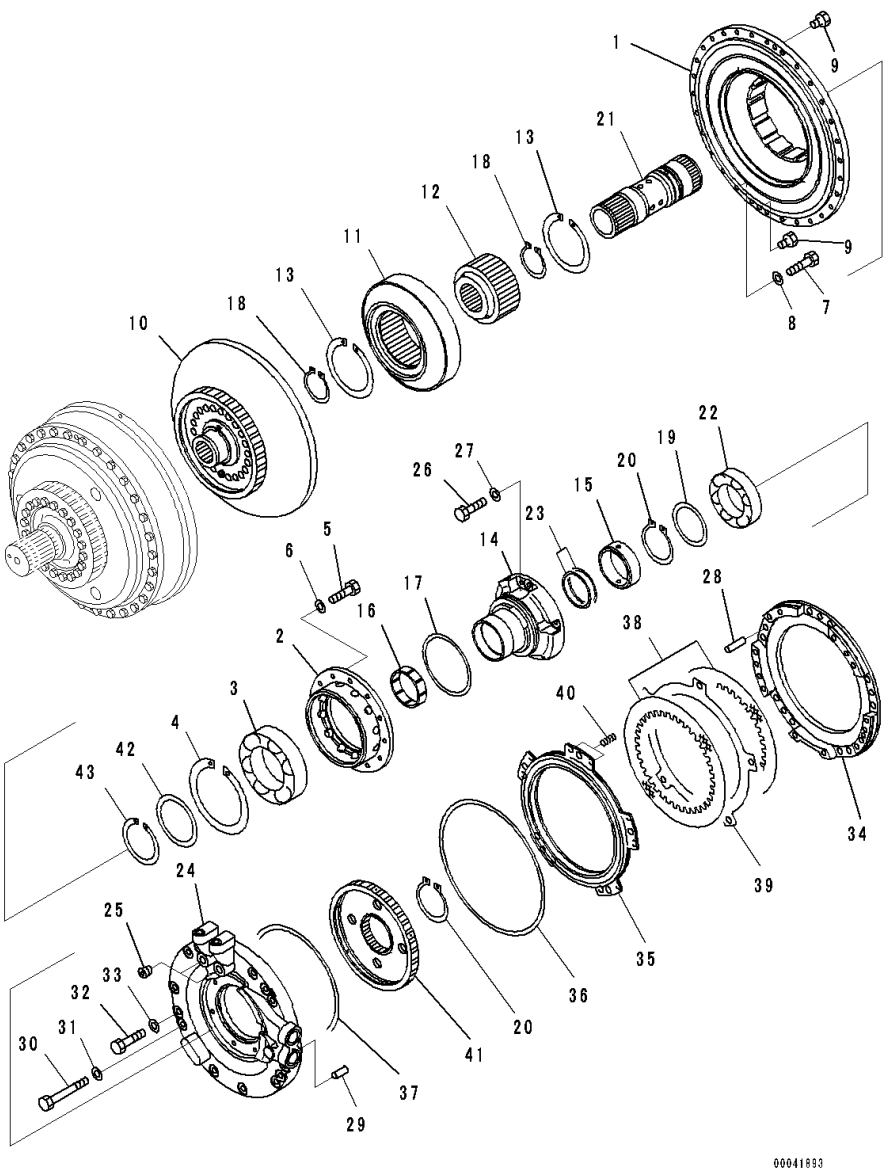

Index	Code	Part Number	Description	Qty	Serial Number
40		23A-15-12910	• Spring	10	81028-
41		17A-13-48310	• Hub	1	81028-
42		17A-13-41770	• Plate	1	81028-
43		04070-00105	• Ring, Snap	1	81028-

FIG. F2300-001002 Power Train, Input shaft and Drive Case

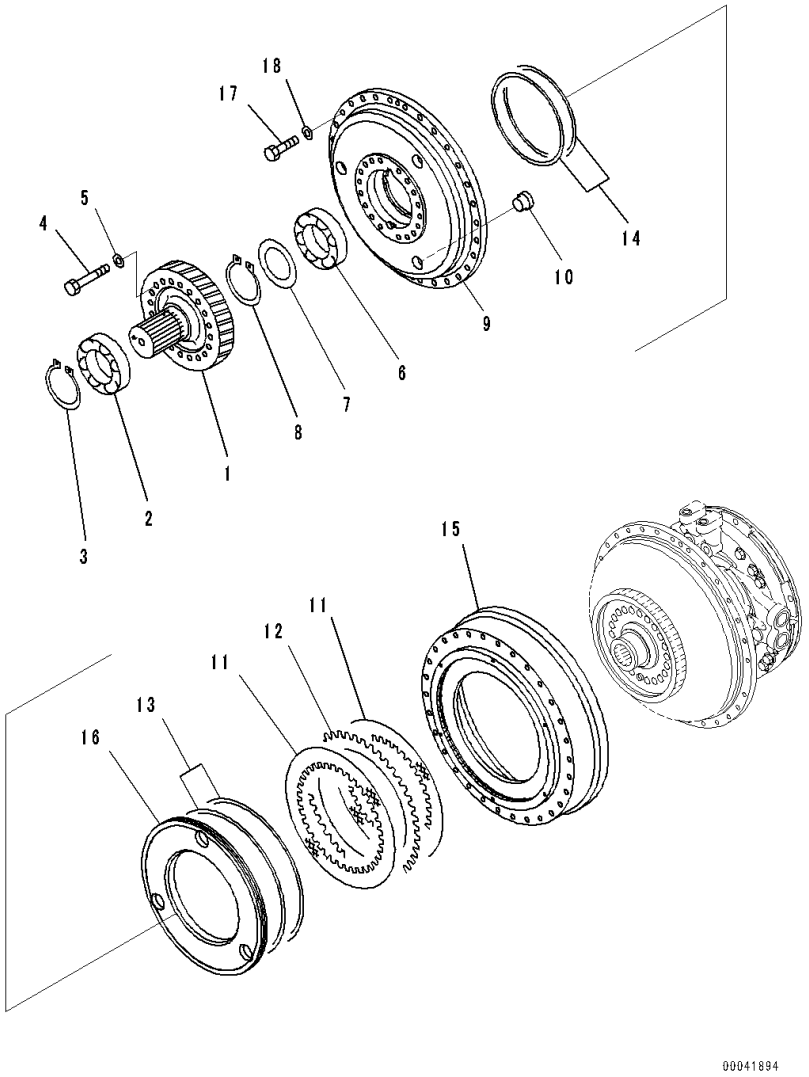

Index	Code	Part Number	Description	Qty	Serial Number
		17A-13-41000	Torque Converter Assembly	1	81028-
1		17A-13-41350	• Shaft	1	81028-
2		17A-13-39320	• Bearing	1	81028-
3		04064-08025	• Ring, Snap	1	81028-
4		01010-81270	• Bolt	18	81028-
5		01643-31232	• Washer	18	81028-
6		711-16-11560	• Bearing	1	81028-
7		711-53-11770	• Plate	1	81028-
8		04064-08025	• Ring, Snap	1	81028-
		17A-13-47111	• Housing	1	81028-
9	C1		• • Housing	1	81028-
10		17M-13-27130	• • Pin	3	81028-
11		582-15-12811	• Disc	2	81028-
12		234-15-12720	• Plate	1	81028-
13		568-15-12830	• Seal Ring, (Kit : K01)	2	81028-
14		567-15-12830	• Ring, (Kit : K01)	2	81028-
15		17A-13-41211	• Case	1	81028-
16		17A-13-47210	• Piston	1	81028-
17		01010-81240	• Bolt	30	81028-
18		01643-31232	• Washer	30	81028-

FIG. F2300-001003 Power Train, Torque Converter Case (1/2)

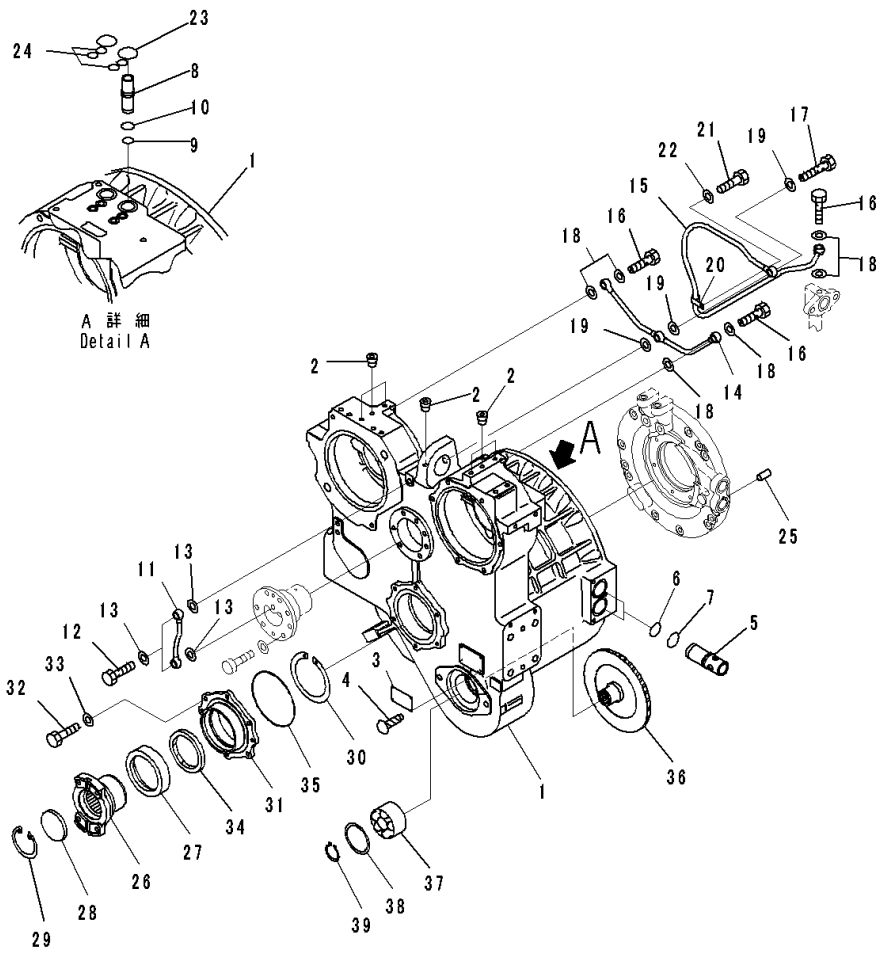

Index	Code	Part Number	Description	Qty	Serial Number
		17A-13-41000	Torque Converter Assembly	1	81028-
		17A-13-00291	• Case Assembly	1	81028-
1	C1		• • Case	1	81028-
2		07043-70108	• • Plug	7	81028-
3		09607-05080	• Plate, Name (Limited Supply)	1	81028-
4		04418-13060	• Screw	4	81028-
5		17A-13-22550	• Sleeve	2	81028-
6		07000-73035	• O-ring, (Kit : K01)	2	81028-
7		07000-73038	• O-ring, (Kit : K01)	2	81028-
8		17A-13-41330	• Sleeve	2	81028-
9		07000-72018	• O-ring, (Kit : K01)	2	81028-
10		07000-72021	• O-ring, (Kit : K01)	2	81028-
11		17A-13-46910	• Tube	1	81028-
12		07206-31216	• Bolt, Joint	2	81028-
13		07005-01612	• Seal, Washer, (Kit : K01)	4	81028-
14		17A-13-46950	• Tube	1	81028-
15		17A-13-46961	• Tube	1	81028-
16		07206-31216	• Bolt, Joint	3	81028-
17		17A-13-46970	• Bolt	1	81028-
18		07005-01612	• Seal, Washer, (Kit : K01)	6	81028-
19		07005-01612	• Seal, Washer, (Kit : K01)	3	81028-
20		562-13-16860	• Clip	1	81028-
21		01010-81220	• Bolt	1	81028-
22		01643-31232	• Washer	1	81028-
23		07000-73030	• O-ring, (Kit : K01)	2	81028-
24		07000-72015	• O-ring, (Kit : K01)	4	81028-
25		04020-01228	• Pin, Dowel	1	81028-
		17A-13-38660	• Coupling	1	81028-
26	C1		• • Coupling	1	81028-
27		17A-15-18271	• • Cover	1	81028-
28		17A-15-18392	• Cap	1	81028-
29		04065-09030	• Ring, Snap, for Hole Side	1	81028-
30		04077-00140	• Ring	1	81028-
31		17A-13-43350	• Retainer	1	81028-
32		01010-81030	• Bolt	6	81028-
33		01643-31032	• Washer	6	81028-
34		07012-50100	• Seal, (Kit : K01)	1	81028-
35		07000-75165	• O-ring, (Kit : K01)	1	81028-
36		17A-13-44120	• Gear	1	81028-
37		06030-05209	• Bearing	1	81028-

FIG. F2300-001003 Power Train, Torque Converter Case (1/2)

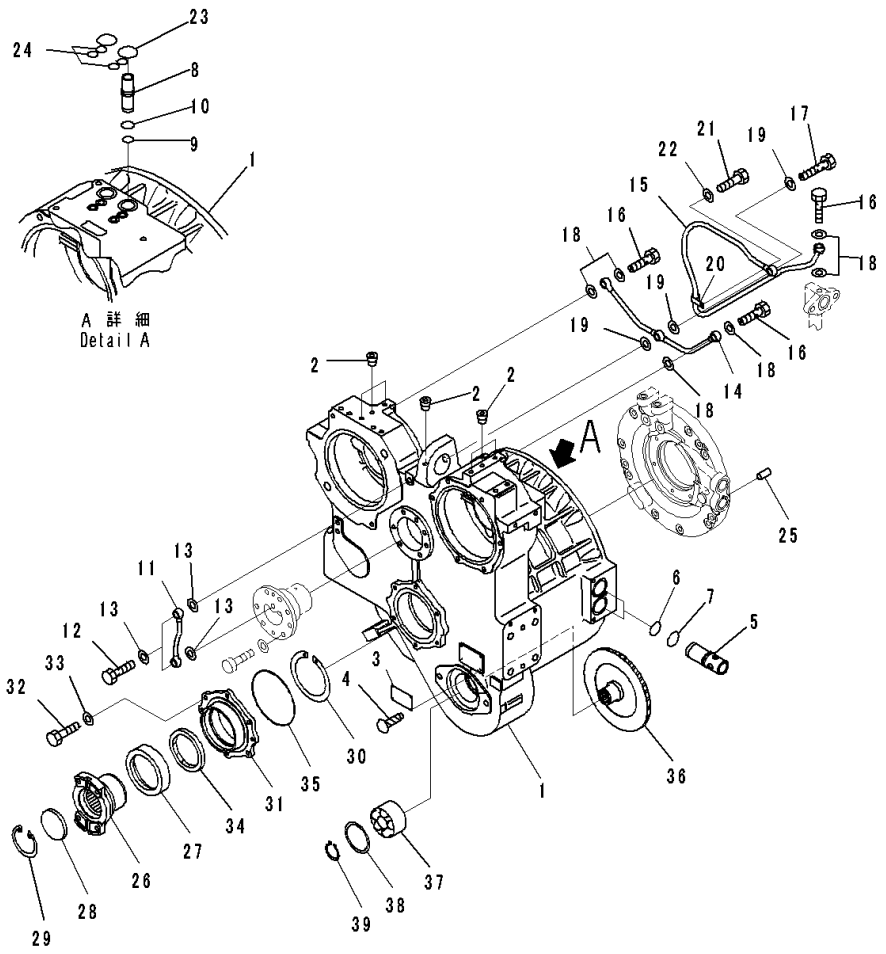

Index	Code	Part Number	Description	Qty	Serial Number
38		04065-08530	• Ring, Snap	1	81028-
39		04064-04518	• Ring, Snap	1	81028-

FIG. F2300-001004 Power Train, Power takeoff Gear

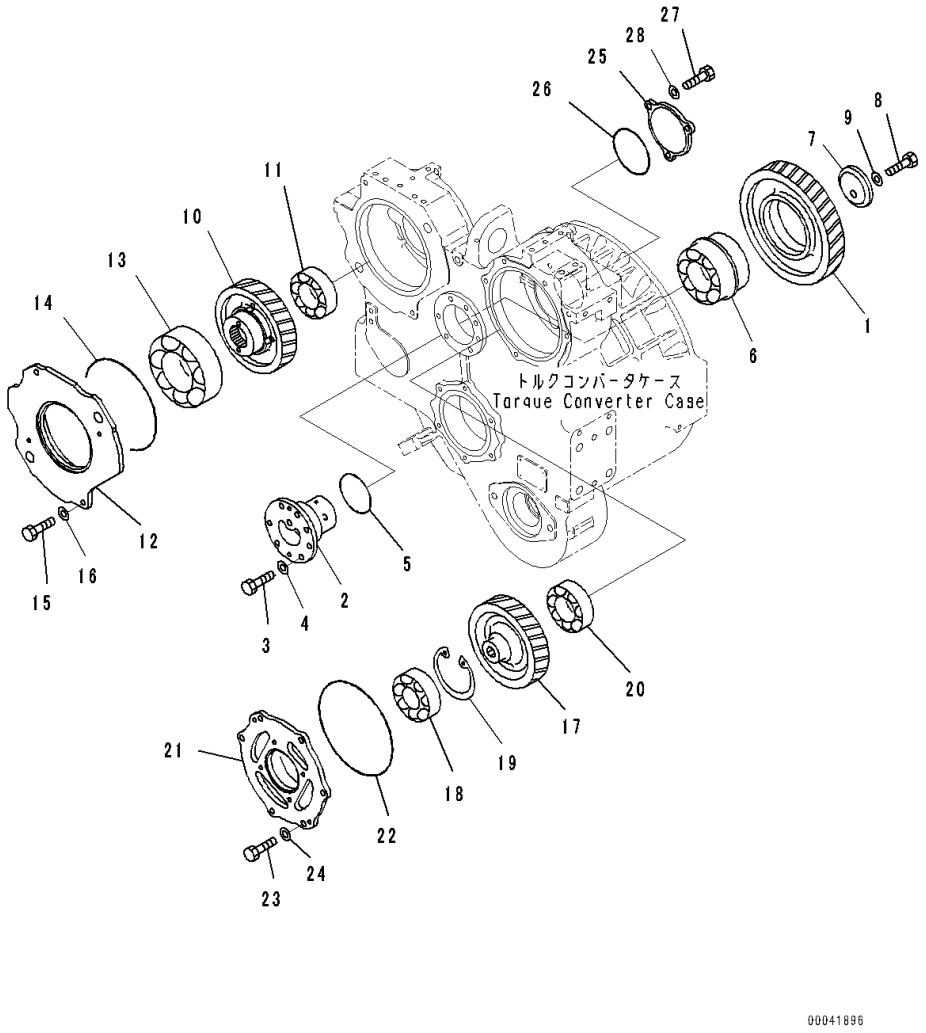

Index	Code	Part Number	Description	Qty	Serial Number
		17A-13-41000	Torque Converter Assembly	1	81028-
1		17A-13-34220	• Gear	1	81028-
2		17M-13-44240	• Shaft	1	81028-
3		01010-81235	• Bolt	7	81028-
4		01643-31232	• Washer	7	81028-
5		07000-72095	• O-ring, (Kit : K01)	1	81028-
6		569-13-14460	• Bearing	1	81028-
7		17A-15-18350	• Holder	1	81028-
8		01010-61645	• Bolt	1	81028-
9		01643-31645	• Washer	1	81028-
10		17A-13-44310	• Gear	1	81028-
11		17A-13-39340	• Bearing	1	81028-
12		17A-13-44490	• Cover	1	81028-
13		06040-06220	• Bearing	1	81028-
14		07000-75230	• O-ring, (Kit : K01)	1	81028-
15		01010-81235	• Bolt	2	81028-
16		01643-31232	• Washer	2	81028-
17		17A-13-44340	• Gear	1	81028-
18		06040-06311	• Bearing	1	81028-
19		04065-01204	• Ring, Snap	1	81028-
20		17A-13-39340	• Bearing	1	81028-
21		17A-13-44480	• Cover	1	81028-
22		07000-75230	• O-ring, (Kit : K01)	1	81028-
23		01010-81235	• Bolt	6	81028-
24		01643-31232	• Washer	6	81028-
25		425-15-13450	• Cover	1	81028-
26		07000-72115	• O-ring, (Kit : K01)	1	81028-
27		01010-81230	• Bolt	3	81028-
28		01643-31232	• Washer	3	81028-

FIG. F2300-001005 Power Train, Torque Converter Valve (1/2)

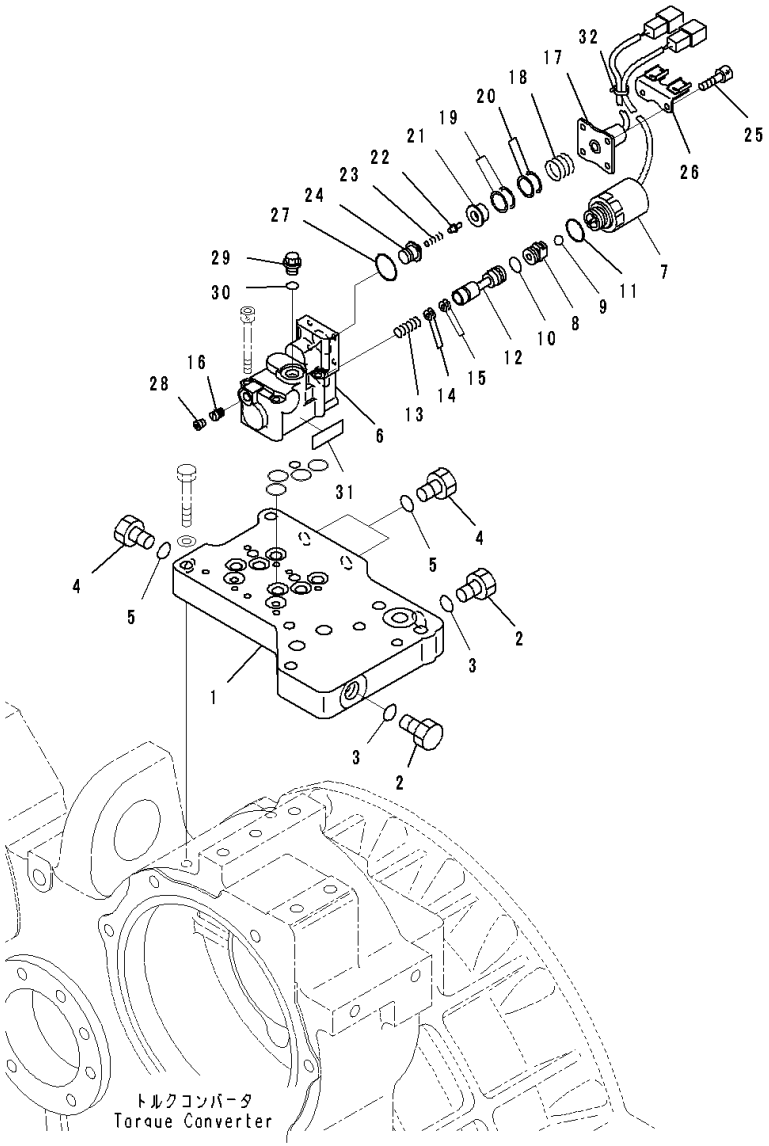

Index	Code	Part Number	Description	Qty	Serial Number
		17A-13-41000	Torque Converter Assembly	1	81028-
		17A-13-46001	• Valve Assembly	1	81028-
1		17A-13-46110	• • Valve	1	81028-
2		07040-11612	• • Plug	2	81028-
3		07002-61623	• • O-ring, (Kit : K02)	2	81028-
4		07040-11209	• • Plug	3	81028-
5		07002-61223	• • O-ring, (Kit : K02)	3	81028-
		56B-15-25301	• • ECMV Assembly	1	81028-
6	C1		• • • Body	1	81028-
7	C1		• • • Solenoid	1	81028-
8	C1		• • • Valve	1	81028-
9	C1		• • • Ball	1	81028-
10	C1		• • • O-ring	1	81028-
11	C1		• • • O-ring	1	81028-
12	C1		• • • Spool	1	81028-
13	C1		• • • Spring, L=24.5mm	1	81028-
14	C1		• • • Shim, T=0.50mm	3	81028-
15	C1		• • • Shim, T=0.20mm	3	81028-
16	C1		• • • Plug	1	81028-
17	C1		• • • Switch Assembly	1	81028-
18	C1		• • • Spring	1	81028-
19	C1		• • • Shim, T=0.50mm	2	81028-
20	C1		• • • Shim, T=0.20mm	1	81028-
21	C1		• • • Seat, Spring	1	81028-
22	C1		• • • Pin	1	81028-
23	C1		• • • Spring, L=18.0mm	1	81028-
24	C1		• • • Sleeve	1	81028-
25		01252-60510	• • • Bolt	4	81028-
26		714-23-15690	• • • Bracket	1	81028-
27	C1		• • • O-ring	1	81028-
28	C1		• • • Plug	1	81028-
29		708-8E-16150	• • • Plug	1	81028-
30		07002-61023	• • • O-ring	1	81028-
31	C2	700-11-31940	• • • Plate, Name (Limited Supply)	1	81028-
32		08034-00310	• • • Band, White	1	81028-

FIG. F2300-001006 Power Train, Torque Converter Valve (2/2)

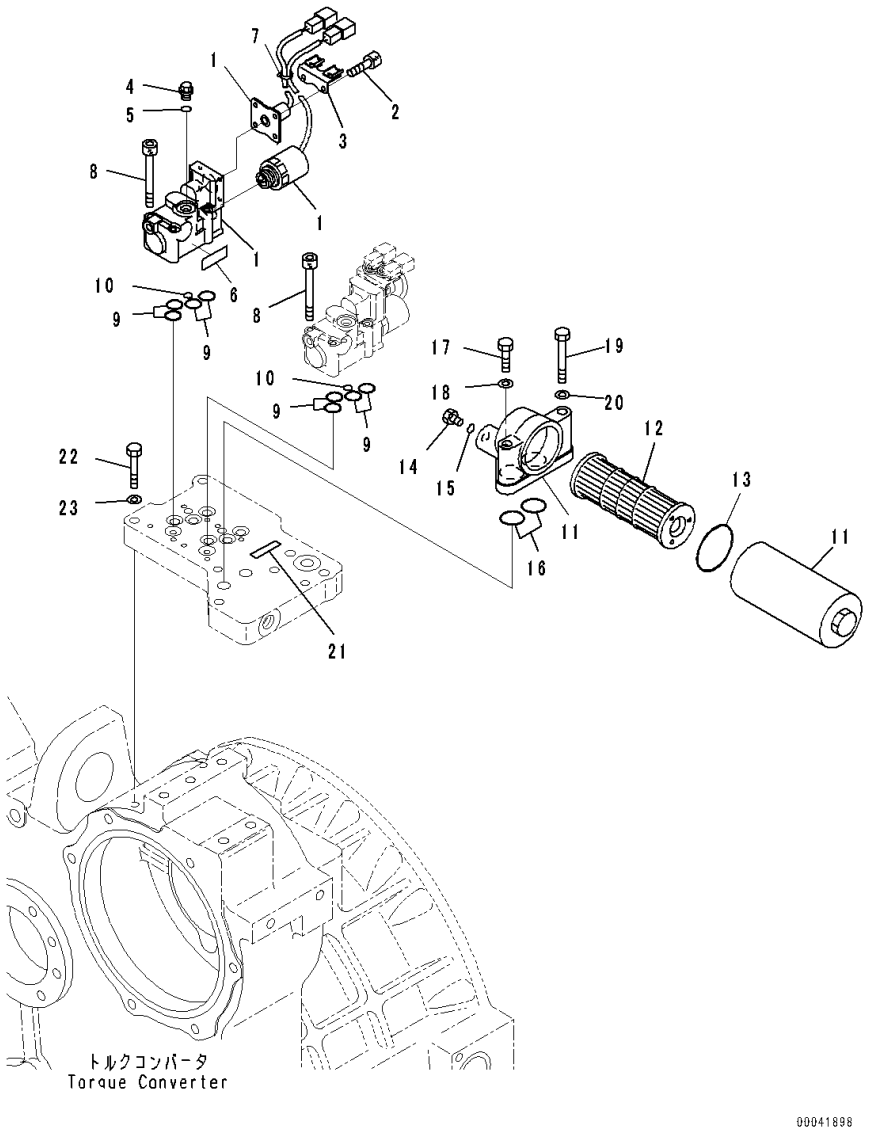

Index	Code	Part Number	Description	Qty	Serial Number
		17A-13-41000	Torque Converter Assembly	1	81028-
		17A-13-46001	• Valve Assembly	1	81028-
1		714-07-35501	• • ECMV Assembly	1	81028-
	C1		• • • Body	1	81028-
2		01252-60510	• • • Bolt	4	81028-
3		714-23-15690	• • • Bracket	1	81028-
4		708-8E-16150	• • • Plug	1	81028-
5		07002-61023	• • • O-ring	1	81028-
6	C2	700-11-31940	• • • Plate, Name (Limited Supply)	1	81028-
7		08034-00310	• • • Band, White	1	81028-
8		01252-70650	• • Bolt	8	81028-
9		07000-72015	• • O-ring, (Kit : K02)	8	81028-
10		07000-71007	• • O-ring, (Kit : K02)	2	81028-
11		569-15-51721	• • Filter Assembly	1	81028-
12		569-15-51732	• • • Element Assembly	1	81028-
13		07000-A2060	• • • O-ring, (Kit : K02)	1	81028-
14		07040-11812	• • Plug	1	81028-
15		07002-61823	• • O-ring, (Kit : K02)	1	81028-
16		07000-73022	• • O-ring, (Kit : K02)	2	81028-
17		01010-81030	• • Bolt	1	81028-
18		01643-31032	• • Washer	1	81028-
19		01011-81010	• • Bolt	2	81028-
20		01643-31032	• • Washer	2	81028-
21	C2	700-11-31980	• • Plate, Name (Limited Supply)	1	81028-
22		01010-81050	• Bolt	2	81028-
23		01643-31032	• Washer	2	81028-

FIG. F2300-001007 Power Train, 1st, 2nd and 3rd Housing

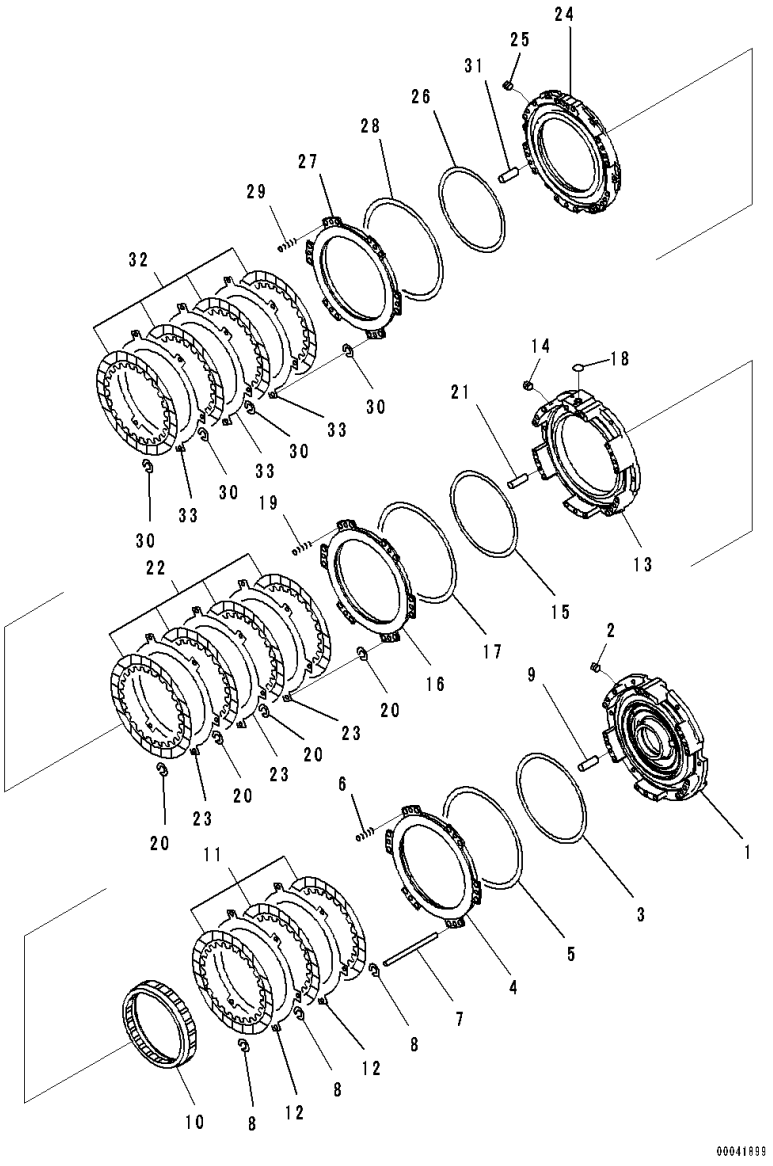

Index	Code	Part Number	Description	Qty	Serial Number
		17A-15-41000	Transmission Assembly	1	81028-
		17A-15-00711	• Housing Assembly	1	81028-
1	C1		• • Housing	1	81028-
2		568-15-11380	• • Plug	1	81028-
3		562-15-19230	• Seal Ring, (Kit : K03)	1	81028-
4		17M-15-42730	• Piston	1	81028-
5		566-15-79260	• Seal Ring, (Kit : K03)	1	81028-
6		566-15-12880	• Spring	12	81028-
7		425-15-11270	• Pin	6	81028-
8		175-15-42880	• Spring	18	81028-
9		04020-01434	• Pin, Dowel	2	81028-
10		17A-15-42660	• Ring	1	81028-
11		195-15-32710	• Disc	3	81028-
12		17A-15-42740	• Plate	2	81028-
		17A-15-00720	• Housing Assembly	1	81028-
13	C1		• • Housing	1	81028-
14		145-14-11320	• • Plug	1	81028-
15		144-15-22881	• Ring, (Kit : K03)	1	81028-
16		17A-15-42770	• Piston	1	81028-
17		568-15-12830	• Seal Ring, (Kit : K03)	1	81028-
18		07000-72020	• O-ring, (Kit : K03)	1	81028-
19		195-15-48140	• Spring	12	81028-
20		175-15-42880	• Spring	24	81028-
21		04020-01434	• Pin, Dowel	2	81028-
22		195-15-32710	• Disc	4	81028-
23		17A-15-42740	• Plate	3	81028-
		17A-15-00730	• Housing Assembly	1	81028-
24	C1		• • Housing	1	81028-
25		145-14-11320	• • Plug	1	81028-
26		425-15-19250	• Seal Ring, (Kit : K03)	1	81028-
27		17A-15-22750	• Piston	1	81028-
28		566-15-79260	• Seal Ring, (Kit : K03)	1	81028-
29		195-15-48140	• Spring	12	81028-
30		175-15-42880	• Spring	24	81028-
31		04020-01434	• Pin, Dowel	2	81028-
32		195-15-32710	• Disc	4	81028-
33		17A-15-42740	• Plate	3	81028-

FIG. F2300-001008 Power Train, Forward and Reverse Housing

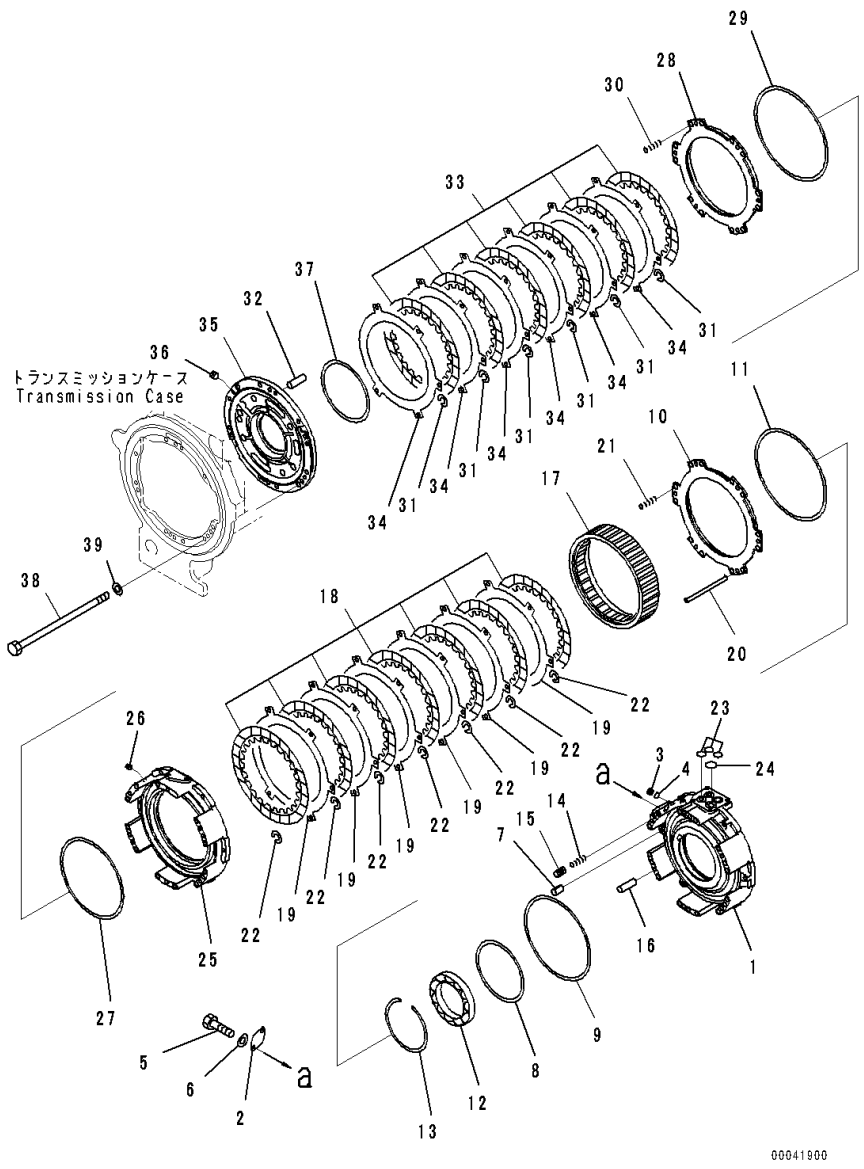

Index	Code	Part Number	Description	Qty	Serial Number
		17A-15-41000	Transmission Assembly	1	81028-
		17A-15-00741	• Housing Assembly	1	81028-
1	C1		• • Housing	1	81028-
2		17A-15-41310	• • Cover	1	81028-
3		134-22-66140	• • Sleeve	1	81028-
4		07000-72018	• • O-ring, (Kit : K03)	1	81028-
5		01010-80616	• • Bolt	2	81028-
6		01643-30623	• • Washer	2	81028-
7		569-15-41310	• Sleeve	17	81028-
8		17M-15-49270	• Seal Ring	1	81028-
9		562-15-19230	• Seal Ring, (Kit : K03)	1	81028-
10		17A-15-42760	• Piston	1	81028-
11		568-15-12840	• Seal Ring, (Kit : K03)	1	81028-
12		06000-06930	• Bearing	1	81028-
13		04071-00210	• Ring	1	81028-
14		700-80-51390	• Spring	1	81028-
15		287-15-15360	• Piston	1	81028-
16		04020-01434	• Pin, Dowel	2	81028-
17		17A-15-42631	• Ring	1	81028-
18		195-15-32710	• Disc	7	81028-
19		17A-15-42740	• Plate	6	81028-
20		424-15-11270	• Pin, D=18mm, L=210mm	6	81028-
21		144-40-21790	• Spring	12	81028-
22		175-15-42880	• Spring	42	81028-
23		07000-73030	• O-ring, (Kit : K03)	3	81028-
24		07000-73035	• O-ring, (Kit : K03)	1	81028-
		17A-15-00750	• Housing Assembly	1	81028-
25	C1		• • Housing	1	81028-
26		145-14-11320	• • Plug	1	81028-
27		144-15-22881	• Ring, (Kit : K03)	1	81028-
28		17A-15-42770	• Piston	1	81028-
29		568-15-12830	• Seal Ring, (Kit : K03)	1	81028-
30		144-40-21790	• Spring	12	81028-
31		175-15-42880	• Spring	36	81028-
32		04020-01434	• Pin, Dowel	2	81028-
33		195-15-32710	• Disc	6	81028-
34		17A-15-42740	• Plate	6	81028-
		17A-15-00760	• Housing Assembly	1	81028-
35	C1		• • Housing	1	81028-
36		175-15-11230	• • Plug	1	81028-

FIG. F2300-001008 Power Train, Forward and Reverse Housing

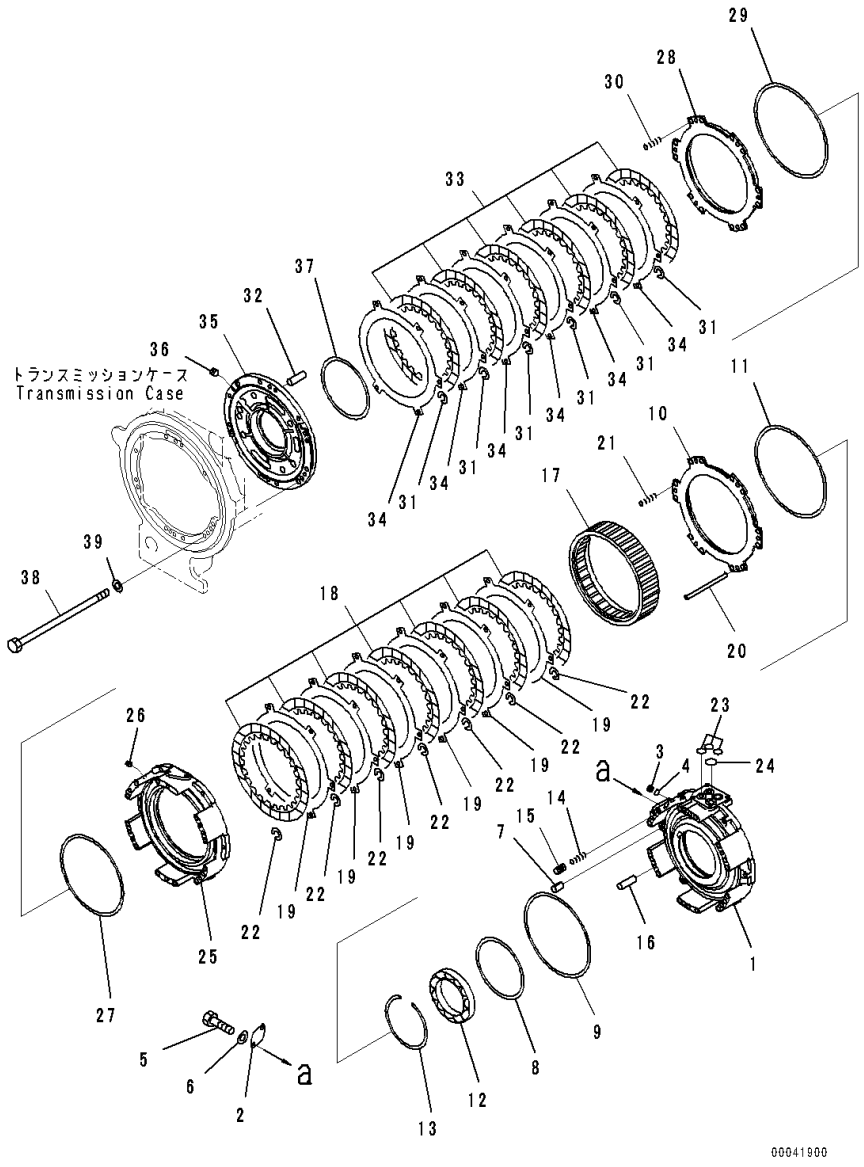

Index	Code	Part Number	Description	Qty	Serial Number
37		17M-15-49270	• Seal Ring	1	81028-
38		281-15-11392	• Bolt	4	81028-
39		145-14-11571	• Washer	4	81028-

FIG. F2300-001009 Power Train, 1st and 2nd Carrier

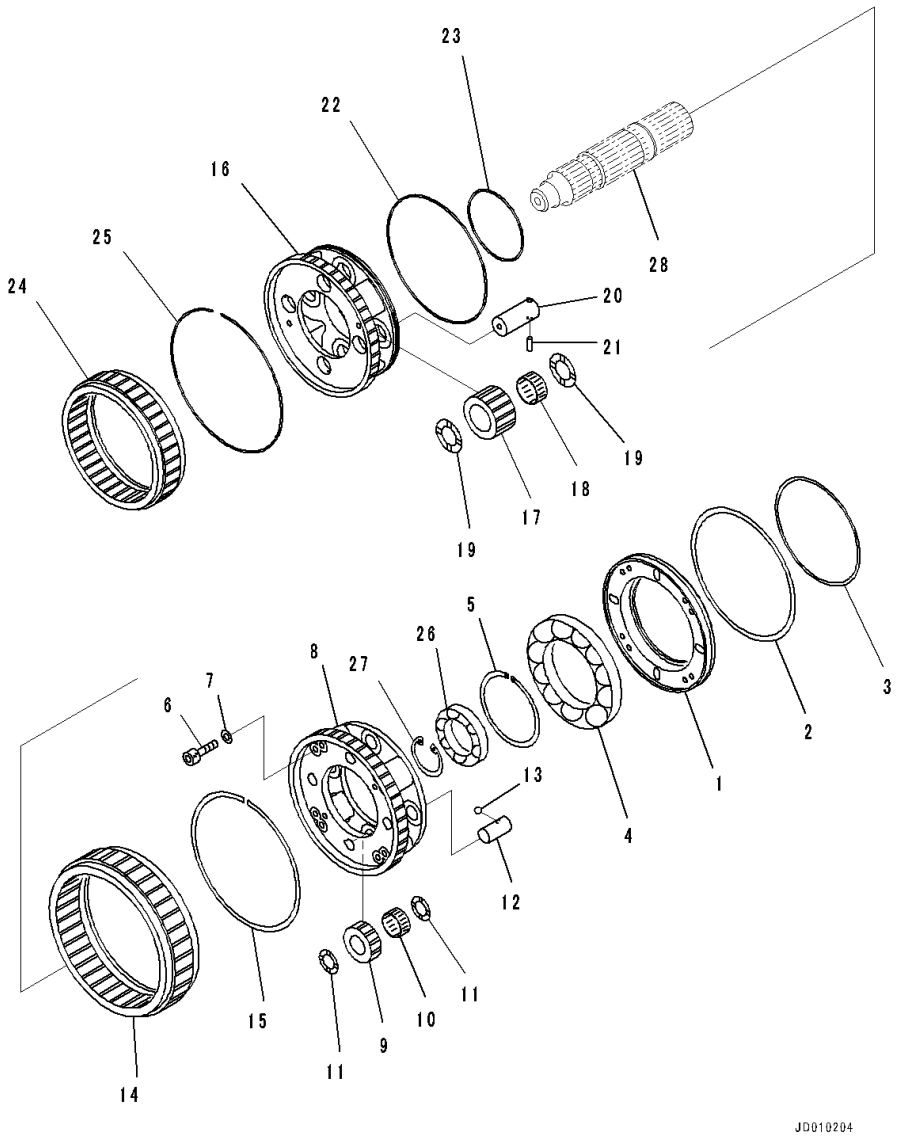

Index	Code	Part Number	Description	Qty	Serial Number
		17A-15-41000	Transmission Assembly	1	81028-
1		17A-15-42370	• Cover	1	81028-
2		17M-15-49280	• Seal Ring	1	81028-
3		17M-15-49290	• Seal Ring	1	81028-
4		06030-06928	• Bearing	1	81028-
5		04070-00140	• Ring	1	81028-
6		01252-41060	• Bolt	8	81028-
7		01643-31032	• Washer	8	81028-
8		17A-15-42351	• Carrier	1	81028-
9		17A-15-42451	• Gear	4	81028-
10		418-17-39311	• Bearing	4	81028-
11		17A-15-42570	• Thrust Metal Assembly	8	81028-
12		17A-15-42550	• Shaft	4	81028-
13		04260-00635	• Ball, Steel	4	81028-
14		17A-15-42650	• Ring	1	81028-
15		561-15-59510	• Ring	1	81028-
16		17A-15-42342	• Carrier	1	81028-
17		17A-15-42442	• Gear	4	81028-
18		17A-15-49440	• Bearing	4	81028-
19		569-15-32580	• Washer	8	81028-
20		17A-15-42540	• Shaft	4	81028-
21		17A-15-42960	• Pin	4	81028-
22		154-15-49260	• Ring	1	81028-
23		566-15-79230	• Ring	1	81028-
24		17A-15-42640	• Ring	1	81028-
25		561-15-59510	• Ring	1	81028-
26		17A-15-29321	• Bearing	1	81028-
27		04065-01154	• Ring	1	81028-
28		(17A-15-42131)	Shaft(Refer to Page 320)		-

FIG. F2300-001010 Power Train, 3rd, Forward and Reverse Carrier

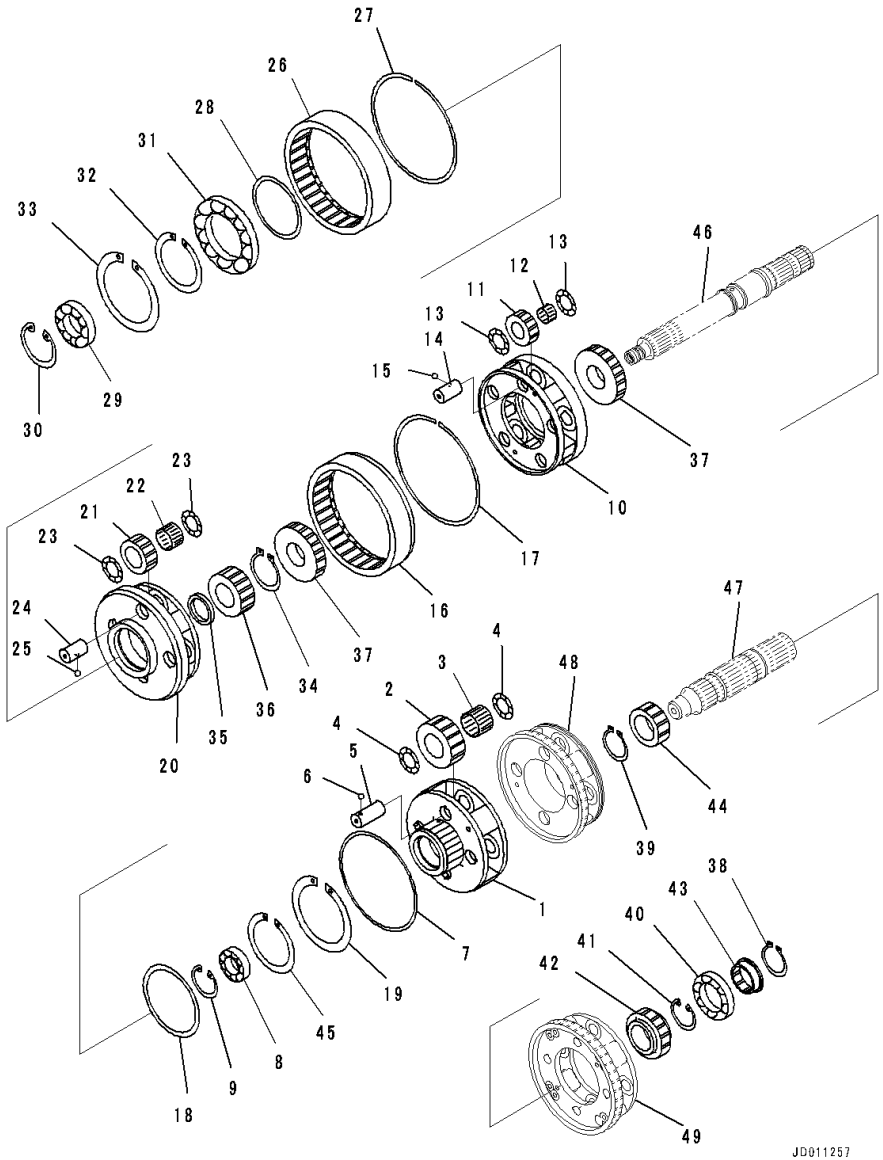

Index	Code	Part Number	Description	Qty	Serial Number
		17A-15-41000	Transmission Assembly	1	81028-
1		17A-15-42332	• Carrier	1	81028-
2		17A-15-42431	• Gear	4	81028-
3		20G-26-11240	• Bearing	4	81028-
4		569-15-32580	• Washer	8	81028-
5		17A-15-42531	• Shaft	4	81028-
6		04260-00635	• Ball, Steel	4	81028-
7		17M-15-49270	• Seal Ring	1	81028-
8		17A-15-39310	• Bearing	1	81028-
9		04065-08025	• Ring, Snap	1	81028-
10		17A-15-42321	• Carrier	1	81028-
11		17A-15-42421	• Gear	5	81028-
12		569-15-59410	• Bearing	5	81028-
13		569-15-32580	• Washer	10	81028-
14		17A-15-42521	• Shaft	5	81028-
15		04260-00635	• Ball, Steel	5	81028-
16		17A-15-42620	• Gear, Ring	1	81028-
17		17A-15-49520	• Ring, Snap	1	81028-
18		17A-15-42161	• Spacer	1	81028-
19		04070-00150	• Ring, Snap	1	81028-
20		17A-15-42311	• Carrier	1	81028-
21		17M-15-42411	• Gear	4	81028-
22		17M-15-39440	• Bearing	4	81028-
23		561-15-32570	• Washer, Thrust	8	81028-
24		17A-15-42510	• Shaft	4	81028-
25		04260-00635	• Ball, Steel	4	81028-
26		17A-15-42610	• Gear, Ring	1	81028-
27		17A-15-29510	• Ring, Snap	1	81028-
28		17A-15-42140	• Spacer	1	81028-
29		714-12-19380	• Bearing	1	81028-
30		04065-01104	• Ring, Snap	1	81028-
31		06030-06928	• Bearing	1	81028-
32		04070-00140	• Ring	1	81028-
33		04071-00190	• Ring	1	81028-
34		04064-06020	• Ring, Snap	3	81028-
35		17M-15-42140	• Spacer	1	81028-
36		17M-15-42211	• Gear	1	81028-
37		17A-15-42221	• Gear	1	81028-
38		04064-06320	• Ring	1	81028-
39		04064-06320	• Ring	1	81028-

FIG. F2300-001010 Power Train, 3rd, Forward and Reverse Carrier

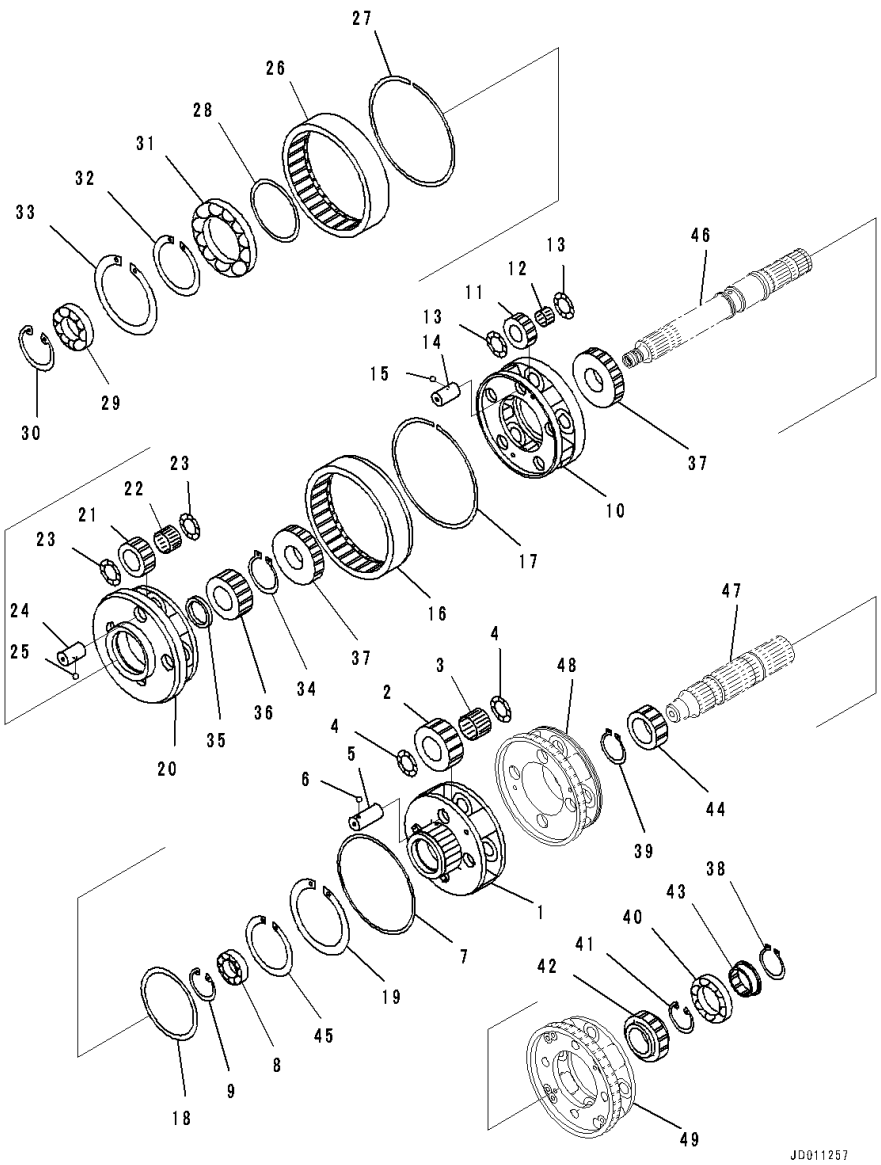

Index	Code	Part Number	Description	Qty	Serial Number
40		17A-15-29321	• Bearing	1	81028-
41		04065-01154	• Ring	1	81028-
42		17A-15-42252	• Gear	1	81028-
43		17A-15-42710	• Spacer	2	81028-
44		17A-15-42240	• Gear	1	81028-
45		04070-00115	• Ring, Snap	1	81028-
46		(17A-15-42110)	Shaft(Refer to Page 320)		-
47		(17A-15-42131)	Shaft(Refer to Page 320)		-
48		(17A-15-42342)	Carrier(Refer to Page 316)		-
49		(17A-15-42351)	Carrier(Refer to Page 316)		-

FIG. F2300-001011 Power Train, Transmission Case

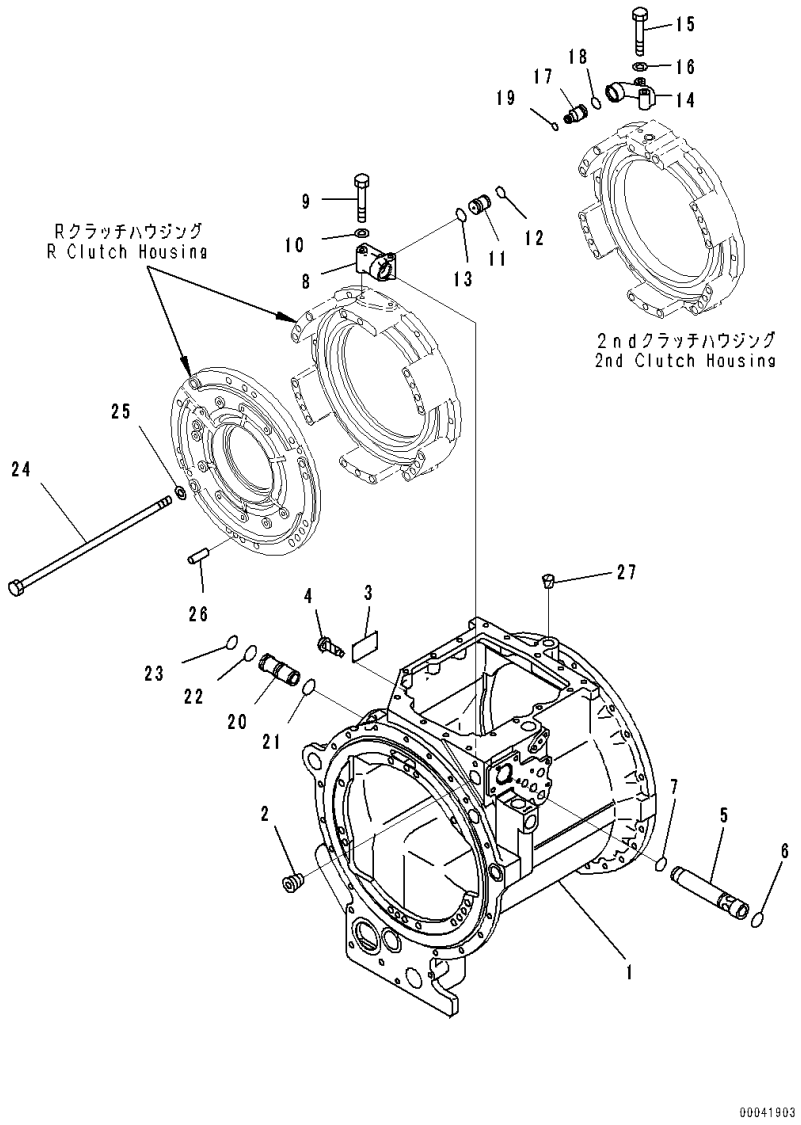

Index	Code	Part Number	Description	Qty	Serial Number
		17A-15-41000	Transmission Assembly	1	81028-
		17A-15-00770	• Case Assembly	1	81028-
1	C1		• • Case	1	81028-
2		07043-71019	• • Plug	5	81028-
3		09608-05080	• Plate, Name (Limited Supply)	1	81028-
4		04418-13060	• Screw	4	81028-
5		17A-15-25181	• Sleeve	1	81028-
6		07000-73030	• O-ring, (Kit : K03)	1	81028-
7		07000-73028	• O-ring, (Kit : K03)	1	81028-
8		17A-15-25150	• Block	1	81028-
9		01010-81075	• Bolt	2	81028-
10		01643-31032	• Washer	2	81028-
11		17A-15-35160	• Sleeve	1	81028-
12		07000-72014	• O-ring, (Kit : K03)	1	81028-
13		07000-73025	• O-ring, (Kit : K03)	1	81028-
14		17A-15-25140	• Block	1	81028-
15		01010-81060	• Bolt	2	81028-
16		01643-31032	• Washer	2	81028-
17		17M-15-45190	• Sleeve	1	81028-
18		07000-73022	• O-ring, (Kit : K03)	1	81028-
19		07000-72014	• O-ring, (Kit : K03)	1	81028-
20		17A-15-24152	• Sleeve	1	81028-
21		07000-73028	• O-ring, (Kit : K03)	1	81028-
22		07000-73030	• O-ring, (Kit : K03)	1	81028-
23		07000-73032	• O-ring, (Kit : K03)	1	81028-
24		426-15-11260	• Bolt	13	81028-
25		145-14-11571	• Washer	13	81028-
26		04020-01434	• Pin, Dowel	2	81028-
27		07049-02430	• Plug	1	81028-

FIG. F2300-001012 Power Train, Input and Output Shaft

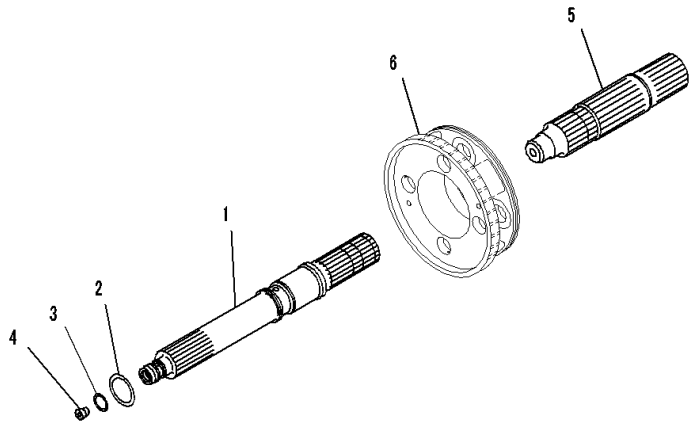

Index	Code	Part Number	Description	Qty	Serial Number
		17A-15-41000	Transmission Assembly	1	81028-
1		17A-15-42110	• Shaft	1	81028-
2		07018-20653	• Ring	2	81028-
3		07018-20353	• Ring	2	81028-
4		07043-70312	• Plug	1	81028-
5		17A-15-42131	• Shaft	1	81028-
6		(17A-15-42342)	Carrier(Refer to Page 316)		-

FIG. F2300-001013 Power Train, Filter and Wiring Harness

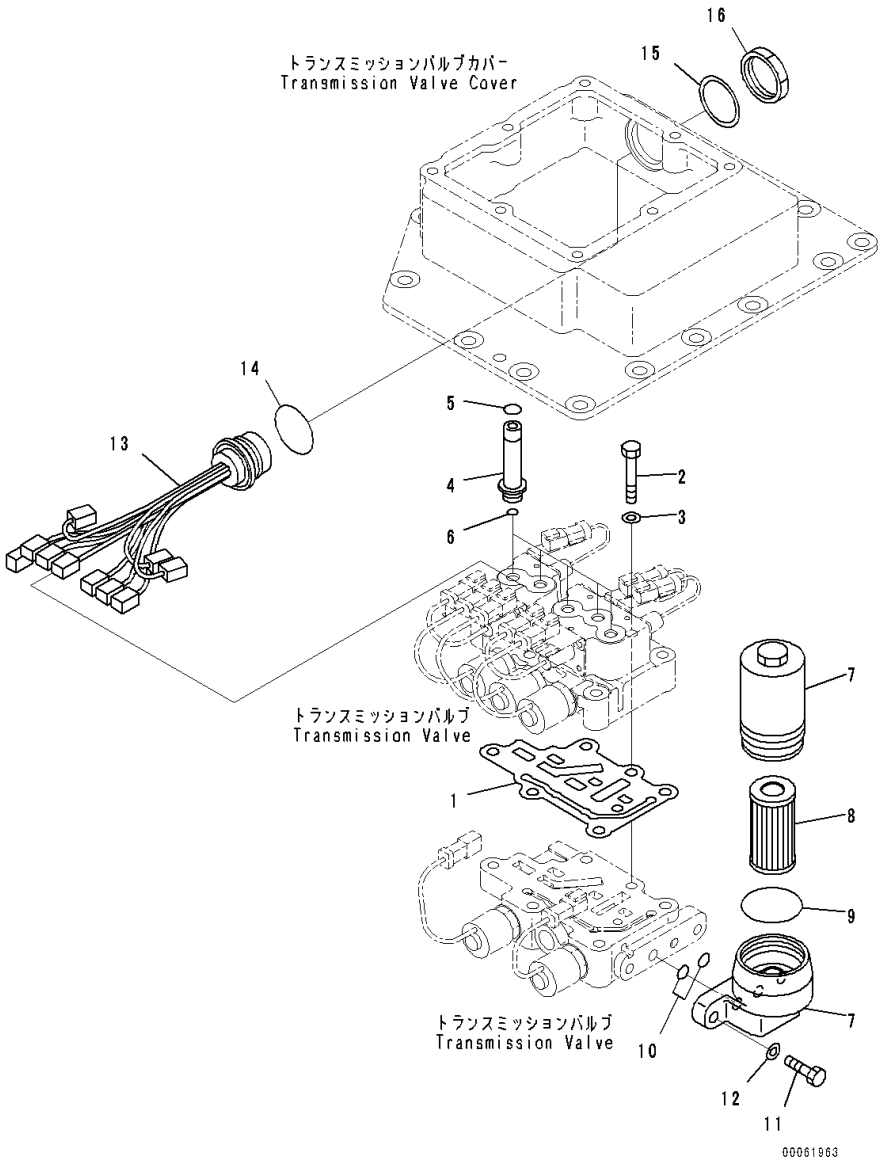

Index	Code	Part Number	Description	Qty	Serial Number
		17A-15-41000	Transmission Assembly	1	81028-
		17M-15-55501	• Valve Assembly	1	81028-
1		195-15-75531	• • Gasket, (Kit : K04)	1	81028-
2		01010-81055	• • Bolt	2	81028-
3		01643-31032	• • Washer	2	81028-
4		17A-15-45540	• • Sleeve	5	81028-
5		07000-72016	• • O-ring, (Kit : K04)	5	81028-
6		07002-61823	• • O-ring, (Kit : K04)	5	81028-
7		154-15-65553	• • Filter Assembly	1	81028-
8		154-15-65561	• • • Element	1	81028-
9		154-15-65590	• • • O-ring, (Kit : K04)	1	81028-
10		07000-72014	• • O-ring, (Kit : K04)	2	81028-
11		01010-81035	• • Bolt	2	81028-
12		01643-31032	• • Washer	2	81028-
13		195-15-77200	• • Wiring Harness	1	81028-
14		195-15-75740	• • • O-ring, (Kit : K04)	1	81028-
15		08191-50809	• • • Washer, Lock	1	81028-
16		08191-50808	• • • Nut	1	81028-

FIG. F2300-001014 Power Train, Transmission Upper Valve

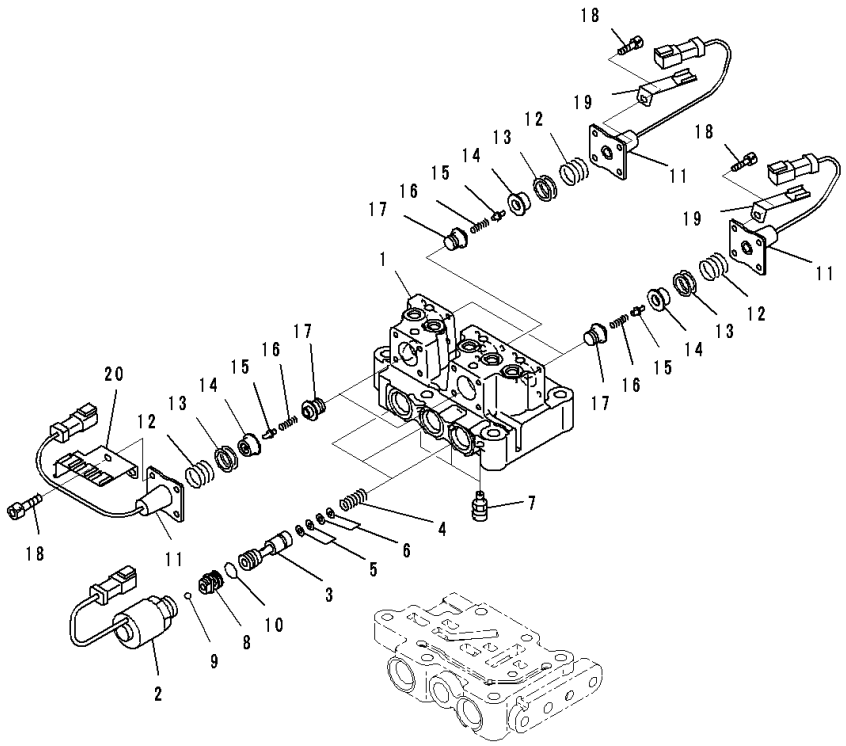

Index	Code	Part Number	Description	Qty	Serial Number
		17A-15-41000	Transmission Assembly	1	81028-
		17M-15-55501	• Valve Assembly	1	81028-
		17M-15-00313	• • Valve Assembly	1	81028-
1	C1		• • • Valve Body	1	81028-
2	C1		• • • Solenoid	3	81028-
3	C1		• • • Spool	3	81028-
4	C1		• • • Spring, L=24.5mm	3	81028-
5	C1		• • • Shim, T=0.50mm	12	81028-
6	C1		• • • Shim, T=0.20mm	12	81028-
7	C1		• • • Plug	3	81028-
8	C1		• • • Valve	3	81028-
9	C1		• • • Ball	3	81028-
10	C1		• • • O-ring	3	81028-
11	C1		• • • Switch Assembly	5	81028-
12	C1		• • • Spring	5	81028-
13	C1		• • • Shim, T=0.50mm	10	81028-
14	C1		• • • Seat, Spring	5	81028-
15	C1		• • • Pin	5	81028-
16	C1		• • • Spring, L=18.0mm	5	81028-
17	C1		• • • Sleeve	5	81028-
18		01252-60510	• • • Bolt	20	81028-
19		195-15-77341	• • • Bracket	3	81028-
20		195-15-77351	• • • Bracket	2	81028-

FIG. F2300-001015 Power Train, Transmission Lower Valve

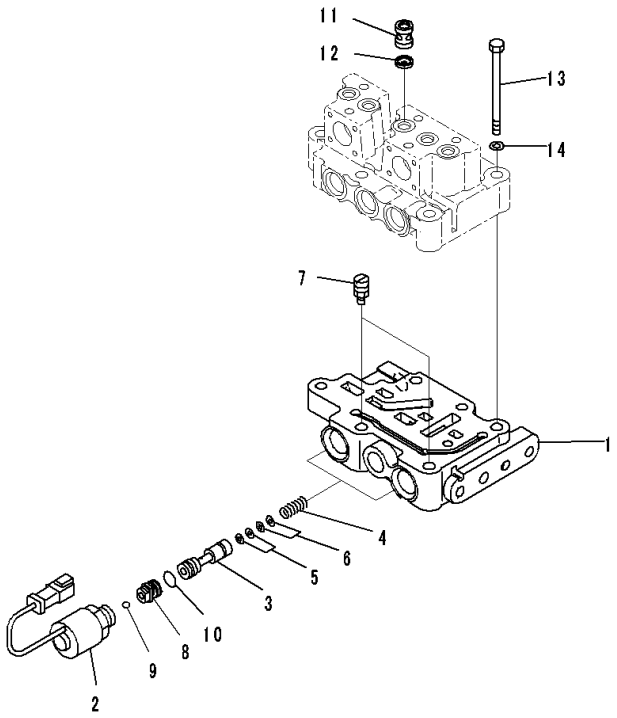

Index	Code	Part Number	Description	Qty	Serial Number
		17A-15-41000	Transmission Assembly	1	81028-
		17M-15-55501	• Valve Assembly	1	81028-
		17M-15-00323	• • Valve Assembly	1	81028-
1	C1		• • • Valve Body	1	81028-
2	C1		• • • Solenoid	2	81028-
3	C1		• • • Spool	2	81028-
4	C1		• • • Spring, L=24.5mm	2	81028-
5	C1		• • • Shim, T=0.50mm	8	81028-
6	C1		• • • Shim, T=0.20mm	8	81028-
7	C1		• • • Plug	2	81028-
8	C1		• • • Valve	2	81028-
9	C1		• • • Ball	2	81028-
10	C1		• • • O-ring	2	81028-
11		195-15-76320	• • Sleeve	5	81028-
12		195-15-76330	• • Filter	5	81028-
13		195-15-76410	• Bolt	4	81028-
14		01643-51032	• Washer	4	81028-

FIG. F2300-001016 Power Train, Transmission Main Relief Valve

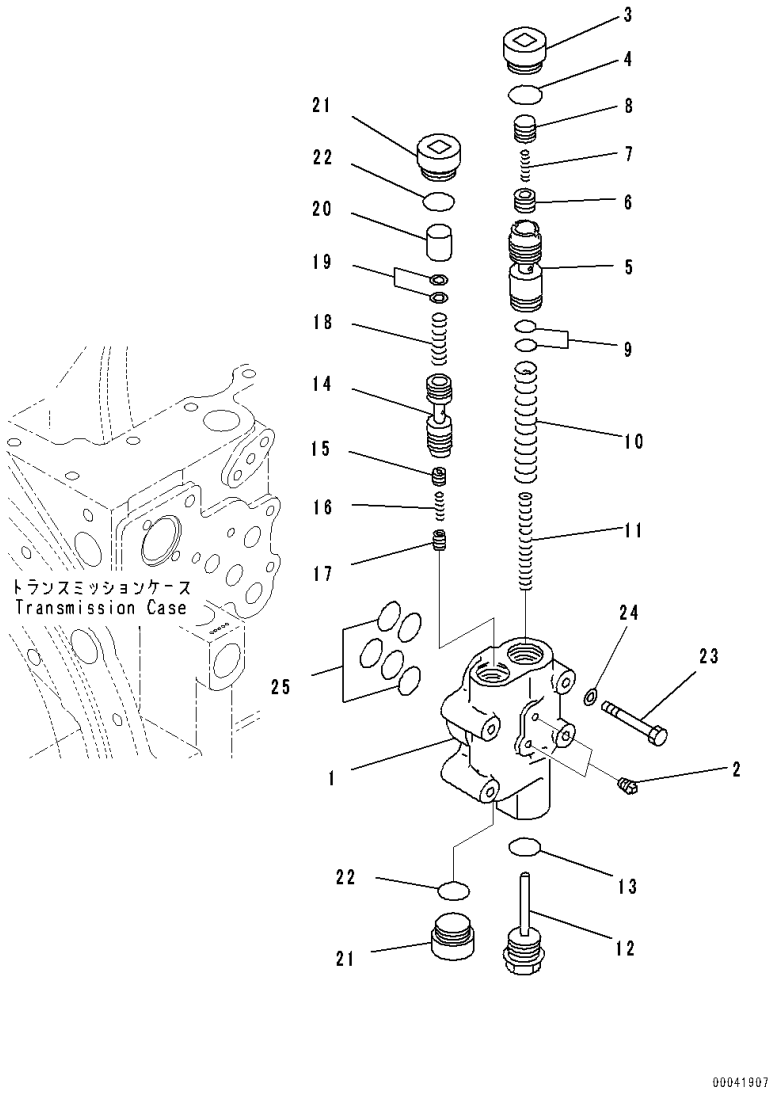

Index	Code	Part Number	Description	Qty	Serial Number
		17A-15-41000	Transmission Assembly	1	81028-
		134-15-76001	• Valve Assembly, Relief	1	81028-
1	C1		• • Valve Body	1	81028-
2		07042-80108	• • Plug	3	81028-
3		14X-15-15850	• • Plug	1	81028-
4		07002-03034	• • O-ring, (Kit : K05)	1	81028-
5		134-15-75230	• • Valve	1	81028-
6		426-15-15490	• • Valve	1	81028-
7		198-15-15770	• • Spring, L=30mm	1	81028-
8		426-15-15480	• • Valve	1	81028-
9		198-15-15570	• • Shim, T=0.5mm	6	81028-
10		426-15-16251	• • Spring, L=122mm	1	81028-
11		426-15-16261	• • Spring, L=108.0mm	1	81028-
12		426-15-15810	• • Plug	1	81028-
13		07002-03034	• • O-ring, (Kit : K05)	1	81028-
14		12H-15-14130	• • Spool	1	81028-
15		104-15-25490	• • Valve	1	81028-
16		125-15-15290	• • Spring	1	81028-
17		104-15-25480	• • Valve	1	81028-
18		14X-15-16210	• • Spring	1	81028-
19		175-15-56470	• • Shim, T=0.50mm	3	81028-
20		12H-15-14140	• • Guide	1	81028-
21		14X-15-15850	• • Plug	2	81028-
22		07002-03034	• • O-ring, (Kit : K05)	2	81028-
23		01010-81065	• Bolt	4	81028-
24		01643-31032	• Washer	4	81028-
25		07000-73030	• O-ring, (Kit : K05)	5	81028-

FIG. F2300-001017 Power Train, Valve Cover

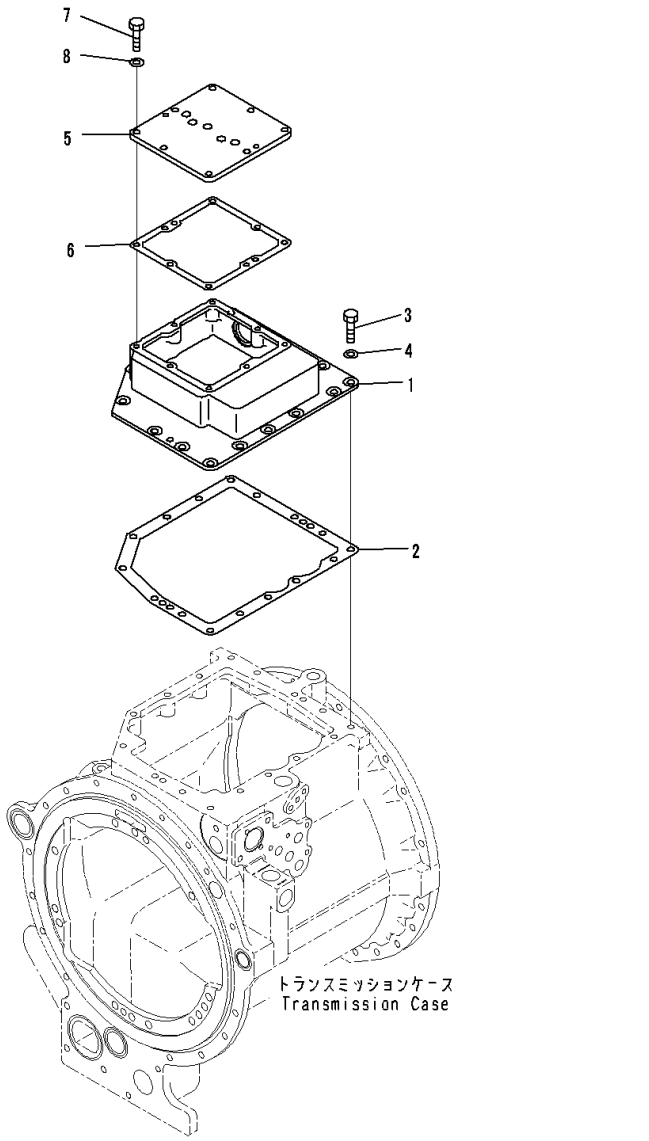

Index	Code	Part Number	Description	Qty	Serial Number
		17A-15-41000	Transmission Assembly	1	81028-
1		17M-15-45810	• Cover	1	81028-
2		17A-15-25911	• Gasket, (Kit : K05)	1	81028-
3		01010-81230	• Bolt	16	81028-
4		01643-31232	• Washer	16	81028-
5		17A-15-41220	• Cover	1	81028-
6		195-15-71230	• Gasket, (Kit : K05)	1	81028-
7		01010-81030	• Bolt	8	81028-
8		01643-31032	• Washer	8	81028-

FIG. F2300-001018 Power Train, Bevel Gear and Shaft

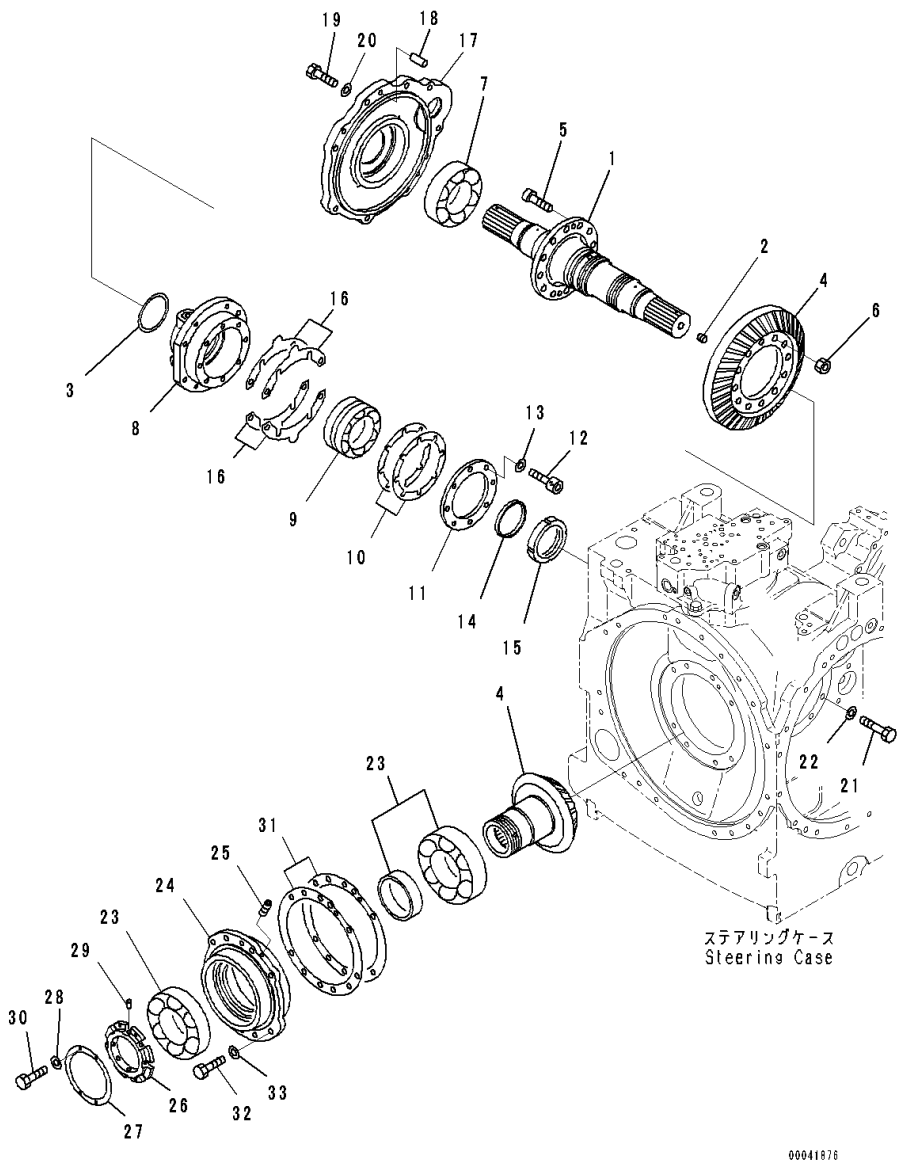

Index	Code	Part Number	Description	Qty	Serial Number
		17A-22-41000	Backhoe Assembly	1	81028-
1		17A-22-25460	• Shaft	1	81028-
2		17M-22-45471	• Orifice	2	81028-
3		07018-11004	• Seal Ring	2	81028-
4		17A-22-45900	• Shaft, Bevel gear	1	81028-
	C1		• • Gear	1	81028-
	C1		• • Pinion and Shaft Assembly	1	81028-
5		01084-01650	• Bolt	12	81028-
6		01582-01613	• Nut	12	81028-
7		17A-22-29310	• Bearing	1	81028-
8		17A-22-45480	• Retainer	1	81028-
9		17A-09-11130	• Bearing	1	81028-
10		17A-22-00030	• Shim Assembly	1	81028-
	C1		• • Shim, T=0.1mm	1	81028-
	C1		• • Shim, T=0.2mm	1	81028-
	C1		• • Shim, T=0.5mm	1	81028-
11		17A-22-15470	• Plate	1	81028-
12		01252-31230	• Bolt	8	81028-
13		01643-51232	• Washer	8	81028-
14		17A-22-15430	• Spacer	1	81028-
15		17A-22-15861	• Nut	1	81028-
16		17A-22-00040	• Shim Assembly	1	81028-
	C1		• • Shim, T=0.1mm	4	81028-
	C1		• • Shim, T=0.2mm	8	81028-
	C1		• • Shim, T=0.5mm	4	81028-
17		17A-22-17120	• Retainer	1	81028-
18		04020-01228	• Pin, Dowel	1	81028-
19		01010-81250	• Bolt	9	81028-
20		01643-31232	• Washer	9	81028-
21		01010-81280	• Bolt	8	81028-
22		01643-31232	• Washer	8	81028-
23		17A-09-11161	• Bearing	1	81028-
24		17A-22-25890	• Cage	1	81028-
25		01310-20608	• Screw	1	81028-
26		17A-22-55210	• Nut	1	81028-
27		17A-22-25220	• Plate	1	81028-
28		01643-30623	• Washer	4	81028-
29		154-22-65860	• Pin	1	81028-
30		01010-80614	• Bolt	4	81028-
31		17A-22-00050	• Shim Assembly	1	81028-

FIG. F2300-001018 Power Train, Bevel Gear and Shaft

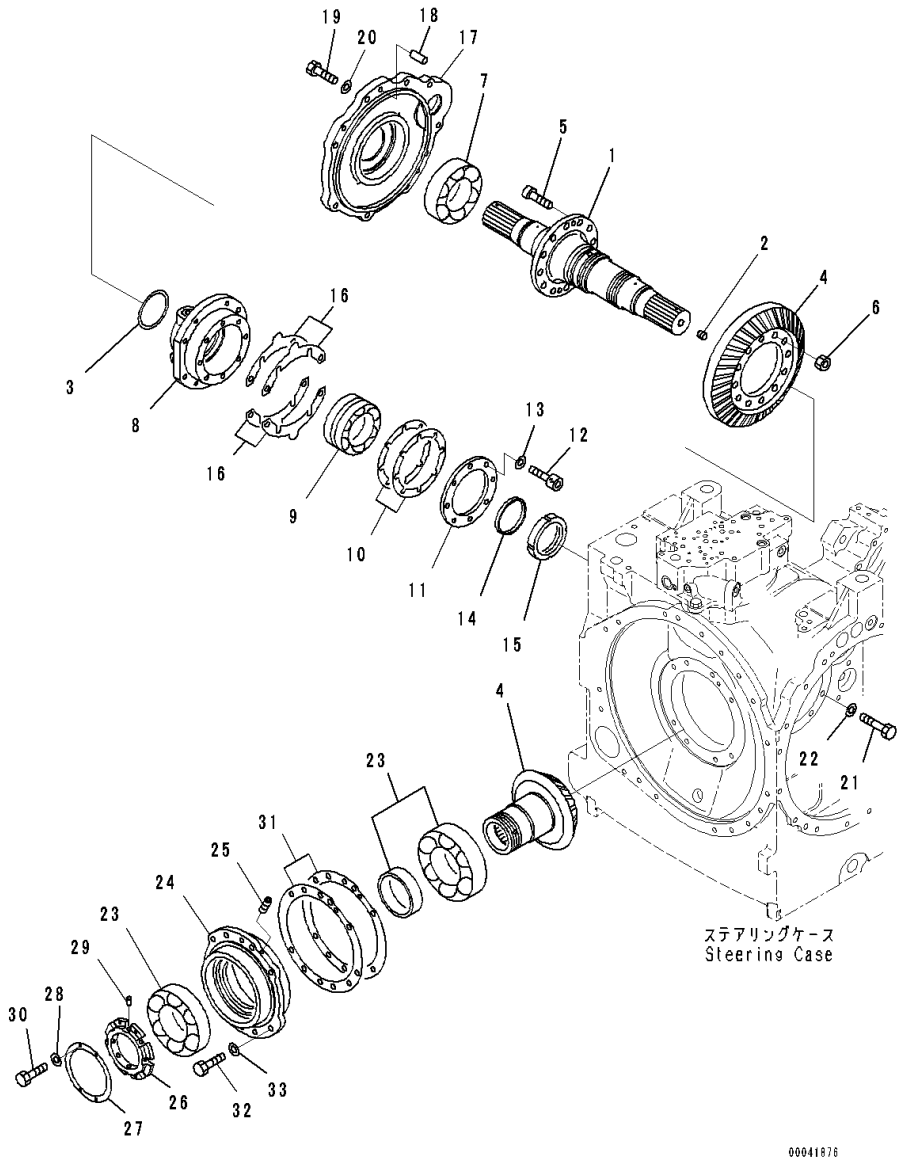

Index	Code	Part Number	Description	Qty	Serial Number
	C1		• • Shim, T=0.1mm	2	81028-
	C1		• • Shim, T=0.2mm	4	81028-
	C1		• • Shim, T=0.5mm	2	81028-
32		01010-81245	• Bolt	8	81028-
33		01643-31232	• Washer	8	81028-

FIG. F2300-001019 Power Train, Brake (1/2)

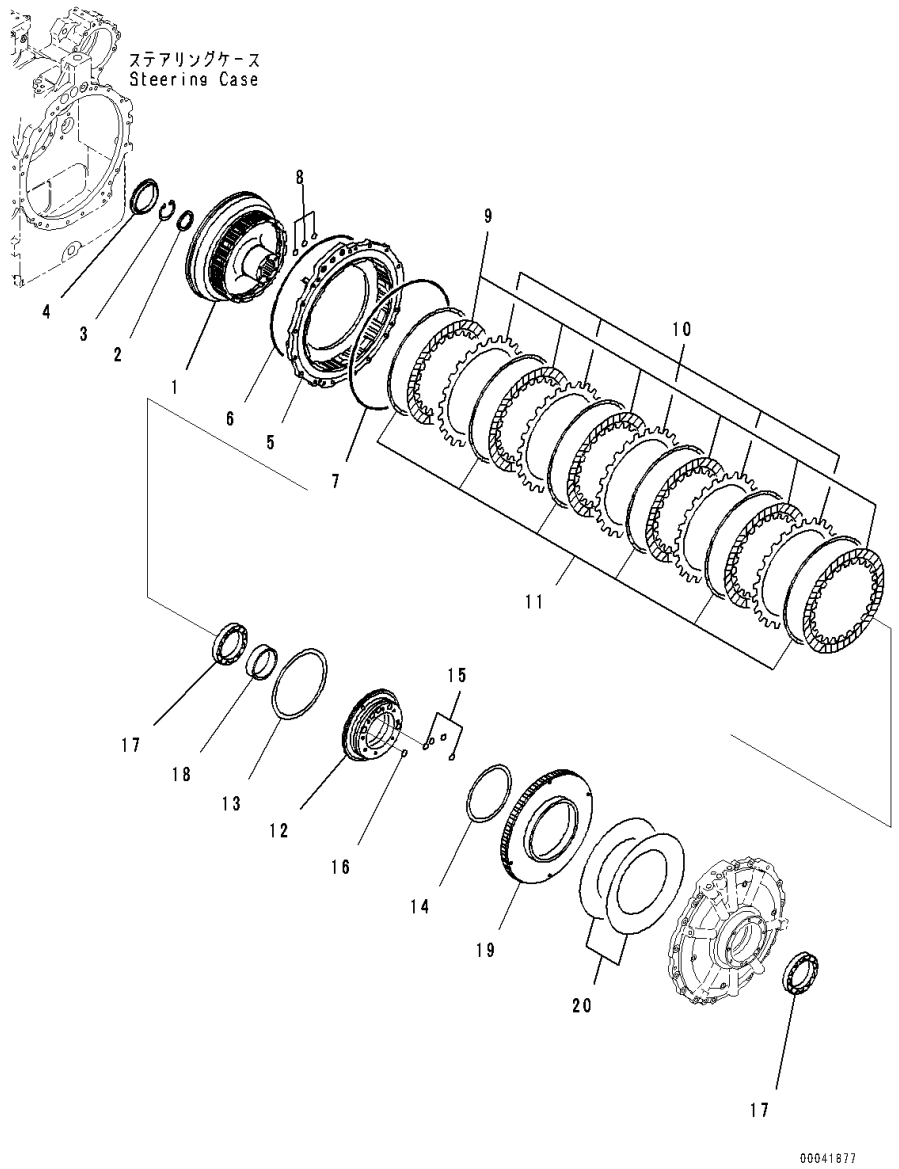

Index	Code	Part Number	Description	Qty	Serial Number
		17A-22-41000	Backhoe Assembly	1	81028-
		17A-22-00091	• Brake Assembly	2	81028-
1		17A-22-12111	• • Hub	1	81028-
2		17A-22-18121	• • Spacer	1	81028-
3		04065-07225	• • Ring, Snap	1	81028-
4		17A-22-12251	• • Bushing	1	81028-
5		17A-22-41180	• • Drum	1	81028-
6		07000-75465	• • O-ring	1	81028-
7		07000-75490	• • O-ring	1	81028-
8		07000-73025	• • O-ring	3	81028-
9		17A-22-11170	• • Disc	6	81028-
10		17A-22-12120	• • Plate	5	81028-
11		17A-22-12130	• • Spring	6	81028-
12		17A-22-12162	• • Cylinder	1	81028-
13		113-15-12840	• • Seal Ring	1	81028-
14		103-15-29210	• • Seal Ring	1	81028-
15		07000-72018	• • O-ring	4	81028-
16		07000-72021	• • O-ring	1	81028-
17		569-15-39620	• • Bearing	2	81028-
18		17A-22-12190	• • Spacer	1	81028-
19		17A-22-12150	• • Piston	1	81028-
20		17M-22-43430	• • Spring Assembly	1	81028-

FIG. F2300-001020 Power Train, Brake (2/2)

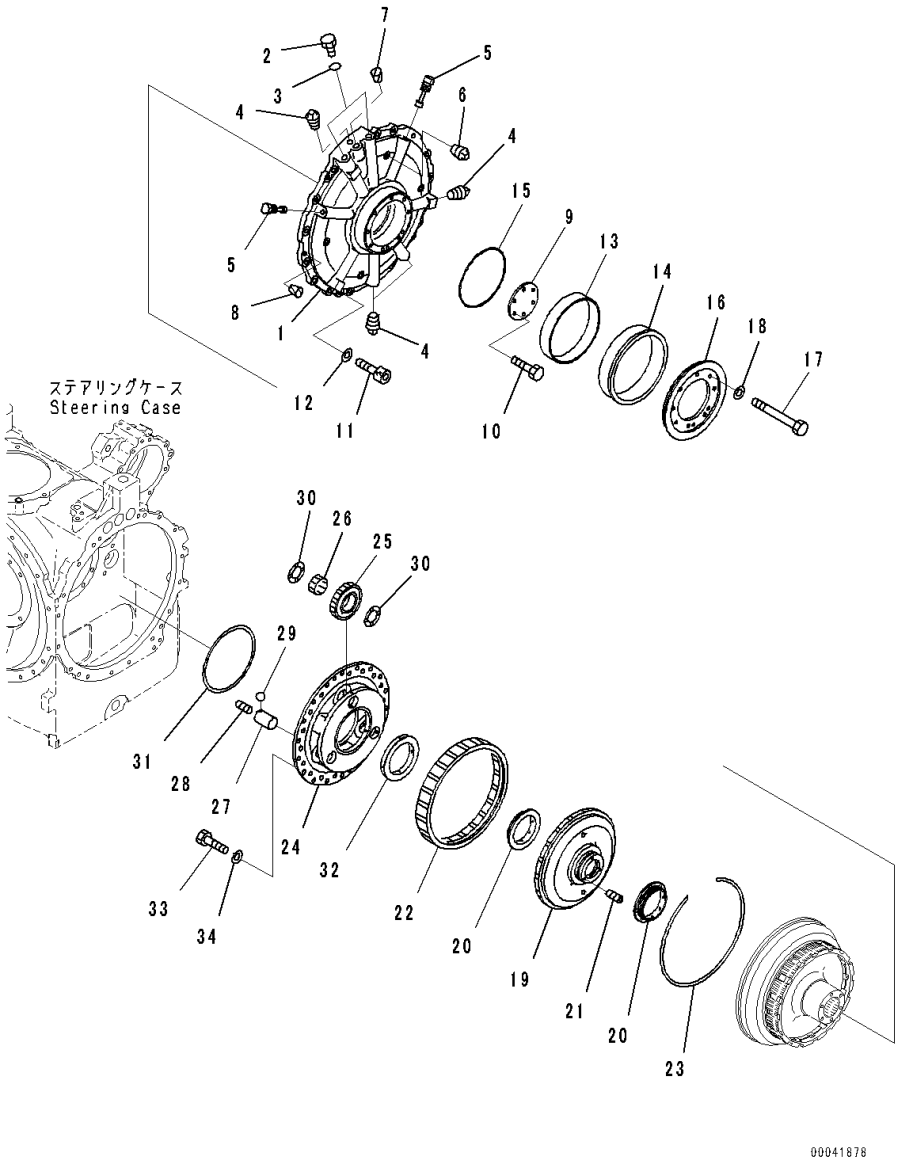

Index	Code	Part Number	Description	Qty	Serial Number
		17A-22-41000	Backhoe Assembly	1	81028-
		17A-22-00091	• Brake Assembly	2	81028-
1		17A-22-42220	• • Case	1	81028-
2		07040-11612	• • Plug	2	81028-
3		07002-61623	• • O-ring	2	81028-
4		07042-70312	• • Plug	4	81028-
5		17A-22-42230	• • Plug	2	81028-
6		07042-70211	• • Plug, Taper	4	81028-
7		07049-02025	• • Plug	1	81028-
8		07049-01215	• • Plug	2	81028-
9		17A-22-12241	• • Plate	1	81028-
10		01010-81040	• • Bolt	6	81028-
11		01252-31245	• • Bolt	4	81028-
12		01643-31232	• • Washer	4	81028-
13		14Y-21-13130	• • Bushing	1	81028-
14		14Y-21-13240	• • Collar Assembly	1	81028-
15		14Y-22-15220	• • O-ring	1	81028-
16		17A-21-12132	• • Flange	1	81028-
17		01011-81000	• • Bolt	8	81028-
18		01643-31032	• • Washer	8	81028-
19		17A-22-14211	• • Gear	1	81028-
20		17A-22-14161	• • Bushing	2	81028-
21		01310-20812	• • Screw	3	81028-
22		17A-22-14221	• • Gear	1	81028-
23		17A-22-14230	• • Ring, Snap	1	81028-
24		17A-22-14381	• • Carrier	1	81028-
25		17A-22-14130	• • Gear	3	81028-
26		17M-15-39420	• • Bearing	3	81028-
27		17A-22-24140	• • Shaft	3	81028-
28		07043-70108	• • Plug	3	81028-
29		04260-00635	• • Ball, Steel	3	81028-
30		561-15-32590	• • Washer	6	81028-
31		232-15-19530	• • Ring	1	81028-
32		17A-22-14151	• • Bushing	1	81028-
33		01010-81235	• • Bolt	18	81028-
34		01643-31232	• • Washer	18	81028-

FIG. F2300-001021 Power Train, H.S.S. Gear

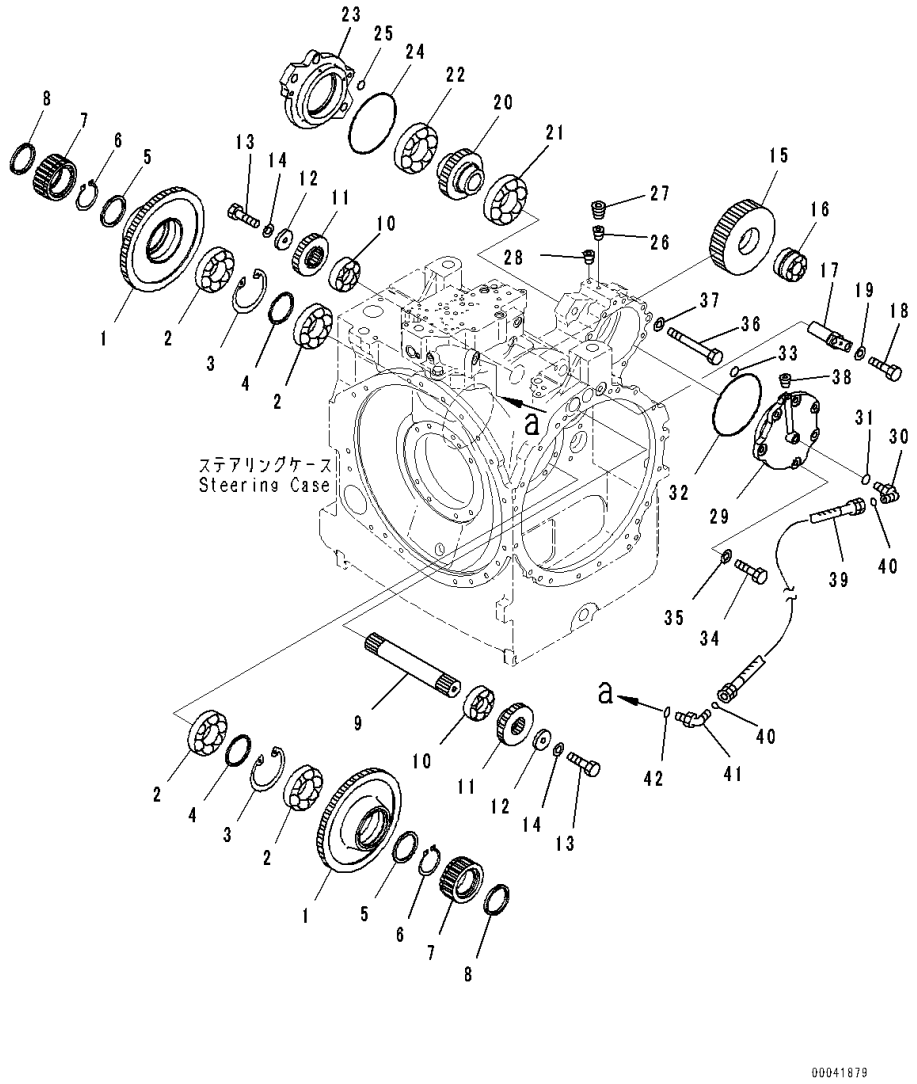

Index	Code	Part Number	Description	Qty	Serial Number
		17A-22-41000	Backhoe Assembly	1	81028-
1		17A-22-14240	• Gear	2	81028-
2		06043-01015	• Bearing	4	81028-
3		04065-01154	• Ring	2	81028-
4		17A-22-14360	• Spacer	2	81028-
5		17A-22-14250	• Spacer	2	81028-
6		04064-07025	• Ring	2	81028-
7		17A-22-24180	• Gear	2	81028-
8		17A-22-14190	• Spacer	2	81028-
9		17A-22-14260	• Shaft	1	81028-
10		17A-22-29320	• Bearing	2	81028-
11		17A-22-14270	• Gear	2	81028-
12		144-65-21650	• Plate	2	81028-
13		01010-81235	• Bolt	2	81028-
14		01643-31232	• Washer	2	81028-
15		17A-22-14290	• Gear	1	81028-
16		17A-09-11111	• Bearing	1	81028-
17		17A-22-14321	• Shaft	1	81028-
18		01010-81230	• Bolt	2	81028-
19		01643-31232	• Washer	2	81028-
20		17A-22-44340	• Gear	1	81028-
21		06040-06214	• Bearing	1	81028-
22		17A-22-29330	• Bearing	1	81028-
23		17A-22-44371	• Flange	1	81028-
24		07000-75165	• O-ring	1	81028-
25		07000-72022	• O-ring	1	81028-
26		17A-22-47360	• Plug	1	81028-
27		07043-70312	• Plug	1	81028-
28		07043-70108	• Plug	1	81028-
29		17A-22-44350	• Flange	1	81028-
30		02782-10210	• Elbow	1	81028-
31		07002-61423	• O-ring	1	81028-
32		07000-75165	• O-ring	1	81028-
33		07000-72022	• O-ring	1	81028-
34		01010-81235	• Bolt	6	81028-
35		01643-31232	• Washer	6	81028-
36		01011-81225	• Bolt	2	81028-
37		01643-31232	• Washer	2	81028-
38		07043-70108	• Plug	1	81028-
39		02762-20204	• Hose	1	81028-

FIG. F2300-001021 Power Train, H.S.S. Gear

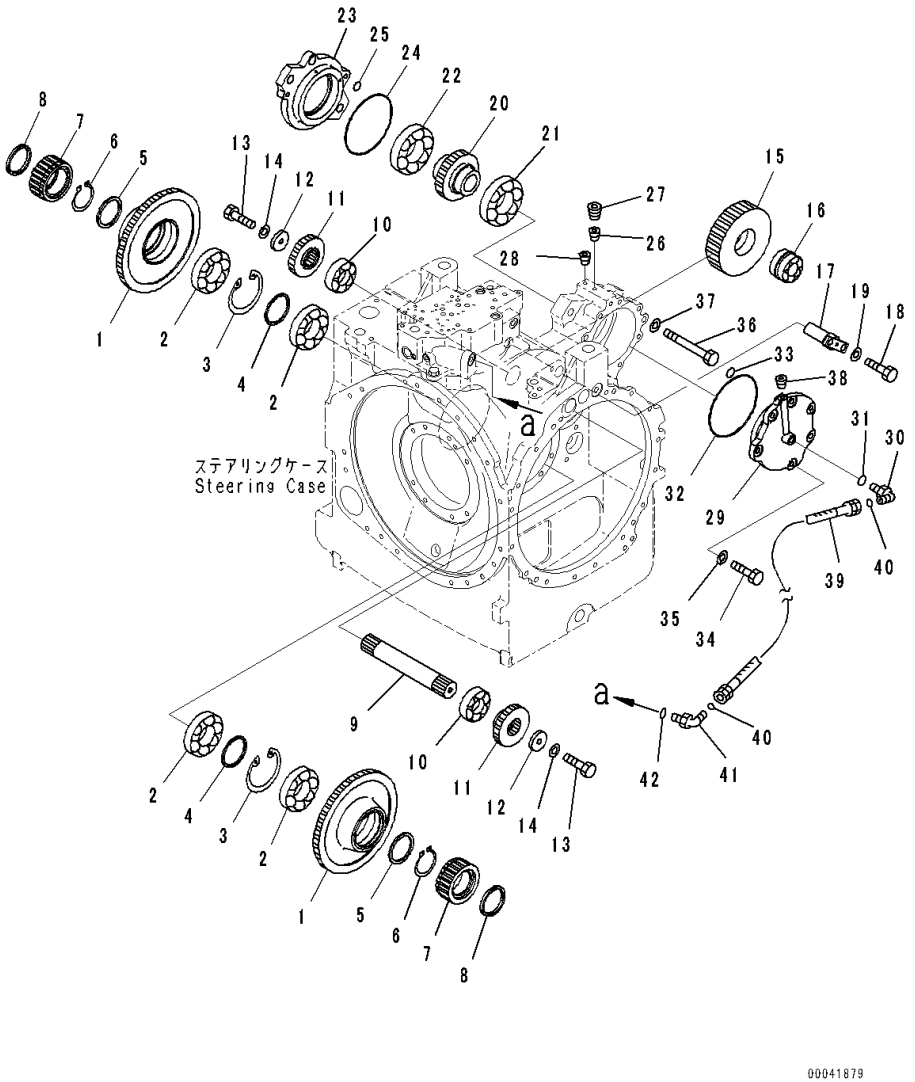

Index	Code	Part Number	Description	Qty	Serial Number
40		02896-61008	• O-ring	2	81028-
41		02782-10210	• Elbow	1	81028-
42		07002-61423	• O-ring	1	81028-

FIG. F2300-001022 Power Train, Torque Converter Case (2/2)

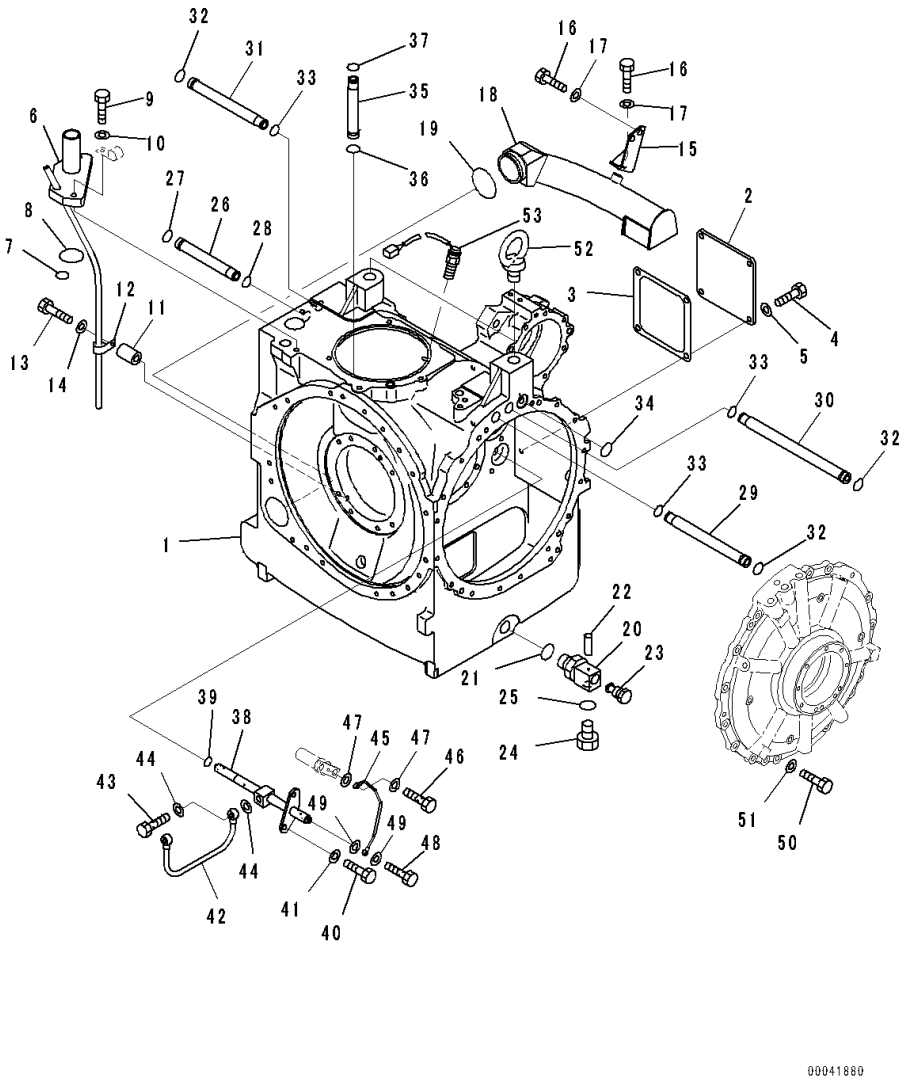

Index	Code	Part Number	Description	Qty	Serial Number
		17A-22-41000	Backhoe Assembly	1	81028-
1		17A-22-47371	• Case	1	81028-
2		17A-22-17311	• Plate	1	81028-
3		17A-22-17320	• Gasket	1	81028-
4		01010-81230	• Bolt	4	81028-
5		01643-31232	• Washer	4	81028-
6		17A-22-47440	• Tube	1	81028-
7		07000-72070	• O-ring	1	81028-
8		07000-73038	• O-ring	1	81028-
9		01010-81245	• Bolt	2	81028-
10		01643-31232	• Washer	2	81028-
11		205-03-71330	• Collar	1	81028-
12		156-76-21170	• Clip	1	81028-
13		01010-81265	• Bolt	1	81028-
14		01643-31232	• Washer	1	81028-
15		17A-22-47210	• Bracket	1	81028-
16		01010-81225	• Bolt	3	81028-
17		01643-31232	• Washer	3	81028-
18		17A-22-46210	• Tube	1	81028-
19		07000-72075	• O-ring	1	81028-
20		17A-22-47990	• Joint	1	81028-
21		07002-63634	• O-ring	1	81028-
22		04020-00514	• Pin, Dowel	1	81028-
23		195-49-31280	• Valve	1	81028-
24		07040-12412	• Plug	1	81028-
25		07002-62434	• O-ring	1	81028-
26		17A-22-27291	• Tube	1	81028-
27		07000-73022	• O-ring	1	81028-
28		07000-72021	• O-ring	1	81028-
29		17A-22-27281	• Tube	1	81028-
30		17A-22-46181	• Tube	1	81028-
31		17A-22-46190	• Tube	1	81028-
32		07000-73022	• O-ring	3	81028-
33		07000-72021	• O-ring	3	81028-
34		07000-73032	• O-ring	6	81028-
35		17A-22-46230	• Tube	1	81028-
36		07000-73022	• O-ring	1	81028-
37		07000-72021	• O-ring	1	81028-
38		17A-22-47130	• Tube	1	81028-
39		07000-72018	• O-ring	1	81028-

FIG. F2300-001022 Power Train, Torque Converter Case (2/2)

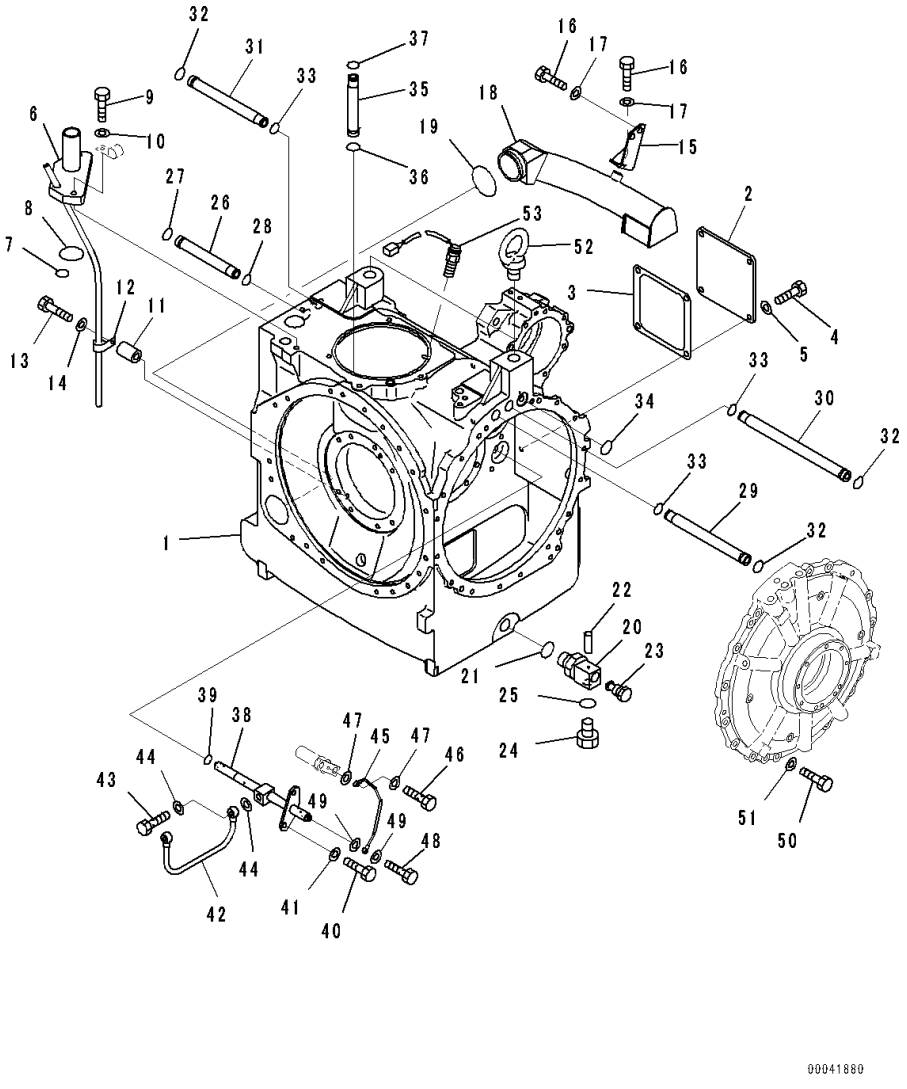

Index	Code	Part Number	Description	Qty	Serial Number
40		01010-81235	• Bolt	2	81028-
41		01643-31232	• Washer	2	81028-
42		17A-22-17160	• Tube	1	81028-
43		07206-31216	• Bolt, Joint	2	81028-
44		07005-01612	• Seal, Washer	4	81028-
45		17A-22-17141	• Tube	1	81028-
46		07206-30508	• Bolt, Joint	1	81028-
47		07005-00812	• Gasket	2	81028-
48		07206-30508	• Bolt, Joint	1	81028-
49		07005-00812	• Gasket	2	81028-
50		01010-81260	• Bolt	32	81028-
51		01643-31232	• Washer	32	81028-
52		04530-13045	• Bolt	2	81028-
53		7861-93-2330	• Sensor	1	81028-

FIG. F2300-001023 Power Train, Inner Parts, Steering Valve (1/3)

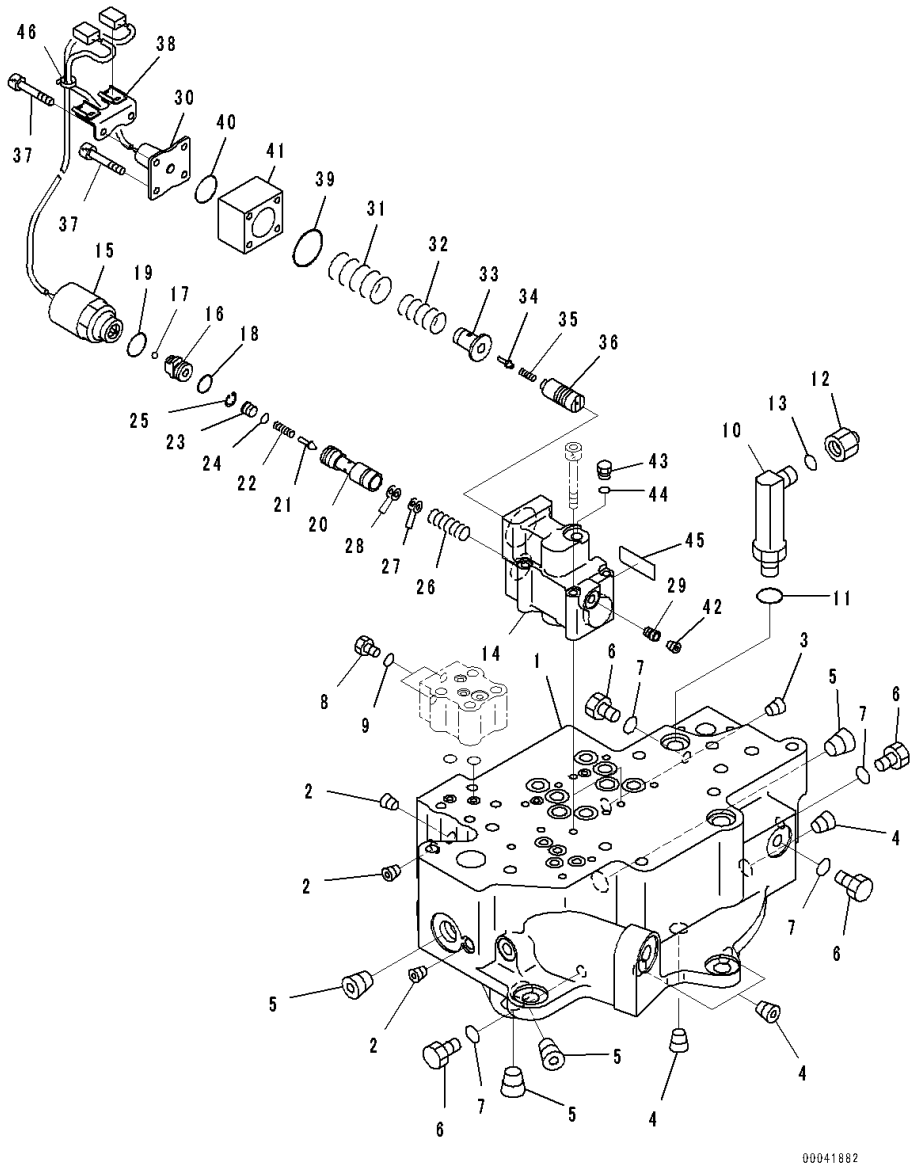

Index	Code	Part Number	Description	Qty	Serial Number
		17A-22-41000	Backhoe Assembly	1	81028-
		17A-22-46001	• Valve Assembly	1	81028-
1		17A-22-46112	• • Valve	1	81028-
2		07043-70108	• • Plug	3	81028-
3		07043-70211	• • Plug	1	81028-
4		07043-70312	• • Plug	4	81028-
5		07043-70617	• • Plug	4	81028-
6		07040-11209	• • Plug	11	81028-
7		07002-61223	• • O-ring	11	81028-
8		07040-10807	• • Plug	1	81028-
9		07002-60823	• • O-ring	1	81028-
10		02782-10317	• • Elbow	1	81028-
11		07002-62034	• • O-ring	1	81028-
12		02789-10315	• • Plug	1	81028-
13		02896-61009	• • O-ring	1	81028-
		17A-22-46401	• • ECMV Assembly	2	81028-
14	C1		• • • Valve Body	1	81028-
15	C1		• • • Solenoid	1	81028-
16	C1		• • • Valve	1	81028-
17	C1		• • • Ball	1	81028-
18	C1		• • • O-ring	1	81028-
19	C1		• • • O-ring	1	81028-
20	C1		• • • Spool	1	81028-
21	C1		• • • Poppet	1	81028-
22	C1		• • • Spring, L=18.0mm	1	81028-
23	C1		• • • Sleeve	1	81028-
24	C1		• • • O-ring	1	81028-
25	C1		• • • Ring	1	81028-
26	C1		• • • Spring, L=24.5mm	1	81028-
27	C1		• • • Shim, T=0.50mm	3	81028-
28	C1		• • • Shim, T=0.20mm	3	81028-
29	C1		• • • Plug	1	81028-
30	C1		• • • Switch Assembly	1	81028-
31	C1		• • • Spring	1	81028-
32	C1		• • • Spring	1	81028-
33	C1		• • • Seat, Spring	1	81028-
34	C1		• • • Pin	1	81028-
35	C1		• • • Spring, L=18.0mm	1	81028-
36	C1		• • • Sleeve	1	81028-
37		01252-70540	• • • Bolt	4	81028-

FIG. F2300-001023 Power Train, Inner Parts, Steering Valve (1/3)

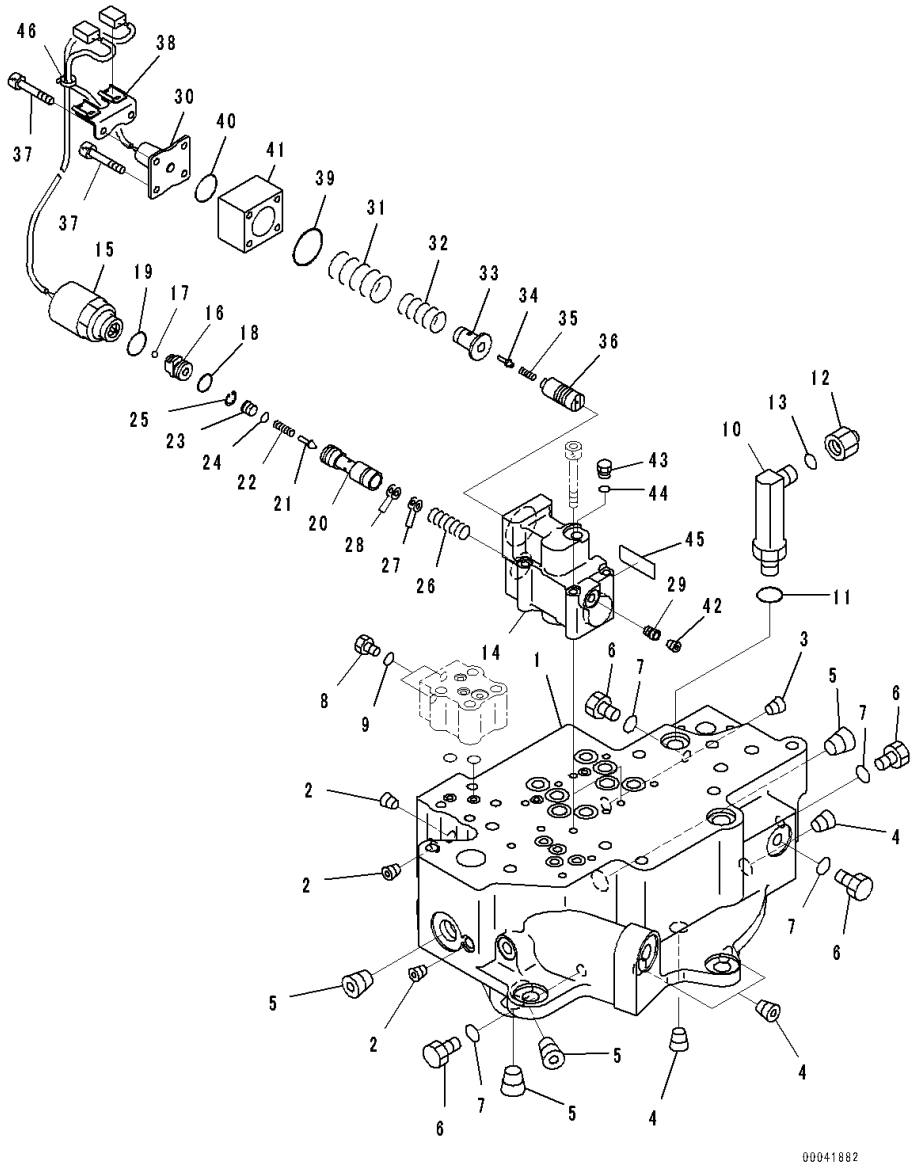

Index	Code	Part Number	Description	Qty	Serial Number
38		714-23-15690	• • • Bracket	1	81028-
39	C1		• • • O-ring	1	81028-
40	C1		• • • O-ring	1	81028-
41	C1		• • • Cover	1	81028-
42	C1		• • • Plug	1	81028-
43	C1		• • • Plug	1	81028-
44	C1		• • • O-ring	1	81028-
45	C2	700-11-31940	• • • Plate, Name (Limited Supply)	1	81028-
46		08034-00310	• • • Band, White	1	81028-

FIG. F2300-001024 Power Train, Inner Parts, Steering Valve (2/3)

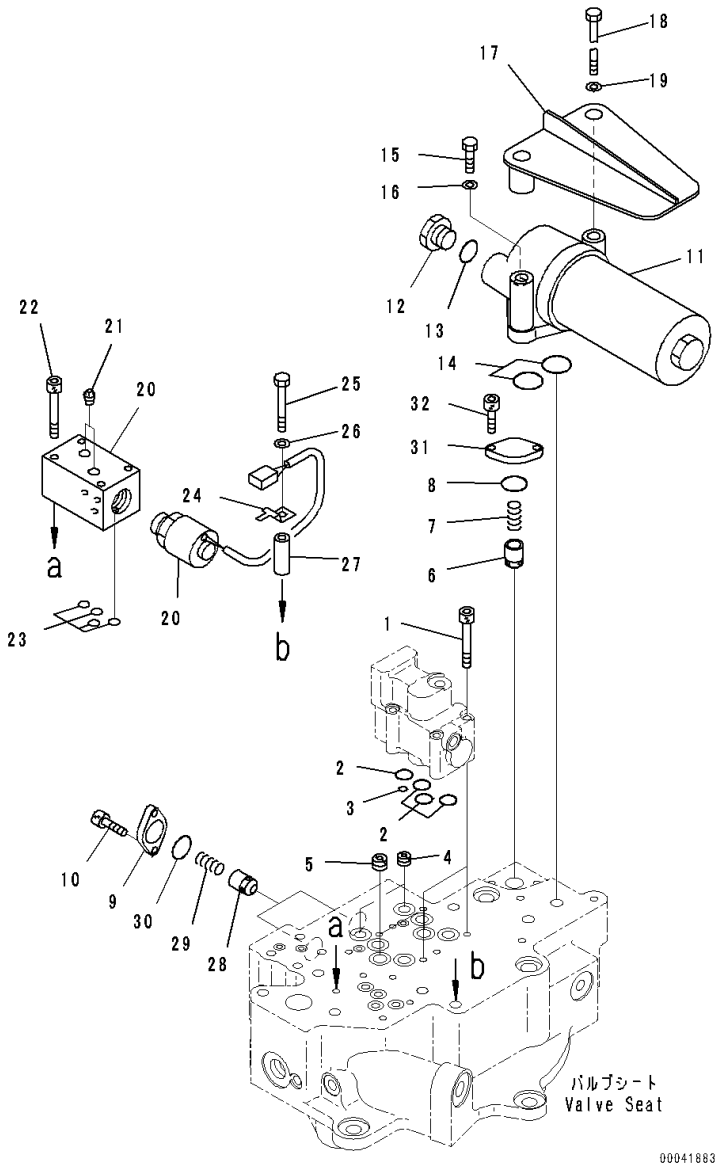

Index	Code	Part Number	Description	Qty	Serial Number
		17A-22-41000	Backhoe Assembly	1	81028-
		17A-22-46001	• Valve Assembly	1	81028-
1		01252-70650	• • Bolt	8	81028-
2		07000-72015	• • O-ring	8	81028-
3		07000-71007	• • O-ring	2	81028-
4		17A-22-46250	• • Orifice	2	81028-
5		17A-22-46260	• • Orifice	2	81028-
6		07750-01623	• • Valve	1	81028-
7		07750-01628	• • Spring	1	81028-
8		07000-72021	• • O-ring	1	81028-
9		709-25-11670	• • Cover	1	81028-
10		01252-60616	• • Bolt, Hexagon Socket Head	2	81028-
11		569-15-51721	• • Filter Assembly	1	81028-
		569-15-51732	• • • Element Assembly	1	81028-
		07000-A2060	• • • O-ring	1	81028-
12		07040-11812	• • Plug	1	81028-
13		07002-61823	• • O-ring	1	81028-
14		07000-73022	• • O-ring	2	81028-
15		01010-81030	• • Bolt	1	81028-
16		01643-31032	• • Washer	1	81028-
17		17A-22-46151	• • Cover	1	81028-
18		01011-81015	• • Bolt	2	81028-
19		01643-31032	• • Washer	2	81028-
20		17M-22-42100	• • Valve Assembly	1	81028-
21		07042-80108	• • • Plug	2	81028-
22		01252-70650	• • Bolt	4	81028-
23		07000-72010	• • O-ring	4	81028-
24		08193-20010	• • Clip	1	81028-
25		01010-81055	• • Bolt	1	81028-
26		01643-31032	• • Washer	1	81028-
27		20Y-03-11220	• • Collar	1	81028-
28		07750-01623	• • Valve	2	81028-
29		07750-01628	• • Spring	2	81028-
30		07000-72021	• • O-ring	2	81028-
31		709-25-11670	• • Cover	2	81028-
32		01252-60616	• • Bolt, Hexagon Socket Head	4	81028-

FIG. F2300-001025 Power Train, Inner Parts, Steering Valve (3/3)

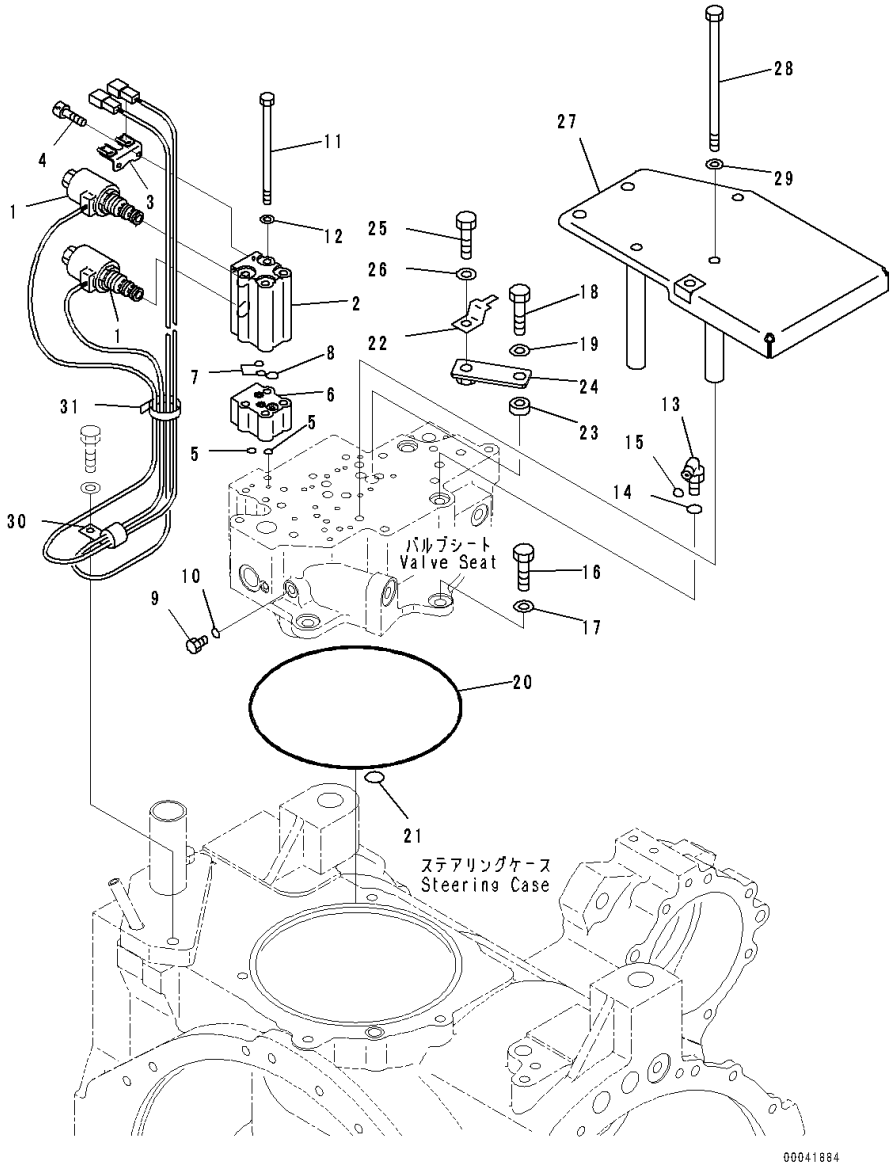

Index	Code	Part Number	Description	Qty	Serial Number
		17A-22-41000	Backhoe Assembly	1	81028-
		17A-22-46001	• Valve Assembly	1	81028-
		17A-22-46100	• • Valve Assembly	1	81028-
1		209-60-77290	• • • Valve, Solenoid	2	81028-
2	C1		• • • Valve Body	1	81028-
3		714-23-15690	• • • Bracket	1	81028-
4		01252-70510	• • • Bolt	2	81028-
5		07000-71007	• • O-ring	2	81028-
6		17A-22-46130	• • Valve Body	1	81028-
7		07000-71007	• • O-ring	2	81028-
8		07000-72010	• • O-ring	1	81028-
9		07040-10807	• • Plug	2	81028-
10		07002-60823	• • O-ring	2	81028-
11		426-S62-2520	• • Bolt	4	81028-
12		01643-30823	• • Washer	4	81028-
13		02782-10422	• • Elbow	1	81028-
14		07002-62034	• • O-ring	1	81028-
15		02896-11012	• • O-ring	1	81028-
16		01010-81230	• Bolt	3	81028-
17		01643-31232	• Washer	3	81028-
18		01010-81245	• Bolt	1	81028-
19		01643-31232	• Washer	1	81028-
20		07000-75240	• O-ring	1	81028-
21		07000-72018	• O-ring	1	81028-
22		08193-21012	• Clip	1	81028-
23		198-43-15310	• Collar	1	81028-
24		154-Z11-5340	• Bracket	1	81028-
25		01010-81220	• Bolt	1	81028-
26		01643-31232	• Washer	1	81028-
27		17A-22-46143	• Cover	1	81028-
28		01011-81090	• Bolt	3	81028-
29		01643-31032	• Washer	3	81028-
30		04434-50812	• Clip	1	81028-
31		08034-00310	• Band, White	1	81028-

FIG. F2300-001026 Power Train, Main Steering Shaft

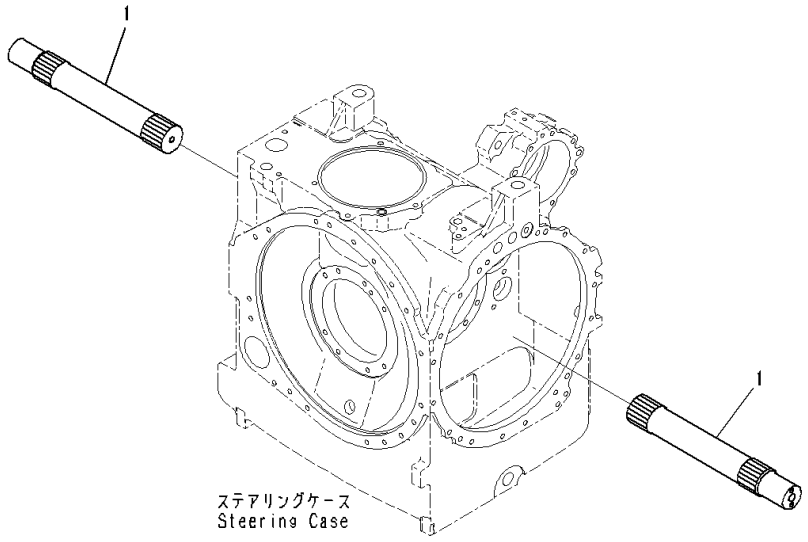

Index	Code	Part Number	Description	Qty	Serial Number
1		17A-22-18110	Shaft	2	81028-

FIG. F2300-001027 Power Train, Accessory

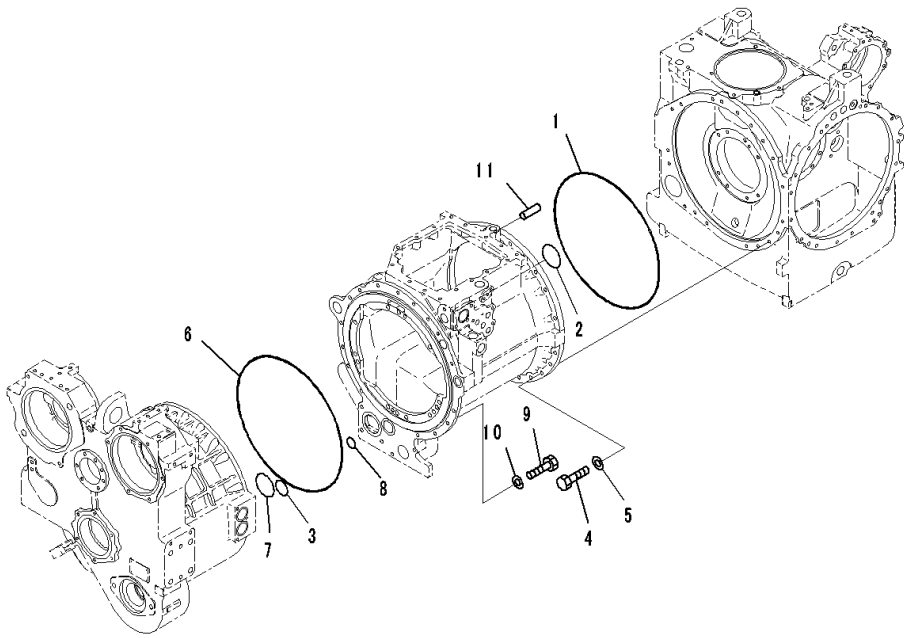

Index	Code	Part Number	Description	Qty	Serial Number
1		17M-15-45980	O-ring	1	81028-
2		07000-72085	O-ring	1	81028-
3		07000-72055	O-ring	1	81028-
4		01010-81240	Bolt	18	81028-
5		01643-31232	Washer	18	81028-
6		17M-15-45980	O-ring	1	81028-
7		07000-72085	O-ring	1	81028-
8		07000-73038	O-ring	1	81028-
9		01010-81235	Bolt	19	81028-
10		01643-31232	Washer	19	81028-
11		04020-01228	Pin, Dowel	1	81028-

FIG. F2300-001028 Power Train, Valve Piping

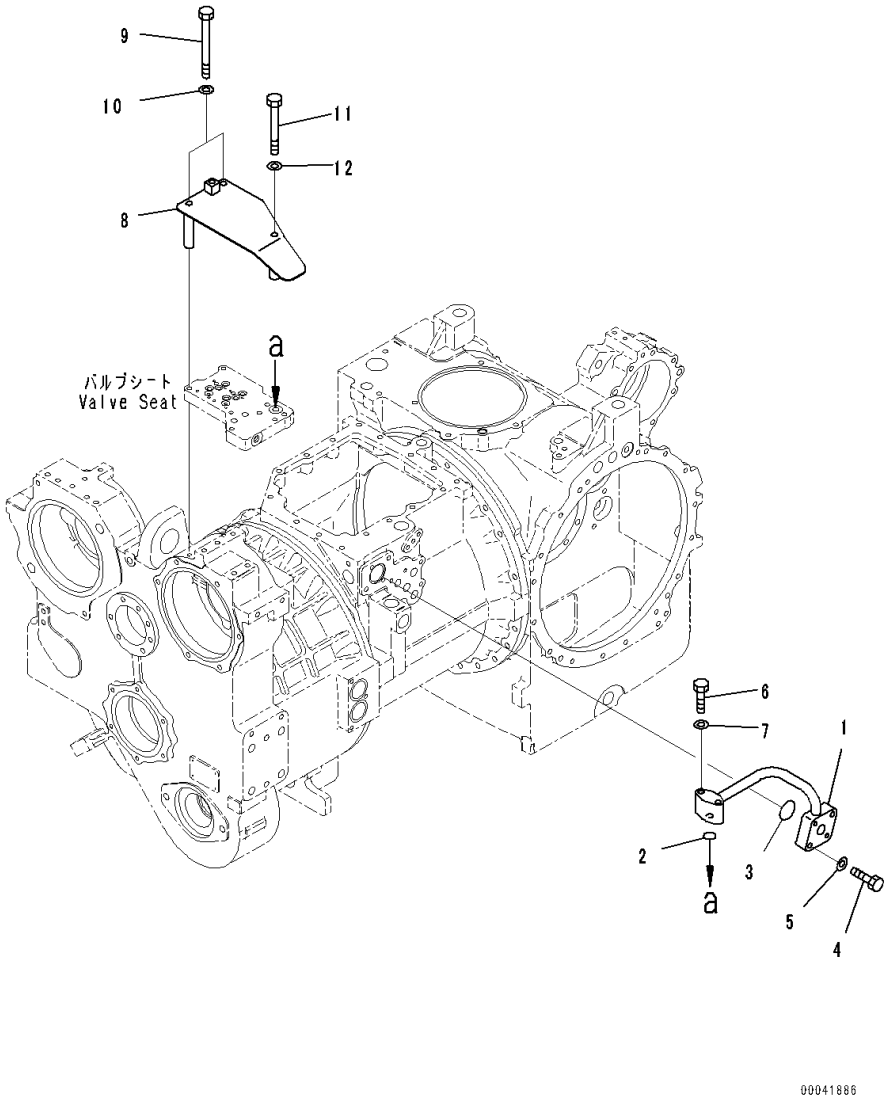

Index	Code	Part Number	Description	Qty	Serial Number
1		17A-13-46130	Tube	1	81028-
2		07000-73025	O-ring	1	81028-
3		07000-73045	O-ring	1	81028-
4		01010-81255	Bolt	2	81028-
5		01643-31232	Washer	2	81028-
6		01010-81275	Bolt	2	81028-
7		01643-31232	Washer	2	81028-
8		17A-13-46140	Cover	1	81028-
9		01011-81070	Bolt	2	81028-
10		01643-31032	Washer	2	81028-
11		01011-81040	Bolt	1	81028-
12		01643-31032	Washer	1	81028-

FIG. F2300-001029 Power Train, Inner Parts, Hydraulic Pump (1/2)

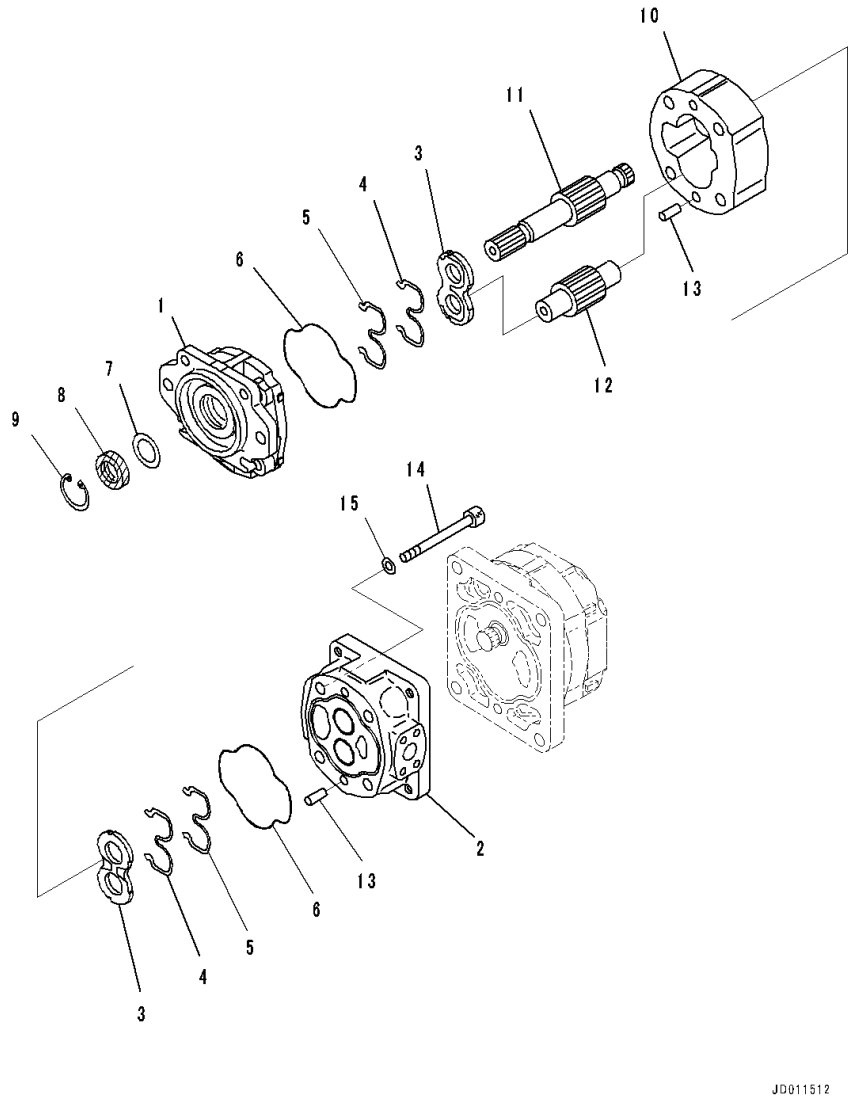

Index	Code	Part Number	Description	Qty	Serial Number
		705-52-30A00	Pump Assembly	1	81028-
		705-22-40160	• Pump Assembly	1	81028-
1	C2	705-18-03620	• • Bracket Assembly	1	81028-
	C2	705-18-03350	• • • Bushing	2	81028-
2	C2	705-18-03240	• • Carrier Assembly	1	81028-
	C2	705-18-03350	• • • Bushing	2	81028-
3		705-17-03610	• • Plate	2	81028-
4		705-17-03443	• • Ring, Back-up	2	81028-
5		705-17-03473	• • Seal	2	81028-
6		705-17-03381	• • O-ring	2	81028-
7		705-17-03870	• • Plate	1	81028-
8		705-17-03811	• • Seal, Oil	1	81028-
9		04065-05220	• • Ring, Snap	1	81028-
10	C2	705-17-40010	• • Gear Case	1	81028-
11	C2	705-17-40730	• • Gear	1	81028-
12	C2	705-17-40810	• • Gear, Driven	1	81028-
13		04020-01228	• • Pin, Dowel	4	81028-
14		01253-61635	• • Bolt	4	81028-
15		01643-51645	• • Washer	4	81028-

FIG. F2300-001030 Power Train, Inner Parts, Hydraulic Pump (2/2)

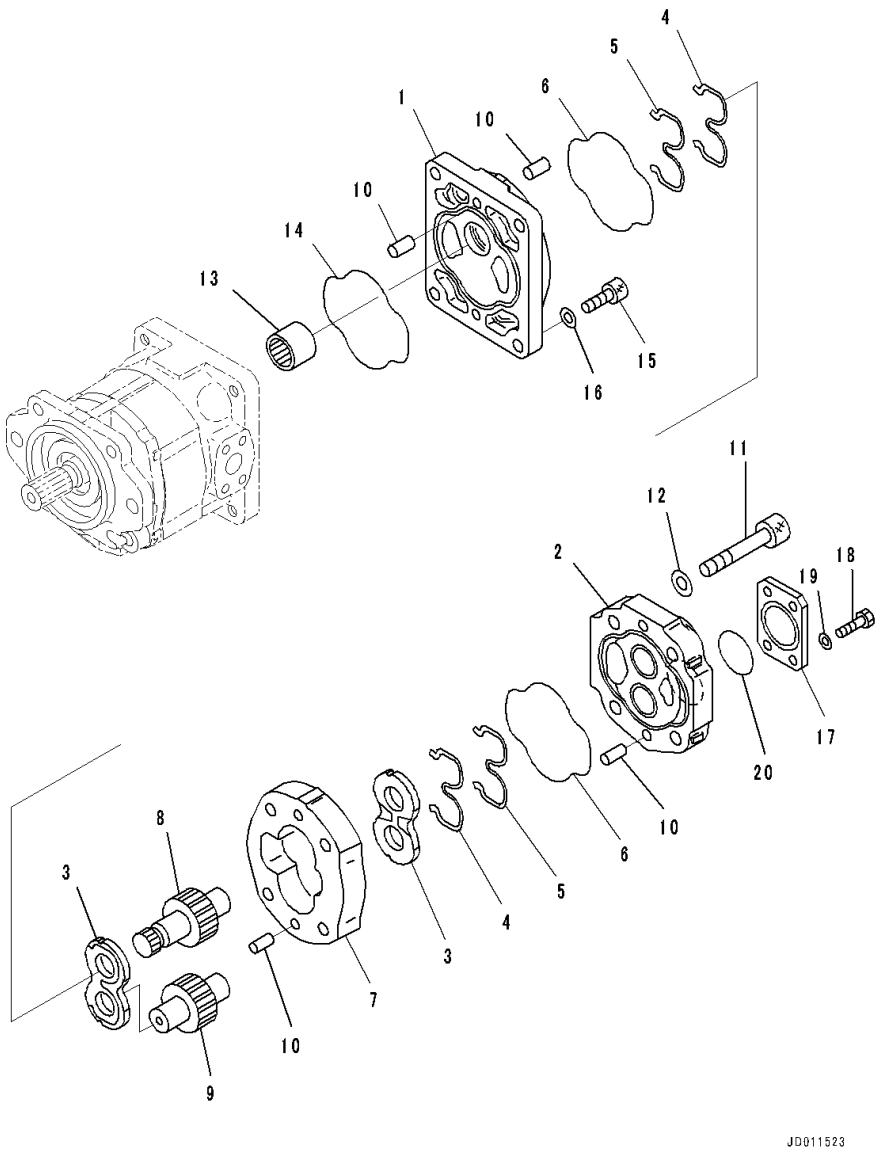

Index	Code	Part Number	Description	Qty	Serial Number
		705-52-30A00	Pump Assembly	1	81028-
		705-14-32731	• Pump Assembly	1	81028-
1	C2	705-17-03520	• • Bracket	1	81028-
	C2	705-17-03352	• • • Bushing	2	81028-
2	C2	705-17-03140	• • Cover	1	81028-
	C2	705-17-03352	• • • Bushing	2	81028-
3		705-17-03610	• • Plate,Side	2	81028-
4		705-17-03443	• • Ring, Back-up	2	81028-
5		705-17-03473	• • Seal	2	81028-
6		705-17-03381	• • O-ring	2	81028-
7	C2	705-18-32010	• • Gear Case	1	81028-
8	C2	705-18-32450	• • Drive	1	81028-
9	C2	705-18-32510	• • Gear, Driven	1	81028-
10		04020-01228	• • Pin, Dowel	4	81028-
11		01253-61600	• • Bolt	4	81028-
12		01643-51645	• • Washer	4	81028-
13		705-17-03330	• Coupling Assembly	1	81028-
14		705-17-03381	• O-ring	1	81028-
15		01252-61450	• Bolt	4	81028-
16		705-17-04980	• Washer	4	81028-
17		705-17-03880	• Plate	1	81028-
18		01010-81230	• Bolt	4	81028-
19		01643-51232	• Washer	4	81028-
20		07000-E2055	• O-ring	1	81028-

FIG. F2300-001031 Power Train, Hydraulic Pump Piping

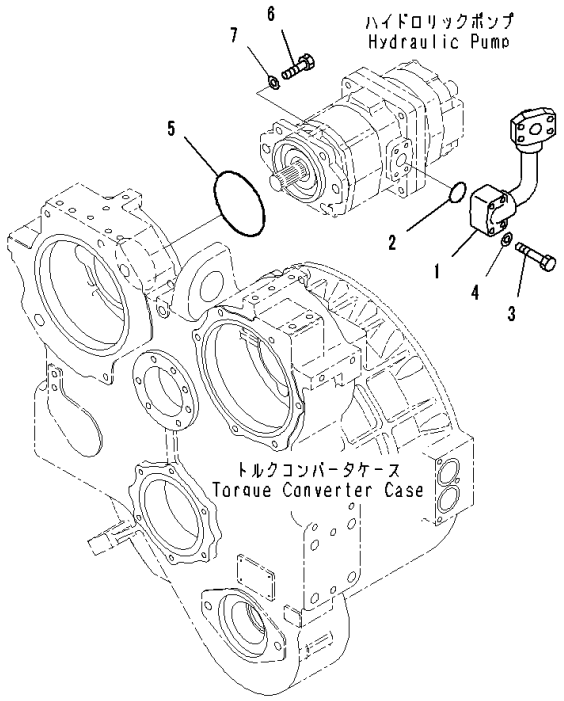

JD011489

Index	Code	Part Number	Description	Qty	Serial Number
1		17A-49-41291	Tube	1	81028-
2		07000-73035	O-ring	1	81028-
3		01010-81060	Bolt	4	81028-
4		01643-51032	Washer	4	81028-
5		07000-72130	O-ring	1	81028-
6		01010-81645	Bolt	2	81028-
7		01643-31645	Washer	2	81028-

FIG. F2300-001032 Power Train, Inner Parts, Scavenging Pump

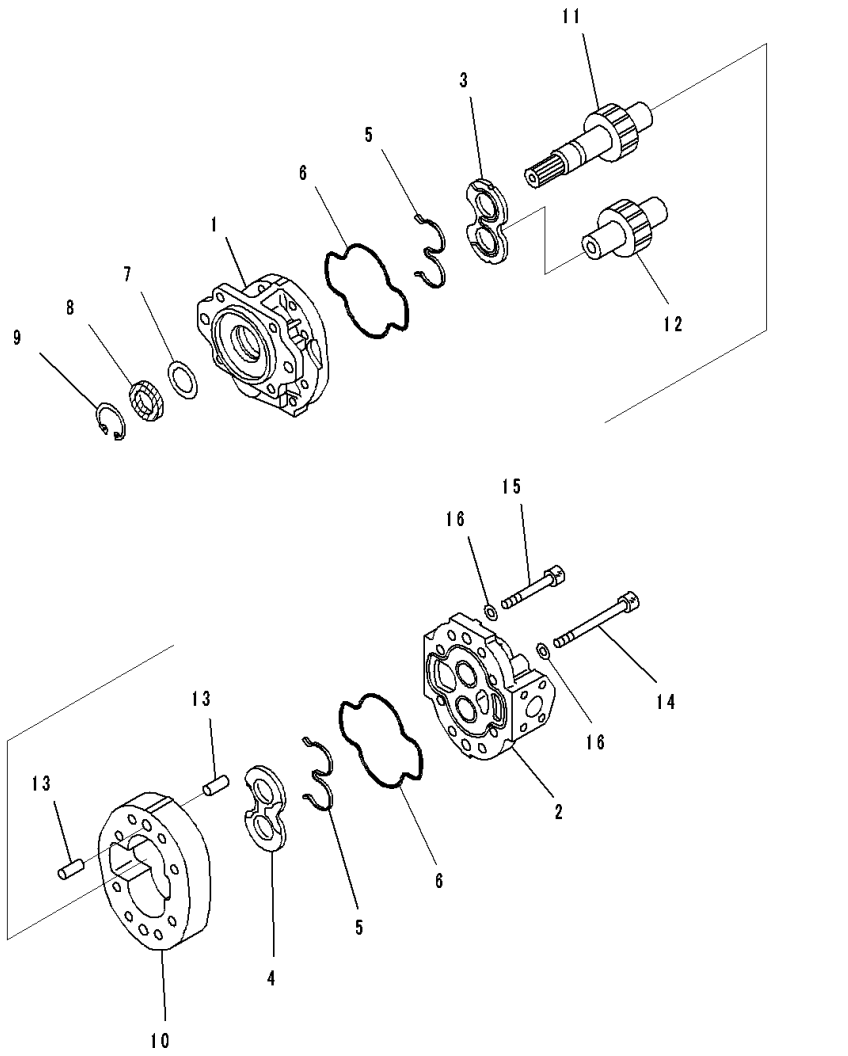

Index	Code	Part Number	Description	Qty	Serial Number
		705-22-43070	Pump Assembly, SAR140	1	81028-
1	C2	705-17-04021	• Bracket	1	81028-
	C2	705-17-04352	• • Bushing	2	81028-
2	C2	705-17-04120	• Cover	1	81028-
	C2	705-17-04352	• • Bushing	2	81028-
3		705-18-04640	• Plate,Side	1	81028-
4		705-18-04630	• Plate,Side	1	81028-
5		705-18-04470	• Seal	2	81028-
6		705-17-04382	• O-ring	2	81028-
7		705-17-04870	• Plate	1	81028-
8		704-17-05811	• Seal, Oil	1	81028-
9		04065-06220	• Ring, Snap	1	81028-
10	C2	705-17-43010	• Gear Case	1	81028-
11	C2	705-17-43410	• Gear, Driven	1	81028-
12	C2	705-17-43510	• Gear, Driven	1	81028-
13		04020-01842	• Pin, Dowel	4	81028-
14		01253-61415	• Bolt	4	81028-
15		705-17-04730	• Bolt	4	81028-
16		705-17-04980	• Washer	8	81028-

FIG. F2300-001033 Power Train, Scavenging Pump Mounting

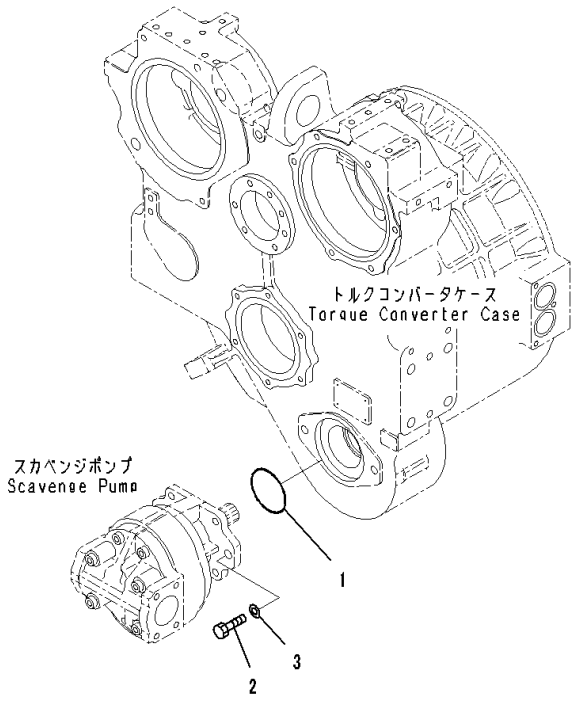

Index	Code	Part Number	Description	Qty	Serial Number
1		07000-72130	O-ring	1	81028-
2		01010-81645	Bolt	2	81028-
3		01643-31645	Washer	2	81028-

FIG. F2300-001034 Power Train, Suction Piping

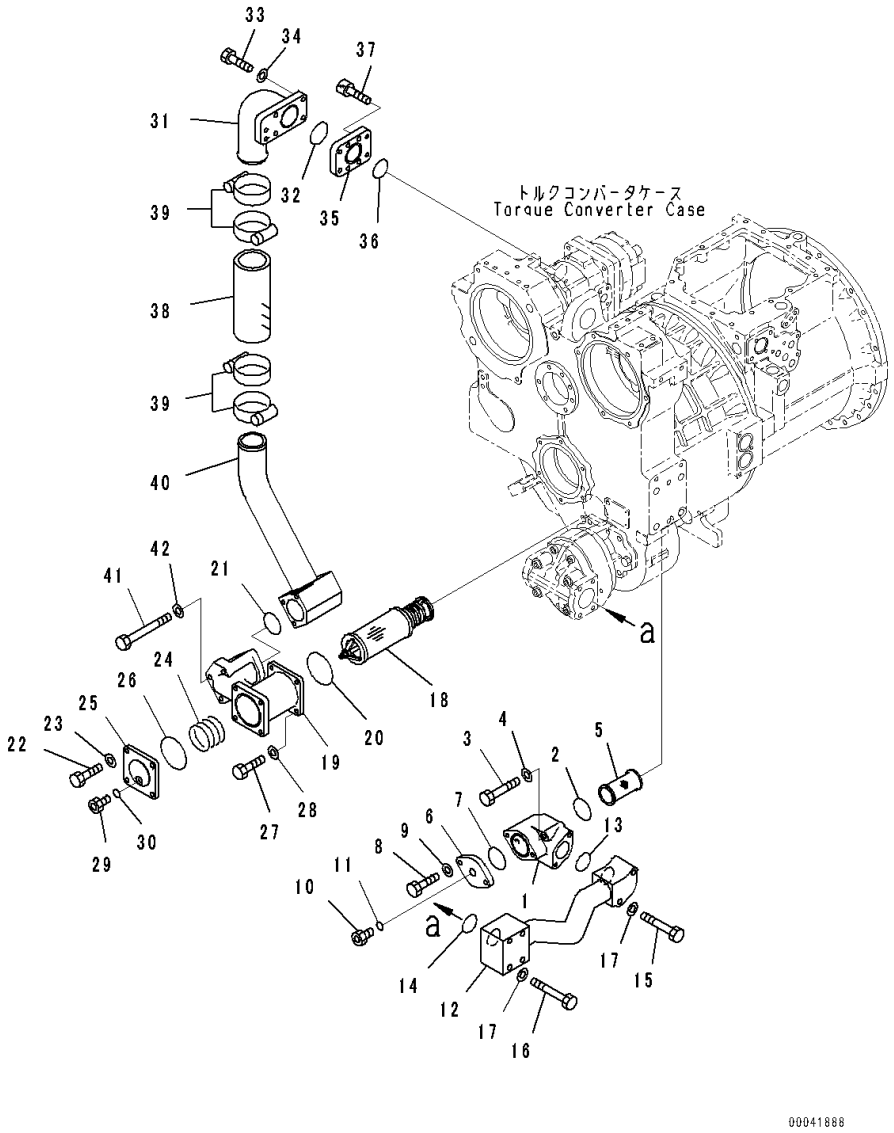

Index	Code	Part Number	Description	Qty	Serial Number
1		17A-49-41310	Elbow	1	81028-
2		07000-72070	O-ring	1	81028-
3		01010-81290	Bolt	2	81028-
4		01643-31232	Washer	2	81028-
5		17A-49-41320	Strainer	1	81028-
6		17A-49-15141	Flange	1	81028-
7		07000-72070	O-ring	1	81028-
8		01010-81235	Bolt	2	81028-
9		01643-31232	Washer	2	81028-
10		07040-12412	Plug	1	81028-
11		07002-12434	O-ring	1	81028-
12		17A-49-41111	Tube	1	81028-
13		07000-72055	O-ring	1	81028-
14		07000-72075	O-ring	1	81028-
15		01011-81200	Bolt	2	81028-
16		01011-81210	Bolt	4	81028-
17		01643-31232	Washer	6	81028-
18		17A-49-41630	Magnet Assembly	1	81028-
19		17A-49-41641	Head	1	81028-
20		07000-72110	O-ring	1	81028-
21		07000-72070	O-ring	1	81028-
22		01010-81235	Bolt	4	81028-
23		01643-31232	Washer	4	81028-
24		14X-49-12320	Spring	1	81028-
25		17A-49-41680	Tube	1	81028-
26		07000-72100	O-ring	1	81028-
27		01010-81235	Bolt	4	81028-
28		01643-31232	Washer	4	81028-
29		07040-12012	Plug	1	81028-
30		07002-12034	O-ring	1	81028-
31		17A-49-41191	Tube	1	81028-
32		07000-72055	O-ring	1	81028-
33		01010-81245	Bolt	4	81028-
34		01643-31232	Washer	4	81028-
35		17A-49-41231	Flange	1	81028-
36		07000-72055	O-ring	1	81028-
37		01252-71225	Bolt	4	81028-
38		07260-07425	Hose	1	81028-
39		07289-00095	Clamp	4	81028-
40		17A-49-41221	Tube	1	81028-

FIG. F2300-001034 Power Train, Suction Piping

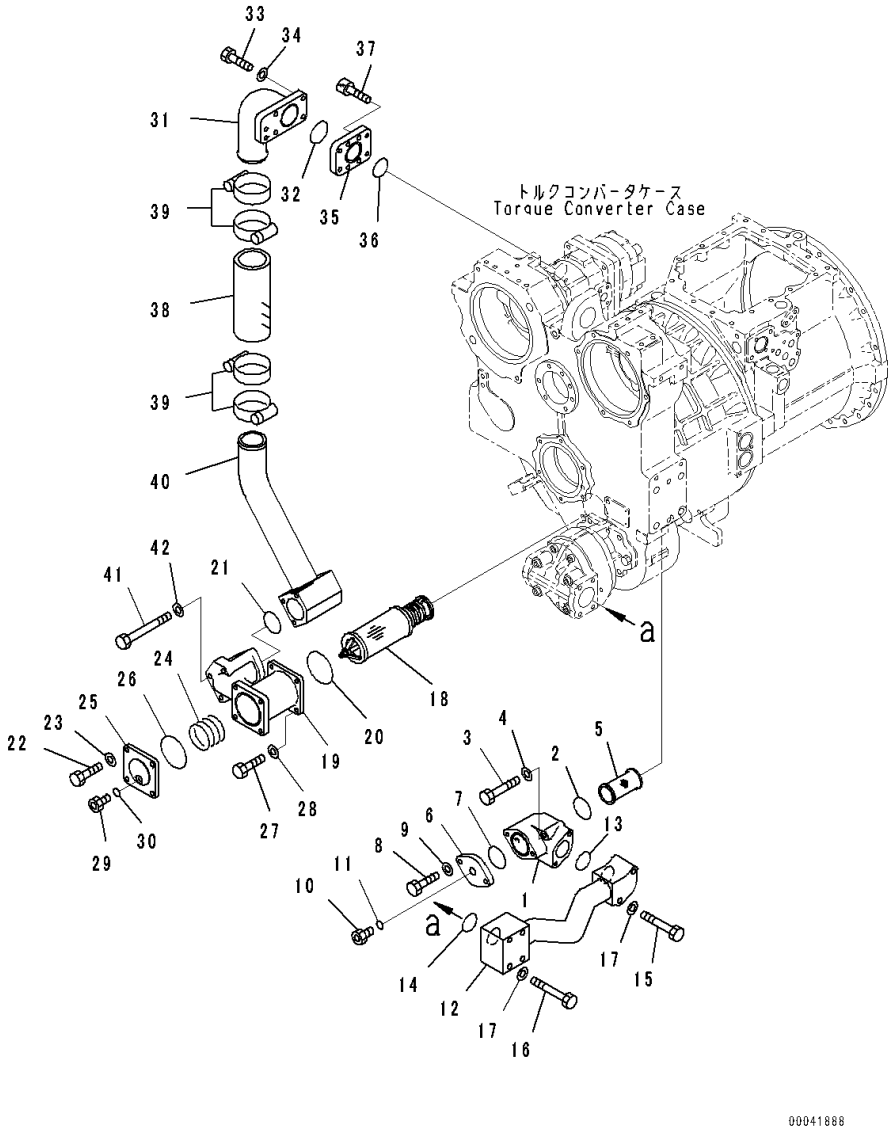

Index	Code	Part Number	Description	Qty	Serial Number
41		01011-81240	Bolt	3	81028-
42		01643-51232	Washer	3	81028-

FIG. F2300-001035 Power Train, Piping

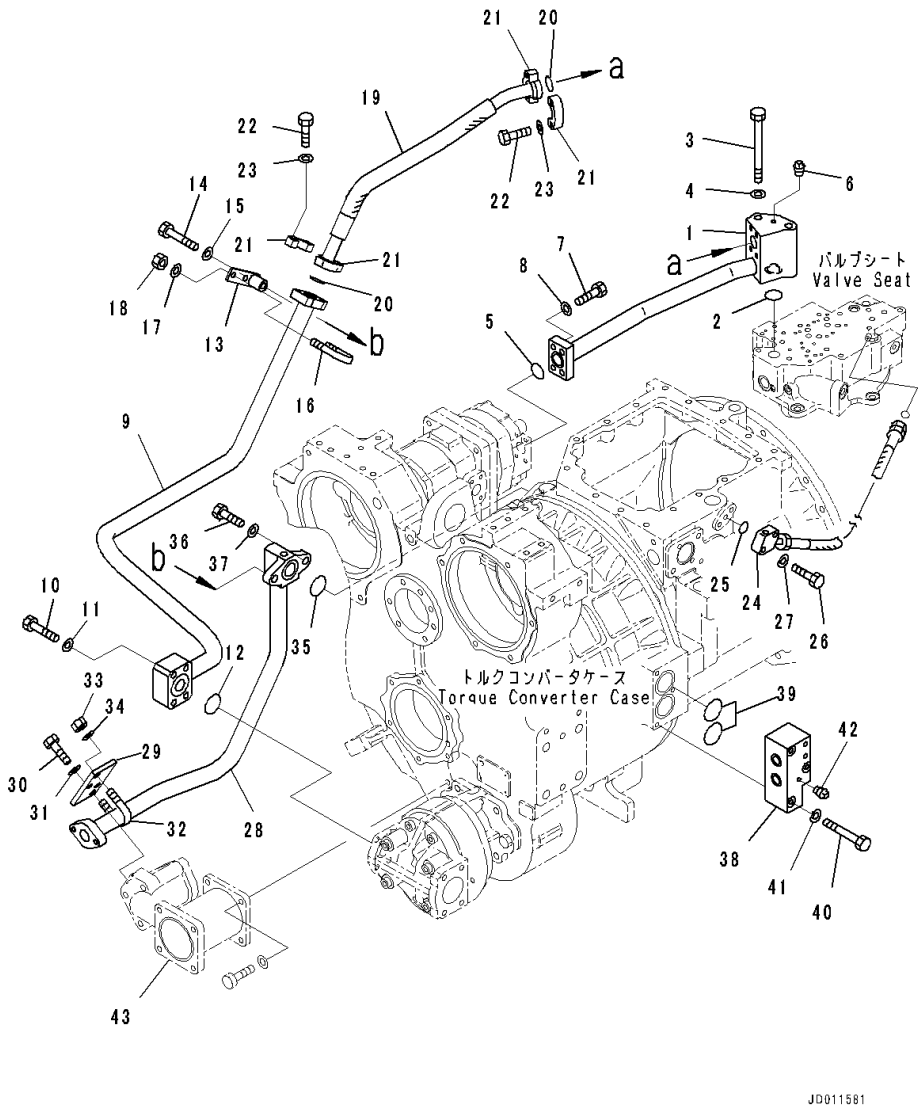

Index	Code	Part Number	Description	Qty	Serial Number
1		17A-49-41131	Tube	1	81028-
2		07000-73035	O-ring	1	81028-
3		01011-81040	Bolt	2	81028-
4		203-54-56970	Washer	2	81028-
5		07000-73035	O-ring	1	81028-
6		07042-80108	Plug	1	81028-
7		07372-21040	Bolt	4	81028-
8		01643-51032	Washer	4	81028-
9		17A-49-41711	Tube	1	81028-
10		01010-81265	Bolt	4	81028-
11		01643-31232	Washer	4	81028-
12		07000-72045	O-ring	1	81028-
13		17A-49-41721	Bracket	1	81028-
14		01010-81280	Bolt	1	81028-
15		01643-31232	Washer	1	81028-
16		07283-33442	Clip, Pipe	1	81028-
17		01643-31032	Washer	2	81028-
18		01597-01009	Nut	2	81028-
19		07297-010A5	Hose	1	81028-
20		07000-73032	O-ring	2	81028-
21		07371-31049	Flange, Split	4	81028-
22		07372-21035	Bolt	8	81028-
23		01643-51032	Washer	8	81028-
24		17A-49-41270	Hose	1	81028-
25		07000-72018	O-ring	1	81028-
26		01010-81040	Bolt	2	81028-
27		01643-31032	Washer	2	81028-
28		17A-49-41261	Tube	1	81028-
29		17A-49-41670	Plate	1	81028-
30		01010-81230	Bolt	2	81028-
31		01643-31232	Washer	2	81028-
32		07283-33442	Clip, Pipe	1	81028-
33		01597-01009	Nut	2	81028-
34		01643-31032	Washer	2	81028-
35		07000-73045	O-ring	1	81028-
36		01010-81245	Bolt	1	81028-
37		01643-31232	Washer	1	81028-
38		17A-49-41331	Block	1	81028-
39		07000-73050	O-ring	2	81028-
40		01010-81085	Bolt	3	81028-

FIG. F2300-001035 Power Train, Piping

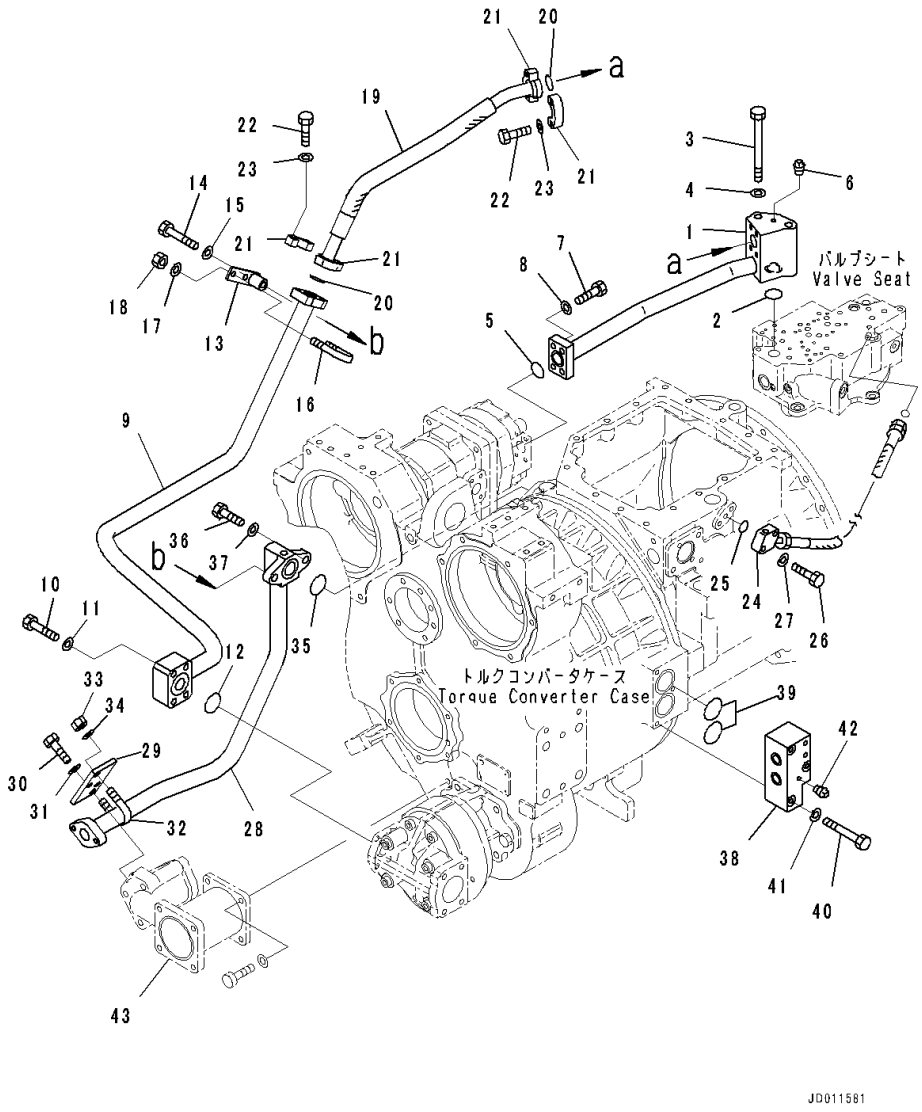

Index	Code	Part Number	Description	Qty	Serial Number
41		01643-31032	Washer	3	81028-
42		07042-80108	Plug	1	81028-
43		(17A-49-41641)	Head(Refer to Page 346)		-

FIG. F2300-001036 Power Train, Hydraulic Piping

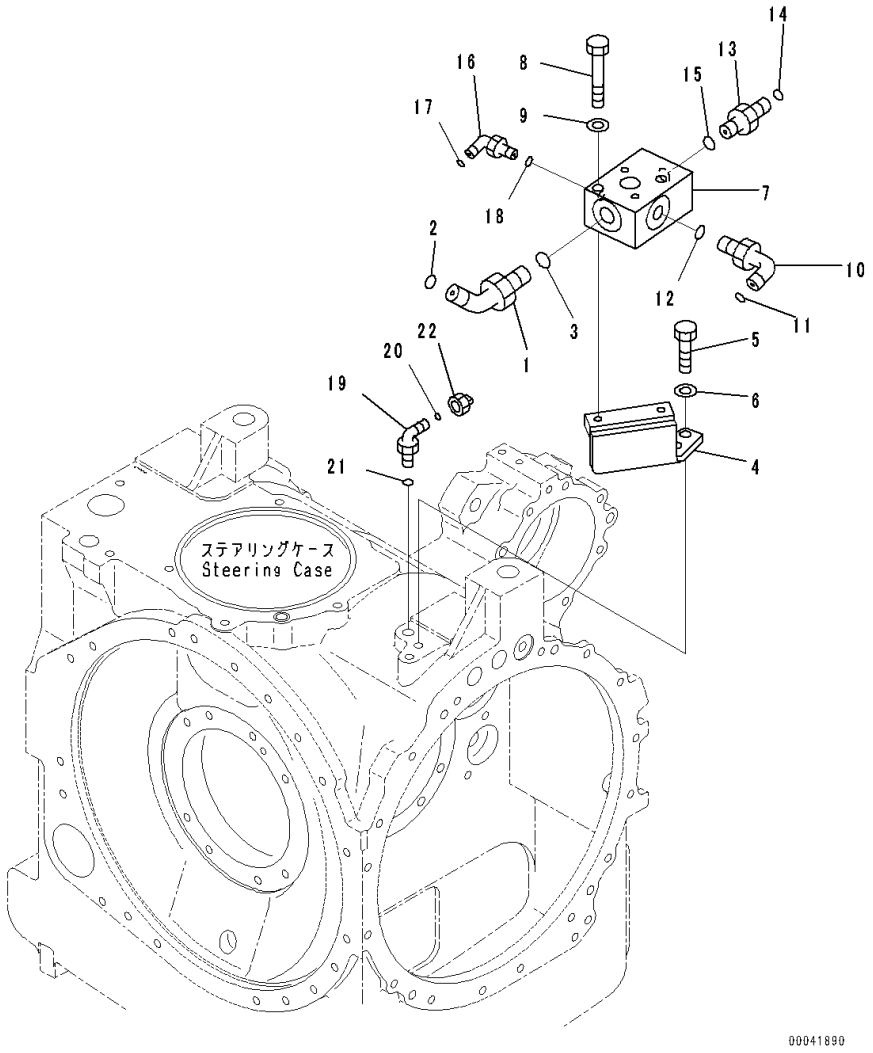

Index	Code	Part Number	Description	Qty	Serial Number
1		02783-10628	Elbow	1	81028-
2		02896-11018	O-ring	1	81028-
3		07002-12434	O-ring	1	81028-
4		17A-49-41151	Bracket	1	81028-
5		01010-81235	Bolt	2	81028-
6		01643-31232	Washer	2	81028-
7		17A-49-41161	Block	1	81028-
8		01010-81280	Bolt	2	81028-
9		01643-31232	Washer	2	81028-
10		02782-10425	Elbow	1	81028-
11		02896-11012	O-ring	1	81028-
12		07002-12434	O-ring	1	81028-
13		02781-00628	Union	1	81028-
14		02896-11018	O-ring	1	81028-
15		07002-12434	O-ring	1	81028-
16		02782-10210	Elbow	1	81028-
17		02896-11008	O-ring	1	81028-
18		07002-11423	O-ring	1	81028-
19		02782-10315	Elbow	1	81028-
20		02896-11009	O-ring	1	81028-
21		07002-12034	O-ring	1	81028-
22		02789-10315	Plug	1	81028-

FIG. F2300-001037 Power Train, Concentrated Piping

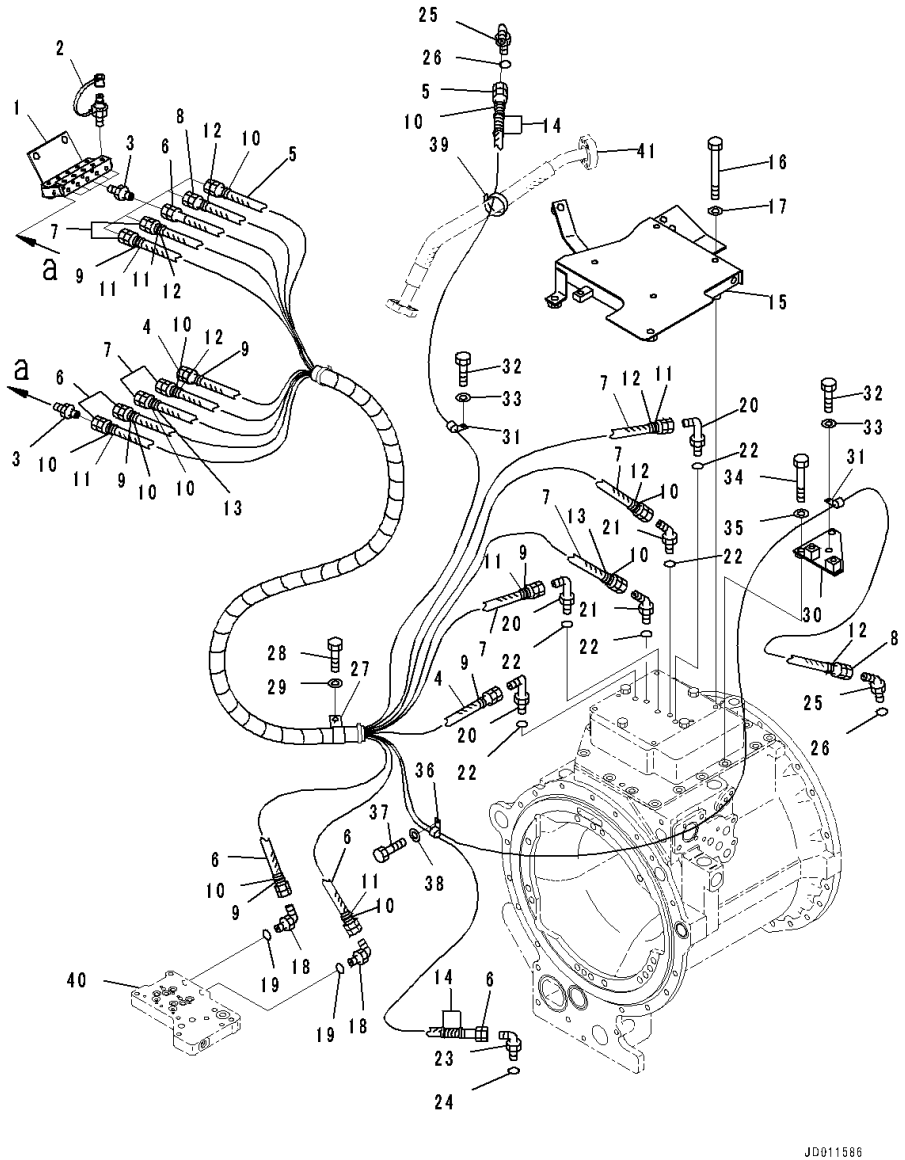

Index	Code	Part Number	Description	Qty	Serial Number
1		17A-49-41341	Bracket	1	81028-
2		195-49-36120	Nipple	10	81028-
3		203-62-21740	Nipple	10	81028-
4		17A-49-41940	Hose	1	81028-
5		17A-49-21261	Hose	1	81028-
6		17A-49-21311	Hose	3	81028-
7		198-49-56150	Hose	4	81028-
8		17A-49-17571	Hose	1	81028-
9		20Y-62-22790	Band, Red	6	81028-
10		20Y-62-22810	Band, Yellow	10	81028-
11		20Y-62-22820	Band, Blue	6	81028-
12		20Y-62-22830	Band, White	6	81028-
13		20Y-62-22840	Band, Black	2	81028-
14		08034-20310	Band, Black	4	81028-
15		17A-49-41761	Bracket	1	81028-
16		01011-81030	Bolt	4	81028-
17		01643-31032	Washer	4	81028-
18		17A-15-41380	Elbow	2	81028-
19		07002-61223	O-ring	2	81028-
20		17A-15-41360	Elbow	3	81028-
21		17A-15-41370	Elbow	2	81028-
22		07002-61023	O-ring	5	81028-
23		17A-15-41380	Elbow	1	81028-
24		07002-61223	O-ring	1	81028-
25		17A-22-41390	Elbow	2	81028-
26		07002-61623	O-ring	2	81028-
27		04434-53412	Clip	1	81028-
28		01010-81225	Bolt	1	81028-
29		01643-31232	Washer	1	81028-
30		17A-49-41770	Bracket	1	81028-
31		04434-50812	Clip	2	81028-
32		01010-81225	Bolt	2	81028-
33		01643-31232	Washer	2	81028-
34		01010-81245	Bolt	2	81028-
35		01643-31232	Washer	2	81028-
36		04434-51712	Clip	1	81028-
37		01010-81225	Bolt	1	81028-
38		01643-31232	Washer	1	81028-
39		08034-20536	Band	1	81028-
40		(17A-13-46110)	Valve(Refer to Page 311)		-

FIG. F2300-001037 Power Train, Concentrated Piping

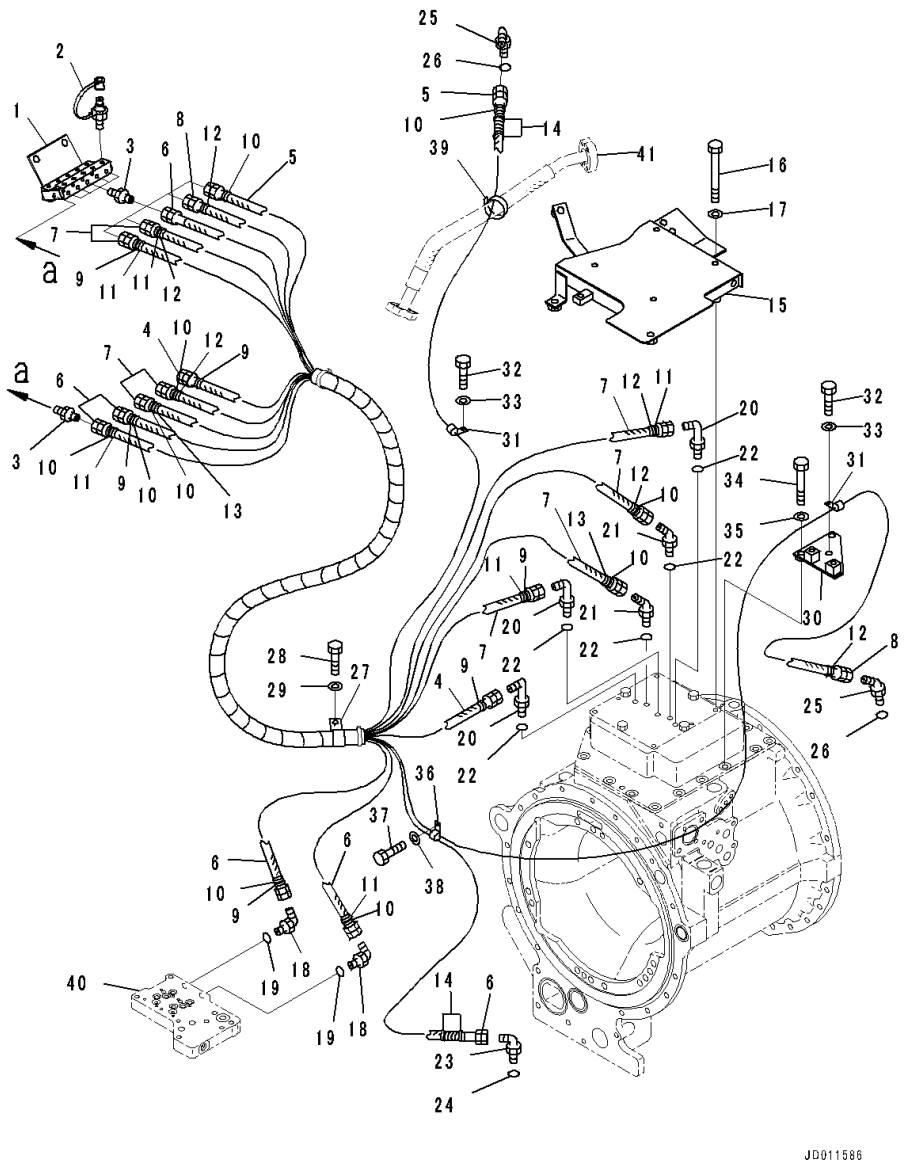

Index	Code	Part Number	Description	Qty	Serial Number
41		(07297-010A5)	Hose(Refer to Page 348)		-

FIG. F2300-001038 Power Train, Mounting Parts

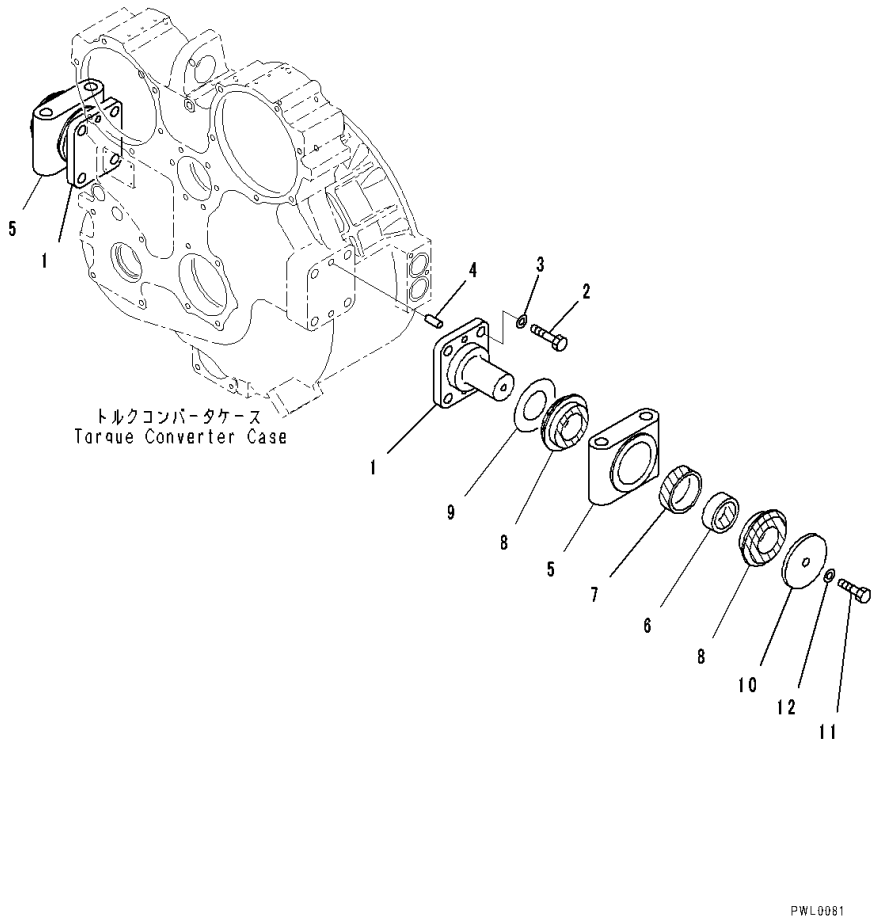

Index	Code	Part Number	Description	Qty	Serial Number
1		17A-21-12110	Pin	2	81028-
2		01010-62055	Bolt	8	81028-
3		01643-32060	Washer	8	81028-
4		04020-01434	Pin, Dowel	4	81028-
5		17A-21-12151	Cap	2	81028-
6		154-01-21330	Cushion	2	81028-
7		154-01-21320	Cushion	2	81028-
8		154-01-21310	Cushion	4	81028-
9		14X-01-11140	Spacer	2	81028-
10		14X-01-11150	Plate	2	81028-
11		01010-61645	Bolt	2	81028-
12		01643-31645	Washer	2	81028-

FIG. F2300-001039 Power Train, Sensor

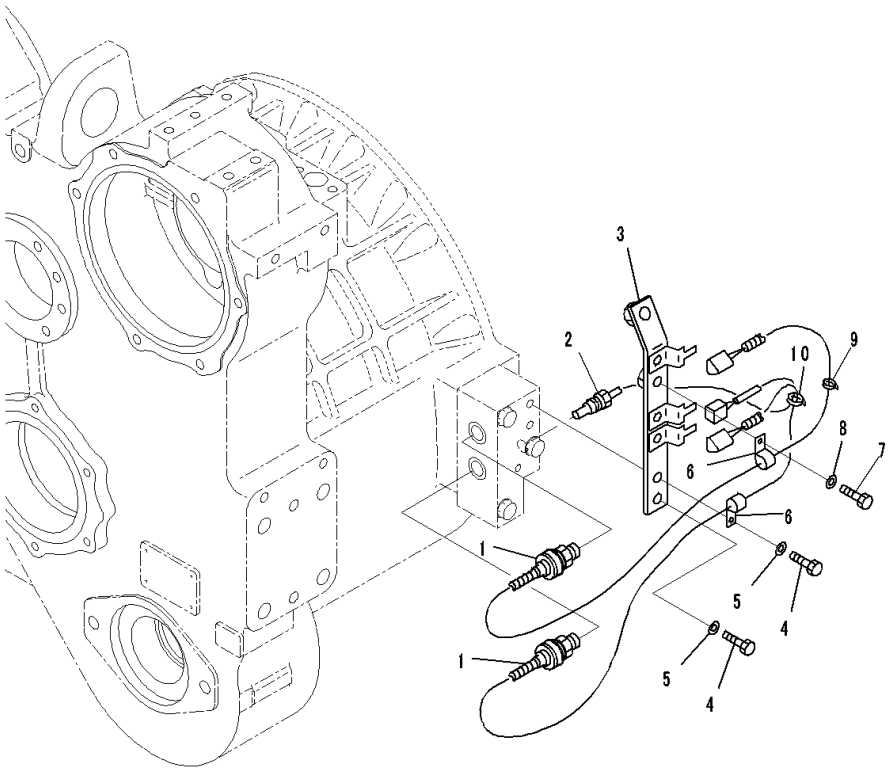

Index	Code	Part Number	Description	Qty	Serial Number
1		421-06-35121	Sensor, Pressure	2	81028-
		07000-12014	• O-ring	1	81028-
2		7861-93-3320	Sensor, Temperature	1	81028-
3		17A-06-41571	Bracket	1	81028-
4		01010-81025	Bolt	2	81028-
5		01643-31032	Washer	2	81028-
6		04434-51012	Clip	2	81028-
7		01010-81225	Bolt	1	81028-
8		01643-31232	Washer	1	81028-
9		20Y-62-22790	Band, Red	1	81028-
10		08034-20414	Band	1	81028-

FIG. F2300-001040 Power Train, Power Train Button

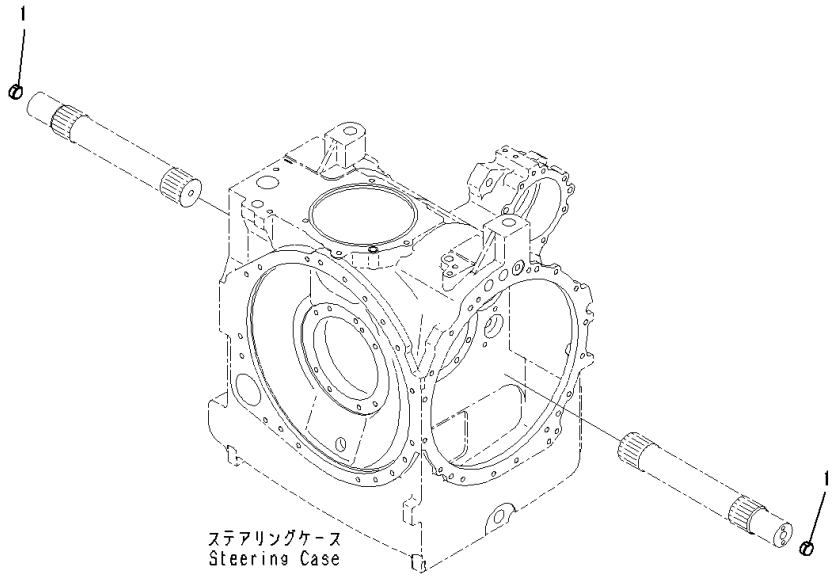

Index	Code	Part Number	Description	Qty	Serial Number
1		195-22-12580	Button	2	81028-

FIG. F2380-001001A Final Drive, Sprocket Hub, LHS

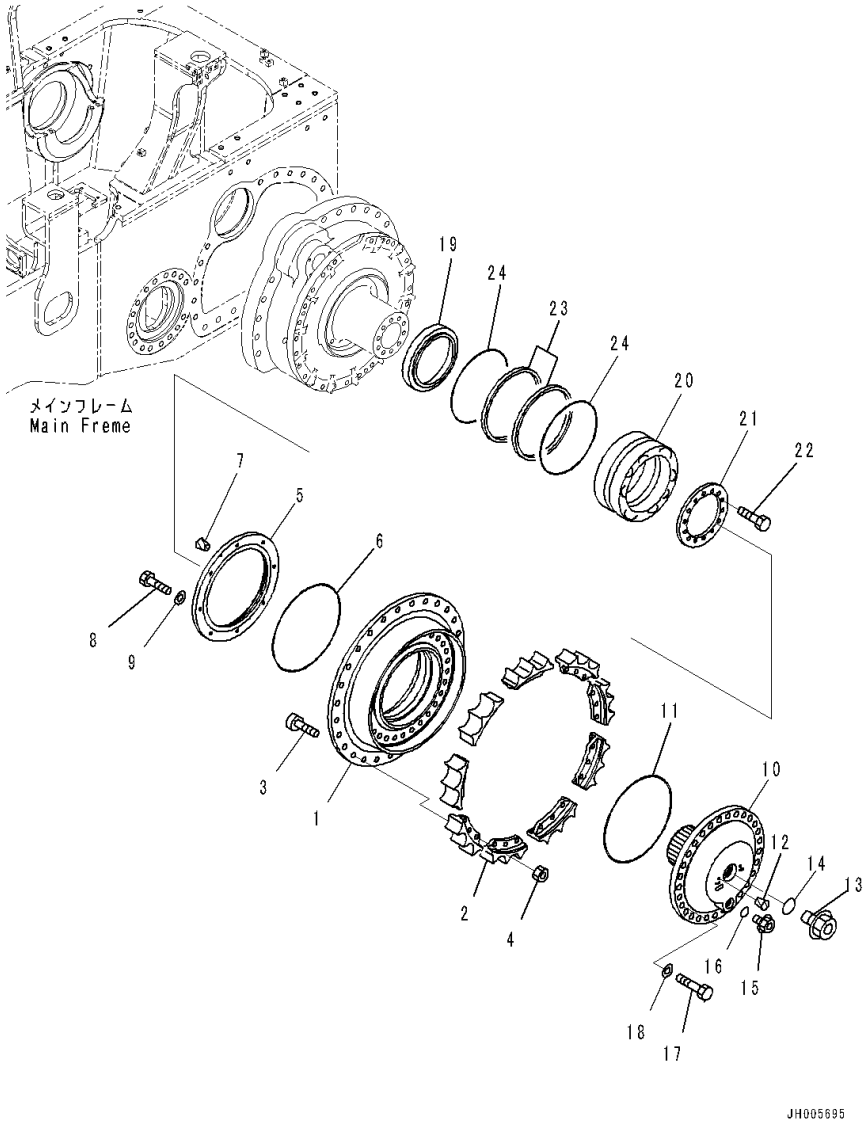

Index	Code	Part Number	Description	Qty	Serial Number
		17A-27-00095	Final Drive Assembly,LHS	1	81237-
1		17A-27-41671	• Hub	1	81237-
2		17A-27-11630	• Teeth	9	81028-
3		178-27-11150	• Bolt	27	81028-
4		01803-02430	• Nut	27	81028-
5		17A-27-41491	• Cover	1	81237-
6		07000-A5440	• O-ring	1	81105-
7		07049-01215	• Plug	2	81105-
8		01010-81230	• Bolt	8	81105-
9		01643-31232	• Washer	8	81105-
10		17A-27-41141	• Shaft	1	81028-
11		07000-A5460	• O-ring	1	81028-
12		07049-01215	• Plug	2	81028-
13		07044-13620	• Plug	1	81028-
14		07002-13634	• O-ring	1	81028-
15		07044-12412	• Plug	1	81028-
16		07002-12434	• O-ring	1	81028-
17		01010-82780	• Bolt	29	81028-
18		01643-32780	• Washer	29	81028-
19		17A-27-41290	• Collar	1	81028-
20		17A-09-41190	• Bearing	1	81028-
21		17M-27-21390	• Holder	1	81028-
22		01010-81640	• Bolt	14	81028-
		17M-27-00180	• Floating Seal Assembly	1	81028-
23	C1		• • Ring	2	81028-
24	C1		• • O-ring	2	81028-

FIG. F2380-001002A Final Drive, Final Gear Case LHS

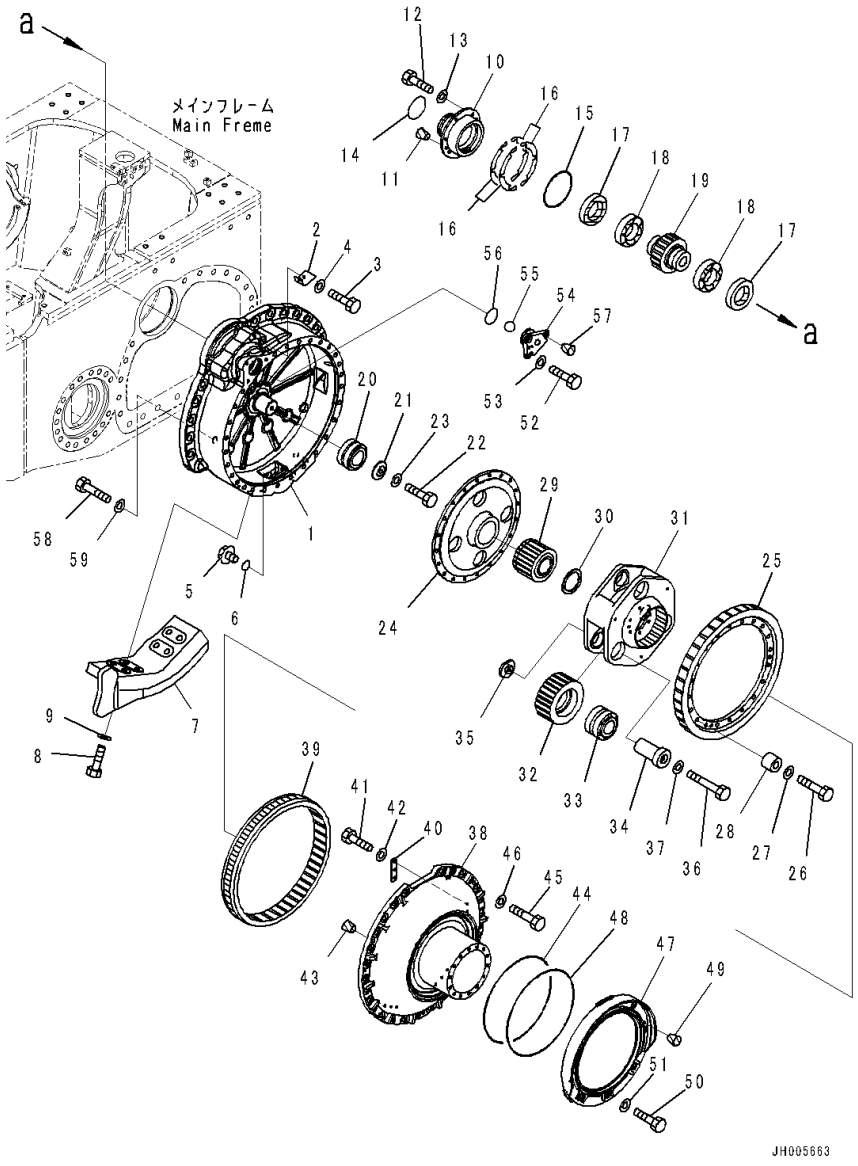

Index	Code	Part Number	Description	Qty	Serial Number
		17A-27-00095	Final Drive Assembly,LHS	1	81237-
1		17A-27-41111	• Case	1	81028-
2		17A-27-11371	• Plate	1	81028-
3		01010-81020	• Bolt	2	81028-
4		01643-31032	• Washer	2	81028-
5		07044-13620	• Plug	2	81028-
6		07002-13634	• O-ring	2	81028-
7		17A-27-41810	• Guard	1	81028-
8		01010-82460	• Bolt	8	81028-
9		01643-32460	• Washer	8	81028-
10		17A-27-41171	• Cage	1	81028-
11		07049-01215	• Plug	2	81028-
12		01010-81235	• Bolt	6	81028-
13		01643-31232	• Washer	6	81028-
14		07000-A5105	• O-ring	1	81028-
15		07000-A5185	• O-ring	1	81028-
16		17A-27-00050	• Shim Assembly	1	81028-
	C1		• • Shim, T=1.0mm	6	81028-
	C1		• • Shim, T=0.5mm	2	81028-
	C1		• • Shim, T=0.15mm	18	81028-
17		17M-09-41120	• Seal	2	81028-
18		423-22-32870	• Bearing	2	81028-
19		17A-27-41210	• Pinion	1	81028-
20		17A-09-41121	• Bearing	1	81028-
21		17A-27-41270	• Holder	1	81028-
22		01010-81640	• Bolt	1	81028-
23		01643-31645	• Washer	1	81028-
24		17A-27-41230	• Hub	1	81028-
25		17A-27-41220	• Gear	1	81028-
26		01010-81670	• Bolt	20	81028-
27		01643-31645	• Washer	20	81028-
28		176-54-11760	• Spacer	20	81028-
29		17A-27-41241	• Gear	1	81028-
30		20Y-27-21310	• Washer	1	81028-
31		17A-27-41161	• Carrier	1	81105-
32		17A-27-41251	• Gear	3	81028-
33		17A-09-41131	• Bearing	3	81028-
34		17A-27-41280	• Shaft	3	81028-
35		154-27-72320	• Holder	3	81028-
36		01011-81660	• Bolt	3	81028-

FIG. F2380-001002A Final Drive, Final Gear Case LHS

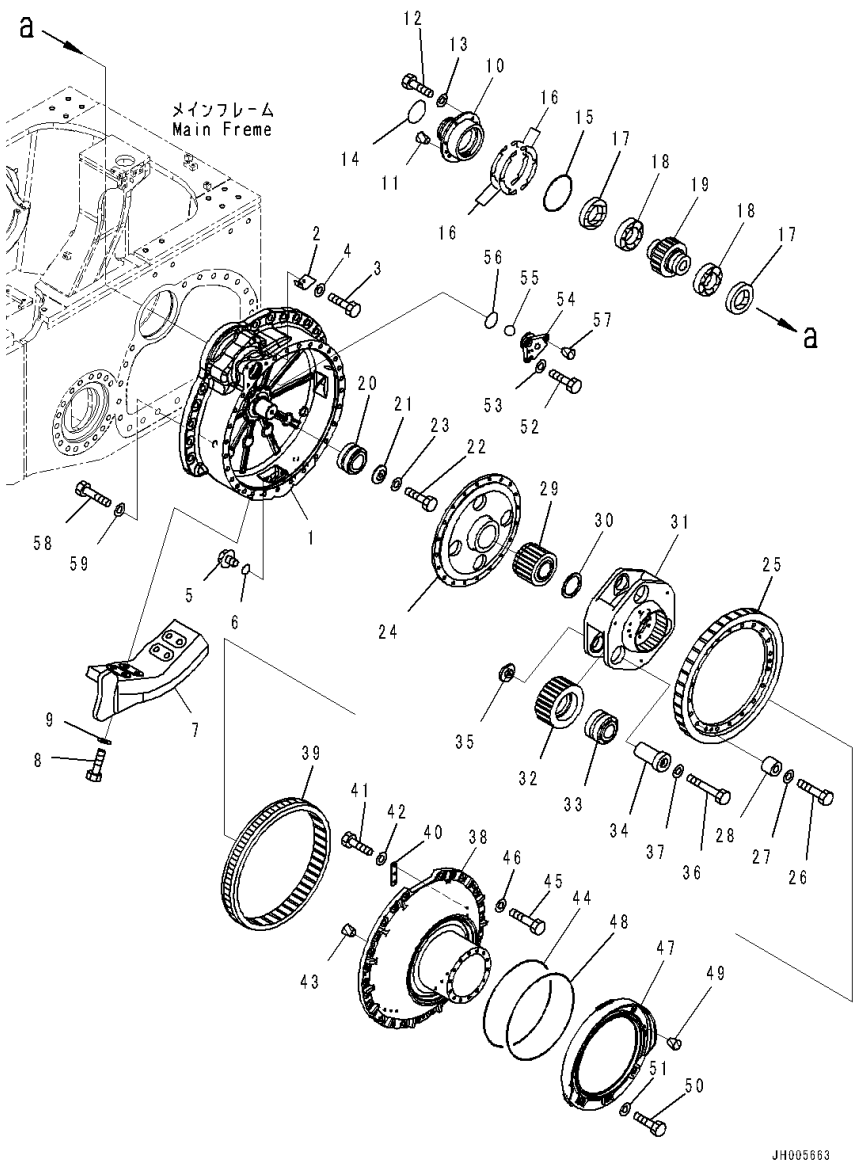

Index	Code	Part Number	Description	Qty	Serial Number
37		01643-31645	• Washer	3	81028-
38		17A-27-41660	• Cover	1	81105-
39		17A-27-41260	• Gear	1	81028-
40		17M-27-21780	• Plate	6	81028-
41		01010-81230	• Bolt	18	81028-
42		01643-31232	• Washer	18	81028-
43		07049-02025	• Plug	3	81028-
44		17A-09-41150	• O-ring	1	81028-
45		01010-82055	• Bolt	28	81028-
46		01643-32060	• Washer	28	81028-
47		17A-27-41680	• Cover	1	81105-
48		07000-A5440	• O-ring	1	81105-
49		07049-01215	• Plug	2	81105-
50		01010-81230	• Bolt	8	81105-
51		01643-31232	• Washer	8	81105-
52		01010-81230	• Bolt	3	81028-
53		01643-31232	• Washer	3	81028-
54		17A-27-41181	• Cover	1	81028-
55		04260-01905	• Ball	1	81028-
56		07000-A2075	• O-ring	1	81028-
57		07049-01215	• Plug	2	81028-
58		01010-82780	Bolt	22	81028-
59		01643-32780	Washer	22	81028-

FIG. F2380-001003A Final Drive, Sprocket Hub, RHS

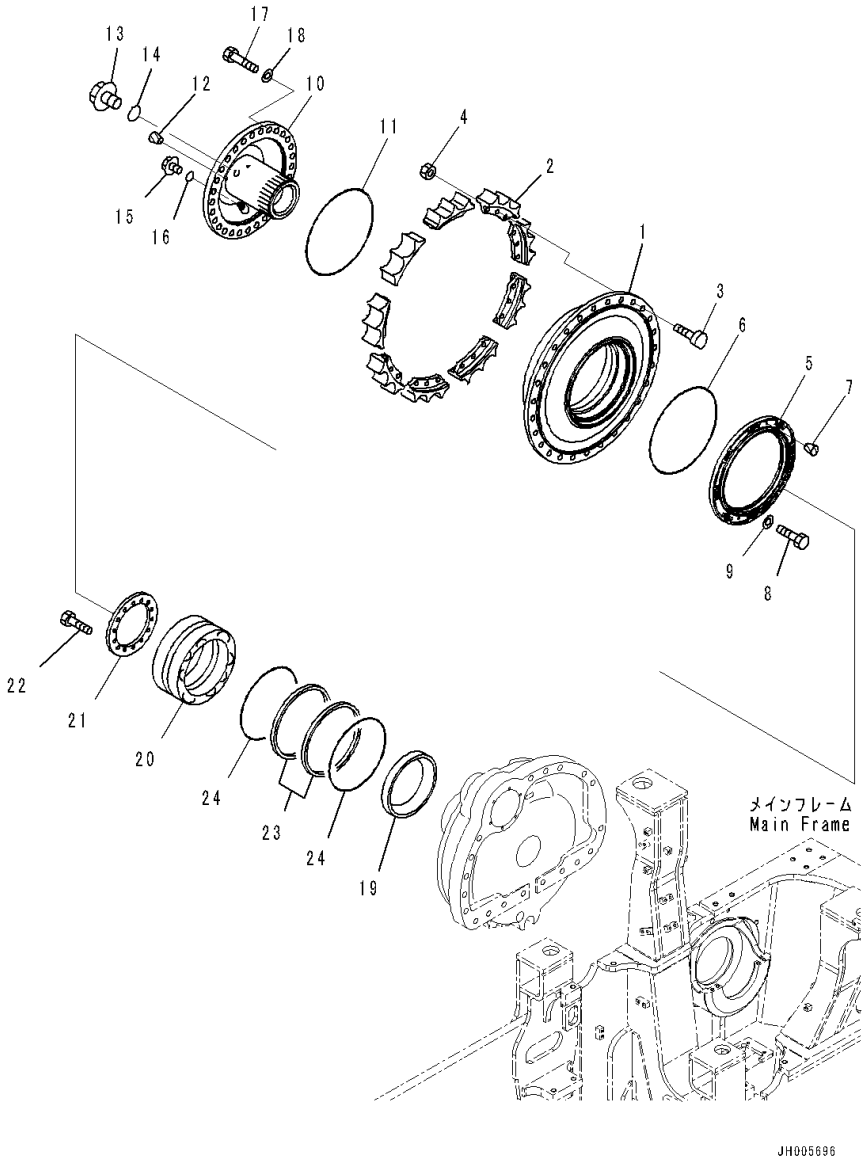

Index	Code	Part Number	Description	Qty	Serial Number
		17A-27-00115	Final Drive Assembly,RHS	1	81237-
1		17A-27-41671	• Hub	1	81237-
2		17A-27-11630	• Teeth	9	81028-
3		178-27-11150	• Bolt	27	81028-
4		01803-02430	• Nut	27	81028-
5		17A-27-41491	• Cover	1	81237-
6		07000-A5440	• O-ring	1	81105-
7		07049-01215	• Plug	2	81105-
8		01010-81230	• Bolt	8	81105-
9		01643-31232	• Washer	8	81105-
10		17A-27-41141	• Shaft	1	81028-
11		07000-A5460	• O-ring	1	81028-
12		07049-01215	• Plug	2	81028-
13		07044-13620	• Plug	1	81028-
14		07002-13634	• O-ring	1	81028-
15		07044-12412	• Plug	1	81028-
16		07002-12434	• O-ring	1	81028-
17		01010-82780	• Bolt	29	81028-
18		01643-32780	• Washer	29	81028-
19		17A-27-41290	• Collar	1	81028-
20		17A-09-41190	• Bearing	1	81028-
21		17M-27-21390	• Holder	1	81028-
22		01010-81640	• Bolt	14	81028-
		17M-27-00180	• Floating Seal Assembly	1	81028-
23	C1		• • Ring	2	81028-
24	C1		• • O-ring	2	81028-

FIG. F2380-001004A Final Drive, Final Gear Case RHS

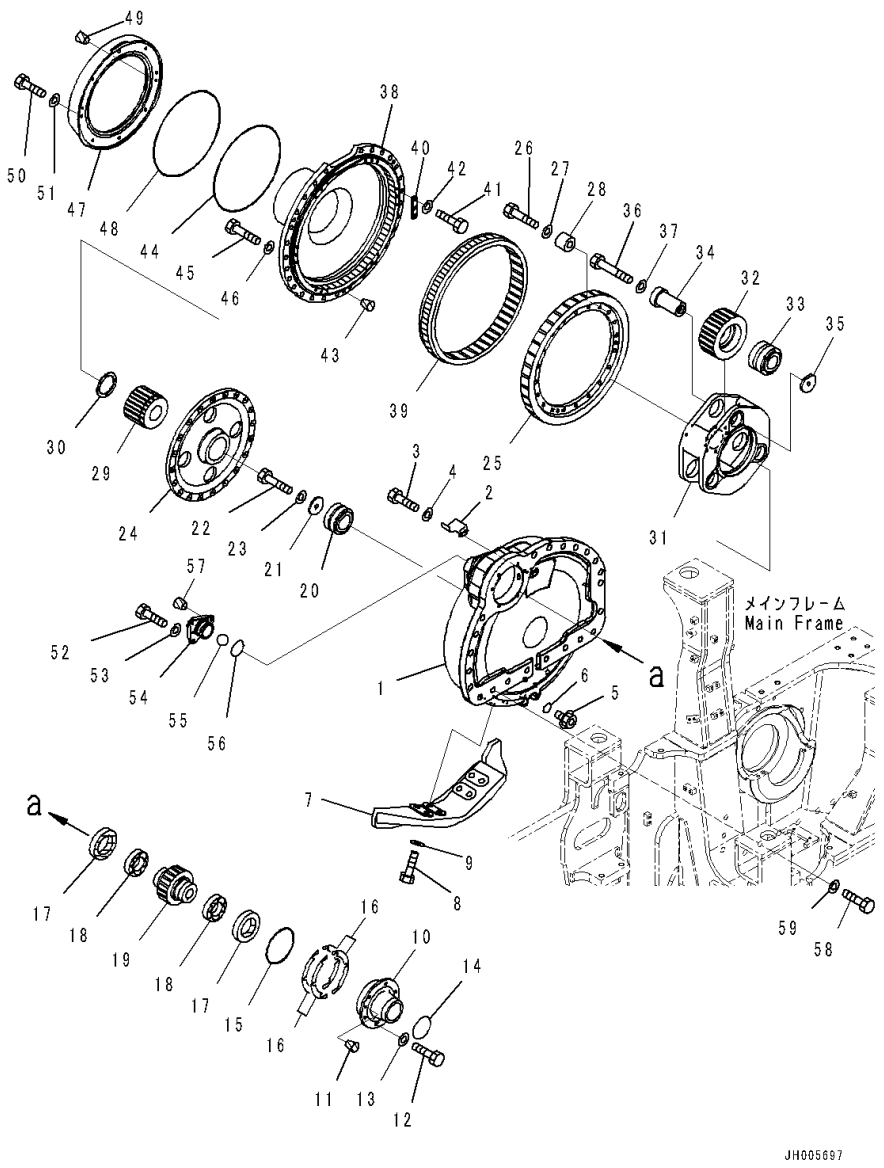

Index	Code	Part Number	Description	Qty	Serial Number
		17A-27-00115	Final Drive Assembly,RHS	1	81237-
1		17A-27-41121	• Case,RHS	1	81028-
2		17A-27-11381	• Plate	1	81028-
3		01010-81020	• Bolt	2	81028-
4		01643-31032	• Washer	2	81028-
5		07044-13620	• Plug	2	81028-
6		07002-13634	• O-ring	2	81028-
7		17A-27-41820	• Guard	1	81028-
8		01010-82460	• Bolt	8	81028-
9		01643-32460	• Washer	8	81028-
10		17A-27-41171	• Cage	1	81028-
11		07049-01215	• Plug	2	81028-
12		01010-81235	• Bolt	6	81028-
13		01643-31232	• Washer	6	81028-
14		07000-A5105	• O-ring	1	81028-
15		07000-A5185	• O-ring	1	81028-
16		17A-27-00050	• Shim Assembly	1	81028-
	C1		• • Shim, T=1.0mm	6	81028-
	C1		• • Shim, T=0.5mm	2	81028-
	C1		• • Shim, T=0.15mm	18	81028-
17		17M-09-41120	• Seal	2	81028-
18		423-22-32870	• Bearing	2	81028-
19		17A-27-41210	• Pinion	1	81028-
20		17A-09-41121	• Bearing	1	81028-
21		17A-27-41270	• Holder	1	81028-
22		01010-81640	• Bolt	1	81028-
23		01643-31645	• Washer	1	81028-
24		17A-27-41230	• Hub	1	81028-
25		17A-27-41220	• Gear	1	81028-
26		01010-81670	• Bolt	20	81028-
27		01643-31645	• Washer	20	81028-
28		176-54-11760	• Spacer	20	81028-
29		17A-27-41241	• Gear	1	81028-
30		20Y-27-21310	• Washer	1	81028-
31		17A-27-41161	• Carrier	1	81105-
32		17A-27-41251	• Gear	3	81028-
33		17A-09-41131	• Bearing	3	81028-
34		17A-27-41280	• Shaft	3	81028-
35		154-27-72320	• Holder	3	81028-
36		01011-81660	• Bolt	3	81028-

FIG. F2380-001004A Final Drive, Final Gear Case RHS

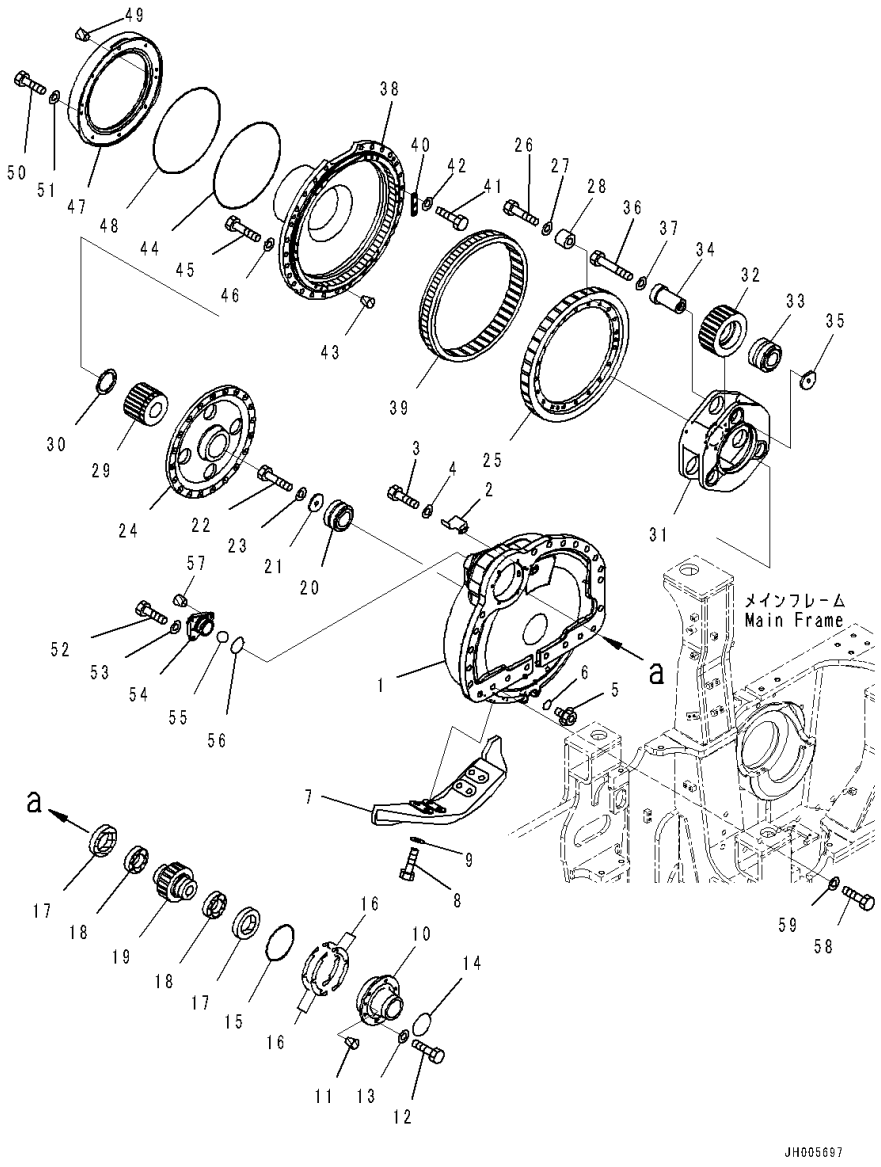

Index	Code	Part Number	Description	Qty	Serial Number
37		01643-31645	• Washer	3	81028-
38		17A-27-41660	• Cover	1	81105-
39		17A-27-41260	• Gear	1	81028-
40		17M-27-21780	• Plate	6	81028-
41		01010-81230	• Bolt	18	81028-
42		01643-31232	• Washer	18	81028-
43		07049-02025	• Plug	3	81028-
44		17A-09-41150	• O-ring	1	81028-
45		01010-82055	• Bolt	28	81028-
46		01643-32060	• Washer	28	81028-
47		17A-27-41680	• Cover	1	81105-
48		07000-A5440	• O-ring	1	81105-
49		07049-01215	• Plug	2	81105-
50		01010-81230	• Bolt	8	81105-
51		01643-31232	• Washer	8	81105-
52		01010-81230	• Bolt	3	81028-
53		01643-31232	• Washer	3	81028-
54		17A-27-41181	• Cover	1	81028-
55		04260-01905	• Ball	1	81028-
56		07000-A2075	• O-ring	1	81028-
57		07049-01215	• Plug	2	81028-
58		01010-82780	Bolt	22	81028-
59		01643-32780	Washer	22	81028-

FIG. F2380-002001A Final Drive, Landfill Specification, Sprocket Hub, LHS

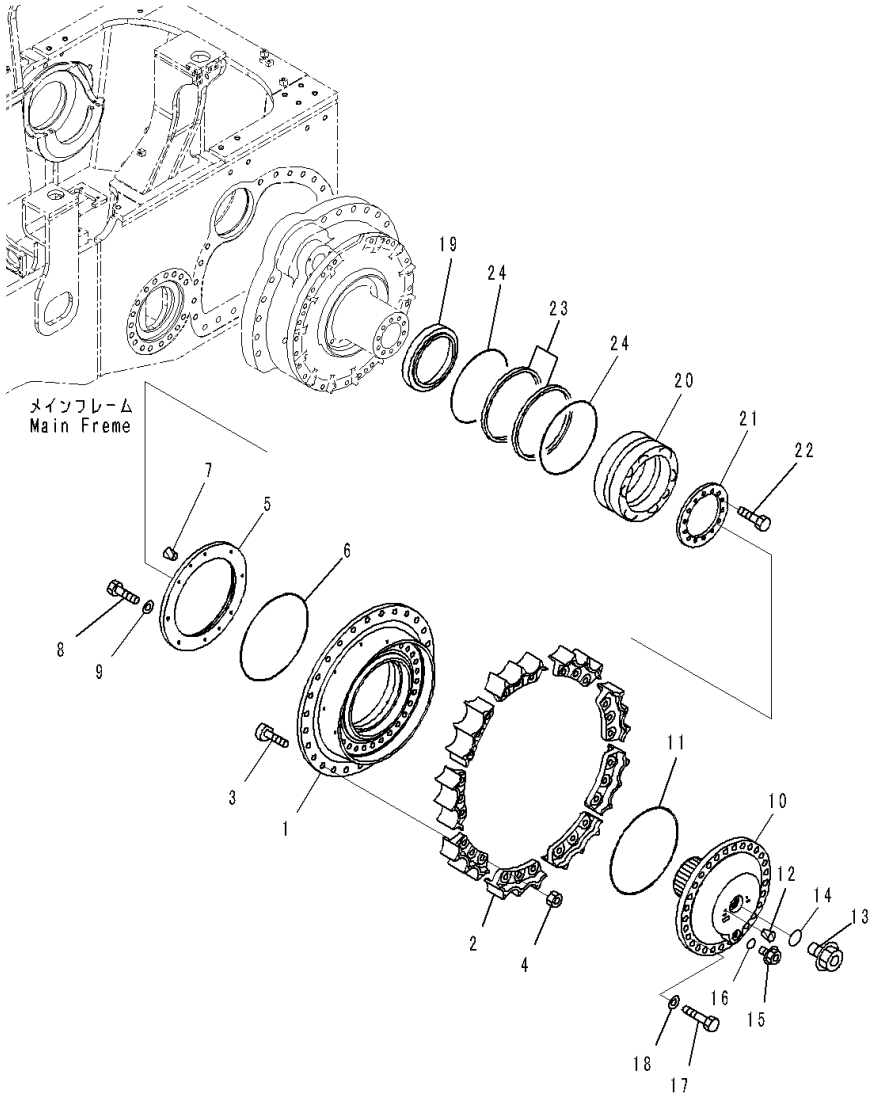

Index	Code	Part Number	Description	Qty	Serial Number
		17A-27-00125	Final Drive Assembly,LHS	1	81237-
1		17A-27-41671	• Hub	1	81237-
2		17A-27-11630	• Teeth	9	81028-
3		178-27-11150	• Bolt	27	81028-
4		01803-02430	• Nut	27	81028-
5		17A-27-41491	• Cover	1	81237-
6		07000-A5440	• O-ring	1	81105-
7		07049-01215	• Plug	2	81105-
8		01010-81230	• Bolt	8	81105-
9		01643-31232	• Washer	8	81105-
10		17A-27-41141	• Shaft	1	81028-
11		07000-A5460	• O-ring	1	81028-
12		07049-01215	• Plug	2	81028-
13		07044-13620	• Plug	1	81028-
14		07002-13634	• O-ring	1	81028-
15		07044-12412	• Plug	1	81028-
16		07002-12434	• O-ring	1	81028-
17		01010-82780	• Bolt	29	81028-
18		01643-32780	• Washer	29	81028-
19		17A-27-41290	• Collar	1	81028-
20		17A-09-41190	• Bearing	1	81028-
21		17M-27-21390	• Holder	1	81028-
22		01010-81640	• Bolt	14	81028-
		17M-27-00180	• Floating Seal Assembly	1	81028-
23	C1		• • Ring	2	81028-
24	C1		• • O-ring	2	81028-

FIG. F2380-002002A Final Drive, Landfill Specification, Gear Case (1/2)

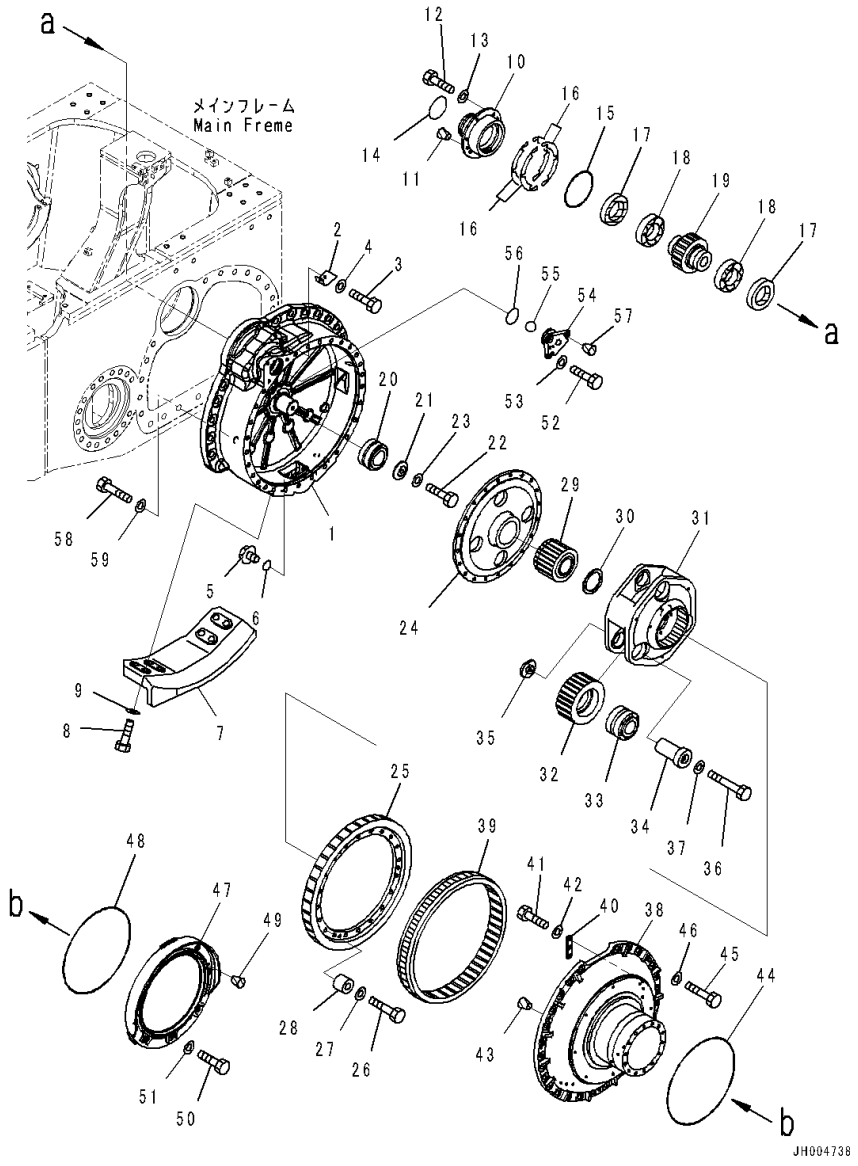

Index	Code	Part Number	Description	Qty	Serial Number
		17A-27-00125	Final Drive Assembly,LHS	1	81237-
1		17A-27-41111	• Case	1	81028-
2		17A-27-11371	• Plate	1	81028-
3		01010-81020	• Bolt	2	81028-
4		01643-31032	• Washer	2	81028-
5		07044-13620	• Plug	2	81028-
6		07002-13634	• O-ring	2	81028-
7		17A-27-41810	• Guard,LHS	1	81028-
8		01010-82460	• Bolt	8	81028-
9		01643-32460	• Washer	8	81028-
10		17A-27-41171	• Cage	1	81028-
11		07049-01215	• Plug	2	81028-
12		01010-81235	• Bolt	6	81028-
13		01643-31232	• Washer	6	81028-
14		07000-A5105	• O-ring	1	81028-
15		07000-A5185	• O-ring	1	81028-
16		17A-27-00050	• Shim Assembly	1	81028-
	C1		• • Shim, T=1.0mm	6	81028-
	C1		• • Shim, T=0.5mm	2	81028-
	C1		• • Shim, T=0.15mm	18	81028-
17		17M-09-41120	• Seal	2	81028-
18		423-22-32870	• Bearing	2	81028-
19		17A-27-41210	• Pinion	1	81028-
20		17A-09-41121	• Bearing	1	81028-
21		17A-27-41270	• Holder	1	81028-
22		01010-81640	• Bolt	1	81028-
23		01643-31645	• Washer	1	81028-
24		17A-27-41230	• Hub	1	81028-
25		17A-27-41220	• Gear	1	81028-
26		01010-81670	• Bolt	20	81028-
27		01643-31645	• Washer	20	81028-
28		176-54-11760	• Spacer	20	81028-
29		17A-27-41241	• Gear	1	81028-
30		20Y-27-21310	• Washer	1	81028-
31		17A-27-41161	• Carrier	1	81105-
32		17A-27-41251	• Gear	3	81028-
33		17A-09-41131	• Bearing	3	81028-
34		17A-27-41280	• Shaft	3	81028-
35		154-27-72320	• Holder	3	81028-
36		01011-81660	• Bolt	3	81028-

FIG. F2380-002002A Final Drive, Landfill Specification, Gear Case (1/2)

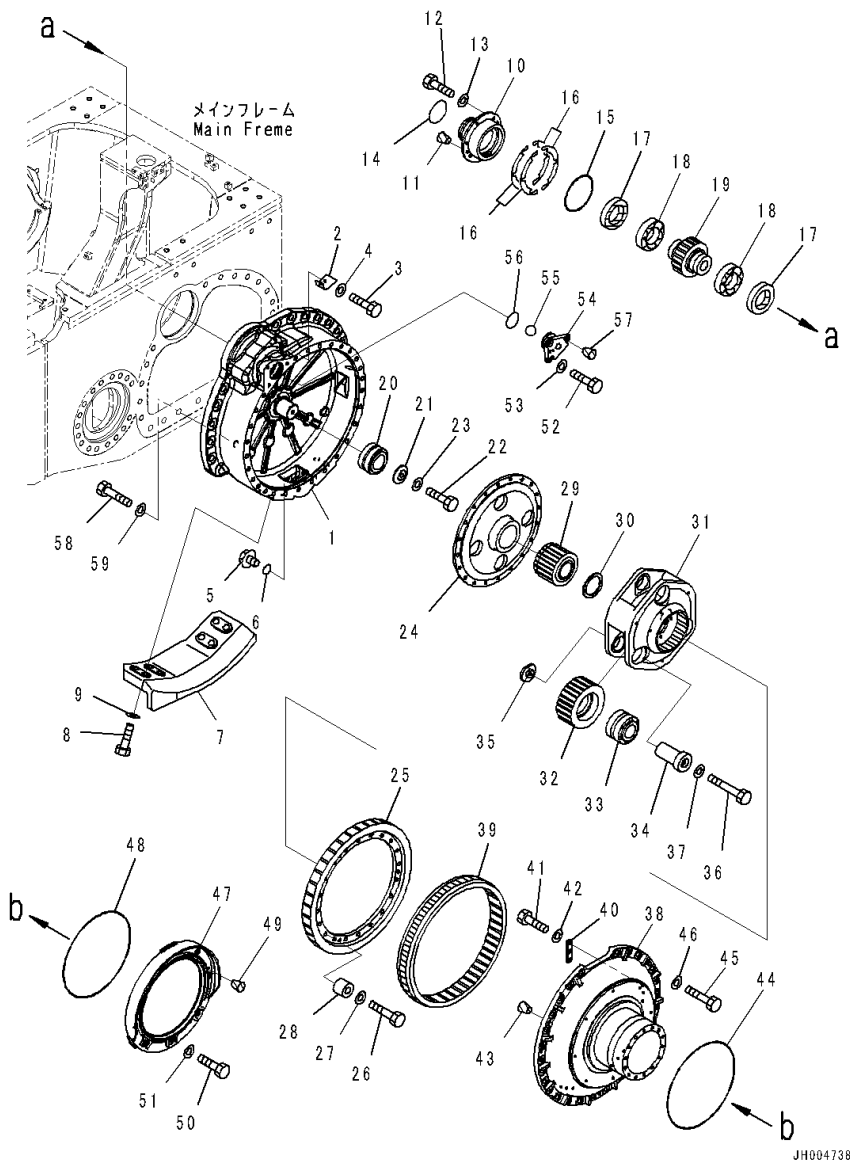

Index	Code	Part Number	Description	Qty	Serial Number
37		01643-31645	• Washer	3	81028-
38		17A-27-41660	• Cover	1	81105-
39		17A-27-41260	• Gear	1	81028-
40		17M-27-21780	• Plate	6	81028-
41		01010-81230	• Bolt	18	81028-
42		01643-31232	• Washer	18	81028-
43		07049-02025	• Plug	3	81028-
44		17A-09-41150	• O-ring	1	81028-
45		01010-82055	• Bolt	28	81028-
46		01643-32060	• Washer	28	81028-
47		17A-27-41690	• Cover	1	81105-
48		07000-A5440	• O-ring	1	81105-
49		07049-01215	• Plug	2	81105-
50		01010-81230	• Bolt	8	81105-
51		01643-31232	• Washer	8	81105-
52		01010-81230	• Bolt	3	81028-
53		01643-31232	• Washer	3	81028-
54		17A-27-41181	• Cover	1	81028-
55		04260-01905	• Ball	1	81028-
56		07000-A2075	• O-ring	1	81028-
57		07049-01215	• Plug	2	81028-
58		01010-82780	Bolt	22	81028-
59		01643-32780	Washer	22	81028-

FIG. F2380-002003A Final Drive, Landfill Specification, Sprocket Hub, RHS

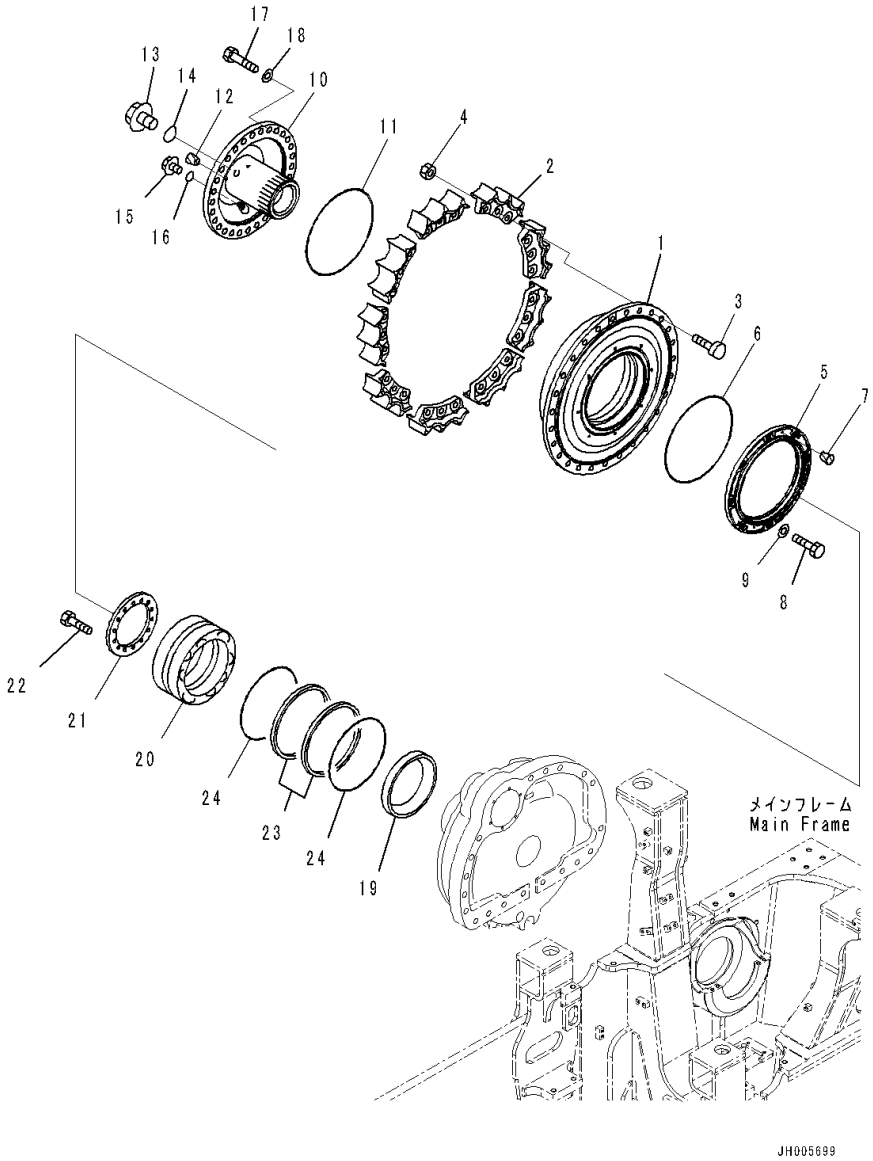

Index	Code	Part Number	Description	Qty	Serial Number
		17A-27-00135	Final Drive Assembly,RHS	1	81237-
1		17A-27-41671	• Hub	1	81237-
2		17A-27-11630	• Teeth	9	81028-
3		178-27-11150	• Bolt	27	81028-
4		01803-02430	• Nut	27	81028-
5		17A-27-41491	• Cover	1	81237-
6		07000-A5440	• O-ring	1	81105-
7		07049-01215	• Plug	2	81105-
8		01010-81230	• Bolt	8	81105-
9		01643-31232	• Washer	8	81105-
10		17A-27-41141	• Shaft	1	81028-
11		07000-A5460	• O-ring	1	81028-
12		07049-01215	• Plug	2	81028-
13		07044-13620	• Plug	1	81028-
14		07002-13634	• O-ring	1	81028-
15		07044-12412	• Plug	1	81028-
16		07002-12434	• O-ring	1	81028-
17		01010-82780	• Bolt	29	81028-
18		01643-32780	• Washer	29	81028-
19		17A-27-41290	• Collar	1	81028-
20		17A-09-41190	• Bearing	1	81028-
21		17M-27-21390	• Holder	1	81028-
22		01010-81640	• Bolt	14	81028-
		17M-27-00180	• Floating Seal Assembly	1	81028-
23	C1		• • Ring	2	81028-
24	C1		• • O-ring	2	81028-

FIG. F2380-002004A Final Drive, Landfill Specification, Gear Case (2/2)

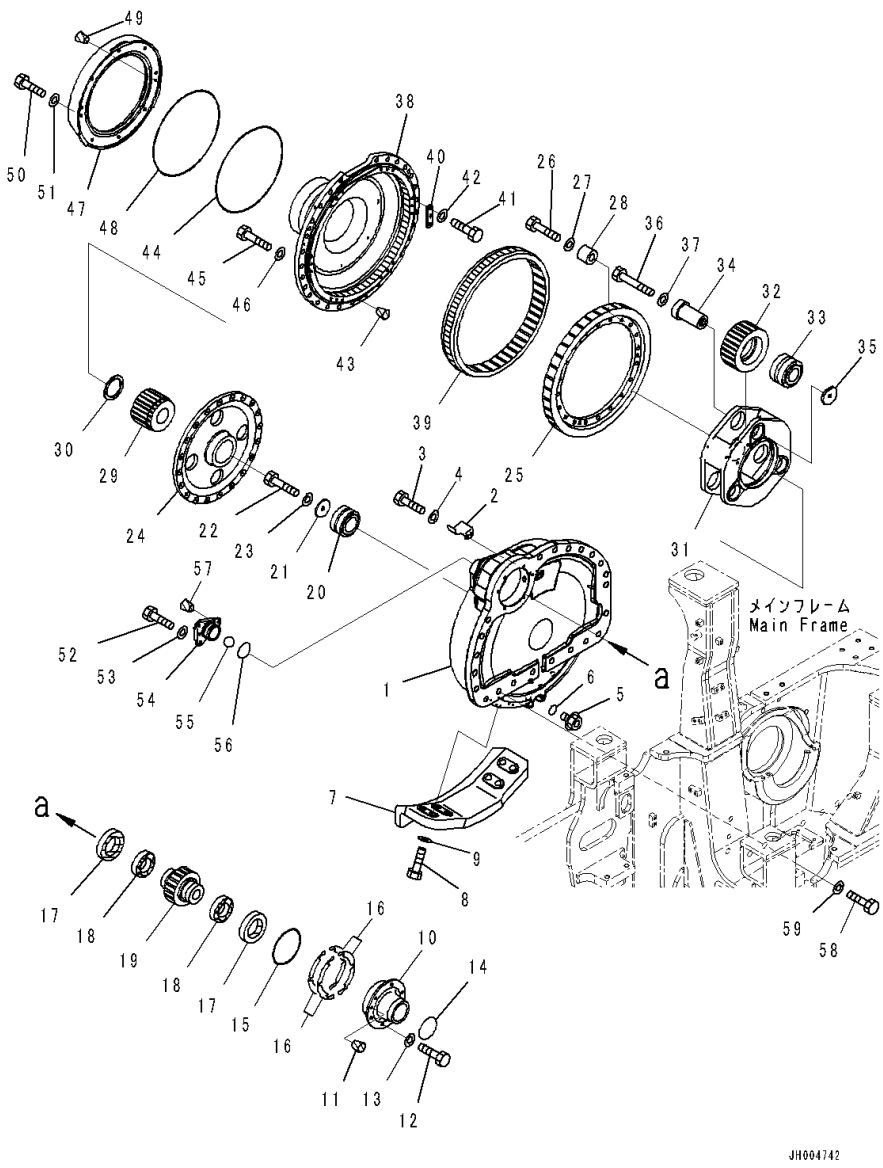

Index	Code	Part Number	Description	Qty	Serial Number
		17A-27-00135	Final Drive Assembly,RHS	1	81237-
1		17A-27-41121	• Case,RHS	1	81028-
2		17A-27-11381	• Plate	1	81028-
3		01010-81020	• Bolt	2	81028-
4		01643-31032	• Washer	2	81028-
5		07044-13620	• Plug	2	81028-
6		07002-13634	• O-ring	2	81028-
7		17A-27-41820	• Guard,RHS	1	81028-
8		01010-82460	• Bolt	8	81028-
9		01643-32460	• Washer	8	81028-
10		17A-27-41171	• Cage	1	81028-
11		07049-01215	• Plug	2	81028-
12		01010-81235	• Bolt	6	81028-
13		01643-31232	• Washer	6	81028-
14		07000-A5105	• O-ring	1	81028-
15		07000-A5185	• O-ring	1	81028-
16		17A-27-00050	• Shim Assembly	1	81028-
	C1		• • Shim, T=1.0mm	6	81028-
	C1		• • Shim, T=0.5mm	2	81028-
	C1		• • Shim, T=0.15mm	18	81028-
17		17M-09-41120	• Seal	2	81028-
18		423-22-32870	• Bearing	2	81028-
19		17A-27-41210	• Pinion	1	81028-
20		17A-09-41121	• Bearing	1	81028-
21		17A-27-41270	• Holder	1	81028-
22		01010-81640	• Bolt	1	81028-
23		01643-31645	• Washer	1	81028-
24		17A-27-41230	• Hub	1	81028-
25		17A-27-41220	• Gear	1	81028-
26		01010-81670	• Bolt	20	81028-
27		01643-31645	• Washer	20	81028-
28		176-54-11760	• Spacer	20	81028-
29		17A-27-41241	• Gear	1	81028-
30		20Y-27-21310	• Washer	1	81028-
31		17A-27-41161	• Carrier	1	81105-
32		17A-27-41251	• Gear	3	81028-
33		17A-09-41131	• Bearing	3	81028-
34		17A-27-41280	• Shaft	3	81028-
35		154-27-72320	• Holder	3	81028-
36		01011-81660	• Bolt	3	81028-

FIG. F2380-002004A Final Drive, Landfill Specification, Gear Case (2/2)

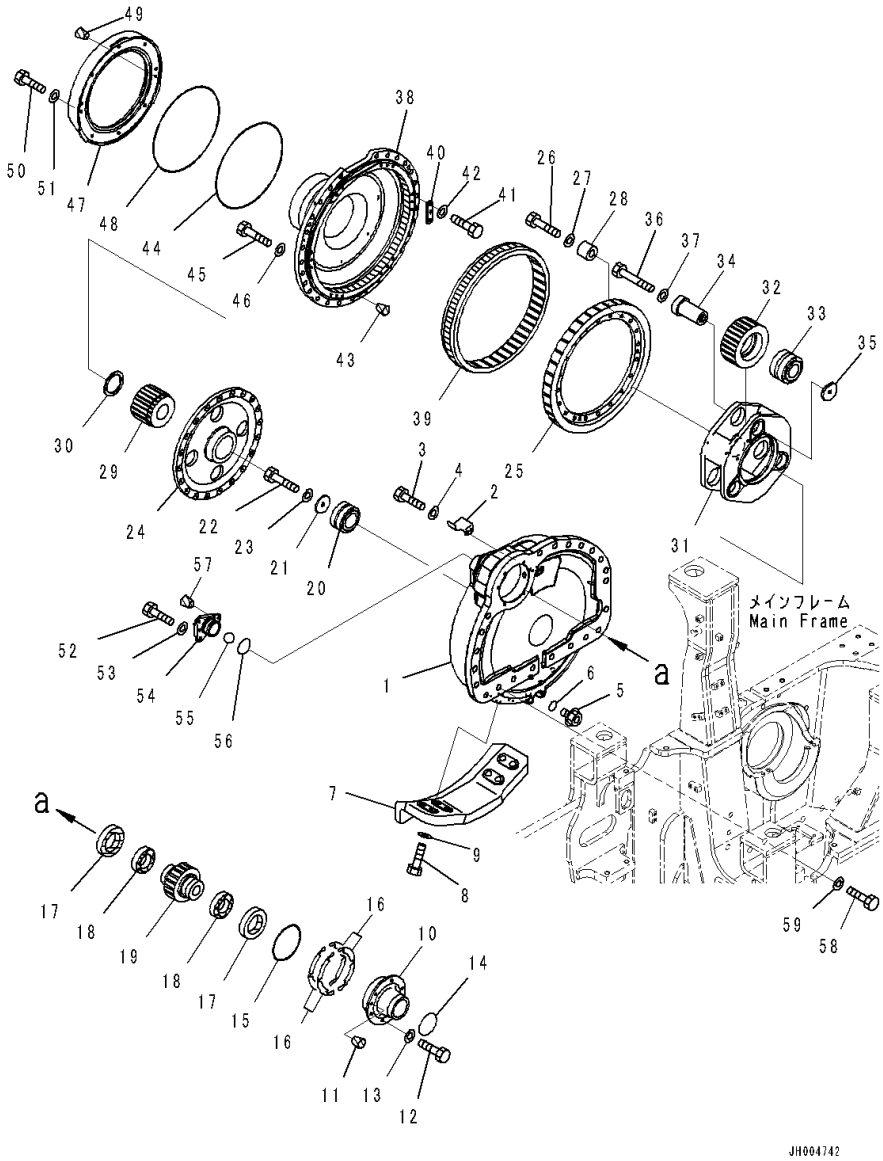

Index	Code	Part Number	Description	Qty	Serial Number
37		01643-31645	• Washer	3	81028-
38		17A-27-41660	• Cover	1	81105-
39		17A-27-41260	• Gear	1	81028-
40		17M-27-21780	• Plate	6	81028-
41		01010-81230	• Bolt	18	81028-
42		01643-31232	• Washer	18	81028-
43		07049-02025	• Plug	3	81028-
44		17A-09-41150	• O-ring	1	81028-
45		01010-82055	• Bolt	28	81028-
46		01643-32060	• Washer	28	81028-
47		17A-27-41690	• Cover	1	81105-
48		07000-A5440	• O-ring	1	81105-
49		07049-01215	• Plug	2	81105-
50		01010-81230	• Bolt	8	81105-
51		01643-31232	• Washer	8	81105-
52		01010-81230	• Bolt	3	81028-
53		01643-31232	• Washer	3	81028-
54		17A-27-41181	• Cover	1	81028-
55		04260-01905	• Ball	1	81028-
56		07000-A2075	• O-ring	1	81028-
57		07049-01215	• Plug	2	81028-
58		01010-82780	Bolt	22	81028-
59		01643-32780	Washer	22	81028-

FIG. F2380-003001A Final Drive, Segmented Full Track Roller Guard, Sprocket Hub, LHS

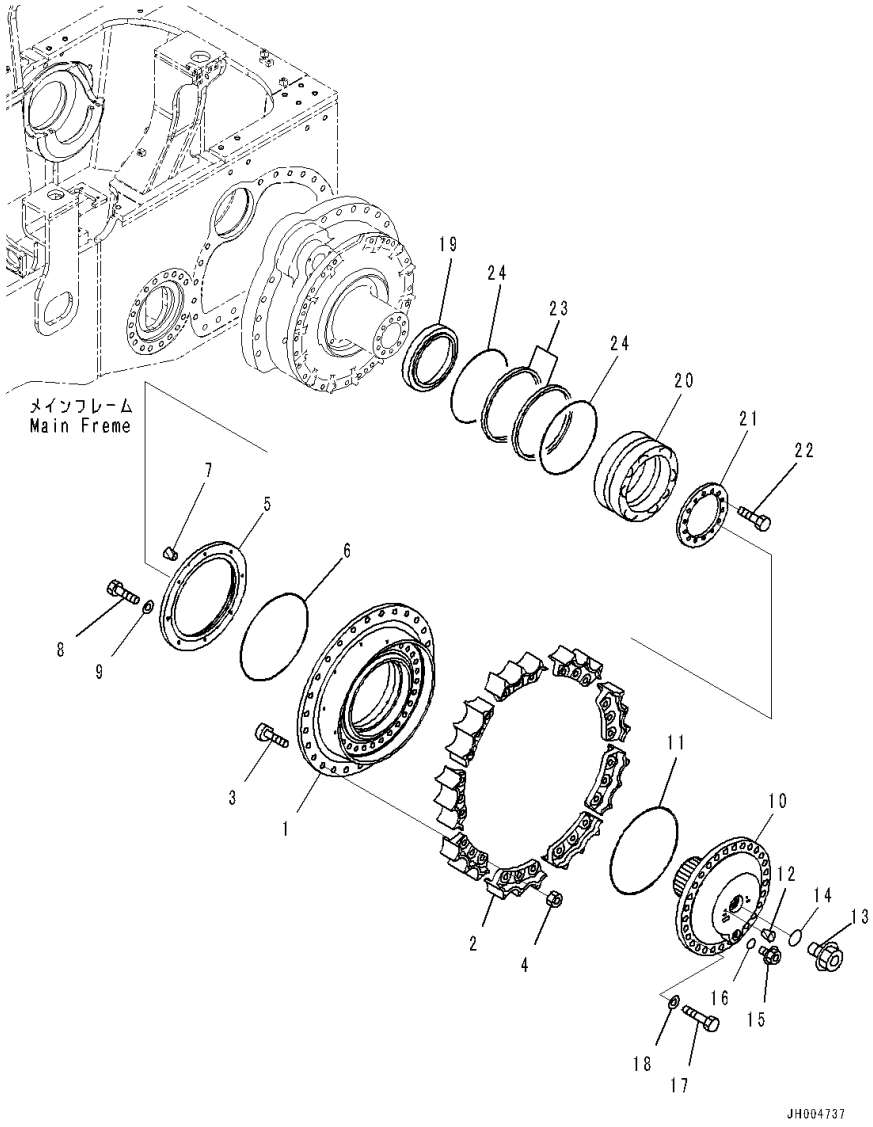

Index	Code	Part Number	Description	Qty	Serial Number
		17A-27-00144	Final Drive Assembly,LHS	1	81237-
1		17A-27-41671	• Hub	1	81237-
2		17A-27-41630	• Teeth	9	81028-
3		178-27-11150	• Bolt	27	81028-
4		01803-02430	• Nut	27	81028-
5		17A-27-41491	• Cover	1	81237-
6		07000-A5440	• O-ring	1	81105-
7		07049-01215	• Plug	2	81105-
8		01010-81230	• Bolt	8	81105-
9		01643-31232	• Washer	8	81105-
10		17A-27-41141	• Shaft	1	81028-
11		07000-A5460	• O-ring	1	81028-
12		07049-01215	• Plug	2	81028-
13		07044-13620	• Plug	1	81028-
14		07002-13634	• O-ring	1	81028-
15		07044-12412	• Plug	1	81028-
16		07002-12434	• O-ring	1	81028-
17		01010-82780	• Bolt	29	81028-
18		01643-32780	• Washer	29	81028-
19		17A-27-41290	• Collar	1	81028-
20		17A-09-41190	• Bearing	1	81028-
21		17M-27-21390	• Holder	1	81028-
22		01010-81640	• Bolt	14	81028-
		17M-27-00180	• Floating Seal Assembly	1	81028-
23	C1		• • Ring	2	81028-
24	C1		• • O-ring	2	81028-

FIG. F2380-003002A Final Drive, Segmented Full Track Roller Guard, Gear Case (1/2)

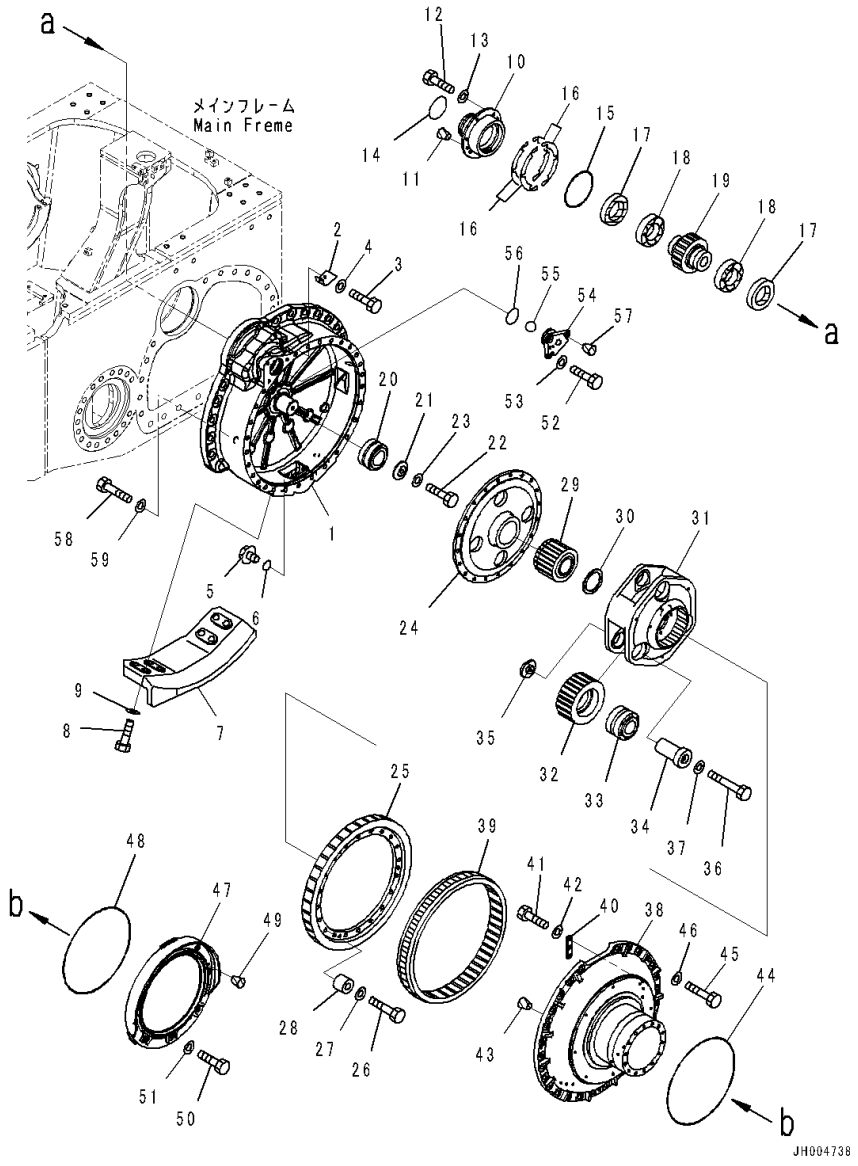

Index	Code	Part Number	Description	Qty	Serial Number
		17A-27-00144	Final Drive Assembly,LHS	1	81237-
1		17A-27-41111	• Case	1	81028-
2		17A-27-11371	• Plate	1	81028-
3		01010-81020	• Bolt	2	81028-
4		01643-31032	• Washer	2	81028-
5		07044-13620	• Plug	2	81028-
6		07002-13634	• O-ring	2	81028-
7		17A-27-41510	• Guard,LHS	1	81028-
8		01010-82460	• Bolt	8	81028-
9		01643-32460	• Washer	8	81028-
10		17A-27-41171	• Cage	1	81028-
11		07049-01215	• Plug	2	81028-
12		01010-81235	• Bolt	6	81028-
13		01643-31232	• Washer	6	81028-
14		07000-A5105	• O-ring	1	81028-
15		07000-A5185	• O-ring	1	81028-
16		17A-27-00050	• Shim Assembly	1	81028-
	C1		• • Shim, T=1.0mm	6	81028-
	C1		• • Shim, T=0.5mm	2	81028-
	C1		• • Shim, T=0.15mm	18	81028-
17		17M-09-41120	• Seal	2	81028-
18		423-22-32870	• Bearing	2	81028-
19		17A-27-41210	• Pinion	1	81028-
20		17A-09-41121	• Bearing	1	81028-
21		17A-27-41270	• Holder	1	81028-
22		01010-81640	• Bolt	1	81028-
23		01643-31645	• Washer	1	81028-
24		17A-27-41230	• Hub	1	81028-
25		17A-27-41220	• Gear	1	81028-
26		01010-81670	• Bolt	20	81028-
27		01643-31645	• Washer	20	81028-
28		176-54-11760	• Spacer	20	81028-
29		17A-27-41241	• Gear	1	81028-
30		20Y-27-21310	• Washer	1	81028-
31		17A-27-41161	• Carrier	1	81105-
32		17A-27-41251	• Gear	3	81028-
33		17A-09-41131	• Bearing	3	81028-
34		17A-27-41280	• Shaft	3	81028-
35		154-27-72320	• Holder	3	81028-
36		01011-81660	• Bolt	3	81028-

FIG. F2380-003002A Final Drive, Segmented Full Track Roller Guard, Gear Case (1/2)

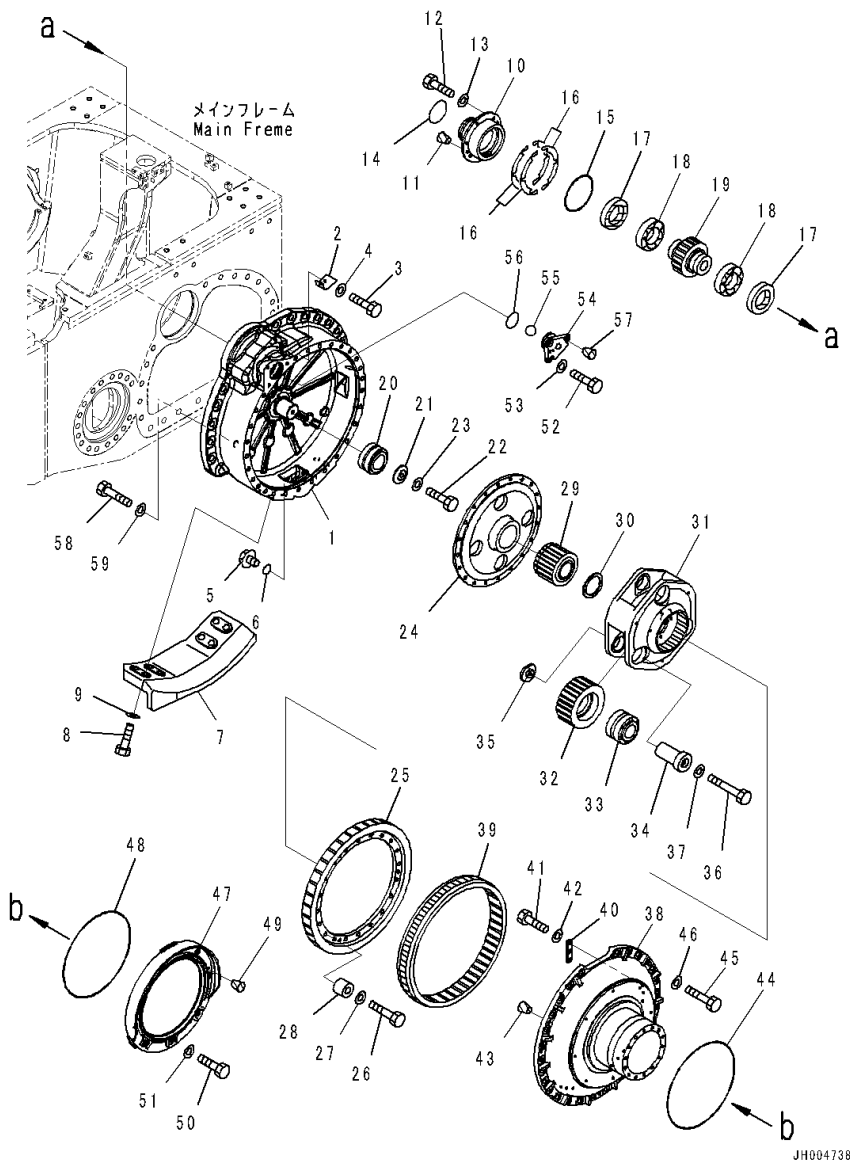

Index	Code	Part Number	Description	Qty	Serial Number
37		01643-31645	• Washer	3	81028-
38		17A-27-41660	• Cover	1	81105-
39		17A-27-41260	• Gear	1	81028-
40		17M-27-21780	• Plate	6	81028-
41		01010-81230	• Bolt	18	81028-
42		01643-31232	• Washer	18	81028-
43		07049-02025	• Plug	3	81028-
44		17A-09-41150	• O-ring	1	81028-
45		01010-82055	• Bolt	28	81028-
46		01643-32060	• Washer	28	81028-
47		17A-27-41680	• Cover	1	81105-
48		07000-A5440	• O-ring	1	81105-
49		07049-01215	• Plug	2	81105-
50		01010-81230	• Bolt	8	81105-
51		01643-31232	• Washer	8	81105-
52		01010-81230	• Bolt	3	81028-
53		01643-31232	• Washer	3	81028-
54		17A-27-41181	• Cover	1	81028-
55		04260-01905	• Ball	1	81028-
56		07000-A2075	• O-ring	1	81028-
57		07049-01215	• Plug	2	81028-
58		01010-82780	Bolt	22	81028-
59		01643-32780	Washer	22	81028-

FIG. F2380-003003A Final Drive, Segmented Full Track Roller Guard, Sprocket Hub, RHS

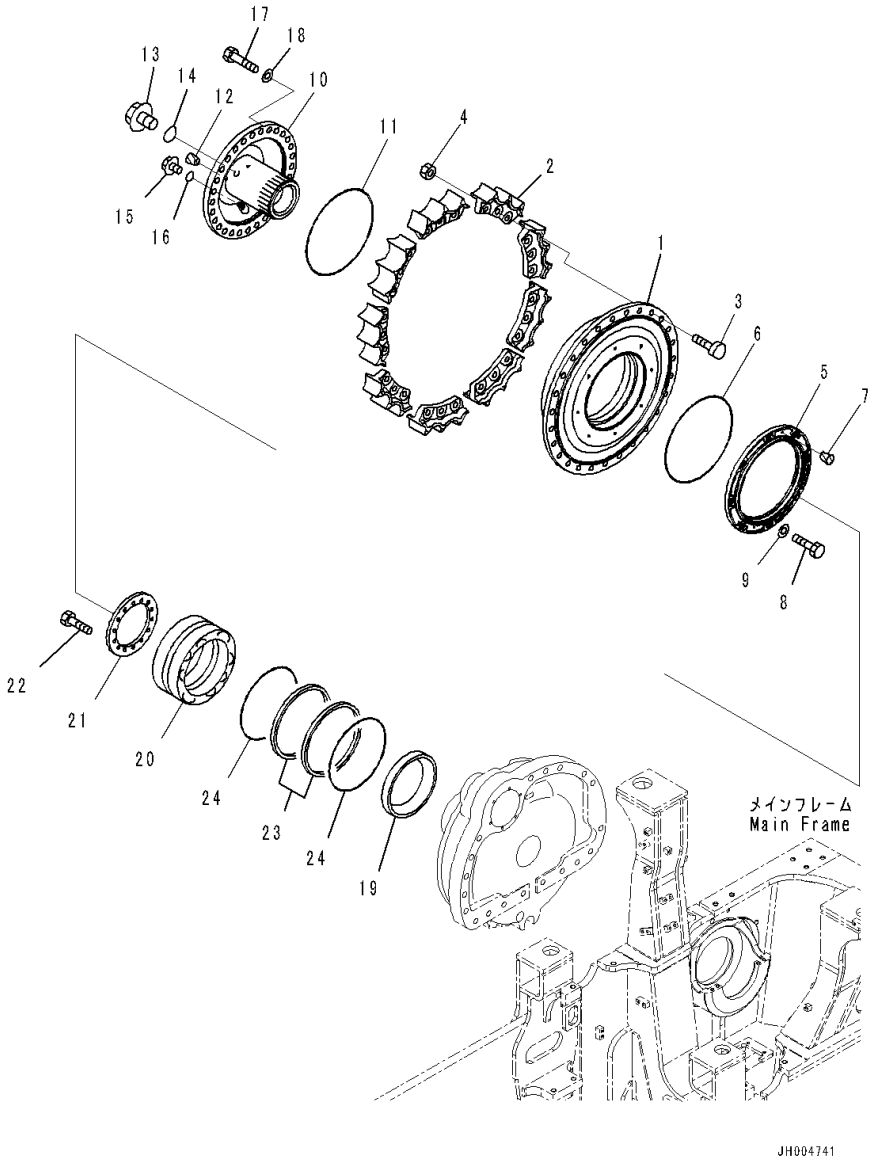

Index	Code	Part Number	Description	Qty	Serial Number
		17A-27-00154	Final Drive Assembly,RHS	1	81237-
1		17A-27-41671	• Hub	1	81237-
2		17A-27-41630	• Teeth	9	81028-
3		178-27-11150	• Bolt	27	81028-
4		01803-02430	• Nut	27	81028-
5		17A-27-41491	• Cover	1	81237-
6		07000-A5440	• O-ring	1	81105-
7		07049-01215	• Plug	2	81105-
8		01010-81230	• Bolt	8	81105-
9		01643-31232	• Washer	8	81105-
10		17A-27-41141	• Shaft	1	81028-
11		07000-A5460	• O-ring	1	81028-
12		07049-01215	• Plug	2	81028-
13		07044-13620	• Plug	1	81028-
14		07002-13634	• O-ring	1	81028-
15		07044-12412	• Plug	1	81028-
16		07002-12434	• O-ring	1	81028-
17		01010-82780	• Bolt	29	81028-
18		01643-32780	• Washer	29	81028-
19		17A-27-41290	• Collar	1	81028-
20		17A-09-41190	• Bearing	1	81028-
21		17M-27-21390	• Holder	1	81028-
22		01010-81640	• Bolt	14	81028-
		17M-27-00180	• Floating Seal Assembly	1	81028-
23	C1		• • Ring	2	81028-
24	C1		• • O-ring	2	81028-

FIG. F2380-003004A Final Drive, Segmented Full Track Roller Guard, Gear Case (2/2)

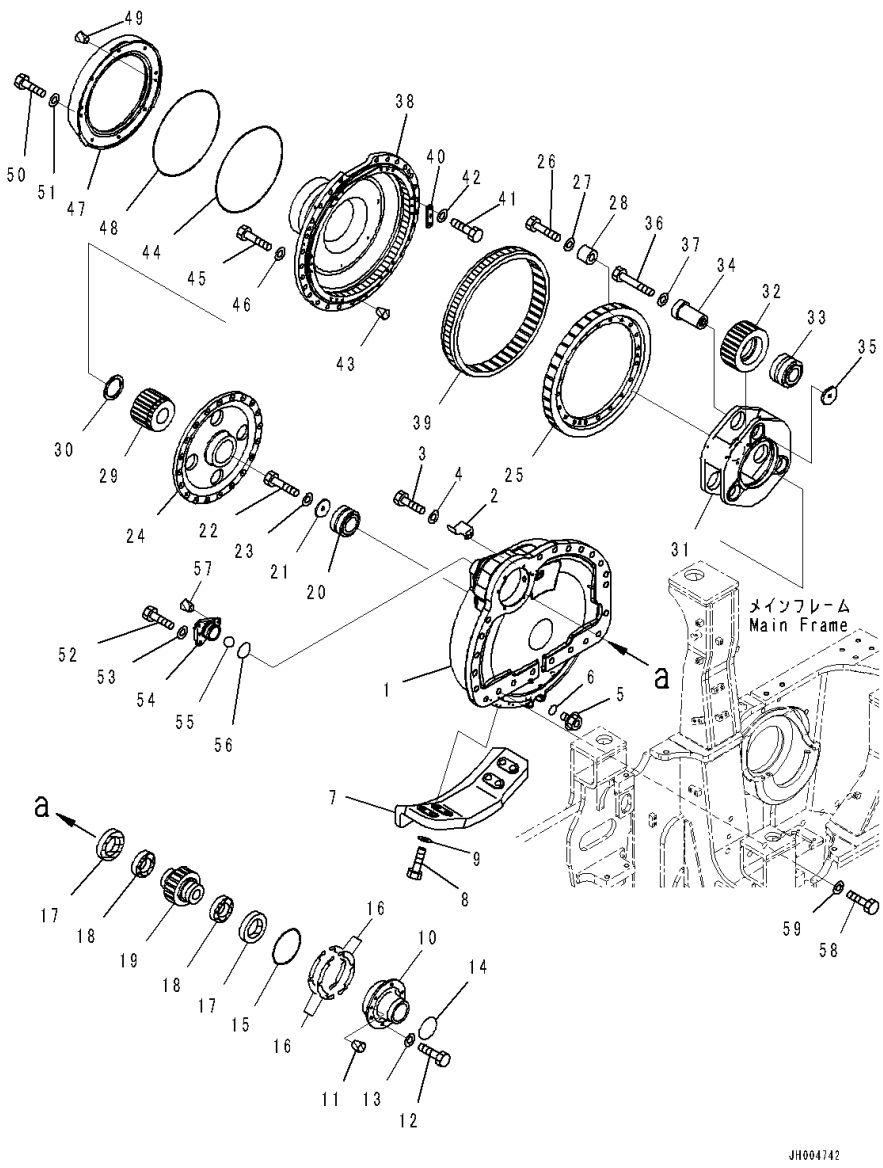

Index	Code	Part Number	Description	Qty	Serial Number
		17A-27-00154	Final Drive Assembly,RHS	1	81237-
1		17A-27-41121	• Case,RHS	1	81028-
2		17A-27-11381	• Plate	1	81028-
3		01010-81020	• Bolt	2	81028-
4		01643-31032	• Washer	2	81028-
5		07044-13620	• Plug	2	81028-
6		07002-13634	• O-ring	2	81028-
7		17A-27-41520	• Guard,RHS	1	81028-
8		01010-82460	• Bolt	8	81028-
9		01643-32460	• Washer	8	81028-
10		17A-27-41171	• Cage	1	81028-
11		07049-01215	• Plug	2	81028-
12		01010-81235	• Bolt	6	81028-
13		01643-31232	• Washer	6	81028-
14		07000-A5105	• O-ring	1	81028-
15		07000-A5185	• O-ring	1	81028-
16		17A-27-00050	• Shim Assembly	1	81028-
	C1		• • Shim, T=1.0mm	6	81028-
	C1		• • Shim, T=0.5mm	2	81028-
	C1		• • Shim, T=0.15mm	18	81028-
17		17M-09-41120	• Seal	2	81028-
18		423-22-32870	• Bearing	2	81028-
19		17A-27-41210	• Pinion	1	81028-
20		17A-09-41121	• Bearing	1	81028-
21		17A-27-41270	• Holder	1	81028-
22		01010-81640	• Bolt	1	81028-
23		01643-31645	• Washer	1	81028-
24		17A-27-41230	• Hub	1	81028-
25		17A-27-41220	• Gear	1	81028-
26		01010-81670	• Bolt	20	81028-
27		01643-31645	• Washer	20	81028-
28		176-54-11760	• Spacer	20	81028-
29		17A-27-41241	• Gear	1	81028-
30		20Y-27-21310	• Washer	1	81028-
31		17A-27-41161	• Carrier	1	81105-
32		17A-27-41251	• Gear	3	81028-
33		17A-09-41131	• Bearing	3	81028-
34		17A-27-41280	• Shaft	3	81028-
35		154-27-72320	• Holder	3	81028-
36		01011-81660	• Bolt	3	81028-

FIG. F2380-003004A Final Drive, Segmented Full Track Roller Guard, Gear Case (2/2)

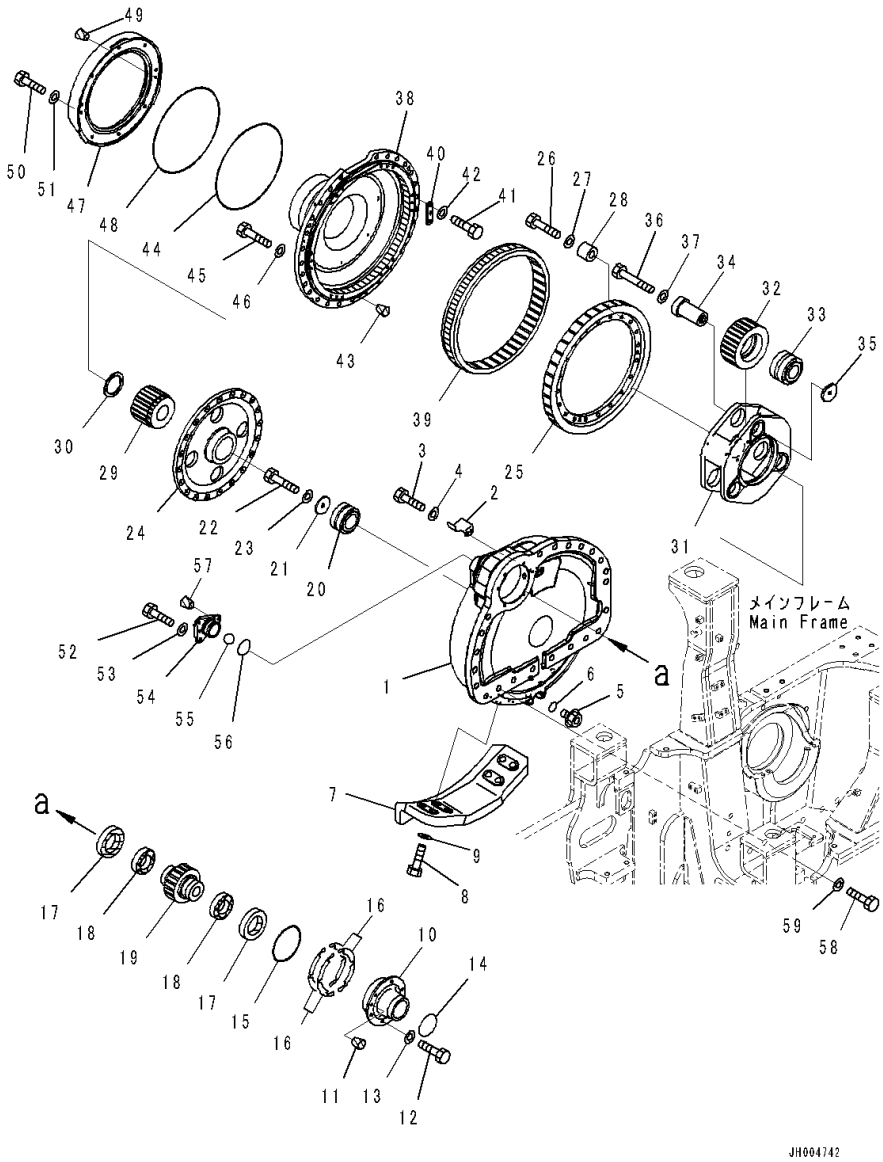

Index	Code	Part Number	Description	Qty	Serial Number
37		01643-31645	• Washer	3	81028-
38		17A-27-41660	• Cover	1	81105-
39		17A-27-41260	• Gear	1	81028-
40		17M-27-21780	• Plate	6	81028-
41		01010-81230	• Bolt	18	81028-
42		01643-31232	• Washer	18	81028-
43		07049-02025	• Plug	3	81028-
44		17A-09-41150	• O-ring	1	81028-
45		01010-82055	• Bolt	28	81028-
46		01643-32060	• Washer	28	81028-
47		17A-27-41680	• Cover	1	81105-
48		07000-A5440	• O-ring	1	81105-
49		07049-01215	• Plug	2	81105-
50		01010-81230	• Bolt	8	81105-
51		01643-31232	• Washer	8	81105-
52		01010-81230	• Bolt	3	81028-
53		01643-31232	• Washer	3	81028-
54		17A-27-41181	• Cover	1	81028-
55		04260-01905	• Ball	1	81028-
56		07000-A2075	• O-ring	1	81028-
57		07049-01215	• Plug	2	81028-
58		01010-82780	Bolt	22	81028-
59		01643-32780	Washer	22	81028-

FIG. F2700-001001 Power Train Piping

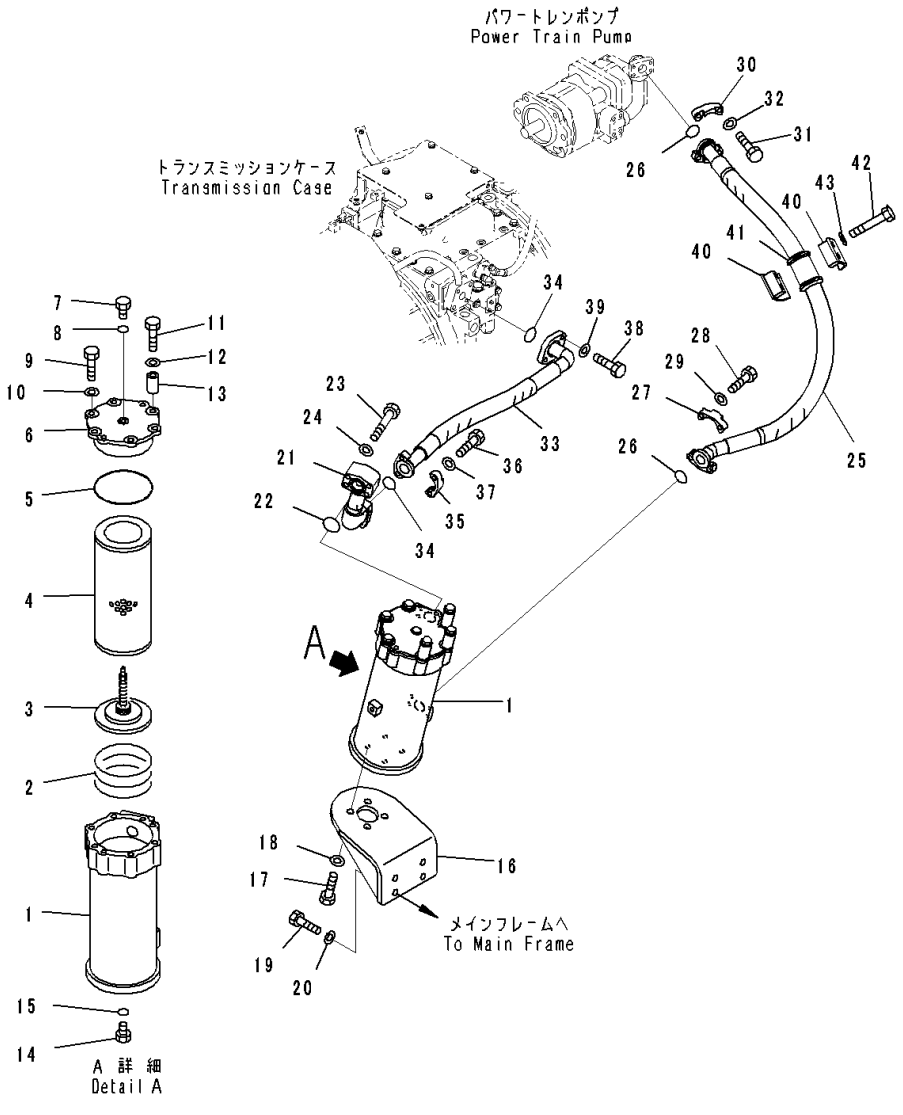

Index	Code	Part Number	Description	Qty	Serial Number
		17A-49-41201	Filter Assembly	1	81028-
1		17A-49-41821	• Case	1	81028-
2		21T-60-13650	• Spring	1	81028-
3		17M-49-42310	• Valve Assembly	1	81028-
4		07063-51100	• Element	1	81028-
5		07000-12130	• O-ring	1	81028-
6		17A-49-15441	• Cover	1	81028-
7		07040-11007	• Plug	1	81028-
8		07002-11023	• O-ring	1	81028-
9		01010-81230	• Bolt	3	81028-
10		01643-31232	• Washer	3	81028-
11		01010-81275	• Bolt	3	81028-
12		01643-31232	• Washer	3	81028-
13		205-03-71331	• Collar	3	81028-
14		07040-12412	• Plug	1	81028-
15		07002-12434	• O-ring	1	81028-
16		17A-49-41921	Bracket	1	81028-
17		01010-81230	Bolt	4	81028-
18		01643-31232	Washer	4	81028-
19		01010-81230	Bolt	4	81028-
20		01643-31232	Washer	4	81028-
21		17A-49-41740	Tube	1	81028-
22		07000-73035	O-ring	1	81028-
23		01010-81065	Bolt	4	81028-
24		01643-51032	Washer	4	81028-
25		17A-49-41411	Hose	1	81028-
26		07000-13032	O-ring	2	81028-
27		07371-31049	Flange, Split	2	81028-
28		07372-21035	Bolt	4	81028-
29		01643-51032	Washer	4	81028-
30		07371-31049	Flange, Split	2	81028-
31		07372-21035	Bolt	4	81028-
32		01643-51032	Washer	4	81028-
33		17A-49-41451	Hose	1	81028-
34		07000-13032	O-ring	2	81028-
35		07371-31049	Flange, Split	2	81028-
36		07372-21035	Bolt	4	81028-
37		01643-51032	Washer	4	81028-
38		01010-81030	Bolt	2	81028-
39		01643-31032	Washer	2	81028-

FIG. F2700-001001 Power Train Piping

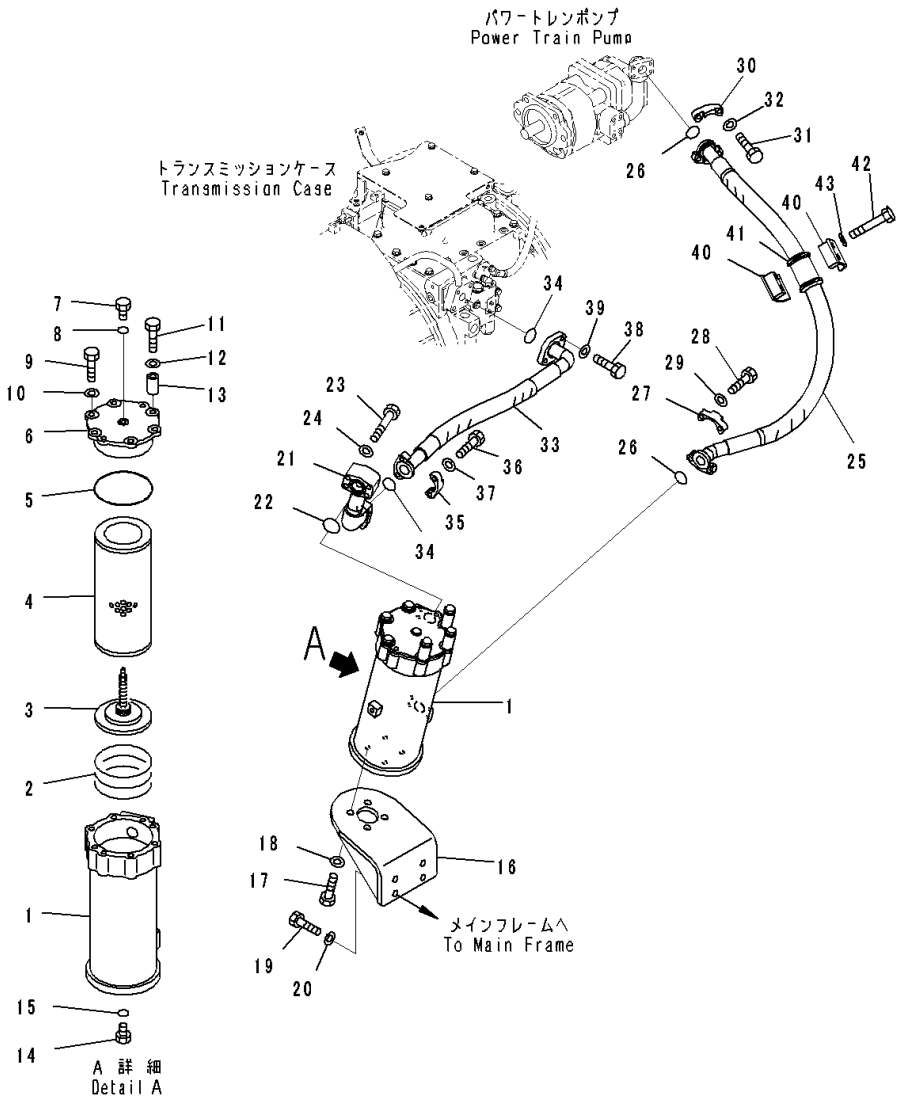

Index	Code	Part Number	Description	Qty	Serial Number
40		07094-11024	Clamp	2	81028-
41		07095-01034	Cushion	1	81028-
42		01010-81280	Bolt	2	81028-
43		01643-31232	Washer	2	81028-

FIG. F2720-001001 Power Train Hydraulic Oil Piping, For Scraper, Inner Parts, HSS Pump (1/5)

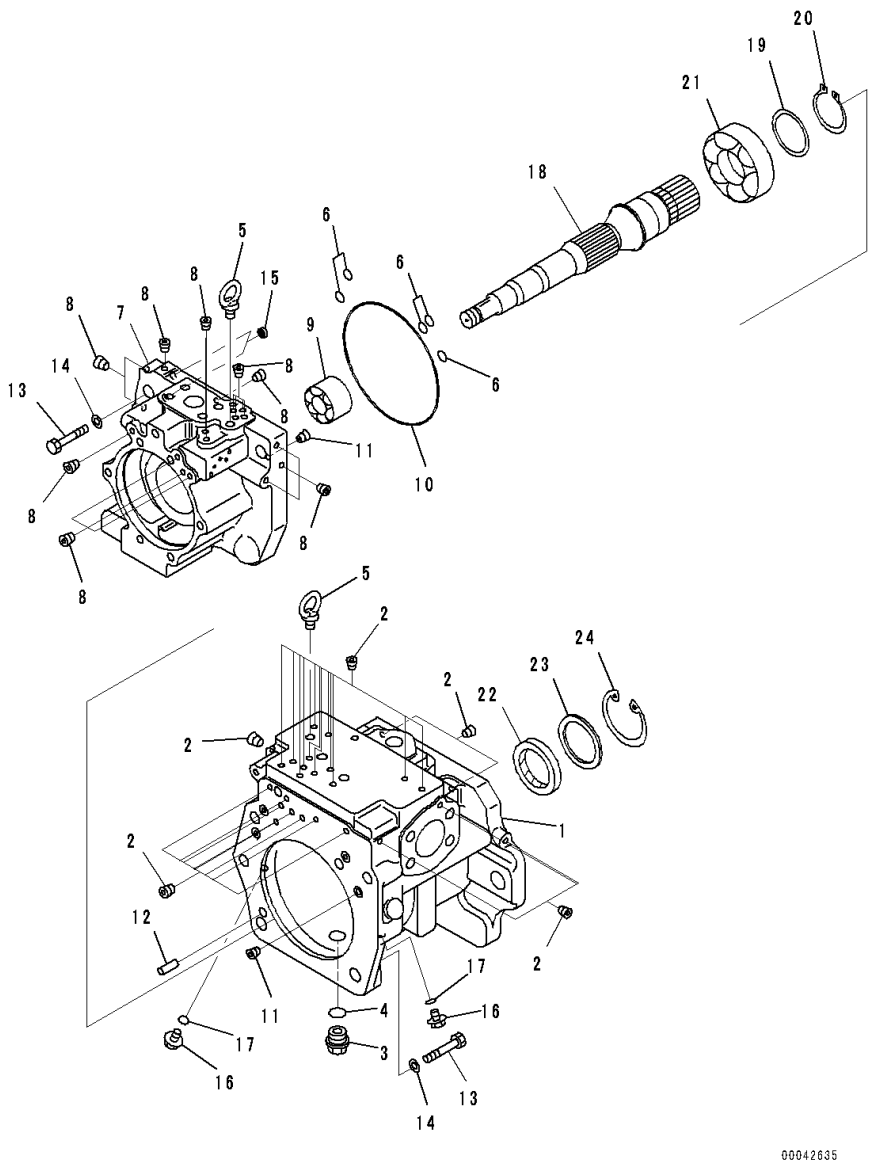

Index	Code	Part Number	Description	Qty	Serial Number
		708-1H-00251	Pump Assembly	1	81137-
		708-1H-01252	• Pump Subassembly	1	81137-
	C2	708-1H-04330	• • Case Assembly	1	81028-
1	C1		• • • Case	1	81028-
2	C1		• • • Plug	28	81028-
3		07044-12412	• • Plug	1	81028-
4		07002-62434	• • O-ring	1	81028-
5		04530-11222	• • Bolt, Eye	2	81028-
6		07000-B2012	• • O-ring	5	81028-
	C2	708-1H-04230	• • End Cap Subassembly	1	81137-
7	C1		• • • Cap	1	81137-
8	C1		• • • Plug	12	81137-
9	C2	708-2H-12430	• • Bearing	1	81028-
10	C2	07000-A5190	• • O-ring	1	81028-
11	C2	708-1L-29340	• • Orifice	2	81028-
12	C2	04020-01434	• • Pin, Dowel	1	81028-
13	C2	01010-61860	• • Bolt	5	81028-
14	C2	01643-31845	• • Washer	5	81028-
15		708-2L-25480	• • Filter	2	81028-
16		708-8E-16150	• • Plug	4	81028-
17		07002-61023	• • O-ring	4	81028-
18	C2	708-1H-32140	• • Shaft	1	81137-
19	C2	708-17-05010	• • Washer Kit	1	81028-
	C1		• • • Washer, T=3.0mm	1	81028-
	C1		• • • Washer, T=3.1mm	1	81028-
	C1		• • • Washer, T=3.2mm	1	81028-
20	C2	708-17-12780	• • Ring, Snap	1	81028-
21	C2	708-1H-22150	• • Bearing	1	81028-
22		708-2H-22570	• • Seal, Oil	1	81137-
23		708-2H-22160	• • Spacer	1	81028-
24		04065-08225	• • Ring, Snap	1	81028-

FIG. F2720-001002 Power Train Hydraulic Oil Piping, For Scraper, Inner Parts, HSS Pump (2/5)

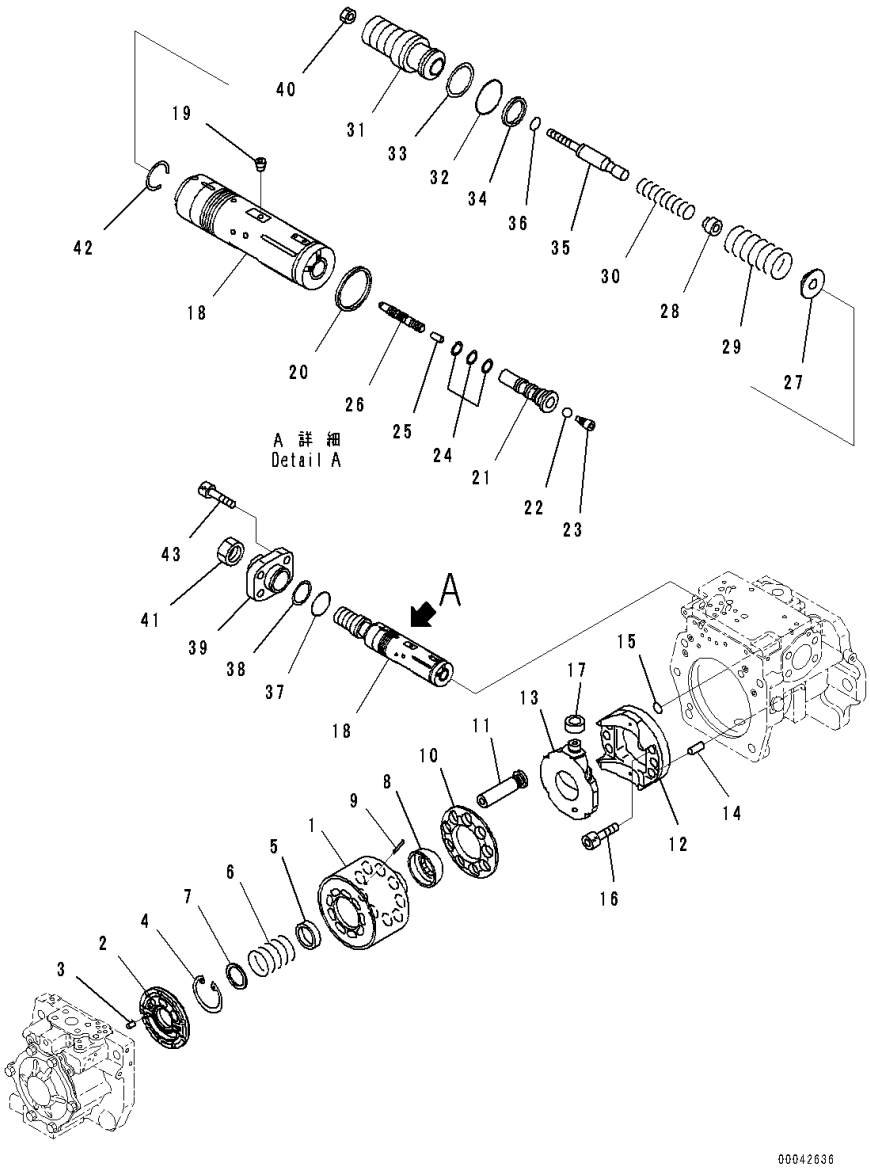

Index	Code	Part Number	Description	Qty	Serial Number
		708-1H-00251	Pump Assembly	1	81137-
		708-1H-01252	• Pump Subassembly	1	81137-
	C2	708-2H-04760	• • Block Assembly	1	81028-
1	C1		• • • Block, Cylinder	1	81028-
2	C1		• • • Plate, Valve	1	81028-
3	C2	708-18-13230	• • Pin	1	81028-
4	C2	04065-05820	• • Ring, Snap	1	81028-
5	C2	708-2H-33140	• • Seat	1	81028-
6	C2	708-2H-33150	• • Spring	1	81028-
7	C2	708-2H-23141	• • Seat	1	81028-
8	C2	708-2H-23350	• • Guide	1	81028-
9	C2	708-2H-23360	• • Pin	3	81028-
10	C2	708-2H-33343	• • Retainer	1	81028-
11	C2	708-2H-33311	• • Piston Subassembly	9	81028-
	C2	708-2H-04690	• • Cradle Subassembly	1	81028-
12	C1		• • • Cradle	1	81028-
13	C1		• • • Cam	1	81028-
14	C2	04020-01434	• • Pin, Dowel	1	81028-
15	C2	07000-B1009	• • O-ring	1	81028-
16	C2	01252-61235	• • Bolt, Hexagon Socket Head	6	81028-
17	C2	708-2H-34150	• • Slider	1	81028-
		708-1H-03260	• • Valve Assembly	1	81028-
	C2	708-1H-03240	• • • Piston Assembly	1	81028-
18	C1		• • • • Piston	1	81028-
19	C1		• • • • Screw	8	81028-
20	C2	708-2G-15320	• • • Seal	1	81028-
21	C2	708-2H-15310	• • • Plug	1	81028-
22	C2	708-2L-35760	• • • Ball	1	81028-
23	C2	708-2L-35770	• • • Plug	1	81028-
24	C2	708-2L-35690	• • • Seal	3	81028-
25	C2	708-2L-35170	• • • Pin	1	81028-
26	C2	708-2H-15210	• • • Spool	1	81028-
27	C2	708-2G-15290	• • • Retainer	1	81028-
28	C2	708-2G-15140	• • • Seat	1	81028-
29	C2	708-2H-15330	• • • Spring	1	81028-
30	C2	708-2H-15350	• • • Spring	1	81028-
31	C2	708-2G-14340	• • • Screw	1	81028-
32	C2	07000-B3038	• • • O-ring	1	81028-
33	C2	708-2G-15230	• • • Ring, Back-up	1	81028-
34	C2	708-2G-15260	• • • Seal	1	81028-

FIG. F2720-001002 Power Train Hydraulic Oil Piping, For Scraper, Inner Parts, HSS Pump (2/5)

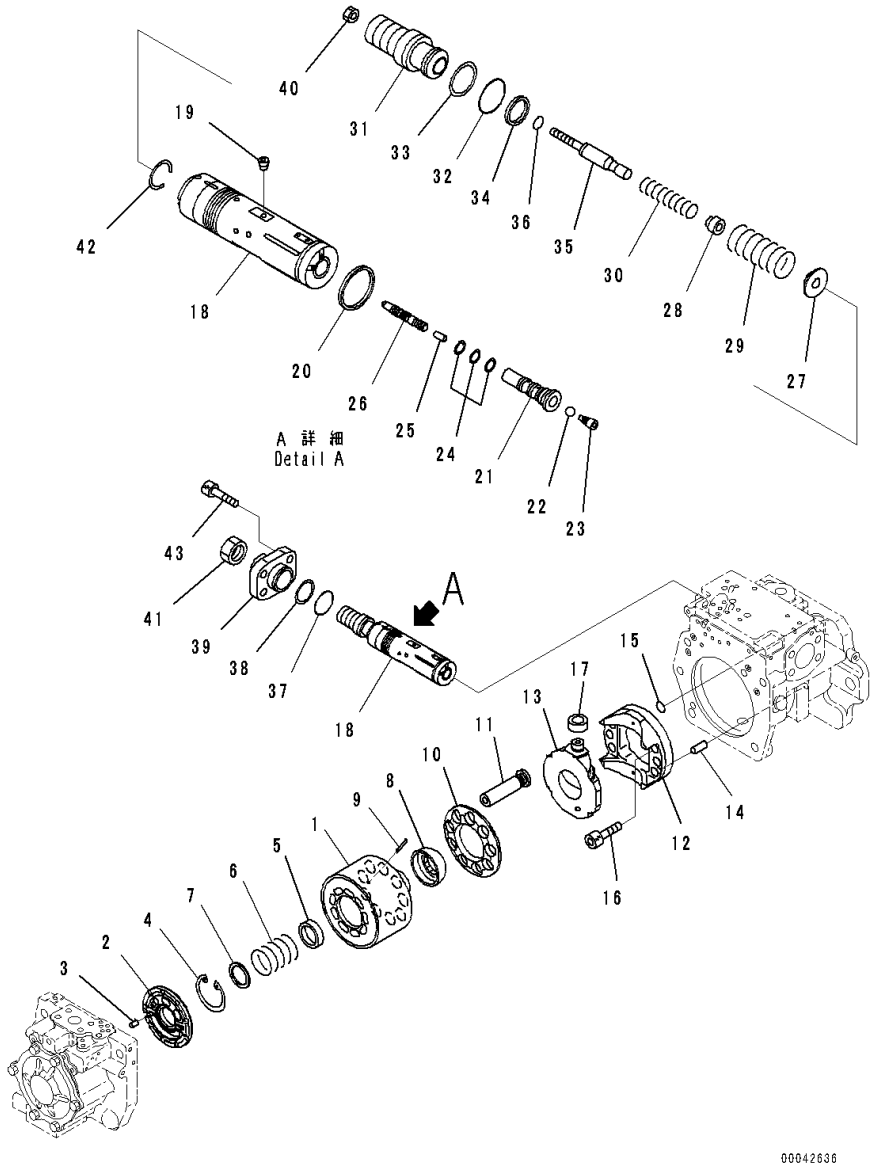

Index	Code	Part Number	Description	Qty	Serial Number
35	C2	708-2G-15390	• • • Plug	1	81028-
36	C2	07000-B2012	• • • O-ring	1	81028-
37	C2	07000-B2050	• • • O-ring	1	81028-
38	C2	708-2G-15310	• • • Ring, Back-up	1	81028-
39	C2	708-2L-44161	• • • Cover	1	81028-
40	C2	01580-10806	• • • Nut	1	81028-
41	C2	708-2L-35290	• • • Nut	1	81028-
42	C2	708-2G-15330	• • • Ring, Wear	1	81028-
43		01252-61645	• • Bolt	4	81028-

FIG. F2720-001003A Power Train Hydraulic Oil Piping, For Scraper, Inner Parts, HSS Pump (3/5)

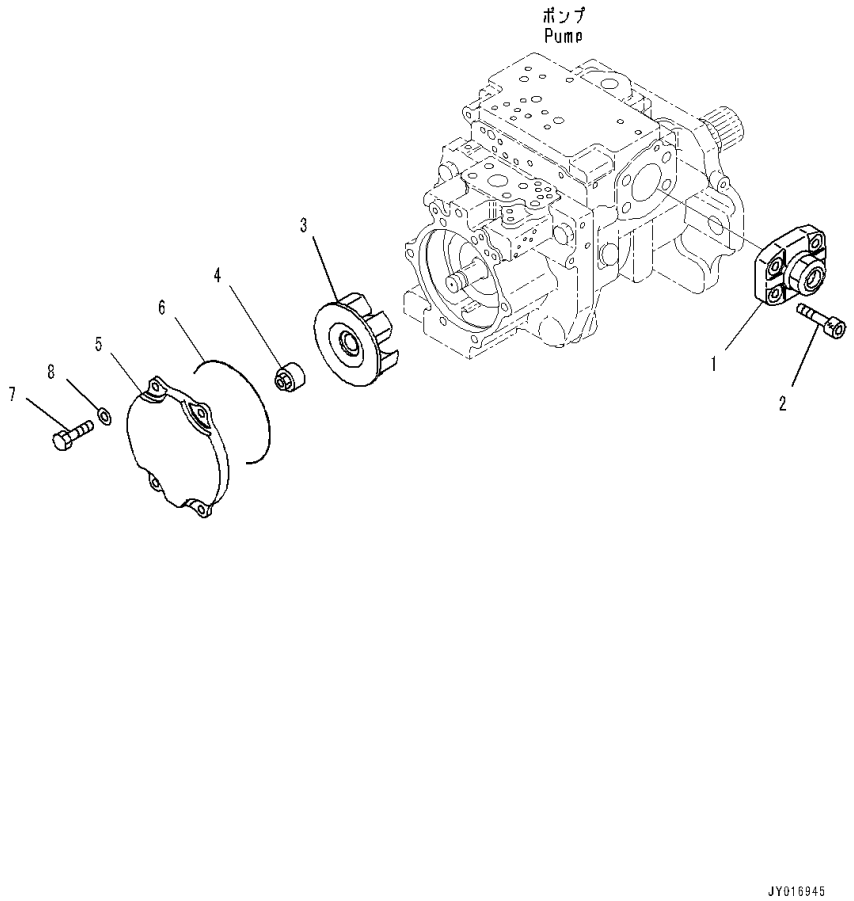

Index	Code	Part Number	Description	Qty	Serial Number
		708-1H-00251	Pump Assembly	1	81137-
		708-1H-01252	• Pump Subassembly	1	81137-
1	C2	708-1H-03250	• • Cover Assembly	1	81028-
2		01252-61645	• • Bolt	4	81028-
3	C2	708-1H-21760	• • Impeller	1	81137-
4	C2	708-1H-32150	• • Nut	1	81137-
5	C2	708-1H-31630	• • Cover	1	81137-
6	C2	07000-A5190	• • O-ring	1	81137-
7		01010-81230	• • Bolt	4	81137-
8		01643-31232	• • Washer	4	81137-

FIG. F2720-001004 Power Train Hydraulic Oil Piping, For Scraper, Inner Parts, HSS Pump (4/5)

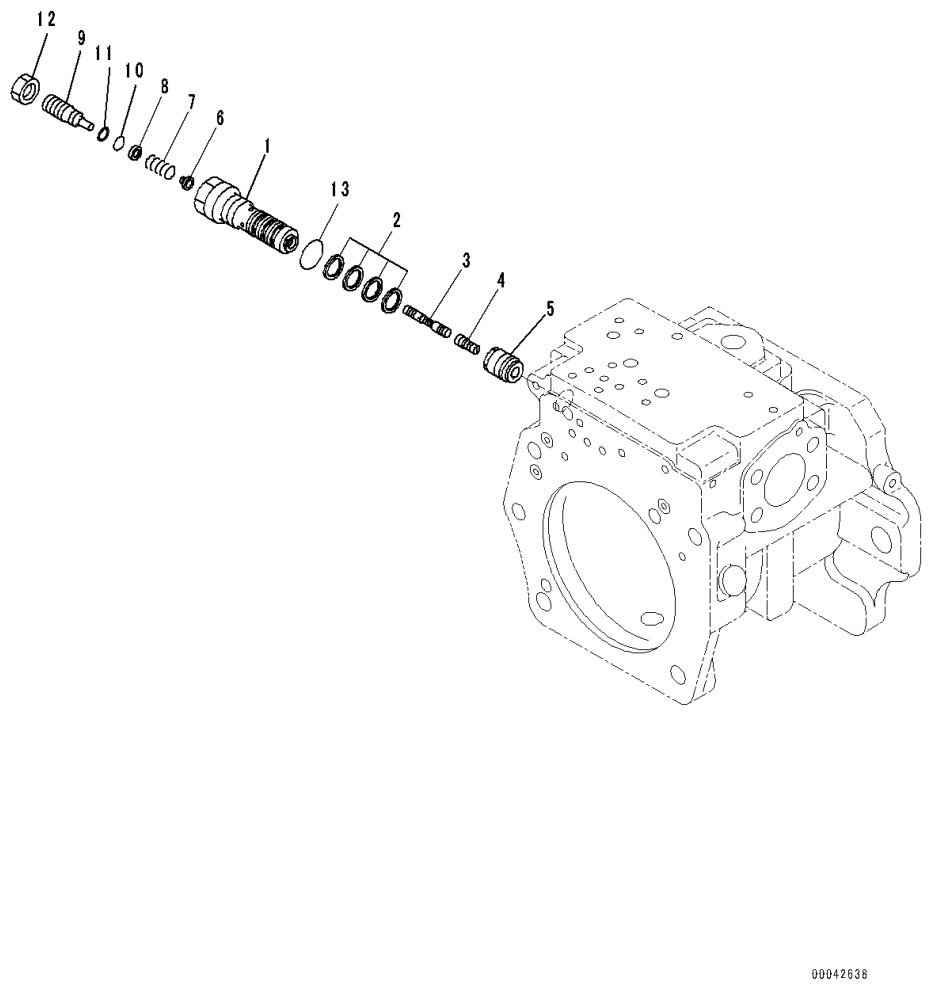

Index	Code	Part Number	Description	Qty	Serial Number
		708-1H-00251	Pump Assembly	1	81137-
		708-2H-03620	• Valve Assembly	1	81028-
1	C2	708-2L-35311	• • Sleeve	1	81028-
2		708-2L-24680	• • Seal	4	81028-
3	C2	708-2H-15410	• • Spool	1	81028-
4	C2	708-2L-28540	• • Piston	1	81028-
5	C2	708-2L-35360	• • Sleeve	1	81028-
6	C2	708-2L-35331	• • Seat	1	81028-
7	C2	708-2L-35410	• • Spring	1	81028-
8	C2	708-2L-35341	• • Seat	1	81028-
9	C2	708-2L-35351	• • Plug	1	81028-
10	C2	07000-B1009	• • O-ring	1	81028-
11	C2	07001-01009	• • Ring, Back-up	1	81028-
12		01583-11408	• • Nut	1	81028-
13		07002-62434	• • O-ring	1	81028-

FIG. F2720-001005 Power Train Hydraulic Oil Piping, For Scraper, Inner Parts, HSS Pump (5/5)

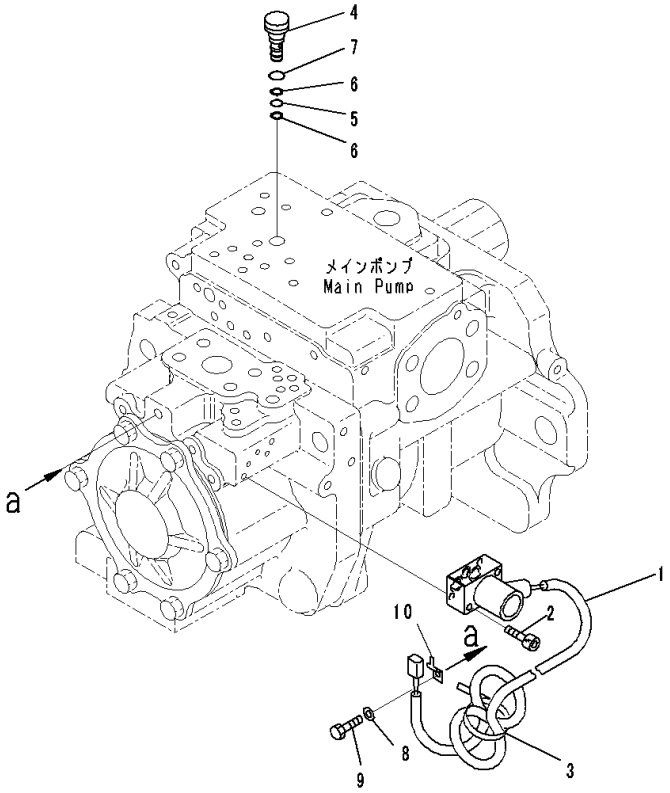

Index	Code	Part Number	Description	Qty	Serial Number
		708-1H-00251	Pump Assembly	1	81137-
1		702-21-57600	• Valve, Pilot	1	81028-
2		01252-60635	• Bolt, Hexagon Socket Head	2	81028-
3		20Y-62-22810	• Band, Yellow	1	81028-
4	C2	708-1H-35910	• Plug	1	81028-
5		07000-B1008	• O-ring	1	81028-
6		07001-01008	• Ring	2	81028-
7		07002-61423	• O-ring	1	81028-
8		01643-51232	• Washer	1	81028-
9		01010-81220	• Bolt	1	81028-
10		08193-21012	• Clip	1	81028-

FIG. F2720-001006 Power Train Hydraulic Oil Piping, For Scraper, HSS Pump Piping

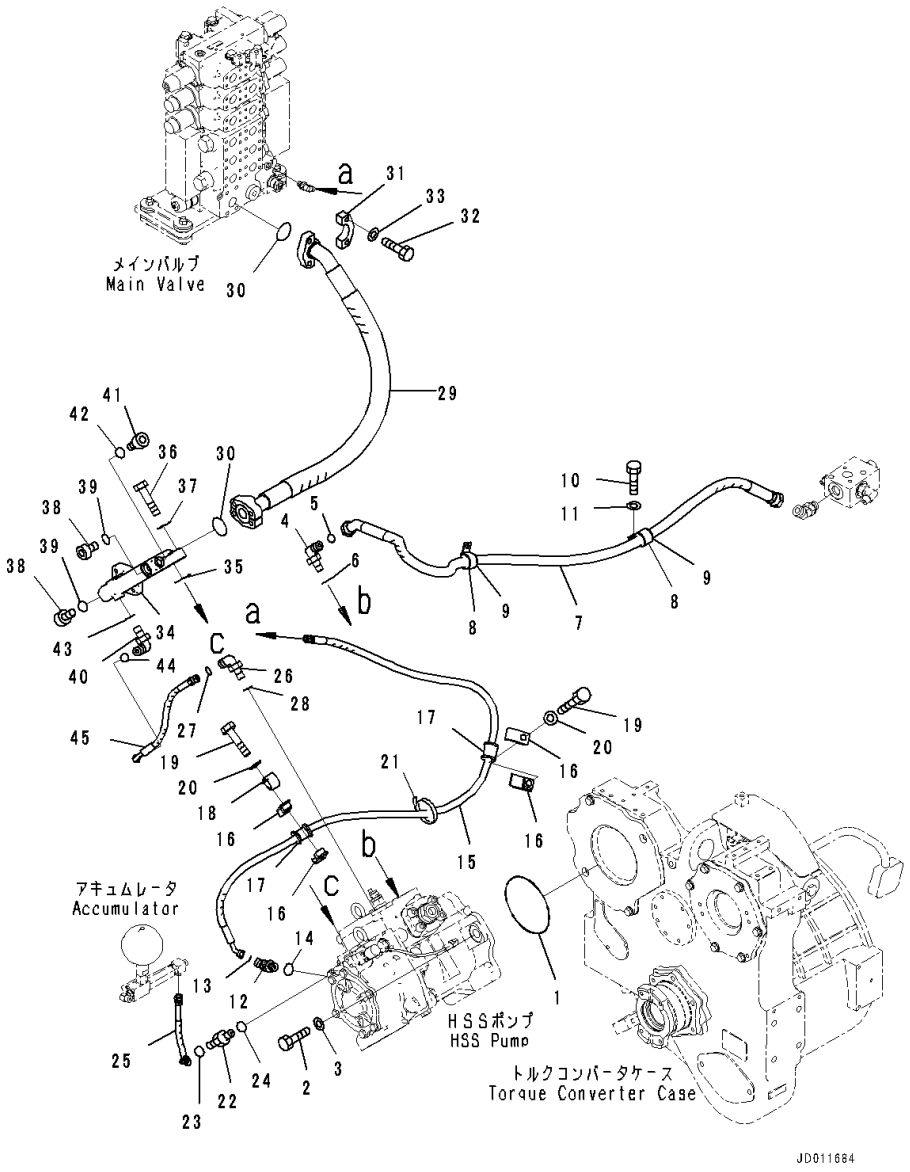

Index	Code	Part Number	Description	Qty	Serial Number
1		07000-75170	O-ring	1	81028-
2		01010-82480	Bolt	2	81028-
3		01643-32460	Washer	2	81028-
4		02782-1062A	Elbow	1	81028-
5		02896-11018	O-ring	1	81028-
6		07002-12434	O-ring	1	81028-
7		02764-00614	Hose	1	81028-
8		113-899-7950	Clip	2	81028-
9		07095-20625	Cushion	2	81028-
10		01010-81225	Bolt	2	81028-
11		01643-31232	Washer	2	81028-
12		154-61-75761	Elbow	1	81028-
13		02896-11008	O-ring	1	81028-
14		07002-11423	O-ring	1	81028-
15		17A-61-41471	Hose	1	81028-
16		07094-10315	Clamp	4	81028-
17		07095-00314	Cushion	2	81028-
18		04434-53412	Clip	1	81028-
19		01010-81260	Bolt	2	81028-
20		01643-31232	Washer	2	81028-
21		08034-20823	Band	1	81028-
22		02781-0021D	Union	1	81028-
23		02896-11008	O-ring	1	81028-
24		07002-11423	O-ring	1	81028-
25		02755-002A4	Hose	1	81028-
26		02782-10210	Elbow	1	81028-
27		02896-11008	O-ring	1	81028-
28		07002-11423	O-ring	1	81028-
29		17A-49-41511	Hose	1	81028-
30		21T-09-11480	O-ring	2	81028-
31		07371-51260	Flange	4	81028-
32		01010-81250	Bolt	8	81028-
33		01643-31232	Washer	8	81028-
34		17A-49-41391	Block	1	81028-
35		21T-09-11480	O-ring	1	81028-
36		01010-81250	Bolt	4	81028-
37		01643-31232	Washer	4	81028-
38		07040-13016	Plug	2	81028-
39		07002-13034	O-ring	2	81028-
40		22M-62-21390	Elbow	1	81028-

FIG. F2720-001006 Power Train Hydraulic Oil Piping, For Scraper, HSS Pump Piping

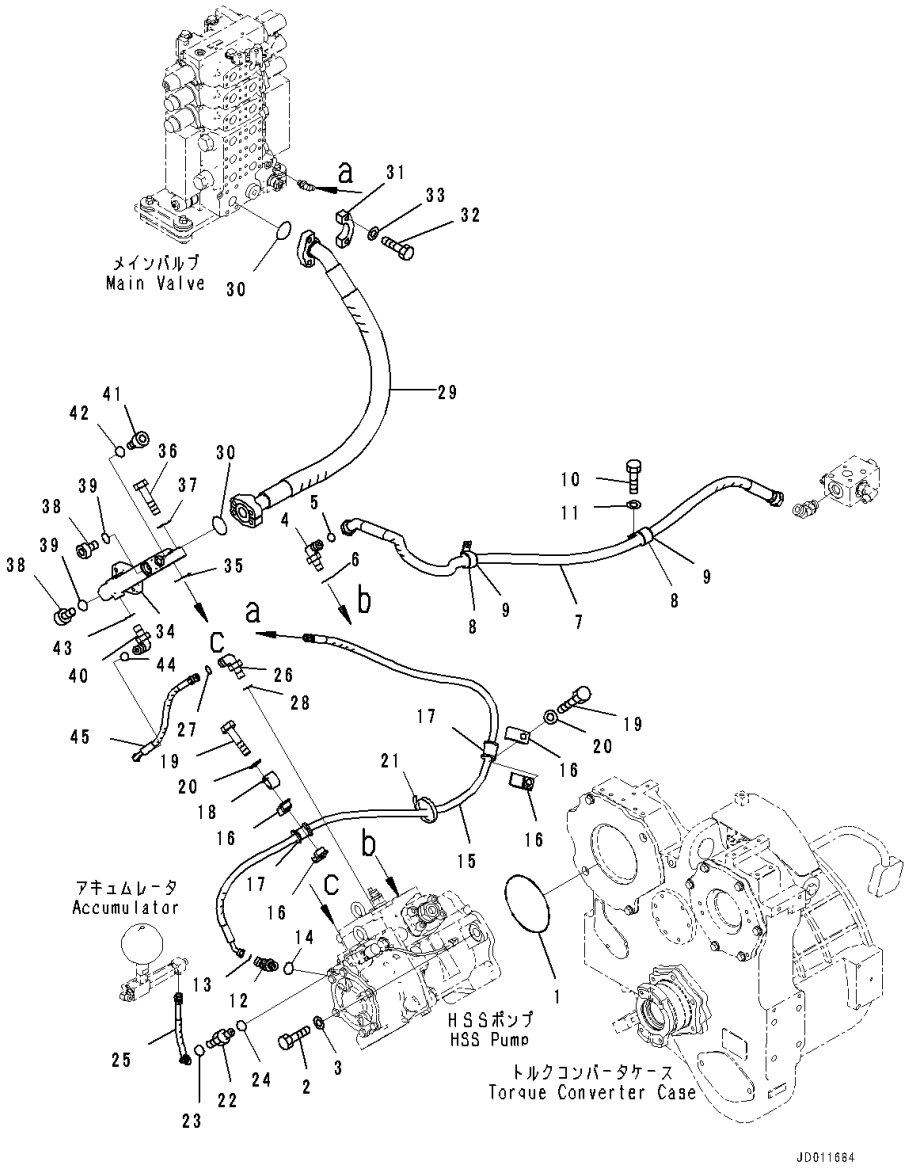

Index	Code	Part Number	Description	Qty	Serial Number
41		07040-11007	Plug	1	81028-
42		07002-11023	O-ring	1	81028-
43		07002-11823	O-ring	1	81028-
44		02896-11008	O-ring	1	81028-
45		17A-61-41460	Hose	1	81028-

FIG. F2720-001007 Power Train Hydraulic Oil Piping, For Scraper, Inner Parts, Fan Pump (1/5)

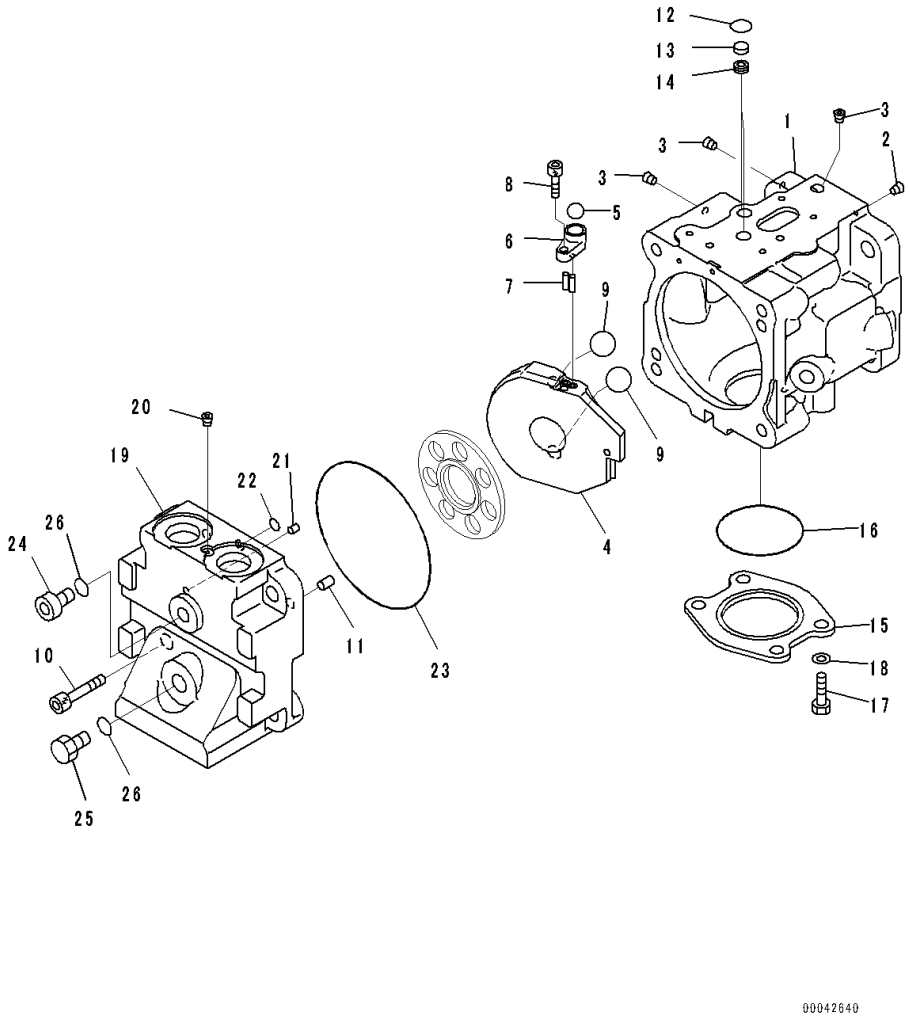

Index	Code	Part Number	Description	Qty	Serial Number
		708-1T-00470	Pump Assembly	1	81028-
		708-1T-01470	• Pump Subassembly	1	81028-
	C2	708-1T-04610	• • Case Subassembly	1	81028-
1	C1		• • • Case	1	81028-
2	C1		• • • Plug	1	81028-
3	C1		• • • Plug	3	81028-
4	C2	708-1T-13580	• • Cam	1	81028-
5	C2	04260-01270	• • Ball	1	81028-
6	C2	708-1T-14610	• • Spacer	1	81028-
7	C2	708-1S-13420	• • Pin	2	81028-
8	C2	01252-60616	• • Bolt, Hexagon Socket Head	1	81028-
9	C2	708-1S-13430	• • Ball, Retainer	2	81028-
10		01252-61240	• • Bolt	4	81028-
11	C2	04020-01024	• • Pin, Dowel	2	81028-
12		708-2L-25490	• • O-ring	2	81028-
13		708-2L-25480	• • Filter	2	81028-
14		708-1S-19710	• • Orifice	2	81028-
15		708-1S-19920	• • Plate	1	81028-
16		07000-E2065	• • O-ring	1	81028-
17		01010-81025	• • Bolt	4	81028-
18		01643-31032	• • Washer	4	81028-
	C2	708-1T-04620	• • Cap Subassembly	1	81028-
19	C1		• • • Cap	1	81028-
20	C1		• • • Plug	1	81028-
21	C2	720-68-19610	• • Pin	1	81028-
22	C2	07000-F1006	• • O-ring	2	81028-
23	C2	07000-E2125	• • O-ring	1	81028-
24		702-21-55620	• • Plug	1	81028-
25		07040-11409	• • Plug	1	81028-
26		07002-21423	• • O-ring	2	81028-

FIG. F2720-001008 Power Train Hydraulic Oil Piping, For Scraper, Inner Parts, Fan Pump (2/5)

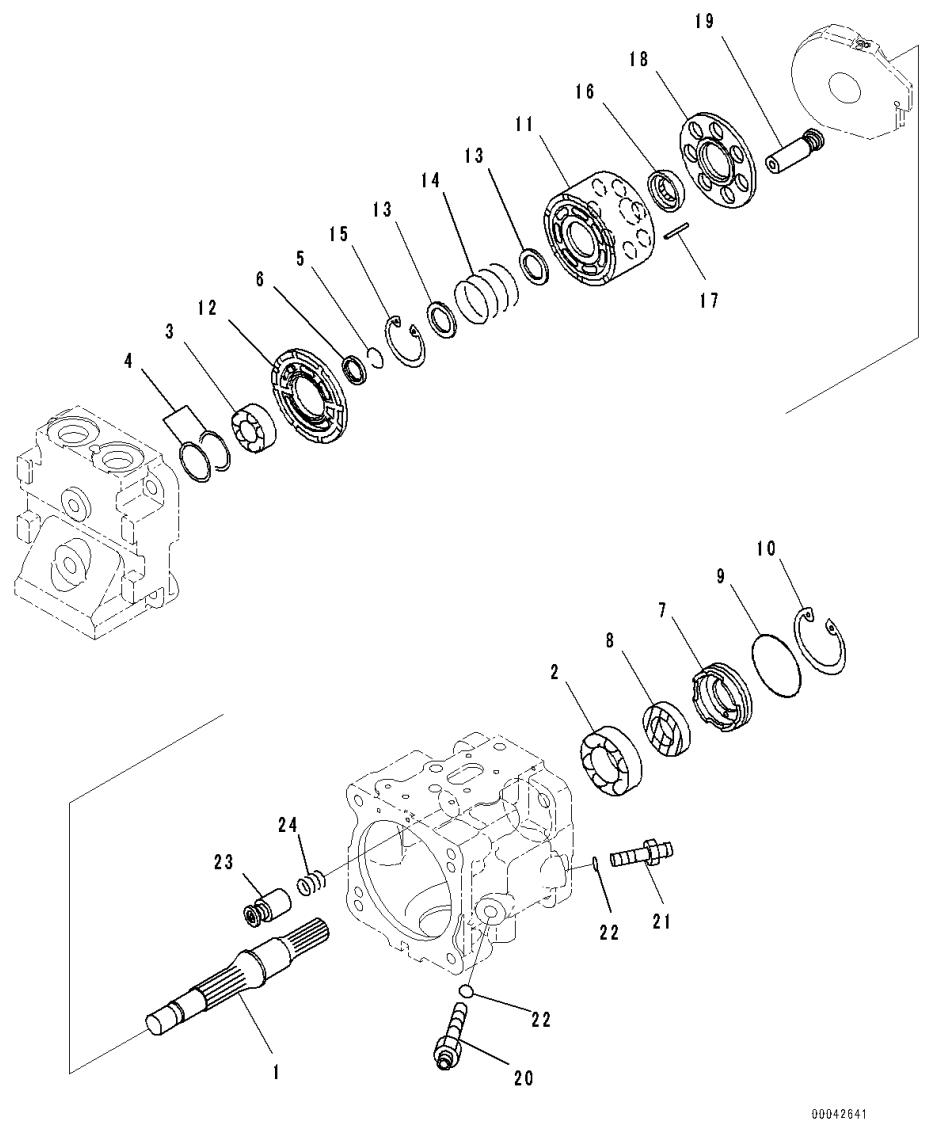

Index	Code	Part Number	Description	Qty	Serial Number
		708-1T-00470	Pump Assembly	1	81028-
		708-1T-01470	• Pump Subassembly	1	81028-
1	C2	708-1T-12410	• • Shaft	1	81028-
2	C2	706-73-40890	• • Bearing	1	81028-
3	C2	708-1T-12420	• • Bearing	1	81028-
4	C2	708-7T-05010	• • Spacer Kit	1	81028-
	C1		• • • Spacer, T=1.8mm	1	81028-
	C1		• • • Spacer, T=1.9mm	1	81028-
	C1		• • • Spacer, T=2.0mm	1	81028-
	C1		• • • Spacer, T=2.1mm	1	81028-
	C1		• • • Spacer, T=1.6mm	1	81028-
	C1		• • • Spacer, T=1.7mm	1	81028-
5	C2	708-1S-12280	• • Ring, Wear	1	81028-
6	C2	708-1S-12330	• • Retainer	1	81028-
7		708-1S-12340	• • Case	1	81028-
8		708-21-12970	• • Seal, Oil	1	81028-
9		708-1S-12350	• • O-ring	1	81028-
10		04065-06220	• • Ring, Snap	1	81028-
11	C2	708-1T-13510	• • Cylinder Block	1	81028-
12	C2	708-1T-13590	• • Plate, Valve	1	81028-
13	C2	708-3S-13160	• • Washer	2	81028-
14	C2	708-3S-13150	• • Spring	1	81028-
15	C2	04065-03515	• • Ring, Snap	1	81028-
16	C2	708-1T-13540	• • Guide	1	81028-
17	C2	708-1S-13380	• • Pin	3	81028-
18	C2	708-1T-13550	• • Retainer	1	81028-
19	C2	708-1T-13310	• • Piston Subassembly	7	81028-
20	C2	708-1S-14210	• • Plug	1	81028-
21	C2	708-1S-14220	• • Plug	1	81028-
22	C2	07002-21223	• • O-ring	2	81028-
23		708-1S-14230	• • Piston Subassembly	1	81028-
24	C2	708-1S-14241	• • Spring	1	81028-

FIG. F2720-001009 Power Train Hydraulic Oil Piping, For Scraper, Inner Parts, Fan Pump (3/5)

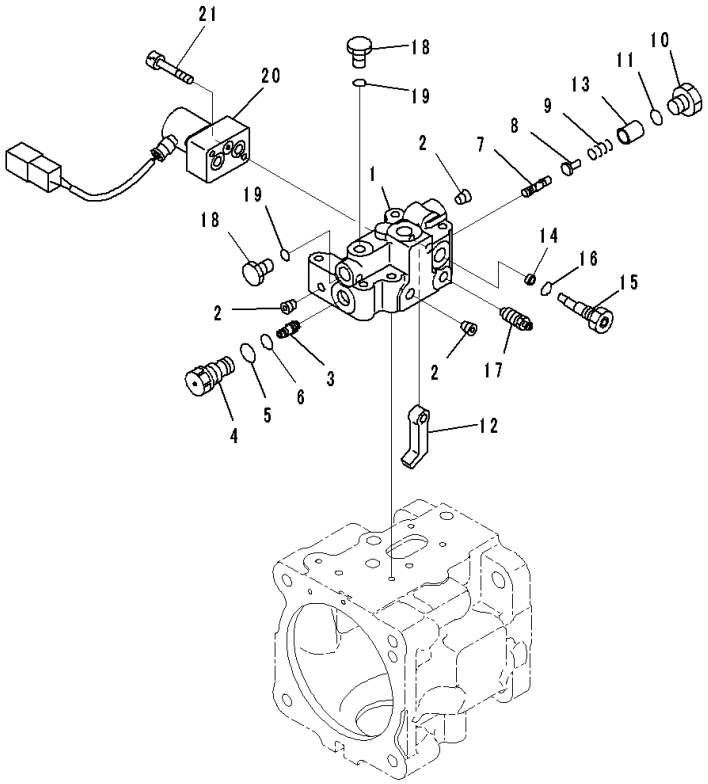

JD011700

Index	Code	Part Number	Description	Qty	Serial Number
		708-1T-00470	Pump Assembly	1	81028-
		708-1T-01470	• Pump Subassembly	1	81028-
	C2	708-1S-03340	• • Valve Assembly	1	81028-
	C2	708-1S-03920	• • • Body Subassembly	1	81028-
1	C1		• • • • Body, Valve	1	81028-
2	C1		• • • • Plug	3	81028-
3	C2	708-1S-15420	• • • Piston	1	81028-
4	C2	708-1S-15430	• • • Sleeve	1	81028-
5		07002-21623	• • • O-ring	1	81028-
6		07000-B1010	• • • O-ring	1	81028-
7	C2	708-1S-15470	• • • Spool	1	81028-
8	C2	708-1S-15240	• • • Seat	1	81028-
9	C2	708-1S-15441	• • • Spring	1	81028-
10	C2	723-56-31630	• • • Plug	1	81028-
11		07002-21623	• • • O-ring	1	81028-
12	C2	708-1S-15270	• • • Lever	1	81028-
13	C2	708-1S-15480	• • • Retainer	1	81028-
14	C2	708-1S-15280	• • • Spacer	1	81028-
15	C2	708-1S-15260	• • • Plug	1	81028-
16		07002-21023	• • • O-ring	1	81028-
17		20B-27-11210	• • • Bleeder	1	81028-
18		07040-11007	• • • Plug	2	81028-
19		07002-21023	• • • O-ring	2	81028-
20	C2	702-21-57700	• • • Valve, Pilot	1	81028-
21		01252-60635	• • • Bolt, Hexagon Socket Head	2	81028-

FIG. F2720-001010 Power Train Hydraulic Oil Piping, For Scraper, Inner Parts, Fan Pump (4/5)

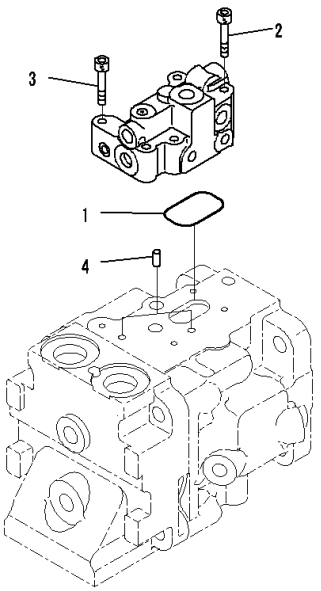

PW5A162

Index	Code	Part Number	Description	Qty	Serial Number
		708-1T-00470	Pump Assembly	1	81028-
		708-1T-01470	• Pump Subassembly	1	81028-
1		07000-E3040	• • O-ring	1	81028-
2		01252-60650	• • Bolt, Hexagon Socket Head	1	81028-
3		01252-60635	• • Bolt, Hexagon Socket Head	3	81028-
4		04020-00616	• • Pin, Dowel	2	81028-

FIG. F2720-001011 Power Train Hydraulic Oil Piping, For Scraper, Inner Parts, Fan Pump (5/5)

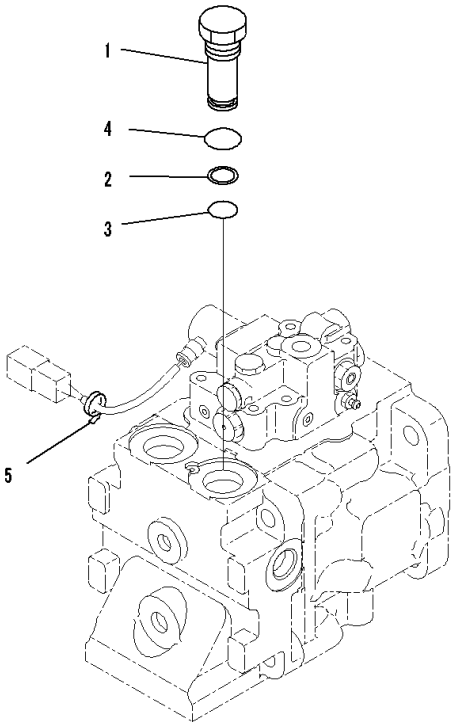

JD011710

Index	Code	Part Number	Description	Qty	Serial Number
		708-1T-00470	Pump Assembly	1	81028-
1		708-1S-19930	• Plug	1	81028-
2		723-60-22230	• Ring, Back-up	1	81028-
3		07000-F2016	• O-ring	1	81028-
4		07002-12434	• O-ring	1	81028-
5		20Y-62-22790	• Band, Red	1	81028-

FIG. F2720-001012 Power Train Hydraulic Oil Piping, For Scraper, Fan Pump Piping

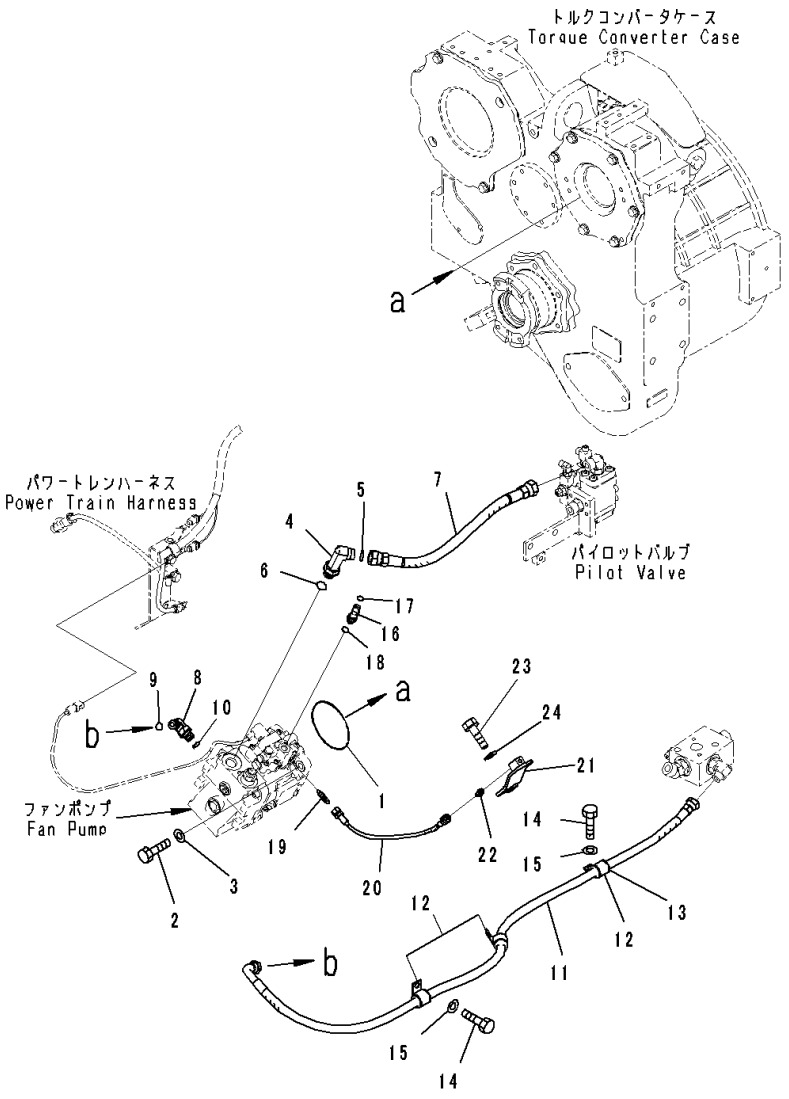

Index	Code	Part Number	Description	Qty	Serial Number
1		07000-72105	O-ring	1	81028-
2		01010-81240	Bolt	4	81028-
3		01643-31232	Washer	4	81028-
4		02782-10524	Elbow	1	81028-
5		02896-11015	O-ring	1	81028-
6		07002-12434	O-ring	1	81028-
7		02765-005A4	Hose	1	81028-
8		02782-10422	Elbow	1	81028-
9		02896-11012	O-ring	1	81028-
10		07002-12034	O-ring	1	81028-
11		17A-61-41930	Hose	1	81028-
12		04434-52512	Clip	3	81028-
13		07095-20318	Cushion	3	81028-
14		01010-81225	Bolt	2	81028-
15		01643-31232	Washer	2	81028-
16		02783-10210	Elbow	1	81028-
17		02896-11008	O-ring	1	81028-
18		07002-11423	O-ring	1	81028-
19		17A-61-21340	Nipple	1	81028-
20		17A-49-41791	Hose	1	81028-
21		17A-61-21331	Bracket	1	81028-
22		203-62-21740	Nipple	1	81028-
23		01010-81230	Bolt	1	81028-
24		01643-31232	Washer	1	81028-

FIG. F2720-001013 Power Train Hydraulic Oil Piping, For Scraper, Valve Bracket

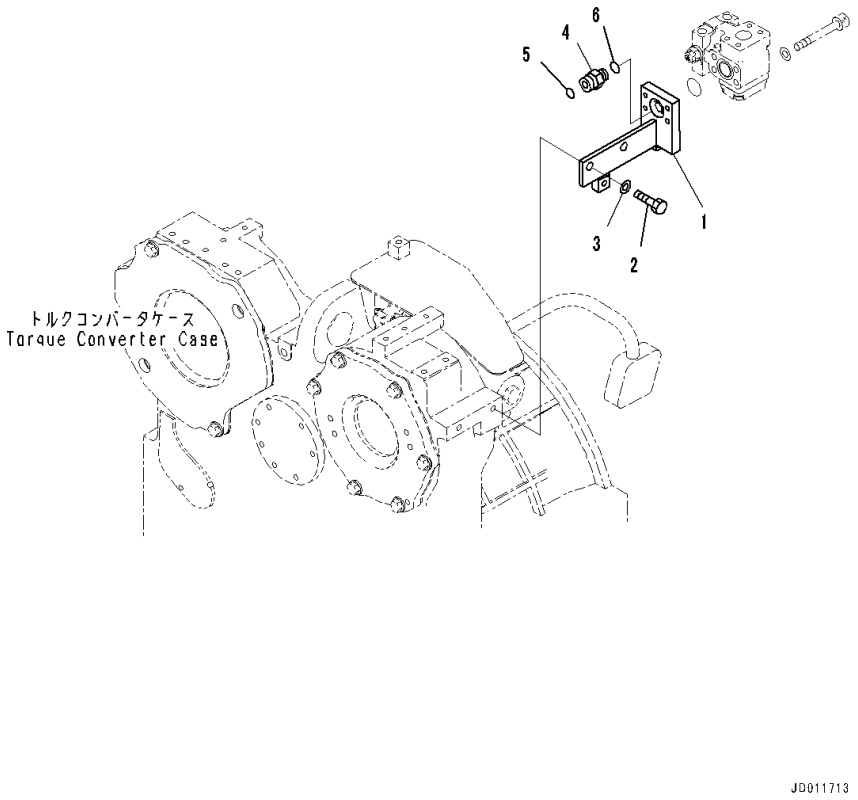

Index	Code	Part Number	Description	Qty	Serial Number
1		17A-49-41421	Bracket	1	81028-
2		01010-81230	Bolt	2	81028-
3		01643-31232	Washer	2	81028-
4		02781-00516	Union	1	81028-
5		02896-11015	O-ring	1	81028-
6		07002-12034	O-ring	1	81028-

FIG. F2720-001014 Power Train Hydraulic Oil Piping, For Scraper, Pilot Valve

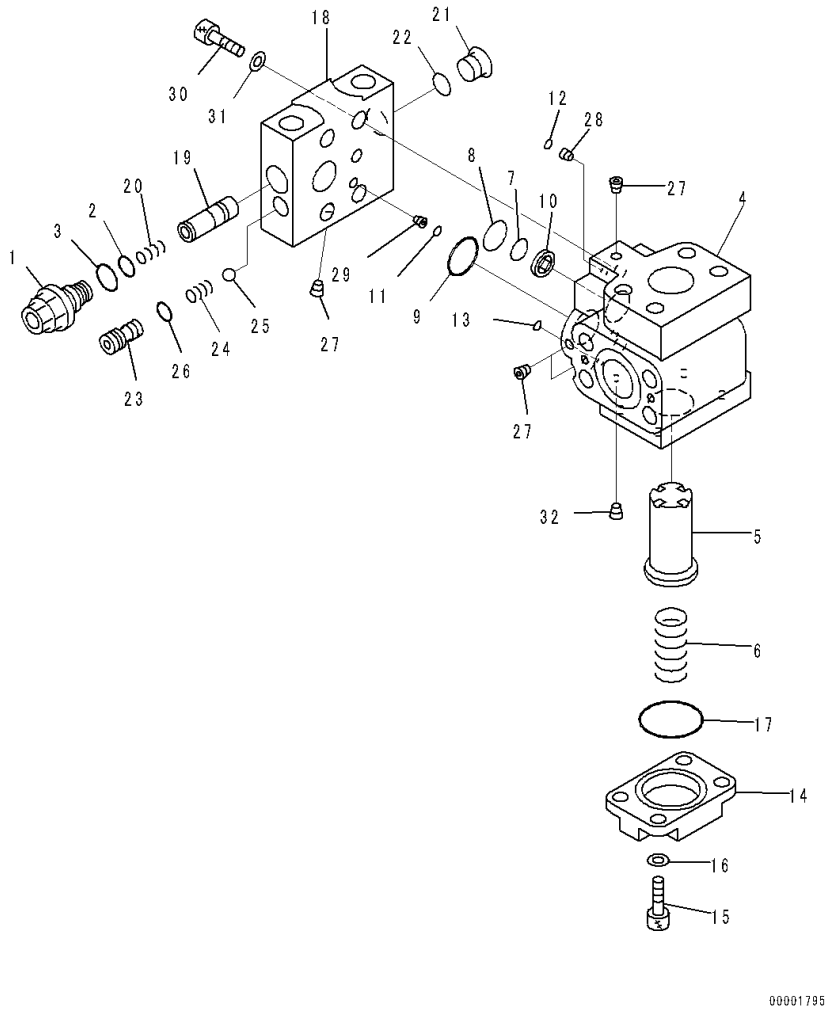

Index	Code	Part Number	Description	Qty	Serial Number
		702-21-09250	Valve Assembly, Pilot	1	81028-
1		723-60-27200	• Valve Assembly, Relief	1	81028-
2		702-16-53920	• • O-ring	1	81028-
3		07002-11623	• • O-ring	1	81028-
4	C1		• Block	1	81028-
5		702-21-55310	• Valve	1	81028-
6		702-21-55460	• Spring	1	81028-
7		702-21-55420	• O-ring	1	81028-
8		702-21-55520	• O-ring	1	81028-
9		702-21-55440	• O-ring	1	81028-
10		702-21-53120	• Filter	1	81028-
11		07000-11009	• O-ring	1	81028-
12		07000-11010	• O-ring	1	81028-
13		07000-11006	• O-ring	1	81028-
14		702-21-55410	• Plate	1	81028-
15		01252-60820	• Bolt, Hexagon Socket Head	4	81028-
16		01643-50823	• Washer	4	81028-
17		702-21-55530	• O-ring	1	81028-
18	C1		• Block	1	81028-
19	C1		• Spool	1	81028-
20		702-21-55640	• Spring	1	81028-
21		702-21-55620	• Plug	1	81028-
22		07002-11423	• O-ring	1	81028-
23		702-21-55710	• Seat	1	81028-
24		702-21-55720	• Spring	1	81028-
25		04260-00793	• Ball	1	81028-
26		07000-11009	• O-ring	1	81028-
27	C1		• Plug	4	81028-
28	C1		• Orifice	1	81028-
29	C1		• Orifice	1	81028-
30		01252-61040	• Bolt, Hexagon Socket Head	4	81028-
31		01643-51032	• Washer	4	81028-
32	C1		• Screw	1	81028-

FIG. F2720-001015 Power Train Hydraulic Oil Piping, For Scraper, Valve Piping

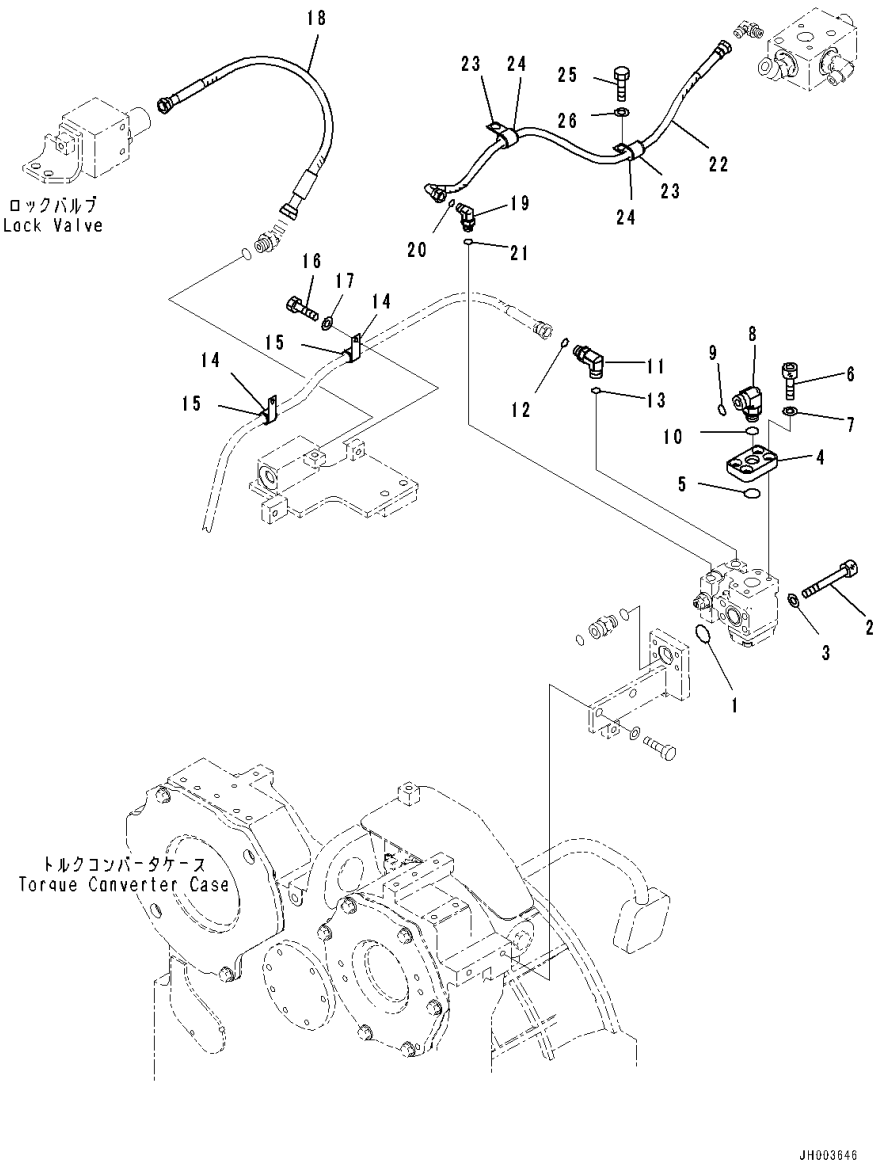

Index	Code	Part Number	Description	Qty	Serial Number
1		07000-13032	O-ring	1	81028-
2		01252-71085	Bolt	4	81028-
3		01643-51032	Washer	4	81028-
4		17A-61-21221	Plate	1	81028-
5		07000-13032	O-ring	1	81028-
6		01252-71025	Bolt, Hexagon Socket Head	4	81028-
7		01643-51032	Washer	4	81028-
8		02782-10516	Elbow	1	81028-
9		02896-11015	O-ring	1	81028-
10		07002-12034	O-ring	1	81028-
11		02782-10311	Elbow	1	81028-
12		02896-11009	O-ring	1	81028-
13		07002-11423	O-ring	1	81028-
14		04434-52112	Clip	2	81028-
15		07095-20314	Cushion	2	81028-
16		01010-81225	Bolt	2	81028-
17		01643-31232	Washer	2	81028-
18		02754-00304	Hose	1	81028-
19		02782-10210	Elbow	1	81028-
20		02896-11008	O-ring	1	81028-
21		07002-11423	O-ring	1	81028-
22		02763-002A8	Hose	1	81028-
23		04434-51712	Clip	2	81028-
24		07095-20211	Cushion	2	81028-
25		01010-81225	Bolt	1	81028-
26		01643-31232	Washer	1	81028-

FIG. F2720-001016 Power Train Hydraulic Oil Piping, For Scraper, Filter Piping

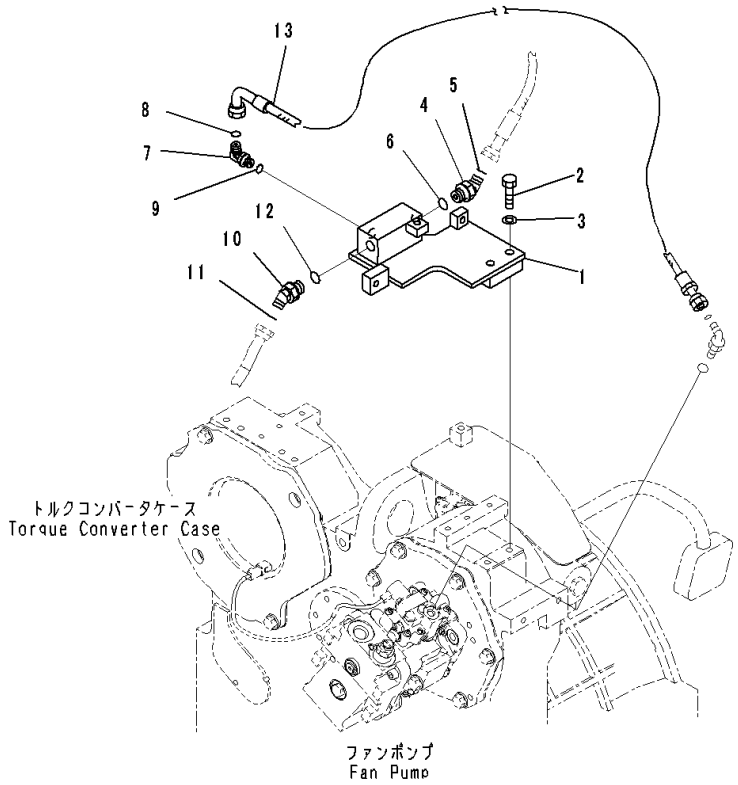

Index	Code	Part Number	Description	Qty	Serial Number
1		17A-61-43921	Bracket	1	81028-
2		01010-81250	Bolt	2	81028-
3		01643-31232	Washer	2	81028-
4		02783-10315	Elbow	1	81028-
5		02896-11009	O-ring	1	81028-
6		07002-12034	O-ring	1	81028-
7		02782-10210	Elbow	1	81028-
8		02896-11008	O-ring	1	81028-
9		07002-11423	O-ring	1	81028-
10		02783-10315	Elbow	1	81028-
11		02896-11009	O-ring	1	81028-
12		07002-12034	O-ring	1	81028-
13		17A-61-43890	Hose	1	81028-

FIG. F2720-001017 Power Train Hydraulic Oil Piping, For Scraper, Inner Parts, HSS Motor (1/2)

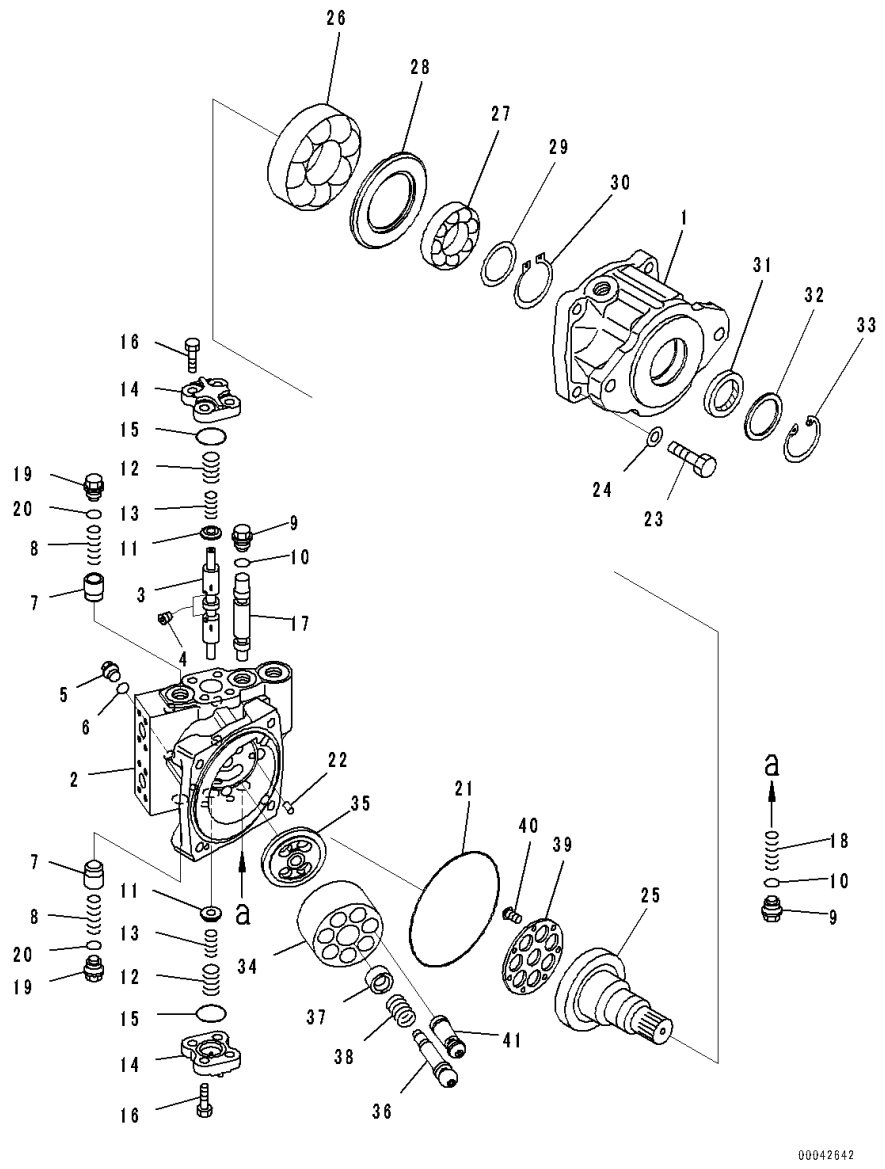

Index	Code	Part Number	Description	Qty	Serial Number
		706-7H-01101	Motor Assembly	1	81028-
1	C2	706-7H-12310	• Case	1	81028-
	C2	706-7H-05010	• Housing Assembly	1	81028-
2	C1		• • Housing	1	81028-
3	C1		• • Spool	1	81028-
4	C1		• • Plug	1	81028-
5		706-8E-14191	• Plug	4	81028-
6		07002-11823	• O-ring	4	81028-
7		706-75-74540	• Valve	2	81028-
8		706-75-74550	• Spring	2	81028-
9		706-75-74850	• Plug	2	81028-
10		07002-13334	• O-ring	2	81028-
11		706-7H-71120	• Retainer	2	81028-
12		708-7H-16410	• Spring	2	81028-
13		706-7H-71130	• Spring	2	81028-
14		706-7H-71160	• Cover	2	81028-
15		07000-13042	• O-ring	2	81028-
16		01010-61440	• Bolt	8	81028-
17	C2	706-7H-71150	• Spool	1	81028-
18	C2	706-75-74550	• Spring	1	81028-
19	C2	706-75-74850	• Plug	2	81028-
20	C2	07002-13334	• O-ring	2	81028-
21	C2	07000-15195	• O-ring	1	81028-
22	C2	708-18-13230	• Pin	2	81028-
23	C2	01010-61655	• Bolt	4	81028-
24	C2	01643-31645	• Washer	4	81028-
25	C2	706-7H-41110	• Shaft	1	81028-
26	C2	706-8J-41010	• Bearing	1	81028-
27	C2	706-7H-41120	• Bearing	1	81028-
28	C2	706-7H-41210	• Spacer	1	81028-
29	C2	706-7H-05910	• Spacer Kit	1	81028-
	C1		• • Spacer, T=1.9mm	1	81028-
	C1		• • Spacer, T=2.1mm	1	81028-
	C1		• • Spacer, T=2.3mm	1	81028-
	C1		• • Spacer, T=2.5mm	1	81028-
	C1		• • Spacer, T=2.7mm	1	81028-
30		04064-06020	• Ring, Snap	1	81028-
31		708-27-22811	• Seal, Oil	1	81028-
32		708-2H-22160	• Spacer	1	81028-
33		04065-08225	• Ring, Snap	1	81028-

FIG. F2720-001017 Power Train Hydraulic Oil Piping, For Scraper, Inner Parts, HSS Motor (1/2)

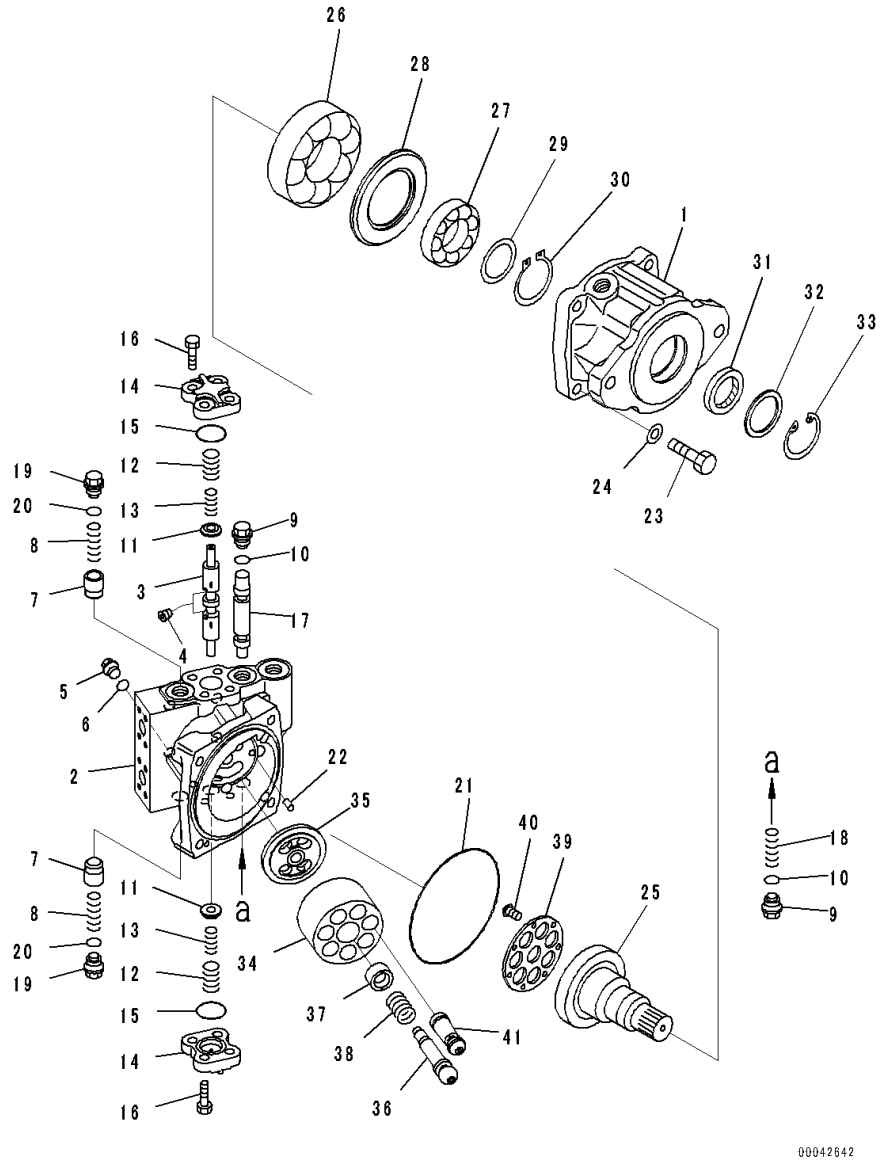

Index	Code	Part Number	Description	Qty	Serial Number
	C2	706-7H-05020	• Cylinder Block Assembly	1	81028-
34	C1		• • Cylinder Block	1	81028-
35	C1		• • Plate, Valve	1	81028-
36	C2	706-8H-41120	• Shaft,Center	1	81028-
37	C2	706-7H-41730	• Ring,Center	1	81028-
38	C2	706-7H-41740	• Spring	1	81028-
39	C2	706-8H-41260	• Retainer	1	81028-
40	C2	708-23-12350	• Screw	7	81028-
41	C2	706-8H-41160	• Piston Subassembly	7	81028-

FIG. F2720-001018 Power Train Hydraulic Oil Piping, For Scraper, Inner Parts, HSS Motor (2/2)

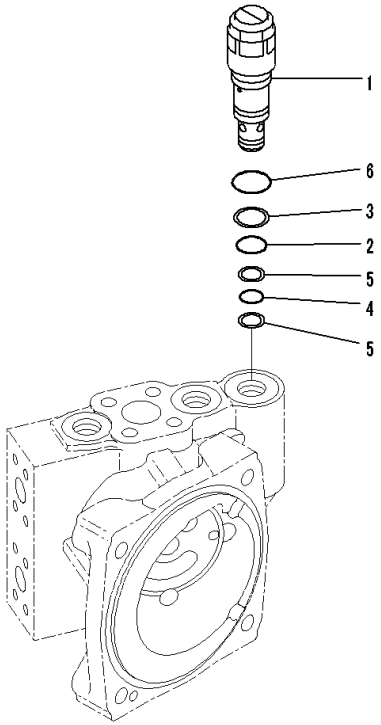

JD011725

Index	Code	Part Number	Description	Qty	Serial Number
		706-7H-01101	Motor Assembly	1	81028-
1		702-77-03110	• Valve, Relief	1	81028-
2		700-93-11320	• • O-ring	1	81028-
3		700-93-11330	• • Ring, Back-up	1	81028-
4		07000-F2020	• • O-ring	1	81028-
5		702-77-11380	• • Ring, Back-up	2	81028-
6		07002-13634	• • O-ring	1	81028-

FIG. F2720-001019 Power Train Hydraulic Oil Piping, For Scraper, Motor Mounting

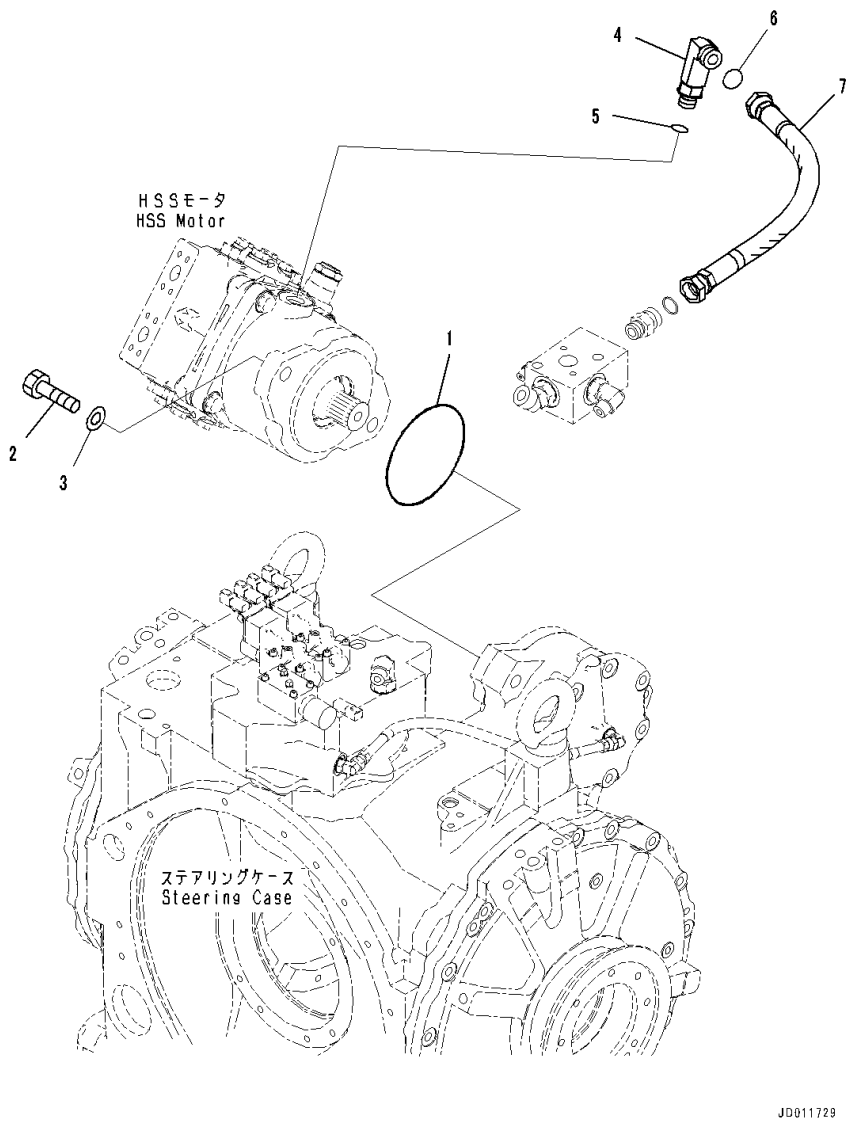

Index	Code	Part Number	Description	Qty	Serial Number
1		07000-75165	O-ring	1	81028-
2		01010-82080	Bolt	2	81028-
3		01643-32060	Washer	2	81028-
4		02782-10630	Elbow	1	81028-
5		07002-12434	O-ring	1	81028-
6		02896-11018	O-ring	1	81028-
7		17A-61-41780	Hose	1	81028-

FIG. F2720-001020 Power Train Hydraulic Oil Piping, For Scraper, Boom Cylinder Lock Valve Piping

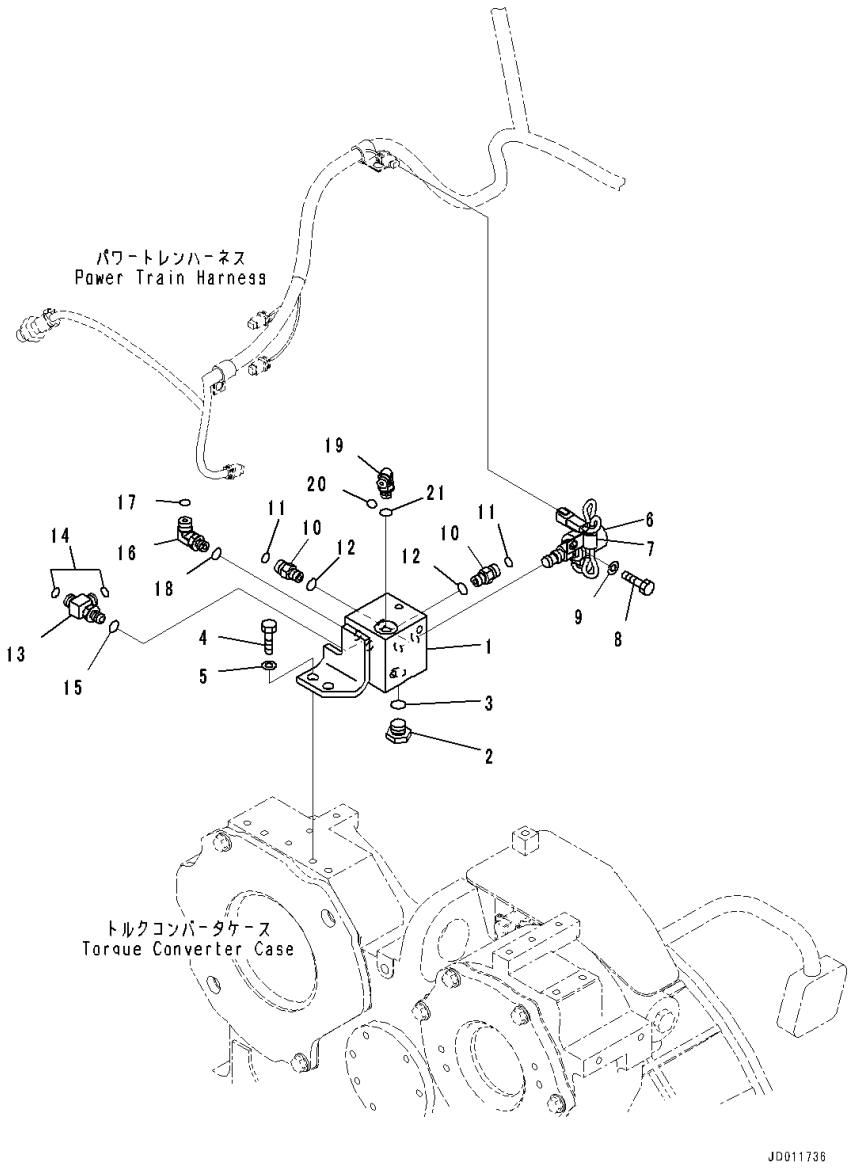

Index	Code	Part Number	Description	Qty	Serial Number
1		17A-49-41432	Block	1	81028-
2		07040-12012	Plug	1	81028-
3		07002-12034	O-ring	1	81028-
4		01010-81230	Bolt	2	81028-
5		01643-31232	Washer	2	81028-
6		198-06-56520	Valve, Solenoid	1	81028-
7		04434-51212	Clip	1	81028-
8		01010-81220	Bolt	1	81028-
9		01643-31232	Washer	1	81028-
10		02781-0031D	Union	2	81028-
11		02896-11009	O-ring	2	81028-
12		07002-11423	O-ring	2	81028-
13		21N-64-36680	Tee	1	81028-
14		02896-11009	O-ring	2	81028-
15		07002-11423	O-ring	1	81028-
16		02782-10311	Elbow	1	81028-
17		02896-11009	O-ring	1	81028-
18		07002-11423	O-ring	1	81028-
19		02782-10210	Elbow	1	81028-
20		02896-11008	O-ring	1	81028-
21		07002-11423	O-ring	1	81028-

FIG. F2720-001021 Power Train Hydraulic Oil Piping, For Scraper, Accumulator

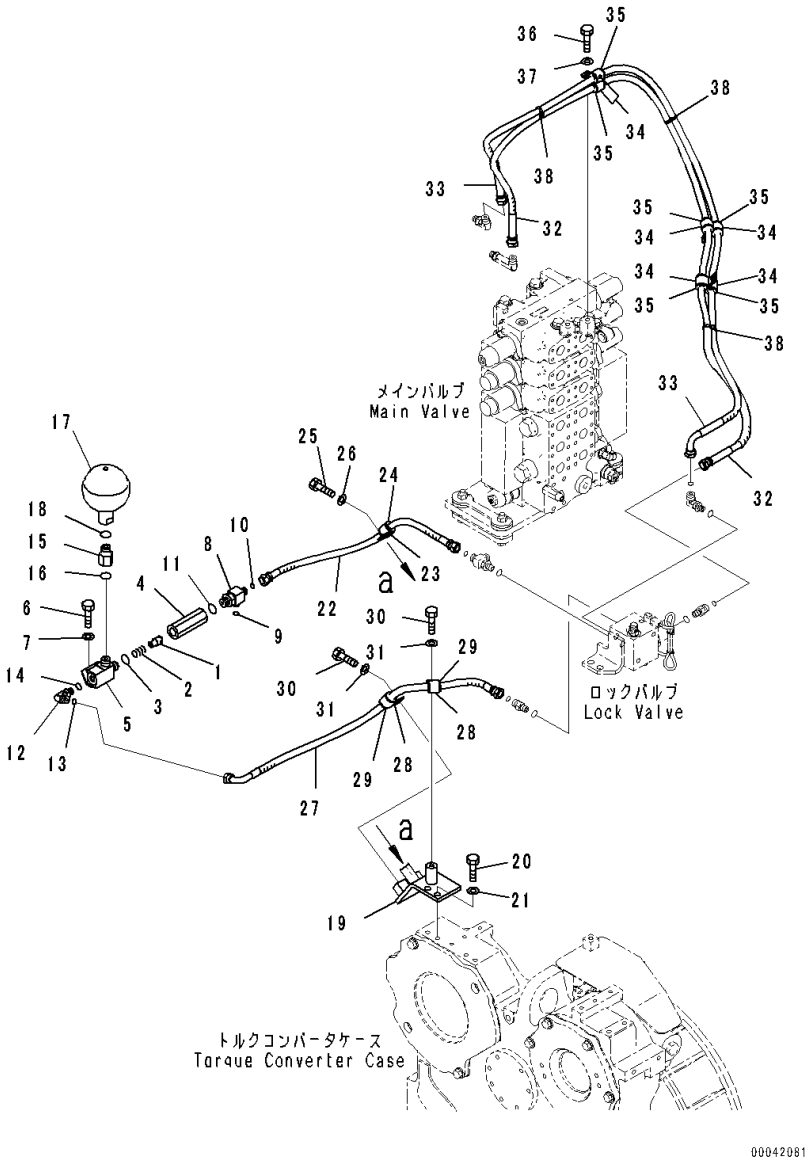

Index	Code	Part Number	Description	Qty	Serial Number
		17A-61-41501	Valve Assembly	1	81028-
1		20X-62-21950	• Valve	1	81028-
2		203-60-21260	• Spring	1	81028-
3		07002-02034	• O-ring	1	81028-
4		203-62-58670	• Body	1	81028-
5		17A-61-41511	• Tee	1	81028-
6		01010-81020	Bolt	2	81028-
7		01643-31032	Washer	2	81028-
8		423-62-31640	Tee	1	81028-
9		02896-11008	O-ring	1	81028-
10		02896-11009	O-ring	1	81028-
11		07002-12034	O-ring	1	81028-
12		02782-10311	Elbow	1	81028-
13		02896-11009	O-ring	1	81028-
14		07002-11423	O-ring	1	81028-
15		154-61-75782	Adapter	1	81028-
16		07002-12034	O-ring	1	81028-
17		22U-60-21340	Accumulator	1	81028-
18		07002-12034	O-ring	1	81028-
19		17A-49-41591	Bracket	1	81028-
20		01010-81230	Bolt	2	81028-
21		01643-31232	Washer	2	81028-
22		17A-61-41480	Hose	1	81028-
23		04434-52712	Clip	1	81028-
24		07095-20418	Cushion	1	81028-
25		01010-81225	Bolt	1	81028-
26		01643-31232	Washer	1	81028-
27		17A-61-41490	Hose	1	81028-
28		04434-52112	Clip	2	81028-
29		07095-20314	Cushion	2	81028-
30		01010-81225	Bolt	2	81028-
31		01643-31232	Washer	2	81028-
32		17A-61-41530	Hose	1	81028-
33		17A-61-41541	Hose	1	81028-
34		04434-52112	Clip	6	81028-
35		07095-20314	Cushion	6	81028-
36		01010-81225	Bolt	3	81028-
37		01643-31232	Washer	3	81028-
38		08034-20519	Band	3	81028-

FIG. F2720-001022 Power Train Hydraulic Oil Piping, For Scraper, Drain Piping

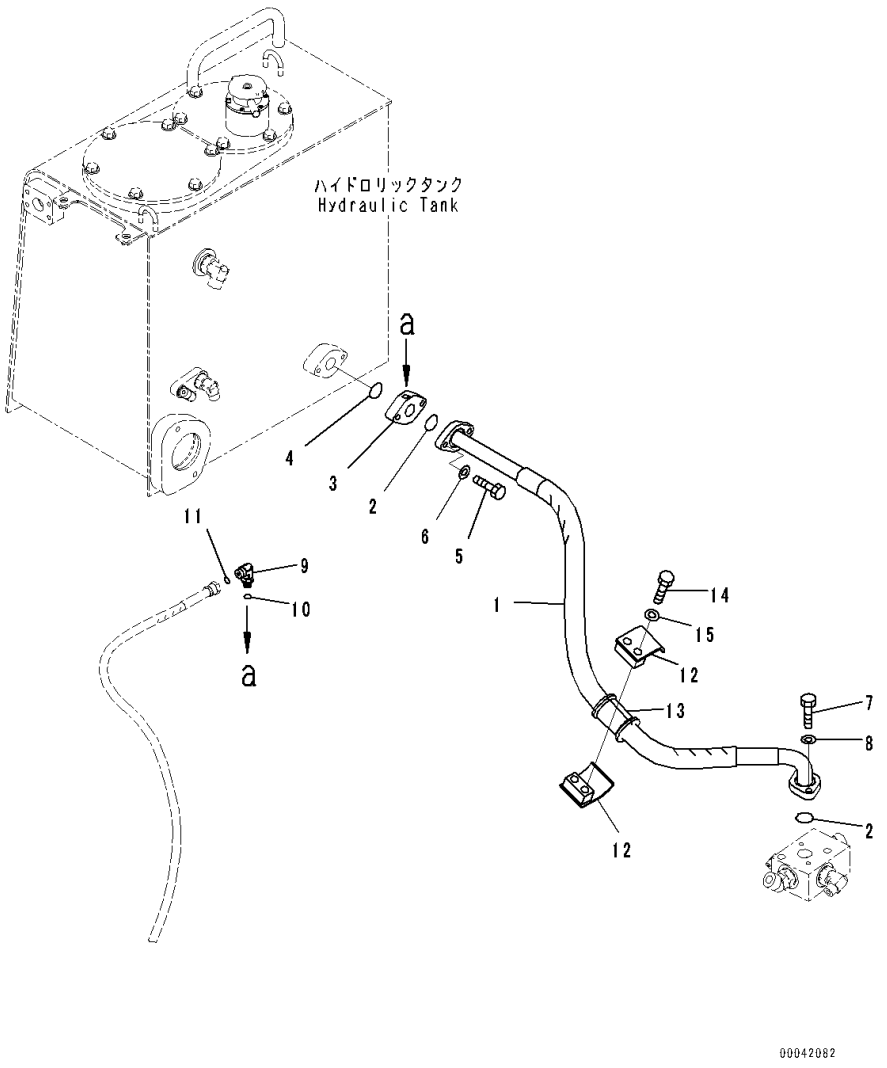

Index	Code	Part Number	Description	Qty	Serial Number
1		17A-49-41622	Hose	1	81028-
2		07000-13032	O-ring	2	81028-
3		17A-61-42540	Flange	1	81028-
4		07000-13032	O-ring	1	81028-
5		01010-81055	Bolt	2	81028-
6		01643-31032	Washer	2	81028-
7		01010-81035	Bolt	2	81028-
8		01643-31032	Washer	2	81028-
9		02782-10311	Elbow	1	81028-
10		07002-11423	O-ring	1	81028-
11		02896-11009	O-ring	1	81028-
12		07094-11024	Clamp	2	81028-
13		07095-01034	Cushion	1	81028-
14		01010-81280	Bolt	2	81028-
15		01643-31232	Washer	2	81028-

FIG. F2720-001023 Power Train Hydraulic Oil Piping, For Scraper, Concentrated Piping

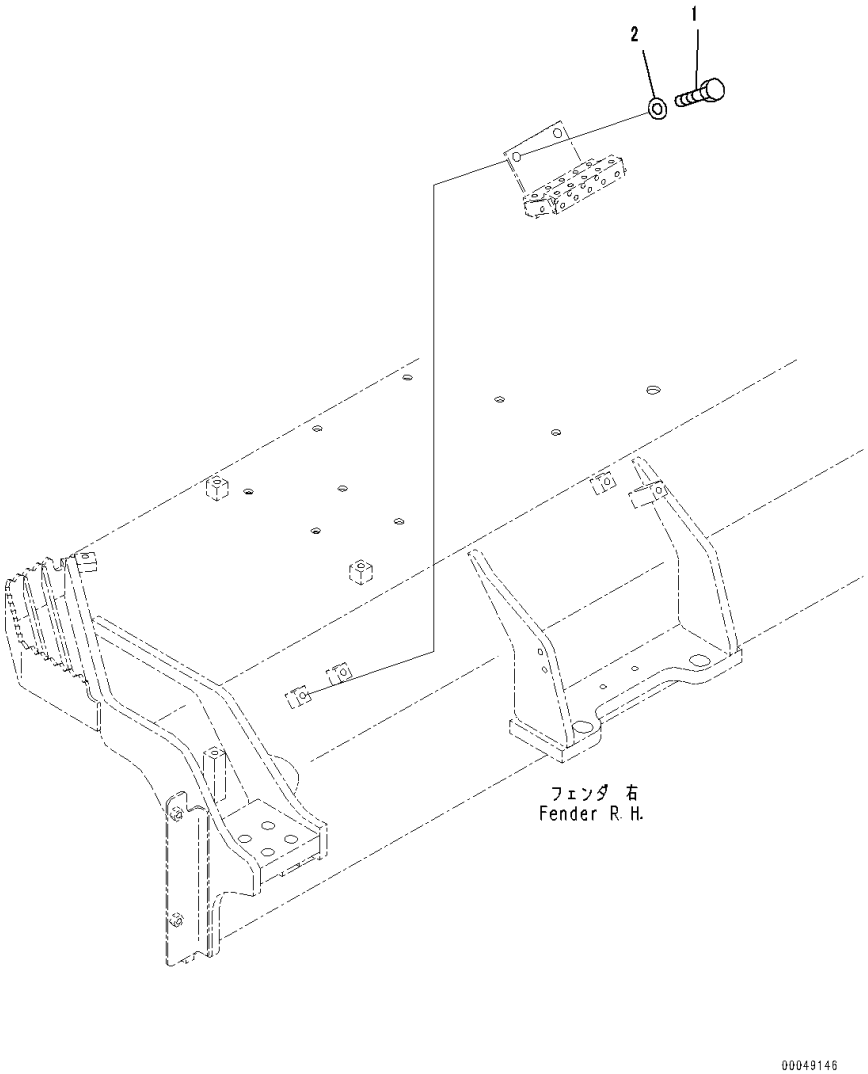

Index	Code	Part Number	Description	Qty	Serial Number
1		01010-81225	Bolt	2	81028-
2		01643-31232	Washer	2	81028-

FIG. F2720-004001 Power Train Hydraulic Oil Piping, For Scraper, Inner Parts, HSS Pump (1/5)

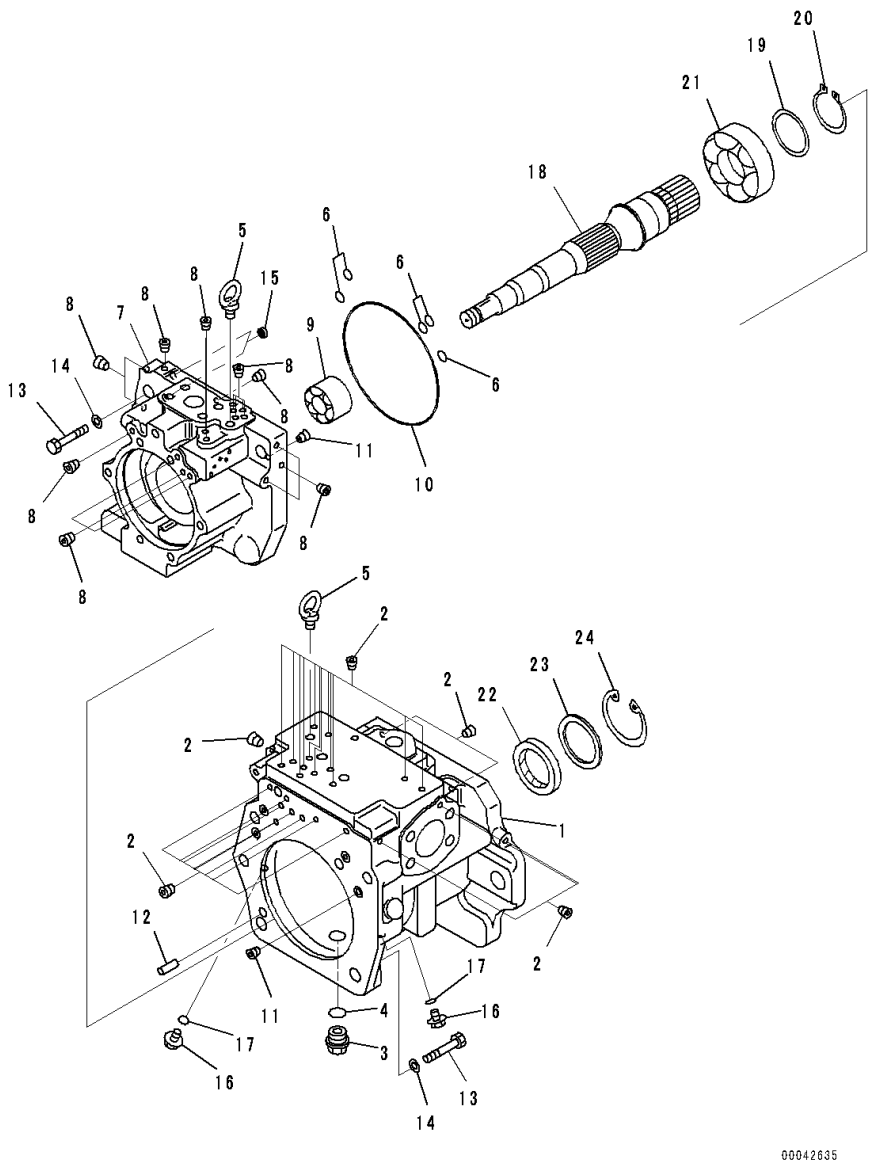

Index	Code	Part Number	Description	Qty	Serial Number
		708-1H-00251	Pump Assembly	1	81125-
		708-1H-01252	• Pump Subassembly	1	81125-
	C2	708-1H-04330	• • Case Assembly	1	81125-
1	C1		• • • Case	1	81125-
2	C1		• • • Plug	28	81125-
3		07044-12412	• • Plug	1	81125-
4		07002-62434	• • O-ring	1	81125-
5		04530-11222	• • Bolt, Eye	2	81125-
6		07000-B2012	• • O-ring	5	81125-
	C2	708-1H-04230	• • End Cap Subassembly	1	81125-
7	C1		• • • Cap	1	81125-
8	C1		• • • Plug	12	81125-
9	C2	708-2H-12430	• • Bearing	1	81125-
10	C2	07000-A5190	• • O-ring	1	81125-
11	C2	708-1L-29340	• • Orifice	2	81125-
12	C2	04020-01434	• • Pin, Dowel	1	81125-
13	C2	01010-61860	• • Bolt	5	81125-
14	C2	01643-31845	• • Washer	5	81125-
15		708-2L-25480	• • Filter	2	81125-
16		708-8E-16150	• • Plug	4	81125-
17		07002-61023	• • O-ring	4	81125-
18	C2	708-1H-32140	• • Shaft	1	81125-
19	C2	708-17-05010	• • Washer Kit	1	81125-
	C1		• • • Washer, T=3.0mm	1	81125-
	C1		• • • Washer, T=3.1mm	1	81125-
	C1		• • • Washer, T=3.2mm	1	81125-
20	C2	708-17-12780	• • Ring, Snap	1	81125-
21	C2	708-1H-22150	• • Bearing	1	81125-
22		708-2H-22570	• • Seal, Oil	1	81125-
23		708-2H-22160	• • Spacer	1	81125-
24		04065-08225	• • Ring, Snap	1	81125-

FIG. F2720-004002 Power Train Hydraulic Oil Piping, For Scraper, Inner Parts, HSS Pump (2/5)

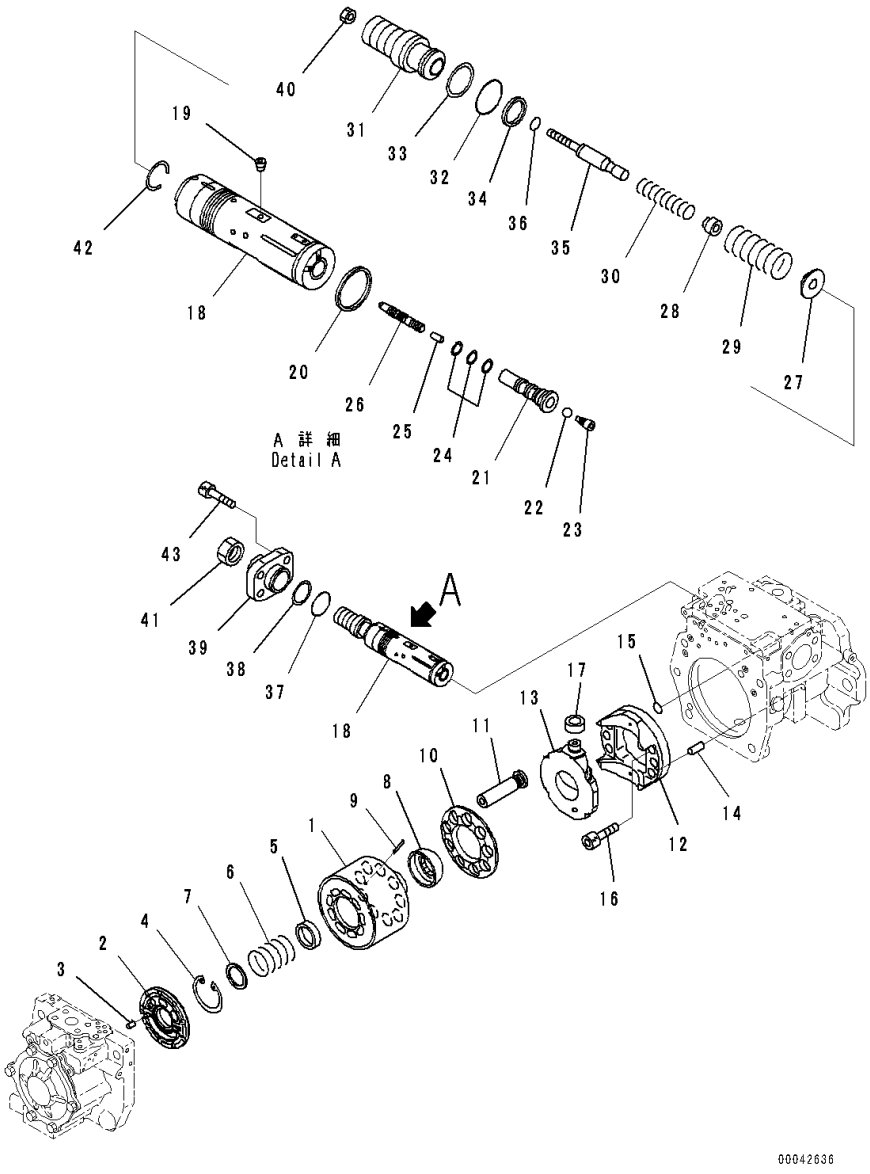

Index	Code	Part Number	Description	Qty	Serial Number
		708-1H-00251	Pump Assembly	1	81125-
		708-1H-01252	• Pump Subassembly	1	81125-
	C2	708-2H-04760	• • Block Assembly	1	81125-
1	C1		• • • Block, Cylinder	1	81125-
2	C1		• • • Plate, Valve	1	81125-
3	C2	708-18-13230	• • Pin	1	81125-
4	C2	04065-05820	• • Ring, Snap	1	81125-
5	C2	708-2H-33140	• • Seat	1	81125-
6	C2	708-2H-33150	• • Spring	1	81125-
7	C2	708-2H-23141	• • Seat	1	81125-
8	C2	708-2H-23350	• • Guide	1	81125-
9	C2	708-2H-23360	• • Pin	3	81125-
10	C2	708-2H-33343	• • Retainer	1	81125-
11	C2	708-2H-33311	• • Piston Subassembly	9	81125-
	C2	708-2H-04690	• • Cradle Subassembly	1	81125-
12	C1		• • • Cradle	1	81125-
13	C1		• • • Cam	1	81125-
14	C2	04020-01434	• • Pin, Dowel	1	81125-
15	C2	07000-B1009	• • O-ring	1	81125-
16	C2	01252-61235	• • Bolt, Hexagon Socket Head	6	81125-
17	C2	708-2H-34150	• • Slider	1	81125-
		708-1H-03260	• • Valve Assembly	1	81125-
	C2	708-1H-03240	• • • Piston Assembly	1	81125-
18	C1		• • • • Piston	1	81125-
19	C1		• • • • Screw	8	81125-
20	C2	708-2G-15320	• • • Seal	1	81125-
21	C2	708-2H-15310	• • • Plug	1	81125-
22	C2	708-2L-35760	• • • Ball	1	81125-
23	C2	708-2L-35770	• • • Plug	1	81125-
24	C2	708-2L-35690	• • • Seal	3	81125-
25	C2	708-2L-35170	• • • Pin	1	81125-
26	C2	708-2H-15210	• • • Spool	1	81125-
27	C2	708-2G-15290	• • • Retainer	1	81125-
28	C2	708-2G-15140	• • • Seat	1	81125-
29	C2	708-2H-15330	• • • Spring	1	81125-
30	C2	708-2H-15350	• • • Spring	1	81125-
31	C2	708-2G-14340	• • • Screw	1	81125-
32	C2	07000-B3038	• • • O-ring	1	81125-
33	C2	708-2G-15230	• • • Ring, Back-up	1	81125-
34	C2	708-2G-15260	• • • Seal	1	81125-

FIG. F2720-004002 Power Train Hydraulic Oil Piping, For Scraper, Inner Parts, HSS Pump (2/5)

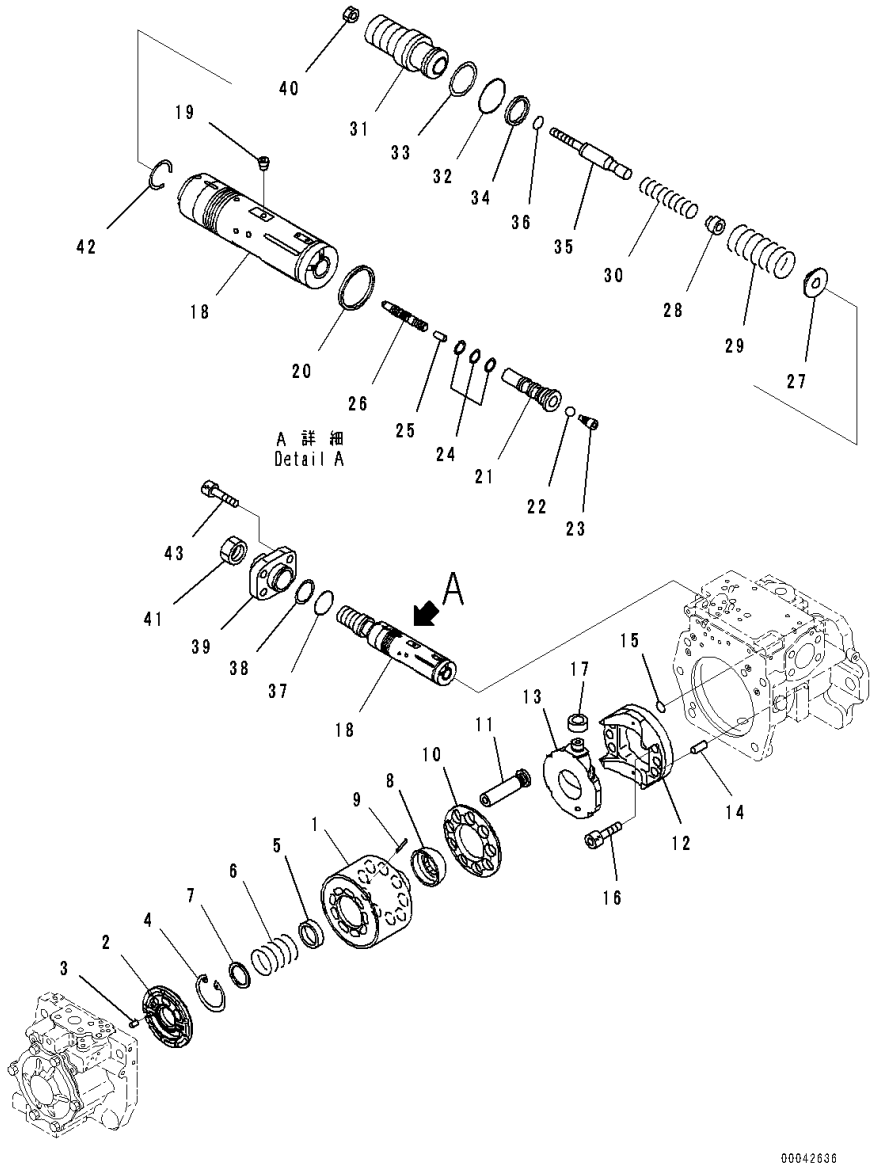

Index	Code	Part Number	Description	Qty	Serial Number
35	C2	708-2G-15390	• • • Plug	1	81125-
36	C2	07000-B2012	• • • O-ring	1	81125-
37	C2	07000-B2050	• • • O-ring	1	81125-
38	C2	708-2G-15310	• • • Ring, Back-up	1	81125-
39	C2	708-2L-44161	• • • Cover	1	81125-
40	C2	01580-10806	• • • Nut	1	81125-
41	C2	708-2L-35290	• • • Nut	1	81125-
42	C2	708-2G-15330	• • • Ring, Wear	1	81125-
43		01252-61645	• • Bolt	4	81125-

FIG. F2720-004003 Power Train Hydraulic Oil Piping, For Scraper, Inner Parts, HSS Pump (3/5)

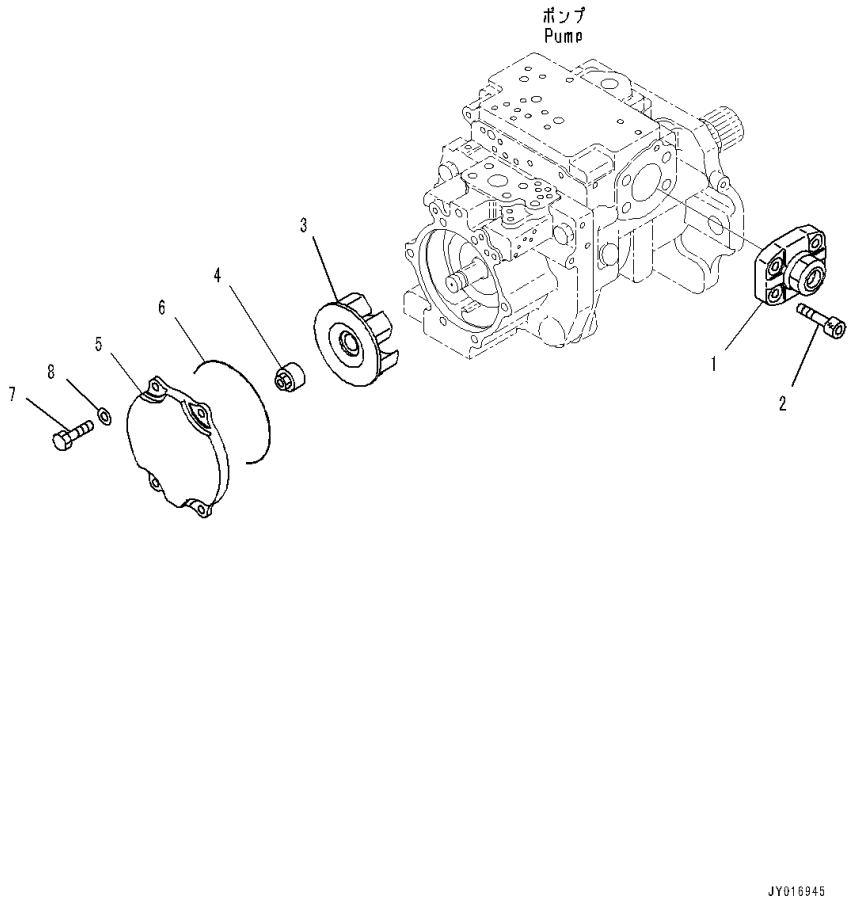

Index	Code	Part Number	Description	Qty	Serial Number
		708-1H-00251	Pump Assembly	1	81125-
		708-1H-01252	• Pump Subassembly	1	81125-
1	C2	708-1H-03250	• • Cover Assembly	1	81125-
2		01252-61645	• • Bolt	4	81125-
3	C2	708-1H-21760	• • Impeller	1	81125-
4	C2	708-1H-32150	• • Nut	1	81125-
5	C2	708-1H-31630	• • Cover	1	81125-
6	C2	07000-A5190	• • O-ring	1	81125-
7		01010-81230	• • Bolt	4	81125-
8		01643-31232	• • Washer	4	81125-

FIG. F2720-004004 Power Train Hydraulic Oil Piping, For Scraper, Inner Parts, HSS Pump (4/5)

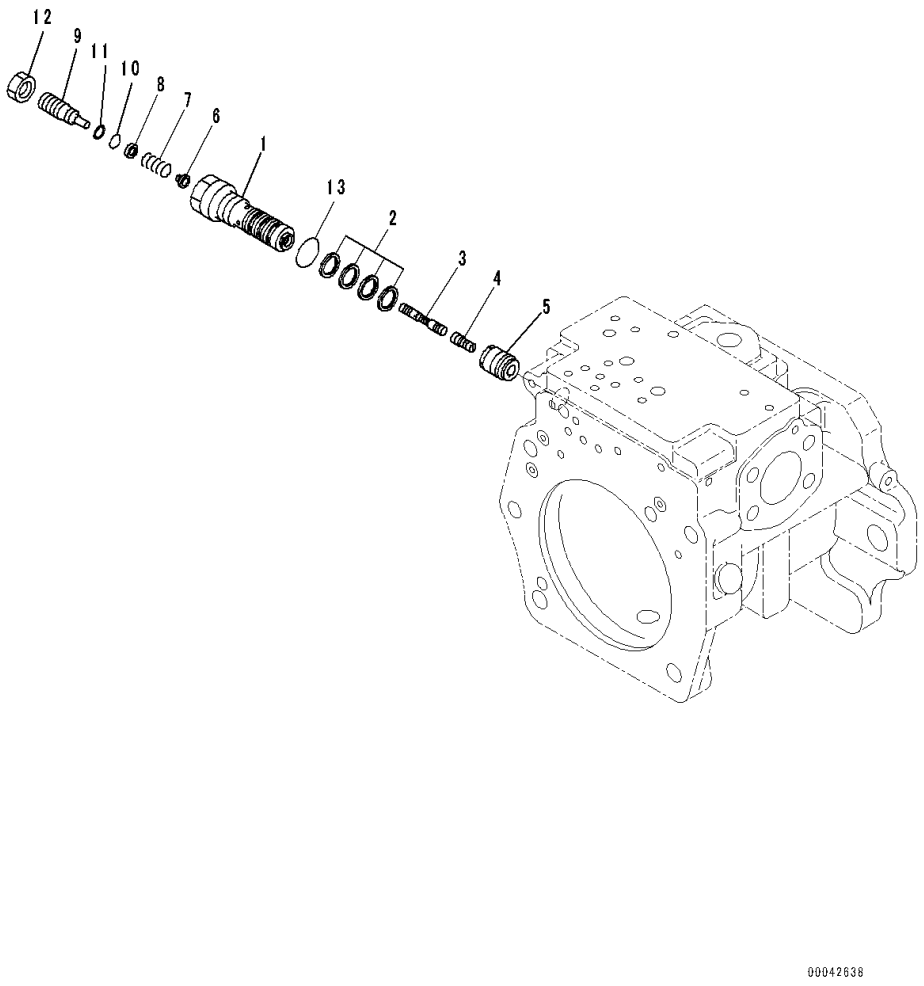

Index	Code	Part Number	Description	Qty	Serial Number
		708-1H-00251	Pump Assembly	1	81125-
		708-2H-03620	• Valve Assembly	1	81125-
1	C2	708-2L-35311	• • Sleeve	1	81125-
2		708-2L-24680	• • Seal	4	81125-
3	C2	708-2H-15410	• • Spool	1	81125-
4	C2	708-2L-28540	• • Piston	1	81125-
5	C2	708-2L-35360	• • Sleeve	1	81125-
6	C2	708-2L-35331	• • Seat	1	81125-
7	C2	708-2L-35410	• • Spring	1	81125-
8	C2	708-2L-35341	• • Seat	1	81125-
9	C2	708-2L-35351	• • Plug	1	81125-
10	C2	07000-B1009	• • O-ring	1	81125-
11	C2	07001-01009	• • Ring, Back-up	1	81125-
12		01583-11408	• • Nut	1	81125-
13		07002-62434	• • O-ring	1	81125-

FIG. F2720-004005 Power Train Hydraulic Oil Piping, For Scraper, Inner Parts, HSS Pump (5/5)

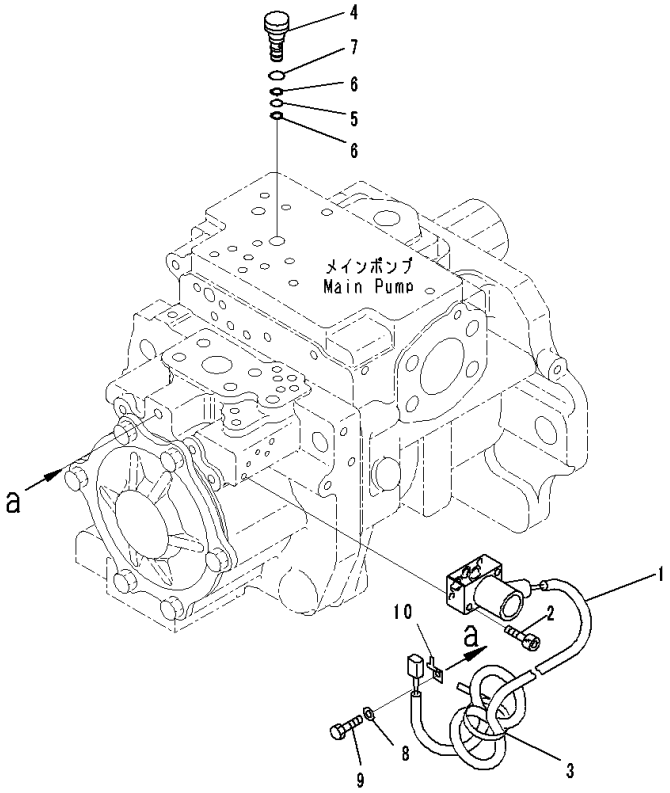

Index	Code	Part Number	Description	Qty	Serial Number
		708-1H-00251	Pump Assembly	1	81125-
1		702-21-57600	• Valve, Pilot	1	81125-
2		01252-60635	• Bolt, Hexagon Socket Head	2	81125-
3		20Y-62-22810	• Band, Yellow	1	81125-
4	C2	708-1H-35910	• Plug	1	81125-
5		07000-B1008	• O-ring	1	81125-
6		07001-01008	• Ring	2	81125-
7		07002-61423	• O-ring	1	81125-
8		01643-51232	• Washer	1	81125-
9		01010-81220	• Bolt	1	81125-
10		08193-21012	• Clip	1	81125-

FIG. F2720-004006 Power Train Hydraulic Oil Piping, For Scraper, HSS Pump Piping

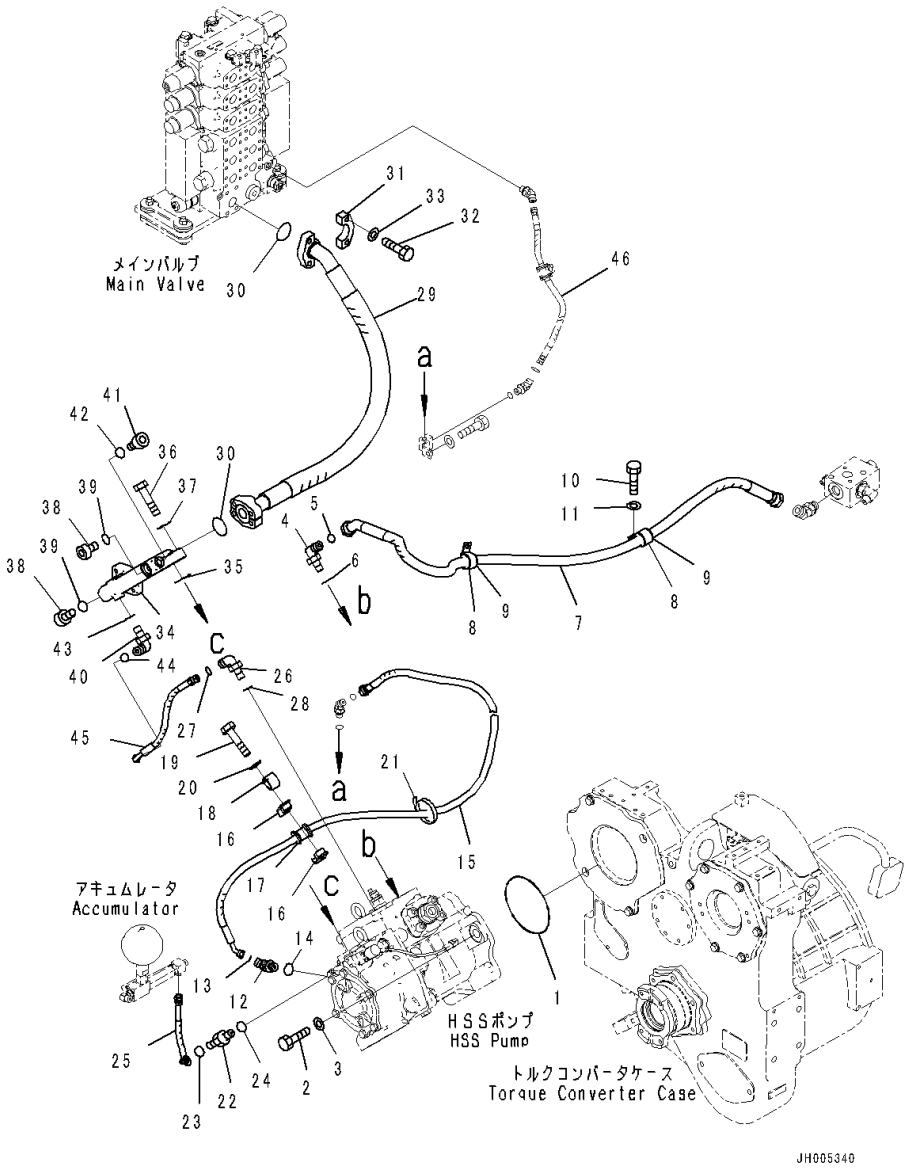

Index	Code	Part Number	Description	Qty	Serial Number
1		07000-75170	O-ring	1	81125-
2		01010-82480	Bolt	2	81125-
3		01643-32460	Washer	2	81125-
4		02782-1062A	Elbow	1	81125-
5		02896-11018	O-ring	1	81125-
6		07002-12434	O-ring	1	81125-
7		02764-00614	Hose	1	81125-
8		113-899-7950	Clip	2	81125-
9		07095-20625	Cushion	2	81125-
10		01010-81225	Bolt	2	81125-
11		01643-31232	Washer	2	81125-
12		154-61-75761	Elbow	1	81125-
13		02896-11008	O-ring	1	81125-
14		07002-11423	O-ring	1	81125-
15		17A-61-51420	Hose	1	81125-
16		07094-10315	Clamp	2	81125-
17		07095-00314	Cushion	1	81125-
18		04434-53412	Clip	1	81125-
19		01010-81260	Bolt	1	81125-
20		01643-31232	Washer	1	81125-
21		08034-20823	Band	1	81125-
22		02781-0021D	Union	1	81125-
23		02896-11008	O-ring	1	81125-
24		07002-11423	O-ring	1	81125-
25		02755-002A4	Hose	1	81125-
26		02782-10210	Elbow	1	81125-
27		02896-11008	O-ring	1	81125-
28		07002-11423	O-ring	1	81125-
29		17A-49-41511	Hose	1	81125-
30		21T-09-11480	O-ring	2	81125-
31		07371-51260	Flange	4	81125-
32		01010-81250	Bolt	8	81125-
33		01643-31232	Washer	8	81125-
34		17A-49-41391	Block	1	81125-
35		21T-09-11480	O-ring	1	81125-
36		01010-81250	Bolt	4	81125-
37		01643-31232	Washer	4	81125-
38		07040-13016	Plug	2	81125-
39		07002-13034	O-ring	2	81125-
40		22M-62-21390	Elbow	1	81125-

FIG. F2720-004006 Power Train Hydraulic Oil Piping, For Scraper, HSS Pump Piping

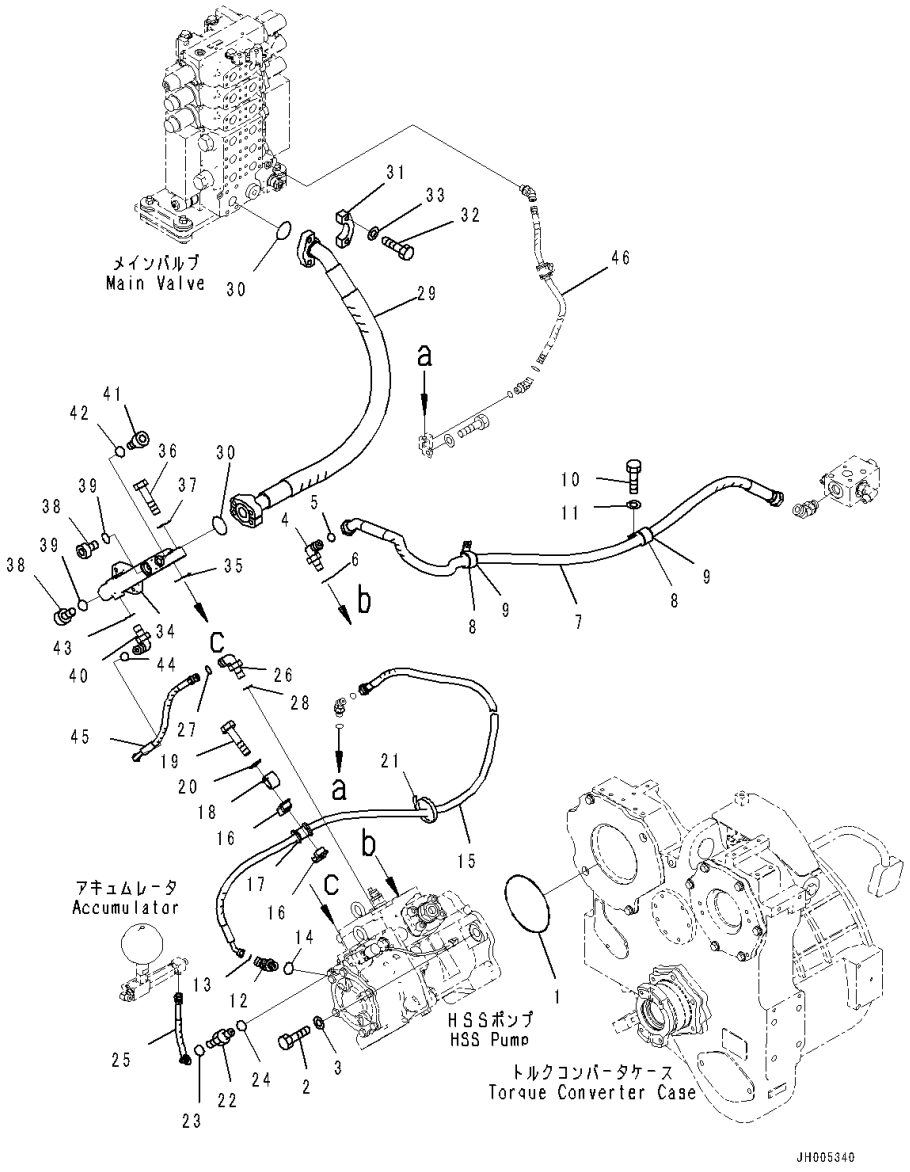

Index	Code	Part Number	Description	Qty	Serial Number
41		07040-11007	Plug	1	81125-
42		07002-11023	O-ring	1	81125-
43		07002-11823	O-ring	1	81125-
44		02896-11008	O-ring	1	81125-
45		17A-61-41460	Hose	1	81125-
46		(17A-61-51430)	Hose(Refer to Page 782)		-

FIG. F2720-004007 Power Train Hydraulic Oil Piping, For Scraper, Inner Parts, Fan Pump (1/5)

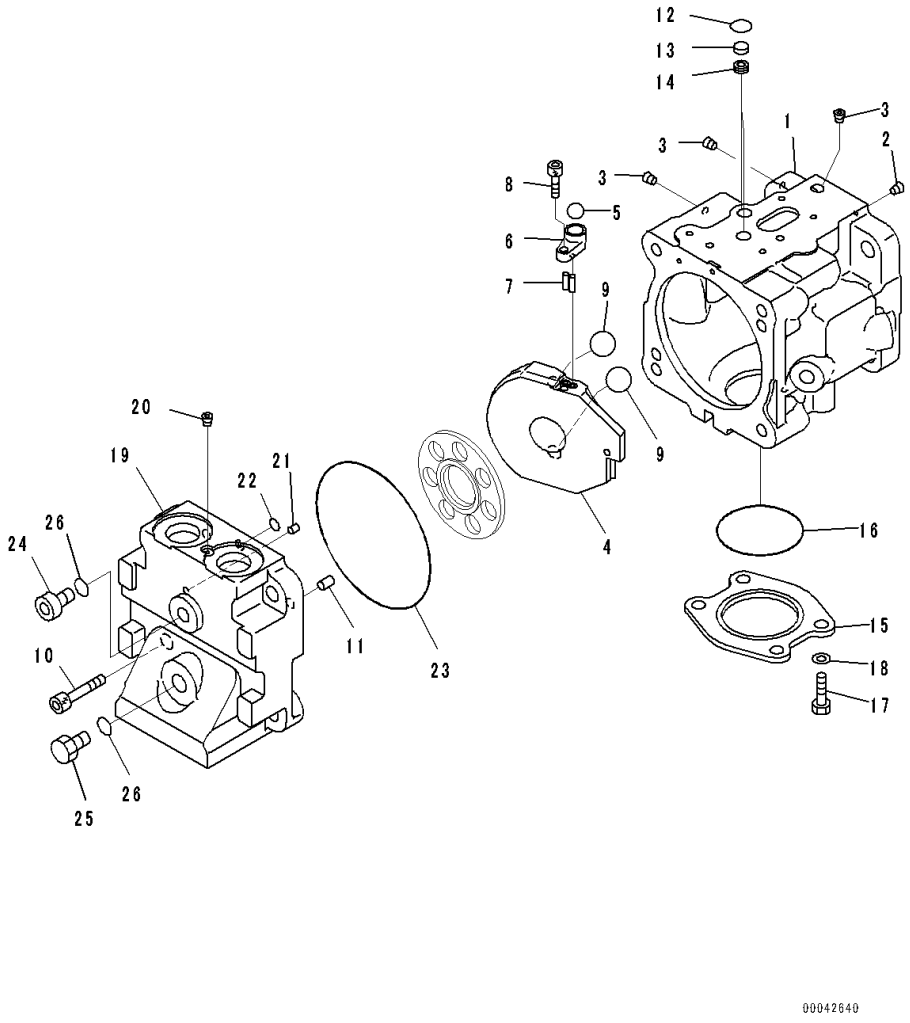

Index	Code	Part Number	Description	Qty	Serial Number
		708-1T-00470	Pump Assembly	1	81125-
		708-1T-01470	• Pump Subassembly	1	81125-
	C2	708-1T-04610	• • Case Subassembly	1	81125-
1	C1		• • • Case	1	81125-
2	C1		• • • Plug	1	81125-
3	C1		• • • Plug	3	81125-
4	C2	708-1T-13580	• • Cam	1	81125-
5	C2	04260-01270	• • Ball	1	81125-
6	C2	708-1T-14610	• • Spacer	1	81125-
7	C2	708-1S-13420	• • Pin	2	81125-
8	C2	01252-60616	• • Bolt, Hexagon Socket Head	1	81125-
9	C2	708-1S-13430	• • Ball, Retainer	2	81125-
10		01252-61240	• • Bolt	4	81125-
11	C2	04020-01024	• • Pin, Dowel	2	81125-
12		708-2L-25490	• • O-ring	2	81125-
13		708-2L-25480	• • Filter	2	81125-
14		708-1S-19710	• • Orifice	2	81125-
15		708-1S-19920	• • Plate	1	81125-
16		07000-E2065	• • O-ring	1	81125-
17		01010-81025	• • Bolt	4	81125-
18		01643-31032	• • Washer	4	81125-
	C2	708-1T-04620	• • Cap Subassembly	1	81125-
19	C1		• • • Cap	1	81125-
20	C1		• • • Plug	1	81125-
21	C2	720-68-19610	• • Pin	1	81125-
22	C2	07000-F1006	• • O-ring	2	81125-
23	C2	07000-E2125	• • O-ring	1	81125-
24		702-21-55620	• • Plug	1	81125-
25		07040-11409	• • Plug	1	81125-
26		07002-21423	• • O-ring	2	81125-

FIG. F2720-004008 Power Train Hydraulic Oil Piping, For Scraper, Inner Parts, Fan Pump (2/5)

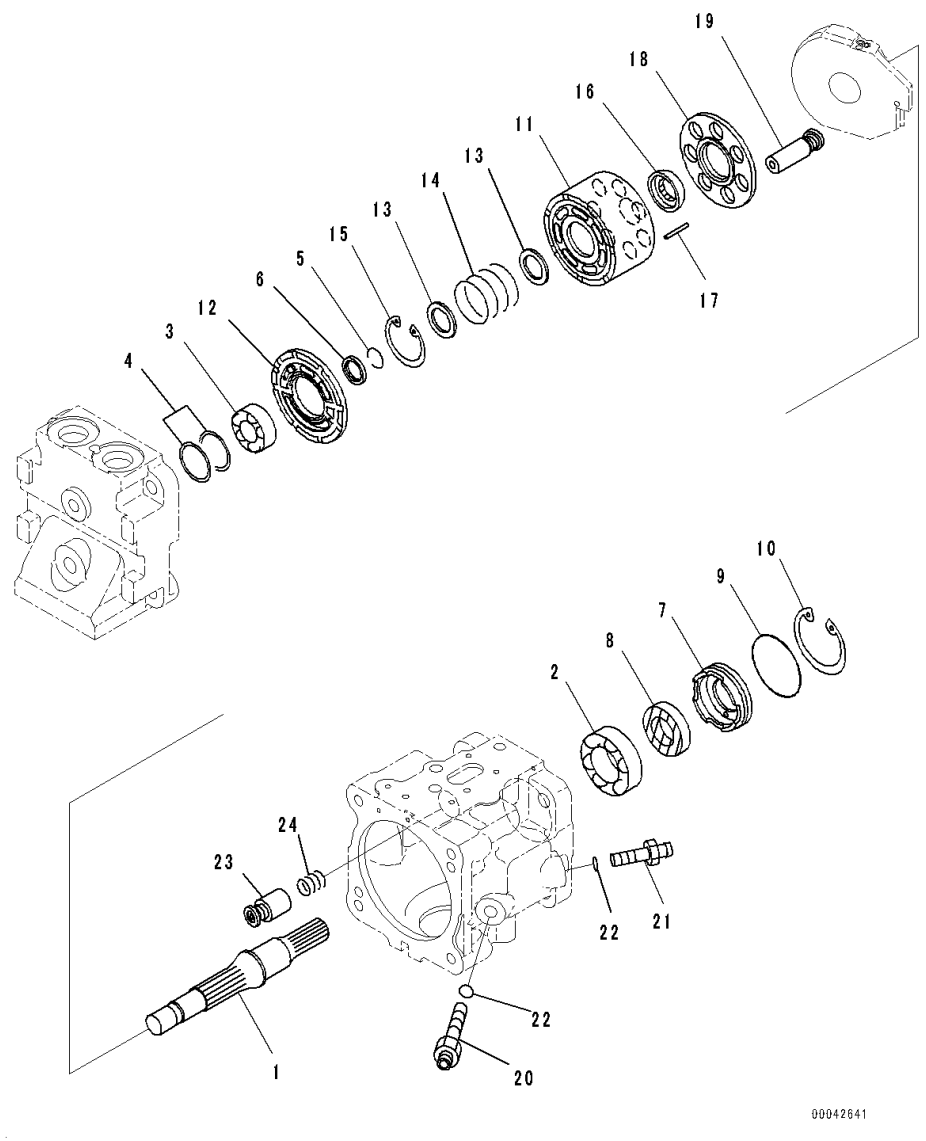

Index	Code	Part Number	Description	Qty	Serial Number
		708-1T-00470	Pump Assembly	1	81125-
		708-1T-01470	• Pump Subassembly	1	81125-
1	C2	708-1T-12410	• • Shaft	1	81125-
2	C2	706-73-40890	• • Bearing	1	81125-
3	C2	708-1T-12420	• • Bearing	1	81125-
4	C2	708-7T-05010	• • Spacer Kit	1	81125-
	C1		• • • Spacer, T=1.8mm	1	81125-
	C1		• • • Spacer, T=1.9mm	1	81125-
	C1		• • • Spacer, T=2.0mm	1	81125-
	C1		• • • Spacer, T=2.1mm	1	81125-
	C1		• • • Spacer, T=1.6mm	1	81125-
	C1		• • • Spacer, T=1.7mm	1	81125-
5	C2	708-1S-12280	• • Ring, Wear	1	81125-
6	C2	708-1S-12330	• • Retainer	1	81125-
7		708-1S-12340	• • Case	1	81125-
8		708-21-12970	• • Seal, Oil	1	81125-
9		708-1S-12350	• • O-ring	1	81125-
10		04065-06220	• • Ring, Snap	1	81125-
11	C2	708-1T-13510	• • Cylinder Block	1	81125-
12	C2	708-1T-13590	• • Plate, Valve	1	81125-
13	C2	708-3S-13160	• • Washer	2	81125-
14		708-3S-13430	• • Spring	1	81125-
15	C2	04065-03515	• • Ring, Snap	1	81125-
16	C2	708-1T-13540	• • Guide	1	81125-
17	C2	708-1S-13380	• • Pin	3	81125-
18	C2	708-1T-13550	• • Retainer	1	81125-
19	C2	708-1T-13310	• • Piston Subassembly	7	81125-
20	C2	708-1S-14210	• • Plug	1	81125-
21	C2	708-1S-14220	• • Plug	1	81125-
22	C2	07002-21223	• • O-ring	2	81125-
23		708-3S-14290	• • Piston Subassembly	1	81125-
24	C2	708-1S-14241	• • Spring	1	81125-

FIG. F2720-004009 Power Train Hydraulic Oil Piping, For Scraper, Inner Parts, Fan Pump (3/5)

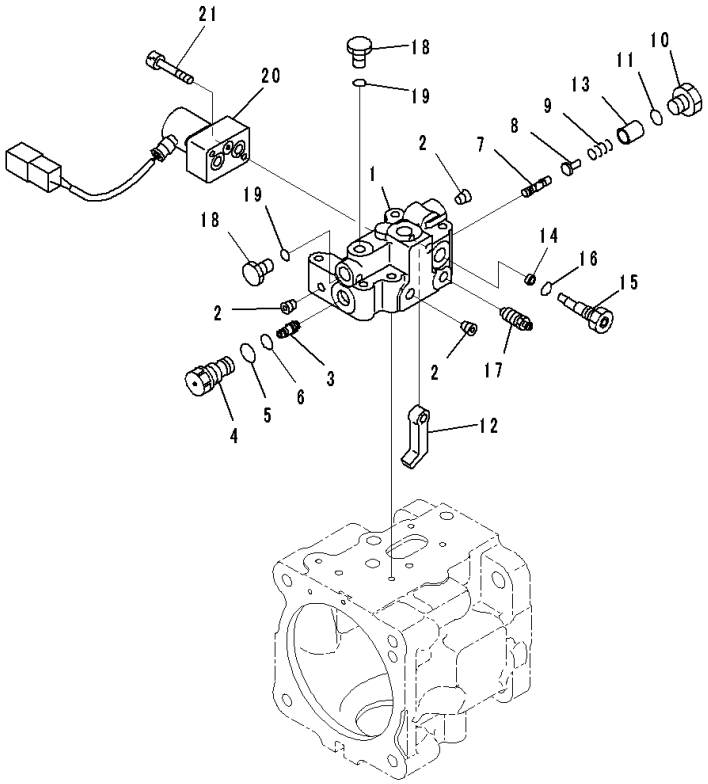

Index	Code	Part Number	Description	Qty	Serial Number
		708-1T-00470	Pump Assembly	1	81125-
		708-1T-01470	• Pump Subassembly	1	81125-
	C2	708-1S-03340	• • Valve Assembly	1	81125-
	C2	708-1S-03920	• • • Body Subassembly	1	81125-
1	C1		• • • • Body, Valve	1	81125-
2	C1		• • • • Plug	3	81125-
3	C2	708-1S-15420	• • • Piston	1	81125-
4	C2	708-1S-15430	• • • Sleeve	1	81125-
5		07002-21623	• • • O-ring	1	81125-
6		07000-B1010	• • • O-ring	1	81125-
7	C2	708-1S-15470	• • • Spool	1	81125-
8	C2	708-1S-15240	• • • Seat	1	81125-
9	C2	708-1S-15441	• • • Spring	1	81125-
10	C2	723-56-31630	• • • Plug	1	81125-
11		07002-21623	• • • O-ring	1	81125-
12	C2	708-1S-15270	• • • Lever	1	81125-
13	C2	708-1S-15480	• • • Retainer	1	81125-
14	C2	708-1S-15280	• • • Spacer	1	81125-
15	C2	708-1S-15260	• • • Plug	1	81125-
16		07002-21023	• • • O-ring	1	81125-
17		20B-27-11210	• • • Bleeder	1	81125-
18		07040-11007	• • • Plug	2	81125-
19		07002-21023	• • • O-ring	2	81125-
20	C2	702-21-57700	• • • Valve, Pilot	1	81125-
21		01252-60635	• • • Bolt, Hexagon Socket Head	2	81125-

FIG. F2720-004010 Power Train Hydraulic Oil Piping, For Scraper, Inner Parts, Fan Pump (4/5)

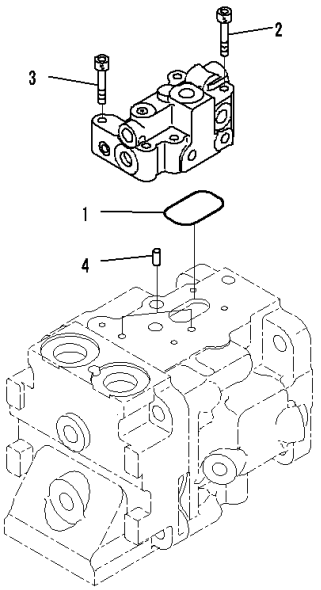

PW5A162

Index	Code	Part Number	Description	Qty	Serial Number
		708-1T-00470	Pump Assembly	1	81125-
		708-1T-01470	• Pump Subassembly	1	81125-
1		07000-E3040	• • O-ring	1	81125-
2		01252-60650	• • Bolt, Hexagon Socket Head	1	81125-
3		01252-60635	• • Bolt, Hexagon Socket Head	3	81125-
4		04020-00616	• • Pin, Dowel	2	81125-

FIG. F2720-004011 Power Train Hydraulic Oil Piping, For Scraper, Inner Parts, Fan Pump (5/5)

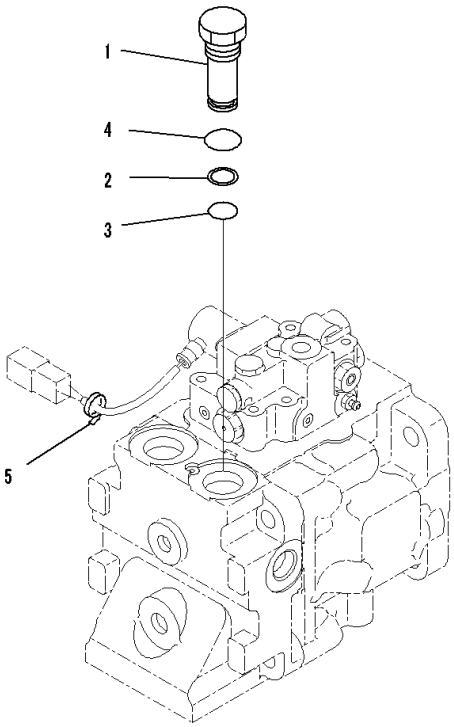

Index	Code	Part Number	Description	Qty	Serial Number
		708-1T-00470	Pump Assembly	1	81125-
1		708-1S-19930	• Plug	1	81125-
2		723-60-22230	• Ring, Back-up	1	81125-
3		07000-F2016	• O-ring	1	81125-
4		07002-12434	• O-ring	1	81125-
5		20Y-62-22790	• Band, Red	1	81125-

FIG. F2720-004012 Power Train Hydraulic Oil Piping, For Scraper, Fan Pump Piping

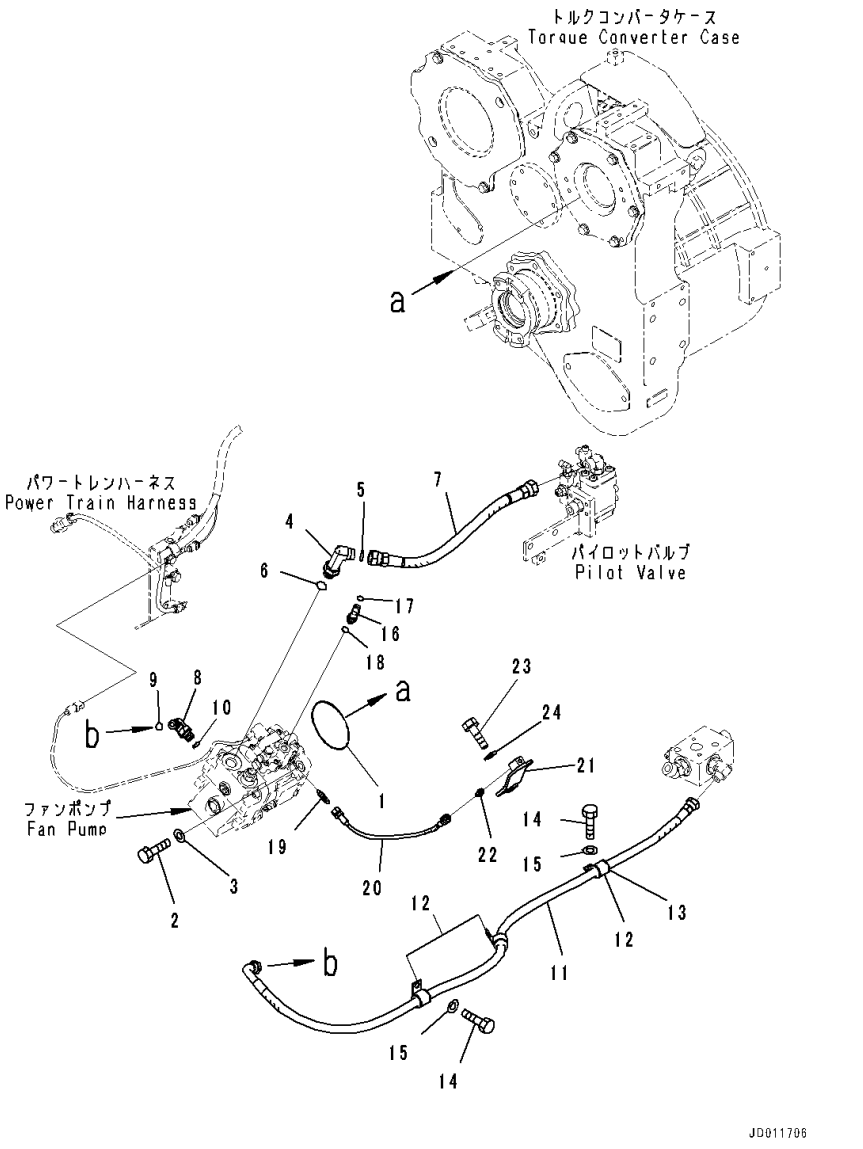

Index	Code	Part Number	Description	Qty	Serial Number
1		07000-72105	O-ring	1	81125-
2		01010-81240	Bolt	4	81125-
3		01643-31232	Washer	4	81125-
4		02782-10524	Elbow	1	81125-
5		02896-11015	O-ring	1	81125-
6		07002-12434	O-ring	1	81125-
7		02765-005A4	Hose	1	81125-
8		02782-10422	Elbow	1	81125-
9		02896-11012	O-ring	1	81125-
10		07002-12034	O-ring	1	81125-
11		17A-61-41930	Hose	1	81125-
12		04434-52512	Clip	3	81125-
13		07095-20318	Cushion	3	81125-
14		01010-81225	Bolt	2	81125-
15		01643-31232	Washer	2	81125-
16		02783-10210	Elbow	1	81125-
17		02896-11008	O-ring	1	81125-
18		07002-11423	O-ring	1	81125-
19		17A-61-21340	Nipple	1	81125-
20		17A-49-41791	Hose	1	81125-
21		17A-61-21331	Bracket	1	81125-
22		203-62-21740	Nipple	1	81125-
23		01010-81230	Bolt	1	81125-
24		01643-31232	Washer	1	81125-

FIG. F2720-004013 Power Train Hydraulic Oil Piping, For Scraper, Valve Bracket

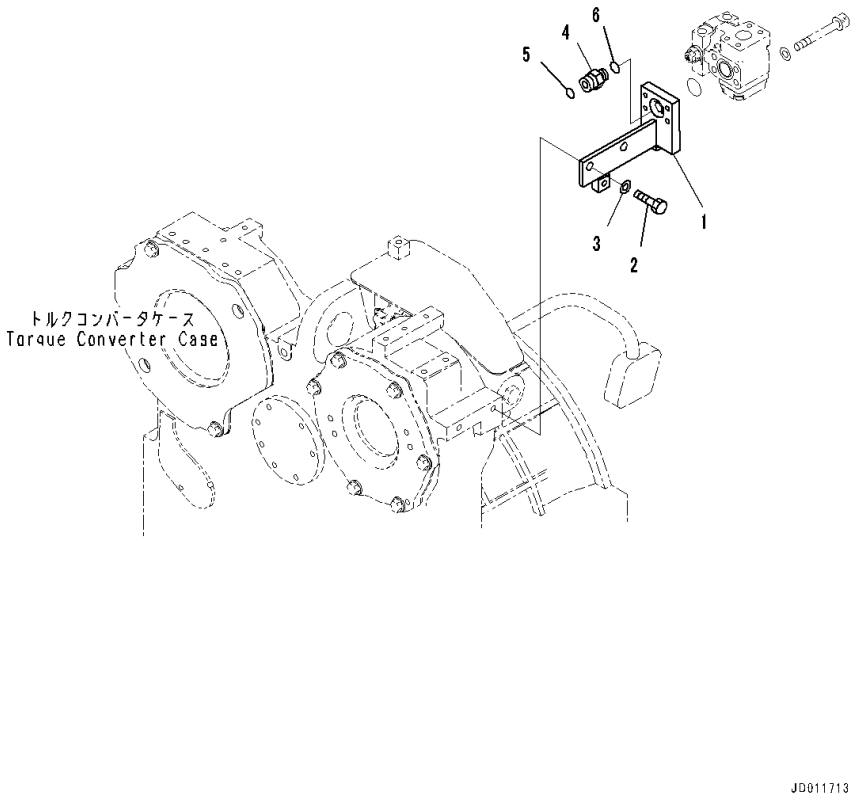

Index	Code	Part Number	Description	Qty	Serial Number
1		17A-49-41421	Bracket	1	81125-
2		01010-81230	Bolt	2	81125-
3		01643-31232	Washer	2	81125-
4		02781-00516	Union	1	81125-
5		02896-11015	O-ring	1	81125-
6		07002-12034	O-ring	1	81125-

FIG. F2720-004014 Power Train Hydraulic Oil Piping, For Scraper, Pilot Valve

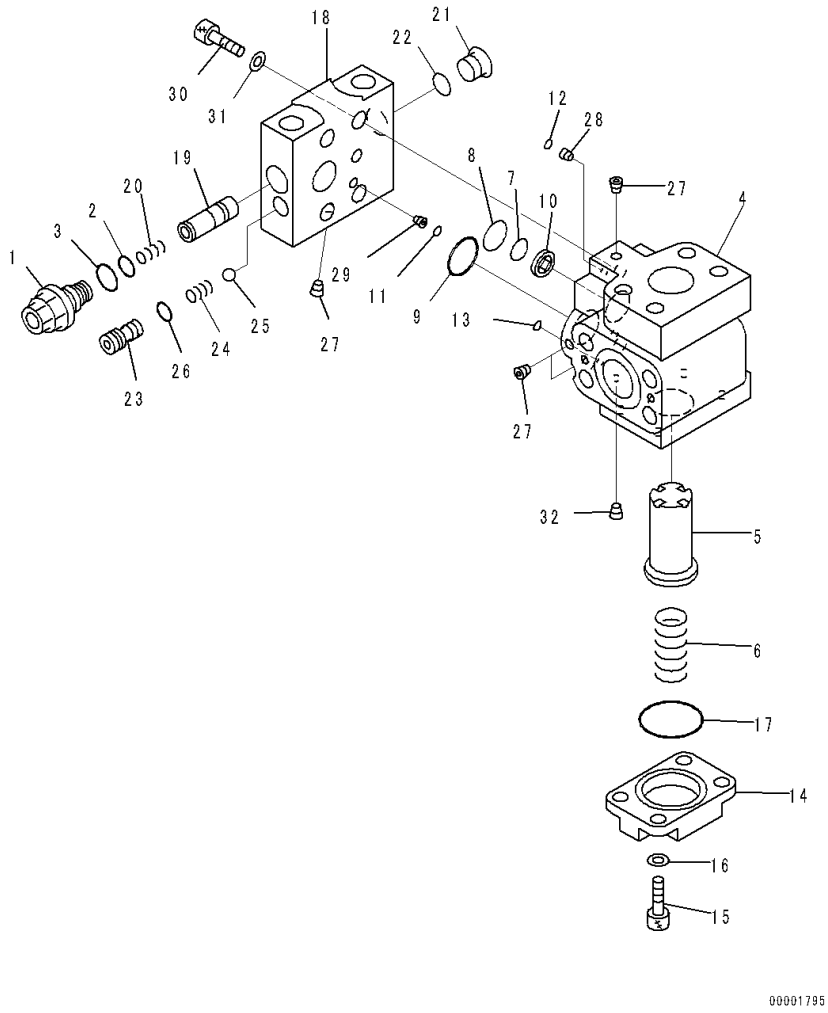

Index	Code	Part Number	Description	Qty	Serial Number
		702-21-09250	Valve Assembly, Pilot	1	81125-
1		723-60-27200	• Valve Assembly, Relief	1	81125-
2		702-16-53920	• • O-ring	1	81125-
3		07002-11623	• • O-ring	1	81125-
4	C1		• Block	1	81125-
5		702-21-55310	• Valve	1	81125-
6		702-21-55460	• Spring	1	81125-
7		702-21-55420	• O-ring	1	81125-
8		702-21-55520	• O-ring	1	81125-
9		702-21-55440	• O-ring	1	81125-
10		702-21-53120	• Filter	1	81125-
11		07000-11009	• O-ring	1	81125-
12		07000-11010	• O-ring	1	81125-
13		07000-11006	• O-ring	1	81125-
14		702-21-55410	• Plate	1	81125-
15		01252-60820	• Bolt, Hexagon Socket Head	4	81125-
16		01643-50823	• Washer	4	81125-
17		702-21-55530	• O-ring	1	81125-
18	C1		• Block	1	81125-
19	C1		• Spool	1	81125-
20		702-21-55640	• Spring	1	81125-
21		702-21-55620	• Plug	1	81125-
22		07002-11423	• O-ring	1	81125-
23		702-21-55710	• Seat	1	81125-
24		702-21-55720	• Spring	1	81125-
25		04260-00793	• Ball	1	81125-
26		07000-11009	• O-ring	1	81125-
27	C1		• Plug	4	81125-
28	C1		• Orifice	1	81125-
29	C1		• Orifice	1	81125-
30		01252-61040	• Bolt, Hexagon Socket Head	4	81125-
31		01643-51032	• Washer	4	81125-
32	C1		• Screw	1	81125-

FIG. F2720-004015 Power Train Hydraulic Oil Piping, For Scraper, Valve Piping

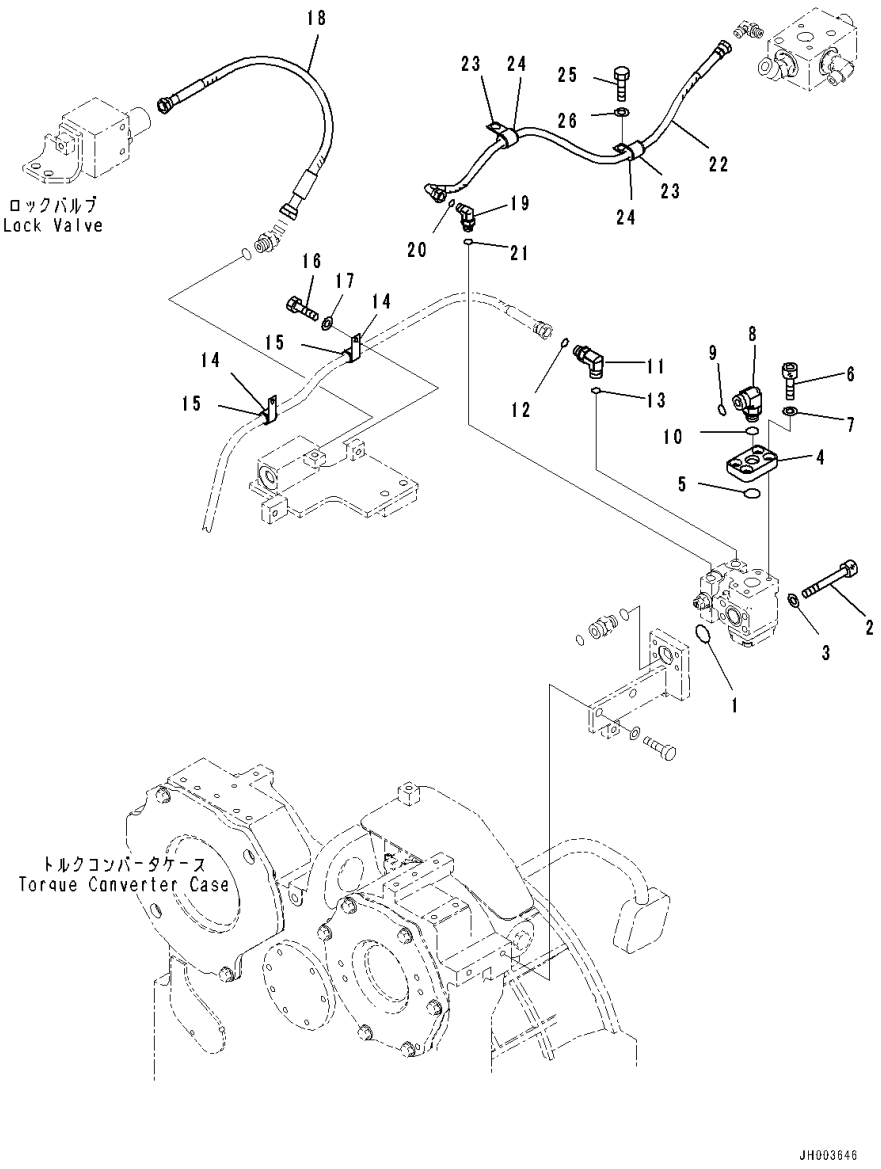

Index	Code	Part Number	Description	Qty	Serial Number
1		07000-13032	O-ring	1	81125-
2		01252-71085	Bolt	4	81125-
3		01643-51032	Washer	4	81125-
4		17A-61-21221	Plate	1	81125-
5		07000-13032	O-ring	1	81125-
6		01252-71025	Bolt, Hexagon Socket Head	4	81125-
7		01643-51032	Washer	4	81125-
8		02782-10516	Elbow	1	81125-
9		02896-11015	O-ring	1	81125-
10		07002-12034	O-ring	1	81125-
11		02782-10311	Elbow	1	81125-
12		02896-11009	O-ring	1	81125-
13		07002-11423	O-ring	1	81125-
14		04434-52112	Clip	2	81125-
15		07095-20314	Cushion	2	81125-
16		01010-81225	Bolt	2	81125-
17		01643-31232	Washer	2	81125-
18		02754-00304	Hose	1	81125-
19		02782-10210	Elbow	1	81125-
20		02896-11008	O-ring	1	81125-
21		07002-11423	O-ring	1	81125-
22		02763-002A8	Hose	1	81125-
23		04434-51712	Clip	2	81125-
24		07095-20211	Cushion	2	81125-
25		01010-81225	Bolt	1	81125-
26		01643-31232	Washer	1	81125-

FIG. F2720-004016 Power Train Hydraulic Oil Piping, For Scraper, Filter Piping

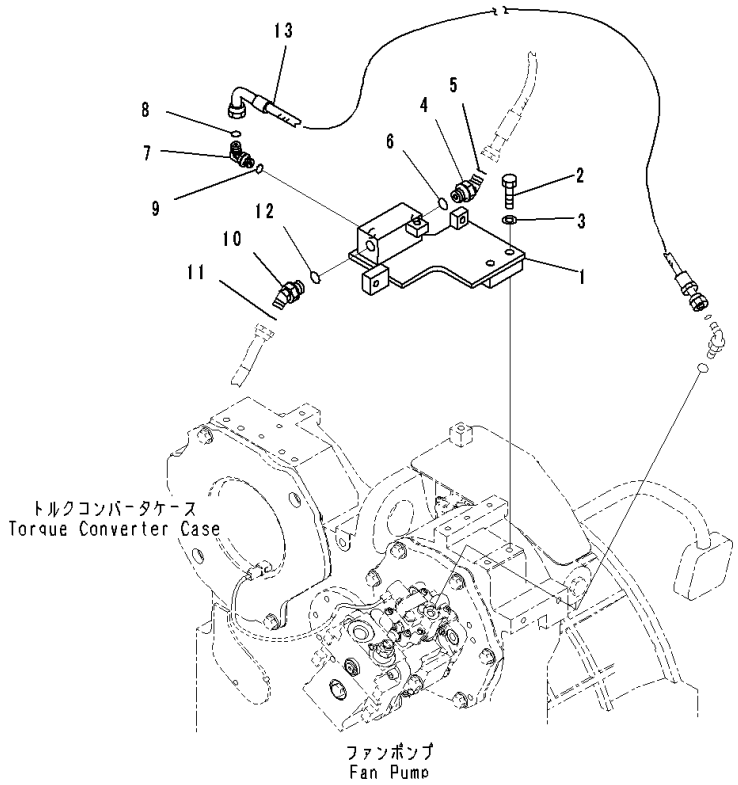

Index	Code	Part Number	Description	Qty	Serial Number
1		17A-61-43921	Bracket	1	81125-
2		01010-81250	Bolt	2	81125-
3		01643-31232	Washer	2	81125-
4		02783-10315	Elbow	1	81125-
5		02896-11009	O-ring	1	81125-
6		07002-12034	O-ring	1	81125-
7		02782-10210	Elbow	1	81125-
8		02896-11008	O-ring	1	81125-
9		07002-11423	O-ring	1	81125-
10		02783-10315	Elbow	1	81125-
11		02896-11009	O-ring	1	81125-
12		07002-12034	O-ring	1	81125-
13		17A-61-43890	Hose	1	81125-

FIG. F2720-004017 Power Train Hydraulic Oil Piping, For Scraper, Inner Parts, HSS Motor (1/2)

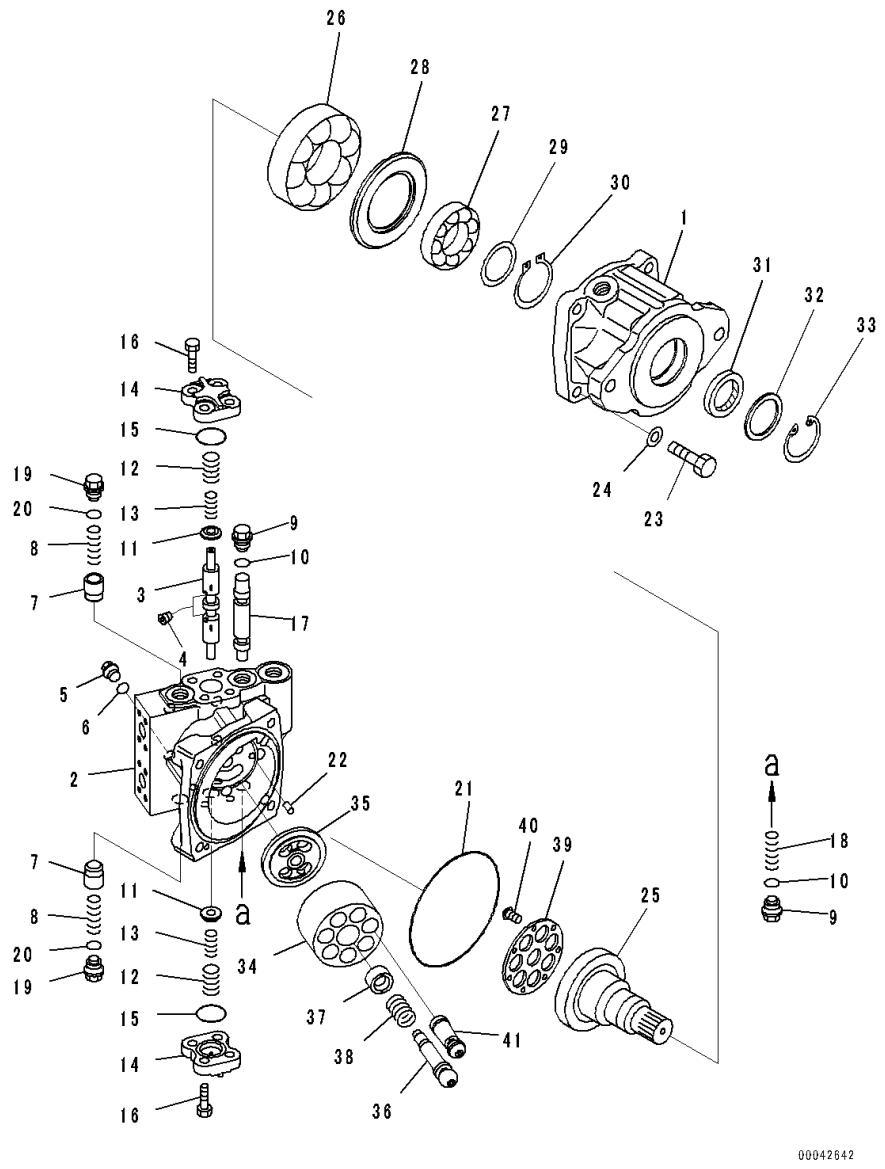

Index	Code	Part Number	Description	Qty	Serial Number
		706-7H-01101	Motor Assembly	1	81125-
1	C2	706-7H-12310	• Case	1	81125-
	C2	706-7H-05010	• Housing Assembly	1	81125-
2	C1		• • Housing	1	81125-
3	C1		• • Spool	1	81125-
4	C1		• • Plug	1	81125-
5		706-8E-14191	• Plug	4	81125-
6		07002-11823	• O-ring	4	81125-
7		706-75-74540	• Valve	2	81125-
8		706-75-74550	• Spring	2	81125-
9		706-75-74850	• Plug	2	81125-
10		07002-13334	• O-ring	2	81125-
11		706-7H-71120	• Retainer	2	81125-
12		708-7H-16410	• Spring	2	81125-
13		706-7H-71130	• Spring	2	81125-
14		706-7H-71160	• Cover	2	81125-
15		07000-13042	• O-ring	2	81125-
16		01010-61440	• Bolt	8	81125-
17	C2	706-7H-71150	• Spool	1	81125-
18	C2	706-75-74550	• Spring	1	81125-
19	C2	706-75-74850	• Plug	2	81125-
20	C2	07002-13334	• O-ring	2	81125-
21	C2	07000-15195	• O-ring	1	81125-
22	C2	708-18-13230	• Pin	2	81125-
23	C2	01010-61655	• Bolt	4	81125-
24	C2	01643-31645	• Washer	4	81125-
25	C2	706-7H-41110	• Shaft	1	81125-
26	C2	706-8J-41010	• Bearing	1	81125-
27	C2	706-7H-41120	• Bearing	1	81125-
28	C2	706-7H-41210	• Spacer	1	81125-
29	C2	706-7H-05910	• Spacer Kit	1	81125-
	C1		• • Spacer, T=1.9mm	1	81125-
	C1		• • Spacer, T=2.1mm	1	81125-
	C1		• • Spacer, T=2.3mm	1	81125-
	C1		• • Spacer, T=2.5mm	1	81125-
	C1		• • Spacer, T=2.7mm	1	81125-
30		04064-06020	• Ring, Snap	1	81125-
31		708-27-22811	• Seal, Oil	1	81125-
32		708-2H-22160	• Spacer	1	81125-
33		04065-08225	• Ring, Snap	1	81125-

FIG. F2720-004017 Power Train Hydraulic Oil Piping, For Scraper, Inner Parts, HSS Motor (1/2)

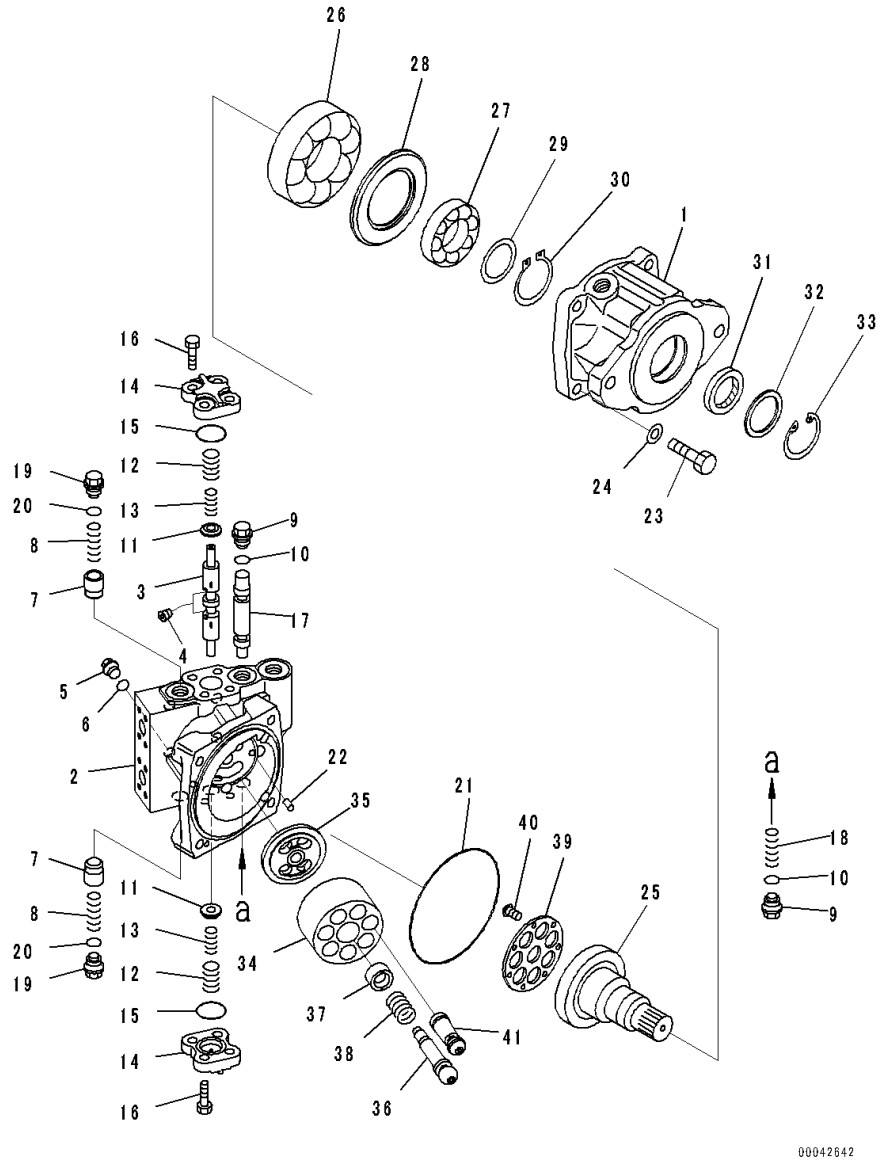

Index	Code	Part Number	Description	Qty	Serial Number
	C2	706-7H-05020	• Cylinder Block Assembly	1	81125-
34	C1		• • Cylinder Block	1	81125-
35	C1		• • Plate, Valve	1	81125-
36	C2	706-8H-41120	• Shaft,Center	1	81125-
37	C2	706-7H-41730	• Ring,Center	1	81125-
38	C2	706-7H-41740	• Spring	1	81125-
39	C2	706-8H-41260	• Retainer	1	81125-
40	C2	708-23-12350	• Screw	7	81125-
41	C2	706-8H-41160	• Piston Subassembly	7	81125-

FIG. F2720-004018 Power Train Hydraulic Oil Piping, For Scraper, Inner Parts, HSS Motor (2/2)

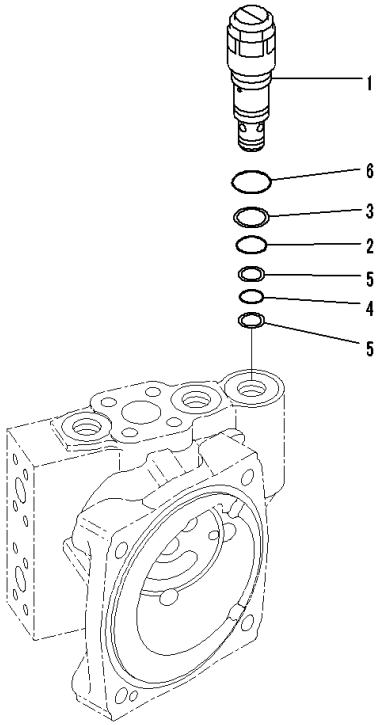

JD011725

Index	Code	Part Number	Description	Qty	Serial Number
		706-7H-01101	Motor Assembly	1	81125-
1		702-77-03110	• Valve, Relief	1	81125-
2		700-93-11320	• • O-ring	1	81125-
3		700-93-11330	• • Ring, Back-up	1	81125-
4		07000-F2020	• • O-ring	1	81125-
5		702-77-11380	• • Ring, Back-up	2	81125-
6		07002-13634	• • O-ring	1	81125-

FIG. F2720-004019 Power Train Hydraulic Oil Piping, For Scraper, Motor Mounting

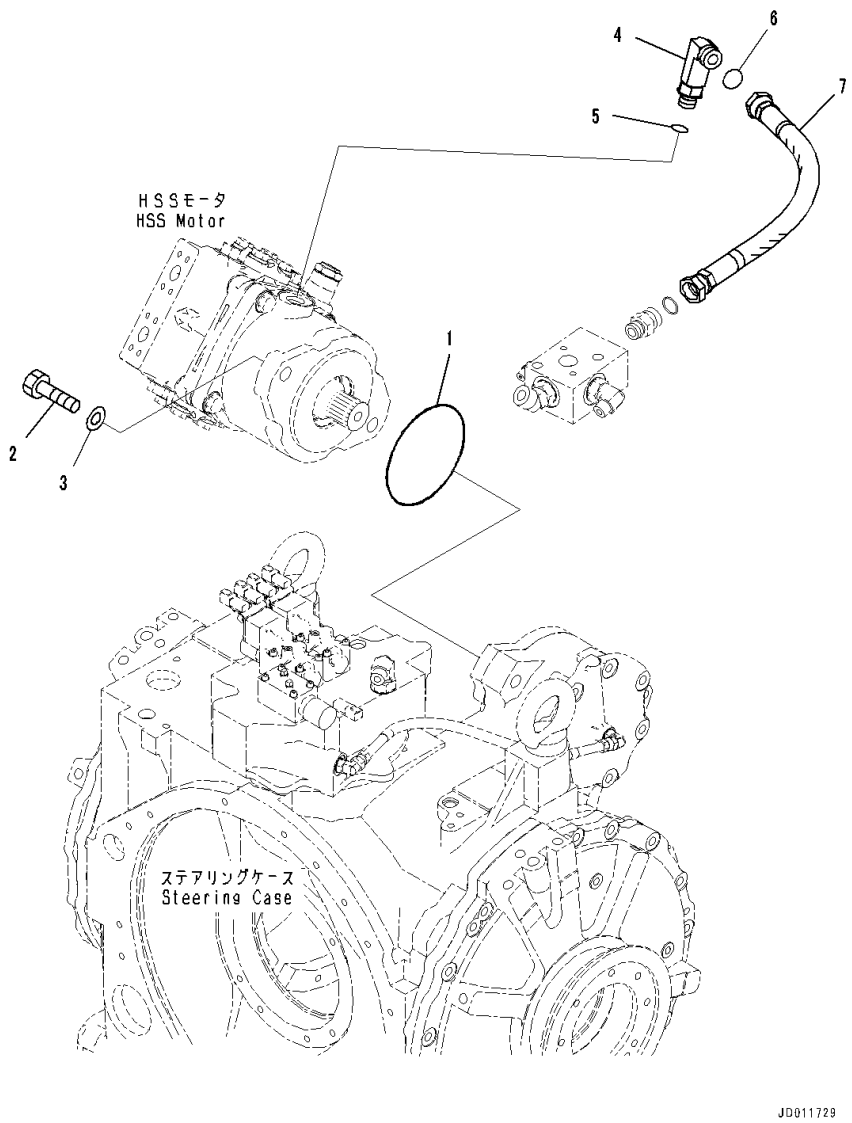

Index	Code	Part Number	Description	Qty	Serial Number
1		07000-75165	O-ring	1	81125-
2		01010-82080	Bolt	2	81125-
3		01643-32060	Washer	2	81125-
4		02782-10630	Elbow	1	81125-
5		07002-12434	O-ring	1	81125-
6		02896-11018	O-ring	1	81125-
7		17A-61-41780	Hose	1	81125-

FIG. F2720-004020 Power Train Hydraulic Oil Piping, For Scraper, Boom Cylinder Lock Valve Piping

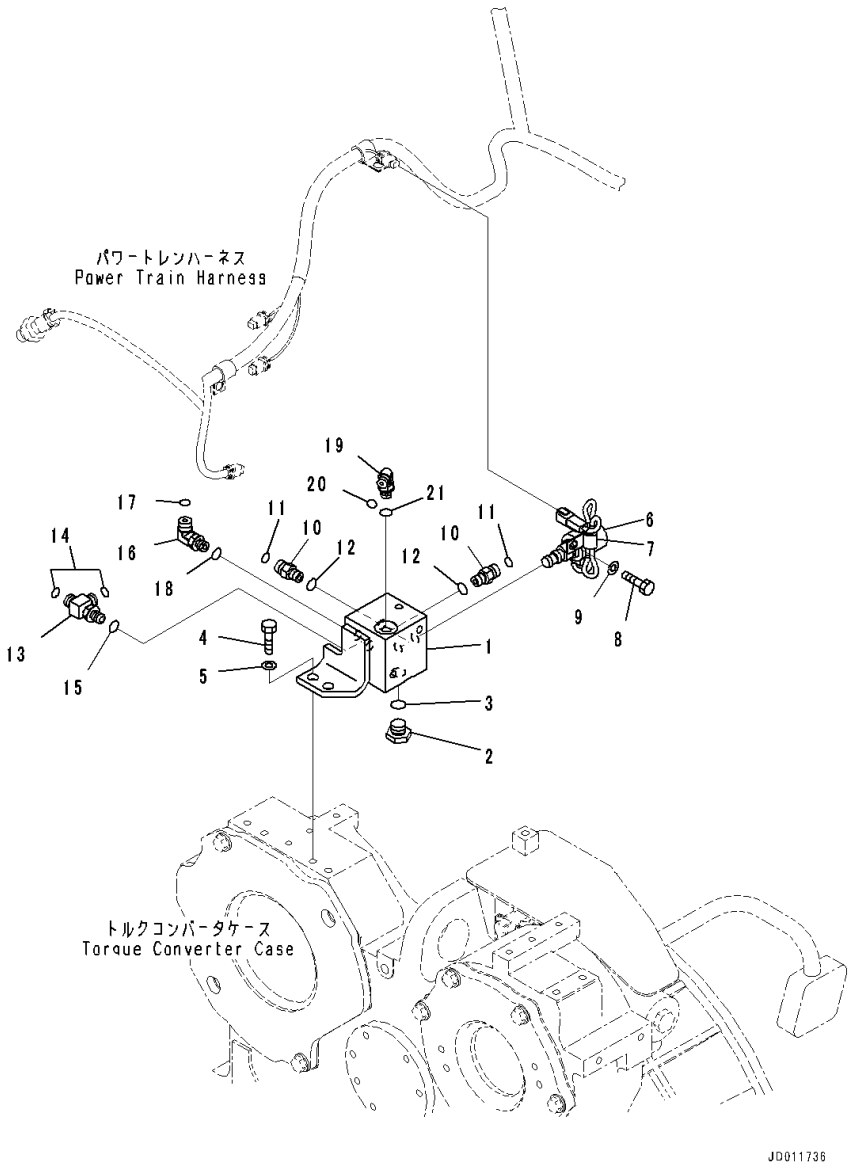

Index	Code	Part Number	Description	Qty	Serial Number
1		17A-49-41432	Block	1	81125-
2		07040-12012	Plug	1	81125-
3		07002-12034	O-ring	1	81125-
4		01010-81230	Bolt	2	81125-
5		01643-31232	Washer	2	81125-
6		198-06-56520	Valve, Solenoid	1	81125-
7		04434-51212	Clip	1	81125-
8		01010-81220	Bolt	1	81125-
9		01643-31232	Washer	1	81125-
10		02781-0031D	Union	2	81125-
11		02896-11009	O-ring	2	81125-
12		07002-11423	O-ring	2	81125-
13		21N-64-36680	Tee	1	81125-
14		02896-11009	O-ring	2	81125-
15		07002-11423	O-ring	1	81125-
16		02782-10311	Elbow	1	81125-
17		02896-11009	O-ring	1	81125-
18		07002-11423	O-ring	1	81125-
19		02782-10210	Elbow	1	81125-
20		02896-11008	O-ring	1	81125-
21		07002-11423	O-ring	1	81125-

FIG. F2720-004021 Power Train Hydraulic Oil Piping, For Scraper, Accumulator

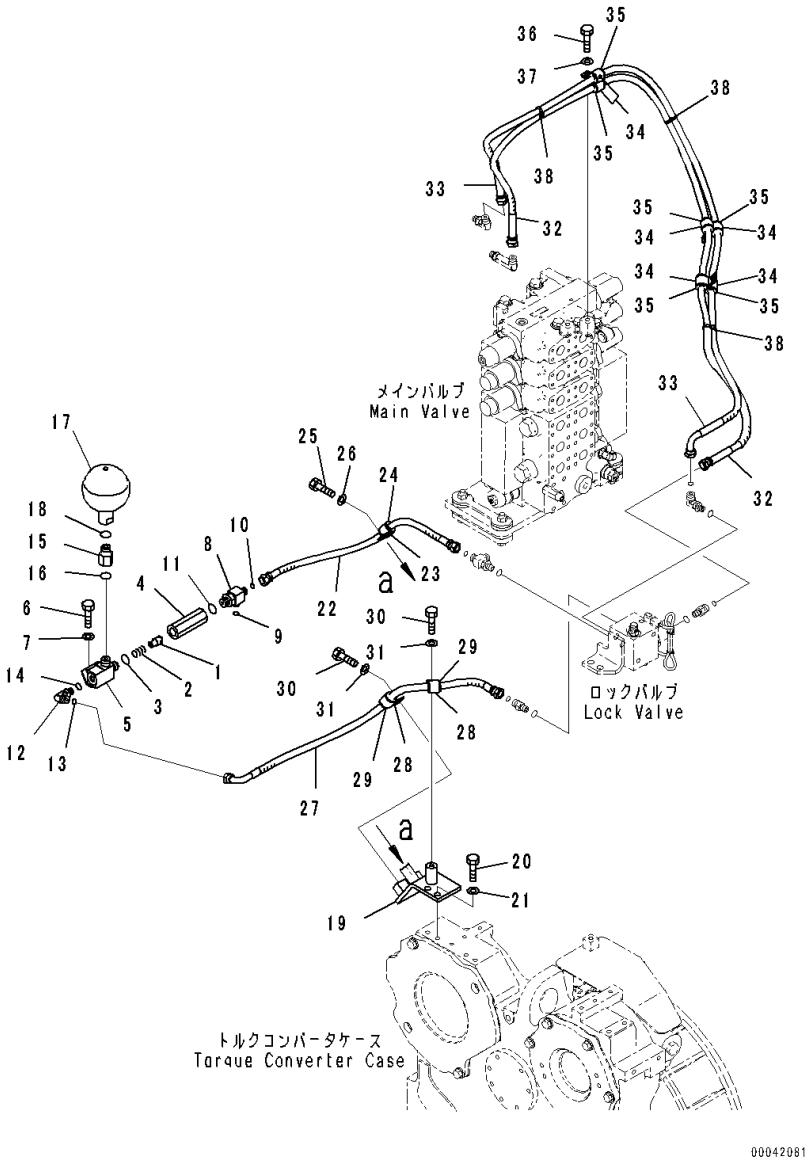

Index	Code	Part Number	Description	Qty	Serial Number
		17A-61-41501	Valve Assembly	1	81125-
1		20X-62-21950	• Valve	1	81125-
2		203-60-21260	• Spring	1	81125-
3		07002-02034	• O-ring	1	81125-
4		203-62-58670	• Body	1	81125-
5		17A-61-41511	• Tee	1	81125-
6		01010-81020	Bolt	2	81125-
7		01643-31032	Washer	2	81125-
8		423-62-31640	Tee	1	81125-
9		02896-11008	O-ring	1	81125-
10		02896-11009	O-ring	1	81125-
11		07002-12034	O-ring	1	81125-
12		02782-10311	Elbow	1	81125-
13		02896-11009	O-ring	1	81125-
14		07002-11423	O-ring	1	81125-
15		154-61-75782	Adapter	1	81125-
16		07002-12034	O-ring	1	81125-
17		22U-60-21340	Accumulator	1	81125-
18		07002-12034	O-ring	1	81125-
19		17A-49-41591	Bracket	1	81125-
20		01010-81230	Bolt	2	81125-
21		01643-31232	Washer	2	81125-
22		17A-61-41480	Hose	1	81125-
23		04434-52712	Clip	1	81125-
24		07095-20418	Cushion	1	81125-
25		01010-81225	Bolt	1	81125-
26		01643-31232	Washer	1	81125-
27		17A-61-41490	Hose	1	81125-
28		04434-52112	Clip	2	81125-
29		07095-20314	Cushion	2	81125-
30		01010-81225	Bolt	2	81125-
31		01643-31232	Washer	2	81125-
32		17A-61-41530	Hose	1	81125-
33		17A-61-41541	Hose	1	81125-
34		04434-52112	Clip	6	81125-
35		07095-20314	Cushion	6	81125-
36		01010-81225	Bolt	3	81125-
37		01643-31232	Washer	3	81125-
38		08034-20519	Band	3	81125-

FIG. F2720-004022 Power Train Hydraulic Oil Piping, For Scraper, Drain Piping

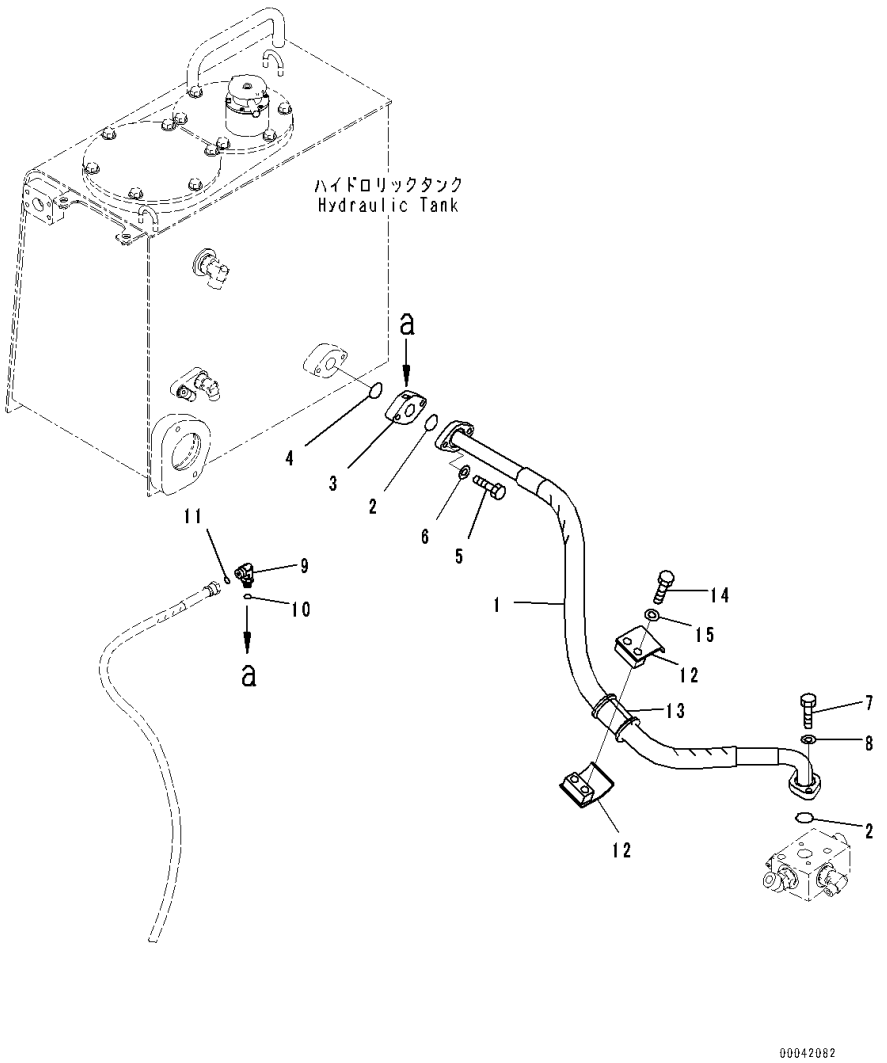

Index	Code	Part Number	Description	Qty	Serial Number
1		17A-49-41622	Hose	1	81125-
2		07000-13032	O-ring	2	81125-
3		17A-61-42540	Flange	1	81125-
4		07000-13032	O-ring	1	81125-
5		01010-81055	Bolt	2	81125-
6		01643-31032	Washer	2	81125-
7		01010-81035	Bolt	2	81125-
8		01643-31032	Washer	2	81125-
9		02782-10311	Elbow	1	81125-
10		07002-11423	O-ring	1	81125-
11		02896-11009	O-ring	1	81125-
12		07094-11024	Clamp	2	81125-
13		07095-01034	Cushion	1	81125-
14		01010-81280	Bolt	2	81125-
15		01643-31232	Washer	2	81125-

FIG. F2720-004023 Power Train Hydraulic Oil Piping, For Scraper, Concentrated Piping

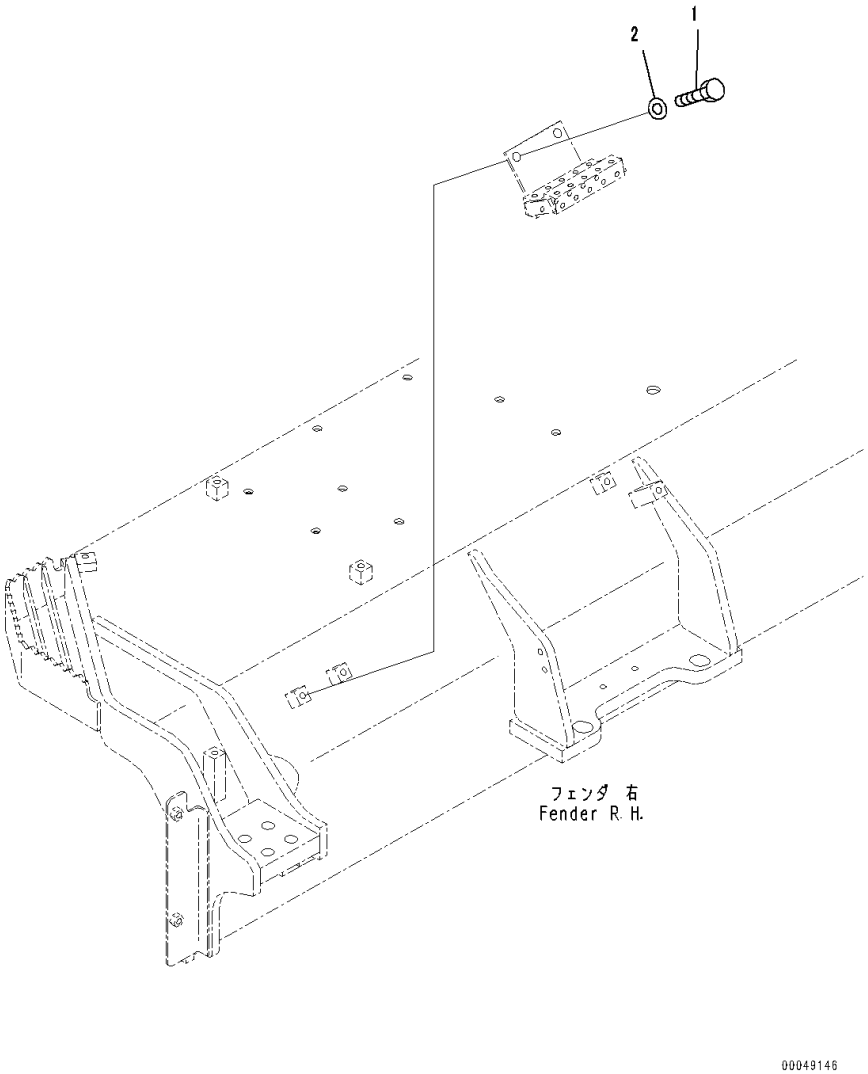

Index	Code	Part Number	Description	Qty	Serial Number
1		01010-81225	Bolt	2	81125-
2		01643-31232	Washer	2	81125-

FIG. F2810-001001 Power Train Mounting

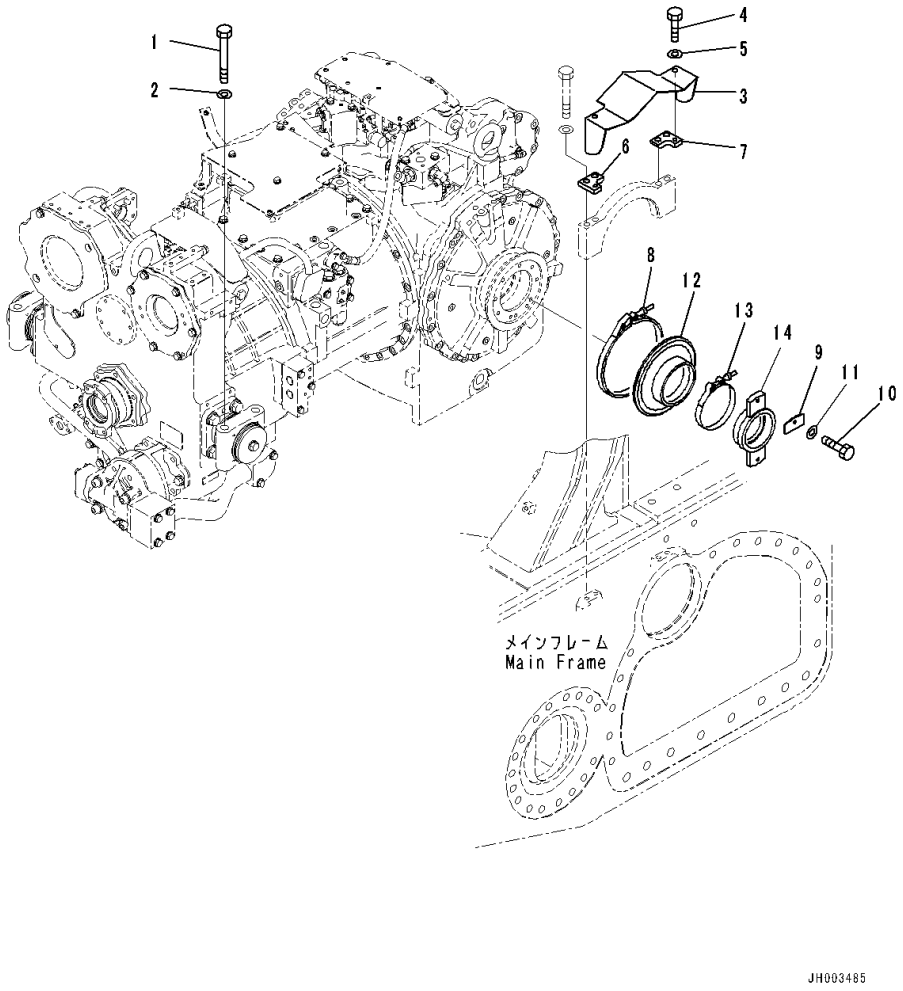

Index	Code	Part Number	Description	Qty	Serial Number
1		01011-82485	Bolt	4	81028-
2		01643-32460	Washer	4	81028-
3		17A-21-41382	Cover	2	81028-
4		01010-81225	Bolt	4	81028-
5		01643-31232	Washer	4	81028-
6		17A-21-41341	Plate	2	81028-
7		17A-21-41371	Plate	2	81028-
8		14Y-21-13210	Coupling	2	81028-
9		14Y-21-11231	Plate	4	81028-
10		01010-81030	Bolt	4	81028-
11		01643-31032	Washer	4	81028-
12		14Y-21-13160	Seal	2	81028-
13		14Y-21-13190	Clamp	2	81028-
14		17A-21-44131	Cage	2	81028-

FIG. F2830-001001 Power Train Wiring Harness, (1/2)

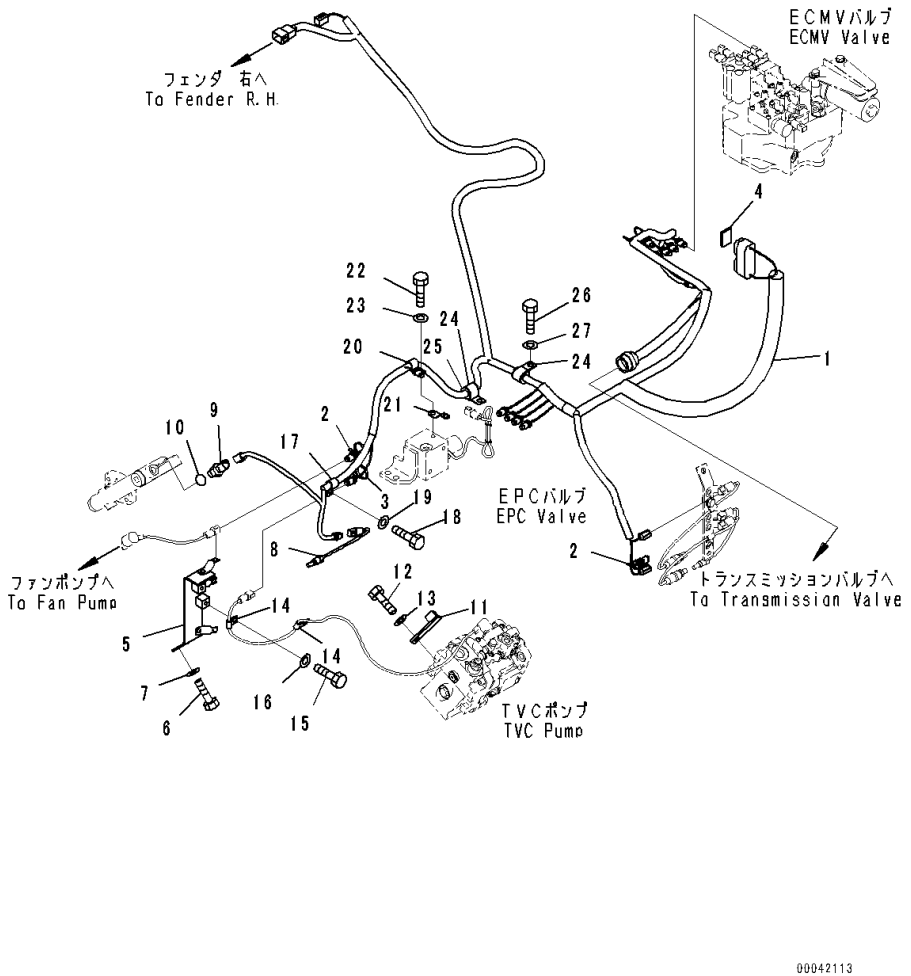

Index	Code	Part Number	Description	Qty	Serial Number
1		17A-06-41152	Wiring Harness	1	81028-
2		20Y-62-22790	• Band, Red	2	81028-
3		20Y-62-22810	• Band, Yellow	1	81028-
4		17A-06-41840	• Seal	1	81028-
5		17A-06-41620	Bracket	1	81028-
6		01010-81225	Bolt	2	81028-
7		01643-31232	Washer	2	81028-
8		7861-93-3320	Sensor, Temperature	1	81028-
9		7861-93-1652	Sensor	1	81245-
		07002-61823	• O-ring	1	81245-
10		07002-11823	O-ring	1	81028-
11		154-49-51980	Bracket	1	81028-
12		01010-81225	Bolt	1	81028-
13		01643-31232	Washer	1	81028-
14		04434-50612	Clip	2	81028-
15		01010-81220	Bolt	2	81028-
16		01643-31232	Washer	2	81028-
17		04434-51712	Clip	1	81028-
18		01010-81225	Bolt	1	81028-
19		01643-31232	Washer	1	81028-
20		04434-51712	Clip	1	81028-
21		08193-21012	Clip	1	81028-
22		01010-81225	Bolt	1	81028-
23		01643-31232	Washer	1	81028-
24		04434-52712	Clip	2	81028-
25		07095-20418	Cushion	2	81028-
26		01010-81225	Bolt	2	81028-
27		01643-31232	Washer	2	81028-

FIG. F2830-001002 Power Train Wiring Harness, (2/2)

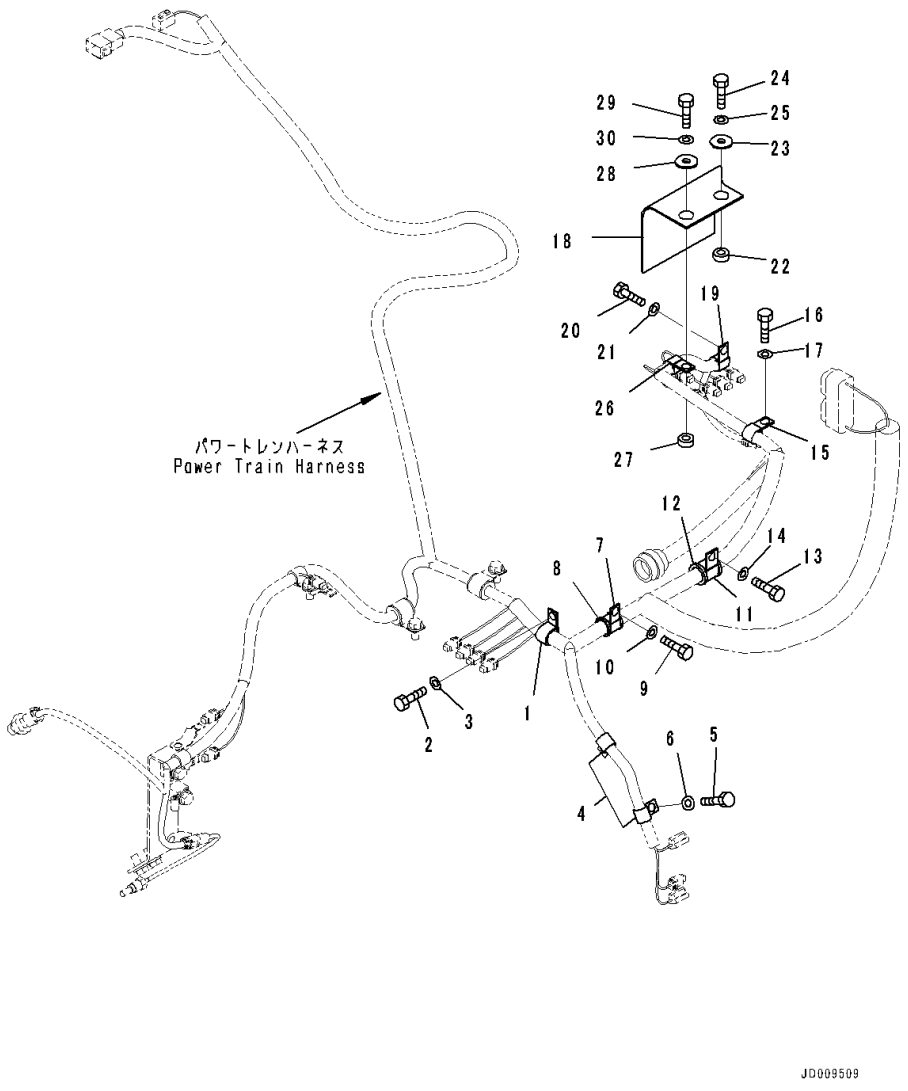

Index	Code	Part Number	Description	Qty	Serial Number
1		04434-52312	Clip	1	81028-
2		01010-81225	Bolt	1	81028-
3		01643-31232	Washer	1	81028-
4		04434-51712	Clip	2	81028-
5		01010-81225	Bolt	2	81028-
6		01643-31232	Washer	2	81028-
7		04434-53212	Clip	1	81028-
8		07095-20522	Cushion	1	81028-
9		01010-81225	Bolt	1	81028-
10		01643-31232	Washer	1	81028-
11		04434-53412	Clip	1	81028-
12		07095-20625	Cushion	1	81028-
13		01010-81225	Bolt	1	81028-
14		01643-31232	Washer	1	81028-
15		04434-51912	Clip	1	81028-
16		01010-81225	Bolt	1	81028-
17		01643-31232	Washer	1	81028-
18		17A-06-41932	Rubber	1	81028-
19		04434-51912	Clip	1	81028-
20		01010-81225	Bolt	1	81028-
21		01643-31232	Washer	1	81028-
22		103-54-24440	Washer	1	81028-
23		207-62-56250	Washer	1	81028-
24		01010-81235	Bolt	1	81028-
25		01643-31232	Washer	1	81028-
26		04434-51912	Clip	1	81028-
27		103-54-24440	Washer	1	81028-
28		207-62-56250	Washer	1	81028-
29		01010-81235	Bolt	1	81028-
30		01643-31232	Washer	1	81028-

HYDRAULIC SYSTEM

FIG. H0310-001001 Hydraulic Oil Pump Piping

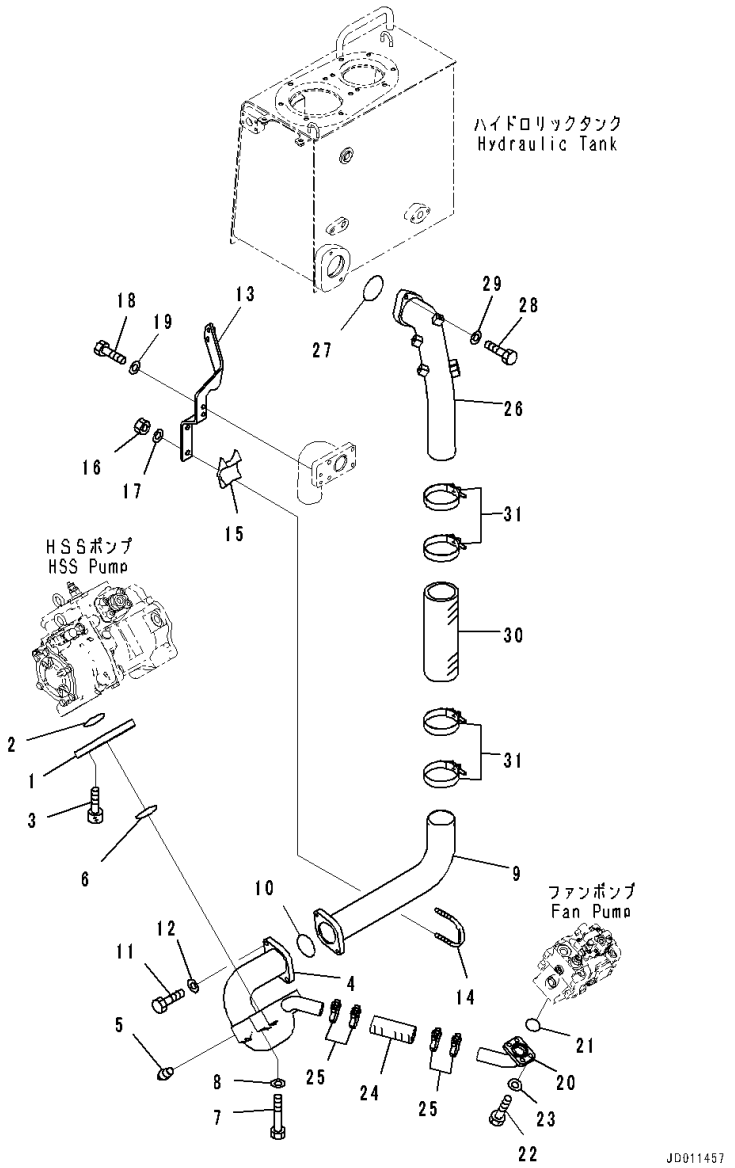

Index	Code	Part Number	Description	Qty	Serial Number
1		17A-49-41251	Flange	1	81028-
2		07000-12080	O-ring	1	81028-
3		01252-61230	Bolt	4	81028-
4		17A-49-41241	Tube	1	81028-
5		07042-70108	Plug	1	81028-
6		07000-12080	O-ring	1	81028-
7		01010-81280	Bolt	4	81028-
8		01643-31232	Washer	4	81028-
9		17A-49-41381	Tube	1	81028-
10		07000-12080	O-ring	1	81028-
11		01010-81250	Bolt	2	81028-
12		01643-31232	Washer	2	81028-
13		17A-49-41372	Bracket	1	81028-
14		07283-38981	Clip, Pipe	1	81028-
15		17A-49-41931	Seat	1	81028-
16		01597-01211	Nut	2	81028-
17		01643-31232	Washer	2	81028-
18		01010-81230	Bolt	2	81028-
19		01643-31232	Washer	2	81028-
20		17A-49-41280	Tube	1	81028-
21		07000-13048	O-ring	1	81028-
22		01010-81240	Bolt	4	81028-
23		01643-31232	Washer	4	81028-
24		07260-04114	Hose	1	81028-
25		17A-61-41770	Clamp	4	81028-
26		17A-60-41141	Tube	1	81028-
27		07000-12090	O-ring	1	81028-
28		01010-81245	Bolt	2	81028-
29		01643-31232	Washer	2	81028-
30		07260-08732	Hose	1	81028-
31		20Y-62-51671	Clamp	4	81028-

FIG. H2210-001001 Blade Lift Piping, Drain Piping

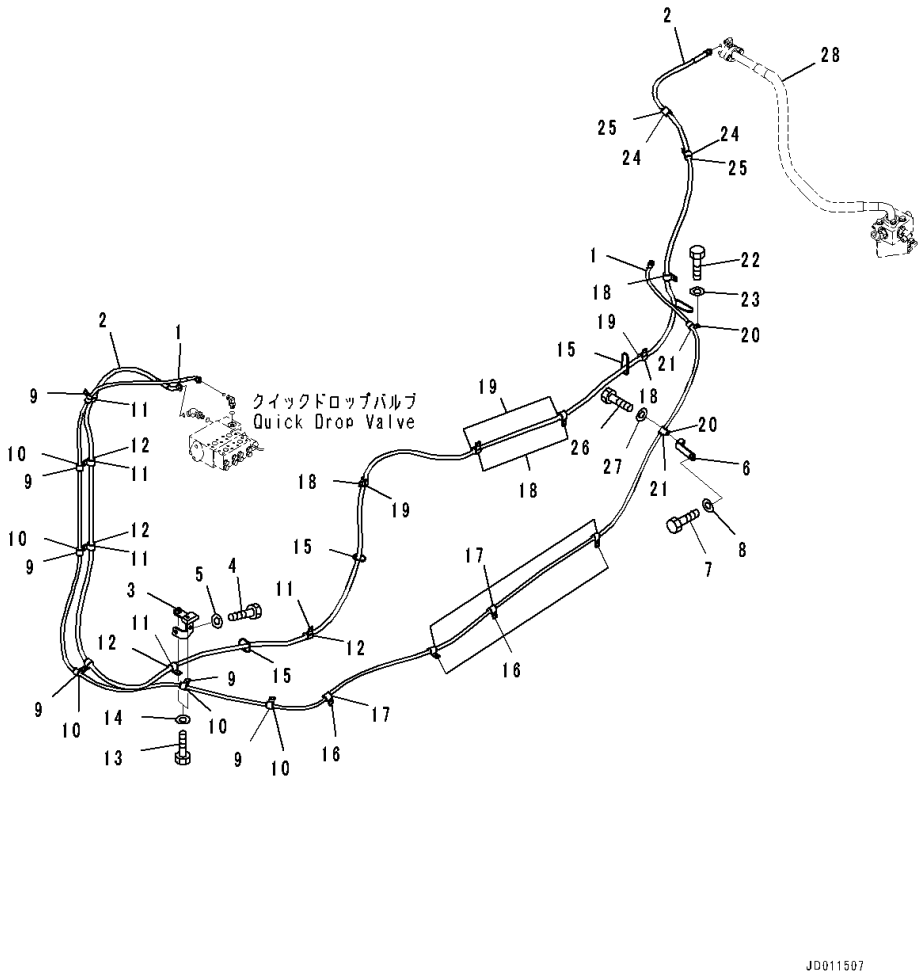

Index	Code	Part Number	Description	Qty	Serial Number
1		17A-61-41551	Hose	1	81028-
2		17A-61-41561	Hose	1	81028-
3		17A-61-41752	Bracket	1	81028-
4		01010-81225	Bolt	1	81028-
5		01643-31232	Washer	1	81028-
6		195-49-37150	Bracket	1	81028-
7		01010-81225	Bolt	1	81028-
8		01643-31232	Washer	1	81028-
9		04434-51712	Clip	6	81028-
10		07095-20211	Cushion	6	81028-
11		04434-52112	Clip	5	81028-
12		07095-20314	Cushion	5	81028-
13		01010-81225	Bolt	7	81028-
14		01643-31232	Washer	7	81028-
15		08034-20536	Band	9	81028-
16		04434-51712	Clip	4	81028-
17		07095-20211	Cushion	4	81028-
18		04434-52112	Clip	6	81028-
19		07095-20314	Cushion	6	81028-
20		04434-51712	Clip	2	81028-
21		07095-20211	Cushion	2	81028-
22		01010-81225	Bolt	2	81028-
23		01643-31232	Washer	2	81028-
24		04434-52112	Clip	2	81028-
25		07095-20314	Cushion	2	81028-
26		01010-81225	Bolt	2	81028-
27		01643-31232	Washer	2	81028-
28		(17A-49-41622)	Hose(Refer to Page 400)		-

FIG. H2210-001002 Blade Lift Piping, Hose

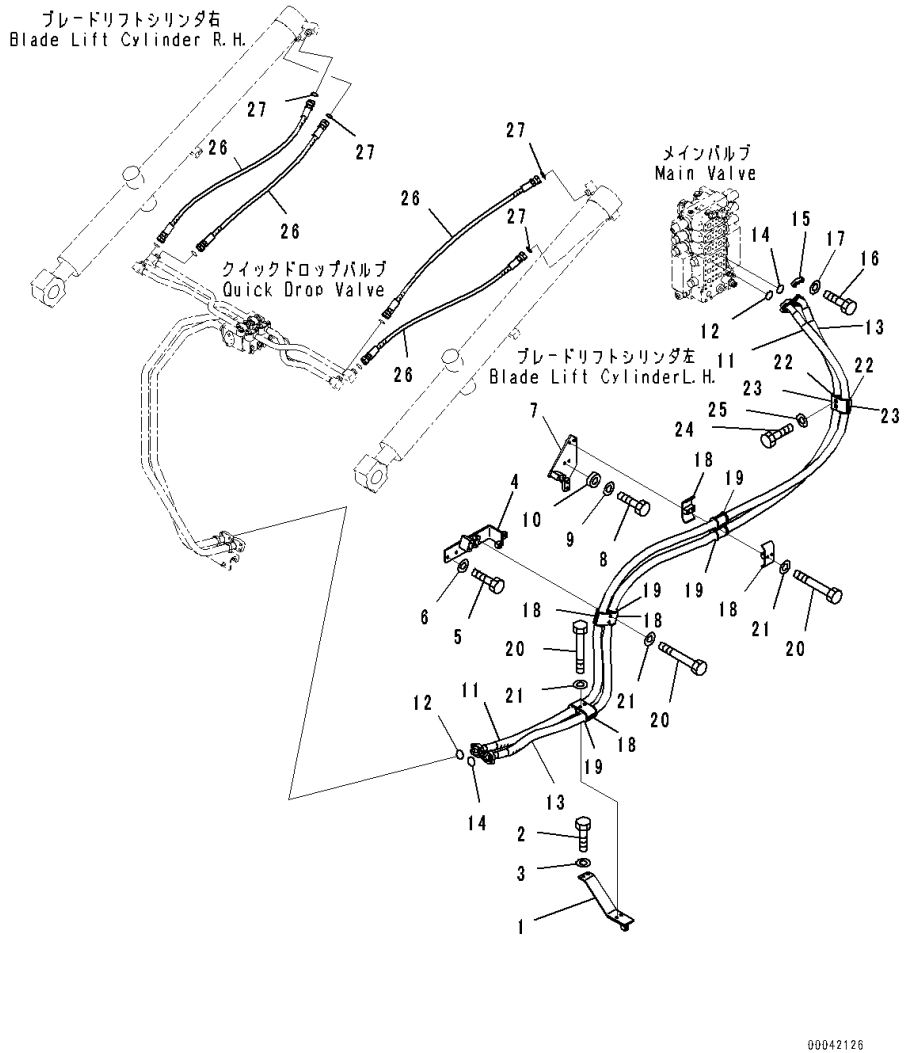

Index	Code	Part Number	Description	Qty	Serial Number
1		17A-61-41112	Bracket	1	81028-
2		01010-81235	Bolt	2	81028-
3		01643-31232	Washer	2	81028-
4		17A-61-41124	Bracket	1	81028-
5		01010-81235	Bolt	2	81028-
6		01643-31232	Washer	2	81028-
7		17A-61-41131	Bracket	1	81028-
8		01010-81235	Bolt	2	81028-
9		01643-31232	Washer	2	81028-
10		205-62-54562	Spacer	2	81028-
11		17A-61-41252	Hose	1	81028-
12		07000-13032	O-ring	2	81028-
13		17A-61-41263	Hose	1	81028-
14		07000-13032	O-ring	2	81028-
15		07371-31049	Flange, Split	8	81028-
16		07372-21035	Bolt	16	81028-
17		01643-51032	Washer	16	81028-
18		07094-31024	Clamp	6	81028-
19		07095-01035	Cushion	6	81028-
20		01010-81285	Bolt	6	81028-
21		01643-31232	Washer	6	81028-
22		07094-31024	Clamp	2	81028-
23		07095-01035	Cushion	2	81028-
24		01010-81290	Bolt	2	81028-
25		01643-31232	Washer	2	81028-
26		02756-00611	Hose	4	81028-
27		02896-11018	O-ring	4	81028-

FIG. H2210-001003 Blade Lift Piping, Tube (1/2)

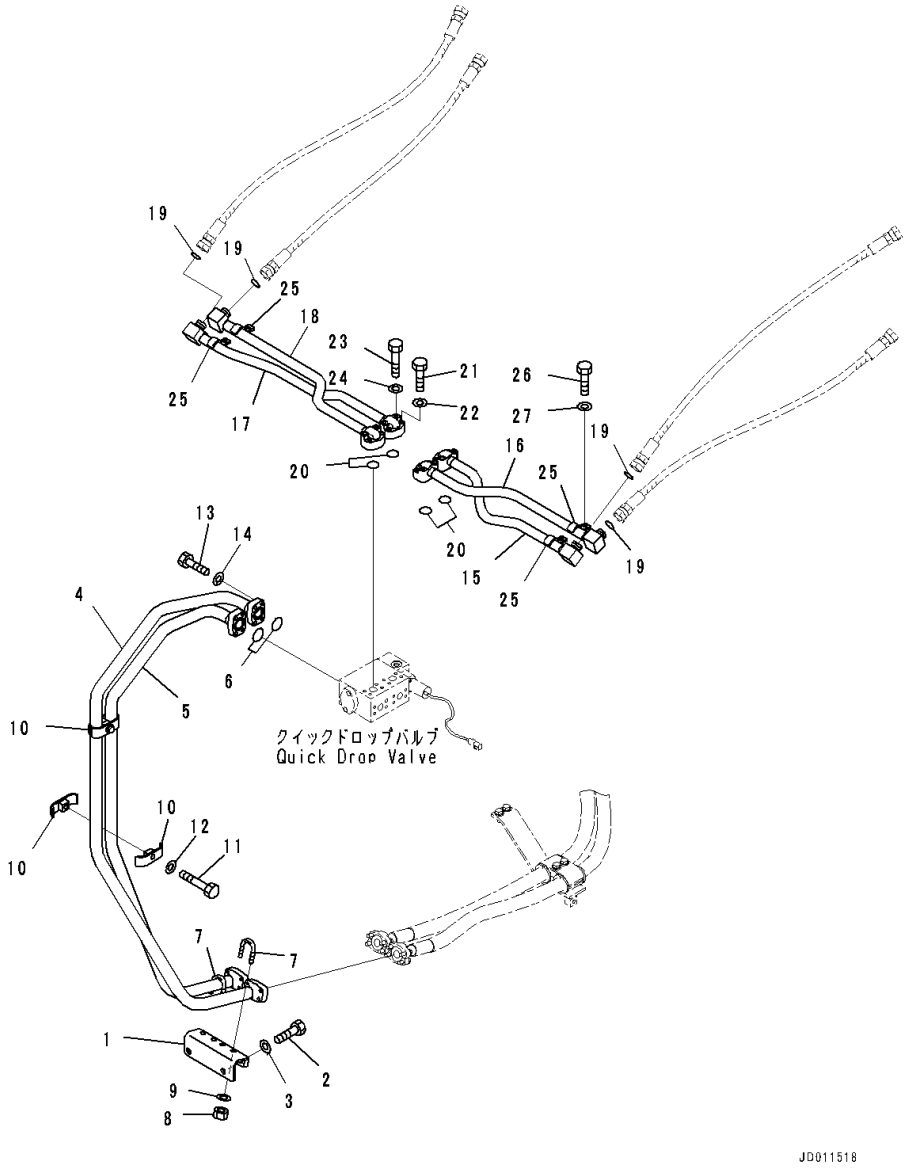

Index	Code	Part Number	Description	Qty	Serial Number
1		17A-61-41741	Bracket	1	81028-
2		01010-81230	Bolt	2	81028-
3		01643-31232	Washer	2	81028-
4		17A-61-41710	Tube	1	81028-
5		17A-61-41720	Tube	1	81028-
6		07000-13035	O-ring	2	81028-
7		07283-33442	Clip, Pipe	2	81028-
8		01597-01009	Nut	4	81028-
9		01643-31032	Washer	4	81028-
10		07094-30417	Clamp	4	81028-
11		01010-81265	Bolt	2	81028-
12		01643-31232	Washer	2	81028-
13		07372-21040	Bolt	8	81028-
14		01643-51032	Washer	8	81028-
15		17A-61-42511	Tube	1	81028-
16		17A-61-42521	Tube	1	81028-
17		17A-61-42130	Tube	1	81028-
18		17A-61-42140	Tube	1	81028-
19		02896-11018	O-ring	4	81028-
20		07000-13030	O-ring	4	81028-
21		07372-21045	Bolt	8	81028-
22		01643-51032	Washer	8	81028-
23		07372-21060	Bolt	8	81028-
24		01643-51032	Washer	8	81028-
25		112-62-32150	Clamp	4	81028-
26		01010-81225	Bolt	4	81028-
27		01643-31232	Washer	4	81028-

FIG. H2210-001004 Blade Lift Piping, Quick Drop Valve

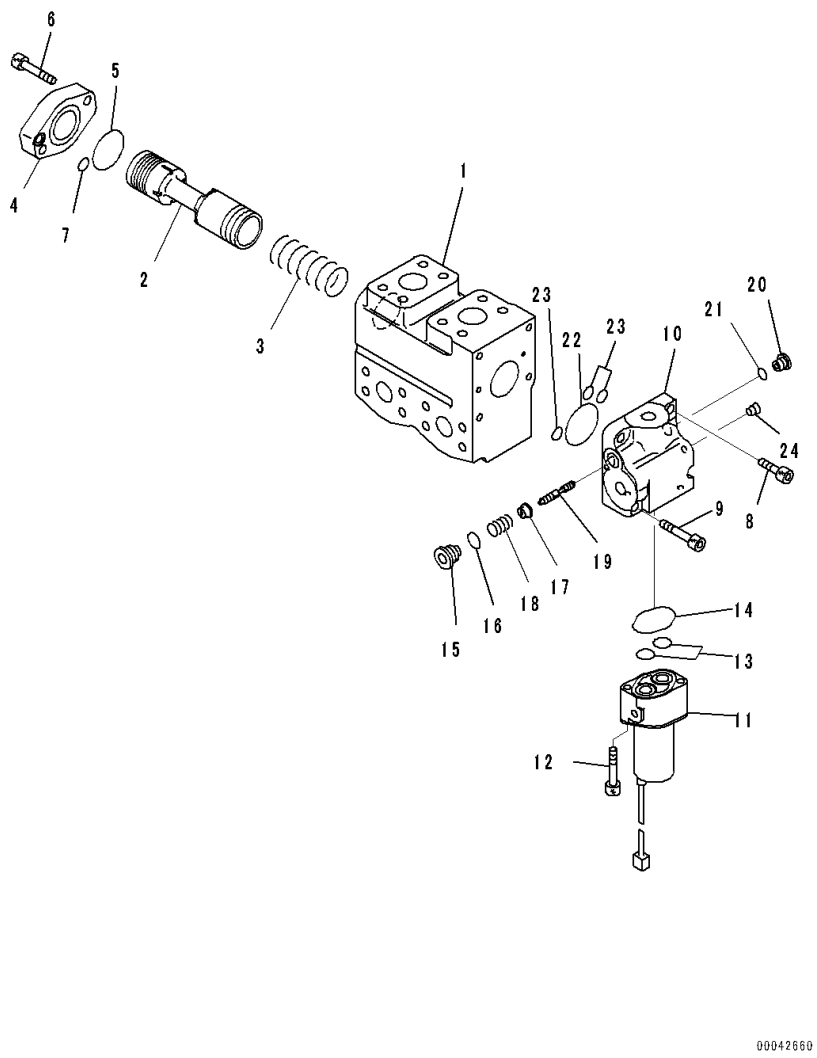

Index	Code	Part Number	Description	Qty	Serial Number
		702-21-11800	Valve Assembly	1	81028-
		702-21-00100	• Body Group	1	81028-
1	C1		• • Body	1	81028-
2	C1		• • Spool	1	81028-
3	C1		• • Spring	1	81028-
4		702-21-81520	• • Plate	1	81028-
5		702-21-81530	• • O-ring	1	81028-
6		01252-60820	• • Bolt, Hexagon Socket Head	2	81028-
7		07000-11010	• • O-ring	1	81028-
8		01252-60825	• • Bolt, Hexagon Socket Head	3	81028-
9		01252-60845	• • Bolt, Hexagon Socket Head	1	81028-
		702-21-00200	• Valve Group	1	81028-
10	C1		• • Body	1	81028-
11		702-21-07610	• • Valve, Solenoid	1	81028-
12		203-60-62220	• • Bolt	2	81028-
13		700-22-11410	• • O-ring	2	81028-
14		702-21-39450	• • O-ring	1	81028-
15		702-21-81730	• • Plug	1	81028-
16		07002-11623	• • O-ring	1	81028-
17	C1		• • Seat	1	81028-
18	C1		• • Spring	1	81028-
19	C1		• • Spool	1	81028-
20		723-11-18190	• • Plug	1	81028-
21		07002-11023	• • O-ring	1	81028-
22		702-21-81530	• • O-ring	1	81028-
23		07000-11010	• • O-ring	3	81028-
24		708-21-12541	• • Plug	1	81028-

FIG. H2210-001005 Blade Lift Piping, Tube (2/2)

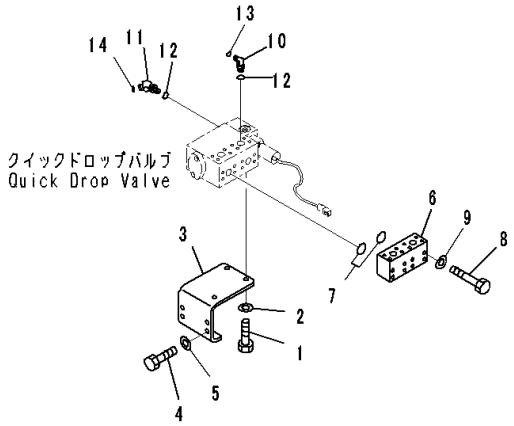

Index	Code	Part Number	Description	Qty	Serial Number
1		01010-81230	Bolt	3	81028-
2		01643-31232	Washer	3	81028-
3		17A-61-42910	Bracket	1	81028-
4		01010-81230	Bolt	4	81028-
5		01643-31232	Washer	4	81028-
6		17A-61-42530	Block	1	81028-
7		07000-12030	O-ring	2	81028-
8		01010-81070	Bolt	8	81028-
9		01643-31032	Washer	8	81028-
10		02782-10210	Elbow	1	81028-
11		11Y-62-12510	Elbow	1	81028-
12		07002-11423	O-ring	2	81028-
13		02896-11008	O-ring	1	81028-
14		02896-11009	O-ring	1	81028-

FIG. H2210-001006 Blade Lift Piping, Plugs

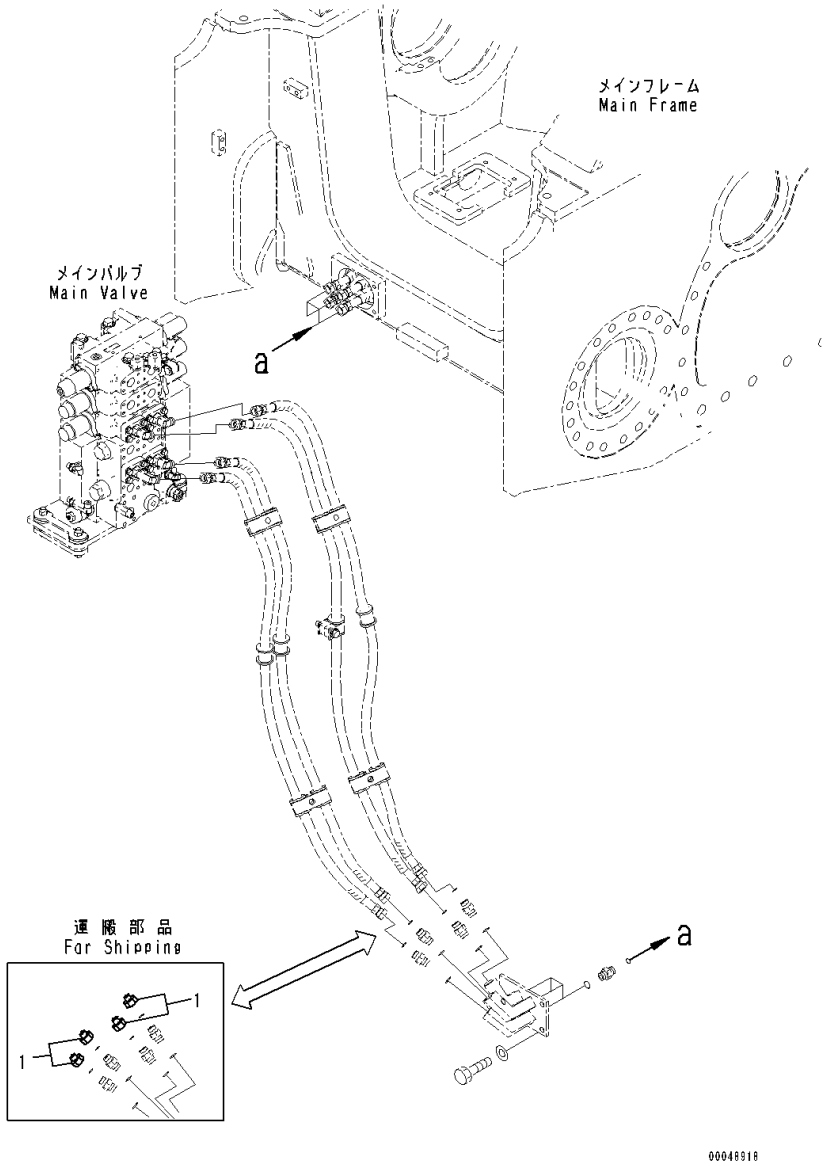

Index	Code	Part Number	Description	Qty	Serial Number
1		02789-10628	Plug	4	81028-

FIG. H2210-002001 Blade Lift Piping, Cylinder Less, Drain Piping

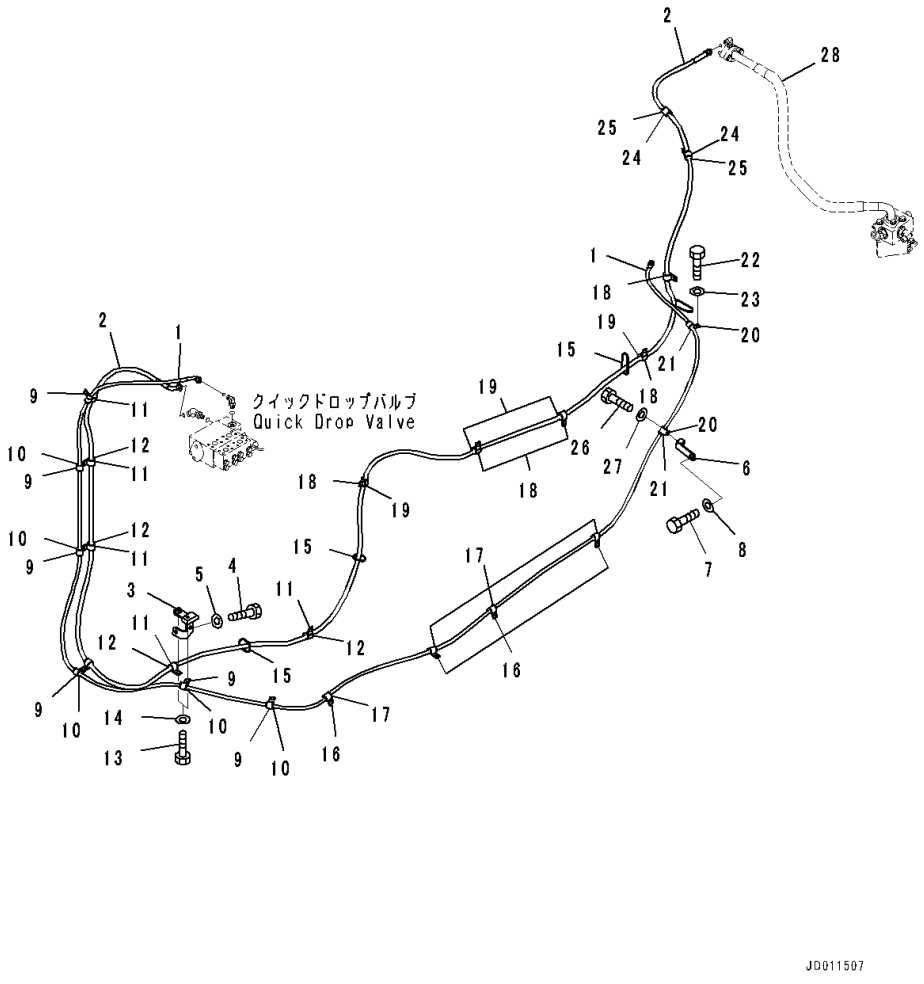

Index	Code	Part Number	Description	Qty	Serial Number
1		17A-61-41551	Hose	1	81028-
2		17A-61-41561	Hose	1	81028-
3		17A-61-41752	Bracket	1	81028-
4		01010-81225	Bolt	1	81028-
5		01643-31232	Washer	1	81028-
6		195-49-37150	Bracket	1	81028-
7		01010-81225	Bolt	1	81028-
8		01643-31232	Washer	1	81028-
9		04434-51712	Clip	6	81028-
10		07095-20211	Cushion	6	81028-
11		04434-52112	Clip	5	81028-
12		07095-20314	Cushion	5	81028-
13		01010-81225	Bolt	7	81028-
14		01643-31232	Washer	7	81028-
15		08034-20536	Band	9	81028-
16		04434-51712	Clip	4	81028-
17		07095-20211	Cushion	4	81028-
18		04434-52112	Clip	6	81028-
19		07095-20314	Cushion	6	81028-
20		04434-51712	Clip	2	81028-
21		07095-20211	Cushion	2	81028-
22		01010-81225	Bolt	2	81028-
23		01643-31232	Washer	2	81028-
24		04434-52112	Clip	2	81028-
25		07095-20314	Cushion	2	81028-
26		01010-81225	Bolt	2	81028-
27		01643-31232	Washer	2	81028-
28		(17A-49-41622)	Hose(Refer to Page 400)		-

FIG. H2210-002002 Blade Lift Piping, Cylinder Less, Cylinder Less

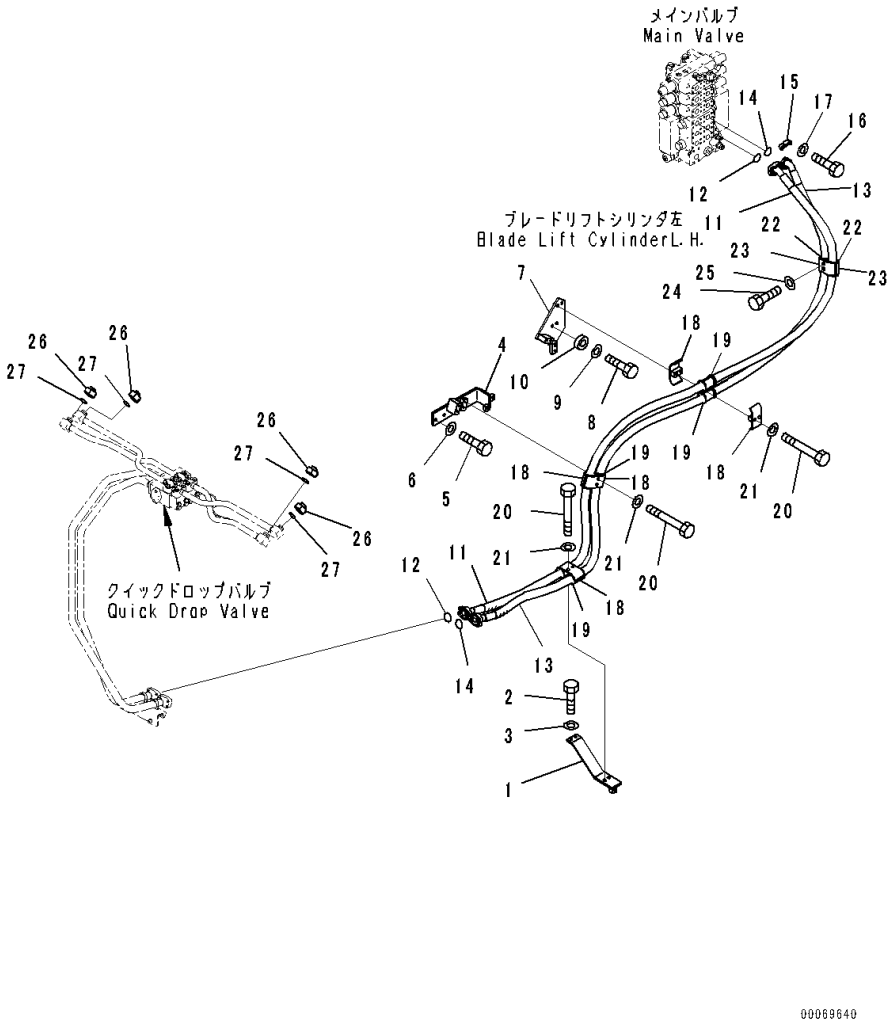

Index	Code	Part Number	Description	Qty	Serial Number
1		17A-61-41112	Bracket	1	81028-
2		01010-81235	Bolt	2	81028-
3		01643-31232	Washer	2	81028-
4		17A-61-41124	Bracket	1	81028-
5		01010-81235	Bolt	2	81028-
6		01643-31232	Washer	2	81028-
7		17A-61-41131	Bracket	1	81028-
8		01010-81235	Bolt	2	81028-
9		01643-31232	Washer	2	81028-
10		205-62-54562	Spacer	2	81028-
11		17A-61-41252	Hose	1	81028-
12		07000-13032	O-ring	2	81028-
13		17A-61-41263	Hose	1	81028-
14		07000-13032	O-ring	2	81028-
15		07371-31049	Flange, Split	8	81028-
16		07372-21035	Bolt	16	81028-
17		01643-51032	Washer	16	81028-
18		07094-31024	Clamp	6	81028-
19		07095-01035	Cushion	6	81028-
20		01010-81285	Bolt	6	81028-
21		01643-31232	Washer	6	81028-
22		07094-31024	Clamp	2	81028-
23		07095-01035	Cushion	2	81028-
24		01010-81290	Bolt	2	81028-
25		01643-31232	Washer	2	81028-
26		02789-10628	Plug	4	81028-
27		02896-11018	O-ring	4	81028-

FIG. H2210-002003 Blade Lift Piping, Cylinder Less, Tube (1/2)

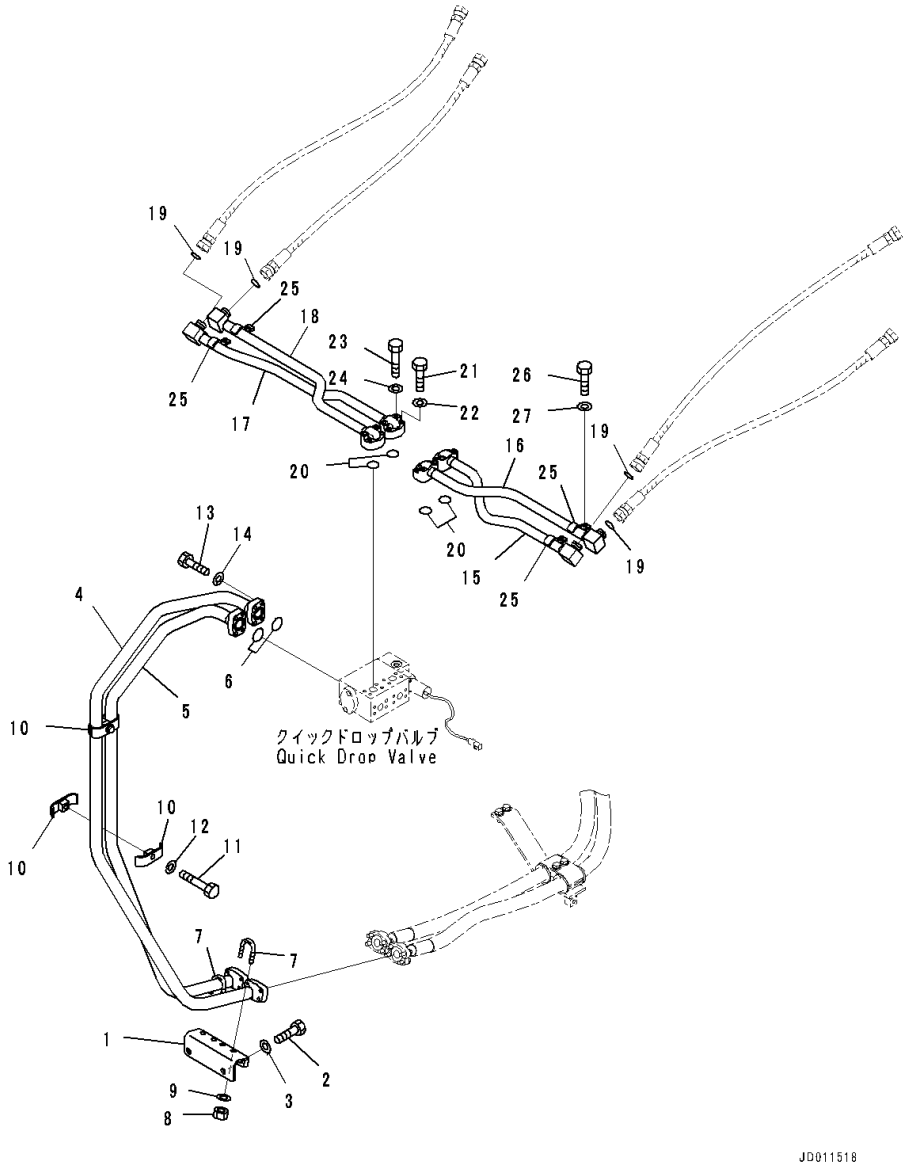

Index	Code	Part Number	Description	Qty	Serial Number
1		17A-61-41741	Bracket	1	81028-
2		01010-81230	Bolt	2	81028-
3		01643-31232	Washer	2	81028-
4		17A-61-41710	Tube	1	81028-
5		17A-61-41720	Tube	1	81028-
6		07000-13035	O-ring	2	81028-
7		07283-33442	Clip, Pipe	2	81028-
8		01597-01009	Nut	4	81028-
9		01643-31032	Washer	4	81028-
10		07094-30417	Clamp	4	81028-
11		01010-81265	Bolt	2	81028-
12		01643-31232	Washer	2	81028-
13		07372-21040	Bolt	8	81028-
14		01643-51032	Washer	8	81028-
15		17A-61-42511	Tube	1	81028-
16		17A-61-42521	Tube	1	81028-
17		17A-61-42130	Tube	1	81028-
18		17A-61-42140	Tube	1	81028-
19		02896-11018	O-ring	4	81028-
20		07000-13030	O-ring	4	81028-
21		07372-21045	Bolt	8	81028-
22		01643-51032	Washer	8	81028-
23		07372-21060	Bolt	8	81028-
24		01643-51032	Washer	8	81028-
25		112-62-32150	Clamp	4	81028-
26		01010-81225	Bolt	4	81028-
27		01643-31232	Washer	4	81028-

FIG. H2210-002004 Blade Lift Piping, Cylinder Less, Quick Drop Valve

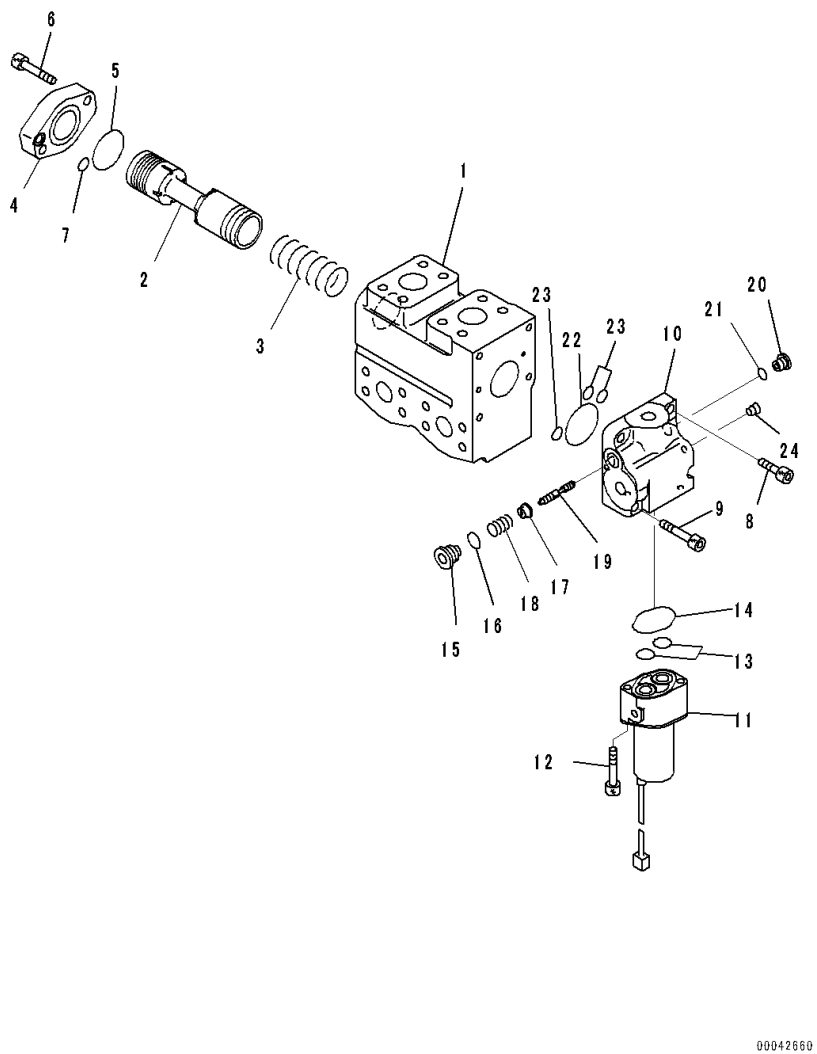

Index	Code	Part Number	Description	Qty	Serial Number
		702-21-11800	Valve Assembly	1	81028-
		702-21-00100	• Body Group	1	81028-
1	C1		• • Body	1	81028-
2	C1		• • Spool	1	81028-
3	C1		• • Spring	1	81028-
4		702-21-81520	• • Plate	1	81028-
5		702-21-81530	• • O-ring	1	81028-
6		01252-60820	• • Bolt, Hexagon Socket Head	2	81028-
7		07000-11010	• • O-ring	1	81028-
8		01252-60825	• • Bolt, Hexagon Socket Head	3	81028-
9		01252-60845	• • Bolt, Hexagon Socket Head	1	81028-
		702-21-00200	• Valve Group	1	81028-
10	C1		• • Body	1	81028-
11		702-21-07610	• • Valve, Solenoid	1	81028-
12		203-60-62220	• • Bolt	2	81028-
13		700-22-11410	• • O-ring	2	81028-
14		702-21-39450	• • O-ring	1	81028-
15		702-21-81730	• • Plug	1	81028-
16		07002-11623	• • O-ring	1	81028-
17	C1		• • Seat	1	81028-
18	C1		• • Spring	1	81028-
19	C1		• • Spool	1	81028-
20		723-11-18190	• • Plug	1	81028-
21		07002-11023	• • O-ring	1	81028-
22		702-21-81530	• • O-ring	1	81028-
23		07000-11010	• • O-ring	3	81028-
24		708-21-12541	• • Plug	1	81028-

FIG. H2210-002005 Blade Lift Piping, Cylinder Less, Tube (2/2)

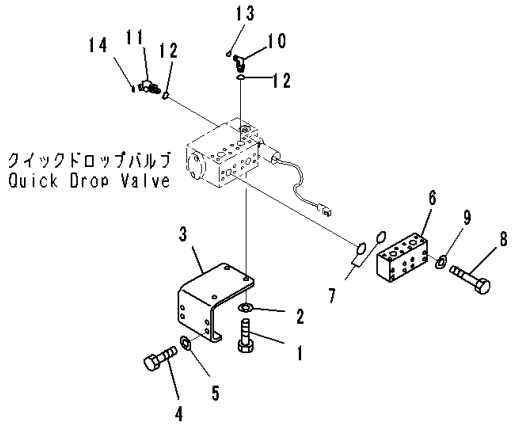

JD011529

Index	Code	Part Number	Description	Qty	Serial Number
1		01010-81230	Bolt	3	81028-
2		01643-31232	Washer	3	81028-
3		17A-61-42910	Bracket	1	81028-
4		01010-81230	Bolt	4	81028-
5		01643-31232	Washer	4	81028-
6		17A-61-42530	Block	1	81028-
7		07000-12030	O-ring	2	81028-
8		01010-81070	Bolt	8	81028-
9		01643-31032	Washer	8	81028-
10		02782-10210	Elbow	1	81028-
11		11Y-62-12510	Elbow	1	81028-
12		07002-11423	O-ring	2	81028-
13		02896-11008	O-ring	1	81028-
14		02896-11009	O-ring	1	81028-

FIG. H2220-001001 Blade Tilt Piping, For Dual Tilt Pitch Dozer

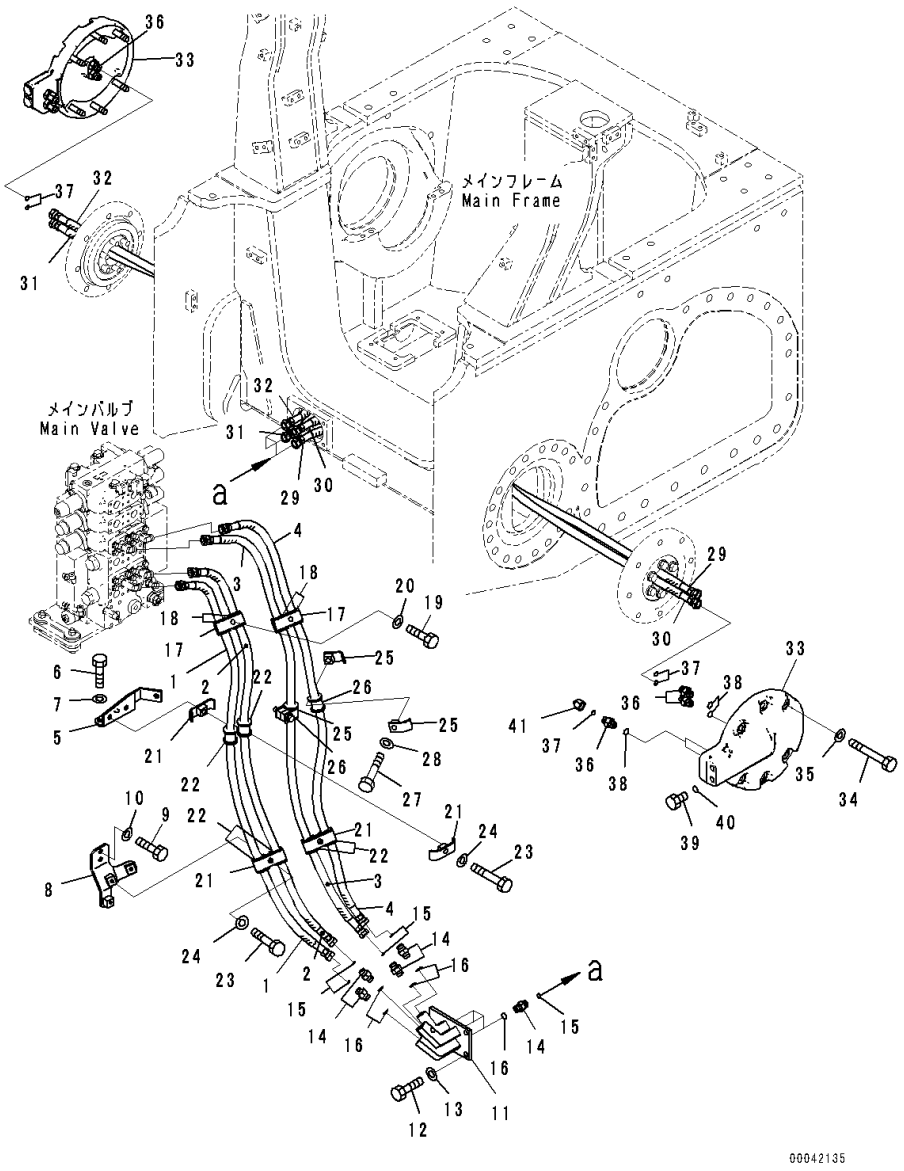

Index	Code	Part Number	Description	Qty	Serial Number
1		17A-61-41441	Hose	1	81028-
2		17A-61-41371	Hose	1	81028-
3		17A-61-41451	Hose	1	81028-
4		17A-61-41383	Hose	1	81028-
5		17A-61-41881	Bracket	1	81028-
6		01010-81230	Bolt	2	81028-
7		01643-31232	Washer	2	81028-
8		17A-61-41851	Bracket	1	81028-
9		01010-81230	Bolt	2	81028-
10		01643-31232	Washer	2	81028-
11		17A-61-41841	Flange	1	81028-
12		01010-81230	Bolt	3	81028-
13		01643-31232	Washer	3	81028-
14		02781-00422	Union	8	81028-
15		02896-11012	O-ring	8	81028-
16		07002-12034	O-ring	8	81028-
17		07094-30417	Clamp	4	81028-
18		07095-00420	Cushion	4	81028-
19		01010-81265	Bolt	2	81028-
20		01643-31232	Washer	2	81028-
21		07094-30417	Clamp	6	81028-
22		07095-00420	Cushion	6	81028-
23		01010-81265	Bolt	3	81028-
24		01643-31232	Washer	3	81028-
25		07094-10417	Clamp	4	81028-
26		07095-00420	Cushion	2	81028-
27		01010-81265	Bolt	2	81028-
28		01643-31232	Washer	2	81028-
29		17A-61-41161	Hose	1	81028-
30		17A-61-41151	Hose	1	81028-
31		17A-61-41141	Hose	1	81028-
32		17A-61-41171	Hose	1	81028-
33		17A-50-41151	Cover Assembly	2	81028-
34		01010-81680	Bolt	12	81028-
35		01643-31645	Washer	12	81028-
36		02781-00422	Union	8	81028-
37		02896-11012	O-ring	8	81028-
38		07002-12034	O-ring	8	81028-
39		07040-12012	Plug	4	81028-
40		07002-12034	O-ring	4	81028-

FIG. H2220-001001 Blade Tilt Piping, For Dual Tilt Pitch Dozer

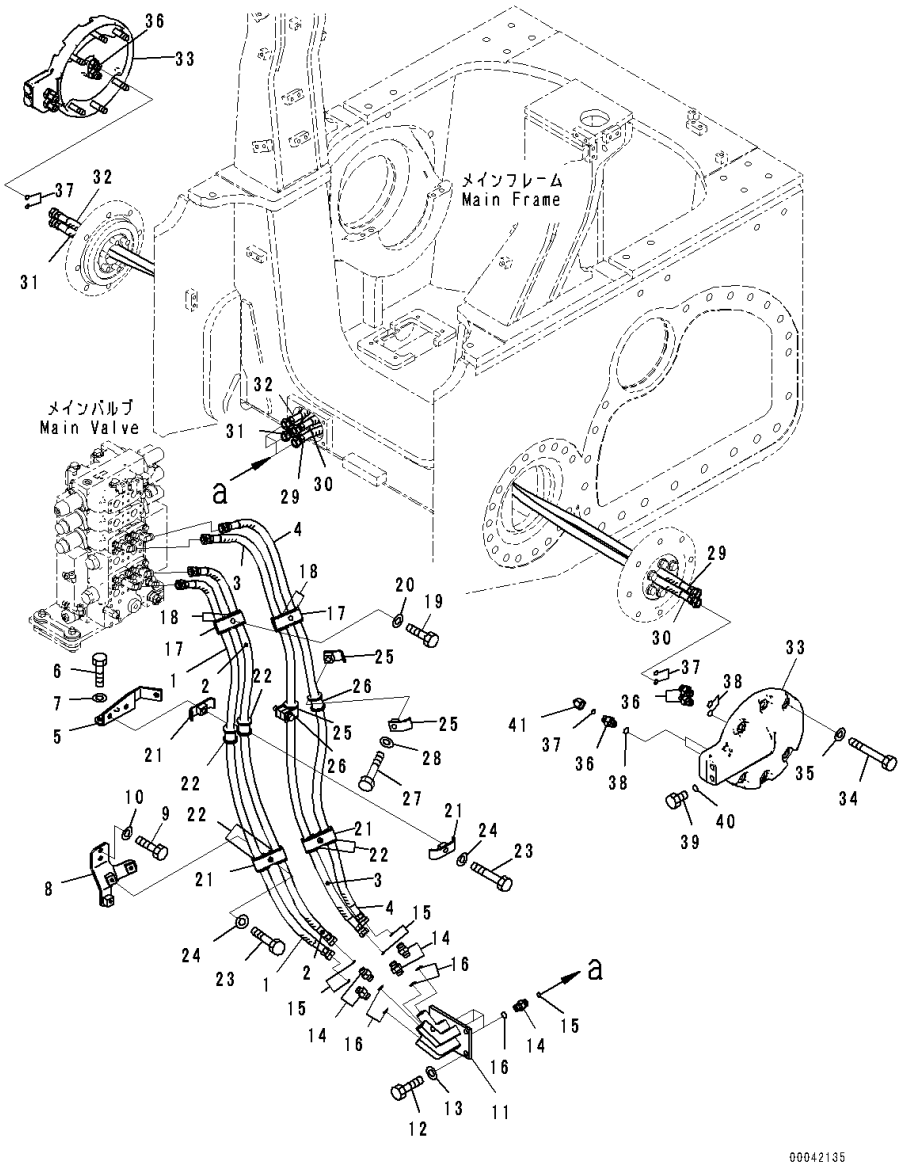

Index	Code	Part Number	Description	Qty	Serial Number
41		02789-10422	Plug, Face Seal Type	4	81028-

FIG. H2220-002001 Blade Tilt Piping

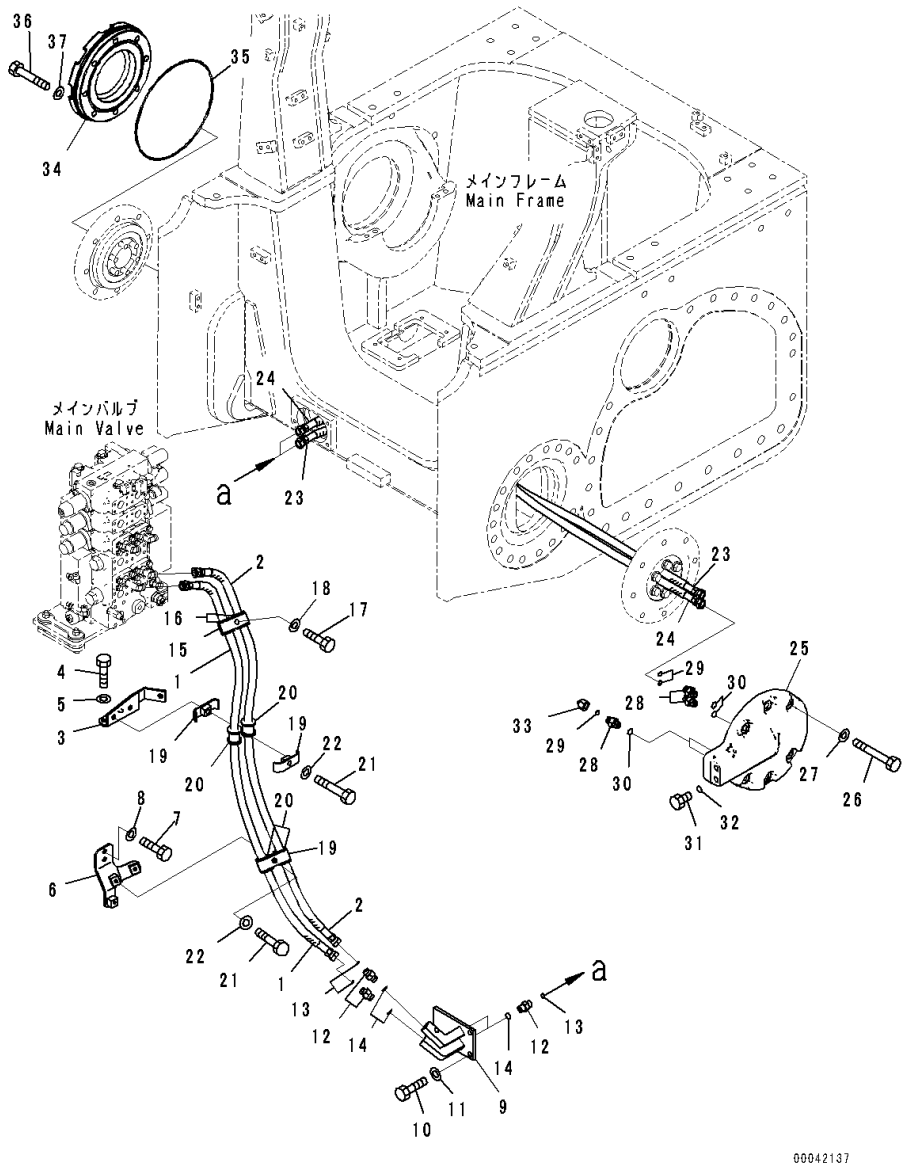

Index	Code	Part Number	Description	Qty	Serial Number
1		17A-61-41441	Hose	1	81028-
2		17A-61-41371	Hose	1	81028-
3		17A-61-41881	Bracket	1	81028-
4		01010-81230	Bolt	2	81028-
5		01643-31232	Washer	2	81028-
6		17A-61-41851	Bracket	1	81028-
7		01010-81230	Bolt	2	81028-
8		01643-31232	Washer	2	81028-
9		17A-61-41690	Flange	1	81028-
10		01010-81230	Bolt	3	81028-
11		01643-31232	Washer	3	81028-
12		02781-00422	Union	4	81028-
13		02896-11012	O-ring	4	81028-
14		07002-12034	O-ring	4	81028-
15		07094-30417	Clamp	2	81028-
16		07095-00420	Cushion	2	81028-
17		01010-81265	Bolt	1	81028-
18		01643-31232	Washer	1	81028-
19		07094-30417	Clamp	4	81028-
20		07095-00420	Cushion	4	81028-
21		01010-81265	Bolt	2	81028-
22		01643-31232	Washer	2	81028-
23		17A-61-41161	Hose	1	81028-
24		17A-61-41151	Hose	1	81028-
25		17A-50-41151	Cover Assembly	1	81028-
26		01010-81680	Bolt	6	81028-
27		01643-31645	Washer	6	81028-
28		02781-00422	Union	4	81028-
29		02896-11012	O-ring	4	81028-
30		07002-12034	O-ring	4	81028-
31		07040-12012	Plug	2	81028-
32		07002-12034	O-ring	2	81028-
33		02789-10422	Plug, Face Seal Type	2	81028-
34		17A-50-41171	Cover,RHS	1	81028-
35		07000-15230	O-ring	1	81028-
36		01010-81660	Bolt	8	81028-
37		01643-31645	Washer	8	81028-

FIG. H2250-001001 Ripper Piping, For Dual Tilt Pitch Dozer, (1/2)

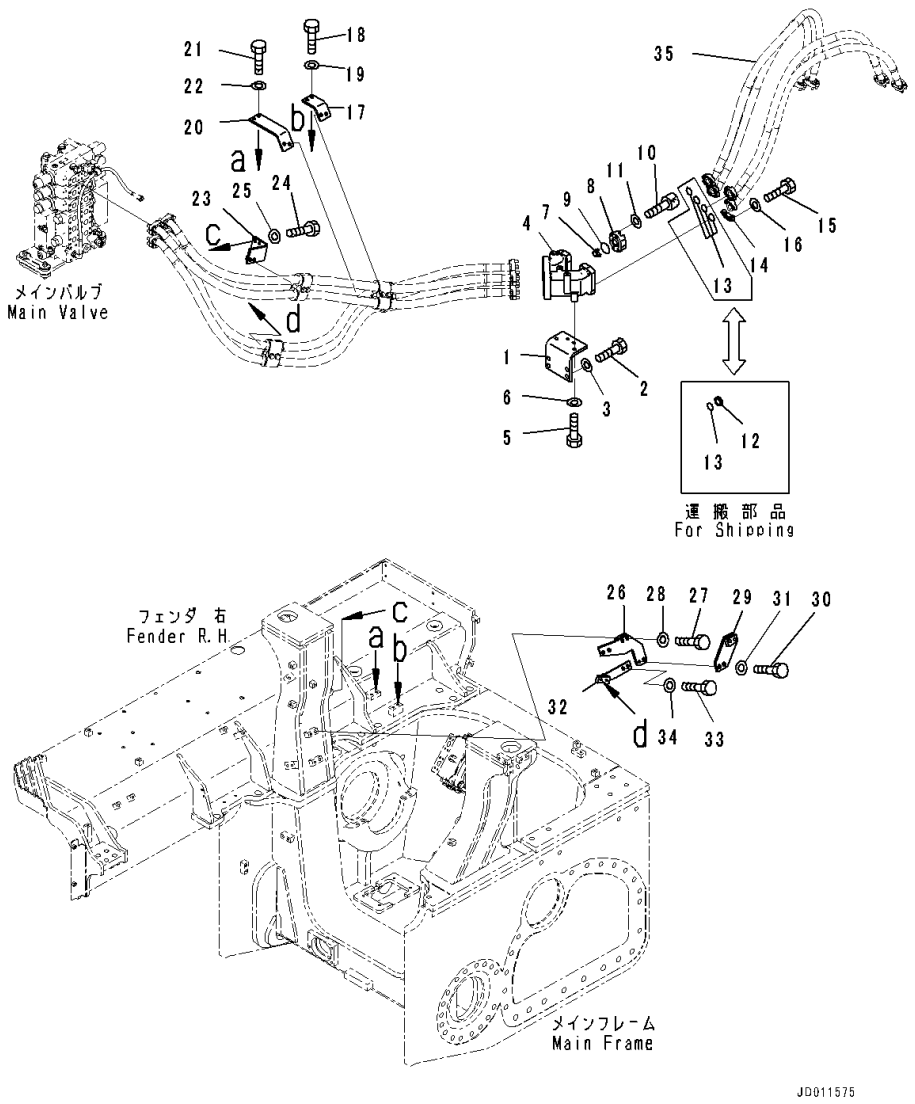

Index	Code	Part Number	Description	Qty	Serial Number
1		17A-78-42131	Bracket	1	81028-
2		01010-81640	Bolt	4	81028-
3		01643-31645	Washer	4	81028-
4		17A-78-42151	Block	1	81028-
5		01010-81235	Bolt	4	81028-
6		01643-31232	Washer	4	81028-
7		17A-78-12160	Valve	1	81028-
8		17A-78-12120	Flange	1	81028-
9		07000-13045	O-ring	1	81028-
10		01252-71035	Bolt, Hexagon Socket Head	4	81028-
11		01643-51032	Washer	4	81028-
12		07378-11000	Head	4	81028-
13		07000-13032	O-ring	4	81028-
14		07371-31049	Flange, Split	8	81028-
15		07372-21035	Bolt	16	81028-
16		01643-51032	Washer	16	81028-
17		17A-61-41192	Bracket	1	81028-
18		01010-81230	Bolt	2	81028-
19		01643-31232	Washer	2	81028-
20		17A-61-41211	Bracket	1	81028-
21		01010-81230	Bolt	2	81028-
22		01643-31232	Washer	2	81028-
23		17A-61-41221	Bracket	1	81028-
24		01010-81230	Bolt	2	81028-
25		01643-31232	Washer	2	81028-
26		17A-61-41242	Bracket	1	81028-
27		01010-81255	Bolt	2	81028-
28		01643-31232	Washer	2	81028-
29		17A-61-41391	Bracket	1	81028-
30		01010-81245	Bolt	2	81028-
31		01643-31232	Washer	2	81028-
32		17A-49-41582	Bracket	1	81028-
33		01010-81230	Bolt	2	81028-
34		01643-31232	Washer	2	81028-
35		(07120-01016)	Hose, Flange Type(Refer to Page 1055)		-

FIG. H2250-001002 Ripper Piping, For Dual Tilt Pitch Dozer, (2/2)

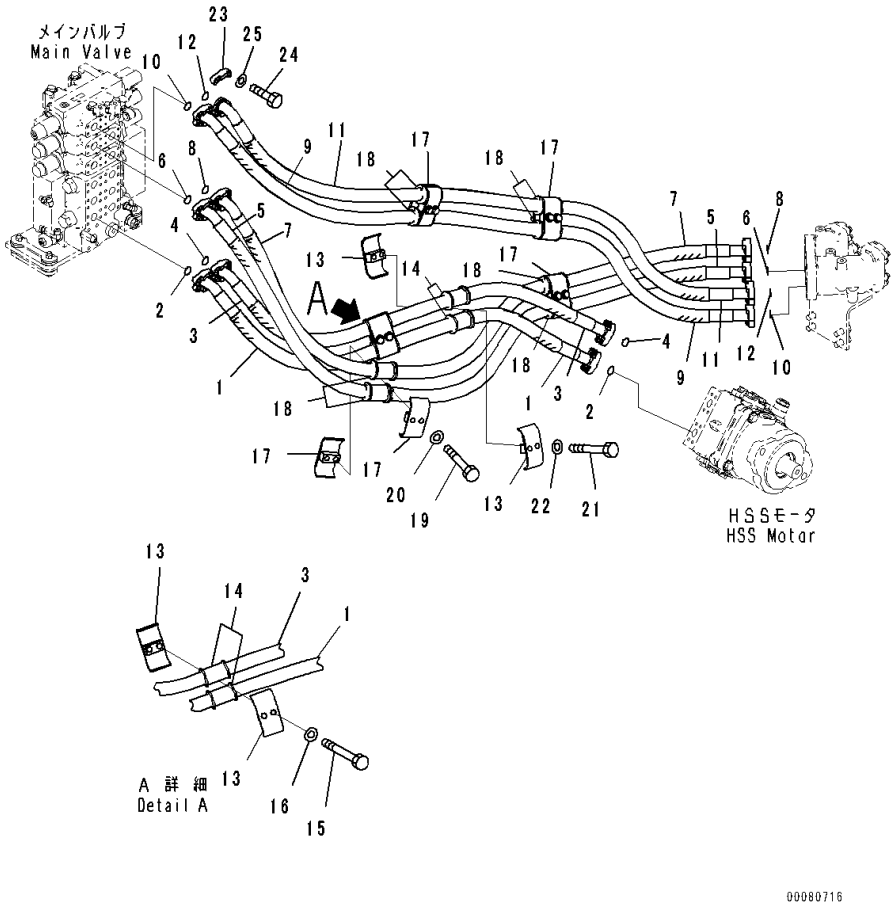

Index	Code	Part Number	Description	Qty	Serial Number
1		17A-61-41271	Hose	1	81028-
2		21T-09-11460	O-ring	2	81028-
3		17A-61-41282	Hose	1	81028-
4		21T-09-11460	O-ring	2	81028-
5		17A-61-41291	Hose	1	81028-
6		07000-13032	O-ring	2	81028-
7		17A-61-41311	Hose	1	81028-
8		07000-13032	O-ring	2	81028-
9		17A-61-41352	Hose	1	81028-
10		07000-13032	O-ring	2	81028-
11		17A-61-41361	Hose	1	81028-
12		07000-13032	O-ring	2	81028-
13		07094-31024	Clamp	4	81028-
14		07095-01035	Cushion	4	81028-
15		01010-81290	Bolt	2	81028-
16		01643-31232	Washer	2	81028-
17		07094-31024	Clamp	8	81028-
18		07095-01035	Cushion	8	81028-
19		01010-81290	Bolt	8	81028-
20		01643-31232	Washer	8	81028-
21		01011-81205	Bolt	2	81028-
22		01643-31232	Washer	2	81028-
23		07371-31049	Flange, Split	24	81028-
24		07372-21035	Bolt	48	81028-
25		01643-51032	Washer	48	81028-

FIG. H2250-002001 Ripper Piping, (1/2)

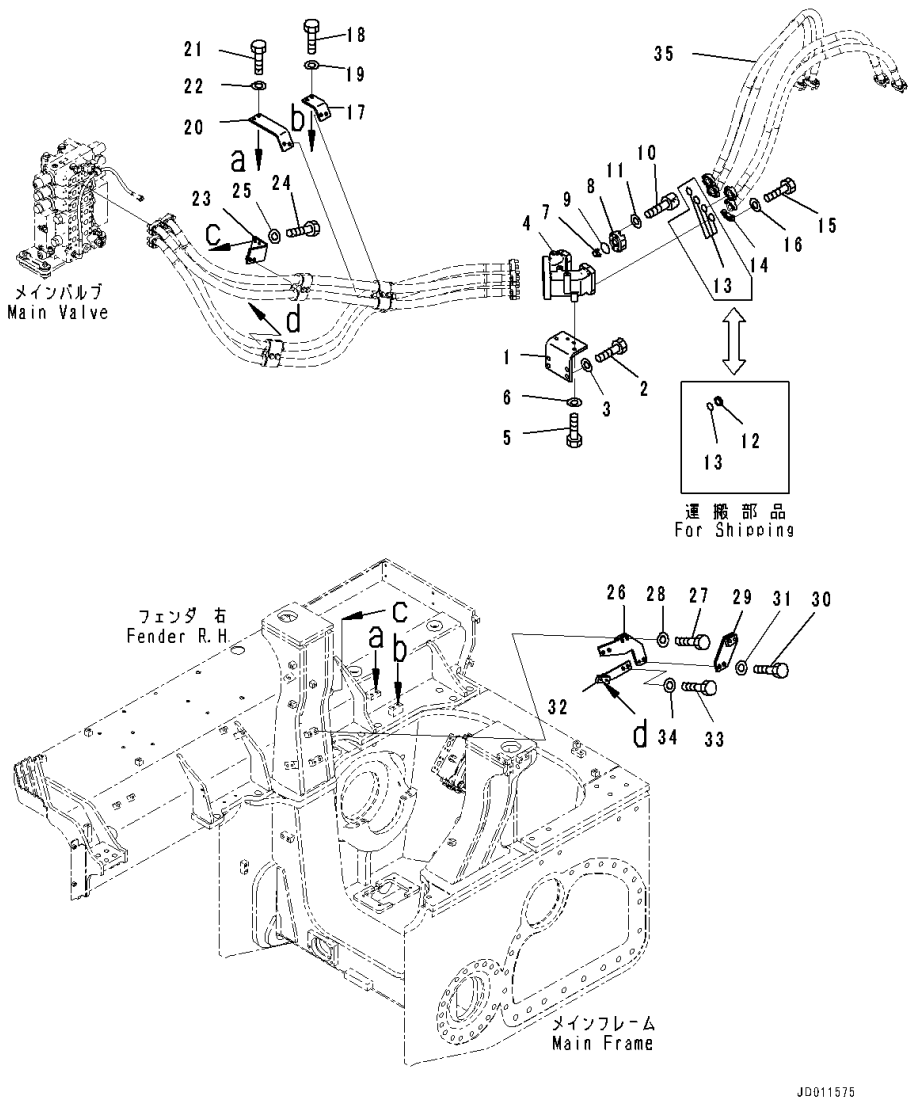

Index	Code	Part Number	Description	Qty	Serial Number
1		17A-78-42131	Bracket	1	81028-
2		01010-81640	Bolt	4	81028-
3		01643-31645	Washer	4	81028-
4		17A-78-42151	Block	1	81028-
5		01010-81235	Bolt	4	81028-
6		01643-31232	Washer	4	81028-
7		17A-78-12160	Valve	1	81028-
8		17A-78-12120	Flange	1	81028-
9		07000-13045	O-ring	1	81028-
10		01252-71035	Bolt, Hexagon Socket Head	4	81028-
11		01643-51032	Washer	4	81028-
12		07378-11000	Head	4	81028-
13		07000-13032	O-ring	4	81028-
14		07371-31049	Flange, Split	8	81028-
15		07372-21035	Bolt	16	81028-
16		01643-51032	Washer	16	81028-
17		17A-61-41192	Bracket	1	81028-
18		01010-81230	Bolt	2	81028-
19		01643-31232	Washer	2	81028-
20		17A-61-41211	Bracket	1	81028-
21		01010-81230	Bolt	2	81028-
22		01643-31232	Washer	2	81028-
23		17A-61-41221	Bracket	1	81028-
24		01010-81230	Bolt	2	81028-
25		01643-31232	Washer	2	81028-
26		17A-61-41242	Bracket	1	81028-
27		01010-81255	Bolt	2	81028-
28		01643-31232	Washer	2	81028-
29		17A-61-41391	Bracket	1	81028-
30		01010-81245	Bolt	2	81028-
31		01643-31232	Washer	2	81028-
32		17A-49-41582	Bracket	1	81028-
33		01010-81230	Bolt	2	81028-
34		01643-31232	Washer	2	81028-
35		(07120-01016)	Hose, Flange Type(Refer to Page 1055)		-

FIG. H2250-002002 Ripper Piping, (2/2)

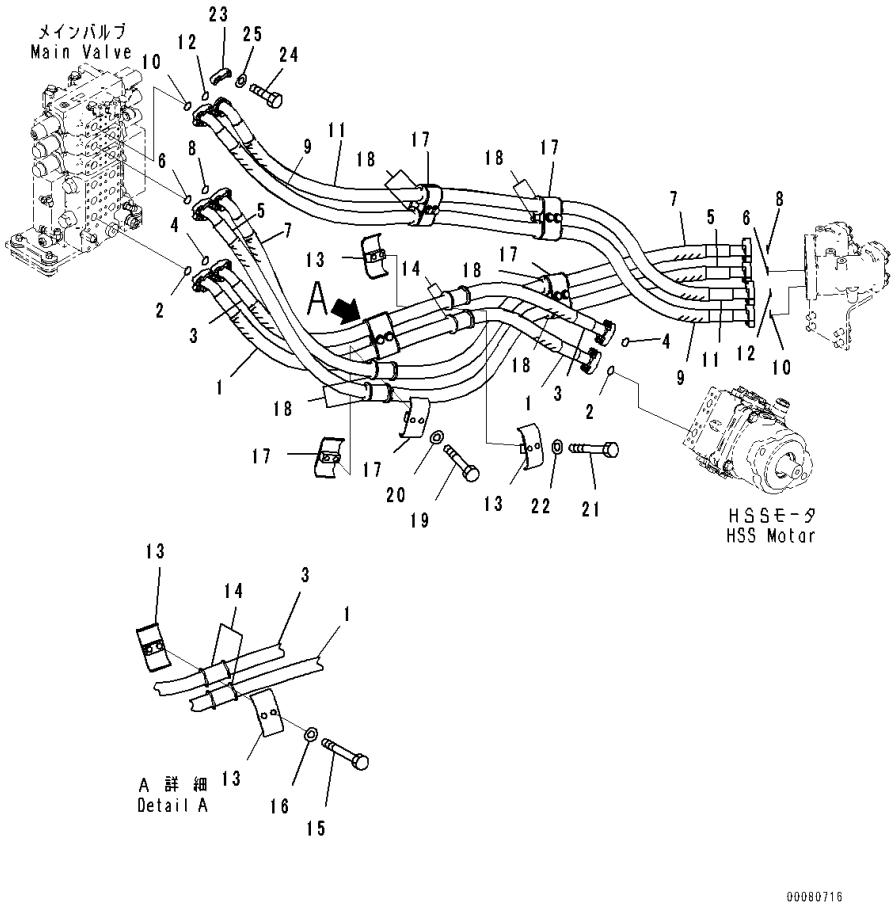

Index	Code	Part Number	Description	Qty	Serial Number
1		17A-61-41271	Hose	1	81028-
2		21T-09-11460	O-ring	2	81028-
3		17A-61-41282	Hose	1	81028-
4		21T-09-11460	O-ring	2	81028-
5		17A-61-41650	Hose	1	81028-
6		07000-13032	O-ring	2	81028-
7		17A-61-41660	Hose	1	81028-
8		07000-13032	O-ring	2	81028-
9		17A-61-41671	Hose	1	81028-
10		07000-13032	O-ring	2	81028-
11		17A-61-41680	Hose	1	81028-
12		07000-13032	O-ring	2	81028-
13		07094-31024	Clamp	4	81028-
14		07095-01035	Cushion	4	81028-
15		01010-81290	Bolt	2	81028-
16		01643-31232	Washer	2	81028-
17		07094-31024	Clamp	8	81028-
18		07095-01035	Cushion	8	81028-
19		01010-81290	Bolt	8	81028-
20		01643-31232	Washer	8	81028-
21		01011-81205	Bolt	2	81028-
22		01643-31232	Washer	2	81028-
23		07371-31049	Flange, Split	24	81028-
24		07372-21035	Bolt	48	81028-
25		01643-51032	Washer	48	81028-

FIG. H2252-001001 Ripper Pin Puller Piping, For Giant Ripper

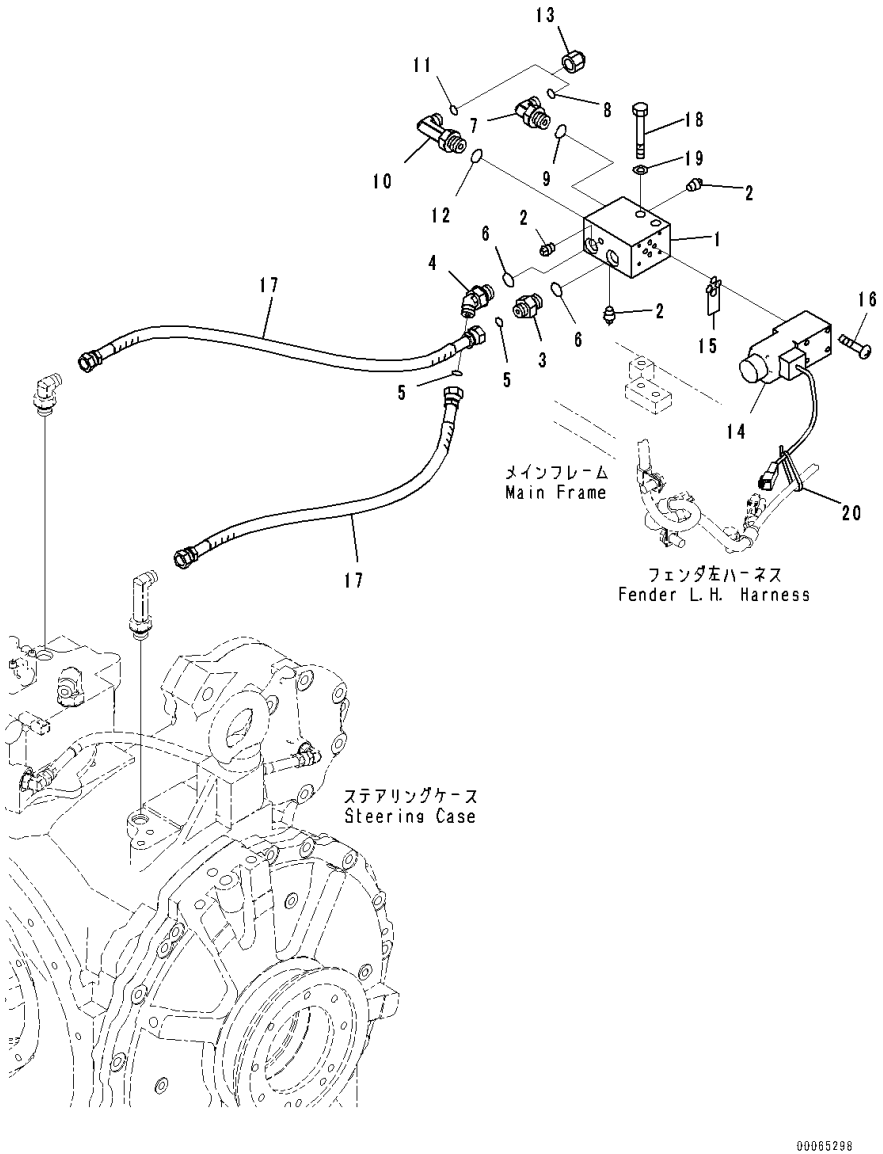

Index	Code	Part Number	Description	Qty	Serial Number
1		17A-79-41310	Body	1	81028-
2		07042-70108	Plug	3	81028-
3		02781-00315	Union	1	81028-
4		02783-10315	Elbow	1	81028-
5		02896-11009	O-ring	2	81028-
6		07002-12034	O-ring	2	81028-
7		02782-10315	Elbow	1	81028-
8		02896-11009	O-ring	1	81028-
9		07002-12034	O-ring	1	81028-
10		02782-10316	Elbow	1	81028-
11		02896-11009	O-ring	1	81028-
12		07002-12034	O-ring	1	81028-
13		02789-10315	Plug	2	81028-
14		198-06-56580	Valve	1	81028-
15		07000-11009	O-ring	4	81028-
16		01220-40545	Screw, Philips Head	4	81028-
17		17A-61-41760	Hose	2	81028-
18		01010-81275	Bolt	2	81028-
19		01643-31232	Washer	2	81028-
20		08034-20414	Band	1	81028-

FIG. H2252-002001 Ripper Pin Puller Piping, For Multi Ripper

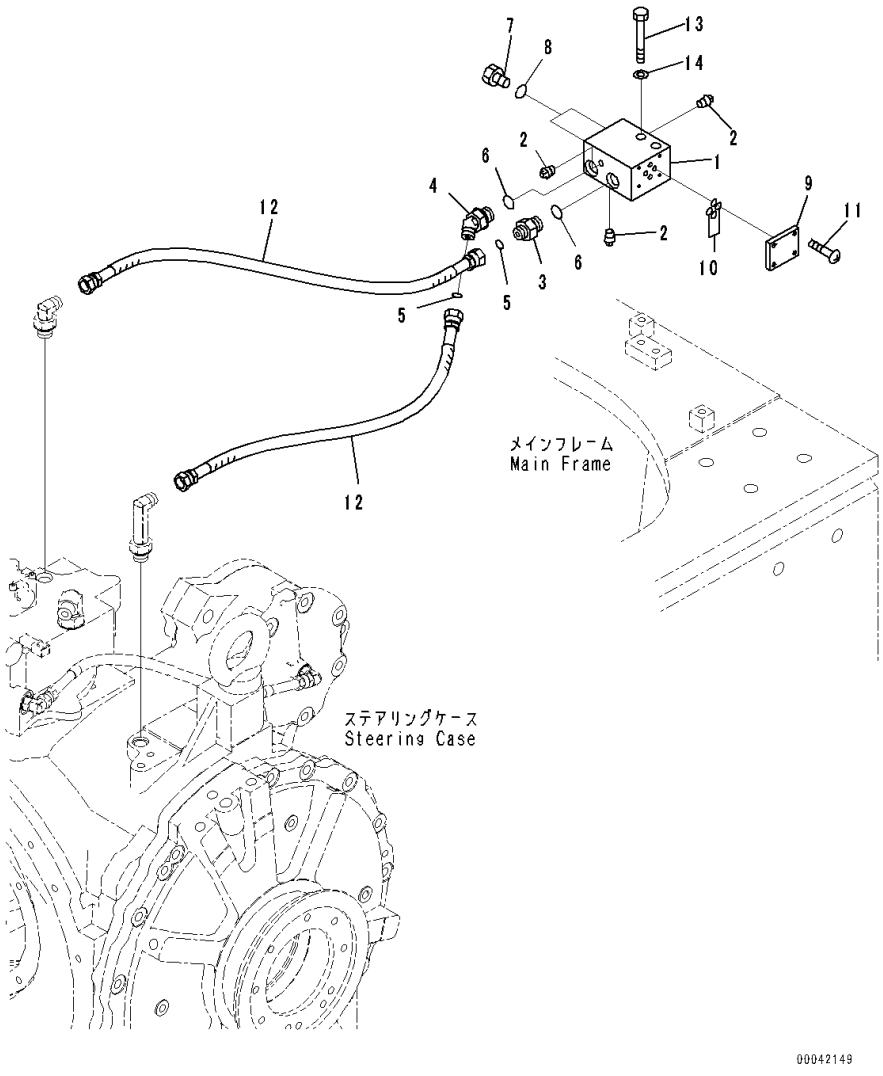

Index	Code	Part Number	Description	Qty	Serial Number
1		17A-79-41310	Body	1	81028-
2		07042-70108	Plug	3	81028-
3		02781-00315	Union	1	81028-
4		02783-10315	Elbow	1	81028-
5		02896-11009	O-ring	2	81028-
6		07002-12034	O-ring	2	81028-
7		07040-12012	Plug	2	81028-
8		07002-12034	O-ring	2	81028-
9		195-79-12410	Plate	1	81028-
10		07000-11009	O-ring	4	81028-
11		01220-40516	Screw, Philips Head	4	81028-
12		17A-61-41760	Hose	2	81028-
13		01010-81275	Bolt	2	81028-
14		01643-31232	Washer	2	81028-

FIG. H2260-001001 Cooling Fan Drive Piping, Fan Motor Delivery Piping

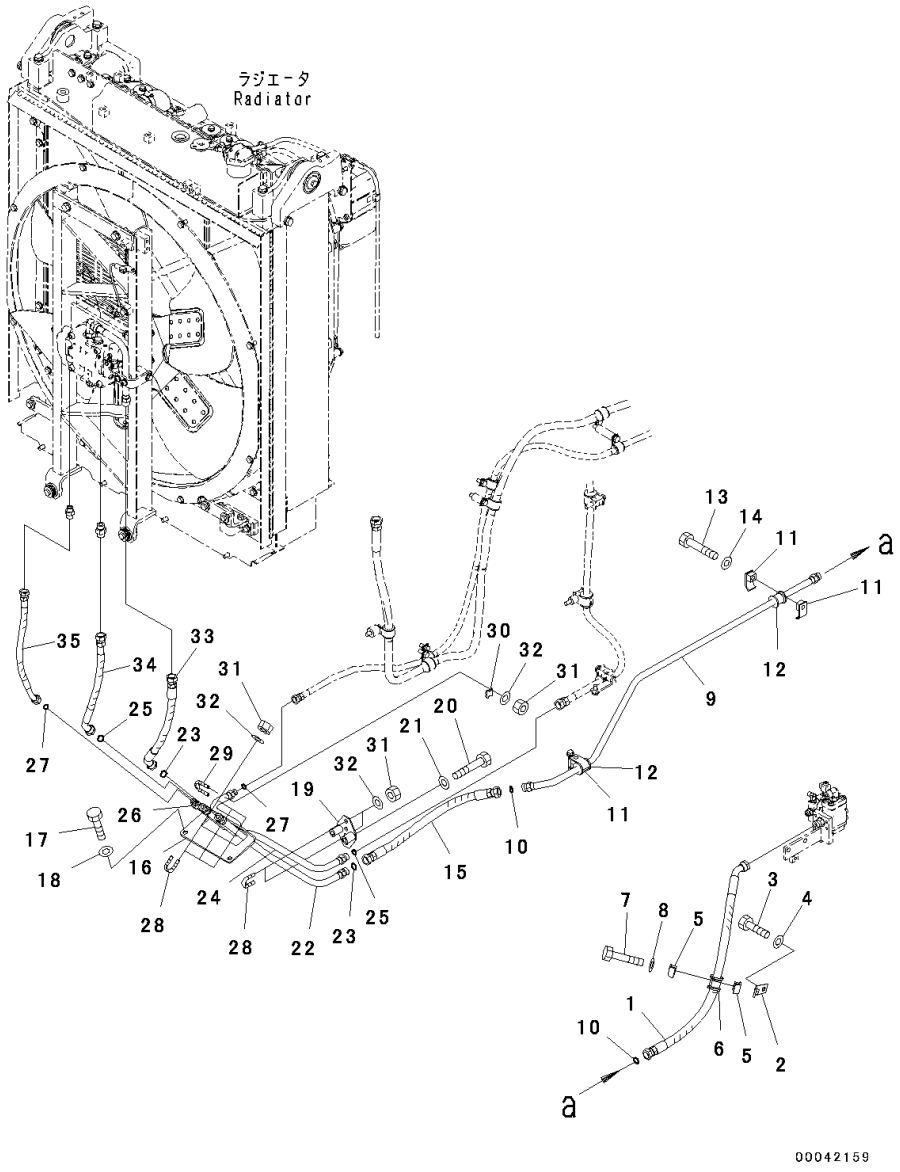

Index	Code	Part Number	Description	Qty	Serial Number
		Note: This list covers following specifications.			
		For Scraper			
		Without Scraper			
		Landfill Specification			
1		17A-61-41571	Hose	1	81028-
2		17A-61-41630	Bracket	1	81028-
3		01010-81230	Bolt	1	81028-
4		01643-31232	Washer	1	81028-
5		07094-10518	Clamp	2	81028-
6		07095-00524	Cushion	1	81028-
7		01010-81265	Bolt	1	81028-
8		01643-31232	Washer	1	81028-
9		17A-61-41611	Tube	1	81028-
10		02896-11015	O-ring	2	81028-
11		07094-10417	Clamp	6	81028-
12		07095-00421	Cushion	3	81028-
13		01010-81265	Bolt	3	81028-
14		01643-31232	Washer	3	81028-
15		02765-005A5	Hose, Face Seal Type	1	81028-
16		17A-03-43221	Bracket	1	81028-
17		01010-81225	Bolt	2	81028-
18		01643-31232	Washer	2	81028-
19		17A-03-43261	Bracket	1	81028-
20		01010-81265	Bolt	2	81028-
21		01643-31232	Washer	2	81028-
22		17A-03-43231	Tube	1	81028-
23		02896-11015	O-ring	2	81028-
24		17A-03-43241	Tube	1	81028-
25		02896-11015	O-ring	2	81028-
26		17A-03-43250	Tube	1	81028-
27		02896-11012	O-ring	2	81028-
28		07283-32236	Clip, Pipe	5	81028-
29		07283-32244	Clip	1	81028-
30		07283-52232	Seat	1	81028-
31		01597-01009	Nut	12	81028-
32		01643-31032	Washer	12	81028-
33		02767-005A4	Hose, Face Seal Type	1	81028-
34		02764-00504	Hose, Face Seal Type	1	81028-
35		17A-61-41580	Hose	1	81028-

FIG. H2260-001002 Cooling Fan Drive Piping, For Scraper, Fan Motor Return and Drain Piping

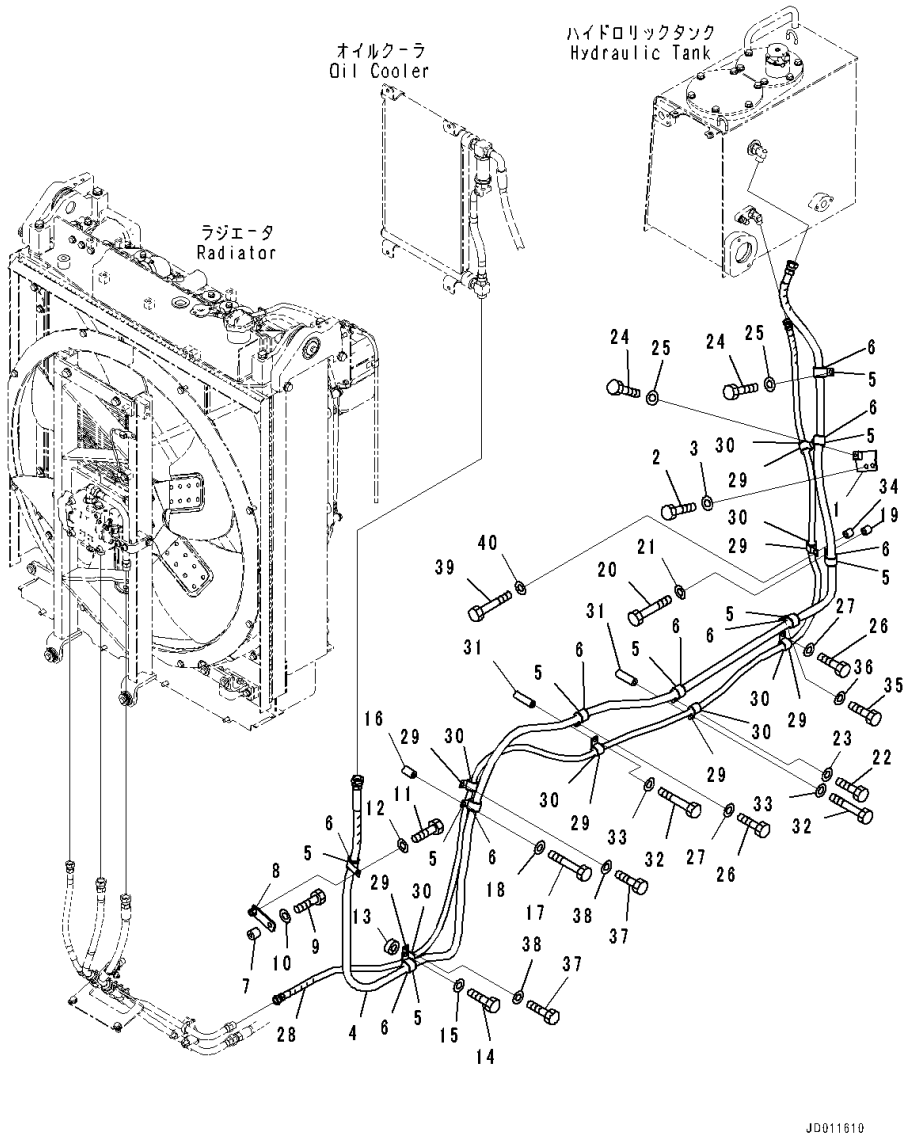

Index	Code	Part Number	Description	Qty	Serial Number
1		17A-61-41340	Bracket	1	81028-
2		01010-81225	Bolt	2	81028-
3		01643-31232	Washer	2	81028-
4		17A-03-41942	Hose	1	81028-
5		04434-53412	Clip	9	81028-
6		07095-20625	Cushion	9	81028-
7		113-99-21890	Spacer	1	81028-
8		154-Z11-5340	Bracket	1	81028-
9		01010-81235	Bolt	1	81028-
10		01643-31232	Washer	1	81028-
11		01010-81255	Bolt	1	81028-
12		01643-31232	Washer	1	81028-
13		198-43-15310	Collar	1	81028-
14		01010-81235	Bolt	1	81028-
15		01643-31232	Washer	1	81028-
16		205-03-71330	Collar	1	81028-
17		01010-81265	Bolt	1	81028-
18		01643-31232	Washer	1	81028-
19		6131-22-3750	Boss	1	81028-
20		01010-81250	Bolt	1	81028-
21		01643-31232	Washer	1	81028-
22		01010-81230	Bolt	1	81028-
23		01643-31232	Washer	1	81028-
24		01010-81225	Bolt	2	81028-
25		01643-31232	Washer	2	81028-
26		01010-81220	Bolt	2	81028-
27		01643-31232	Washer	2	81028-
28		17A-61-41591	Hose	1	81028-
29		04434-52712	Clip	7	81028-
30		07095-20419	Cushion	7	81028-
31		581-60-17860	Spacer	2	81028-
32		01011-81205	Bolt	2	81028-
33		01643-31232	Washer	2	81028-
34		195-33-11220	Spacer	1	81028-
35		01010-81250	Bolt	1	81028-
36		01643-31232	Washer	1	81028-
37		01010-81230	Bolt	2	81028-
38		01643-31232	Washer	2	81028-
39		01010-81250	Bolt	1	81028-
40		01643-31232	Washer	1	81028-

FIG. H2260-004002A Cooling Fan Drive Piping, Without Scraper, Fan Motor Return and Drain Piping

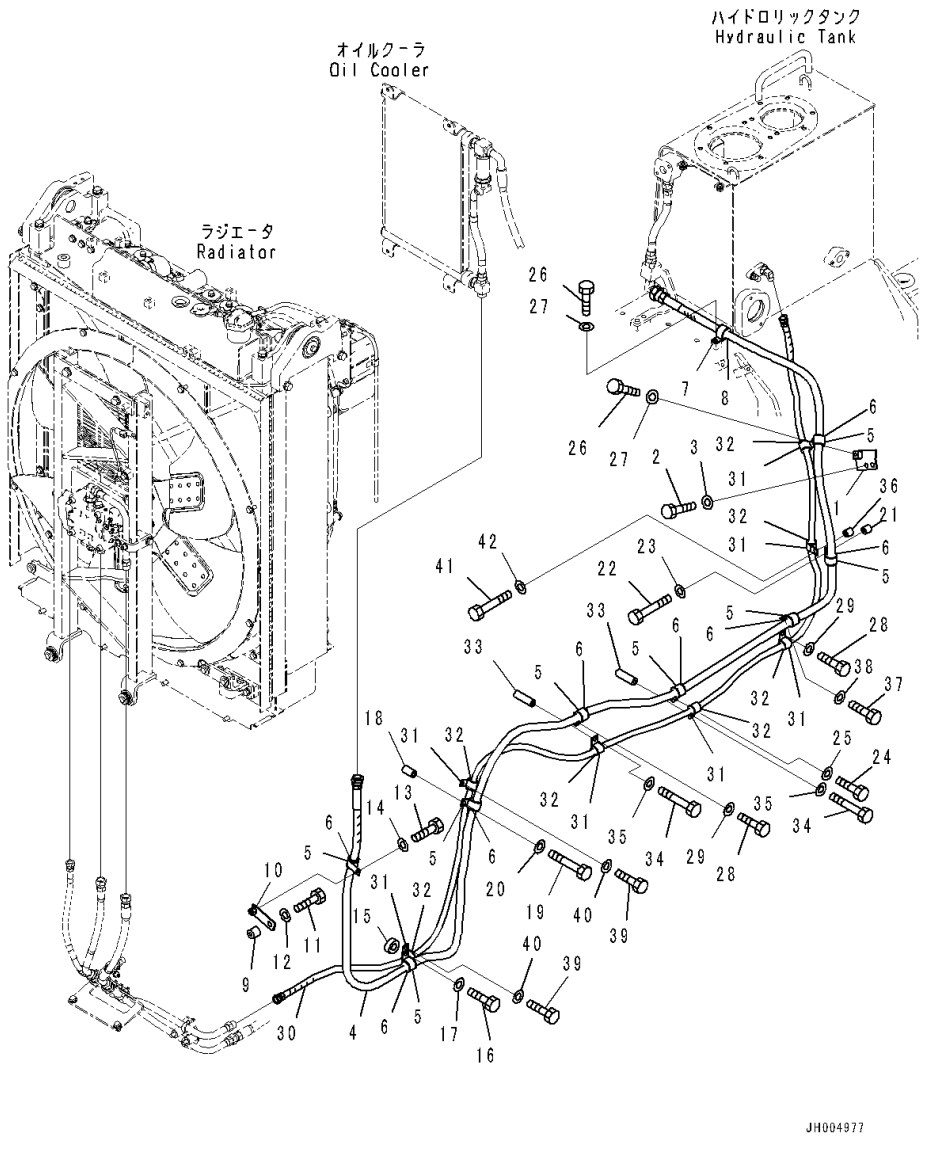

Index	Code	Part Number	Description	Qty	Serial Number
1		17A-61-41340	Bracket	1	81028-
2		01010-81225	Bolt	2	81028-
3		01643-31232	Washer	2	81028-
4		17A-03-41943	Hose	1	81028-
5		04434-53412	Clip	8	81157-
6		07095-20625	Cushion	8	81157-
7		04434-53412	Clip	1	81157-
8		07095-20625	Cushion	1	81157-
9		113-99-21890	Spacer	1	81028-
10		154-Z11-5340	Bracket	1	81028-
11		01010-81235	Bolt	1	81028-
12		01643-31232	Washer	1	81028-
13		01010-81255	Bolt	1	81028-
14		01643-31232	Washer	1	81028-
15		198-43-15310	Collar	1	81028-
16		01010-81235	Bolt	1	81028-
17		01643-31232	Washer	1	81028-
18		205-03-71330	Collar	1	81028-
19		01010-81265	Bolt	1	81028-
20		01643-31232	Washer	1	81028-
21		6131-22-3750	Boss	1	81028-
22		01010-81250	Bolt	1	81028-
23		01643-31232	Washer	1	81028-
24		01010-81230	Bolt	1	81028-
25		01643-31232	Washer	1	81028-
26		01010-81225	Bolt	2	81028-
27		01643-31232	Washer	2	81028-
28		01010-81220	Bolt	2	81028-
29		01643-31232	Washer	2	81028-
30		17A-61-41592	Hose	1	81028-
31		04434-52712	Clip	7	81028-
32		07095-20419	Cushion	7	81028-
33		581-60-17860	Spacer	2	81028-
34		01011-81205	Bolt	2	81028-
35		01643-31232	Washer	2	81028-
36		195-33-11220	Spacer	1	81028-
37		01010-81250	Bolt	1	81028-
38		01643-31232	Washer	1	81028-
39		01010-81230	Bolt	2	81028-
40		01643-31232	Washer	2	81028-

FIG. H2260-004002A Cooling Fan Drive Piping, Without Scraper, Fan Motor Return and Drain Piping

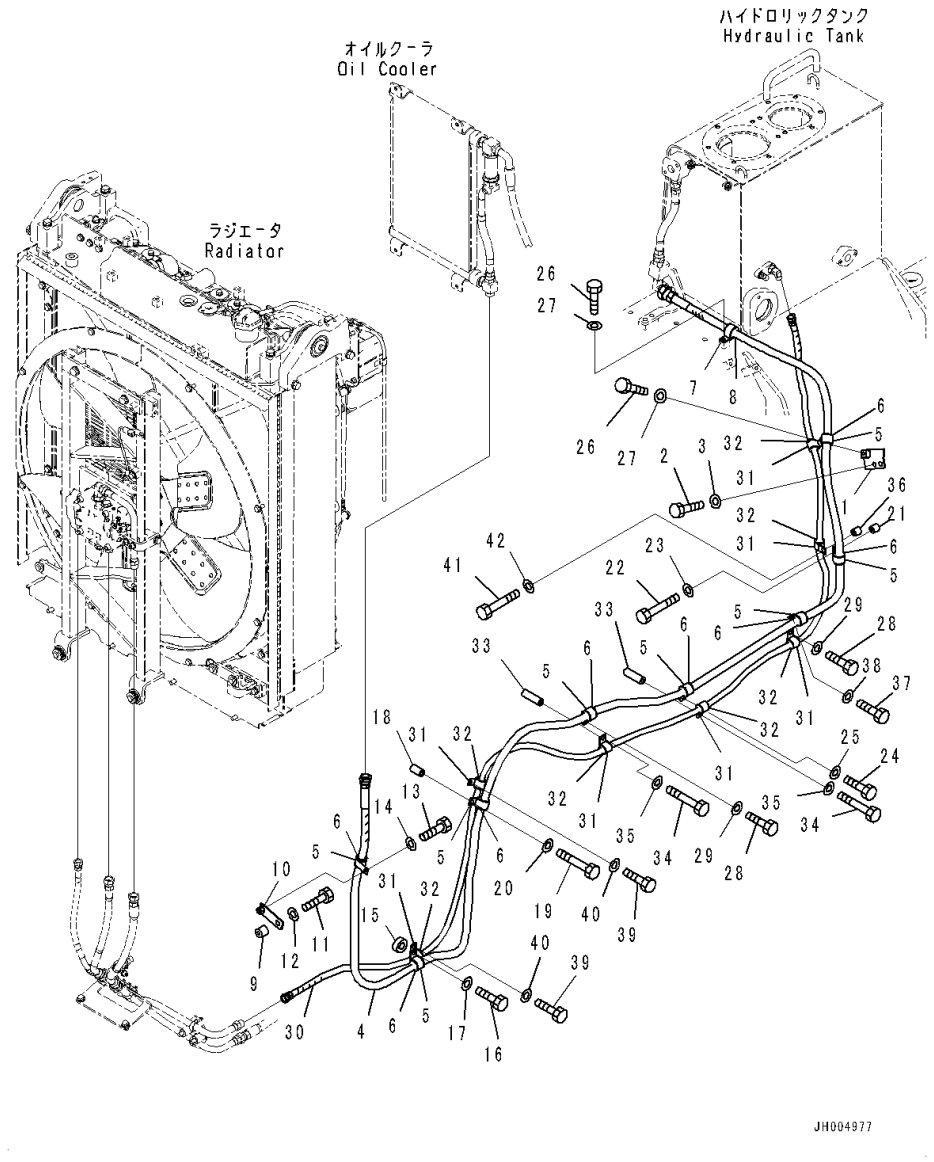

Index	Code	Part Number	Description	Qty	Serial Number
41		01010-81250	Bolt	1	81028-
42		01643-31232	Washer	1	81028-

FIG. H2260-002002 Cooling Fan Drive Piping, Landfill Specification, Fan Motor Return and Drain Piping

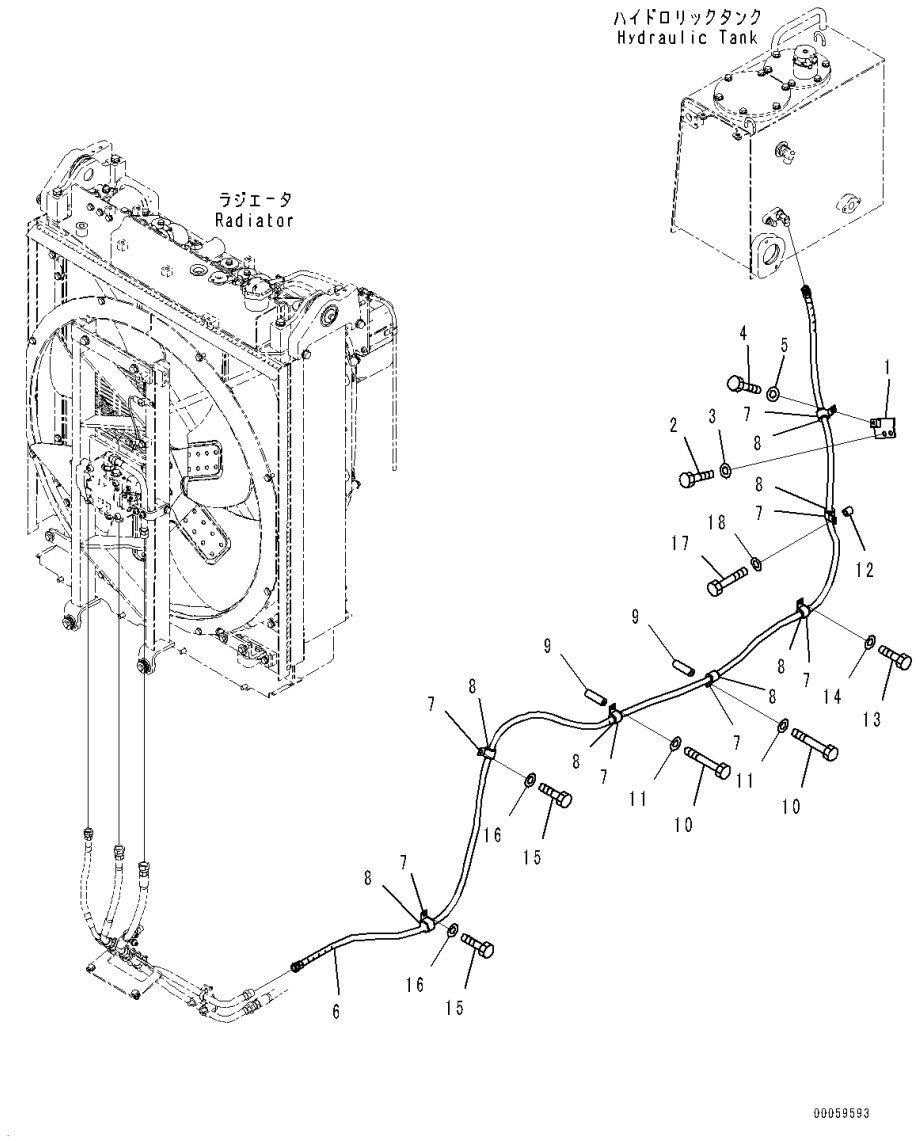

Index	Code	Part Number	Description	Qty	Serial Number
1		17A-61-41340	Bracket	1	81028-
2		01010-81225	Bolt	2	81028-
3		01643-31232	Washer	2	81028-
4		01010-81220	Bolt	1	81028-
5		01643-31232	Washer	1	81028-
6		17A-61-41591	Hose	1	81028-
7		04434-52712	Clip	7	81028-
8		07095-20419	Cushion	7	81028-
9		581-60-17860	Spacer	2	81028-
10		01011-81205	Bolt	2	81028-
11		01643-31232	Washer	2	81028-
12		195-33-11220	Spacer	1	81028-
13		01010-81250	Bolt	1	81028-
14		01643-31232	Washer	1	81028-
15		01010-81230	Bolt	2	81028-
16		01643-31232	Washer	2	81028-
17		01010-81250	Bolt	1	81028-
18		01643-31232	Washer	1	81028-

FRAME AND ITS RELATED PARTS

FIG. J2100-001001 Main Frame

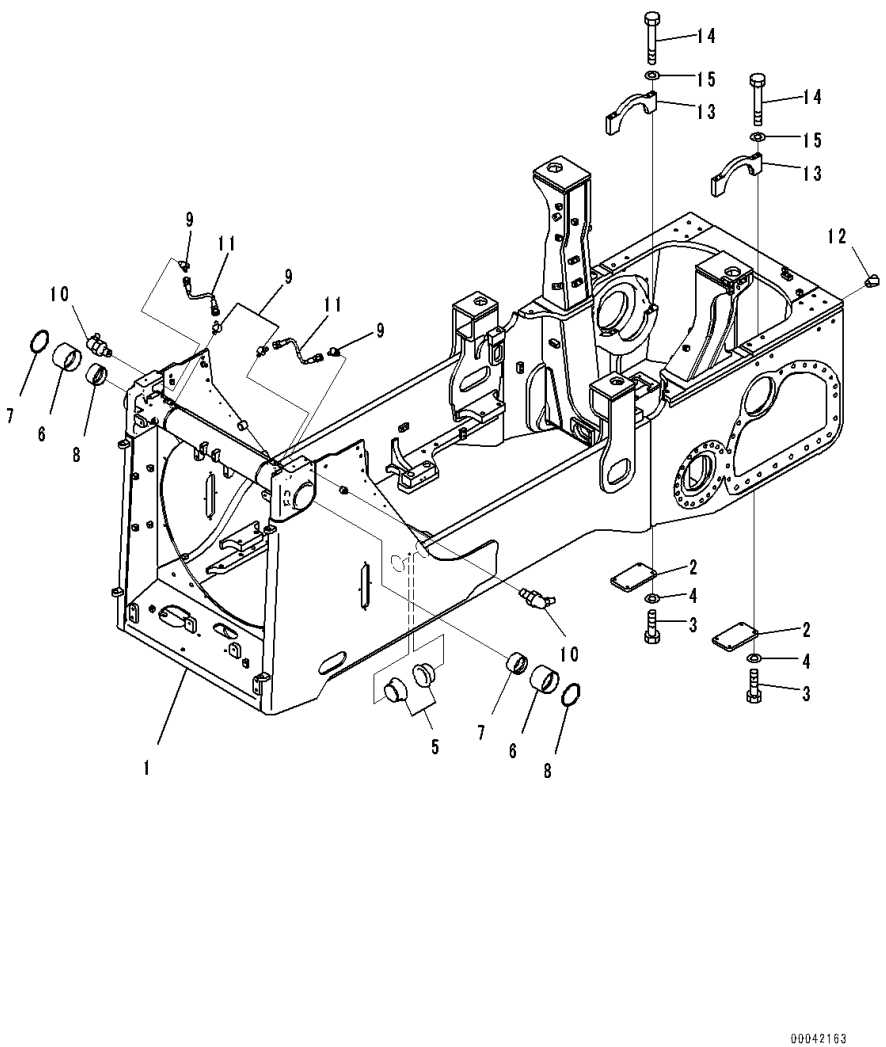

Index	Code	Part Number	Description	Qty	Serial Number
1		17A-21-41211	Frame Assembly	1	81028-
2		17A-21-11151	Plate	2	81028-
3		01010-81225	Bolt	8	81028-
4		01643-31232	Washer	8	81028-
5		17A-50-42211	Bushing	2	81028-
6		175-61-15450	Bushing	2	81028-
7		175-61-15460	Bushing	2	81028-
8		07145-00125	Seal, Dust	2	81028-
9		201-62-41910	Elbow	4	81028-
10		07020-00675	Fitting, Grease	2	81028-
11		17A-61-41820	Hose	2	81028-
12		07049-03949	Plug, Cork	22	81028-
13		17A-21-41391	Cap	2	81028-
14		01011-81655	Bolt	8	81028-
15		01643-31645	Washer	8	81028-

FIG. J2100-002001 Main Frame, Landfill Specification

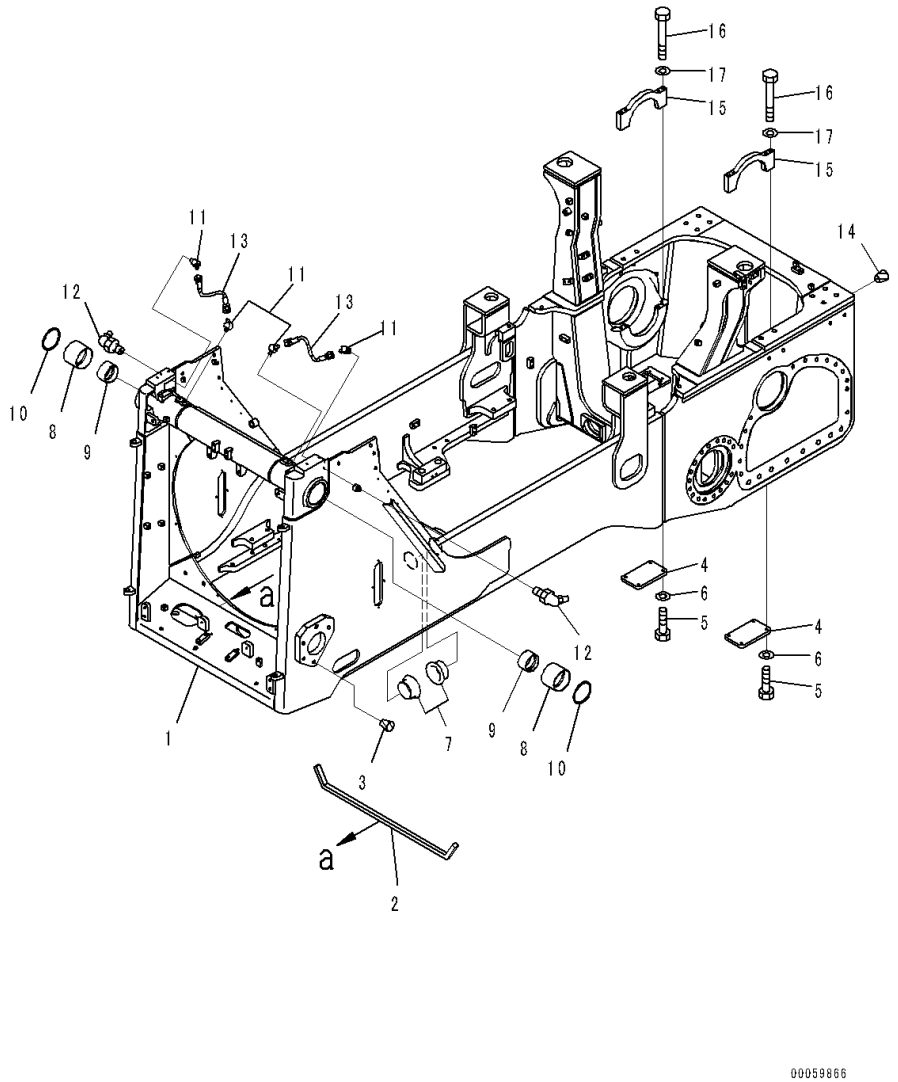

Index	Code	Part Number	Description	Qty	Serial Number
1		17A-21-41512	Frame Assembly	1	81028-
2		17A-21-41550	Seal	1	81028-
3		07049-02430	Plug	10	81028-
4		17A-21-11151	Plate	2	81028-
5		01010-81225	Bolt	8	81028-
6		01643-31232	Washer	8	81028-
7		17A-50-42211	Bushing	2	81028-
8		175-61-15450	Bushing	2	81028-
9		175-61-15460	Bushing	2	81028-
10		07145-00125	Seal, Dust	2	81028-
11		201-62-41910	Elbow	4	81028-
12		07020-00675	Fitting, Grease	2	81028-
13		17A-61-41820	Hose	2	81028-
14		07049-03949	Plug, Cork	22	81028-
15		17A-21-41391	Cap	2	81028-
16		01011-81655	Bolt	8	81028-
17		01643-31645	Washer	8	81028-

FIG. J2112-001001 Level Gauge Piping

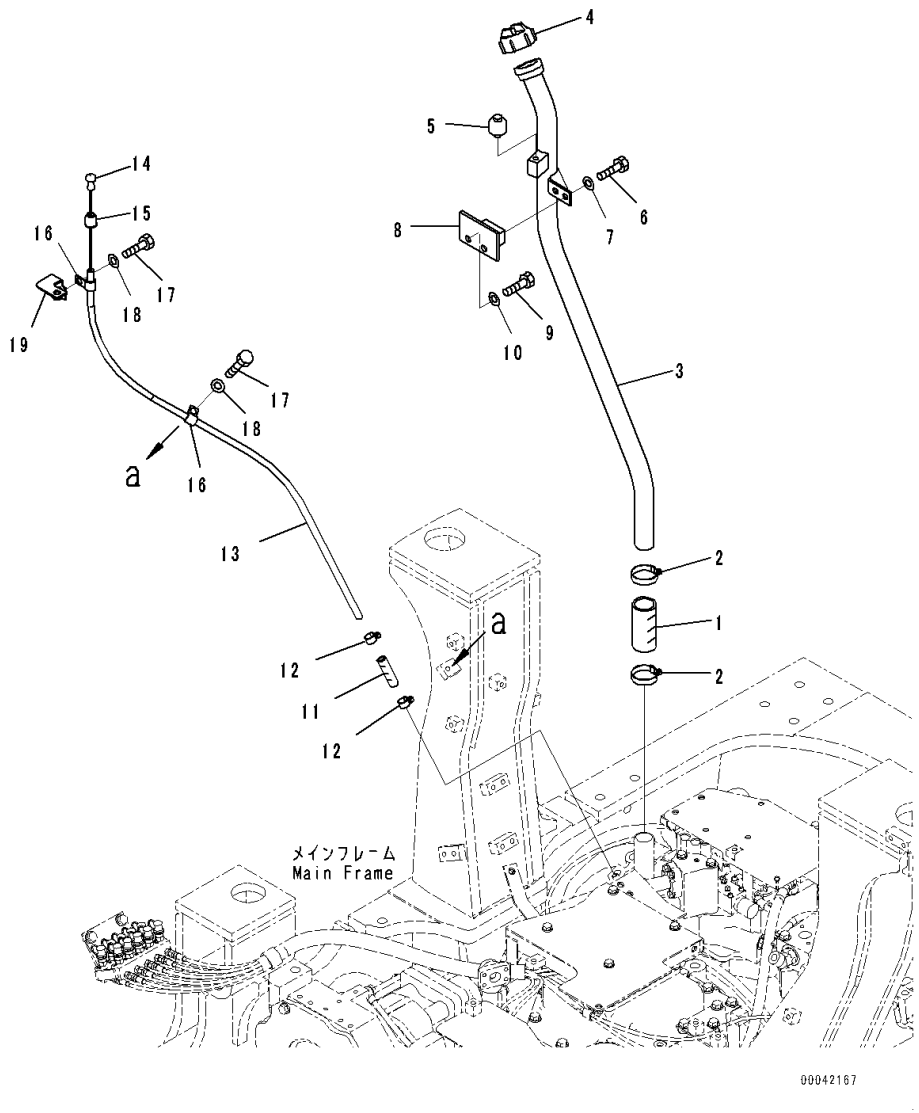

Index	Code	Part Number	Description	Qty	Serial Number
1		07260-24111	Hose	1	81028-
2		07281-00549	Clamp	2	81028-
3		17A-21-43111	Tube	1	81028-
4		07051-01000	Cap, Oil Filler	1	81028-
		07051-00005	• Gasket	1	81028-
5		07030-00252	Breather	1	81028-
6		01010-81225	Bolt	2	81028-
7		01643-31232	Washer	2	81028-
8		17A-21-43141	Bracket	1	81028-
9		01010-81230	Bolt	2	81028-
10		01643-31232	Washer	2	81028-
11		17A-21-13131	Hose	1	81028-
12		07281-00259	Clamp	2	81028-
13		17A-21-43120	Pipe	1	81028-
14		17A-21-43131	Gauge	1	81028-
15		08013-01513	• Cap	1	81028-
16		04434-51412	Clip	2	81028-
17		01010-81230	Bolt	2	81028-
18		01643-31232	Washer	2	81028-
19		17A-21-43150	Bracket	1	81028-

FIG. J2112-002001 Level Gauge Piping, Landfill Specification

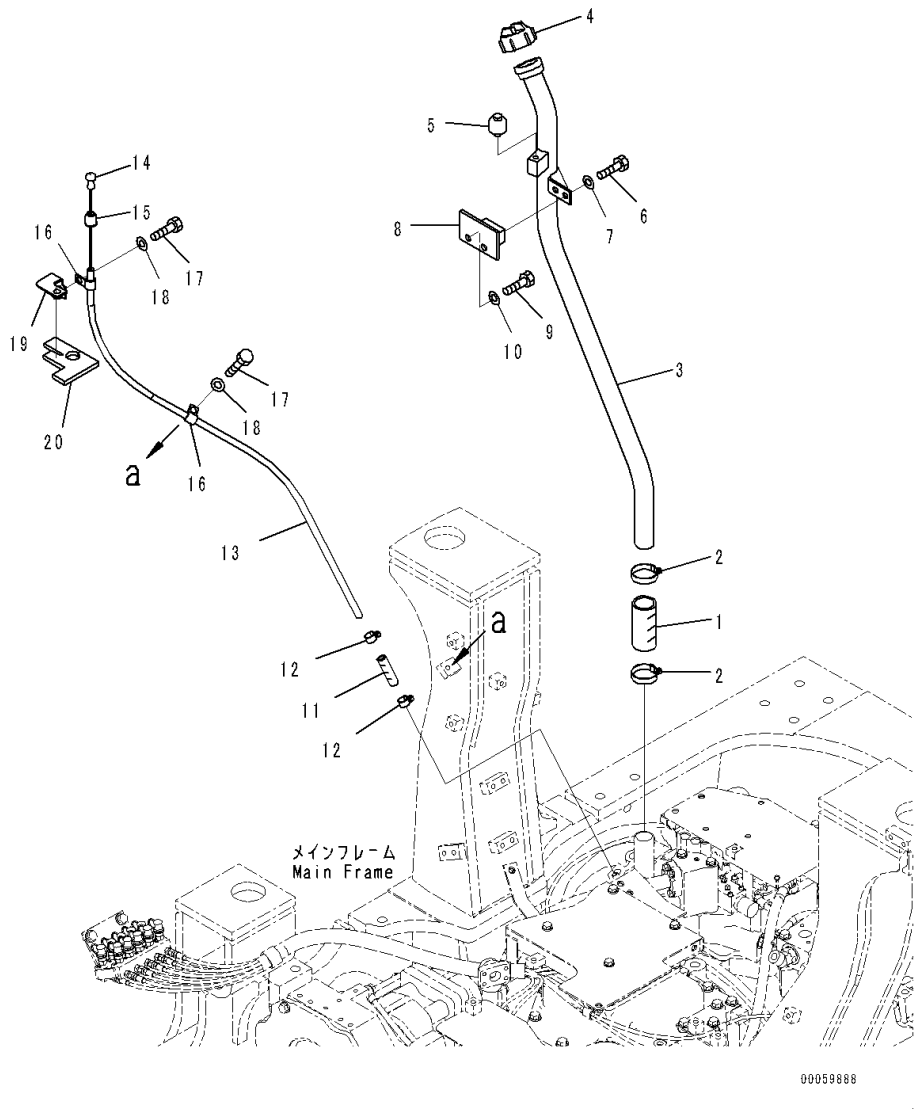

Index	Code	Part Number	Description	Qty	Serial Number
1		07260-24111	Hose	1	81028-
2		07281-00549	Clamp	2	81028-
3		17A-21-43111	Tube	1	81028-
4		07051-01000	Cap, Oil Filler	1	81028-
		07051-00005	• Gasket	1	81028-
5		07030-00252	Breather	1	81028-
6		01010-81225	Bolt	2	81028-
7		01643-31232	Washer	2	81028-
8		17A-21-43141	Bracket	1	81028-
9		01010-81230	Bolt	2	81028-
10		01643-31232	Washer	2	81028-
11		17A-21-13131	Hose	1	81028-
12		07281-00259	Clamp	2	81028-
13		17A-21-43120	Pipe	1	81028-
14		17A-21-43131	Gauge	1	81028-
15		08013-01513	• Cap	1	81028-
16		04434-51412	Clip	2	81028-
17		01010-81230	Bolt	2	81028-
18		01643-31232	Washer	2	81028-
19		17A-21-43170	Bracket	1	81028-
20		17A-21-43180	• Seal	1	81028-

FIG. J2700-001001 Suspension, For Dual Tilt Pitch Dozer, Equalizer Bar

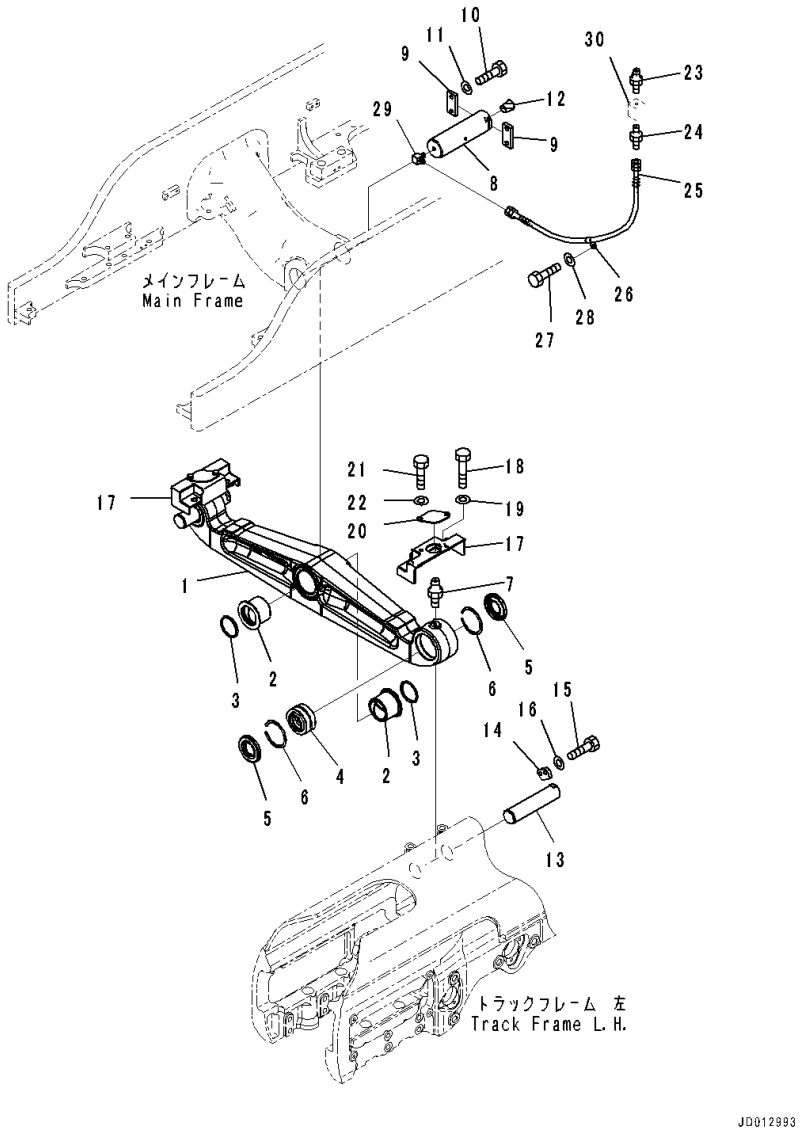

Index	Code	Part Number	Description	Qty	Serial Number
		17A-50-00111	Equalizer Bar Assembly	1	81028-
1	C1		• Bar	1	81028-
2		17A-50-42131	• Bushing	2	81028-
3		15A-78-11180	• Seal, Dust	2	81028-
4		17A-50-42151	• Bushing	2	81028-
5		17A-50-42160	• Seal	4	81028-
6		04071-00130	• Ring	4	81028-
7		07020-00000	• Fitting, Grease	2	81028-
8		17A-50-42120	Pin	1	81028-
9		04082-00616	Lock	2	81028-
10		01010-81645	Bolt	4	81028-
11		01643-31645	Washer	4	81028-
12		07049-01620	Plug	1	81028-
13		17A-50-42140	Pin	2	81028-
14		17A-50-42220	Lock	2	81028-
15		01010-81645	Bolt	4	81028-
16		01643-31645	Washer	4	81028-
17		17A-50-42273	Cover	2	81028-
18		01011-82460	Bolt	4	81028-
19		01643-32460	Washer	4	81028-
20		17A-50-42181	Plate	2	81028-
21		01010-81230	Bolt	4	81028-
22		01643-31232	Washer	4	81028-
23		07020-00000	Fitting, Grease	1	81028-
24		203-62-21740	Nipple	1	81028-
25		17M-03-26140	Hose	1	81028-
26		198-904-4280	Clip	1	81028-
27		01010-81220	Bolt	1	81028-
28		01643-31232	Washer	1	81028-
29		202-62-21430	Elbow	1	81028-
30		(17A-49-41482)	Bracket(Refer to Page 273)		-
		(17A-49-41482)	Bracket(Refer to Page 274)		-

FIG. J2700-001002 Suspension, Pivot Shaft

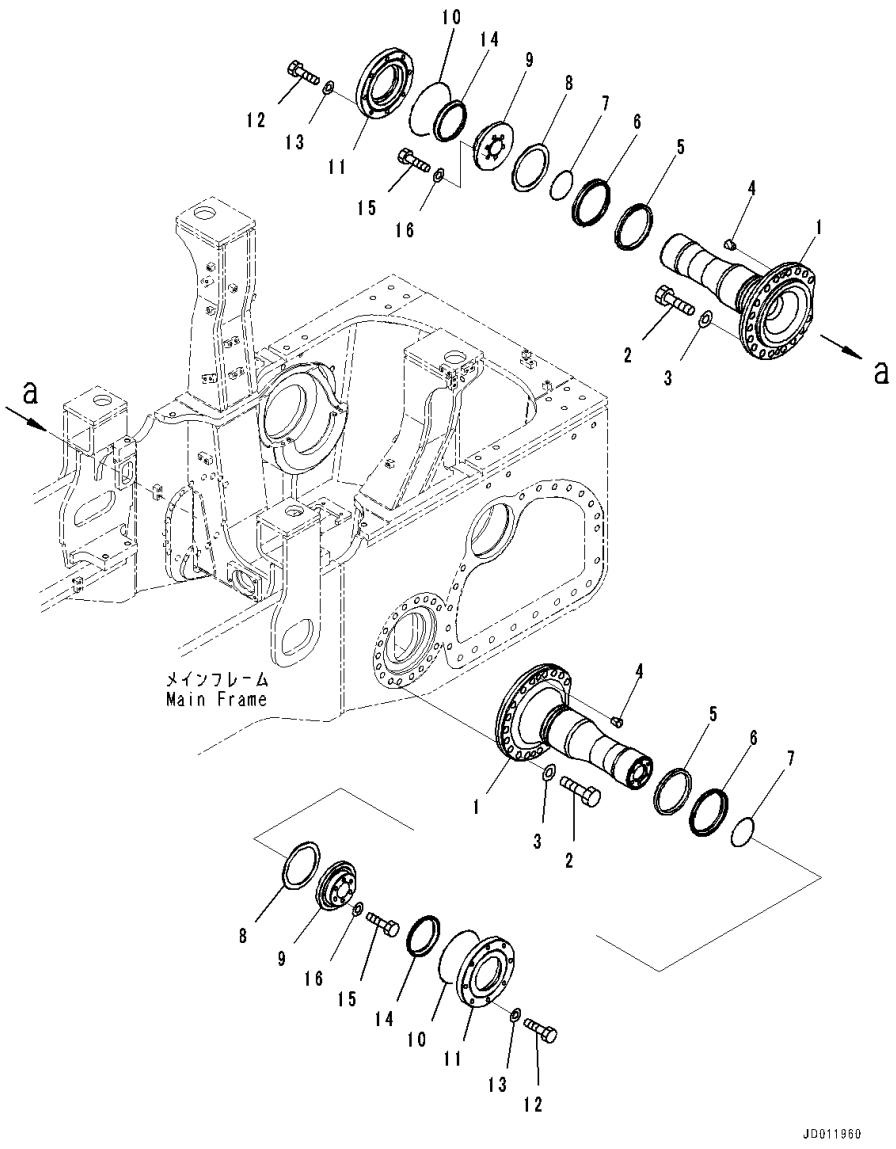

Index	Code	Part Number	Description	Qty	Serial Number
		Note: This list covers following specifications.			
		For Dual Tilt Pitch Dozer			
		For Dual Tilt Dozer, Strengthened Track Frame			
1		17A-50-41331	Shaft	2	81028-
2		01011-82700	Bolt	34	81028-
3		01643-32780	Washer	34	81028-
4		07049-02734	Plug	4	81028-
5		17A-50-11151	Ring	2	81028-
6		17A-50-11140	Seal	2	81028-
7		07000-12125	O-ring	2	81028-
8		17A-50-41190	Spacer	2	81028-
9		17A-50-41120	Washer	2	81028-
10		07000-15230	O-ring	2	81028-
11		17A-50-41130	Washer	2	81028-
12		01010-81660	Bolt	4	81028-
13		01643-31645	Washer	4	81028-
14		14Y-30-18150	Seal	2	81028-
15		01010-81680	Bolt	12	81028-
16		01643-31645	Washer	12	81028-

FIG. J2700-002001 Suspension, Equalizer Bar

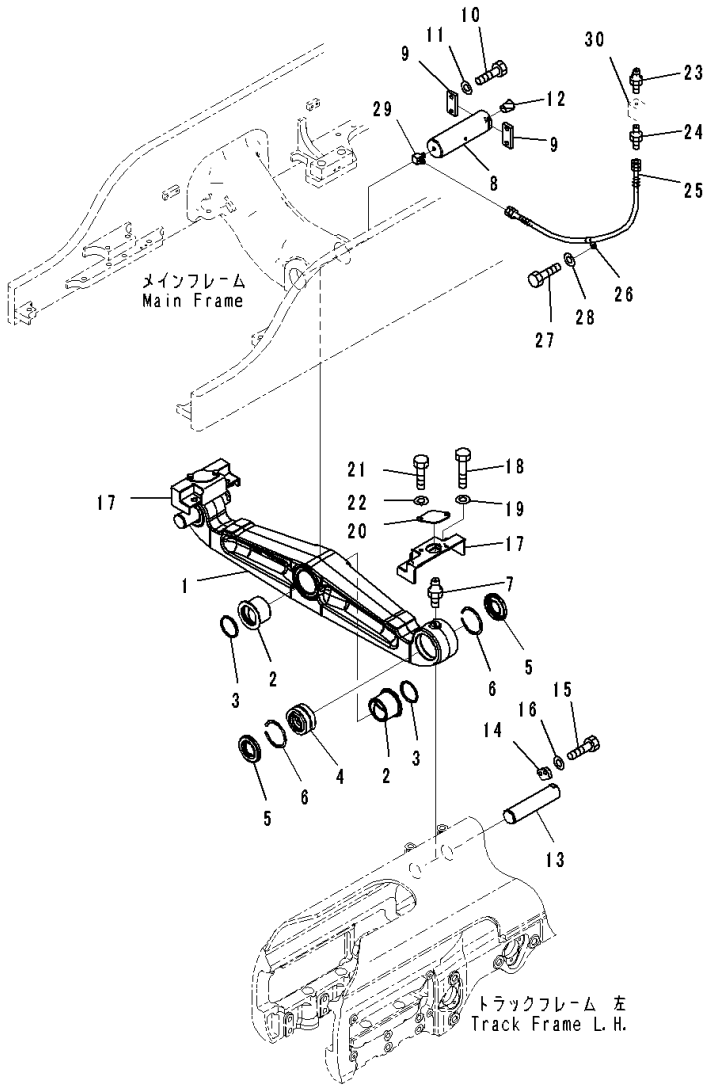

Index	Code	Part Number	Description	Qty	Serial Number
		17A-50-00111	Equalizer Bar Assembly	1	81028-
1	C1		• Bar	1	81028-
2		17A-50-42131	• Bushing	2	81028-
3		15A-78-11180	• Seal, Dust	2	81028-
4		17A-50-42151	• Bushing	2	81028-
5		17A-50-42160	• Seal	4	81028-
6		04071-00130	• Ring	4	81028-
7		07020-00000	• Fitting, Grease	2	81028-
8		17A-50-42120	Pin	1	81028-
9		04082-00616	Lock	2	81028-
10		01010-81645	Bolt	4	81028-
11		01643-31645	Washer	4	81028-
12		07049-01620	Plug	1	81028-
13		17A-50-42140	Pin	2	81028-
14		17A-50-42220	Lock	2	81028-
15		01010-81645	Bolt	4	81028-
16		01643-31645	Washer	4	81028-
17		17A-50-42273	Cover	2	81028-
18		01011-82460	Bolt	4	81028-
19		01643-32460	Washer	4	81028-
20		17A-50-42181	Plate	2	81028-
21		01010-81230	Bolt	4	81028-
22		01643-31232	Washer	4	81028-
23		07020-00000	Fitting, Grease	1	81028-
24		203-62-21740	Nipple	1	81028-
25		17M-03-26140	Hose	1	81028-
26		198-904-4280	Clip	1	81028-
27		01010-81220	Bolt	1	81028-
28		01643-31232	Washer	1	81028-
29		202-62-21430	Elbow	1	81028-
30		(17A-49-41482)	Bracket(Refer to Page 273)		-
		(17A-49-41482)	Bracket(Refer to Page 274)		-

FIG. J2700-002002 Suspension, Pivot Shaft

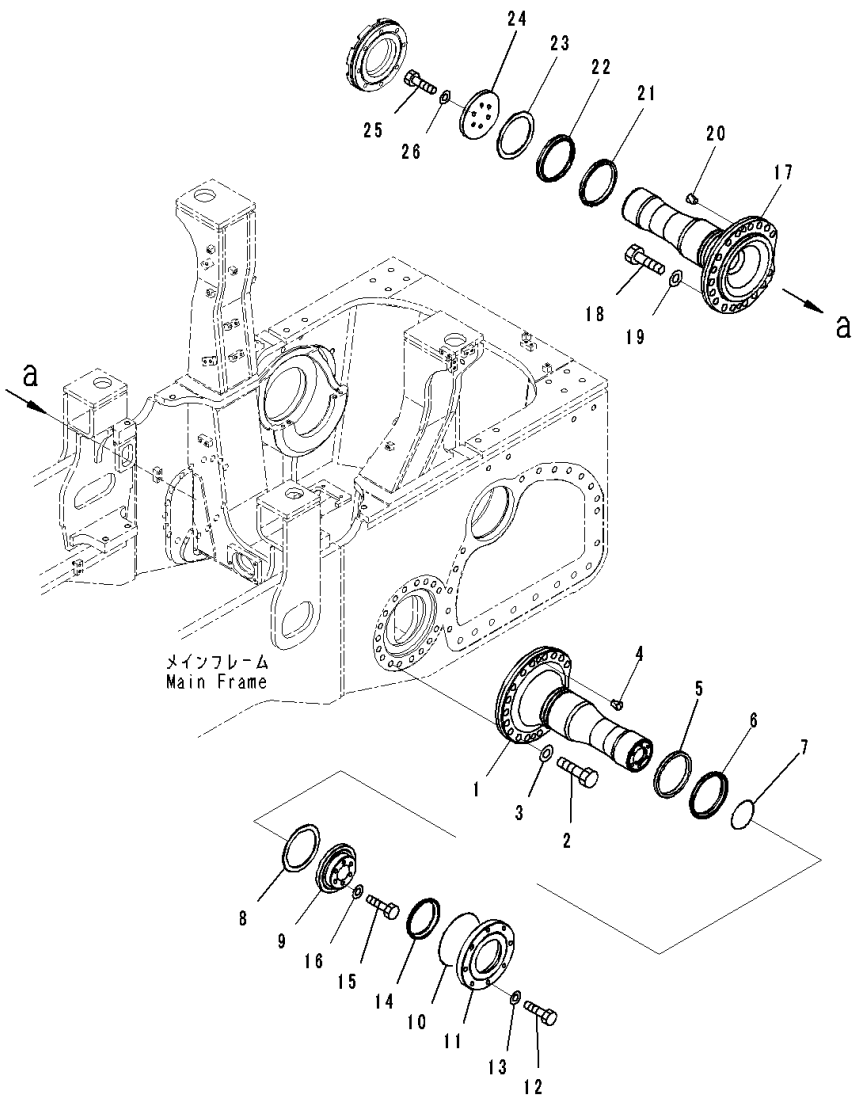

Index	Code	Part Number	Description	Qty	Serial Number
1		17A-50-41331	Shaft	1	81028-
2		01011-82700	Bolt	17	81028-
3		01643-32780	Washer	17	81028-
4		07049-02734	Plug	2	81028-
5		17A-50-11151	Ring	1	81028-
6		17A-50-11140	Seal	1	81028-
7		07000-12125	O-ring	1	81028-
8		17A-50-41190	Spacer	1	81028-
9		17A-50-41120	Washer	1	81028-
10		07000-15230	O-ring	1	81028-
11		17A-50-41130	Washer	1	81028-
12		01010-81660	Bolt	2	81028-
13		01643-31645	Washer	2	81028-
14		14Y-30-18150	Seal	1	81028-
15		01010-81680	Bolt	6	81028-
16		01643-31645	Washer	6	81028-
17		17A-50-41321	Shaft	1	81028-
18		01011-82700	Bolt	17	81028-
19		01643-32780	Washer	17	81028-
20		07049-02734	Plug	2	81028-
21		17A-50-11151	Ring	1	81028-
22		17A-50-11140	Seal	1	81028-
23		17A-50-41190	Spacer	1	81028-
24		17A-50-41140	Washer	1	81028-
25		01010-81645	Bolt	6	81028-
26		01643-31645	Washer	6	81028-

FIG. J2700-004001 Equalizer Bar and Pivot Shaft, Equalizer Bar

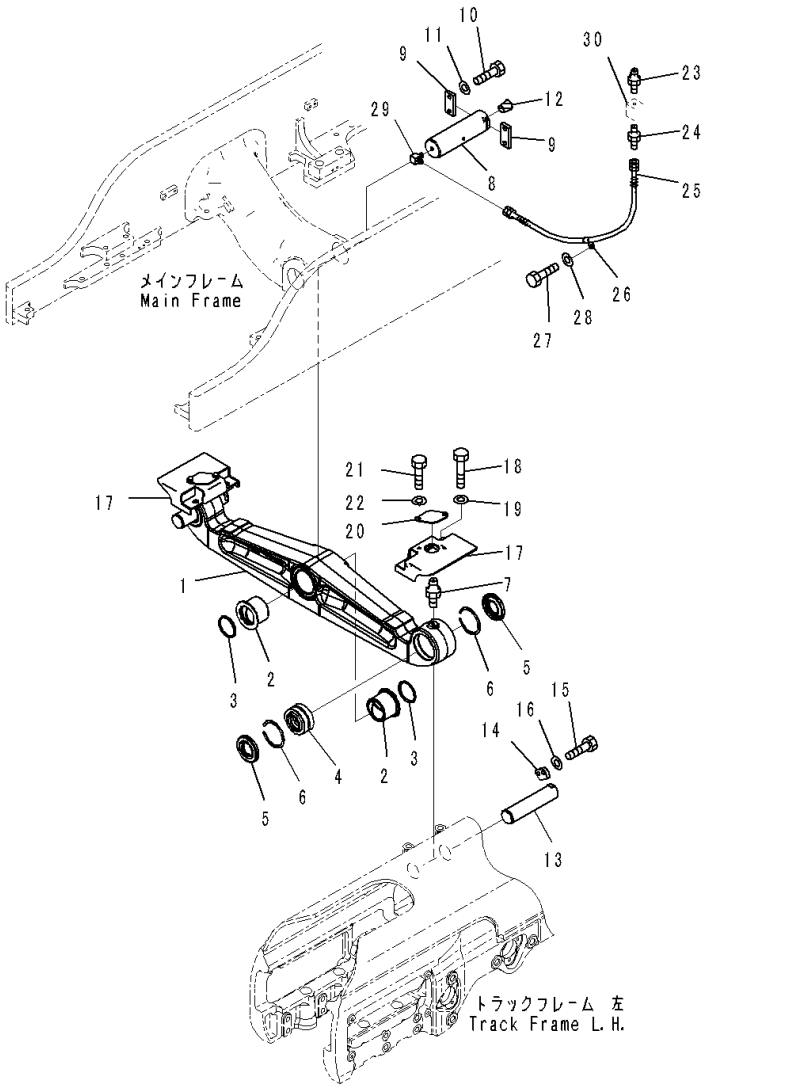

Index	Code	Part Number	Description	Qty	Serial Number
		Note: This list covers following specifications.			
		For Strengthened Track Frame			
		For Dual Tilt Dozer, Strengthened Track Frame			
		17A-50-00111	Equalizer Bar Assembly	1	81028-
1	C1		• Bar	1	81028-
2		17A-50-42131	• Bushing	2	81028-
3		15A-78-11180	• Seal, Dust	2	81028-
4		17A-50-42151	• Bushing	2	81028-
5		17A-50-42160	• Seal	4	81028-
6		04071-00130	• Ring	4	81028-
7		07020-00000	• Fitting, Grease	2	81028-
8		17A-50-42120	Pin	1	81028-
9		04082-00616	Lock	2	81028-
10		01010-81645	Bolt	4	81028-
11		01643-31645	Washer	4	81028-
12		07049-01620	Plug	1	81028-
13		17A-50-42140	Pin	2	81028-
14		17A-50-42220	Lock	2	81028-
15		01010-81645	Bolt	4	81028-
16		01643-31645	Washer	4	81028-
17		17A-50-42171	Cover	2	81028-
18		01011-82450	Bolt	4	81028-
19		01643-32460	Washer	4	81028-
20		17A-50-42181	Plate	2	81028-
21		01010-81230	Bolt	4	81028-
22		01643-31232	Washer	4	81028-
23		07020-00000	Fitting, Grease	1	81028-
24		203-62-21740	Nipple	1	81028-
25		17M-03-26140	Hose	1	81028-
26		198-904-4280	Clip	1	81028-
27		01010-81220	Bolt	1	81028-
28		01643-31232	Washer	1	81028-
29		202-62-21430	Elbow	1	81028-
30		(17A-49-41482)	Bracket(Refer to Page 273)		-
		(17A-49-41482)	Bracket(Refer to Page 274)		-

FIG. J2700-004002 Equalizer Bar and Pivot Shaft, For Strengthened Track Frame, Pivot Shaft

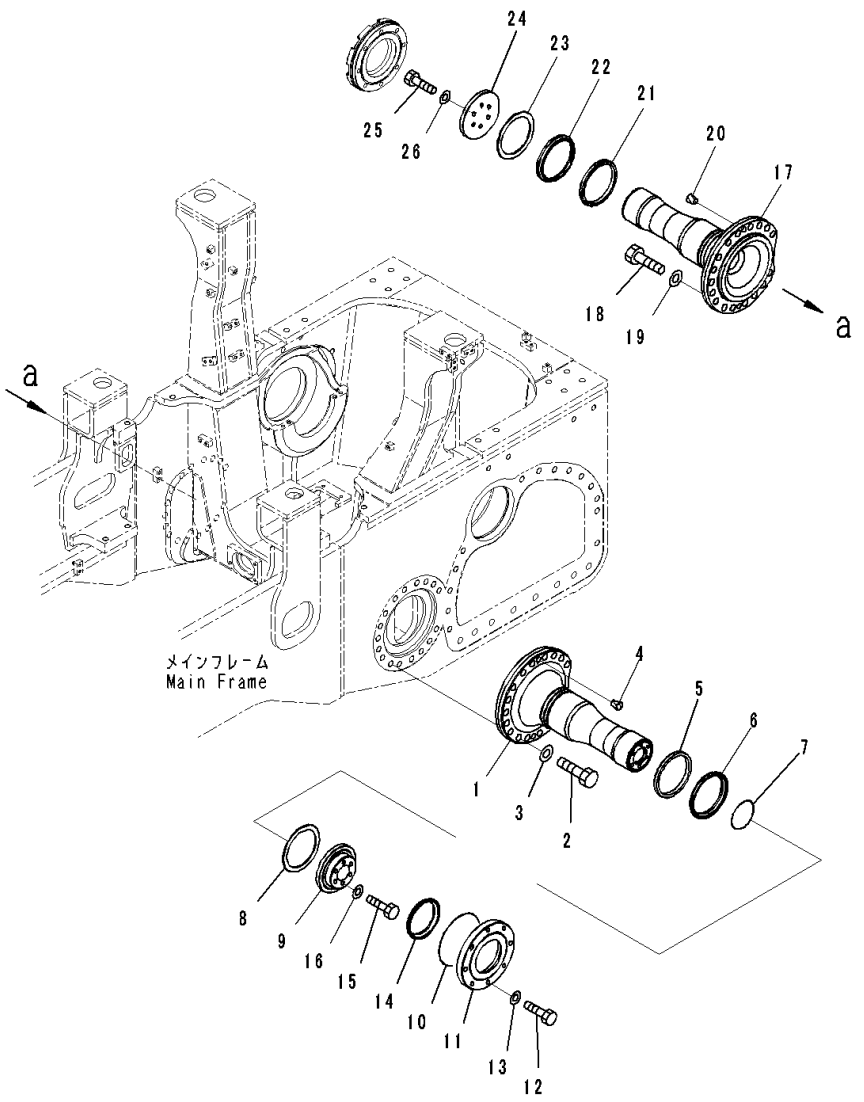

Index	Code	Part Number	Description	Qty	Serial Number
1		17A-50-41331	Shaft	1	81028-
2		01011-82700	Bolt	17	81028-
3		01643-32780	Washer	17	81028-
4		07049-02734	Plug	2	81028-
5		17A-50-11151	Ring	1	81028-
6		17A-50-11140	Seal	1	81028-
7		07000-12125	O-ring	1	81028-
8		17A-50-41190	Spacer	1	81028-
9		17A-50-41120	Washer	1	81028-
10		07000-15230	O-ring	1	81028-
11		17A-50-41130	Washer	1	81028-
12		01010-81660	Bolt	2	81028-
13		01643-31645	Washer	2	81028-
14		14Y-30-18150	Seal	1	81028-
15		01010-81680	Bolt	6	81028-
16		01643-31645	Washer	6	81028-
17		17A-50-41321	Shaft	1	81028-
18		01011-82700	Bolt	17	81028-
19		01643-32780	Washer	17	81028-
20		07049-02734	Plug	2	81028-
21		17A-50-11151	Ring	1	81028-
22		17A-50-11140	Seal	1	81028-
23		17A-50-41190	Spacer	1	81028-
24		17A-50-41140	Washer	1	81028-
25		01010-81645	Bolt	6	81028-
26		01643-31645	Washer	6	81028-

OPERATOR'S COMPARTMENT AND CONTROL SYSTEM

FIG. K0110-001001 Operator's Seat, Inner Parts

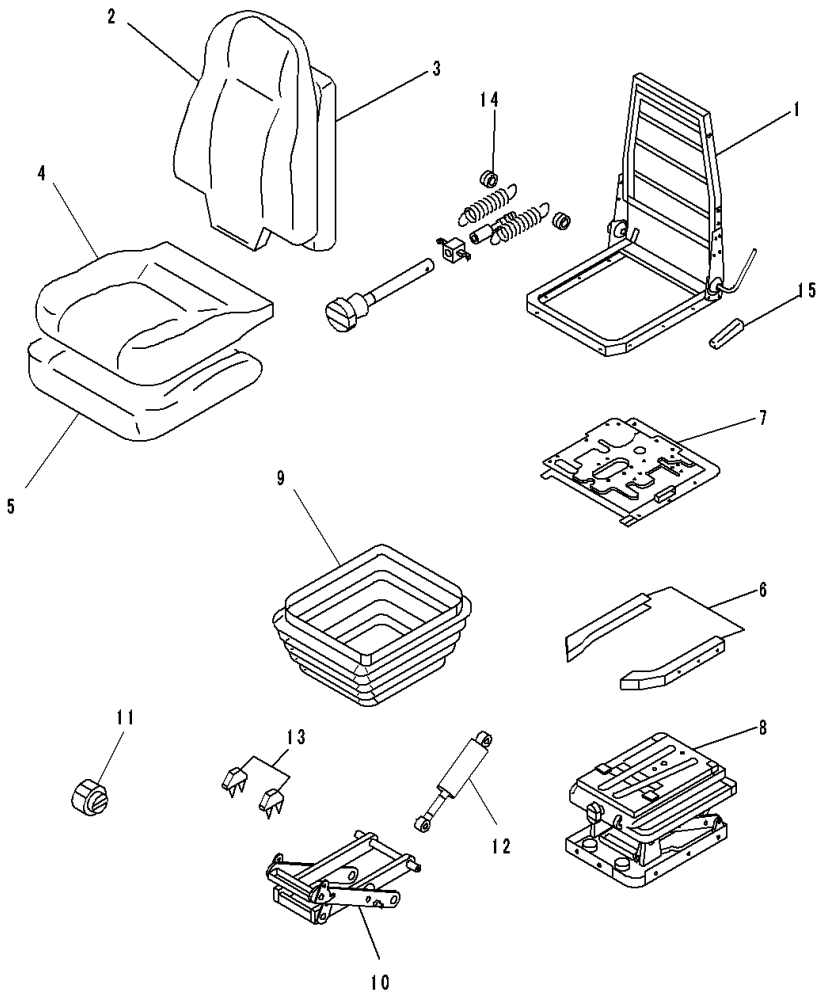

Index	Code	Part Number	Description	Qty	Serial Number
		Note: This list covers following specifications.			
		Operator's Seat Turn Type, Fabric Type			
		Operator's Seat Turn Type, Fabric Type, With Headrest			
		Hi-Back Type Operator's Seat, Fabric Type			
		Hi-Back Type Operator's Seat, With Headrest			
		17A-57-23201	Seat Assembly ..... Operator's Seat Turn Type, Fabric Type	1	81028-
		17A-57-23201	Seat Assembly ..... Operator's Seat Turn Type, Fabric Type, With Headrest	1	81028-
		17A-57-23501	Seat Assembly ..... Hi-Back Type Operator's Seat, Fabric Type	1	81028-
		17A-57-23501	Seat Assembly ..... Hi-Back Type Operator's Seat, With Headrest	1	81028-
		17A-57-23210	• Seat Assembly ..... Operator's Seat Turn Type, Fabric Type	1	81028-
		17A-57-23210	• Seat Assembly ..... Operator's Seat Turn Type, Fabric Type, With Headrest	1	81028-
		17A-57-23510	• Seat Assembly ..... Hi-Back Type Operator's Seat, Fabric Type	1	81028-
		17A-57-23510	• Seat Assembly ..... Hi-Back Type Operator's Seat, With Headrest	1	81028-
		AS183704	• Seat Assembly	1	81028-
1		AS183707	• • Frame Assembly	1	81028-
2		AS183705	• • Cover	1	81028-
3		AS183708	• • Back Seat Foam Kit	1	81028-
4		AS183706	• • Cover	1	81028-
5		AS183709	• • Seat Foam Kit	1	81028-
6		AS183683	• • Bracket	2	81028-
7		AS183684	• • Swivel Assembly	1	81028-
8		AS183685	• • Suspension Assembly	1	81028-
9		AS183686	• • Cover	1	81028-
10		AS183687	• • Bearing Kit	1	81028-

FIG. K0110-001001 Operator's Seat, Inner Parts

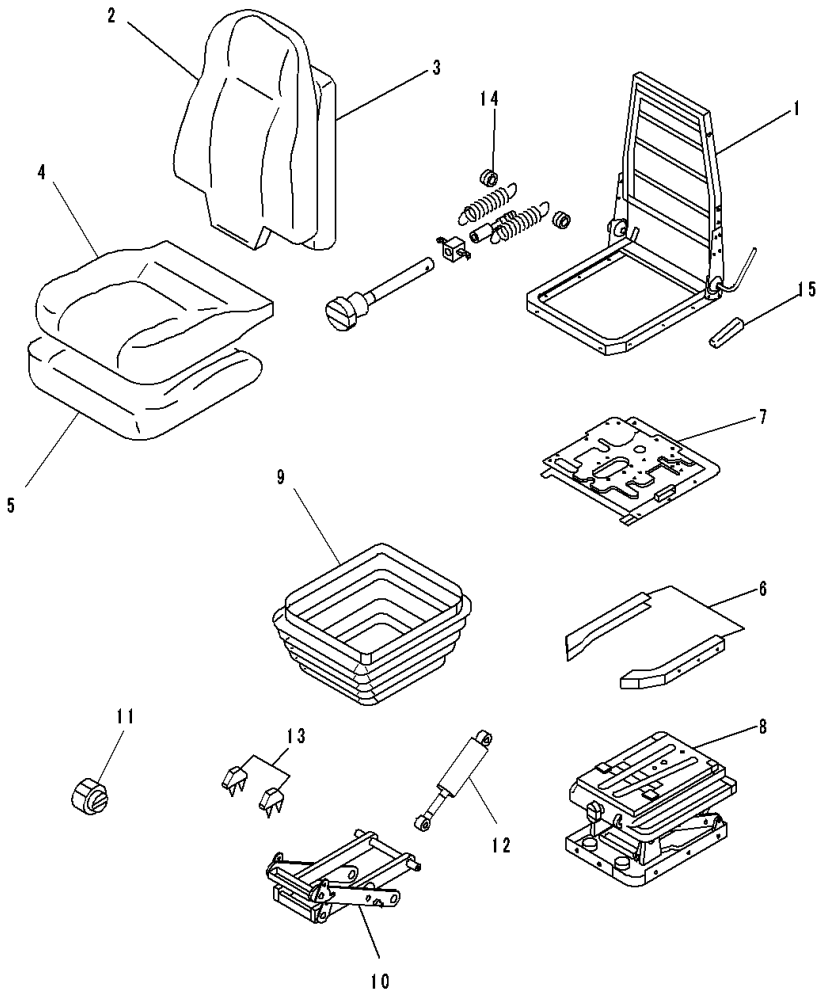

Index	Code	Part Number	Description	Qty	Serial Number
11		AS170373	• • Indicator	1	81028-
12		AS167566	• • Damper	1	81028-
13		AS167544	• • Stopper	2	81028-
14		AS183688	• • Adjuster Kit	2	81028-
15		AS183689	• • Knob	1	81028-

FIG. K0110-001002 Operator's Seat, Mounting

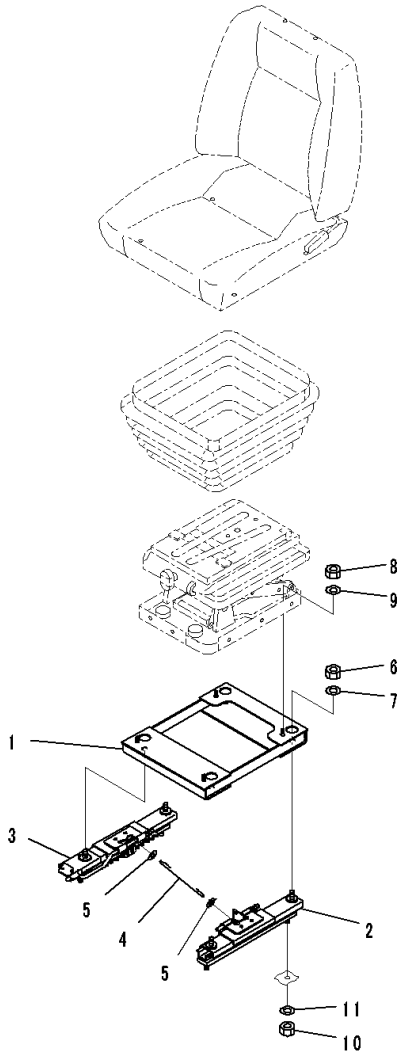

JD010244

Index	Code	Part Number	Description	Qty	Serial Number
		Note: This list covers following specifications.			
		Operator's Seat Turn Type, Fabric Type			
		Turn and Reclining Type, Suspension Type			
		17A-57-23201	Seat Assembly	1	81028-
			Operator's Seat Turn Type, Fabric Type		
		17A-57-23301	Seat Assembly	1	81028-
			Turn and Reclining Type, Suspension Type		
		17A-57-23531	• Adjuster Assembly	1	81028-
1		17A-57-23220	• • Bracket	1	81028-
2		17A-57-23230	• • Adjuster,LHS	1	81028-
3		17A-57-23241	• • Adjuster,RHS	1	81028-
4		17A-57-23270	• • Wire	1	81028-
5		01640-20816	• • Washer	2	81028-
6		01582-11210	• • Nut	4	81028-
7		01643-51232	• • Washer	4	81028-
8		01580-10806	• Nut	4	81028-
9		01643-50823	• Washer	4	81028-
10		01582-11210	Nut	4	81028-
11		01643-31232	Washer	4	81028-

FIG. K0110-002001 Operator's Seat, Turn and Reclining Type, Suspension Type, Inner Parts

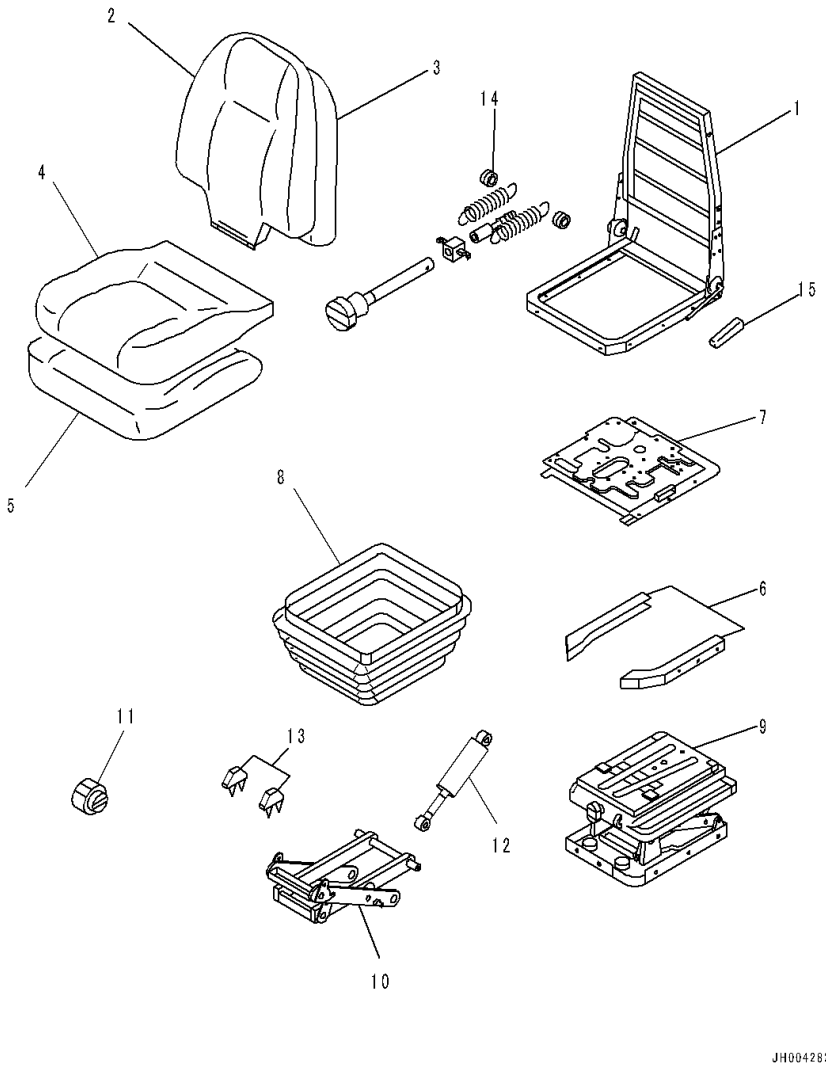

Index	Code	Part Number	Description	Qty	Serial Number
		17A-57-23301	Seat Assembly	1	81028-
		17A-57-23310	• Seat Assembly	1	81028-
		AS183675	• • Seat Assembly, Black	1	81028-
1		AS183676	• • • Frame Assembly	1	81028-
2		AS183678	• • • Cover, Black	1	81028-
3		AS183679	• • • Cushion	1	81028-
4		AS183681	• • • Cover, Black	1	81028-
5		AS183682	• • • Seat	1	81028-
6		AS183683	• • Bracket	2	81028-
7		AS183684	• • Swivel Assembly	1	81028-
8		AS193158	• • Cover	1	81028-
9		AS183685	• • Suspension Assembly	1	81028-
10		AS183687	• • • Bearing Kit	1	81028-
11		AS170373	• • • Indicator	1	81028-
12		AS198304	• • • Damper	1	81028-
13		AS167554	• • • Up Stop And Bump Stop Kit	2	81028-
14		AS183688	• • • Adjuster Kit	2	81028-
15		AS183689	• • Knob	1	81028-

FIG. K0110-003002 Operator's Seat, Operator's Seat Turn Type, Fabric Type, With Headrest, Mounting

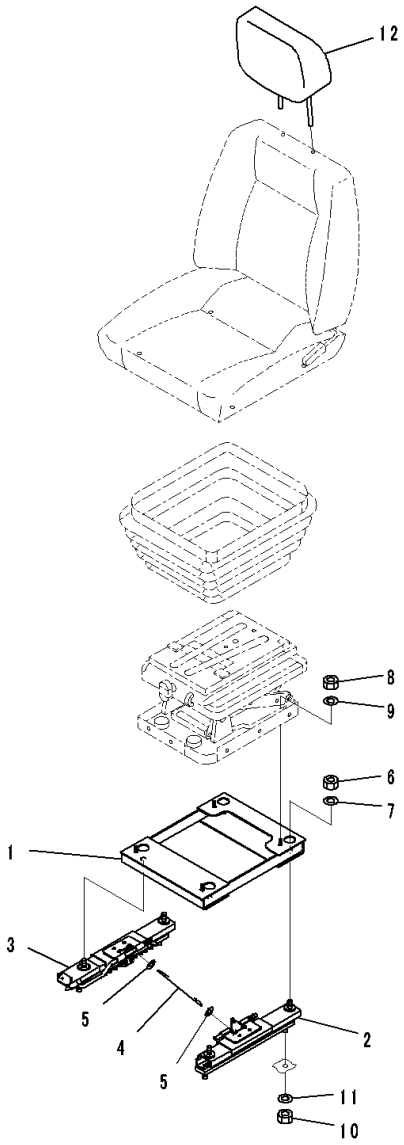

JD010275

Index	Code	Part Number	Description	Qty	Serial Number
		17A-57-23201	Seat Assembly	1	81028-
		17A-57-23531	• Adjuster Assembly	1	81028-
1		17A-57-23220	• • Bracket	1	81028-
2		17A-57-23230	• • Adjuster,LHS	1	81028-
3		17A-57-23241	• • Adjuster,RHS	1	81028-
4		17A-57-23270	• • Wire	1	81028-
5		01640-20816	• • Washer	2	81028-
6		01582-11210	• • Nut	4	81028-
7		01643-51232	• • Washer	4	81028-
8		01580-10806	• Nut	4	81028-
9		01643-50823	• Washer	4	81028-
10		01582-11210	Nut	4	81028-
11		01643-31232	Washer	4	81028-
12		17A-57-21170	Head Assembly	1	81028-

FIG. K0110-004002 Operator's Seat, Hi-Back Type Operator's Seat, Fabric Type, Mounting

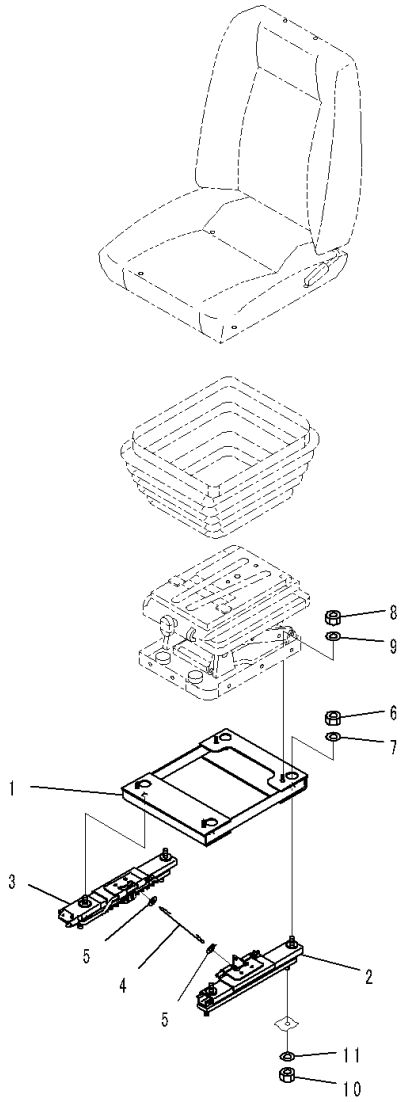

JD010281

Index	Code	Part Number	Description	Qty	Serial Number
		17A-57-23501	Seat Assembly	1	81028-
		17A-57-23550	• Adjuster Assembly	1	81028-
1		17A-57-23220	• • Bracket	1	81028-
2		17A-57-23290	• • Adjuster,LHS	1	81028-
3		17A-57-23560	• • Adjuster,RHS	1	81028-
4		17A-57-23270	• • Wire	1	81028-
5		01640-20816	• • Washer	2	81028-
6		01582-11210	• • Nut	4	81028-
7		01643-51232	• • Washer	4	81028-
8		01580-10806	• Nut	4	81028-
9		01643-50823	• Washer	4	81028-
10		01582-11210	Nut	4	81028-
11		01643-31232	Washer	4	81028-

FIG. K0110-005002 Operator's Seat, Hi-Back Type Operator's Seat, With Headrest, Mounting

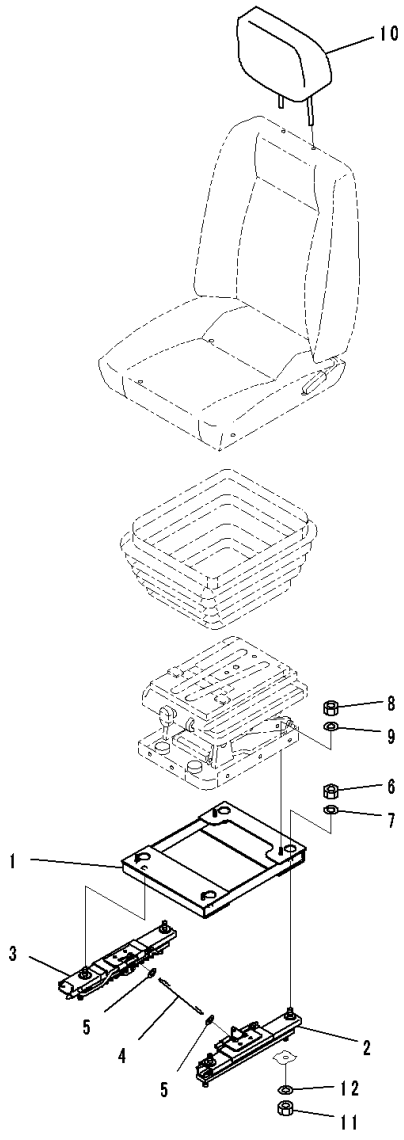

JD010312

Index	Code	Part Number	Description	Qty	Serial Number
		17A-57-23501	Seat Assembly	1	81028-
		17A-57-23550	• Adjuster Assembly	1	81028-
1		17A-57-23220	• • Bracket	1	81028-
2		17A-57-23290	• • Adjuster,LHS	1	81028-
3		17A-57-23560	• • Adjuster,RHS	1	81028-
4		17A-57-23270	• • Wire	1	81028-
5		01640-20816	• • Washer	2	81028-
6		01582-11210	• • Nut	4	81028-
7		01643-51232	• • Washer	4	81028-
8		01580-10806	• Nut	4	81028-
9		01643-50823	• Washer	4	81028-
10		17A-57-23520	Head Assembly	1	81028-
11		01582-11210	Nut	4	81028-
12		01643-31232	Washer	4	81028-

FIG. K0110-006001 Operator's Seat, Air Suspension Type, Hi-Back Type Operator's Seat, With Headrest, Inner Parts

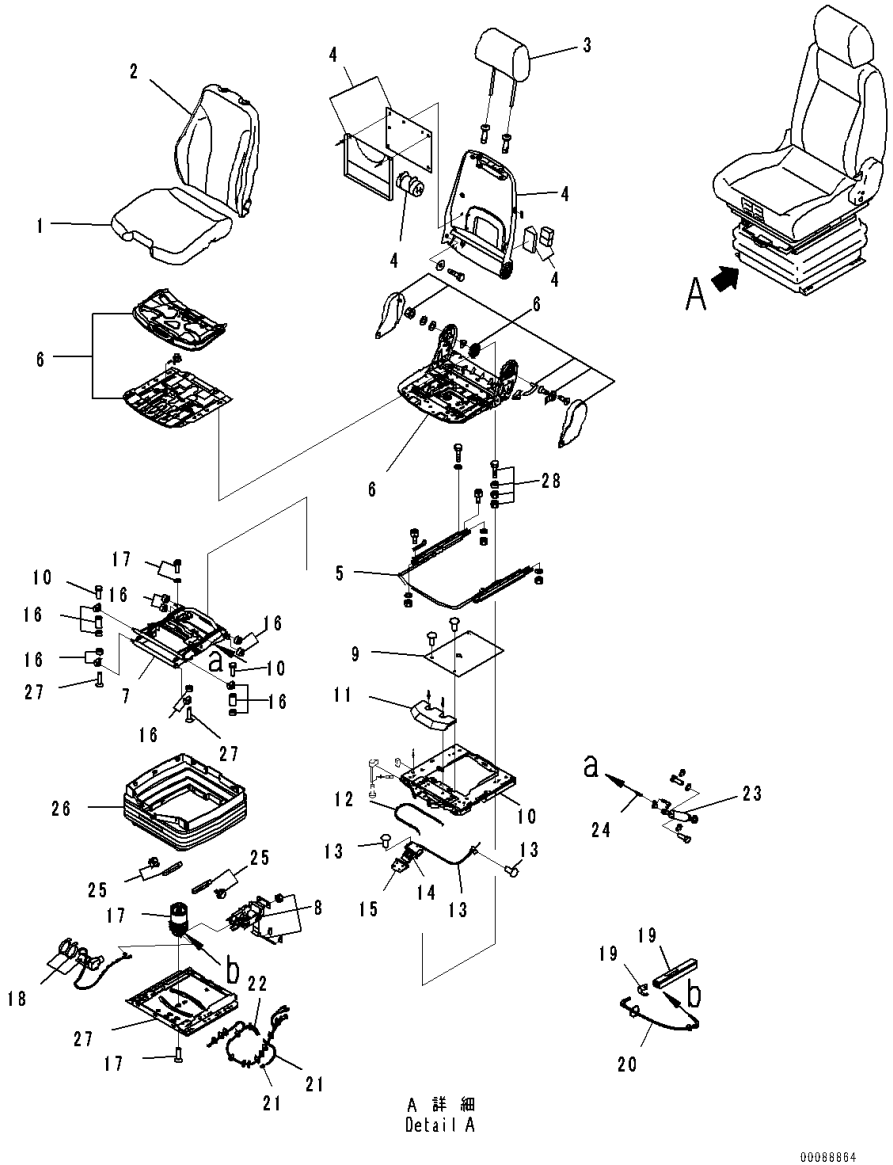

Index	Code	Part Number	Description	Qty	Serial Number
		198-57-65590	Seat Assembly	1	81028-
1		GJ140907	• Seat, Fabric	1	81028-
2		GJ2048193	• Backrest, Cushion	1	81028-
3		GJ140912	• Rest	1	81028-
4		GJ2048660	• Backrest, Frame	1	81028-
5		GJ2048661	• Slide Rail Kit	1	81028-
6		GJ2048662	• Seat	1	81028-
		GJTS40102	• Suspension Assembly	1	81028-
7		198-57-65510	• • Suspension	1	81028-
8		GJ1081312	• • Control, Level	1	81028-
9		GJ1076975	• • Cover	1	81028-
10	C1		• • Suspension	1	81028-
11		GJ1078590	• • Cover	1	81028-
12		GJ1077152	• • Cable	1	81028-
13		GJ1077153	• • Cable	1	81028-
14		GJ131834	• • Control	1	81028-
15		GJ138628	• • Handle	1	81028-
16		GJ1076979	• • Wear Plate Assembly	1	81028-
17		GJ1081315	• • Spring	1	81028-
18		GJ1096687	• • Compressor	1	81028-
19		GJ1090447	• • Reservoir	1	81028-
20		GJ1090779	• • Hose, Air	1	81028-
21		GJ1096565	• • Hose, Air	1	81028-
22		GJ1089165	• • Cable	1	81028-
23		GJ1096588	• • Absorber, Shock	1	81028-
24		GJ1076987	• • Cable	1	81028-
25		GJ1090446	• • Stopper	1	81028-
26		GJ1104066	• • Mount	1	81028-
27	C1		• • Suspension	1	81028-
28		GJTSM4NB	• • Bolt	4	81028-

FIG. K0110-006002 Operator's Seat, Air Suspension Type, Hi-Back Type Operator's Seat, With Headrest, Mounting

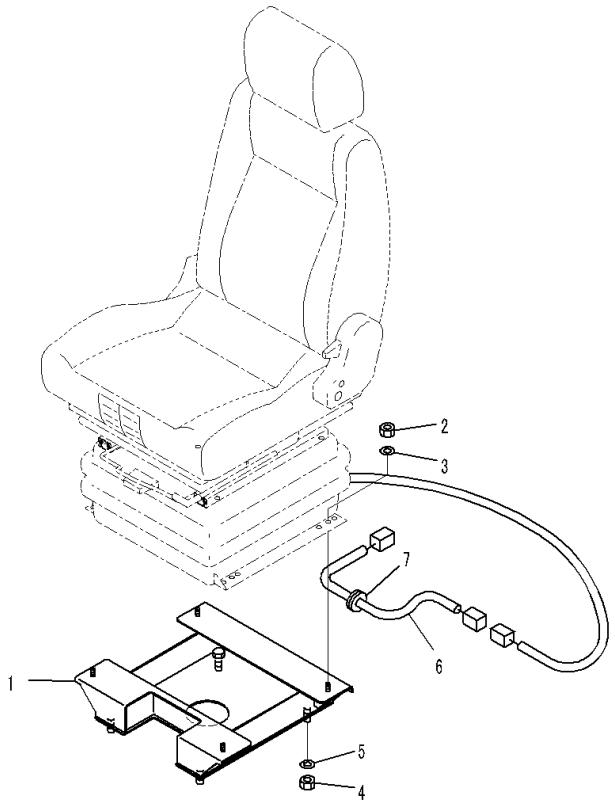

JH003590

Index	Code	Part Number	Description	Qty	Serial Number
1		17A-57-41141	Bracket	1	81028-
2		01580-10806	Nut	4	81028-
3		01643-50823	Washer	4	81028-
4		01582-11210	Nut	4	81028-
5		01643-31232	Washer	4	81028-
6		17A-57-41150	Wiring Harness	1	81028-
7		08037-01610	• Grommet	1	81028-

FIG. K0110-008001 Operator's Seat, Air Suspension Type, Operator's Seat Turn Type, For KAB Made Operator's Seat, Inner Parts

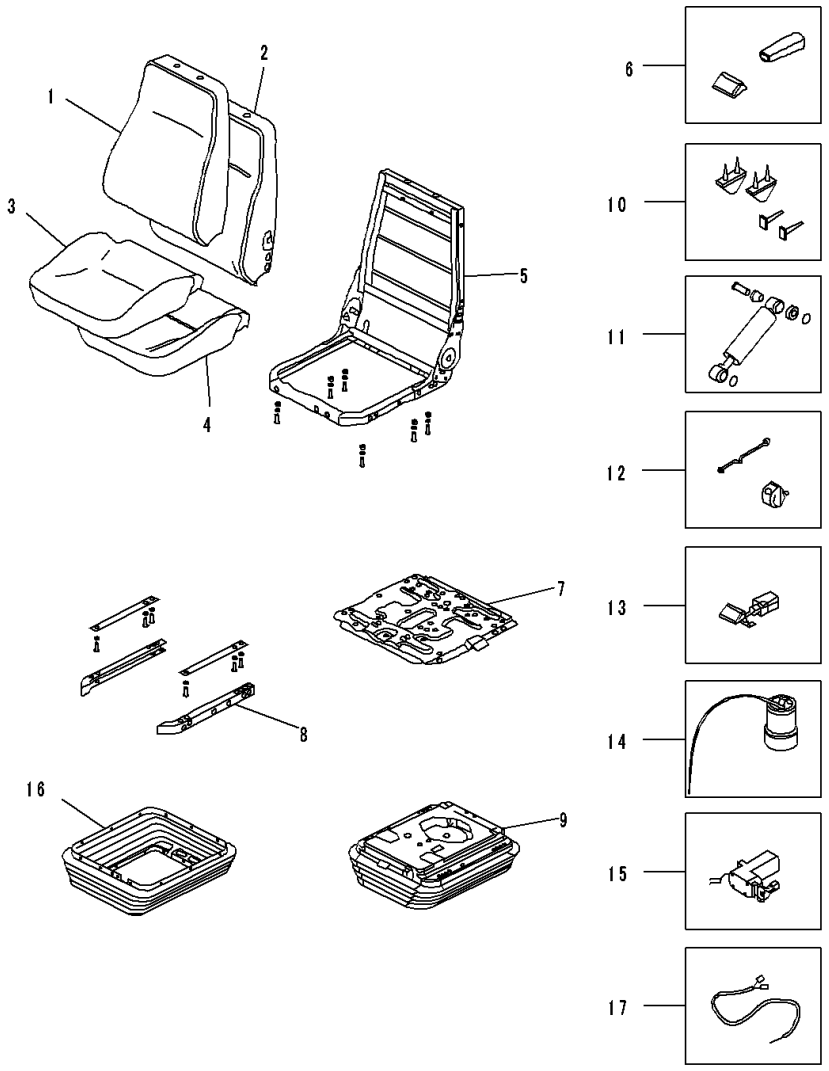

Index	Code	Part Number	Description	Qty	Serial Number
		17A-57-42310	Seat Assembly	1	81028-
1		AS198529	• Back Seat Cover Kit	1	81028-
2		AS183679	• Cushion	1	81028-
3		AS183680	• Cover	1	81028-
4		AS183682	• Seat	1	81028-
5		AS183676	• Frame Assembly	1	81028-
6		AS183689	• Knob	1	81028-
7		AS183684	• Swivel Assembly	1	81028-
8		AS198488	• Channel Kit	1	81028-
9		AS198489	• Suspension Kit	1	81028-
10		AS167554	• Up Stop And Bump Stop Kit	1	81028-
11		AS198316	• Damper Kit	1	81028-
12		AS170373	• Indicator	1	81028-
13		AS175319	• Valve Kit	1	81028-
14		AS196618	• Air Spring Kit	1	81028-
15		AS195653	• Compressor Kit	1	81028-
16		AS193156	• Suspension Cover Kit	1	81028-
17		AS177303	• Fly Lead Kit	1	81028-

FIG. K0110-008002 Operator's Seat, Air Suspension Type, Operator's Seat Turn Type, For KAB Made Operator's Seat, Mounting

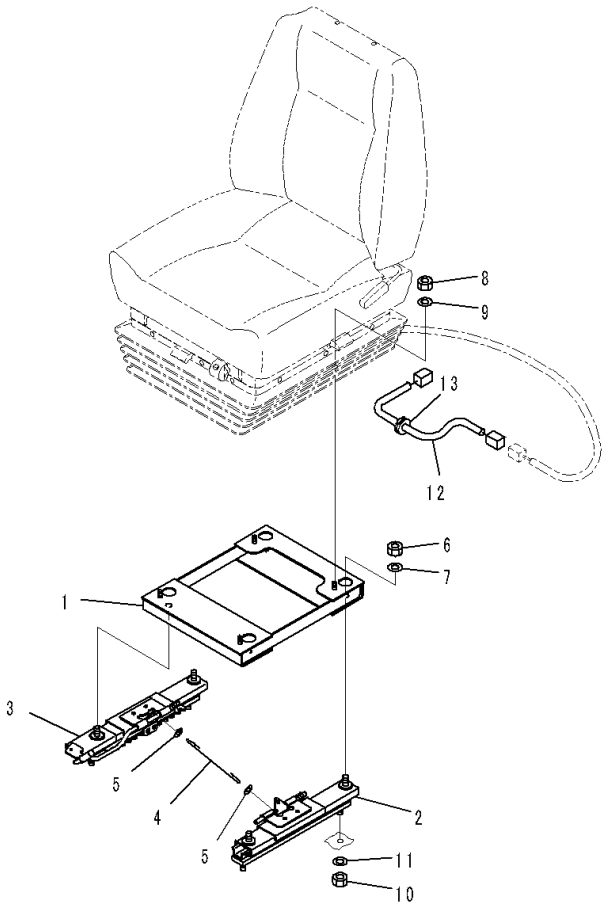

Index	Code	Part Number	Description	Qty	Serial Number
		17A-57-23531	Adjuster Assembly	1	81028-
1		17A-57-23220	• Bracket	1	81028-
2		17A-57-23230	• Adjuster	1	81028-
3		17A-57-23241	• Adjuster	1	81028-
4		17A-57-23270	• Wire	1	81028-
5		01640-20816	• Washer	2	81028-
6		01582-11210	• Nut	4	81028-
7		01643-51232	• Washer	4	81028-
8		01580-10806	Nut	4	81028-
9		01643-50823	Washer	4	81028-
10		01582-11210	Nut	4	81028-
11		01643-31232	Washer	4	81028-
12		17A-57-41150	Wiring Harness	1	81028-
13		08037-01610	• Grommet	1	81028-

FIG. K0110-009001 Operator's Seat, Air Suspension Type, Operator's Seat Turn Type, Hi-Back Type Operator's Seat, For KAB Made Operator's Seat

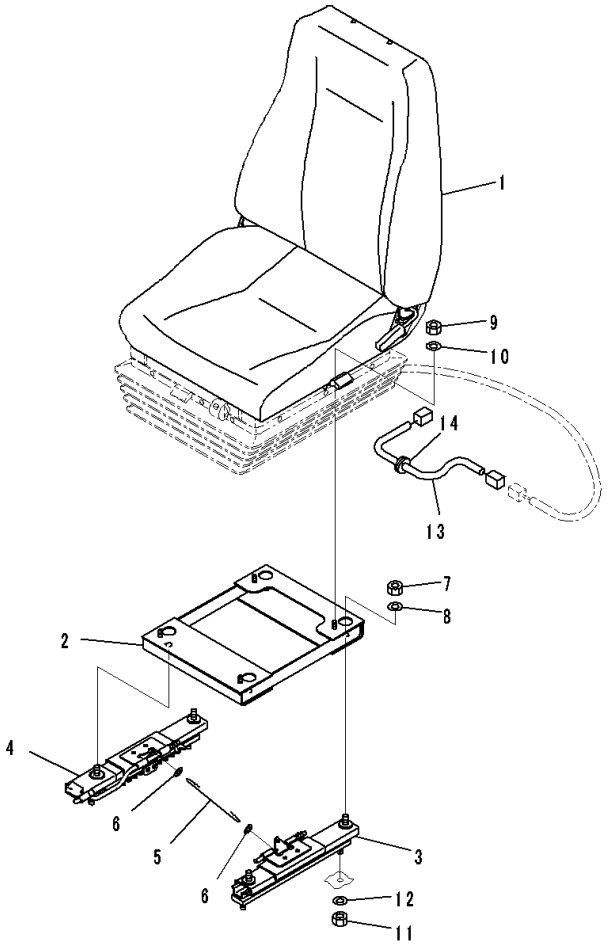

00069171

Index	Code	Part Number	Description	Qty	Serial Number
1		17A-57-42410	Seat Assembly	1	81028-
		17A-57-23550	Adjuster Assembly	1	81028-
2		17A-57-23220	• Bracket	1	81028-
3		17A-57-23290	• Adjuster	1	81028-
4		17A-57-23560	• Adjuster	1	81028-
5		17A-57-23270	• Wire	1	81028-
6		01640-20816	• Washer	2	81028-
7		01582-11210	• Nut	4	81028-
8		01643-51232	• Washer	4	81028-
9		01580-10806	Nut	4	81028-
10		01643-50823	Washer	4	81028-
11		01582-11210	Nut	4	81028-
12		01643-31232	Washer	4	81028-
13		17A-57-41150	Wiring Harness	1	81028-
14		08037-01610	• Grommet	1	81028-

FIG. K0110-010001 Operator's Seat, Air Suspension Type, Operator's Seat Turn Type, For KAB Made Operator's Seat, With Headrest

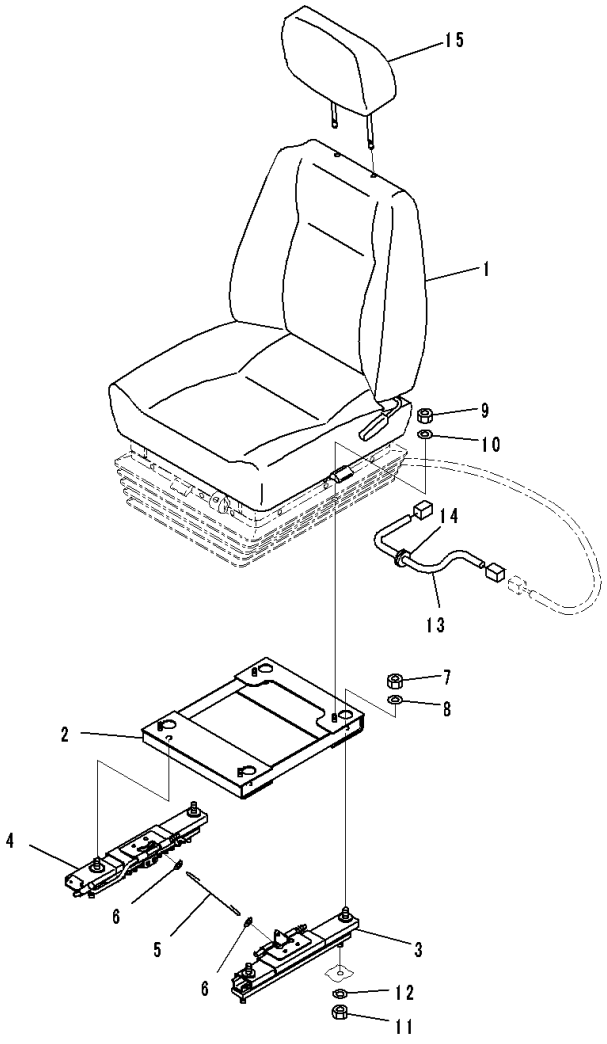

Index	Code	Part Number	Description	Qty	Serial Number
1		17A-57-42310	Seat Assembly	1	81028-
		17A-57-23531	Adjuster Assembly	1	81028-
2		17A-57-23220	• Bracket	1	81028-
3		17A-57-23230	• Adjuster	1	81028-
4		17A-57-23241	• Adjuster	1	81028-
5		17A-57-23270	• Wire	1	81028-
6		01640-20816	• Washer	2	81028-
7		01582-11210	• Nut	4	81028-
8		01643-51232	• Washer	4	81028-
9		01580-10806	Nut	4	81028-
10		01643-50823	Washer	4	81028-
11		01582-11210	Nut	4	81028-
12		01643-31232	Washer	4	81028-
13		17A-57-41150	Wiring Harness	1	81028-
14		08037-01610	• Grommet	1	81028-
15		17A-57-21170	Head Assembly	1	81028-

FIG. K0110-011001 Operator's Seat, Air Suspension Type, Operator's Seat Turn Type, Hi-Back Type Operator's Seat, For KAB Made Operator's Seat, With Headrest

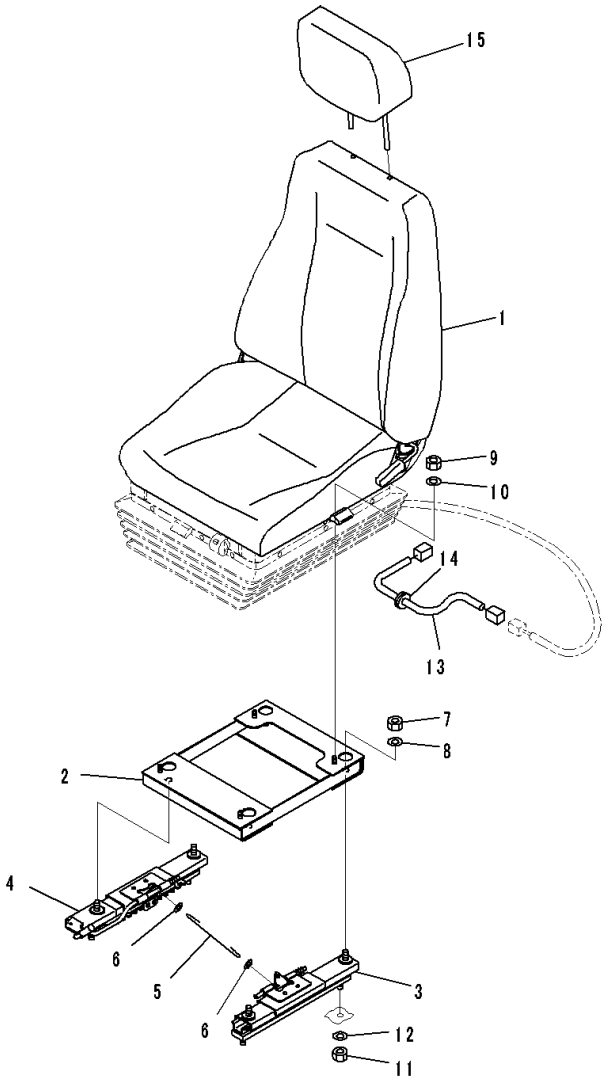

Index	Code	Part Number	Description	Qty	Serial Number
1		17A-57-42410	Seat Assembly	1	81028-
		17A-57-23550	Adjuster Assembly	1	81028-
2		17A-57-23220	• Bracket	1	81028-
3		17A-57-23290	• Adjuster	1	81028-
4		17A-57-23560	• Adjuster	1	81028-
5		17A-57-23270	• Wire	1	81028-
6		01640-20816	• Washer	2	81028-
7		01582-11210	• Nut	4	81028-
8		01643-51232	• Washer	4	81028-
9		01580-10806	Nut	4	81028-
10		01643-50823	Washer	4	81028-
11		01582-11210	Nut	4	81028-
12		01643-31232	Washer	4	81028-
13		17A-57-41150	Wiring Harness	1	81028-
14		08037-01610	• Grommet	1	81028-
15		17A-57-23520	Head Assembly	1	81028-

FIG. K0160-001001 Seat Belt, 50mm Width

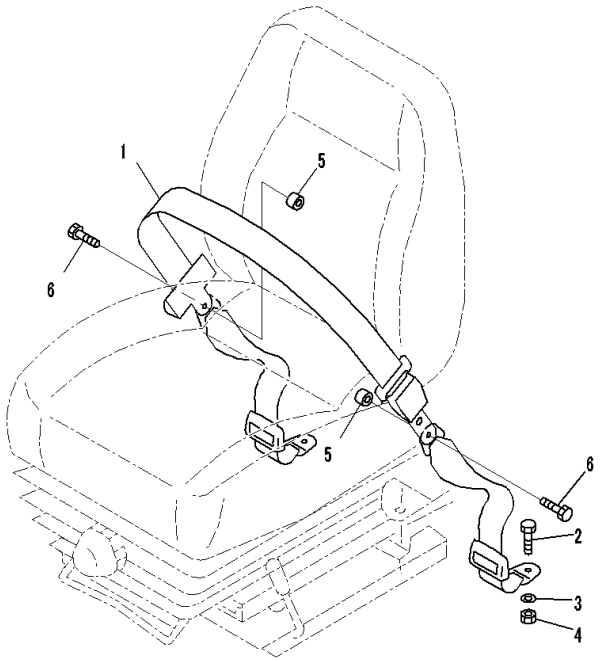

00042179

Index	Code	Part Number	Description	Qty	Serial Number
1		17A-57-21202	Seat Belt, Lap	1	81028-
		09409-20000	Belt, Tether	2	81028-
2		09409-00001	• Bolt	2	81028-
3		09409-00002	• Washer	2	81028-
4		09409-00003	• Nut	2	81028-
5		205-970-2410	Pipe	2	81028-
6		02030-70757	Bolt	2	81028-

FIG. K0160-002001 Seat Belt, 78mm Width

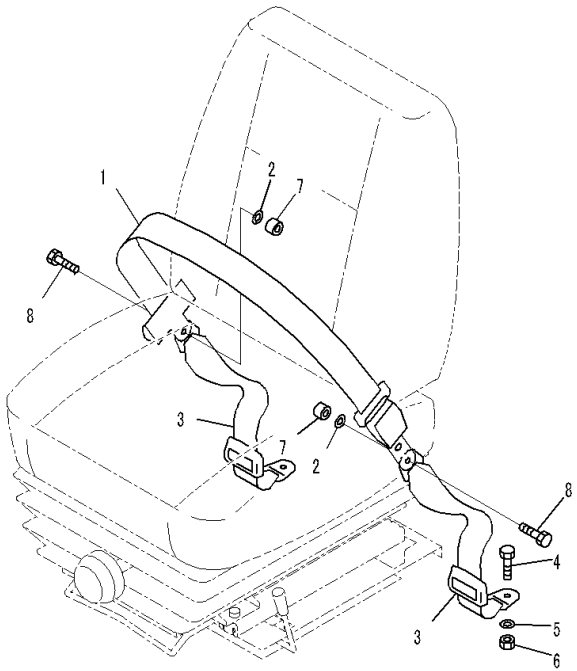

00042253

Index	Code	Part Number	Description	Qty	Serial Number
1		09409-70000	Seat Belt Kit, Lap	1	81028-
2		09409-00002	• Washer	2	81028-
3		09409-20000	Belt, Tether	2	81028-
4		09409-00001	• Bolt	2	81028-
5		09409-00002	• Washer	2	81028-
6		09409-00003	• Nut	2	81028-
7		205-970-2410	Pipe	2	81028-
8		02030-70757	Bolt	2	81028-

FIG. K0160-003001 Seat Belt, 50mm Width, Air Suspension Type, Hi-Back Type Operator's Seat

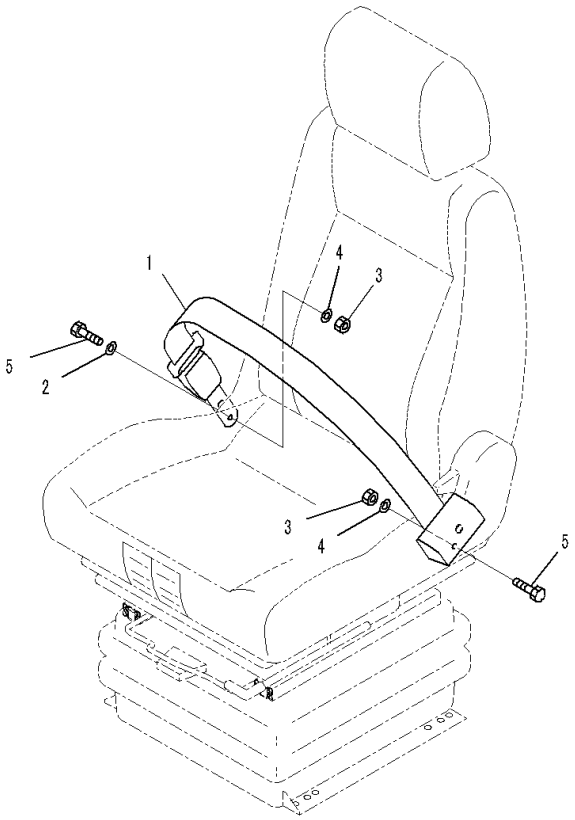

Index	Code	Part Number	Description	Qty	Serial Number
1		17A-57-21202	Seat Belt, Lap	1	81028-
2		01643-51232	Washer	1	81028-
3		01643-51232	Washer	2	81028-
4		01643-51232	Washer	2	81028-
5		02030-70732	Bolt, Unified	2	81028-

FIG. K0160-004001 Seat Belt, 78mm Width, Air Suspension Type, Hi-Back Type Operator's Seat

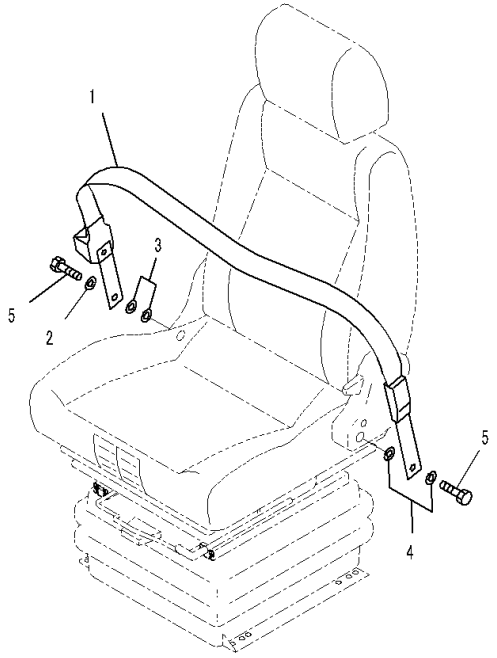

Index	Code	Part Number	Description	Qty	Serial Number
1		09409-70000	Seat Belt Kit, Lap	1	81028-
2		01643-51232	Washer	1	81028-
3		01643-51232	Washer	2	81028-
4		01643-51232	Washer	2	81028-
5		02030-70732	Bolt, Unified	2	81028-

FIG. K0210-003001 Cab, Cab

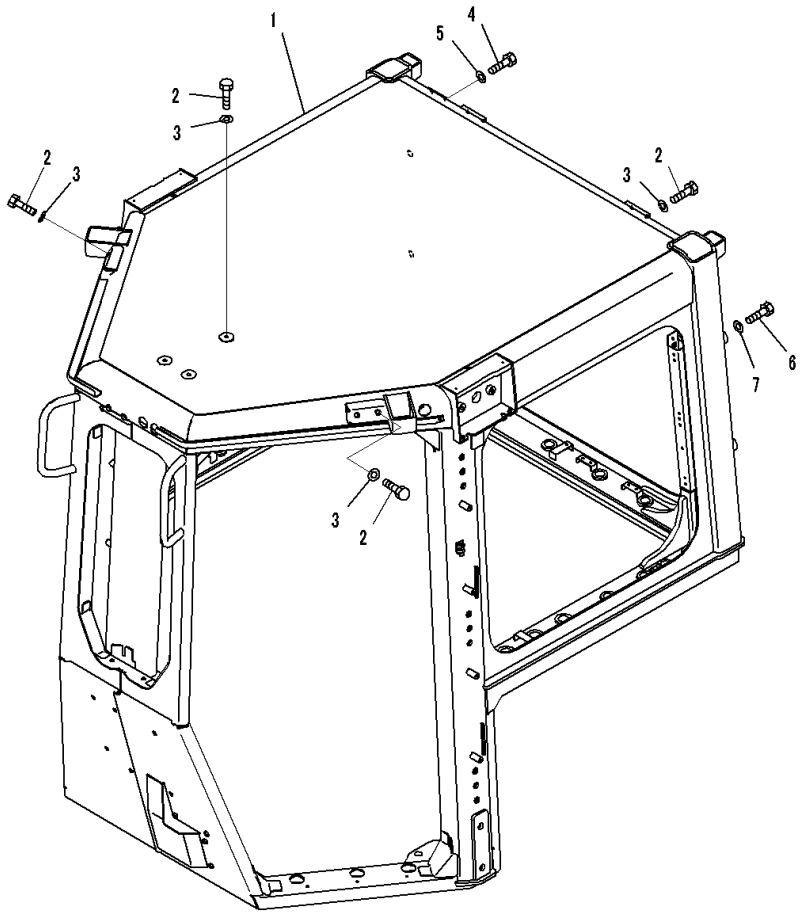

Index	Code	Part Number	Description	Qty	Serial Number
		Note: This list covers following specifications.			
		ROPS			
		ROPS, With AM-FM Stereo Radio With Cassette For North America			
		ROPS, With AM-FM Stereo Radio With Cassette For Europe and Asia			
		ROPS, With AM-FM Stereo Radio With Cassette For North America, For KOMTRAX			
		ROPS, With AM-FM Stereo Radio With Cassette For Europe and Asia, For KOMTRAX			
		ROPS, For KOMTRAX			
		ROPS, Rearview Monitoring System			
		ROPS, Rearview Monitoring System, With AM-FM Stereo Radio With Cassette For North America			
		ROPS, Rearview Monitoring System, With AM-FM Stereo Radio With Cassette For Europe and Asia			
		ROPS, Rearview Monitoring System, With AM-FM Stereo Radio With Cassette For North America, For KOMTRAX			
		ROPS, Rearview Monitoring System, With AM-FM Stereo Radio With Cassette For Europe and Asia, For KOMTRAX			
		ROPS, Rearview Monitoring System, For KOMTRAX			
		ROPS Cab, EU Safety Regulation, Rear View Monitoring System, AM-FM Stereo Radio, Cassette, Europe, Asia, KOMTRAX			
1		17A-979-1114	Cab Assembly	1	81199-
2		01010-D1220	Bolt	11	81028-
3		01643-71232	Washer	11	81028-
4		01010-D0816	Bolt	2	81028-
5		01643-70823	Washer	2	81028-
6		01010-82035	Bolt	4	81028-
7		01643-32060	Washer	4	81028-

FIG. K0210-003002A Cab, Door Lock, LHS

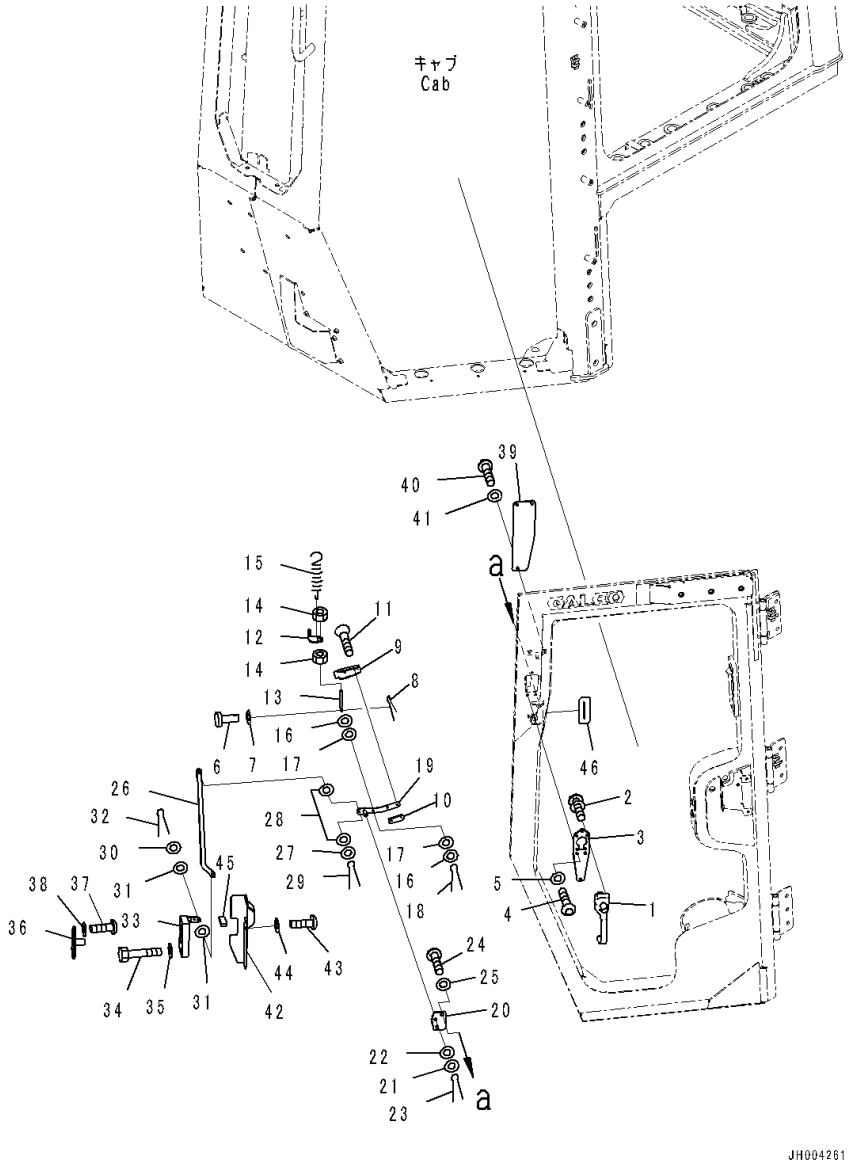

Index	Code	Part Number	Description	Qty	Serial Number
		Note: This list covers following specifications.			
		ROPS			
		ROPS, With AM-FM Stereo Radio With Cassette For North America			
		ROPS, With AM-FM Stereo Radio With Cassette For Europe and Asia			
		ROPS, With AM-FM Stereo Radio With Cassette For North America, For KOMTRAX			
		ROPS, With AM-FM Stereo Radio With Cassette For Europe and Asia, For KOMTRAX			
		ROPS, For KOMTRAX			
		ROPS, Rearview Monitoring System			
		ROPS, Rearview Monitoring System, With AM-FM Stereo Radio With Cassette For North America			
		ROPS, Rearview Monitoring System, With AM-FM Stereo Radio With Cassette For Europe and Asia			
		ROPS, Rearview Monitoring System, With AM-FM Stereo Radio With Cassette For North America, For KOMTRAX			
		ROPS, Rearview Monitoring System, With AM-FM Stereo Radio With Cassette For Europe and Asia, For KOMTRAX			
		ROPS, Rearview Monitoring System, For KOMTRAX			
1		11Y-979-2571	Handle Assembly	1	81049-
2		01023-10520	Screw	5	81028-
3		12Y-978-3210	Plate	1	81028-
4		01245-00620	Screw	3	81028-
5		01643-70623	Washer	3	81028-
6		04205-10622	Pin	1	81028-
7		01643-70623	Washer	4	81028-
8		04050-11612	Pin, Cotter	1	81028-
9		12Y-978-3281	Knob	1	81028-
10		12Y-978-3290	Plate	1	81028-
11		01023-20410	Screw	2	81028-
12		12Y-978-3221	Plate	1	81028-
13		12Y-978-3241	Rod	1	81028-
14		01580-00605	Nut	2	81028-
15		176-06-42170	Spring	1	81028-
16		01643-70623	Washer	2	81028-
17		12Y-978-3310	Rubber	2	81028-
18		04050-11612	Pin, Cotter	1	81028-
19		12Y-978-3251	Plate	1	81028-

FIG. K0210-003002A Cab, Door Lock, LHS

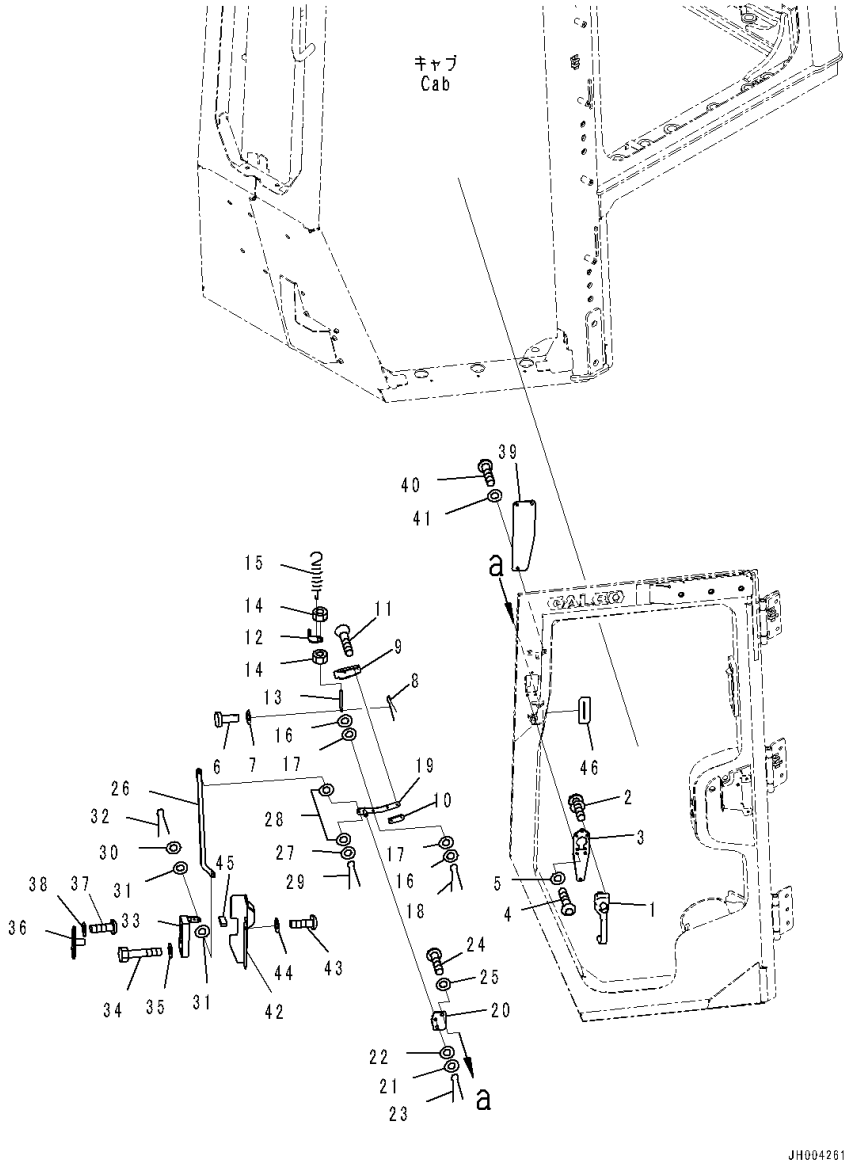

Index	Code	Part Number	Description	Qty	Serial Number
20		12Y-978-3261	Plate	1	81028-
21		01643-70823	Washer	1	81028-
22		12Y-978-3360	Rubber	1	81028-
23		04050-12012	Pin, Cotter	1	81028-
24		01245-00620	Screw	2	81028-
25		01643-70623	Washer	2	81028-
26		17A-979-3320	Plate	1	81028-
27		01640-20610	Washer	1	81028-
28		12Y-978-3310	Rubber	2	81028-
29		04050-11612	Pin, Cotter	1	81028-
30		01643-70623	Washer	1	81028-
31		12Y-978-3310	Rubber	2	81028-
32		04050-11612	Pin, Cotter	1	81028-
33		195-Z11-4520	Lock	1	81028-
34		01010-D0635	Bolt	4	81028-
35		01643-70623	Washer	4	81028-
36		12Y-978-3480	Striker	1	81028-
37		01245-00825	Screw	4	81028-
38		01643-70823	Washer	4	81028-
39		12Y-978-3340	Plate	1	81028-
40		01245-00620	Screw	3	81028-
41		01643-70623	Washer	3	81028-
42		17A-979-3741	Cover	1	81028-
43		01245-00620	Screw	2	81028-
44		01643-70623	Washer	2	81028-
45		17A-979-3811	Sheet	1	81028-
46		17A-979-4120	Sheet	1	81049-

FIG. K0210-003003 Cab, Door Dumper, Window and Wiper, LHS

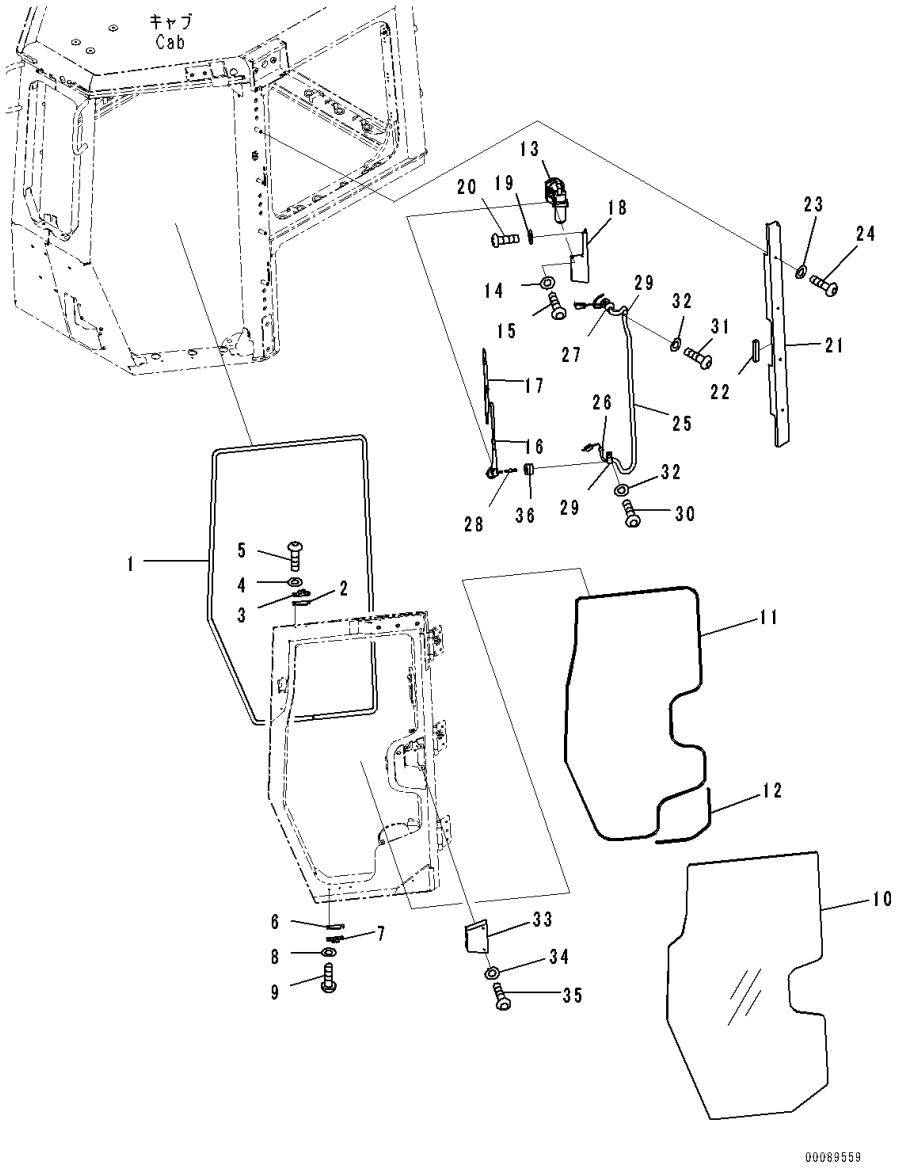

Index	Code	Part Number	Description	Qty	Serial Number
		Note: This list covers following specifications. ROPS ROPS, With AM-FM Stereo Radio With Cassette For North America ROPS, With AM-FM Stereo Radio With Cassette For Europe and Asia ROPS, With AM-FM Stereo Radio With Cassette For North America, For KOMTRAX ROPS, With AM-FM Stereo Radio With Cassette For Europe and Asia, For KOMTRAX ROPS, For KOMTRAX ROPS, Rearview Monitoring System ROPS, Rearview Monitoring System, With AM-FM Stereo Radio With Cassette For North America ROPS, Rearview Monitoring System, With AM-FM Stereo Radio With Cassette For Europe and Asia ROPS, Rearview Monitoring System, With AM-FM Stereo Radio With Cassette For North America, For KOMTRAX ROPS, Rearview Monitoring System, With AM-FM Stereo Radio With Cassette For Europe and Asia, For KOMTRAX ROPS, Rearview Monitoring System, For KOMTRAX ROPS Cab, EU Safety Regulation, Rear View Monitoring System, AM-FM Stereo Radio, Cassette, Europe, Asia, KOMTRAX		
1		12Y-978-3370	Seal	1	81028-
2		14X-911-1761	Shim, T=1.2mm	2	81028-
3		14X-911-1690	Damper	1	81028-
4		01643-70623	Washer	2	81028-
5		01245-00620	Screw	2	81028-
6		14X-911-1761	Shim, T=1.2mm	2	81028-
7		14X-911-1690	Damper	1	81028-
8		01643-70623	Washer	2	81028-
9		01245-00620	Screw	2	81028-
10		17A-979-1361	Glass	1	81028-
11		17A-979-1381	Seal	1	81028-
12		17A-979-1390	Seal	1	81028-
13		12Y-978-2431	Wiper Motor	1	81028-
14		01643-70623	Washer	2	81028-
15		01245-00616	Screw, Hexagon Socket Head	2	81028-
16		12Y-978-2490	Arm, Wiper	1	81028-

FIG. K0210-003003 Cab, Door Dumper, Window and Wiper, LHS

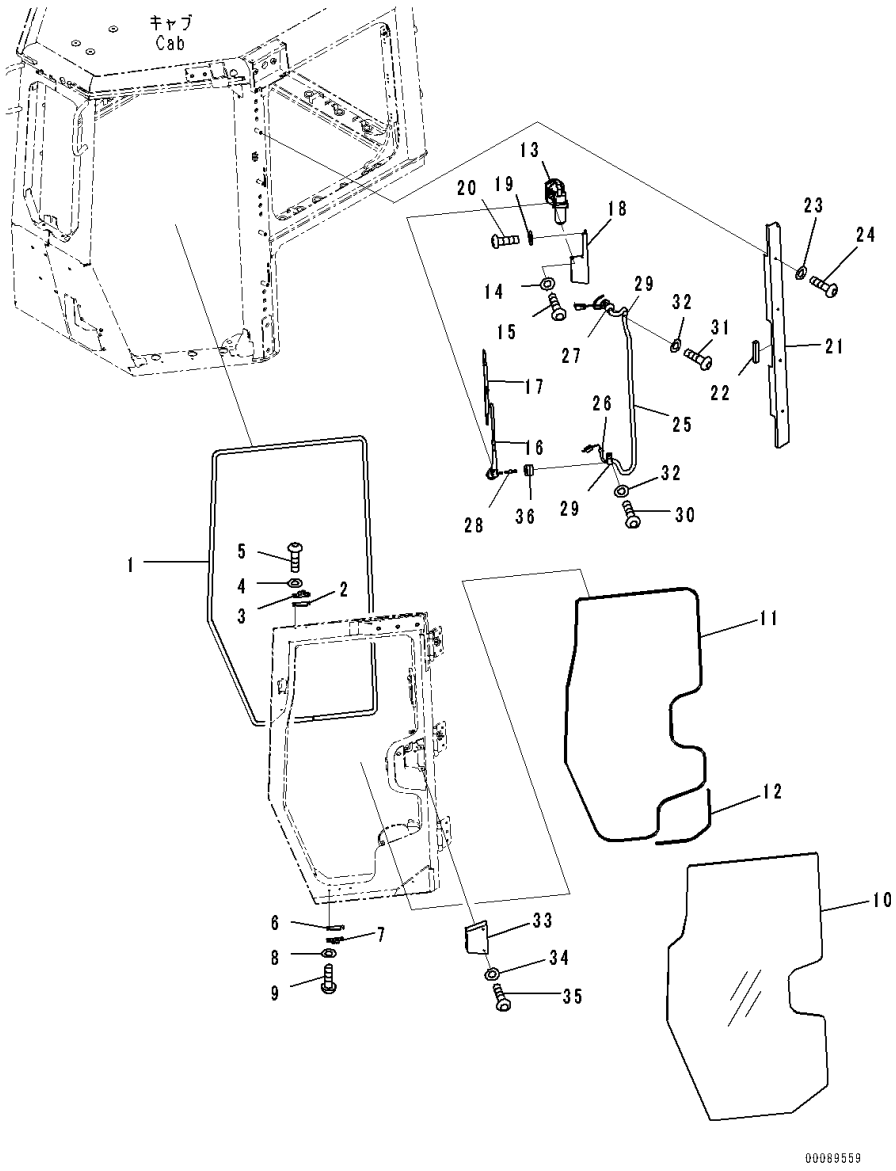

Index	Code	Part Number	Description	Qty	Serial Number
17		17A-Z11-2581	Wiper Blade	1	81028-
18		12Y-978-2550	Bracket	1	81028-
19		01643-70823	Washer	2	81028-
20		01245-00825	Screw	2	81028-
21		17A-979-3452	Plate	1	81028-
22		17A-979-3651	• Sheet	1	81028-
23		01643-70823	Washer	4	81028-
24		01245-00816	Screw	4	81028-
25		17A-979-2522	Wiring Harness	1	81028-
26		08037-01610	• Grommet	1	81028-
27		08037-11825	• Grommet	1	81028-
28		195-979-8590	Valve	1	81028-
29		04434-51708	Clip	2	81028-
30		01245-00825	Screw	1	81028-
31		01245-00816	Screw	1	81028-
32		01643-70823	Washer	2	81028-
33		17A-979-3671	Cover	1	81028-
34		01643-70623	Washer	4	81028-
35		01245-00620	Screw	4	81028-
36		08037-01008	Grommet	1	81028-

FIG. K0210-003004 Cab, Door, LHS

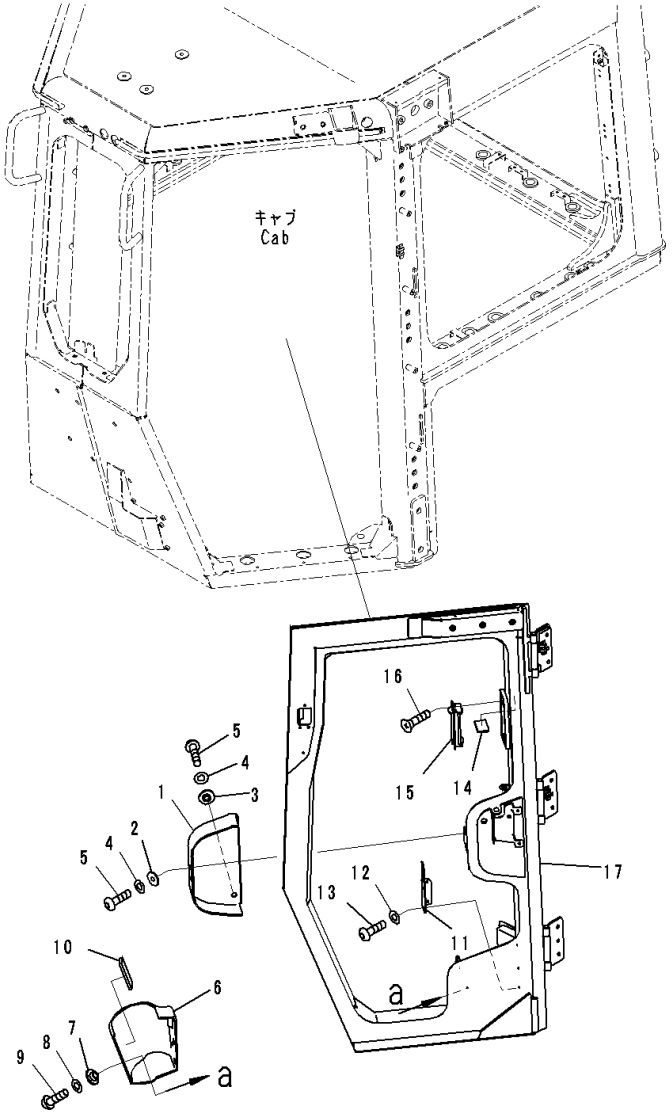

Index	Code	Part Number	Description	Qty	Serial Number
		Note: This list covers following specifications. ROPS ROPS, With AM-FM Stereo Radio With Cassette For North America ROPS, With AM-FM Stereo Radio With Cassette For Europe and Asia ROPS, With AM-FM Stereo Radio With Cassette For North America, For KOMTRAX ROPS, With AM-FM Stereo Radio With Cassette For Europe and Asia, For KOMTRAX ROPS, For KOMTRAX ROPS, Rearview Monitoring System ROPS, Rearview Monitoring System, With AM-FM Stereo Radio With Cassette For North America ROPS, Rearview Monitoring System, With AM-FM Stereo Radio With Cassette For Europe and Asia ROPS, Rearview Monitoring System, With AM-FM Stereo Radio With Cassette For North America, For KOMTRAX ROPS, Rearview Monitoring System, With AM-FM Stereo Radio With Cassette For Europe and Asia, For KOMTRAX ROPS, Rearview Monitoring System, For KOMTRAX ROPS Cab, EU Safety Regulation, Rear View Monitoring System, AM-FM Stereo Radio, Cassette, Europe, Asia, KOMTRAX		
1		12Y-978-3381	Cover	1	81028-
2		12Y-978-2660	Collar	2	81028-
3		17A-979-1620	Collar	2	81028-
4		01643-70623	Washer	4	81028-
5		01245-00620	Screw	4	81028-
6		17A-979-3632	Cover	1	81028-
7		12Y-978-2660	Collar	3	81028-
8		01643-70623	Washer	3	81028-
9		01245-00620	Screw	3	81028-
10		17A-979-3470	Rubber	1	81028-
11		17A-979-3710	Cover	1	81028-
12		01643-70623	Washer	4	81028-
13		01245-00620	Screw	4	81028-
14		17A-979-3730	Sheet	2	81028-
15		17A-Z11-7161	Louver	1	81028-
16		01236-60308	Screw	2	81028-

FIG. K0210-003004 Cab, Door, LHS

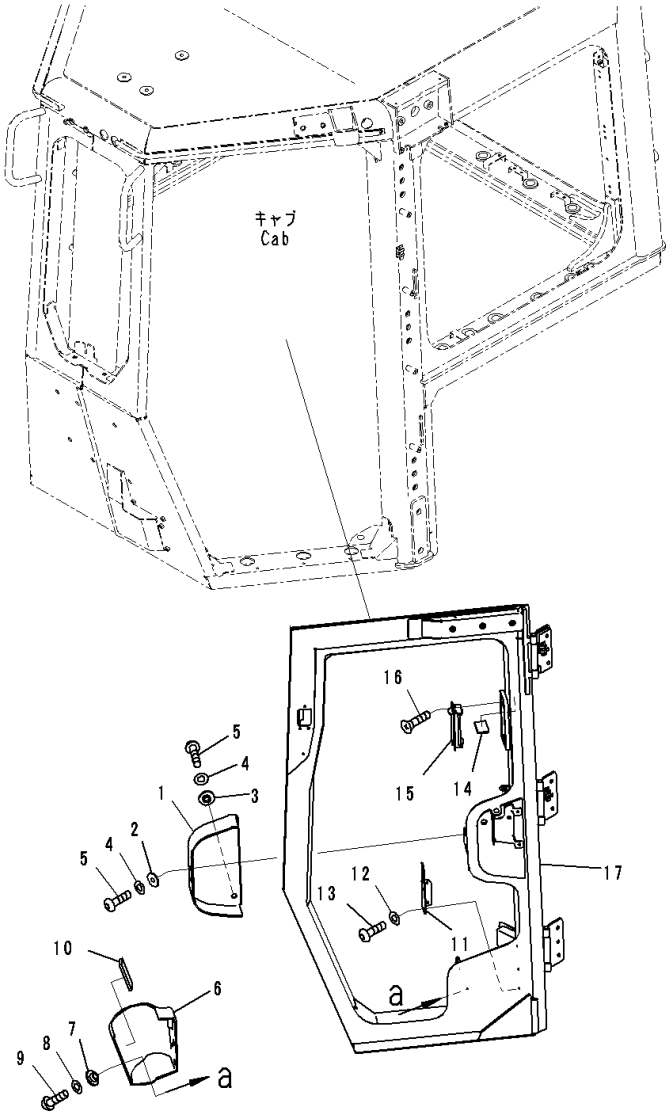

Index	Code	Part Number	Description	Qty	Serial Number
17		17A-979-3113	Door	1	81028-

FIG. K0210-003005A Cab, Door Lock, RHS

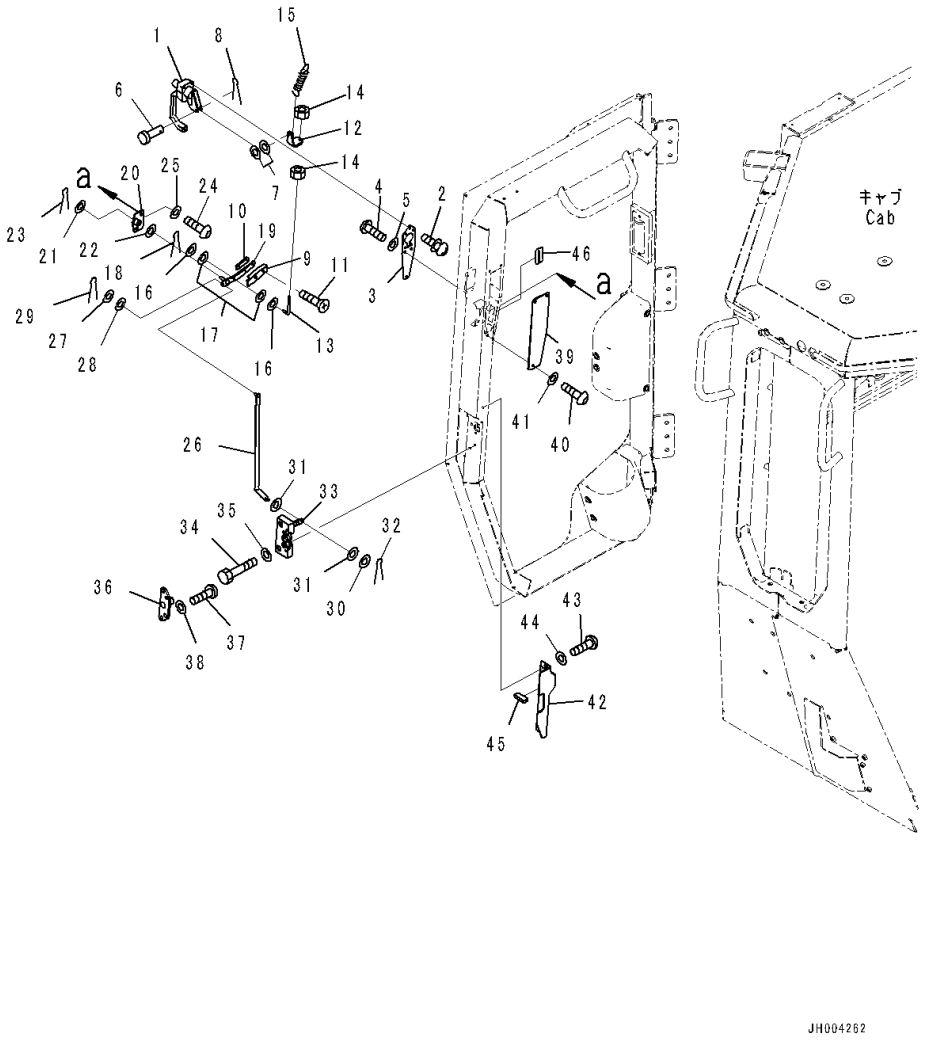

Index	Code	Part Number	Description	Qty	Serial Number
		Note: This list covers following specifications.			
		ROPS			
		ROPS, With AM-FM Stereo Radio With Cassette For North America			
		ROPS, With AM-FM Stereo Radio With Cassette For Europe and Asia			
		ROPS, With AM-FM Stereo Radio With Cassette For North America, For KOMTRAX			
		ROPS, With AM-FM Stereo Radio With Cassette For Europe and Asia, For KOMTRAX			
		ROPS, For KOMTRAX			
		ROPS, Rearview Monitoring System			
		ROPS, Rearview Monitoring System, With AM-FM Stereo Radio With Cassette For North America			
		ROPS, Rearview Monitoring System, With AM-FM Stereo Radio With Cassette For Europe and Asia			
		ROPS, Rearview Monitoring System, With AM-FM Stereo Radio With Cassette For North America, For KOMTRAX			
		ROPS, Rearview Monitoring System, With AM-FM Stereo Radio With Cassette For Europe and Asia, For KOMTRAX			
		ROPS, Rearview Monitoring System, For KOMTRAX			
1		11Y-979-2571	Handle Assembly	1	81049-
2		01023-10520	Screw	5	81028-
3		12Y-978-3210	Plate	1	81028-
4		01245-00620	Screw	3	81028-
5		01643-70623	Washer	3	81028-
6		04205-10622	Pin	1	81028-
7		01643-70623	Washer	4	81028-
8		04050-11612	Pin, Cotter	1	81028-
9		12Y-978-3281	Knob	1	81028-
10		12Y-978-3290	Plate	1	81028-
11		01023-20410	Screw	2	81028-
12		12Y-978-3231	Plate	1	81028-
13		12Y-978-3241	Rod	1	81028-
14		01580-00605	Nut	2	81028-
15		176-06-42170	Spring	1	81028-
16		01643-70623	Washer	2	81028-
17		12Y-978-3310	Rubber	2	81028-
18		04050-11612	Pin, Cotter	1	81028-
19		12Y-978-3470	Plate	1	81028-

FIG. K0210-003005A Cab, Door Lock, RHS

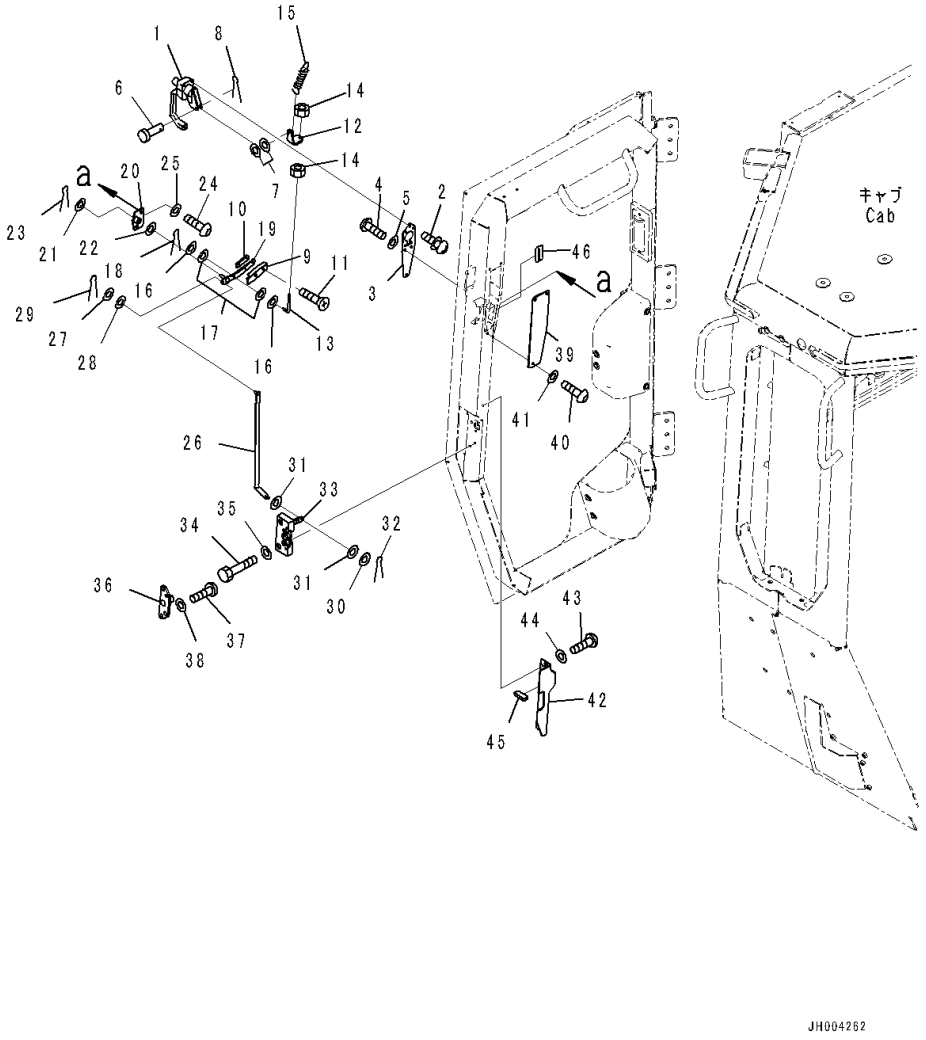

Index	Code	Part Number	Description	Qty	Serial Number
20		12Y-978-3271	Plate	1	81028-
21		01643-70823	Washer	1	81028-
22		12Y-978-3360	Rubber	1	81028-
23		04050-12012	Pin, Cotter	1	81028-
24		01245-00620	Screw	2	81028-
25		01643-70623	Washer	2	81028-
26		17A-979-3330	Plate	1	81028-
27		01640-20610	Washer	1	81028-
28		12Y-978-3310	Rubber	2	81028-
29		04050-11612	Pin, Cotter	1	81028-
30		01643-70623	Washer	1	81028-
31		12Y-978-3310	Rubber	2	81028-
32		04050-11612	Pin, Cotter	1	81028-
33		195-Z11-4510	Lock	1	81028-
34		01010-D0635	Bolt	4	81028-
35		01643-70623	Washer	4	81028-
36		12Y-978-3480	Striker	1	81028-
37		01245-00825	Screw	4	81028-
38		01643-70823	Washer	4	81028-
39		12Y-978-3340	Plate	1	81028-
40		01245-00620	Screw	3	81028-
41		01643-70623	Washer	3	81028-
42		17A-979-3751	Cover	1	81028-
43		01245-00620	Screw	2	81028-
44		01643-70623	Washer	2	81028-
45		17A-979-3811	Sheet	1	81028-
46		17A-979-4120	Sheet	1	81049-

FIG. K0210-003006 Cab, Door Dumper, Window and Wiper, RHS

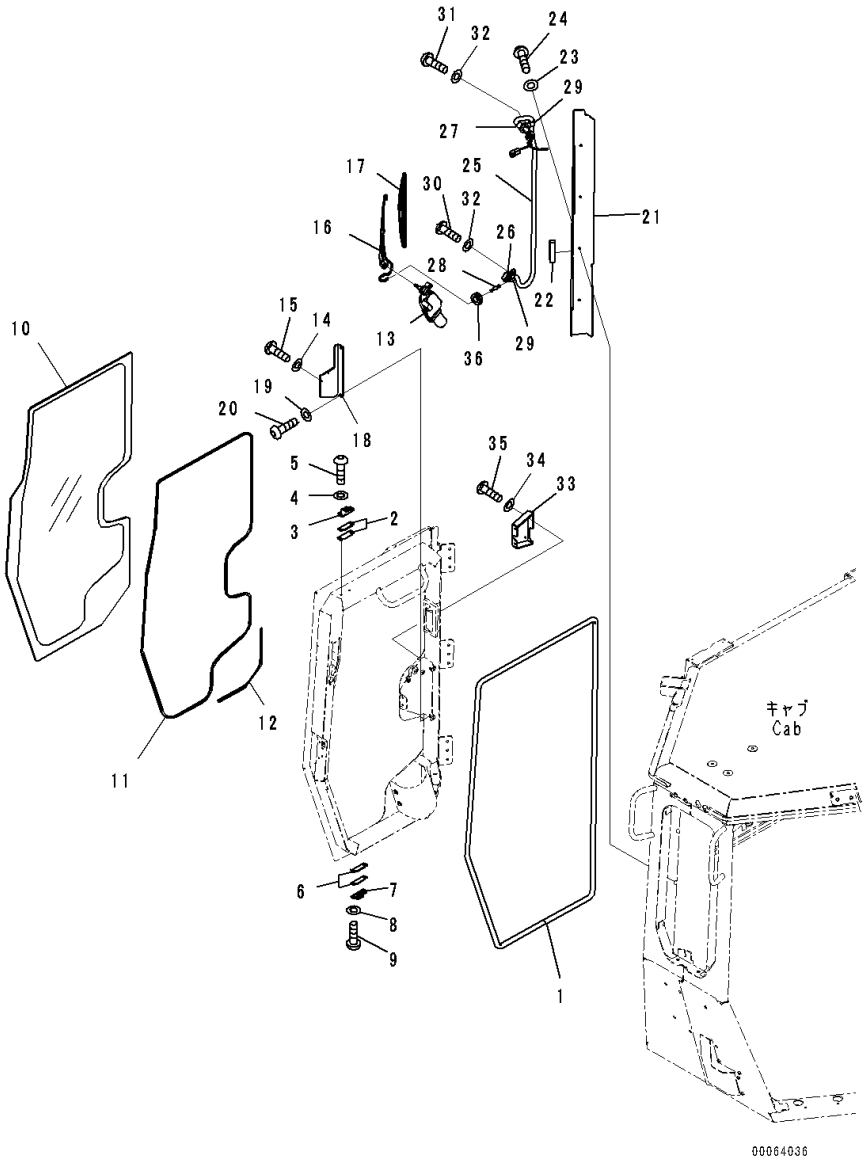

Index	Code	Part Number	Description	Qty	Serial Number
		Note: This list covers following specifications. ROPS ROPS, With AM-FM Stereo Radio With Cassette For North America ROPS, With AM-FM Stereo Radio With Cassette For Europe and Asia ROPS, With AM-FM Stereo Radio With Cassette For North America, For KOMTRAX ROPS, With AM-FM Stereo Radio With Cassette For Europe and Asia, For KOMTRAX ROPS, For KOMTRAX ROPS, Rearview Monitoring System ROPS, Rearview Monitoring System, With AM-FM Stereo Radio With Cassette For North America ROPS, Rearview Monitoring System, With AM-FM Stereo Radio With Cassette For Europe and Asia ROPS, Rearview Monitoring System, With AM-FM Stereo Radio With Cassette For North America, For KOMTRAX ROPS, Rearview Monitoring System, With AM-FM Stereo Radio With Cassette For Europe and Asia, For KOMTRAX ROPS, Rearview Monitoring System, For KOMTRAX ROPS Cab, EU Safety Regulation, Rear View Monitoring System, AM-FM Stereo Radio, Cassette, Europe, Asia, KOMTRAX		
1		12Y-978-3370	Seal	1	81028-
2		14X-911-1761	Shim, T=1.2mm	2	81028-
3		14X-911-1690	Damper	1	81028-
4		01643-70623	Washer	2	81028-
5		01245-00620	Screw	2	81028-
6		14X-911-1761	Shim, T=1.2mm	2	81028-
7		14X-911-1690	Damper	1	81028-
8		01643-70623	Washer	2	81028-
9		01245-00620	Screw	2	81028-
10		17A-979-1371	Glass	1	81028-
11		17A-979-1381	Seal	1	81028-
12		17A-979-1390	Seal	1	81028-
13		12Y-978-2441	Wiper Motor	1	81028-
14		01643-70623	Washer	2	81028-
15		01245-00616	Screw, Hexagon Socket Head	2	81028-
16		12Y-978-2490	Arm, Wiper	1	81028-

FIG. K0210-003006 Cab, Door Dumper, Window and Wiper, RHS

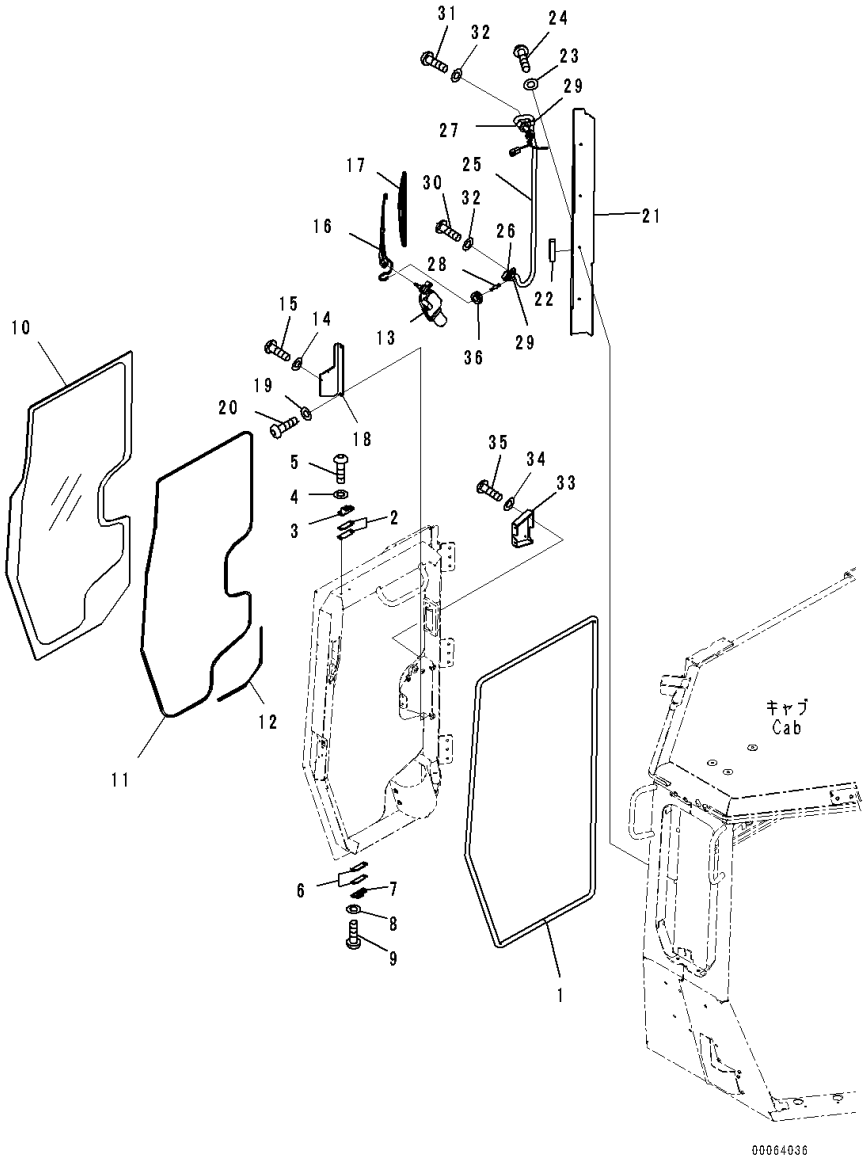

Index	Code	Part Number	Description	Qty	Serial Number
17		17A-Z11-2581	Wiper Blade	1	81028-
18		12Y-978-2560	Bracket	1	81028-
19		01643-70823	Washer	2	81028-
20		01245-00825	Screw	2	81028-
21		17A-979-3462	Plate	1	81028-
22		17A-979-3651	• Sheet	1	81028-
23		01643-70823	Washer	4	81028-
24		01245-00816	Screw	4	81028-
25		17A-979-2522	Wiring Harness	1	81028-
26		08037-01610	• Grommet	1	81028-
27		08037-11825	• Grommet	1	81028-
28		195-979-8590	Valve	1	81028-
29		04434-51708	Clip	2	81028-
30		01245-00825	Screw	1	81028-
31		01245-00816	Screw	1	81028-
32		01643-70823	Washer	2	81028-
33		17A-979-3681	Cover	1	81028-
34		01643-70623	Washer	4	81028-
35		01245-00620	Screw	4	81028-
36		08037-01008	Grommet	1	81028-

FIG. K0210-003007 Cab, Door, RHS

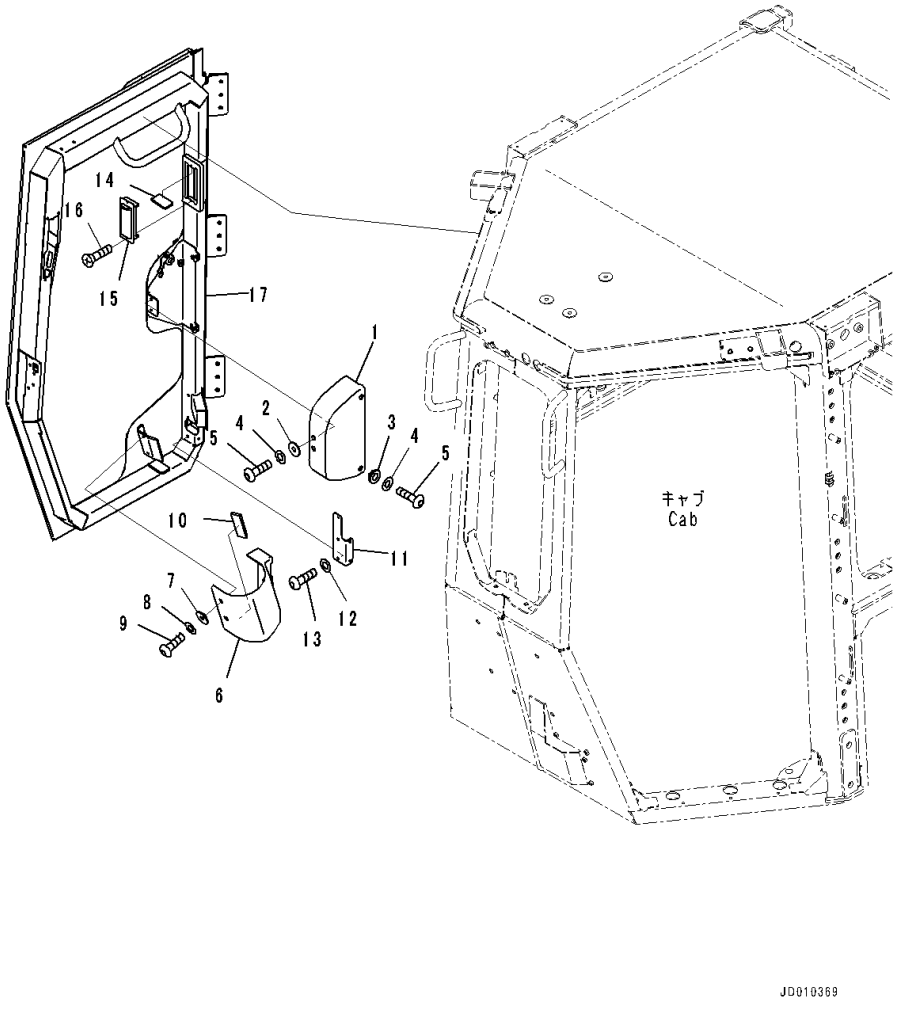

Index	Code	Part Number	Description	Qty	Serial Number
		Note: This list covers following specifications. ROPS ROPS, With AM-FM Stereo Radio With Cassette For North America ROPS, With AM-FM Stereo Radio With Cassette For Europe and Asia ROPS, With AM-FM Stereo Radio With Cassette For North America, For KOMTRAX ROPS, With AM-FM Stereo Radio With Cassette For Europe and Asia, For KOMTRAX ROPS, For KOMTRAX ROPS, Rearview Monitoring System ROPS, Rearview Monitoring System, With AM-FM Stereo Radio With Cassette For North America ROPS, Rearview Monitoring System, With AM-FM Stereo Radio With Cassette For Europe and Asia ROPS, Rearview Monitoring System, With AM-FM Stereo Radio With Cassette For North America, For KOMTRAX ROPS, Rearview Monitoring System, With AM-FM Stereo Radio With Cassette For Europe and Asia, For KOMTRAX ROPS, Rearview Monitoring System, For KOMTRAX ROPS Cab, EU Safety Regulation, Rear View Monitoring System, AM-FM Stereo Radio, Cassette, Europe, Asia, KOMTRAX		
1		12Y-978-3381	Cover	1	81028-
2		12Y-978-2660	Collar	2	81028-
3		17A-979-1620	Collar	2	81028-
4		01643-70623	Washer	4	81028-
5		01245-00620	Screw	4	81028-
6		17A-979-3642	Cover	1	81028-
7		12Y-978-2660	Collar	3	81028-
8		01643-70623	Washer	3	81028-
9		01245-00620	Screw	3	81028-
10		17A-979-3470	Rubber	1	81028-
11		17A-979-3720	Cover	1	81028-
12		01643-70623	Washer	4	81028-
13		01245-00620	Screw	4	81028-
14		17A-979-3730	Sheet	2	81028-
15		17A-Z11-7161	Louver	1	81028-
16		01236-60308	Screw	2	81028-

FIG. K0210-003007 Cab, Door, RHS

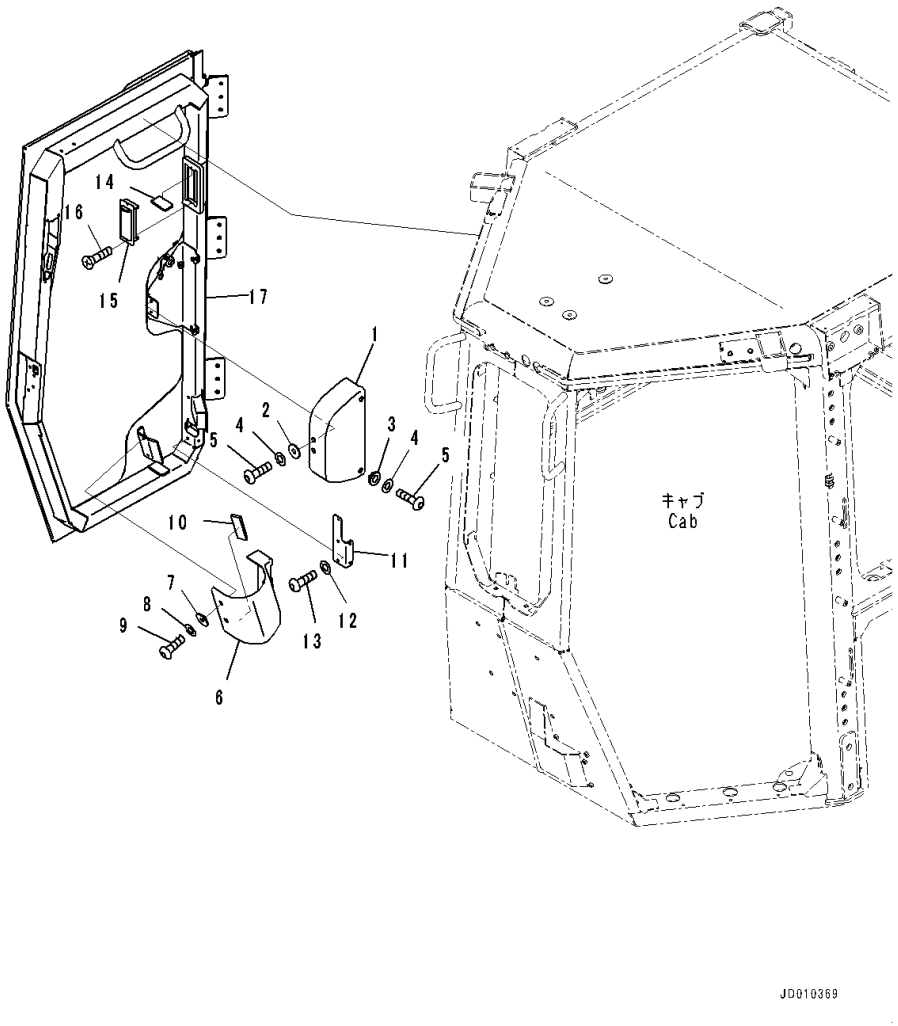

Index	Code	Part Number	Description	Qty	Serial Number
17		17A-979-3123	Door	1	81028-

FIG. K0210-003008 Cab, Door Hinge

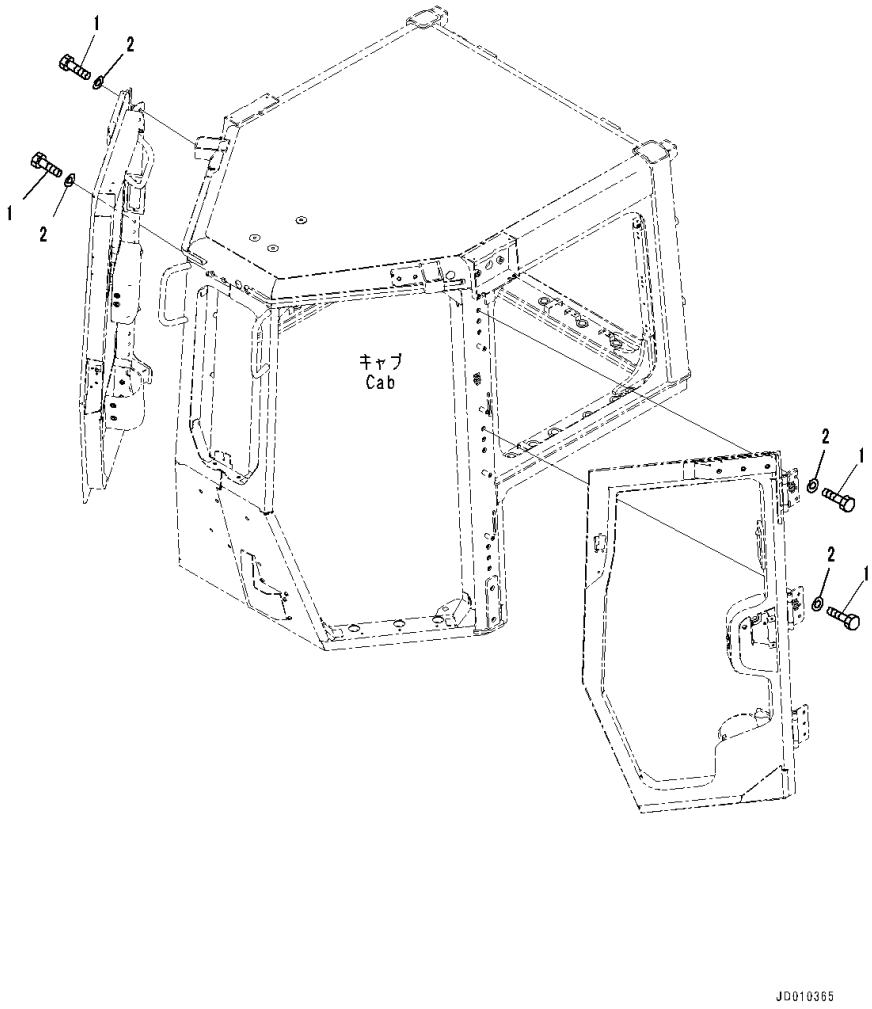

Index	Code	Part Number	Description	Qty	Serial Number
		Note: This list covers following specifications.			
		ROPS			
		ROPS, With AM-FM Stereo Radio With Cassette For North America			
		ROPS, With AM-FM Stereo Radio With Cassette For Europe and Asia			
		ROPS, With AM-FM Stereo Radio With Cassette For North America, For KOMTRAX			
		ROPS, With AM-FM Stereo Radio With Cassette For Europe and Asia, For KOMTRAX			
		ROPS, For KOMTRAX			
		ROPS, Rearview Monitoring System			
		ROPS, Rearview Monitoring System, With AM-FM Stereo Radio With Cassette For North America			
		ROPS, Rearview Monitoring System, With AM-FM Stereo Radio With Cassette For Europe and Asia			
		ROPS, Rearview Monitoring System, With AM-FM Stereo Radio With Cassette For North America, For KOMTRAX			
		ROPS, Rearview Monitoring System, With AM-FM Stereo Radio With Cassette For Europe and Asia, For KOMTRAX			
		ROPS, Rearview Monitoring System, For KOMTRAX			
		ROPS Cab, EU Safety Regulation, Rear View Monitoring System, AM-FM Stereo Radio, Cassette, Europe, Asia, KOMTRAX			
1		01010-D1040	Bolt	18	81028-
2		01643-71032	Washer	18	81028-

FIG. K0210-003009 Cab, Bracket

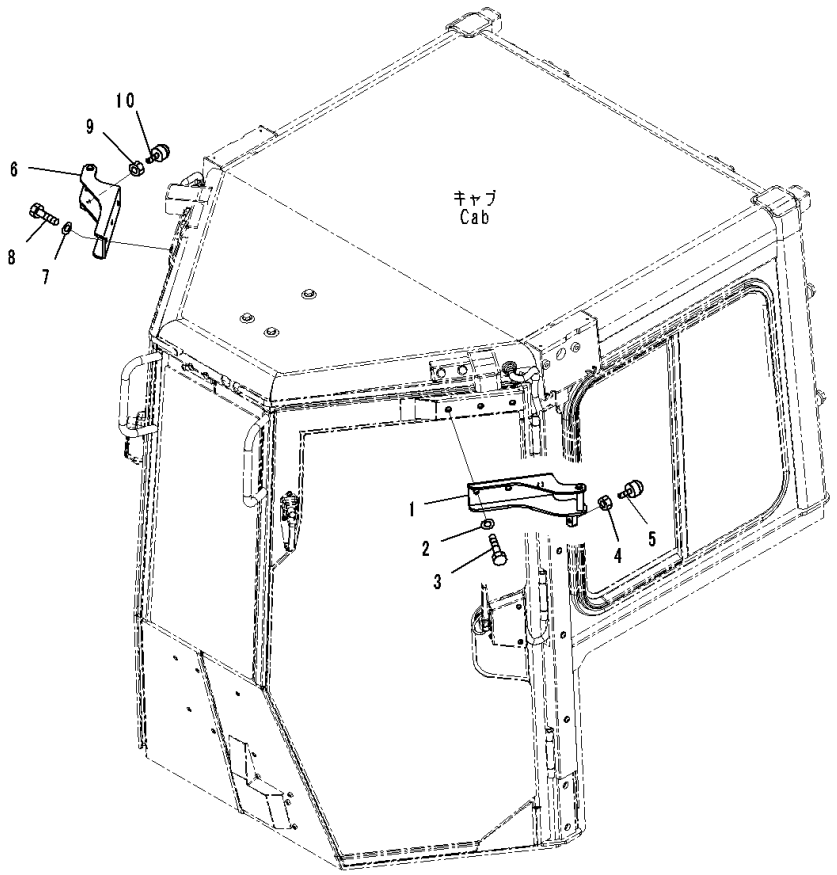

Index	Code	Part Number	Description	Qty	Serial Number
		Note: This list covers following specifications.			
		ROPS			
		ROPS, With AM-FM Stereo Radio With Cassette For North America			
		ROPS, With AM-FM Stereo Radio With Cassette For Europe and Asia			
		ROPS, With AM-FM Stereo Radio With Cassette For North America, For KOMTRAX			
		ROPS, With AM-FM Stereo Radio With Cassette For Europe and Asia, For KOMTRAX			
		ROPS, For KOMTRAX			
		ROPS, Rearview Monitoring System			
		ROPS, Rearview Monitoring System, With AM-FM Stereo Radio With Cassette For North America			
		ROPS, Rearview Monitoring System, With AM-FM Stereo Radio With Cassette For Europe and Asia			
		ROPS, Rearview Monitoring System, With AM-FM Stereo Radio With Cassette For North America, For KOMTRAX			
		ROPS, Rearview Monitoring System, With AM-FM Stereo Radio With Cassette For Europe and Asia, For KOMTRAX			
		ROPS, Rearview Monitoring System, For KOMTRAX			
		ROPS Cab, EU Safety Regulation, Rear View Monitoring System, AM-FM Stereo Radio, Cassette, Europe, Asia, KOMTRAX			
1		17A-979-3411	Striker	1	81028-
2		01643-71232	Washer	3	81028-
3		01010-D1230	Bolt	3	81028-
4		01580-11210	Nut	1	81028-
5		17A-Z11-3592	Stopper	1	81028-
6		17A-979-3421	Bracket	1	81028-
7		01643-71232	Washer	3	81028-
8		01010-D1230	Bolt	3	81028-
9		01580-11210	Nut	1	81028-
10		17A-Z11-3592	Stopper	1	81028-

FIG. K0210-003010 Cab, Door Open Lock, LHS

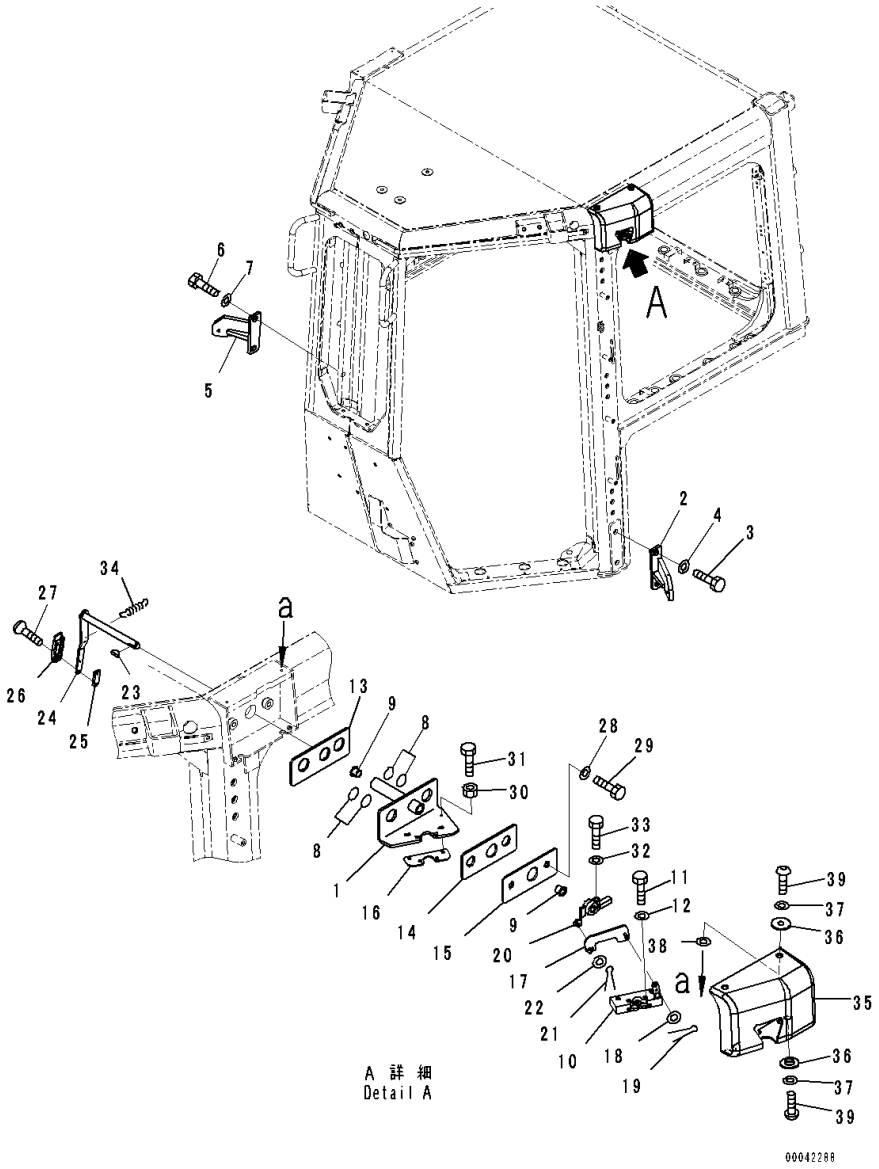

Index	Code	Part Number	Description	Qty	Serial Number
		Note: This list covers following specifications.			
		ROPS			
		ROPS, With AM-FM Stereo Radio With Cassette For North America			
		ROPS, With AM-FM Stereo Radio With Cassette For Europe and Asia			
		ROPS, With AM-FM Stereo Radio With Cassette For North America, For KOMTRAX			
		ROPS, With AM-FM Stereo Radio With Cassette For Europe and Asia, For KOMTRAX			
		ROPS, For KOMTRAX			
		ROPS, Rearview Monitoring System			
		ROPS, Rearview Monitoring System, With AM-FM Stereo Radio With Cassette For North America			
		ROPS, Rearview Monitoring System, With AM-FM Stereo Radio With Cassette For Europe and Asia			
		ROPS, Rearview Monitoring System, With AM-FM Stereo Radio With Cassette For North America, For KOMTRAX			
		ROPS, Rearview Monitoring System, With AM-FM Stereo Radio With Cassette For Europe and Asia, For KOMTRAX			
		ROPS, Rearview Monitoring System, For KOMTRAX			
		ROPS Cab, EU Safety Regulation, Rear View Monitoring System, AM-FM Stereo Radio, Cassette, Europe, Asia, KOMTRAX			
1		17A-979-3511	Bracket	1	81028-
2		17A-979-3480	Bracket	1	81028-
3		198-54-42260	Bolt	2	81028-
4		01643-71645	Washer	2	81028-
5		17A-979-3490	Bracket	1	81028-
6		198-54-42260	Bolt	2	81028-
7		01643-71645	Washer	2	81028-
8		07000-13025	O-ring	4	81028-
9		17A-Z11-1810	Bushing	2	81028-
10		195-Z11-4520	Lock	1	81028-
11		01643-70623	Washer	4	81028-
12		01010-D0635	Bolt	4	81028-
13		17A-979-3531	Rubber	1	81028-
14		12Y-978-3541	Rubber	1	81028-
15		12Y-978-3551	Plate	1	81028-
16		17A-Z11-3680	Plate	1	81028-

FIG. K0210-003010 Cab, Door Open Lock, LHS

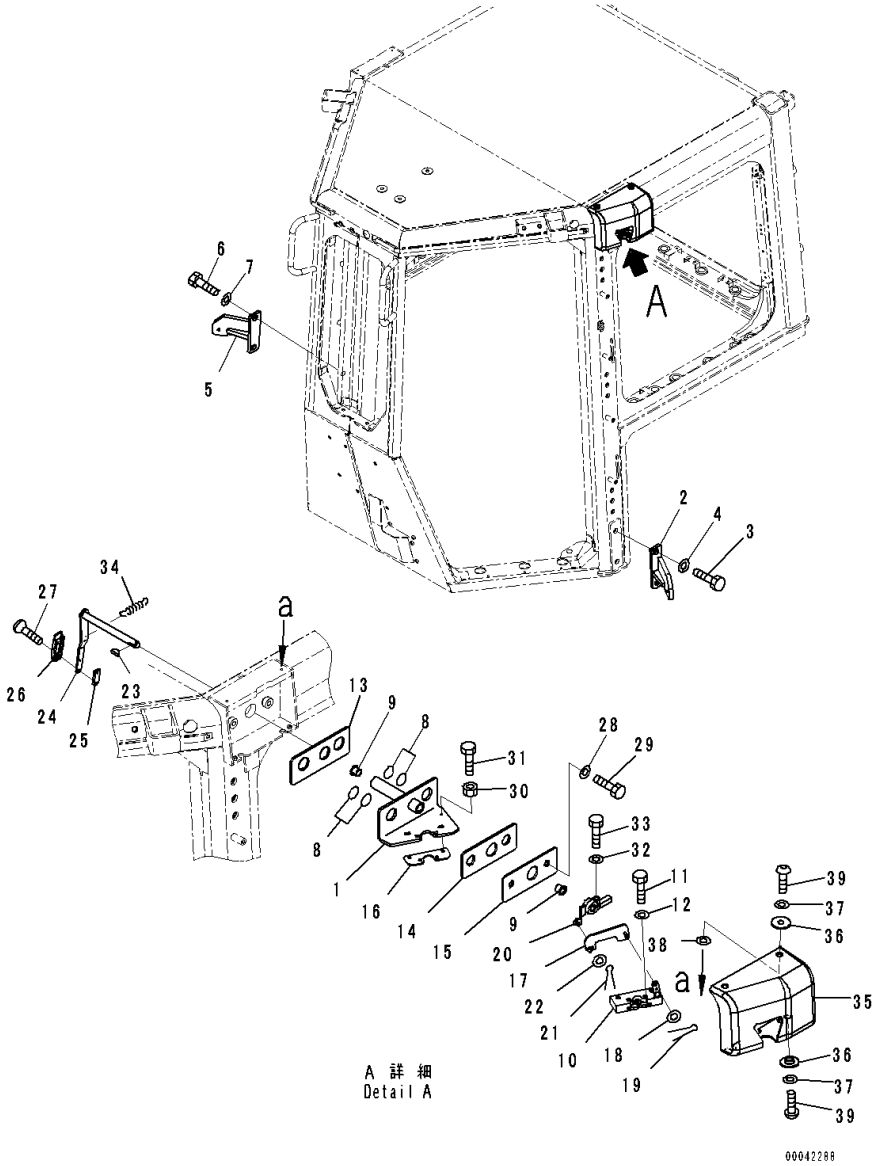

Index	Code	Part Number	Description	Qty	Serial Number
17		17A-979-3561	Plate	1	81028-
18		01640-20610	Washer	1	81028-
19		04050-11612	Pin, Cotter	1	81028-
20		17A-979-3581	Lever	1	81028-
21		04050-11612	Pin, Cotter	1	81028-
22		01640-20610	Washer	1	81028-
23		04010-00516	Key	1	81028-
24		17A-979-3611	Lever	1	81028-
25		12Y-978-3290	Plate	1	81028-
26		12Y-978-3281	Knob	1	81028-
27		01023-20410	Screw	2	81028-
28		01643-71232	Washer	2	81028-
29		01010-D1230	Bolt	2	81028-
30		01580-10605	Nut	1	81028-
31		01010-80620	Bolt	1	81028-
32		01643-70823	Washer	1	81028-
33		01010-80825	Bolt	1	81028-
34		176-06-42170	Spring	1	81028-
35		17A-979-3433	Cover	1	81028-
36		12Y-978-2660	Collar	4	81028-
37		01643-70623	Washer	4	81028-
38		17A-Z11-2813	Plate	4	81028-
39		01245-00620	Screw	4	81028-

FIG. K0210-003011 Cab, Door Open Lock, RHS

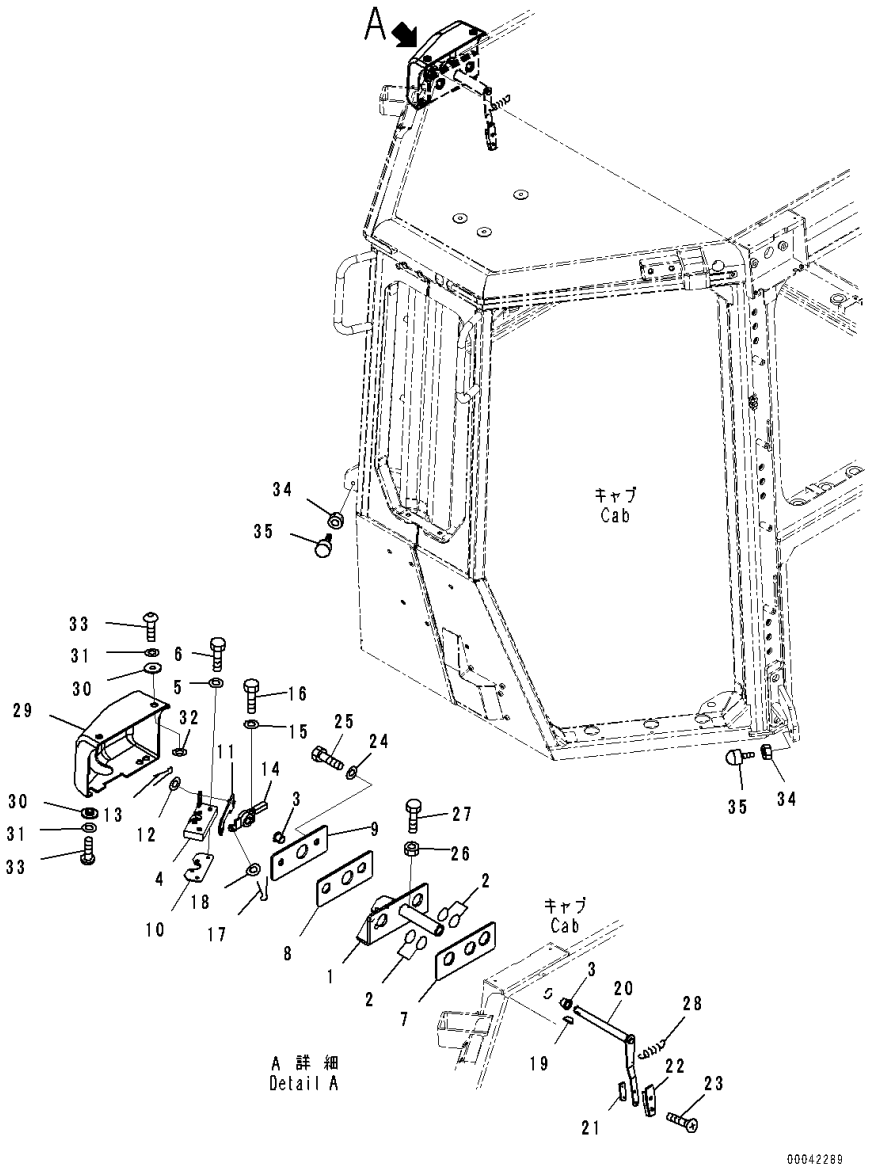

Index	Code	Part Number	Description	Qty	Serial Number
		Note: This list covers following specifications. ROPS ROPS, With AM-FM Stereo Radio With Cassette For North America ROPS, With AM-FM Stereo Radio With Cassette For Europe and Asia ROPS, With AM-FM Stereo Radio With Cassette For North America, For KOMTRAX ROPS, With AM-FM Stereo Radio With Cassette For Europe and Asia, For KOMTRAX ROPS, For KOMTRAX ROPS, Rearview Monitoring System ROPS, Rearview Monitoring System, With AM-FM Stereo Radio With Cassette For North America ROPS, Rearview Monitoring System, With AM-FM Stereo Radio With Cassette For Europe and Asia ROPS, Rearview Monitoring System, With AM-FM Stereo Radio With Cassette For North America, For KOMTRAX ROPS, Rearview Monitoring System, With AM-FM Stereo Radio With Cassette For Europe and Asia, For KOMTRAX ROPS, Rearview Monitoring System, For KOMTRAX ROPS Cab, EU Safety Regulation, Rear View Monitoring System, AM-FM Stereo Radio, Cassette, Europe, Asia, KOMTRAX			
1		17A-979-3521	Bracket	1	81028-
2		07000-13025	O-ring	4	81028-
3		17A-Z11-1810	Bushing	2	81028-
4		195-Z11-4510	Lock	1	81028-
5		01643-70623	Washer	4	81028-
6		01010-D0635	Bolt	4	81028-
7		17A-979-3531	Rubber	1	81028-
8		12Y-978-3541	Rubber	1	81028-
9		12Y-978-3551	Plate	1	81028-
10		17A-Z11-3680	Plate	1	81028-
11		17A-979-3571	Plate	1	81028-
12		01640-20610	Washer	1	81028-
13		04050-11612	Pin, Cotter	1	81028-
14		17A-979-3591	Lever	1	81028-
15		01643-70823	Washer	1	81028-
16		01010-80825	Bolt	1	81028-

FIG. K0210-003011 Cab, Door Open Lock, RHS

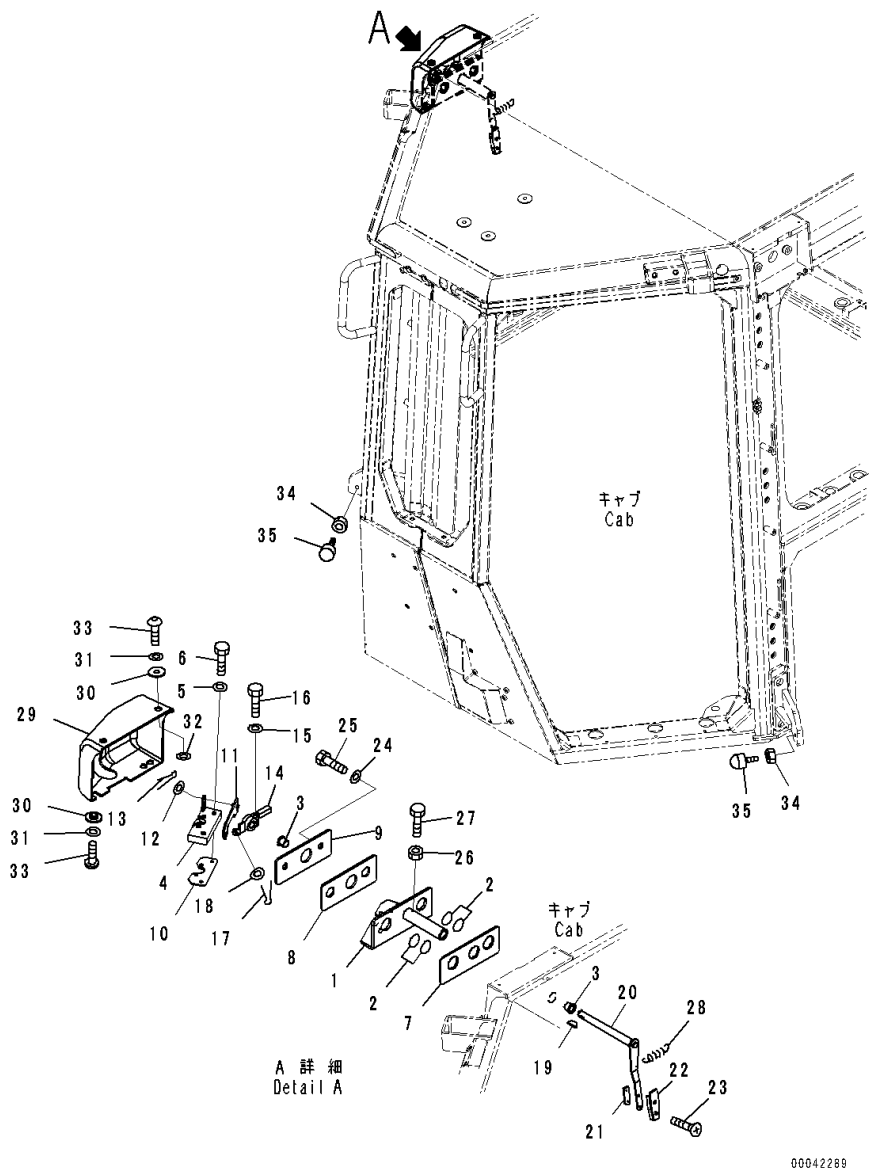

Index	Code	Part Number	Description	Qty	Serial Number
17		04050-11612	Pin, Cotter	1	81028-
18		01640-20610	Washer	1	81028-
19		04010-00516	Key	1	81028-
20		17A-979-3621	Lever	1	81028-
21		12Y-978-3290	Plate	1	81028-
22		12Y-978-3281	Knob	1	81028-
23		01023-20410	Screw	2	81028-
24		01643-71232	Washer	2	81028-
25		01010-D1230	Bolt	2	81028-
26		01580-10605	Nut	1	81028-
27		01010-80620	Bolt	1	81028-
28		176-06-42170	Spring	1	81028-
29		17A-979-3443	Cover	1	81028-
30		12Y-978-2660	Collar	4	81028-
31		01643-70623	Washer	4	81028-
32		17A-Z11-2813	Plate	4	81028-
33		01245-00620	Screw	4	81028-
34		01580-11210	Nut	2	81028-
35		17A-Z11-3592	Stopper	2	81028-

FIG. K0210-003012A Cab, Window Sash

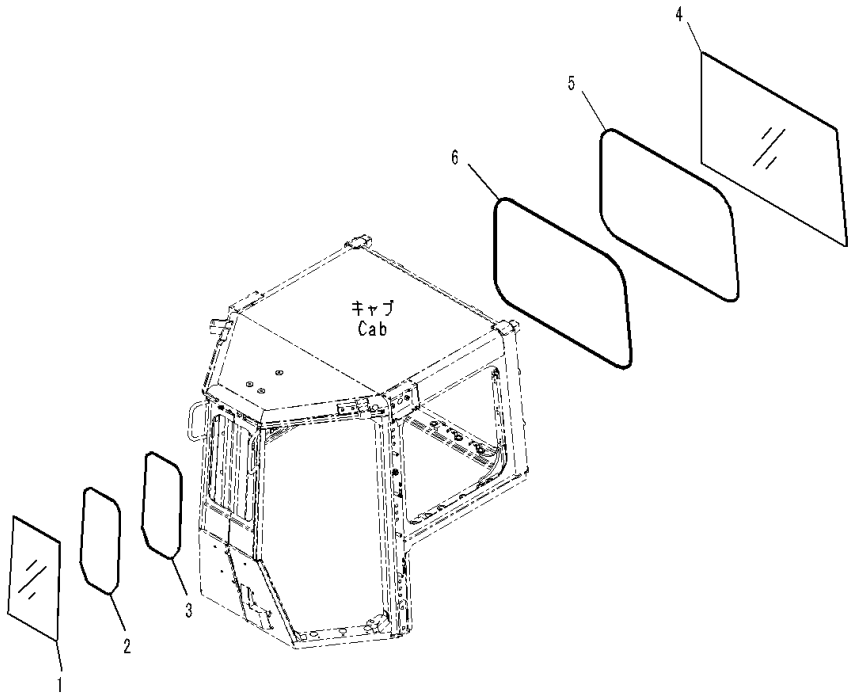

Index	Code	Part Number	Description	Qty	Serial Number
		Note: This list covers following specifications.			
		ROPS			
		ROPS, With AM-FM Stereo Radio With Cassette For North America			
		ROPS, With AM-FM Stereo Radio With Cassette For Europe and Asia			
		ROPS, With AM-FM Stereo Radio With Cassette For North America, For KOMTRAX			
		ROPS, With AM-FM Stereo Radio With Cassette For Europe and Asia, For KOMTRAX			
		ROPS, For KOMTRAX			
		ROPS, Rearview Monitoring System			
		ROPS, Rearview Monitoring System, With AM-FM Stereo Radio With Cassette For North America			
		ROPS, Rearview Monitoring System, With AM-FM Stereo Radio With Cassette For Europe and Asia			
		ROPS, Rearview Monitoring System, With AM-FM Stereo Radio With Cassette For North America, For KOMTRAX			
		ROPS, Rearview Monitoring System, With AM-FM Stereo Radio With Cassette For Europe and Asia, For KOMTRAX			
		ROPS, Rearview Monitoring System, For KOMTRAX			
1		17A-979-1313	Glass	1	81076-
2		17A-979-1321	Seal	1	81028-
3		17A-979-1520	Trim	1	81076-
4		17A-979-1331	Glass	1	81028-
5		17A-979-1341	Seal	1	81028-
6		17A-979-1351	Trim	1	81028-

FIG. K0210-003013A Cab, Sash type Glass Windows, LHS

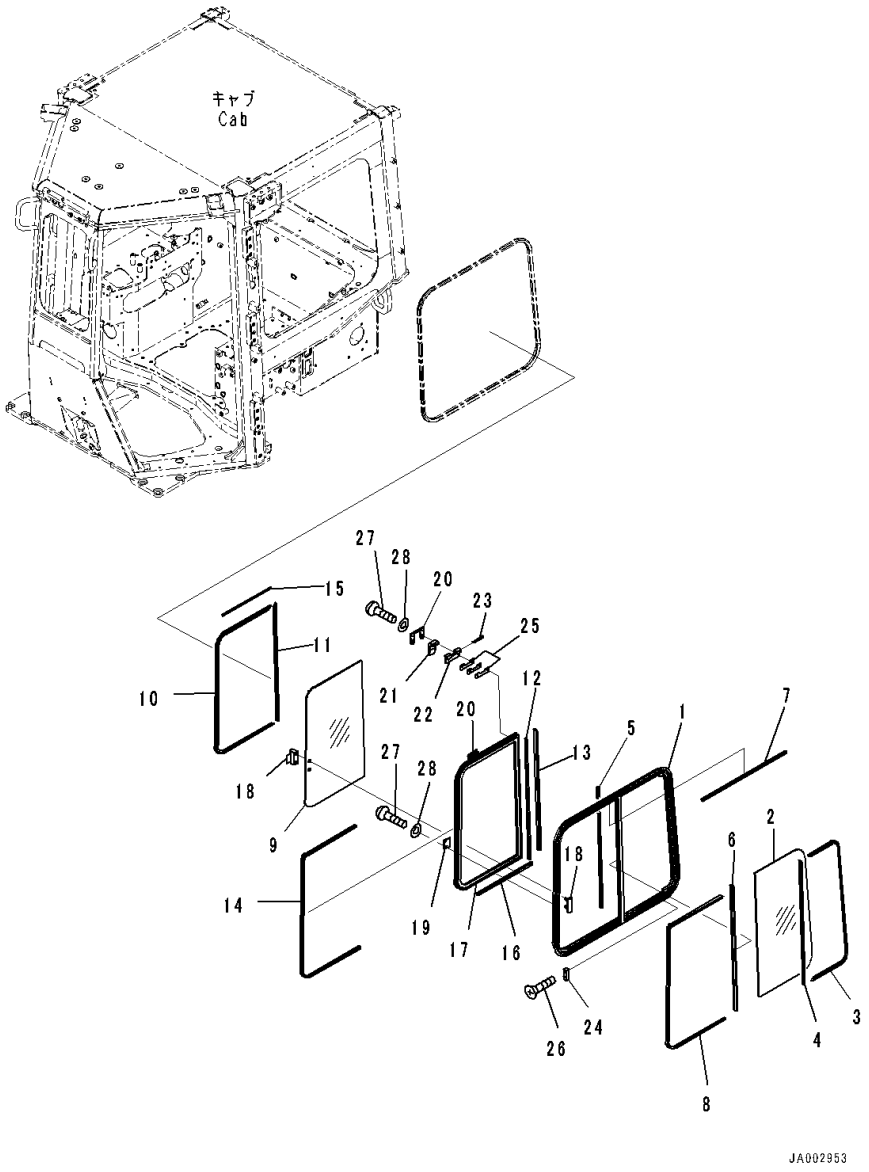

Index	Code	Part Number	Description	Qty	Serial Number
		Note: This list covers following specifications.			
		ROPS			
		ROPS, With AM-FM Stereo Radio With Cassette For North America			
		ROPS, With AM-FM Stereo Radio With Cassette For Europe and Asia			
		ROPS, With AM-FM Stereo Radio With Cassette For North America, For KOMTRAX			
		ROPS, With AM-FM Stereo Radio With Cassette For Europe and Asia, For KOMTRAX			
		ROPS, For KOMTRAX			
		ROPS, Rearview Monitoring System			
		ROPS, Rearview Monitoring System, With AM-FM Stereo Radio With Cassette For North America			
		ROPS, Rearview Monitoring System, With AM-FM Stereo Radio With Cassette For Europe and Asia			
		ROPS, Rearview Monitoring System, With AM-FM Stereo Radio With Cassette For North America, For KOMTRAX			
		ROPS, Rearview Monitoring System, With AM-FM Stereo Radio With Cassette For Europe and Asia, For KOMTRAX			
		ROPS, Rearview Monitoring System, For KOMTRAX			
		14X-Y79-1400	Sash Assembly	1	81076-
		12Y-978-1410	• Sash Assembly	1	81028-
1		12Y-978-1420	• • Frame	1	81028-
2		12Y-978-1450	• • Glass	1	81028-
3		12Y-978-1460	• • Seal	1	81028-
4		12Y-978-1470	• • Seal	1	81028-
5		12Y-978-1480	• • Seal,Bonded	1	81028-
6		12Y-978-1490	• • Seal	1	81028-
7		12Y-978-1550	• • Seal,Bonded	1	81028-
8		12Y-978-1640	• Seal	1	81076-
		14X-Y79-1430	• Sash Assembly	1	81076-
9		12Y-978-1560	• • Glass	1	81076-
10		12Y-978-1570	• • Seal	1	81076-
11		12Y-978-1580	• • Seal	1	81076-
12		12Y-978-1590	• • Seal	1	81076-
13		12Y-978-1610	• • Seal	1	81076-
14		12Y-978-1620	• • Run Channel	1	81076-
15		12Y-978-1630	• • Seal	1	81076-
16		12Y-978-1650	• • Seal	1	81076-

FIG. K0210-003013A Cab, Sash type Glass Windows, LHS

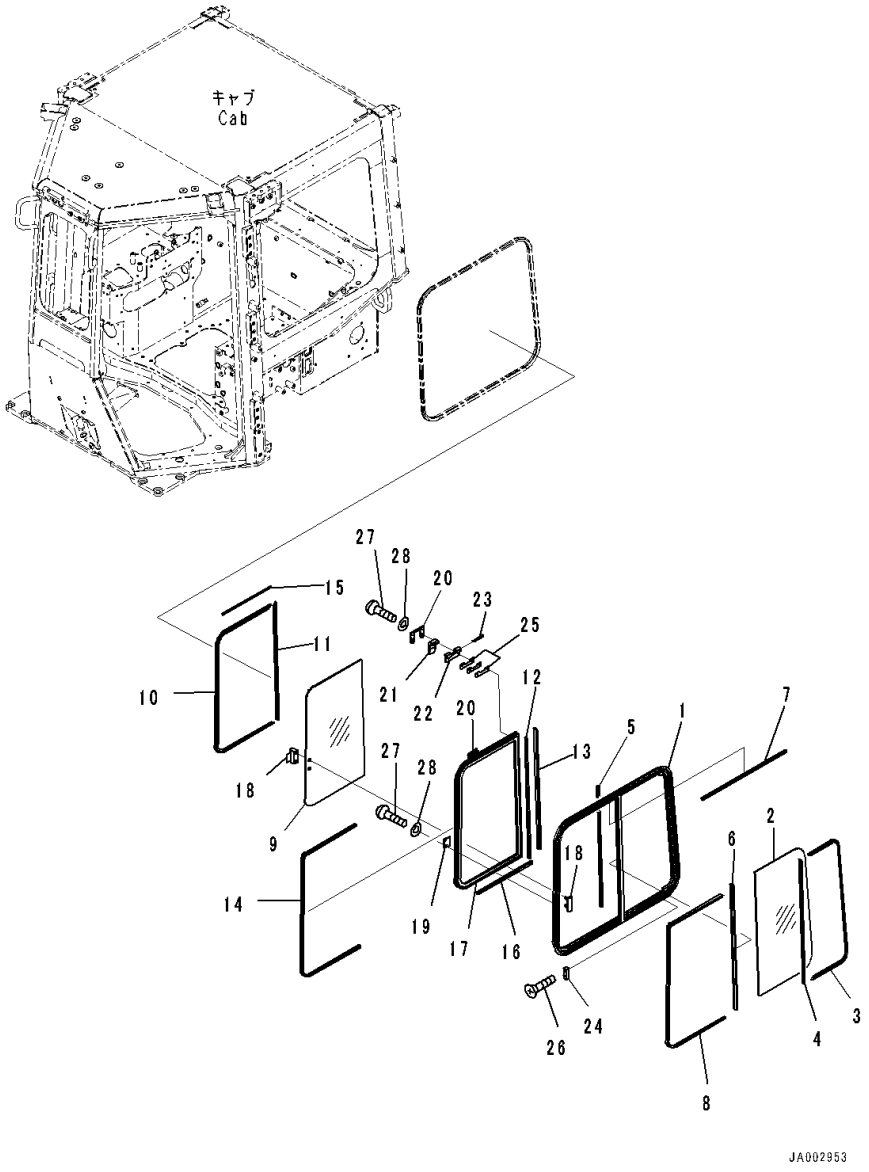

Index	Code	Part Number	Description	Qty	Serial Number
17		14X-Y79-1440	• • Frame	1	81076-
		17A-Z11-1610	• Lock Assembly	1	81076-
18		17A-Z11-1620	• Striker	1	81076-
19		17A-Z11-1660	• Plate	2	81076-
20		195-Z11-1371	• Lock Assembly	2	81028-
21		195-Z11-3630	• • Lever	1	81028-
22		195-Z11-3640	• • Plate	1	81028-
23		195-Z11-3860	• • Pin, Spring	1	81028-
24		195-Z11-1381	• Stopper	1	81076-
25		195-Z11-3670	• Shim, T=0.5mm	6	81076-
26		01224-70316	• Screw	2	81076-
27		01252-80514	• Bolt	6	81076-
28		01641-50508	• Washer, Flat	6	81076-

FIG. K0210-003014A Cab, Sash type Glass Windows, RHS

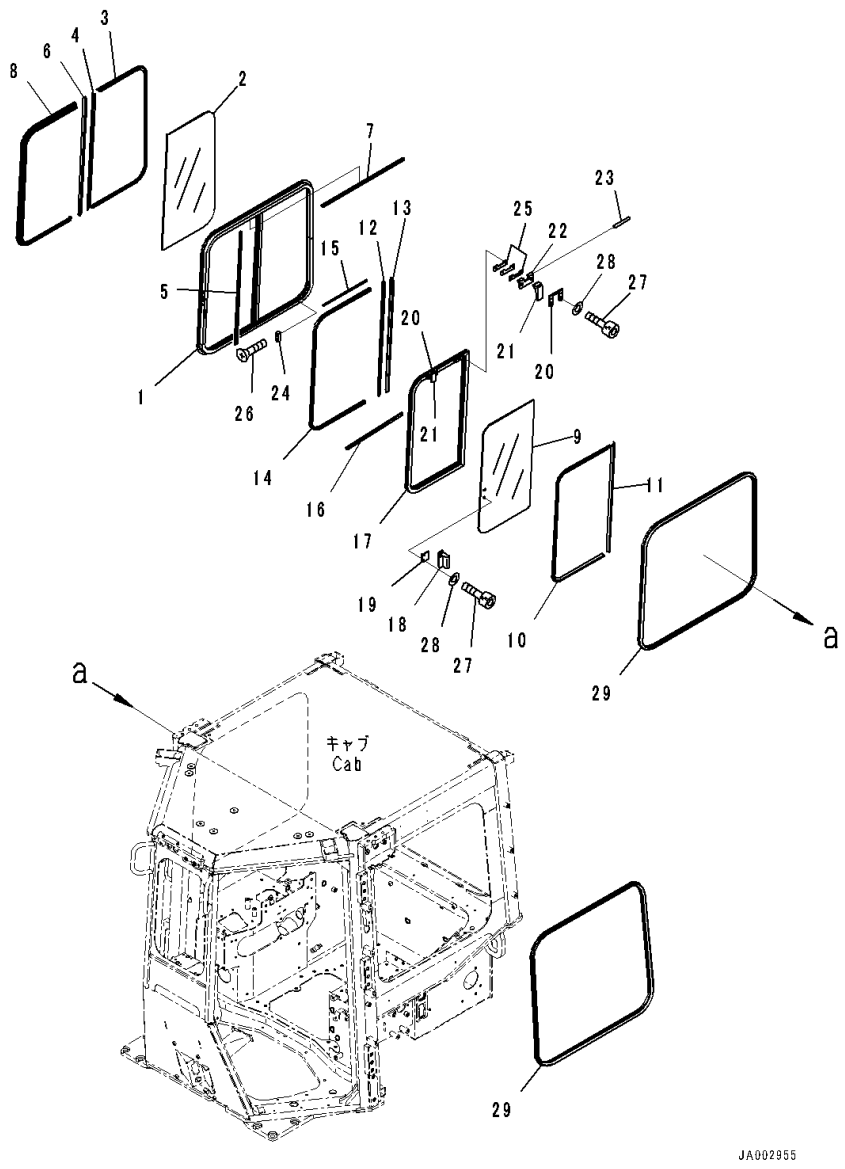

Index	Code	Part Number	Description	Qty	Serial Number
		Note: This list covers following specifications.			
		ROPS			
		ROPS, With AM-FM Stereo Radio With Cassette For North America			
		ROPS, With AM-FM Stereo Radio With Cassette For Europe and Asia			
		ROPS, With AM-FM Stereo Radio With Cassette For North America, For KOMTRAX			
		ROPS, With AM-FM Stereo Radio With Cassette For Europe and Asia, For KOMTRAX			
		ROPS, For KOMTRAX			
		ROPS, Rearview Monitoring System			
		ROPS, Rearview Monitoring System, With AM-FM Stereo Radio With Cassette For North America			
		ROPS, Rearview Monitoring System, With AM-FM Stereo Radio With Cassette For Europe and Asia			
		ROPS, Rearview Monitoring System, With AM-FM Stereo Radio With Cassette For North America, For KOMTRAX			
		ROPS, Rearview Monitoring System, With AM-FM Stereo Radio With Cassette For Europe and Asia, For KOMTRAX			
		ROPS, Rearview Monitoring System, For KOMTRAX			
		14X-Y79-1500	Sash Assembly	1	81076-
		12Y-978-1510	• Sash Assembly	1	81028-
1		12Y-978-1520	• • Frame	1	81028-
2		12Y-978-1450	• • Glass	1	81028-
3		12Y-978-1460	• • Seal	1	81028-
4		12Y-978-1470	• • Seal	1	81028-
5		12Y-978-1480	• • Seal,Bonded	1	81028-
6		12Y-978-1490	• • Seal	1	81028-
7		12Y-978-1550	• • Seal,Bonded	1	81028-
8		12Y-978-1640	• Seal	1	81076-
		14X-Y79-1450	• Sash Assembly	1	81076-
9		12Y-978-1560	• • Glass	1	81076-
10		12Y-978-1570	• • Seal	1	81076-
11		12Y-978-1580	• • Seal	1	81076-
12		12Y-978-1590	• • Seal	1	81076-
13		12Y-978-1610	• • Seal	1	81076-
14		12Y-978-1620	• • Run Channel	1	81076-
15		12Y-978-1630	• • Seal	1	81076-
16		12Y-978-1650	• • Seal	1	81076-

FIG. K0210-003014A Cab, Sash type Glass Windows, RHS

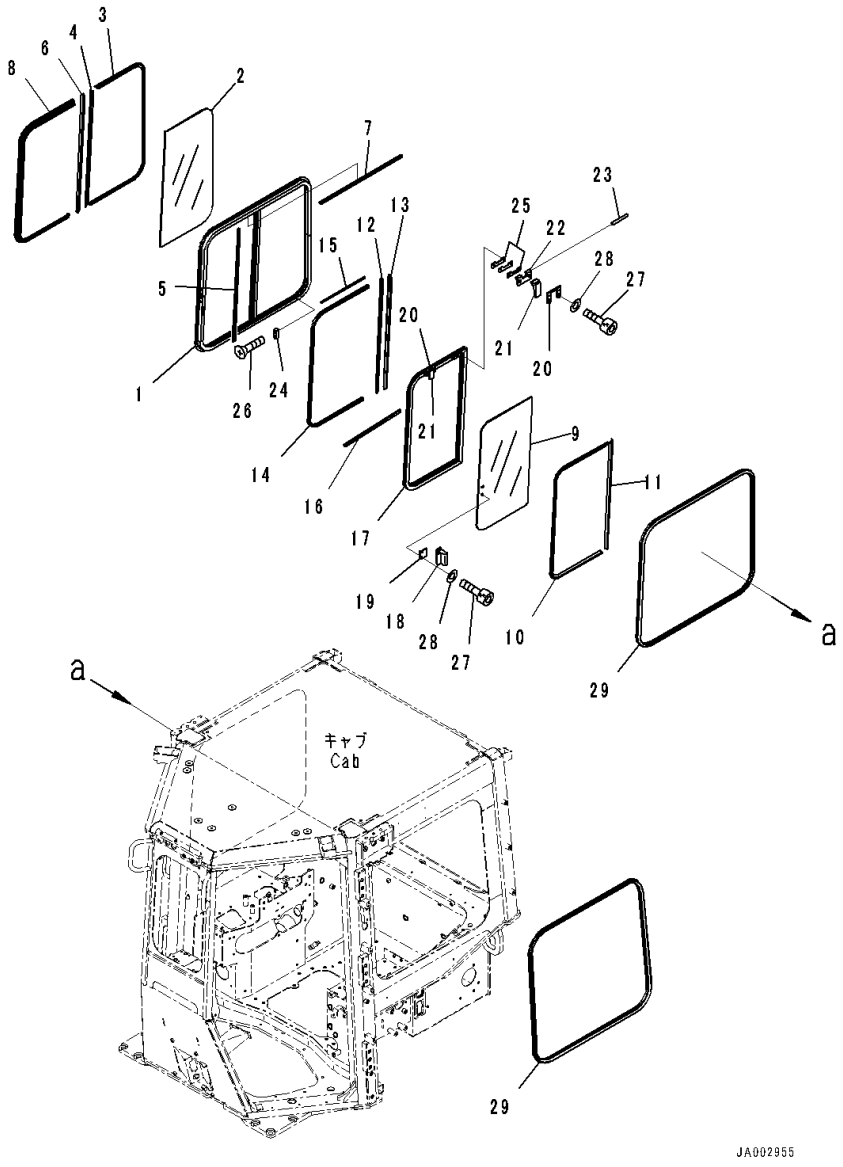

Index	Code	Part Number	Description	Qty	Serial Number
17		14X-Y79-1460	• • Frame	1	81076-
18		17A-Z11-1610	• Lock Assembly	1	81076-
19		17A-Z11-1620	• Striker	1	81076-
20		17A-Z11-1660	• Plate	2	81076-
		195-Z11-1371	• Lock Assembly	2	81028-
21		195-Z11-3630	• • Lever	1	81028-
22		195-Z11-3640	• • Plate	1	81028-
23		195-Z11-3860	• • Pin, Spring	1	81028-
24		195-Z11-1381	• Stopper	1	81076-
25		195-Z11-3670	• Shim, T=0.5mm	6	81076-
26		01224-70316	• Screw	2	81076-
27		01252-80514	• Bolt	6	81076-
28		01641-50508	• Washer, Flat	6	81076-
29		12Y-978-1390	Weather Strip	2	81028-

FIG. K0210-003015 Cab, Switch Panel

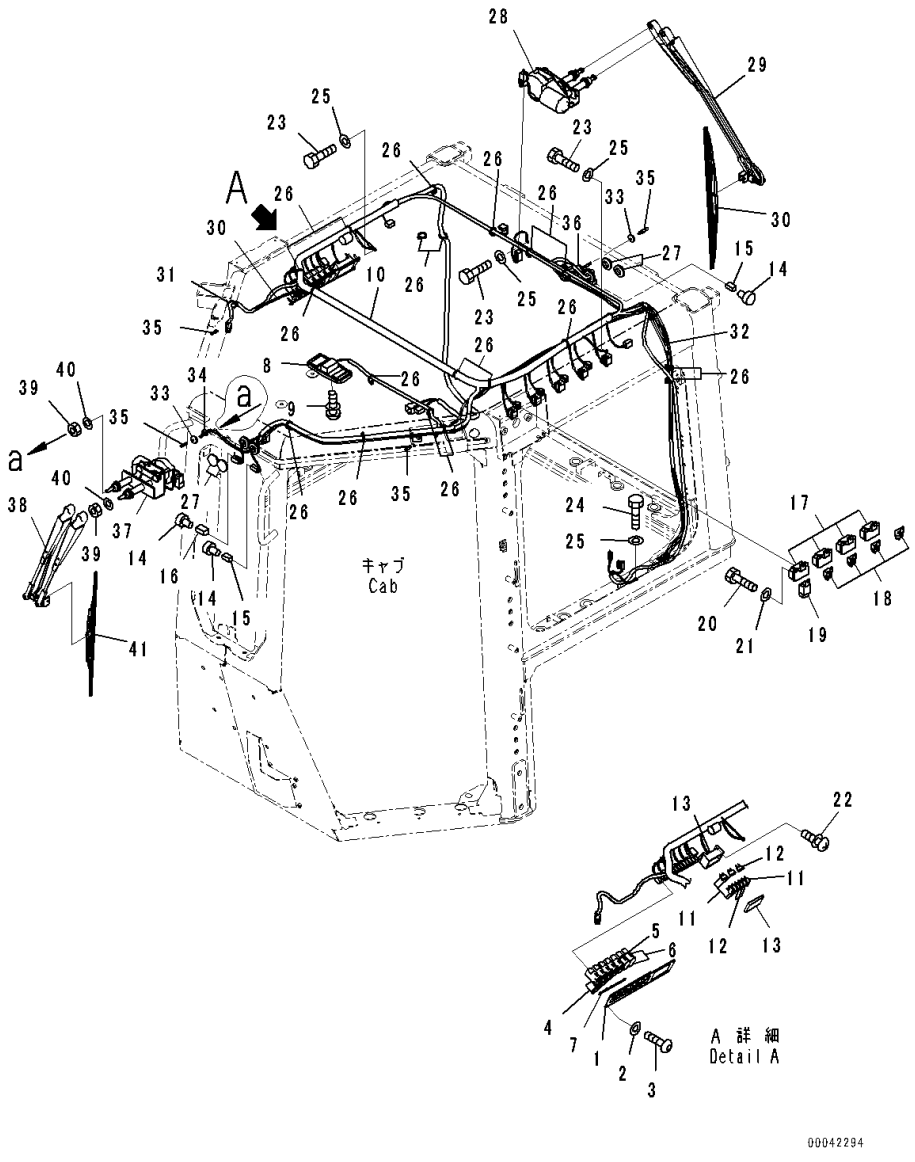

Index	Code	Part Number	Description	Qty	Serial Number
		Note: This list covers following specifications.			
		ROPS			
		ROPS, With AM-FM Stereo Radio With Cassette For North America			
		ROPS, With AM-FM Stereo Radio With Cassette For North America, For KOMTRAX			
		ROPS, For KOMTRAX			
		ROPS, Rearview Monitoring System			
		ROPS, Rearview Monitoring System, With AM-FM Stereo Radio With Cassette For North America			
		ROPS, Rearview Monitoring System, With AM-FM Stereo Radio With Cassette For North America, For KOMTRAX			
		ROPS, Rearview Monitoring System, For KOMTRAX			
		ROPS Cab, EU Safety Regulation, Rear View Monitoring System, AM-FM Stereo Radio, Cassette, Europe, Asia, KOMTRAX			
1		17A-979-3140	Cover	1	81028-
2		01643-70623	Washer	4	81028-
3		01245-00620	Screw	4	81028-
4		17A-06-42210	Switch	4	81028-
5		17A-06-42220	Switch	1	81028-
6		20Y-06-42190	Cover	2	81028-
7		17A-Z11-2350	Panel	1	81028-
8		421-06-26210	Room Lamp	1	81028-
9		01023-10520	Screw	2	81028-
10		17A-979-2511	Wiring Harness	1	81028-
11		08041-01000	• Fuse, 10Amp.	5	81028-
12		08041-02000	• Fuse, 20Amp.	4	81028-
13		08044-00600	• Box Assembly, Fuse	1	81028-
14		08191-00770	• Plug, Connector	10	81028-
15		08192-14100	• Connector Body	2	81028-
16		08192-12100	• Connector Assembly	1	81028-
17		17A-Z11-2420	Relay	4	81028-
18		7861-74-5100	Relay	4	81028-
19		198-911-9240	Relay Assembly	1	81028-
20		01010-80616	Bolt	9	81028-
21		01643-70623	Washer	9	81028-
22		01023-10520	Screw	2	81028-
23		01010-80616	Bolt	3	81028-
24		01435-00610	Bolt	1	81028-

FIG. K0210-003015 Cab, Switch Panel

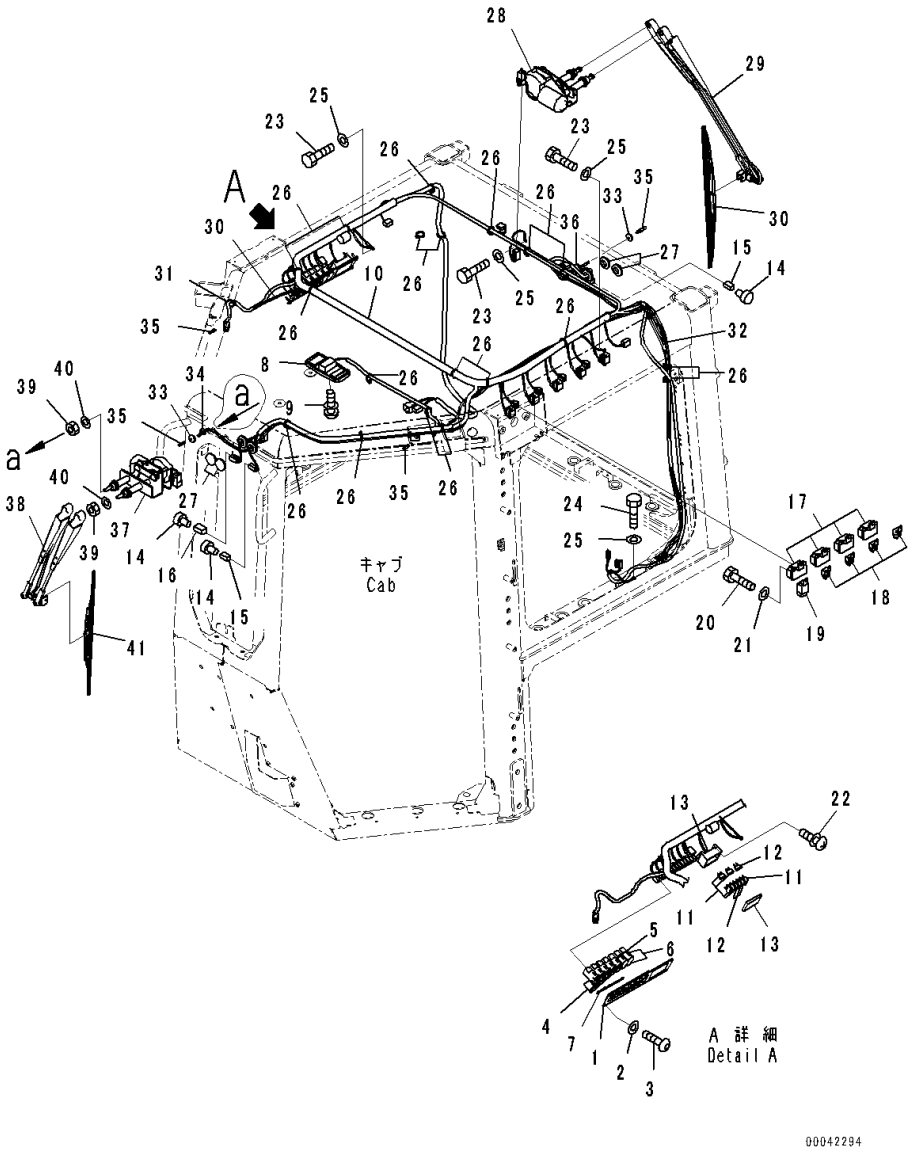

Index	Code	Part Number	Description	Qty	Serial Number
25		01643-70623	Washer	4	81028-
26		08034-20519	Band	22	81028-
27		09415-02512	Cap	4	81028-
28		17A-979-2850	Wiper Motor	1	81028-
29		17A-979-2860	Arm, Wiper	1	81028-
30		17A-979-2870	Wiper Blade	1	81028-
31		17A-979-2530	Hose	2	81028-
32		17A-979-2540	Hose	2	81028-
33		17A-Z11-2660	Cap	2	81028-
34		08037-01008	Grommet	1	81028-
35		195-979-8590	Valve	4	81028-
36		135-06-34260	Grommet	1	81028-
37		17A-Z11-2512	Wiper Motor	1	81028-
38		17A-Z11-2530	Wiper Assembly	1	81028-
39		01580-10806	Nut	2	81028-
40		01640-20816	Washer	2	81028-
41		17A-979-1420	Wiper Blade	1	81028-

FIG. K0210-003016 Cab, Radio

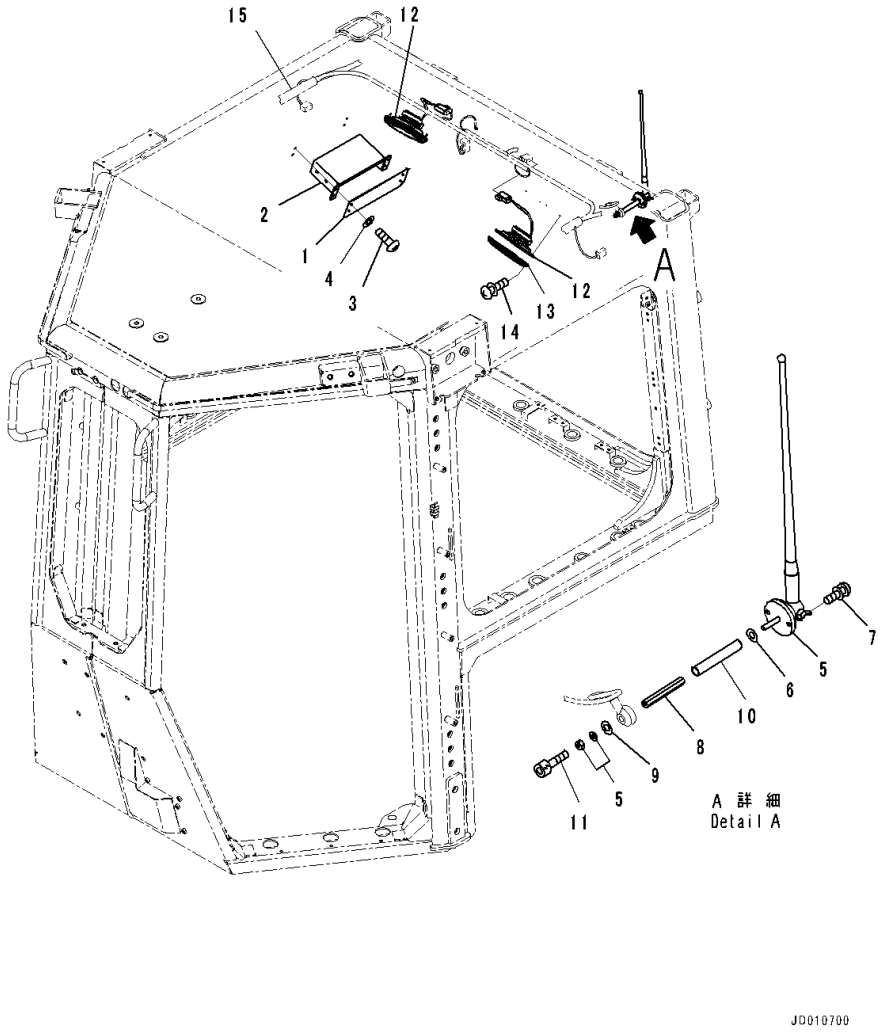

Index	Code	Part Number	Description	Qty	Serial Number
		Note: This list covers following specifications.			
		ROPS			
		ROPS, For KOMTRAX			
		ROPS, Rearview Monitoring System			
		ROPS, Rearview Monitoring System, For KOMTRAX			
1		17A-Z11-2240	Plate	1	81028-
2		12Y-978-2210	Bracket	1	81028-
3		01245-00620	Screw	4	81028-
4		01643-70623	Washer	4	81028-
5		198-Z11-4611	Rubber Antenna	1	81028-
6		01643-70623	Washer	1	81028-
7		01023-20416	Screw	2	81028-
8		17A-979-2691	Bar	1	81028-
9		01643-70623	Washer	1	81028-
10		08023-10007	Tube	1	81028-
11		01252-70530	Bolt, Hexagon Socket Head	1	81028-
12		20Y-06-42180	Speaker	2	81084-
13		418-967-2150	Cover	2	81028-
14		01023-20425	Screw	8	81028-
15		(17A-979-2511)	Wiring Harness(Refer to Page 514)		-

FIG. K0210-003017 Cab, Roof Cover

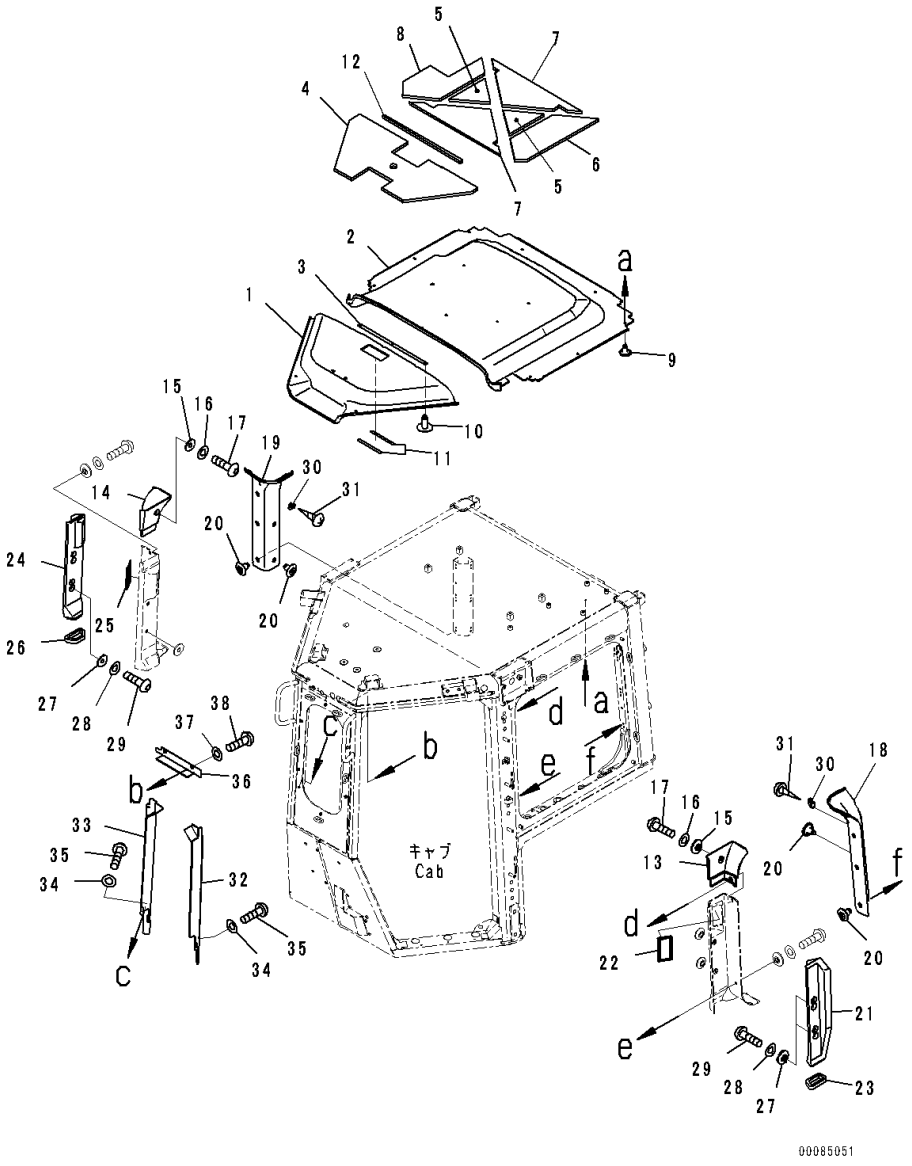

Index	Code	Part Number	Description	Qty	Serial Number
		Note: This list covers following specifications.			
		ROPS			
		ROPS, With AM-FM Stereo Radio With Cassette For North America			
		ROPS, With AM-FM Stereo Radio With Cassette For Europe and Asia			
		ROPS, With AM-FM Stereo Radio With Cassette For North America, For KOMTRAX			
		ROPS, With AM-FM Stereo Radio With Cassette For Europe and Asia, For KOMTRAX			
		ROPS, For KOMTRAX			
		ROPS, Rearview Monitoring System			
		ROPS, Rearview Monitoring System, With AM-FM Stereo Radio With Cassette For North America			
		ROPS, Rearview Monitoring System, With AM-FM Stereo Radio With Cassette For Europe and Asia			
		ROPS, Rearview Monitoring System, With AM-FM Stereo Radio With Cassette For North America, For KOMTRAX			
		ROPS, Rearview Monitoring System, With AM-FM Stereo Radio With Cassette For Europe and Asia, For KOMTRAX			
		ROPS, Rearview Monitoring System, For KOMTRAX			
		ROPS Cab, EU Safety Regulation, Rear View Monitoring System, AM-FM Stereo Radio, Cassette, Europe, Asia, KOMTRAX			
1		17A-979-2612	Cover,Front	1	81028-
		17A-979-2301	Cover,Rear	1	81028-
2		17A-979-2622	• Cover,Rear	1	81028-
3		17A-979-1780	• Plate	1	81028-
4		17A-979-2711	Sheet	1	81028-
5		17A-979-1720	Sheet	2	81028-
6		17A-979-1730	Sheet	1	81028-
7		17A-979-1740	Sheet	2	81028-
8		17A-979-1750	Sheet	1	81028-
9		20Y-54-18690	Rivet	15	81028-
10		198-Z11-6370	Clip	3	81028-
11		17A-979-1760	Sheet	2	81028-
12		17A-979-1790	Sheet	1	81028-
13		17A-979-1630	Cover	1	81028-
14		17A-979-1640	Cover	1	81028-
15		17A-979-1620	Collar	2	81028-

FIG. K0210-003017 Cab, Roof Cover

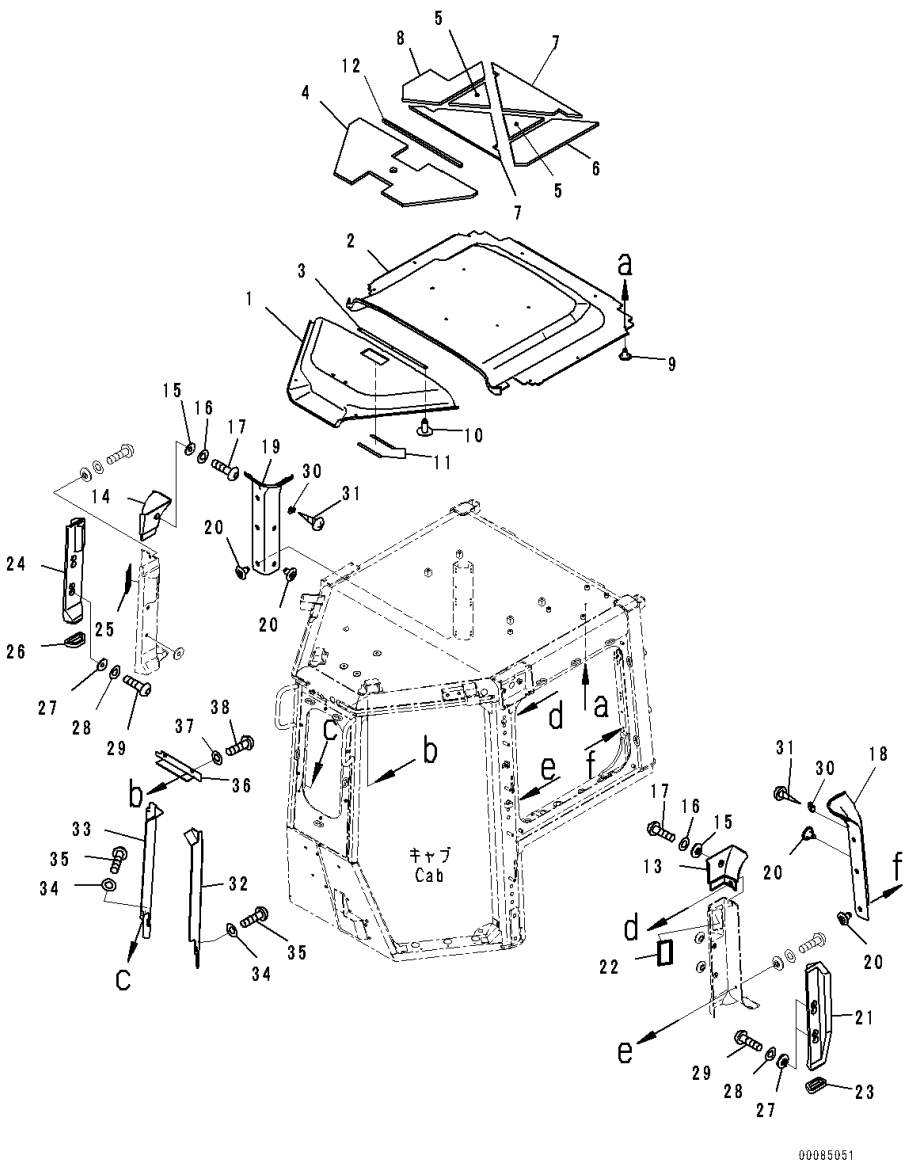

Index	Code	Part Number	Description	Qty	Serial Number
16		01643-70623	Washer	2	81028-
17		01245-00620	Screw	2	81028-
18		17A-979-2653	Cover	1	81199-
19		17A-979-2663	Cover	1	81199-
20		20Y-54-18690	Rivet	10	81028-
21		17A-979-1911	Duct	1	81028-
22		17A-979-1930	• Seal,Bonded	1	81028-
23		17A-979-2731	• Seal,Bonded	1	81028-
24		17A-979-1921	Duct	1	81028-
25		17A-979-1930	• Seal,Bonded	1	81028-
26		17A-979-2741	• Seal,Bonded	1	81028-
27		17A-979-1620	Collar	4	81028-
28		01643-70623	Washer	4	81028-
29		01245-00616	Screw, Hexagon Socket Head	4	81028-
30		17A-Z11-2941	Hook	2	81199-
31		01370-40412	Screw	4	81028-
32		17A-979-2953	Cover	1	81028-
33		17A-979-1952	Cover	1	81028-
34		01643-70623	Washer	6	81028-
35		01245-00620	Screw	6	81028-
36		17A-979-1942	Cover	1	81028-
37		01643-70623	Washer	2	81028-
38		01245-00620	Screw	2	81028-

FIG. K0210-003018 Cab, Rearview Mirror

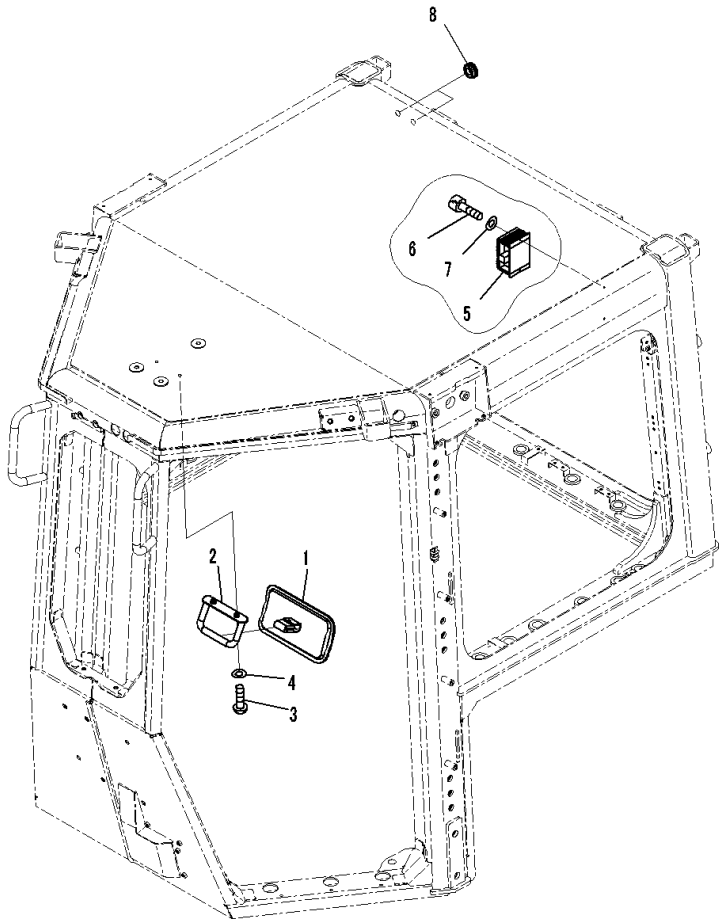

Index	Code	Part Number	Description	Qty	Serial Number
		Note: This list covers following specifications.			
		ROPS			
		ROPS, With AM-FM Stereo Radio With Cassette For North America			
		ROPS, Rearview Monitoring System			
		ROPS, Rearview Monitoring System, With AM-FM Stereo Radio With Cassette For North America			
		ROPS, Rearview Monitoring System, With AM-FM Stereo Radio With Cassette For Europe and Asia			
1		195-Z11-2180	Mirror	1	81028-
2		17A-Z11-1922	Bracket	1	81028-
3		01245-00825	Screw	2	81028-
4		01643-70823	Washer	2	81028-
5		12Y-06-11650	Converter	1	81028-
6		01252-80514	Bolt	2	81028-
7		01641-50508	Washer, Flat	2	81028-
8		09415-01008	Cap	2	81028-

FIG. K0210-003019 Cab, Envelope Parts

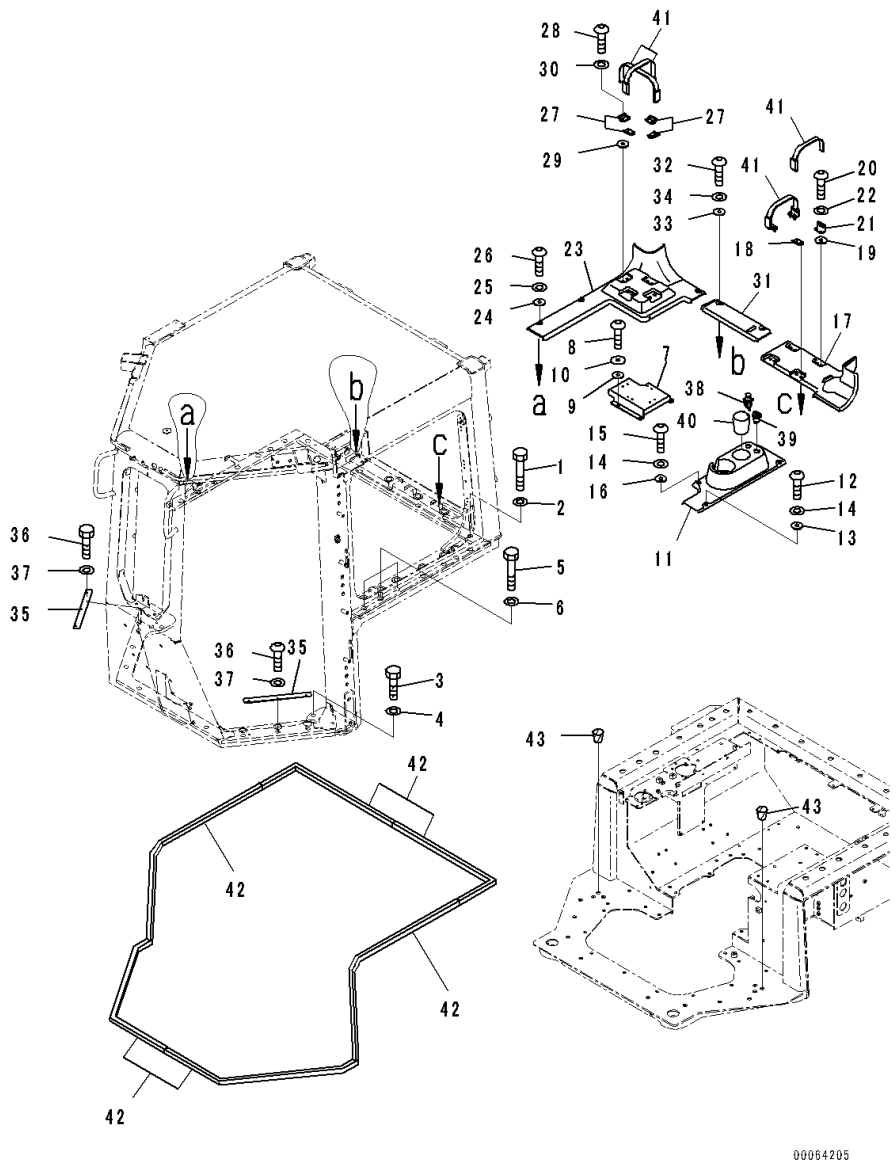

Index	Code	Part Number	Description	Qty	Serial Number
		Note: This list covers following specifications.			
		ROPS			
		ROPS, With AM-FM Stereo Radio With Cassette For North America			
		ROPS, With AM-FM Stereo Radio With Cassette For Europe and Asia			
		ROPS, With AM-FM Stereo Radio With Cassette For North America, For KOMTRAX			
		ROPS, With AM-FM Stereo Radio With Cassette For Europe and Asia, For KOMTRAX			
		ROPS, For KOMTRAX			
		ROPS, Rearview Monitoring System			
		ROPS, Rearview Monitoring System, With AM-FM Stereo Radio With Cassette For North America			
		ROPS, Rearview Monitoring System, With AM-FM Stereo Radio With Cassette For Europe and Asia			
		ROPS, Rearview Monitoring System, With AM-FM Stereo Radio With Cassette For North America, For KOMTRAX			
		ROPS, Rearview Monitoring System, With AM-FM Stereo Radio With Cassette For Europe and Asia, For KOMTRAX			
		ROPS, Rearview Monitoring System, For KOMTRAX			
		ROPS Cab, EU Safety Regulation, Rear View Monitoring System, AM-FM Stereo Radio, Cassette, Europe, Asia, KOMTRAX			
1		01011-82020	Bolt	15	81028-
2		01643-32060	Washer	15	81028-
3		01010-81655	Bolt	12	81028-
4		01643-31645	Washer	12	81028-
5		01011-82425	Bolt	6	81028-
6		01643-32460	Washer	6	81028-
7		17A-979-2792	Cover	1	81028-
8		01245-00625	Screw	4	81028-
9		17A-979-3880	Plate	4	81028-
10		103-15-15210	• Washer	1	81028-
11		17A-979-1430	Cover Assembly	1	81221-
12		01245-00625	Screw	2	81028-
13		12Y-978-2660	Collar	2	81028-
14		01643-70623	Washer	4	81028-
15		01245-00625	Screw	2	81028-
16		17A-Z11-2813	Plate	2	81028-

FIG. K0210-003019 Cab, Envelope Parts

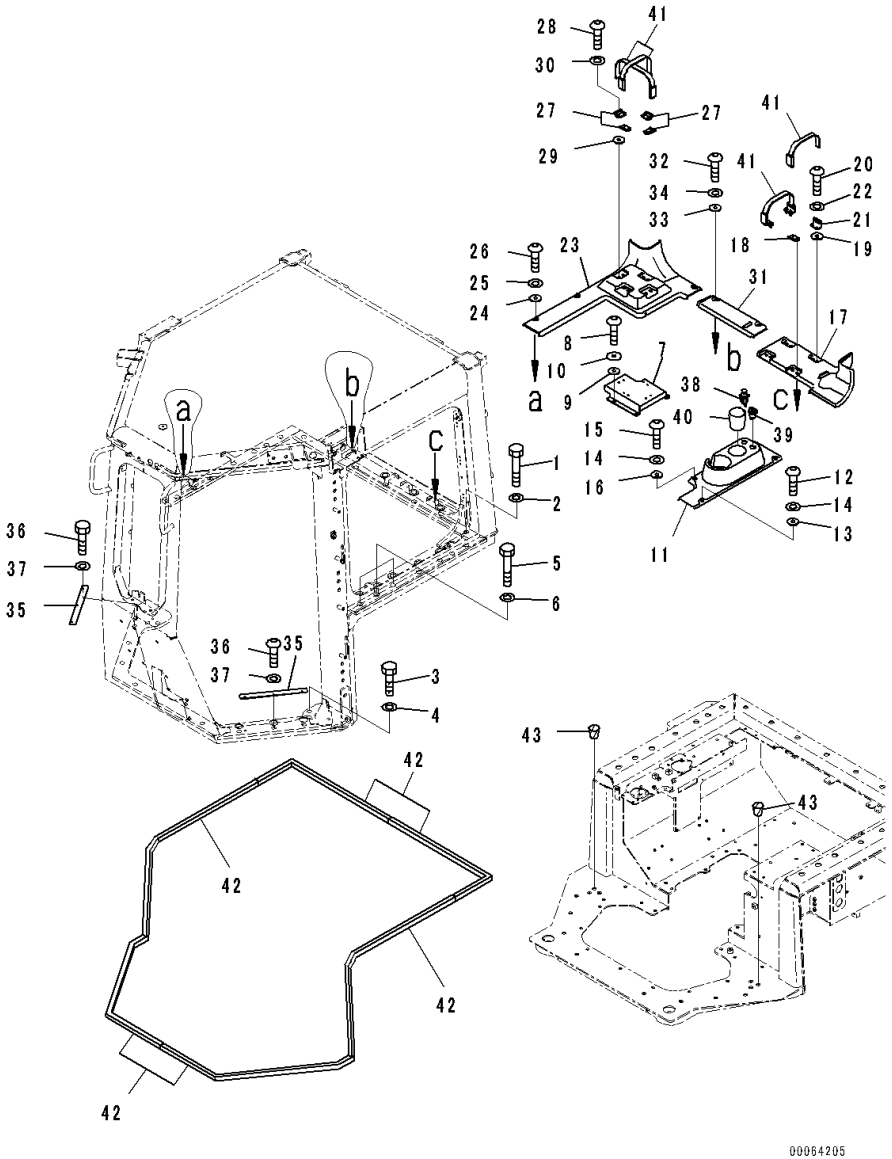

Index	Code	Part Number	Description	Qty	Serial Number
17		17A-979-2761	Cover	1	81028-
18		17A-979-3350	Plate	2	81028-
19		17A-979-3360	Plate	2	81028-
20		01245-00625	Screw	8	81028-
21		12Y-978-2660	Collar	8	81028-
22		01643-70623	Washer	8	81028-
23		17A-979-2771	Cover	1	81028-
24		12Y-978-2660	Collar	3	81028-
25		01643-70623	Washer	3	81028-
26		01245-00625	Screw	3	81028-
27		17A-979-3350	Plate	4	81028-
28		01245-00625	Screw	8	81028-
29		12Y-978-2660	Collar	8	81028-
30		01643-70623	Washer	8	81028-
31		17A-979-2781	Cover	1	81028-
32		01245-00625	Screw	2	81028-
33		12Y-978-2660	Collar	2	81028-
34		01643-70623	Washer	2	81028-
35		12Y-978-2890	Plate	2	81028-
36		01245-00620	Screw	6	81028-
37		01643-70623	Washer	6	81028-
38		20Y-06-23472	Cigarette Lighter	1	81028-
39		12Y-06-11640	Socket Assembly	1	81028-
40		20Y-43-41491	Ashtray	1	81028-
41		423-54-42790	Band	4	81028-
42		17A-Z11-3541	Seal	6	81028-
43		07049-01215	Plug	2	81028-

FIG. K0210-003020 Cab, Grip

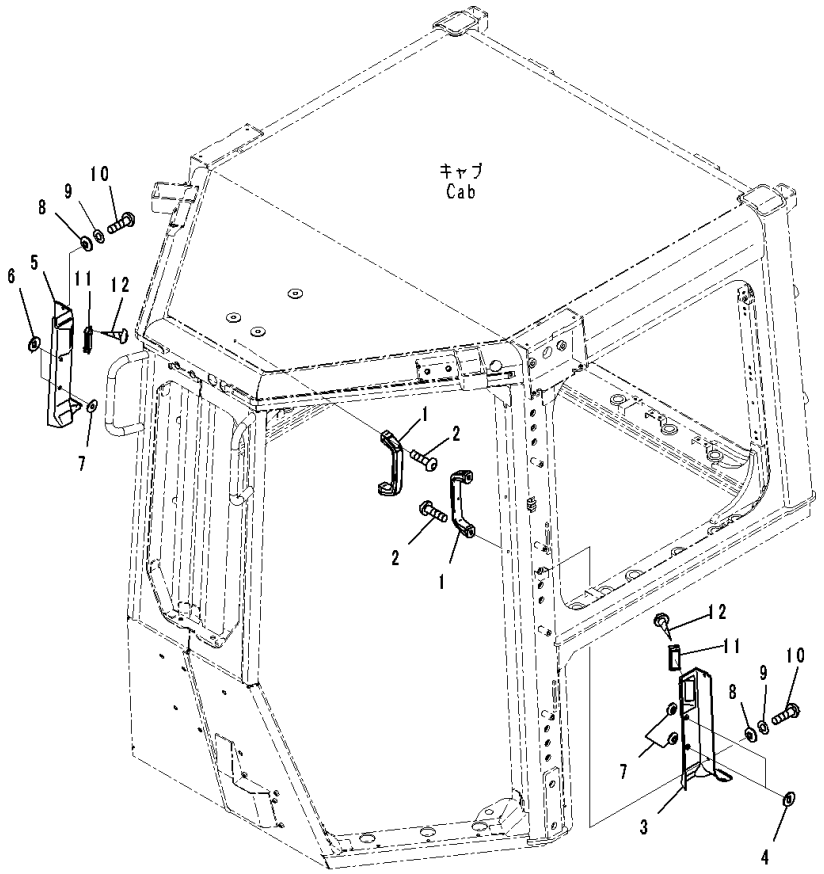

Index	Code	Part Number	Description	Qty	Serial Number
		Note: This list covers following specifications.			
		ROPS			
		ROPS, With AM-FM Stereo Radio With Cassette For North America			
		ROPS, With AM-FM Stereo Radio With Cassette For Europe and Asia			
		ROPS, With AM-FM Stereo Radio With Cassette For North America, For KOMTRAX			
		ROPS, With AM-FM Stereo Radio With Cassette For Europe and Asia, For KOMTRAX			
		ROPS, For KOMTRAX			
		ROPS, Rearview Monitoring System			
		ROPS, Rearview Monitoring System, With AM-FM Stereo Radio With Cassette For North America			
		ROPS, Rearview Monitoring System, With AM-FM Stereo Radio With Cassette For Europe and Asia			
		ROPS, Rearview Monitoring System, With AM-FM Stereo Radio With Cassette For North America, For KOMTRAX			
		ROPS, Rearview Monitoring System, With AM-FM Stereo Radio With Cassette For Europe and Asia, For KOMTRAX			
		ROPS, Rearview Monitoring System, For KOMTRAX			
		ROPS Cab, EU Safety Regulation, Rear View Monitoring System, AM-FM Stereo Radio, Cassette, Europe, Asia, KOMTRAX			
1		361-54-21150	Handle	2	81028-
2		01245-00825	Screw	4	81028-
		17A-979-2400	Cover Assembly	1	81028-
3		17A-979-2632	• Cover	1	81028-
4		17A-979-3890	• Plate	2	81028-
		17A-979-2500	Cover Assembly	1	81028-
5		17A-979-2642	• Cover	1	81028-
6		17A-979-3890	• Plate	2	81028-
7		17A-979-1611	Collar	4	81028-
8		17A-979-1620	Collar	4	81028-
9		01643-70623	Washer	4	81028-
10		01245-00625	Screw	4	81028-
11		17A-Z11-7161	Louver	2	81028-
12		01370-20316	Screw	4	81028-

FIG. K0210-003021 Cab, Plate

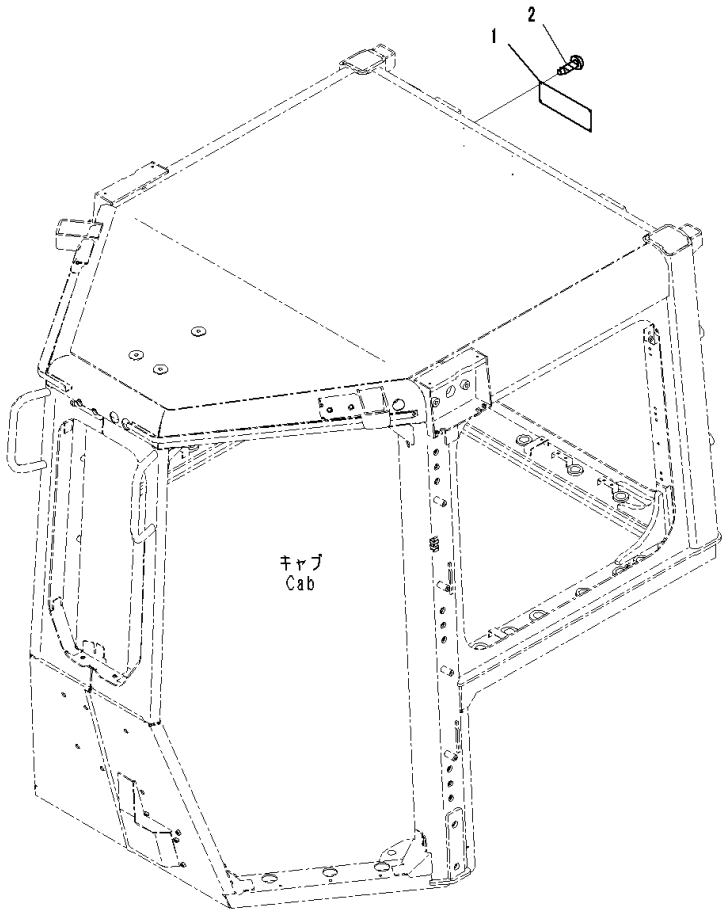

Index	Code	Part Number	Description	Qty	Serial Number
		Note: This list covers following specifications. ROPS ROPS, With AM-FM Stereo Radio With Cassette For North America ROPS, With AM-FM Stereo Radio With Cassette For Europe and Asia ROPS, With AM-FM Stereo Radio With Cassette For North America, For KOMTRAX ROPS, With AM-FM Stereo Radio With Cassette For Europe and Asia, For KOMTRAX ROPS, For KOMTRAX ROPS, Rearview Monitoring System ROPS, Rearview Monitoring System, With AM-FM Stereo Radio With Cassette For North America ROPS, Rearview Monitoring System, With AM-FM Stereo Radio With Cassette For Europe and Asia ROPS, Rearview Monitoring System, With AM-FM Stereo Radio With Cassette For North America, For KOMTRAX ROPS, Rearview Monitoring System, With AM-FM Stereo Radio With Cassette For Europe and Asia, For KOMTRAX ROPS, Rearview Monitoring System, For KOMTRAX ROPS Cab, EU Safety Regulation, Rear View Monitoring System, AM-FM Stereo Radio, Cassette, Europe, Asia, KOMTRAX		
1	C2	09620-A2000	Plate, Name, ROPS/FOPS (Limited Supply)	1	81028-
2		04418-13060	Screw	4	81028-

FIG. K0210-004016 Cab, AM-FM Radio and Cassette Stereo

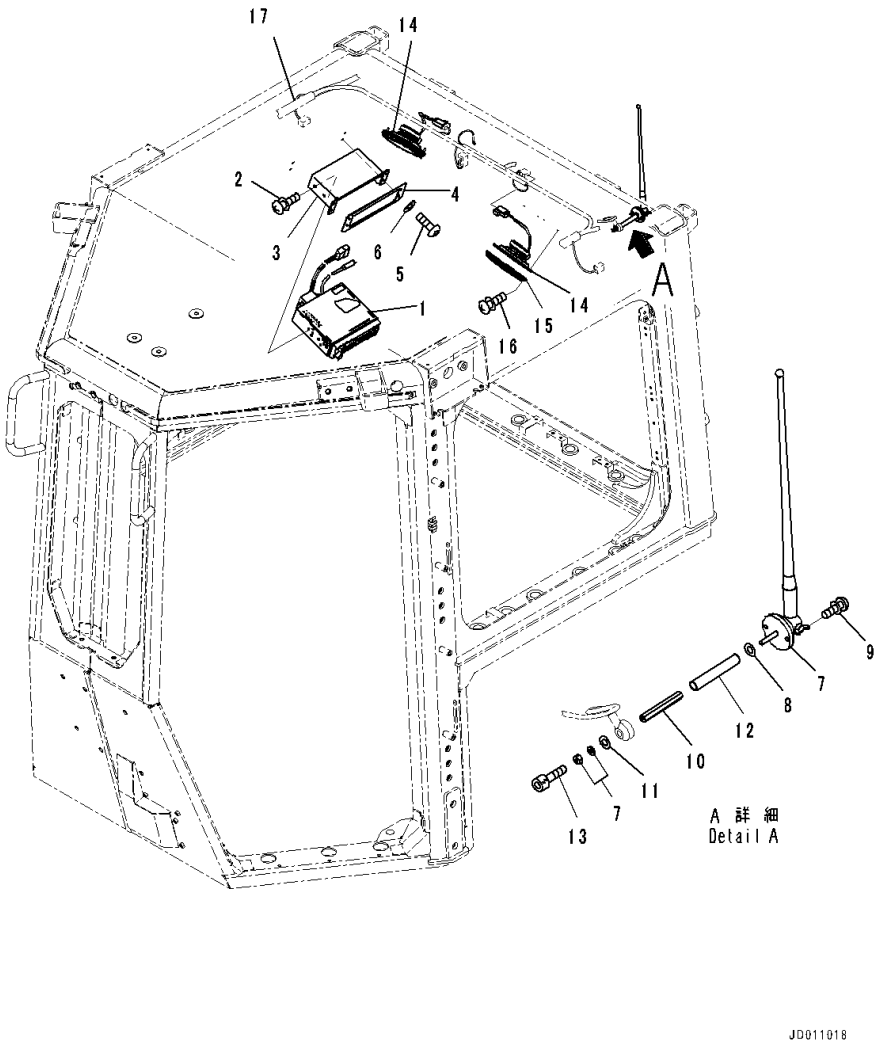

Index	Code	Part Number	Description	Qty	Serial Number
		Note: This list covers following specifications. ROPS, With AM-FM Stereo Radio With Cassette For North America ROPS, With AM-FM Stereo Radio With Cassette For North America, For KOMTRAX ROPS, Rearview Monitoring System, With AM-FM Stereo Radio With Cassette For North America ROPS, Rearview Monitoring System, With AM-FM Stereo Radio With Cassette For North America, For KOMTRAX			
1		195-Z11-8943	Radio	1	81028-
2		01023-20510	Screw	4	81028-
3		12Y-978-2210	Bracket	1	81028-
4		12Y-978-2280	Plate	1	81028-
5		01245-00620	Screw	4	81028-
6		01643-70623	Washer	4	81028-
7		198-Z11-4611	Rubber Antenna	1	81028-
8		01643-70623	Washer	1	81028-
9		01023-20416	Screw	2	81028-
10		17A-979-2691	Bar	1	81028-
11		01643-70623	Washer	1	81028-
12		08023-10007	Tube	1	81028-
13		01252-70530	Bolt, Hexagon Socket Head	1	81028-
14		20Y-06-42180	Speaker	2	81084-
15		418-967-2150	Cover	2	81028-
16		01023-20425	Screw	8	81028-
17		(17A-979-2511)	Wiring Harness(Refer to Page 514)		-

FIG. K0210-006015 Cab, Switch Panel

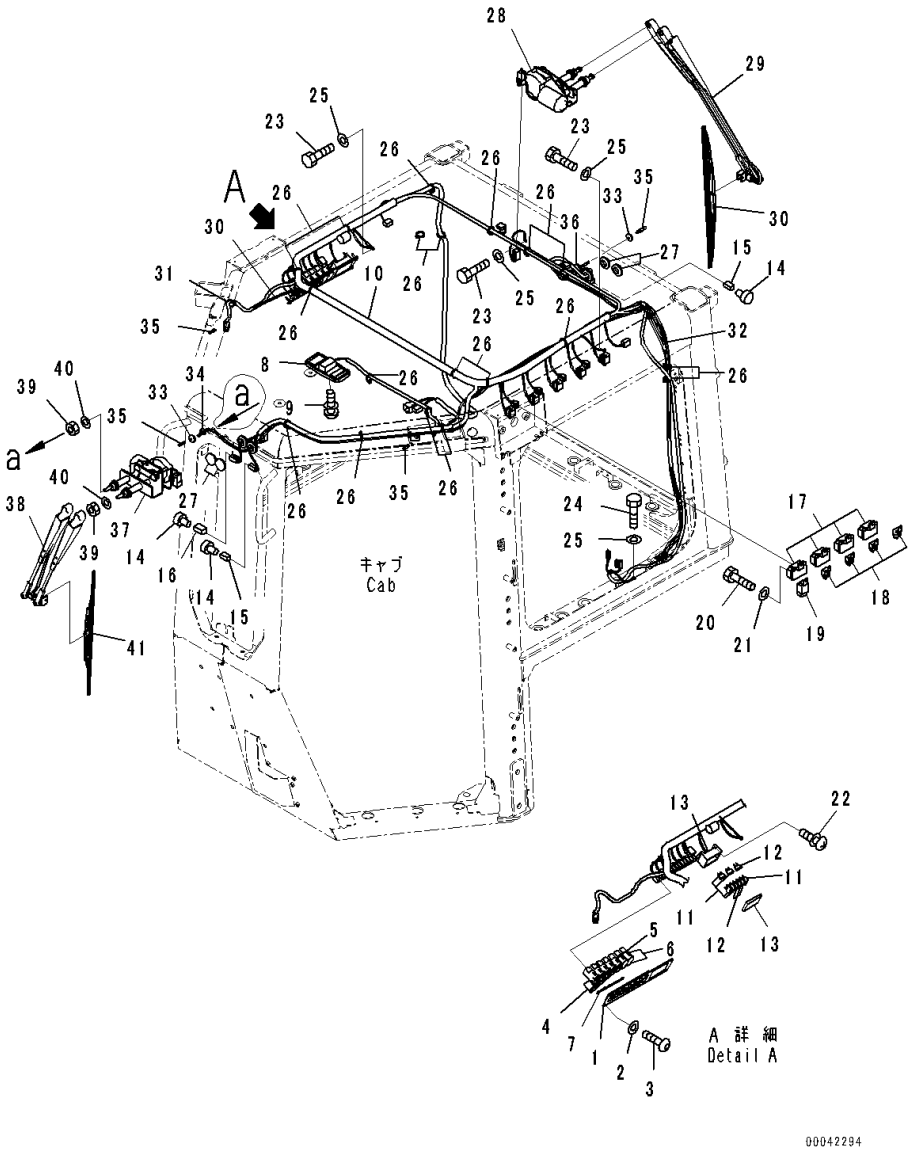

Index	Code	Part Number	Description	Qty	Serial Number
		Note: This list covers following specifications.			
		ROPS, With AM-FM Stereo Radio With Cassette For Europe and Asia			
		ROPS, With AM-FM Stereo Radio With Cassette For Europe and Asia, For KOMTRAX			
		ROPS, Rearview Monitoring System, With AM-FM Stereo Radio With Cassette For Europe and Asia			
		ROPS, Rearview Monitoring System, With AM-FM Stereo Radio With Cassette For Europe and Asia, For KOMTRAX			
1		17A-979-3140	Cover	1	81028-
2		01643-70623	Washer	4	81028-
3		01245-00620	Screw	4	81028-
4		17A-06-42210	Switch	4	81028-
5		17A-06-42220	Switch	1	81028-
6		20Y-06-42190	Cover	2	81028-
7		17A-Z11-2350	Panel	1	81028-
8		421-06-26210	Room Lamp	1	81028-
9		01023-10520	Screw	2	81028-
10		17A-979-5210	Wiring Harness	1	81076-
11		08041-01000	• Fuse, 10Amp.	5	81028-
12		08041-02000	• Fuse, 20Amp.	4	81028-
13		08044-00600	• Box Assembly, Fuse	1	81028-
14		08191-00770	• Plug, Connector	10	81028-
15		08192-14100	• Connector Body	2	81028-
16		08192-12100	• Connector Assembly	1	81028-
17		17A-Z11-2420	Relay	4	81028-
18		7861-74-5100	Relay	4	81028-
19		198-911-9240	Relay Assembly	1	81028-
20		01010-80616	Bolt	9	81028-
21		01643-70623	Washer	9	81028-
22		01023-10520	Screw	2	81028-
23		01010-80616	Bolt	3	81028-
24		01435-00610	Bolt	1	81028-
25		01643-70623	Washer	4	81028-
26		08034-20519	Band	22	81028-
27		09415-02512	Cap	4	81028-
28		17A-979-2850	Wiper Motor	1	81028-
29		17A-979-2860	Arm, Wiper	1	81028-
30		17A-979-2870	Wiper Blade	1	81028-
31		17A-979-2530	Hose	2	81028-

FIG. K0210-006015 Cab, Switch Panel

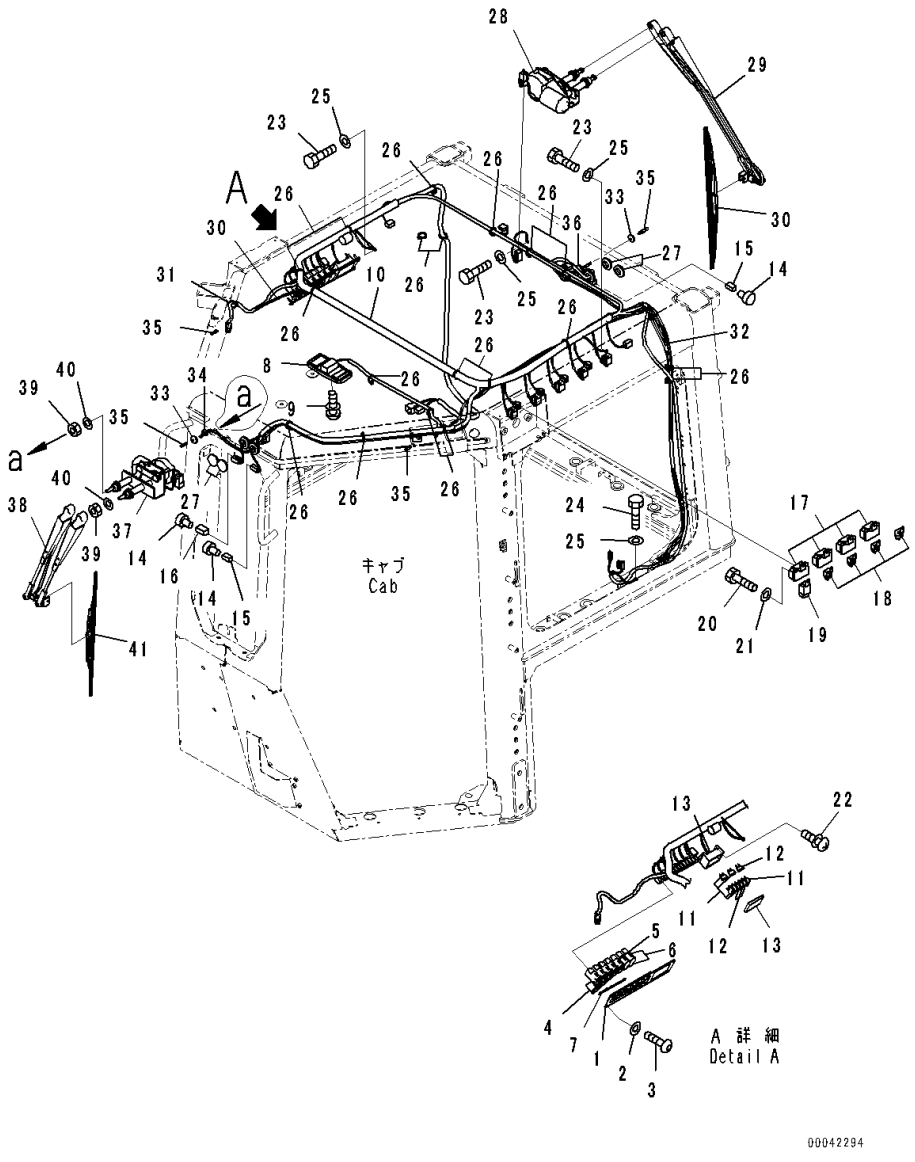

Index	Code	Part Number	Description	Qty	Serial Number
32		17A-979-2540	Hose	2	81028-
33		17A-Z11-2660	Cap	2	81028-
34		08037-01008	Grommet	1	81028-
35		195-979-8590	Valve	4	81028-
36		135-06-34260	Grommet	1	81028-
37		17A-Z11-2512	Wiper Motor	1	81028-
38		17A-Z11-2530	Wiper Assembly	1	81028-
39		01580-10806	Nut	2	81028-
40		01640-20816	Washer	2	81028-
41		17A-979-1420	Wiper Blade	1	81028-

FIG. K0210-006016 Cab, AM-FM Radio and Cassette Stereo

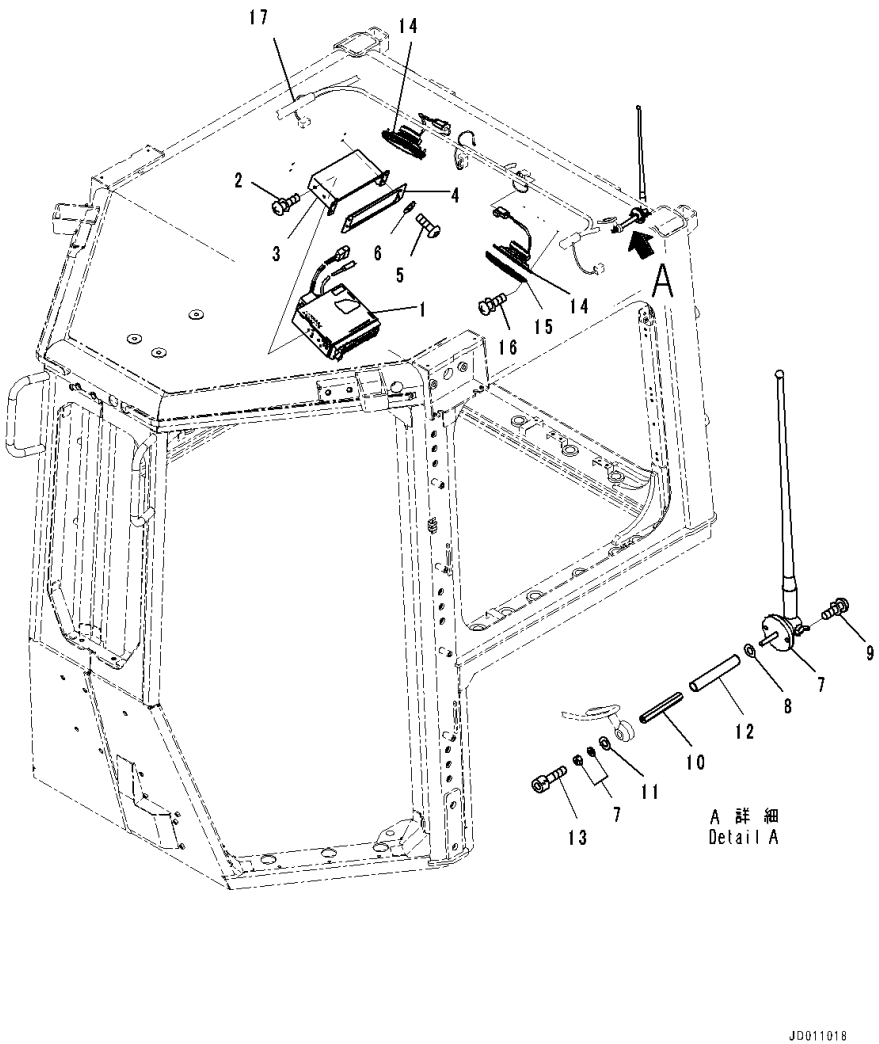

Index	Code	Part Number	Description	Qty	Serial Number
		Note: This list covers following specifications. ROPS, With AM-FM Stereo Radio With Cassette For Europe and Asia ROPS, With AM-FM Stereo Radio With Cassette For Europe and Asia, For KOMTRAX ROPS, Rearview Monitoring System, With AM-FM Stereo Radio With Cassette For Europe and Asia ROPS, Rearview Monitoring System, With AM-FM Stereo Radio With Cassette For Europe and Asia, For KOMTRAX ROPS Cab, EU Safety Regulation, Rear View Monitoring System, AM-FM Stereo Radio, Cassette, Europe, Asia, KOMTRAX			
1		195-Z11-8914	Radio	1	81028-
2		01023-20510	Screw	4	81028-
3		12Y-978-2210	Bracket	1	81028-
4		12Y-978-2280	Plate	1	81028-
5		01245-00620	Screw	4	81028-
6		01643-70623	Washer	4	81028-
7		198-Z11-4611	Rubber Antenna	1	81028-
8		01643-70623	Washer	1	81028-
9		01023-20416	Screw	2	81028-
10		17A-979-2691	Bar	1	81028-
11		01643-70623	Washer	1	81028-
12		08023-10007	Tube	1	81028-
13		01252-70530	Bolt, Hexagon Socket Head	1	81028-
14		20Y-06-42180	Speaker	2	81084-
15		418-967-2150	Cover	2	81028-
16		01023-20425	Screw	8	81028-
17		(17A-979-2511)	Wiring Harness(Refer to Page 525)		-

FIG. K0210-006018A Cab, ROPS, With AM-FM Stereo Radio With Cassette For Europe and Asia, Rearview Mirror

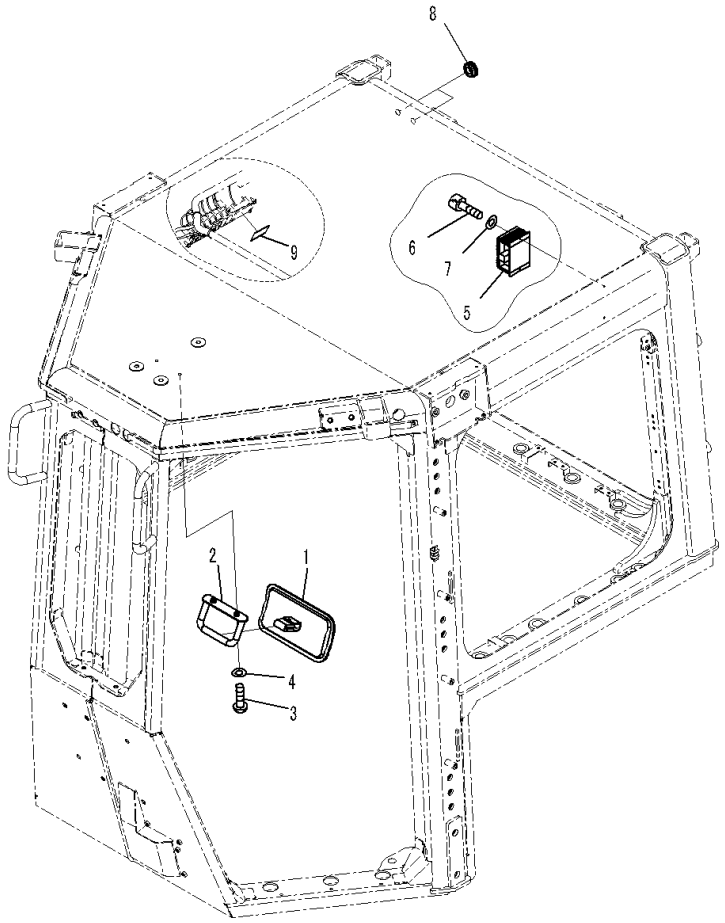

Index	Code	Part Number	Description	Qty	Serial Number
1		195-Z11-2180	Mirror	1	81028-
2		17A-Z11-1922	Bracket	1	81028-
3		01245-00825	Screw	2	81028-
4		01643-70823	Washer	2	81028-
5		12Y-06-11650	Converter	1	81028-
6		01252-80514	Bolt	2	81028-
7		01641-50508	Washer, Flat	2	81028-
8		09415-01008	Cap	2	81028-
9		14X-98-51260	Plate	1	81076-

FIG. K0210-007018 Cab, Rearview Mirror

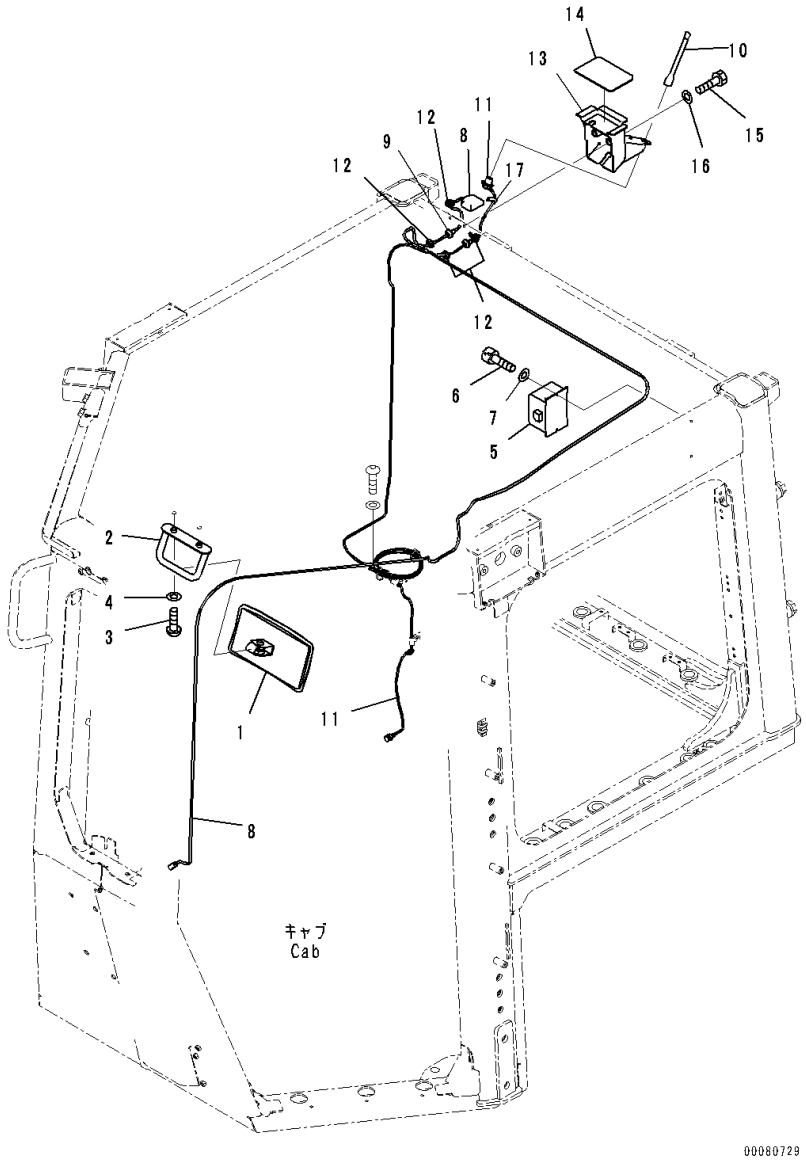

Index	Code	Part Number	Description	Qty	Serial Number
		Note: This list covers following specifications. ROPS, With AM-FM Stereo Radio With Cassette For North America, For KOMTRAX ROPS, For KOMTRAX ROPS, Rearview Monitoring System, With AM-FM Stereo Radio With Cassette For North America, For KOMTRAX ROPS, Rearview Monitoring System, With AM-FM Stereo Radio With Cassette For Europe and Asia, For KOMTRAX ROPS, Rearview Monitoring System, For KOMTRAX ROPS Cab, EU Safety Regulation, Rear View Monitoring System, AM-FM Stereo Radio, Cassette, Europe, Asia, KOMTRAX			
1		195-Z11-2180	Mirror	1	81028-
2		17A-Z11-1922	Bracket	1	81028-
3		01245-00825	Screw	2	81028-
4		01643-70823	Washer	2	81028-
5		12Y-06-11650	Converter	1	81028-
6		01252-80514	Bolt	2	81028-
7		01641-50508	Washer, Flat	2	81028-
8		8A13-10-4320	Antenna	1	81084-
9		08037-10610	• Grommet	1	81028-
10		8A13-10-2100	Antenna	1	81028-
11		8A13-10-2200	Cable	1	81028-
12		175-06-81610	Grommet	4	81028-
13		17A-979-3961	Bracket	1	81028-
14		14X-06-51840	Plate	1	81028-
15		01010-D0850	Bolt	2	81028-
16		01643-70823	Washer	2	81028-
17		08059-00413	Clip	2	81028-

FIG. K0210-008018A Cab, ROPS, With AM-FM Stereo Radio With Cassette For Europe and Asia, For KOMTRAX, Rearview Mirror

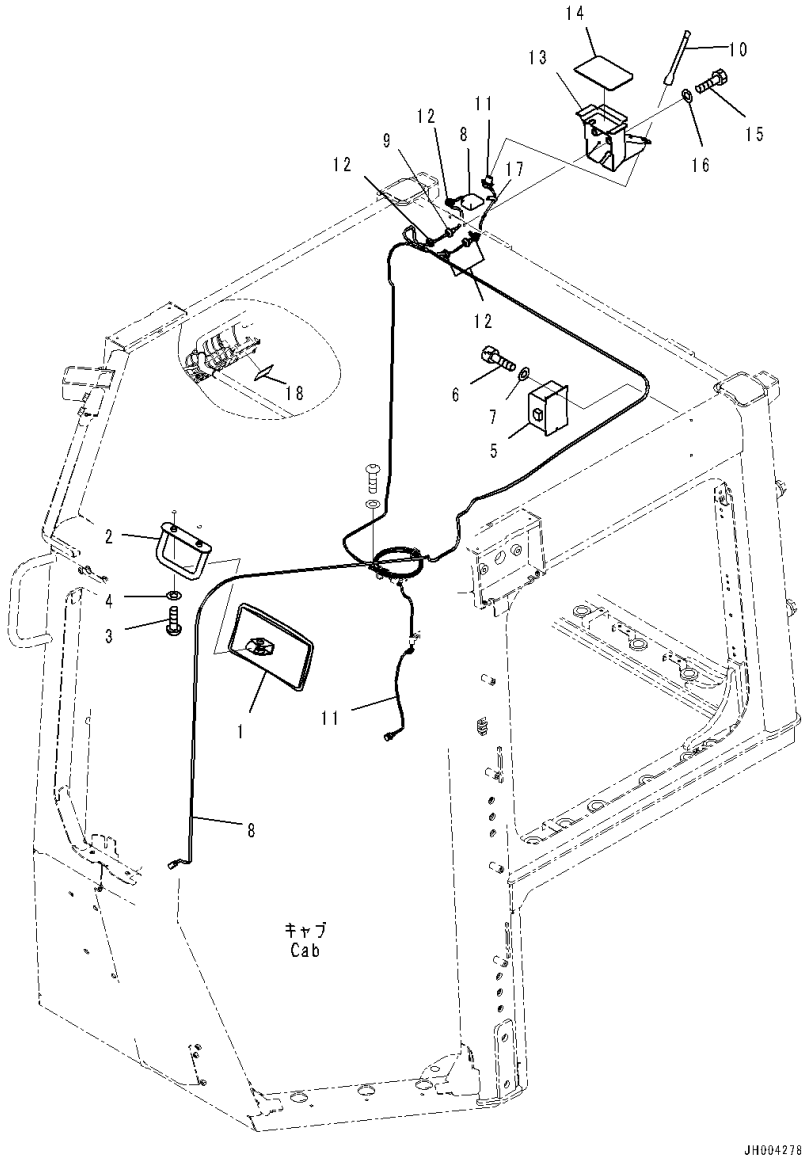

Index	Code	Part Number	Description	Qty	Serial Number
1		195-Z11-2180	Mirror	1	81028-
2		17A-Z11-1922	Bracket	1	81028-
3		01245-00825	Screw	2	81028-
4		01643-70823	Washer	2	81028-
5		12Y-06-11650	Converter	1	81028-
6		01252-80514	Bolt	2	81028-
7		01641-50508	Washer, Flat	2	81028-
8		8A13-10-4320	Antenna	1	81084-
9		08037-10610	• Grommet	1	81028-
10		8A13-10-2100	Antenna	1	81028-
11		8A13-10-2200	Cable	1	81028-
12		175-06-81610	Grommet	4	81028-
13		17A-979-3961	Bracket	1	81028-
14		14X-06-51840	Plate	1	81028-
15		01010-D0850	Bolt	2	81028-
16		01643-70823	Washer	2	81028-
17		08059-00413	Clip	2	81028-
18		14X-98-51260	Plate	1	81076-

FIG. K0210-012019 Cab, Rear Camera

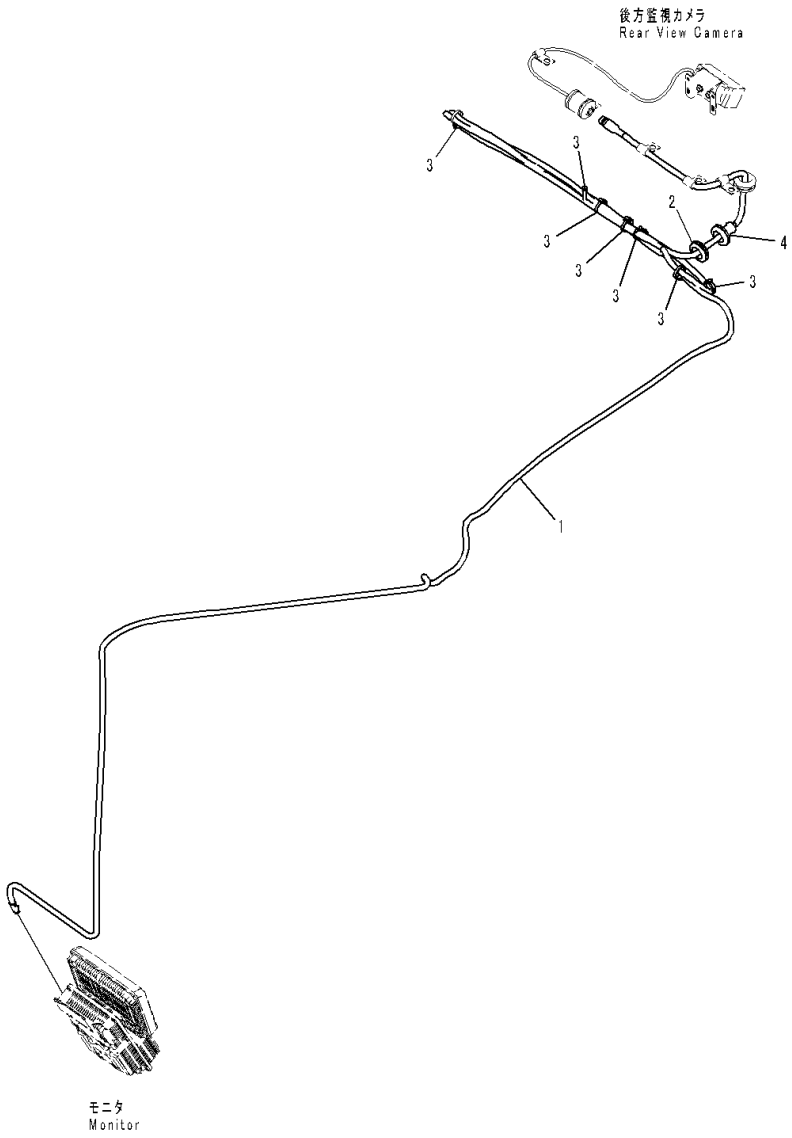

Index	Code	Part Number	Description	Qty	Serial Number
		Note: This list covers following specifications. ROPS, Rearview Monitoring System ROPS, Rearview Monitoring System, With AM-FM Stereo Radio With Cassette For North America ROPS, Rearview Monitoring System, With AM-FM Stereo Radio With Cassette For North America, For KOMTRAX ROPS, Rearview Monitoring System, For KOMTRAX ROPS Cab, EU Safety Regulation, Rear View Monitoring System, AM-FM Stereo Radio, Cassette, Europe, Asia, KOMTRAX			
1		7835-33-8100	Cable Assembly	1	81028-
2		08037-02512	Grommet	1	81028-
3		08034-20519	Band	13	81028-
4		08037-11425	Grommet	1	81028-

FIG. K0210-015019A Cab, Rear Camera

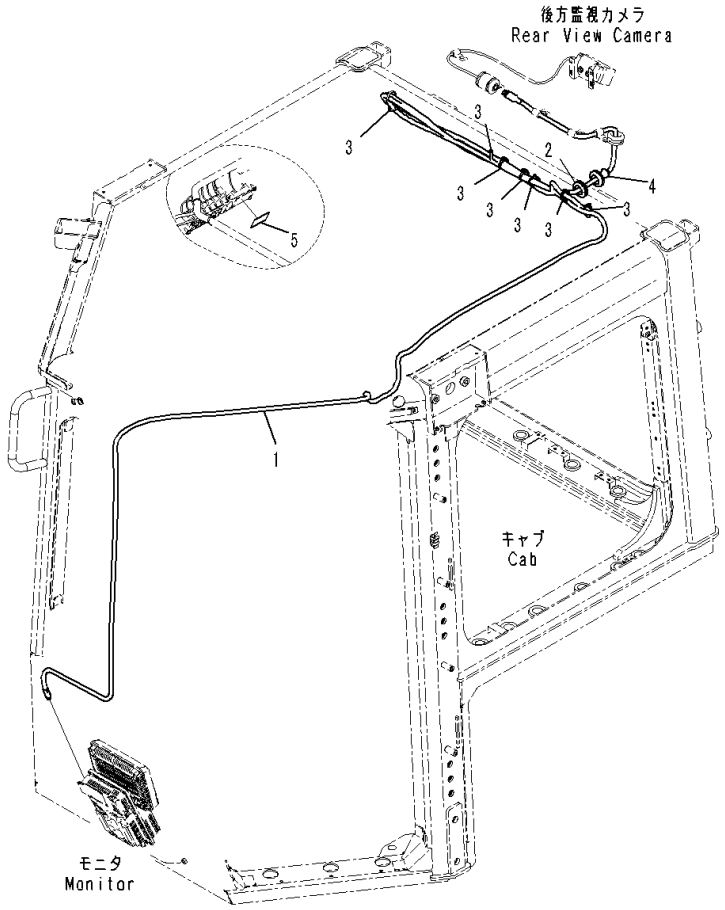

Index	Code	Part Number	Description	Qty	Serial Number
		Note: This list covers following specifications.			
		ROPS, Rearview Monitoring System, With AM-FM Stereo			
		Radio With Cassette For Europe and Asia			
		ROPS, Rearview Monitoring System, With AM-FM Stereo			
		Radio With Cassette For Europe and Asia, For KOMTRAX			
1		7835-33-8100	Cable Assembly	1	81028-
2		08037-02512	Grommet	1	81028-
3		08034-20519	Band	13	81028-
4		08037-11425	Grommet	1	81028-
5		14X-98-51260	Plate	1	81076-

FIG. K0210-035002 Cab, ROPS Cab, EU Safety Regulation, Rear View Monitoring System, AM-FM Stereo Radio, Cassette, Europe, Asia, KOMTRAX, Door Lock, LHS

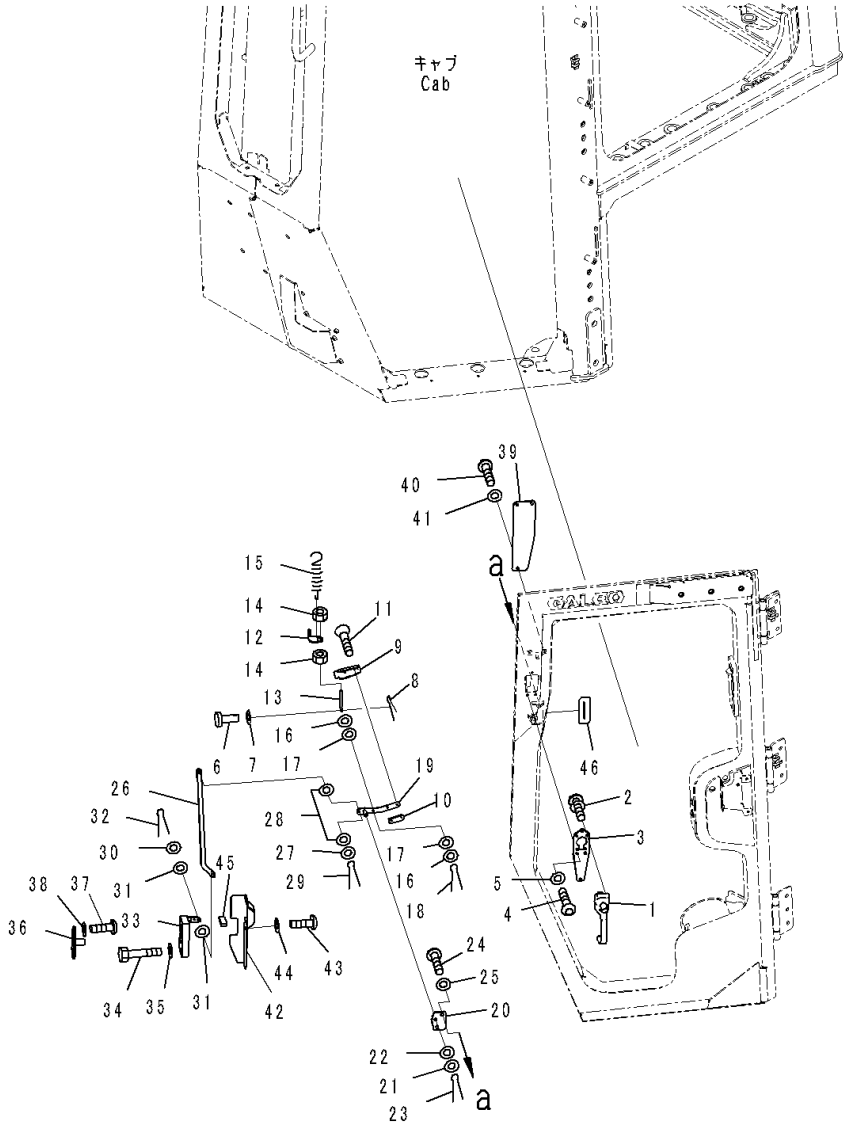

Index	Code	Part Number	Description	Qty	Serial Number
1		11Y-979-2571	Handle Assembly	1	81028-
2		01023-10520	Screw	5	81028-
3		12Y-978-3210	Plate	1	81028-
4		01245-00620	Screw	3	81028-
5		01643-70623	Washer	3	81028-
6		04205-10622	Pin	1	81028-
7		01643-70623	Washer	4	81028-
8		04050-11612	Pin, Cotter	1	81028-
9		12Y-978-3281	Knob	1	81028-
10		12Y-978-3290	Plate	1	81028-
11		01023-20410	Screw	2	81028-
12		12Y-978-3221	Plate	1	81028-
13		12Y-978-3241	Rod	1	81028-
14		01580-00605	Nut	2	81028-
15		176-06-42170	Spring	1	81028-
16		01643-70623	Washer	2	81028-
17		12Y-978-3310	Rubber	2	81028-
18		04050-11612	Pin, Cotter	1	81028-
19		12Y-978-3251	Plate	1	81028-
20		12Y-978-3261	Plate	1	81028-
21		01643-70823	Washer	1	81028-
22		12Y-978-3360	Rubber	1	81028-
23		04050-12012	Pin, Cotter	1	81028-
24		01245-00620	Screw	2	81028-
25		01643-70623	Washer	2	81028-
26		17A-979-3320	Plate	1	81028-
27		01640-20610	Washer	1	81028-
28		12Y-978-3310	Rubber	2	81028-
29		04050-11612	Pin, Cotter	1	81028-
30		01643-70623	Washer	1	81028-
31		12Y-978-3310	Rubber	2	81028-
32		04050-11612	Pin, Cotter	1	81028-
33		195-Z11-4520	Lock	1	81028-
34		01010-D0635	Bolt	4	81028-
35		01643-70623	Washer	4	81028-
36		12Y-978-3480	Striker	1	81028-
37		01245-00825	Screw	4	81028-
38		01643-70823	Washer	4	81028-

FIG. K0210-035002 Cab, ROPS Cab, EU Safety Regulation, Rear View Monitoring System, AM-FM Stereo Radio, Cassette, Europe, Asia, KOMTRAX, Door Lock, LHS

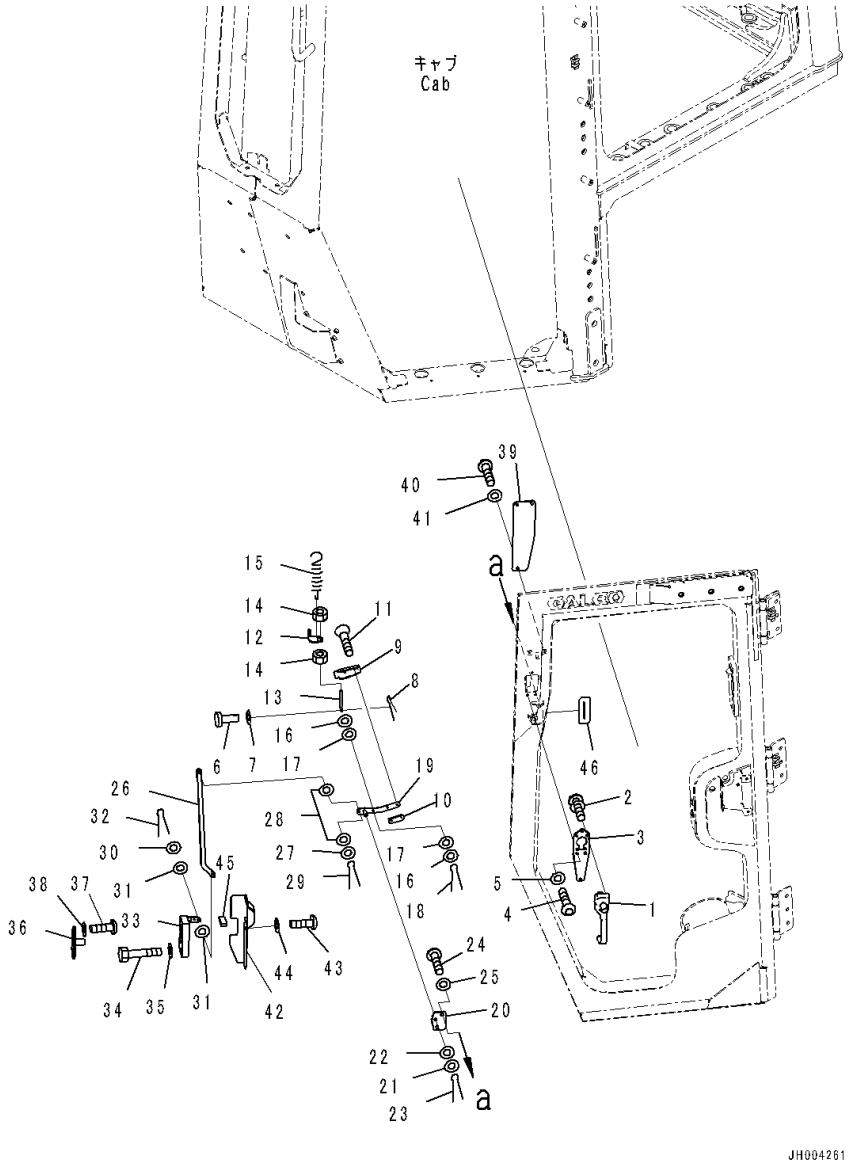

Index	Code	Part Number	Description	Qty	Serial Number
39		12Y-978-3340	Plate	1	81028-
40		01245-00620	Screw	3	81028-
41		01643-70623	Washer	3	81028-
42		17A-979-3741	Cover	1	81028-
43		01245-00620	Screw	2	81028-
44		01643-70623	Washer	2	81028-
45		17A-979-3811	Sheet	1	81028-
46		17A-979-4120	Sheet	1	81028-

FIG. K0210-035005 Cab, ROPS Cab, EU Safety Regulation, Rear View Monitoring System, AM-FM Stereo Radio, Cassette, Europe, Asia, KOMTRAX, Door Lock, RHS

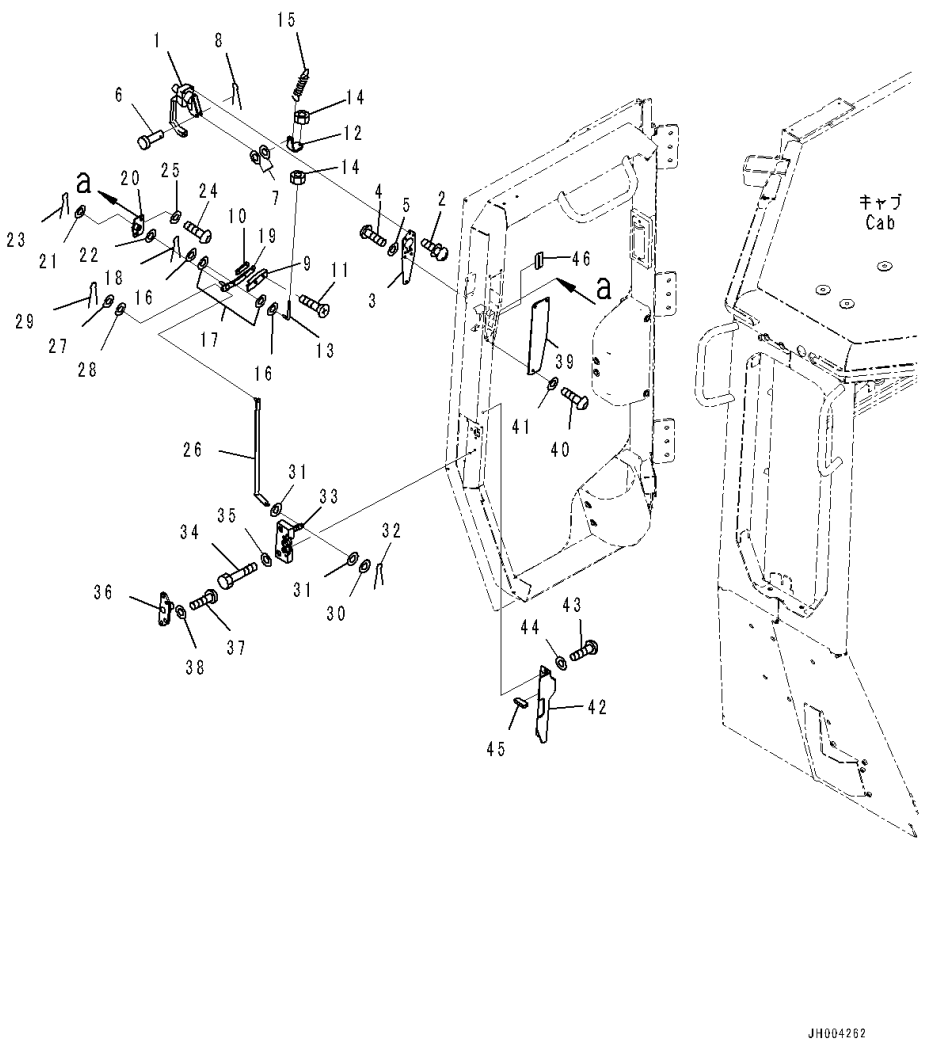

Index	Code	Part Number	Description	Qty	Serial Number
1		11Y-979-2571	Handle Assembly	1	81028-
2		01023-10520	Screw	5	81028-
3		12Y-978-3210	Plate	1	81028-
4		01245-00620	Screw	3	81028-
5		01643-70623	Washer	3	81028-
6		04205-10622	Pin	1	81028-
7		01643-70623	Washer	4	81028-
8		04050-11612	Pin, Cotter	1	81028-
9		12Y-978-3281	Knob	1	81028-
10		12Y-978-3290	Plate	1	81028-
11		01023-20410	Screw	2	81028-
12		12Y-978-3231	Plate	1	81028-
13		12Y-978-3241	Rod	1	81028-
14		01580-00605	Nut	2	81028-
15		176-06-42170	Spring	1	81028-
16		01643-70623	Washer	2	81028-
17		12Y-978-3310	Rubber	2	81028-
18		04050-11612	Pin, Cotter	1	81028-
19		12Y-978-3470	Plate	1	81028-
20		12Y-978-3271	Plate	1	81028-
21		01643-70823	Washer	1	81028-
22		12Y-978-3360	Rubber	1	81028-
23		04050-12012	Pin, Cotter	1	81028-
24		01245-00620	Screw	2	81028-
25		01643-70623	Washer	2	81028-
26		17A-979-3330	Plate	1	81028-
27		01640-20610	Washer	1	81028-
28		12Y-978-3310	Rubber	2	81028-
29		04050-11612	Pin, Cotter	1	81028-
30		01643-70623	Washer	1	81028-
31		12Y-978-3310	Rubber	2	81028-
32		04050-11612	Pin, Cotter	1	81028-
33		195-Z11-4510	Lock	1	81028-
34		01010-D0635	Bolt	4	81028-
35		01643-70623	Washer	4	81028-
36		12Y-978-3480	Striker	1	81028-
37		01245-00825	Screw	4	81028-
38		01643-70823	Washer	4	81028-

FIG. K0210-035005 Cab, ROPS Cab, EU Safety Regulation, Rear View Monitoring System, AM-FM Stereo Radio, Cassette, Europe, Asia, KOMTRAX, Door Lock, RHS

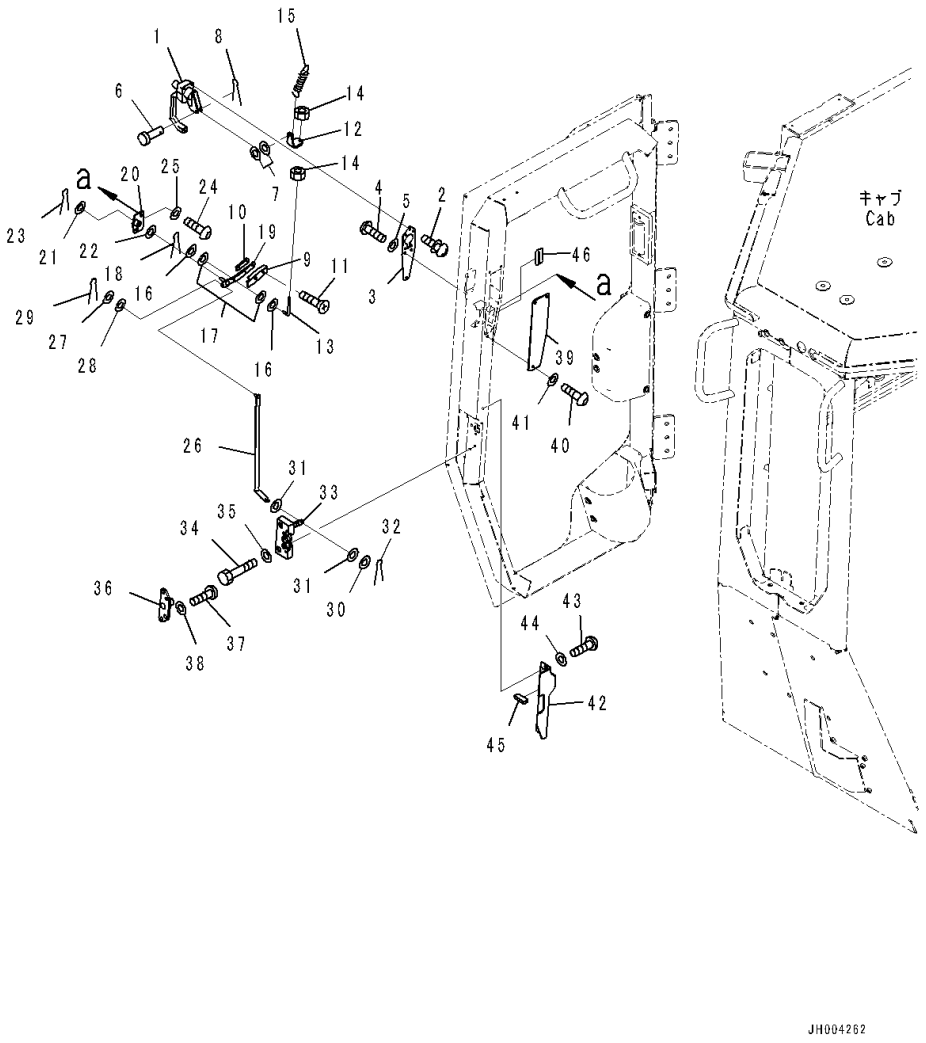

Index	Code	Part Number	Description	Qty	Serial Number
39		12Y-978-3340	Plate	1	81028-
40		01245-00620	Screw	3	81028-
41		01643-70623	Washer	3	81028-
42		17A-979-3751	Cover	1	81028-
43		01245-00620	Screw	2	81028-
44		01643-70623	Washer	2	81028-
45		17A-979-3811	Sheet	1	81028-
46		17A-979-4120	Sheet	1	81028-

FIG. K0210-035012 Cab, ROPS Cab, EU Safety Regulation, Rear View Monitoring System, AM-FM Stereo Radio, Cassette, Europe, Asia, KOMTRAX, Window Sash

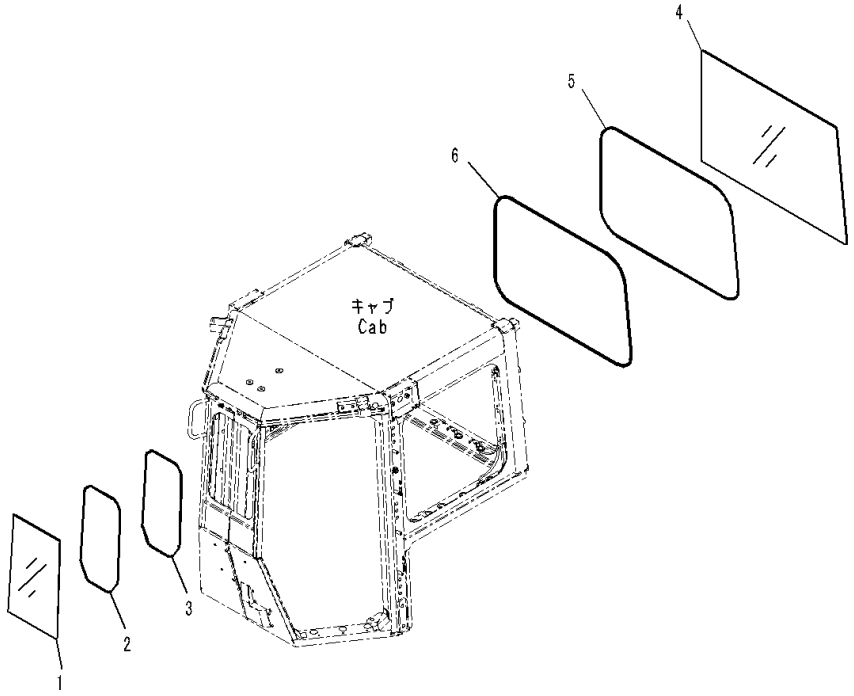

Index	Code	Part Number	Description	Qty	Serial Number
1		17A-979-1313	Glass	1	81028-
2		17A-979-1321	Seal	1	81028-
3		17A-979-1520	Trim	1	81028-
4		17A-979-1331	Glass	1	81028-
5		17A-979-1341	Seal	1	81028-
6		17A-979-1351	Trim	1	81028-

FIG. K0210-035013 Cab, ROPS Cab, EU Safety Regulation, Rear View Monitoring System, AM-FM Stereo Radio, Cassette, Europe, Asia, KOMTRAX, Sash type Glass Windows, LHS

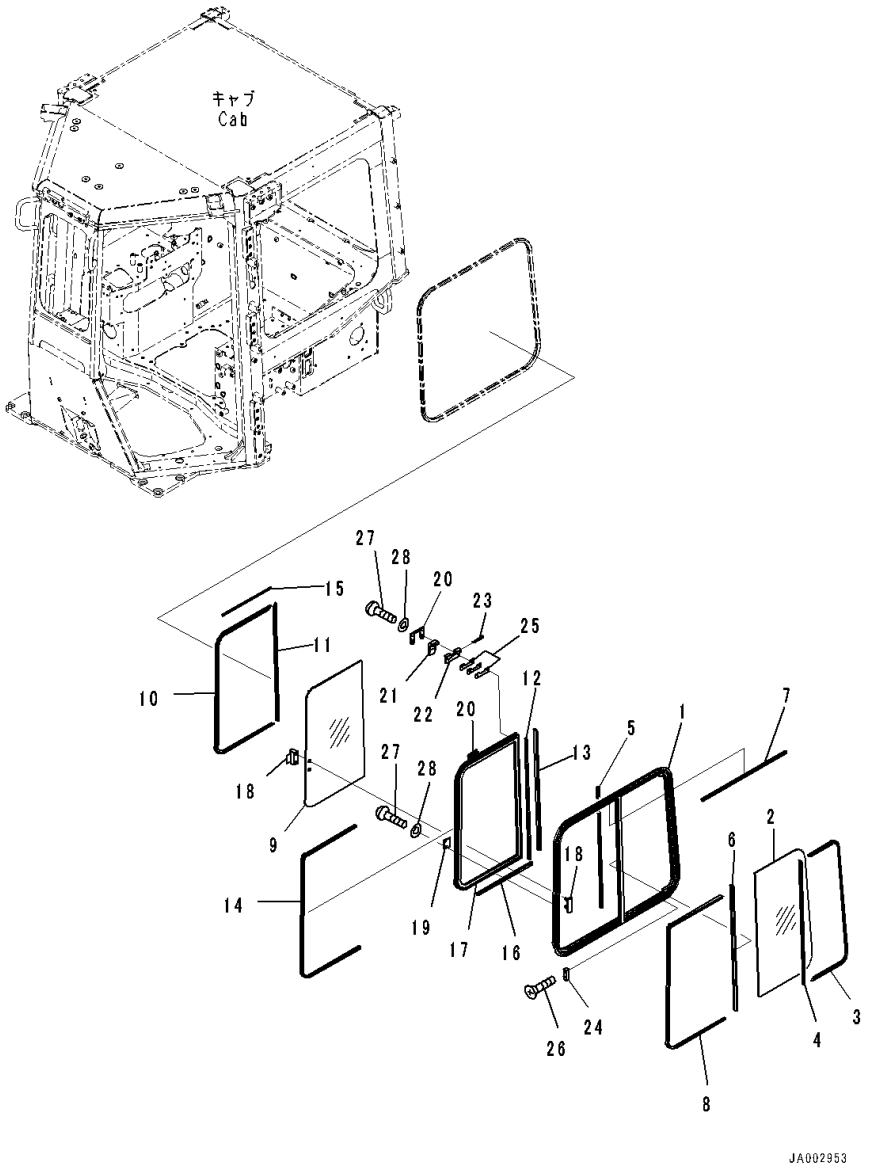

Index	Code	Part Number	Description	Qty	Serial Number
		14X-Y79-1400	Sash Assembly	1	81028-
		12Y-978-1410	• Sash Assembly	1	81028-
1		12Y-978-1420	• • Frame	1	81028-
2		12Y-978-1450	• • Glass	1	81028-
3		12Y-978-1460	• • Seal	1	81028-
4		12Y-978-1470	• • Seal	1	81028-
5		12Y-978-1480	• • Seal,Bonded	1	81028-
6		12Y-978-1490	• • Seal	1	81028-
7		12Y-978-1550	• • Seal,Bonded	1	81028-
8		12Y-978-1640	• Seal	1	81028-
		14X-Y79-1430	• Sash Assembly	1	81028-
9		12Y-978-1560	• • Glass	1	81028-
10		12Y-978-1570	• • Seal	1	81028-
11		12Y-978-1580	• • Seal	1	81028-
12		12Y-978-1590	• • Seal	1	81028-
13		12Y-978-1610	• • Seal	1	81028-
14		12Y-978-1620	• • Run Channel	1	81028-
15		12Y-978-1630	• • Seal	1	81028-
16		12Y-978-1650	• • Seal	1	81028-
17		14X-Y79-1440	• • Frame	1	81028-
		17A-Z11-1610	• Lock Assembly	1	81028-
18		17A-Z11-1620	• Striker	1	81028-
19		17A-Z11-1660	• Plate	2	81028-
20		195-Z11-1371	• Lock Assembly	2	81028-
21		195-Z11-3630	• • Lever	1	81028-
22		195-Z11-3640	• • Plate	1	81028-
23		195-Z11-3860	• • Pin, Spring	1	81028-
24		195-Z11-1381	• Stopper	1	81028-
25		195-Z11-3670	• Shim, T=0.5mm	6	81028-
26		01224-70316	• Screw	2	81028-
27		01252-80514	• Bolt	6	81028-
28		01641-50508	• Washer, Flat	6	81028-

FIG. K0210-035014 Cab, ROPS Cab, EU Safety Regulation, Rear View Monitoring System, AM-FM Stereo Radio, Cassette, Europe, Asia, KOMTRAX, Sash type Glass Windows, RHS

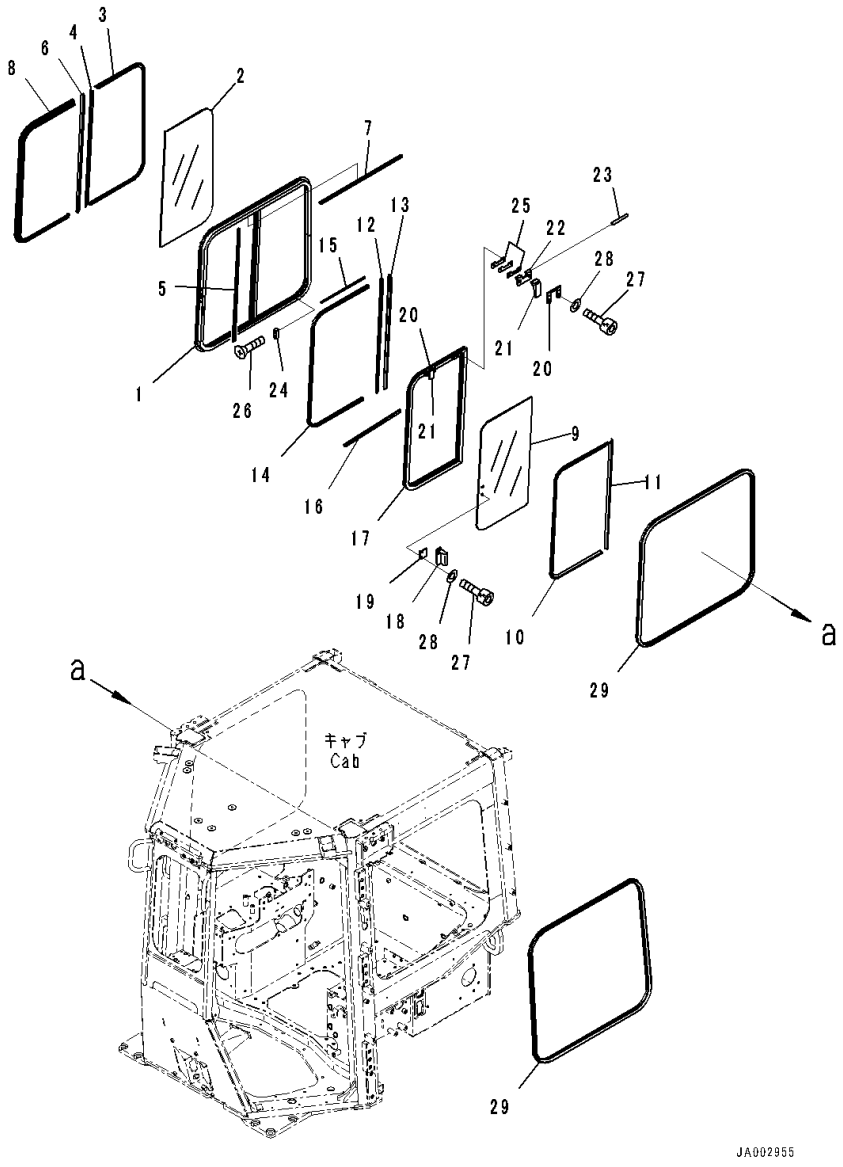

Index	Code	Part Number	Description	Qty	Serial Number
		14X-Y79-1500	Sash Assembly	1	81028-
		12Y-978-1510	• Sash Assembly	1	81028-
1		12Y-978-1520	• • Frame	1	81028-
2		12Y-978-1450	• • Glass	1	81028-
3		12Y-978-1460	• • Seal	1	81028-
4		12Y-978-1470	• • Seal	1	81028-
5		12Y-978-1480	• • Seal,Bonded	1	81028-
6		12Y-978-1490	• • Seal	1	81028-
7		12Y-978-1550	• • Seal,Bonded	1	81028-
8		12Y-978-1640	• Seal	1	81028-
		14X-Y79-1450	• Sash Assembly	1	81028-
9		12Y-978-1560	• • Glass	1	81028-
10		12Y-978-1570	• • Seal	1	81028-
11		12Y-978-1580	• • Seal	1	81028-
12		12Y-978-1590	• • Seal	1	81028-
13		12Y-978-1610	• • Seal	1	81028-
14		12Y-978-1620	• • Run Channel	1	81028-
15		12Y-978-1630	• • Seal	1	81028-
16		12Y-978-1650	• • Seal	1	81028-
17		14X-Y79-1460	• • Frame	1	81028-
18		17A-Z11-1610	• Lock Assembly	1	81028-
19		17A-Z11-1620	• Striker	1	81028-
20		17A-Z11-1660	• Plate	2	81028-
		195-Z11-1371	• Lock Assembly	2	81028-
21		195-Z11-3630	• • Lever	1	81028-
22		195-Z11-3640	• • Plate	1	81028-
23		195-Z11-3860	• • Pin, Spring	1	81028-
24		195-Z11-1381	• Stopper	1	81028-
25		195-Z11-3670	• Shim, T=0.5mm	6	81028-
26		01224-70316	• Screw	2	81028-
27		01252-80514	• Bolt	6	81028-
28		01641-50508	• Washer, Flat	6	81028-
29		12Y-978-1390	Weather Strip	2	81028-

FIG. K0310-001001 Floor Mat

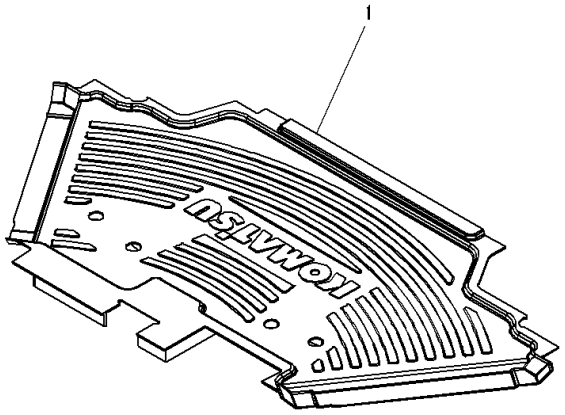

00042336

Index	Code	Part Number	Description	Qty	Serial Number
1		17A-979-2882	Mat	1	81028-

FIG. K0830-001001 Fire Extinguisher, English

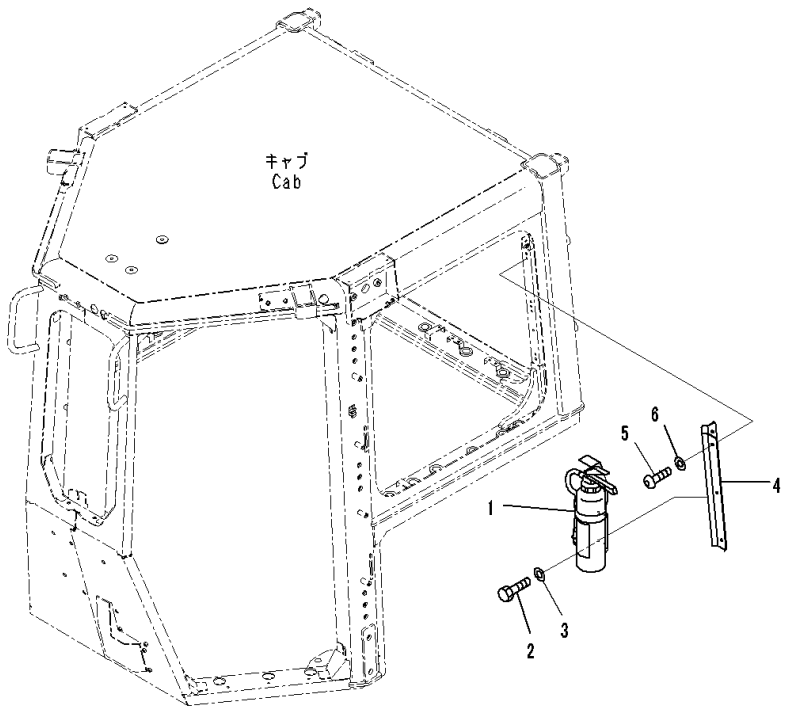

Index	Code	Part Number	Description	Qty	Serial Number
1		09495-40010	Fire Extinguisher, English	1	81028-
2		01010-D0620	Bolt	6	81028-
3		01643-70623	Washer	6	81028-
4		17A-979-1770	Bracket	1	81028-
5		01245-00625	Screw	6	81028-
6		01643-70823	Washer	6	81028-

FIG. K0830-004001 Fire Extinguisher, Chinese

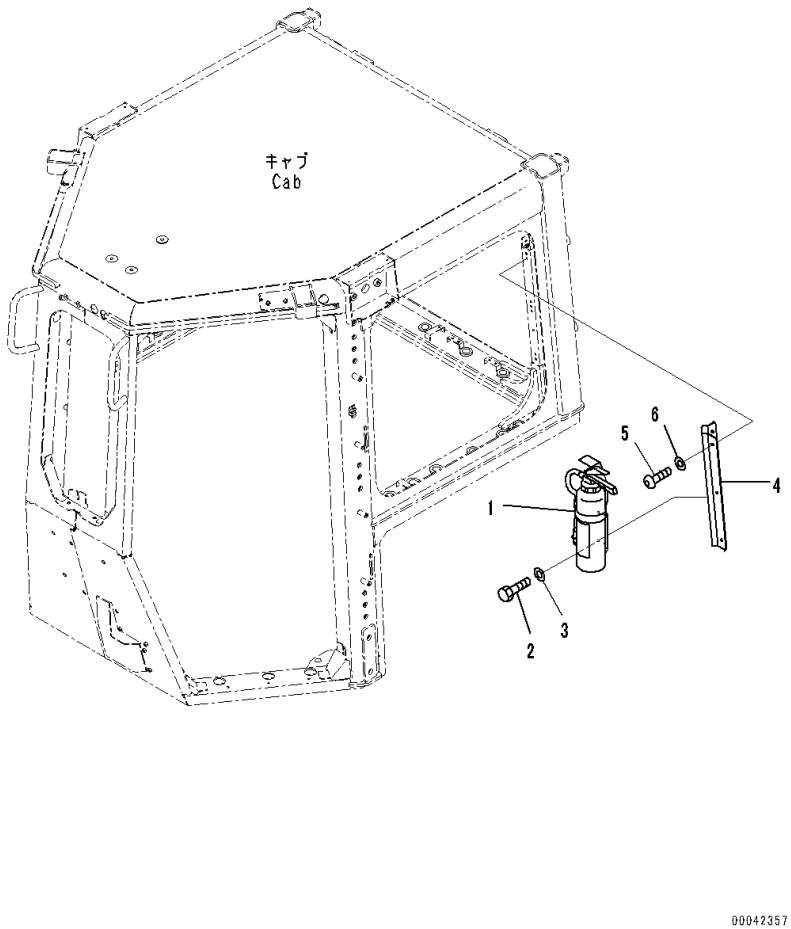

Index	Code	Part Number	Description	Qty	Serial Number
1		09495-90010	Fire Extinguisher, Chinese	1	81028-
2		01010-D0620	Bolt	6	81028-
3		01643-70623	Washer	6	81028-
4		17A-979-1770	Bracket	1	81028-
5		01245-00625	Screw	6	81028-
6		01643-70823	Washer	6	81028-

FIG. K0830-003001 Fire Extinguisher, Portuguese

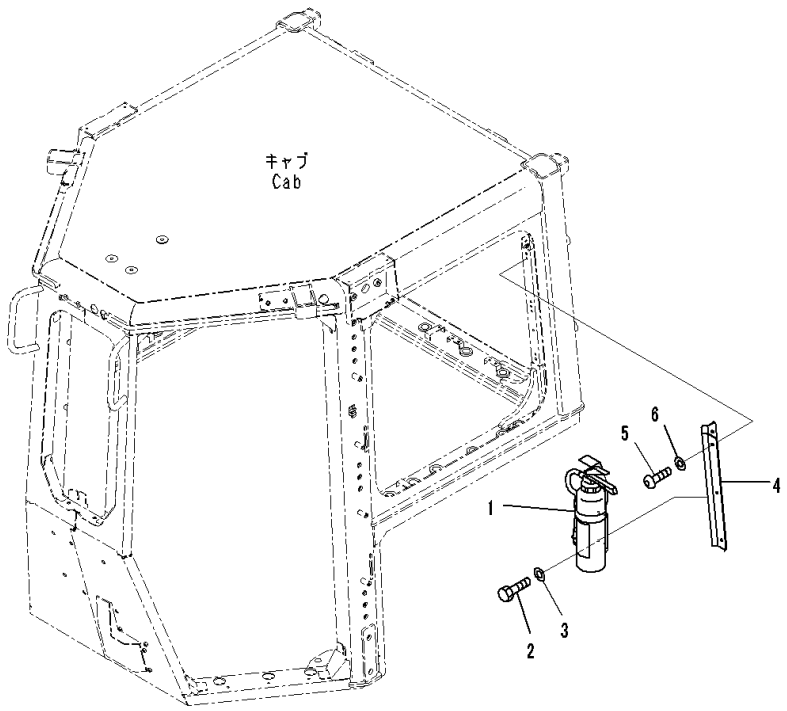

Index	Code	Part Number	Description	Qty	Serial Number
1		09495-80010	Fire Extinguisher, Portuguese	1	81028-
2		01010-D0620	Bolt	6	81028-
3		01643-70623	Washer	6	81028-
4		17A-979-1770	Bracket	1	81028-
5		01245-00625	Screw	6	81028-
6		01643-70823	Washer	6	81028-

FIG. K0830-005001 Fire Extinguisher, Spanish

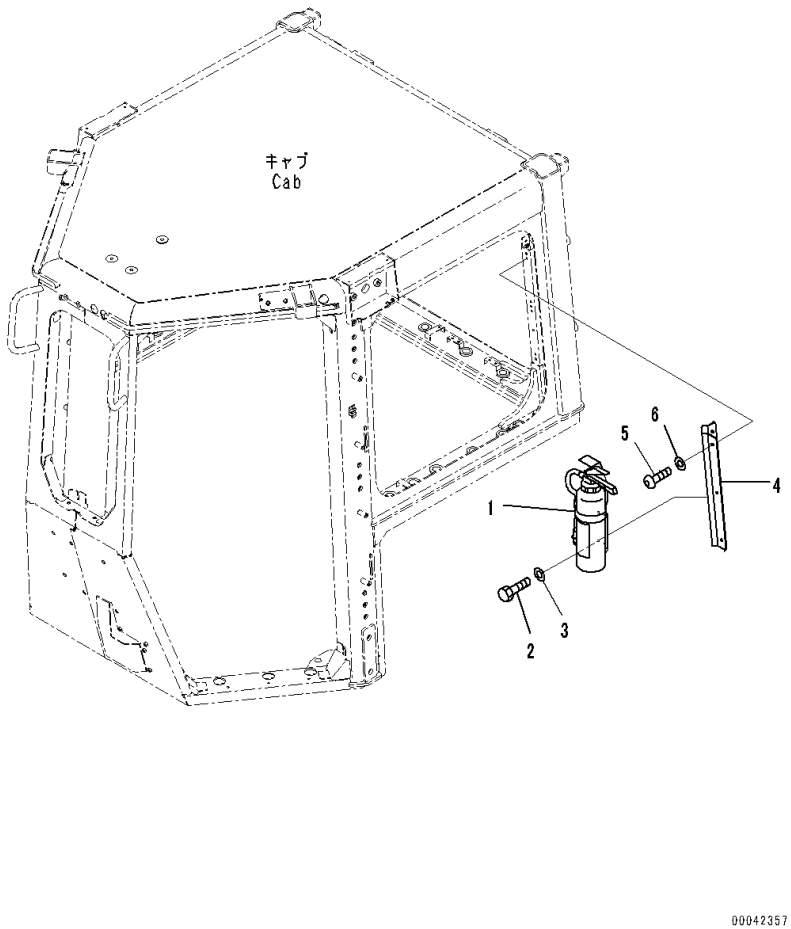

Index	Code	Part Number	Description	Qty	Serial Number
1		09495-10010	Fire Extinguisher, Spanish	1	81028-
2		01010-D0620	Bolt	6	81028-
3		01643-70623	Washer	6	81028-
4		17A-979-1770	Bracket	1	81028-
5		01245-00625	Screw	6	81028-
6		01643-70823	Washer	6	81028-

FIG. K0840-001001 First Aid Box

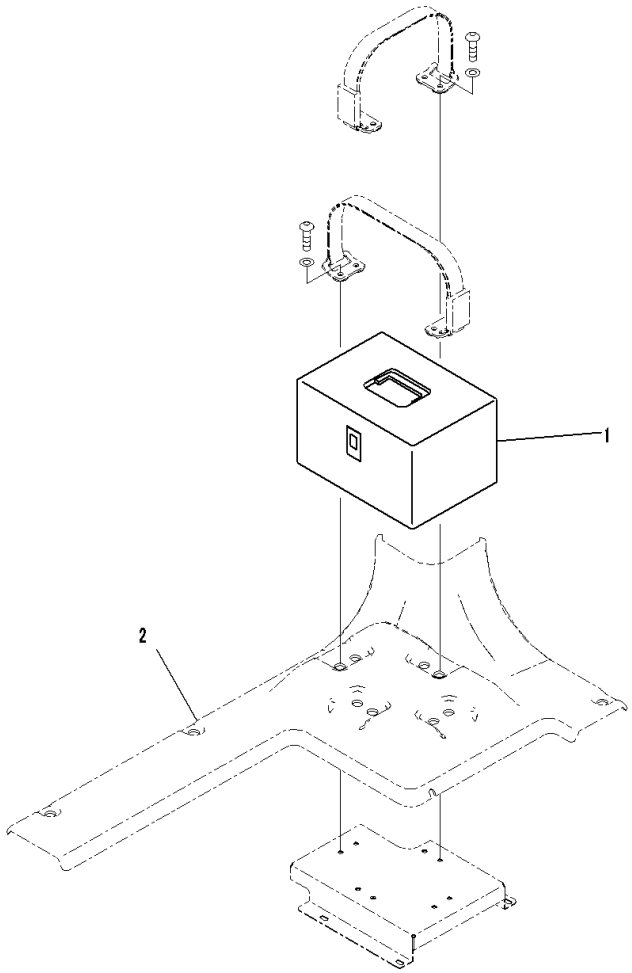

Index	Code	Part Number	Description	Qty	Serial Number
1		17A-911-1830	Box	1	81028-
2		(17A-979-2771)	Cover(Refer to Page 520)		-

FIG. K0850-001001 Thermos Bottle

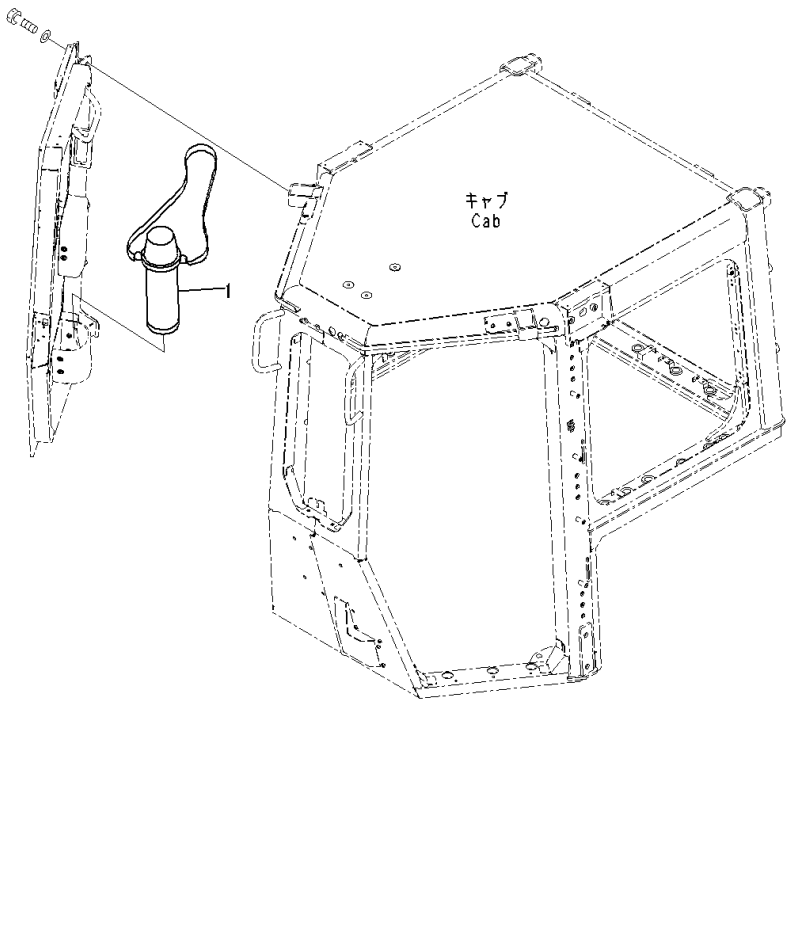

Index	Code	Part Number	Description	Qty	Serial Number
1		195-911-1722	Thermos Bottle	1	81028-

FIG. K2110-009001 Floor Frame, Frame

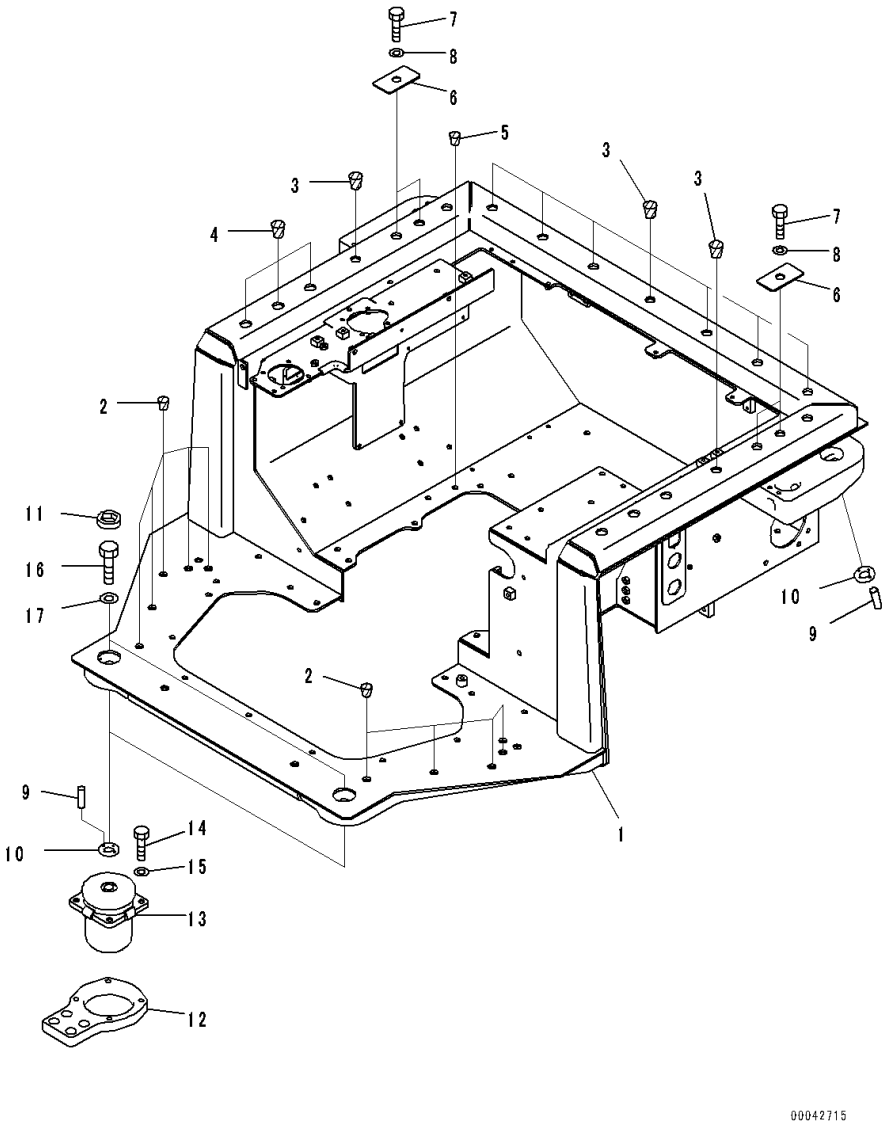

Index	Code	Part Number	Description	Qty	Serial Number
		Note: This list covers following specifications.			
		For Variable Giant Ripper, MSHA Dust Regulation			
		For Variable Multi Ripper, For Dual Tilt Pitch Dozer, MSHA Dust Regulation			
		For Variable Giant Ripper, For Dual Tilt Pitch Dozer, MSHA Dust Regulation			
		Without Rear Work Equipment, MSHA Dust Regulation			
		Without Rear Work Equipment, For Dual Tilt Pitch Dozer, MSHA Dust Regulation			
		For Mechanical Angle Dozer, For Variable Multi Ripper, MSHA Dust Regulation			
		For Mechanical Angle Dozer, For Variable Giant Ripper, MSHA Dust Regulation			
		For Mechanical Angle Dozer, Without Rear Work Equipment, MSHA Dust Regulation			
1		17A-54-46113	Frame	1	81028-
2		07049-01620	Plug	10	81028-
3		07049-02025	Plug	9	81028-
4		07049-02430	Plug	6	81028-
5		07049-01215	Plug	2	81028-
6		17A-54-46291	Plate	4	81028-
7		01010-82050	Bolt	4	81028-
8		01643-32060	Washer	4	81028-
9		04020-00616	Pin, Dowel	8	81028-
10		17A-54-46440	Plate	4	81028-
11		17A-54-46690	Cap	2	81028-
12		17A-54-46330	Plate	2	81028-
13		17A-54-46120	Cushion	2	81028-
14		01010-81440	Bolt	8	81028-
15		01643-31445	Washer	8	81028-
16		01010-82465	Bolt	2	81028-
17		01643-32460	Washer	2	81028-

FIG. K2110-009002 Floor Frame, Parking Brake Lever

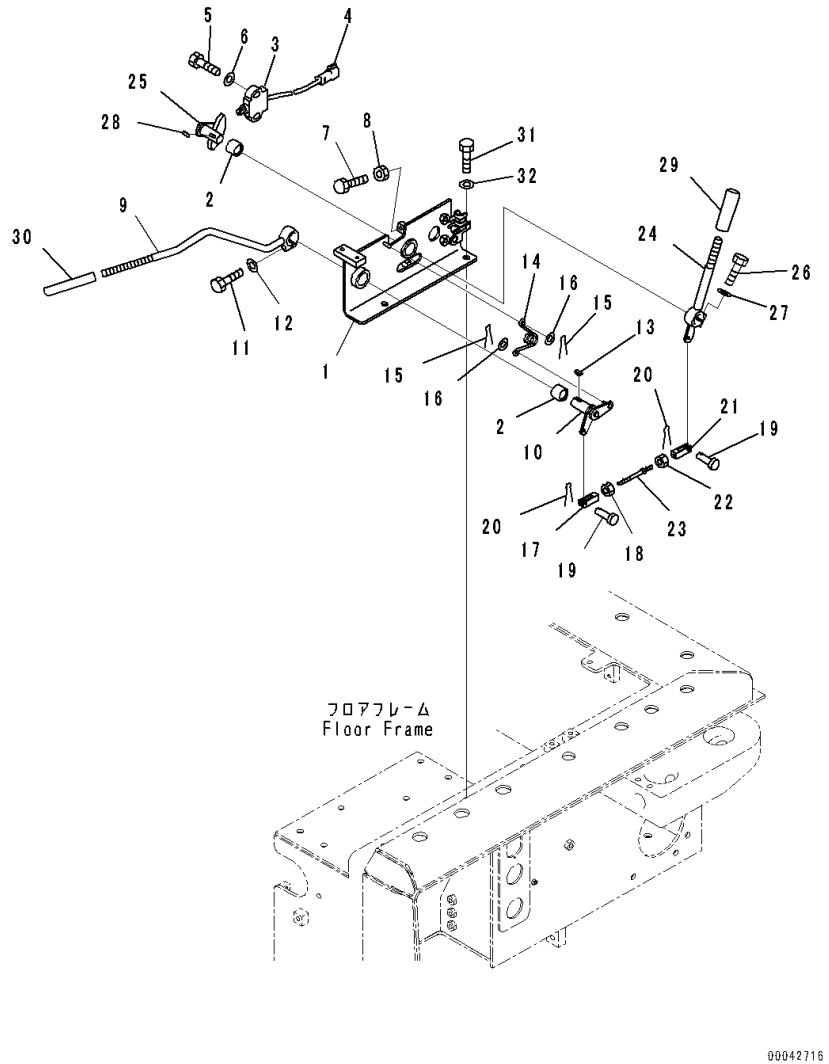

Index	Code	Part Number	Description	Qty	Serial Number
		Note: This list covers following specifications. For Variable Giant Ripper, MSHA Dust Regulation For Variable Multi Ripper, For Dual Tilt Pitch Dozer, MSHA Dust Regulation For Variable Giant Ripper, For Dual Tilt Pitch Dozer, MSHA Dust Regulation Without Rear Work Equipment, MSHA Dust Regulation Without Rear Work Equipment, For Dual Tilt Pitch Dozer, MSHA Dust Regulation For Mechanical Angle Dozer, For Variable Multi Ripper, MSHA Dust Regulation For Mechanical Angle Dozer, For Variable Giant Ripper, MSHA Dust Regulation For Mechanical Angle Dozer, Without Rear Work Equipment, MSHA Dust Regulation For Variable Giant Ripper, For Dual Tilt Pitch Dozer, MSHA Dust Regulation, Landfill Specification		
1		17A-43-41711	Bracket	1	81028-
2		06124-02020	Bearing	2	81028-
3		11Y-06-22150	Switch	1	81028-
4		08192-13830	• Connector	1	81028-
5		01010-81040	Bolt	2	81028-
6		01643-31032	Washer	2	81028-
7		01016-50830	Bolt	1	81028-
8		01580-10806	Nut	1	81028-
9		17A-43-41722	Lever	1	81028-
10		17A-43-41731	Lever	1	81028-
11		01010-80830	Bolt	1	81028-
12		01643-30823	Washer	1	81028-
13		04010-00516	Key	1	81028-
14		17A-43-41760	Spring	1	81028-
15		04050-11612	Pin, Cotter	2	81028-
16		01640-20610	Washer	2	81028-
17		04221-20634	Yoke,LHS	1	81028-
18		01508-40603	Nut, Left-handed	1	81028-
19		04205-10618	Pin	2	81028-
20		04050-11612	Pin, Cotter	2	81028-
21		04211-20634	Yoke	1	81028-
22		01580-10605	Nut	1	81028-
23		04248-30609	Rod	1	81028-

FIG. K2110-009002 Floor Frame, Parking Brake Lever

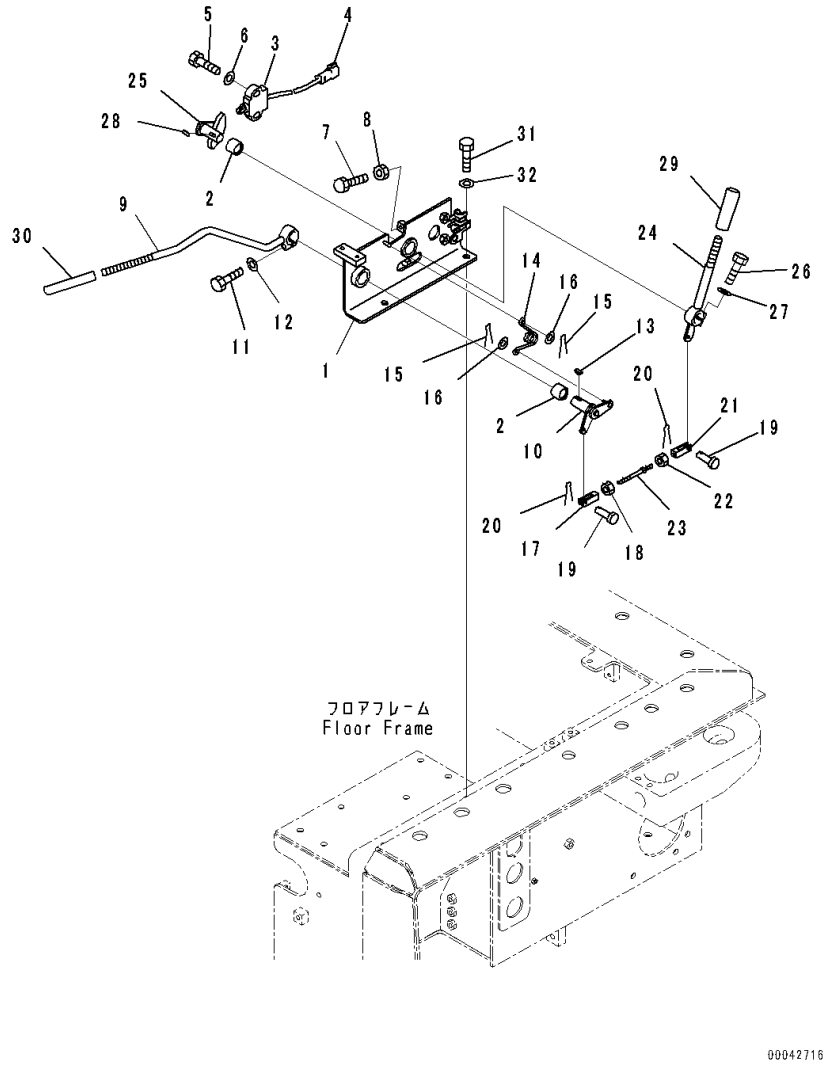

Index	Code	Part Number	Description	Qty	Serial Number
24		17A-43-41751	Lever	1	81028-
25		17A-43-41741	Lever	1	81028-
26		01010-80830	Bolt	1	81028-
27		01643-30823	Washer	1	81028-
28		04010-00516	Key	1	81028-
29		22M-43-21470	Knob	1	81028-
30		417-43-28270	Cap	1	81028-
31		01010-81025	Bolt	2	81028-
32		01643-31032	Washer	2	81028-

FIG. K2110-009003 Floor Frame, Horn Switch and Controller

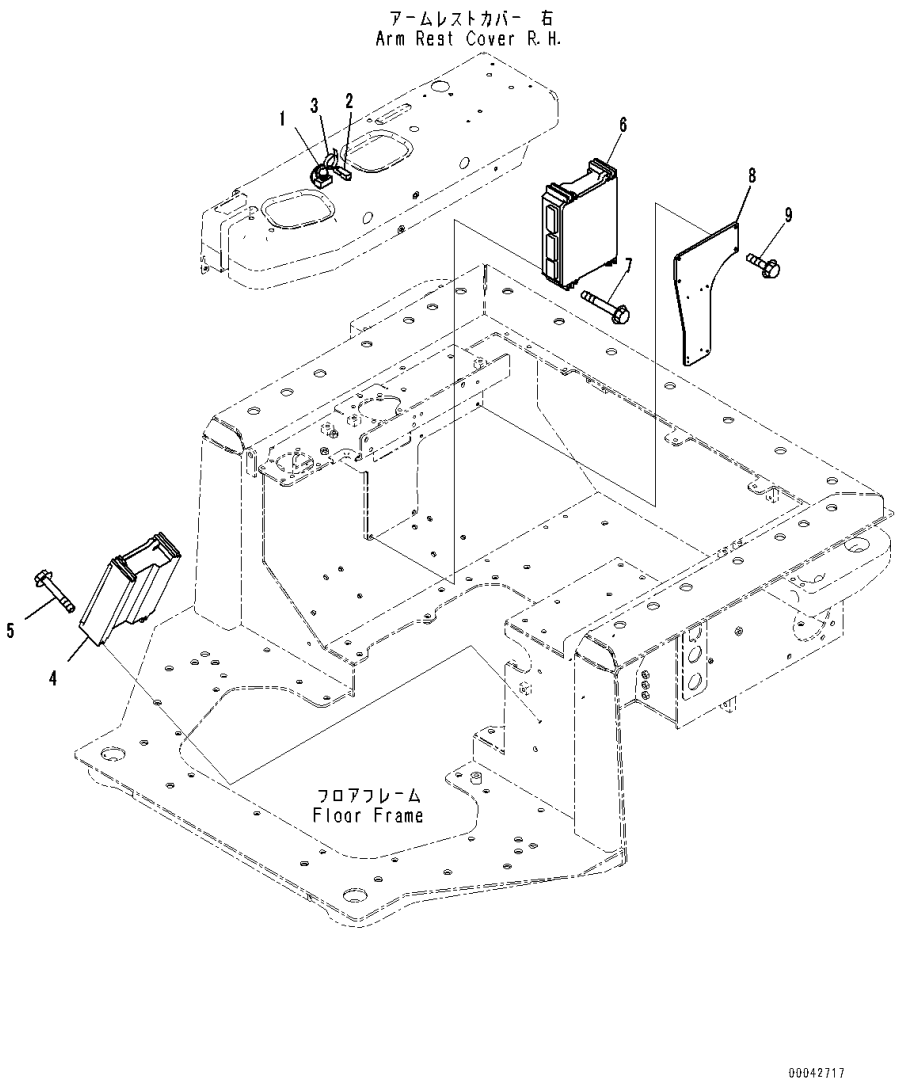

Index	Code	Part Number	Description	Qty	Serial Number
		Note: This list covers following specifications.			
		For Variable Giant Ripper, MSHA Dust Regulation			
		For Variable Multi Ripper, For Dual Tilt Pitch Dozer, MSHA Dust Regulation			
		For Variable Giant Ripper, For Dual Tilt Pitch Dozer, MSHA Dust Regulation			
		Without Rear Work Equipment, MSHA Dust Regulation			
		Without Rear Work Equipment, For Dual Tilt Pitch Dozer, MSHA Dust Regulation			
		For Mechanical Angle Dozer, For Variable Multi Ripper, MSHA Dust Regulation			
		For Mechanical Angle Dozer, For Variable Giant Ripper, MSHA Dust Regulation			
		For Mechanical Angle Dozer, Without Rear Work Equipment, MSHA Dust Regulation			
		For Variable Giant Ripper, For Dual Tilt Pitch Dozer, MSHA Dust Regulation, Landfill Specification			
1		08064-10000	Switch, Horn	1	81028-
2		17A-06-41860	Wiring Harness	1	81028-
3		08034-20310	• Band, Black	1	81028-
4		7830-54-2008	Controller	1	81028-
5		01435-00885	Bolt	4	81028-
6		7830-54-2008	Controller	1	81028-
7		01435-00880	Bolt	4	81028-
8		17A-54-46990	Plate	1	81028-
9		01435-00616	Bolt	4	81028-

FIG. K2110-009004 Floor Frame, Floor, Wiring Harness

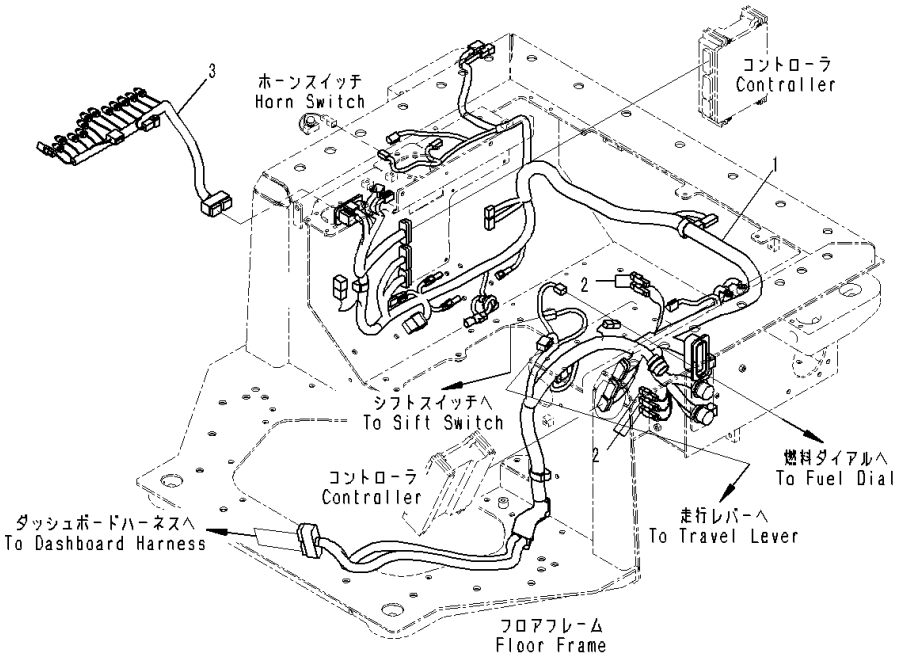

Index	Code	Part Number	Description	Qty	Serial Number
		Note: This list covers following specifications.			
		For Variable Giant Ripper, MSHA Dust Regulation			
		For Variable Multi Ripper, For Dual Tilt Pitch Dozer, MSHA Dust Regulation			
		For Variable Giant Ripper, For Dual Tilt Pitch Dozer, MSHA Dust Regulation			
		Without Rear Work Equipment, MSHA Dust Regulation			
		Without Rear Work Equipment, For Dual Tilt Pitch Dozer, MSHA Dust Regulation			
		For Mechanical Angle Dozer, For Variable Multi Ripper, MSHA Dust Regulation			
		For Mechanical Angle Dozer, For Variable Giant Ripper, MSHA Dust Regulation			
		For Mechanical Angle Dozer, Without Rear Work Equipment, MSHA Dust Regulation			
		For Variable Giant Ripper, For Dual Tilt Pitch Dozer, MSHA Dust Regulation, Landfill Specification			
1		17A-06-41113	Wiring Harness	1	81028-
2		21J-06-13661	• Diode	5	81028-
3		17A-06-41141	Wiring Harness	1	81028-

FIG. K2110-009005 Floor Frame, Floor Wiring Harness Clamp (1/2)

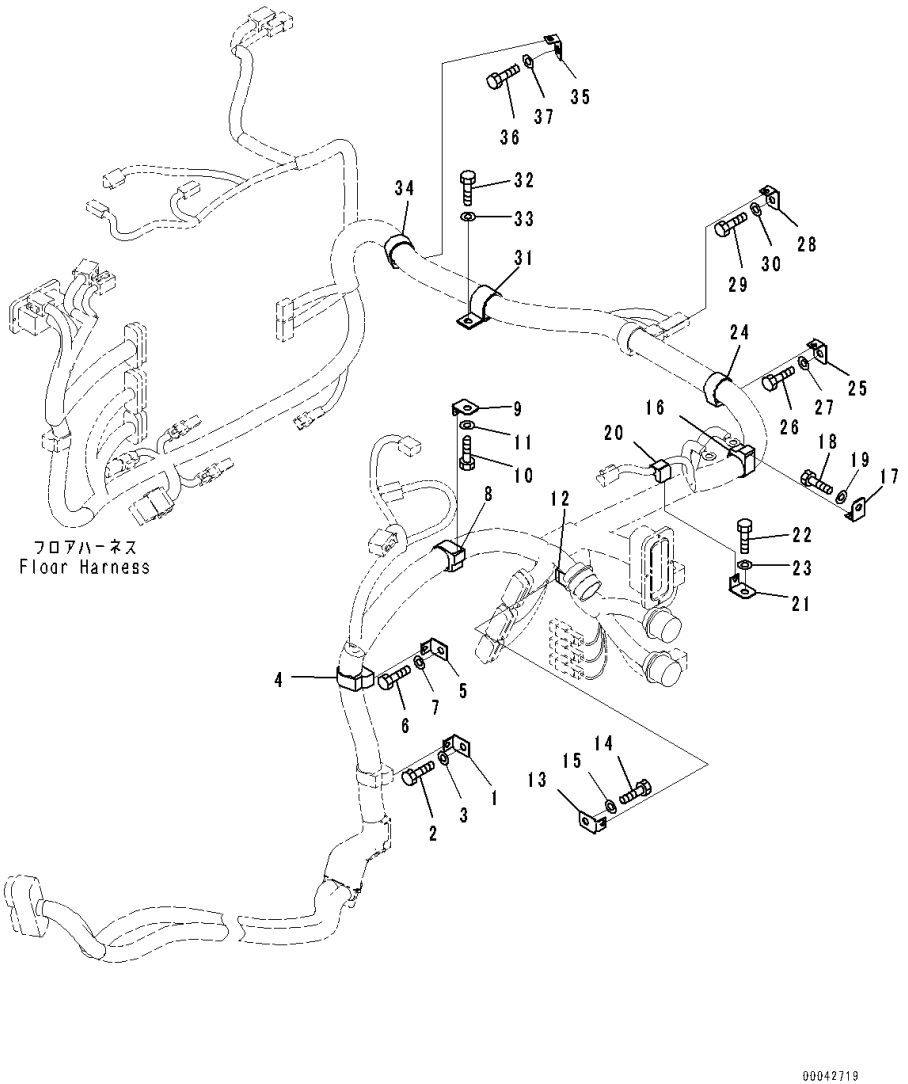

Index	Code	Part Number	Description	Qty	Serial Number
		Note: This list covers following specifications.			
		For Variable Giant Ripper, MSHA Dust Regulation			
		For Variable Multi Ripper, For Dual Tilt Pitch Dozer, MSHA Dust Regulation			
		For Variable Giant Ripper, For Dual Tilt Pitch Dozer, MSHA Dust Regulation			
		Without Rear Work Equipment, MSHA Dust Regulation			
		Without Rear Work Equipment, For Dual Tilt Pitch Dozer, MSHA Dust Regulation			
		For Mechanical Angle Dozer, For Variable Multi Ripper, MSHA Dust Regulation			
		For Mechanical Angle Dozer, For Variable Giant Ripper, MSHA Dust Regulation			
		For Mechanical Angle Dozer, Without Rear Work Equipment, MSHA Dust Regulation			
		For Variable Giant Ripper, For Dual Tilt Pitch Dozer, MSHA Dust Regulation, Landfill Specification			
1		08057-12010	Clip	1	81028-
2		01010-81020	Bolt	1	81028-
3		01643-31032	Washer	1	81028-
4		08211-02820	Clip	1	81028-
5		08057-12010	Clip	1	81028-
6		01010-81020	Bolt	1	81028-
7		01643-31032	Washer	1	81028-
8		08211-02820	Clip	1	81028-
9		08057-12010	Clip	1	81028-
10		01010-81020	Bolt	1	81028-
11		01643-31032	Washer	1	81028-
12		08211-02820	Clip	1	81028-
13		08057-12010	Clip	1	81028-
14		01010-81020	Bolt	1	81028-
15		01643-31032	Washer	1	81028-
16		08211-02820	Clip	1	81028-
17		08057-12010	Clip	1	81028-
18		01010-81020	Bolt	1	81028-
19		01643-31032	Washer	1	81028-
20		08211-00720	Clip	1	81028-
21		08057-12010	Clip	1	81028-
22		01010-81020	Bolt	1	81028-
23		01643-31032	Washer	1	81028-

FIG. K2110-009005 Floor Frame, Floor Wiring Harness Clamp (1/2)

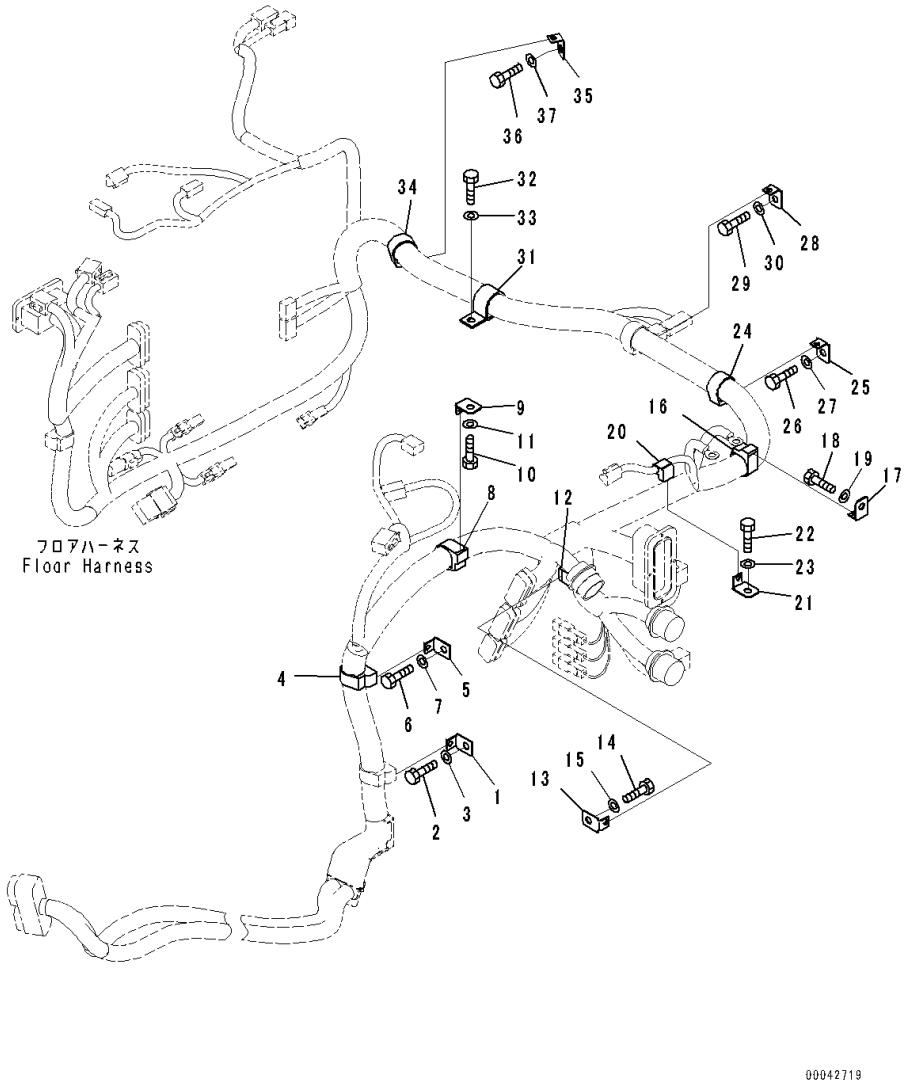

Index	Code	Part Number	Description	Qty	Serial Number
24		08211-02820	Clip	1	81028-
25		08057-12010	Clip	1	81028-
26		01010-81020	Bolt	1	81028-
27		01643-31032	Washer	1	81028-
28		08057-12010	Clip	1	81028-
29		01010-81020	Bolt	1	81028-
30		01643-31032	Washer	1	81028-
31		04434-53411	Clip	1	81028-
32		01010-81020	Bolt	1	81028-
33		01643-31032	Washer	1	81028-
34		08211-02820	Clip	1	81028-
35		08057-12010	Clip	1	81028-
36		01010-81020	Bolt	1	81028-
37		01643-31032	Washer	1	81028-

FIG. K2110-009006 Floor Frame, Floor Wiring Harness Clamp (2/2)

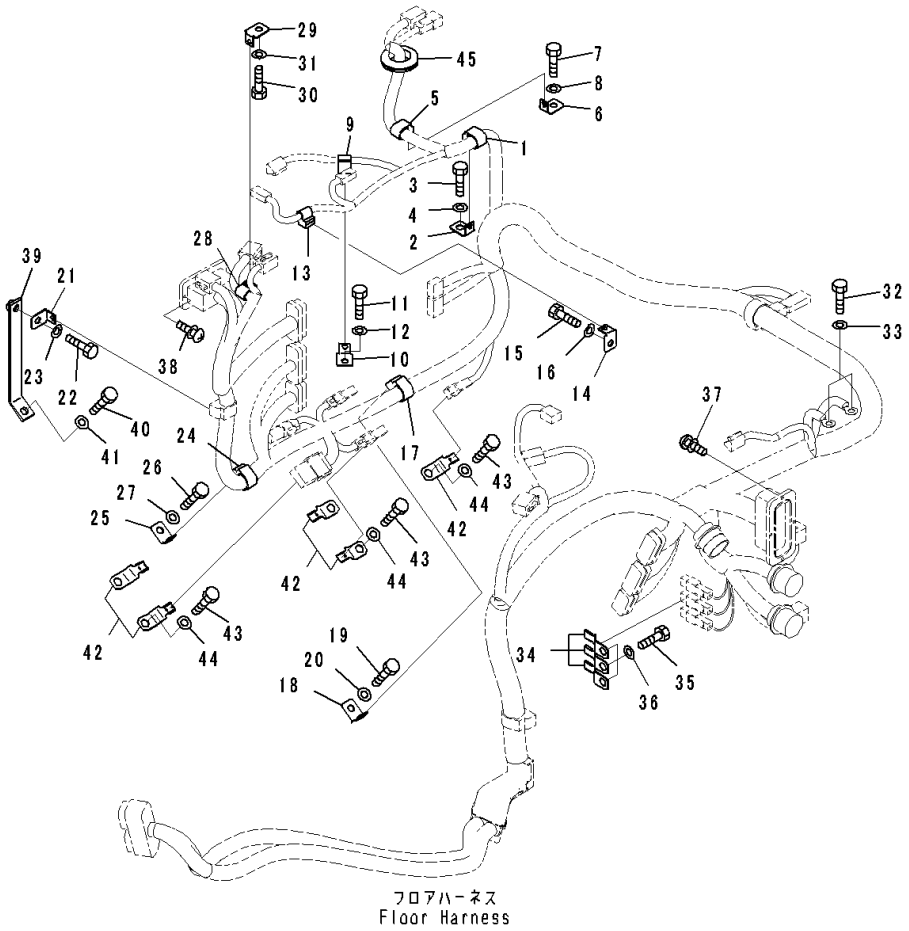

Index	Code	Part Number	Description	Qty	Serial Number
		Note: This list covers following specifications. For Variable Giant Ripper, MSHA Dust Regulation For Variable Multi Ripper, For Dual Tilt Pitch Dozer, MSHA Dust Regulation For Variable Giant Ripper, For Dual Tilt Pitch Dozer, MSHA Dust Regulation Without Rear Work Equipment, MSHA Dust Regulation Without Rear Work Equipment, For Dual Tilt Pitch Dozer, MSHA Dust Regulation For Mechanical Angle Dozer, For Variable Multi Ripper, MSHA Dust Regulation For Mechanical Angle Dozer, For Variable Giant Ripper, MSHA Dust Regulation For Mechanical Angle Dozer, Without Rear Work Equipment, MSHA Dust Regulation For Variable Giant Ripper, For Dual Tilt Pitch Dozer, MSHA Dust Regulation, Landfill Specification		
1		08211-01520	Clip	1	81028-
2		08057-12010	Clip	1	81028-
3		01010-81020	Bolt	1	81028-
4		01643-31032	Washer	1	81028-
5		08211-01320	Clip	1	81028-
6		08057-12010	Clip	1	81028-
7		01010-81020	Bolt	1	81028-
8		01643-31032	Washer	1	81028-
9		08211-00720	Clip	1	81028-
10		08057-12010	Clip	1	81028-
11		01010-81020	Bolt	1	81028-
12		01643-31032	Washer	1	81028-
13		08211-00720	Clip	1	81028-
14		08057-12010	Clip	1	81028-
15		01010-81020	Bolt	1	81028-
16		01643-31032	Washer	1	81028-
17		08211-01920	Clip	1	81028-
18		08057-12010	Clip	1	81028-
19		01010-81020	Bolt	1	81028-
20		01643-31032	Washer	1	81028-
21		08057-12010	Clip	1	81028-
22		01010-81020	Bolt	1	81028-
23		01643-31032	Washer	1	81028-

FIG. K2110-009006 Floor Frame, Floor Wiring Harness Clamp (2/2)

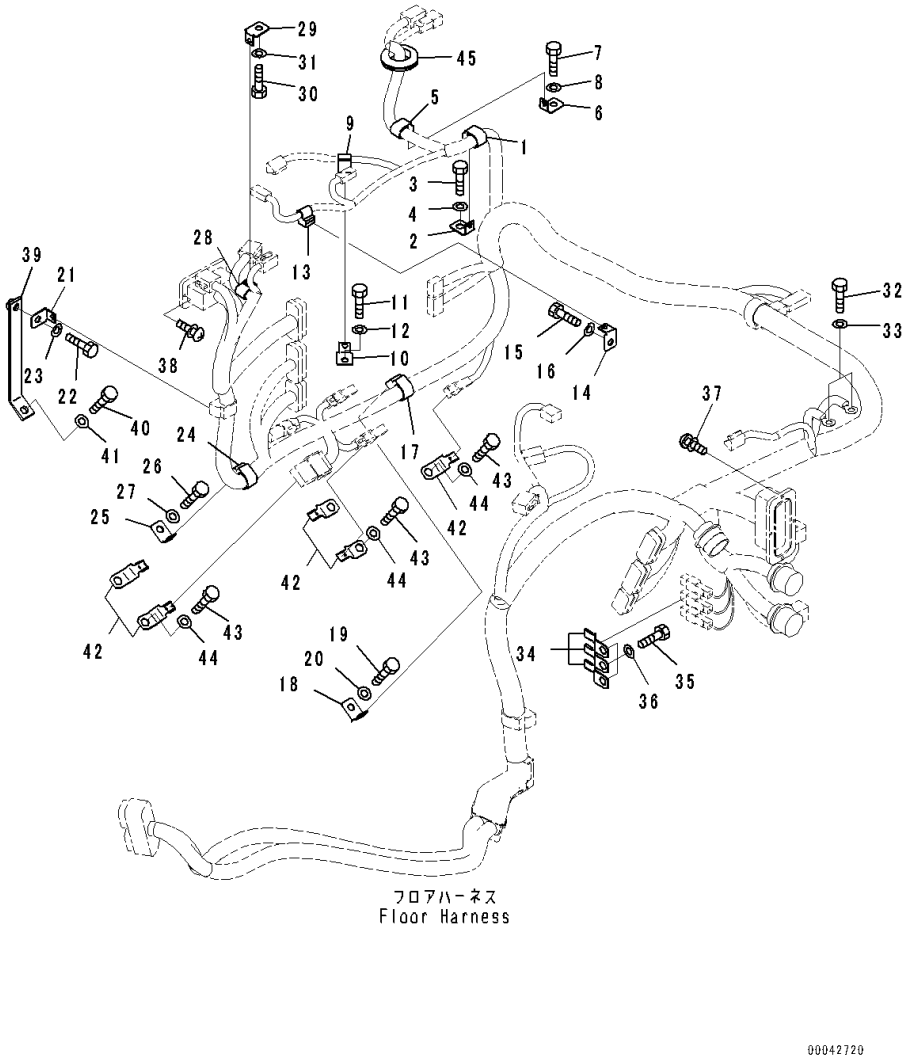

Index	Code	Part Number	Description	Qty	Serial Number
24		08211-01920	Clip	1	81028-
25		08057-12010	Clip	1	81028-
26		01010-81020	Bolt	1	81028-
27		01643-31032	Washer	1	81028-
28		08211-01020	Clip	1	81028-
29		08057-12010	Clip	1	81028-
30		01010-81020	Bolt	1	81028-
31		01643-31032	Washer	1	81028-
32		01010-81020	Bolt	2	81028-
33		01643-31032	Washer	2	81028-
34		08193-20010	Clip	3	81028-
35		01010-81020	Bolt	3	81028-
36		01643-31032	Washer	3	81028-
37		01023-10416	Screw	4	81028-
38		01023-10416	Screw	4	81028-
39		17A-06-41870	Bracket	1	81028-
40		01010-81020	Bolt	1	81028-
41		01643-31032	Washer	1	81028-
42		08193-20010	Clip	5	81028-
43		01010-81020	Bolt	5	81028-
44		01643-31032	Washer	5	81028-
45		08037-03614	Grommet	1	81028-

FIG. K2110-009007 Floor Frame, Fuse Box and Relay

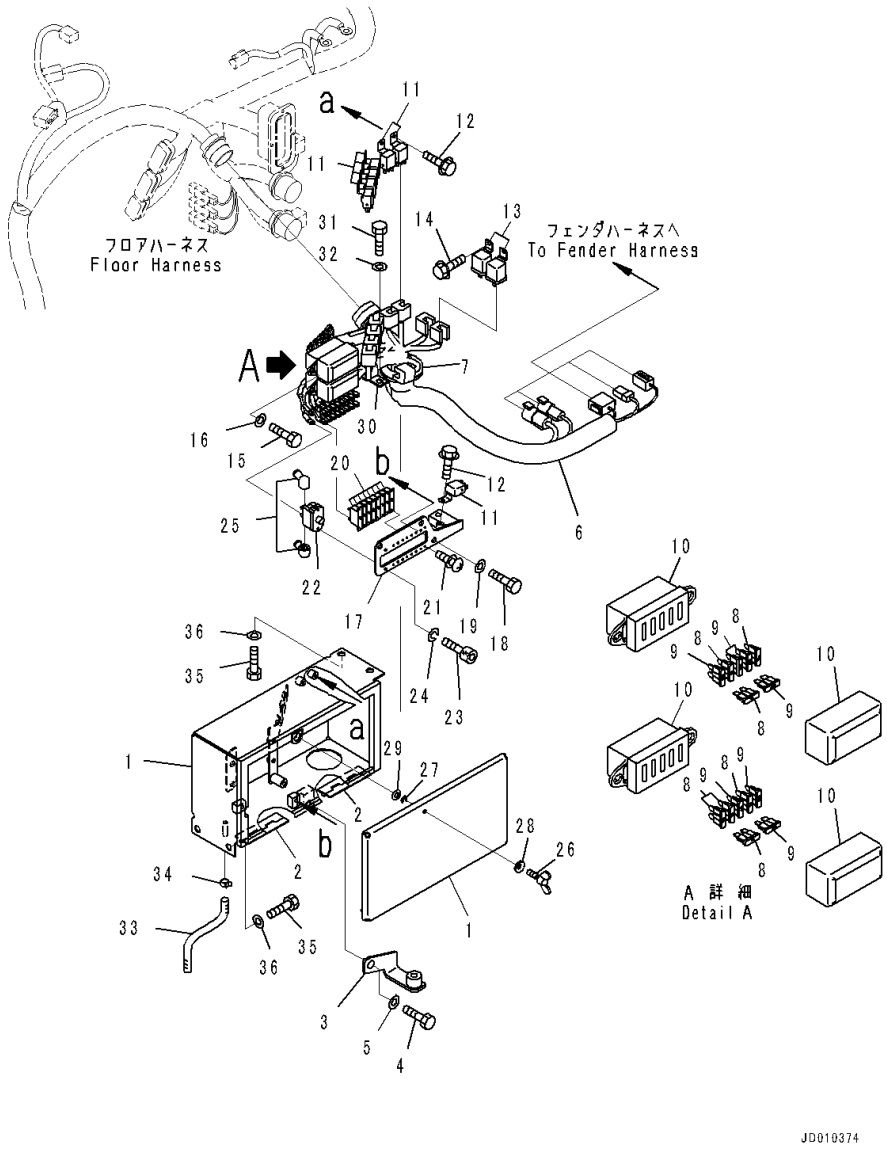

Index	Code	Part Number	Description	Qty	Serial Number
		Note: This list covers following specifications.			
		For Variable Giant Ripper, MSHA Dust Regulation			
		For Variable Multi Ripper, For Dual Tilt Pitch Dozer, MSHA Dust Regulation			
		For Variable Giant Ripper, For Dual Tilt Pitch Dozer, MSHA Dust Regulation			
		Without Rear Work Equipment, MSHA Dust Regulation			
		Without Rear Work Equipment, For Dual Tilt Pitch Dozer, MSHA Dust Regulation			
		For Mechanical Angle Dozer, For Variable Multi Ripper, MSHA Dust Regulation			
		For Mechanical Angle Dozer, For Variable Giant Ripper, MSHA Dust Regulation			
		For Mechanical Angle Dozer, Without Rear Work Equipment, MSHA Dust Regulation			
		For Variable Giant Ripper, For Dual Tilt Pitch Dozer, MSHA Dust Regulation, Landfill Specification			
1		17A-06-41511	Bracket	1	81028-
2		113-54-24190	• Hinge,Welded	2	81028-
3		17A-06-41912	Bracket	1	81028-
4		01010-81225	Bolt	1	81028-
5		01643-31232	Washer	1	81028-
6		17A-06-41223	Wiring Harness	1	81028-
7		08037-13550	• Grommet	1	81028-
8		08041-00500	• Fuse, 5Amp.	7	81028-
9		08041-02000	• Fuse, 20Amp.	7	81028-
10		20T-06-71560	• Box, Fuse	2	81028-
11		7861-74-5100	Relay	7	81028-
12		01435-00612	Bolt	7	81028-
13		569-06-61960	Relay	2	81028-
14		01435-00612	Bolt	2	81028-
15		01010-80816	Bolt	4	81028-
16		01643-30823	Washer	4	81028-
17		17A-06-41662	Bracket	1	81028-
18		01010-80816	Bolt	3	81028-
19		01643-30823	Washer	3	81028-
20		195-979-8340	Breaker	8	81028-
21		01023-10308	Screw	16	81028-
22		209-06-77460	Circuit Breaker	1	81028-
23		01252-70410	Bolt	2	81028-

FIG. K2110-009007 Floor Frame, Fuse Box and Relay

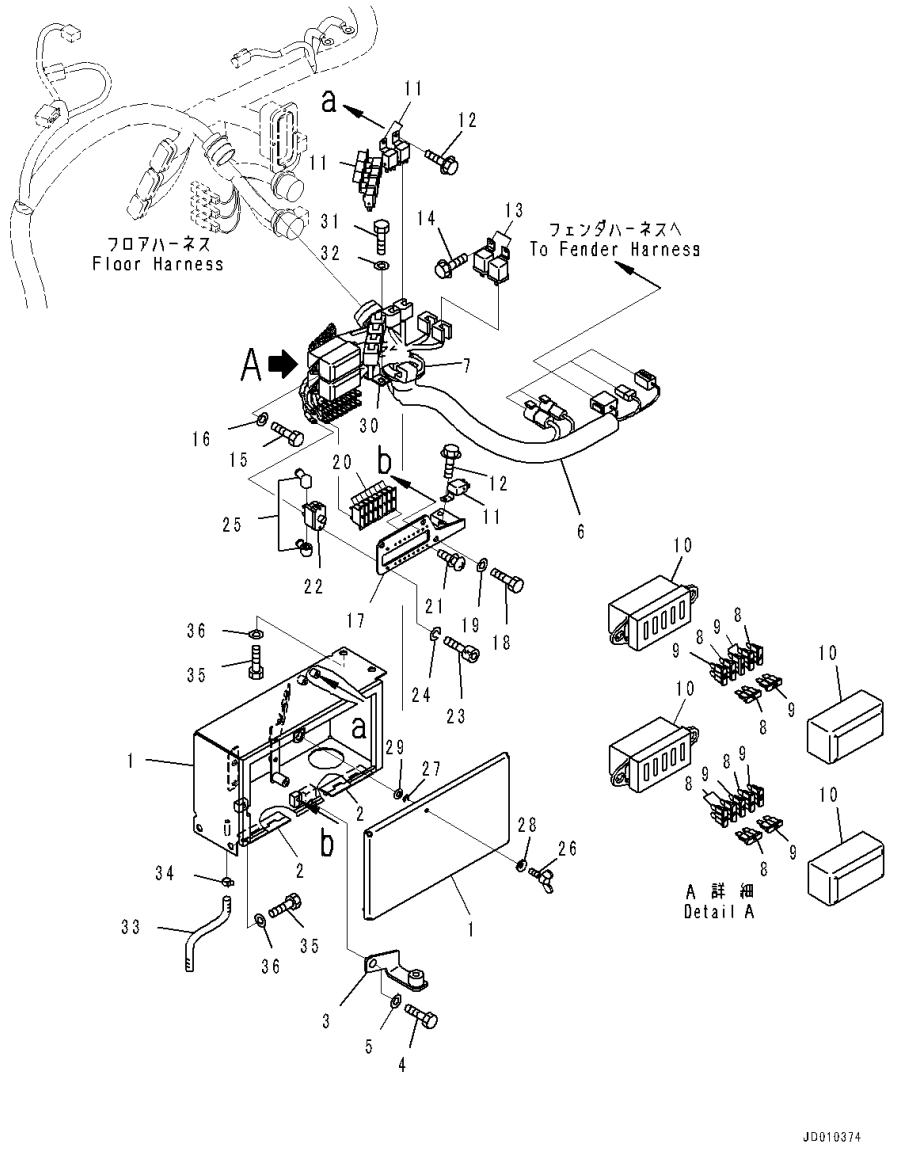

Index	Code	Part Number	Description	Qty	Serial Number
24		01601-20410	Washer	2	81028-
25		08038-00519	Cap	2	81028-
26		198-911-6970	Bolt	1	81028-
27		198-911-6990	Ring, Snap	1	81028-
28		01643-70623	Washer	1	81028-
29		01640-20610	Washer	1	81028-
30		04434-52711	Clip	1	81028-
31		01010-81020	Bolt	1	81028-
32		01643-31032	Washer	1	81028-
33		07270-20820	Tube	1	81028-
34		07285-00115	Clip	1	81028-
35		01010-81020	Bolt	4	81028-
36		01643-31032	Washer	4	81028-

FIG. K2110-009008 Floor Frame, Pin Puller Switch

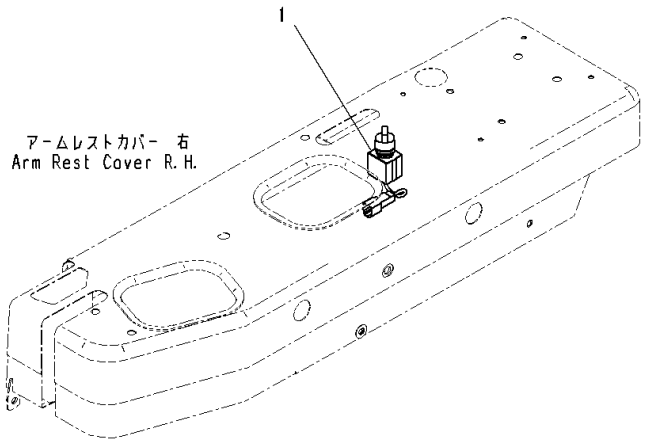

Index	Code	Part Number	Description	Qty	Serial Number
		Note: This list covers following specifications. For Variable Giant Ripper, MSHA Dust Regulation For Variable Giant Ripper, For Dual Tilt Pitch Dozer, MSHA Dust Regulation For Mechanical Angle Dozer, For Variable Giant Ripper, MSHA Dust Regulation For Variable Giant Ripper, For Dual Tilt Pitch Dozer, MSHA Dust Regulation, Landfill Specification			
1		17A-06-41850	Switch Assembly	1	81028-

FIG. K2110-009009 Floor Frame, Console Box

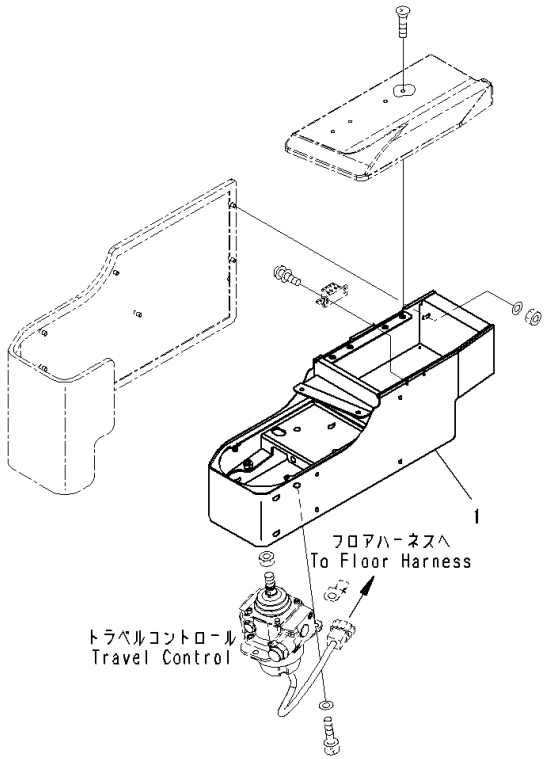

JD010499

Index	Code	Part Number	Description	Qty	Serial Number
		Note: This list covers following specifications. For Variable Giant Ripper, MSHA Dust Regulation For Variable Multi Ripper, For Dual Tilt Pitch Dozer, MSHA Dust Regulation For Variable Giant Ripper, For Dual Tilt Pitch Dozer, MSHA Dust Regulation Without Rear Work Equipment, MSHA Dust Regulation Without Rear Work Equipment, For Dual Tilt Pitch Dozer, MSHA Dust Regulation For Mechanical Angle Dozer, For Variable Multi Ripper, MSHA Dust Regulation For Mechanical Angle Dozer, For Variable Giant Ripper, MSHA Dust Regulation For Mechanical Angle Dozer, Without Rear Work Equipment, MSHA Dust Regulation For Variable Giant Ripper, For Dual Tilt Pitch Dozer, MSHA Dust Regulation, Landfill Specification		
1		154-43-73611	Box	1	81028-

FIG. K2110-009010A Floor Frame, Travel Control Lever

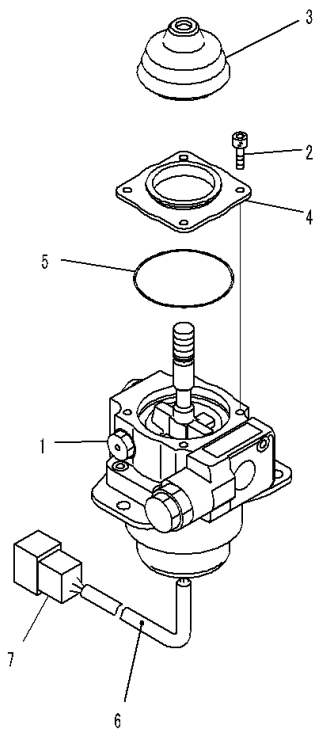

JY015790

Index	Code	Part Number	Description	Qty	Serial Number
		Note: This list covers following specifications. For Variable Giant Ripper, MSHA Dust Regulation For Variable Multi Ripper, For Dual Tilt Pitch Dozer, MSHA Dust Regulation For Variable Giant Ripper, For Dual Tilt Pitch Dozer, MSHA Dust Regulation Without Rear Work Equipment, MSHA Dust Regulation Without Rear Work Equipment, For Dual Tilt Pitch Dozer, MSHA Dust Regulation For Mechanical Angle Dozer, For Variable Multi Ripper, MSHA Dust Regulation For Mechanical Angle Dozer, For Variable Giant Ripper, MSHA Dust Regulation For Mechanical Angle Dozer, Without Rear Work Equipment, MSHA Dust Regulation For Variable Giant Ripper, For Dual Tilt Pitch Dozer, MSHA Dust Regulation, Landfill Specification		
1		702-16-02290	Lever Assembly	1	81082-
2		01252-60512	• Bolt	4	81028-
3		702-16-59330	• Boot	1	81028-
4		702-16-62730	• Cover	1	81082-
5		702-16-62740	• O-ring	1	81082-
6		702-16-61270	• Tube	1	81028-
7		08192-28812	• Connector	1	81028-

FIG. K2110-009011 Floor Frame, Console

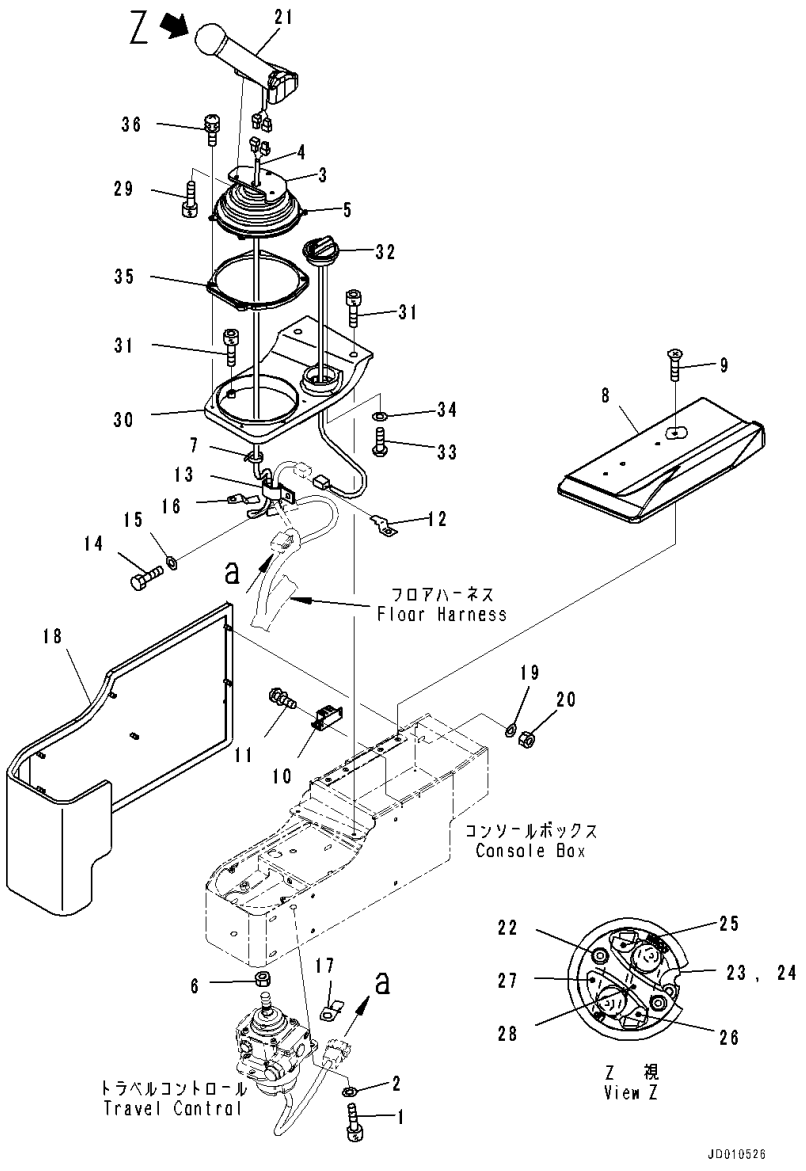

Index	Code	Part Number	Description	Qty	Serial Number
		Note: This list covers following specifications.			
		For Variable Giant Ripper, MSHA Dust Regulation			
		For Variable Multi Ripper, For Dual Tilt Pitch Dozer, MSHA Dust Regulation			
		For Variable Giant Ripper, For Dual Tilt Pitch Dozer, MSHA Dust Regulation			
		Without Rear Work Equipment, MSHA Dust Regulation			
		Without Rear Work Equipment, For Dual Tilt Pitch Dozer, MSHA Dust Regulation			
		For Mechanical Angle Dozer, For Variable Multi Ripper, MSHA Dust Regulation			
		For Mechanical Angle Dozer, For Variable Giant Ripper, MSHA Dust Regulation			
		For Mechanical Angle Dozer, Without Rear Work Equipment, MSHA Dust Regulation			
		For Variable Giant Ripper, For Dual Tilt Pitch Dozer, MSHA Dust Regulation, Landfill Specification			
1		01252-70825	Bolt	3	81028-
2		01643-30823	Washer	3	81028-
		14X-06-31311	Wiring Harness	1	81028-
3		154-43-73531	• Bracket	1	81028-
4	C1		• Wiring Harness	1	81028-
5		14X-43-34331	• Boot	1	81028-
6		20T-43-71190	Nut	1	81028-
7		08034-20519	Band	4	81028-
8		154-43-73641	Pad	1	81028-
9		01224-70408	Screw, Philips Head	4	81028-
10		154-43-73651	Magnet	1	81028-
11		01023-10308	Screw	4	81028-
12		08053-01510	Clip	1	81028-
13		04435-51408	Clip	1	81028-
14		01010-80816	Bolt	1	81028-
15		01643-30823	Washer	1	81028-
16		08193-20010	Clip	1	81028-
17		08193-31012	Clip	1	81028-
18		154-43-73281	Pad	1	81028-
19		01640-20610	Washer	8	81028-
20		01580-20605	Nut	8	81028-
21		19M-43-33111	Knob Assembly	1	81028-
22		19M-09-11510	• Bolt	2	81028-

FIG. K2110-009011 Floor Frame, Console

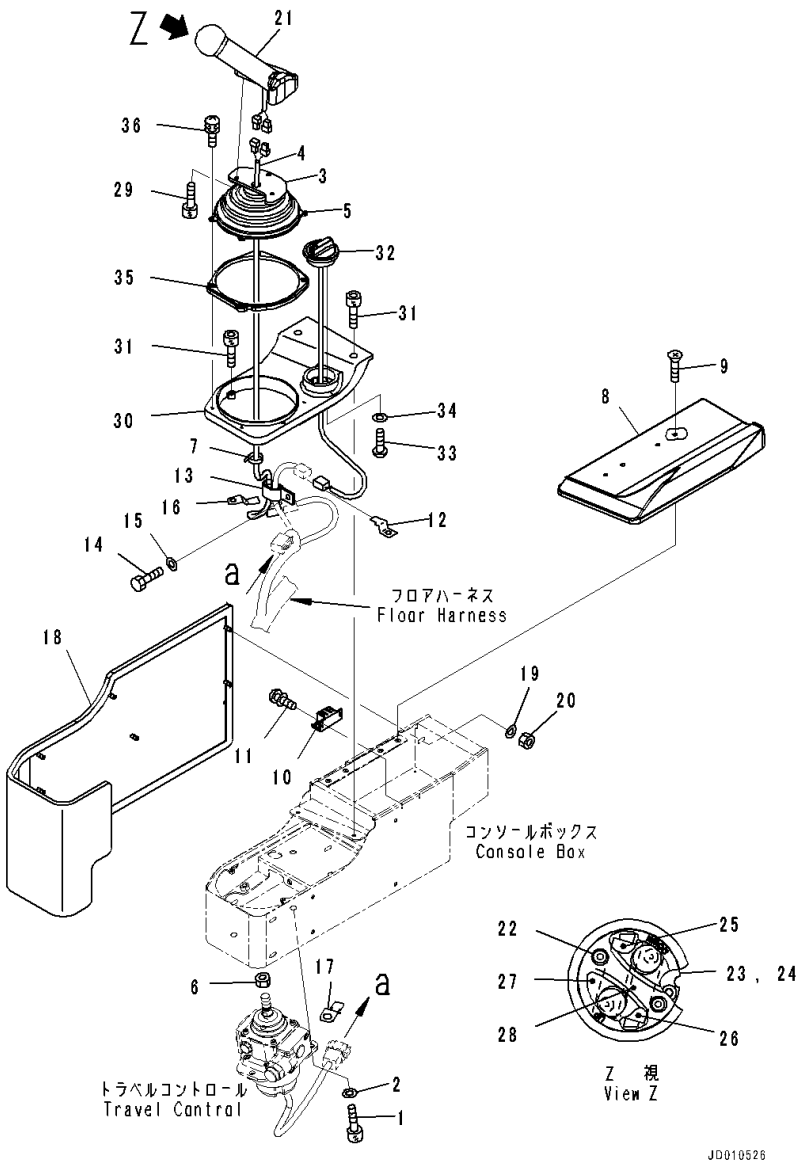

Index	Code	Part Number	Description	Qty	Serial Number
23		19M-43-33141	• Switch Assembly	1	81028-
24		19M-43-33171	• • Plate	1	81028-
25		19M-43-33460	• • Switch	1	81028-
26		19M-43-33470	• • Switch	1	81028-
27		19M-43-33151	• Rubber	1	81028-
28		19M-43-33161	• Cover	1	81028-
29		01252-80514	Bolt	3	81028-
30		154-43-73620	Finisher Assembly	1	81028-
31		01252-70520	Bolt	4	81028-
32		7825-30-1301	Dial	1	81028-
33		01220-40408	Screw	2	81028-
34		01641-20405	Washer	2	81028-
35		14X-43-34341	Cover	1	81028-
36		01023-70414	Screw	4	81028-

FIG. K2110-009012 Floor Frame, Lift and Slider

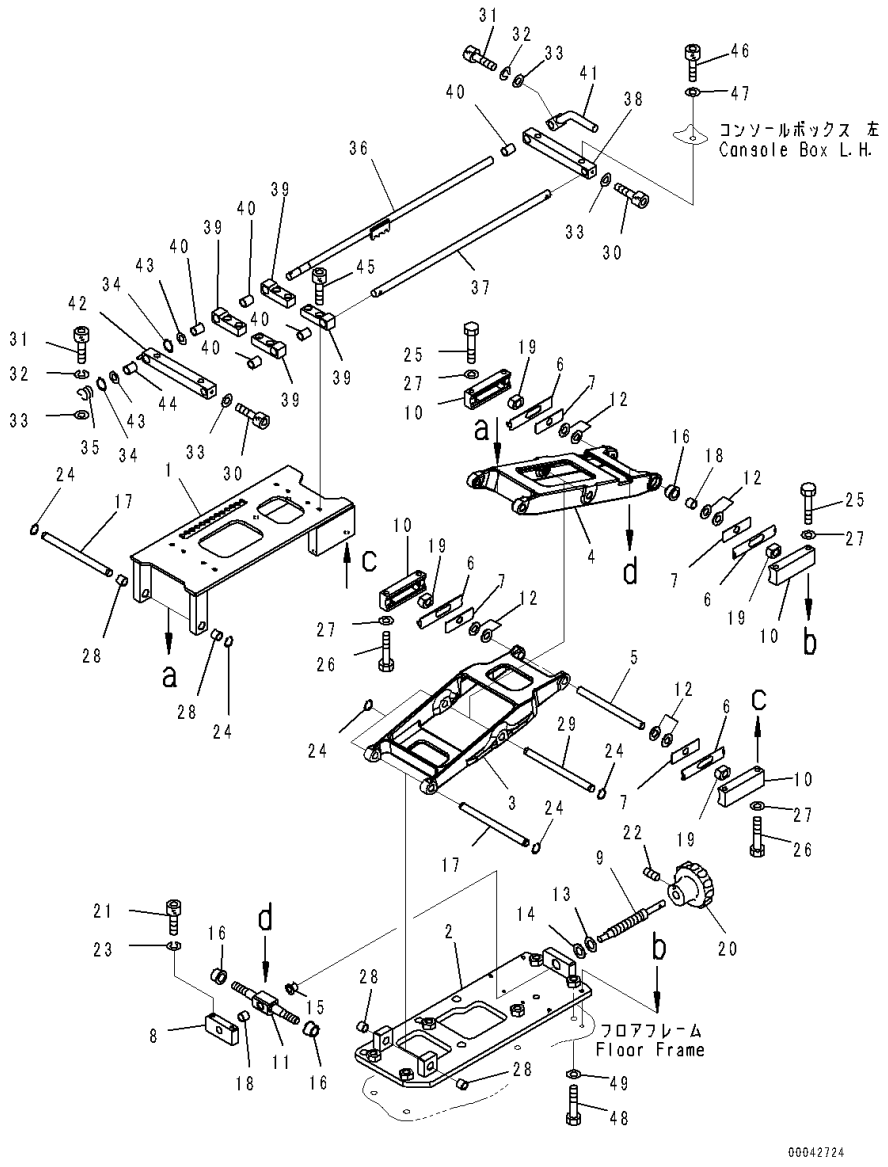

Index	Code	Part Number	Description	Qty	Serial Number
		Note: This list covers following specifications.			
		For Variable Giant Ripper, MSHA Dust Regulation			
		For Variable Multi Ripper, For Dual Tilt Pitch Dozer, MSHA Dust Regulation			
		For Variable Giant Ripper, For Dual Tilt Pitch Dozer, MSHA Dust Regulation			
		Without Rear Work Equipment, MSHA Dust Regulation			
		Without Rear Work Equipment, For Dual Tilt Pitch Dozer, MSHA Dust Regulation			
		For Mechanical Angle Dozer, For Variable Multi Ripper, MSHA Dust Regulation			
		For Mechanical Angle Dozer, For Variable Giant Ripper, MSHA Dust Regulation			
		For Mechanical Angle Dozer, Without Rear Work Equipment, MSHA Dust Regulation			
		For Variable Giant Ripper, For Dual Tilt Pitch Dozer, MSHA Dust Regulation, Landfill Specification			
		154-43-73301	Lifter Assembly	1	81028-
1		154-43-73211	• Plate	1	81028-
2		154-43-73831	• Plate	1	81028-
3		17A-43-26211	• Arm	1	81028-
4		154-43-73850	• Arm	1	81028-
5		154-43-73860	• Shaft	1	81028-
6		154-43-73870	• Plate	4	81028-
7		154-43-73880	• Plate	4	81028-
8		154-43-73890	• Block	1	81028-
9		154-43-73910	• Shaft	1	81028-
10		154-43-73920	• Box	4	81028-
11		154-43-73930	• Shaft	1	81028-
12		19M-43-34520	• Shim, T=0.2mm	8	81028-
13		363-43-38550	• Shim, T=0.2mm	2	81028-
14		154-43-73950	• Shim, T=0.5mm	2	81028-
15		154-43-73960	• Bushing	1	81028-
16		19M-43-34250	• Bushing	1	81028-
17		19M-43-34280	• Shaft	2	81028-
18		19M-43-34290	• Bushing	2	81028-
19		19M-43-34320	• Bushing	4	81028-
20		20A-43-15311	• Knob	1	81028-
21		01252-80530	• Bolt	2	81028-
22		01312-20612	• Screw	1	81028-

FIG. K2110-009012 Floor Frame, Lift and Slider

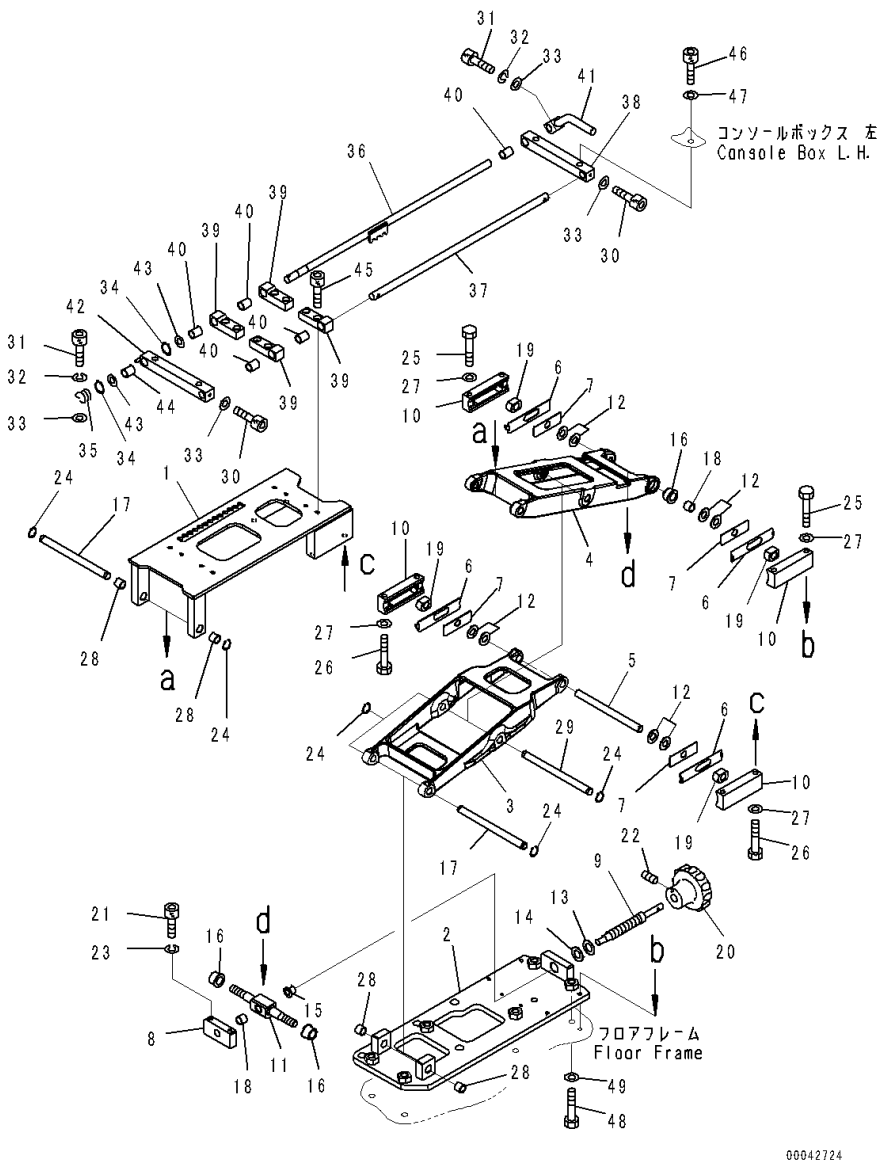

Index	Code	Part Number	Description	Qty	Serial Number
23		01601-20512	• Washer	2	81028-
24		04064-01010	• Ring, Snap	6	81028-
25		01010-80635	• Bolt	4	81028-
26		01010-80640	• Bolt	4	81028-
27		01643-30623	• Washer	8	81028-
28		06600-01008	• Bushing	4	81028-
29		17A-43-26231	• Shaft	1	81028-
		154-43-73601	Slider Assembly	1	81028-
30		01252-80412	• Bolt	2	81028-
31		01252-80414	• Bolt	2	81028-
32		01601-20411	• Washer	2	81028-
33		01640-20408	• Washer, Flat	4	81028-
34		04064-01010	• Ring, Snap	2	81028-
35		154-43-73670	• Spring	1	81028-
36		154-43-73680	• Shaft	1	81028-
37		19M-43-34120	• Shaft	1	81028-
38		19M-43-34132	• Guide	1	81028-
39		19M-43-34141	• Guide	4	81028-
40		19M-43-34150	• Bushing	5	81028-
41		19M-43-34160	• Lever	2	81028-
42		19M-43-34182	• Guide	1	81028-
43		19M-09-34110	• Washer	2	81028-
44		19M-43-34190	• Bushing	1	81028-
45		01252-80516	Bolt	8	81028-
46		01252-70816	Bolt	4	81028-
47		01643-30823	Washer	4	81028-
48		01010-81030	Bolt	6	81028-
49		01643-31032	Washer	6	81028-

FIG. K2110-009013 Floor Frame, Blade Control Lever

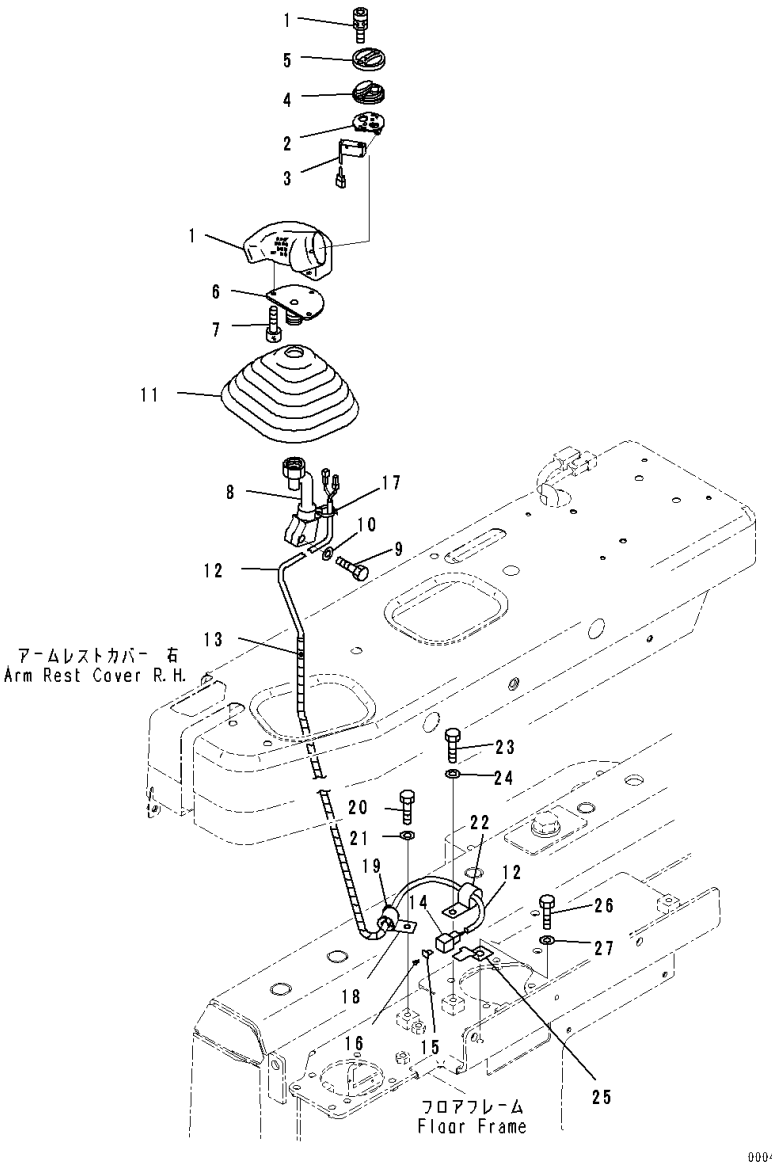

Index	Code	Part Number	Description	Qty	Serial Number
		Note: This list covers following specifications.			
		For Variable Giant Ripper, MSHA Dust Regulation			
		Without Rear Work Equipment, MSHA Dust Regulation			
		For Mechanical Angle Dozer, For Variable Multi Ripper,			
		MSHA Dust Regulation			
		For Mechanical Angle Dozer, For Variable Giant Ripper,			
		MSHA Dust Regulation			
		For Mechanical Angle Dozer, Without Rear Work			
		Equipment, MSHA Dust Regulation			
		17A-43-42410	Knob Assembly	1	81028-
1		19M-09-11510	• Bolt	2	81028-
		17A-43-42440	• Switch Assembly	1	81028-
2		19M-43-33170	• • Plate	1	81028-
3		19M-43-33470	• • Switch	1	81028-
4		17A-43-42430	• Rubber	1	81028-
5		17A-43-42420	• Cover	1	81028-
6		19M-43-38220	Bracket	1	81028-
7		01252-80510	Bolt	3	81028-
8		19M-43-38211	Lever	1	81028-
9		01010-81030	Bolt	1	81028-
10		01643-31032	Washer	1	81028-
11		11Y-43-11181	Boot	1	81028-
12		17A-06-41470	Wiring Harness	1	81028-
13		08210-00404	Tube, Spiral	1	81028-
14		08192-26100	Connector	1	81028-
15		08192-16300	Wedge	1	81028-
16		08191-00770	Plug, Connector	3	81028-
17		20Y-06-23940	Band	1	81028-
18		04434-51010	Clip	1	81028-
19		198-06-53510	Bushing	1	81028-
20		01010-81020	Bolt	1	81028-
21		01643-31032	Washer	1	81028-
22		04434-50610	Clip	1	81028-
23		01010-81020	Bolt	1	81028-
24		01643-31032	Washer	1	81028-
25		08193-20010	Clip	1	81028-
26		01010-81020	Bolt	1	81028-
27		01643-31032	Washer	1	81028-

FIG. K2110-009014 Floor Frame, PPC Valve for Blade

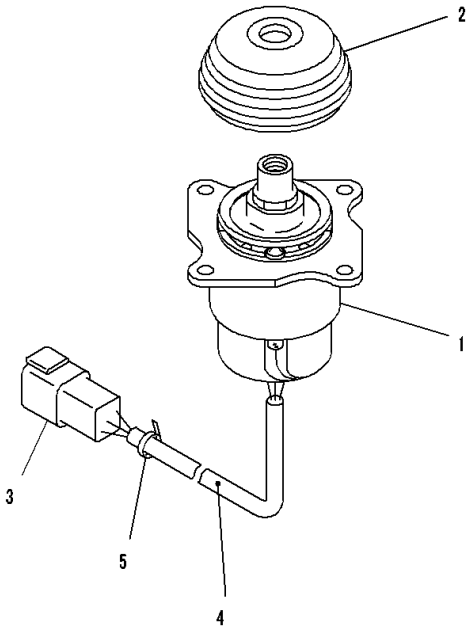

JD010610

Index	Code	Part Number	Description	Qty	Serial Number
		Note: This list covers following specifications.			
		For Variable Giant Ripper, MSHA Dust Regulation			
		For Variable Multi Ripper, For Dual Tilt Pitch Dozer, MSHA Dust Regulation			
		For Variable Giant Ripper, For Dual Tilt Pitch Dozer, MSHA Dust Regulation			
		Without Rear Work Equipment, MSHA Dust Regulation			
		Without Rear Work Equipment, For Dual Tilt Pitch Dozer, MSHA Dust Regulation			
		For Mechanical Angle Dozer, For Variable Multi Ripper, MSHA Dust Regulation			
		For Mechanical Angle Dozer, For Variable Giant Ripper, MSHA Dust Regulation			
		For Mechanical Angle Dozer, Without Rear Work Equipment, MSHA Dust Regulation			
		For Variable Giant Ripper, For Dual Tilt Pitch Dozer, MSHA Dust Regulation, Landfill Specification			
1		702-16-02242	Lever Assembly	1	81028-
2		702-16-71280	• Boot	1	81028-
3		08192-28812	• Connector	1	81028-
4		702-16-61270	• Tube	1	81028-
5		08034-20414	• Band	1	81028-

FIG. K2110-009015 Floor Frame, PPC Valve Mounting (1/2)

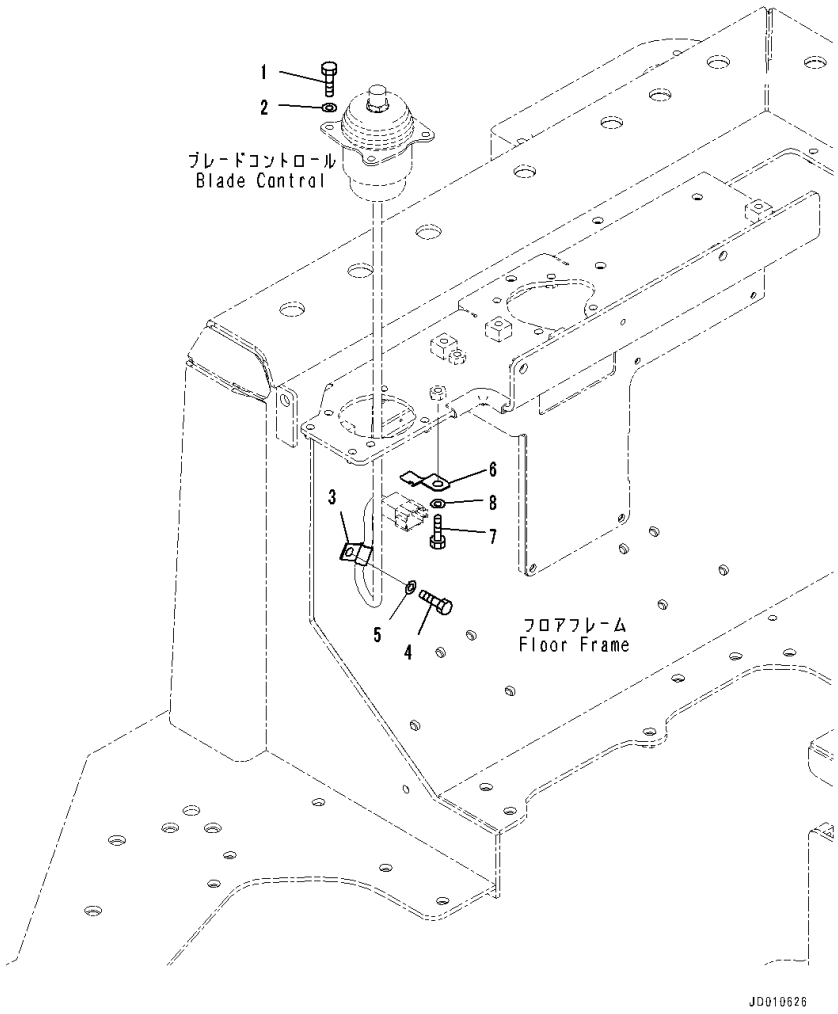

Index	Code	Part Number	Description	Qty	Serial Number
		Note: This list covers following specifications. For Variable Giant Ripper, MSHA Dust Regulation For Variable Multi Ripper, For Dual Tilt Pitch Dozer, MSHA Dust Regulation For Variable Giant Ripper, For Dual Tilt Pitch Dozer, MSHA Dust Regulation Without Rear Work Equipment, MSHA Dust Regulation Without Rear Work Equipment, For Dual Tilt Pitch Dozer, MSHA Dust Regulation For Variable Giant Ripper, For Dual Tilt Pitch Dozer, MSHA Dust Regulation, Landfill Specification			
1		01010-80825	Bolt	4	81028-
2		01643-30823	Washer	4	81028-
3		04434-50810	Clip	1	81028-
4		01010-81020	Bolt	1	81028-
5		01643-31032	Washer	1	81028-
6		08193-30010	Clip	1	81028-
7		01010-81020	Bolt	1	81028-
8		01643-31032	Washer	1	81028-

FIG. K2110-009016 Floor Frame, Blade Lock Lever

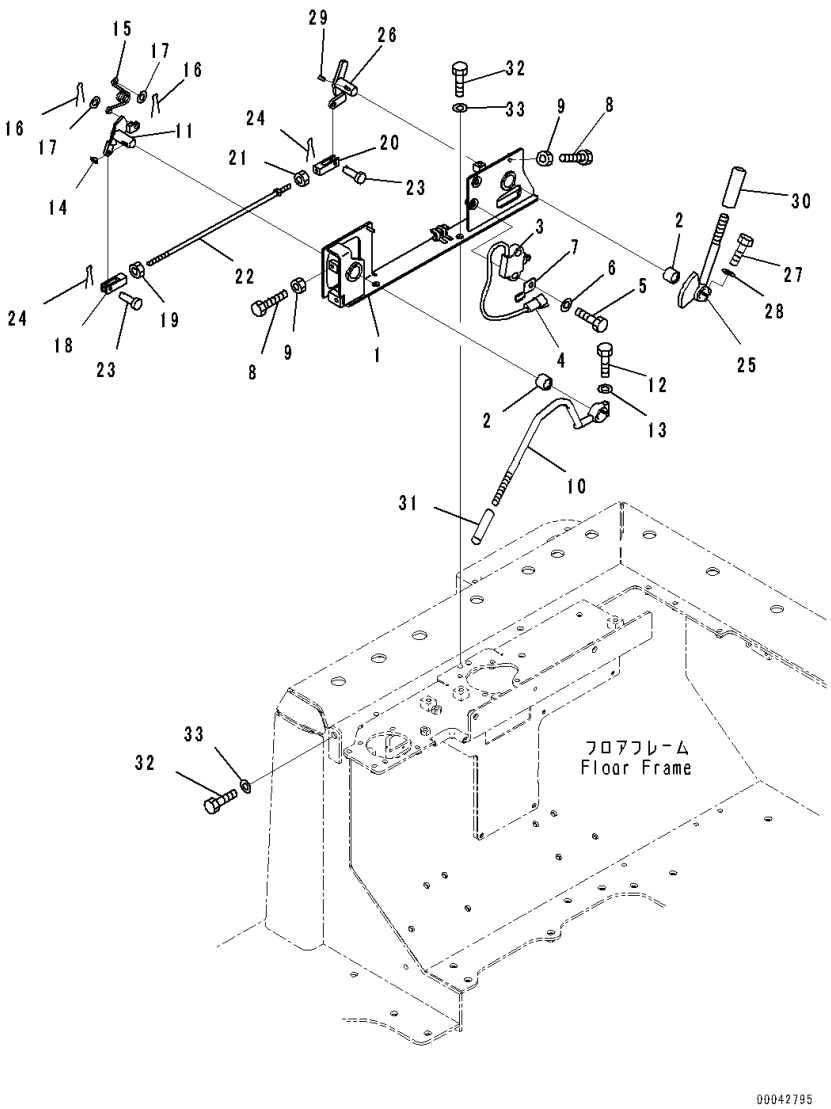

Index	Code	Part Number	Description	Qty	Serial Number
		Note: This list covers following specifications. For Variable Giant Ripper, MSHA Dust Regulation For Variable Multi Ripper, For Dual Tilt Pitch Dozer, MSHA Dust Regulation For Variable Giant Ripper, For Dual Tilt Pitch Dozer, MSHA Dust Regulation Without Rear Work Equipment, MSHA Dust Regulation Without Rear Work Equipment, For Dual Tilt Pitch Dozer, MSHA Dust Regulation For Mechanical Angle Dozer, For Variable Multi Ripper, MSHA Dust Regulation For Mechanical Angle Dozer, For Variable Giant Ripper, MSHA Dust Regulation For Mechanical Angle Dozer, Without Rear Work Equipment, MSHA Dust Regulation For Variable Giant Ripper, For Dual Tilt Pitch Dozer, MSHA Dust Regulation, Landfill Specification		
1		17A-43-42112	Bracket	1	81028-
2		06124-02020	Bearing	2	81028-
3		11Y-06-22150	Switch	1	81028-
4		08192-13830	• Connector	1	81028-
5		01010-81040	Bolt	2	81028-
6		01643-31032	Washer	2	81028-
7		08193-20010	Clip	1	81028-
8		01016-50830	Bolt	2	81028-
9		01580-10806	Nut	2	81028-
10		17A-43-42122	Lever	1	81028-
11		17A-43-42132	Lever	1	81028-
12		01010-80830	Bolt	1	81028-
13		01643-30823	Washer	1	81028-
14		04010-00516	Key	1	81028-
15		17A-43-41760	Spring	1	81028-
16		04050-11612	Pin, Cotter	2	81028-
17		01640-20610	Washer	2	81028-
18		04221-20844	York, Left-handed Thread	1	81028-
19		01508-40805	Nut	1	81028-
20		04211-20844	Yoke	1	81028-
21		01580-10806	Nut	1	81028-
22		04248-30839	Rod	1	81028-
23		04205-10822	Pin	2	81028-

FIG. K2110-009016 Floor Frame, Blade Lock Lever

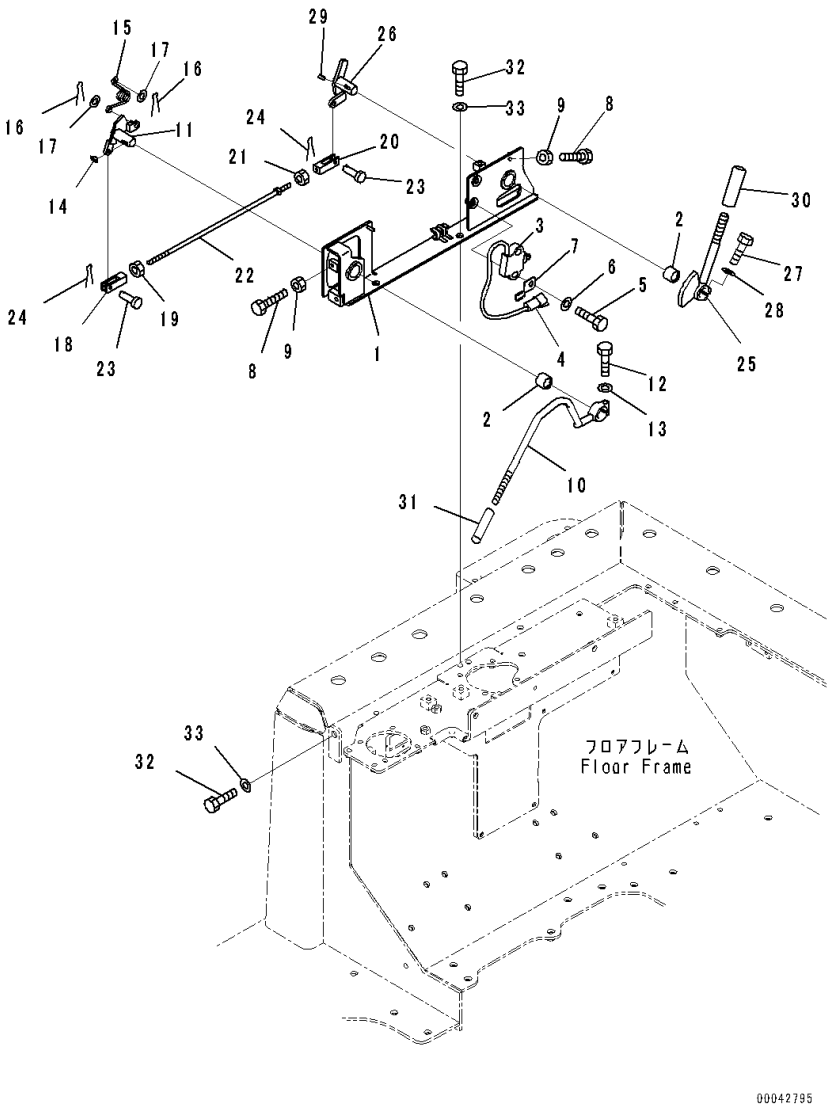

Index	Code	Part Number	Description	Qty	Serial Number
24		04050-12015	Pin, Cotter	2	81028-
25		17A-43-42171	Lever	1	81028-
26		17A-43-42161	Lever	1	81028-
27		01010-80830	Bolt	1	81028-
28		01643-30823	Washer	1	81028-
29		04010-00516	Key	1	81028-
30		22M-43-21470	Knob	1	81028-
31		417-43-28270	Cap	1	81028-
32		01010-81025	Bolt	4	81028-
33		01643-31032	Washer	4	81028-

FIG. K2110-009017 Floor Frame, Ripper Control Lever

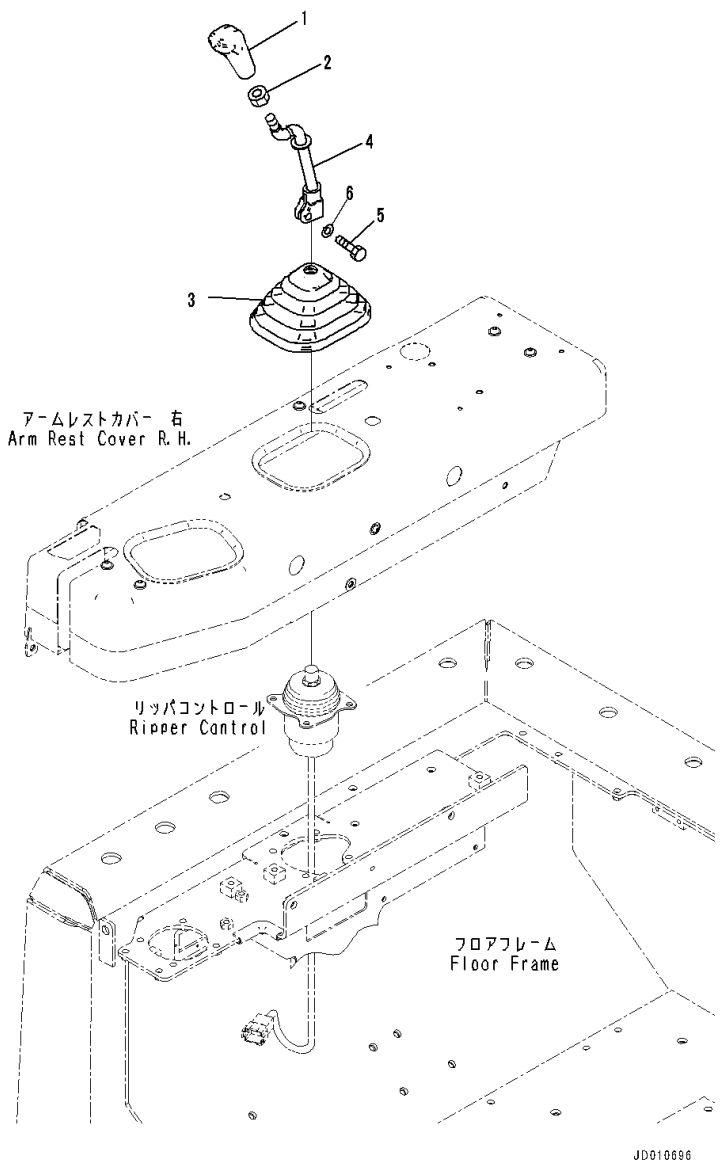

Index	Code	Part Number	Description	Qty	Serial Number
		Note: This list covers following specifications.			
		For Variable Giant Ripper, MSHA Dust Regulation			
		For Variable Multi Ripper, For Dual Tilt Pitch Dozer, MSHA Dust Regulation			
		For Variable Giant Ripper, For Dual Tilt Pitch Dozer, MSHA Dust Regulation			
		For Mechanical Angle Dozer, For Variable Multi Ripper, MSHA Dust Regulation			
		For Mechanical Angle Dozer, For Variable Giant Ripper, MSHA Dust Regulation			
		For Variable Giant Ripper, For Dual Tilt Pitch Dozer, MSHA Dust Regulation, Landfill Specification			
1		17A-43-42240	Knob	1	81028-
2		20T-43-71190	Nut	1	81028-
3		11Y-43-11181	Boot	1	81028-
4		17A-43-42230	Lever	1	81028-
5		01010-81030	Bolt	1	81028-
6		01643-31032	Washer	1	81028-

FIG. K2110-009018 Floor Frame, PPC Valve for Ripper

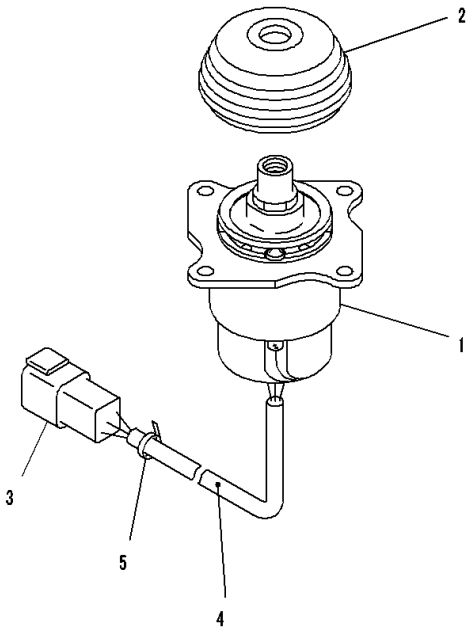

JD010610

Index	Code	Part Number	Description	Qty	Serial Number
		Note: This list covers following specifications. For Variable Giant Ripper, MSHA Dust Regulation For Variable Multi Ripper, For Dual Tilt Pitch Dozer, MSHA Dust Regulation For Variable Giant Ripper, For Dual Tilt Pitch Dozer, MSHA Dust Regulation Without Rear Work Equipment, MSHA Dust Regulation Without Rear Work Equipment, For Dual Tilt Pitch Dozer, MSHA Dust Regulation For Mechanical Angle Dozer, For Variable Multi Ripper, MSHA Dust Regulation For Mechanical Angle Dozer, For Variable Giant Ripper, MSHA Dust Regulation For Mechanical Angle Dozer, Without Rear Work Equipment, MSHA Dust Regulation For Variable Giant Ripper, For Dual Tilt Pitch Dozer, MSHA Dust Regulation, Landfill Specification		
1		702-16-02252	Lever Assembly	1	81028-
2		702-16-71280	• Boot	1	81028-
3		08192-28812	• Connector	1	81028-
4		702-16-61270	• Tube	1	81028-
5		20Y-62-22790	• Band, Red	1	81028-

FIG. K2110-009019 Floor Frame, PPC Valve Mounting (2/2)

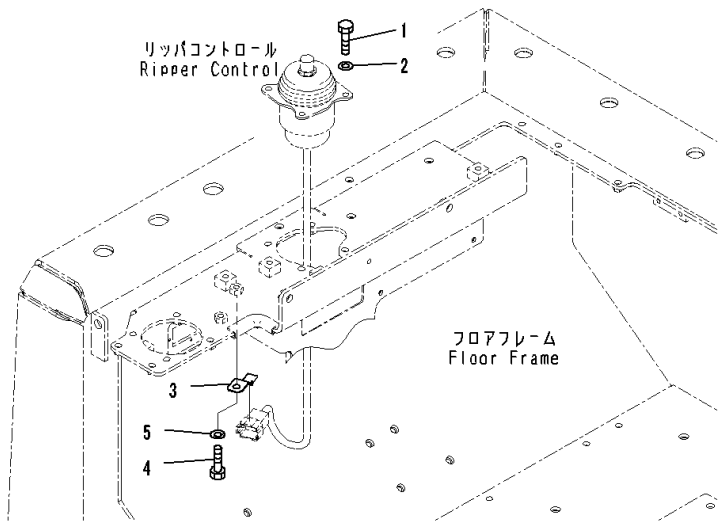

Index	Code	Part Number	Description	Qty	Serial Number
		Note: This list covers following specifications. For Variable Giant Ripper, MSHA Dust Regulation For Variable Multi Ripper, For Dual Tilt Pitch Dozer, MSHA Dust Regulation For Variable Giant Ripper, For Dual Tilt Pitch Dozer, MSHA Dust Regulation Without Rear Work Equipment, MSHA Dust Regulation Without Rear Work Equipment, For Dual Tilt Pitch Dozer, MSHA Dust Regulation For Mechanical Angle Dozer, For Variable Multi Ripper, MSHA Dust Regulation For Mechanical Angle Dozer, For Variable Giant Ripper, MSHA Dust Regulation For Mechanical Angle Dozer, Without Rear Work Equipment, MSHA Dust Regulation For Variable Giant Ripper, For Dual Tilt Pitch Dozer, MSHA Dust Regulation, Landfill Specification		
1		01010-80825	Bolt	4	81028-
2		01643-30823	Washer	4	81028-
3		08193-30010	Clip	1	81028-
4		01010-81020	Bolt	1	81028-
5		01643-31032	Washer	1	81028-

FIG. K2110-009020 Floor Frame, Armrest, RHS

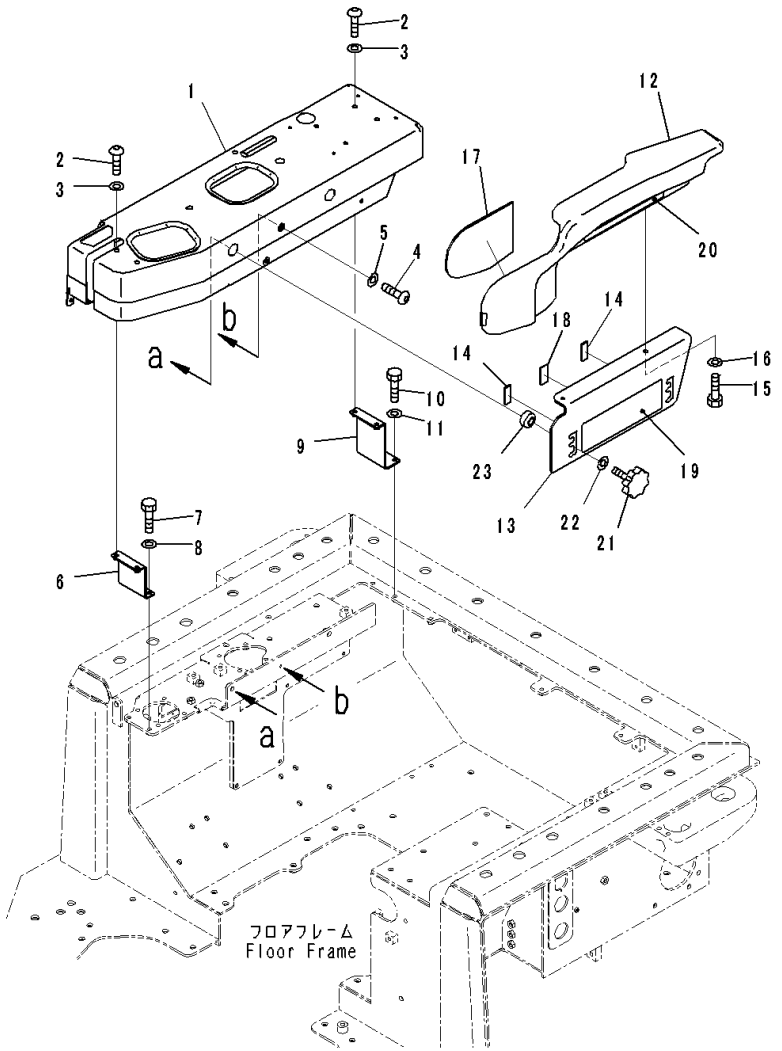

Index	Code	Part Number	Description	Qty	Serial Number
		Note: This list covers following specifications. For Variable Giant Ripper, MSHA Dust Regulation For Variable Multi Ripper, For Dual Tilt Pitch Dozer, MSHA Dust Regulation For Variable Giant Ripper, For Dual Tilt Pitch Dozer, MSHA Dust Regulation For Mechanical Angle Dozer, For Variable Multi Ripper, MSHA Dust Regulation For Mechanical Angle Dozer, For Variable Giant Ripper, MSHA Dust Regulation For Variable Giant Ripper, For Dual Tilt Pitch Dozer, MSHA Dust Regulation, Landfill Specification			
1		17A-54-46233	Cover	1	81028-
2		01245-00820	Screw	5	81028-
3		01643-70823	Washer	5	81028-
4		01245-00616	Screw, Hexagon Socket Head	1	81028-
5		01640-20610	Washer	1	81028-
6		17A-54-46411	Bracket	1	81028-
7		01010-80825	Bolt	2	81028-
8		01643-30823	Washer	2	81028-
9		17A-54-46311	Bracket	1	81028-
10		01010-80825	Bolt	2	81028-
11		01643-30823	Washer	2	81028-
		14X-54-36310	Arm Assembly, Assembly	1	81028-
12		14X-54-36320	• Arm Rest	1	81028-
13		14X-54-36330	• Plate	1	81028-
14		134-54-66240	• Sheet	2	81028-
15		01010-80820	• Bolt	2	81028-
16		01643-30823	• Washer	2	81028-
17		14X-54-36340	• Sheet	1	81028-
18		17A-43-42310	• Rubber	1	81028-
19		134-54-66190	Plate	1	81028-
20		134-54-66290	Plate	1	81028-
21		195-54-68760	Knob	2	81028-
22		01643-31032	Washer	2	81028-
23		17A-54-25610	Spacer	2	81028-

FIG. K2110-009021 Floor Frame, Air Conditioner Unit

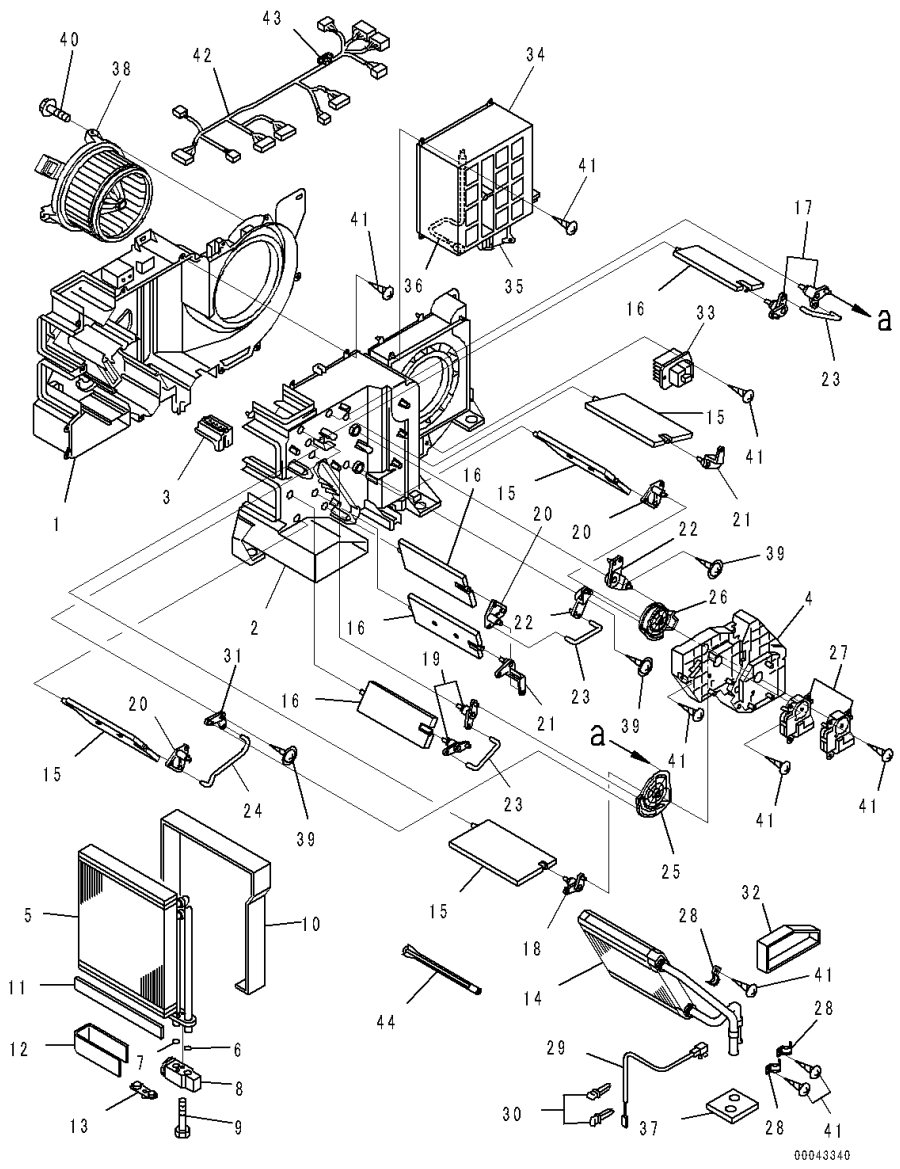

Index	Code	Part Number	Description	Qty	Serial Number
		Note: This list covers following specifications.			
		For Variable Giant Ripper, MSHA Dust Regulation			
		For Variable Multi Ripper, For Dual Tilt Pitch Dozer, MSHA Dust Regulation			
		For Variable Giant Ripper, For Dual Tilt Pitch Dozer, MSHA Dust Regulation			
		Without Rear Work Equipment, MSHA Dust Regulation			
		Without Rear Work Equipment, For Dual Tilt Pitch Dozer, MSHA Dust Regulation			
		For Mechanical Angle Dozer, For Variable Multi Ripper, MSHA Dust Regulation			
		For Mechanical Angle Dozer, For Variable Giant Ripper, MSHA Dust Regulation			
		For Mechanical Angle Dozer, Without Rear Work Equipment, MSHA Dust Regulation			
		For Variable Giant Ripper, For Dual Tilt Pitch Dozer, MSHA Dust Regulation, Landfill Specification			
		20Y-810-1211	Air Conditioner Assembly	1	81028-
1		ND245450-5831	• Case, Cooling	1	81028-
2		ND245450-5840	• Case, Cooling	1	81028-
3		ND116576-3810	• Plate	1	81028-
4		ND116576-3820	• Plate	1	81028-
		ND446010-3132	• Evaporator	1	81028-
5		ND446600-0991	• • Evaporator Assembly	1	81028-
6		ND949142-0020	• • O-ring	1	81028-
7		ND949142-0030	• • O-ring	1	81028-
8		ND447500-2750	• • Valve	1	81028-
9		ND949046-3100	• • Bolt	2	81028-
10		ND146657-8841	• • Packing	1	81028-
11		ND146657-9811	• • Packing	3	81028-
12		ND146657-8850	• • Packing	1	81028-
13		ND445021-3941	• • Plug	1	81028-
14		ND116140-0050	• Core Subassembly, Heater	1	81028-
15		ND116660-7570	• Door Assembly	4	81028-
16		ND116650-6850	• Door Assembly	4	81028-
17		ND116780-2481	• Lever Subassembly, Link	2	81028-
18		ND116780-2491	• Lever Subassembly, Link	1	81028-
19		ND116780-2501	• Lever Subassembly, Link	2	81028-
20		ND116780-2510	• Lever Subassembly, Link	3	81028-
21		ND116781-3000	• Lever	2	81028-

FIG. K2110-009021 Floor Frame, Air Conditioner Unit

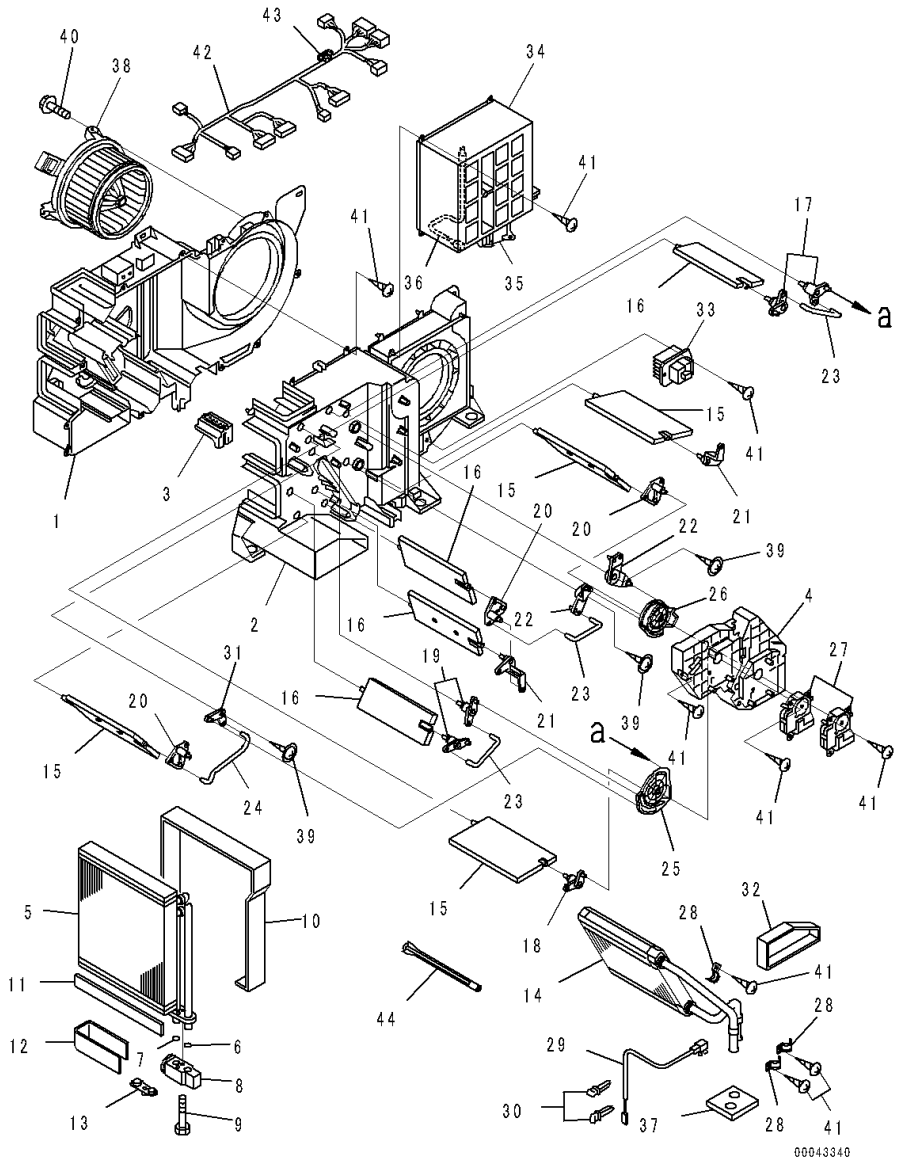

Index	Code	Part Number	Description	Qty	Serial Number
22		ND116780-3130	• Lever Subassembly, Link	2	81028-
23		ND116662-7670	• Shaft	3	81028-
24		ND116662-7681	• Shaft	1	81028-
25		ND116576-3852	• Plate	1	81028-
26		ND116576-3862	• Plate	1	81028-
27		ND063800-0300	• Servo Motor Assembly	2	81028-
28		ND017231-0700	• Clamp	3	81028-
29		ND077500-5890	• Thermistor Assembly	1	81028-
30		ND246790-2060	• Clamp	2	81028-
31		ND116780-3920	• Lever Subassembly, Link	1	81028-
32		ND146667-0440	• Packing	1	81028-
33		ND077800-0750	• Transistor	1	81028-
34		ND146340-0560	• Box Assembly	1	81028-
35		ND063600-4580	• • Servo Motor Assembly	1	81028-
36		ND077500-5650	• • Thermistor Assembly	1	81028-
37		ND146657-8860	• Packing	1	81028-
38		ND116340-7350	• Motor Assembly, Fan	1	81028-
39		ND949008-0460	• Screw, Tapping	3	81028-
40		ND949008-0330	• Screw, Tapping	3	81028-
41		ND949001-1730	• Screw, Tapping	32	81028-
42		ND246470-4311	• Wiring Harness Assembly	1	81028-
43		ND93950-05003	• • Fuse	1	81028-
44		ND116662-8320	• Shaft	1	81028-

FIG. K2110-009022 Floor Frame, Air Conditioner Condenser Unit Mounting

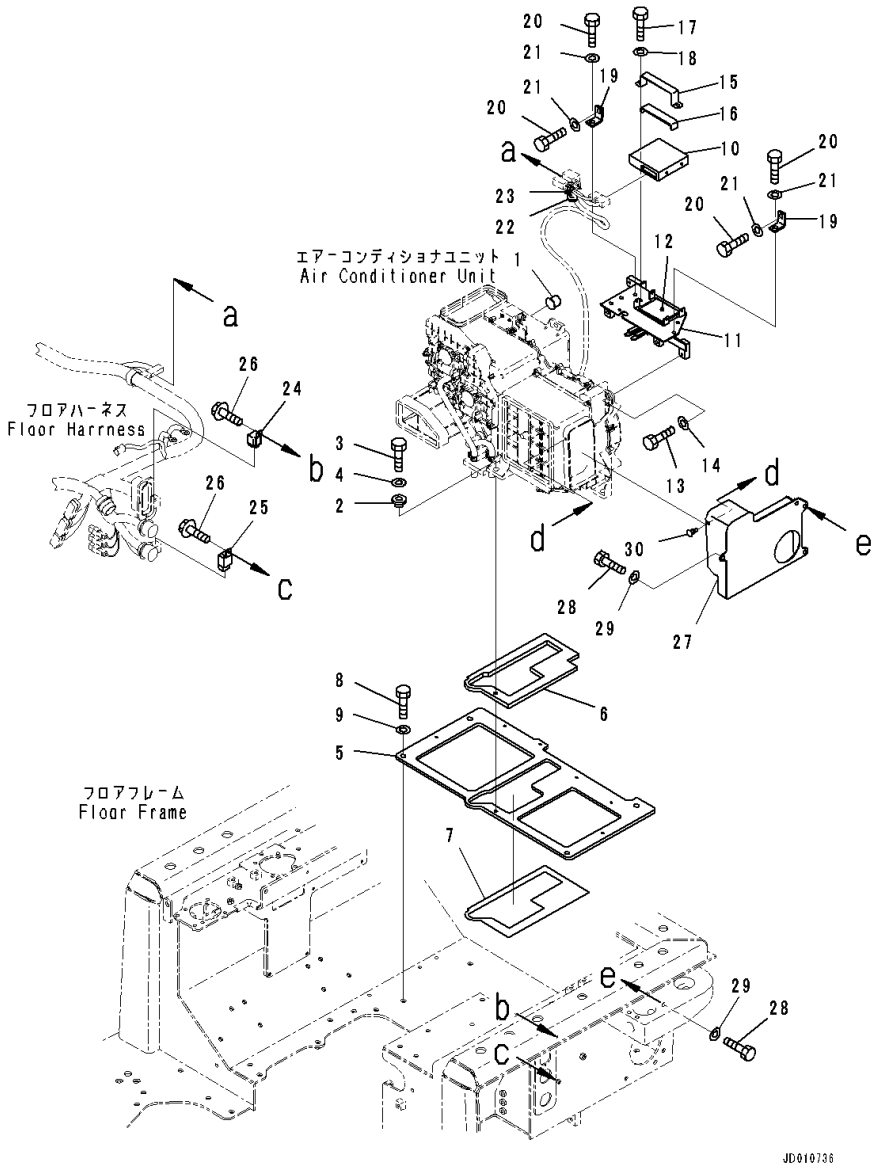

Index	Code	Part Number	Description	Qty	Serial Number
		Note: This list covers following specifications.			
		For Variable Giant Ripper, MSHA Dust Regulation			
		For Variable Multi Ripper, For Dual Tilt Pitch Dozer, MSHA Dust Regulation			
		For Variable Giant Ripper, For Dual Tilt Pitch Dozer, MSHA Dust Regulation			
		Without Rear Work Equipment, MSHA Dust Regulation			
		Without Rear Work Equipment, For Dual Tilt Pitch Dozer, MSHA Dust Regulation			
		For Mechanical Angle Dozer, For Variable Multi Ripper, MSHA Dust Regulation			
		For Mechanical Angle Dozer, For Variable Giant Ripper, MSHA Dust Regulation			
		For Mechanical Angle Dozer, Without Rear Work Equipment, MSHA Dust Regulation			
		For Variable Giant Ripper, For Dual Tilt Pitch Dozer, MSHA Dust Regulation, Landfill Specification			
1		17A-979-3131	Cap	1	81028-
2		208-979-7540	Collar	7	81028-
3		01010-80825	Bolt	7	81028-
4		01643-30823	Washer	7	81028-
5		17A-979-2171	Plate	1	81028-
6		17A-979-2310	• Sheet,Bonded	1	81028-
7		17A-979-2330	• Sheet,Bonded	1	81028-
8		01010-81230	Bolt	4	81028-
9		01643-31232	Washer	4	81028-
10		17A-979-3180	Controller	1	81028-
11		17A-979-2351	Bracket	1	81028-
12		17A-979-2360	• Seal,Bonded	1	81028-
13		01010-80825	Bolt	2	81028-
14		01643-30823	Washer	2	81028-
15		17A-979-2370	Bracket	1	81028-
16		17A-979-2380	• Sheet	1	81028-
17		01010-80816	Bolt	2	81028-
18		01643-30823	Washer	2	81028-
19		17A-979-2120	Bracket	2	81028-
20		01010-80825	Bolt	4	81028-
21		01643-30823	Washer	4	81028-
22		08037-01610	Grommet	1	81028-
23		08059-00413	Clip	1	81028-

FIG. K2110-009022 Floor Frame, Air Conditioner Condenser Unit Mounting

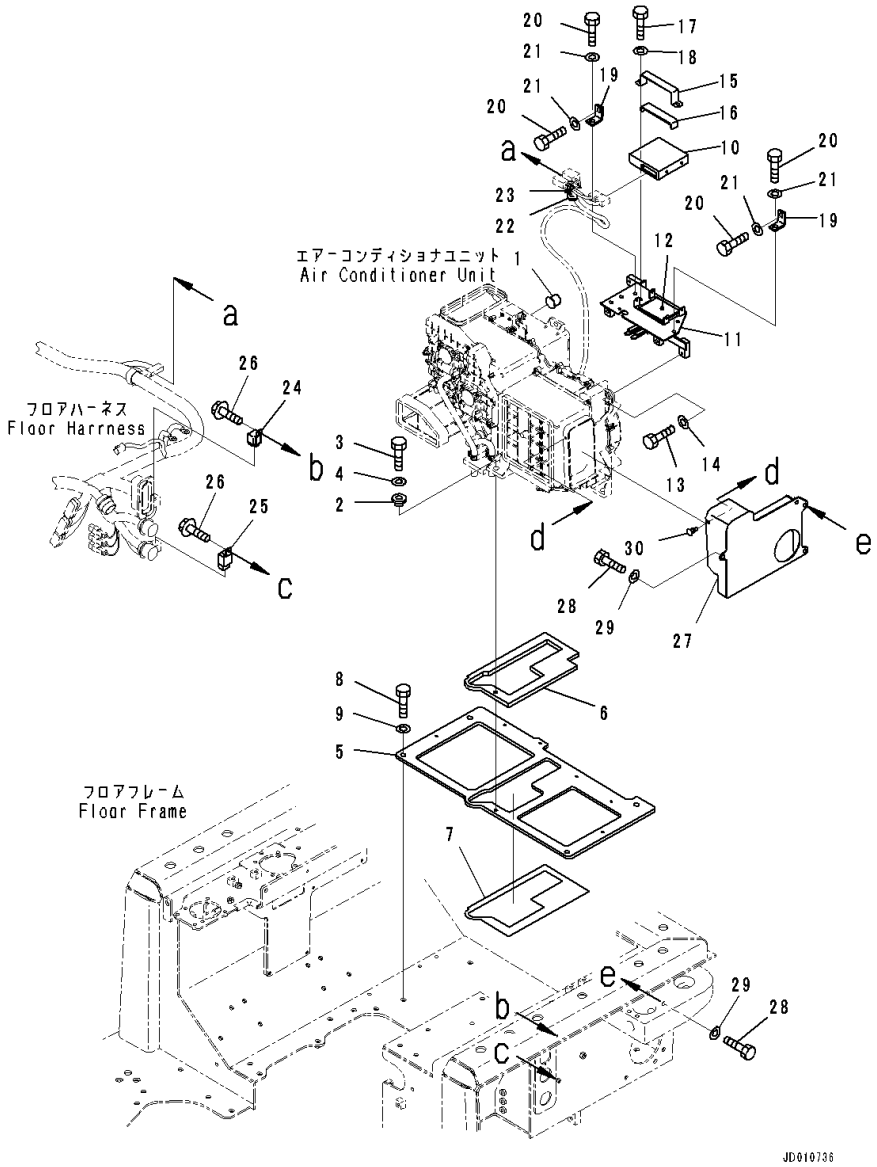

Index	Code	Part Number	Description	Qty	Serial Number
24		20Y-979-6771	Relay	1	81028-
25		421-07-31270	Relay	1	81028-
26		01435-00616	Bolt	2	81028-
27		17A-979-2211	Duct	1	81028-
28		01010-81020	Bolt	3	81028-
29		01643-31032	Washer	3	81028-
30		208-53-12680	Clip	1	81028-

FIG. K2110-009023 Floor Frame, Air Conditioner Cover

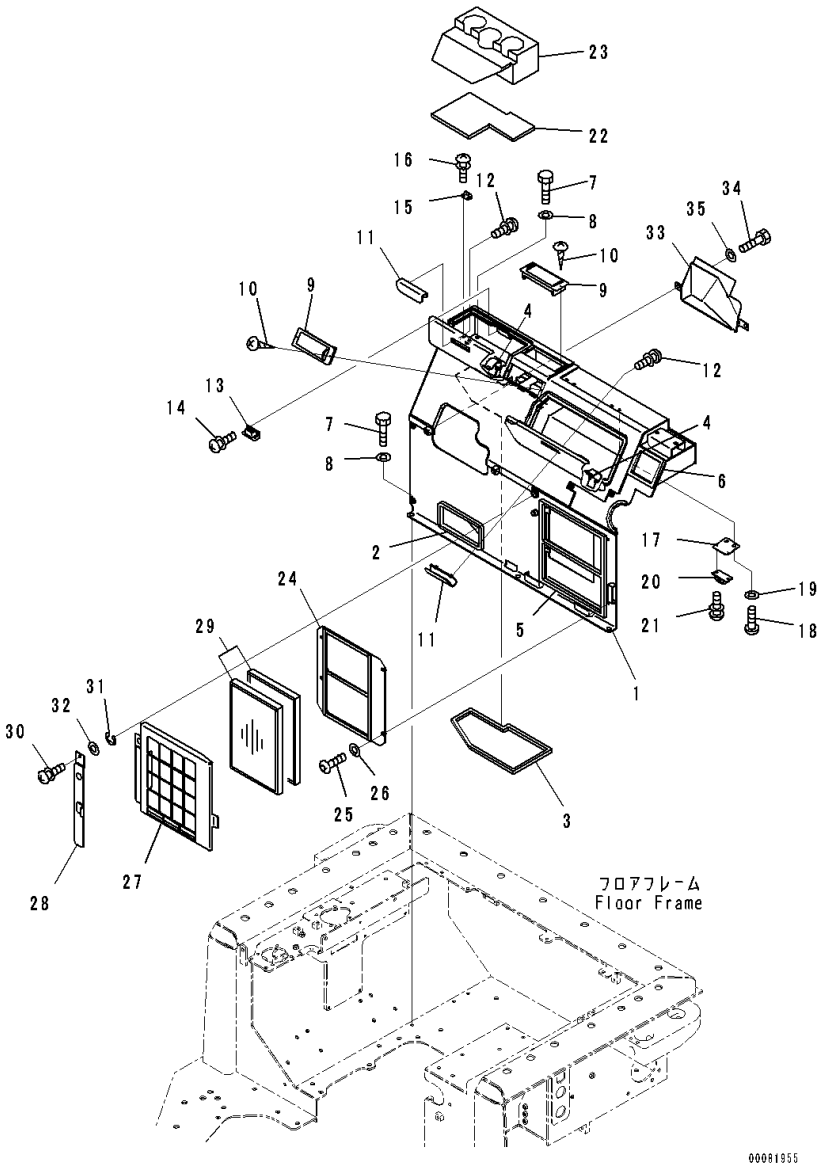

Index	Code	Part Number	Description	Qty	Serial Number
		Note: This list covers following specifications. For Variable Giant Ripper, MSHA Dust Regulation For Variable Multi Ripper, For Dual Tilt Pitch Dozer, MSHA Dust Regulation For Variable Giant Ripper, For Dual Tilt Pitch Dozer, MSHA Dust Regulation Without Rear Work Equipment, MSHA Dust Regulation Without Rear Work Equipment, For Dual Tilt Pitch Dozer, MSHA Dust Regulation For Mechanical Angle Dozer, For Variable Multi Ripper, MSHA Dust Regulation For Mechanical Angle Dozer, For Variable Giant Ripper, MSHA Dust Regulation For Mechanical Angle Dozer, Without Rear Work Equipment, MSHA Dust Regulation For Variable Giant Ripper, For Dual Tilt Pitch Dozer, MSHA Dust Regulation, Landfill Specification			
1		17A-979-2113	Cover	1	81028-
2		17A-979-2251	• Seal,Bonded	1	81028-
3		17A-979-2281	• Seat,Bonded	1	81028-
4		17A-979-2390	• Hinge,Welded	4	81028-
5		17A-979-2430	• Seal,Bonded	1	81028-
6		17A-979-2891	• Seal,Bonded	1	81028-
7		01010-80825	Bolt	6	81028-
8		01643-30823	Washer	6	81028-
9		17A-Z11-7161	Louver	2	81028-
10		01370-20308	Screw	4	81028-
11		17A-54-46940	Bracket	2	81028-
12		01023-10508	Screw	4	81028-
13		154-43-73651	Magnet	1	81028-
14		01023-10306	Screw	4	81028-
15		17A-54-46961	Plate	1	81028-
16		01023-10508	Screw	2	81028-
17		17A-54-46951	Plate	2	81028-
18		01245-00616	Screw, Hexagon Socket Head	4	81028-
19		01643-70623	Washer	4	81028-
20		09452-14503	Catcher	2	81028-
21		01023-10306	Screw	4	81028-
22		17A-979-2411	Cushion	1	81028-
23		17A-979-2261	Cushion	1	81028-

FIG. K2110-009023 Floor Frame, Air Conditioner Cover

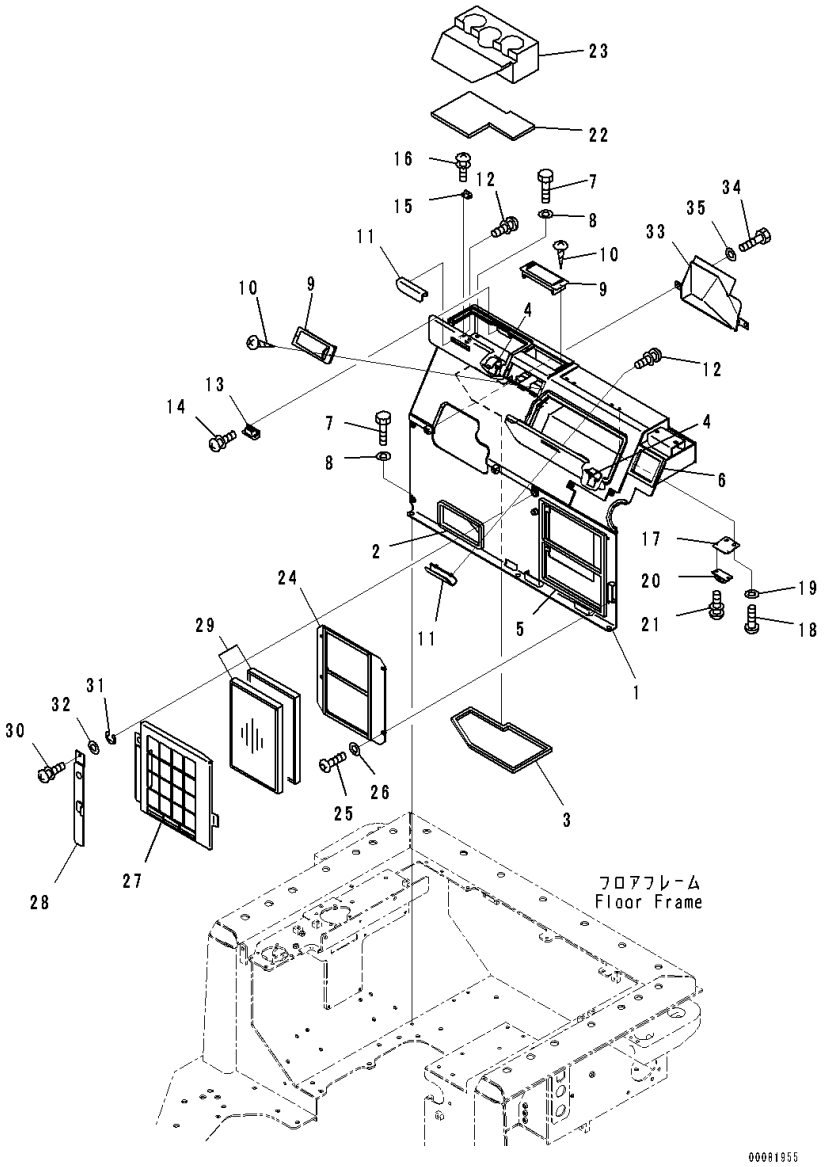

Index	Code	Part Number	Description	Qty	Serial Number
24		17A-979-2290	Cover	1	81028-
25		01245-00616	Screw, Hexagon Socket Head	4	81028-
26		01643-70623	Washer	4	81028-
27		17A-979-2160	Cover	1	81028-
28		17A-979-1691	Bracket	1	81028-
29		427-07-22130	Filter	1	81028-
30		01232-10616	Screw, Knurled Head	1	81028-
31		195-54-78790	Ring, Snap	1	81028-
32		01640-20610	Washer	1	81028-
33		17A-54-46930	Cover	1	81028-
34		01010-80816	Bolt	2	81028-
35		01643-30823	Washer	2	81028-

FIG. K2110-009024 Floor Frame, Air Conditioner Duct

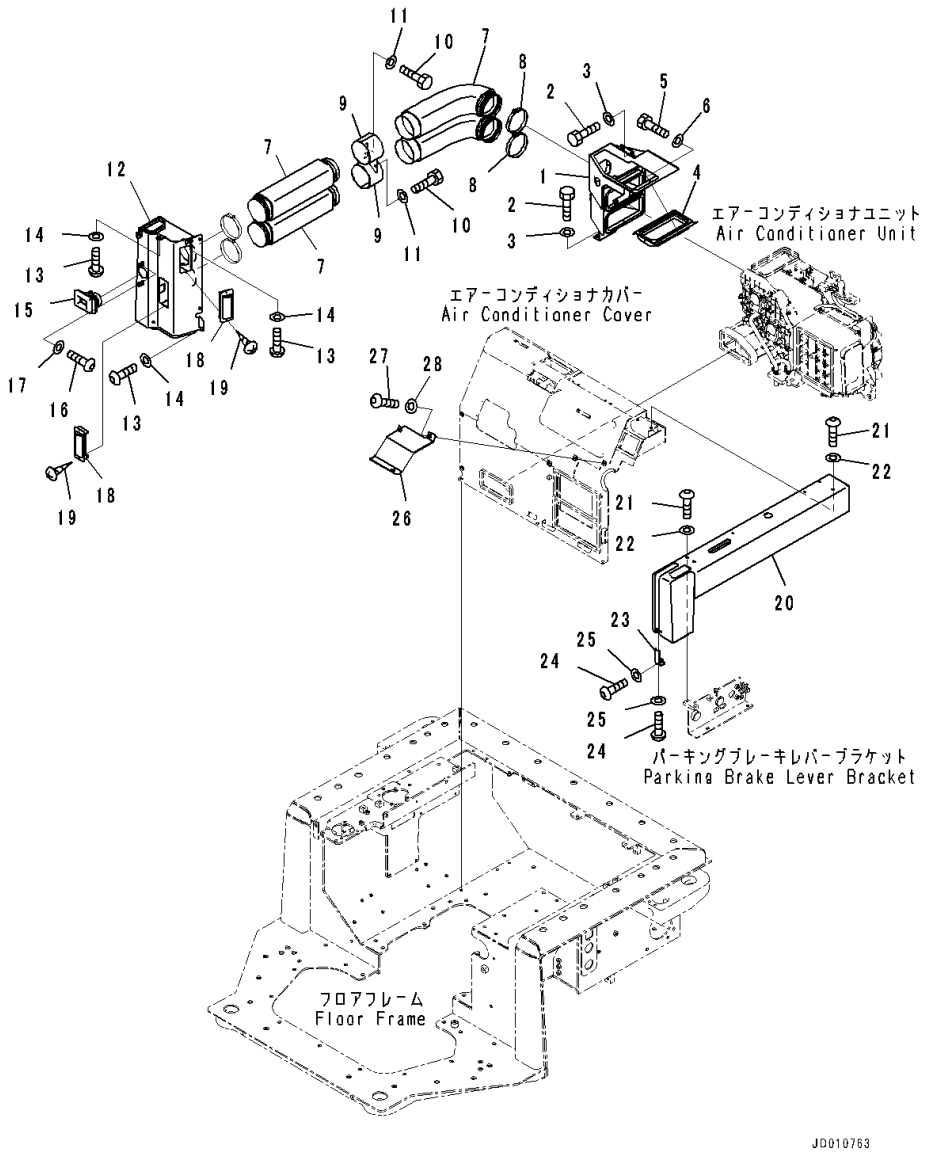

Index	Code	Part Number	Description	Qty	Serial Number
		Note: This list covers following specifications.			
		For Variable Giant Ripper, MSHA Dust Regulation			
		For Variable Multi Ripper, For Dual Tilt Pitch Dozer, MSHA Dust Regulation			
		For Variable Giant Ripper, For Dual Tilt Pitch Dozer, MSHA Dust Regulation			
		Without Rear Work Equipment, MSHA Dust Regulation			
		Without Rear Work Equipment, For Dual Tilt Pitch Dozer, MSHA Dust Regulation			
		For Mechanical Angle Dozer, For Variable Multi Ripper, MSHA Dust Regulation			
		For Mechanical Angle Dozer, For Variable Giant Ripper, MSHA Dust Regulation			
		For Mechanical Angle Dozer, Without Rear Work Equipment, MSHA Dust Regulation			
		For Variable Giant Ripper, For Dual Tilt Pitch Dozer, MSHA Dust Regulation, Landfill Specification			
1		17A-979-2131	Duct	1	81028-
2		01010-80825	Bolt	4	81028-
3		01643-30823	Washer	4	81028-
4		17A-979-1710	Bracket	1	81028-
5		01010-80816	Bolt	2	81028-
6		01643-30823	Washer	2	81028-
7		208-53-12220	Duct	4	81028-
8		07281-01159	Clamp	2	81028-
9		17A-979-2441	Bracket	1	81028-
10		01010-80825	Bolt	3	81028-
11		01643-30823	Washer	3	81028-
12		17A-54-46192	Duct	1	81028-
13		01245-00820	Screw	4	81028-
14		01643-70823	Washer	4	81028-
15		17A-54-45160	Duct	1	81028-
16		01245-00616	Screw, Hexagon Socket Head	2	81028-
17		01643-70623	Washer	2	81028-
18		17A-Z11-7161	Louver	2	81028-
19		01370-20308	Screw	4	81028-
20		17A-54-46273	Cover	1	81028-
21		01245-00820	Screw	4	81028-
22		01643-70823	Washer	4	81028-
23		17A-54-46831	Bracket	1	81028-

FIG. K2110-009024 Floor Frame, Air Conditioner Duct

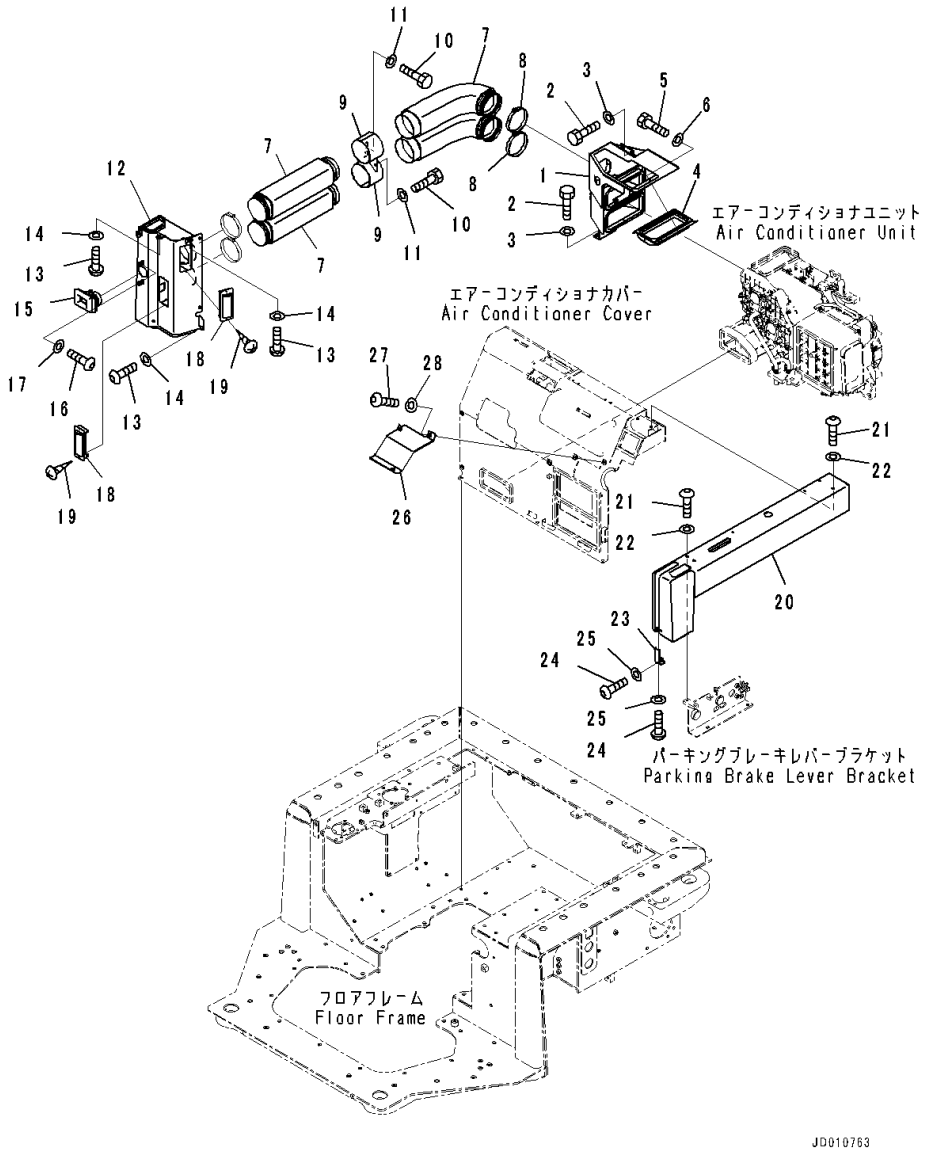

Index	Code	Part Number	Description	Qty	Serial Number
24		01245-00616	Screw, Hexagon Socket Head	2	81028-
25		01643-70623	Washer	2	81028-
26		17A-54-46812	Cover	1	81028-
27		01245-00820	Screw	3	81028-
28		01643-70823	Washer	3	81028-

FIG. K2110-009025 Floor Frame, Air Conditioner Piping

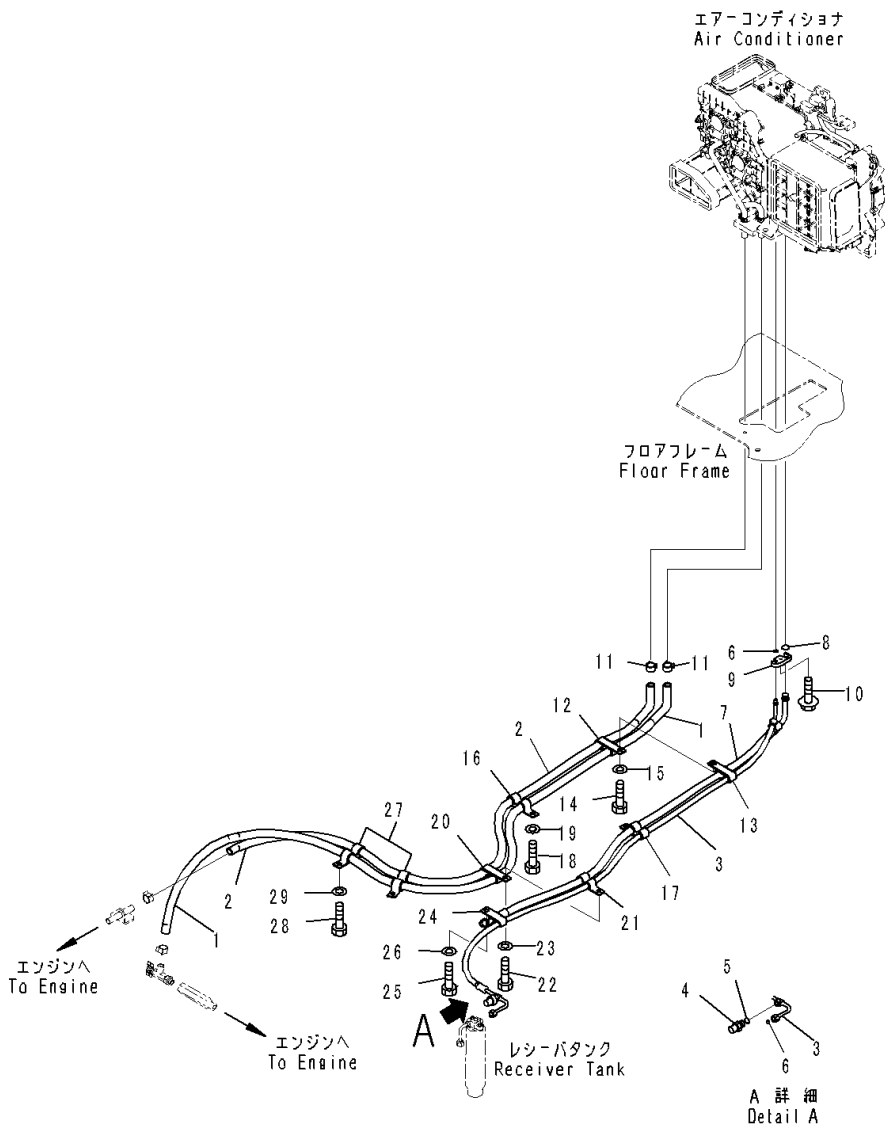

Index	Code	Part Number	Description	Qty	Serial Number
		Note: This list covers following specifications.			
		For Variable Giant Ripper, MSHA Dust Regulation			
		For Variable Multi Ripper, For Dual Tilt Pitch Dozer, MSHA Dust Regulation			
		For Variable Giant Ripper, For Dual Tilt Pitch Dozer, MSHA Dust Regulation			
		Without Rear Work Equipment, MSHA Dust Regulation			
		Without Rear Work Equipment, For Dual Tilt Pitch Dozer, MSHA Dust Regulation			
		For Mechanical Angle Dozer, For Variable Multi Ripper, MSHA Dust Regulation			
		For Mechanical Angle Dozer, For Variable Giant Ripper, MSHA Dust Regulation			
		For Mechanical Angle Dozer, Without Rear Work Equipment, MSHA Dust Regulation			
		For Variable Giant Ripper, For Dual Tilt Pitch Dozer, MSHA Dust Regulation, Landfill Specification			
1		17A-979-2822	Hose	1	81028-
2		17A-979-2321	Hose	1	81028-
3		17A-979-2831	Hose	1	81028-
4		ND443440-0030	• Switch, Pressure	1	81028-
5		ND949142-0040	• • O-ring	1	81028-
6		20Y-979-3150	• O-ring	2	81028-
7		17A-979-2841	Hose	1	81028-
8		20Y-979-3130	• O-ring	1	81028-
9		208-979-7650	Connector	1	81028-
10		01435-00620	Bolt	1	81028-
11		09479-02400	Clamp	2	81028-
12		195-979-1550	Clamp	1	81028-
13		195-Z11-7250	Clip	1	81028-
14		01010-81230	Bolt	1	81028-
15		01643-31232	Washer	1	81028-
16		195-979-1550	Clamp	1	81028-
17		195-Z11-7250	Clip	1	81028-
18		01010-81230	Bolt	1	81028-
19		01643-31232	Washer	1	81028-
20		195-979-1550	Clamp	1	81028-
21		17A-911-4421	Clip	1	81028-
22		01010-81230	Bolt	1	81028-
23		01643-31232	Washer	1	81028-

FIG. K2110-009025 Floor Frame, Air Conditioner Piping

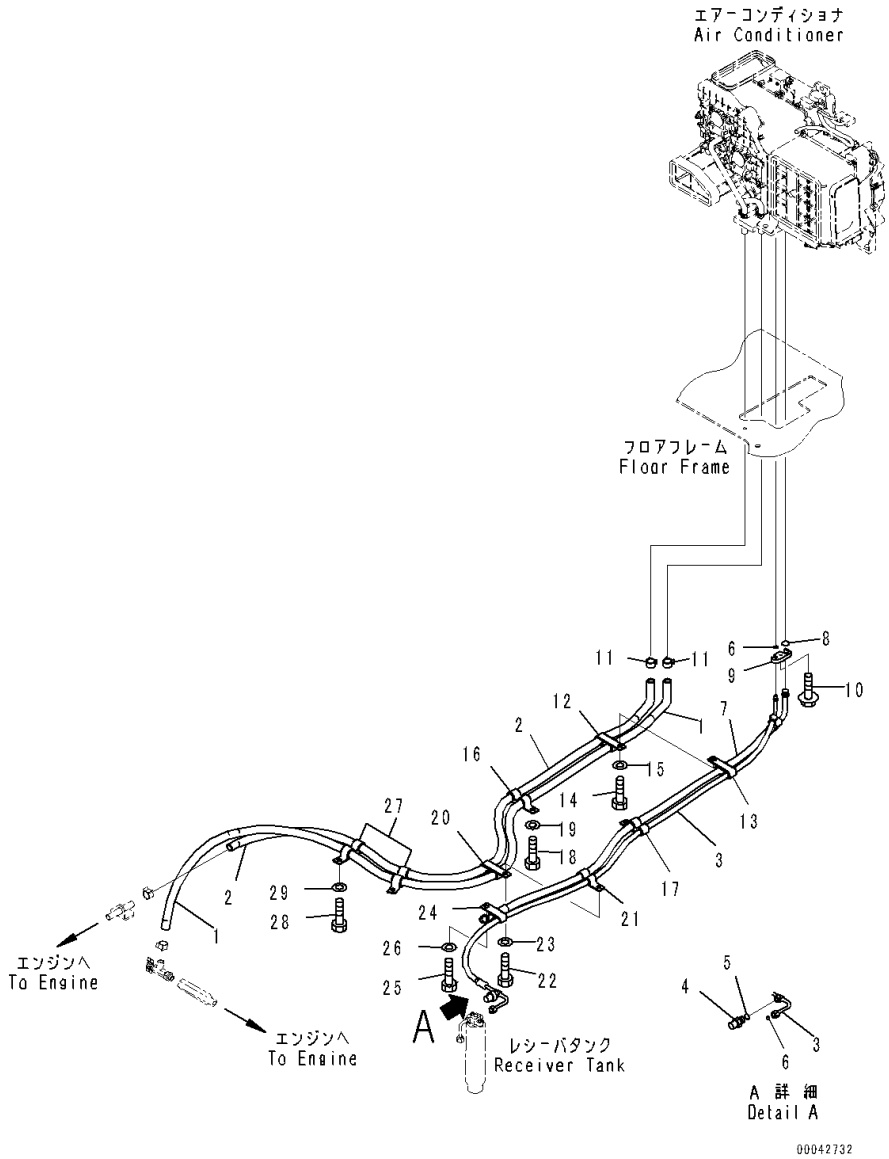

Index	Code	Part Number	Description	Qty	Serial Number
24		17A-911-4460	Clip	1	81028-
25		01010-81230	Bolt	1	81028-
26		01643-31232	Washer	1	81028-
27		195-979-1550	Clamp	2	81028-
28		01010-81230	Bolt	2	81028-
29		01643-31232	Washer	2	81028-

FIG. K2110-009026 Floor Frame, Floor, Window Washer Hose

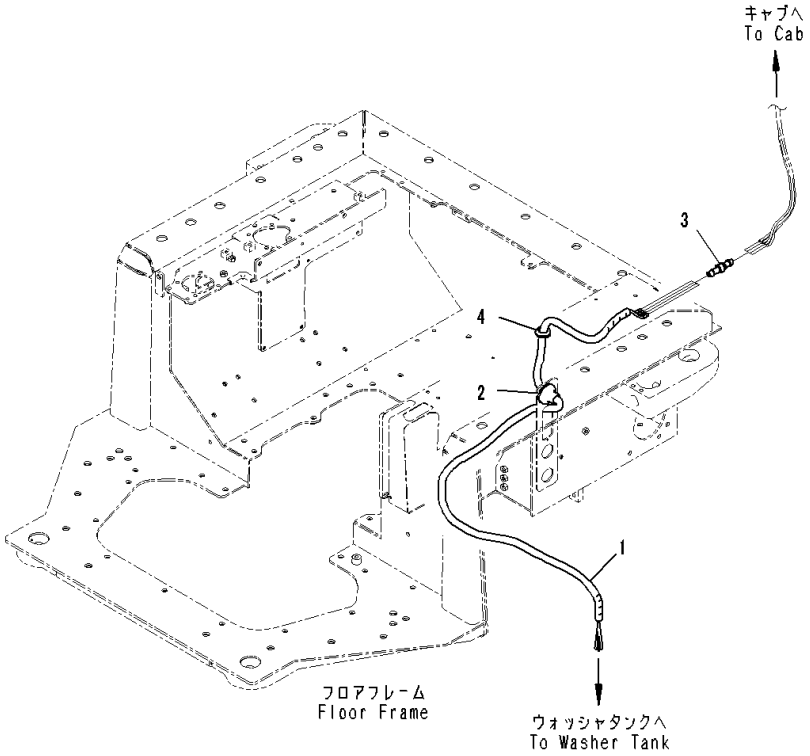

Index	Code	Part Number	Description	Qty	Serial Number
		Note: This list covers following specifications.			
		For Variable Giant Ripper, MSHA Dust Regulation			
		For Variable Multi Ripper, For Dual Tilt Pitch Dozer, MSHA Dust Regulation			
		For Variable Giant Ripper, For Dual Tilt Pitch Dozer, MSHA Dust Regulation			
		Without Rear Work Equipment, MSHA Dust Regulation			
		Without Rear Work Equipment, For Dual Tilt Pitch Dozer, MSHA Dust Regulation			
		For Mechanical Angle Dozer, For Variable Multi Ripper, MSHA Dust Regulation			
		For Mechanical Angle Dozer, For Variable Giant Ripper, MSHA Dust Regulation			
		For Mechanical Angle Dozer, Without Rear Work Equipment, MSHA Dust Regulation			
		For Variable Giant Ripper, For Dual Tilt Pitch Dozer, MSHA Dust Regulation, Landfill Specification			
		17A-979-2571	Tape	1	81028-
1	C1		• Tape	4	81028-
2		08037-12536	• Grommet	1	81028-
3		195-979-8590	• Valve	4	81028-
4		08037-02512	Grommet	1	81028-

FIG. K2110-009027 Floor Frame, For Variable Giant Ripper, MSHA Dust Regulation, Decal

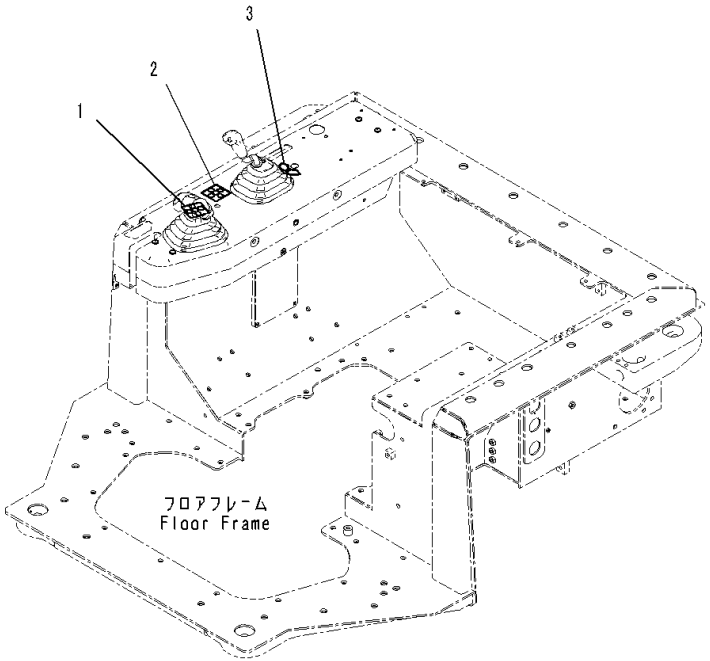

Index	Code	Part Number	Description	Qty	Serial Number
1		17A-98-41140	Plate	1	81028-
2		17A-98-11160	Plate	1	81028-
3		17A-98-11171	Plate	1	81028-

FIG. K2110-010008 Floor Frame, Without Pin Puller Switch

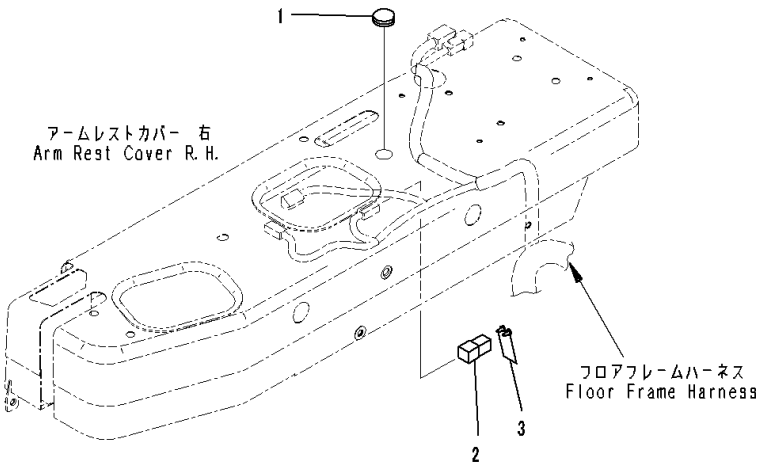

Index	Code	Part Number	Description	Qty	Serial Number
		Note: This list covers following specifications. For Variable Multi Ripper, For Dual Tilt Pitch Dozer, MSHA Dust Regulation For Mechanical Angle Dozer, For Variable Multi Ripper, MSHA Dust Regulation			
1		09415-01610	Cap	1	81028-
2		08192-22100	Connector Body	1	81028-
3		08191-00770	Plug, Connector	2	81028-

FIG. K2110-010013 Floor Frame, Blade Control Lever

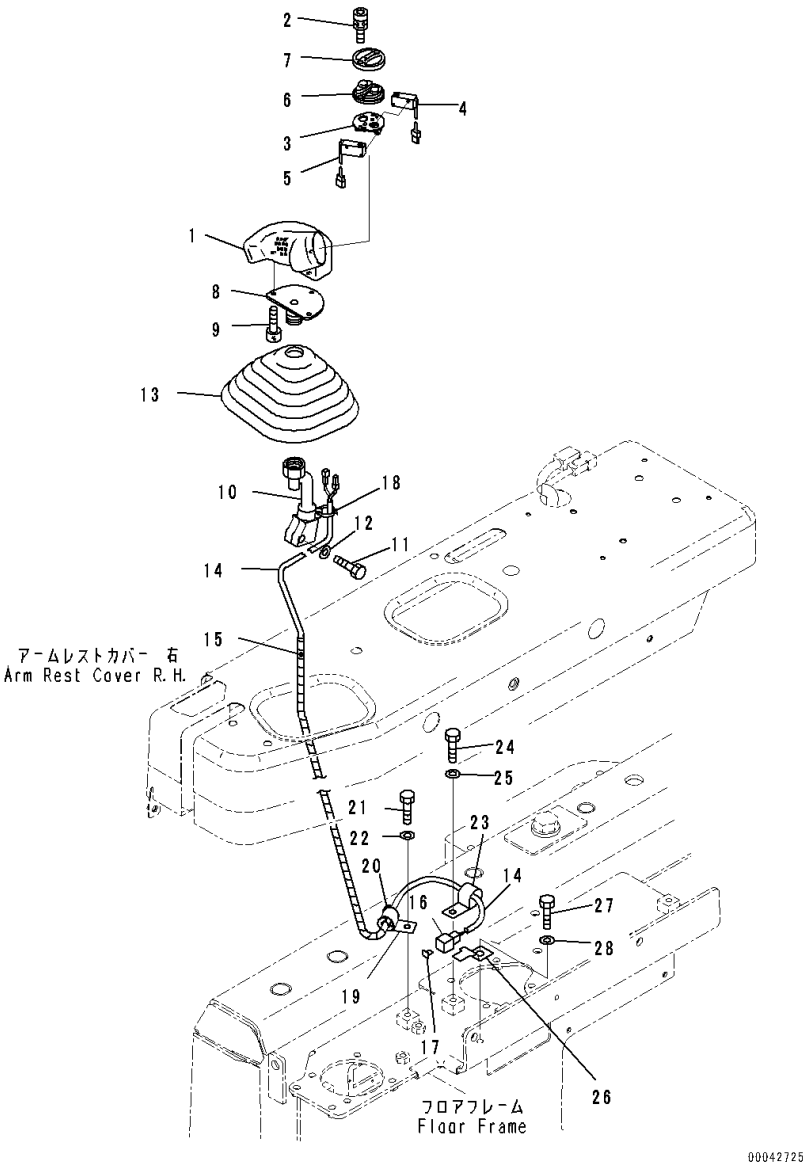

Index	Code	Part Number	Description	Qty	Serial Number
		Note: This list covers following specifications. For Variable Multi Ripper, For Dual Tilt Pitch Dozer, MSHA Dust Regulation For Variable Giant Ripper, For Dual Tilt Pitch Dozer, MSHA Dust Regulation Without Rear Work Equipment, For Dual Tilt Pitch Dozer, MSHA Dust Regulation For Variable Giant Ripper, For Dual Tilt Pitch Dozer, MSHA Dust Regulation, Landfill Specification			
		17A-43-42211	Knob Assembly	1	81028-
1	C1		• Knob Assembly	1	81028-
2		19M-09-11510	• Bolt	2	81028-
		19M-43-33140	• Switch Assembly	1	81028-
3		19M-43-33170	• • Plate	1	81028-
4		19M-43-33460	• • Switch	1	81028-
5		19M-43-33470	• • Switch	1	81028-
6		19M-43-33150	• Rubber	1	81028-
7		17A-43-42220	• Cover	1	81028-
8		19M-43-38220	Bracket	1	81028-
9		01252-80510	Bolt	3	81028-
10		19M-43-38211	Lever	1	81028-
11		01010-81030	Bolt	1	81028-
12		01643-31032	Washer	1	81028-
13		11Y-43-11181	Boot	1	81028-
14		19M-06-37171	Wiring Harness	1	81028-
15		08210-00604	Tube, Spiral	1	81028-
16		08192-26100	Connector	1	81028-
17		08192-16300	Wedge	1	81028-
18		20Y-06-23940	Band	1	81028-
19		04434-51410	Clip	1	81028-
20		198-06-53520	Cushion	1	81028-
21		01010-81020	Bolt	1	81028-
22		01643-31032	Washer	1	81028-
23		04434-50810	Clip	1	81028-
24		01010-81020	Bolt	1	81028-
25		01643-31032	Washer	1	81028-
26		08193-20010	Clip	1	81028-
27		01010-81020	Bolt	1	81028-
28		01643-31032	Washer	1	81028-

FIG. K2110-010027 Floor Frame, For Variable Multi Ripper, For Dual Tilt Pitch Dozer, MSHA Dust Regulation, Decal

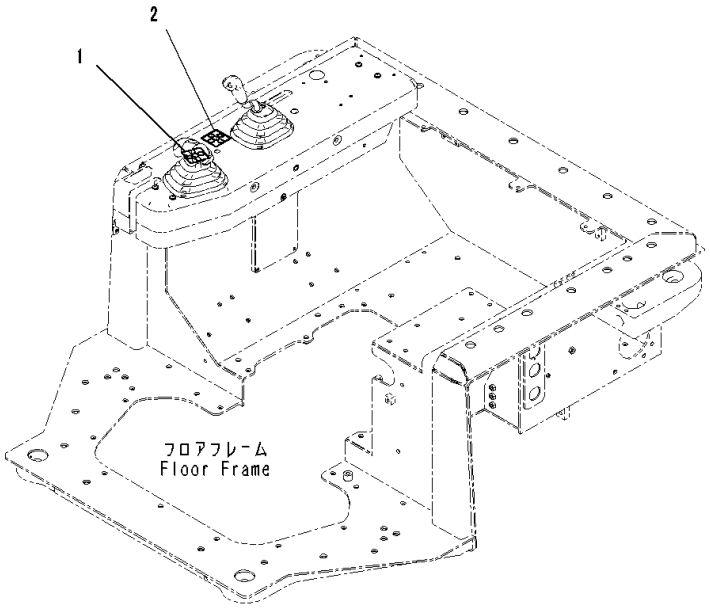

Index	Code	Part Number	Description	Qty	Serial Number
1		17A-98-41130	Plate	1	81028-
2		17A-98-11160	Plate	1	81028-

FIG. K2110-011027 Floor Frame, Decal

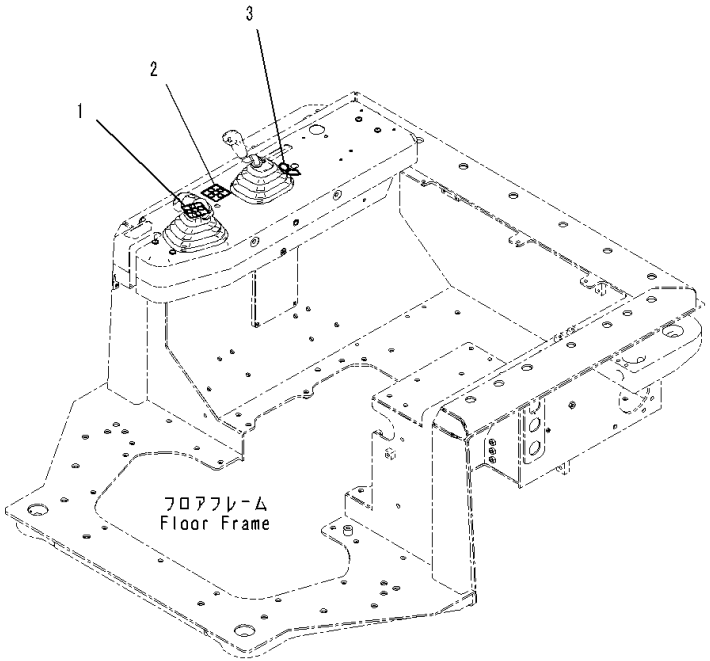

Index	Code	Part Number	Description	Qty	Serial Number
		Note: This list covers following specifications. For Variable Giant Ripper, For Dual Tilt Pitch Dozer, MSHA Dust Regulation For Variable Giant Ripper, For Dual Tilt Pitch Dozer, MSHA Dust Regulation, Landfill Specification			
1		17A-98-41130	Plate	1	81028-
2		17A-98-11160	Plate	1	81028-
3		17A-98-11171	Plate	1	81028-

FIG. K2110-012008 Floor Frame, Without Pin Puller Switch

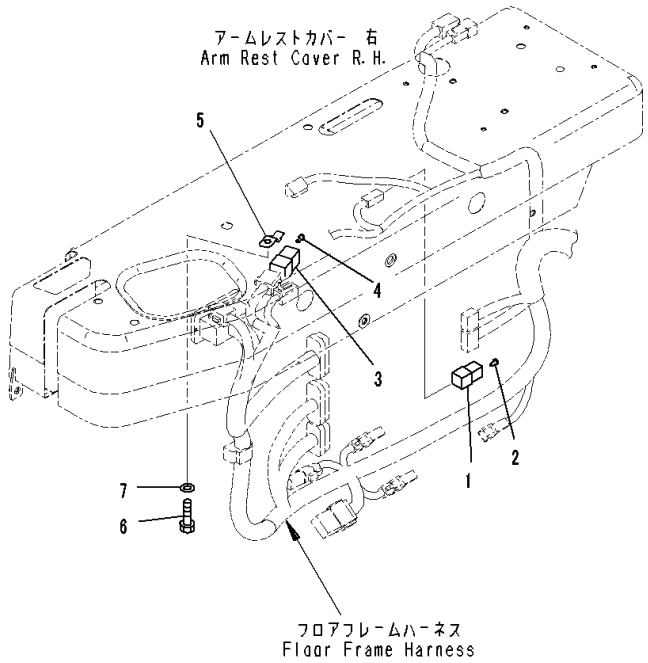

Index	Code	Part Number	Description	Qty	Serial Number
		Note: This list covers following specifications. Without Rear Work Equipment, MSHA Dust Regulation Without Rear Work Equipment, For Dual Tilt Pitch Dozer, MSHA Dust Regulation For Mechanical Angle Dozer, Without Rear Work Equipment, MSHA Dust Regulation			
1		08192-22100	Connector Body	1	81028-
2		08191-00770	Plug, Connector	2	81028-
3		08192-28102	Connector	1	81028-
4		08191-00770	Plug, Connector	8	81028-
5		08193-30010	Clip	1	81028-
6		01010-81020	Bolt	1	81028-
7		01643-31032	Washer	1	81028-

FIG. K2110-012019 Floor Frame, Armrest, RHS

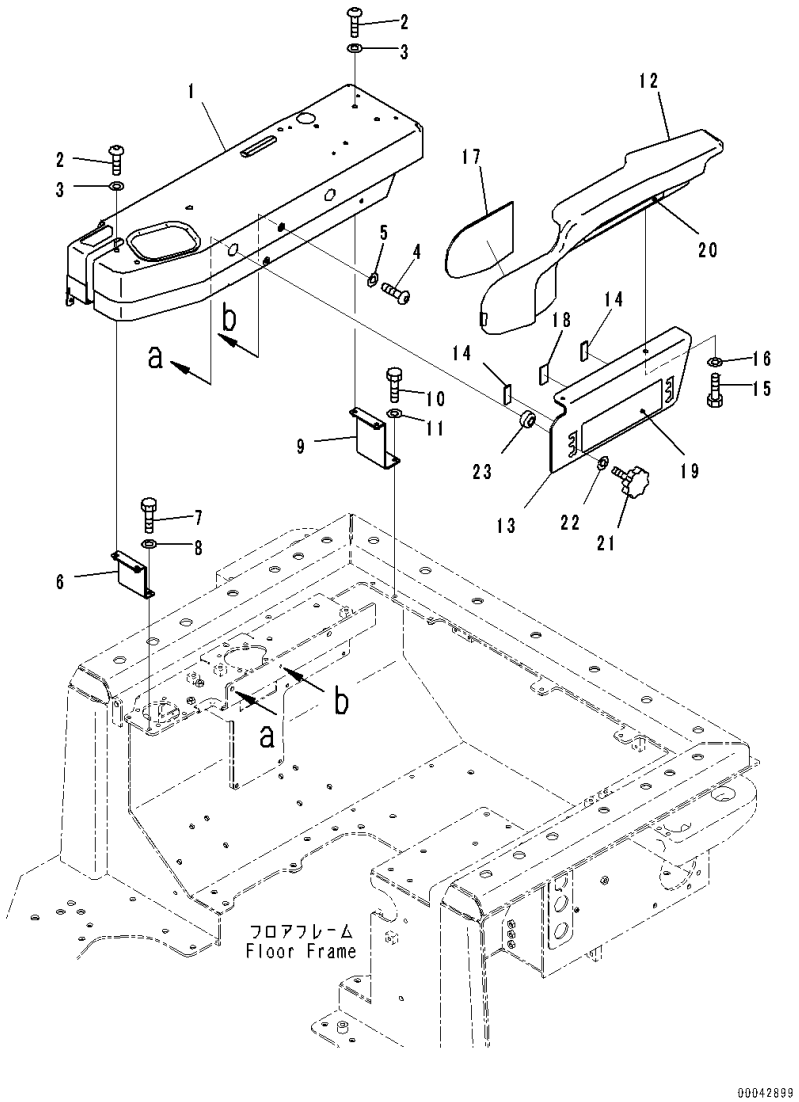

Index	Code	Part Number	Description	Qty	Serial Number
		Note: This list covers following specifications.			
		Without Rear Work Equipment, MSHA Dust Regulation			
		Without Rear Work Equipment, For Dual Tilt Pitch Dozer,			
		MSHA Dust Regulation			
		For Mechanical Angle Dozer, Without Rear Work			
		Equipment, MSHA Dust Regulation			
1		17A-54-46242	Cover	1	81028-
2		01245-00820	Screw	5	81028-
3		01643-70823	Washer	5	81028-
4		01245-00616	Screw, Hexagon Socket Head	1	81028-
5		01640-20610	Washer	1	81028-
6		17A-54-46411	Bracket	1	81028-
7		01010-80825	Bolt	2	81028-
8		01643-30823	Washer	2	81028-
9		17A-54-46311	Bracket	1	81028-
10		01010-80825	Bolt	2	81028-
11		01643-30823	Washer	2	81028-
		14X-54-36310	Arm Assembly	1	81028-
12		14X-54-36320	• Arm Rest	1	81028-
13		14X-54-36330	• Plate	1	81028-
14		134-54-66240	• Sheet	2	81028-
15		01010-80820	• Bolt	2	81028-
16		01643-30823	• Washer	2	81028-
17		14X-54-36340	• Sheet	1	81028-
18		17A-43-42310	• Rubber	1	81028-
19		134-54-66190	Plate	1	81028-
20		134-54-66290	Plate	1	81028-
21		195-54-68760	Knob	2	81028-
22		01643-31032	Washer	2	81028-
23		17A-54-25610	Spacer	2	81028-

FIG. K2110-012026 Floor Frame, Without Rear Work Equipment, MSHA Dust Regulation, Decal

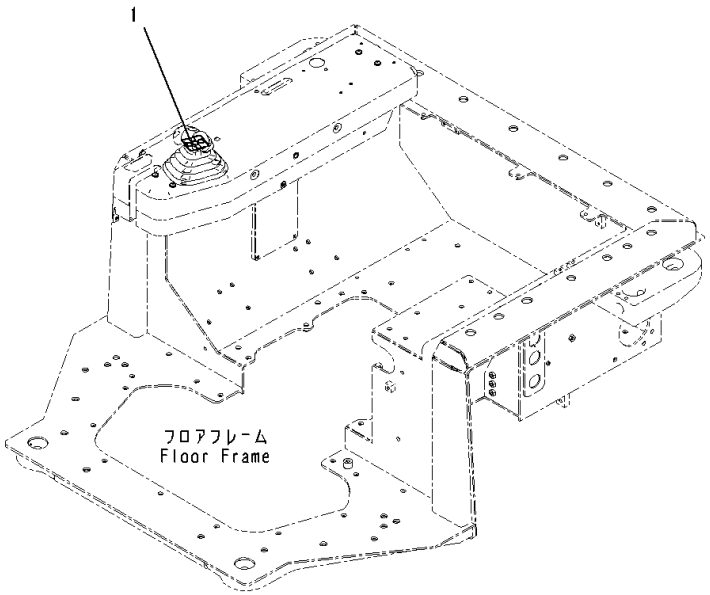

Index	Code	Part Number	Description	Qty	Serial Number
1		17A-98-41140	Plate	1	81028-

FIG. K2110-013026 Floor Frame, Without Rear Work Equipment, For Dual Tilt Pitch Dozer, MSHA Dust Regulation, Decal

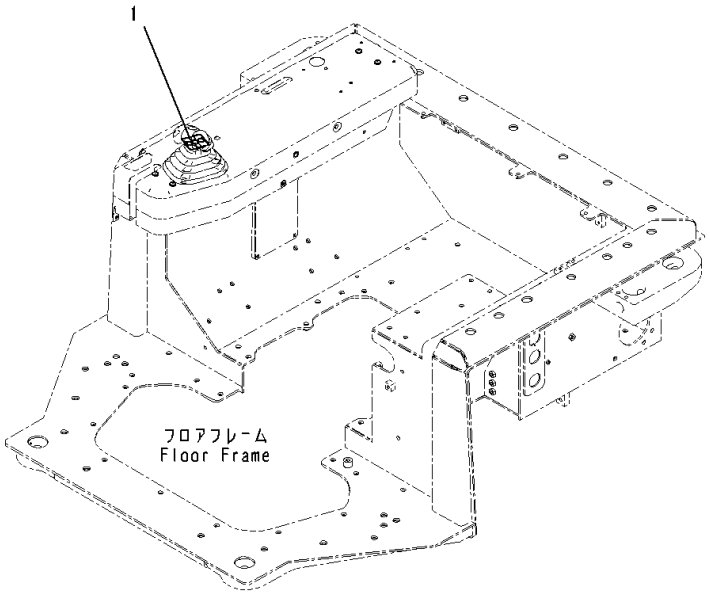

Index	Code	Part Number	Description	Qty	Serial Number
1		17A-98-41130	Plate	1	81028-

FIG. K2110-018015 Floor Frame, PPC Valve Mounting (1/2)

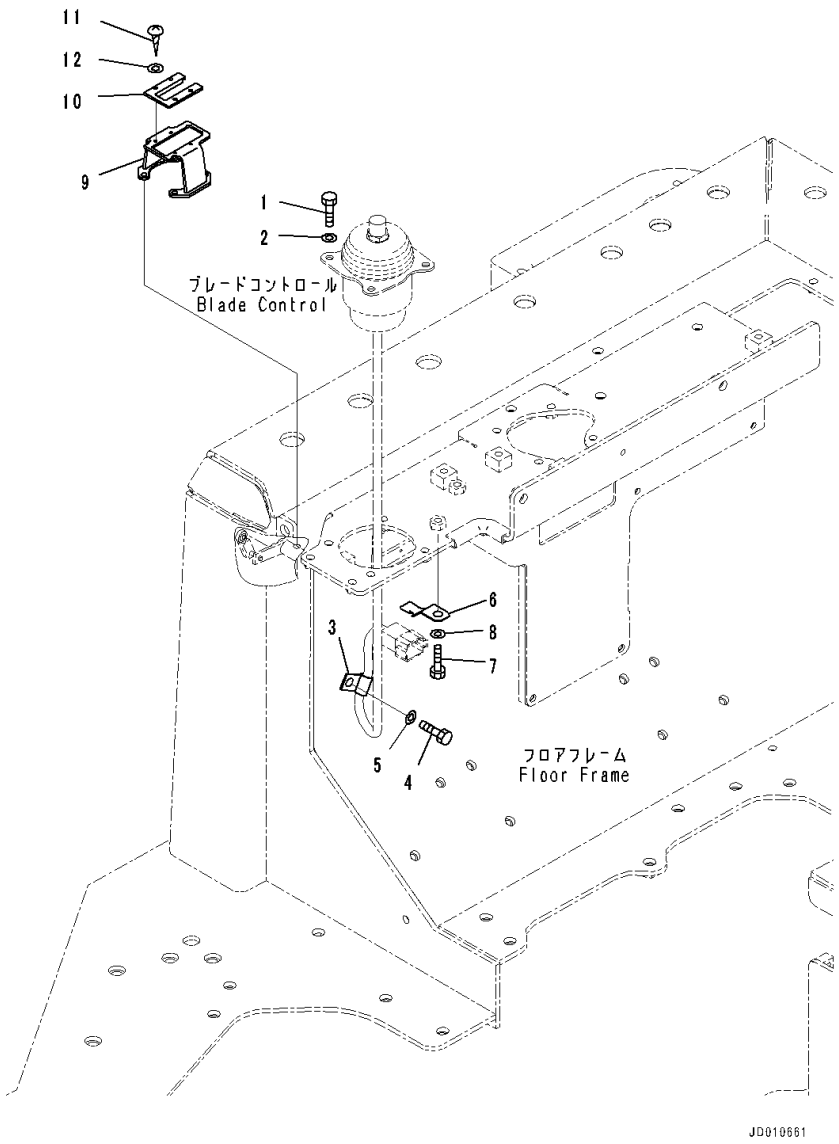

Index	Code	Part Number	Description	Qty	Serial Number
		Note: This list covers following specifications. For Mechanical Angle Dozer, For Variable Multi Ripper, MSHA Dust Regulation For Mechanical Angle Dozer, For Variable Giant Ripper, MSHA Dust Regulation For Mechanical Angle Dozer, Without Rear Work Equipment, MSHA Dust Regulation			
1		01010-80830	Bolt	4	81028-
2		01643-30823	Washer	4	81028-
3		04434-50810	Clip	1	81028-
4		01010-81020	Bolt	1	81028-
5		01643-31032	Washer	1	81028-
6		08193-30010	Clip	1	81028-
7		01010-81020	Bolt	1	81028-
8		01643-31032	Washer	1	81028-
9		17A-43-45110	Bracket	1	81028-
10		17A-78-11630	Plate	1	81028-
11		01370-00512	Screw	4	81028-
12		01641-20508	Washer, Flat	4	81028-

FIG. K2110-018027 Floor Frame, For Mechanical Angle Dozer, For Variable Multi Ripper, MSHA Dust Regulation, Decal

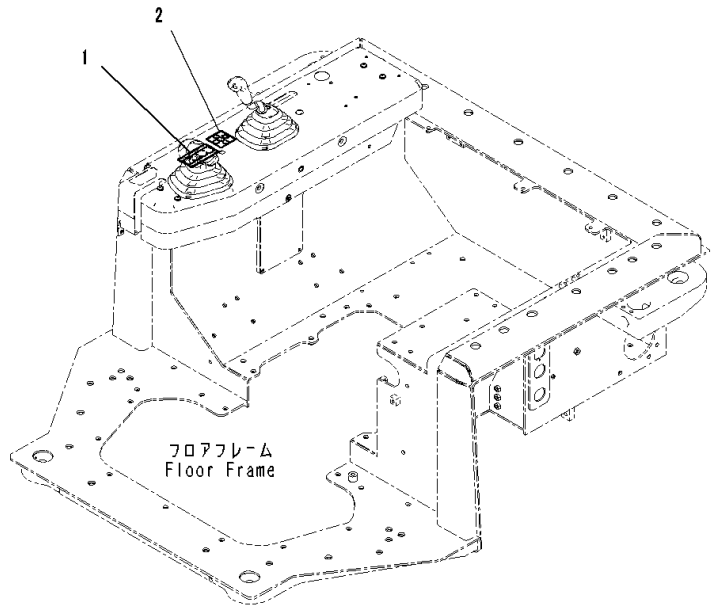

Index	Code	Part Number	Description	Qty	Serial Number
1		17A-98-41150	Plate	1	81028-
2		17A-98-11160	Plate	1	81028-

FIG. K2110-019027 Floor Frame, For Mechanical Angle Dozer, For Variable Giant Ripper, MSHA Dust Regulation, Decal

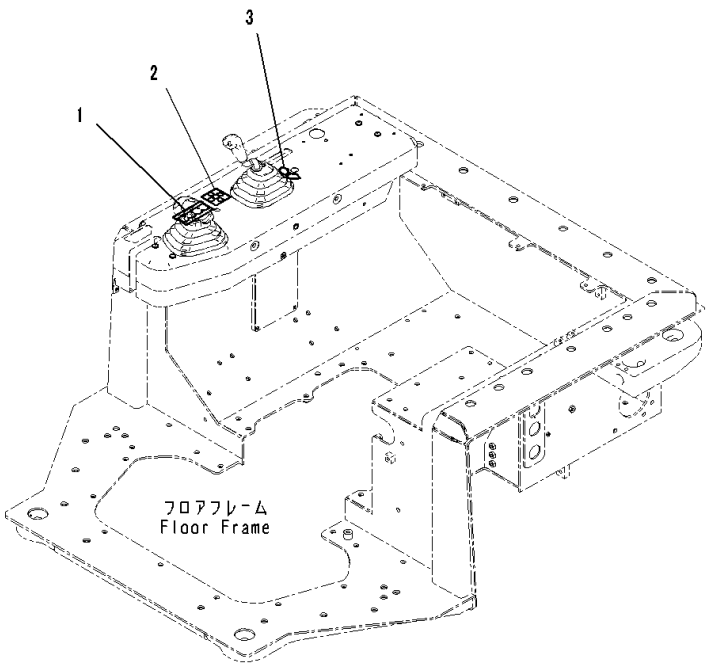

Index	Code	Part Number	Description	Qty	Serial Number
1		17A-98-41150	Plate	1	81028-
2		17A-98-11160	Plate	1	81028-
3		17A-98-11171	Plate	1	81028-

FIG. K2110-020026 Floor Frame, For Mechanical Angle Dozer, Without Rear Work Equipment, MSHA Dust Regulation, Decal

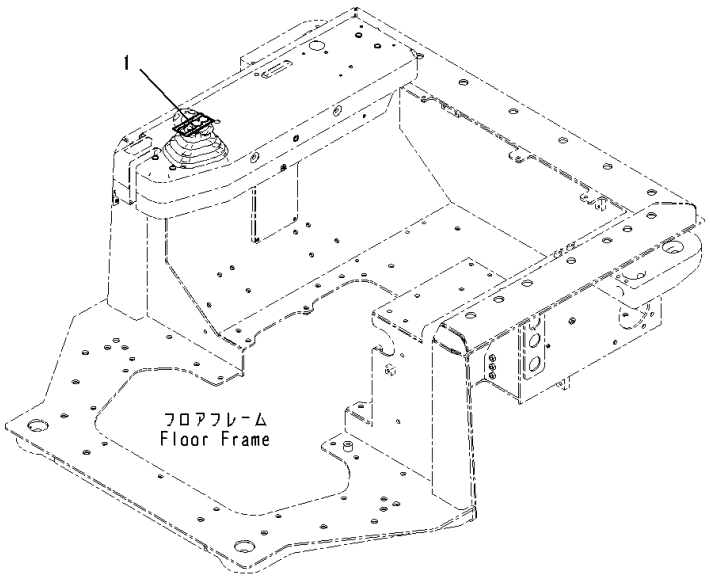

Index	Code	Part Number	Description	Qty	Serial Number
1		17A-98-41150	Plate	1	81028-

FIG. K2110-022001 Floor Frame, For Variable Giant Ripper, For Dual Tilt Pitch Dozer, MSHA Dust Regulation, Landfill Specification, Frame

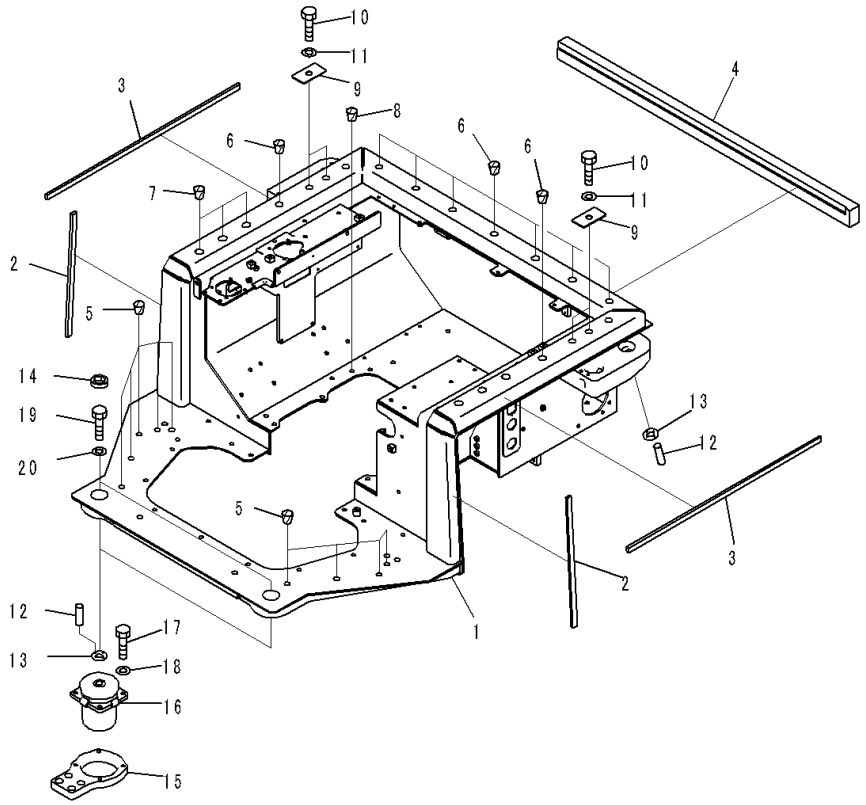

Index	Code	Part Number	Description	Qty	Serial Number
1		17A-54-47511	Frame	1	81028-
2		17A-54-47520	• Seal,Bonded	2	81028-
3		17A-54-47530	• Seal,Bonded	2	81028-
4		17A-54-47541	• Seal,Bonded	1	81028-
5		07049-01620	Plug	10	81028-
6		07049-02025	Plug	9	81028-
7		07049-02430	Plug	6	81028-
8		07049-01215	Plug	2	81028-
9		17A-54-46291	Plate	4	81028-
10		01010-82050	Bolt	4	81028-
11		01643-32060	Washer	4	81028-
12		04020-00616	Pin, Dowel	8	81028-
13		17A-54-46440	Plate	4	81028-
14		17A-54-46690	Cap	2	81028-
15		17A-54-46330	Plate	2	81028-
16		17A-54-46120	Cushion	2	81028-
17		01010-81440	Bolt	8	81028-
18		01643-31445	Washer	8	81028-
19		01010-82465	Bolt	2	81028-
20		01643-32460	Washer	2	81028-

FIG. K2110-027001 Floor Frame, Frame

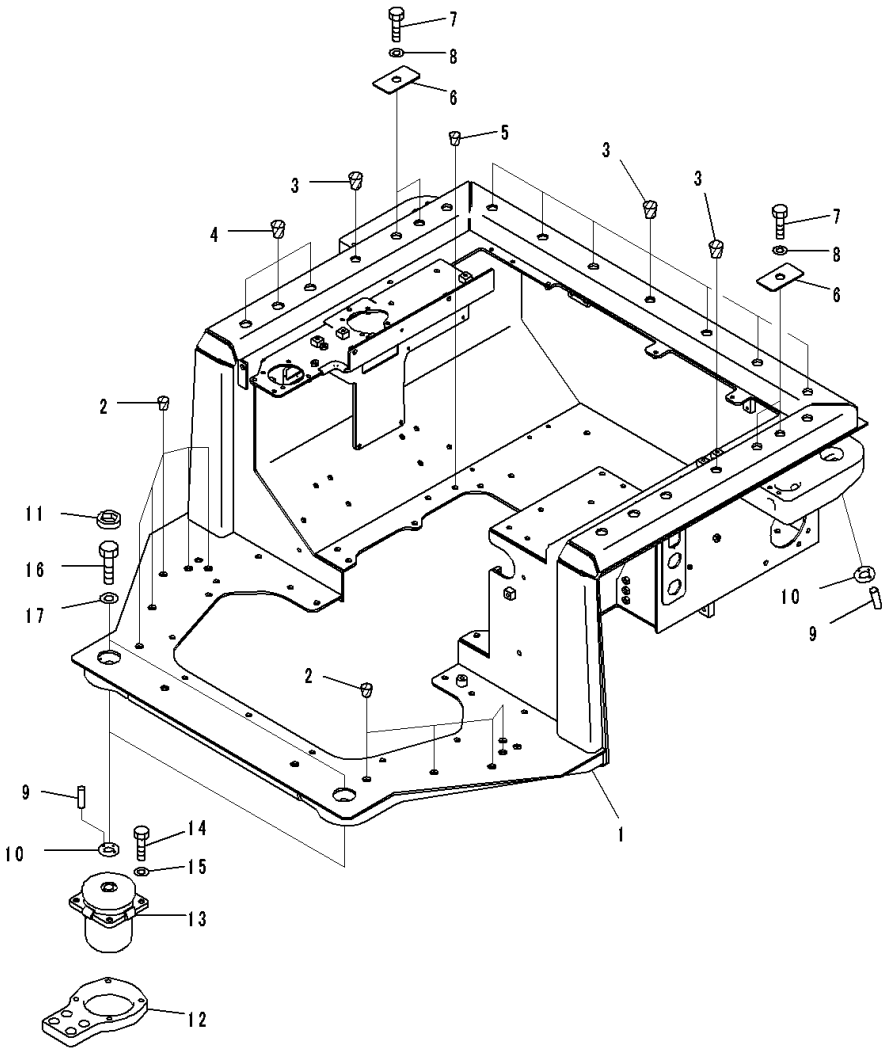

Index	Code	Part Number	Description	Qty	Serial Number
		Note: This list covers following specifications. Dual Tilt Dozer, With Variable Digging Angle Giant Ripper, Variable Digging Angle Giant Ripper Without Push Block, Variable Giant Ripper Dual Tilt Dozer, With Variable Digging Angle Multi Ripper, Variable Multi Ripper Without Rear Equipment Dual Tilt Dozer, Without Rear Equipment With Variable Digging Angle Multi Ripper, Variable Multi Ripper With Variable Digging Angle Giant Ripper, Variable Digging Angle Giant Ripper Without Push Block, Variable Giant Ripper With MSHA Dust Regulation Arrangement, Variable Digging Angle Multi Ripper, Variable Multi Ripper With MSHA Dust Regulation Arrangement, Variable Digging Angle Giant Ripper, Variable Digging Angle Giant Ripper Without Push Block, Variable Giant Ripper Dual Tilt Dozer, With MSHA Dust Regulation Arrangement, Variable Digging Angle Multi Ripper, Variable Multi Ripper Dual Tilt Dozer, With MSHA Dust Regulation Arrangement, Variable Digging Angle Giant Ripper, Variable Digging Angle Giant Ripper Without Push Block, Variable Giant Ripper			
1		17A-54-46113	Frame	1	81105-
2		07049-01620	Plug	10	81105-
3		07049-02025	Plug	9	81105-
4		07049-02430	Plug	6	81105-
5		07049-01215	Plug	2	81105-
6		17A-54-46291	Plate	4	81105-
7		01010-82050	Bolt	4	81105-
8		01643-32060	Washer	4	81105-
9		04020-00616	Pin, Dowel	8	81105-
10		17A-54-46440	Plate	4	81105-
11		17A-54-46690	Cap	2	81105-
12		17A-54-46330	Plate	2	81105-
13		17A-54-46120	Cushion	2	81105-
14		01010-81440	Bolt	8	81105-
15		01643-31445	Washer	8	81105-
16		01010-82465	Bolt	2	81105-
17		01643-32460	Washer	2	81105-

FIG. K2110-027002 Floor Frame, Parking Brake Lever

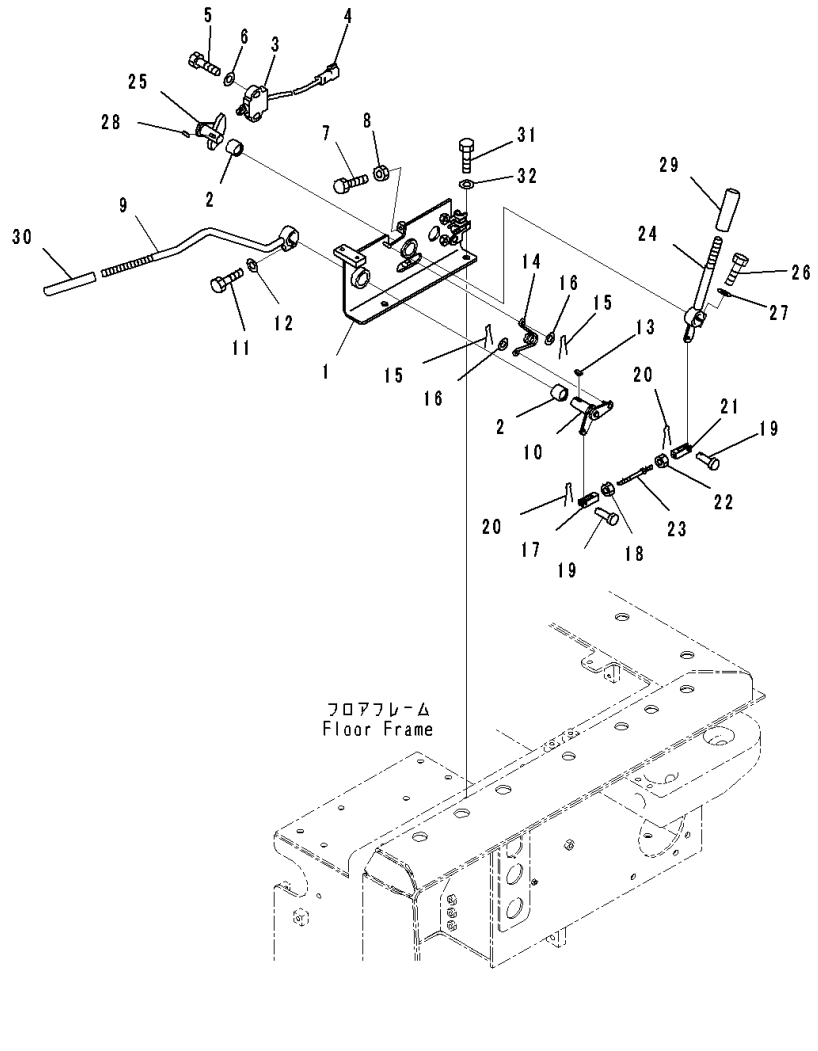

Index	Code	Part Number	Description	Qty	Serial Number
		Note: This list covers following specifications.			
		Dual Tilt Dozer, With Variable Digging Angle Giant Ripper, Variable Digging Angle Giant Ripper Without Push Block, Variable Giant Ripper			
		Dual Tilt Dozer, With Variable Digging Angle Multi Ripper, Variable Multi Ripper			
		Without Rear Equipment			
		Dual Tilt Dozer, Without Rear Equipment			
		With Variable Digging Angle Multi Ripper, Variable Multi Ripper			
		With Variable Digging Angle Giant Ripper, Variable Digging Angle Giant Ripper Without Push Block, Variable Giant Ripper			
		With MSHA Dust Regulation Arrangement, Variable Digging Angle Multi Ripper, Variable Multi Ripper			
		With MSHA Dust Regulation Arrangement, Variable Digging Angle Giant Ripper, Variable Digging Angle Giant Ripper Without Push Block, Variable Giant Ripper			
		Dual Tilt Dozer, With MSHA Dust Regulation Arrangement, Variable Digging Angle Multi Ripper, Variable Multi Ripper			
		Dual Tilt Dozer, With MSHA Dust Regulation Arrangement, Variable Digging Angle Giant Ripper, Variable Digging Angle Giant Ripper Without Push Block, Variable Giant Ripper			
1		17A-43-41711	Bracket	1	81105-
2		06124-02020	Bearing	2	81105-
3		11Y-06-22150	Switch	1	81105-
4		08192-13830	• Connector	1	81105-
5		01010-81040	Bolt	2	81105-
6		01643-31032	Washer	2	81105-
7		01016-50830	Bolt	1	81105-
8		01580-10806	Nut	1	81105-
9		17A-43-41722	Lever	1	81105-
10		17A-43-41731	Lever	1	81105-
11		01010-80830	Bolt	1	81105-
12		01643-30823	Washer	1	81105-
13		04010-00516	Key	1	81105-
14		17A-43-41760	Spring	1	81105-
15		04050-11612	Pin, Cotter	2	81105-
16		01640-20610	Washer	2	81105-
17		04221-20634	Yoke,LHS	1	81105-

FIG. K2110-027002 Floor Frame, Parking Brake Lever

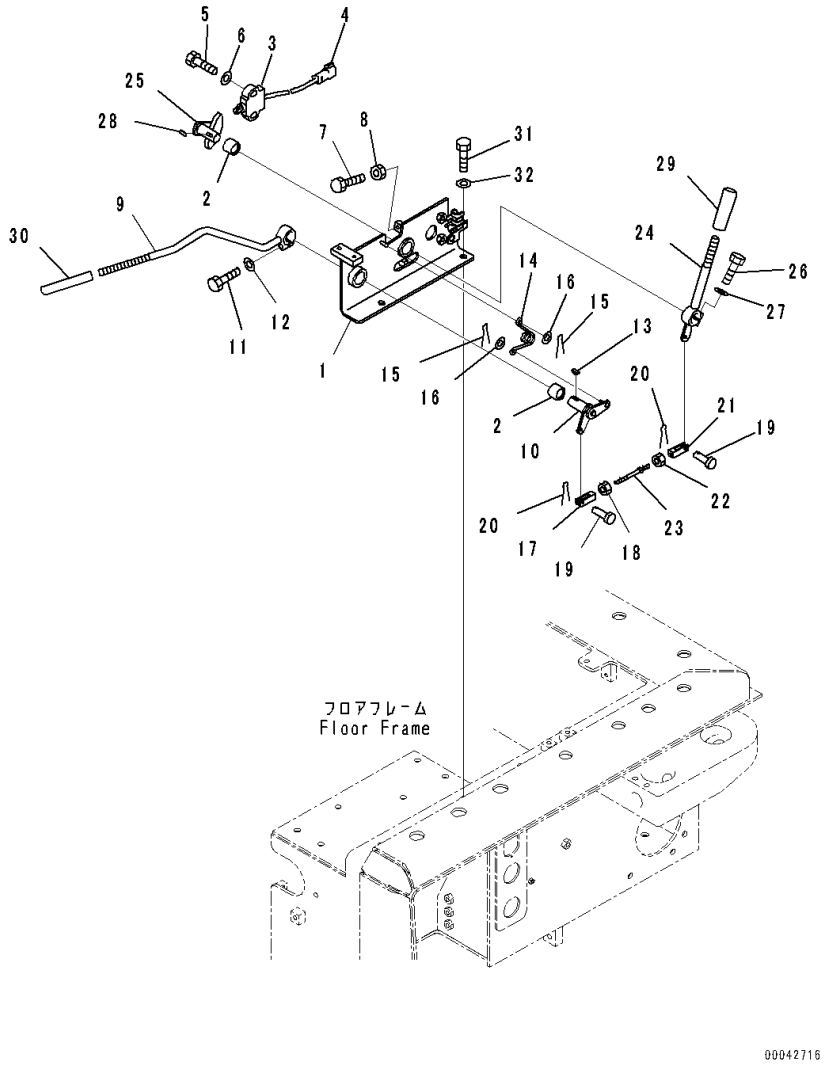

Index	Code	Part Number	Description	Qty	Serial Number
18		01508-40603	Nut, Left-handed	1	81105-
19		04205-10618	Pin	2	81105-
20		04050-11612	Pin, Cotter	2	81105-
21		04211-20634	Yoke	1	81105-
22		01580-10605	Nut	1	81105-
23		04248-30609	Rod	1	81105-
24		17A-43-41751	Lever	1	81105-
25		17A-43-41741	Lever	1	81105-
26		01010-80830	Bolt	1	81105-
27		01643-30823	Washer	1	81105-
28		04010-00516	Key	1	81105-
29		22M-43-21470	Knob	1	81105-
30		417-43-28270	Cap	1	81105-
31		01010-81025	Bolt	2	81105-
32		01643-31032	Washer	2	81105-

FIG. K2110-027003 Floor Frame, Horn Switch and Controller

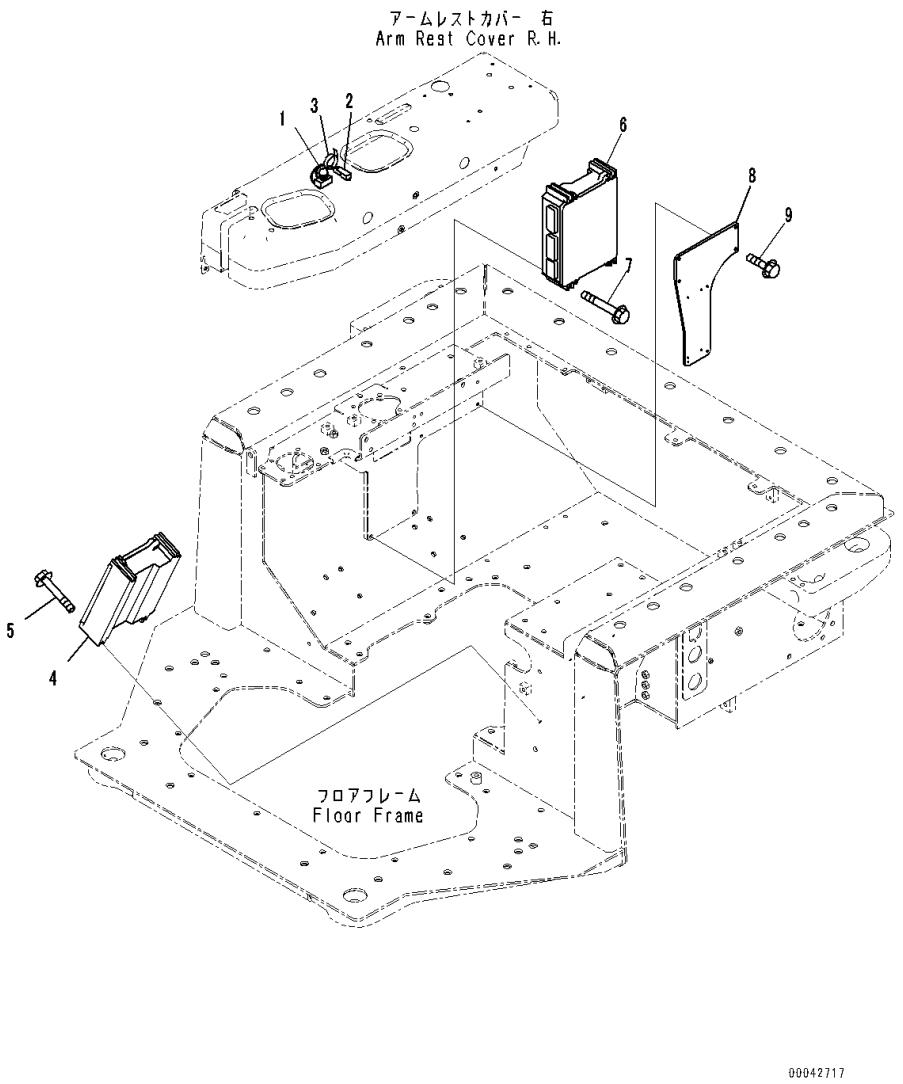

Index	Code	Part Number	Description	Qty	Serial Number
		Note: This list covers following specifications.			
		Dual Tilt Dozer, With Variable Digging Angle Giant Ripper, Variable Digging Angle Giant Ripper Without Push Block, Variable Giant Ripper			
		Dual Tilt Dozer, With Variable Digging Angle Multi Ripper, Variable Multi Ripper			
		Without Rear Equipment			
		Dual Tilt Dozer, Without Rear Equipment			
		With Variable Digging Angle Multi Ripper, Variable Multi Ripper			
		With Variable Digging Angle Giant Ripper, Variable Digging Angle Giant Ripper Without Push Block, Variable Giant Ripper			
		With MSHA Dust Regulation Arrangement, Variable Digging Angle Multi Ripper, Variable Multi Ripper			
		With MSHA Dust Regulation Arrangement, Variable Digging Angle Giant Ripper, Variable Digging Angle Giant Ripper Without Push Block, Variable Giant Ripper			
		Dual Tilt Dozer, With MSHA Dust Regulation Arrangement, Variable Digging Angle Multi Ripper, Variable Multi Ripper			
		Dual Tilt Dozer, With MSHA Dust Regulation Arrangement, Variable Digging Angle Giant Ripper, Variable Digging Angle Giant Ripper Without Push Block, Variable Giant Ripper			
1		08064-10000	Switch, Horn	1	81105-
2		17A-06-41860	Wiring Harness	1	81105-
3		08034-20310	• Band, Black	1	81105-
4		7830-54-2009	Controller	1	81193-
5		01435-00885	Bolt	4	81105-
6		7830-54-2009	Controller	1	81193-
7		01435-00880	Bolt	4	81105-
8		17A-54-46990	Plate	1	81105-
9		01435-00616	Bolt	4	81105-

FIG. K2110-027004 Floor Frame, Floor, Wiring Harness

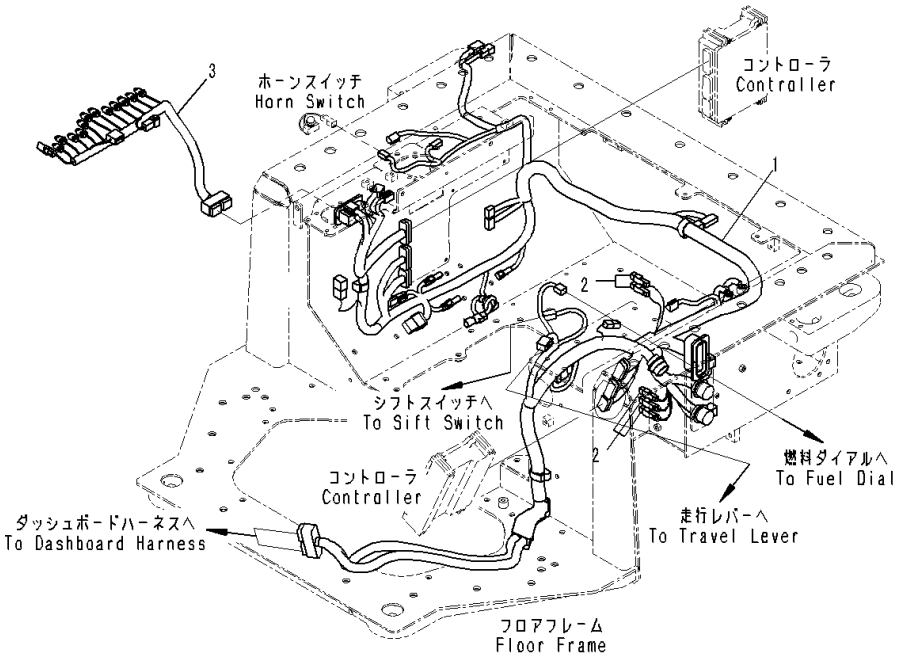

Index	Code	Part Number	Description	Qty	Serial Number
		Note: This list covers following specifications. Dual Tilt Dozer, With Variable Digging Angle Giant Ripper, Variable Digging Angle Giant Ripper Without Push Block, Variable Giant Ripper Dual Tilt Dozer, With Variable Digging Angle Multi Ripper, Variable Multi Ripper Without Rear Equipment Dual Tilt Dozer, Without Rear Equipment With Variable Digging Angle Multi Ripper, Variable Multi Ripper With Variable Digging Angle Giant Ripper, Variable Digging Angle Giant Ripper Without Push Block, Variable Giant Ripper With MSHA Dust Regulation Arrangement, Variable Digging Angle Multi Ripper, Variable Multi Ripper With MSHA Dust Regulation Arrangement, Variable Digging Angle Giant Ripper, Variable Digging Angle Giant Ripper Without Push Block, Variable Giant Ripper Dual Tilt Dozer, With MSHA Dust Regulation Arrangement, Variable Digging Angle Multi Ripper, Variable Multi Ripper Dual Tilt Dozer, With MSHA Dust Regulation Arrangement, Variable Digging Angle Giant Ripper, Variable Digging Angle Giant Ripper Without Push Block, Variable Giant Ripper			
1		17A-06-41113	Wiring Harness	1	81105-
2		21J-06-13661	• Diode	5	81105-
3		17A-06-41141	Wiring Harness	1	81105-

FIG. K2110-027005 Floor Frame, Floor Wiring Harness Clamp (1/2)

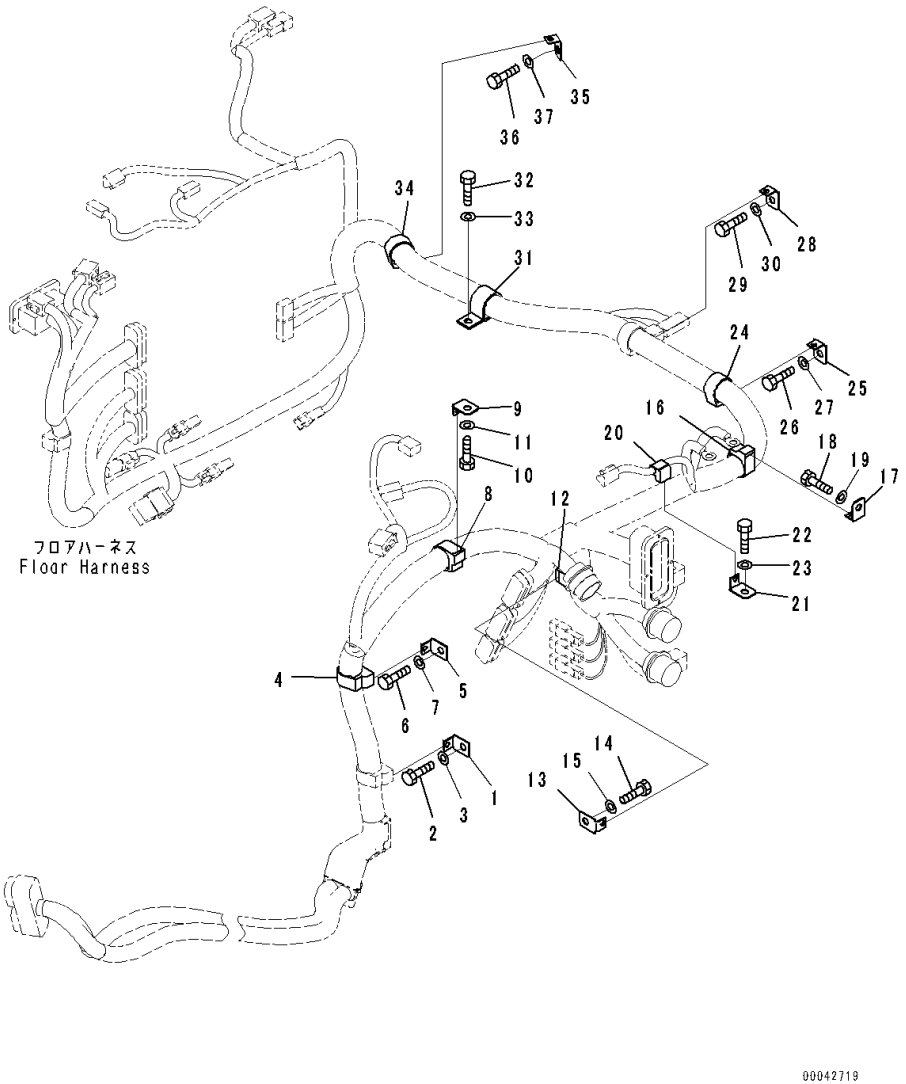

Index	Code	Part Number	Description	Qty	Serial Number
		Note: This list covers following specifications.			
		Dual Tilt Dozer, With Variable Digging Angle Giant Ripper, Variable Digging Angle Giant Ripper Without Push Block, Variable Giant Ripper			
		Dual Tilt Dozer, With Variable Digging Angle Multi Ripper, Variable Multi Ripper			
		Without Rear Equipment			
		Dual Tilt Dozer, Without Rear Equipment			
		With Variable Digging Angle Multi Ripper, Variable Multi Ripper			
		With Variable Digging Angle Giant Ripper, Variable Digging Angle Giant Ripper Without Push Block, Variable Giant Ripper			
		With MSHA Dust Regulation Arrangement, Variable Digging Angle Multi Ripper, Variable Multi Ripper			
		With MSHA Dust Regulation Arrangement, Variable Digging Angle Giant Ripper, Variable Digging Angle Giant Ripper Without Push Block, Variable Giant Ripper			
		Dual Tilt Dozer, With MSHA Dust Regulation Arrangement, Variable Digging Angle Multi Ripper, Variable Multi Ripper			
		Dual Tilt Dozer, With MSHA Dust Regulation Arrangement, Variable Digging Angle Giant Ripper, Variable Digging Angle Giant Ripper Without Push Block, Variable Giant Ripper			
1		08057-12010	Clip	1	81105-
2		01010-81020	Bolt	1	81105-
3		01643-31032	Washer	1	81105-
4		08211-02820	Clip	1	81105-
5		08057-12010	Clip	1	81105-
6		01010-81020	Bolt	1	81105-
7		01643-31032	Washer	1	81105-
8		08211-02820	Clip	1	81105-
9		08057-12010	Clip	1	81105-
10		01010-81020	Bolt	1	81105-
11		01643-31032	Washer	1	81105-
12		08211-02820	Clip	1	81105-
13		08057-12010	Clip	1	81105-
14		01010-81020	Bolt	1	81105-
15		01643-31032	Washer	1	81105-
16		08211-02820	Clip	1	81105-
17		08057-12010	Clip	1	81105-

FIG. K2110-027005 Floor Frame, Floor Wiring Harness Clamp (1/2)

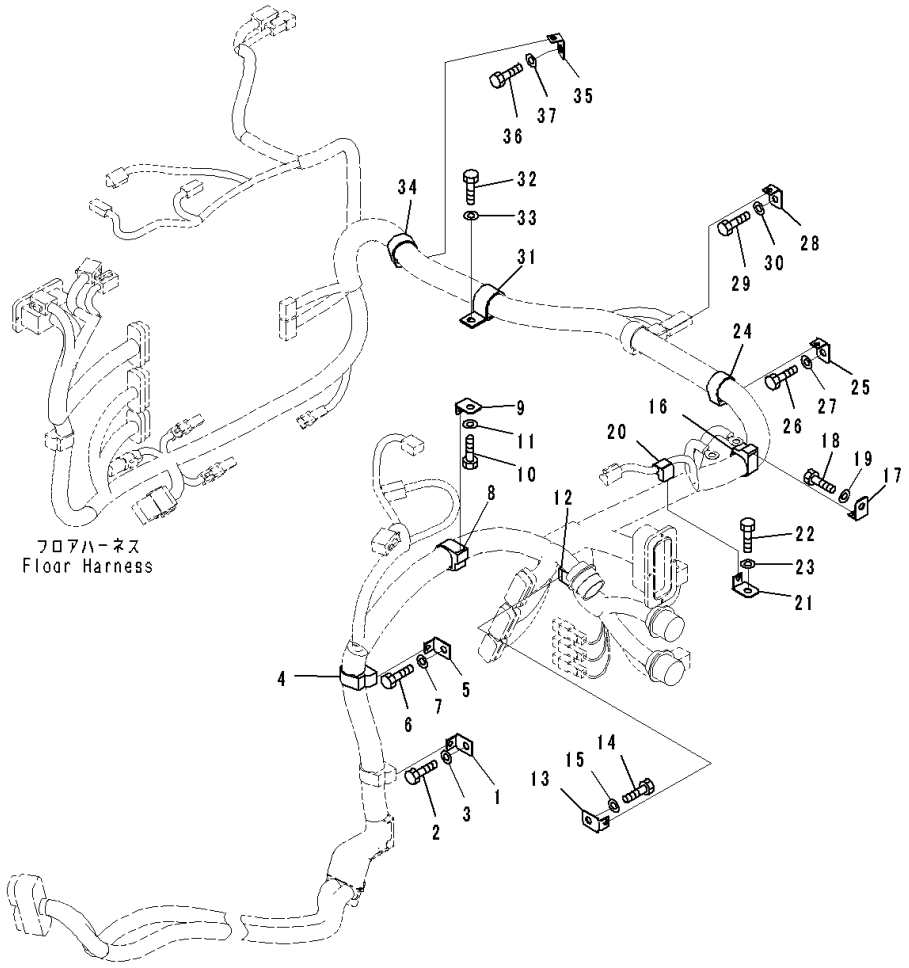

Index	Code	Part Number	Description	Qty	Serial Number
18		01010-81020	Bolt	1	81105-
19		01643-31032	Washer	1	81105-
20		08211-00720	Clip	1	81105-
21		08057-12010	Clip	1	81105-
22		01010-81020	Bolt	1	81105-
23		01643-31032	Washer	1	81105-
24		08211-02820	Clip	1	81105-
25		08057-12010	Clip	1	81105-
26		01010-81020	Bolt	1	81105-
27		01643-31032	Washer	1	81105-
28		08057-12010	Clip	1	81105-
29		01010-81020	Bolt	1	81105-
30		01643-31032	Washer	1	81105-
31		04434-53411	Clip	1	81105-
32		01010-81020	Bolt	1	81105-
33		01643-31032	Washer	1	81105-
34		08211-02820	Clip	1	81105-
35		08057-12010	Clip	1	81105-
36		01010-81020	Bolt	1	81105-
37		01643-31032	Washer	1	81105-

FIG. K2110-027006 Floor Frame, Floor Wiring Harness Clamp (2/2)

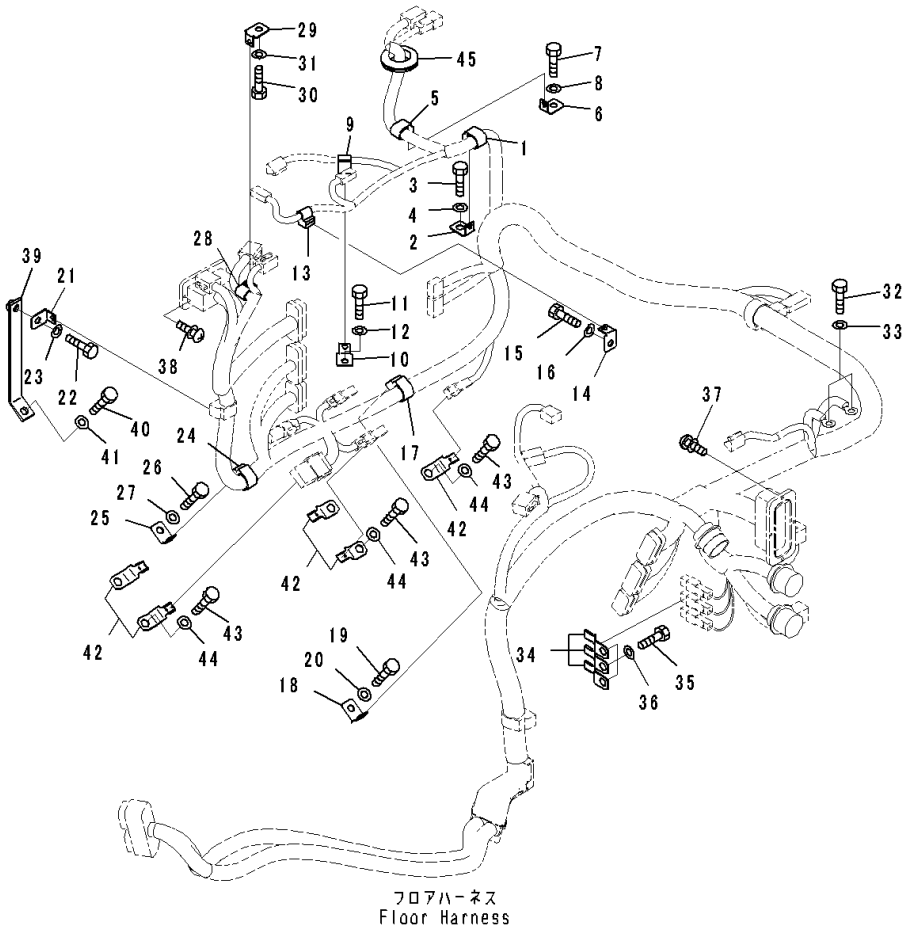

Index	Code	Part Number	Description	Qty	Serial Number
		Note: This list covers following specifications.			
		Dual Tilt Dozer, With Variable Digging Angle Giant Ripper, Variable Digging Angle Giant Ripper Without Push Block, Variable Giant Ripper			
		Dual Tilt Dozer, With Variable Digging Angle Multi Ripper, Variable Multi Ripper			
		Without Rear Equipment			
		Dual Tilt Dozer, Without Rear Equipment			
		With Variable Digging Angle Multi Ripper, Variable Multi Ripper			
		With Variable Digging Angle Giant Ripper, Variable Digging Angle Giant Ripper Without Push Block, Variable Giant Ripper			
		With MSHA Dust Regulation Arrangement, Variable Digging Angle Multi Ripper, Variable Multi Ripper			
		With MSHA Dust Regulation Arrangement, Variable Digging Angle Giant Ripper, Variable Digging Angle Giant Ripper Without Push Block, Variable Giant Ripper			
		Dual Tilt Dozer, With MSHA Dust Regulation Arrangement, Variable Digging Angle Multi Ripper, Variable Multi Ripper			
		Dual Tilt Dozer, With MSHA Dust Regulation Arrangement, Variable Digging Angle Giant Ripper, Variable Digging Angle Giant Ripper Without Push Block, Variable Giant Ripper			
1		08211-01520	Clip	1	81105-
2		08057-12010	Clip	1	81105-
3		01010-81020	Bolt	1	81105-
4		01643-31032	Washer	1	81105-
5		08211-01320	Clip	1	81105-
6		08057-12010	Clip	1	81105-
7		01010-81020	Bolt	1	81105-
8		01643-31032	Washer	1	81105-
9		08211-00720	Clip	1	81105-
10		08057-12010	Clip	1	81105-
11		01010-81020	Bolt	1	81105-
12		01643-31032	Washer	1	81105-
13		08211-00720	Clip	1	81105-
14		08057-12010	Clip	1	81105-
15		01010-81020	Bolt	1	81105-
16		01643-31032	Washer	1	81105-
17		08211-01920	Clip	1	81105-

FIG. K2110-027006 Floor Frame, Floor Wiring Harness Clamp (2/2)

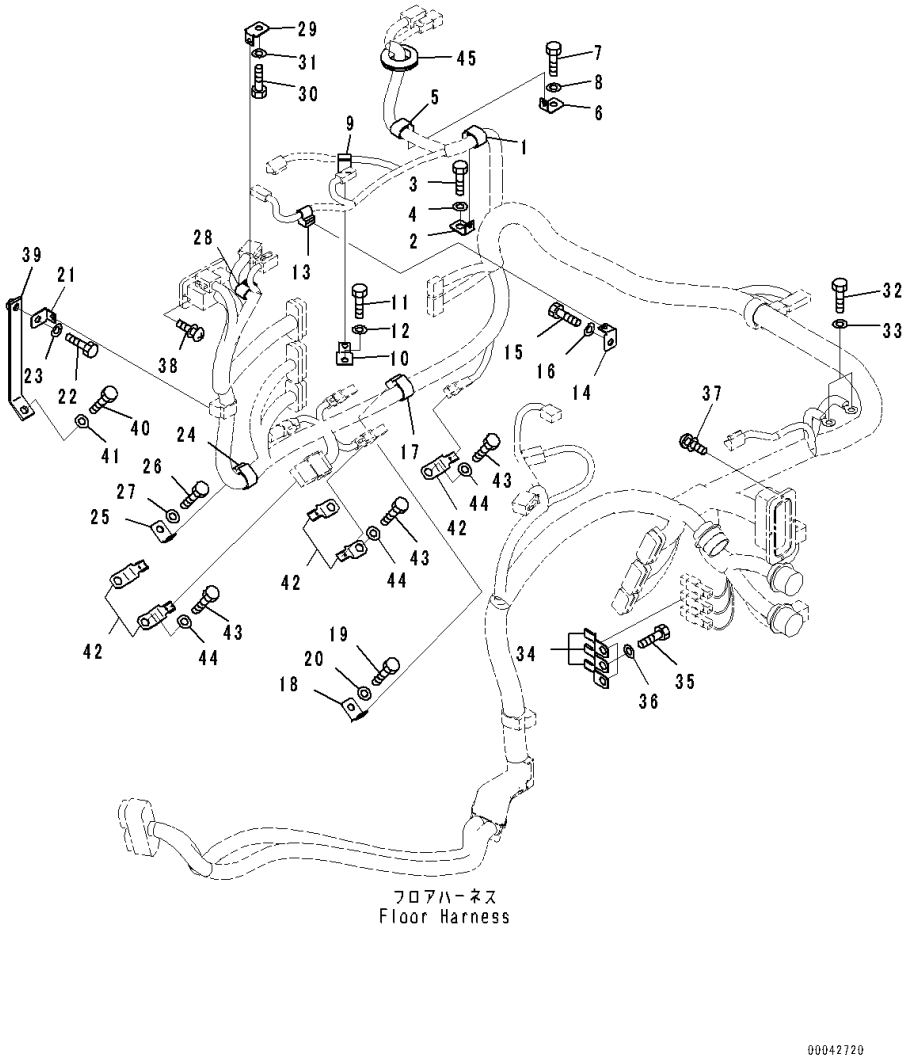

Index	Code	Part Number	Description	Qty	Serial Number
18		08057-12010	Clip	1	81105-
19		01010-81020	Bolt	1	81105-
20		01643-31032	Washer	1	81105-
21		08057-12010	Clip	1	81105-
22		01010-81020	Bolt	1	81105-
23		01643-31032	Washer	1	81105-
24		08211-01920	Clip	1	81105-
25		08057-12010	Clip	1	81105-
26		01010-81020	Bolt	1	81105-
27		01643-31032	Washer	1	81105-
28		08211-01020	Clip	1	81105-
29		08057-12010	Clip	1	81105-
30		01010-81020	Bolt	1	81105-
31		01643-31032	Washer	1	81105-
32		01010-81020	Bolt	2	81105-
33		01643-31032	Washer	2	81105-
34		08193-20010	Clip	3	81105-
35		01010-81020	Bolt	3	81105-
36		01643-31032	Washer	3	81105-
37		01023-10416	Screw	4	81105-
38		01023-10416	Screw	4	81105-
39		17A-06-41870	Bracket	1	81105-
40		01010-81020	Bolt	1	81105-
41		01643-31032	Washer	1	81105-
42		08193-20010	Clip	5	81105-
43		01010-81020	Bolt	5	81105-
44		01643-31032	Washer	5	81105-
45		08037-03614	Grommet	1	81105-

FIG. K2110-027007 Floor Frame, Fuse Box and Relay

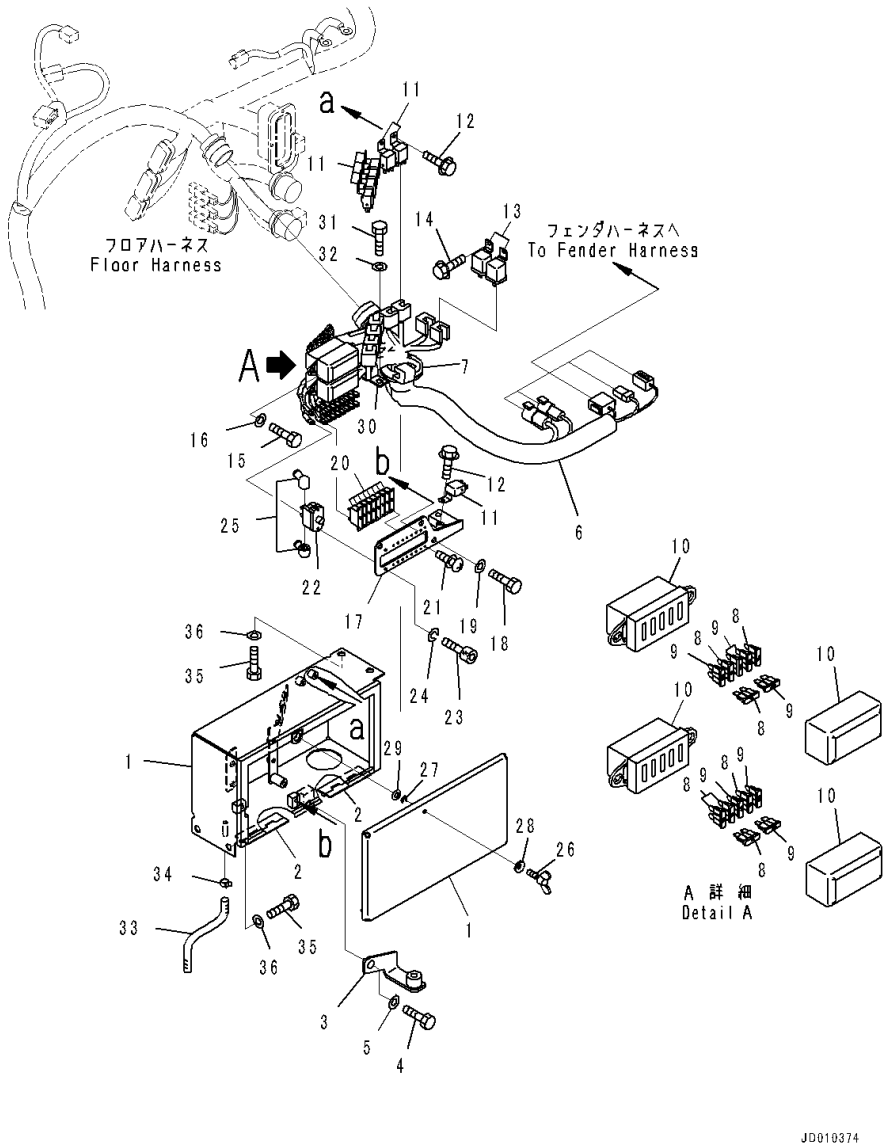

Index	Code	Part Number	Description	Qty	Serial Number
		Note: This list covers following specifications.			
		Dual Tilt Dozer, With Variable Digging Angle Giant Ripper, Variable Digging Angle Giant Ripper Without Push Block, Variable Giant Ripper			
		Dual Tilt Dozer, With Variable Digging Angle Multi Ripper, Variable Multi Ripper			
		Without Rear Equipment			
		Dual Tilt Dozer, Without Rear Equipment			
		With Variable Digging Angle Multi Ripper, Variable Multi Ripper			
		With Variable Digging Angle Giant Ripper, Variable Digging Angle Giant Ripper Without Push Block, Variable Giant Ripper			
		With MSHA Dust Regulation Arrangement, Variable Digging Angle Multi Ripper, Variable Multi Ripper			
		With MSHA Dust Regulation Arrangement, Variable Digging Angle Giant Ripper, Variable Digging Angle Giant Ripper Without Push Block, Variable Giant Ripper			
		Dual Tilt Dozer, With MSHA Dust Regulation Arrangement, Variable Digging Angle Multi Ripper, Variable Multi Ripper			
		Dual Tilt Dozer, With MSHA Dust Regulation Arrangement, Variable Digging Angle Giant Ripper, Variable Digging Angle Giant Ripper Without Push Block, Variable Giant Ripper			
1		17A-06-41511	Bracket	1	81105-
2		113-54-24190	• Hinge,Welded	2	81105-
3		17A-06-41912	Bracket	1	81105-
4		01010-81225	Bolt	1	81105-
5		01643-31232	Washer	1	81105-
6		17A-06-41223	Wiring Harness	1	81105-
7		08037-13550	• Grommet	1	81105-
8		08041-00500	• Fuse, 5Amp.	7	81105-
9		08041-02000	• Fuse, 20Amp.	7	81105-
10		20T-06-71560	• Box, Fuse	2	81105-
11		7861-74-5100	Relay	7	81105-
12		01435-00612	Bolt	7	81105-
13		569-06-61960	Relay	2	81105-
14		01435-00612	Bolt	2	81105-
15		01010-80816	Bolt	4	81105-
16		01643-30823	Washer	4	81105-
17		17A-06-41662	Bracket	1	81105-

FIG. K2110-027007 Floor Frame, Fuse Box and Relay

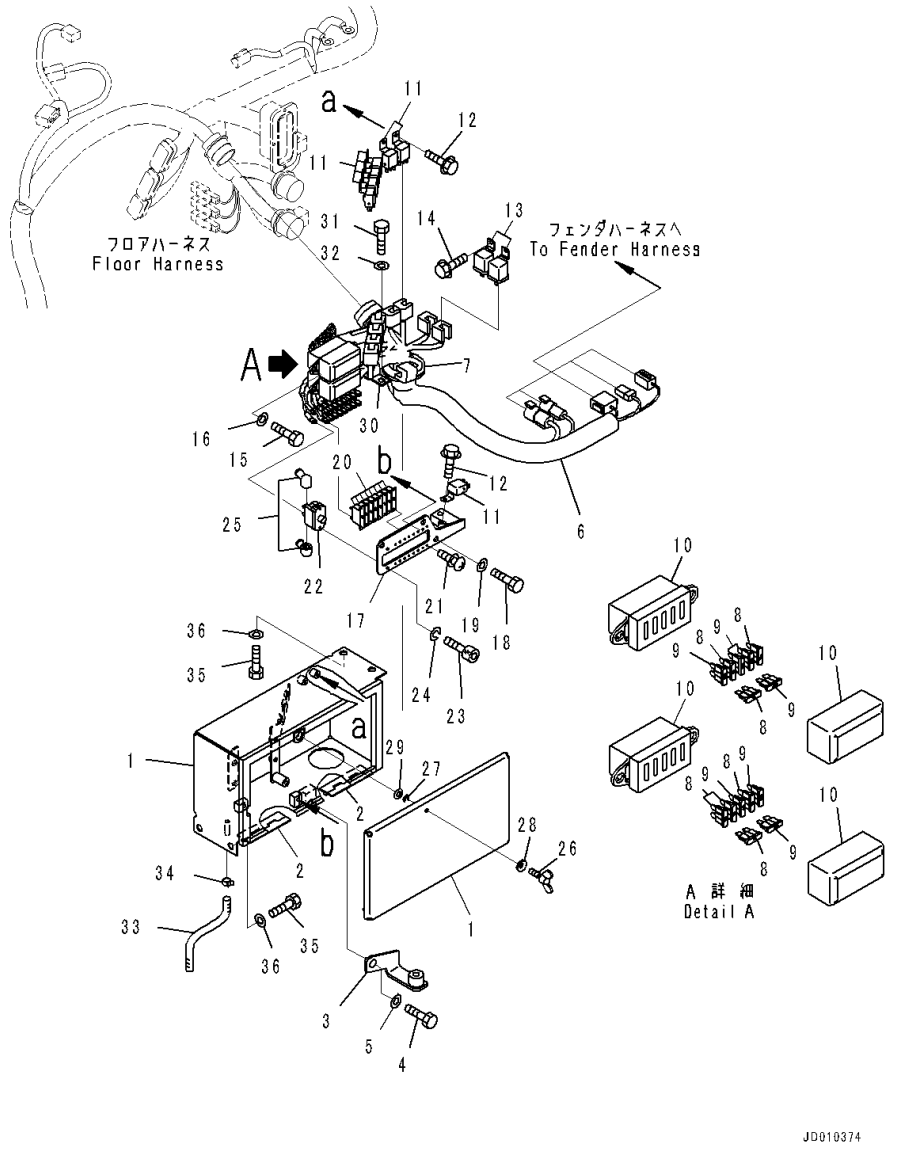

Index	Code	Part Number	Description	Qty	Serial Number
18		01010-80816	Bolt	3	81105-
19		01643-30823	Washer	3	81105-
20		195-979-8340	Breaker	8	81105-
21		01023-10308	Screw	16	81105-
22		209-06-77460	Circuit Breaker	1	81105-
23		01252-70410	Bolt	2	81105-
24		01601-20410	Washer	2	81105-
25		08038-00519	Cap	2	81105-
26		198-911-6970	Bolt	1	81105-
27		198-911-6990	Ring, Snap	1	81105-
28		01643-70623	Washer	1	81105-
29		01640-20610	Washer	1	81105-
30		04434-52711	Clip	1	81105-
31		01010-81020	Bolt	1	81105-
32		01643-31032	Washer	1	81105-
33		07270-20820	Tube	1	81105-
34		07285-00115	Clip	1	81105-
35		01010-81020	Bolt	4	81105-
36		01643-31032	Washer	4	81105-

FIG. K2110-027008 Floor Frame, Pin Puller Switch

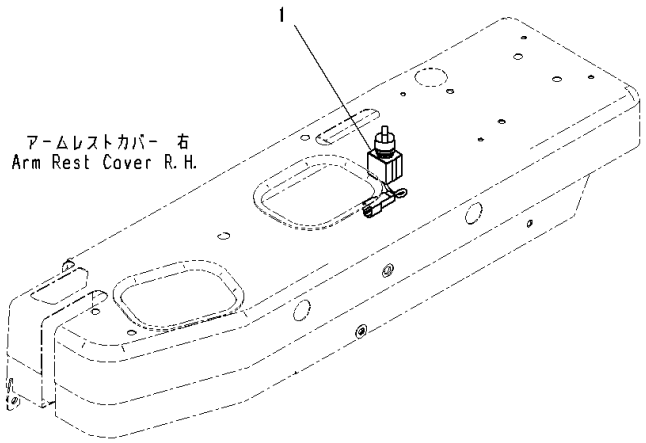

Index	Code	Part Number	Description	Qty	Serial Number
		Note: This list covers following specifications.			
		Dual Tilt Dozer, With Variable Digging Angle Giant Ripper, Variable Digging Angle Giant Ripper Without Push Block, Variable Giant Ripper			
		With Variable Digging Angle Giant Ripper, Variable Digging Angle Giant Ripper Without Push Block, Variable Giant Ripper			
		With MSHA Dust Regulation Arrangement, Variable Digging Angle Giant Ripper, Variable Digging Angle Giant Ripper Without Push Block, Variable Giant Ripper			
		Dual Tilt Dozer, With MSHA Dust Regulation Arrangement, Variable Digging Angle Giant Ripper, Variable Digging Angle Giant Ripper Without Push Block, Variable Giant Ripper			
		With MSHA Dust Regulation Arrangement, Variable Giant Ripper, Provision For Landfill Specification			
		Angle Dozer, With Variable Digging Angle Giant Ripper, Variable Digging Angle Giant Ripper Without Push Block, Variable Giant Ripper			
		Dual Tilt Dozer, With MSHA Dust Regulation Arrangement, Variable Giant Ripper, For Landfill Specification			
		With Variable Digging Angle Giant Ripper, For Angle Dozer			
1		17A-06-41850	Switch Assembly	1	81105-

FIG. K2110-027009 Floor Frame, Console Box

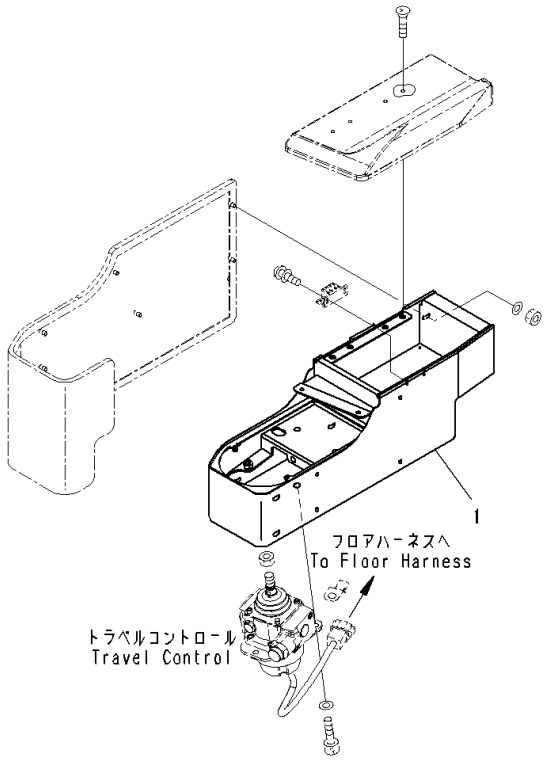

Index	Code	Part Number	Description	Qty	Serial Number
		Note: This list covers following specifications. Dual Tilt Dozer, With Variable Digging Angle Giant Ripper, Variable Digging Angle Giant Ripper Without Push Block, Variable Giant Ripper Dual Tilt Dozer, With Variable Digging Angle Multi Ripper, Variable Multi Ripper Without Rear Equipment Dual Tilt Dozer, Without Rear Equipment With Variable Digging Angle Multi Ripper, Variable Multi Ripper With Variable Digging Angle Giant Ripper, Variable Digging Angle Giant Ripper Without Push Block, Variable Giant Ripper With MSHA Dust Regulation Arrangement, Variable Digging Angle Multi Ripper, Variable Multi Ripper With MSHA Dust Regulation Arrangement, Variable Digging Angle Giant Ripper, Variable Digging Angle Giant Ripper Without Push Block, Variable Giant Ripper Dual Tilt Dozer, With MSHA Dust Regulation Arrangement, Variable Digging Angle Multi Ripper, Variable Multi Ripper Dual Tilt Dozer, With MSHA Dust Regulation Arrangement, Variable Digging Angle Giant Ripper, Variable Digging Angle Giant Ripper Without Push Block, Variable Giant Ripper			
1		154-43-73611	Box	1	81105-

FIG. K2110-027010 Floor Frame, Travel Control Lever

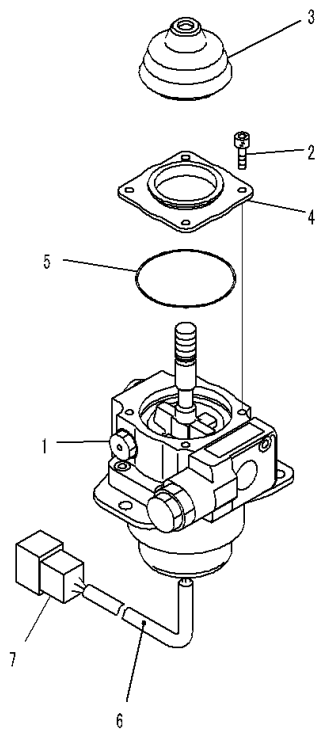

JY015790

Index	Code	Part Number	Description	Qty	Serial Number
		Note: This list covers following specifications.			
		Dual Tilt Dozer, With Variable Digging Angle Giant Ripper, Variable Digging Angle Giant Ripper Without Push Block, Variable Giant Ripper			
		Dual Tilt Dozer, With Variable Digging Angle Multi Ripper, Variable Multi Ripper			
		Without Rear Equipment			
		Dual Tilt Dozer, Without Rear Equipment			
		With Variable Digging Angle Multi Ripper, Variable Multi Ripper			
		With Variable Digging Angle Giant Ripper, Variable Digging Angle Giant Ripper Without Push Block, Variable Giant Ripper			
		With MSHA Dust Regulation Arrangement, Variable Digging Angle Multi Ripper, Variable Multi Ripper			
		With MSHA Dust Regulation Arrangement, Variable Digging Angle Giant Ripper, Variable Digging Angle Giant Ripper Without Push Block, Variable Giant Ripper			
		Dual Tilt Dozer, With MSHA Dust Regulation Arrangement, Variable Digging Angle Multi Ripper, Variable Multi Ripper			
		Dual Tilt Dozer, With MSHA Dust Regulation Arrangement, Variable Digging Angle Giant Ripper, Variable Digging Angle Giant Ripper Without Push Block, Variable Giant Ripper			
1		702-16-02290	Lever Assembly	1	81105-
2		01252-60512	• Bolt	4	81105-
3		702-16-59330	• Boot	1	81105-
4		702-16-62730	• Cover	1	81105-
5		702-16-62740	• O-ring	1	81105-
6		702-16-61270	• Tube	1	81105-
7		08192-28812	• Connector	1	81105-

FIG. K2110-027011 Floor Frame, Console

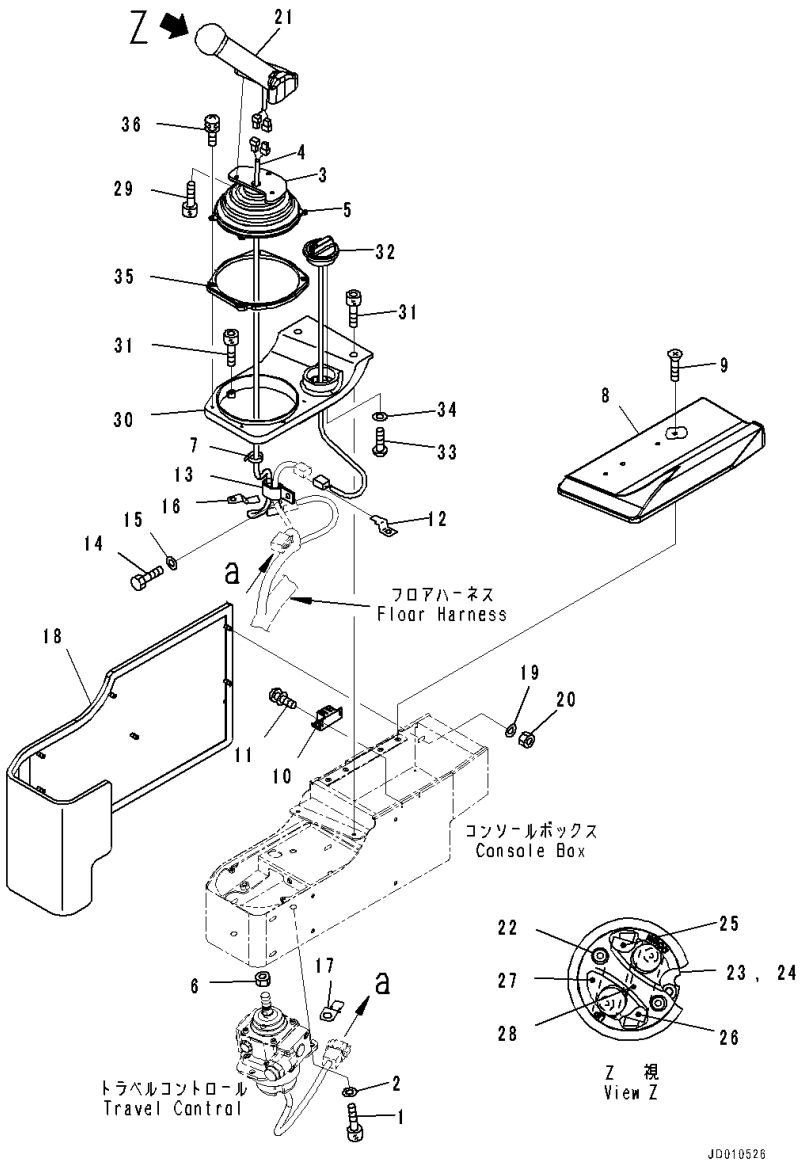

Index	Code	Part Number	Description	Qty	Serial Number
		Note: This list covers following specifications. Dual Tilt Dozer, With Variable Digging Angle Giant Ripper, Variable Digging Angle Giant Ripper Without Push Block, Variable Giant Ripper Dual Tilt Dozer, With Variable Digging Angle Multi Ripper, Variable Multi Ripper Without Rear Equipment Dual Tilt Dozer, Without Rear Equipment With Variable Digging Angle Multi Ripper, Variable Multi Ripper With Variable Digging Angle Giant Ripper, Variable Digging Angle Giant Ripper Without Push Block, Variable Giant Ripper With MSHA Dust Regulation Arrangement, Variable Digging Angle Multi Ripper, Variable Multi Ripper With MSHA Dust Regulation Arrangement, Variable Digging Angle Giant Ripper, Variable Digging Angle Giant Ripper Without Push Block, Variable Giant Ripper Dual Tilt Dozer, With MSHA Dust Regulation Arrangement, Variable Digging Angle Multi Ripper, Variable Multi Ripper Dual Tilt Dozer, With MSHA Dust Regulation Arrangement, Variable Digging Angle Giant Ripper, Variable Digging Angle Giant Ripper Without Push Block, Variable Giant Ripper			
1		01252-70825	Bolt	3	81105-
2		01643-30823	Washer	3	81105-
		14X-06-31311	Wiring Harness	1	81105-
3		154-43-73531	• Bracket	1	81105-
4	C1		• Wiring Harness	1	81105-
5		14X-43-34331	• Boot	1	81105-
6		20T-43-71190	Nut	1	81105-
7		08034-20519	Band	4	81105-
8		154-43-73641	Pad	1	81105-
9		01224-70408	Screw, Philips Head	4	81105-
10		154-43-73651	Magnet	1	81105-
11		01023-10308	Screw	4	81105-
12		08053-01510	Clip	1	81105-
13		04435-51408	Clip	1	81105-
14		01010-80816	Bolt	1	81105-
15		01643-30823	Washer	1	81105-
16		08193-20010	Clip	1	81105-

FIG. K2110-027011 Floor Frame, Console

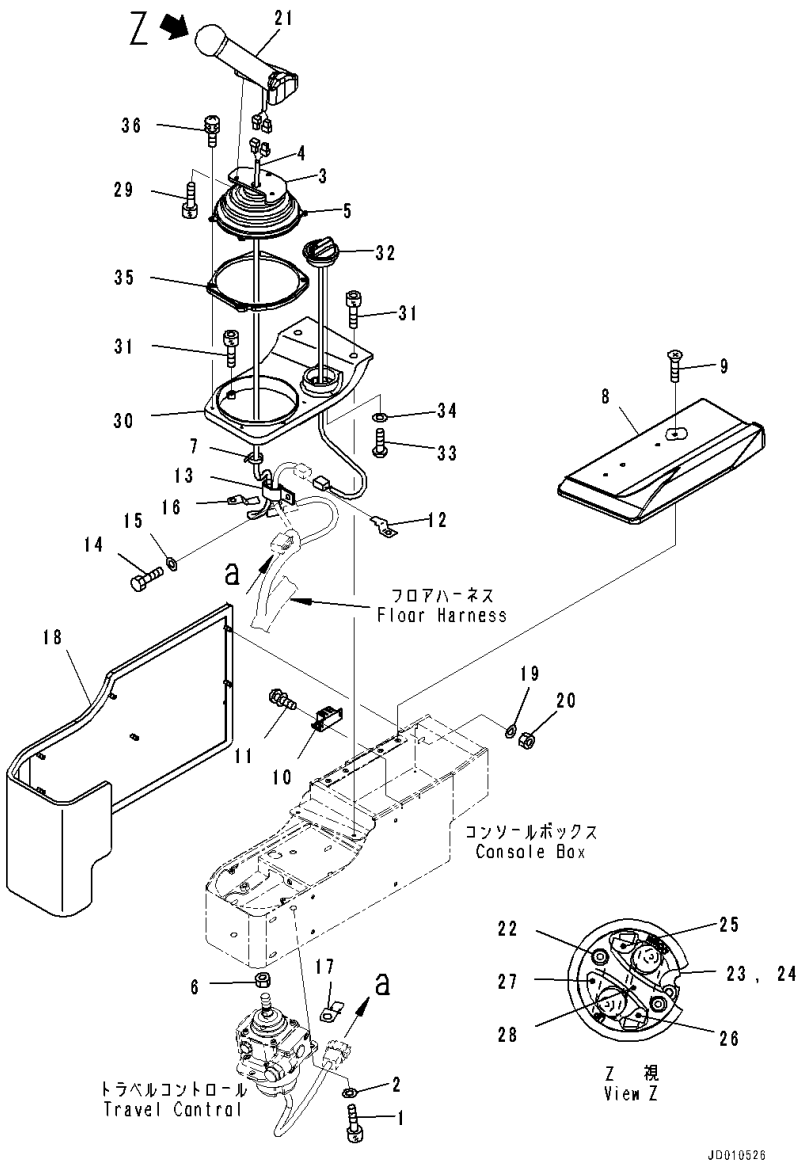

Index	Code	Part Number	Description	Qty	Serial Number
17		08193-31012	Clip	1	81105-
18		154-43-73281	Pad	1	81105-
19		01640-20610	Washer	8	81105-
20		01580-20605	Nut	8	81105-
21		19M-43-33111	Knob Assembly	1	81105-
22		19M-09-11510	• Bolt	2	81105-
23		19M-43-33141	• Switch Assembly	1	81105-
24		19M-43-33171	• • Plate	1	81105-
25		19M-43-33460	• • Switch	1	81105-
26		19M-43-33470	• • Switch	1	81105-
27		19M-43-33151	• Rubber	1	81105-
28		19M-43-33161	• Cover	1	81105-
29		01252-80514	Bolt	3	81105-
30		154-43-73620	Finisher Assembly	1	81105-
31		01252-70520	Bolt	4	81105-
32		7825-30-1301	Dial	1	81105-
33		01220-40408	Screw	2	81105-
34		01641-20405	Washer	2	81105-
35		14X-43-34341	Cover	1	81105-
36		01023-70414	Screw	4	81105-

FIG. K2110-027012 Floor Frame, Lift and Slider

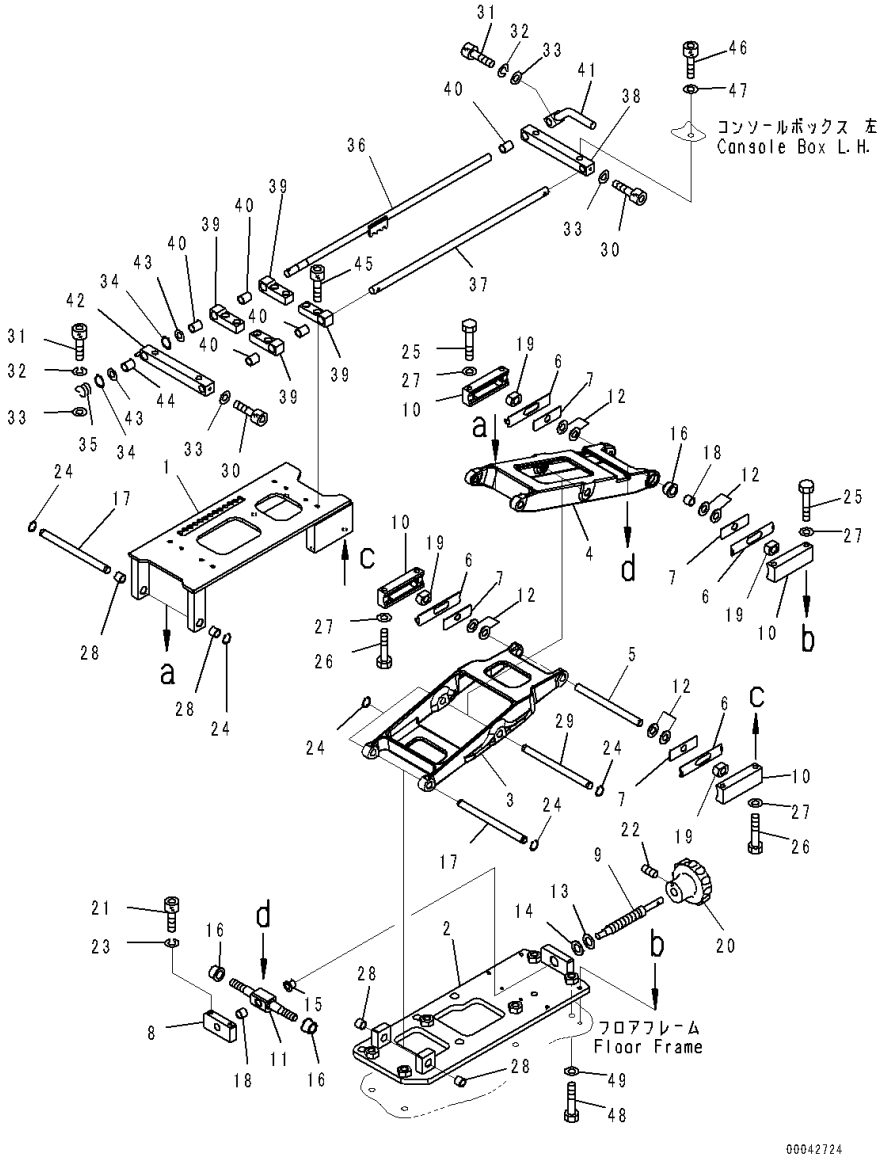

Index	Code	Part Number	Description	Qty	Serial Number
		Note: This list covers following specifications.			
		Dual Tilt Dozer, With Variable Digging Angle Giant Ripper, Variable Digging Angle Giant Ripper Without Push Block, Variable Giant Ripper			
		Dual Tilt Dozer, With Variable Digging Angle Multi Ripper, Variable Multi Ripper			
		Without Rear Equipment			
		Dual Tilt Dozer, Without Rear Equipment			
		With Variable Digging Angle Multi Ripper, Variable Multi Ripper			
		With Variable Digging Angle Giant Ripper, Variable Digging Angle Giant Ripper Without Push Block, Variable Giant Ripper			
		With MSHA Dust Regulation Arrangement, Variable Digging Angle Multi Ripper, Variable Multi Ripper			
		With MSHA Dust Regulation Arrangement, Variable Digging Angle Giant Ripper, Variable Digging Angle Giant Ripper Without Push Block, Variable Giant Ripper			
		Dual Tilt Dozer, With MSHA Dust Regulation Arrangement, Variable Digging Angle Multi Ripper, Variable Multi Ripper			
		Dual Tilt Dozer, With MSHA Dust Regulation Arrangement, Variable Digging Angle Giant Ripper, Variable Digging Angle Giant Ripper Without Push Block, Variable Giant Ripper			
		154-43-73301	Lifter Assembly	1	81105-
1		154-43-73211	• Plate	1	81105-
2		154-43-73831	• Plate	1	81105-
3		17A-43-26211	• Arm	1	81105-
4		154-43-73850	• Arm	1	81105-
5		154-43-73860	• Shaft	1	81105-
6		154-43-73870	• Plate	4	81105-
7		154-43-73880	• Plate	4	81105-
8		154-43-73890	• Block	1	81105-
9		154-43-73910	• Shaft	1	81105-
10		154-43-73920	• Box	4	81105-
11		154-43-73930	• Shaft	1	81105-
12		19M-43-34520	• Shim, T=0.2mm	8	81105-
13		363-43-38550	• Shim, T=0.2mm	2	81105-
14		154-43-73950	• Shim, T=0.5mm	2	81105-
15		154-43-73960	• Bushing	1	81105-
16		19M-43-34250	• Bushing	1	81105-

FIG. K2110-027012 Floor Frame, Lift and Slider

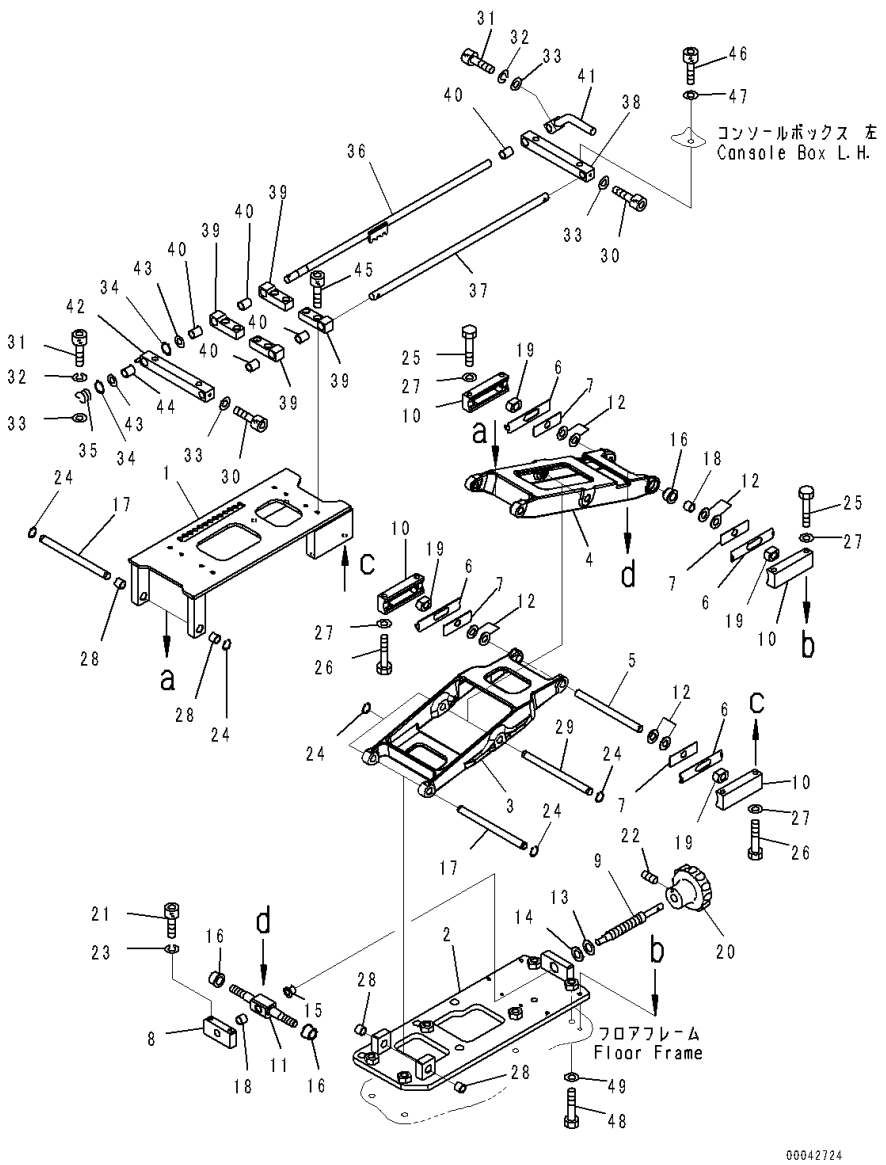

Index	Code	Part Number	Description	Qty	Serial Number
17		19M-43-34280	• Shaft	2	81105-
18		19M-43-34290	• Bushing	2	81105-
19		19M-43-34320	• Bushing	4	81105-
20		20A-43-15311	• Knob	1	81105-
21		01252-80530	• Bolt	2	81105-
22		01312-20612	• Screw	1	81105-
23		01601-20512	• Washer	2	81105-
24		04064-01010	• Ring, Snap	6	81105-
25		01010-80635	• Bolt	4	81105-
26		01010-80640	• Bolt	4	81105-
27		01643-30623	• Washer	8	81105-
28		06600-01008	• Bushing	4	81105-
29		17A-43-26231	• Shaft	1	81105-
		154-43-73601	Slider Assembly	1	81105-
30		01252-80412	• Bolt	2	81105-
31		01252-80414	• Bolt	2	81105-
32		01601-20411	• Washer	2	81105-
33		01640-20408	• Washer, Flat	4	81105-
34		04064-01010	• Ring, Snap	2	81105-
35		154-43-73670	• Spring	1	81105-
36		154-43-73680	• Shaft	1	81105-
37		19M-43-34120	• Shaft	1	81105-
38		19M-43-34132	• Guide	1	81105-
39		19M-43-34141	• Guide	4	81105-
40		19M-43-34150	• Bushing	5	81105-
41		19M-43-34160	• Lever	2	81105-
42		19M-43-34182	• Guide	1	81105-
43		19M-09-34110	• Washer	2	81105-
44		19M-43-34190	• Bushing	1	81105-
45		01252-80516	Bolt	8	81105-
46		01252-70816	Bolt	4	81105-
47		01643-30823	Washer	4	81105-
48		01010-81030	Bolt	6	81105-
49		01643-31032	Washer	6	81105-

FIG. K2110-027013 Floor Frame, Blade Control Lever

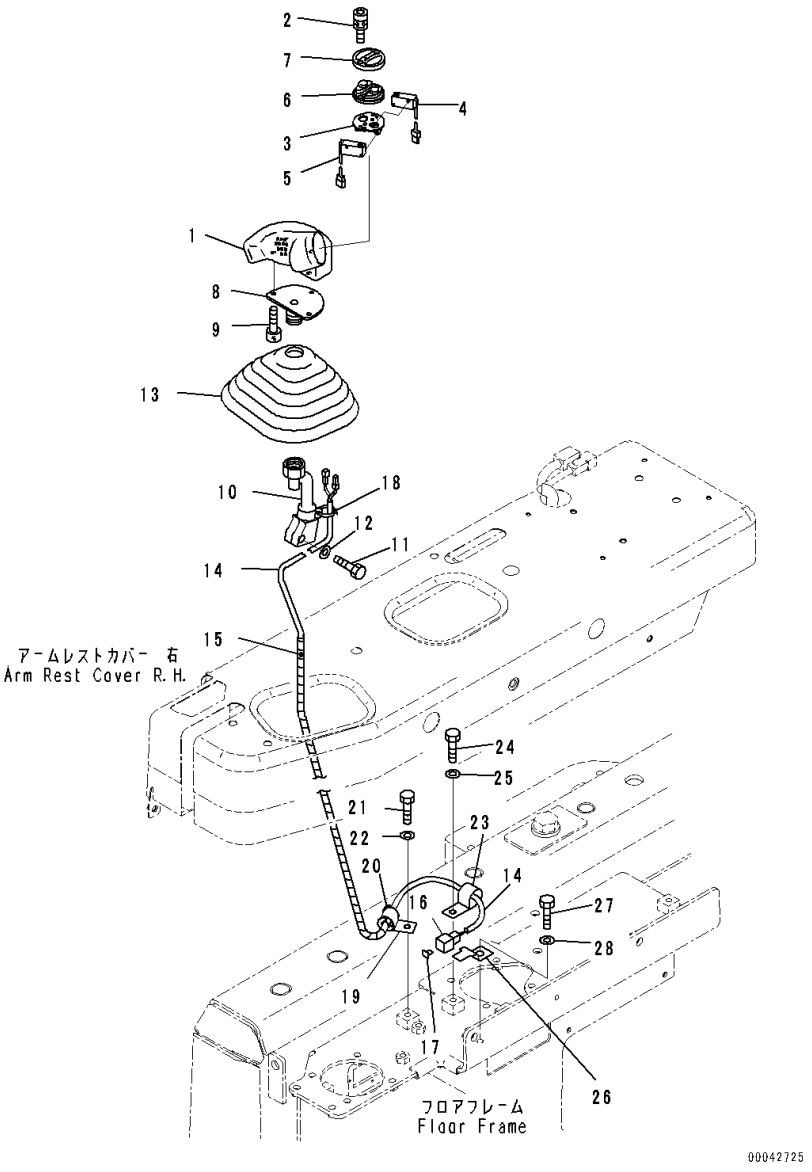

Index	Code	Part Number	Description	Qty	Serial Number
		Note: This list covers following specifications.			
		Dual Tilt Dozer, With Variable Digging Angle Giant Ripper,			
		Variable Digging Angle Giant Ripper Without Push Block,			
		Variable Giant Ripper			
		Dual Tilt Dozer, With Variable Digging Angle Multi Ripper,			
		Variable Multi Ripper			
		Dual Tilt Dozer, Without Rear Equipment			
		Dual Tilt Dozer, With MSHA Dust Regulation Arrangement,			
		Variable Digging Angle Multi Ripper, Variable Multi Ripper			
		Dual Tilt Dozer, With MSHA Dust Regulation Arrangement,			
		Variable Digging Angle Giant Ripper, Variable Digging Angle			
		Giant Ripper Without Push Block, Variable Giant Ripper			
		Dual Tilt Dozer, With MSHA Dust Regulation Arrangement,			
		Without Rear Equipment			
		Dual Tilt Dozer, With MSHA Dust Regulation Arrangement,			
		Variable Giant Ripper, For Landfill Specification			
		17A-43-42211	Knob Assembly	1	81105-
1	C1		• Knob Assembly	1	81105-
2		19M-09-11510	• Bolt	2	81105-
		19M-43-33140	• Switch Assembly	1	81105-
3		19M-43-33170	• • Plate	1	81105-
4		19M-43-33460	• • Switch	1	81105-
5		19M-43-33470	• • Switch	1	81105-
6		19M-43-33150	• Rubber	1	81105-
7		17A-43-42220	• Cover	1	81105-
8		19M-43-38220	Bracket	1	81105-
9		01252-80510	Bolt	3	81105-
10		19M-43-38211	Lever	1	81105-
11		01010-81030	Bolt	1	81105-
12		01643-31032	Washer	1	81105-
13		11Y-43-11181	Boot	1	81105-
14		19M-06-37171	Wiring Harness	1	81105-
15		08210-00604	Tube, Spiral	1	81105-
16		08192-26100	Connector	1	81105-
17		08192-16300	Wedge	1	81105-
18		20Y-06-23940	Band	1	81105-
19		04434-51410	Clip	1	81105-
20		198-06-53520	Cushion	1	81105-
21		01010-81020	Bolt	1	81105-
22		01643-31032	Washer	1	81105-

FIG. K2110-027013 Floor Frame, Blade Control Lever

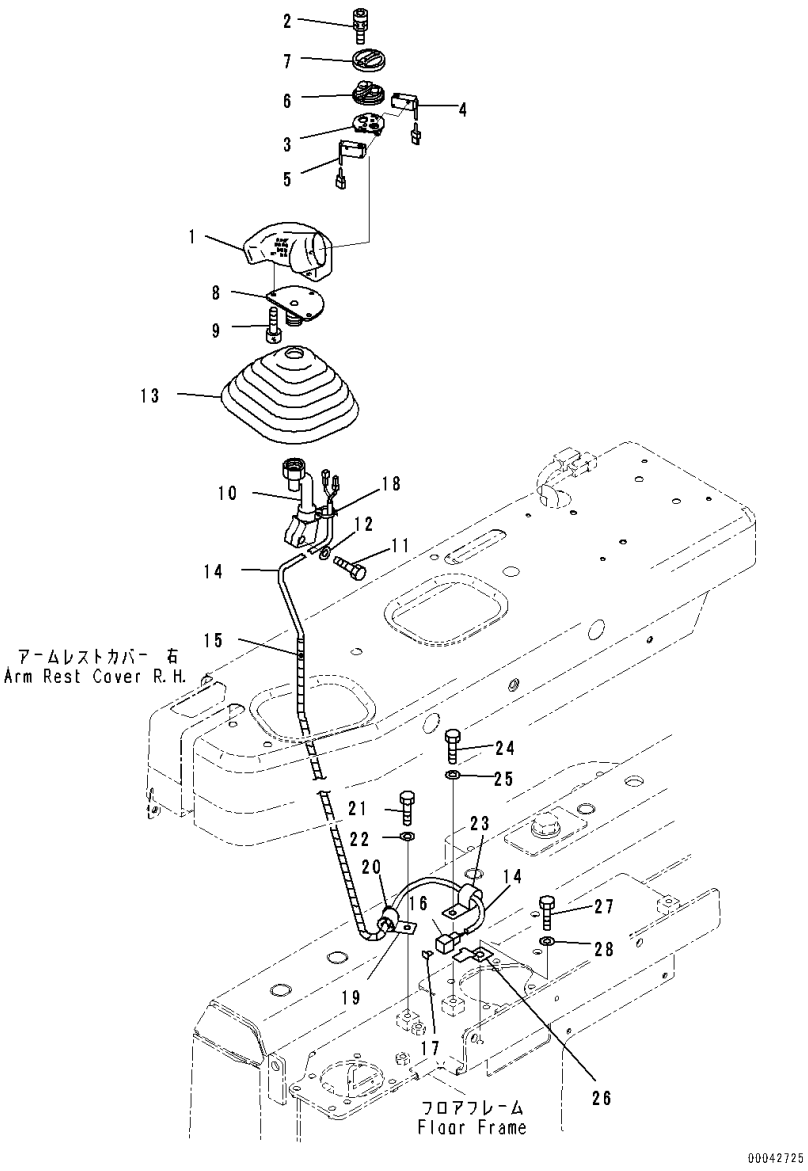

Index	Code	Part Number	Description	Qty	Serial Number
23		04434-50810	Clip	1	81105-
24		01010-81020	Bolt	1	81105-
25		01643-31032	Washer	1	81105-
26		08193-20010	Clip	1	81105-
27		01010-81020	Bolt	1	81105-
28		01643-31032	Washer	1	81105-

FIG. K2110-027014 Floor Frame, PPC Valve for Blade

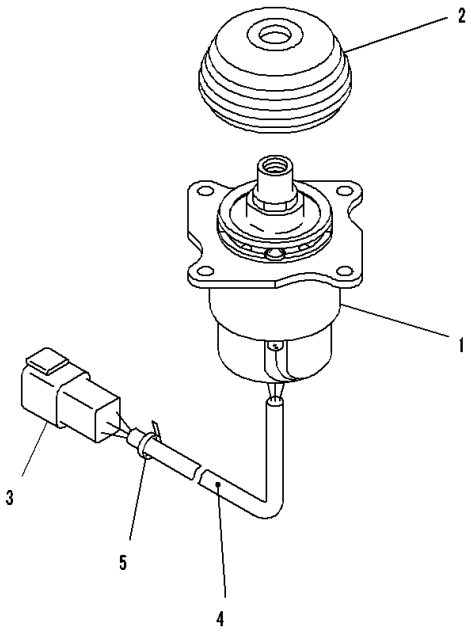

Index	Code	Part Number	Description	Qty	Serial Number
		Note: This list covers following specifications.			
		Dual Tilt Dozer, With Variable Digging Angle Giant Ripper, Variable Digging Angle Giant Ripper Without Push Block, Variable Giant Ripper			
		Dual Tilt Dozer, With Variable Digging Angle Multi Ripper, Variable Multi Ripper			
		Without Rear Equipment			
		Dual Tilt Dozer, Without Rear Equipment			
		With Variable Digging Angle Multi Ripper, Variable Multi Ripper			
		With Variable Digging Angle Giant Ripper, Variable Digging Angle Giant Ripper Without Push Block, Variable Giant Ripper			
		With MSHA Dust Regulation Arrangement, Variable Digging Angle Multi Ripper, Variable Multi Ripper			
		With MSHA Dust Regulation Arrangement, Variable Digging Angle Giant Ripper, Variable Digging Angle Giant Ripper Without Push Block, Variable Giant Ripper			
		Dual Tilt Dozer, With MSHA Dust Regulation Arrangement, Variable Digging Angle Multi Ripper, Variable Multi Ripper			
		Dual Tilt Dozer, With MSHA Dust Regulation Arrangement, Variable Digging Angle Giant Ripper, Variable Digging Angle Giant Ripper Without Push Block, Variable Giant Ripper			
1		702-16-02340	Lever Assembly	1	81132-
2		702-16-71280	• Boot	1	81105-
3		08192-28812	• Connector	1	81105-
4		702-16-61270	• Tube	1	81105-
5		08034-20414	• Band	1	81105-

FIG. K2110-027015 Floor Frame, PPC Valve Mounting (1/2)

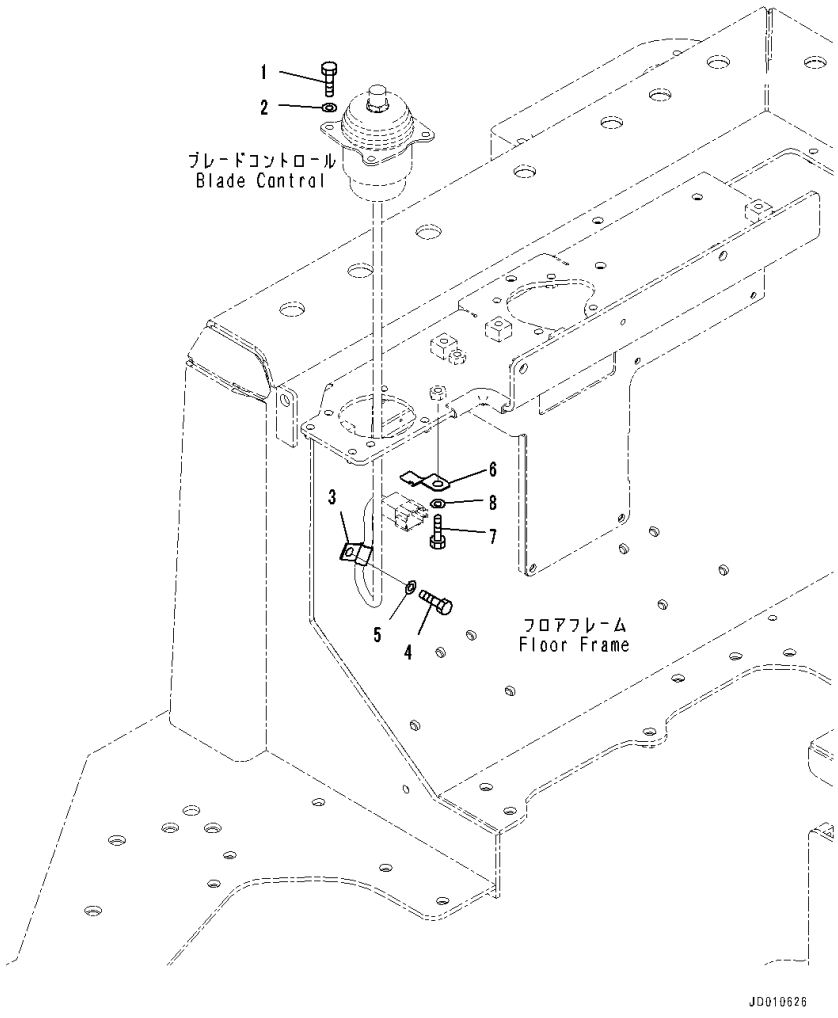

Index	Code	Part Number	Description	Qty	Serial Number
		Note: This list covers following specifications.			
		Dual Tilt Dozer, With Variable Digging Angle Giant Ripper, Variable Digging Angle Giant Ripper Without Push Block, Variable Giant Ripper			
		Dual Tilt Dozer, With Variable Digging Angle Multi Ripper, Variable Multi Ripper			
		Without Rear Equipment			
		Dual Tilt Dozer, Without Rear Equipment			
		With Variable Digging Angle Multi Ripper, Variable Multi Ripper			
		With Variable Digging Angle Giant Ripper, Variable Digging Angle Giant Ripper Without Push Block, Variable Giant Ripper			
		With MSHA Dust Regulation Arrangement, Variable Digging Angle Multi Ripper, Variable Multi Ripper			
		With MSHA Dust Regulation Arrangement, Variable Digging Angle Giant Ripper, Variable Digging Angle Giant Ripper Without Push Block, Variable Giant Ripper			
		Dual Tilt Dozer, With MSHA Dust Regulation Arrangement, Variable Digging Angle Multi Ripper, Variable Multi Ripper			
		Dual Tilt Dozer, With MSHA Dust Regulation Arrangement, Variable Digging Angle Giant Ripper, Variable Digging Angle Giant Ripper Without Push Block, Variable Giant Ripper			
1		01010-80825	Bolt	4	81105-
2		01643-30823	Washer	4	81105-
3		04434-50810	Clip	1	81105-
4		01010-81020	Bolt	1	81105-
5		01643-31032	Washer	1	81105-
6		08193-30010	Clip	1	81105-
7		01010-81020	Bolt	1	81105-
8		01643-31032	Washer	1	81105-

FIG. K2110-027016 Floor Frame, Blade Lock Lever

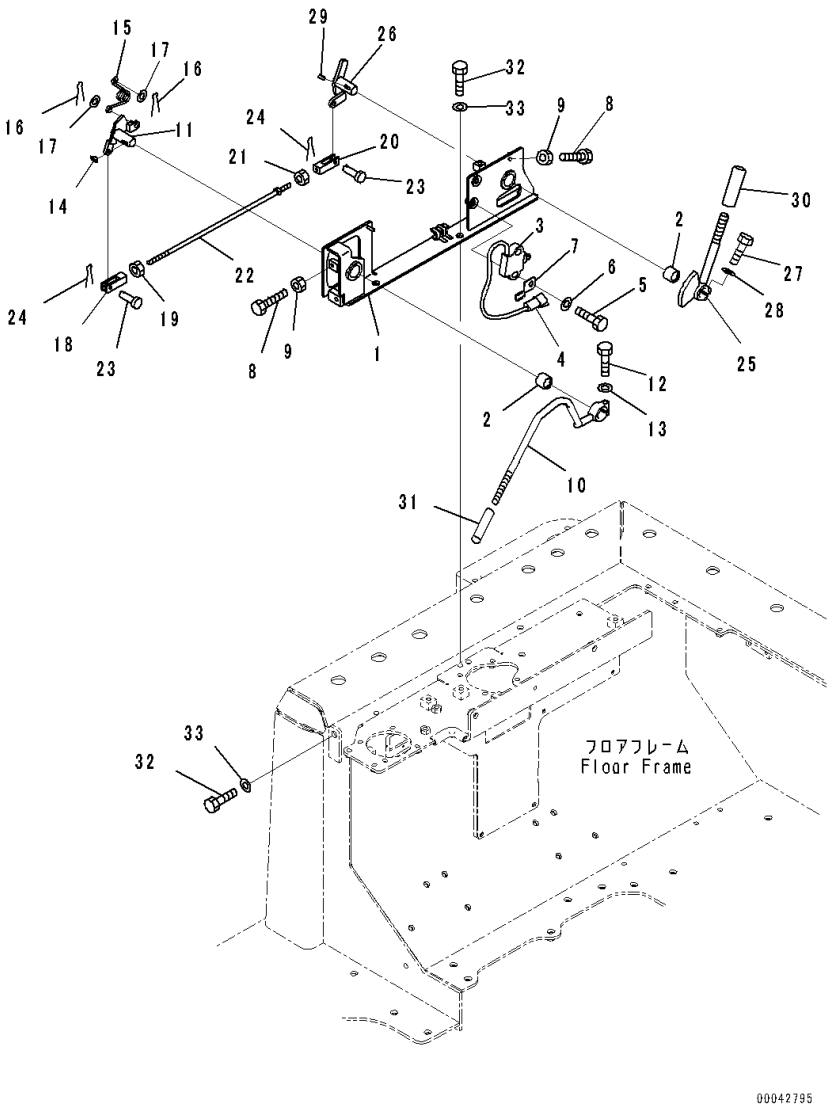

Index	Code	Part Number	Description	Qty	Serial Number
		Note: This list covers following specifications. Dual Tilt Dozer, With Variable Digging Angle Giant Ripper, Variable Digging Angle Giant Ripper Without Push Block, Variable Giant Ripper Dual Tilt Dozer, With Variable Digging Angle Multi Ripper, Variable Multi Ripper Without Rear Equipment Dual Tilt Dozer, Without Rear Equipment With Variable Digging Angle Multi Ripper, Variable Multi Ripper With Variable Digging Angle Giant Ripper, Variable Digging Angle Giant Ripper Without Push Block, Variable Giant Ripper With MSHA Dust Regulation Arrangement, Variable Digging Angle Multi Ripper, Variable Multi Ripper With MSHA Dust Regulation Arrangement, Variable Digging Angle Giant Ripper, Variable Digging Angle Giant Ripper Without Push Block, Variable Giant Ripper Dual Tilt Dozer, With MSHA Dust Regulation Arrangement, Variable Digging Angle Multi Ripper, Variable Multi Ripper Dual Tilt Dozer, With MSHA Dust Regulation Arrangement, Variable Digging Angle Giant Ripper, Variable Digging Angle Giant Ripper Without Push Block, Variable Giant Ripper			
1		17A-43-42112	Bracket	1	81105-
2		06124-02020	Bearing	2	81105-
3		11Y-06-22150	Switch	1	81105-
4		08192-13830	• Connector	1	81105-
5		01010-81040	Bolt	2	81105-
6		01643-31032	Washer	2	81105-
7		08193-20010	Clip	1	81105-
8		01016-50830	Bolt	2	81105-
9		01580-10806	Nut	2	81105-
10		17A-43-42122	Lever	1	81105-
11		17A-43-42132	Lever	1	81105-
12		01010-80830	Bolt	1	81105-
13		01643-30823	Washer	1	81105-
14		04010-00516	Key	1	81105-
15		17A-43-41760	Spring	1	81105-
16		04050-11612	Pin, Cotter	2	81105-
17		01640-20610	Washer	2	81105-

FIG. K2110-027016 Floor Frame, Blade Lock Lever

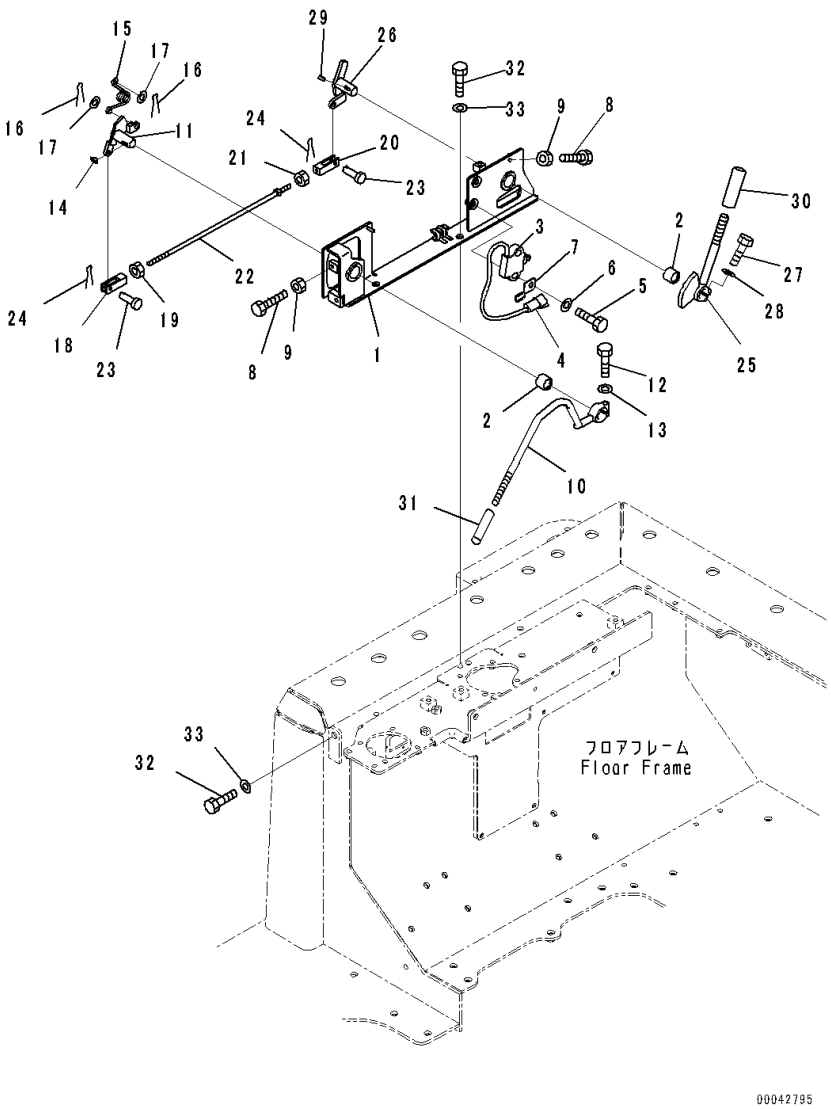

Index	Code	Part Number	Description	Qty	Serial Number
18		04221-20844	York, Left-handed Thread	1	81105-
19		01508-40805	Nut	1	81105-
20		04211-20844	Yoke	1	81105-
21		01580-10806	Nut	1	81105-
22		04248-30839	Rod	1	81105-
23		04205-10822	Pin	2	81105-
24		04050-12015	Pin, Cotter	2	81105-
25		17A-43-42171	Lever	1	81105-
26		17A-43-42161	Lever	1	81105-
27		01010-80830	Bolt	1	81105-
28		01643-30823	Washer	1	81105-
29		04010-00516	Key	1	81105-
30		22M-43-21470	Knob	1	81105-
31		417-43-28270	Cap	1	81105-
32		01010-81025	Bolt	4	81105-
33		01643-31032	Washer	4	81105-

FIG. K2110-027017 Floor Frame, Ripper Control Lever

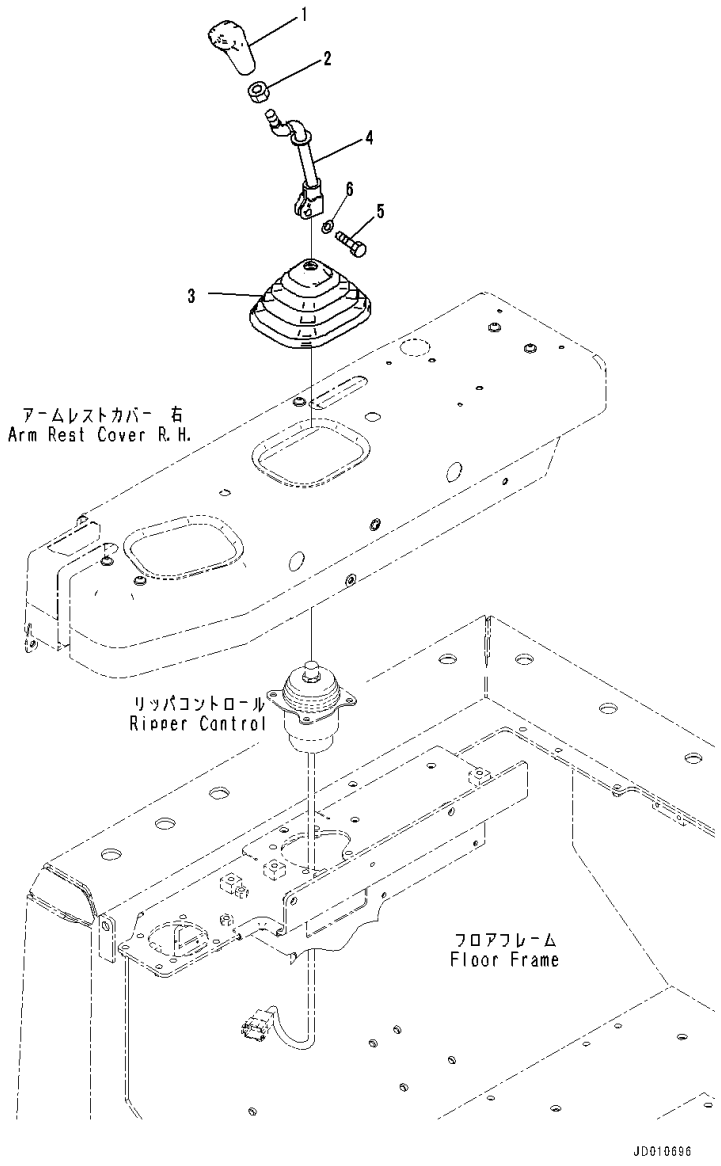

Index	Code	Part Number	Description	Qty	Serial Number
		Note: This list covers following specifications. Dual Tilt Dozer, With Variable Digging Angle Giant Ripper, Variable Digging Angle Giant Ripper Without Push Block, Variable Giant Ripper Dual Tilt Dozer, With Variable Digging Angle Multi Ripper, Variable Multi Ripper With Variable Digging Angle Multi Ripper, Variable Multi Ripper With Variable Digging Angle Giant Ripper, Variable Digging Angle Giant Ripper Without Push Block, Variable Giant Ripper With MSHA Dust Regulation Arrangement, Variable Digging Angle Multi Ripper, Variable Multi Ripper With MSHA Dust Regulation Arrangement, Variable Digging Angle Giant Ripper, Variable Digging Angle Giant Ripper Without Push Block, Variable Giant Ripper Dual Tilt Dozer, With MSHA Dust Regulation Arrangement, Variable Digging Angle Multi Ripper, Variable Multi Ripper Dual Tilt Dozer, With MSHA Dust Regulation Arrangement, Variable Digging Angle Giant Ripper, Variable Digging Angle Giant Ripper Without Push Block, Variable Giant Ripper With MSHA Dust Regulation Arrangement, Variable Giant Ripper, Provision For Landfill Specification			
1		17A-43-42240	Knob	1	81105-
2		20T-43-71190	Nut	1	81105-
3		11Y-43-11181	Boot	1	81105-
4		17A-43-42230	Lever	1	81105-
5		01010-81030	Bolt	1	81105-
6		01643-31032	Washer	1	81105-

FIG. K2110-027018 Floor Frame, PPC Valve for Ripper

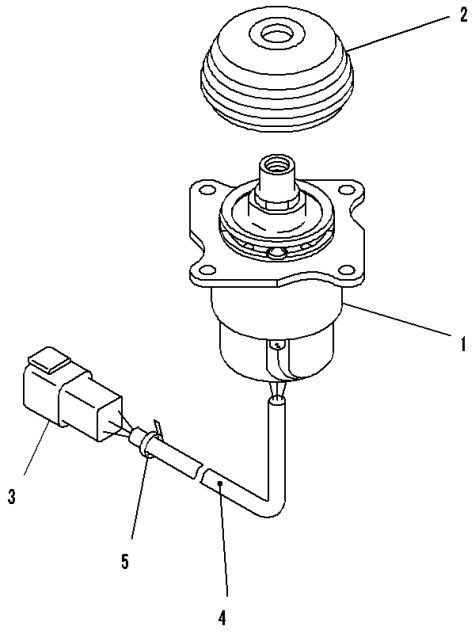

JD010610

Index	Code	Part Number	Description	Qty	Serial Number
		Note: This list covers following specifications.			
		Dual Tilt Dozer, With Variable Digging Angle Giant Ripper, Variable Digging Angle Giant Ripper Without Push Block, Variable Giant Ripper			
		Dual Tilt Dozer, With Variable Digging Angle Multi Ripper, Variable Multi Ripper			
		Without Rear Equipment			
		Dual Tilt Dozer, Without Rear Equipment			
		With Variable Digging Angle Multi Ripper, Variable Multi Ripper			
		With Variable Digging Angle Giant Ripper, Variable Digging Angle Giant Ripper Without Push Block, Variable Giant Ripper			
		With MSHA Dust Regulation Arrangement, Variable Digging Angle Multi Ripper, Variable Multi Ripper			
		With MSHA Dust Regulation Arrangement, Variable Digging Angle Giant Ripper, Variable Digging Angle Giant Ripper Without Push Block, Variable Giant Ripper			
		Dual Tilt Dozer, With MSHA Dust Regulation Arrangement, Variable Digging Angle Multi Ripper, Variable Multi Ripper			
		Dual Tilt Dozer, With MSHA Dust Regulation Arrangement, Variable Digging Angle Giant Ripper, Variable Digging Angle Giant Ripper Without Push Block, Variable Giant Ripper			
1		702-16-02350	Lever Assembly	1	81132-
2		702-16-71280	• Boot	1	81105-
3		08192-28812	• Connector	1	81105-
4		702-16-61270	• Tube	1	81105-
5		20Y-62-22790	• Band, Red	1	81105-

FIG. K2110-027019 Floor Frame, PPC Valve Mounting (2/2)

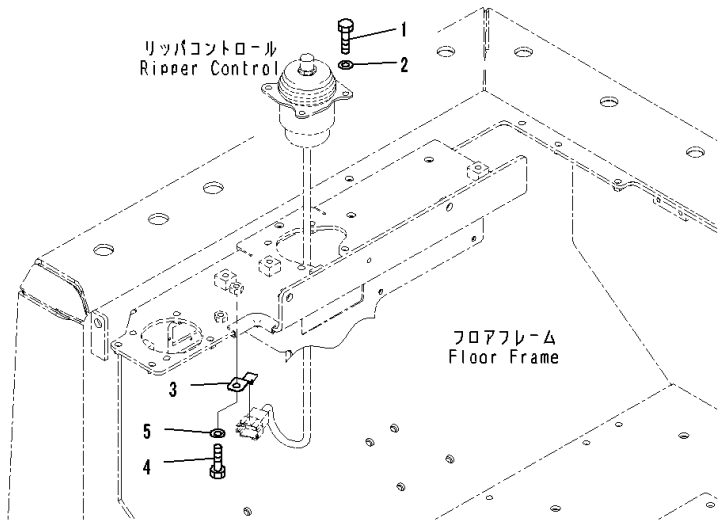

Index	Code	Part Number	Description	Qty	Serial Number
		Note: This list covers following specifications. Dual Tilt Dozer, With Variable Digging Angle Giant Ripper, Variable Digging Angle Giant Ripper Without Push Block, Variable Giant Ripper Dual Tilt Dozer, With Variable Digging Angle Multi Ripper, Variable Multi Ripper Without Rear Equipment Dual Tilt Dozer, Without Rear Equipment With Variable Digging Angle Multi Ripper, Variable Multi Ripper With Variable Digging Angle Giant Ripper, Variable Digging Angle Giant Ripper Without Push Block, Variable Giant Ripper With MSHA Dust Regulation Arrangement, Variable Digging Angle Multi Ripper, Variable Multi Ripper With MSHA Dust Regulation Arrangement, Variable Digging Angle Giant Ripper, Variable Digging Angle Giant Ripper Without Push Block, Variable Giant Ripper Dual Tilt Dozer, With MSHA Dust Regulation Arrangement, Variable Digging Angle Multi Ripper, Variable Multi Ripper Dual Tilt Dozer, With MSHA Dust Regulation Arrangement, Variable Digging Angle Giant Ripper, Variable Digging Angle Giant Ripper Without Push Block, Variable Giant Ripper			
1		01010-80825	Bolt	4	81105-
2		01643-30823	Washer	4	81105-
3		08193-30010	Clip	1	81105-
4		01010-81020	Bolt	1	81105-
5		01643-31032	Washer	1	81105-

FIG. K2110-027020 Floor Frame, Armrest, RHS

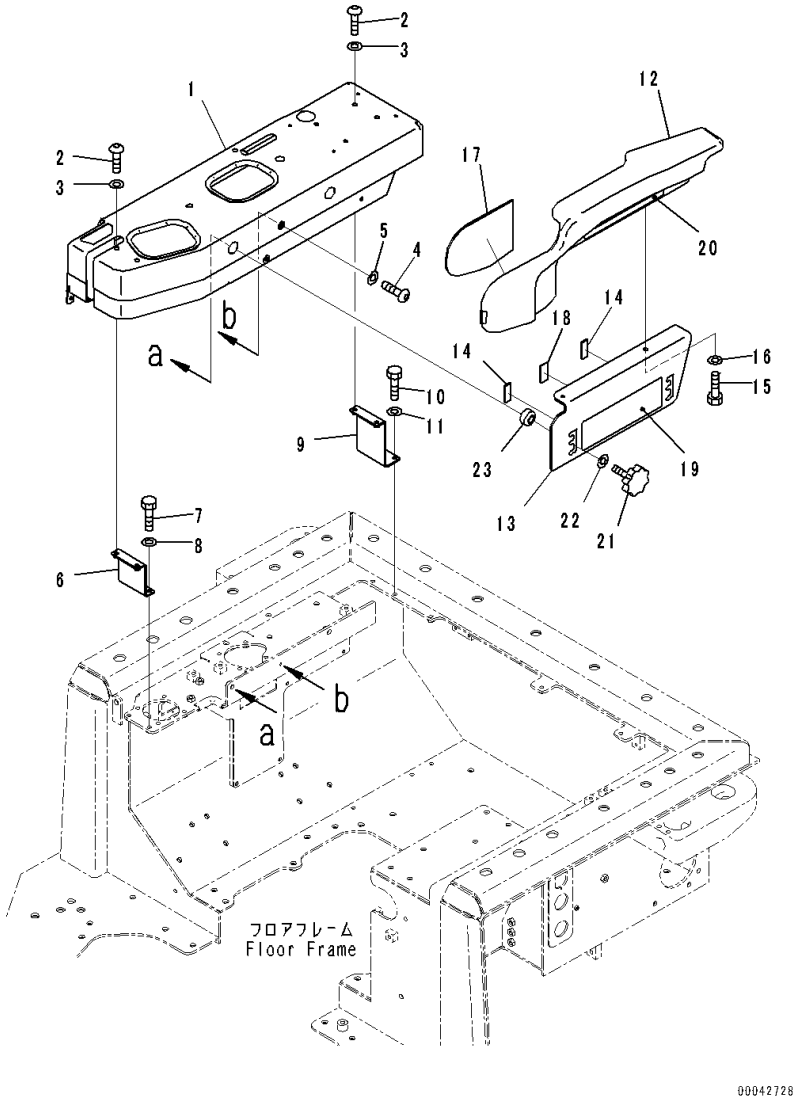

Index	Code	Part Number	Description	Qty	Serial Number
		Note: This list covers following specifications.			
		Dual Tilt Dozer, With Variable Digging Angle Giant Ripper, Variable Digging Angle Giant Ripper Without Push Block, Variable Giant Ripper			
		Dual Tilt Dozer, With Variable Digging Angle Multi Ripper, Variable Multi Ripper			
		With Variable Digging Angle Multi Ripper, Variable Multi Ripper			
		With Variable Digging Angle Giant Ripper, Variable Digging Angle Giant Ripper Without Push Block, Variable Giant Ripper			
		With MSHA Dust Regulation Arrangement, Variable Digging Angle Multi Ripper, Variable Multi Ripper			
		With MSHA Dust Regulation Arrangement, Variable Digging Angle Giant Ripper, Variable Digging Angle Giant Ripper Without Push Block, Variable Giant Ripper			
		Dual Tilt Dozer, With MSHA Dust Regulation Arrangement, Variable Digging Angle Multi Ripper, Variable Multi Ripper			
		Dual Tilt Dozer, With MSHA Dust Regulation Arrangement, Variable Digging Angle Giant Ripper, Variable Digging Angle Giant Ripper Without Push Block, Variable Giant Ripper			
		With MSHA Dust Regulation Arrangement, Variable Giant Ripper, Provision For Landfill Specification			
1		17A-54-46233	Cover	1	81105-
2		01245-00820	Screw	5	81105-
3		01643-70823	Washer	5	81105-
4		01245-00616	Screw, Hexagon Socket Head	1	81105-
5		01640-20610	Washer	1	81105-
6		17A-54-46411	Bracket	1	81105-
7		01010-80825	Bolt	2	81105-
8		01643-30823	Washer	2	81105-
9		17A-54-46311	Bracket	1	81105-
10		01010-80825	Bolt	2	81105-
11		01643-30823	Washer	2	81105-
		14X-54-36310	Arm Assembly, Assembly	1	81105-
12		14X-54-36320	• Arm Rest	1	81105-
13		14X-54-36330	• Plate	1	81105-
14		134-54-66240	• Sheet	2	81105-
15		01010-80820	• Bolt	2	81105-
16		01643-30823	• Washer	2	81105-

FIG. K2110-027020 Floor Frame, Armrest, RHS

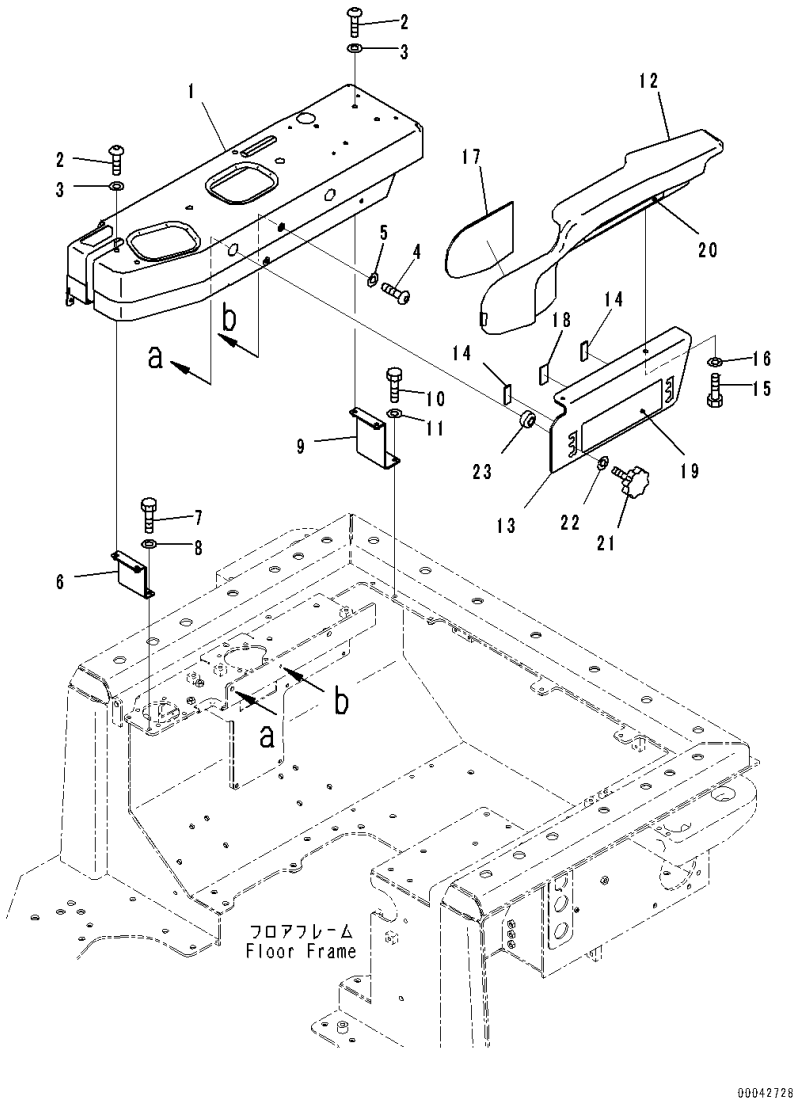

Index	Code	Part Number	Description	Qty	Serial Number
17		14X-54-36340	• Sheet	1	81105-
18		17A-43-42310	• Rubber	1	81105-
19		134-54-66190	Plate	1	81105-
20		134-54-66290	Plate	1	81105-
21		195-54-68760	Knob	2	81105-
22		01643-31032	Washer	2	81105-
23		17A-54-25610	Spacer	2	81105-

FIG. K2110-027021 Floor Frame, Air Conditioner Unit

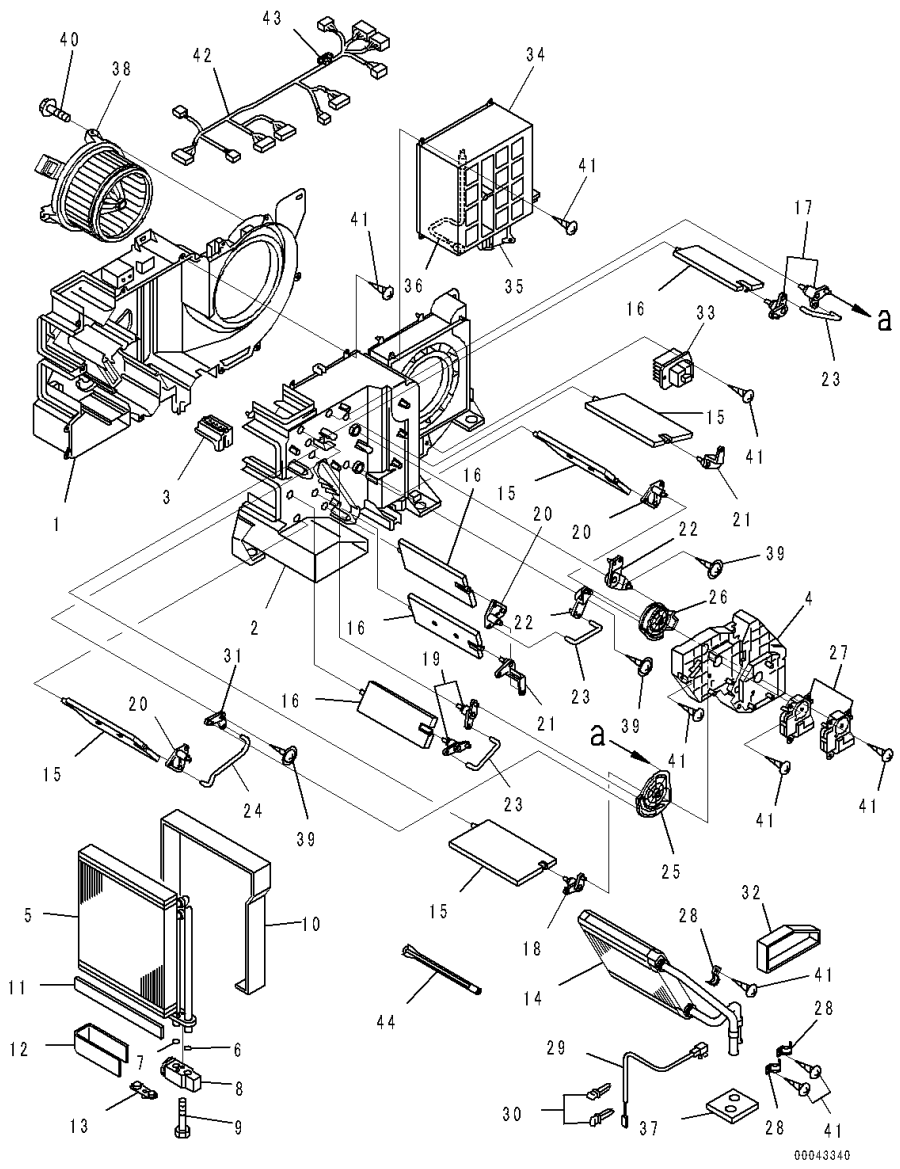

Index	Code	Part Number	Description	Qty	Serial Number
		Note: This list covers following specifications.			
		Dual Tilt Dozer, With Variable Digging Angle Giant Ripper, Variable Digging Angle Giant Ripper Without Push Block, Variable Giant Ripper			
		Dual Tilt Dozer, With Variable Digging Angle Multi Ripper, Variable Multi Ripper			
		Without Rear Equipment			
		Dual Tilt Dozer, Without Rear Equipment			
		With Variable Digging Angle Multi Ripper, Variable Multi Ripper			
		With Variable Digging Angle Giant Ripper, Variable Digging Angle Giant Ripper Without Push Block, Variable Giant Ripper			
		With MSHA Dust Regulation Arrangement, Variable Digging Angle Multi Ripper, Variable Multi Ripper			
		With MSHA Dust Regulation Arrangement, Variable Digging Angle Giant Ripper, Variable Digging Angle Giant Ripper Without Push Block, Variable Giant Ripper			
		Dual Tilt Dozer, With MSHA Dust Regulation Arrangement, Variable Digging Angle Multi Ripper, Variable Multi Ripper			
		Dual Tilt Dozer, With MSHA Dust Regulation Arrangement, Variable Digging Angle Giant Ripper, Variable Digging Angle Giant Ripper Without Push Block, Variable Giant Ripper			
		20Y-810-1211	Air Conditioner Assembly	1	81105-
1		ND245450-5831	• Case, Cooling	1	81105-
2		ND245450-5840	• Case, Cooling	1	81105-
3		ND116576-3810	• Plate	1	81105-
4		ND116576-3820	• Plate	1	81105-
		ND446010-3132	• Evaporator	1	81105-
5		ND446600-0991	• • Evaporator Assembly	1	81105-
6		ND949142-0020	• • O-ring	1	81105-
7		ND949142-0030	• • O-ring	1	81105-
8		ND447500-2750	• • Valve	1	81105-
9		ND949046-3100	• • Bolt	2	81105-
10		ND146657-8841	• • Packing	1	81105-
11		ND146657-9811	• • Packing	3	81105-
12		ND146657-8850	• • Packing	1	81105-
13		ND445021-3941	• • Plug	1	81105-
14		ND116140-0050	• Core Subassembly, Heater	1	81105-
15		ND116660-7570	• Door Assembly	4	81105-

FIG. K2110-027021 Floor Frame, Air Conditioner Unit

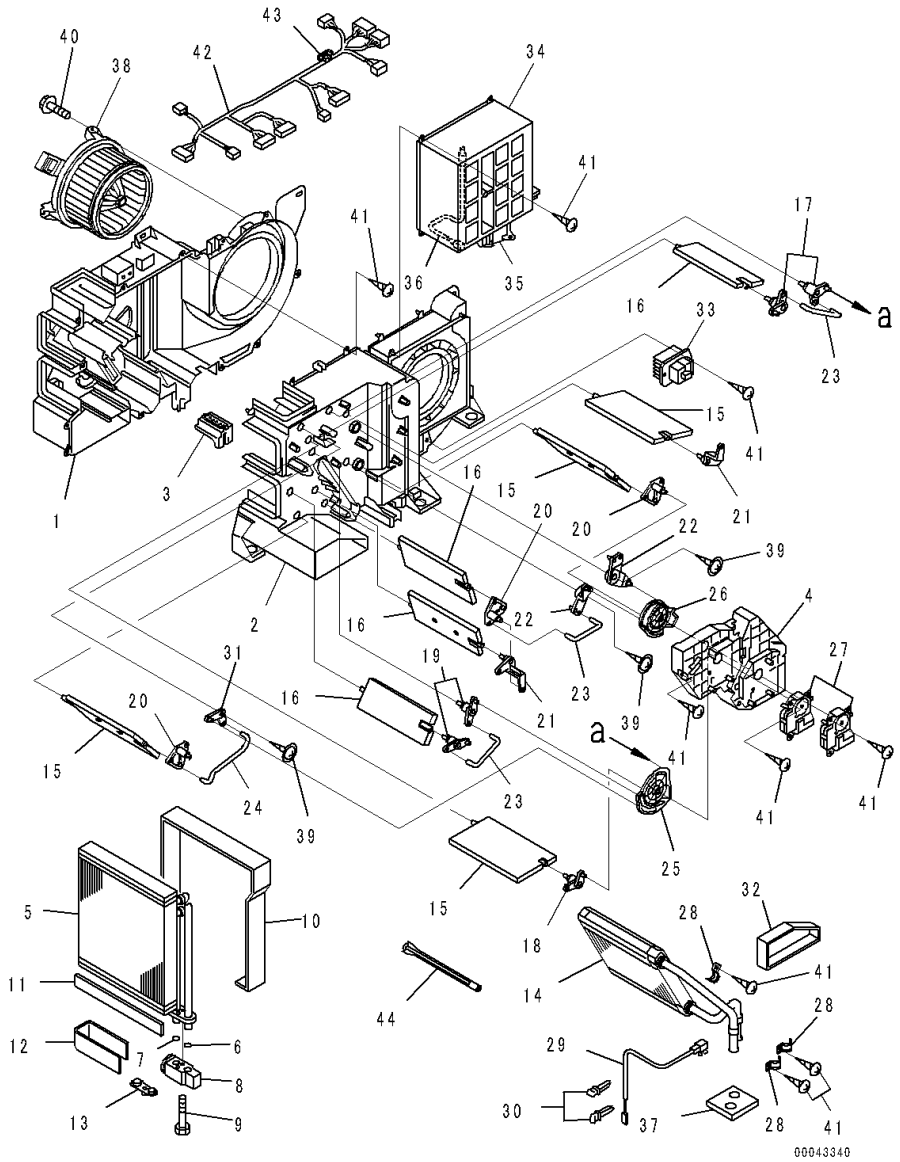

Index	Code	Part Number	Description	Qty	Serial Number
16		ND116650-6850	• Door Assembly	4	81105-
17		ND116780-2481	• Lever Subassembly, Link	2	81105-
18		ND116780-2491	• Lever Subassembly, Link	1	81105-
19		ND116780-2501	• Lever Subassembly, Link	2	81105-
20		ND116780-2510	• Lever Subassembly, Link	3	81105-
21		ND116781-3000	• Lever	2	81105-
22		ND116780-3130	• Lever Subassembly, Link	2	81105-
23		ND116662-7670	• Shaft	3	81105-
24		ND116662-7681	• Shaft	1	81105-
25		ND116576-3852	• Plate	1	81105-
26		ND116576-3862	• Plate	1	81105-
27		ND063800-0300	• Servo Motor Assembly	2	81105-
28		ND017231-0700	• Clamp	3	81105-
29		ND077500-5890	• Thermistor Assembly	1	81105-
30		ND246790-2060	• Clamp	2	81105-
31		ND116780-3920	• Lever Subassembly, Link	1	81105-
32		ND146667-0440	• Packing	1	81105-
33		ND077800-0750	• Transistor	1	81105-
34		ND146340-0560	• Box Assembly	1	81105-
35		ND063600-4580	• • Servo Motor Assembly	1	81105-
36		ND077500-5650	• • Thermistor Assembly	1	81105-
37		ND146657-8860	• Packing	1	81105-
38		ND116340-7350	• Motor Assembly, Fan	1	81105-
39		ND949008-0460	• Screw, Tapping	3	81105-
40		ND949008-0330	• Screw, Tapping	3	81105-
41		ND949001-1730	• Screw, Tapping	32	81105-
42		ND246470-4311	• Wiring Harness Assembly	1	81105-
43		ND93950-05003	• • Fuse	1	81105-
44		ND116662-8320	• Shaft	1	81105-

FIG. K2110-027022 Floor Frame, Air Conditioner Condenser Unit Mounting

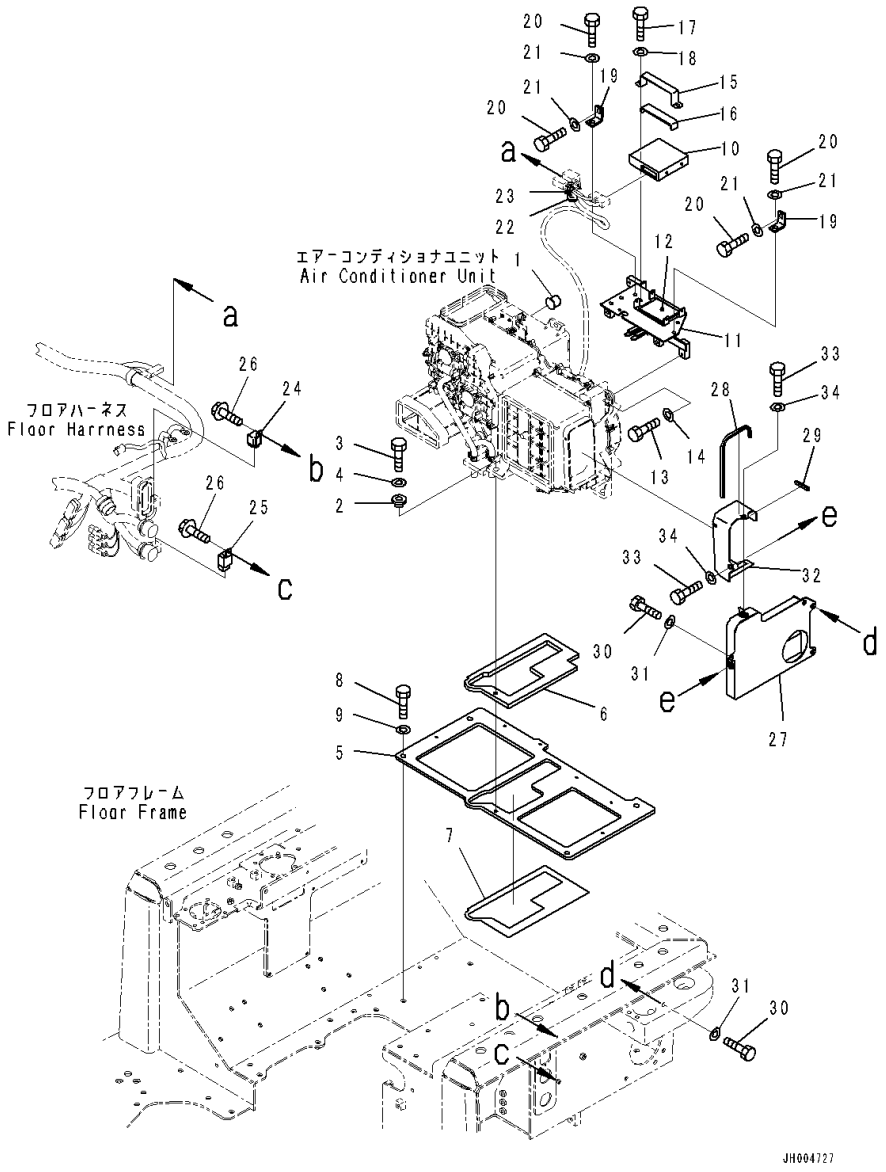

Index	Code	Part Number	Description	Qty	Serial Number
		Note: This list covers following specifications.			
		Dual Tilt Dozer, With Variable Digging Angle Giant Ripper, Variable Digging Angle Giant Ripper Without Push Block, Variable Giant Ripper			
		Dual Tilt Dozer, With Variable Digging Angle Multi Ripper, Variable Multi Ripper			
		Without Rear Equipment			
		Dual Tilt Dozer, Without Rear Equipment			
		With Variable Digging Angle Multi Ripper, Variable Multi Ripper			
		With Variable Digging Angle Giant Ripper, Variable Digging Angle Giant Ripper Without Push Block, Variable Giant Ripper			
		With MSHA Dust Regulation Arrangement, Variable Digging Angle Multi Ripper, Variable Multi Ripper			
		With MSHA Dust Regulation Arrangement, Variable Digging Angle Giant Ripper, Variable Digging Angle Giant Ripper Without Push Block, Variable Giant Ripper			
		Dual Tilt Dozer, With MSHA Dust Regulation Arrangement, Variable Digging Angle Multi Ripper, Variable Multi Ripper			
		Dual Tilt Dozer, With MSHA Dust Regulation Arrangement, Variable Digging Angle Giant Ripper, Variable Digging Angle Giant Ripper Without Push Block, Variable Giant Ripper			
1		17A-979-3131	Cap	1	81105-
2		208-979-7540	Collar	7	81105-
3		01010-80825	Bolt	7	81105-
4		01643-30823	Washer	7	81105-
5		17A-979-2171	Plate	1	81105-
6		17A-979-2310	• Sheet,Bonded	1	81105-
7		17A-979-2330	• Sheet,Bonded	1	81105-
8		01010-81230	Bolt	4	81105-
9		01643-31232	Washer	4	81105-
10		17A-979-3180	Controller	1	81105-
11		17A-979-2351	Bracket	1	81105-
12		17A-979-2360	• Seal,Bonded	1	81105-
13		01010-80825	Bolt	2	81105-
14		01643-30823	Washer	2	81105-
15		17A-979-2370	Bracket	1	81105-
16		17A-979-2380	• Sheet	1	81105-
17		01010-80816	Bolt	2	81105-

FIG. K2110-027022 Floor Frame, Air Conditioner Condenser Unit Mounting

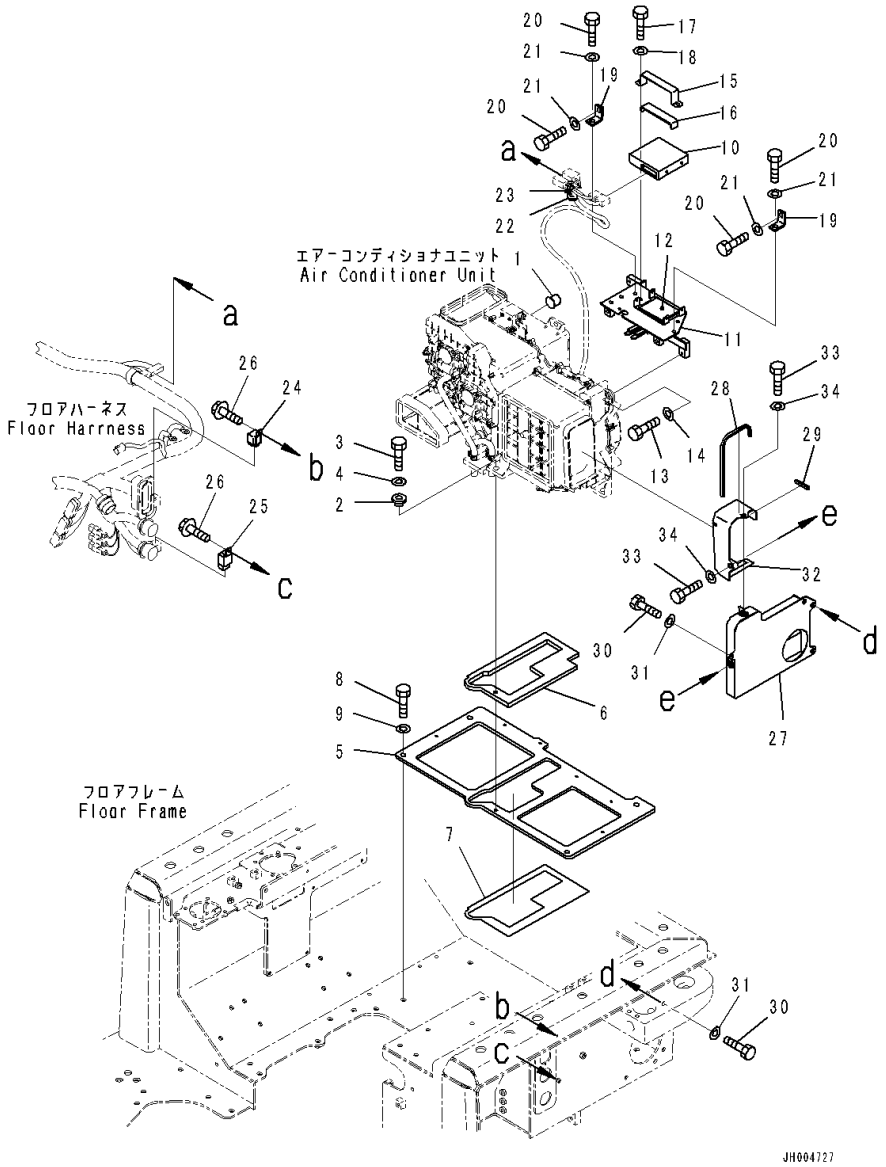

Index	Code	Part Number	Description	Qty	Serial Number
18		01643-30823	Washer	2	81105-
19		17A-979-2120	Bracket	2	81105-
20		01010-80825	Bolt	4	81105-
21		01643-30823	Washer	4	81105-
22		08037-01610	Grommet	1	81105-
23		08059-00413	Clip	1	81105-
24		20Y-979-6771	Relay	1	81105-
25		421-07-31270	Relay	1	81105-
26		01435-00616	Bolt	2	81105-
27		17A-979-2212	Duct	1	81105-
28		17A-979-3250	• Sheet	1	81105-
29		17A-979-3260	• Sheet	1	81105-
30		01010-81020	Bolt	3	81105-
31		01643-31032	Washer	3	81105-
32		17A-979-3230	Duct	1	81105-
33		01010-81020	Bolt	2	81105-
34		01643-31032	Washer	2	81105-

FIG. K2110-027023 Floor Frame, Air Conditioner Cover

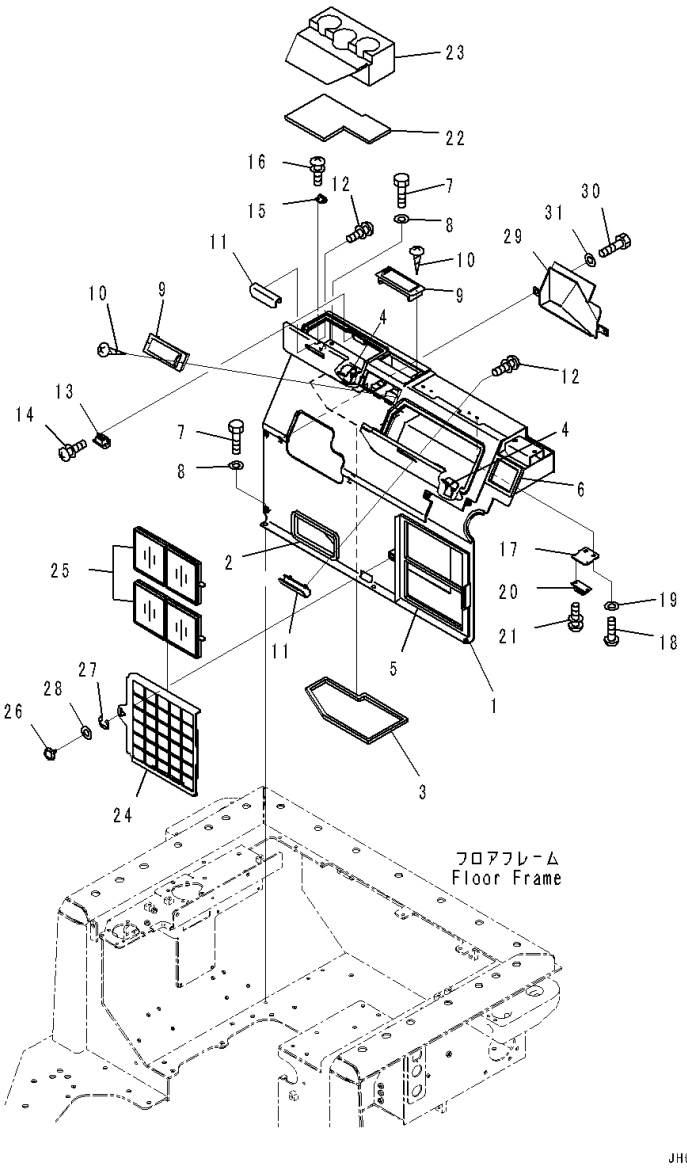

Index	Code	Part Number	Description	Qty	Serial Number
		Note: This list covers following specifications.			
		Dual Tilt Dozer, With Variable Digging Angle Giant Ripper,			
		Variable Digging Angle Giant Ripper Without Push Block,			
		Variable Giant Ripper			
		Dual Tilt Dozer, With Variable Digging Angle Multi Ripper,			
		Variable Multi Ripper			
		Without Rear Equipment			
		Dual Tilt Dozer, Without Rear Equipment			
		With Variable Digging Angle Multi Ripper, Variable Multi			
		Ripper			
		With Variable Digging Angle Giant Ripper, Variable Digging			
		Angle Giant Ripper Without Push Block, Variable Giant			
		Ripper			
		Angle Dozer, With Variable Digging Angle Multi Ripper,			
		Variable Multi Ripper			
		Angle Dozer, With Variable Digging Angle Giant Ripper,			
		Variable Digging Angle Giant Ripper Without Push Block,			
		Variable Giant Ripper			
		Angle Dozer, Without Rear Equipment			
1		17A-979-2114	Cover	1	81105-
2		17A-979-2251	• Seal,Bonded	1	81105-
3		17A-979-2281	• Seat,Bonded	1	81105-
4		17A-979-2390	• Hinge,Welded	4	81105-
5		17A-979-4140	• Seal,Bonded	1	81105-
6		17A-979-2891	• Seal,Bonded	1	81105-
7		01010-80825	Bolt	6	81105-
8		01643-30823	Washer	6	81105-
9		17A-Z11-7161	Louver	2	81105-
10		01370-20308	Screw	4	81105-
11		17A-54-46940	Bracket	2	81105-
12		01023-10508	Screw	4	81105-
13		154-43-73651	Magnet	1	81105-
14		01023-10306	Screw	4	81105-
15		17A-54-46961	Plate	1	81105-
16		01023-10508	Screw	2	81105-
17		17A-54-46951	Plate	2	81105-
18		01245-00616	Screw, Hexagon Socket Head	4	81105-
19		01643-70623	Washer	4	81105-
20		09452-14503	Catcher	2	81105-
21		01023-10306	Screw	4	81105-

FIG. K2110-027023 Floor Frame, Air Conditioner Cover

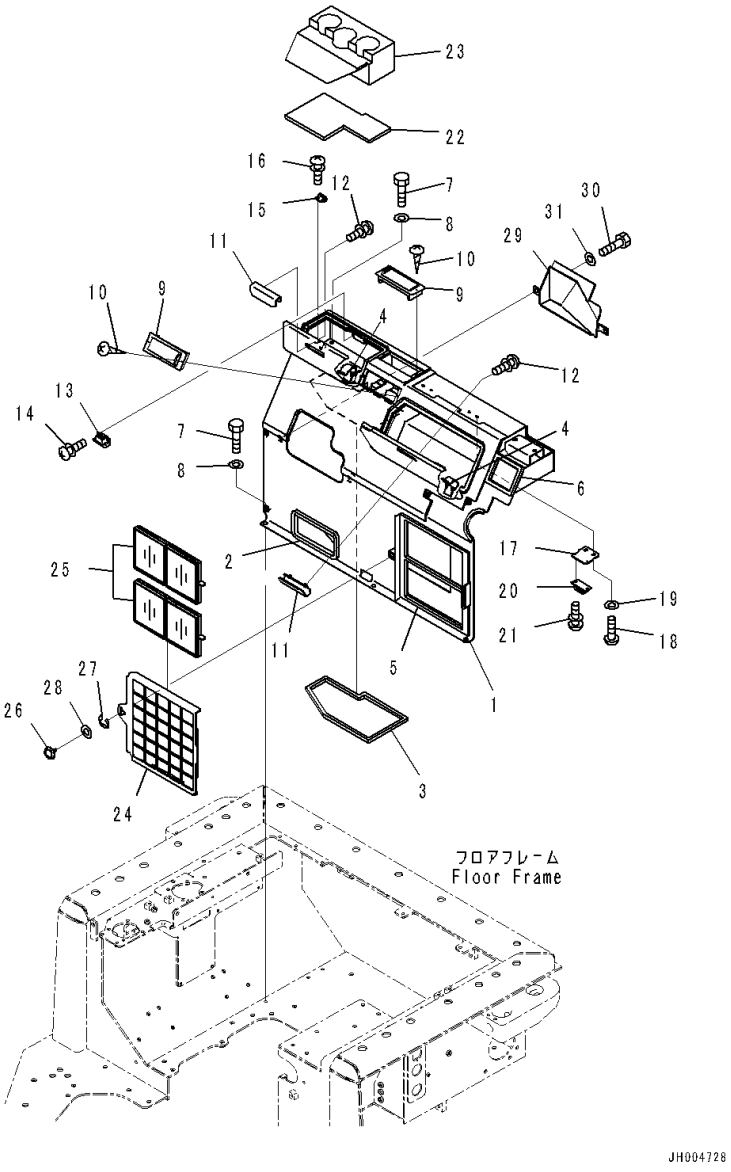

Index	Code	Part Number	Description	Qty	Serial Number
22		17A-979-2411	Cushion	1	81105-
23		17A-979-2261	Cushion	1	81105-
24		17A-911-5611	Cover	1	81105-
25		20Y-979-6261	Filter	2	81105-
26		561-06-86280	Screw	1	81105-
27		195-54-78790	Ring, Snap	1	81105-
28		17A-911-5740	Plate	1	81259-
29		17A-54-46930	Cover	1	81105-
30		01010-80816	Bolt	2	81105-
31		01643-30823	Washer	2	81105-

FIG. K2110-027024 Floor Frame, Air Conditioner Duct

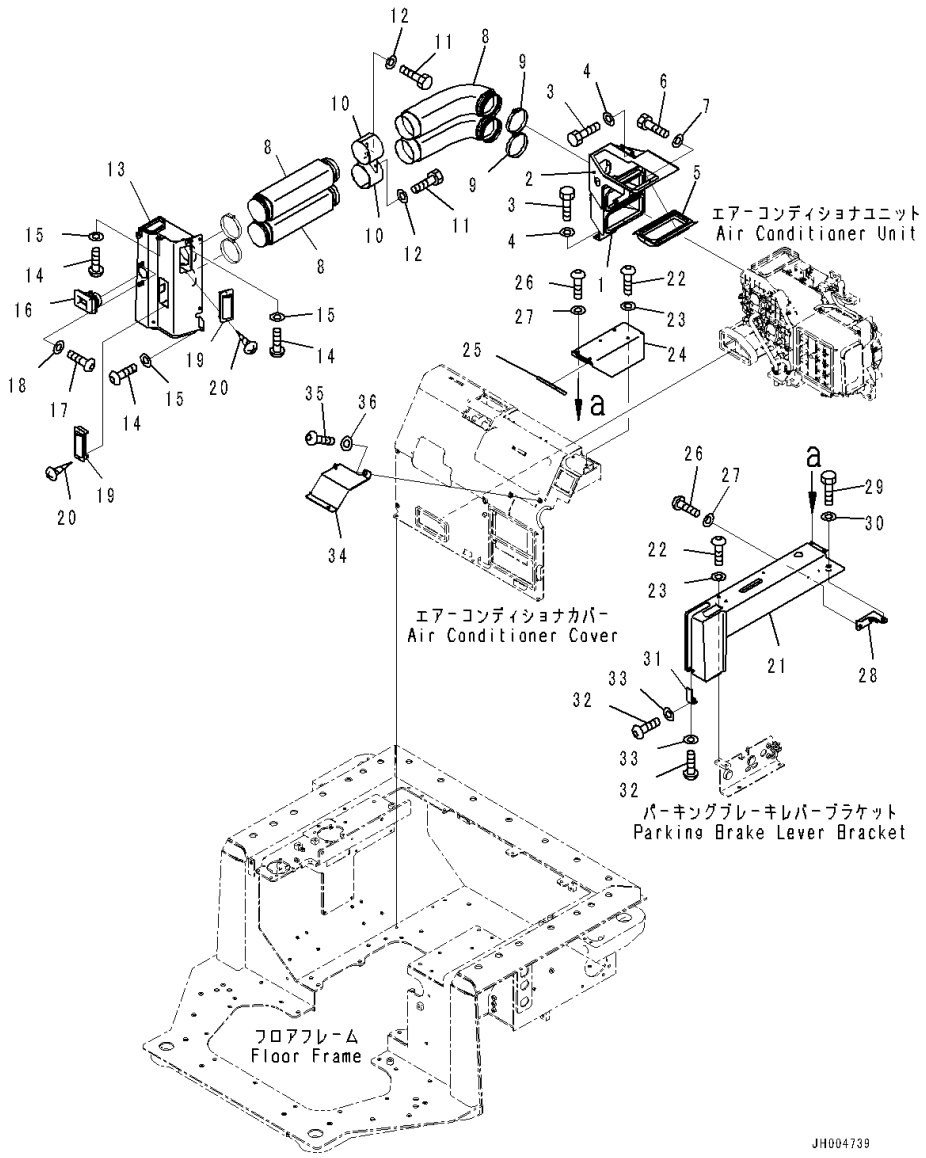

Index	Code	Part Number	Description	Qty	Serial Number
		Note: This list covers following specifications.			
		Dual Tilt Dozer, With Variable Digging Angle Giant Ripper, Variable Digging Angle Giant Ripper Without Push Block, Variable Giant Ripper			
		Dual Tilt Dozer, With Variable Digging Angle Multi Ripper, Variable Multi Ripper			
		Without Rear Equipment			
		Dual Tilt Dozer, Without Rear Equipment			
		With Variable Digging Angle Multi Ripper, Variable Multi Ripper			
		With Variable Digging Angle Giant Ripper, Variable Digging Angle Giant Ripper Without Push Block, Variable Giant Ripper			
		With MSHA Dust Regulation Arrangement, Variable Digging Angle Multi Ripper, Variable Multi Ripper			
		With MSHA Dust Regulation Arrangement, Variable Digging Angle Giant Ripper, Variable Digging Angle Giant Ripper Without Push Block, Variable Giant Ripper			
		Dual Tilt Dozer, With MSHA Dust Regulation Arrangement, Variable Digging Angle Multi Ripper, Variable Multi Ripper			
		Dual Tilt Dozer, With MSHA Dust Regulation Arrangement, Variable Digging Angle Giant Ripper, Variable Digging Angle Giant Ripper Without Push Block, Variable Giant Ripper			
1		17A-979-2131	Duct	1	81105-
2		17A-979-3170	• Sheet	1	81105-
3		01010-80825	Bolt	4	81105-
4		01643-30823	Washer	4	81105-
5		17A-979-1710	Bracket	1	81105-
6		01010-80816	Bolt	2	81105-
7		01643-30823	Washer	2	81105-
8		208-53-12220	Duct	4	81105-
9		07281-01159	Clamp	2	81105-
10		17A-979-2441	Bracket	1	81105-
11		01010-80825	Bolt	3	81105-
12		01643-30823	Washer	3	81105-
13		17A-54-46192	Duct	1	81105-
14		01245-00820	Screw	4	81105-
15		01643-70823	Washer	4	81105-
16		17A-54-45160	Duct	1	81105-
17		01245-00616	Screw, Hexagon Socket Head	2	81105-

FIG. K2110-027024 Floor Frame, Air Conditioner Duct

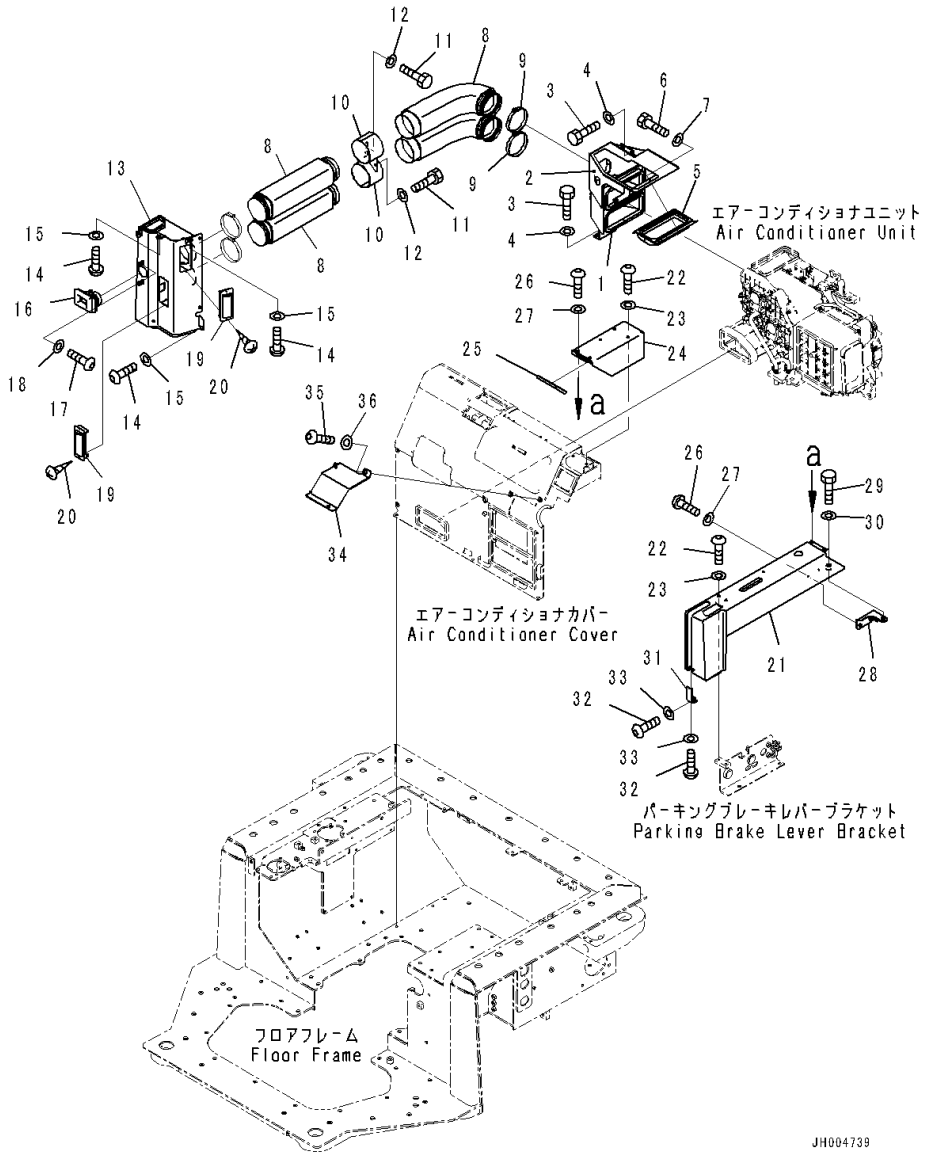

Index	Code	Part Number	Description	Qty	Serial Number
18		01643-70623	Washer	2	81105-
19		17A-Z11-7161	Louver	2	81105-
20		01370-20308	Screw	4	81105-
21		17A-54-46274	Cover	1	81105-
22		01245-00820	Screw	4	81105-
23		01643-70823	Washer	4	81105-
24		17A-54-47320	Cover	1	81105-
25		17A-54-47380	• Sheet	1	81105-
26		01245-00820	Screw	4	81105-
27		01643-70823	Washer	4	81105-
28		17A-54-47330	Cover	1	81105-
29		01010-81045	Bolt	1	81105-
30		01643-31032	Washer	1	81105-
31		17A-54-46831	Bracket	1	81105-
32		01245-00616	Screw, Hexagon Socket Head	2	81105-
33		01643-70623	Washer	2	81105-
34		17A-54-46812	Cover	1	81105-
35		01245-00820	Screw	3	81105-
36		01643-70823	Washer	3	81105-

FIG. K2110-027025 Floor Frame, Air Conditioner Piping

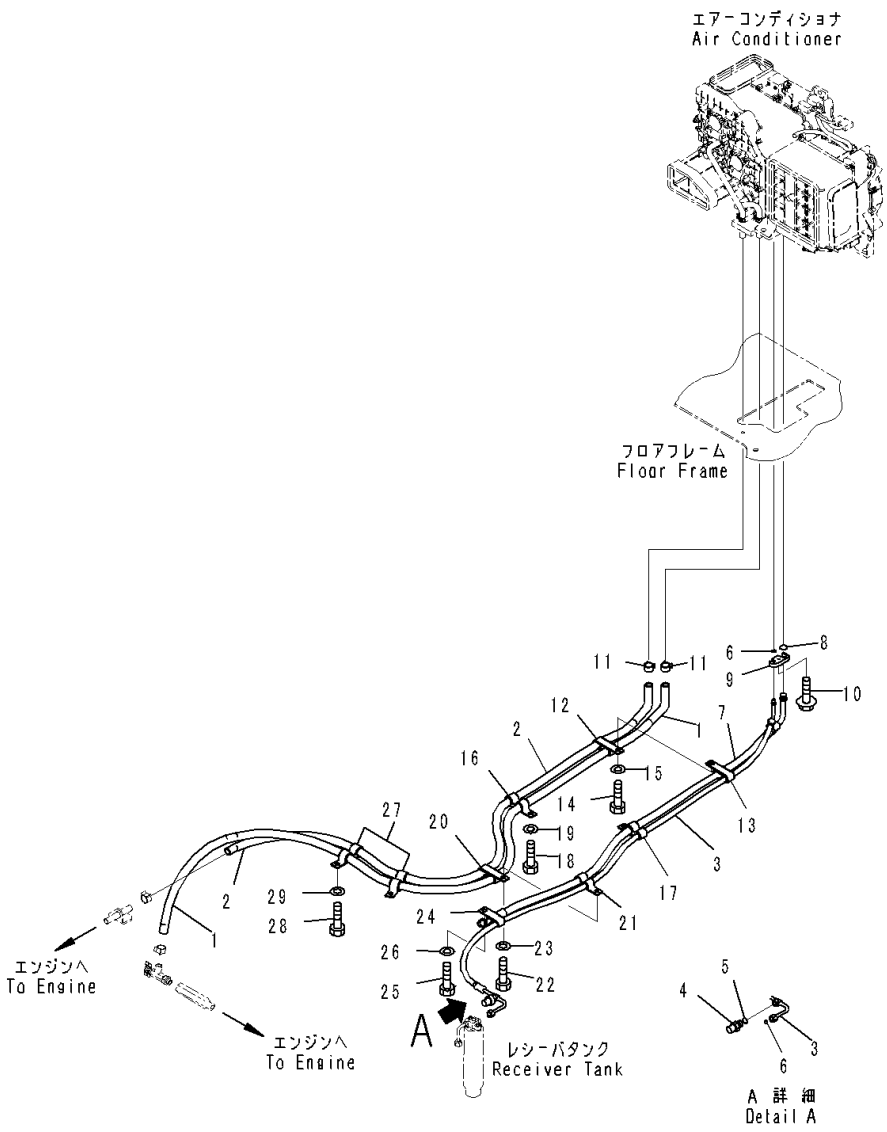

Index	Code	Part Number	Description	Qty	Serial Number
		Note: This list covers following specifications.			
		Dual Tilt Dozer, With Variable Digging Angle Giant Ripper, Variable Digging Angle Giant Ripper Without Push Block, Variable Giant Ripper			
		Dual Tilt Dozer, With Variable Digging Angle Multi Ripper, Variable Multi Ripper			
		Without Rear Equipment			
		Dual Tilt Dozer, Without Rear Equipment			
		With Variable Digging Angle Multi Ripper, Variable Multi Ripper			
		With Variable Digging Angle Giant Ripper, Variable Digging Angle Giant Ripper Without Push Block, Variable Giant Ripper			
		With MSHA Dust Regulation Arrangement, Variable Digging Angle Multi Ripper, Variable Multi Ripper			
		With MSHA Dust Regulation Arrangement, Variable Digging Angle Giant Ripper, Variable Digging Angle Giant Ripper Without Push Block, Variable Giant Ripper			
		Dual Tilt Dozer, With MSHA Dust Regulation Arrangement, Variable Digging Angle Multi Ripper, Variable Multi Ripper			
		Dual Tilt Dozer, With MSHA Dust Regulation Arrangement, Variable Digging Angle Giant Ripper, Variable Digging Angle Giant Ripper Without Push Block, Variable Giant Ripper			
1		17A-979-2822	Hose	1	81105-
2		17A-979-2321	Hose	1	81105-
3		17A-979-2831	Hose	1	81105-
4		ND443440-0030	• Switch, Pressure	1	81105-
5		ND949142-0040	• • O-ring	1	81105-
6		20Y-979-3150	• O-ring	2	81105-
7		17A-979-2841	Hose	1	81105-
8		20Y-979-3130	• O-ring	1	81105-
9		208-979-7650	Connector	1	81105-
10		01435-00620	Bolt	1	81105-
11		09479-02400	Clamp	2	81105-
12		195-979-1550	Clamp	1	81105-
13		195-Z11-7250	Clip	1	81105-
14		01010-81230	Bolt	1	81105-
15		01643-31232	Washer	1	81105-
16		195-979-1550	Clamp	1	81105-
17		195-Z11-7250	Clip	1	81105-

FIG. K2110-027025 Floor Frame, Air Conditioner Piping

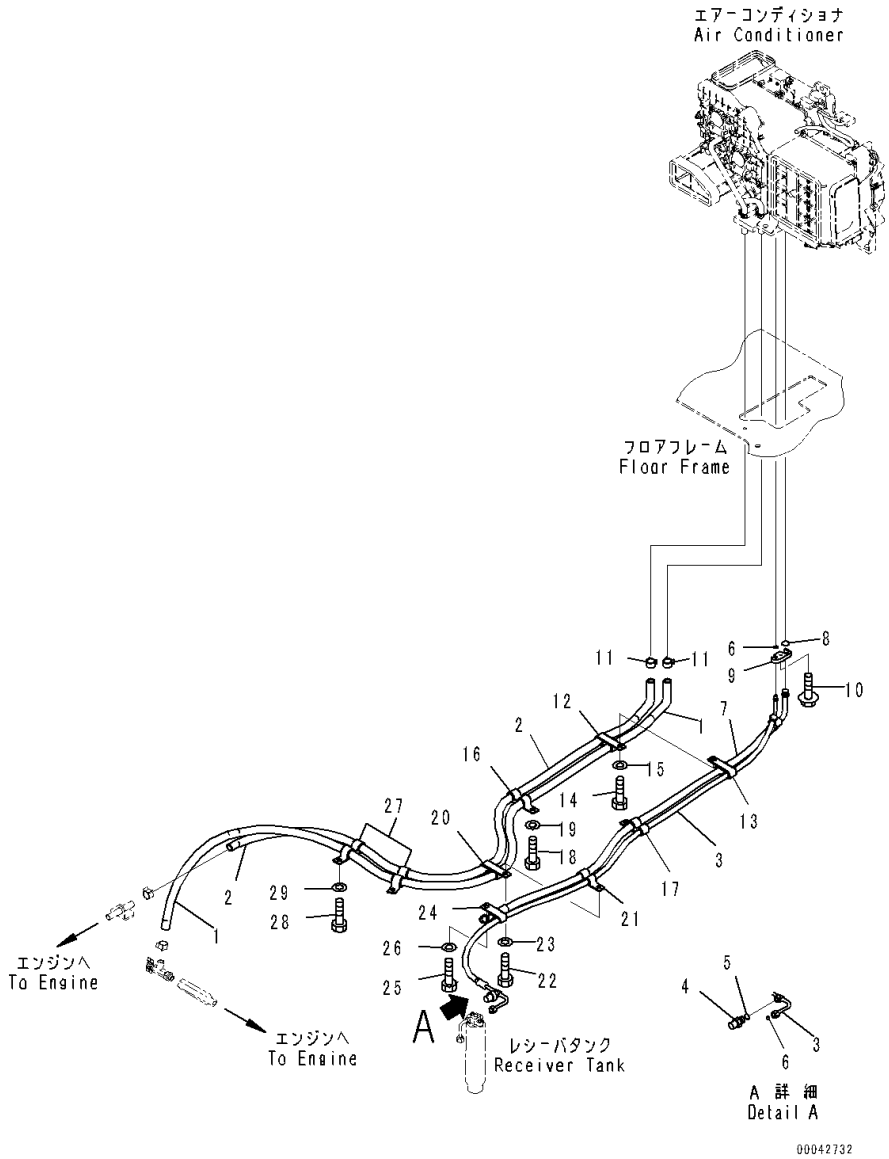

Index	Code	Part Number	Description	Qty	Serial Number
18		01010-81230	Bolt	1	81105-
19		01643-31232	Washer	1	81105-
20		195-979-1550	Clamp	1	81105-
21		17A-911-4421	Clip	1	81105-
22		01010-81230	Bolt	1	81105-
23		01643-31232	Washer	1	81105-
24		17A-911-4460	Clip	1	81105-
25		01010-81230	Bolt	1	81105-
26		01643-31232	Washer	1	81105-
27		195-979-1550	Clamp	2	81105-
28		01010-81230	Bolt	2	81105-
29		01643-31232	Washer	2	81105-

FIG. K2110-027026 Floor Frame, Floor, Window Washer Hose

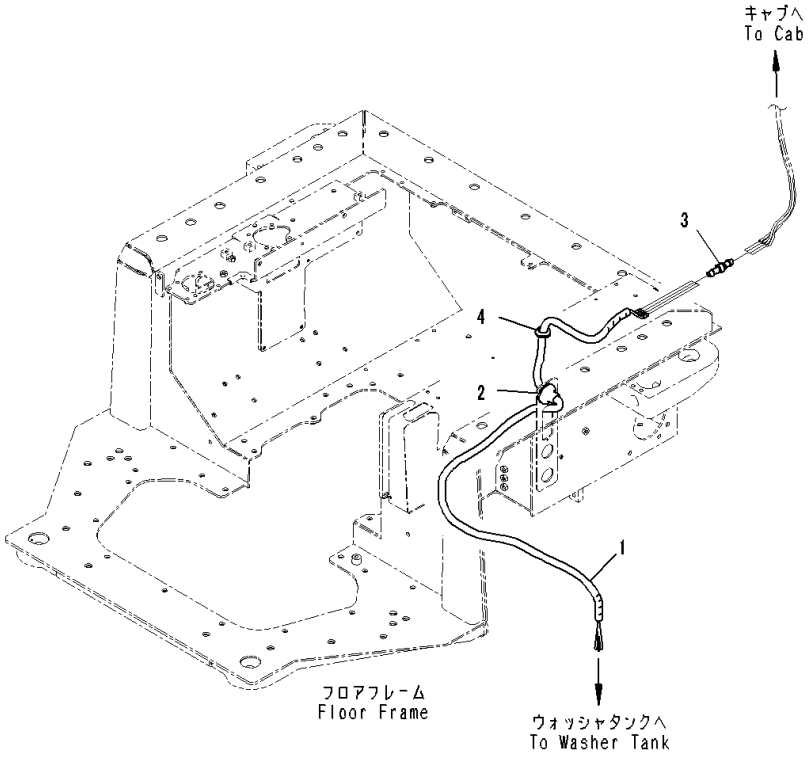

Index	Code	Part Number	Description	Qty	Serial Number
		Note: This list covers following specifications.			
		Dual Tilt Dozer, With Variable Digging Angle Giant Ripper, Variable Digging Angle Giant Ripper Without Push Block, Variable Giant Ripper			
		Dual Tilt Dozer, With Variable Digging Angle Multi Ripper, Variable Multi Ripper			
		Without Rear Equipment			
		Dual Tilt Dozer, Without Rear Equipment			
		With Variable Digging Angle Multi Ripper, Variable Multi Ripper			
		With Variable Digging Angle Giant Ripper, Variable Digging Angle Giant Ripper Without Push Block, Variable Giant Ripper			
		With MSHA Dust Regulation Arrangement, Variable Digging Angle Multi Ripper, Variable Multi Ripper			
		With MSHA Dust Regulation Arrangement, Variable Digging Angle Giant Ripper, Variable Digging Angle Giant Ripper Without Push Block, Variable Giant Ripper			
		Dual Tilt Dozer, With MSHA Dust Regulation Arrangement, Variable Digging Angle Multi Ripper, Variable Multi Ripper			
		Dual Tilt Dozer, With MSHA Dust Regulation Arrangement, Variable Digging Angle Giant Ripper, Variable Digging Angle Giant Ripper Without Push Block, Variable Giant Ripper			
		17A-979-2571	Tape	1	81105-
1	C1		• Tape	4	81105-
2		08037-12536	• Grommet	1	81105-
3		195-979-8590	• Valve	4	81105-
4		08037-02512	Grommet	1	81105-

FIG. K2110-027027 Floor Frame, Decal

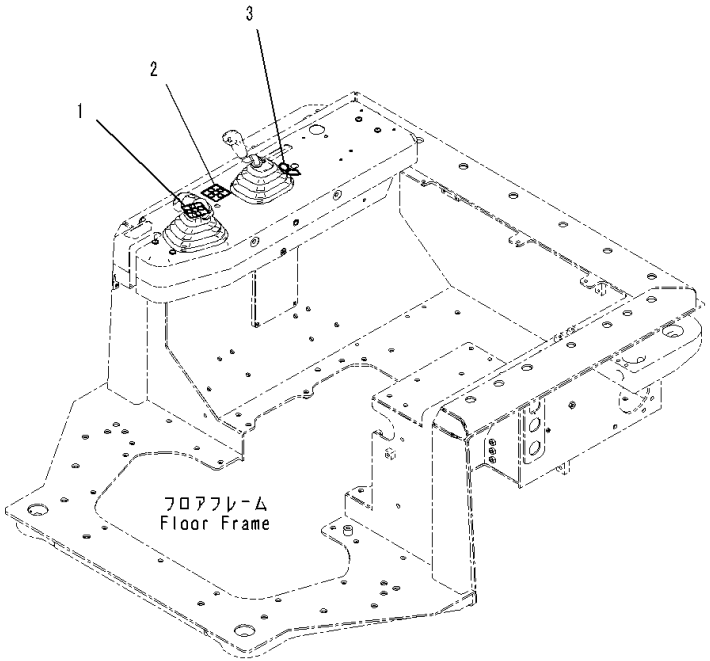

Index	Code	Part Number	Description	Qty	Serial Number
		Note: This list covers following specifications. Dual Tilt Dozer, With Variable Digging Angle Giant Ripper, Variable Digging Angle Giant Ripper Without Push Block, Variable Giant Ripper Dual Tilt Dozer, With MSHA Dust Regulation Arrangement, Variable Digging Angle Giant Ripper, Variable Digging Angle Giant Ripper Without Push Block, Variable Giant Ripper Dual Tilt Dozer, With MSHA Dust Regulation Arrangement, Variable Giant Ripper, For Landfill Specification			
1		17A-98-41130	Plate	1	81105-
2		17A-98-11160	Plate	1	81105-
3		17A-98-11171	Plate	1	81105-

FIG. K2110-028008 Floor Frame, Without Pin Puller Switch

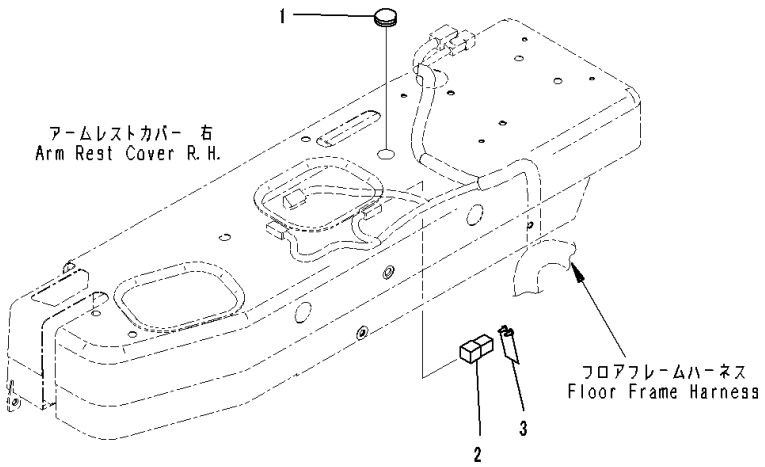

Index	Code	Part Number	Description	Qty	Serial Number
		Note: This list covers following specifications.			
		Dual Tilt Dozer, With Variable Digging Angle Multi Ripper, Variable Multi Ripper			
		With Variable Digging Angle Multi Ripper, Variable Multi Ripper			
		With MSHA Dust Regulation Arrangement, Variable Digging Angle Multi Ripper, Variable Multi Ripper			
		Dual Tilt Dozer, With MSHA Dust Regulation Arrangement, Variable Digging Angle Multi Ripper, Variable Multi Ripper			
		Angle Dozer, With Variable Digging Angle Multi Ripper, Variable Multi Ripper			
		Angle Dozer, With MSHA Dust Regulation Arrangement, Variable Digging Angle Multi Ripper, Variable Multi Ripper			
1		09415-01610	Cap	1	81105-
2		08192-22100	Connector Body	1	81105-
3		08191-00770	Plug, Connector	2	81105-

FIG. K2110-028027 Floor Frame, Decal

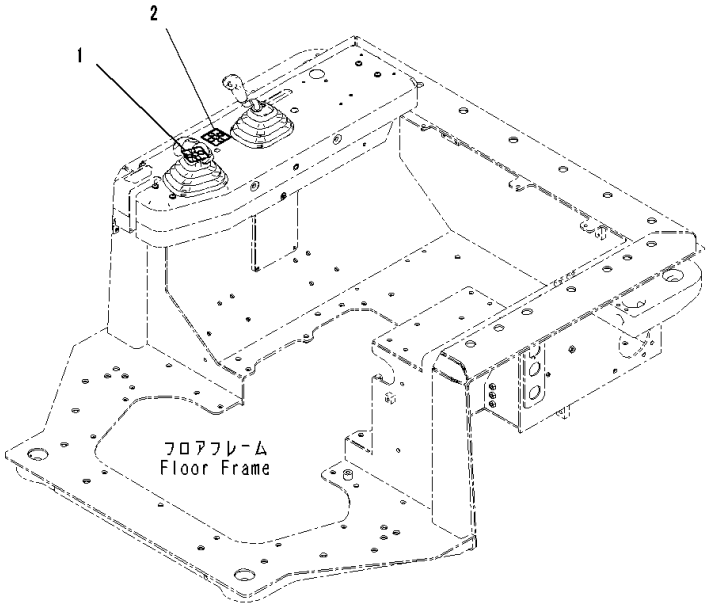

Index	Code	Part Number	Description	Qty	Serial Number
		Note: This list covers following specifications.			
		Dual Tilt Dozer, With Variable Digging Angle Multi Ripper, Variable Multi Ripper			
		Dual Tilt Dozer, With MSHA Dust Regulation Arrangement, Variable Digging Angle Multi Ripper, Variable Multi Ripper			
1		17A-98-41130	Plate	1	81105-
2		17A-98-11160	Plate	1	81105-

FIG. K2110-029008 Floor Frame, Without Pin Puller Switch

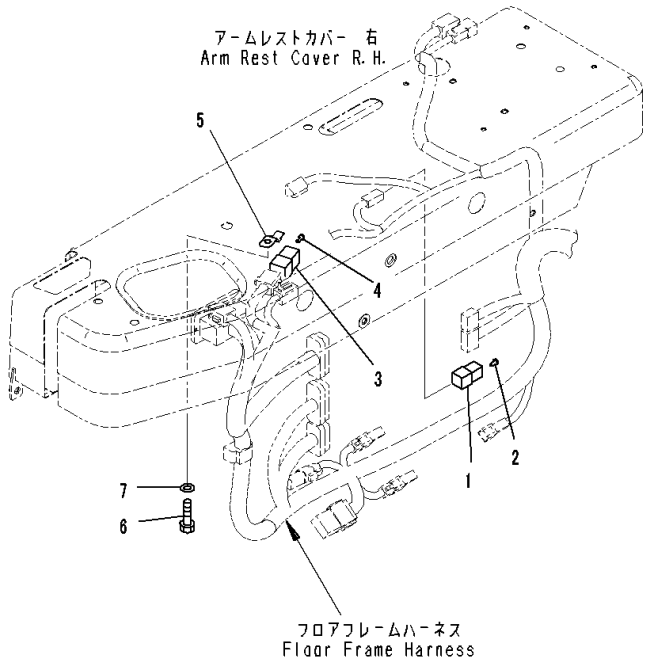

Index	Code	Part Number	Description	Qty	Serial Number
		Note: This list covers following specifications.			
		Without Rear Equipment			
		Dual Tilt Dozer, Without Rear Equipment			
		With MSHA Dust Regulation Arrangement, Without Rear Equipment			
		Dual Tilt Dozer, With MSHA Dust Regulation Arrangement, Without Rear Equipment			
		Angle Dozer, Without Rear Equipment			
		Angle Dozer, With MSHA Dust Regulation Arrangement, Without Rear Equipment			
1		08192-22100	Connector Body	1	81105-
2		08191-00770	Plug, Connector	2	81105-
3		08192-28102	Connector	1	81105-
4		08191-00770	Plug, Connector	8	81105-
5		08193-30010	Clip	1	81105-
6		01010-81020	Bolt	1	81105-
7		01643-31032	Washer	1	81105-

FIG. K2110-029013 Floor Frame, Blade Control Lever

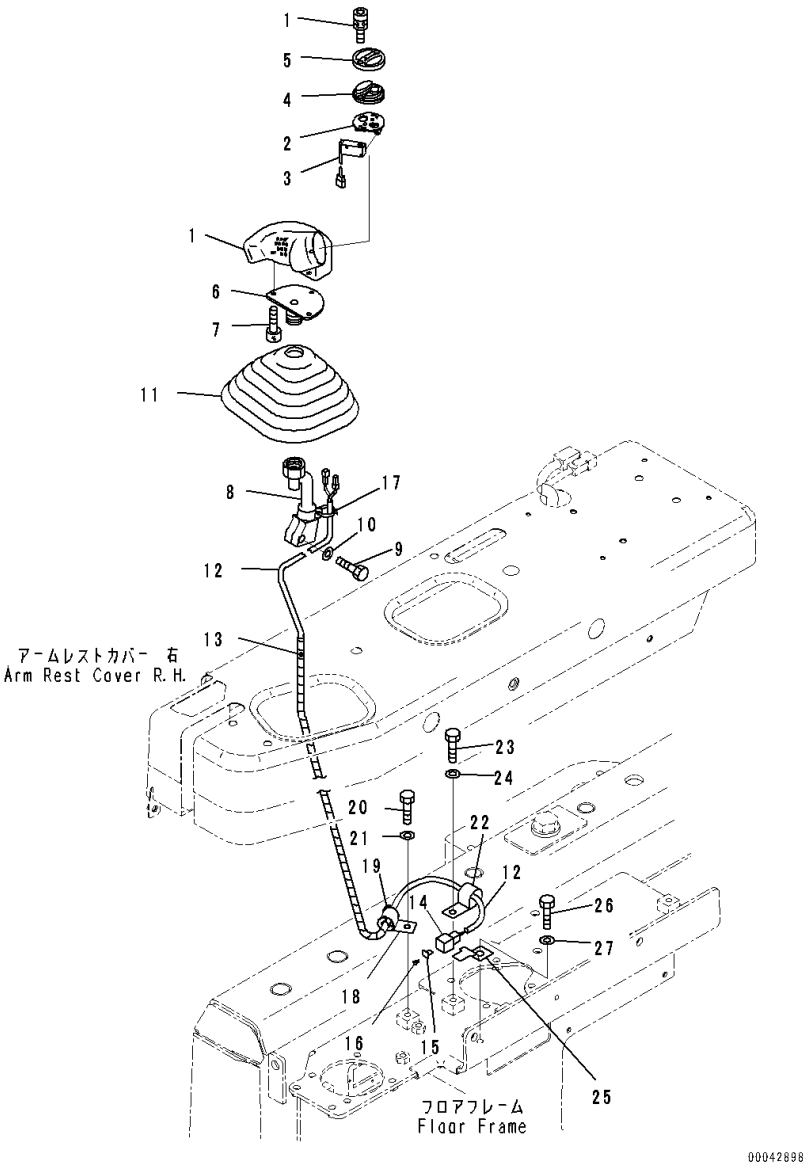

Index	Code	Part Number	Description	Qty	Serial Number
		Note: This list covers following specifications.			
		Without Rear Equipment			
		With Variable Digging Angle Multi Ripper, Variable Multi Ripper			
		With Variable Digging Angle Giant Ripper, Variable Digging Angle Giant Ripper Without Push Block, Variable Giant Ripper			
		With MSHA Dust Regulation Arrangement, Variable Digging Angle Multi Ripper, Variable Multi Ripper			
		With MSHA Dust Regulation Arrangement, Variable Digging Angle Giant Ripper, Variable Digging Angle Giant Ripper Without Push Block, Variable Giant Ripper			
		With MSHA Dust Regulation Arrangement, Without Rear Equipment			
		With MSHA Dust Regulation Arrangement, Variable Giant Ripper, Provision For Landfill Specification			
		Angle Dozer, With Variable Digging Angle Multi Ripper, Variable Multi Ripper			
		Angle Dozer, With Variable Digging Angle Giant Ripper, Variable Digging Angle Giant Ripper Without Push Block, Variable Giant Ripper			
		Angle Dozer, Without Rear Equipment			
		Angle Dozer, With MSHA Dust Regulation Arrangement, Variable Digging Angle Multi Ripper, Variable Multi Ripper			
		17A-43-42410	Knob Assembly	1	81105-
1		19M-09-11510	• Bolt	2	81105-
		17A-43-42440	• Switch Assembly	1	81105-
2		19M-43-33170	• • Plate	1	81105-
3		19M-43-33470	• • Switch	1	81105-
4		17A-43-42430	• Rubber	1	81105-
5		17A-43-42420	• Cover	1	81105-
6		19M-43-38220	Bracket	1	81105-
7		01252-80510	Bolt	3	81105-
8		19M-43-38211	Lever	1	81105-
9		01010-81030	Bolt	1	81105-
10		01643-31032	Washer	1	81105-
11		11Y-43-11181	Boot	1	81105-
12		17A-06-41470	Wiring Harness	1	81105-
13		08210-00404	Tube, Spiral	1	81105-
14		08192-26100	Connector	1	81105-

FIG. K2110-029013 Floor Frame, Blade Control Lever

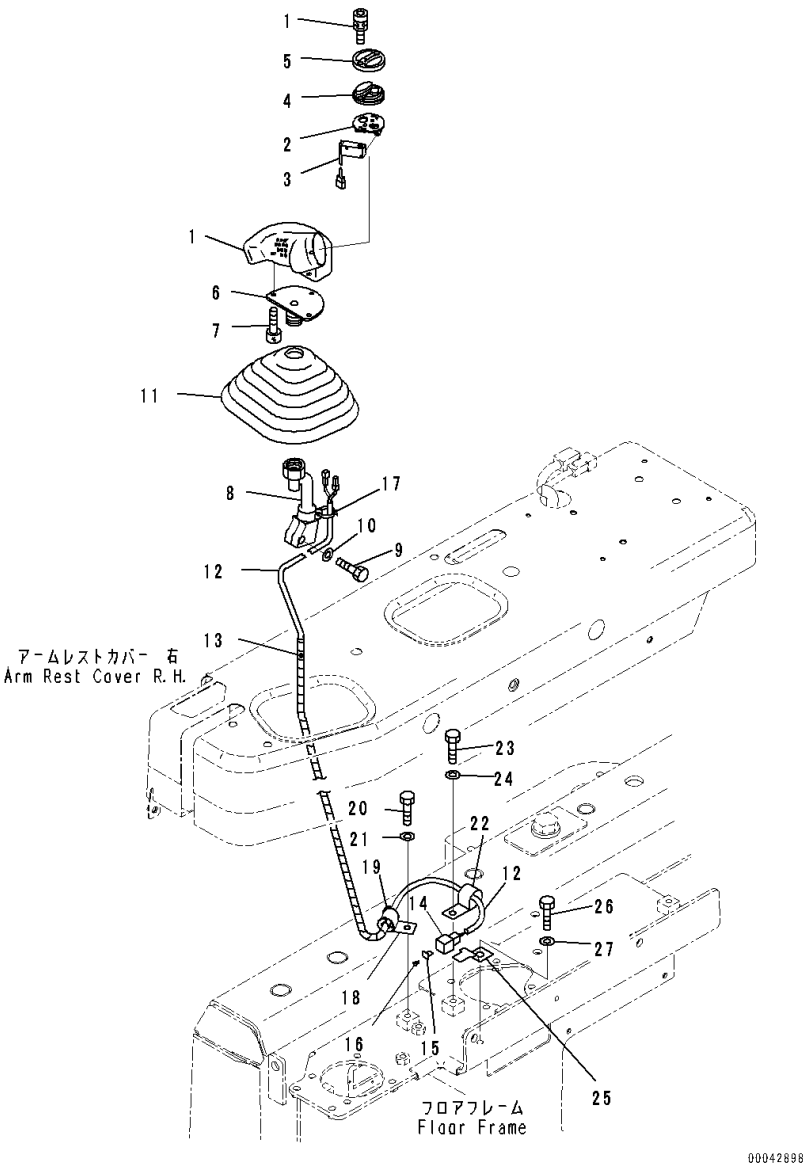

Index	Code	Part Number	Description	Qty	Serial Number
15		08192-16300	Wedge	1	81105-
16		08191-00770	Plug, Connector	3	81105-
17		20Y-06-23940	Band	1	81105-
18		04434-51010	Clip	1	81105-
19		198-06-53510	Bushing	1	81105-
20		01010-81020	Bolt	1	81105-
21		01643-31032	Washer	1	81105-
22		04434-50610	Clip	1	81105-
23		01010-81020	Bolt	1	81105-
24		01643-31032	Washer	1	81105-
25		08193-20010	Clip	1	81105-
26		01010-81020	Bolt	1	81105-
27		01643-31032	Washer	1	81105-

FIG. K2110-029019 Floor Frame, Armrest, RHS

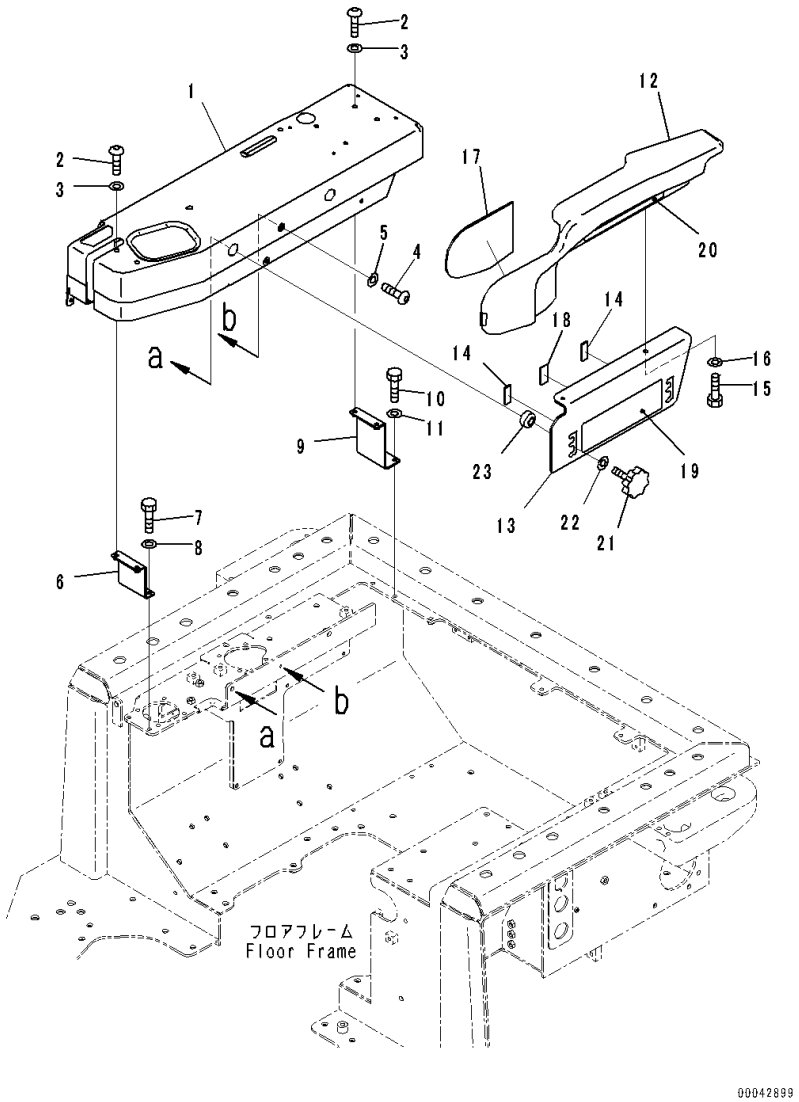

Index	Code	Part Number	Description	Qty	Serial Number
		Note: This list covers following specifications.			
		Without Rear Equipment			
		Dual Tilt Dozer, Without Rear Equipment			
		With MSHA Dust Regulation Arrangement, Without Rear Equipment			
		Dual Tilt Dozer, With MSHA Dust Regulation Arrangement, Without Rear Equipment			
		Angle Dozer, Without Rear Equipment			
		Angle Dozer, With MSHA Dust Regulation Arrangement, Without Rear Equipment			
1		17A-54-46242	Cover	1	81105-
2		01245-00820	Screw	5	81105-
3		01643-70823	Washer	5	81105-
4		01245-00616	Screw, Hexagon Socket Head	1	81105-
5		01640-20610	Washer	1	81105-
6		17A-54-46411	Bracket	1	81105-
7		01010-80825	Bolt	2	81105-
8		01643-30823	Washer	2	81105-
9		17A-54-46311	Bracket	1	81105-
10		01010-80825	Bolt	2	81105-
11		01643-30823	Washer	2	81105-
		14X-54-36310	Arm Assembly	1	81105-
12		14X-54-36320	• Arm Rest	1	81105-
13		14X-54-36330	• Plate	1	81105-
14		134-54-66240	• Sheet	2	81105-
15		01010-80820	• Bolt	2	81105-
16		01643-30823	• Washer	2	81105-
17		14X-54-36340	• Sheet	1	81105-
18		17A-43-42310	• Rubber	1	81105-
19		134-54-66190	Plate	1	81105-
20		134-54-66290	Plate	1	81105-
21		195-54-68760	Knob	2	81105-
22		01643-31032	Washer	2	81105-
23		17A-54-25610	Spacer	2	81105-

FIG. K2110-029026 Floor Frame, Decal

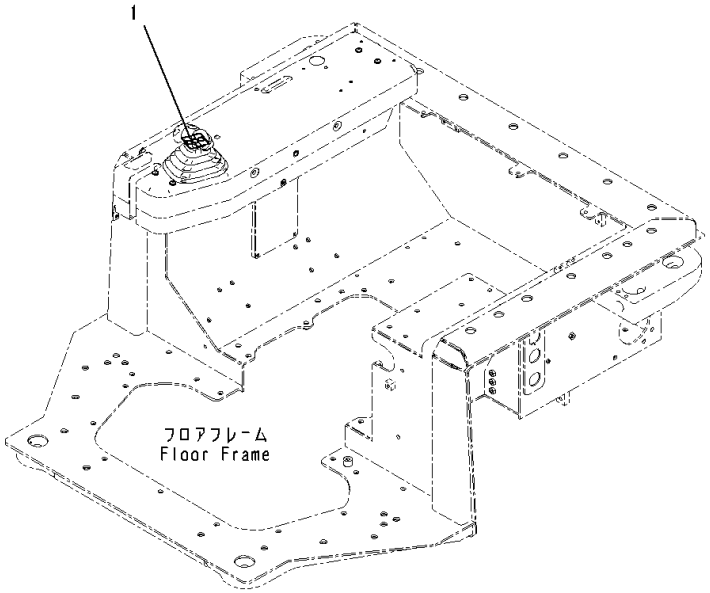

Index	Code	Part Number	Description	Qty	Serial Number
		Note: This list covers following specifications. Without Rear Equipment With MSHA Dust Regulation Arrangement, Without Rear Equipment			
1		17A-98-41140	Plate	1	81105-

FIG. K2110-031027 Floor Frame, Decal

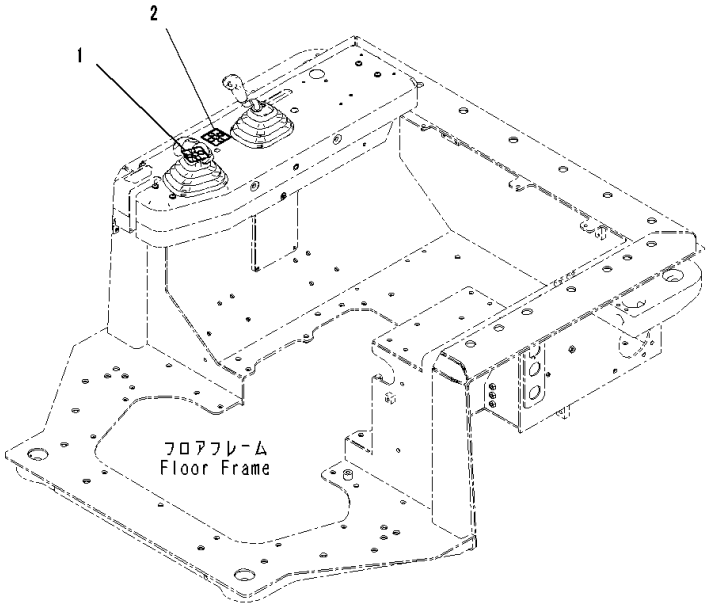

Index	Code	Part Number	Description	Qty	Serial Number
		Note: This list covers following specifications. With Variable Digging Angle Multi Ripper, Variable Multi Ripper With MSHA Dust Regulation Arrangement, Variable Digging Angle Multi Ripper, Variable Multi Ripper			
1		17A-98-41140	Plate	1	81105-
2		17A-98-11160	Plate	1	81105-

FIG. K2110-032027 Floor Frame, Decal

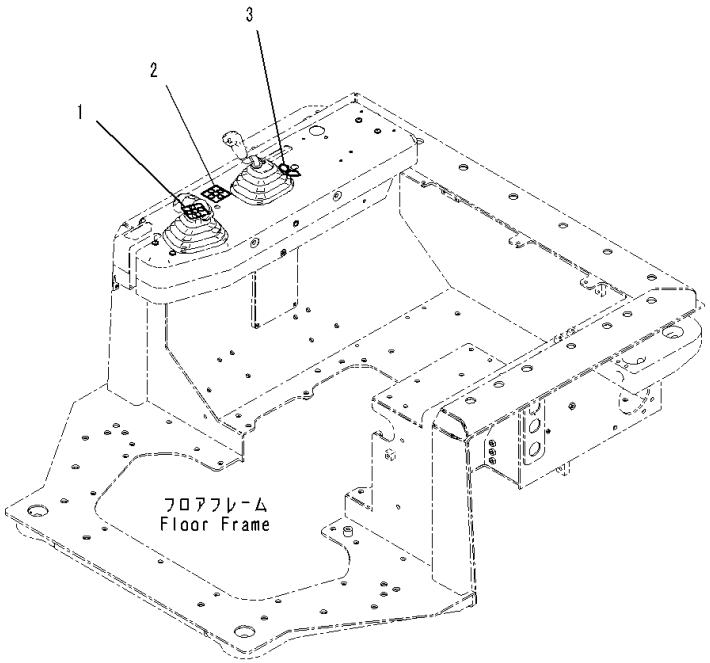

Index	Code	Part Number	Description	Qty	Serial Number
		Note: This list covers following specifications. With Variable Digging Angle Giant Ripper, Variable Digging Angle Giant Ripper Without Push Block, Variable Giant Ripper With MSHA Dust Regulation Arrangement, Variable Digging Angle Giant Ripper, Variable Digging Angle Giant Ripper Without Push Block, Variable Giant Ripper With MSHA Dust Regulation Arrangement, Variable Giant Ripper, Provision For Landfill Specification			
1		17A-98-41140	Plate	1	81105-
2		17A-98-11160	Plate	1	81105-
3		17A-98-11171	Plate	1	81105-

FIG. K2110-033023 Floor Frame, Air Conditioner Cover

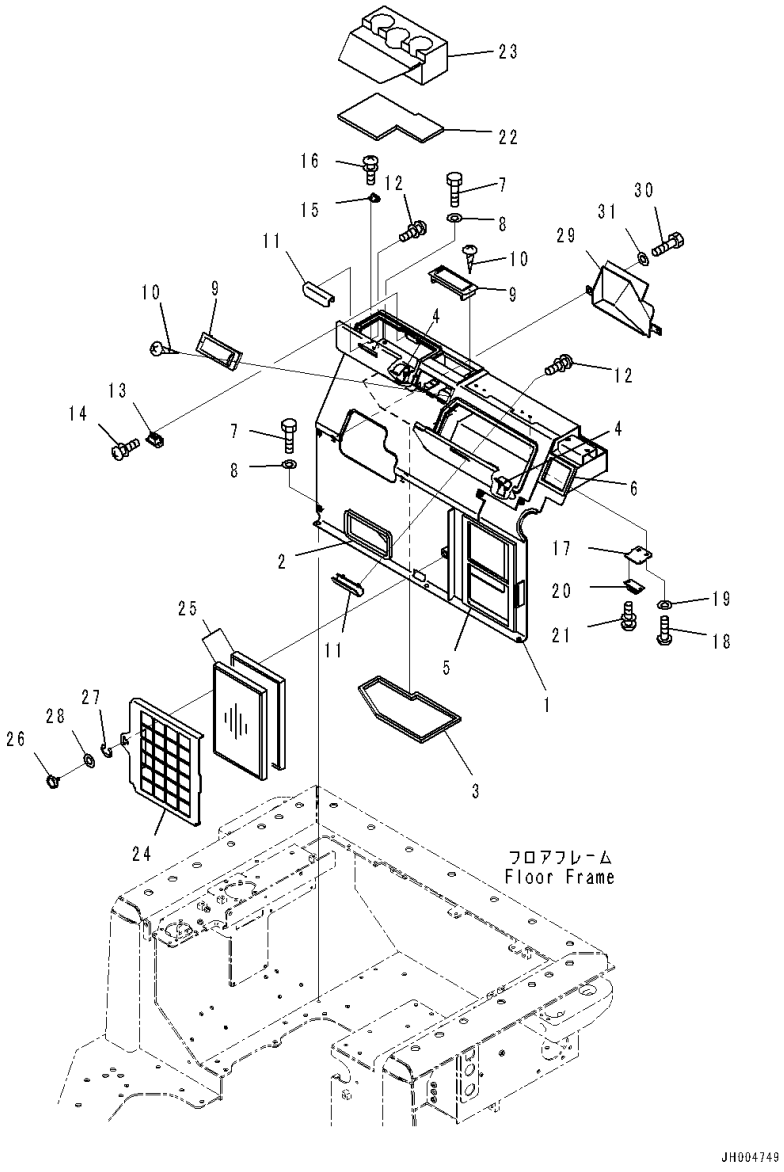

Index	Code	Part Number	Description	Qty	Serial Number
		Note: This list covers following specifications.			
		With MSHA Dust Regulation Arrangement, Variable Digging Angle Multi Ripper, Variable Multi Ripper			
		With MSHA Dust Regulation Arrangement, Variable Digging Angle Giant Ripper, Variable Digging Angle Giant Ripper Without Push Block, Variable Giant Ripper			
		Dual Tilt Dozer, With MSHA Dust Regulation Arrangement, Variable Digging Angle Multi Ripper, Variable Multi Ripper			
		Dual Tilt Dozer, With MSHA Dust Regulation Arrangement, Variable Digging Angle Giant Ripper, Variable Digging Angle Giant Ripper Without Push Block, Variable Giant Ripper			
		With MSHA Dust Regulation Arrangement, Without Rear Equipment			
		Dual Tilt Dozer, With MSHA Dust Regulation Arrangement, Without Rear Equipment			
		With MSHA Dust Regulation Arrangement, Variable Giant Ripper, Provision For Landfill Specification			
		Angle Dozer, With MSHA Dust Regulation Arrangement, Variable Digging Angle Multi Ripper, Variable Multi Ripper			
		Angle Dozer, With MSHA Dust Regulation Arrangement, Without Rear Equipment			
1		17A-979-4160	Cover	1	81105-
2		17A-979-2251	• Seal,Bonded	1	81105-
3		17A-979-2281	• Seat,Bonded	1	81105-
4		17A-979-2390	• Hinge,Welded	4	81105-
5		17A-979-4170	• Seal,Bonded	1	81105-
6		17A-979-2891	• Seal,Bonded	1	81105-
7		01010-80825	Bolt	6	81105-
8		01643-30823	Washer	6	81105-
9		17A-Z11-7161	Louver	2	81105-
10		01370-20308	Screw	4	81105-
11		17A-54-46940	Bracket	2	81105-
12		01023-10508	Screw	4	81105-
13		154-43-73651	Magnet	1	81105-
14		01023-10306	Screw	4	81105-
15		17A-54-46961	Plate	1	81105-
16		01023-10508	Screw	2	81105-
17		17A-54-46951	Plate	2	81105-
18		01245-00616	Screw, Hexagon Socket Head	4	81105-
19		01643-70623	Washer	4	81105-

FIG. K2110-033023 Floor Frame, Air Conditioner Cover

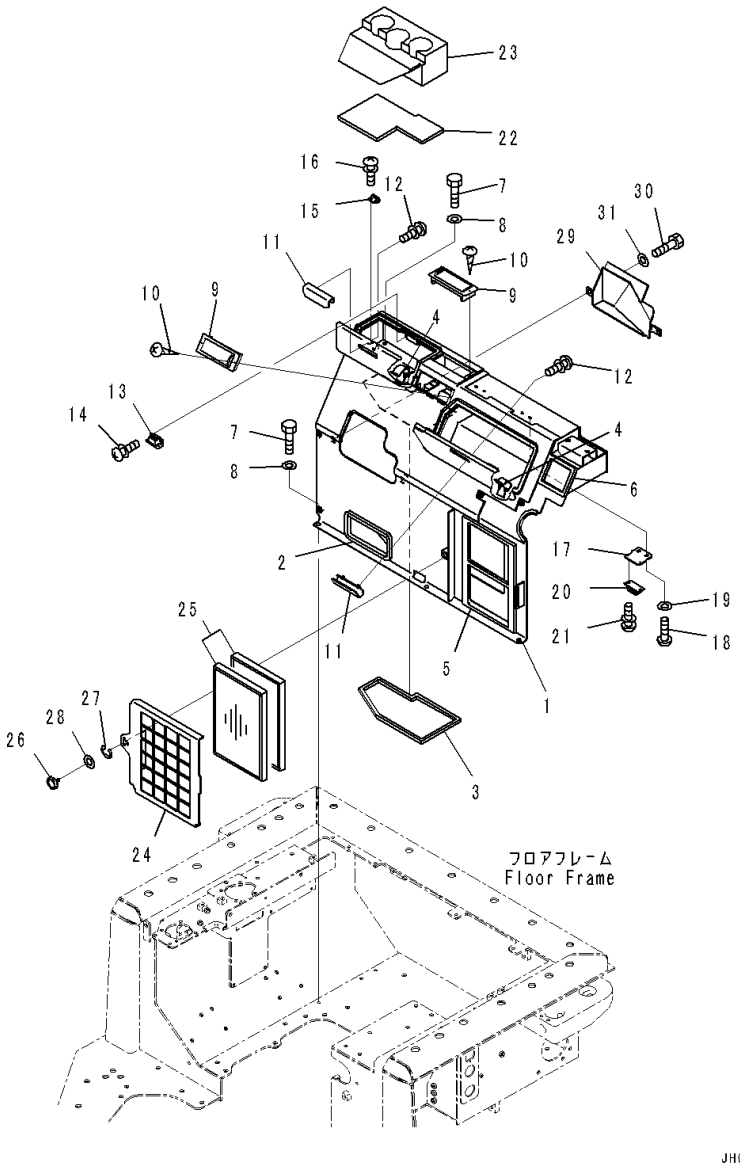

Index	Code	Part Number	Description	Qty	Serial Number
20		09452-14503	Catcher	2	81105-
21		01023-10306	Screw	4	81105-
22		17A-979-2411	Cushion	1	81105-
23		17A-979-2261	Cushion	1	81105-
24		17A-979-4180	Cover	1	81105-
25		427-07-22130	Filter	1	81105-
26		561-06-86280	Screw	1	81105-
27		195-54-78790	Ring, Snap	1	81105-
28		17A-911-5740	Plate	1	81259-
29		17A-54-46930	Cover	1	81105-
30		01010-80816	Bolt	2	81105-
31		01643-30823	Washer	2	81105-

FIG. K2110-037001 Floor Frame, Frame

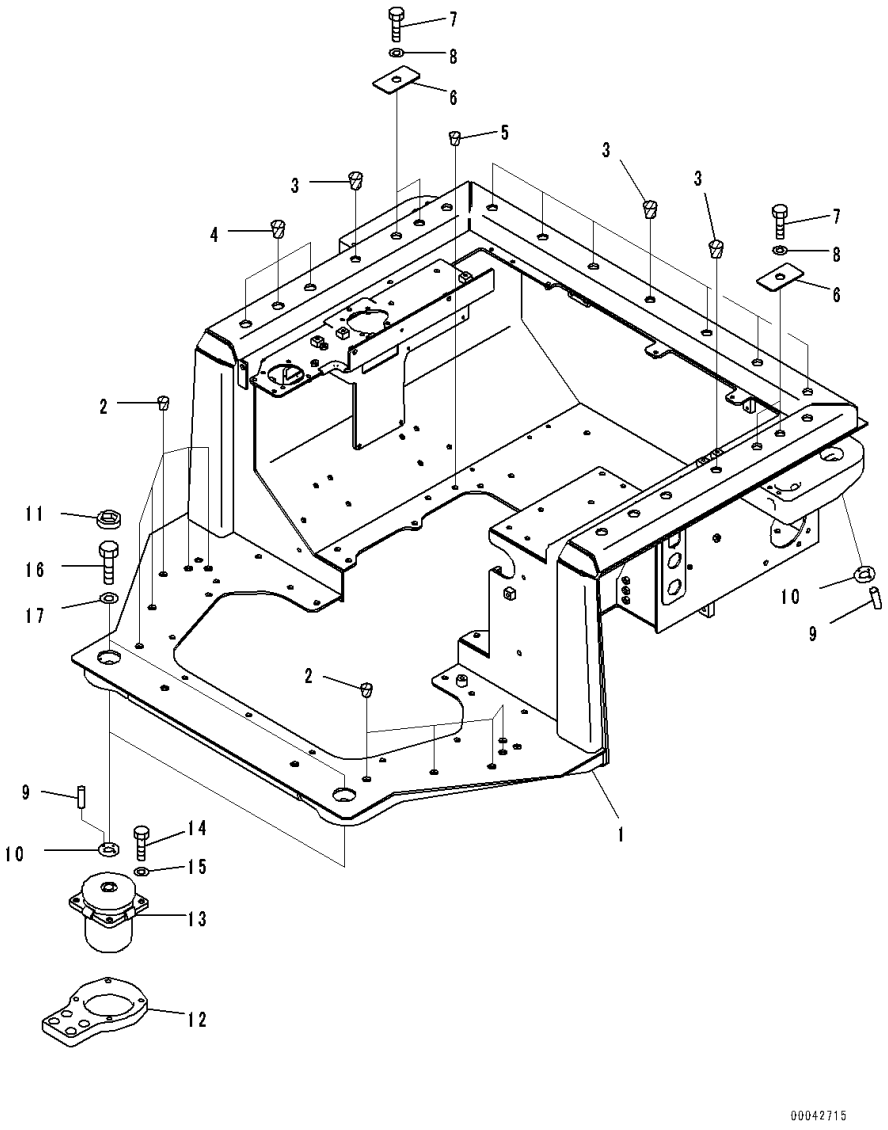

Index	Code	Part Number	Description	Qty	Serial Number
		Note: This list covers following specifications.			
		With MSHA Dust Regulation Arrangement, Without Rear Equipment			
		Dual Tilt Dozer, With MSHA Dust Regulation Arrangement, Without Rear Equipment			
		Angle Dozer, With Variable Digging Angle Multi Ripper, Variable Multi Ripper			
		Angle Dozer, With Variable Digging Angle Giant Ripper, Variable Digging Angle Giant Ripper Without Push Block, Variable Giant Ripper			
		Angle Dozer, Without Rear Equipment			
		Angle Dozer, With MSHA Dust Regulation Arrangement, Variable Digging Angle Multi Ripper, Variable Multi Ripper			
		Angle Dozer, With MSHA Dust Regulation Arrangement, Without Rear Equipment			
		With Variable Digging Angle Giant Ripper, For Angle Dozer			
1		17A-54-46113	Frame	1	81105-
2		07049-01620	Plug	10	81105-
3		07049-02025	Plug	9	81105-
4		07049-02430	Plug	6	81105-
5		07049-01215	Plug	2	81105-
6		17A-54-46291	Plate	4	81105-
7		01010-82050	Bolt	4	81105-
8		01643-32060	Washer	4	81105-
9		04020-00616	Pin, Dowel	8	81105-
10		17A-54-46440	Plate	4	81105-
11		17A-54-46690	Cap	2	81105-
12		17A-54-46330	Plate	2	81105-
13		17A-54-46120	Cushion	2	81105-
14		01010-81440	Bolt	8	81105-
15		01643-31445	Washer	8	81105-
16		01010-82465	Bolt	2	81105-
17		01643-32460	Washer	2	81105-

FIG. K2110-037002 Floor Frame, Parking Brake Lever

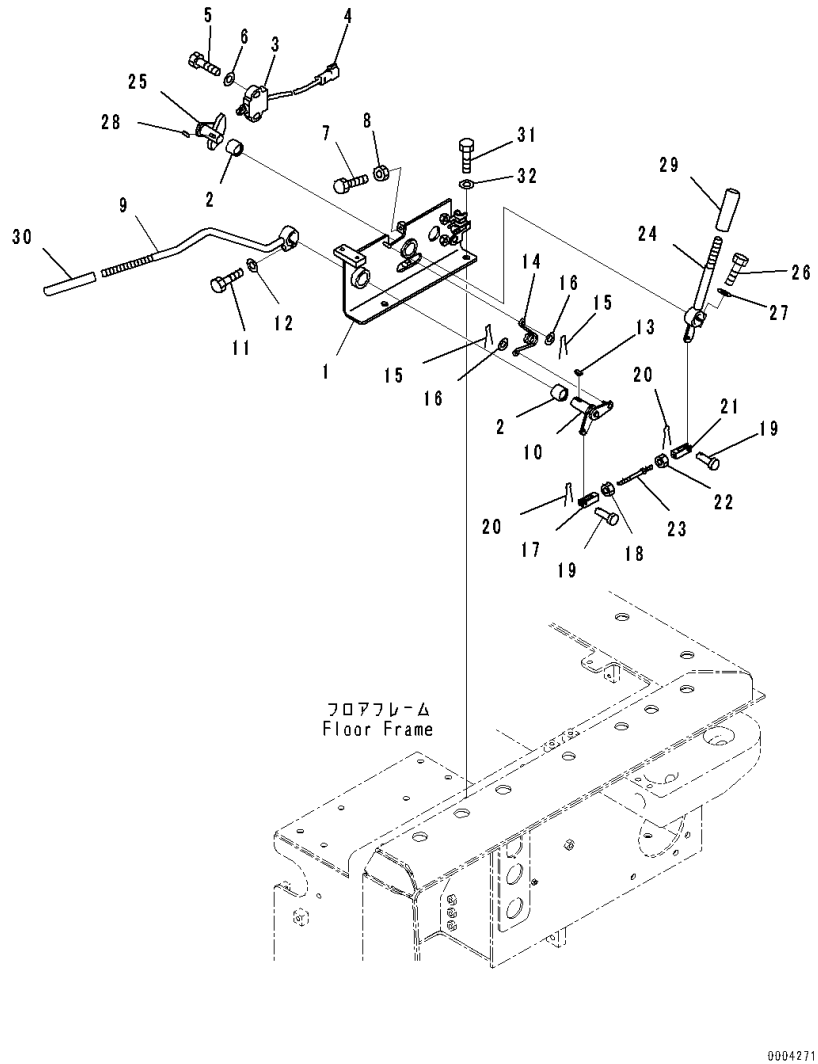

Index	Code	Part Number	Description	Qty	Serial Number
		Note: This list covers following specifications.			
		With MSHA Dust Regulation Arrangement, Without Rear Equipment			
		Dual Tilt Dozer, With MSHA Dust Regulation Arrangement, Without Rear Equipment			
		With MSHA Dust Regulation Arrangement, Variable Giant Ripper, Provision For Landfill Specification			
		Angle Dozer, With Variable Digging Angle Multi Ripper, Variable Multi Ripper			
		Angle Dozer, With Variable Digging Angle Giant Ripper, Variable Digging Angle Giant Ripper Without Push Block, Variable Giant Ripper			
		Angle Dozer, Without Rear Equipment			
		Angle Dozer, With MSHA Dust Regulation Arrangement, Variable Digging Angle Multi Ripper, Variable Multi Ripper			
		Angle Dozer, With MSHA Dust Regulation Arrangement, Without Rear Equipment			
		Dual Tilt Dozer, With MSHA Dust Regulation Arrangement, Variable Giant Ripper, For Landfill Specification			
		With Variable Digging Angle Giant Ripper, For Angle Dozer			
1		17A-43-41711	Bracket	1	81105-
2		06124-02020	Bearing	2	81105-
3		11Y-06-22150	Switch	1	81105-
4		08192-13830	• Connector	1	81105-
5		01010-81040	Bolt	2	81105-
6		01643-31032	Washer	2	81105-
7		01016-50830	Bolt	1	81105-
8		01580-10806	Nut	1	81105-
9		17A-43-41722	Lever	1	81105-
10		17A-43-41731	Lever	1	81105-
11		01010-80830	Bolt	1	81105-
12		01643-30823	Washer	1	81105-
13		04010-00516	Key	1	81105-
14		17A-43-41760	Spring	1	81105-
15		04050-11612	Pin, Cotter	2	81105-
16		01640-20610	Washer	2	81105-
17		04221-20634	Yoke,LHS	1	81105-
18		01508-40603	Nut, Left-handed	1	81105-
19		04205-10618	Pin	2	81105-
20		04050-11612	Pin, Cotter	2	81105-

FIG. K2110-037002 Floor Frame, Parking Brake Lever

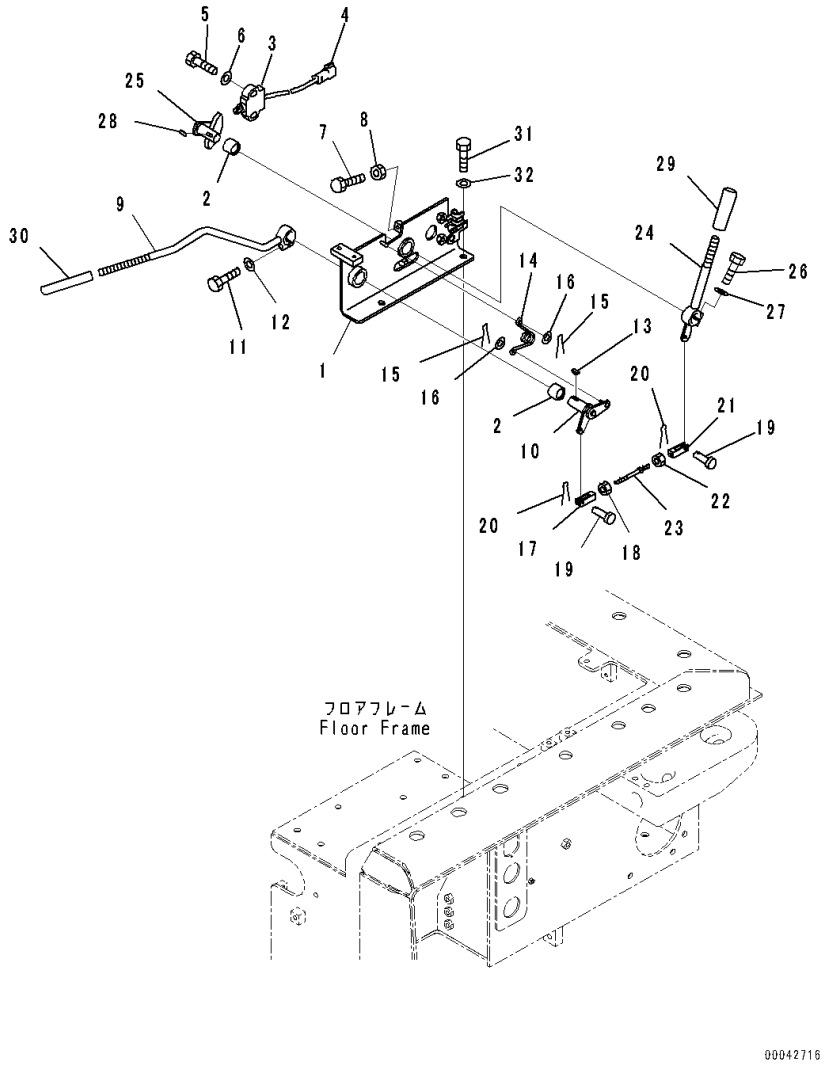

Index	Code	Part Number	Description	Qty	Serial Number
21		04211-20634	Yoke	1	81105-
22		01580-10605	Nut	1	81105-
23		04248-30609	Rod	1	81105-
24		17A-43-41751	Lever	1	81105-
25		17A-43-41741	Lever	1	81105-
26		01010-80830	Bolt	1	81105-
27		01643-30823	Washer	1	81105-
28		04010-00516	Key	1	81105-
29		22M-43-21470	Knob	1	81105-
30		417-43-28270	Cap	1	81105-
31		01010-81025	Bolt	2	81105-
32		01643-31032	Washer	2	81105-

FIG. K2110-037003 Floor Frame, Horn Switch and Controller

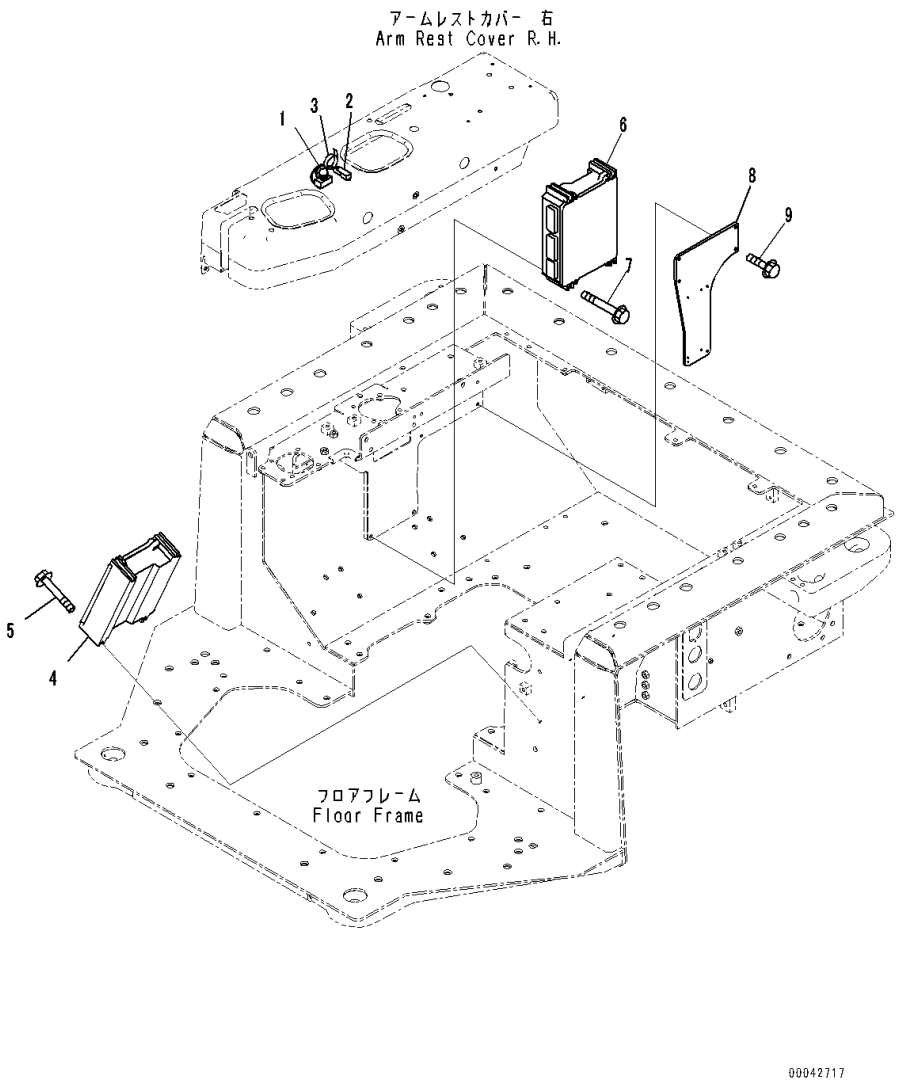

Index	Code	Part Number	Description	Qty	Serial Number
		Note: This list covers following specifications.			
		With MSHA Dust Regulation Arrangement, Without Rear Equipment			
		Dual Tilt Dozer, With MSHA Dust Regulation Arrangement, Without Rear Equipment			
		With MSHA Dust Regulation Arrangement, Variable Giant Ripper, Provision For Landfill Specification			
		Angle Dozer, With Variable Digging Angle Multi Ripper, Variable Multi Ripper			
		Angle Dozer, With Variable Digging Angle Giant Ripper, Variable Digging Angle Giant Ripper Without Push Block, Variable Giant Ripper			
		Angle Dozer, Without Rear Equipment			
		Angle Dozer, With MSHA Dust Regulation Arrangement, Variable Digging Angle Multi Ripper, Variable Multi Ripper			
		Angle Dozer, With MSHA Dust Regulation Arrangement, Without Rear Equipment			
		Dual Tilt Dozer, With MSHA Dust Regulation Arrangement, Variable Giant Ripper, For Landfill Specification			
		With Variable Digging Angle Giant Ripper, For Angle Dozer			
1		08064-10000	Switch, Horn	1	81105-
2		17A-06-41860	Wiring Harness	1	81105-
3		08034-20310	• Band, Black	1	81105-
4		7830-54-2009	Controller	1	81193-
5		01435-00885	Bolt	4	81105-
6		7830-54-2009	Controller	1	81193-
7		01435-00880	Bolt	4	81105-
8		17A-54-46990	Plate	1	81105-
9		01435-00616	Bolt	4	81105-

FIG. K2110-037004 Floor Frame, Floor, Wiring Harness

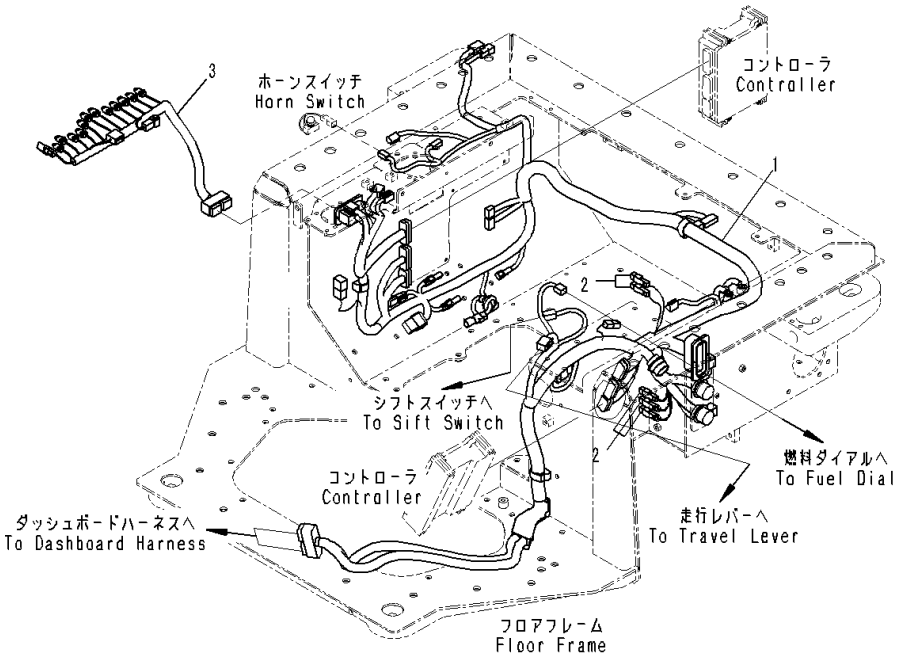

Index	Code	Part Number	Description	Qty	Serial Number
		Note: This list covers following specifications. With MSHA Dust Regulation Arrangement, Without Rear Equipment Dual Tilt Dozer, With MSHA Dust Regulation Arrangement, Without Rear Equipment With MSHA Dust Regulation Arrangement, Variable Giant Ripper, Provision For Landfill Specification Angle Dozer, With Variable Digging Angle Multi Ripper, Variable Multi Ripper Angle Dozer, With Variable Digging Angle Giant Ripper, Variable Digging Angle Giant Ripper Without Push Block, Variable Giant Ripper Angle Dozer, Without Rear Equipment Angle Dozer, With MSHA Dust Regulation Arrangement, Variable Digging Angle Multi Ripper, Variable Multi Ripper Angle Dozer, With MSHA Dust Regulation Arrangement, Without Rear Equipment Dual Tilt Dozer, With MSHA Dust Regulation Arrangement, Variable Giant Ripper, For Landfill Specification With Variable Digging Angle Giant Ripper, For Angle Dozer			
1		17A-06-41113	Wiring Harness	1	81105-
2		21J-06-13661	• Diode	5	81105-
3		17A-06-41141	Wiring Harness	1	81105-

FIG. K2110-037005 Floor Frame, Floor Wiring Harness Clamp (1/2)

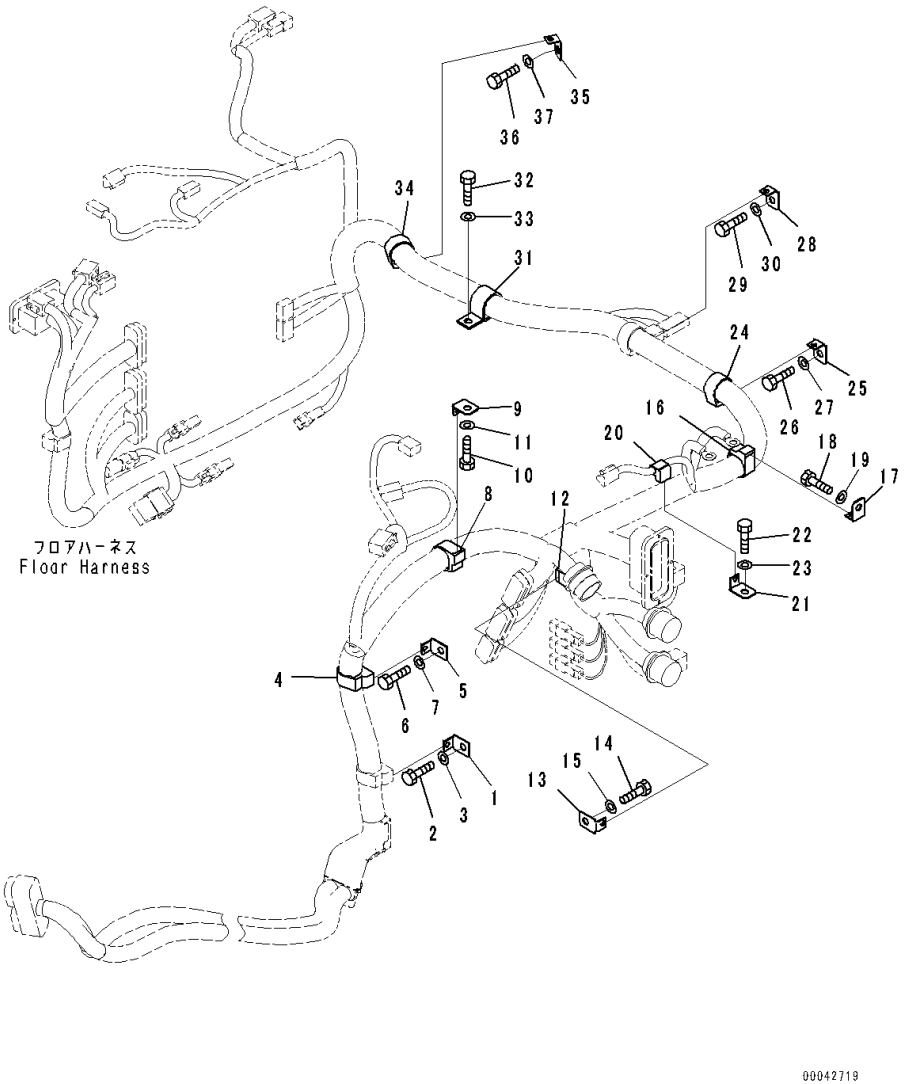

Index	Code	Part Number	Description	Qty	Serial Number
		Note: This list covers following specifications. With MSHA Dust Regulation Arrangement, Without Rear Equipment Dual Tilt Dozer, With MSHA Dust Regulation Arrangement, Without Rear Equipment With MSHA Dust Regulation Arrangement, Variable Giant Ripper, Provision For Landfill Specification Angle Dozer, With Variable Digging Angle Multi Ripper, Variable Multi Ripper Angle Dozer, With Variable Digging Angle Giant Ripper, Variable Digging Angle Giant Ripper Without Push Block, Variable Giant Ripper Angle Dozer, Without Rear Equipment Angle Dozer, With MSHA Dust Regulation Arrangement, Variable Digging Angle Multi Ripper, Variable Multi Ripper Angle Dozer, With MSHA Dust Regulation Arrangement, Without Rear Equipment Dual Tilt Dozer, With MSHA Dust Regulation Arrangement, Variable Giant Ripper, For Landfill Specification With Variable Digging Angle Giant Ripper, For Angle Dozer		
1		08057-12010	Clip	1	81105-
2		01010-81020	Bolt	1	81105-
3		01643-31032	Washer	1	81105-
4		08211-02820	Clip	1	81105-
5		08057-12010	Clip	1	81105-
6		01010-81020	Bolt	1	81105-
7		01643-31032	Washer	1	81105-
8		08211-02820	Clip	1	81105-
9		08057-12010	Clip	1	81105-
10		01010-81020	Bolt	1	81105-
11		01643-31032	Washer	1	81105-
12		08211-02820	Clip	1	81105-
13		08057-12010	Clip	1	81105-
14		01010-81020	Bolt	1	81105-
15		01643-31032	Washer	1	81105-
16		08211-02820	Clip	1	81105-
17		08057-12010	Clip	1	81105-
18		01010-81020	Bolt	1	81105-
19		01643-31032	Washer	1	81105-
20		08211-00720	Clip	1	81105-

FIG. K2110-037005 Floor Frame, Floor Wiring Harness Clamp (1/2)

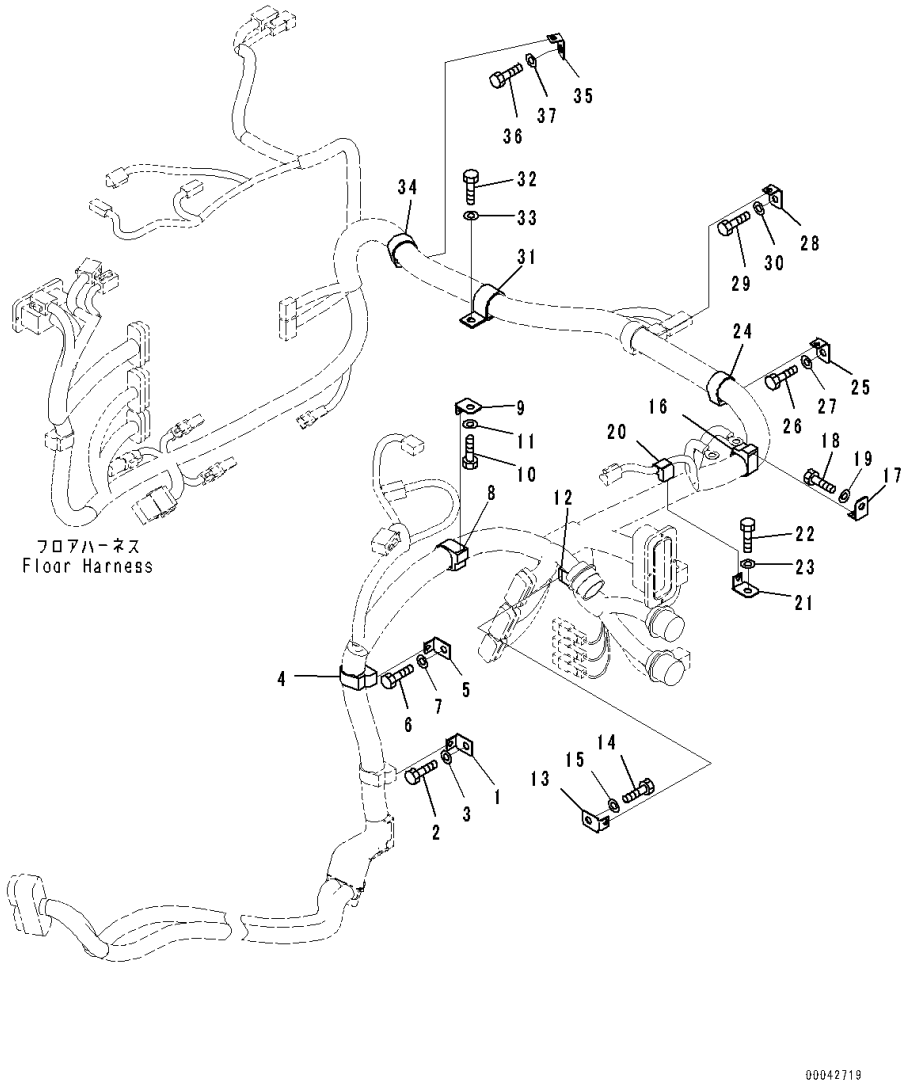

Index	Code	Part Number	Description	Qty	Serial Number
21		08057-12010	Clip	1	81105-
22		01010-81020	Bolt	1	81105-
23		01643-31032	Washer	1	81105-
24		08211-02820	Clip	1	81105-
25		08057-12010	Clip	1	81105-
26		01010-81020	Bolt	1	81105-
27		01643-31032	Washer	1	81105-
28		08057-12010	Clip	1	81105-
29		01010-81020	Bolt	1	81105-
30		01643-31032	Washer	1	81105-
31		04434-53411	Clip	1	81105-
32		01010-81020	Bolt	1	81105-
33		01643-31032	Washer	1	81105-
34		08211-02820	Clip	1	81105-
35		08057-12010	Clip	1	81105-
36		01010-81020	Bolt	1	81105-
37		01643-31032	Washer	1	81105-

FIG. K2110-037006 Floor Frame, Floor Wiring Harness Clamp (2/2)

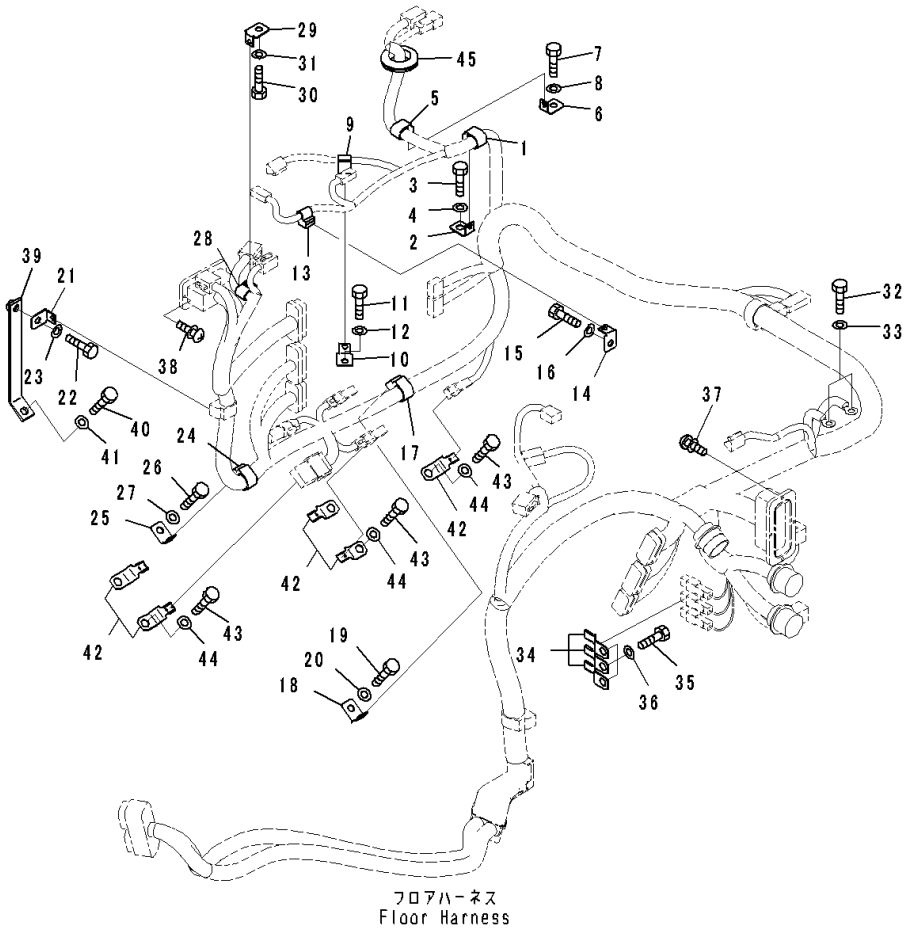

Index	Code	Part Number	Description	Qty	Serial Number
		Note: This list covers following specifications.			
		With MSHA Dust Regulation Arrangement, Without Rear Equipment			
		Dual Tilt Dozer, With MSHA Dust Regulation Arrangement, Without Rear Equipment			
		With MSHA Dust Regulation Arrangement, Variable Giant Ripper, Provision For Landfill Specification			
		Angle Dozer, With Variable Digging Angle Multi Ripper, Variable Multi Ripper			
		Angle Dozer, With Variable Digging Angle Giant Ripper, Variable Digging Angle Giant Ripper Without Push Block, Variable Giant Ripper			
		Angle Dozer, Without Rear Equipment			
		Angle Dozer, With MSHA Dust Regulation Arrangement, Variable Digging Angle Multi Ripper, Variable Multi Ripper			
		Angle Dozer, With MSHA Dust Regulation Arrangement, Without Rear Equipment			
		Dual Tilt Dozer, With MSHA Dust Regulation Arrangement, Variable Giant Ripper, For Landfill Specification			
		With Variable Digging Angle Giant Ripper, For Angle Dozer			
1		08211-01520	Clip	1	81105-
2		08057-12010	Clip	1	81105-
3		01010-81020	Bolt	1	81105-
4		01643-31032	Washer	1	81105-
5		08211-01320	Clip	1	81105-
6		08057-12010	Clip	1	81105-
7		01010-81020	Bolt	1	81105-
8		01643-31032	Washer	1	81105-
9		08211-00720	Clip	1	81105-
10		08057-12010	Clip	1	81105-
11		01010-81020	Bolt	1	81105-
12		01643-31032	Washer	1	81105-
13		08211-00720	Clip	1	81105-
14		08057-12010	Clip	1	81105-
15		01010-81020	Bolt	1	81105-
16		01643-31032	Washer	1	81105-
17		08211-01920	Clip	1	81105-
18		08057-12010	Clip	1	81105-
19		01010-81020	Bolt	1	81105-
20		01643-31032	Washer	1	81105-

FIG. K2110-037006 Floor Frame, Floor Wiring Harness Clamp (2/2)

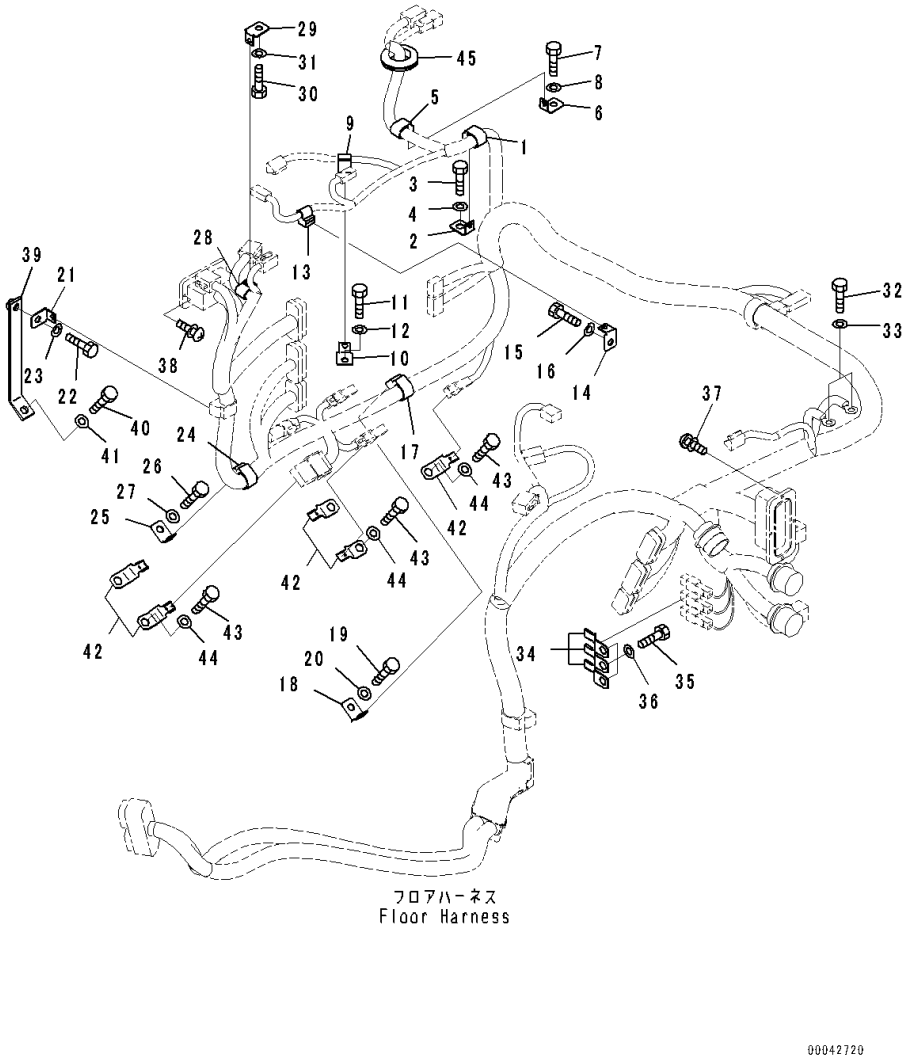

Index	Code	Part Number	Description	Qty	Serial Number
21		08057-12010	Clip	1	81105-
22		01010-81020	Bolt	1	81105-
23		01643-31032	Washer	1	81105-
24		08211-01920	Clip	1	81105-
25		08057-12010	Clip	1	81105-
26		01010-81020	Bolt	1	81105-
27		01643-31032	Washer	1	81105-
28		08211-01020	Clip	1	81105-
29		08057-12010	Clip	1	81105-
30		01010-81020	Bolt	1	81105-
31		01643-31032	Washer	1	81105-
32		01010-81020	Bolt	2	81105-
33		01643-31032	Washer	2	81105-
34		08193-20010	Clip	3	81105-
35		01010-81020	Bolt	3	81105-
36		01643-31032	Washer	3	81105-
37		01023-10416	Screw	4	81105-
38		01023-10416	Screw	4	81105-
39		17A-06-41870	Bracket	1	81105-
40		01010-81020	Bolt	1	81105-
41		01643-31032	Washer	1	81105-
42		08193-20010	Clip	5	81105-
43		01010-81020	Bolt	5	81105-
44		01643-31032	Washer	5	81105-
45		08037-03614	Grommet	1	81105-

FIG. K2110-037007 Floor Frame, Fuse Box and Relay

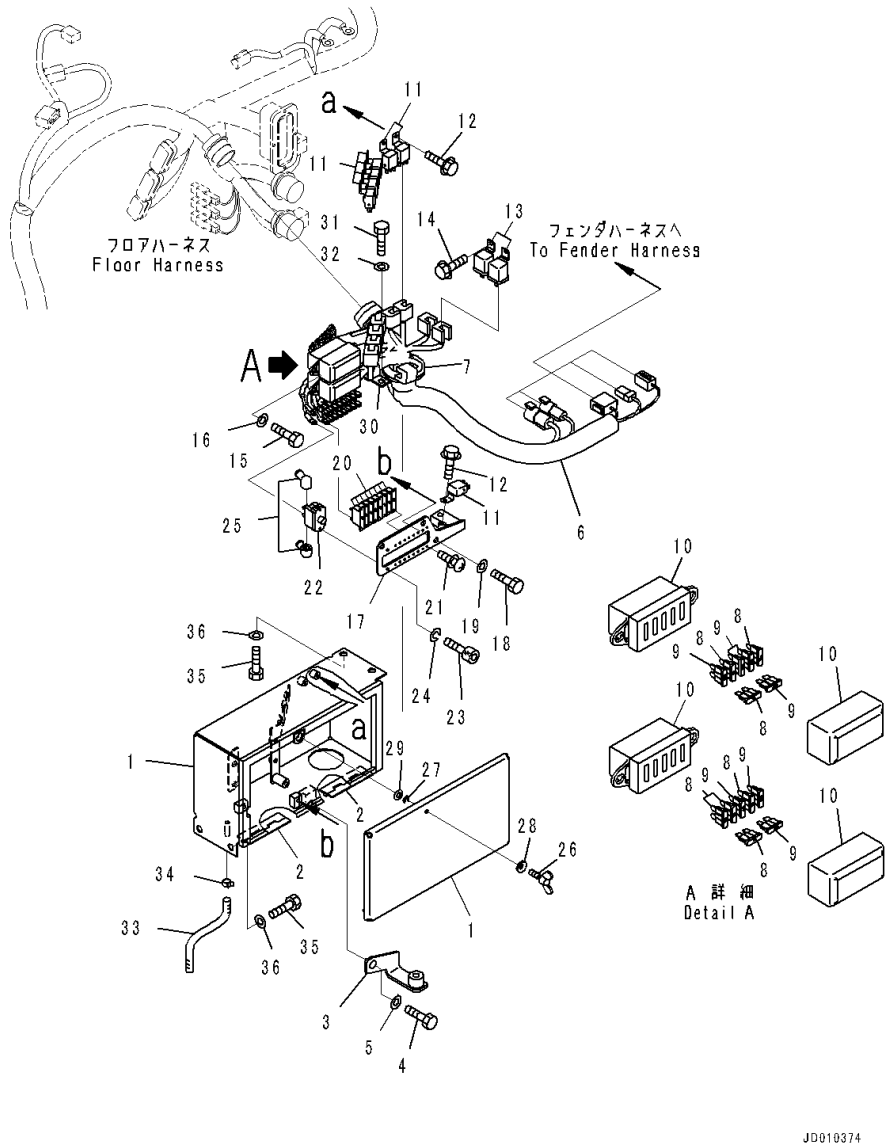

Index	Code	Part Number	Description	Qty	Serial Number
		Note: This list covers following specifications.			
		With MSHA Dust Regulation Arrangement, Without Rear Equipment			
		Dual Tilt Dozer, With MSHA Dust Regulation Arrangement, Without Rear Equipment			
		With MSHA Dust Regulation Arrangement, Variable Giant Ripper, Provision For Landfill Specification			
		Angle Dozer, With Variable Digging Angle Multi Ripper, Variable Multi Ripper			
		Angle Dozer, With Variable Digging Angle Giant Ripper, Variable Digging Angle Giant Ripper Without Push Block, Variable Giant Ripper			
		Angle Dozer, Without Rear Equipment			
		Angle Dozer, With MSHA Dust Regulation Arrangement, Variable Digging Angle Multi Ripper, Variable Multi Ripper			
		Angle Dozer, With MSHA Dust Regulation Arrangement, Without Rear Equipment			
		Dual Tilt Dozer, With MSHA Dust Regulation Arrangement, Variable Giant Ripper, For Landfill Specification			
		With Variable Digging Angle Giant Ripper, For Angle Dozer			
1		17A-06-41511	Bracket	1	81105-
2		113-54-24190	• Hinge,Welded	2	81105-
3		17A-06-41912	Bracket	1	81105-
4		01010-81225	Bolt	1	81105-
5		01643-31232	Washer	1	81105-
6		17A-06-41223	Wiring Harness	1	81105-
7		08037-13550	• Grommet	1	81105-
8		08041-00500	• Fuse, 5Amp.	7	81105-
9		08041-02000	• Fuse, 20Amp.	7	81105-
10		20T-06-71560	• Box, Fuse	2	81105-
11		7861-74-5100	Relay	7	81105-
12		01435-00612	Bolt	7	81105-
13		569-06-61960	Relay	2	81105-
14		01435-00612	Bolt	2	81105-
15		01010-80816	Bolt	4	81105-
16		01643-30823	Washer	4	81105-
17		17A-06-41662	Bracket	1	81105-
18		01010-80816	Bolt	3	81105-
19		01643-30823	Washer	3	81105-
20		195-979-8340	Breaker	8	81105-

FIG. K2110-037007 Floor Frame, Fuse Box and Relay

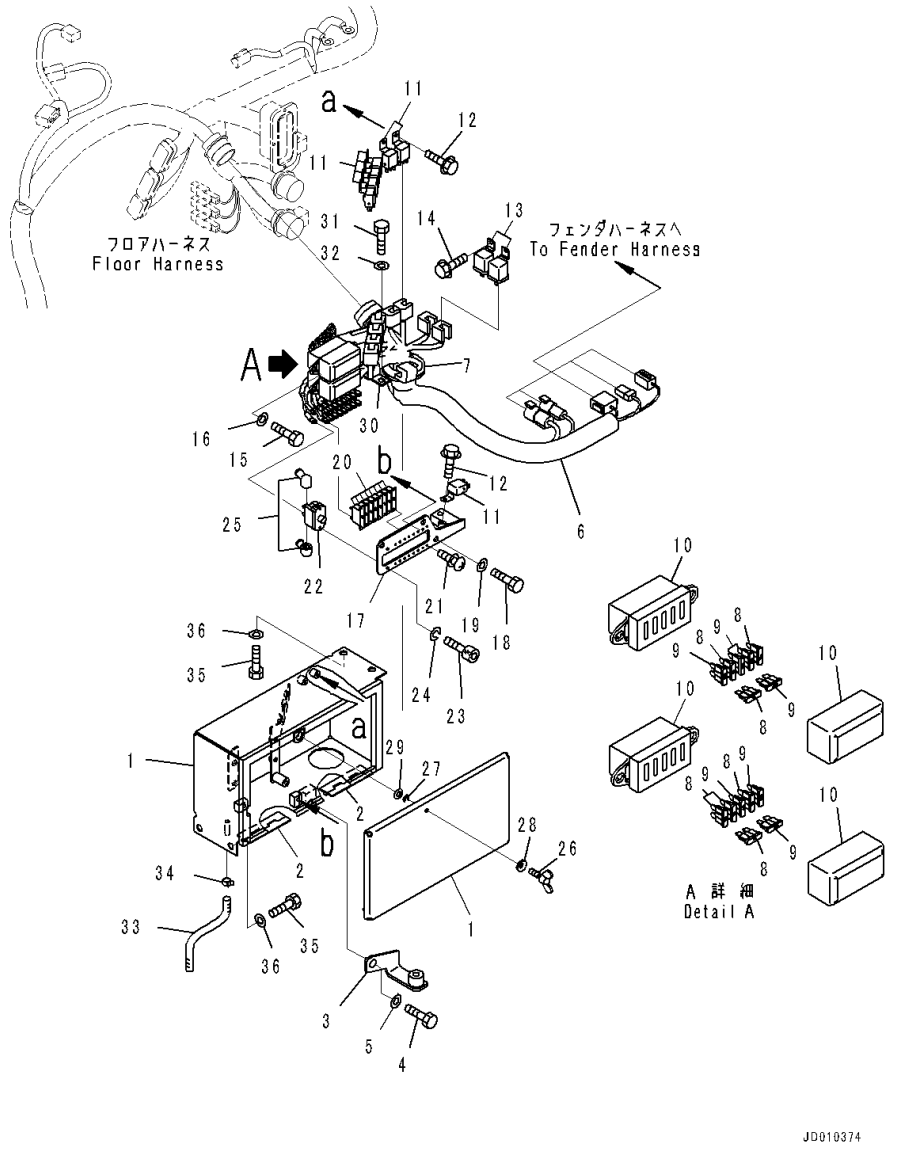

Index	Code	Part Number	Description	Qty	Serial Number
21		01023-10308	Screw	16	81105-
22		209-06-77460	Circuit Breaker	1	81105-
23		01252-70410	Bolt	2	81105-
24		01601-20410	Washer	2	81105-
25		08038-00519	Cap	2	81105-
26		198-911-6970	Bolt	1	81105-
27		198-911-6990	Ring, Snap	1	81105-
28		01643-70623	Washer	1	81105-
29		01640-20610	Washer	1	81105-
30		04434-52711	Clip	1	81105-
31		01010-81020	Bolt	1	81105-
32		01643-31032	Washer	1	81105-
33		07270-20820	Tube	1	81105-
34		07285-00115	Clip	1	81105-
35		01010-81020	Bolt	4	81105-
36		01643-31032	Washer	4	81105-

FIG. K2110-037009 Floor Frame, Console Box

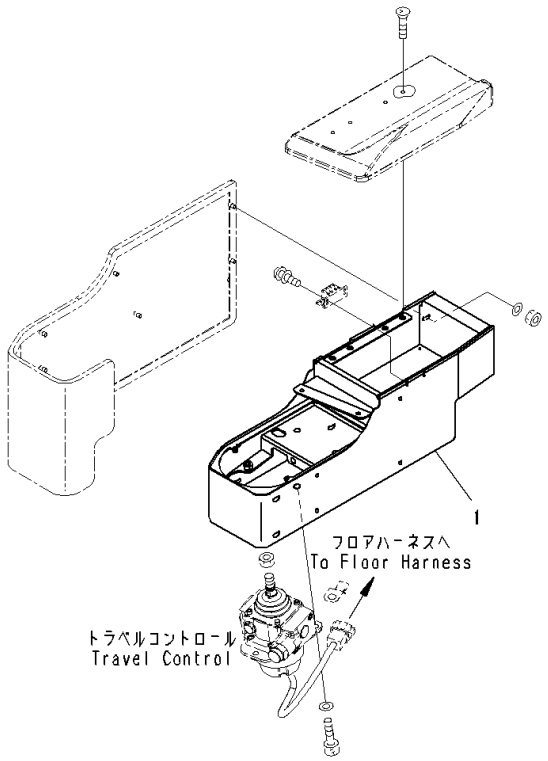

Index	Code	Part Number	Description	Qty	Serial Number
		Note: This list covers following specifications. With MSHA Dust Regulation Arrangement, Without Rear Equipment Dual Tilt Dozer, With MSHA Dust Regulation Arrangement, Without Rear Equipment With MSHA Dust Regulation Arrangement, Variable Giant Ripper, Provision For Landfill Specification Angle Dozer, With Variable Digging Angle Multi Ripper, Variable Multi Ripper Angle Dozer, With Variable Digging Angle Giant Ripper, Variable Digging Angle Giant Ripper Without Push Block, Variable Giant Ripper Angle Dozer, Without Rear Equipment Angle Dozer, With MSHA Dust Regulation Arrangement, Variable Digging Angle Multi Ripper, Variable Multi Ripper Angle Dozer, With MSHA Dust Regulation Arrangement, Without Rear Equipment Dual Tilt Dozer, With MSHA Dust Regulation Arrangement, Variable Giant Ripper, For Landfill Specification With Variable Digging Angle Giant Ripper, For Angle Dozer		
1		154-43-73611	Box	1	81105-

FIG. K2110-037010 Floor Frame, Travel Control Lever

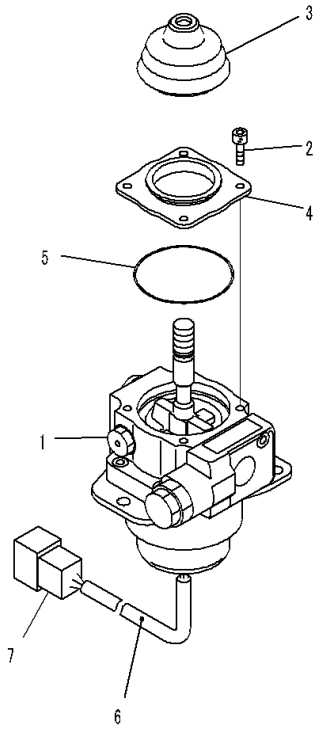

JY015790

Index	Code	Part Number	Description	Qty	Serial Number
		Note: This list covers following specifications. With MSHA Dust Regulation Arrangement, Without Rear Equipment Dual Tilt Dozer, With MSHA Dust Regulation Arrangement, Without Rear Equipment With MSHA Dust Regulation Arrangement, Variable Giant Ripper, Provision For Landfill Specification Angle Dozer, With Variable Digging Angle Multi Ripper, Variable Multi Ripper Angle Dozer, With Variable Digging Angle Giant Ripper, Variable Digging Angle Giant Ripper Without Push Block, Variable Giant Ripper Angle Dozer, Without Rear Equipment Angle Dozer, With MSHA Dust Regulation Arrangement, Variable Digging Angle Multi Ripper, Variable Multi Ripper Angle Dozer, With MSHA Dust Regulation Arrangement, Without Rear Equipment Dual Tilt Dozer, With MSHA Dust Regulation Arrangement, Variable Giant Ripper, For Landfill Specification With Variable Digging Angle Giant Ripper, For Angle Dozer			
1		702-16-02290	Lever Assembly	1	81105-
2		01252-60512	• Bolt	4	81105-
3		702-16-59330	• Boot	1	81105-
4		702-16-62730	• Cover	1	81105-
5		702-16-62740	• O-ring	1	81105-
6		702-16-61270	• Tube	1	81105-
7		08192-28812	• Connector	1	81105-

FIG. K2110-037011 Floor Frame, Console

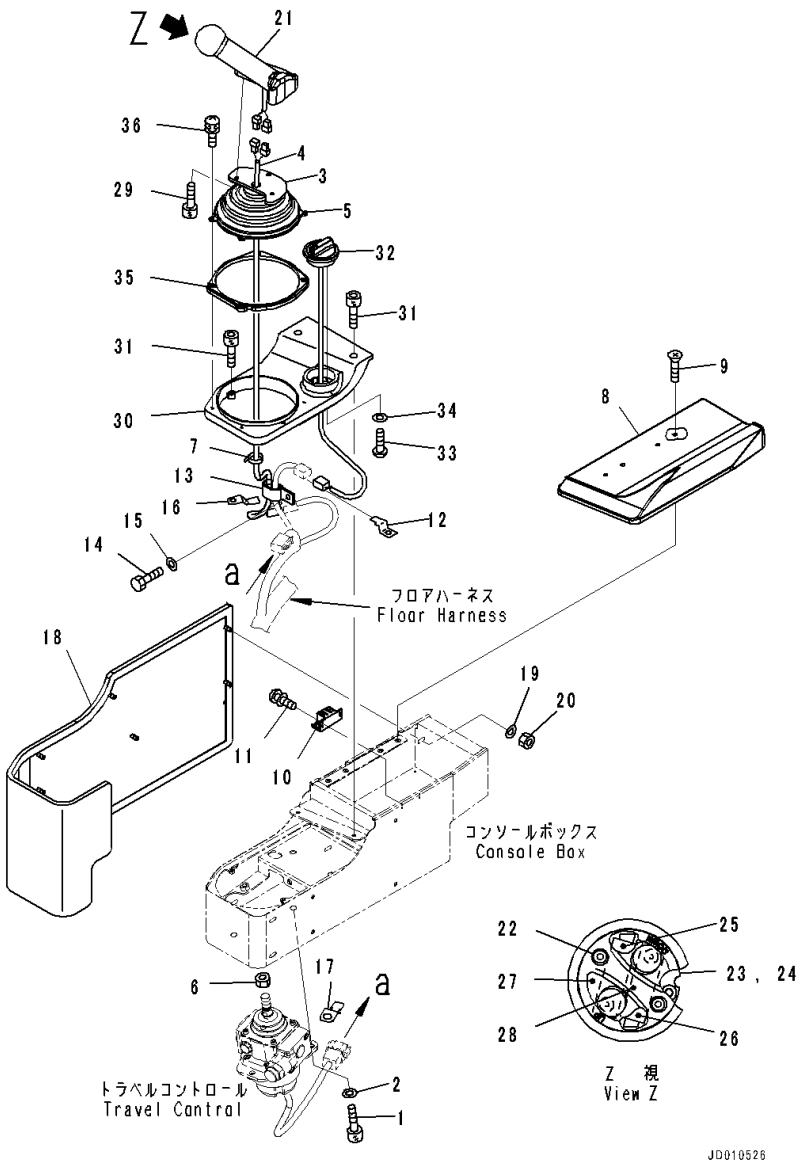

Index	Code	Part Number	Description	Qty	Serial Number
		Note: This list covers following specifications. With MSHA Dust Regulation Arrangement, Without Rear Equipment Dual Tilt Dozer, With MSHA Dust Regulation Arrangement, Without Rear Equipment With MSHA Dust Regulation Arrangement, Variable Giant Ripper, Provision For Landfill Specification Angle Dozer, With Variable Digging Angle Multi Ripper, Variable Multi Ripper Angle Dozer, With Variable Digging Angle Giant Ripper, Variable Digging Angle Giant Ripper Without Push Block, Variable Giant Ripper Angle Dozer, Without Rear Equipment Angle Dozer, With MSHA Dust Regulation Arrangement, Variable Digging Angle Multi Ripper, Variable Multi Ripper Angle Dozer, With MSHA Dust Regulation Arrangement, Without Rear Equipment Dual Tilt Dozer, With MSHA Dust Regulation Arrangement, Variable Giant Ripper, For Landfill Specification With Variable Digging Angle Giant Ripper, For Angle Dozer			
1		01252-70825	Bolt	3	81105-
2		01643-30823	Washer	3	81105-
		14X-06-31311	Wiring Harness	1	81105-
3		154-43-73531	• Bracket	1	81105-
4	C1		• Wiring Harness	1	81105-
5		14X-43-34331	• Boot	1	81105-
6		20T-43-71190	Nut	1	81105-
7		08034-20519	Band	4	81105-
8		154-43-73641	Pad	1	81105-
9		01224-70408	Screw, Philips Head	4	81105-
10		154-43-73651	Magnet	1	81105-
11		01023-10308	Screw	4	81105-
12		08053-01510	Clip	1	81105-
13		04435-51408	Clip	1	81105-
14		01010-80816	Bolt	1	81105-
15		01643-30823	Washer	1	81105-
16		08193-20010	Clip	1	81105-
17		08193-31012	Clip	1	81105-
18		154-43-73281	Pad	1	81105-
19		01640-20610	Washer	8	81105-

FIG. K2110-037011 Floor Frame, Console

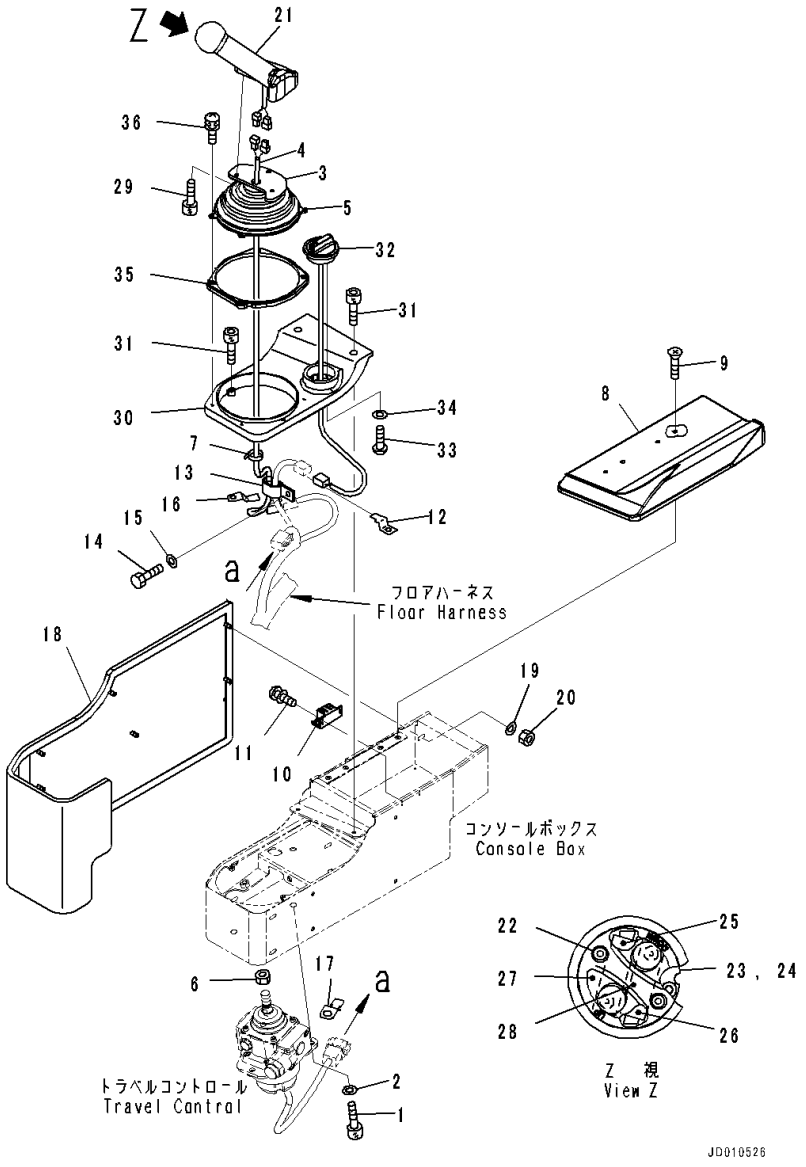

Index	Code	Part Number	Description	Qty	Serial Number
20		01580-20605	Nut	8	81105-
21		19M-43-33111	Knob Assembly	1	81105-
22		19M-09-11510	• Bolt	2	81105-
23		19M-43-33141	• Switch Assembly	1	81105-
24		19M-43-33171	• • Plate	1	81105-
25		19M-43-33460	• • Switch	1	81105-
26		19M-43-33470	• • Switch	1	81105-
27		19M-43-33151	• Rubber	1	81105-
28		19M-43-33161	• Cover	1	81105-
29		01252-80514	Bolt	3	81105-
30		154-43-73620	Finisher Assembly	1	81105-
31		01252-70520	Bolt	4	81105-
32		7825-30-1301	Dial	1	81105-
33		01220-40408	Screw	2	81105-
34		01641-20405	Washer	2	81105-
35		14X-43-34341	Cover	1	81105-
36		01023-70414	Screw	4	81105-

FIG. K2110-037012 Floor Frame, Lift and Slider

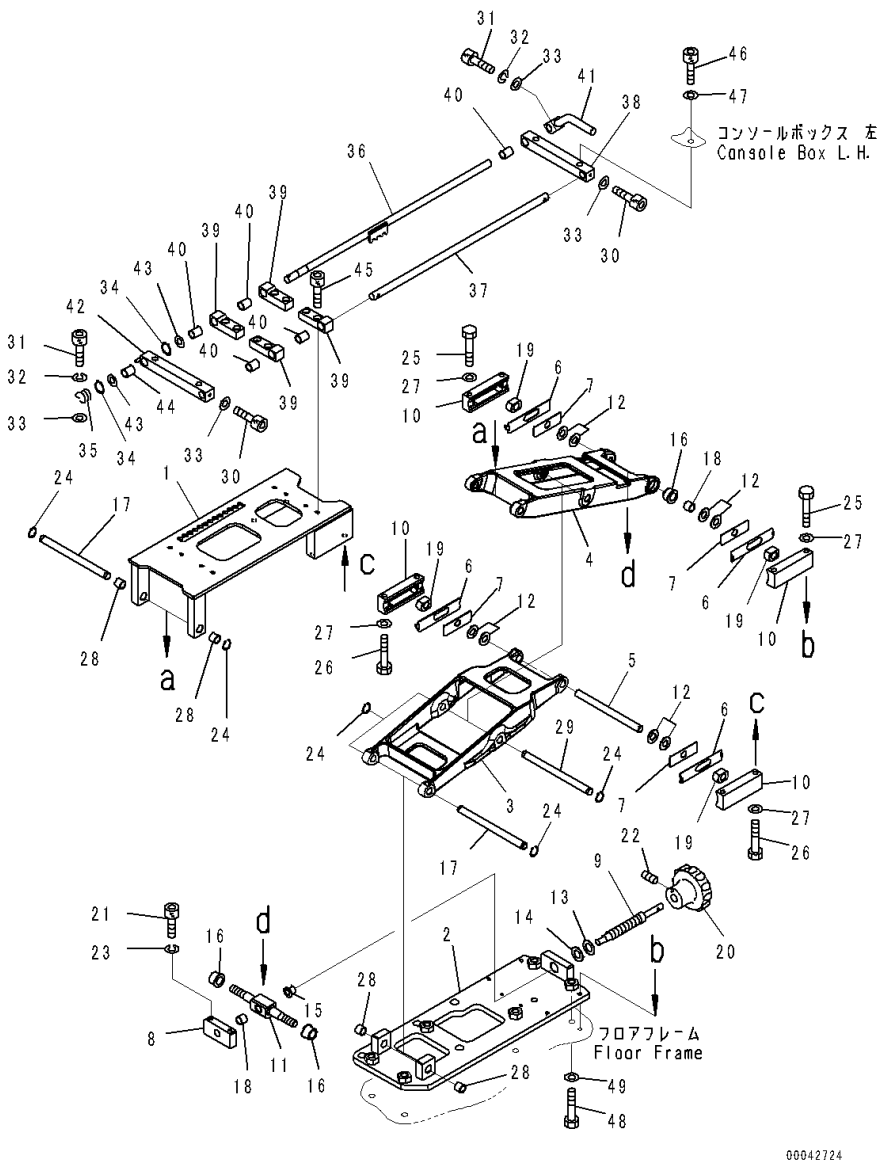

Index	Code	Part Number	Description	Qty	Serial Number
		Note: This list covers following specifications.			
		With MSHA Dust Regulation Arrangement, Without Rear Equipment			
		Dual Tilt Dozer, With MSHA Dust Regulation Arrangement, Without Rear Equipment			
		With MSHA Dust Regulation Arrangement, Variable Giant Ripper, Provision For Landfill Specification			
		Angle Dozer, With Variable Digging Angle Multi Ripper, Variable Multi Ripper			
		Angle Dozer, With Variable Digging Angle Giant Ripper, Variable Digging Angle Giant Ripper Without Push Block, Variable Giant Ripper			
		Angle Dozer, Without Rear Equipment			
		Angle Dozer, With MSHA Dust Regulation Arrangement, Variable Digging Angle Multi Ripper, Variable Multi Ripper			
		Angle Dozer, With MSHA Dust Regulation Arrangement, Without Rear Equipment			
		Dual Tilt Dozer, With MSHA Dust Regulation Arrangement, Variable Giant Ripper, For Landfill Specification			
		With Variable Digging Angle Giant Ripper, For Angle Dozer			
		154-43-73301	Lifter Assembly	1	81105-
1		154-43-73211	• Plate	1	81105-
2		154-43-73831	• Plate	1	81105-
3		17A-43-26211	• Arm	1	81105-
4		154-43-73850	• Arm	1	81105-
5		154-43-73860	• Shaft	1	81105-
6		154-43-73870	• Plate	4	81105-
7		154-43-73880	• Plate	4	81105-
8		154-43-73890	• Block	1	81105-
9		154-43-73910	• Shaft	1	81105-
10		154-43-73920	• Box	4	81105-
11		154-43-73930	• Shaft	1	81105-
12		19M-43-34520	• Shim, T=0.2mm	8	81105-
13		363-43-38550	• Shim, T=0.2mm	2	81105-
14		154-43-73950	• Shim, T=0.5mm	2	81105-
15		154-43-73960	• Bushing	1	81105-
16		19M-43-34250	• Bushing	1	81105-
17		19M-43-34280	• Shaft	2	81105-
18		19M-43-34290	• Bushing	2	81105-
19		19M-43-34320	• Bushing	4	81105-

FIG. K2110-037012 Floor Frame, Lift and Slider

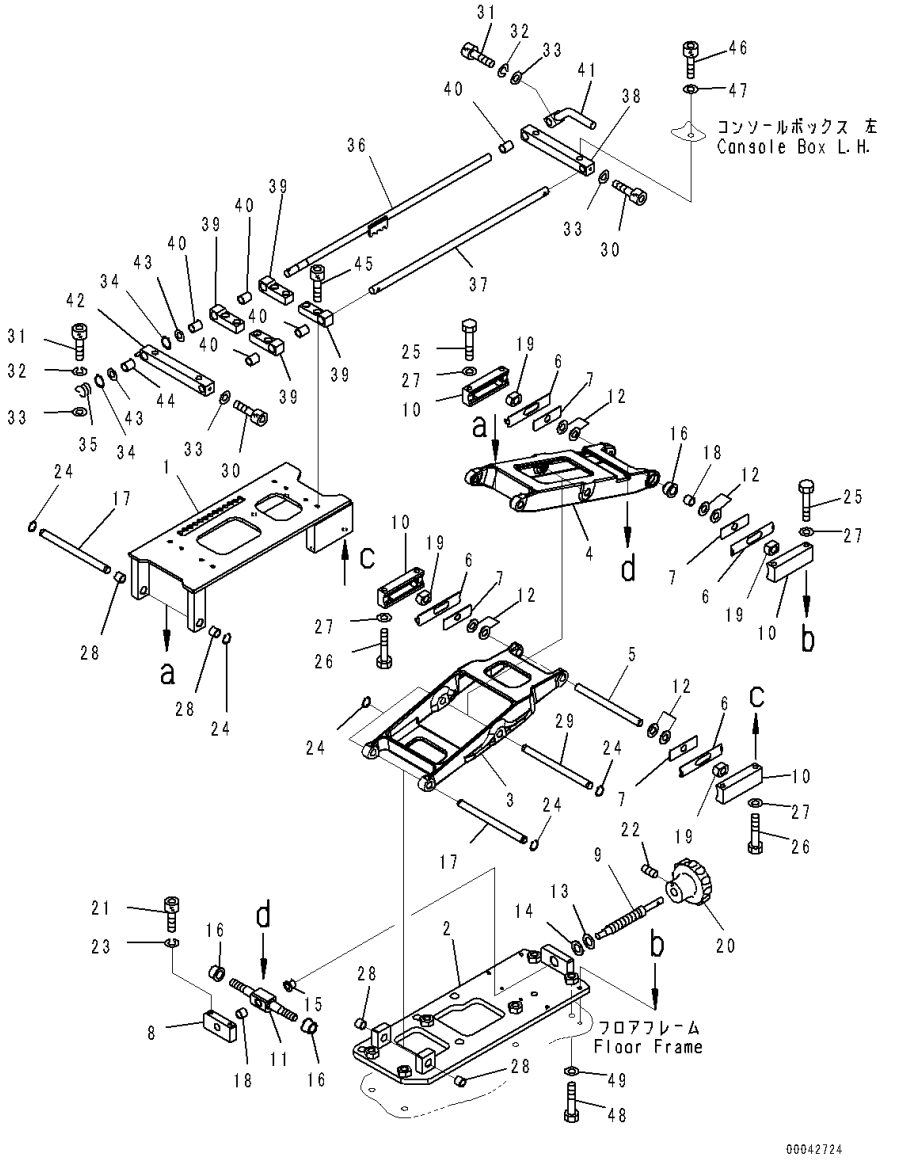

Index	Code	Part Number	Description	Qty	Serial Number
20		20A-43-15311	• Knob	1	81105-
21		01252-80530	• Bolt	2	81105-
22		01312-20612	• Screw	1	81105-
23		01601-20512	• Washer	2	81105-
24		04064-01010	• Ring, Snap	6	81105-
25		01010-80635	• Bolt	4	81105-
26		01010-80640	• Bolt	4	81105-
27		01643-30623	• Washer	8	81105-
28		06600-01008	• Bushing	4	81105-
29		17A-43-26231	• Shaft	1	81105-
		154-43-73601	Slider Assembly	1	81105-
30		01252-80412	• Bolt	2	81105-
31		01252-80414	• Bolt	2	81105-
32		01601-20411	• Washer	2	81105-
33		01640-20408	• Washer, Flat	4	81105-
34		04064-01010	• Ring, Snap	2	81105-
35		154-43-73670	• Spring	1	81105-
36		154-43-73680	• Shaft	1	81105-
37		19M-43-34120	• Shaft	1	81105-
38		19M-43-34132	• Guide	1	81105-
39		19M-43-34141	• Guide	4	81105-
40		19M-43-34150	• Bushing	5	81105-
41		19M-43-34160	• Lever	2	81105-
42		19M-43-34182	• Guide	1	81105-
43		19M-09-34110	• Washer	2	81105-
44		19M-43-34190	• Bushing	1	81105-
45		01252-80516	Bolt	8	81105-
46		01252-70816	Bolt	4	81105-
47		01643-30823	Washer	4	81105-
48		01010-81030	Bolt	6	81105-
49		01643-31032	Washer	6	81105-

FIG. K2110-037014 Floor Frame, PPC Valve for Blade

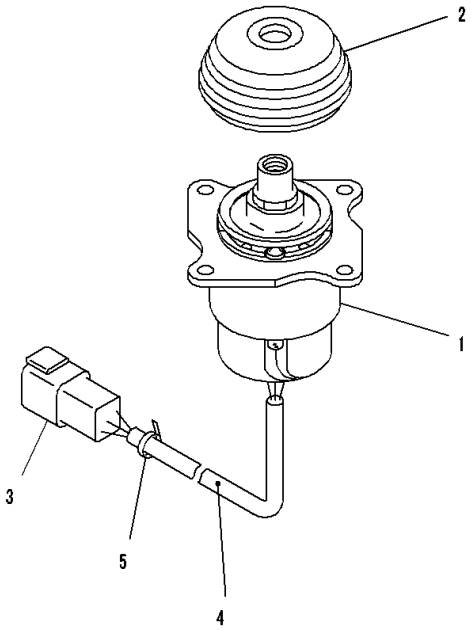

JD010610

Index	Code	Part Number	Description	Qty	Serial Number
		Note: This list covers following specifications.			
		With MSHA Dust Regulation Arrangement, Without Rear Equipment			
		Dual Tilt Dozer, With MSHA Dust Regulation Arrangement, Without Rear Equipment			
		With MSHA Dust Regulation Arrangement, Variable Giant Ripper, Provision For Landfill Specification			
		Angle Dozer, With Variable Digging Angle Multi Ripper, Variable Multi Ripper			
		Angle Dozer, With Variable Digging Angle Giant Ripper, Variable Digging Angle Giant Ripper Without Push Block, Variable Giant Ripper			
		Angle Dozer, Without Rear Equipment			
		Angle Dozer, With MSHA Dust Regulation Arrangement, Variable Digging Angle Multi Ripper, Variable Multi Ripper			
		Angle Dozer, With MSHA Dust Regulation Arrangement, Without Rear Equipment			
		Dual Tilt Dozer, With MSHA Dust Regulation Arrangement, Variable Giant Ripper, For Landfill Specification			
		With Variable Digging Angle Giant Ripper, For Angle Dozer			
1		702-16-02340	Lever Assembly	1	81132-
2		702-16-71280	• Boot	1	81105-
3		08192-28812	• Connector	1	81105-
4		702-16-61270	• Tube	1	81105-
5		08034-20414	• Band	1	81105-

FIG. K2110-037015 Floor Frame, PPC Valve Mounting (1/2)

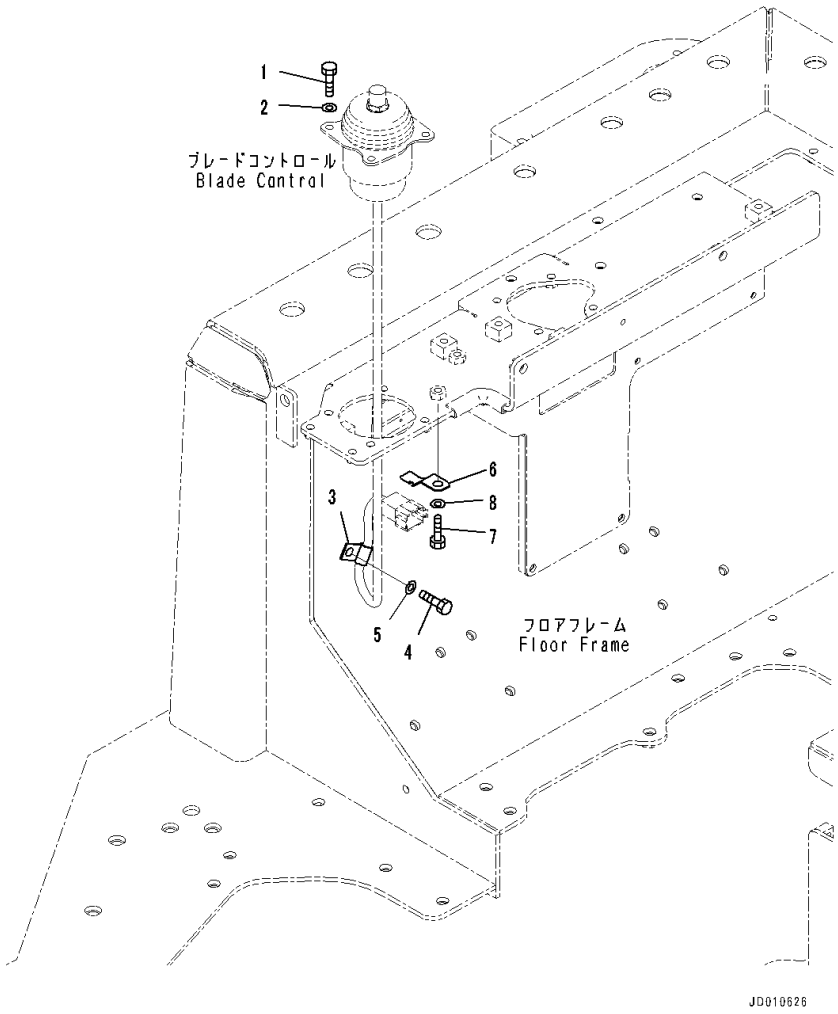

Index	Code	Part Number	Description	Qty	Serial Number
		Note: This list covers following specifications. With MSHA Dust Regulation Arrangement, Without Rear Equipment Dual Tilt Dozer, With MSHA Dust Regulation Arrangement, Without Rear Equipment With MSHA Dust Regulation Arrangement, Variable Giant Ripper, Provision For Landfill Specification Dual Tilt Dozer, With MSHA Dust Regulation Arrangement, Variable Giant Ripper, For Landfill Specification			
1		01010-80825	Bolt	4	81105-
2		01643-30823	Washer	4	81105-
3		04434-50810	Clip	1	81105-
4		01010-81020	Bolt	1	81105-
5		01643-31032	Washer	1	81105-
6		08193-30010	Clip	1	81105-
7		01010-81020	Bolt	1	81105-
8		01643-31032	Washer	1	81105-

FIG. K2110-037016 Floor Frame, Blade Lock Lever

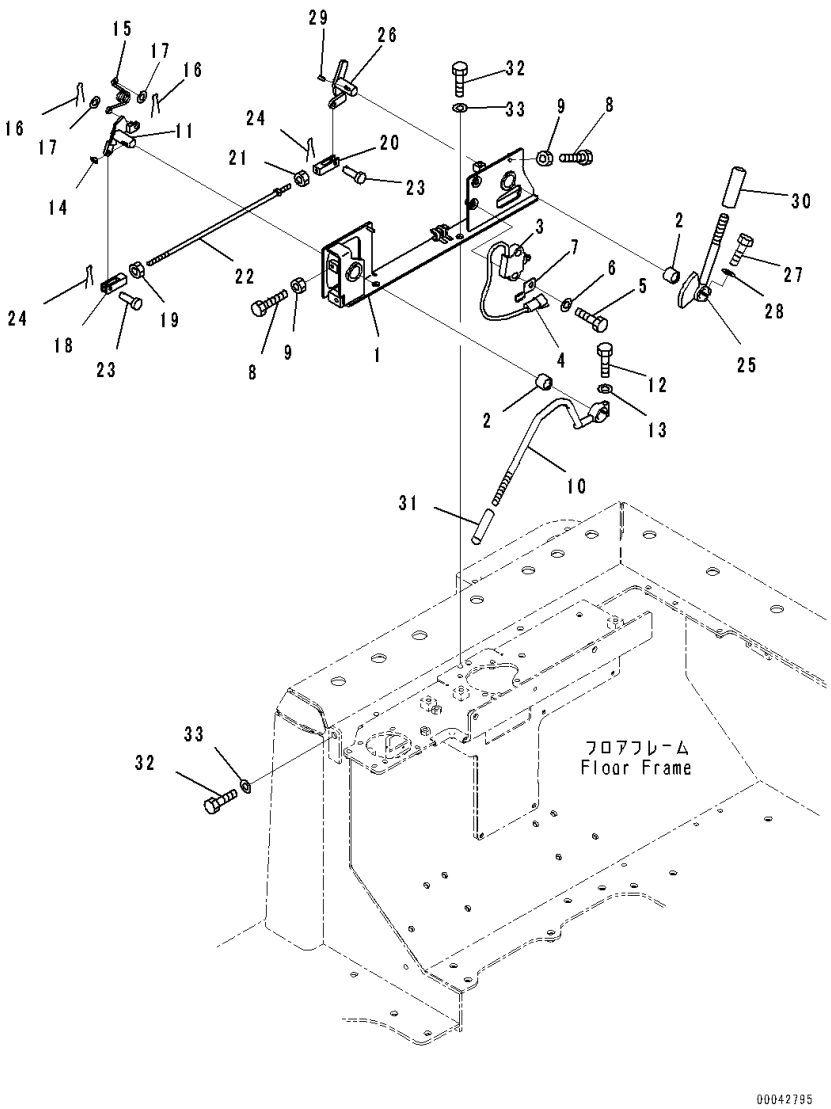

Index	Code	Part Number	Description	Qty	Serial Number
		Note: This list covers following specifications.			
		With MSHA Dust Regulation Arrangement, Without Rear Equipment			
		Dual Tilt Dozer, With MSHA Dust Regulation Arrangement, Without Rear Equipment			
		With MSHA Dust Regulation Arrangement, Variable Giant Ripper, Provision For Landfill Specification			
		Angle Dozer, With Variable Digging Angle Multi Ripper, Variable Multi Ripper			
		Angle Dozer, With Variable Digging Angle Giant Ripper, Variable Digging Angle Giant Ripper Without Push Block, Variable Giant Ripper			
		Angle Dozer, Without Rear Equipment			
		Angle Dozer, With MSHA Dust Regulation Arrangement, Variable Digging Angle Multi Ripper, Variable Multi Ripper			
		Angle Dozer, With MSHA Dust Regulation Arrangement, Without Rear Equipment			
		Dual Tilt Dozer, With MSHA Dust Regulation Arrangement, Variable Giant Ripper, For Landfill Specification			
		With Variable Digging Angle Giant Ripper, For Angle Dozer			
1		17A-43-42112	Bracket	1	81105-
2		06124-02020	Bearing	2	81105-
3		11Y-06-22150	Switch	1	81105-
4		08192-13830	• Connector	1	81105-
5		01010-81040	Bolt	2	81105-
6		01643-31032	Washer	2	81105-
7		08193-20010	Clip	1	81105-
8		01016-50830	Bolt	2	81105-
9		01580-10806	Nut	2	81105-
10		17A-43-42122	Lever	1	81105-
11		17A-43-42132	Lever	1	81105-
12		01010-80830	Bolt	1	81105-
13		01643-30823	Washer	1	81105-
14		04010-00516	Key	1	81105-
15		17A-43-41760	Spring	1	81105-
16		04050-11612	Pin, Cotter	2	81105-
17		01640-20610	Washer	2	81105-
18		04221-20844	York, Left-handed Thread	1	81105-
19		01508-40805	Nut	1	81105-
20		04211-20844	Yoke	1	81105-

FIG. K2110-037016 Floor Frame, Blade Lock Lever

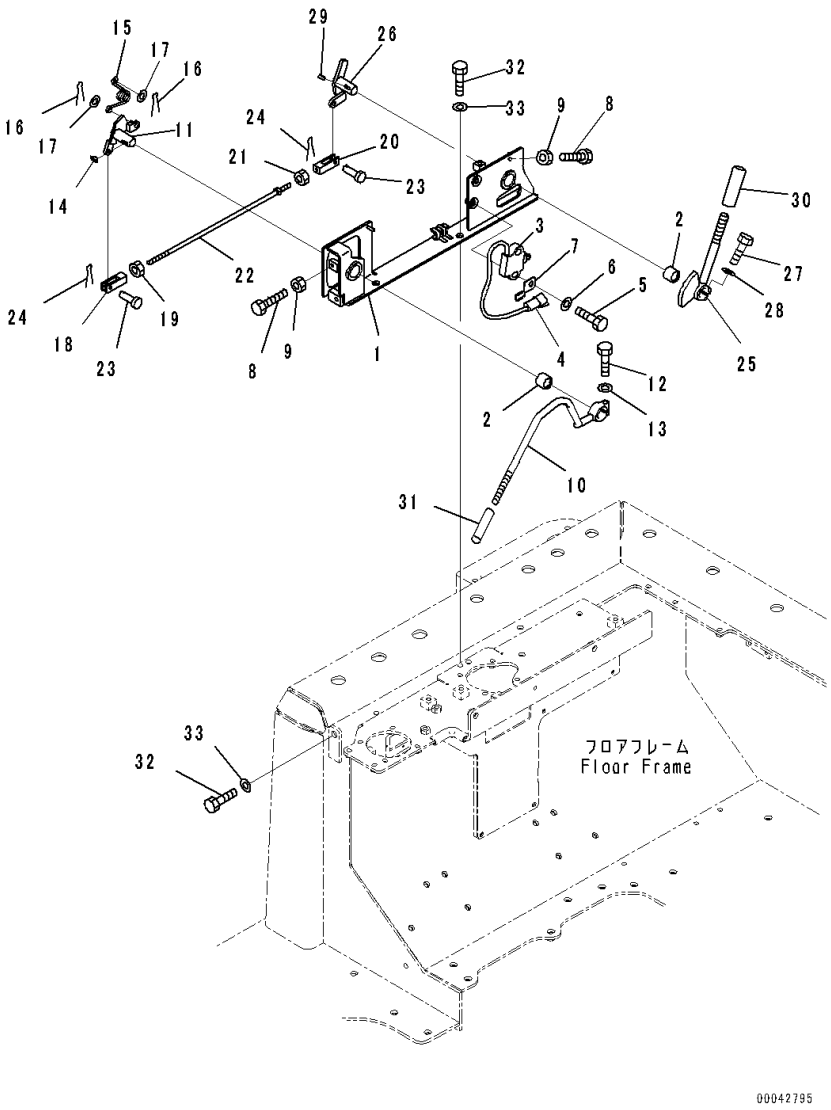

Index	Code	Part Number	Description	Qty	Serial Number
21		01580-10806	Nut	1	81105-
22		04248-30839	Rod	1	81105-
23		04205-10822	Pin	2	81105-
24		04050-12015	Pin, Cotter	2	81105-
25		17A-43-42171	Lever	1	81105-
26		17A-43-42161	Lever	1	81105-
27		01010-80830	Bolt	1	81105-
28		01643-30823	Washer	1	81105-
29		04010-00516	Key	1	81105-
30		22M-43-21470	Knob	1	81105-
31		417-43-28270	Cap	1	81105-
32		01010-81025	Bolt	4	81105-
33		01643-31032	Washer	4	81105-

FIG. K2110-037017 Floor Frame, PPC Valve for Ripper

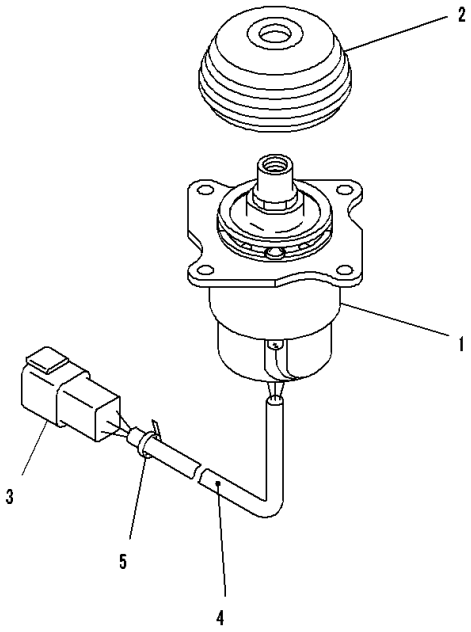

JD010610

Index	Code	Part Number	Description	Qty	Serial Number
		Note: This list covers following specifications.			
		With MSHA Dust Regulation Arrangement, Without Rear Equipment			
		Dual Tilt Dozer, With MSHA Dust Regulation Arrangement, Without Rear Equipment			
		With MSHA Dust Regulation Arrangement, Variable Giant Ripper, Provision For Landfill Specification			
		Angle Dozer, With Variable Digging Angle Multi Ripper, Variable Multi Ripper			
		Angle Dozer, With Variable Digging Angle Giant Ripper, Variable Digging Angle Giant Ripper Without Push Block, Variable Giant Ripper			
		Angle Dozer, Without Rear Equipment			
		Angle Dozer, With MSHA Dust Regulation Arrangement, Variable Digging Angle Multi Ripper, Variable Multi Ripper			
		Angle Dozer, With MSHA Dust Regulation Arrangement, Without Rear Equipment			
		Dual Tilt Dozer, With MSHA Dust Regulation Arrangement, Variable Giant Ripper, For Landfill Specification			
		With Variable Digging Angle Giant Ripper, For Angle Dozer			
1		702-16-02350	Lever Assembly	1	81132-
2		702-16-71280	• Boot	1	81105-
3		08192-28812	• Connector	1	81105-
4		702-16-61270	• Tube	1	81105-
5		20Y-62-22790	• Band, Red	1	81105-

FIG. K2110-037018 Floor Frame, PPC Valve Mounting (2/2)

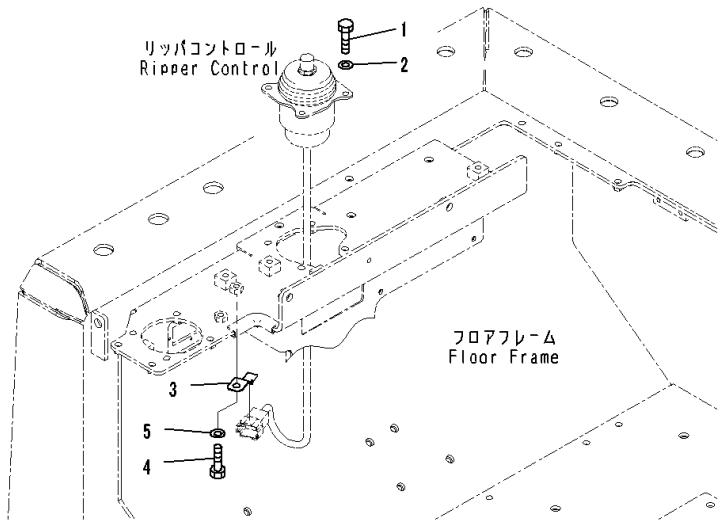

Index	Code	Part Number	Description	Qty	Serial Number
		Note: This list covers following specifications. With MSHA Dust Regulation Arrangement, Without Rear Equipment Dual Tilt Dozer, With MSHA Dust Regulation Arrangement, Without Rear Equipment With MSHA Dust Regulation Arrangement, Variable Giant Ripper, Provision For Landfill Specification Angle Dozer, With Variable Digging Angle Multi Ripper, Variable Multi Ripper Angle Dozer, With Variable Digging Angle Giant Ripper, Variable Digging Angle Giant Ripper Without Push Block, Variable Giant Ripper Angle Dozer, Without Rear Equipment Angle Dozer, With MSHA Dust Regulation Arrangement, Variable Digging Angle Multi Ripper, Variable Multi Ripper Angle Dozer, With MSHA Dust Regulation Arrangement, Without Rear Equipment Dual Tilt Dozer, With MSHA Dust Regulation Arrangement, Variable Giant Ripper, For Landfill Specification With Variable Digging Angle Giant Ripper, For Angle Dozer			
1		01010-80825	Bolt	4	81105-
2		01643-30823	Washer	4	81105-
3		08193-30010	Clip	1	81105-
4		01010-81020	Bolt	1	81105-
5		01643-31032	Washer	1	81105-

FIG. K2110-037020 Floor Frame, Air Conditioner Unit

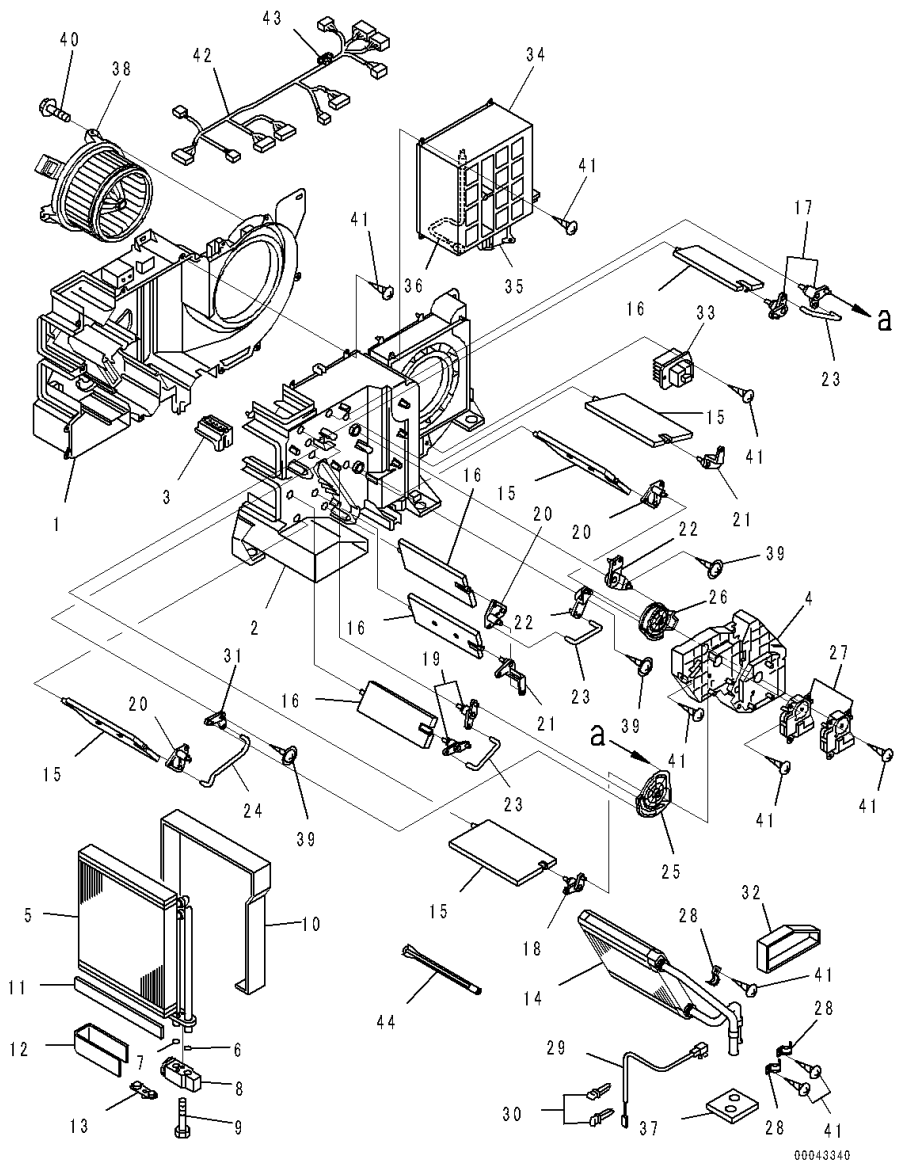

Index	Code	Part Number	Description	Qty	Serial Number
		Note: This list covers following specifications.			
		With MSHA Dust Regulation Arrangement, Without Rear Equipment			
		Dual Tilt Dozer, With MSHA Dust Regulation Arrangement, Without Rear Equipment			
		With MSHA Dust Regulation Arrangement, Variable Giant Ripper, Provision For Landfill Specification			
		Angle Dozer, With Variable Digging Angle Multi Ripper, Variable Multi Ripper			
		Angle Dozer, With Variable Digging Angle Giant Ripper, Variable Digging Angle Giant Ripper Without Push Block, Variable Giant Ripper			
		Angle Dozer, Without Rear Equipment			
		Angle Dozer, With MSHA Dust Regulation Arrangement, Variable Digging Angle Multi Ripper, Variable Multi Ripper			
		Angle Dozer, With MSHA Dust Regulation Arrangement, Without Rear Equipment			
		Dual Tilt Dozer, With MSHA Dust Regulation Arrangement, Variable Giant Ripper, For Landfill Specification			
		With Variable Digging Angle Giant Ripper, For Angle Dozer			
		20Y-810-1211	Air Conditioner Assembly	1	81105-
1		ND245450-5831	• Case, Cooling	1	81105-
2		ND245450-5840	• Case, Cooling	1	81105-
3		ND116576-3810	• Plate	1	81105-
4		ND116576-3820	• Plate	1	81105-
		ND446010-3132	• Evaporator	1	81105-
5		ND446600-0991	• • Evaporator Assembly	1	81105-
6		ND949142-0020	• • O-ring	1	81105-
7		ND949142-0030	• • O-ring	1	81105-
8		ND447500-2750	• • Valve	1	81105-
9		ND949046-3100	• • Bolt	2	81105-
10		ND146657-8841	• • Packing	1	81105-
11		ND146657-9811	• • Packing	3	81105-
12		ND146657-8850	• • Packing	1	81105-
13		ND445021-3941	• • Plug	1	81105-
14		ND116140-0050	• Core Subassembly, Heater	1	81105-
15		ND116660-7570	• Door Assembly	4	81105-
16		ND116650-6850	• Door Assembly	4	81105-
17		ND116780-2481	• Lever Subassembly, Link	2	81105-
18		ND116780-2491	• Lever Subassembly, Link	1	81105-

FIG. K2110-037020 Floor Frame, Air Conditioner Unit

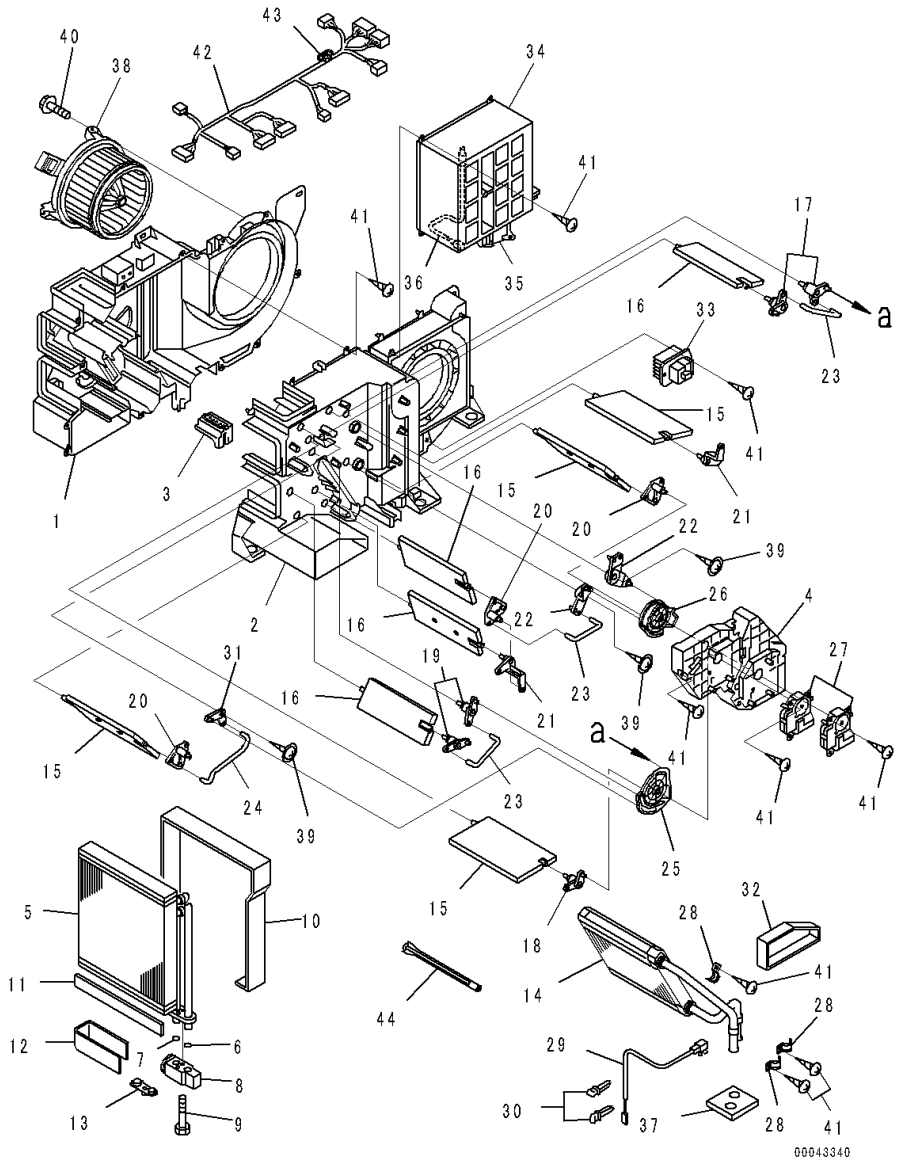

Index	Code	Part Number	Description	Qty	Serial Number
19		ND116780-2501	• Lever Subassembly, Link	2	81105-
20		ND116780-2510	• Lever Subassembly, Link	3	81105-
21		ND116781-3000	• Lever	2	81105-
22		ND116780-3130	• Lever Subassembly, Link	2	81105-
23		ND116662-7670	• Shaft	3	81105-
24		ND116662-7681	• Shaft	1	81105-
25		ND116576-3852	• Plate	1	81105-
26		ND116576-3862	• Plate	1	81105-
27		ND063800-0300	• Servo Motor Assembly	2	81105-
28		ND017231-0700	• Clamp	3	81105-
29		ND077500-5890	• Thermistor Assembly	1	81105-
30		ND246790-2060	• Clamp	2	81105-
31		ND116780-3920	• Lever Subassembly, Link	1	81105-
32		ND146667-0440	• Packing	1	81105-
33		ND077800-0750	• Transistor	1	81105-
34		ND146340-0560	• Box Assembly	1	81105-
35		ND063600-4580	• • Servo Motor Assembly	1	81105-
36		ND077500-5650	• • Thermistor Assembly	1	81105-
37		ND146657-8860	• Packing	1	81105-
38		ND116340-7350	• Motor Assembly, Fan	1	81105-
39		ND949008-0460	• Screw, Tapping	3	81105-
40		ND949008-0330	• Screw, Tapping	3	81105-
41		ND949001-1730	• Screw, Tapping	32	81105-
42		ND246470-4311	• Wiring Harness Assembly	1	81105-
43		ND93950-05003	• • Fuse	1	81105-
44		ND116662-8320	• Shaft	1	81105-

FIG. K2110-037021 Floor Frame, Air Conditioner Condenser Unit Mounting

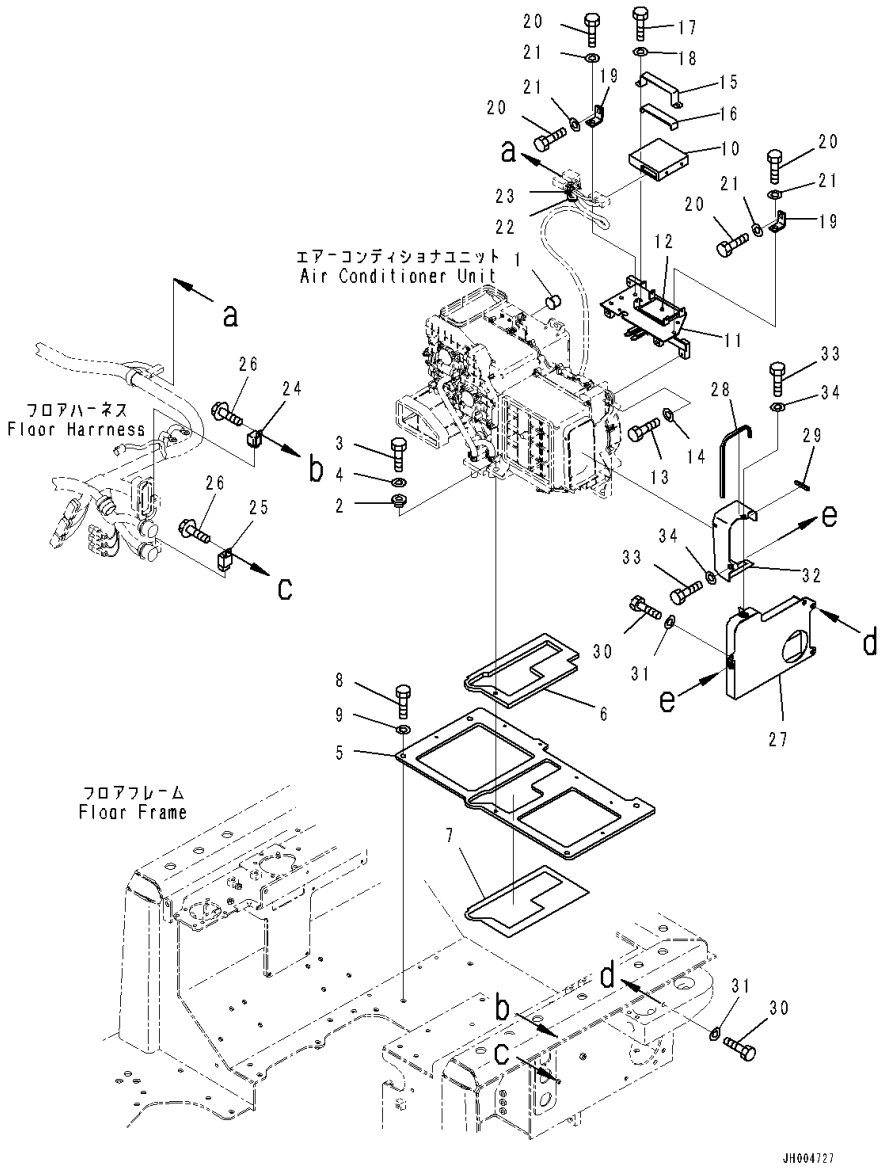

Index	Code	Part Number	Description	Qty	Serial Number
		Note: This list covers following specifications. With MSHA Dust Regulation Arrangement, Without Rear Equipment Dual Tilt Dozer, With MSHA Dust Regulation Arrangement, Without Rear Equipment With MSHA Dust Regulation Arrangement, Variable Giant Ripper, Provision For Landfill Specification Angle Dozer, With Variable Digging Angle Multi Ripper, Variable Multi Ripper Angle Dozer, With Variable Digging Angle Giant Ripper, Variable Digging Angle Giant Ripper Without Push Block, Variable Giant Ripper Angle Dozer, Without Rear Equipment Angle Dozer, With MSHA Dust Regulation Arrangement, Variable Digging Angle Multi Ripper, Variable Multi Ripper Angle Dozer, With MSHA Dust Regulation Arrangement, Without Rear Equipment Dual Tilt Dozer, With MSHA Dust Regulation Arrangement, Variable Giant Ripper, For Landfill Specification With Variable Digging Angle Giant Ripper, For Angle Dozer		
1		17A-979-3131	Cap	1	81105-
2		208-979-7540	Collar	7	81105-
3		01010-80825	Bolt	7	81105-
4		01643-30823	Washer	7	81105-
5		17A-979-2171	Plate	1	81105-
6		17A-979-2310	• Sheet,Bonded	1	81105-
7		17A-979-2330	• Sheet,Bonded	1	81105-
8		01010-81230	Bolt	4	81105-
9		01643-31232	Washer	4	81105-
10		17A-979-3180	Controller	1	81105-
11		17A-979-2351	Bracket	1	81105-
12		17A-979-2360	• Seal,Bonded	1	81105-
13		01010-80825	Bolt	2	81105-
14		01643-30823	Washer	2	81105-
15		17A-979-2370	Bracket	1	81105-
16		17A-979-2380	• Sheet	1	81105-
17		01010-80816	Bolt	2	81105-
18		01643-30823	Washer	2	81105-
19		17A-979-2120	Bracket	2	81105-
20		01010-80825	Bolt	4	81105-

FIG. K2110-037021 Floor Frame, Air Conditioner Condenser Unit Mounting

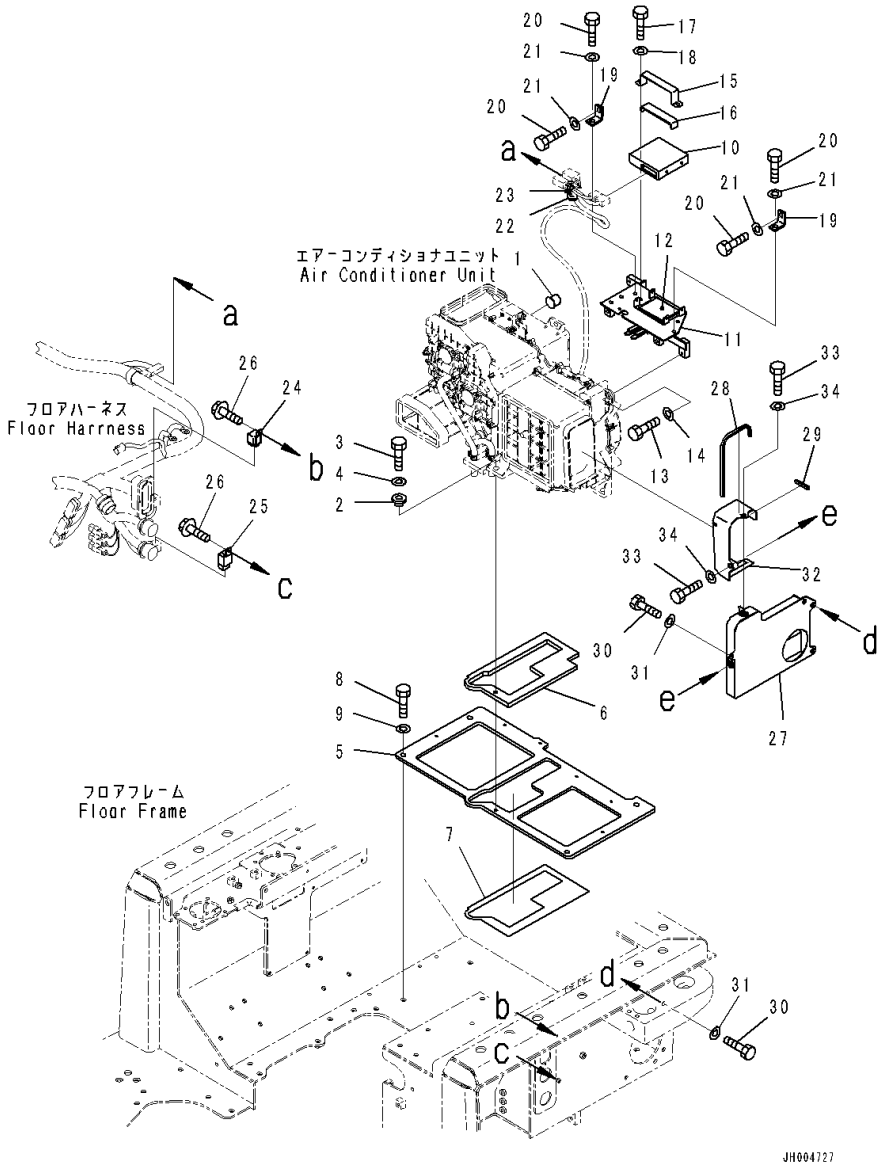

Index	Code	Part Number	Description	Qty	Serial Number
21		01643-30823	Washer	4	81105-
22		08037-01610	Grommet	1	81105-
23		08059-00413	Clip	1	81105-
24		20Y-979-6771	Relay	1	81105-
25		421-07-31270	Relay	1	81105-
26		01435-00616	Bolt	2	81105-
27		17A-979-2212	Duct	1	81105-
28		17A-979-3250	• Sheet	1	81105-
29		17A-979-3260	• Sheet	1	81105-
30		01010-81020	Bolt	3	81105-
31		01643-31032	Washer	3	81105-
32		17A-979-3230	Duct	1	81105-
33		01010-81020	Bolt	2	81105-
34		01643-31032	Washer	2	81105-

FIG. K2110-037023 Floor Frame, Air Conditioner Duct

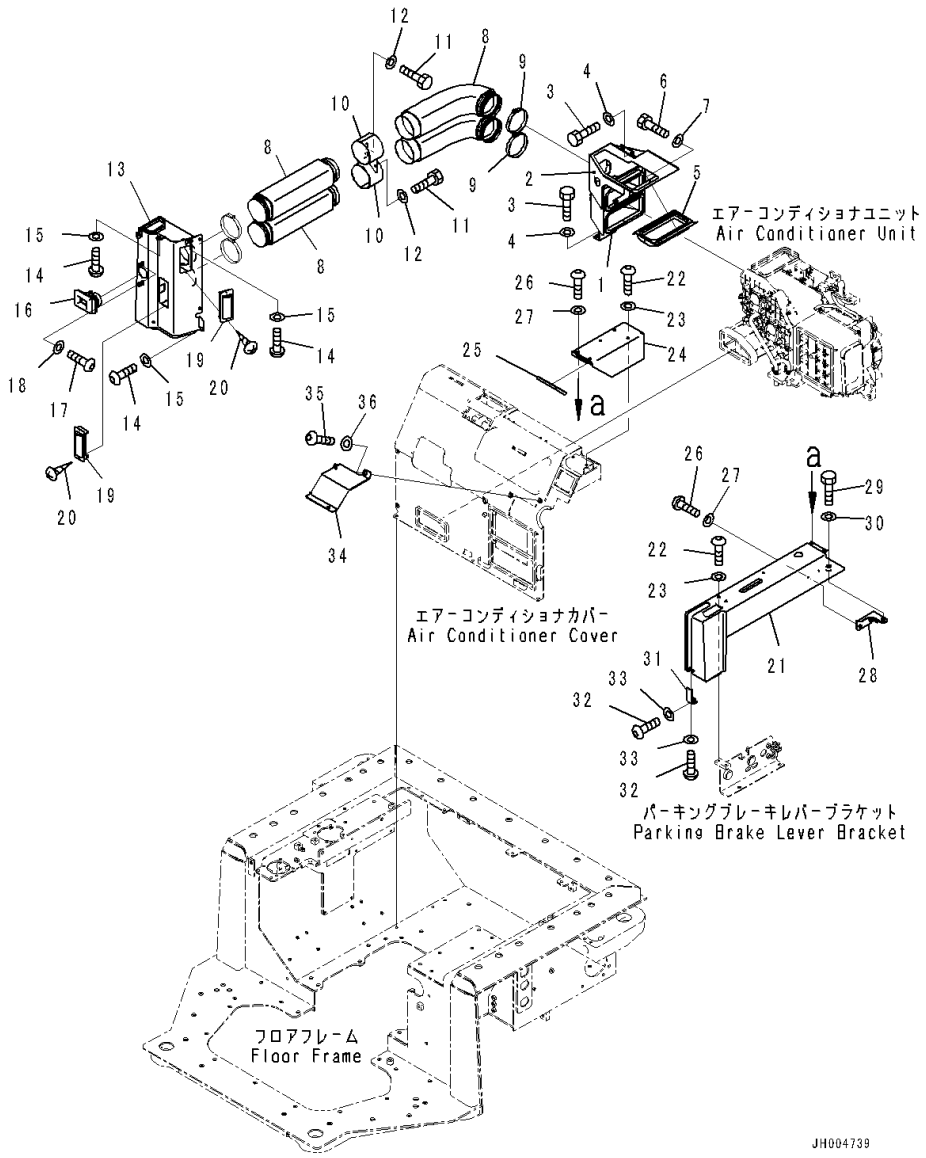

Index	Code	Part Number	Description	Qty	Serial Number
		Note: This list covers following specifications. With MSHA Dust Regulation Arrangement, Without Rear Equipment Dual Tilt Dozer, With MSHA Dust Regulation Arrangement, Without Rear Equipment With MSHA Dust Regulation Arrangement, Variable Giant Ripper, Provision For Landfill Specification Angle Dozer, With Variable Digging Angle Multi Ripper, Variable Multi Ripper Angle Dozer, With Variable Digging Angle Giant Ripper, Variable Digging Angle Giant Ripper Without Push Block, Variable Giant Ripper Angle Dozer, Without Rear Equipment Angle Dozer, With MSHA Dust Regulation Arrangement, Variable Digging Angle Multi Ripper, Variable Multi Ripper Angle Dozer, With MSHA Dust Regulation Arrangement, Without Rear Equipment Dual Tilt Dozer, With MSHA Dust Regulation Arrangement, Variable Giant Ripper, For Landfill Specification With Variable Digging Angle Giant Ripper, For Angle Dozer			
1		17A-979-2131	Duct	1	81105-
2		17A-979-3170	• Sheet	1	81105-
3		01010-80825	Bolt	4	81105-
4		01643-30823	Washer	4	81105-
5		17A-979-1710	Bracket	1	81105-
6		01010-80816	Bolt	2	81105-
7		01643-30823	Washer	2	81105-
8		208-53-12220	Duct	4	81105-
9		07281-01159	Clamp	2	81105-
10		17A-979-2441	Bracket	1	81105-
11		01010-80825	Bolt	3	81105-
12		01643-30823	Washer	3	81105-
13		17A-54-46192	Duct	1	81105-
14		01245-00820	Screw	4	81105-
15		01643-70823	Washer	4	81105-
16		17A-54-45160	Duct	1	81105-
17		01245-00616	Screw, Hexagon Socket Head	2	81105-
18		01643-70623	Washer	2	81105-
19		17A-Z11-7161	Louver	2	81105-
20		01370-20308	Screw	4	81105-

FIG. K2110-037023 Floor Frame, Air Conditioner Duct

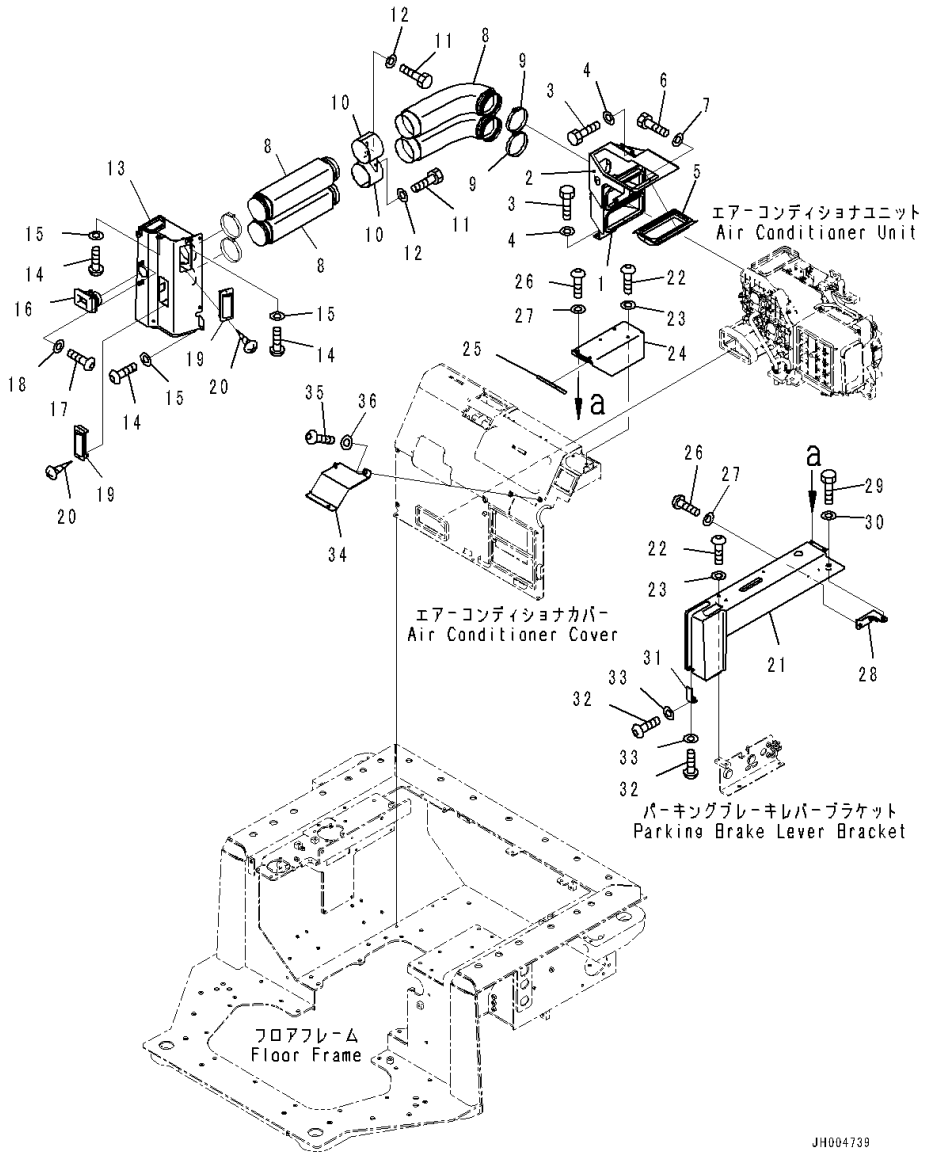

Index	Code	Part Number	Description	Qty	Serial Number
21		17A-54-46274	Cover	1	81105-
22		01245-00820	Screw	4	81105-
23		01643-70823	Washer	4	81105-
24		17A-54-47320	Cover	1	81105-
25		17A-54-47380	• Sheet	1	81105-
26		01245-00820	Screw	4	81105-
27		01643-70823	Washer	4	81105-
28		17A-54-47330	Cover	1	81105-
29		01010-81045	Bolt	1	81105-
30		01643-31032	Washer	1	81105-
31		17A-54-46831	Bracket	1	81105-
32		01245-00616	Screw, Hexagon Socket Head	2	81105-
33		01643-70623	Washer	2	81105-
34		17A-54-46812	Cover	1	81105-
35		01245-00820	Screw	3	81105-
36		01643-70823	Washer	3	81105-

FIG. K2110-037024 Floor Frame, Air Conditioner Piping

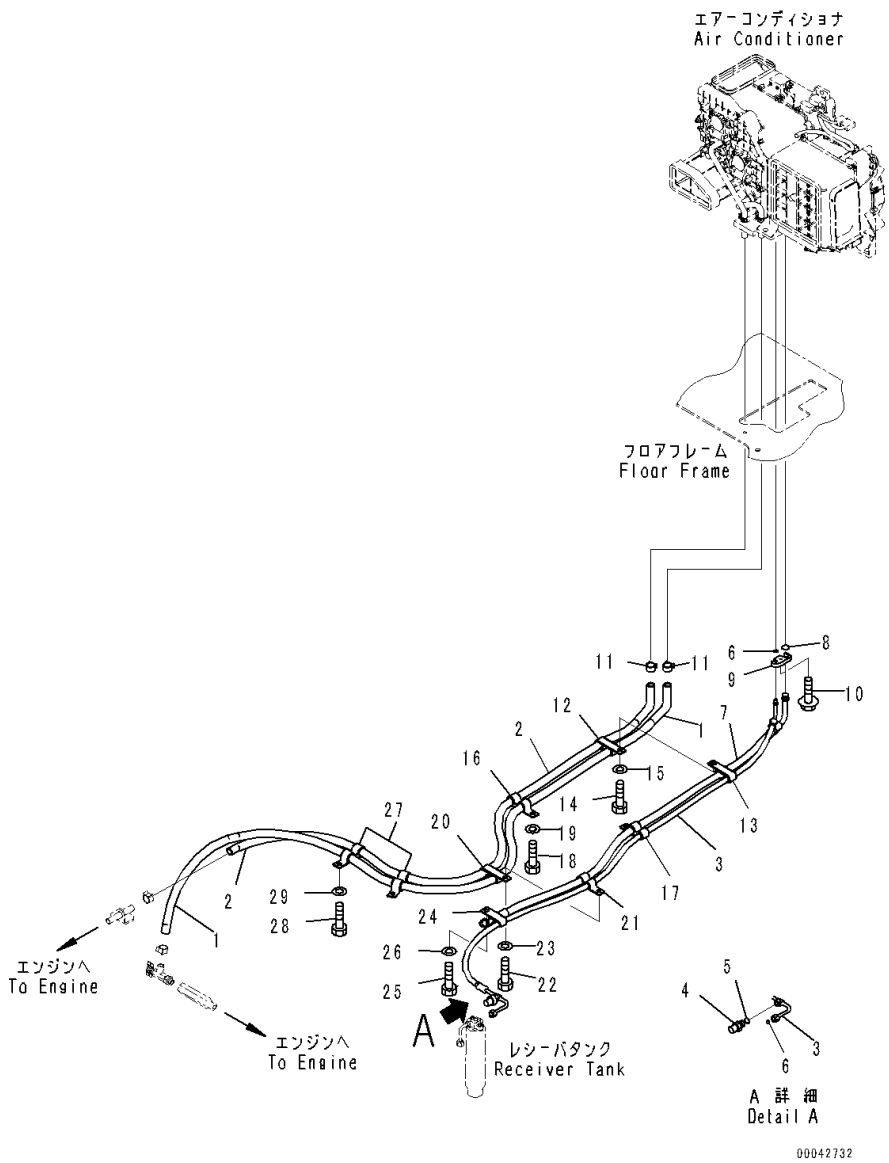

Index	Code	Part Number	Description	Qty	Serial Number
		Note: This list covers following specifications.			
		With MSHA Dust Regulation Arrangement, Without Rear Equipment			
		Dual Tilt Dozer, With MSHA Dust Regulation Arrangement, Without Rear Equipment			
		With MSHA Dust Regulation Arrangement, Variable Giant Ripper, Provision For Landfill Specification			
		Angle Dozer, With Variable Digging Angle Multi Ripper, Variable Multi Ripper			
		Angle Dozer, With Variable Digging Angle Giant Ripper, Variable Digging Angle Giant Ripper Without Push Block, Variable Giant Ripper			
		Angle Dozer, Without Rear Equipment			
		Angle Dozer, With MSHA Dust Regulation Arrangement, Variable Digging Angle Multi Ripper, Variable Multi Ripper			
		Angle Dozer, With MSHA Dust Regulation Arrangement, Without Rear Equipment			
		Dual Tilt Dozer, With MSHA Dust Regulation Arrangement, Variable Giant Ripper, For Landfill Specification			
		With Variable Digging Angle Giant Ripper, For Angle Dozer			
1		17A-979-2822	Hose	1	81105-
2		17A-979-2321	Hose	1	81105-
3		17A-979-2831	Hose	1	81105-
4		ND443440-0030	• Switch, Pressure	1	81105-
5		ND949142-0040	• • O-ring	1	81105-
6		20Y-979-3150	• O-ring	2	81105-
7		17A-979-2841	Hose	1	81105-
8		20Y-979-3130	• O-ring	1	81105-
9		208-979-7650	Connector	1	81105-
10		01435-00620	Bolt	1	81105-
11		09479-02400	Clamp	2	81105-
12		195-979-1550	Clamp	1	81105-
13		195-Z11-7250	Clip	1	81105-
14		01010-81230	Bolt	1	81105-
15		01643-31232	Washer	1	81105-
16		195-979-1550	Clamp	1	81105-
17		195-Z11-7250	Clip	1	81105-
18		01010-81230	Bolt	1	81105-
19		01643-31232	Washer	1	81105-
20		195-979-1550	Clamp	1	81105-

FIG. K2110-037024 Floor Frame, Air Conditioner Piping

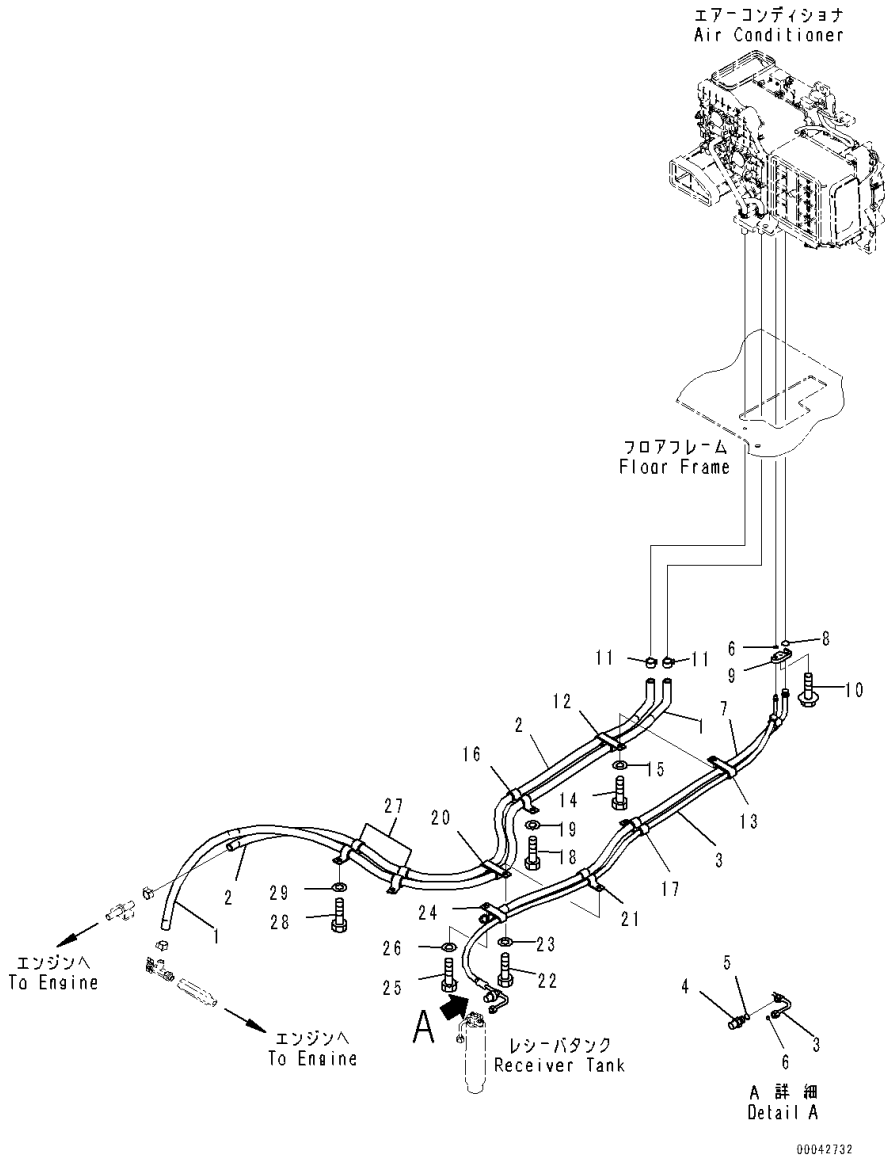

Index	Code	Part Number	Description	Qty	Serial Number
21		17A-911-4421	Clip	1	81105-
22		01010-81230	Bolt	1	81105-
23		01643-31232	Washer	1	81105-
24		17A-911-4460	Clip	1	81105-
25		01010-81230	Bolt	1	81105-
26		01643-31232	Washer	1	81105-
27		195-979-1550	Clamp	2	81105-
28		01010-81230	Bolt	2	81105-
29		01643-31232	Washer	2	81105-

FIG. K2110-037025 Floor Frame, Floor, Window Washer Hose

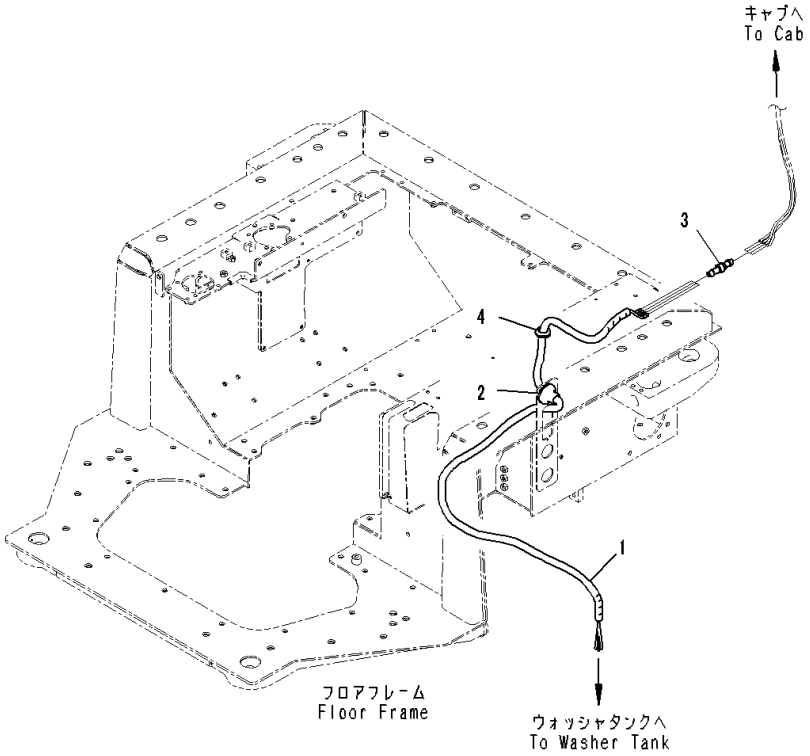

Index	Code	Part Number	Description	Qty	Serial Number
		Note: This list covers following specifications. With MSHA Dust Regulation Arrangement, Without Rear Equipment Dual Tilt Dozer, With MSHA Dust Regulation Arrangement, Without Rear Equipment With MSHA Dust Regulation Arrangement, Variable Giant Ripper, Provision For Landfill Specification Angle Dozer, With Variable Digging Angle Multi Ripper, Variable Multi Ripper Angle Dozer, With Variable Digging Angle Giant Ripper, Variable Digging Angle Giant Ripper Without Push Block, Variable Giant Ripper Angle Dozer, Without Rear Equipment Angle Dozer, With MSHA Dust Regulation Arrangement, Variable Digging Angle Multi Ripper, Variable Multi Ripper Angle Dozer, With MSHA Dust Regulation Arrangement, Without Rear Equipment Dual Tilt Dozer, With MSHA Dust Regulation Arrangement, Variable Giant Ripper, For Landfill Specification With Variable Digging Angle Giant Ripper, For Angle Dozer			
		17A-979-2571	Tape	1	81105-
1	C1		• Tape	4	81105-
2		08037-12536	• Grommet	1	81105-
3		195-979-8590	• Valve	4	81105-
4		08037-02512	Grommet	1	81105-

FIG. K2110-038026 Floor Frame, Dual Tilt Dozer, With MSHA Dust Regulation Arrangement, Without Rear Equipment, Decal

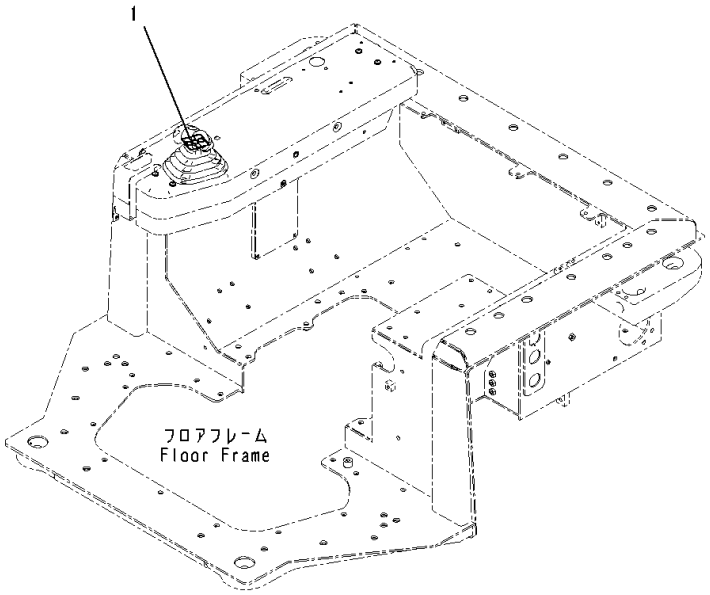

Index	Code	Part Number	Description	Qty	Serial Number
1		17A-98-41130	Plate	1	81105-

FIG. K2110-039001 Floor Frame, Frame

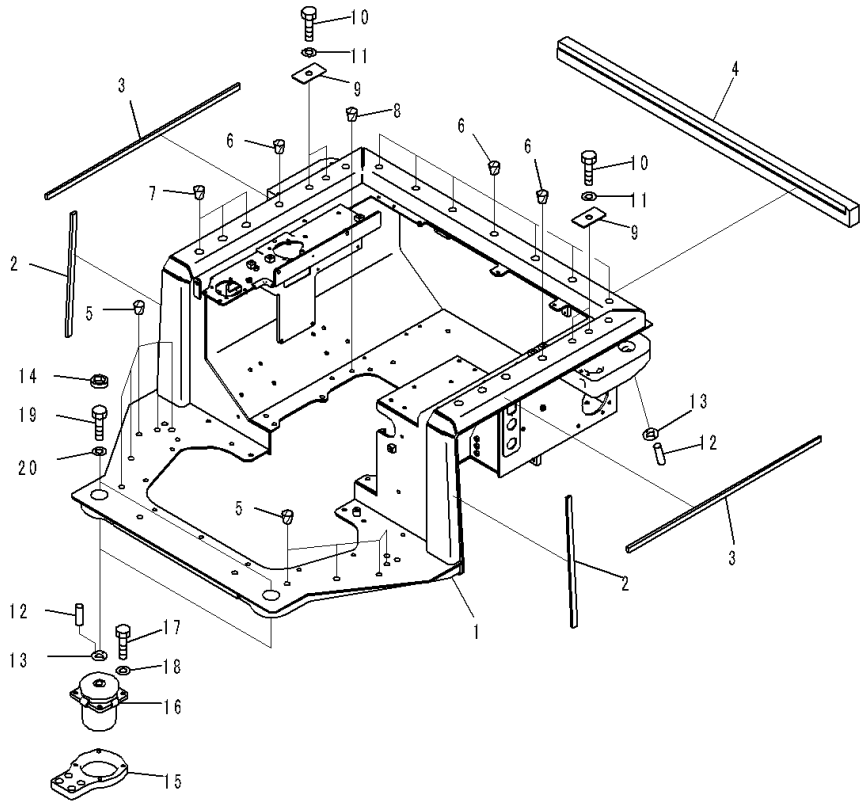

Index	Code	Part Number	Description	Qty	Serial Number
		Note: This list covers following specifications. With MSHA Dust Regulation Arrangement, Variable Giant Ripper, Provision For Landfill Specification Dual Tilt Dozer, With MSHA Dust Regulation Arrangement, Variable Giant Ripper, For Landfill Specification			
1		17A-54-47511	Frame	1	81105-
2		17A-54-47520	• Seal,Bonded	2	81105-
3		17A-54-47530	• Seal,Bonded	2	81105-
4		17A-54-47541	• Seal,Bonded	1	81105-
5		07049-01620	Plug	10	81105-
6		07049-02025	Plug	9	81105-
7		07049-02430	Plug	6	81105-
8		07049-01215	Plug	2	81105-
9		17A-54-46291	Plate	4	81105-
10		01010-82050	Bolt	4	81105-
11		01643-32060	Washer	4	81105-
12		04020-00616	Pin, Dowel	8	81105-
13		17A-54-46440	Plate	4	81105-
14		17A-54-46690	Cap	2	81105-
15		17A-54-46330	Plate	2	81105-
16		17A-54-46120	Cushion	2	81105-
17		01010-81440	Bolt	8	81105-
18		01643-31445	Washer	8	81105-
19		01010-82465	Bolt	2	81105-
20		01643-32460	Washer	2	81105-

FIG. K2110-040015 Floor Frame, PPC Valve Mounting (1/2)

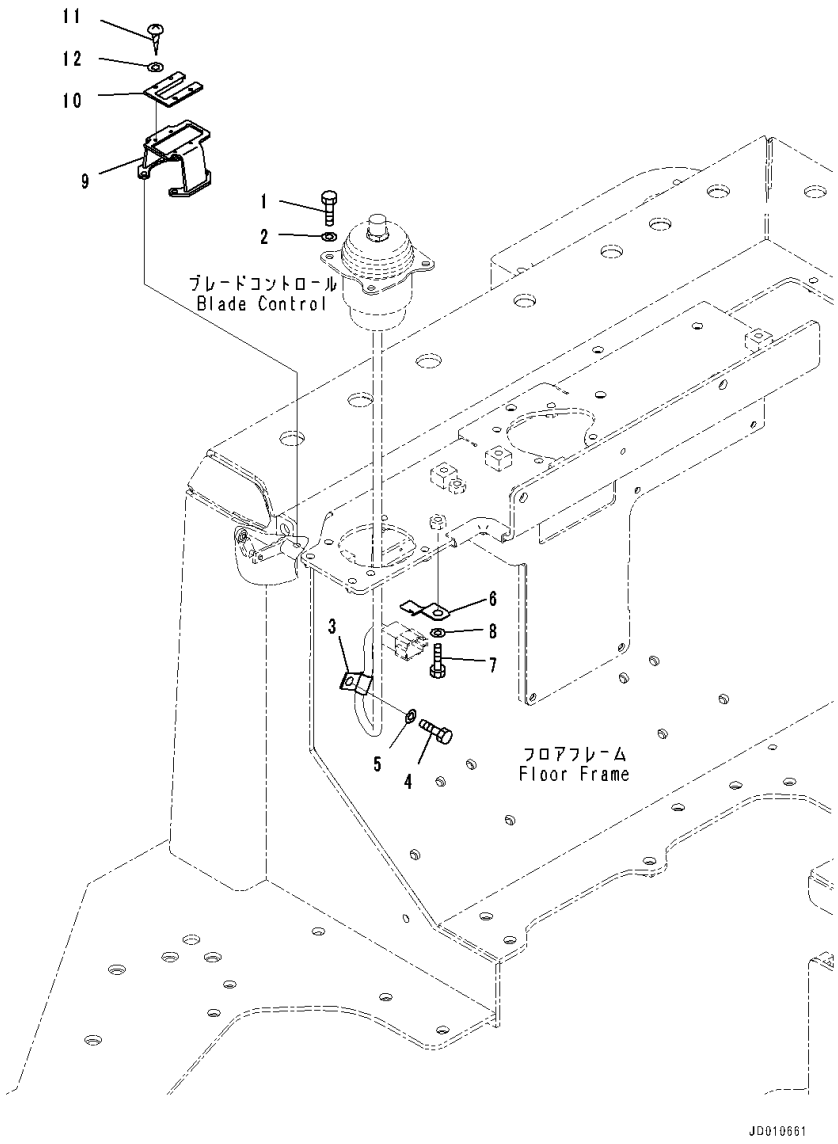

Index	Code	Part Number	Description	Qty	Serial Number
		Note: This list covers following specifications.			
		Angle Dozer, With Variable Digging Angle Multi Ripper,			
		Variable Multi Ripper			
		Angle Dozer, With Variable Digging Angle Giant Ripper,			
		Variable Digging Angle Giant Ripper Without Push Block,			
		Variable Giant Ripper			
		Angle Dozer, Without Rear Equipment			
		Angle Dozer, With MSHA Dust Regulation Arrangement,			
		Variable Digging Angle Multi Ripper, Variable Multi Ripper			
		Angle Dozer, With MSHA Dust Regulation Arrangement,			
		Without Rear Equipment			
		With Variable Digging Angle Giant Ripper, For Angle Dozer			
1		01010-80830	Bolt	4	81105-
2		01643-30823	Washer	4	81105-
3		04434-50810	Clip	1	81105-
4		01010-81020	Bolt	1	81105-
5		01643-31032	Washer	1	81105-
6		08193-30010	Clip	1	81105-
7		01010-81020	Bolt	1	81105-
8		01643-31032	Washer	1	81105-
9		17A-43-45110	Bracket	1	81105-
10		17A-78-11630	Plate	1	81105-
11		01370-00512	Screw	4	81105-
12		01641-20508	Washer, Flat	4	81105-

FIG. K2110-040017 Floor Frame, Ripper Control Lever

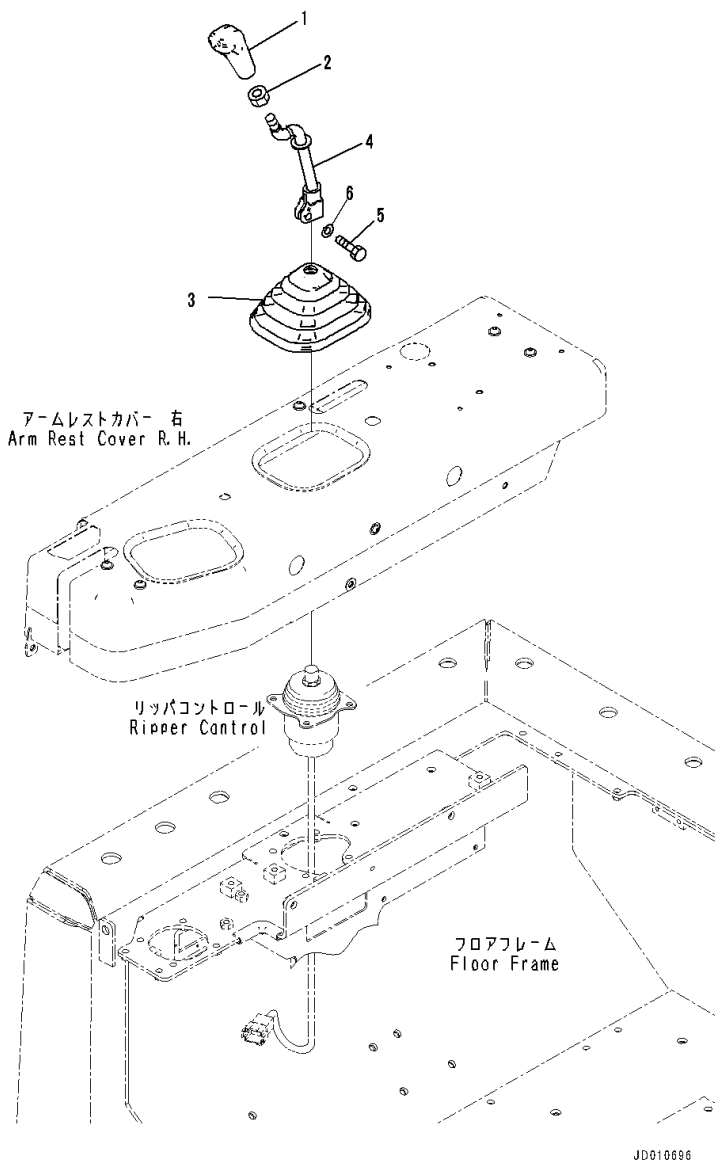

Index	Code	Part Number	Description	Qty	Serial Number
		Note: This list covers following specifications.			
		Angle Dozer, With Variable Digging Angle Multi Ripper,			
		Variable Multi Ripper			
		Angle Dozer, With Variable Digging Angle Giant Ripper,			
		Variable Digging Angle Giant Ripper Without Push Block,			
		Variable Giant Ripper			
		Angle Dozer, With MSHA Dust Regulation Arrangement,			
		Variable Digging Angle Multi Ripper, Variable Multi Ripper			
		Dual Tilt Dozer, With MSHA Dust Regulation Arrangement,			
		Variable Giant Ripper, For Landfill Specification			
		With Variable Digging Angle Giant Ripper, For Angle Dozer			
1		17A-43-42240	Knob	1	81105-
2		20T-43-71190	Nut	1	81105-
3		11Y-43-11181	Boot	1	81105-
4		17A-43-42230	Lever	1	81105-
5		01010-81030	Bolt	1	81105-
6		01643-31032	Washer	1	81105-

FIG. K2110-040020 Floor Frame, Armrest, RHS

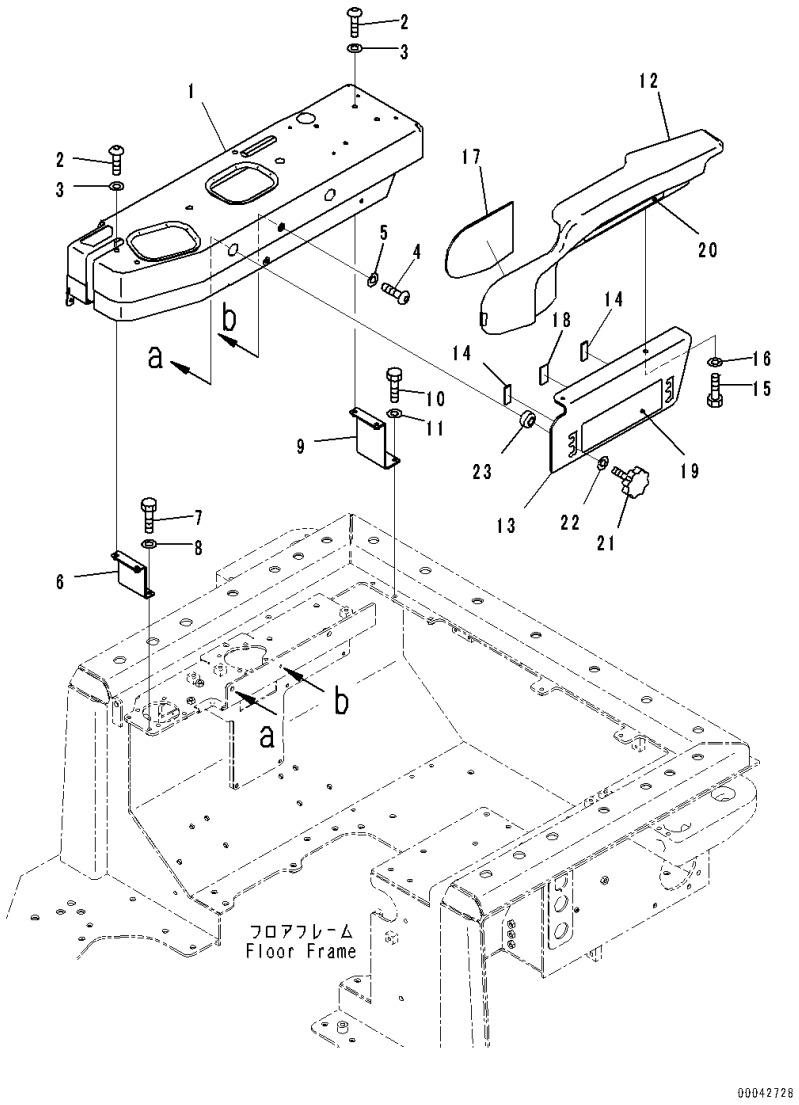

Index	Code	Part Number	Description	Qty	Serial Number
		Note: This list covers following specifications.			
		Angle Dozer, With Variable Digging Angle Multi Ripper,			
		Variable Multi Ripper			
		Angle Dozer, With Variable Digging Angle Giant Ripper,			
		Variable Digging Angle Giant Ripper Without Push Block,			
		Variable Giant Ripper			
		Angle Dozer, With MSHA Dust Regulation Arrangement,			
		Variable Digging Angle Multi Ripper, Variable Multi Ripper			
		Dual Tilt Dozer, With MSHA Dust Regulation Arrangement,			
		Variable Giant Ripper, For Landfill Specification			
		With Variable Digging Angle Giant Ripper, For Angle Dozer			
1		17A-54-46233	Cover	1	81105-
2		01245-00820	Screw	5	81105-
3		01643-70823	Washer	5	81105-
4		01245-00616	Screw, Hexagon Socket Head	1	81105-
5		01640-20610	Washer	1	81105-
6		17A-54-46411	Bracket	1	81105-
7		01010-80825	Bolt	2	81105-
8		01643-30823	Washer	2	81105-
9		17A-54-46311	Bracket	1	81105-
10		01010-80825	Bolt	2	81105-
11		01643-30823	Washer	2	81105-
		14X-54-36310	Arm Assembly, Assembly	1	81105-
12		14X-54-36320	• Arm Rest	1	81105-
13		14X-54-36330	• Plate	1	81105-
14		134-54-66240	• Sheet	2	81105-
15		01010-80820	• Bolt	2	81105-
16		01643-30823	• Washer	2	81105-
17		14X-54-36340	• Sheet	1	81105-
18		17A-43-42310	• Rubber	1	81105-
19		134-54-66190	Plate	1	81105-
20		134-54-66290	Plate	1	81105-
21		195-54-68760	Knob	2	81105-
22		01643-31032	Washer	2	81105-
23		17A-54-25610	Spacer	2	81105-

FIG. K2110-040027 Floor Frame, Decal

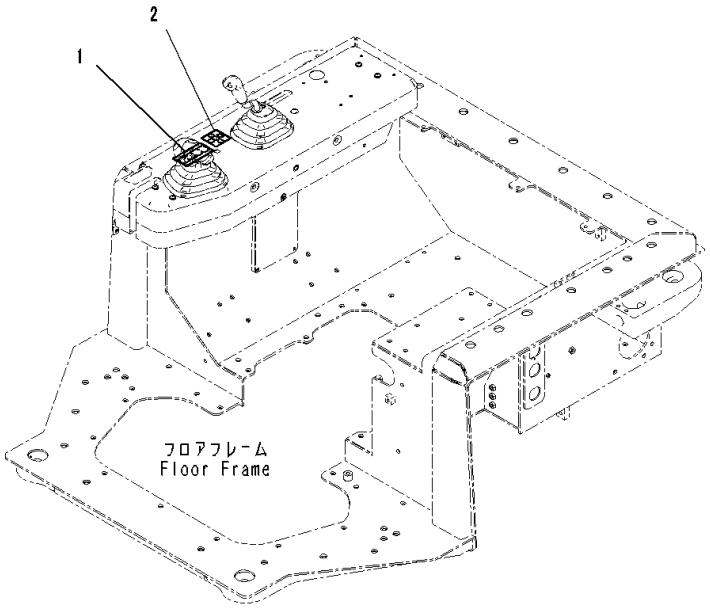

Index	Code	Part Number	Description	Qty	Serial Number
		Note: This list covers following specifications.			
		Angle Dozer, With Variable Digging Angle Multi Ripper, Variable Multi Ripper			
		Angle Dozer, With MSHA Dust Regulation Arrangement, Variable Digging Angle Multi Ripper, Variable Multi Ripper			
1		17A-98-41150	Plate	1	81105-
2		17A-98-11160	Plate	1	81105-

FIG. K2110-041027 Floor Frame, Decal

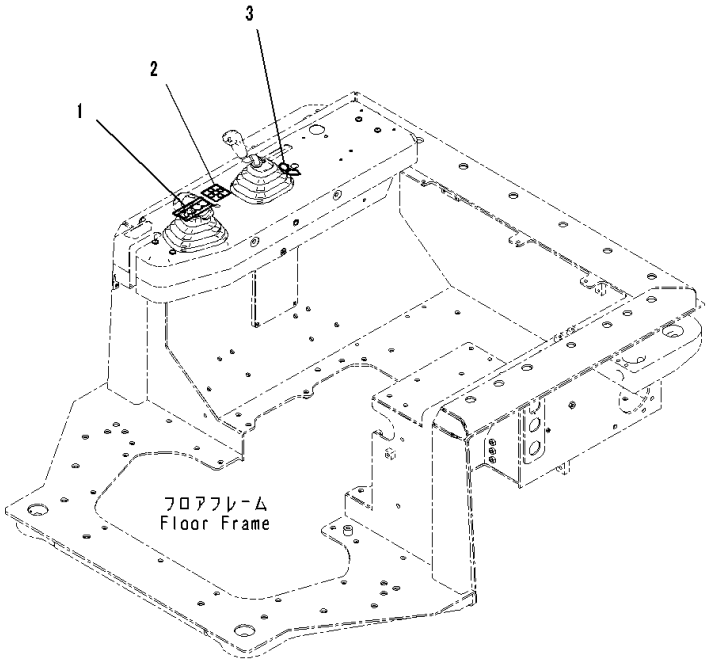

Index	Code	Part Number	Description	Qty	Serial Number
		Note: This list covers following specifications. Angle Dozer, With Variable Digging Angle Giant Ripper, Variable Digging Angle Giant Ripper Without Push Block, Variable Giant Ripper With Variable Digging Angle Giant Ripper, For Angle Dozer			
1		17A-98-41150	Plate	1	81105-
2		17A-98-11160	Plate	1	81105-
3		17A-98-11171	Plate	1	81105-

FIG. K2110-042026 Floor Frame, Decal

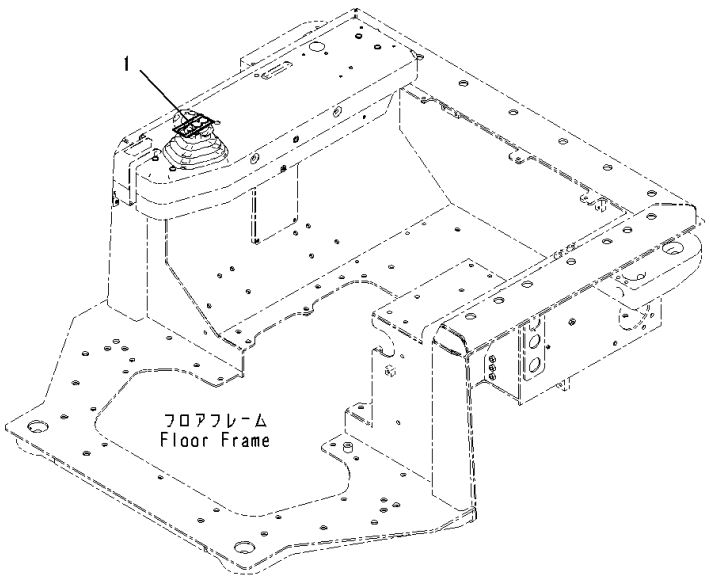

Index	Code	Part Number	Description	Qty	Serial Number
		Note: This list covers following specifications.			
		Angle Dozer, Without Rear Equipment			
		Angle Dozer, With MSHA Dust Regulation Arrangement, Without Rear Equipment			
1		17A-98-41150	Plate	1	81105-

FIG. K2110-045013 Floor Frame, Blade Control Lever

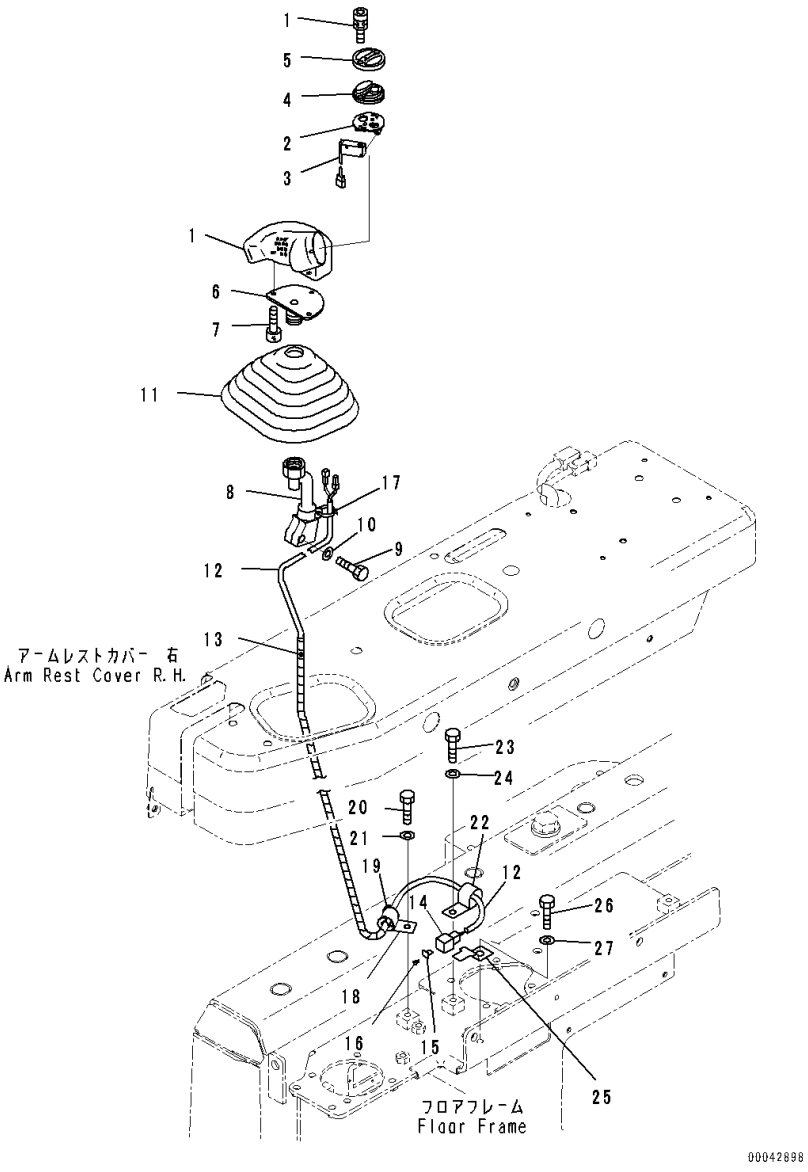

Index	Code	Part Number	Description	Qty	Serial Number
		Note: This list covers following specifications.			
		Angle Dozer, With MSHA Dust Regulation Arrangement,			
		Without Rear Equipment			
		With Variable Digging Angle Giant Ripper, For Angle Dozer			
		17A-43-42410	Knob Assembly	1	81105-
1		19M-09-11510	• Bolt	2	81105-
		17A-43-42440	• Switch Assembly	1	81105-
2		19M-43-33170	• • Plate	1	81105-
3		19M-43-33470	• • Switch	1	81105-
4		17A-43-42430	• Rubber	1	81105-
5		17A-43-42420	• Cover	1	81105-
6		19M-43-38220	Bracket	1	81105-
7		01252-80510	Bolt	3	81105-
8		19M-43-38211	Lever	1	81105-
9		01010-81030	Bolt	1	81105-
10		01643-31032	Washer	1	81105-
11		11Y-43-11181	Boot	1	81105-
12		17A-06-41470	Wiring Harness	1	81105-
13		08210-00404	Tube, Spiral	1	81105-
14		08192-26100	Connector	1	81105-
15		08192-16300	Wedge	1	81105-
16		08191-00770	Plug, Connector	3	81105-
17		20Y-06-23940	Band	1	81105-
18		04434-51010	Clip	1	81105-
19		198-06-53510	Bushing	1	81105-
20		01010-81020	Bolt	1	81105-
21		01643-31032	Washer	1	81105-
22		04434-50610	Clip	1	81105-
23		01010-81020	Bolt	1	81105-
24		01643-31032	Washer	1	81105-
25		08193-20010	Clip	1	81105-
26		01010-81020	Bolt	1	81105-
27		01643-31032	Washer	1	81105-

FIG. K2110-046023 Floor Frame, Air Conditioner Cover

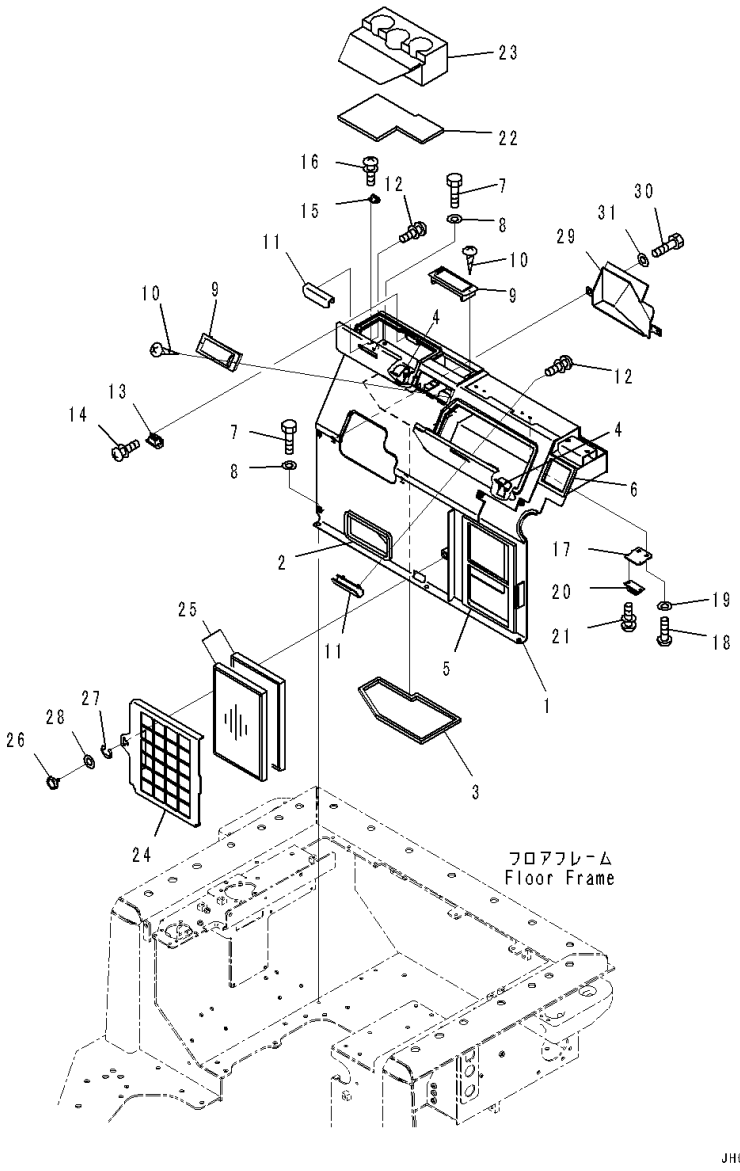

Index	Code	Part Number	Description	Qty	Serial Number
		Note: This list covers following specifications.			
		Dual Tilt Dozer, With MSHA Dust Regulation Arrangement,			
		Variable Giant Ripper, For Landfill Specification			
		With Variable Digging Angle Giant Ripper, For Angle Dozer			
1		17A-979-4160	Cover	1	81105-
2		17A-979-2251	• Seal,Bonded	1	81105-
3		17A-979-2281	• Seat,Bonded	1	81105-
4		17A-979-2390	• Hinge,Welded	4	81105-
5		17A-979-4170	• Seal,Bonded	1	81105-
6		17A-979-2891	• Seal,Bonded	1	81105-
7		01010-80825	Bolt	6	81105-
8		01643-30823	Washer	6	81105-
9		17A-Z11-7161	Louver	2	81105-
10		01370-20308	Screw	4	81105-
11		17A-54-46940	Bracket	2	81105-
12		01023-10508	Screw	4	81105-
13		154-43-73651	Magnet	1	81105-
14		01023-10306	Screw	4	81105-
15		17A-54-46961	Plate	1	81105-
16		01023-10508	Screw	2	81105-
17		17A-54-46951	Plate	2	81105-
18		01245-00616	Screw, Hexagon Socket Head	4	81105-
19		01643-70623	Washer	4	81105-
20		09452-14503	Catcher	2	81105-
21		01023-10306	Screw	4	81105-
22		17A-979-2411	Cushion	1	81105-
23		17A-979-2261	Cushion	1	81105-
24		17A-979-4180	Cover	1	81105-
25		427-07-22130	Filter	1	81105-
26		561-06-86280	Screw	1	81105-
27		195-54-78790	Ring, Snap	1	81105-
28		17A-911-5740	Plate	1	81259-
29		17A-54-46930	Cover	1	81105-
30		01010-80816	Bolt	2	81105-
31		01643-30823	Washer	2	81105-

FIG. K2120-001001 Floor Frame Mounting, Mounting

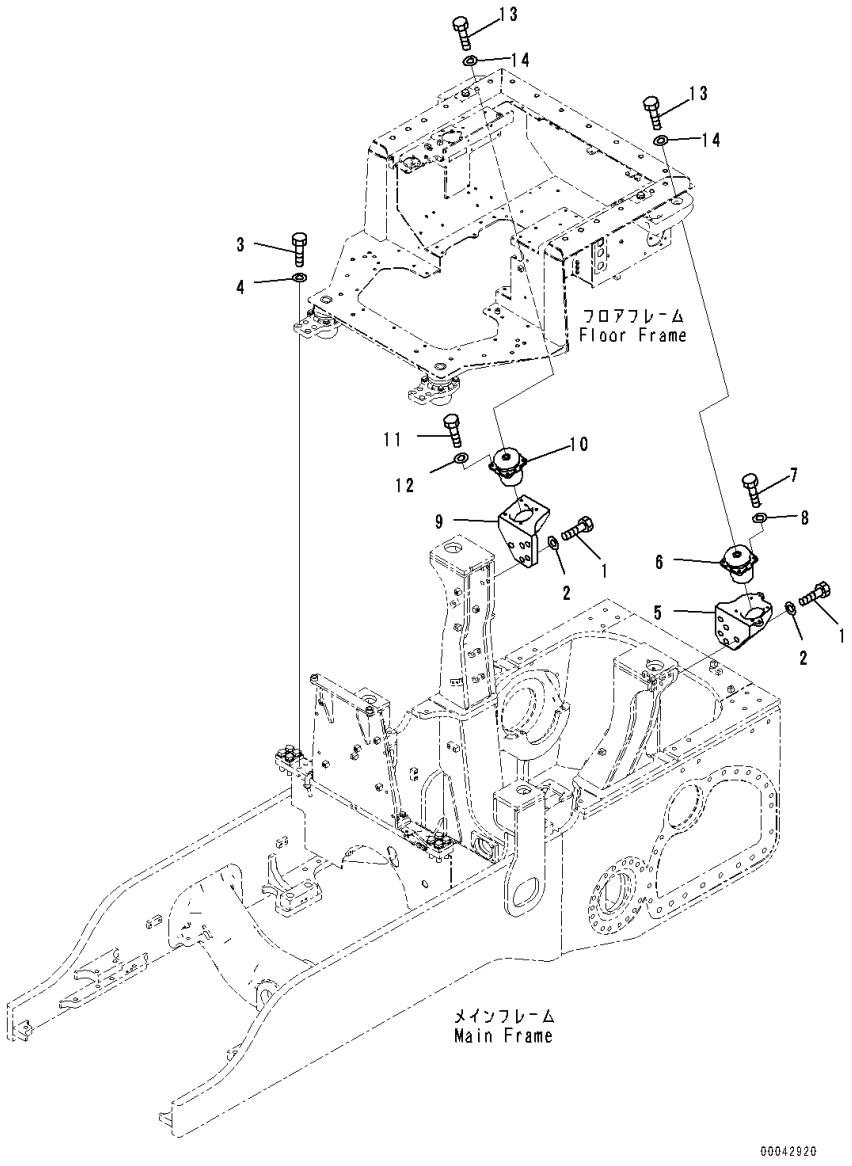

Index	Code	Part Number	Description	Qty	Serial Number
1		01010-82475	Bolt	10	81028-
2		01643-32460	Washer	10	81028-
3		01010-82060	Bolt	8	81028-
4		01643-32060	Washer	8	81028-
5		17A-54-48132	Bracket	1	81028-
6		17A-54-46130	Cushion	1	81028-
7		01010-81440	Bolt	4	81028-
8		01643-31445	Washer	4	81028-
9		17A-54-48142	Bracket	1	81028-
10		17A-54-46130	Cushion	1	81028-
11		01010-81440	Bolt	4	81028-
12		01643-31445	Washer	4	81028-
13		01010-82465	Bolt	2	81028-
14		01643-32460	Washer	2	81028-

FIG. K2120-001002 Floor Frame Mounting, Stopper

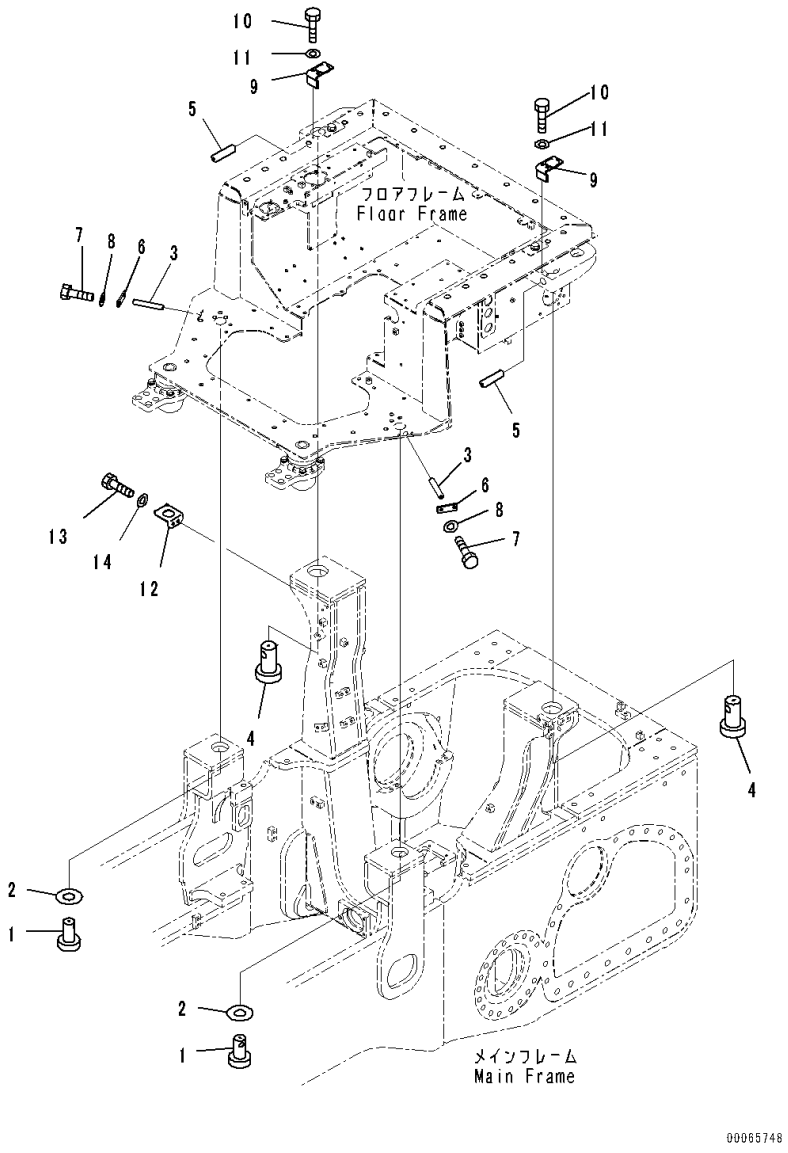

Index	Code	Part Number	Description	Qty	Serial Number
1		17A-979-1811	Pin	2	81028-
2		17A-979-1510	Sheet,Bonded	2	81028-
3		17A-979-1821	Pin	2	81028-
4		17A-979-1831	Pin	2	81028-
5		17A-979-1841	Pin	2	81028-
6		11S-959-1780	Shim	2	81028-
7		01010-81230	Bolt	4	81028-
8		01643-31232	Washer	4	81028-
9		17A-979-1871	Plate	2	81028-
10		01010-81225	Bolt	3	81028-
11		01643-31232	Washer	3	81028-
12		17A-979-1860	Bracket	1	81028-
13		01010-81225	Bolt	2	81028-
14		01643-31232	Washer	2	81028-

FIG. K2120-001003 Floor Frame Mounting, Bracket

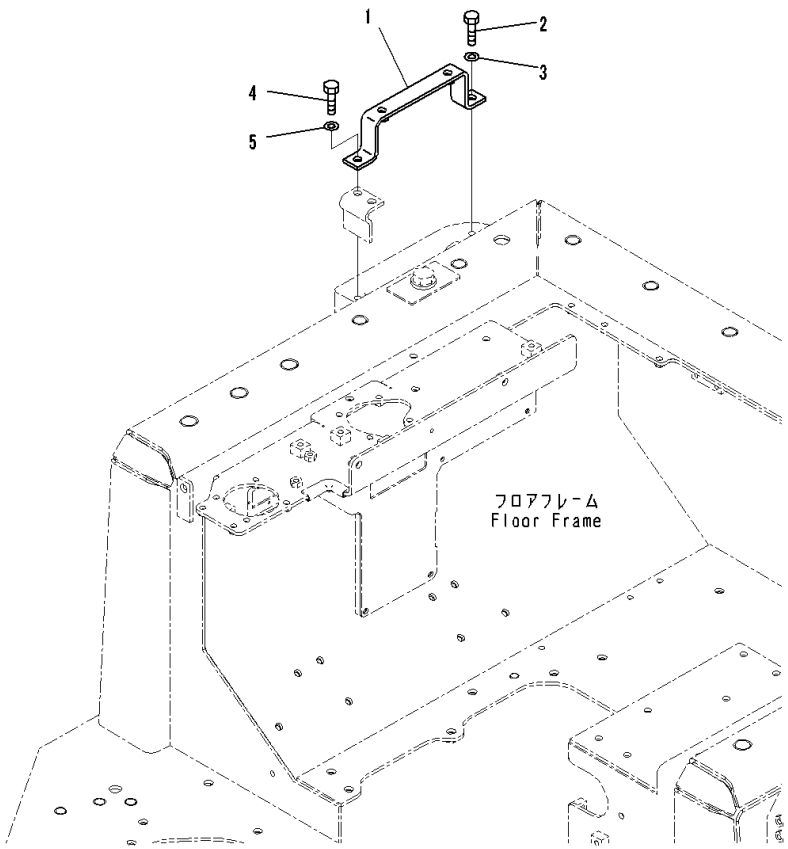

Index	Code	Part Number	Description	Qty	Serial Number
1		17A-54-45290	Bracket	1	81028-
2		01010-81225	Bolt	1	81028-
3		01643-31232	Washer	1	81028-
4		01010-81230	Bolt	1	81028-
5		01643-31232	Washer	1	81028-

FIG. K2120-001004 Floor Frame Mounting, Plugs

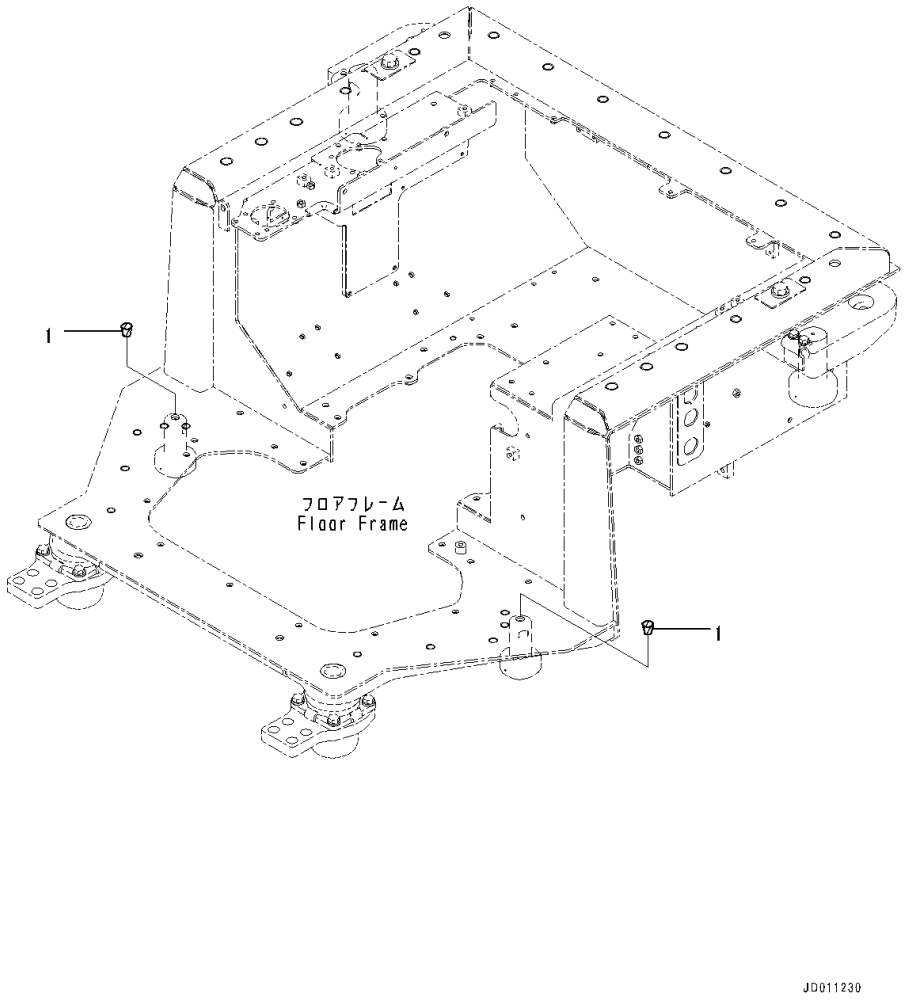

Index	Code	Part Number	Description	Qty	Serial Number
1		07049-00811	Plug	2	81028-

FIG. K2130-003001 Floor Frame Cover, Air Conditioner Duct

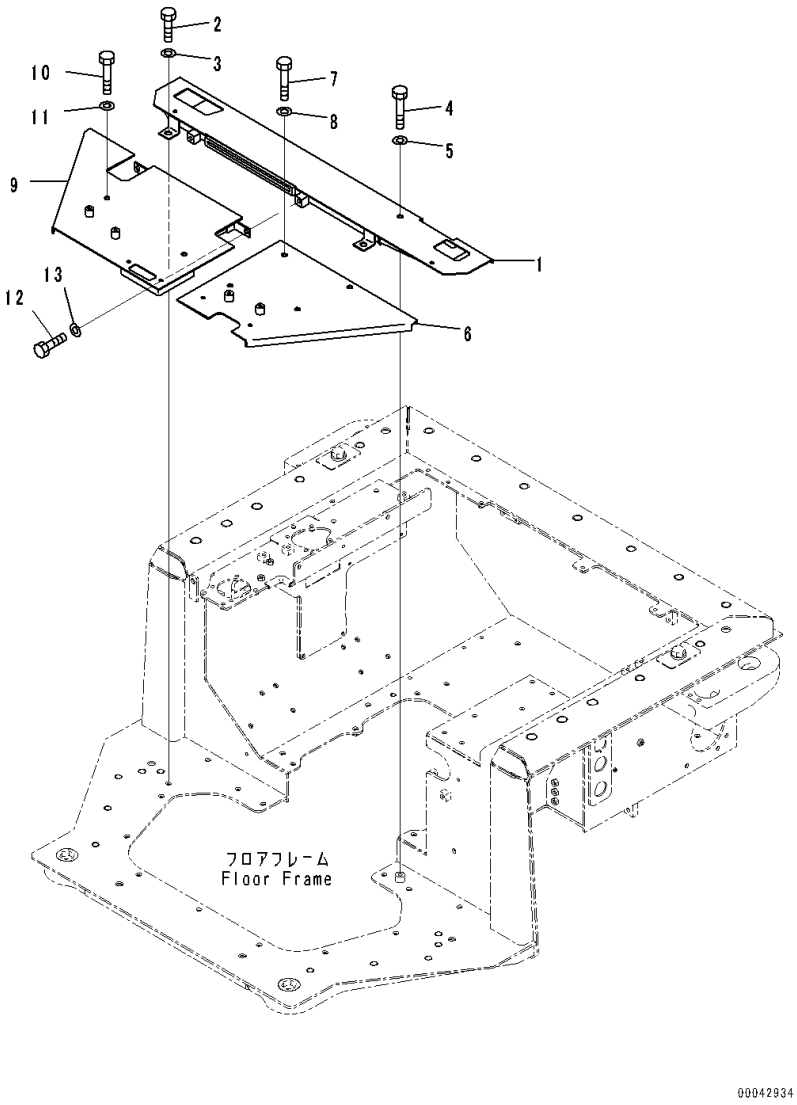

Index	Code	Part Number	Description	Qty	Serial Number
1		17A-54-46182	Cover	1	81105-
2		01010-81225	Bolt	2	81105-
3		01643-31232	Washer	2	81105-
4		01010-81245	Bolt	1	81105-
5		01643-31232	Washer	1	81105-
6		17A-54-46842	Cover	1	81105-
7		01010-81260	Bolt	4	81105-
8		01643-31232	Washer	4	81105-
9		17A-54-46851	Cover	1	81105-
10		01010-81260	Bolt	2	81105-
11		01643-31232	Washer	2	81105-
12		01010-81225	Bolt	2	81105-
13		01643-31232	Washer	2	81105-

FIG. K2130-003002 Floor Frame Cover, Footrest

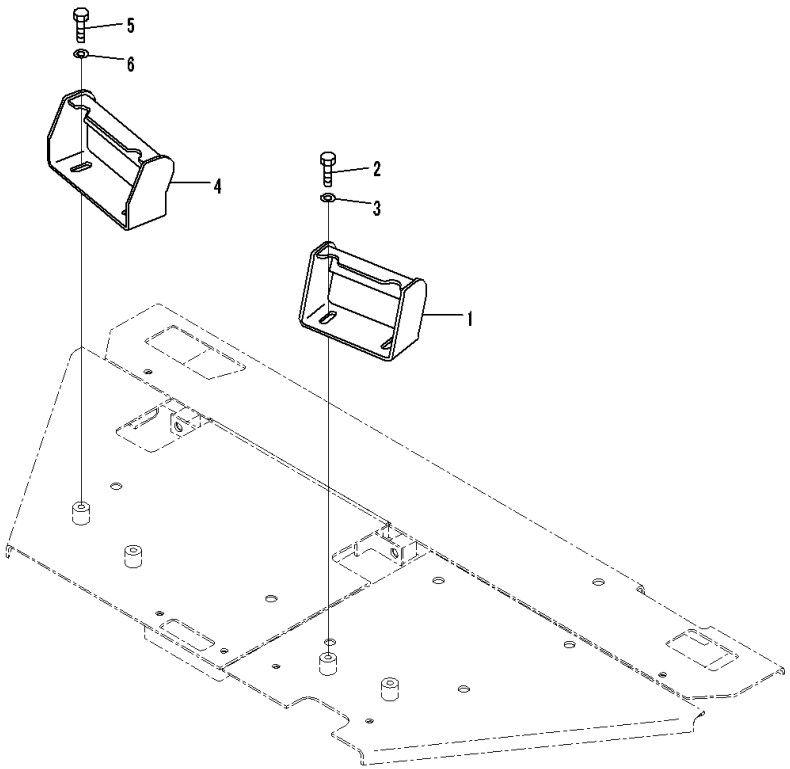

Index	Code	Part Number	Description	Qty	Serial Number
1		17A-43-41311	Bracket	1	81105-
2		01010-D1020	Bolt	2	81105-
3		01643-71032	Washer	2	81105-
4		17A-43-41241	Bracket	1	81105-
5		01010-D1020	Bolt	2	81105-
6		01643-71032	Washer	2	81105-

FIG. K2130-003003 Floor Frame Cover, Foot cover

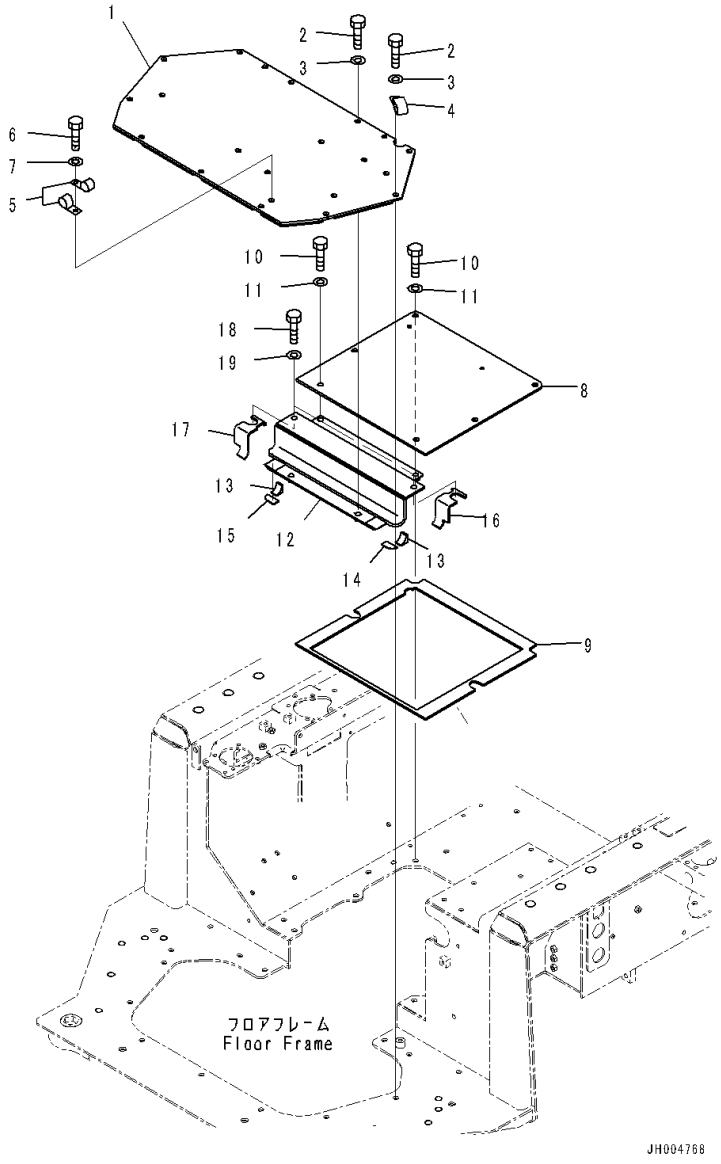

Index	Code	Part Number	Description	Qty	Serial Number
1		17A-54-46141	Cover	1	81105-
2		01010-81230	Bolt	13	81105-
3		01643-31232	Washer	13	81105-
4		421-07-11550	Clip	1	81105-
5		04434-52312	Clip	2	81105-
6		01010-81230	Bolt	1	81105-
7		01643-31232	Washer	1	81105-
8		17A-54-46152	Cover	1	81105-
9		17A-54-46162	• Sheet,Bonded	1	81105-
10		01010-81230	Bolt	6	81105-
11		01643-31232	Washer	6	81105-
12		17A-54-47430	Cover	1	81105-
13		17A-54-46210	• Sheet,Bonded	2	81105-
14		17A-54-46280	• Sheet,Bonded	1	81105-
15		17A-54-46320	• Sheet,Bonded	1	81105-
16		17A-54-47440	• Sheet,Bonded	1	81105-
17		17A-54-47450	• Sheet,Bonded	1	81105-
18		01010-81230	Bolt	2	81105-
19		01643-31232	Washer	2	81105-

FIG. K2130-003004 Floor Frame Cover, Duct

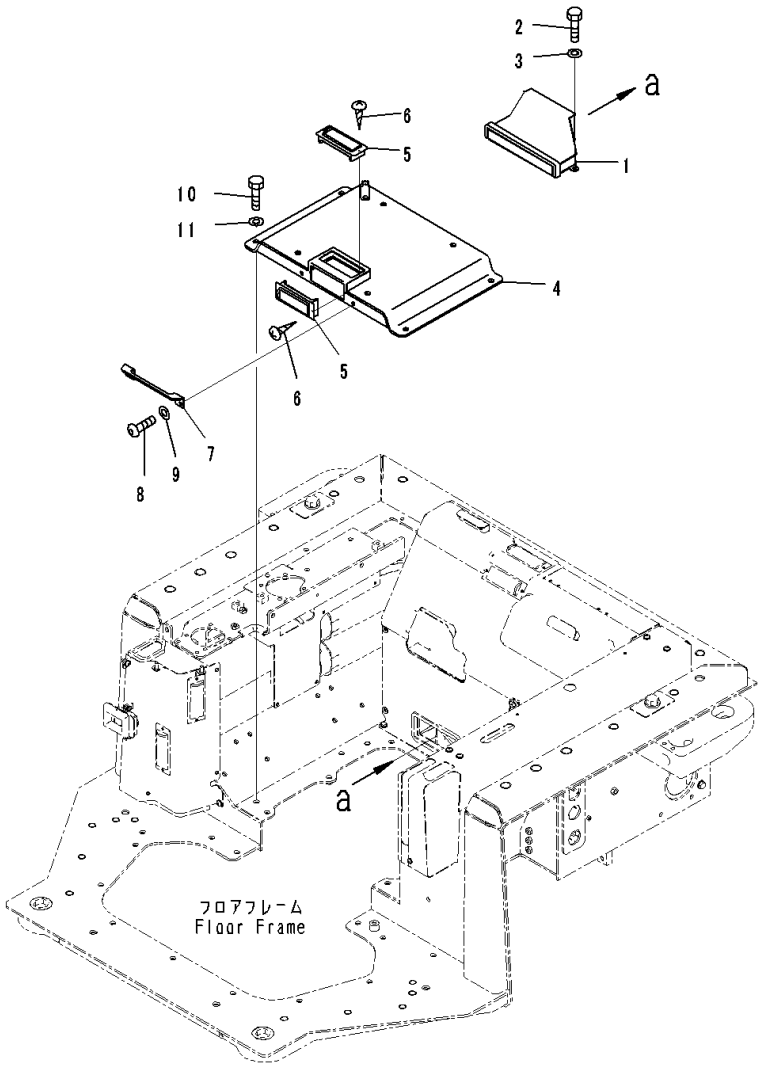

Index	Code	Part Number	Description	Qty	Serial Number
1		17A-979-2271	Duct	1	81105-
2		01010-80825	Bolt	2	81105-
3		01643-30823	Washer	2	81105-
4		17A-57-41113	Bracket	1	81105-
5		17A-Z11-7161	Louver	2	81105-
6		01370-20308	Screw	4	81105-
7		17A-57-41161	Plate	1	81105-
8		01245-00830	Screw, Hexagon Socket Head	2	81105-
9		01643-70823	Washer	2	81105-
10		01010-81235	Bolt	4	81105-
11		01643-31232	Washer	4	81105-

FIG. K2130-003005 Floor Frame Cover, LHS

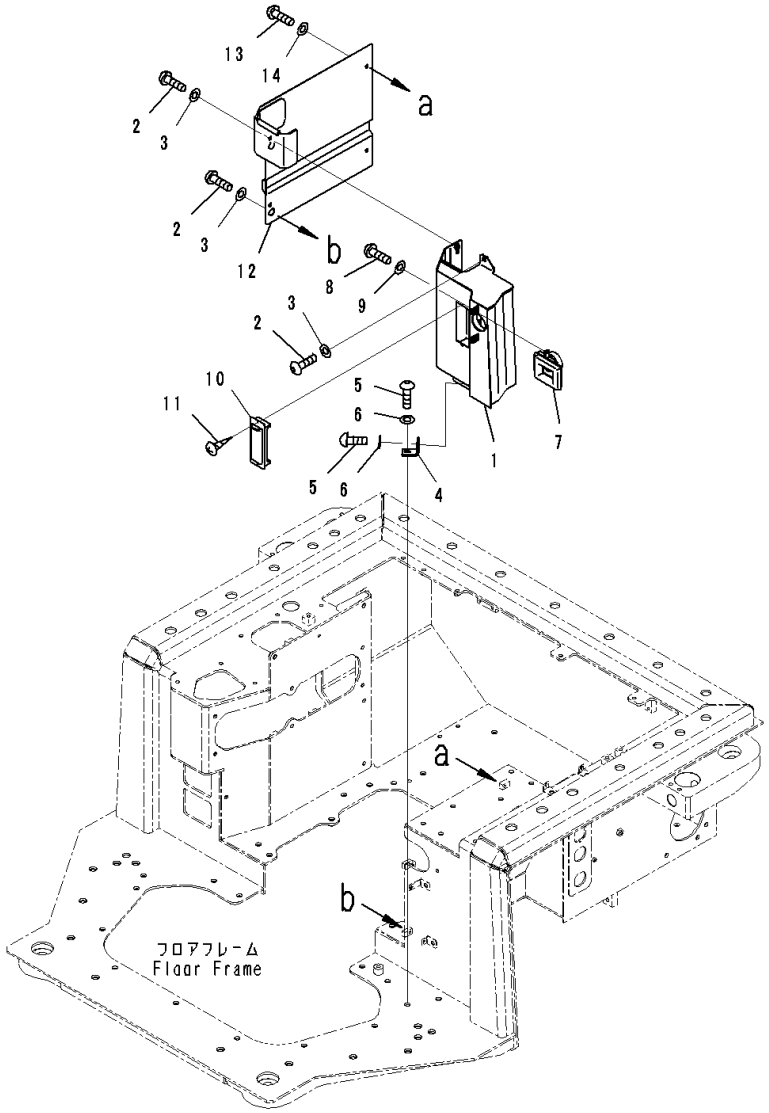

Index	Code	Part Number	Description	Qty	Serial Number
1		17A-54-46223	Duct	1	81105-
2		01245-00820	Screw	3	81105-
3		01643-70823	Washer	3	81105-
4		17A-979-2120	Bracket	1	81105-
5		01245-00820	Screw	2	81105-
6		01643-70823	Washer	2	81105-
7		17A-54-45160	Duct	1	81105-
8		01245-00616	Screw, Hexagon Socket Head	2	81105-
9		01643-70623	Washer	2	81105-
10		17A-Z11-7161	Louver	1	81105-
11		01370-20308	Screw	2	81105-
12		17A-54-46351	Cover	1	81105-
13		01245-00820	Screw	4	81105-
14		01643-70823	Washer	4	81105-

FIG. K2130-003006 Floor Frame Cover, RHS

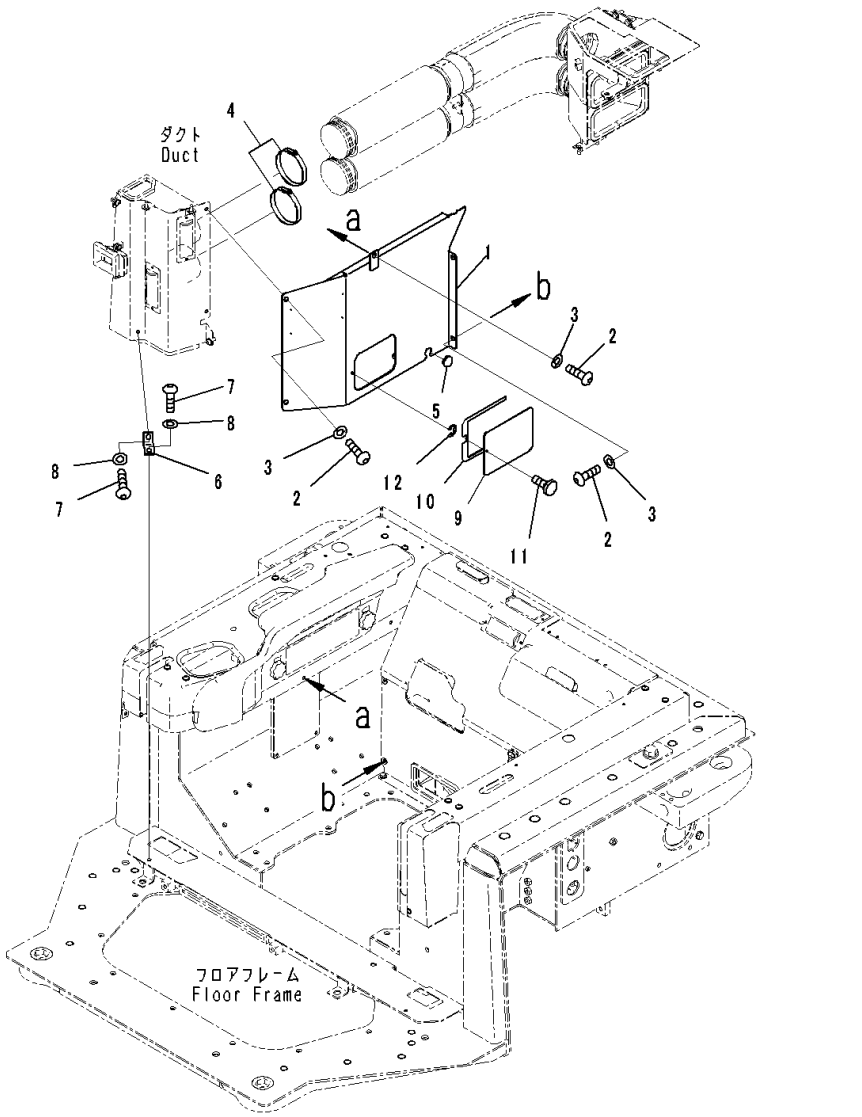

Index	Code	Part Number	Description	Qty	Serial Number
1		17A-54-46343	Cover	1	81105-
2		01245-00820	Screw	5	81105-
3		01643-70823	Washer	5	81105-
4		07281-01159	Clamp	2	81105-
5		09415-01610	Cap	1	81105-
6		17A-979-2120	Bracket	1	81105-
7		01245-00820	Screw	2	81105-
8		01643-70823	Washer	2	81105-
9		17A-54-46250	Cover	1	81105-
10		17A-54-46260	• Seal,Bonded	1	81105-
11		198-54-75730	Screw	1	81105-
12		198-911-6990	Ring, Snap	1	81105-

FIG. K2210-001001 Dashboard, Duct and Cover

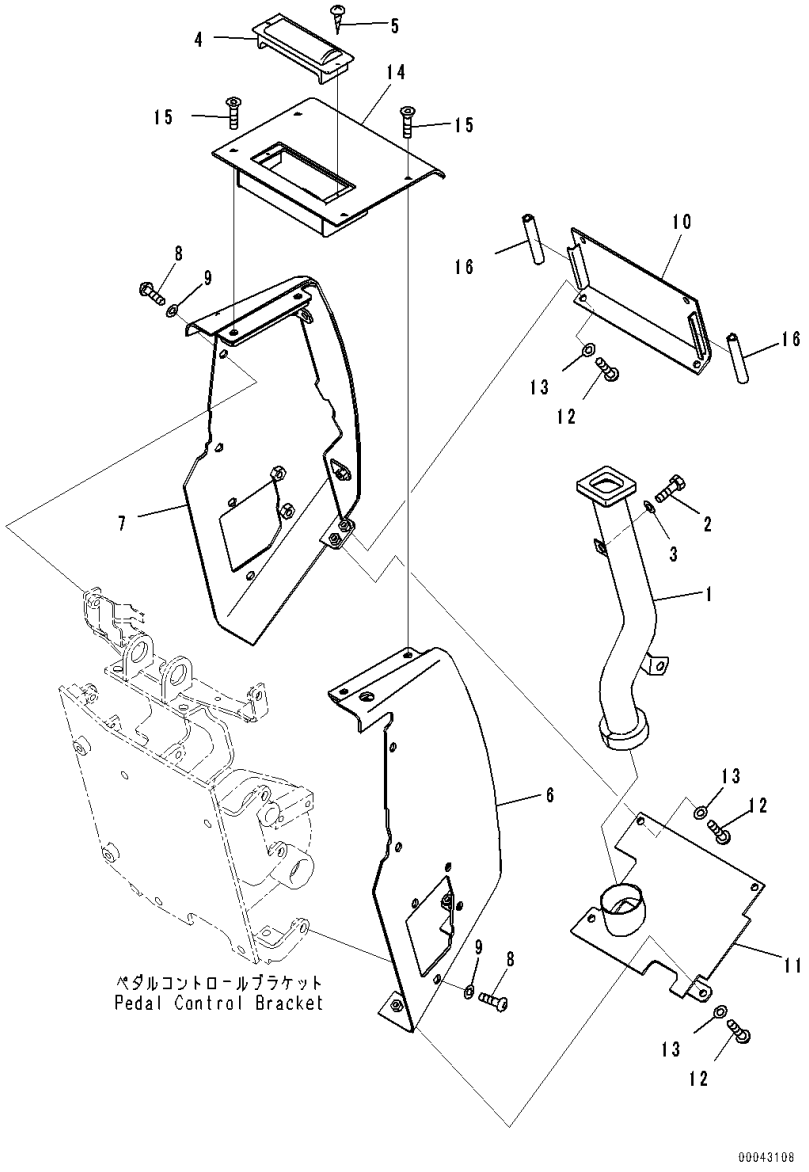

Index	Code	Part Number	Description	Qty	Serial Number
		Note: This list covers following specifications.			
		With Air Conditioner			
		With Air Conditioner, For KOMTRAX			
1		17A-979-2451	Duct	1	81028-
2		01010-81020	Bolt	2	81028-
3		01643-31032	Washer	2	81028-
4		17A-Z11-7161	Louver	1	81028-
5		01370-20316	Screw	2	81028-
6		17A-54-46514	Cover	1	81076-
7		17A-54-46525	Cover	1	81076-
8		01245-01025	Screw	8	81028-
9		01643-71032	Washer	8	81028-
10		17A-54-46541	Cover	1	81028-
11		17A-54-46551	Cover	1	81028-
12		01245-00820	Screw	8	81028-
13		01643-70823	Washer	8	81028-
14		17A-54-46562	Cover	1	81076-
15		01240-00616	Screw	4	81028-
16		17A-54-46771	Sheet	2	81028-

FIG. K2210-001002 Dashboard, Monitor

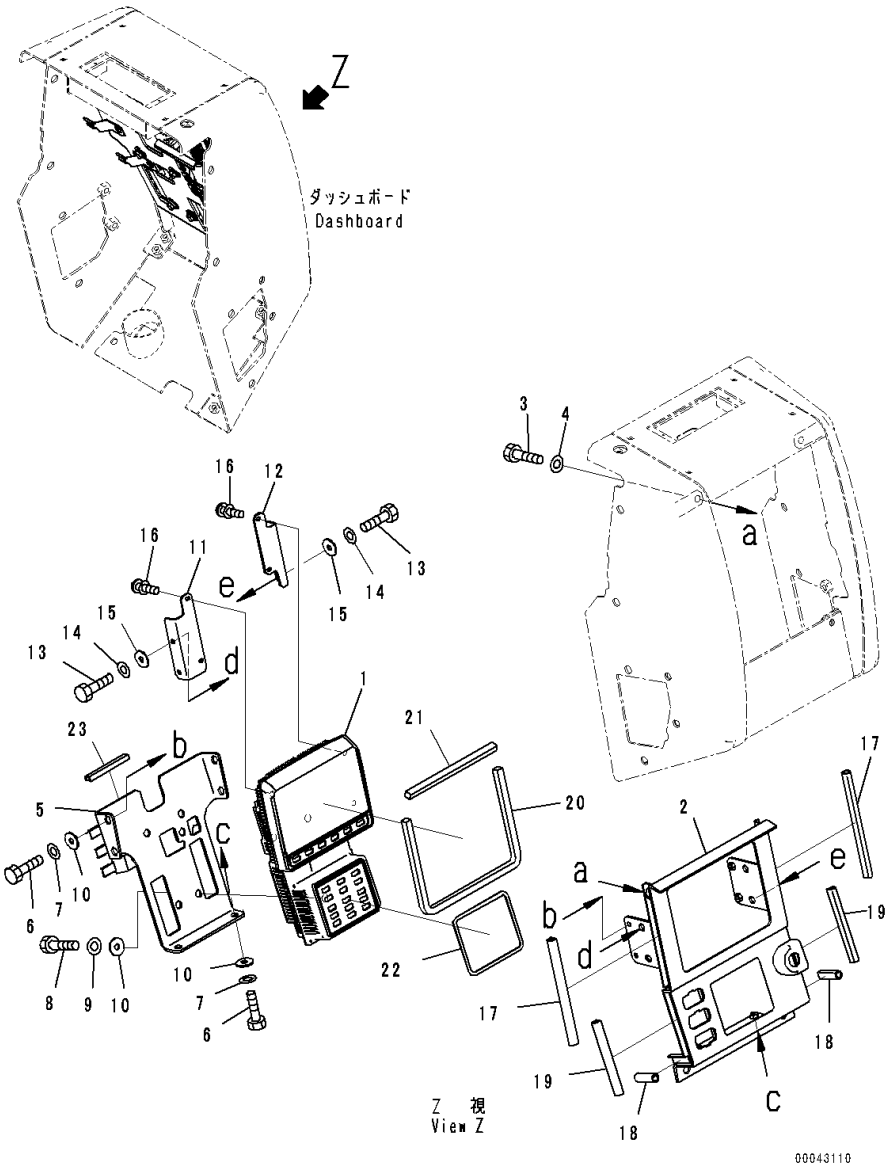

Index	Code	Part Number	Description	Qty	Serial Number
		Note: This list covers following specifications.			
		With Air Conditioner			
		With Air Conditioner, For KOMTRAX			
1		7831-69-1106	Monitor	1	81260-
2		17A-54-46532	Cover	1	81028-
3		01010-80816	Bolt	2	81028-
4		01643-30823	Washer	2	81028-
5		17A-54-46712	Bracket	1	81028-
6		01010-80620	Bolt	6	81028-
7		01643-30623	Washer	6	81028-
8		01010-80620	Bolt	4	81028-
9		01643-30623	Washer	4	81028-
10		17A-Z11-2813	Plate	10	81028-
11		17A-54-46721	Bracket,LHS	1	81028-
12		17A-54-46731	Bracket,RHS	1	81028-
13		01010-80620	Bolt	4	81028-
14		01643-30623	Washer	4	81028-
15		17A-Z11-2813	Plate	4	81028-
16		01023-10410	Screw	4	81028-
17		17A-54-46751	Seal	2	81028-
18		17A-54-46761	Seal	2	81028-
19		17A-54-46780	Seal	2	81028-
20		17A-54-46661	Sheet	1	81028-
21		17A-54-46820	Seal	1	81028-
22		17A-54-46671	Sheet	1	81028-
23		17A-54-45990	Seal	1	81028-

FIG. K2210-001003 Dashboard, Wiring Harness and Switch

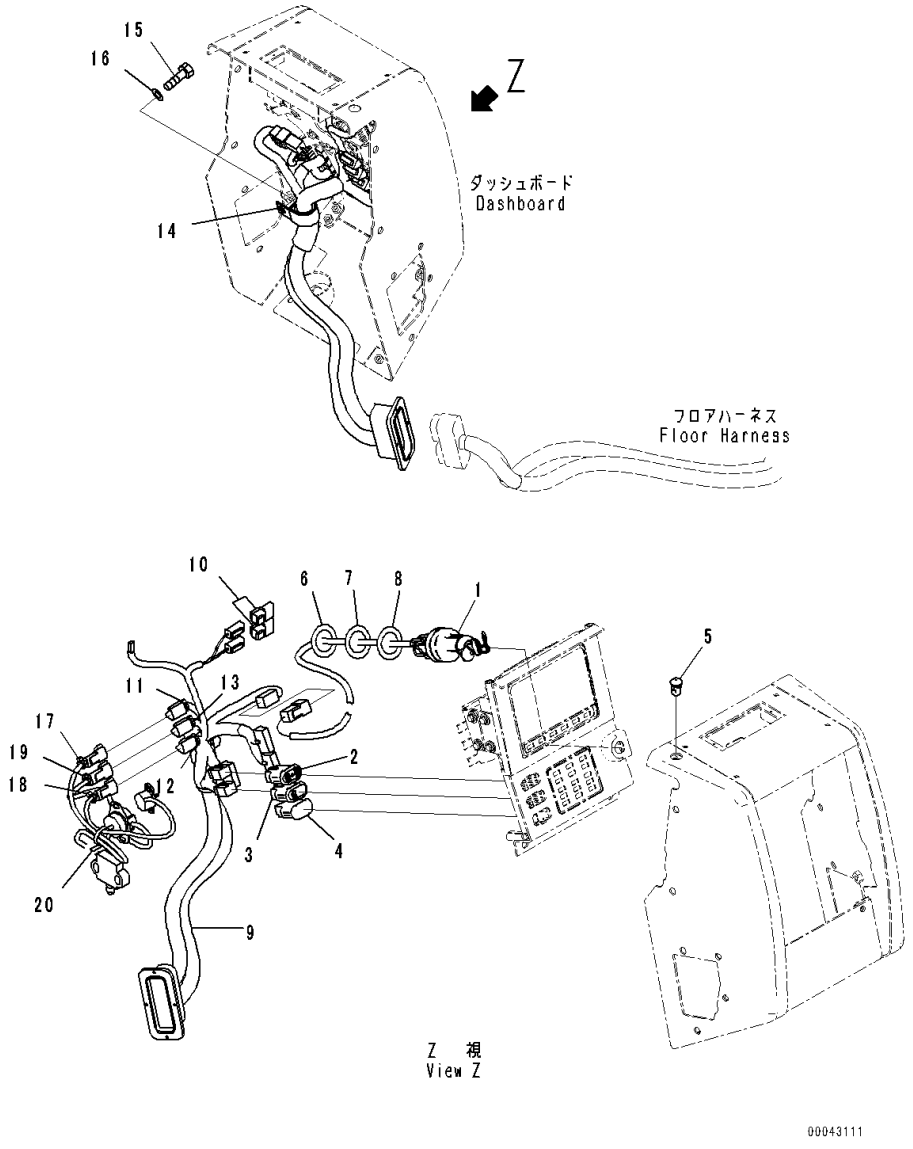

Index	Code	Part Number	Description	Qty	Serial Number
		Note: This list covers following specifications.			
		With Air Conditioner			
		With Air Conditioner, For KOMTRAX			
1		198-06-62141	Wiring Harness	1	81028-
2		17A-06-42250	Switch, Light, Front	1	81028-
3		17A-06-42260	Switch, Light, Rear	1	81028-
4		20Y-06-42190	Cover	1	81028-
5		20Y-979-6161	Sensor	1	81028-
6		23S-15-45860	Shim, T=0.5mm	2	81028-
7		20Y-43-41750	Washer	2	81028-
8		20Y-43-41790	Washer	2	81028-
9		17A-06-41122	Wiring Harness	1	81028-
10		21J-06-13661	• Diode	2	81028-
11		20Y-62-22790	• Band, Red	1	81028-
12		20Y-62-22810	• Band, Yellow	1	81028-
13		20Y-62-22820	• Band, Blue	1	81028-
14		04434-53411	Clip	1	81028-
15		01010-81020	Bolt	1	81028-
16		01643-31032	Washer	1	81028-
17		20Y-62-22790	Band, Red	1	81028-
18		20Y-62-22810	Band, Yellow	1	81028-
19		20Y-62-22820	Band, Blue	1	81028-
20		20Y-06-24320	Band	1	81028-

FIG. K2210-001004 Dashboard, Footrest

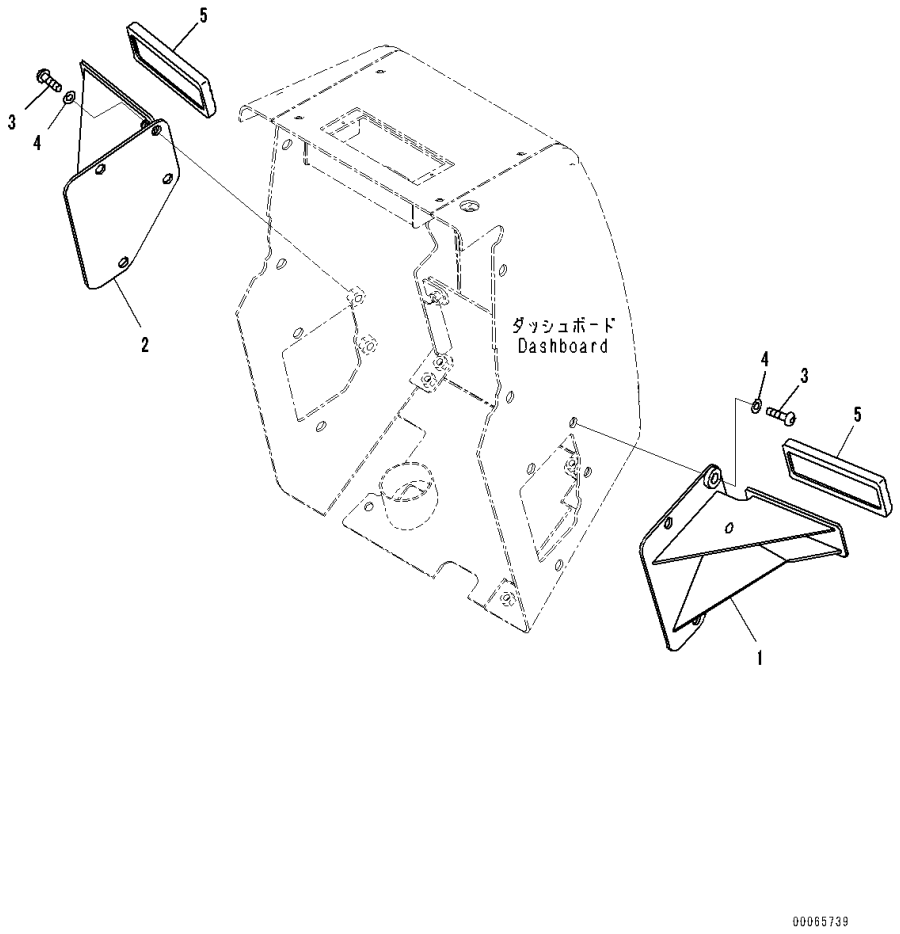

Index	Code	Part Number	Description	Qty	Serial Number
		Note: This list covers following specifications.			
		With Air Conditioner			
		With Air Conditioner, For KOMTRAX			
1		17A-54-46582	Bracket,LHS	1	81028-
2		17A-54-46592	Bracket,RHS	1	81028-
3		01245-01025	Screw	4	81028-
4		01643-71032	Washer	4	81028-
5		203-43-56450	Pedal Cap	2	81028-

FIG. K2210-001005 Dashboard, Control Pedal (1/3)

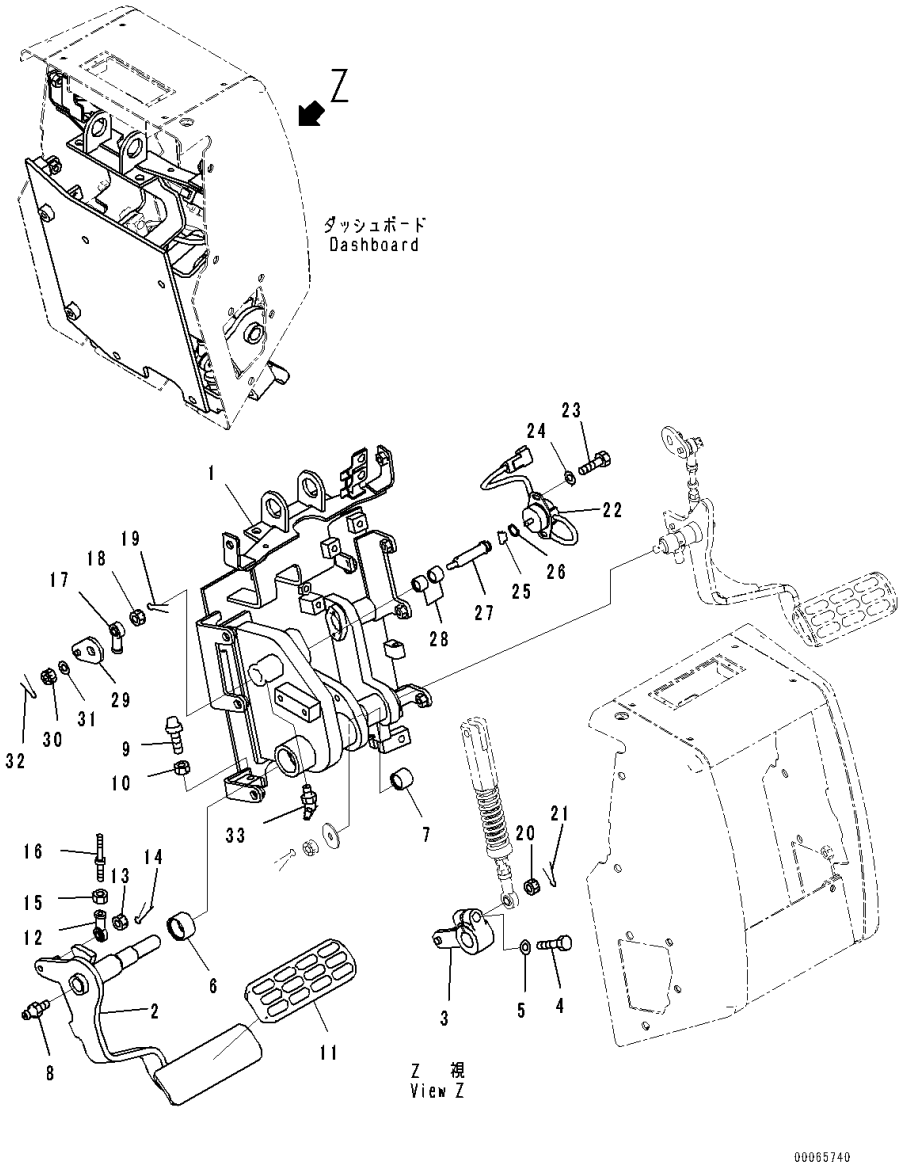

Index	Code	Part Number	Description	Qty	Serial Number
		Note: This list covers following specifications.			
		With Air Conditioner			
		With Air Conditioner, For KOMTRAX			
1		17A-43-41112	Bracket	1	81028-
2		17A-43-41121	Pedal	1	81028-
3		17A-43-41140	Lever	1	81028-
4		01010-81245	Bolt	1	81028-
5		01643-31232	Washer	1	81028-
6		06124-03020	Bearing	1	81028-
7		06124-02020	Bearing	1	81028-
8		07020-00000	Fitting, Grease	1	81028-
9		09311-41237	Bumper, Pedal	1	81028-
10		01580-11210	Nut	1	81028-
11		14X-43-12110	Pedal Cap	1	81028-
12		04250-80847	Rod End	1	81028-
13		01590-30809	Nut	1	81028-
14		04050-12015	Pin, Cotter	1	81028-
15		01580-10806	Nut	1	81028-
16		04248-30808	Rod	1	81028-
17		04250-90847	Rod End	1	81028-
18		01590-30809	Nut	1	81028-
19		04050-12015	Pin, Cotter	1	81028-
20		01593-31008	Nut, Slotted	1	81028-
21		04050-12018	Pin, Cotter	1	81028-
22		7861-93-4132	Sensor	1	81093-
23		01010-80616	Bolt	2	81028-
24		01643-30623	Washer	2	81028-
25		142-43-13180	Spring	1	81028-
26		04064-01610	Ring, Snap	1	81028-
27		17A-43-41182	Shaft	1	81028-
28		06123-01414	Bearing	2	81028-
29		17A-43-41172	Plate	1	81028-
30		01590-30809	Nut	1	81028-
31		01643-30823	Washer	1	81028-
32		04050-12015	Pin, Cotter	1	81028-
33		07020-00675	Fitting, Grease	1	81028-

FIG. K2210-001006 Dashboard, Control Pedal (2/3)

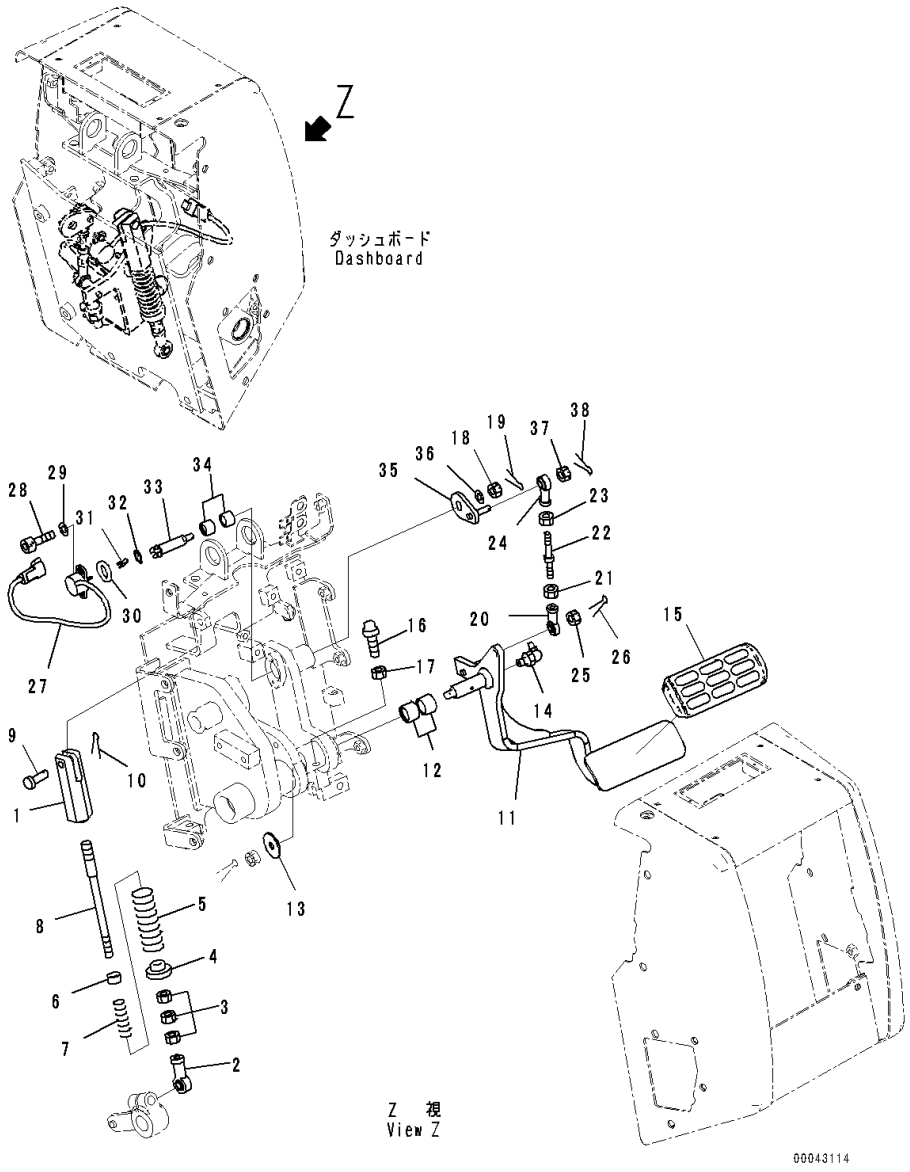

Index	Code	Part Number	Description	Qty	Serial Number
		Note: This list covers following specifications.			
		With Air Conditioner			
		With Air Conditioner, For KOMTRAX			
1		17A-43-41531	Yoke	1	81028-
2		04250-81056	End	1	81028-
3		01582-11008	Nut	3	81028-
4		17A-43-41521	Guide	1	81028-
5		714-10-17151	Spring	1	81028-
6		202-970-1220	Washer	1	81028-
7		700-92-11690	Spring	1	81028-
8		17A-43-41511	Rod	1	81028-
9		04205-11038	Pin	1	81028-
10		04050-13020	Pin, Cotter	1	81028-
11		17A-43-41131	Pedal	1	81028-
12		06123-02018	Bearing, Needle	2	81260-
13		175-54-88110	Washer	1	81028-
14		07020-00000	Fitting, Grease	1	81028-
15		14X-43-13760	Cap	1	81028-
16		09311-41237	Bumper, Pedal	1	81028-
17		01580-11210	Nut	1	81028-
18		01590-30809	Nut	1	81028-
19		04050-12015	Pin, Cotter	1	81028-
20		04250-80847	Rod End	1	81028-
21		01580-10806	Nut	1	81028-
22		04248-30808	Rod	1	81028-
23		01508-40805	Nut	1	81028-
24		04250-90847	Rod End	1	81028-
25		01590-30809	Nut	1	81028-
26		04050-12015	Pin, Cotter	1	81028-
27		17A-06-41980	Sensor	1	81028-
28		01252-70414	Bolt	2	81028-
29		01640-20408	Washer, Flat	2	81028-
30		12Y-43-12160	Plate	1	81028-
31		142-43-13180	Spring	1	81028-
32		04064-01610	Ring, Snap	1	81028-
33		17A-43-41161	Shaft	1	81028-
34		06123-01414	Bearing	2	81028-
35		17A-43-41152	Lever	1	81028-
36		01643-30823	Washer	1	81028-
37		01590-30809	Nut	1	81028-

FIG. K2210-001006 Dashboard, Control Pedal (2/3)

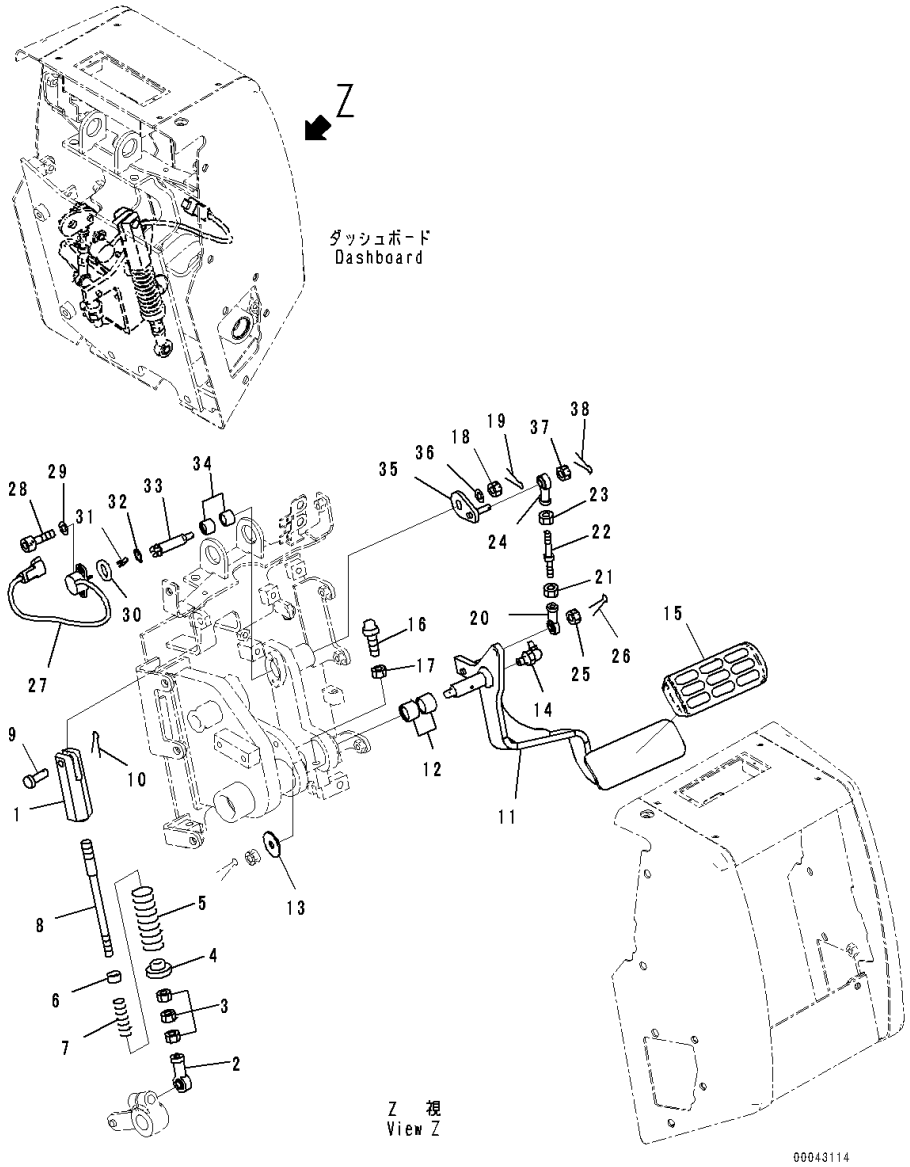

Index	Code	Part Number	Description	Qty	Serial Number
38		04050-12015	Pin, Cotter	1	81028-

FIG. K2210-001007 Dashboard, Control Pedal (3/3)

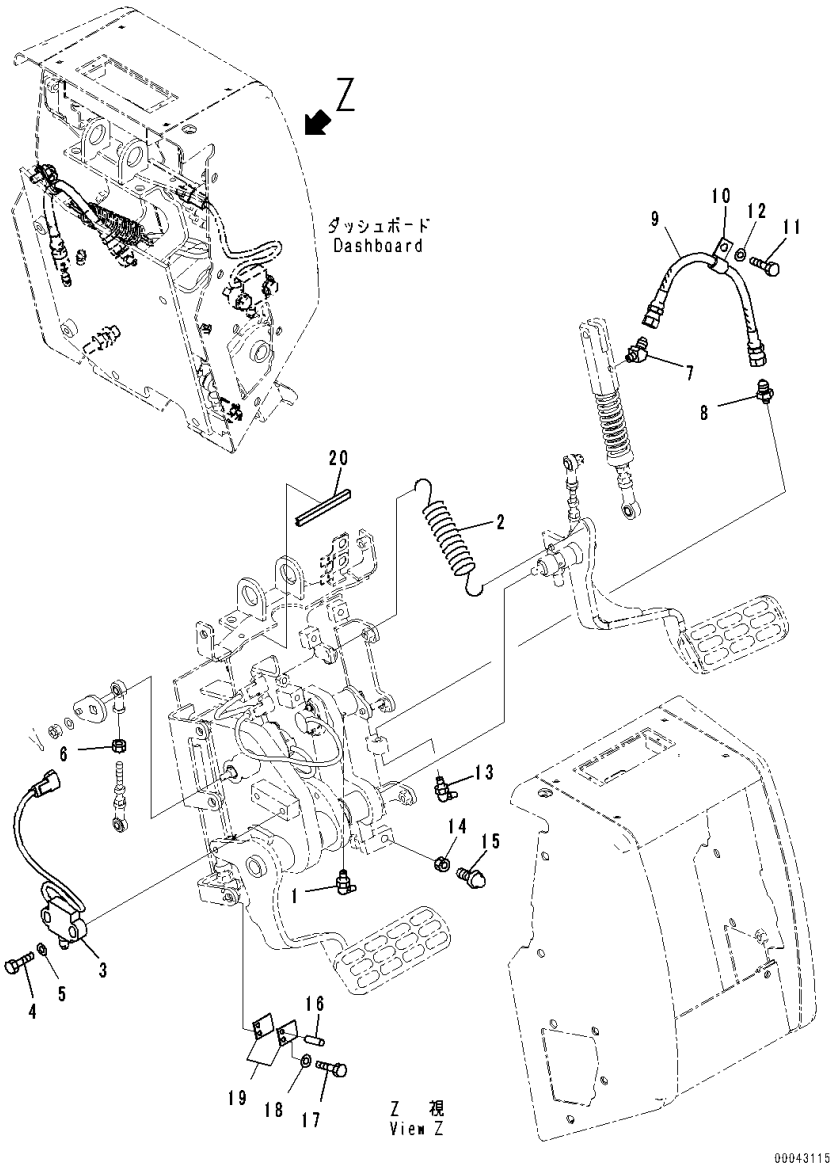

Index	Code	Part Number	Description	Qty	Serial Number
		Note: This list covers following specifications.			
		With Air Conditioner			
		With Air Conditioner, For KOMTRAX			
1		07020-00900	Fitting, Grease	1	81028-
2		154-43-41260	Spring	1	81028-
3		11Y-06-22150	Switch	1	81028-
4		01010-81035	Bolt	2	81028-
5		01643-31032	Washer	2	81028-
6		01508-40805	Nut	1	81028-
7		205-70-65780	Elbow	1	81028-
8		205-70-51390	Nipple	1	81028-
9		17A-43-41250	Hose	1	81028-
10		04434-51210	Clip	1	81028-
11		01010-81020	Bolt	1	81028-
12		01643-31032	Washer	1	81028-
13		07020-00900	Fitting, Grease	1	81028-
14		01580-11210	Nut	1	81028-
15		09311-41237	Bumper, Pedal	1	81028-
16		04020-00616	Pin, Dowel	1	81028-
17		01010-80616	Bolt	1	81028-
18		01643-30623	Washer	1	81028-
19		17A-43-41190	Shim	2	81028-
20		17A-979-2970	Seal	1	81028-

FIG. K2210-001008 Dashboard, Mounting

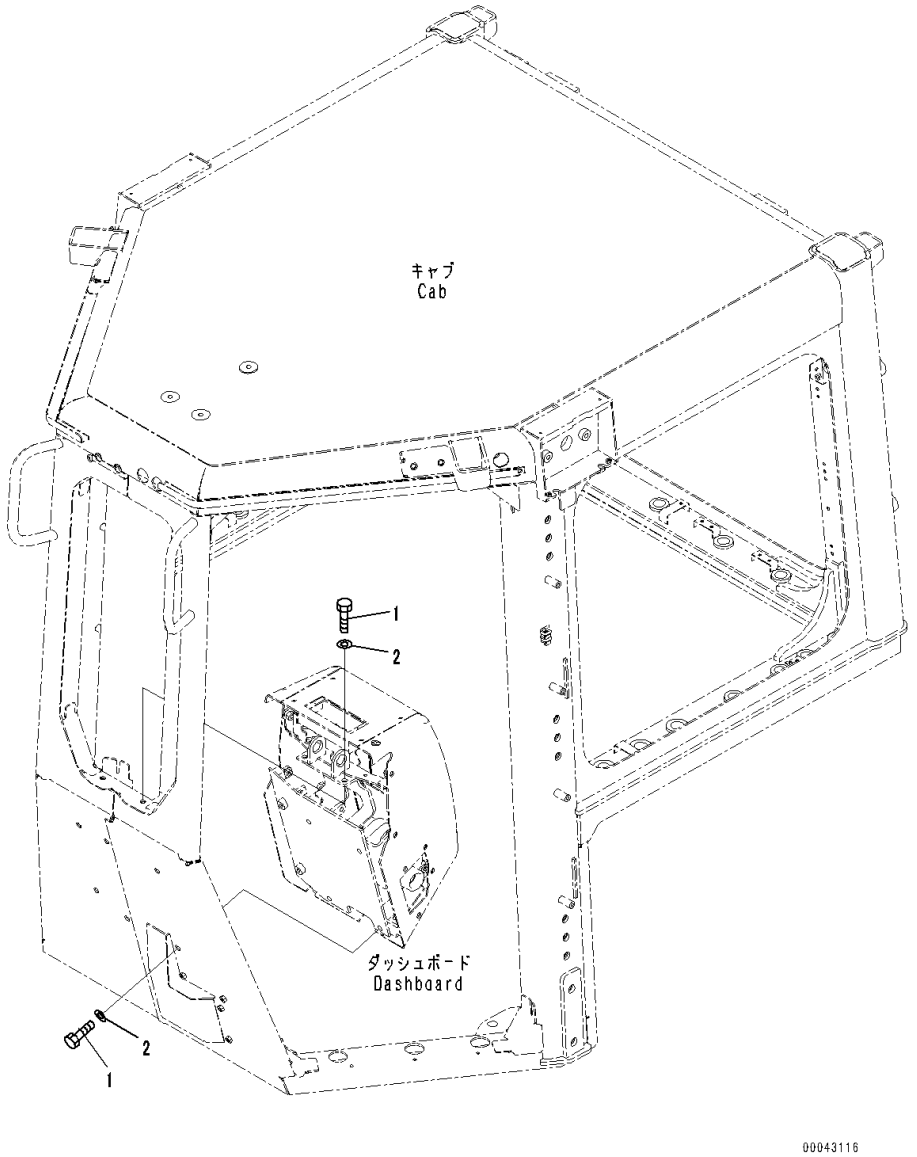

Index	Code	Part Number	Description	Qty	Serial Number
		Note: This list covers following specifications.			
		With Air Conditioner			
		With Air Conditioner, For KOMTRAX			
1		01010-81030	Bolt	8	81028-
2		01643-31032	Washer	8	81028-

FIG. K2210-001009 Dashboard, Duct

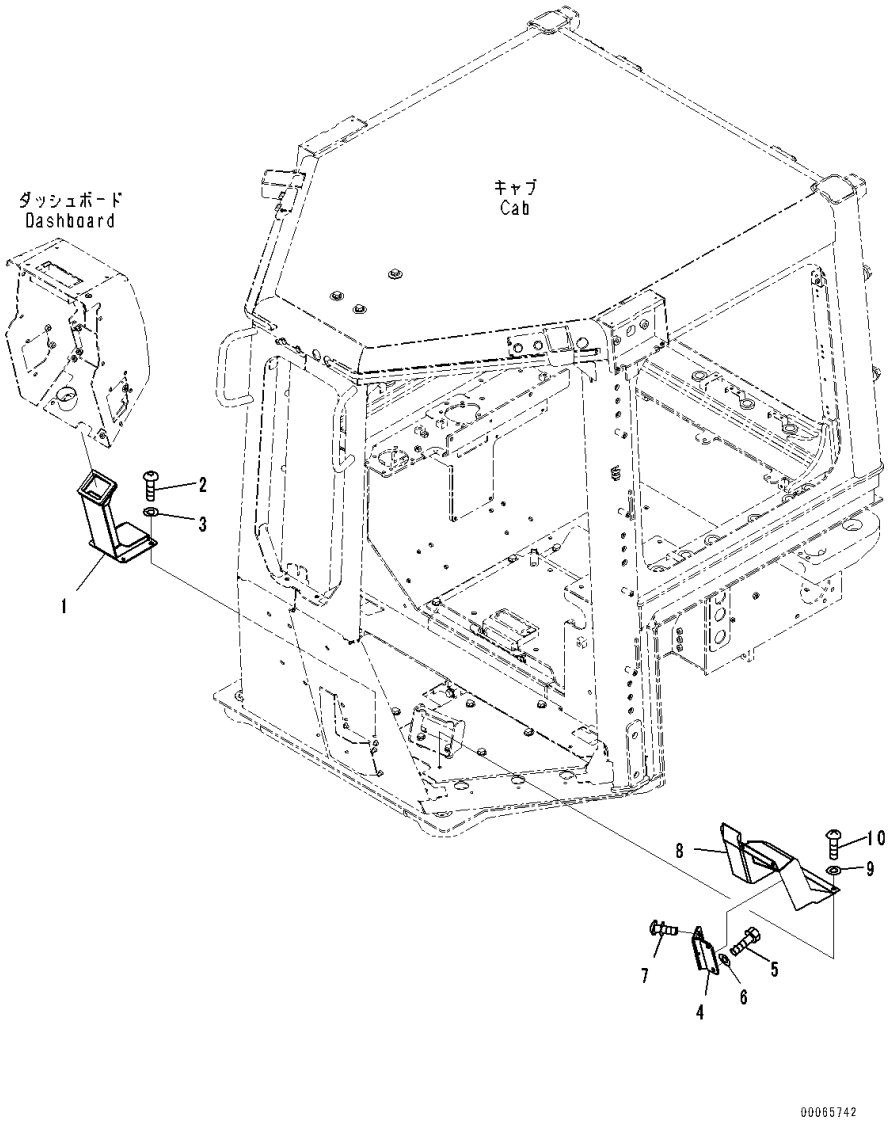

Index	Code	Part Number	Description	Qty	Serial Number
		Note: This list covers following specifications.			
		With Air Conditioner			
		With Air Conditioner, For KOMTRAX			
1		17A-979-2471	Duct	1	81028-
2		01245-00820	Screw	4	81028-
3		01643-70823	Washer	4	81028-
4		17A-06-41721	Bracket	1	81028-
5		01010-80825	Bolt	2	81028-
6		01643-30823	Washer	2	81028-
7		01023-10416	Screw	4	81028-
8		17A-06-41731	Cover	1	81028-
9		01643-70823	Washer	4	81028-
10		01245-00820	Screw	4	81028-

FIG. K2210-002002 Dashboard, With Air Conditioner, For KOMTRAX, KOMTRAX Related Parts

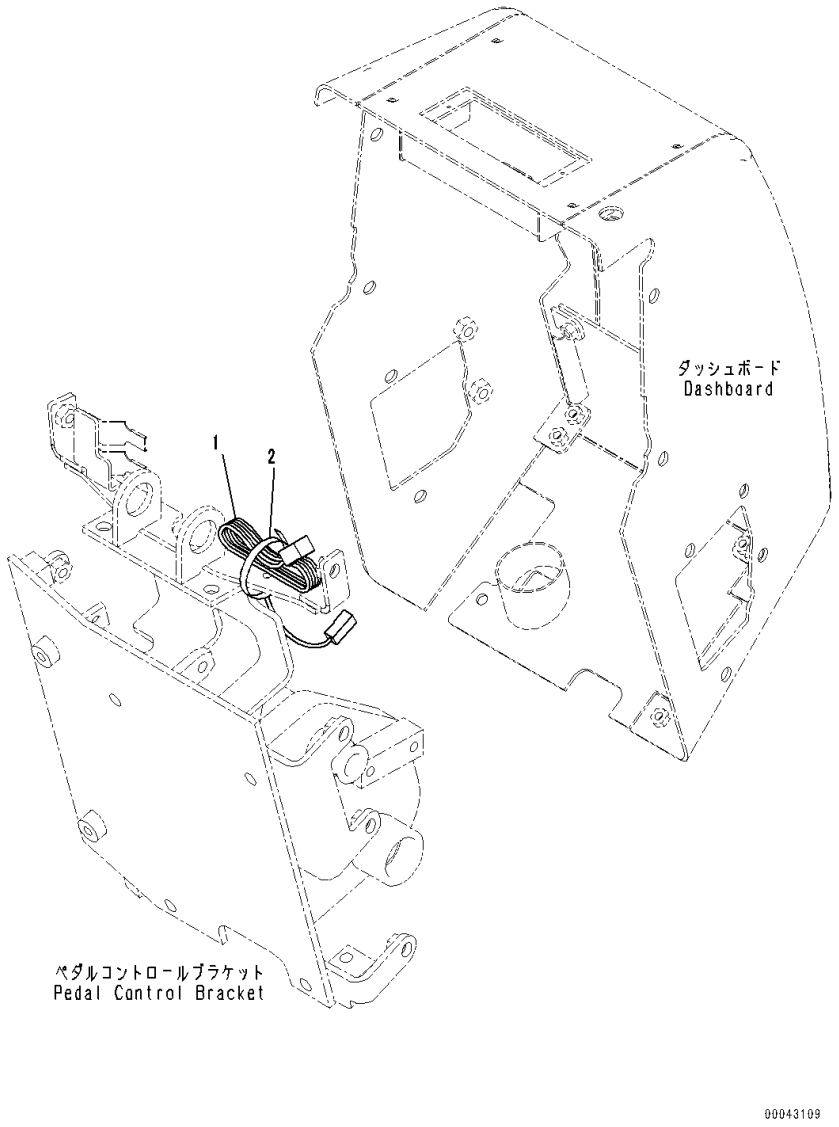

Index	Code	Part Number	Description	Qty	Serial Number
1		8A13-10-1410	Cable	1	81028-
2		20Y-06-24320	Band	1	81028-

FIG. K2290-001001 Floor Frame Electric Wiring Harness

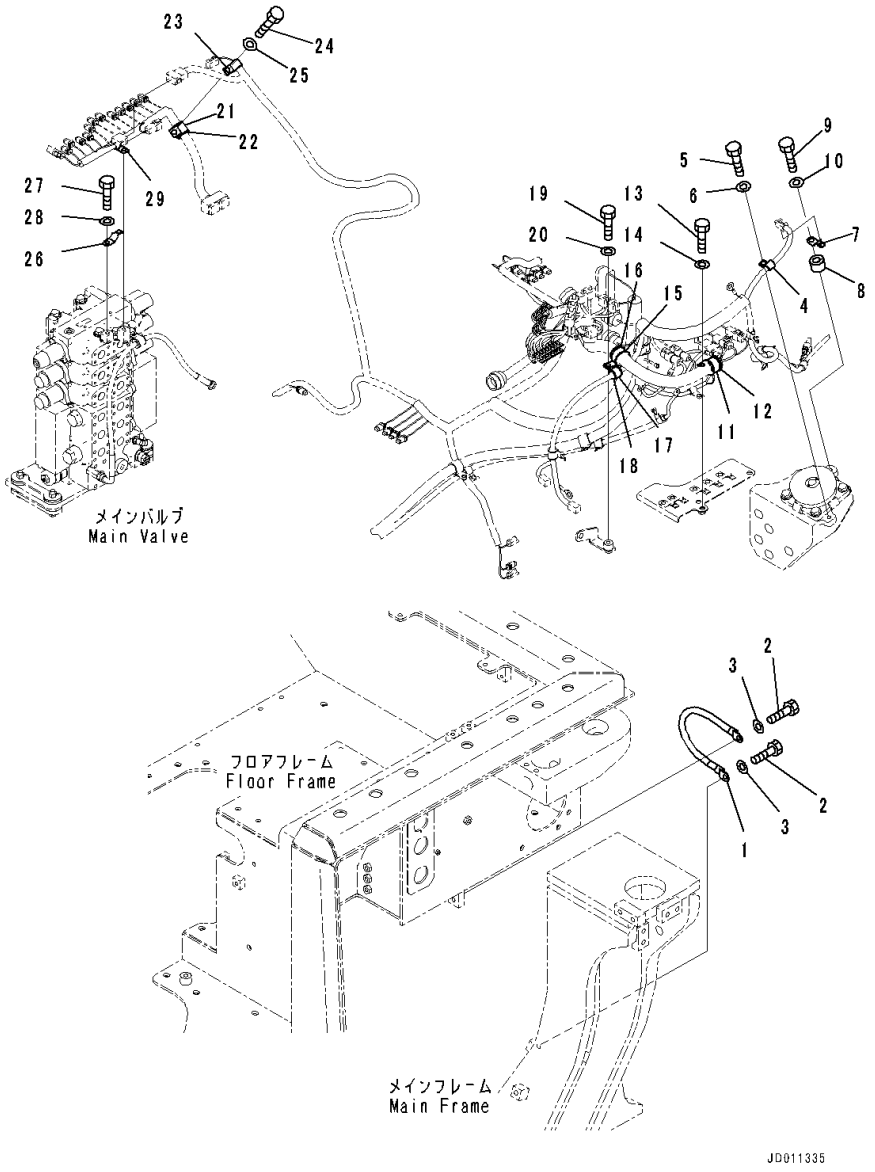

Index	Code	Part Number	Description	Qty	Serial Number
1		175-06-51440	Wire	1	81028-
2		01010-81225	Bolt	2	81028-
3		01643-31232	Washer	2	81028-
4		04434-51412	Clip	1	81028-
5		01010-81225	Bolt	1	81028-
6		01643-31232	Washer	1	81028-
7		08193-21012	Clip	1	81028-
8		144-947-3490	Spacer	1	81028-
9		01010-81240	Bolt	1	81028-
10		01643-31232	Washer	1	81028-
11		04434-53412	Clip	1	81028-
12		07095-20627	Cushion	1	81028-
13		01010-81225	Bolt	1	81028-
14		01643-31232	Washer	1	81028-
15		04434-53412	Clip	1	81028-
16		07095-20627	Cushion	1	81028-
17		04434-51912	Clip	1	81028-
18		07095-20213	Cushion	1	81028-
19		01010-81225	Bolt	1	81028-
20		01643-31232	Washer	1	81028-
21		04434-53412	Clip	1	81028-
22		07095-20627	Cushion	1	81028-
23		04434-51912	Clip	1	81028-
24		01010-81225	Bolt	1	81028-
25		01643-31232	Washer	1	81028-
26		08193-21012	Clip	1	81028-
27		01010-81225	Bolt	1	81028-
28		01643-31232	Washer	1	81028-
29		04434-52312	Clip	1	81028-

FIG. K2910-001001 Dashboard Bracket

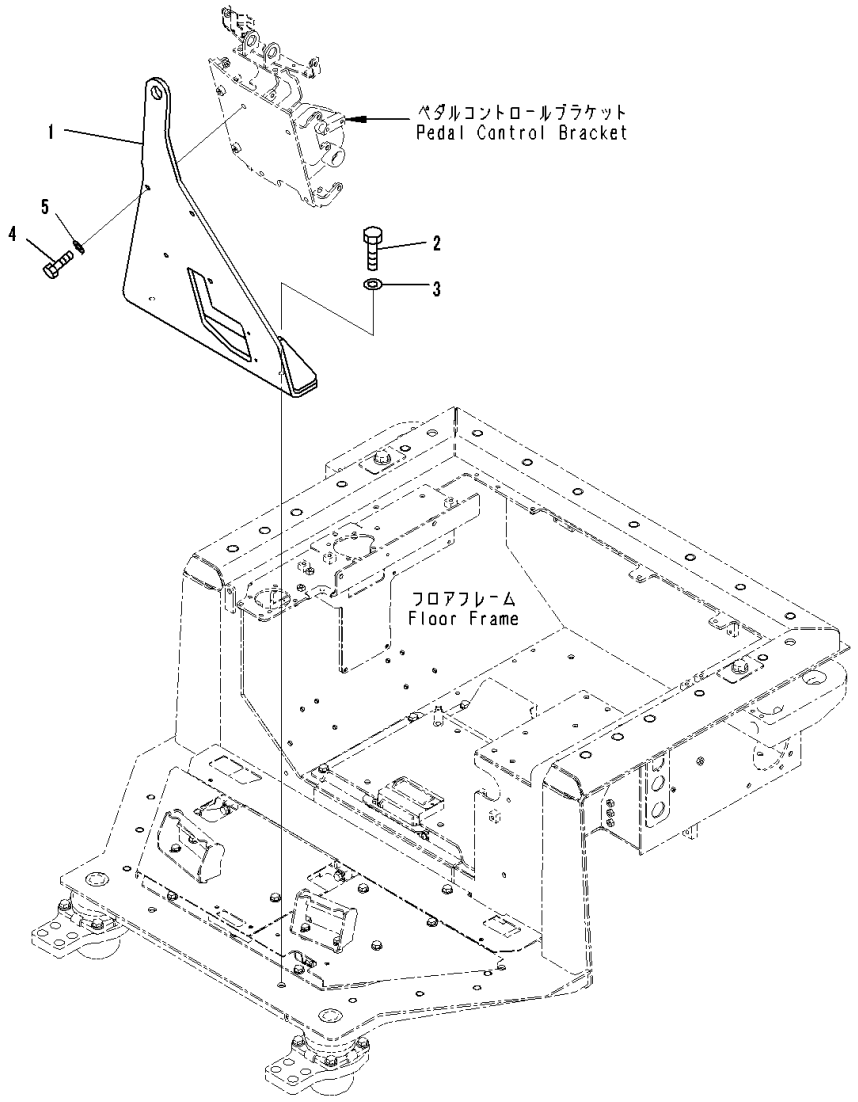

Index	Code	Part Number	Description	Qty	Serial Number
1		17A-54-46432	Bracket	1	81028-
2		01010-81640	Bolt	2	81028-
3		01643-31645	Washer	2	81028-
4		01010-81035	Bolt	4	81028-
5		01643-31032	Washer	4	81028-

GUARDS AND COVERS

FIG. M2111-001001 Dozer Blade Lift Cylinder Support Parts

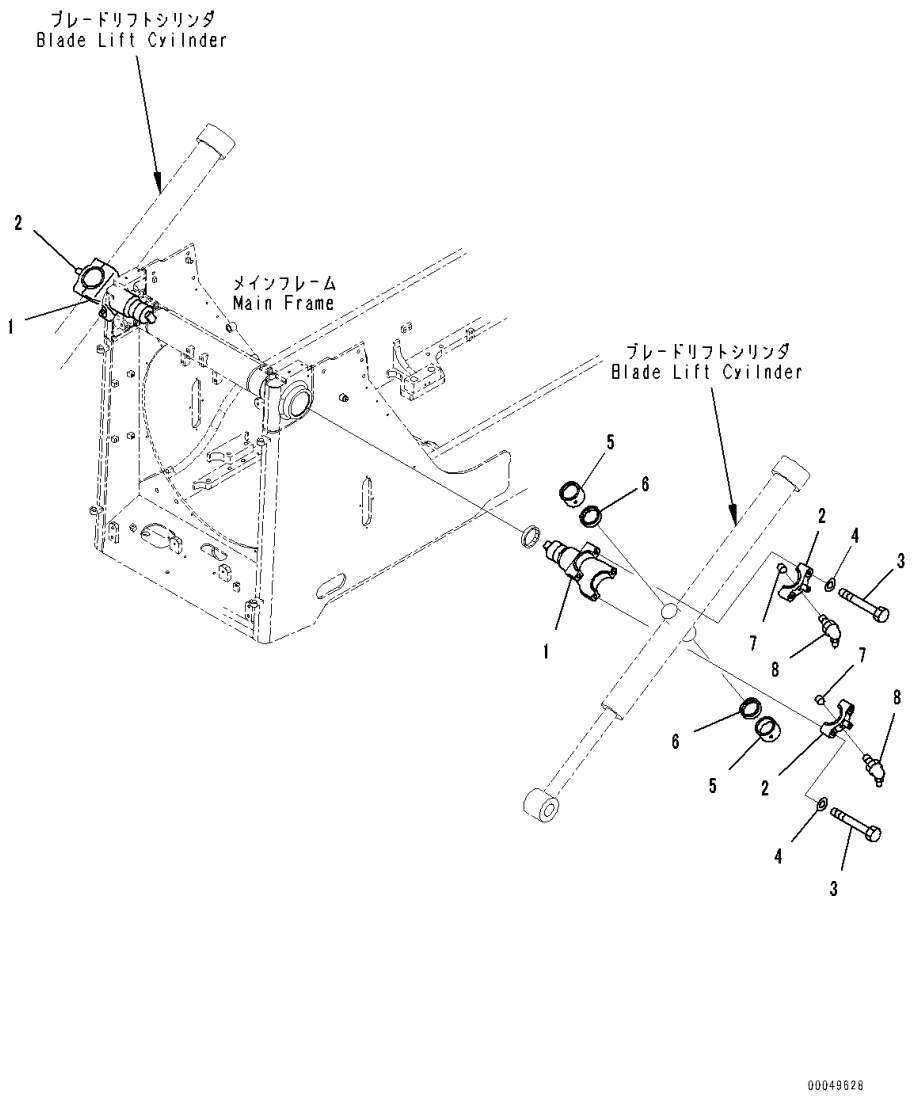

Index	Code	Part Number	Description	Qty	Serial Number
1		17A-61-43210	Yoke	2	81028-
2		17A-61-49122	Cap	4	81028-
3		01010-82095	Bolt	8	81028-
4		01643-32060	Washer	8	81028-
5		175-61-15201	Bushing Assembly	4	81028-
6		07145-00085	Seal, Dust	4	81028-
7		154-61-75750	Pin	4	81028-
8		07020-00675	Fitting, Grease	4	81028-

FIG. M2111-002001 Dozer Blade Lift Cylinder Support Parts, Cylinder Less

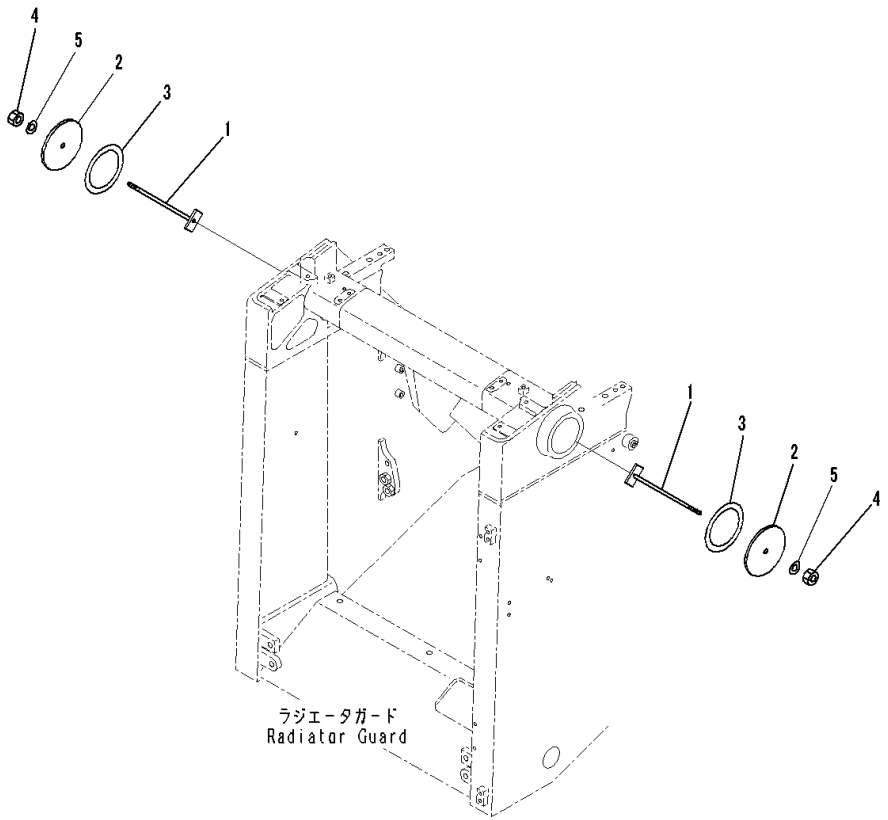

Index	Code	Part Number	Description	Qty	Serial Number
1		17A-54-18141	Rod	2	81028-
2		175-61-15320	Cover	2	81028-
3		175-61-15331	Gasket	2	81028-
4		01580-11210	Nut	4	81028-
5		01643-31232	Washer	2	81028-

FIG. M2113-001001 Radiator Guard Related Parts, Head Lamp

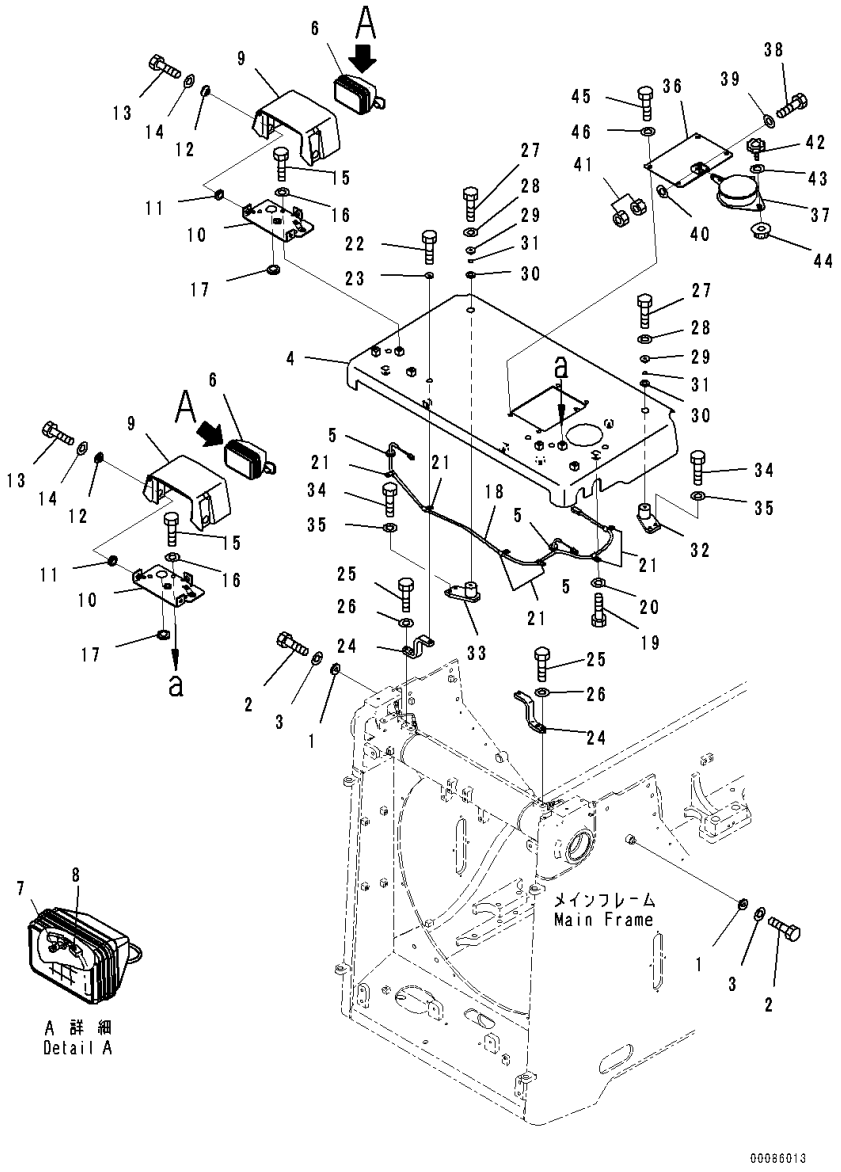

Index	Code	Part Number	Description	Qty	Serial Number
1		21T-09-11330	Washer	2	81028-
2		01010-81230	Bolt	2	81028-
3		01643-31232	Washer	2	81028-
4		17A-54-41922	Cover	1	81028-
5		135-06-34260	Grommet	2	81028-
6		17A-06-17931	Lamp Assembly, Working	2	81028-
7		17A-06-17970	• Bulb, 70watt	1	81028-
8		17A-06-17980	• Sleeve	1	81028-
9		17A-54-41991	Cover	2	81028-
10		17A-54-41981	Bracket	2	81028-
11		175-03-42140	Rubber	6	81028-
12		203-54-14330	Collar	6	81028-
13		01010-81235	Bolt	6	81028-
14		01643-31232	Washer	6	81028-
15		01010-81225	Bolt	6	81028-
16		01643-31232	Washer	6	81028-
17		08037-03614	Grommet	2	81028-
18		17A-06-41231	Wiring Harness	1	81028-
19		01010-81220	Bolt	6	81028-
20		01643-31232	Washer	6	81028-
21		04434-51012	Clip	6	81028-
22		01010-81225	Bolt	2	81028-
23		175-54-34170	Washer	2	81028-
24		17A-54-41941	Bracket	2	81028-
25		01010-81235	Bolt	4	81028-
26		01643-31232	Washer	4	81028-
27		01010-81235	Bolt	2	81028-
28		01643-31232	Washer	2	81028-
29		15B-54-14220	Collar	2	81028-
30		175-54-27350	Spring	4	81028-
31		175-54-28770	Ring	2	81028-
32		17A-03-42581	Bracket	1	81028-
33		17A-03-42591	Bracket	1	81028-
34		01010-81230	Bolt	4	81028-
35		01643-31232	Washer	4	81028-
36		17A-54-41634	Cover	1	81028-
37		17A-54-43332	Cover	1	81028-
38		01010-81050	Bolt	1	81028-
39		01643-31032	Washer	1	81028-
40		01643-31032	Washer	1	81028-

FIG. M2113-001001 Radiator Guard Related Parts, Head Lamp

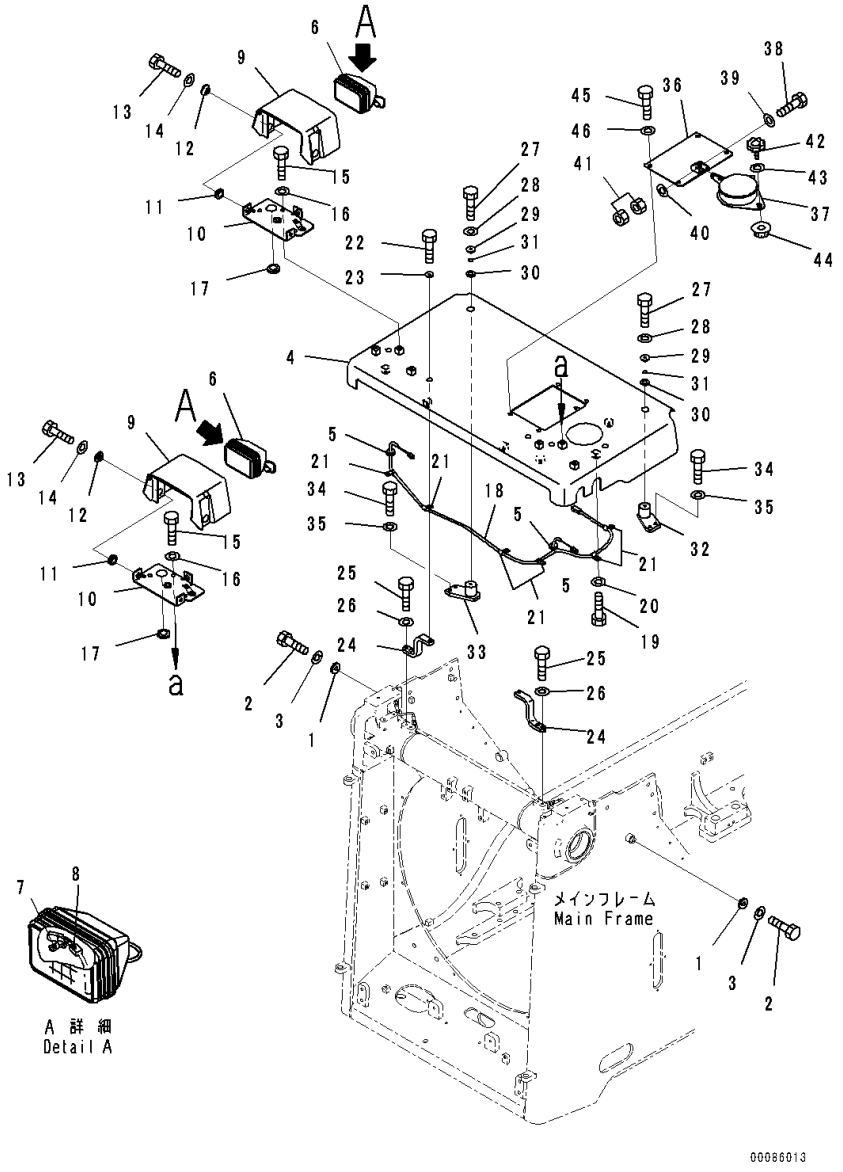

Index	Code	Part Number	Description	Qty	Serial Number
41		01580-11008	Nut	2	81028-
42		195-54-68760	Knob	1	81028-
43		01640-21016	Washer	1	81028-
44		01594-01008	Nut	1	81028-
45		01010-81220	Bolt	4	81028-
46		01643-31232	Washer	4	81028-

FIG. M2113-001002 Radiator Guard Related Parts, Bracket

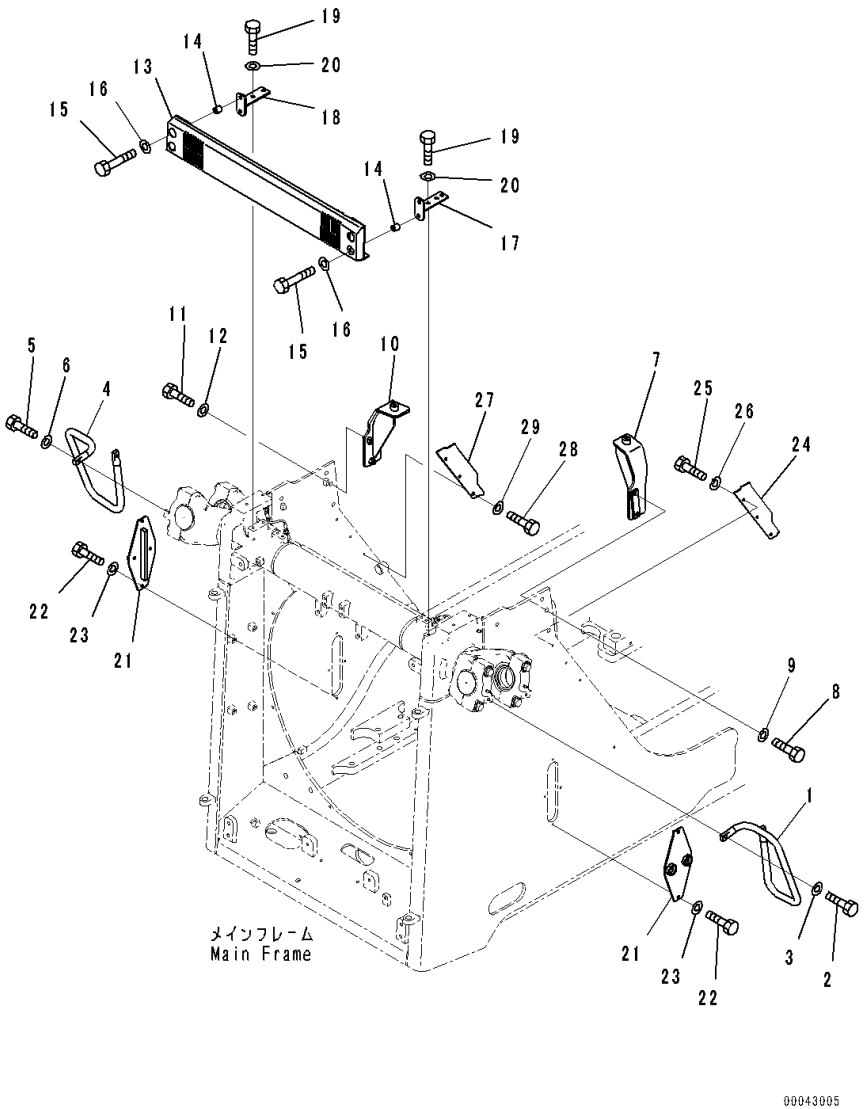

Index	Code	Part Number	Description	Qty	Serial Number
1		17A-54-41812	Grip,LHS	1	81028-
2		01010-81235	Bolt	2	81028-
3		01643-31232	Washer	2	81028-
4		17A-54-41822	Grip,RHS	1	81028-
5		01010-81235	Bolt	2	81028-
6		01643-31232	Washer	2	81028-
7		17A-54-42162	Bracket,LHS	1	81028-
8		01010-81650	Bolt	2	81028-
9		01643-31645	Washer	2	81028-
10		17A-54-42172	Bracket,RHS	1	81028-
11		01010-81650	Bolt	2	81028-
12		01643-31645	Washer	2	81028-
13		17A-54-41611	Mask	1	81028-
14		195-33-11220	Spacer	4	81028-
15		01010-D1250	Bolt	4	81028-
16		01643-71232	Washer	4	81028-
17		17A-54-41671	Bracket,LHS	1	81028-
18		17A-54-41691	Bracket,RHS	1	81028-
19		01010-81225	Bolt	4	81028-
20		01643-31232	Washer	4	81028-
21		17A-54-41192	Cover	2	81028-
22		01010-81020	Bolt	8	81028-
23		01643-31032	Washer	8	81028-
24		17A-54-42461	Cover,LHS	1	81028-
25		01010-81020	Bolt	3	81028-
26		01643-31032	Washer	3	81028-
27		17A-54-42471	Cover,RHS	1	81028-
28		01010-81020	Bolt	3	81028-
29		01643-31032	Washer	3	81028-

FIG. M2113-001003 Radiator Guard Related Parts, Shipping Lock Bracket

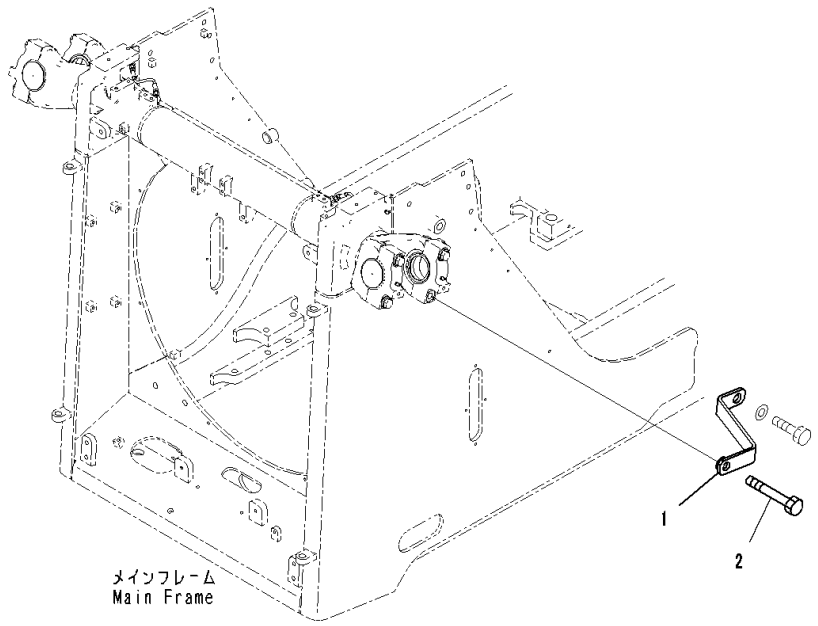

Index	Code	Part Number	Description	Qty	Serial Number
1		17A-61-43120	Bracket	2	81028-
2		01011-82015	Bolt	2	81028-

FIG. M2113-002001 Radiator Guard Related Parts, Landfill Specification, Head Lamp

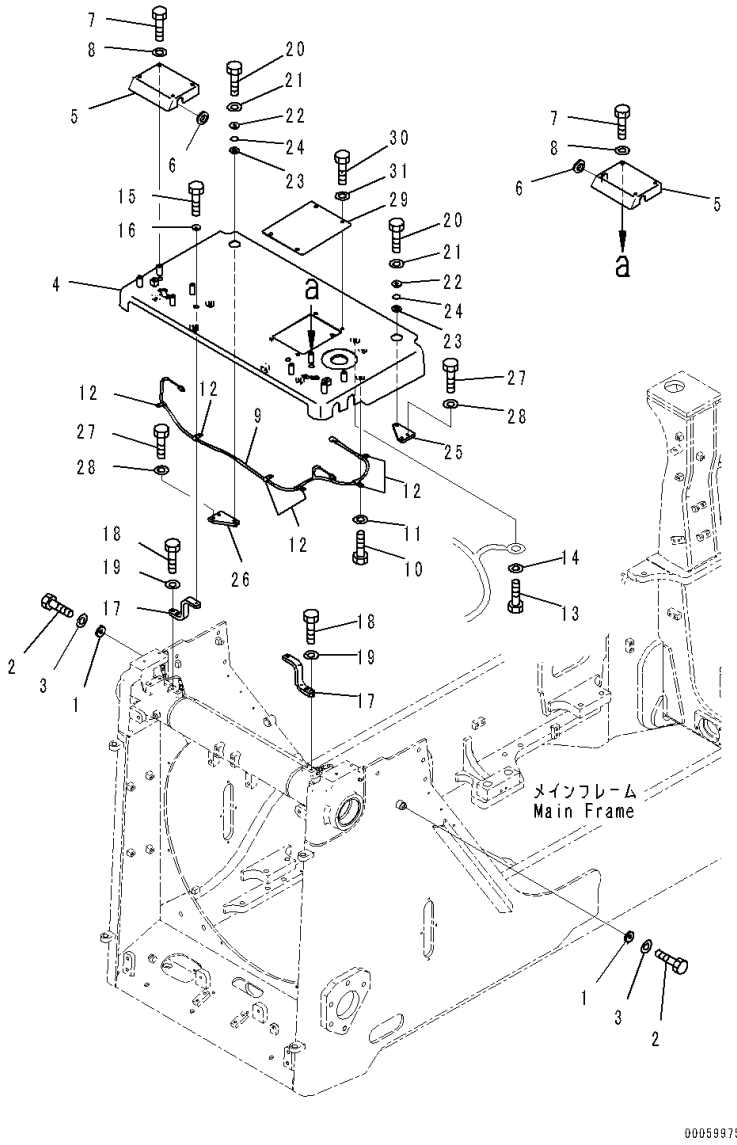

Index	Code	Part Number	Description	Qty	Serial Number
1		21T-09-11330	Washer	2	81028-
2		01010-81230	Bolt	2	81028-
3		01643-31232	Washer	2	81028-
4		17A-54-41310	Cover	1	81028-
5		17A-06-42550	Cover	2	81028-
6		09415-02512	Cap	2	81028-
7		01010-81020	Bolt	8	81028-
8		01643-31032	Washer	8	81028-
9		17A-06-41451	Wiring Harness	1	81028-
10		01010-81220	Bolt	6	81028-
11		01643-31232	Washer	6	81028-
12		04434-51412	Clip	6	81028-
13		01010-81220	Bolt	1	81028-
14		01643-31232	Washer	1	81028-
15		01010-81225	Bolt	2	81028-
16		175-54-34170	Washer	2	81028-
17		17A-54-41641	Bracket	2	81028-
18		01010-81235	Bolt	4	81028-
19		01643-31232	Washer	4	81028-
20		01010-81245	Bolt	2	81028-
21		01643-31232	Washer	2	81028-
22		15B-54-14220	Collar	2	81028-
23		175-54-27350	Spring	4	81028-
24		175-54-28770	Ring	2	81028-
25		17A-03-41581	Bracket	1	81028-
26		17A-03-41591	Bracket	1	81028-
27		01010-81230	Bolt	4	81028-
28		01643-31232	Washer	4	81028-
29		17A-54-41631	Cover	1	81028-
30		01010-81220	Bolt	4	81028-
31		01643-31232	Washer	4	81028-

FIG. M2113-002002 Radiator Guard Related Parts, Landfill Specification, Bracket

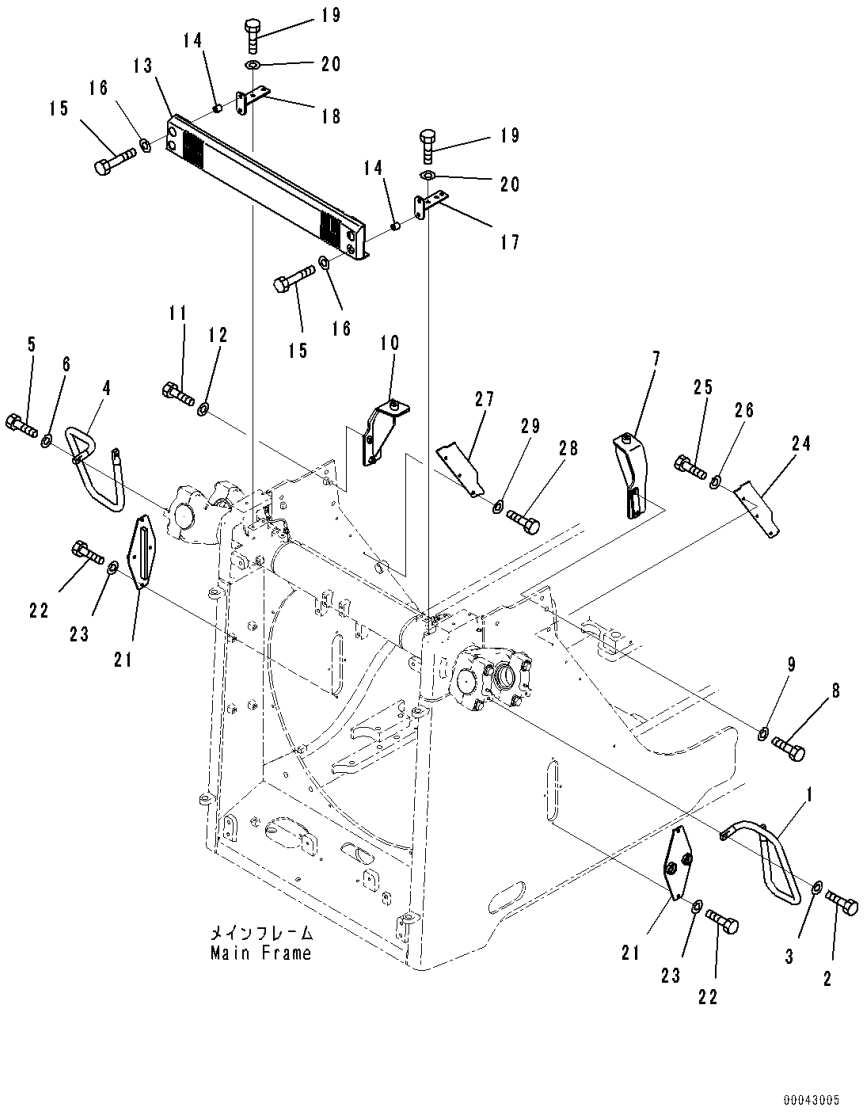

Index	Code	Part Number	Description	Qty	Serial Number
1		17A-54-41812	Grip,LHS	1	81028-
2		01010-81235	Bolt	2	81028-
3		01643-31232	Washer	2	81028-
4		17A-54-41822	Grip,RHS	1	81028-
5		01010-81235	Bolt	2	81028-
6		01643-31232	Washer	2	81028-
7		17A-54-42161	Bracket,LHS	1	81028-
8		01010-81650	Bolt	2	81028-
9		01643-31645	Washer	2	81028-
10		17A-54-42171	Bracket,RHS	1	81028-
11		01010-81650	Bolt	2	81028-
12		01643-31645	Washer	2	81028-
13		17A-54-49610	Mask	1	81028-
14		195-33-11220	Spacer	4	81028-
15		01010-D1250	Bolt	4	81028-
16		01643-71232	Washer	4	81028-
17		17A-54-41671	Bracket,LHS	1	81028-
18		17A-54-41691	Bracket,RHS	1	81028-
19		01010-81225	Bolt	4	81028-
20		01643-31232	Washer	4	81028-
21		17A-54-41192	Cover	2	81028-
22		01010-81020	Bolt	8	81028-
23		01643-31032	Washer	8	81028-
24		17A-54-42461	Cover,LHS	1	81028-
25		01010-81020	Bolt	3	81028-
26		01643-31032	Washer	3	81028-
27		17A-54-42471	Cover,RHS	1	81028-
28		01010-81020	Bolt	3	81028-
29		01643-31032	Washer	3	81028-

FIG. M2113-002003 Radiator Guard Related Parts, Landfill Specification, Shipping Lock Bracket

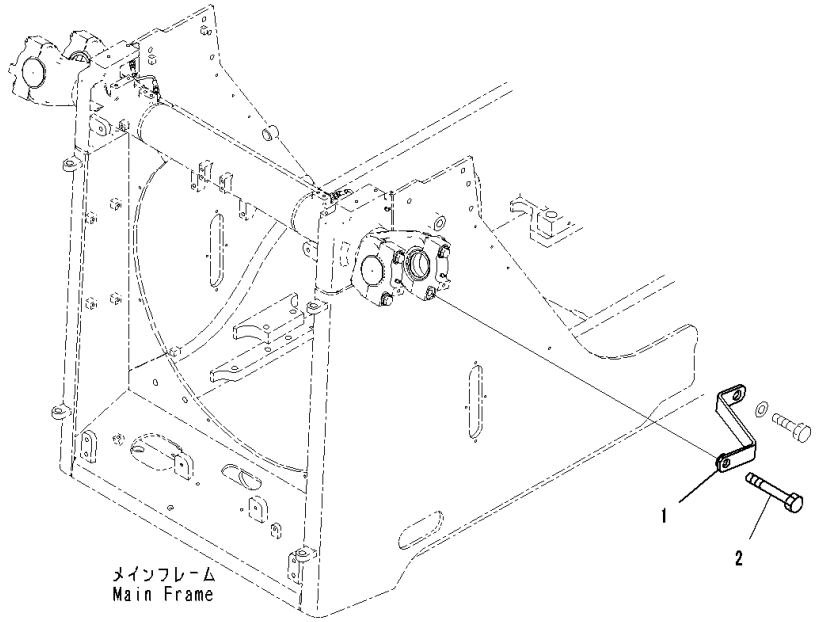

Index	Code	Part Number	Description	Qty	Serial Number
1		17A-61-43120	Bracket	2	81028-
2		01011-82015	Bolt	2	81028-

FIG. M2113-002004 Radiator Guard Related Parts, Landfill Specification, Striker

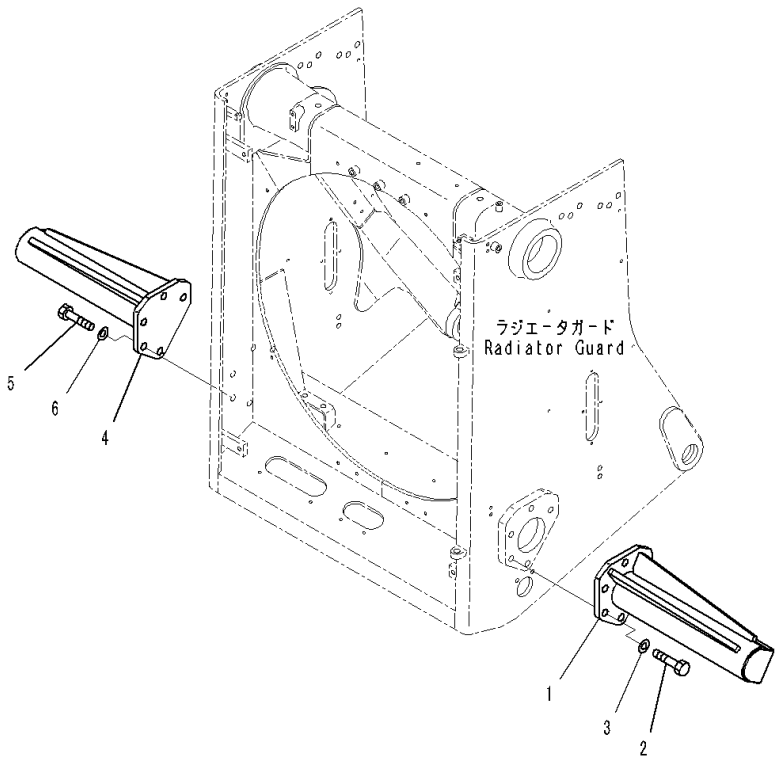

Index	Code	Part Number	Description	Qty	Serial Number
1		17A-54-49111	Striker	1	81028-
2		01010-82460	Bolt	5	81028-
3		01643-32460	Washer	5	81028-
4		17A-54-49121	Striker	1	81028-
5		01010-82460	Bolt	5	81028-
6		01643-32460	Washer	5	81028-

FIG. M2120-001001 Radiator Mask, Lattice Type

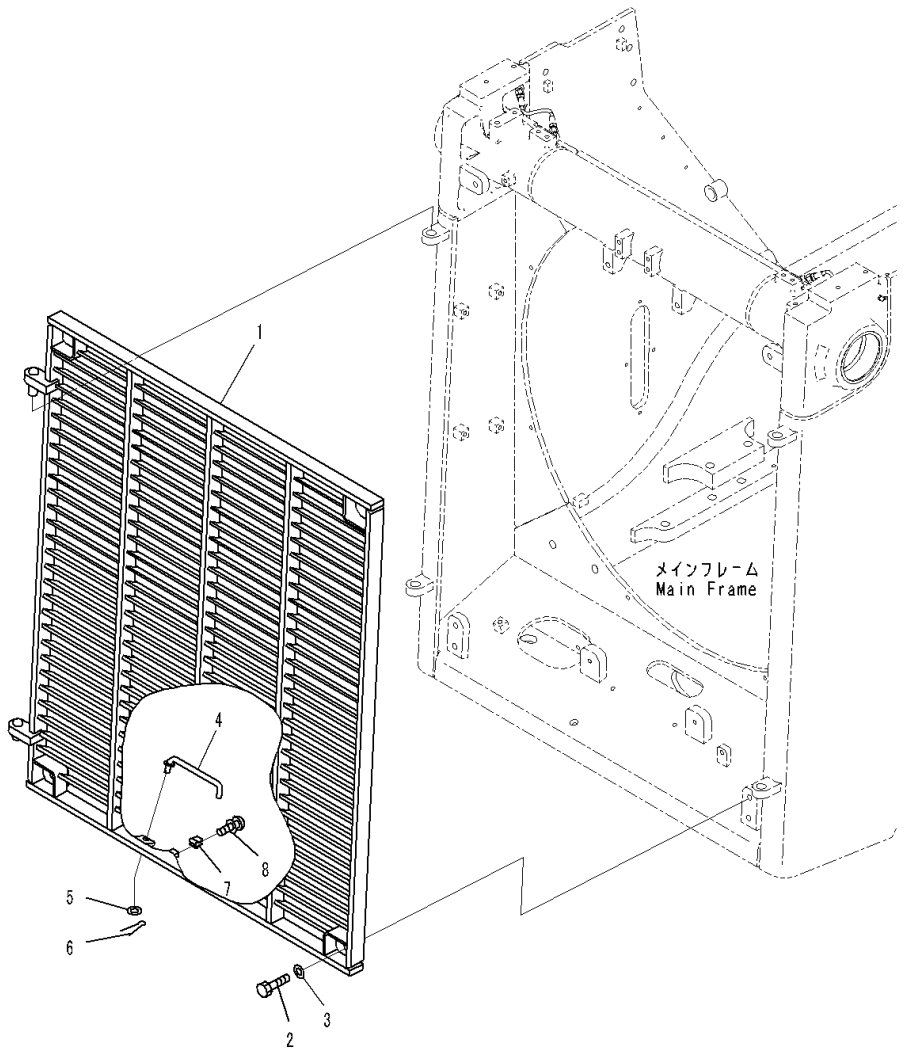

Index	Code	Part Number	Description	Qty	Serial Number
1		17A-54-41511	Mask	1	81028-
2		01010-81645	Bolt	4	81028-
3		01643-31645	Washer	4	81028-
4		17A-54-41711	Bar	1	81028-
5		01643-31232	Washer	1	81028-
6		04050-14025	Pin, Cotter	1	81028-
7		20R-54-11460	Spring	1	81028-
8		01023-10510	Screw	2	81028-

FIG. M2120-002001 Radiator Mask, Perforated Type

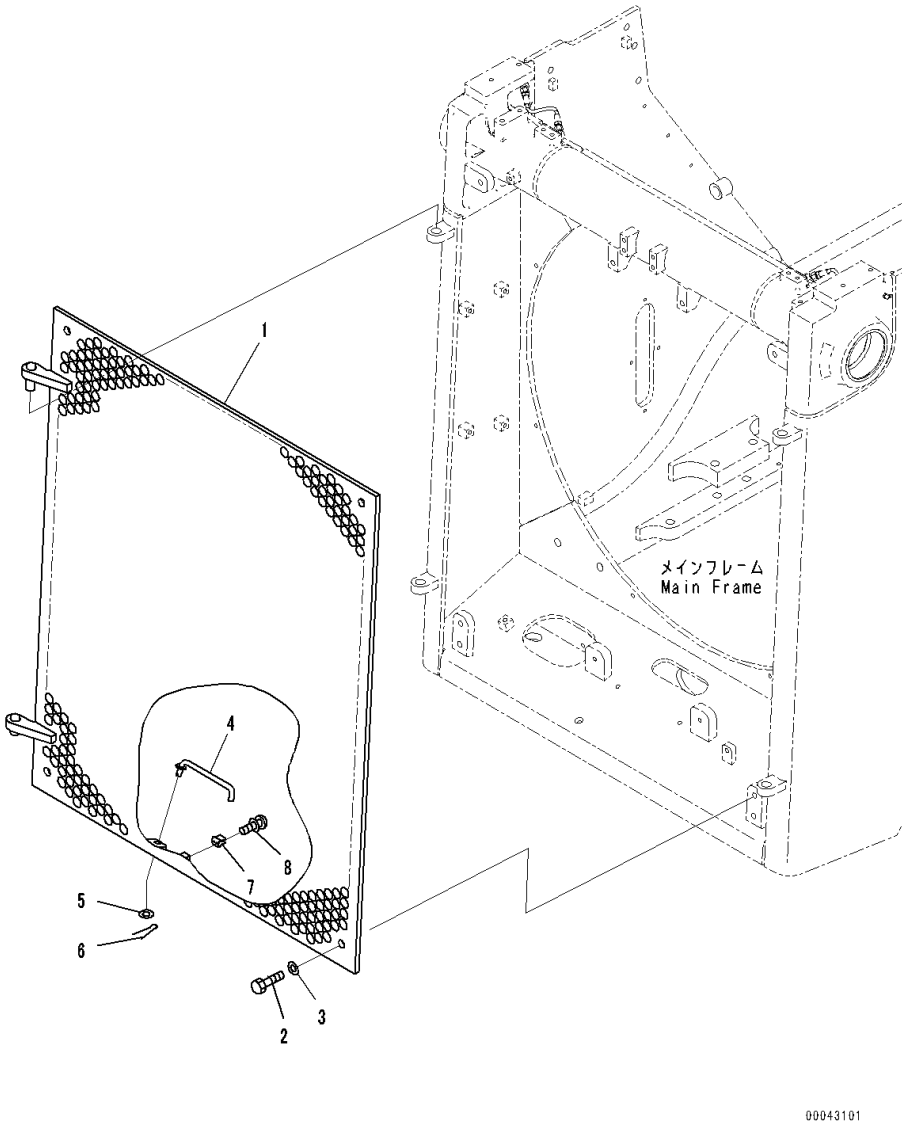

Index	Code	Part Number	Description	Qty	Serial Number
1		17A-54-41521	Mask	1	81028-
2		01010-81655	Bolt	4	81028-
3		01643-31645	Washer	4	81028-
4		17A-54-41711	Bar	1	81028-
5		01643-31232	Washer	1	81028-
6		04050-14025	Pin, Cotter	1	81028-
7		20R-54-11460	Spring	1	81028-
8		01023-10510	Screw	2	81028-

FIG. M2120-004001 Radiator Mask, Perforated Type, Landfill Specification

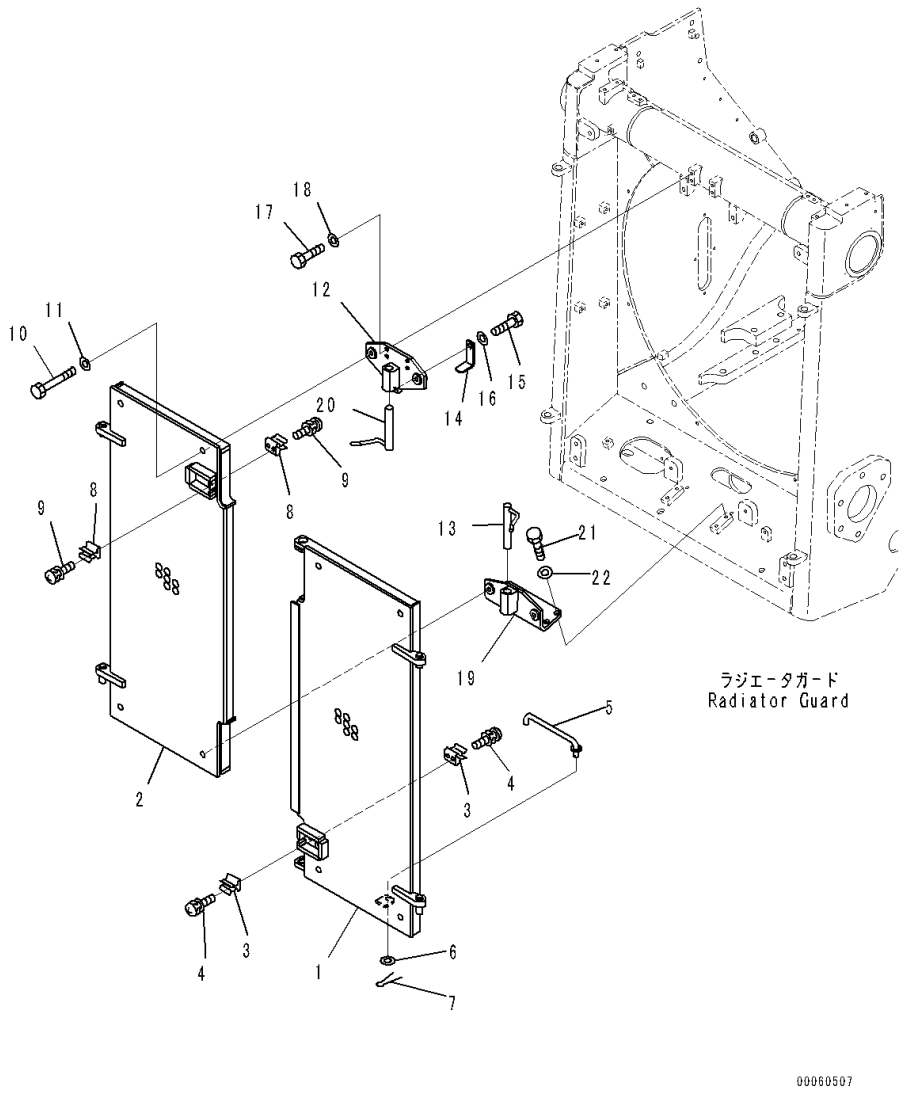

Index	Code	Part Number	Description	Qty	Serial Number
1		17A-54-49151	Mask	1	81028-
2		17A-54-49161	Mask	1	81028-
3		20R-54-11460	Spring	2	81028-
4		01023-10510	Screw	4	81028-
5		17A-54-41711	Bar	2	81028-
6		01643-31232	Washer	2	81028-
7		04050-14025	Pin, Cotter	2	81028-
8		20R-54-11460	Spring	2	81028-
9		01023-10510	Screw	4	81028-
10		01010-81685	Bolt	8	81028-
11		01643-31645	Washer	8	81028-
12		17A-61-42921	Bracket	1	81028-
13		17A-54-27180	Bracket	1	81028-
14		17A-54-49190	Bracket	1	81028-
15		01010-81225	Bolt	1	81028-
16		01643-31232	Washer	1	81028-
17		01010-81245	Bolt	4	81028-
18		01643-31232	Washer	4	81028-
19		17A-54-49170	Bracket	1	81028-
20		17A-54-27180	Bracket	1	81028-
21		01010-81230	Bolt	4	81028-
22		01643-31232	Washer	4	81028-

FIG. M2120-005001 Radiator Mask, Perforated Type, Reinforced Type

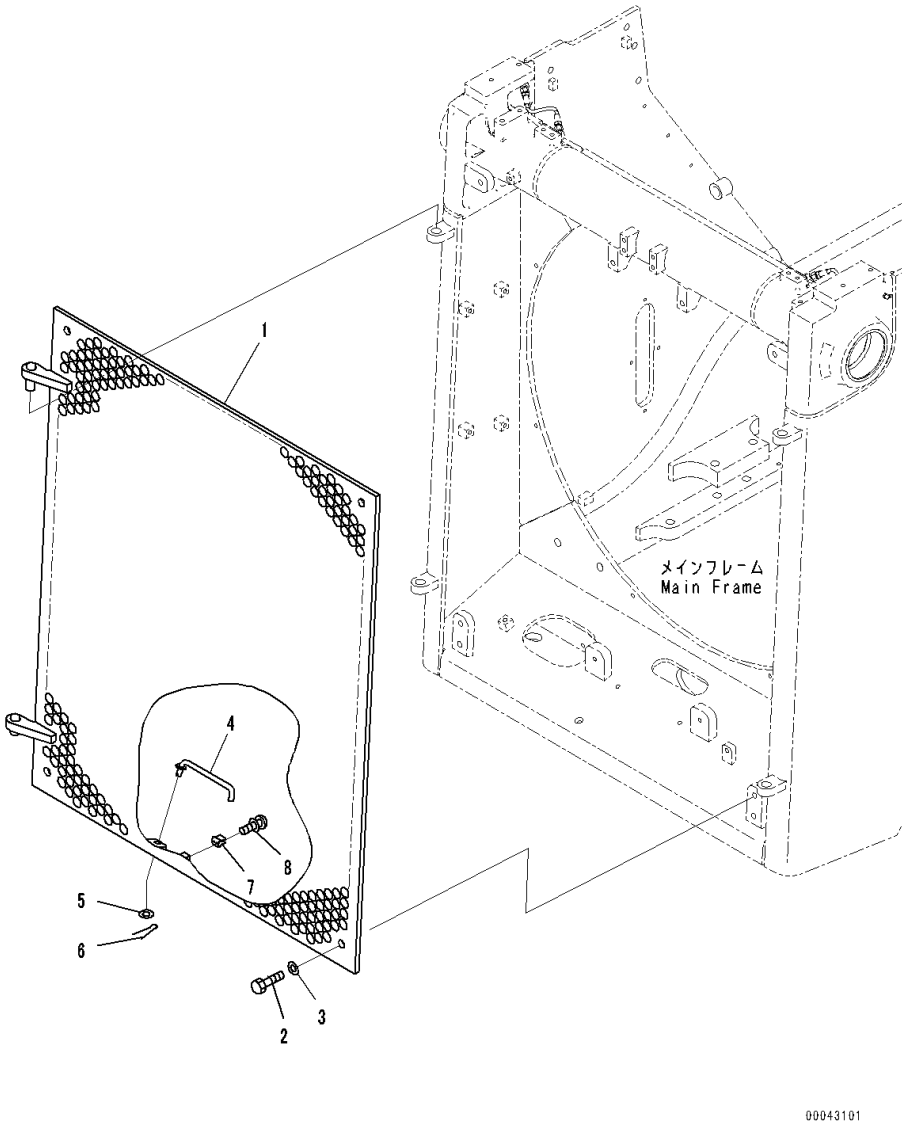

Index	Code	Part Number	Description	Qty	Serial Number
1		17A-54-49430	Mask	1	81028-
2		01010-81660	Bolt	4	81028-
3		01643-31645	Washer	4	81028-
4		17A-54-41711	Bar	1	81028-
5		01643-31232	Washer	1	81028-
6		04050-14025	Pin, Cotter	1	81028-
7		20R-54-11460	Spring	1	81028-
8		01023-10510	Screw	2	81028-

FIG. M2140-001001 Engine Hood and Side Cover Group, Hood

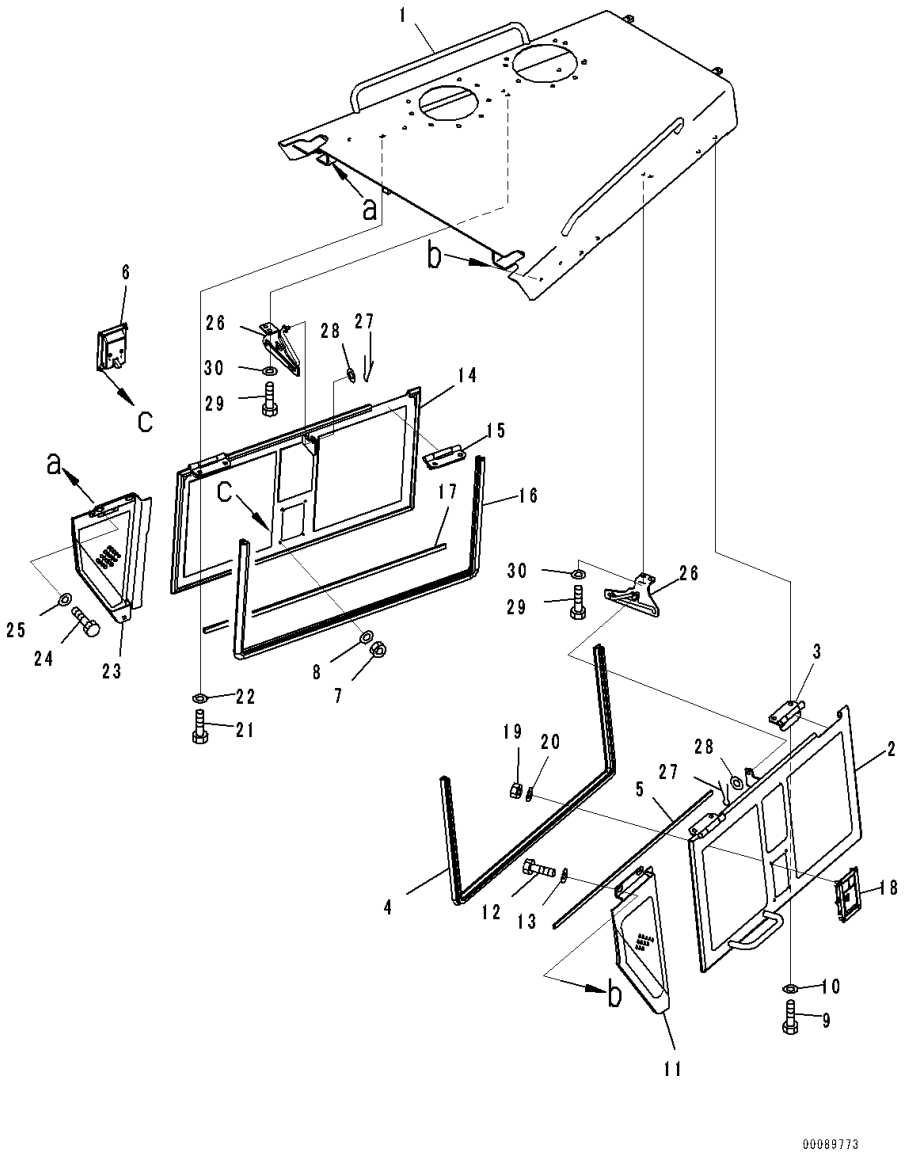

Index	Code	Part Number	Description	Qty	Serial Number
		Note: This list covers following specifications.			
		Perforated Type			
		Perforated Type, Landfill Specification			
		Perforated Type, For Engine With Coolant Heater			
1		17A-54-42191	Hood	1	81028-
		17A-54-42214	Cover,LHS	1	81028-
2	C1		• Cover	1	81028-
3		17A-54-42390	• • Hinge,Welded	2	81028-
4		17A-54-42610	• Seal	1	81028-
5		17A-54-42660	• Seal	1	81028-
6		198-54-55990	• Lock Assembly	1	81028-
7		01580-10806	• Nut	4	81028-
8		01643-30823	• Washer	4	81028-
9		01010-81225	Bolt	4	81028-
10		01643-31232	Washer	4	81028-
11		17A-54-42413	Cover	1	81028-
12		01010-D1230	Bolt	2	81028-
13		17A-54-42370	Washer	2	81028-
		17A-54-42224	Cover	1	81028-
14	C1		• Cover	1	81028-
15		17A-54-42390	• • Hinge,Welded	2	81028-
16		17A-54-42610	• Seal	1	81028-
17		17A-54-42660	• Seal	1	81028-
18		198-54-55990	• Lock Assembly	1	81028-
19		01580-10806	• Nut	4	81028-
20		01643-30823	• Washer	4	81028-
21		01010-81225	Bolt	4	81028-
22		01643-31232	Washer	4	81028-
23		17A-54-42423	Cover	1	81028-
24		01010-D1230	Bolt	2	81028-
25		17A-54-42370	Washer	2	81028-
26		17A-54-42362	Bracket	2	81028-
27		04050-13020	Pin, Cotter	2	81028-
28		01643-31232	Washer	2	81028-
29		01010-81225	Bolt	4	81028-
30		01643-31232	Washer	4	81028-

FIG. M2140-001002 Engine Hood and Side Cover Group, Inner Parts

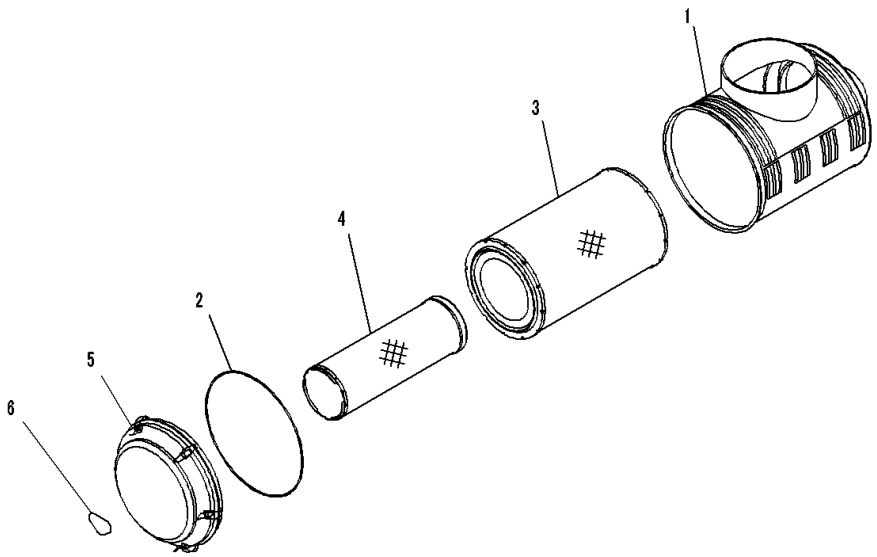

Index	Code	Part Number	Description	Qty	Serial Number
		Note: This list covers following specifications.			
		Perforated Type			
		Perforated Type, Landfill Specification			
		Perforated Type, For Engine With Coolant Heater			
		6240-81-7402	Air Cleaner Assembly	1	81028-
1		6240-81-7411	• Body	1	81028-
		600-185-6100	• Element Assembly	1	81028-
2		600-184-1671	• • O-ring	1	81028-
3		600-185-6110	• • Element	1	81028-
4	C1		• • Element	1	81028-
5		600-184-1632	• Cover	1	81028-
6		600-184-2810	• Plate, Mark	1	81028-

FIG. M2140-001003 Engine Hood and Side Cover Group, Air Cleaner

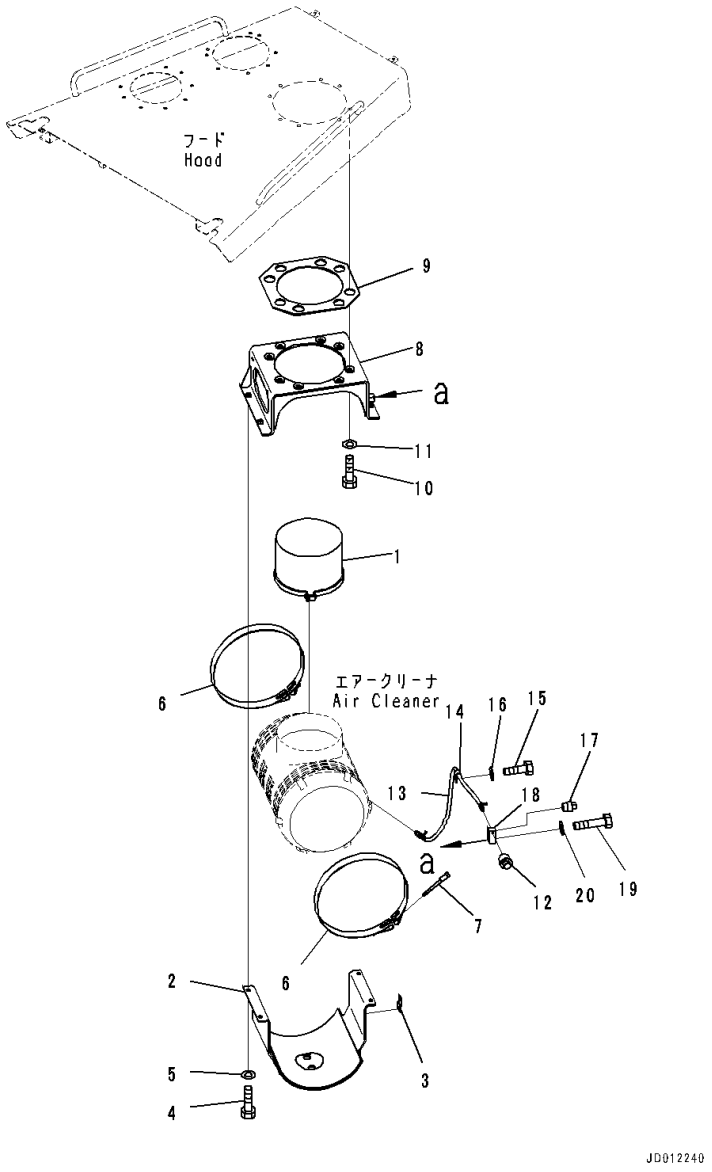

Index	Code	Part Number	Description	Qty	Serial Number
		Note: This list covers following specifications.			
		Perforated Type			
		Perforated Type, Landfill Specification			
		Perforated Type, For Engine With Coolant Heater			
1		600-183-7521	Air Cleaner	1	81028-
2		17A-01-41311	Bracket	1	81028-
3		08193-21012	• Clip	1	81028-
4		01010-81240	Bolt	4	81028-
5		01643-31232	Washer	4	81028-
6		6240-11-9910	Band	2	81028-
7		6643-11-4641	Bolt	2	81028-
8		17A-01-41321	Cover	1	81028-
9		17A-01-41330	Sheet	1	81028-
10		01010-81240	Bolt	8	81028-
11		01643-31232	Washer	8	81028-
12		08672-01000	Indicator, Dust	1	81028-
13		08671-70100	Hose	1	81028-
14		04434-51412	Clip	1	81028-
15		01010-81225	Bolt	1	81028-
16		01643-31232	Washer	1	81028-
17		07042-70108	Plug	1	81028-
18		17A-01-41341	Block	1	81028-
19		01010-81250	Bolt	1	81028-
20		01643-31232	Washer	1	81028-

FIG. M2140-001004 Engine Hood and Side Cover Group, Wiring Harness

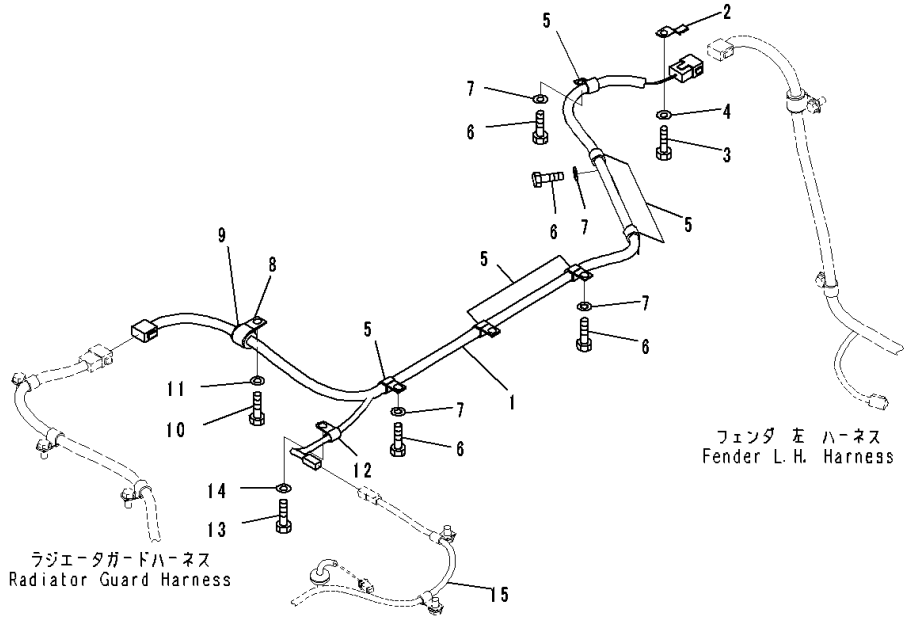

Index	Code	Part Number	Description	Qty	Serial Number
		Note: This list covers following specifications.			
		Perforated Type			
		Perforated Type, Landfill Specification			
		Perforated Type, For Engine With Coolant Heater			
1		17A-06-41492	Wiring Harness	1	81028-
2		08193-21012	Clip	1	81028-
3		01010-81225	Bolt	1	81028-
4		01643-31232	Washer	1	81028-
5		04434-51712	Clip	6	81028-
6		01010-81225	Bolt	6	81028-
7		01643-31232	Washer	6	81028-
8		04434-52712	Clip	1	81028-
9		07095-20418	Cushion	1	81028-
10		01010-81225	Bolt	1	81028-
11		01643-31232	Washer	1	81028-
12		600-051-3100	Clip	1	81028-
13		01010-81225	Bolt	1	81028-
14		01643-31232	Washer	1	81028-
15		(17A-06-41231)	Wiring Harness(Refer to Page 720)		-

FIG. M2140-001005 Engine Hood and Side Cover Group, Perforated Type, Side Cover Bottom and Mounting

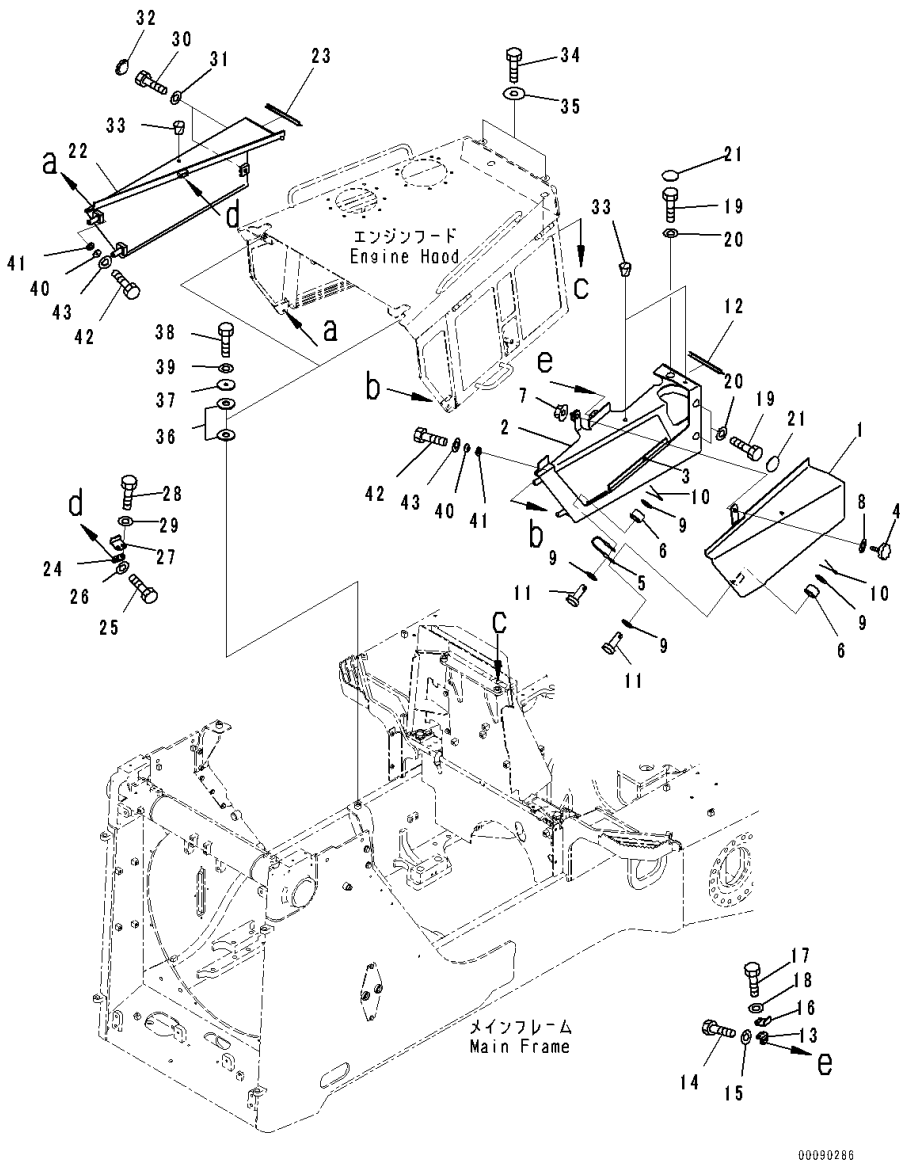

Index	Code	Part Number	Description	Qty	Serial Number
		17A-54-41412	Cover Assembly,LHS	1	81028-
	C1		• Cover Assembly,LHS	1	81028-
1		17A-54-42572	• • Cover	1	81028-
2		17A-54-42584	• • Cover,Welded	1	81028-
3		17A-54-42670	• • • Hinge,Welded	1	81028-
4		195-54-68760	• • Knob	1	81028-
5		418-54-21390	• • Wire	1	81028-
6		424-54-14380	• • Collar	2	81028-
7		01594-01008	• • Nut	1	81028-
8		01640-21016	• • Washer	1	81028-
9		01643-31032	• • Washer	4	81028-
10		04050-13020	• • Pin, Cotter	2	81028-
11		04205-11028	• • Pin	2	81028-
12		17A-54-44940	• Seal	1	81028-
13		17M-54-43210	• Bracket	1	81028-
14		01010-81025	• Bolt	2	81028-
15		01643-31032	• Washer	2	81028-
16		17A-54-42860	• Bracket	1	81028-
17		01010-81025	• Bolt	2	81028-
18		01643-31032	• Washer	2	81028-
19		01010-81225	Bolt	3	81028-
20		01643-31232	Washer	3	81028-
21		195-54-42981	Cap	3	81028-
		17A-54-41422	Cover Assembly,RHS	1	81028-
22	C1		• Cover	1	81028-
23		17A-54-44940	• Seal	1	81028-
24		17M-54-43210	• Bracket	1	81028-
25		01010-81025	• Bolt	2	81028-
26		01643-31032	• Washer	2	81028-
27		17A-54-42860	• Bracket	1	81028-
28		01010-81025	• Bolt	2	81028-
29		01643-31032	• Washer	2	81028-
30		01010-81225	Bolt	2	81028-
31		01643-31232	Washer	2	81028-
32		195-54-42981	Cap	2	81028-
33		07049-01215	Plug	3	81028-
34		01010-81660	Bolt	2	81028-
35		21T-09-11330	Washer	2	81028-
36		195-54-46180	Plate	4	81028-
37		6930-21-4120	Plate	2	81028-

FIG. M2140-001005 Engine Hood and Side Cover Group, Perforated Type, Side Cover Bottom and Mounting

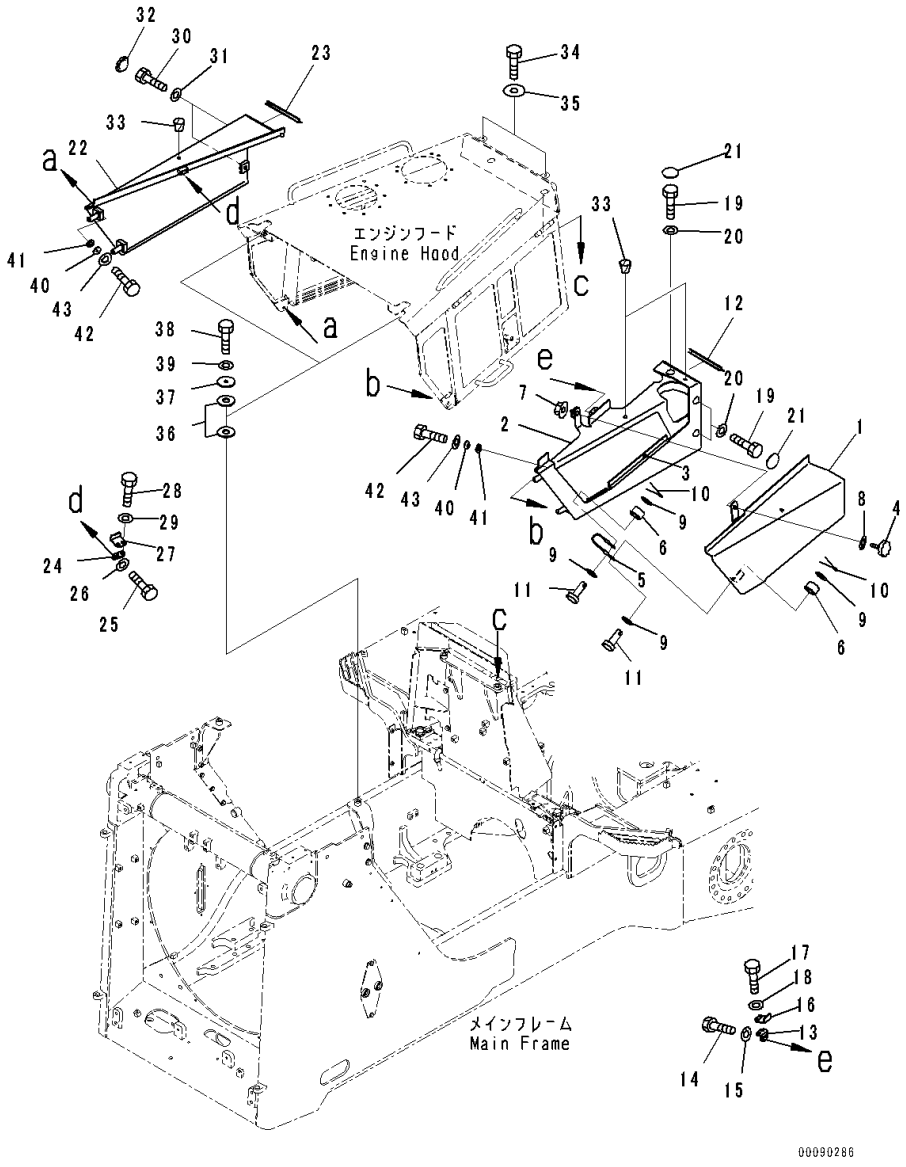

Index	Code	Part Number	Description	Qty	Serial Number
38		01010-81645	Bolt	2	81028-
39		01643-31645	Washer	2	81028-
40		17A-54-42380	Collar	2	81028-
41		17A-54-42350	Spacer	2	81028-
42		01010-81230	Bolt	2	81028-
43		01643-31232	Washer	2	81028-

FIG. M2140-001006 Engine Hood and Side Cover Group, Air Cleaner Hose

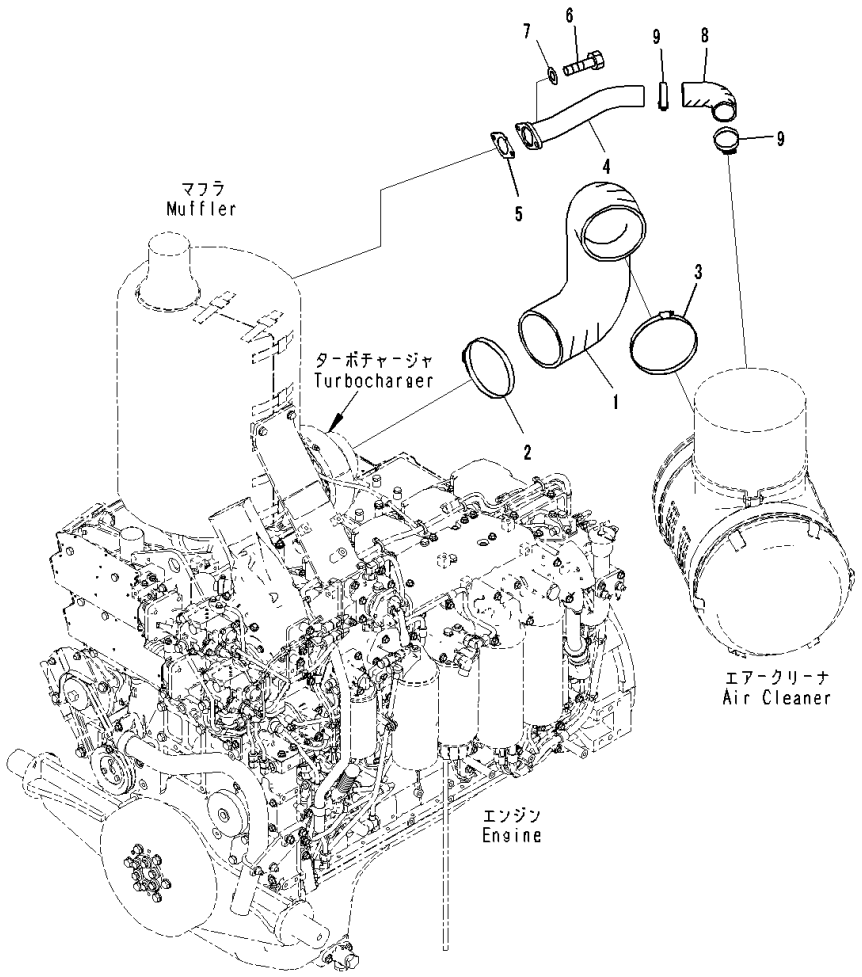

Index	Code	Part Number	Description	Qty	Serial Number
		Note: This list covers following specifications.			
		Perforated Type			
		Perforated Type, Landfill Specification			
		Perforated Type, For Engine With Coolant Heater			
1		17A-01-41360	Hose	1	81028-
2		07289-00160	Clamp, Hose	1	81028-
3		07289-00170	Clamp, Hose	1	81028-
4		17A-01-41220	Tube	1	81028-
5		6162-13-5611	Gasket	1	81028-
6		01010-81030	Bolt	2	81028-
7		01643-31032	Washer	2	81028-
8		6162-13-5870	Hose	1	81028-
9		07289-00055	Clamp	2	81028-

FIG. M2140-003005 Engine Hood and Side Cover Group, Perforated Type, Landfill Specification, Side Cover

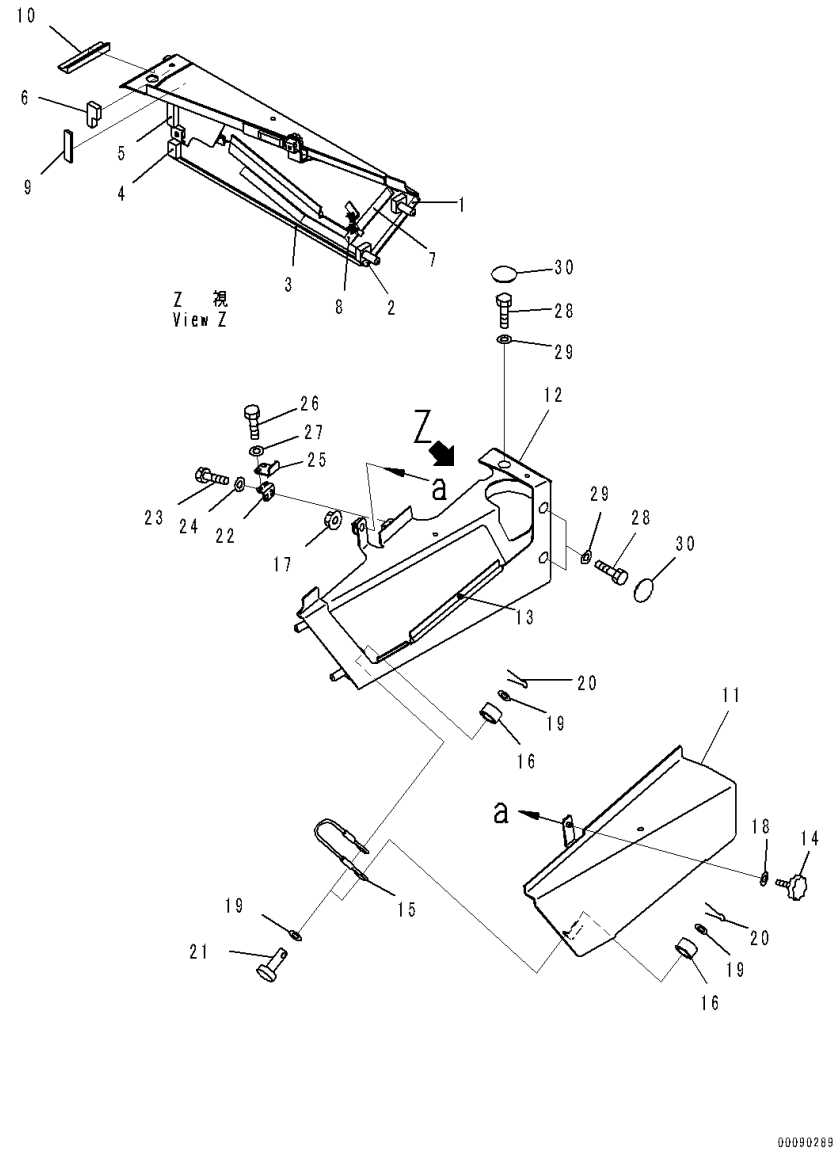

Index	Code	Part Number	Description	Qty	Serial Number
1		17A-54-47580	Seal,Bonded	1	81028-
2		17A-54-47590	Seal,Bonded	1	81028-
3		17A-54-47610	Seal,Bonded	1	81028-
4		17A-54-47620	Seal,Bonded	1	81028-
5		17A-54-47630	Seal,Bonded	1	81028-
6		17A-54-47640	Seal,Bonded	1	81028-
7		17A-54-47651	Seal,Bonded	1	81028-
8		17A-54-47660	Seal,Bonded	1	81028-
9		17A-54-47690	Seal,Bonded	1	81028-
10		17A-54-47970	Seal,Bonded	1	81028-
11		17A-54-42572	Cover	1	81028-
12		17A-54-42584	Cover	1	81028-
13		17A-54-42670	• Hinge,Welded	1	81028-
14		195-54-68760	Knob	1	81028-
15		418-54-21390	Wire	1	81028-
16		424-54-14380	Collar	2	81028-
17		01594-01008	Nut	1	81028-
18		01640-21016	Washer	1	81028-
19		01643-31032	Washer	4	81028-
20		04050-13020	Pin, Cotter	2	81028-
21		04205-11028	Pin	2	81028-
22		17M-54-43210	Bracket	1	81028-
23		01010-81025	Bolt	2	81028-
24		01643-31032	Washer	2	81028-
25		17A-54-42860	Bracket	1	81028-
26		01010-81025	Bolt	2	81028-
27		01643-31032	Washer	2	81028-
28		01010-81225	Bolt	3	81028-
29		01643-31232	Washer	3	81028-
30		195-54-42981	Cap	3	81028-

FIG. M2140-003006 Engine Hood and Side Cover Group, Perforated Type, Landfill Specification, Side Cover Bottom and Mounting

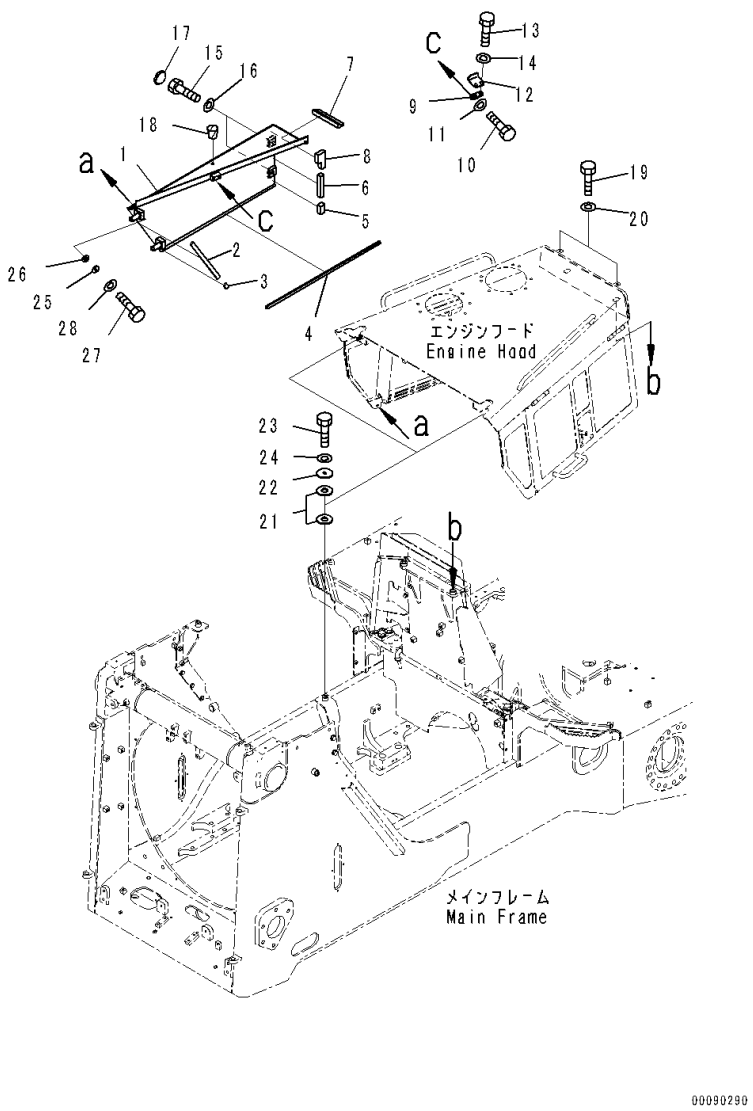

Index	Code	Part Number	Description	Qty	Serial Number
1		17A-54-42524	Cover	1	81028-
2		17A-54-47580	Seal,Bonded	1	81028-
3		17A-54-47590	Seal,Bonded	1	81028-
4		17A-54-47610	Seal,Bonded	1	81028-
5		17A-54-47620	Seal,Bonded	1	81028-
6		17A-54-47630	Seal,Bonded	1	81028-
7		17A-54-47970	Seal,Bonded	1	81028-
8		17A-54-47990	Seal,Bonded	1	81028-
9		17M-54-43210	Bracket	1	81028-
10		01010-81025	Bolt	2	81028-
11		01643-31032	Washer	2	81028-
12		17A-54-42860	Bracket	1	81028-
13		01010-81025	Bolt	2	81028-
14		01643-31032	Washer	2	81028-
15		01010-81225	Bolt	2	81028-
16		01643-31232	Washer	2	81028-
17		195-54-42981	Cap	2	81028-
18		07049-01215	Plug	3	81028-
19		01010-81660	Bolt	2	81028-
20		21T-09-11330	Washer	2	81028-
21		195-54-46180	Plate	4	81028-
22		6930-21-4120	Plate	2	81028-
23		01010-81645	Bolt	2	81028-
24		01643-31645	Washer	2	81028-
25		17A-54-42380	Collar	2	81028-
26		17A-54-42350	Spacer	2	81028-
27		01010-81230	Bolt	2	81028-
28		01643-31232	Washer	2	81028-

FIG. M2140-006005 Engine Hood and Side Cover Group, Perforated Type, For Engine With Coolant Heater, Side Cover Bottom and Mounting

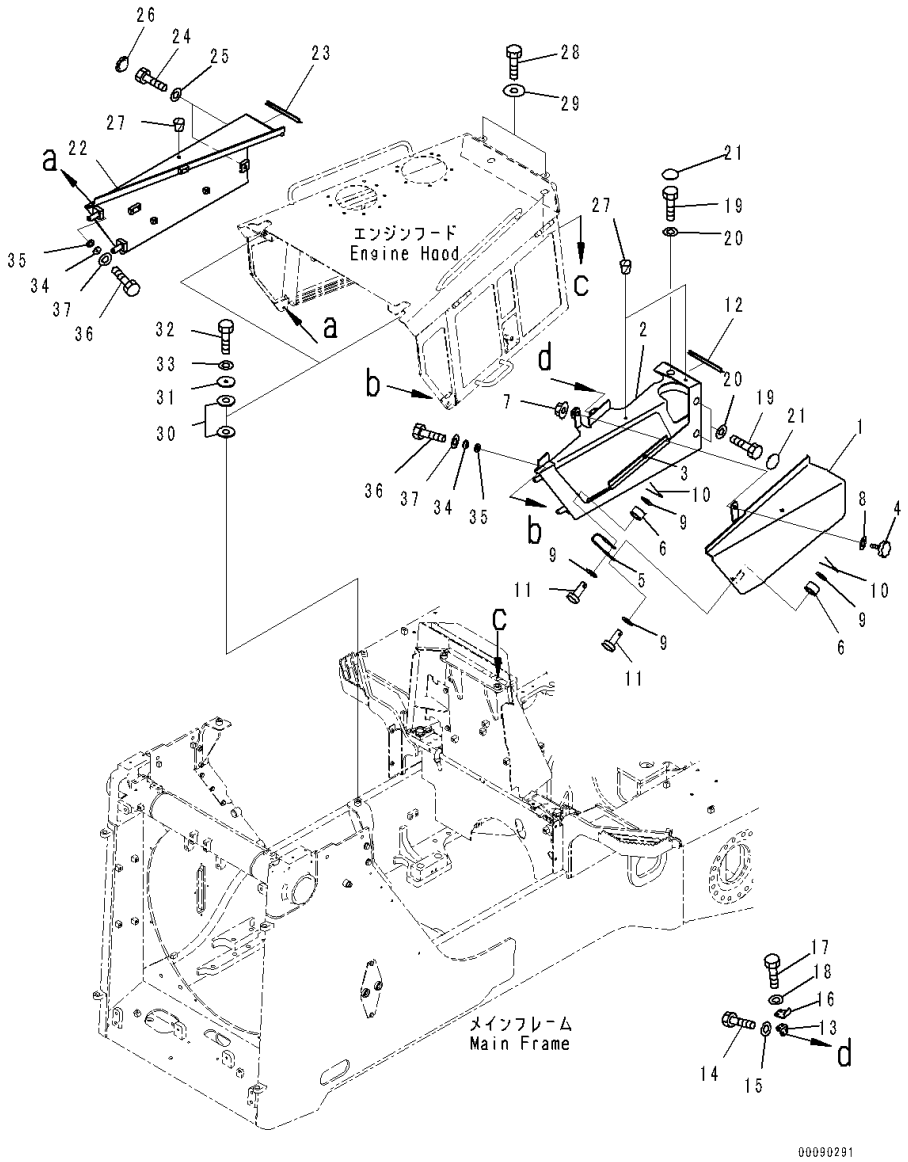

Index	Code	Part Number	Description	Qty	Serial Number
1		17A-54-42572	Cover	1	81028-
2		17A-54-42584	Cover	1	81028-
3		17A-54-42670	• Hinge,Welded	1	81028-
4		195-54-68760	Knob	1	81028-
5		418-54-21390	Wire	1	81028-
6		424-54-14380	Collar	2	81028-
7		01594-01008	Nut	1	81028-
8		01640-21016	Washer	1	81028-
9		01643-31032	Washer	4	81028-
10		04050-13020	Pin, Cotter	2	81028-
11		04205-11028	Pin	2	81028-
12		17A-54-44940	Seal	1	81028-
13		17M-54-43210	Bracket	1	81028-
14		01010-81025	Bolt	2	81028-
15		01643-31032	Washer	2	81028-
16		17A-54-42860	Bracket	1	81028-
17		01010-81025	Bolt	2	81028-
18		01643-31032	Washer	2	81028-
19		01010-81225	Bolt	3	81028-
20		01643-31232	Washer	3	81028-
21		195-54-42981	Cap	3	81028-
22		17A-54-42542	Cover	1	81028-
23		17A-54-44940	Seal	1	81028-
24		01010-81225	Bolt	2	81028-
25		01643-31232	Washer	2	81028-
26		195-54-42981	Cap	2	81028-
27		07049-01215	Plug	3	81028-
28		01010-81660	Bolt	2	81028-
29		21T-09-11330	Washer	2	81028-
30		195-54-46180	Plate	4	81028-
31		6930-21-4120	Plate	2	81028-
32		01010-81645	Bolt	2	81028-
33		01643-31645	Washer	2	81028-
34		17A-54-42380	Collar	2	81028-
35		17A-54-42350	Spacer	2	81028-
36		01010-81230	Bolt	2	81028-
37		01643-31232	Washer	2	81028-

FIG. M2140-009001 Engine Hood and Side Cover Group, Sandy and Dusty Terrain Arrangement, Hood

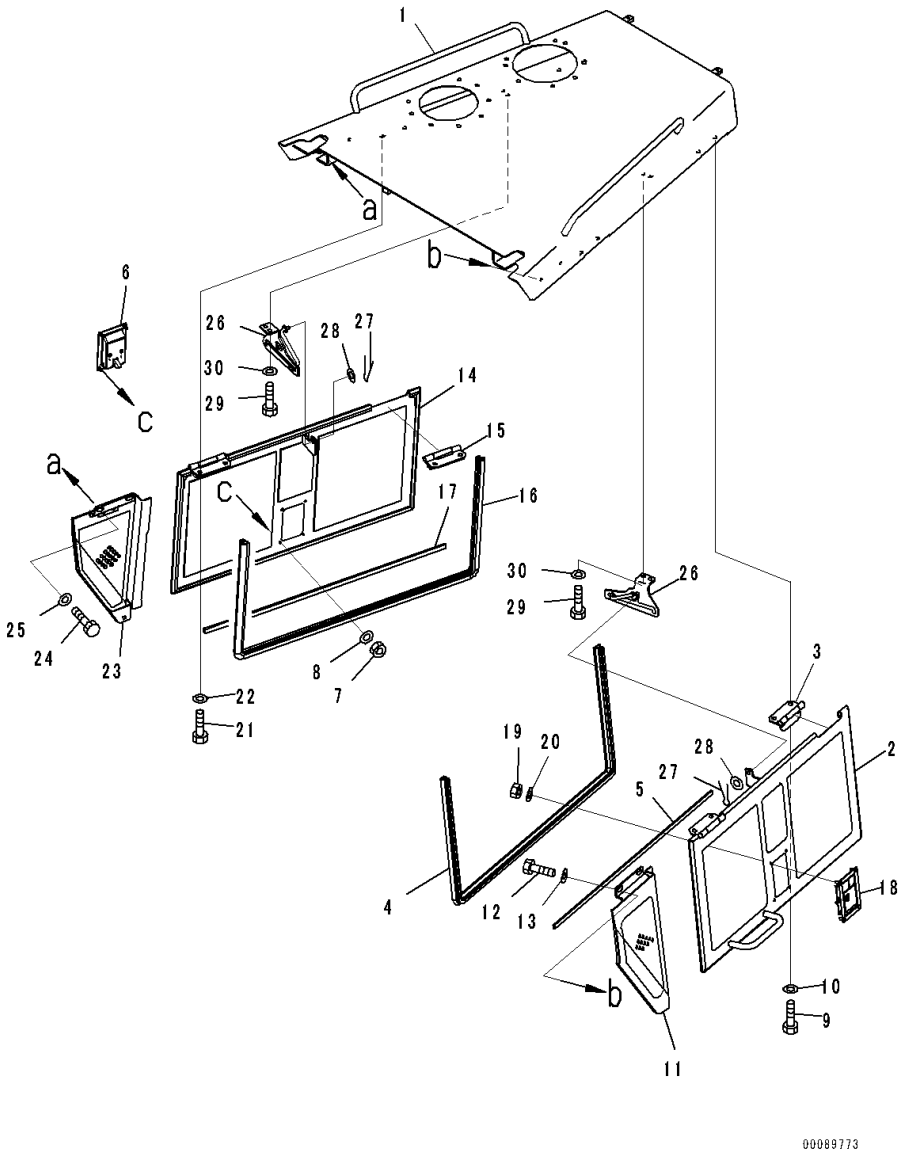

Index	Code	Part Number	Description	Qty	Serial Number
1		17A-54-42191	Hood	1	81177-
		17A-54-42214	Cover,LHS	1	81177-
2	C1		• Cover	1	81177-
3		17A-54-42390	• • Hinge,Welded	2	81177-
4		17A-54-42610	• Seal	1	81177-
5		17A-54-42660	• Seal	1	81177-
6		198-54-55990	• Lock Assembly	1	81177-
7		01580-10806	• Nut	4	81177-
8		01643-30823	• Washer	4	81177-
9		01010-81225	Bolt	4	81177-
10		01643-31232	Washer	4	81177-
11		17A-54-42413	Cover	1	81177-
12		01010-D1230	Bolt	2	81177-
13		17A-54-42370	Washer	2	81177-
		17A-54-42224	Cover	1	81177-
14	C1		• Cover	1	81177-
15		17A-54-42390	• • Hinge,Welded	2	81177-
16		17A-54-42610	• Seal	1	81177-
17		17A-54-42660	• Seal	1	81177-
18		198-54-55990	• Lock Assembly	1	81177-
19		01580-10806	• Nut	4	81177-
20		01643-30823	• Washer	4	81177-
21		01010-81225	Bolt	4	81177-
22		01643-31232	Washer	4	81177-
23		17A-54-42423	Cover	1	81177-
24		01010-D1230	Bolt	2	81177-
25		17A-54-42370	Washer	2	81177-
26		17A-54-42362	Bracket	2	81177-
27		04050-13020	Pin, Cotter	2	81177-
28		01643-31232	Washer	2	81177-
29		01010-81225	Bolt	4	81177-
30		01643-31232	Washer	4	81177-

FIG. M2140-009002 Engine Hood and Side Cover Group, Sandy and Dusty Terrain Arrangement, Inner Parts

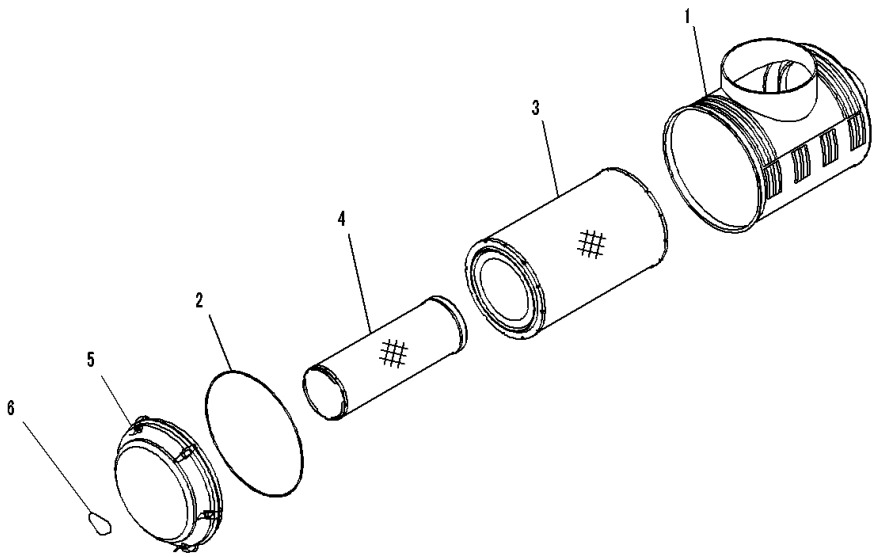

Index	Code	Part Number	Description	Qty	Serial Number
		6240-81-7402	Air Cleaner Assembly	1	81177-
1		6240-81-7411	• Body	1	81177-
		600-185-6100	• Element Assembly	1	81177-
2		600-184-1671	• • O-ring	1	81177-
3		600-185-6110	• • Element	1	81177-
4	C1		• • Element	1	81177-
5		600-184-1632	• Cover	1	81177-
6		600-184-2810	• Plate, Mark	1	81177-

FIG. M2140-009003 Engine Hood and Side Cover Group, Sandy and Dusty Terrain Arrangement, Air Cleaner

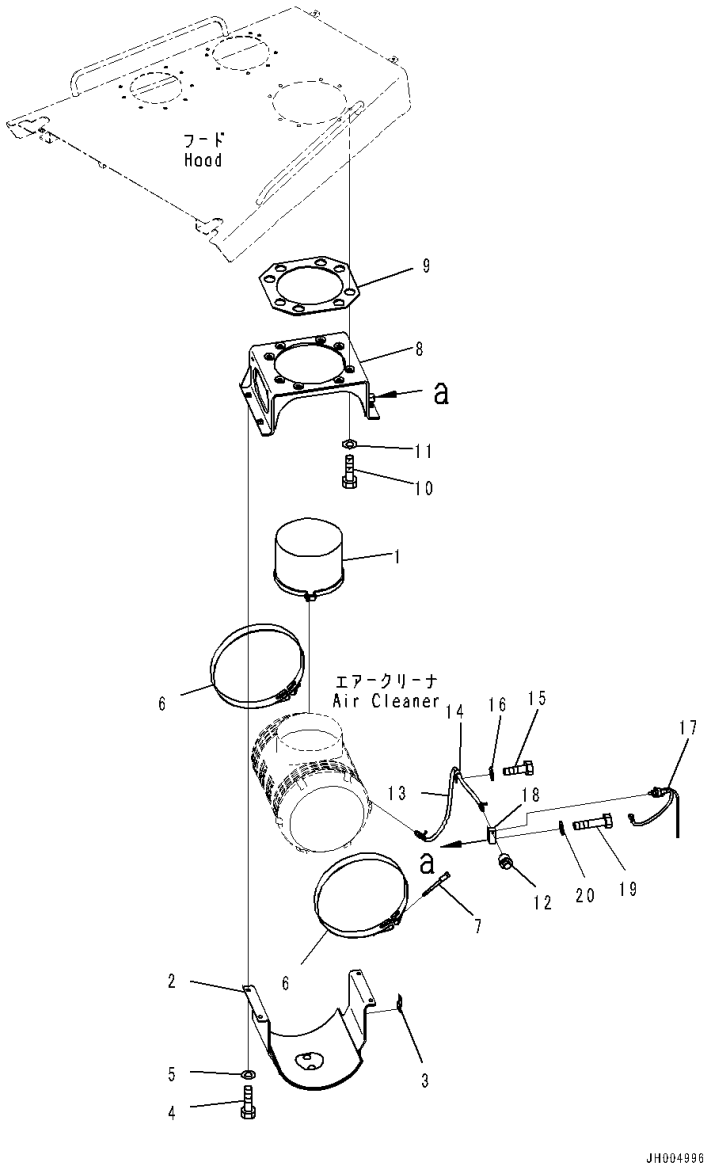

Index	Code	Part Number	Description	Qty	Serial Number
1		600-183-7521	Air Cleaner	1	81177-
2		17A-01-41311	Bracket	1	81177-
3		08193-21012	• Clip	1	81177-
4		01010-81240	Bolt	4	81177-
5		01643-31232	Washer	4	81177-
6		6240-11-9910	Band	2	81177-
7		6643-11-4641	Bolt	2	81177-
8		17A-01-41321	Cover	1	81177-
9		17A-01-41330	Sheet	1	81177-
10		01010-81240	Bolt	8	81177-
11		01643-31232	Washer	8	81177-
12		08672-01000	Indicator, Dust	1	81177-
13		08671-70100	Hose	1	81177-
14		04434-51412	Clip	1	81177-
15		01010-81225	Bolt	1	81177-
16		01643-31232	Washer	1	81177-
17		7861-93-1422	Sensor, Switch	1	81268-
18		17A-01-41341	Block	1	81177-
19		01010-81250	Bolt	1	81177-
20		01643-31232	Washer	1	81177-

FIG. M2140-009004 Engine Hood and Side Cover Group, Sandy and Dusty Terrain Arrangement, Wiring Harness

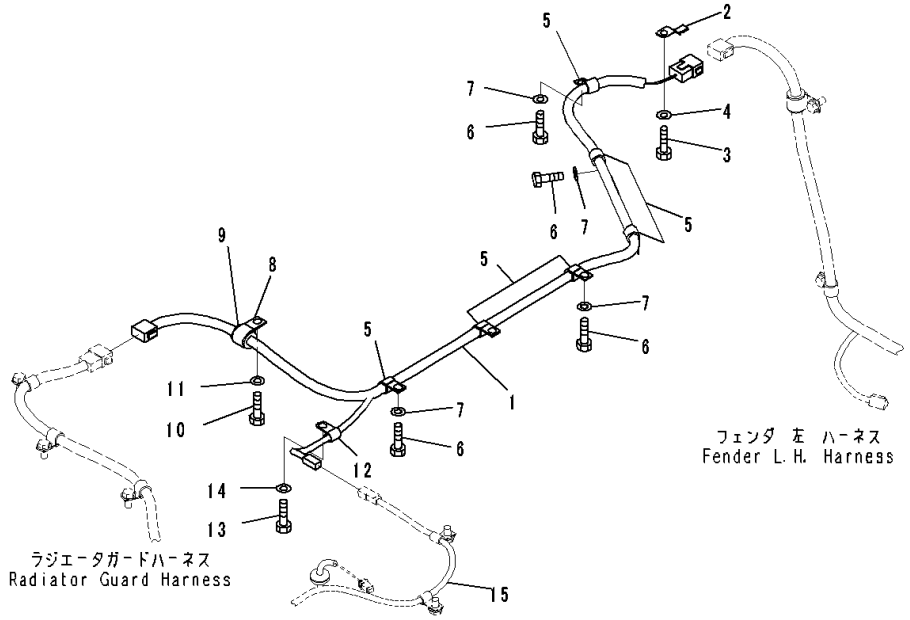

Index	Code	Part Number	Description	Qty	Serial Number
1		17A-06-41492	Wiring Harness	1	81177-
2		08193-21012	Clip	1	81177-
3		01010-81225	Bolt	1	81177-
4		01643-31232	Washer	1	81177-
5		04434-51712	Clip	6	81177-
6		01010-81225	Bolt	6	81177-
7		01643-31232	Washer	6	81177-
8		04434-52712	Clip	1	81177-
9		07095-20418	Cushion	1	81177-
10		01010-81225	Bolt	1	81177-
11		01643-31232	Washer	1	81177-
12		600-051-3100	Clip	1	81177-
13		01010-81225	Bolt	1	81177-
14		01643-31232	Washer	1	81177-
15		(17A-06-41231)	Wiring Harness(Refer to Page 720)		-

FIG. M2140-009005 Engine Hood and Side Cover Group, Sandy and Dusty Terrain Arrangement, Side Cover Bottom and Mounting

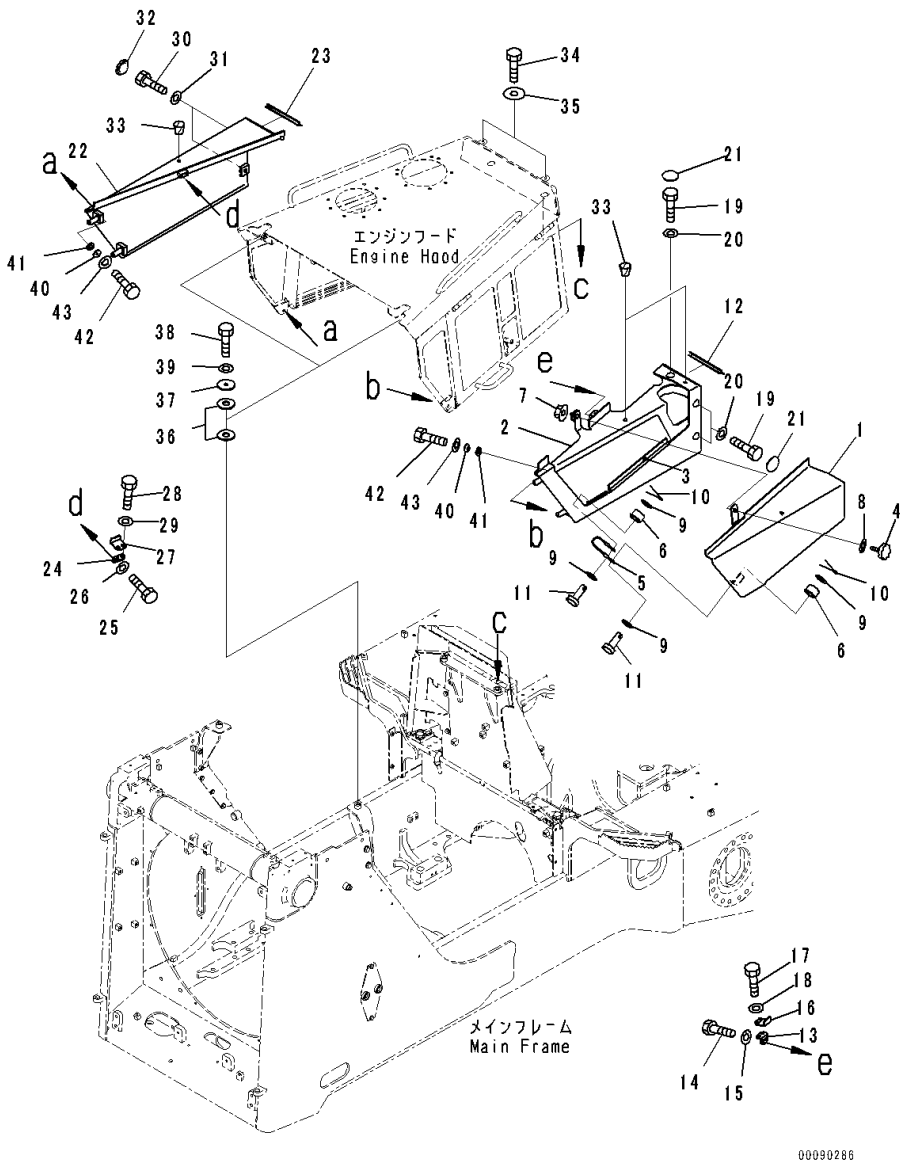

Index	Code	Part Number	Description	Qty	Serial Number
1		17A-54-42572	Cover	1	81177-
2		17A-54-42584	Cover	1	81177-
3		17A-54-42670	• Hinge,Welded	1	81177-
4		195-54-68760	Knob	1	81177-
5		418-54-21390	Wire	1	81177-
6		424-54-14380	Collar	2	81177-
7		01594-01008	Nut	1	81177-
8		01640-21016	Washer	1	81177-
9		01643-31032	Washer	4	81177-
10		04050-13020	Pin, Cotter	2	81177-
11		04205-11028	Pin	2	81177-
12		17A-54-44940	Seal	1	81177-
13		17M-54-43210	Bracket	1	81177-
14		01010-81025	Bolt	2	81177-
15		01643-31032	Washer	2	81177-
16		17A-54-42860	Bracket	1	81177-
17		01010-81025	Bolt	2	81177-
18		01643-31032	Washer	2	81177-
19		01010-81225	Bolt	3	81177-
20		01643-31232	Washer	3	81177-
21		195-54-42981	Cap	3	81177-
22		17A-54-42524	Cover	1	81177-
23		17A-54-44940	Seal	1	81177-
24		17M-54-43210	Bracket	1	81177-
25		01010-81025	Bolt	2	81177-
26		01643-31032	Washer	2	81177-
27		17A-54-42860	Bracket	1	81177-
28		01010-81025	Bolt	2	81177-
29		01643-31032	Washer	2	81177-
30		01010-81225	Bolt	2	81177-
31		01643-31232	Washer	2	81177-
32		195-54-42981	Cap	2	81177-
33		07049-01215	Plug	3	81177-
34		01010-81660	Bolt	2	81177-
35		21T-09-11330	Washer	2	81177-
36		195-54-46180	Plate	4	81177-
37		6930-21-4120	Plate	2	81177-
38		01010-81645	Bolt	2	81177-
39		01643-31645	Washer	2	81177-

FIG. M2140-009005 Engine Hood and Side Cover Group, Sandy and Dusty Terrain Arrangement, Side Cover Bottom and Mounting

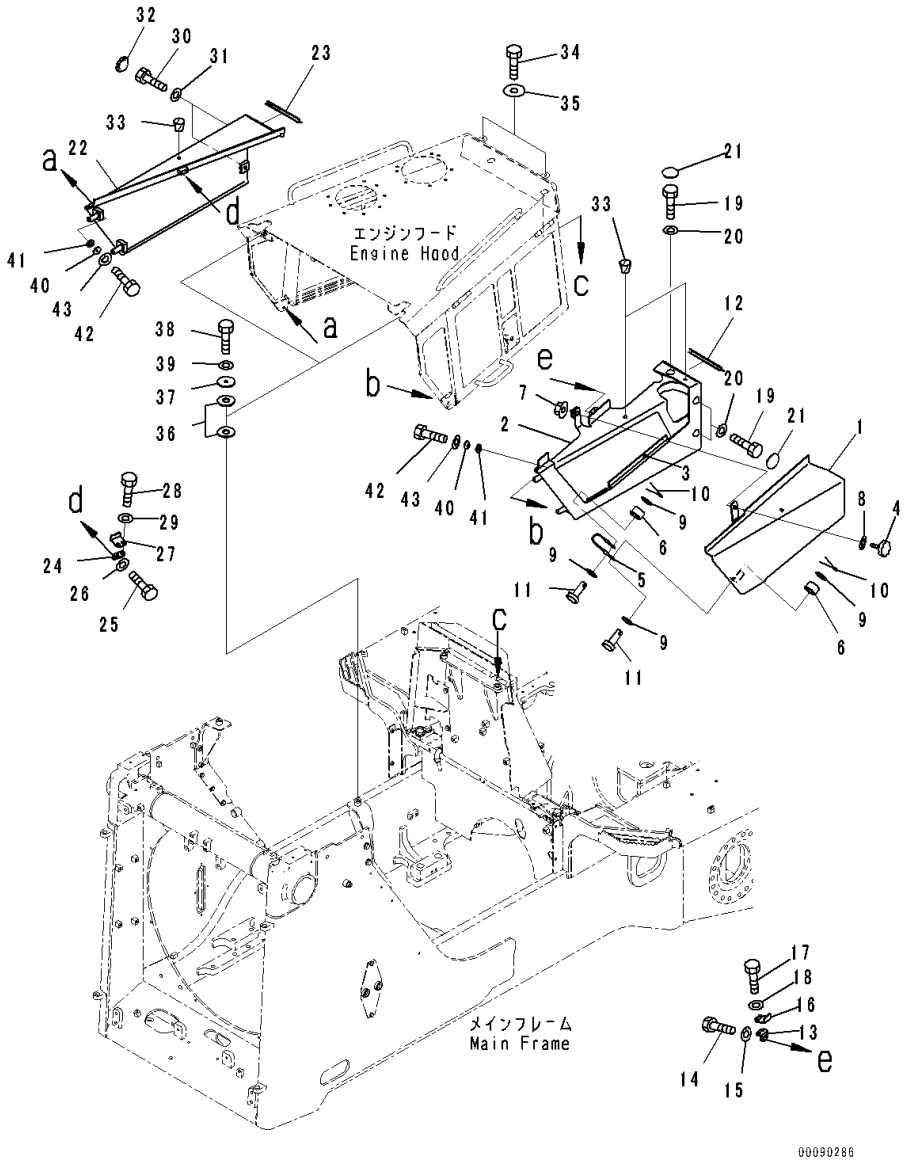

Index	Code	Part Number	Description	Qty	Serial Number
40		17A-54-42380	Collar	2	81177-
41		17A-54-42350	Spacer	2	81177-
42		01010-81230	Bolt	2	81177-
43		01643-31232	Washer	2	81177-

FIG. M2140-009006 Engine Hood and Side Cover Group, Sandy and Dusty Terrain Arrangement, Air Cleaner Hose

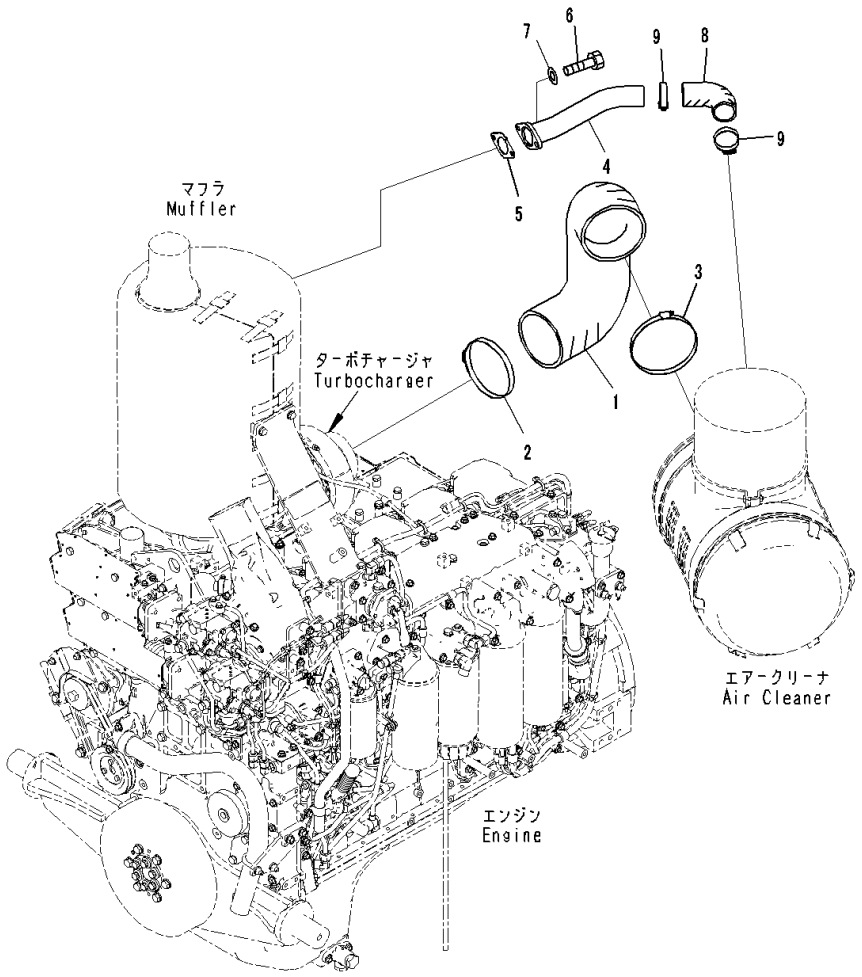

Index	Code	Part Number	Description	Qty	Serial Number
1		17A-01-41360	Hose	1	81177-
2		07289-00160	Clamp, Hose	1	81177-
3		07289-00170	Clamp, Hose	1	81177-
4		17A-01-41220	Tube	1	81177-
5		6162-13-5611	Gasket	1	81177-
6		01010-81030	Bolt	2	81177-
7		01643-31032	Washer	2	81177-
8		6162-13-5870	Hose	1	81177-
9		07289-00055	Clamp	2	81177-

FIG. M2143-001001 Engine Hood Mounting Bracket

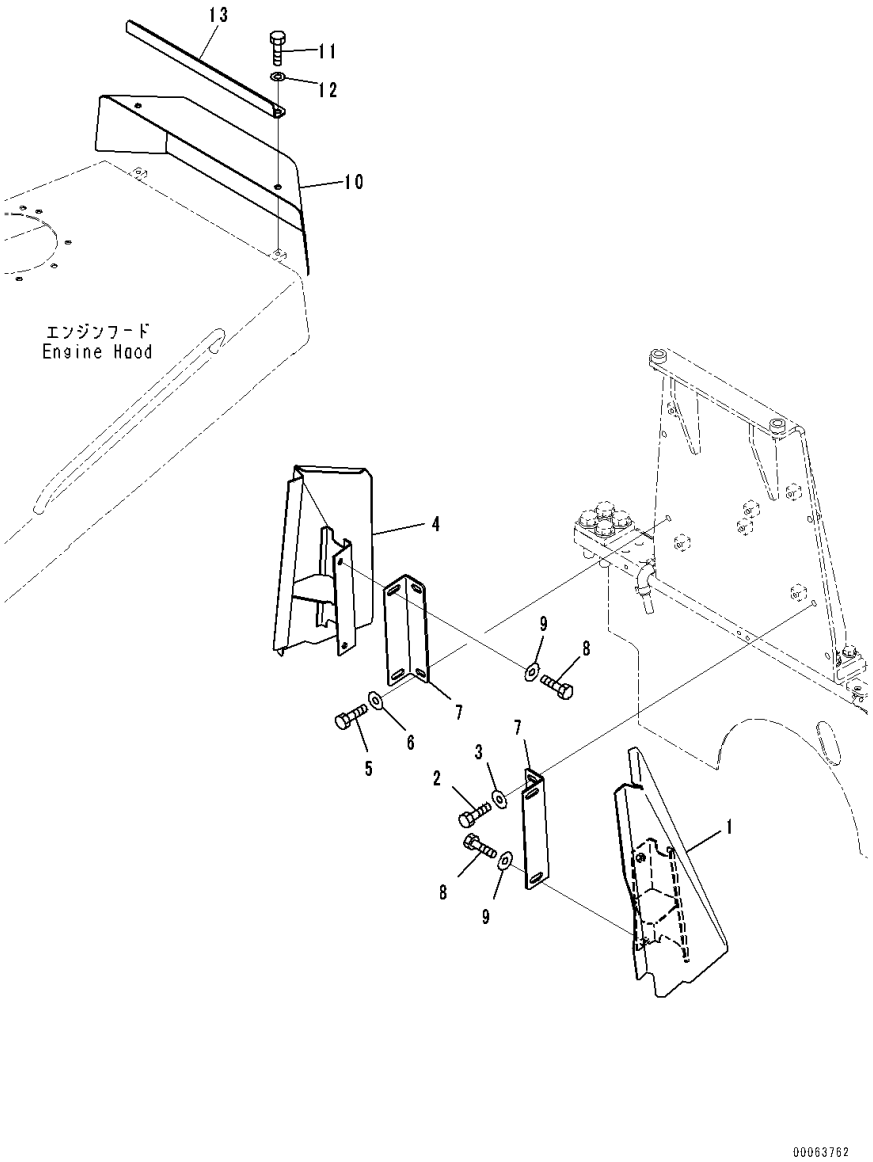

Index	Code	Part Number	Description	Qty	Serial Number
1		17A-54-42432	Cover,LHS	1	81028-
2		01010-81230	Bolt	2	81028-
3		175-54-34170	Washer	2	81028-
4		17A-54-42442	Cover,RHS	1	81028-
5		01010-81230	Bolt	2	81028-
6		175-54-34170	Washer	2	81028-
7		17A-54-42490	Bracket	2	81028-
8		01010-81240	Bolt	4	81028-
9		175-54-34170	Washer	4	81028-
10		17A-54-42451	Cover	1	81028-
11		01010-81230	Bolt	2	81028-
12		01643-31232	Washer	2	81028-
13		17A-54-42481	Guard	1	81028-

FIG. M2143-002001 Engine Hood Mounting Bracket, Landfill Specification

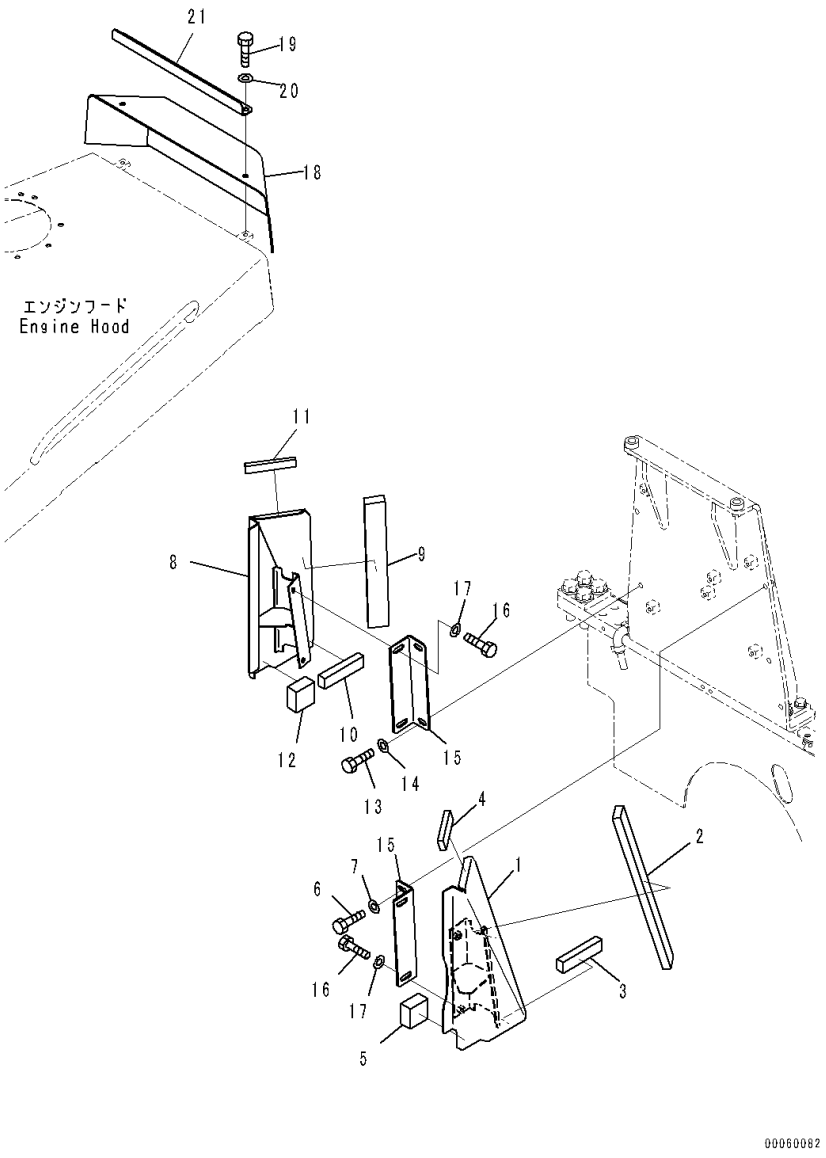

Index	Code	Part Number	Description	Qty	Serial Number
1		17A-54-43210	Cover	1	81028-
2		17A-54-43230	• Seal	1	81028-
3		17A-54-43240	• Seal	1	81028-
4		17A-54-43250	• Seal	1	81028-
5		17A-54-43260	• Seal	1	81028-
6		01010-81230	Bolt	2	81028-
7		175-54-34170	Washer	2	81028-
8		17A-54-43220	Cover	1	81028-
9		17A-54-43230	• Seal	1	81028-
10		17A-54-43240	• Seal	1	81028-
11		17A-54-43250	• Seal	1	81028-
12		17A-54-43260	• Seal	1	81028-
13		01010-81230	Bolt	2	81028-
14		175-54-34170	Washer	2	81028-
15		17A-54-42490	Bracket	2	81028-
16		01010-81240	Bolt	4	81028-
17		175-54-34170	Washer	4	81028-
18		17A-54-42451	Cover	1	81028-
19		01010-81230	Bolt	2	81028-
20		01643-31232	Washer	2	81028-
21		17A-54-42481	Guard	1	81028-

FIG. M2190-001001 Pre Cleaner Hood

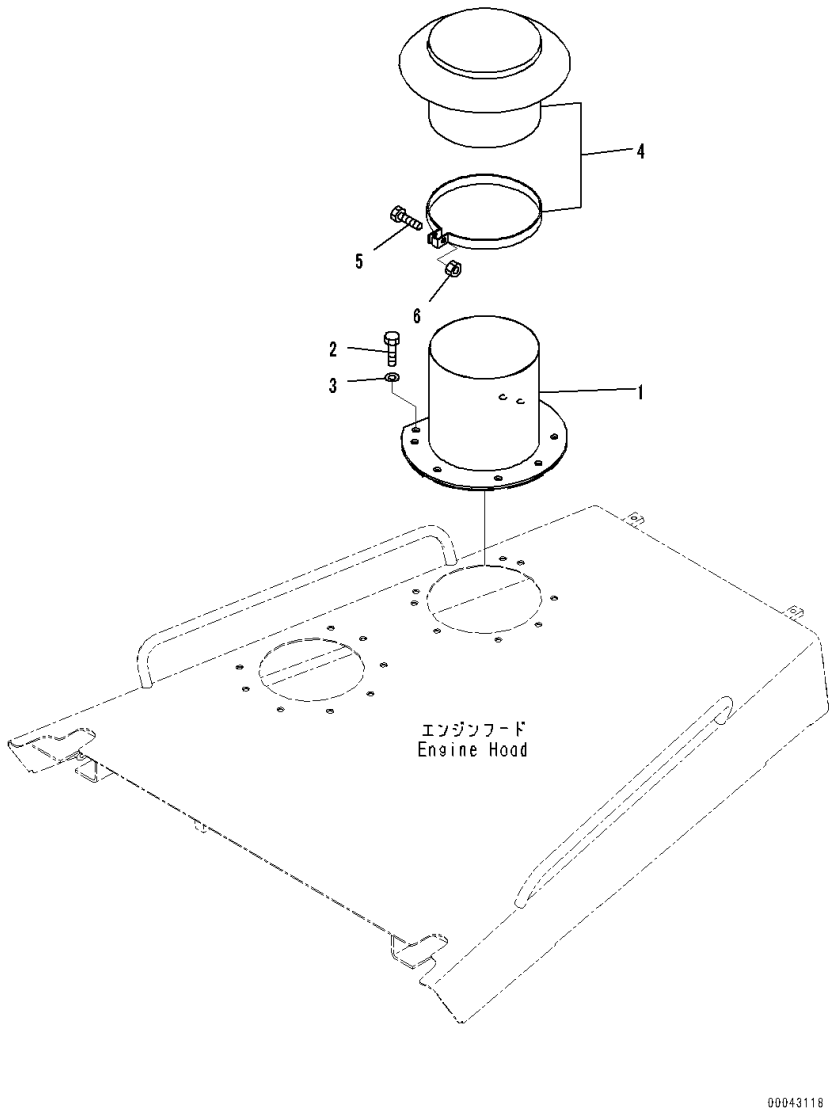

Index	Code	Part Number	Description	Qty	Serial Number
1		17A-01-41391	Plate	1	81028-
2		01010-D1225	Bolt	8	81028-
3		01643-71232	Washer	8	81028-
4		600-181-4990	Hood	1	81028-
5		01016-51045	• Bolt	1	81028-
6		01580-11008	• Nut	1	81028-

FIG. M2190-002001 Pre Cleaner Hood, With Pre-cleaner

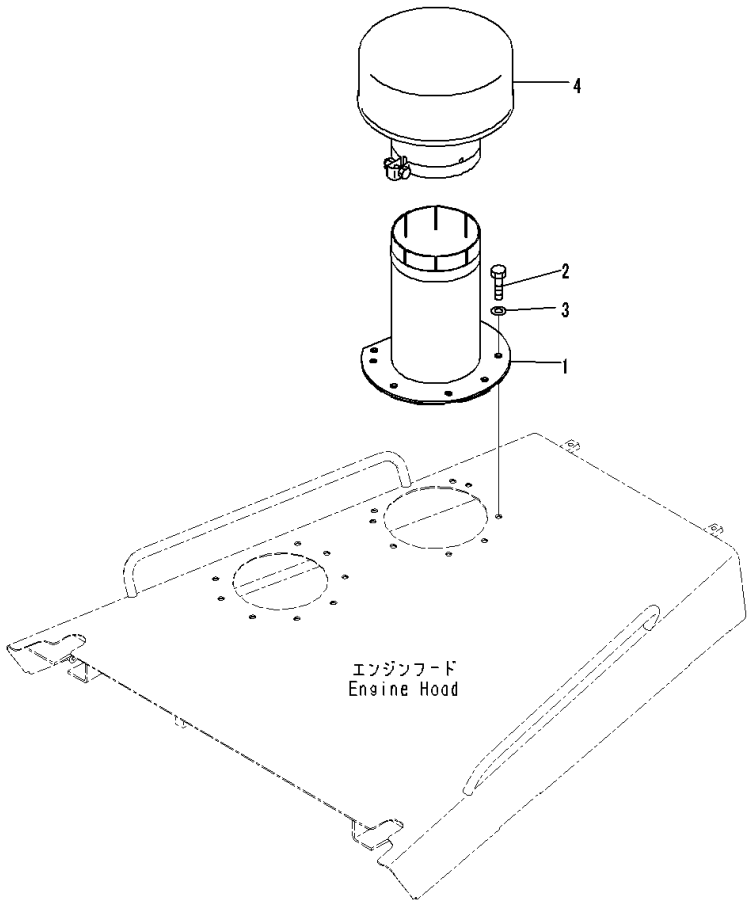

Index	Code	Part Number	Description	Qty	Serial Number
1		17A-01-41790	Plate	1	81028-
2		01010-D1225	Bolt	8	81028-
3		01643-71232	Washer	8	81028-
4		198-01-51311	Cleaner Assembly	1	81041-

FIG. M2210-025001 Fender, Starting Wiring Harness

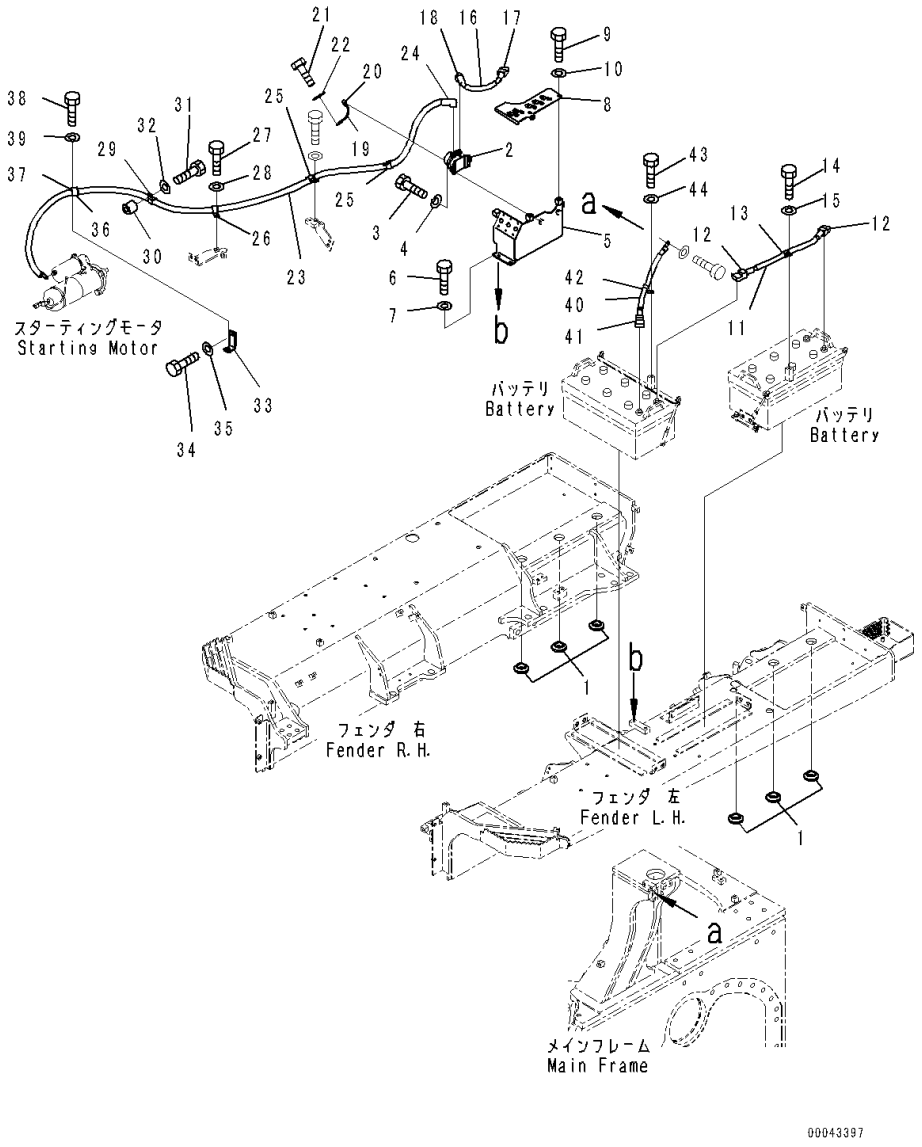

Index	Code	Part Number	Description	Qty	Serial Number
		Note: This list covers following specifications.			
		With Battery			
		With Battery, For Dual Tilt Dozer			
1		17A-04-12550	Cushion	6	81087-
2		08088-30000	Switch, Battery Relay	1	81087-
3		01010-80825	Bolt	2	81087-
4		01643-30823	Washer	2	81087-
5		17A-06-41531	Bracket	1	81087-
6		01010-81225	Bolt	3	81087-
7		01643-31232	Washer	3	81087-
8		17A-06-41551	Bracket	1	81087-
9		01010-81225	Bolt	2	81087-
10		01643-31232	Washer	2	81087-
11		08028-HE060	Cable, Ground	1	81087-
12		08038-42511	Cap	2	81087-
13		04434-52312	Clip	1	81087-
14		01010-81225	Bolt	1	81087-
15		01643-31232	Washer	1	81087-
16		08028-HE035	Cable, Ground	1	81087-
17		08038-42511	Cap	1	81087-
18		17A-06-41540	Cap	1	81087-
19		209-06-19680	Wire	1	81087-
20		08038-00519	Cap	1	81087-
21		01010-80816	Bolt	1	81087-
22		01643-30823	Washer	1	81087-
23		17A-06-41272	Wiring Harness	1	81087-
24		17A-06-41540	Cap	1	81087-
25		04434-52712	Clip	2	81087-
26		04434-52712	Clip	1	81087-
27		01010-81225	Bolt	1	81087-
28		01643-31232	Washer	1	81087-
29		04434-52712	Clip	1	81087-
30		195-33-11220	Spacer	1	81087-
31		01010-81245	Bolt	1	81087-
32		01643-31232	Washer	1	81087-
33		17A-06-41771	Bracket	1	81087-
34		01010-81225	Bolt	1	81087-
35		01643-31232	Washer	1	81087-
36		04434-53412	Clip	1	81087-
37		07095-20625	Cushion	1	81087-

FIG. M2210-025001 Fender, Starting Wiring Harness

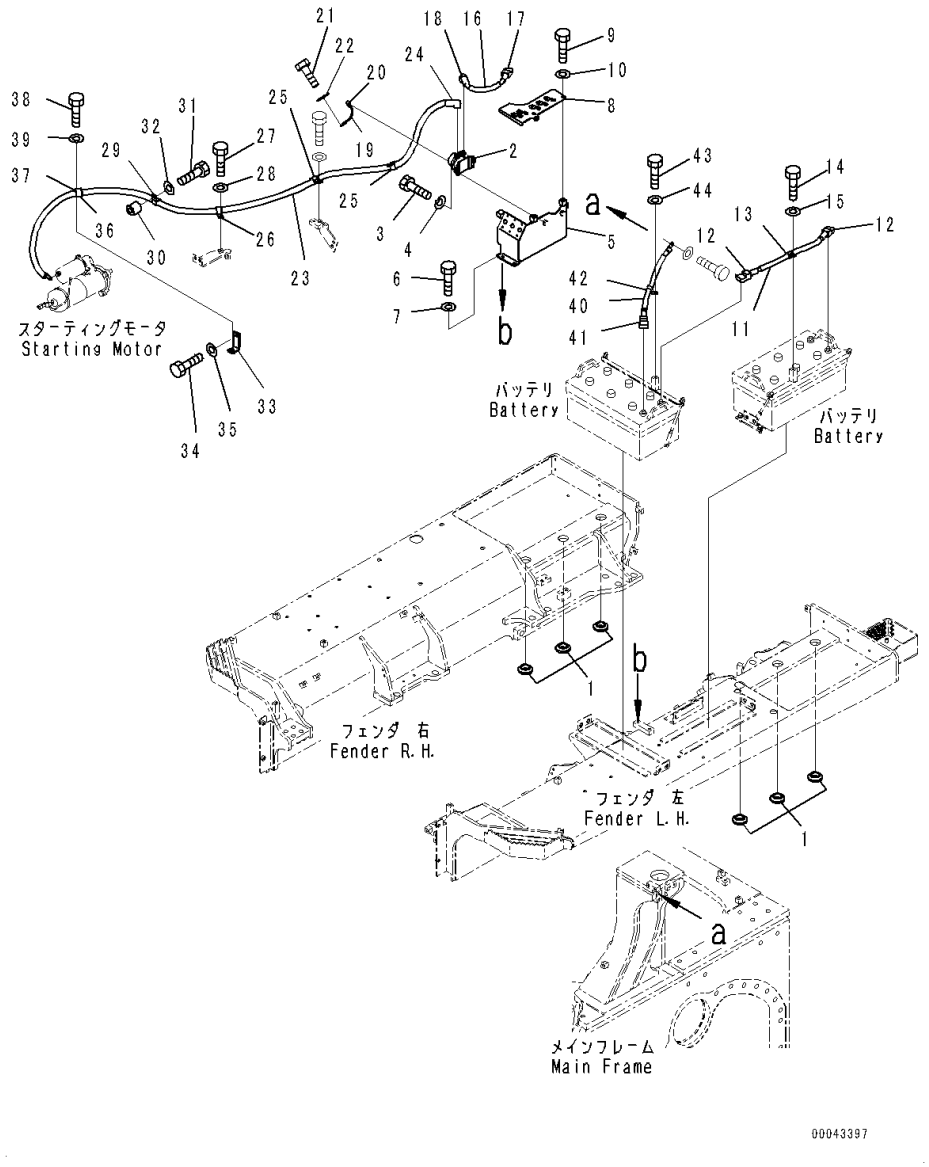

Index	Code	Part Number	Description	Qty	Serial Number
38		01010-81225	Bolt	1	81087-
39		01643-31232	Washer	1	81087-
40		08028-FF055	Cable, Ground	1	81087-
41		08038-22511	Cap	1	81087-
42		04434-52312	Clip	1	81087-
43		01010-81225	Bolt	1	81087-
44		01643-31232	Washer	1	81087-

FIG. M2210-025002 Fender, Main Wiring Harness (1/2)

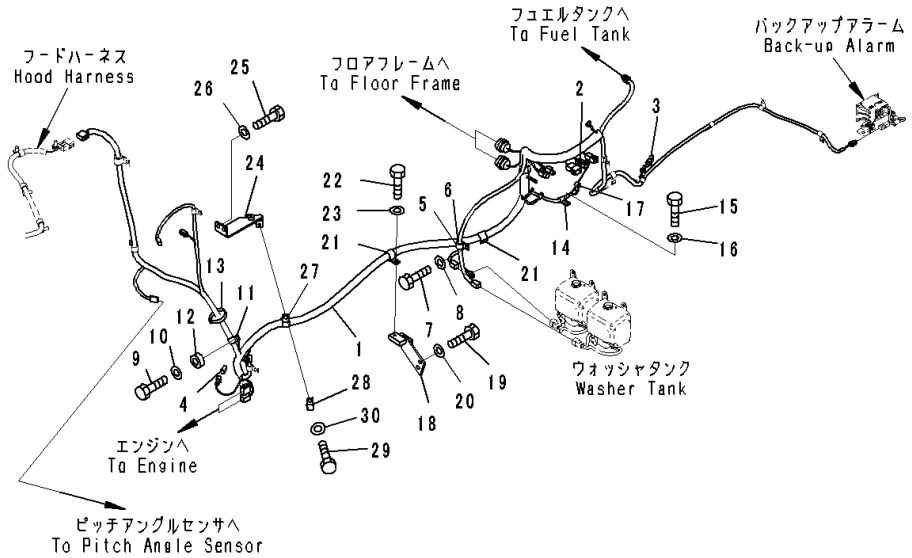

Index	Code	Part Number	Description	Qty	Serial Number
		Note: This list covers following specifications.			
		With Battery			
		With Battery, For Dual Tilt Dozer			
		With Large Capacity Battery			
		With Large Capacity Battery, For Dual Tilt Dozer			
		With Large Capacity Battery, Tool Box, Fender RHS			
		With Large Capacity Battery, Tool Box, Fender RHS, For Dual Tilt Dozer			
1		17A-06-41131	Wiring Harness	1	81087-
2		08192-22830	• Connector	1	81087-
3		08192-23830	• Connector	1	81087-
4		21J-06-13661	• Diode	1	81087-
5		04434-51912	Clip	1	81087-
6		07095-20213	Cushion	1	81087-
7		01010-81225	Bolt	1	81087-
8		01643-31232	Washer	1	81087-
9		01010-81235	Bolt	1	81087-
10		01643-31232	Washer	1	81087-
11		04434-51912	Clip	1	81087-
12		198-43-15310	Collar	1	81087-
13		08034-20519	Band	1	81087-
14		04434-51012	Clip	1	81087-
15		01010-81225	Bolt	1	81087-
16		01643-31232	Washer	1	81087-
17		08038-00519	Cap	1	81087-
18		17A-06-41582	Bracket	1	81087-
19		01010-81225	Bolt	2	81087-
20		01643-31232	Washer	2	81087-
21		04434-52712	Clip	2	81087-
22		01010-81225	Bolt	2	81087-
23		01643-31232	Washer	2	81087-
24		17A-06-41642	Bracket	1	81087-
25		01010-81225	Bolt	2	81087-
26		01643-31232	Washer	2	81087-
27		04434-52712	Clip	1	81087-
28		04434-51412	Clip	1	81087-
29		01010-81225	Bolt	1	81087-
30		01643-31232	Washer	1	81087-

FIG. M2210-025003 Fender, Main Wiring Harness (2/2)

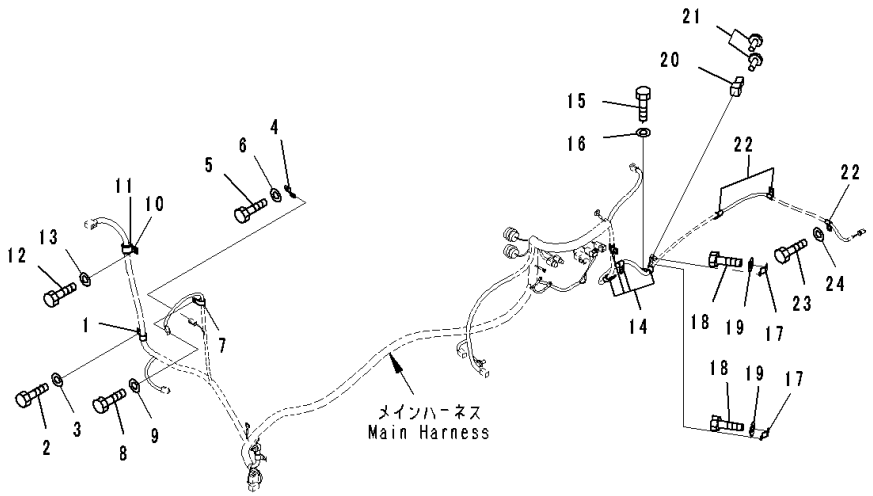

Index	Code	Part Number	Description	Qty	Serial Number
		Note: This list covers following specifications.			
		With Battery			
		With Battery, For Dual Tilt Dozer			
		With Large Capacity Battery			
		With Large Capacity Battery, For Dual Tilt Dozer			
		With Large Capacity Battery, Tool Box, Fender RHS			
		With Large Capacity Battery, Tool Box, Fender RHS, For Dual Tilt Dozer			
1		04434-51912	Clip	1	81087-
2		01010-81225	Bolt	1	81087-
3		01643-31232	Washer	1	81087-
4		08193-21012	Clip	1	81087-
5		01010-81225	Bolt	1	81087-
6		01643-31232	Washer	1	81087-
7		600-051-3100	Clip	1	81087-
8		01010-81225	Bolt	1	81087-
9		01643-31232	Washer	1	81087-
10		04434-52712	Clip	1	81087-
11		07095-20419	Cushion	1	81087-
12		01010-81225	Bolt	1	81087-
13		01643-31232	Washer	1	81087-
14		04434-51412	Clip	4	81087-
15		01010-81225	Bolt	4	81087-
16		01643-31232	Washer	4	81087-
17		08193-21012	Clip	2	81087-
18		01010-81225	Bolt	2	81087-
19		01643-31232	Washer	2	81087-
20		08192-22100	Connector Body	1	81087-
21		08191-00770	Plug, Connector	2	81087-
22		04434-51012	Clip	3	81087-
23		01010-81225	Bolt	3	81087-
24		01643-31232	Washer	3	81087-

FIG. M2210-025004 Fender, Heater Relay Wiring Harness

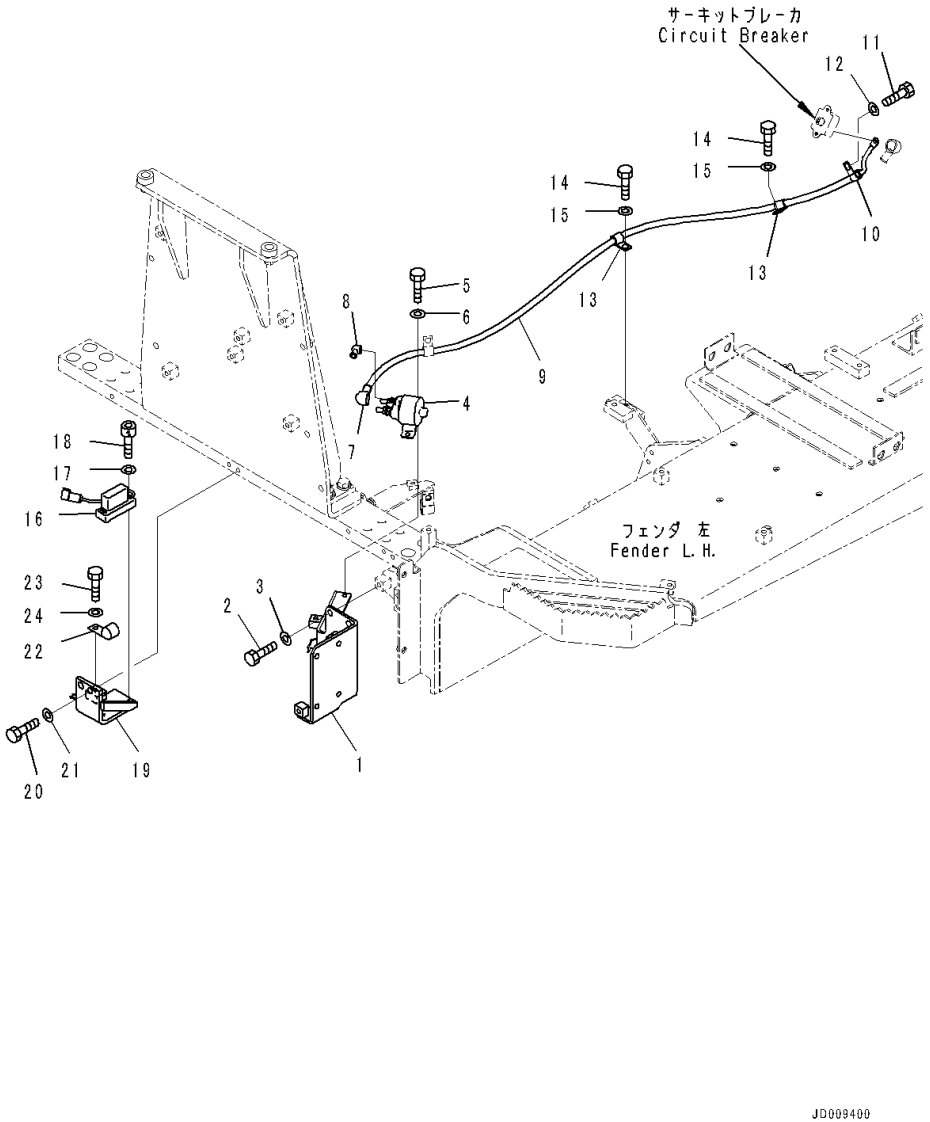

Index	Code	Part Number	Description	Qty	Serial Number
		Note: This list covers following specifications.			
		With Battery			
		With Battery, For Dual Tilt Dozer			
		With Large Capacity Battery			
		With Large Capacity Battery, For Dual Tilt Dozer			
		With Large Capacity Battery, Tool Box, Fender RHS			
		With Large Capacity Battery, Tool Box, Fender RHS, For Dual Tilt Dozer			
1		17A-06-41671	Bracket	1	81087-
2		01010-81225	Bolt	3	81087-
3		01643-31232	Washer	3	81087-
4		600-815-2690	Switch, Heater	1	81087-
5		01010-80820	Bolt	2	81087-
6		01643-30823	Washer	2	81087-
7		08038-02027	Cap	1	81087-
8		08038-00519	Cap	1	81087-
9		17A-06-41281	Wiring Harness	1	81087-
10		04434-51412	Clip	1	81087-
11		01010-81225	Bolt	1	81087-
12		01643-31232	Washer	1	81087-
13		04434-51412	Clip	2	81087-
14		01010-81225	Bolt	2	81087-
15		01643-31232	Washer	2	81087-
16		7861-93-5390	Sensor, Angle	1	81087-
17		01643-30623	Washer	2	81087-
18		01252-70635	Bolt	2	81087-
19		17A-06-41653	Bracket	1	81087-
20		01010-81230	Bolt	2	81087-
21		01643-31232	Washer	2	81087-
22		600-051-3300	Clip	1	81087-
23		01010-81225	Bolt	1	81087-
24		01643-31232	Washer	1	81087-

FIG. M2210-025005 Fender, Backup Alarm

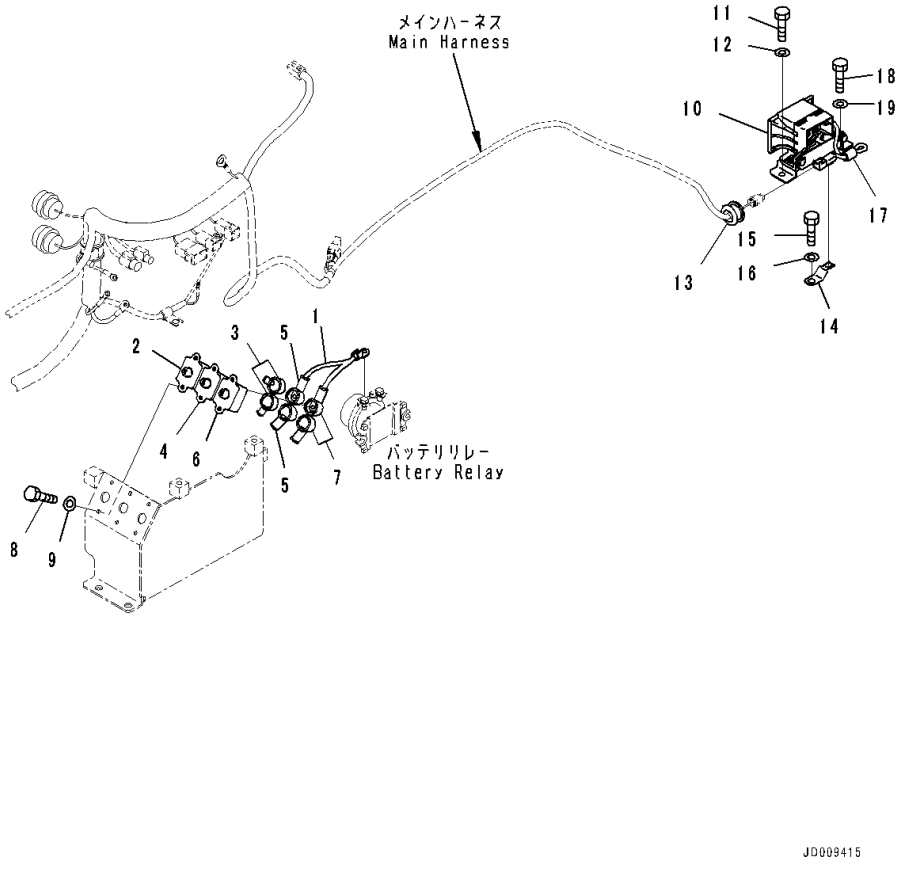

Index	Code	Part Number	Description	Qty	Serial Number
		Note: This list covers following specifications.			
		With Battery			
		With Battery, For Dual Tilt Dozer			
		With Large Capacity Battery			
		With Large Capacity Battery, For Dual Tilt Dozer			
		With Large Capacity Battery, Tool Box, Fender RHS			
		With Large Capacity Battery, Tool Box, Fender RHS, For Dual Tilt Dozer			
1		17A-06-41211	Wiring Harness	1	81087-
2		198-06-62830	Circuit Breaker	1	81087-
3		08038-00525	Cap	2	81087-
4		198-06-62840	Circuit Breaker	1	81087-
5		08038-02027	Cap	2	81087-
6		198-06-62840	Circuit Breaker	1	81087-
7		08038-02027	Cap	2	81087-
8		01010-80616	Bolt	6	81087-
9		01643-30623	Washer	6	81087-
10		20Y-06-41812	Alarm, Back-up	1	81087-
11		01010-80816	Bolt	2	81087-
12		01643-30823	Washer	2	81087-
13		201-46-38220	Grommet	1	81087-
14		08193-21012	Clip	1	81087-
15		01010-81225	Bolt	1	81087-
16		01643-31232	Washer	1	81087-
17		600-051-3120	Clip	1	81087-
18		01010-81225	Bolt	1	81087-
19		01643-31232	Washer	1	81087-

FIG. M2210-025006 Fender, Hood Mounting

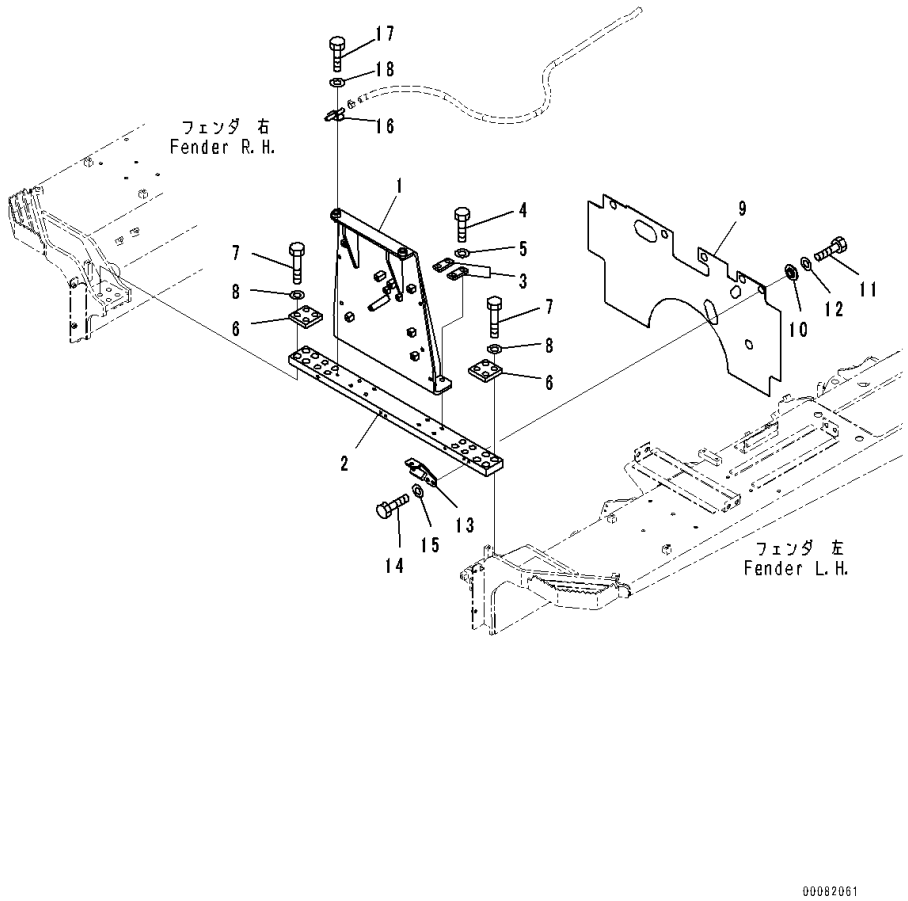

Index	Code	Part Number	Description	Qty	Serial Number
		Note: This list covers following specifications.			
		With Battery			
		With Battery, For Dual Tilt Dozer			
		With Large Capacity Battery			
		With Large Capacity Battery, For Dual Tilt Dozer			
		With Large Capacity Battery, Tool Box, Fender RHS			
		With Large Capacity Battery, Tool Box, Fender RHS, For Dual Tilt Dozer			
		17A-54-42932	Bracket Assembly	1	81087-
1	C1		• Bracket	1	81087-
2		17A-54-42922	• Plate	1	81087-
3		17A-54-42961	• Plate	4	81087-
4		01010-81655	• Bolt	8	81087-
5		01643-31645	• Washer	8	81087-
6		17A-54-42971	Plate	2	81087-
7		01011-82400	Bolt	8	81087-
8		01643-32460	Washer	8	81087-
9		17A-54-42891	Rubber	1	81087-
10		203-54-62670	Collar	5	81087-
11		01010-81225	Bolt	5	81087-
12		01643-31232	Washer	5	81087-
13		17A-54-42531	Bracket	1	81087-
14		01010-81225	Bolt	2	81087-
15		01643-31232	Washer	2	81087-
16		17A-911-4411	Bracket	1	81087-
17		01010-81225	Bolt	1	81087-
18		01643-31232	Washer	1	81087-

FIG. M2210-025007 Fender, Inner Parts

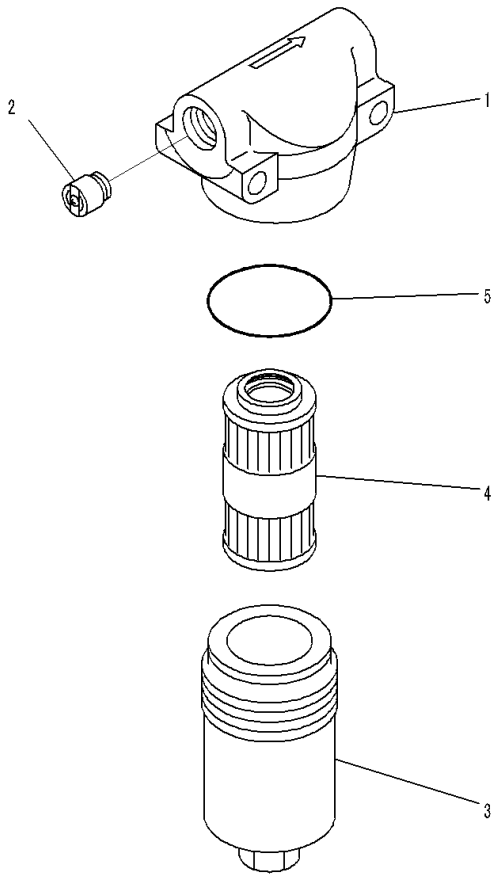

00060759

Index	Code	Part Number	Description	Qty	Serial Number
		Note: This list covers following specifications.			
		With Battery			
		With Battery, For Dual Tilt Dozer			
		With Large Capacity Battery			
		With Large Capacity Battery, For Dual Tilt Dozer			
		With Large Capacity Battery, Tool Box, Fender RHS			
		With Large Capacity Battery, Tool Box, Fender RHS, For Dual Tilt Dozer			
		20Y-62-51681	Case	1	81087-
1	C1		• Head	1	81087-
2	C1		• Valve Assembly	1	81087-
3	C1		• Case	1	81087-
4		20Y-62-51691	• Filter	1	81087-
5		706-76-71390	• O-ring	1	81087-

FIG. M2210-025008 Fender, Pilot Filter

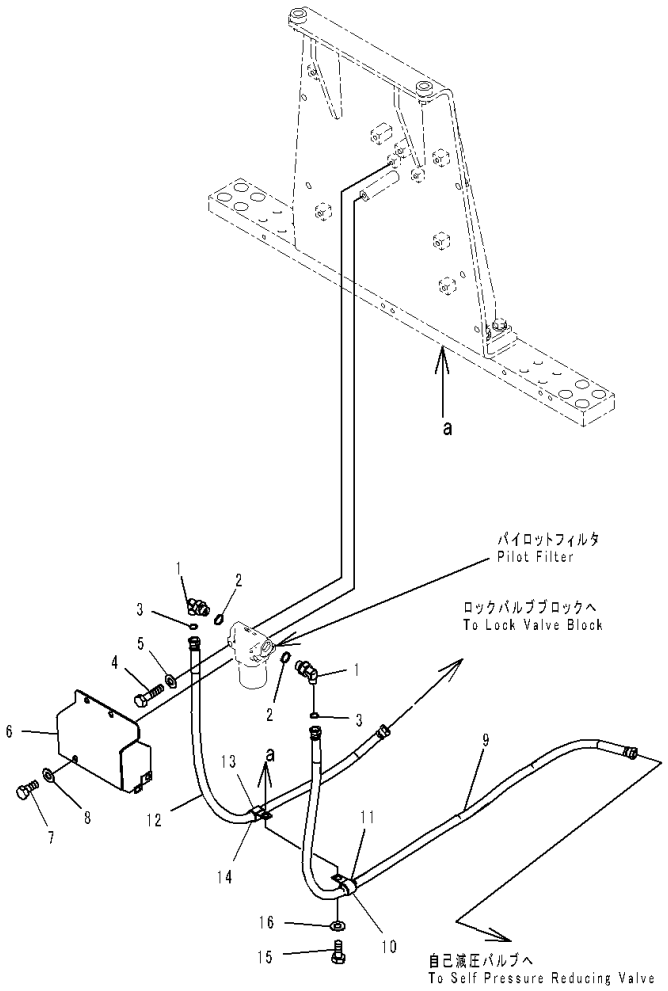

JD012488-V

Index	Code	Part Number	Description	Qty	Serial Number
		Note: This list covers following specifications.			
		With Battery			
		With Battery, For Dual Tilt Dozer			
		With Large Capacity Battery			
		With Large Capacity Battery, For Dual Tilt Dozer			
		With Large Capacity Battery, Tool Box, Fender RHS			
		With Large Capacity Battery, Tool Box, Fender RHS, For Dual Tilt Dozer			
1		02782-10315	Elbow	2	81087-
2		07002-12034	O-ring	2	81087-
3		02896-11009	O-ring	2	81087-
4		01010-81075	Bolt	2	81087-
5		01643-31032	Washer	2	81087-
6		17A-61-43941	Cover	1	81087-
7		01010-81225	Bolt	3	81087-
8		01643-31232	Washer	3	81087-
9		17A-61-43910	Hose	1	81087-
10		04434-52112	Clip	1	81087-
11		07095-20314	Cushion	1	81087-
12		17A-61-43930	Hose	1	81087-
13		04434-52112	Clip	1	81087-
14		07095-20314	Cushion	1	81087-
15		01010-81225	Bolt	1	81087-
16		01643-31232	Washer	1	81087-

FIG. M2210-025009 Fender, Fender

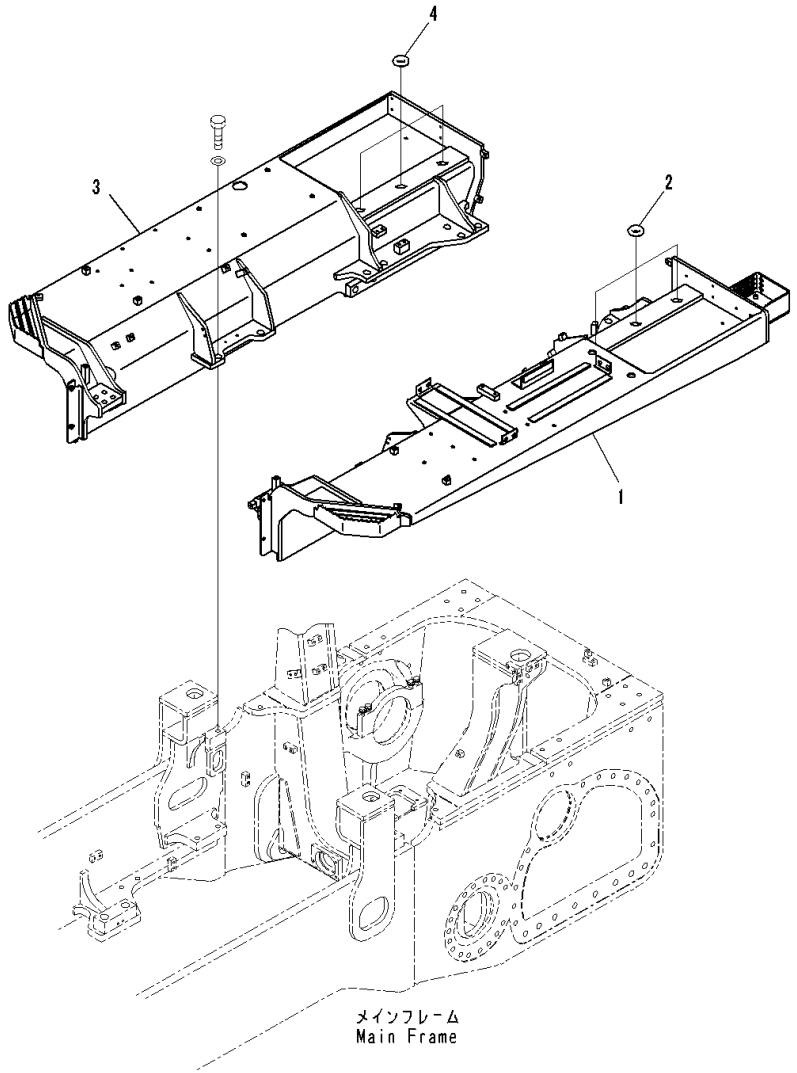

Index	Code	Part Number	Description	Qty	Serial Number
		Note: This list covers following specifications.			
		With Battery			
		With Battery, For Dual Tilt Dozer			
		With Large Capacity Battery			
		With Large Capacity Battery, For Dual Tilt Dozer			
		With Large Capacity Battery, Tool Box, Fender RHS			
		With Large Capacity Battery, Tool Box, Fender RHS, For Dual Tilt Dozer			
1		17A-54-44113	Fender	1	81087-
2		17A-04-12550	Cushion	3	81087-
3		17A-54-44523	Fender,RHS	1	81087-
4		17A-04-12550	Cushion	3	81087-

FIG. M2210-025010 Fender, Battery

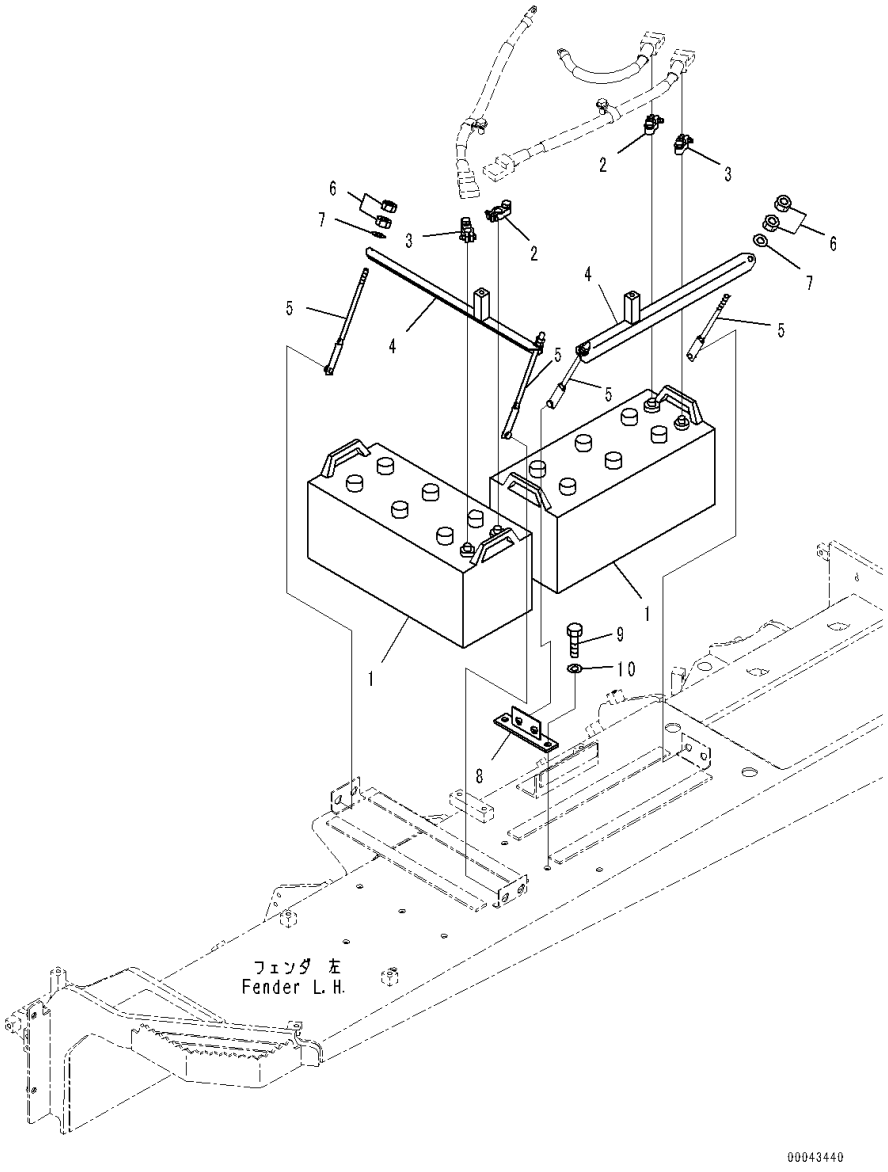

Index	Code	Part Number	Description	Qty	Serial Number
		Note: This list covers following specifications.			
		With Battery			
		With Battery, For Dual Tilt Dozer			
1		08000-32220	Battery, Wet, 165G51	2	81087-
2		08000-00000	Terminal	2	81087-
3		08000-00001	Terminal	2	81087-
4		17A-06-41941	Holder	2	81087-
5		175-06-39621	Rod	4	81087-
6		01580-11008	Nut	8	81087-
7		01643-31032	Washer	4	81087-
8		17A-54-44171	Bracket	1	81087-
9		01010-81230	Bolt	2	81087-
10		01643-31232	Washer	2	81087-

FIG. M2210-025011 Fender, Hydraulic Tank

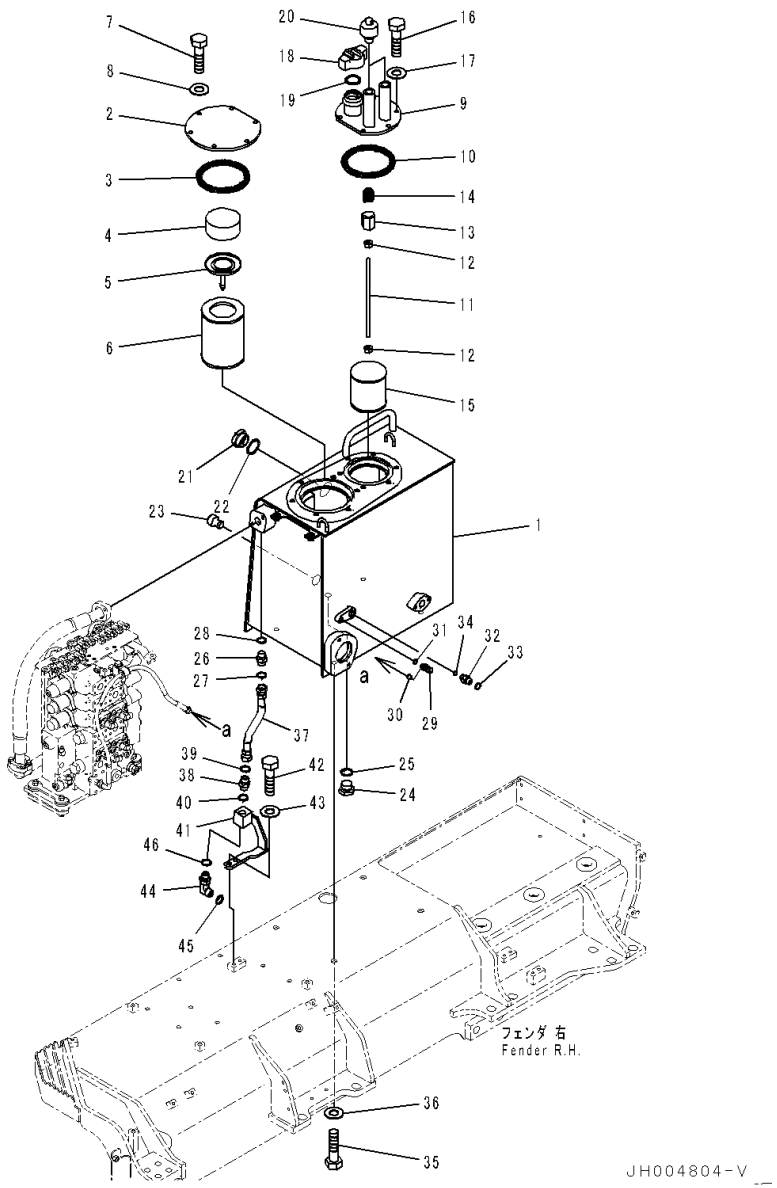

Index	Code	Part Number	Description	Qty	Serial Number
		Note: This list covers following specifications.			
		With Battery			
		With Battery, For Dual Tilt Dozer			
		With Large Capacity Battery			
		With Large Capacity Battery, For Dual Tilt Dozer			
		With Large Capacity Battery, Tool Box, Fender RHS			
		With Large Capacity Battery, Tool Box, Fender RHS, For Dual Tilt Dozer			
1		17A-60-51711	Tank	1	81087-
2		22U-60-21232	Cover	1	81087-
3		07000-15195	O-ring	1	81087-
4		20Y-60-21240	Spring	1	81087-
5		20Y-60-31131	Valve Assembly	1	81087-
6		207-60-71182	Element	1	81087-
7		01010-81230	Bolt	6	81087-
8		01643-31232	Washer	6	81087-
9		17A-60-51720	Cover	1	81087-
10		07000-15160	O-ring	1	81087-
		17A-60-41211	Strainer Assembly	1	81087-
	C1		• Rod	1	81087-
11	C1		• • Rod	1	81087-
12	C1		• • Rod	2	81087-
13		20Y-60-21320	• • Holder	1	81087-
14		12R-60-11230	• • Spring	1	81087-
15		22B-60-11160	• Strainer	1	81087-
16		01010-81230	Bolt	6	81087-
17		01643-31232	Washer	6	81087-
18		07092-01000	Cap	1	81087-
19		07051-00005	• Gasket	1	81087-
20		22U-60-21520	Breather	2	81087-
21		20N-60-11143	Gauge	1	81087-
22		20N-60-11181	• Gasket	1	81087-
23		198-60-19820	Valve	1	81087-
24		07040-12412	Plug	1	81087-
25		07002-12434	O-ring	1	81087-
26		02781-00522	Union	1	81087-
27		02896-11015	O-ring	1	81087-
28		07002-12434	O-ring	1	81087-
29		02782-10311	Elbow	1	81087-
30		02896-11009	O-ring	1	81087-

FIG. M2210-025011 Fender, Hydraulic Tank

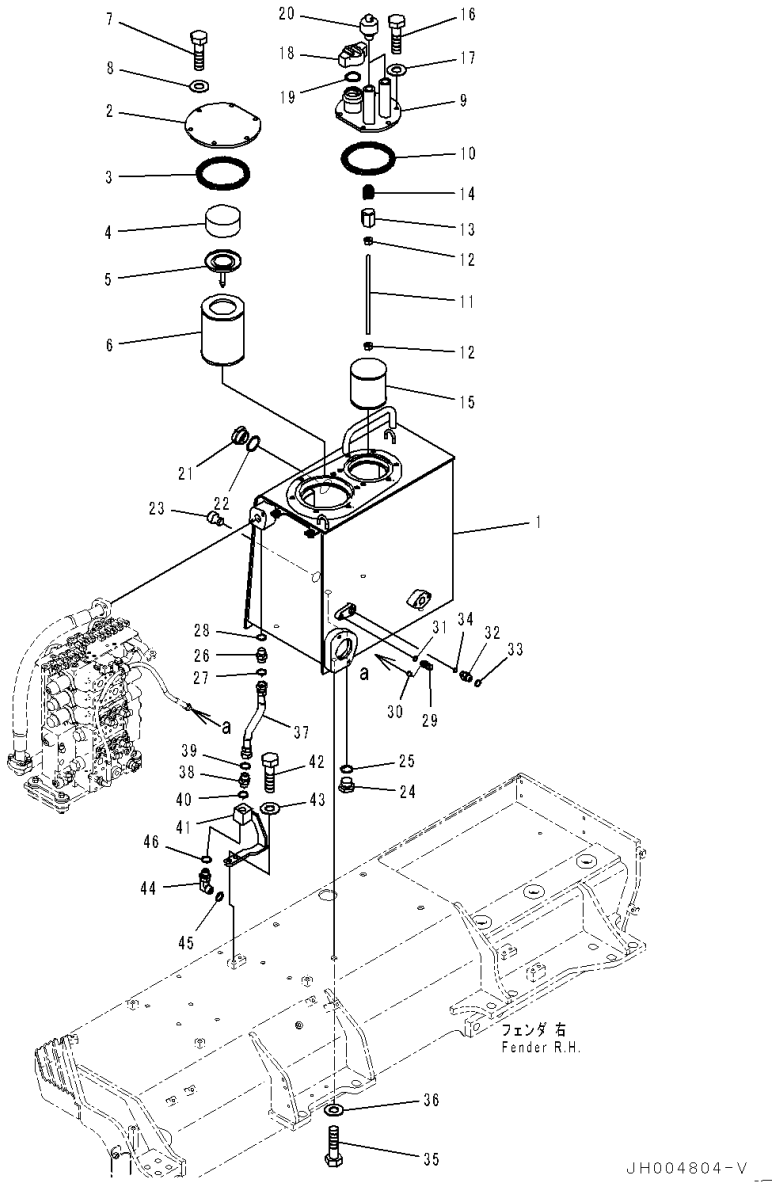

Index	Code	Part Number	Description	Qty	Serial Number
31		07002-11423	O-ring	1	81087-
32		02781-00422	Union	1	81087-
33		02896-11012	O-ring	1	81087-
34		07002-12034	O-ring	1	81087-
35		01010-81635	Bolt	4	81087-
36		01643-31645	Washer	4	81087-
37		02762-00503	Hose, Face Seal Type	1	81087-
38		02781-00522	Union	1	81087-
39		02896-11015	O-ring	1	81087-
40		07002-12434	O-ring	1	81087-
41		17A-60-42162	Cover	1	81087-
42		01010-81225	Bolt	2	81087-
43		01643-31232	Washer	2	81087-
44		02782-1052A	Elbow	1	81087-
45		02896-11015	O-ring	1	81087-
46		07002-12434	O-ring	1	81087-

FIG. M2210-025012 Fender, Control Valve (1/9)

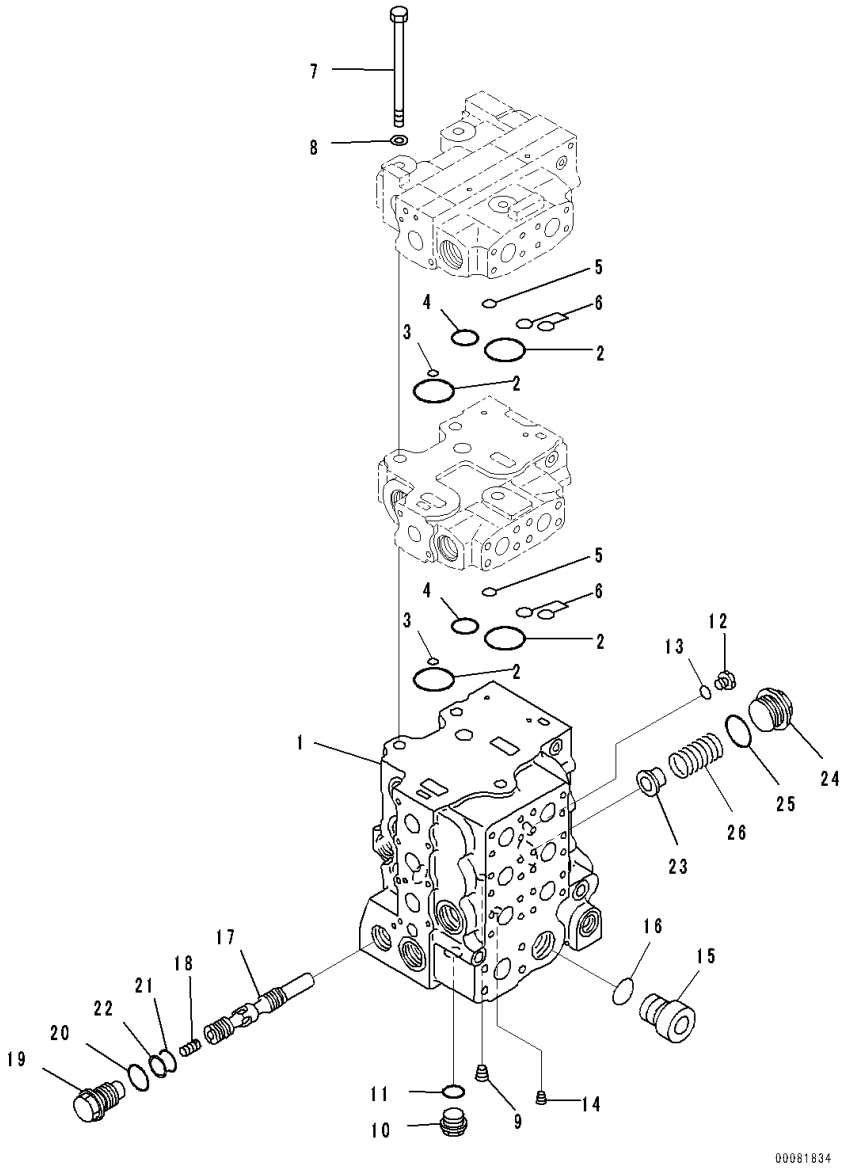

Index	Code	Part Number	Description	Qty	Serial Number
		Note: This list covers following specifications.			
		With Battery			
		With Large Capacity Battery			
		With Large Capacity Battery, Tool Box, Fender RHS			
		723-65-21700	Valve Assembly, Control	1	81087-
1	C1		• Body	1	81087-
2		07000-13048	• O-ring	4	81087-
3		07000-11009	• O-ring	2	81087-
4		07000-13030	• O-ring	2	81087-
5		07000-12012	• O-ring	2	81087-
6		722-12-19120	• O-ring	4	81087-
7		01011-61460	• Bolt	3	81087-
8		01643-31445	• Washer	3	81087-
9	C1		• Plug	1	81087-
10		709-74-91860	• Plug	1	81087-
11		07002-12434	• O-ring	1	81087-
12		702-21-55620	• Plug	1	81087-
13		07002-11423	• O-ring	1	81087-
14	C1		• Plug	12	81087-
15		07040-13316	• Plug	1	81087-
16		07002-13334	• O-ring	1	81087-
17	C1		• Spool	1	81087-
18		723-63-31520	• Piston	1	81087-
19		723-63-31530	• Plug	1	81087-
20		07002-13034	• O-ring	1	81087-
21		700-13-31161	• O-ring	1	81087-
22		723-63-32710	• Ring	1	81087-
23		723-63-31540	• Retainer	1	81087-
24		723-63-31550	• Plug	1	81087-
25		07002-14234	• O-ring	1	81087-
26		723-63-32560	• Spring	1	81087-

FIG. M2210-025013 Fender, Control Valve (2/9)

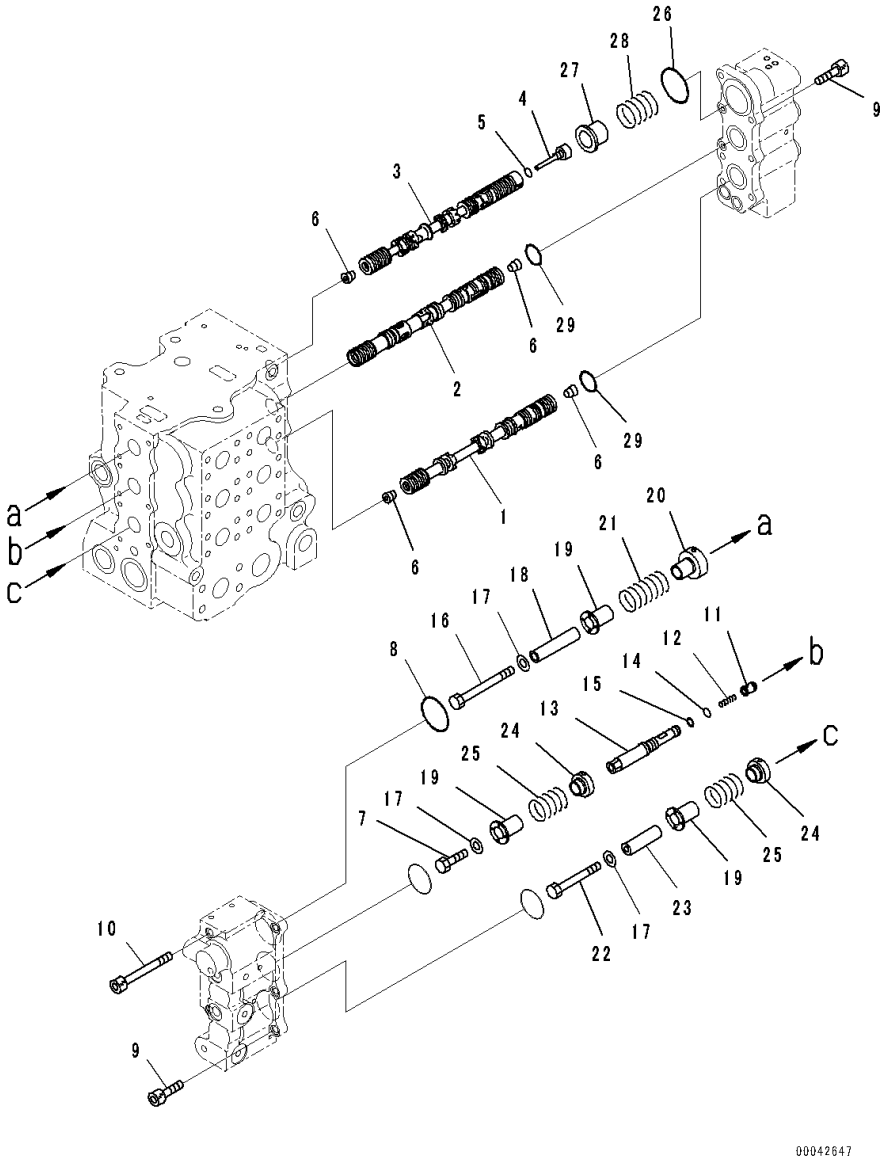

Index	Code	Part Number	Description	Qty	Serial Number
		Note: This list covers following specifications.			
		With Battery			
		With Battery, For Dual Tilt Dozer			
		With Large Capacity Battery			
		With Large Capacity Battery, For Dual Tilt Dozer			
		With Large Capacity Battery, Tool Box, Fender RHS			
		With Large Capacity Battery, Tool Box, Fender RHS, For Dual Tilt Dozer			
		723-65-21700	Valve Assembly, Control ..... With Battery	1	81087-
		723-66-21100	Control ..... With Battery, For Dual Tilt Dozer	1	81087-
		723-65-21700	Valve Assembly, Control ..... With Large Capacity Battery	1	81087-
		723-66-21100	Control ..... With Large Capacity Battery, For Dual Tilt Dozer	1	81087-
		723-65-21700	Valve Assembly, Control ..... With Large Capacity Battery, Tool Box, Fender RHS	1	81087-
		723-66-21100	Control ..... With Large Capacity Battery, Tool Box, Fender RHS, For Dual Tilt Dozer	1	81087-
1	C1		• Spool	1	81087-
2	C1		• Spool	1	81087-
3	C1		• Spool	1	81087-
4		723-63-31640	• Plug	1	81087-
5		07002-11023	• O-ring	1	81087-
6	C1		• Plug, Tapered	4	81087-
7		01010-81016	• Bolt	1	81087-
8		07430-71380	• O-ring	1	81087-
9		01252-60820	• Bolt, Hexagon Socket Head	9	81087-
10		708-25-19160	• Bolt, Hexagon Socket Head	3	81087-
11		723-63-32540	• Valve	1	81087-
12		723-63-32550	• Spring	1	81087-
13		723-63-31930	• Plug	1	81087-
14		07000-11009	• O-ring	1	81087-
15		07001-01009	• Ring, Back-up	1	81087-
16		01010-81095	• Bolt	1	81087-
17		01643-31032	• Washer	3	81087-

FIG. M2210-025013 Fender, Control Valve (2/9)

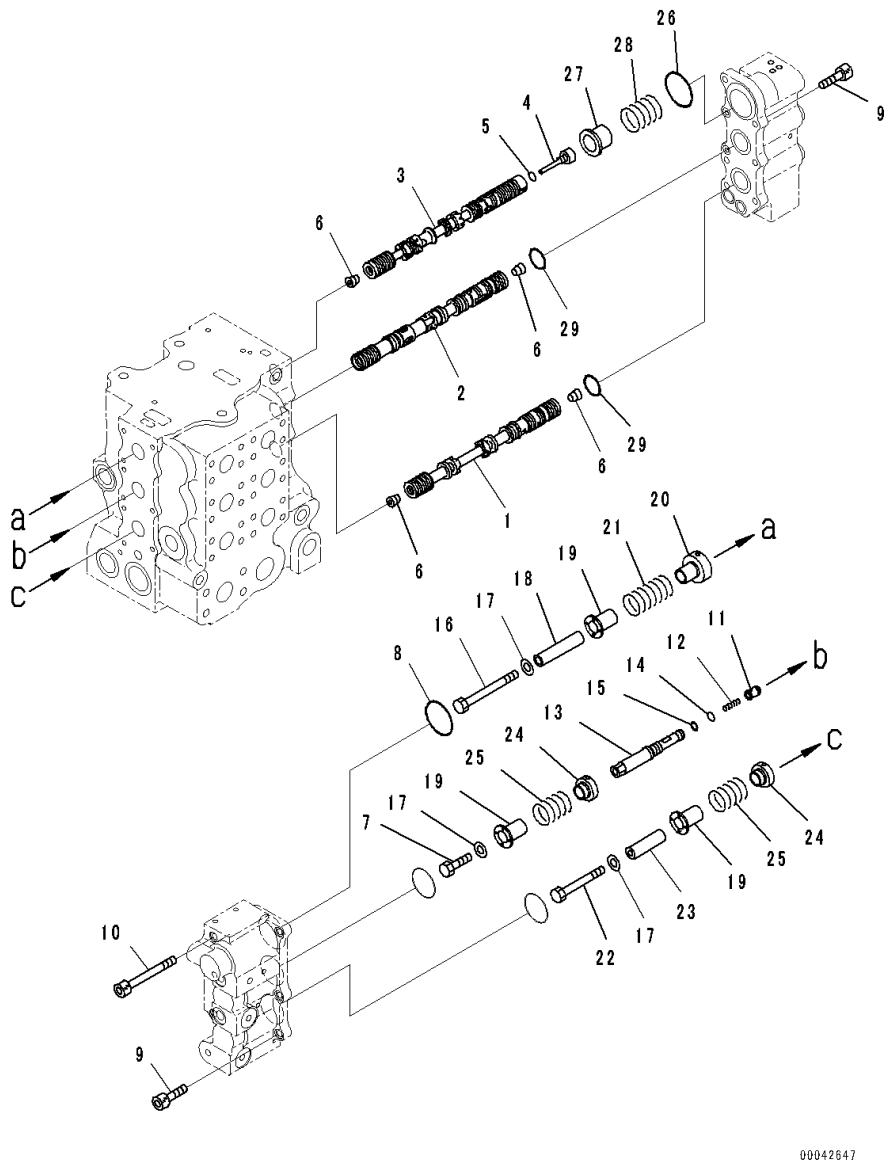

Index	Code	Part Number	Description	Qty	Serial Number
18		723-63-31660	• Spacer	1	81087-
19		723-63-31670	• Retainer	3	81087-
20		723-63-31680	• Retainer	1	81087-
21		723-63-41510	• Spring	1	81087-
22		01010-81075	• Bolt	1	81087-
23		723-63-31720	• Spacer	1	81087-
24		723-63-31730	• Retainer	2	81087-
25		723-63-31740	• Spring	2	81087-
26		723-63-31760	• O-ring	1	81087-
27		723-63-31770	• Retainer	1	81087-
28		723-63-41520	• Spring	1	81087-
29		07000-12030	• O-ring	2	81087-

FIG. M2210-025014 Fender, Control Valve (3/9)

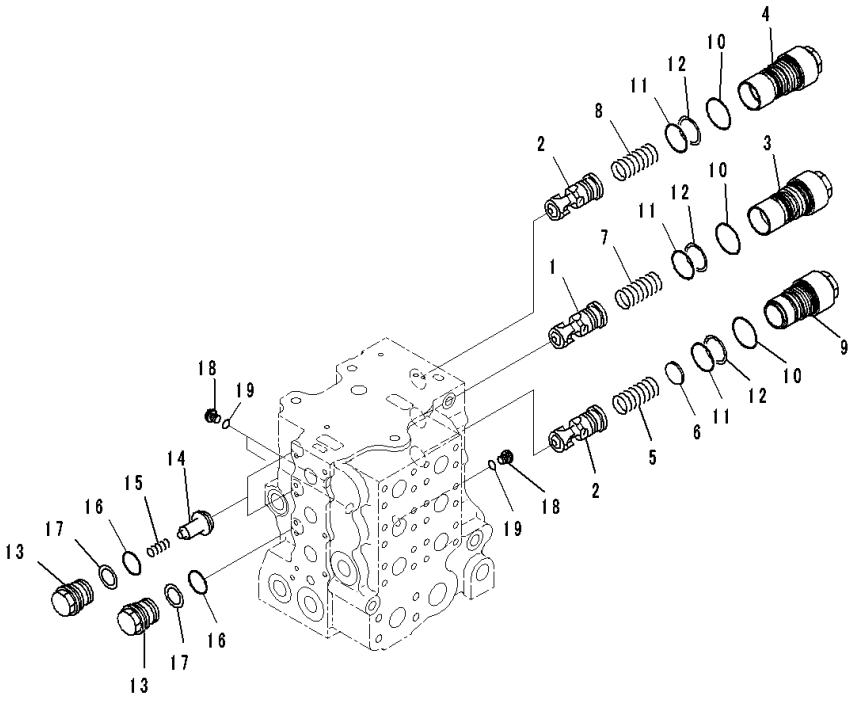

Index	Code	Part Number	Description	Qty	Serial Number
		Note: This list covers following specifications.			
		With Battery			
		With Battery, For Dual Tilt Dozer			
		With Large Capacity Battery			
		With Large Capacity Battery, For Dual Tilt Dozer			
		With Large Capacity Battery, Tool Box, Fender RHS			
		With Large Capacity Battery, Tool Box, Fender RHS, For Dual Tilt Dozer			
		723-65-21700	Valve Assembly, Control ..... With Battery	1	81087-
		723-66-21100	Control ..... With Battery, For Dual Tilt Dozer	1	81087-
		723-65-21700	Valve Assembly, Control ..... With Large Capacity Battery	1	81087-
		723-66-21100	Control ..... With Large Capacity Battery, For Dual Tilt Dozer	1	81087-
		723-65-21700	Valve Assembly, Control ..... With Large Capacity Battery, Tool Box, Fender RHS	1	81087-
		723-66-21100	Control ..... With Large Capacity Battery, Tool Box, Fender RHS, For Dual Tilt Dozer	1	81087-
1	C1		• Spool	1	81087-
2	C1		• Spool	2	81087-
3		723-63-32520	• Plug	1	81087-
4		723-63-32640	• Plug	1	81087-
5		723-63-31940	• Spring	1	81087-
6		723-63-31970	• Spacer	1	81087-
7		723-63-32530	• Spring	1	81087-
8		723-63-32650	• Spring	1	81087-
9		723-63-31960	• Plug	1	81087-
10		700-61-49160	• O-ring	3	81087-
11		723-63-31850	• O-ring	3	81087-
12		723-63-31860	• Ring	3	81087-
13		709-74-92821	• Plug	3	81087-
14		709-94-92811	• Valve	2	81087-
15		709-94-91751	• Spring	2	81087-
16		700-93-11320	• O-ring	3	81087-
17		700-93-11330	• Ring, Back-up	3	81087-

FIG. M2210-025014 Fender, Control Valve (3/9)

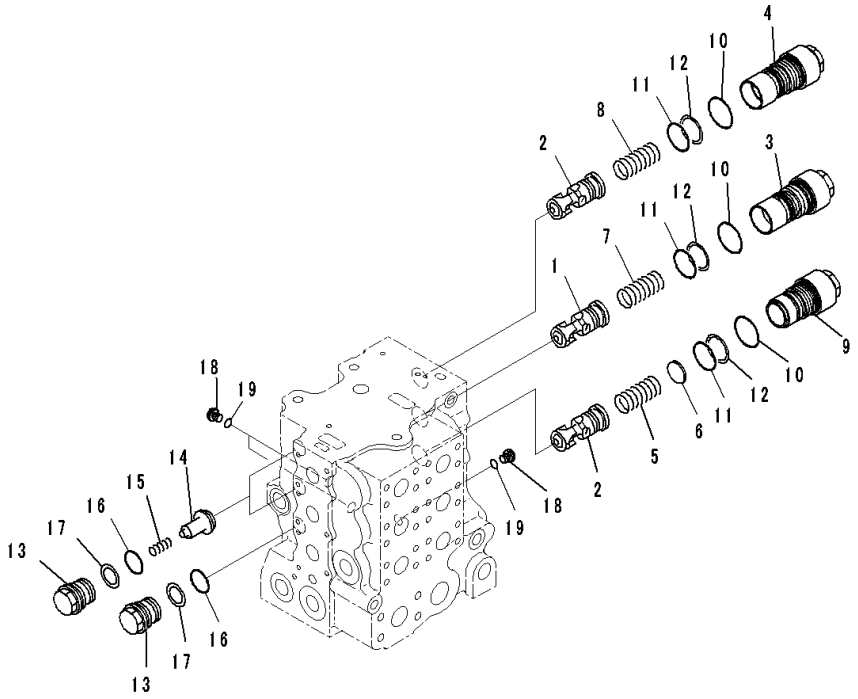

Index	Code	Part Number	Description	Qty	Serial Number
18		708-8E-16160	• Plug	3	81087-
19		07002-11023	• O-ring	3	81087-

FIG. M2210-025015 Fender, Control Valve (4/9)

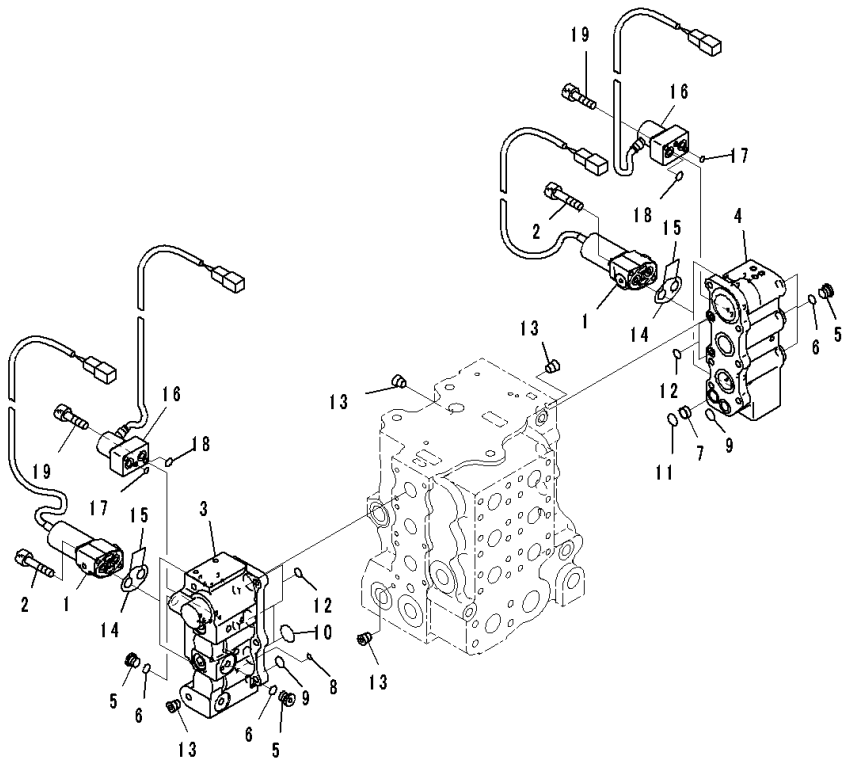

Index	Code	Part Number	Description	Qty	Serial Number
		Note: This list covers following specifications.			
		With Battery			
		With Battery, For Dual Tilt Dozer			
		With Large Capacity Battery			
		With Large Capacity Battery, For Dual Tilt Dozer			
		With Large Capacity Battery, Tool Box, Fender RHS			
		With Large Capacity Battery, Tool Box, Fender RHS, For Dual Tilt Dozer			
		723-65-21700	Valve Assembly, Control ..... With Battery	1	81087-
		723-66-21100	Control ..... With Battery, For Dual Tilt Dozer	1	81087-
		723-65-21700	Valve Assembly, Control ..... With Large Capacity Battery	1	81087-
		723-66-21100	Control ..... With Large Capacity Battery, For Dual Tilt Dozer	1	81087-
		723-65-21700	Valve Assembly, Control ..... With Large Capacity Battery, Tool Box, Fender RHS	1	81087-
		723-66-21100	Control ..... With Large Capacity Battery, Tool Box, Fender RHS, For Dual Tilt Dozer	1	81087-
1		702-21-07630	• Valve, Solenoid	4	81087-
2		203-60-62220	• Bolt	8	81087-
3		723-63-32730	• Block	1	81087-
4		723-63-32740	• Block	1	81087-
5		702-21-55620	• Plug	5	81087-
6		07002-11423	• O-ring	5	81087-
7		723-63-32810	• Ring	1	81087-
8		07000-11009	• O-ring	1	81087-
9		07000-12016	• O-ring	2	81087-
10		702-21-55450	• O-ring	2	81087-
11		722-12-19070	• O-ring	1	81087-
12		07000-11010	• O-ring	4	81087-
13	C1		• Plug	15	81087-
14		702-21-39450	• O-ring	4	81087-
15		700-22-11410	• O-ring	8	81087-
16		702-21-58100	• Valve, Pilot	2	81087-
17		723-11-19960	• • O-ring	1	81087-

FIG. M2210-025015 Fender, Control Valve (4/9)

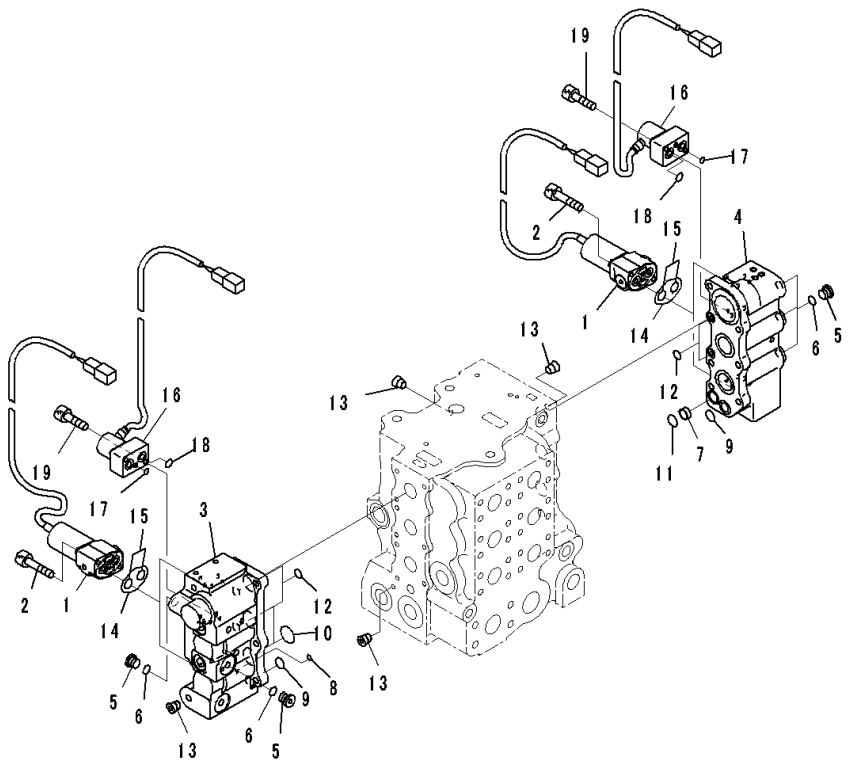

Index	Code	Part Number	Description	Qty	Serial Number
18		702-21-54910	• • O-ring	2	81087-
19		01252-60635	• Bolt, Hexagon Socket Head	4	81087-

FIG. M2210-025016 Fender, Control Valve (5/9)

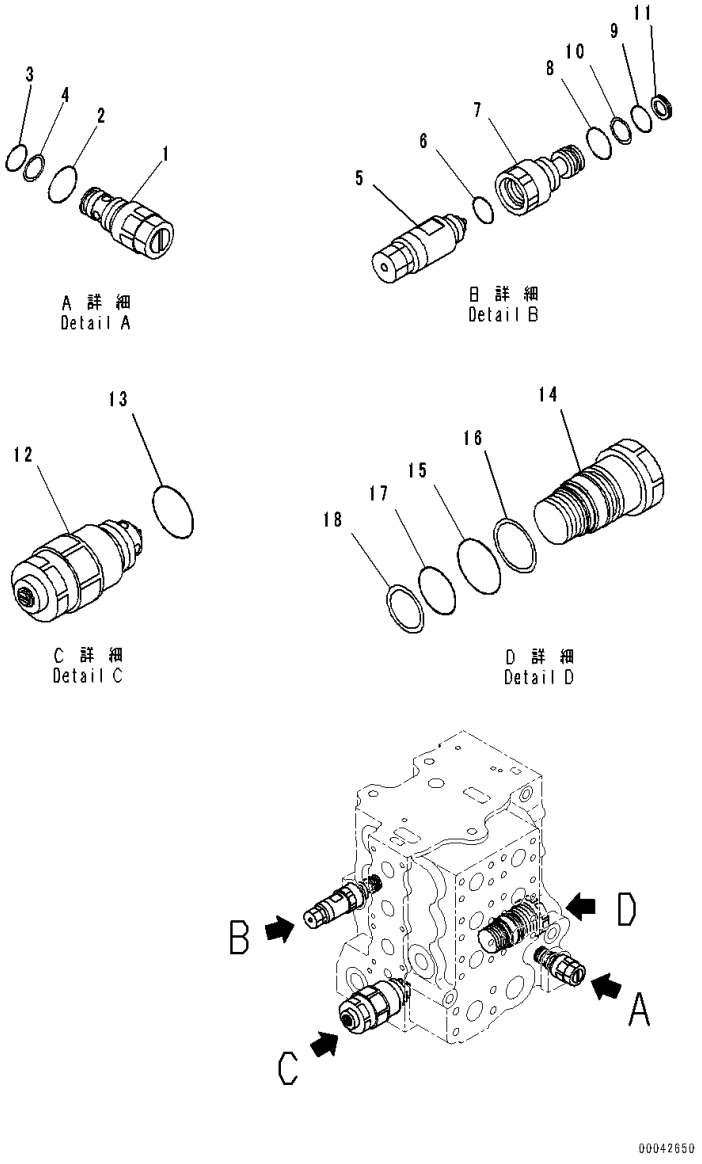

Index	Code	Part Number	Description	Qty	Serial Number
		Note: This list covers following specifications.			
		With Battery			
		With Battery, For Dual Tilt Dozer			
		With Large Capacity Battery			
		With Large Capacity Battery, For Dual Tilt Dozer			
		With Large Capacity Battery, Tool Box, Fender RHS			
		With Large Capacity Battery, Tool Box, Fender RHS, For Dual Tilt Dozer			
		723-65-21700	Valve Assembly, Control ..... With Battery	1	81087-
		723-66-21100	Control ..... With Battery, For Dual Tilt Dozer	1	81087-
		723-65-21700	Valve Assembly, Control ..... With Large Capacity Battery	1	81087-
		723-66-21100	Control ..... With Large Capacity Battery, For Dual Tilt Dozer	1	81087-
		723-65-21700	Valve Assembly, Control ..... With Large Capacity Battery, Tool Box, Fender RHS	1	81087-
		723-66-21100	Control ..... With Large Capacity Battery, Tool Box, Fender RHS, For Dual Tilt Dozer	1	81087-
1		723-60-21800	• Valve, Relief	1	81087-
2		07002-02434	• • O-ring	1	81087-
3		07000-12016	• • O-ring	1	81087-
4		07001-02016	• • Ring, Back-up	1	81087-
5		723-20-65700	• Valve, Relief	1	81087-
6		07002-12034	• • O-ring	2	81087-
7		723-63-32790	• Sleeve	1	81087-
8		07002-02434	• O-ring	1	81087-
9		07000-22016	• O-ring	1	81087-
10		07001-02016	• Ring, Back-up	1	81087-
11		702-21-53130	• Filter	1	81087-
12		723-60-23100	• Valve Assembly, Suction and Relief	1	81087-
13		07002-03634	• • O-ring	1	81087-
14		723-63-31990	• Plug	1	81087-
15		07000-13035	• O-ring	1	81087-
16		07001-03035	• Ring, Back-up	1	81087-
17		07000-13030	• O-ring	1	81087-

FIG. M2210-025016 Fender, Control Valve (5/9)

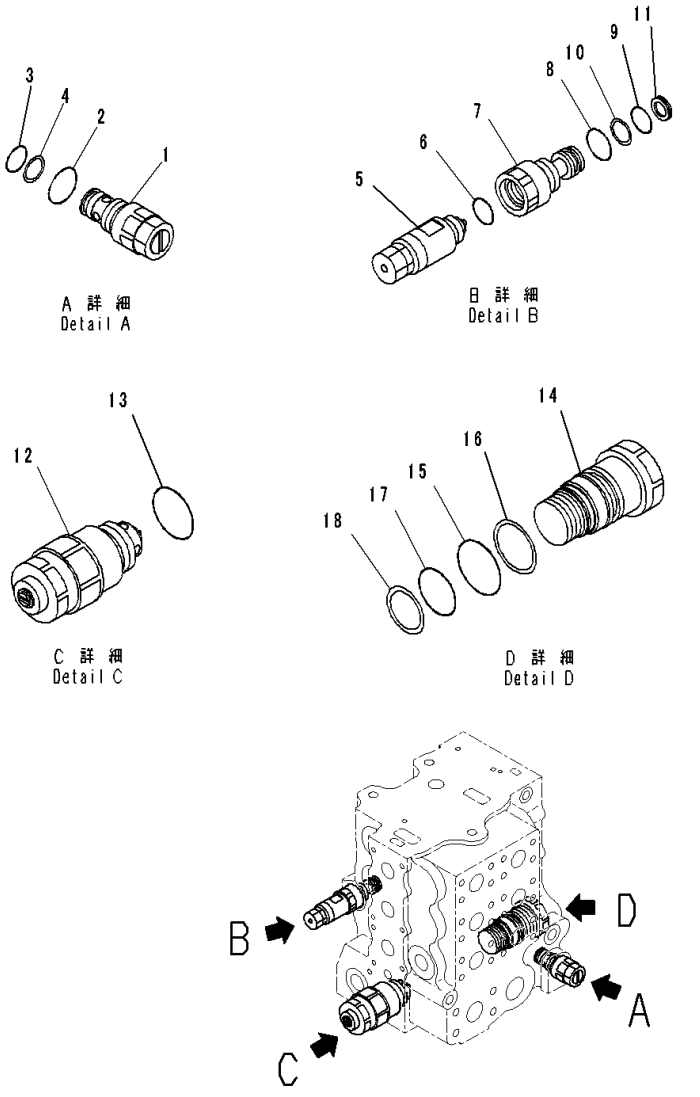

Index	Code	Part Number	Description	Qty	Serial Number
18		07001-03030	• Ring, Back-up	1	81087-

FIG. M2210-025017 Fender, Control Valve (6/9)

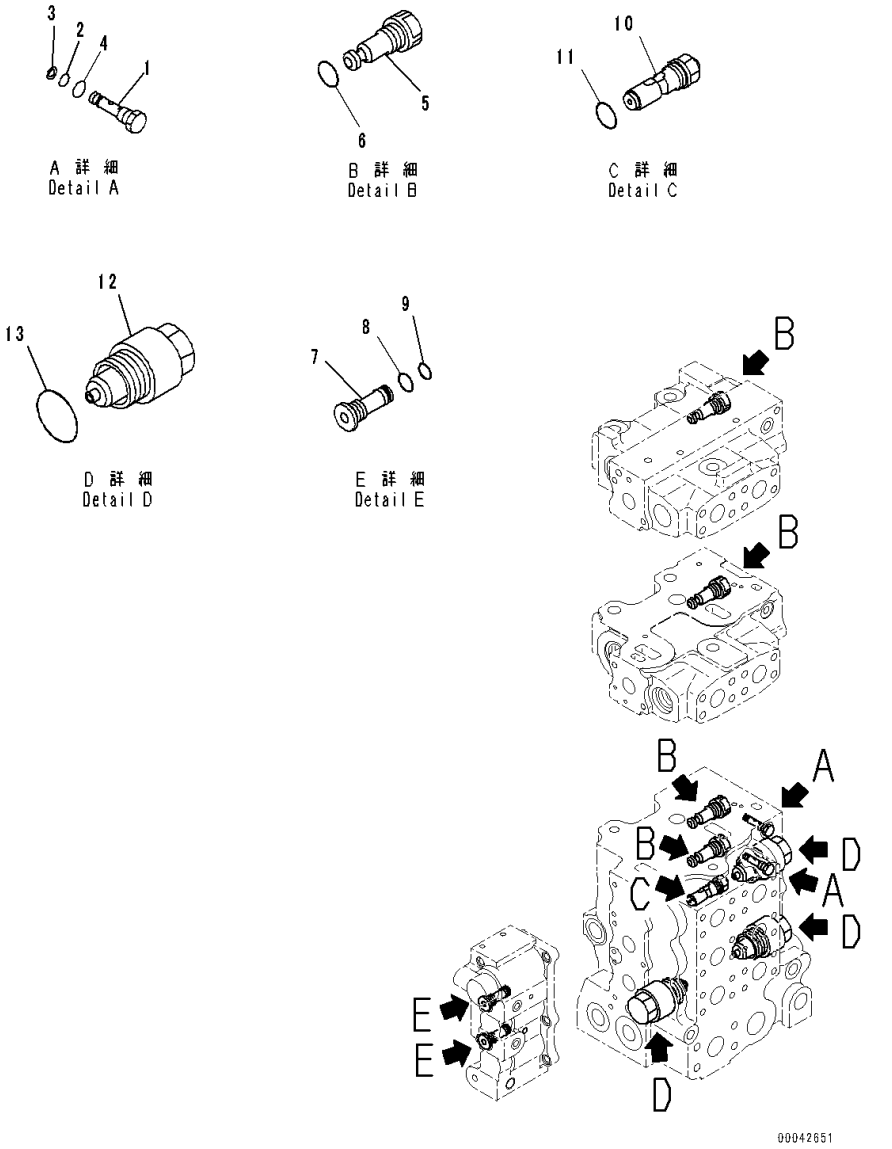

Index	Code	Part Number	Description	Qty	Serial Number
		Note: This list covers following specifications.			
		With Battery			
		With Battery, For Dual Tilt Dozer			
		With Large Capacity Battery			
		With Large Capacity Battery, For Dual Tilt Dozer			
		With Large Capacity Battery, Tool Box, Fender RHS			
		With Large Capacity Battery, Tool Box, Fender RHS, For Dual Tilt Dozer			
		723-65-21700	Valve Assembly, Control With Battery	1	81087-
		723-66-21100	Control With Battery, For Dual Tilt Dozer	1	81087-
		723-65-21700	Valve Assembly, Control With Large Capacity Battery	1	81087-
		723-66-21100	Control With Large Capacity Battery, For Dual Tilt Dozer	1	81087-
		723-65-21700	Valve Assembly, Control With Large Capacity Battery, Tool Box, Fender RHS	1	81087-
		723-66-21100	Control With Large Capacity Battery, Tool Box, Fender RHS, For Dual Tilt Dozer	1	81087-
1		723-60-23601	• Valve Assembly, Check	2	81087-
2		07000-11005	• • O-ring	1	81087-
3		07001-01005	• • Ring, Back-up	1	81087-
4		07002-11023	• • O-ring	1	81087-
5		723-60-23400	• Valve Assembly, Check	5	81087-
6		07002-11823	• • O-ring	1	81087-
7		708-7R-18230	• Filter	2	81087-
8		07002-11423	• O-ring	2	81087-
9		07000-11009	• O-ring	2	81087-
10		723-60-23501	• Valve, Check	1	81087-
11		07002-11823	• • O-ring	1	81087-
12		723-60-23800	• Valve Assembly, Suction	3	81087-
13		07002-13634	• • O-ring	1	81087-

FIG. M2210-025018 Fender, Control Valve (7/9)

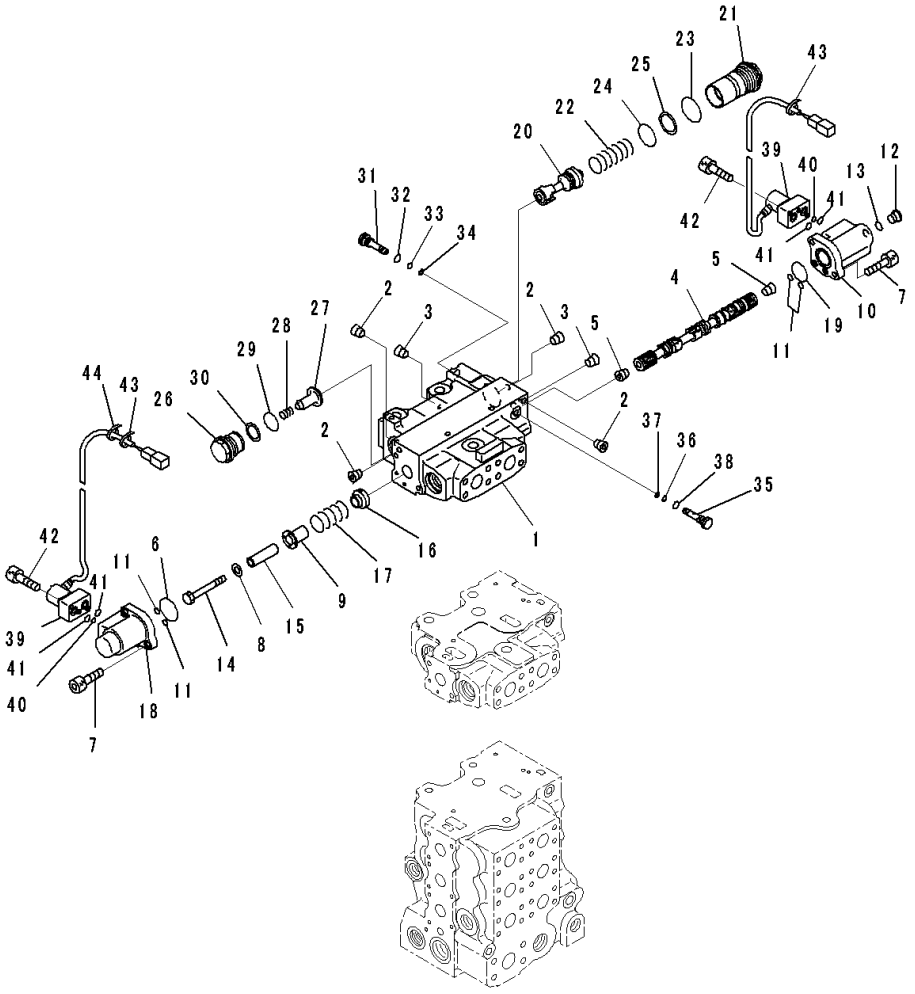

Index	Code	Part Number	Description	Qty	Serial Number
		Note: This list covers following specifications.			
		With Battery			
		With Large Capacity Battery			
		With Large Capacity Battery, Tool Box, Fender RHS			
		723-65-21700	Valve Assembly, Control	1	81087-
		723-61-25600	• Valve Assembly	1	81087-
1	C1		• • Block	1	81087-
2	C1		• • Plug	4	81087-
3	C1		• • Plug	2	81087-
4	C1		• • Spool	1	81087-
5	C1		• • Plug, Tapered	2	81087-
6		702-21-55450	• • O-ring	1	81087-
7		01252-60820	• • Bolt, Hexagon Socket Head	4	81087-
8		01643-31032	• • Washer	1	81087-
9		723-63-31670	• • Retainer	1	81087-
10		723-63-32760	• • Case	1	81087-
11		07000-11007	• • O-ring	4	81087-
12		702-21-55620	• • Plug	1	81087-
13		07002-11423	• • O-ring	1	81087-
14		01010-81075	• • Bolt	1	81087-
15		723-63-31720	• • Spacer	1	81087-
16		723-63-31730	• • Retainer	1	81087-
17		723-63-31740	• • Spring	1	81087-
18		723-63-32750	• • Case	1	81087-
19		07000-12030	• • O-ring	1	81087-
20	C1		• • Spool	1	81087-
21		723-63-32630	• • Plug	1	81087-
22		723-63-32770	• • Spring	1	81087-
23		700-61-49160	• • O-ring	1	81087-
24		723-63-31850	• • O-ring	1	81087-
25		723-63-31860	• • Ring	1	81087-
26		709-74-92821	• • Plug	1	81087-
27		709-94-92811	• • Valve	1	81087-
28		709-94-91751	• • Spring	1	81087-
29		700-93-11320	• • O-ring	1	81087-
30		700-93-11330	• • Ring, Back-up	1	81087-
31		723-63-31610	• • Plug	1	81087-
32		07002-11423	• • O-ring	1	81087-
33		07000-11007	• • O-ring	1	81087-
34		07001-01007	• • Ring, Back-up	1	81087-

FIG. M2210-025018 Fender, Control Valve (7/9)

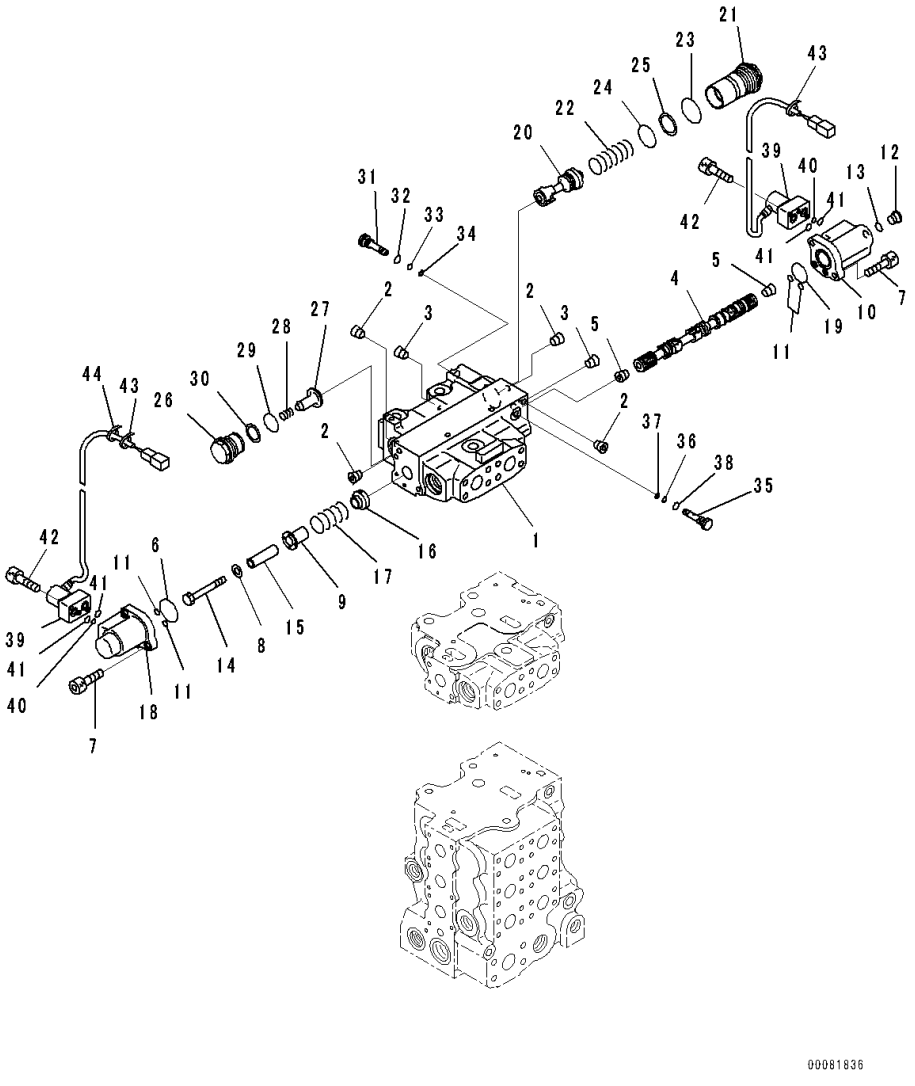

Index	Code	Part Number	Description	Qty	Serial Number
35		723-60-24501	• • Valve, Check	1	81087-
36		07000-11005	• • • O-ring	1	81087-
37		07001-01005	• • • Ring, Back-up	1	81087-
38		07002-11023	• • • O-ring	1	81087-
39		702-21-57400	• • Valve, Pilot	2	81087-
40		723-11-19960	• • • O-ring	1	81087-
41		702-21-54910	• • • O-ring	2	81087-
42		01252-60635	• • Bolt, Hexagon Socket Head	4	81087-
43		20Y-62-22790	• • Band, Red	2	81087-
44		08034-20414	• • Band	1	81087-

FIG. M2210-025019 Fender, Control Valve (8/9)

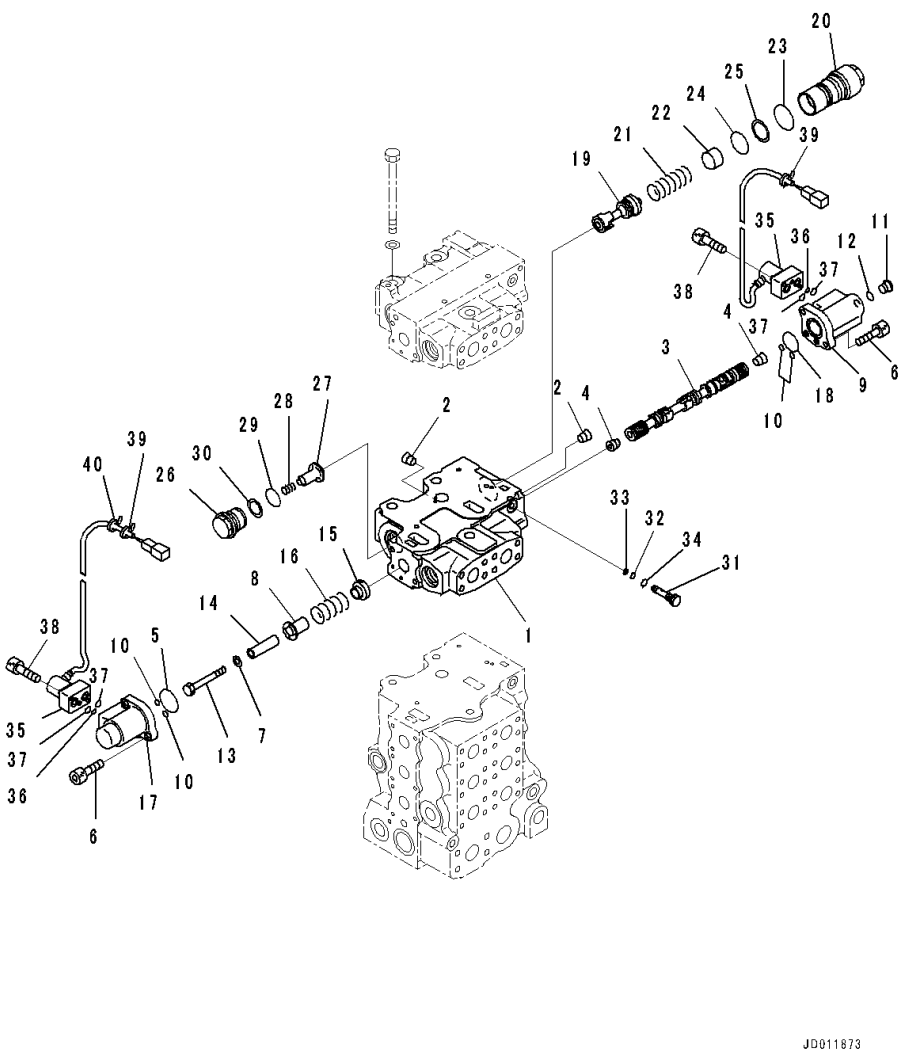

Index	Code	Part Number	Description	Qty	Serial Number
		Note: This list covers following specifications.			
		With Battery			
		With Large Capacity Battery			
		With Large Capacity Battery, Tool Box, Fender RHS			
		723-65-21700	Valve Assembly, Control	1	81087-
		723-61-25400	• Valve Assembly	1	81087-
1	C1		• • Block	1	81087-
2	C1		• • Plug	2	81087-
3	C1		• • Spool	1	81087-
4	C1		• • Plug, Tapered	2	81087-
5		702-21-55450	• • O-ring	1	81087-
6		01252-60820	• • Bolt, Hexagon Socket Head	4	81087-
7		01643-31032	• • Washer	1	81087-
8		723-63-31670	• • Retainer	1	81087-
9		723-63-32760	• • Case	1	81087-
10		07000-11007	• • O-ring	4	81087-
11		702-21-55620	• • Plug	1	81087-
12		07002-11423	• • O-ring	1	81087-
13		01010-81075	• • Bolt	1	81087-
14		723-63-31720	• • Spacer	1	81087-
15		723-63-31730	• • Retainer	1	81087-
16		723-63-31740	• • Spring	1	81087-
17		723-63-32750	• • Case	1	81087-
18		07000-12030	• • O-ring	1	81087-
19	C1		• • Spool	1	81087-
20		723-63-32640	• • Plug	1	81087-
21		723-63-32770	• • Spring	1	81087-
22		723-63-32780	• • Spacer	1	81087-
23		700-61-49160	• • O-ring	1	81087-
24		723-63-31850	• • O-ring	1	81087-
25		723-63-31860	• • Ring	1	81087-
26		709-74-92821	• • Plug	1	81087-
27		709-94-92811	• • Valve	1	81087-
28		709-94-91751	• • Spring	1	81087-
29		700-93-11320	• • O-ring	1	81087-
30		700-93-11330	• • Ring, Back-up	1	81087-
31		723-60-24501	• • Valve, Check	1	81087-
32		07000-11005	• • • O-ring	1	81087-
33		07001-01005	• • • Ring, Back-up	1	81087-
34		07002-11023	• • • O-ring	1	81087-

FIG. M2210-025019 Fender, Control Valve (8/9)

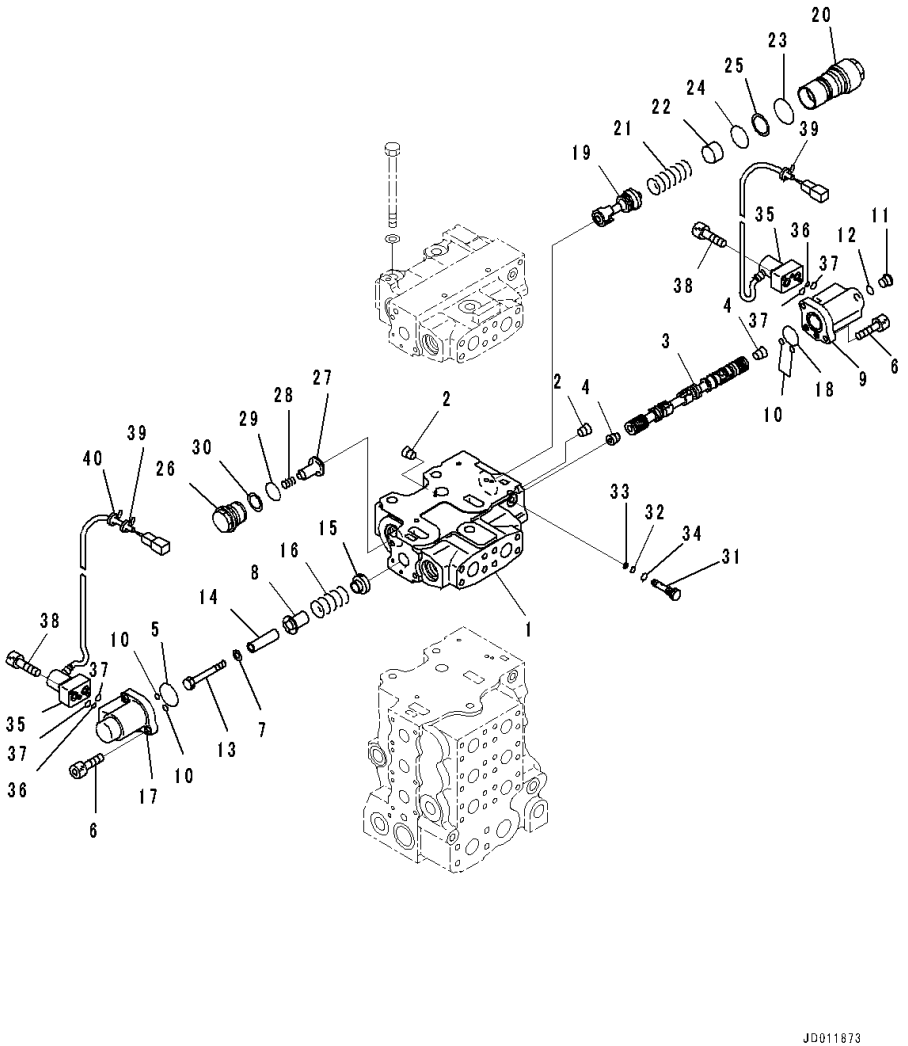

Index	Code	Part Number	Description	Qty	Serial Number
35		702-21-57400	• • Valve, Pilot	2	81087-
36		723-11-19960	• • • O-ring	1	81087-
37		702-21-54910	• • • O-ring	2	81087-
38		01252-60635	• • Bolt, Hexagon Socket Head	4	81087-
39		20Y-62-22810	• • Band, Yellow	2	81087-
40		08034-20414	• • Band	1	81087-

FIG. M2210-025020 Fender, Control Valve (9/9)

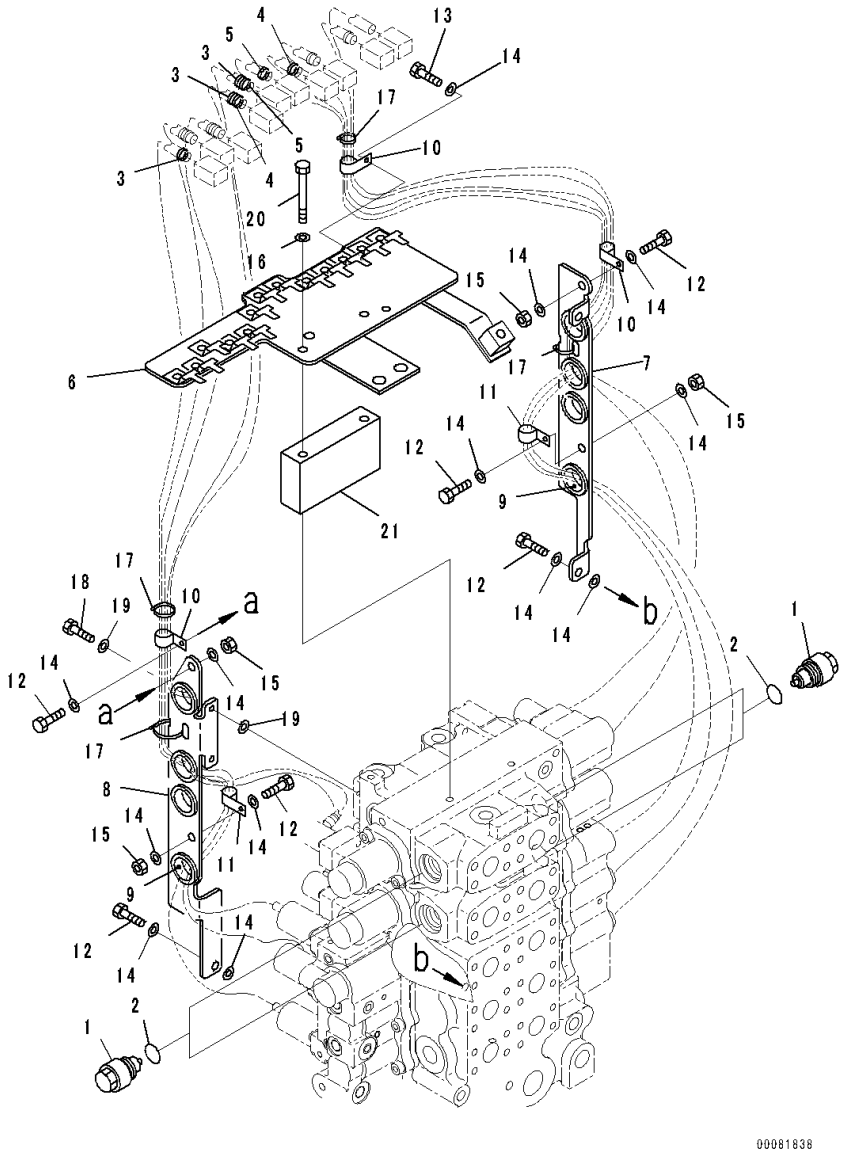

Index	Code	Part Number	Description	Qty	Serial Number
		Note: This list covers following specifications.			
		With Battery			
		With Large Capacity Battery			
		With Large Capacity Battery, Tool Box, Fender RHS			
		723-65-21700	Valve Assembly, Control	1	81087-
1		723-40-85100	• Valve Assembly, Suction	4	81087-
2		709-25-11390	• • O-ring	1	81087-
3		08034-20414	• Band	3	81087-
4		20Y-62-22850	• Band, Green	2	81087-
5		20Y-62-22860	• Band, Brown	2	81087-
		723-66-05201	• Bracket Group	1	81087-
6		723-63-32910	• • Bracket	1	81087-
7		723-63-32920	• • Bracket	1	81087-
8		723-63-32930	• • Bracket	1	81087-
9		08037-02512	• • Grommet	8	81087-
10		04434-51608	• • Clip	3	81087-
11		04434-51208	• • Clip	2	81087-
12		01010-80820	• • Bolt	7	81087-
13		01010-80816	• • Bolt	1	81087-
14		01643-30823	• • Washer	15	81087-
15		01580-10806	• • Nut	4	81087-
16		01643-30823	• • Washer	2	81087-
17		08034-20834	• • Band	4	81087-
18		01010-80620	• • Bolt	2	81087-
19		01643-30623	• • Washer	4	81087-
20		20T-62-61970	• • Bolt	2	81087-
21		723-63-32950	• • Block	1	81087-

FIG. M2210-025021 Fender, C.L.S.S Valve

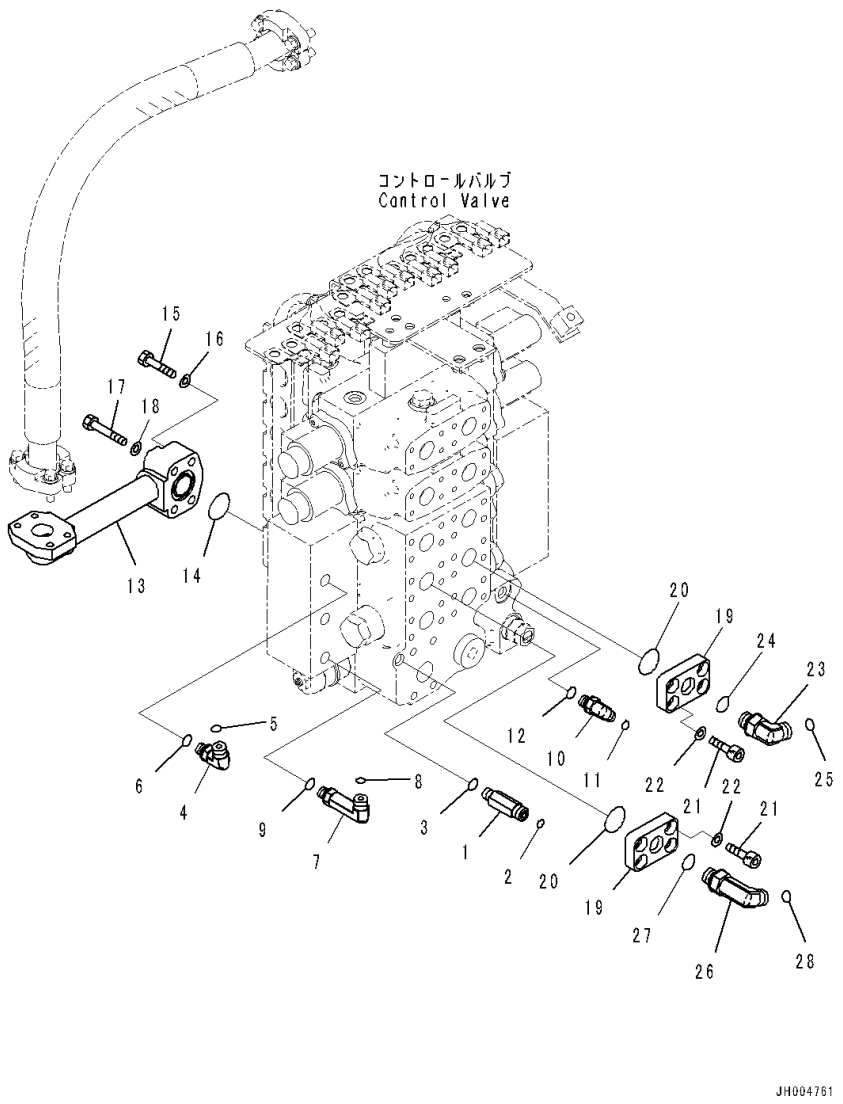

Index	Code	Part Number	Description	Qty	Serial Number
		Note: This list covers following specifications.			
		With Battery			
		With Large Capacity Battery			
		With Large Capacity Battery, Tool Box, Fender RHS			
1		20U-62-41710	Nipple	1	81087-
2		02896-11009	O-ring	1	81087-
3		07002-11423	O-ring	1	81087-
4		02782-10311	Elbow	1	81087-
5		02896-11009	O-ring	1	81087-
6		07002-11423	O-ring	1	81087-
7		02782-10312	Elbow	1	81087-
8		02896-11009	O-ring	1	81087-
9		07002-11423	O-ring	1	81087-
10		154-61-75761	Elbow	1	81087-
11		02896-11008	O-ring	1	81087-
12		07002-11423	O-ring	1	81087-
13		17A-60-41120	Tube	1	81087-
14		07000-73035	O-ring	1	81087-
15		01010-81055	Bolt	2	81087-
16		01643-31032	Washer	2	81087-
17		01010-81060	Bolt	2	81087-
18		01643-31032	Washer	2	81087-
19		17A-61-21221	Plate	2	81087-
20		07000-13032	O-ring	4	81087-
21		01252-71025	Bolt, Hexagon Socket Head	16	81087-
22		01643-51032	Washer	16	81087-
23		02782-10422	Elbow	3	81087-
24		07002-12034	O-ring	3	81087-
25		02896-11012	O-ring	3	81087-
26		02782-10423	Elbow	1	81087-
27		07002-12034	O-ring	1	81087-
28		02896-11012	O-ring	1	81087-

FIG. M2210-025022 Fender, Hose and Bracket

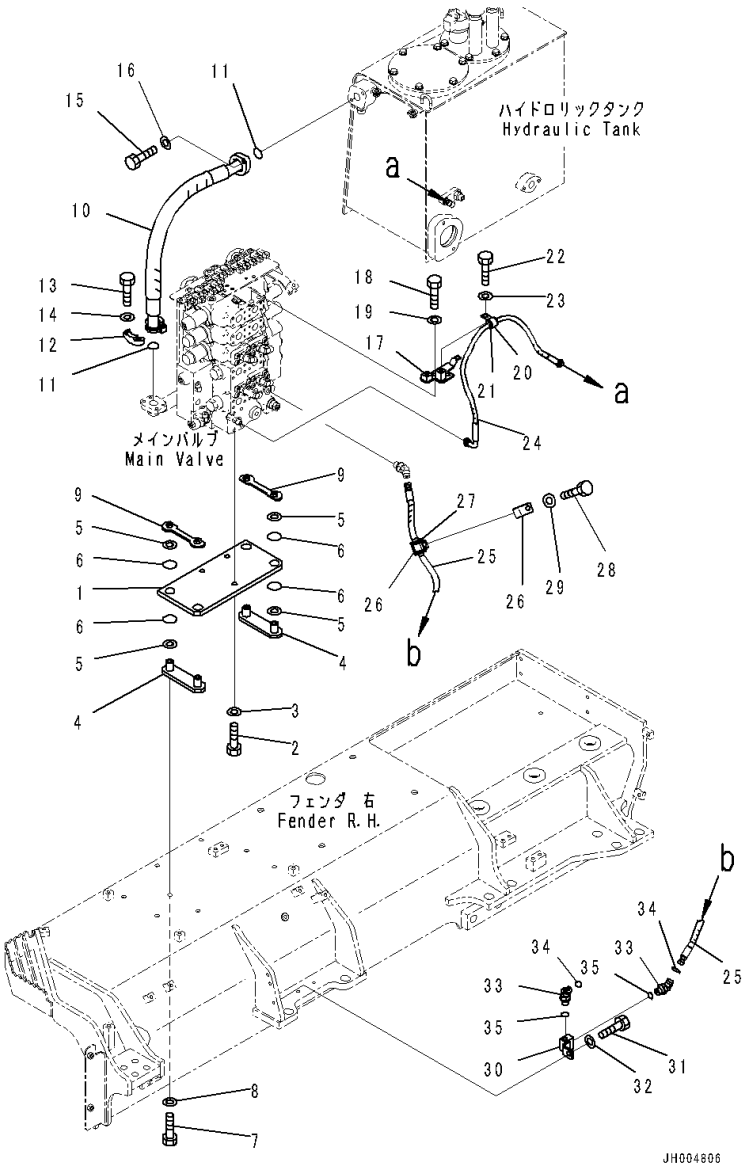

Index	Code	Part Number	Description	Qty	Serial Number
		Note: This list covers following specifications.			
		With Battery			
		With Battery, For Dual Tilt Dozer			
		With Large Capacity Battery			
		With Large Capacity Battery, For Dual Tilt Dozer			
		With Large Capacity Battery, Tool Box, Fender RHS			
		With Large Capacity Battery, Tool Box, Fender RHS, For Dual Tilt Dozer			
1		17A-60-41511	Plate	1	81087-
2		01010-81440	Bolt	3	81087-
3		01643-31445	Washer	3	81087-
4		17A-60-41520	Bracket	2	81087-
5		14X-60-12120	Cushion	8	81087-
6		07000-13025	O-ring	8	81087-
7		01010-81275	Bolt	4	81087-
8		01643-31232	Washer	4	81087-
9		17A-60-41531	Bracket	2	81087-
10		17A-60-41131	Hose	1	81087-
11		07000-73038	O-ring	2	81087-
12		07371-31255	Flange, Split	2	81087-
13		07372-21035	Bolt	4	81087-
14		01643-51032	Washer	4	81087-
15		01010-81240	Bolt	2	81087-
16		01643-31232	Washer	2	81087-
17		17A-61-41921	Bracket	1	81087-
18		01010-81225	Bolt	2	81087-
19		01643-31232	Washer	2	81087-
20		04434-52112	Clip	1	81087-
21		07095-20314	Cushion	1	81087-
22		01010-81225	Bolt	1	81087-
23		01643-31232	Washer	1	81087-
24		02763-00310	Hose, Face Seal Type	1	81087-
25		17A-61-51430	Hose	1	81087-
26		07094-10315	Clamp	2	81087-
27		07095-00314	Cushion	1	81087-
28		01010-81260	Bolt	1	81087-
29		01643-31232	Washer	1	81087-
30		17A-61-51440	Block	1	81087-
31		01010-81225	Bolt	1	81087-
32		01643-31232	Washer	1	81087-

FIG. M2210-025022 Fender, Hose and Bracket

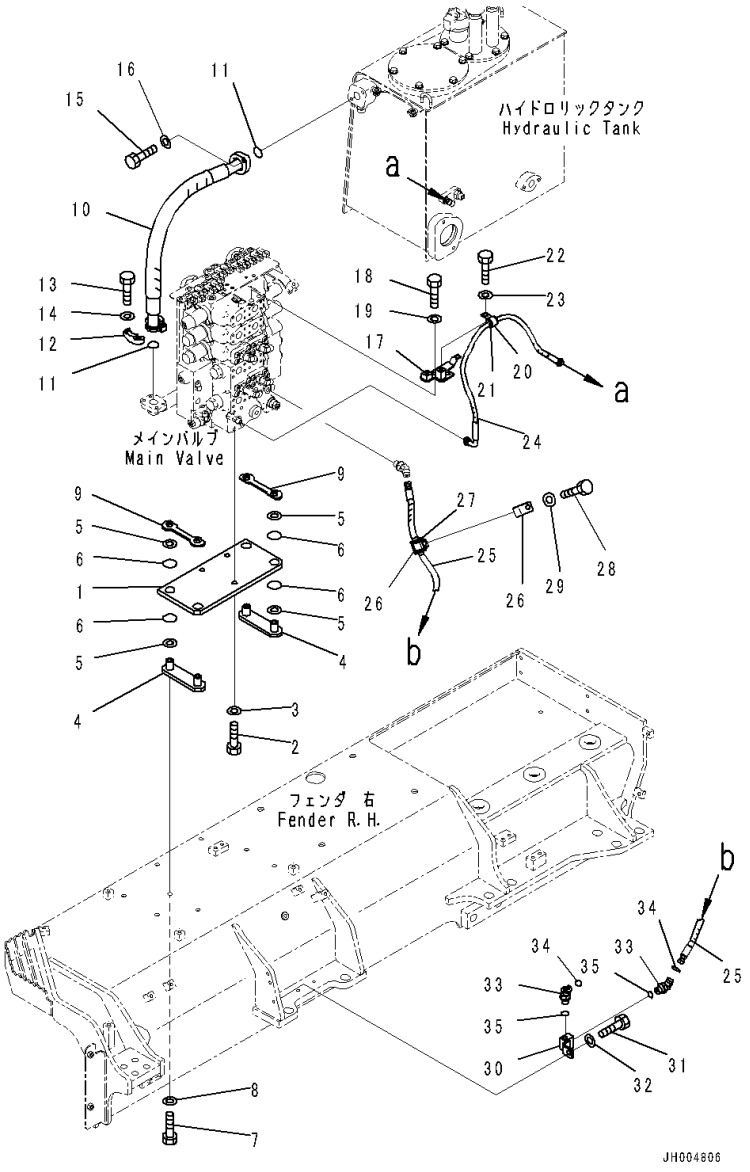

Index	Code	Part Number	Description	Qty	Serial Number
33		02783-10210	Elbow	2	81087-
34		02896-11008	O-ring	2	81087-
35		07002-11423	O-ring	2	81087-

FIG. M2210-025023A Fender, Window Washer Tank

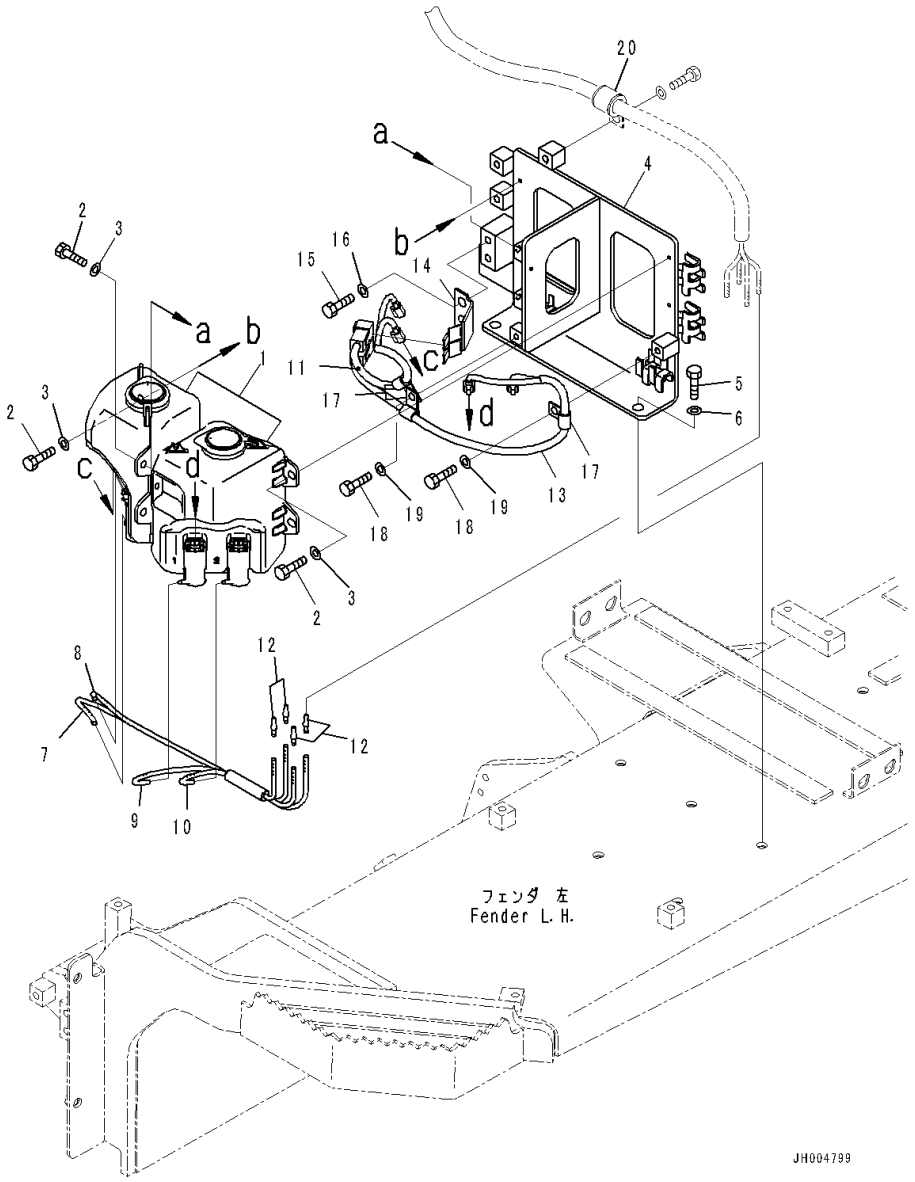

Index	Code	Part Number	Description	Qty	Serial Number
		Note: This list covers following specifications.			
		With Battery			
		With Battery, For Dual Tilt Dozer			
		With Large Capacity Battery			
		With Large Capacity Battery, For Dual Tilt Dozer			
		With Large Capacity Battery, Tool Box, Fender RHS			
		With Large Capacity Battery, Tool Box, Fender RHS, For Dual Tilt Dozer			
1		14X-Y11-2110	Tank Assembly	2	81087-
2		01010-80616	Bolt	6	81087-
3		209-72-12230	Washer	6	81087-
4		17A-911-6111	Bracket	1	81087-
5		01010-81230	Bolt	2	81087-
6		01643-31232	Washer	2	81087-
		17A-911-6120	Hose Assembly	1	81087-
7	C1		• Hose Assembly	1	81087-
8	C1		• Hose Assembly	1	81087-
9	C1		• Hose Assembly	1	81087-
10	C1		• Hose Assembly	1	81087-
11		08017-C1302	• Conduit	1	81087-
12		195-979-8590	• Valve	4	81087-
13		17A-911-6131	Wiring Harness	1	81087-
14		17A-911-6150	Plate	1	81087-
15		01010-81220	Bolt	2	81087-
16		01643-31232	Washer	2	81087-
17		04434-51010	Clip	3	81087-
18		01010-81020	Bolt	2	81087-
19		01643-31032	Washer	2	81087-
20		(04434-52712)	Clip(Refer to Page 788)		-

FIG. M2210-025024 Fender, Step

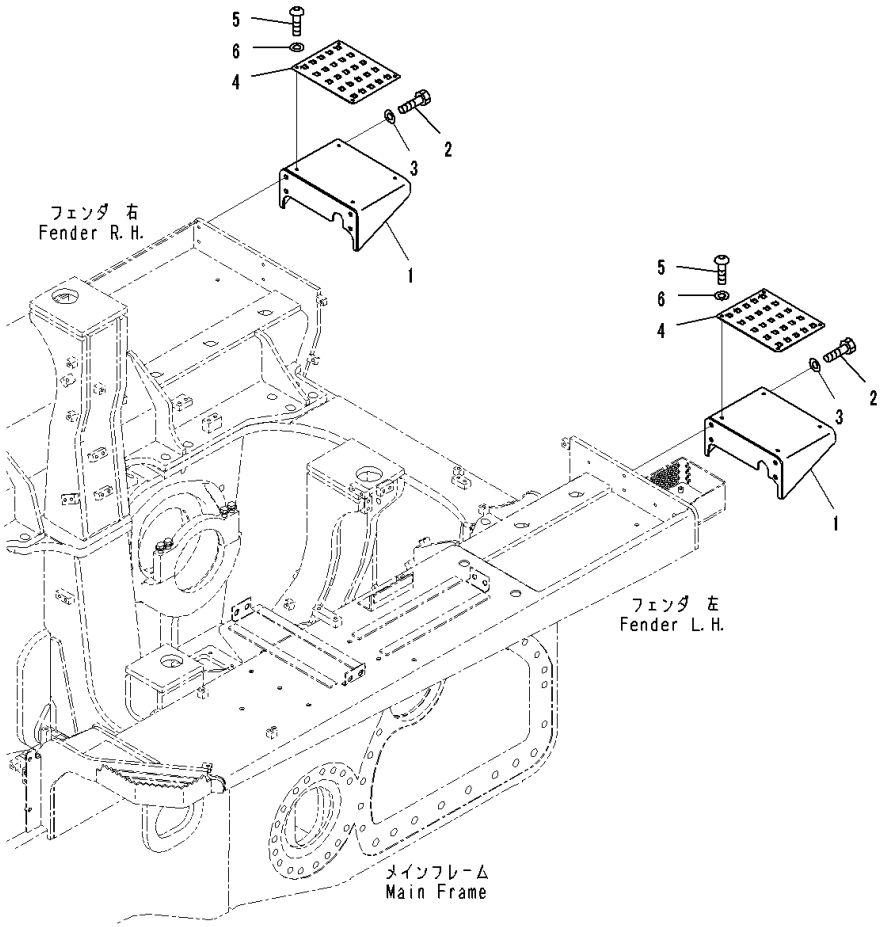

Index	Code	Part Number	Description	Qty	Serial Number
		Note: This list covers following specifications.			
		With Battery			
		With Battery, For Dual Tilt Dozer			
		With Large Capacity Battery			
		With Large Capacity Battery, For Dual Tilt Dozer			
1		17A-54-44162	Cover	2	81087-
2		01010-81230	Bolt	8	81087-
3		01643-31232	Washer	8	81087-
4		17A-54-44151	Plate	2	81087-
5		01245-00820	Screw	8	81087-
6		01643-70823	Washer	8	81087-

FIG. M2210-025025 Fender, Receiver Tank

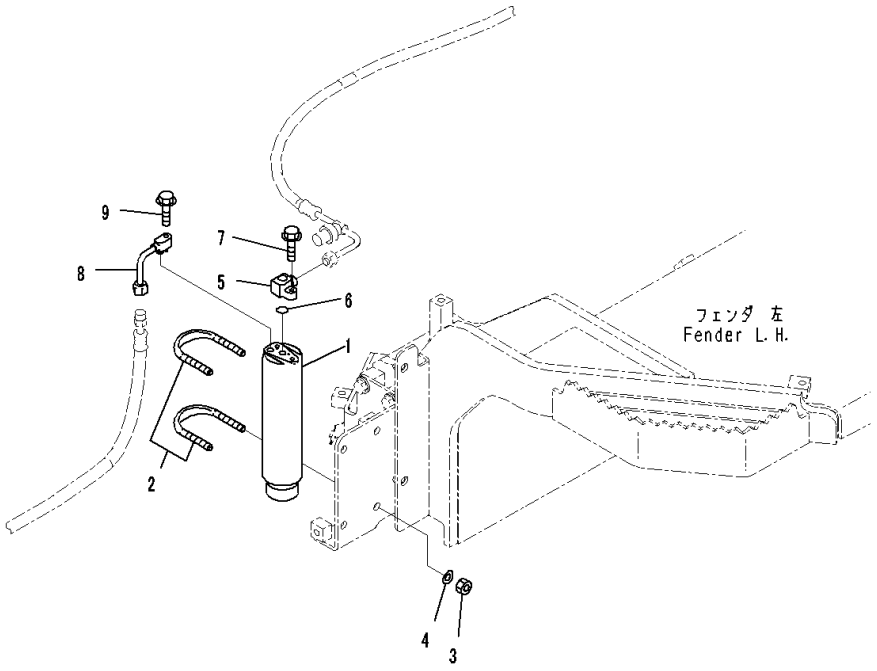

Index	Code	Part Number	Description	Qty	Serial Number
		Note: This list covers following specifications.			
		With Battery			
		With Battery, For Dual Tilt Dozer			
		With Large Capacity Battery			
		With Large Capacity Battery, For Dual Tilt Dozer			
		With Large Capacity Battery, Tool Box, Fender RHS			
		With Large Capacity Battery, Tool Box, Fender RHS, For Dual Tilt Dozer			
1		20Y-979-3120	Tank, Receiver	1	81087-
2		07283-36155	Clip, Pipe	2	81087-
3		01597-01009	Nut	4	81087-
4		01643-31032	Washer	4	81087-
5		17A-911-1671	Joint	1	81087-
6		20Y-979-3150	• O-ring	1	81087-
7		01435-00625	Bolt	1	81087-
8		17A-911-1511	Tube	1	81087-
9		01435-00625	Bolt	1	81087-

FIG. M2210-025026 Fender, Mounting Bolt

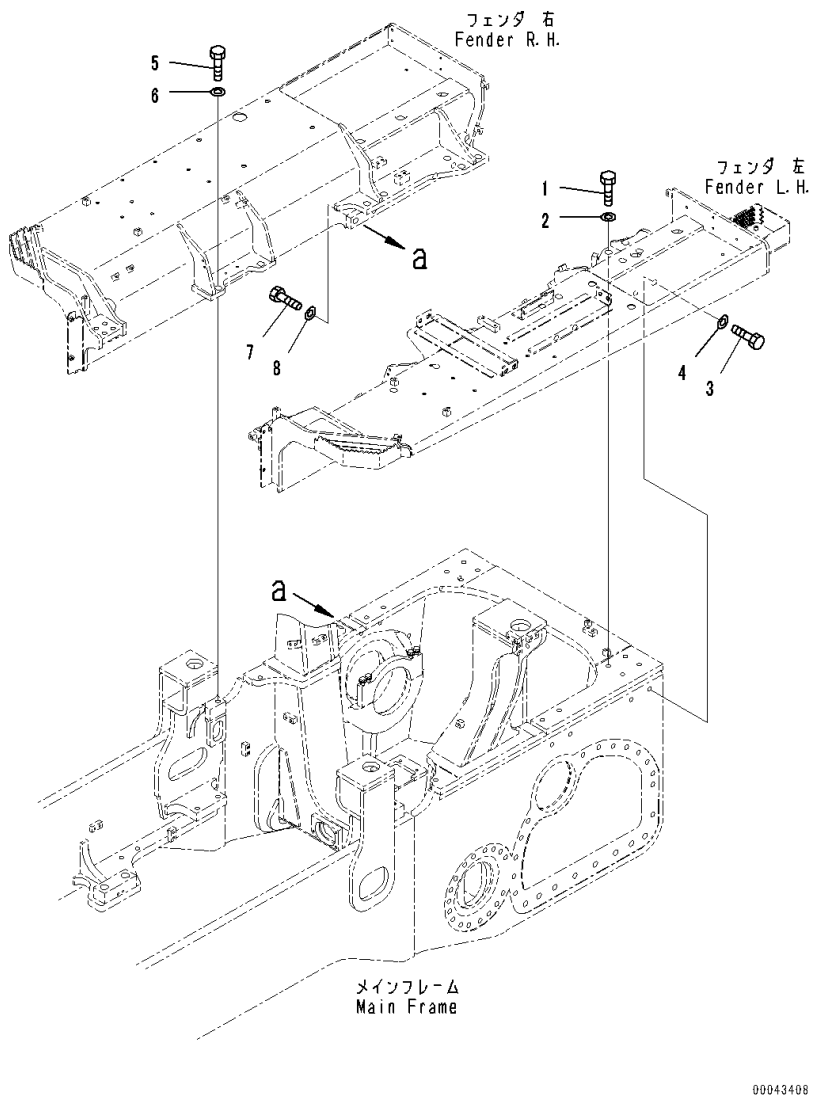

Index	Code	Part Number	Description	Qty	Serial Number
		Note: This list covers following specifications.			
		With Battery			
		With Battery, For Dual Tilt Dozer			
		With Large Capacity Battery			
		With Large Capacity Battery, For Dual Tilt Dozer			
		With Large Capacity Battery, Tool Box, Fender RHS			
		With Large Capacity Battery, Tool Box, Fender RHS, For Dual Tilt Dozer			
1		01010-82470	Bolt	8	81087-
2		17A-54-44130	Washer	8	81087-
3		01010-82480	Bolt	4	81087-
4		01643-32460	Washer	4	81087-
5		01010-82470	Bolt	8	81087-
6		17A-54-44130	Washer	8	81087-
7		01010-82480	Bolt	4	81087-
8		01643-32460	Washer	4	81087-

FIG. M2210-025027 Fender, With Battery, Clamp, Washer Hose

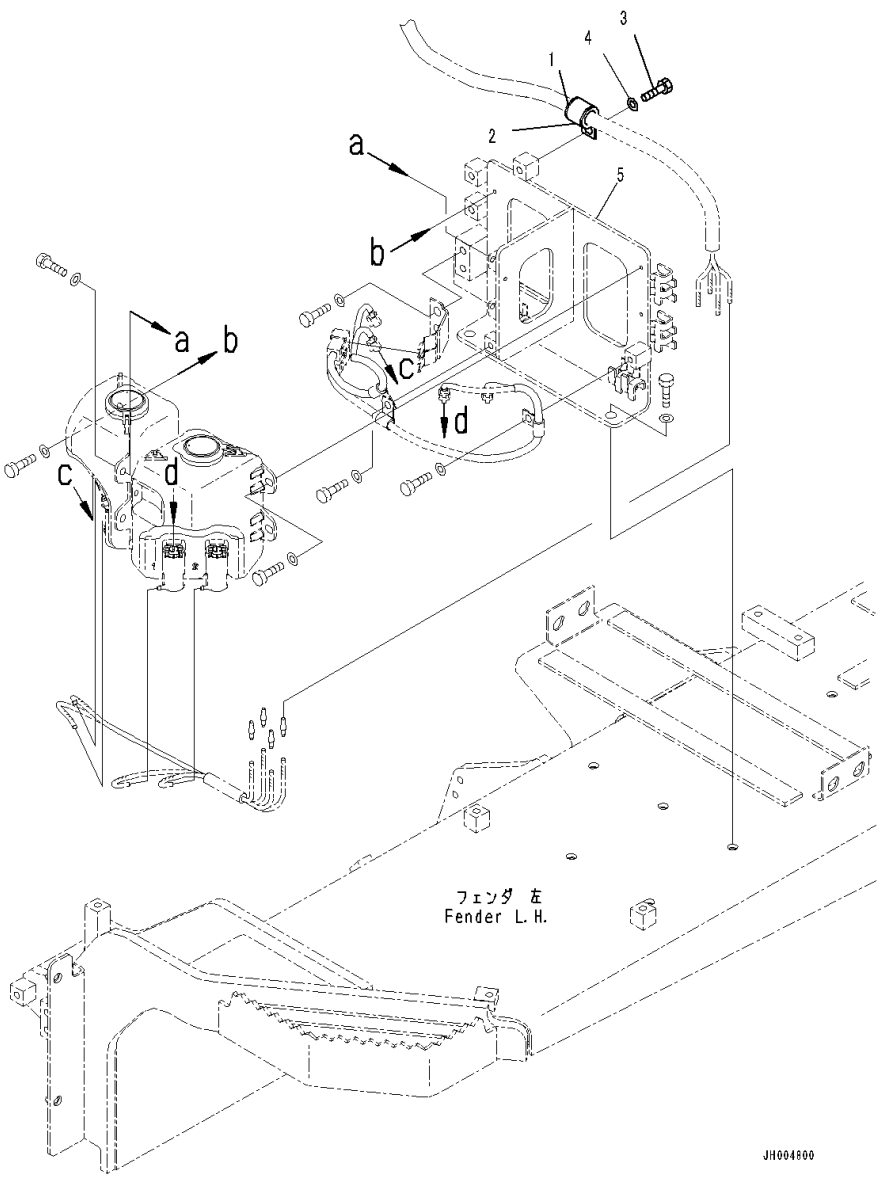

Index	Code	Part Number	Description	Qty	Serial Number
1		04434-52712	Clip	1	81105-
2		07095-20419	Cushion	1	81105-
3		01010-81225	Bolt	1	81105-
4		01643-31232	Washer	1	81105-
5		(17A-911-6111)	Bracket(Refer to Page 784)		-

FIG. M2210-026012 Fender, Control Valve (1/10)

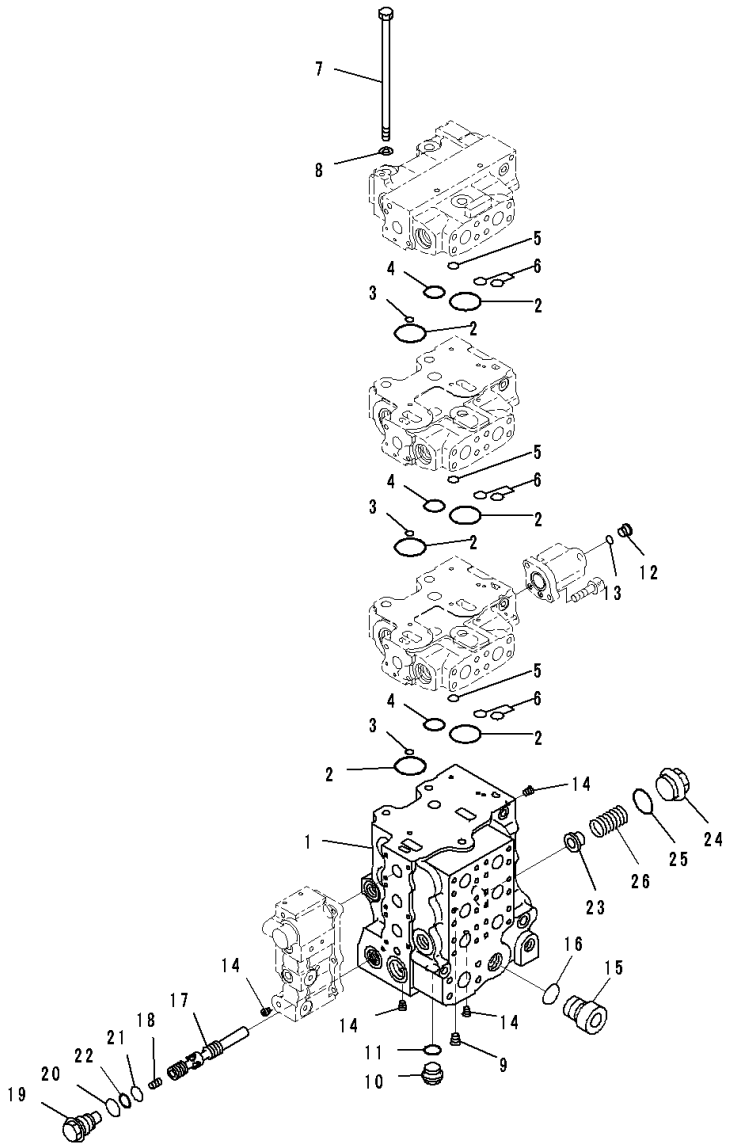

Index	Code	Part Number	Description	Qty	Serial Number
		Note: This list covers following specifications. With Battery, For Dual Tilt Dozer With Large Capacity Battery, For Dual Tilt Dozer With Large Capacity Battery, Tool Box, Fender RHS, For Dual Tilt Dozer			
		723-66-21100	Control	1	81087-
1	C1		• Body	1	81087-
2		07000-13048	• O-ring	6	81087-
3		07000-11009	• O-ring	3	81087-
4		07000-13030	• O-ring	3	81087-
5		07000-12012	• O-ring	3	81087-
6		722-12-19120	• O-ring	6	81087-
7		723-63-32620	• Bolt	3	81087-
8		01643-31445	• Washer	3	81087-
9	C1		• Plug	1	81087-
10		709-74-91860	• Plug	1	81087-
11		07002-12434	• O-ring	1	81087-
12		702-21-55620	• Plug	1	81087-
13		07002-11423	• O-ring	1	81087-
14	C1		• Plug	12	81087-
15		07040-13316	• Plug	1	81087-
16		07002-13334	• O-ring	1	81087-
17	C1		• Spool	1	81087-
18		723-63-31520	• Piston	1	81087-
19		723-63-31530	• Plug	1	81087-
20		07002-13034	• O-ring	1	81087-
21		700-13-31161	• O-ring	1	81087-
22		723-63-32710	• Ring	1	81087-
23		723-63-31540	• Retainer	1	81087-
24		723-63-31550	• Plug	1	81087-
25		07002-14234	• O-ring	1	81087-
26		723-63-32560	• Spring	1	81087-

FIG. M2210-026018 Fender, Control Valve (7/10)

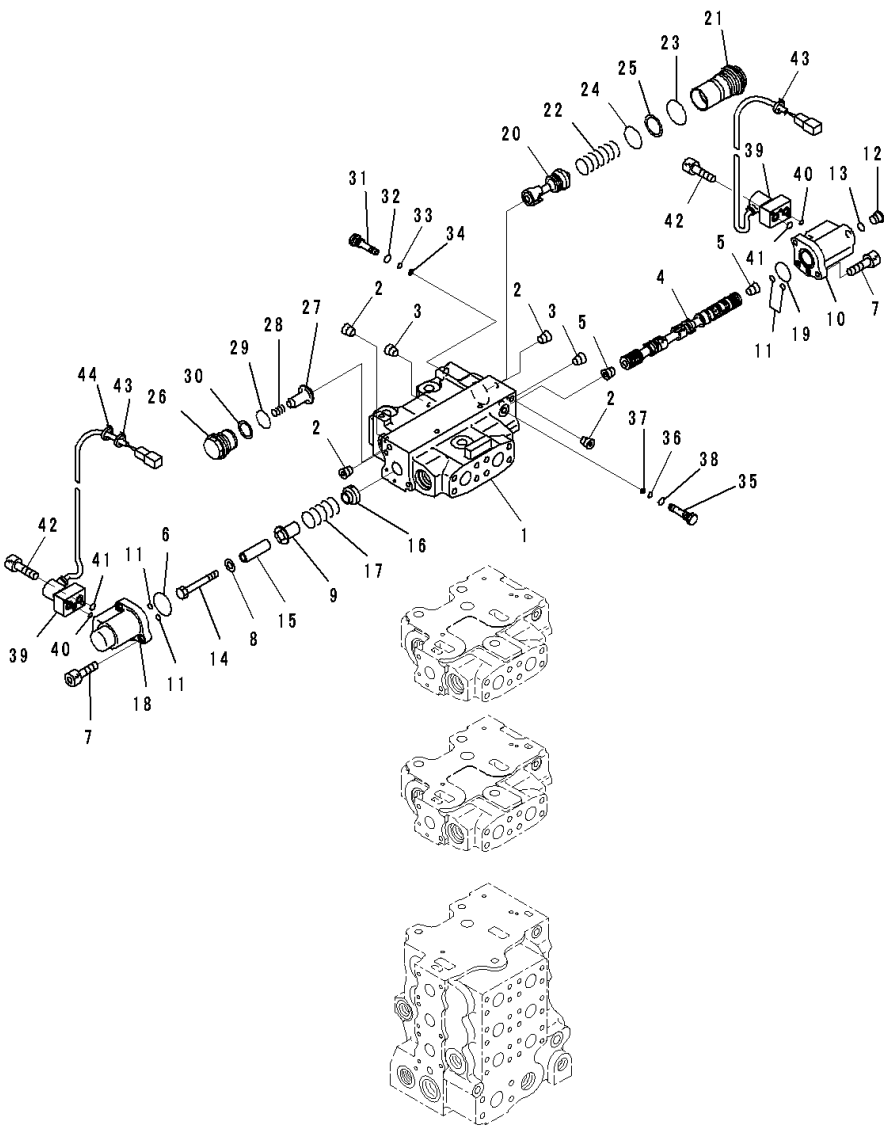

Index	Code	Part Number	Description	Qty	Serial Number
		Note: This list covers following specifications. With Battery, For Dual Tilt Dozer With Large Capacity Battery, For Dual Tilt Dozer With Large Capacity Battery, Tool Box, Fender RHS, For Dual Tilt Dozer			
		723-66-21100	Control	1	81087-
		723-61-25500	• Valve Assembly	1	81087-
1	C1		• • Block	1	81087-
2	C1		• • Plug	4	81087-
3	C1		• • Plug	2	81087-
4	C1		• • Spool	1	81087-
5	C1		• • Plug, Tapered	2	81087-
6		702-21-55450	• • O-ring	1	81087-
7		01252-60820	• • Bolt, Hexagon Socket Head	4	81087-
8		01643-31032	• • Washer	1	81087-
9		723-63-31670	• • Retainer	1	81087-
10		723-63-32760	• • Case	1	81087-
11		07000-11007	• • O-ring	4	81087-
12		702-21-55620	• • Plug	1	81087-
13		07002-11423	• • O-ring	1	81087-
14		01010-81075	• • Bolt	1	81087-
15		723-63-31720	• • Spacer	1	81087-
16		723-63-31730	• • Retainer	1	81087-
17		723-63-31740	• • Spring	1	81087-
18		723-63-32750	• • Case	1	81087-
19		07000-12030	• • O-ring	1	81087-
20	C1		• • Spool	1	81087-
21		723-63-32630	• • Plug	1	81087-
22		723-63-32770	• • Spring	1	81087-
23		700-61-49160	• • O-ring	1	81087-
24		723-63-31850	• • O-ring	1	81087-
25		723-63-31860	• • Ring	1	81087-
26		709-74-92821	• • Plug	1	81087-
27		709-94-92811	• • Valve	1	81087-
28		709-94-91751	• • Spring	1	81087-
29		700-93-11320	• • O-ring	1	81087-
30		700-93-11330	• • Ring, Back-up	1	81087-
31		723-63-31610	• • Plug	1	81087-
32		07002-11423	• • O-ring	1	81087-
33		07000-11007	• • O-ring	1	81087-

FIG. M2210-026018 Fender, Control Valve (7/10)

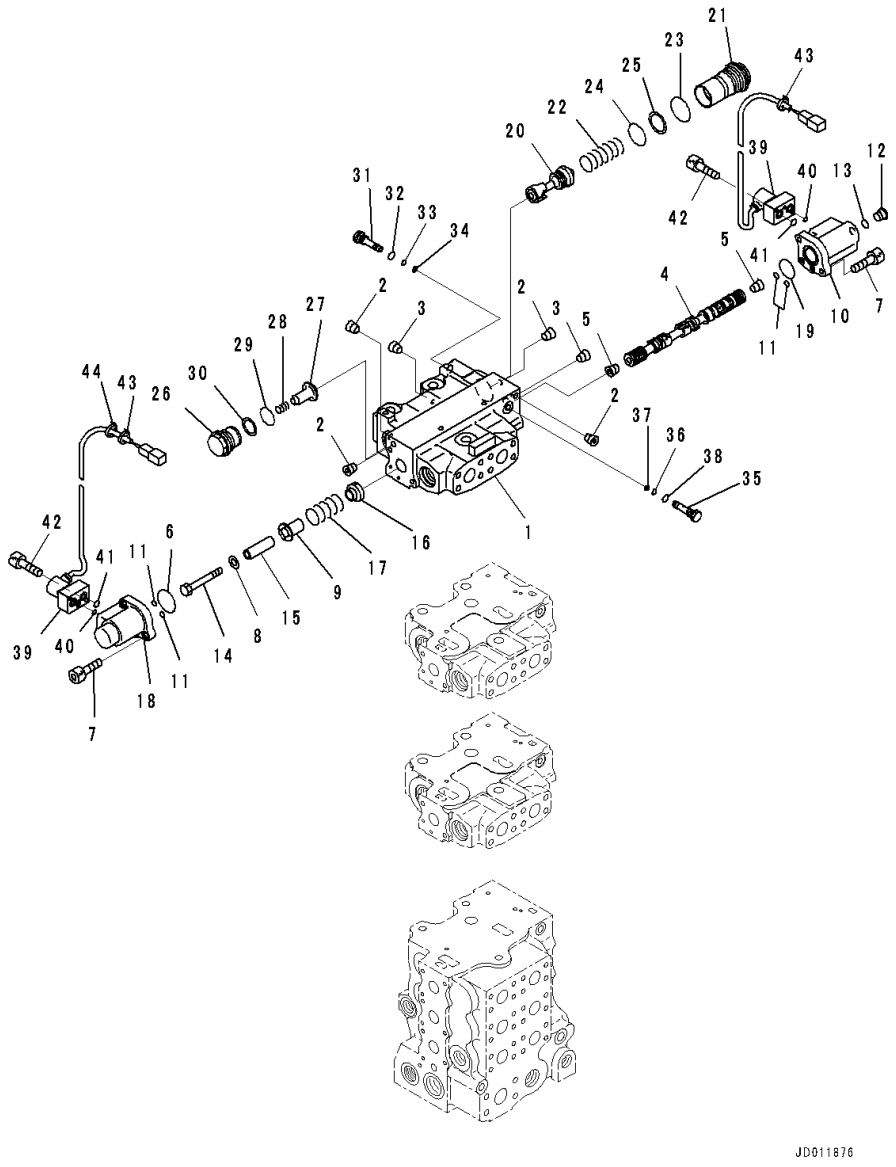

Index	Code	Part Number	Description	Qty	Serial Number
34		07001-01007	• • Ring, Back-up	1	81087-
35		723-60-24501	• • Valve, Check	1	81087-
36		07000-11005	• • • O-ring	1	81087-
37		07001-01005	• • • Ring, Back-up	1	81087-
38		07002-11023	• • • O-ring	1	81087-
39		702-21-58100	• • Valve, Pilot	2	81087-
40		723-11-19960	• • • O-ring	1	81087-
41		702-21-54910	• • • O-ring	2	81087-
42		01252-60635	• • Bolt, Hexagon Socket Head	4	81087-
43		20Y-62-22790	• • Band, Red	2	81087-
44		08034-20414	• • Band	1	81087-

FIG. M2210-026019 Fender, Control Valve (8/10)

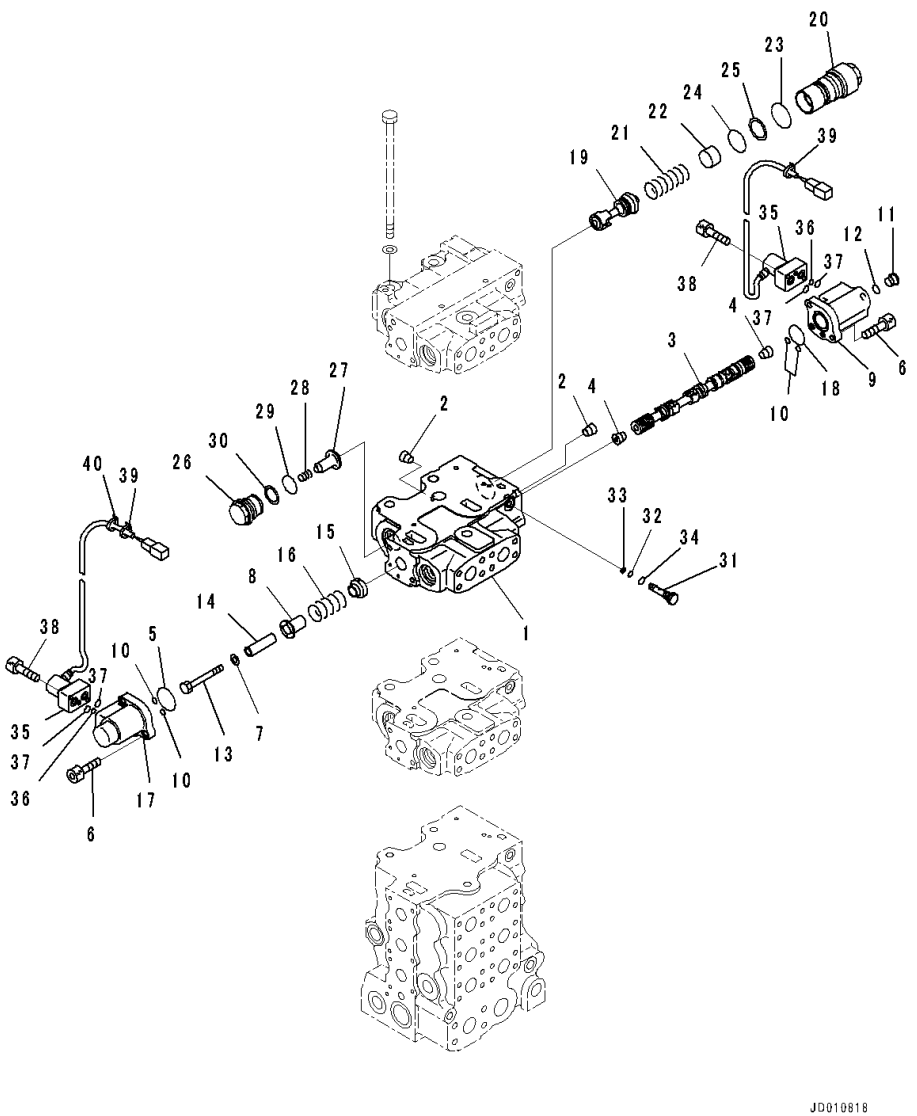

Index	Code	Part Number	Description	Qty	Serial Number
		Note: This list covers following specifications. With Battery, For Dual Tilt Dozer With Large Capacity Battery, For Dual Tilt Dozer With Large Capacity Battery, Tool Box, Fender RHS, For Dual Tilt Dozer			
		723-66-21100	Control	1	81087-
		723-61-25400	• Valve Assembly	1	81087-
1	C1		• • Block	1	81087-
2	C1		• • Plug	2	81087-
3	C1		• • Spool	1	81087-
4	C1		• • Plug, Tapered	2	81087-
5		702-21-55450	• • O-ring	1	81087-
6		01252-60820	• • Bolt, Hexagon Socket Head	4	81087-
7		01643-31032	• • Washer	1	81087-
8		723-63-31670	• • Retainer	1	81087-
9		723-63-32760	• • Case	1	81087-
10		07000-11007	• • O-ring	4	81087-
11		702-21-55620	• • Plug	1	81087-
12		07002-11423	• • O-ring	1	81087-
13		01010-81075	• • Bolt	1	81087-
14		723-63-31720	• • Spacer	1	81087-
15		723-63-31730	• • Retainer	1	81087-
16		723-63-31740	• • Spring	1	81087-
17		723-63-32750	• • Case	1	81087-
18		07000-12030	• • O-ring	1	81087-
19	C1		• • Spool	1	81087-
20		723-63-32640	• • Plug	1	81087-
21		723-63-32770	• • Spring	1	81087-
22		723-63-32780	• • Spacer	1	81087-
23		700-61-49160	• • O-ring	1	81087-
24		723-63-31850	• • O-ring	1	81087-
25		723-63-31860	• • Ring	1	81087-
26		709-74-92821	• • Plug	1	81087-
27		709-94-92811	• • Valve	1	81087-
28		709-94-91751	• • Spring	1	81087-
29		700-93-11320	• • O-ring	1	81087-
30		700-93-11330	• • Ring, Back-up	1	81087-
31		723-60-24501	• • Valve, Check	1	81087-
32		07000-11005	• • • O-ring	1	81087-
33		07001-01005	• • • Ring, Back-up	1	81087-

FIG. M2210-026019 Fender, Control Valve (8/10)

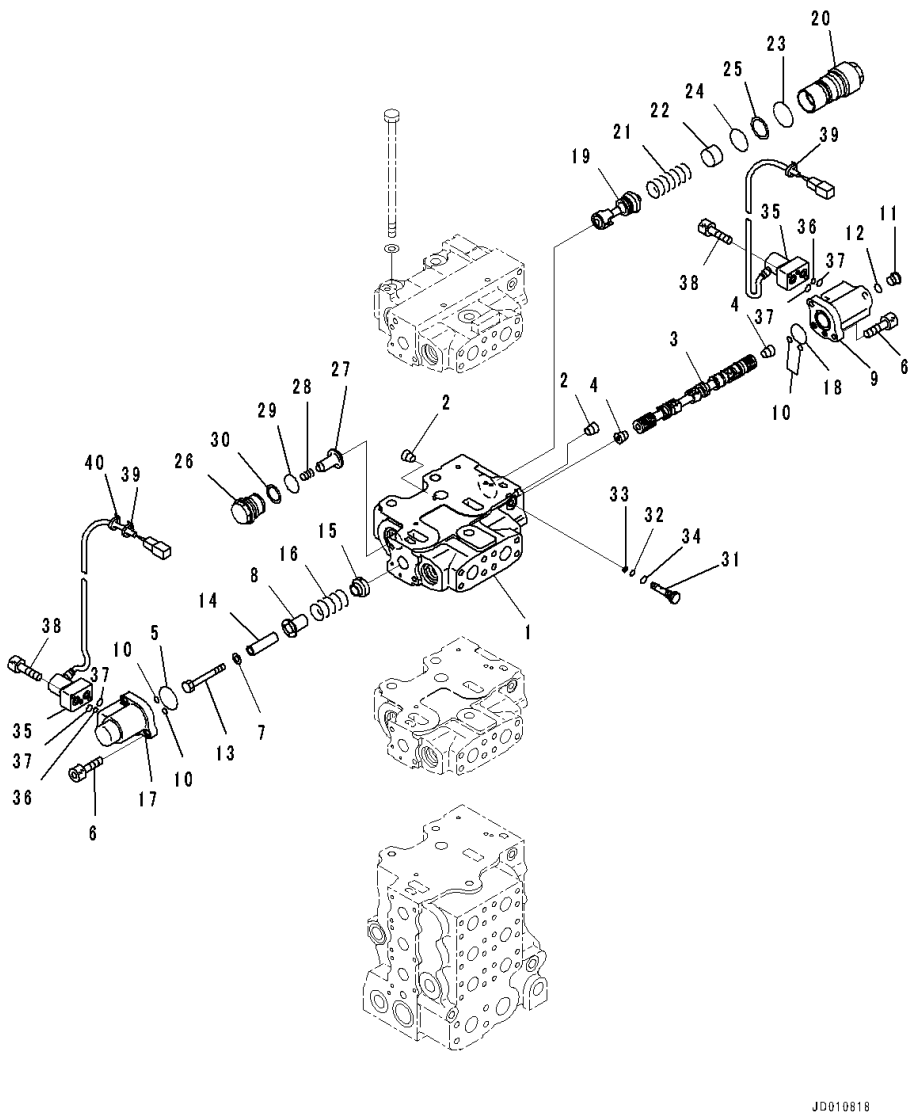

Index	Code	Part Number	Description	Qty	Serial Number
34		07002-11023	• • • O-ring	1	81087-
35		702-21-57400	• • Valve, Pilot	2	81087-
36		723-11-19960	• • • O-ring	1	81087-
37		702-21-54910	• • • O-ring	2	81087-
38		01252-60635	• • Bolt, Hexagon Socket Head	4	81087-
39		20Y-62-22810	• • Band, Yellow	2	81087-
40		08034-20414	• • Band	1	81087-

FIG. M2210-026020 Fender, Control Valve (9/10)

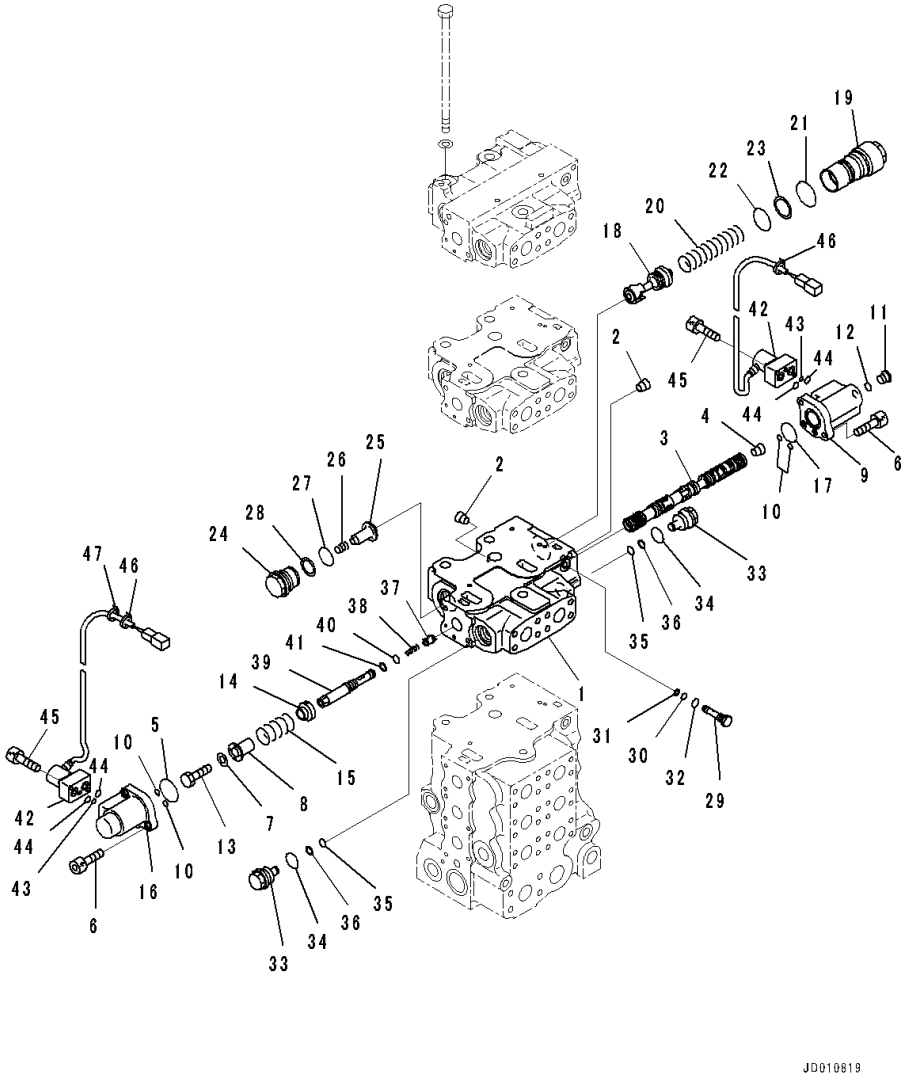

Index	Code	Part Number	Description	Qty	Serial Number
		Note: This list covers following specifications. With Battery, For Dual Tilt Dozer With Large Capacity Battery, For Dual Tilt Dozer With Large Capacity Battery, Tool Box, Fender RHS, For Dual Tilt Dozer			
		723-66-21100	Control	1	81087-
		723-61-25300	• Valve Assembly	1	81087-
1	C1		• • Block	1	81087-
2	C1		• • Plug	2	81087-
3	C1		• • Spool	1	81087-
4	C1		• • Plug, Tapered	1	81087-
5		702-21-55450	• • O-ring	1	81087-
6		01252-60820	• • Bolt, Hexagon Socket Head	4	81087-
7		01643-31032	• • Washer	1	81087-
8		723-63-31670	• • Retainer	1	81087-
9		723-63-32760	• • Case	1	81087-
10		07000-11007	• • O-ring	4	81087-
11		702-21-55620	• • Plug	1	81087-
12		07002-11423	• • O-ring	1	81087-
13		01010-81016	• • Bolt	1	81087-
14		723-63-31730	• • Retainer	1	81087-
15		723-63-31740	• • Spring	1	81087-
16		723-63-32750	• • Case	1	81087-
17		07000-12030	• • O-ring	1	81087-
18	C1		• • Spool	1	81087-
19		723-63-32520	• • Plug	1	81087-
20		723-63-32530	• • Spring	1	81087-
21		700-61-49160	• • O-ring	1	81087-
22		723-63-31850	• • O-ring	1	81087-
23		723-63-31860	• • Ring	1	81087-
24		709-74-92821	• • Plug	1	81087-
25		709-94-92811	• • Valve	1	81087-
26		709-94-91751	• • Spring	1	81087-
27		700-93-11320	• • O-ring	1	81087-
28		700-93-11330	• • Ring, Back-up	1	81087-
29		723-60-23601	• • Valve Assembly, Check	1	81087-
30		07000-11005	• • • O-ring	1	81087-
31		07001-01005	• • • Ring, Back-up	1	81087-
32		07002-11023	• • • O-ring	1	81087-
33		709-74-91510	• • Plug	2	81087-

FIG. M2210-026020 Fender, Control Valve (9/10)

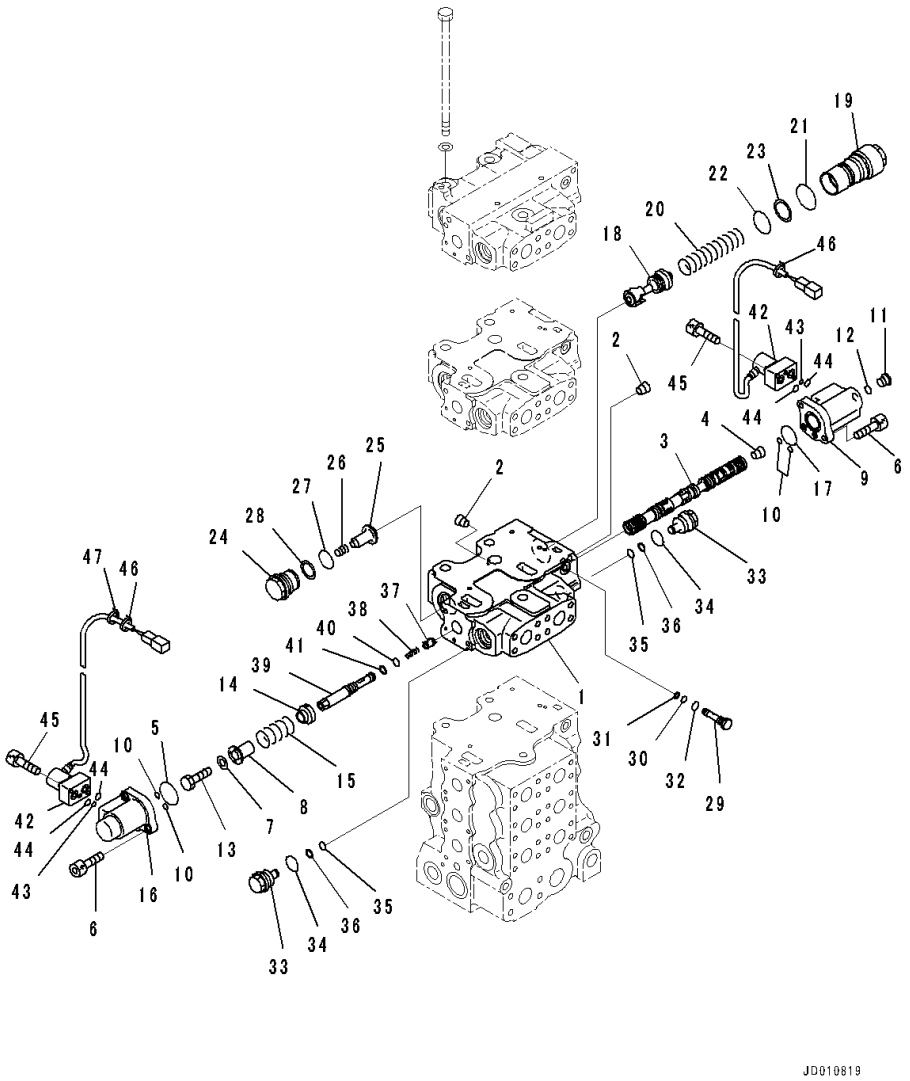

Index	Code	Part Number	Description	Qty	Serial Number
34		709-25-11390	• • O-ring	2	81087-
35		07000-11009	• • O-ring	2	81087-
36		07001-01009	• • Ring, Back-up	2	81087-
37		723-63-32540	• • Valve	1	81087-
38		723-63-32550	• • Spring	1	81087-
39		723-63-31930	• • Plug	1	81087-
40		07000-11009	• • O-ring	1	81087-
41		07001-01009	• • Ring, Back-up	1	81087-
42		702-21-57400	• • Valve, Pilot	2	81087-
43		723-11-19960	• • • O-ring	1	81087-
44		702-21-54910	• • • O-ring	2	81087-
45		01252-60635	• • Bolt, Hexagon Socket Head	4	81087-
46		20Y-62-22820	• • Band, Blue	2	81087-
47		08034-20414	• • Band	1	81087-

FIG. M2210-026021 Fender, Control Valve (10/10)

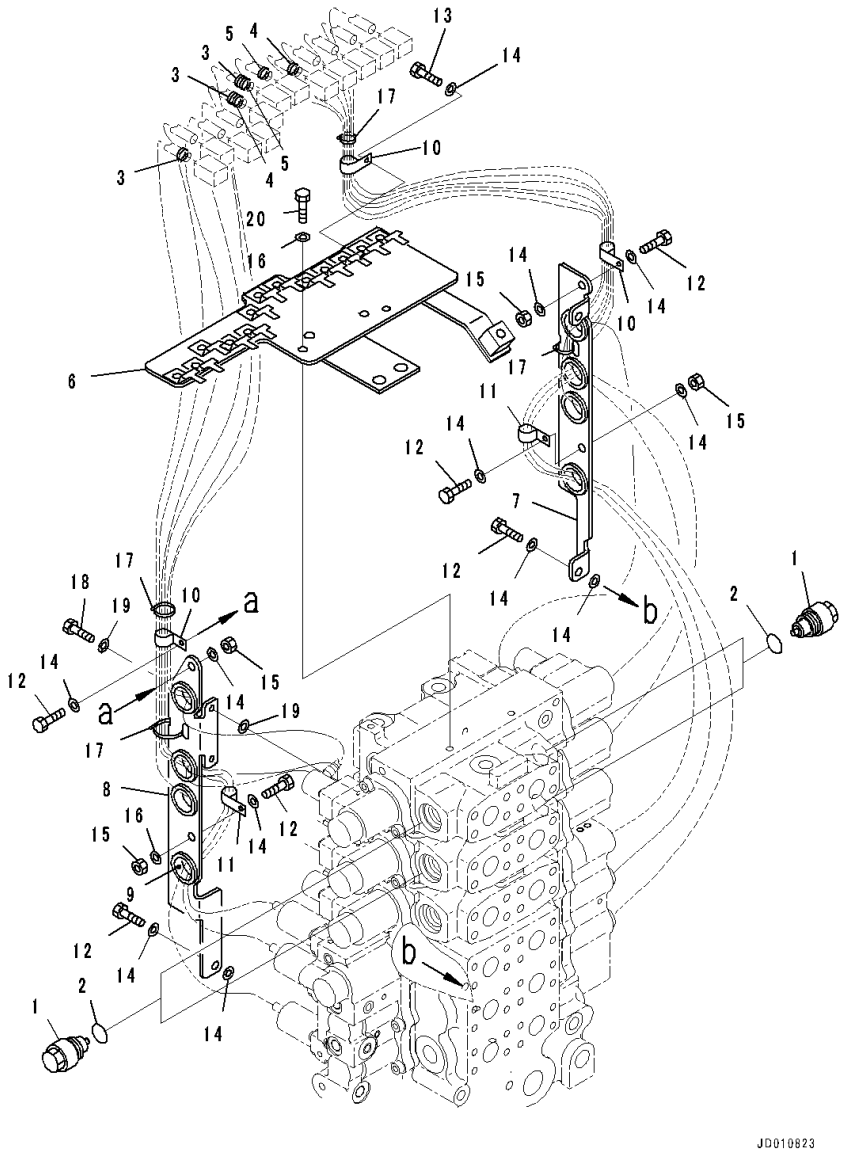

Index	Code	Part Number	Description	Qty	Serial Number
		Note: This list covers following specifications.			
		With Battery, For Dual Tilt Dozer			
		With Large Capacity Battery, For Dual Tilt Dozer			
		With Large Capacity Battery, Tool Box, Fender RHS, For Dual Tilt Dozer			
		723-66-21100	Control	1	81087-
1		723-40-85100	• Valve Assembly, Suction	4	81087-
2		709-25-11390	• • O-ring	1	81087-
3		08034-20414	• Band	3	81087-
4		20Y-62-22850	• Band, Green	2	81087-
5		20Y-62-22860	• Band, Brown	2	81087-
		723-66-05101	• Bracket Group	1	81087-
6		723-63-32910	• • Bracket	1	81087-
7		723-63-32920	• • Bracket	1	81087-
8		723-63-32930	• • Bracket	1	81087-
9		08037-02512	• • Grommet	8	81087-
10		04434-51608	• • Clip	3	81087-
11		04434-51208	• • Clip	2	81087-
12		01010-80820	• • Bolt	7	81087-
13		01010-80816	• • Bolt	1	81087-
14		01643-30823	• • Washer	15	81087-
15		01580-10806	• • Nut	4	81087-
16		01643-30823	• • Washer	2	81087-
17		08034-20834	• • Band	4	81087-
18		01010-80620	• • Bolt	2	81087-
19		01643-30623	• • Washer	4	81087-
20		01010-80835	• • Bolt	2	81087-

FIG. M2210-026022 Fender, C.L.S.S Valve

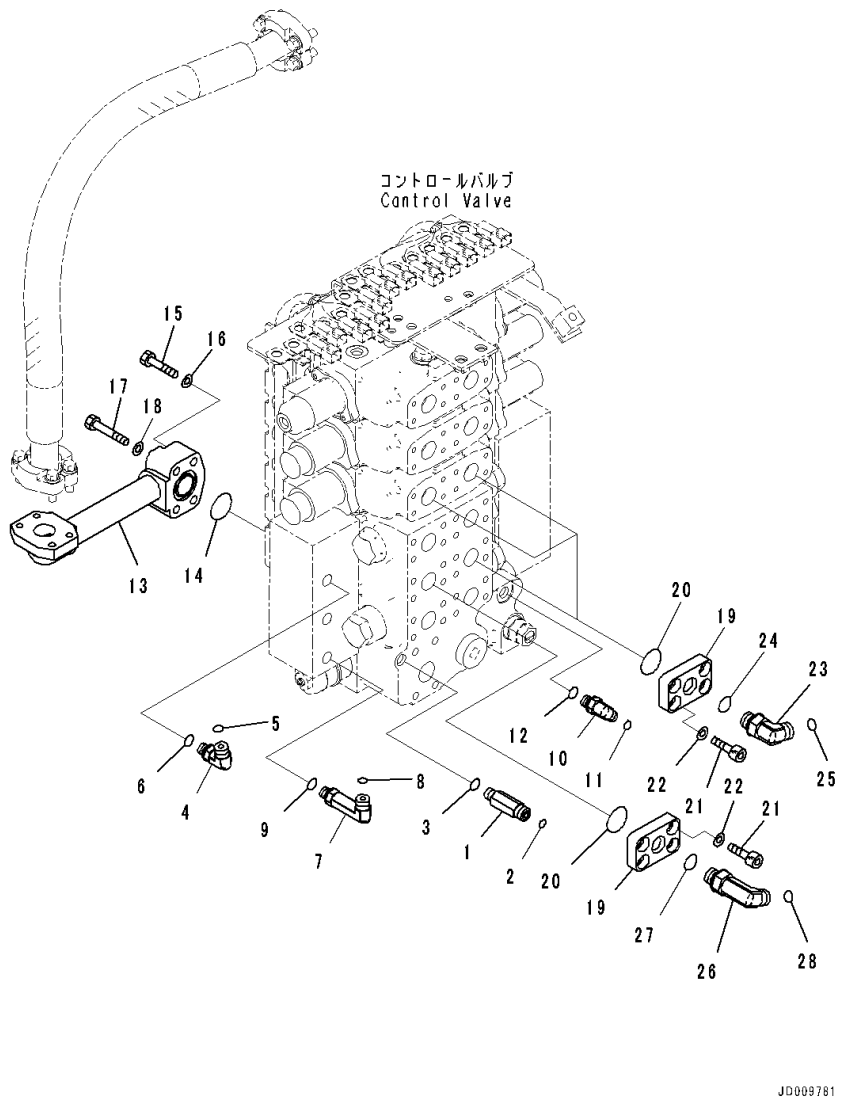

Index	Code	Part Number	Description	Qty	Serial Number
		Note: This list covers following specifications. With Battery, For Dual Tilt Dozer With Large Capacity Battery, For Dual Tilt Dozer With Large Capacity Battery, Tool Box, Fender RHS, For Dual Tilt Dozer			
1		20U-62-41710	Nipple	1	81087-
2		02896-11009	O-ring	1	81087-
3		07002-11423	O-ring	1	81087-
4		02782-10311	Elbow	1	81087-
5		02896-11009	O-ring	1	81087-
6		07002-11423	O-ring	1	81087-
7		02782-10312	Elbow	1	81087-
8		02896-11009	O-ring	1	81087-
9		07002-11423	O-ring	1	81087-
10		154-61-75761	Elbow	1	81087-
11		02896-11008	O-ring	1	81087-
12		07002-11423	O-ring	1	81087-
13		17A-60-41120	Tube	1	81087-
14		07000-73035	O-ring	1	81087-
15		01010-81055	Bolt	2	81087-
16		01643-31032	Washer	2	81087-
17		01010-81060	Bolt	2	81087-
18		01643-31032	Washer	2	81087-
19		17A-61-21221	Plate	4	81087-
20		07000-13032	O-ring	4	81087-
21		01252-71025	Bolt, Hexagon Socket Head	16	81087-
22		01643-51032	Washer	16	81087-
23		02782-10422	Elbow	3	81087-
24		07002-12034	O-ring	3	81087-
25		02896-11012	O-ring	3	81087-
26		02782-10423	Elbow	1	81087-
27		07002-12034	O-ring	1	81087-
28		02896-11012	O-ring	1	81087-

FIG. M2210-026028 Fender, Clamp, Washer Hose

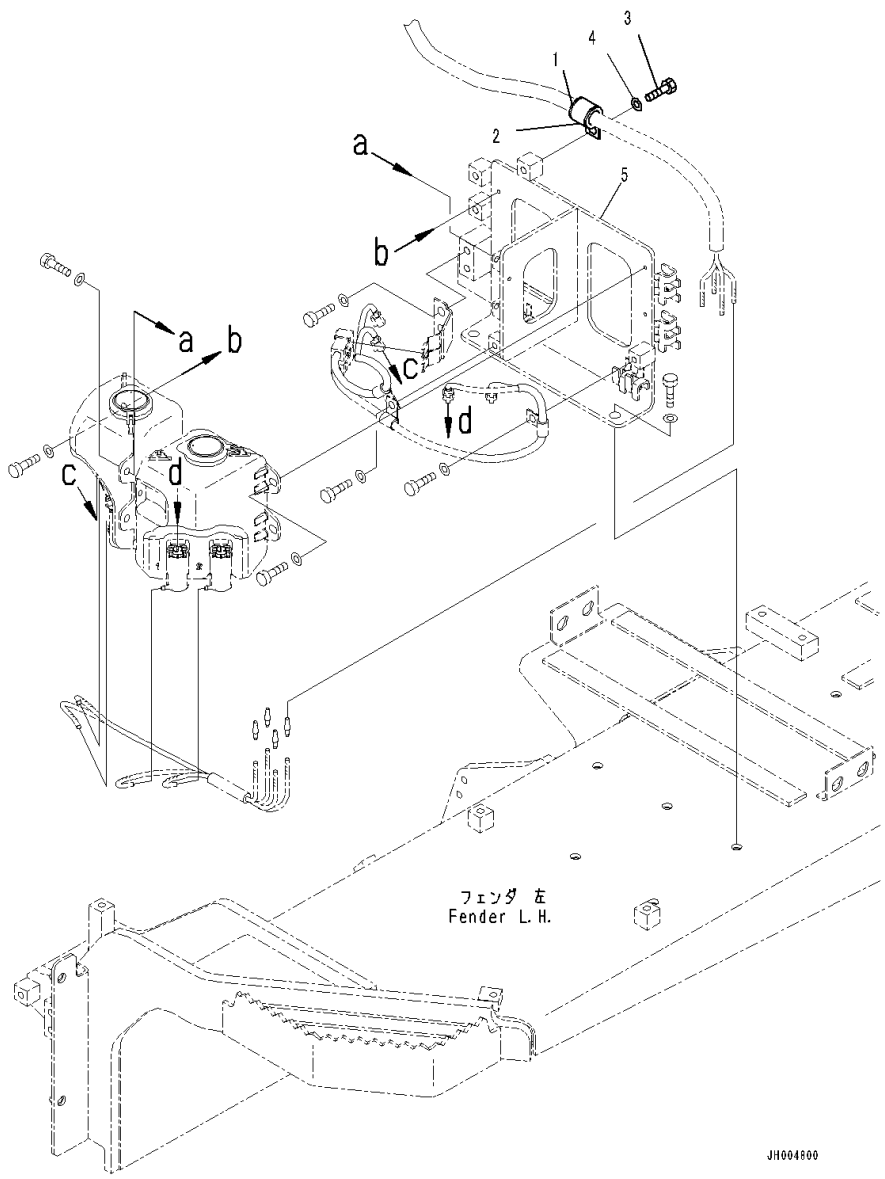

Index	Code	Part Number	Description	Qty	Serial Number
		Note: This list covers following specifications.			
		With Battery, For Dual Tilt Dozer			
		With Large Capacity Battery			
		With Large Capacity Battery, For Dual Tilt Dozer			
		With Large Capacity Battery, Tool Box, Fender RHS			
		With Large Capacity Battery, Tool Box, Fender RHS, For Dual Tilt Dozer			
1		04434-52712	Clip	1	81087-
2		07095-20419	Cushion	1	81087-
3		01010-81225	Bolt	1	81087-
4		01643-31232	Washer	1	81087-
5		(17A-911-6111)	Bracket(Refer to Page 784)		-

FIG. M2210-027001 Fender, Starting Wiring Harness

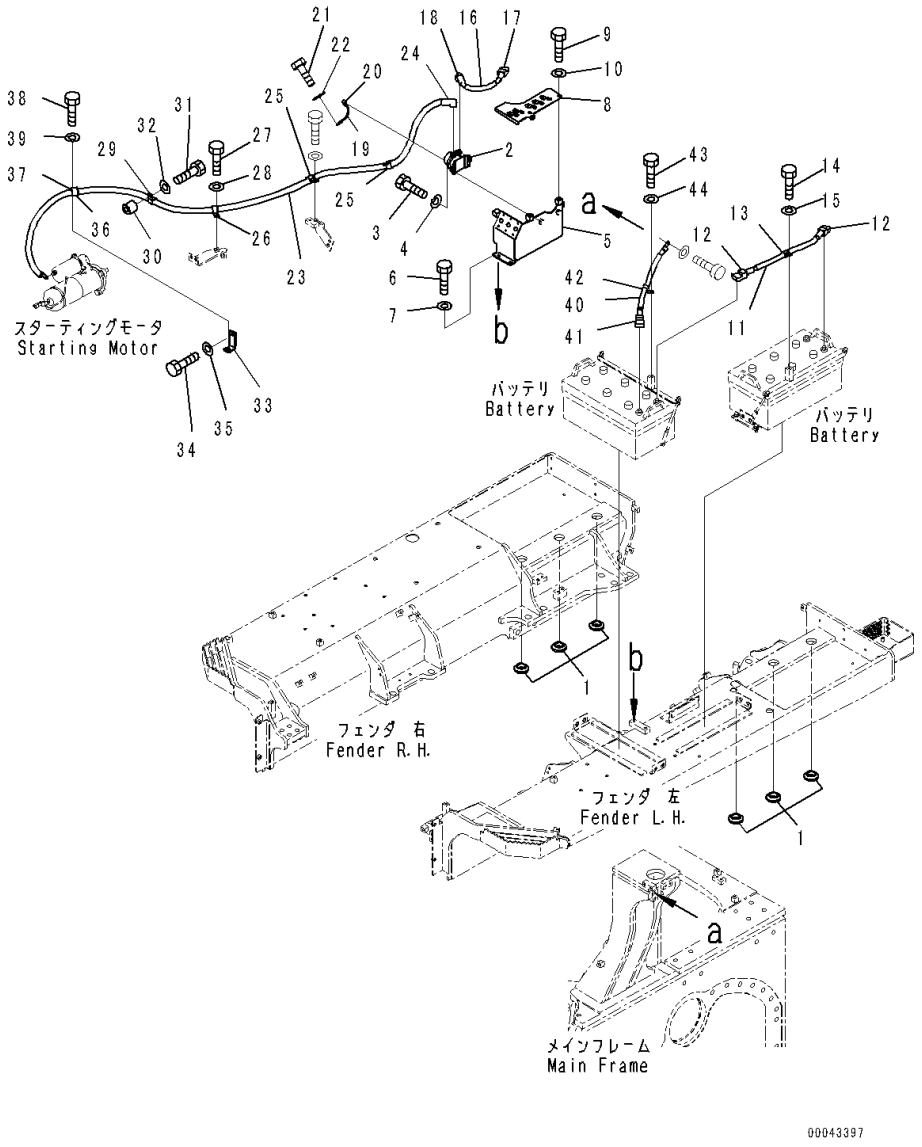

Index	Code	Part Number	Description	Qty	Serial Number
		Note: This list covers following specifications.			
		With Large Capacity Battery			
		With Large Capacity Battery, For Dual Tilt Dozer			
		With Large Capacity Battery, Tool Box, Fender RHS			
		With Large Capacity Battery, Tool Box, Fender RHS, For Dual Tilt Dozer			
1		17A-04-12550	Cushion	6	81087-
2		08088-30000	Switch, Battery Relay	1	81087-
3		01010-80825	Bolt	2	81087-
4		01643-30823	Washer	2	81087-
5		17A-06-41531	Bracket	1	81087-
6		01010-81225	Bolt	3	81087-
7		01643-31232	Washer	3	81087-
8		17A-06-41551	Bracket	1	81087-
9		01010-81225	Bolt	2	81087-
10		01643-31232	Washer	2	81087-
11		08028-HE055	Cable, Ground	1	81087-
12		08038-42511	Cap	2	81087-
13		04434-52312	Clip	1	81087-
14		01010-81225	Bolt	1	81087-
15		01643-31232	Washer	1	81087-
16		08028-HE035	Cable, Ground	1	81087-
17		08038-42511	Cap	1	81087-
18		17A-06-41540	Cap	1	81087-
19		209-06-19680	Wire	1	81087-
20		08038-00519	Cap	1	81087-
21		01010-80816	Bolt	1	81087-
22		01643-30823	Washer	1	81087-
23		17A-06-41272	Wiring Harness	1	81087-
24		17A-06-41540	Cap	1	81087-
25		04434-52712	Clip	2	81087-
26		04434-52712	Clip	1	81087-
27		01010-81225	Bolt	1	81087-
28		01643-31232	Washer	1	81087-
29		04434-52712	Clip	1	81087-
30		195-33-11220	Spacer	1	81087-
31		01010-81245	Bolt	1	81087-
32		01643-31232	Washer	1	81087-
33		17A-06-41771	Bracket	1	81087-
34		01010-81225	Bolt	1	81087-

FIG. M2210-027001 Fender, Starting Wiring Harness

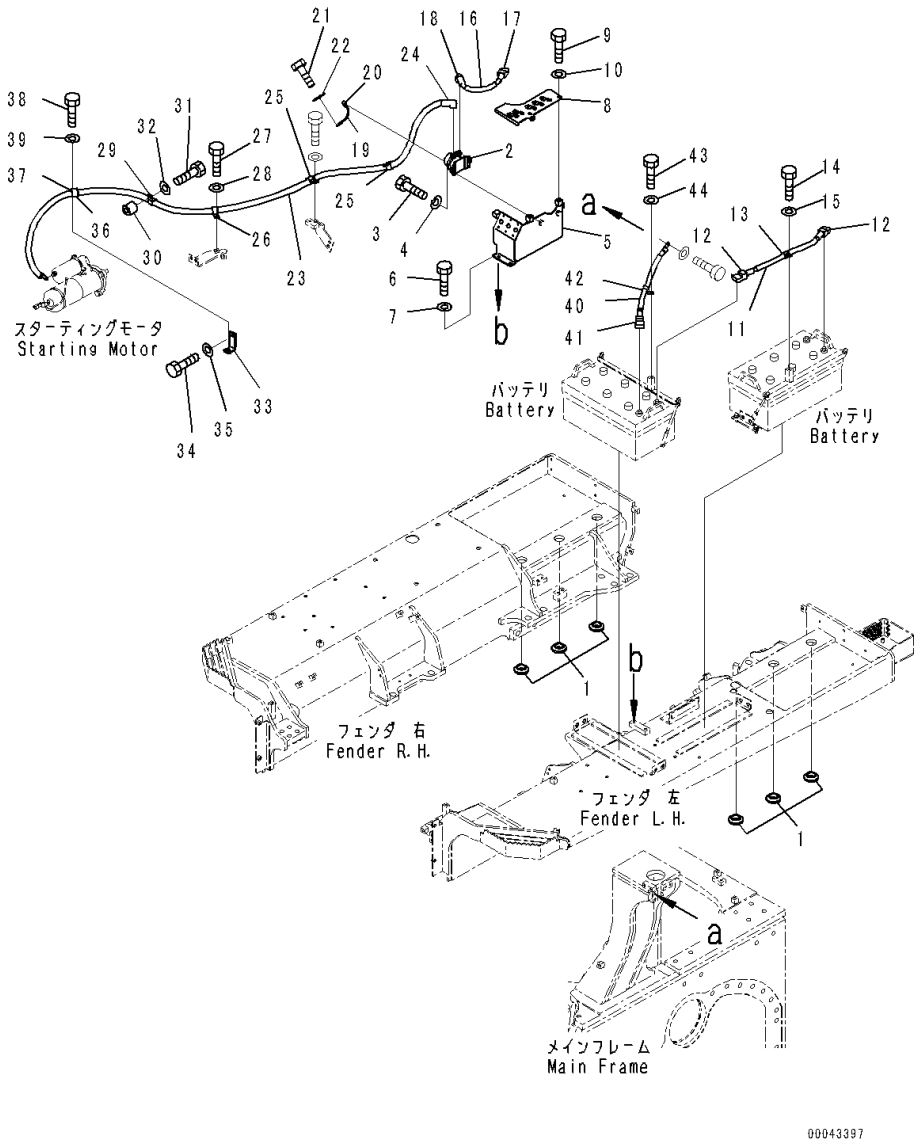

Index	Code	Part Number	Description	Qty	Serial Number
35		01643-31232	Washer	1	81087-
36		04434-53412	Clip	1	81087-
37		07095-20625	Cushion	1	81087-
38		01010-81225	Bolt	1	81087-
39		01643-31232	Washer	1	81087-
40		08028-FF055	Cable, Ground	1	81087-
41		08038-22511	Cap	1	81087-
42		04434-52312	Clip	1	81087-
43		01010-81225	Bolt	1	81087-
44		01643-31232	Washer	1	81087-

FIG. M2210-027010 Fender, Battery

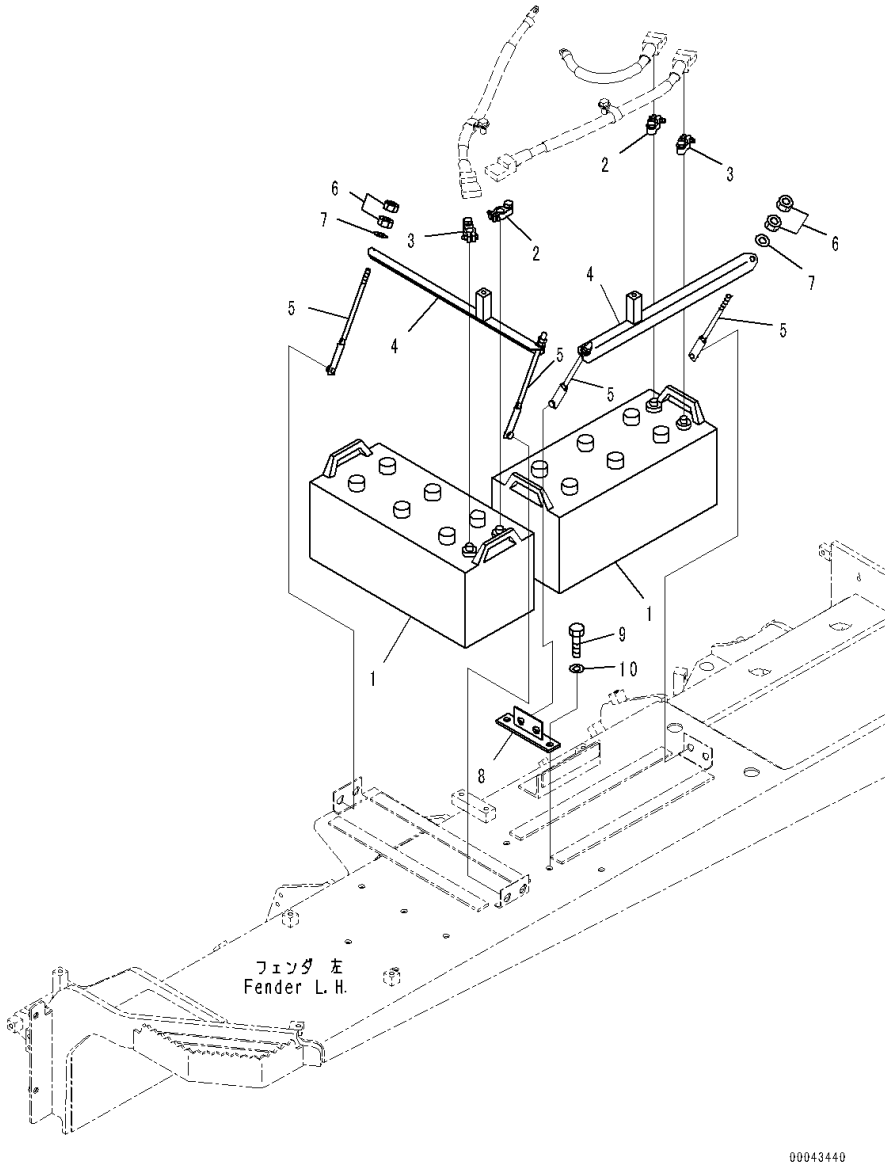

Index	Code	Part Number	Description	Qty	Serial Number
		Note: This list covers following specifications.			
		With Large Capacity Battery			
		With Large Capacity Battery, For Dual Tilt Dozer			
		With Large Capacity Battery, Tool Box, Fender RHS			
		With Large Capacity Battery, Tool Box, Fender RHS, For Dual Tilt Dozer			
1		08000-02221	Battery, Wet, C200	2	81087-
2		08000-00000	Terminal	2	81087-
3		08000-00001	Terminal	2	81087-
4		17A-06-41941	Holder	2	81087-
5		175-06-39621	Rod	4	81087-
6		01580-11008	Nut	8	81087-
7		01643-31032	Washer	4	81087-
8		17A-54-44171	Bracket	1	81087-
9		01010-81230	Bolt	2	81087-
10		01643-31232	Washer	2	81087-

FIG. M2210-009001 Fender, Starting Wiring Harness

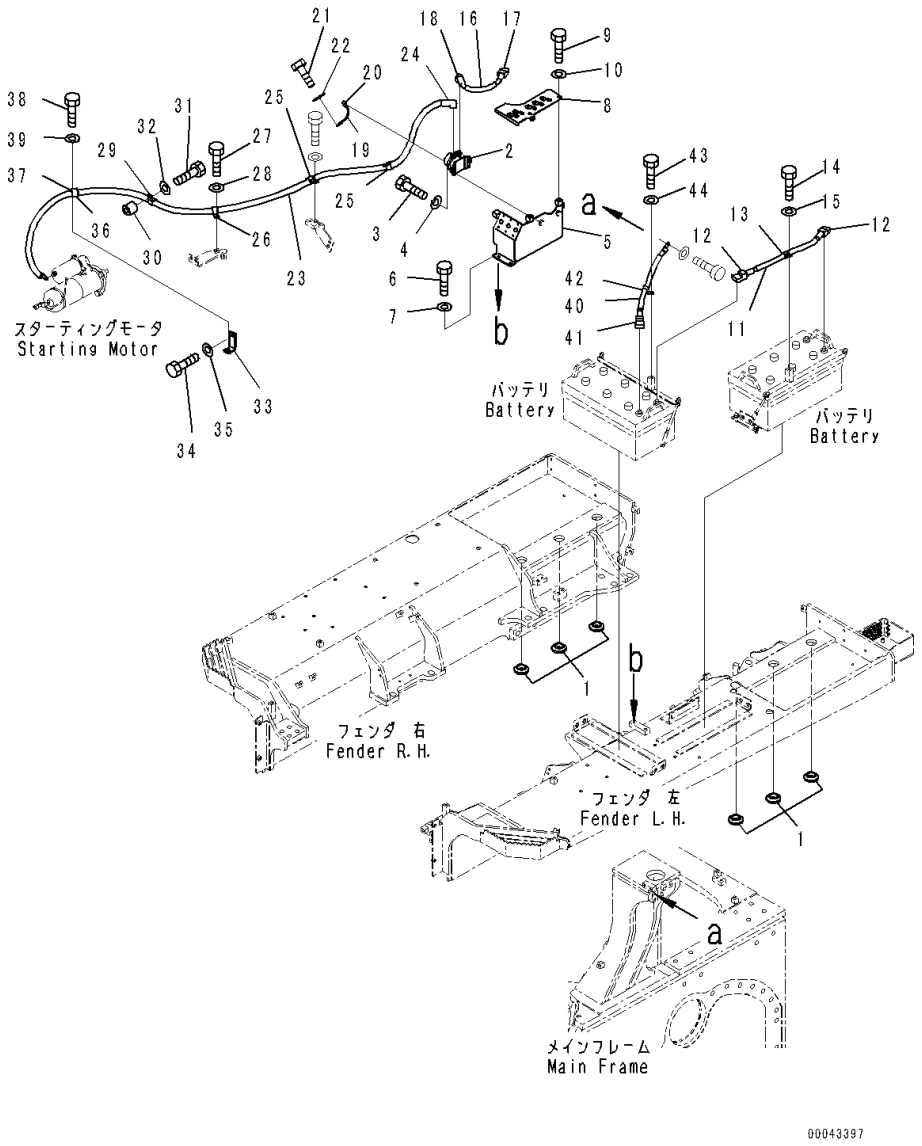

Index	Code	Part Number	Description	Qty	Serial Number
		Note: This list covers following specifications. With Large Capacity Batteries, Landfill Specification With Large Capacity Batteries, For Dual Tilt Pitch Dozer, Landfill Specification			
1		17A-04-12550	Cushion	6	81028-
2		08088-30000	Switch, Battery Relay	1	81028-
3		01010-80825	Bolt	2	81028-
4		01643-30823	Washer	2	81028-
5		17A-06-41531	Bracket	1	81028-
6		01010-81225	Bolt	3	81028-
7		01643-31232	Washer	3	81028-
8		17A-06-41551	Bracket	1	81028-
9		01010-81225	Bolt	2	81028-
10		01643-31232	Washer	2	81028-
11		08028-HE055	Cable, Ground	1	81028-
12		08038-42511	Cap	2	81028-
13		04434-52312	Clip	1	81028-
14		01010-81225	Bolt	1	81028-
15		01643-31232	Washer	1	81028-
16		08028-HE035	Cable, Ground	1	81028-
17		08038-42511	Cap	1	81028-
18		17A-06-41540	Cap	1	81028-
19		209-06-19680	Wire	1	81028-
20		08038-00519	Cap	1	81028-
21		01010-80816	Bolt	1	81028-
22		01643-30823	Washer	1	81028-
23		17A-06-41272	Wiring Harness	1	81028-
24		17A-06-41540	Cap	1	81028-
25		04434-52712	Clip	2	81028-
26		04434-52712	Clip	1	81028-
27		01010-81225	Bolt	1	81028-
28		01643-31232	Washer	1	81028-
29		04434-52712	Clip	1	81028-
30		195-33-11220	Spacer	1	81028-
31		01010-81245	Bolt	1	81028-
32		01643-31232	Washer	1	81028-
33		17A-06-41771	Bracket	1	81028-
34		01010-81225	Bolt	1	81028-
35		01643-31232	Washer	1	81028-
36		04434-53412	Clip	1	81028-

FIG. M2210-009001 Fender, Starting Wiring Harness

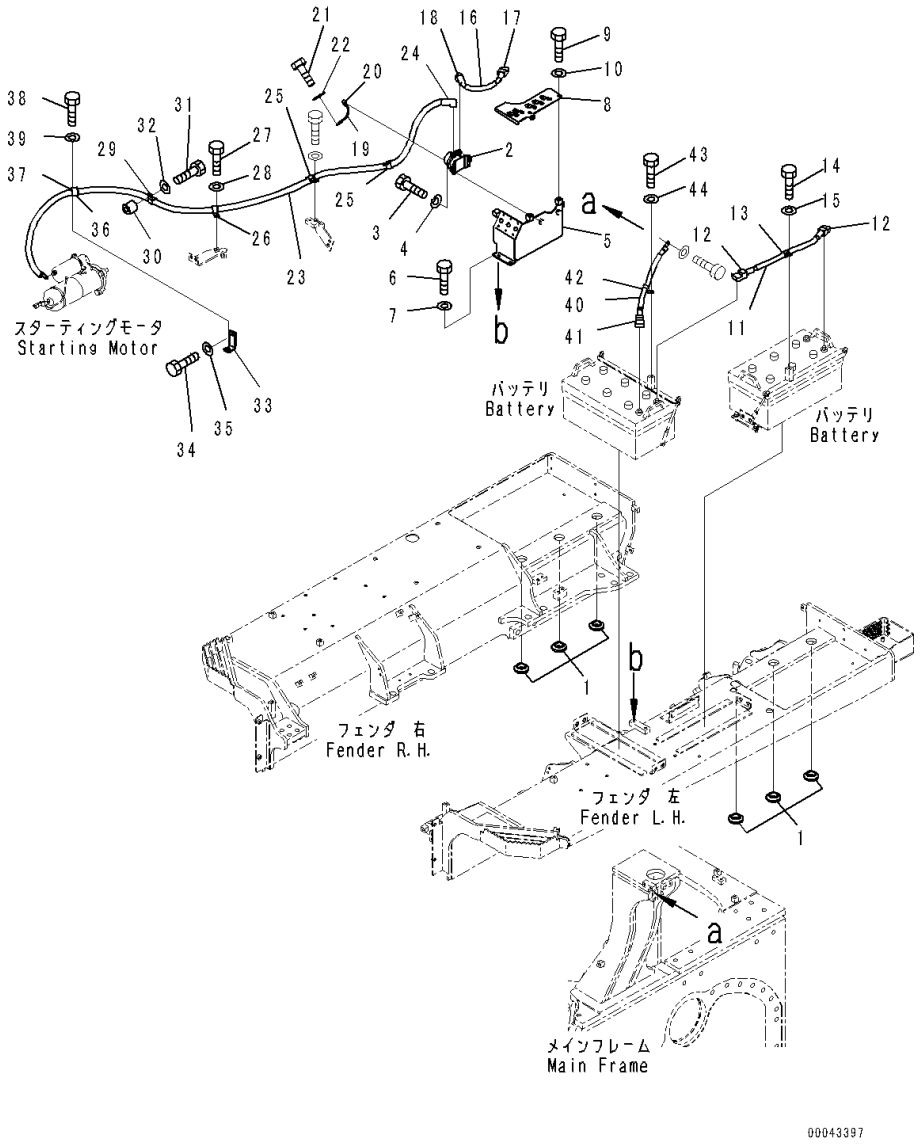

Index	Code	Part Number	Description	Qty	Serial Number
37		07095-20625	Cushion	1	81028-
38		01010-81225	Bolt	1	81028-
39		01643-31232	Washer	1	81028-
40		08028-FF055	Cable, Ground	1	81028-
41		08038-22511	Cap	1	81028-
42		04434-52312	Clip	1	81028-
43		01010-81225	Bolt	1	81028-
44		01643-31232	Washer	1	81028-

FIG. M2210-009002 Fender, Main Wiring Harness (1/2)

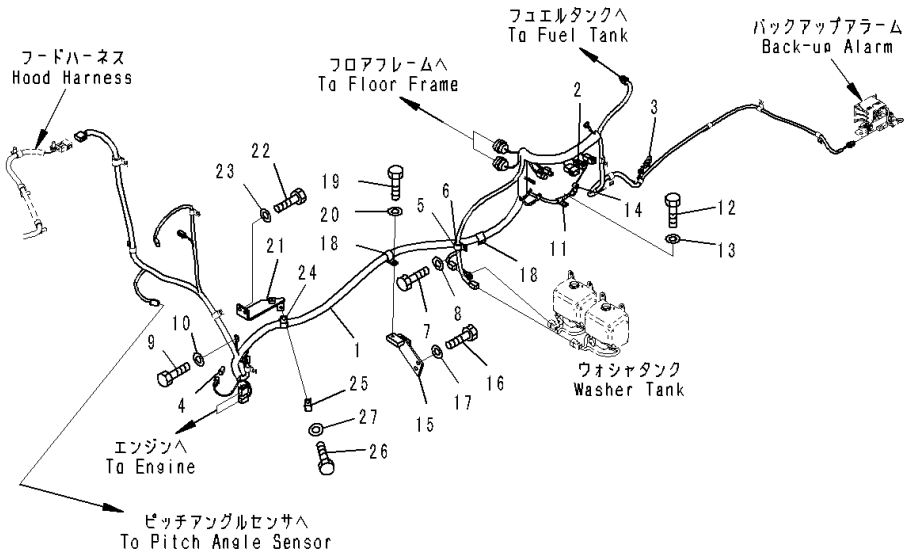

Index	Code	Part Number	Description	Qty	Serial Number
		Note: This list covers following specifications. With Large Capacity Batteries, Landfill Specification With Large Capacity Batteries, For Dual Tilt Pitch Dozer, Landfill Specification			
1		17A-06-41131	Wiring Harness	1	81028-
2		08192-22830	• Connector	1	81028-
3		08192-23830	• Connector	1	81028-
4		21J-06-13661	• Diode	1	81028-
5		04434-51912	Clip	1	81028-
6		07095-20213	Cushion	1	81028-
7		01010-81225	Bolt	1	81028-
8		01643-31232	Washer	1	81028-
9		01010-81225	Bolt	1	81028-
10		01643-31232	Washer	1	81028-
11		04434-51012	Clip	1	81028-
12		01010-81225	Bolt	1	81028-
13		01643-31232	Washer	1	81028-
14		08038-00519	Cap	1	81028-
15		17A-06-42681	Bracket	1	81028-
16		01010-81225	Bolt	2	81028-
17		01643-31232	Washer	2	81028-
18		04434-52712	Clip	2	81028-
19		01010-81225	Bolt	2	81028-
20		01643-31232	Washer	2	81028-
21		17A-06-42640	Bracket	1	81028-
22		01010-81225	Bolt	2	81028-
23		01643-31232	Washer	2	81028-
24		04434-52712	Clip	1	81028-
25		04434-51412	Clip	1	81028-
26		01010-81225	Bolt	1	81028-
27		01643-31232	Washer	1	81028-

FIG. M2210-009003 Fender, Main Wiring Harness (2/2)

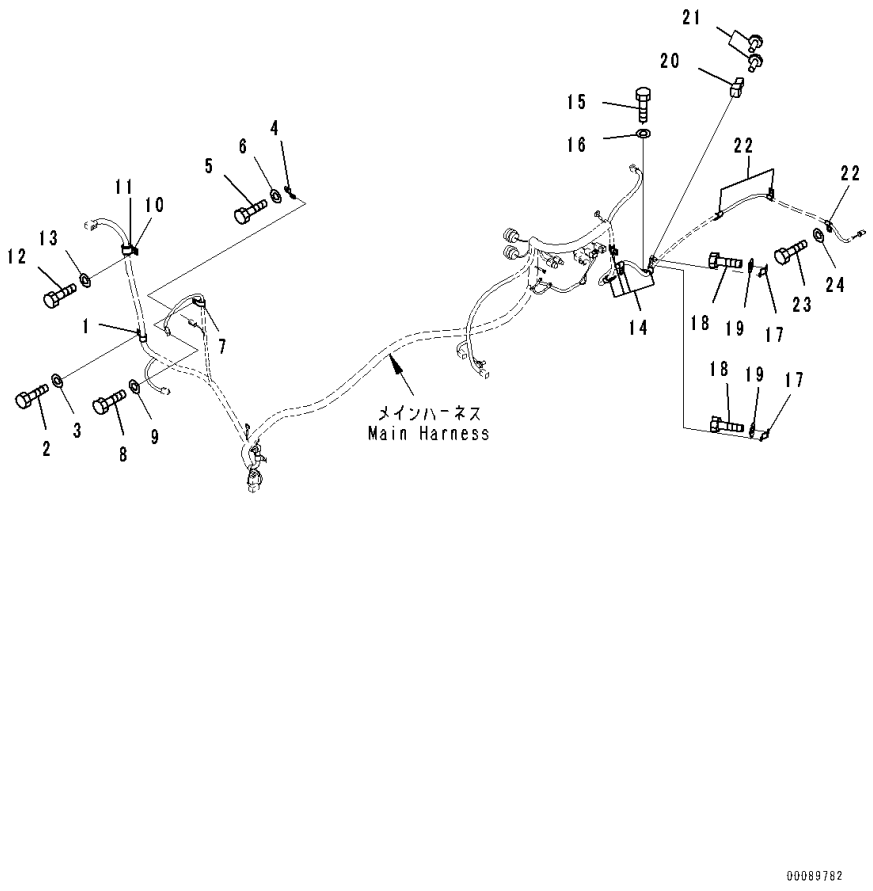

Index	Code	Part Number	Description	Qty	Serial Number
		Note: This list covers following specifications. With Large Capacity Batteries, Landfill Specification With Large Capacity Batteries, For Dual Tilt Pitch Dozer, Landfill Specification			
1		04434-51912	Clip	1	81028-
2		01010-81225	Bolt	1	81028-
3		01643-31232	Washer	1	81028-
4		08193-21012	Clip	1	81028-
5		01010-81225	Bolt	1	81028-
6		01643-31232	Washer	1	81028-
7		600-051-3100	Clip	1	81028-
8		01010-81225	Bolt	1	81028-
9		01643-31232	Washer	1	81028-
10		04434-52712	Clip	1	81028-
11		07095-20419	Cushion	1	81028-
12		01010-81225	Bolt	1	81028-
13		01643-31232	Washer	1	81028-
14		04434-51412	Clip	4	81028-
15		01010-81225	Bolt	4	81028-
16		01643-31232	Washer	4	81028-
17		08193-21012	Clip	2	81028-
18		01010-81225	Bolt	2	81028-
19		01643-31232	Washer	2	81028-
20		08192-22100	Connector Body	1	81028-
21		08191-00770	Plug, Connector	2	81028-
22		04434-51012	Clip	3	81028-
23		01010-81225	Bolt	3	81028-
24		01643-31232	Washer	3	81028-

FIG. M2210-009004 Fender, Heater Relay Wiring Harness

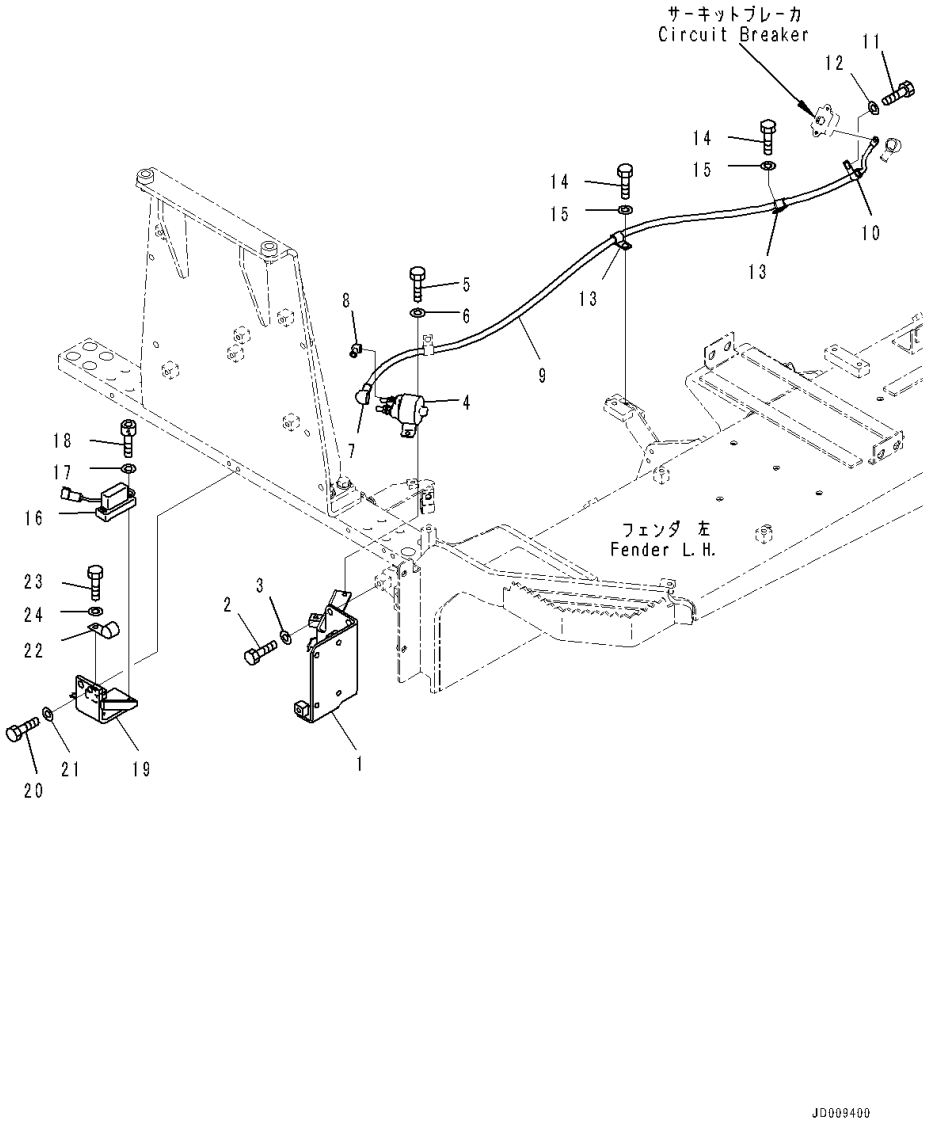

Index	Code	Part Number	Description	Qty	Serial Number
		Note: This list covers following specifications. With Large Capacity Batteries, Landfill Specification With Large Capacity Batteries, For Dual Tilt Pitch Dozer, Landfill Specification			
1		17A-06-42670	Bracket	1	81028-
2		01010-81225	Bolt	3	81028-
3		01643-31232	Washer	3	81028-
4		600-815-2690	Switch, Heater	1	81028-
5		01010-80820	Bolt	2	81028-
6		01643-30823	Washer	2	81028-
7		08038-02027	Cap	1	81028-
8		08038-00519	Cap	1	81028-
9		17A-06-41281	Wiring Harness	1	81028-
10		04434-51412	Clip	1	81028-
11		01010-81225	Bolt	1	81028-
12		01643-31232	Washer	1	81028-
13		04434-51412	Clip	2	81028-
14		01010-81225	Bolt	2	81028-
15		01643-31232	Washer	2	81028-
16		7861-93-5390	Sensor, Angle	1	81028-
17		01643-30623	Washer	2	81028-
18		01252-70635	Bolt	2	81028-
19		17A-06-41653	Bracket	1	81028-
20		01010-81230	Bolt	2	81028-
21		01643-31232	Washer	2	81028-
22		600-051-3300	Clip	1	81028-
23		01010-81225	Bolt	1	81028-
24		01643-31232	Washer	1	81028-

FIG. M2210-009005 Fender, Backup Alarm

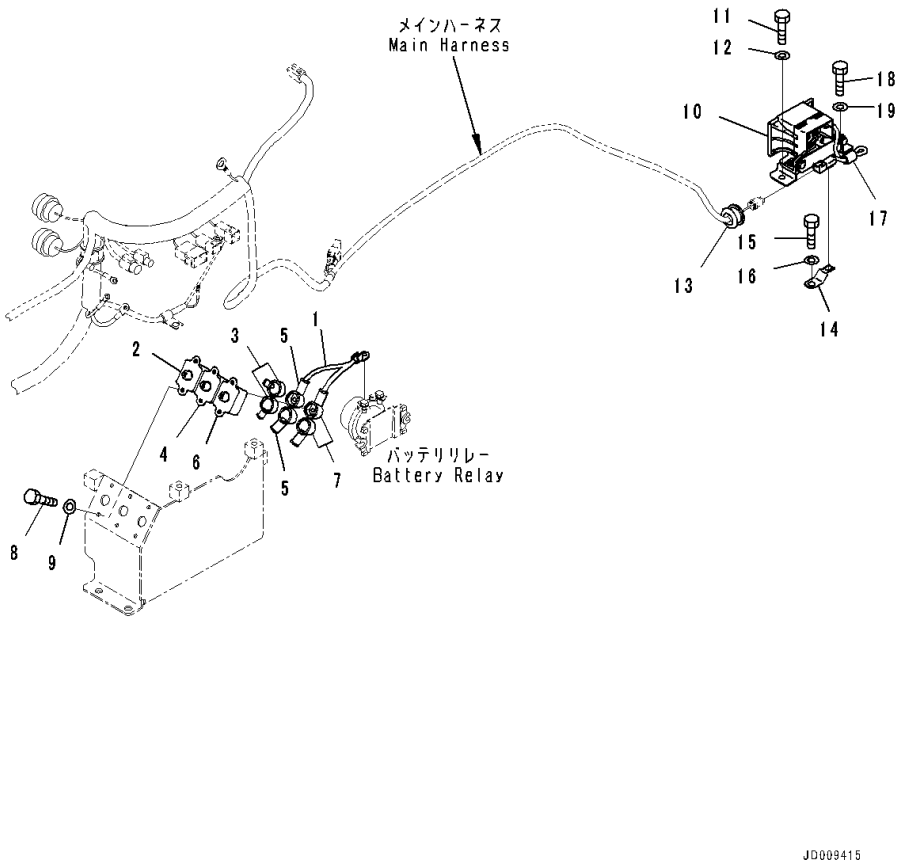

Index	Code	Part Number	Description	Qty	Serial Number
		Note: This list covers following specifications. With Large Capacity Batteries, Landfill Specification With Large Capacity Batteries, For Dual Tilt Pitch Dozer, Landfill Specification			
1		17A-06-41211	Wiring Harness	1	81028-
2		198-06-62830	Circuit Breaker	1	81028-
3		08038-00525	Cap	2	81028-
4		198-06-62840	Circuit Breaker	1	81028-
5		08038-02027	Cap	2	81028-
6		198-06-62840	Circuit Breaker	1	81028-
7		08038-02027	Cap	2	81028-
8		01010-80616	Bolt	6	81028-
9		01643-30623	Washer	6	81028-
10		20Y-06-41812	Alarm, Back-up	1	81028-
11		01010-80816	Bolt	2	81028-
12		01643-30823	Washer	2	81028-
13		201-46-38220	Grommet	1	81028-
14		08193-21012	Clip	1	81028-
15		01010-81225	Bolt	1	81028-
16		01643-31232	Washer	1	81028-
17		600-051-3120	Clip	1	81028-
18		01010-81225	Bolt	1	81028-
19		01643-31232	Washer	1	81028-

FIG. M2210-009006 Fender, Hood Mounting

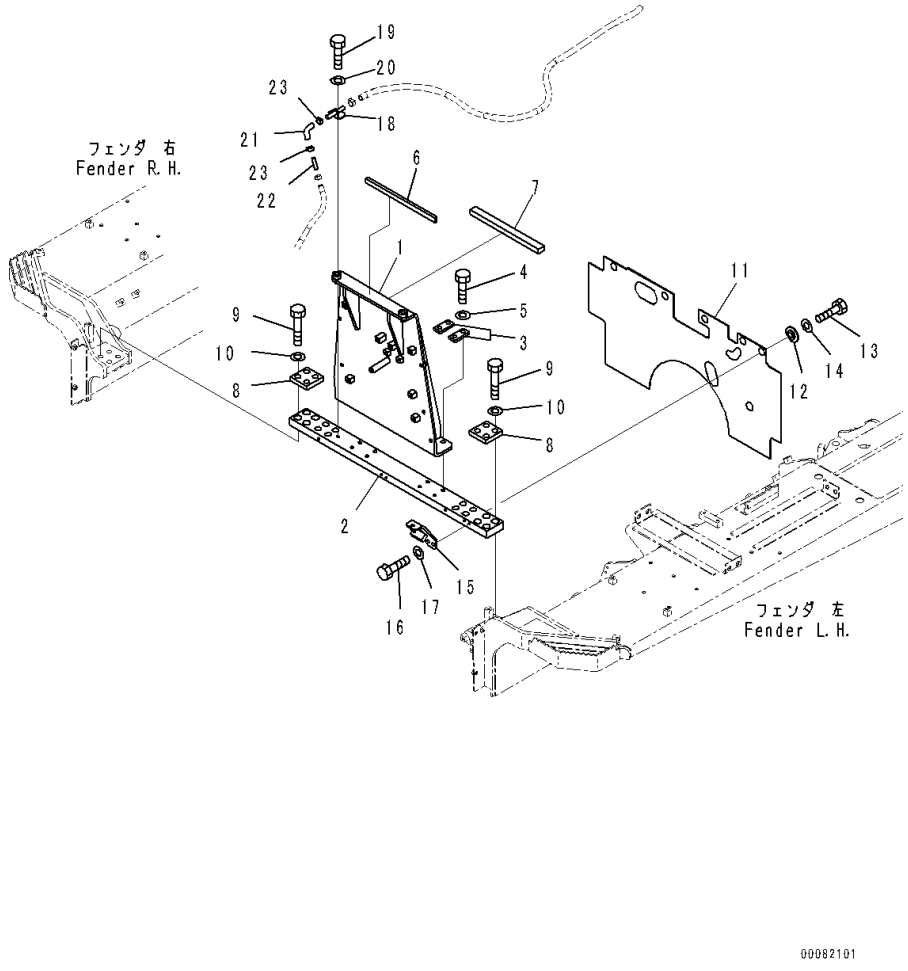

Index	Code	Part Number	Description	Qty	Serial Number
		Note: This list covers following specifications. With Large Capacity Batteries, Landfill Specification With Large Capacity Batteries, For Dual Tilt Pitch Dozer, Landfill Specification			
		17A-54-43131	Bracket Assembly	1	81028-
1	C1		• Bracket	1	81028-
2		17A-54-42922	• Plate	1	81028-
3		17A-54-42961	• Plate	4	81028-
4		01010-81655	• Bolt	8	81028-
5		01643-31645	• Washer	8	81028-
6		17A-54-43150	• Seal,Bonded	1	81028-
7		17A-54-43160	• Seal,Bonded	1	81028-
8		17A-54-42971	Plate	2	81028-
9		01011-82400	Bolt	8	81028-
10		01643-32460	Washer	8	81028-
11		17A-54-45862	Rubber	1	81028-
12		17A-54-42981	Plate	5	81028-
13		01010-81230	Bolt	5	81028-
14		01643-31232	Washer	5	81028-
15		17A-54-42531	Bracket	1	81028-
16		01010-81225	Bolt	2	81028-
17		01643-31232	Washer	2	81028-
18		17A-911-4411	Bracket	1	81028-
19		01010-81225	Bolt	1	81028-
20		01643-31232	Washer	1	81028-
21		09483-70550	Hose	1	81028-
22		09484-00560	Connector	1	81028-
23		09479-02400	Clamp	2	81028-

FIG. M2210-009007 Fender, Inner Parts

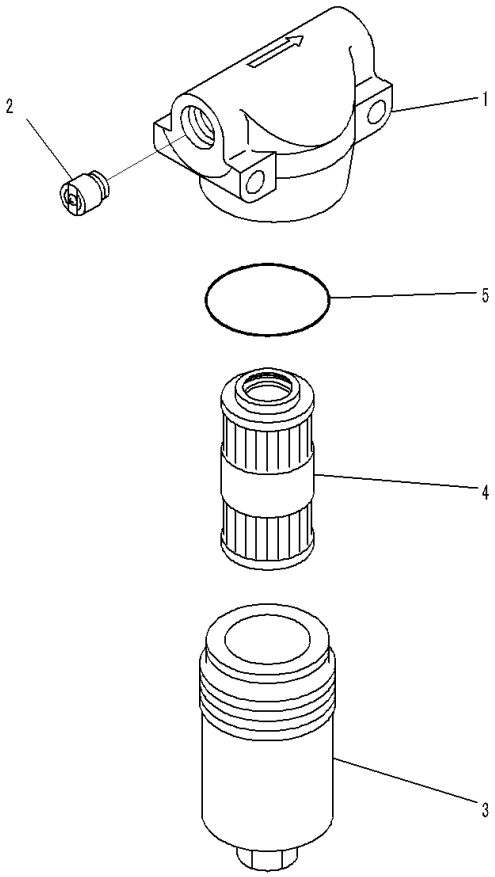

00060759

Index	Code	Part Number	Description	Qty	Serial Number
		Note: This list covers following specifications. With Large Capacity Batteries, Landfill Specification With Large Capacity Batteries, For Dual Tilt Pitch Dozer, Landfill Specification			
		20Y-62-51681	Case	1	81028-
1	C1		• Head	1	81028-
2	C1		• Valve Assembly	1	81028-
3	C1		• Case	1	81028-
4		20Y-62-51691	• Filter	1	81028-
5		706-76-71390	• O-ring	1	81028-

FIG. M2210-009008 Fender, Pilot Filter

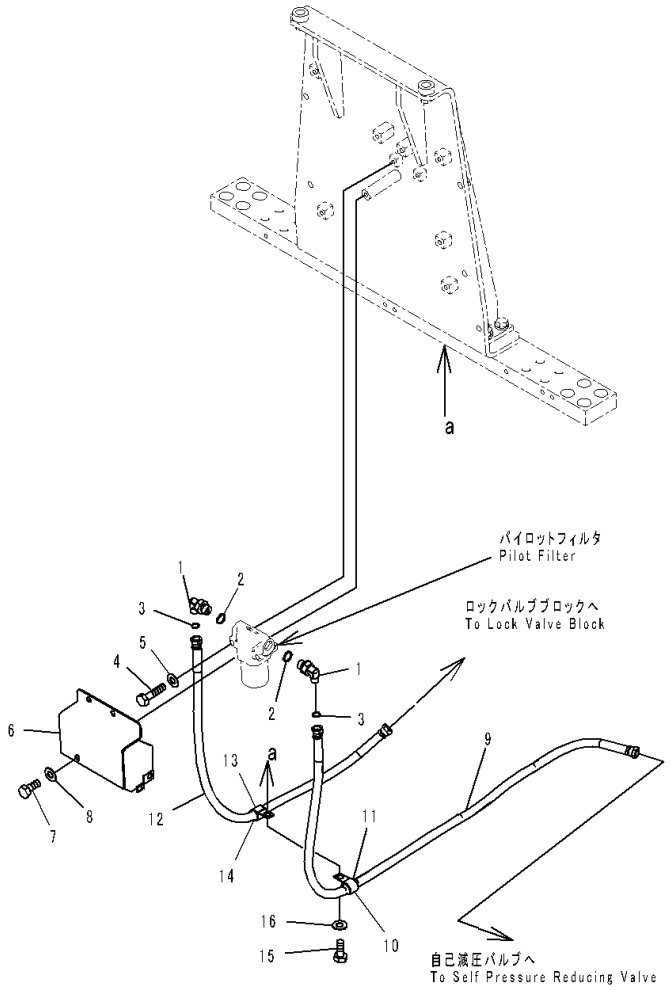

JD012488-V

Index	Code	Part Number	Description	Qty	Serial Number
		Note: This list covers following specifications. With Large Capacity Batteries, Landfill Specification With Large Capacity Batteries, For Dual Tilt Pitch Dozer, Landfill Specification			
1		02782-10315	Elbow	2	81028-
2		07002-12034	O-ring	2	81028-
3		02896-11009	O-ring	2	81028-
4		01010-81075	Bolt	2	81028-
5		01643-31032	Washer	2	81028-
6		17A-61-43941	Cover	1	81028-
7		01010-81225	Bolt	3	81028-
8		01643-31232	Washer	3	81028-
9		17A-61-43910	Hose	1	81028-
10		04434-52112	Clip	1	81028-
11		07095-20314	Cushion	1	81028-
12		17A-61-43930	Hose	1	81028-
13		04434-52112	Clip	1	81028-
14		07095-20314	Cushion	1	81028-
15		01010-81225	Bolt	1	81028-
16		01643-31232	Washer	1	81028-

FIG. M2210-009009 Fender, Fender

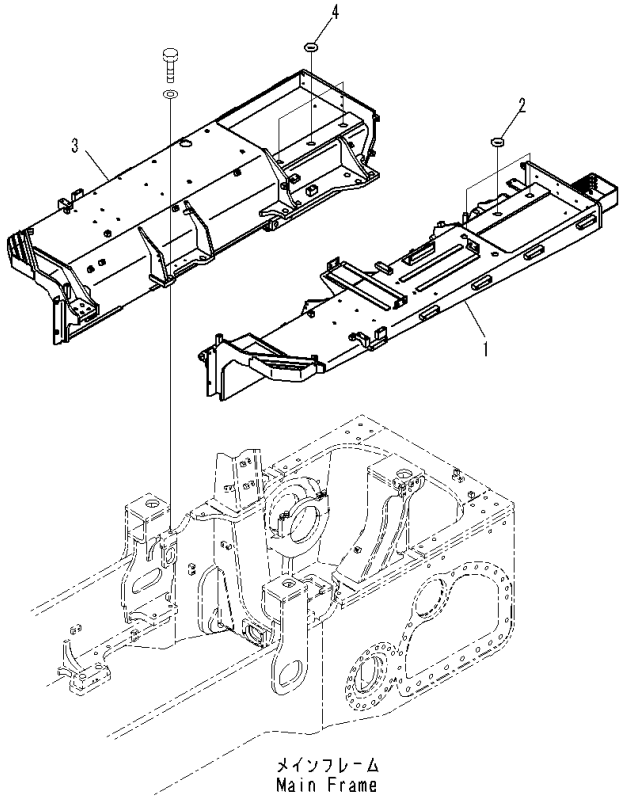

00059982

Index	Code	Part Number	Description	Qty	Serial Number
		Note: This list covers following specifications.			
		With Large Capacity Batteries, Landfill Specification			
		With Large Capacity Batteries, For Dual Tilt Pitch Dozer,			
		Landfill Specification			
1		17A-54-49211	Fender	1	81028-
2		17A-04-12550	Cushion	3	81028-
3		17A-54-49220	Fender	1	81028-
4		17A-04-12550	Cushion	3	81028-

FIG. M2210-009010 Fender, Battery

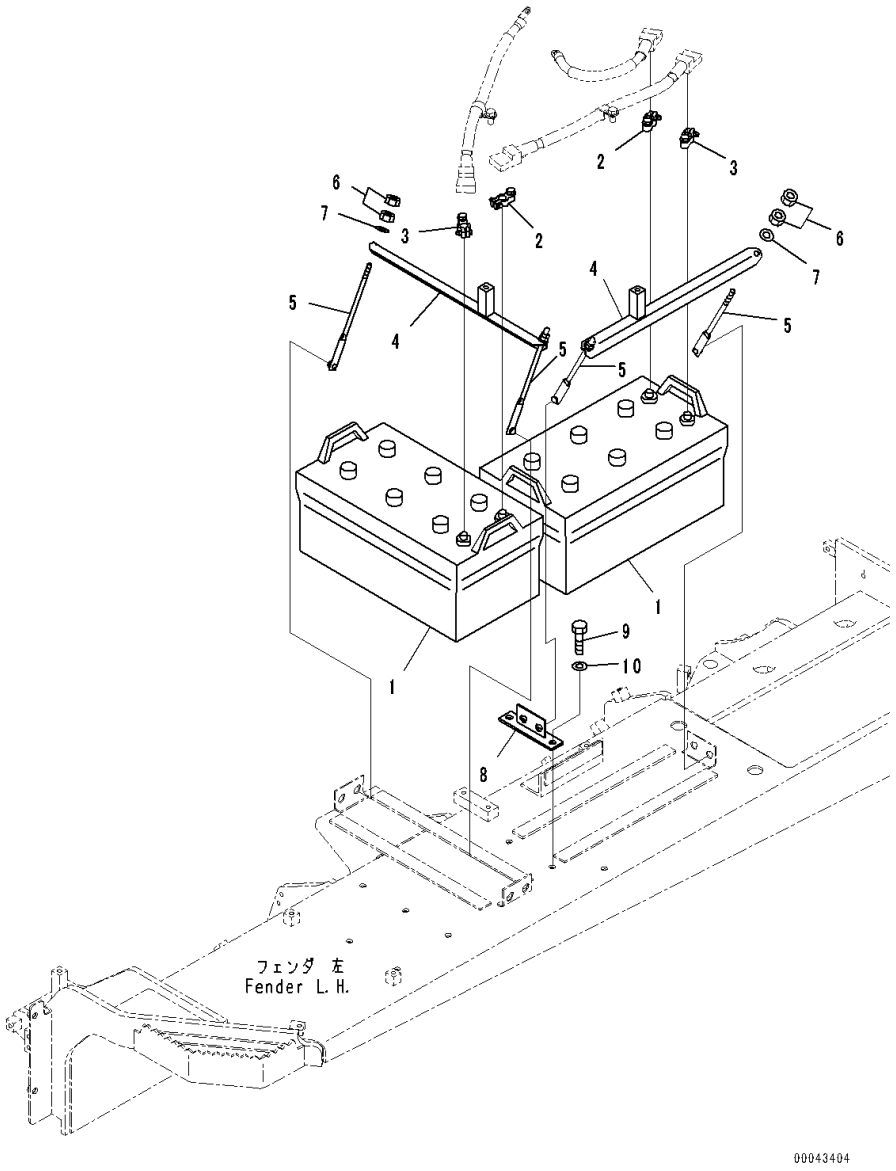

Index	Code	Part Number	Description	Qty	Serial Number
		Note: This list covers following specifications. With Large Capacity Batteries, Landfill Specification With Large Capacity Batteries, For Dual Tilt Pitch Dozer, Landfill Specification			
1		08000-02221	Battery, Wet, C200	2	81028-
2		08000-00000	Terminal	2	81028-
3		08000-00001	Terminal	2	81028-
4		17A-06-41941	Holder	2	81028-
5		175-06-39621	Rod	4	81028-
6		01580-11008	Nut	8	81028-
7		01643-31032	Washer	4	81028-
8		17A-54-44171	Bracket	1	81028-
9		01010-81230	Bolt	2	81028-
10		01643-31232	Washer	2	81028-

FIG. M2210-009011 Fender, Hydraulic Tank

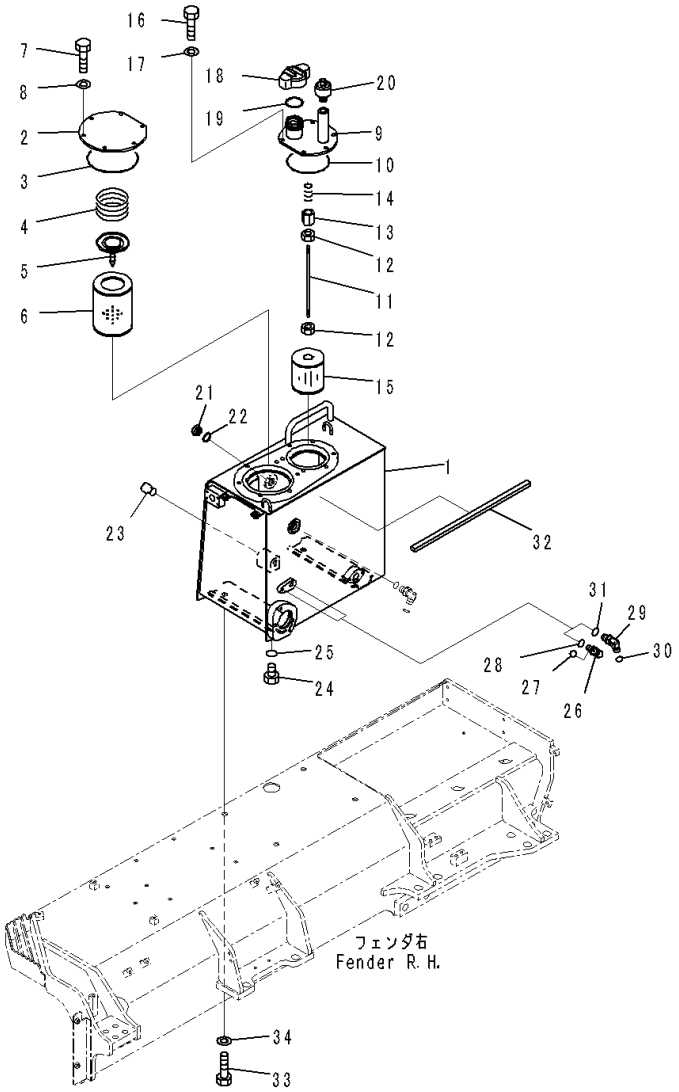

Index	Code	Part Number	Description	Qty	Serial Number
		Note: This list covers following specifications.			
		With Large Capacity Batteries, Landfill Specification			
		With Large Capacity Batteries, For Dual Tilt Pitch Dozer,			
		Landfill Specification			
		17A-60-41602	Tank Assembly	1	81028-
1	C1		• Tank	1	81028-
2		22U-60-21232	• Cover	1	81028-
3		07000-15195	• O-ring	1	81028-
4		20Y-60-21240	• Spring	1	81028-
5		20Y-60-31131	• Valve Assembly	1	81028-
6		207-60-71182	• Element	1	81028-
7		01010-81230	• Bolt	6	81028-
8		01643-31232	• Washer	6	81028-
9		17A-60-42172	• Cover	1	81028-
10		07000-15160	• O-ring	1	81028-
		17A-60-41211	• Strainer Assembly	1	81028-
	C1		• • Rod	1	81028-
11	C1		• • • Rod	1	81028-
12	C1		• • • Nut	2	81028-
13		20Y-60-21320	• • • Holder	1	81028-
14		12R-60-11230	• • • Spring	1	81028-
15		22B-60-11160	• • Strainer	1	81028-
16		01010-81230	• Bolt	6	81028-
17		01643-31232	• Washer	6	81028-
18		07092-01000	• Cap	1	81028-
19		07051-00005	• • Gasket	1	81028-
20		22U-60-21520	• Breather	1	81028-
21		20N-60-11143	• Gauge	1	81028-
22		20N-60-11181	• • Gasket	1	81028-
23		198-60-19820	• Valve	1	81028-
24		07040-12412	• Plug	1	81028-
25		07002-12434	• O-ring	1	81028-
26		02782-10311	• Elbow	1	81028-
27		02896-11009	• O-ring	1	81028-
28		07002-11423	• O-ring	1	81028-
29		02782-10422	• Elbow	1	81028-
30		02896-11012	• O-ring	1	81028-
31		07002-12034	• O-ring	1	81028-
32		17A-60-41620	• Seal,Bonded	1	81028-
33		01010-81635	Bolt	4	81028-

FIG. M2210-009011 Fender, Hydraulic Tank

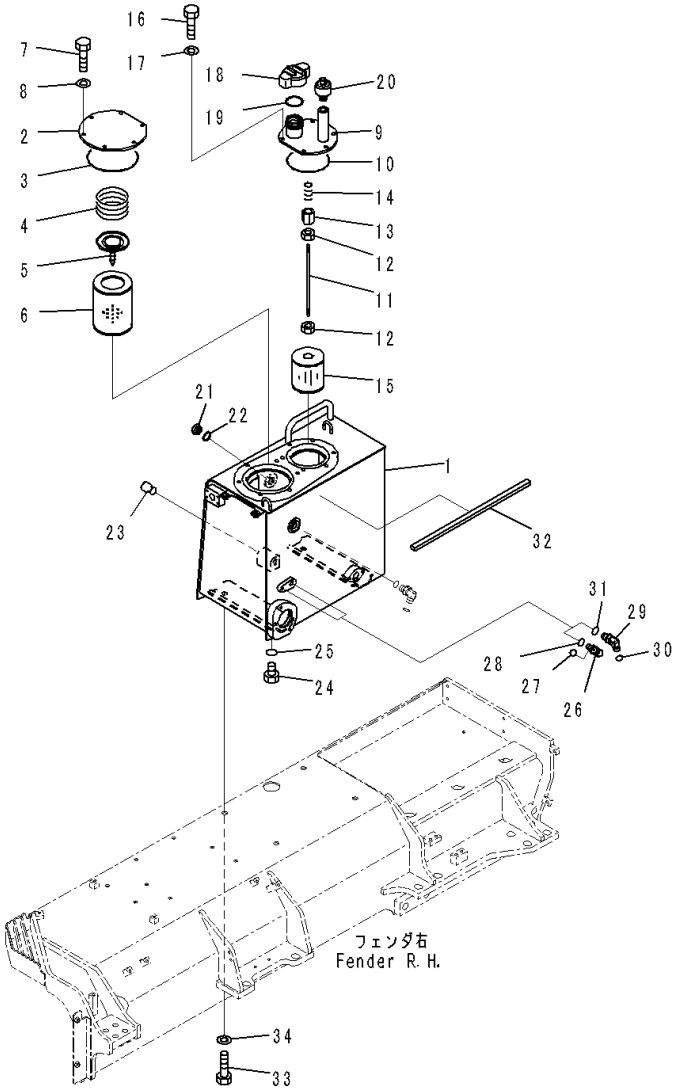

Index	Code	Part Number	Description	Qty	Serial Number
34		21T-54-16150	Washer	4	81028-

FIG. M2210-009012 Fender, With Large Capacity Batteries, Landfill Specification, Control Valve (1/9)

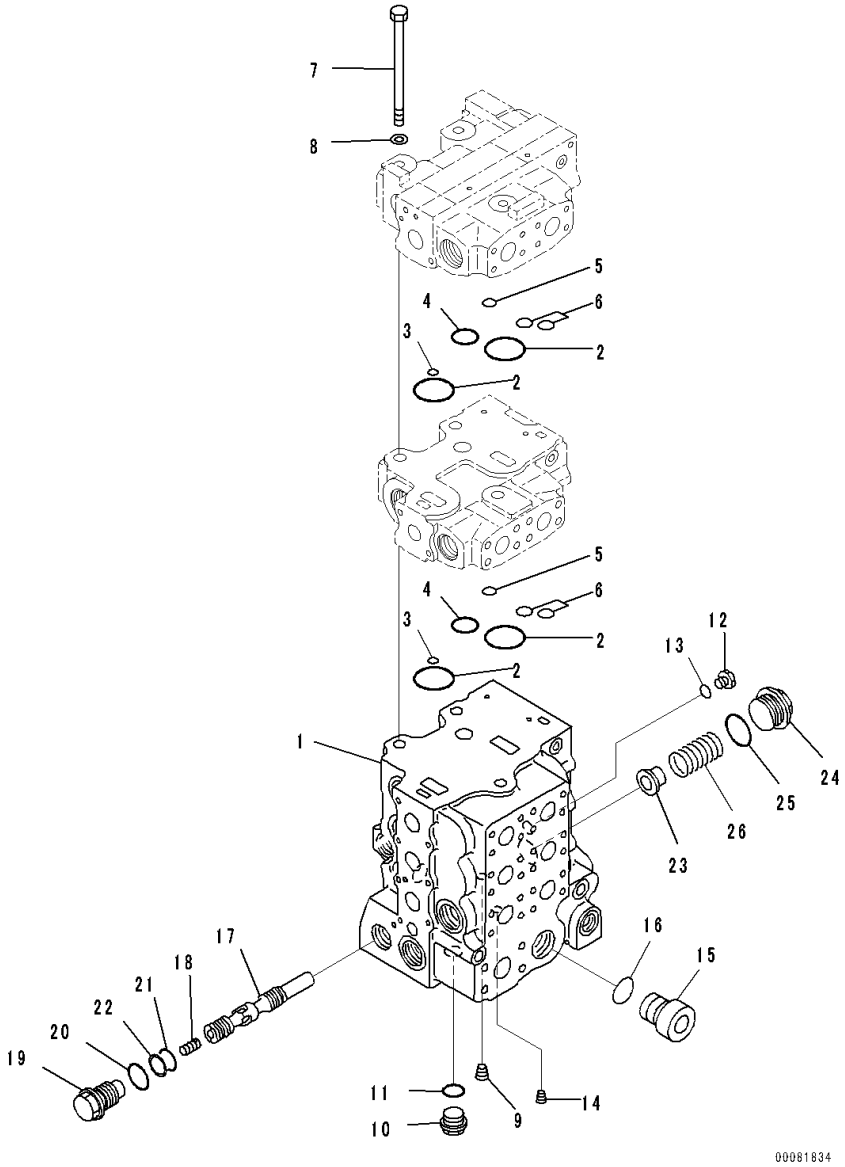

Index	Code	Part Number	Description	Qty	Serial Number
		723-65-21700	Valve Assembly, Control	1	81028-
1	C1		• Body	1	81028-
2		07000-13048	• O-ring	4	81028-
3		07000-11009	• O-ring	2	81028-
4		07000-13030	• O-ring	2	81028-
5		07000-12012	• O-ring	2	81028-
6		722-12-19120	• O-ring	4	81028-
7		01011-61460	• Bolt	3	81028-
8		01643-31445	• Washer	3	81028-
9	C1		• Plug	1	81028-
10		709-74-91860	• Plug	1	81028-
11		07002-12434	• O-ring	1	81028-
12		702-21-55620	• Plug	1	81028-
13		07002-11423	• O-ring	1	81028-
14	C1		• Plug	12	81028-
15		07040-13316	• Plug	1	81028-
16		07002-13334	• O-ring	1	81028-
17	C1		• Spool	1	81028-
18		723-63-31520	• Piston	1	81028-
19		723-63-31530	• Plug	1	81028-
20		07002-13034	• O-ring	1	81028-
21		700-13-31161	• O-ring	1	81028-
22		723-63-32710	• Ring	1	81028-
23		723-63-31540	• Retainer	1	81028-
24		723-63-31550	• Plug	1	81028-
25		07002-14234	• O-ring	1	81028-
26		723-63-32560	• Spring	1	81028-

FIG. M2210-009013 Fender, Control Valve (2/9)

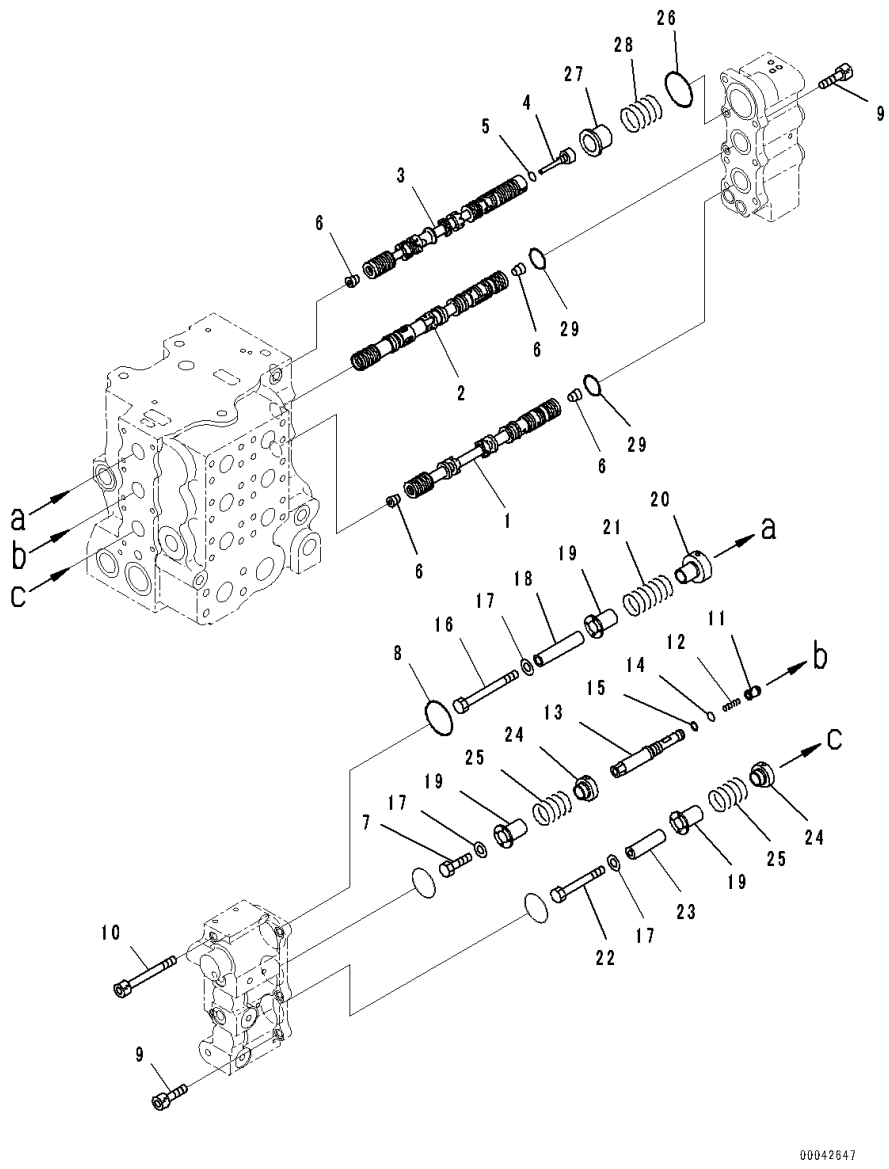

Index	Code	Part Number	Description	Qty	Serial Number
		Note: This list covers following specifications. With Large Capacity Batteries, Landfill Specification With Large Capacity Batteries, For Dual Tilt Pitch Dozer, Landfill Specification			
		723-65-21700	Valve Assembly, Control ..... With Large Capacity Batteries, Landfill Specification	1	81028-
		723-66-21100	Control ..... With Large Capacity Batteries, For Dual Tilt Pitch Dozer, Landfill Specification	1	81028-
1	C1		• Spool	1	81028-
2	C1		• Spool	1	81028-
3	C1		• Spool	1	81028-
4		723-63-31640	• Plug	1	81028-
5		07002-11023	• O-ring	1	81028-
6	C1		• Plug, Tapered	4	81028-
7		01010-81016	• Bolt	1	81028-
8		07430-71380	• O-ring	1	81028-
9		01252-60820	• Bolt, Hexagon Socket Head	9	81028-
10		708-25-19160	• Bolt, Hexagon Socket Head	3	81028-
11		723-63-32540	• Valve	1	81028-
12		723-63-32550	• Spring	1	81028-
13		723-63-31930	• Plug	1	81028-
14		07000-11009	• O-ring	1	81028-
15		07001-01009	• Ring, Back-up	1	81028-
16		01010-81095	• Bolt	1	81028-
17		01643-31032	• Washer	3	81028-
18		723-63-31660	• Spacer	1	81028-
19		723-63-31670	• Retainer	3	81028-
20		723-63-31680	• Retainer	1	81028-
21		723-63-41510	• Spring	1	81028-
22		01010-81075	• Bolt	1	81028-
23		723-63-31720	• Spacer	1	81028-
24		723-63-31730	• Retainer	2	81028-
25		723-63-31740	• Spring	2	81028-
26		723-63-31760	• O-ring	1	81028-
27		723-63-31770	• Retainer	1	81028-
28		723-63-41520	• Spring	1	81028-
29		07000-12030	• O-ring	2	81028-

FIG. M2210-009014 Fender, Control Valve (3/9)

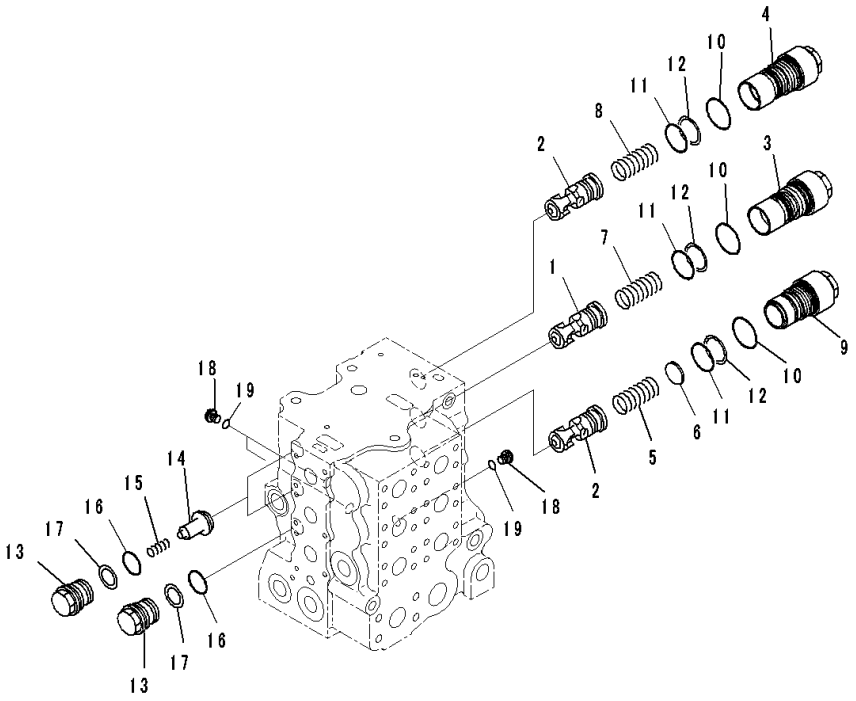

Index	Code	Part Number	Description	Qty	Serial Number
		Note: This list covers following specifications.			
		With Large Capacity Batteries, Landfill Specification			
		With Large Capacity Batteries, For Dual Tilt Pitch Dozer, Landfill Specification			
		723-65-21700	Valve Assembly, Control	1	81028-
			With Large Capacity Batteries, Landfill Specification		
		723-66-21100	Control	1	81028-
			With Large Capacity Batteries, For Dual Tilt Pitch Dozer, Landfill Specification		
1	C1		• Spool	1	81028-
2	C1		• Spool	2	81028-
3		723-63-32520	• Plug	1	81028-
4		723-63-32640	• Plug	1	81028-
5		723-63-31940	• Spring	1	81028-
6		723-63-31970	• Spacer	1	81028-
7		723-63-32530	• Spring	1	81028-
8		723-63-32650	• Spring	1	81028-
9		723-63-31960	• Plug	1	81028-
10		700-61-49160	• O-ring	3	81028-
11		723-63-31850	• O-ring	3	81028-
12		723-63-31860	• Ring	3	81028-
13		709-74-92821	• Plug	3	81028-
14		709-94-92811	• Valve	2	81028-
15		709-94-91751	• Spring	2	81028-
16		700-93-11320	• O-ring	3	81028-
17		700-93-11330	• Ring, Back-up	3	81028-
18		708-8E-16160	• Plug	3	81028-
19		07002-11023	• O-ring	3	81028-

FIG. M2210-009015 Fender, Control Valve (4/9)

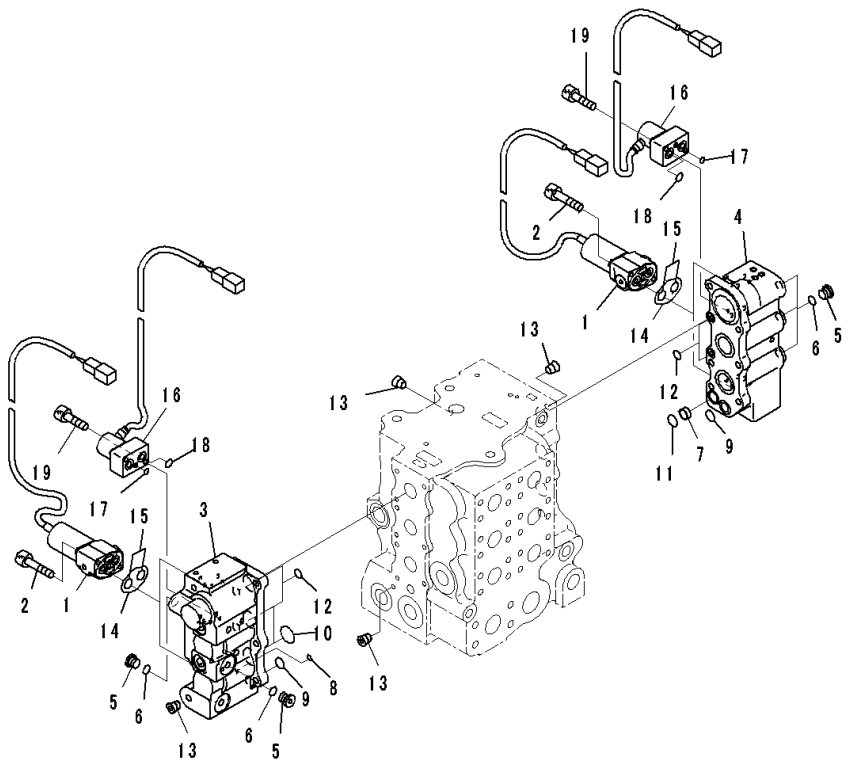

Index	Code	Part Number	Description	Qty	Serial Number
		Note: This list covers following specifications. With Large Capacity Batteries, Landfill Specification With Large Capacity Batteries, For Dual Tilt Pitch Dozer, Landfill Specification			
		723-65-21700	Valve Assembly, Control ..... With Large Capacity Batteries, Landfill Specification	1	81028-
		723-66-21100	Control ..... With Large Capacity Batteries, For Dual Tilt Pitch Dozer, Landfill Specification	1	81028-
1		702-21-07630	• Valve, Solenoid	4	81028-
2		203-60-62220	• Bolt	8	81028-
3		723-63-32730	• Block	1	81028-
4		723-63-32740	• Block	1	81028-
5		702-21-55620	• Plug	5	81028-
6		07002-11423	• O-ring	5	81028-
7		723-63-32810	• Ring	1	81028-
8		07000-11009	• O-ring	1	81028-
9		07000-12016	• O-ring	2	81028-
10		702-21-55450	• O-ring	2	81028-
11		722-12-19070	• O-ring	1	81028-
12		07000-11010	• O-ring	4	81028-
13		708-21-12541	• Plug	15	81028-
14		702-21-39450	• O-ring	4	81028-
15		700-22-11410	• O-ring	8	81028-
16		702-21-58100	• Valve, Pilot	2	81028-
17		723-11-19960	• • O-ring	1	81028-
18		702-21-54910	• • O-ring	2	81028-
19		01252-60635	• Bolt, Hexagon Socket Head	4	81028-

FIG. M2210-009016 Fender, Control Valve (5/9)

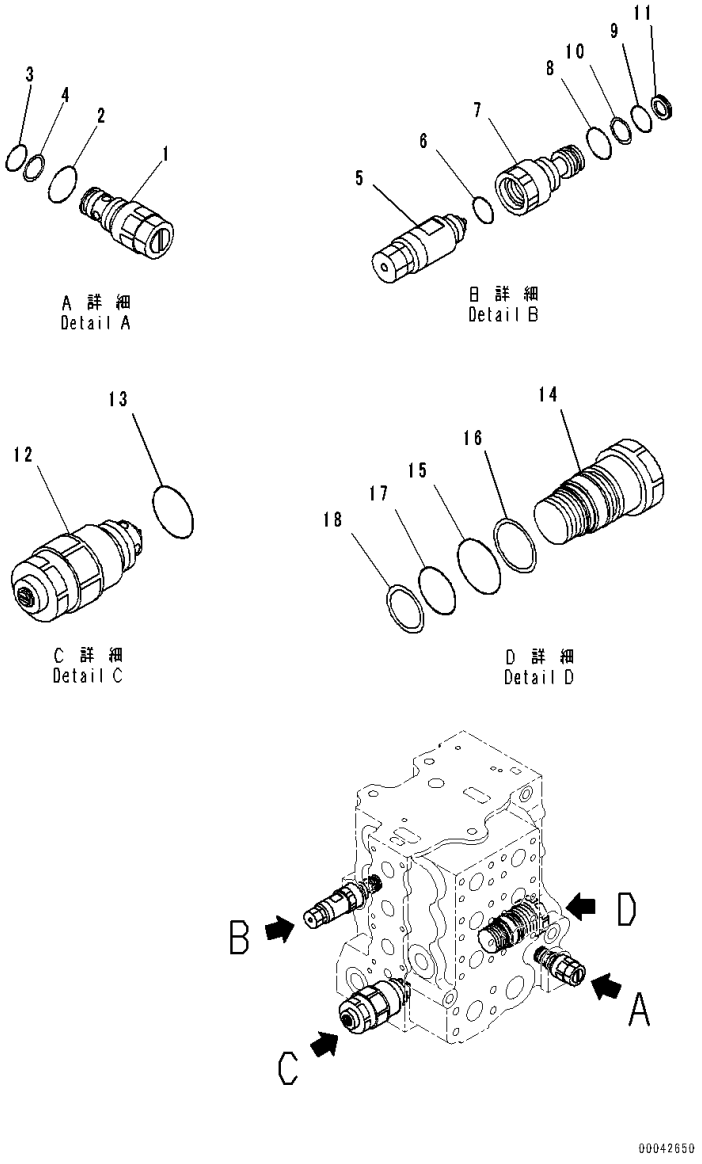

Index	Code	Part Number	Description	Qty	Serial Number
		Note: This list covers following specifications. With Large Capacity Batteries, Landfill Specification With Large Capacity Batteries, For Dual Tilt Pitch Dozer, Landfill Specification			
		723-65-21700	Valve Assembly, Control ..... With Large Capacity Batteries, Landfill Specification	1	81028-
		723-66-21100	Control ..... With Large Capacity Batteries, For Dual Tilt Pitch Dozer, Landfill Specification	1	81028-
1		723-60-21800	• Valve, Relief	1	81028-
2		07002-02434	• • O-ring	1	81028-
3		07000-12016	• • O-ring	1	81028-
4		07001-02016	• • Ring, Back-up	1	81028-
5		723-20-65700	• Valve, Relief	1	81028-
6		07002-12034	• • O-ring	1	81028-
7		723-63-32790	• Sleeve	1	81028-
8		07002-02434	• O-ring	1	81028-
9		07000-22016	• O-ring	1	81028-
10		07001-02016	• Ring, Back-up	1	81028-
11		702-21-53130	• Filter	1	81028-
12		723-60-23100	• Valve Assembly, Suction and Relief	1	81028-
13		07002-03634	• • O-ring	1	81028-
14		723-63-31990	• Plug	1	81028-
15		07000-13035	• O-ring	1	81028-
16		07001-03035	• Ring, Back-up	1	81028-
17		07000-13030	• O-ring	1	81028-
18		07001-03030	• Ring, Back-up	1	81028-

FIG. M2210-009017 Fender, Control Valve (6/9)

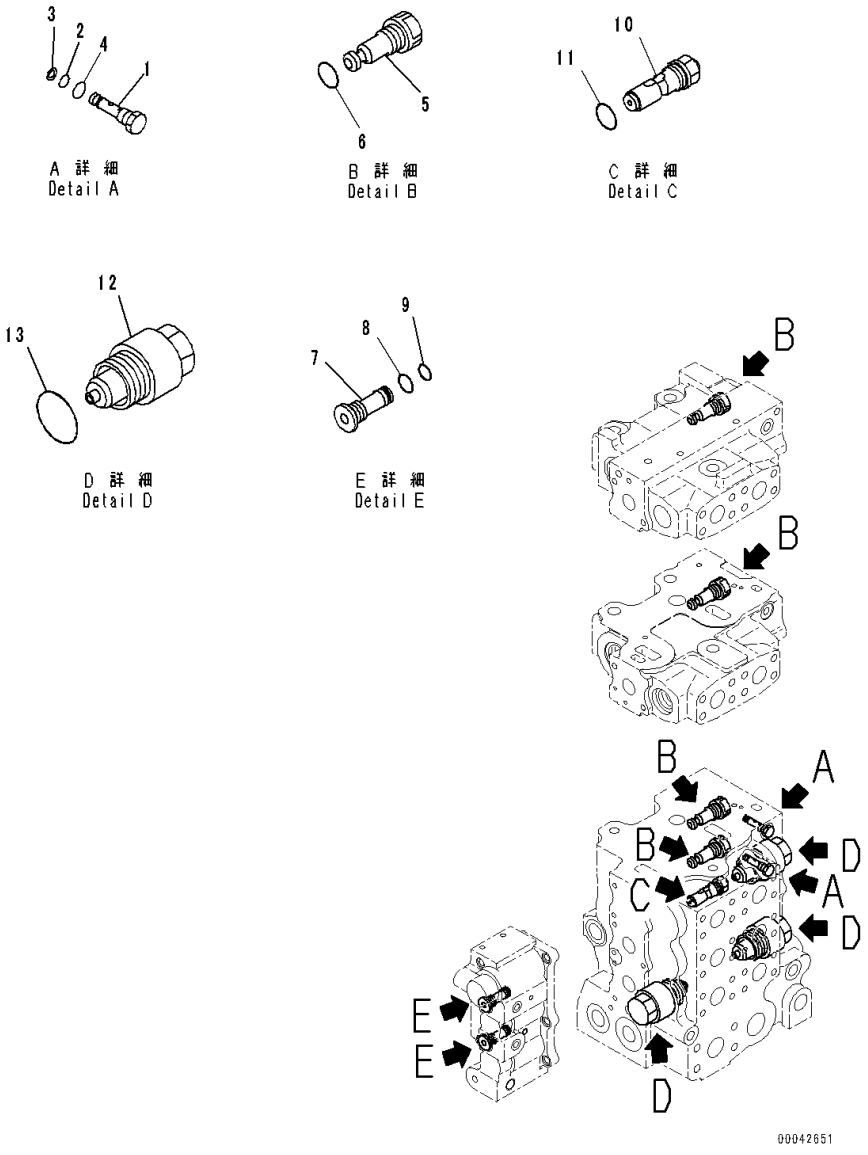

Index	Code	Part Number	Description	Qty	Serial Number
		Note: This list covers following specifications. With Large Capacity Batteries, Landfill Specification With Large Capacity Batteries, For Dual Tilt Pitch Dozer, Landfill Specification			
		723-65-21700	Valve Assembly, Control ..... With Large Capacity Batteries, Landfill Specification	1	81028-
		723-66-21100	Control ..... With Large Capacity Batteries, For Dual Tilt Pitch Dozer, Landfill Specification	1	81028-
1		723-60-23601	• Valve Assembly, Check	2	81028-
2		07000-11005	• • O-ring	1	81028-
3		07001-01005	• • Ring, Back-up	1	81028-
4		07002-11023	• • O-ring	1	81028-
5		723-60-23400	• Valve Assembly, Check	5	81028-
6		07002-11823	• • O-ring	1	81028-
7		708-7R-18230	• Filter	2	81028-
8		07002-11423	• O-ring	2	81028-
9		07000-11009	• O-ring	2	81028-
10		723-60-23501	• Valve, Check	1	81028-
11		07002-11823	• • O-ring	1	81028-
12		723-60-23800	• Valve Assembly, Suction	3	81028-
13		07002-13634	• • O-ring	1	81028-

FIG. M2210-009018 Fender, With Large Capacity Batteries, Landfill Specification, Control Valve (7/9)

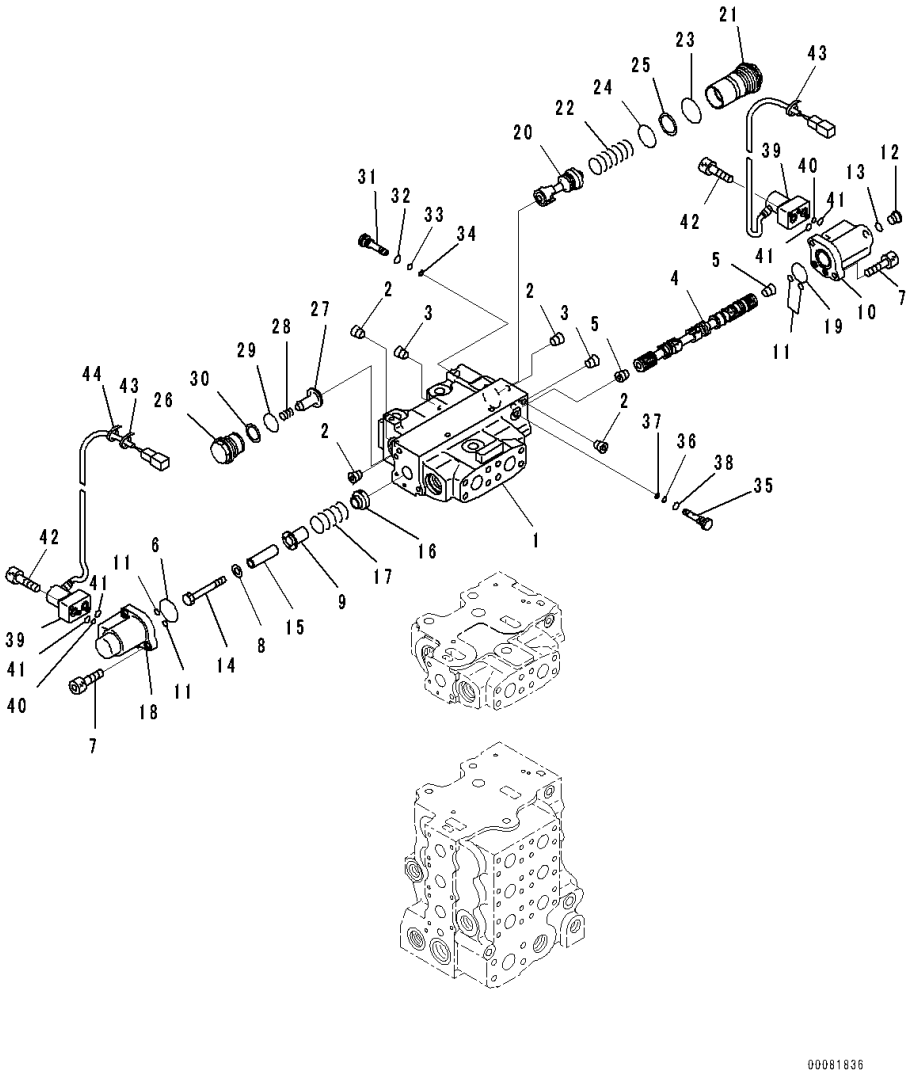

Index	Code	Part Number	Description	Qty	Serial Number
		723-65-21700	Valve Assembly, Control	1	81028-
		723-61-25600	• Valve Assembly	1	81028-
1	C1		• • Block	1	81028-
2	C1		• • Plug	4	81028-
3	C1		• • Plug	2	81028-
4	C1		• • Spool	1	81028-
5	C1		• • Plug, Tapered	2	81028-
6		702-21-55450	• • O-ring	1	81028-
7		01252-60820	• • Bolt, Hexagon Socket Head	4	81028-
8		01643-31032	• • Washer	1	81028-
9		723-63-31670	• • Retainer	1	81028-
10		723-63-32760	• • Case	1	81028-
11		07000-11007	• • O-ring	4	81028-
12		702-21-55620	• • Plug	1	81028-
13		07002-11423	• • O-ring	1	81028-
14		01010-81075	• • Bolt	1	81028-
15		723-63-31720	• • Spacer	1	81028-
16		723-63-31730	• • Retainer	1	81028-
17		723-63-31740	• • Spring	1	81028-
18		723-63-32750	• • Case	1	81028-
19		07000-12030	• • O-ring	1	81028-
20	C1		• • Spool	1	81028-
21		723-63-32630	• • Plug	1	81028-
22		723-63-32770	• • Spring	1	81028-
23		700-61-49160	• • O-ring	1	81028-
24		723-63-31850	• • O-ring	1	81028-
25		723-63-31860	• • Ring	1	81028-
26		709-74-92821	• • Plug	1	81028-
27		709-94-92811	• • Valve	1	81028-
28		709-94-91751	• • Spring	1	81028-
29		700-93-11320	• • O-ring	1	81028-
30		700-93-11330	• • Ring, Back-up	1	81028-
31		723-63-31610	• • Plug	1	81028-
32		07002-11423	• • O-ring	1	81028-
33		07000-11007	• • O-ring	1	81028-
34		07001-01007	• • Ring, Back-up	1	81028-
35		723-60-24501	• • Valve, Check	1	81028-
36		07000-11005	• • • O-ring	1	81028-
37		07001-01005	• • • Ring, Back-up	1	81028-
38		07002-11023	• • • O-ring	1	81028-

FIG. M2210-009018 Fender, With Large Capacity Batteries, Landfill Specification, Control Valve (7/9)

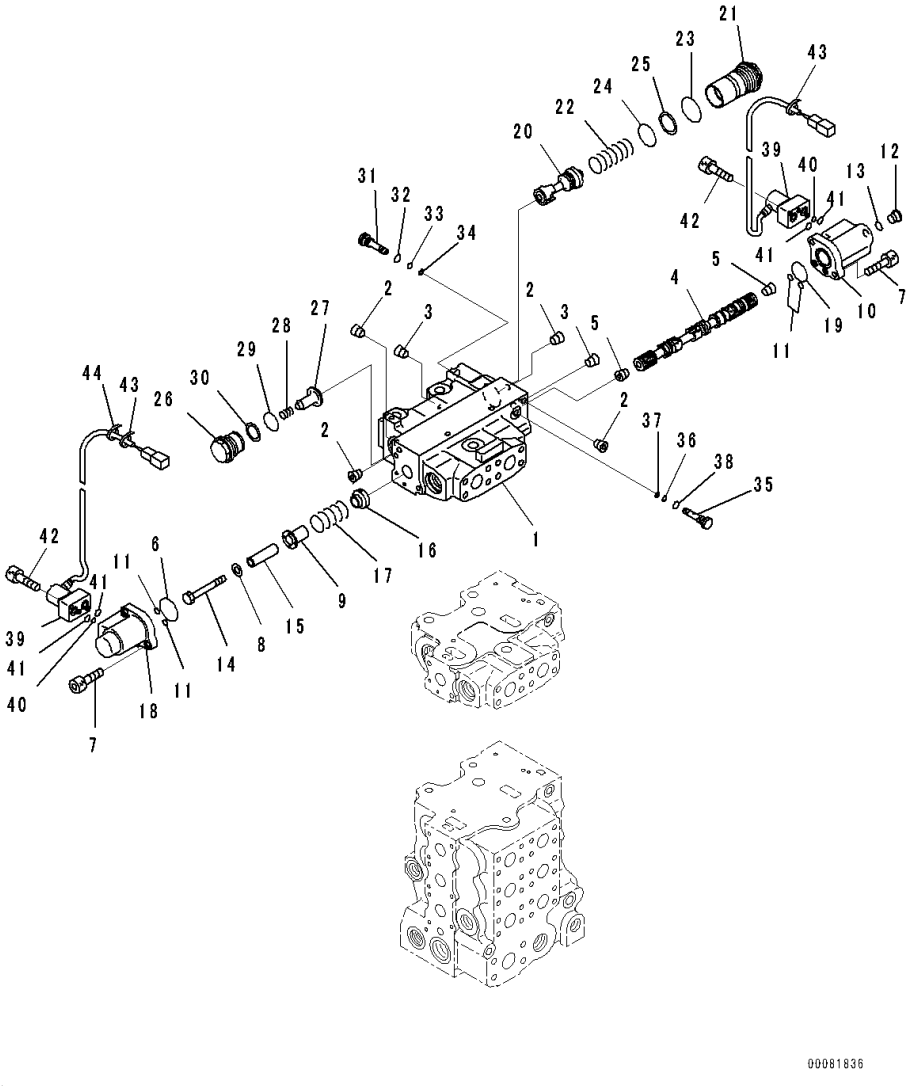

Index	Code	Part Number	Description	Qty	Serial Number
39		702-21-57400	• • Valve, Pilot	2	81028-
40		723-11-19960	• • • O-ring	1	81028-
41		702-21-54910	• • • O-ring	2	81028-
42		01252-60635	• • Bolt, Hexagon Socket Head	4	81028-
43		20Y-62-22790	• • Band, Red	2	81028-
44		08034-20414	• • Band	1	81028-

FIG. M2210-009019 Fender, With Large Capacity Batteries, Landfill Specification, Control Valve (8/9)

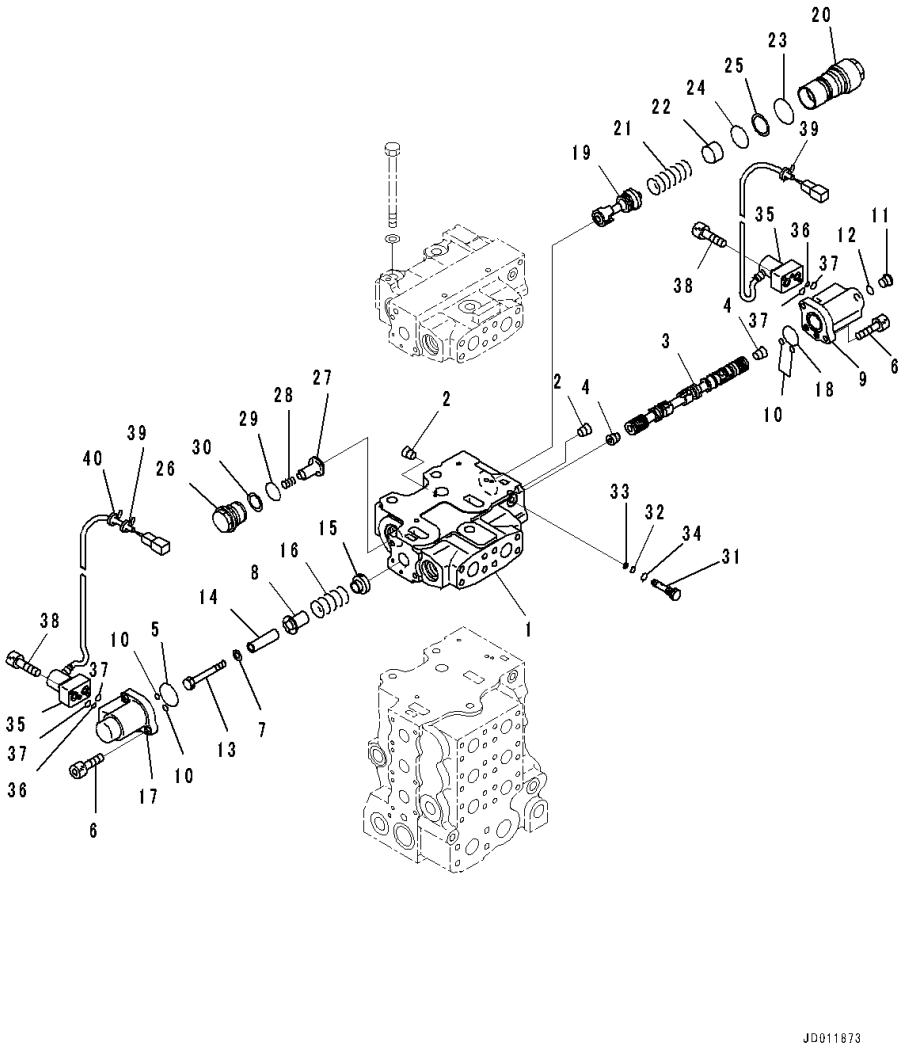

Index	Code	Part Number	Description	Qty	Serial Number
		723-65-21700	Valve Assembly, Control	1	81028-
		723-61-25400	• Valve Assembly	1	81028-
1	C1		• • Block	1	81028-
2	C1		• • Plug	2	81028-
3	C1		• • Spool	1	81028-
4	C1		• • Plug, Tapered	2	81028-
5		702-21-55450	• • O-ring	1	81028-
6		01252-60820	• • Bolt, Hexagon Socket Head	4	81028-
7		01643-31032	• • Washer	1	81028-
8		723-63-31670	• • Retainer	1	81028-
9		723-63-32760	• • Case	1	81028-
10		07000-11007	• • O-ring	4	81028-
11		702-21-55620	• • Plug	1	81028-
12		07002-11423	• • O-ring	1	81028-
13		01010-81075	• • Bolt	1	81028-
14		723-63-31720	• • Spacer	1	81028-
15		723-63-31730	• • Retainer	1	81028-
16		723-63-31740	• • Spring	1	81028-
17		723-63-32750	• • Case	1	81028-
18		07000-12030	• • O-ring	1	81028-
19	C1		• • Spool	1	81028-
20		723-63-32640	• • Plug	1	81028-
21		723-63-32770	• • Spring	1	81028-
22		723-63-32780	• • Spacer	1	81028-
23		700-61-49160	• • O-ring	1	81028-
24		723-63-31850	• • O-ring	1	81028-
25		723-63-31860	• • Ring	1	81028-
26		709-74-92821	• • Plug	1	81028-
27		709-94-92811	• • Valve	1	81028-
28		709-94-91751	• • Spring	1	81028-
29		700-93-11320	• • O-ring	1	81028-
30		700-93-11330	• • Ring, Back-up	1	81028-
31		723-60-24501	• • Valve, Check	1	81028-
32		07000-11005	• • • O-ring	1	81028-
33		07001-01005	• • • Ring, Back-up	1	81028-
34		07002-11023	• • • O-ring	1	81028-
35		702-21-57400	• • Valve, Pilot	2	81028-
36		723-11-19960	• • • O-ring	1	81028-
37		702-21-54910	• • • O-ring	2	81028-
38		01252-60635	• • Bolt, Hexagon Socket Head	4	81028-

FIG. M2210-009019 Fender, With Large Capacity Batteries, Landfill Specification, Control Valve (8/9)

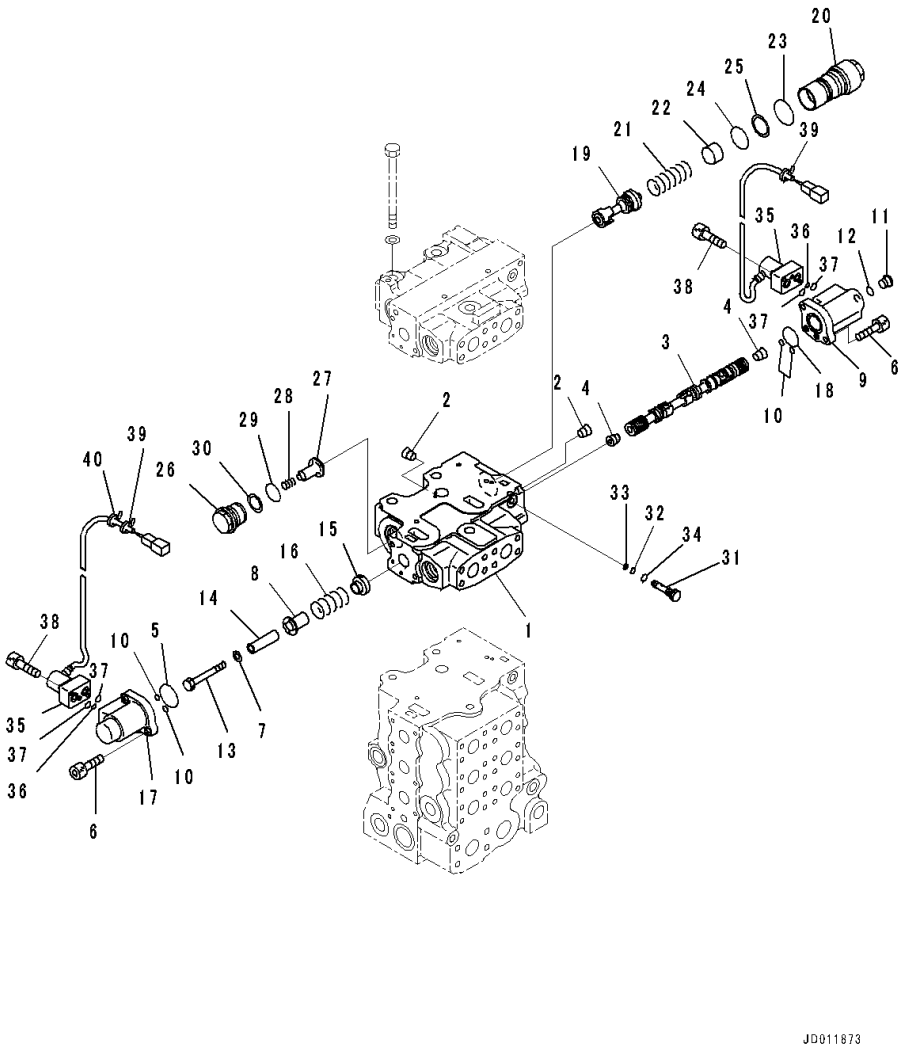

Index	Code	Part Number	Description	Qty	Serial Number
39		20Y-62-22810	• • Band, Yellow	2	81028-
40		08034-20414	• • Band	1	81028-

FIG. M2210-009020 Fender, With Large Capacity Batteries, Landfill Specification, Control Valve (9/9)

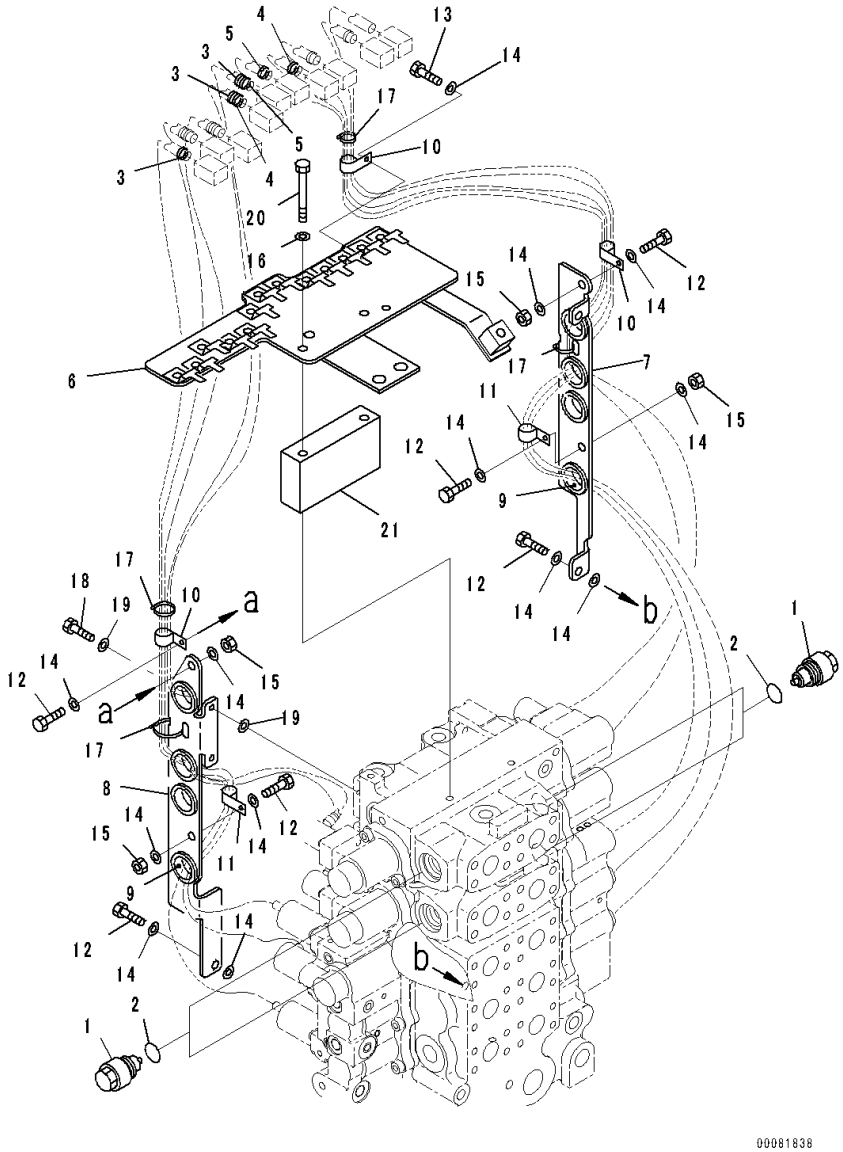

Index	Code	Part Number	Description	Qty	Serial Number
		723-65-21700	Valve Assembly, Control	1	81028-
1		723-40-85100	• Valve Assembly, Suction	4	81028-
2		709-25-11390	• • O-ring	1	81028-
3		08034-20414	• Band	3	81028-
4		20Y-62-22850	• Band, Green	2	81028-
5		20Y-62-22860	• Band, Brown	2	81028-
		723-66-05201	• Bracket Group	1	81028-
6		723-63-32910	• • Bracket	1	81028-
7		723-63-32920	• • Bracket	1	81028-
8		723-63-32930	• • Bracket	1	81028-
9		08037-02512	• • Grommet	8	81028-
10		04434-51608	• • Clip	3	81028-
11		04434-51208	• • Clip	2	81028-
12		01010-80820	• • Bolt	7	81028-
13		01010-80816	• • Bolt	1	81028-
14		01643-30823	• • Washer	15	81028-
15		01580-10806	• • Nut	4	81028-
16		01643-30823	• • Washer	2	81028-
17		08034-20834	• • Band	4	81028-
18		01010-80620	• • Bolt	2	81028-
19		01643-30623	• • Washer	4	81028-
20		20T-62-61970	• • Bolt	2	81028-
21		723-63-32950	• • Block	1	81028-

FIG. M2210-009021 Fender, With Large Capacity Batteries, Landfill Specification, C.L.S.S Valve

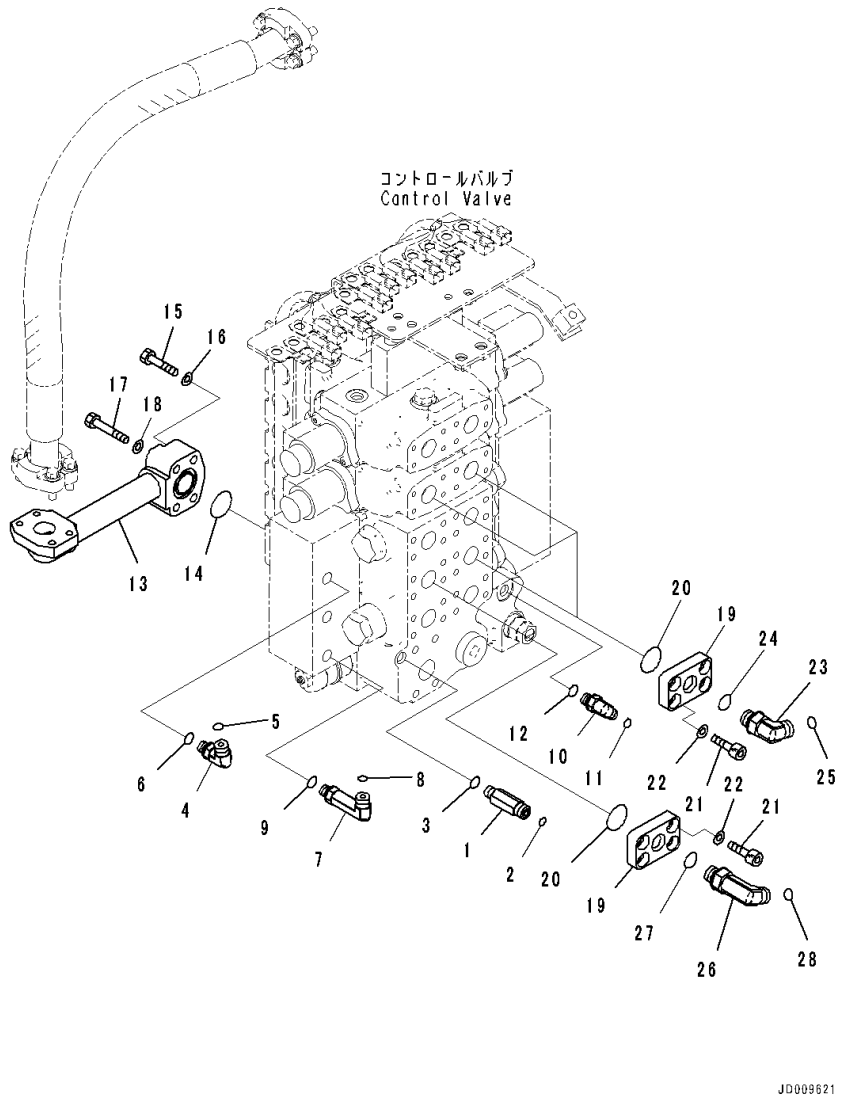

Index	Code	Part Number	Description	Qty	Serial Number
1		20U-62-41710	Nipple	1	81028-
2		02896-11009	O-ring	1	81028-
3		07002-11423	O-ring	1	81028-
4		02782-10311	Elbow	1	81028-
5		02896-11009	O-ring	1	81028-
6		07002-11423	O-ring	1	81028-
7		02782-10312	Elbow	1	81028-
8		02896-11009	O-ring	1	81028-
9		07002-11423	O-ring	1	81028-
10		17M-61-41280	Elbow	1	81028-
11		02896-11008	O-ring	1	81028-
12		07002-11423	O-ring	1	81028-
13		17A-60-41120	Tube	1	81028-
14		07000-73035	O-ring	1	81028-
15		01010-81055	Bolt	2	81028-
16		01643-31032	Washer	2	81028-
17		01010-81060	Bolt	2	81028-
18		01643-31032	Washer	2	81028-
19		17A-61-21221	Plate	2	81028-
20		07000-13032	O-ring	4	81028-
21		01252-71025	Bolt, Hexagon Socket Head	16	81028-
22		01643-51032	Washer	16	81028-
23		02782-10422	Elbow	3	81028-
24		07002-12034	O-ring	3	81028-
25		02896-11012	O-ring	3	81028-
26		02782-10423	Elbow	1	81028-
27		07002-12034	O-ring	1	81028-
28		02896-11012	O-ring	1	81028-

FIG. M2210-009022 Fender, Hose and Bracket

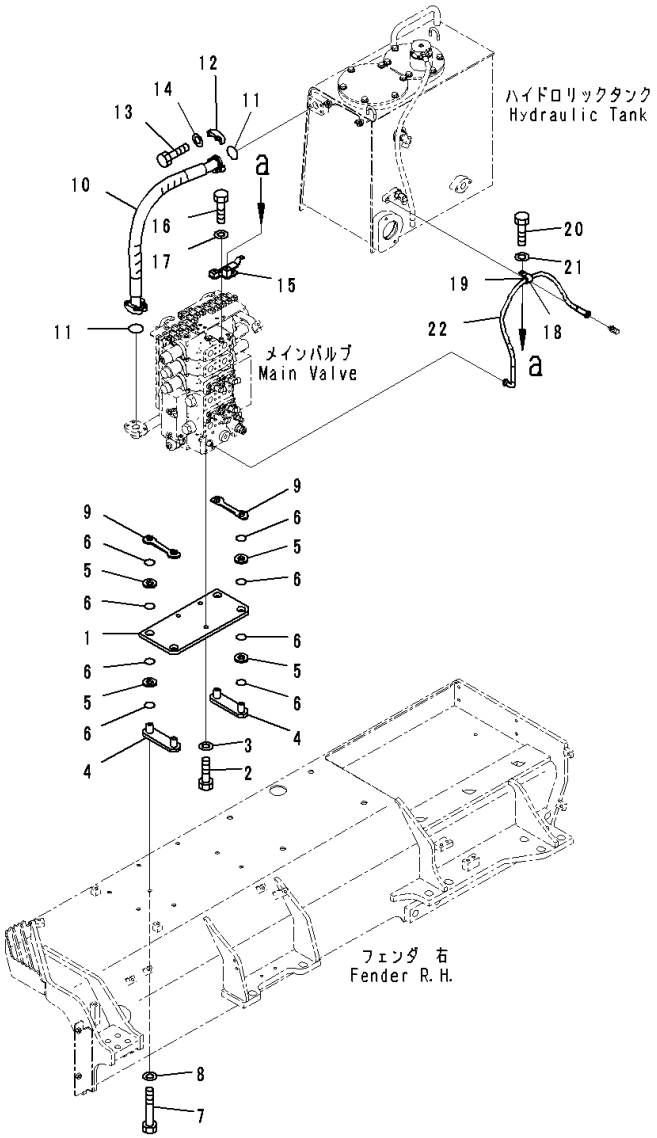

Index	Code	Part Number	Description	Qty	Serial Number
		Note: This list covers following specifications.			
		With Large Capacity Batteries, Landfill Specification			
		With Large Capacity Batteries, For Dual Tilt Pitch Dozer,			
		Landfill Specification			
1		17A-60-41511	Plate	1	81028-
2		01010-81440	Bolt	3	81028-
3		01643-31445	Washer	3	81028-
4		17A-60-41520	Bracket	2	81028-
5		14X-60-12120	Cushion	8	81028-
6		07000-13025	O-ring	8	81028-
7		01010-81275	Bolt	4	81028-
8		01643-31232	Washer	4	81028-
9		17A-60-41531	Bracket	2	81028-
10		17A-60-41130	Hose	1	81028-
11		07000-73038	O-ring	2	81028-
12		07371-31255	Flange, Split	4	81028-
13		07372-21035	Bolt	8	81028-
14		01643-51032	Washer	8	81028-
15		17A-61-41921	Bracket	1	81028-
16		01010-81225	Bolt	2	81028-
17		01643-31232	Washer	2	81028-
18		04434-52112	Clip	1	81028-
19		07095-20314	Cushion	1	81028-
20		01010-81225	Bolt	1	81028-
21		01643-31232	Washer	1	81028-
22		02763-00310	Hose, Face Seal Type	1	81028-

FIG. M2210-009023A Fender, Window Washer Tank

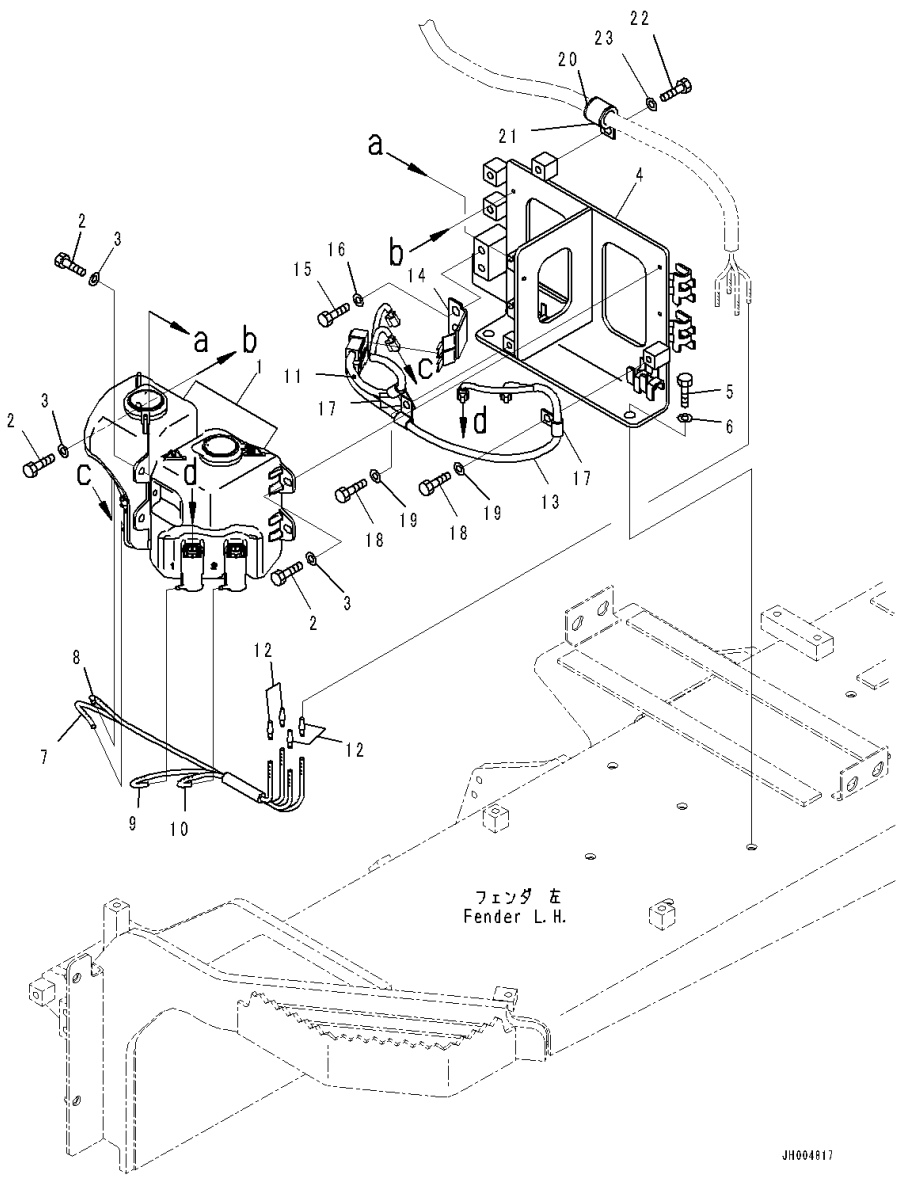

Index	Code	Part Number	Description	Qty	Serial Number
		Note: This list covers following specifications.			
		With Large Capacity Batteries, Landfill Specification			
		With Large Capacity Batteries, For Dual Tilt Pitch Dozer,			
		Landfill Specification			
1		14X-Y11-2110	Tank Assembly	2	81065-
2		01010-80616	Bolt	6	81065-
3		209-72-12230	Washer	6	81065-
4		17A-911-6111	Bracket	1	81065-
5		01010-81230	Bolt	2	81065-
6		01643-31232	Washer	2	81065-
		17A-911-6120	Hose Assembly	1	81065-
7	C1		• Hose	1	81065-
8	C1		• Hose	1	81065-
9	C1		• Hose	1	81065-
10	C1		• Hose	1	81065-
11		08017-C1302	• Conduit	1	81065-
12		195-979-8590	• Valve	4	81065-
13		17A-911-6131	Wiring Harness	1	81065-
14		17A-911-6150	Plate	1	81065-
15		01010-81220	Bolt	2	81065-
16		01643-31232	Washer	2	81065-
17		04434-51010	Clip	3	81065-
18		01010-81020	Bolt	2	81065-
19		01643-31032	Washer	2	81065-
20		04434-52712	Clip	1	81065-81104
21		07095-20419	Cushion	1	81065-81104
22		01010-81225	Bolt	1	81065-81104
23		01643-31232	Washer	1	81065-81104

FIG. M2210-009024 Fender, Step

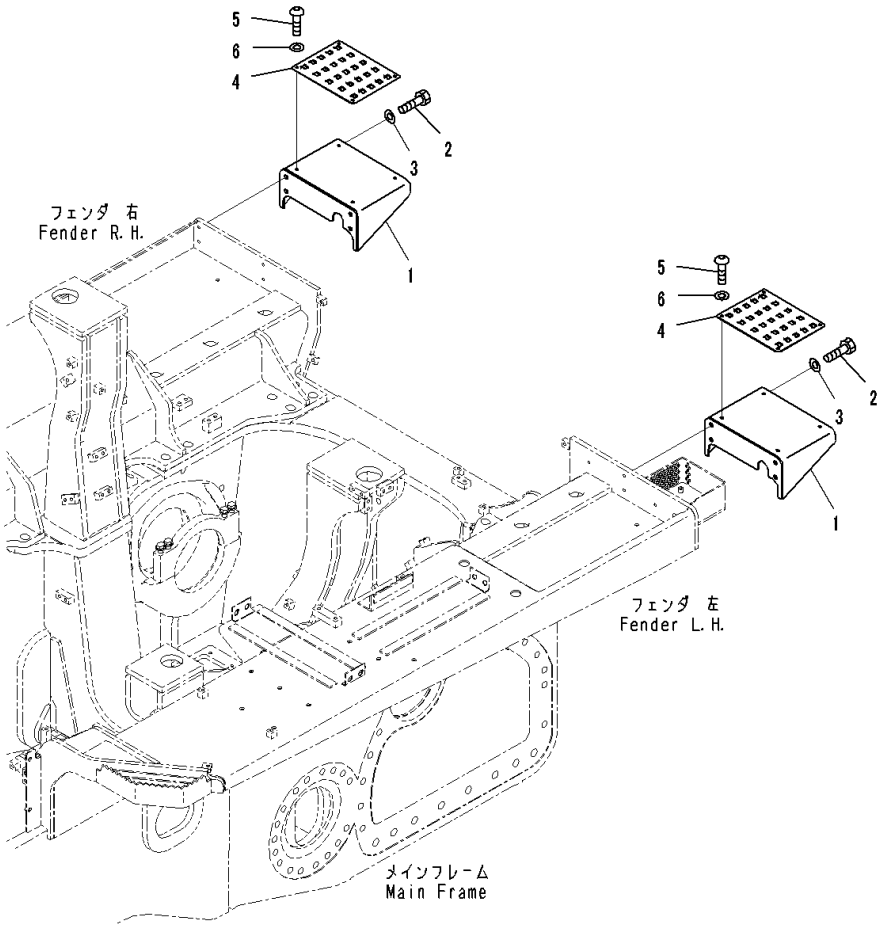

Index	Code	Part Number	Description	Qty	Serial Number
		Note: This list covers following specifications. With Large Capacity Batteries, Landfill Specification With Large Capacity Batteries, For Dual Tilt Pitch Dozer, Landfill Specification			
1		17A-54-44162	Cover	2	81028-
2		01010-81230	Bolt	8	81028-
3		01643-31232	Washer	8	81028-
4		17A-54-44151	Plate	2	81028-
5		01245-00820	Screw	8	81028-
6		01643-70823	Washer	8	81028-

FIG. M2210-009025 Fender, Receiver Tank

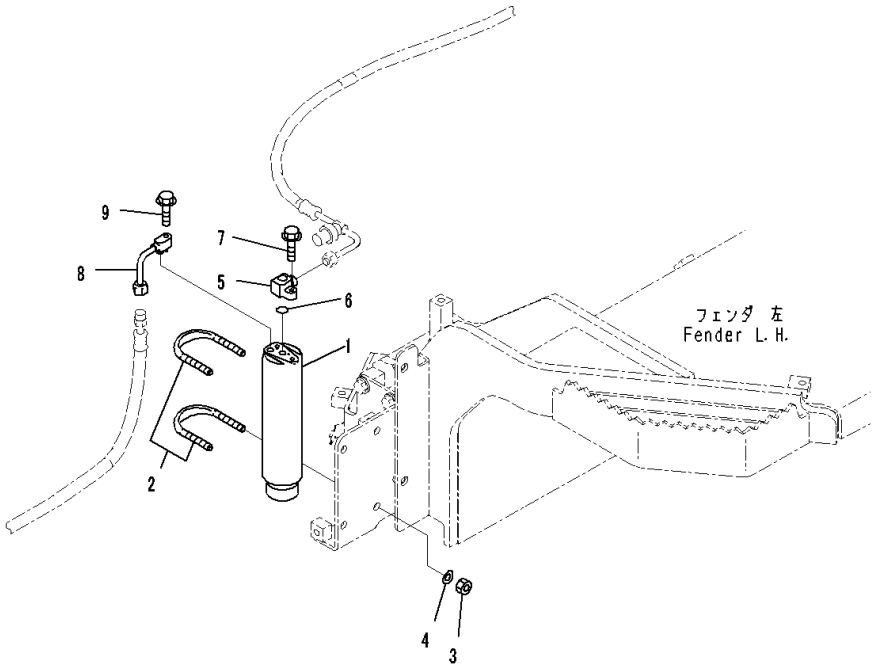

Index	Code	Part Number	Description	Qty	Serial Number
		Note: This list covers following specifications. With Large Capacity Batteries, Landfill Specification With Large Capacity Batteries, For Dual Tilt Pitch Dozer, Landfill Specification			
1		20Y-979-3120	Tank, Receiver	1	81028-
2		07283-36155	Clip, Pipe	2	81028-
3		01597-01009	Nut	4	81028-
4		01643-31032	Washer	4	81028-
5		17A-911-1671	Joint	1	81028-
6		20Y-979-3150	• O-ring	1	81028-
7		01435-00625	Bolt	1	81028-
8		17A-911-1511	Tube	1	81028-
9		01435-00625	Bolt	1	81028-

FIG. M2210-009026 Fender, Mounting Bolt

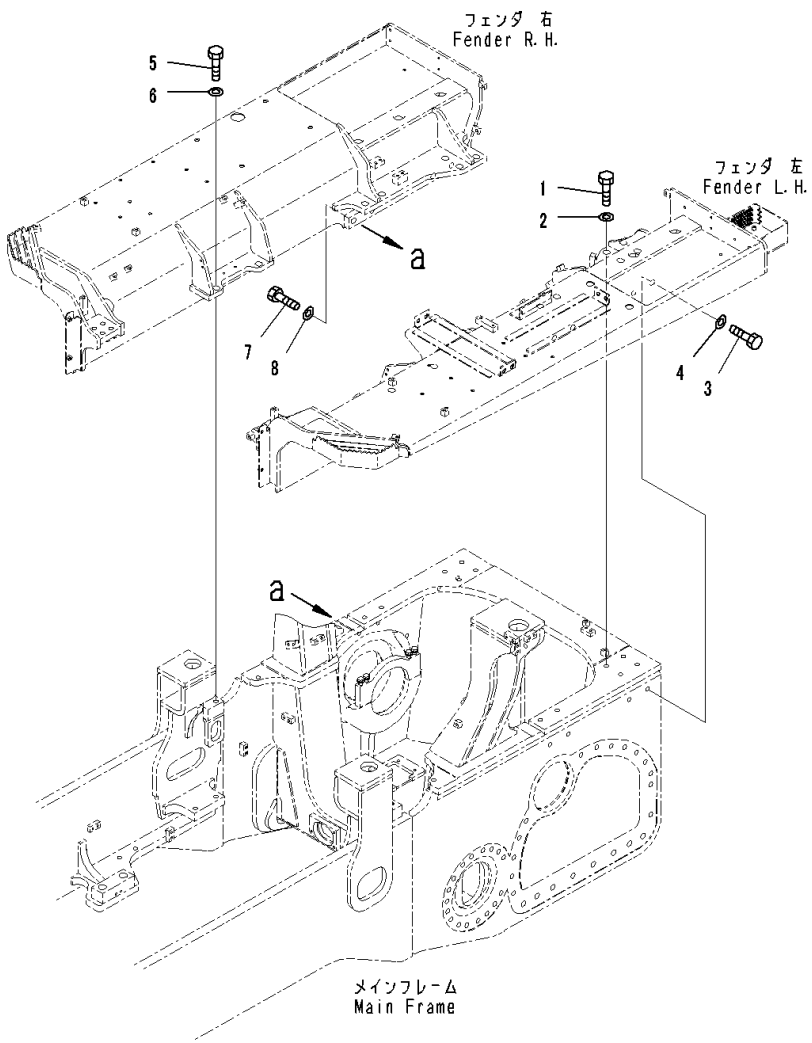

Index	Code	Part Number	Description	Qty	Serial Number
		Note: This list covers following specifications. With Large Capacity Batteries, Landfill Specification With Large Capacity Batteries, For Dual Tilt Pitch Dozer, Landfill Specification			
1		01010-82470	Bolt	8	81028-
2		17A-54-44130	Washer	8	81028-
3		01010-82480	Bolt	4	81028-
4		01643-32460	Washer	4	81028-
5		01010-82470	Bolt	8	81028-
6		17A-54-44130	Washer	8	81028-
7		01010-82480	Bolt	4	81028-
8		01643-32460	Washer	4	81028-

FIG. M2210-009027 Fender, Clamp, Washer Hose

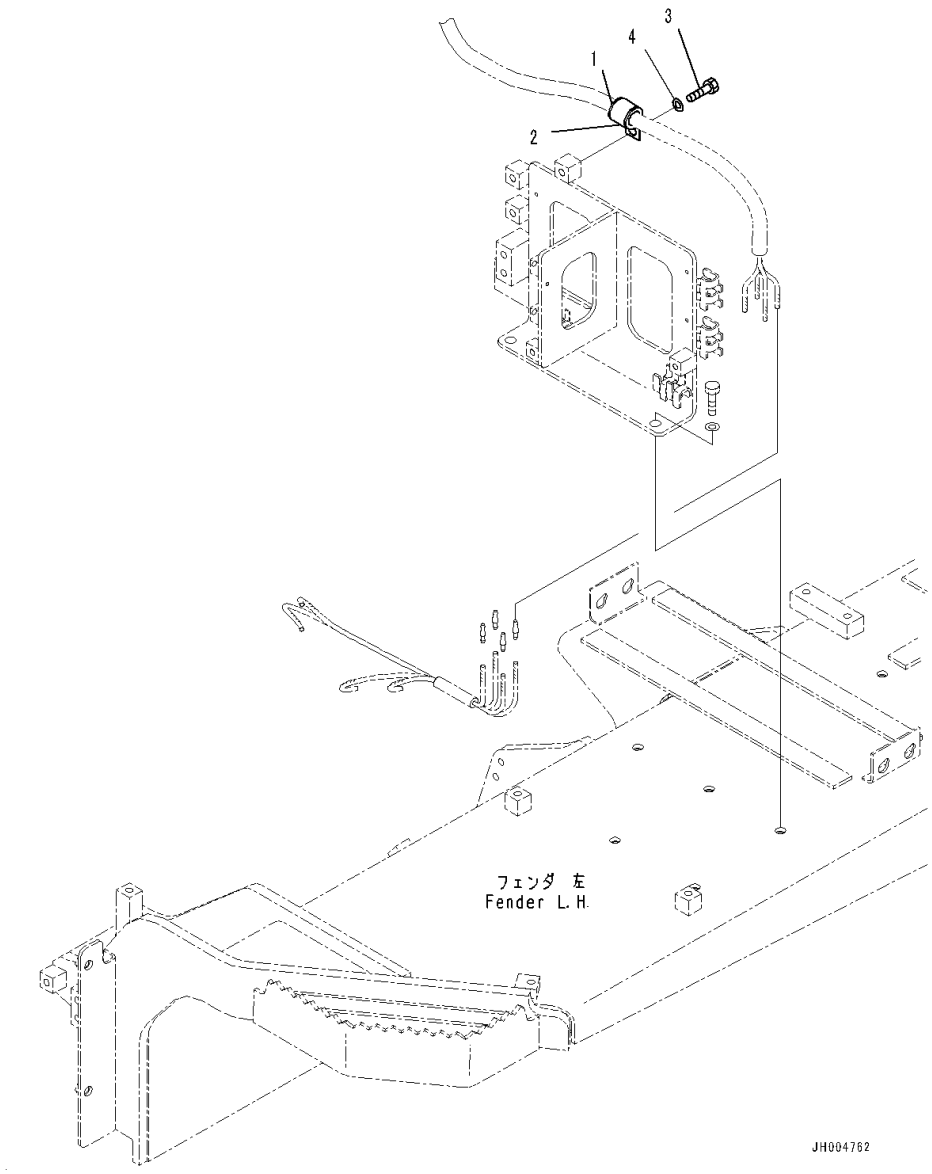

Index	Code	Part Number	Description	Qty	Serial Number
		Note: This list covers following specifications. With Large Capacity Batteries, Landfill Specification With Large Capacity Batteries, For Dual Tilt Pitch Dozer, Landfill Specification			
1		04434-52712	Clip	1	81105-
2		07095-20419	Cushion	1	81105-
3		01010-81225	Bolt	1	81105-
4		01643-31232	Washer	1	81105-

FIG. M2210-033024 Fender, Steps and Lunch Box Fixed Belts

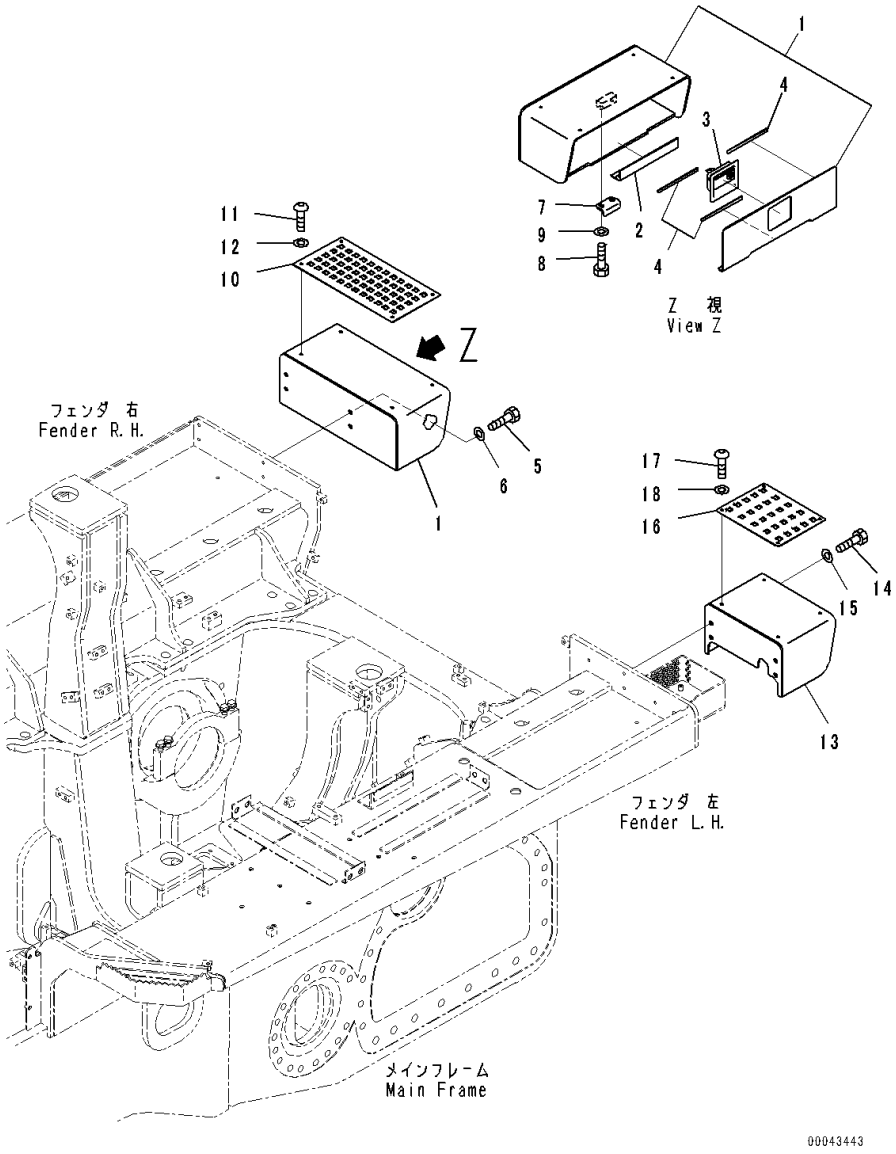

Index	Code	Part Number	Description	Qty	Serial Number
		Note: This list covers following specifications. With Large Capacity Battery, Tool Box, Fender RHS With Large Capacity Battery, Tool Box, Fender RHS, For Dual Tilt Dozer			
1		17A-54-44311	Cover	1	81087-
2		09457-00275	• Hinge	1	81087-
3		17A-54-14231	• Lock	1	81087-
4		17A-54-44390	• Seal	3	81087-
5		01010-81230	Bolt	4	81087-
6		01643-31232	Washer	4	81087-
7		22U-54-24411	Bracket	1	81087-
8		01010-81025	Bolt	2	81087-
9		01643-31032	Washer	2	81087-
10		17A-54-44330	Plate	1	81087-
11		01245-00816	Screw	4	81087-
12		01641-50812	Washer, Flat	4	81087-
13		17A-54-44341	Cover	1	81087-
14		01010-81230	Bolt	4	81087-
15		01643-31232	Washer	4	81087-
16		17A-54-44151	Plate	1	81087-
17		01245-00816	Screw	4	81087-
18		01641-50812	Washer, Flat	4	81087-

FIG. M2210-014012 Fender, With Large Capacity Batteries, For Dual Tilt Pitch Dozer, Landfill Specification, Control Valve (1/10)

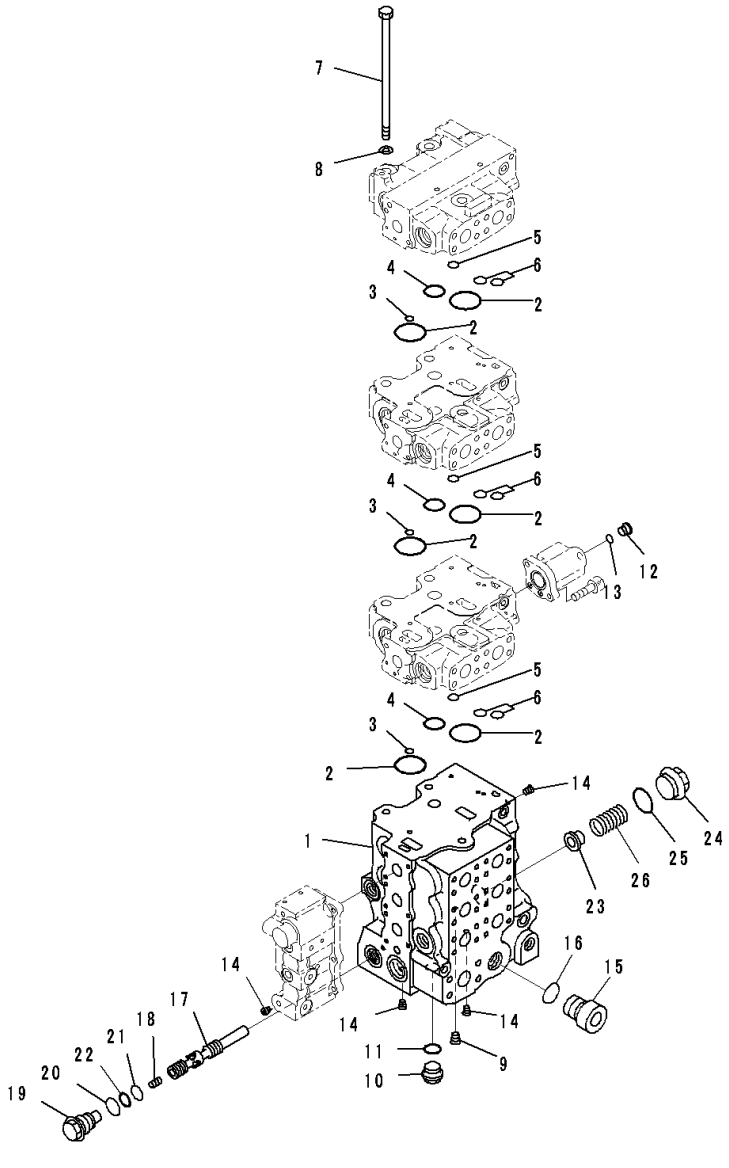

Index	Code	Part Number	Description	Qty	Serial Number
		723-66-21100	Control	1	81028-
1	C1		• Body	1	81028-
2		07000-13048	• O-ring	6	81028-
3		07000-11009	• O-ring	3	81028-
4		07000-13030	• O-ring	3	81028-
5		07000-12012	• O-ring	3	81028-
6		722-12-19120	• O-ring	6	81028-
7		723-63-32620	• Bolt	3	81028-
8		01643-31445	• Washer	3	81028-
9	C1		• Plug	1	81028-
10		709-74-91860	• Plug	1	81028-
11		07002-12434	• O-ring	1	81028-
12		702-21-55620	• Plug	1	81028-
13		07002-11423	• O-ring	1	81028-
14	C1		• Plug	12	81028-
15		07040-13316	• Plug	1	81028-
16		07002-13334	• O-ring	1	81028-
17	C1		• Spool	1	81028-
18		723-63-31520	• Piston	1	81028-
19		723-63-31530	• Plug	1	81028-
20		07002-13034	• O-ring	1	81028-
21		700-13-31161	• O-ring	1	81028-
22		723-63-32710	• Ring	1	81028-
23		723-63-31540	• Retainer	1	81028-
24		723-63-31550	• Plug	1	81028-
25		07002-14234	• O-ring	1	81028-
26		723-63-32560	• Spring	1	81028-

FIG. M2210-014018 Fender, With Large Capacity Batteries, For Dual Tilt Pitch Dozer, Landfill Specification, Control Valve (7/10)

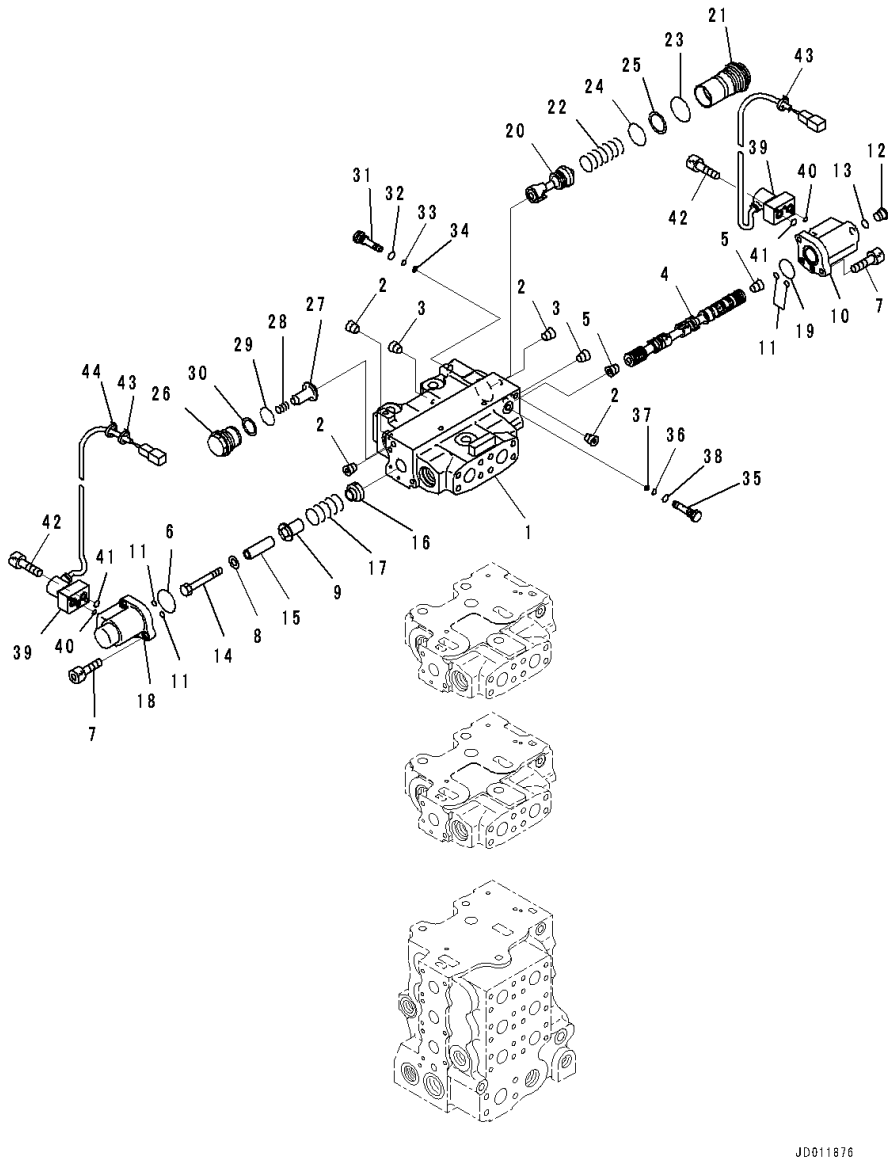

Index	Code	Part Number	Description	Qty	Serial Number
		723-66-21100	Control	1	81028-
		723-61-25500	• Valve Assembly	1	81028-
1	C1		• • Block	1	81028-
2	C1		• • Plug	4	81028-
3	C1		• • Plug	2	81028-
4	C1		• • Spool	1	81028-
5	C1		• • Plug, Tapered	2	81028-
6		702-21-55450	• • O-ring	1	81028-
7		01252-60820	• • Bolt, Hexagon Socket Head	4	81028-
8		01643-31032	• • Washer	1	81028-
9		723-63-31670	• • Retainer	1	81028-
10		723-63-32760	• • Case	1	81028-
11		07000-11007	• • O-ring	4	81028-
12		702-21-55620	• • Plug	1	81028-
13		07002-11423	• • O-ring	1	81028-
14		01010-81075	• • Bolt	1	81028-
15		723-63-31720	• • Spacer	1	81028-
16		723-63-31730	• • Retainer	1	81028-
17		723-63-31740	• • Spring	1	81028-
18		723-63-32750	• • Case	1	81028-
19		07000-12030	• • O-ring	1	81028-
20	C1		• • Spool	1	81028-
21		723-63-32630	• • Plug	1	81028-
22		723-63-32770	• • Spring	1	81028-
23		700-61-49160	• • O-ring	1	81028-
24		723-63-31850	• • O-ring	1	81028-
25		723-63-31860	• • Ring	1	81028-
26		709-74-92821	• • Plug	1	81028-
27		709-94-92811	• • Valve	1	81028-
28		709-94-91751	• • Spring	1	81028-
29		700-93-11320	• • O-ring	1	81028-
30		700-93-11330	• • Ring, Back-up	1	81028-
31		723-63-31610	• • Plug	1	81028-
32		07002-11423	• • O-ring	1	81028-
33		07000-11007	• • O-ring	1	81028-
34		07001-01007	• • Ring, Back-up	1	81028-
35		723-60-24501	• • Valve, Check	1	81028-
36		07000-11005	• • • O-ring	1	81028-
37		07001-01005	• • • Ring, Back-up	1	81028-

FIG. M2210-014018 Fender, With Large Capacity Batteries, For Dual Tilt Pitch Dozer, Landfill Specification, Control Valve (7/10)

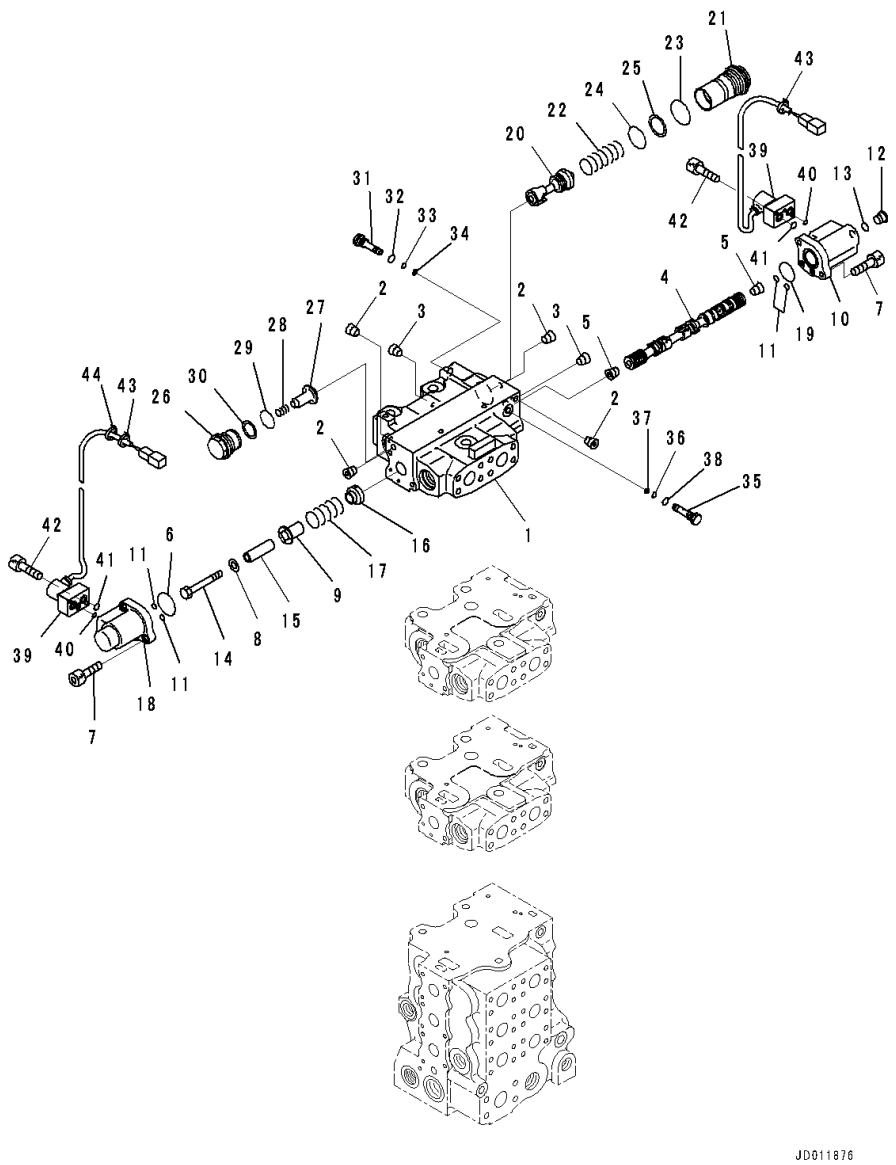

Index	Code	Part Number	Description	Qty	Serial Number
38		07002-11023	• • • O-ring	1	81028-
39		702-21-58100	• • Valve, Pilot	2	81028-
40		723-11-19960	• • • O-ring	1	81028-
41		702-21-54910	• • • O-ring	2	81028-
42		01252-60635	• • Bolt, Hexagon Socket Head	4	81028-
43		20Y-62-22790	• • Band, Red	2	81028-
44		08034-20414	• • Band	1	81028-

FIG. M2210-014019 Fender, With Large Capacity Batteries, For Dual Tilt Pitch Dozer, Landfill Specification, Control Valve (8/10)

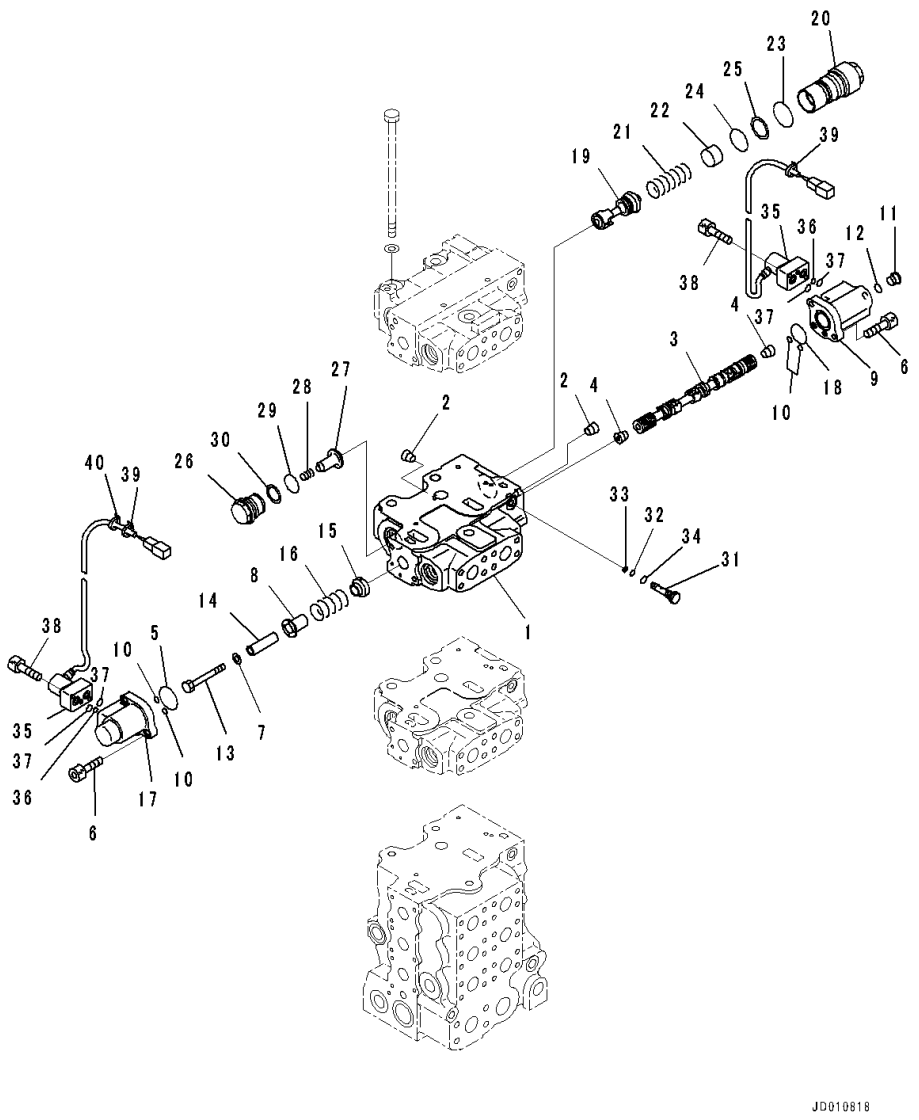

Index	Code	Part Number	Description	Qty	Serial Number
		723-66-21100	Control	1	81028-
		723-61-25400	• Valve Assembly	1	81028-
1	C1		• • Block	1	81028-
2	C1		• • Plug	2	81028-
3	C1		• • Spool	1	81028-
4	C1		• • Plug, Tapered	2	81028-
5		702-21-55450	• • O-ring	1	81028-
6		01252-60820	• • Bolt, Hexagon Socket Head	4	81028-
7		01643-31032	• • Washer	1	81028-
8		723-63-31670	• • Retainer	1	81028-
9		723-63-32760	• • Case	1	81028-
10		07000-11007	• • O-ring	4	81028-
11		702-21-55620	• • Plug	1	81028-
12		07002-11423	• • O-ring	1	81028-
13		01010-81075	• • Bolt	1	81028-
14		723-63-31720	• • Spacer	1	81028-
15		723-63-31730	• • Retainer	1	81028-
16		723-63-31740	• • Spring	1	81028-
17		723-63-32750	• • Case	1	81028-
18		07000-12030	• • O-ring	1	81028-
19	C1		• • Spool	1	81028-
20		723-63-32640	• • Plug	1	81028-
21		723-63-32770	• • Spring	1	81028-
22		723-63-32780	• • Spacer	1	81028-
23		700-61-49160	• • O-ring	1	81028-
24		723-63-31850	• • O-ring	1	81028-
25		723-63-31860	• • Ring	1	81028-
26		709-74-92821	• • Plug	1	81028-
27		709-94-92811	• • Valve	1	81028-
28		709-94-91751	• • Spring	1	81028-
29		700-93-11320	• • O-ring	1	81028-
30		700-93-11330	• • Ring, Back-up	1	81028-
31		723-60-24501	• • Valve, Check	1	81028-
32		07000-11005	• • • O-ring	1	81028-
33		07001-01005	• • • Ring, Back-up	1	81028-
34		07002-11023	• • • O-ring	1	81028-
35		702-21-57400	• • Valve, Pilot	2	81028-
36		723-11-19960	• • • O-ring	1	81028-
37		702-21-54910	• • • O-ring	2	81028-

FIG. M2210-014019 Fender, With Large Capacity Batteries, For Dual Tilt Pitch Dozer, Landfill Specification, Control Valve (8/10)

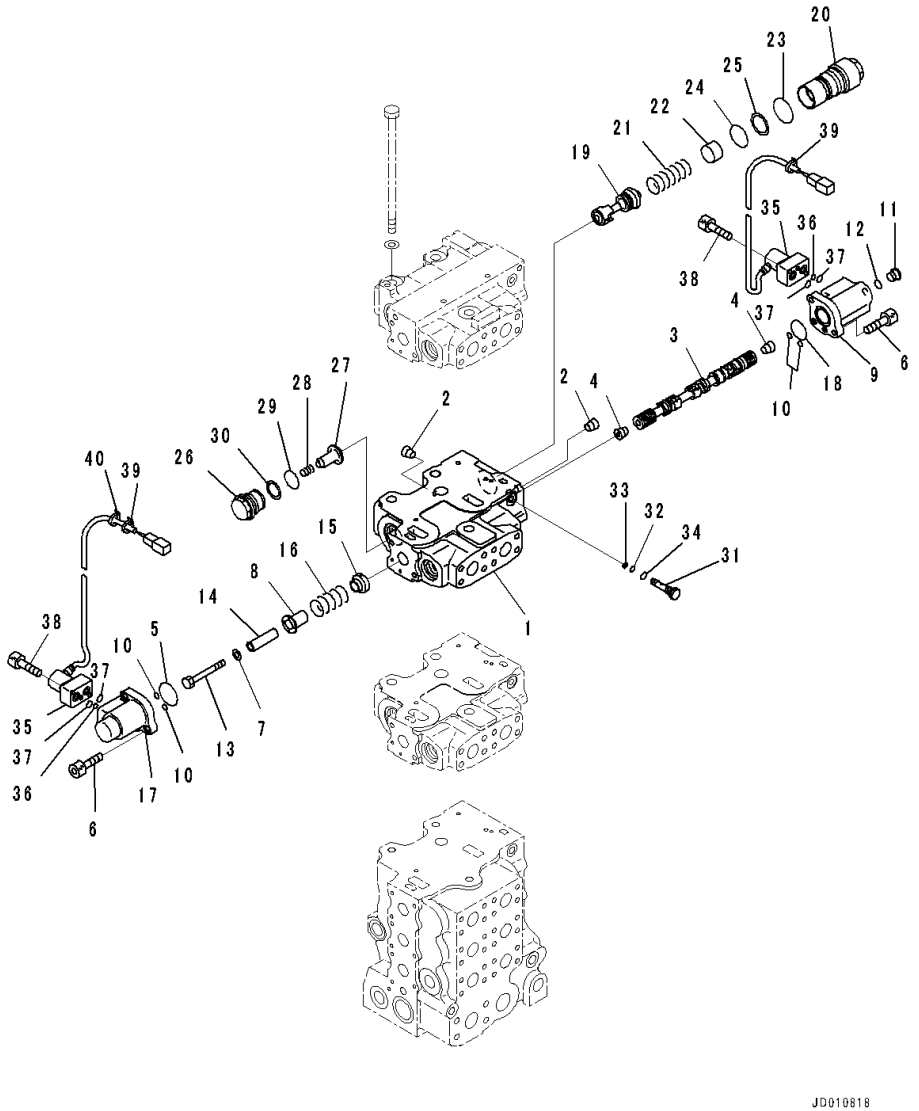

Index	Code	Part Number	Description	Qty	Serial Number
38		01252-60635	• • Bolt, Hexagon Socket Head	4	81028-
39		20Y-62-22810	• • Band, Yellow	2	81028-
40		08034-20414	• • Band	1	81028-

FIG. M2210-014020 Fender, With Large Capacity Batteries, For Dual Tilt Pitch Dozer, Landfill Specification, Control Valve (9/10)

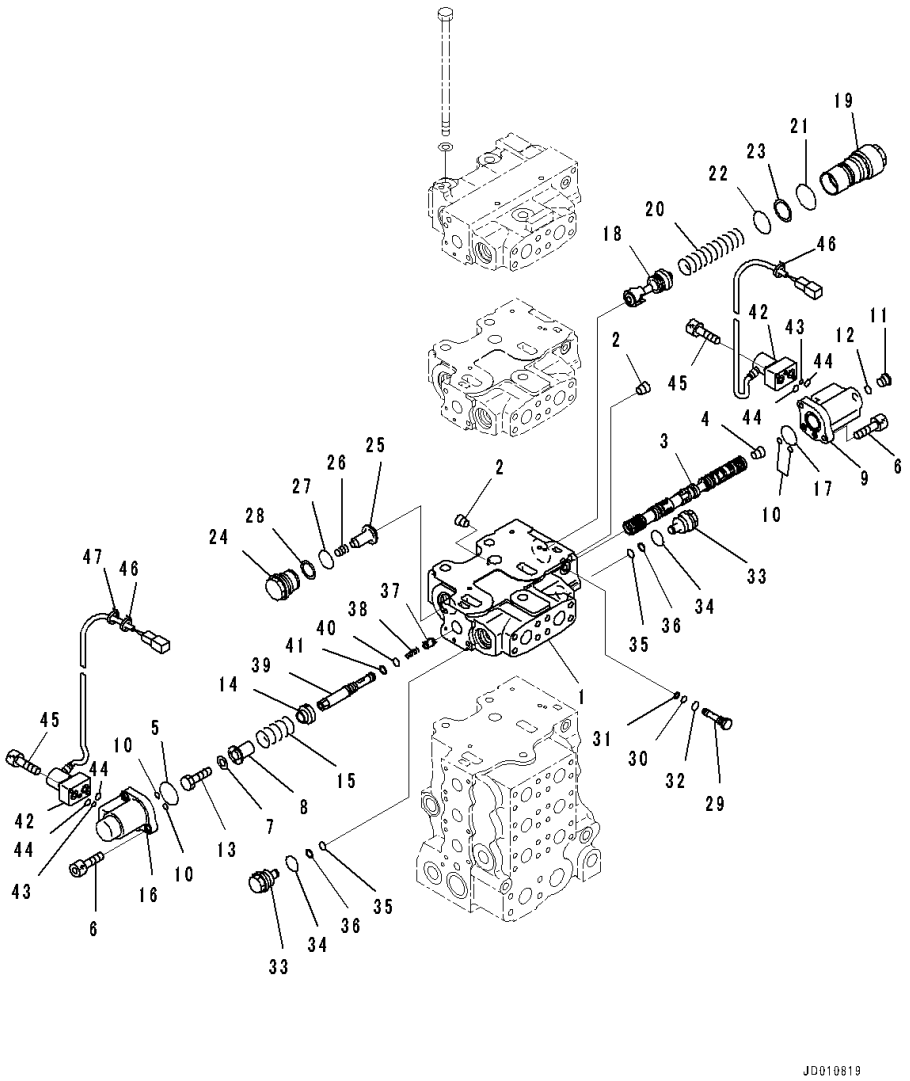

Index	Code	Part Number	Description	Qty	Serial Number
		723-66-21100	Control	1	81028-
		723-61-25300	• Valve Assembly	1	81028-
1	C1		• • Block	1	81028-
2	C1		• • Plug	2	81028-
3	C1		• • Spool	1	81028-
4	C1		• • Plug, Tapered	1	81028-
5		702-21-55450	• • O-ring	1	81028-
6		01252-60820	• • Bolt, Hexagon Socket Head	4	81028-
7		01643-31032	• • Washer	1	81028-
8		723-63-31670	• • Retainer	1	81028-
9		723-63-32760	• • Case	1	81028-
10		07000-11007	• • O-ring	4	81028-
11		702-21-55620	• • Plug	1	81028-
12		07002-11423	• • O-ring	1	81028-
13		01010-81016	• • Bolt	1	81028-
14		723-63-31730	• • Retainer	1	81028-
15		723-63-31740	• • Spring	1	81028-
16		723-63-32750	• • Case	1	81028-
17		07000-12030	• • O-ring	1	81028-
18	C1		• • Spool	1	81028-
19		723-63-32520	• • Plug	1	81028-
20		723-63-32530	• • Spring	1	81028-
21		700-61-49160	• • O-ring	1	81028-
22		723-63-31850	• • O-ring	1	81028-
23		723-63-31860	• • Ring	1	81028-
24		709-74-92821	• • Plug	1	81028-
25		709-94-92811	• • Valve	1	81028-
26		709-94-91751	• • Spring	1	81028-
27		700-93-11320	• • O-ring	1	81028-
28		700-93-11330	• • Ring, Back-up	1	81028-
29		723-60-23601	• • Valve Assembly, Check	1	81028-
30		07000-11005	• • • O-ring	1	81028-
31		07001-01005	• • • Ring, Back-up	1	81028-
32		07002-11023	• • • O-ring	1	81028-
33		709-74-91510	• • Plug	2	81028-
34		709-25-11390	• • O-ring	2	81028-
35		07000-11009	• • O-ring	2	81028-
36		07001-01009	• • Ring, Back-up	2	81028-
37		723-63-32540	• • Valve	1	81028-

FIG. M2210-014020 Fender, With Large Capacity Batteries, For Dual Tilt Pitch Dozer, Landfill Specification, Control Valve (9/10)

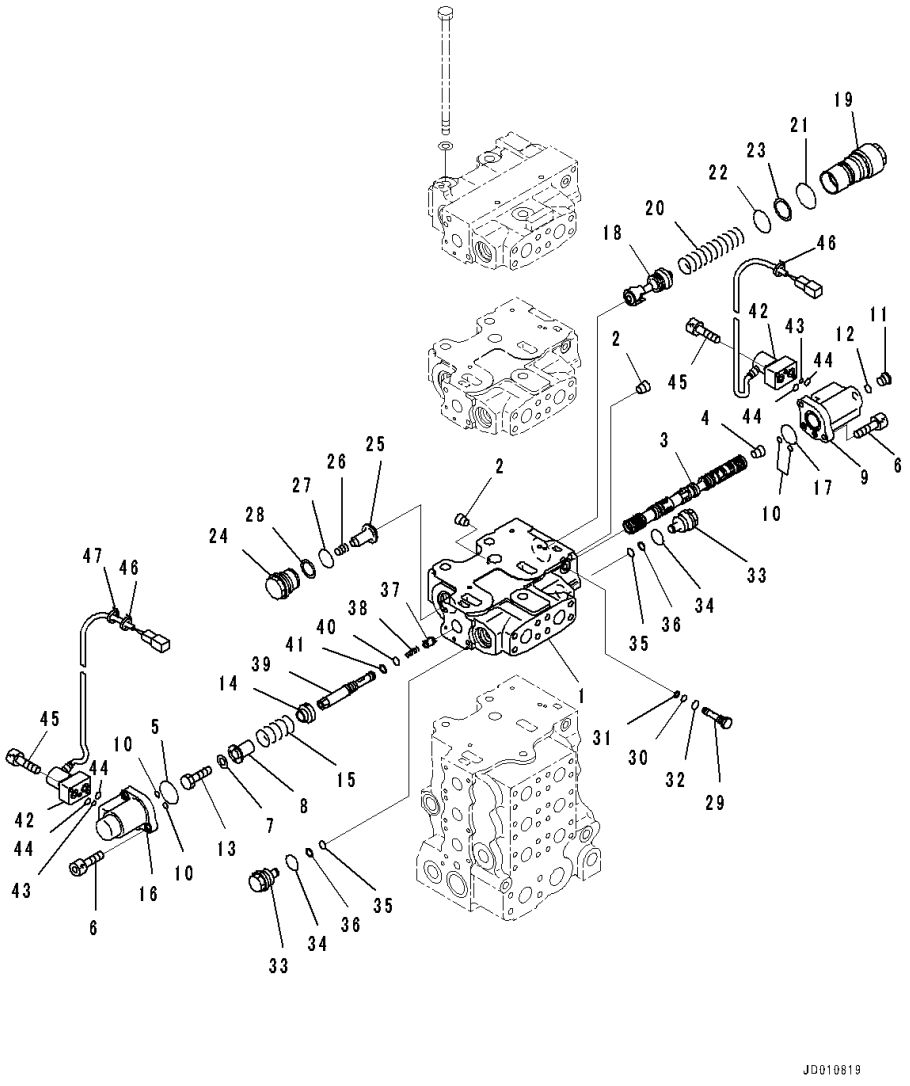

Index	Code	Part Number	Description	Qty	Serial Number
38		723-63-32550	• • Spring	1	81028-
39		723-63-31930	• • Plug	1	81028-
40		07000-11009	• • O-ring	1	81028-
41		07001-01009	• • Ring, Back-up	1	81028-
42		702-21-57400	• • Valve, Pilot	2	81028-
43		723-11-19960	• • • O-ring	1	81028-
44		702-21-54910	• • • O-ring	2	81028-
45		01252-60635	• • Bolt, Hexagon Socket Head	4	81028-
46		20Y-62-22820	• • Band, Blue	2	81028-
47		08034-20414	• • Band	1	81028-

FIG. M2210-014021 Fender, With Large Capacity Batteries, For Dual Tilt Pitch Dozer, Landfill Specification, Control Valve (10/10)

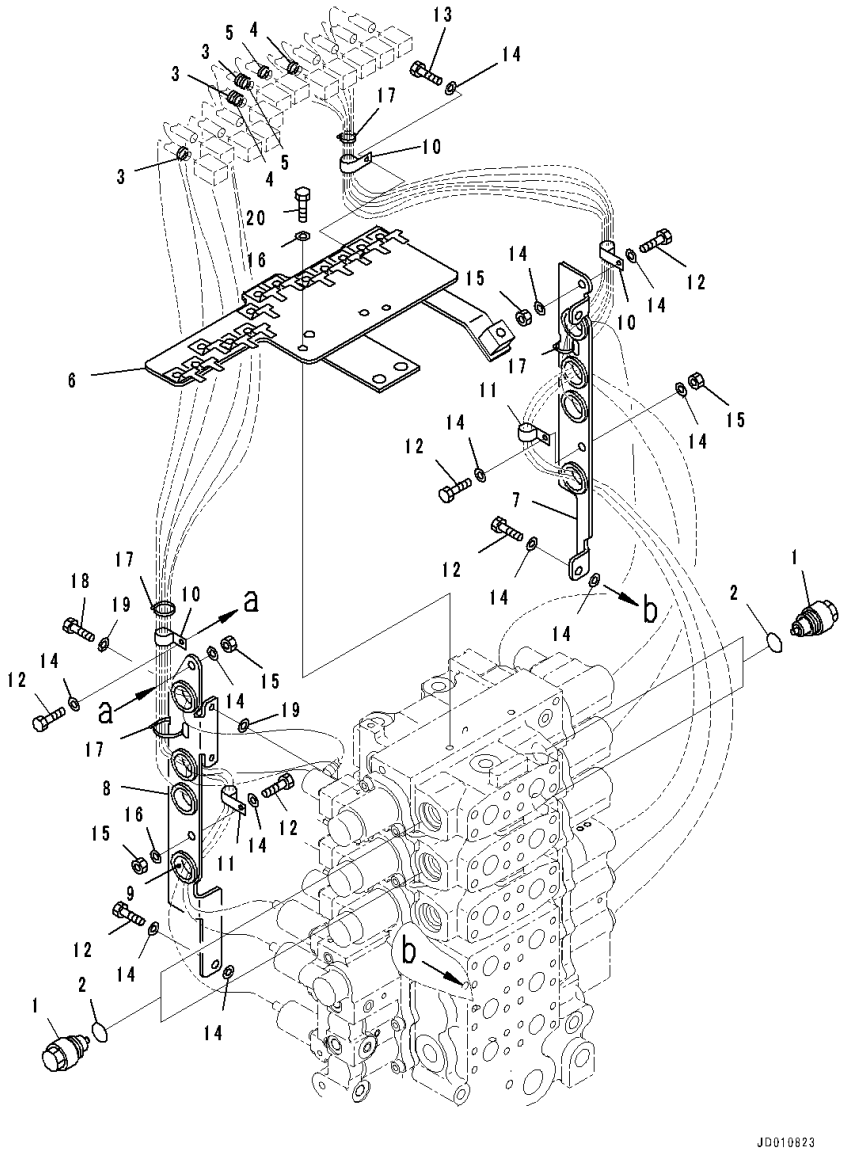

Index	Code	Part Number	Description	Qty	Serial Number
		723-66-21100	Control	1	81028-
1		723-40-85100	• Valve Assembly, Suction	4	81028-
2		709-25-11390	• • O-ring	1	81028-
3		08034-20414	• Band	3	81028-
4		20Y-62-22850	• Band, Green	2	81028-
5		20Y-62-22860	• Band, Brown	2	81028-
		723-66-05101	• Bracket Group	1	81028-
6		723-63-32910	• • Bracket	1	81028-
7		723-63-32920	• • Bracket	1	81028-
8		723-63-32930	• • Bracket	1	81028-
9		08037-02512	• • Grommet	8	81028-
10		04434-51608	• • Clip	3	81028-
11		04434-51208	• • Clip	2	81028-
12		01010-80820	• • Bolt	7	81028-
13		01010-80816	• • Bolt	1	81028-
14		01643-30823	• • Washer	15	81028-
15		01580-10806	• • Nut	4	81028-
16		01643-30823	• • Washer	2	81028-
17		08034-20834	• • Band	4	81028-
18		01010-80620	• • Bolt	2	81028-
19		01643-30623	• • Washer	4	81028-
20		01010-80835	• • Bolt	2	81028-

FIG. M2210-014022 Fender, With Large Capacity Batteries, For Dual Tilt Pitch Dozer, Landfill Specification, C.L.S.S Valve

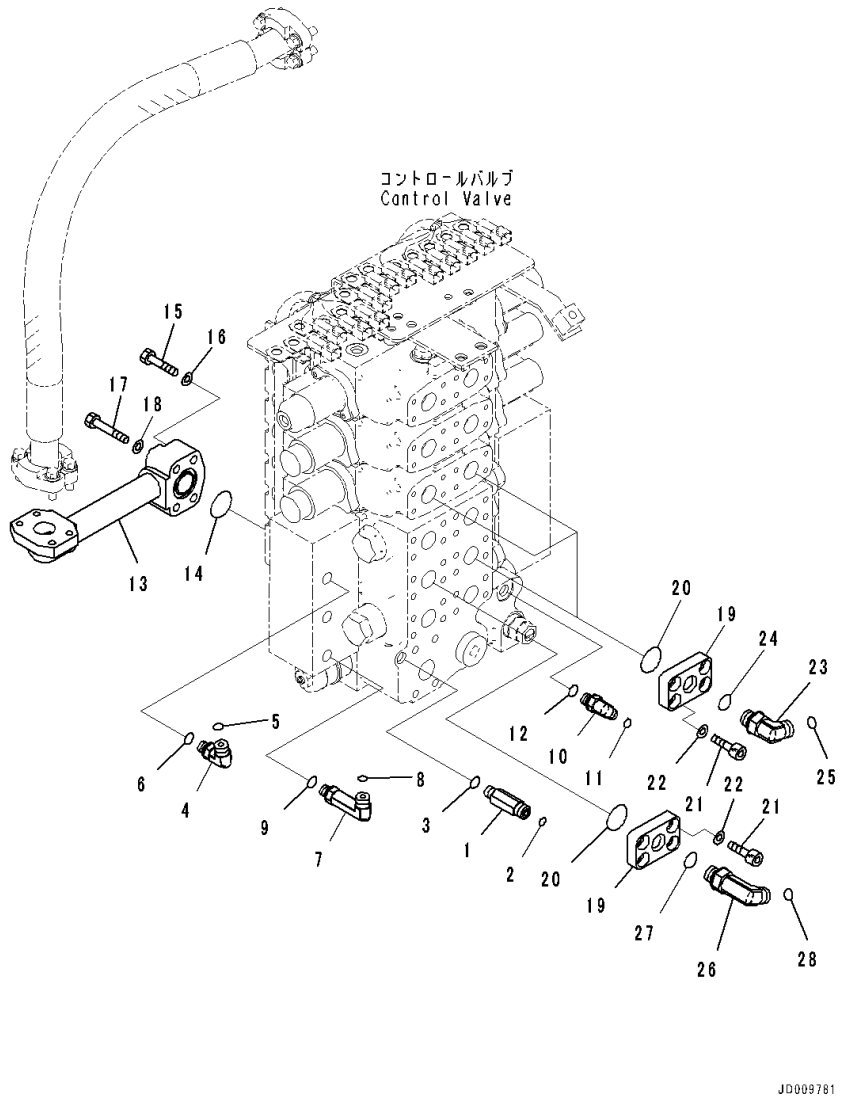

Index	Code	Part Number	Description	Qty	Serial Number
1		20U-62-41710	Nipple	1	81028-
2		02896-11009	O-ring	1	81028-
3		07002-11423	O-ring	1	81028-
4		02782-10311	Elbow	1	81028-
5		02896-11009	O-ring	1	81028-
6		07002-11423	O-ring	1	81028-
7		02782-10312	Elbow	1	81028-
8		02896-11009	O-ring	1	81028-
9		07002-11423	O-ring	1	81028-
10		17M-61-41280	Elbow	1	81028-
11		02896-11008	O-ring	1	81028-
12		07002-11423	O-ring	1	81028-
13		17A-60-41120	Tube	1	81028-
14		07000-73035	O-ring	1	81028-
15		01010-81055	Bolt	2	81028-
16		01643-31032	Washer	2	81028-
17		01010-81060	Bolt	2	81028-
18		01643-31032	Washer	2	81028-
19		17A-61-21221	Plate	4	81028-
20		07000-13032	O-ring	4	81028-
21		01252-71025	Bolt, Hexagon Socket Head	16	81028-
22		01643-51032	Washer	16	81028-
23		02782-10422	Elbow	3	81028-
24		07002-12034	O-ring	3	81028-
25		02896-11012	O-ring	3	81028-
26		02782-10423	Elbow	1	81028-
27		07002-12034	O-ring	1	81028-
28		02896-11012	O-ring	1	81028-

FIG. M2214-001001 Fender Related Parts, Fender Cover,LHS

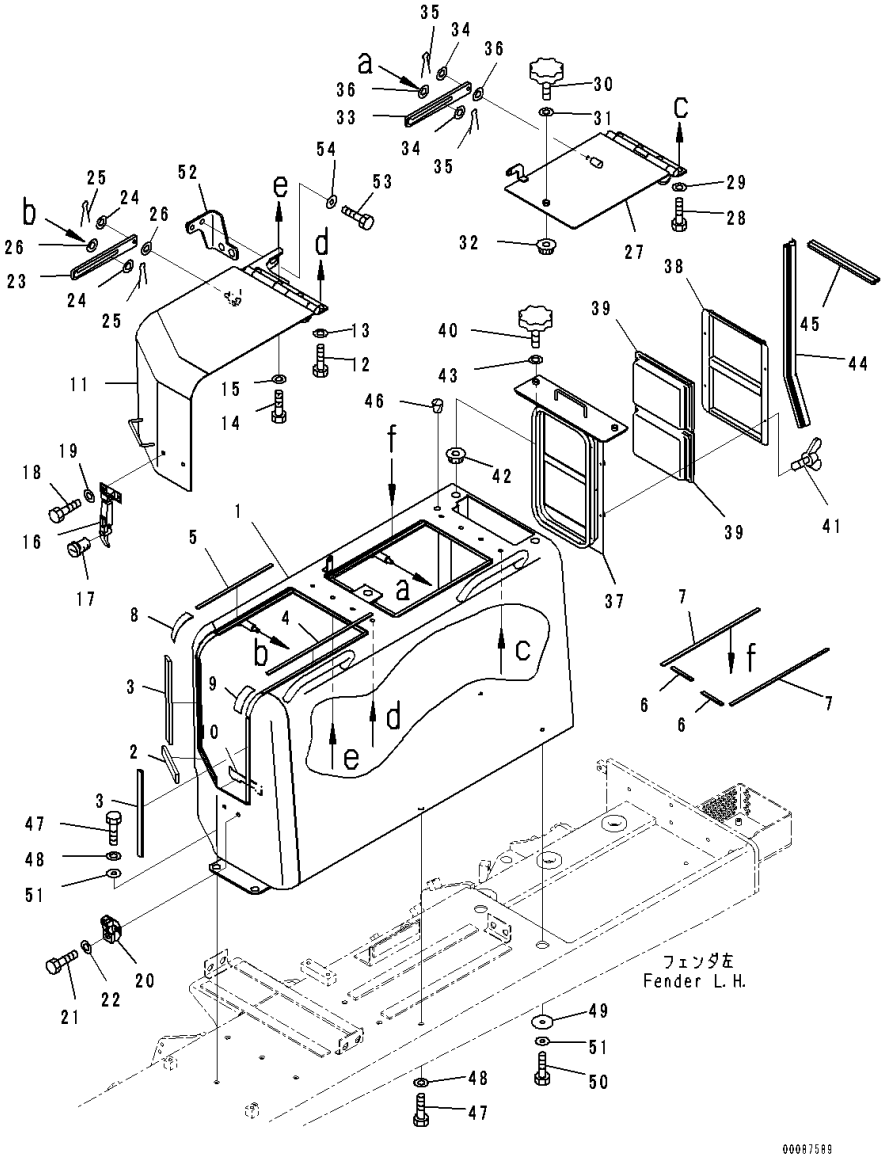

Index	Code	Part Number	Description	Qty	Serial Number
1		17A-54-45115	Cover	1	81028-
2		17A-54-45232	• Seal,Bonded	1	81028-
3		17A-54-45241	• Seal,Bonded	2	81028-
4		17A-54-45251	• Seal,Bonded	1	81028-
5		17A-54-45261	• Seal,Bonded	1	81028-
6		17A-54-45271	• Seal,Bonded	2	81028-
7		17A-54-45281	• Seal,Bonded	2	81028-
8		17A-54-45380	• Rubber,Bonded	1	81028-
9		17A-54-45390	• Rubber,Bonded	1	81028-
10		17A-54-45411	• Rubber,Bonded	1	81028-
11		17A-54-45124	Cover	1	81028-
12		01010-81230	Bolt	2	81028-
13		01643-31232	Washer	2	81028-
14		01010-81235	Bolt	2	81028-
15		01643-31232	Washer	2	81028-
16		205-54-76260	Catcher	1	81028-
17		205-54-76280	• Rotor Assembly	1	81028-
18		01010-80820	Bolt	2	81028-
19		01643-30823	Washer	2	81028-
20		205-54-67660	Support	1	81028-
21		01010-80820	Bolt	2	81028-
22		01643-30823	Washer	2	81028-
23		17A-54-45151	Plate	1	81028-
24		01640-21123	Washer, Flat	2	81028-
25		04050-13020	Pin, Cotter	2	81028-
26		17A-54-45440	Washer	2	81028-
27		17A-54-45133	Cover	1	81028-
28		01010-81230	Bolt	4	81028-
29		01643-31232	Washer	4	81028-
30		195-54-68760	Knob	1	81028-
31		01640-21016	Washer	1	81028-
32		01594-01008	Nut	1	81028-
33		17A-54-45151	Plate	1	81028-
34		01640-21123	Washer, Flat	2	81028-
35		04050-13020	Pin, Cotter	2	81028-
36		17A-54-45440	Washer	2	81028-
		17A-911-4201	Filter Assembly	1	81028-
37		17A-911-4211	• Bracket	1	81028-
38		17A-911-4220	• Bracket	1	81028-
39		14X-911-7750	• Filter	2	81028-

FIG. M2214-001001 Fender Related Parts, Fender Cover,LHS

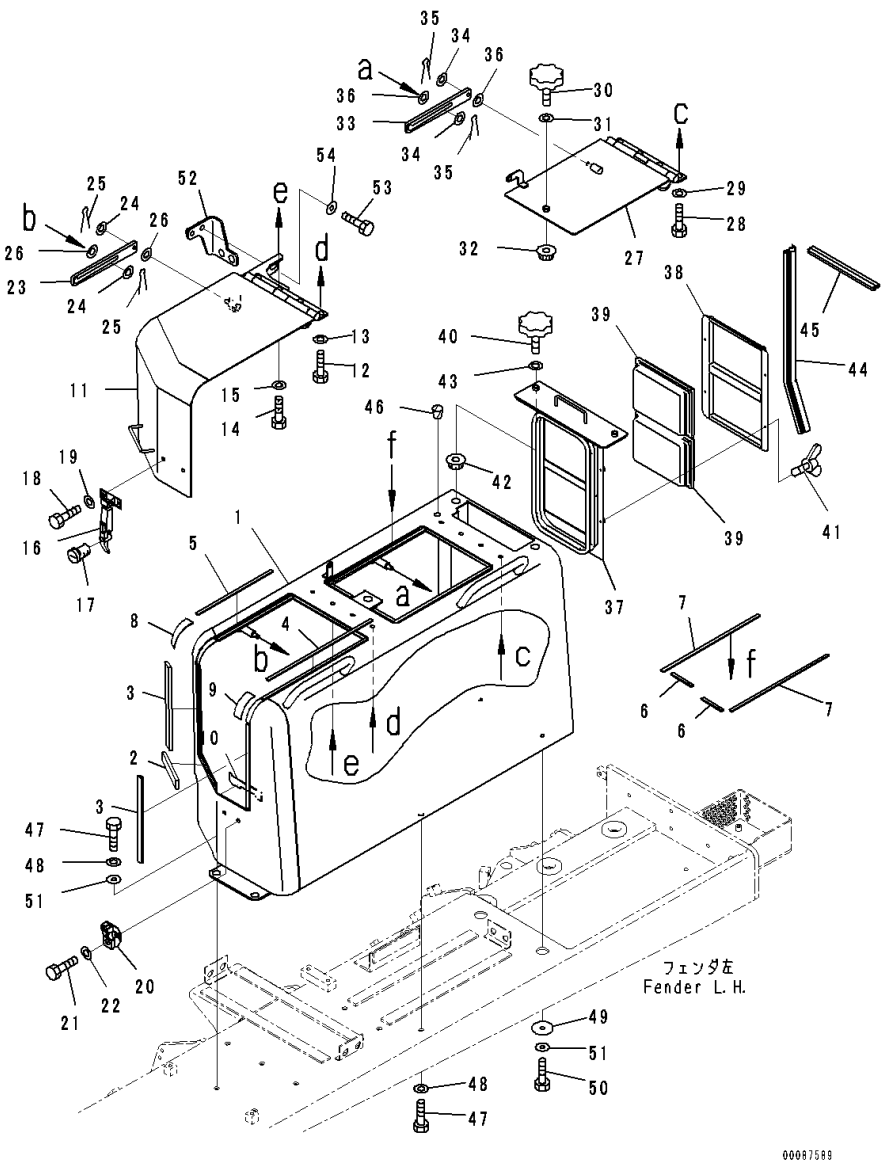

Index	Code	Part Number	Description	Qty	Serial Number
40		195-54-68760	• Knob	2	81028-
41		01434-00412	• Bolt, Wing	4	81028-
42		01594-01008	• Nut	2	81028-
43		01640-21016	• Washer	2	81028-
44		17A-54-28530	Trim	1	81028-
45		17A-54-45350	Seal	1	81028-
46		07049-01215	Plug	1	81028-
47		01010-81230	Bolt	3	81028-
48		01643-31232	Washer	3	81028-
49		195-56-11210	Plate	2	81028-
50		01010-81230	Bolt	2	81028-
51		175-54-34170	Washer	2	81028-
52		17A-54-45171	Bracket	1	81028-
53		01010-81230	Bolt	4	81028-
54		175-54-34170	Washer	4	81028-

FIG. M2214-001002 Fender Related Parts, Step

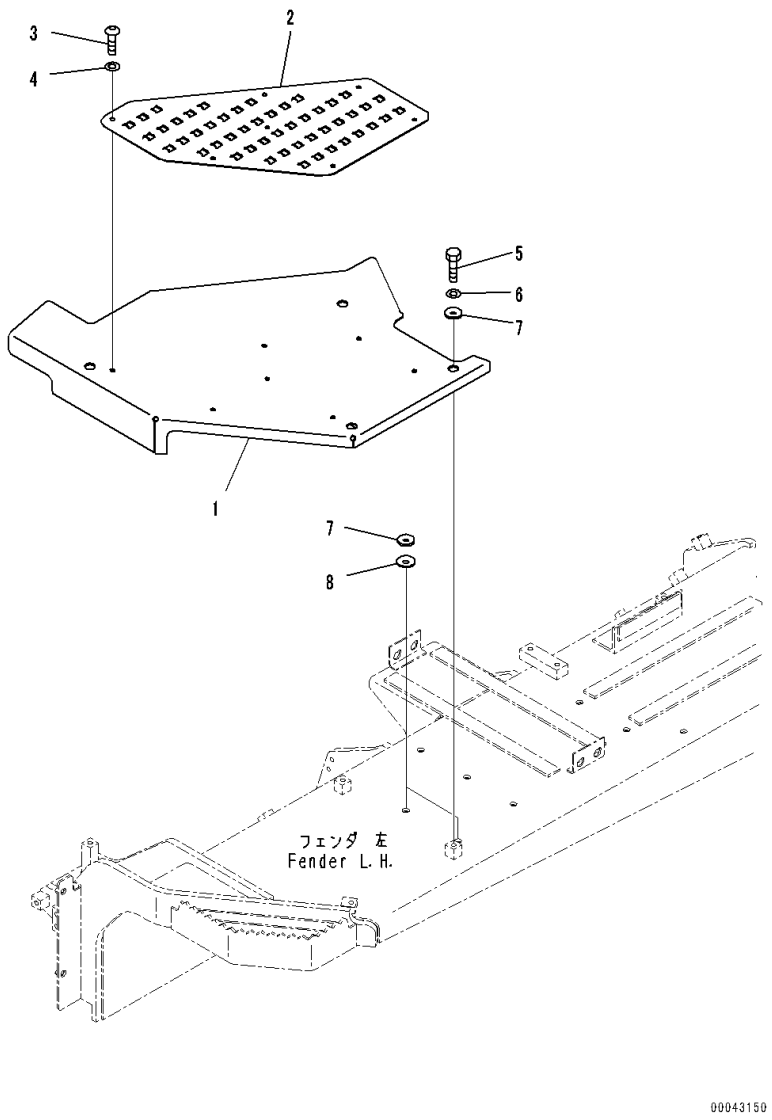

Index	Code	Part Number	Description	Qty	Serial Number
1		17A-54-45311	Cover,LHS	1	81028-
2		17A-54-45331	Plate	1	81028-
3		01245-00816	Screw	7	81028-
4		01643-70823	Washer	7	81028-
5		01010-81230	Bolt	4	81028-
6		175-54-34170	Washer	4	81028-
7		20S-71-11250	Spacer, T=2.3mm	2	81028-
8		21K-46-21190	Plate, T=1.0mm	3	81028-

FIG. M2214-001003 Fender Related Parts, Fender Cover,RHS

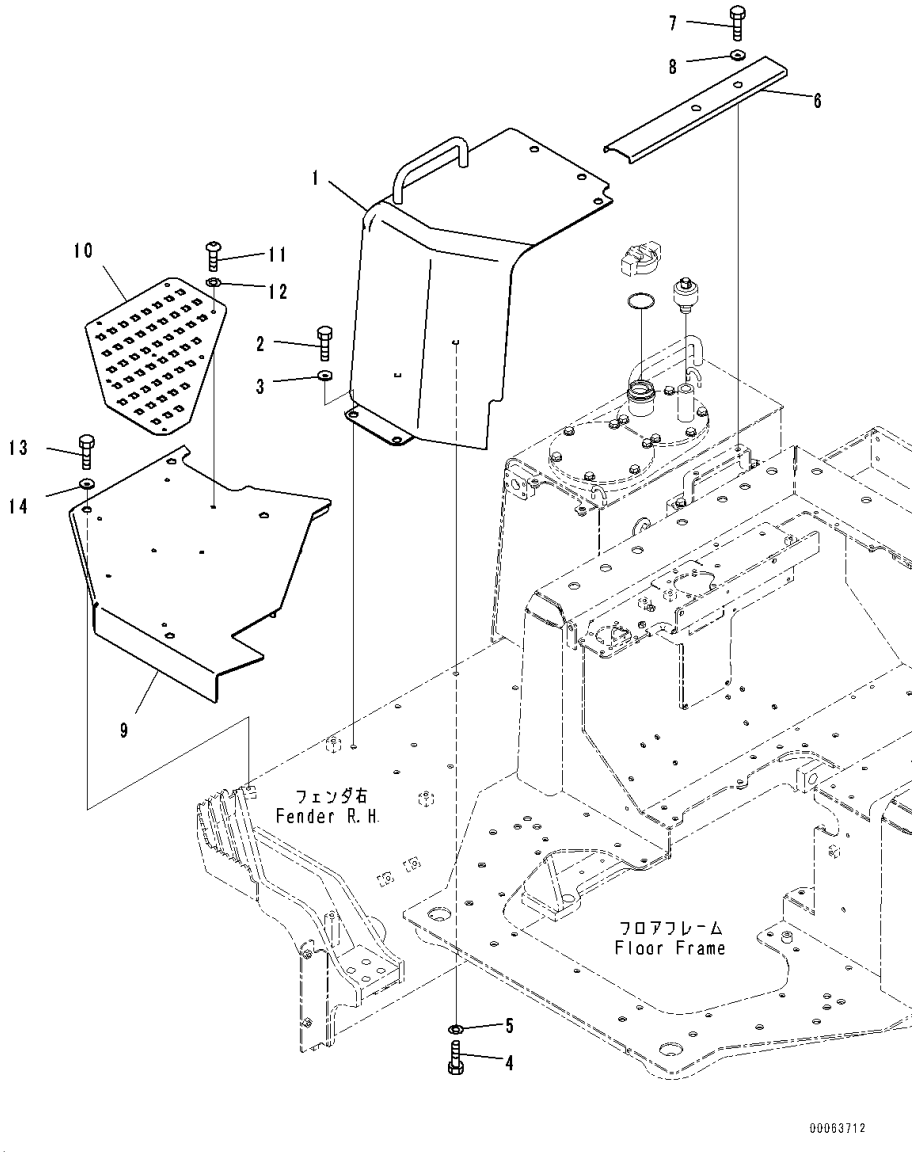

Index	Code	Part Number	Description	Qty	Serial Number
1		17A-54-45212	Cover	1	81028-
2		01010-81230	Bolt	5	81028-
3		175-54-34170	Washer	5	81028-
4		01010-81230	Bolt	2	81028-
5		01643-31232	Washer	2	81028-
6		17A-54-45421	Cover	1	81028-
7		01010-81230	Bolt	2	81028-
8		175-54-34170	Washer	2	81028-
9		17A-54-45321	Cover,RHS	1	81028-
10		17A-54-45341	Plate	1	81028-
11		01245-00816	Screw	7	81028-
12		01643-70823	Washer	7	81028-
13		01010-81230	Bolt	4	81028-
14		175-54-34170	Washer	4	81028-

FIG. M2214-002001 Fender Related Parts, With Air Intake For Air Conditioner, MSHA Dust Regulation, Fender Cover,LHS

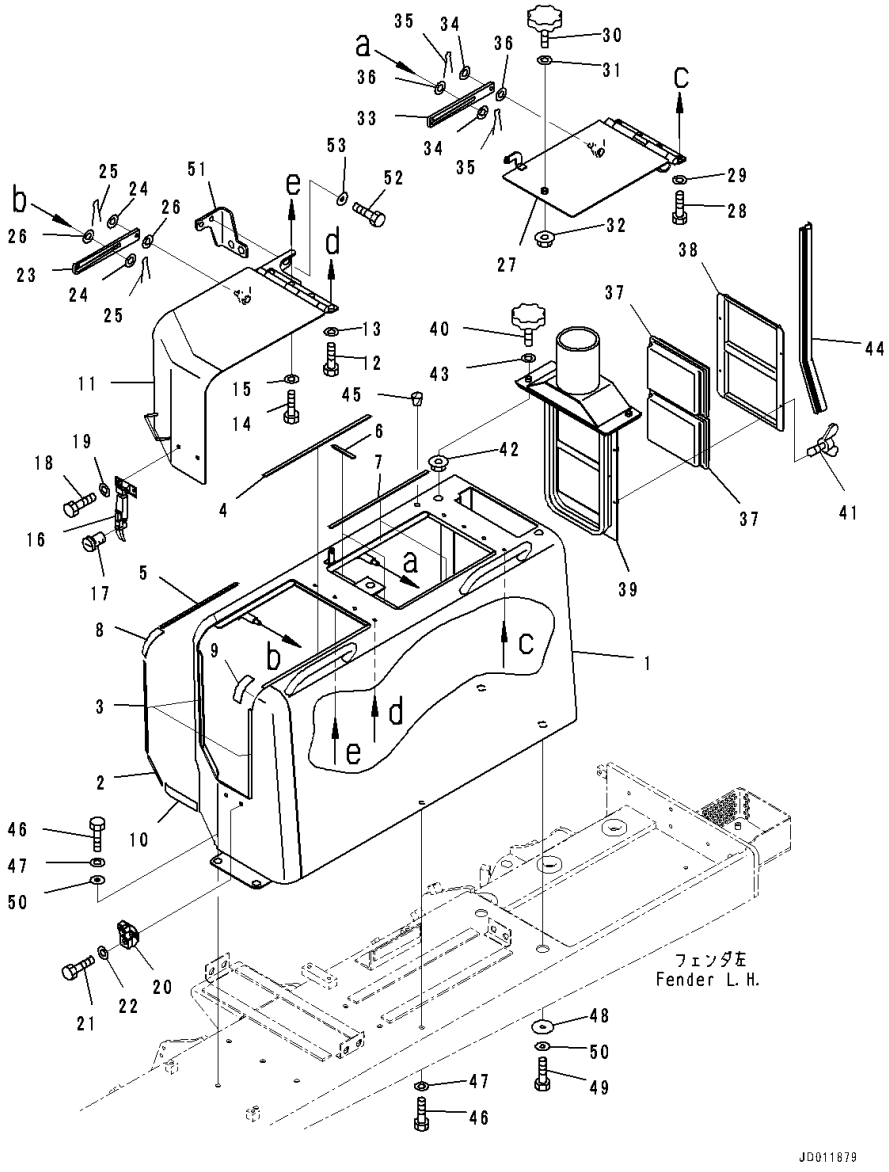

Index	Code	Part Number	Description	Qty	Serial Number
1		17A-54-45432	Cover	1	81028-
2		17A-54-45232	• Seal,Bonded	1	81028-
3		17A-54-45241	• Seal,Bonded	2	81028-
4		17A-54-45251	• Seal,Bonded	1	81028-
5		17A-54-45261	• Seal,Bonded	1	81028-
6		17A-54-45271	• Seal,Bonded	2	81028-
7		17A-54-45281	• Seal,Bonded	2	81028-
8		17A-54-45380	• Rubber,Bonded	1	81028-
9		17A-54-45390	• Rubber,Bonded	1	81028-
10		17A-54-45411	• Rubber,Bonded	1	81028-
11		17A-54-45124	Cover	1	81028-
12		01010-81230	Bolt	2	81028-
13		01643-31232	Washer	2	81028-
14		01010-81235	Bolt	2	81028-
15		01643-31232	Washer	2	81028-
16		205-54-76260	Catcher	1	81028-
17		205-54-76280	• Rotor Assembly	1	81028-
18		01010-80820	Bolt	2	81028-
19		01643-30823	Washer	2	81028-
20		205-54-67660	Support	1	81028-
21		01010-80820	Bolt	2	81028-
22		01643-30823	Washer	2	81028-
23		17A-54-45151	Plate	1	81028-
24		01640-21123	Washer, Flat	2	81028-
25		04050-13020	Pin, Cotter	2	81028-
26		17A-54-45440	Washer	2	81028-
27		17A-54-45133	Cover	1	81028-
28		01010-81230	Bolt	4	81028-
29		01643-31232	Washer	4	81028-
30		195-54-68760	Knob	1	81028-
31		01640-21016	Washer	1	81028-
32		01594-01008	Nut	1	81028-
33		17A-54-45151	Plate	1	81028-
34		01640-21123	Washer, Flat	2	81028-
35		04050-13020	Pin, Cotter	2	81028-
36		17A-54-45440	Washer	2	81028-
		17A-911-4901	Filter Assembly	1	81028-
37		198-911-9670	• Filter	2	81028-
38		17A-911-4220	• Bracket	1	81028-

FIG. M2214-002001 Fender Related Parts, With Air Intake For Air Conditioner, MSHA Dust Regulation, Fender Cover,LHS

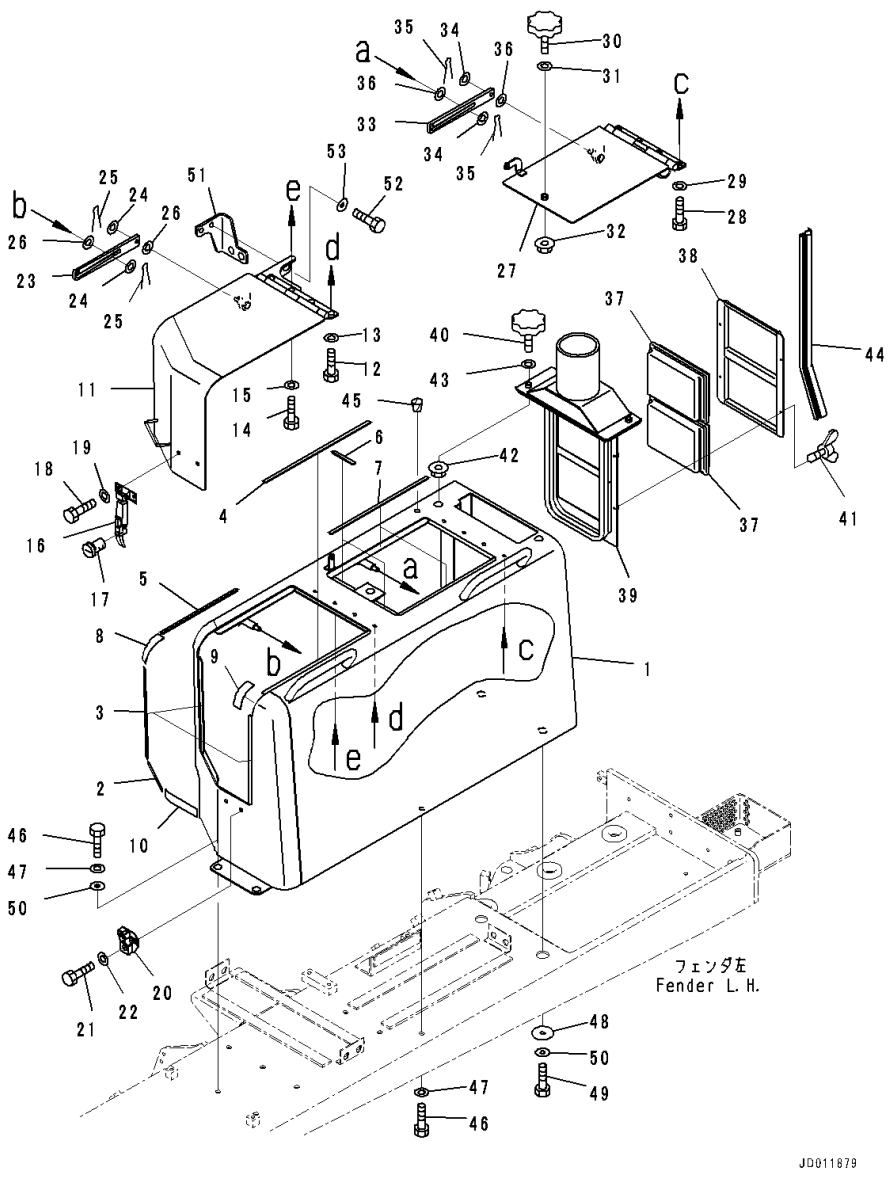

Index	Code	Part Number	Description	Qty	Serial Number
39		17A-911-4911	• Bracket	1	81028-
40		195-54-68760	• Knob	2	81028-
41		01434-00412	• Bolt, Wing	4	81028-
42		01594-01008	• Nut	2	81028-
43		01640-21016	• Washer	2	81028-
44		17A-54-28530	Trim	1	81028-
45		07049-01215	Plug	1	81028-
46		01010-81230	Bolt	3	81028-
47		01643-31232	Washer	3	81028-
48		195-56-11210	Plate	2	81028-
49		01010-81230	Bolt	2	81028-
50		175-54-34170	Washer	2	81028-
51		17A-54-45171	Bracket	1	81028-
52		01010-81230	Bolt	4	81028-
53		175-54-34170	Washer	4	81028-

FIG. M2214-002002 Fender Related Parts, With Air Intake For Air Conditioner, MSHA Dust Regulation, Step

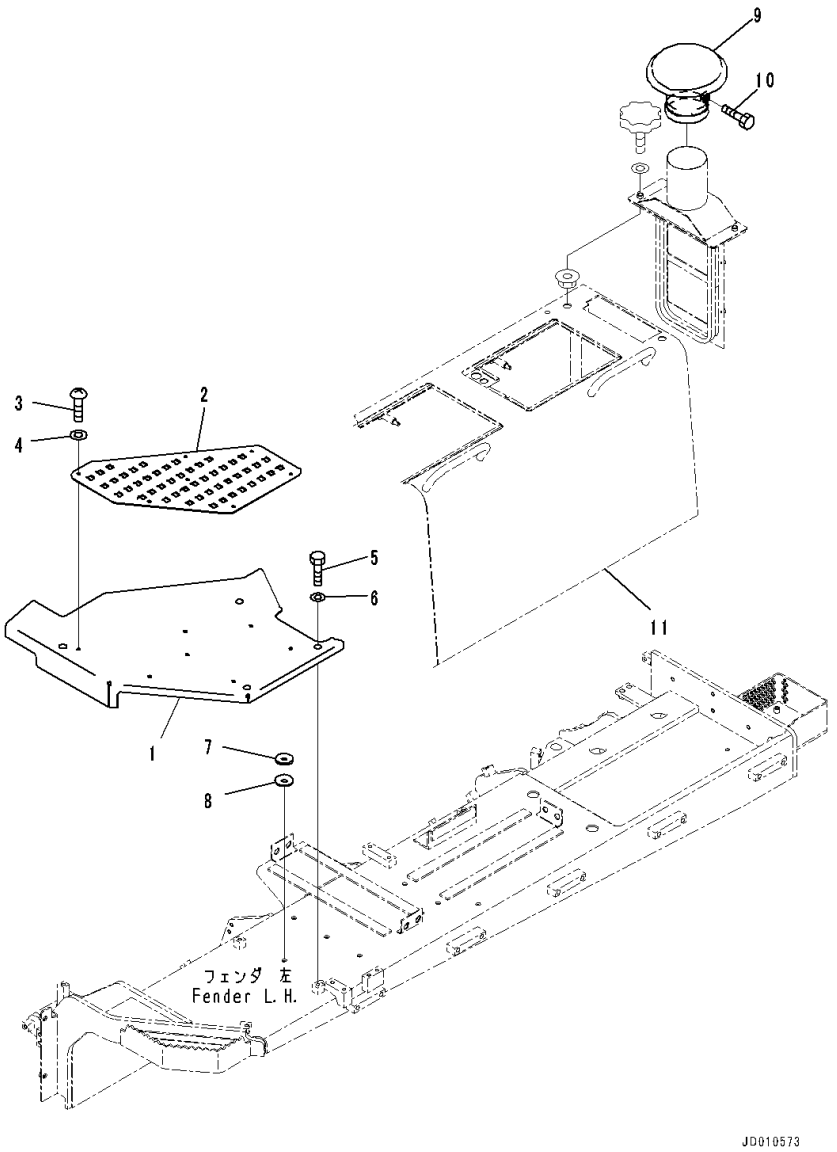

Index	Code	Part Number	Description	Qty	Serial Number
1		17A-54-45311	Cover,LHS	1	81028-
2		17A-54-45331	Plate	1	81028-
3		01245-00816	Screw	7	81028-
4		01643-70823	Washer	7	81028-
5		01010-81230	Bolt	4	81028-
6		175-54-34170	Washer	4	81028-
7		20S-71-11250	Spacer, T=2.3mm	2	81028-
8		21K-46-21190	Plate, T=1.0mm	3	81028-
		124-911-1430	Hood	1	81028-
9		600-181-2430	• Cap	1	81028-
10		01016-51040	• • Bolt	1	81028-
11		(17A-54-45432)	Cover(Refer to Page 847)		-

FIG. M2214-002003 Fender Related Parts, Fender Cover,RHS

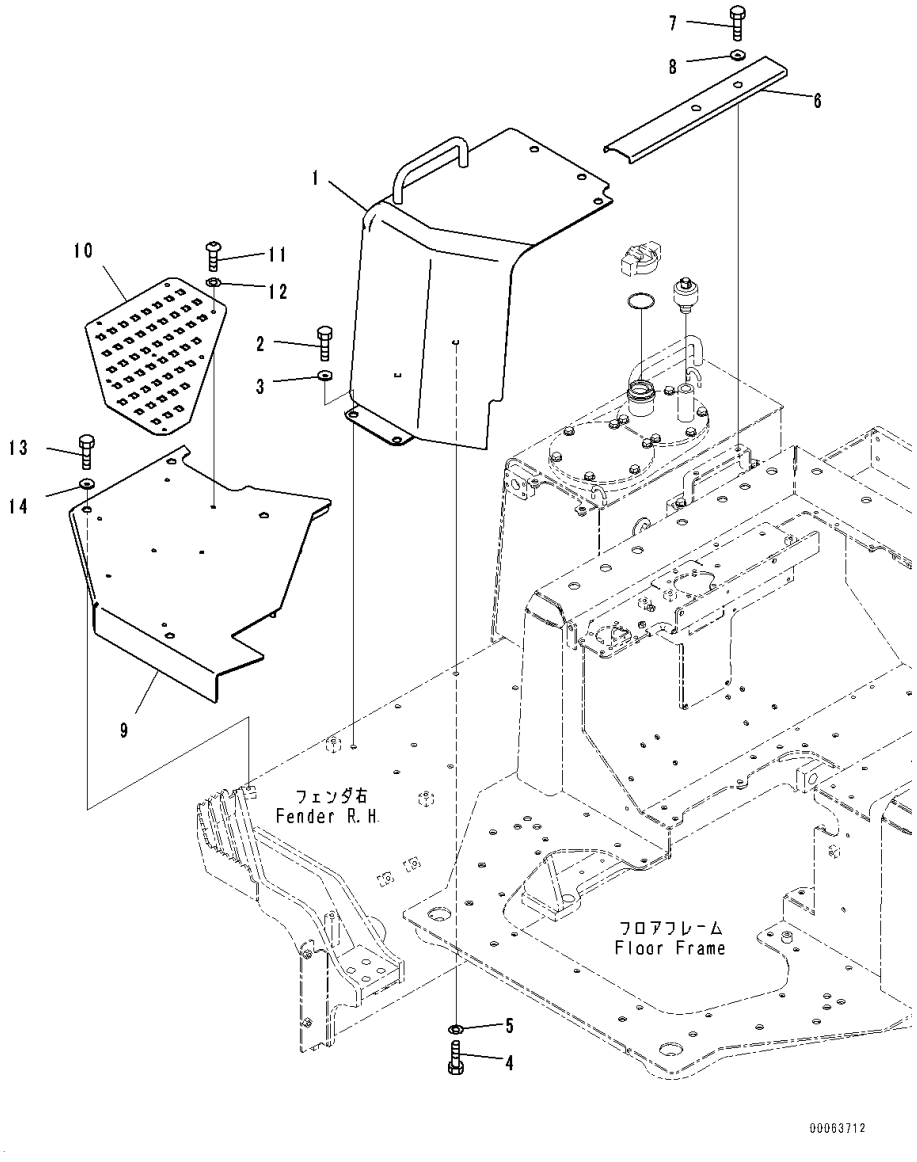

Index	Code	Part Number	Description	Qty	Serial Number
		Note: This list covers following specifications.			
		With Air Intake For Air Conditioner, MSHA Dust Regulation			
		MSHA Dust Regulation			
		With Air Intake For Air Conditioner			
1		17A-54-45212	Cover	1	81028-
2		01010-81230	Bolt	5	81028-
3		175-54-34170	Washer	5	81028-
4		01010-81230	Bolt	2	81028-
5		01643-31232	Washer	2	81028-
6		17A-54-45421	Cover	1	81028-
7		01010-81230	Bolt	2	81028-
8		175-54-34170	Washer	2	81028-
9		17A-54-45321	Cover,RHS	1	81028-
10		17A-54-45341	Plate	1	81028-
11		01245-00816	Screw	7	81028-
12		01643-70823	Washer	7	81028-
13		01010-81230	Bolt	4	81028-
14		175-54-34170	Washer	4	81028-

FIG. M2214-003001 Fender Related Parts, MSHA Dust Regulation, Fender Cover,LHS

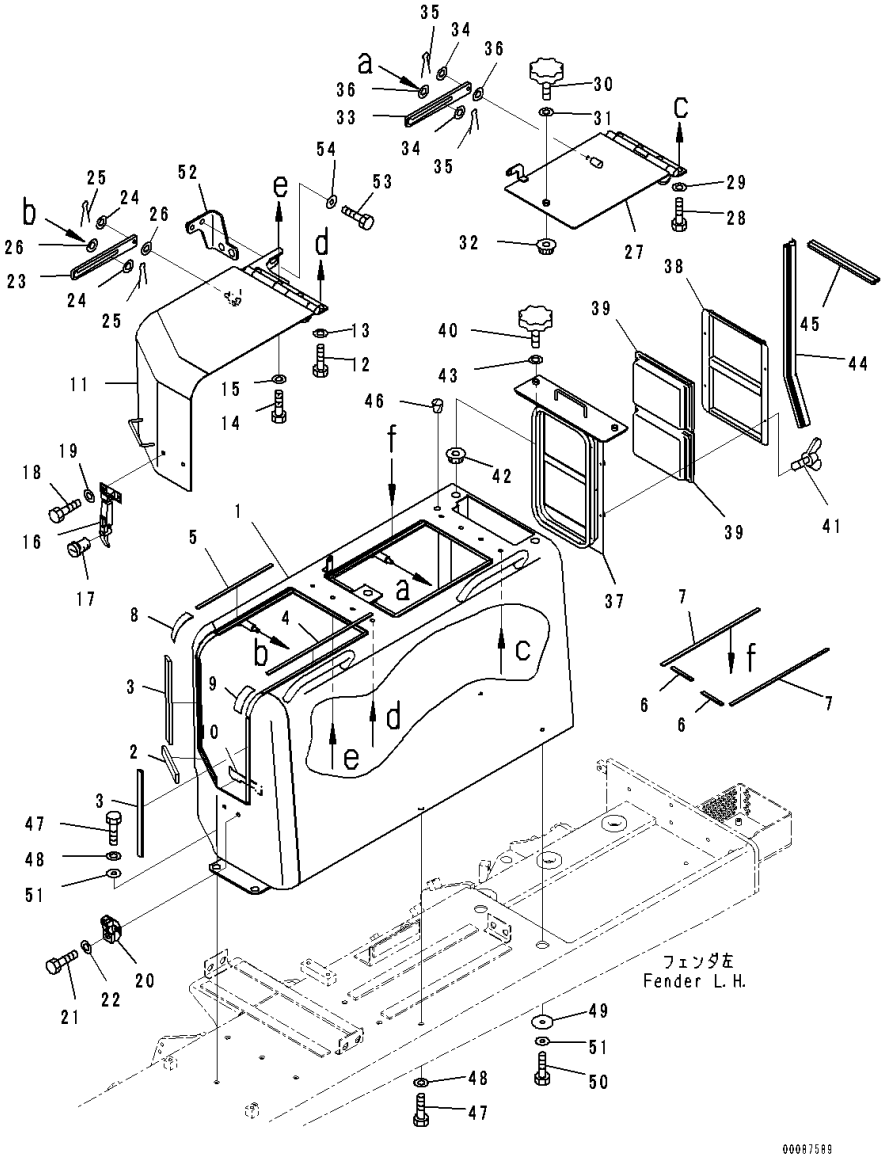

Index	Code	Part Number	Description	Qty	Serial Number
1		17A-54-45115	Cover	1	81028-
2		17A-54-45232	• Seal,Bonded	1	81028-
3		17A-54-45241	• Seal,Bonded	2	81028-
4		17A-54-45251	• Seal,Bonded	1	81028-
5		17A-54-45261	• Seal,Bonded	1	81028-
6		17A-54-45271	• Seal,Bonded	2	81028-
7		17A-54-45281	• Seal,Bonded	2	81028-
8		17A-54-45380	• Rubber,Bonded	1	81028-
9		17A-54-45390	• Rubber,Bonded	1	81028-
10		17A-54-45411	• Rubber,Bonded	1	81028-
11		17A-54-45124	Cover	1	81028-
12		01010-81230	Bolt	2	81028-
13		01643-31232	Washer	2	81028-
14		01010-81235	Bolt	2	81028-
15		01643-31232	Washer	2	81028-
16		205-54-76260	Catcher	1	81028-
17		205-54-76280	• Rotor Assembly	1	81028-
18		01010-80820	Bolt	2	81028-
19		01643-30823	Washer	2	81028-
20		205-54-67660	Support	1	81028-
21		01010-80820	Bolt	2	81028-
22		01643-30823	Washer	2	81028-
23		17A-54-45151	Plate	1	81028-
24		01640-21123	Washer, Flat	2	81028-
25		04050-13020	Pin, Cotter	2	81028-
26		17A-54-45440	Washer	2	81028-
27		17A-54-45133	Cover	1	81028-
28		01010-81230	Bolt	4	81028-
29		01643-31232	Washer	4	81028-
30		195-54-68760	Knob	1	81028-
31		01640-21016	Washer	1	81028-
32		01594-01008	Nut	1	81028-
33		17A-54-45151	Plate	1	81028-
34		01640-21123	Washer, Flat	2	81028-
35		04050-13020	Pin, Cotter	2	81028-
36		17A-54-45440	Washer	2	81028-
		17A-911-4300	Filter Assembly	1	81028-
37		17A-911-4211	• Bracket	1	81028-
38		17A-911-4220	• Bracket	1	81028-
39		198-911-9670	• Filter	2	81028-

FIG. M2214-003001 Fender Related Parts, MSHA Dust Regulation, Fender Cover,LHS

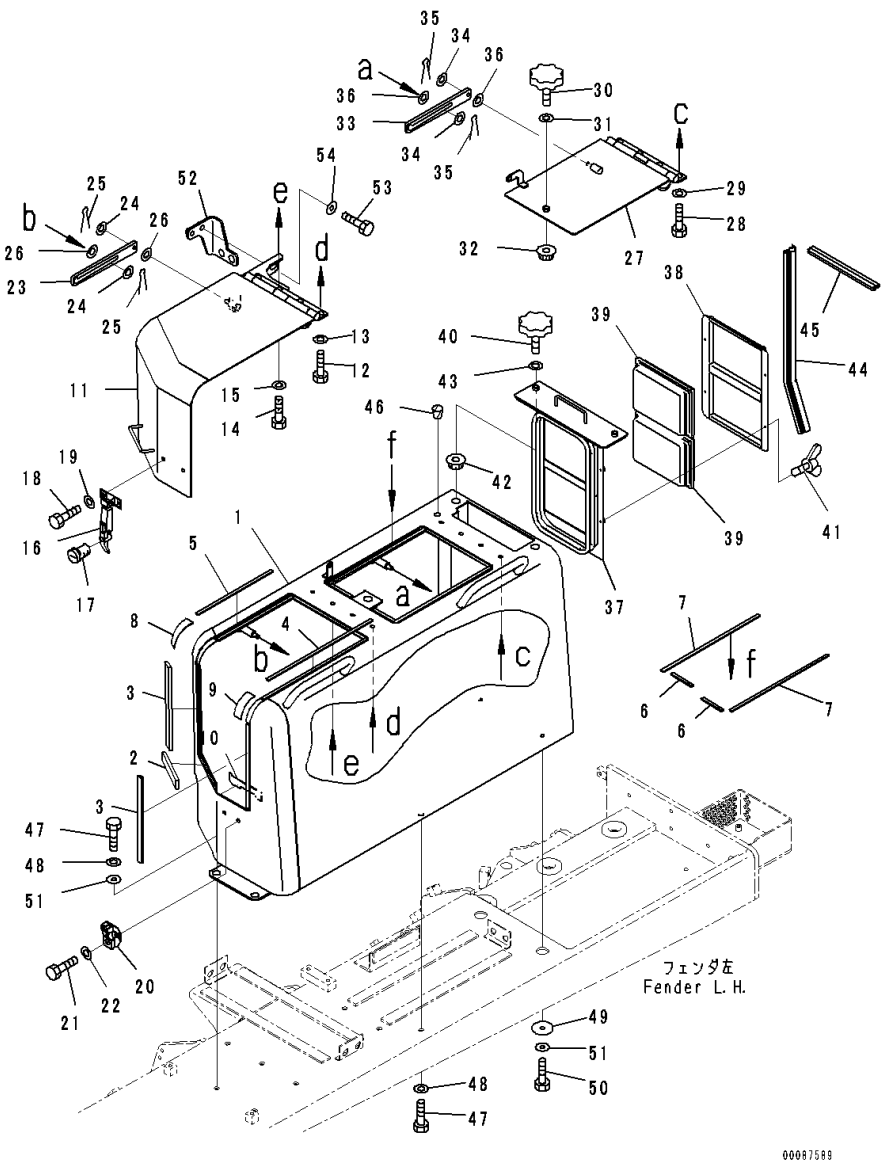

Index	Code	Part Number	Description	Qty	Serial Number
40		195-54-68760	• Knob	2	81028-
41		01434-00412	• Bolt, Wing	4	81028-
42		01594-01008	• Nut	2	81028-
43		01640-21016	• Washer	2	81028-
44		17A-54-28530	Trim	1	81028-
45		17A-54-45350	Seal	1	81028-
46		07049-01215	Plug	1	81028-
47		01010-81230	Bolt	3	81028-
48		01643-31232	Washer	3	81028-
49		195-56-11210	Plate	2	81028-
50		01010-81230	Bolt	2	81028-
51		175-54-34170	Washer	2	81028-
52		17A-54-45171	Bracket	1	81028-
53		01010-81230	Bolt	4	81028-
54		175-54-34170	Washer	4	81028-

FIG. M2214-003002 Fender Related Parts, MSHA Dust Regulation, Step

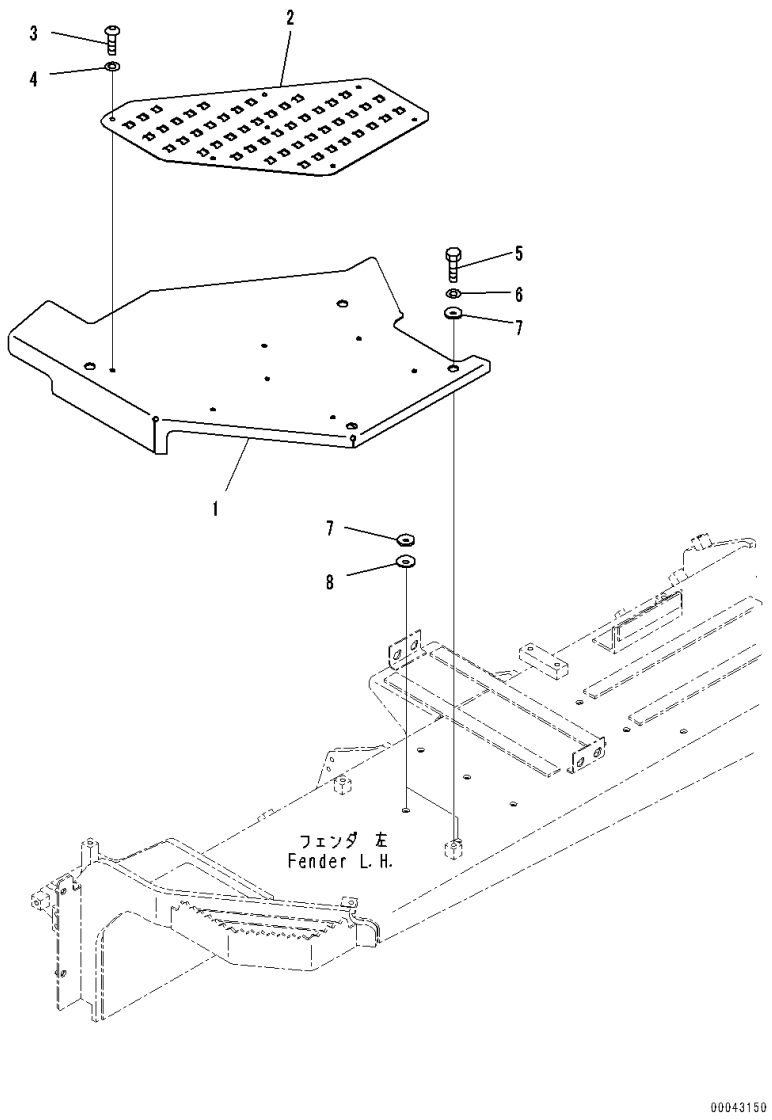

Index	Code	Part Number	Description	Qty	Serial Number
1		17A-54-45311	Cover,LHS	1	81028-
2		17A-54-45331	Plate	1	81028-
3		01245-00816	Screw	7	81028-
4		01643-70823	Washer	7	81028-
5		01010-81230	Bolt	4	81028-
6		175-54-34170	Washer	4	81028-
7		20S-71-11250	Spacer, T=2.3mm	2	81028-
8		21K-46-21190	Plate, T=1.0mm	3	81028-

FIG. M2214-004001 Fender Related Parts, MSHA Dust Regulation, Landfill Specification, Fender Cover,LHS

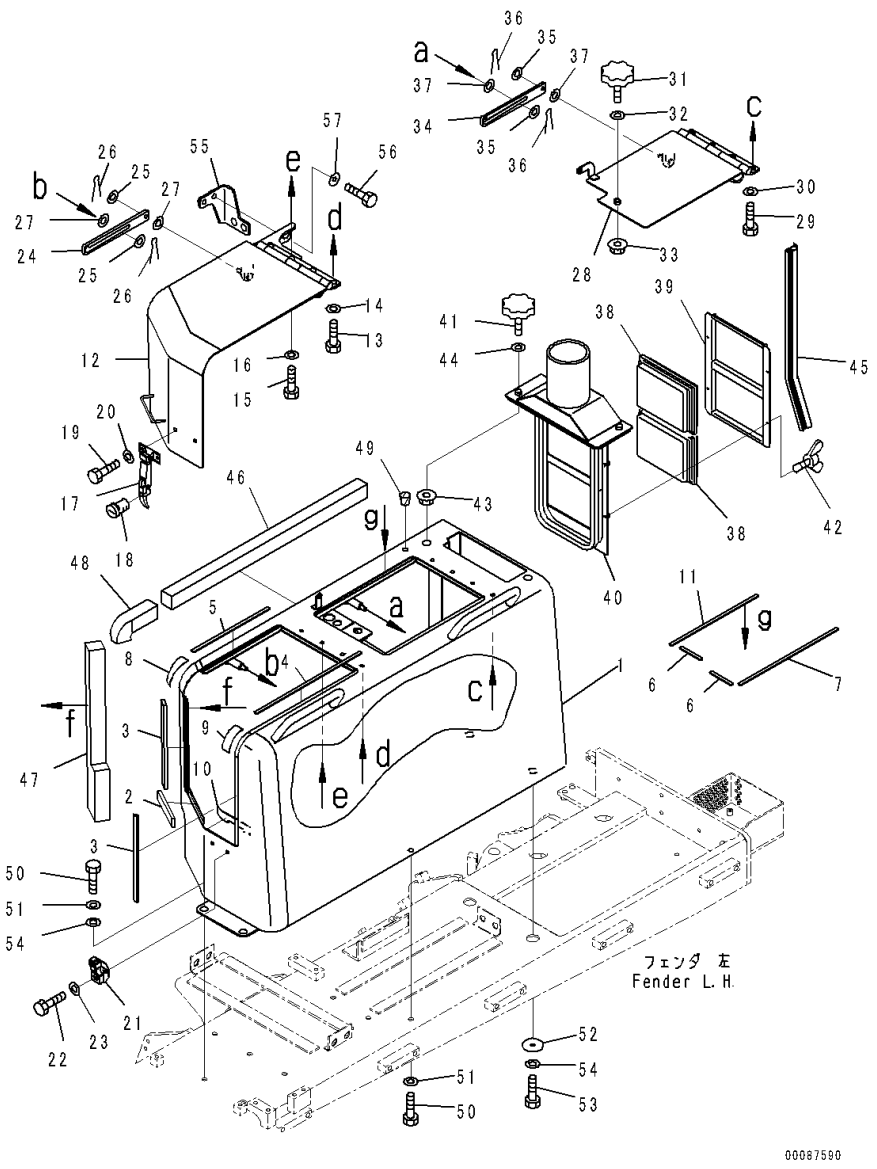

Index	Code	Part Number	Description	Qty	Serial Number
1		17A-54-45813	Cover	1	81028-
2		17A-54-45232	• Seal,Bonded	1	81028-
3		17A-54-45241	• Seal,Bonded	2	81028-
4		17A-54-45251	• Seal,Bonded	1	81028-
5		17A-54-45261	• Seal,Bonded	1	81028-
6		17A-54-45271	• Seal,Bonded	2	81028-
7		17A-54-45281	• Seal,Bonded	1	81028-
8		17A-54-45380	• Rubber,Bonded	1	81028-
9		17A-54-45390	• Rubber,Bonded	1	81028-
10		17A-54-45411	• Rubber,Bonded	1	81028-
11		17A-54-45840	• Seal,Bonded	1	81028-
12		17A-54-45851	Cover	1	81028-
13		01010-81230	Bolt	2	81028-
14		01643-31232	Washer	2	81028-
15		01010-81235	Bolt	2	81028-
16		01643-31232	Washer	2	81028-
17		205-54-76260	Catcher	1	81028-
18		205-54-76280	• Rotor Assembly	1	81028-
19		01010-80820	Bolt	2	81028-
20		01643-30823	Washer	2	81028-
21		205-54-67660	Support	1	81028-
22		01010-80820	Bolt	2	81028-
23		01643-30823	Washer	2	81028-
24		17A-54-45151	Plate	1	81028-
25		01640-21123	Washer, Flat	2	81028-
26		04050-13020	Pin, Cotter	2	81028-
27		17A-54-45440	Washer	2	81028-
28		17A-54-45831	Cover	1	81028-
29		01010-81230	Bolt	4	81028-
30		01643-31232	Washer	4	81028-
31		195-54-68760	Knob	1	81028-
32		01640-21016	Washer	1	81028-
33		01594-01008	Nut	1	81028-
34		17A-54-45151	Plate	1	81028-
35		01640-21123	Washer, Flat	2	81028-
36		04050-13020	Pin, Cotter	2	81028-
37		17A-54-45440	Washer	2	81028-
		17A-911-4901	Filter Assembly	1	81028-
38		198-911-9670	• Filter	2	81028-
39		17A-911-4220	• Bracket	1	81028-

FIG. M2214-004001 Fender Related Parts, MSHA Dust Regulation, Landfill Specification, Fender Cover,LHS

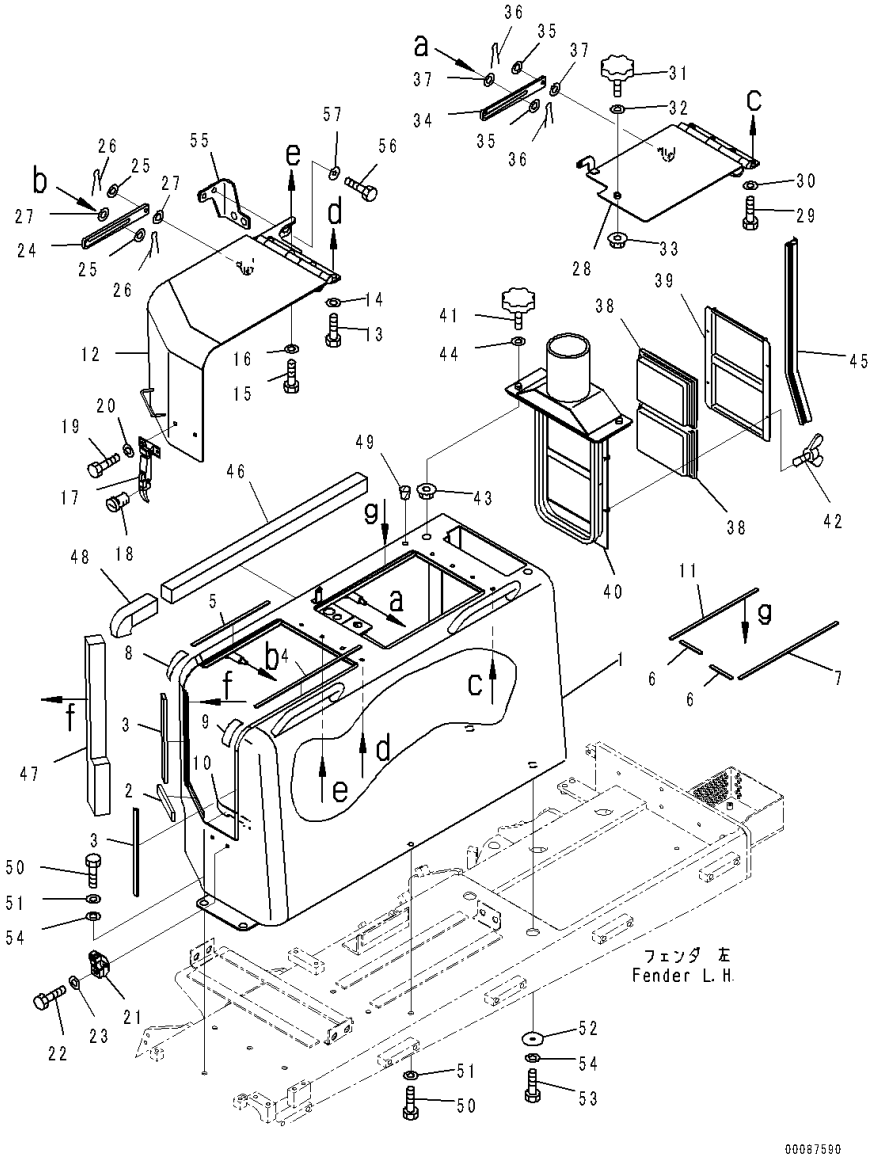

Index	Code	Part Number	Description	Qty	Serial Number
40		17A-911-4911	• Bracket	1	81028-
41		195-54-68760	• Knob	2	81028-
42		01434-00412	• Bolt, Wing	4	81028-
43		01594-01008	• Nut	2	81028-
44		01640-21016	• Washer	2	81028-
45		17A-54-28530	Trim	1	81028-
46		17A-54-47810	Seal	1	81028-
47		17A-54-47821	Seal	1	81028-
48		17A-54-47831	Seal	1	81028-
49		07049-01215	Plug	1	81028-
50		01010-81230	Bolt	3	81028-
51		01643-31232	Washer	3	81028-
52		195-56-11210	Plate	2	81028-
53		01010-81230	Bolt	2	81028-
54		175-54-34170	Washer	2	81028-
55		17A-54-45171	Bracket	1	81028-
56		01010-81230	Bolt	4	81028-
57		175-54-34170	Washer	4	81028-

FIG. M2214-004002 Fender Related Parts, MSHA Dust Regulation, Landfill Specification, Step

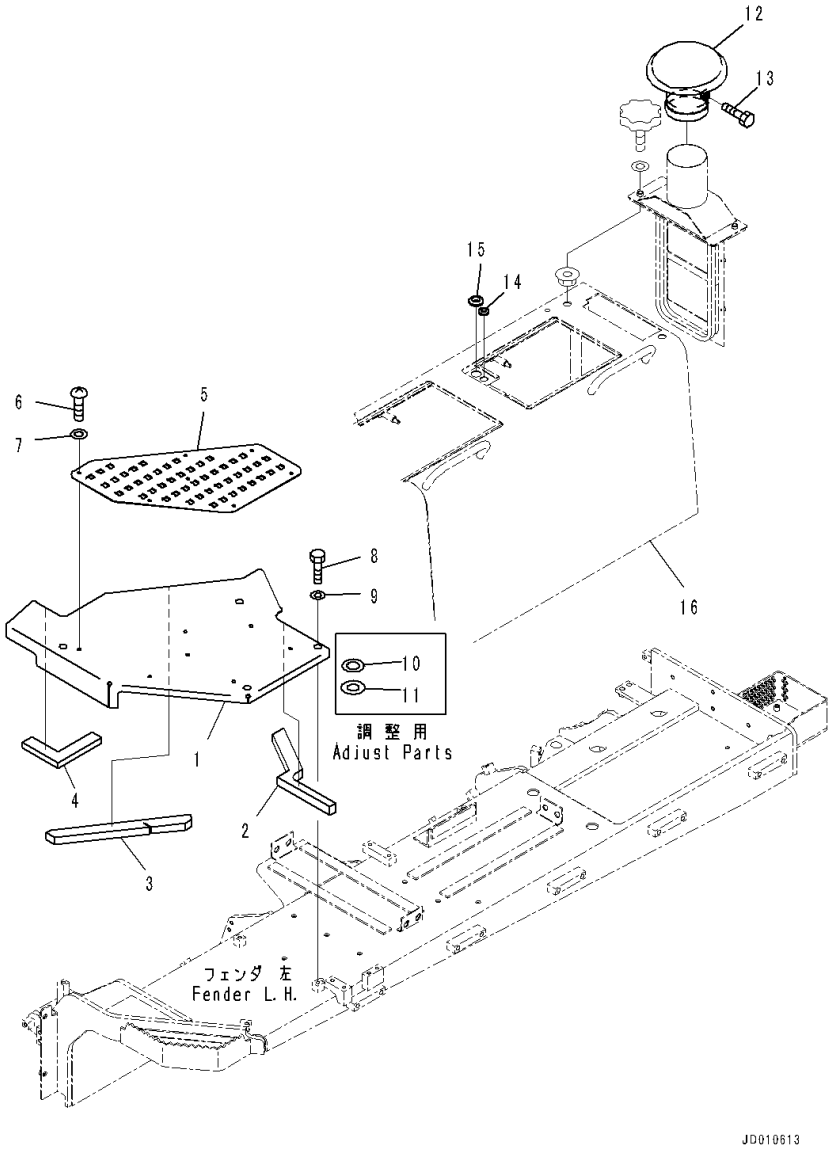

Index	Code	Part Number	Description	Qty	Serial Number
1		17A-54-47710	Cover,LHS	1	81028-
2		17A-54-47730	• Seal	1	81028-
3		17A-54-47750	• Seal	1	81028-
4		17A-54-47960	• Seal	1	81028-
5		17A-54-45331	Plate	1	81028-
6		01245-00816	Screw	7	81028-
7		01643-70823	Washer	7	81028-
8		01010-81230	Bolt	4	81028-
9		175-54-34170	Washer	4	81028-
10		20S-71-11250	Spacer, T=2.3mm	2	81028-
11		21K-46-21190	Plate, T=1.0mm	3	81028-
		124-911-1430	Hood	1	81028-
12		600-181-2430	• Cap	1	81028-
13		01016-51040	• • Bolt	1	81028-
14		08037-01610	Grommet	1	81028-
15		08037-02512	Grommet	1	81028-
16		(17A-54-45813)	Cover(Refer to Page 854)		-

FIG. M2214-004003 Fender Related Parts, MSHA Dust Regulation, Landfill Specification, Fender Cover,RHS

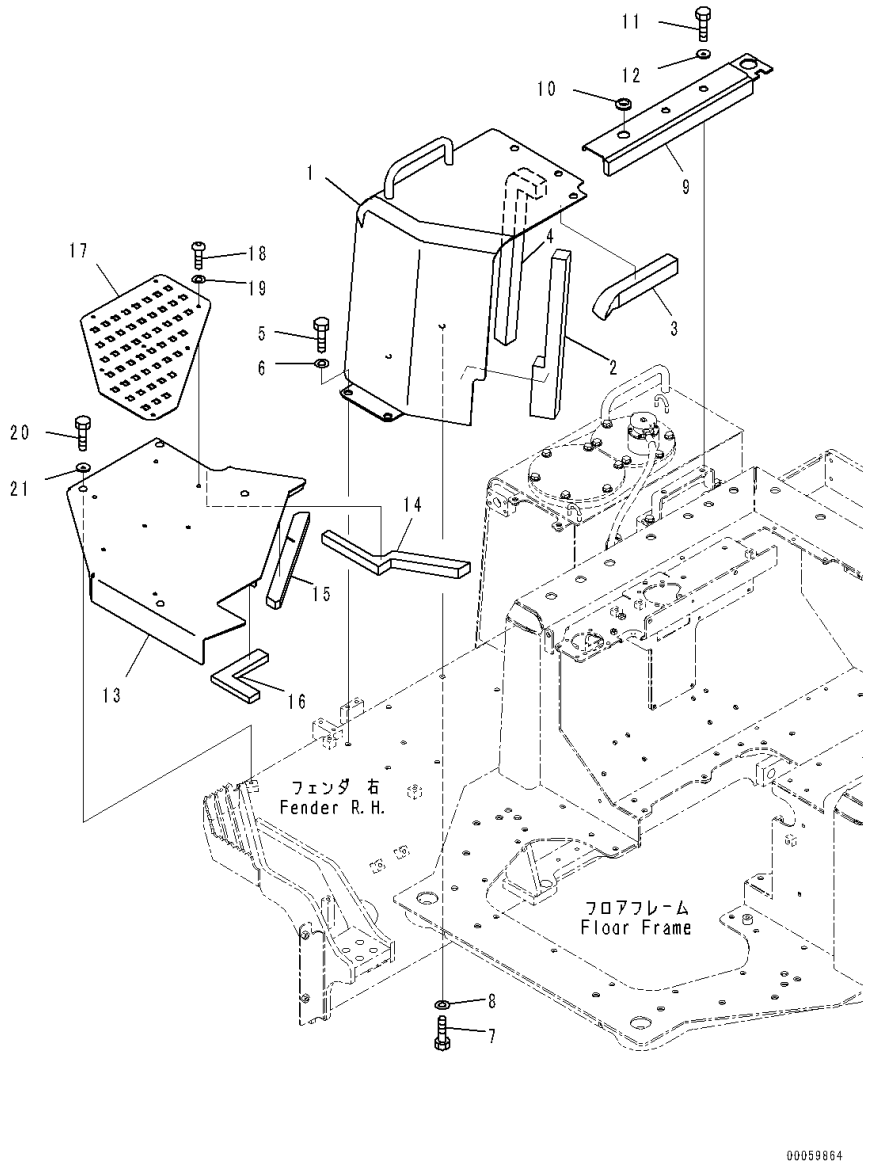

Index	Code	Part Number	Description	Qty	Serial Number
1		17A-54-47850	Cover	1	81028-
2		17A-54-47860	• Seal	1	81028-
3		17A-54-47871	• Seal	1	81028-
4		17A-54-47881	• Seal	1	81028-
5		01010-81230	Bolt	5	81028-
6		175-54-34170	Washer	5	81028-
7		01010-81230	Bolt	2	81028-
8		01643-31232	Washer	2	81028-
9		17A-54-47910	Cover	1	81028-
10		09415-02512	Cap	1	81028-
11		01010-81230	Bolt	2	81028-
12		175-54-34170	Washer	2	81028-
13		17A-54-47720	Cover,RHS	1	81028-
14		17A-54-47740	• Seal	1	81028-
15		17A-54-47760	• Seal	1	81028-
16		17A-54-47780	• Seal	1	81028-
17		17A-54-45341	Plate	1	81028-
18		01245-00816	Screw	7	81028-
19		01643-70823	Washer	7	81028-
20		01010-81230	Bolt	4	81028-
21		175-54-34170	Washer	4	81028-

FIG. M2214-004004 Fender Related Parts, MSHA Dust Regulation, Landfill Specification, Tank Related Parts

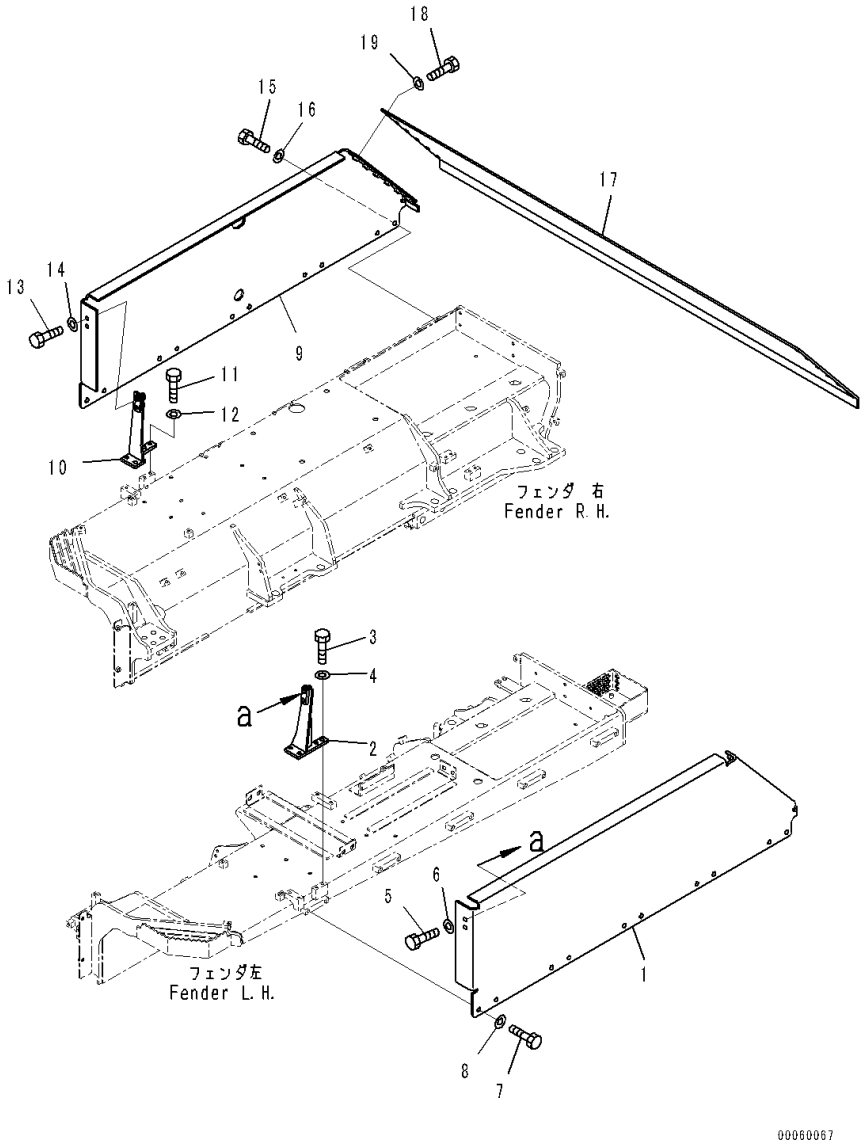

Index	Code	Part Number	Description	Qty	Serial Number
1		17A-54-49240	Cover	1	81028-
2		17A-54-49260	Bracket	1	81028-
3		01010-81245	Bolt	2	81028-
4		01643-31232	Washer	2	81028-
5		01010-81230	Bolt	4	81028-
6		01643-31232	Washer	4	81028-
7		01010-81640	Bolt	10	81028-
8		01643-31645	Washer	10	81028-
9		17A-54-49250	Cover	1	81028-
10		17A-54-49270	Bracket	1	81028-
11		01010-81245	Bolt	2	81028-
12		01643-31232	Washer	2	81028-
13		01010-81230	Bolt	4	81028-
14		01643-31232	Washer	4	81028-
15		01010-81640	Bolt	10	81028-
16		01643-31645	Washer	10	81028-
17		17A-54-49230	Cover	1	81028-
18		01010-81640	Bolt	12	81028-
19		01643-31645	Washer	12	81028-

FIG. M2214-005001 Fender Related Parts, With Air Intake For Air Conditioner, Fender Cover,LHS

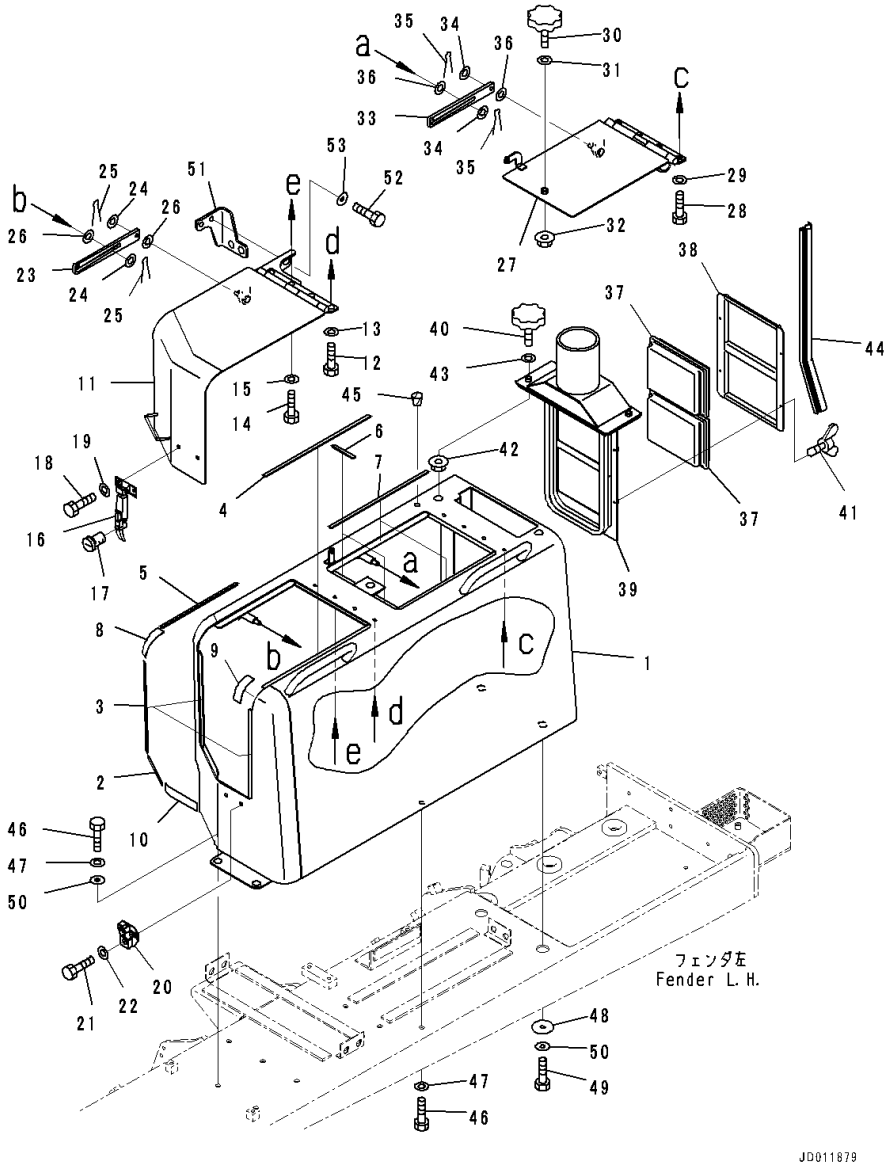

Index	Code	Part Number	Description	Qty	Serial Number
1		17A-54-45432	Cover	1	81028-
2		17A-54-45232	• Seal	1	81028-
3		17A-54-45241	• Seal	2	81028-
4		17A-54-45251	• Seal	1	81028-
5		17A-54-45261	• Seal	1	81028-
6		17A-54-45271	• Seal	2	81028-
7		17A-54-45281	• Seal	2	81028-
8		17A-54-45380	• Rubber	1	81028-
9		17A-54-45390	• Rubber	1	81028-
10		17A-54-45411	• Rubber	1	81028-
11		17A-54-45124	Cover	1	81028-
12		01010-81230	Bolt	2	81028-
13		01643-31232	Washer	2	81028-
14		01010-81235	Bolt	2	81028-
15		01643-31232	Washer	2	81028-
16		205-54-76260	Catcher	1	81028-
17		205-54-76280	• Rotor Assembly	1	81028-
18		01010-80820	Bolt	2	81028-
19		01643-30823	Washer	2	81028-
20		205-54-67660	Support	1	81028-
21		01010-80820	Bolt	2	81028-
22		01643-30823	Washer	2	81028-
23		17A-54-45151	Plate	1	81028-
24		01640-21123	Washer, Flat	2	81028-
25		04050-13020	Pin, Cotter	2	81028-
26		17A-54-45440	Washer	2	81028-
27		17A-54-45133	Cover	1	81028-
28		01010-81230	Bolt	4	81028-
29		01643-31232	Washer	4	81028-
30		195-54-68760	Knob	1	81028-
31		01640-21016	Washer	1	81028-
32		01594-01008	Nut	1	81028-
33		17A-54-45151	Plate	1	81028-
34		01640-21123	Washer, Flat	2	81028-
35		04050-13020	Pin, Cotter	2	81028-
36		17A-54-45440	Washer	2	81028-
		17A-911-4700	Filter Assembly	1	81028-
37		14X-911-7750	• Filter	2	81028-
38		17A-911-4220	• Bracket	1	81028-
39		17A-911-4911	• Bracket	1	81028-

FIG. M2214-005001 Fender Related Parts, With Air Intake For Air Conditioner, Fender Cover,LHS

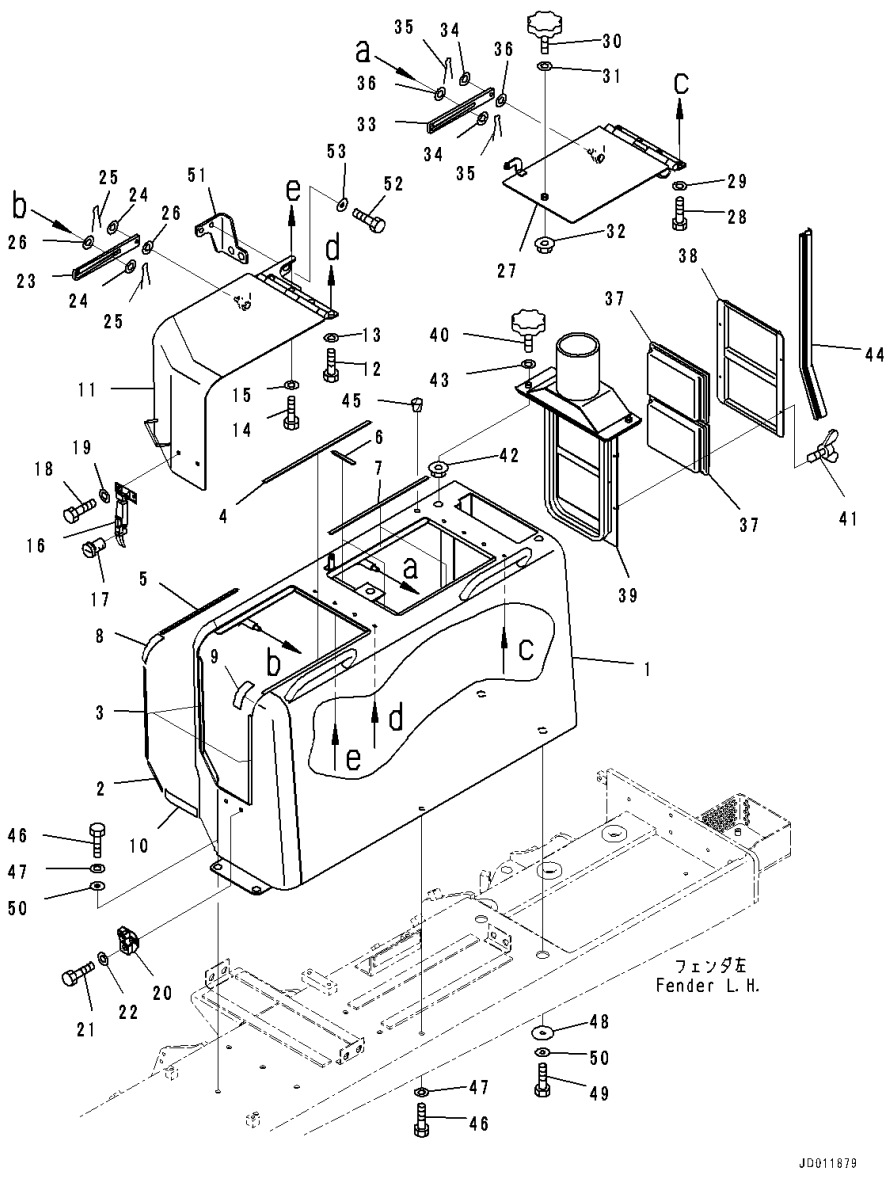

Index	Code	Part Number	Description	Qty	Serial Number
40		195-54-68760	• Knob	2	81028-
41		01434-00412	• Bolt, Wing	4	81028-
42		01594-01008	• Nut	2	81028-
43		01640-21016	• Washer	2	81028-
44		17A-54-28530	Trim	1	81028-
45		07049-01215	Plug	1	81028-
46		01010-81230	Bolt	3	81028-
47		01643-31232	Washer	3	81028-
48		195-56-11210	Plate	2	81028-
49		01010-81230	Bolt	2	81028-
50		175-54-34170	Washer	2	81028-
51		17A-54-45171	Bracket	1	81028-
52		01010-81230	Bolt	4	81028-
53		175-54-34170	Washer	4	81028-

FIG. M2214-005002 Fender Related Parts, With Air Intake For Air Conditioner, Step

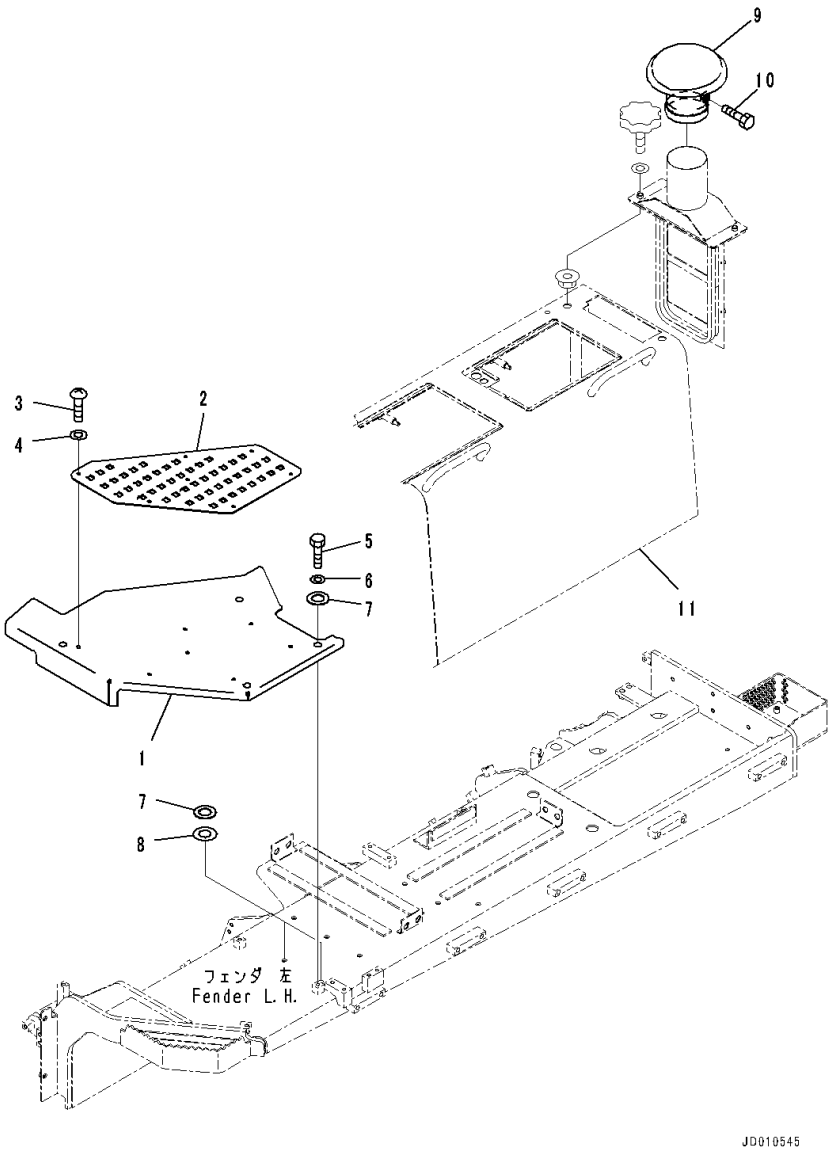

Index	Code	Part Number	Description	Qty	Serial Number
1		17A-54-45311	Cover,LHS	1	81028-
2		17A-54-45331	Plate	1	81028-
3		01245-00816	Screw	7	81028-
4		01643-70823	Washer	7	81028-
5		01010-81230	Bolt	4	81028-
6		175-54-34170	Washer	4	81028-
7		20S-71-11250	Spacer, T=2.3mm	2	81028-
8		21K-46-21190	Plate, T=1.0mm	3	81028-
		124-911-1430	Hood	1	81028-
9		600-181-2430	• Cap	1	81028-
10		01016-51040	• • Bolt	1	81028-
11		(17A-54-45432)	Cover(Refer to Page 859)		-

FIG. M2240-001001A Rear Cover

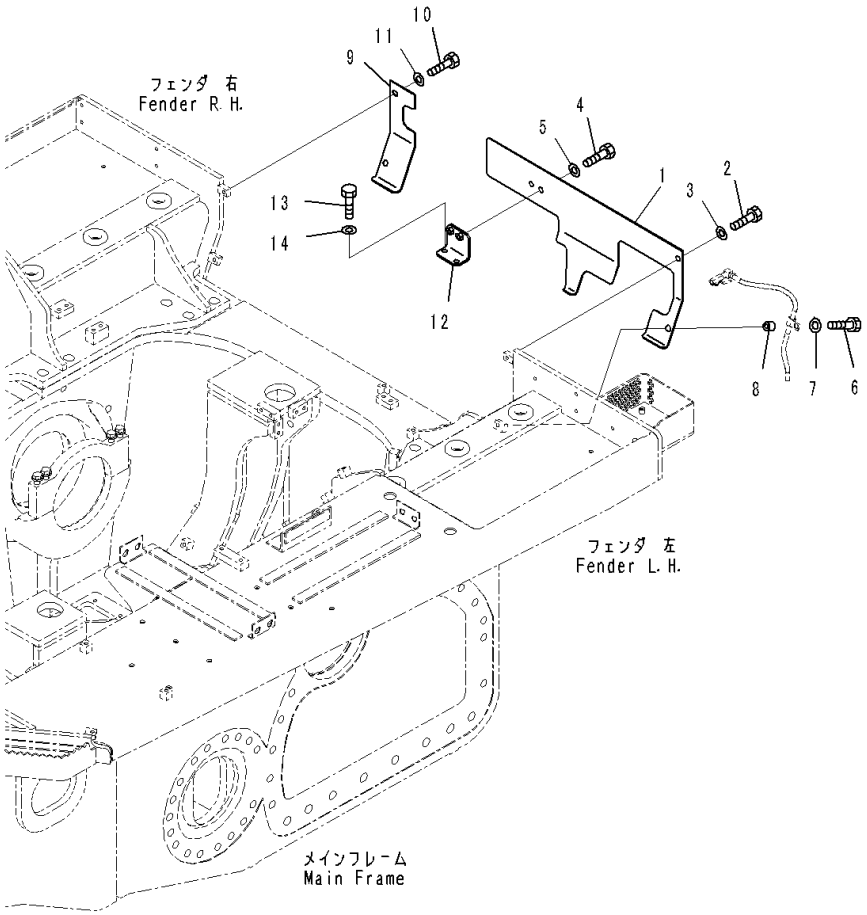

Index	Code	Part Number	Description	Qty	Serial Number
1		17A-54-44211	Cover	1	81028-
2		01010-81225	Bolt	1	81279-
3		01643-31232	Washer	1	81279-
4		01010-81235	Bolt	2	81279-
5		01643-31232	Washer	2	81279-
6		01010-81250	Bolt	1	81028-
7		01643-31232	Washer	1	81028-
8		195-33-11220	Spacer	1	81028-
9		17A-54-44220	Cover	1	81028-
10		01010-81225	Bolt	2	81028-
11		01643-31232	Washer	2	81028-
12		17A-54-44231	Bracket	1	81028-
13		01010-81225	Bolt	2	81028-
14		01643-31232	Washer	2	81028-

FIG. M2240-002001 Rear Cover, Landfill Specification

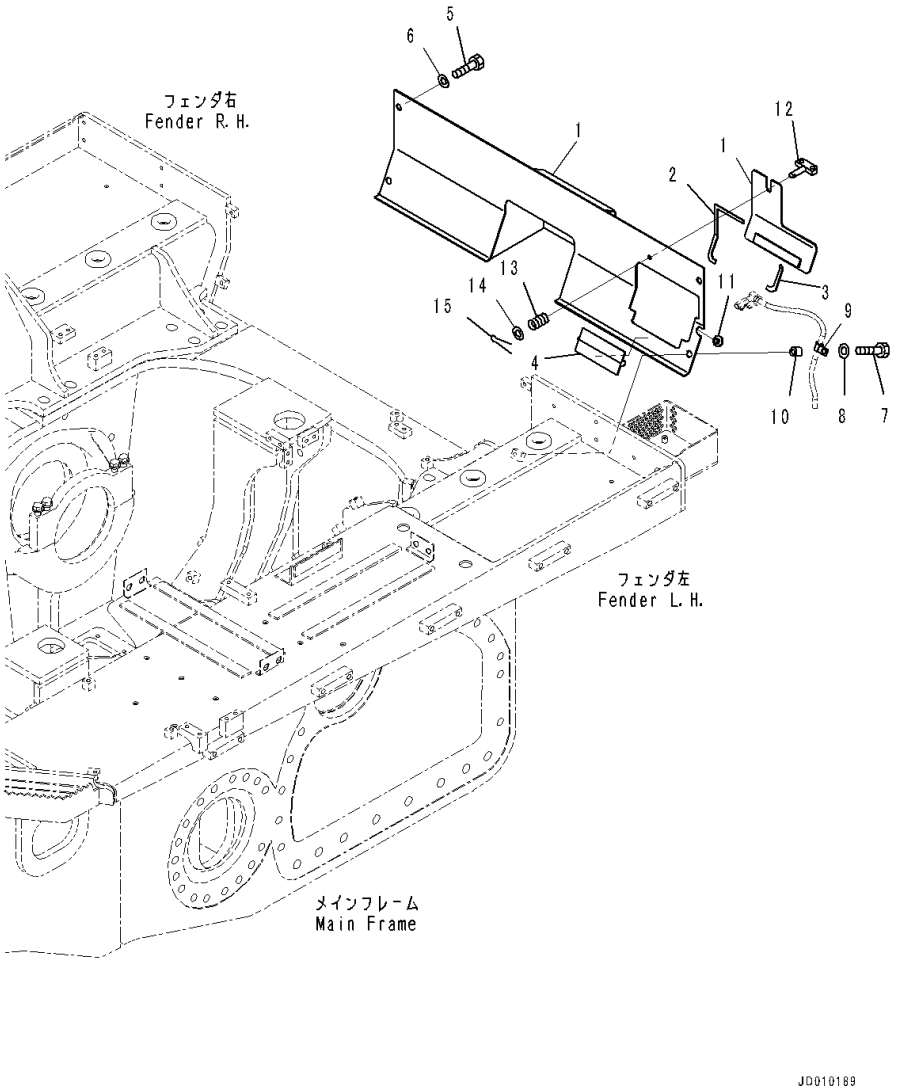

Index	Code	Part Number	Description	Qty	Serial Number
1		17A-54-49311	Cover	1	81028-
2		17A-54-49320	• Seal,Bonded	1	81028-
3		17A-54-49331	• Seal,Bonded	1	81028-
4		09457-00165	• Hinge,Bonded	1	81028-
5		01010-81225	Bolt	3	81028-
6		01643-31232	Washer	3	81028-
7		01010-81230	Bolt	1	81028-
8		01643-31232	Washer	1	81028-
9		04434-52112	Clip	1	81028-
10		198-43-15310	Collar	1	81028-
11		08037-01610	Grommet	1	81028-
12		09459-11033	Lock	1	81028-
13		09459-01614	Spring	1	81028-
14		01642-21016	Washer	1	81028-
15		04050-03015	Pin, Cotter	1	81028-

FIG. M2240-003001A Rear Cover, Without Rear Work Equipment

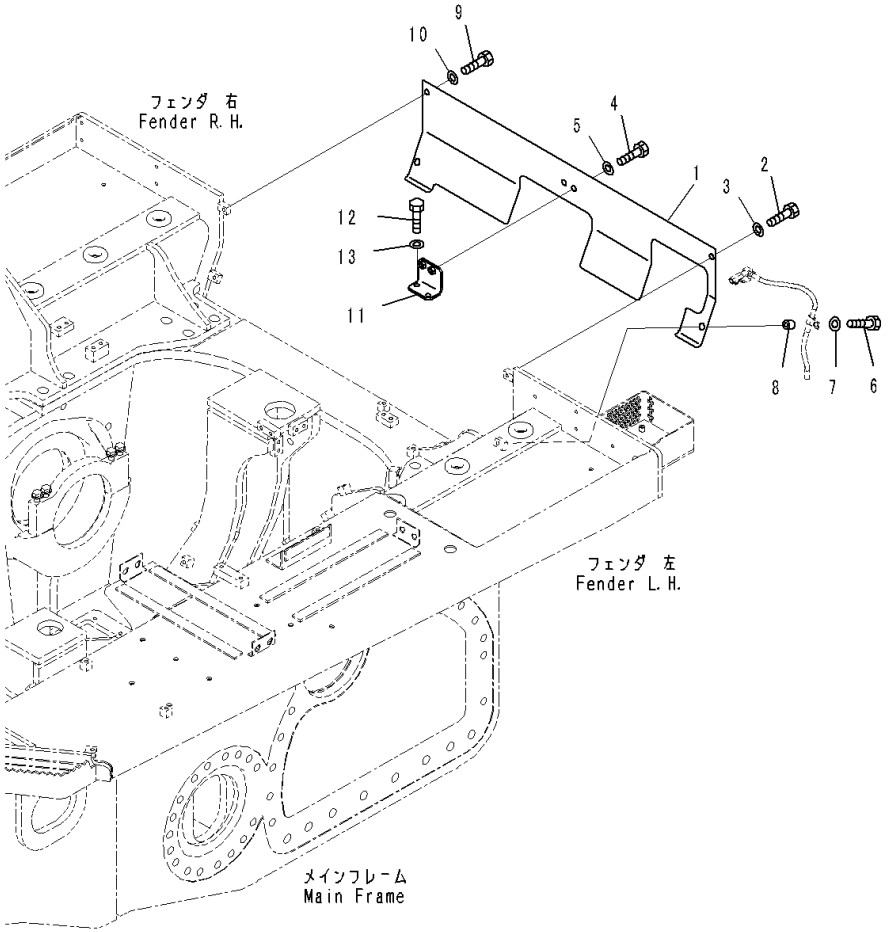

Index	Code	Part Number	Description	Qty	Serial Number
1		17A-54-44290	Cover	1	81028-
2		01010-81225	Bolt	1	81279-
3		01643-31232	Washer	1	81279-
4		01010-81235	Bolt	2	81279-
5		01643-31232	Washer	2	81279-
6		01010-81250	Bolt	1	81028-
7		01643-31232	Washer	1	81028-
8		195-33-11220	Spacer	1	81028-
9		01010-81225	Bolt	2	81028-
10		01643-31232	Washer	2	81028-
11		17A-54-44231	Bracket	1	81028-
12		01010-81225	Bolt	2	81028-
13		01643-31232	Washer	2	81028-

FIG. M2810-001001 Under Guard

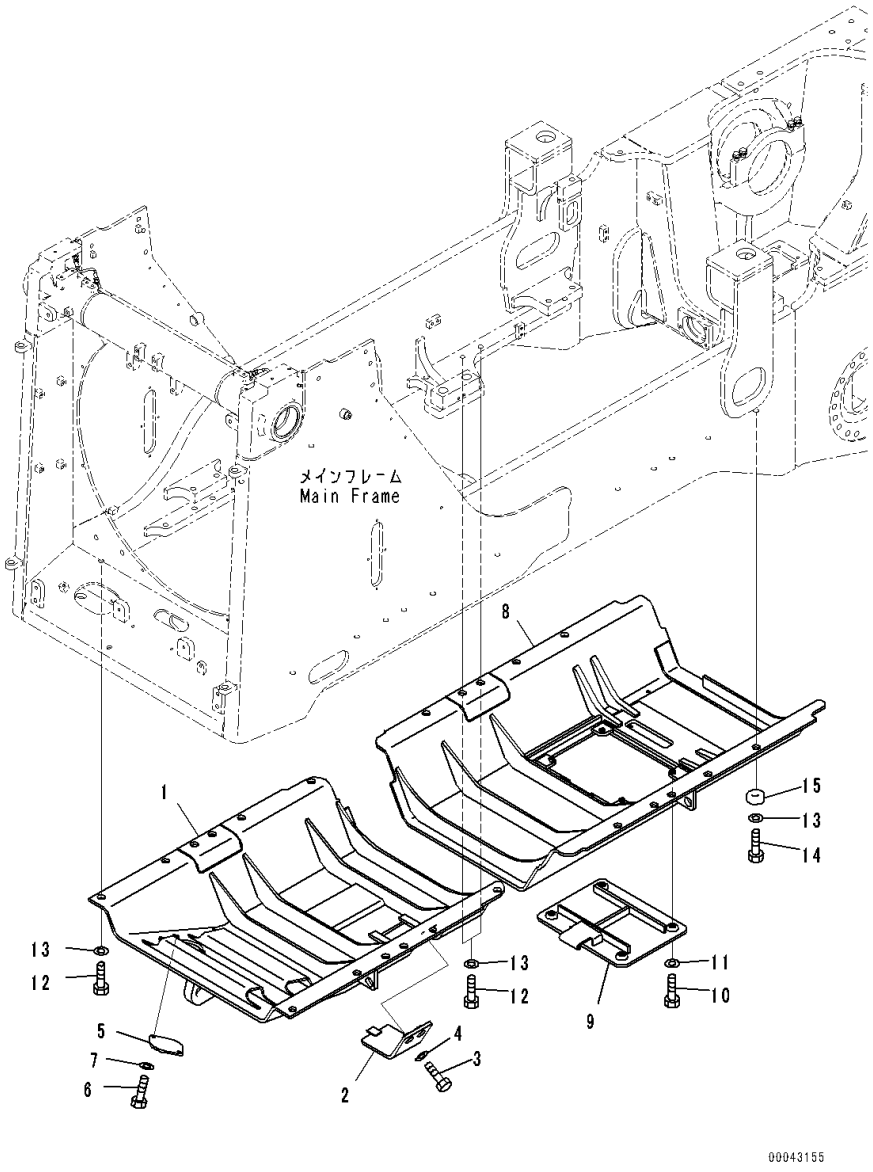

Index	Code	Part Number	Description	Qty	Serial Number
1		17A-54-48623	Cover	1	81028-
2		17A-54-48640	Cover	1	81028-
3		01010-81230	Bolt	2	81028-
4		01643-31232	Washer	2	81028-
5		17A-30-41380	Cover	1	81028-
6		01010-81230	Bolt	2	81028-
7		01643-31232	Washer	2	81028-
8		17A-54-48611	Cover	1	81028-
9		17A-54-15150	Cover	1	81028-
10		01010-81235	Bolt	4	81028-
11		01643-31232	Washer	4	81028-
12		01010-82450	Bolt	14	81028-
13		01643-32460	Washer	22	81028-
14		01010-82475	Bolt	8	81028-
15		17A-54-48650	Plate	8	81028-

FIG. M2810-002001 Under Guard, Landfill Specification

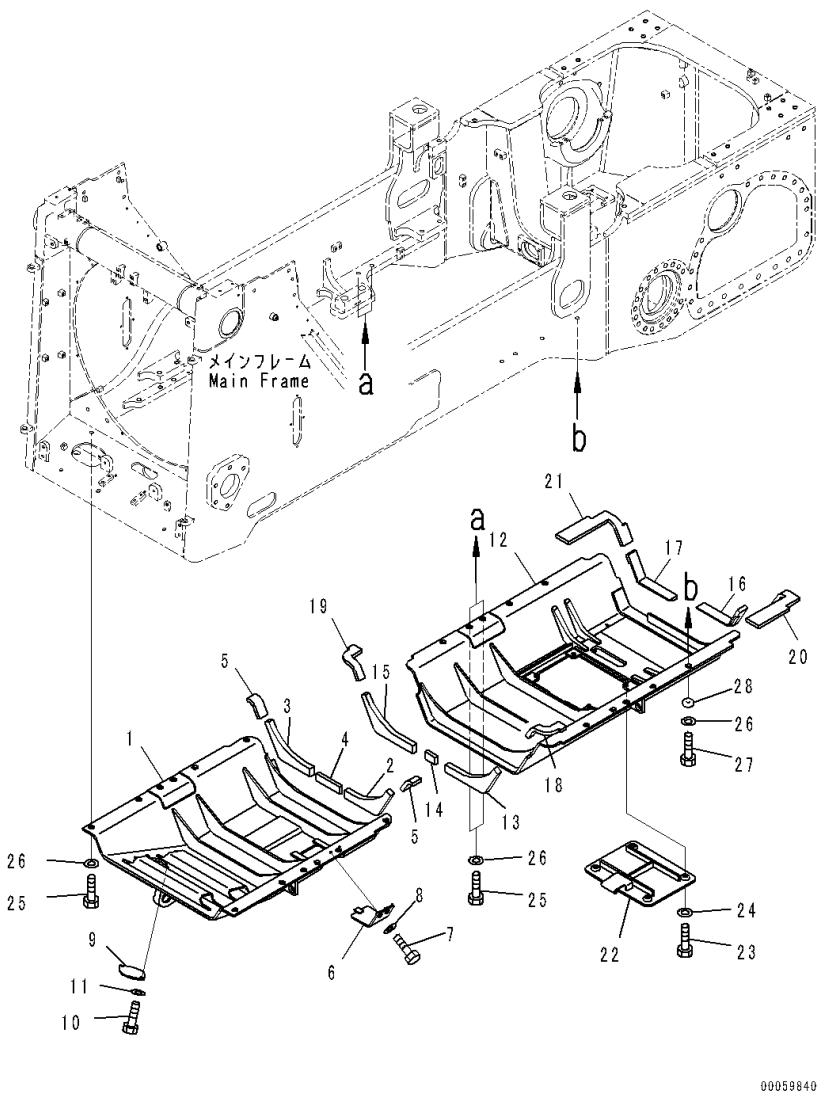

Index	Code	Part Number	Description	Qty	Serial Number
1		17A-54-48820	Cover	1	81028-
2		17A-54-48880	• Seal,Bonded	1	81028-
3		17A-54-48890	• Seal,Bonded	1	81028-
4		17A-54-48910	• Seal,Bonded	1	81028-
5		17A-54-48921	• Seal,Bonded	2	81028-
6		17A-54-48640	Cover	1	81028-
7		01010-81235	Bolt	2	81028-
8		01643-31232	Washer	2	81028-
9		205-30-71181	Cover	1	81028-
10		01010-81235	Bolt	2	81028-
11		01643-31232	Washer	2	81028-
12		17A-54-48810	Cover	1	81028-
13		17A-54-48831	• Seal,Bonded	1	81028-
14		17A-54-48840	• Seal,Bonded	1	81028-
15		17A-54-48851	• Seal,Bonded	1	81028-
16		17A-54-48860	• Seal,Bonded	1	81028-
17		17A-54-48870	• Seal,Bonded	1	81028-
18		17A-54-48941	• Seal,Bonded	1	81028-
19		17A-54-48951	• Seal,Bonded	1	81028-
20		17A-54-48961	• Seal,Bonded	1	81028-
21		17A-54-48971	• Seal,Bonded	1	81028-
22		17A-54-15150	Cover	1	81028-
23		01010-81235	Bolt	4	81028-
24		01643-31232	Washer	4	81028-
25		01010-82450	Bolt	14	81028-
26		01643-32460	Washer	22	81028-
27		01010-82475	Bolt	8	81028-
28		17A-54-48650	Plate	8	81028-

UNDERCARRIAGE

FIG. R0500-001001 Track Shoe Assembly, Single Shoe Grouser, 560mm Width, Sealed & Lubricated Link and Master Link, Rigid Type

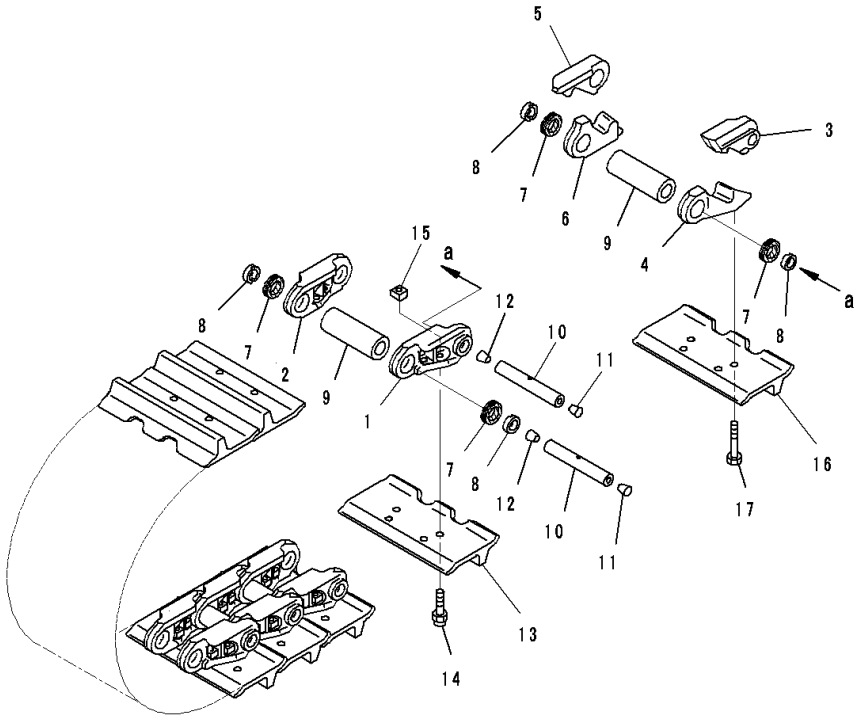

Index	Code	Part Number	Description	Qty	Serial Number
		175-32-02503	Track Shoe Assembly	1	81028-
1		15A-32-77120	• Link,LHS	80	81028-
2		15A-32-77130	• Link,RHS	80	81028-
		175-32-08010	• Link Kit, Master,LHS	2	81028-
3	C1		• • Link, Master	1	81028-
4	C1		• • Link, Master	1	81028-
		175-32-08020	• Link Kit, Master,RHS	2	81028-
5	C1		• • Link, Master	1	81028-
6	C1		• • Link, Master	1	81028-
7		17A-32-21201	• Seal Assembly	164	81028-
8		175-32-81181	• Spacer	164	81028-
9		15A-32-11142	• Bushing	82	81028-
10		175-32-81450	• Pin	82	81028-
11		07059-11830	• Plug, Large	82	81028-
12		07059-20721	• Plug, Small	82	81028-
13		170-32-11115	• Shoe	80	81028-
14		176-32-11210	• Bolt, (Kit : K06)	320	81028-
15		178-32-11220	• Nut, (Kit : K06)	320	81028-
16		170-32-11115	• Shoe	2	81028-
17		175-32-41261	• Bolt, Master Track Shoe	8	81028-

FIG. R0500-018001 Track Shoe Assembly, Single Shoe Grouser, 610mm Width, Sealed & Lubricated Link and Master Link, Rigid Type

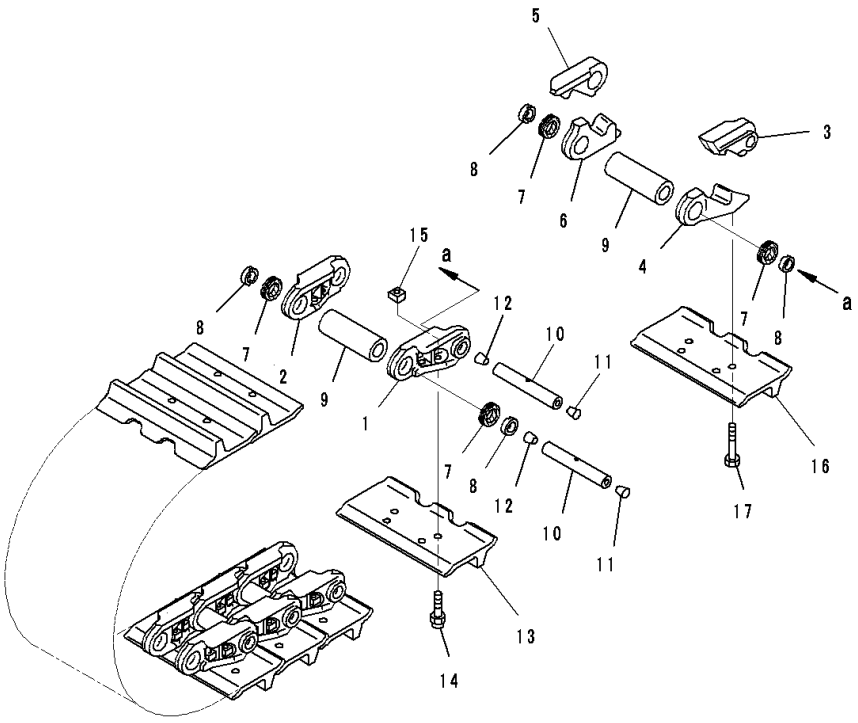

Index	Code	Part Number	Description	Qty	Serial Number
		175-32-02513	Track Shoe Assembly	1	81028-
1		15A-32-77120	• Link	80	81028-
2		15A-32-77130	• Link	80	81028-
		175-32-08010	• Link Kit, Master	2	81028-
3	C1		• • Link, Master	1	81028-
4	C1		• • Link, Master	1	81028-
		175-32-08020	• Link Kit, Master	2	81028-
5	C1		• • Link, Master	1	81028-
6	C1		• • Link, Master	1	81028-
7		17A-32-21201	• Seal Assembly	164	81028-
8		175-32-81181	• Spacer	164	81028-
9		15A-32-11142	• Bushing	82	81028-
10		175-32-81450	• Pin	82	81028-
11		07059-11830	• Plug, Large	82	81028-
12		07059-20721	• Plug, Small	82	81028-
13		175-32-11113	• Track Shoe	80	81028-
14		176-32-11210	• Bolt, (Kit : K06)	320	81028-
15		178-32-11220	• Nut, (Kit : K06)	320	81028-
16		175-32-11113	• Track Shoe	2	81028-
17		175-32-41261	• Bolt, Master Track Shoe	8	81028-

FIG. R0500-019001 Track Shoe Assembly, Single Shoe Grouser, 660mm Wide, Sealed & Lubricated Link and Master Link, Rigid Type

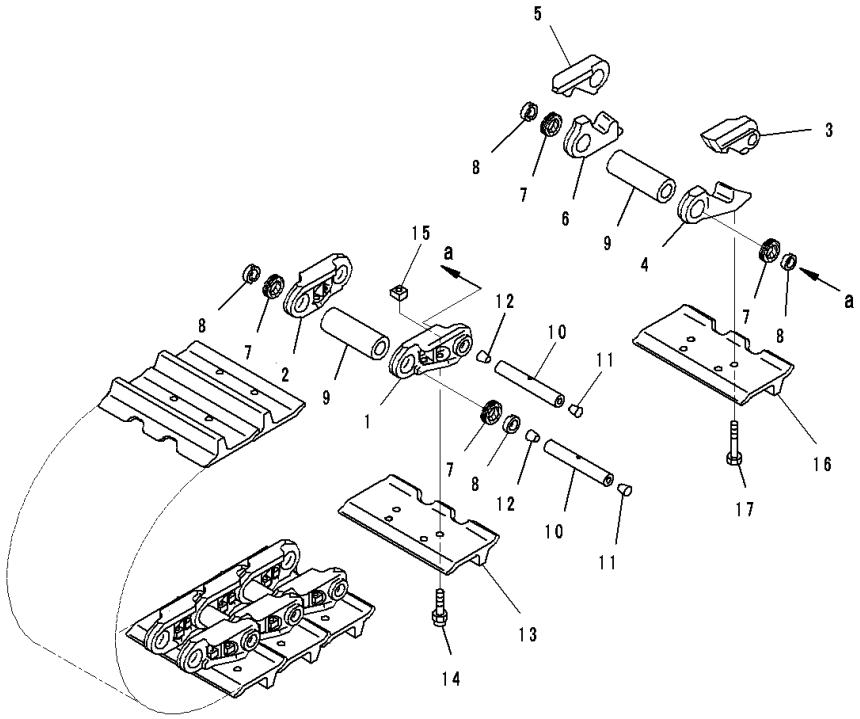

Index	Code	Part Number	Description	Qty	Serial Number
		175-32-02523	Track Shoe Assembly	1	81028-
1		15A-32-77120	• Link	80	81028-
2		15A-32-77130	• Link	80	81028-
		175-32-08010	• Link Kit, Master	2	81028-
3	C1		• • Link, Master	1	81028-
4	C1		• • Link, Master	1	81028-
		175-32-08020	• Link Kit, Master	2	81028-
5	C1		• • Link, Master	1	81028-
6	C1		• • Link, Master	1	81028-
7		17A-32-21201	• Seal Assembly	164	81028-
8		175-32-81181	• Spacer	164	81028-
9		15A-32-11142	• Bushing	82	81028-
10		175-32-81450	• Pin	82	81028-
11		07059-11830	• Plug, Large	82	81028-
12		07059-20721	• Plug, Small	82	81028-
13		170-32-11332	• Track Shoe	80	81028-
14		176-32-11210	• Bolt, (Kit : K06)	320	81028-
15		178-32-11220	• Nut, (Kit : K06)	320	81028-
16		170-32-11332	• Track Shoe	2	81028-
17		175-32-41261	• Bolt, Master Track Shoe	8	81028-

FIG. R0500-020001 Track Shoe Assembly, Single Shoe Grouser, 710mm Width, Sealed & Lubricated Link and Master Link, Rigid Type

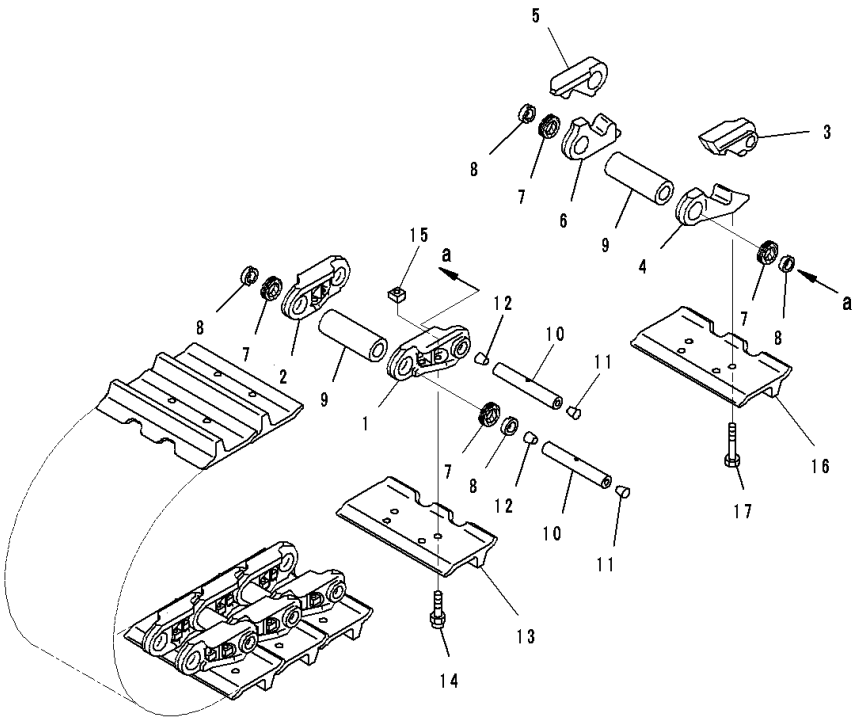

Index	Code	Part Number	Description	Qty	Serial Number
		175-32-02533	Track Shoe Assembly	1	81028-
1		15A-32-77120	• Link	80	81028-
2		15A-32-77130	• Link	80	81028-
		175-32-08010	• Link Kit, Master	2	81028-
3	C1		• • Link, Master	1	81028-
4	C1		• • Link, Master	1	81028-
		175-32-08020	• Link Kit, Master	2	81028-
5	C1		• • Link, Master	1	81028-
6	C1		• • Link, Master	1	81028-
7		17A-32-21201	• Seal Assembly	164	81028-
8		175-32-81181	• Spacer	164	81028-
9		15A-32-11142	• Bushing	82	81028-
10		175-32-81450	• Pin	82	81028-
11		07059-11830	• Plug, Large	82	81028-
12		07059-20721	• Plug, Small	82	81028-
13		175-32-11132	• Track Shoe	80	81028-
14		176-32-11210	• Bolt, (Kit : K06)	320	81028-
15		178-32-11220	• Nut, (Kit : K06)	320	81028-
16		175-32-11132	• Track Shoe	2	81028-
17		175-32-41261	• Bolt, Master Track Shoe	8	81028-

FIG. R0500-003001 Track Shoe Assembly, Heavy Duty, 560mm Width, Sealed & Lubricated Link and Master Link, Boggy Type

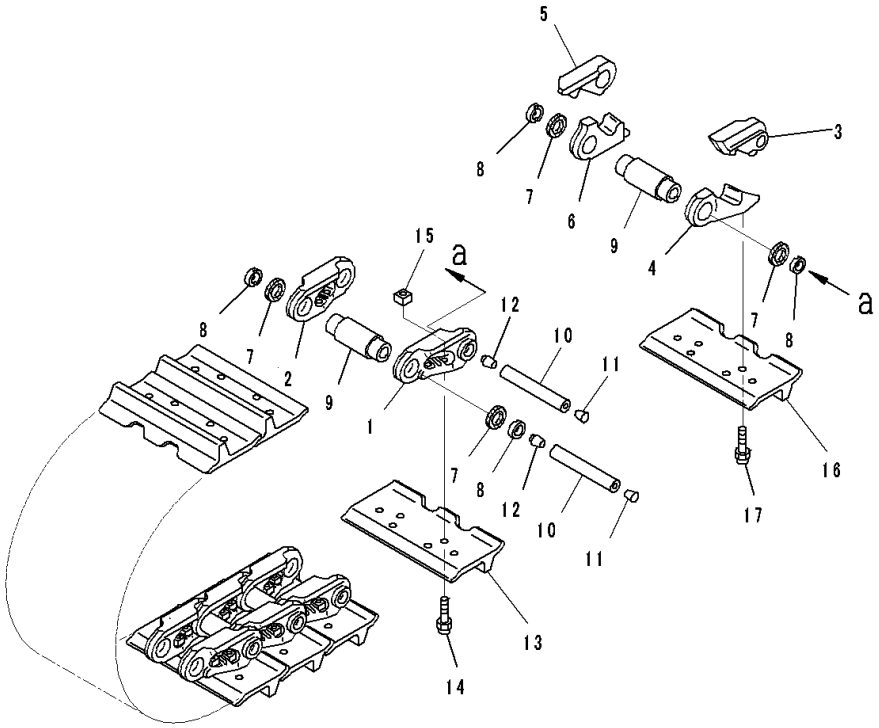

Index	Code	Part Number	Description	Qty	Serial Number
		17A-32-01090	Track Shoe Assembly	1	81028-
1		15A-32-77120	• Link,LHS	82	81028-
2		15A-32-77130	• Link,RHS	82	81028-
		175-32-08010	• Link Kit, Master,LHS	2	81028-
3	C1		• • Link, Master	1	81028-
4	C1		• • Link, Master	1	81028-
		175-32-08020	• Link Kit, Master,RHS	2	81028-
5	C1		• • Link, Master	1	81028-
6	C1		• • Link, Master	1	81028-
7		17A-32-21201	• Seal Assembly	168	81028-
8		175-32-81181	• Spacer	168	81028-
9		15A-32-11142	• Bushing	84	81028-
10		175-32-81450	• Pin	84	81028-
11		07059-11830	• Plug, Large	84	81028-
12		07059-20721	• Plug, Small	84	81028-
13		175-32-31313	• Track Shoe	82	81028-
14		176-32-11210	• Bolt, (Kit : K06)	328	81028-
15		178-32-11220	• Nut, (Kit : K06)	328	81028-
16		175-32-31313	• Track Shoe	2	81028-
17		175-32-41261	• Bolt, Master Track Shoe	8	81028-

FIG. R0500-004001 Track Shoe Assembly, Single Shoe Grouser, 610mm Width, Sealed & Lubricated Link and Master Link, 84-SET, Boggy Type

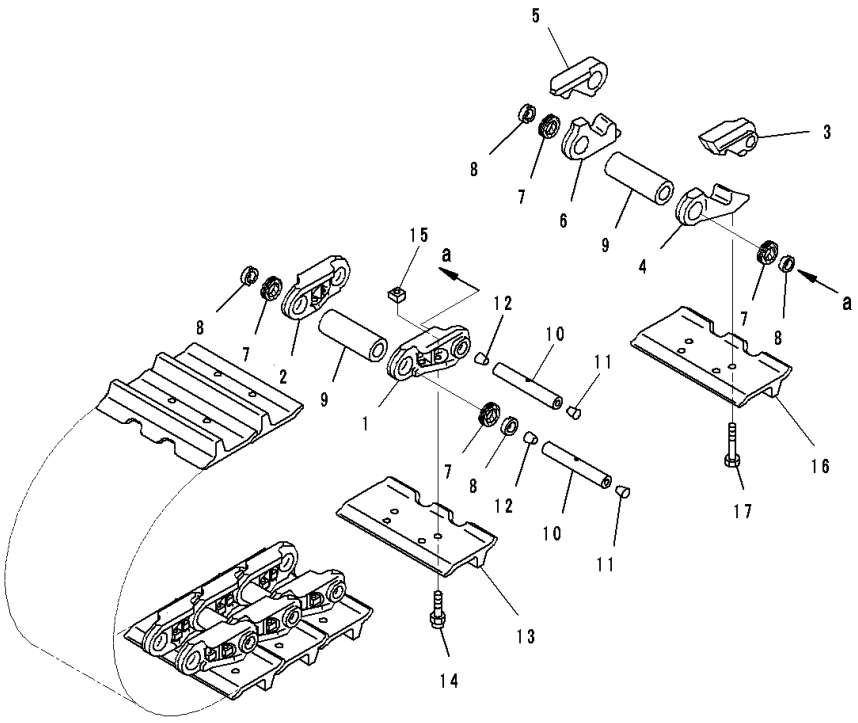

Index	Code	Part Number	Description	Qty	Serial Number
		17A-32-01060	Track Shoe Assembly	1	81028-
1		15A-32-77120	• Link,LHS	82	81028-
2		15A-32-77130	• Link,RHS	82	81028-
		175-32-08010	• Link Kit, Master,LHS	2	81028-
3	C1		• • Link, Master	1	81028-
4	C1		• • Link, Master	1	81028-
		175-32-08020	• Link Kit, Master,RHS	2	81028-
5	C1		• • Link, Master	1	81028-
6	C1		• • Link, Master	1	81028-
7		17A-32-21201	• Seal Assembly	168	81028-
8		175-32-81181	• Spacer	168	81028-
9		15A-32-11142	• Bushing	84	81028-
10		175-32-81450	• Pin	84	81028-
11		07059-11830	• Plug, Large	84	81028-
12		07059-20721	• Plug, Small	84	81028-
13		175-32-11113	• Track Shoe	82	81028-
14		176-32-11210	• Bolt, (Kit : K06)	328	81028-
15		178-32-11220	• Nut, (Kit : K06)	328	81028-
16		175-32-11113	• Track Shoe	2	81028-
17		175-32-41261	• Bolt, Master Track Shoe	8	81028-

FIG. R0500-005001 Track Shoe Assembly, Single Shoe Grouser, 560mm Width, Sealed & Lubricated Link and Master Link, 84-SET, Boggy Type

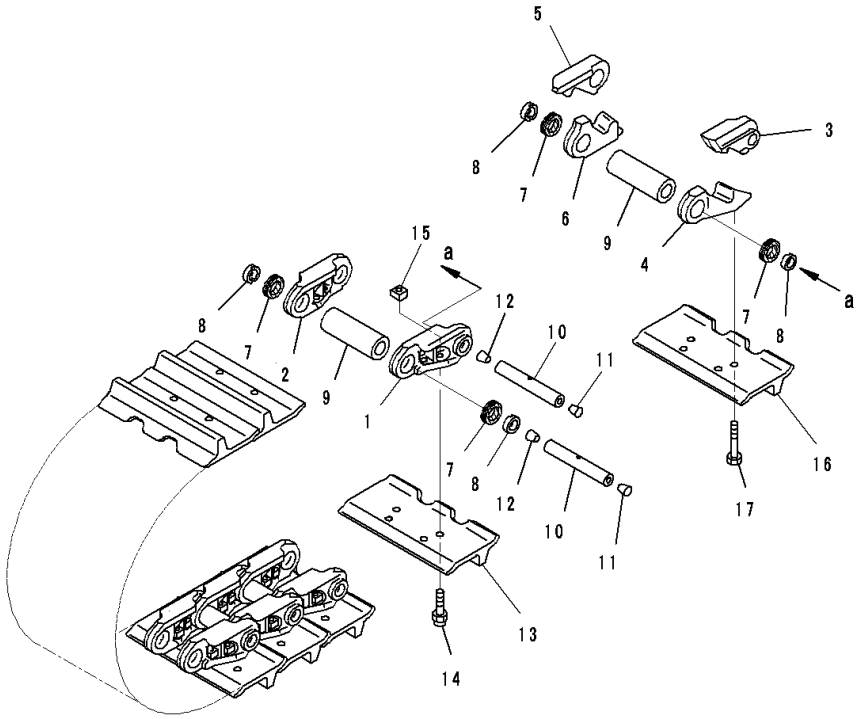

Index	Code	Part Number	Description	Qty	Serial Number
		17A-32-01050	Track Shoe Assembly	1	81028-
1		15A-32-77120	• Link,LHS	82	81028-
2		15A-32-77130	• Link,RHS	82	81028-
		175-32-08010	• Link Kit, Master,LHS	2	81028-
3	C1		• • Link, Master	1	81028-
4	C1		• • Link, Master	1	81028-
		175-32-08020	• Link Kit, Master,RHS	2	81028-
5	C1		• • Link, Master	1	81028-
6	C1		• • Link, Master	1	81028-
7		17A-32-21201	• Seal Assembly	168	81028-
8		175-32-81181	• Spacer	168	81028-
9		15A-32-11142	• Bushing	84	81028-
10		175-32-81450	• Pin	84	81028-
11		07059-11830	• Plug, Large	84	81028-
12		07059-20721	• Plug, Small	84	81028-
13		170-32-11115	• Shoe	82	81028-
14		176-32-11210	• Bolt, (Kit : K06)	328	81028-
15		178-32-11220	• Nut, (Kit : K06)	328	81028-
16		170-32-11115	• Shoe	2	81028-
17		175-32-41261	• Bolt, Master Track Shoe	8	81028-

FIG. R0500-006001 Track Shoe Assembly, Single Shoe Grouser, 660mm Wide, Sealed & Lubricated Link and Master Link, 84-SET, Boggy Type

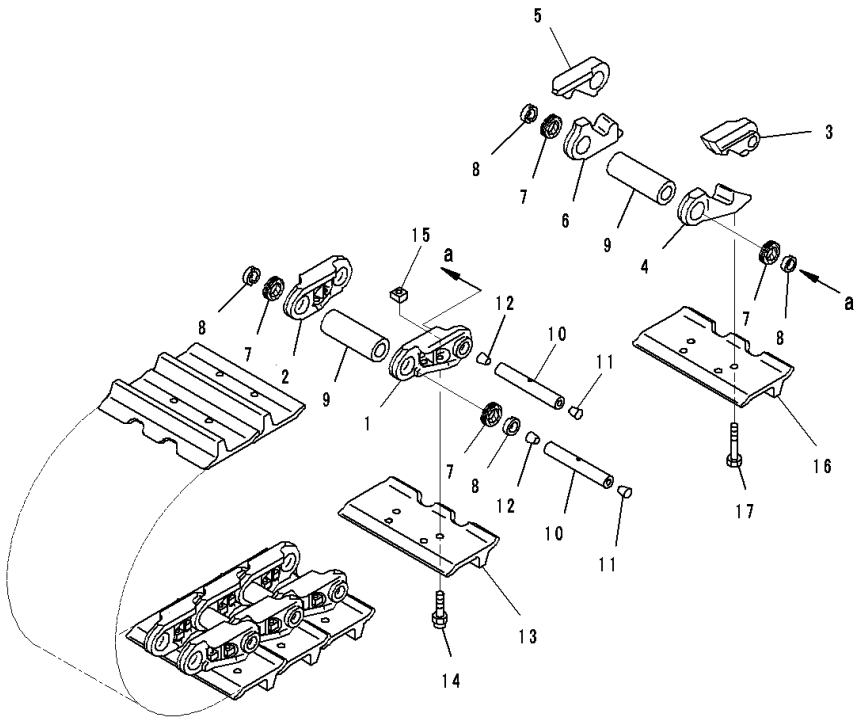

Index	Code	Part Number	Description	Qty	Serial Number
		17A-32-01070	Track Shoe Assembly	1	81028-
1		15A-32-77120	• Link,LHS	82	81028-
2		15A-32-77130	• Link,RHS	82	81028-
		175-32-08010	• Link Kit, Master,LHS	2	81028-
3	C1		• • Link, Master	1	81028-
4	C1		• • Link, Master	1	81028-
		175-32-08020	• Link Kit, Master,RHS	2	81028-
5	C1		• • Link, Master	1	81028-
6	C1		• • Link, Master	1	81028-
7		17A-32-21201	• Seal Assembly	168	81028-
8		175-32-81181	• Spacer	168	81028-
9		15A-32-11142	• Bushing	84	81028-
10		175-32-81450	• Pin	84	81028-
11		07059-11830	• Plug, Large	84	81028-
12		07059-20721	• Plug, Small	84	81028-
13		170-32-11332	• Track Shoe	82	81028-
14		176-32-11210	• Bolt, (Kit : K06)	328	81028-
15		178-32-11220	• Nut, (Kit : K06)	328	81028-
16		170-32-11332	• Track Shoe	2	81028-
17		175-32-41261	• Bolt, Master Track Shoe	8	81028-

FIG. R0500-007001 Track Shoe Assembly, Single Shoe Grouser, 710mm Width, Sealed & Lubricated Link and Master Link, Boggy Type

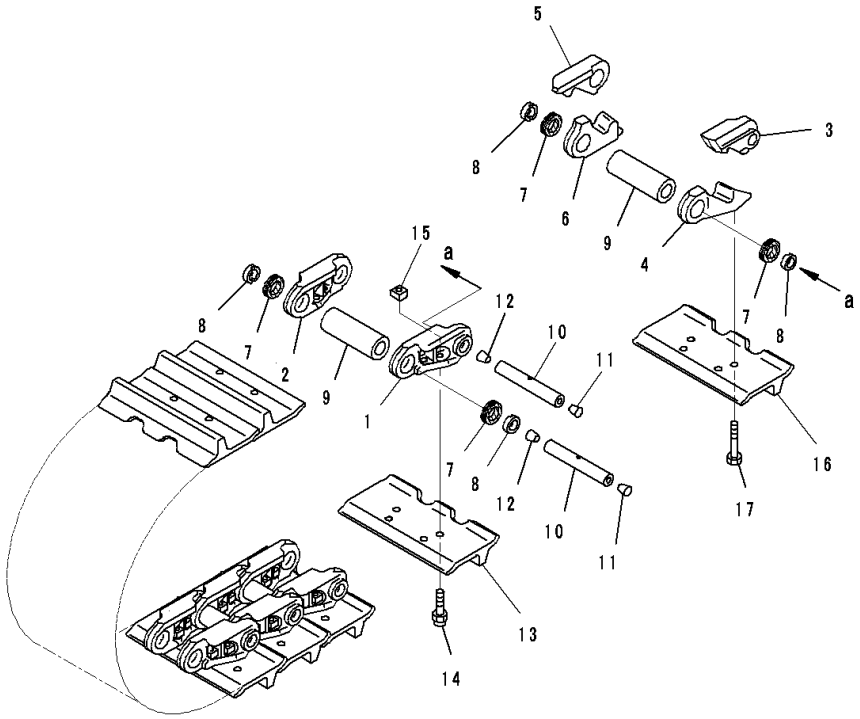

Index	Code	Part Number	Description	Qty	Serial Number
		17A-32-01080	Track Shoe Assembly	1	81028-
1		15A-32-77120	• Link,LHS	82	81028-
2		15A-32-77130	• Link,RHS	82	81028-
		175-32-08010	• Link Kit, Master,LHS	2	81028-
3	C1		• • Link, Master	1	81028-
4	C1		• • Link, Master	1	81028-
		175-32-08020	• Link Kit, Master,RHS	2	81028-
5	C1		• • Link, Master	1	81028-
6	C1		• • Link, Master	1	81028-
7		17A-32-21201	• Seal Assembly	168	81028-
8		175-32-81181	• Spacer	168	81028-
9		15A-32-11142	• Bushing	84	81028-
10		175-32-81450	• Pin	84	81028-
11		07059-11830	• Plug, Large	84	81028-
12		07059-20721	• Plug, Small	84	81028-
13		175-32-11132	• Track Shoe	82	81028-
14		176-32-11210	• Bolt, (Kit : K06)	328	81028-
15		178-32-11220	• Nut, (Kit : K06)	328	81028-
16		175-32-11132	• Track Shoe	2	81028-
17		175-32-41261	• Bolt, Master Track Shoe	8	81028-

FIG. R0500-008001 Track Shoe Assembly, Heavy Duty, 610mm Width, Sealed & Lubricated Link and Master Link, Boggy Type

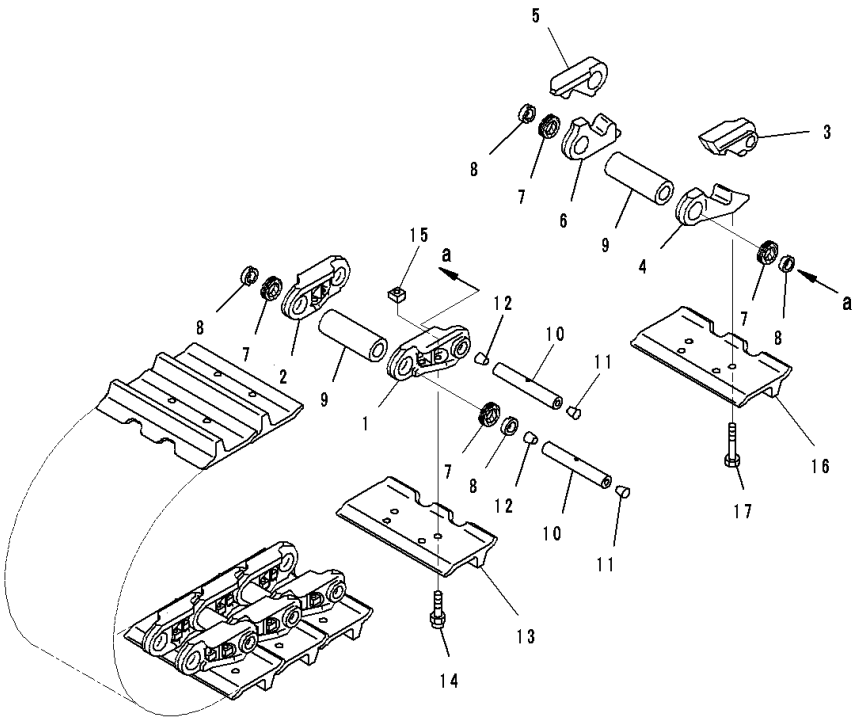

Index	Code	Part Number	Description	Qty	Serial Number
		17A-32-01100	Track Shoe Assembly	1	81028-
1		15A-32-77120	• Link,LHS	82	81028-
2		15A-32-77130	• Link,RHS	82	81028-
		175-32-08010	• Link Kit, Master,LHS	2	81028-
3	C1		• • Link, Master	1	81028-
4	C1		• • Link, Master	1	81028-
		175-32-08020	• Link Kit, Master,RHS	2	81028-
5	C1		• • Link, Master	1	81028-
6	C1		• • Link, Master	1	81028-
7		17A-32-21201	• Seal Assembly	168	81028-
8		175-32-81181	• Spacer	168	81028-
9		15A-32-11142	• Bushing	84	81028-
10		175-32-81450	• Pin	84	81028-
11		07059-11830	• Plug, Large	84	81028-
12		07059-20721	• Plug, Small	84	81028-
13		175-32-31410	• Track Shoe	82	81028-
14		176-32-11210	• Bolt, (Kit : K06)	328	81028-
15		178-32-11220	• Nut, (Kit : K06)	328	81028-
16		175-32-31410	• Track Shoe	2	81028-
17		175-32-41261	• Bolt, Master Track Shoe	8	81028-

FIG. R0500-009001 Track Shoe Assembly, Heavy Duty, 660mm Wide, Sealed & Lubricated Link and Master Link, Boggy Type

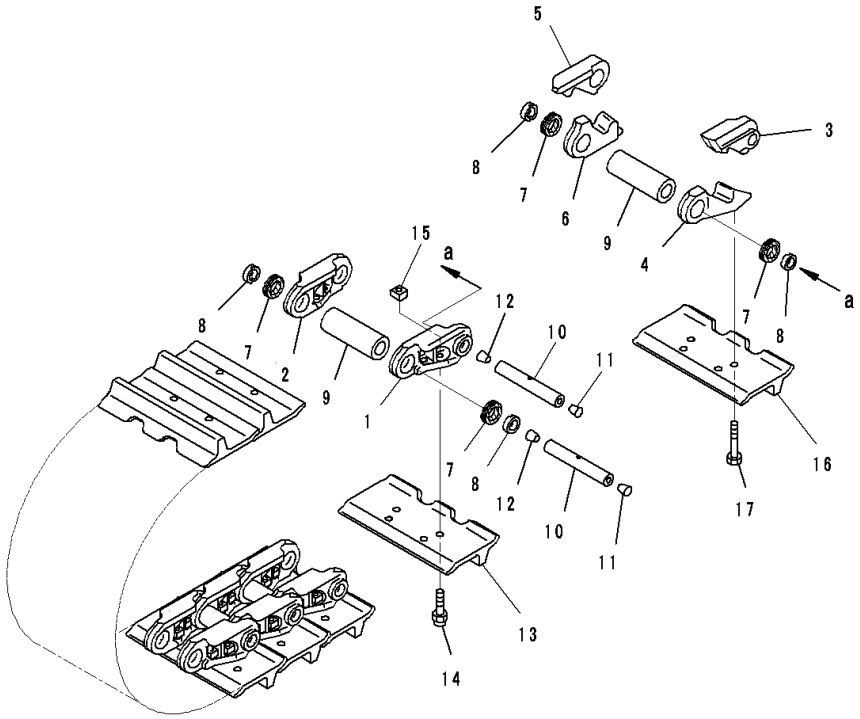

Index	Code	Part Number	Description	Qty	Serial Number
		17A-32-01110	Track Shoe Assembly	1	81028-
1		15A-32-77120	• Link,LHS	82	81028-
2		15A-32-77130	• Link,RHS	82	81028-
		175-32-08010	• Link Kit, Master,LHS	2	81028-
3	C1		• • Link, Master	1	81028-
4	C1		• • Link, Master	1	81028-
		175-32-08020	• Link Kit, Master,RHS	2	81028-
5	C1		• • Link, Master	1	81028-
6	C1		• • Link, Master	1	81028-
7		17A-32-21201	• Seal Assembly	168	81028-
8		175-32-81181	• Spacer	168	81028-
9		15A-32-11142	• Bushing	84	81028-
10		175-32-81450	• Pin	84	81028-
11		07059-11830	• Plug, Large	84	81028-
12		07059-20721	• Plug, Small	84	81028-
13		175-32-31420	• Track Shoe	82	81028-
14		176-32-11210	• Bolt, (Kit : K06)	328	81028-
15		178-32-11220	• Nut, (Kit : K06)	328	81028-
16		175-32-31420	• Track Shoe	2	81028-
17		175-32-41261	• Bolt, Master Track Shoe	8	81028-

FIG. R0500-010001 Track Shoe Assembly, Single Shoe Grouser, 560mm Width, Sealed Dry Link and Master Pin, Boggy Type

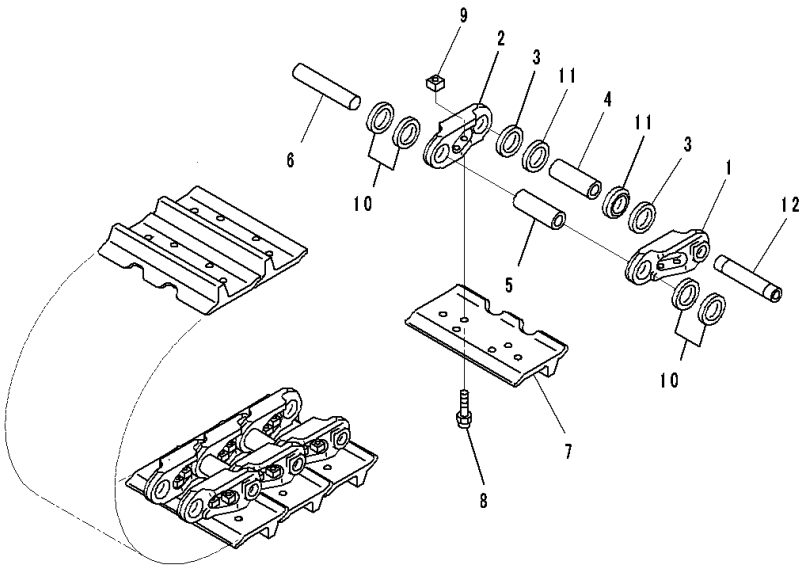

Index	Code	Part Number	Description	Qty	Serial Number
		17A-32-01120	Track Shoe Assembly	1	81028-
1		15A-32-77120	• Link,LHS	84	81028-
2		15A-32-77130	• Link,RHS	84	81028-
3		176-32-11292	• Washer	320	81028-
4		176-32-11174	• Bushing, Master	4	81028-
5		176-32-11145	• Bushing, Regular	80	81028-
6		176-32-11152	• Pin, Regular	80	81028-
7		170-32-11115	• Shoe	84	81028-
8		176-32-11210	• Bolt, (Kit : K06)	336	81028-
9		178-32-11220	• Nut, (Kit : K06)	336	81028-
10		176-32-11292	• Washer	8	81028-
11		176-32-11332	• Spacer	8	81028-
12		176-32-11193	• Pin, Master	4	81028-

FIG. R0500-011001 Track Shoe Assembly, Single Shoe Grouser, 610mm Width, Sealed Dry Link and Master Pin, Boggy Type

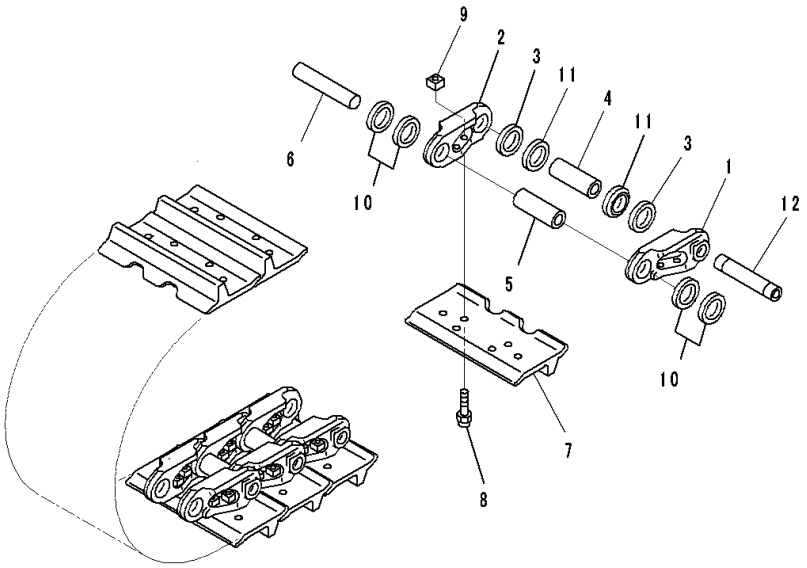

Index	Code	Part Number	Description	Qty	Serial Number
		17A-32-01130	Track Shoe Assembly	1	81028-
1		15A-32-77120	• Link,LHS	84	81028-
2		15A-32-77130	• Link,RHS	84	81028-
3		176-32-11292	• Washer	320	81028-
4		176-32-11174	• Bushing, Master	4	81028-
5		176-32-11145	• Bushing, Regular	80	81028-
6		176-32-11152	• Pin, Regular	80	81028-
7		175-32-11113	• Track Shoe	84	81028-
8		176-32-11210	• Bolt, (Kit : K06)	336	81028-
9		178-32-11220	• Nut, (Kit : K06)	336	81028-
10		176-32-11292	• Washer	8	81028-
11		176-32-11332	• Spacer	8	81028-
12		176-32-11193	• Pin, Master	4	81028-

FIG. R0500-012001 Track Shoe Assembly, Single Shoe Grouser, 660mm Wide, Sealed Dry Link and Master Pin, Boggy Type

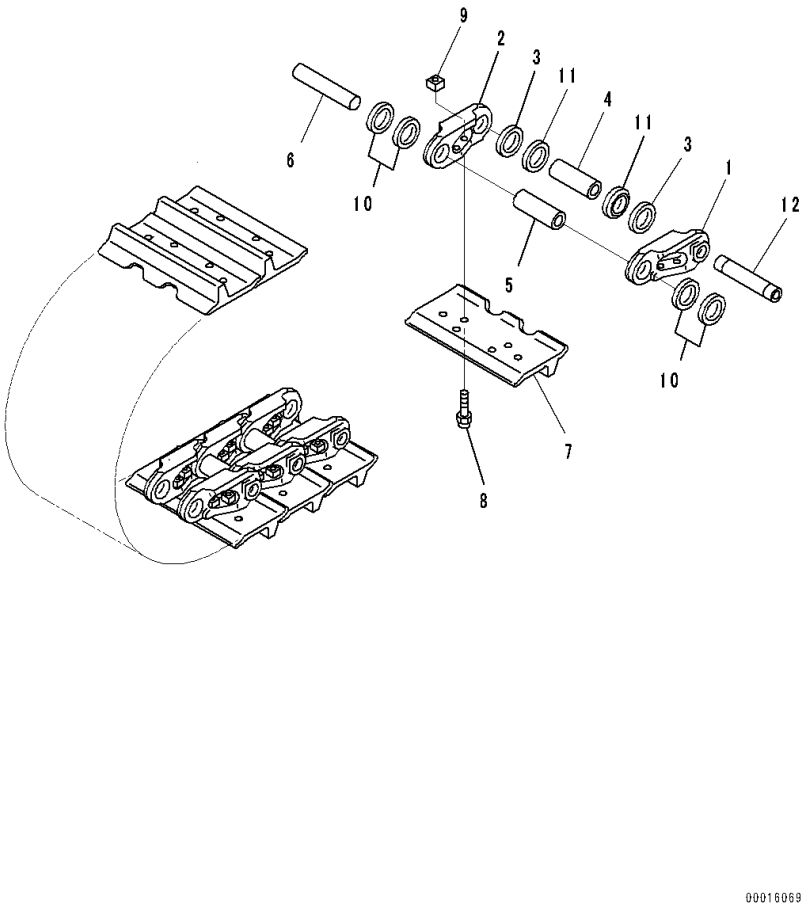

Index	Code	Part Number	Description	Qty	Serial Number
		17A-32-01140	Track Shoe Assembly	1	81028-
1		15A-32-77120	• Link,LHS	84	81028-
2		15A-32-77130	• Link,RHS	84	81028-
3		176-32-11292	• Washer	320	81028-
4		176-32-11174	• Bushing, Master	4	81028-
5		176-32-11145	• Bushing, Regular	80	81028-
6		176-32-11152	• Pin, Regular	80	81028-
7		170-32-11332	• Track Shoe	84	81028-
8		176-32-11210	• Bolt, (Kit : K06)	336	81028-
9		178-32-11220	• Nut, (Kit : K06)	336	81028-
10		176-32-11292	• Washer	8	81028-
11		176-32-11332	• Spacer	8	81028-
12		176-32-11193	• Pin, Master	4	81028-

FIG. R0500-013001 Track Shoe Assembly, Single Shoe Grouser, 710mm Width, Sealed Dry Link and Master Pin, Boggy Type

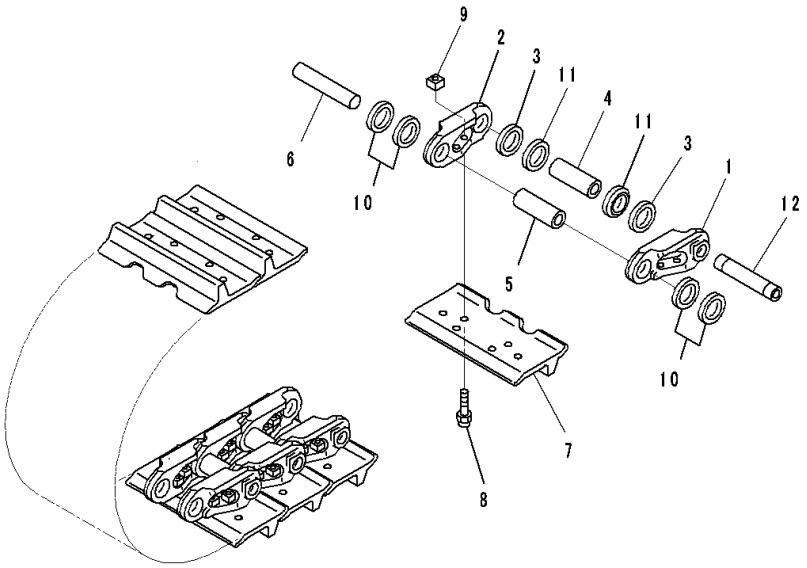

Index	Code	Part Number	Description	Qty	Serial Number
		17A-32-01150	Track Shoe Assembly	1	81028-
1		15A-32-77120	• Link,LHS	84	81028-
2		15A-32-77130	• Link,RHS	84	81028-
3		176-32-11292	• Washer	320	81028-
4		176-32-11174	• Bushing, Master	4	81028-
5		176-32-11145	• Bushing, Regular	80	81028-
6		176-32-11152	• Pin, Regular	80	81028-
7		175-32-11132	• Track Shoe	84	81028-
8		176-32-11210	• Bolt, (Kit : K06)	336	81028-
9		178-32-11220	• Nut, (Kit : K06)	336	81028-
10		176-32-11292	• Washer	8	81028-
11		176-32-11332	• Spacer	8	81028-
12		176-32-11193	• Pin, Master	4	81028-

FIG. R0500-014001 Track Shoe Assembly, Heavy Duty, 560mm Width, Sealed Dry Link and Master Pin, Boggy Type

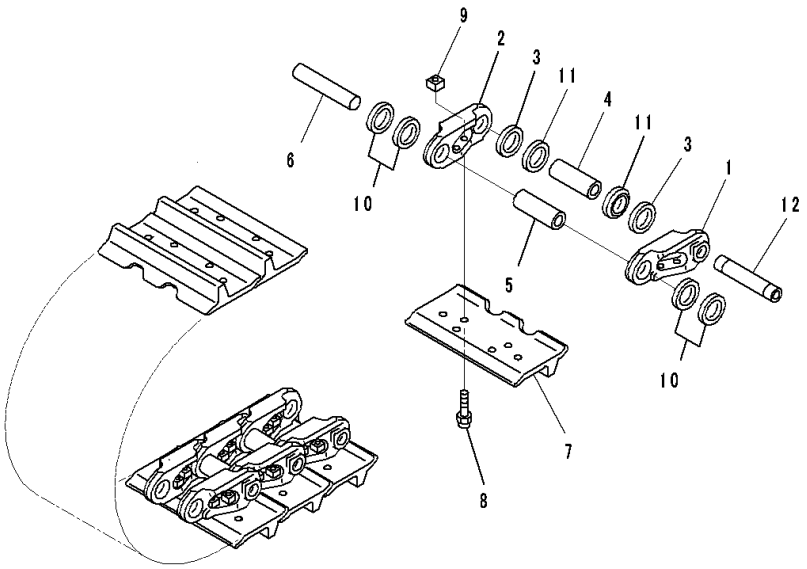

Index	Code	Part Number	Description	Qty	Serial Number
		17A-32-01160	Track Shoe Assembly	1	81028-
1		15A-32-77120	• Link,LHS	84	81028-
2		15A-32-77130	• Link,RHS	84	81028-
3		176-32-11292	• Washer	320	81028-
4		176-32-11174	• Bushing, Master	4	81028-
5		176-32-11145	• Bushing, Regular	80	81028-
6		176-32-11152	• Pin, Regular	80	81028-
7		175-32-31313	• Track Shoe	84	81028-
8		176-32-11210	• Bolt, (Kit : K06)	336	81028-
9		178-32-11220	• Nut, (Kit : K06)	336	81028-
10		176-32-11292	• Washer	8	81028-
11		176-32-11332	• Spacer	8	81028-
12		176-32-11193	• Pin, Master	4	81028-

FIG. R0500-015001 Track Shoe Assembly, Heavy Single Grouser, With Large Holed, 560mm Width, Sealed & Lubricated Link and Master Link, Boggy Type

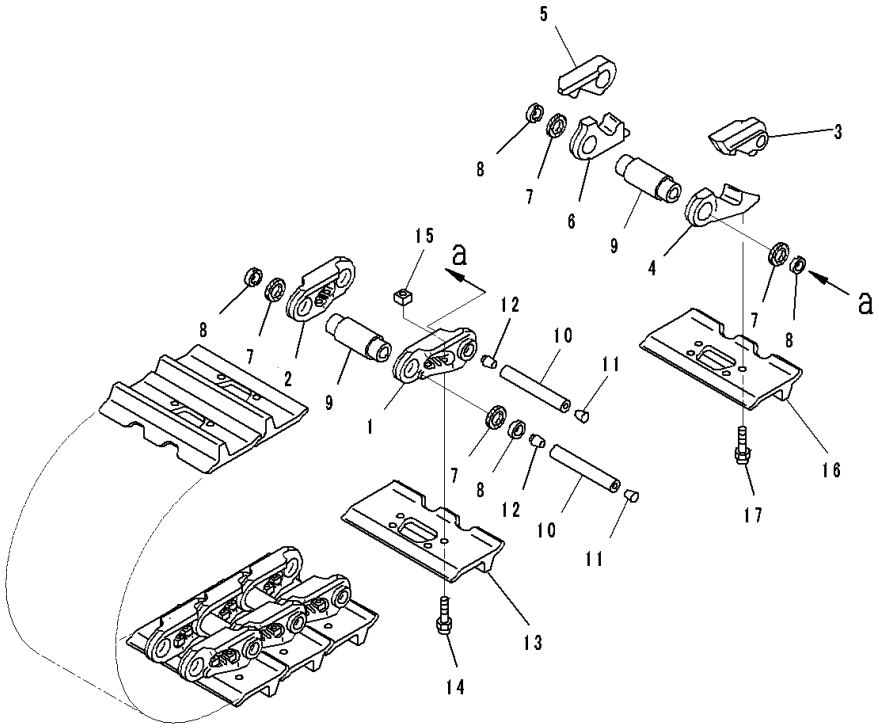

Index	Code	Part Number	Description	Qty	Serial Number
		17A-32-01170	Track Shoe Assembly	1	81028-
1		15A-32-77120	• Link,LHS	82	81028-
2		15A-32-77130	• Link,RHS	82	81028-
		175-32-08010	• Link Kit, Master,LHS	2	81028-
3	C1		• • Link, Master	1	81028-
4	C1		• • Link, Master	1	81028-
		175-32-08020	• Link Kit, Master,RHS	2	81028-
5	C1		• • Link, Master	1	81028-
6	C1		• • Link, Master	1	81028-
7		17A-32-21201	• Seal Assembly	168	81028-
8		175-32-81181	• Spacer	168	81028-
9		15A-32-11142	• Bushing	84	81028-
10		175-32-81450	• Pin	84	81028-
11		07059-11830	• Plug, Large	84	81028-
12		07059-20721	• Plug, Small	84	81028-
13		175-32-31440	• Track Shoe, Master	82	81028-
14		176-32-11210	• Bolt, (Kit : K06)	328	81028-
15		178-32-11220	• Nut, (Kit : K06)	328	81028-
16		175-32-31440	• Track Shoe, Master, Master	2	81028-
17		175-32-41261	• Bolt, Master Track Shoe	8	81028-

FIG. R0500-016001 Track Shoe Assembly, Heavy Single Grouser, With Large Holed, 610mm Width, Sealed & Lubricated Link and Master Link, Boggy Type

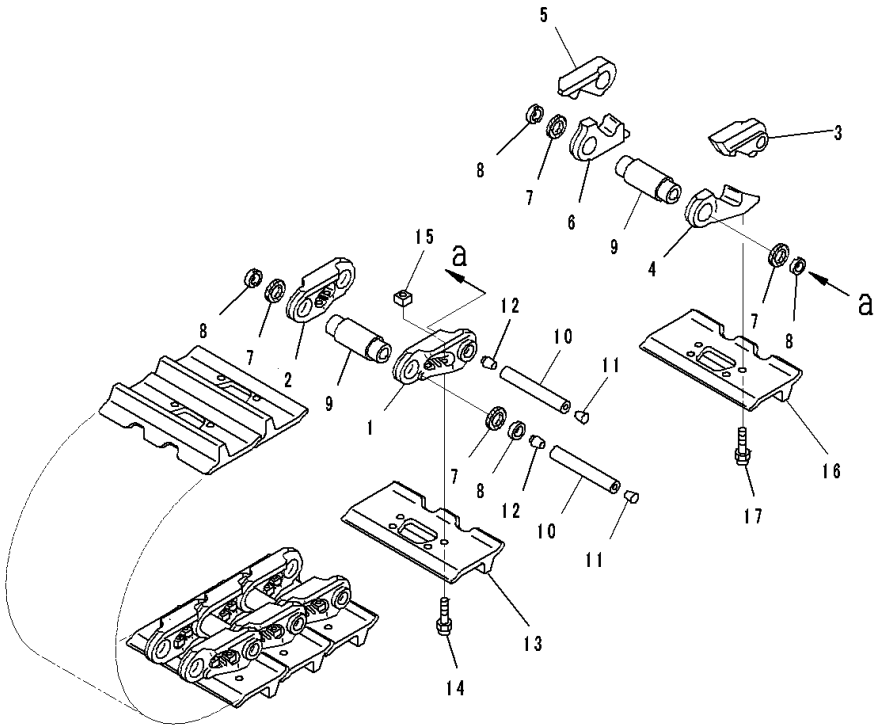

Index	Code	Part Number	Description	Qty	Serial Number
		17A-32-01180	Track Shoe Assembly	1	81028-
1		15A-32-77120	• Link,LHS	82	81028-
2		15A-32-77130	• Link,RHS	82	81028-
		175-32-08010	• Link Kit, Master,LHS	2	81028-
3	C1		• • Link, Master	1	81028-
4	C1		• • Link, Master	1	81028-
		175-32-08020	• Link Kit, Master,RHS	2	81028-
5	C1		• • Link, Master	1	81028-
6	C1		• • Link, Master	1	81028-
7		17A-32-21201	• Seal Assembly	168	81028-
8		175-32-81181	• Spacer	168	81028-
9		15A-32-11142	• Bushing	84	81028-
10		175-32-81450	• Pin	84	81028-
11		07059-11830	• Plug, Large	84	81028-
12		07059-20721	• Plug, Small	84	81028-
13		175-32-31450	• Track Shoe, Master	82	81028-
14		176-32-11210	• Bolt, (Kit : K06)	328	81028-
15		178-32-11220	• Nut, (Kit : K06)	328	81028-
16		175-32-31450	• Track Shoe, Master	2	81028-
17		175-32-41261	• Bolt, Master Track Shoe	8	81028-

FIG. R0500-017001 Track Shoe Assembly, Heavy Single Grouser, With Large Holed, 660mm Wide, Sealed & Lubricated Link and Master Link, Boggy Type

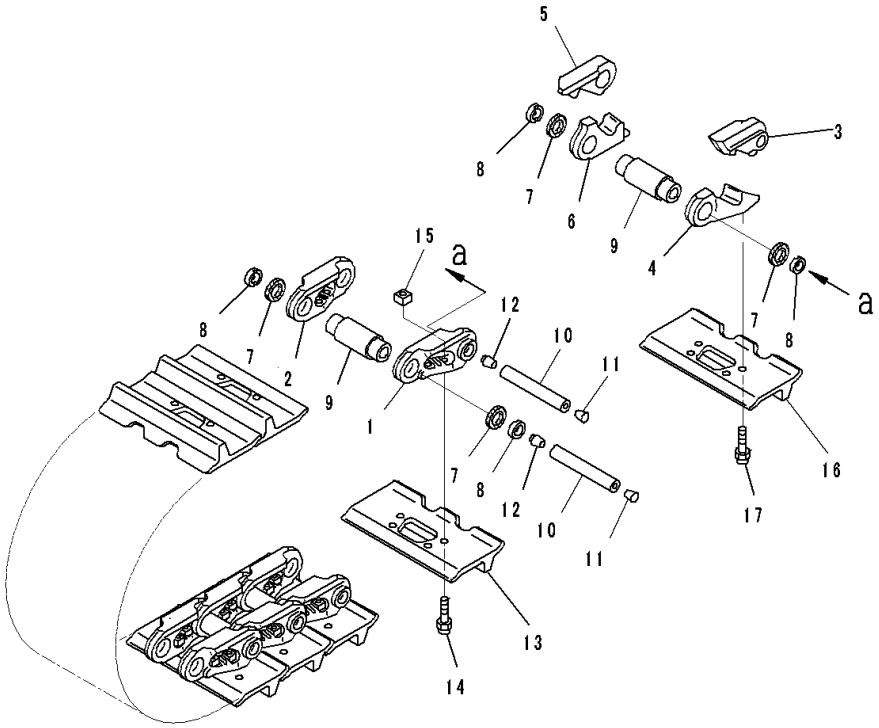

Index	Code	Part Number	Description	Qty	Serial Number
		17A-32-01190	Track Shoe Assembly	1	81028-
1		15A-32-77120	• Link,LHS	82	81028-
2		15A-32-77130	• Link,RHS	82	81028-
		175-32-08010	• Link Kit, Master,LHS	2	81028-
3	C1		• • Link, Master	1	81028-
4	C1		• • Link, Master	1	81028-
		175-32-08020	• Link Kit, Master,RHS	2	81028-
5	C1		• • Link, Master	1	81028-
6	C1		• • Link, Master	1	81028-
7		17A-32-21201	• Seal Assembly	168	81028-
8		175-32-81181	• Spacer	168	81028-
9		15A-32-11142	• Bushing	84	81028-
10		175-32-81450	• Pin	84	81028-
11		07059-11830	• Plug, Large	84	81028-
12		07059-20721	• Plug, Small	84	81028-
13		175-32-31460	• Track Shoe, Master	82	81028-
14		176-32-11210	• Bolt, (Kit : K06)	328	81028-
15		178-32-11220	• Nut, (Kit : K06)	328	81028-
16		175-32-31460	• Track Shoe, Master	2	81028-
17		175-32-41261	• Bolt, Master Track Shoe	8	81028-

FIG. R0501-001001 Track Link Assembly, Lubrication Type, Rigid Type

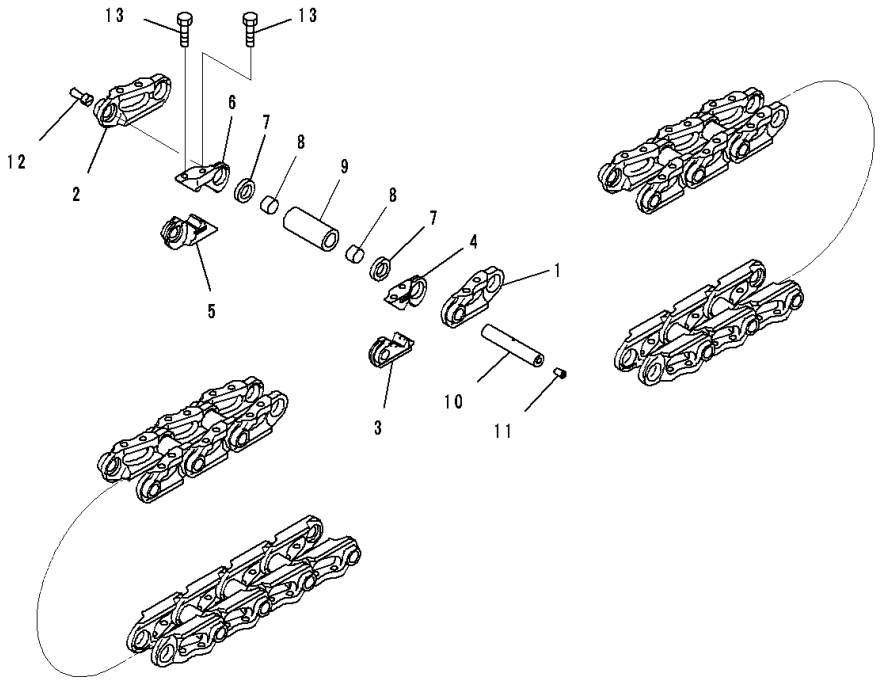

Index	Code	Part Number	Description	Qty	Serial Number
		175-32-00503	Track Link Assembly	1	81028-
1		15A-32-77120	• Link	80	81028-
2		15A-32-77130	• Link	80	81028-
		175-32-08010	• Link Kit, Master	2	81028-
3	C1		• • Link, Master	1	81028-
4	C1		• • Link, Master	1	81028-
		175-32-08020	• Link Kit, Master	2	81028-
5	C1		• • Link, Master	1	81028-
6	C1		• • Link, Master	1	81028-
7		17A-32-21201	• Seal Assembly	164	81028-
8		175-32-81181	• Spacer	164	81028-
9		15A-32-11142	• Bushing	82	81028-
10		175-32-81450	• Pin	82	81028-
11		07059-11830	• Plug, Large	82	81028-
12		07059-20721	• Plug, Small	82	81028-
13		175-32-41261	• Bolt, Master Track Shoe	8	81028-

FIG. R0501-003001 Track Link Assembly, Lubrication Type, 84-SET, Boggy Type

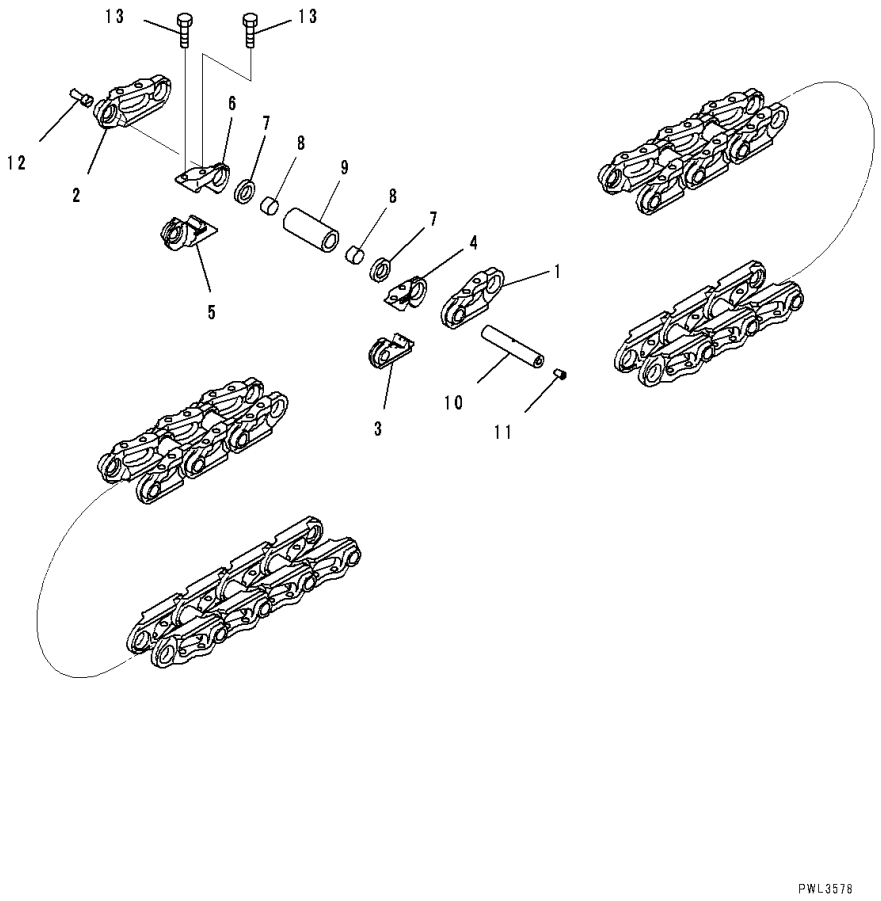

Index	Code	Part Number	Description	Qty	Serial Number
		17A-32-00110	Track Link Assembly	1	81028-
1		15A-32-77120	• Link,LHS	82	81028-
2		15A-32-77130	• Link,RHS	82	81028-
		175-32-08010	• Link Kit, Master,LHS	2	81028-
3	C1		• • Link, Master	1	81028-
4	C1		• • Link, Master	1	81028-
		175-32-08020	• Link Kit, Master,RHS	2	81028-
5	C1		• • Link, Master	1	81028-
6	C1		• • Link, Master	1	81028-
7		17A-32-21201	• Seal Assembly	168	81028-
8		175-32-81181	• Spacer	168	81028-
9		15A-32-11142	• Bushing	84	81028-
10		175-32-81450	• Pin	84	81028-
11		07059-11830	• Plug, Large	84	81028-
12		07059-20721	• Plug, Small	84	81028-
13		175-32-41261	• Bolt, Master Track Shoe	8	81028-

FIG. R0501-004001 Track Link Assembly, Sealed Dry Link, Boggy Type

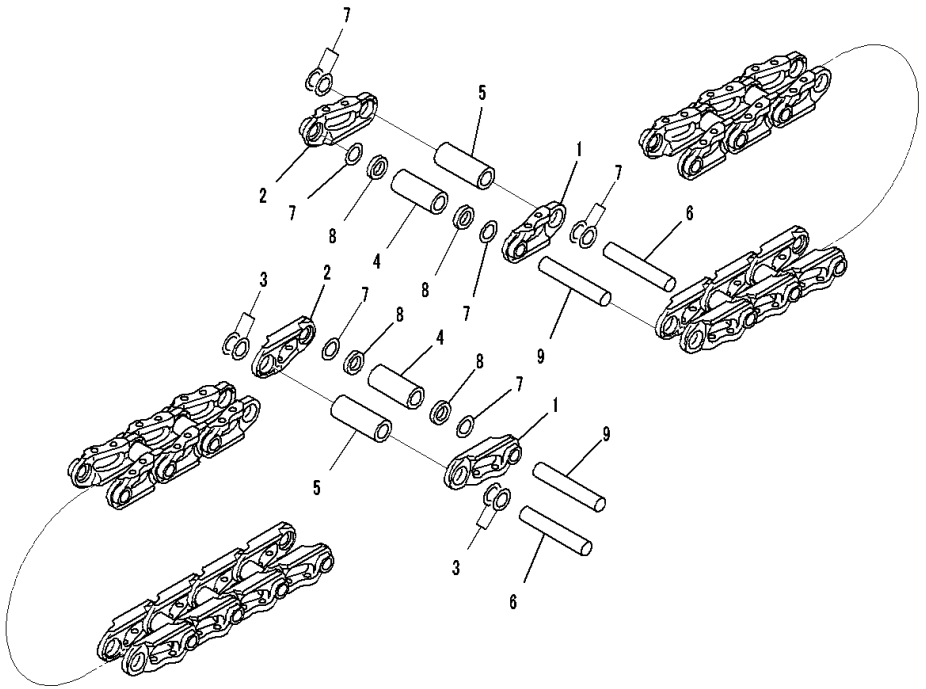

Index	Code	Part Number	Description	Qty	Serial Number
		17A-32-00120	Track Link Assembly	1	81028-
1		15A-32-77120	• Link,LHS	84	81028-
2		15A-32-77130	• Link,RHS	84	81028-
3		176-32-11292	• Washer	320	81028-
4		176-32-11174	• Bushing, Master	4	81028-
5		176-32-11145	• Bushing, Regular	80	81028-
6		176-32-11152	• Pin, Regular	80	81028-
7		176-32-11292	• Washer	8	81028-
8		176-32-11332	• Spacer	8	81028-
9		176-32-11193	• Pin, Master	4	81028-

FIG. R2100-001001 Track Frame, Frame LHS

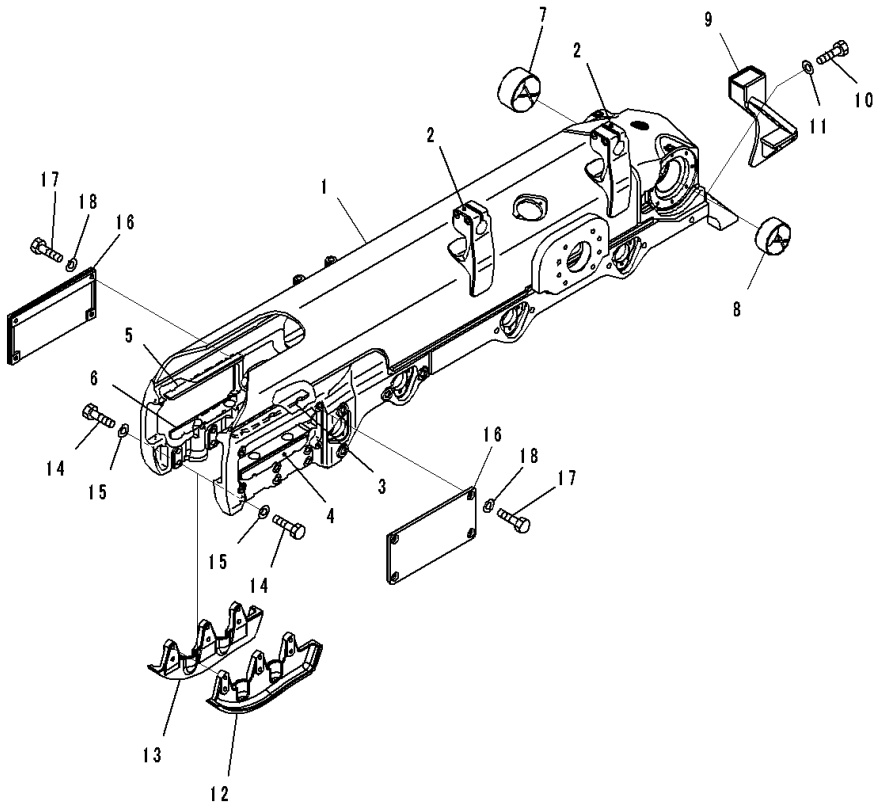

Index	Code	Part Number	Description	Qty	Serial Number
		Note: This list covers following specifications.			
		With Track Roller Guard			
		With Track Roller Guard, Landfill Specification			
		17A-30-00811	Track Frame Assembly,LHS	1	81028-
1	C1		• Frame,LHS	1	81028-
2		17A-30-41411	• • Support,Welded	2	81028-
3		17A-30-41311	• • Plate,Welded	1	81028-
4		17A-30-41321	• • Plate,Welded	1	81028-
5		17A-30-41311	• • Plate,Welded	1	81028-
6		17A-30-41321	• • Plate,Welded	1	81028-
7		17A-50-41210	• Bushing	1	81028-
8		17A-50-11130	• Bushing	1	81028-
9		17A-30-41361	Cover,LHS	1	81028-
10		01010-62040	Bolt	4	81028-
11		01643-32060	Washer	4	81028-
12		17A-30-47141	Guard,LHS	1	81028-
13		17A-30-47151	Guard,RHS	1	81028-
14		01010-82275	Bolt	12	81028-
15		01643-32260	Washer	12	81028-
16		17A-30-41351	Cover	2	81028-
17		01010-61640	Bolt	8	81028-
18		01643-31645	Washer	8	81028-

FIG. R2100-001002 Track Frame, Front Bogie, LHS

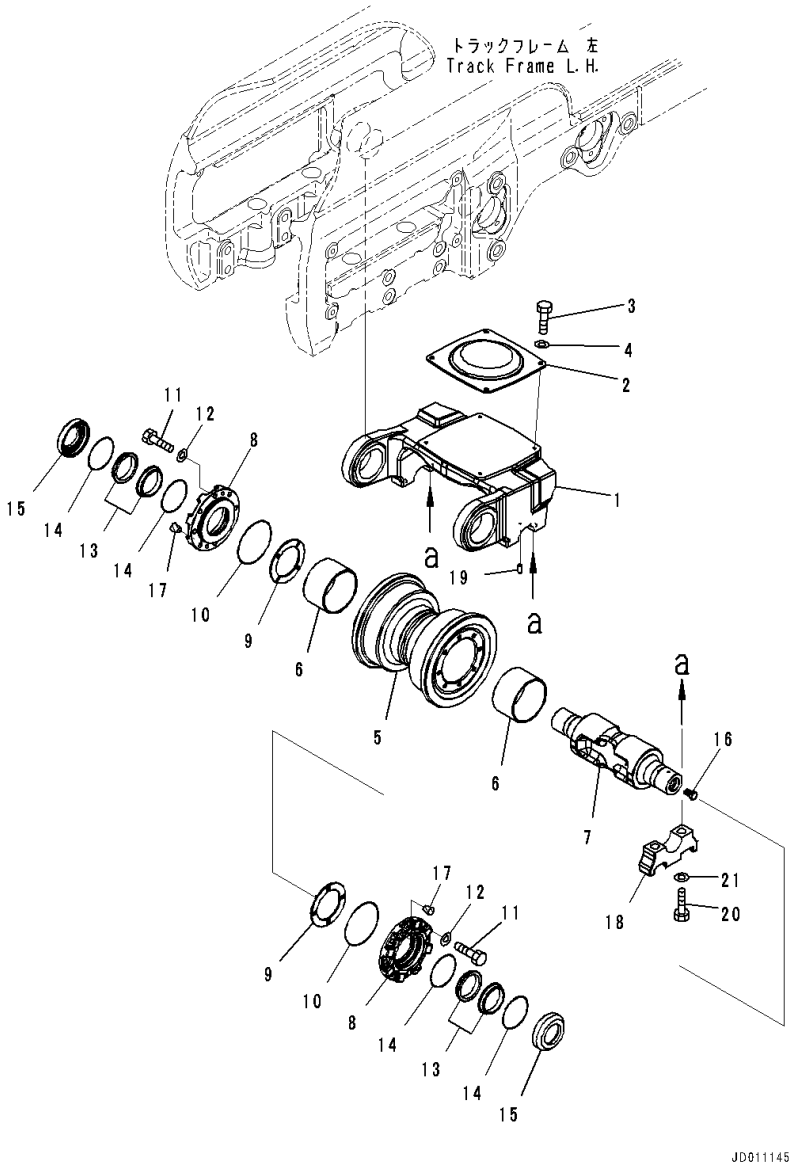

Index	Code	Part Number	Description	Qty	Serial Number
		Note: This list covers following specifications.			
		With Track Roller Guard			
		With Full Length Track Roller Guard, Landfill Specification			
		With Track Roller Guard, Landfill Specification			
1		17A-30-46151	Bogie	1	81028-
2		17A-30-46141	Pad	1	81028-
3		01010-81025	Bolt	4	81028-
4		01643-31032	Washer	4	81028-
		17A-30-00610	Roller Assembly, Track	1	81028-
5		17A-30-15110	• Roller, Single Flange	1	81028-
6		17A-30-15140	• Bushing	2	81028-
7		17A-30-45230	• Shaft	1	81028-
8		17A-30-45210	• Retainer	2	81028-
9		17A-30-45220	• Plate	2	81028-
10		07000-12130	• O-ring	2	81028-
11		01010-81235	• Bolt	16	81028-
12		01643-31232	• Washer	16	81028-
		154-30-00832	• Floating Seal Assembly	2	81028-
13	C1		• • Seal	2	81028-
14	C1		• • O-ring	2	81028-
15		17A-30-15181	• Ring	2	81028-
16		07052-31624	• Plug	1	81028-
17		07049-01215	• Plug	4	81028-
18		17A-30-46330	Cap	2	81028-
19		04020-00616	Pin, Dowel	1	81028-
20		01010-62285	Bolt	4	81028-
21		01643-32260	Washer	4	81028-

FIG. R2100-001003 Track Frame, With Track Roller Guard, Front Idler, LHS

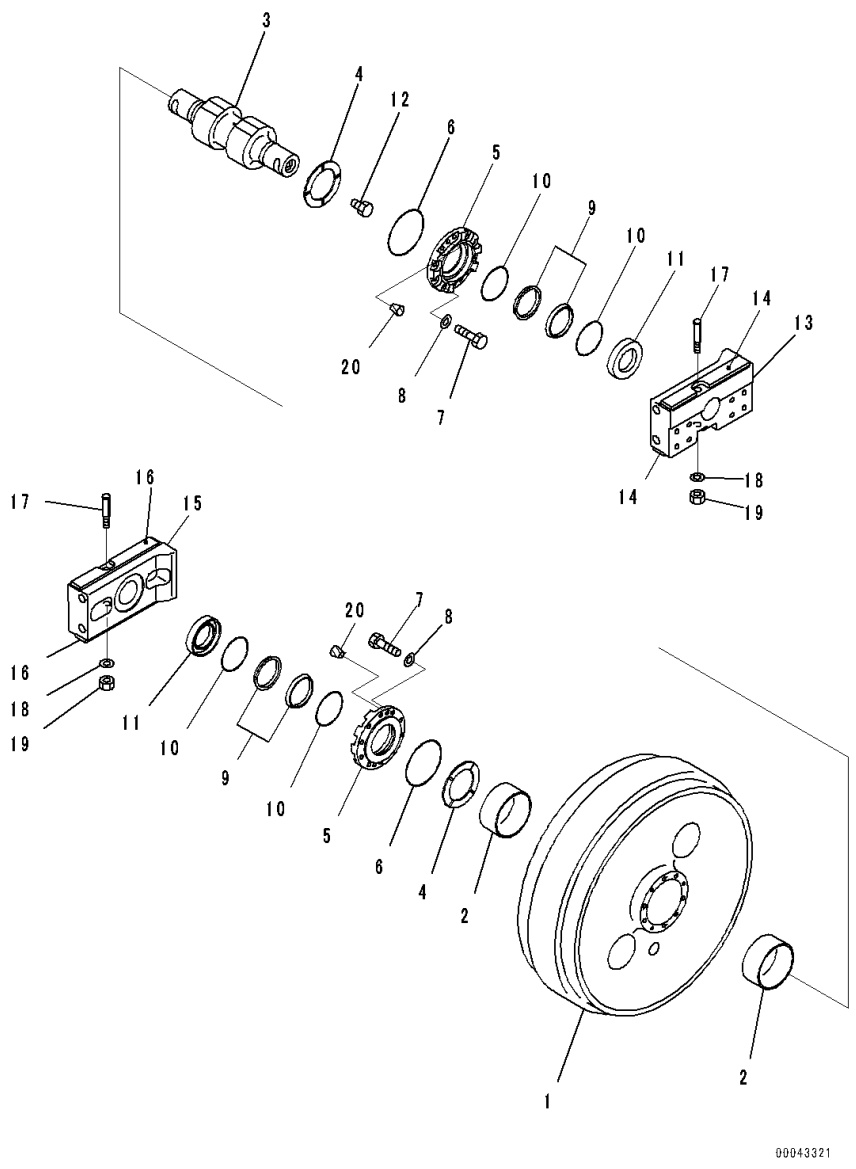

Index	Code	Part Number	Description	Qty	Serial Number
		17A-30-00042	Idler Assembly	1	81028-
1		17A-30-13410	• Idler	1	81028-
2		17A-30-13140	• Bushing	2	81028-
3		17A-30-13450	• Shaft	1	81028-
4		195-30-62650	• Plate	2	81028-
5		17A-30-13440	• Retainer	2	81028-
6		07000-12145	• O-ring	2	81028-
7		01010-81235	• Bolt	20	81028-
8		01643-31232	• Washer	20	81028-
		22B-30-00030	• Floating Seal Assembly	2	81028-
9	C1		• • Seal	2	81028-
10	C1		• • O-ring	2	81028-
11		195-30-62680	• Ring	2	81028-
12		07052-31624	• Plug	1	81028-
13		17A-30-13470	• Support Assembly,LHS	1	81028-
14		17A-30-12150	• • Plate,Welded	2	81028-
15		17A-30-13490	• Support Assembly,RHS	1	81028-
16		17A-30-12150	• • Plate,Welded	2	81028-
17		130-30-13170	• Bolt	2	81028-
18		01643-31645	• Washer	2	81028-
19		01582-11613	• Nut	2	81028-
20		07049-01215	• Plug	4	81028-

FIG. R2100-001004 Track Frame, Recoil Spring, LHS

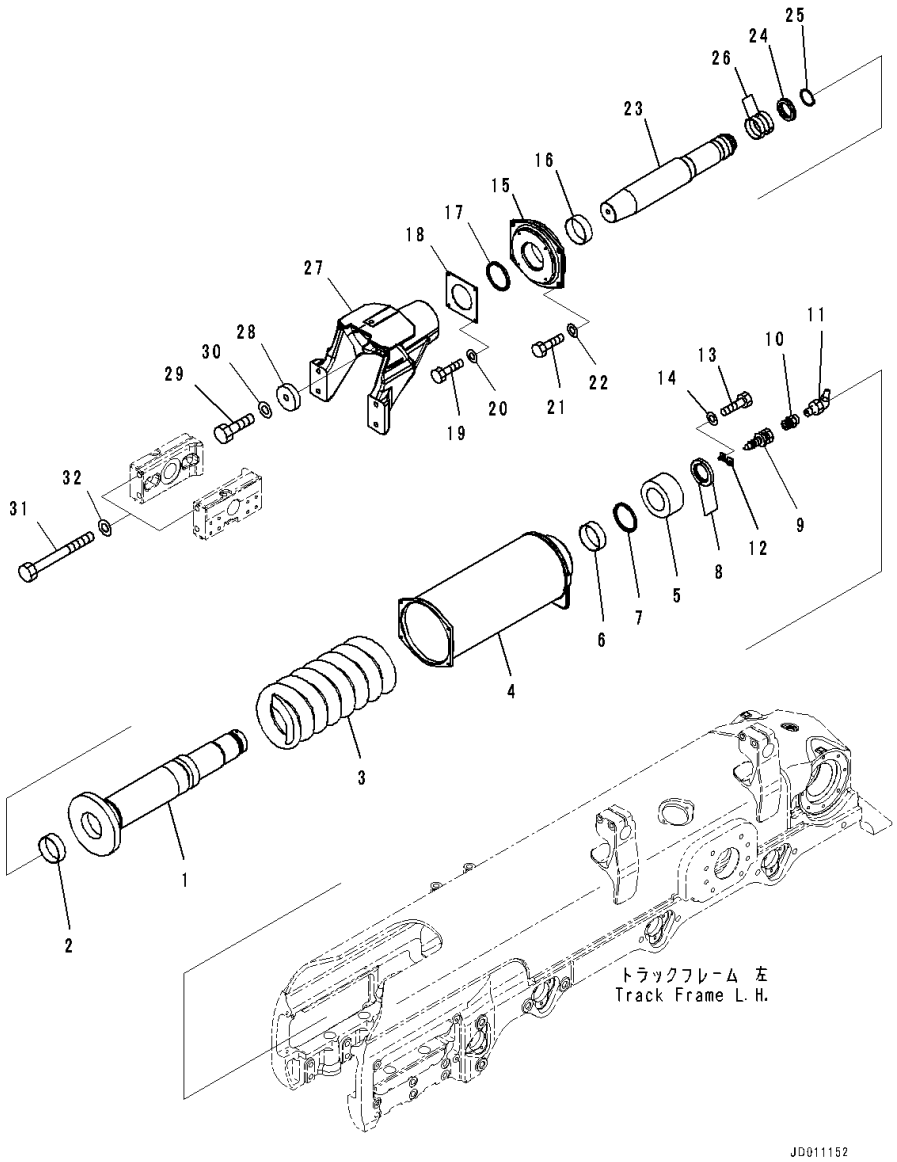

Index	Code	Part Number	Description	Qty	Serial Number
		Note: This list covers following specifications.			
		With Track Roller Guard			
		With Full Length Track Roller Guard, Landfill Specification			
		With Track Roller Guard, Landfill Specification			
1		17A-30-43461	Cylinder	1	81028-
2		07177-01240	Bushing	1	81028-
3		17A-30-43470	Spring	1	81028-
4		17A-30-43432	Cabin,Recoil Spring	1	81028-
5		17A-30-48481	Nut	1	81028-
6		07177-01240	Bushing	1	81028-
7		17A-30-43540	Seal	1	81028-
8		17A-30-48491	Spacer	2	81028-
9		07959-30000	Valve	1	81028-
10		423-70-11160	Nipple	1	81028-
11		07020-00900	Fitting, Grease	1	81028-
12		14X-30-13174	Plate	1	81028-
13		01010-80830	Bolt	2	81028-
14		01643-30823	Washer	2	81028-
15		17A-30-43412	Holder	1	81028-
16		07177-01240	Bushing	1	81028-
17		17A-30-43540	Seal	1	81028-
18		17A-30-43520	Cover	1	81028-
19		01010-81020	Bolt	4	81028-
20		01643-31032	Washer	4	81028-
21		01010-81240	Bolt	4	81028-
22		01643-31232	Washer	4	81028-
23		17A-30-43511	Piston	1	81028-
24		175-30-24242	Packing	1	81028-
25		04064-07525	Ring, Snap	1	81028-
26		07155-01025	Ring, Wear	2	81028-
27		17A-30-44191	Yoke	1	81028-
28		17A-30-43532	Plate	1	81028-
29		01010-82470	Bolt	1	81028-
30		01643-32460	Washer	1	81028-
31		175-30-32162	Bolt	4	81028-
32		01643-32460	Washer	4	81028-

FIG. R2100-001005 Track Frame, Guide Plate, LHS

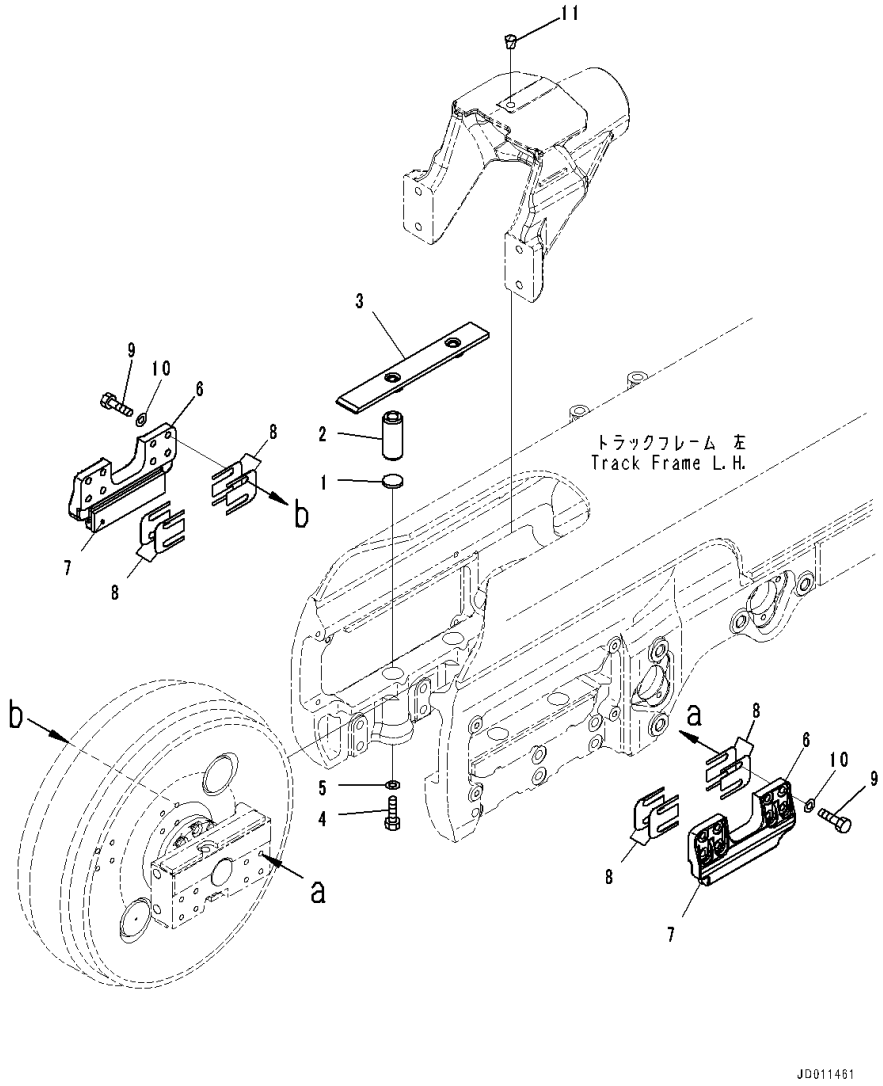

Index	Code	Part Number	Description	Qty	Serial Number
		Note: This list covers following specifications.			
		With Track Roller Guard			
		With Full Length Track Roller Guard, Landfill Specification			
		With Track Roller Guard, Landfill Specification			
1		195-30-17960	Plate	4	81028-
2		155-30-13230	Spring	4	81028-
3		17A-30-12241	Plate Assembly	2	81028-
4		01016-51260	Bolt	4	81028-
5		01643-31232	Washer	4	81028-
6		17A-30-12170	Guide Assembly	2	81028-
7		17A-30-12190	• Plate	1	81028-
8		17A-30-12211	Shim, T=1.0mm	32	81028-
9		01010-81655	Bolt	16	81028-
10		01643-31645	Washer	16	81028-
11		07049-02430	Plug	1	81028-

FIG. R2100-001006 Track Frame, Bogie Mounting, LHS

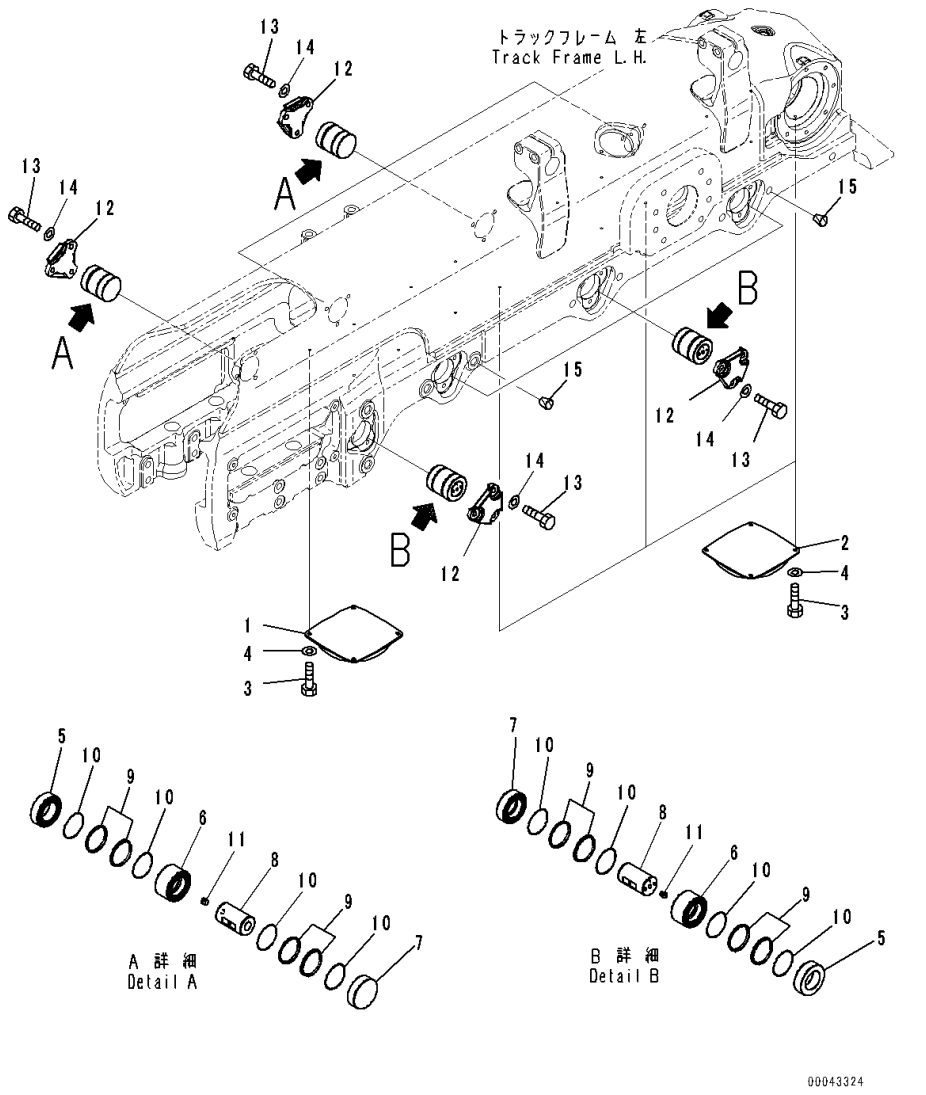

Index	Code	Part Number	Description	Qty	Serial Number
		Note: This list covers following specifications.			
		With Track Roller Guard			
		With Full Length Track Roller Guard, Landfill Specification			
		With Track Roller Guard, Landfill Specification			
1		17A-30-46141	Pad	1	81028-
2		17A-30-46131	Pad	3	81028-
3		01010-81025	Bolt	16	81028-
4		01643-31032	Washer	16	81028-
		17A-30-46202	Pin Assembly	8	81028-
5		17A-30-46221	• Ring	1	81028-
6		17A-30-46231	• Ring	1	81028-
7		17A-30-46241	• Ring	1	81028-
8		17A-30-46252	• Shaft	1	81028-
		17M-30-00500	• Floating Seal Assembly	2	81028-
9	C1		• • Seal	2	81028-
10	C1		• • O-ring	2	81028-
11		209-30-63150	• Plug	1	81028-
12		17M-30-56331	Cover	8	81028-
13		01010-61640	Bolt	24	81028-
14		01643-31645	Washer	24	81028-
15		07049-03038	Plug	13	81028-

FIG. R2100-001007 Track Frame, Bogie, LHS

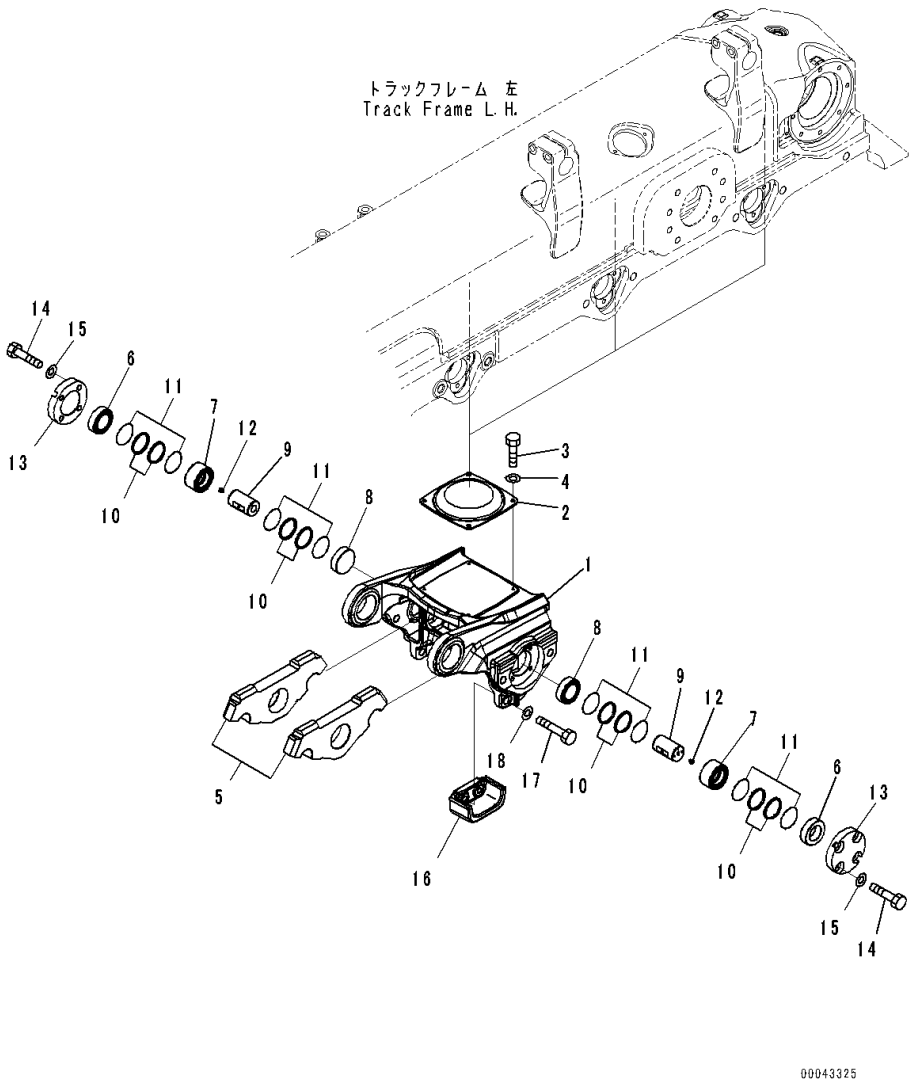

Index	Code	Part Number	Description	Qty	Serial Number
		Note: This list covers following specifications.			
		With Track Roller Guard			
		With Track Roller Guard, Landfill Specification			
		17A-30-00831	Bogie Assembly	3	81028-
1		17A-30-46111	• Bogie	1	81028-
2		17A-30-46131	• Pad	1	81028-
3		01010-81025	• Bolt	4	81028-
4		01643-31032	• Washer	4	81028-
5		17A-30-46121	• Bogie	2	81028-
		17A-30-46202	• Pin Assembly	2	81028-
6		17A-30-46221	• • Ring	1	81028-
7		17A-30-46231	• • Ring	1	81028-
8		17A-30-46241	• • Ring	1	81028-
9		17A-30-46252	• • Shaft	1	81028-
		17M-30-00500	• • Floating Seal Assembly	2	81028-
10	C1		• • • Seal	2	81028-
11	C1		• • • O-ring	2	81028-
12		209-30-63150	• • Plug	1	81028-
13		17M-30-56341	• Cover	2	81028-
14		01010-61640	• Bolt	8	81028-
15		01643-31645	• Washer	8	81028-
16		17A-30-47131	• Guide	2	81028-
17		01010-62265	• Bolt	4	81028-
18		01643-32260	• Washer	4	81028-

FIG. R2100-001008 Track Frame, Track Roller, LHS (1/2)

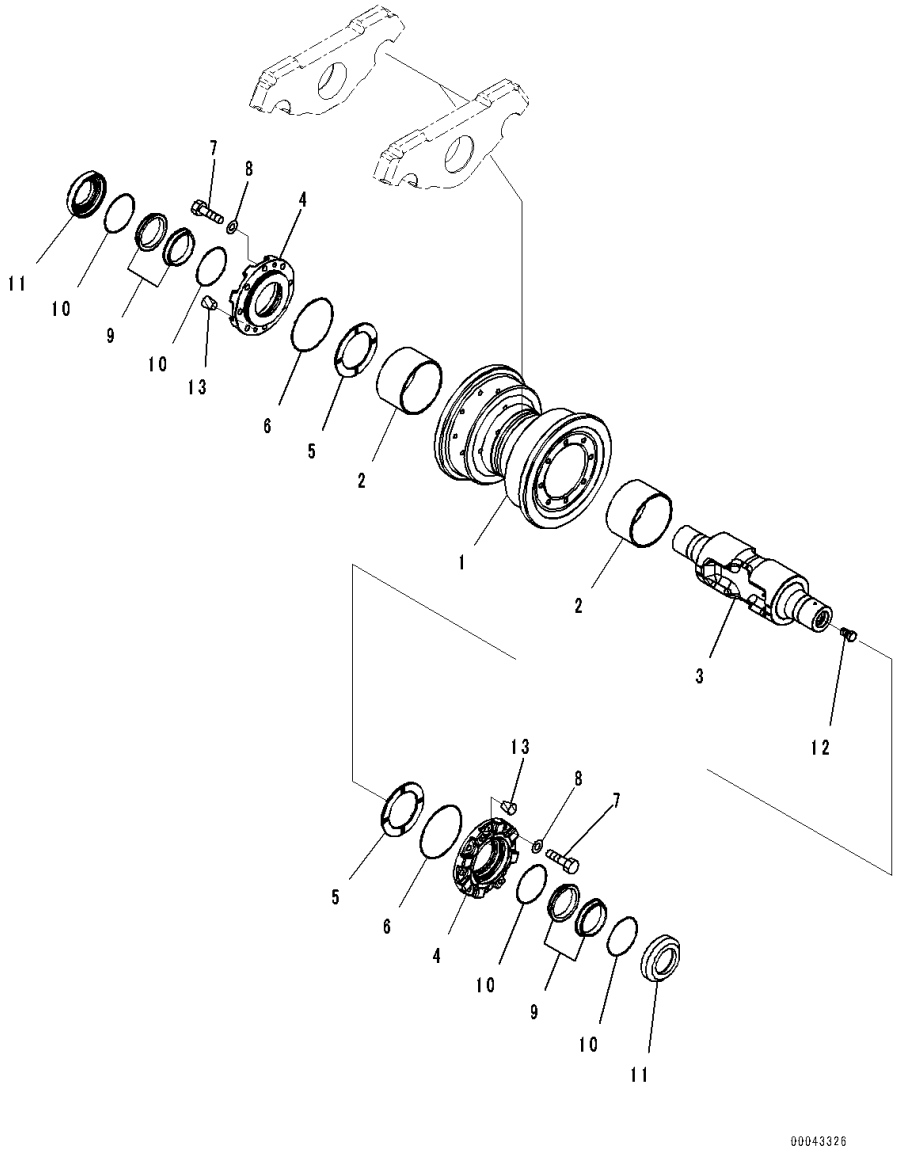

Index	Code	Part Number	Description	Qty	Serial Number
		Note: This list covers following specifications.			
		With Track Roller Guard			
		With Full Length Track Roller Guard, Landfill Specification			
		With Track Roller Guard, Landfill Specification			
		17A-30-00610	Roller Assembly, Track	3	81028-
1		17A-30-15110	• Roller, Single Flange	1	81028-
2		17A-30-15140	• Bushing	2	81028-
3		17A-30-45230	• Shaft	1	81028-
4		17A-30-45210	• Retainer	2	81028-
5		17A-30-45220	• Plate	2	81028-
6		07000-12130	• O-ring	2	81028-
7		01010-81235	• Bolt	16	81028-
8		01643-31232	• Washer	16	81028-
		154-30-00832	• Floating Seal Assembly	2	81028-
9	C1		• • Seal	2	81028-
10	C1		• • O-ring	2	81028-
11		17A-30-15181	• Ring	2	81028-
12		07052-31624	• Plug	1	81028-
13		07049-01215	• Plug	4	81028-

FIG. R2100-001009 Track Frame, Track Roller, LHS (2/2)

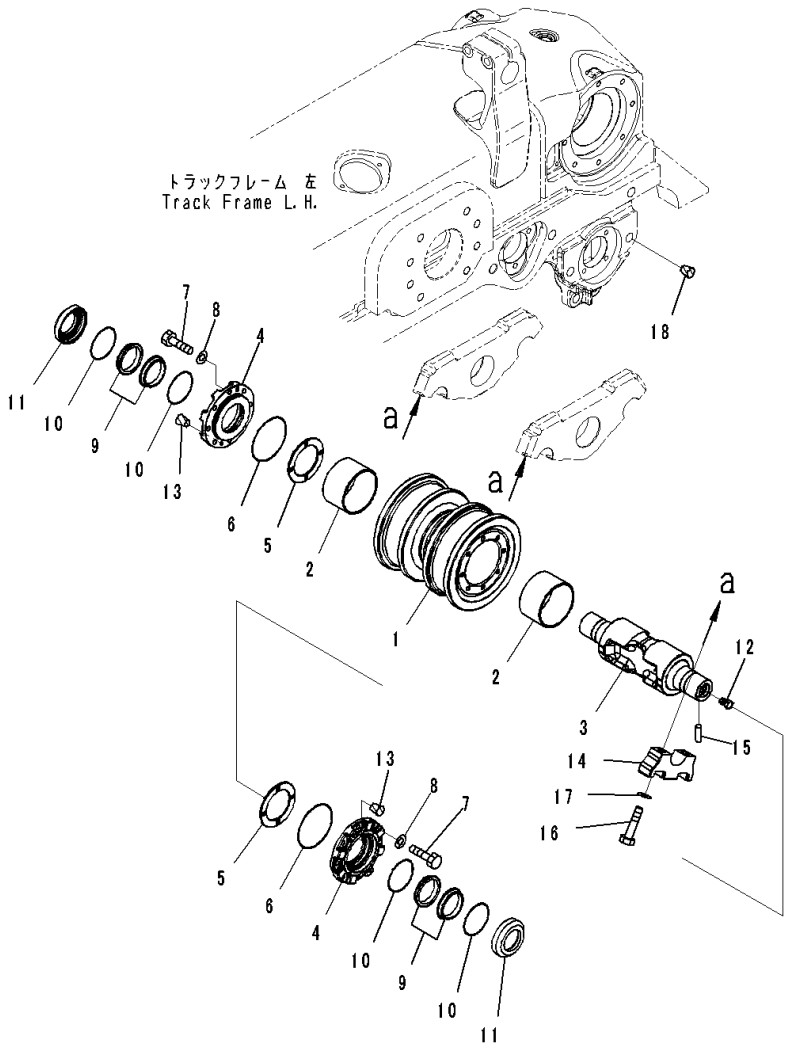

Index	Code	Part Number	Description	Qty	Serial Number
		Note: This list covers following specifications.			
		With Track Roller Guard			
		With Track Roller Guard, Landfill Specification			
		17A-30-00620	Roller Assembly, Track	3	81028-
1		17A-30-15120	• Roller, Double Flange	1	81028-
2		17A-30-15140	• Bushing	2	81028-
3		17A-30-45230	• Shaft	1	81028-
4		17A-30-45210	• Retainer	2	81028-
5		17A-30-45220	• Plate	2	81028-
6		07000-12130	• O-ring	2	81028-
7		01010-81235	• Bolt	16	81028-
8		01643-31232	• Washer	16	81028-
		154-30-00832	• Floating Seal Assembly	2	81028-
9	C1		• • Seal	2	81028-
10	C1		• • O-ring	2	81028-
11		17A-30-15181	• Ring	2	81028-
12		07052-31624	• Plug	1	81028-
13		07049-01215	• Plug	4	81028-
14		17A-30-46330	Cap	12	81028-
15		04020-00616	Pin, Dowel	6	81028-
16		01010-62285	Bolt	24	81028-
17		01643-32260	Washer	24	81028-
18		07049-03038	Plug	9	81028-

FIG. R2100-001010 Track Frame, Carrier Roller, LHS

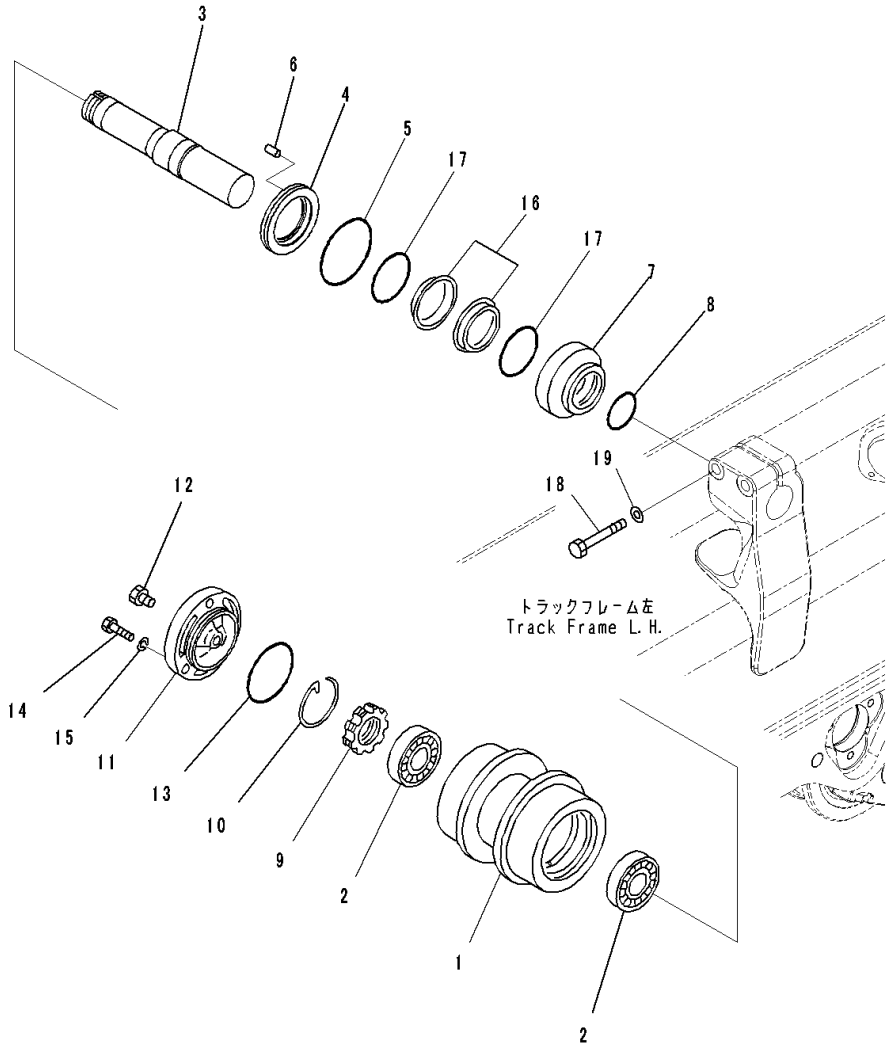

Index	Code	Part Number	Description	Qty	Serial Number
		Note: This list covers following specifications.			
		With Track Roller Guard			
		With Full Length Track Roller Guard, Landfill Specification			
		With Track Roller Guard, Landfill Specification			
		17A-30-00721	Carrier Roller Assembly	2	81124-
1		175-30-45111	• Roller	1	81028-
2		06002-30212	• Bearing	2	81028-
3		175-30-25131	• Shaft	1	81028-
4		175-30-35161	• Ring	1	81028-
5		07000-12130	• O-ring	1	81028-
6		04020-00616	• Pin, Dowel	1	81028-
7		175-30-35171	• Ring	1	81028-
8		07000-12070	• O-ring	1	81028-
9		170-30-15190	• Nut	1	81028-
10		170-30-15210	• Ring	1	81028-
11		175-30-45131	• Cover	1	81028-
12		07052-31624	• Plug	1	81028-
13		07000-12110	• O-ring	1	81028-
14		01010-81435	• Bolt	3	81028-
15		01643-31445	• Washer	3	81028-
		154-30-00832	• Floating Seal Assembly	1	81124-
16	C1		• • Seal	2	81124-
17	C1		• • O-ring	2	81028-
18		01011-82005	Bolt	4	81028-
19		01643-32060	Washer	4	81028-

FIG. R2100-001011 Track Frame, Rear Cover (1/2)

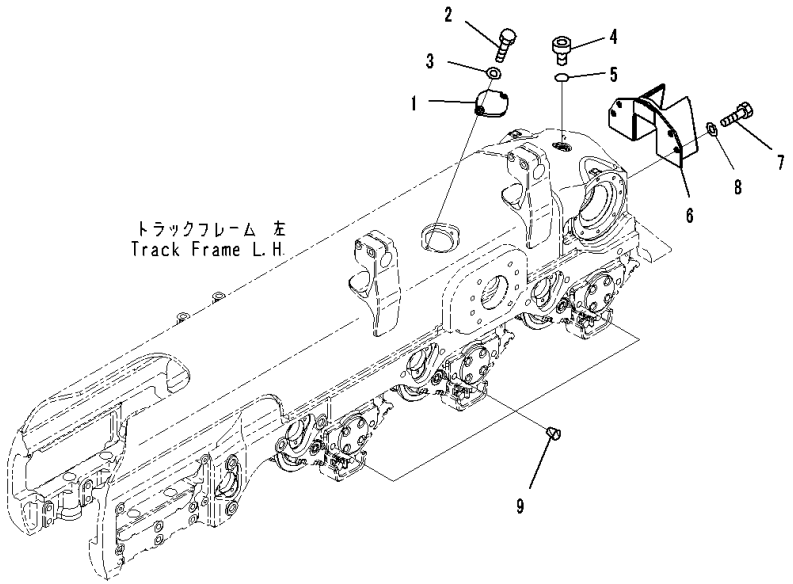

Index	Code	Part Number	Description	Qty	Serial Number
		Note: This list covers following specifications.			
		With Track Roller Guard			
		With Track Roller Guard, Landfill Specification			
1		17A-30-41380	Cover	1	81028-
2		01010-81230	Bolt	2	81028-
3		01643-31232	Washer	2	81028-
4		07040-13618	Plug	1	81028-
5		07002-13634	O-ring	1	81028-
6		17A-30-48951	Cover	1	81028-
7		01010-62040	Bolt	3	81028-
8		01643-32060	Washer	3	81028-
9		07049-03038	Plug	6	81028-

FIG. R2100-001012 Track Frame, Frame RHS

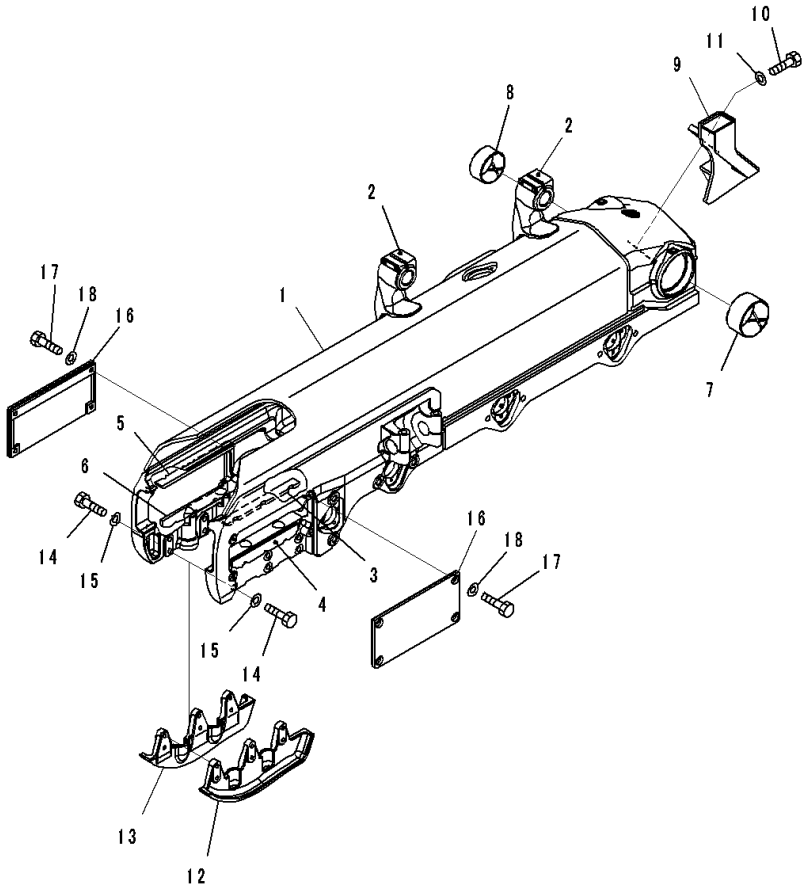

Index	Code	Part Number	Description	Qty	Serial Number
		Note: This list covers following specifications.			
		With Track Roller Guard			
		With Track Roller Guard, Landfill Specification			
		17A-30-00821	Track Frame Assembly,RHS	1	81028-
1	C1		• Frame,RHS	1	81028-
2		17A-30-41411	• • Support,Welded	2	81028-
3		17A-30-41311	• • Plate,Welded	1	81028-
4		17A-30-41321	• • Plate,Welded	1	81028-
5		17A-30-41311	• • Plate,Welded	1	81028-
6		17A-30-41321	• • Plate,Welded	1	81028-
7		17A-50-41210	• Bushing	1	81028-
8		17A-50-11130	• Bushing	1	81028-
9		17A-30-41371	Cover,RHS	1	81028-
10		01010-62040	Bolt	4	81028-
11		01643-32060	Washer	4	81028-
12		17A-30-47141	Guard,LHS	1	81028-
13		17A-30-47151	Guard,RHS	1	81028-
14		01010-82275	Bolt	12	81028-
15		01643-32260	Washer	12	81028-
16		17A-30-41351	Cover	2	81028-
17		01010-61640	Bolt	8	81028-
18		01643-31645	Washer	8	81028-

FIG. R2100-001013 Track Frame, Front Bogie, RHS

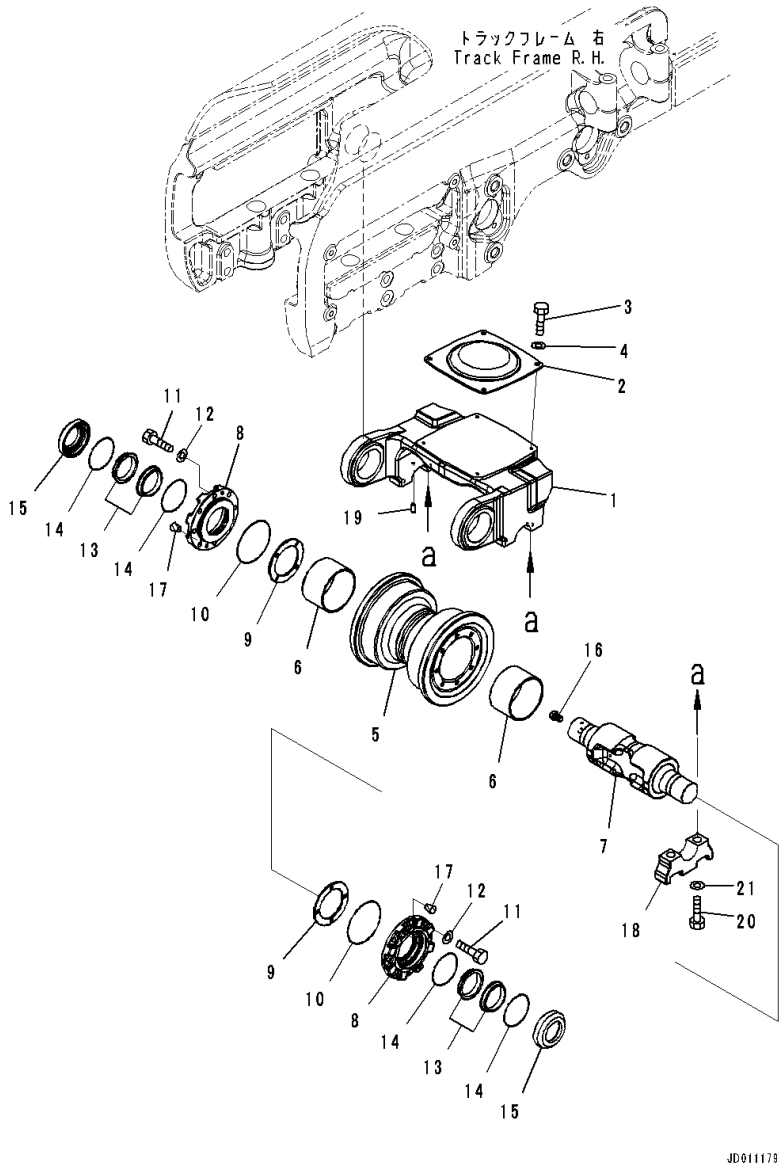

Index	Code	Part Number	Description	Qty	Serial Number
		Note: This list covers following specifications.			
		With Track Roller Guard			
		With Full Length Track Roller Guard, Landfill Specification			
		With Track Roller Guard, Landfill Specification			
1		17A-30-46151	Bogie	1	81028-
2		17A-30-46141	Pad	1	81028-
3		01010-81025	Bolt	4	81028-
4		01643-31032	Washer	4	81028-
		17A-30-00610	Roller Assembly, Track	1	81028-
5		17A-30-15110	• Roller, Single Flange	1	81028-
6		17A-30-15140	• Bushing	2	81028-
7		17A-30-45230	• Shaft	1	81028-
8		17A-30-45210	• Retainer	2	81028-
9		17A-30-45220	• Plate	2	81028-
10		07000-12130	• O-ring	2	81028-
11		01010-81235	• Bolt	16	81028-
12		01643-31232	• Washer	16	81028-
		154-30-00832	• Floating Seal Assembly	2	81028-
13	C1		• • Seal	2	81028-
14	C1		• • O-ring	2	81028-
15		17A-30-15181	• Ring	2	81028-
16		07052-31624	• Plug	1	81028-
17		07049-01215	• Plug	4	81028-
18		17A-30-46330	Cap	2	81028-
19		04020-00616	Pin, Dowel	1	81028-
20		01010-62285	Bolt	4	81028-
21		01643-32260	Washer	4	81028-

FIG. R2100-001014 Track Frame, With Track Roller Guard, Front Idler, RHS

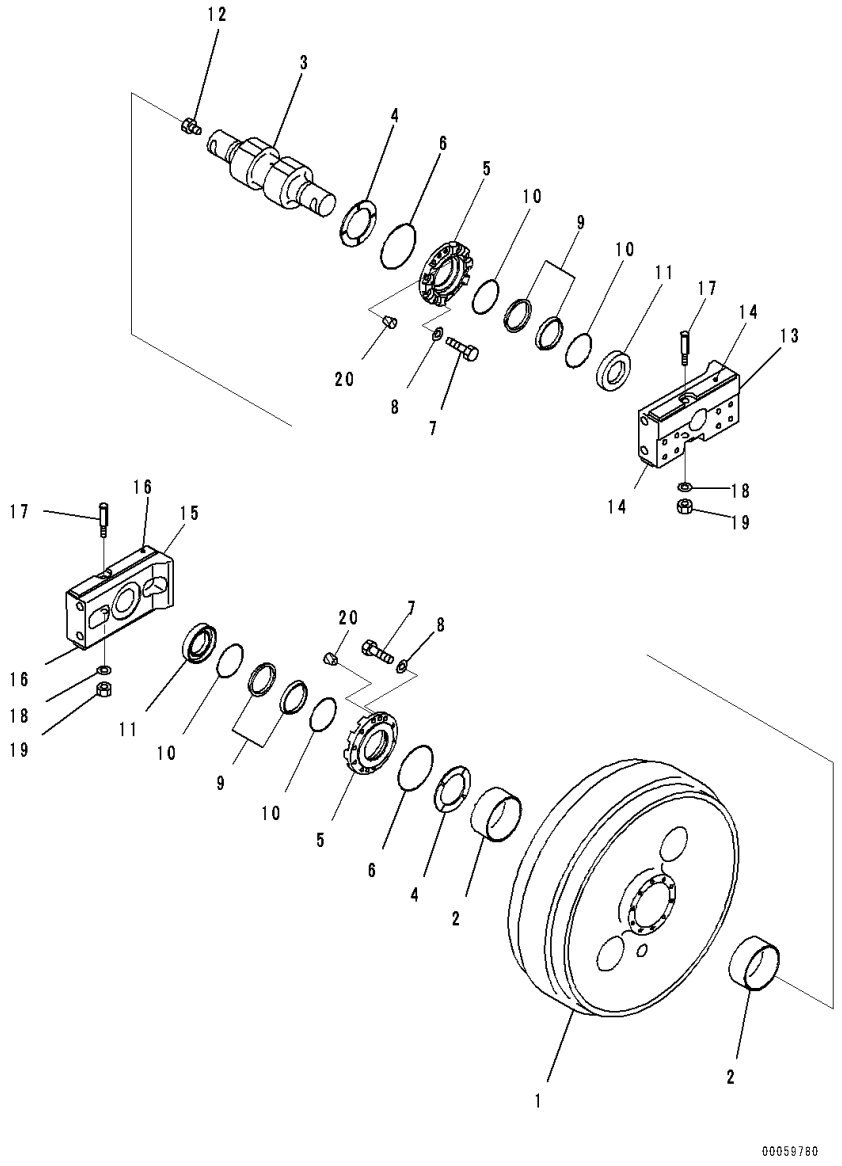

Index	Code	Part Number	Description	Qty	Serial Number
		17A-30-00042	Idler Assembly	1	81028-
1		17A-30-13410	• Idler	1	81028-
2		17A-30-13140	• Bushing	2	81028-
3		17A-30-13450	• Shaft	1	81028-
4		195-30-62650	• Plate	2	81028-
5		17A-30-13440	• Retainer	2	81028-
6		07000-12145	• O-ring	2	81028-
7		01010-81235	• Bolt	20	81028-
8		01643-31232	• Washer	20	81028-
		22B-30-00030	• Floating Seal Assembly	2	81028-
9	C1		• • Seal	2	81028-
10	C1		• • O-ring	2	81028-
11		195-30-62680	• Ring	2	81028-
12		07052-31624	• Plug	1	81028-
13		17A-30-13470	• Support Assembly,LHS	1	81028-
14		17A-30-12150	• • Plate,Welded	2	81028-
15		17A-30-13490	• Support Assembly,RHS	1	81028-
16		17A-30-12150	• • Plate,Welded	2	81028-
17		130-30-13170	• Bolt	2	81028-
18		01643-31645	• Washer	2	81028-
19		01582-11613	• Nut	2	81028-
20		07049-01215	• Plug	4	81028-

FIG. R2100-001015 Track Frame, Recoil Spring, RHS

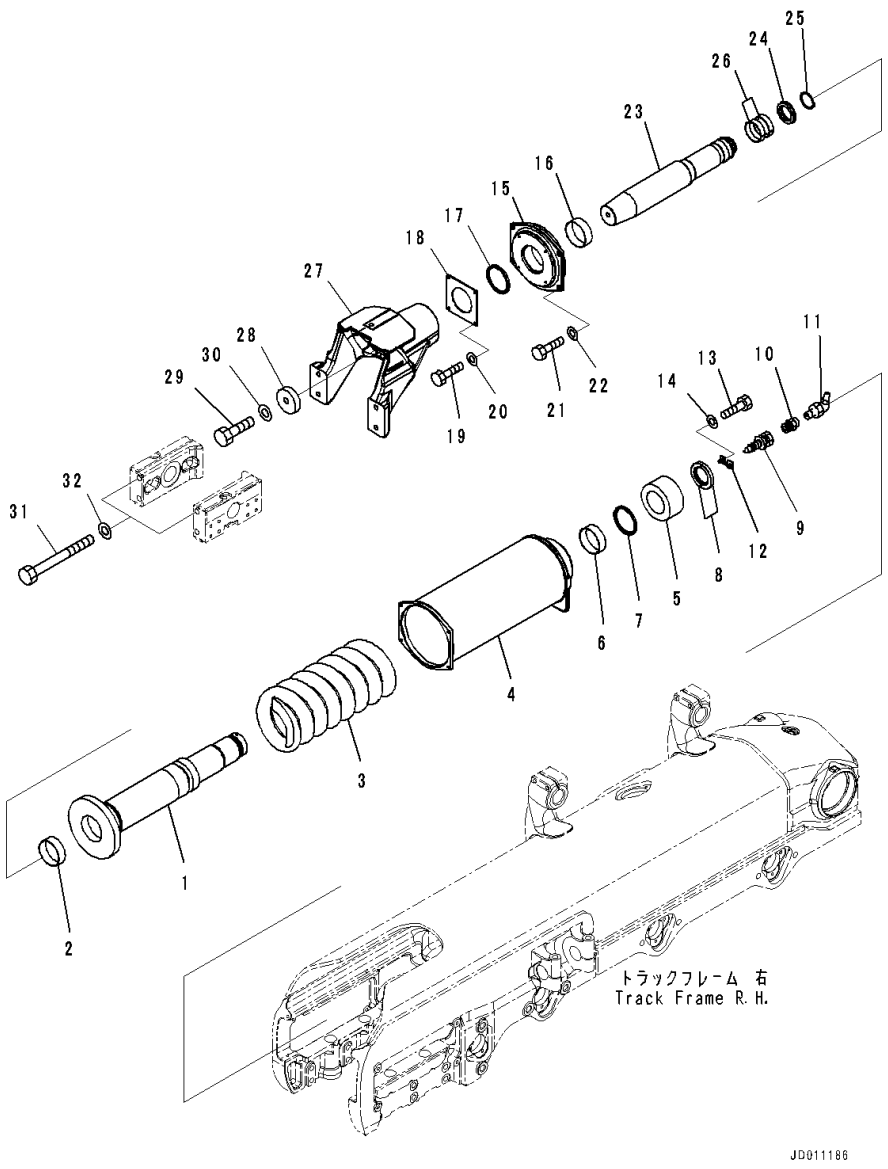

Index	Code	Part Number	Description	Qty	Serial Number
		Note: This list covers following specifications.			
		With Track Roller Guard			
		With Full Length Track Roller Guard, Landfill Specification			
		With Track Roller Guard, Landfill Specification			
1		17A-30-43461	Cylinder	1	81028-
2		07177-01240	Bushing	1	81028-
3		17A-30-43470	Spring	1	81028-
4		17A-30-43432	Cabin,Recoil Spring	1	81028-
5		17A-30-48481	Nut	1	81028-
6		07177-01240	Bushing	1	81028-
7		17A-30-43540	Seal	1	81028-
8		17A-30-48491	Spacer	2	81028-
9		07959-30000	Valve	1	81028-
10		423-70-11160	Nipple	1	81028-
11		07020-00900	Fitting, Grease	1	81028-
12		14X-30-13174	Plate	1	81028-
13		01010-80830	Bolt	2	81028-
14		01643-30823	Washer	2	81028-
15		17A-30-43412	Holder	1	81028-
16		07177-01240	Bushing	1	81028-
17		17A-30-43540	Seal	1	81028-
18		17A-30-43520	Cover	1	81028-
19		01010-81020	Bolt	4	81028-
20		01643-31032	Washer	4	81028-
21		01010-81240	Bolt	4	81028-
22		01643-31232	Washer	4	81028-
23		17A-30-43511	Piston	1	81028-
24		175-30-24242	Packing	1	81028-
25		04064-07525	Ring, Snap	1	81028-
26		07155-01025	Ring, Wear	2	81028-
27		17A-30-44191	Yoke	1	81028-
28		17A-30-43532	Plate	1	81028-
29		01010-82470	Bolt	1	81028-
30		01643-32460	Washer	1	81028-
31		175-30-32162	Bolt	4	81028-
32		01643-32460	Washer	4	81028-

FIG. R2100-001016 Track Frame, Guide Plate, RHS

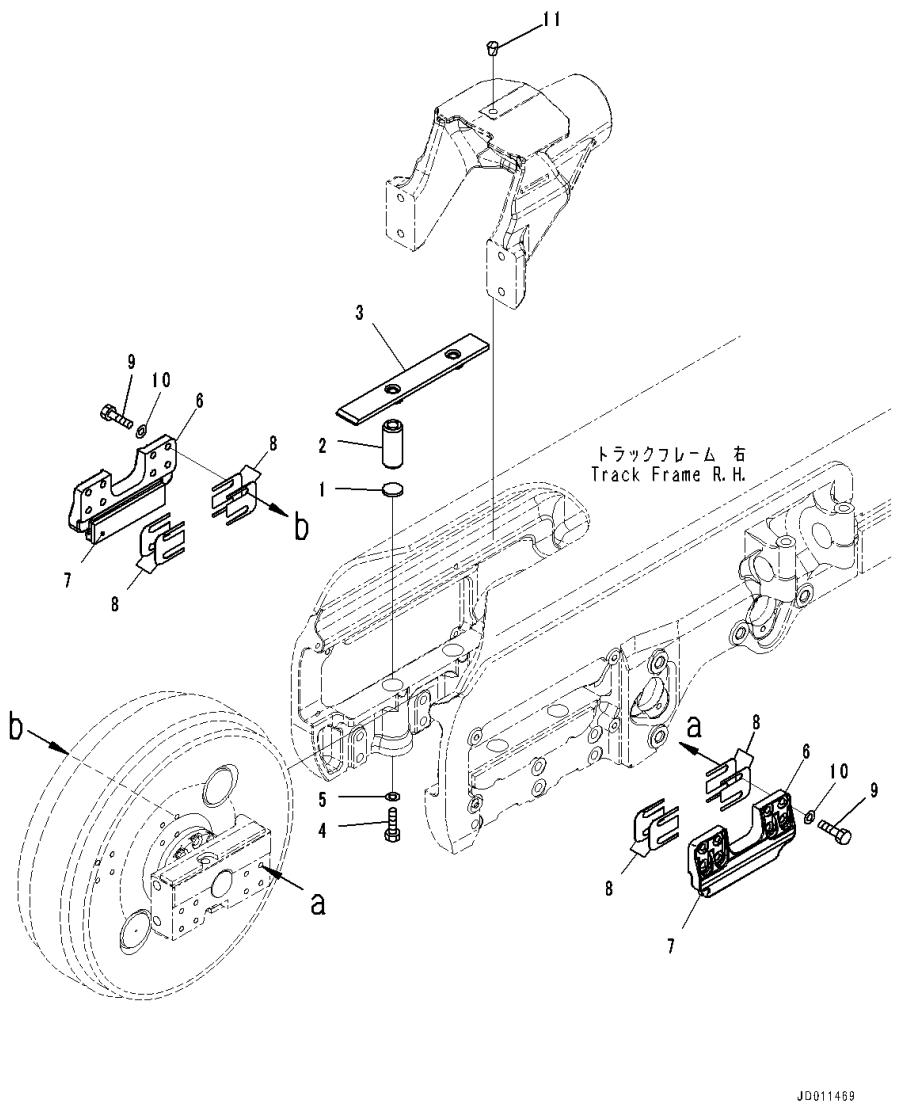

Index	Code	Part Number	Description	Qty	Serial Number
		Note: This list covers following specifications.			
		With Track Roller Guard			
		With Full Length Track Roller Guard, Landfill Specification			
		With Track Roller Guard, Landfill Specification			
1		195-30-17960	Plate	4	81028-
2		155-30-13230	Spring	4	81028-
3		17A-30-12241	Plate Assembly	2	81028-
4		01016-51260	Bolt	4	81028-
5		01643-31232	Washer	4	81028-
6		17A-30-12170	Guide Assembly	2	81028-
7		17A-30-12190	• Plate	1	81028-
8		17A-30-12211	Shim, T=1.0mm	32	81028-
9		01010-81655	Bolt	16	81028-
10		01643-31645	Washer	16	81028-
11		07049-02430	Plug	1	81028-

FIG. R2100-001017 Track Frame, Bogie Mounting, RHS

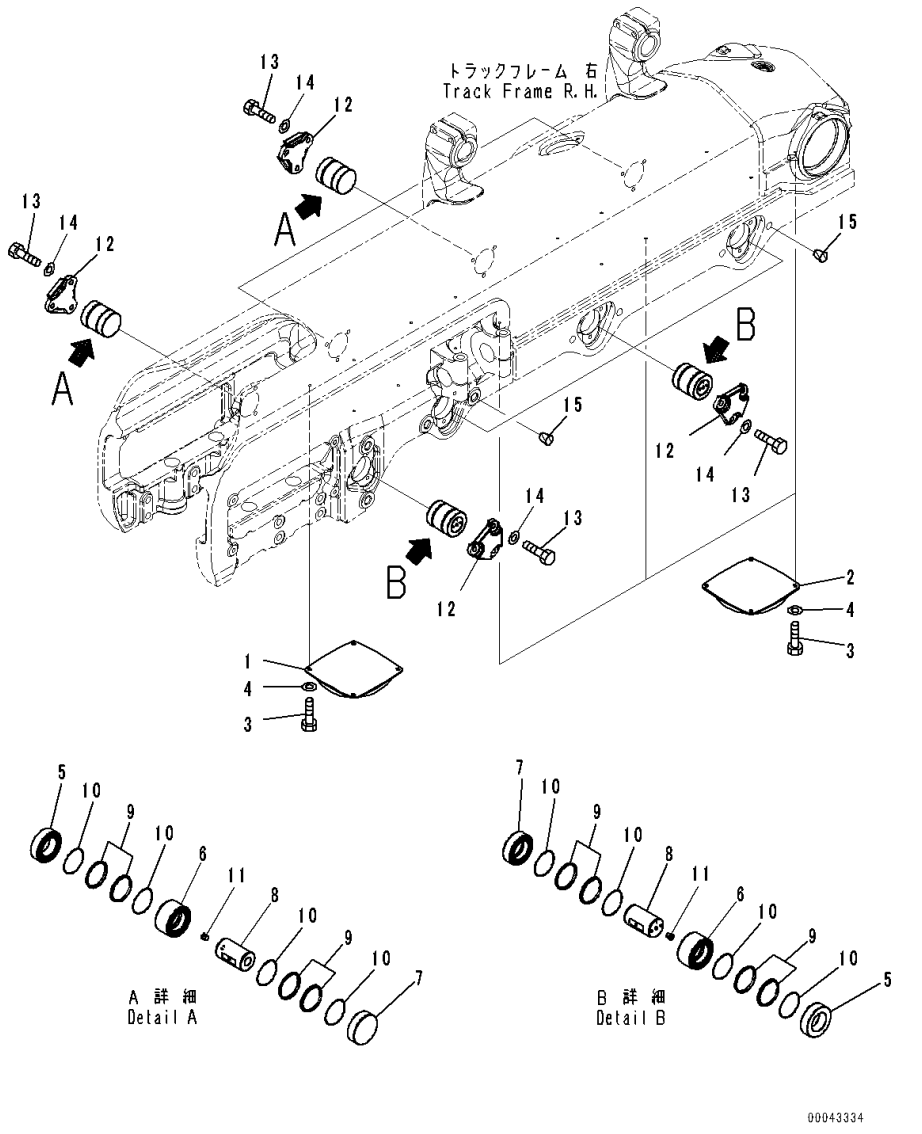

Index	Code	Part Number	Description	Qty	Serial Number
		Note: This list covers following specifications.			
		With Track Roller Guard			
		With Full Length Track Roller Guard, Landfill Specification			
		With Track Roller Guard, Landfill Specification			
1		17A-30-46141	Pad	1	81028-
2		17A-30-46131	Pad	3	81028-
3		01010-81025	Bolt	16	81028-
4		01643-31032	Washer	16	81028-
		17A-30-46202	Pin Assembly	8	81028-
5		17A-30-46221	• Ring	1	81028-
6		17A-30-46231	• Ring	1	81028-
7		17A-30-46241	• Ring	1	81028-
8		17A-30-46252	• Shaft	1	81028-
		17M-30-00500	• Floating Seal Assembly	2	81028-
9	C1		• • Seal	2	81028-
10	C1		• • O-ring	2	81028-
11		209-30-63150	• Plug	1	81028-
12		17M-30-56331	Cover	8	81028-
13		01010-61640	Bolt	24	81028-
14		01643-31645	Washer	24	81028-
15		07049-03038	Plug	13	81028-

FIG. R2100-001018 Track Frame, Bogie, RHS

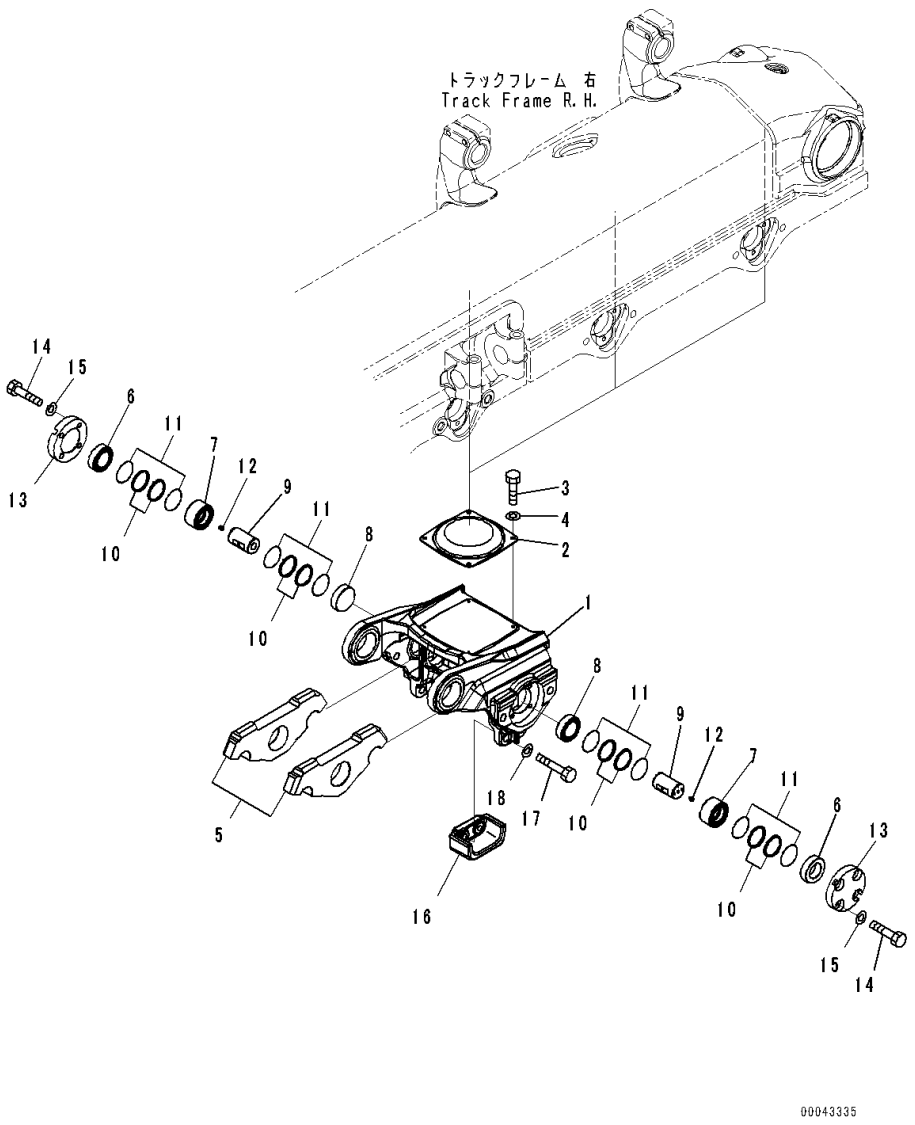

Index	Code	Part Number	Description	Qty	Serial Number
		Note: This list covers following specifications.			
		With Track Roller Guard			
		With Track Roller Guard, Landfill Specification			
		17A-30-00831	Bogie Assembly	3	81028-
1		17A-30-46111	• Bogie	1	81028-
2		17A-30-46131	• Pad	1	81028-
3		01010-81025	• Bolt	4	81028-
4		01643-31032	• Washer	4	81028-
5		17A-30-46121	• Bogie	2	81028-
		17A-30-46202	• Pin Assembly	2	81028-
6		17A-30-46221	• • Ring	1	81028-
7		17A-30-46231	• • Ring	1	81028-
8		17A-30-46241	• • Ring	1	81028-
9		17A-30-46252	• • Shaft	1	81028-
		17M-30-00500	• • Floating Seal Assembly	2	81028-
10	C1		• • • Seal	2	81028-
11	C1		• • • O-ring	2	81028-
12		209-30-63150	• • Plug	1	81028-
13		17M-30-56341	• Cover	2	81028-
14		01010-61640	• Bolt	8	81028-
15		01643-31645	• Washer	8	81028-
16		17A-30-47131	• Guide	2	81028-
17		01010-62265	• Bolt	4	81028-
18		01643-32260	• Washer	4	81028-

FIG. R2100-001019 Track Frame, Track Roller, RHS (1/2)

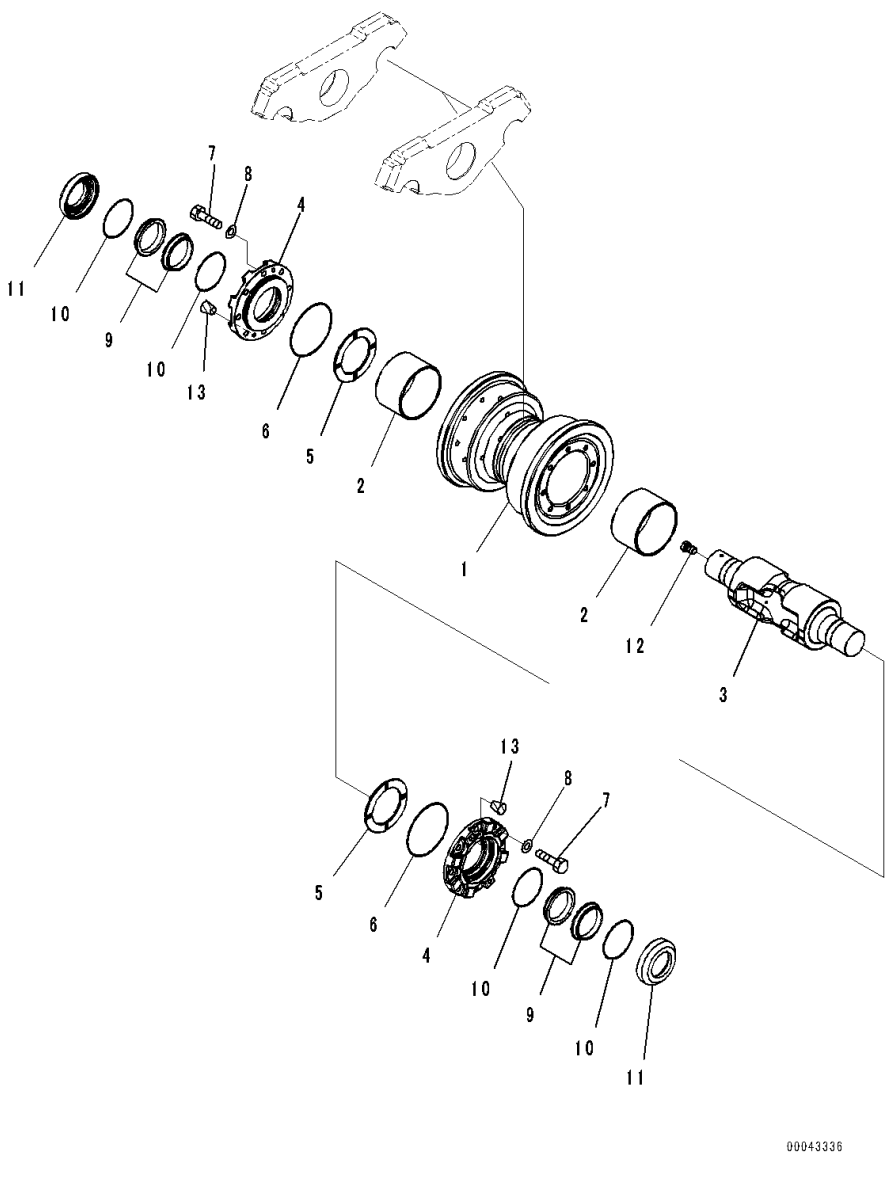

Index	Code	Part Number	Description	Qty	Serial Number
		Note: This list covers following specifications.			
		With Track Roller Guard			
		With Full Length Track Roller Guard, Landfill Specification			
		With Track Roller Guard, Landfill Specification			
		17A-30-00610	Roller Assembly, Track	3	81028-
1		17A-30-15110	• Roller, Single Flange	1	81028-
2		17A-30-15140	• Bushing	2	81028-
3		17A-30-45230	• Shaft	1	81028-
4		17A-30-45210	• Retainer	2	81028-
5		17A-30-45220	• Plate	2	81028-
6		07000-12130	• O-ring	2	81028-
7		01010-81235	• Bolt	16	81028-
8		01643-31232	• Washer	16	81028-
		154-30-00832	• Floating Seal Assembly	2	81028-
9	C1		• • Seal	2	81028-
10	C1		• • O-ring	2	81028-
11		17A-30-15181	• Ring	2	81028-
12		07052-31624	• Plug	1	81028-
13		07049-01215	• Plug	4	81028-

FIG. R2100-001020 Track Frame, Track Roller, RHS (2/2)

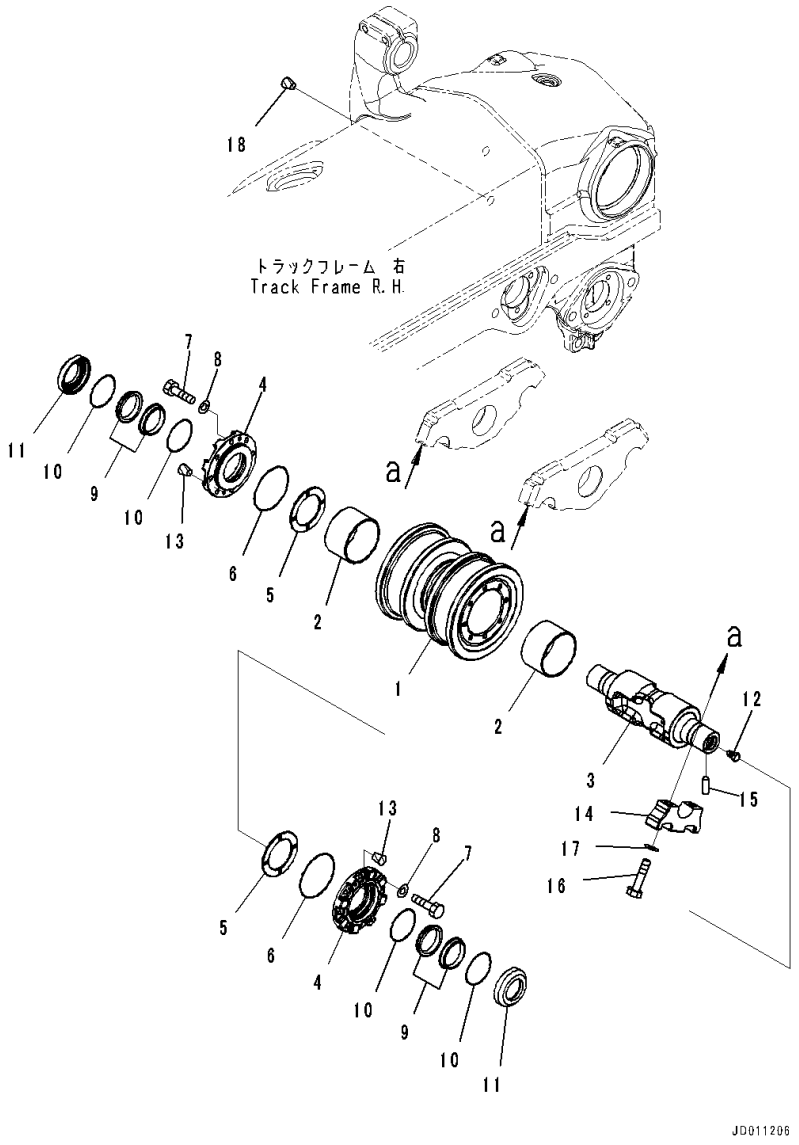

Index	Code	Part Number	Description	Qty	Serial Number
		Note: This list covers following specifications.			
		With Track Roller Guard			
		With Track Roller Guard, Landfill Specification			
		17A-30-00620	Roller Assembly, Track	3	81028-
1		17A-30-15120	• Roller, Double Flange	1	81028-
2		17A-30-15140	• Bushing	2	81028-
3		17A-30-45230	• Shaft	1	81028-
4		17A-30-45210	• Retainer	2	81028-
5		17A-30-45220	• Plate	2	81028-
6		07000-12130	• O-ring	2	81028-
7		01010-81235	• Bolt	16	81028-
8		01643-31232	• Washer	16	81028-
		154-30-00832	• Floating Seal Assembly	2	81028-
9	C1		• • Seal	2	81028-
10	C1		• • O-ring	2	81028-
11		17A-30-15181	• Ring	2	81028-
12		07052-31624	• Plug	1	81028-
13		07049-01215	• Plug	4	81028-
14		17A-30-46330	Cap	12	81028-
15		04020-00616	Pin, Dowel	6	81028-
16		01010-62285	Bolt	24	81028-
17		01643-32260	Washer	24	81028-
18		07049-03038	Plug	9	81028-

FIG. R2100-001021 Track Frame, Carrier Roller, RHS

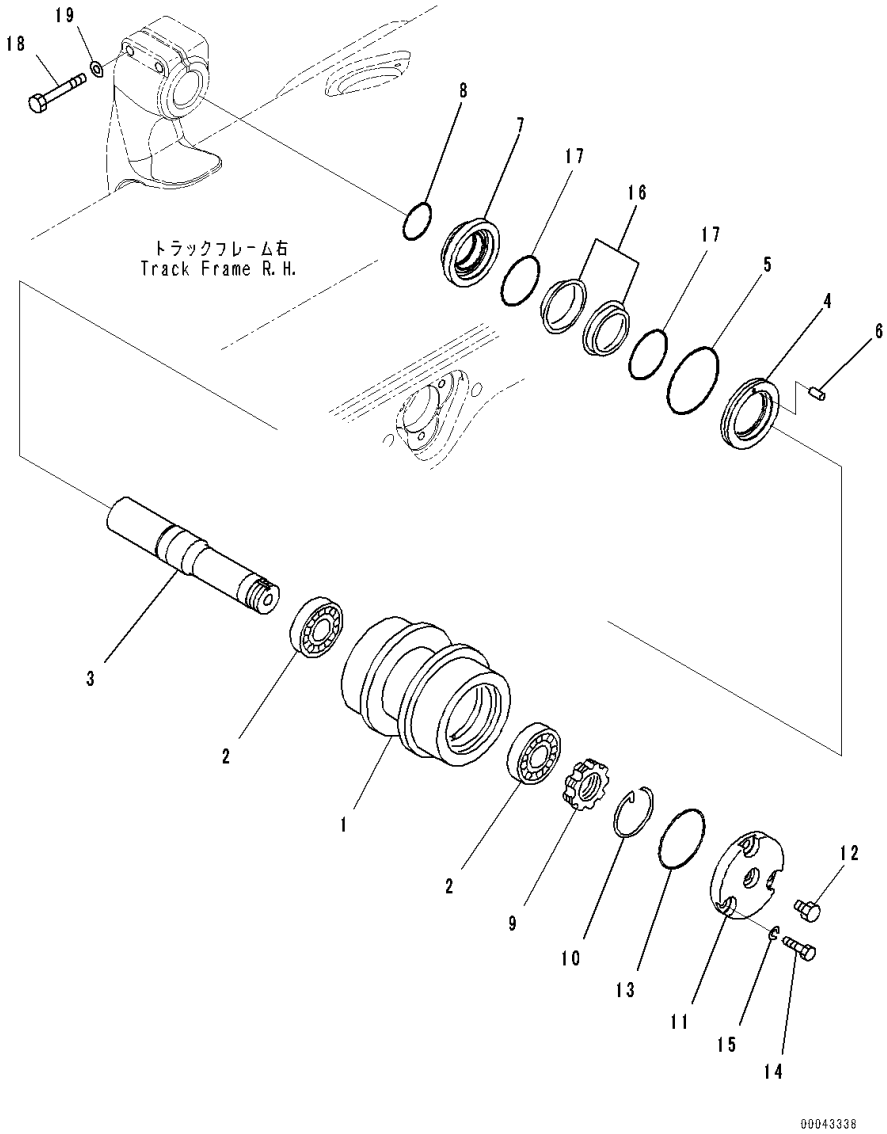

Index	Code	Part Number	Description	Qty	Serial Number
		Note: This list covers following specifications.			
		With Track Roller Guard			
		With Full Length Track Roller Guard, Landfill Specification			
		With Track Roller Guard, Landfill Specification			
		17A-30-00721	Carrier Roller Assembly	2	81124-
1		175-30-45111	• Roller	1	81028-
2		06002-30212	• Bearing	2	81028-
3		175-30-25131	• Shaft	1	81028-
4		175-30-35161	• Ring	1	81028-
5		07000-12130	• O-ring	1	81028-
6		04020-00616	• Pin, Dowel	1	81028-
7		175-30-35171	• Ring	1	81028-
8		07000-12070	• O-ring	1	81028-
9		170-30-15190	• Nut	1	81028-
10		170-30-15210	• Ring	1	81028-
11		175-30-45131	• Cover	1	81028-
12		07052-31624	• Plug	1	81028-
13		07000-12110	• O-ring	1	81028-
14		01010-81435	• Bolt	3	81028-
15		01643-31445	• Washer	3	81028-
		154-30-00832	• Floating Seal Assembly	1	81124-
16	C1		• • Seal	2	81124-
17	C1		• • O-ring	2	81028-
18		01011-82005	Bolt	4	81028-
19		01643-32060	Washer	4	81028-

FIG. R2100-001022 Track Frame, Rear Cover (2/2)

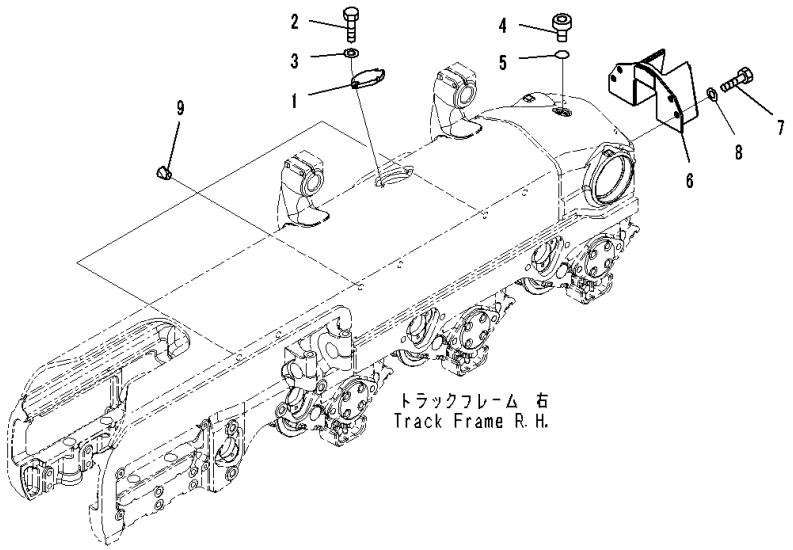

Index	Code	Part Number	Description	Qty	Serial Number
		Note: This list covers following specifications.			
		With Track Roller Guard			
		With Track Roller Guard, Landfill Specification			
1		17A-30-41380	Cover	1	81028-
2		01010-81230	Bolt	2	81028-
3		01643-31232	Washer	2	81028-
4		07040-13618	Plug	1	81028-
5		07002-13634	O-ring	1	81028-
6		17A-30-48951	Cover	1	81028-
7		01010-62040	Bolt	3	81028-
8		01643-32060	Washer	3	81028-
9		07049-03038	Plug	6	81028-

FIG. R2100-002001 Track Frame, Heavy Duty, With Full Length Track Roller Guard, Segmented, Frame LHS

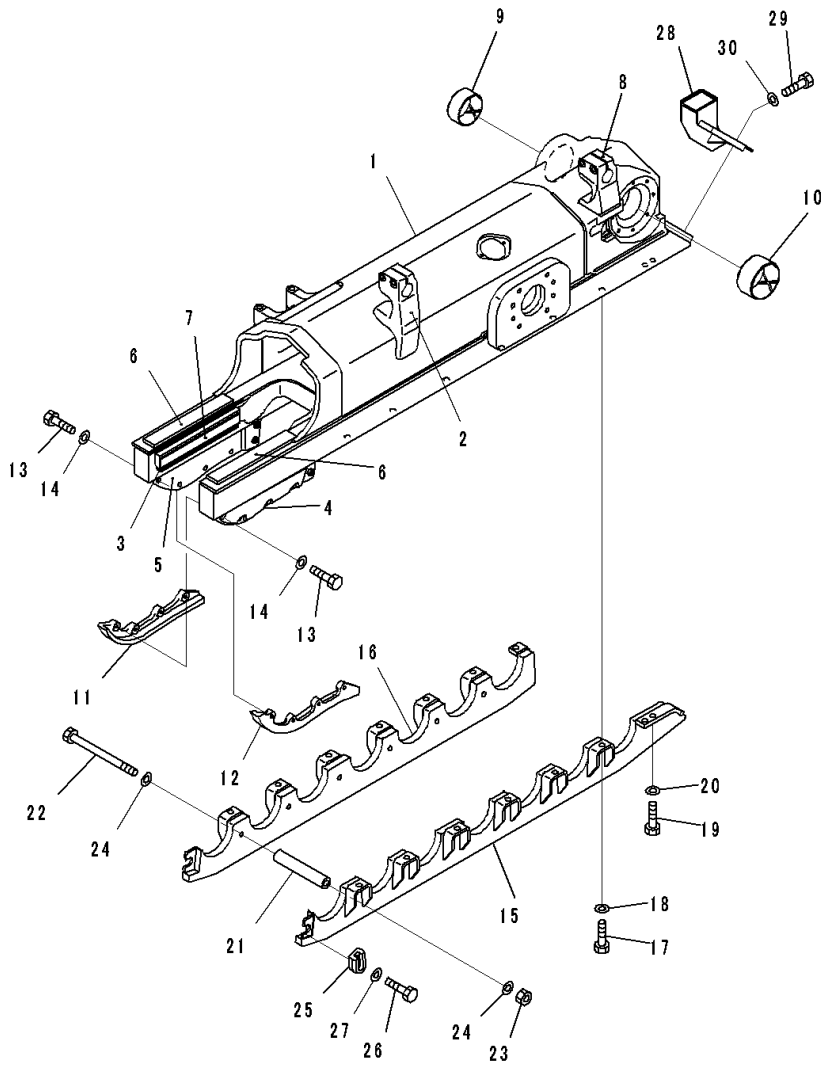

Index	Code	Part Number	Description	Qty	Serial Number
		17A-30-00852	Track Frame	1	81028-
1	C1		• Frame	1	81028-
2		17A-30-41411	• • Support,Welded	1	81028-
3		175-30-11272	• • Plate,Welded	2	81028-
4		175-30-21353	• • Guard,Welded	1	81028-
5		175-30-21363	• • Guard,Welded	1	81028-
6		17A-30-48370	• • Plate,Welded	2	81028-
7		17A-30-48380	• • Plate,Welded	2	81028-
8		17A-30-48161	• • Support,Welded	1	81028-
9		17A-50-41210	• Bushing	1	81028-
10		17A-50-11130	• Bushing	1	81028-
11		178-30-12161	Guard	1	81028-
12		178-30-12171	Guard	1	81028-
13		01010-82045	Bolt	12	81028-
14		01643-32060	Washer	12	81028-
15		17A-30-48911	Guard	1	81028-
16		17A-30-48931	Guard	1	81028-
17		01010-62450	Bolt	12	81028-
18		01643-32460	Washer	12	81028-
19		01010-62460	Bolt	3	81028-
20		01643-32460	Washer	3	81028-
21		17A-30-48981	Spacer	6	81028-
22		195-30-37250	Bolt	6	81028-
23		01580-12419	Nut	6	81028-
24		01643-32460	Washer	12	81028-
25		170-30-12162	Retainer	2	81028-
26		01010-62050	Bolt	4	81028-
27		01643-32060	Washer	4	81028-
28		17A-30-48962	Cover	1	81028-
29		01010-62040	Bolt	4	81028-
30		01643-32060	Washer	4	81028-

FIG. R2100-002002 Track Frame, Heavy Duty, With Full Length Track Roller Guard, Segmented, Front Idler, LHS

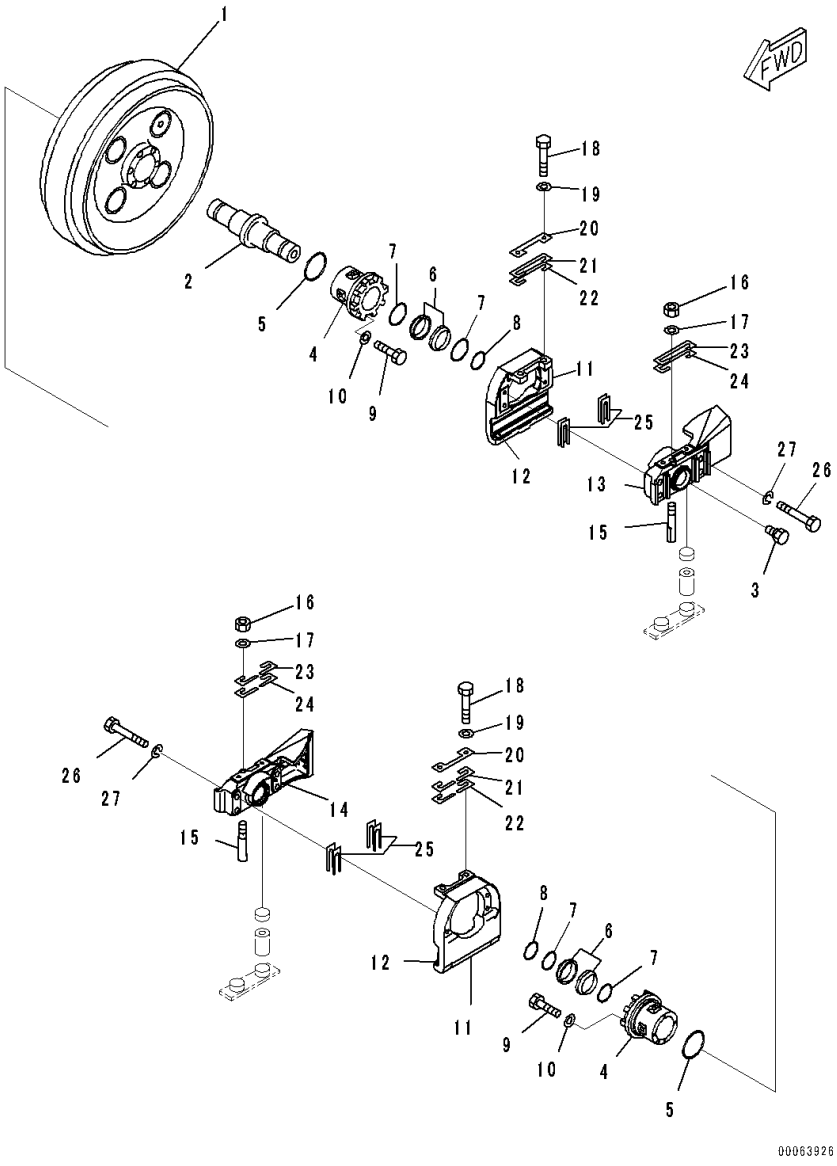

Index	Code	Part Number	Description	Qty	Serial Number
		17A-30-00430	Idler Assembly	1	81028-
1		175-30-23114	• Idler	1	81028-
2		175-30-23121	• Shaft	1	81028-
3		07052-31624	• Plug	1	81028-
4		175-30-36108	• Bushing Assembly	2	81028-
5		07000-12130	• O-ring	2	81028-
		175-30-00702	• Seal Ring Assembly	2	81028-
6	C1		• • Seal	2	81028-
7	C1		• • O-ring	2	81028-
8		07000-03068	• O-ring	2	81028-
9		01010-81235	• Bolt	12	81028-
10		01602-21236	• Washer, Spring	12	81028-
11		17A-30-48342	• Guide Assembly	2	81028-
12		17A-30-48390	• • Plate,Welded	1	81028-
13		17A-30-48311	• Support	1	81028-
14		17A-30-48321	• Support	1	81028-
15		175-30-23172	• Bolt	2	81028-
16		175-30-23180	• Nut	2	81028-
17		01643-31645	• Washer	2	81028-
18		175-30-33492	• Bolt	4	81028-
19		01643-32060	• Washer	4	81028-
20		175-30-33460	• Plate	2	81028-
		175-30-05050	• Shim Kit	2	81028-
21	C1		• • Shim, T=1.0mm	4	81028-
22	C1		• • Shim, T=2.0mm	2	81028-
		175-30-05060	• Shim Kit	2	81028-
23	C1		• • Shim, T=1.0mm	8	81028-
24	C1		• • Shim, T=2.0mm	4	81028-
25		175-30-05072	• Shim Kit	2	81028-
	C1		• • Shim, T=1.0mm	16	81028-
	C1		• • Shim, T=0.5mm	2	81028-
26		01011-62225	• Bolt	8	81028-
27		01643-32260	• Washer	8	81028-

FIG. R2100-002003 Track Frame, Heavy Duty, With Full Length Track Roller Guard, Segmented, Recoil Spring, LHS

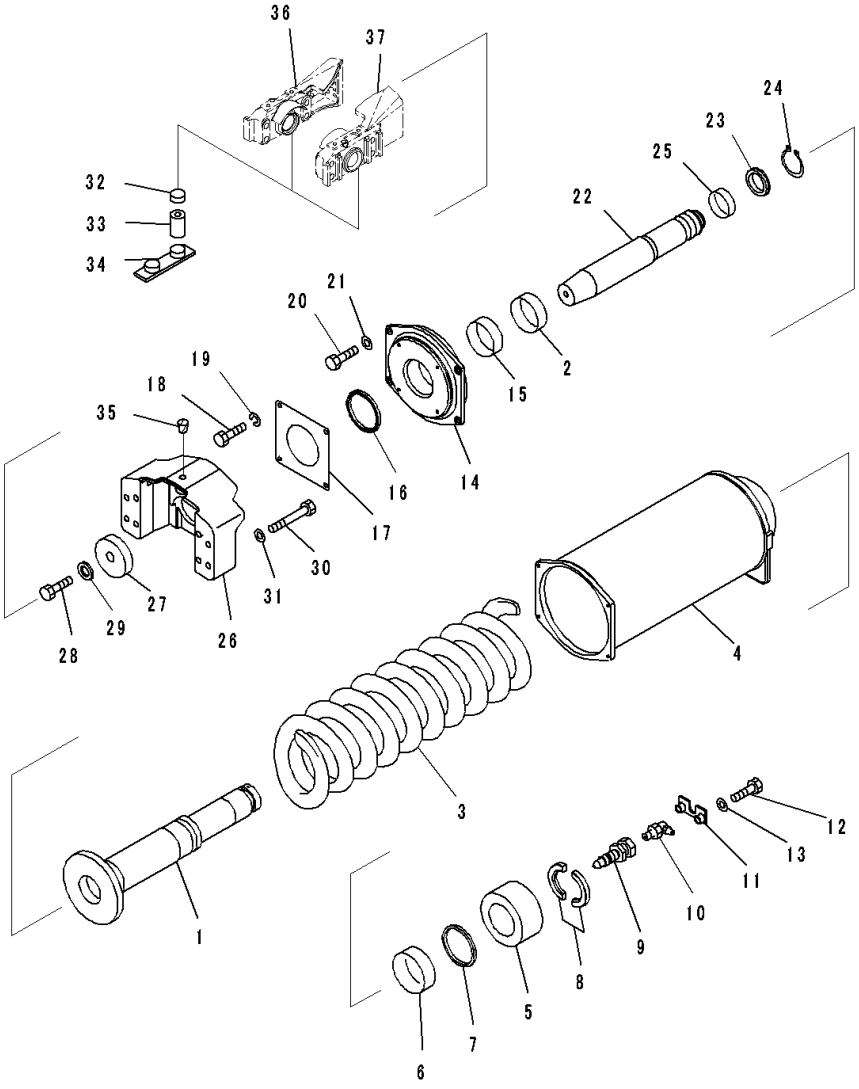

Index	Code	Part Number	Description	Qty	Serial Number
1		17A-30-48461	Cylinder	1	81028-
2		07177-01140	Bushing	1	81028-
3		17A-30-48471	Spring	1	81028-
4		17A-30-48432	Cabin,Recoil Spring	1	81028-
5		17A-30-48481	Nut	1	81028-
6		07177-01140	Bushing	1	81028-
7		21M-30-14150	Seal	1	81028-
8		17A-30-48491	Spacer	2	81028-
9		17A-30-48630	Valve	1	81028-
10		07020-00900	Fitting, Grease	1	81028-
11		14X-30-13174	Plate	1	81028-
12		01010-80830	Bolt	2	81028-
13		01643-30823	Washer	2	81028-
14		17A-30-48412	Holder	1	81028-
15		07177-01140	Bushing	1	81028-
16		21M-30-14150	Seal	1	81028-
17		17A-30-48520	Cover	1	81028-
18		01010-81020	Bolt	4	81028-
19		01643-31032	Washer	4	81028-
20		01010-81240	Bolt	4	81028-
21		01643-31232	Washer	4	81028-
22		17A-30-48511	Piston	1	81028-
23		175-30-24242	Packing	1	81028-
24		04064-07525	Ring, Snap	1	81028-
25		07155-01025	Ring, Wear	2	81028-
26		17A-30-48621	Yoke	1	81028-
27		17A-30-48531	Plate	1	81028-
28		01010-82470	Bolt	1	81028-
29		01643-32460	Washer	1	81028-
30		01011-82045	Bolt	8	81028-
31		01643-32060	Washer	8	81028-
32		195-30-17960	Plate	4	81028-
33		155-30-13230	Spring	4	81028-
34		175-30-24131	Guide	2	81028-
35		07049-02025	Plug	1	81028-
36		(17A-30-48321)	Support(Refer to Page 913)		-
37		(17A-30-48311)	Support(Refer to Page 913)		-

FIG. R2100-002004 Track Frame, Heavy Duty, With Full Length Track Roller Guard, Segmented, Track Roller, LHS (1/2)

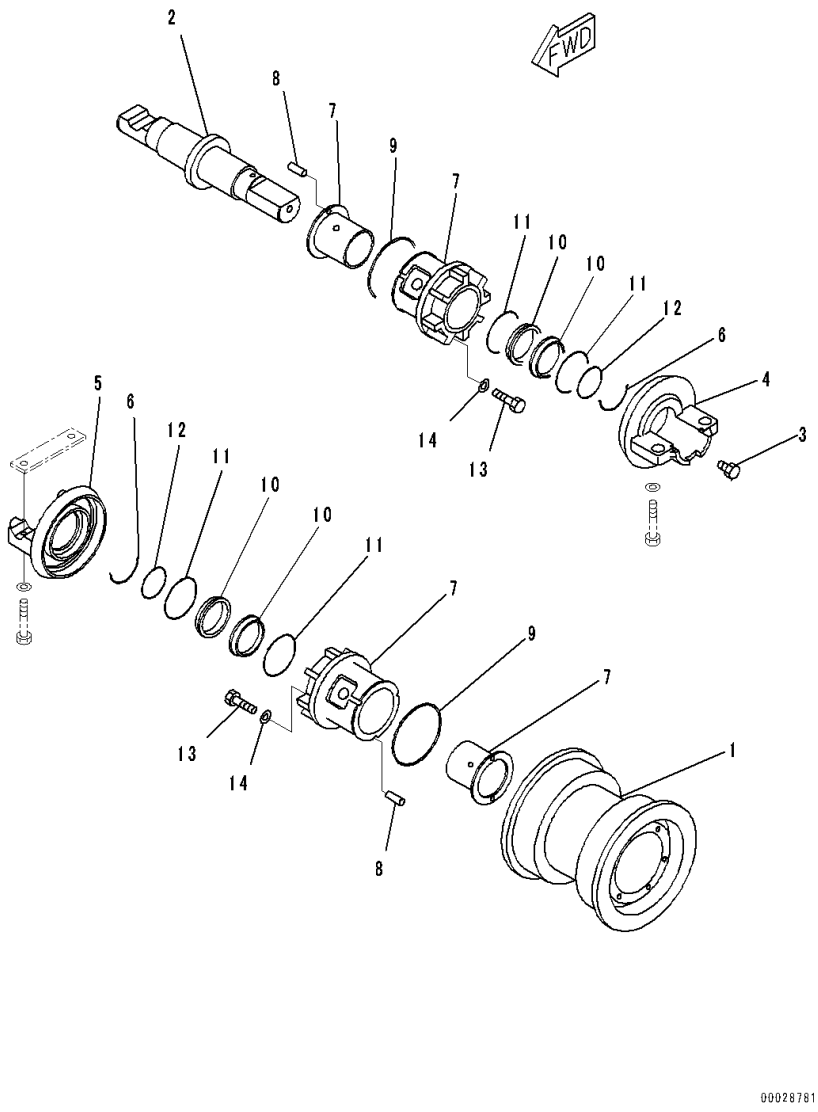

Index	Code	Part Number	Description	Qty	Serial Number
		175-30-00761	Roller Assembly, Track	2	81028-
1		178-30-16115	• Roller	1	81028-
2		175-30-36130	• Shaft	1	81028-
3		07052-31624	• Plug	1	81028-
4		175-30-36210	• Collar	1	81028-
5		175-30-36220	• Collar	1	81028-
6		175-30-26230	• Ring	2	81028-
7		175-30-36108	• Bushing Assembly	2	81028-
8		170-30-91130	• • Pin, Dowel	2	81028-
9		07000-12130	• O-ring	2	81028-
		175-30-00702	• Seal Ring Assembly	2	81028-
10	C1		• • Seal	2	81028-
11	C1		• • O-ring	2	81028-
12		07000-03068	• O-ring	2	81028-
13		175-30-36340	• Bolt	12	81028-
14		01643-51232	• Washer	12	81028-

FIG. R2100-002005 Track Frame, Heavy Duty, With Full Length Track Roller Guard, Segmented, Track Roller, LHS (2/2)

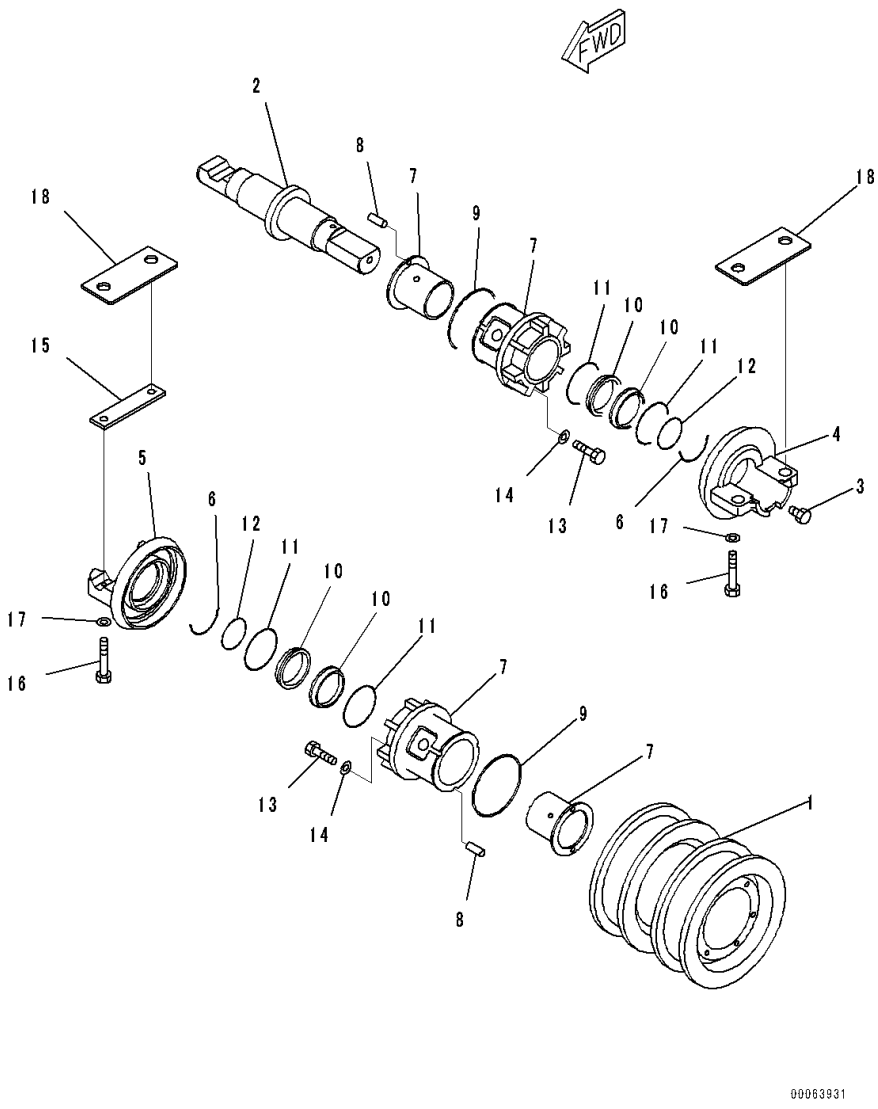

Index	Code	Part Number	Description	Qty	Serial Number
		175-30-00771	Roller Assembly, Track	5	81028-
1		178-30-16125	• Roller	1	81028-
2		175-30-36130	• Shaft	1	81028-
3		07052-31624	• Plug	1	81028-
4		175-30-36210	• Collar	1	81028-
5		175-30-36220	• Collar	1	81028-
6		175-30-26230	• Ring	2	81028-
7		175-30-36108	• Bushing Assembly	2	81028-
8		170-30-91130	• • Pin, Dowel	2	81028-
9		07000-12130	• O-ring	2	81028-
		175-30-00702	• Seal Ring Assembly	2	81028-
10	C1		• • Seal	2	81028-
11	C1		• • O-ring	2	81028-
12		07000-03068	• O-ring	2	81028-
13		175-30-36340	• Bolt	12	81028-
14		01643-51232	• Washer	12	81028-
15		175-30-26241	Plate	7	81028-
16		01010-62490	Bolt	28	81028-
17		01643-32460	Washer	28	81028-
18		17A-30-48251	Plate	14	81028-

FIG. R2100-002006 Track Frame, Heavy Duty, With Full Length Track Roller Guard, Segmented, Carrier Roller, LHS

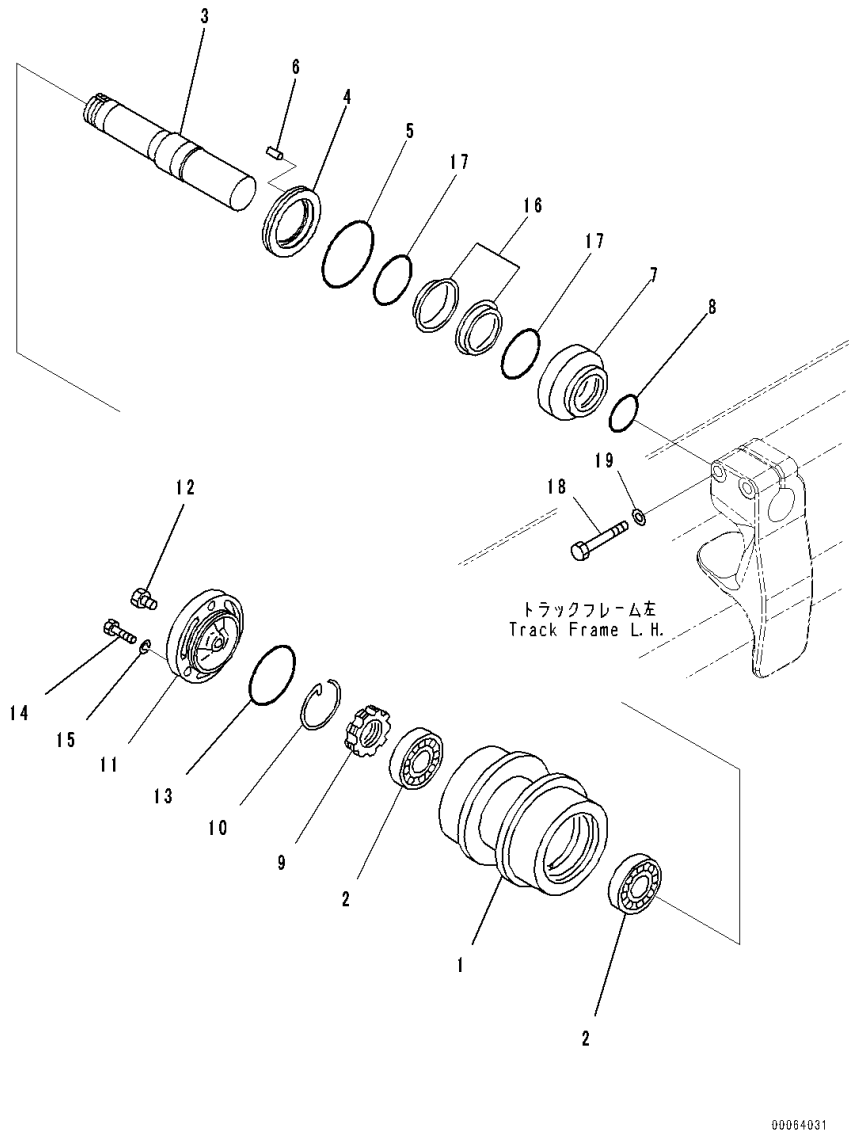

Index	Code	Part Number	Description	Qty	Serial Number
		17A-30-00721	Carrier Roller Assembly	2	81124-
1		175-30-45111	• Roller	1	81028-
2		06002-30212	• Bearing	2	81028-
3		175-30-25131	• Shaft	1	81028-
4		175-30-35161	• Ring	1	81028-
5		07000-12130	• O-ring	1	81028-
6		04020-00616	• Pin, Dowel	1	81028-
7		175-30-35171	• Ring	1	81028-
8		07000-12070	• O-ring	1	81028-
9		170-30-15190	• Nut	1	81028-
10		170-30-15210	• Ring	1	81028-
11		175-30-45131	• Cover	1	81028-
12		07052-31624	• Plug	1	81028-
13		07000-12110	• O-ring	1	81028-
14		01010-81435	• Bolt	3	81028-
15		01643-31445	• Washer	3	81028-
		154-30-00832	• Floating Seal Assembly	1	81124-
16	C1		• • Seal	2	81124-
17	C1		• • O-ring	2	81028-
18		01011-82005	Bolt	4	81028-
19		01643-32060	Washer	4	81028-

FIG. R2100-002007 Track Frame, Heavy Duty, With Full Length Track Roller Guard, Segmented, Rear Cover (1/2)

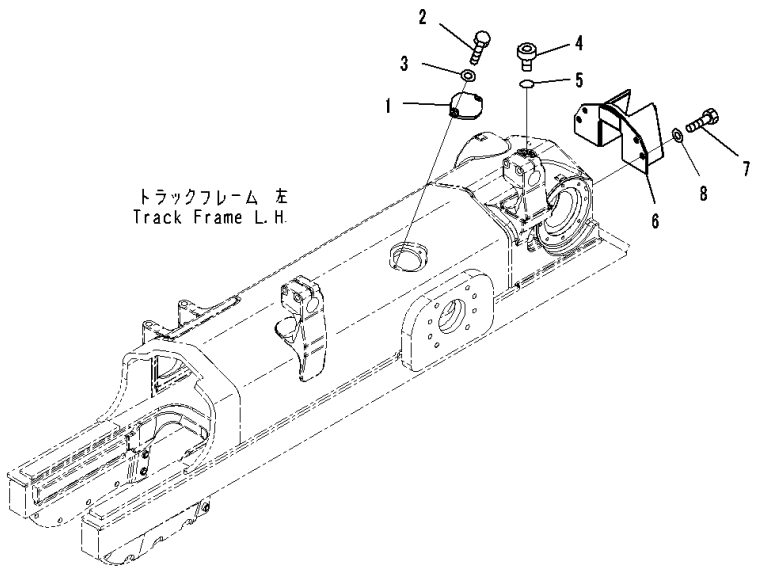

Index	Code	Part Number	Description	Qty	Serial Number
1		17A-30-41380	Cover	1	81028-
2		01010-81230	Bolt	2	81028-
3		01643-31232	Washer	2	81028-
4		07040-13618	Plug	1	81028-
5		07002-13634	O-ring	1	81028-
6		17A-30-48951	Cover	1	81028-
7		01010-62040	Bolt	3	81028-
8		01643-32060	Washer	3	81028-

FIG. R2100-002008 Track Frame, Heavy Duty, With Full Length Track Roller Guard, Segmented, Frame RHS

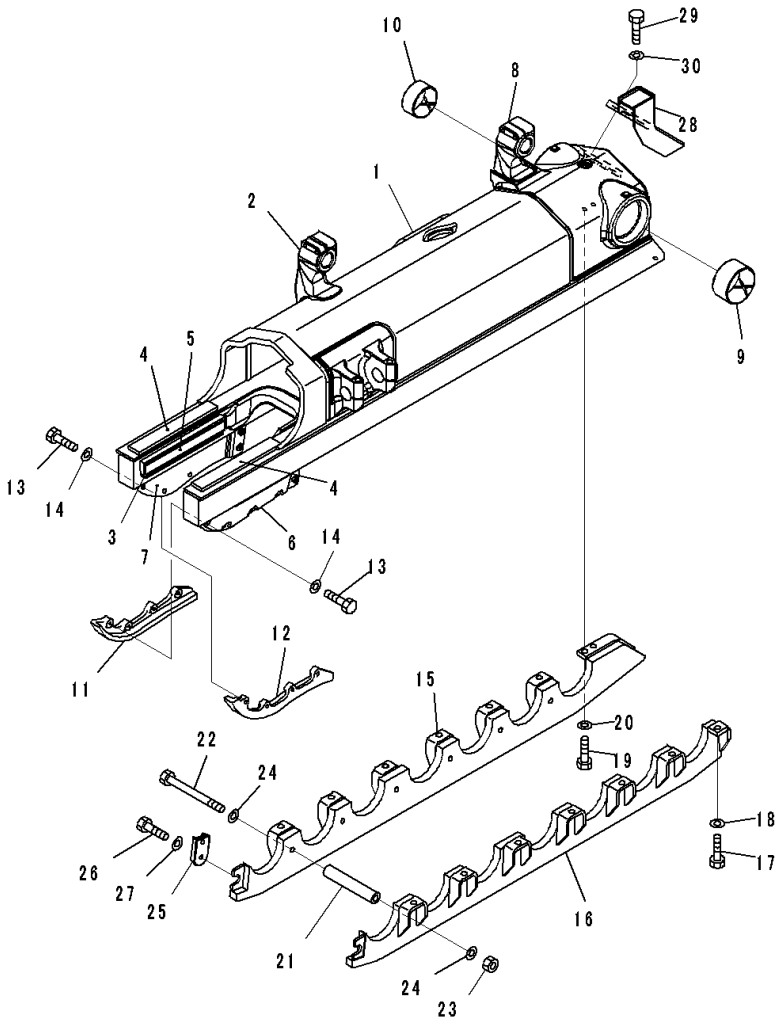

Index	Code	Part Number	Description	Qty	Serial Number
		17A-30-00862	Track Frame	1	81028-
1	C1		• Track Frame	1	81028-
2		17A-30-41411	• • Support,Welded	1	81028-
3		175-30-11272	• • Plate,Welded	2	81028-
4		17A-30-48370	• • Plate,Welded	2	81028-
5		17A-30-48380	• • Plate,Welded	2	81028-
6		175-30-21353	• • Guard,Welded	1	81028-
7		175-30-21363	• • Guard,Welded	1	81028-
8		17A-30-48161	• • Support,Welded	1	81028-
9		17A-50-41210	• Bushing	1	81028-
10		17A-50-11130	• Bushing	1	81028-
11		178-30-12161	Guard	1	81028-
12		178-30-12171	Guard	1	81028-
13		01010-82045	Bolt	12	81028-
14		01643-32060	Washer	12	81028-
15		17A-30-48921	Guard	1	81028-
16		17A-30-48941	Guard	1	81028-
17		01010-62450	Bolt	12	81028-
18		01643-32460	Washer	12	81028-
19		01010-62460	Bolt	3	81028-
20		01643-32460	Washer	3	81028-
21		17A-30-48981	Spacer	6	81028-
22		195-30-37250	Bolt	6	81028-
23		01580-12419	Nut	6	81028-
24		01643-32460	Washer	12	81028-
25		170-30-12162	Retainer	2	81028-
26		01010-62050	Bolt	4	81028-
27		01643-32060	Washer	4	81028-
28		17A-30-48972	Cover	1	81028-
29		01010-62040	Bolt	4	81028-
30		01643-32060	Washer	4	81028-

FIG. R2100-002009 Track Frame, Heavy Duty, With Full Length Track Roller Guard, Segmented, Front Idler, RHS

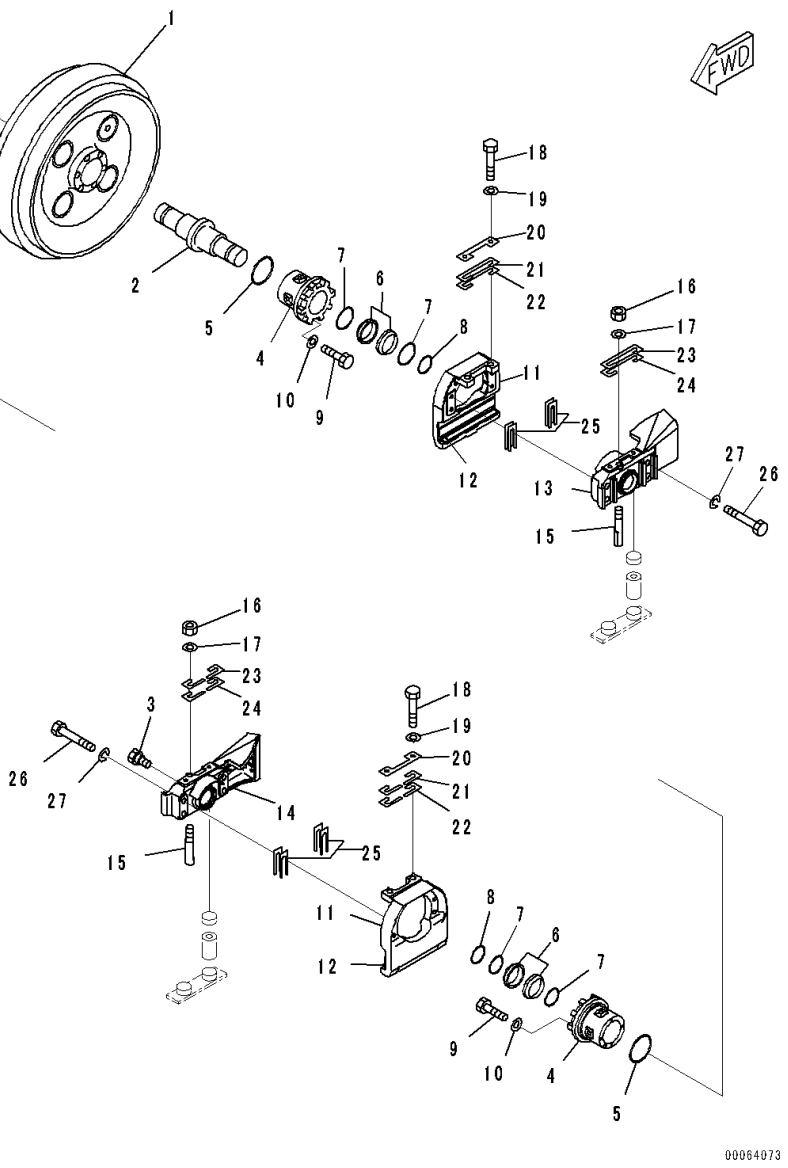

Index	Code	Part Number	Description	Qty	Serial Number
		17A-30-00430	Idler Assembly	1	81028-
1		175-30-23114	• Idler	1	81028-
2		175-30-23121	• Shaft	1	81028-
3		07052-31624	• Plug	1	81028-
4		175-30-36108	• Bushing Assembly	2	81028-
5		07000-12130	• O-ring	2	81028-
		175-30-00702	• Seal Ring Assembly	2	81028-
6	C1		• • Seal	2	81028-
7	C1		• • O-ring	2	81028-
8		07000-03068	• O-ring	2	81028-
9		01010-81235	• Bolt	12	81028-
10		01602-21236	• Washer, Spring	12	81028-
11		17A-30-48342	• Guide Assembly	2	81028-
12		17A-30-48390	• • Plate	1	81028-
13		17A-30-48311	• Support	1	81028-
14		17A-30-48321	• Support	1	81028-
15		175-30-23172	• Bolt	2	81028-
16		175-30-23180	• Nut	2	81028-
17		01643-31645	• Washer	2	81028-
18		175-30-33492	• Bolt	4	81028-
19		01643-32060	• Washer	4	81028-
20		175-30-33460	• Plate	2	81028-
		175-30-05050	• Shim Kit	2	81028-
21	C1		• • Shim, T=1.0mm	4	81028-
22	C1		• • Shim, T=2.0mm	2	81028-
		175-30-05060	• Shim Kit	2	81028-
23	C1		• • Shim, T=1.0mm	8	81028-
24	C1		• • Shim, T=2.0mm	4	81028-
25		175-30-05072	• Shim Kit	2	81028-
	C1		• • Shim, T=1.0mm	16	81028-
	C1		• • Shim, T=0.5mm	2	81028-
26		01011-62225	• Bolt	8	81028-
27		01643-32260	• Washer	8	81028-

FIG. R2100-002010 Track Frame, Heavy Duty, With Full Length Track Roller Guard, Segmented, Recoil Spring, RHS

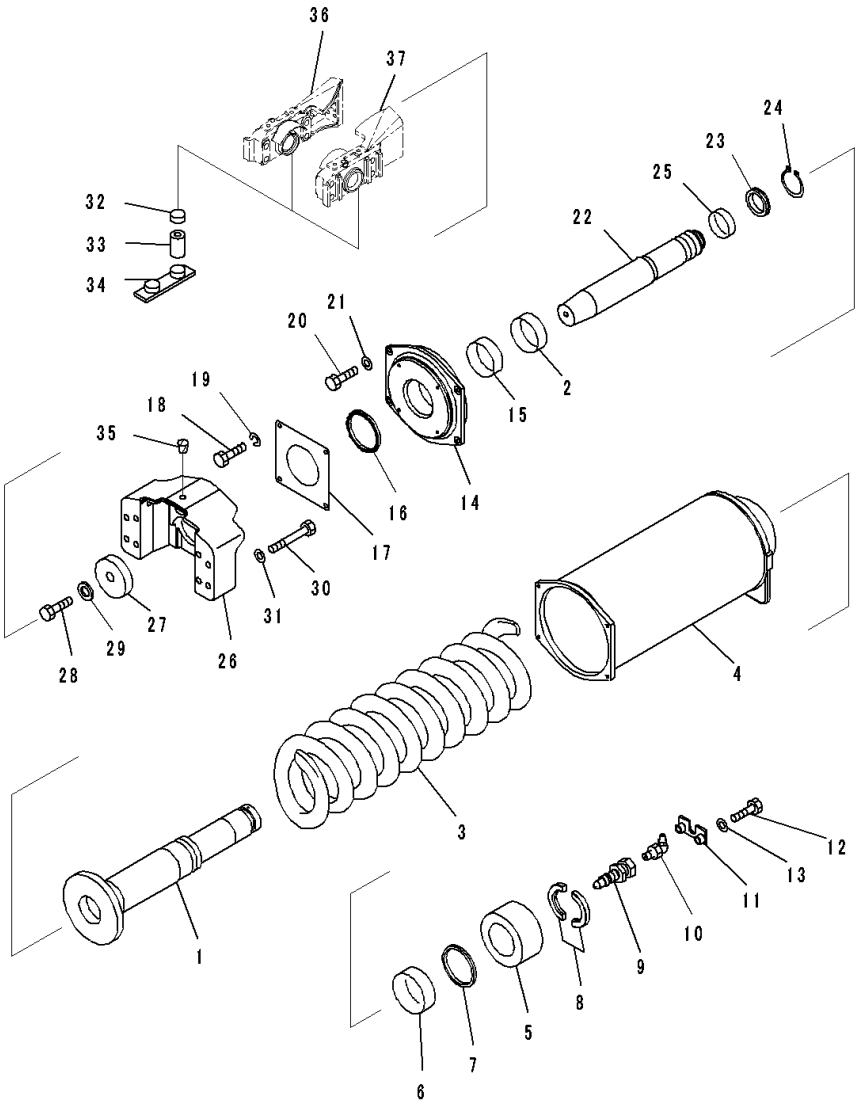

Index	Code	Part Number	Description	Qty	Serial Number
1		17A-30-48461	Cylinder	1	81028-
2		07177-01140	Bushing	1	81028-
3		17A-30-48471	Spring	1	81028-
4		17A-30-48432	Cabin,Recoil Spring	1	81028-
5		17A-30-48481	Nut	1	81028-
6		07177-01140	Bushing	1	81028-
7		21M-30-14150	Seal	1	81028-
8		17A-30-48491	Spacer	2	81028-
9		17A-30-48630	Valve	1	81028-
10		07020-00900	Fitting, Grease	1	81028-
11		14X-30-13174	Plate	1	81028-
12		01010-80830	Bolt	2	81028-
13		01643-30823	Washer	2	81028-
14		17A-30-48412	Holder	1	81028-
15		07177-01140	Bushing	1	81028-
16		21M-30-14150	Seal	1	81028-
17		17A-30-48520	Cover	1	81028-
18		01010-81020	Bolt	4	81028-
19		01643-31032	Washer	4	81028-
20		01010-81240	Bolt	4	81028-
21		01643-31232	Washer	4	81028-
22		17A-30-48511	Piston	1	81028-
23		175-30-24242	Packing	1	81028-
24		04064-07525	Ring, Snap	1	81028-
25		07155-01025	Ring, Wear	2	81028-
26		17A-30-48621	Yoke	1	81028-
27		17A-30-48531	Plate	1	81028-
28		01010-82470	Bolt	1	81028-
29		01643-32460	Washer	1	81028-
30		01011-82045	Bolt	8	81028-
31		01643-32060	Washer	8	81028-
32		195-30-17960	Plate	4	81028-
33		155-30-13230	Spring	4	81028-
34		175-30-24131	Guide	2	81028-
35		07049-02025	Plug	1	81028-
36		(17A-30-48321)	Support(Refer to Page 920)		-
37		(17A-30-48311)	Support(Refer to Page 920)		-

FIG. R2100-002011 Track Frame, Heavy Duty, With Full Length Track Roller Guard, Segmented, Track Roller, RHS (1/2)

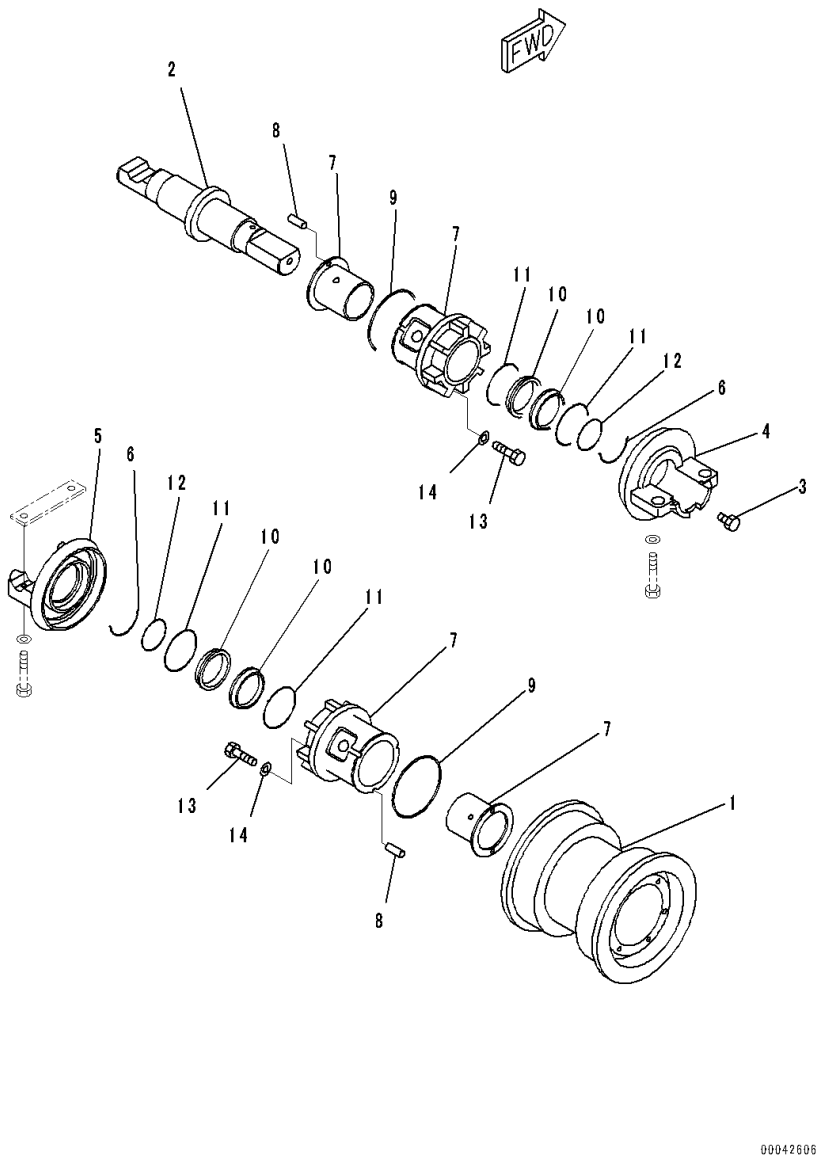

Index	Code	Part Number	Description	Qty	Serial Number
		175-30-00761	Roller Assembly, Track	2	81028-
1		178-30-16115	• Roller	1	81028-
2		175-30-36130	• Shaft	1	81028-
3		07052-31624	• Plug	1	81028-
4		175-30-36210	• Collar	1	81028-
5		175-30-36220	• Collar	1	81028-
6		175-30-26230	• Ring	2	81028-
7		175-30-36108	• Bushing Assembly	2	81028-
8		170-30-91130	• • Pin, Dowel	2	81028-
9		07000-12130	• O-ring	2	81028-
		175-30-00702	• Seal Ring Assembly	2	81028-
10	C1		• • Seal	2	81028-
11	C1		• • O-ring	2	81028-
12		07000-03068	• O-ring	2	81028-
13		175-30-36340	• Bolt	12	81028-
14		01643-51232	• Washer	12	81028-

FIG. R2100-002012 Track Frame, Heavy Duty, With Full Length Track Roller Guard, Segmented, Track Roller, RHS (2/2)

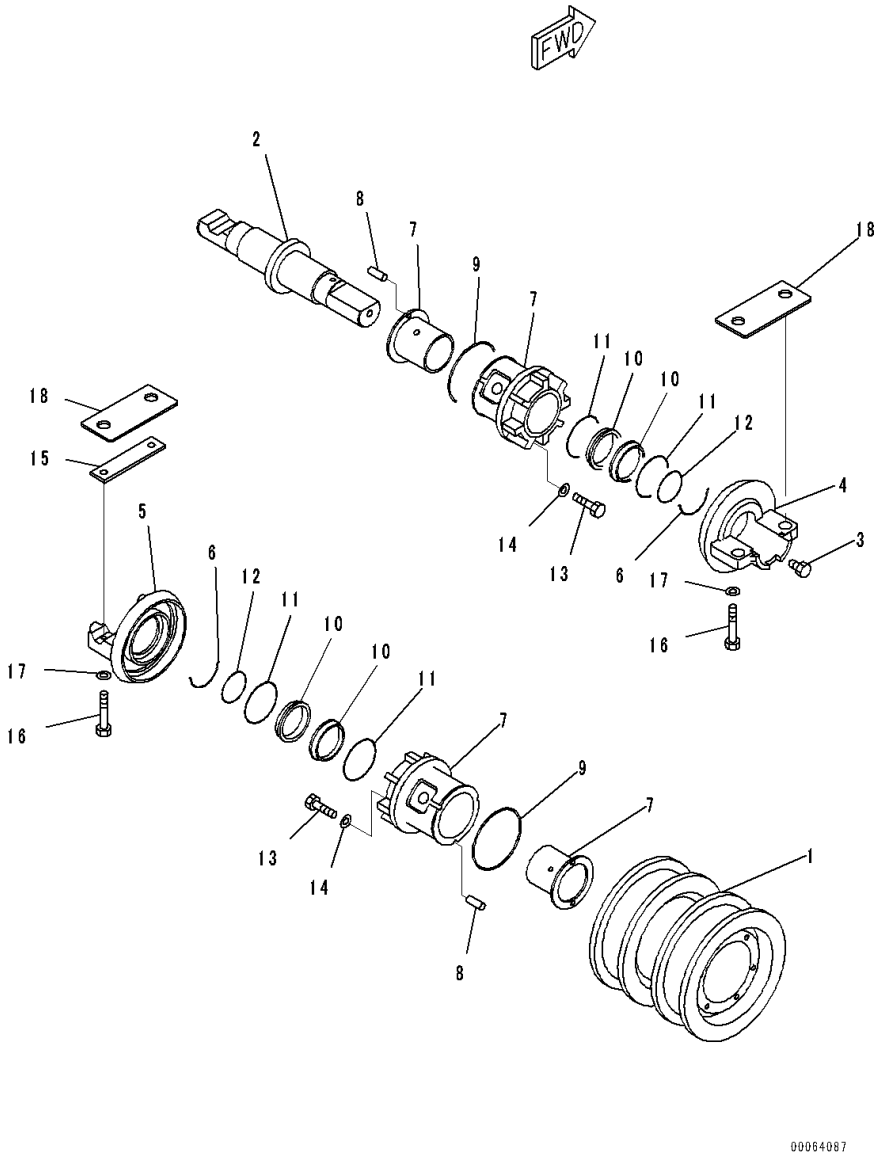

Index	Code	Part Number	Description	Qty	Serial Number
		175-30-00771	Roller Assembly, Track	5	81028-
1		178-30-16125	• Roller	1	81028-
2		175-30-36130	• Shaft	1	81028-
3		07052-31624	• Plug	1	81028-
4		175-30-36210	• Collar	1	81028-
5		175-30-36220	• Collar	1	81028-
6		175-30-26230	• Ring	2	81028-
7		175-30-36108	• Bushing Assembly	2	81028-
8		170-30-91130	• • Pin, Dowel	2	81028-
9		07000-12130	• O-ring	2	81028-
		175-30-00702	• Seal Ring Assembly	2	81028-
10	C1		• • Seal	2	81028-
11	C1		• • O-ring	2	81028-
12		07000-03068	• O-ring	2	81028-
13		175-30-36340	• Bolt	12	81028-
14		01643-51232	• Washer	12	81028-
15		175-30-26241	Plate	7	81028-
16		01010-62490	Bolt	28	81028-
17		01643-32460	Washer	28	81028-
18		17A-30-48251	Plate	14	81028-

FIG. R2100-002013 Track Frame, Heavy Duty, With Full Length Track Roller Guard, Segmented, Carrier Roller, RHS

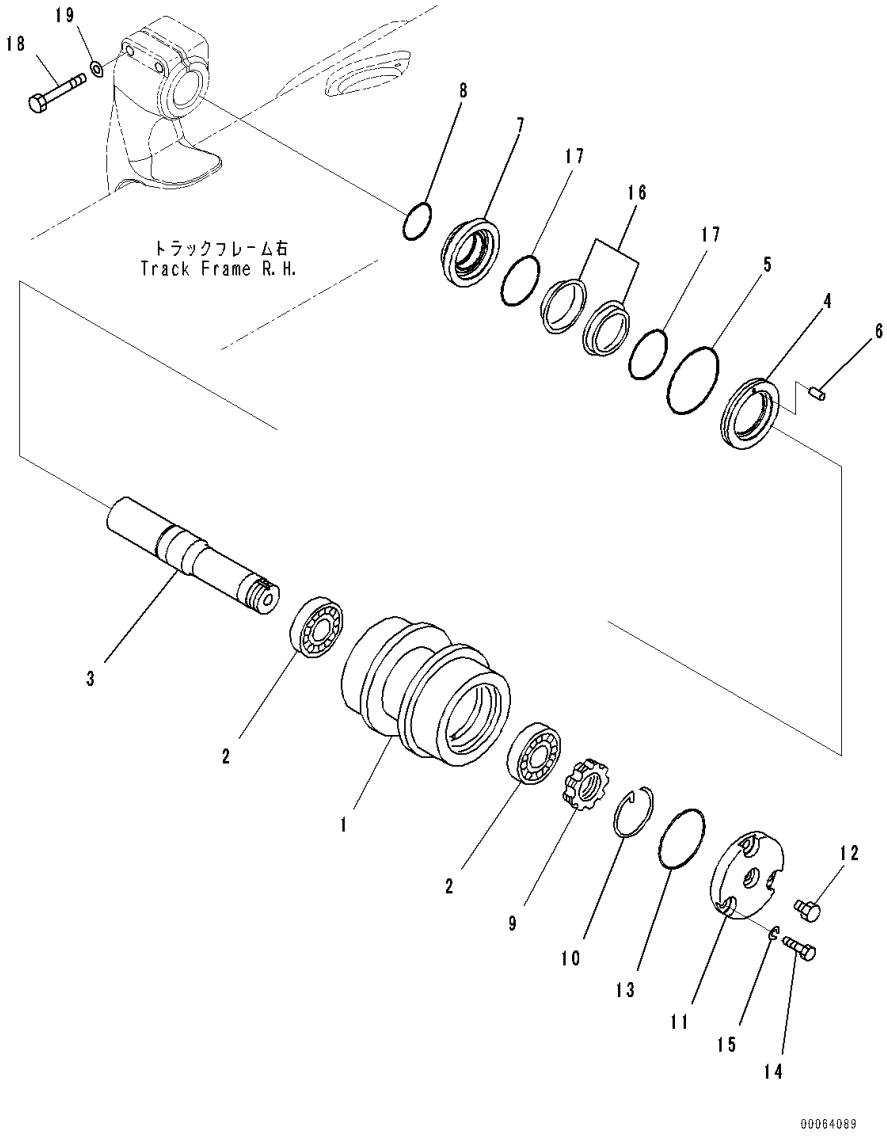

Index	Code	Part Number	Description	Qty	Serial Number
		17A-30-00721	Carrier Roller Assembly	2	81124-
1		175-30-45111	• Roller	1	81028-
2		06002-30212	• Bearing	2	81028-
3		175-30-25131	• Shaft	1	81028-
4		175-30-35161	• Ring	1	81028-
5		07000-12130	• O-ring	1	81028-
6		04020-00616	• Pin, Dowel	1	81028-
7		175-30-35171	• Ring	1	81028-
8		07000-12070	• O-ring	1	81028-
9		170-30-15190	• Nut	1	81028-
10		170-30-15210	• Ring	1	81028-
11		175-30-45131	• Cover	1	81028-
12		07052-31624	• Plug	1	81028-
13		07000-12110	• O-ring	1	81028-
14		01010-81435	• Bolt	3	81028-
15		01643-31445	• Washer	3	81028-
		154-30-00832	• Floating Seal Assembly	1	81124-
16	C1		• • Seal	2	81124-
17	C1		• • O-ring	2	81028-
18		01011-82005	Bolt	4	81028-
19		01643-32060	Washer	4	81028-

FIG. R2100-002014 Track Frame, Heavy Duty, With Full Length Track Roller Guard, Segmented, Rear Cover (2/2)

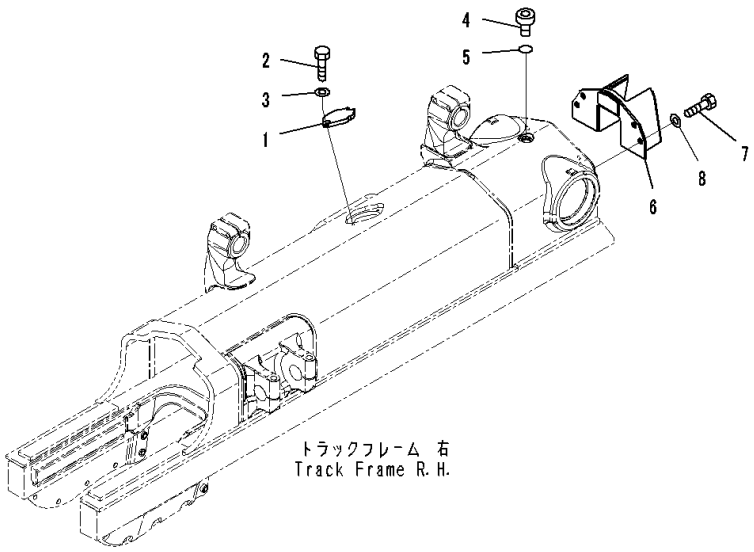

Index	Code	Part Number	Description	Qty	Serial Number
1		17A-30-41380	Cover	1	81028-
2		01010-81230	Bolt	2	81028-
3		01643-31232	Washer	2	81028-
4		07040-13618	Plug	1	81028-
5		07002-13634	O-ring	1	81028-
6		17A-30-48951	Cover	1	81028-
7		01010-62040	Bolt	3	81028-
8		01643-32060	Washer	3	81028-

FIG. R2100-004001 Track Frame, With Full Length Track Roller Guard, Landfill Specification, Frame LHS

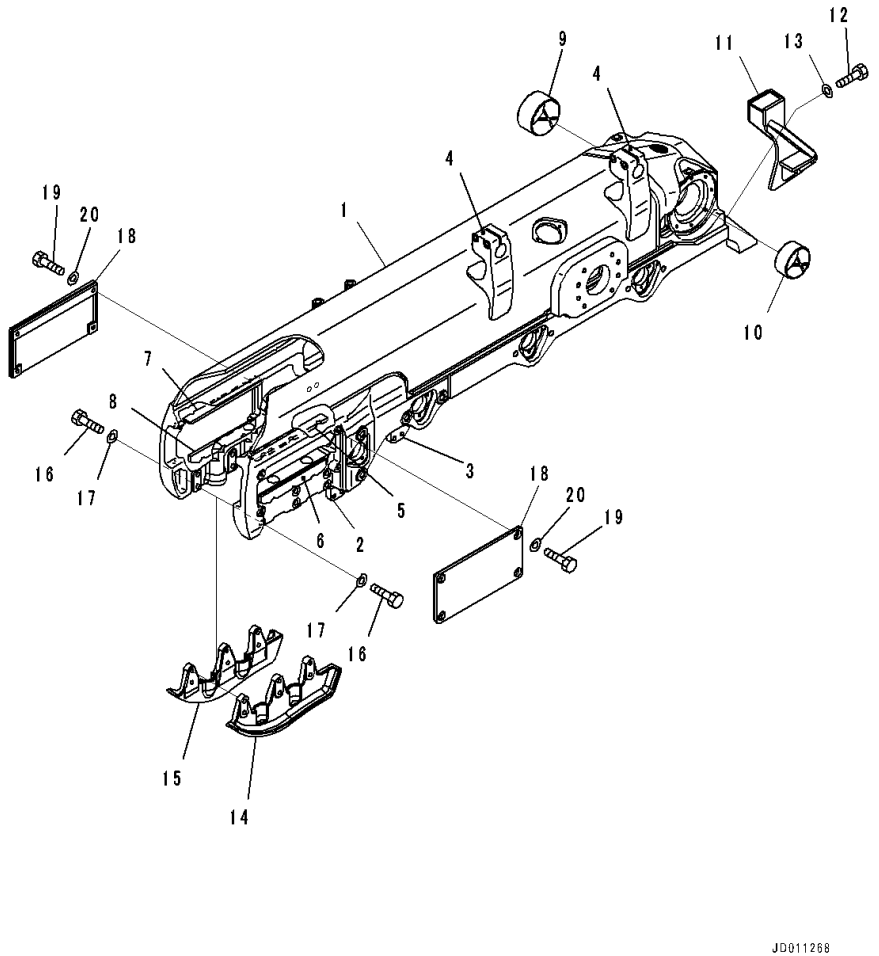

Index	Code	Part Number	Description	Qty	Serial Number
		17A-30-00910	Track Frame,LHS	1	81028-
1	C1		• Frame,LHS	1	81028-
2		17A-30-47A10	• • Plate,Welded	2	81028-
3		17A-30-47A20	• • Plate,Welded	2	81028-
4		17A-30-41411	• • Support,Welded	2	81028-
5		17A-30-41311	• • Plate,Welded	1	81028-
6		17A-30-41321	• • Plate,Welded	1	81028-
7		17A-30-41311	• • Plate,Welded	1	81028-
8		17A-30-41321	• • Plate,Welded	1	81028-
9		17A-50-41210	• Bushing	1	81028-
10		17A-50-11130	• Bushing	1	81028-
11		17A-30-41361	Cover	1	81028-
12		01010-62040	Bolt	4	81028-
13		01643-32060	Washer	4	81028-
14		17A-30-47141	Guard	1	81028-
15		17A-30-47151	Guard	1	81028-
16		01010-82275	Bolt	12	81028-
17		01643-32260	Washer	12	81028-
18		17A-30-41351	Cover	2	81028-
19		01010-61640	Bolt	8	81028-
20		01643-31645	Washer	8	81028-

FIG. R2100-004003 Track Frame, Front Idler, LHS

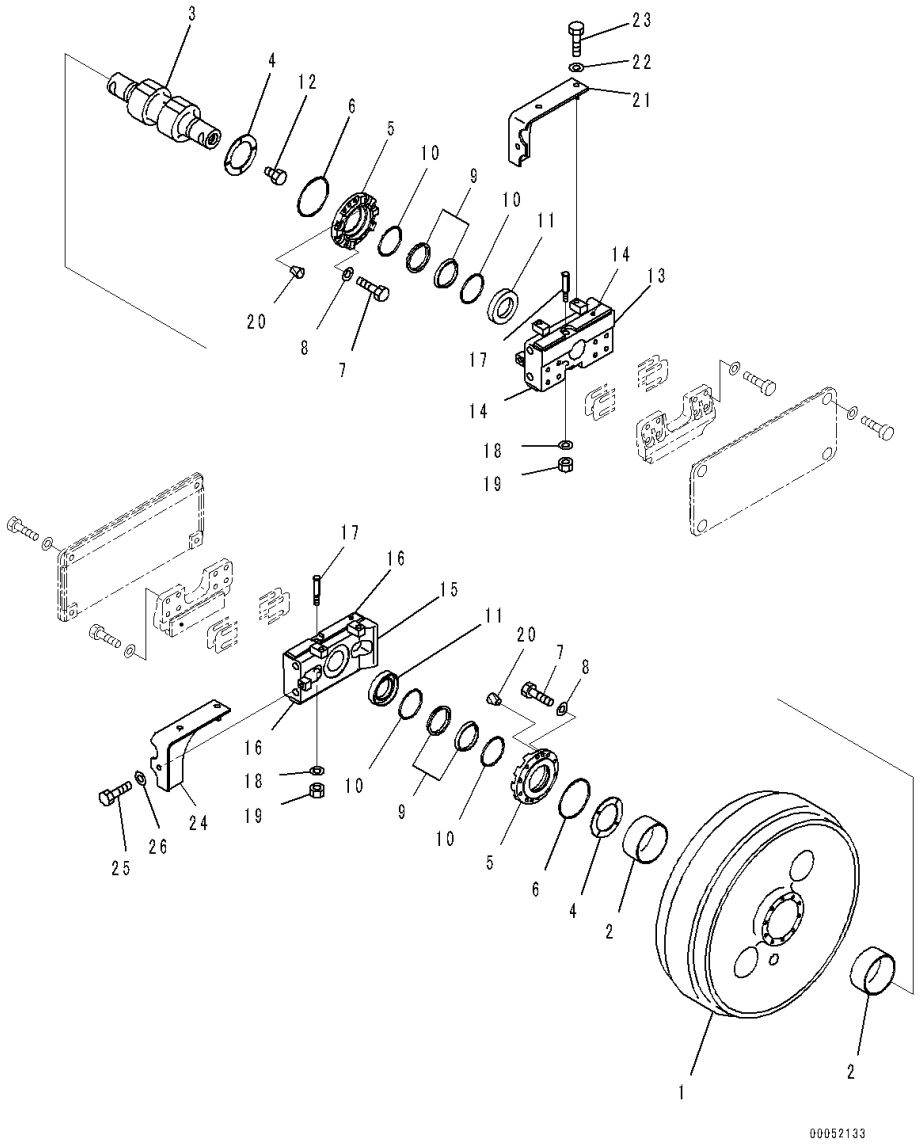

Index	Code	Part Number	Description	Qty	Serial Number
		Note: This list covers following specifications.			
		With Full Length Track Roller Guard, Landfill Specification			
		With Track Roller Guard, Landfill Specification			
		17A-30-00310	Idler Assembly	1	81028-
1		17A-30-13410	• Idler	1	81028-
2		17A-30-13140	• Bushing	2	81028-
3		17A-30-13450	• Shaft	1	81028-
4		195-30-62650	• Plate	2	81028-
5		17A-30-13440	• Retainer	2	81028-
6		07000-12145	• O-ring	2	81028-
7		01010-81235	• Bolt	20	81028-
8		01643-31232	• Washer	20	81028-
		22B-30-00030	• Floating Seal Assembly	2	81028-
9	C1		• • Seal	2	81028-
10	C1		• • O-ring	2	81028-
11		195-30-62680	• Ring	2	81028-
12		07052-31624	• Plug	1	81028-
13		17A-30-23470	• Support Assembly	1	81028-
14		17A-30-12150	• • Plate,Welded	2	81028-
15		17A-30-23490	• Support Assembly	1	81028-
16		17A-30-12150	• • Plate,Welded	2	81028-
17		130-30-13170	• Bolt	2	81028-
18		01643-31645	• Washer	2	81028-
19		01582-11613	• Nut	2	81028-
20		07049-01215	• Plug	4	81028-
21		17A-30-23510	• Cover	1	81028-
22		01643-31645	• Washer	3	81028-
23		01010-81635	• Bolt	3	81028-
24		17A-30-23520	• Cover	1	81028-
25		01010-81635	• Bolt	3	81028-
26		01643-31645	• Washer	3	81028-

FIG. R2100-004007 Track Frame, With Full Length Track Roller Guard, Landfill Specification, Bogie, LHS

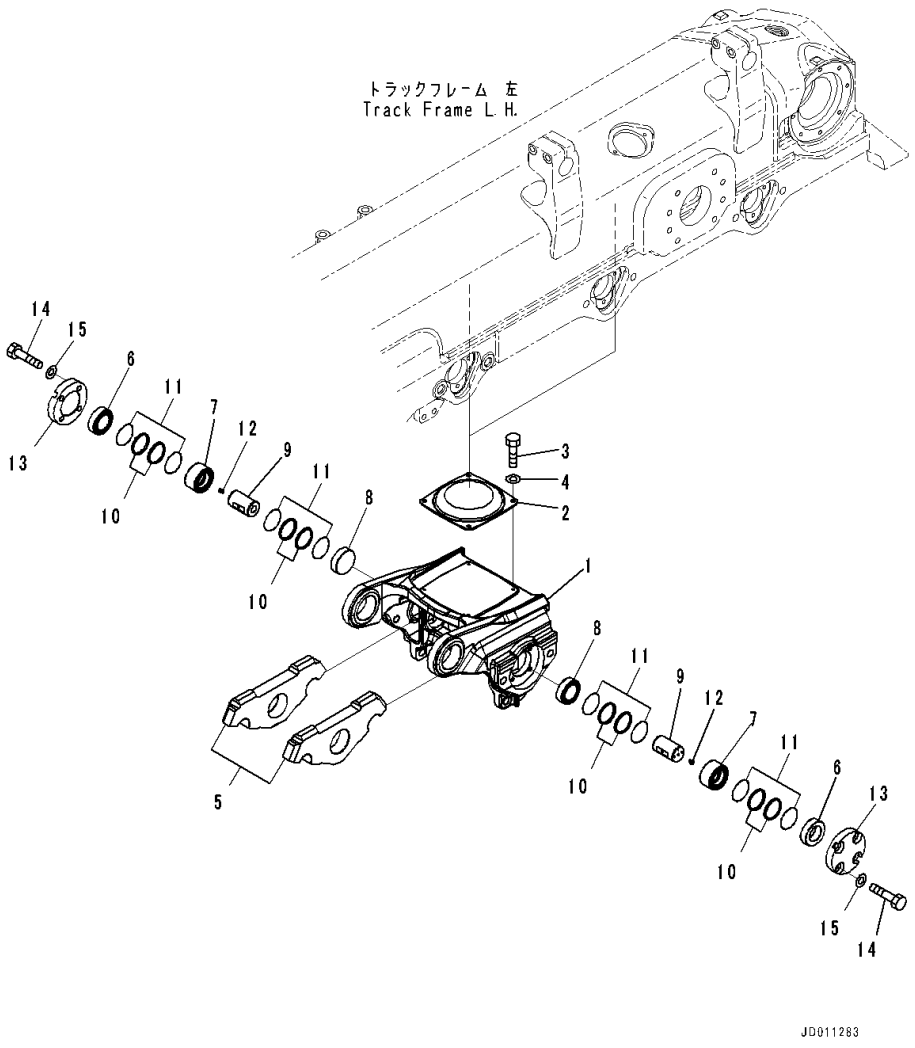

Index	Code	Part Number	Description	Qty	Serial Number
		17A-30-00930	Bogie Assembly	3	81028-
1		17A-30-46111	• Bogie	1	81028-
2		17A-30-46131	• Pad	1	81028-
3		01010-81025	• Bolt	4	81028-
4		01643-31032	• Washer	4	81028-
5		17A-30-46121	• Bogie	2	81028-
		17A-30-46202	• Pin Assembly	2	81028-
6		17A-30-46221	• • Ring	1	81028-
7		17A-30-46231	• • Ring	1	81028-
8		17A-30-46241	• • Ring	1	81028-
9		17A-30-46252	• • Shaft	1	81028-
		17M-30-00500	• • Floating Seal Assembly	2	81028-
10	C1		• • • Seal	2	81028-
11	C1		• • • O-ring	2	81028-
12		209-30-63150	• • Plug	1	81028-
13		17M-30-56341	• Cover	2	81028-
14		01010-61640	• Bolt	8	81028-
15		01643-31645	• Washer	8	81028-

FIG. R2100-004009 Track Frame, With Full Length Track Roller Guard, Landfill Specification, Track Roller, LHS (2/2)

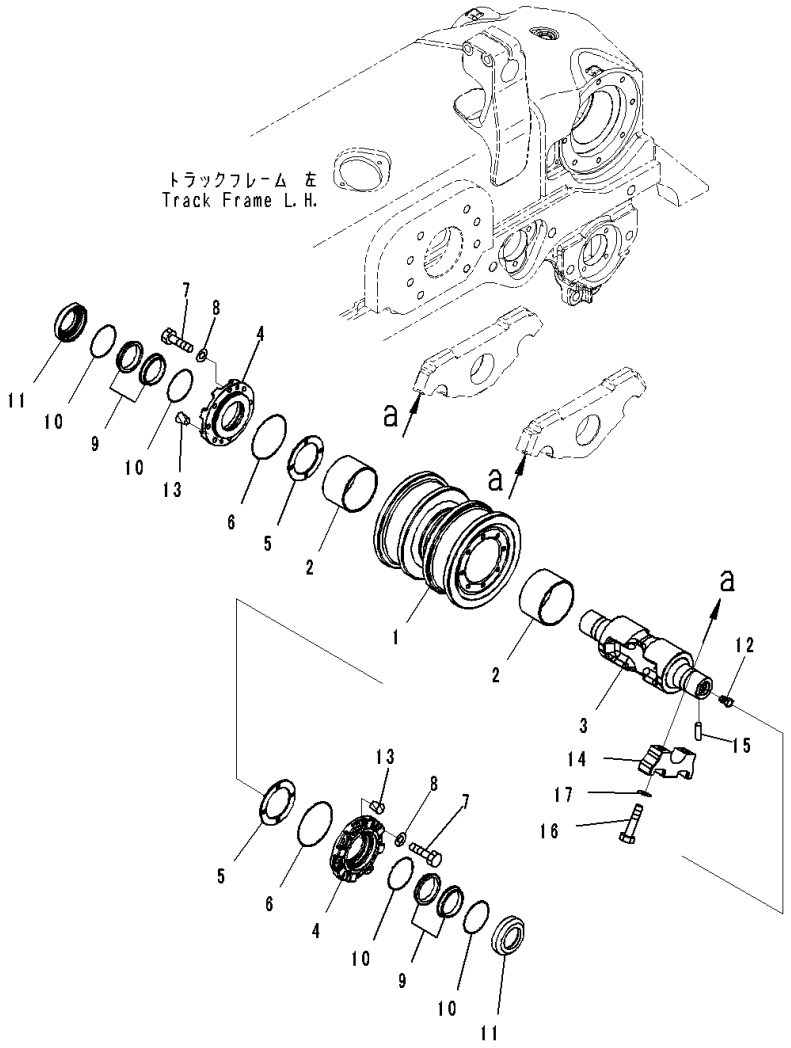

Index	Code	Part Number	Description	Qty	Serial Number
		17A-30-00620	Roller Assembly, Track	3	81028-
1		17A-30-15120	• Roller, Double Flange	1	81028-
2		17A-30-15140	• Bushing	2	81028-
3		17A-30-45230	• Shaft	1	81028-
4		17A-30-45210	• Retainer	2	81028-
5		17A-30-45220	• Plate	2	81028-
6		07000-12130	• O-ring	2	81028-
7		01010-81235	• Bolt	16	81028-
8		01643-31232	• Washer	16	81028-
		154-30-00832	• Floating Seal Assembly	2	81028-
9	C1		• • Seal	2	81028-
10	C1		• • O-ring	2	81028-
11		17A-30-15181	• Ring	2	81028-
12		07052-31624	• Plug	1	81028-
13		07049-01215	• Plug	4	81028-
14		17A-30-16331	Cap	12	81028-
15		04020-00616	Pin, Dowel	6	81028-
16		01010-62285	Bolt	24	81028-
17		01643-32260	Washer	24	81028-

FIG. R2100-004011 Track Frame, With Full Length Track Roller Guard, Landfill Specification, Rear Cover (1/2)

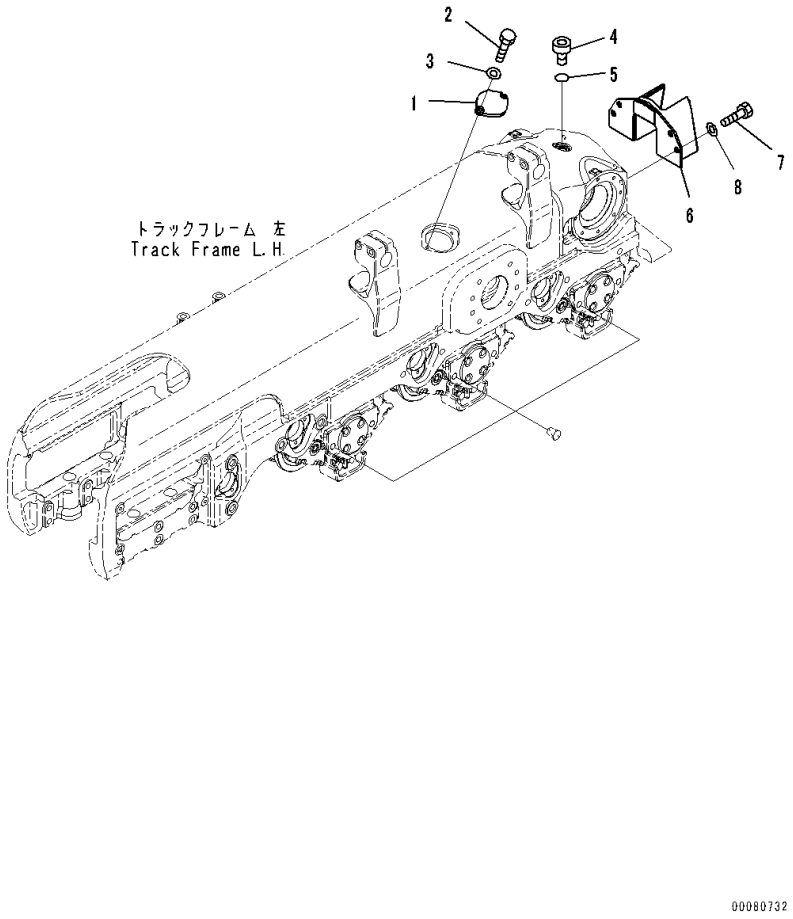

Index	Code	Part Number	Description	Qty	Serial Number
1		17A-30-41380	Cover	1	81028-
2		01010-81230	Bolt	2	81028-
3		01643-31232	Washer	2	81028-
4		07040-13618	Plug	1	81028-
5		07002-13634	O-ring	1	81028-
6		17A-30-48951	Cover	1	81028-
7		01010-62040	Bolt	3	81028-
8		01643-32060	Washer	3	81028-

FIG. R2100-004012 Track Frame, With Full Length Track Roller Guard, Landfill Specification, Guard (1/2)

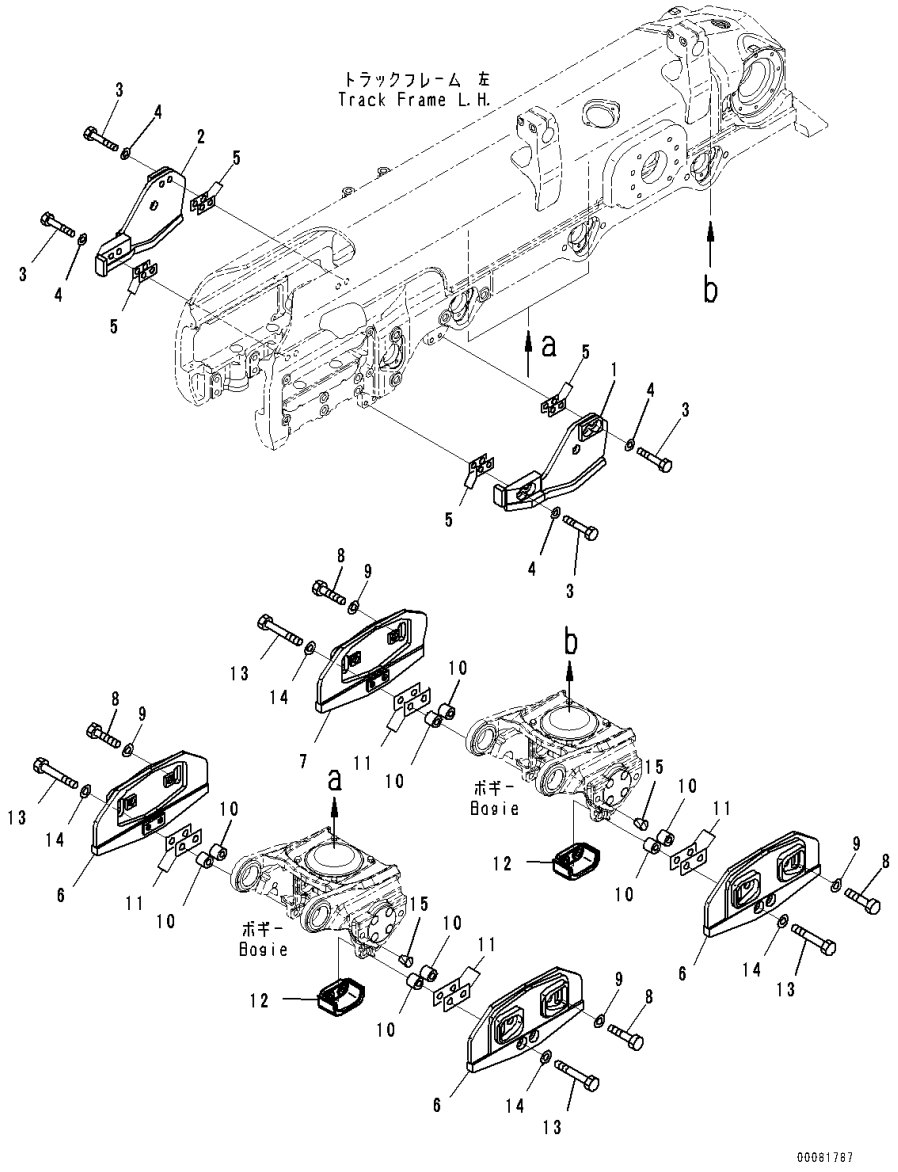

Index	Code	Part Number	Description	Qty	Serial Number
1		17A-30-47230	Guard,LHS	1	81028-
2		17A-30-47240	Guard,RHS	1	81028-
3		01010-62255	Bolt	8	81028-
4		01643-32260	Washer	8	81028-
5		17A-30-47340	Shim, T=0.5mm	8	81028-
6		17A-30-47250	Guard	5	81028-
7		17A-30-47270	Guard,LHS	1	81028-
8		01010-63080	Bolt	12	81028-
9		01643-33080	Washer	12	81028-
10		17A-30-47310	Spacer	12	81028-
11		17A-30-47320	Shim, T=0.5mm	24	81028-
12		17A-30-47131	Guide	6	81028-
13		01011-62225	Bolt	12	81028-
14		01643-32260	Washer	12	81028-
15		07049-03038	Plug	3	81028-

FIG. R2100-004013 Track Frame, With Full Length Track Roller Guard, Landfill Specification, Frame RHS

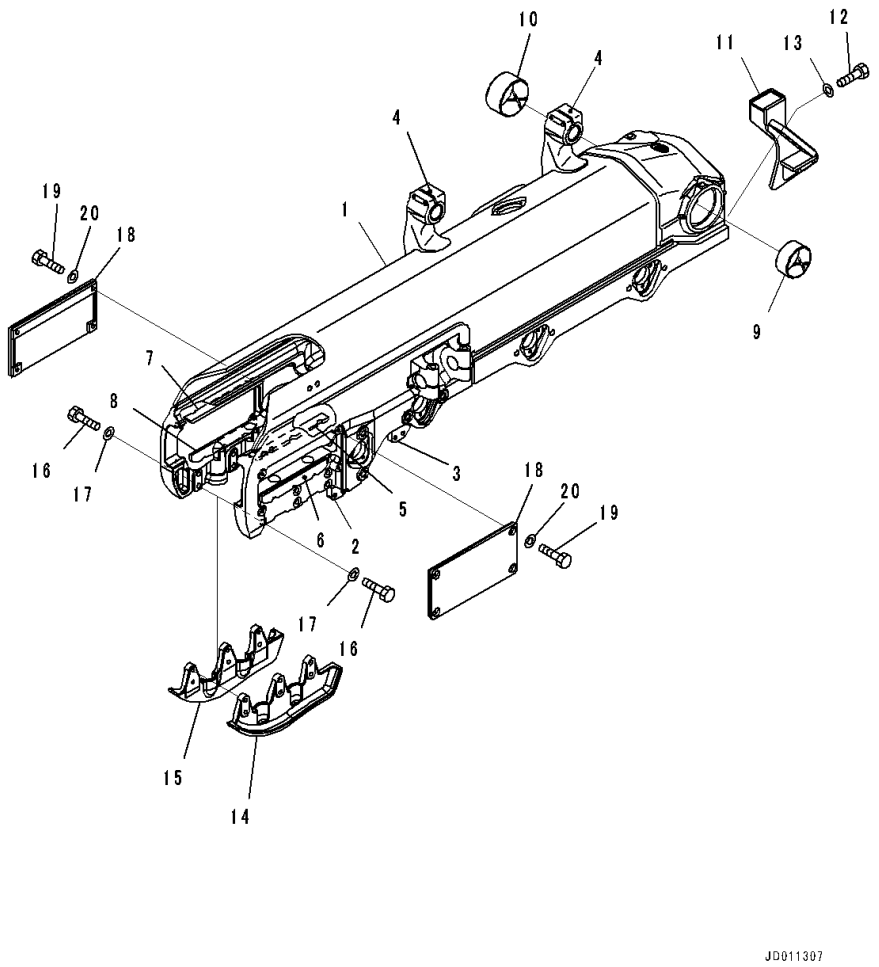

Index	Code	Part Number	Description	Qty	Serial Number
		17A-30-00920	Track Frame	1	81028-
1	C1		• Frame,LHS	1	81028-
2		17A-30-47A10	• • Plate,Welded	2	81028-
3		17A-30-47A20	• • Plate,Welded	2	81028-
4		17A-30-41411	• • Support,Welded	2	81028-
5		17A-30-41311	• • Plate,Welded	1	81028-
6		17A-30-41321	• • Plate,Welded	1	81028-
7		17A-30-41311	• • Plate,Welded	1	81028-
8		17A-30-41321	• • Plate,Welded	1	81028-
9		17A-50-41210	• Bushing	1	81028-
10		17A-50-11130	• Bushing	1	81028-
11		17A-30-41371	Cover	1	81028-
12		01010-62040	Bolt	4	81028-
13		01643-32060	Washer	4	81028-
14		17A-30-47141	Guard	1	81028-
15		17A-30-47151	Guard	1	81028-
16		01010-82275	Bolt	12	81028-
17		01643-32260	Washer	12	81028-
18		17A-30-41351	Cover	2	81028-
19		01010-61640	Bolt	8	81028-
20		01643-31645	Washer	8	81028-

FIG. R2100-004015 Track Frame, Front Idler, RHS

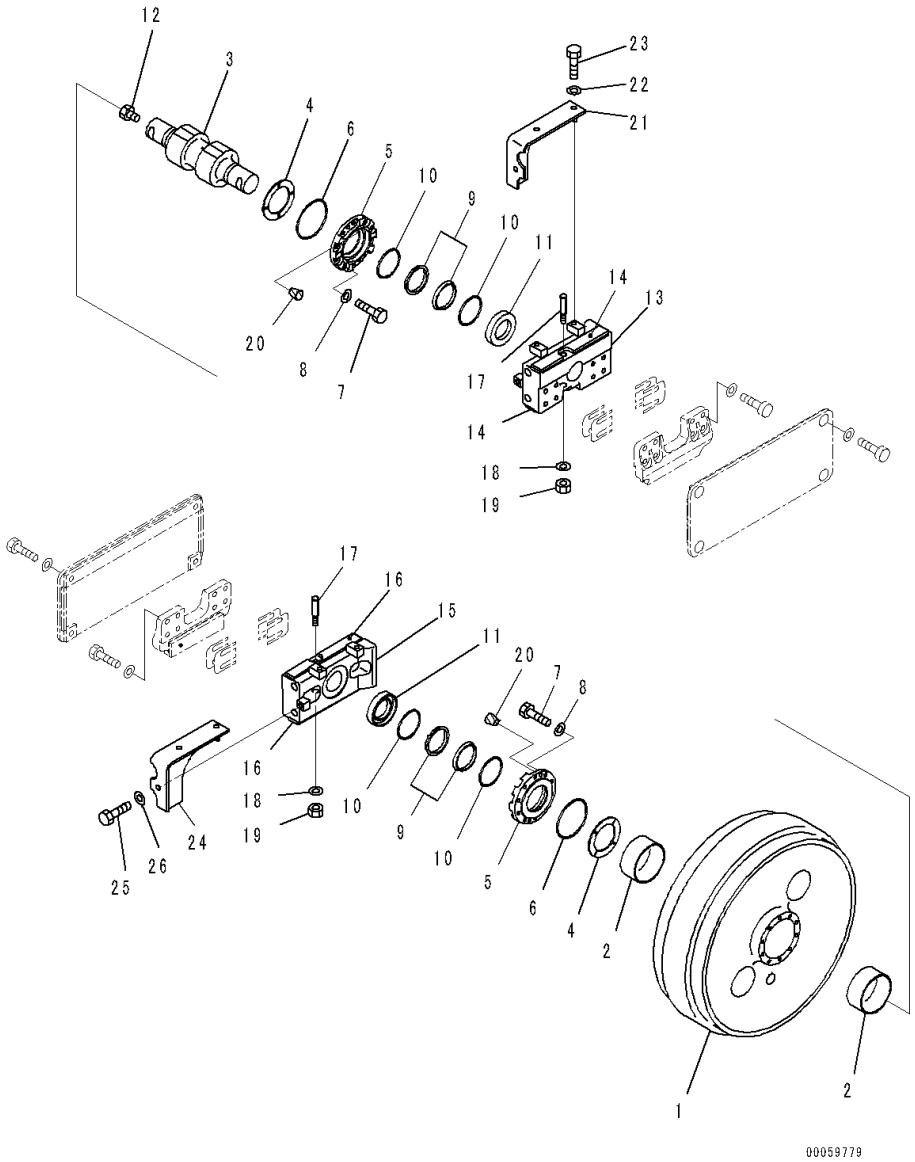

Index	Code	Part Number	Description	Qty	Serial Number
		Note: This list covers following specifications.			
		With Full Length Track Roller Guard, Landfill Specification			
		With Track Roller Guard, Landfill Specification			
		17A-30-00310	Idler Assembly	1	81028-
1		17A-30-13410	• Idler	1	81028-
2		17A-30-13140	• Bushing	2	81028-
3		17A-30-13450	• Shaft	1	81028-
4		195-30-62650	• Plate	2	81028-
5		17A-30-13440	• Retainer	2	81028-
6		07000-12145	• O-ring	2	81028-
7		01010-81235	• Bolt	20	81028-
8		01643-31232	• Washer	20	81028-
		22B-30-00030	• Floating Seal Assembly	2	81028-
9	C1		• • Seal	2	81028-
10	C1		• • O-ring	2	81028-
11		195-30-62680	• Ring	2	81028-
12		07052-31624	• Plug	1	81028-
13		17A-30-23470	• Support Assembly	1	81028-
14		17A-30-12150	• • Plate,Welded	2	81028-
15		17A-30-23490	• Support Assembly	1	81028-
16		17A-30-12150	• • Plate,Welded	2	81028-
17		130-30-13170	• Bolt	2	81028-
18		01643-31645	• Washer	2	81028-
19		01582-11613	• Nut	2	81028-
20		07049-01215	• Plug	4	81028-
21		17A-30-23510	• Cover	1	81028-
22		01643-31645	• Washer	3	81028-
23		01010-81635	• Bolt	3	81028-
24		17A-30-23520	• Cover	1	81028-
25		01010-81635	• Bolt	3	81028-
26		01643-31645	• Washer	3	81028-

FIG. R2100-004019 Track Frame, With Full Length Track Roller Guard, Landfill Specification, Bogie, RHS

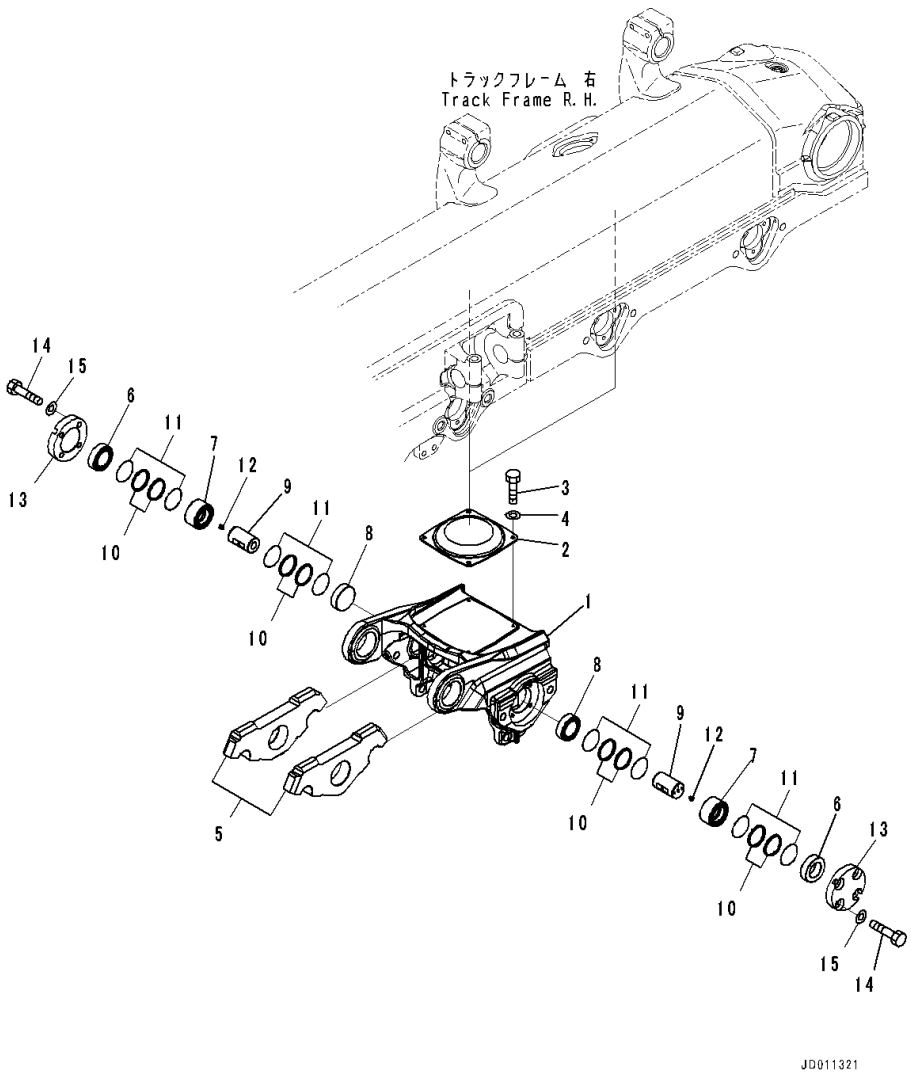

Index	Code	Part Number	Description	Qty	Serial Number
		17A-30-00930	Bogie Assembly	3	81028-
1		17A-30-46111	• Bogie	1	81028-
2		17A-30-46131	• Pad	1	81028-
3		01010-81025	• Bolt	4	81028-
4		01643-31032	• Washer	4	81028-
5		17A-30-46121	• Bogie	2	81028-
6		17A-30-46221	• Ring	2	81028-
7		17A-30-46231	• Ring	2	81028-
8		17A-30-46241	• Ring	2	81028-
9		17A-30-46252	• Shaft	2	81028-
		17M-30-00500	• Floating Seal Assembly	4	81028-
10	C1		• • Seal	2	81028-
11	C1		• • O-ring	2	81028-
12		209-30-63150	• Plug	2	81028-
13		17M-30-56341	• Cover	2	81028-
14		01010-61640	• Bolt	8	81028-
15		01643-31645	• Washer	8	81028-

FIG. R2100-004021 Track Frame, With Full Length Track Roller Guard, Landfill Specification, Track Roller, RHS (2/2)

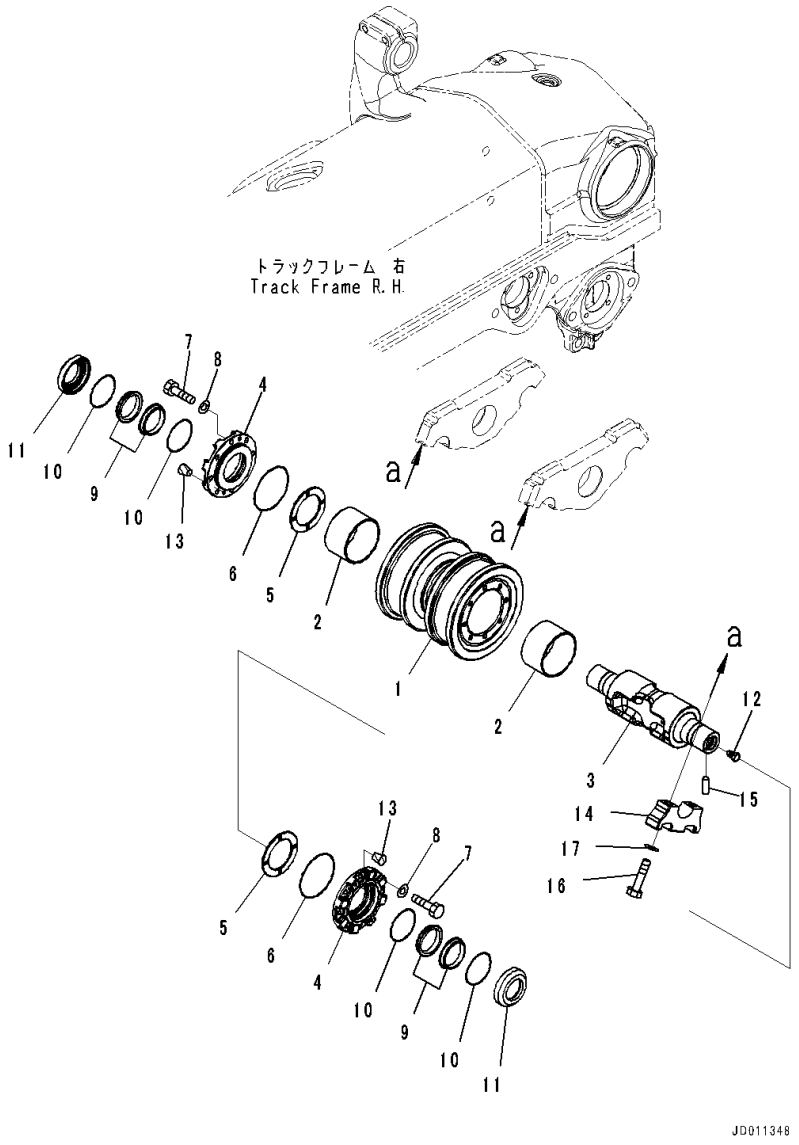

Index	Code	Part Number	Description	Qty	Serial Number
		17A-30-00620	Roller Assembly, Track	3	81028-
1		17A-30-15120	• Roller, Double Flange	1	81028-
2		17A-30-15140	• Bushing	2	81028-
3		17A-30-45230	• Shaft	1	81028-
4		17A-30-45210	• Retainer	2	81028-
5		17A-30-45220	• Plate	2	81028-
6		07000-12130	• O-ring	2	81028-
7		01010-81235	• Bolt	16	81028-
8		01643-31232	• Washer	16	81028-
		154-30-00832	• Floating Seal Assembly	2	81028-
9	C1		• • Seal	2	81028-
10	C1		• • O-ring	2	81028-
11		17A-30-15181	• Ring	2	81028-
12		07052-31624	• Plug	1	81028-
13		07049-01215	• Plug	4	81028-
14		17A-30-16331	Cap	12	81028-
15		04020-00616	Pin, Dowel	6	81028-
16		01010-62285	Bolt	24	81028-
17		01643-32260	Washer	24	81028-

FIG. R2100-004023 Track Frame, With Full Length Track Roller Guard, Landfill Specification, Rear Cover (2/2)

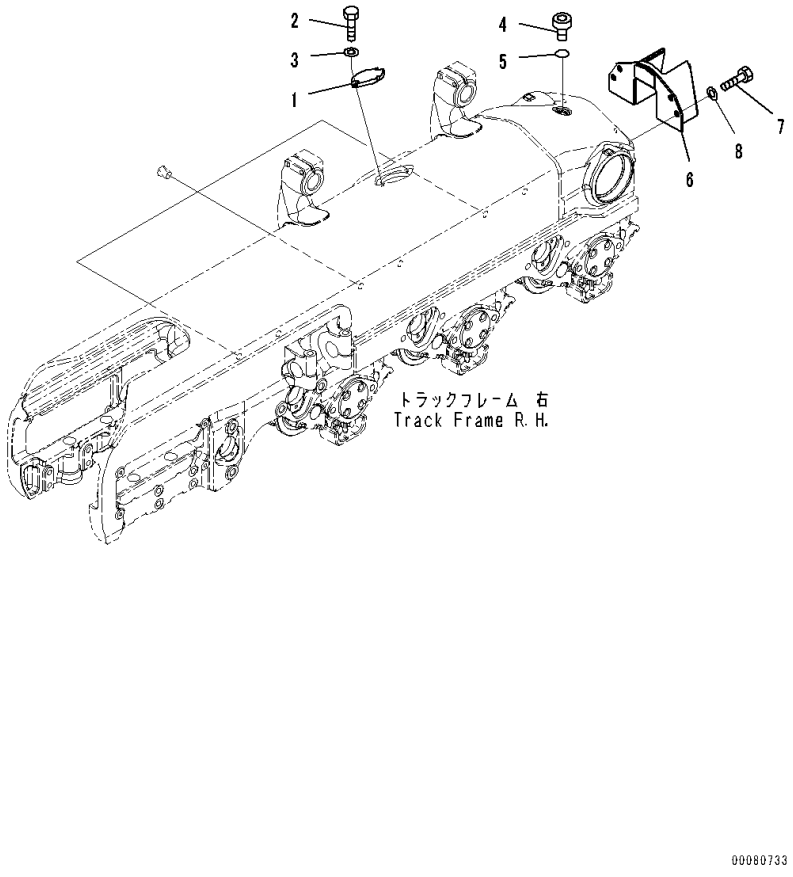

Index	Code	Part Number	Description	Qty	Serial Number
1		17A-30-41380	Cover	1	81028-
2		01010-81230	Bolt	2	81028-
3		01643-31232	Washer	2	81028-
4		07040-13618	Plug	1	81028-
5		07002-13634	O-ring	1	81028-
6		17A-30-48951	Cover	1	81028-
7		01010-62040	Bolt	3	81028-
8		01643-32060	Washer	3	81028-

FIG. R2100-004024 Track Frame, With Full Length Track Roller Guard, Landfill Specification, Guard (2/2)

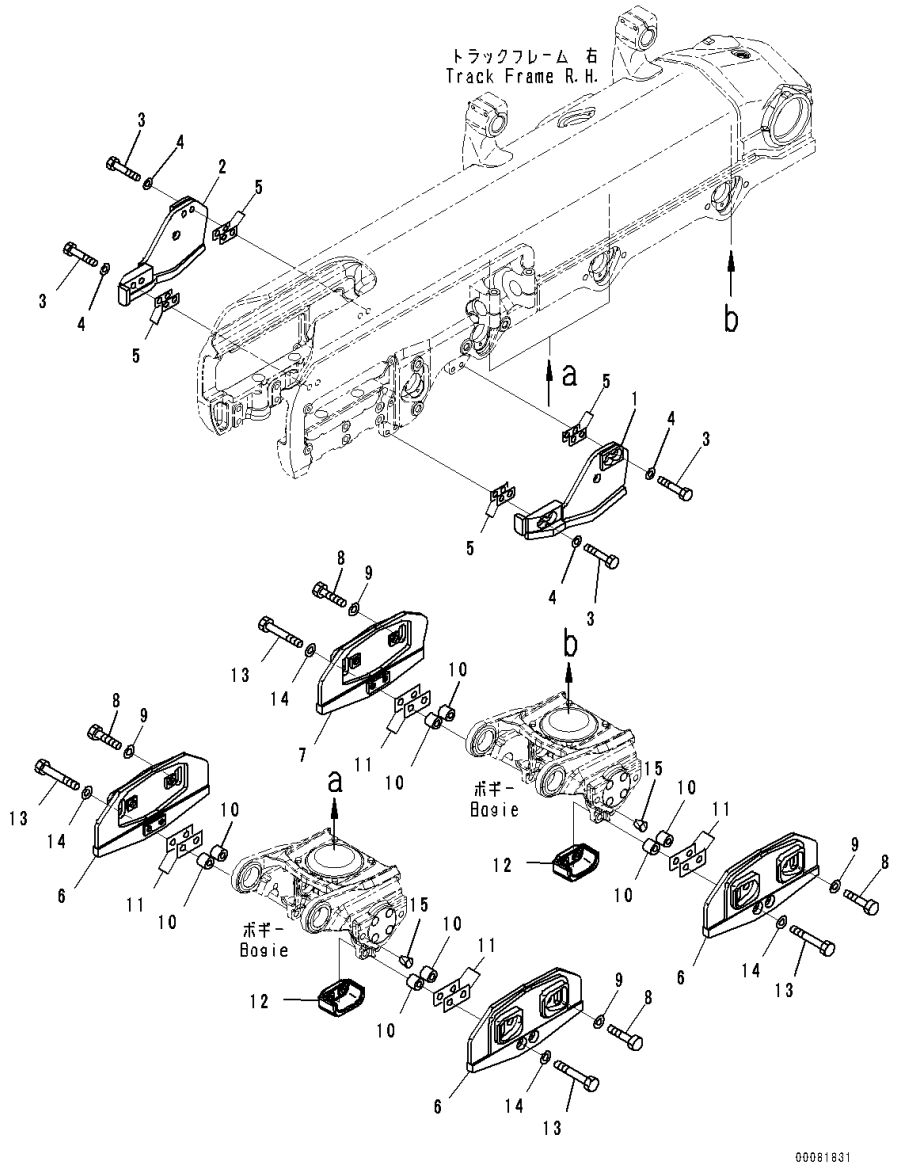

Index	Code	Part Number	Description	Qty	Serial Number
1		17A-30-47230	Guard,LHS	1	81028-
2		17A-30-47240	Guard,RHS	1	81028-
3		01010-62255	Bolt	8	81028-
4		01643-32260	Washer	8	81028-
5		17A-30-47340	Shim, T=0.5mm	8	81028-
6		17A-30-47250	Guard	5	81028-
7		17A-30-47260	Guard,RHS	1	81028-
8		01010-63080	Bolt	12	81028-
9		01643-33080	Washer	12	81028-
10		17A-30-47310	Spacer	12	81028-
11		17A-30-47320	Shim, T=0.5mm	24	81028-
12		17A-30-47131	Guide	6	81028-
13		01011-62225	Bolt	12	81028-
14		01643-32260	Washer	12	81028-
15		07049-03038	Plug	3	81028-

FIG. R2100-009001 Track Frame, With Full Length Track Roller Guard, Frame LHS

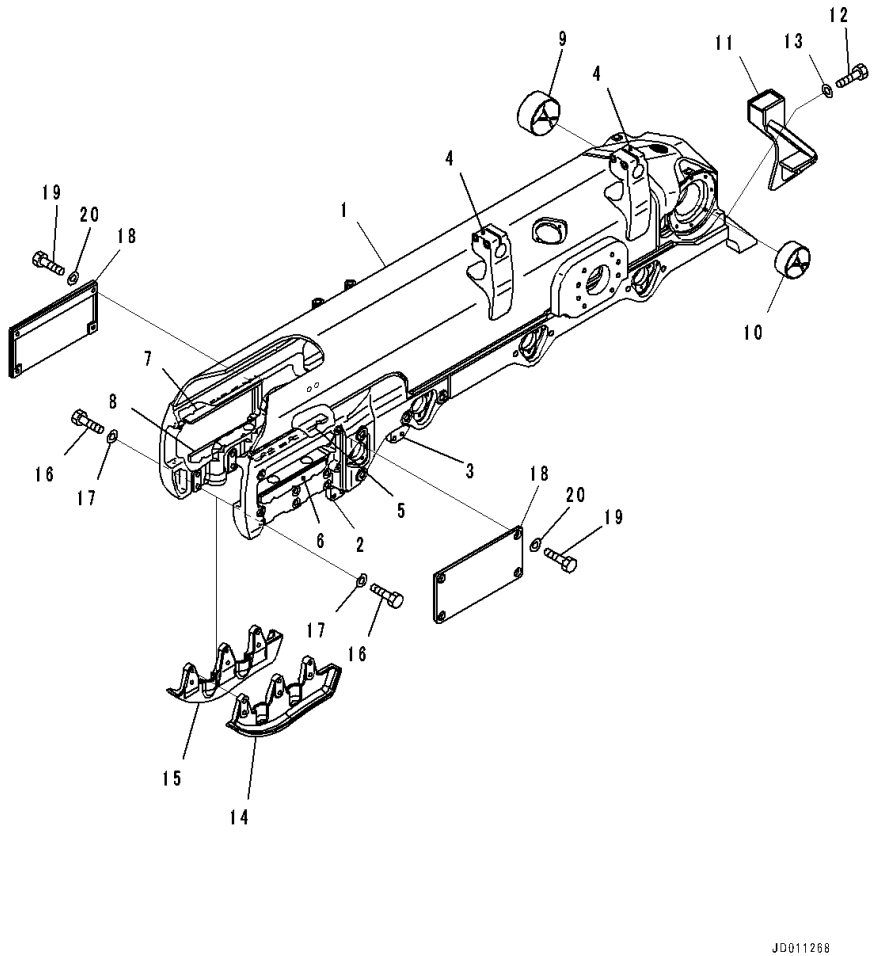

Index	Code	Part Number	Description	Qty	Serial Number
		17A-30-00910	Track Frame,LHS	1	81150-
1	C1		• Frame,LHS	1	81150-
2		17A-30-47A10	• • Plate,Welded	2	81150-
3		17A-30-47A20	• • Plate,Welded	2	81150-
4		17A-30-41411	• • Support,Welded	2	81150-
5		17A-30-41311	• • Plate,Welded	1	81150-
6		17A-30-41321	• • Plate,Welded	1	81150-
7		17A-30-41311	• • Plate,Welded	1	81150-
8		17A-30-41321	• • Plate,Welded	1	81150-
9		17A-50-41210	• Bushing	1	81150-
10		17A-50-11130	• Bushing	1	81150-
11		17A-30-41361	Cover	1	81150-
12		01010-62040	Bolt	4	81150-
13		01643-32060	Washer	4	81150-
14		17A-30-47141	Guard	1	81150-
15		17A-30-47151	Guard	1	81150-
16		01010-82275	Bolt	12	81150-
17		01643-32260	Washer	12	81150-
18		17A-30-41351	Cover	2	81150-
19		01010-61640	Bolt	8	81150-
20		01643-31645	Washer	8	81150-

FIG. R2100-009002 Track Frame, With Full Length Track Roller Guard, Front Bogie, LHS

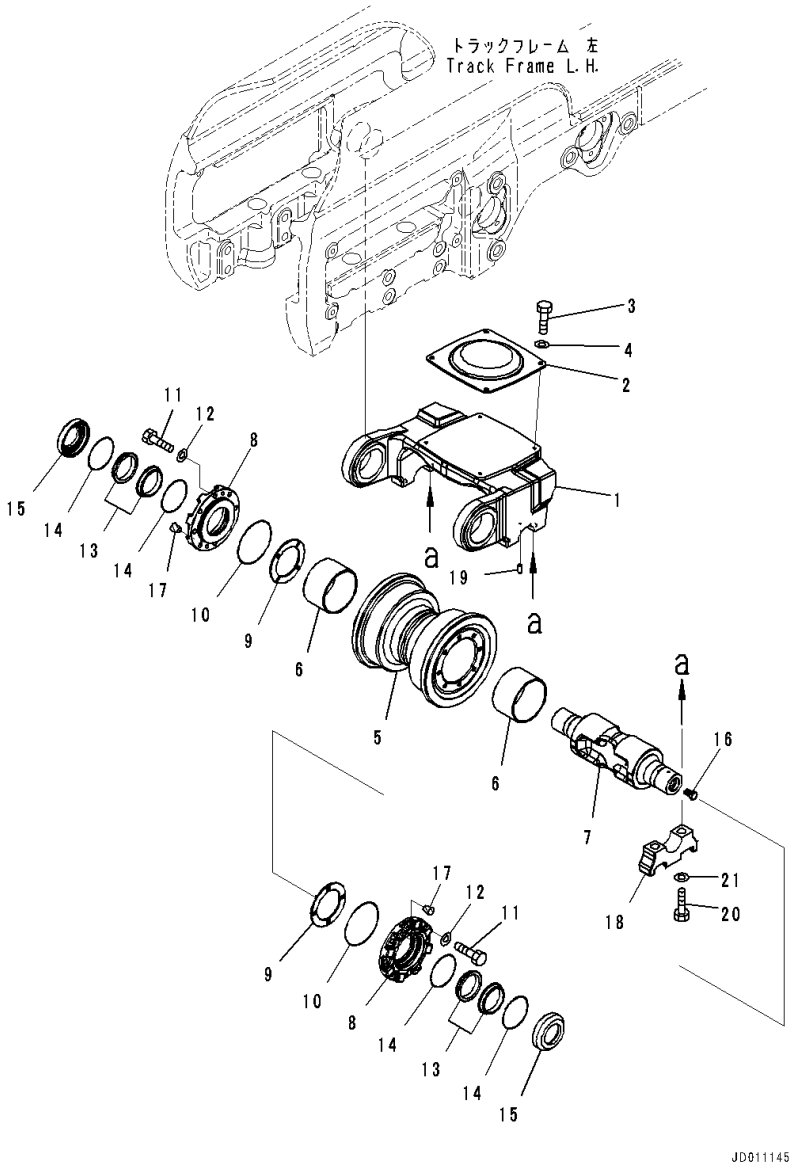

Index	Code	Part Number	Description	Qty	Serial Number
1		17A-30-46151	Bogie	1	81150-
2		17A-30-46141	Pad	1	81150-
3		01010-81025	Bolt	4	81150-
4		01643-31032	Washer	4	81150-
		17A-30-00610	Roller Assembly, Track	1	81150-
5		17A-30-15110	• Roller, Single Flange	1	81150-
6		17A-30-15140	• Bushing	2	81150-
7		17A-30-45230	• Shaft	1	81150-
8		17A-30-45210	• Retainer	2	81150-
9		17A-30-45220	• Plate	2	81150-
10		07000-12130	• O-ring	2	81150-
11		01010-81235	• Bolt	16	81150-
12		01643-31232	• Washer	16	81150-
		154-30-00832	• Floating Seal Assembly	2	81150-
13	C1		• • Seal	2	81150-
14	C1		• • O-ring	2	81150-
15		17A-30-15181	• Ring	2	81150-
16		07052-31624	• Plug	1	81150-
17		07049-01215	• Plug	4	81150-
18		17A-30-46330	Cap	2	81150-
19		04020-00616	Pin, Dowel	1	81150-
20		01010-62285	Bolt	4	81150-
21		01643-32260	Washer	4	81150-

FIG. R2100-009003 Track Frame, With Full Length Track Roller Guard, Front Idler, LHS

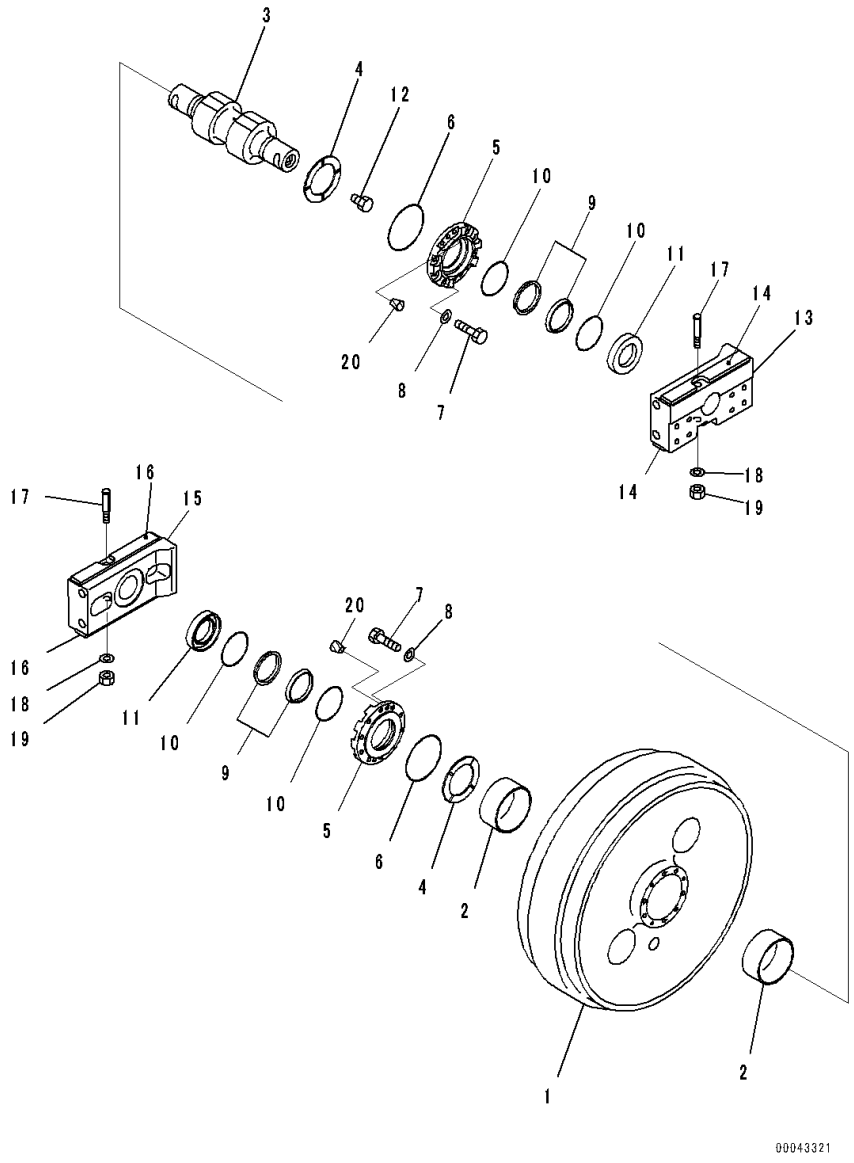

Index	Code	Part Number	Description	Qty	Serial Number
		17A-30-00042	Idler Assembly	1	81150-
1		17A-30-13410	• Idler	1	81150-
2		17A-30-13140	• Bushing	2	81150-
3		17A-30-13450	• Shaft	1	81150-
4		195-30-62650	• Plate	2	81150-
5		17A-30-13440	• Retainer	2	81150-
6		07000-12145	• O-ring	2	81150-
7		01010-81235	• Bolt	20	81150-
8		01643-31232	• Washer	20	81150-
		22B-30-00030	• Floating Seal Assembly	2	81150-
9	C1		• • Seal	2	81150-
10	C1		• • O-ring	2	81150-
11		195-30-62680	• Ring	2	81150-
12		07052-31624	• Plug	1	81150-
13		17A-30-13470	• Support Assembly,LHS	1	81150-
14		17A-30-12150	• • Plate,Welded	2	81150-
15		17A-30-13490	• Support Assembly,RHS	1	81150-
16		17A-30-12150	• • Plate,Welded	2	81150-
17		130-30-13170	• Bolt	2	81150-
18		01643-31645	• Washer	2	81150-
19		01582-11613	• Nut	2	81150-
20		07049-01215	• Plug	4	81150-

FIG. R2100-009004 Track Frame, With Full Length Track Roller Guard, Recoil Spring, LHS

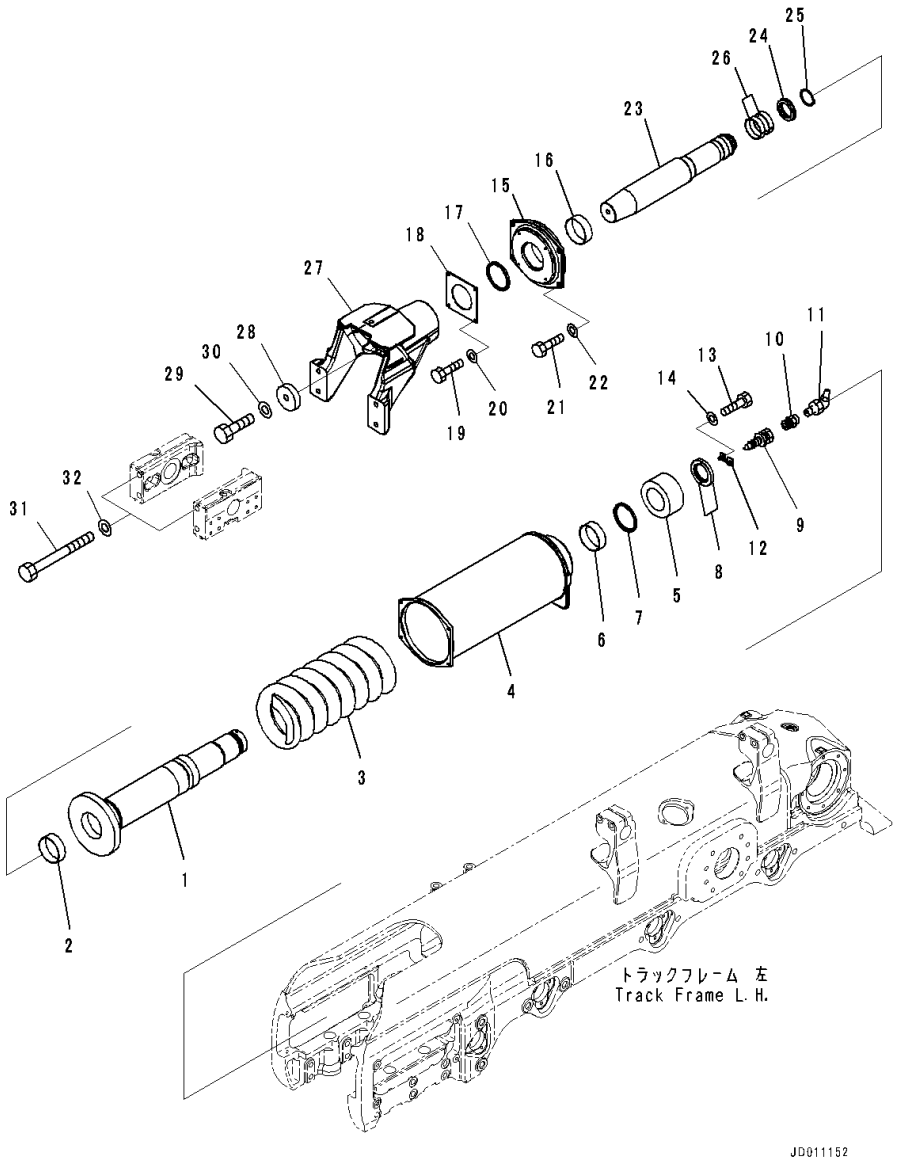

Index	Code	Part Number	Description	Qty	Serial Number
1		17A-30-43461	Cylinder	1	81150-
2		07177-01240	Bushing	1	81150-
3		17A-30-43470	Spring	1	81150-
4		17A-30-43432	Cabin,Recoil Spring	1	81150-
5		17A-30-48481	Nut	1	81150-
6		07177-01240	Bushing	1	81150-
7		17A-30-43540	Seal	1	81150-
8		17A-30-48491	Spacer	2	81150-
9		07959-30000	Valve	1	81150-
10		423-70-11160	Nipple	1	81150-
11		07020-00900	Fitting, Grease	1	81150-
12		14X-30-13174	Plate	1	81150-
13		01010-80830	Bolt	2	81150-
14		01643-30823	Washer	2	81150-
15		17A-30-43412	Holder	1	81150-
16		07177-01240	Bushing	1	81150-
17		17A-30-43540	Seal	1	81150-
18		17A-30-43520	Cover	1	81150-
19		01010-81020	Bolt	4	81150-
20		01643-31032	Washer	4	81150-
21		01010-81240	Bolt	4	81150-
22		01643-31232	Washer	4	81150-
23		17A-30-43511	Piston	1	81150-
24		175-30-24242	Packing	1	81150-
25		04064-07525	Ring, Snap	1	81150-
26		07155-01025	Ring, Wear	2	81150-
27		17A-30-44191	Yoke	1	81150-
28		17A-30-43532	Plate	1	81150-
29		01010-82470	Bolt	1	81150-
30		01643-32460	Washer	1	81150-
31		175-30-32162	Bolt	4	81150-
32		01643-32460	Washer	4	81150-

FIG. R2100-009005 Track Frame, With Full Length Track Roller Guard, Guide Plate, LHS

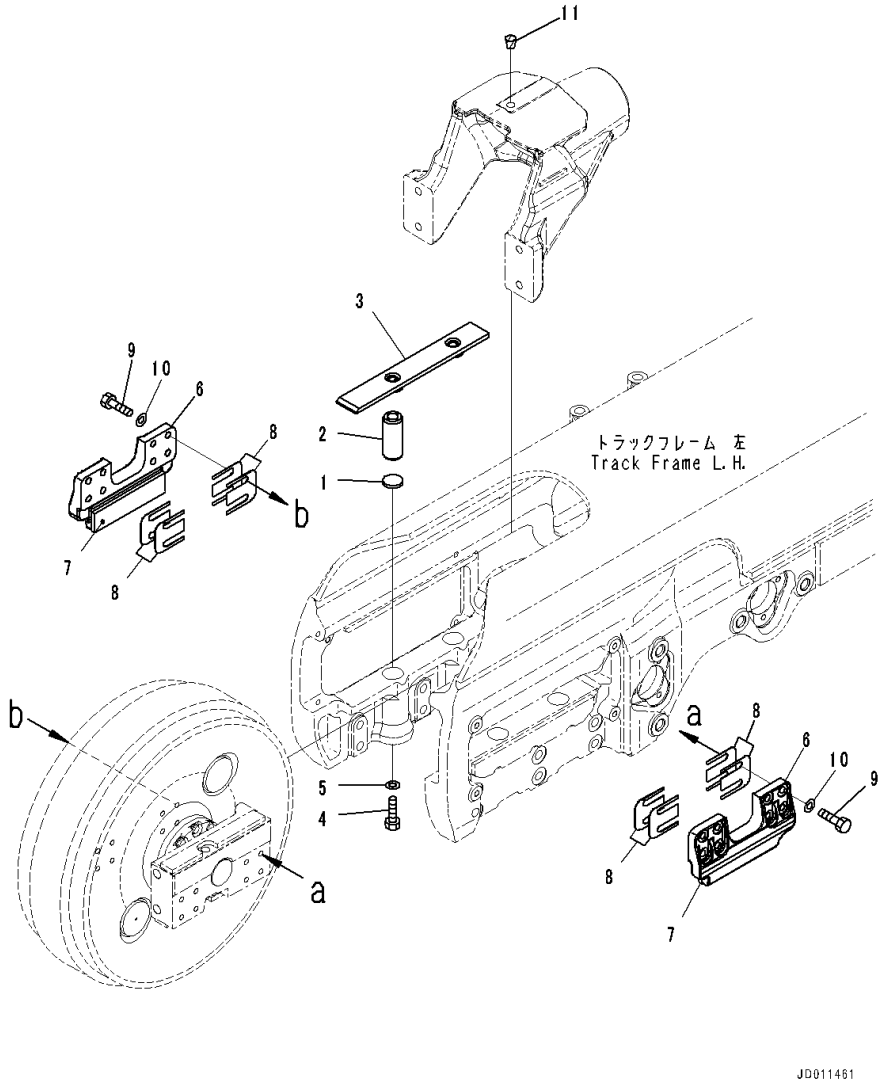

Index	Code	Part Number	Description	Qty	Serial Number
1		195-30-17960	Plate	4	81150-
2		155-30-13230	Spring	4	81150-
3		17A-30-12241	Plate Assembly	2	81150-
4		01016-51260	Bolt	4	81150-
5		01643-31232	Washer	4	81150-
6		17A-30-12170	Guide Assembly	2	81150-
7		17A-30-12190	• Plate	1	81150-
8		17A-30-12211	Shim, T=1.0mm	32	81150-
9		01010-81655	Bolt	16	81150-
10		01643-31645	Washer	16	81150-
11		07049-02430	Plug	1	81150-

FIG. R2100-009006 Track Frame, With Full Length Track Roller Guard, Bogie Mounting, LHS

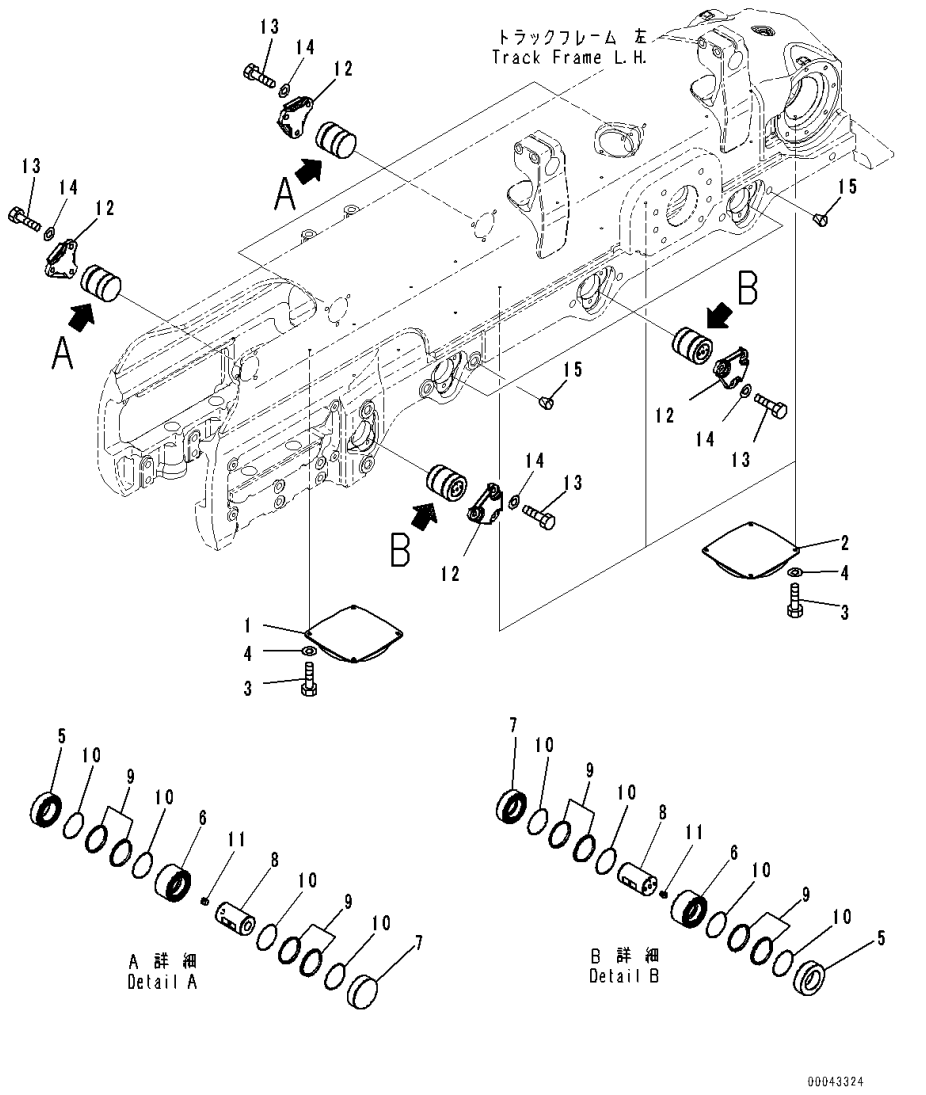

Index	Code	Part Number	Description	Qty	Serial Number
1		17A-30-46141	Pad	1	81150-
2		17A-30-46131	Pad	3	81150-
3		01010-81025	Bolt	16	81150-
4		01643-31032	Washer	16	81150-
		17A-30-46202	Pin Assembly	8	81150-
5		17A-30-46221	• Ring	1	81150-
6		17A-30-46231	• Ring	1	81150-
7		17A-30-46241	• Ring	1	81150-
8		17A-30-46252	• Shaft	1	81150-
		17M-30-00500	• Floating Seal Assembly	2	81150-
9	C1		• • Seal	2	81150-
10	C1		• • O-ring	2	81150-
11		209-30-63150	• Plug	1	81150-
12		17M-30-56331	Cover	8	81150-
13		01010-61640	Bolt	24	81150-
14		01643-31645	Washer	24	81150-
15		07049-03038	Plug	13	81150-

FIG. R2100-009007 Track Frame, With Full Length Track Roller Guard, Bogie, LHS

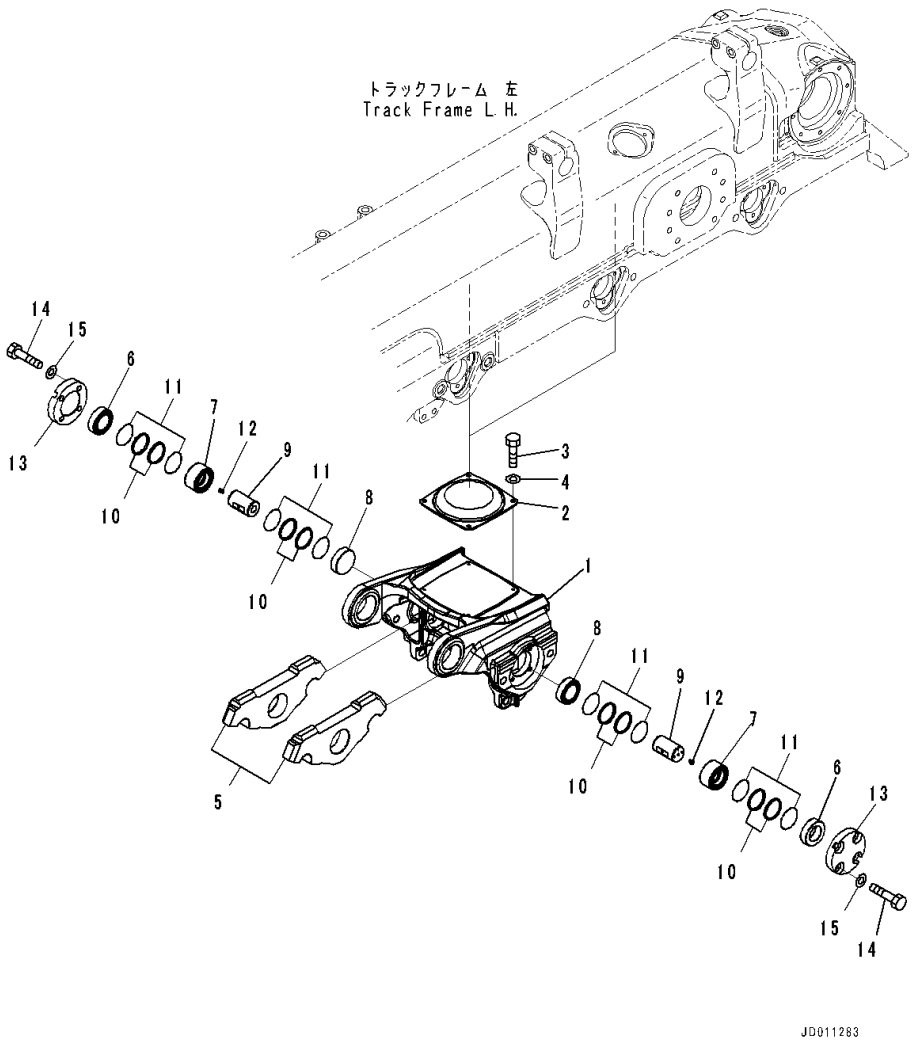

Index	Code	Part Number	Description	Qty	Serial Number
		17A-30-00930	Bogie Assembly	3	81150-
1		17A-30-46111	• Bogie	1	81150-
2		17A-30-46131	• Pad	1	81150-
3		01010-81025	• Bolt	4	81150-
4		01643-31032	• Washer	4	81150-
5		17A-30-46121	• Bogie	2	81150-
		17A-30-46202	• Pin Assembly	2	81150-
6		17A-30-46221	• • Ring	1	81150-
7		17A-30-46231	• • Ring	1	81150-
8		17A-30-46241	• • Ring	1	81150-
9		17A-30-46252	• • Shaft	1	81150-
		17M-30-00500	• • Floating Seal Assembly	2	81150-
10	C1		• • • Seal	2	81150-
11	C1		• • • O-ring	2	81150-
12		209-30-63150	• • Plug	1	81150-
13		17M-30-56341	• Cover	2	81150-
14		01010-61640	• Bolt	8	81150-
15		01643-31645	• Washer	8	81150-

FIG. R2100-009008 Track Frame, With Full Length Track Roller Guard, Track Roller, LHS (1/2)

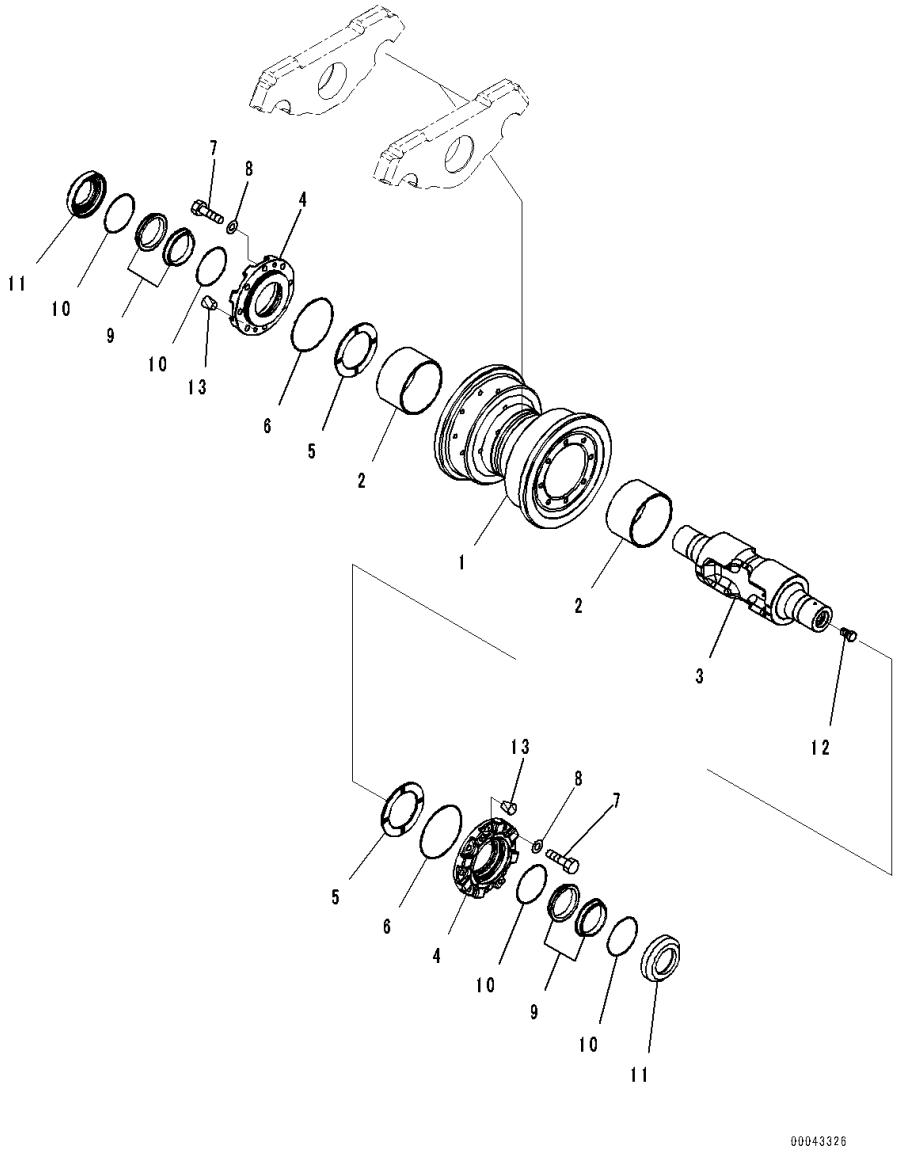

Index	Code	Part Number	Description	Qty	Serial Number
		17A-30-00610	Roller Assembly, Track	3	81150-
1		17A-30-15110	• Roller, Single Flange	1	81150-
2		17A-30-15140	• Bushing	2	81150-
3		17A-30-45230	• Shaft	1	81150-
4		17A-30-45210	• Retainer	2	81150-
5		17A-30-45220	• Plate	2	81150-
6		07000-12130	• O-ring	2	81150-
7		01010-81235	• Bolt	16	81150-
8		01643-31232	• Washer	16	81150-
		154-30-00832	• Floating Seal Assembly	2	81150-
9	C1		• • Seal	2	81150-
10	C1		• • O-ring	2	81150-
11		17A-30-15181	• Ring	2	81150-
12		07052-31624	• Plug	1	81150-
13		07049-01215	• Plug	4	81150-

FIG. R2100-009009 Track Frame, With Full Length Track Roller Guard, Track Roller, LHS (2/2)

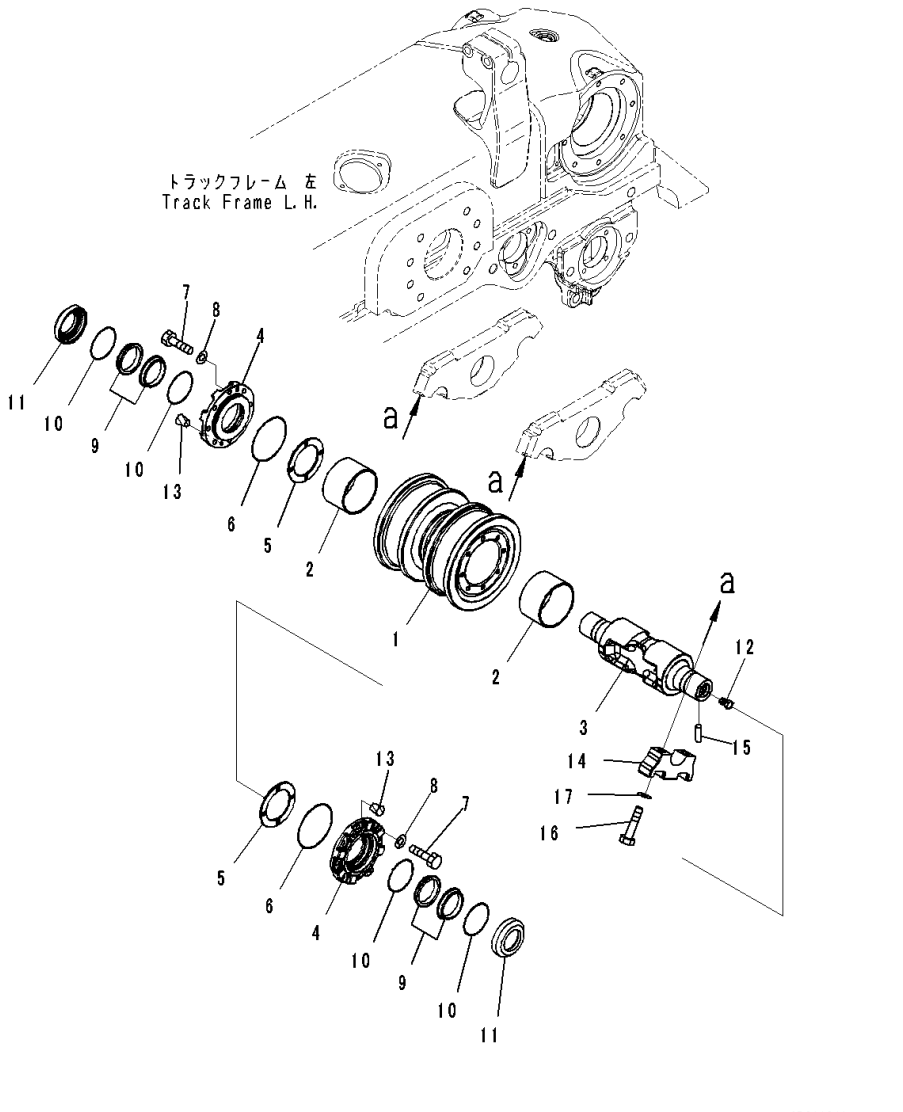

Index	Code	Part Number	Description	Qty	Serial Number
		17A-30-00620	Roller Assembly, Track	3	81150-
1		17A-30-15120	• Roller, Double Flange	1	81150-
2		17A-30-15140	• Bushing	2	81150-
3		17A-30-45230	• Shaft	1	81150-
4		17A-30-45210	• Retainer	2	81150-
5		17A-30-45220	• Plate	2	81150-
6		07000-12130	• O-ring	2	81150-
7		01010-81235	• Bolt	16	81150-
8		01643-31232	• Washer	16	81150-
		154-30-00832	• Floating Seal Assembly	2	81150-
9	C1		• • Seal	2	81150-
10	C1		• • O-ring	2	81150-
11		17A-30-15181	• Ring	2	81150-
12		07052-31624	• Plug	1	81150-
13		07049-01215	• Plug	4	81150-
14		17A-30-16331	Cap	12	81150-
15		04020-00616	Pin, Dowel	6	81150-
16		01010-62285	Bolt	24	81150-
17		01643-32260	Washer	24	81150-

FIG. R2100-009010 Track Frame, With Full Length Track Roller Guard, Carrier Roller, LHS

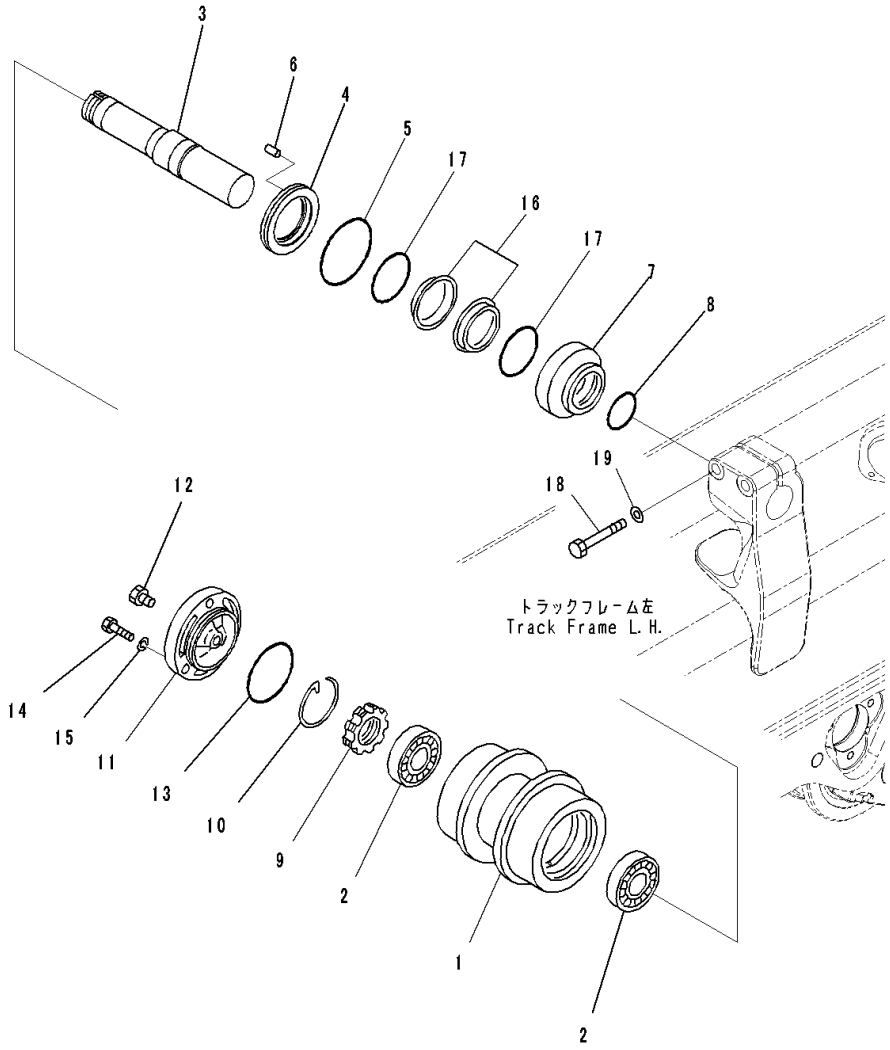

Index	Code	Part Number	Description	Qty	Serial Number
		17A-30-00721	Carrier Roller Assembly	2	81150-
1		175-30-45111	• Roller	1	81150-
2		06002-30212	• Bearing	2	81150-
3		175-30-25131	• Shaft	1	81150-
4		175-30-35161	• Ring	1	81150-
5		07000-12130	• O-ring	1	81150-
6		04020-00616	• Pin, Dowel	1	81150-
7		175-30-35171	• Ring	1	81150-
8		07000-12070	• O-ring	1	81150-
9		170-30-15190	• Nut	1	81150-
10		170-30-15210	• Ring	1	81150-
11		175-30-45131	• Cover	1	81150-
12		07052-31624	• Plug	1	81150-
13		07000-12110	• O-ring	1	81150-
14		01010-81435	• Bolt	3	81150-
15		01643-31445	• Washer	3	81150-
		154-30-00832	• Floating Seal Assembly	1	81150-
16	C1		• • Seal	2	81150-
17	C1		• • O-ring	2	81150-
18		01011-82005	Bolt	4	81150-
19		01643-32060	Washer	4	81150-

FIG. R2100-009011 Track Frame, With Full Length Track Roller Guard, Rear Cover (1/2)

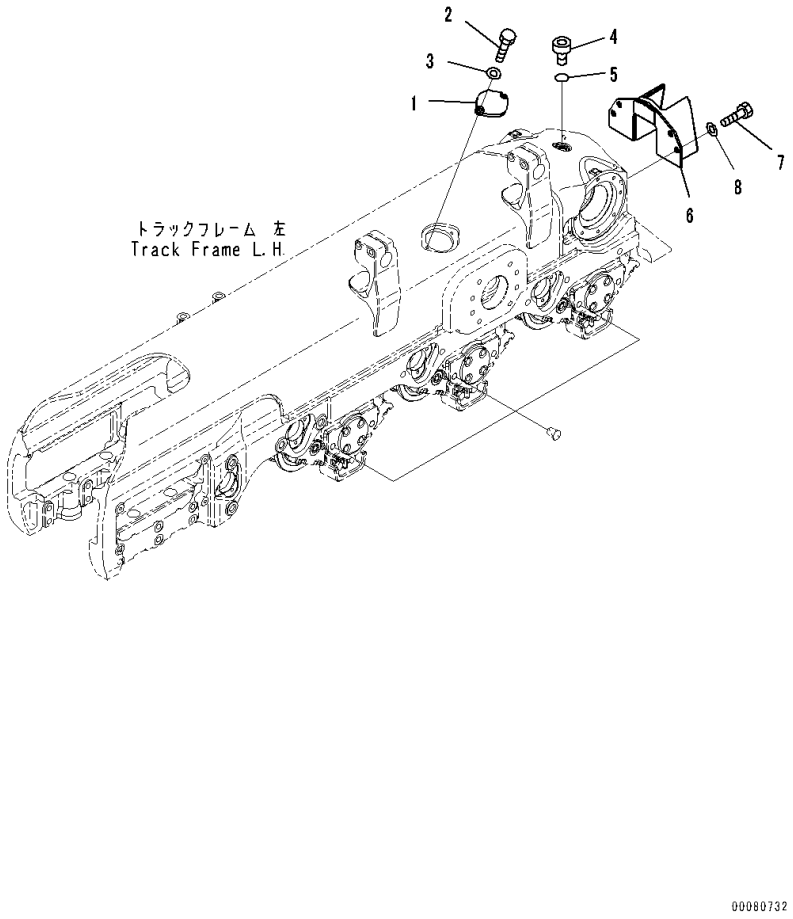

Index	Code	Part Number	Description	Qty	Serial Number
1		17A-30-41380	Cover	1	81150-
2		01010-81230	Bolt	2	81150-
3		01643-31232	Washer	2	81150-
4		07040-13618	Plug	1	81150-
5		07002-13634	O-ring	1	81150-
6		17A-30-48951	Cover	1	81150-
7		01010-62040	Bolt	3	81150-
8		01643-32060	Washer	3	81150-

FIG. R2100-009012 Track Frame, With Full Length Track Roller Guard, Guard (1/2)

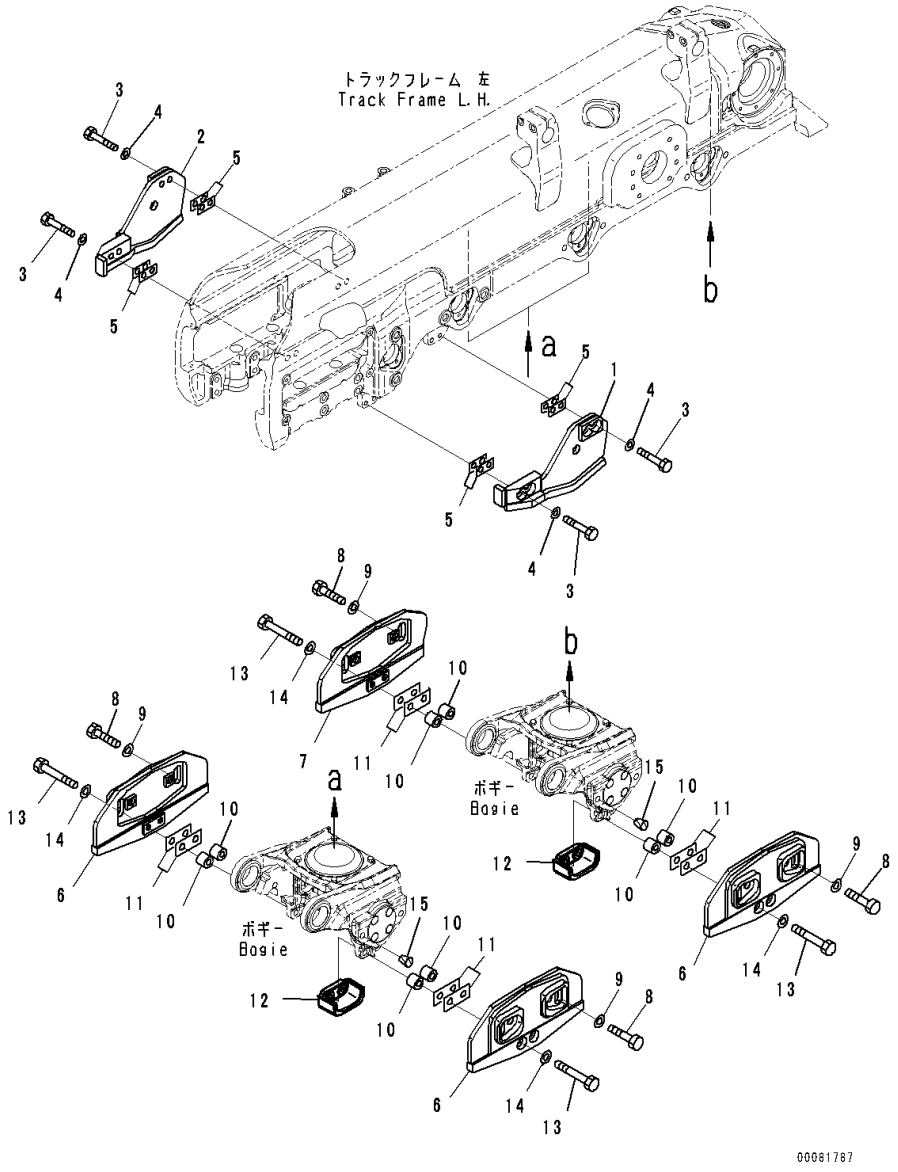

Index	Code	Part Number	Description	Qty	Serial Number
1		17A-30-47230	Guard,LHS	1	81150-
2		17A-30-47240	Guard,RHS	1	81150-
3		01010-62255	Bolt	8	81150-
4		01643-32260	Washer	8	81150-
5		17A-30-47340	Shim, T=0.5mm	8	81150-
6		17A-30-47250	Guard	5	81150-
7		17A-30-47270	Guard,LHS	1	81150-
8		01010-63080	Bolt	12	81150-
9		01643-33080	Washer	12	81150-
10		17A-30-47310	Spacer	12	81150-
11		17A-30-47320	Shim, T=0.5mm	24	81150-
12		17A-30-47131	Guide	6	81150-
13		01011-62225	Bolt	12	81150-
14		01643-32260	Washer	12	81150-
15		07049-03038	Plug	3	81150-

FIG. R2100-009013 Track Frame, With Full Length Track Roller Guard, Frame RHS

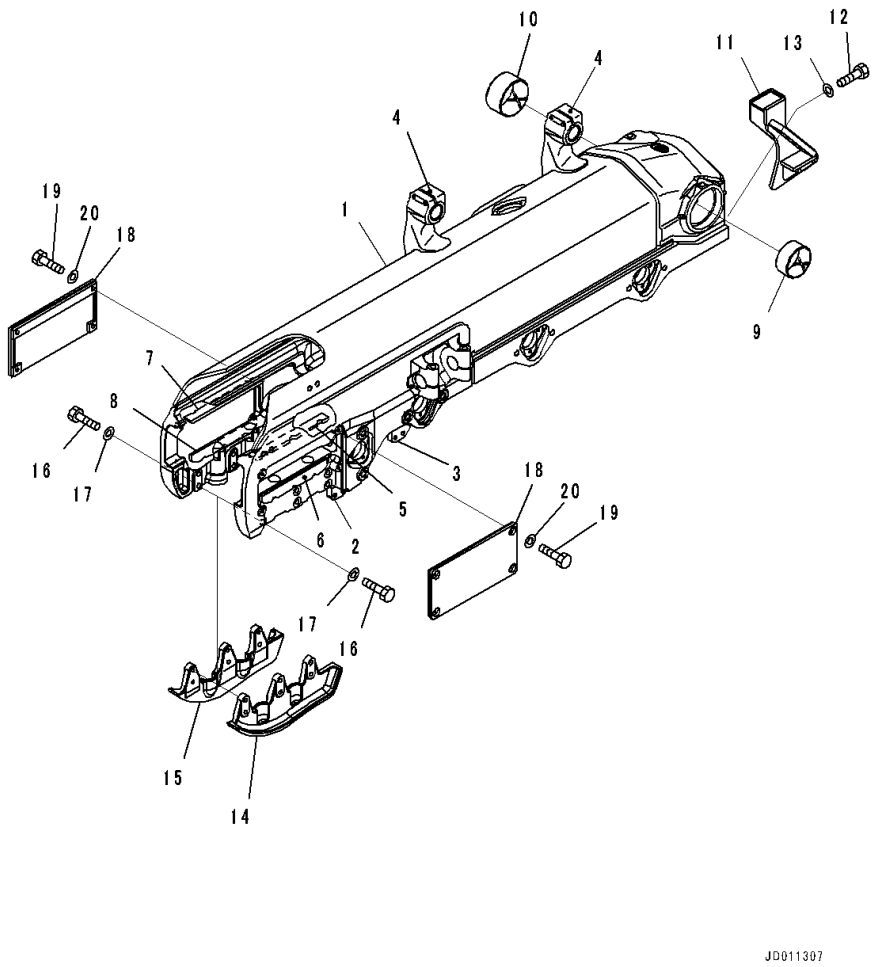

Index	Code	Part Number	Description	Qty	Serial Number
		17A-30-00920	Track Frame	1	81150-
1	C1		• Frame,LHS	1	81150-
2		17A-30-47A10	• • Plate,Welded	2	81150-
3		17A-30-47A20	• • Plate,Welded	2	81150-
4		17A-30-41411	• • Support,Welded	2	81150-
5		17A-30-41311	• • Plate,Welded	1	81150-
6		17A-30-41321	• • Plate,Welded	1	81150-
7		17A-30-41311	• • Plate,Welded	1	81150-
8		17A-30-41321	• • Plate,Welded	1	81150-
9		17A-50-41210	• Bushing	1	81150-
10		17A-50-11130	• Bushing	1	81150-
11		17A-30-41371	Cover	1	81150-
12		01010-62040	Bolt	4	81150-
13		01643-32060	Washer	4	81150-
14		17A-30-47141	Guard	1	81150-
15		17A-30-47151	Guard	1	81150-
16		01010-82275	Bolt	12	81150-
17		01643-32260	Washer	12	81150-
18		17A-30-41351	Cover	2	81150-
19		01010-61640	Bolt	8	81150-
20		01643-31645	Washer	8	81150-

FIG. R2100-009014 Track Frame, With Full Length Track Roller Guard, Front Bogie, RHS

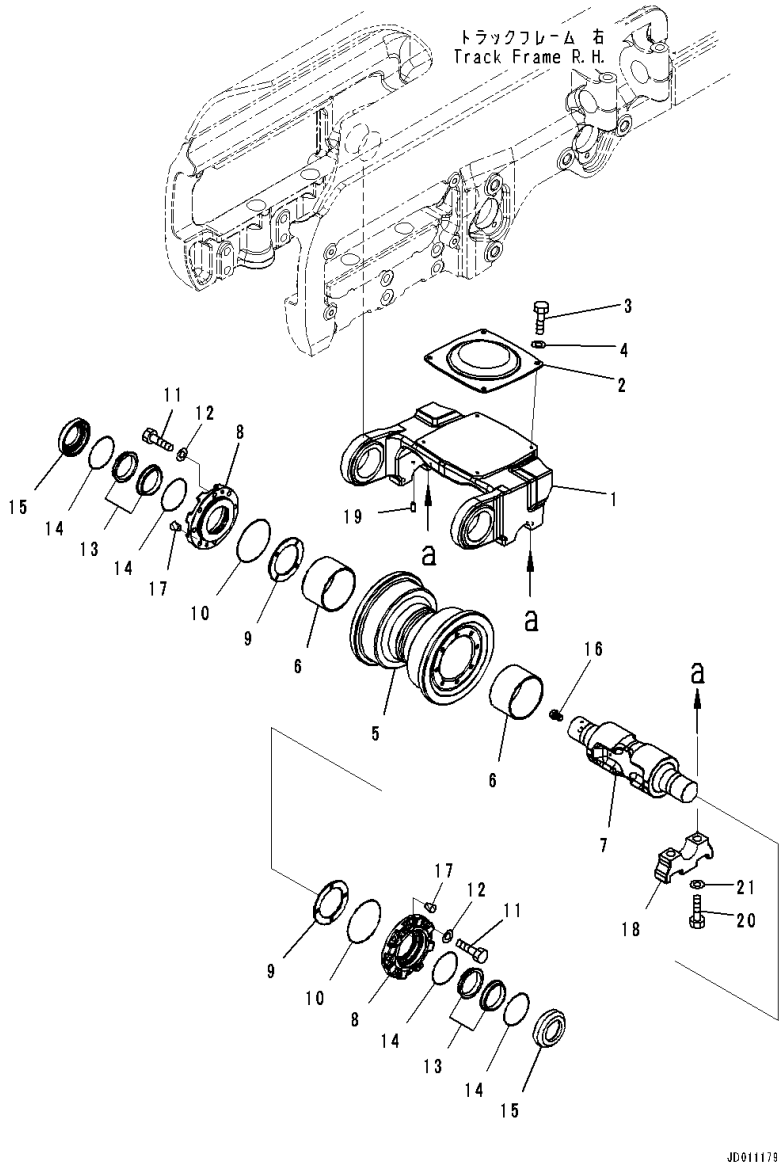

Index	Code	Part Number	Description	Qty	Serial Number
1		17A-30-46151	Bogie	1	81150-
2		17A-30-46141	Pad	1	81150-
3		01010-81025	Bolt	4	81150-
4		01643-31032	Washer	4	81150-
		17A-30-00610	Roller Assembly, Track	1	81150-
5		17A-30-15110	• Roller, Single Flange	1	81150-
6		17A-30-15140	• Bushing	2	81150-
7		17A-30-45230	• Shaft	1	81150-
8		17A-30-45210	• Retainer	2	81150-
9		17A-30-45220	• Plate	2	81150-
10		07000-12130	• O-ring	2	81150-
11		01010-81235	• Bolt	16	81150-
12		01643-31232	• Washer	16	81150-
		154-30-00832	• Floating Seal Assembly	2	81150-
13	C1		• • Seal	2	81150-
14	C1		• • O-ring	2	81150-
15		17A-30-15181	• Ring	2	81150-
16		07052-31624	• Plug	1	81150-
17		07049-01215	• Plug	4	81150-
18		17A-30-46330	Cap	2	81150-
19		04020-00616	Pin, Dowel	1	81150-
20		01010-62285	Bolt	4	81150-
21		01643-32260	Washer	4	81150-

FIG. R2100-009015 Track Frame, With Full Length Track Roller Guard, Front Idler, RHS

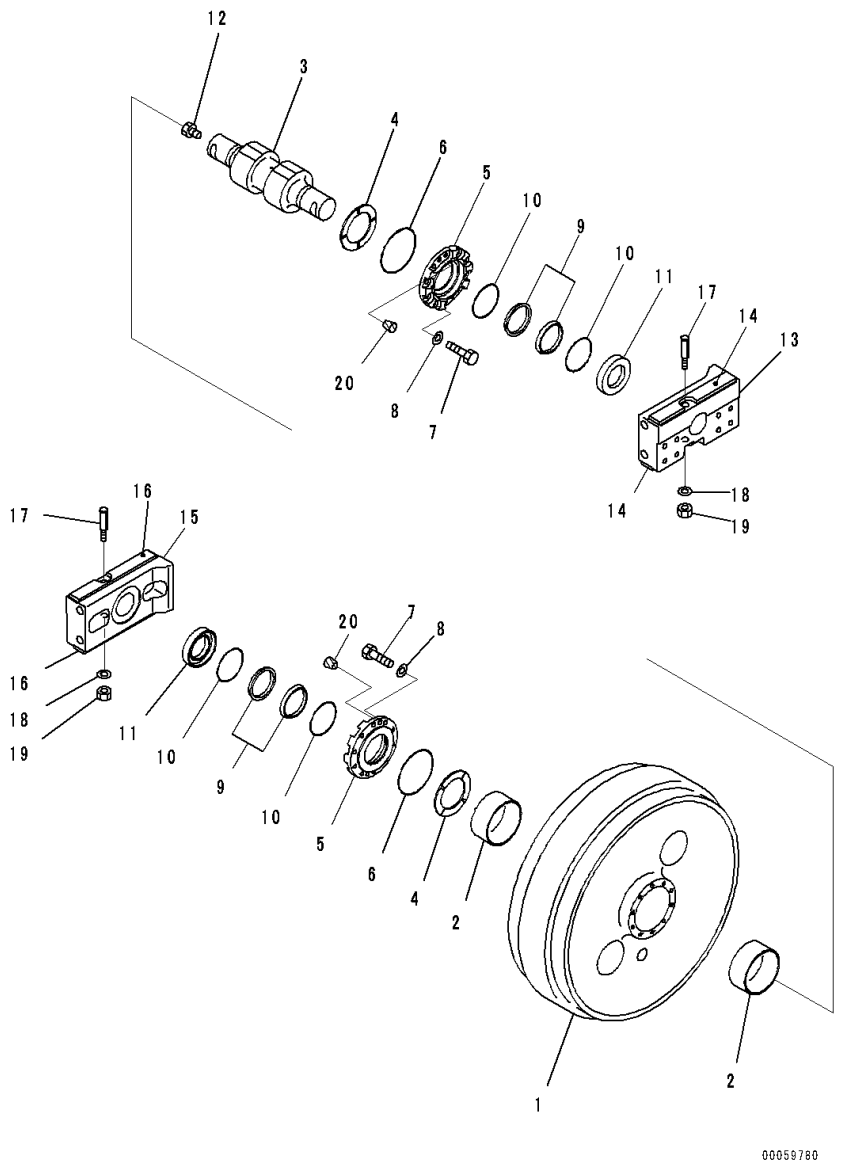

Index	Code	Part Number	Description	Qty	Serial Number
		17A-30-00042	Idler Assembly	1	81150-
1		17A-30-13410	• Idler	1	81150-
2		17A-30-13140	• Bushing	2	81150-
3		17A-30-13450	• Shaft	1	81150-
4		195-30-62650	• Plate	2	81150-
5		17A-30-13440	• Retainer	2	81150-
6		07000-12145	• O-ring	2	81150-
7		01010-81235	• Bolt	20	81150-
8		01643-31232	• Washer	20	81150-
		22B-30-00030	• Floating Seal Assembly	2	81150-
9	C1		• • Seal	2	81150-
10	C1		• • O-ring	2	81150-
11		195-30-62680	• Ring	2	81150-
12		07052-31624	• Plug	1	81150-
13		17A-30-13470	• Support Assembly,LHS	1	81150-
14		17A-30-12150	• • Plate,Welded	2	81150-
15		17A-30-13490	• Support Assembly,RHS	1	81150-
16		17A-30-12150	• • Plate,Welded	2	81150-
17		130-30-13170	• Bolt	2	81150-
18		01643-31645	• Washer	2	81150-
19		01582-11613	• Nut	2	81150-
20		07049-01215	• Plug	4	81150-

FIG. R2100-009016 Track Frame, With Full Length Track Roller Guard, Recoil Spring, RHS

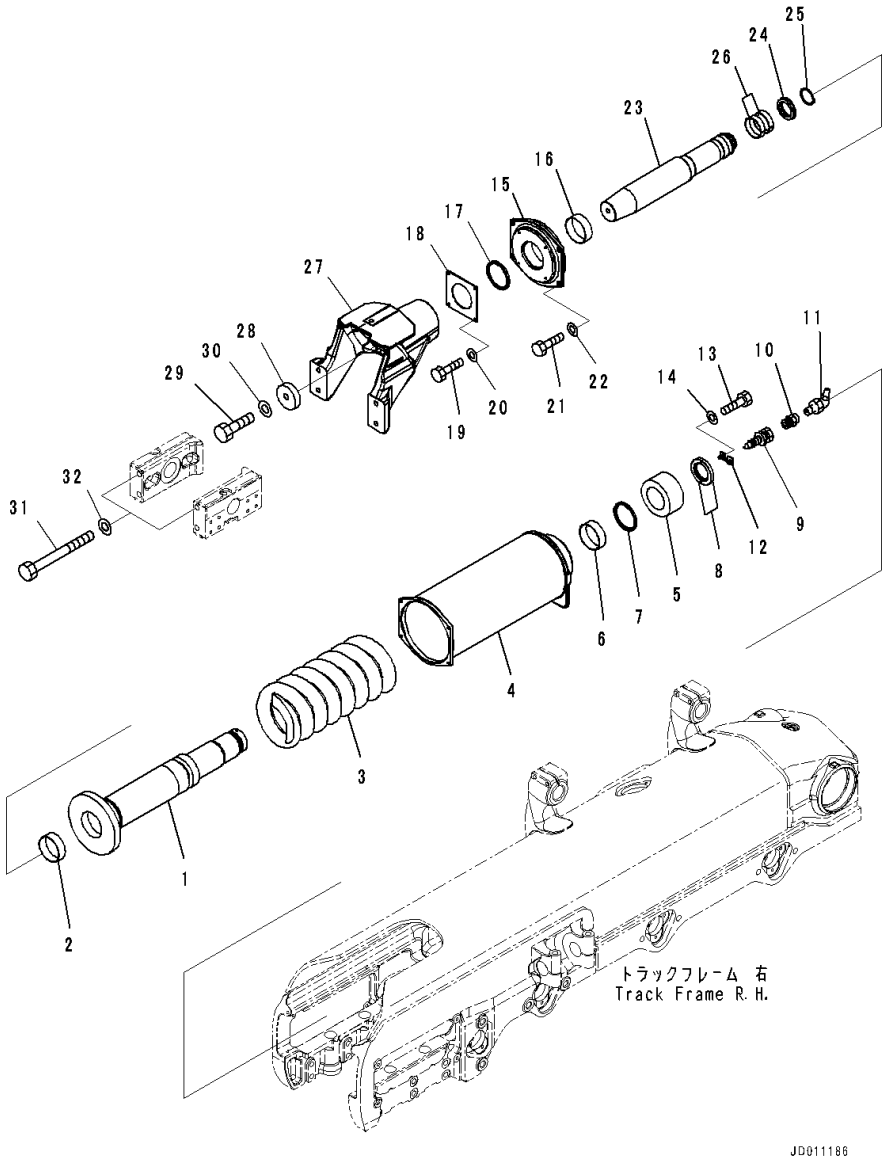

Index	Code	Part Number	Description	Qty	Serial Number
1		17A-30-43461	Cylinder	1	81150-
2		07177-01240	Bushing	1	81150-
3		17A-30-43470	Spring	1	81150-
4		17A-30-43432	Cabin,Recoil Spring	1	81150-
5		17A-30-48481	Nut	1	81150-
6		07177-01240	Bushing	1	81150-
7		17A-30-43540	Seal	1	81150-
8		17A-30-48491	Spacer	2	81150-
9		07959-30000	Valve	1	81150-
10		423-70-11160	Nipple	1	81150-
11		07020-00900	Fitting, Grease	1	81150-
12		14X-30-13174	Plate	1	81150-
13		01010-80830	Bolt	2	81150-
14		01643-30823	Washer	2	81150-
15		17A-30-43412	Holder	1	81150-
16		07177-01240	Bushing	1	81150-
17		17A-30-43540	Seal	1	81150-
18		17A-30-43520	Cover	1	81150-
19		01010-81020	Bolt	4	81150-
20		01643-31032	Washer	4	81150-
21		01010-81240	Bolt	4	81150-
22		01643-31232	Washer	4	81150-
23		17A-30-43511	Piston	1	81150-
24		175-30-24242	Packing	1	81150-
25		04064-07525	Ring, Snap	1	81150-
26		07155-01025	Ring, Wear	2	81150-
27		17A-30-44191	Yoke	1	81150-
28		17A-30-43532	Plate	1	81150-
29		01010-82470	Bolt	1	81150-
30		01643-32460	Washer	1	81150-
31		175-30-32162	Bolt	4	81150-
32		01643-32460	Washer	4	81150-

FIG. R2100-009017 Track Frame, With Full Length Track Roller Guard, Guide Plate, RHS

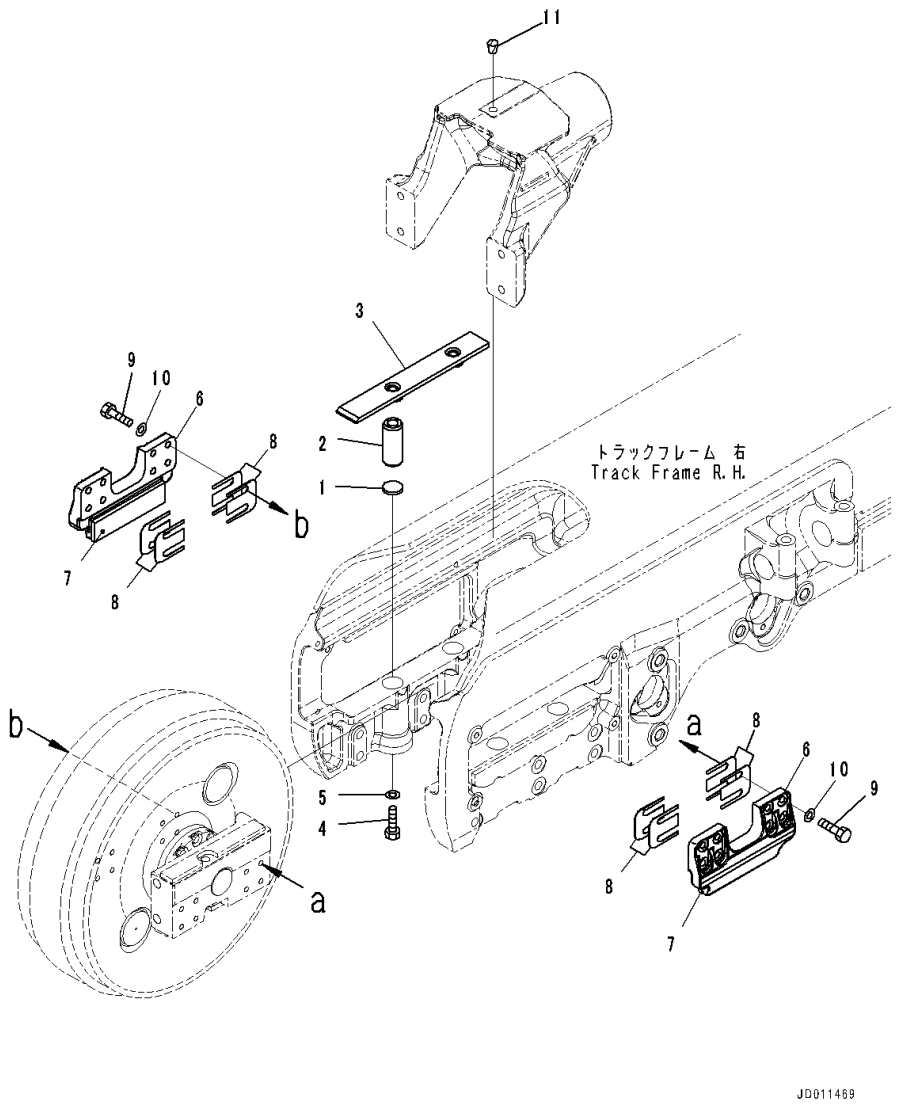

Index	Code	Part Number	Description	Qty	Serial Number
1		195-30-17960	Plate	4	81150-
2		155-30-13230	Spring	4	81150-
3		17A-30-12241	Plate Assembly	2	81150-
4		01016-51260	Bolt	4	81150-
5		01643-31232	Washer	4	81150-
6		17A-30-12170	Guide Assembly	2	81150-
7		17A-30-12190	• Plate	1	81150-
8		17A-30-12211	Shim, T=1.0mm	32	81150-
9		01010-81655	Bolt	16	81150-
10		01643-31645	Washer	16	81150-
11		07049-02430	Plug	1	81150-

FIG. R2100-009018 Track Frame, With Full Length Track Roller Guard, Bogie Mounting, RHS

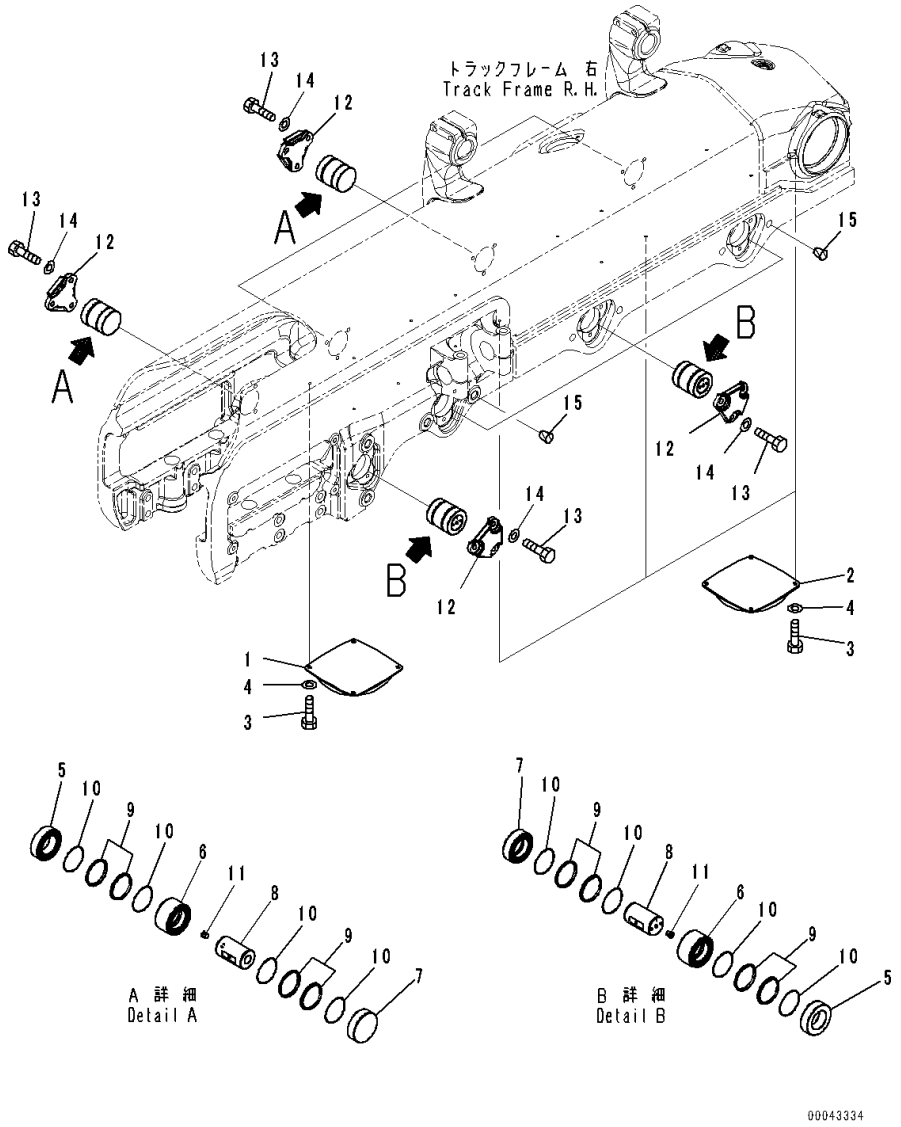

Index	Code	Part Number	Description	Qty	Serial Number
1		17A-30-46141	Pad	1	81150-
2		17A-30-46131	Pad	3	81150-
3		01010-81025	Bolt	16	81150-
4		01643-31032	Washer	16	81150-
		17A-30-46202	Pin Assembly	8	81150-
5		17A-30-46221	• Ring	1	81150-
6		17A-30-46231	• Ring	1	81150-
7		17A-30-46241	• Ring	1	81150-
8		17A-30-46252	• Shaft	1	81150-
		17M-30-00500	• Floating Seal Assembly	2	81150-
9	C1		• • Seal	2	81150-
10	C1		• • O-ring	2	81150-
11		209-30-63150	• Plug	1	81150-
12		17M-30-56331	Cover	8	81150-
13		01010-61640	Bolt	24	81150-
14		01643-31645	Washer	24	81150-
15		07049-03038	Plug	13	81150-

FIG. R2100-009019 Track Frame, With Full Length Track Roller Guard, Bogie, RHS

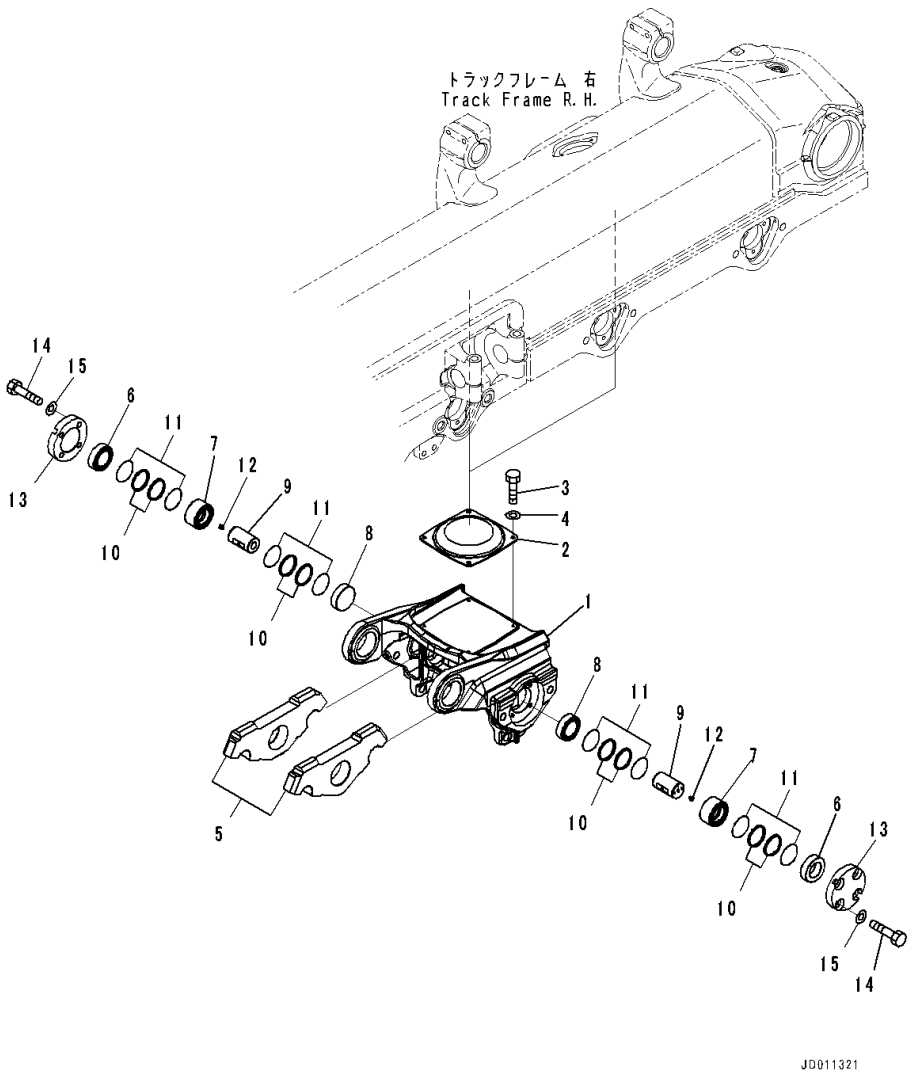

Index	Code	Part Number	Description	Qty	Serial Number
		17A-30-00930	Bogie Assembly	3	81150-
1		17A-30-46111	• Bogie	1	81150-
2		17A-30-46131	• Pad	1	81150-
3		01010-81025	• Bolt	4	81150-
4		01643-31032	• Washer	4	81150-
5		17A-30-46121	• Bogie	2	81150-
6		17A-30-46221	• Ring	2	81150-
7		17A-30-46231	• Ring	2	81150-
8		17A-30-46241	• Ring	2	81150-
9		17A-30-46252	• Shaft	2	81150-
		17M-30-00500	• Floating Seal Assembly	4	81150-
10	C1		• • Seal	2	81150-
11	C1		• • O-ring	2	81150-
12		209-30-63150	• Plug	2	81150-
13		17M-30-56341	• Cover	2	81150-
14		01010-61640	• Bolt	8	81150-
15		01643-31645	• Washer	8	81150-

FIG. R2100-009020 Track Frame, With Full Length Track Roller Guard, Track Roller, RHS (1/2)

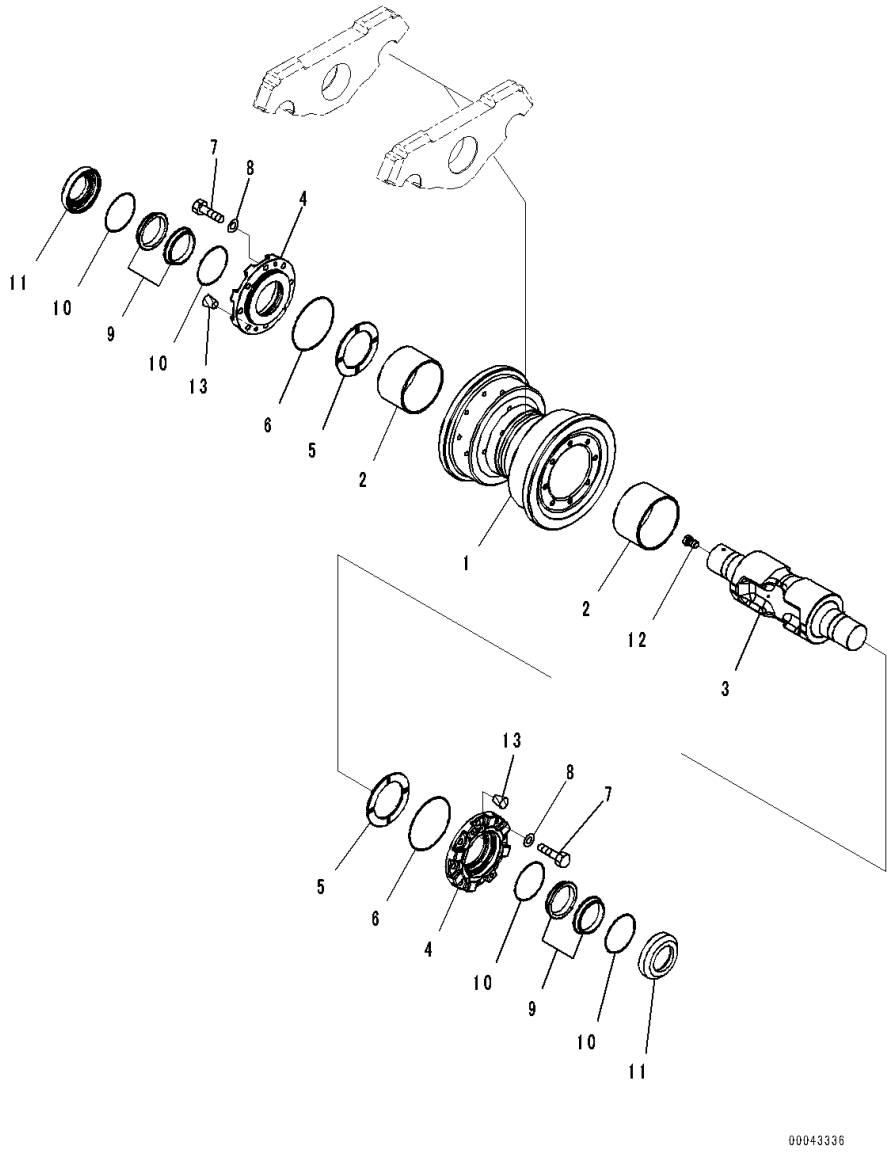

Index	Code	Part Number	Description	Qty	Serial Number
		17A-30-00610	Roller Assembly, Track	3	81150-
1		17A-30-15110	• Roller, Single Flange	1	81150-
2		17A-30-15140	• Bushing	2	81150-
3		17A-30-45230	• Shaft	1	81150-
4		17A-30-45210	• Retainer	2	81150-
5		17A-30-45220	• Plate	2	81150-
6		07000-12130	• O-ring	2	81150-
7		01010-81235	• Bolt	16	81150-
8		01643-31232	• Washer	16	81150-
		154-30-00832	• Floating Seal Assembly	2	81150-
9	C1		• • Seal	2	81150-
10	C1		• • O-ring	2	81150-
11		17A-30-15181	• Ring	2	81150-
12		07052-31624	• Plug	1	81150-
13		07049-01215	• Plug	4	81150-

FIG. R2100-009021 Track Frame, With Full Length Track Roller Guard, Track Roller, RHS (2/2)

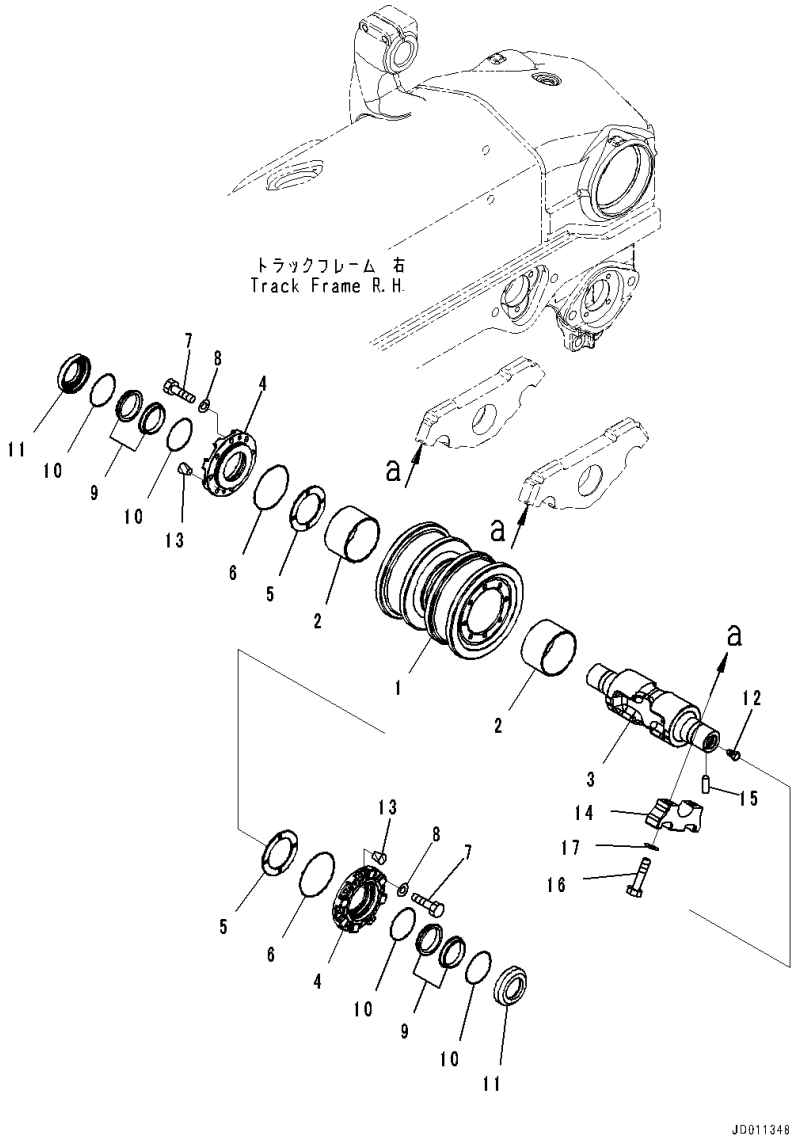

Index	Code	Part Number	Description	Qty	Serial Number
		17A-30-00620	Roller Assembly, Track	3	81150-
1		17A-30-15120	• Roller, Double Flange	1	81150-
2		17A-30-15140	• Bushing	2	81150-
3		17A-30-45230	• Shaft	1	81150-
4		17A-30-45210	• Retainer	2	81150-
5		17A-30-45220	• Plate	2	81150-
6		07000-12130	• O-ring	2	81150-
7		01010-81235	• Bolt	16	81150-
8		01643-31232	• Washer	16	81150-
		154-30-00832	• Floating Seal Assembly	2	81150-
9	C1		• • Seal	2	81150-
10	C1		• • O-ring	2	81150-
11		17A-30-15181	• Ring	2	81150-
12		07052-31624	• Plug	1	81150-
13		07049-01215	• Plug	4	81150-
14		17A-30-16331	Cap	12	81150-
15		04020-00616	Pin, Dowel	6	81150-
16		01010-62285	Bolt	24	81150-
17		01643-32260	Washer	24	81150-

FIG. R2100-009022 Track Frame, With Full Length Track Roller Guard, Carrier Roller, RHS

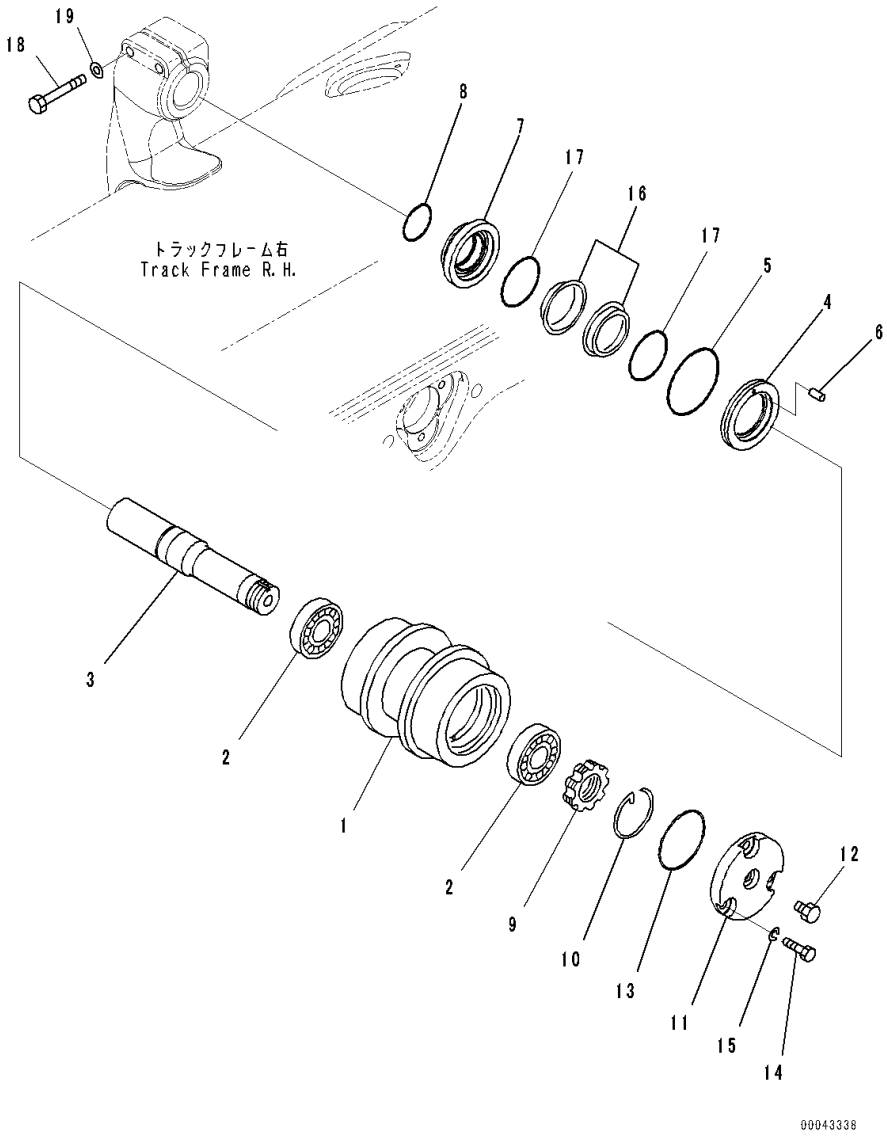

Index	Code	Part Number	Description	Qty	Serial Number
		17A-30-00721	Carrier Roller Assembly	2	81150-
1		175-30-45111	• Roller	1	81150-
2		06002-30212	• Bearing	2	81150-
3		175-30-25131	• Shaft	1	81150-
4		175-30-35161	• Ring	1	81150-
5		07000-12130	• O-ring	1	81150-
6		04020-00616	• Pin, Dowel	1	81150-
7		175-30-35171	• Ring	1	81150-
8		07000-12070	• O-ring	1	81150-
9		170-30-15190	• Nut	1	81150-
10		170-30-15210	• Ring	1	81150-
11		175-30-45131	• Cover	1	81150-
12		07052-31624	• Plug	1	81150-
13		07000-12110	• O-ring	1	81150-
14		01010-81435	• Bolt	3	81150-
15		01643-31445	• Washer	3	81150-
		154-30-00832	• Floating Seal Assembly	1	81150-
16	C1		• • Seal	2	81150-
17	C1		• • O-ring	2	81150-
18		01011-82005	Bolt	4	81150-
19		01643-32060	Washer	4	81150-

FIG. R2100-009023 Track Frame, With Full Length Track Roller Guard, Rear Cover (2/2)

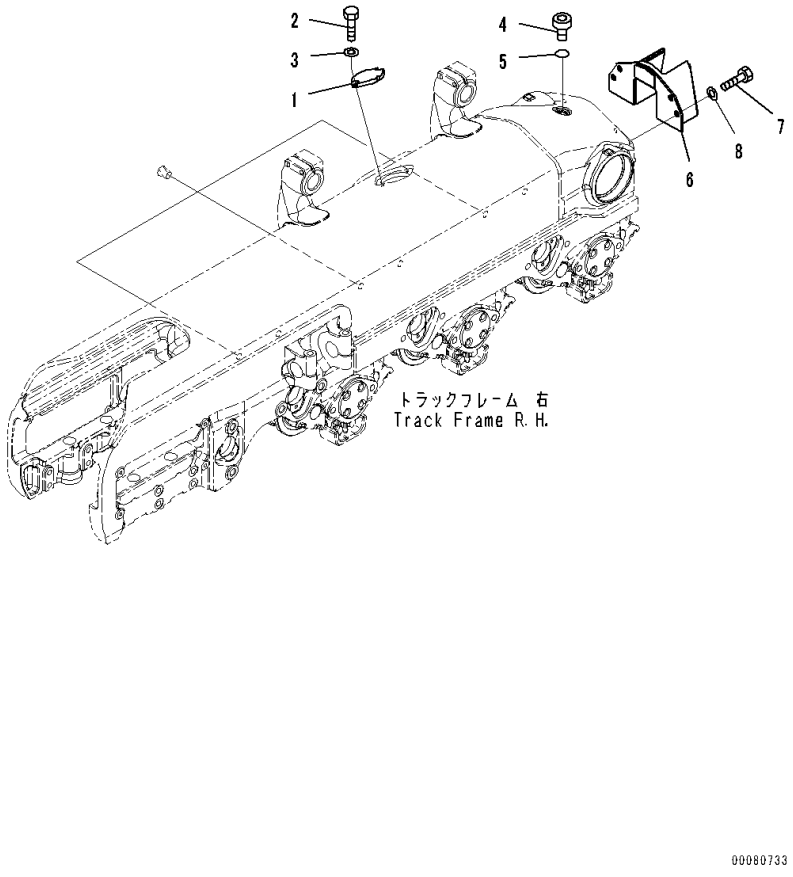

Index	Code	Part Number	Description	Qty	Serial Number
1		17A-30-41380	Cover	1	81150-
2		01010-81230	Bolt	2	81150-
3		01643-31232	Washer	2	81150-
4		07040-13618	Plug	1	81150-
5		07002-13634	O-ring	1	81150-
6		17A-30-48951	Cover	1	81150-
7		01010-62040	Bolt	3	81150-
8		01643-32060	Washer	3	81150-

FIG. R2100-009024 Track Frame, With Full Length Track Roller Guard, Guard (2/2)

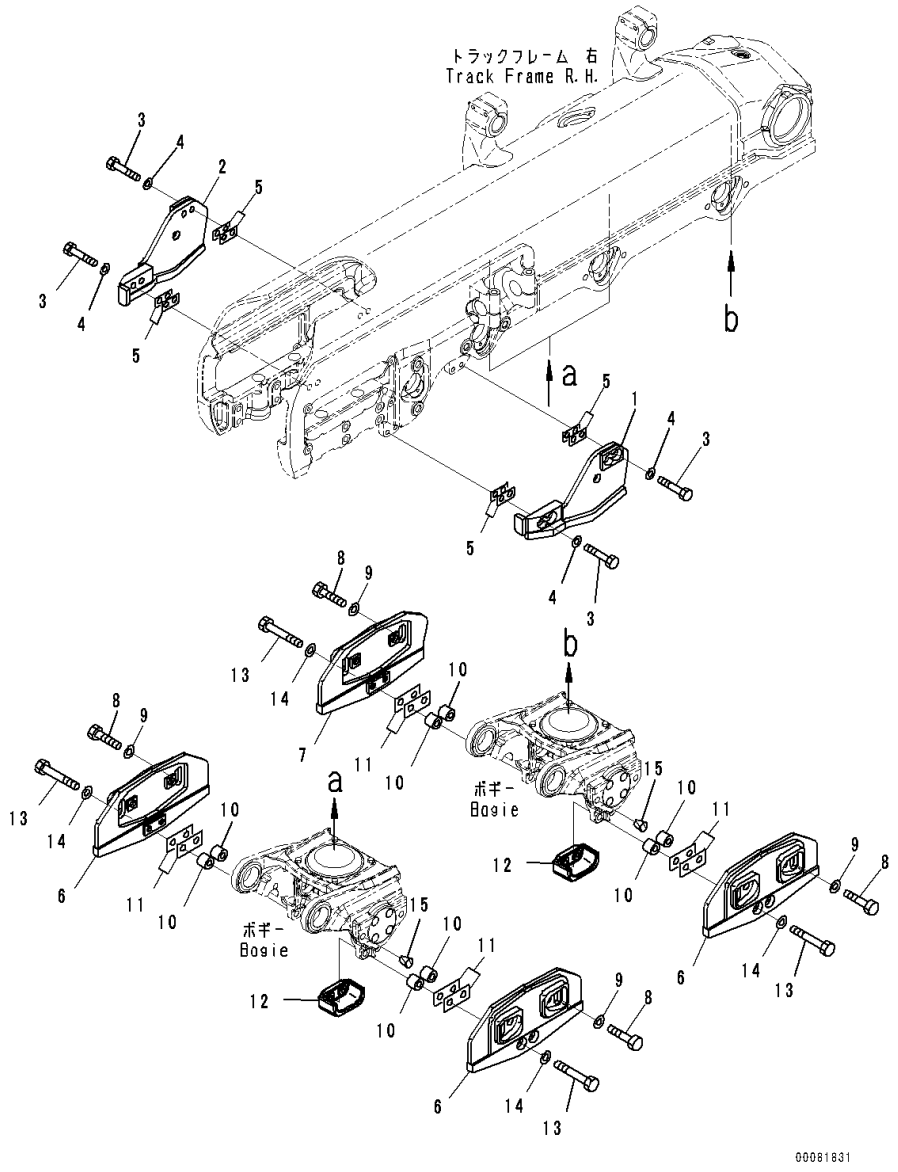

Index	Code	Part Number	Description	Qty	Serial Number
1		17A-30-47230	Guard,LHS	1	81150-
2		17A-30-47240	Guard,RHS	1	81150-
3		01010-62255	Bolt	8	81150-
4		01643-32260	Washer	8	81150-
5		17A-30-47340	Shim, T=0.5mm	8	81150-
6		17A-30-47250	Guard	5	81150-
7		17A-30-47260	Guard,RHS	1	81150-
8		01010-63080	Bolt	12	81150-
9		01643-33080	Washer	12	81150-
10		17A-30-47310	Spacer	12	81150-
11		17A-30-47320	Shim, T=0.5mm	24	81150-
12		17A-30-47131	Guide	6	81150-
13		01011-62225	Bolt	12	81150-
14		01643-32260	Washer	12	81150-
15		07049-03038	Plug	3	81150-

WORK EQUIPMENT

FIG. T2110-001001 Dozer Frame, Frame

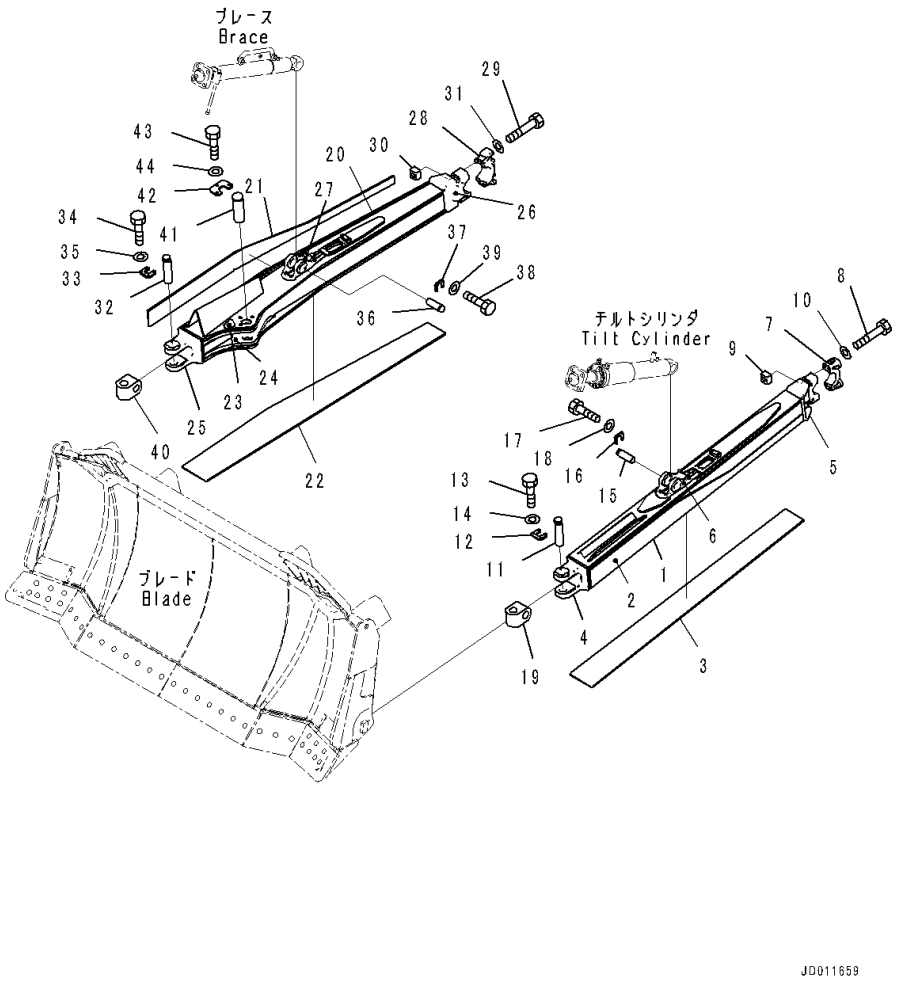

Index	Code	Part Number	Description	Qty	Serial Number
		Note: This list covers following specifications.			
		For Dual Tilt Pitch Dozer, Reinforced Type			
		For Strengthened Semi U Dozer			
1		17A-71-46312	Frame	1	81028-
2		17A-71-46320	• Plate,Welded	1	81028-
3		17A-71-46331	• Plate,Welded	1	81028-
4		17A-71-45321	• Bracket,Welded	1	81028-
5		17A-71-45331	• Bracket,Welded	1	81028-
6		17A-71-12481	• Bracket,Welded	1	81028-
7		17A-71-12280	Cap	1	81028-
8		175-71-11491	Bolt	4	81028-
9		175-71-11520	Nut	4	81028-
10		01643-32260	Washer	4	81028-
11		175-71-21221	Pin	1	81028-
12		175-71-21230	Plate	1	81028-
13		01010-81440	Bolt	4	81028-
14		01643-31445	Washer	4	81028-
15		154-71-21290	Pin	1	81028-
16		175-71-21330	Plate	1	81028-
17		01010-81435	Bolt	4	81028-
18		01643-31445	Washer	4	81028-
19		175-71-21261	Joint	1	81028-
20		17A-71-46411	Frame	1	81028-
21		17A-71-46420	• Plate,Welded	1	81028-
22		17A-71-46431	• Plate,Welded	1	81028-
23		17A-71-45H52	• Plate,Welded	1	81028-
24		17A-71-45H62	• Plate,Welded	1	81028-
25		17A-71-45421	• Bracket,Welded	1	81028-
26		17A-71-45431	• Bracket,Welded	1	81028-
27		17A-71-12132	• Bracket,Welded	1	81028-
28		17A-71-45460	Cap	1	81028-
29		561-88-48950	Bolt	4	81028-
30		175-71-11520	Nut	4	81028-
31		01643-32260	Washer	4	81028-
32		175-71-21221	Pin	1	81028-
33		175-71-21230	Plate	1	81028-
34		01010-81440	Bolt	4	81028-
35		01643-31445	Washer	4	81028-
36		154-71-21290	Pin	1	81028-
37		175-71-21330	Plate	1	81028-

FIG. T2110-001001 Dozer Frame, Frame

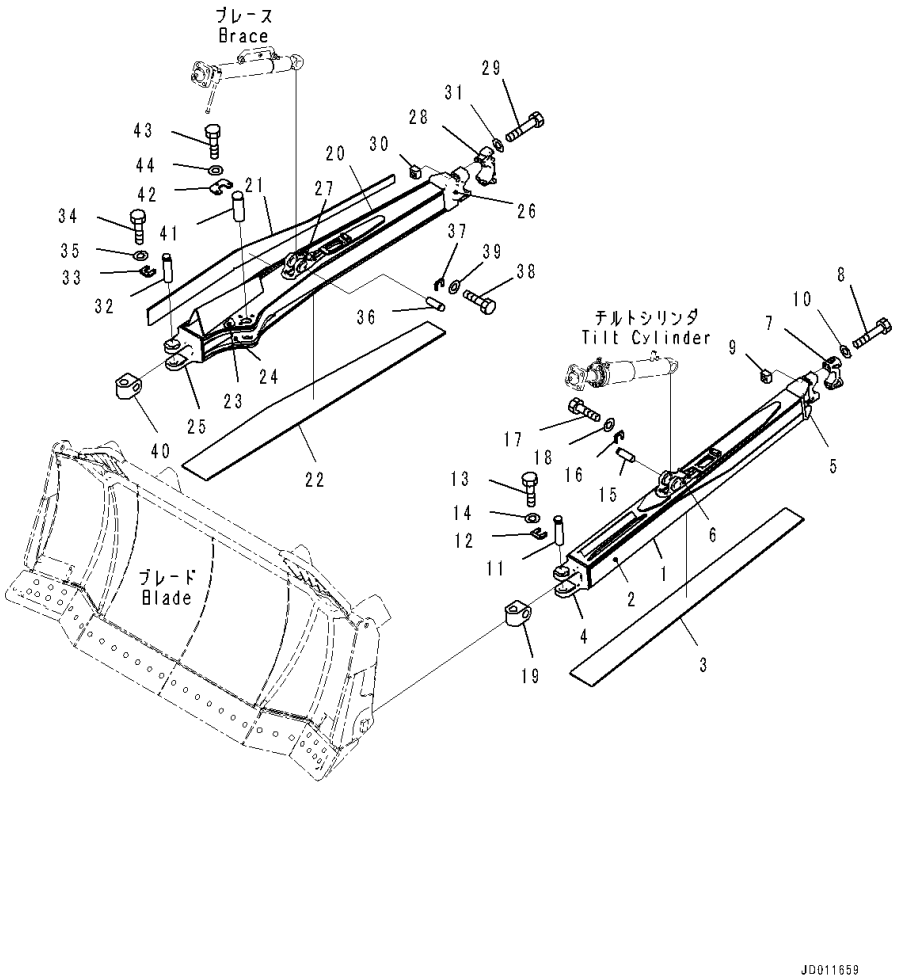

Index	Code	Part Number	Description	Qty	Serial Number
38		01010-81435	Bolt	4	81028-
39		01643-31445	Washer	4	81028-
40		175-71-21261	Joint	1	81028-
41		09255-06245	Pin	1	81028-
42		17A-71-45490	Lock	1	81028-
43		01010-82080	Bolt	3	81028-
44		01643-32060	Washer	3	81028-

FIG. T2110-001002 Dozer Frame, Blade Tilt Piping

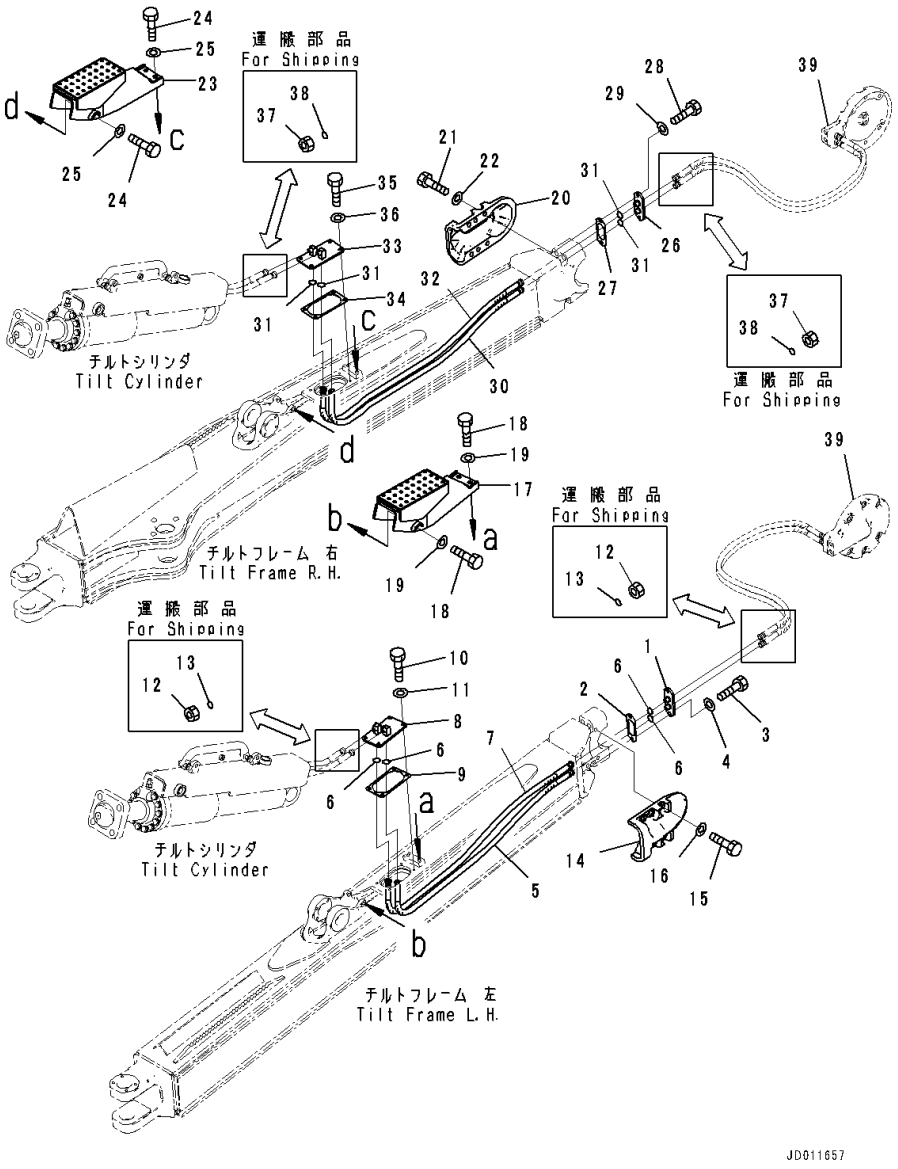

Index	Code	Part Number	Description	Qty	Serial Number
		Note: This list covers following specifications.			
		For Dual Tilt Pitch Dozer, Reinforced Type			
		For Dual Tilt Pitch Dozer			
		For Strengthened Dual Tilt Pitch Semi U Dozer, Heavy Duty			
		Semi U Dozer, With Bushing			
1		154-71-71820	Flange	1	81028-
2		17A-71-12331	Gasket	1	81028-
3		01010-81230	Bolt	2	81028-
4		01643-31232	Washer	2	81028-
5		17A-71-45651	Hose	1	81028-
6		02896-11012	O-ring	4	81028-
7		17A-71-45750	Hose	1	81028-
8		154-71-71840	Flange	1	81028-
9		154-71-71850	Gasket	1	81028-
10		01010-81225	Bolt	4	81028-
11		01643-31232	Washer	4	81028-
12		02789-00422	Plug	4	81028-
13		02896-11012	O-ring	4	81028-
14		17A-71-12291	Cover	1	81028-
15		01010-82050	Bolt	6	81028-
16		01643-32060	Washer	6	81028-
17		17A-71-45353	Cover	1	81028-
18		01010-81635	Bolt	4	81028-
19		01643-31645	Washer	4	81028-
20		17M-71-41920	Cover	1	81028-
21		01010-82050	Bolt	6	81028-
22		01643-32060	Washer	6	81028-
23		17A-71-45453	Cover	1	81028-
24		01010-81635	Bolt	4	81028-
25		01643-31645	Washer	4	81028-
26		154-71-71820	Flange	1	81028-
27		17A-71-12331	Gasket	1	81028-
28		01010-81230	Bolt	2	81028-
29		01643-31232	Washer	2	81028-
30		17A-71-45651	Hose	1	81028-
31		02896-11012	O-ring	4	81028-
32		17A-71-45760	Hose	1	81028-
33		154-71-71840	Flange	1	81028-
34		154-71-71850	Gasket	1	81028-
35		01010-81225	Bolt	4	81028-

FIG. T2110-001002 Dozer Frame, Blade Tilt Piping

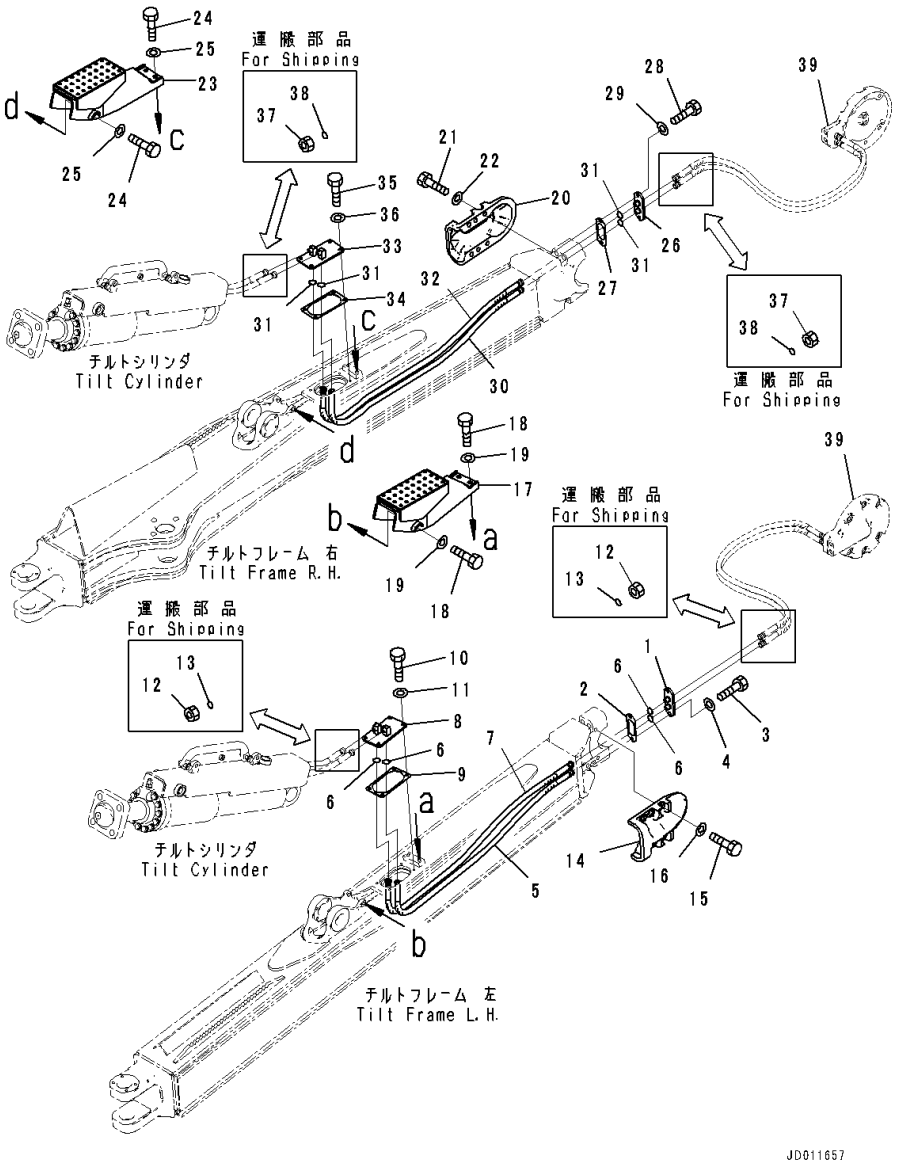

Index	Code	Part Number	Description	Qty	Serial Number
36		01643-31232	Washer	4	81028-
37		02789-00422	Plug	4	81028-
38		02896-11012	O-ring	4	81028-
39		(17A-50-41151)	Cover Assembly(Refer to Page 444)		-

FIG. T2110-001003 Dozer Frame, Arm and Trunnion

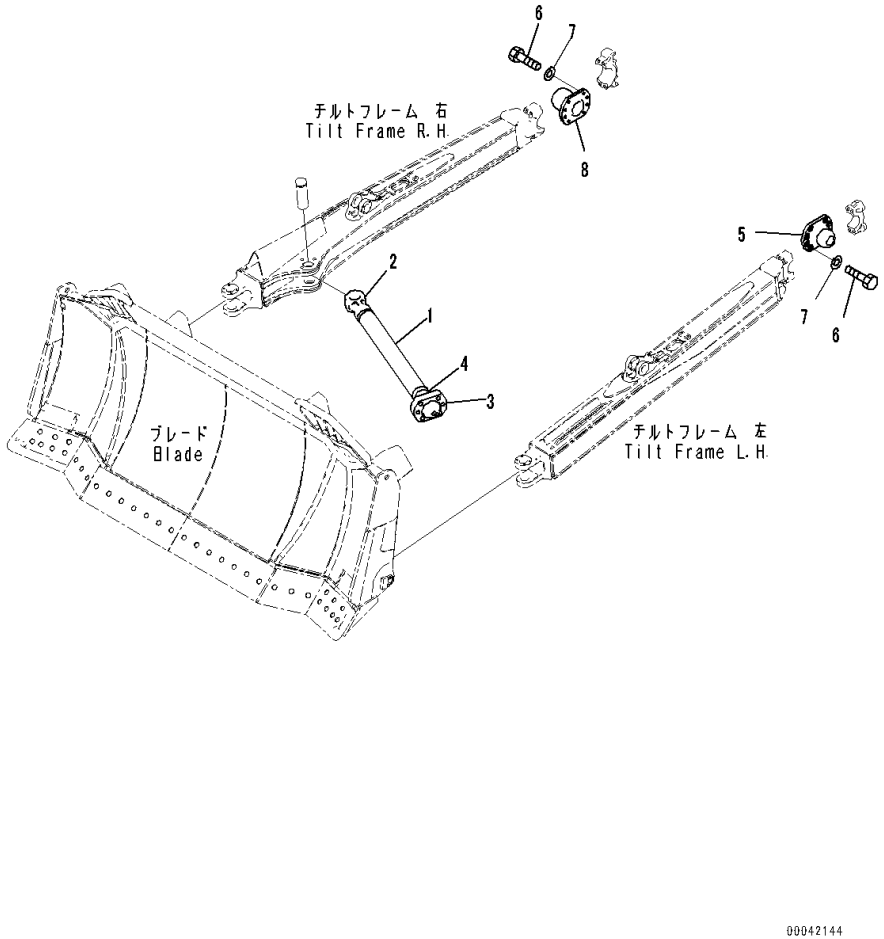

Index	Code	Part Number	Description	Qty	Serial Number
		Note: This list covers following specifications.			
		For Dual Tilt Pitch Dozer, Reinforced Type			
		For Dual Tilt Pitch Dozer			
		For Strengthened Dual Tilt Pitch Semi U Dozer, Heavy Duty			
		Semi U Dozer, With Bushing			
1		17A-71-45511	Arm	1	81028-
2		17A-71-45521	• Joint,Welded	1	81028-
3		17A-71-45531	• Cap,Welded	1	81028-
4		17A-71-45541	• Stud,Welded	1	81028-
5		17A-71-12262	Trunnion	1	81028-
6		01010-82450	Bolt	16	81028-
7		01643-32460	Washer	16	81028-
8		17A-71-45591	Trunnion	1	81028-

FIG. T2110-002001 Dozer Frame, Frame

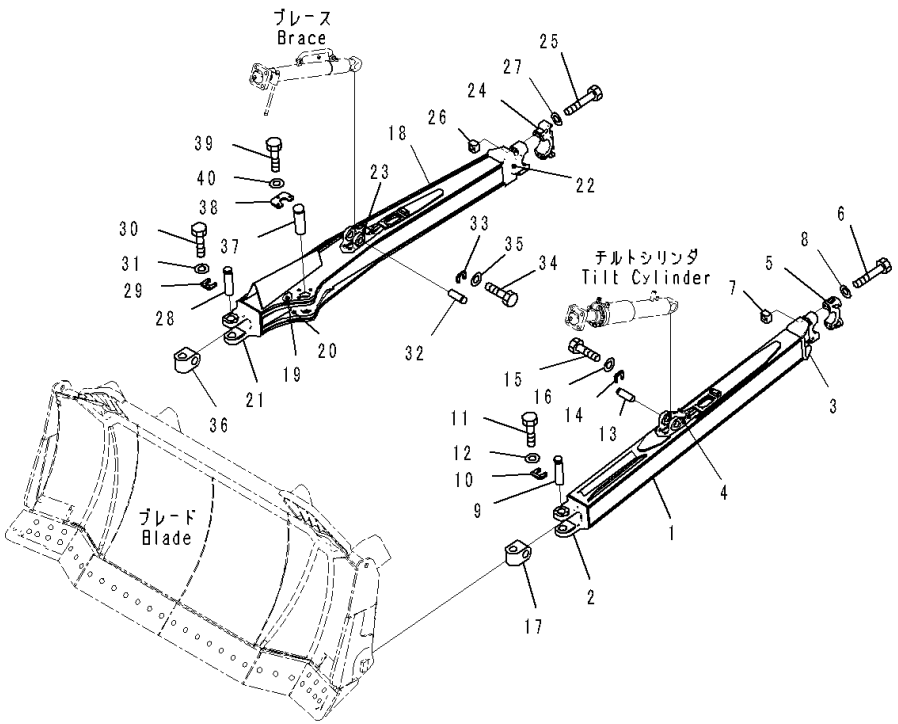

Index	Code	Part Number	Description	Qty	Serial Number
		Note: This list covers following specifications.			
		For Straight Tilt Dozer			
		For Dual Tilt Pitch Dozer			
1		17A-71-45312	Frame	1	81028-
2		17A-71-45321	• Bracket,Welded	1	81028-
3		17A-71-45331	• Bracket,Welded	1	81028-
4		17A-71-12481	• Bracket,Welded	1	81028-
5		17A-71-12280	Cap	1	81028-
6		175-71-11491	Bolt	4	81028-
7		175-71-11520	Nut	4	81028-
8		01643-32260	Washer	4	81028-
9		175-71-21221	Pin	1	81028-
10		175-71-21230	Plate	1	81028-
11		01010-81440	Bolt	4	81028-
12		01643-31445	Washer	4	81028-
13		154-71-21290	Pin	1	81028-
14		175-71-21330	Plate	1	81028-
15		01010-81435	Bolt	4	81028-
16		01643-31445	Washer	4	81028-
17		175-71-21261	Joint	1	81028-
18		17A-71-45412	Frame	1	81028-
19		17A-71-45H52	• Plate,Welded	1	81028-
20		17A-71-45H62	• Plate,Welded	1	81028-
21		17A-71-45421	• Bracket,Welded	1	81028-
22		17A-71-45431	• Bracket,Welded	1	81028-
23		17A-71-12132	• Bracket,Welded	1	81028-
24		17A-71-45460	Cap	1	81028-
25		561-88-48950	Bolt	4	81028-
26		175-71-11520	Nut	4	81028-
27		01643-32260	Washer	4	81028-
28		175-71-21221	Pin	1	81028-
29		175-71-21230	Plate	1	81028-
30		01010-81440	Bolt	4	81028-
31		01643-31445	Washer	4	81028-
32		154-71-21290	Pin	1	81028-
33		175-71-21330	Plate	1	81028-
34		01010-81435	Bolt	4	81028-
35		01643-31445	Washer	4	81028-
36		175-71-21261	Joint	1	81028-
37		09255-06245	Pin	1	81028-

FIG. T2110-002001 Dozer Frame, Frame

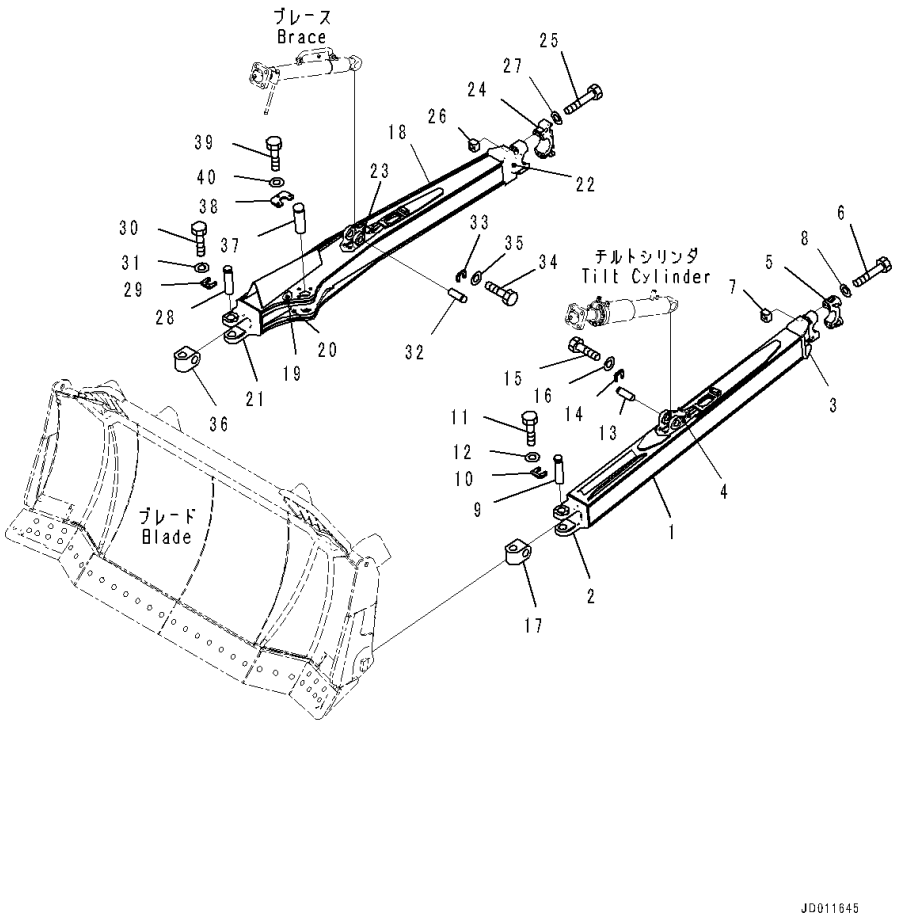

Index	Code	Part Number	Description	Qty	Serial Number
38		17A-71-45490	Lock	1	81028-
39		01010-82080	Bolt	3	81028-
40		01643-32060	Washer	3	81028-

FIG. T2110-002002 Dozer Frame, For Straight Tilt Dozer, Blade Tilt Piping

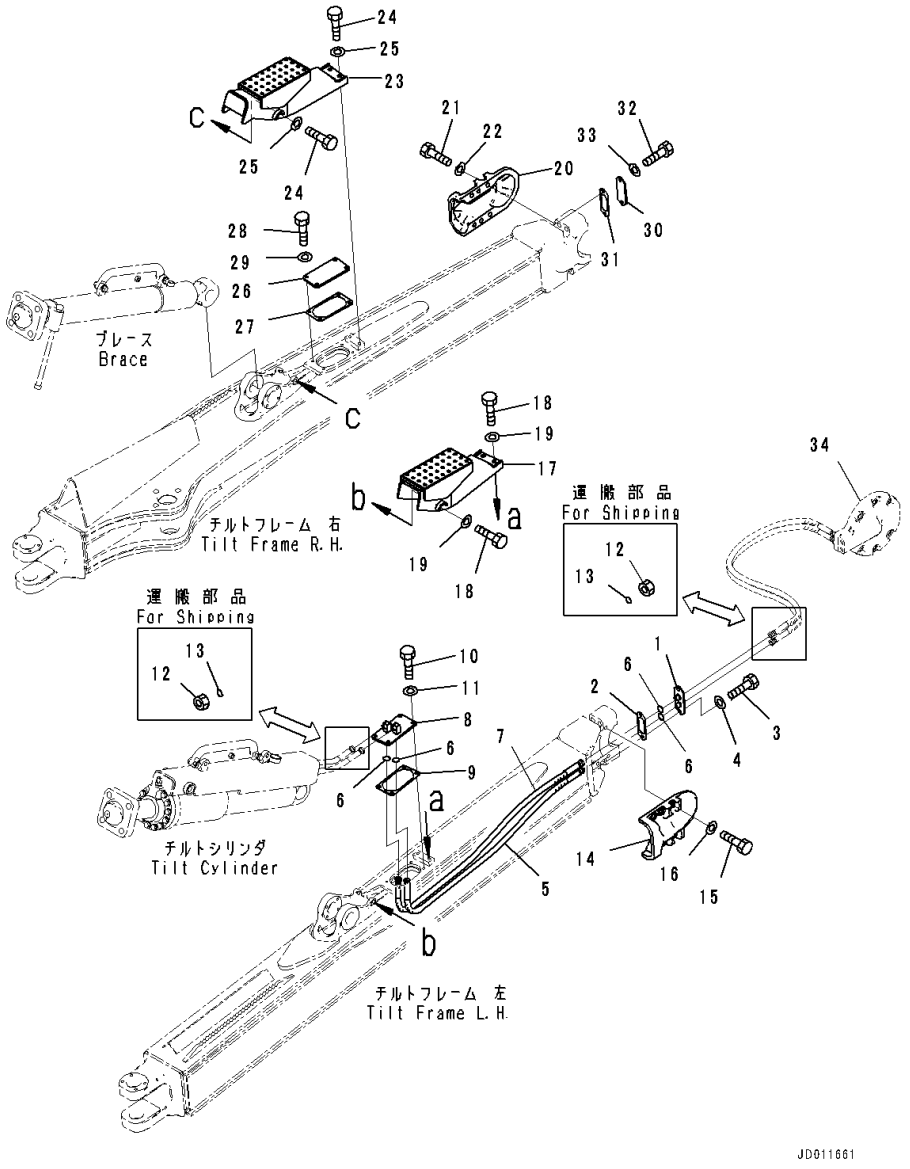

Index	Code	Part Number	Description	Qty	Serial Number
1		154-71-71820	Flange	1	81028-
2		17A-71-12331	Gasket	1	81028-
3		01010-81230	Bolt	2	81028-
4		01643-31232	Washer	2	81028-
5		17A-71-45651	Hose	1	81028-
6		02896-11012	O-ring	4	81028-
7		17A-71-45750	Hose	1	81028-
8		154-71-71840	Flange	1	81028-
9		154-71-71850	Gasket	1	81028-
10		01010-81225	Bolt	4	81028-
11		01643-31232	Washer	4	81028-
12		02789-00422	Plug	4	81028-
13		02896-11012	O-ring	4	81028-
14		17A-71-12291	Cover	1	81028-
15		01010-82050	Bolt	6	81028-
16		01643-32060	Washer	6	81028-
17		17A-71-45353	Cover	1	81028-
18		01010-81635	Bolt	4	81028-
19		01643-31645	Washer	4	81028-
20		17M-71-41920	Cover	1	81028-
21		01010-82050	Bolt	6	81028-
22		01643-32060	Washer	6	81028-
23		17A-71-45962	Cover	1	81028-
24		01010-81635	Bolt	4	81028-
25		01643-31645	Washer	4	81028-
26		17A-71-45470	Plate	1	81028-
27		154-71-71850	Gasket	1	81028-
28		01010-81225	Bolt	4	81028-
29		01643-31232	Washer	4	81028-
30		17A-71-12471	Plate	1	81028-
31		17A-71-12331	Gasket	1	81028-
32		01010-81230	Bolt	2	81028-
33		01643-31232	Washer	2	81028-
34		(17A-50-41151)	Cover Assembly(Refer to Page 444)		-

FIG. T2110-002003 Dozer Frame, Arm and Trunnion

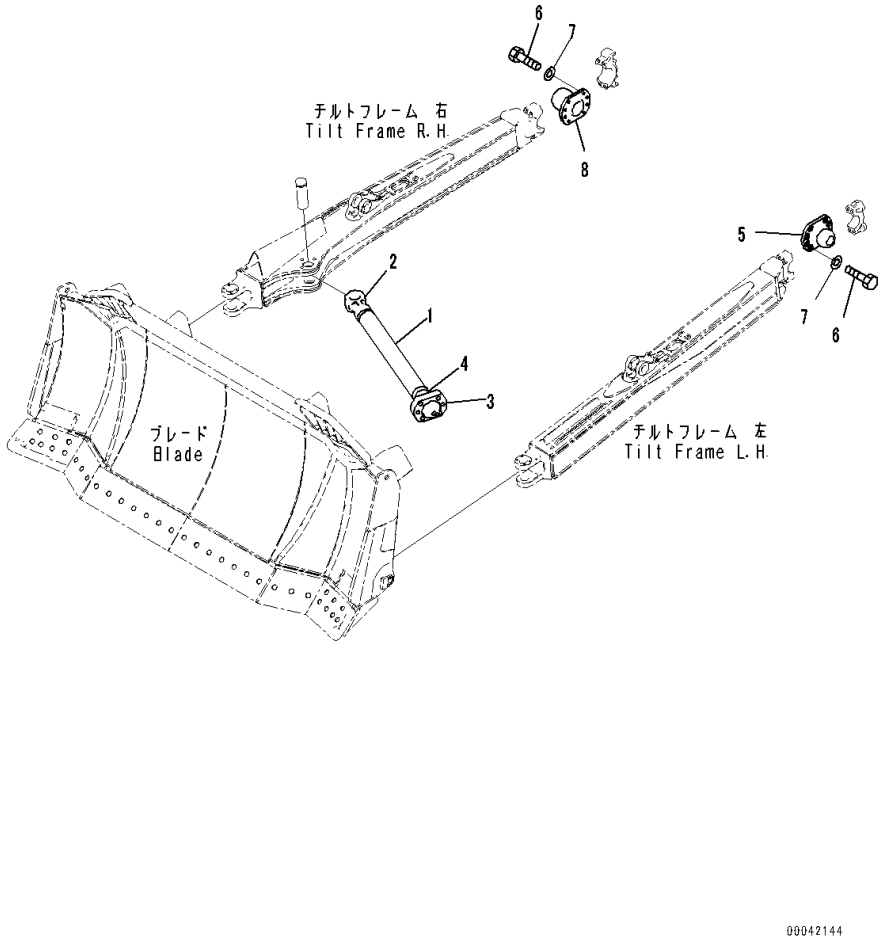

Index	Code	Part Number	Description	Qty	Serial Number
		Note: This list covers following specifications.			
		For Straight Tilt Dozer			
		For Strengthened Semi U Dozer			
		For Heavy Duty Semi U Dozer, With Bushing			
1		17A-71-45511	Arm	1	81028-
2		17A-71-45521	• Joint,Welded	1	81028-
3		17A-71-45531	• Cap,Welded	1	81028-
4		17A-71-45541	• Stud,Welded	1	81028-
5		17A-71-12262	Trunnion	1	81028-
6		01010-82450	Bolt	16	81028-
7		01643-32460	Washer	16	81028-
8		17A-71-45970	Trunnion	1	81028-

FIG. T2110-004002 Dozer Frame, Blade Piping

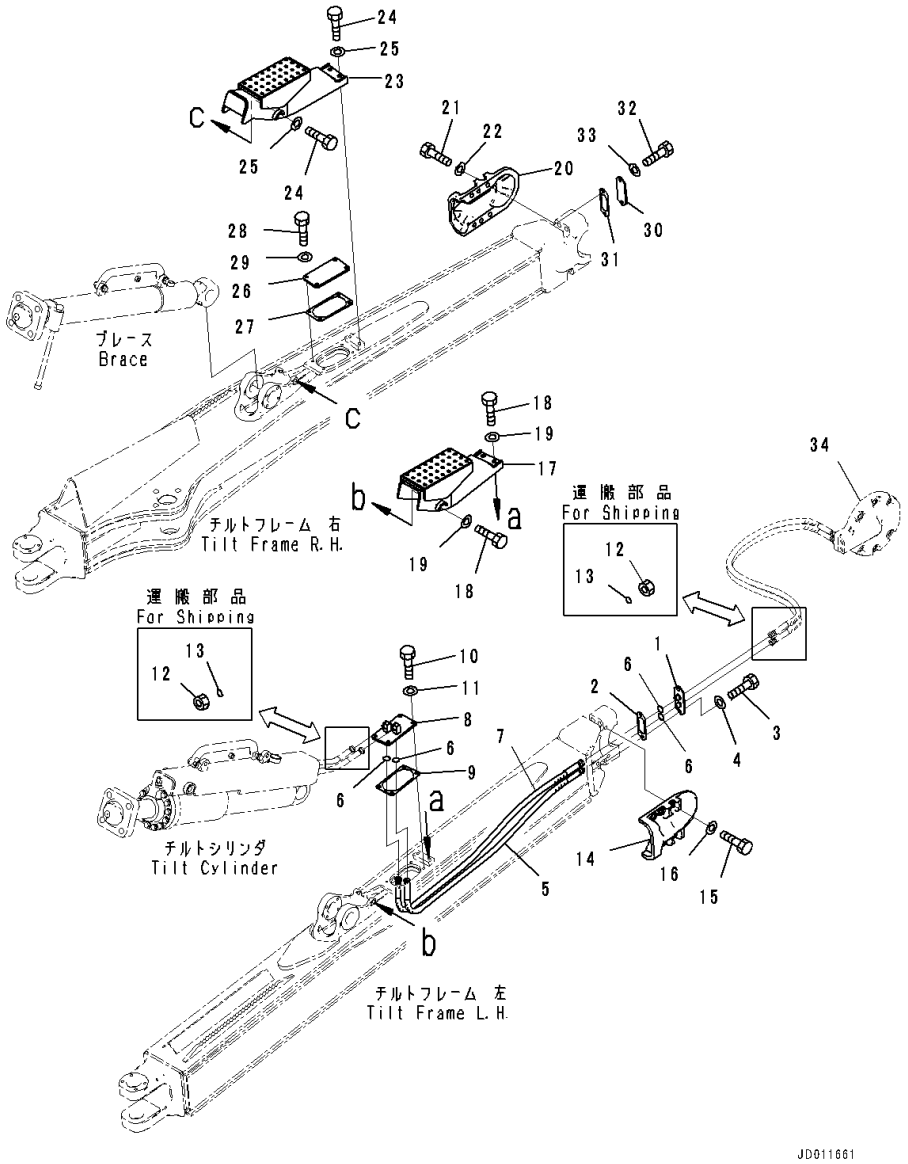

Index	Code	Part Number	Description	Qty	Serial Number
		Note: This list covers following specifications.			
		For Strengthened Semi U Dozer			
		For Heavy Duty Semi U Dozer, With Bushing			
1		154-71-71820	Flange	1	81028-
2		17A-71-12331	Gasket	1	81028-
3		01010-81230	Bolt	2	81028-
4		01643-31232	Washer	2	81028-
5		17A-71-45651	Hose	1	81028-
6		02896-11012	O-ring	4	81028-
7		17A-71-45750	Hose	1	81028-
8		154-71-71840	Flange	1	81028-
9		154-71-71850	Gasket	1	81028-
10		01010-81225	Bolt	4	81028-
11		01643-31232	Washer	4	81028-
12		02789-00422	Plug	4	81028-
13		02896-11012	O-ring	4	81028-
14		17A-71-12291	Cover	1	81028-
15		01010-82050	Bolt	6	81028-
16		01643-32060	Washer	6	81028-
17		17A-71-45353	Cover	1	81028-
18		01010-81635	Bolt	4	81028-
19		01643-31645	Washer	4	81028-
20		17M-71-41920	Cover	1	81028-
21		01010-82050	Bolt	6	81028-
22		01643-32060	Washer	6	81028-
23		17A-71-45962	Cover	1	81028-
24		01010-81635	Bolt	4	81028-
25		01643-31645	Washer	4	81028-
26		17A-71-45470	Plate	1	81028-
27		154-71-71850	Gasket	1	81028-
28		01010-81225	Bolt	4	81028-
29		01643-31232	Washer	4	81028-
30		17A-71-12471	Plate	1	81028-
31		17A-71-12331	Gasket	1	81028-
32		01010-81230	Bolt	2	81028-
33		01643-31232	Washer	2	81028-
34		(17A-50-41151)	Cover Assembly(Refer to Page 444)		-

FIG. T2110-005001 Dozer Frame, For Coal Dozer, For Straight Tilt Dozer, Frame

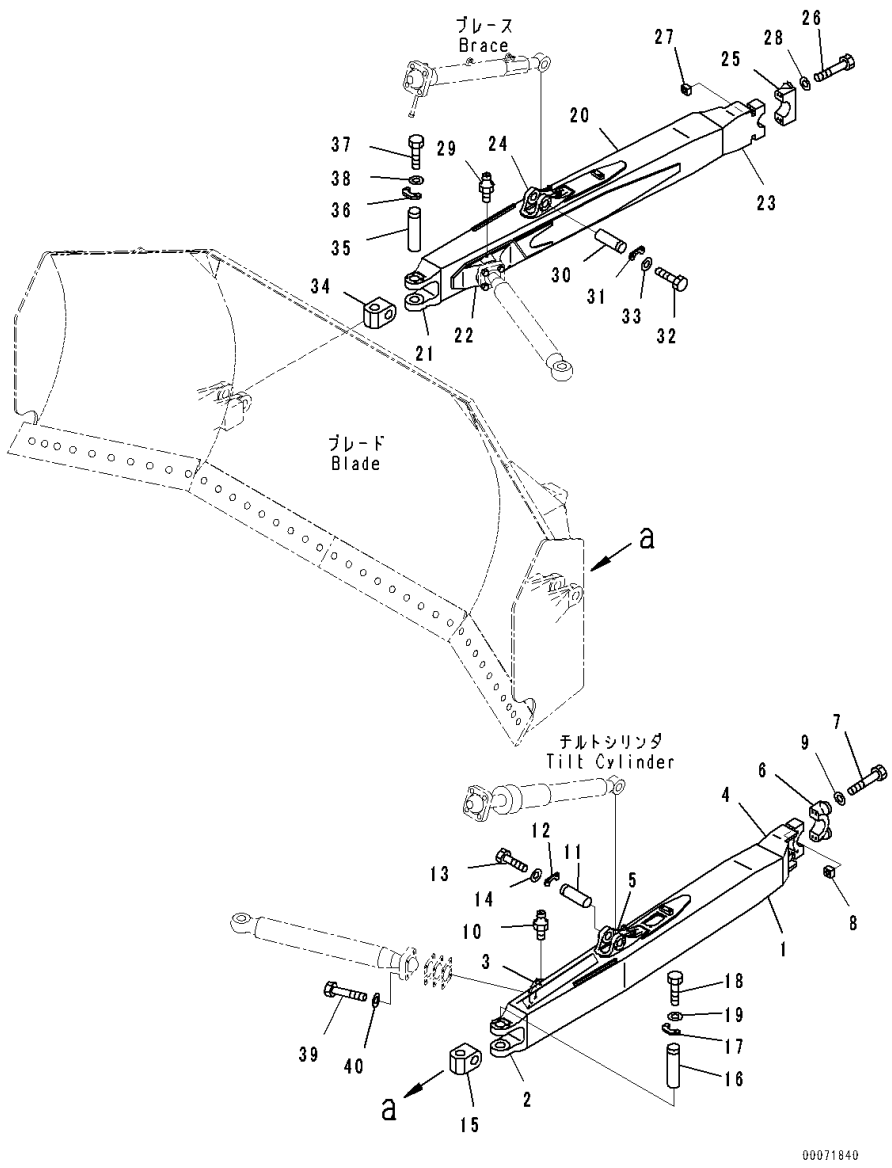

Index	Code	Part Number	Description	Qty	Serial Number
1		17A-73-41120	Frame	1	81028-
2		175-71-21182	• Bracket,Welded	1	81028-
3		175-71-31173	• Bracket,Welded	1	81028-
4		17A-71-12241	• Bracket,Welded	1	81028-
5		17A-71-12481	• Bracket,Welded	1	81028-
6		17A-71-12280	Cap	1	81028-
7		175-71-11491	Bolt	4	81028-
8		175-71-11520	Nut	4	81028-
9		01643-32260	Washer	4	81028-
10		07020-00000	Fitting, Grease	1	81028-
11		154-71-21290	Pin	1	81028-
12		175-71-21330	Plate	1	81028-
13		01010-81435	Bolt	4	81028-
14		01643-31445	Washer	4	81028-
15		175-71-21261	Joint	1	81028-
16		175-71-21221	Pin	1	81028-
17		175-71-21230	Plate	1	81028-
18		01010-81440	Bolt	4	81028-
19		01643-31445	Washer	4	81028-
20		17A-73-41130	Frame	1	81028-
21		175-71-21182	• Bracket,Welded	1	81028-
22		175-71-31622	• Bracket,Welded	1	81028-
23		17A-71-12241	• Bracket,Welded	1	81028-
24		17A-71-12132	• Bracket,Welded	1	81028-
25		17A-71-12280	Cap	1	81028-
26		175-71-11491	Bolt	4	81028-
27		175-71-11520	Nut	4	81028-
28		01643-32260	Washer	4	81028-
29		07020-00000	Fitting, Grease	1	81028-
30		154-71-21290	Pin	1	81028-
31		175-71-21330	Plate	1	81028-
32		01010-81435	Bolt	4	81028-
33		01643-31445	Washer	4	81028-
34		175-71-21261	Joint	1	81028-
35		175-71-21221	Pin	1	81028-
36		175-71-21230	Plate	1	81028-
37		01010-81440	Bolt	4	81028-
38		01643-31445	Washer	4	81028-
39		01011-82700	Bolt	8	81028-
40		01643-32780	Washer	8	81028-

FIG. T2110-005002 Dozer Frame, For Coal Dozer, For Straight Tilt Dozer, Blade Tilt Piping

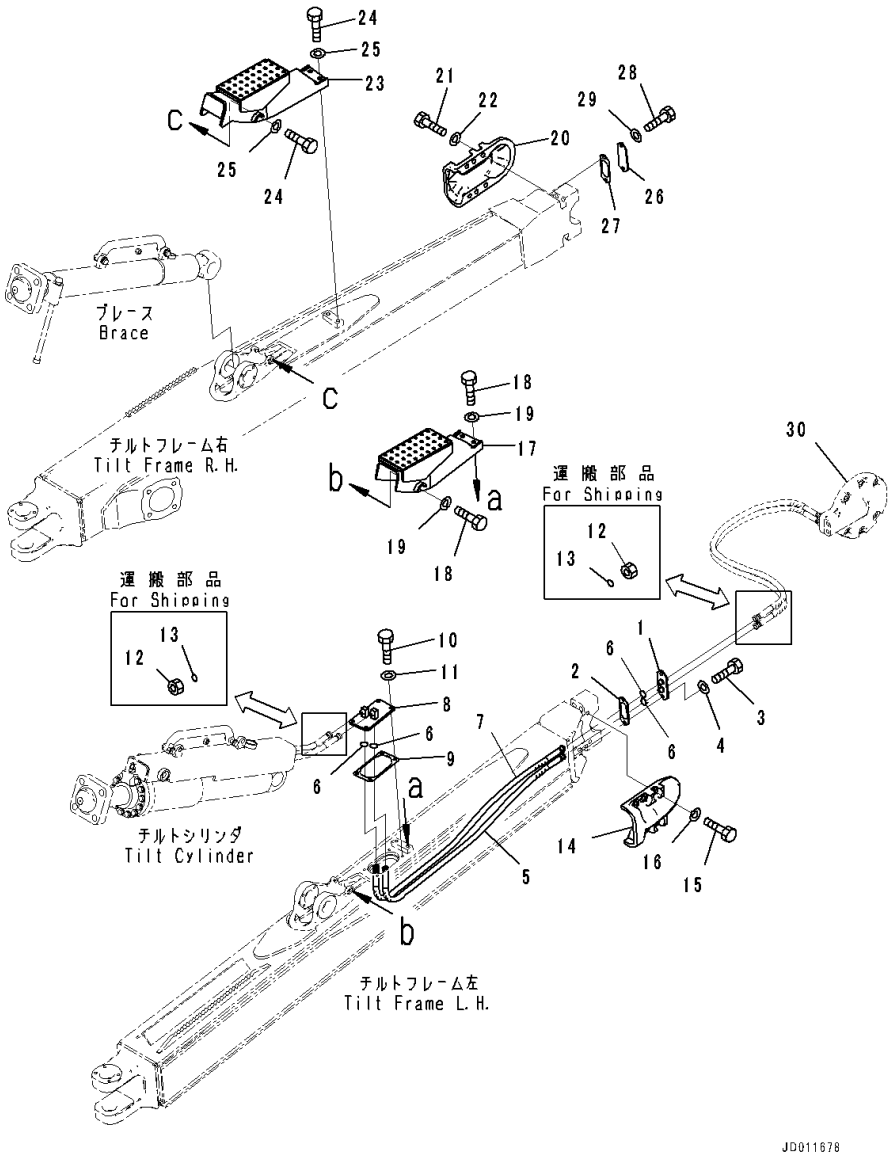

Index	Code	Part Number	Description	Qty	Serial Number
1		154-71-71820	Flange	1	81028-
2		17A-71-12331	Gasket	1	81028-
3		01010-81230	Bolt	2	81028-
4		01643-31232	Washer	2	81028-
5		17A-73-41140	Hose	1	81028-
6		02896-11012	O-ring	4	81028-
7		17A-73-41150	Hose	1	81028-
8		154-71-71840	Flange	1	81028-
9		154-71-71850	Gasket	1	81028-
10		01010-81225	Bolt	4	81028-
11		01643-31232	Washer	4	81028-
12		02789-00422	Plug	4	81028-
13		02896-11012	O-ring	4	81028-
14		17A-71-12291	Cover	1	81028-
15		01010-82050	Bolt	6	81028-
16		01643-32060	Washer	6	81028-
17		17A-71-45353	Cover	1	81028-
18		01010-81635	Bolt	4	81028-
19		01643-31645	Washer	4	81028-
20		17A-71-12291	Cover	1	81028-
21		01010-82050	Bolt	6	81028-
22		01643-32060	Washer	6	81028-
23		17A-71-45962	Cover	1	81028-
24		01010-81635	Bolt	4	81028-
25		01643-31645	Washer	4	81028-
26		17A-71-12471	Plate	1	81028-
27		17A-71-12331	Gasket	1	81028-
28		01010-81230	Bolt	2	81028-
29		01643-31232	Washer	2	81028-
30		(17A-50-41151)	Cover Assembly(Refer to Page 444)		-

FIG. T2110-005003 Dozer Frame, For Coal Dozer, For Straight Tilt Dozer, Arm and Trunnion

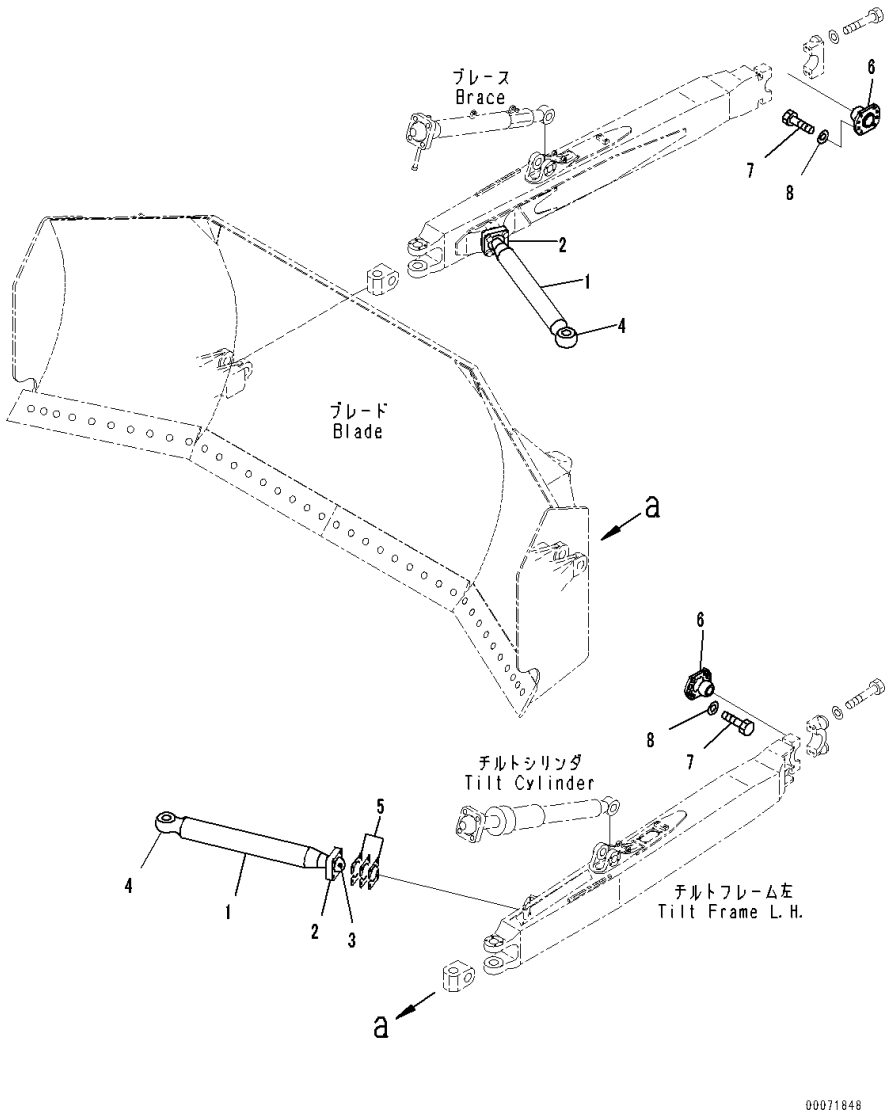

Index	Code	Part Number	Description	Qty	Serial Number
1		175-71-31293	Arm	2	81028-
2		175-71-31190	• Cap,Welded	1	81028-
3		175-71-31563	• Stud,Welded	1	81028-
4		195-71-22681	• Joint,Welded	1	81028-
5		175-71-00302	Shim Assembly	2	81028-
	C1		• Shim, T=0.5mm	8	81028-
	C1		• Shim, T=1.0mm	16	81028-
	C1		• Shim, T=2.3mm	8	81028-
6		17A-71-12262	Trunnion	2	81028-
7		01010-82450	Bolt	16	81028-
8		01643-32460	Washer	16	81028-

FIG. T2110-006001 Dozer Frame, For Mechanical Angle Dozer

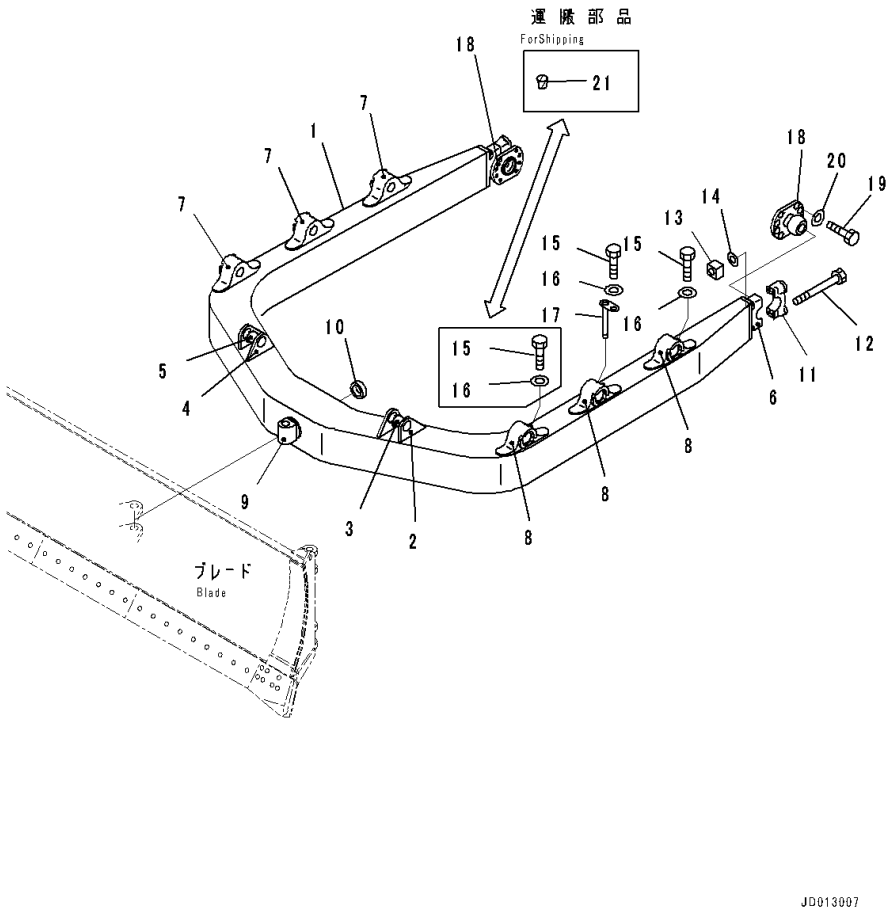

Index	Code	Part Number	Description	Qty	Serial Number
1		17A-70-71110	C-frame	1	81028-
2		17A-70-71121	• Bracket,Welded	1	81028-
3		154-71-41120	• • Trunnion,Welded	1	81028-
4		17A-70-71131	• Bracket,Welded	1	81028-
5		154-71-41120	• • Trunnion,Welded	1	81028-
6		175-70-23261	• Bracket,Welded	2	81028-
7		175-70-23114	• Bracket,Welded	3	81028-
8		175-70-23124	• Bracket,Welded	3	81028-
9		175-70-13314	• Joint,Welded	1	81028-
10		150-70-23320	• Bushing,Welded	1	81028-
11		175-71-11482	Cap	2	81028-
12		175-71-11491	Bolt	8	81028-
13		175-71-11520	Nut	8	81028-
14		01643-32260	Washer	8	81028-
15		01010-81420	Bolt	6	81028-
16		205-06-62270	Washer	6	81028-
17		154-70-19181	Pin	2	81028-
18		17A-70-71141	Trunnion	2	81028-
19		01010-82450	Bolt	16	81028-
20		01643-32460	Washer	16	81028-
21		07049-03342	Plug, Cork	6	81028-

FIG. T2110-010001A Dozer Frame, Frame

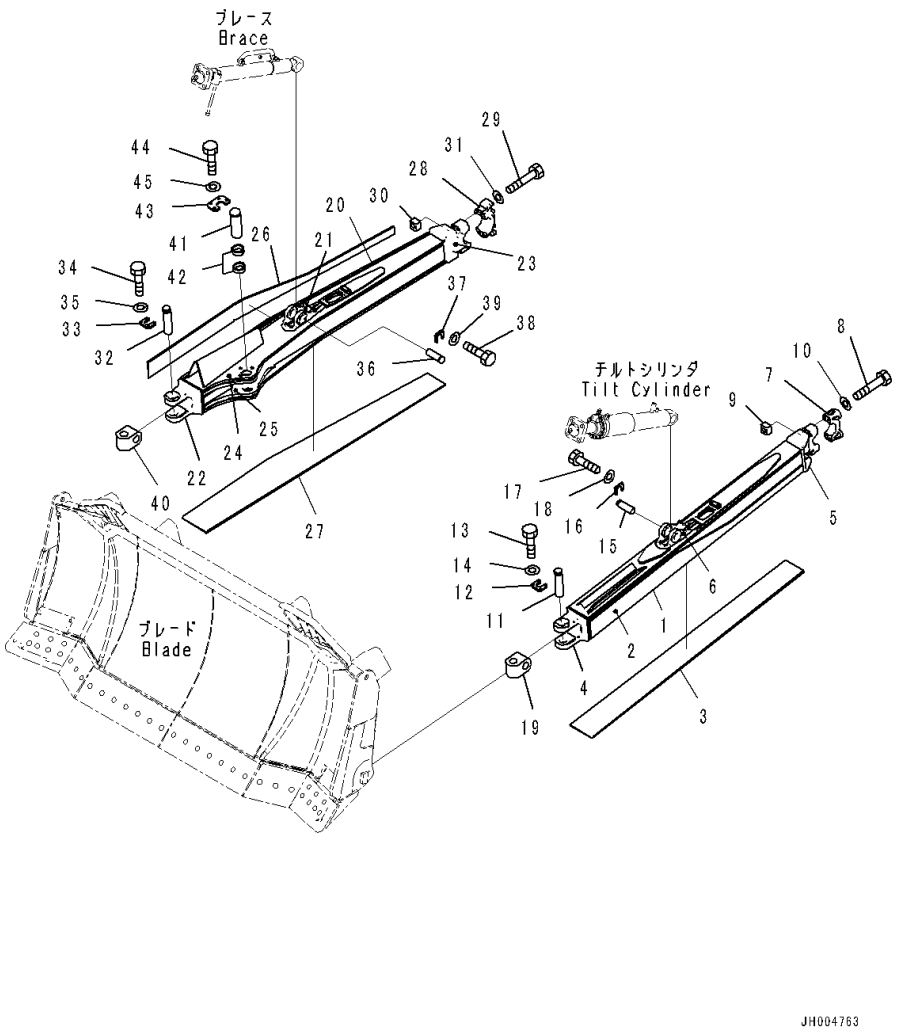

Index	Code	Part Number	Description	Qty	Serial Number
		Note: This list covers following specifications. For Heavy Duty Semi U Dozer, With Bushing For Strengthened Dual Tilt Pitch Semi U Dozer, Heavy Duty Semi U Dozer, With Bushing			
1		17A-71-46312	Frame	1	81028-
2		17A-71-46320	• Plate,Welded	1	81028-
3		17A-71-46331	• Plate,Welded	1	81028-
4		17A-71-45321	• Bracket,Welded	1	81028-
5		17A-71-45331	• Bracket,Welded	1	81028-
6		17A-71-12481	• Bracket,Welded	1	81028-
7		17A-71-12280	Cap	1	81028-
8		175-71-11491	Bolt	4	81028-
9		175-71-11520	Nut	4	81028-
10		01643-32260	Washer	4	81028-
11		175-71-21221	Pin	1	81028-
12		175-71-21230	Plate	1	81028-
13		01010-81440	Bolt	4	81028-
14		01643-31445	Washer	4	81028-
15		154-71-21290	Pin	1	81028-
16		175-71-21330	Plate	1	81028-
17		01010-81435	Bolt	4	81028-
18		01643-31445	Washer	4	81028-
19		175-71-21261	Joint	1	81028-
20		17A-71-41631	Frame	1	81093-
21		17A-71-12132	• Bracket,Welded	1	81028-
22		17A-71-45421	• Bracket,Welded	1	81028-
23		17A-71-45431	• Bracket,Welded	1	81028-
24		17A-71-51H51	• Plate,Welded	1	81093-
25		17A-71-51H61	• Plate,Welded	1	81093-
26		17A-71-46420	• Plate,Welded	1	81028-
27		17A-71-46431	• Plate,Welded	1	81028-
28		17A-71-45460	Cap	1	81028-
29		561-88-48950	Bolt	4	81028-
30		175-71-11520	Nut	4	81028-
31		01643-32260	Washer	4	81028-
32		175-71-21221	Pin	1	81028-
33		175-71-21230	Plate	1	81028-
34		01010-81440	Bolt	4	81028-
35		01643-31445	Washer	4	81028-
36		154-71-21290	Pin	1	81028-

FIG. T2110-010001A Dozer Frame, Frame

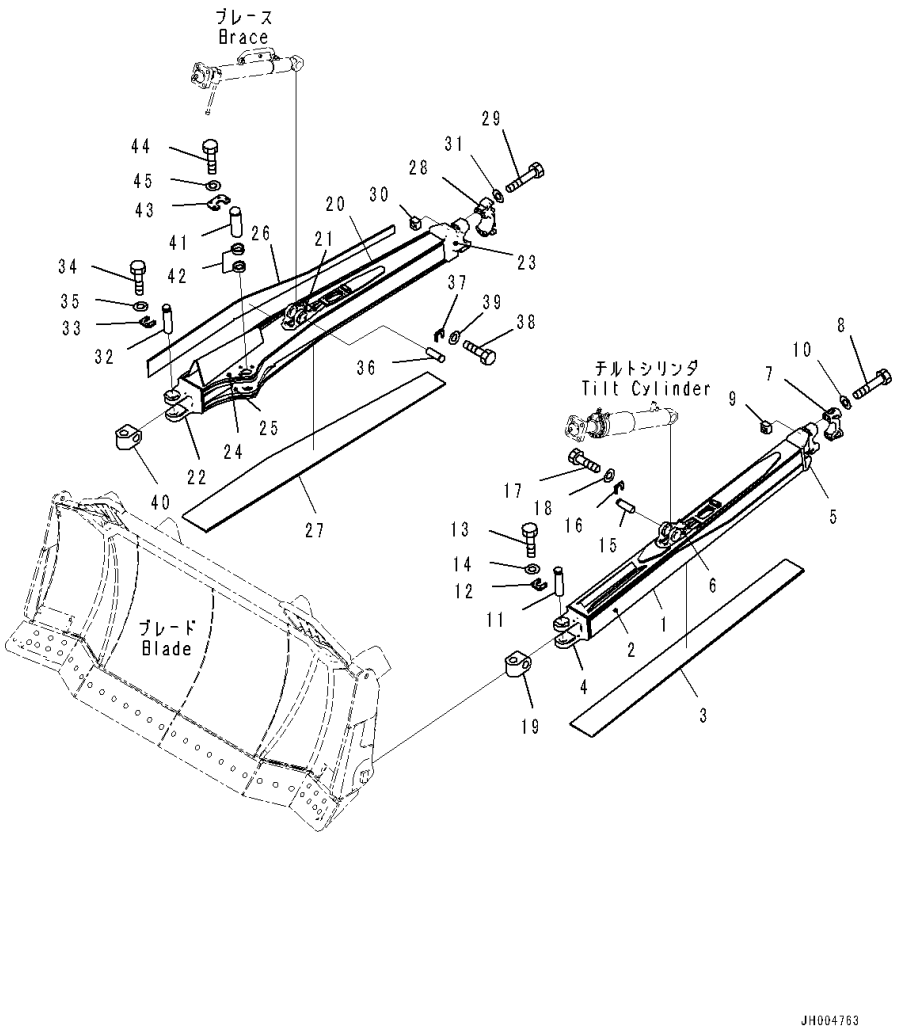

Index	Code	Part Number	Description	Qty	Serial Number
37		175-71-21330	Plate	1	81028-
38		01010-81435	Bolt	4	81028-
39		01643-31445	Washer	4	81028-
40		175-71-21261	Joint	1	81028-
41		09255-06245	Pin	1	81028-
42		17A-71-51920	Bushing	2	81028-
43		17A-71-51931	Lock	1	81093-
44		01010-82080	Bolt	4	81093-
45		01643-32060	Washer	4	81093-

FIG. T2120-001001 Dozer Blade, For Mechanical Angle Dozer

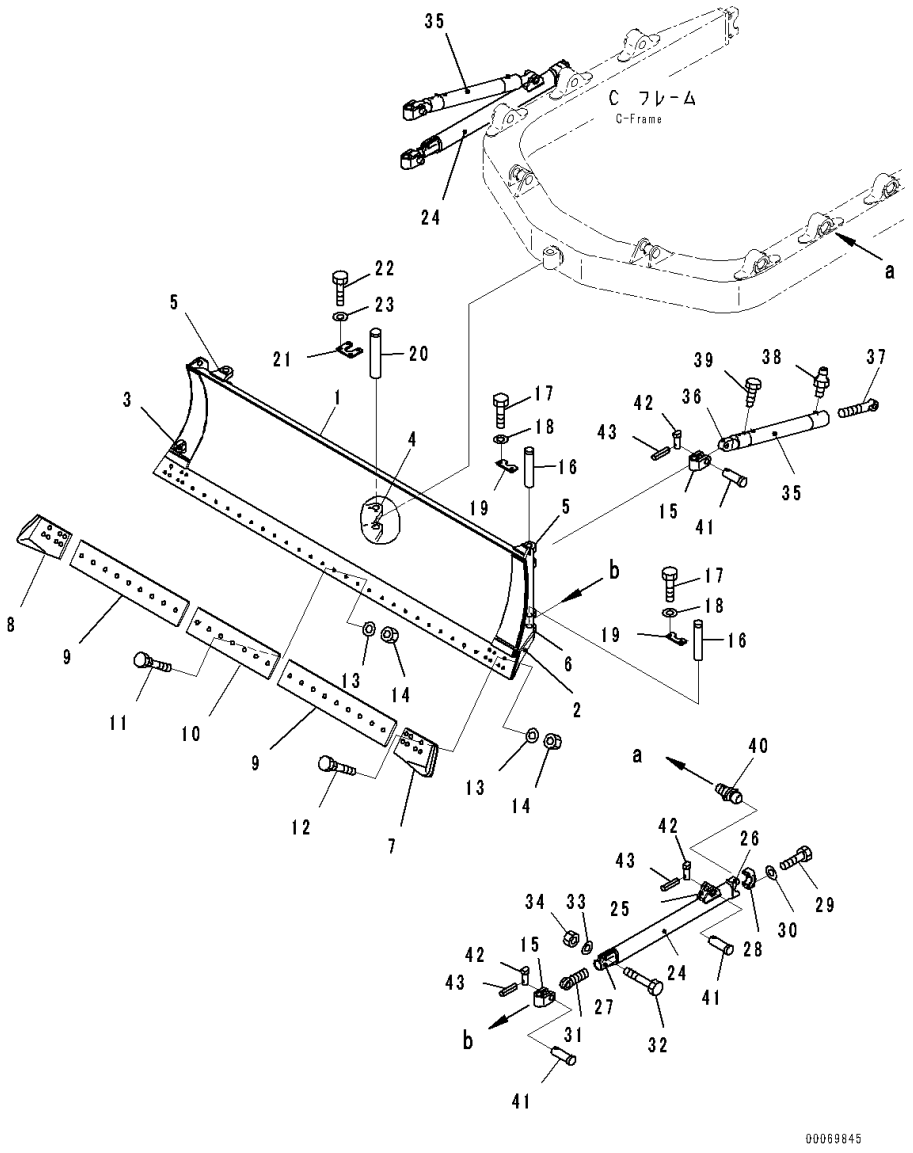

Index	Code	Part Number	Description	Qty	Serial Number
1		175-70-21210	Blade	1	81028-
2		175-70-21160	• Plate,Welded	1	81028-
3		175-70-21170	• Plate,Welded	1	81028-
4		175-70-21153	• Bracket,Welded	1	81028-
5		175-70-21181	• Bracket,Welded	2	81028-
6		175-70-21191	• Bracket,Welded	2	81028-
7		175-70-21126	End Bit	1	81028-
8		175-70-21136	End Bit	1	81028-
9		175-70-21115	Edge,Side	2	81028-
10		175-70-26310	Edge,Center	1	81028-
11		175-71-11454	Bolt	25	81028-
12		175-71-11463	Bolt	14	81028-
13		01643-22245	Washer	39	81028-
14		175-71-11530	Nut	39	81028-
15		175-70-23180	Joint	4	81028-
16		09255-02215	Pin	4	81028-
17		01010-81435	Bolt	8	81028-
18		01643-31445	Washer	8	81028-
19		195-70-12510	Plate	4	81028-
20		175-70-23223	Pin	1	81028-
21		09257-06009	Lock	1	81028-
22		01010-81435	Bolt	4	81028-
23		01643-31445	Washer	4	81028-
		175-70-00514	Arm Assembly	2	81028-
24	C1		• Arm	1	81028-
25		175-70-22110	• • Bracket,Welded	1	81028-
26	C1		• • Bracket,Welded	1	81028-
27		175-70-22130	• • Boss,Welded	1	81028-
28	C1		• Cap	1	81028-
29		01010-82095	• Bolt	4	81028-
30		01643-32060	• Washer	4	81028-
31		175-70-22160	• Joint	1	81028-
32		01010-81880	• Bolt	2	81028-
33		01643-31845	• Washer	2	81028-
34		01580-01815	• Nut	2	81028-
		175-70-00523	Brace Assembly	2	81028-
35	C1		• Brace	1	81028-
36		154-70-17170	• • Joint,Welded	1	81028-
37		175-70-22190	• Screw	1	81028-
38		07020-00000	• Fitting, Grease	2	81028-

FIG. T2120-001001 Dozer Blade, For Mechanical Angle Dozer

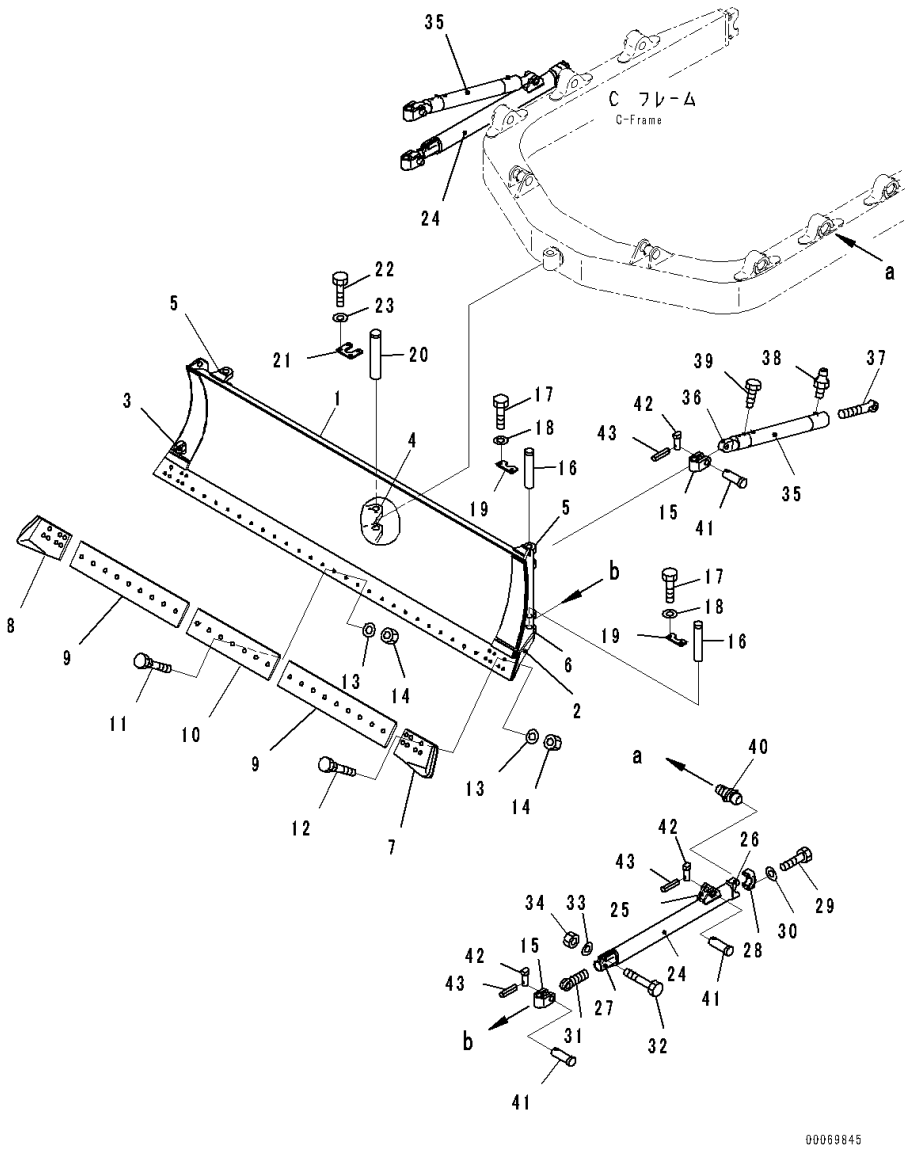

Index	Code	Part Number	Description	Qty	Serial Number
39		175-70-12221	Screw, Set	2	81028-
40		175-70-22141	Shaft	2	81028-
41		150-70-13411	Pin	6	81028-
42		170-70-12240	Pin	6	81028-
43		04050-14025	Pin, Cotter	6	81028-

FIG. T2120-012001 Dozer Blade, For Coal Dozer

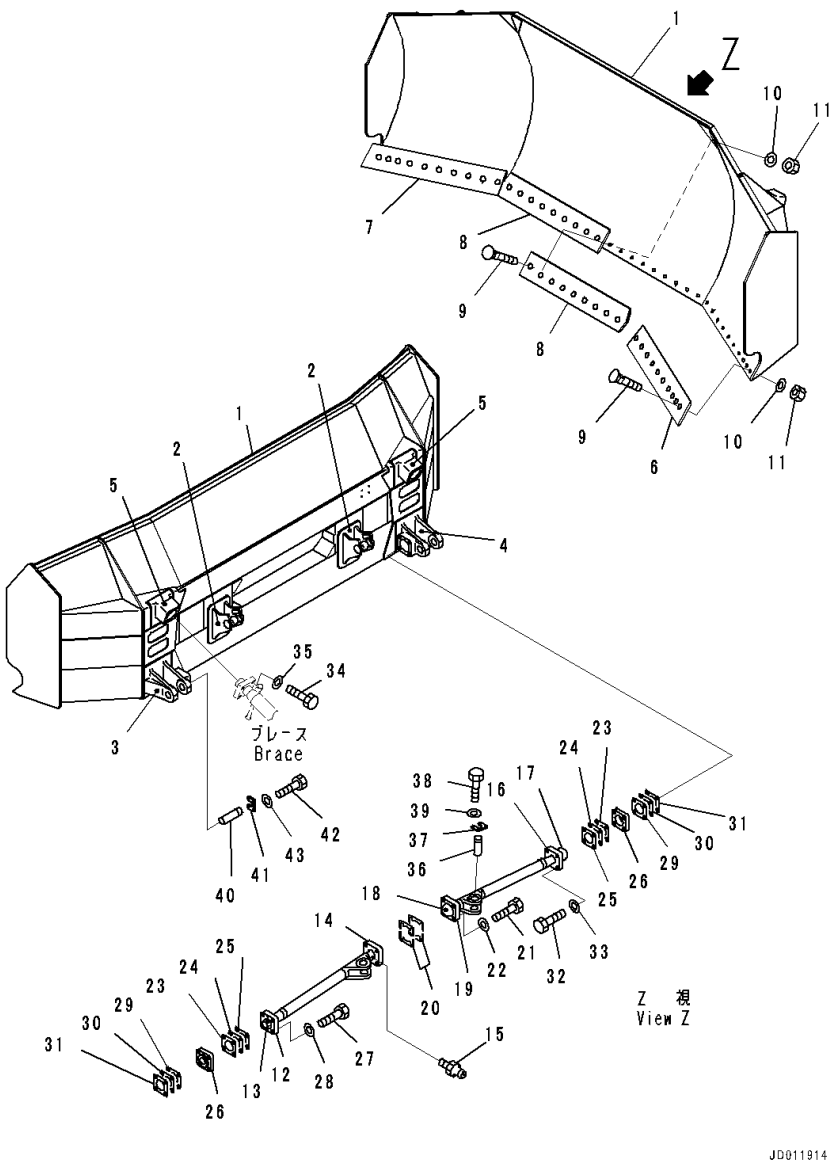

Index	Code	Part Number	Description	Qty	Serial Number
		17A-73-41111	Blade	1	81028-
1		17A-73-11110	• Blade	1	81028-
2		17A-73-11120	• • Bracket,Welded	2	81028-
3		175-71-31121	• • Bracket,Welded	1	81028-
4		175-71-31131	• • Bracket,Welded	1	81028-
5		175-71-31141	• • Pivot,Welded	2	81028-
6		175-73-11141	Edge	1	81028-
7		175-73-11151	Edge	1	81028-
8		175-73-11131	Edge	2	81028-
9		175-71-11454	Bolt	38	81028-
10		01643-22245	Washer	38	81028-
11		175-71-11530	Nut	38	81028-
		175-71-31183	Arm	1	81028-
12		175-71-31190	• Cap,Welded	1	81028-
13		175-71-31563	• Stud,Welded	1	81028-
14		175-71-31221	• Cap,Welded	1	81028-
15		07020-00000	Fitting, Grease	3	81028-
		175-71-31233	Arm	1	81028-
16		175-71-31190	• Cap,Welded	1	81028-
17		175-71-31563	• Stud,Welded	1	81028-
18		175-71-31241	• Stud,Welded	1	81028-
19		175-71-31380	• Cap,Welded	1	81028-
20		175-71-00294	Shim Assembly	1	81028-
	C1		• Shim, T=0.5mm	4	81028-
	C1		• Shim, T=1.0mm	8	81028-
	C1		• Shim, T=2.3mm	4	81028-
21		01011-82700	Bolt	4	81028-
22		01643-32780	Washer	4	81028-
23		175-71-31250	Shim, T=0.5mm	8	81028-
24		175-71-31260	Shim, T=1.0mm	16	81028-
25		175-71-31270	Shim, T=2.3mm	8	81028-
26		175-71-31280	Cap	2	81028-
27		01010-81270	Bolt	4	81028-
28		01643-51232	Washer	4	81028-
29		175-71-31250	Shim, T=0.5mm	8	81028-
30		175-71-31260	Shim, T=1.0mm	8	81028-
31		175-71-31270	Shim, T=2.3mm	24	81028-
32		175-71-21351	Bolt	8	81028-
33		01643-32780	Washer	8	81028-
34		01011-82700	Bolt	8	81028-

FIG. T2120-012001 Dozer Blade, For Coal Dozer

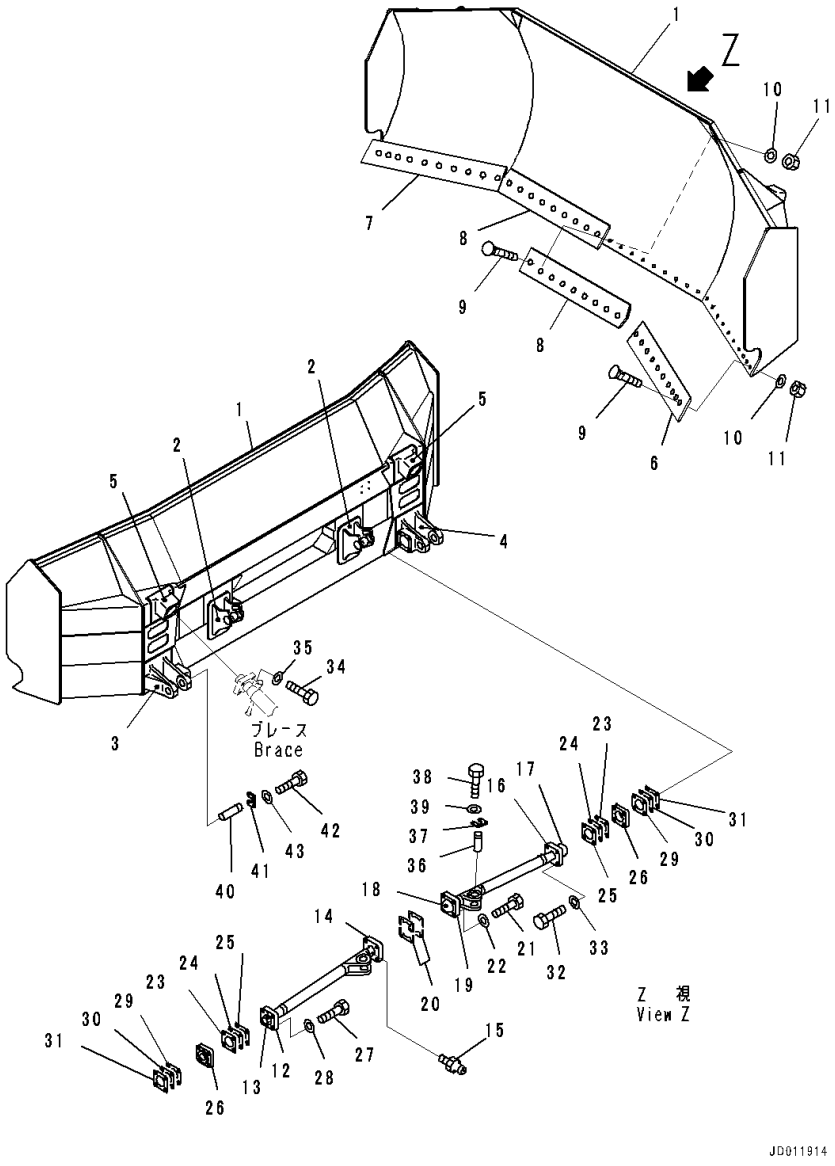

Index	Code	Part Number	Description	Qty	Serial Number
35		01643-32780	Washer	8	81028-
36		154-71-21290	Pin	2	81028-
37		175-71-21330	Plate	2	81028-
38		01010-81435	Bolt	8	81028-
39		01643-31445	Washer	8	81028-
40		175-71-21221	Pin	2	81028-
41		175-71-21230	Plate	2	81028-
42		01010-81440	Bolt	8	81028-
43		01643-31445	Washer	8	81028-

FIG. T2120-027001 Dozer Blade, For Strengthened Dual Tilt Pitch Semi U Dozer, Heavy Duty Semi U Dozer, With Bushing

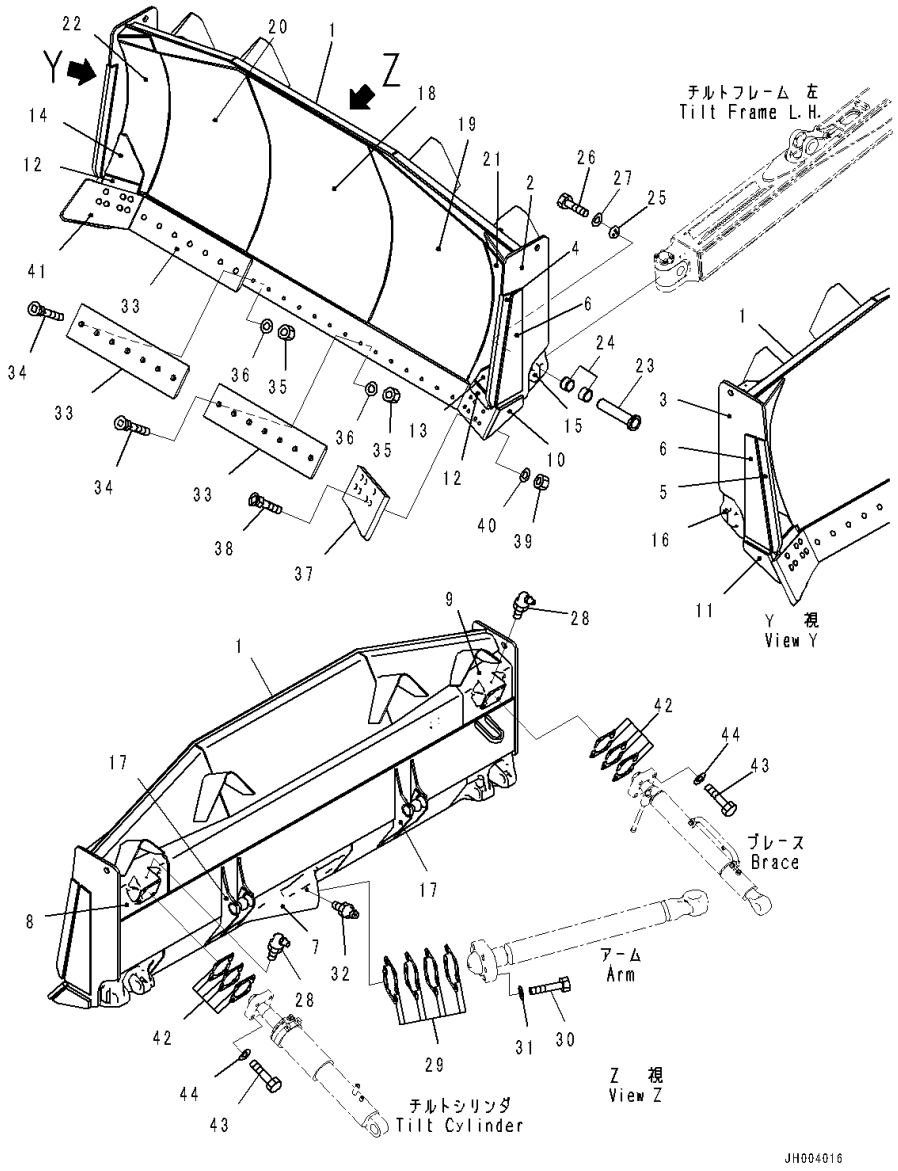

Index	Code	Part Number	Description	Qty	Serial Number
1		17A-71-41610	Blade	1	81028-
2		17A-71-41C10	• Plate,Welded	1	81028-
3		17A-71-41C21	• Plate,Welded	1	81028-
4		17A-71-41C31	• Plate,Welded	1	81028-
5		17A-71-41C41	• Plate,Welded	1	81028-
6		17A-71-41C70	• Plate,Welded	2	81028-
7		17A-71-41142	• Bracket,Welded	1	81028-
8		17A-71-41171	• Pivot,Welded	1	81028-
9		17A-71-41181	• Pivot,Welded	1	81028-
10		17A-71-41210	• Plate,Welded	1	81028-
11		17A-71-41220	• Plate,Welded	1	81028-
12		17A-71-41240	• Stopper,Welded	2	81028-
13		17A-71-41250	• Plate,Welded	1	81028-
14		17A-71-41260	• Plate,Welded	1	81028-
15		17A-71-41420	• Bracket,Welded	1	81028-
16		17A-71-41430	• Bracket,Welded	1	81028-
17		17A-71-45151	• Bracket,Welded	2	81028-
18		17A-71-42120	• Plate,Welded	1	81028-
19		17A-71-42130	• Plate,Welded	1	81028-
20		17A-71-42140	• Plate,Welded	1	81028-
21		17A-71-42150	• Plate,Welded	1	81028-
22		17A-71-42160	• Plate,Welded	1	81028-
23		17A-71-51940	Pin	2	81028-
24		17A-71-51910	Bushing	4	81028-
25		17A-71-45390	Plate	2	81028-
26		01010-81645	Bolt	6	81028-
27		01643-31645	Washer	6	81028-
28		07020-00675	Fitting, Grease	2	81028-
29		17A-71-00410	Shim Assembly	1	81028-
	C1		• Shim, T=2.0mm	2	81028-
	C1		• Shim, T=1.0mm	4	81028-
	C1		• Shim, T=0.5mm	4	81028-
30		01011-83335	Bolt	6	81028-
31		01643-33380	Washer	6	81028-
32		07020-00000	Fitting, Grease	1	81028-
33		175-70-26310	Edge	3	81028-
34		175-71-11454	Bolt	21	81028-
35		175-71-11530	Nut	21	81028-
36		01643-22245	Washer	21	81028-

FIG. T2120-027001 Dozer Blade, For Strengthened Dual Tilt Pitch Semi U Dozer, Heavy Duty Semi U Dozer, With Bushing

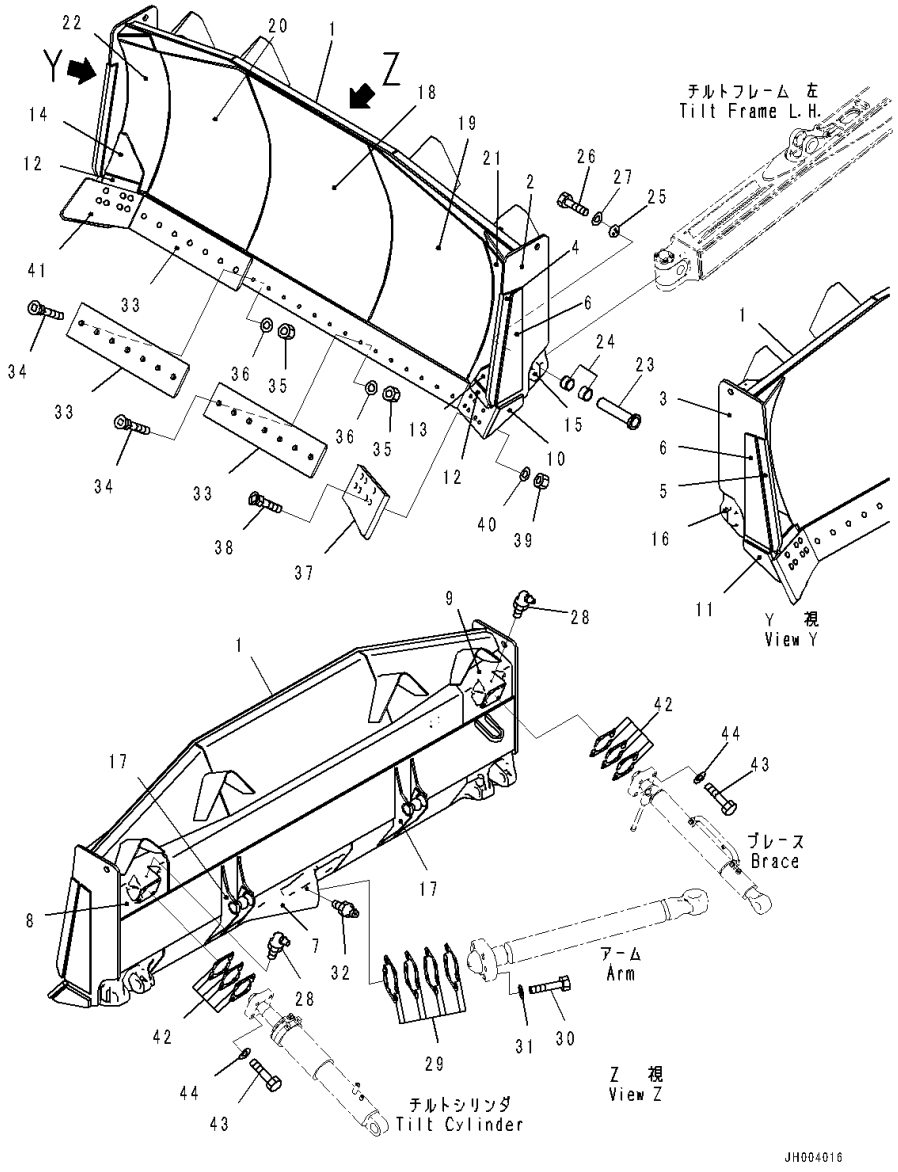

Index	Code	Part Number	Description	Qty	Serial Number
37		175-71-22272	Bit	1	81028-
38		175-71-11463	Bolt	14	81028-
39		175-71-11530	Nut	14	81028-
40		01643-22245	Washer	14	81028-
41		175-71-22282	Bit	1	81028-
42		17A-71-00420	Shim Assembly	2	81028-
	C1		• Shim, T=0.5mm	2	81028-
	C1		• Shim, T=1.0mm	4	81028-
	C1		• Shim, T=2.3mm	2	81028-
43		01011-62700	Bolt	8	81028-
44		01643-32780	Washer	8	81028-

FIG. T2120-029001 Dozer Blade, For Dual Tilt Pitch Dozer, SIGMADOZER With Superhard Bit and Edge, Blade

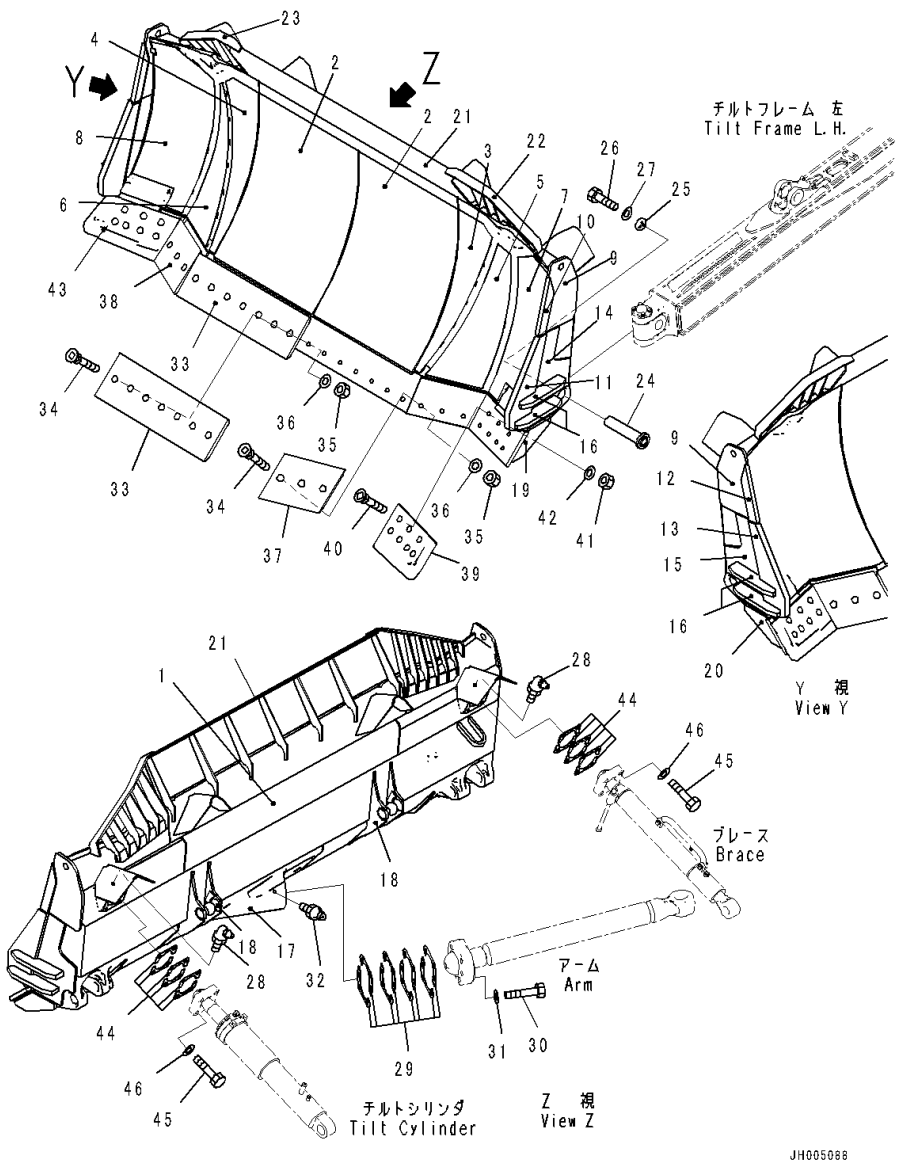

Index	Code	Part Number	Description	Qty	Serial Number
1		17A-71-45914	Blade	1	81159-
2		17A-71-46121	• Plate,Welded	2	81159-
3		17A-71-46130	• Plate,Welded	1	81159-
4		17A-71-46140	• Plate,Welded	1	81159-
5		17A-71-46150	• Plate,Welded	1	81159-
6		17A-71-46160	• Plate,Welded	1	81159-
7		17A-71-46171	• Plate,Welded	1	81159-
8		17A-71-46181	• Plate,Welded	1	81159-
9		17A-71-45A91	• Plate,Welded	2	81159-
10		17A-71-46D10	• Plate,Welded	1	81159-
11		17A-71-46D50	• Plate,Welded	1	81159-
12		17A-71-46D20	• Plate,Welded	1	81159-
13		17A-71-46D60	• Plate,Welded	1	81159-
14		17A-71-45D31	• Plate,Welded	1	81159-
15		17A-71-45D41	• Plate,Welded	1	81159-
16		17A-71-46D70	• Plate,Welded	4	81159-
17		17A-71-45141	• Bracket,Welded	1	81159-
18		17A-71-45151	• Bracket,Welded	2	81159-
19		17A-71-45192	• Plate,Welded	1	81159-
20		17A-71-45292	• Plate,Welded	1	81159-
21		17A-71-45923	• Spill Guard,Welded	1	81159-
22		17A-71-45933	• Spill Guard,Welded	1	81159-
23		17A-71-45943	• Spill Guard,Welded	1	81159-
24		17A-71-51941	Pin	2	81159-
25		17A-71-48390	Plate	2	81159-
26		01010-81645	Bolt	6	81159-
27		01643-31645	Washer	6	81159-
28		07020-00675	Fitting, Grease	2	81159-
29		17A-71-00410	Shim Assembly	1	81159-
	C1		• Shim, T=2.0mm	2	81159-
	C1		• Shim, T=1.0mm	4	81159-
	C1		• Shim, T=0.5mm	4	81159-
30		01011-83335	Bolt	6	81159-
31		01643-33380	Washer	6	81159-
32		07020-00000	Fitting, Grease	1	81159-
33		17A-71-45210	Cutting Edge	2	81159-
34		17A-71-12451	Bolt	20	81159-
35		17M-71-21530	Nut	20	81159-
36		01643-22460	Washer	20	81159-
37		17A-71-46670	Cutting Edge	1	81159-

FIG. T2120-029001 Dozer Blade, For Dual Tilt Pitch Dozer, SIGMADOZER With Superhard Bit and Edge, Blade

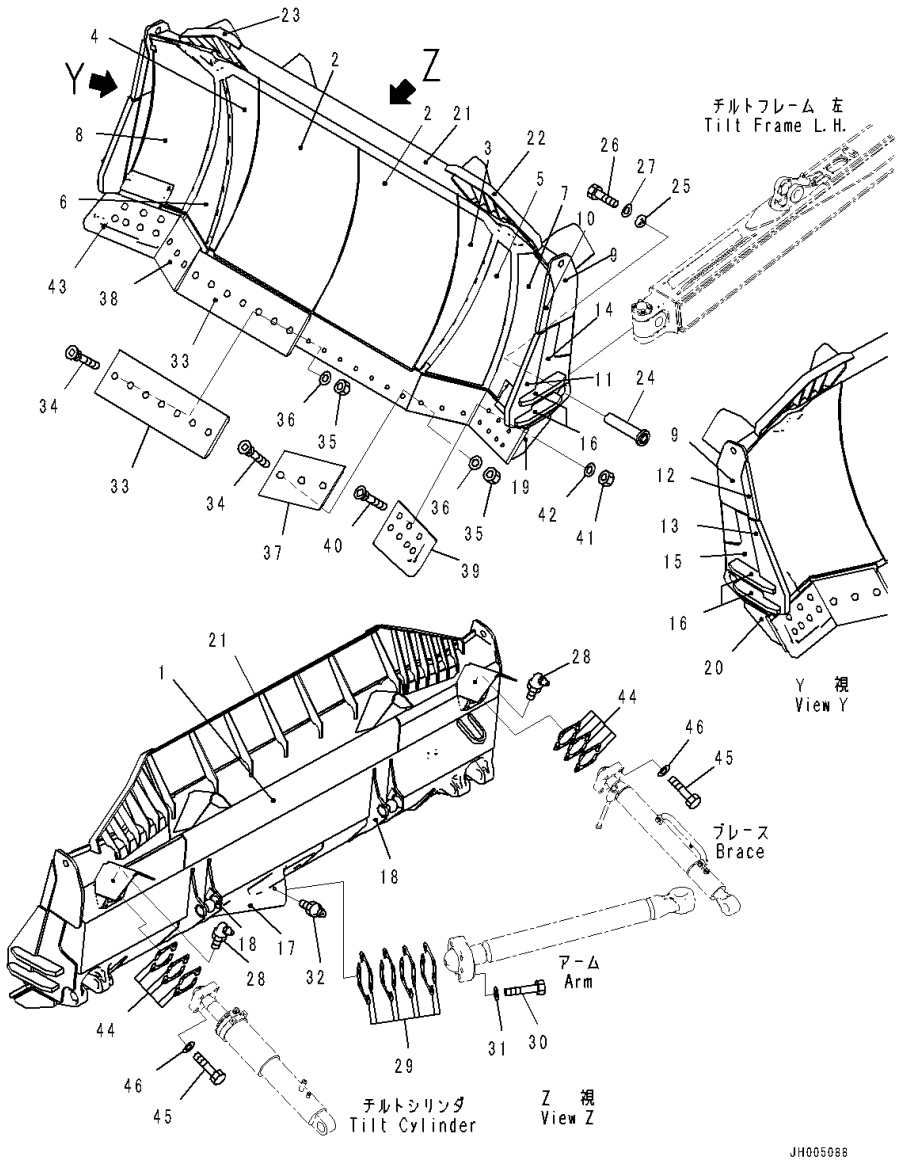

Index	Code	Part Number	Description	Qty	Serial Number
38		17A-71-46680	Cutting Edge	1	81159-
39		17A-71-46611	End Bit	1	81159-
40		17A-71-12451	Bolt	14	81159-
41		17M-71-21530	Nut	14	81159-
42		01643-22460	Washer	14	81159-
43		17A-71-46621	End Bit	1	81159-
44		17A-71-00420	Shim Assembly	2	81159-
	C1		• Shim, T=0.5mm	2	81159-
	C1		• Shim, T=1.0mm	4	81159-
	C1		• Shim, T=2.3mm	2	81159-
45		01011-62700	Bolt	8	81159-
46		01643-32780	Washer	8	81159-

FIG. T2120-030001 Dozer Blade, Semi U Dozer, Dual Tilt Pitch Semi U Dozer

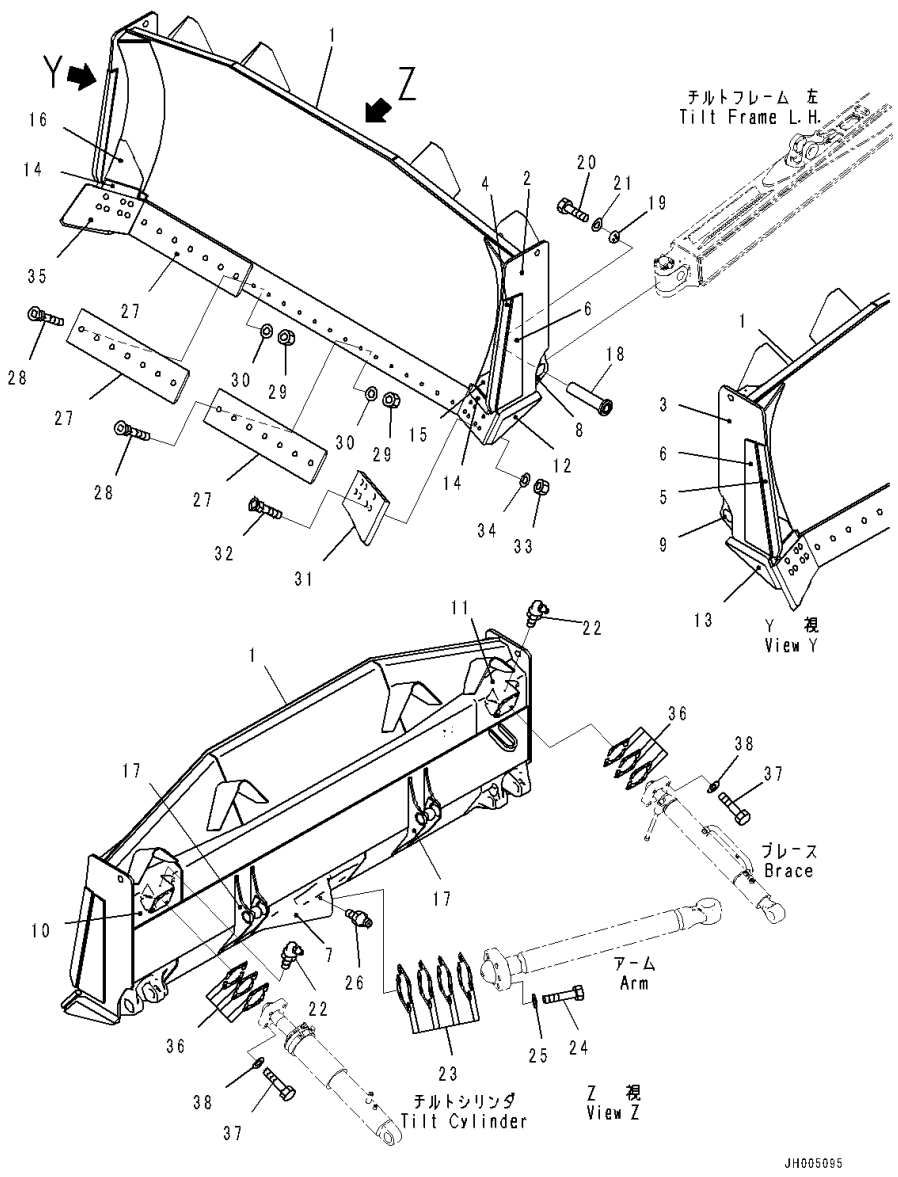

Index	Code	Part Number	Description	Qty	Serial Number
1		17A-71-41113	Blade	1	81147-
2		17A-71-42480	• Plate,Welded	1	81147-
3		17A-71-42490	• Plate,Welded	1	81147-
4		17A-71-41C31	• Plate,Welded	1	81147-
5		17A-71-41C41	• Plate,Welded	1	81147-
6		17A-71-41C70	• Plate,Welded	2	81147-
7		17A-71-41142	• Bracket,Welded	1	81147-
8		17A-71-41153	• Bracket,Welded	1	81147-
9		17A-71-41163	• Bracket,Welded	1	81147-
10		17A-71-41171	• Pivot,Welded	1	81147-
11		17A-71-41181	• Pivot,Welded	1	81147-
12		17A-71-42450	• Plate,Welded	1	81147-
13		17A-71-42460	• Plate,Welded	1	81147-
14		17A-71-41240	• Stopper,Welded	2	81147-
15		17A-71-41250	• Plate,Welded	1	81147-
16		17A-71-41260	• Plate,Welded	1	81147-
17		17A-71-45151	• Bracket,Welded	2	81147-
18		17A-71-51941	Pin	2	81147-
19		17A-71-48390	Plate	2	81147-
20		01010-81645	Bolt	6	81147-
21		01643-31645	Washer	6	81147-
22		07020-00675	Fitting, Grease	2	81147-
23		17A-71-00410	Shim Assembly	1	81147-
	C1		• Shim, T=2.0mm	2	81147-
	C1		• Shim, T=1.0mm	4	81147-
	C1		• Shim, T=0.5mm	4	81147-
24		01011-83335	Bolt	6	81147-
25		01643-33380	Washer	6	81147-
26		07020-00000	Fitting, Grease	1	81147-
27		175-70-26310	Edge	3	81147-
28		175-71-11454	Bolt	21	81147-
29		175-71-11530	Nut	21	81147-
30		01643-22245	Washer	21	81147-
31		175-71-22272	Bit	1	81147-
32		175-71-11463	Bolt	14	81147-
33		175-71-11530	Nut	14	81147-
34		01643-22245	Washer	14	81147-
35		175-71-22282	Bit	1	81147-
36		17A-71-00420	Shim Assembly	2	81147-
	C1		• Shim, T=0.5mm	2	81147-

FIG. T2120-030001 Dozer Blade, Semi U Dozer, Dual Tilt Pitch Semi U Dozer

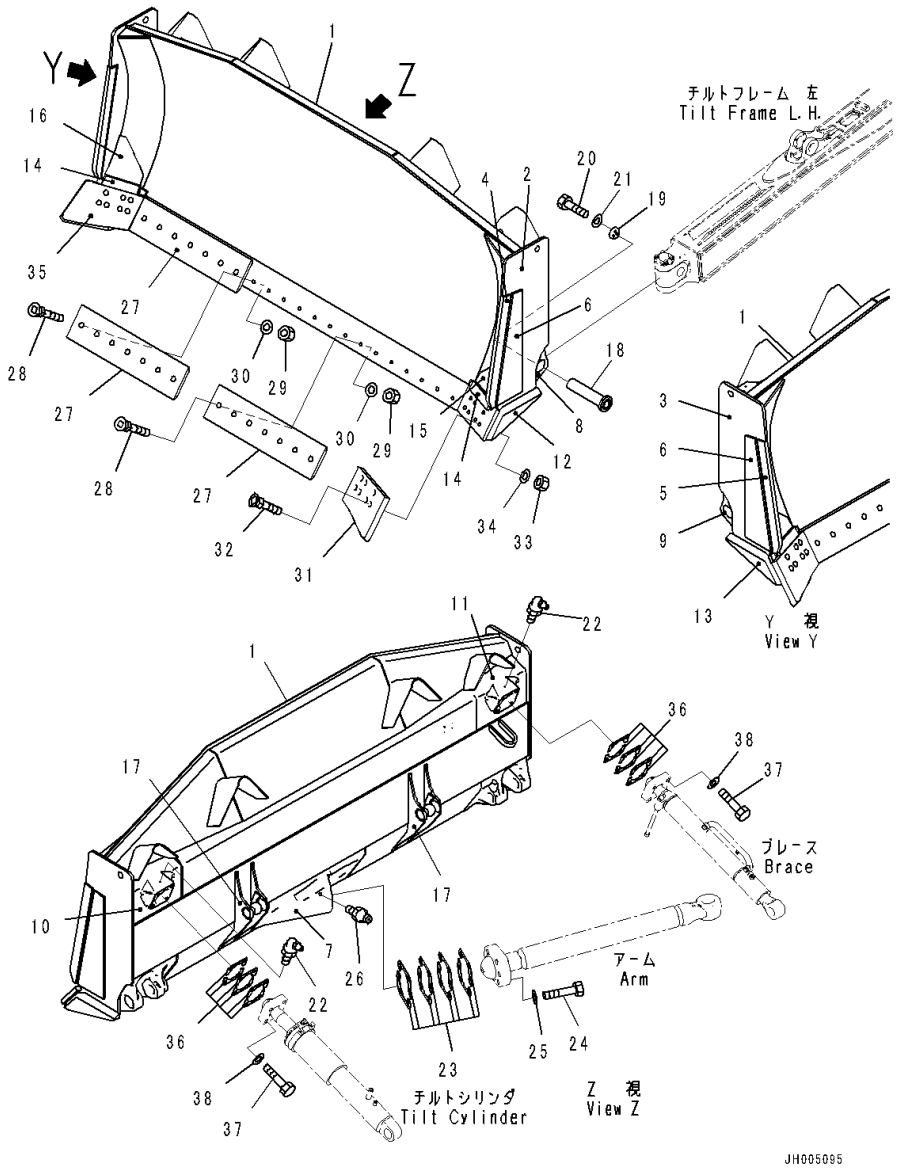

Index	Code	Part Number	Description	Qty	Serial Number
	C1		• Shim, T=1.0mm	4	81147-
	C1		• Shim, T=2.3mm	2	81147-
37		01011-62700	Bolt	8	81147-
38		01643-32780	Washer	8	81147-

FIG. T2120-031001 Dozer Blade, Semi U Dozer, With Pusher Plate

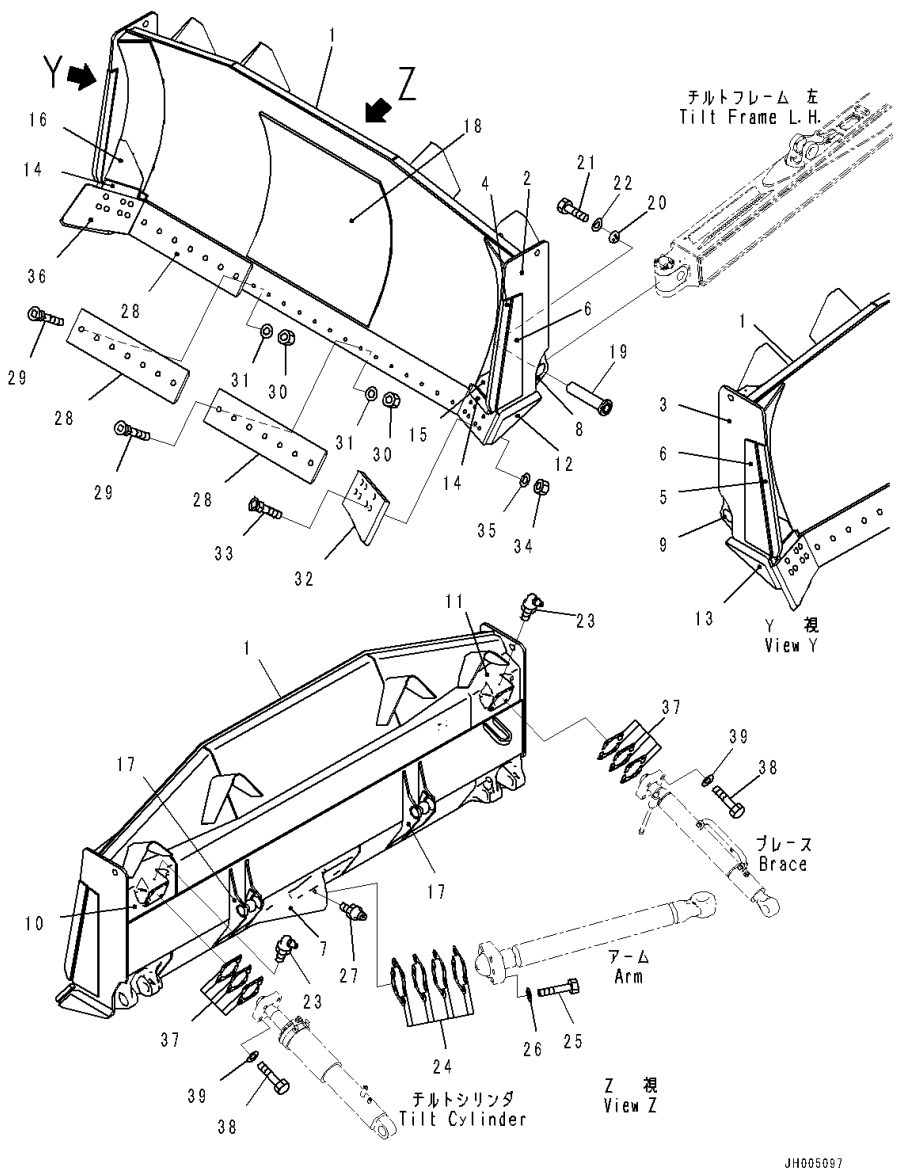

Index	Code	Part Number	Description	Qty	Serial Number
1		17A-937-4112	Blade	1	81147-
2		17A-71-42480	• Plate,Welded	1	81147-
3		17A-71-42490	• Plate,Welded	1	81147-
4		17A-71-41C31	• Plate,Welded	1	81147-
5		17A-71-41C41	• Plate,Welded	1	81147-
6		17A-71-41C70	• Plate,Welded	2	81147-
7		17A-71-41142	• Bracket,Welded	1	81147-
8		17A-71-41153	• Bracket,Welded	1	81147-
9		17A-71-41163	• Bracket,Welded	1	81147-
10		17A-71-41171	• Pivot,Welded	1	81147-
11		17A-71-41181	• Pivot,Welded	1	81147-
12		17A-71-42450	• Plate,Welded	1	81147-
13		17A-71-42460	• Plate,Welded	1	81147-
14		17A-71-41240	• Stopper,Welded	2	81147-
15		17A-71-41250	• Plate,Welded	1	81147-
16		17A-71-41260	• Plate,Welded	1	81147-
17		17A-71-45151	• Bracket,Welded	2	81147-
18		175-937-4220	• Plate,Welded	1	81147-
19		17A-71-51941	Pin	2	81147-
20		17A-71-48390	Plate	2	81147-
21		01010-81645	Bolt	6	81147-
22		01643-31645	Washer	6	81147-
23		07020-00675	Fitting, Grease	2	81147-
24		17A-71-00410	Shim Assembly	1	81147-
	C1		• Shim, T=2.0mm	2	81147-
	C1		• Shim, T=1.0mm	4	81147-
	C1		• Shim, T=0.5mm	4	81147-
25		01011-83335	Bolt	6	81147-
26		01643-33380	Washer	6	81147-
27		07020-00000	Fitting, Grease	1	81147-
28		175-70-26310	Edge	3	81147-
29		175-71-11454	Bolt	21	81147-
30		175-71-11530	Nut	21	81147-
31		01643-22245	Washer	21	81147-
32		175-71-22272	Bit	1	81147-
33		175-71-11463	Bolt	14	81147-
34		175-71-11530	Nut	14	81147-
35		01643-22245	Washer	14	81147-
36		175-71-22282	Bit	1	81147-
37		17A-71-00420	Shim Assembly	2	81147-

FIG. T2120-031001 Dozer Blade, Semi U Dozer, With Pusher Plate

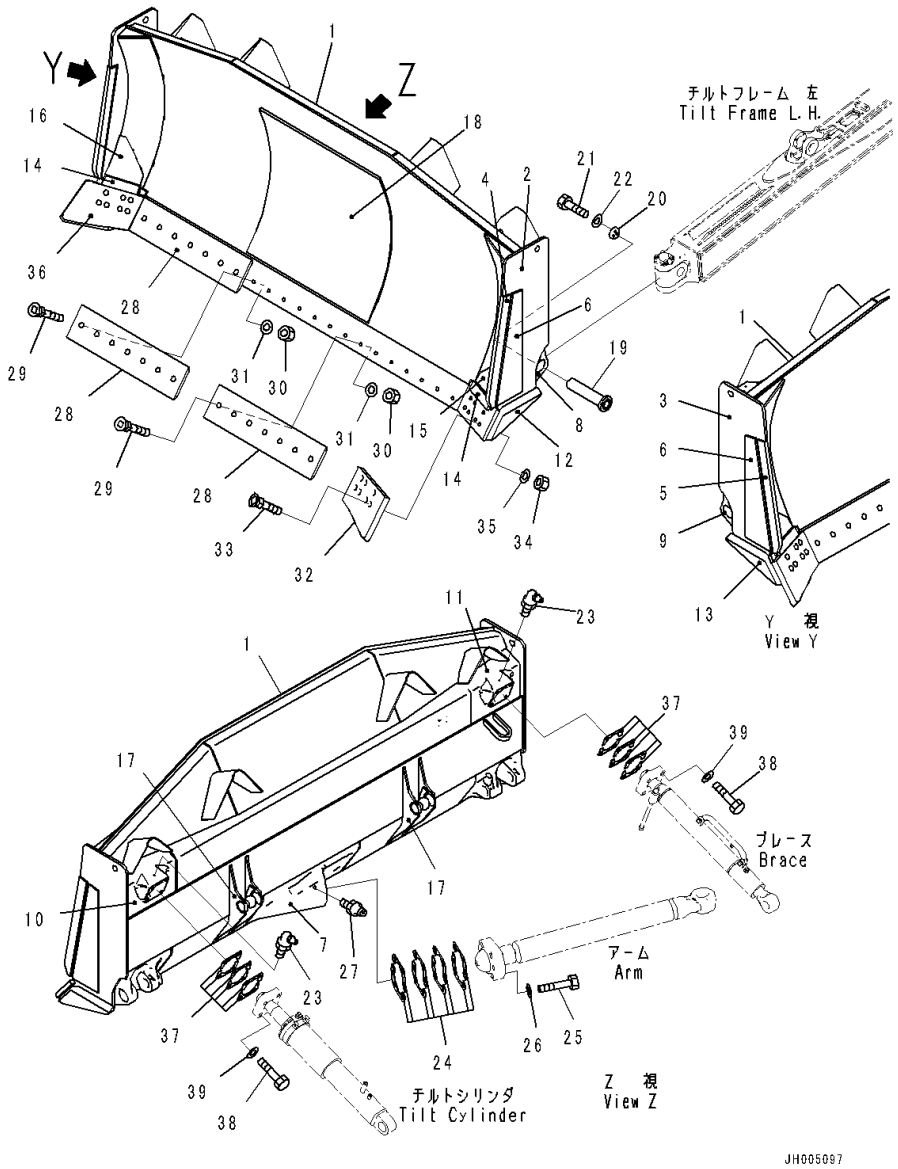

Index	Code	Part Number	Description	Qty	Serial Number
	C1		• Shim, T=0.5mm	2	81147-
	C1		• Shim, T=1.0mm	4	81147-
	C1		• Shim, T=2.3mm	2	81147-
38		01011-62700	Bolt	8	81147-
39		01643-32780	Washer	8	81147-

FIG. T2120-032001 Dozer Blade, Strengthened Semi U Dozer

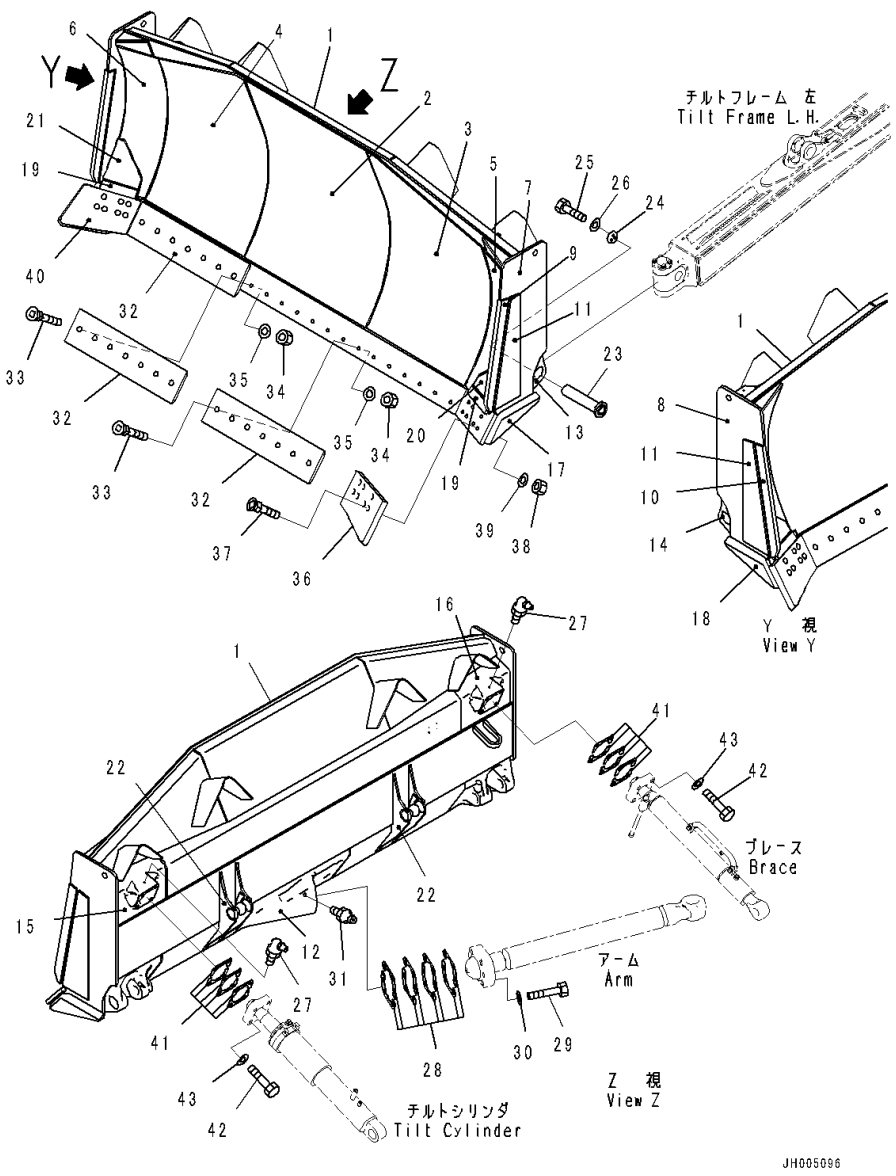

Index	Code	Part Number	Description	Qty	Serial Number
1		17A-71-42113	Blade	1	81147-
2		17A-71-42120	• Plate,Welded	1	81147-
3		17A-71-42130	• Plate,Welded	1	81147-
4		17A-71-42140	• Plate,Welded	1	81147-
5		17A-71-42150	• Plate,Welded	1	81147-
6		17A-71-42160	• Plate,Welded	1	81147-
7		17A-71-42480	• Plate,Welded	1	81147-
8		17A-71-42490	• Plate,Welded	1	81147-
9		17A-71-41C31	• Plate,Welded	1	81147-
10		17A-71-41C41	• Plate,Welded	1	81147-
11		17A-71-41C70	• Plate,Welded	2	81147-
12		17A-71-41142	• Bracket,Welded	1	81147-
13		17A-71-41153	• Bracket,Welded	1	81147-
14		17A-71-41163	• Bracket,Welded	1	81147-
15		17A-71-41171	• Pivot,Welded	1	81147-
16		17A-71-41181	• Pivot,Welded	1	81147-
17		17A-71-42450	• Plate,Welded	1	81147-
18		17A-71-42460	• Plate,Welded	1	81147-
19		17A-71-41240	• Stopper,Welded	2	81147-
20		17A-71-41250	• Plate,Welded	1	81147-
21		17A-71-41260	• Plate,Welded	1	81147-
22		17A-71-45151	• Bracket,Welded	2	81147-
23		17A-71-51941	Pin	2	81147-
24		17A-71-48390	Plate	2	81147-
25		01010-81645	Bolt	6	81147-
26		01643-31645	Washer	6	81147-
27		07020-00675	Fitting, Grease	2	81147-
28		17A-71-00410	Shim Assembly	1	81147-
	C1		• Shim, T=2.0mm	2	81147-
	C1		• Shim, T=1.0mm	4	81147-
	C1		• Shim, T=0.5mm	4	81147-
29		01011-83335	Bolt	6	81147-
30		01643-33380	Washer	6	81147-
31		07020-00000	Fitting, Grease	1	81147-
32		175-70-26310	Edge	3	81147-
33		175-71-11454	Bolt	21	81147-
34		175-71-11530	Nut	21	81147-
35		01643-22245	Washer	21	81147-
36		175-71-22272	Bit	1	81147-
37		175-71-11463	Bolt	14	81147-

FIG. T2120-032001 Dozer Blade, Strengthened Semi U Dozer

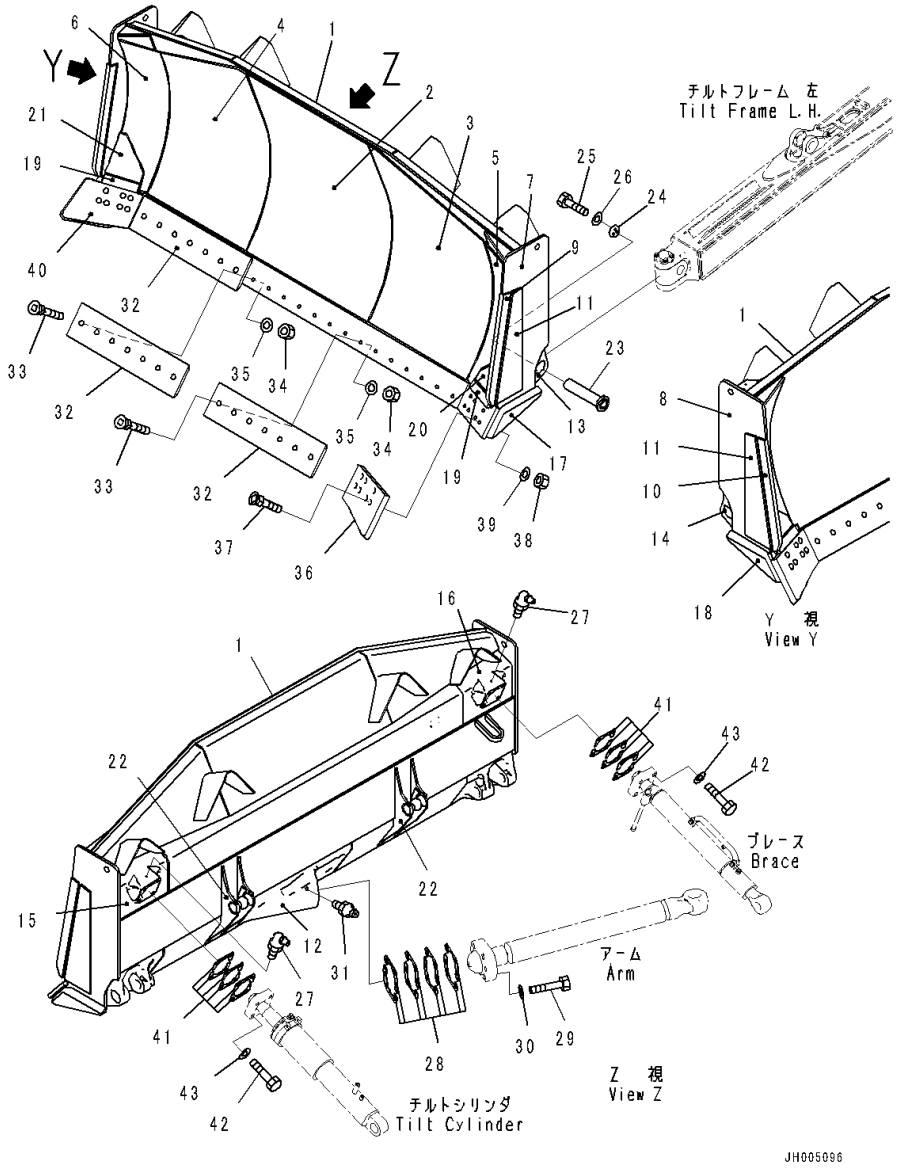

Index	Code	Part Number	Description	Qty	Serial Number
38		175-71-11530	Nut	14	81147-
39		01643-22245	Washer	14	81147-
40		175-71-22282	Bit	1	81147-
41		17A-71-00420	Shim Assembly	2	81147-
	C1		• Shim, T=0.5mm	2	81147-
	C1		• Shim, T=1.0mm	4	81147-
	C1		• Shim, T=2.3mm	2	81147-
42		01011-62700	Bolt	8	81147-
43		01643-32780	Washer	8	81147-

FIG. T2120-033001 Dozer Blade, Strengthened Semi U Dozer, With Pusher Plate

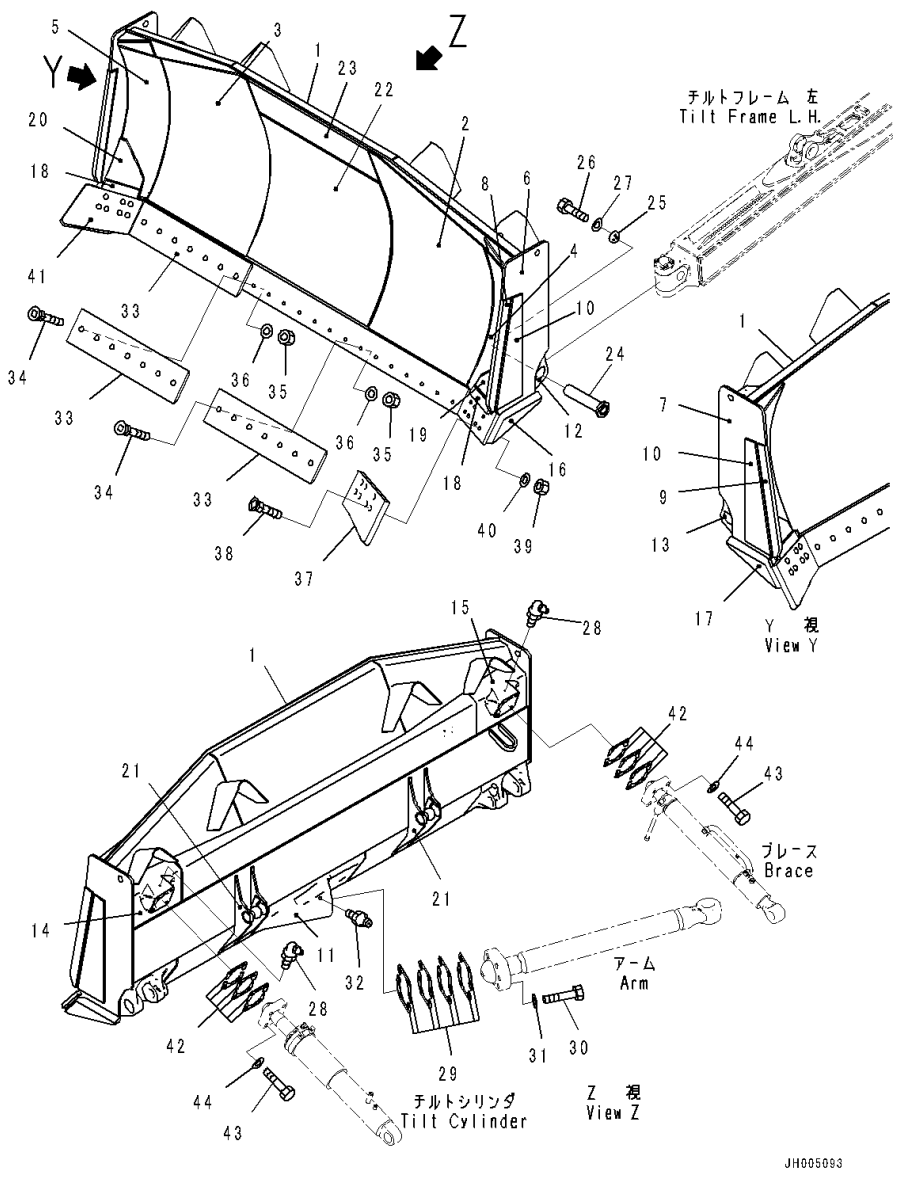

Index	Code	Part Number	Description	Qty	Serial Number
1		17A-937-4212	Blade	1	81147-
2		17A-71-42130	• Plate,Welded	1	81147-
3		17A-71-42140	• Plate,Welded	1	81147-
4		17A-71-42150	• Plate,Welded	1	81147-
5		17A-71-42160	• Plate,Welded	1	81147-
6		17A-71-42480	• Plate,Welded	1	81147-
7		17A-71-42490	• Plate,Welded	1	81147-
8		17A-71-41C31	• Plate,Welded	1	81147-
9		17A-71-41C41	• Plate,Welded	1	81147-
10		17A-71-41C70	• Plate,Welded	2	81147-
11		17A-71-41142	• Bracket,Welded	1	81147-
12		17A-71-41153	• Bracket,Welded	1	81147-
13		17A-71-41163	• Bracket,Welded	1	81147-
14		17A-71-41171	• Pivot,Welded	1	81147-
15		17A-71-41181	• Pivot,Welded	1	81147-
16		17A-71-42450	• Plate,Welded	1	81147-
17		17A-71-42460	• Plate,Welded	1	81147-
18		17A-71-41240	• Stopper,Welded	2	81147-
19		17A-71-41250	• Plate,Welded	1	81147-
20		17A-71-41260	• Plate,Welded	1	81147-
21		17A-71-45151	• Bracket,Welded	2	81147-
22		175-937-4220	• Plate,Welded	1	81147-
23		175-71-33220	• Plate,Welded	1	81147-
24		17A-71-51941	Pin	2	81147-
25		17A-71-48390	Plate	2	81147-
26		01010-81645	Bolt	6	81147-
27		01643-31645	Washer	6	81147-
28		07020-00675	Fitting, Grease	2	81147-
29		17A-71-00410	Shim Assembly	1	81147-
	C1		• Shim, T=2.0mm	2	81147-
	C1		• Shim, T=1.0mm	4	81147-
	C1		• Shim, T=0.5mm	4	81147-
30		01011-83335	Bolt	6	81147-
31		01643-33380	Washer	6	81147-
32		07020-00000	Fitting, Grease	1	81147-
33		175-70-26310	Edge	3	81147-
34		175-71-11454	Bolt	21	81147-
35		175-71-11530	Nut	21	81147-
36		01643-22245	Washer	21	81147-
37		175-71-22272	Bit	1	81147-

FIG. T2120-033001 Dozer Blade, Strengthened Semi U Dozer, With Pusher Plate

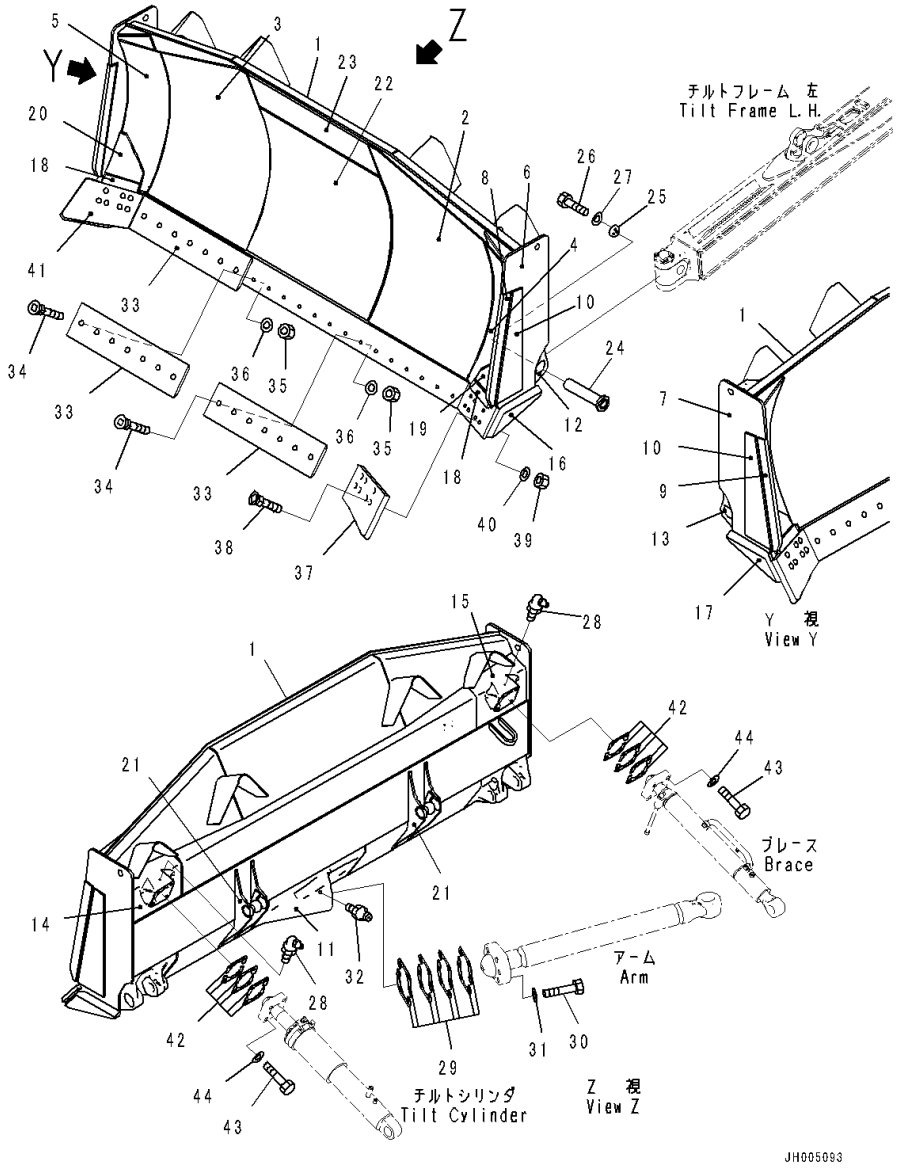

Index	Code	Part Number	Description	Qty	Serial Number
38		175-71-11463	Bolt	14	81147-
39		175-71-11530	Nut	14	81147-
40		01643-22245	Washer	14	81147-
41		175-71-22282	Bit	1	81147-
42		17A-71-00420	Shim Assembly	2	81147-
	C1		• Shim, T=0.5mm	2	81147-
	C1		• Shim, T=1.0mm	4	81147-
	C1		• Shim, T=2.3mm	2	81147-
43		01011-62700	Bolt	8	81147-
44		01643-32780	Washer	8	81147-

FIG. T2120-034001 Dozer Blade, For Dual Tilt Pitch Dozer, For SIGMADOZER

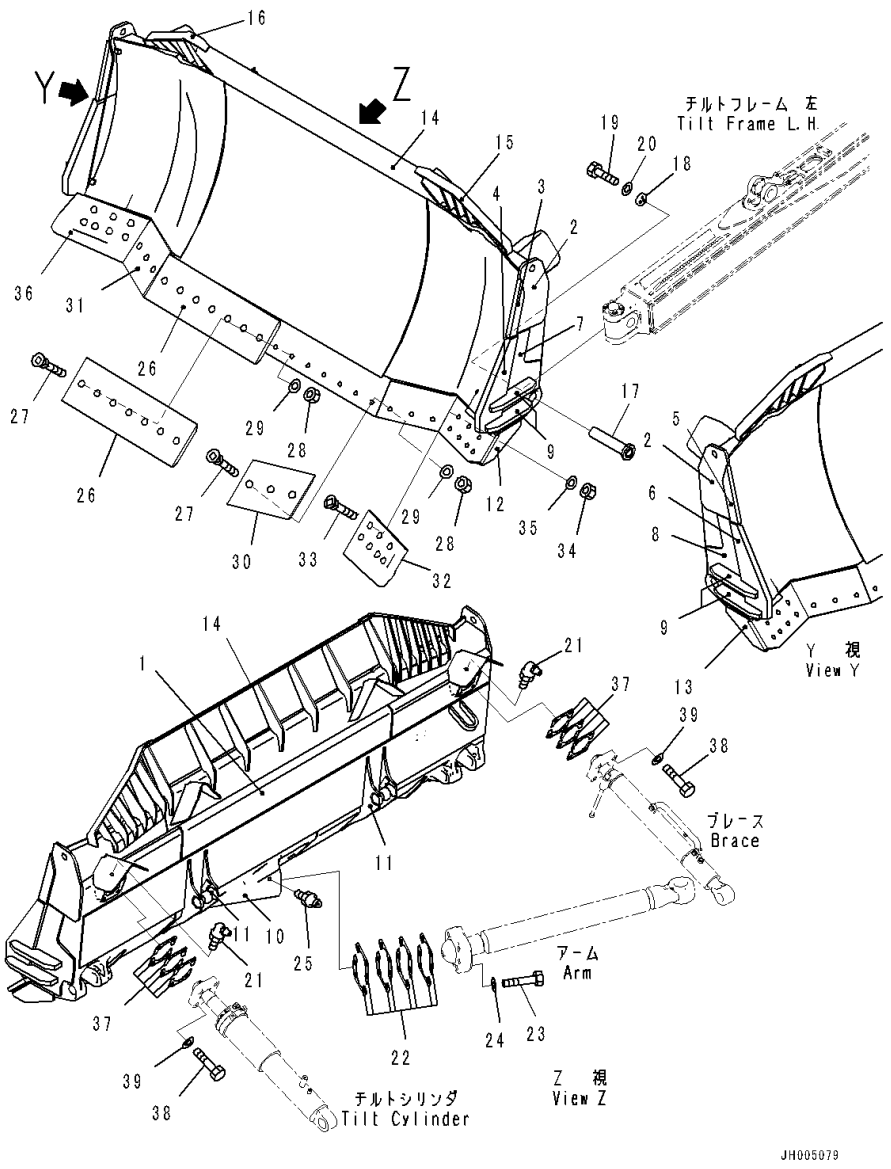

Index	Code	Part Number	Description	Qty	Serial Number
1		17A-71-45914	Blade	1	81159-
2		17A-71-45A91	• Plate,Welded	2	81159-
3		17A-71-46D10	• Plate,Welded	1	81159-
4		17A-71-46D50	• Plate,Welded	1	81159-
5		17A-71-46D20	• Plate,Welded	1	81159-
6		17A-71-46D60	• Plate,Welded	1	81159-
7		17A-71-45D31	• Plate,Welded	1	81159-
8		17A-71-45D41	• Plate,Welded	1	81159-
9		17A-71-46D70	• Plate,Welded	4	81159-
10		17A-71-45141	• Bracket,Welded	1	81159-
11		17A-71-45151	• Bracket,Welded	2	81159-
12		17A-71-45192	• Plate,Welded	1	81159-
13		17A-71-45292	• Plate,Welded	1	81159-
14		17A-71-45923	• Spill Guard,Welded	1	81159-
15		17A-71-45933	• Spill Guard,Welded	1	81159-
16		17A-71-45943	• Spill Guard,Welded	1	81159-
17		17A-71-51941	Pin	2	81159-
18		17A-71-48390	Plate	2	81159-
19		01010-81645	Bolt	6	81159-
20		01643-31645	Washer	6	81159-
21		07020-00675	Fitting, Grease	2	81159-
22		17A-71-00410	Shim Assembly	1	81159-
	C1		• Shim, T=2.0mm	2	81159-
	C1		• Shim, T=1.0mm	4	81159-
	C1		• Shim, T=0.5mm	4	81159-
23		01011-83335	Bolt	6	81159-
24		01643-33380	Washer	6	81159-
25		07020-00000	Fitting, Grease	1	81159-
26		17A-71-45210	Cutting Edge	2	81159-
27		17A-71-12451	Bolt	20	81159-
28		17M-71-21530	Nut	20	81159-
29		01643-22460	Washer	20	81159-
30		17A-71-45220	Cutting Edge	1	81159-
31		17A-71-45230	Cutting Edge	1	81159-
32		17A-71-45712	End Bit	1	81159-
33		17A-71-12451	Bolt	14	81159-
34		17M-71-21530	Nut	14	81159-
35		01643-22460	Washer	14	81159-
36		17A-71-45722	End Bit	1	81159-
37		17A-71-00420	Shim Assembly	2	81159-

FIG. T2120-034001 Dozer Blade, For Dual Tilt Pitch Dozer, For SIGMADOZER

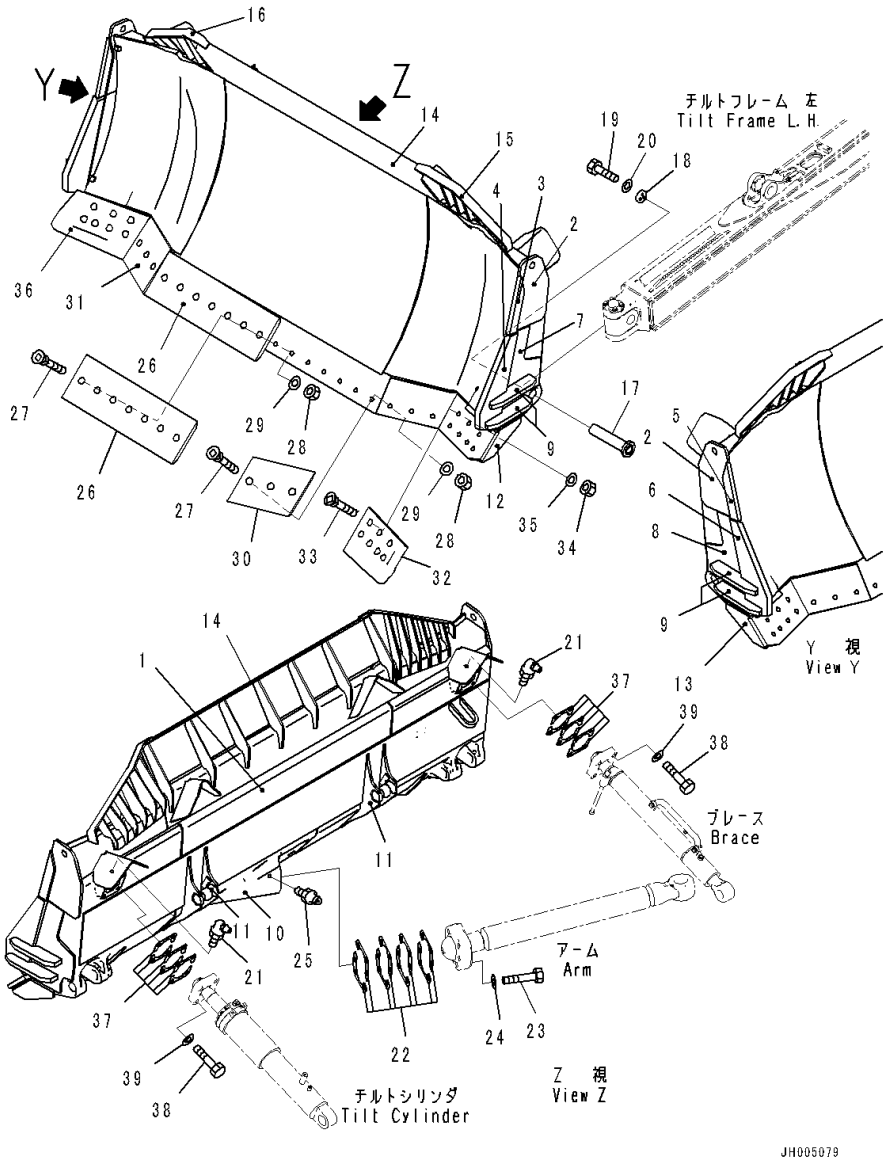

Index	Code	Part Number	Description	Qty	Serial Number
	C1		• Shim, T=0.5mm	2	81159-
	C1		• Shim, T=1.0mm	4	81159-
	C1		• Shim, T=2.3mm	2	81159-
38		01011-62700	Bolt	8	81159-
39		01643-32780	Washer	8	81159-

FIG. T2120-035001 Dozer Blade, For Dual Tilt Pitch Dozer, SIGMADOZER With Push Plate

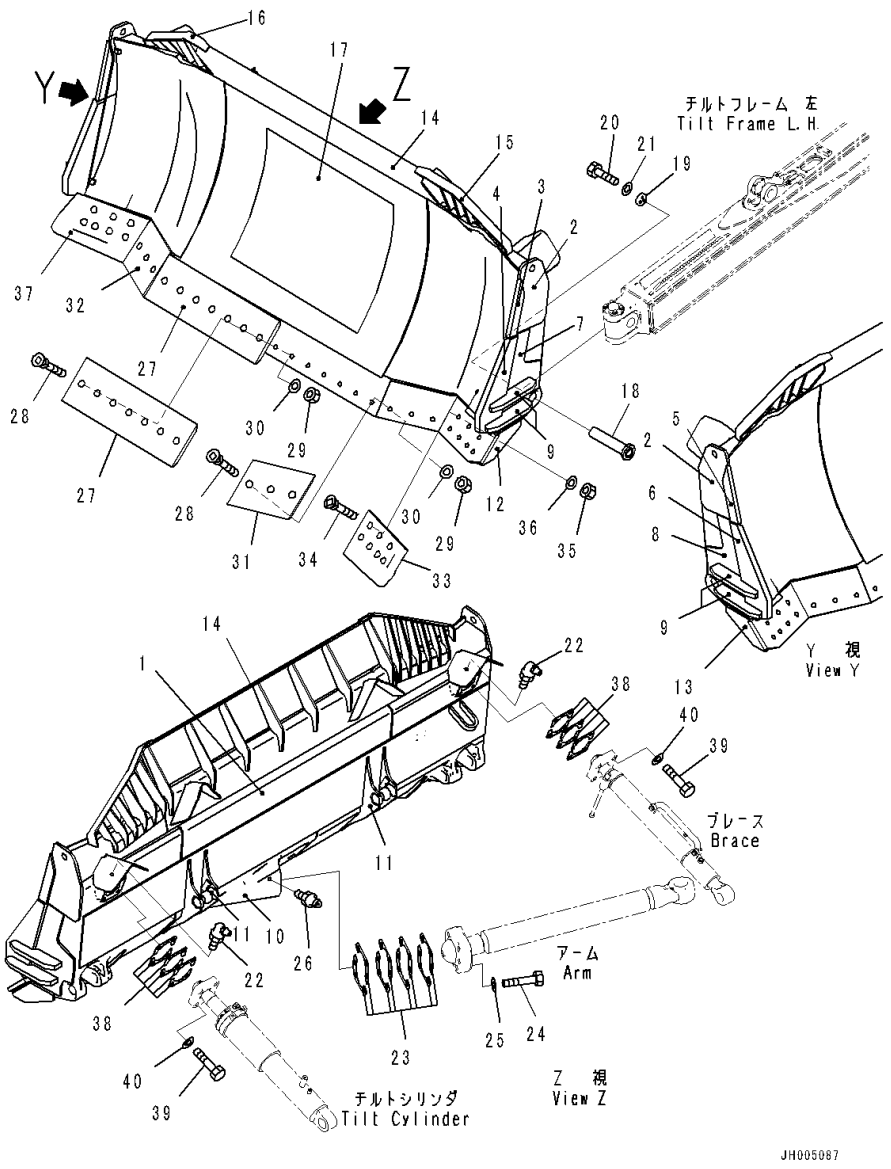

Index	Code	Part Number	Description	Qty	Serial Number
1		17A-937-4512	Blade	1	81159-
2		17A-71-45A91	• Plate,Welded	2	81159-
3		17A-71-46D10	• Plate,Welded	1	81159-
4		17A-71-46D50	• Plate,Welded	1	81159-
5		17A-71-46D20	• Plate,Welded	1	81159-
6		17A-71-46D60	• Plate,Welded	1	81159-
7		17A-71-45D31	• Plate,Welded	1	81159-
8		17A-71-45D41	• Plate,Welded	1	81159-
9		17A-71-46D70	• Plate,Welded	4	81159-
10		17A-71-45141	• Bracket,Welded	1	81159-
11		17A-71-45151	• Bracket,Welded	2	81159-
12		17A-71-45192	• Plate,Welded	1	81159-
13		17A-71-45292	• Plate,Welded	1	81159-
14		17A-71-45923	• Spill Guard,Welded	1	81159-
15		17A-71-45933	• Spill Guard,Welded	1	81159-
16		17A-71-45943	• Spill Guard,Welded	1	81159-
17		17A-937-4520	• Plate,Welded	1	81159-
18		17A-71-51941	Pin	2	81159-
19		17A-71-48390	Plate	2	81159-
20		01010-81645	Bolt	6	81159-
21		01643-31645	Washer	6	81159-
22		07020-00675	Fitting, Grease	2	81159-
23		17A-71-00410	Shim Assembly	1	81159-
	C1		• Shim, T=2.0mm	2	81159-
	C1		• Shim, T=1.0mm	4	81159-
	C1		• Shim, T=0.5mm	4	81159-
24		01011-83335	Bolt	6	81159-
25		01643-33380	Washer	6	81159-
26		07020-00000	Fitting, Grease	1	81159-
27		17A-71-45210	Cutting Edge	2	81159-
28		17A-71-12451	Bolt	20	81159-
29		17M-71-21530	Nut	20	81159-
30		01643-22460	Washer	20	81159-
31		17A-71-45220	Cutting Edge	1	81159-
32		17A-71-45230	Cutting Edge	1	81159-
33		17A-71-45712	End Bit	1	81159-
34		17A-71-12451	Bolt	14	81159-
35		17M-71-21530	Nut	14	81159-
36		01643-22460	Washer	14	81159-
37		17A-71-45722	End Bit	1	81159-

FIG. T2120-035001 Dozer Blade, For Dual Tilt Pitch Dozer, SIGMADOZER With Push Plate

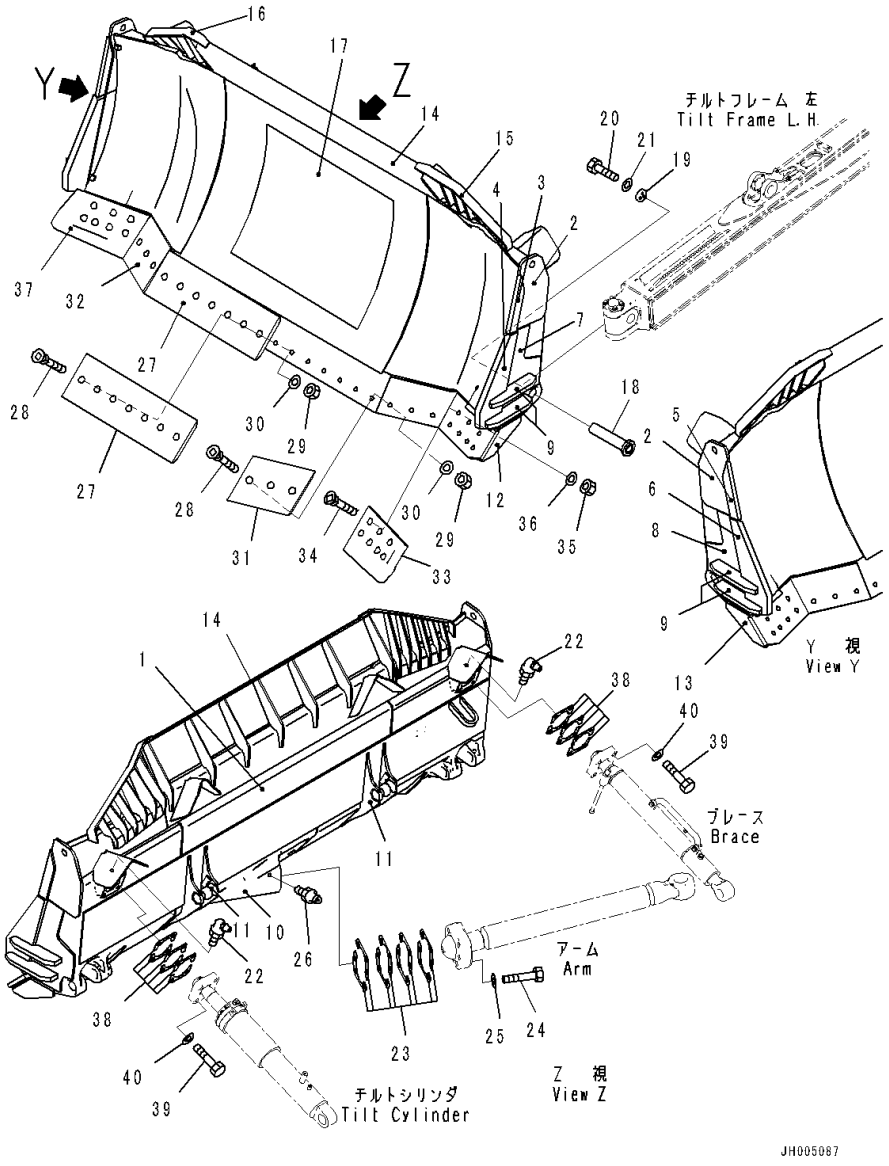

Index	Code	Part Number	Description	Qty	Serial Number
38		17A-71-00420	Shim Assembly	2	81159-
	C1		• Shim, T=0.5mm	2	81159-
	C1		• Shim, T=1.0mm	4	81159-
	C1		• Shim, T=2.3mm	2	81159-
39		01011-62700	Bolt	8	81159-
40		01643-32780	Washer	8	81159-

FIG. T2120-036001 Dozer Blade, Blade

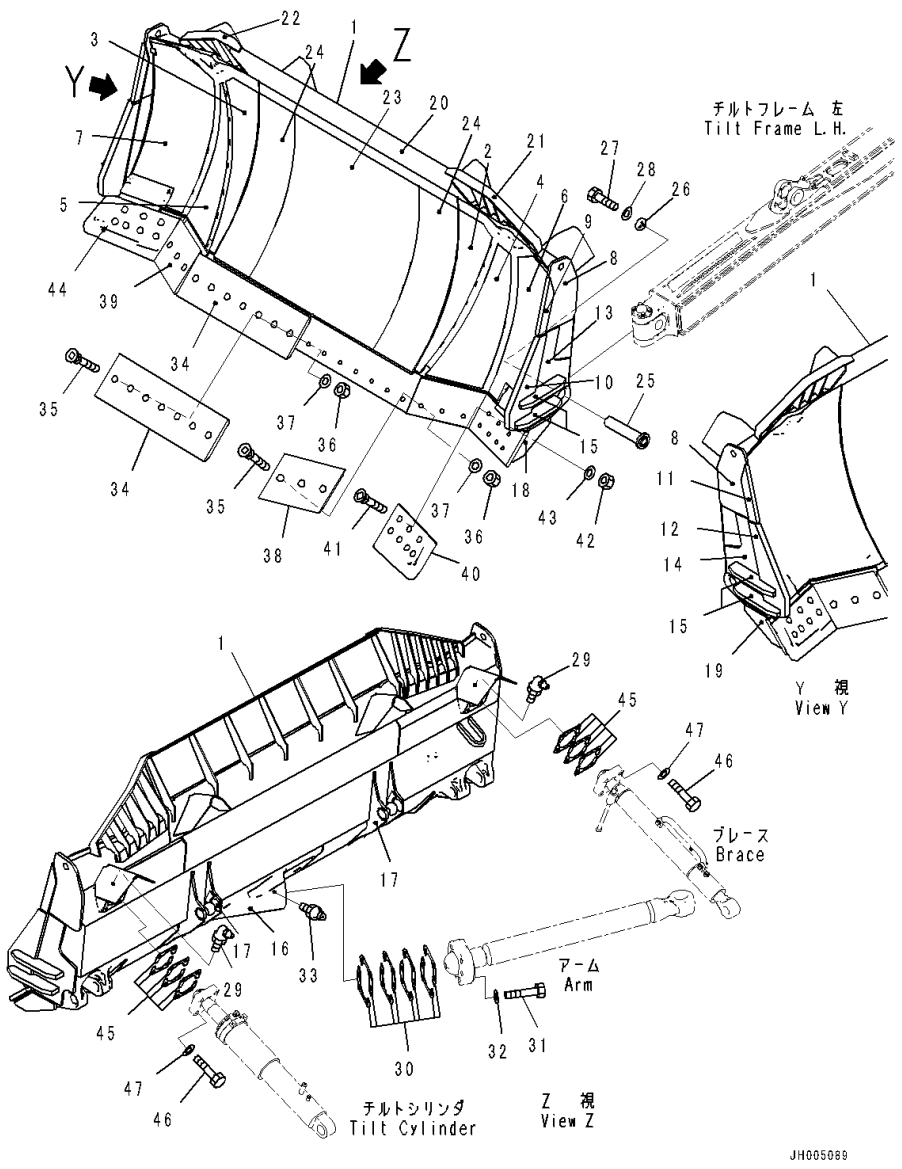

Index	Code	Part Number	Description	Qty	Serial Number
		Note: This list covers following specifications. For Dual Tilt Pitch Dozer, SIGMADOZER With Push Plate, With Superhard Bit and Edge Strengthened SIGMADOZER, With Pusher Plate, Superhard Bit and Edge			
1		17A-937-4612	Blade	1	81159-
2		17A-71-46130	• Plate,Welded	1	81159-
3		17A-71-46140	• Plate,Welded	1	81159-
4		17A-71-46150	• Plate,Welded	1	81159-
5		17A-71-46160	• Plate,Welded	1	81159-
6		17A-71-46171	• Plate,Welded	1	81159-
7		17A-71-46181	• Plate,Welded	1	81159-
8		17A-71-45A91	• Plate,Welded	2	81159-
9		17A-71-46D10	• Plate,Welded	1	81159-
10		17A-71-46D50	• Plate,Welded	1	81159-
11		17A-71-46D20	• Plate,Welded	1	81159-
12		17A-71-46D60	• Plate,Welded	1	81159-
13		17A-71-45D31	• Plate,Welded	1	81159-
14		17A-71-45D41	• Plate,Welded	1	81159-
15		17A-71-46D70	• Plate,Welded	4	81159-
16		17A-71-45141	• Bracket,Welded	1	81159-
17		17A-71-45151	• Bracket,Welded	2	81159-
18		17A-71-45192	• Plate,Welded	1	81159-
19		17A-71-45292	• Plate,Welded	1	81159-
20		17A-71-45923	• Spill Guard,Welded	1	81159-
21		17A-71-45933	• Spill Guard,Welded	1	81159-
22		17A-71-45943	• Spill Guard,Welded	1	81159-
23		17A-937-4520	• Plate,Welded	1	81159-
24		17A-71-46190	• Plate,Welded	2	81159-
25		17A-71-51941	Pin	2	81159-
26		17A-71-48390	Plate	2	81159-
27		01010-81645	Bolt	6	81159-
28		01643-31645	Washer	6	81159-
29		07020-00675	Fitting, Grease	2	81159-
30		17A-71-00410	Shim Assembly	1	81159-
	C1		• Shim, T=2.0mm	2	81159-
	C1		• Shim, T=1.0mm	4	81159-
	C1		• Shim, T=0.5mm	4	81159-
31		01011-83335	Bolt	6	81159-
32		01643-33380	Washer	6	81159-

FIG. T2120-036001 Dozer Blade, Blade

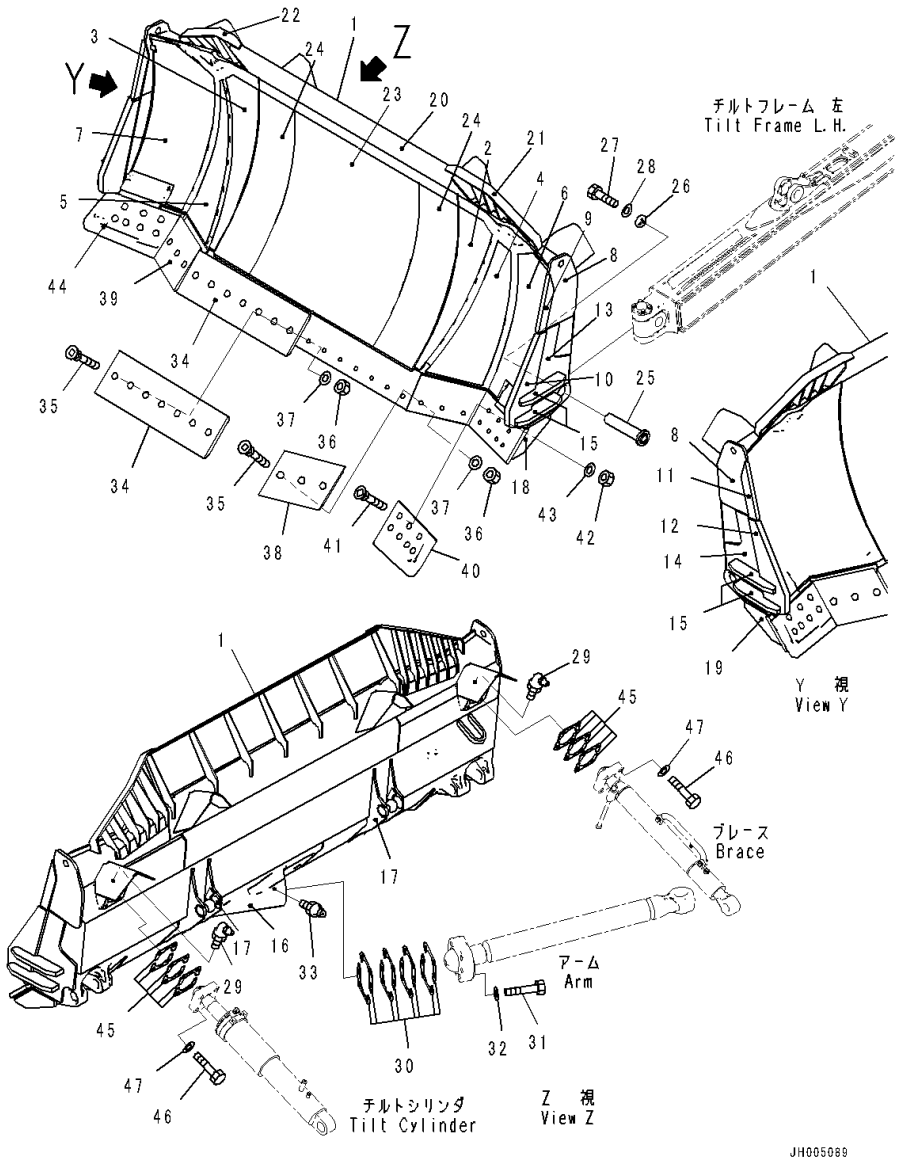

Index	Code	Part Number	Description	Qty	Serial Number
33		07020-00000	Fitting, Grease	1	81159-
34		17A-71-45210	Cutting Edge	2	81159-
35		17A-71-12451	Bolt	20	81159-
36		17M-71-21530	Nut	20	81159-
37		01643-22460	Washer	20	81159-
38		17A-71-46670	Cutting Edge	1	81159-
39		17A-71-46680	Cutting Edge	1	81159-
40		17A-71-46611	End Bit	1	81159-
41		17A-71-12451	Bolt	14	81159-
42		17M-71-21530	Nut	14	81159-
43		01643-22460	Washer	14	81159-
44		17A-71-46621	End Bit	1	81159-
45		17A-71-00420	Shim Assembly	2	81159-
	C1		• Shim, T=0.5mm	2	81159-
	C1		• Shim, T=1.0mm	4	81159-
	C1		• Shim, T=2.3mm	2	81159-
46		01011-62700	Bolt	8	81159-
47		01643-32780	Washer	8	81159-

FIG. T2120-037001 Dozer Blade, U Dozer, Dual Tilt Pitch U Dozer

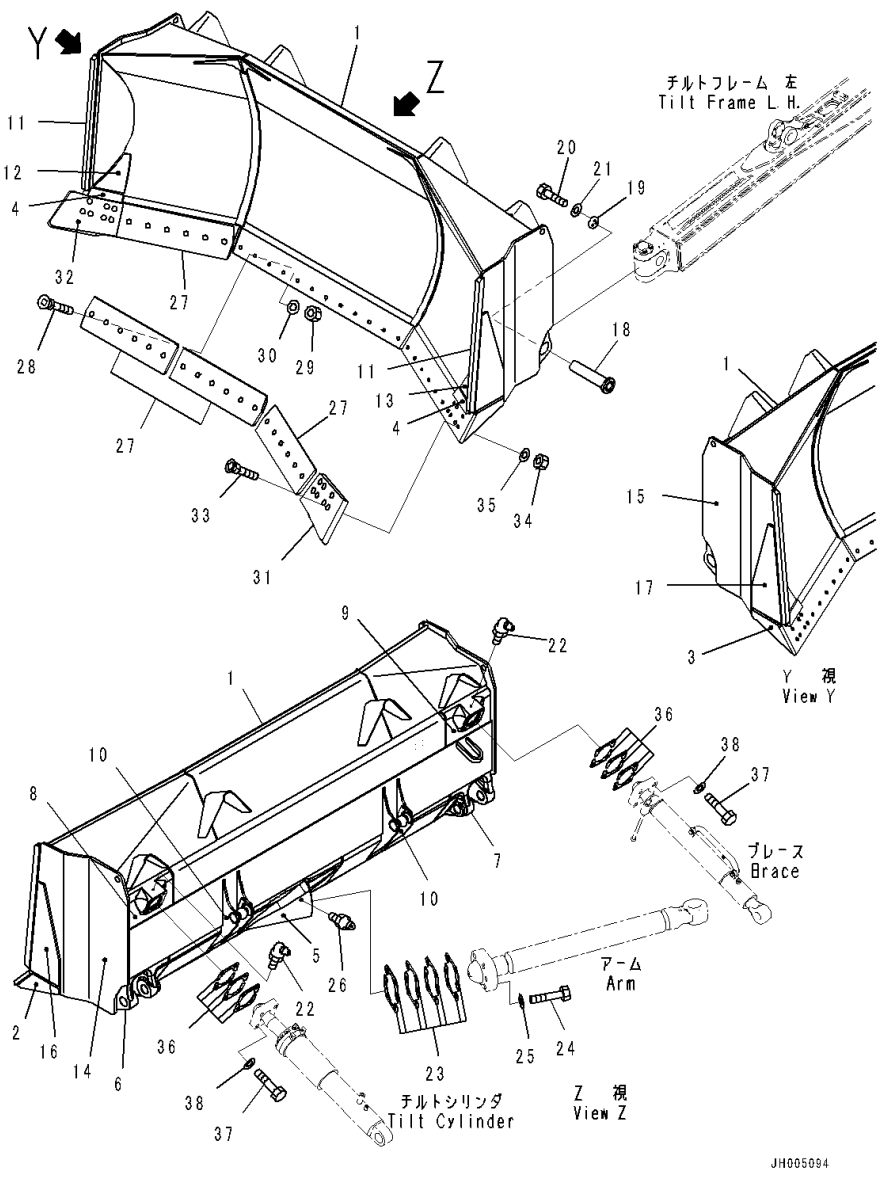

Index	Code	Part Number	Description	Qty	Serial Number
1		17A-72-41113	Blade	1	81147-
2		175-72-22121	• Plate,Welded	1	81147-
3		175-72-22131	• Plate,Welded	1	81147-
4		175-72-31120	• Plate,Welded	2	81147-
5		17A-71-41142	• Bracket,Welded	1	81147-
6		17A-71-41153	• Bracket,Welded	1	81147-
7		17A-71-41163	• Bracket,Welded	1	81147-
8		17A-71-41171	• Pivot,Welded	1	81147-
9		17A-71-41181	• Pivot,Welded	1	81147-
10		17A-71-45151	• Bracket,Welded	2	81147-
11		17A-72-41120	• Plate,Welded	2	81147-
12		17A-72-41131	• Plate,Welded	1	81147-
13		17A-72-41141	• Plate,Welded	1	81147-
14		17A-72-42480	• Plate,Welded	1	81147-
15		17A-72-42490	• Plate,Welded	1	81147-
16		17A-72-41F40	• Plate,Welded	1	81147-
17		17A-72-41F50	• Plate,Welded	1	81147-
18		17A-71-51941	Pin	2	81147-
19		17A-71-48390	Plate	2	81147-
20		01010-81645	Bolt	6	81147-
21		01643-31645	Washer	6	81147-
22		07020-00675	Fitting, Grease	2	81147-
23		17A-71-00410	Shim Assembly	1	81147-
	C1		• Shim, T=2.0mm	2	81147-
	C1		• Shim, T=1.0mm	4	81147-
	C1		• Shim, T=0.5mm	4	81147-
24		01011-83335	Bolt	6	81147-
25		01643-33380	Washer	6	81147-
26		07020-00000	Fitting, Grease	1	81147-
27		175-72-21123	Edge	4	81147-
28		175-71-11454	Bolt	24	81147-
29		175-71-11530	Nut	24	81147-
30		01643-22245	Washer	24	81147-
31		175-70-21126	End Bit	1	81147-
32		175-70-21136	End Bit	1	81147-
33		175-71-11463	Bolt	14	81147-
34		175-71-11530	Nut	14	81147-
35		01643-22245	Washer	14	81147-
36		17A-71-00420	Shim Assembly	2	81147-
	C1		• Shim, T=0.5mm	2	81147-

FIG. T2120-037001 Dozer Blade, U Dozer, Dual Tilt Pitch U Dozer

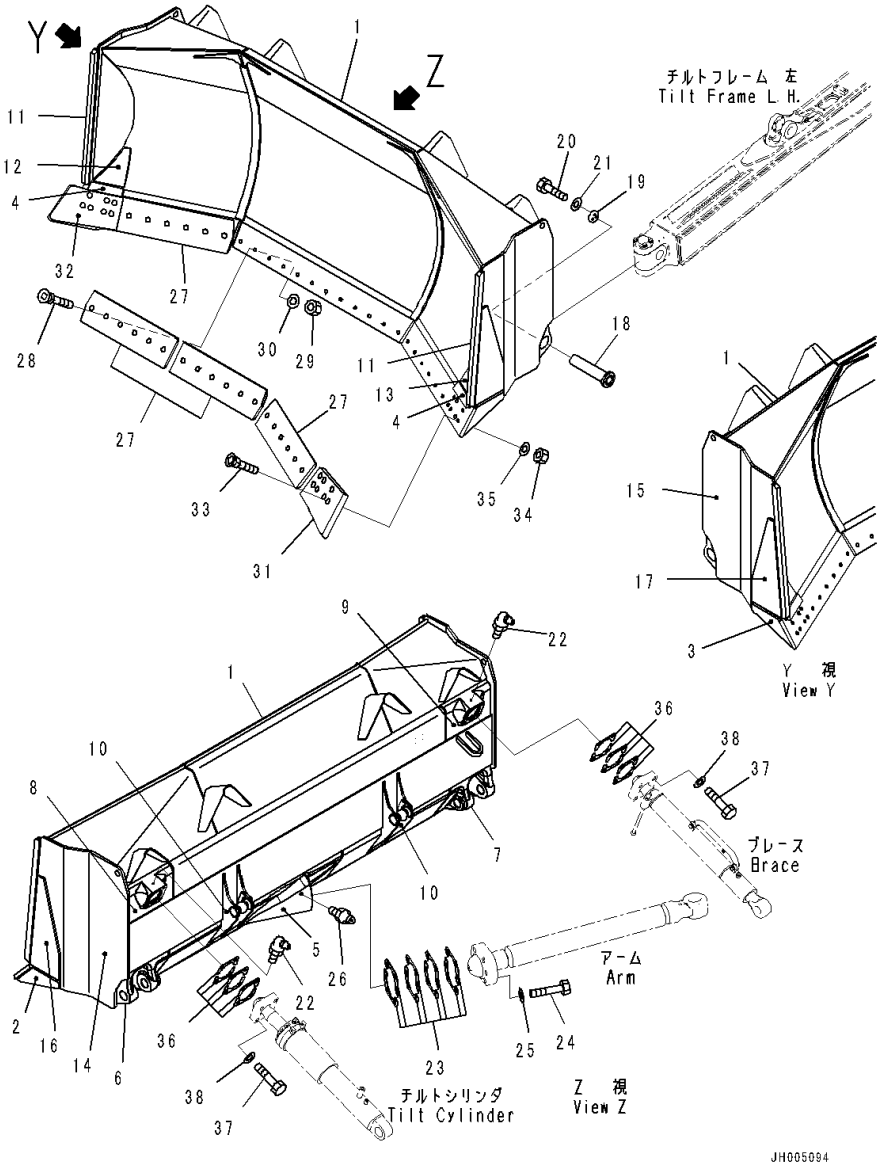

Index	Code	Part Number	Description	Qty	Serial Number
	C1		• Shim, T=1.0mm	4	81147-
	C1		• Shim, T=2.3mm	2	81147-
37		01011-62700	Bolt	8	81147-
38		01643-32780	Washer	8	81147-

FIG. T2120-038001 Dozer Blade, Strengthened U Dozer, Strengthened Dual Tilt Pitch U Dozer

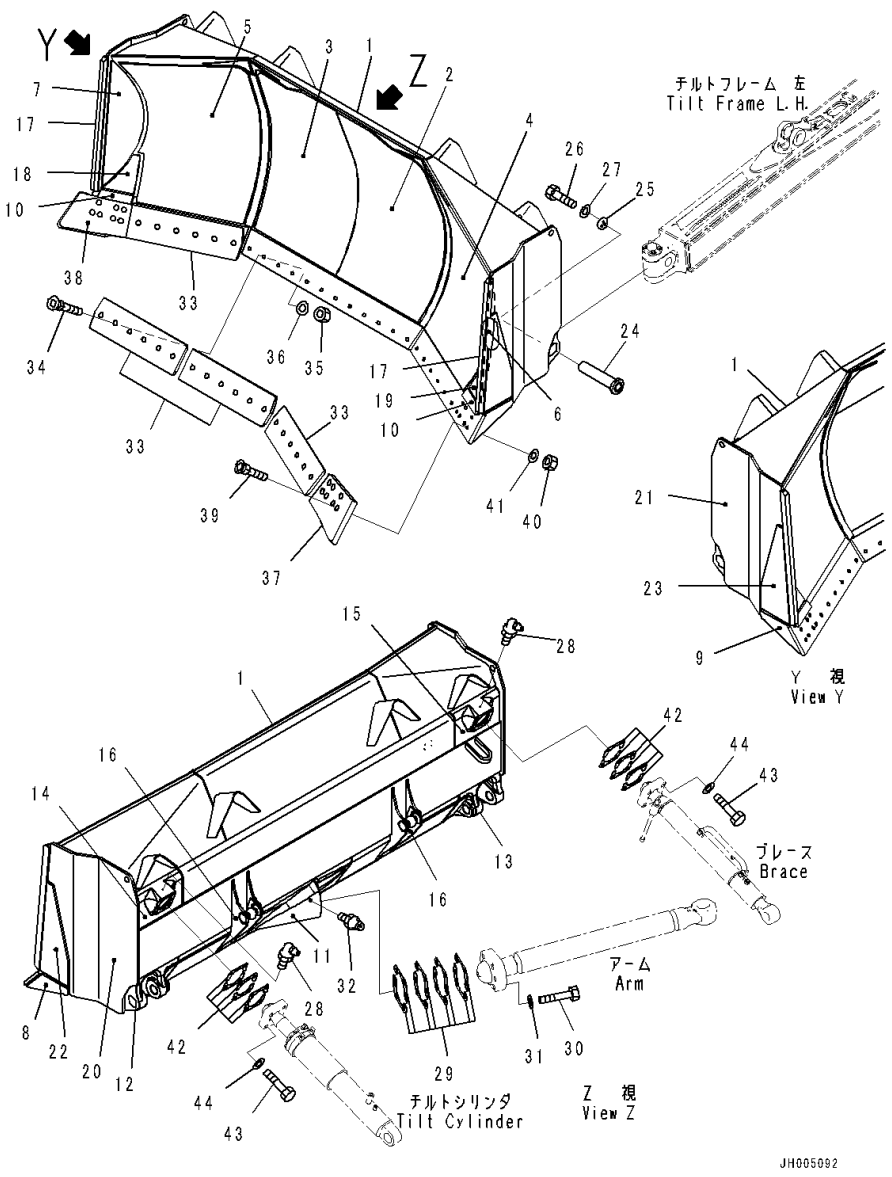

Index	Code	Part Number	Description	Qty	Serial Number
1		17A-72-42123	Blade	1	81147-
2		17A-72-42130	• Plate,Welded	1	81147-
3		17A-72-42140	• Plate,Welded	1	81147-
4		17A-72-42150	• Plate,Welded	1	81147-
5		17A-72-42160	• Plate,Welded	1	81147-
6		17A-72-42170	• Plate,Welded	1	81147-
7		17A-72-42180	• Plate,Welded	1	81147-
8		175-72-22121	• Plate,Welded	1	81147-
9		175-72-22131	• Plate,Welded	1	81147-
10		175-72-31120	• Plate,Welded	2	81147-
11		17A-71-41142	• Bracket,Welded	1	81147-
12		17A-71-41153	• Bracket,Welded	1	81147-
13		17A-71-41163	• Bracket,Welded	1	81147-
14		17A-71-41171	• Pivot,Welded	1	81147-
15		17A-71-41181	• Pivot,Welded	1	81147-
16		17A-71-45151	• Bracket,Welded	2	81147-
17		17A-72-41120	• Plate,Welded	2	81147-
18		17A-72-41131	• Plate,Welded	1	81147-
19		17A-72-41141	• Plate,Welded	1	81147-
20		17A-72-42480	• Plate,Welded	1	81147-
21		17A-72-42490	• Plate,Welded	1	81147-
22		17A-72-41F40	• Plate,Welded	1	81147-
23		17A-72-41F50	• Plate,Welded	1	81147-
24		17A-71-51941	Pin	2	81147-
25		17A-71-48390	Plate	2	81147-
26		01010-81645	Bolt	6	81147-
27		01643-31645	Washer	6	81147-
28		07020-00675	Fitting, Grease	2	81147-
29		17A-71-00410	Shim Assembly	1	81147-
	C1		• Shim, T=2.0mm	2	81147-
	C1		• Shim, T=1.0mm	4	81147-
	C1		• Shim, T=0.5mm	4	81147-
30		01011-83335	Bolt	6	81147-
31		01643-33380	Washer	6	81147-
32		07020-00000	Fitting, Grease	1	81147-
33		175-72-21123	Edge	4	81147-
34		175-71-11454	Bolt	24	81147-
35		175-71-11530	Nut	24	81147-
36		01643-22245	Washer	24	81147-
37		175-70-21126	End Bit	1	81147-

FIG. T2120-038001 Dozer Blade, Strengthened U Dozer, Strengthened Dual Tilt Pitch U Dozer

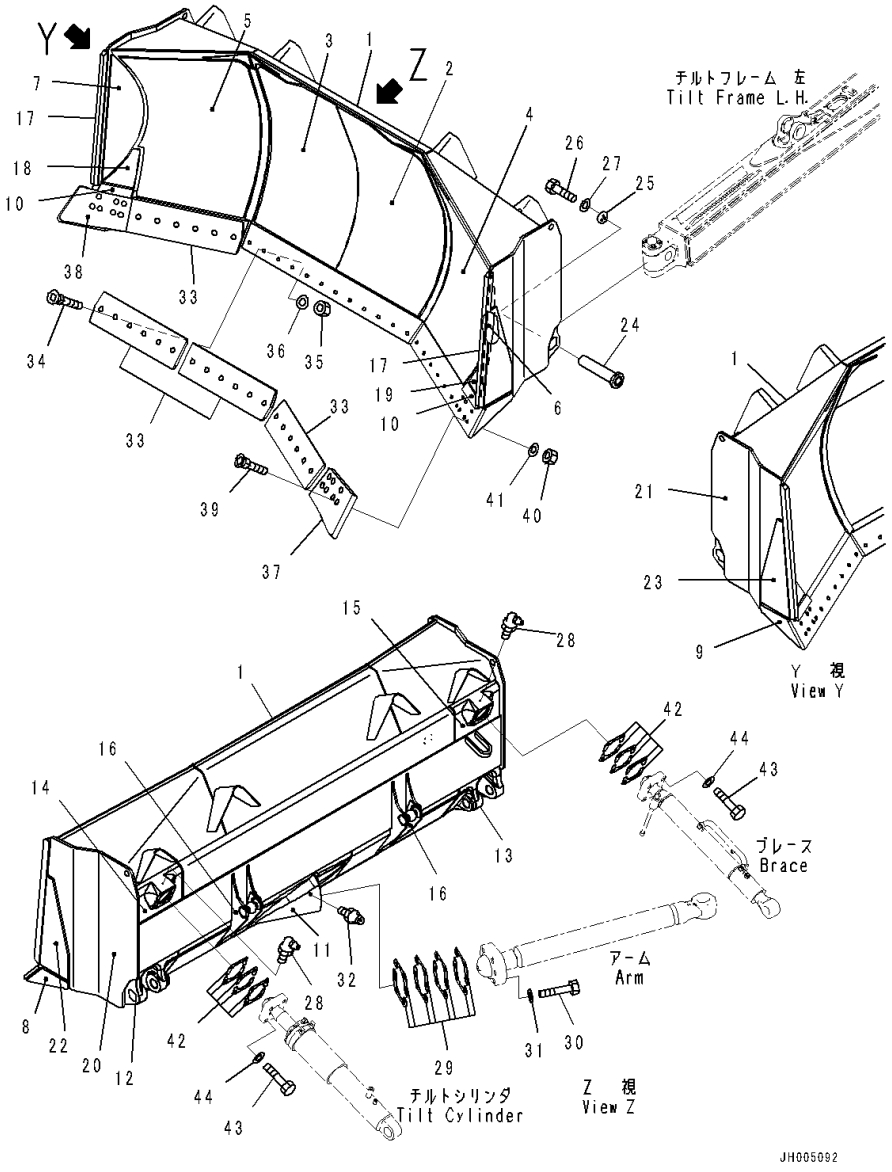

Index	Code	Part Number	Description	Qty	Serial Number
38		175-70-21136	End Bit	1	81147-
39		175-71-11463	Bolt	14	81147-
40		175-71-11530	Nut	14	81147-
41		01643-22245	Washer	14	81147-
42		17A-71-00420	Shim Assembly	2	81147-
	C1		• Shim, T=0.5mm	2	81147-
	C1		• Shim, T=1.0mm	4	81147-
	C1		• Shim, T=2.3mm	2	81147-
43		01011-62700	Bolt	8	81147-
44		01643-32780	Washer	8	81147-

FIG. T2120-039001 Dozer Blade, Blade

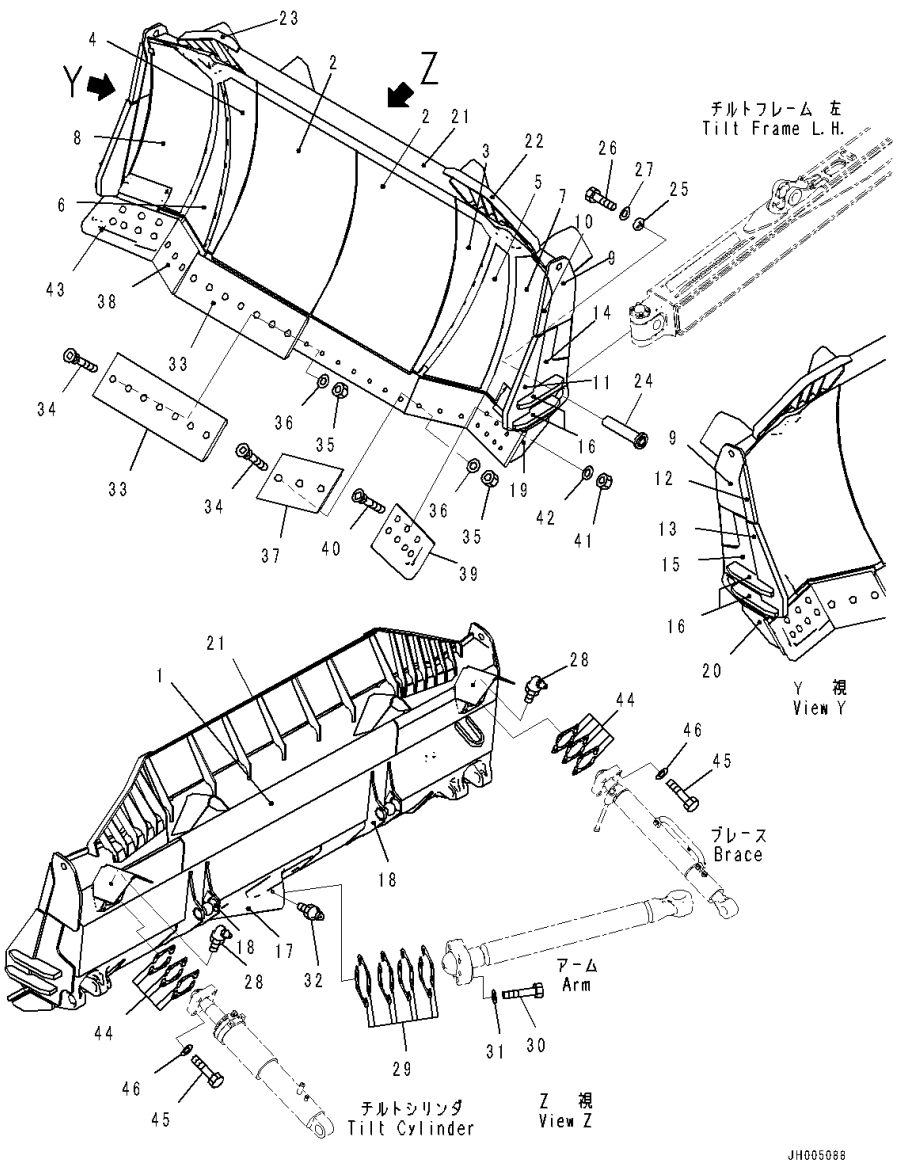

Index	Code	Part Number	Description	Qty	Serial Number
		Note: This list covers following specifications.			
		For Dual Tilt Pitch Dozer, SIGMADOZER, Strengthened			
		With Superhard Bit and Edge			
		Strengthened SIGMADOZER, With Superhard Bit and Edge			
1		17A-71-46114	Blade	1	81159-
2		17A-71-46121	• Plate,Welded	2	81159-
3		17A-71-46130	• Plate,Welded	1	81159-
4		17A-71-46140	• Plate,Welded	1	81159-
5		17A-71-46150	• Plate,Welded	1	81159-
6		17A-71-46160	• Plate,Welded	1	81159-
7		17A-71-46171	• Plate,Welded	1	81159-
8		17A-71-46181	• Plate,Welded	1	81159-
9		17A-71-45A91	• Plate,Welded	2	81159-
10		17A-71-46D10	• Plate,Welded	1	81159-
11		17A-71-46D50	• Plate,Welded	1	81159-
12		17A-71-46D20	• Plate,Welded	1	81159-
13		17A-71-46D60	• Plate,Welded	1	81159-
14		17A-71-45D31	• Plate,Welded	1	81159-
15		17A-71-45D41	• Plate,Welded	1	81159-
16		17A-71-46D70	• Plate,Welded	4	81159-
17		17A-71-45141	• Bracket,Welded	1	81159-
18		17A-71-45151	• Bracket,Welded	2	81159-
19		17A-71-45192	• Plate,Welded	1	81159-
20		17A-71-45292	• Plate,Welded	1	81159-
21		17A-71-45923	• Spill Guard,Welded	1	81159-
22		17A-71-45933	• Spill Guard,Welded	1	81159-
23		17A-71-45943	• Spill Guard,Welded	1	81159-
24		17A-71-51941	Pin	2	81159-
25		17A-71-48390	Plate	2	81159-
26		01010-81645	Bolt	6	81159-
27		01643-31645	Washer	6	81159-
28		07020-00675	Fitting, Grease	2	81159-
29		17A-71-00410	Shim Assembly	1	81159-
	C1		• Shim, T=2.0mm	2	81159-
	C1		• Shim, T=1.0mm	4	81159-
	C1		• Shim, T=0.5mm	4	81159-
30		01011-83335	Bolt	6	81159-
31		01643-33380	Washer	6	81159-
32		07020-00000	Fitting, Grease	1	81159-
33		17A-71-45210	Cutting Edge	2	81159-

FIG. T2120-039001 Dozer Blade, Blade

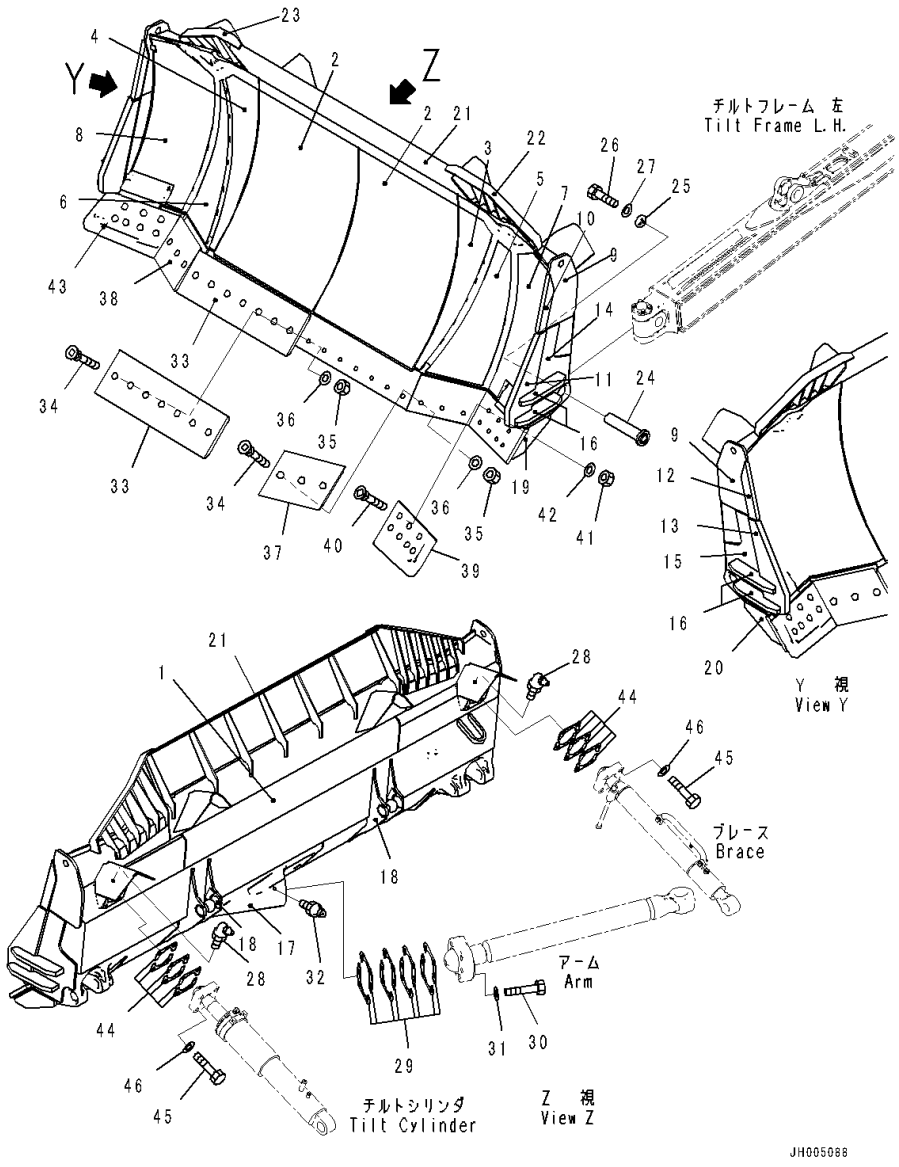

Index	Code	Part Number	Description	Qty	Serial Number
34		17A-71-12451	Bolt	20	81159-
35		17M-71-21530	Nut	20	81159-
36		01643-22460	Washer	20	81159-
37		17A-71-46670	Cutting Edge	1	81159-
38		17A-71-46680	Cutting Edge	1	81159-
39		17A-71-46611	End Bit	1	81159-
40		17A-71-12451	Bolt	14	81159-
41		17M-71-21530	Nut	14	81159-
42		01643-22460	Washer	14	81159-
43		17A-71-46621	End Bit	1	81159-
44		17A-71-00420	Shim Assembly	2	81159-
	C1		• Shim, T=0.5mm	2	81159-
	C1		• Shim, T=1.0mm	4	81159-
	C1		• Shim, T=2.3mm	2	81159-
45		01011-62700	Bolt	8	81159-
46		01643-32780	Washer	8	81159-

FIG. T2120-041001 Dozer Blade, For Dual Tilt Pitch Dozer, SIGMADOZER, Strengthened With Push Plate, With Superhard Bit and Edge

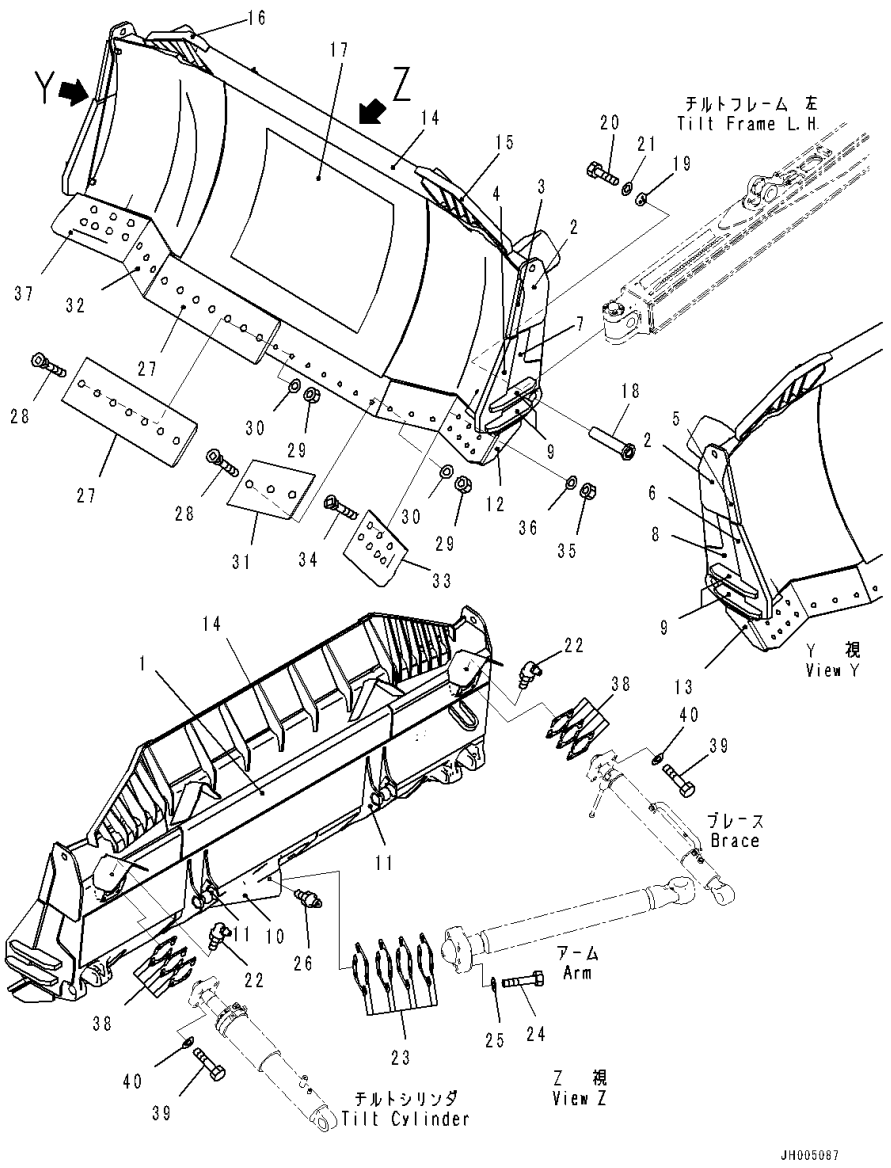

Index	Code	Part Number	Description	Qty	Serial Number
1		17A-937-4512	Blade	1	81159-
2		17A-71-45A91	• Plate,Welded	2	81159-
3		17A-71-46D10	• Plate,Welded	1	81159-
4		17A-71-46D50	• Plate,Welded	1	81159-
5		17A-71-46D20	• Plate,Welded	1	81159-
6		17A-71-46D60	• Plate,Welded	1	81159-
7		17A-71-45D31	• Plate,Welded	1	81159-
8		17A-71-45D41	• Plate,Welded	1	81159-
9		17A-71-46D70	• Plate,Welded	4	81159-
10		17A-71-45141	• Bracket,Welded	1	81159-
11		17A-71-45151	• Bracket,Welded	2	81159-
12		17A-71-45192	• Plate,Welded	1	81159-
13		17A-71-45292	• Plate,Welded	1	81159-
14		17A-71-45923	• Spill Guard,Welded	1	81159-
15		17A-71-45933	• Spill Guard,Welded	1	81159-
16		17A-71-45943	• Spill Guard,Welded	1	81159-
17		17A-937-4520	• Plate,Welded	1	81159-
18		17A-71-51941	Pin	2	81159-
19		17A-71-48390	Plate	2	81159-
20		01010-81645	Bolt	6	81159-
21		01643-31645	Washer	6	81159-
22		07020-00675	Fitting, Grease	2	81159-
23		17A-71-00410	Shim Assembly	1	81159-
	C1		• Shim, T=2.0mm	2	81159-
	C1		• Shim, T=1.0mm	4	81159-
	C1		• Shim, T=0.5mm	4	81159-
24		01011-83335	Bolt	6	81159-
25		01643-33380	Washer	6	81159-
26		07020-00000	Fitting, Grease	1	81159-
27		17A-71-45210	Cutting Edge	2	81159-
28		17A-71-12451	Bolt	20	81159-
29		17M-71-21530	Nut	20	81159-
30		01643-22460	Washer	20	81159-
31		17A-71-46670	Cutting Edge	1	81159-
32		17A-71-46680	Cutting Edge	1	81159-
33		17A-71-46611	End Bit	1	81159-
34		17A-71-12451	Bolt	14	81159-
35		17M-71-21530	Nut	14	81159-
36		01643-22460	Washer	14	81159-

FIG. T2120-041001 Dozer Blade, For Dual Tilt Pitch Dozer, SIGMADOZER, Strengthened With Push Plate, With Superhard Bit and Edge

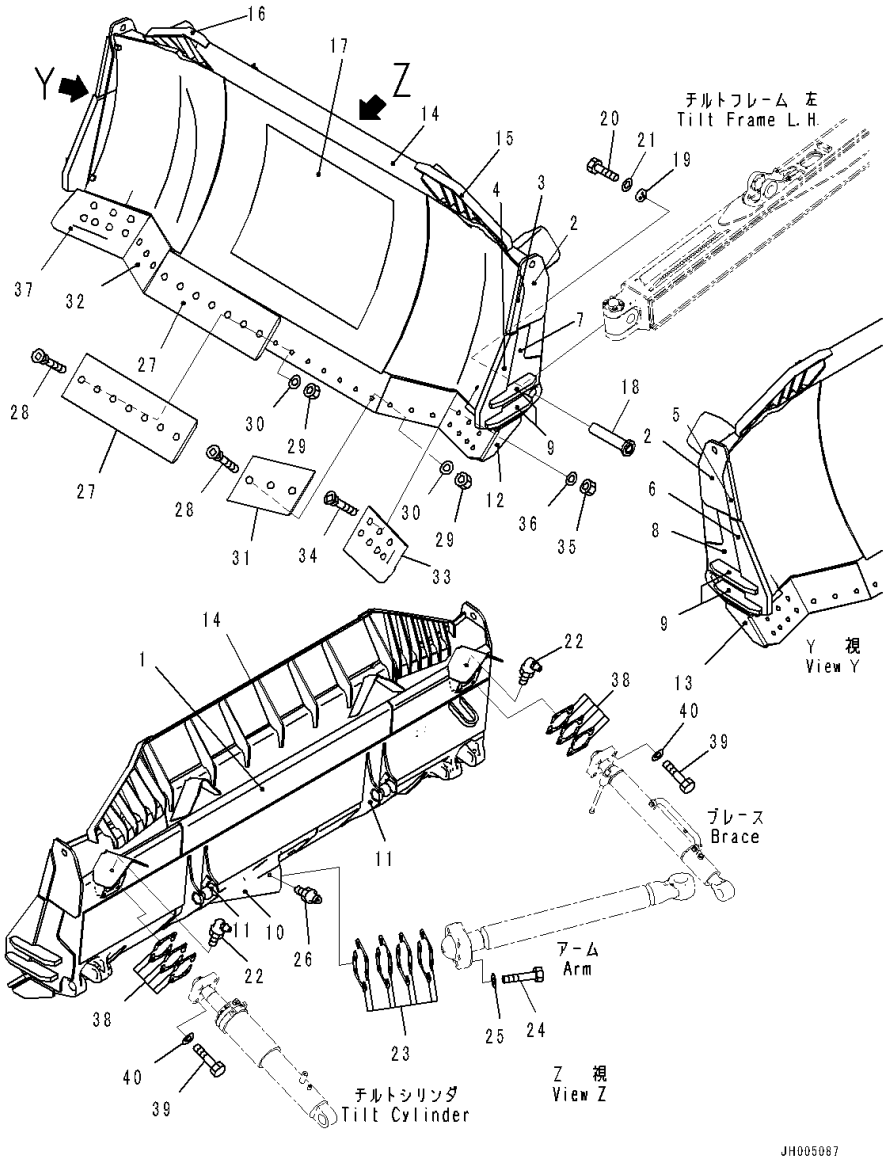

Index	Code	Part Number	Description	Qty	Serial Number
37		17A-71-46621	End Bit	1	81159-
38		17A-71-00420	Shim Assembly	2	81159-
	C1		• Shim, T=0.5mm	2	81159-
	C1		• Shim, T=1.0mm	4	81159-
	C1		• Shim, T=2.3mm	2	81159-
39		01011-62700	Bolt	8	81159-
40		01643-32780	Washer	8	81159-

FIG. T2120-042002 Dozer Blade, Spacer

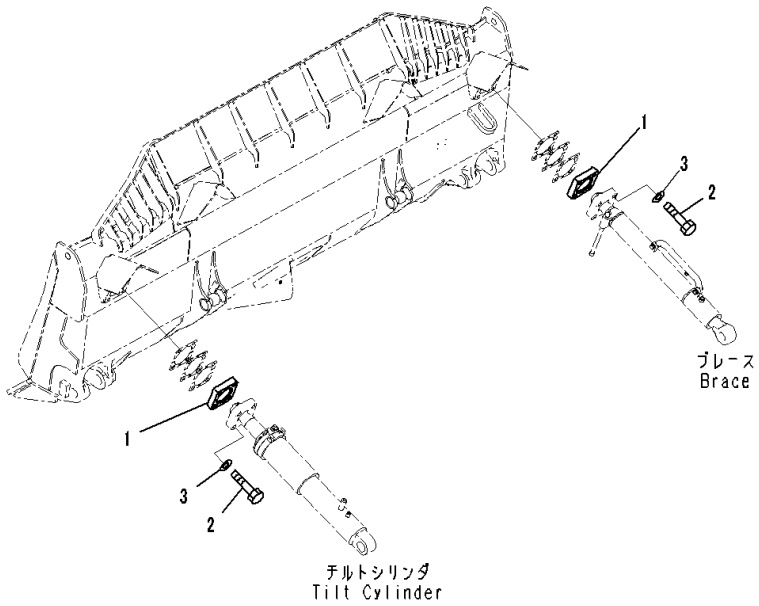

Index	Code	Part Number	Description	Qty	Serial Number
		Note: This list covers following specifications.			
		Strengthened SIGMADOZER, With Pusher Plate, Superhard Bit and Edge			
		Strengthened SIGMADOZER, With Superhard Bit and Edge			
		SIGMADOZER, With Superhard Bit and Edge			
		SIGMADOZER, With Pusher Plate, Superhard Bit and Edge			
		SIGMADOZER, With Pusher Plate			
		SIGMADOZER			
1		17A-71-45980	Spacer	2	81159-
2		01011-62740	Bolt	8	81159-
3		01643-32780	Washer	8	81159-

FIG. T2120-044001 Dozer Blade, SIGMADOZER, With Superhard Bit and Edge, Blade

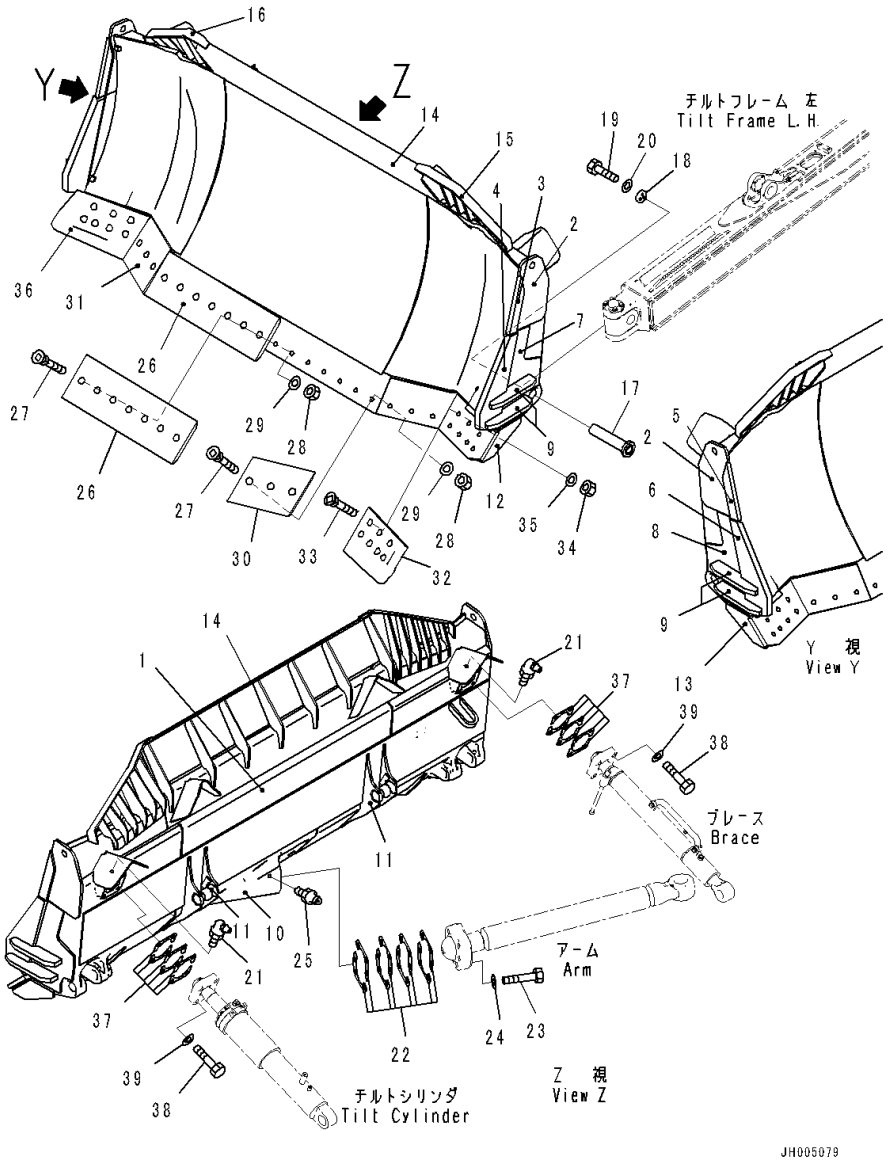

Index	Code	Part Number	Description	Qty	Serial Number
1		17A-71-45914	Blade	1	81159-
2		17A-71-45A91	• Plate,Welded	2	81159-
3		17A-71-46D10	• Plate,Welded	1	81159-
4		17A-71-46D50	• Plate,Welded	1	81159-
5		17A-71-46D20	• Plate,Welded	1	81159-
6		17A-71-46D60	• Plate,Welded	1	81159-
7		17A-71-45D31	• Plate,Welded	1	81159-
8		17A-71-45D41	• Plate,Welded	1	81159-
9		17A-71-46D70	• Plate,Welded	4	81159-
10		17A-71-45141	• Bracket,Welded	1	81159-
11		17A-71-45151	• Bracket,Welded	2	81159-
12		17A-71-45192	• Plate,Welded	1	81159-
13		17A-71-45292	• Plate,Welded	1	81159-
14		17A-71-45923	• Spill Guard,Welded	1	81159-
15		17A-71-45933	• Spill Guard,Welded	1	81159-
16		17A-71-45943	• Spill Guard,Welded	1	81159-
17		17A-71-51941	Pin	2	81159-
18		17A-71-48390	Plate	2	81159-
19		01010-81645	Bolt	6	81159-
20		01643-31645	Washer	6	81159-
21		07020-00675	Fitting, Grease	2	81159-
22		17A-71-00410	Shim Assembly	1	81159-
	C1		• Shim, T=2.0mm	2	81159-
	C1		• Shim, T=1.0mm	4	81159-
	C1		• Shim, T=0.5mm	4	81159-
23		01011-83335	Bolt	6	81159-
24		01643-33380	Washer	6	81159-
25		07020-00000	Fitting, Grease	1	81159-
26		17A-71-45210	Cutting Edge	2	81159-
27		17A-71-12451	Bolt	20	81159-
28		17M-71-21530	Nut	20	81159-
29		01643-22460	Washer	20	81159-
30		17A-71-46670	Cutting Edge	1	81159-
31		17A-71-46680	Cutting Edge	1	81159-
32		17A-71-46611	End Bit	1	81159-
33		17A-71-12451	Bolt	14	81159-
34		17M-71-21530	Nut	14	81159-
35		01643-22460	Washer	14	81159-
36		17A-71-46621	End Bit	1	81159-
37		17A-71-00420	Shim Assembly	2	81159-

FIG. T2120-044001 Dozer Blade, SIGMADOZER, With Superhard Bit and Edge, Blade

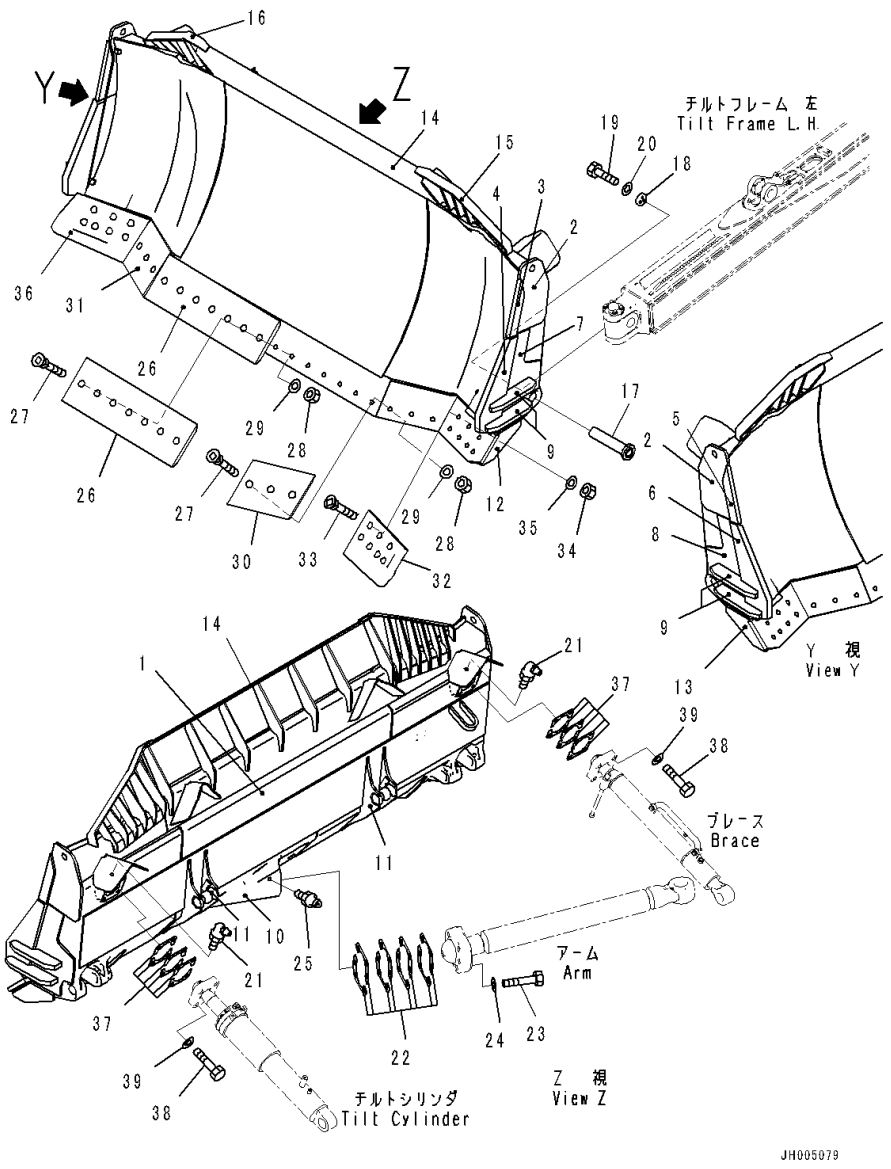

Index	Code	Part Number	Description	Qty	Serial Number
	C1		• Shim, T=0.5mm	2	81159-
	C1		• Shim, T=1.0mm	4	81159-
	C1		• Shim, T=2.3mm	2	81159-
38		01011-62700	Bolt	8	81159-
39		01643-32780	Washer	8	81159-

FIG. T2120-045001 Dozer Blade, SIGMADOZER, With Pusher Plate, Superhard Bit and Edge, Blade

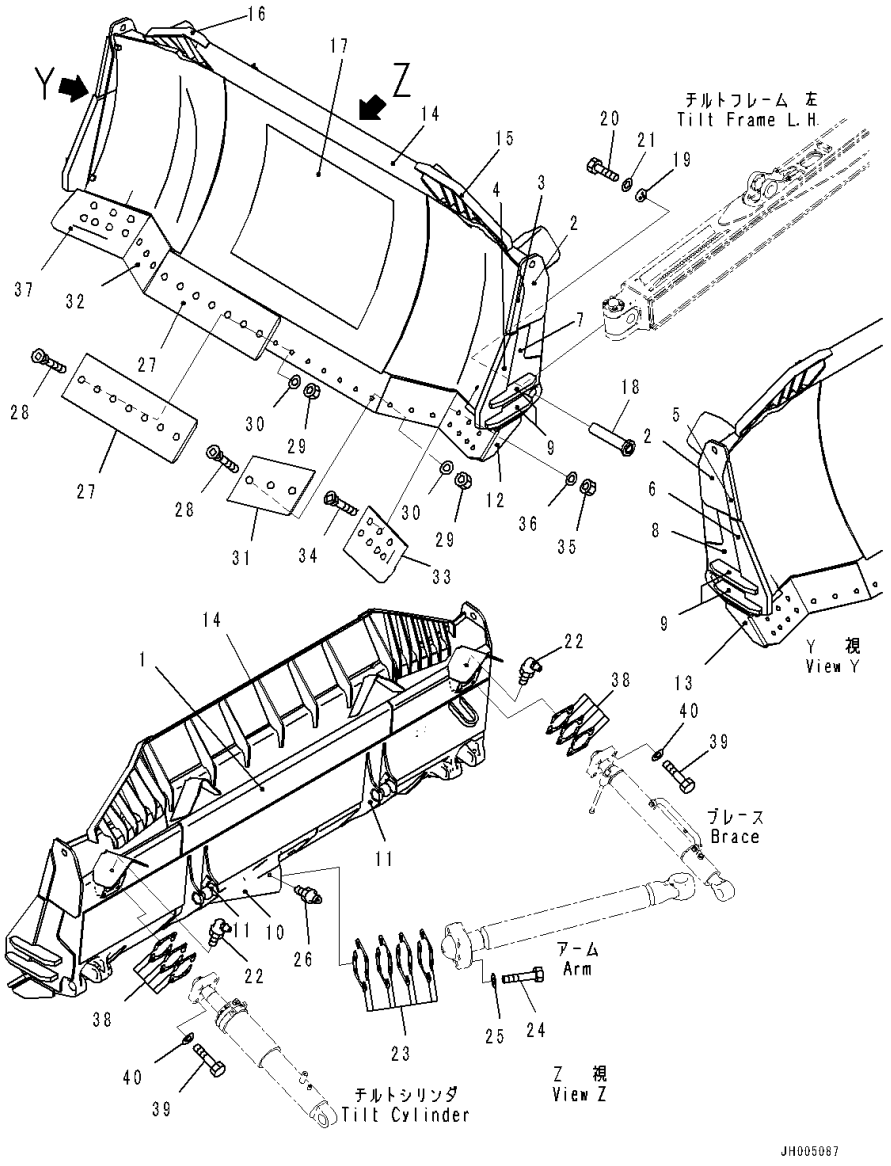

Index	Code	Part Number	Description	Qty	Serial Number
1		17A-937-4512	Blade	1	81159-
2		17A-71-45A91	• Plate,Welded	2	81159-
3		17A-71-46D10	• Plate,Welded	1	81159-
4		17A-71-46D50	• Plate,Welded	1	81159-
5		17A-71-46D20	• Plate,Welded	1	81159-
6		17A-71-46D60	• Plate,Welded	1	81159-
7		17A-71-45D31	• Plate,Welded	1	81159-
8		17A-71-45D41	• Plate,Welded	1	81159-
9		17A-71-46D70	• Plate,Welded	4	81159-
10		17A-71-45141	• Bracket,Welded	1	81159-
11		17A-71-45151	• Bracket,Welded	2	81159-
12		17A-71-45192	• Plate,Welded	1	81159-
13		17A-71-45292	• Plate,Welded	1	81159-
14		17A-71-45923	• Spill Guard,Welded	1	81159-
15		17A-71-45933	• Spill Guard,Welded	1	81159-
16		17A-71-45943	• Spill Guard,Welded	1	81159-
17		17A-937-4520	• Plate,Welded	1	81159-
18		17A-71-51941	Pin	2	81159-
19		17A-71-48390	Plate	2	81159-
20		01010-81645	Bolt	6	81159-
21		01643-31645	Washer	6	81159-
22		07020-00675	Fitting, Grease	2	81159-
23		17A-71-00410	Shim Assembly	1	81159-
	C1		• Shim, T=2.0mm	2	81159-
	C1		• Shim, T=1.0mm	4	81159-
	C1		• Shim, T=0.5mm	4	81159-
24		01011-83335	Bolt	6	81159-
25		01643-33380	Washer	6	81159-
26		07020-00000	Fitting, Grease	1	81159-
27		17A-71-45210	Cutting Edge	2	81159-
28		17A-71-12451	Bolt	20	81159-
29		17M-71-21530	Nut	20	81159-
30		01643-22460	Washer	20	81159-
31		17A-71-46670	Cutting Edge	1	81159-
32		17A-71-46680	Cutting Edge	1	81159-
33		17A-71-46611	End Bit	1	81159-
34		17A-71-12451	Bolt	14	81159-
35		17M-71-21530	Nut	14	81159-
36		01643-22460	Washer	14	81159-
37		17A-71-46621	End Bit	1	81159-

FIG. T2120-045001 Dozer Blade, SIGMADOZER, With Pusher Plate, Superhard Bit and Edge, Blade

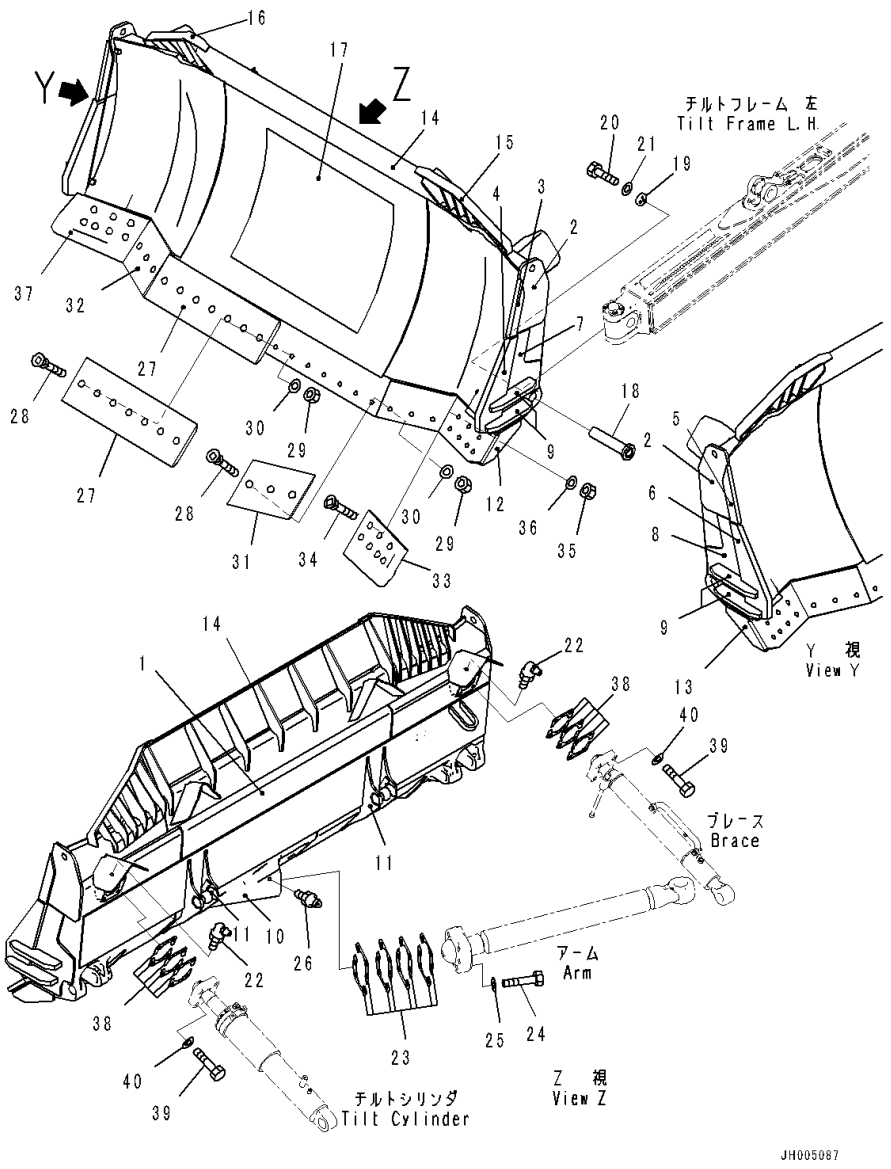

Index	Code	Part Number	Description	Qty	Serial Number
38		17A-71-00420	Shim Assembly	2	81159-
	C1		• Shim, T=0.5mm	2	81159-
	C1		• Shim, T=1.0mm	4	81159-
	C1		• Shim, T=2.3mm	2	81159-
39		01011-62700	Bolt	8	81159-
40		01643-32780	Washer	8	81159-

FIG. T2120-046001 Dozer Blade, SIGMADOZER, With Pusher Plate, Blade

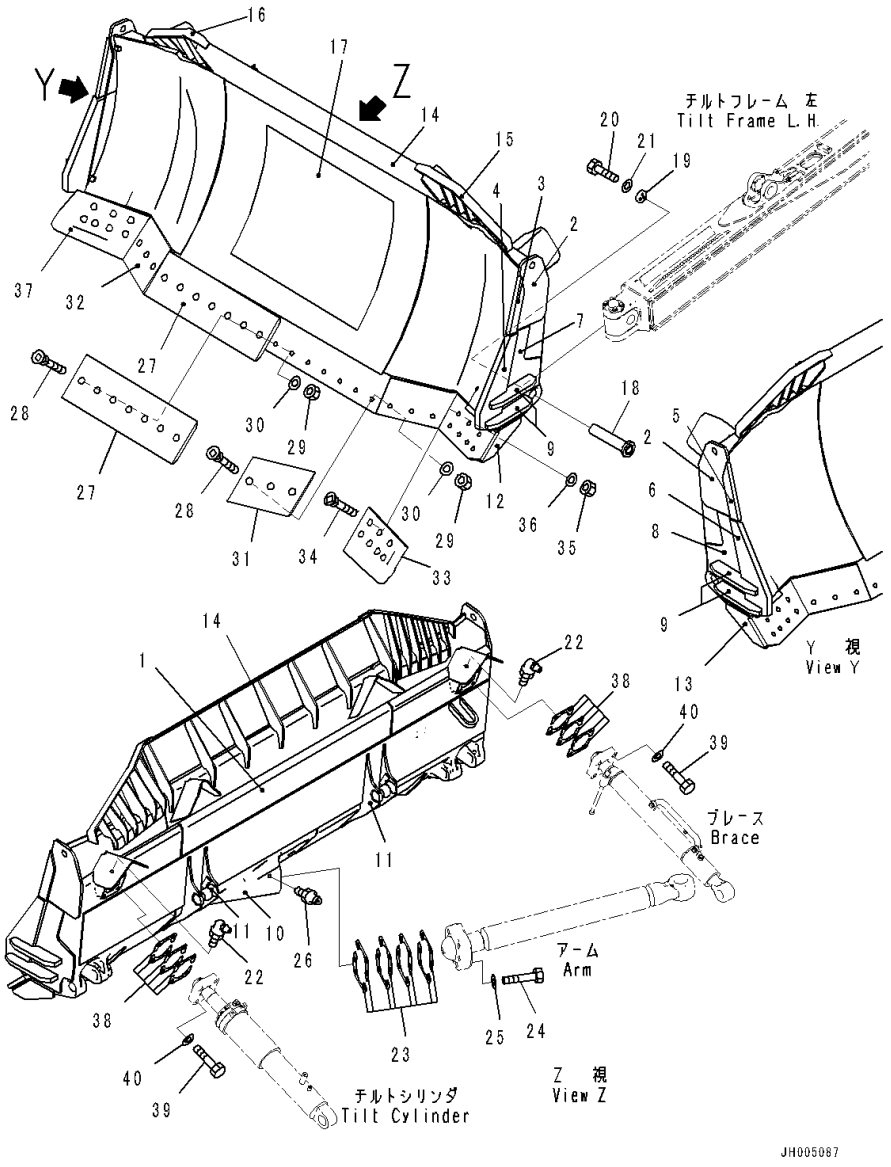

Index	Code	Part Number	Description	Qty	Serial Number
1		17A-937-4512	Blade	1	81159-
2		17A-71-45A91	• Plate,Welded	2	81159-
3		17A-71-46D10	• Plate,Welded	1	81159-
4		17A-71-46D50	• Plate,Welded	1	81159-
5		17A-71-46D20	• Plate,Welded	1	81159-
6		17A-71-46D60	• Plate,Welded	1	81159-
7		17A-71-45D31	• Plate,Welded	1	81159-
8		17A-71-45D41	• Plate,Welded	1	81159-
9		17A-71-46D70	• Plate,Welded	4	81159-
10		17A-71-45141	• Bracket,Welded	1	81159-
11		17A-71-45151	• Bracket,Welded	2	81159-
12		17A-71-45192	• Plate,Welded	1	81159-
13		17A-71-45292	• Plate,Welded	1	81159-
14		17A-71-45923	• Spill Guard,Welded	1	81159-
15		17A-71-45933	• Spill Guard,Welded	1	81159-
16		17A-71-45943	• Spill Guard,Welded	1	81159-
17		17A-937-4520	• Plate,Welded	1	81159-
18		17A-71-51941	Pin	2	81159-
19		17A-71-48390	Plate	2	81159-
20		01010-81645	Bolt	6	81159-
21		01643-31645	Washer	6	81159-
22		07020-00675	Fitting, Grease	2	81159-
23		17A-71-00410	Shim Assembly	1	81159-
	C1		• Shim, T=2.0mm	2	81159-
	C1		• Shim, T=1.0mm	4	81159-
	C1		• Shim, T=0.5mm	4	81159-
24		01011-83335	Bolt	6	81159-
25		01643-33380	Washer	6	81159-
26		07020-00000	Fitting, Grease	1	81159-
27		17A-71-45210	Cutting Edge	2	81159-
28		17A-71-12451	Bolt	20	81159-
29		17M-71-21530	Nut	20	81159-
30		01643-22460	Washer	20	81159-
31		17A-71-45220	Cutting Edge	1	81159-
32		17A-71-45230	Cutting Edge	1	81159-
33		17A-71-45712	End Bit	1	81159-
34		17A-71-12451	Bolt	14	81159-
35		17M-71-21530	Nut	14	81159-
36		01643-22460	Washer	14	81159-
37		17A-71-45722	End Bit	1	81159-

FIG. T2120-046001 Dozer Blade, SIGMADOZER, With Pusher Plate, Blade

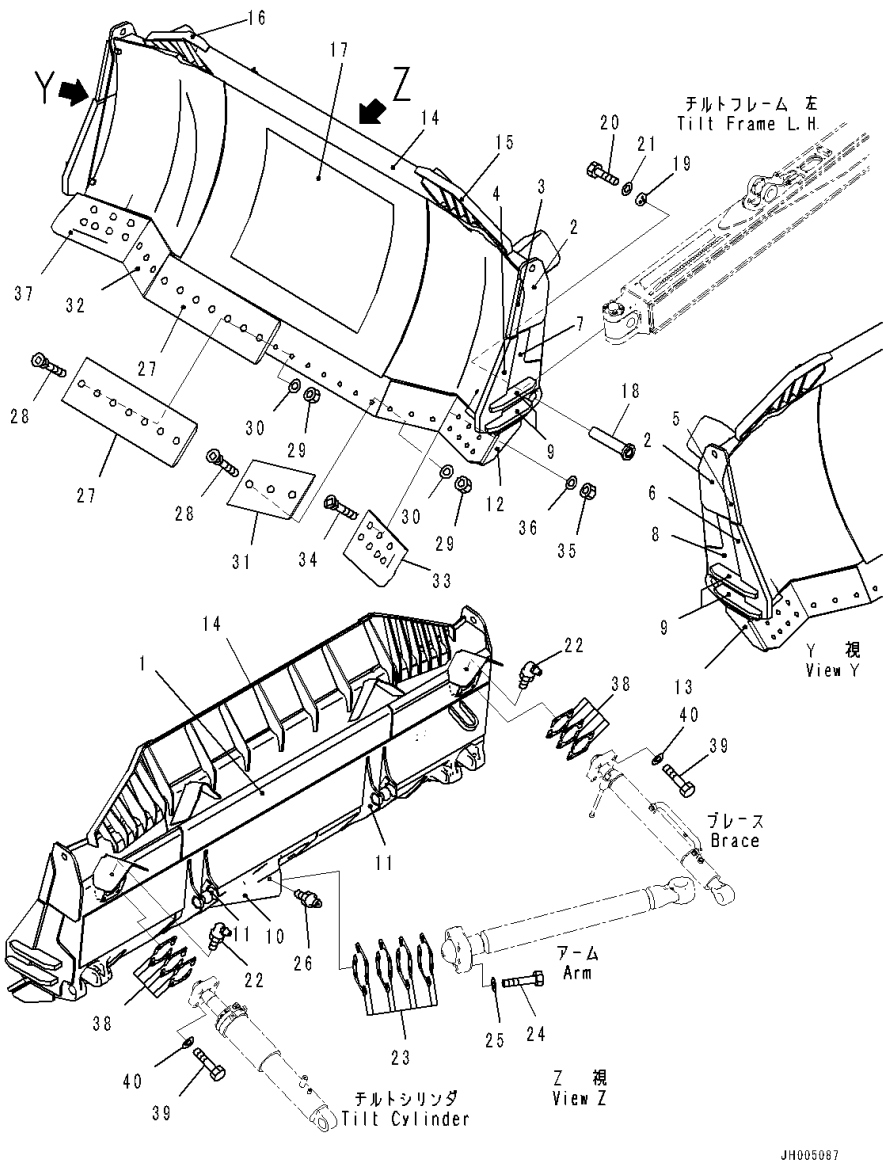

Index	Code	Part Number	Description	Qty	Serial Number
38		17A-71-00420	Shim Assembly	2	81159-
	C1		• Shim, T=0.5mm	2	81159-
	C1		• Shim, T=1.0mm	4	81159-
	C1		• Shim, T=2.3mm	2	81159-
39		01011-62700	Bolt	8	81159-
40		01643-32780	Washer	8	81159-

FIG. T2120-047001 Dozer Blade, SIGMADOZER, Blade

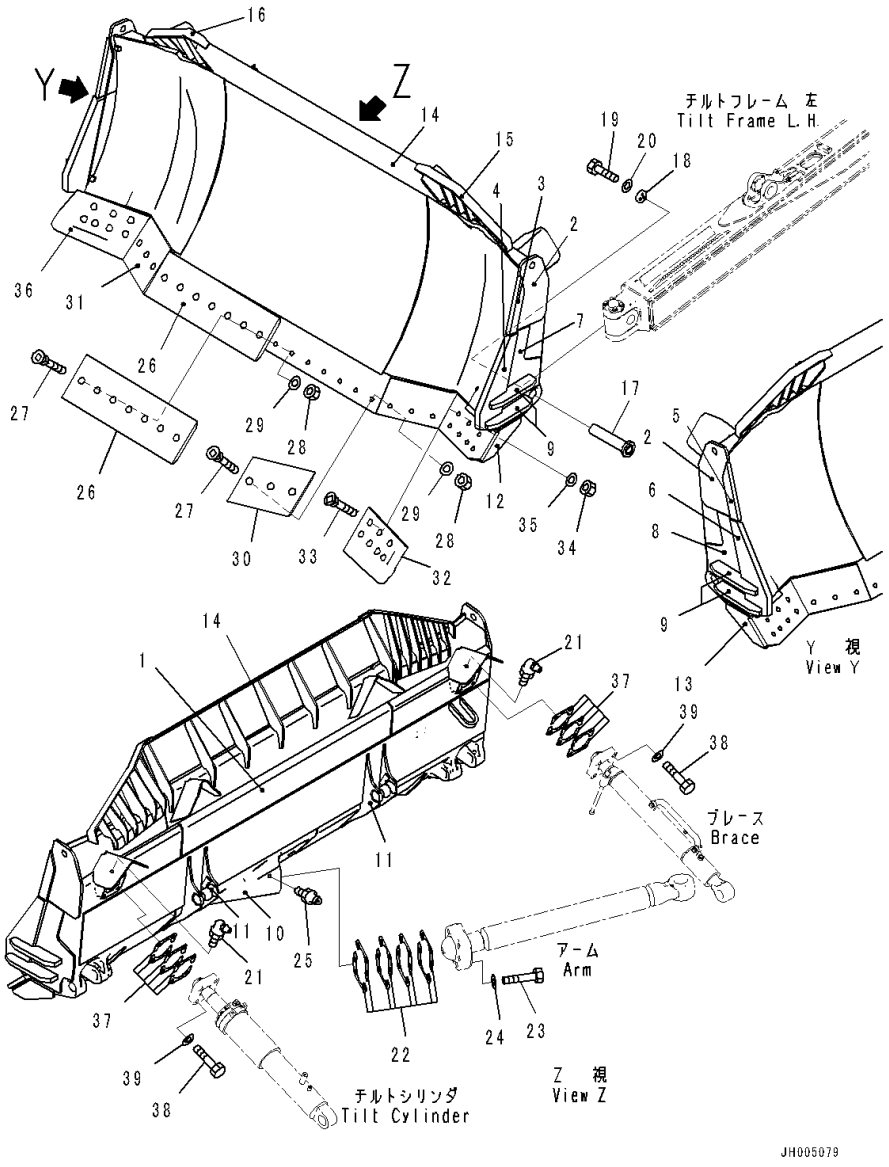

Index	Code	Part Number	Description	Qty	Serial Number
1		17A-71-45914	Blade	1	81159-
2		17A-71-45A91	• Plate,Welded	2	81159-
3		17A-71-46D10	• Plate,Welded	1	81159-
4		17A-71-46D50	• Plate,Welded	1	81159-
5		17A-71-46D20	• Plate,Welded	1	81159-
6		17A-71-46D60	• Plate,Welded	1	81159-
7		17A-71-45D31	• Plate,Welded	1	81159-
8		17A-71-45D41	• Plate,Welded	1	81159-
9		17A-71-46D70	• Plate,Welded	4	81159-
10		17A-71-45141	• Bracket,Welded	1	81159-
11		17A-71-45151	• Bracket,Welded	2	81159-
12		17A-71-45192	• Plate,Welded	1	81159-
13		17A-71-45292	• Plate,Welded	1	81159-
14		17A-71-45923	• Spill Guard,Welded	1	81159-
15		17A-71-45933	• Spill Guard,Welded	1	81159-
16		17A-71-45943	• Spill Guard,Welded	1	81159-
17		17A-71-51941	Pin	2	81159-
18		17A-71-48390	Plate	2	81159-
19		01010-81645	Bolt	6	81159-
20		01643-31645	Washer	6	81159-
21		07020-00675	Fitting, Grease	2	81159-
22		17A-71-00410	Shim Assembly	1	81159-
	C1		• Shim, T=2.0mm	2	81159-
	C1		• Shim, T=1.0mm	4	81159-
	C1		• Shim, T=0.5mm	4	81159-
23		01011-83335	Bolt	6	81159-
24		01643-33380	Washer	6	81159-
25		07020-00000	Fitting, Grease	1	81159-
26		17A-71-45210	Cutting Edge	2	81159-
27		17A-71-12451	Bolt	20	81159-
28		17M-71-21530	Nut	20	81159-
29		01643-22460	Washer	20	81159-
30		17A-71-45220	Cutting Edge	1	81159-
31		17A-71-45230	Cutting Edge	1	81159-
32		17A-71-45712	End Bit	1	81159-
33		17A-71-12451	Bolt	14	81159-
34		17M-71-21530	Nut	14	81159-
35		01643-22460	Washer	14	81159-
36		17A-71-45722	End Bit	1	81159-
37		17A-71-00420	Shim Assembly	2	81159-

FIG. T2120-047001 Dozer Blade, SIGMADOZER, Blade

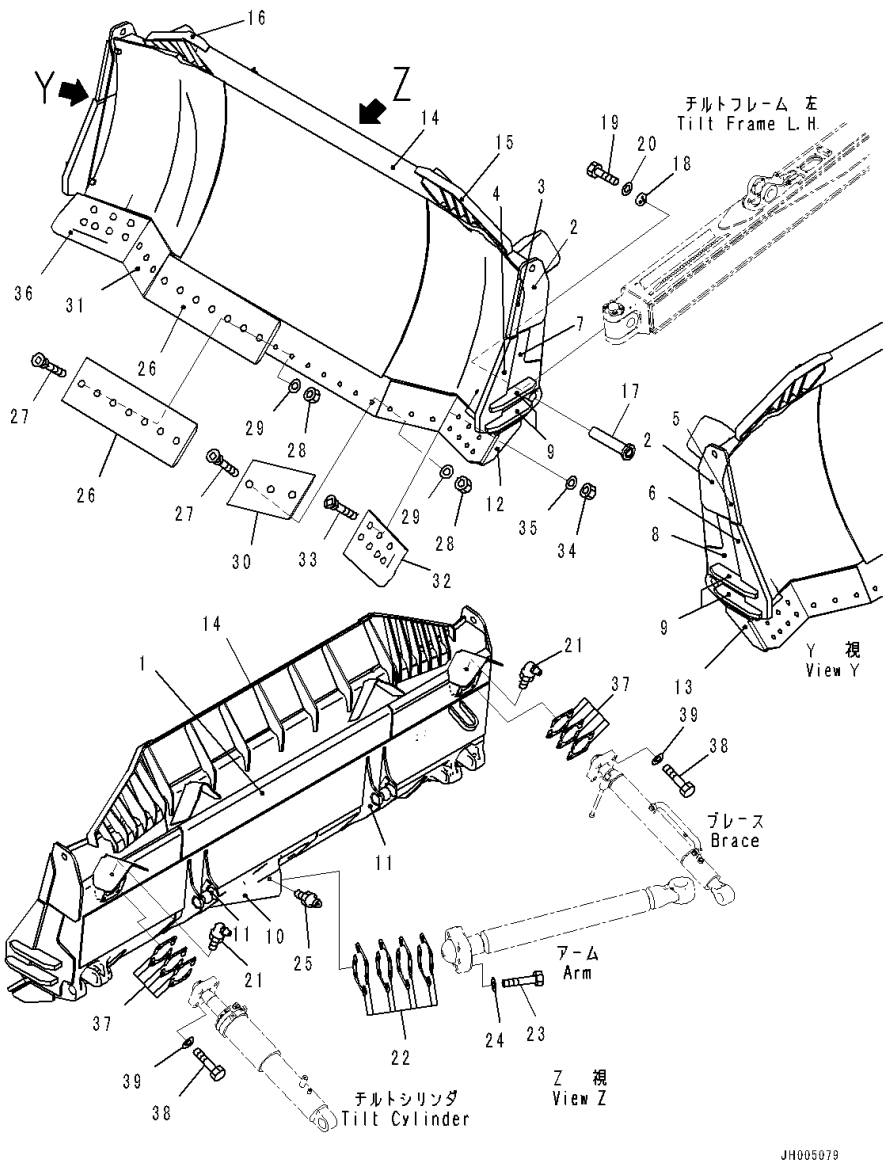

Index	Code	Part Number	Description	Qty	Serial Number
	C1		• Shim, T=0.5mm	2	81159-
	C1		• Shim, T=1.0mm	4	81159-
	C1		• Shim, T=2.3mm	2	81159-
38		01011-62700	Bolt	8	81159-
39		01643-32780	Washer	8	81159-

FIG. T2140-001001 Dozer Blade Lift Cylinder, LHS

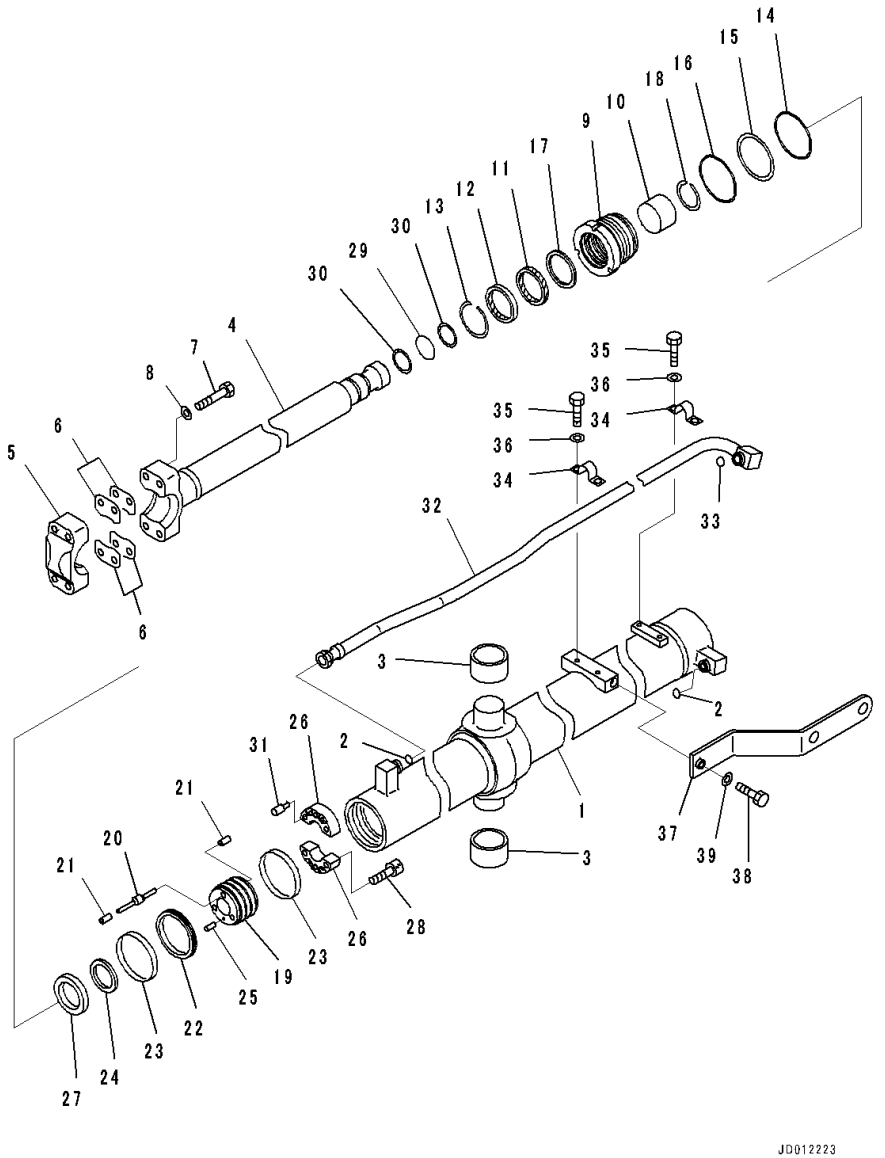

Index	Code	Part Number	Description	Qty	Serial Number
		707-02-00660	Cylinder Assembly,LHS	1	81028-
1		707-12-11140	• Cylinder	1	81028-
2		02896-11018	• O-ring, (Kit : K07)	2	81028-
3		175-63-12540	• Bushing	2	81028-
4		707-60-75070	• Rod, Piston	1	81028-
5		707-66-75020	• Cap	1	81028-
6		707-88-15010	• Shim, T=1.0mm	10	81028-
7		01011-81805	• Bolt	4	81028-
8		707-41-11840	• Washer	4	81028-
9		707-29-11980	• Head, Cylinder	1	81028-
10		707-52-90501	• Bushing	1	81028-
11		707-51-75030	• Packing, Rod, (Kit : K07)	1	81028-
12		707-56-75740	• Seal, Dust, (Kit : K07)	1	81028-
13		07179-13089	• Ring, Snap	1	81028-
14		07000-12105	• O-ring, (Kit : K07)	1	81028-
15		07146-02106	• Ring, Back-up, (Kit : K07)	1	81028-
16		07000-12110	• O-ring, (Kit : K07)	1	81028-
17		707-51-75640	• Ring, Buffer, (Kit : K07)	1	81028-
18		707-75-75110	• Ring, Snap	1	81028-
		707-91-01150	• Piston Assembly	1	81028-
19		707-37-11080	• • Piston	1	81028-
20		707-83-10270	• • Valve, L=77.5mm	3	81028-
21		707-84-10240	• • Seat, Valve	6	81028-
22		707-44-11150	• Ring, Piston, (Kit : K07)	1	81028-
23		07156-01112	• Ring, Wear, (Kit : K07)	2	81028-
24		707-40-11430	• Retainer	1	81028-
25		130-63-12761	• Pin	1	81028-
26		707-40-11270	• Spacer	2	81028-
27		707-69-11000	• Slider	1	81028-
28		01252-61235	• Bolt, Hexagon Socket Head	6	81028-
29		07000-12050	• O-ring, (Kit : K07)	1	81028-
30		07001-02050	• Ring, Back-up, (Kit : K07)	2	81028-
31		707-83-10073	• Valve	3	81028-
32		707-86-68060	Tube,LHS	1	81028-
33		02896-11018	O-ring, (Kit : K07)	1	81028-
34		07282-12793	Clamp	2	81028-
35		01010-81020	Bolt	4	81028-
36		01643-31032	Washer	4	81028-
37		707-88-02660	Plate	1	81028-
38		01010-81250	Bolt	1	81028-

FIG. T2140-001001 Dozer Blade Lift Cylinder, LHS

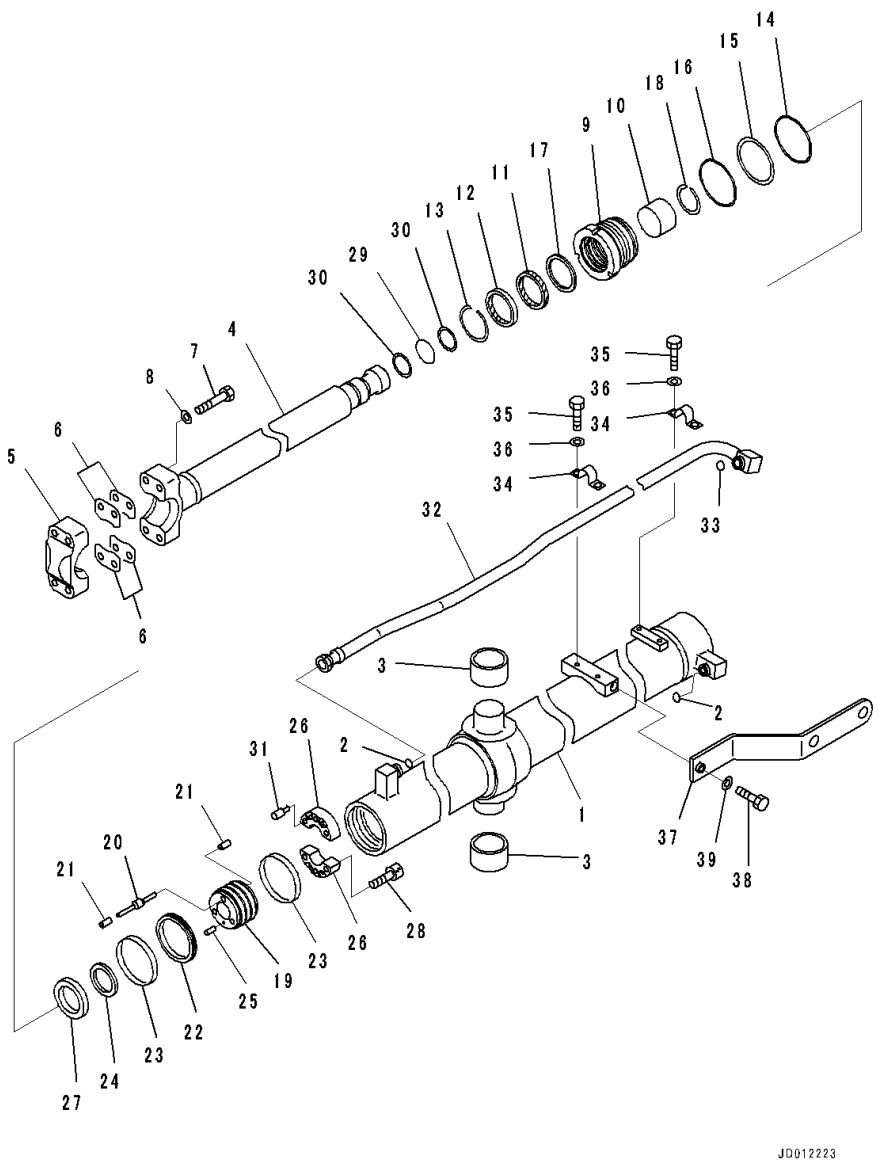

Index	Code	Part Number	Description	Qty	Serial Number
39		01643-31232	Washer	1	81028-

FIG. T2140-001002 Dozer Blade Lift Cylinder, RHS

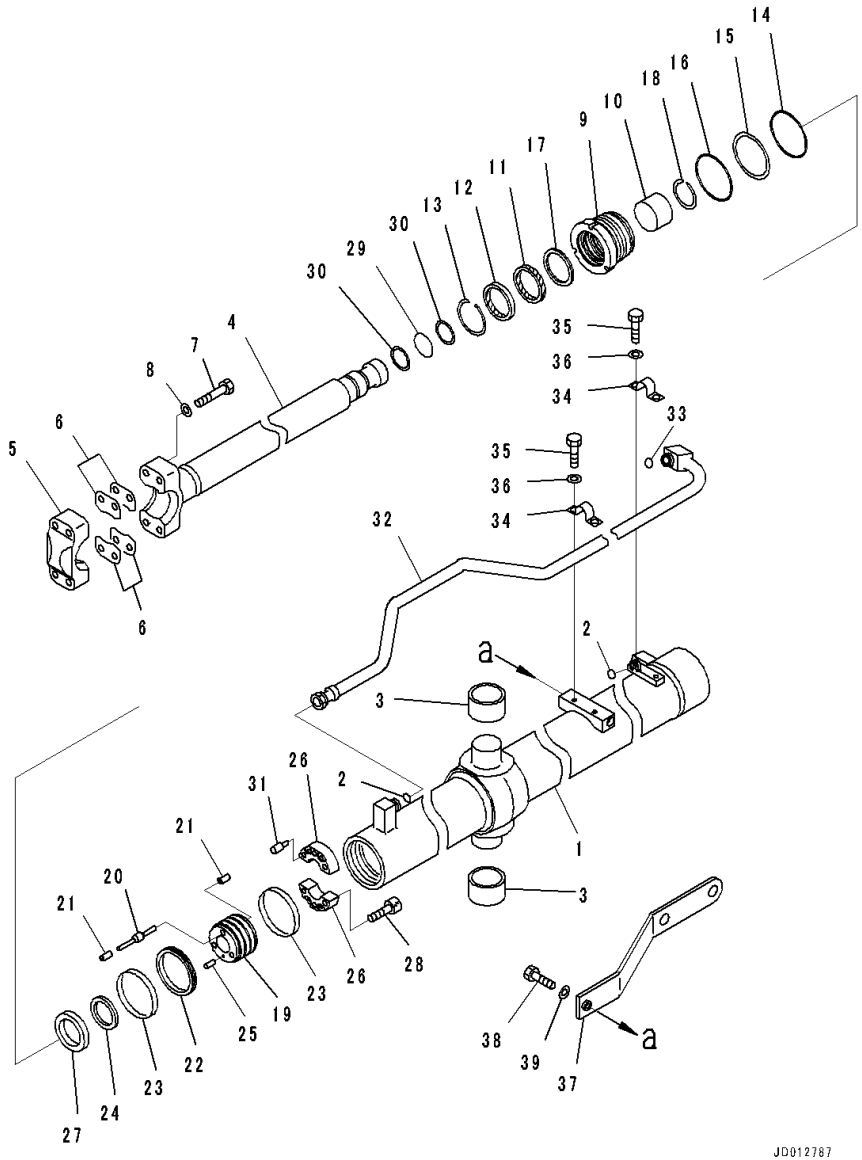

Index	Code	Part Number	Description	Qty	Serial Number
		707-02-00670	Cylinder Assembly,RHS	1	81028-
1		707-12-11150	• Cylinder	1	81028-
2		02896-11018	• O-ring, (Kit : K07)	2	81028-
3		175-63-12540	• Bushing	2	81028-
4		707-60-75070	• Rod, Piston	1	81028-
5		707-66-75020	• Cap	1	81028-
6		707-88-15010	• Shim, T=1.0mm	10	81028-
7		01011-81805	• Bolt	4	81028-
8		707-41-11840	• Washer	4	81028-
9		707-29-11980	• Head, Cylinder	1	81028-
10		707-52-90501	• Bushing	1	81028-
11		707-51-75030	• Packing, Rod, (Kit : K07)	1	81028-
12		707-56-75740	• Seal, Dust, (Kit : K07)	1	81028-
13		07179-13089	• Ring, Snap	1	81028-
14		07000-12105	• O-ring, (Kit : K07)	1	81028-
15		07146-02106	• Ring, Back-up, (Kit : K07)	1	81028-
16		07000-12110	• O-ring, (Kit : K07)	1	81028-
17		707-51-75640	• Ring, Buffer, (Kit : K07)	1	81028-
18		707-75-75110	• Ring, Snap	1	81028-
		707-91-01150	• Piston Assembly	1	81028-
19		707-37-11080	• • Piston	1	81028-
20		707-83-10270	• • Valve, L=77.5mm	3	81028-
21		707-84-10240	• • Seat, Valve	6	81028-
22		707-44-11150	• Ring, Piston, (Kit : K07)	1	81028-
23		07156-01112	• Ring, Wear, (Kit : K07)	2	81028-
24		707-40-11430	• Retainer	1	81028-
25		130-63-12761	• Pin	1	81028-
26		707-40-11270	• Spacer	2	81028-
27		707-69-11000	• Slider	1	81028-
28		01252-61235	• Bolt, Hexagon Socket Head	6	81028-
29		07000-12050	• O-ring, (Kit : K07)	1	81028-
30		07001-02050	• Ring, Back-up, (Kit : K07)	2	81028-
31		707-83-10073	• Valve	3	81028-
32		707-86-68070	Tube,RHS	1	81028-
33		02896-11018	O-ring, (Kit : K07)	1	81028-
34		07282-12793	Clamp	2	81028-
35		01010-81020	Bolt	4	81028-
36		01643-31032	Washer	4	81028-
37		707-88-02660	Plate	1	81028-
38		01010-81250	Bolt	1	81028-

FIG. T2140-001002 Dozer Blade Lift Cylinder, RHS

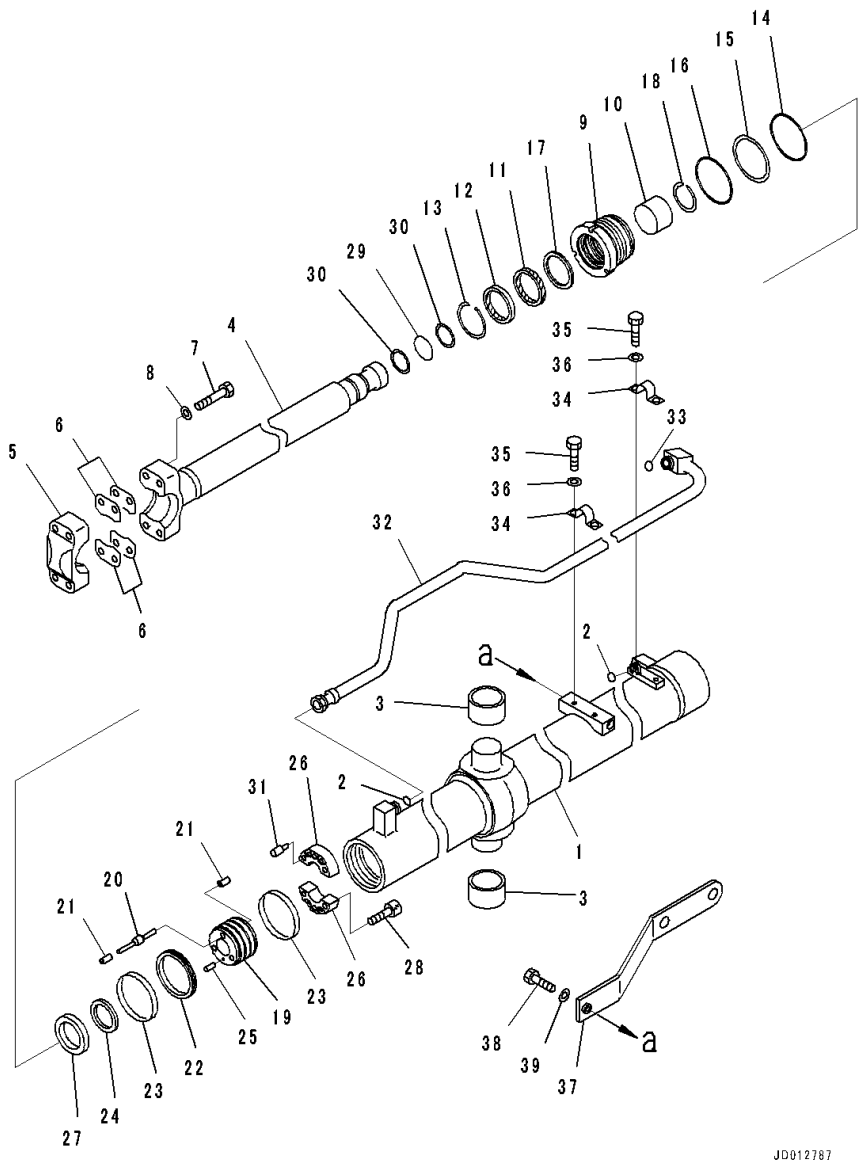

Index	Code	Part Number	Description	Qty	Serial Number
39		01643-31232	Washer	1	81028-

FIG. T2140-002001 Dozer Blade Lift Cylinder, Landfill Specification, LHS

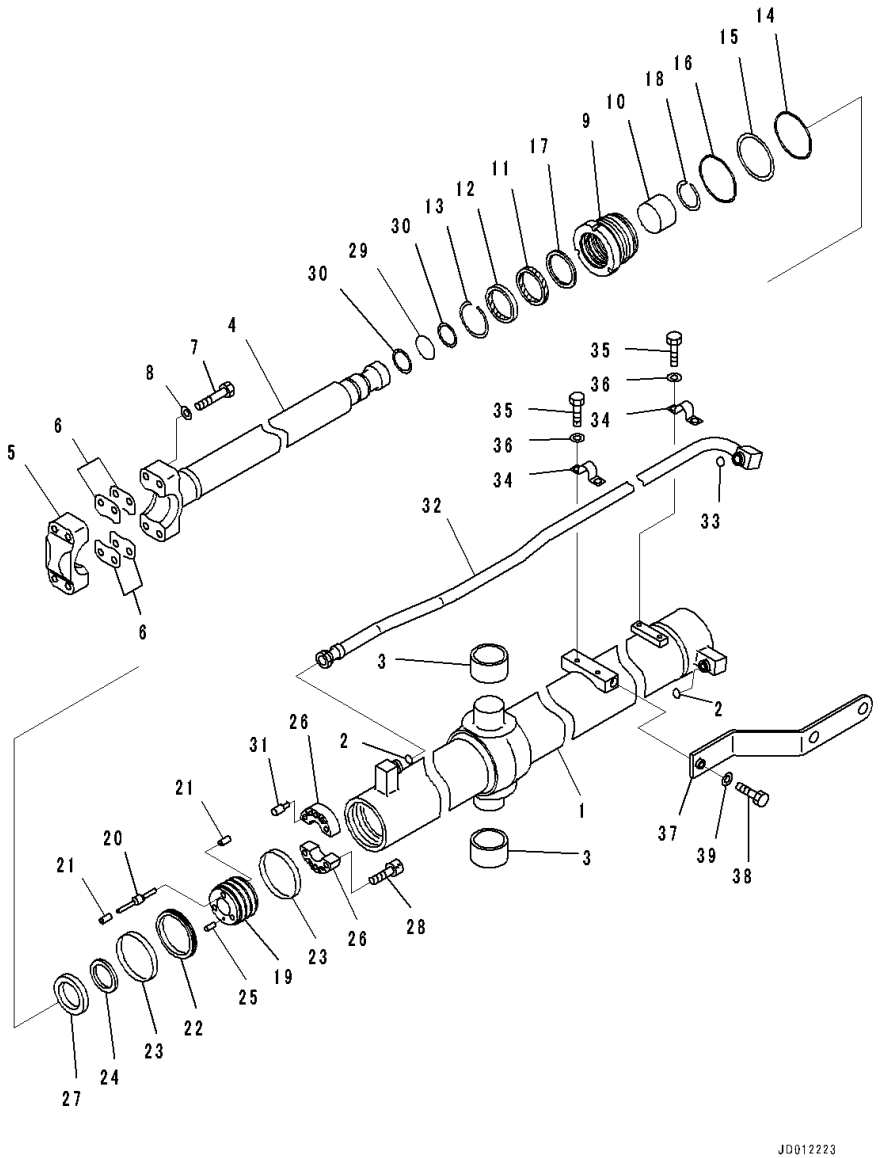

Index	Code	Part Number	Description	Qty	Serial Number
		707-02-00660	Cylinder Assembly,LHS	1	81028-
1		707-12-11140	• Cylinder	1	81028-
2		02896-11018	• O-ring, (Kit : K07)	2	81028-
3		175-63-12540	• Bushing	2	81028-
4		707-60-75070	• Rod, Piston	1	81028-
5		707-66-75020	• Cap	1	81028-
6		707-88-15010	• Shim, T=1.0mm	10	81028-
7		01011-81805	• Bolt	4	81028-
8		707-41-11840	• Washer	4	81028-
9		707-29-11980	• Head, Cylinder	1	81028-
10		707-52-90501	• Bushing	1	81028-
11		707-51-75030	• Packing, Rod, (Kit : K07)	1	81028-
12		707-56-75740	• Seal, Dust, (Kit : K07)	1	81028-
13		07179-13089	• Ring, Snap	1	81028-
14		07000-12105	• O-ring, (Kit : K07)	1	81028-
15		07146-02106	• Ring, Back-up, (Kit : K07)	1	81028-
16		07000-12110	• O-ring, (Kit : K07)	1	81028-
17		707-51-75640	• Ring, Buffer, (Kit : K07)	1	81028-
18		707-75-75110	• Ring, Snap	1	81028-
		707-91-01150	• Piston Assembly	1	81028-
19		707-37-11080	• • Piston	1	81028-
20		707-83-10270	• • Valve, L=77.5mm	3	81028-
21		707-84-10240	• • Seat, Valve	6	81028-
22		707-44-11150	• Ring, Piston, (Kit : K07)	1	81028-
23		07156-01112	• Ring, Wear, (Kit : K07)	2	81028-
24		707-40-11430	• Retainer	1	81028-
25		130-63-12761	• Pin	1	81028-
26		707-40-11270	• Spacer	2	81028-
27		707-69-11000	• Slider	1	81028-
28		01252-61235	• Bolt, Hexagon Socket Head	6	81028-
29		07000-12050	• O-ring, (Kit : K07)	1	81028-
30		07001-02050	• Ring, Back-up, (Kit : K07)	2	81028-
31		707-83-10073	• Valve	3	81028-
32		707-86-68060	Tube,LHS	1	81028-
33		02896-11018	O-ring, (Kit : K07)	1	81028-
34		07282-12793	Clamp	2	81028-
35		01010-81020	Bolt	4	81028-
36		01643-31032	Washer	4	81028-
37		707-88-02660	Plate	1	81028-
38		01010-81250	Bolt	1	81028-

FIG. T2140-002001 Dozer Blade Lift Cylinder, Landfill Specification, LHS

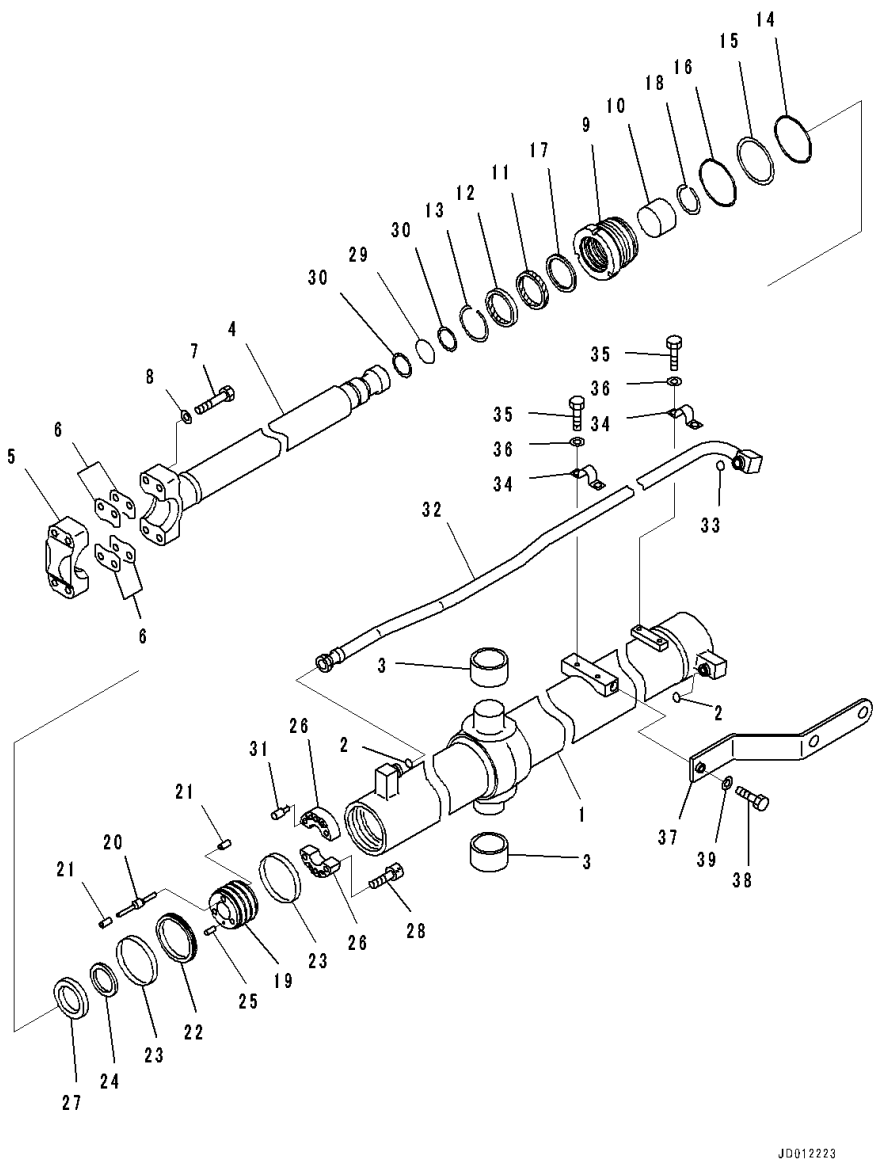

Index	Code	Part Number	Description	Qty	Serial Number
39		01643-31232	Washer	1	81028-

FIG. T2140-002002 Dozer Blade Lift Cylinder, Landfill Specification, RHS

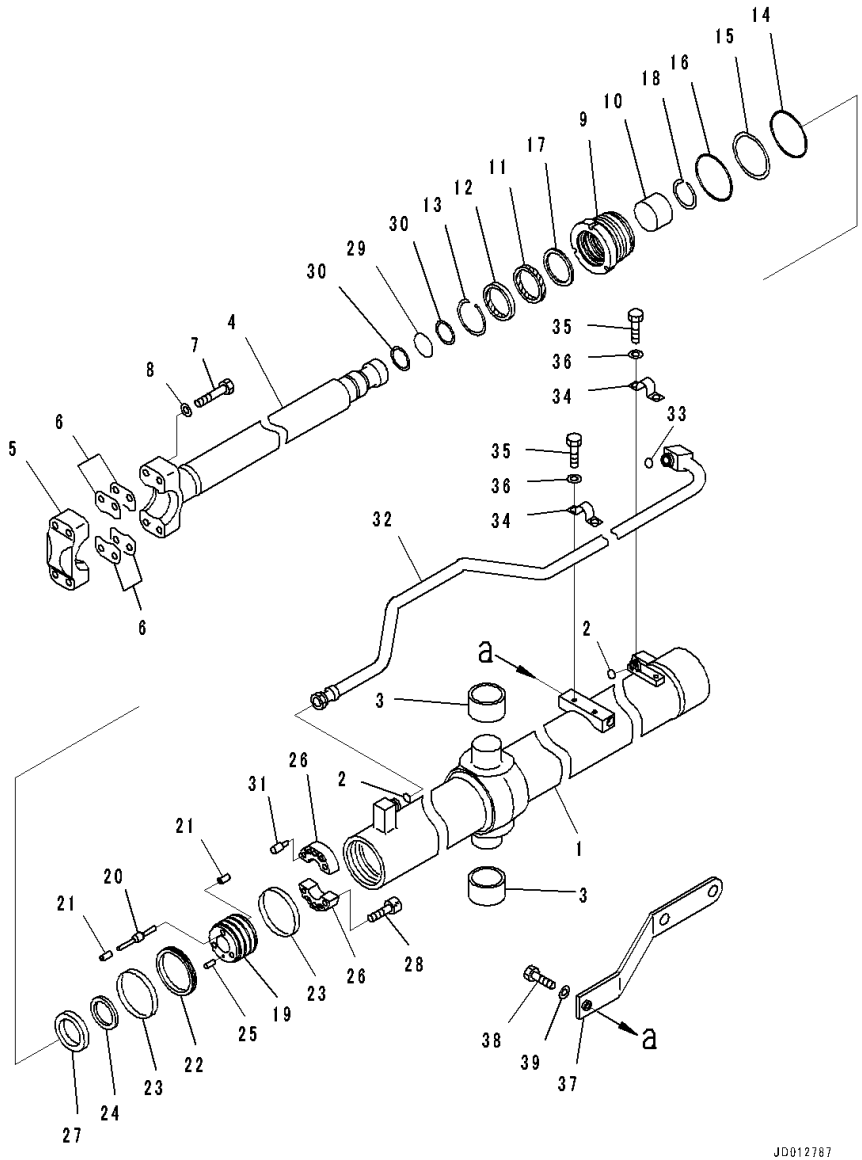

Index	Code	Part Number	Description	Qty	Serial Number
		707-02-00670	Cylinder Assembly,RHS	1	81028-
1		707-12-11150	• Cylinder	1	81028-
2		02896-11018	• O-ring, (Kit : K07)	2	81028-
3		175-63-12540	• Bushing	2	81028-
4		707-60-75070	• Rod, Piston	1	81028-
5		707-66-75020	• Cap	1	81028-
6		707-88-15010	• Shim, T=1.0mm	10	81028-
7		01011-81805	• Bolt	4	81028-
8		707-41-11840	• Washer	4	81028-
9		707-29-11980	• Head, Cylinder	1	81028-
10		707-52-90501	• Bushing	1	81028-
11		707-51-75030	• Packing, Rod, (Kit : K07)	1	81028-
12		707-56-75740	• Seal, Dust, (Kit : K07)	1	81028-
13		07179-13089	• Ring, Snap	1	81028-
14		07000-12105	• O-ring, (Kit : K07)	1	81028-
15		07146-02106	• Ring, Back-up, (Kit : K07)	1	81028-
16		07000-12110	• O-ring, (Kit : K07)	1	81028-
17		707-51-75640	• Ring, Buffer, (Kit : K07)	1	81028-
18		707-75-75110	• Ring, Snap	1	81028-
		707-91-01150	• Piston Assembly	1	81028-
19		707-37-11080	• • Piston	1	81028-
20		707-83-10270	• • Valve, L=77.5mm	3	81028-
21		707-84-10240	• • Seat, Valve	6	81028-
22		707-44-11150	• Ring, Piston, (Kit : K07)	1	81028-
23		07156-01112	• Ring, Wear, (Kit : K07)	2	81028-
24		707-40-11430	• Retainer	1	81028-
25		130-63-12761	• Pin	1	81028-
26		707-40-11270	• Spacer	2	81028-
27		707-69-11000	• Slider	1	81028-
28		01252-61235	• Bolt, Hexagon Socket Head	6	81028-
29		07000-12050	• O-ring, (Kit : K07)	1	81028-
30		07001-02050	• Ring, Back-up, (Kit : K07)	2	81028-
31		707-83-10073	• Valve	3	81028-
32		707-86-68070	Tube,RHS	1	81028-
33		02896-11018	O-ring, (Kit : K07)	1	81028-
34		07282-12793	Clamp	2	81028-
35		01010-81020	Bolt	4	81028-
36		01643-31032	Washer	4	81028-
37		707-88-02660	Plate	1	81028-
38		01010-81250	Bolt	1	81028-

FIG. T2140-002002 Dozer Blade Lift Cylinder, Landfill Specification, RHS

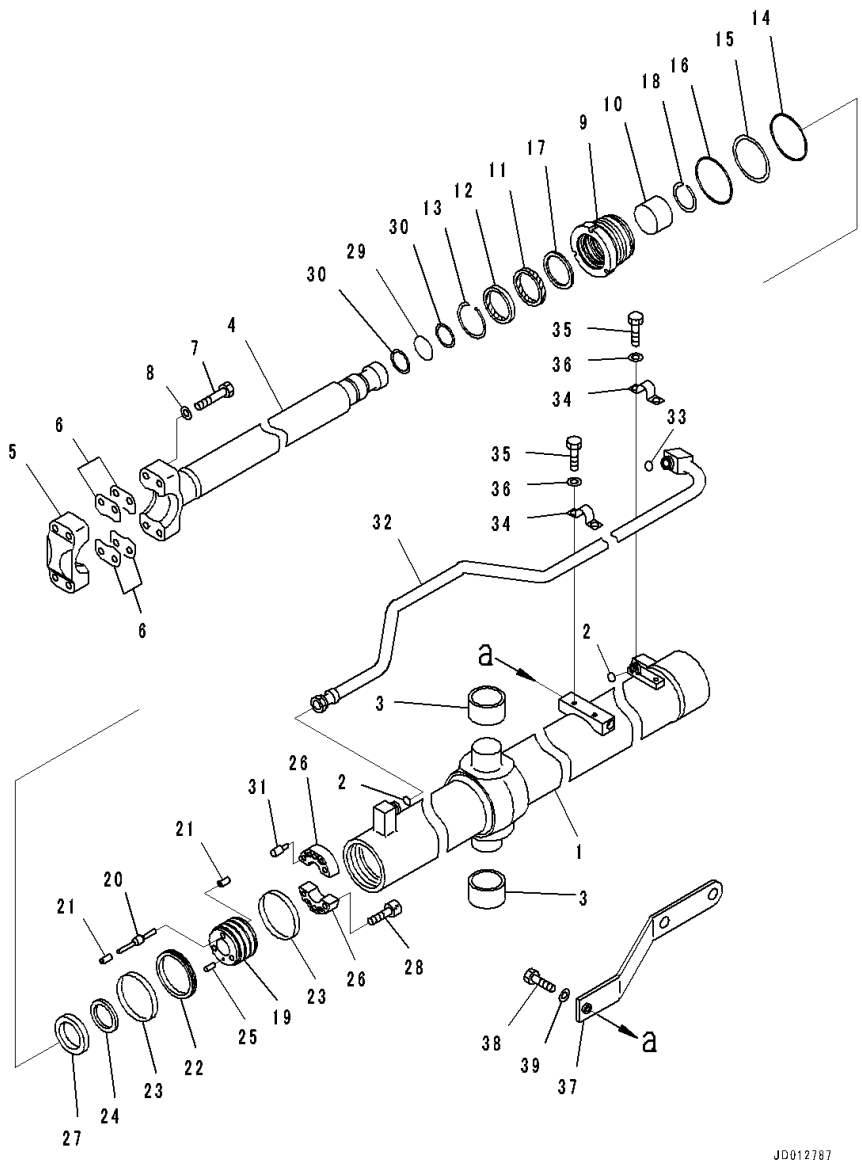

Index	Code	Part Number	Description	Qty	Serial Number
39		01643-31232	Washer	1	81028-

FIG. T2140-002003 Dozer Blade Lift Cylinder, Landfill Specification, Working Lamp

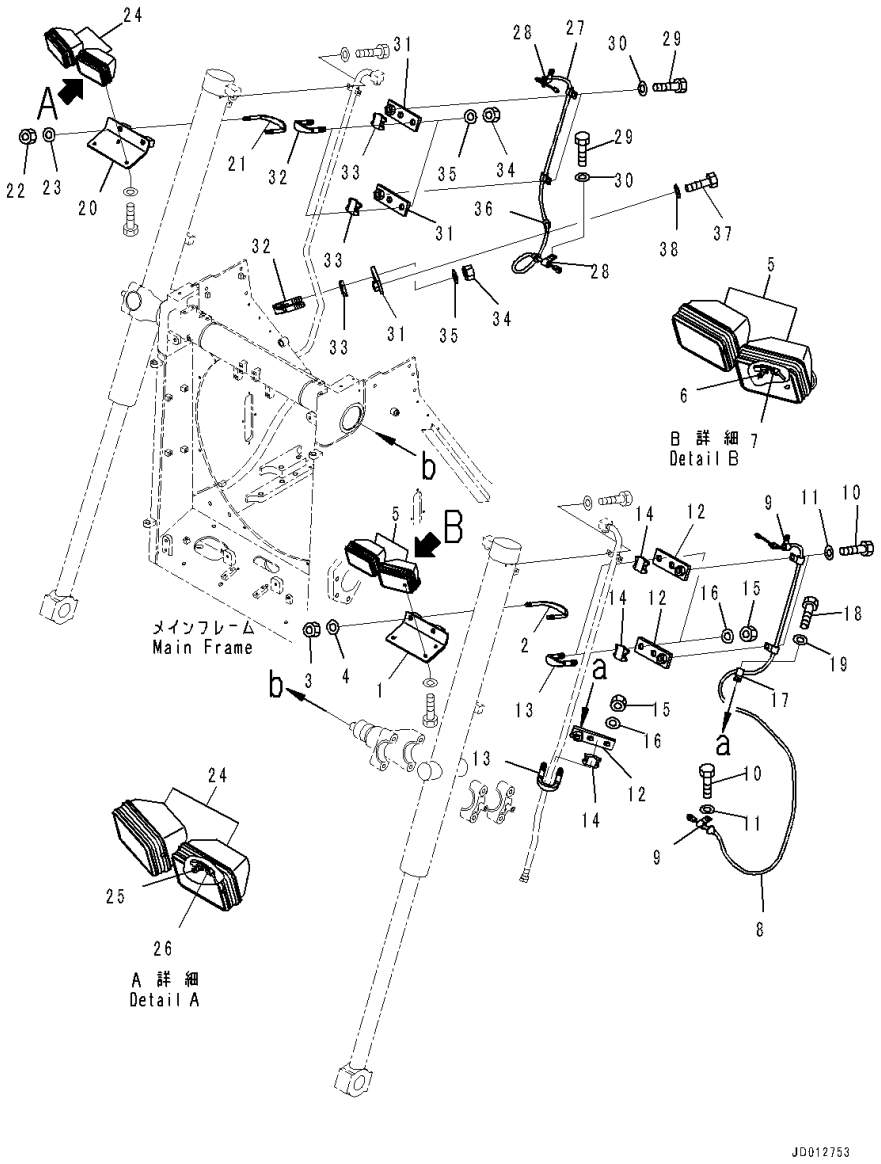

Index	Code	Part Number	Description	Qty	Serial Number
1		17A-06-42510	Bracket	1	81028-
2		154-61-22140	U-bolt	1	81028-
3		01596-01615	Nut, Lock	2	81028-
4		01643-31645	Washer	2	81028-
5		17A-06-17931	Lamp Assembly, Working	2	81028-
6		17A-06-17970	• Bulb, 70watt	1	81028-
7		17A-06-17980	• Sleeve	1	81028-
8		17A-06-42531	Wiring Harness	1	81028-
9		04434-51412	Clip	4	81028-
10		01010-81225	Bolt	4	81028-
11		01643-31232	Washer	4	81028-
12		17A-06-42580	Bracket	3	81028-
13		07283-32746	Clip	3	81028-
14		07283-52737	Seat	3	81028-
15		01597-01009	Nut	6	81028-
16		01643-31032	Washer	6	81028-
17		04434-51412	Clip	1	81028-
18		01010-81220	Bolt	1	81028-
19		01643-31232	Washer	1	81028-
20		17A-06-42520	Bracket	1	81028-
21		154-61-22140	U-bolt	1	81028-
22		01596-01615	Nut, Lock	2	81028-
23		01643-31645	Washer	2	81028-
24		17A-06-17931	Lamp Assembly, Working	2	81028-
25		17A-06-17970	• Bulb, 70watt	1	81028-
26		17A-06-17980	• Sleeve	1	81028-
27		17A-06-42631	Wiring Harness	1	81028-
28		04434-51412	Clip	4	81028-
29		01010-81225	Bolt	4	81028-
30		01643-31232	Washer	4	81028-
31		17A-06-42580	Bracket	3	81028-
32		07283-32746	Clip	3	81028-
33		07283-52737	Seat	3	81028-
34		01597-01009	Nut	6	81028-
35		01643-31032	Washer	6	81028-
36		04434-51412	Clip	1	81028-
37		01010-81220	Bolt	1	81028-
38		01643-31232	Washer	1	81028-

FIG. T2150-002001 Dozer Blade Tilt Cylinder, For Semi U and U Dozer, LHS

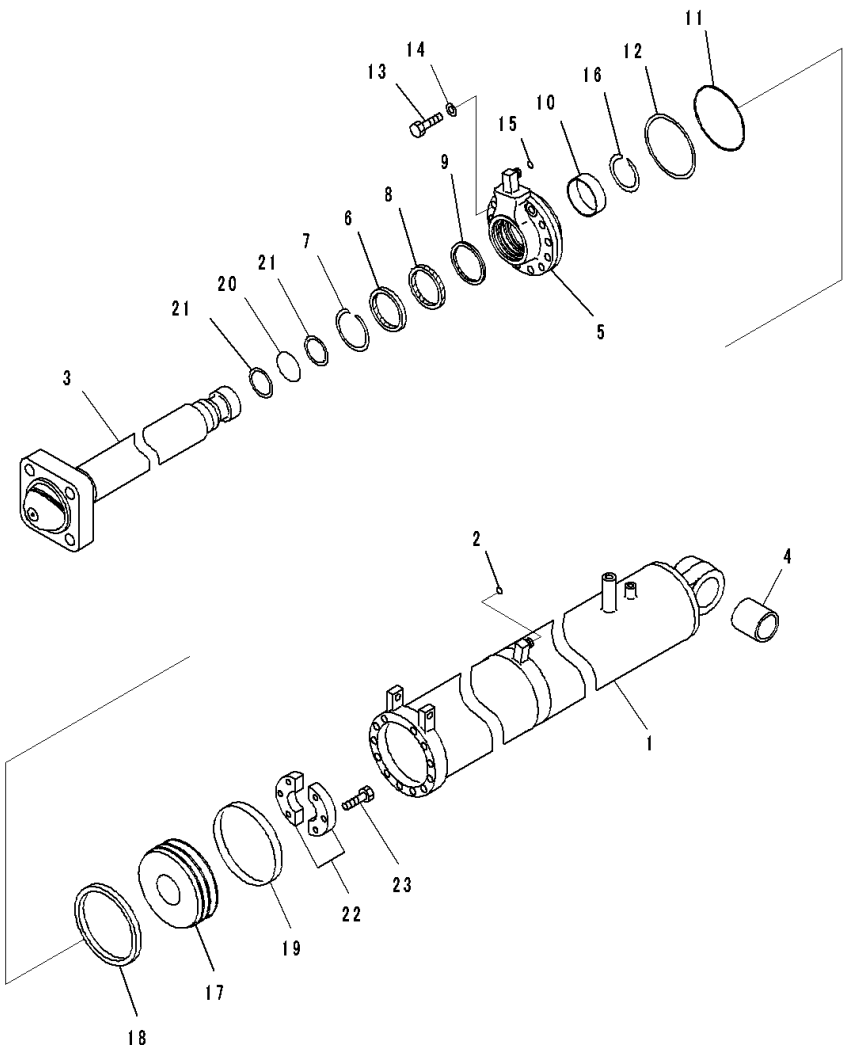

Index	Code	Part Number	Description	Qty	Serial Number
		707-04-00200	Cylinder Assembly	1	81028-
1		721-13-16160	• Cylinder	1	81028-
2		02896-11012	• O-ring, (Kit : K10)	1	81028-
3		707-60-90100	• Rod, Piston	1	81028-
4		154-63-52760	• Bushing	1	81028-
5		707-27-16700	• Head, Cylinder	1	81028-
6		195-63-94170	• Seal, Dust, (Kit : K10)	1	81028-
7		07179-13104	• Ring, Snap	1	81028-
8		707-51-90030	• Packing, Rod, (Kit : K10)	1	81028-
9		707-51-90640	• Ring, Buffer, (Kit : K10)	1	81028-
10		707-52-90681	• Bushing	1	81028-
11		07000-15150	• O-ring, (Kit : K10)	1	81028-
12		07146-05152	• Ring, Back-up, (Kit : K10)	1	81028-
13		01010-81660	• Bolt	12	81028-
14		01643-31645	• Washer	12	81028-
15		02896-11012	• O-ring, (Kit : K10)	1	81028-
16		707-75-90110	• Ring, Snap	1	81028-
17		707-36-16410	• Piston	1	81028-
18		707-44-16190	• Ring, Piston, (Kit : K10)	1	81028-
19		07156-01620	• Ring, Wear, (Kit : K10)	1	81028-
20		07000-B2070	• O-ring, (Kit : K10)	1	81028-
21		707-35-52910	• Ring, Back-up, (Kit : K10)	2	81028-
22		707-40-18070	• Spacer	2	81028-
23		01010-61240	• Bolt	6	81028-

FIG. T2150-002002 Dozer Blade Tilt Cylinder, For Semi U and U Dozer, Brace

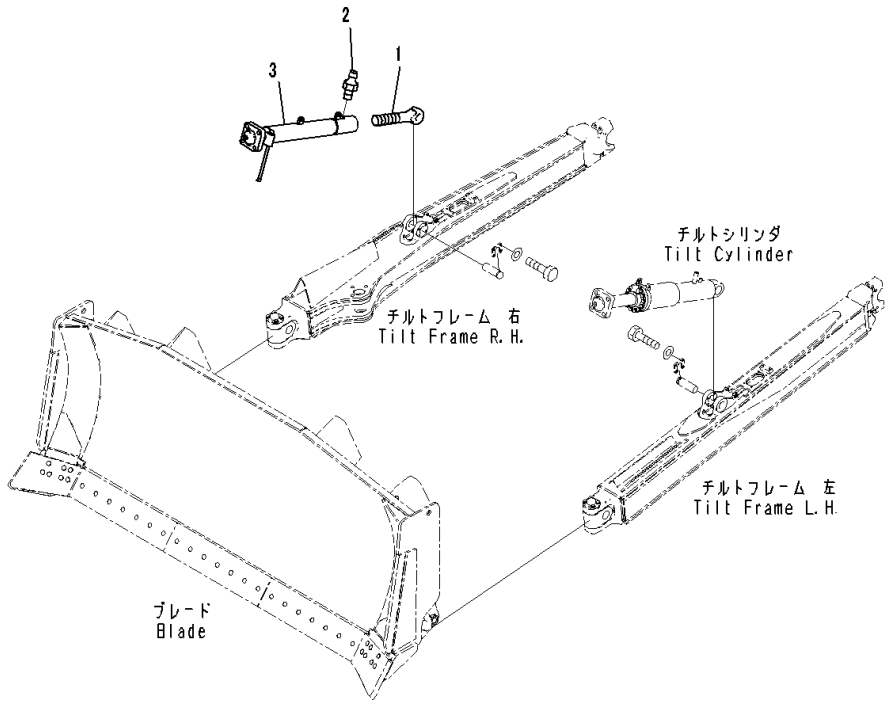

Index	Code	Part Number	Description	Qty	Serial Number
1		175-71-11281	Screw	1	81084-
2		07020-00000	Fitting, Grease	1	81028-
3		17A-71-41710	Brace	1	81028-

FIG. T2150-003001 Dozer Blade Tilt Cylinder, For SIGMADOZER, LHS

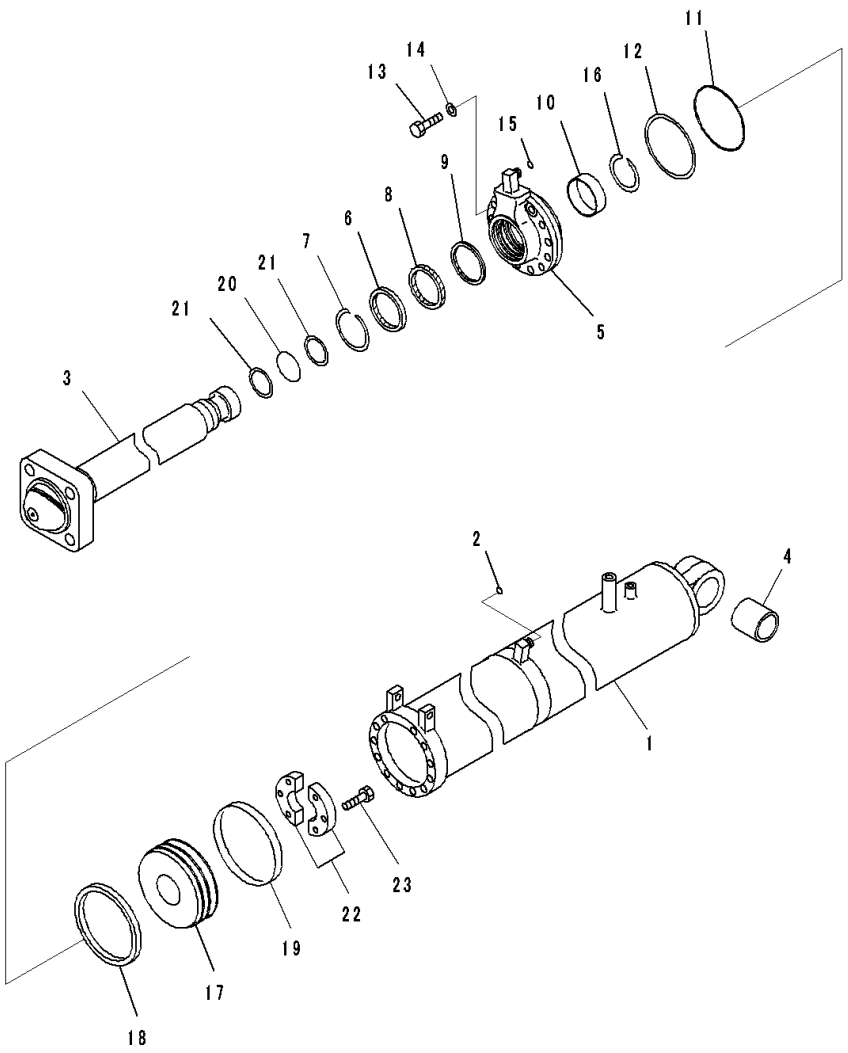

Index	Code	Part Number	Description	Qty	Serial Number
		707-04-00190	Cylinder Assembly	1	81028-
1		721-13-16160	• Cylinder	1	81028-
2		02896-11012	• O-ring, (Kit : K10)	1	81028-
3		707-60-90080	• Rod, Piston	1	81028-
4		154-63-52760	• Bushing	1	81028-
5		707-27-16700	• Head, Cylinder	1	81028-
6		195-63-94170	• Seal, Dust, (Kit : K10)	1	81028-
7		07179-13104	• Ring, Snap	1	81028-
8		707-51-90030	• Packing, Rod, (Kit : K10)	1	81028-
9		707-51-90640	• Ring, Buffer, (Kit : K10)	1	81028-
10		707-52-90681	• Bushing	1	81028-
11		07000-15150	• O-ring, (Kit : K10)	1	81028-
12		07146-05152	• Ring, Back-up, (Kit : K10)	1	81028-
13		01010-81660	• Bolt	12	81028-
14		01643-31645	• Washer	12	81028-
15		02896-11012	• O-ring, (Kit : K10)	1	81028-
16		707-75-90110	• Ring, Snap	1	81028-
17		707-36-16410	• Piston	1	81028-
18		707-44-16190	• Ring, Piston, (Kit : K10)	1	81028-
19		07156-01620	• Ring, Wear, (Kit : K10)	1	81028-
20		07000-B2070	• O-ring, (Kit : K10)	1	81028-
21		707-35-52910	• Ring, Back-up, (Kit : K10)	2	81028-
22		707-40-18070	• Spacer	2	81028-
23		01010-61240	• Bolt	6	81028-

FIG. T2150-003002 Dozer Blade Tilt Cylinder, For SIGMADOZER, Brace

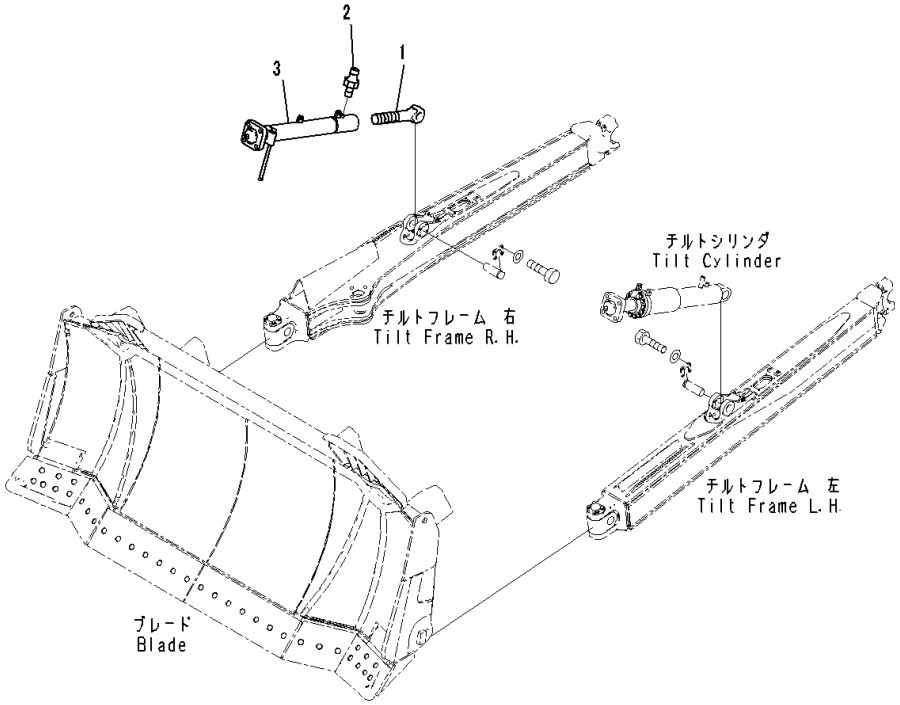

Index	Code	Part Number	Description	Qty	Serial Number
1		175-71-11281	Screw	1	81084-
2		07020-00000	Fitting, Grease	1	81028-
3		17A-71-45681	Brace	1	81028-

FIG. T2150-004001 Dozer Blade Tilt Cylinder, For Coal Dozer, LHS

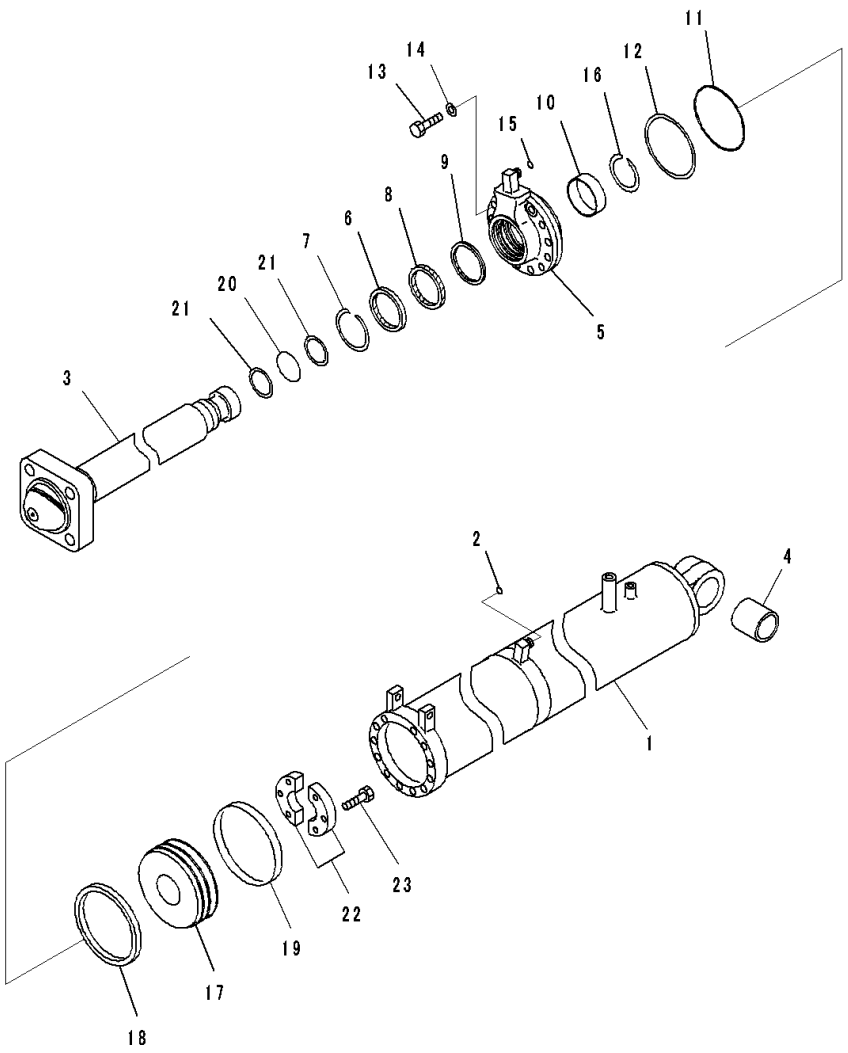

Index	Code	Part Number	Description	Qty	Serial Number
		707-04-00220	Cylinder Assembly	1	81028-
1		721-13-16170	• Cylinder	1	81028-
2		02896-11012	• O-ring, (Kit : K10)	1	81028-
3		707-60-90090	• Rod, Piston	1	81028-
4		154-63-52760	• Bushing	1	81028-
5		707-27-16700	• Head, Cylinder	1	81028-
6		195-63-94170	• Seal, Dust, (Kit : K10)	1	81028-
7		07179-13104	• Ring, Snap	1	81028-
8		707-51-90030	• Packing, Rod, (Kit : K10)	1	81028-
9		707-51-90640	• Ring, Buffer, (Kit : K10)	1	81028-
10		707-52-90681	• Bushing	1	81028-
11		07000-15150	• O-ring, (Kit : K10)	1	81028-
12		07146-05152	• Ring, Back-up, (Kit : K10)	1	81028-
13		01010-81660	• Bolt	12	81028-
14		01643-31645	• Washer	12	81028-
15		02896-11012	• O-ring, (Kit : K10)	1	81028-
16		707-75-90110	• Ring, Snap	1	81028-
17		707-36-16410	• Piston	1	81028-
18		707-44-16190	• Ring, Piston, (Kit : K10)	1	81028-
19		07156-01620	• Ring, Wear, (Kit : K10)	1	81028-
20		07000-B2070	• O-ring, (Kit : K10)	1	81028-
21		707-35-52910	• Ring, Back-up, (Kit : K10)	2	81028-
22		707-40-18070	• Spacer	2	81028-
23		01010-61240	• Bolt	6	81028-

FIG. T2150-004002 Dozer Blade Tilt Cylinder, For Coal Dozer, Brace

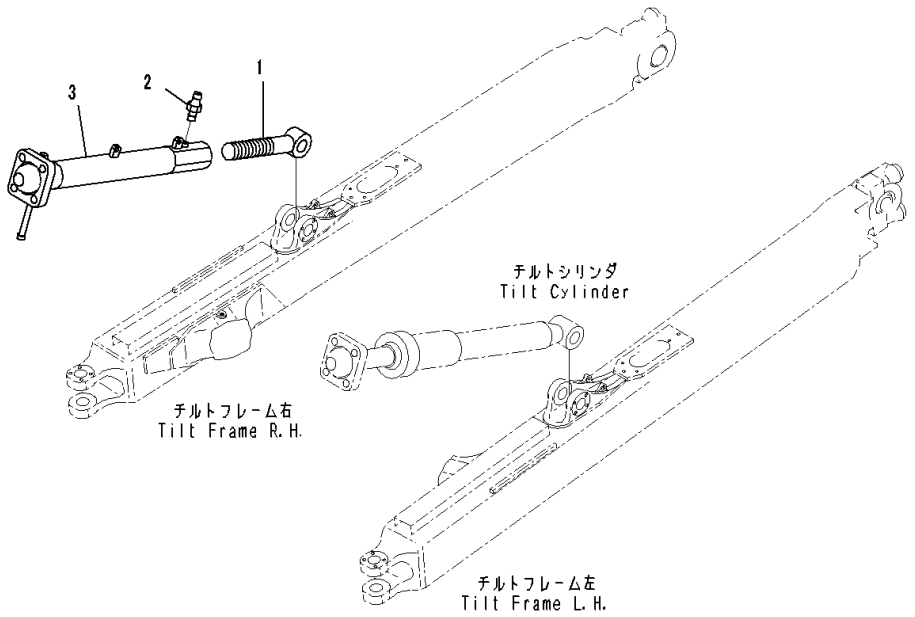

Index	Code	Part Number	Description	Qty	Serial Number
1		175-71-11281	Screw	1	81084-
2		07020-00000	Fitting, Grease	1	81028-
3		17A-71-45681	Brace	1	81028-

FIG. T2150-006001 Dozer Blade Tilt Cylinder, For Dual Tilt Pitch Dozer

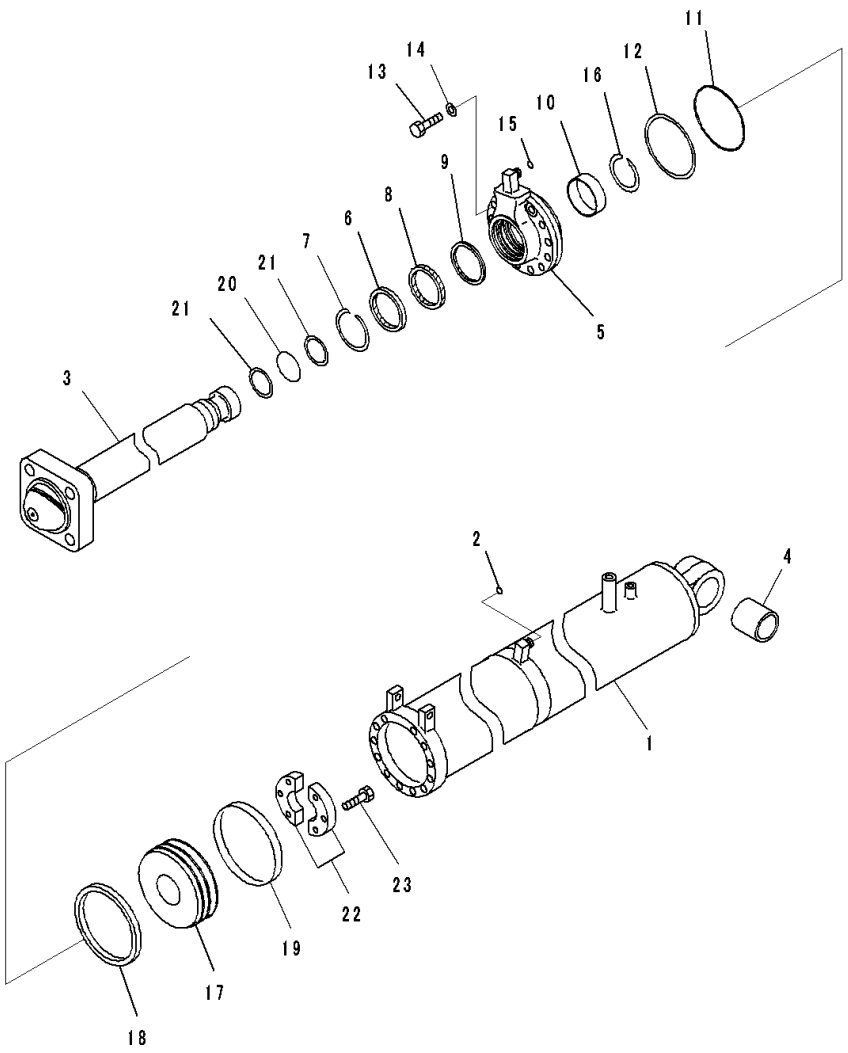

Index	Code	Part Number	Description	Qty	Serial Number
		707-04-00240	Cylinder Assembly	2	81028-
1		721-13-16170	• Cylinder	1	81028-
2		02896-11012	• O-ring, (Kit : K11)	1	81028-
3		707-60-90180	• Rod, Piston	1	81028-
4		154-63-52760	• Bushing	1	81028-
5		707-27-16700	• Head, Cylinder	1	81028-
6		707-56-90740	• Seal, Dust, (Kit : K11)	1	81028-
7		07179-13104	• Ring, Snap	1	81028-
8		707-51-90030	• Packing, Rod, (Kit : K11)	1	81028-
9		707-51-90640	• Ring, Buffer, (Kit : K11)	1	81028-
10		707-52-90681	• Bushing	1	81028-
11		07000-15150	• O-ring, (Kit : K11)	1	81028-
12		07146-05152	• Ring, Back-up, (Kit : K11)	1	81028-
13		01010-81660	• Bolt	12	81028-
14		01643-31645	• Washer	12	81028-
15		02896-11012	• O-ring, (Kit : K11)	1	81028-
16		707-75-90110	• Ring, Snap	1	81028-
17		707-36-16410	• Piston	1	81028-
18		707-44-16190	• Ring, Piston, (Kit : K11)	1	81028-
19		07156-01620	• Ring, Wear, (Kit : K11)	1	81028-
20		07000-B2070	• O-ring, (Kit : K11)	1	81028-
21		707-35-52910	• Ring, Back-up, (Kit : K11)	2	81028-
22		707-40-18070	• Spacer	2	81028-
23		01010-61240	• Bolt	6	81028-

FIG. T2160-001001 Dozer Blade Tilt Piping, For Dual Tilt Pitch Dozer, For SIGMADOZER

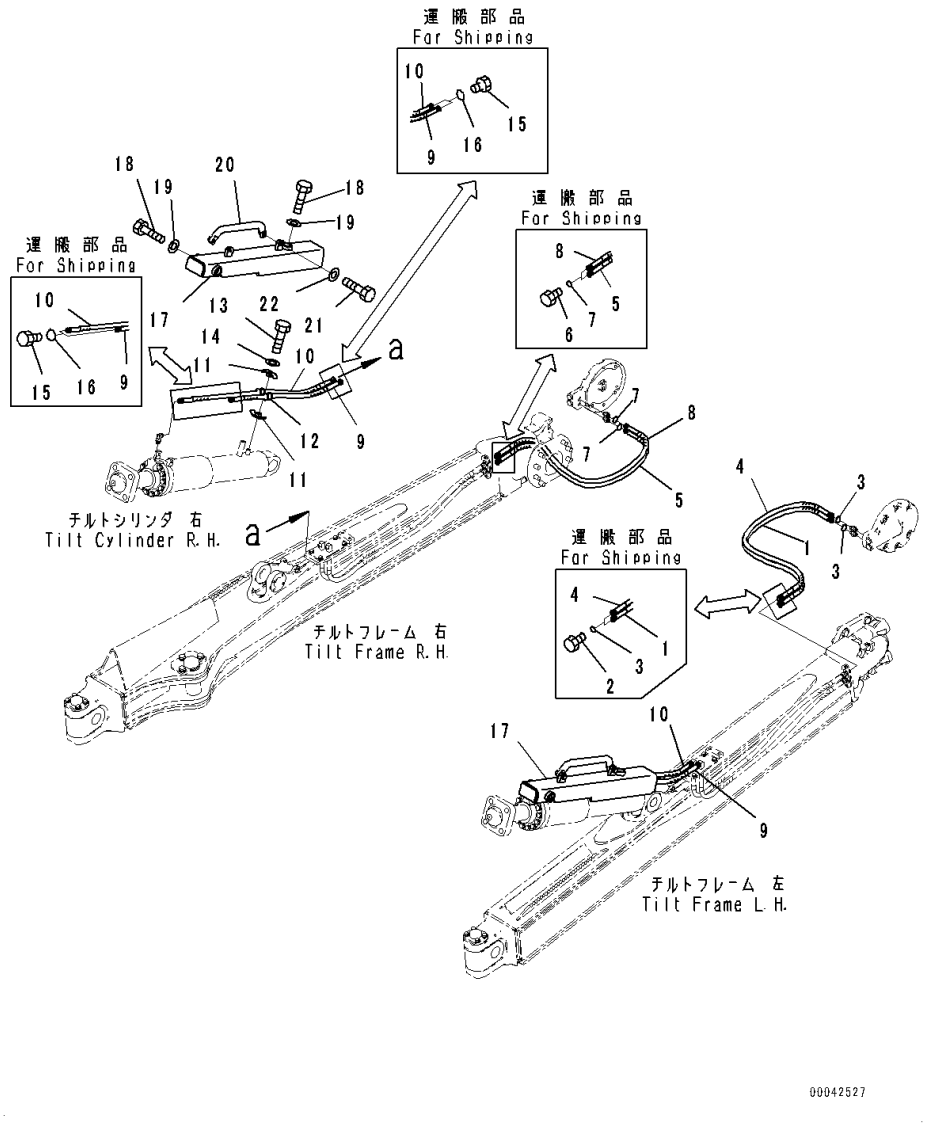

Index	Code	Part Number	Description	Qty	Serial Number
1		17A-71-45651	Hose	1	81028-
2		07376-70422	Plug	2	81028-
3		02896-11012	O-ring	4	81028-
4		17A-71-45750	Hose	1	81028-
5		17A-71-45651	Hose	1	81028-
6		07376-70422	Plug	2	81028-
7		02896-11012	O-ring	4	81028-
8		17A-71-45760	Hose	1	81028-
9		17A-71-45741	Hose	2	81028-
10		17A-71-45731	Hose	2	81028-
11		07094-30417	Clamp	4	81028-
12		07095-00420	Cushion	4	81028-
13		01010-81265	Bolt	2	81028-
14		01643-31232	Washer	2	81028-
15		07376-70422	Plug	8	81028-
16		02896-11012	O-ring	8	81028-
17		17A-71-45661	Cover	2	81028-
18		01010-81635	Bolt	6	81028-
19		01643-31645	Washer	6	81028-
20		195-71-62151	Handle	2	81028-
21		01010-81660	Bolt	4	81028-
22		01643-31645	Washer	4	81028-

FIG. T2160-002001 Dozer Blade Tilt Piping, For Straight Tilt Dozer, For SIGMADOZER

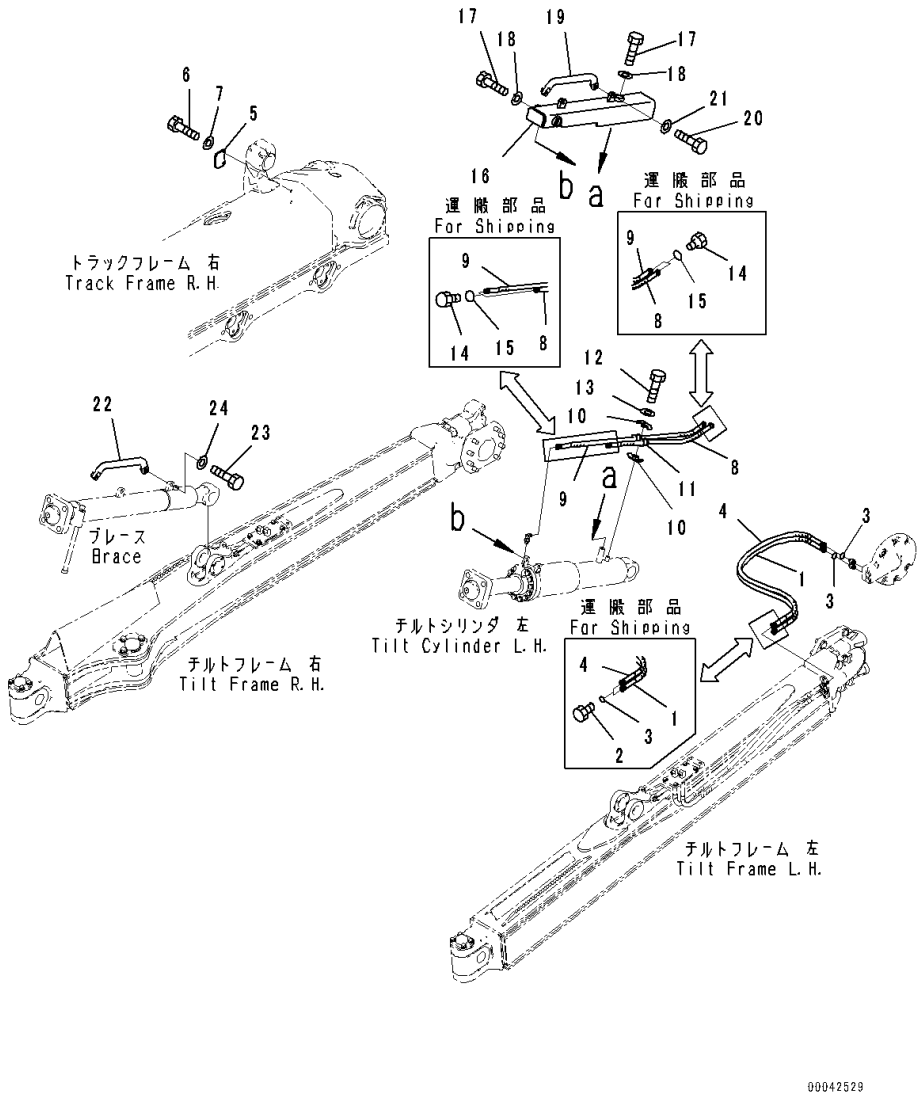

Index	Code	Part Number	Description	Qty	Serial Number
1		17A-71-45651	Hose	1	81028-
2		07376-70422	Plug	2	81028-
3		02896-11012	O-ring	4	81028-
4		17A-71-45750	Hose	1	81028-
5		17A-30-48990	Plate	1	81028-
6		01010-81225	Bolt	2	81028-
7		01643-31232	Washer	2	81028-
8		17A-71-45880	Hose	1	81028-
9		17A-71-45870	Hose	1	81028-
10		07094-30417	Clamp	2	81028-
11		07095-00420	Cushion	2	81028-
12		01010-81265	Bolt	1	81028-
13		01643-31232	Washer	1	81028-
14		07376-70422	Plug	4	81028-
15		02896-11012	O-ring	4	81028-
16		17A-71-45890	Cover	1	81028-
17		01010-81635	Bolt	3	81028-
18		01643-31645	Washer	3	81028-
19		195-71-62151	Handle	1	81028-
20		01010-81660	Bolt	2	81028-
21		01643-31645	Washer	2	81028-
22		195-71-62151	Handle	1	81028-
23		01010-81660	Bolt	2	81028-
24		01643-31645	Washer	2	81028-

FIG. T2160-003001 Dozer Blade Tilt Piping, For Coal Dozer

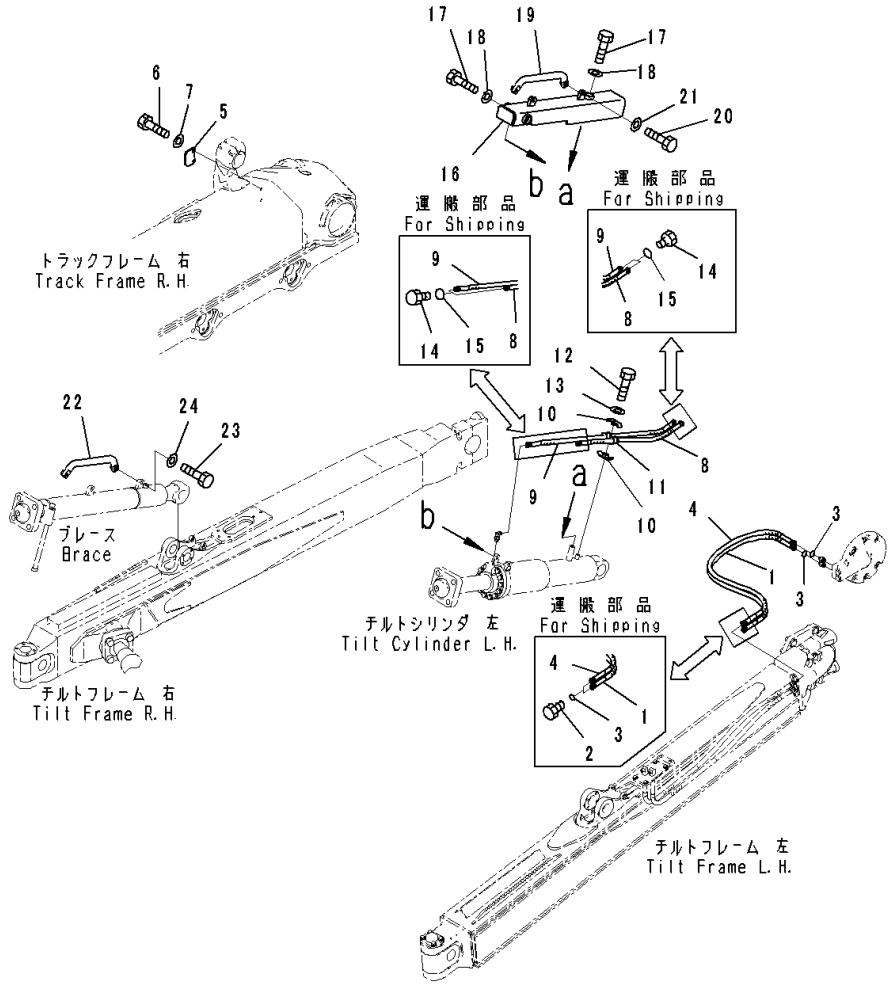

Index	Code	Part Number	Description	Qty	Serial Number
1		17A-71-45651	Hose	1	81028-
2		07376-70422	Plug	2	81028-
3		02896-11012	O-ring	4	81028-
4		17A-71-45750	Hose	1	81028-
5		17A-30-48990	Plate	1	81028-
6		01010-81225	Bolt	2	81028-
7		01643-31232	Washer	2	81028-
8		17A-71-45741	Hose	1	81028-
9		17A-71-45731	Hose	1	81028-
10		07094-30417	Clamp	2	81028-
11		07095-00420	Cushion	2	81028-
12		01010-81265	Bolt	1	81028-
13		01643-31232	Washer	1	81028-
14		07376-70422	Plug	4	81028-
15		02896-11012	O-ring	4	81028-
16		17A-71-45661	Cover	1	81028-
17		01010-81635	Bolt	3	81028-
18		01643-31645	Washer	3	81028-
19		195-71-62151	Handle	1	81028-
20		01010-81660	Bolt	2	81028-
21		01643-31645	Washer	2	81028-
22		195-71-62151	Handle	1	81028-
23		01010-81660	Bolt	2	81028-
24		01643-31645	Washer	2	81028-

FIG. T2160-004001 Dozer Blade Tilt Piping, Blade Less

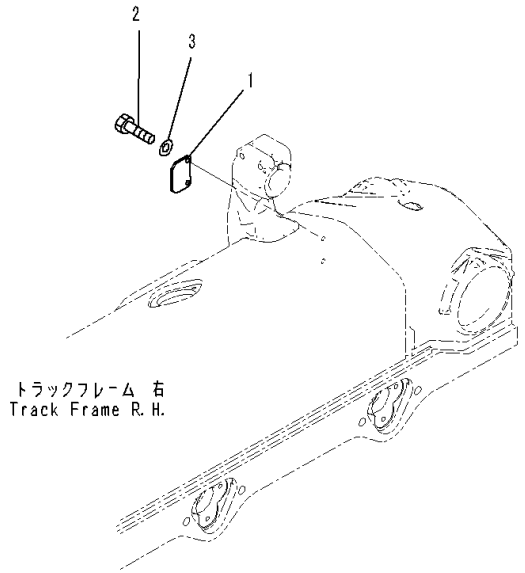

Index	Code	Part Number	Description	Qty	Serial Number
1		17A-30-48990	Plate	1	81028-
2		01010-81225	Bolt	2	81028-
3		01643-31232	Washer	2	81028-

FIG. T2400-005001 Ripper Beam and Arm, For Variable Digging Angle Multi Ripper, Beam and Arm

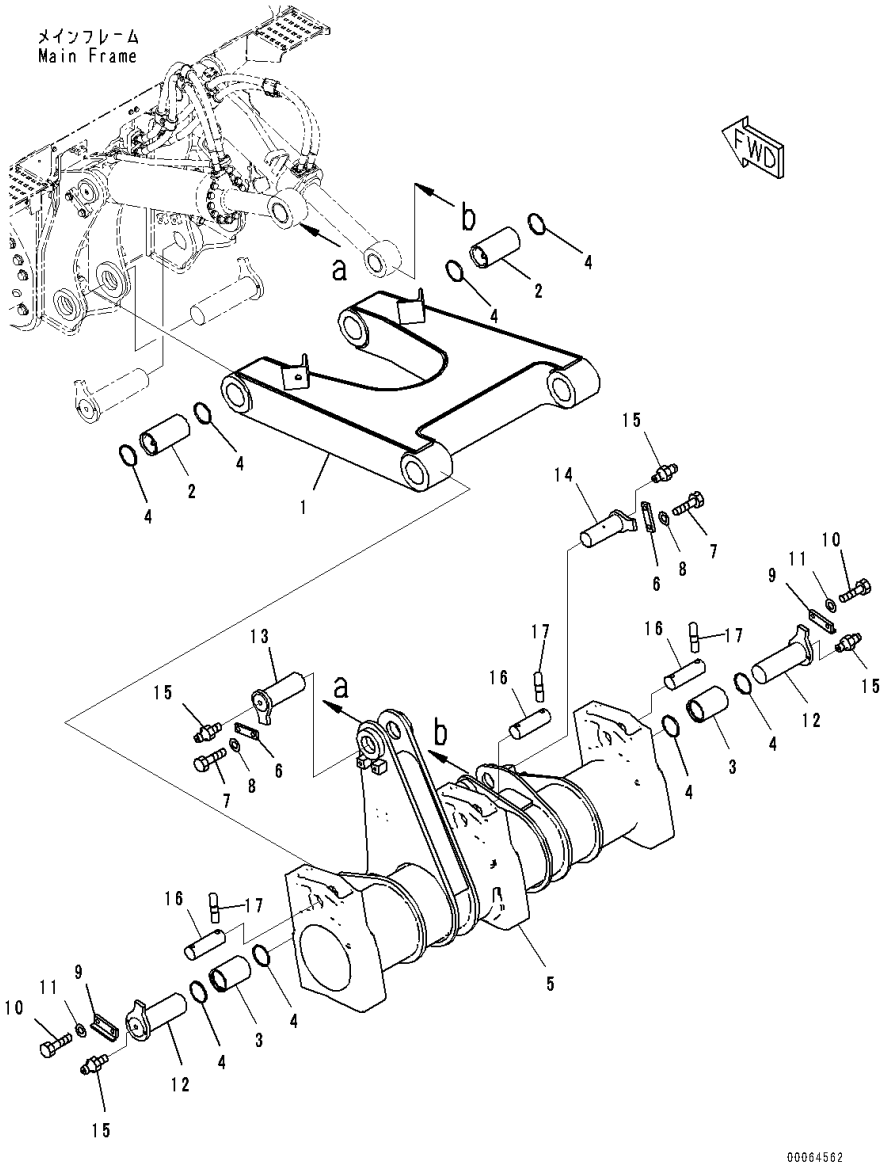

Index	Code	Part Number	Description	Qty	Serial Number
1		17A-78-47211	Arm	1	81028-
2		17A-78-44210	Bushing	2	81028-
3		175-78-61271	Bushing	2	81028-
4		175-78-61281	Seal, Dust	8	81028-
5		17A-78-43111	Beam	1	81028-
6		205-70-61560	Plate	2	81028-
7		01010-82040	Bolt	4	81028-
8		01643-32060	Washer	4	81028-
9		17A-78-43130	Bracket	2	81028-
10		01010-82040	Bolt	4	81028-
11		01643-32060	Washer	4	81028-
12		17A-78-44120	Pin	2	81028-
13		17A-78-44150	Pin	1	81028-
14		17A-78-44180	Pin	1	81028-
15		07020-00000	Fitting, Grease	4	81028-
16		17A-78-11190	Pin	3	81028-
17		09244-02508	Pin	6	81028-

FIG. T2400-005002 Ripper Beam and Arm, For Variable Digging Angle Multi Ripper, Shank and Ripper Point

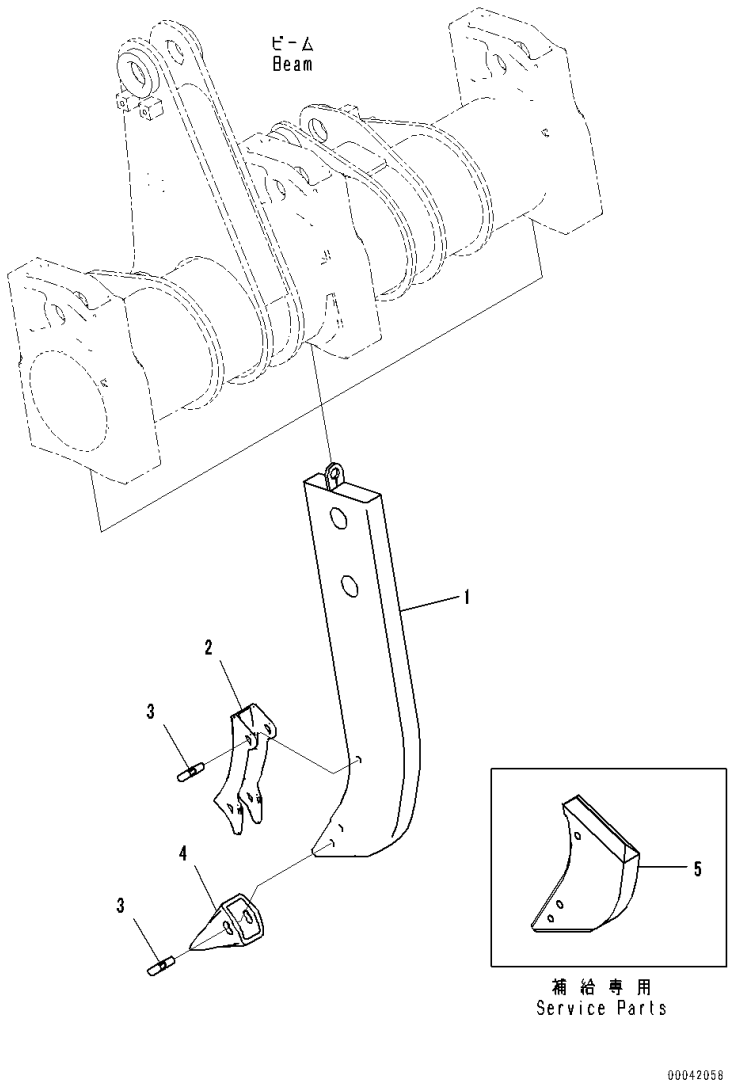

Index	Code	Part Number	Description	Qty	Serial Number
1		17A-78-43121	Shank	3	81028-
2		195-78-21320	Protector	3	81028-
3		09244-02508	Pin	9	81028-
4		175-78-31230	Point	3	81028-
5		175-78-21693	Shank, Service Parts	3	81028-

FIG. T2400-005003 Ripper Beam and Arm, Inner Parts, Lift Cylinder

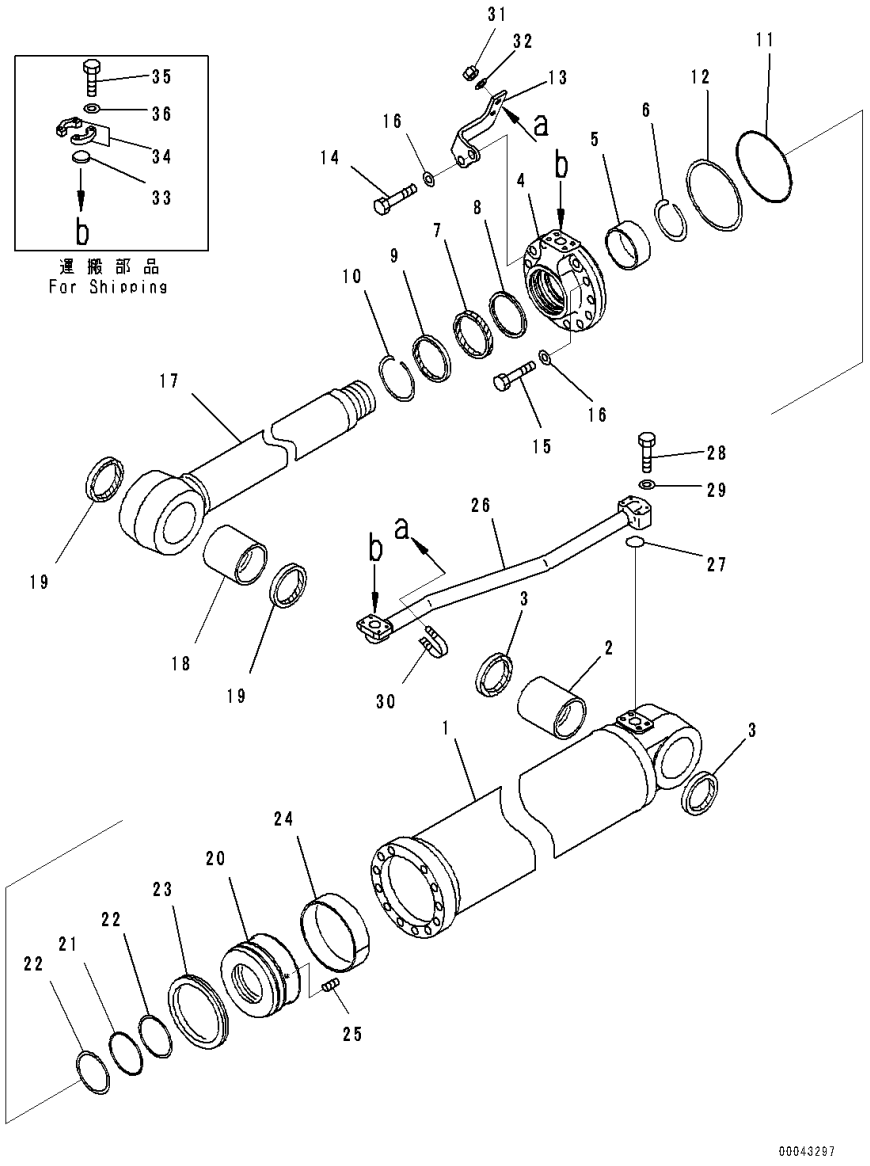

Index	Code	Part Number	Description	Qty	Serial Number
		Note: This list covers following specifications.			
		For Variable Digging Angle Multi Ripper			
		For Variable Digging Angle Giant Ripper Without Push Block			
		For Variable Digging Angle Giant Ripper, With Pusher Plate			
		707-01-0K410	Cylinder Group	1	81028-
1		707-13-18370	• Cylinder	1	81028-
2		721-58-10150	• Rod, Piston	1	81028-
3		707-76-90520	• Bushing	1	81028-
4		07145-00090	• Seal, Dust, (Kit : K13)	2	81028-
5		707-76-90530	• Bushing	1	81028-
6		07145-00090	• Seal, Dust, (Kit : K13)	2	81028-
7		707-27-18940	• Head, Cylinder	1	81028-
8		707-56-10740	• Seal, Dust, (Kit : K13)	1	81028-
9		07179-13114	• Ring, Snap	1	81028-
10		707-51-10030	• Packing, Rod, (Kit : K13)	1	81028-
11		707-51-10640	• Ring, Buffer, (Kit : K13)	1	81028-
12		707-52-90781	• Bushing	1	81028-
13		07000-15170	• O-ring, (Kit : K13)	1	81028-
14		07146-05172	• Ring, Back-up, (Kit : K13)	1	81028-
15		01010-81865	• Bolt	10	81028-
16		01010-81875	• Bolt	2	81028-
17		01643-31845	• Washer	12	81028-
18		707-88-05701	• Bracket	1	81028-
19		707-75-10160	• Ring, Snap	1	81028-
20		707-36-18060	• Piston	1	81028-
21		707-44-18190	• Ring, Piston, (Kit : K13)	1	81028-
22		07155-01845	• Ring, Wear, (Kit : K13)	1	81028-
23		07000-B5100	• O-ring, (Kit : K13)	1	81028-
24		707-35-90030	• Ring, Back-up, (Kit : K13)	2	81028-
25		01310-01216	• Screw	1	81028-
26		707-86-13520	Tube	1	81028-
27		07372-21060	Bolt	4	81028-
28		01643-51032	Washer	4	81028-
29		07000-13035	O-ring, (Kit : K13)	1	81028-
30		707-88-33040	Cap	2	81028-
31		07371-31049	Flange, Split	4	81028-
32		07372-21035	Bolt	8	81028-
33		01643-51032	Washer	8	81028-
34		07283-33442	Clip, Pipe	1	81028-
35		01643-31032	Washer	2	81028-

FIG. T2400-005003 Ripper Beam and Arm, Inner Parts, Lift Cylinder

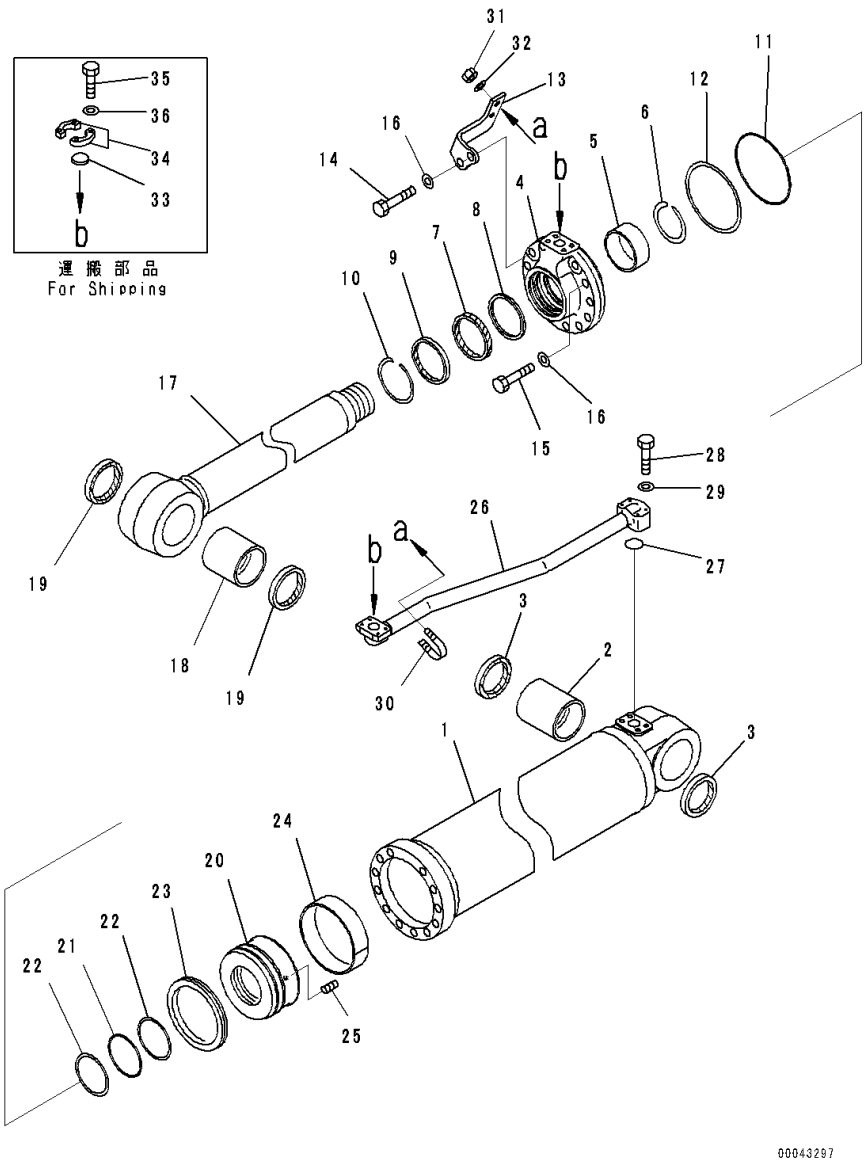

Index	Code	Part Number	Description	Qty	Serial Number
36		01597-01009	Nut	2	81028-

FIG. T2400-005004 Ripper Beam and Arm, Inner Parts, Tilt Cylinder

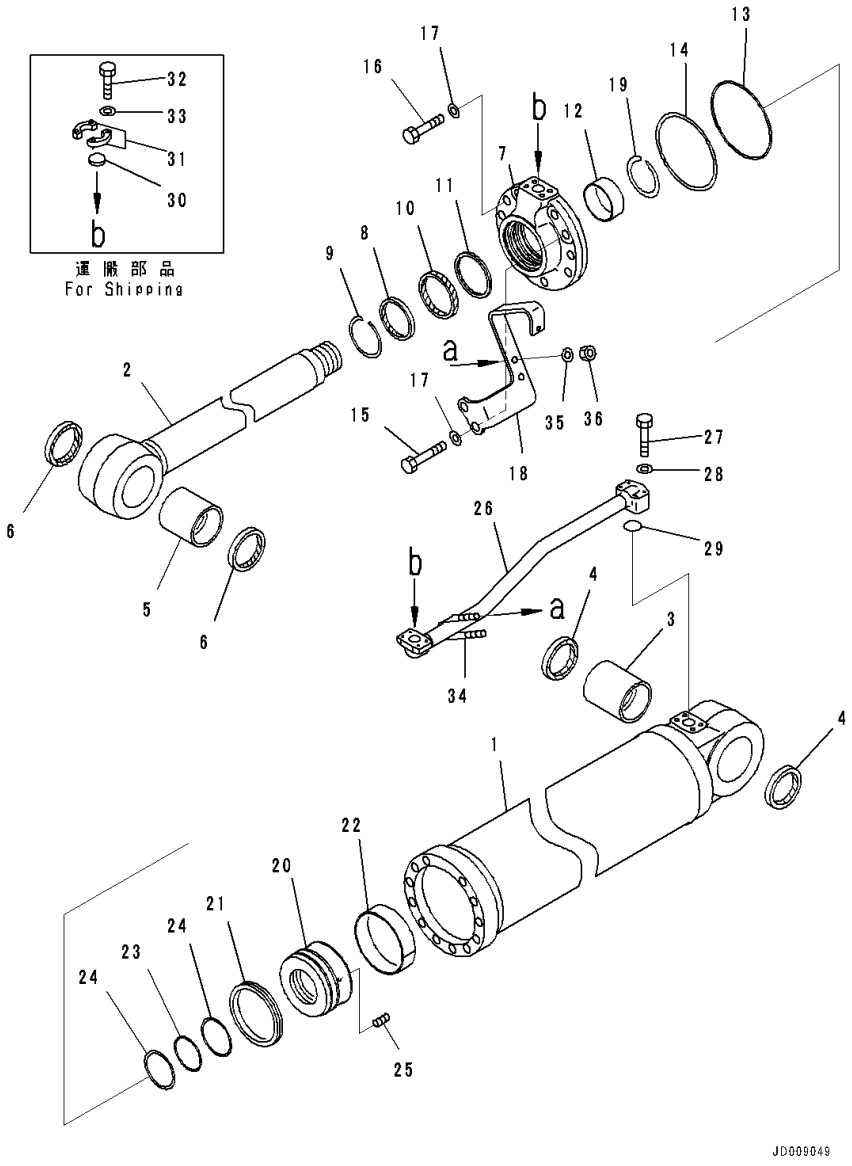

Index	Code	Part Number	Description	Qty	Serial Number
		Note: This list covers following specifications.			
		For Variable Digging Angle Multi Ripper			
		For Variable Digging Angle Giant Ripper Without Push Block			
		For Variable Digging Angle Giant Ripper, With Pusher Plate			
		707-01-0K420	Cylinder Assembly	1	81028-
1		707-13-20490	• Cylinder	1	81028-
2		707-58-11870	• Rod, Piston	1	81028-
3		707-76-10380	• Bushing	1	81028-
4		07145-00100	• Seal, Dust, (Kit : K14)	2	81028-
5		707-76-10050	• Bushing	1	81028-
6		07145-00100	• Seal, Dust, (Kit : K14)	2	81028-
7		707-27-20740	• Cylinder Head	1	81028-
8		707-56-11740	• Seal, Dust, (Kit : K14)	1	81028-
9		07179-13126	• Ring, Snap	1	81028-
10		707-51-11030	• Packing, Rod, (Kit : K14)	1	81028-
11		707-51-11640	• Ring, Buffer, (Kit : K14)	1	81028-
12		707-52-90851	• Bushing	1	81028-
13		07000-15190	• O-ring, (Kit : K14)	1	81028-
14		07146-05192	• Ring, Back-up, (Kit : K14)	1	81028-
15		01010-82085	• Bolt	2	81028-
16		01010-82075	• Bolt	10	81028-
17		01643-32060	• Washer	12	81028-
18		707-88-05711	• Bracket	1	81028-
19		707-75-11040	• Ring, Snap	1	81028-
20		707-36-20600	• Piston	1	81028-
21		707-44-20190	• Ring, Piston, (Kit : K14)	1	81028-
22		07155-02045	• Ring, Wear, (Kit : K14)	1	81028-
23		07000-B5110	• O-ring, (Kit : K14)	1	81028-
24		07001-05110	• Ring, Back-up, (Kit : K14)	2	81028-
25		01310-01225	• Screw	1	81028-
26		707-86-13530	Tube	1	81028-
27		07372-21060	Bolt	4	81028-
28		01643-51032	Washer	4	81028-
29		07000-13035	O-ring, (Kit : K14)	1	81028-
30		707-88-33040	Cap	2	81028-
31		07371-31049	Flange, Split	4	81028-
32		07372-21035	Bolt	8	81028-
33		01643-51032	Washer	8	81028-
34		07283-33442	Clip, Pipe	1	81028-
35		01643-31032	Washer	2	81028-

FIG. T2400-005004 Ripper Beam and Arm, Inner Parts, Tilt Cylinder

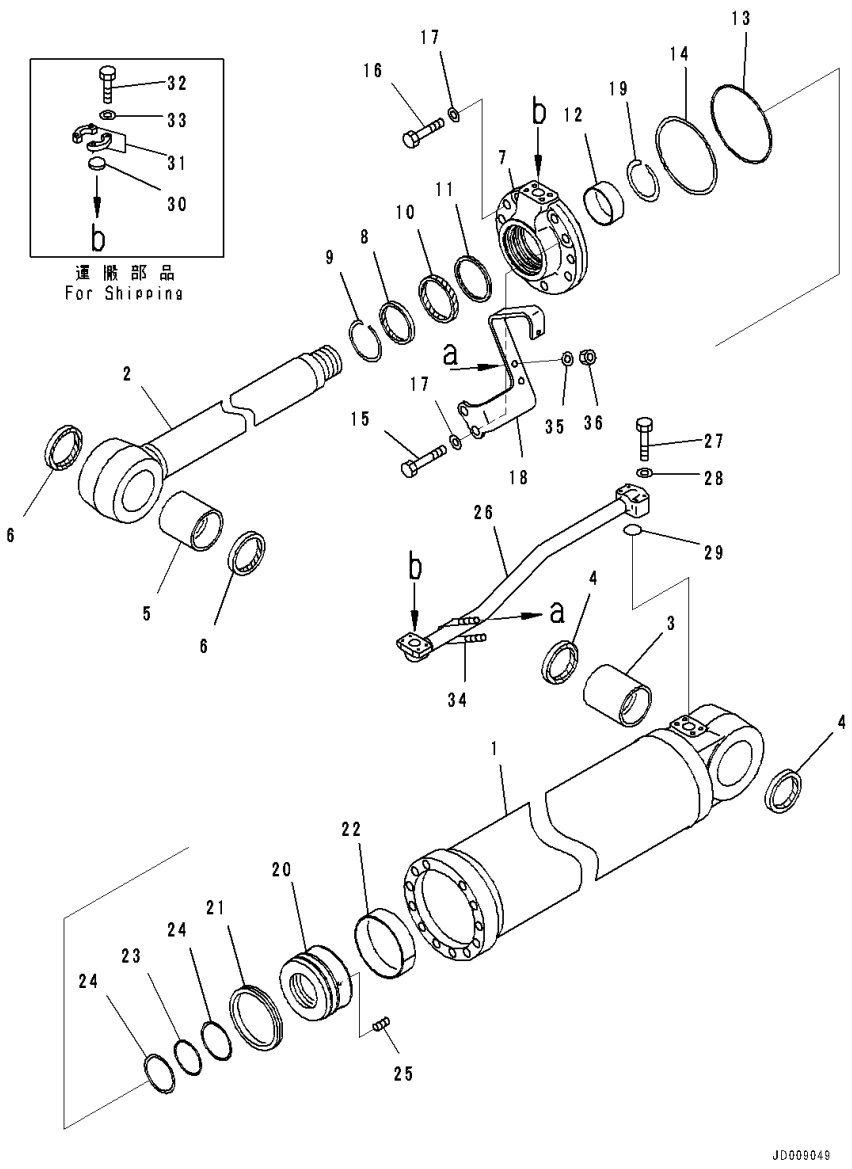

Index	Code	Part Number	Description	Qty	Serial Number
36		01597-01009	Nut	2	81028-

FIG. T2400-005005 Ripper Beam and Arm, For Variable Digging Angle Multi Ripper, Plate

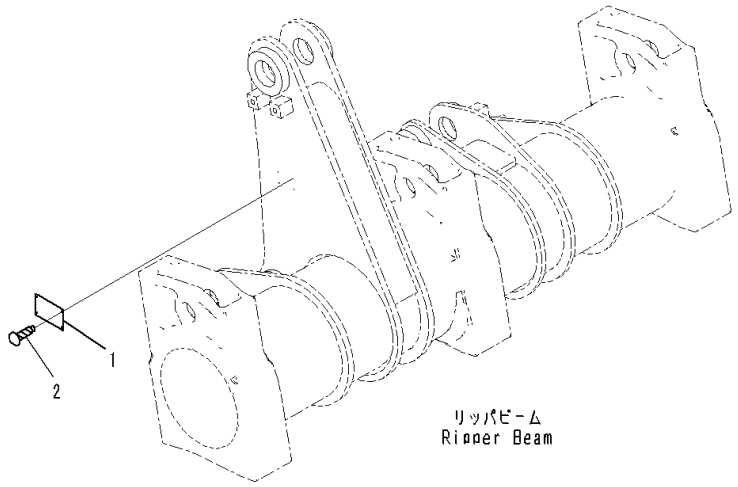

Index	Code	Part Number	Description	Qty	Serial Number
1	C2	09601-50000	Plate, Name (Limited Supply), EU Regulation, For EU	1	81028-
	C2	09601-60000	Plate, Name (Limited Supply)	1	81028-
2		04418-13060	Screw	4	81028-

FIG. T2400-006001 Ripper Beam and Arm, For Variable Digging Angle Giant Ripper Without Push Block, Beam and Arm

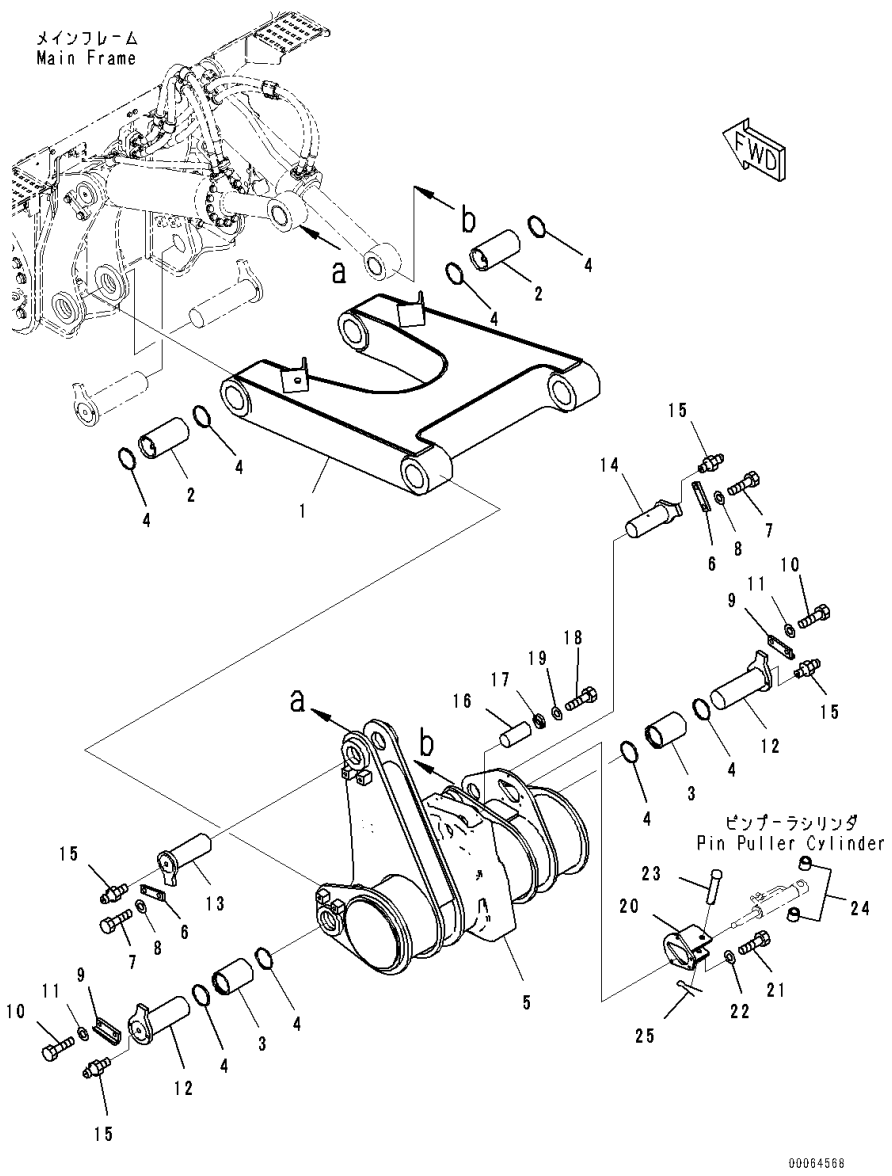

Index	Code	Part Number	Description	Qty	Serial Number
1		17A-78-47211	Arm	1	81028-
2		17A-78-44210	Bushing	2	81028-
3		175-78-61271	Bushing	2	81028-
4		175-78-61281	Seal, Dust	8	81028-
5		17A-79-43111	Beam	1	81028-
6		205-70-61560	Plate	2	81028-
7		01010-82040	Bolt	4	81028-
8		01643-32060	Washer	4	81028-
9		17A-78-43130	Bracket	2	81028-
10		01010-82040	Bolt	4	81028-
11		01643-32060	Washer	4	81028-
12		17A-78-44120	Pin	2	81028-
13		17A-78-44150	Pin	1	81028-
14		17A-78-44180	Pin	1	81028-
15		07020-00000	Fitting, Grease	4	81028-
16		15A-79-12110	Pin	1	81028-
17		175-79-61160	Plate	2	81028-
18		01010-81030	Bolt	4	81028-
19		01643-51032	Washer	4	81028-
20		17A-79-43210	Bracket	1	81028-
21		01010-81245	Bolt	4	81028-
22		01643-31232	Washer	4	81028-
23		195-79-52130	Pin	1	81028-
24		195-79-52110	Collar	2	81028-
25		04050-16040	Pin, Cotter	1	81028-

FIG. T2400-006002 Ripper Beam and Arm, Shank and Ripper Point

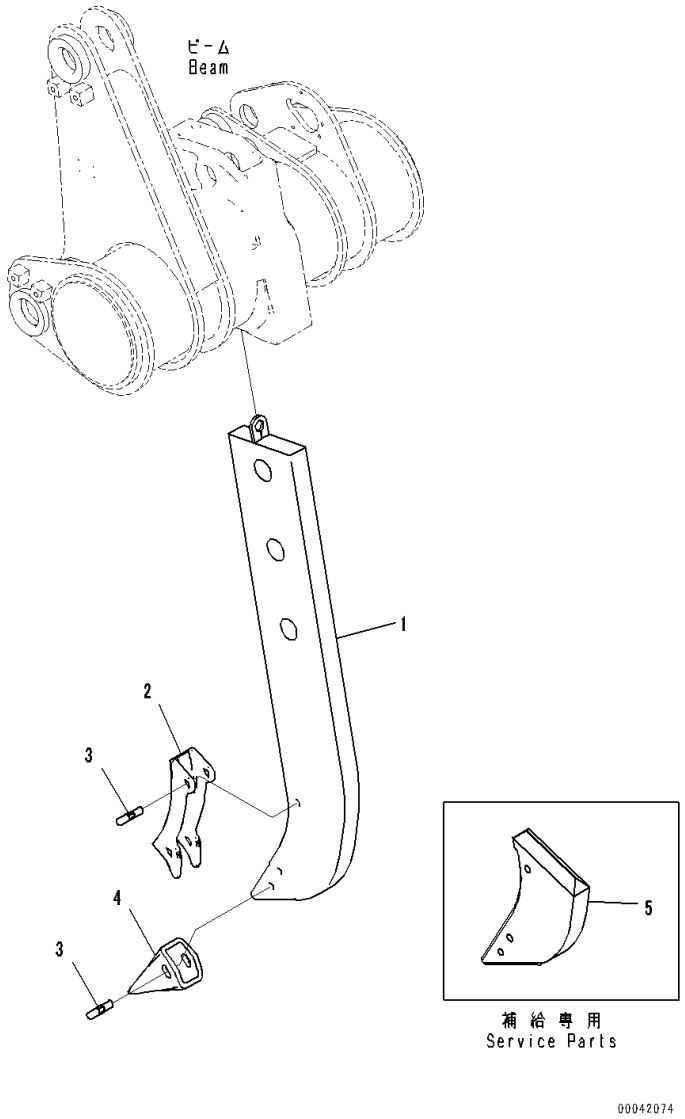

Index	Code	Part Number	Description	Qty	Serial Number
		Note: This list covers following specifications.			
		For Variable Digging Angle Giant Ripper Without Push Block			
		For Variable Digging Angle Giant Ripper, With Pusher Plate			
1		15A-79-11120	Shank	1	81028-
2		195-78-21320	Protector	1	81028-
3		09244-02508	Pin	3	81028-
4		175-78-31230	Point	1	81028-
5		175-78-21693	Shank, Service Parts	1	81028-

FIG. T2400-006003 Ripper Beam and Arm, Inner Parts, Pin Puller Cylinder

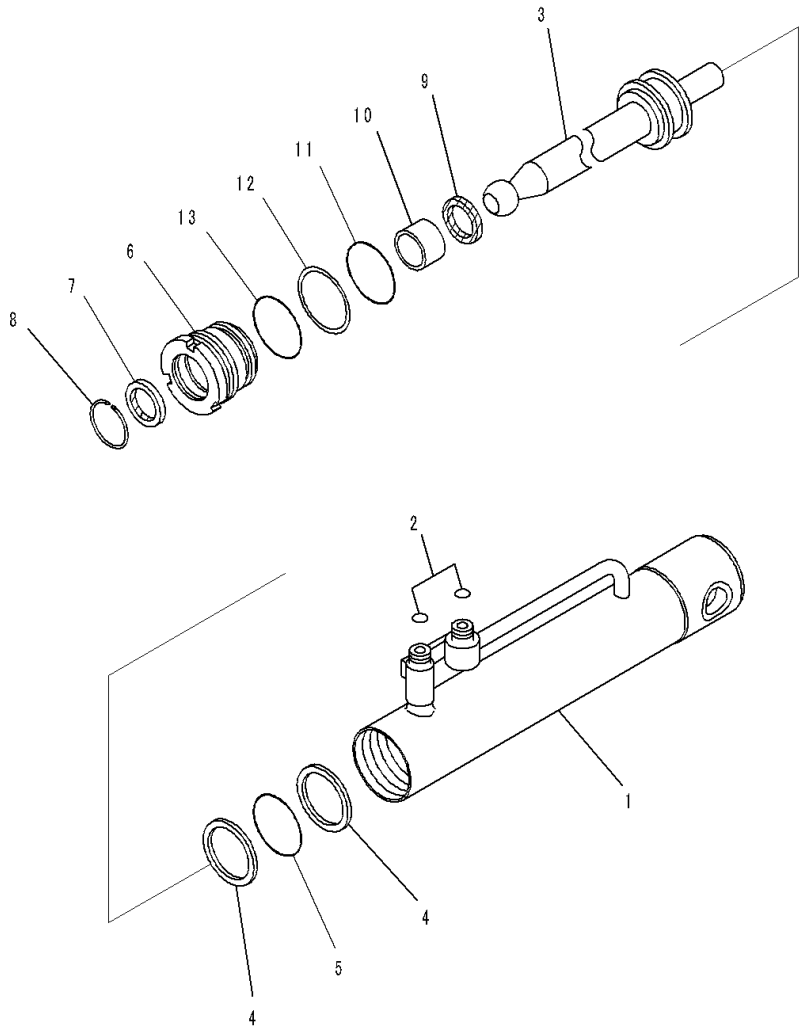

Index	Code	Part Number	Description	Qty	Serial Number
		Note: This list covers following specifications.			
		For Variable Digging Angle Giant Ripper Without Push Block			
		For Variable Digging Angle Giant Ripper, With Pusher Plate			
		707-04-00210	Cylinder Assembly	1	81028-
1		721-11-60950	Cylinder	1	81028-
2		02896-11009	O-ring, (Kit : K16)	2	81028-
3		707-60-30020	Rod	1	81028-
4		707-35-99600	Ring, Back-up, (Kit : K16)	2	81028-
5		707-34-10600	O-ring, (Kit : K16)	1	81028-
6		707-29-60930	Head, Cylinder	1	81028-
7		707-56-30740	Seal, Dust, (Kit : K16)	1	81028-
8		07179-12042	Ring, Snap	1	81028-
9		707-51-30210	Packing, Rod, (Kit : K16)	1	81028-
10		707-52-15050	Bushing	1	81028-
11		07000-12055	O-ring, (Kit : K16)	1	81028-
12		07001-02055	Ring, Back-up, (Kit : K16)	1	81028-
13		07000-12060	O-ring, (Kit : K16)	1	81028-

FIG. T2400-006006 Ripper Beam and Arm, For Variable Digging Angle Giant Ripper Without Push Block, Plate

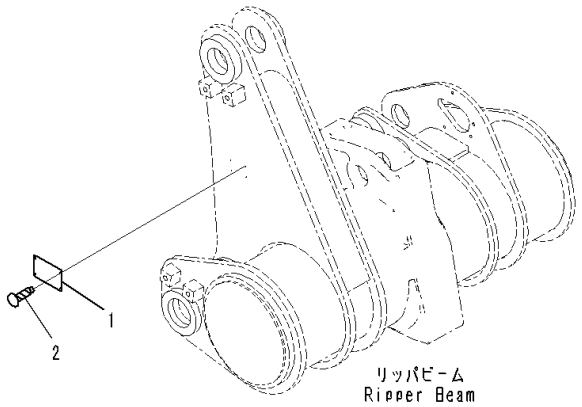

JH004004

Index	Code	Part Number	Description	Qty	Serial Number
1	C2	09601-50000	Plate, Name (Limited Supply), EU Regulation, For EU	1	81028-
	C2	09601-60000	Plate, Name (Limited Supply)	1	81028-
2		04418-13060	Screw	4	81028-

FIG. T2400-006007 Ripper Beam and Arm, Piping

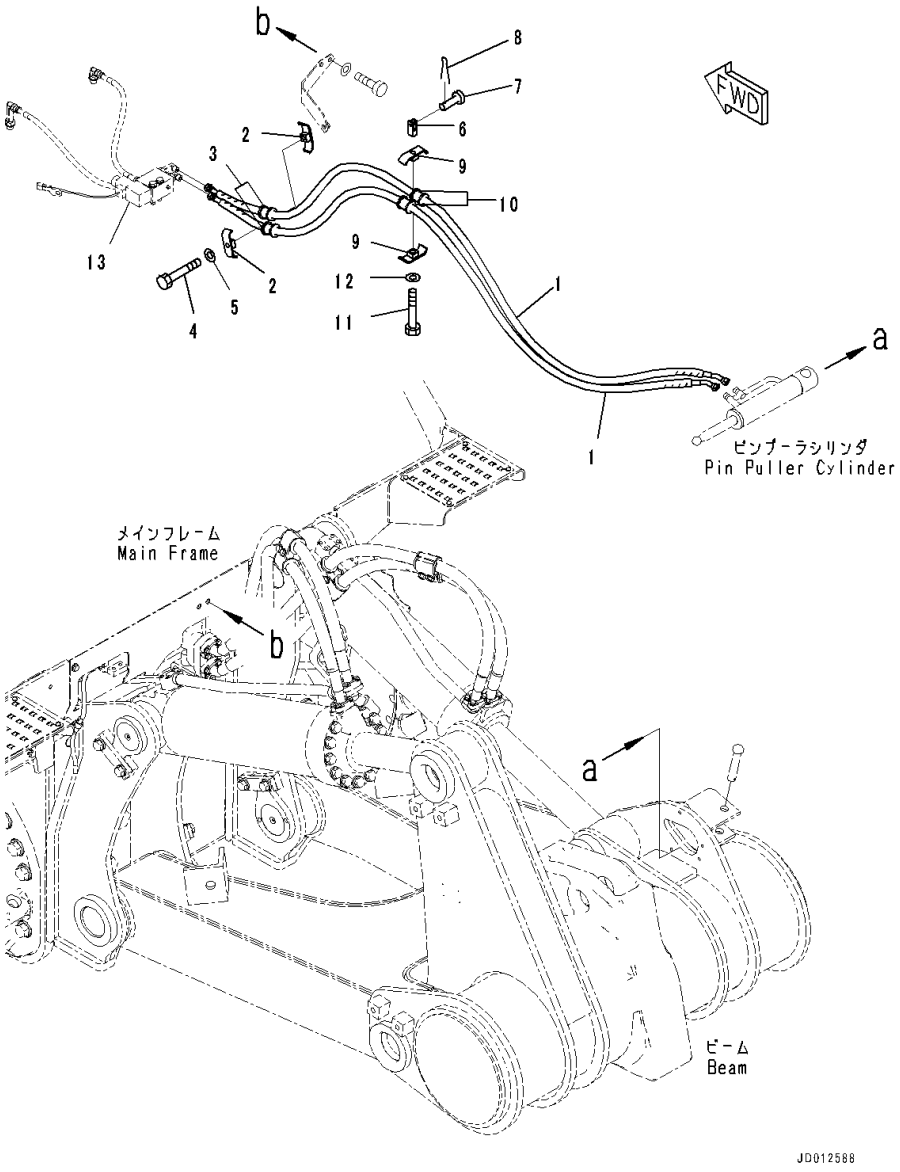

Index	Code	Part Number	Description	Qty	Serial Number
		Note: This list covers following specifications.			
		For Variable Digging Angle Giant Ripper Without Push Block			
		For Variable Digging Angle Giant Ripper, With Pusher Plate			
1		17A-61-41432	Hose	2	81028-
2		07094-30315	Clamp	2	81028-
3		07095-00317	Cushion	2	81028-
4		01010-81265	Bolt	1	81028-
5		01643-31232	Washer	1	81028-
6		144-947-2850	Yoke	1	81028-
7		04205-11028	Pin	1	81028-
8		04050-13015	Pin	1	81028-
9		07094-30315	Clamp	2	81028-
10		07095-00317	Cushion	2	81028-
11		01010-81060	Bolt	1	81028-
12		01643-31032	Washer	1	81028-
13		(17A-79-41310)	Body(Refer to Page 451)		-
		(17A-79-41310)	Body(Refer to Page 452)		-

FIG. T2400-006008 Ripper Beam and Arm, Bracket

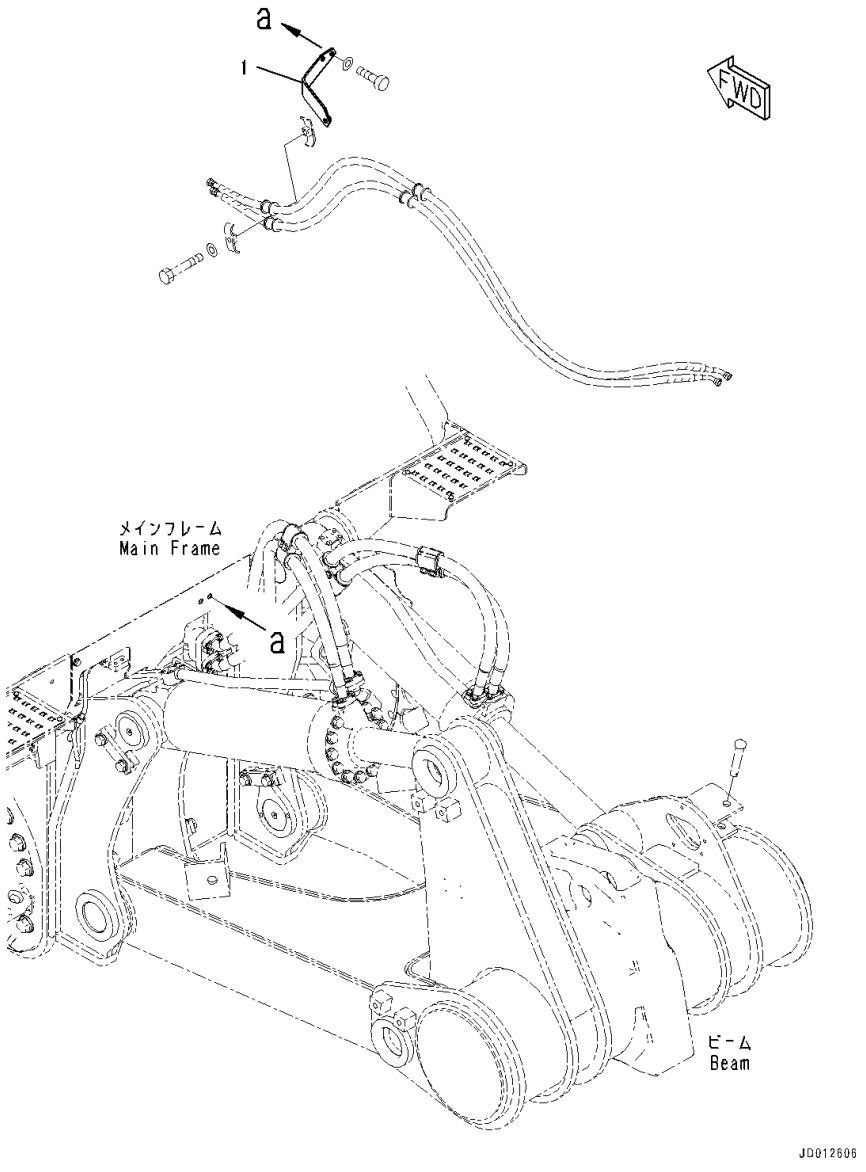

Index	Code	Part Number	Description	Qty	Serial Number
		Note: This list covers following specifications.			
		For Variable Digging Angle Giant Ripper Without Push Block			
		For Variable Digging Angle Giant Ripper, With Pusher Plate			
1		17A-61-41420	Bracket	1	81028-

FIG. T2400-007001 Ripper Beam and Arm, For Variable Digging Angle Giant Ripper, With Pusher Plate, Beam and Arm

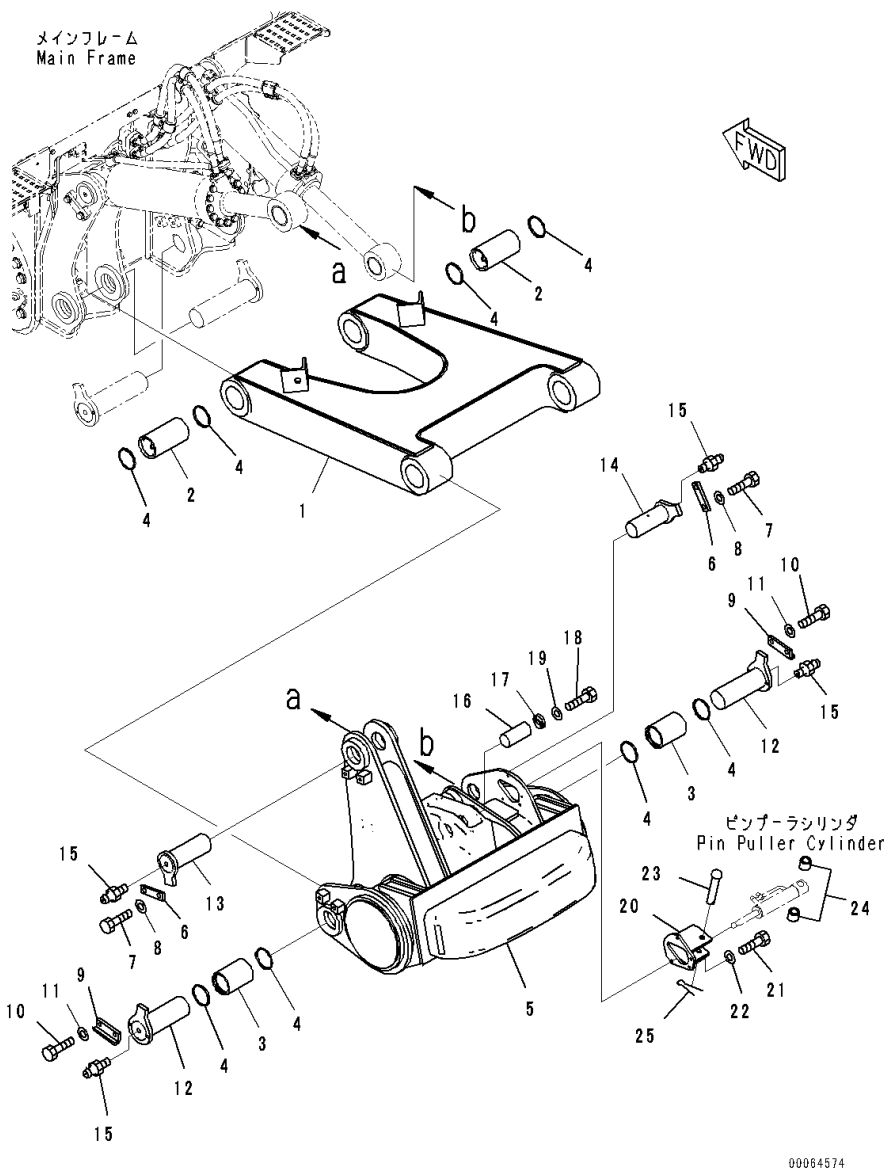

Index	Code	Part Number	Description	Qty	Serial Number
1		17A-78-47211	Arm	1	81028-
2		17A-78-44210	Bushing	2	81028-
3		175-78-61271	Bushing	2	81028-
4		175-78-61281	Seal, Dust	8	81028-
5		17A-79-43310	Beam	1	81028-
6		205-70-61560	Plate	2	81028-
7		01010-82040	Bolt	4	81028-
8		01643-32060	Washer	4	81028-
9		17A-78-43130	Bracket	2	81028-
10		01010-82040	Bolt	4	81028-
11		01643-32060	Washer	4	81028-
12		17A-78-44120	Pin	2	81028-
13		17A-78-44150	Pin	1	81028-
14		17A-78-44180	Pin	1	81028-
15		07020-00000	Fitting, Grease	4	81028-
16		15A-79-12110	Pin	1	81028-
17		175-79-61160	Plate	2	81028-
18		01010-81030	Bolt	4	81028-
19		01643-51032	Washer	4	81028-
20		17A-79-43210	Bracket	1	81028-
21		01010-81245	Bolt	4	81028-
22		01643-31232	Washer	4	81028-
23		195-79-52130	Pin	1	81028-
24		195-79-52110	Collar	2	81028-
25		04050-16040	Pin, Cotter	1	81028-

FIG. T2400-007006 Ripper Beam and Arm, For Variable Digging Angle Giant Ripper, With Pusher Plate, Plate

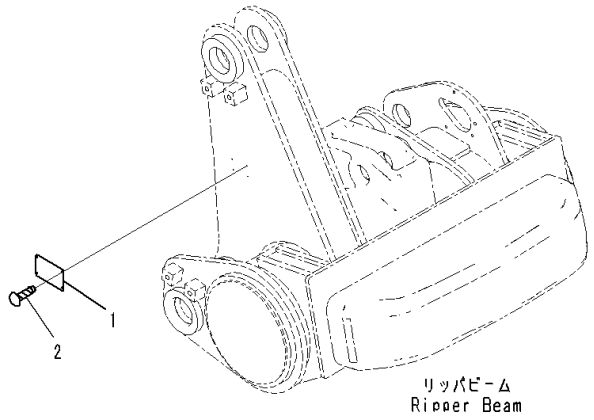

Index	Code	Part Number	Description	Qty	Serial Number
1	C2	09601-50000	Plate, Name (Limited Supply), EU Regulation, For EU	1	81028-
	C2	09601-60000	Plate, Name (Limited Supply)	1	81028-
2		04418-13060	Screw	4	81028-

FIG. T2440-001001 Ripper Mounting

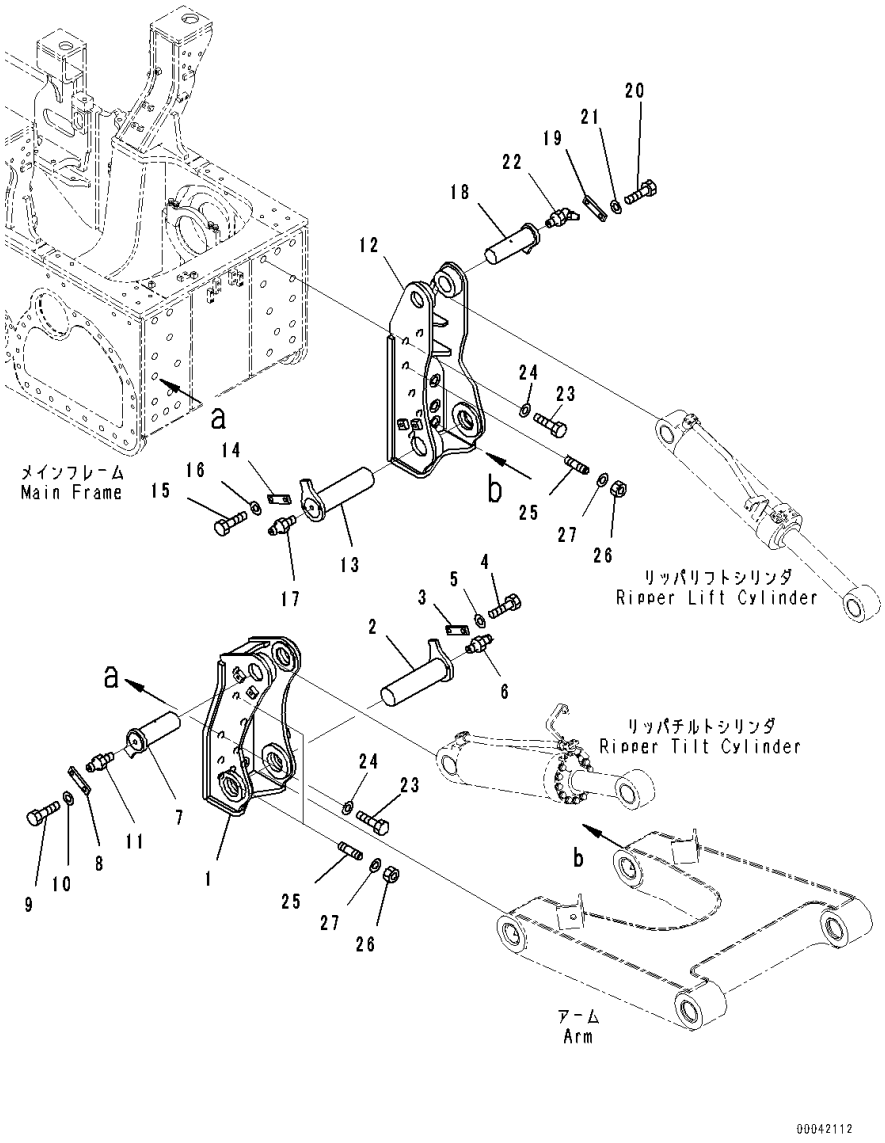

Index	Code	Part Number	Description	Qty	Serial Number
1		17A-78-41112	Bracket	1	81028-
2		17A-78-44110	Pin	1	81028-
3		205-70-61560	Plate	1	81028-
4		01010-82040	Bolt	2	81028-
5		01643-32060	Washer	2	81028-
6		07020-00000	Fitting, Grease	1	81028-
7		17A-78-44150	Pin	1	81028-
8		205-70-61560	Plate	1	81028-
9		01010-82040	Bolt	2	81028-
10		01643-32060	Washer	2	81028-
11		07020-00000	Fitting, Grease	1	81028-
12		17A-78-47920	Bracket	1	81084-
13		17A-78-44110	Pin	1	81028-
14		205-70-61560	Plate	1	81028-
15		01010-82040	Bolt	2	81028-
16		01643-32060	Washer	2	81028-
17		07020-00000	Fitting, Grease	1	81028-
18		17A-78-44161	Pin	1	81028-
19		205-70-61560	Plate	1	81028-
20		01010-82040	Bolt	2	81028-
21		01643-32060	Washer	2	81028-
22		07020-00675	Fitting, Grease	1	81028-
23		01018-33990	Bolt	14	81028-
24		195-69-11140	Washer	14	81028-
25		195-78-11270	Stud	4	81028-
26		195-69-11131	Nut	4	81028-
27		195-69-11140	Washer	4	81028-

FIG. T2460-001001 Ripper Hydraulic Piping, Variable Gauge Type

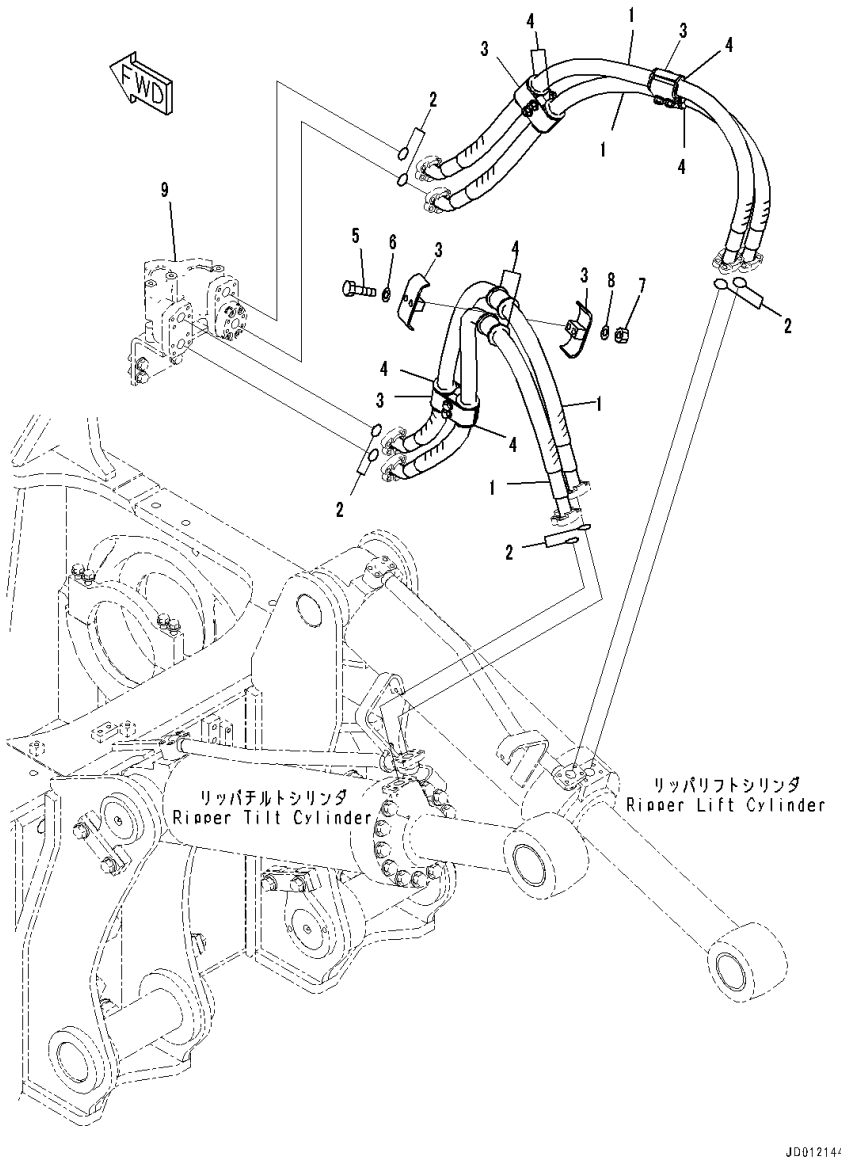

Index	Code	Part Number	Description	Qty	Serial Number
1		07120-01016	Hose, Flange Type	4	81028-
2		07000-13032	O-ring	8	81028-
3		07094-31024	Clamp	8	81028-
4		07095-01035	Cushion	8	81028-
5		01010-81275	Bolt	8	81028-
6		01643-31232	Washer	8	81028-
7		01580-11210	Nut	8	81028-
8		01643-31232	Washer	8	81028-
9		(17A-78-42151)	Block(Refer to Page 447)		-
		(17A-78-42151)	Block(Refer to Page 449)		-

FIG. T2470-001001 Ripper Point Lamp

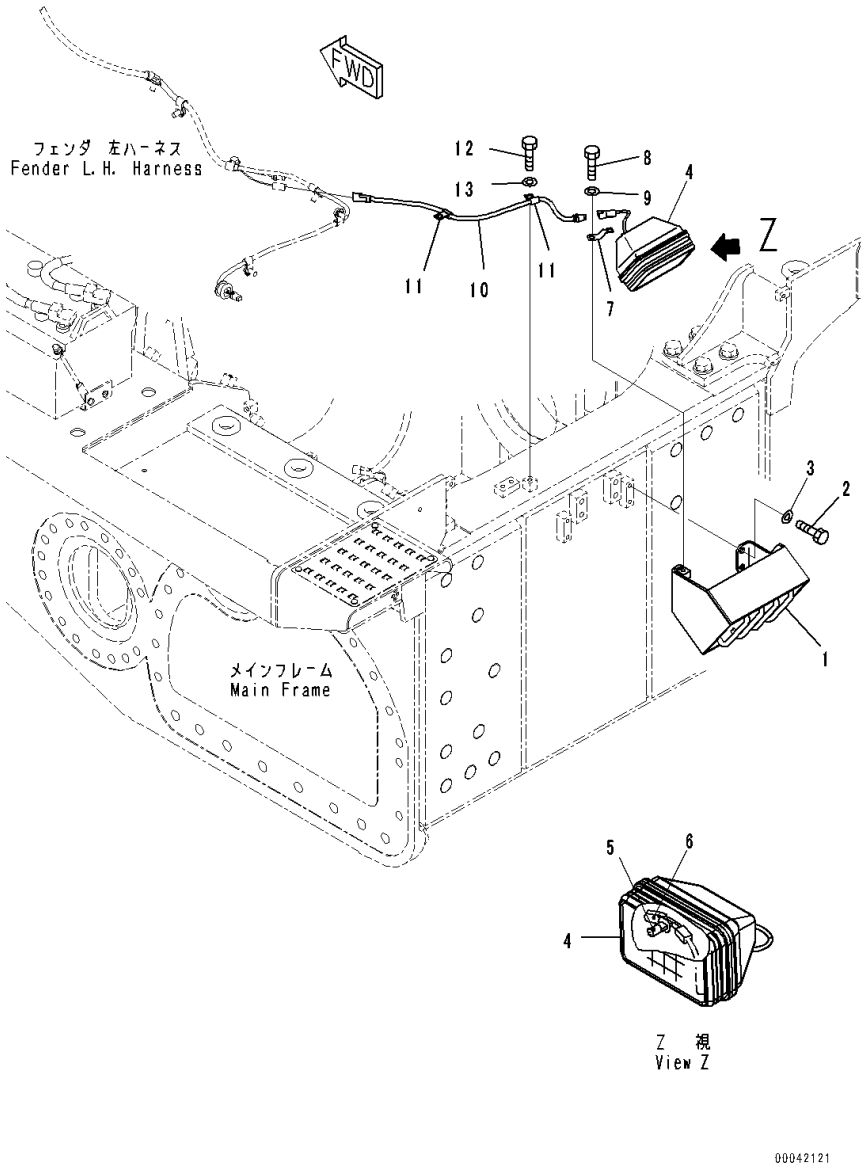

Index	Code	Part Number	Description	Qty	Serial Number
1		17A-06-41791	Cover	1	81028-
2		01010-81230	Bolt	4	81028-
3		01643-31232	Washer	4	81028-
4		17A-06-17931	Lamp Assembly, Working	1	81028-
5		17A-06-17970	• Bulb, 70watt	1	81028-
6		17A-06-17980	• Sleeve	1	81028-
7		08193-21012	Clip	1	81028-
8		01010-81225	Bolt	1	81028-
9		01643-31232	Washer	1	81028-
10		17A-06-41261	Wiring Harness	1	81028-
11		04434-51012	Clip	2	81028-
12		01010-81225	Bolt	2	81028-
13		01643-31232	Washer	2	81028-

FIG. T2810-001001 Drawbar

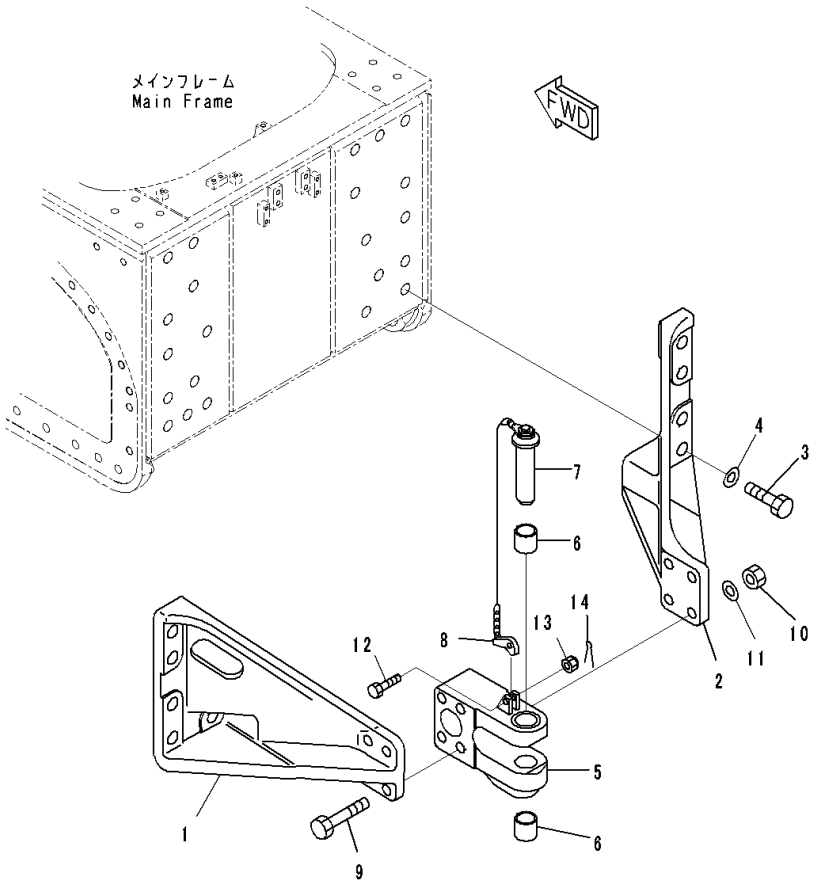

Index	Code	Part Number	Description	Qty	Serial Number
1		175-69-21111	Bracket	1	81028-
2		175-69-21121	Bracket	1	81028-
3		01018-33990	Bolt	10	81028-
4		195-69-11140	Washer	10	81028-
		175-69-00012	Drawbar Assembly	1	81028-
5		175-69-21212	• Drawbar	1	81028-
6		195-69-11230	• Bushing	2	81028-
		195-69-11226	Pin Assembly	1	81028-
7		195-69-11280	• Pin	1	81028-
8		09249-10016	• Latch	1	81028-
9		170-69-11143	Bolt	4	81028-
10		01580-03326	Nut	4	81028-
11		01643-33380	Washer	4	81028-
12		01052-51675	Bolt	1	81028-
13		01592-31619	Nut	1	81028-
14		04050-14030	Pin, Cotter	1	81028-

FIG. T2820-001001 Counterweight

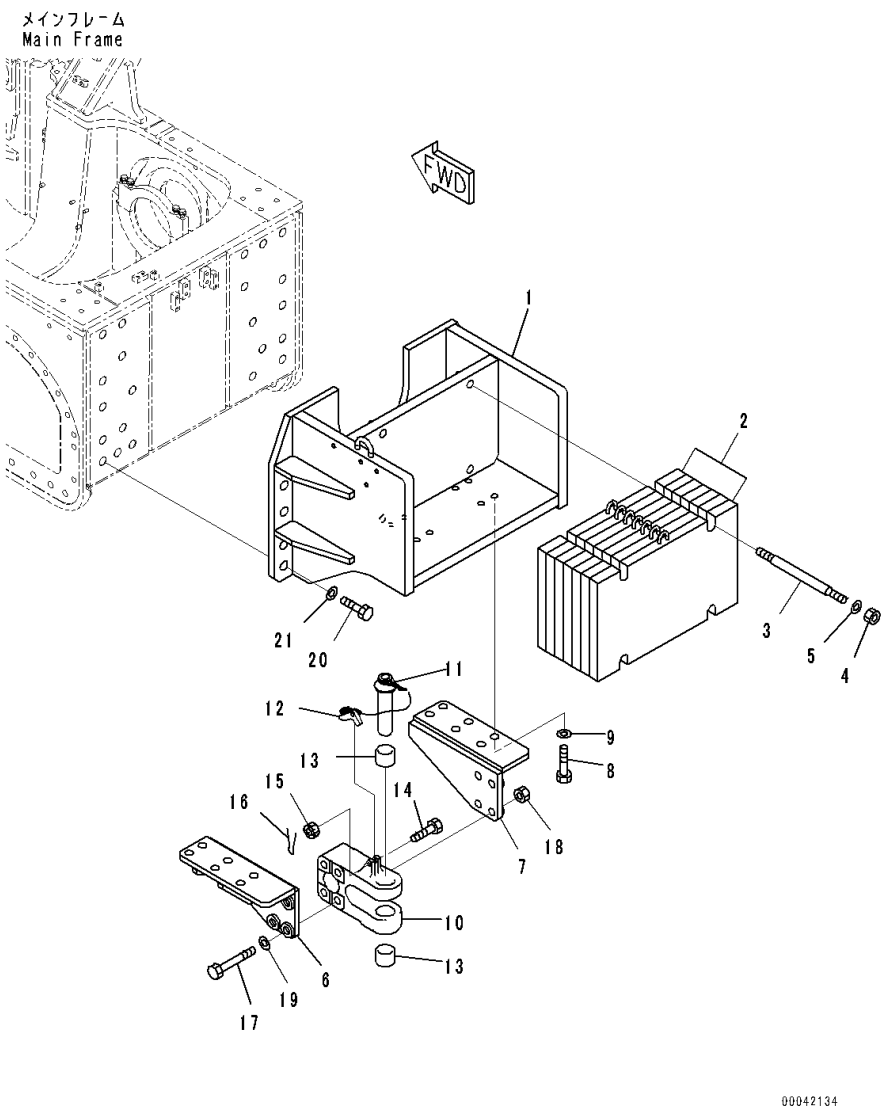

Index	Code	Part Number	Description	Qty	Serial Number
		175-69-00023	Counter Group	1	81028-
1		175-69-22113	• Bracket	1	81260-
2		195-69-12121	• Weight	7	81028-
3		175-69-22140	• Bolt	4	81028-
4		01580-13024	• Nut	4	81028-
5		01643-33080	• Washer	4	81028-
6		195-69-12141	• Bracket	1	81028-
7		195-69-12151	• Bracket	1	81028-
8		01010-83075	• Bolt	12	81028-
9		01643-33080	• Washer	12	81028-
		175-69-00014	• Drawbar Assembly	1	81028-
10		175-69-21212	• • Drawbar	1	81028-
		195-69-11226	• • Pin Assembly	1	81028-
11		195-69-11280	• • • Pin	1	81028-
12		09249-10016	• • • Latch	1	81028-
13		195-69-11230	• • Bushing	2	81028-
14		01052-51675	• Bolt	1	81028-
15		01592-31619	• Nut	1	81028-
16		04050-14030	• Pin, Cotter	1	81028-
17		170-69-11143	• Bolt	4	81028-
18		07165-13336	• Nut	4	81028-
19		01643-33380	• Washer	4	81028-
20		01018-33990	Bolt	10	81028-
21		195-69-11140	Washer	10	81028-

FIG. T2820-002001 Counterweight, For Coal Dozer

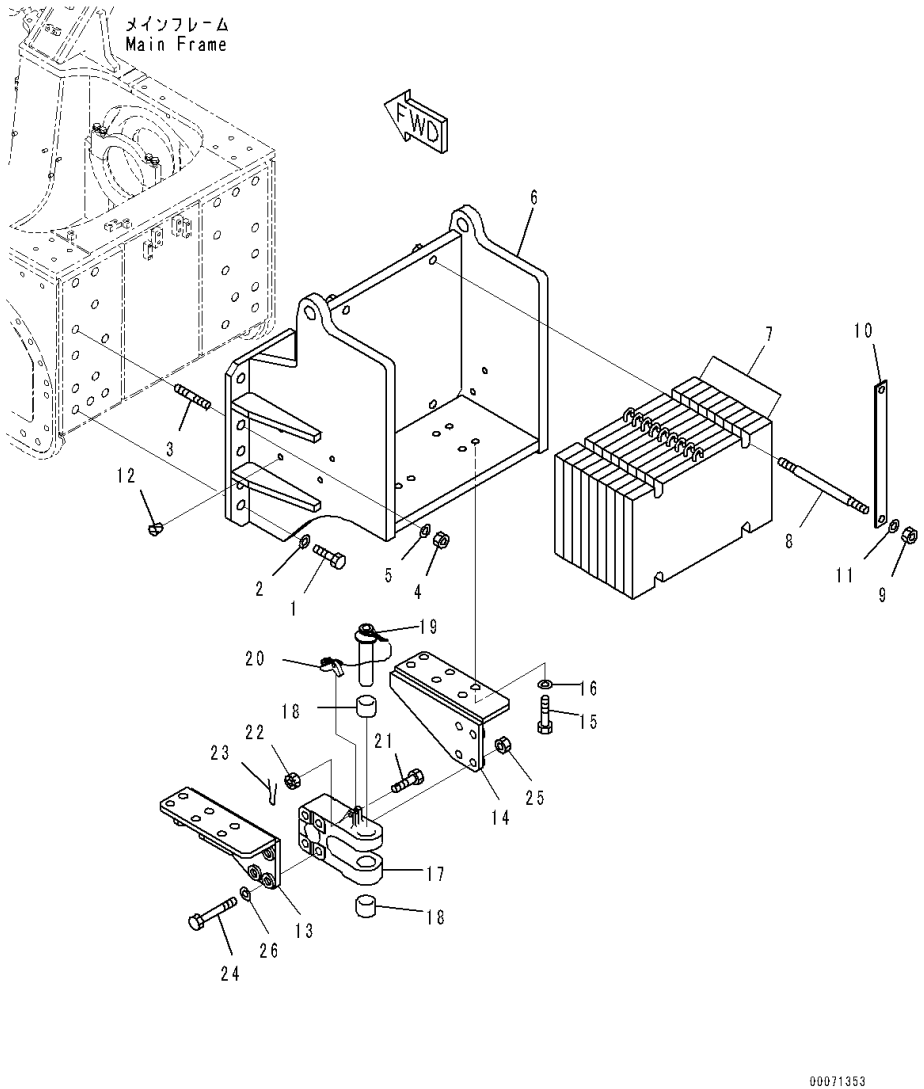

Index	Code	Part Number	Description	Qty	Serial Number
1		01018-33990	Bolt	8	81028-
2		195-69-11140	Washer	8	81028-
3		195-78-11270	Stud	4	81028-
4		195-69-11131	Nut	4	81028-
5		195-69-11140	Washer	4	81028-
6		17A-69-41311	Bracket	1	81265-
7		17A-69-41320	Weight	9	81028-
8		198-69-21160	Bolt	4	81028-
9		01580-13024	Nut	4	81028-
10		17A-69-41330	Plate	2	81028-
11		01643-33080	Washer	4	81028-
12		07049-02430	Plug	8	81028-
13		195-69-12141	Bracket	1	81028-
14		195-69-12151	Bracket	1	81028-
15		01010-83075	Bolt	12	81028-
16		01643-33080	Washer	12	81028-
		175-69-00012	Drawbar Assembly	1	81028-
17		175-69-21212	• Drawbar	1	81028-
18		195-69-11230	• Bushing	2	81028-
		195-69-11226	Pin Assembly	1	81028-
19		195-69-11280	• Pin	1	81028-
20		09249-10016	• Latch	1	81028-
21		01052-51675	Bolt	1	81028-
22		01592-31619	Nut	1	81028-
23		04050-14030	Pin, Cotter	1	81028-
24		170-69-11143	Bolt	4	81028-
25		01580-03326	Nut	4	81028-
26		01643-33380	Washer	4	81028-

FIG. T2850-001001 Additional Rear Working Lamp

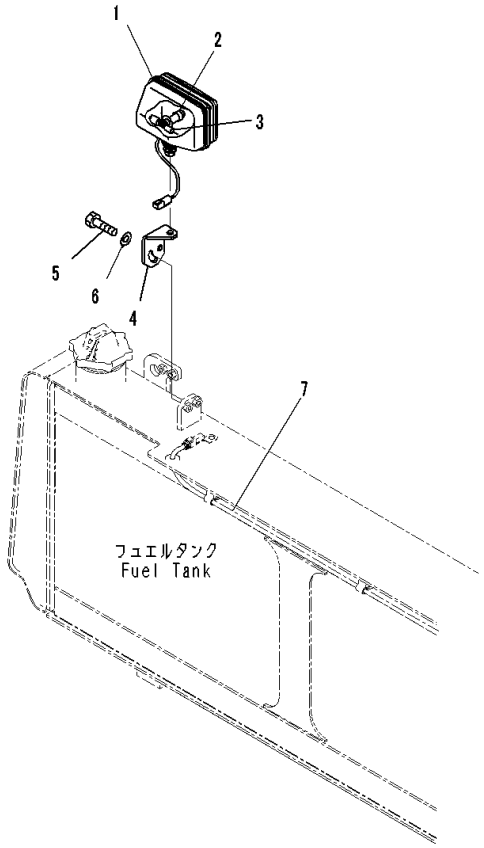

Index	Code	Part Number	Description	Qty	Serial Number
1		17A-06-17931	Lamp Assembly, Working	1	81028-
2		17A-06-17970	• Bulb, 70watt	1	81028-
3		17A-06-17980	• Sleeve	1	81028-
4		17A-06-41591	Plate	1	81028-
5		01010-81235	Bolt	2	81028-
6		01643-31232	Washer	2	81028-
7		(17A-06-41253)	Wiring Harness(Refer to Page 281)		-

MARKS AND PLATES

FIG. U0100-049001 Marks and Plates, English, Text Type, English, USA and Puerto Rico

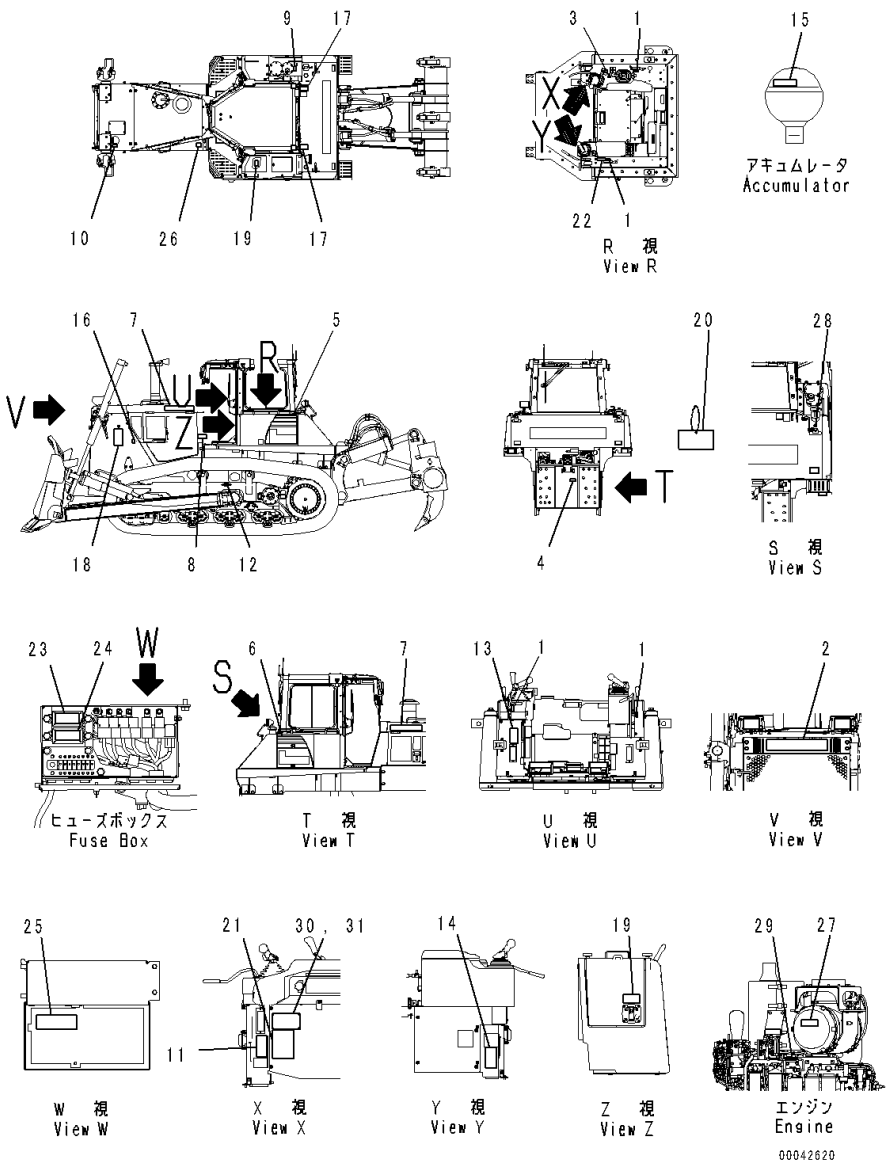

Index	Code	Part Number	Description	Qty	Serial Number
1		14X-98-11170	Plate, Operating, Lock	4	81105-
2		09690-F0630	Plate, Mark	1	81105-
3		17A-98-11180	Plate, Horn	1	81105-
4		09690-M0063	Mark, Komatsu Logo	1	81105-81252
5		17A-98-41111	Mark	1	81105-
6		17A-98-41122	Mark	1	81105-
7		09690-F0560	Plate, Mark	2	81105-
8		20Y-00-41530	Plate, Symbol, Ecot3	1	81105-
9		09653-03001	Plate, Warning, High Temperature	1	81105-
10		09668-03001	Plate, Warning, Hot Water	1	81105-
11		09654-33001	Plate, Warning, Before Leaving Seat	1	81105-
12		09657-03003	Plate, Warning, Track Adjustment	2	81105-
13		09651-03001	Plate, Warning, Read Manual Before Operating	1	81105-
14		09802-13000	Plate, Warning, Back-up	1	81105-
15		09659-53000	Plate, Warning, Explosive Hazard	1	81105-
16		09667-03001	Plate, Caution, Rotating Object	2	81105-
17		17A-98-23920	Plate	2	81105-
18		09812-03000	Plate, Caution, Do not Approach	2	81105-
19		09808-03000	Plate, Warning, Battery Cables	2	81105-
20		09963-03001	Tag, Danger, Do Not Operate	1	81105-
21		17A-98-41182	Oil Chart	1	81105-
22		09649-03012	Plate, Engine Stop	1	81105-
23		17A-98-41190	Plate	1	81105-
24		17A-98-41210	Plate	1	81105-
25		17A-98-41220	Plate	1	81105-
26		17A-98-41160	Plate	1	81105-
27		09637-30163	Plate, Service Instruction, Air Cleaner	1	81105-
28		09669-0000E	Plate, Symbol, Fuel Filler	1	81105-
29		6217-71-6470	Plate, Fuel Filter Replace	1	81105-
30	C2	09602-10001	Plate, Name (Limited Supply)	1	81105-
31		04418-13060	Screw	4	81105-

FIG. U0100-051001 Marks and Plates, English

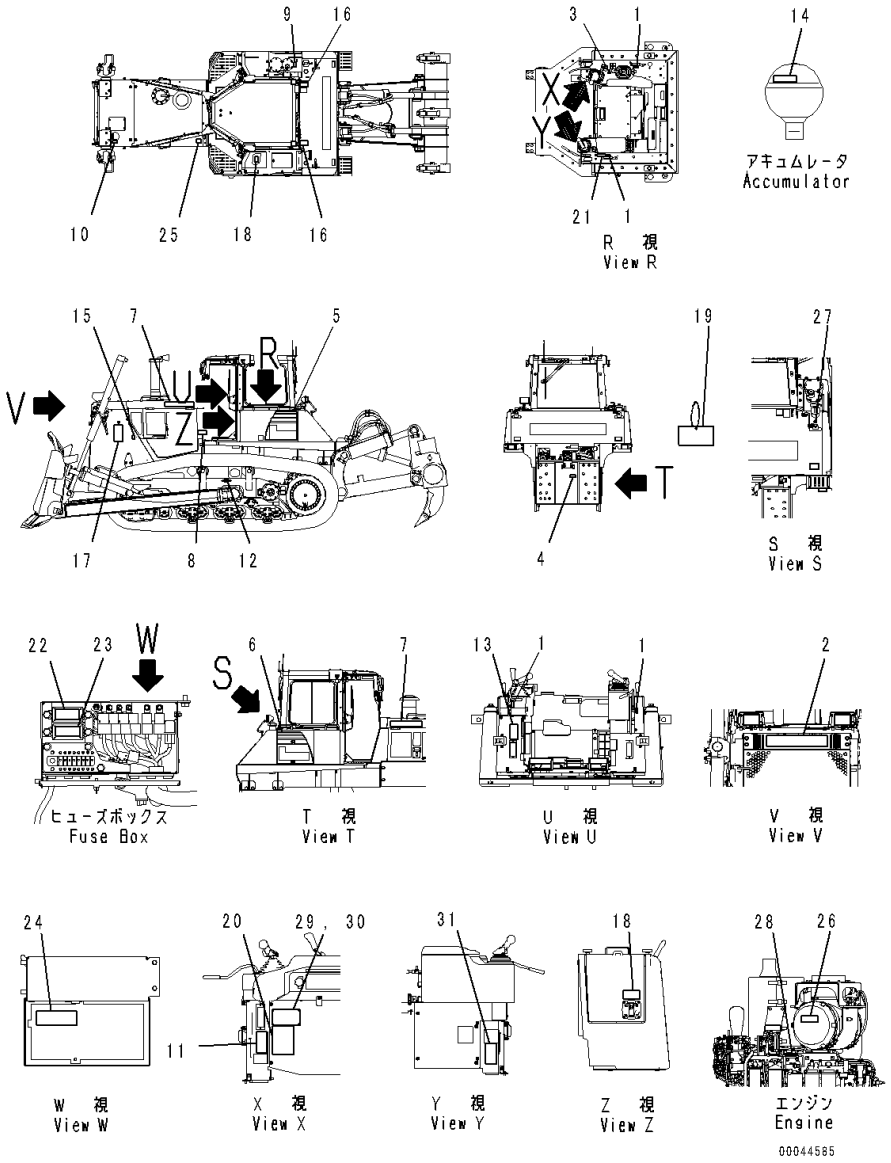

Index	Code	Part Number	Description	Qty	Serial Number
1		14X-98-11170	Plate, Operating, Lock	4	81105-
2		09690-F0630	Plate, Mark	1	81105-
3		17A-98-11180	Plate, Horn	1	81105-
4		09690-M0063	Mark, Komatsu Logo	1	81105-81252
5		17A-98-41111	Mark	1	81105-
6		17A-98-41122	Mark	1	81105-
7		09690-F0560	Plate, Mark	2	81105-
8		20Y-00-41530	Plate, Symbol, Ecot3	1	81105-
9		09653-A0481	Plate, Warning, High Temperature	1	81105-
10		09653-A0481	Plate, Warning, High Temperature	1	81105-
11		09654-B0641	Plate, Warning, Before Leaving Seat	1	81105-
12		09657-A0881	Decal, Warning, Track Adjustment	2	81105-
13		09651-A0641	Plate, Warning, Read Manual Before Operating	1	81105-
14		09659-A057B	Plate, Warning, Explosive Hazard	1	81105-
15		09667-A0481	Plate, Caution, Rotating Object	2	81105-
16		09805-C0881	Plate, Caution, Do not Get On	2	81105-
17		09806-B1683	Decal, Danger, Keep a Safe Distance	2	81105-
18		09808-A0881	Plate, Warning, Battery Cables	2	81105-
19		09963-A1640	Tag, Danger, Do Not Operate	1	81105-
20		17A-98-41182	Oil Chart	1	81105-
21		09649-03012	Plate, Engine Stop	1	81105-
22		17A-98-41190	Plate	1	81105-
23		17A-98-41210	Plate	1	81105-
24		17A-98-41220	Plate	1	81105-
25		17A-98-41160	Plate	1	81105-
26		09637-30163	Plate, Service Instruction, Air Cleaner	1	81105-
27		09669-0000E	Plate, Symbol, Fuel Filler	1	81105-
28		6217-71-6470	Plate, Fuel Filter Replace	1	81105-
29	C2	09602-10001	Plate, Name (Limited Supply)	1	81105-
30		04418-13060	Screw	4	81105-
31		09802-13000	Plate, Warning, Back-up	1	81105-

FIG. U0100-052001 Marks and Plates, French-English

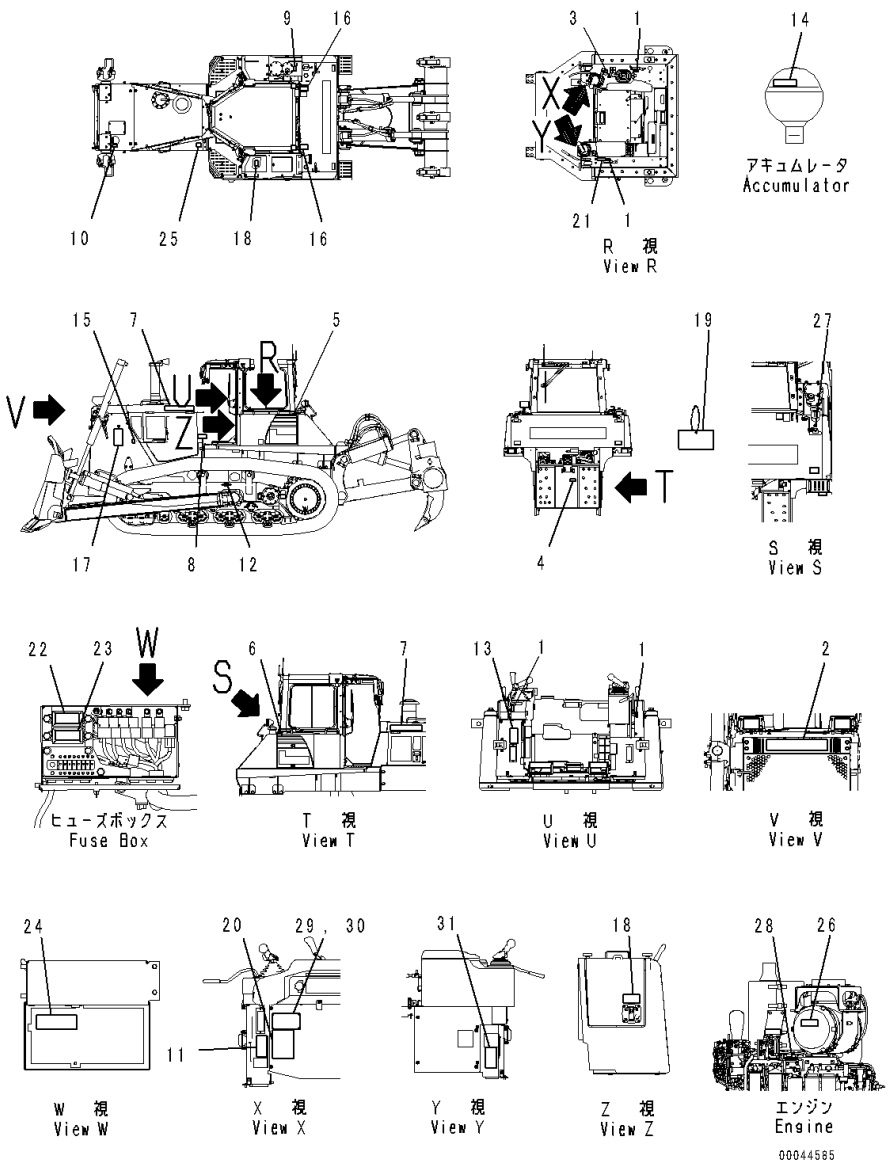

Index	Code	Part Number	Description	Qty	Serial Number
1		14X-98-11170	Plate, Operating, Lock	4	81105-
2		09690-F0630	Plate, Mark	1	81105-
3		17A-98-11180	Plate, Horn	1	81105-
4		09690-M0063	Mark, Komatsu Logo	1	81105-81252
5		17A-98-41111	Mark	1	81105-
6		17A-98-41122	Mark	1	81105-
7		09690-F0560	Plate, Mark	2	81105-
8		20Y-00-41530	Plate, Symbol, Ecot3	1	81105-
9		09653-A0481	Plate, Warning, High Temperature	1	81105-
10		09653-A0481	Plate, Warning, High Temperature	1	81105-
11		09654-B0641	Plate, Warning, Before Leaving Seat	1	81105-
12		09657-A0881	Decal, Warning, Track Adjustment	2	81105-
13		09651-A0641	Plate, Warning, Read Manual Before Operating	1	81105-
14		09659-A057B	Plate, Warning, Explosive Hazard	1	81105-
15		09667-A0481	Plate, Caution, Rotating Object	2	81105-
16		09805-C0881	Plate, Caution, Do not Get On	2	81105-
17		09806-B1683	Decal, Danger, Keep a Safe Distance	2	81105-
18		09808-A0881	Plate, Warning, Battery Cables	2	81105-
19		09963-A1640	Tag, Danger, Do Not Operate	1	81105-
20		17A-98-41182	Oil Chart	1	81105-
21		09649-05012	Plate	1	81105-
22		17A-98-41190	Plate	1	81105-
23		17A-98-41210	Plate	1	81105-
24		17A-98-41220	Plate	1	81105-
25		17A-98-41160	Plate	1	81105-
26		09637-30263	Plate	1	81105-
27		09669-0000E	Plate, Symbol, Fuel Filler	1	81105-
28		6217-71-6490	Plate, Fuel Filter Replace	1	81105-
29	C2	09602-10001	Plate, Name (Limited Supply)	1	81105-
30		04418-13060	Screw	4	81105-
31		09802-15000	Plate, Warning, Back-up	1	81105-

FIG. U0100-053001 Marks and Plates, German-English

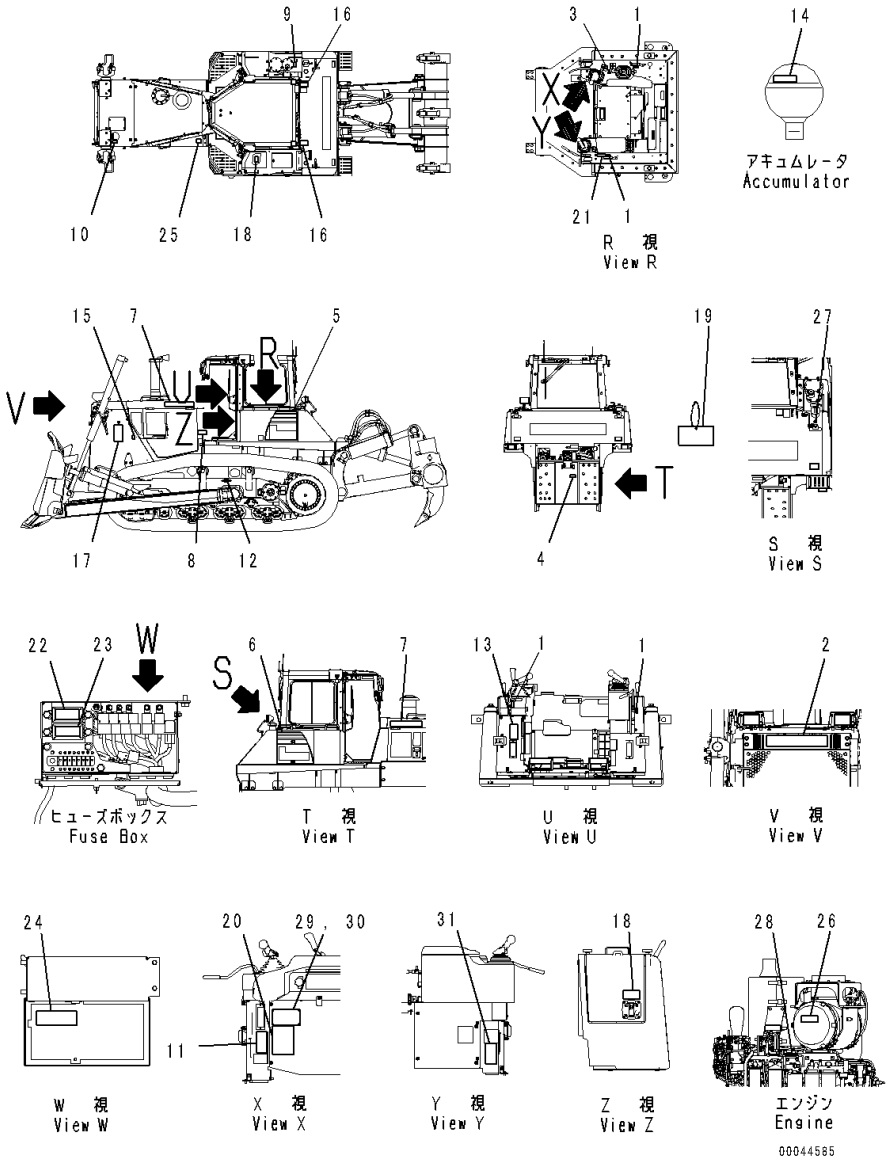

Index	Code	Part Number	Description	Qty	Serial Number
1		14X-98-11170	Plate, Operating, Lock	4	81105-
2		09690-F0630	Plate, Mark	1	81105-
3		17A-98-11180	Plate, Horn	1	81105-
4		09690-M0063	Mark, Komatsu Logo	1	81105-81252
5		17A-98-41111	Mark	1	81105-
6		17A-98-41122	Mark	1	81105-
7		09690-F0560	Plate, Mark	2	81105-
8		20Y-00-41530	Plate, Symbol, Ecot3	1	81105-
9		09653-A0481	Plate, Warning, High Temperature	1	81105-
10		09653-A0481	Plate, Warning, High Temperature	1	81105-
11		09654-B0641	Plate, Warning, Before Leaving Seat	1	81105-
12		09657-A0881	Decal, Warning, Track Adjustment	2	81105-
13		09651-A0641	Plate, Warning, Read Manual Before Operating	1	81105-
14		09659-A057B	Plate, Warning, Explosive Hazard	1	81105-
15		09667-A0481	Plate, Caution, Rotating Object	2	81105-
16		09805-C0881	Plate, Caution, Do not Get On	2	81105-
17		09806-B1683	Decal, Danger, Keep a Safe Distance	2	81105-
18		09808-A0881	Plate, Warning, Battery Cables	2	81105-
19		09963-A1640	Tag, Danger, Do Not Operate	1	81105-
20		17A-98-41182	Oil Chart	1	81105-
21		09649-02012	Plate	1	81105-
22		17A-98-41190	Plate	1	81105-
23		17A-98-41210	Plate	1	81105-
24		17A-98-41220	Plate	1	81105-
25		17A-98-41160	Plate	1	81105-
26		09637-81163	Plate	1	81105-
27		09669-0000E	Plate, Symbol, Fuel Filler	1	81105-
28		6217-71-6480	Plate	1	81105-
29	C2	09602-10001	Plate, Name (Limited Supply)	1	81105-
30		04418-13060	Screw	4	81105-
31		09802-12000	Plate	1	81105-

FIG. U0100-054001 Marks and Plates, Spanish-English

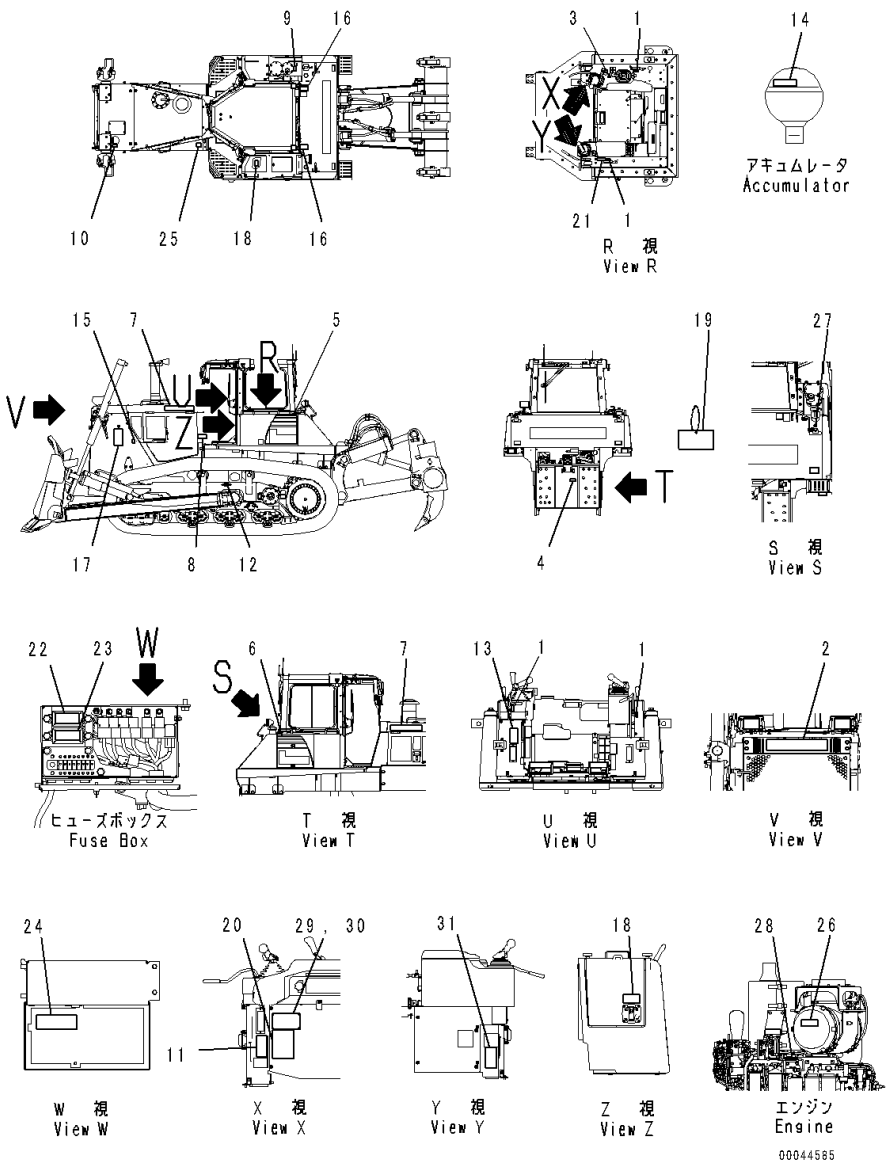

Index	Code	Part Number	Description	Qty	Serial Number
1		14X-98-11170	Plate, Operating, Lock	4	81105-
2		09690-F0630	Plate, Mark	1	81105-
3		17A-98-11180	Plate, Horn	1	81105-
4		09690-M0063	Mark, Komatsu Logo	1	81105-81252
5		17A-98-41111	Mark	1	81105-
6		17A-98-41122	Mark	1	81105-
7		09690-F0560	Plate, Mark	2	81105-
8		20Y-00-41530	Plate, Symbol, Ecot3	1	81105-
9		09653-A0481	Plate, Warning, High Temperature	1	81105-
10		09653-A0481	Plate, Warning, High Temperature	1	81105-
11		09654-B0641	Plate, Warning, Before Leaving Seat	1	81105-
12		09657-A0881	Decal, Warning, Track Adjustment	2	81105-
13		09651-A0641	Plate, Warning, Read Manual Before Operating	1	81105-
14		09659-A057B	Plate, Warning, Explosive Hazard	1	81105-
15		09667-A0481	Plate, Caution, Rotating Object	2	81105-
16		09805-C0881	Plate, Caution, Do not Get On	2	81105-
17		09806-B1683	Decal, Danger, Keep a Safe Distance	2	81105-
18		09808-A0881	Plate, Warning, Battery Cables	2	81105-
19		09963-A1640	Tag, Danger, Do Not Operate	1	81105-
20		17A-98-41182	Oil Chart	1	81105-
21		09649-01012	Plate, Engine Stop	1	81105-
22		17A-98-41190	Plate	1	81105-
23		17A-98-41210	Plate	1	81105-
24		17A-98-41220	Plate	1	81105-
25		17A-98-41160	Plate	1	81105-
26		09637-70163	Decal, Service Instruction, Air Cleaner	1	81105-
27		09669-0000E	Plate, Symbol, Fuel Filler	1	81105-
28		6217-71-6510	Plate	1	81105-
29	C2	09602-10001	Plate, Name (Limited Supply)	1	81105-
30		04418-13060	Screw	4	81105-
31		09802-11000	Plate	1	81105-

FIG. U0100-055001 Marks and Plates, Russian-English

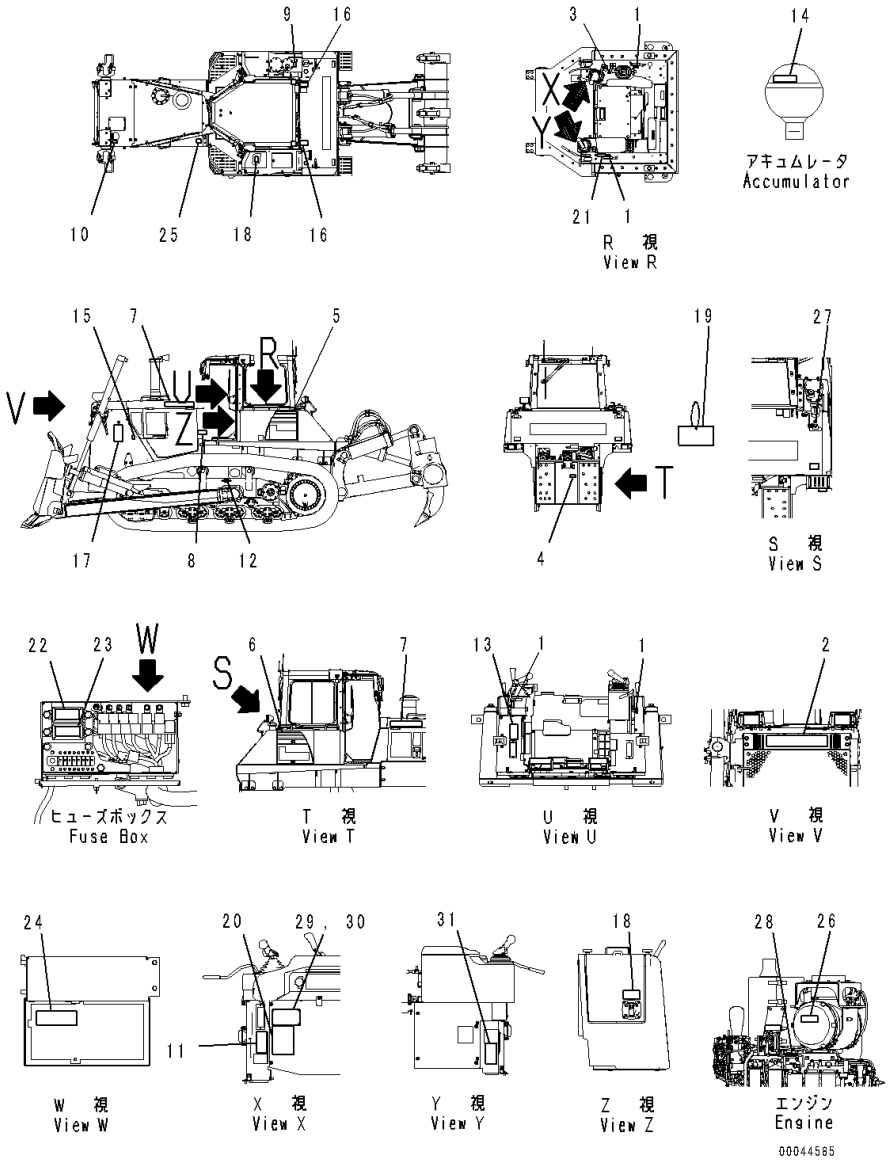

Index	Code	Part Number	Description	Qty	Serial Number
1		14X-98-11170	Plate, Operating, Lock	4	81105-
2		09690-F0630	Plate, Mark	1	81105-
3		17A-98-11180	Plate, Horn	1	81105-
4		09690-M0063	Mark, Komatsu Logo	1	81105-81252
5		17A-98-41111	Mark	1	81105-
6		17A-98-41122	Mark	1	81105-
7		09690-F0560	Plate, Mark	2	81105-
8		20Y-00-41530	Plate, Symbol, Ecot3	1	81105-
9		09653-A0481	Plate, Warning, High Temperature	1	81105-
10		09653-A0481	Plate, Warning, High Temperature	1	81105-
11		09654-B0641	Plate, Warning, Before Leaving Seat	1	81105-
12		09657-A0881	Decal, Warning, Track Adjustment	2	81105-
13		09651-A0641	Plate, Warning, Read Manual Before Operating	1	81105-
14		09659-A057B	Plate, Warning, Explosive Hazard	1	81105-
15		09667-A0481	Plate, Caution, Rotating Object	2	81105-
16		09805-C0881	Plate, Caution, Do not Get On	2	81105-
17		09806-B1683	Decal, Danger, Keep a Safe Distance	2	81105-
18		09808-A0881	Plate, Warning, Battery Cables	2	81105-
19		09963-A1640	Tag, Danger, Do Not Operate	1	81105-
20		17A-98-41182	Oil Chart	1	81105-
21		09649-04012	Plate	1	81105-
22		17A-98-41190	Plate	1	81105-
23		17A-98-41210	Plate	1	81105-
24		17A-98-41220	Plate	1	81105-
25		17A-98-41160	Plate	1	81105-
26		09637-40163	Plate	1	81105-
27		09669-0000E	Plate, Symbol, Fuel Filler	1	81105-
28		6217-71-6540	Plate	1	81105-
29	C2	09602-10001	Plate, Name (Limited Supply)	1	81105-
30		04418-13060	Screw	4	81105-
31		09802-14000	Plate	1	81105-

FIG. U0100-056001 Marks and Plates, Persian-English

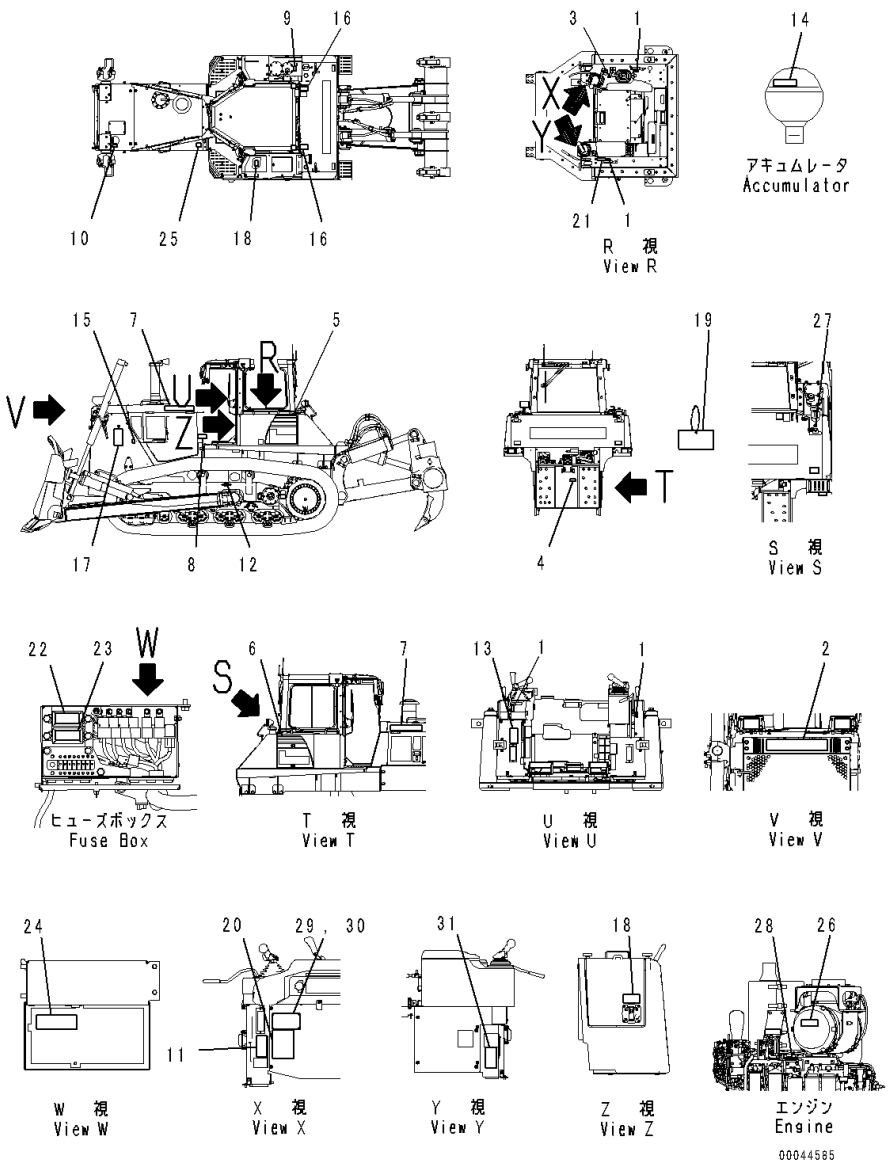

Index	Code	Part Number	Description	Qty	Serial Number
1		14X-98-11170	Plate, Operating, Lock	4	81105-
2		09690-F0630	Plate, Mark	1	81105-
3		17A-98-11180	Plate, Horn	1	81105-
4		09690-M0063	Mark, Komatsu Logo	1	81105-81252
5		17A-98-41111	Mark	1	81105-
6		17A-98-41122	Mark	1	81105-
7		09690-F0560	Plate, Mark	2	81105-
8		20Y-00-41530	Plate, Symbol, Ecot3	1	81105-
9		09653-A0481	Plate, Warning, High Temperature	1	81105-
10		09653-A0481	Plate, Warning, High Temperature	1	81105-
11		09654-B0641	Plate, Warning, Before Leaving Seat	1	81105-
12		09657-A0881	Decal, Warning, Track Adjustment	2	81105-
13		09651-A0641	Plate, Warning, Read Manual Before Operating	1	81105-
14		09659-A057B	Plate, Warning, Explosive Hazard	1	81105-
15		09667-A0481	Plate, Caution, Rotating Object	2	81105-
16		09805-C0881	Plate, Caution, Do not Get On	2	81105-
17		09806-B1683	Decal, Danger, Keep a Safe Distance	2	81105-
18		09808-A0881	Plate, Warning, Battery Cables	2	81105-
19		09963-A1640	Tag, Danger, Do Not Operate	1	81105-
20		17A-98-41182	Oil Chart	1	81105-
21		09649-00412	Plate, Service Instruction	1	81105-
22		17A-98-41190	Plate	1	81105-
23		17A-98-41210	Plate	1	81105-
24		17A-98-41220	Plate	1	81105-
25		17A-98-41160	Plate	1	81105-
26		09637-04163	Plate, Service Instruction	1	81105-
27		09669-0000E	Plate, Symbol, Fuel Filler	1	81105-
28		6217-71-6580	Plate, Caution	1	81105-
29	C2	09602-10001	Plate, Name (Limited Supply)	1	81105-
30		04418-13060	Screw	4	81105-
31		09802-10400	Plate	1	81105-

FIG. U0100-057001 Marks and Plates, Portuguese-English

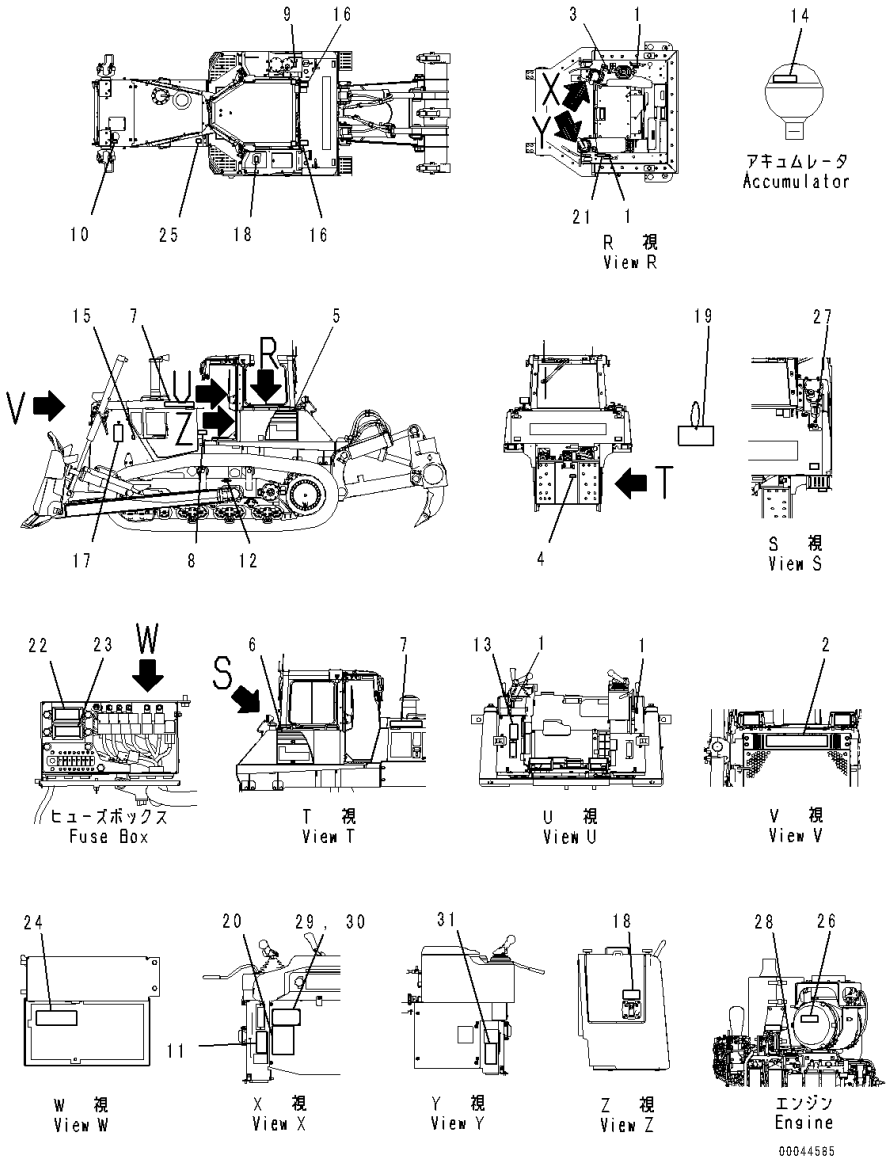

Index	Code	Part Number	Description	Qty	Serial Number
1		14X-98-11170	Plate, Operating, Lock	4	81105-
2		09690-F0630	Plate, Mark	1	81105-
3		17A-98-11180	Plate, Horn	1	81105-
4		09690-M0063	Mark, Komatsu Logo	1	81105-81252
5		17A-98-41111	Mark	1	81105-
6		17A-98-41122	Mark	1	81105-
7		09690-F0560	Plate, Mark	2	81105-
8		20Y-00-41530	Plate, Symbol, Ecot3	1	81105-
9		09653-A0481	Plate, Warning, High Temperature	1	81105-
10		09653-A0481	Plate, Warning, High Temperature	1	81105-
11		09654-B0641	Plate, Warning, Before Leaving Seat	1	81105-
12		09657-A0881	Decal, Warning, Track Adjustment	2	81105-
13		09651-A0641	Plate, Warning, Read Manual Before Operating	1	81105-
14		09659-A057B	Plate, Warning, Explosive Hazard	1	81105-
15		09667-A0481	Plate, Caution, Rotating Object	2	81105-
16		09805-C0881	Plate, Caution, Do not Get On	2	81105-
17		09806-B1683	Decal, Danger, Keep a Safe Distance	2	81105-
18		09808-A0881	Plate, Warning, Battery Cables	2	81105-
19		09963-A1640	Tag, Danger, Do Not Operate	1	81105-
20		17A-98-41182	Oil Chart	1	81105-
21		09649-07012	Plate, Service Instruction	1	81105-
22		17A-98-41190	Plate	1	81105-
23		17A-98-41210	Plate	1	81105-
24		17A-98-41220	Plate	1	81105-
25		17A-98-41160	Plate	1	81105-
26		09637-50263	Plate, Service Instruction	1	81105-
27		09669-0000E	Plate, Symbol, Fuel Filler	1	81105-
28		6217-71-6610	Plate, Fuel Filter Replace	1	81105-
29	C2	09602-10001	Plate, Name (Limited Supply)	1	81105-
30		04418-13060	Screw	4	81105-
31		09802-17000	Plate	1	81105-

FIG. U0100-058001 Marks and Plates, Spanish

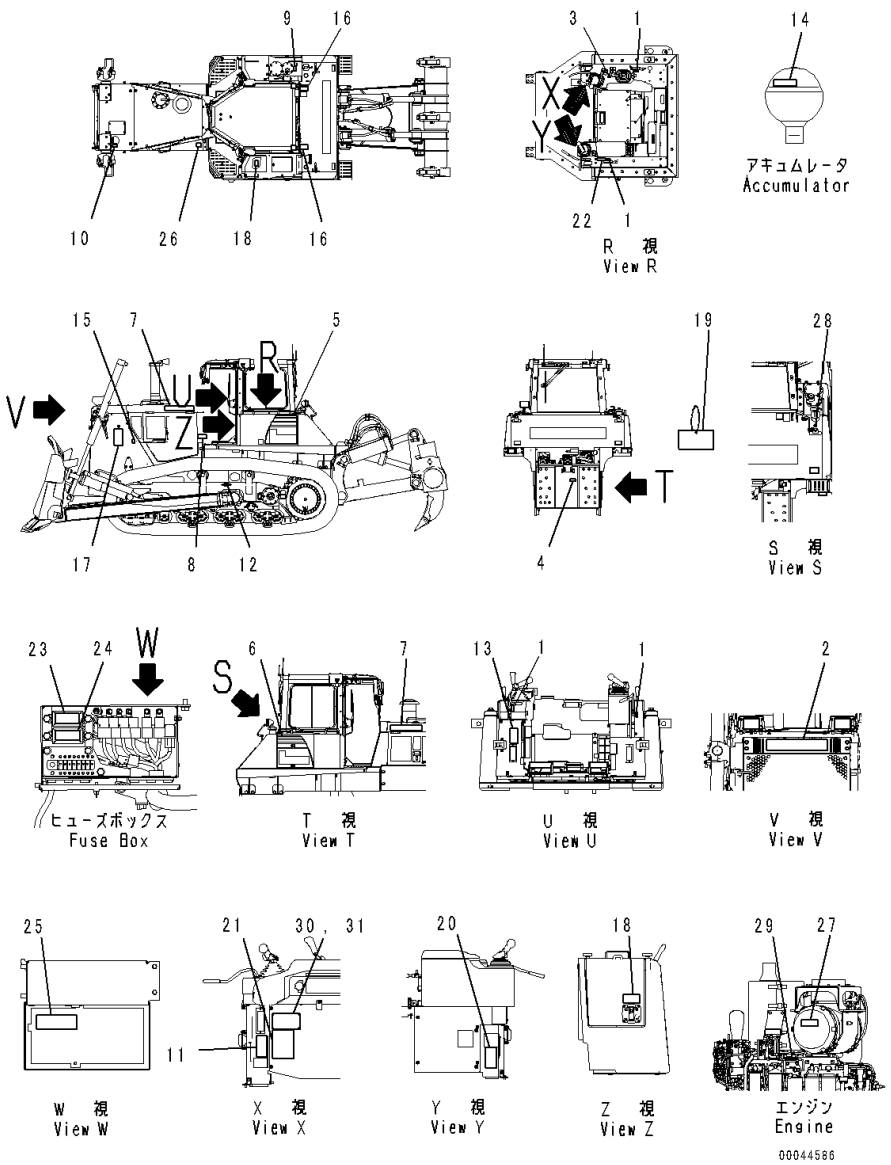

Index	Code	Part Number	Description	Qty	Serial Number
1		14X-98-11170	Plate, Operating, Lock	4	81105-
2		09690-F0630	Plate, Mark	1	81105-
3		17A-98-11180	Plate, Horn	1	81105-
4		09690-M0063	Mark, Komatsu Logo	1	81105-81252
5		17A-98-41111	Mark	1	81105-
6		17A-98-41122	Mark	1	81105-
7		09690-F0560	Plate, Mark	2	81105-
8		20Y-00-41530	Plate, Symbol, Ecot3	1	81105-
9		09653-01001	Plate, Warning, High Temperature	1	81105-
10		09668-01001	Plate, Warning, Hot Water	1	81105-
11		09654-31001	Plate	1	81105-
12		09657-01004	Plate	2	81105-
13		09651-01001	Plate, Warning, Read Manual Before Operating	1	81105-
14		09659-51000	Plate, Warning, Explosive Hazard	1	81105-
15		09667-01001	Plate, Caution, Rotating Object	2	81105-
16		17A-98-23930	Plate	2	81105-
17		09812-01000	Plate, Danger, Keep a Safe Distance	2	81105-
18		09808-01000	Plate, Warning, Battery Cables	2	81105-
19		09963-01001	Tag, Danger, Do Not Operate	1	81105-
20		09802-11000	Plate	1	81105-
21		17A-98-41182	Oil Chart	1	81105-
22		09649-01012	Plate, Engine Stop	1	81105-
23		17A-98-41190	Plate	1	81105-
24		17A-98-41210	Plate	1	81105-
25		17A-98-41220	Plate	1	81105-
26		17A-98-41160	Plate	1	81105-
27		09637-70163	Decal, Service Instruction, Air Cleaner	1	81105-
28		09669-0000E	Plate, Symbol, Fuel Filler	1	81105-
29		6217-71-6510	Plate	1	81105-
30	C2	09602-10001	Plate, Name (Limited Supply)	1	81105-
31		04418-13060	Screw	4	81105-

FIG. U0100-059001 Marks and Plates, Provision For Portuguese, Text Type

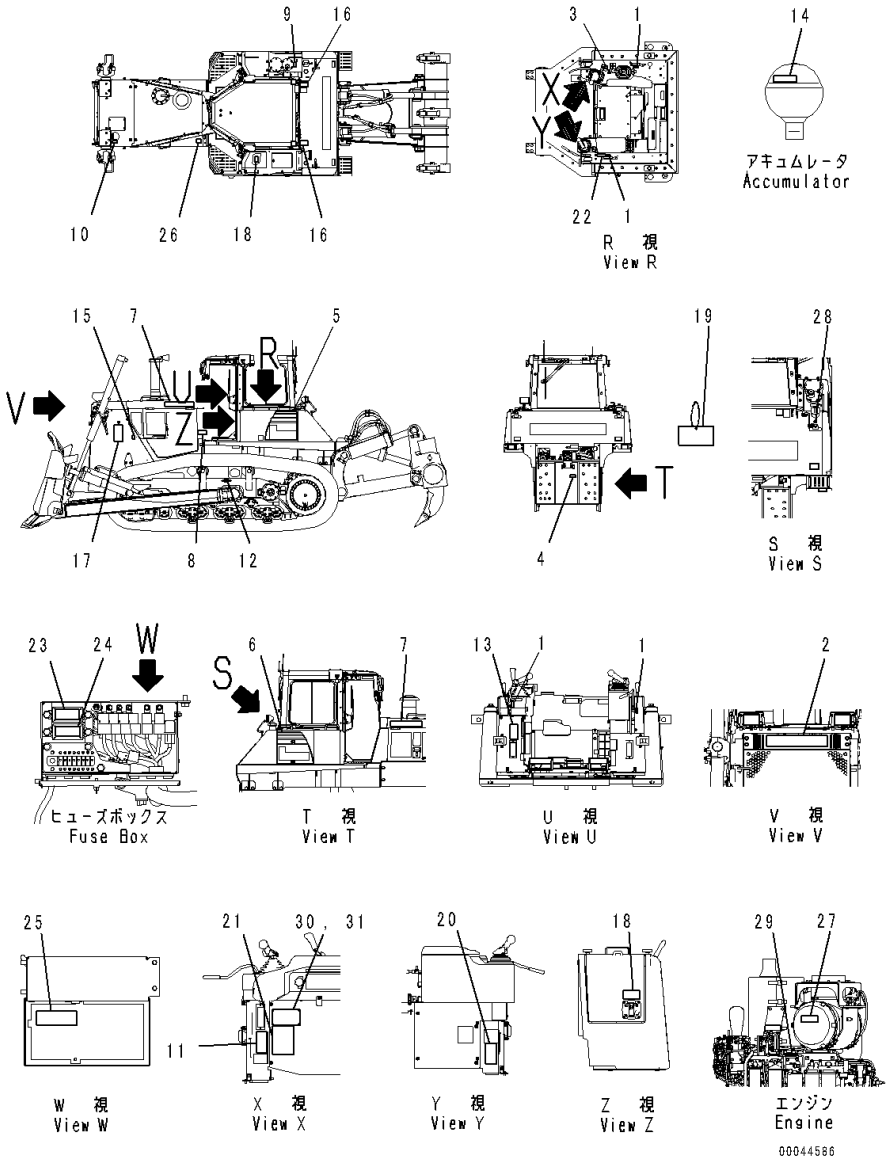

Index	Code	Part Number	Description	Qty	Serial Number
1		14X-98-11170	Plate, Operating, Lock	4	81105-
2		09690-F0630	Plate, Mark	1	81105-
3		17A-98-11180	Plate, Horn	1	81105-
4		09690-M0063	Mark, Komatsu Logo	1	81105-81252
5		17A-98-41111	Mark	1	81105-
6		17A-98-41122	Mark	1	81105-
7		09690-F0560	Plate, Mark	2	81105-
8		20Y-00-41530	Plate, Symbol, Ecot3	1	81105-
9		09653-07101	Plate, Warning, High Temperature	1	81105-
10		09668-07101	Plate, Warning, Hot Water	1	81105-
11		09654-37101	Plate, Warning, Before Leaving Seat	1	81105-
12		09657-07102	Plate, Warning, Track Adjustment	2	81105-
13		09651-07101	Plate	1	81105-
14		09659-57100	Decal, Warning, Explosive Hazard	1	81105-
15		09667-07101	Plate, Caution, Rotating Object	2	81105-
16		17A-98-23940	Plate	2	81105-
17		09812-07000	Plate	2	81105-
18		09808-07100	Plate, Warning, Battery Cables	2	81105-
19		09963-07001	Tag, Danger, Do Not Operate	1	81105-
20		09802-17100	Decal, Warning, Before Operation and Traveling	1	81105-
21		17A-98-41182	Oil Chart	1	81105-
22		09649-07112	Decal, Notice, Engine Shutdown	1	81105-
23		17A-98-41190	Plate	1	81105-
24		17A-98-41210	Plate	1	81105-
25		17A-98-41220	Plate	1	81105-
26		17A-98-41160	Plate	1	81105-
27		09637-51263	Decal, Service Instruction, Air Cleaner	1	81105-
28		09669-0000E	Plate, Symbol, Fuel Filler	1	81105-
29		6217-71-6890	Plate	1	81105-
30	C2	09602-10001	Plate, Name (Limited Supply)	1	81105-
31		04418-13060	Screw	4	81105-

FIG. U0100-060001 Marks and Plates, Chinese

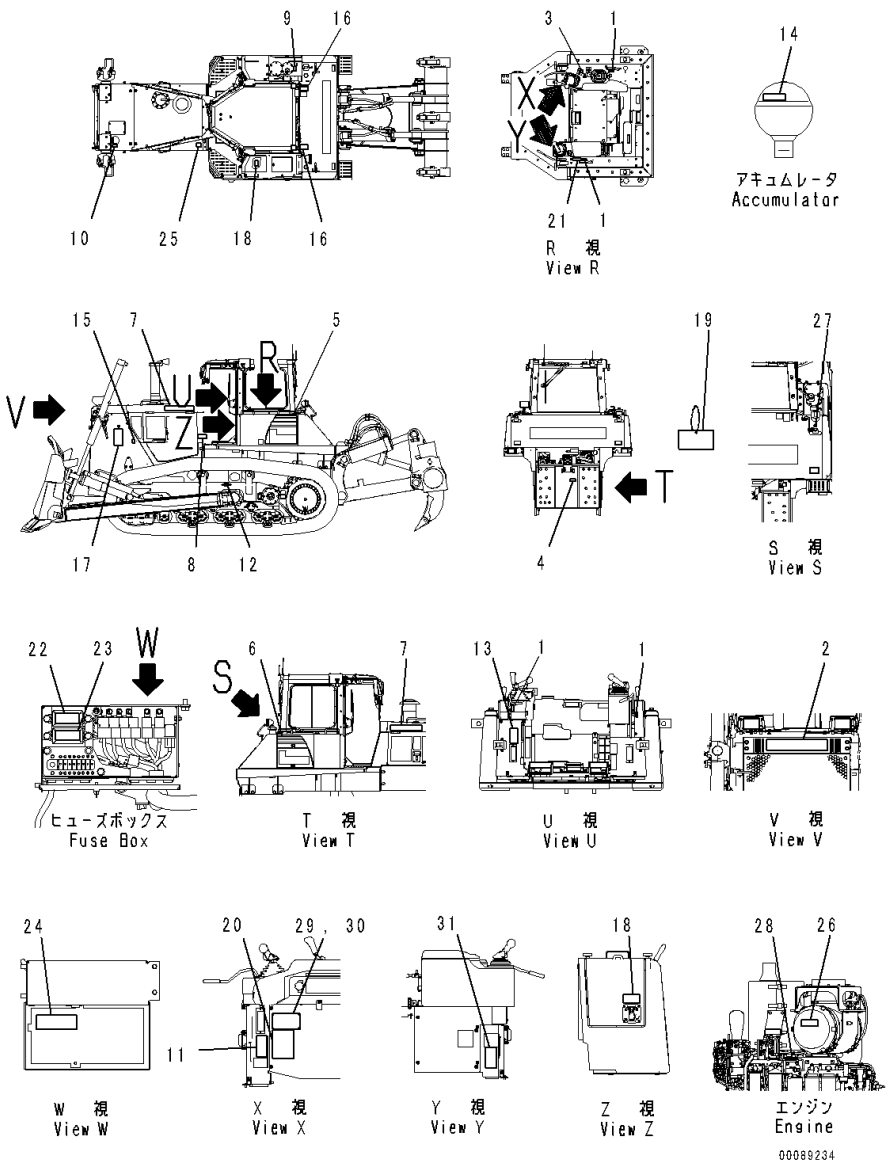

Index	Code	Part Number	Description	Qty	Serial Number
1		14X-98-11170	Plate, Operating, Lock	4	81105-
2		09690-F0630	Plate, Mark	1	81105-
3		17A-98-11180	Plate, Horn	1	81105-
4		09690-M0063	Mark, Komatsu Logo	1	81105-81252
5		17A-98-41111	Mark	1	81105-
6		17A-98-41122	Mark	1	81105-
7		09690-F0560	Plate, Mark	2	81105-
8		20Y-00-41530	Plate, Symbol, Ecot3	1	81105-
9		09653-A0481	Plate, Warning, High Temperature	1	81105-
10		09653-A0481	Plate, Warning, High Temperature	1	81105-
11		09654-B0641	Plate, Warning, Before Leaving Seat	1	81105-
12		09657-A0881	Decal, Warning, Track Adjustment	2	81105-
13		09651-A0641	Plate, Warning, Read Manual Before Operating	1	81105-
14		09659-A057B	Plate, Warning, Explosive Hazard	1	81105-
15		09667-A0481	Plate, Caution, Rotating Object	2	81105-
16		09805-C0881	Plate, Caution, Do not Get On	2	81105-
17		09806-B1683	Decal, Danger, Keep a Safe Distance	2	81105-
18		09808-A0881	Plate, Warning, Battery Cables	2	81105-
19		09963-A1640	Tag, Danger, Do Not Operate	1	81105-
20		17A-98-41182	Oil Chart	1	81105-
21		09649-09012	Plate	1	81105-
22		17A-98-41190	Plate	1	81105-
23		17A-98-41210	Plate	1	81105-
24		17A-98-41220	Plate	1	81105-
25		17A-98-41160	Plate	1	81105-
26		09637-90263	Plate, Service Instruction, Air Cleaner	1	81105-
27		09669-0000E	Plate, Symbol, Fuel Filler	1	81105-
28		6217-71-6520	Plate	1	81105-
29	C2	09602-21001	Plate, Name (Limited Supply)	1	81105-
30		04418-13060	Screw	4	81105-
31		09802-19000	Plate	1	81105-

FIG. U0150-001001 Marks and Plates, Rear

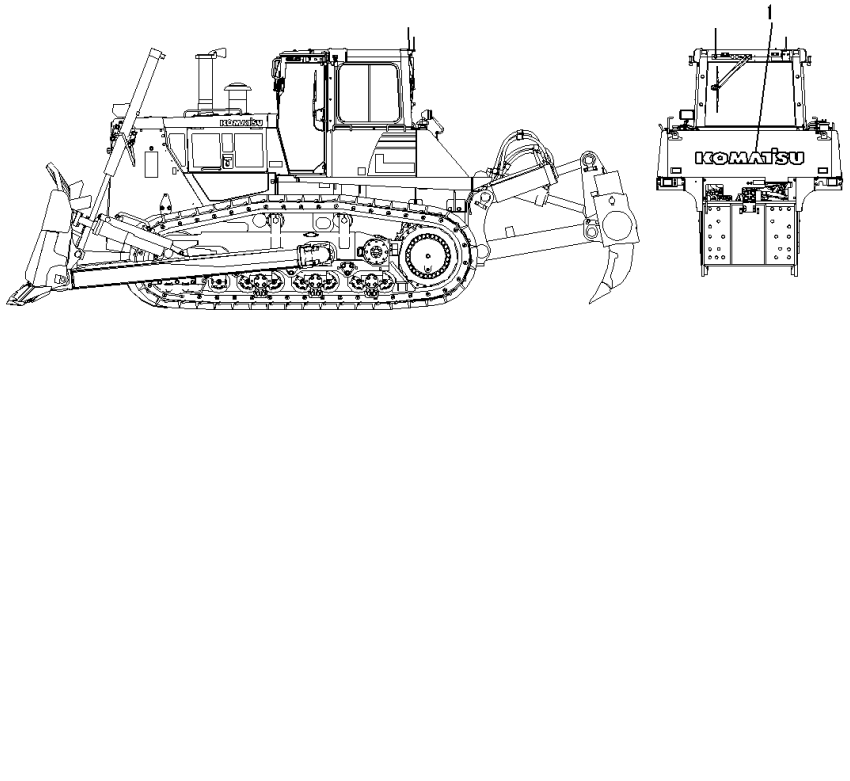

Index	Code	Part Number	Description	Qty	Serial Number
1		09690-P1400	Plate	1	81028-

FIG. U0205-001001 Caution Plates, KOMTRAX

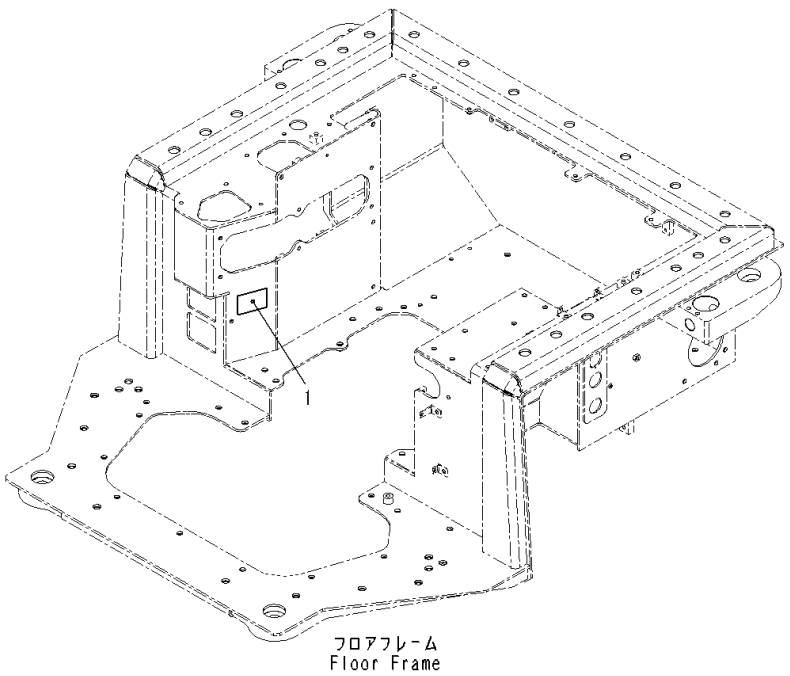

Index	Code	Part Number	Description	Qty	Serial Number
1		09845-00480	Plate, Caution, Blast Site	1	81028-

FIG. U0207-001001 Mercurial Component Indication Plate

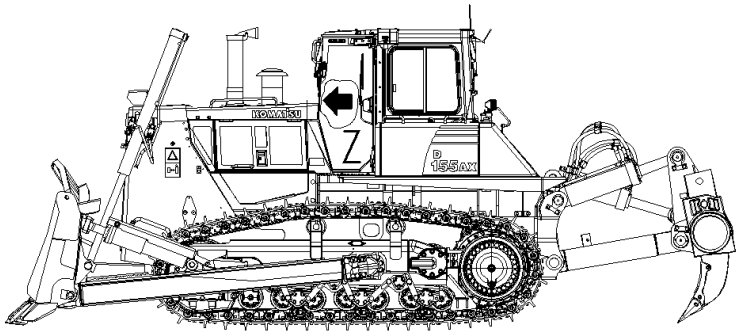

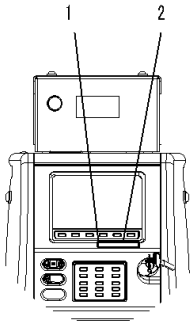

Z 視
View Z

JH005307

Index	Code	Part Number	Description	Qty	Serial Number
1		17A-98-41360	Plate	1	81172-
2		09974-00801	• Plate	1	81172-

FIG. U0220-001001 Marks and Plates, Battery, For U.S.A

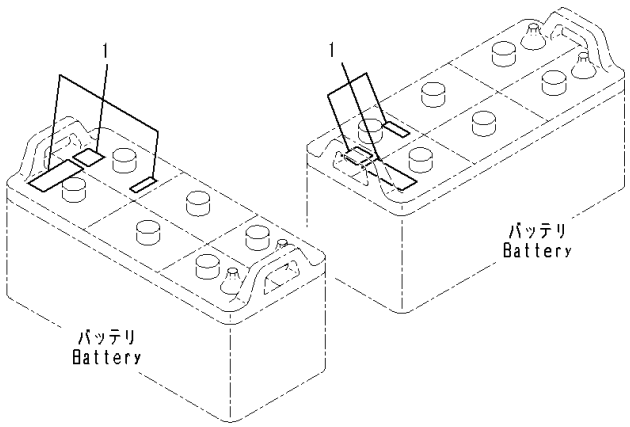

JD011807

Index	Code	Part Number	Description	Qty	Serial Number
1		09664-30011	Plate, Danger, Battery	2	81028-

FIG. U0220-005001 Caution Plates, Portuguese, Text Type

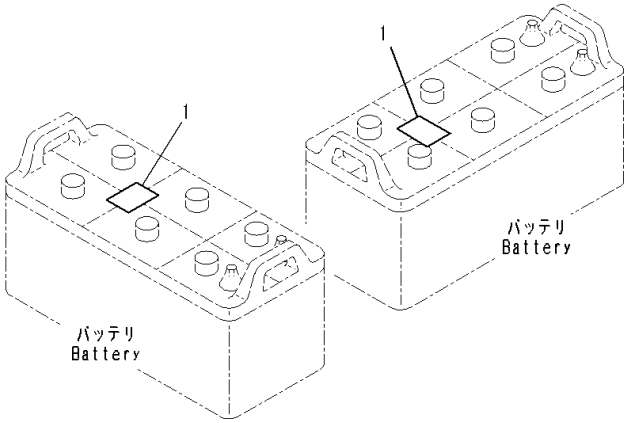

00042630

Index	Code	Part Number	Description	Qty	Serial Number
1		09664-50001	Decal, Danger, Battery	2	81028-

FIG. U0220-006001 Caution Plates, English, Text Type

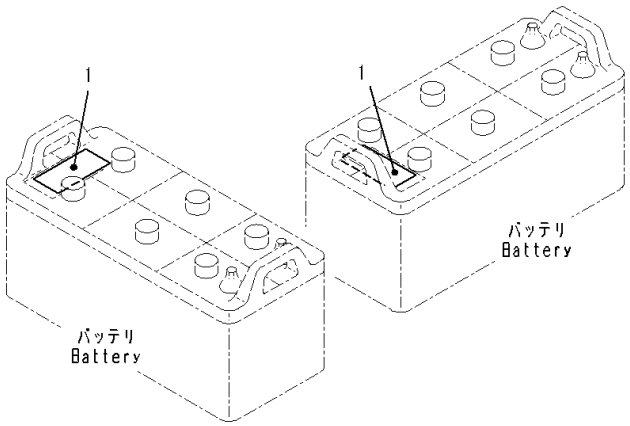

00093292

Index	Code	Part Number	Description	Qty	Serial Number
1		09664-30111	Decal, Danger, Battery, Safety	2	81028-

FIG. U0400-001001 Balancing Mark

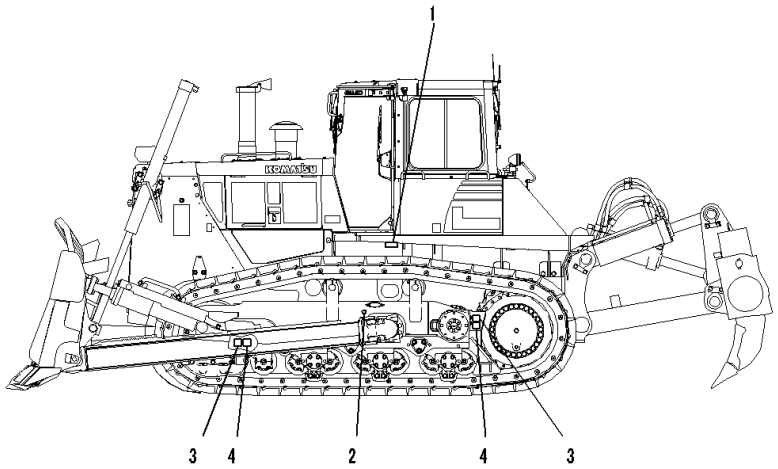

Index	Code	Part Number	Description	Qty	Serial Number
1		17A-98-41510	Plate, Lift Point and Tie Down Point Marks	1	81028-
2		09960-01012	Plate, Mark	2	81028-
3		09960-00801	Decal, Lift Point Mark	4	81028-
4		09960-00802	Decal, Tie Down Point Mark	4	81028-

FIG. U0410-001001 Marks and Plates

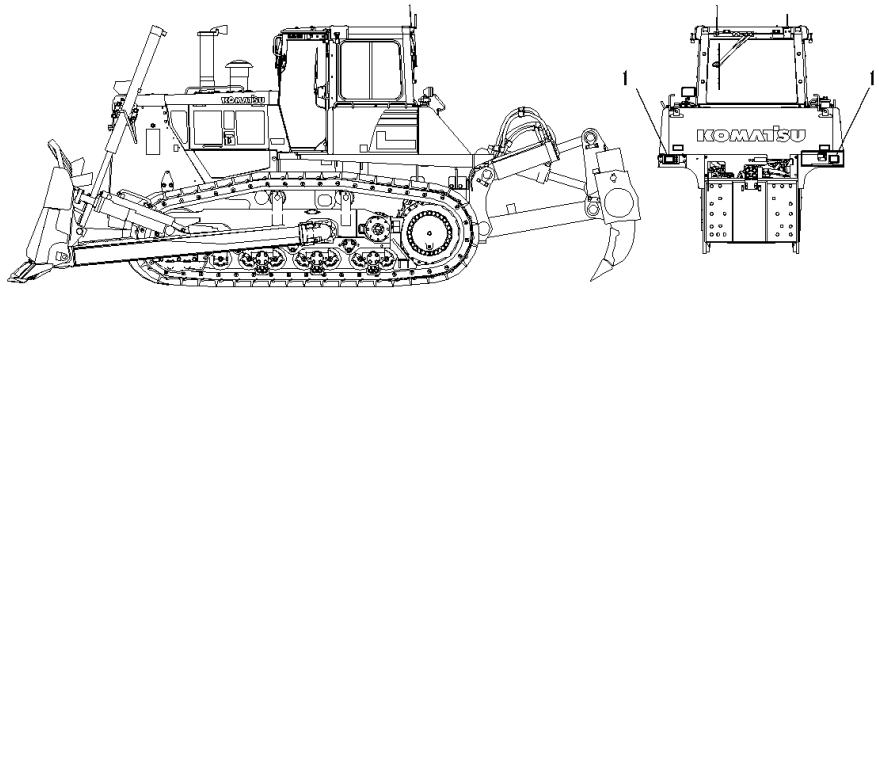

Index	Code	Part Number	Description	Qty	Serial Number
1		14X-98-35181	Plate, Reflector	2	81028-

FIG. U0520-001001 Name Plate, ROPS, Italian

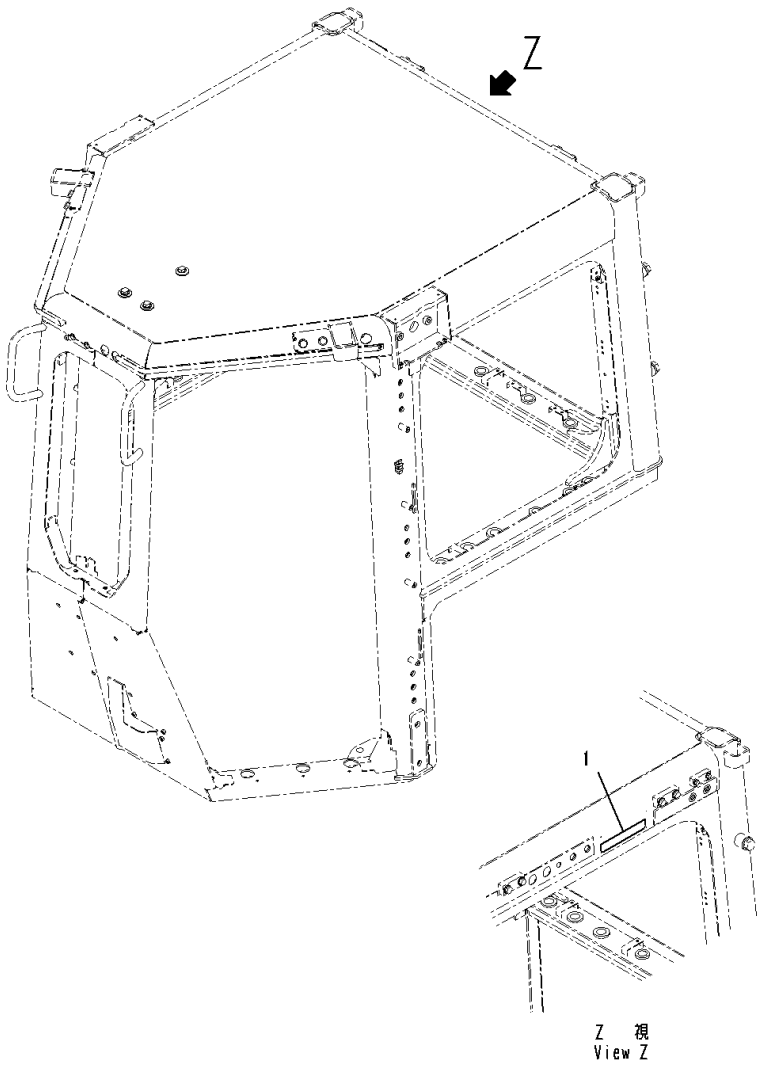

Index	Code	Part Number	Description	Qty	Serial Number
1		09620-A2110	Plate, Safety	1	81028-

FIG. U0520-002001 Name Plate, ROPS, Persian

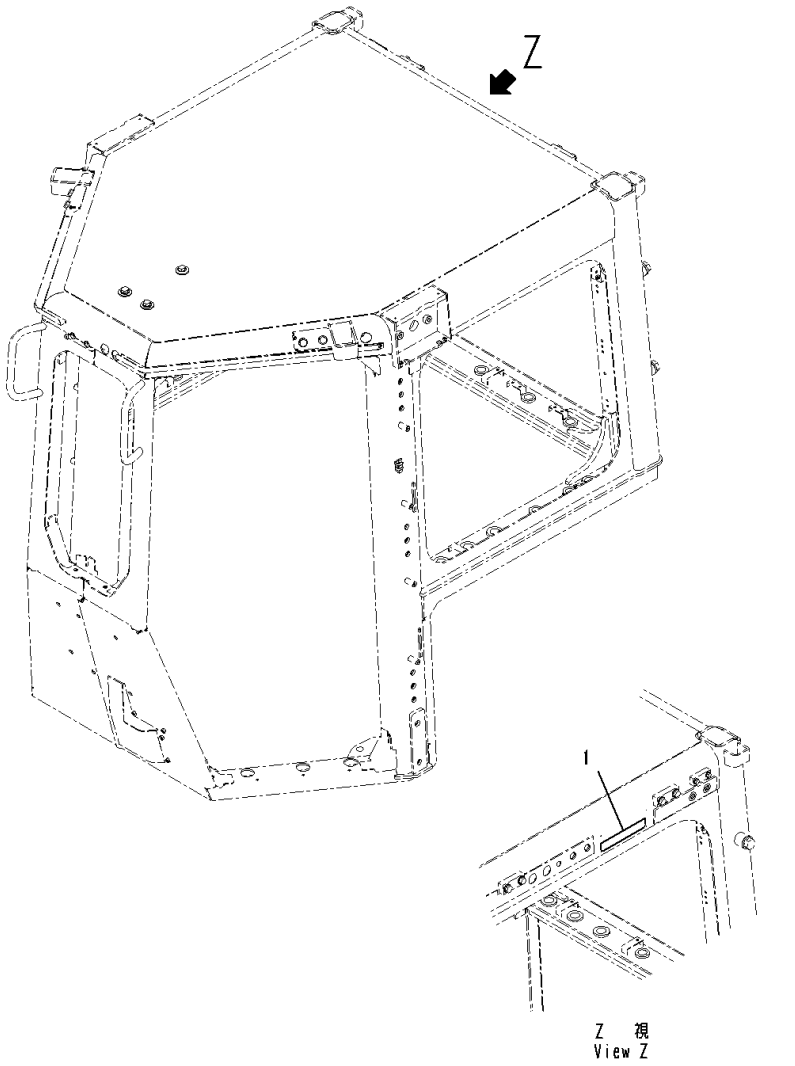

Index	Code	Part Number	Description	Qty	Serial Number
1		09620-A2040	Plate, Certification Mark	1	81028-

FIG. U0520-003001 Name Plate, ROPS, Spanish

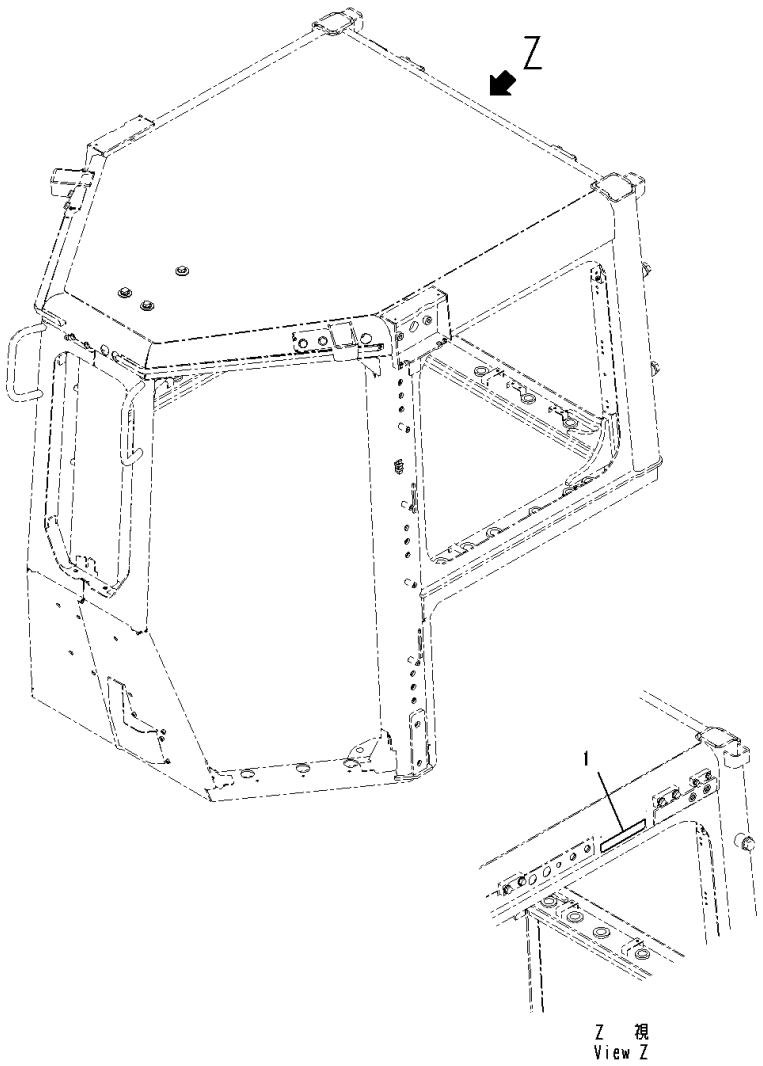

Index	Code	Part Number	Description	Qty	Serial Number
1		09620-A2070	Plate, Safety	1	81028-

FIG. U0520-004001 Name Plate, ROPS, Germany

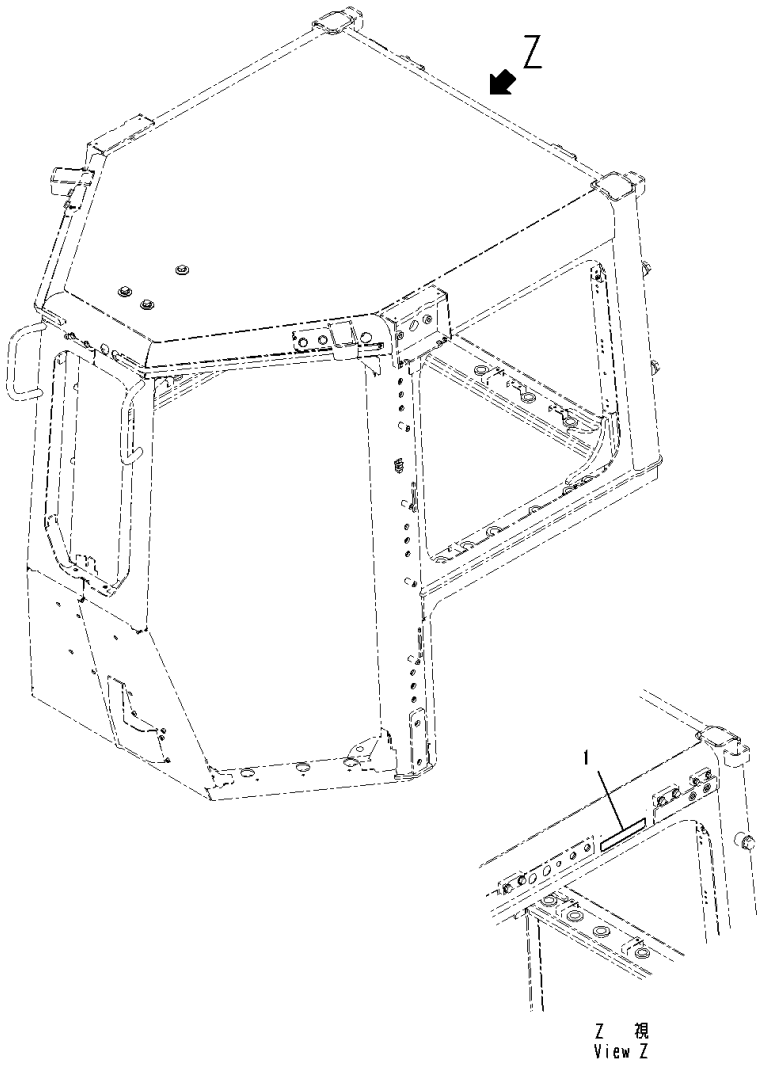

Index	Code	Part Number	Description	Qty	Serial Number
1		09620-A2080	Plate, Safety	1	81028-

FIG. U0520-005001 Name Plate, ROPS, Russian

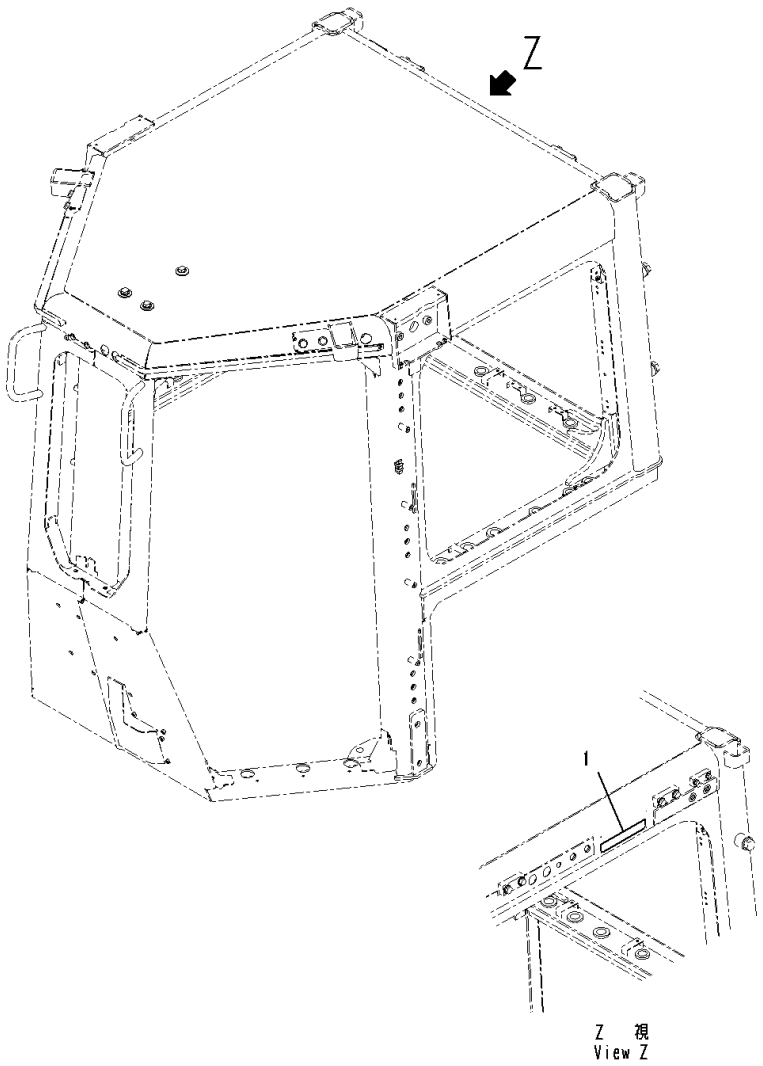

Index	Code	Part Number	Description	Qty	Serial Number
1		09620-A2090	Plate, Certification Mark	1	81028-

FIG. U0520-006001 Name Plate, ROPS, French

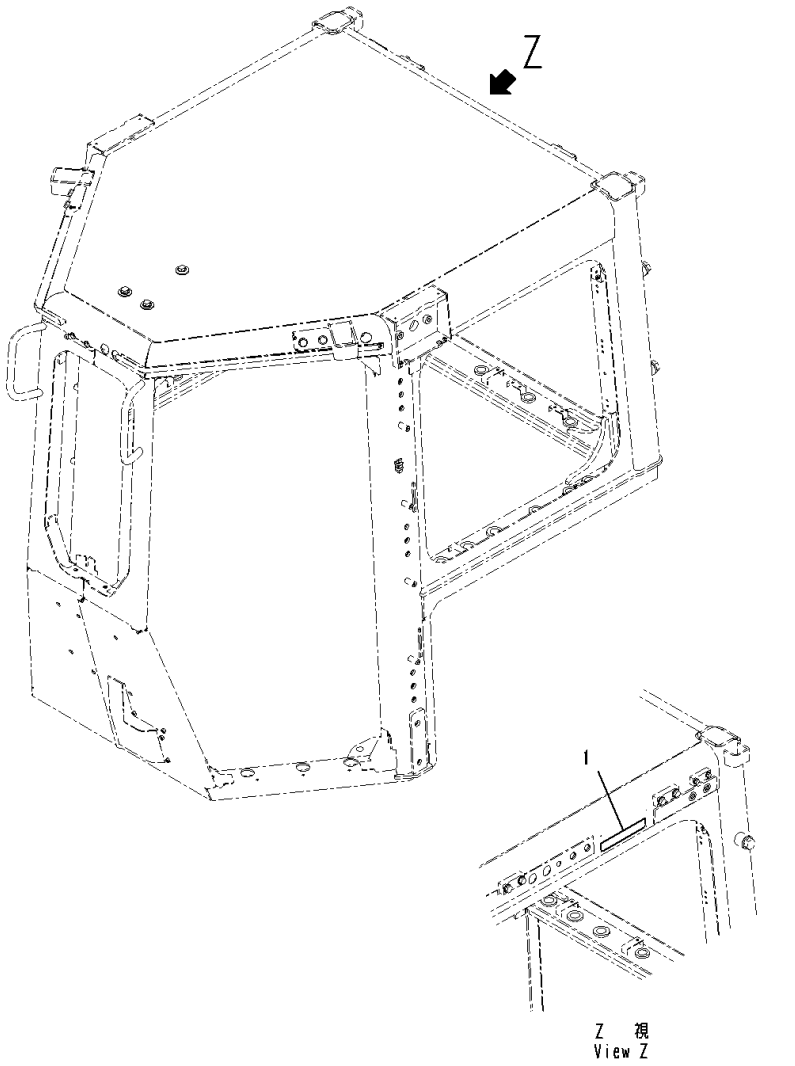

Index	Code	Part Number	Description	Qty	Serial Number
1		09620-A2100	Plate, Safety	1	81028-

FIG. U0520-007001 Name Plate, ROPS, Portuguese

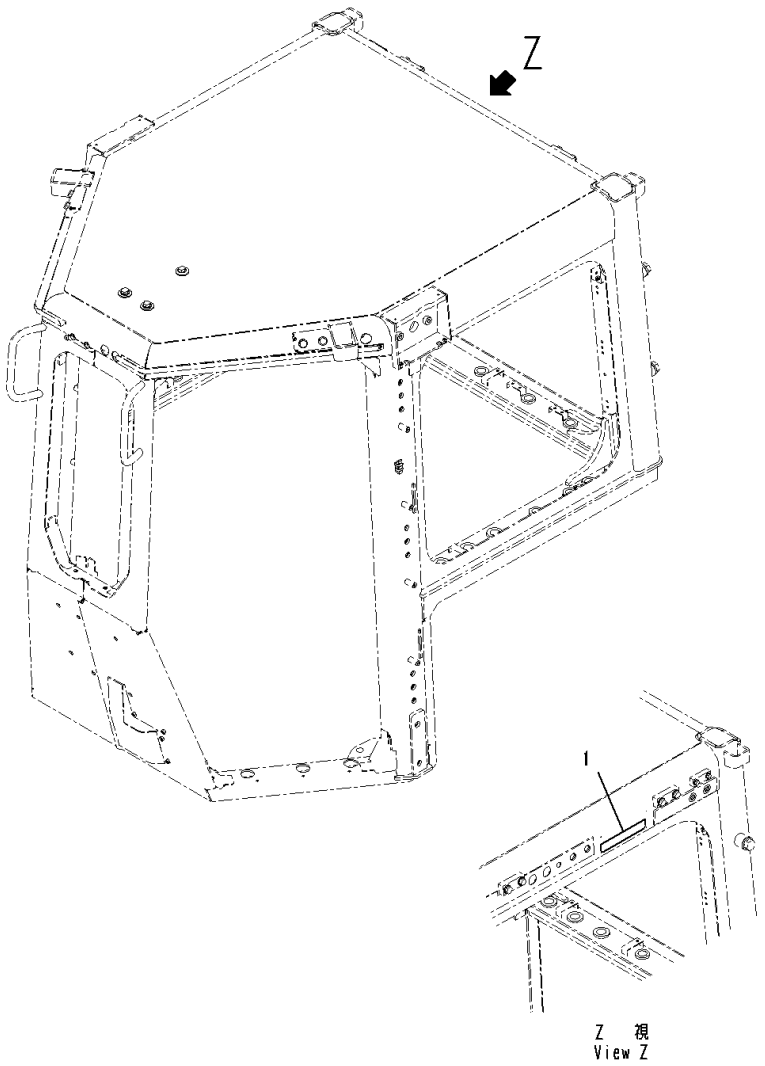

Index	Code	Part Number	Description	Qty	Serial Number
1		09620-A2120	Plate, Safety	1	81028-

FIG. U0520-009001 Name Plate, ROPS, Estonian

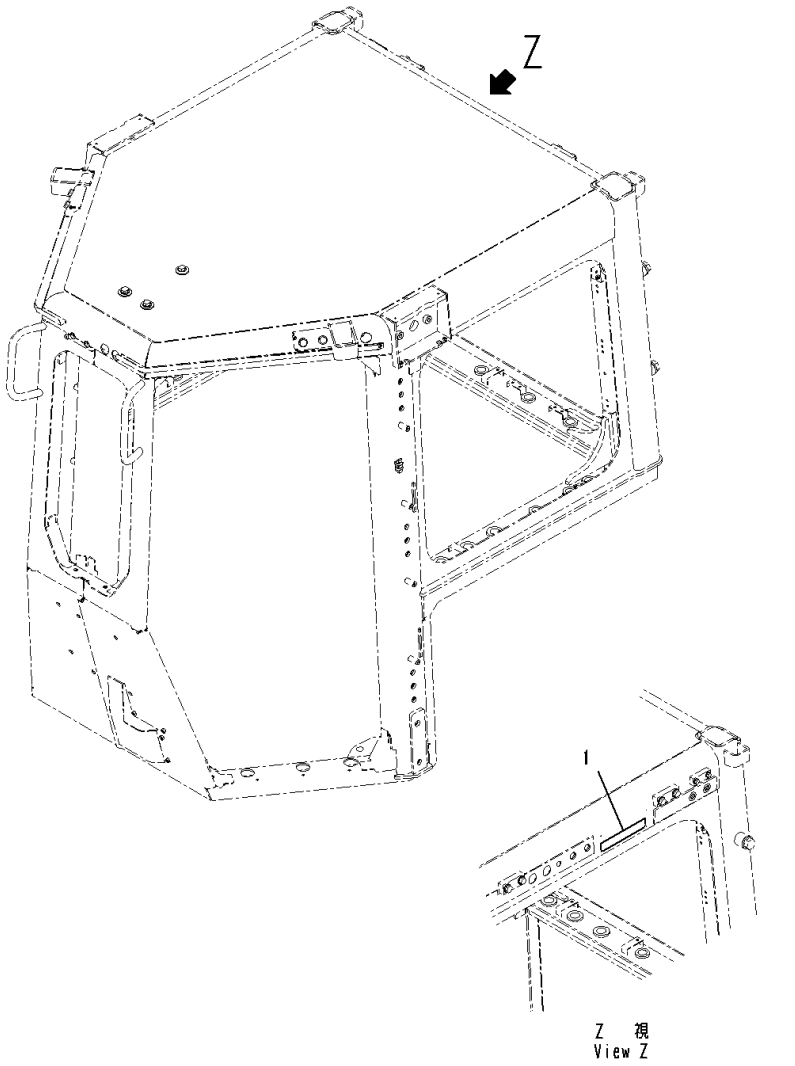

Index	Code	Part Number	Description	Qty	Serial Number
1		17A-98-41310	Plate, Warning	1	81028-

FIG. U0520-010001 Name Plate, ROPS, Turkish

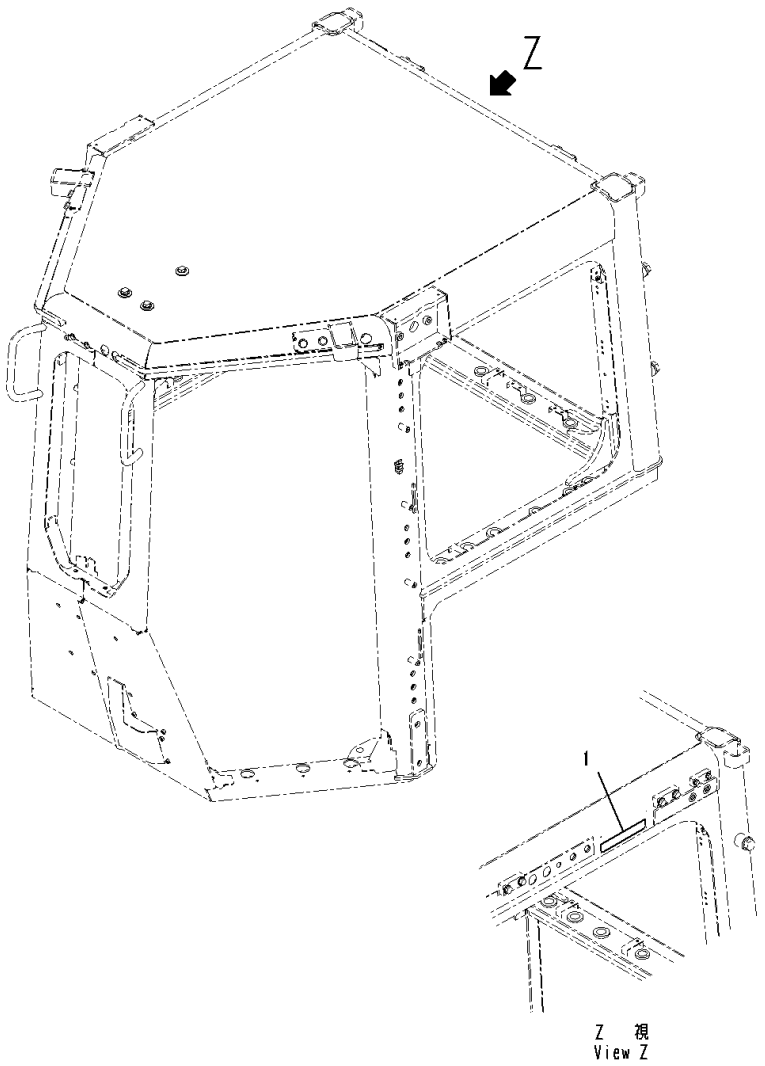

Index	Code	Part Number	Description	Qty	Serial Number
1		17A-98-41320	Plate, Warning	1	81028-

FIG. U0520-011001 Name Plate, Chinese

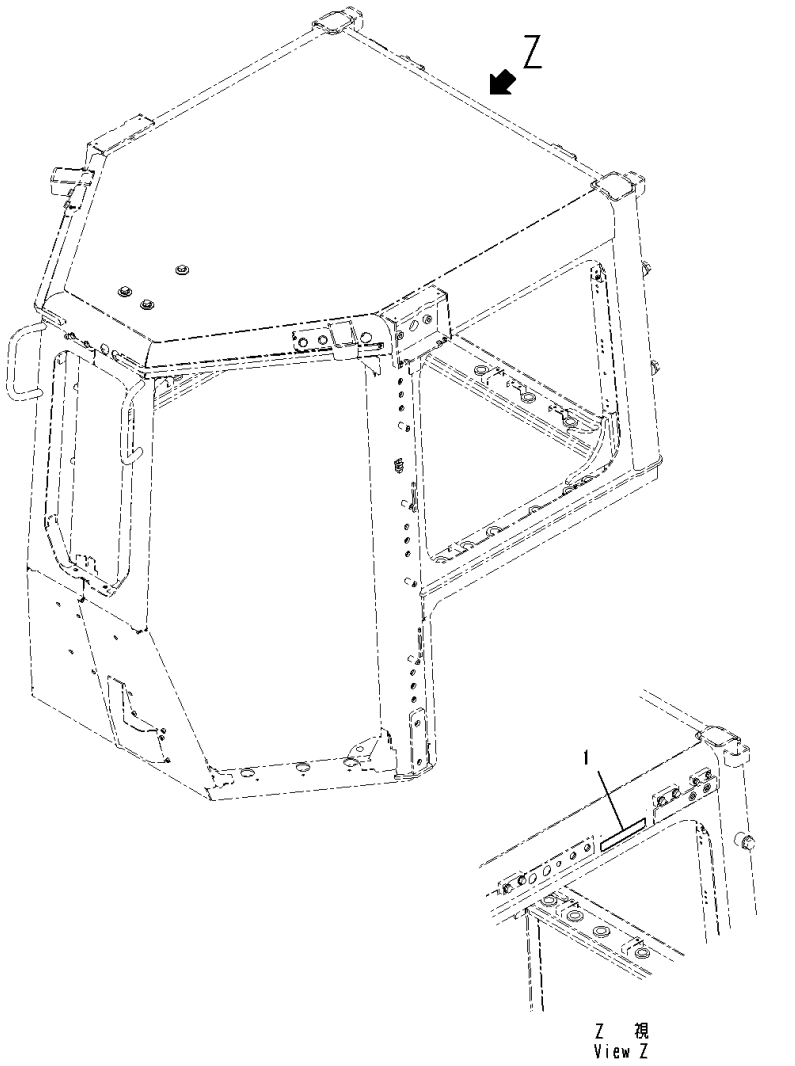

Index	Code	Part Number	Description	Qty	Serial Number
1		09620-A2140	Plate, Certification Mark	1	81028-

FIG. U0520-013001 Name Plate, For EU Safety Regulation

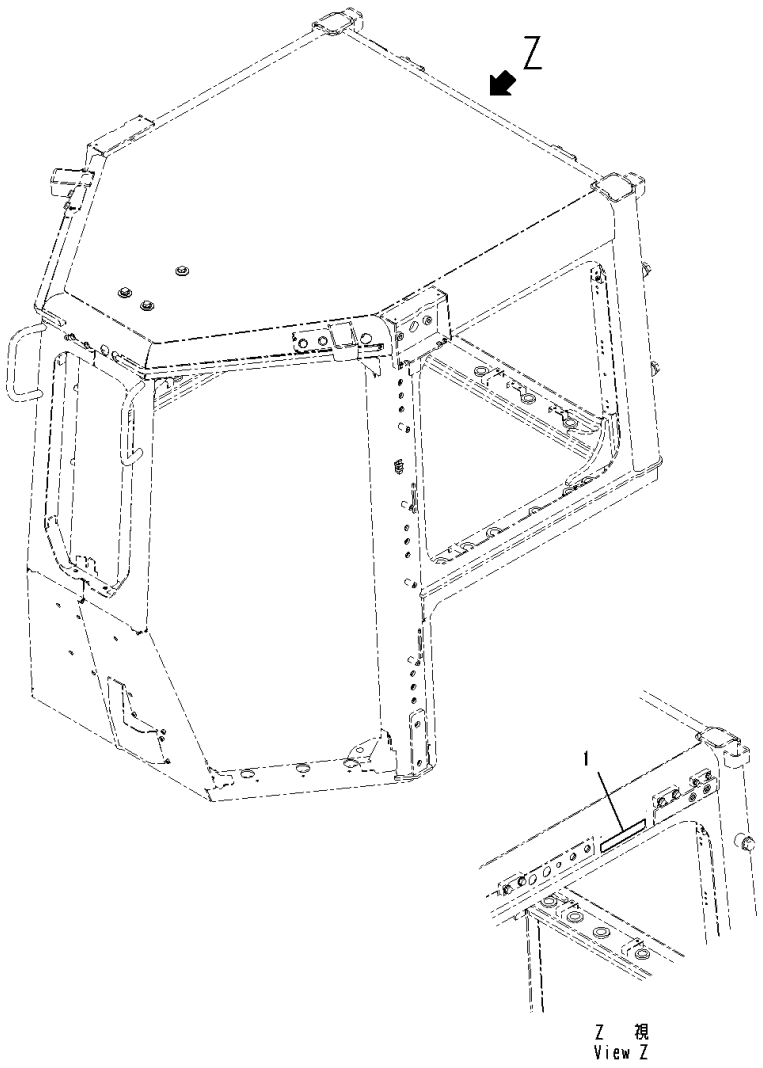

Index	Code	Part Number	Description	Qty	Serial Number
1		09620-A3000	Plate, Safety	1	81028-

FIG. U0520-012001 Name Plate, For Portuguese, Text Type

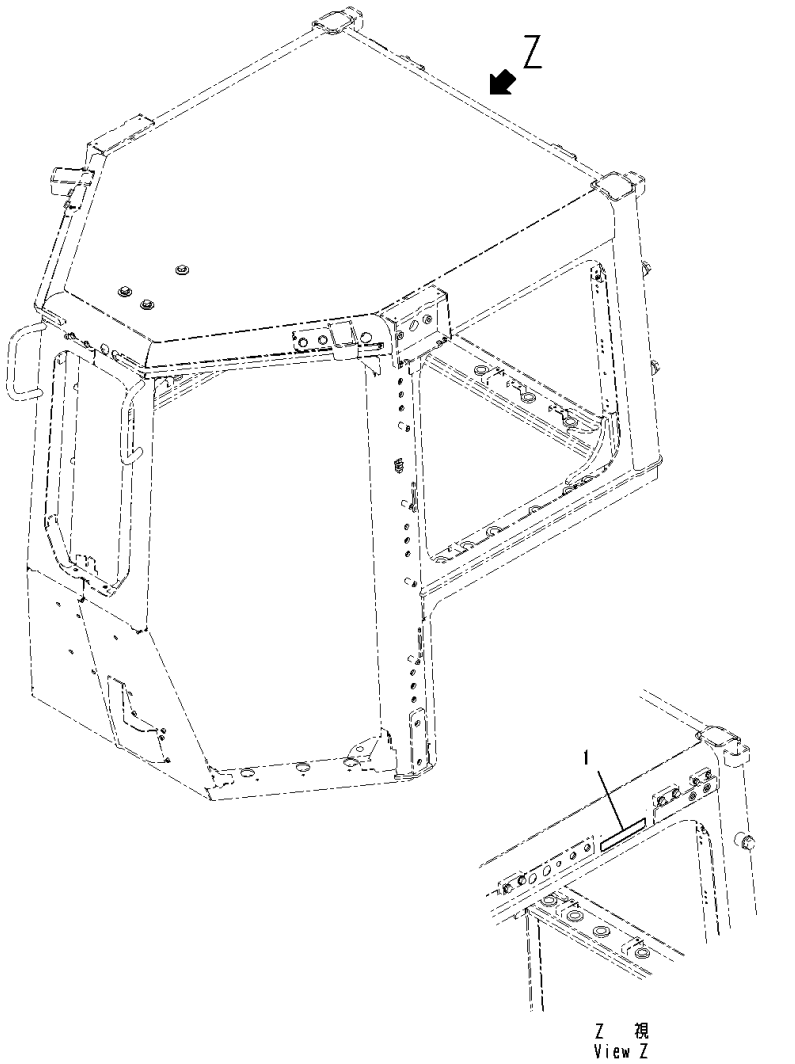

Index	Code	Part Number	Description	Qty	Serial Number
1		09620-A2160	Plate, Name, ROPS/FOPS (Limited Supply)	1	81028-

FIG. U0630-001001 Marks and Plates, Seat Belt, Italian

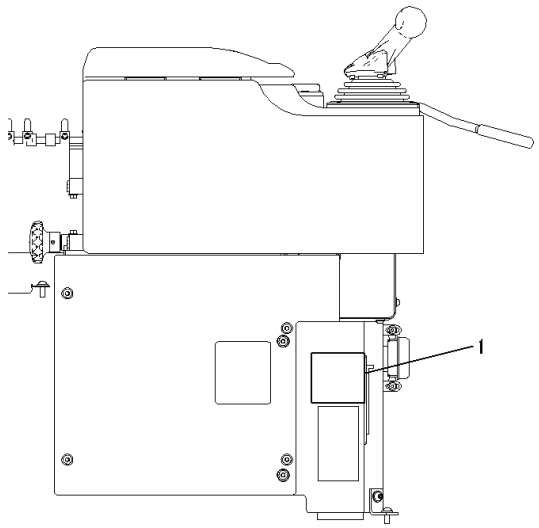

コンソールボックス 左
Console Box L.H.

00042818

Index	Code	Part Number	Description	Qty	Serial Number
1		154-98-36630	Plate, Caution	1	81028-

FIG. U0630-002001 Marks and Plates, Seat Belt, Turkish

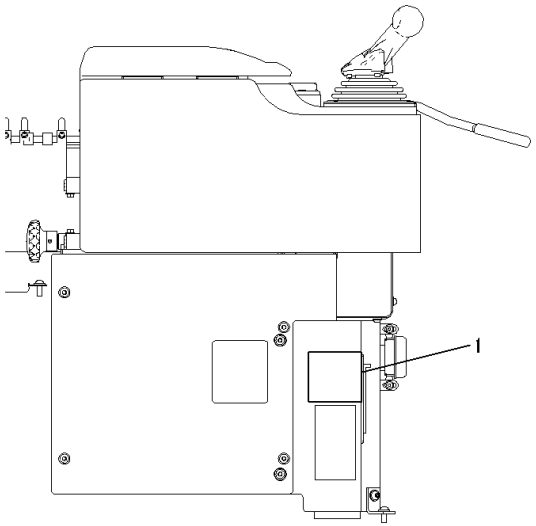

コンソールボックス 左
Console Box L. H.

00042818

Index	Code	Part Number	Description	Qty	Serial Number
1		17A-98-19980	Plate, Caution	1	81028-

FIG. U0630-003001 Marks and Plates, Seat Belt, English

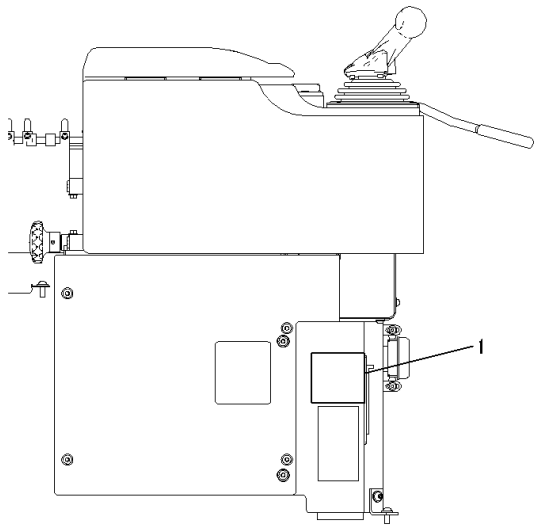

コンソールボックス 左
Console Box L.H.

00042818

Index	Code	Part Number	Description	Qty	Serial Number
1		195-98-12940	Plate, Caution	1	81028-

FIG. U0630-004001 Marks and Plates, Seat Belt, Spanish

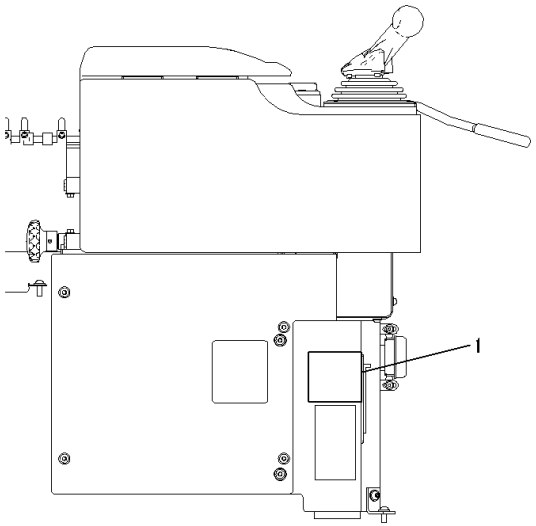

コンソールボックス 左
Console Box L. H.

00042818

Index	Code	Part Number	Description	Qty	Serial Number
1		195-98-12960	Plate, Caution	1	81028-

FIG. U0630-005001 Marks and Plates, Seat Belt, Germany

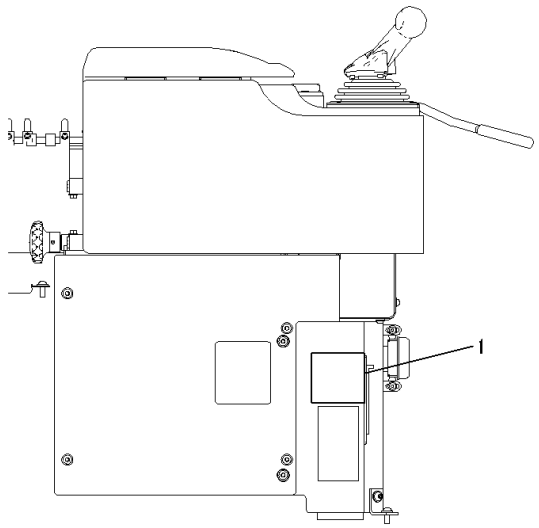

コンソールボックス 左
Console Box L.H.

00042818

Index	Code	Part Number	Description	Qty	Serial Number
1		195-98-12980	Plate, Caution	1	81028-

FIG. U0630-007001 Marks and Plates, Seat Belt, Russian

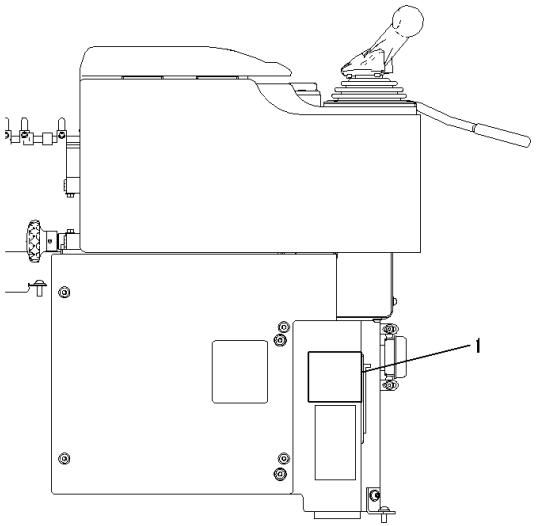

コンソールボックス 左
Console Box L. H.

00042818

Index	Code	Part Number	Description	Qty	Serial Number
1		195-98-13180	Plate, Caution	1	81028-

FIG. U0630-008001 Marks and Plates, Seat Belt, Persian

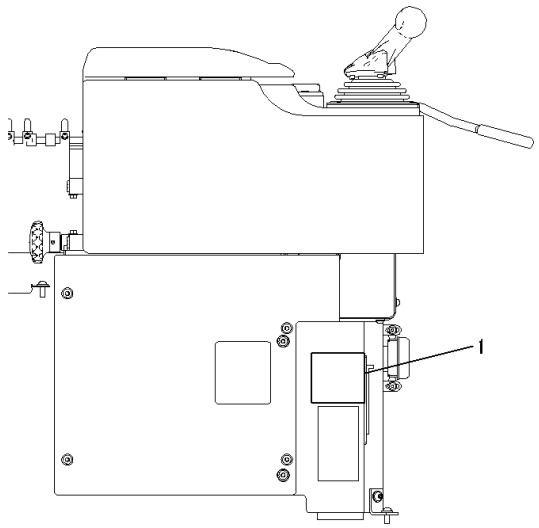

コンソールボックス 左
Console Box L.H.

00042818

Index	Code	Part Number	Description	Qty	Serial Number
1		195-98-14620	Plate, Caution	1	81028-

FIG. U0630-009001 Marks and Plates, Seat Belt, French

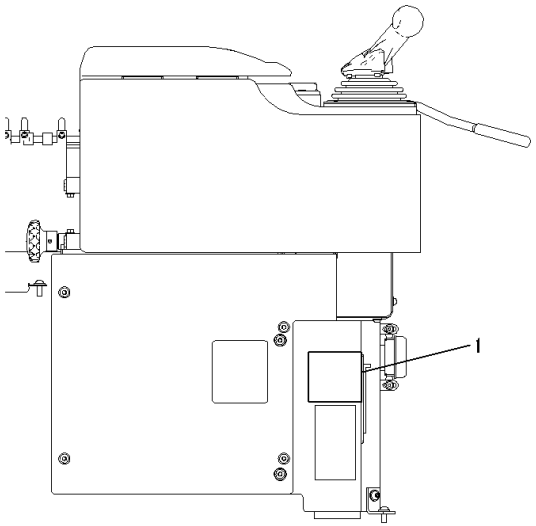

コンソールボックス 左
Console Box L. H.

00042818

Index	Code	Part Number	Description	Qty	Serial Number
1		198-98-16310	Plate, Caution	1	81028-

FIG. U0630-010001 Marks and Plates, Seat Belt, Portuguese

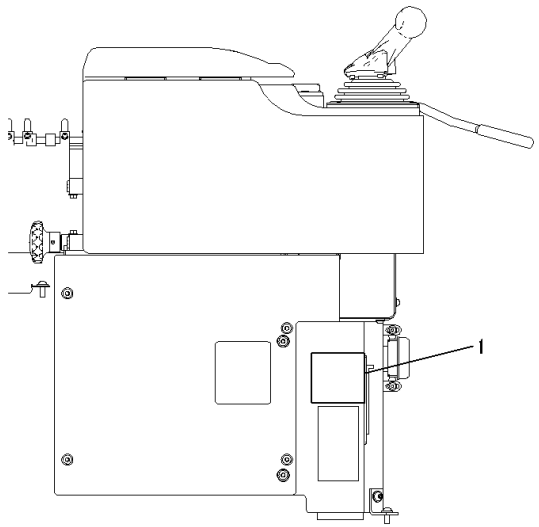

コンソールボックス 左
Console Box L.H.

00042818

Index	Code	Part Number	Description	Qty	Serial Number
1		195-98-13650	Plate, Caution	1	81028-

FIG. U0630-011001 Marks and Plates, Seat Belt, Estonian

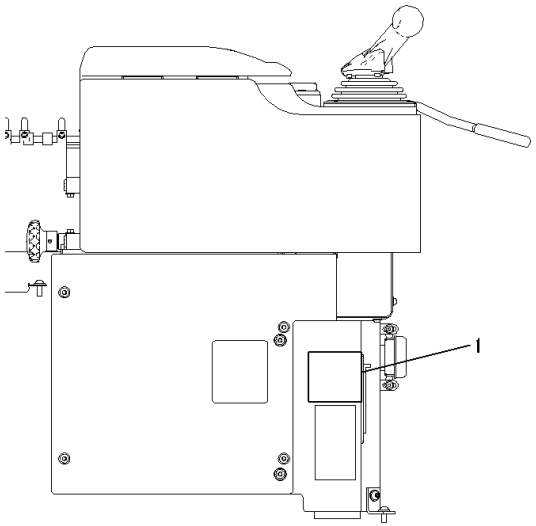

コンソールボックス 左
Console Box L. H.

00042818

Index	Code	Part Number	Description	Qty	Serial Number
1		17A-98-23460	Plate, Caution	1	81028-

FIG. U0630-012001 Marks and Plates, Seat Belt, Chinese

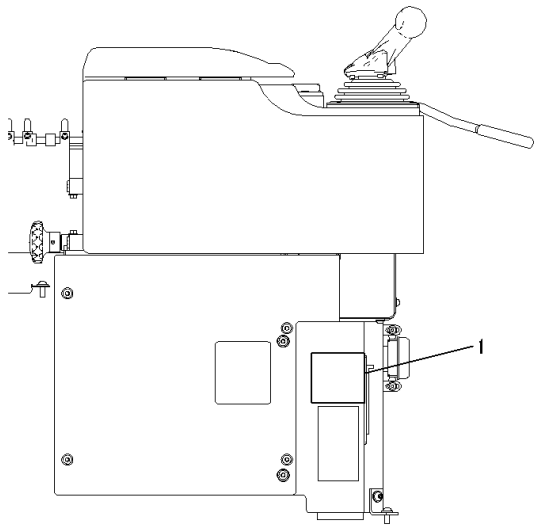

コンソールボックス 左
Console Box L.H.

00042818

Index	Code	Part Number	Description	Qty	Serial Number
1		195-98-13250	Plate	1	81028-

FIG. U0630-013001 Marks and Plates, For Portuguese, Text Type, 50mm Seat Belt, 2-point Type, Suspension Type Operator's Seat, 78mm Seat Belt, 2-point Type, Suspension Type Operator's Seat

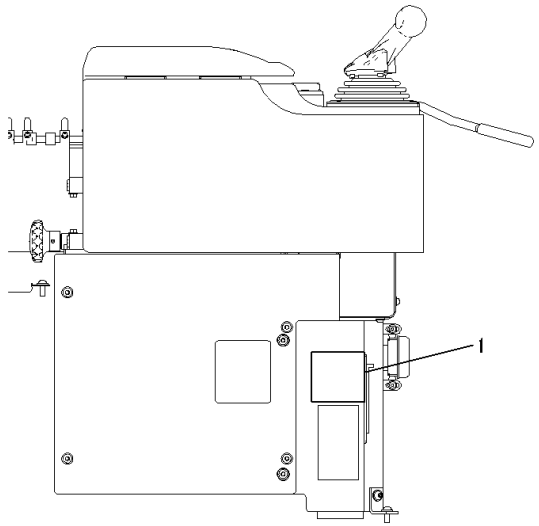

コンソールボックス 左
Console Box L. H.

00042818

Index	Code	Part Number	Description	Qty	Serial Number
1		195-98-43650	Plate	1	81028-

FIG. U0640-001001 Name Plate, Blade

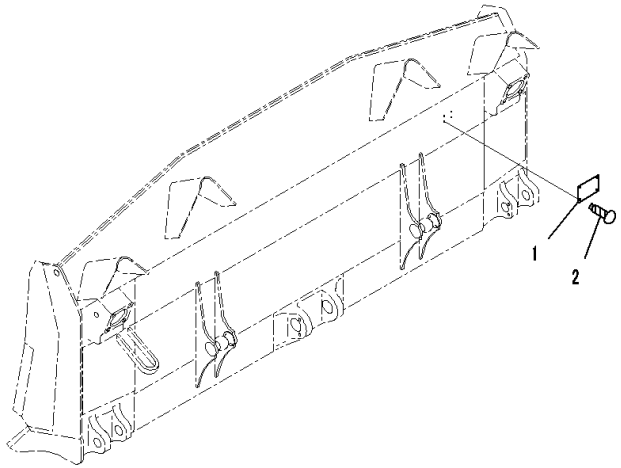

00059526

Index	Code	Part Number	Description	Qty	Serial Number
1	C2	09601-60000	Plate, Name (Limited Supply)	1	81028-
2		04418-13060	Screw	4	81028-

AUXILIARY PARTS AND TOOL

FIG. V0100-001001 Spare Parts, Fuel Filter (1-5/8)

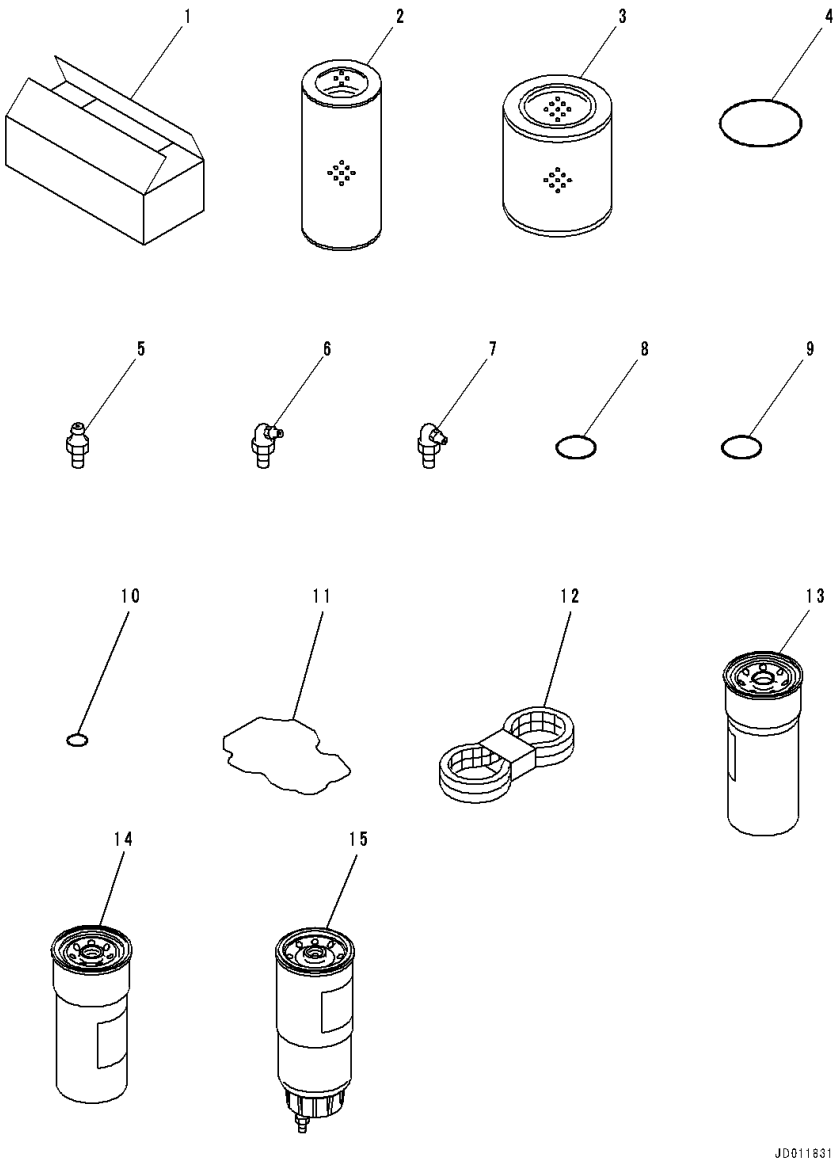

Index	Code	Part Number	Description	Qty	Serial Number
1		09059-00800	Box	1	81028-
2		07063-51100	Element	1	81028-
3		207-60-71182	Element	1	81028-
4		07000-12130	O-ring	1	81028-
5		07020-00000	Fitting, Grease	4	81028-
6		07020-00675	Fitting, Grease	4	81028-
7		07020-00900	Fitting, Grease	4	81028-
8		07002-13634	O-ring	6	81028-
9		07002-63634	O-ring	1	81028-
10		07002-02034	O-ring	1	81028-
11		6217-11-8830	Gasket	6	81028-
12		6261-81-6810	V-belt Set	1	81028-
13		600-211-1340	Cartridge	2	81028-
14		600-319-3550	Cartridge (1-5/8)	1	81028-
15		600-319-4500	Cartridge Assembly	1	81028-

FIG. V0100-002001 Spare Parts

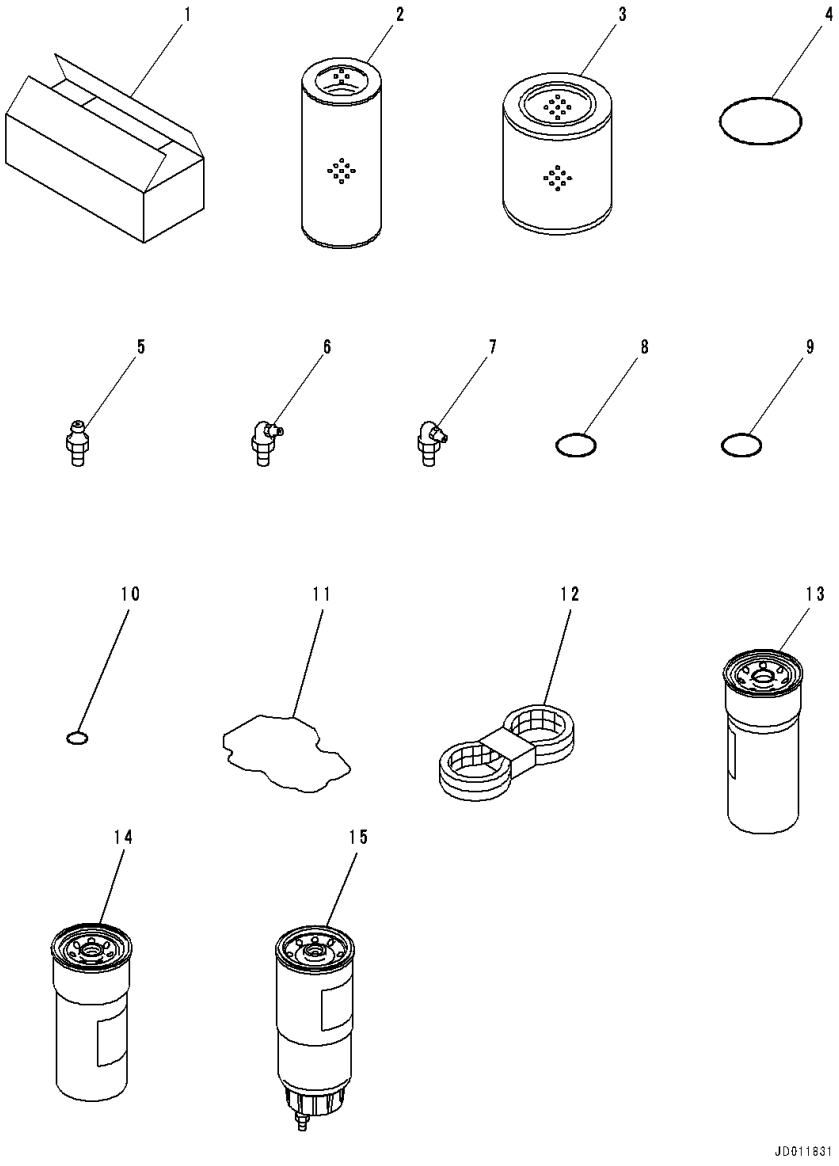

Index	Code	Part Number	Description	Qty	Serial Number
1		09059-00800	Box	1	81028-
2		07063-51100	Element	1	81028-
3		207-60-71182	Element	1	81028-
4		07000-12130	O-ring	1	81028-
5		07020-00000	Fitting, Grease	4	81028-
6		07020-00675	Fitting, Grease	4	81028-
7		07020-00900	Fitting, Grease	4	81028-
8		07002-13634	O-ring	6	81028-
9		07002-63634	O-ring	1	81028-
10		07002-02034	O-ring	1	81028-
11		6217-11-8830	Gasket	6	81028-
12		6261-81-6810	V-belt Set	1	81028-
13		600-211-1340	Cartridge	2	81028-
14		600-319-3841	Cartridge, (1-3/8)	1	81028-
15		600-319-4500	Cartridge Assembly	1	81028-

FIG. V0200-001001 Cap and Overall

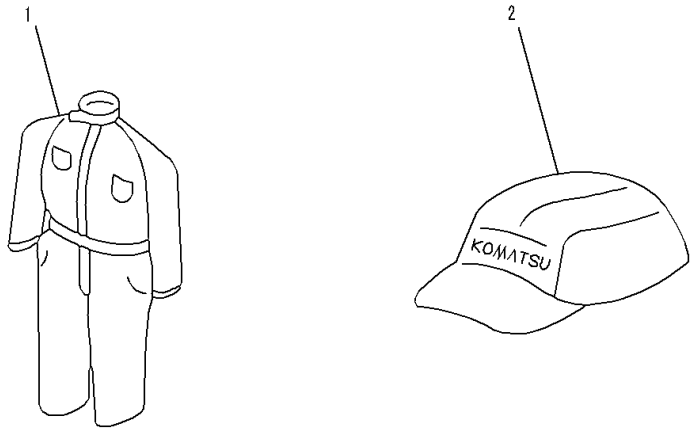

Index	Code	Part Number	Description	Qty	Serial Number
		09980-92550	Cap and Overall Kit	1	81028-
1		09980-10550	• Overall	1	81028-
2		09982-20057	• Cap	1	81028-

FIG. V0300-001001 Tool

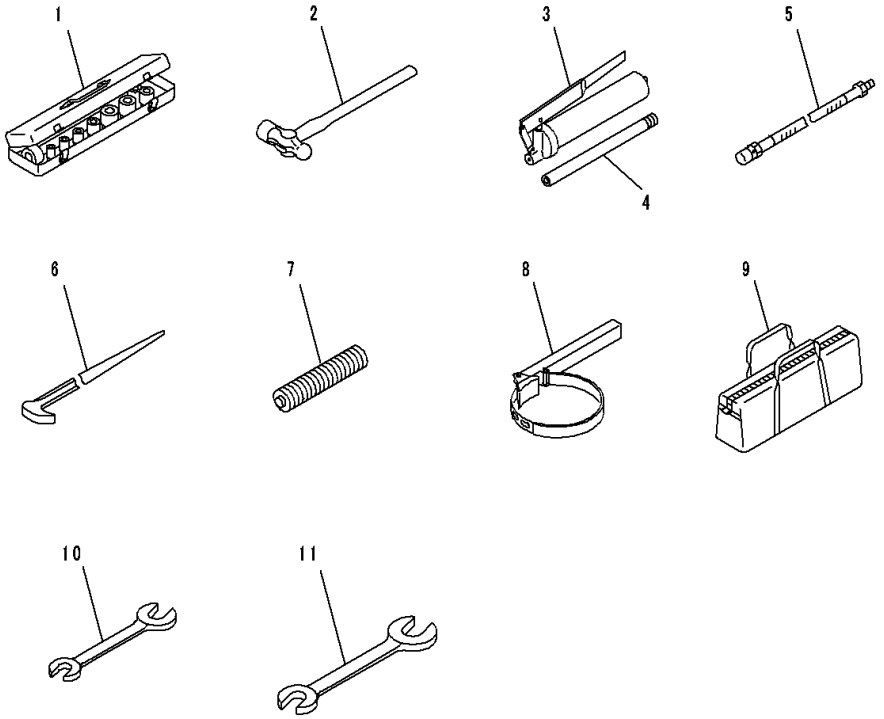

Index	Code	Part Number	Description	Qty	Serial Number
1		09020-10284	Socket Wrench Set	1	81028-
2		09039-00150	Hammer	1	81028-
		07952-70004	Pump Assembly	1	81028-
3		07950-10450	• Pump	1	81028-
4		07951-41017	• Nozzle	1	81028-
5		07951-31400	Nozzle	1	81028-
6		09055-10390	Bar	1	81028-
7		07950-90403	Cartridge	1	81028-
8		09019-28036	Wrench	1	81028-
9		09056-04613	Bag	1	81028-
10		09002-01417	Wrench, W=14X17mm	1	81028-
11		09002-01922	Wrench, W=19X22mm	1	81028-

FIG. V0305-001001 Emergency Tool

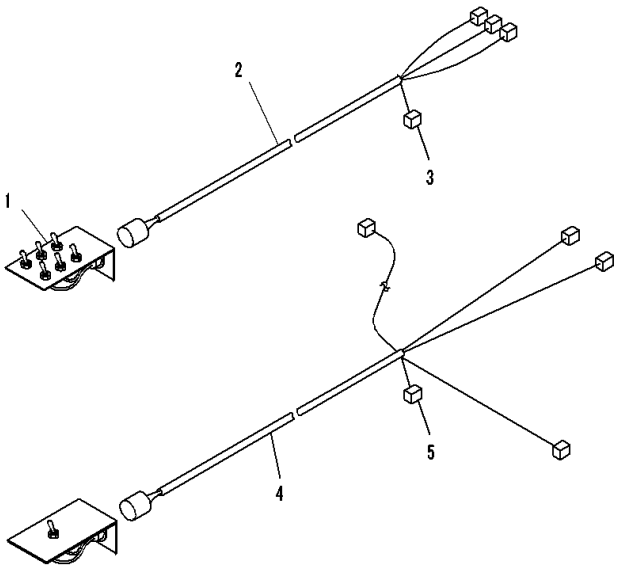

00041833

Index	Code	Part Number	Description	Qty	Serial Number
1		19M-06-32820	Switch Assembly	1	81028-
2		17A-06-41411	Wiring Harness	1	81028-
3		21J-06-13661	• Diode	1	81028-
4		17A-06-41421	Wiring Harness	1	81028-
5		21J-06-13661	• Diode	1	81028-

OTHER EQUIPMENT

FIG. W2111-001001 Vandalism Protection Lock

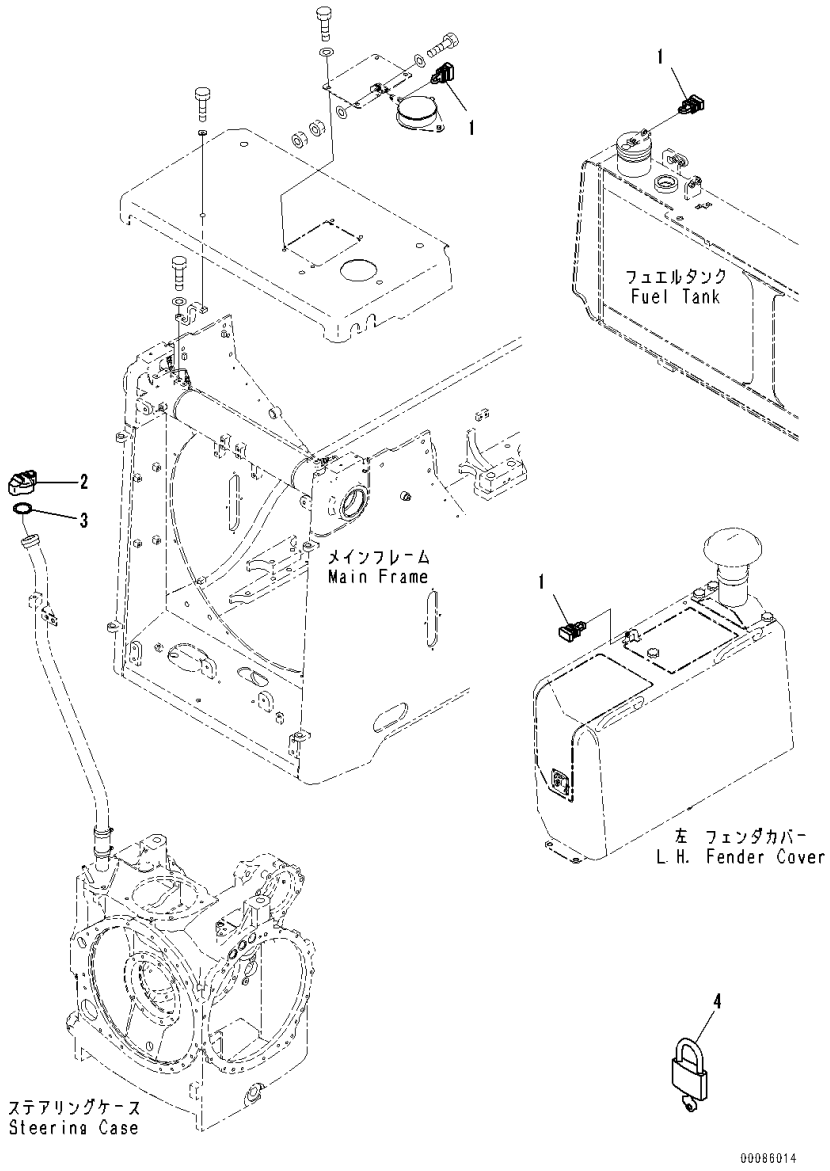

Index	Code	Part Number	Description	Qty	Serial Number
1		17A-04-41440	Lock	3	81028-
2		07092-01000	Cap	1	81028-
3		07051-00005	• Gasket	1	81028-
4		09460-00000	Lock	1	81028-

FIG. W2111-002001 Vandalism Protection Lock, Landfill Specification

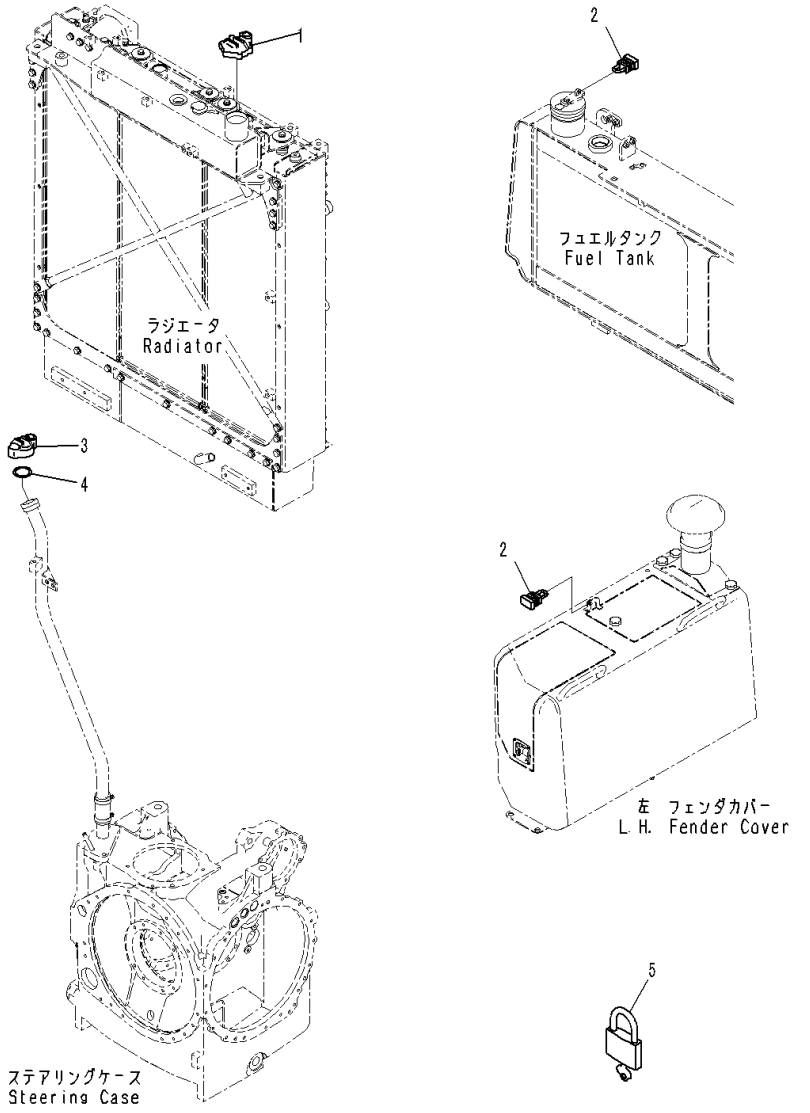

Index	Code	Part Number	Description	Qty	Serial Number
1		07093-20000	Cap	1	81028-
2		17A-04-41440	Lock	2	81028-
3		07092-01000	Cap	1	81028-
4		07051-00005	• Gasket	1	81028-
5		09460-00000	Lock	1	81028-

FIG. W2121-001001 Pre Heater, For Coolant and Engine Oil Pan Heater

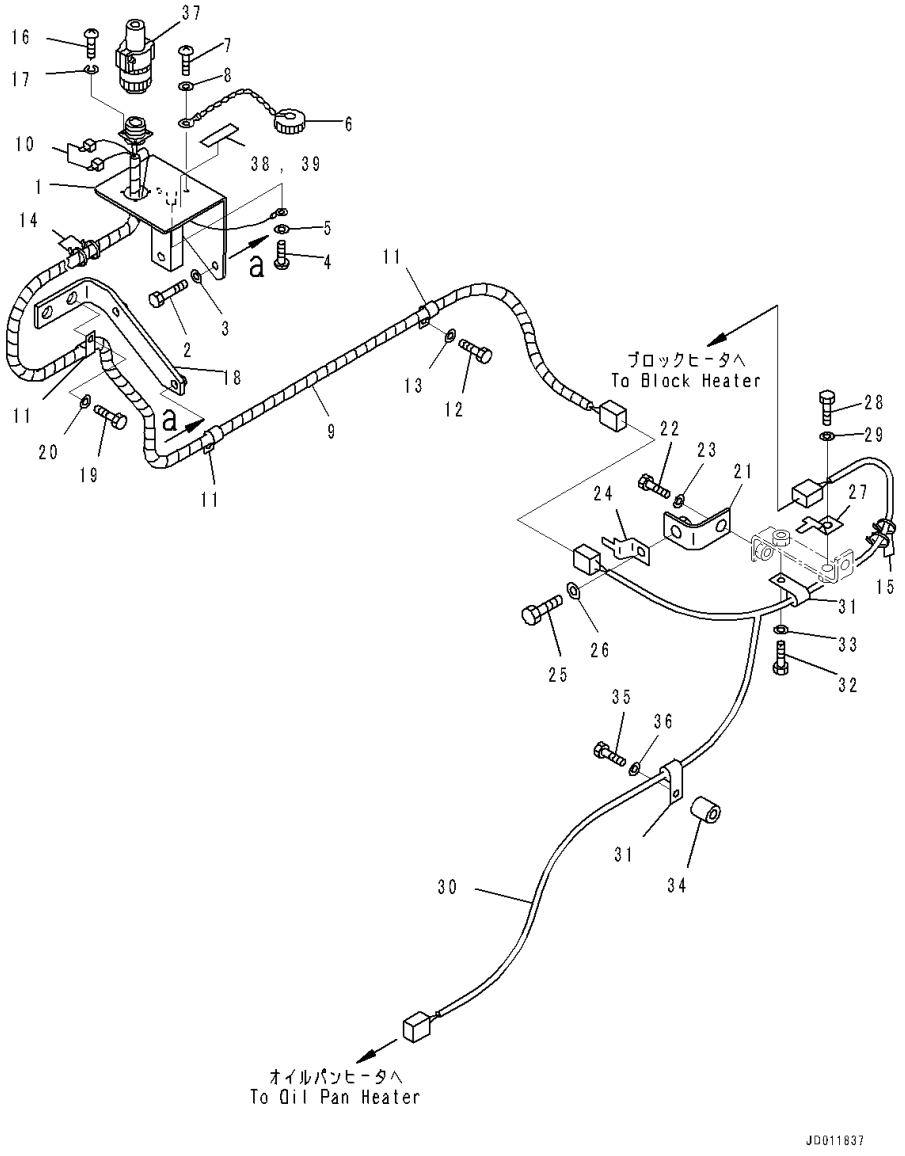

Index	Code	Part Number	Description	Qty	Serial Number
1		195-06-43121	Bracket	1	81028-
2		01010-80820	Bolt	2	81028-
3		01643-30823	Washer	2	81028-
4		01220-40610	Screw	1	81028-
5		01641-20608	Washer	1	81028-
6		175-06-39830	Cap	1	81028-
7		01220-40312	Screw	1	81028-
8		01641-20305	Washer	1	81028-
9		17A-06-23130	Wiring Harness	1	81028-
10		20T-06-81230	• Fusible Link	2	81028-
11		04434-51712	Clip	3	81028-
12		01010-81220	Bolt	2	81028-
13		01643-31232	Washer	2	81028-
14		08034-20536	Band	2	81028-
15		08034-20519	Band	2	81028-
16		01220-40312	Screw	4	81028-
17		01601-20307	Washer	4	81028-
18		17A-06-42131	Bracket	1	81028-
19		01010-81225	Bolt	2	81028-
20		01643-31232	Washer	2	81028-
21		17M-49-15260	Bracket	1	81028-
22		01010-81020	Bolt	1	81028-
23		01643-31032	Washer	1	81028-
24		08193-20012	Clip	1	81028-
25		01010-81225	Bolt	1	81028-
26		01643-31232	Washer	1	81028-
27		08193-20010	Clip	1	81028-
28		01010-81020	Bolt	1	81028-
29		01643-31032	Washer	1	81028-
30		17A-06-42140	Wiring Harness	1	81028-
31		04434-51012	Clip	2	81028-
32		01010-81020	Bolt	1	81028-
33		01643-31032	Washer	1	81028-
34		144-874-7470	Boss	1	81028-
35		01010-81045	Bolt	1	81028-
36		01643-31032	Washer	1	81028-
37		175-06-37871	Plug	1	81028-
38		195-98-14750	Plate, Caution	1	81028-
39		195-98-14780	Plate, Caution	1	81028-

FIG. W9950-001001 Service Kit Parts

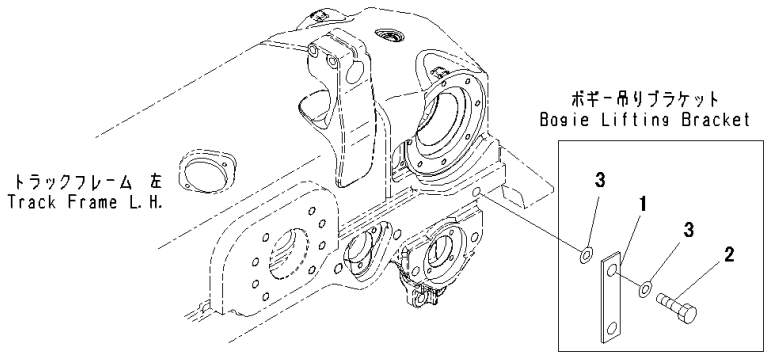

Index	Code	Part Number	Description	Qty	Serial Number
1		17A-30-46181	Plate	6	81028-
2		01010-83060	Bolt	12	81028-
3		01643-33080	Washer	18	81028-

FIELD REPAIR SERVICE PARTS

FIG. KIT Service Kit Parts (1/2)

Index	Code	Part Number	Description	Qty	Serial Number
K01		17A-13-05310	Torque Converter Service Kit		81028-
		07000-72015	• O-ring	4	-
		07000-72018	• O-ring	2	-
		07000-72021	• O-ring	2	-
		07000-72095	• O-ring	1	-
		07000-72115	• O-ring	1	-
		07000-73030	• O-ring	2	-
		07000-73035	• O-ring	2	-
		07000-73038	• O-ring	2	-
		07000-75165	• O-ring	1	-
		07000-75230	• O-ring	2	-
		07005-01612	• Seal, Washer	13	-
		07012-50100	• Seal	1	-
		113-15-12870	• Ring	1	-
		195-13-12711	• Seal Ring	1	-
		567-15-12830	• Ring	2	-
		568-15-12830	• Seal Ring	2	-
		568-15-12850	• Seal Ring	1	-
K02		17A-13-05320	Torque Converter Valve Service Kit		81028-
		07000-71007	• O-ring	2	-
		07000-72015	• O-ring	8	-
		07000-73022	• O-ring	2	-
		07000-A2060	• O-ring	1	-
		07002-61223	• O-ring	3	-
		07002-61623	• O-ring	2	-
		07002-61823	• O-ring	1	-
K03		17A-15-05210	Service Kit, Transmission		81028-
		07000-72014	• O-ring	2	-
		07000-72018	• O-ring	1	-
		07000-72020	• O-ring	1	-
		07000-73022	• O-ring	1	-
		07000-73025	• O-ring	1	-
		07000-73028	• O-ring	2	-
		07000-73030	• O-ring	5	-
		07000-73032	• O-ring	1	-
		07000-73035	• O-ring	1	-
		144-15-22881	• Ring	2	-
		17A-15-25911	• Gasket	1	-
		195-15-71230	• Gasket	1	-
		425-15-19250	• Seal Ring	1	-
		562-15-19230	• Seal Ring	2	-
		566-15-79260	• Seal Ring	2	-
		568-15-12830	• Seal Ring	2	-
		568-15-12840	• Seal Ring	1	-
K04		17M-15-05191	Service Kit, Transmission Control Valve		81028-
		07000-72014	• O-ring	2	-
		07000-72016	• O-ring	5	-
		07002-61823	• O-ring	5	-
		154-15-65590	• O-ring	1	-
		195-15-75531	• Gasket	1	-
		195-15-75740	• O-ring	1	-
K05		17A-15-05230	Service Kit, Transmission Main Relief Valve		81028-
		07000-73030	• O-ring	5	-
		07002-03034	• O-ring	4	-
		17A-15-25911	• Gasket	1	-
		195-15-71230	• Gasket	1	-
K06		178-32-05000	Shoe Bolt and Nut Service Kit		81028-
		176-32-11210	• Bolt	30	-
		178-32-11220	• Nut	30	-
K07		707-99-38740	Service Kit, Blade Lift Cylinder		81028-
		02896-11018	• O-ring	3	-
		07000-12050	• O-ring	2	-
		07000-12105	• O-ring	1	-
		07000-12110	• O-ring	1	-
		07001-02050	• Ring, Back-up	2	-
		07146-02106	• Ring, Back-up	1	-
		07156-01112	• Ring, Wear	2	-
		707-12-11170	• Cylinder	1	-
		707-29-11680	• Head	1	-
		707-44-11150	• Ring, Piston	1	-
		707-51-75030	• Packing, Rod	1	-
		707-51-75640	• Ring, Buffer	1	-
		707-51-75650	• Ring, Buffer	1	-
		707-56-75740	• Seal, Dust	2	-
		707-69-11000	• Slider	2	-
		707-86-68740	• Tube	1	-
		707-88-03881	• Ring, Snap	1	-
K10		707-99-64230	Service Kit, Blade Tilt Cylinder		81028-
		02896-11012	• O-ring	2	-

FIG. KIT Service Kit Parts (2/2)

Index	Code	Part Number	Description	Qty	Serial Number
		07000-15150	• O-ring	1	-
		07000-B2070	• O-ring	1	-
		07146-05152	• Ring, Back-up	1	-
		07156-01620	• Ring, Wear	1	-
		195-63-94170	• Seal, Dust	1	-
		707-35-52910	• Ring, Back-up	2	-
		707-44-16190	• Ring, Piston	1	-
		707-51-90030	• Packing, Rod	1	-
		707-51-90640	• Ring, Buffer	1	-
K11		707-99-64250	Service Kit, Hydraulic Cylinder		81028-
		02896-11012	• O-ring	2	-
		07000-15150	• O-ring	1	-
		07000-B2070	• O-ring	1	-
		07146-05152	• Ring, Back-up	1	-
		07156-01620	• Ring, Wear	1	-
		707-35-52910	• Ring, Back-up	2	-
		707-44-16190	• Ring, Piston	1	-
		707-51-90030	• Packing, Rod	1	-
		707-51-90640	• Ring, Buffer	1	-
		707-56-90740	• Seal, Dust	1	-
K13		707-99-66660	Service Kit, Ripper Lift Cylinder		81028-
		07000-13035	• O-ring	1	-
		07000-15170	• O-ring	1	-
		07000-B5100	• O-ring	1	-
		07145-00090	• Seal, Dust	4	-
		07146-05172	• Ring, Back-up	1	-
		07155-01845	• Ring, Wear	1	-
		707-35-90030	• Ring, Back-up	2	-
		707-44-18190	• Ring, Piston	1	-
		707-51-10030	• Packing, Rod	1	-
		707-51-10640	• Ring, Buffer	1	-
		707-56-10740	• Seal, Dust	1	-
K14		707-99-74200	Service Kit, Ripper Tilt Cylinder		81028-
		07000-13035	• O-ring	1	-
		07000-15190	• O-ring	1	-
		07000-B5110	• O-ring	1	-
		07001-05110	• Ring, Back-up	2	-
		07145-00100	• Seal, Dust	4	-
		07146-05192	• Ring, Back-up	1	-
		07155-02045	• Ring, Wear	1	-

Index	Code	Part Number	Description	Qty	Serial Number
		707-44-20190	• Ring, Piston	1	-
		707-51-11030	• Packing, Rod	1	-
		707-51-11640	• Ring, Buffer	1	-
		707-56-11740	• Seal, Dust	1	-
K16		707-98-11700	Service Kit		81028-
		02896-11009	• O-ring	2	-
		07000-12055	• O-ring	1	-
		07000-12060	• O-ring	1	-
		07001-02055	• Ring, Back-up	1	-
		707-34-10600	• O-ring	1	-
		707-35-99600	• Ring, Back-up	2	-
		707-51-30210	• Packing, Rod	1	-
		707-56-30740	• Seal, Dust	1	-

NUMERICAL INDEX

PartNumber	Page	Index
01010-61240	1028	23
	1030	23
	1032	23
	1034	23
01010-61440	394	16
	420	16
01010-61640	206	2
	890	17
	895	13
	896	14
	901	17
	906	13
	907	14
	926	19
	928	14
	932	19
	934	14
	938	19
	943	13
	944	14
	950	19
	955	13
	956	14
01010-61645	310	8
	353	11
01010-61650	128	2
01010-61655	394	23
	420	23
01010-61665	128	3
01010-61860	376	13
	402	13
01010-62040	890	10
	900	7
	901	10
	911	7
	912	29
	918	7
	919	29
	925	7
	926	12
	930	7
	932	12
	936	7
	938	12
	948	7
	950	12
	960	7
01010-62050	912	26
	919	26
01010-62055	353	2
01010-62255	931	3
	937	3
	949	3
	961	3
01010-62265	896	17
	907	17
01010-62285	891	20
	898	16
	902	20
	909	16
	929	16
	935	16
	939	20
	946	16
	951	20
	958	16
01010-62450	912	17
	919	17
01010-62460	912	19
	919	19
01010-62490	916	16
	923	16
01010-63080	931	8
	937	8
	949	8
	961	8
01010-80612	299	2
01010-80614	326	30
01010-80616	250	2
	314	5
	514	20
	514	23
	525	20
	525	23
	707	23
	710	17
	758	8
	784	2
	807	8
	828	2
01010-80620	506	31
	508	27
	704	6
	704	8
	704	13
	780	18
	796	18
	825	18
	841	18
01010-80635	564	25
	616	25
	667	25
01010-80640	564	26
	616	26
	667	26
01010-80816	556	15
	556	18
	561	14
	576	17
	579	34
	580	5
	608	15
	609	18
	613	14
	630	17
	633	30
	634	6
	650	30
	660	15
	660	18
	664	14
	676	17
	678	6
	692	30
	704	3
	753	21
	758	11
	780	13
	796	13
	799	21
	802	21
	807	11
	825	13
	841	13
01010-80820	128	11
	146	11
	197	23
	199	24
	201	24
	203	22
	296	7
	573	15
	591	15
	626	15
	645	15
	687	15
	757	5
	780	12
	796	12
	806	5
	825	12
	841	12
	843	18
	843	21
	847	18
	847	21
	851	18
	851	21
	854	19
	854	22
	859	18
	859	21
	1116	2
01010-80825	281	14
	285	14
	506	33
	507	16
	567	1
	572	1
	573	7
	573	10
	576	3
	576	13
	576	20
	578	7
	580	2
	580	10
	591	7
	591	10
	620	1
	625	1
	626	7
	626	10
	630	3
	630	13
	631	20
	632	7
	634	3
	634	11
	645	7
	645	10
	649	7
	669	1
	673	1
	676	3
	676	13
	676	20
	678	3
	678	11
	687	7
	687	10
	692	7
	700	2
	712	5
	753	3
	799	3
	802	3
01010-80830	148	30
	548	11
	549	26
	568	12
	569	27
	594	1
	600	11
	601	26
	621	12
	622	27
	652	11
	653	26
	670	12
	671	27
	685	1
	893	13
	904	13
	914	12

PartNumber	Page	Index
	921	12
	941	13
	953	13
01010-80835	796	20
	841	20
01010-80850	73	7
	77	7
01010-80875	228	1
	232	1
	237	1
	241	1
01010-81016	280	4
	284	4
	288	7
	767	7
	794	13
	816	7
	839	13
01010-81020	73	9
	77	9
	82	47
	84	47
	102	16
	115	16
	224	8
	224	11
	224	14
	224	17
	224	19
	224	26
	224	29
	224	32
	228	26
	228	39
	230	8
	230	19
	230	22
	230	25
	232	39
	234	11
	235	8
	235	19
	235	22
	235	25
	237	26
	237	39
	239	8
	239	19
	239	22
	239	25
	241	26
	241	39
	243	8
	243	19
	243	22
	243	25
	244	11
	244	15
	245	10
	245	14
	260	7
	265	7
	275	32
	275	35
	357	3
	360	3
	363	3
	366	3
	369	3
	372	3
	399	6
	425	6
	552	2
	552	6
	552	10

PartNumber	Page	Index
	552	14
	552	18
	552	22
	553	26
	553	29
	553	32
	553	36
	554	3
	554	7
	554	11
	554	15
	554	19
	554	22
	555	26
	555	30
	555	32
	555	35
	555	40
	555	43
	557	31
	557	35
	565	20
	565	23
	565	26
	567	4
	567	7
	572	4
	577	28
	587	21
	587	24
	587	27
	590	6
	594	4
	594	7
	604	2
	604	6
	604	10
	604	14
	605	18
	605	22
	605	26
	605	29
	605	32
	605	36
	606	3
	606	7
	606	11
	606	15
	607	19
	607	22
	607	26
	607	30
	607	32
	607	35
	607	40
	607	43
	609	31
	609	35
	617	21
	618	24
	618	27
	620	4
	620	7
	625	4
	631	30
	631	33
	642	6
	644	20
	644	23
	644	26
	656	2
	656	6
	656	10
	656	14
	656	18

PartNumber	Page	Index
	657	22
	657	26
	657	29
	657	32
	657	36
	658	3
	658	7
	658	11
	658	15
	658	19
	659	22
	659	26
	659	30
	659	32
	659	35
	659	40
	659	43
	661	31
	661	35
	669	4
	669	7
	673	4
	677	30
	677	33
	685	4
	685	7
	691	20
	691	23
	691	26
	703	2
	705	15
	710	11
	722	22
	722	25
	722	28
	724	7
	725	22
	725	25
	725	28
	784	18
	828	18
	893	19
	904	19
	914	18
	921	18
	941	19
	953	19
	1019	35
	1021	35
	1023	35
	1025	35
	1116	22
	1116	28
	1116	32
01010-81025	79	12
	80	11
	81	7
	81	15
	81	19
	81	29
	81	35
	81	40
	82	45
	83	7
	83	15
	83	19
	83	29
	83	35
	83	40
	84	45
	131	12
	131	15
	132	12
	132	15
	222	27

PartNumber	Page	Index
	225	36
	228	34
	234	6
	237	34
	241	34
	244	17
	249	2
	249	5
	249	30
	252	4
	254	2
	254	5
	257	4
	271	6
	290	23
	354	4
	384	17
	410	17
	549	31
	569	32
	601	31
	622	32
	653	31
	671	32
	736	14
	736	17
	736	25
	736	28
	739	23
	739	26
	740	10
	740	13
	741	14
	741	17
	746	14
	746	17
	746	25
	746	28
	833	8
	891	3
	895	3
	896	3
	902	3
	906	3
	907	3
	928	3
	934	3
	939	3
	943	3
	944	3
	951	3
	955	3
	956	3
01010-81030	81	5
	81	37
	83	5
	83	37
	101	33
	103	5
	114	33
	116	5
	131	17
	132	17
	224	4
	230	11
	230	16
	235	11
	235	16
	239	11
	239	16
	243	11
	243	16
	250	11
	255	8
	305	26
	308	32
	312	17
	325	7
	336	15
	374	38
	428	10
	564	48
	565	9
	570	5
	587	11
	616	48
	617	11
	623	5
	643	9
	667	48
	686	5
	691	9
	711	1
	738	6
	748	6
	1046	18
	1052	18
01010-81035	73	11
	77	11
	155	1
	273	7
	273	29
	274	7
	274	29
	305	5
	321	11
	400	7
	426	7
	710	4
	715	4
01010-81040	81	22
	83	22
	305	7
	329	10
	348	26
	548	5
	568	5
	600	5
	621	5
	652	5
	670	5
01010-81045	74	26
	78	26
	81	17
	83	17
	103	7
	116	7
	273	5
	274	5
	635	29
	679	29
	1116	35
01010-81050	74	24
	78	24
	136	11
	137	15
	249	27
	254	27
	312	22
	720	38
01010-81055	79	16
	80	15
	321	2
	336	25
	400	5
	426	5
	781	15
	797	15
	826	15
	842	15
01010-81060	80	16
	225	28
	319	15
	343	3
	781	17
	797	17
	826	17
	842	17
	1050	11
01010-81065	249	10
	254	10
	324	23
	374	23
01010-81070	437	8
	443	8
01010-81075	319	9
	761	4
	768	22
	776	14
	778	13
	790	14
	792	13
	810	4
	816	22
	821	14
	823	13
	835	14
	837	13
01010-81085	225	6
	348	40
01010-81090	73	13
	77	13
01010-81095	83	31
	767	16
	816	16
01010-81220	230	3
	232	24
	235	3
	239	3
	243	3
	244	24
	245	21
	250	38
	255	35
	297	20
	308	21
	337	25
	381	9
	398	8
	407	9
	424	8
	429	15
	454	26
	455	28
	457	4
	464	27
	466	27
	468	27
	720	19
	721	45
	724	10
	724	13
	724	30
	784	15
	828	15
	1027	18
	1027	37
	1116	12
01010-81225	224	34
	228	10
	228	12
	232	11
	232	14
	232	17
	232	27

PartNumber	Page	Index
	237	10
	237	12
	241	10
	241	12
	248	10
	248	28
	249	16
	249	22
	250	27
	250	30
	250	33
	251	5
	251	10
	251	28
	251	31
	252	11
	253	10
	253	28
	254	16
	254	22
	255	24
	255	27
	255	30
	256	5
	256	10
	256	28
	256	31
	257	11
	258	34
	264	4
	264	11
	264	32
	269	4
	269	11
	269	32
	270	7
	270	10
	271	14
	272	7
	272	10
	273	10
	273	13
	274	10
	274	13
	275	3
	276	3
	276	31
	276	38
	278	21
	281	9
	281	26
	282	41
	285	9
	285	26
	286	41
	290	11
	290	15
	296	4
	296	12
	296	15
	296	18
	296	21
	296	24
	296	27
	296	30
	297	5
	297	10
	297	13
	297	23
	297	26
	297	32
	297	35
	297	38
	298	48
	332	16
	351	28
	351	32
	351	37
	354	7
	382	10
	389	14
	392	16
	392	25
	399	25
	399	30
	399	36
	401	1
	408	10
	415	14
	418	16
	418	25
	425	25
	425	30
	425	36
	427	1
	428	4
	429	6
	429	12
	429	18
	429	22
	429	26
	430	2
	430	5
	430	9
	430	13
	430	16
	430	20
	433	4
	433	7
	433	13
	433	22
	433	26
	435	26
	439	4
	439	7
	439	13
	439	22
	439	26
	441	26
	453	17
	454	2
	454	24
	455	2
	455	26
	457	2
	460	3
	461	5
	462	6
	463	6
	556	4
	608	4
	660	4
	694	10
	694	13
	695	2
	697	2
	697	12
	714	2
	714	5
	714	13
	714	19
	714	24
	714	27
	720	15
	720	22
	722	19
	724	15
	725	19
	730	15
	732	9
	732	21
	732	29
	734	15
	735	3
	735	6
	735	10
	735	13
	736	19
	736	30
	739	28
	740	15
	741	19
	741	24
	742	9
	742	21
	742	29
	744	15
	745	3
	745	6
	745	10
	745	13
	746	19
	746	30
	753	6
	753	9
	753	14
	753	27
	753	34
	754	38
	754	43
	755	7
	755	15
	755	19
	755	22
	755	25
	755	29
	756	2
	756	5
	756	8
	756	12
	756	15
	756	18
	756	23
	757	2
	757	11
	757	14
	757	23
	758	15
	758	18
	759	11
	759	14
	759	17
	761	7
	761	15
	765	42
	782	18
	782	22
	782	31
	788	3
	798	3
	799	6
	799	9
	799	14
	799	27
	799	34
	800	38
	800	43
	802	6
	802	9
	802	14
	802	27
	802	34
	803	38
	803	43
	804	7

PartNumber	Page	Index
	804	9
	804	12
	804	16
	804	19
	804	22
	804	26
	805	2
	805	5
	805	8
	805	12
	805	15
	805	18
	805	23
	806	2
	806	11
	806	14
	806	23
	807	15
	807	18
	808	16
	808	19
	810	7
	810	15
	827	16
	827	20
	828	22
	832	3
	862	2
	862	10
	862	13
	863	5
	864	2
	864	9
	864	12
	966	10
	966	35
	971	10
	971	28
	973	10
	973	28
	975	10
	1027	10
	1027	29
	1036	6
	1037	6
	1038	2
	1056	8
	1056	12
	1116	19
	1116	25
01010-81230	141	2
	225	33
	226	50
	248	7
	248	13
	248	16
	248	18
	248	23
	248	25
	250	24
	251	14
	253	7
	253	13
	253	16
	253	18
	253	23
	253	25
	255	21
	256	14
	259	42
	259	46
	271	16
	273	16
	274	16
	290	7
	290	32
	310	27
	325	3
	330	18
	332	4
	337	16
	342	18
	348	30
	356	8
	358	41
	358	50
	358	52
	359	8
	361	41
	361	50
	361	52
	362	8
	364	41
	364	50
	364	52
	365	8
	367	41
	367	50
	367	52
	368	8
	370	41
	370	50
	370	52
	371	8
	373	41
	373	50
	373	52
	374	9
	374	17
	374	19
	379	7
	389	23
	390	2
	398	4
	399	20
	405	7
	415	23
	416	2
	424	4
	425	20
	432	18
	435	2
	437	1
	437	4
	441	2
	443	1
	443	4
	444	6
	444	9
	444	12
	446	4
	446	7
	446	10
	447	18
	447	21
	447	24
	447	33
	449	18
	449	21
	449	24
	449	33
	453	3
	454	22
	454	37
	455	24
	455	39
	457	15
	462	9
	462	17
	463	9
	463	17
	464	21
	466	21
	468	21
	576	8
	582	14
	582	18
	582	22
	583	25
	583	28
	630	8
	636	14
	637	18
	637	22
	637	25
	637	28
	676	8
	680	14
	680	18
	681	22
	681	25
	681	28
	694	7
	695	4
	699	2
	699	6
	699	10
	699	18
	720	2
	720	34
	724	2
	724	27
	730	21
	737	42
	740	27
	741	36
	747	42
	749	2
	749	5
	749	11
	750	6
	750	13
	750	19
	757	20
	763	9
	764	7
	764	16
	784	5
	785	2
	801	9
	806	20
	808	13
	812	9
	813	7
	813	16
	828	5
	829	2
	833	5
	833	14
	843	12
	843	28
	844	47
	844	50
	844	53
	845	5
	846	2
	846	4
	846	7
	846	13
	847	12
	847	28
	848	46
	848	49
	848	52
	849	5

PartNumber	Page	Index
	850	2
	850	4
	850	7
	850	13
	851	12
	851	28
	852	47
	852	50
	852	53
	853	5
	854	13
	854	29
	855	50
	855	53
	855	56
	856	8
	857	5
	857	7
	857	11
	857	20
	858	5
	858	13
	859	12
	859	28
	860	46
	860	49
	860	52
	861	5
	863	7
	865	3
	865	6
	900	2
	911	2
	918	2
	925	2
	930	2
	936	2
	948	2
	960	2
	966	3
	966	28
	971	3
	971	32
	973	3
	973	32
	975	3
	975	28
	1056	2
01010-81235	103	3
	116	3
	118	18
	225	25
	248	20
	250	17
	253	20
	255	14
	258	9
	258	14
	277	44
	283	16
	287	16
	289	15
	290	27
	310	3
	310	15
	310	23
	329	33
	330	13
	330	34
	333	40
	339	9
	346	8
	346	22
	346	27
	350	5

PartNumber	Page	Index
	357	12
	360	12
	363	12
	366	12
	369	12
	372	12
	430	24
	430	29
	434	2
	434	5
	434	8
	440	2
	440	5
	440	8
	447	5
	449	5
	454	9
	454	14
	455	11
	455	16
	700	10
	720	13
	720	25
	720	27
	722	2
	722	5
	724	18
	725	2
	725	5
	755	9
	843	14
	847	14
	851	14
	854	15
	859	14
	862	4
	864	4
	865	10
	866	7
	866	10
	866	23
	891	11
	892	7
	897	7
	898	7
	902	11
	903	7
	908	7
	909	7
	913	9
	920	9
	927	7
	929	7
	933	7
	935	7
	939	11
	940	7
	945	7
	946	7
	951	11
	952	7
	957	7
	958	7
	1060	5
01010-81240	249	13
	251	17
	254	13
	256	17
	260	2
	265	2
	278	24
	283	10
	287	10
	289	9
	297	18

PartNumber	Page	Index
	307	17
	339	4
	389	2
	415	2
	432	22
	714	9
	734	4
	734	10
	744	4
	744	10
	749	8
	750	16
	782	15
	893	21
	904	21
	914	20
	921	20
	941	21
	953	21
01010-81245	118	19
	118	20
	270	4
	270	13
	270	16
	272	4
	272	13
	272	16
	327	32
	332	9
	337	18
	346	33
	348	36
	351	34
	432	28
	447	30
	449	30
	697	4
	707	4
	724	20
	730	17
	753	31
	799	31
	802	31
	858	3
	858	11
	1046	21
	1052	21
01010-81250	232	31
	251	21
	256	21
	290	19
	290	36
	326	19
	382	32
	382	36
	393	2
	408	32
	408	36
	419	2
	432	11
	454	20
	454	35
	454	39
	455	22
	455	37
	456	41
	457	13
	457	17
	734	19
	744	19
	862	6
	864	6
	1019	38
	1021	38
	1023	38

PartNumber	Page	Index
	1025	38
01010-81255	225	10
	340	4
	447	27
	449	27
	454	11
	455	13
01010-81260	197	10
	199	11
	201	11
	203	9
	228	31
	234	3
	237	31
	241	31
	264	30
	269	30
	298	44
	304	3
	304	5
	333	50
	382	19
	408	19
	697	7
	697	10
	782	28
01010-81265	275	7
	275	16
	276	7
	276	17
	276	24
	276	27
	332	13
	348	10
	435	11
	441	11
	444	19
	444	23
	444	27
	446	17
	446	21
	453	7
	453	13
	453	20
	454	17
	455	19
	1035	13
	1036	12
	1037	12
	1050	4
01010-81270	232	21
	277	47
	307	4
	982	27
01010-81275	124	18
	125	19
	340	6
	374	11
	451	18
	452	13
	782	7
	827	7
	1055	5
01010-81280	228	15
	237	15
	241	15
	273	22
	273	33
	274	22
	274	33
	326	21
	348	14
	350	8
	375	42
	400	14
	426	14
	432	7
01010-81285	434	20
	440	20
01010-81290	124	20
	125	21
	232	9
	278	9
	305	30
	346	3
	434	24
	440	24
	448	15
	448	19
	450	15
	450	19
01010-81295	275	12
01010-81420	977	15
01010-81435	899	14
	910	14
	917	14
	924	14
	947	14
	959	14
	964	17
	965	38
	969	15
	969	34
	974	13
	974	32
	978	17
	979	38
	980	17
	980	22
	983	38
01010-81440	547	14
	598	17
	599	14
	651	14
	684	17
	693	7
	693	11
	782	2
	827	2
	964	13
	964	34
	969	11
	969	30
	974	18
	974	37
	978	13
	978	34
	983	42
01010-81465	249	19
	254	19
01010-81635	765	35
	813	33
	927	23
	927	25
	933	23
	933	25
	966	18
	966	24
	971	18
	971	24
	973	18
	973	24
	975	18
	975	24
	1035	18
	1036	17
	1037	17
01010-81640	264	1
	264	24
	269	1
	269	24
	356	22
	357	22
	359	22
	360	22
	362	22
	363	22
	365	22
	366	22
	368	22
	369	22
	371	22
	372	22
	447	2
	449	2
	715	2
	858	7
	858	15
	858	18
01010-81645	222	7
	222	14
	251	25
	256	25
	343	6
	345	2
	464	10
	464	15
	466	10
	466	15
	467	25
	468	10
	468	15
	469	25
	728	2
	737	38
	740	23
	741	32
	746	38
	984	26
	986	26
	988	20
	990	21
	992	25
	994	26
	996	19
	998	20
	1000	27
	1002	20
	1004	26
	1006	26
	1008	20
	1011	19
	1013	20
	1015	20
	1017	19
01010-81650	722	8
	722	11
	725	8
	725	11
01010-81655	520	3
	729	2
	759	4
	808	4
	894	9
	905	9
	942	9
	954	9
01010-81660	446	36
	465	12
	467	12
	469	12
	731	2
	736	34
	740	19
	741	28

PartNumber	Page	Index
	746	34
	1028	13
	1030	13
	1032	13
	1034	13
	1035	21
	1036	20
	1036	23
	1037	20
	1037	23
01010-81670	222	17
	357	26
	360	26
	363	26
	366	26
	369	26
	372	26
01010-81675	283	5
	287	5
	289	4
01010-81680	225	16
	444	34
	446	26
	465	15
	467	15
	469	15
01010-81685	730	10
01010-81865	1041	15
01010-81875	1041	16
01010-81880	980	32
01010-82035	490	6
01010-82040	1039	7
	1039	10
	1046	7
	1046	10
	1052	7
	1052	10
	1054	4
	1054	9
	1054	15
	1054	20
01010-82045	912	13
	919	13
01010-82050	547	7
	598	10
	599	7
	651	7
	684	10
	966	15
	966	21
	971	15
	971	21
	973	15
	973	21
	975	15
	975	21
01010-82055	358	45
	361	45
	364	45
	367	45
	370	45
	373	45
01010-82060	693	3
01010-82075	1043	16
01010-82080	397	2
	423	2
	965	43
	970	39
	979	44
01010-82085	1043	15
01010-82095	718	3
	980	29
01010-82275	890	14
	901	14
	926	16
	932	16
	938	16
	950	16
01010-82450	865	12
	866	25
	968	6
	972	6
	976	7
	977	19
01010-82460	357	8
	360	8
	363	8
	366	8
	369	8
	372	8
	727	2
	727	5
01010-82465	547	16
	598	19
	599	16
	651	16
	684	19
	693	13
01010-82470	787	1
	787	5
	831	1
	831	5
	893	29
	904	29
	914	28
	921	28
	941	29
	953	29
01010-82475	693	1
	865	14
	866	27
01010-82480	382	2
	408	2
	787	3
	787	7
	831	3
	831	7
01010-82780	356	17
	358	58
	359	17
	361	58
	362	17
	364	58
	365	17
	367	58
	368	17
	370	58
	371	17
	373	58
01010-83060	1117	2
01010-83075	1058	8
	1059	15
01010-D0620	541	2
	542	2
	543	2
	544	2
01010-D0635	492	34
	498	34
	505	12
	507	6
	533	34
	535	34
01010-D0816	490	4
01010-D0835	302	9
01010-D0850	529	15
	530	15
01010-D1020	302	15
	302	25
	698	2
	698	5
01010-D1025	302	12
01010-D1040	503	1
01010-D1220	490	2
01010-D1225	300	10
	301	9
	302	19
	751	2
	752	2
01010-D1230	504	3
	504	8
	506	29
	508	25
	732	12
	732	24
	742	12
	742	24
01010-D1250	722	15
	725	15
01010-E1025	81	9
	83	9
	86	61
	96	9
	96	29
	96	36
	96	39
	97	42
	99	20
	99	30
	109	9
	109	29
	109	36
	109	39
	110	42
	112	19
	112	24
01010-E1030	96	23
	99	15
	99	29
	109	23
	112	14
01010-E1035	99	26
01010-E1040	81	26
	83	26
	85	5
	112	26
01010-E1045	79	9
	80	8
	99	27
01010-E1050	79	3
	80	3
	96	11
	96	25
	96	32
	99	33
	109	11
	109	25
	109	32
	112	29
01010-E1055	70	8
01010-E1060	96	24
	99	16
	109	24
	112	15
01010-E1075	96	33
	109	33
01011-61460	766	7
	815	7
01011-62225	913	26
	920	26
	931	13
	937	13
	949	13
	961	13
01011-62700	985	43
	987	45

PartNumber	Page	Index
	989	37
	991	38
	993	42
	995	43
	997	38
	999	39
	1001	46
	1003	37
	1005	43
	1007	45
	1009	39
	1012	38
	1014	39
	1016	39
	1018	38
01011-62740	1010	2
01011-81000	329	17
01011-81010	312	19
01011-81015	336	18
01011-81020	81	31
	102	19
	115	19
01011-81030	81	10
	83	10
	351	16
01011-81035	258	24
01011-81040	340	11
	348	3
01011-81070	79	18
	340	9
01011-81090	337	28
01011-81095	74	23
	78	23
	143	31
01011-81200	124	22
	125	23
	346	15
01011-81205	273	25
	274	25
	276	13
	448	21
	450	21
	454	32
	455	34
	457	10
01011-81210	346	16
01011-81215	273	24
	274	24
01011-81225	330	36
01011-81240	347	41
01011-81630	251	11
	256	11
01011-81655	460	14
	461	16
01011-81660	357	36
	360	36
	363	36
	366	36
	369	36
	372	36
01011-81805	1019	7
	1021	7
	1023	7
	1025	7
01011-82005	899	18
	910	18
	917	18
	924	18
	947	18
	959	18
01011-82015	723	2
	726	2
01011-82020	520	1
01011-82045	914	30
	921	30

PartNumber	Page	Index
01011-82400	759	7
	808	9
01011-82425	520	5
01011-82450	468	18
01011-82460	464	18
	466	18
01011-82485	222	21
	428	1
01011-82700	465	2
	467	2
	467	18
	469	2
	469	18
	974	39
	982	21
	982	34
01011-83335	984	30
	986	30
	988	24
	990	25
	992	29
	994	30
	996	23
	998	24
	1000	31
	1002	24
	1004	30
	1006	30
	1008	24
	1011	23
	1013	24
	1015	24
	1017	23
01011-E1000	70	9
01011-E1005	96	1
	109	1
01016-50830	548	7
	568	8
	600	7
	621	8
	652	7
	670	8
01016-51040	849	10
	856	13
	861	10
01016-51045	751	5
01016-51090	228	36
	234	8
	237	36
	241	36
01016-51260	894	4
	905	4
	942	4
	954	4
01018-33990	1054	23
	1057	3
	1058	20
	1059	1
01020-01016	72	19
	76	19
01020-11040	66	29
	85	26
	96	10
	109	10
01020-11050	68	29
	112	12
01020-11060	96	20
	109	20
01023-10306	578	14
	578	21
	632	14
	632	21
	649	14
	650	21
	692	14

PartNumber	Page	Index
	692	21
01023-10308	556	21
	561	11
	609	21
	613	11
	661	21
	664	11
01023-10410	704	16
01023-10416	555	37
	555	38
	607	37
	607	38
	659	37
	659	38
	712	7
01023-10508	578	12
	578	16
	632	12
	632	16
	649	12
	649	16
	692	12
	692	16
01023-10510	728	8
	729	8
	730	4
	730	9
	731	8
01023-10520	491	2
	497	2
	514	9
	514	22
	525	9
	525	22
	533	2
	535	2
01023-20410	491	11
	497	11
	506	27
	508	23
	533	11
	535	11
01023-20416	516	7
	524	9
	527	9
01023-20425	516	14
	524	16
	527	16
01023-20510	524	2
	527	2
01023-70414	562	36
	614	36
	665	36
01050-51225	124	27
	125	28
01050-51260	197	18
	199	19
	201	19
	203	17
01052-51675	1057	12
	1058	14
	1059	21
01084-01650	326	5
01220-40312	1116	7
	1116	16
01220-40408	562	33
	614	33
	665	33
01220-40516	452	11
01220-40545	451	16
01220-40610	1116	4
01224-70316	511	26
	513	26
	538	26
	539	26

PartNumber	Page	Index
01224-70408	561	9
	613	9
	664	9
01232-10616	579	30
01236-60308	495	16
	501	16
01240-00616	703	15
01245-00616	493	15
	499	15
	518	29
	573	4
	578	18
	579	25
	580	16
	581	24
	591	4
	626	4
	632	18
	634	17
	635	32
	645	4
	649	18
	678	17
	679	32
	687	4
	692	18
	701	8
01245-00620	491	4
	492	24
	492	40
	492	43
	493	5
	493	9
	494	35
	495	5
	495	9
	495	13
	497	4
	498	24
	498	40
	498	43
	499	5
	499	9
	500	35
	501	5
	501	9
	501	13
	506	39
	508	33
	514	3
	516	3
	518	17
	518	35
	518	38
	521	36
	524	5
	525	3
	527	5
	533	4
	533	24
	534	40
	534	43
	535	4
	535	24
	536	40
	536	43
01245-00625	520	8
	520	12
	520	15
	521	20
	521	26
	521	28
	521	32
	522	10
	541	5

PartNumber	Page	Index
	542	5
	543	5
	544	5
01245-00816	494	24
	494	31
	500	24
	500	31
	833	11
	833	17
	845	3
	846	11
	849	3
	850	11
	853	3
	856	6
	857	18
	861	3
01245-00820	299	7
	573	2
	580	13
	580	21
	581	27
	591	2
	626	2
	634	14
	635	22
	635	26
	635	35
	645	2
	678	14
	679	22
	679	26
	679	35
	687	2
	701	2
	701	5
	701	13
	702	2
	702	7
	703	12
	712	2
	712	10
	785	5
	829	5
01245-00825	492	37
	494	20
	494	30
	498	37
	500	20
	500	30
	519	3
	522	2
	528	3
	529	3
	530	3
	533	37
	535	37
01245-00830	700	8
01245-01025	703	8
	706	3
01252-31230	326	12
01252-31245	329	11
01252-41060	316	6
01252-60510	311	25
	312	2
	322	18
01252-60512	560	2
	612	2
	663	2
01252-60525	176	9
	182	9
	188	9
01252-60616	261	17
	266	17
	336	10

PartNumber	Page	Index
	336	32
	384	8
	410	8
01252-60625	176	10
	182	10
	188	10
01252-60635	381	2
	386	21
	387	3
	407	2
	412	21
	413	3
	772	19
	777	42
	779	38
	791	42
	793	38
	795	45
	818	19
	822	42
	823	38
	836	42
	838	38
	840	45
01252-60650	387	2
	413	2
01252-60820	391	15
	417	15
	436	6
	442	6
	767	9
	776	7
	778	6
	790	7
	792	6
	794	6
	816	9
	821	7
	823	6
	835	7
	837	6
	839	6
01252-60825	436	8
	442	8
01252-60835	261	24
	266	24
01252-60845	261	14
	266	14
	436	9
	442	9
01252-61035	74	3
	78	3
01252-61040	391	30
	417	30
01252-61230	432	3
01252-61235	377	16
	403	16
	1019	28
	1021	28
	1023	28
	1025	28
01252-61240	384	10
	410	10
01252-61450	342	15
01252-61480	262	3
	267	3
01252-61645	378	43
	379	2
	404	43
	405	2
01252-70410	556	23
	609	23
	661	23
01252-70414	708	28
01252-70510	337	4

PartNumber	Page	Index
01252-70520	562	31
	614	31
	665	31
01252-70530	516	11
	524	13
	527	13
01252-70540	334	37
01252-70635	757	18
	806	18
01252-70650	312	8
	336	1
	336	22
01252-70816	564	46
	616	46
	667	46
01252-70825	561	1
	613	1
	664	1
01252-71025	392	6
	418	6
	781	21
	797	21
	826	21
	842	21
01252-71035	447	10
	449	10
01252-71085	392	2
	418	2
01252-71225	346	37
01252-71250	305	32
01252-80412	564	30
	616	30
	667	30
01252-80414	564	31
	616	31
	667	31
01252-80510	565	7
	587	9
	617	9
	643	7
	691	7
01252-80514	511	27
	513	27
	519	6
	528	6
	529	6
	530	6
	538	27
	539	27
	562	29
	614	29
	665	29
01252-80516	564	45
	616	45
	667	45
01252-80530	563	21
	616	21
	667	21
01253-61415	344	14
01253-61600	342	11
01253-61635	341	14
01310-01216	1041	25
01310-01225	1043	25
01310-20608	326	25
01310-20812	329	21
01312-20612	563	22
	616	22
	667	22
01370-00512	594	11
	685	11
01370-20308	578	10
	580	19
	632	10
	635	20
	649	10
	678	20
	692	10
	700	6
	701	11
01370-20316	522	12
	703	5
01370-40412	518	31
01434-00412	844	41
	848	41
	852	41
	855	42
	860	41
01435-00610	160	7
	514	24
	525	24
01435-00612	92	24
	94	24
	105	24
	107	24
	556	12
	556	14
	608	12
	608	14
	660	12
	660	14
01435-00616	550	9
	577	26
	602	9
	631	26
	654	9
	677	26
01435-00620	582	10
	636	10
	680	10
01435-00625	101	10
	114	10
	148	27
	786	7
	786	9
	830	7
	830	9
01435-00630	101	11
	114	11
	148	28
	156	12
	156	25
	228	5
	228	19
	228	20
	228	23
	232	5
	232	36
	237	5
	237	19
	237	20
	237	23
	241	5
	241	19
	241	20
	241	23
01435-00635	148	29
	156	13
	160	11
01435-00640	156	15
01435-00650	148	33
01435-00820	92	32
	94	32
	105	32
	107	32
	158	12
	159	23
01435-00825	101	39
	114	39
01435-00830	163	13
	177	24
	183	24
	189	24
01435-00835	101	32
	114	32
01435-00840	102	5
	115	5
	158	2
	159	2
01435-00845	92	27
	94	27
	105	27
	107	27
	158	13
	159	24
	177	25
	183	25
	189	25
01435-00855	65	1
01435-00880	550	7
	602	7
	654	7
01435-00885	550	5
	602	5
	654	5
01435-00895	92	26
	94	26
	105	26
	107	26
01435-01016	111	23
	137	11
	174	38
	175	42
	177	19
	178	43
	178	50
	179	22
	179	28
	180	38
	181	42
	183	19
	184	43
	184	50
	185	22
	185	28
	186	38
	187	42
	189	19
	190	44
	190	51
	191	22
	191	28
01435-01020	77	20
	85	2
	85	11
	85	40
	86	45
	86	64
	88	42
	89	5
	89	13
	98	19
	101	12
	111	21
	114	12
	124	10
	125	11
	130	3
	131	27
	132	23
	132	37
	136	35
	138	39
	143	26
	148	3
	148	32

PartNumber	Page	Index
	148	38
	156	28
	159	13
	163	17
	169	33
	171	33
	173	33
	174	9
	174	14
	174	18
	174	22
	174	35
	176	6
	177	2
	177	39
	179	1
	179	25
	180	9
	180	14
	180	18
	180	22
	180	35
	182	6
	183	2
	183	39
	185	1
	185	25
	186	9
	186	14
	186	18
	186	22
	186	35
	188	6
	189	2
	189	40
	191	1
	191	25
	192	4
01435-01025	66	11
	68	11
	73	20
	73	26
	73	30
	73	33
	74	6
	74	37
	77	22
	77	25
	77	27
	78	7
	85	7
	85	9
	85	34
	85	38
	86	50
	86	65
	87	6
	87	14
	87	17
	87	26
	87	37
	87	40
	89	6
	89	11
	89	28
	89	33
	89	38
	98	6
	98	20
	99	4
	101	13
	101	21
	102	26
	111	6
	111	22
	112	4
	114	13
	114	21
	115	26
	124	2
	125	2
	128	14
	131	3
	131	9
	131	28
	132	3
	132	9
	132	38
	136	18
	137	22
	143	13
	143	16
	143	28
	143	30
	148	4
	156	17
	161	5
	163	7
	163	28
	163	36
	173	34
	174	24
	174	33
	176	3
	177	3
	177	15
	178	49
	179	9
	180	24
	180	33
	182	3
	183	3
	183	15
	184	49
	185	9
	186	24
	186	33
	188	3
	189	3
	189	15
	190	50
	191	9
	193	1
	197	17
	199	18
	201	18
	203	16
01435-01030	66	12
	66	19
	66	30
	68	12
	68	19
	68	30
	85	13
	85	18
	85	29
	85	36
	86	43
	86	48
	86	57
	86	59
	87	2
	87	8
	87	11
	87	20
	87	32
	89	7
	89	16
	89	21
	89	30
	89	35
	89	40
	90	45
	98	7
	111	7
	119	11
	136	14
	137	13
	137	18
	146	18
	163	29
	165	9
	175	41
	181	41
	187	41
01435-01035	66	20
	68	20
	85	20
	85	31
	86	55
	87	3
	89	8
	89	23
	90	46
	96	13
	97	45
	98	8
	109	13
	110	45
	111	8
	124	5
	125	5
	136	4
	137	4
	156	16
	163	5
	164	40
	177	10
	183	10
	189	10
	192	5
	192	16
01435-01040	85	3
	85	15
	87	25
	89	14
	101	20
	114	20
	132	26
	156	26
	179	10
	179	16
	185	10
	185	16
	191	10
	191	16
01435-01045	143	24
	158	4
	158	7
	159	4
	159	18
	174	10
	174	28
	176	4
	176	24
	179	13
	180	10
	180	28
	182	4
	182	24
	185	13
	186	10
	186	28
	188	4
	188	24

PartNumber	Page	Index
	191	13
	192	3
01435-01050	78	35
	90	42
	124	11
	125	12
	143	25
	148	39
	165	10
	177	12
	183	12
	189	12
01435-01055	73	21
	98	9
	98	21
	111	9
	111	24
	161	6
01435-01060	102	13
	115	13
	146	19
01435-01065	136	3
	137	3
	177	4
	179	6
	183	4
	185	6
	189	4
	191	6
01435-01070	66	7
	68	7
	165	16
	168	4
	170	4
	172	4
01435-01075	163	35
	169	26
	171	26
	173	26
	176	19
	176	26
	177	31
	177	35
	182	19
	182	26
	183	31
	183	35
	188	19
	188	26
	189	32
	189	36
01435-01080	89	18
	132	29
	176	30
	182	30
	188	30
01435-01085	143	17
	168	5
	170	5
	172	5
	176	34
	182	34
	188	34
01435-01090	124	24
	125	25
	136	20
	137	24
	146	20
	159	14
01435-01095	143	8
	169	27
	171	27
	173	27
01435-01220	96	4
	109	4
	148	5
01435-01225	136	30
	137	34
	168	7
01435-01235	66	21
	68	21
01435-01240	89	25
01435-01245	170	7
	172	7
01435-01255	101	1
	114	1
01436-01000	192	17
01436-01010	124	23
	125	24
	156	11
	165	11
01436-01015	176	15
	178	48
	182	15
	184	48
	188	15
	190	49
01436-01040	74	17
	78	18
	87	28
	143	9
01436-01070	66	3
	68	3
01436-01075	148	37
	149	42
01436-01080	66	22
	68	22
	148	35
	156	20
01436-01085	163	15
01437-01025	135	33
	169	4
	171	4
	173	4
01437-01065	168	15
	170	15
	172	15
01437-01070	160	16
01437-01220	120	5
01437-10816	66	15
	68	15
01437-11080	169	5
	171	5
	173	5
01438-01005	168	16
	170	16
	172	16
01438-01010	87	23
01438-01020	63	25
01508-40603	548	18
	601	18
	652	18
01508-40805	568	19
	622	19
	670	19
	708	23
	710	6
01580-00605	491	14
	497	14
	533	14
	535	14
01580-01008	99	28
	131	19
	132	19
01580-01815	980	34
01580-03326	1057	10
	1059	25
01580-10605	223	5
	506	30
	508	26
	548	22
	601	22
	653	22
01580-10806	378	40
	404	40
	474	8
	476	8
	477	8
	478	8
	480	2
	482	8
	483	9
	484	9
	485	9
	515	39
	526	39
	548	8
	568	9
	568	21
	600	8
	621	9
	622	21
	652	8
	670	9
	671	21
	707	15
	708	21
	732	7
	732	19
	742	7
	742	19
	780	15
	796	15
	825	15
	841	15
01580-11008	223	8
	228	37
	234	9
	237	37
	241	37
	721	41
	751	6
	763	6
	801	6
	812	6
01580-11210	197	12
	199	13
	201	13
	203	11
	251	24
	256	24
	504	4
	504	9
	508	34
	707	10
	708	17
	710	14
	719	4
	1055	7
01580-11613	197	15
	199	16
	201	16
	203	14
01580-12419	912	23
	919	23
01580-13024	1058	4
	1059	9
01580-20605	561	20
	614	20
	665	20
01582-01008	122	6
	122	11
01582-01210	197	2
	199	3
	201	3

PartNumber	Page	Index
01582-01613	326	6
01582-11008	708	3
01582-11210	474	6
	474	10
	476	6
	476	10
	477	6
	477	10
	478	6
	478	11
	480	4
	482	6
	482	10
	483	7
	483	11
	484	7
	484	11
	485	7
	485	11
01582-11613	892	19
	903	19
	927	19
	933	19
	940	19
	952	19
01583-11408	380	12
	406	12
01583-13621	260	5
	265	5
01583-52012	281	17
	285	17
01584-01008	73	28
	73	35
	74	38
	77	29
	85	22
	101	23
	114	23
	131	30
	133	40
	148	6
	156	18
01590-30809	707	13
	707	18
	707	30
	708	18
	708	25
	708	37
01592-31619	1057	13
	1058	15
	1059	22
01593-31008	707	20
01594-01008	721	44
	736	7
	739	17
	741	7
	746	7
	843	32
	844	42
	847	32
	848	42
	851	32
	852	42
	854	33
	855	43
	859	32
	860	42
01596-01615	1027	3
	1027	22
01597-01009	98	10
	111	10
	111	25
	136	25
	137	29
	168	9
	170	9
	172	9
	264	14
	269	14
	276	36
	348	18
	348	33
	435	8
	441	8
	453	31
	786	3
	830	3
	1027	15
	1027	34
	1042	36
	1044	36
01597-01211	258	37
	432	16
01601-20307	1116	17
01601-20410	557	24
	609	24
	661	24
01601-20411	564	32
	616	32
	667	32
01601-20512	564	23
	616	23
	667	23
01602-21236	913	10
	920	10
01640-20408	564	33
	616	33
	667	33
	708	29
01640-20610	492	27
	498	27
	506	18
	506	22
	507	12
	508	18
	533	27
	535	27
	548	16
	557	29
	561	19
	568	17
	573	5
	579	32
	591	5
	600	16
	609	29
	614	19
	621	17
	626	5
	645	5
	652	16
	661	29
	664	19
	670	17
	687	5
01640-20816	146	12
	474	5
	476	5
	477	5
	478	5
	482	5
	483	6
	484	6
	485	6
	515	40
	526	40
01640-21016	721	43
	736	8
	739	18
	741	8
	746	8
	843	31
	844	43
	847	31
	848	43
	851	31
	852	43
	854	32
	855	44
	859	31
	860	43
01640-21123	843	24
	843	34
	847	24
	847	34
	851	24
	851	34
	854	25
	854	35
	859	24
	859	34
01640-21223	124	25
	125	26
01640-21323	203	3
01641-20305	1116	8
01641-20405	562	34
	614	34
	665	34
01641-20508	594	12
	685	12
01641-20608	1116	5
01641-50508	511	28
	513	28
	519	7
	528	7
	529	7
	530	7
	538	28
	539	28
01641-50812	833	12
	833	18
01642-21016	863	14
01643-22245	980	13
	982	10
	984	36
	985	40
	988	30
	988	34
	990	31
	990	35
	992	35
	993	39
	994	36
	995	40
	1002	30
	1002	35
	1004	36
	1005	41
01643-22460	986	36
	987	42
	996	29
	996	35
	998	30
	998	36
	1001	37
	1001	43
	1007	36
	1007	42
	1008	30
	1008	36
	1011	29
	1011	35
	1013	30
	1013	36
	1015	30

PartNumber	Page	Index
	1015	36
	1017	29
	1017	35
01643-30623	93	42
	95	42
	106	42
	108	42
	250	3
	299	3
	314	6
	326	28
	564	27
	616	27
	667	27
	704	7
	704	9
	704	14
	707	24
	710	18
	757	17
	758	9
	780	19
	796	19
	806	17
	807	9
	825	19
	841	19
01643-30823	73	8
	77	8
	128	12
	156	14
	177	26
	183	26
	189	26
	228	2
	232	2
	237	2
	241	2
	281	15
	285	15
	296	8
	337	12
	548	12
	549	27
	556	16
	556	19
	561	2
	561	15
	564	47
	567	2
	568	13
	569	28
	572	2
	573	8
	573	11
	573	16
	576	4
	576	14
	576	18
	576	21
	578	8
	579	35
	580	3
	580	6
	580	11
	591	8
	591	11
	591	16
	594	2
	600	12
	601	27
	608	16
	609	19
	613	2
	613	15

PartNumber	Page	Index
	616	47
	620	2
	621	13
	622	28
	625	2
	626	8
	626	11
	626	16
	630	4
	630	14
	631	18
	631	21
	632	8
	633	31
	634	4
	634	7
	634	12
	645	8
	645	11
	645	16
	649	8
	650	31
	652	12
	653	27
	660	16
	660	19
	664	2
	664	15
	667	47
	669	2
	670	13
	671	28
	673	2
	676	4
	676	14
	676	18
	677	21
	678	4
	678	7
	678	12
	685	2
	687	8
	687	11
	687	16
	692	8
	692	31
	700	3
	704	4
	707	31
	708	36
	712	6
	732	8
	732	20
	742	8
	742	20
	753	4
	753	22
	757	6
	758	12
	780	14
	780	16
	796	14
	796	16
	799	4
	799	22
	802	4
	802	22
	806	6
	807	12
	825	14
	825	16
	841	14
	841	16
	843	19
	843	22

PartNumber	Page	Index
	847	19
	847	22
	851	19
	851	22
	854	20
	854	23
	859	19
	859	22
	893	14
	904	14
	914	13
	921	13
	941	14
	953	14
	1116	3
01643-31032	73	10
	73	12
	73	14
	73	27
	73	34
	74	15
	74	18
	74	22
	74	25
	74	27
	77	10
	77	12
	77	14
	77	21
	77	28
	78	16
	78	22
	78	25
	78	27
	79	17
	79	19
	80	17
	81	6
	81	8
	81	11
	81	16
	81	18
	81	20
	81	23
	81	30
	81	32
	81	36
	81	38
	82	41
	82	46
	82	48
	83	6
	83	8
	83	11
	83	16
	83	18
	83	20
	83	23
	83	30
	83	32
	83	36
	83	38
	84	41
	84	46
	84	48
	86	62
	87	35
	96	2
	96	14
	96	21
	96	26
	96	30
	96	34
	96	37
	96	40

PartNumber	Page	Index
	97	43
	98	11
	99	14
	99	17
	99	21
	99	31
	99	34
	101	22
	101	34
	102	17
	102	20
	103	6
	103	8
	109	2
	109	14
	109	21
	109	26
	109	30
	109	34
	109	37
	109	40
	110	43
	111	11
	111	26
	112	13
	112	16
	112	20
	112	25
	112	27
	112	30
	114	22
	114	34
	115	17
	115	20
	116	6
	116	8
	124	12
	125	13
	131	13
	131	16
	131	18
	131	20
	131	29
	132	13
	132	16
	132	18
	132	20
	132	24
	132	39
	136	12
	136	24
	137	16
	137	28
	143	18
	143	32
	155	2
	156	19
	156	29
	159	15
	163	38
	165	18
	168	10
	170	10
	172	10
	174	6
	174	13
	174	17
	174	20
	174	23
	174	27
	174	32
	174	37
	176	14
	176	18
	176	23
	176	27
	177	40
	179	2
	179	26
	179	29
	180	6
	180	13
	180	17
	180	20
	180	23
	180	27
	180	32
	180	37
	182	14
	182	18
	182	23
	182	27
	183	40
	185	2
	185	26
	185	29
	186	6
	186	13
	186	17
	186	20
	186	23
	186	27
	186	32
	186	37
	188	14
	188	18
	188	23
	188	27
	190	41
	191	2
	191	26
	191	29
	192	7
	222	28
	224	5
	224	9
	224	12
	224	15
	224	18
	224	20
	224	27
	224	30
	224	33
	225	7
	225	29
	225	37
	228	27
	228	40
	230	9
	230	12
	230	17
	230	20
	230	23
	230	26
	232	40
	234	12
	235	9
	235	12
	235	17
	235	20
	235	23
	235	26
	237	27
	237	40
	239	9
	239	12
	239	17
	239	20
	239	23
	239	26
	241	27
	241	40
	243	9
	243	12
	243	17
	243	20
	243	23
	243	26
	244	12
	244	16
	244	18
	245	11
	245	15
	249	3
	249	6
	249	11
	249	28
	249	31
	250	12
	252	5
	254	3
	254	6
	254	11
	254	28
	255	9
	257	5
	258	25
	260	8
	264	15
	265	8
	269	15
	271	7
	273	6
	273	8
	273	30
	274	6
	274	8
	274	30
	275	33
	275	36
	276	37
	280	5
	284	5
	288	8
	290	24
	305	6
	305	8
	305	27
	308	33
	312	18
	312	20
	312	23
	316	7
	319	10
	319	16
	321	3
	321	12
	324	24
	325	8
	329	18
	336	16
	336	19
	336	26
	337	29
	340	10
	340	12
	348	17
	348	27
	348	34
	349	41
	351	17
	354	5
	357	4
	360	4
	363	4

PartNumber	Page	Index
	366	4
	369	4
	372	4
	374	39
	384	18
	399	7
	400	6
	400	8
	410	18
	425	7
	426	6
	426	8
	428	11
	435	9
	437	9
	441	9
	443	9
	453	32
	548	6
	549	32
	552	3
	552	7
	552	11
	552	15
	552	19
	552	23
	553	27
	553	30
	553	33
	553	37
	554	4
	554	8
	554	12
	554	16
	554	20
	554	23
	555	27
	555	31
	555	33
	555	36
	555	41
	555	44
	557	32
	557	36
	564	49
	565	10
	565	21
	565	24
	565	27
	567	5
	567	8
	568	6
	569	33
	570	6
	572	5
	573	22
	577	29
	587	12
	587	22
	587	25
	587	28
	590	7
	591	22
	594	5
	594	8
	600	6
	601	32
	604	3
	604	7
	604	11
	604	15
	605	19
	605	23
	605	27
	605	30
	605	33
	605	37
	606	4
	606	8
	606	12
	606	16
	607	20
	607	23
	607	27
	607	31
	607	33
	607	36
	607	41
	607	44
	609	32
	609	36
	616	49
	617	12
	617	22
	618	25
	618	28
	620	5
	620	8
	621	6
	622	33
	623	6
	625	5
	627	22
	631	31
	631	34
	635	30
	642	7
	643	10
	644	21
	644	24
	644	27
	645	22
	652	6
	653	32
	656	3
	656	7
	656	11
	656	15
	656	19
	657	23
	657	27
	657	30
	657	33
	657	37
	658	4
	658	8
	658	12
	658	16
	658	20
	659	23
	659	27
	659	31
	659	33
	659	36
	659	41
	659	44
	661	32
	661	36
	667	49
	669	5
	669	8
	670	6
	671	33
	673	5
	677	31
	677	34
	679	30
	685	5
	685	8
	686	6
	687	22
	691	10
	691	21
	691	24
	691	27
	703	3
	705	16
	710	5
	710	12
	711	2
	715	5
	720	39
	720	40
	722	23
	722	26
	722	29
	724	8
	725	23
	725	26
	725	29
	736	9
	736	15
	736	18
	736	26
	736	29
	738	7
	739	19
	739	24
	739	27
	740	11
	740	14
	741	9
	741	15
	741	18
	746	9
	746	15
	746	18
	746	26
	746	29
	748	7
	761	5
	763	7
	767	17
	776	8
	778	7
	781	16
	781	18
	784	19
	786	4
	790	8
	792	7
	794	7
	797	16
	797	18
	801	7
	810	5
	812	7
	816	17
	821	8
	823	7
	826	16
	826	18
	828	19
	830	4
	833	9
	835	8
	837	7
	839	7
	842	16
	842	18
	891	4
	893	20
	895	4
	896	4
	902	4

PartNumber	Page	Index
	904	20
	906	4
	907	4
	914	19
	921	19
	928	4
	934	4
	939	4
	941	20
	943	4
	944	4
	951	4
	953	20
	955	4
	956	4
	1019	36
	1021	36
	1023	36
	1025	36
	1027	16
	1027	35
	1041	35
	1043	35
	1050	12
	1116	23
	1116	29
	1116	33
	1116	36
01643-31232	103	4
	116	4
	118	21
	124	19
	124	21
	125	20
	125	22
	141	3
	197	3
	197	11
	197	13
	197	19
	199	4
	199	12
	199	14
	199	20
	201	4
	201	12
	201	14
	201	20
	203	10
	203	12
	203	18
	224	35
	225	11
	225	26
	225	34
	226	51
	228	11
	228	13
	228	16
	228	32
	230	4
	232	10
	232	12
	232	15
	232	18
	232	22
	232	25
	232	28
	232	32
	234	4
	235	4
	237	11
	237	13
	237	16
	237	32
	239	4
	241	11
	241	13
	241	16
	241	32
	243	4
	244	25
	245	22
	248	8
	248	11
	248	14
	248	17
	248	19
	248	21
	248	24
	248	26
	248	29
	249	14
	249	17
	249	23
	250	18
	250	25
	250	28
	250	31
	250	34
	250	39
	251	15
	251	18
	251	29
	251	32
	252	12
	253	8
	253	11
	253	14
	253	17
	253	19
	253	21
	253	24
	253	26
	253	29
	254	14
	254	17
	254	23
	255	15
	255	22
	255	25
	255	28
	255	31
	255	36
	256	15
	256	18
	256	29
	256	32
	257	12
	258	10
	258	15
	258	35
	258	38
	259	43
	259	47
	260	3
	264	5
	264	12
	264	33
	265	3
	269	5
	269	12
	269	33
	270	5
	270	8
	270	11
	270	14
	270	17
	271	15
	271	17
	272	5
	272	8
	272	11
	272	14
	272	17
	273	11
	273	14
	273	17
	273	23
	273	26
	273	34
	274	11
	274	14
	274	17
	274	23
	274	26
	274	34
	275	4
	275	8
	275	13
	275	17
	276	4
	276	8
	276	14
	276	18
	276	25
	276	28
	276	32
	276	39
	277	45
	277	48
	278	10
	278	22
	278	25
	281	10
	281	27
	282	42
	283	11
	283	17
	285	10
	285	27
	286	42
	287	11
	287	17
	289	10
	289	16
	290	8
	290	12
	290	16
	290	20
	290	28
	290	33
	290	37
	296	5
	296	13
	296	16
	296	19
	296	22
	296	25
	296	28
	296	31
	297	6
	297	11
	297	14
	297	19
	297	21
	297	24
	297	27
	297	33
	297	36
	297	39
	298	45
	298	49
	304	4
	305	31

PartNumber	Page	Index
	305	33
	307	5
	307	18
	308	22
	310	4
	310	16
	310	24
	310	28
	325	4
	326	20
	326	22
	327	33
	329	12
	329	34
	330	14
	330	19
	330	35
	330	37
	332	5
	332	10
	332	14
	332	17
	333	41
	333	51
	337	17
	337	19
	337	26
	339	5
	339	10
	340	5
	340	7
	346	4
	346	9
	346	17
	346	23
	346	28
	346	34
	348	11
	348	15
	348	31
	348	37
	350	6
	350	9
	351	29
	351	33
	351	35
	351	38
	354	8
	356	9
	357	13
	358	42
	358	51
	358	53
	359	9
	360	13
	361	42
	361	51
	361	53
	362	9
	363	13
	364	42
	364	51
	364	53
	365	9
	366	13
	367	42
	367	51
	367	53
	368	9
	369	13
	370	42
	370	51
	370	53
	371	9
	372	13
	373	42
	373	51
	373	53
	374	10
	374	12
	374	18
	374	20
	375	43
	379	8
	382	11
	382	20
	382	33
	382	37
	389	3
	389	15
	389	24
	390	3
	392	17
	392	26
	393	3
	398	5
	398	9
	399	21
	399	26
	399	31
	399	37
	400	15
	401	2
	405	8
	408	11
	408	20
	408	33
	408	37
	415	3
	415	15
	415	24
	416	3
	418	17
	418	26
	419	3
	424	5
	424	9
	425	21
	425	26
	425	31
	425	37
	426	15
	427	2
	428	5
	429	7
	429	13
	429	16
	429	19
	429	23
	429	27
	430	3
	430	6
	430	10
	430	14
	430	17
	430	21
	430	25
	430	30
	432	8
	432	12
	432	17
	432	19
	432	23
	432	29
	433	5
	433	8
	433	14
	433	23
	433	27
	434	3
	434	6
	434	9
	434	21
	434	25
	435	3
	435	12
	435	27
	437	2
	437	5
	439	5
	439	8
	439	14
	439	23
	439	27
	440	3
	440	6
	440	9
	440	21
	440	25
	441	3
	441	12
	441	27
	443	2
	443	5
	444	7
	444	10
	444	13
	444	20
	444	24
	444	28
	446	5
	446	8
	446	11
	446	18
	446	22
	447	6
	447	19
	447	22
	447	25
	447	28
	447	31
	447	34
	448	16
	448	20
	448	22
	449	6
	449	19
	449	22
	449	25
	449	28
	449	31
	449	34
	450	16
	450	20
	450	22
	451	19
	452	14
	453	4
	453	8
	453	14
	453	18
	453	21
	454	3
	454	10
	454	12
	454	15
	454	18
	454	21
	454	23
	454	25
	454	27
	454	33
	454	36
	454	38
	454	40

PartNumber	Page	Index
	455	3
	455	12
	455	14
	455	17
	455	20
	455	23
	455	25
	455	27
	455	29
	455	35
	455	38
	455	40
	456	42
	457	3
	457	5
	457	11
	457	14
	457	16
	457	18
	460	4
	461	6
	462	7
	462	10
	462	18
	463	7
	463	10
	463	18
	464	22
	464	28
	466	22
	466	28
	468	22
	468	28
	474	11
	476	11
	477	11
	478	12
	480	5
	482	11
	483	12
	484	12
	485	12
	556	5
	576	9
	582	15
	582	19
	582	23
	583	26
	583	29
	608	5
	630	9
	636	15
	637	19
	637	23
	637	26
	637	29
	660	5
	676	9
	680	15
	680	19
	681	23
	681	26
	681	29
	694	8
	694	11
	694	14
	695	3
	695	5
	697	3
	697	5
	697	8
	697	11
	697	13
	699	3
	699	7
	699	11
	699	19
	700	11
	707	5
	714	3
	714	6
	714	10
	714	14
	714	20
	714	25
	714	28
	719	5
	720	3
	720	14
	720	16
	720	20
	720	26
	720	28
	720	35
	721	46
	722	3
	722	6
	722	20
	724	3
	724	11
	724	14
	724	19
	724	21
	724	28
	724	31
	725	3
	725	6
	725	20
	728	5
	729	5
	730	6
	730	16
	730	18
	730	22
	731	5
	732	10
	732	22
	732	28
	732	30
	734	5
	734	11
	734	16
	734	20
	735	4
	735	7
	735	11
	735	14
	736	20
	736	31
	737	43
	739	29
	740	16
	740	28
	741	20
	741	25
	741	37
	742	10
	742	22
	742	28
	742	30
	744	5
	744	11
	744	16
	744	20
	745	4
	745	7
	745	11
	745	14
	746	20
	746	31
	747	43
	749	12
	750	20
	753	7
	753	10
	753	15
	753	28
	753	32
	753	35
	754	39
	754	44
	755	8
	755	10
	755	16
	755	20
	755	23
	755	26
	755	30
	756	3
	756	6
	756	9
	756	13
	756	16
	756	19
	756	24
	757	3
	757	12
	757	15
	757	21
	757	24
	758	16
	758	19
	759	12
	759	15
	759	18
	761	8
	761	16
	763	10
	764	8
	764	17
	765	43
	782	8
	782	16
	782	19
	782	23
	782	29
	782	32
	784	6
	784	16
	785	3
	788	4
	798	4
	799	7
	799	10
	799	15
	799	28
	799	32
	800	35
	800	39
	800	44
	801	10
	802	7
	802	10
	802	15
	802	28
	802	32
	802	35
	803	39
	803	44
	804	8
	804	10
	804	13
	804	17
	804	20
	804	23

PartNumber	Page	Index
	804	27
	805	3
	805	6
	805	9
	805	13
	805	16
	805	19
	805	24
	806	3
	806	12
	806	15
	806	21
	806	24
	807	16
	807	19
	808	14
	808	17
	808	20
	810	8
	810	16
	812	10
	813	8
	813	17
	827	8
	827	17
	827	21
	828	6
	828	16
	828	23
	829	3
	832	4
	833	6
	833	15
	843	13
	843	15
	843	29
	844	48
	846	5
	847	13
	847	15
	847	29
	848	47
	850	5
	851	13
	851	15
	851	29
	852	48
	854	14
	854	16
	854	30
	855	51
	857	8
	858	4
	858	6
	858	12
	858	14
	859	13
	859	15
	859	29
	860	47
	862	3
	862	5
	862	7
	862	11
	862	14
	863	6
	863	8
	864	3
	864	5
	864	7
	864	10
	864	13
	865	4
	865	7
	865	11
	866	8
	866	11
	866	24
	891	12
	892	8
	893	22
	894	5
	897	8
	898	8
	900	3
	902	12
	903	8
	904	22
	905	5
	908	8
	909	8
	911	3
	914	21
	918	3
	921	21
	925	3
	927	8
	929	8
	930	3
	933	8
	935	8
	936	3
	939	12
	940	8
	941	22
	942	5
	945	8
	946	8
	948	3
	951	12
	952	8
	953	22
	954	5
	957	8
	958	8
	960	3
	966	4
	966	11
	966	29
	967	36
	971	4
	971	11
	971	29
	971	33
	973	4
	973	11
	973	29
	973	33
	975	4
	975	11
	975	29
	1020	39
	1022	39
	1024	39
	1026	39
	1027	11
	1027	19
	1027	30
	1027	38
	1035	14
	1036	7
	1036	13
	1037	7
	1037	13
	1038	3
	1046	22
	1050	5
	1052	22
	1055	6
	1055	8
	1056	3
	1056	9
	1056	13
	1060	6
	1116	13
	1116	20
	1116	26
01643-31445	249	20
	254	20
	547	15
	598	18
	599	15
	651	15
	684	18
	693	8
	693	12
	766	8
	782	3
	789	8
	815	8
	827	3
	834	8
	899	15
	910	15
	917	15
	924	15
	947	15
	959	15
	964	14
	964	18
	964	35
	965	39
	969	12
	969	16
	969	31
	969	35
	974	14
	974	19
	974	33
	974	38
	978	14
	978	18
	978	35
	979	39
	980	18
	980	23
	983	39
	983	43
01643-31645	222	8
	222	15
	222	18
	251	12
	251	26
	256	12
	256	26
	264	2
	264	25
	269	2
	269	25
	283	6
	287	6
	289	5
	310	9
	343	7
	345	3
	353	12
	357	23
	357	27
	358	37
	360	23
	360	27
	361	37
	363	23
	363	27
	364	37

PartNumber	Page	Index
	366	23
	366	27
	367	37
	369	23
	369	27
	370	37
	372	23
	372	27
	373	37
	394	24
	420	24
	444	35
	446	27
	446	37
	447	3
	449	3
	460	15
	461	17
	464	11
	464	16
	465	13
	465	16
	466	11
	466	16
	467	13
	467	16
	467	26
	468	11
	468	16
	469	13
	469	16
	469	26
	520	4
	715	3
	722	9
	722	12
	725	9
	725	12
	728	3
	729	3
	730	11
	731	3
	737	39
	740	24
	741	33
	746	39
	759	5
	765	36
	808	5
	858	8
	858	16
	858	19
	890	18
	892	18
	894	10
	895	14
	896	15
	901	18
	903	18
	905	10
	906	14
	907	15
	913	17
	920	17
	926	20
	927	18
	927	22
	927	26
	928	15
	932	20
	933	18
	933	22
	933	26
	934	15
	938	20
	940	18
	942	10
	943	14
	944	15
	950	20
	952	18
	954	10
	955	14
	956	15
	966	19
	966	25
	971	19
	971	25
	973	19
	973	25
	975	19
	975	25
	984	27
	986	27
	988	21
	990	22
	992	26
	994	27
	996	20
	998	21
	1000	28
	1002	21
	1004	27
	1006	27
	1008	21
	1011	20
	1013	21
	1015	21
	1017	20
	1027	4
	1027	23
	1028	14
	1030	14
	1032	14
	1034	14
	1035	19
	1035	22
	1036	18
	1036	21
	1036	24
	1037	18
	1037	21
	1037	24
01643-31845	135	7
	376	14
	402	14
	980	33
	1041	17
01643-32060	353	3
	358	46
	361	46
	364	46
	367	46
	370	46
	373	46
	397	3
	423	3
	490	7
	520	2
	547	8
	598	11
	599	8
	651	8
	684	11
	693	4
	718	4
	890	11
	899	19
	900	8
	901	11
	910	19
	911	8
	912	14
	912	27
	912	30
	913	19
	914	31
	917	19
	918	8
	919	14
	919	27
	919	30
	920	19
	921	31
	924	19
	925	8
	926	13
	930	8
	932	13
	936	8
	938	13
	947	19
	948	8
	950	13
	959	19
	960	8
	965	44
	966	16
	966	22
	970	40
	971	16
	971	22
	973	16
	973	22
	975	16
	975	22
	979	45
	980	30
	1039	8
	1039	11
	1043	17
	1046	8
	1046	11
	1052	8
	1052	11
	1054	5
	1054	10
	1054	16
	1054	21
01643-32260	890	15
	891	21
	896	18
	898	17
	901	15
	902	21
	907	18
	909	17
	913	27
	920	27
	926	17
	929	17
	931	4
	931	14
	932	17
	935	17
	937	4
	937	14
	938	17
	939	21
	946	17
	949	4
	949	14
	950	17
	951	21
	958	17

PartNumber	Page	Index
	961	4
	961	14
	964	10
	964	31
	969	8
	969	27
	974	9
	974	28
	977	14
	978	10
	978	31
01643-32460	222	22
	222	24
	357	9
	360	9
	363	9
	366	9
	369	9
	372	9
	382	3
	408	3
	428	2
	464	19
	466	19
	468	19
	520	6
	547	17
	598	20
	599	17
	651	17
	684	20
	693	2
	693	14
	727	3
	727	6
	759	8
	787	4
	787	8
	808	10
	831	4
	831	8
	865	13
	866	26
	893	30
	893	32
	904	30
	904	32
	912	18
	912	20
	912	24
	914	29
	916	17
	919	18
	919	20
	919	24
	921	29
	923	17
	941	30
	941	32
	953	30
	953	32
	968	7
	972	7
	976	8
	977	20
01643-32780	356	18
	358	59
	359	18
	361	59
	362	18
	364	59
	365	18
	367	59
	368	18
	370	59
	371	18
	373	59
	465	3
	467	3
	467	19
	469	3
	469	19
	974	40
	982	22
	982	33
	983	35
	985	44
	987	46
	989	38
	991	39
	993	43
	995	44
	997	39
	999	40
	1001	47
	1003	38
	1005	44
	1007	46
	1009	40
	1010	3
	1012	39
	1014	40
	1016	40
	1018	39
01643-33080	931	9
	937	9
	949	9
	961	9
	1058	5
	1058	9
	1059	11
	1059	16
	1117	3
01643-33380	984	31
	986	31
	988	25
	990	26
	992	30
	994	31
	996	24
	998	25
	1000	32
	1002	25
	1004	31
	1006	31
	1008	25
	1011	24
	1013	25
	1015	25
	1017	24
	1057	11
	1058	19
	1059	26
01643-50823	391	16
	417	16
	474	9
	476	9
	477	9
	478	9
	480	3
	482	9
	483	10
	484	10
	485	10
01643-51032	135	34
	174	2
	177	33
	180	2
	183	33
	186	2
	189	34
	323	14
	343	4
	348	8
	348	23
	374	24
	374	29
	374	32
	374	37
	391	31
	392	3
	392	7
	417	31
	418	3
	418	7
	434	17
	435	14
	435	22
	435	24
	440	17
	441	14
	441	22
	441	24
	447	11
	447	16
	448	25
	449	11
	449	16
	450	25
	781	22
	782	14
	797	22
	826	22
	827	14
	842	22
	1041	28
	1041	33
	1043	28
	1043	33
	1046	19
	1052	19
01643-51232	122	22
	304	6
	326	13
	342	19
	347	42
	381	8
	407	8
	474	7
	476	7
	477	7
	478	7
	482	7
	483	8
	484	8
	485	8
	488	2
	488	3
	488	4
	489	2
	489	3
	489	4
	915	14
	916	14
	922	14
	923	14
	982	28
01643-51645	63	26
	341	15
	342	12
01643-70623	491	5
	491	7
	491	16
	492	25
	492	30

PartNumber	Page	Index
	492	35
	492	41
	492	44
	493	4
	493	8
	493	14
	494	34
	495	4
	495	8
	495	12
	497	5
	497	7
	497	16
	498	25
	498	30
	498	35
	498	41
	498	44
	499	4
	499	8
	499	14
	500	34
	501	4
	501	8
	501	12
	505	11
	506	37
	507	5
	508	31
	514	2
	514	21
	515	25
	516	4
	516	6
	516	9
	518	16
	518	28
	518	34
	518	37
	520	14
	521	22
	521	25
	521	30
	521	34
	521	37
	522	9
	524	6
	524	8
	524	11
	525	2
	525	21
	525	25
	527	6
	527	8
	527	11
	533	5
	533	7
	533	16
	533	25
	533	30
	533	35
	534	41
	534	44
	535	5
	535	7
	535	16
	535	25
	535	30
	535	35
	536	41
	536	44
	541	3
	542	3
	543	3
	544	3
	557	28
	578	19
	579	26
	580	17
	581	25
	609	28
	632	19
	635	18
	635	33
	649	19
	661	28
	678	18
	679	33
	692	19
	701	9
01643-70823	299	6
	302	10
	490	5
	492	21
	492	38
	494	19
	494	23
	494	32
	498	21
	498	38
	500	19
	500	23
	500	32
	506	32
	507	15
	519	4
	528	4
	529	4
	529	16
	530	4
	530	16
	533	21
	533	38
	535	21
	535	38
	541	6
	542	6
	543	6
	544	6
	573	3
	580	14
	580	22
	581	28
	591	3
	626	3
	634	15
	635	23
	635	27
	635	36
	645	3
	678	15
	679	23
	679	27
	679	36
	687	3
	700	9
	701	3
	701	6
	701	14
	702	3
	702	8
	703	13
	712	3
	712	9
	785	6
	829	6
	845	4
	846	12
	849	4
	850	12
	853	4
	856	7
	857	19
	861	4
01643-71032	302	13
	302	16
	302	26
	503	2
	698	3
	698	6
	703	9
	706	4
01643-71232	300	11
	301	10
	302	20
	490	3
	504	2
	504	7
	506	28
	508	24
	722	16
	725	16
	751	3
	752	3
01643-71645	505	4
	505	7
01660-03650	260	6
	265	6
01803-02430	356	4
	359	4
	362	4
	365	4
	368	4
	371	4
02030-70732	488	5
	489	5
02030-70757	486	6
	487	8
02400-10413	142	11
02720-10104	169	25
	171	25
	173	25
02720-20204	168	12
	170	12
	172	12
02754-00304	392	18
	418	18
02755-002A4	382	25
	408	25
02756-00611	434	26
02760-003A6	226	41
02762-00337	282	44
	286	44
	290	3
02762-00338	282	45
	286	45
	290	2
02762-00407	281	23
	285	23
02762-00503	765	37
02762-00510	278	11
02762-00526	278	18
02762-00540	282	46
	286	46
	290	1
02762-005A4	276	1
02762-20204	330	39
02763-002A8	392	22
	418	22
02763-00310	782	24
	827	22
02763-004A4	281	37
	286	37
02763-00518	275	1
02764-00504	453	34

PartNumber	Page	Index
02764-00505	276	19
02764-00614	382	7
	408	7
02765-005A4	389	7
	415	7
02765-005A5	453	15
02767-005A4	453	33
02781-0021D	382	22
	408	22
02781-00315	226	42
	451	3
	452	3
02781-0031D	102	8
	115	8
	281	1
	285	1
	398	10
	424	10
02781-00422	264	20
	269	20
	444	14
	444	36
	446	12
	446	28
	765	32
02781-00516	390	4
	416	4
02781-00522	264	17
	269	17
	277	49
	278	12
	764	26
	765	38
02781-00628	350	13
02782-10210	330	30
	331	41
	350	16
	382	26
	392	19
	393	7
	398	19
	408	26
	418	19
	419	7
	424	19
	437	10
	443	10
02782-10311	101	35
	114	35
	281	2
	285	2
	392	11
	398	16
	399	12
	400	9
	418	11
	424	16
	425	12
	426	9
	764	29
	781	4
	797	4
	813	26
	826	4
	842	4
02782-10312	781	7
	797	7
	826	7
	842	7
02782-10315	225	39
	350	19
	451	7
	761	1
	810	1
02782-10316	451	10
02782-10317	334	10
02782-10420	281	5
	285	5
02782-10422	163	31
	165	21
	337	13
	389	8
	415	8
	781	23
	797	23
	813	29
	826	23
	842	23
02782-10423	781	26
	797	26
	826	26
	842	26
02782-10425	350	10
02782-1042A	101	24
	114	24
02782-10516	165	20
	281	20
	285	20
	291	
	291	41
	392	8
	418	8
02782-10522	278	15
02782-10524	278	26
	389	4
	415	4
02782-1052A	264	6
	269	6
	765	44
02782-1062A	382	4
	408	4
02782-10630	397	4
	423	4
02783-10210	389	16
	415	16
	783	33
02783-10315	393	4
	393	10
	419	4
	419	10
	451	4
	452	4
02783-10628	350	1
02789-00422	966	12
	967	37
	971	12
	973	12
	975	12
02789-10315	334	12
	350	22
	451	13
02789-10422	445	41
	446	33
02789-10628	438	1
	440	26
02895-77075	66	31
	68	31
02896-11008	350	17
	382	13
	382	23
	382	27
	383	44
	389	17
	392	20
	393	8
	398	20
	399	9
	408	13
	408	23
	408	27
	409	44
	415	17
	418	20
	419	8
	424	20
	425	9
	437	13
	443	13
	781	11
	783	34
	797	11
	826	11
	842	11
02896-11009	226	44
	281	4
	285	4
	290	40
	350	20
	392	12
	393	5
	393	11
	398	11
	398	14
	398	17
	399	10
	399	13
	400	11
	418	12
	419	5
	419	11
	424	11
	424	14
	424	17
	425	10
	425	13
	426	11
	437	14
	443	14
	451	5
	451	8
	451	11
	452	5
	761	3
	764	30
	781	2
	781	5
	781	8
	797	2
	797	5
	797	8
	810	3
	813	27
	826	2
	826	5
	826	8
	842	2
	842	5
	842	8
	1048	2
	1121	
02896-11012	264	22
	269	22
	281	7
	281	36
	285	7
	285	36
	337	15
	350	11
	389	9
	415	9
	444	15
	444	37
	446	13
	446	29
	453	27

PartNumber	Page	Index
	765	33
	781	25
	781	28
	797	25
	797	28
	813	30
	826	25
	826	28
	842	25
	842	28
	966	6
	966	13
	966	31
	967	38
	971	6
	971	13
	973	6
	973	13
	975	6
	975	13
	1028	2
	1028	15
	1030	2
	1030	15
	1032	2
	1032	15
	1034	2
	1034	15
	1035	3
	1035	7
	1035	16
	1036	3
	1036	15
	1037	3
	1037	15
	1120	
	1121	
02896-11015	264	8
	264	16
	264	19
	269	8
	269	16
	269	19
	275	21
	275	25
	275	29
	276	10
	276	21
	277	50
	278	13
	278	16
	278	28
	281	22
	285	22
	290	39
	389	5
	390	5
	392	9
	415	5
	416	5
	418	9
	453	10
	453	23
	453	25
	764	27
	765	39
	765	45
02896-11018	275	30
	350	2
	350	14
	382	5
	397	6
	408	5
	423	6
	434	27
	435	19
	440	27
	441	19
	1019	2
	1019	33
	1021	2
	1021	33
	1023	2
	1023	33
	1025	2
	1025	33
	1120	
02896-21009	101	36
	102	9
	114	36
	115	9
02896-21012	101	25
	114	25
	159	8
	163	33
	165	23
02896-61008	331	40
02896-61009	334	13
04010-00516	506	23
	508	19
	548	13
	549	28
	568	14
	569	29
	600	13
	601	28
	621	14
	622	29
	652	13
	653	28
	670	14
	671	29
04010-00519	151	2
04010-00725	120	2
04010-01032	260	9
	265	9
04020-00514	92	19
	94	19
	105	19
	107	19
	122	16
	122	17
	127	6
	131	7
	132	7
	135	5
	332	22
04020-00616	387	4
	413	4
	547	9
	598	12
	599	9
	651	9
	684	12
	710	16
	891	19
	898	15
	899	6
	902	19
	909	15
	910	6
	917	6
	924	6
	929	15
	935	15
	939	19
	946	15
	947	6
	951	19
	958	15
	959	6
04020-00820	66	13
	68	13
	126	7
	135	22
04020-01024	140	2
	262	2
	267	2
	384	11
	410	11
04020-01228	139	7
	305	29
	308	25
	326	18
	339	11
	341	13
	342	10
04020-01434	222	19
	313	9
	313	21
	313	31
	314	16
	314	32
	319	26
	353	4
	376	12
	377	14
	402	12
	403	14
04020-01842	344	13
04050-03015	863	15
04050-11612	491	8
	491	18
	492	29
	492	32
	497	8
	497	18
	498	29
	498	32
	506	19
	506	21
	507	13
	508	17
	533	8
	533	18
	533	29
	533	32
	535	8
	535	18
	535	29
	535	32
	548	15
	548	20
	568	16
	600	15
	601	20
	621	16
	652	15
	652	20
	670	16
04050-12012	492	23
	498	23
	533	23
	535	23
04050-12015	569	24
	622	24
	671	24
	707	14
	707	19
	707	32
	708	19
	708	26
	709	38
04050-12018	707	21
04050-13015	1050	8

PartNumber	Page	Index
04050-13020	708	10
	732	27
	736	10
	739	20
	741	10
	742	27
	746	10
	843	25
	843	35
	847	25
	847	35
	851	25
	851	35
	854	26
	854	36
	859	25
	859	35
04050-14025	728	6
	729	6
	730	7
	731	6
	981	43
04050-14030	1057	14
	1058	16
	1059	23
04050-16040	1046	25
	1052	25
04064-01010	564	24
	564	34
	616	24
	616	34
	667	24
	667	34
04064-01610	707	26
	708	32
04064-02212	121	7
04064-04518	309	39
04064-06020	317	34
	394	30
	420	30
04064-06320	317	38
	317	39
04064-07025	330	6
04064-07525	893	25
	904	25
	914	24
	921	24
	941	25
	953	25
04064-08025	307	3
	307	8
04064-08530	305	18
04064-09030	305	20
04065-01104	317	30
04065-01154	316	27
	318	41
	330	3
04065-01204	310	19
04065-03515	385	15
	411	15
04065-04718	119	5
04065-04818	262	17
	267	17
04065-05220	142	3
	341	9
04065-05820	377	4
	403	4
04065-06220	344	9
	385	10
	411	10
04065-06825	262	10
	267	10
04065-07225	169	12
	171	12
	173	12
	328	3
04065-08025	317	9
04065-08225	376	24
	394	33
	402	24
	420	33
04065-08530	309	38
04065-09030	308	29
04070-00105	306	43
04070-00115	318	45
04070-00140	316	5
	317	32
04070-00150	317	19
04071-00130	464	6
	466	6
	468	6
04071-00150	305	13
04071-00180	305	4
04071-00190	317	33
04071-00210	314	13
04077-00140	308	30
04082-00616	464	9
	466	9
	468	9
04205-10618	548	19
	601	19
	652	19
04205-10622	491	6
	497	6
	533	6
	535	6
04205-10822	568	23
	622	23
	671	23
04205-11028	736	11
	739	21
	741	11
	746	11
	1050	7
04205-11038	708	9
04211-20634	548	21
	601	21
	653	21
04211-20844	568	20
	622	20
	670	20
04221-20634	548	17
	600	17
	652	17
04221-20844	568	18
	622	18
	670	18
04248-30609	548	23
	601	23
	653	23
04248-30808	707	16
	708	22
04248-30839	568	22
	622	22
	671	22
04250-80847	707	12
	708	20
04250-81056	708	2
04250-90847	707	17
	708	24
04260-00317	122	4
	122	9
04260-00635	122	13
	316	13
	317	6
	317	15
	317	25
	329	29
04260-00793	391	25
	417	25
04260-01270	384	5
	410	5
04260-01905	358	55
	361	55
	364	55
	367	55
	370	55
	373	55
04418-02550	72	23
	76	23
	208	2
	209	1
	210	1
	211	1
	212	1
	213	2
	214	2
	215	2
	216	1
	217	1
	218	1
	219	2
	220	1
04418-13060	308	4
	319	4
	523	2
	1045	2
	1049	2
	1053	2
	1062	31
	1063	30
	1064	30
	1065	30
	1066	30
	1067	30
	1068	30
	1069	30
	1070	31
	1071	31
	1072	30
	1105	2
04434-50508	299	5
04434-50610	302	21
	565	22
	644	22
	691	22
04434-50612	264	3
	269	3
	296	23
	296	26
	429	14
04434-50810	567	3
	587	23
	594	3
	618	23
	620	3
	669	3
	685	3
04434-50812	337	30
	351	31
04434-51010	302	24
	565	18
	644	18
	691	18
	784	17
	828	17
04434-51012	282	40
	286	40
	296	17
	296	20
	297	7
	300	13
	301	12
	354	6
	720	21

PartNumber	Page	Index
	755	14
	756	22
	804	11
	805	22
	1056	11
	1116	31
04434-51208	780	11
	796	11
	825	11
	841	11
04434-51210	710	10
04434-51212	398	7
	424	7
04434-51310	131	26
	132	36
04434-51312	283	3
	287	3
04434-51410	587	19
	617	19
04434-51412	462	16
	463	16
	714	4
	724	12
	734	14
	744	14
	755	28
	756	14
	757	10
	757	13
	804	25
	805	14
	806	10
	806	13
	1027	9
	1027	17
	1027	28
	1027	36
04434-51608	780	10
	796	10
	825	10
	841	10
04434-51612	250	23
	255	20
04434-51708	494	29
	500	29
04434-51712	296	14
	351	36
	392	23
	418	23
	429	17
	429	20
	430	4
	433	9
	433	16
	433	20
	439	9
	439	16
	439	20
	735	5
	745	5
	1116	11
04434-51910	77	23
	77	26
	224	24
04434-51912	297	8
	297	37
	297	40
	430	15
	430	19
	430	26
	714	17
	714	23
	755	5
	755	11
	756	1

PartNumber	Page	Index
	804	5
	805	1
04434-52112	225	31
	228	6
	228	8
	230	1
	235	1
	237	6
	237	8
	239	1
	241	6
	241	8
	243	1
	290	17
	290	34
	392	14
	399	28
	399	34
	418	14
	425	28
	425	34
	433	11
	433	18
	433	24
	439	11
	439	18
	439	24
	761	10
	761	13
	782	20
	810	10
	810	13
	827	18
	863	9
04434-52312	430	1
	699	5
	714	29
	753	13
	754	42
	799	13
	800	42
	802	13
	803	42
04434-52512	232	7
	298	41
	389	12
	415	12
04434-52711	73	24
	73	31
	224	6
	228	24
	232	37
	237	24
	241	24
	557	30
	609	30
	661	30
04434-52712	226	52
	276	29
	281	24
	285	24
	297	3
	297	25
	399	23
	425	23
	429	24
	454	29
	455	31
	457	7
	735	8
	745	8
	753	25
	753	26
	753	29
	755	21

PartNumber	Page	Index
	755	27
	756	10
	784	20
	788	1
	798	1
	799	25
	799	26
	799	29
	802	25
	802	26
	802	29
	804	18
	804	24
	805	10
	828	20
	832	1
04434-53211	244	13
	245	12
	302	22
04434-53212	277	41
	278	19
	290	9
	290	25
	430	7
04434-53411	159	11
	553	31
	605	31
	657	31
	705	14
04434-53412	244	22
	245	19
	250	37
	255	34
	290	13
	351	27
	382	18
	408	18
	430	11
	454	5
	455	5
	455	7
	714	11
	714	15
	714	21
	753	36
	800	36
	802	36
04435-51408	561	13
	613	13
	664	13
04530-11222	376	5
	402	5
04530-13045	333	52
06000-06305	169	15
	171	15
	173	15
06000-06930	314	12
06002-30212	899	2
	910	2
	917	2
	924	2
	947	2
	959	2
06030-05209	308	37
06030-06306	169	16
	171	16
	173	16
06030-06928	316	4
	317	31
06040-06214	330	21
06040-06220	310	13
06040-06311	310	18
06043-01015	330	2
06043-06018	305	22
06123-01414	707	28

PartNumber	Page	Index
	708	34
06123-02018	708	12
06124-02020	548	2
	568	2
	600	2
	621	2
	652	2
	670	2
	707	7
06124-03020	707	6
06340-06204	119	3
06340-06304	119	4
06600-01008	564	28
	616	28
	667	28
07000-02060	119	10
07000-03068	913	8
	915	12
	916	12
	920	8
	922	12
	923	12
07000-11005	775	2
	777	36
	778	32
	791	36
	792	32
	794	30
	820	2
	821	36
	823	32
	835	36
	837	32
	839	30
07000-11006	391	13
	417	13
07000-11007	776	11
	776	33
	778	10
	790	11
	790	33
	792	10
	794	10
	821	11
	821	33
	823	10
	835	11
	835	33
	837	10
	839	10
07000-11008	261	19
	266	19
07000-11009	391	11
	391	26
	417	11
	417	26
	451	15
	452	10
	766	3
	767	14
	771	8
	775	9
	789	3
	795	35
	795	40
	815	3
	816	14
	818	8
	820	9
	834	3
	839	35
	840	40
07000-11010	391	12
	417	12
	436	7

PartNumber	Page	Index
	436	23
	442	7
	442	23
	771	12
	818	12
07000-12010	261	15
	263	7
	266	15
	268	7
07000-12012	766	5
	789	5
	815	5
	834	5
07000-12014	163	27
	354	
07000-12016	261	12
	266	12
	771	9
	773	3
	818	9
	819	3
07000-12030	437	7
	443	7
	768	29
	776	19
	778	18
	790	19
	792	18
	794	17
	816	29
	821	19
	823	18
	835	19
	837	18
	839	17
07000-12035	261	13
	266	13
07000-12050	1019	29
	1021	29
	1023	29
	1025	29
	1120	
07000-12055	1048	11
	1121	
07000-12060	1048	13
	1121	
07000-12070	899	8
	910	8
	917	8
	924	8
	947	8
	959	8
07000-12080	432	2
	432	6
	432	10
07000-12085	280	3
	284	3
	288	6
07000-12090	432	27
07000-12105	1019	14
	1021	14
	1023	14
	1025	14
	1120	
07000-12110	899	13
	910	13
	917	13
	924	13
	947	13
	959	13
	1019	16
	1021	16
	1023	16
	1025	16
	1120	

PartNumber	Page	Index
07000-12125	465	7
	467	7
	469	7
07000-12130	374	5
	891	10
	897	6
	898	6
	899	5
	902	10
	908	6
	909	6
	910	5
	913	5
	915	9
	916	9
	917	5
	920	5
	922	9
	923	9
	924	5
	929	6
	935	6
	939	10
	945	6
	946	6
	947	5
	951	10
	957	6
	958	6
	959	5
	1108	4
	1109	4
07000-12145	892	6
	903	6
	927	6
	933	6
	940	6
	952	6
07000-13025	505	8
	507	2
	782	6
	827	6
07000-13030	435	20
	441	20
	766	4
	773	17
	789	4
	815	4
	819	17
	834	4
07000-13032	374	26
	374	34
	392	1
	392	5
	400	2
	400	4
	418	1
	418	5
	426	2
	426	4
	434	12
	434	14
	440	12
	440	14
	447	13
	448	6
	448	8
	448	10
	448	12
	449	13
	450	6
	450	8
	450	10
	450	12
	781	20

PartNumber	Page	Index
	797	20
	826	20
	842	20
	1055	2
07000-13035	435	6
	441	6
	773	15
	819	15
	1041	29
	1043	29
	1121	
07000-13042	394	15
	420	15
07000-13045	447	9
	449	9
07000-13048	432	21
	766	2
	789	2
	815	2
	834	2
07000-15150	1028	11
	1030	11
	1032	11
	1034	11
	1121	
07000-15160	764	10
	813	10
07000-15170	1041	13
	1121	
07000-15190	1043	13
	1121	
07000-15195	394	21
	420	21
	764	3
	813	3
07000-15230	446	35
	465	10
	467	10
	469	10
07000-22016	773	9
	819	9
07000-71007	312	10
	336	3
	337	5
	337	7
	1120	
07000-72010	336	23
	337	8
07000-72014	319	12
	319	19
	321	10
	1120	
07000-72015	308	24
	312	9
	336	2
	1120	
07000-72016	321	5
	1120	
07000-72018	308	9
	314	4
	328	15
	332	39
	337	21
	348	25
	1120	
07000-72020	313	18
	1120	
07000-72021	135	12
	308	10
	328	16
	332	28
	332	33
	332	37
	336	8
	336	30

PartNumber	Page	Index
	1120	
07000-72022	330	25
	330	33
07000-72025	135	10
07000-72045	348	12
07000-72055	339	3
	346	13
	346	32
	346	36
07000-72060	124	3
	125	3
07000-72070	169	28
	171	28
	173	28
	332	7
	346	2
	346	7
	346	21
07000-72075	332	19
	346	14
07000-72085	101	2
	114	2
	339	2
	339	7
07000-72095	310	5
	1120	
07000-72100	346	26
07000-72105	389	1
	415	1
07000-72110	346	20
07000-72115	169	29
	171	29
	173	29
	310	26
	1120	
07000-72130	343	5
	345	1
07000-73022	312	16
	319	18
	332	27
	332	32
	332	36
	336	14
	1120	
07000-73025	63	21
	136	34
	137	38
	319	13
	328	8
	340	2
	1120	
07000-73028	131	8
	132	8
	225	30
	319	7
	319	21
	1120	
07000-73030	308	23
	314	23
	319	6
	319	22
	324	25
	1120	
07000-73032	273	2
	273	28
	274	2
	274	28
	319	23
	332	34
	348	20
	1120	
07000-73034	102	25
	115	25
	136	15
	137	19

PartNumber	Page	Index
	143	12
	143	22
07000-73035	308	6
	314	24
	343	2
	348	2
	348	5
	374	22
	781	14
	797	14
	826	14
	842	14
	1120	
07000-73038	118	22
	143	21
	158	8
	159	19
	273	4
	274	4
	308	7
	332	8
	339	8
	782	11
	827	11
	1120	
07000-73040	131	11
	132	11
07000-73042	146	7
07000-73045	340	3
	348	35
07000-73050	348	39
07000-75060	225	17
07000-75165	308	35
	330	24
	330	32
	397	1
	423	1
	1120	
07000-75170	382	1
	408	1
07000-75230	310	14
	310	22
	1120	
07000-75240	337	20
07000-75465	328	6
07000-75490	328	7
07000-A2016	93	40
	95	40
	106	40
	108	40
	146	4
07000-A2021	192	14
07000-A2035	92	31
	94	31
	105	31
	107	31
07000-A2060	312	13
	336	
	1120	
07000-A2075	358	56
	361	56
	364	56
	367	56
	370	56
	373	56
07000-A5105	357	14
	360	14
	363	14
	366	14
	369	14
	372	14
07000-A5185	357	15
	360	15
	363	15
	366	15

PartNumber	Page	Index
	369	15
	372	15
07000-A5190	376	10
	379	6
	402	10
	405	6
07000-A5440	356	6
	358	48
	359	6
	361	48
	362	6
	364	48
	365	6
	367	48
	368	6
	370	48
	371	6
	373	48
07000-A5460	356	11
	359	11
	362	11
	365	11
	368	11
	371	11
07000-B1008	381	5
	407	5
07000-B1009	377	15
	380	10
	403	15
	406	10
07000-B1010	386	6
	412	6
07000-B2012	92	36
	94	36
	105	36
	107	36
	376	6
	378	36
	402	6
	404	36
07000-B2050	378	37
	404	37
07000-B2070	1028	20
	1030	20
	1032	20
	1034	20
	1121	
07000-B3038	377	32
	403	32
07000-B5100	1041	23
	1121	
07000-B5110	1043	23
	1121	
07000-E2012	101	38
	114	38
07000-E2015	148	13
07000-E2018	160	5
07000-E2025	92	23
	94	23
	105	23
	107	23
07000-E2055	92	25
	94	25
	105	25
	107	25
	342	20
07000-E2065	384	16
	410	16
07000-E2110	259	41
	259	45
07000-E2125	384	23
	410	23
07000-E3040	387	1
	413	1
07000-E5075	225	24
07000-F1006	384	22
	410	22
07000-F2016	263	11
	268	11
	388	3
	414	3
07000-F2020	396	4
	422	4
07000-G2075	258	16
07000-G3045	258	8
07001-01005	775	3
	777	37
	778	33
	791	37
	792	33
	794	31
	820	3
	821	37
	823	33
	835	37
	837	33
	839	31
07001-01007	776	34
	791	34
	821	34
	835	34
07001-01008	381	6
	407	6
07001-01009	380	11
	406	11
	767	15
	795	36
	795	41
	816	15
	839	36
	840	41
07001-02010	263	8
	268	8
07001-02012	93	37
	94	37
	105	37
	107	37
07001-02016	773	4
	773	10
	819	4
	819	10
07001-02050	1019	30
	1021	30
	1023	30
	1025	30
	1120	
07001-02055	1048	12
	1121	
07001-03030	774	18
	819	18
07001-03035	773	16
	819	16
07001-05110	1043	24
	1121	
07002-02034	399	3
	425	3
	1108	10
	1109	10
07002-02434	225	21
	773	2
	773	8
	819	2
	819	8
07002-03034	324	4
	324	13
	324	22
	1120	
07002-03634	773	13
	819	13
07002-11023	261	22
	266	22
	374	8
	383	42
	409	42
	436	21
	442	21
	767	5
	770	19
	775	4
	777	38
	778	34
	791	38
	793	34
	794	32
	816	5
	817	19
	820	4
	821	38
	823	34
	836	38
	837	34
	839	32
07002-11423	281	3
	285	3
	350	18
	382	14
	382	24
	382	28
	389	18
	391	22
	392	13
	392	21
	393	9
	398	12
	398	15
	398	18
	398	21
	399	14
	400	10
	408	14
	408	24
	408	28
	415	18
	417	22
	418	13
	418	21
	419	9
	424	12
	424	15
	424	18
	424	21
	425	14
	426	10
	437	12
	443	12
	765	31
	766	13
	771	6
	775	8
	776	13
	776	32
	778	12
	781	3
	781	6
	781	9
	781	12
	783	35
	789	13
	790	13
	790	32
	792	12
	794	12
	797	3
	797	6
	797	9

PartNumber	Page	Index
	797	12
	813	28
	815	13
	818	6
	820	8
	821	13
	821	32
	823	12
	826	3
	826	6
	826	9
	826	12
	834	13
	835	13
	835	32
	837	12
	839	12
	842	3
	842	6
	842	9
	842	12
07002-11623	244	2
	244	5
	245	2
	245	5
	278	7
	391	3
	417	3
	436	16
	442	16
07002-11823	281	6
	281	29
	285	6
	285	29
	383	43
	394	6
	409	43
	420	6
	429	10
	775	6
	775	11
	820	6
	820	11
07002-12034	225	40
	226	43
	264	21
	269	21
	281	18
	281	21
	281	35
	285	18
	285	21
	285	35
	346	30
	350	21
	389	10
	390	6
	392	10
	393	6
	393	12
	398	3
	399	11
	399	16
	399	18
	415	10
	416	6
	418	10
	419	6
	419	12
	424	3
	425	11
	425	16
	425	18
	444	16
	444	38
	444	40
	446	14
	446	30
	446	32
	451	6
	451	9
	451	12
	452	6
	452	8
	761	2
	765	34
	773	6
	781	24
	781	27
	797	24
	797	27
	810	2
	813	31
	819	6
	826	24
	826	27
	842	24
	842	27
07002-12434	261	7
	263	12
	264	7
	264	18
	266	7
	268	12
	269	7
	269	18
	275	19
	275	28
	277	51
	278	8
	278	14
	278	17
	278	27
	346	11
	350	3
	350	12
	350	15
	356	16
	359	16
	362	16
	365	16
	368	16
	371	16
	374	15
	382	6
	388	4
	389	6
	397	5
	408	6
	414	4
	415	6
	423	5
	764	25
	764	28
	765	40
	765	46
	766	11
	789	11
	813	25
	815	11
	834	11
07002-13034	382	39
	408	39
	766	20
	789	20
	815	20
	834	20
07002-13334	275	20
	275	24
	394	10
	394	20
	420	10
	420	20
	766	16
	789	16
	815	16
	834	16
07002-13634	225	23
	226	47
	296	10
	356	14
	357	6
	359	14
	360	6
	362	14
	363	6
	365	14
	366	6
	368	14
	369	6
	371	14
	372	6
	396	6
	422	6
	775	13
	820	13
	900	5
	911	5
	918	5
	925	5
	930	5
	936	5
	948	5
	960	5
	1108	8
	1109	8
07002-14234	281	11
	285	11
	766	25
	789	25
	815	25
	834	25
07002-21023	386	16
	386	19
	412	16
	412	19
07002-21223	385	22
	411	22
07002-21423	67	37
	69	37
	101	37
	102	10
	114	37
	115	10
	384	26
	410	26
07002-21623	386	5
	386	11
	412	5
	412	11
07002-21823	101	26
	114	26
07002-22034	163	32
	165	22
07002-22434	100	16
	113	16
07002-60823	334	9
	337	10
07002-61023	311	30
	312	5
	351	22
	376	17
	402	17
07002-61223	311	5
	334	7

PartNumber	Page	Index
	351	19
	351	24
	1120	
07002-61423	330	31
	331	42
	381	7
	407	7
07002-61623	311	3
	329	3
	351	26
	1120	
07002-61823	92	21
	94	21
	105	21
	107	21
	312	15
	321	6
	336	13
	429	
	1120	
07002-62034	93	38
	95	38
	106	38
	108	38
	334	11
	337	14
07002-62434	332	25
	376	4
	380	13
	402	4
	406	13
07002-63634	332	21
	1108	9
	1109	9
07003-01015	74	33
	78	33
	168	20
	170	20
	172	20
07005-00812	163	3
	165	5
	333	47
	333	49
07005-01012	74	32
	78	32
	101	14
	114	14
	135	30
	157	2
	160	3
	161	9
07005-01212	99	6
	112	6
	161	3
	165	3
07005-01412	73	15
	74	9
	74	12
	77	15
	78	10
	78	13
	102	6
	115	6
	146	16
	159	10
	161	12
	163	11
	163	20
	192	10
	193	2
07005-01612	102	23
	115	23
	308	13
	308	18
	308	19
	333	44
	1120	
07005-02216	128	6
	128	9
07012-50100	308	34
	1120	
07018-11004	326	3
07018-20353	320	3
07018-20653	320	2
07018-20904	305	23
07020-00000	464	7
	464	23
	466	7
	466	23
	468	7
	468	23
	707	8
	708	14
	974	10
	974	29
	980	38
	982	15
	984	32
	986	32
	988	26
	990	27
	992	31
	994	32
	996	25
	998	26
	1001	33
	1002	26
	1004	32
	1006	32
	1008	26
	1011	25
	1013	26
	1015	26
	1017	25
	1029	2
	1031	2
	1033	2
	1039	15
	1046	15
	1052	15
	1054	6
	1054	11
	1054	17
	1108	5
	1109	5
07020-00675	460	10
	461	12
	707	33
	718	8
	984	28
	986	28
	988	22
	990	23
	992	27
	994	28
	996	21
	998	22
	1000	29
	1002	22
	1004	28
	1006	28
	1008	22
	1011	21
	1013	22
	1015	22
	1017	21
	1054	22
	1108	6
	1109	6
07020-00900	710	1
	710	13
	893	11
	904	11
	914	10
	921	10
	941	11
	953	11
	1108	7
	1109	7
07025-00100	136	16
	137	20
07029-00000	225	9
07030-00252	128	8
	226	45
	462	5
	463	5
07040-02412	131	6
	132	6
07040-10807	334	8
	337	9
07040-11007	261	21
	266	21
	374	7
	383	41
	386	18
	409	41
	412	18
07040-11209	165	2
	305	9
	311	4
	334	6
07040-11409	66	36
	68	36
	146	15
	163	19
	384	25
	410	25
07040-11612	311	2
	329	2
07040-11812	312	14
	336	12
07040-12012	346	29
	398	2
	424	2
	444	39
	446	31
	452	7
07040-12412	332	24
	346	10
	374	14
	764	24
	813	24
07040-13016	146	13
	382	38
	408	38
07040-13316	766	15
	789	15
	815	15
	834	15
07040-13618	900	4
	911	4
	918	4
	925	4
	930	4
	936	4
	948	4
	960	4
07041-13612	225	22
07042-30108	258	26
07042-70108	250	19
	255	16
	432	5
	451	2
	452	2
	734	17

PartNumber	Page	Index
07042-70211	329	6
07042-70312	329	4
07042-70415	258	27
07042-80108	324	2
	336	21
	348	6
	349	42
07042-A0108	66	8
	66	32
	68	8
	68	32
	98	12
	111	12
07043-00108	168	13
	170	13
	172	13
07043-01019	135	8
	169	24
	171	24
	173	24
07043-50108	63	23
07043-70108	126	4
	135	16
	136	6
	137	6
	308	2
	329	28
	330	28
	330	38
	334	2
07043-70211	126	6
	135	21
	158	9
	159	20
	334	3
07043-70312	305	25
	320	4
	330	27
	334	4
07043-70617	334	5
07043-71019	319	2
07043-A0415	136	5
	137	5
07044-12412	225	20
	356	15
	359	15
	362	15
	365	15
	368	15
	371	15
	376	3
	402	3
07044-13620	356	13
	357	5
	359	13
	360	5
	362	13
	363	5
	365	13
	366	5
	368	13
	369	5
	371	13
	372	5
07046-11816	126	5
	135	17
07046-41810	135	18
07046-42010	135	15
07046-42516	135	14
07046-43516	135	13
07046-44016	135	20
	136	26
	137	30
07046-47020	135	19
07049-00811	696	1
07049-01215	329	8
	356	7
	356	12
	357	11
	358	49
	358	57
	359	7
	359	12
	360	11
	361	49
	361	57
	362	7
	362	12
	363	11
	364	49
	364	57
	365	7
	365	12
	366	11
	367	49
	367	57
	368	7
	368	12
	369	11
	370	49
	370	57
	371	7
	371	12
	372	11
	373	49
	373	57
	521	43
	547	5
	598	8
	599	5
	651	5
	684	8
	736	33
	740	18
	741	27
	746	33
	844	46
	848	45
	852	46
	855	49
	860	45
	891	17
	892	20
	897	13
	898	13
	902	17
	903	20
	908	13
	909	13
	927	20
	929	13
	933	20
	935	13
	939	17
	940	20
	945	13
	946	13
	951	17
	952	20
	957	13
	958	13
07049-01620	464	12
	466	12
	468	12
	547	2
	598	5
	599	2
	651	2
	684	5
07049-02025	329	7
	358	43
	361	43
	364	43
	367	43
	370	43
	373	43
	547	3
	598	6
	599	3
	651	3
	684	6
	914	35
	921	35
07049-02430	319	27
	461	3
	547	4
	598	7
	599	4
	651	4
	684	7
	894	11
	905	11
	942	11
	954	11
	1059	12
07049-02734	465	4
	467	4
	467	20
	469	4
	469	20
07049-03038	895	15
	898	18
	900	9
	906	15
	909	18
	911	9
	931	15
	937	15
	943	15
	949	15
	955	15
	961	15
07049-03342	977	21
07049-03949	460	12
	461	14
07050-21202	288	11
07050-41200	288	10
07051-00005	462	
	463	
	764	19
	813	19
	1114	3
	1115	4
07051-01000	462	4
	463	4
07052-31624	891	16
	892	12
	897	12
	898	12
	899	12
	902	16
	903	12
	908	12
	909	12
	910	12
	913	3
	915	3
	916	3
	917	12
	920	3
	922	3
	923	3
	924	12
	927	12
	929	12

PartNumber	Page	Index
	933	12
	935	12
	939	16
	940	12
	945	12
	946	12
	947	12
	951	16
	952	12
	957	12
	958	12
	959	12
07053-00002	250	8
	255	5
07053-10000	250	7
	255	4
07056-00048	250	5
	255	2
07056-18422	280	14
	284	15
	288	12
07057-03271	250	6
	255	3
07058-00010	281	12
	285	12
07059-11830	868	11
	869	11
	870	11
	871	11
	872	11
	873	11
	874	11
	875	11
	876	11
	877	11
	878	11
	884	11
	885	11
	886	11
	887	11
	888	11
07059-20721	868	12
	869	12
	870	12
	871	12
	872	12
	873	12
	874	12
	875	12
	876	12
	877	12
	878	12
	884	12
	885	12
	886	12
	887	12
	888	12
07062-00000	169	22
	171	22
	173	22
07063-51100	374	4
	1108	2
	1109	2
07092-01000	764	18
	813	18
	1114	2
	1115	3
07093-20000	1115	1
07094-10315	382	16
	408	16
	782	26
07094-10417	275	5
	275	9
	275	14
	276	5
	276	12
	276	16
	276	23
	444	25
	453	11
07094-10518	453	5
07094-11024	273	18
	273	31
	274	18
	274	31
	375	40
	400	12
	426	12
07094-30315	1050	2
	1050	9
07094-30417	435	10
	441	10
	444	17
	444	21
	446	15
	446	19
	1035	11
	1036	10
	1037	10
07094-31024	434	18
	434	22
	440	18
	440	22
	448	13
	448	17
	450	13
	450	17
	1055	3
07095-00314	382	17
	408	17
	782	27
07095-00317	302	23
	1050	3
	1050	10
07095-00420	444	18
	444	22
	444	26
	446	16
	446	20
	1035	12
	1036	11
	1037	11
07095-00421	276	11
	276	15
	276	22
	453	12
07095-00423	275	6
	275	10
	275	15
	276	6
07095-00524	453	6
07095-01034	375	41
	400	13
	426	13
07095-01035	434	19
	434	23
	440	19
	440	23
	448	14
	448	18
	450	14
	450	18
	1055	4
07095-01038	273	19
	273	32
	274	19
	274	32
07095-20211	392	24
	418	24
	433	10
	433	17
	433	21
	439	10
	439	17
	439	21
07095-20213	224	25
	297	9
	714	18
	755	6
	804	6
07095-20314	225	32
	228	7
	228	9
	230	2
	235	2
	237	7
	237	9
	239	2
	241	7
	241	9
	243	2
	290	18
	290	35
	392	15
	399	29
	399	35
	418	15
	425	29
	425	35
	433	12
	433	19
	433	25
	439	12
	439	19
	439	25
	761	11
	761	14
	782	21
	810	11
	810	14
	827	19
07095-20318	232	6
	298	42
	389	13
	415	13
07095-20418	399	24
	425	24
	429	25
	735	9
	745	9
07095-20419	224	7
	281	25
	285	25
	297	4
	454	30
	455	32
	457	8
	756	11
	788	2
	798	2
	805	11
	828	21
	832	2
07095-20420	228	25
	232	38
	237	25
	241	25
	276	30
07095-20522	277	42
	278	20
	290	10
	430	8
07095-20523	244	14
	245	13
	290	26

PartNumber	Page	Index
07095-20625	244	23
	245	20
	382	9
	408	9
	430	12
	454	6
	455	6
	455	8
	753	37
	800	37
	803	37
07095-20627	290	14
	714	12
	714	16
	714	22
07120-01016	447	35
	449	35
	1055	1
07145-00085	718	6
07145-00090	1041	4
	1041	6
	1121	
07145-00100	1043	4
	1043	6
	1121	
07145-00125	460	8
	461	10
07146-02106	1019	15
	1021	15
	1023	15
	1025	15
	1120	
07146-05152	1028	12
	1030	12
	1032	12
	1034	12
	1121	
07146-05172	1041	14
	1121	
07146-05192	1043	14
	1121	
07155-01025	893	26
	904	26
	914	25
	921	25
	941	26
	953	26
07155-01845	1041	22
	1121	
07155-02045	1043	22
	1121	
07156-01112	1019	23
	1021	23
	1023	23
	1025	23
	1120	
07156-01620	1028	19
	1030	19
	1032	19
	1034	19
	1121	
07165-13336	1058	18
07177-01140	914	2
	914	6
	914	15
	921	2
	921	6
	921	15
07177-01240	893	2
	893	6
	893	16
	904	2
	904	6
	904	16
	941	2
	941	6
	941	16
	953	2
	953	6
	953	16
07179-12042	1048	8
07179-13089	1019	13
	1021	13
	1023	13
	1025	13
07179-13104	1028	7
	1030	7
	1032	7
	1034	7
07179-13114	1041	9
07179-13126	1043	9
07206-30508	333	46
	333	48
07206-30710	74	31
	78	31
	168	18
	170	18
	172	18
07206-30812	99	7
	112	7
	161	2
07206-31014	73	16
	74	8
	74	11
	77	16
	78	9
	78	12
	102	7
	115	7
	159	9
	161	11
	163	10
	192	11
07206-31216	102	22
	115	22
	308	12
	308	16
	333	43
07260-04114	432	24
07260-07425	346	38
07260-08732	432	30
07260-24111	462	1
	463	1
07270-01060	283	2
	287	2
	289	2
07270-20820	557	33
	609	33
	661	33
07270-21030	281	30
	285	30
07281-00167	281	31
	285	31
07281-00197	250	22
	255	19
	258	4
07281-00259	462	12
	463	12
07281-00359	222	26
07281-00419	124	7
07281-00489	125	7
07281-00549	462	2
	463	2
07281-01159	230	6
	235	6
	239	6
	243	6
	580	8
	634	9
	678	9
	702	4
07282-12793	1019	34
	1021	34
	1023	34
	1025	34
07283-31193	258	36
07283-32236	264	13
	269	13
	453	28
07283-32244	276	34
	453	29
07283-32746	1027	13
	1027	32
07283-33442	348	16
	348	32
	435	7
	441	7
	1041	34
	1043	34
07283-33450	98	13
	111	13
	111	27
07283-34354	136	22
	137	26
07283-34957	168	8
	170	8
	172	8
07283-36155	786	2
	830	2
07283-38981	432	14
07283-52232	276	35
	453	30
07283-52737	1027	14
	1027	33
07283-53444	98	14
	111	14
	111	28
07283-54353	136	23
	137	27
07285-00115	283	1
	287	1
	289	1
	557	34
	609	34
	661	34
07285-00125	165	13
07285-00155	258	19
07286-00860	165	12
07286-02660	222	25
07289-00035	250	36
	255	33
07289-00055	250	14
	255	11
	258	12
	738	9
	748	9
07289-00070	258	2
07289-00095	258	21
	346	39
07289-00160	738	2
	748	2
07289-00170	738	3
	748	3
07297-010A5	348	19
	352	41
07371-31049	348	21
	374	27
	374	30
	374	35
	434	15
	440	15
	447	14
	448	23
	449	14
	450	23

PartNumber	Page	Index
	1041	31
	1043	31
07371-31255	782	12
	827	12
07371-51260	382	31
	408	31
07372-21035	348	22
	374	28
	374	31
	374	36
	434	16
	440	16
	447	15
	448	24
	449	15
	450	24
	782	13
	827	13
	1041	32
	1043	32
07372-21040	348	7
	435	13
	441	13
07372-21045	435	21
	441	21
07372-21060	435	23
	441	23
	1041	27
	1043	27
07376-70422	1035	2
	1035	6
	1035	15
	1036	2
	1036	14
	1037	2
	1037	14
07378-11000	447	12
	449	12
07430-71380	767	8
	816	8
07700-40240	281	32
	285	32
07730-50004	169	6
	171	6
	173	6
	258	17
07750-01623	336	6
	336	28
07750-01628	336	7
	336	29
07950-10450	1111	3
07950-90403	1111	7
07951-31400	1111	5
07951-41017	1111	4
07952-70004	1111	
07959-30000	893	9
	904	9
	941	9
	953	9
08000-00000	294	2
	295	2
	763	2
	801	2
	812	2
08000-00001	294	3
	295	3
	763	3
	801	3
	812	3
08000-02221	801	1
	812	1
08000-12221	294	1
08000-32220	763	1
08000-42220	295	1
08013-01513	462	15
	463	15
08017-C1302	784	11
	828	11
08023-10007	516	10
	524	12
	527	12
08028-FF055	754	40
	800	40
	803	40
08028-HE035	753	16
	799	16
	802	16
08028-HE055	799	11
	802	11
08028-HE060	753	11
08034-00310	311	32
	312	7
	335	46
	337	31
08034-20310	351	14
	550	3
	602	3
	654	3
08034-20414	230	24
	235	24
	239	24
	243	24
	299	4
	354	10
	451	20
	566	5
	619	5
	668	5
	777	44
	779	40
	780	3
	791	44
	793	40
	795	47
	796	3
	822	44
	824	40
	825	3
	836	44
	838	40
	840	47
	841	3
08034-20519	224	21
	232	33
	399	38
	425	38
	515	26
	525	26
	531	3
	532	3
	561	7
	613	7
	664	7
	755	13
	1116	15
08034-20536	228	28
	233	41
	237	28
	241	28
	258	6
	275	37
	351	39
	433	15
	439	15
	1116	14
08034-20823	252	14
	257	14
	382	21
	408	21
08034-20834	780	17
	796	17
	825	17
	841	17
08037-01008	494	36
	500	36
	515	34
	526	34
08037-01610	480	7
	482	13
	483	14
	484	14
	485	14
	494	26
	500	26
	576	22
	631	22
	677	22
	856	14
	863	11
08037-02512	531	2
	532	2
	584	4
	638	4
	682	4
	780	9
	796	9
	825	9
	841	9
	856	15
08037-03614	555	45
	607	45
	659	45
	720	17
08037-10610	529	9
	530	9
08037-11025	296	2
08037-11425	531	4
	532	4
08037-11825	494	27
	500	27
08037-12536	584	2
	638	2
	682	2
08037-13550	556	7
	608	7
	660	7
08038-00519	174	5
	180	5
	186	5
	557	25
	609	25
	661	25
	753	20
	755	17
	757	8
	799	20
	802	20
	804	14
	806	8
08038-00525	758	3
	807	3
08038-02027	224	23
	297	2
	757	7
	758	5
	758	7
	806	7
	807	5
	807	7
08038-22511	754	41
	800	41
	803	41
08038-42511	753	12
	753	17
	799	12

PartNumber	Page	Index
	799	17
	802	12
	802	17
08041-00500	556	8
	608	8
	660	8
08041-01000	514	11
	525	11
08041-02000	514	12
	525	12
	556	9
	608	9
	660	9
08044-00600	514	13
	525	13
08053-01510	561	12
	613	12
	664	12
08057-12010	552	1
	552	5
	552	9
	552	13
	552	17
	552	21
	553	25
	553	28
	553	35
	554	2
	554	6
	554	10
	554	14
	554	18
	554	21
	555	25
	555	29
	604	1
	604	5
	604	9
	604	13
	604	17
	605	21
	605	25
	605	28
	605	35
	606	2
	606	6
	606	10
	606	14
	607	18
	607	21
	607	25
	607	29
	656	1
	656	5
	656	9
	656	13
	656	17
	657	21
	657	25
	657	28
	657	35
	658	2
	658	6
	658	10
	658	14
	658	18
	659	21
	659	25
	659	29
08059-00413	529	17
	530	17
	576	23
	631	23
	677	23
08064-10000	550	1
	602	1
	654	1
08088-30000	753	2
	799	2
	802	2
08191-00770	514	14
	525	14
	565	16
	586	3
	590	2
	590	4
	640	3
	642	2
	642	4
	644	16
	691	16
	756	21
	805	21
08191-50808	321	16
08191-50809	321	15
08192-12100	514	16
	525	16
08192-13830	548	4
	568	4
	600	4
	621	4
	652	4
	670	4
08192-14100	514	15
	525	15
08192-16300	565	15
	587	17
	617	17
	644	15
	691	15
08192-22100	586	2
	590	1
	640	2
	642	1
	756	20
	805	20
08192-22830	281	39
	286	39
	755	2
	804	2
08192-23830	755	3
	804	3
08192-26100	565	14
	587	16
	617	16
	643	14
	691	14
08192-28102	590	3
	642	3
08192-28812	560	7
	566	3
	571	3
	612	7
	619	3
	624	3
	663	7
	668	3
	672	3
08193-20010	132	28
	137	10
	174	34
	179	12
	180	34
	185	12
	186	34
	191	12
	206	3
	336	24
	555	34
	555	42
	561	16
	565	25
	568	7
	587	26
	607	34
	607	42
	613	16
	618	26
	621	7
	644	25
	659	34
	659	42
	664	16
	670	7
	691	25
	1116	27
08193-20012	1116	24
08193-21012	296	11
	337	22
	381	10
	407	10
	429	21
	714	7
	714	26
	734	3
	735	2
	744	3
	745	2
	756	4
	756	17
	758	14
	805	4
	805	17
	807	14
	1056	7
08193-30010	567	6
	572	3
	590	5
	594	6
	620	6
	625	3
	642	5
	669	6
	673	3
	685	6
08193-31012	561	17
	614	17
	664	17
08210-00404	565	13
	643	13
	691	13
08210-00604	587	15
	617	15
08211-00720	552	20
	554	9
	554	13
	605	20
	606	9
	606	13
	656	20
	658	9
	658	13
08211-01020	555	28
	607	28
	659	28
08211-01320	554	5
	606	5
	658	5
08211-01520	554	1
	606	1
	658	1
08211-01920	554	17
	555	24
	606	17
	607	24

PartNumber	Page	Index
	658	17
	659	24
08211-02820	552	4
	552	8
	552	12
	552	16
	553	24
	553	34
	604	4
	604	8
	604	12
	604	16
	605	24
	605	34
	656	4
	656	8
	656	12
	656	16
	657	24
	657	34
08671-70100	734	13
	744	13
08672-01000	734	12
	744	12
09002-01417	1111	10
09002-01922	1111	11
09019-28036	1111	8
09020-10284	1111	1
09039-00150	1111	2
09055-10390	1111	6
09056-04613	1111	9
09059-00800	1108	1
	1109	1
09244-02508	1039	17
	1040	3
	1047	3
09249-10016	1057	8
	1058	12
	1059	20
09255-02215	980	16
09255-06245	965	41
	969	37
	979	41
09257-06009	980	21
09311-41237	707	9
	708	16
	710	15
09409-00001	486	2
	487	4
09409-00002	486	3
	487	2
	487	5
09409-00003	486	4
	487	6
09409-20000	486	
	487	3
09409-70000	487	1
	489	1
09415-01008	519	8
	528	8
09415-01610	586	1
	640	1
	702	5
09415-02512	515	27
	525	27
	724	6
	857	10
09452-14503	578	20
	632	20
	650	20
	692	20
09457-00165	863	4
09457-00275	833	2
09459-01614	863	13
09459-11033	863	12

PartNumber	Page	Index
09460-00000	1114	4
	1115	5
09479-02400	244	7
	244	19
	244	20
	244	21
	245	7
	245	16
	245	17
	245	18
	582	11
	636	11
	680	11
	808	23
09483-10312	258	3
09483-70550	808	21
09484-00560	808	22
09495-10010	544	1
09495-40010	541	1
09495-80010	543	1
09495-90010	542	1
09601-50000	1045	1
	1049	1
	1053	1
09601-60000	1045	
	1049	
	1053	
	1105	1
09602-10001	1062	30
	1063	29
	1064	29
	1065	29
	1066	29
	1067	29
	1068	29
	1069	29
	1070	30
	1071	30
09602-21001	1072	29
09607-05080	308	3
09608-05080	319	3
09620-A2000	523	1
09620-A2040	1082	1
09620-A2070	1083	1
09620-A2080	1084	1
09620-A2090	1085	1
09620-A2100	1086	1
09620-A2110	1081	1
09620-A2120	1087	1
09620-A2140	1090	1
09620-A2160	1092	1
09620-A3000	1091	1
09637-04163	1068	26
09637-30163	1062	27
	1063	26
09637-30263	1064	26
09637-40163	1067	26
09637-50263	1069	26
09637-51263	1071	27
09637-70163	1066	26
	1070	27
09637-81163	1065	26
09637-90263	1072	26
09649-00412	1068	21
09649-01012	1066	21
	1070	22
09649-02012	1065	21
09649-03012	1062	22
	1063	21
09649-04012	1067	21
09649-05012	1064	21
09649-07012	1069	21
09649-07112	1071	22
09649-09012	1072	21
09651-01001	1070	13

PartNumber	Page	Index
09651-03001	1062	13
09651-07101	1071	13
09651-A0641	1063	13
	1064	13
	1065	13
	1066	13
	1067	13
	1068	13
	1069	13
	1072	13
09653-01001	1070	9
09653-03001	1062	9
09653-07101	1071	9
09653-A0481	1063	9
	1063	10
	1064	9
	1064	10
	1065	9
	1065	10
	1066	9
	1066	10
	1067	9
	1067	10
	1068	9
	1068	10
	1069	9
	1069	10
	1072	9
	1072	10
09654-31001	1070	11
09654-33001	1062	11
09654-37101	1071	11
09654-B0641	1063	11
	1064	11
	1065	11
	1066	11
	1067	11
	1068	11
	1069	11
	1072	11
09657-01004	1070	12
09657-03003	1062	12
09657-07102	1071	12
09657-A0881	1063	12
	1064	12
	1065	12
	1066	12
	1067	12
	1068	12
	1069	12
	1072	12
09659-51000	1070	14
09659-53000	1062	15
09659-57100	1071	14
09659-A057B	1063	14
	1064	14
	1065	14
	1066	14
	1067	14
	1068	14
	1069	14
	1072	14
09664-30011	1076	1
09664-30111	1078	1
09664-50001	1077	1
09667-01001	1070	15
09667-03001	1062	16
09667-07101	1071	15
09667-A0481	1063	15
	1064	15
	1065	15
	1066	15
	1067	15
	1068	15
	1069	15

PartNumber	Page	Index
	1072	15
09668-01001	1070	10
09668-03001	1062	10
09668-07101	1071	10
09669-0000E	1062	28
	1063	27
	1064	27
	1065	27
	1066	27
	1067	27
	1068	27
	1069	27
	1070	28
	1071	28
	1072	27
09690-F0560	1062	7
	1063	7
	1064	7
	1065	7
	1066	7
	1067	7
	1068	7
	1069	7
	1070	7
	1071	7
	1072	7
09690-F0630	1062	2
	1063	2
	1064	2
	1065	2
	1066	2
	1067	2
	1068	2
	1069	2
	1070	2
	1071	2
	1072	2
09690-M0063	1062	4
	1063	4
	1064	4
	1065	4
	1066	4
	1067	4
	1068	4
	1069	4
	1070	4
	1071	4
	1072	4
09690-P1400	1073	1
09802-10400	1068	31
09802-11000	1066	31
	1070	20
09802-12000	1065	31
09802-13000	1062	14
	1063	31
09802-14000	1067	31
09802-15000	1064	31
09802-17000	1069	31
09802-17100	1071	20
09802-19000	1072	31
09805-C0881	1063	16
	1064	16
	1065	16
	1066	16
	1067	16
	1068	16
	1069	16
	1072	16
09806-B1683	1063	17
	1064	17
	1065	17
	1066	17
	1067	17
	1068	17
	1069	17
	1072	17
09808-01000	1070	18
09808-03000	1062	19
09808-07100	1071	18
09808-A0881	1063	18
	1064	18
	1065	18
	1066	18
	1067	18
	1068	18
	1069	18
	1072	18
09812-01000	1070	17
09812-03000	1062	18
09812-07000	1071	17
09845-00480	1074	1
09920-00150	128	15
09960-00801	1079	3
09960-00802	1079	4
09960-01012	1079	2
09963-01001	1070	19
09963-03001	1062	20
09963-07001	1071	19
09963-A1640	1063	19
	1064	19
	1065	19
	1066	19
	1067	19
	1068	19
	1069	19
	1072	19
09974-00801	1075	2
09980-10550	1110	1
09980-92550	1110	
09982-20057	1110	2
103-15-15210	520	10
103-15-29210	328	14
103-54-24440	226	49
	430	22
	430	27
104-15-25460	278	1
104-15-25480	324	17
104-15-25490	324	15
112-62-32150	435	25
	441	25
113-03-21170	163	37
	165	17
113-15-12840	328	13
113-15-12870	305	37
	1120	
113-54-24190	556	2
	608	2
	660	2
113-899-7950	382	8
	408	8
113-99-21890	273	20
	274	20
	454	7
	455	9
11S-959-1780	694	6
11Y-06-22150	548	3
	568	3
	600	3
	621	3
	652	3
	670	3
	710	3
11Y-09-11120	252	9
	257	9
11Y-09-11170	252	7
	252	13
	257	7
	257	13
11Y-43-11181	565	11
	570	3
	587	13
	617	13
	623	3
	643	11
	686	3
	691	11
11Y-62-12510	437	11
	443	11
11Y-979-2571	491	1
	497	1
	533	1
	535	1
124-911-1430	849	
	856	
	861	
125-15-15290	324	16
12H-15-14130	324	14
12H-15-14140	324	20
12R-60-11230	764	14
	813	14
12Y-06-11640	521	39
12Y-06-11650	519	5
	528	5
	529	5
	530	5
12Y-43-12160	708	30
12Y-978-1390	513	29
	539	29
12Y-978-1410	510	
	538	
12Y-978-1420	510	1
	538	1
12Y-978-1450	510	2
	512	2
	538	2
	539	2
12Y-978-1460	510	3
	512	3
	538	3
	539	3
12Y-978-1470	510	4
	512	4
	538	4
	539	4
12Y-978-1480	510	5
	512	5
	538	5
	539	5
12Y-978-1490	510	6
	512	6
	538	6
	539	6
12Y-978-1510	512	
	539	
12Y-978-1520	512	1
	539	1
12Y-978-1550	510	7
	512	7
	538	7
	539	7
12Y-978-1560	510	9
	512	9
	538	9
	539	9
12Y-978-1570	510	10
	512	10
	538	10
	539	10
12Y-978-1580	510	11
	512	11
	538	11
	539	11
12Y-978-1590	510	12
	512	12
	538	12

PartNumber	Page	Index
	539	12
12Y-978-1610	510	13
	512	13
	538	13
	539	13
12Y-978-1620	510	14
	512	14
	538	14
	539	14
12Y-978-1630	510	15
	512	15
	538	15
	539	15
12Y-978-1640	510	8
	512	8
	538	8
	539	8
12Y-978-1650	510	16
	512	16
	538	16
	539	16
12Y-978-2210	516	2
	524	3
	527	3
12Y-978-2280	524	4
	527	4
12Y-978-2431	493	13
12Y-978-2441	499	13
12Y-978-2490	493	16
	499	16
12Y-978-2550	494	18
12Y-978-2560	500	18
12Y-978-2660	495	2
	495	7
	501	2
	501	7
	506	36
	508	30
	520	13
	521	21
	521	24
	521	29
	521	33
12Y-978-2890	521	35
12Y-978-3210	491	3
	497	3
	533	3
	535	3
12Y-978-3221	491	12
	533	12
12Y-978-3231	497	12
	535	12
12Y-978-3241	491	13
	497	13
	533	13
	535	13
12Y-978-3251	491	19
	533	19
12Y-978-3261	492	20
	533	20
12Y-978-3271	498	20
	535	20
12Y-978-3281	491	9
	497	9
	506	26
	508	22
	533	9
	535	9
12Y-978-3290	491	10
	497	10
	506	25
	508	21
	533	10
	535	10
12Y-978-3310	491	17
	492	28
	492	31
	497	17
	498	28
	498	31
	533	17
	533	28
	533	31
	535	17
	535	28
	535	31
12Y-978-3340	492	39
	498	39
	534	39
	536	39
12Y-978-3360	492	22
	498	22
	533	22
	535	22
12Y-978-3370	493	1
	499	1
12Y-978-3381	495	1
	501	1
12Y-978-3470	497	19
	535	19
12Y-978-3480	492	36
	498	36
	533	36
	535	36
12Y-978-3541	505	14
	507	8
12Y-978-3551	505	15
	507	9
130-30-13170	892	17
	903	17
	927	17
	933	17
	940	17
	952	17
130-63-12761	1019	25
	1021	25
	1023	25
	1025	25
134-15-75230	324	5
134-15-76001	324	
134-22-66140	314	3
134-54-66190	573	19
	591	19
	627	19
	645	19
	687	19
134-54-66240	573	14
	591	14
	626	14
	645	14
	687	14
134-54-66290	573	20
	591	20
	627	20
	645	20
	687	20
135-03-12110	249	18
	254	18
135-06-34260	282	43
	286	43
	515	36
	526	36
	720	5
142-43-13180	707	25
	708	31
142-979-3470	230	5
	235	5
	239	5
	243	5
144-15-22881	313	15
	314	27
	1120	
144-40-21790	314	21
	314	30
144-65-21650	330	12
144-874-7470	78	34
	174	31
	176	21
	176	35
	179	11
	179	18
	180	31
	182	21
	182	35
	185	11
	185	18
	186	31
	188	21
	188	35
	191	11
	191	18
	1116	34
144-947-2850	1050	6
144-947-3490	278	23
	297	17
	714	8
145-14-11320	313	14
	313	25
	314	26
145-14-11571	315	39
	319	25
14X-01-11140	222	5
	353	9
14X-01-11150	222	6
	222	13
	353	10
14X-04-21620	281	19
	285	19
14X-04-21660	281	13
	285	13
14X-06-31311	561	
	613	
	664	
14X-06-51840	529	14
	530	14
14X-15-15850	324	3
	324	21
14X-15-16210	324	18
14X-30-13174	893	12
	904	12
	914	11
	921	11
	941	12
	953	12
14X-43-12110	707	11
14X-43-13760	708	15
14X-43-34331	561	5
	613	5
	664	5
14X-43-34341	562	35
	614	35
	665	35
14X-49-12320	346	24
14X-54-36310	573	
	591	
	626	
	645	
	687	
14X-54-36320	573	12
	591	12
	626	12
	645	12
	687	12
14X-54-36330	573	13
	591	13

PartNumber	Page	Index
	626	13
	645	13
	687	13
14X-54-36340	573	17
	591	17
	627	17
	645	17
	687	17
14X-60-12120	782	5
	827	5
14X-911-1690	493	3
	493	7
	499	3
	499	7
14X-911-1761	493	2
	493	6
	499	2
	499	6
14X-911-7750	843	39
	859	37
14X-98-11170	1062	1
	1063	1
	1064	1
	1065	1
	1066	1
	1067	1
	1068	1
	1069	1
	1070	1
	1071	1
	1072	1
14X-98-35181	1080	1
14X-98-51260	528	9
	530	18
	532	5
14X-Y11-2110	784	1
	828	1
14X-Y79-1400	510	
	538	
14X-Y79-1430	510	
	538	
14X-Y79-1440	511	17
	538	17
14X-Y79-1450	512	
	539	
14X-Y79-1460	513	17
	539	17
14X-Y79-1500	512	
	539	
14Y-21-11231	428	9
14Y-21-13130	329	13
14Y-21-13160	428	12
14Y-21-13190	428	13
14Y-21-13210	428	8
14Y-21-13240	329	14
14Y-22-15220	329	15
14Y-30-18150	465	14
	467	14
	469	14
150-15-11680	305	16
150-70-13411	981	41
150-70-23320	977	10
154-01-21310	222	2
	222	10
	353	8
154-01-21320	222	3
	222	11
	353	7
154-01-21330	222	4
	222	12
	353	6
154-04-12420	124	9
	125	10
154-12-71220	225	12
154-12-71231	225	1

PartNumber	Page	Index
154-15-49260	316	22
154-15-65553	321	7
154-15-65561	321	8
154-15-65590	321	9
	1120	
154-22-65860	326	29
154-27-72320	357	35
	360	35
	363	35
	366	35
	369	35
	372	35
154-30-00832	891	
	897	
	898	
	899	
	902	
	908	
	909	
	910	
	917	
	924	
	929	
	935	
	939	
	945	
	946	
	947	
	951	
	957	
	958	
	959	
154-30-51460	264	28
	269	28
154-43-41260	710	2
154-43-73211	563	1
	615	1
	666	1
154-43-73281	561	18
	614	18
	664	18
154-43-73301	563	
	615	
	666	
154-43-73531	561	3
	613	3
	664	3
154-43-73601	564	
	616	
	667	
154-43-73611	559	1
	611	1
	662	1
154-43-73620	562	30
	614	30
	665	30
154-43-73641	561	8
	613	8
	664	8
154-43-73651	561	10
	578	13
	613	10
	632	13
	649	13
	664	10
	692	13
154-43-73670	564	35
	616	35
	667	35
154-43-73680	564	36
	616	36
	667	36
154-43-73831	563	2
	615	2
	666	2

PartNumber	Page	Index
154-43-73850	563	4
	615	4
	666	4
154-43-73860	563	5
	615	5
	666	5
154-43-73870	563	6
	615	6
	666	6
154-43-73880	563	7
	615	7
	666	7
154-43-73890	563	8
	615	8
	666	8
154-43-73910	563	9
	615	9
	666	9
154-43-73920	563	10
	615	10
	666	10
154-43-73930	563	11
	615	11
	666	11
154-43-73950	563	14
	615	14
	666	14
154-43-73960	563	15
	615	15
	666	15
154-49-51980	429	11
154-61-22140	1027	2
	1027	21
154-61-75750	718	7
154-61-75761	382	12
	408	12
	781	10
	797	10
154-61-75782	399	15
	425	15
154-63-52760	1028	4
	1030	4
	1032	4
	1034	4
154-70-17170	980	36
154-70-19181	977	17
154-71-21290	964	15
	964	36
	969	13
	969	32
	974	11
	974	30
	978	15
	978	36
	983	36
154-71-41120	977	3
	977	5
154-71-71820	966	1
	966	26
	971	1
	973	1
	975	1
154-71-71840	966	8
	966	33
	971	8
	973	8
	975	8
154-71-71850	966	9
	966	34
	971	9
	971	27
	973	9
	973	27
	975	9
154-911-7842	240	

PartNumber	Page	Index
154-98-36630	1093	1
154-Z11-5340	290	22
	337	24
	454	8
	455	10
155-30-13230	894	2
	905	2
	914	33
	921	33
	942	2
	954	2
155-61-15350	297	15
	297	30
156-76-21170	332	12
15A-32-11142	868	9
	869	9
	870	9
	871	9
	872	9
	873	9
	874	9
	875	9
	876	9
	877	9
	878	9
	884	9
	885	9
	886	9
	887	9
	888	9
15A-32-77120	868	1
	869	1
	870	1
	871	1
	872	1
	873	1
	874	1
	875	1
	876	1
	877	1
	878	1
	879	1
	880	1
	881	1
	882	1
	883	1
	884	1
	885	1
	886	1
	887	1
	888	1
	889	1
15A-32-77130	868	2
	869	2
	870	2
	871	2
	872	2
	873	2
	874	2
	875	2
	876	2
	877	2
	878	2
	879	2
	880	2
	881	2
	882	2
	883	2
	884	2
	885	2
	886	2
	887	2
	888	2
	889	2
15A-78-11180	464	3
	466	3
	468	3
15A-79-11120	1047	1
15A-79-12110	1046	16
	1052	16
15B-54-14220	720	29
	724	22
170-30-12162	912	25
	919	25
170-30-15190	899	9
	910	9
	917	9
	924	9
	947	9
	959	9
170-30-15210	899	10
	910	10
	917	10
	924	10
	947	10
	959	10
170-30-91130	915	8
	916	8
	922	8
	923	8
170-32-11115	868	13
	868	16
	874	13
	874	16
	879	7
170-32-11332	870	13
	870	16
	875	13
	875	16
	881	7
170-69-11143	1057	9
	1058	17
	1059	24
170-70-12240	981	42
175-03-31530	258	18
175-03-42140	270	3
	272	3
	720	11
175-06-37871	1116	37
175-06-39621	763	5
	801	5
	812	5
175-06-39830	1116	6
175-06-51440	224	31
	714	1
175-06-81610	529	12
	530	12
175-15-11230	314	36
175-15-42880	313	8
	313	20
	313	30
	314	22
	314	31
175-15-56470	278	2
	324	19
175-20-11130	304	2
175-30-00702	913	
	915	
	916	
	920	
	922	
	923	
175-30-00761	915	
	922	
175-30-00771	916	
	923	
175-30-05050	913	
	920	
175-30-05060	913	
	920	
175-30-05072	913	25
	920	25
175-30-11272	912	3
	919	3
175-30-21353	912	4
	919	6
175-30-21363	912	5
	919	7
175-30-23114	913	1
	920	1
175-30-23121	913	2
	920	2
175-30-23172	913	15
	920	15
175-30-23180	913	16
	920	16
175-30-24131	914	34
	921	34
175-30-24242	893	24
	904	24
	914	23
	921	23
	941	24
	953	24
175-30-25131	899	3
	910	3
	917	3
	924	3
	947	3
	959	3
175-30-26230	915	6
	916	6
	922	6
	923	6
175-30-26241	916	15
	923	15
175-30-32162	893	31
	904	31
	941	31
	953	31
175-30-33460	913	20
	920	20
175-30-33492	913	18
	920	18
175-30-35161	899	4
	910	4
	917	4
	924	4
	947	4
	959	4
175-30-35171	899	7
	910	7
	917	7
	924	7
	947	7
	959	7
175-30-36108	913	4
	915	7
	916	7
	920	4
	922	7
	923	7
175-30-36130	915	2
	916	2
	922	2
	923	2
175-30-36210	915	4
	916	4
	922	4
	923	4
175-30-36220	915	5
	916	5
	922	5
	923	5
175-30-36340	915	13

PartNumber	Page	Index
	916	13
	922	13
	923	13
175-30-45111	899	1
	910	1
	917	1
	924	1
	947	1
	959	1
175-30-45131	899	11
	910	11
	917	11
	924	11
	947	11
	959	11
175-32-00503	887	
175-32-02503	868	
175-32-02513	869	
175-32-02523	870	
175-32-02533	871	
175-32-08010	868	
	869	
	870	
	871	
	872	
	873	
	874	
	875	
	876	
	877	
	878	
	884	
	885	
	886	
	887	
	888	
175-32-08020	868	
	869	
	870	
	871	
	872	
	873	
	874	
	875	
	876	
	877	
	878	
	884	
	885	
	886	
	887	
	888	
175-32-11113	869	13
	869	16
	873	13
	873	16
	880	7
175-32-11132	871	13
	871	16
	876	13
	876	16
	882	7
175-32-31313	872	13
	872	16
	883	7
175-32-31410	877	13
	877	16
175-32-31420	878	13
	878	16
175-32-31440	884	13
	884	16
175-32-31450	885	13
	885	16
175-32-31460	886	13
	886	16

PartNumber	Page	Index
175-32-41261	868	17
	869	17
	870	17
	871	17
	872	17
	873	17
	874	17
	875	17
	876	17
	877	17
	878	17
	884	17
	885	17
	886	17
	887	13
	888	13
175-32-81181	868	8
	869	8
	870	8
	871	8
	872	8
	873	8
	874	8
	875	8
	876	8
	877	8
	878	8
	884	8
	885	8
	886	8
	887	8
	888	8
175-32-81450	868	10
	869	10
	870	10
	871	10
	872	10
	873	10
	874	10
	875	10
	876	10
	877	10
	878	10
	884	10
	885	10
	886	10
	887	10
	888	10
175-40-22540	232	20
175-54-27350	264	27
	269	27
	720	30
	724	23
175-54-28770	264	29
	269	29
	720	31
	724	24
175-54-34170	223	10
	251	22
	251	23
	256	22
	256	23
	720	23
	724	16
	749	3
	749	6
	749	9
	750	7
	750	14
	750	17
	844	51
	844	54
	845	6
	846	3
	846	8

PartNumber	Page	Index
	846	14
	848	50
	848	53
	849	6
	850	3
	850	8
	850	14
	852	51
	852	54
	853	6
	855	54
	855	57
	856	9
	857	6
	857	12
	857	21
	860	50
	860	53
	861	6
175-54-88110	708	13
175-61-15201	718	5
175-61-15320	719	2
175-61-15331	719	3
175-61-15450	460	6
	461	8
175-61-15460	460	7
	461	9
175-61-17240	228	14
	237	14
	241	14
175-63-12540	1019	3
	1021	3
	1023	3
	1025	3
175-69-00012	1057	
	1059	
175-69-00014	1058	
175-69-00023	1058	
175-69-21111	1057	1
175-69-21121	1057	2
175-69-21212	1057	5
	1058	10
	1059	17
175-69-22113	1058	1
175-69-22140	1058	3
175-70-00514	980	
175-70-00523	980	
175-70-12221	981	39
175-70-13314	977	9
175-70-21115	980	9
175-70-21126	980	7
	1002	31
	1004	37
175-70-21136	980	8
	1002	32
	1005	38
175-70-21153	980	4
175-70-21160	980	2
175-70-21170	980	3
175-70-21181	980	5
175-70-21191	980	6
175-70-21210	980	1
175-70-22110	980	25
175-70-22130	980	27
175-70-22141	981	40
175-70-22160	980	31
175-70-22190	980	37
175-70-23114	977	7
175-70-23124	977	8
175-70-23180	980	15
175-70-23223	980	20
175-70-23261	977	6
175-70-26310	980	10
	984	33
	988	27

PartNumber	Page	Index
	990	28
	992	32
	994	33
175-71-00294	982	20
175-71-00302	976	5
175-71-11281	1029	1
	1031	1
	1033	1
175-71-11454	980	11
	982	9
	984	34
	988	28
	990	29
	992	33
	994	34
	1002	28
	1004	34
175-71-11463	980	12
	985	38
	988	32
	990	33
	992	37
	995	38
	1002	33
	1005	39
175-71-11482	977	11
175-71-11491	964	8
	969	6
	974	7
	974	26
	977	12
	978	8
175-71-11520	964	9
	964	30
	969	7
	969	26
	974	8
	974	27
	977	13
	978	9
	978	30
175-71-11530	980	14
	982	11
	984	35
	985	39
	988	29
	988	33
	990	30
	990	34
	992	34
	993	38
	994	35
	995	39
	1002	29
	1002	34
	1004	35
	1005	40
175-71-21182	974	2
	974	21
175-71-21221	964	11
	964	32
	969	9
	969	28
	974	16
	974	35
	978	11
	978	32
	983	40
175-71-21230	964	12
	964	33
	969	10
	969	29
	974	17
	974	36
	978	12
	978	33
	983	41
175-71-21261	964	19
	965	40
	969	17
	969	36
	974	15
	974	34
	978	19
	979	40
175-71-21330	964	16
	964	37
	969	14
	969	33
	974	12
	974	31
	978	16
	979	37
	983	37
175-71-21351	982	32
175-71-22272	985	37
	988	31
	990	32
	992	36
	994	37
175-71-22282	985	41
	988	35
	990	36
	993	40
	995	41
175-71-31121	982	3
175-71-31131	982	4
175-71-31141	982	5
175-71-31173	974	3
175-71-31183	982	
175-71-31190	976	2
	982	12
	982	16
175-71-31221	982	14
175-71-31233	982	
175-71-31241	982	18
175-71-31250	982	23
	982	29
175-71-31260	982	24
	982	30
175-71-31270	982	25
	982	31
175-71-31280	982	26
175-71-31293	976	1
175-71-31380	982	19
175-71-31563	976	3
	982	13
	982	17
175-71-31622	974	22
175-71-33220	994	23
175-72-21123	1002	27
	1004	33
175-72-22121	1002	2
	1004	8
175-72-22131	1002	3
	1004	9
175-72-31120	1002	4
	1004	10
175-73-11131	982	8
175-73-11141	982	6
175-73-11151	982	7
175-78-21693	1040	5
	1047	5
175-78-31230	1040	4
	1047	4
175-78-61271	1039	3
	1046	3
	1052	3
175-78-61281	1039	4
	1046	4
	1052	4
175-79-61160	1046	17
	1052	17
175-79-83760	156	21
175-937-4220	990	18
	994	22
176-06-42170	491	15
	497	15
	506	34
	508	28
	533	15
	535	15
176-32-11145	879	5
	880	5
	881	5
	882	5
	883	5
	889	5
176-32-11152	879	6
	880	6
	881	6
	882	6
	883	6
	889	6
176-32-11174	879	4
	880	4
	881	4
	882	4
	883	4
	889	4
176-32-11193	879	12
	880	12
	881	12
	882	12
	883	12
	889	9
176-32-11210	868	14
	869	14
	870	14
	871	14
	872	14
	873	14
	874	14
	875	14
	876	14
	877	14
	878	14
	879	8
	880	8
	881	8
	882	8
	883	8
	884	14
	885	14
	886	14
	1120	
176-32-11292	879	3
	879	10
	880	3
	880	10
	881	3
	881	10
	882	3
	882	10
	883	3
	883	10
	889	3
	889	7
176-32-11332	879	11
	880	11
	881	11
	882	11
	883	11
	889	8
176-54-11760	357	28

PartNumber	Page	Index
	360	28
	363	28
	366	28
	369	28
	372	28
178-27-11150	356	3
	359	3
	362	3
	365	3
	368	3
	371	3
178-30-12161	912	11
	919	11
178-30-12171	912	12
	919	12
178-30-16115	915	1
	922	1
178-30-16125	916	1
	923	1
178-32-05000	1120	K06
178-32-11220	868	15
	869	15
	870	15
	871	15
	872	15
	873	15
	874	15
	875	15
	876	15
	877	15
	878	15
	879	9
	880	9
	881	9
	882	9
	883	9
	884	15
	885	15
	886	15
	1120	
178-60-12250	249	8
	249	26
	254	8
	254	26
17A-01-41110	134	1
17A-01-41120	222	16
17A-01-41131	222	20
17A-01-41210	223	1
17A-01-41220	738	4
	748	4
17A-01-41311	734	2
	744	2
17A-01-41321	734	8
	744	8
17A-01-41330	734	9
	744	9
17A-01-41341	734	18
	744	18
17A-01-41360	738	1
	748	1
17A-01-41391	751	1
17A-01-41790	752	1
17A-03-11271	251	16
	256	16
17A-03-11281	251	2
	251	7
	256	2
	256	7
17A-03-13170	258	23
17A-03-14111	252	1
	257	1
17A-03-14120	252	2
	257	2
17A-03-23221	264	9
	269	9

PartNumber	Page	Index
17A-03-23441	258	7
17A-03-41112	248	1
	253	1
17A-03-41122	248	2
	253	2
17A-03-41132	248	3
	253	3
17A-03-41142	248	4
	253	4
17A-03-41171	248	9
	253	9
17A-03-41181	248	12
	253	12
17A-03-41212	250	13
	255	10
17A-03-41220	248	30
	253	30
17A-03-41231	248	31
	253	31
17A-03-41240	250	10
	255	7
17A-03-41251	248	27
	253	27
17A-03-41271	249	4
	254	4
17A-03-41281	249	12
	254	12
17A-03-41291	249	15
	254	15
17A-03-41311	249	1
	254	1
17A-03-41321	250	9
	255	6
17A-03-41331	250	35
	255	32
17A-03-41341	250	15
	255	12
17A-03-41351	250	16
	255	13
17A-03-41361	249	7
	254	7
17A-03-41371	249	9
	254	9
17A-03-41380	248	15
	253	15
17A-03-41413	250	32
	255	29
17A-03-41421	251	27
	256	27
17A-03-41431	251	30
	256	30
17A-03-41441	248	22
	253	22
17A-03-41463	250	26
	255	23
17A-03-41473	250	29
	255	26
17A-03-41510	249	29
17A-03-41521	249	24
	254	24
17A-03-41531	249	21
	254	21
17A-03-41550	251	1
	256	1
17A-03-41560	251	6
	256	6
17A-03-41581	724	25
17A-03-41591	724	26
17A-03-41612	258	1
17A-03-41621	258	13
17A-03-41641	258	11
17A-03-41651	251	3
	256	3
17A-03-41661	251	8
	256	8

PartNumber	Page	Index
17A-03-41711	258	28
17A-03-41722	258	40
17A-03-41731	259	48
17A-03-41742	259	44
17A-03-41751	258	33
17A-03-41771	258	31
17A-03-41791	258	39
17A-03-41831	251	19
	256	19
17A-03-41841	275	31
17A-03-41851	275	34
17A-03-41861	275	18
17A-03-41871	275	23
17A-03-41881	275	27
17A-03-41891	275	26
17A-03-41911	252	10
	257	10
17A-03-41930	250	20
	255	17
17A-03-41942	454	4
17A-03-41943	455	4
17A-03-41950	251	20
	256	20
17A-03-41960	252	6
	257	6
17A-03-41970	252	3
	257	3
17A-03-41981	250	21
	255	18
17A-03-42111	264	23
17A-03-42121	260	4
	265	4
17A-03-42132	264	10
	269	10
17A-03-42211	264	31
	269	31
17A-03-42310	269	23
17A-03-42581	720	32
17A-03-42591	720	33
17A-03-42601	251	13
	256	13
17A-03-43221	453	16
17A-03-43231	453	22
17A-03-43241	453	24
17A-03-43250	453	26
17A-03-43261	453	19
17A-03-43312	270	1
17A-03-43321	270	6
	272	6
17A-03-43331	270	9
	272	9
17A-03-43340	272	12
17A-03-43341	270	12
17A-03-43351	272	15
17A-03-43352	270	15
17A-03-43510	272	1
17A-03-44151	248	5
	253	5
17A-03-44161	248	6
	253	6
17A-03-44631	258	22
17A-03-44690	258	20
17A-04-11191	283	4
	287	4
	289	3
17A-04-12550	753	1
	762	2
	762	4
	799	1
	802	1
	811	2
	811	4
17A-04-41112	284	1
17A-04-41161	283	8
	287	8

PartNumber	Page	Index
	289	7
17A-04-41181	283	9
	287	9
	289	8
17A-04-41190	281	
	285	
17A-04-41211	280	1
17A-04-41311	281	8
	283	18
	285	8
	287	18
	289	17
17A-04-41331	281	16
	285	16
17A-04-41411	280	13
	284	14
17A-04-41440	1114	1
	1115	2
17A-04-41611	288	1
17A-04-41620	288	2
17A-04-41630	288	3
17A-04-41641	288	4
17A-04-42150	280	12
	284	13
17A-04-42640	281	28
	285	28
17A-06-17931	283	12
	287	12
	289	11
	300	4
	301	3
	720	6
	1027	5
	1027	24
	1056	4
	1060	1
17A-06-17970	283	13
	287	13
	289	12
	300	5
	301	4
	720	7
	1027	6
	1027	25
	1056	5
	1060	2
17A-06-17980	283	14
	287	14
	289	13
	300	6
	301	5
	720	8
	1027	7
	1027	26
	1056	6
	1060	3
17A-06-23130	1116	9
17A-06-41113	551	1
	603	1
	655	1
17A-06-41122	705	9
17A-06-41131	755	1
	804	1
17A-06-41141	551	3
	603	3
	655	3
17A-06-41152	429	1
17A-06-41191	224	1
17A-06-41211	758	1
	807	1
17A-06-41223	556	6
	608	6
	660	6
17A-06-41231	720	18
	735	15
	745	15
17A-06-41242	296	1
17A-06-41253	281	38
	286	38
	1060	7
17A-06-41261	1056	10
17A-06-41272	753	23
	799	23
	802	23
17A-06-41281	757	9
	806	9
17A-06-41292	224	22
17A-06-41360	230	13
	235	13
	243	13
17A-06-41411	1112	2
17A-06-41421	1112	4
17A-06-41451	724	9
17A-06-41470	565	12
	643	12
	691	12
17A-06-41492	735	1
	745	1
17A-06-41511	556	1
	608	1
	660	1
17A-06-41531	753	5
	799	5
	802	5
17A-06-41540	297	1
	753	18
	753	24
	799	18
	799	24
	802	18
	802	24
17A-06-41551	753	8
	799	8
	802	8
17A-06-41571	354	3
17A-06-41582	755	18
17A-06-41591	1060	4
17A-06-41611	283	15
	287	15
	289	14
17A-06-41620	429	5
17A-06-41642	755	24
17A-06-41653	757	19
	806	19
17A-06-41662	556	17
	608	17
	660	17
17A-06-41671	757	1
17A-06-41711	296	3
17A-06-41721	712	4
17A-06-41731	712	8
17A-06-41771	753	33
	799	33
	802	33
17A-06-41791	1056	1
17A-06-41840	429	4
17A-06-41850	558	1
	610	1
17A-06-41860	550	2
	602	2
	654	2
17A-06-41870	555	39
	607	39
	659	39
17A-06-41912	556	3
	608	3
	660	3
17A-06-41932	430	18
17A-06-41941	763	4
	801	4
	812	4
17A-06-41951	297	22
17A-06-41980	708	27
17A-06-42131	1116	18
17A-06-42140	1116	30
17A-06-42210	514	4
	525	4
17A-06-42220	514	5
	525	5
17A-06-42230	300	9
	301	8
17A-06-42250	705	2
17A-06-42260	705	3
17A-06-42510	1027	1
17A-06-42520	1027	20
17A-06-42531	1027	8
17A-06-42550	724	5
17A-06-42580	1027	12
	1027	31
17A-06-42631	1027	27
17A-06-42640	804	21
17A-06-42670	806	1
17A-06-42681	804	15
17A-06-49240	239	13
17A-09-11111	330	16
17A-09-11130	326	9
17A-09-11161	326	23
17A-09-41121	357	20
	360	20
	363	20
	366	20
	369	20
	372	20
17A-09-41131	357	33
	360	33
	363	33
	366	33
	369	33
	372	33
17A-09-41150	358	44
	361	44
	364	44
	367	44
	370	44
	373	44
17A-09-41190	356	20
	359	20
	362	20
	365	20
	368	20
	371	20
17A-12-11151	225	2
17A-12-11161	225	3
17A-12-11171	225	4
17A-12-11221	225	14
	304	7
17A-12-11230	225	8
17A-12-11260	225	15
17A-12-11270	225	19
17A-12-12111	225	18
17A-12-12181	225	13
17A-12-41111	225	27
17A-12-41121	225	35
17A-12-41140	226	46
17A-12-41153	226	48
17A-12-41160	225	38
17A-13-00291	308	
17A-13-05310	1120	K01
17A-13-05320	1120	K02
17A-13-21121	305	1
17A-13-22550	308	5
17A-13-31160	305	3
17A-13-34220	310	1
17A-13-38660	308	
17A-13-39320	307	2

PartNumber	Page	Index
17A-13-39340	310	11
	310	20
17A-13-41000	305	
	307	
	308	
	310	
	311	
	312	
17A-13-41140	305	2
17A-13-41211	307	15
17A-13-41330	308	8
17A-13-41350	307	1
17A-13-41510	305	10
17A-13-41770	306	42
17A-13-42110	305	11
17A-13-42130	305	12
17A-13-43210	305	19
17A-13-43220	305	15
17A-13-43350	308	31
17A-13-44110	305	24
17A-13-44120	308	36
17A-13-44211	305	14
17A-13-44310	310	10
17A-13-44340	310	17
17A-13-44480	310	21
17A-13-44490	310	12
17A-13-46001	311	
	312	
17A-13-46110	311	1
	351	40
17A-13-46130	340	1
17A-13-46140	340	8
17A-13-46910	308	11
17A-13-46950	308	14
17A-13-46961	308	15
17A-13-46970	308	17
17A-13-47111	307	
17A-13-47210	307	16
17A-13-48120	305	34
17A-13-48310	306	41
17A-13-48520	305	21
17A-15-00711	313	
17A-15-00720	313	
17A-15-00730	313	
17A-15-00741	314	
17A-15-00750	314	
17A-15-00760	314	
17A-15-00770	319	
17A-15-05210	1120	K03
17A-15-05230	1120	K05
17A-15-18271	308	27
17A-15-18350	310	7
17A-15-18392	308	28
17A-15-22750	313	27
17A-15-24152	319	20
17A-15-25140	319	14
17A-15-25150	319	8
17A-15-25181	319	5
17A-15-25911	325	2
	1120	
17A-15-29321	316	26
	318	40
17A-15-29510	317	27
17A-15-35160	319	11
17A-15-39310	317	8
17A-15-41000	313	
	314	
	316	
	317	
	319	
	320	
	321	
	322	
	323	
	324	
	325	
17A-15-41220	325	5
17A-15-41310	314	2
17A-15-41360	351	20
17A-15-41370	351	21
17A-15-41380	351	18
	351	23
17A-15-42110	318	46
	320	1
17A-15-42131	316	28
	318	47
	320	5
17A-15-42140	317	28
17A-15-42161	317	18
17A-15-42221	317	37
17A-15-42240	318	44
17A-15-42252	318	42
17A-15-42311	317	20
17A-15-42321	317	10
17A-15-42332	317	1
17A-15-42342	316	16
	318	48
	320	6
17A-15-42351	316	8
	318	49
17A-15-42370	316	1
17A-15-42421	317	11
17A-15-42431	317	2
17A-15-42442	316	17
17A-15-42451	316	9
17A-15-42510	317	24
17A-15-42521	317	14
17A-15-42531	317	5
17A-15-42540	316	20
17A-15-42550	316	12
17A-15-42570	316	11
17A-15-42610	317	26
17A-15-42620	317	16
17A-15-42631	314	17
17A-15-42640	316	24
17A-15-42650	316	14
17A-15-42660	313	10
17A-15-42710	318	43
17A-15-42740	313	12
	313	23
	313	33
	314	19
	314	34
17A-15-42760	314	10
17A-15-42770	313	16
	314	28
17A-15-42960	316	21
17A-15-45540	321	4
17A-15-49440	316	18
17A-15-49520	317	17
17A-20-11201	304	
17A-20-11211	304	1
17A-21-11151	460	2
	461	4
17A-21-12110	353	1
17A-21-12132	329	16
17A-21-12151	222	1
	222	9
	353	5
17A-21-13131	462	11
	463	11
17A-21-41211	460	1
17A-21-41341	428	6
17A-21-41371	428	7
17A-21-41382	428	3
17A-21-41391	460	13
	461	15
17A-21-41512	461	1
17A-21-41550	461	2
17A-21-43111	462	3
	463	3
17A-21-43120	462	13
	463	13
17A-21-43131	462	14
	463	14
17A-21-43141	462	8
	463	8
17A-21-43150	462	19
17A-21-43170	463	19
17A-21-43180	463	20
17A-21-44131	428	14
17A-22-00030	326	10
17A-22-00040	326	16
17A-22-00050	326	31
17A-22-00091	328	
	329	
17A-22-11170	328	9
17A-22-12111	328	1
17A-22-12120	328	10
17A-22-12130	328	11
17A-22-12150	328	19
17A-22-12162	328	12
17A-22-12190	328	18
17A-22-12241	329	9
17A-22-12251	328	4
17A-22-14130	329	25
17A-22-14151	329	32
17A-22-14161	329	20
17A-22-14190	330	8
17A-22-14211	329	19
17A-22-14221	329	22
17A-22-14230	329	23
17A-22-14240	330	1
17A-22-14250	330	5
17A-22-14260	330	9
17A-22-14270	330	11
17A-22-14290	330	15
17A-22-14321	330	17
17A-22-14360	330	4
17A-22-14381	329	24
17A-22-15430	326	14
17A-22-15470	326	11
17A-22-15861	326	15
17A-22-17120	326	17
17A-22-17141	333	45
17A-22-17160	333	42
17A-22-17311	332	2
17A-22-17320	332	3
17A-22-18110	338	1
17A-22-18121	328	2
17A-22-24140	329	27
17A-22-24180	330	7
17A-22-25220	326	27
17A-22-25460	326	1
17A-22-25890	326	24
17A-22-27281	332	29
17A-22-27291	332	26
17A-22-29310	326	7
17A-22-29320	330	10
17A-22-29330	330	22
17A-22-41000	326	
	328	
	329	
	330	
	332	
	334	
	336	
	337	
17A-22-41180	328	5
17A-22-41390	351	25
17A-22-42220	329	1
17A-22-42230	329	5
17A-22-44340	330	20
17A-22-44350	330	29
17A-22-44371	330	23

PartNumber	Page	Index
17A-22-45480	326	8
17A-22-45900	326	4
17A-22-46001	334	
	336	
	337	
17A-22-46100	337	
17A-22-46112	334	1
17A-22-46130	337	6
17A-22-46143	337	27
17A-22-46151	336	17
17A-22-46181	332	30
17A-22-46190	332	31
17A-22-46210	332	18
17A-22-46230	332	35
17A-22-46250	336	4
17A-22-46260	336	5
17A-22-46401	334	
17A-22-47130	332	38
17A-22-47210	332	15
17A-22-47360	330	26
17A-22-47371	332	1
17A-22-47440	332	6
17A-22-47990	332	20
17A-22-55210	326	26
17A-27-00050	357	16
	360	16
	363	16
	366	16
	369	16
	372	16
17A-27-00095	356	
	357	
17A-27-00115	359	
	360	
17A-27-00125	362	
	363	
17A-27-00135	365	
	366	
17A-27-00144	368	
	369	
17A-27-00154	371	
	372	
17A-27-11371	357	2
	363	2
	369	2
17A-27-11381	360	2
	366	2
	372	2
17A-27-11630	356	2
	359	2
	362	2
	365	2
17A-27-41111	357	1
	363	1
	369	1
17A-27-41121	360	1
	366	1
	372	1
17A-27-41141	356	10
	359	10
	362	10
	365	10
	368	10
	371	10
17A-27-41161	357	31
	360	31
	363	31
	366	31
	369	31
	372	31
17A-27-41171	357	10
	360	10
	363	10
	366	10
	369	10

PartNumber	Page	Index
	372	10
17A-27-41181	358	54
	361	54
	364	54
	367	54
	370	54
	373	54
17A-27-41210	357	19
	360	19
	363	19
	366	19
	369	19
	372	19
17A-27-41220	357	25
	360	25
	363	25
	366	25
	369	25
	372	25
17A-27-41230	357	24
	360	24
	363	24
	366	24
	369	24
	372	24
17A-27-41241	357	29
	360	29
	363	29
	366	29
	369	29
	372	29
17A-27-41251	357	32
	360	32
	363	32
	366	32
	369	32
	372	32
17A-27-41260	358	39
	361	39
	364	39
	367	39
	370	39
	373	39
17A-27-41270	357	21
	360	21
	363	21
	366	21
	369	21
	372	21
17A-27-41280	357	34
	360	34
	363	34
	366	34
	369	34
	372	34
17A-27-41290	356	19
	359	19
	362	19
	365	19
	368	19
	371	19
17A-27-41491	356	5
	359	5
	362	5
	365	5
	368	5
	371	5
17A-27-41510	369	7
17A-27-41520	372	7
17A-27-41630	368	2
	371	2
17A-27-41660	358	38
	361	38
	364	38
	367	38

PartNumber	Page	Index
	370	38
	373	38
17A-27-41671	356	1
	359	1
	362	1
	365	1
	368	1
	371	1
17A-27-41680	358	47
	361	47
	370	47
	373	47
17A-27-41690	364	47
	367	47
17A-27-41810	357	7
	363	7
17A-27-41820	360	7
	366	7
17A-30-00042	892	
	903	
	940	
	952	
17A-30-00310	927	
	933	
17A-30-00430	913	
	920	
17A-30-00610	891	
	897	
	902	
	908	
	939	
	945	
	951	
	957	
17A-30-00620	898	
	909	
	929	
	935	
	946	
	958	
17A-30-00721	899	
	910	
	917	
	924	
	947	
	959	
17A-30-00811	890	
17A-30-00821	901	
17A-30-00831	896	
	907	
17A-30-00852	912	
17A-30-00862	919	
17A-30-00910	926	
	938	
17A-30-00920	932	
	950	
17A-30-00930	928	
	934	
	944	
	956	
17A-30-12150	892	14
	892	16
	903	14
	903	16
	927	14
	927	16
	933	14
	933	16
	940	14
	940	16
	952	14
	952	16
17A-30-12170	894	6
	905	6
	942	6

PartNumber	Page	Index
	954	6
17A-30-12190	894	7
	905	7
	942	7
	954	7
17A-30-12211	894	8
	905	8
	942	8
	954	8
17A-30-12241	894	3
	905	3
	942	3
	954	3
17A-30-13140	892	2
	903	2
	927	2
	933	2
	940	2
	952	2
17A-30-13410	892	1
	903	1
	927	1
	933	1
	940	1
	952	1
17A-30-13440	892	5
	903	5
	927	5
	933	5
	940	5
	952	5
17A-30-13450	892	3
	903	3
	927	3
	933	3
	940	3
	952	3
17A-30-13470	892	13
	903	13
	940	13
	952	13
17A-30-13490	892	15
	903	15
	940	15
	952	15
17A-30-15110	891	5
	897	1
	902	5
	908	1
	939	5
	945	1
	951	5
	957	1
17A-30-15120	898	1
	909	1
	929	1
	935	1
	946	1
	958	1
17A-30-15140	891	6
	897	2
	898	2
	902	6
	908	2
	909	2
	929	2
	935	2
	939	6
	945	2
	946	2
	951	6
	957	2
	958	2
17A-30-15181	891	15
	897	11

PartNumber	Page	Index
	898	11
	902	15
	908	11
	909	11
	929	11
	935	11
	939	15
	945	11
	946	11
	951	15
	957	11
	958	11
17A-30-16331	929	14
	935	14
	946	14
	958	14
17A-30-23470	927	13
	933	13
17A-30-23490	927	15
	933	15
17A-30-23510	927	21
	933	21
17A-30-23520	927	24
	933	24
17A-30-41311	890	3
	890	5
	901	3
	901	5
	926	5
	926	7
	932	5
	932	7
	938	5
	938	7
	950	5
	950	7
17A-30-41321	890	4
	890	6
	901	4
	901	6
	926	6
	926	8
	932	6
	932	8
	938	6
	938	8
	950	6
	950	8
17A-30-41351	890	16
	901	16
	926	18
	932	18
	938	18
	950	18
17A-30-41361	890	9
	926	11
	938	11
17A-30-41371	901	9
	932	11
	950	11
17A-30-41380	865	5
	900	1
	911	1
	918	1
	925	1
	930	1
	936	1
	948	1
	960	1
17A-30-41411	890	2
	901	2
	912	2
	919	2
	926	4
	932	4

PartNumber	Page	Index
	938	4
	950	4
17A-30-43412	893	15
	904	15
	941	15
	953	15
17A-30-43432	893	4
	904	4
	941	4
	953	4
17A-30-43461	893	1
	904	1
	941	1
	953	1
17A-30-43470	893	3
	904	3
	941	3
	953	3
17A-30-43511	893	23
	904	23
	941	23
	953	23
17A-30-43520	893	18
	904	18
	941	18
	953	18
17A-30-43532	893	28
	904	28
	941	28
	953	28
17A-30-43540	893	7
	893	17
	904	7
	904	17
	941	7
	941	17
	953	7
	953	17
17A-30-44191	893	27
	904	27
	941	27
	953	27
17A-30-45210	891	8
	897	4
	898	4
	902	8
	908	4
	909	4
	929	4
	935	4
	939	8
	945	4
	946	4
	951	8
	957	4
	958	4
17A-30-45220	891	9
	897	5
	898	5
	902	9
	908	5
	909	5
	929	5
	935	5
	939	9
	945	5
	946	5
	951	9
	957	5
	958	5
17A-30-45230	891	7
	897	3
	898	3
	902	7
	908	3

PartNumber	Page	Index
	909	3
	929	3
	935	3
	939	7
	945	3
	946	3
	951	7
	957	3
	958	3
17A-30-46111	896	1
	907	1
	928	1
	934	1
	944	1
	956	1
17A-30-46121	896	5
	907	5
	928	5
	934	5
	944	5
	956	5
17A-30-46131	895	2
	896	2
	906	2
	907	2
	928	2
	934	2
	943	2
	944	2
	955	2
	956	2
17A-30-46141	891	2
	895	1
	902	2
	906	1
	939	2
	943	1
	951	2
	955	1
17A-30-46151	891	1
	902	1
	939	1
	951	1
17A-30-46181	1117	1
17A-30-46202	895	
	896	
	906	
	907	
	928	
	943	
	944	
	955	
17A-30-46221	895	5
	896	6
	906	5
	907	6
	928	6
	934	6
	943	5
	944	6
	955	5
	956	6
17A-30-46231	895	6
	896	7
	906	6
	907	7
	928	7
	934	7
	943	6
	944	7
	955	6
	956	7
17A-30-46241	895	7
	896	8
	906	7
	907	8
	928	8
	934	8
	943	7
	944	8
	955	7
	956	8
17A-30-46252	895	8
	896	9
	906	8
	907	9
	928	9
	934	9
	943	8
	944	9
	955	8
	956	9
17A-30-46330	891	18
	898	14
	902	18
	909	14
	939	18
	951	18
17A-30-47131	896	16
	907	16
	931	12
	937	12
	949	12
	961	12
17A-30-47141	890	12
	901	12
	926	14
	932	14
	938	14
	950	14
17A-30-47151	890	13
	901	13
	926	15
	932	15
	938	15
	950	15
17A-30-47230	931	1
	937	1
	949	1
	961	1
17A-30-47240	931	2
	937	2
	949	2
	961	2
17A-30-47250	931	6
	937	6
	949	6
	961	6
17A-30-47260	937	7
	961	7
17A-30-47270	931	7
	949	7
17A-30-47310	931	10
	937	10
	949	10
	961	10
17A-30-47320	931	11
	937	11
	949	11
	961	11
17A-30-47340	931	5
	937	5
	949	5
	961	5
17A-30-47A10	926	2
	932	2
	938	2
	950	2
17A-30-47A20	926	3
	932	3
	938	3
	950	3
17A-30-48161	912	8
	919	8
17A-30-48251	916	18
	923	18
17A-30-48311	913	13
	914	37
	920	13
	921	37
17A-30-48321	913	14
	914	36
	920	14
	921	36
17A-30-48342	913	11
	920	11
17A-30-48370	912	6
	919	4
17A-30-48380	912	7
	919	5
17A-30-48390	913	12
	920	12
17A-30-48412	914	14
	921	14
17A-30-48432	914	4
	921	4
17A-30-48461	914	1
	921	1
17A-30-48471	914	3
	921	3
17A-30-48481	893	5
	904	5
	914	5
	921	5
	941	5
	953	5
17A-30-48491	893	8
	904	8
	914	8
	921	8
	941	8
	953	8
17A-30-48511	914	22
	921	22
17A-30-48520	914	17
	921	17
17A-30-48531	914	27
	921	27
17A-30-48621	914	26
	921	26
17A-30-48630	914	9
	921	9
17A-30-48911	912	15
17A-30-48921	919	15
17A-30-48931	912	16
17A-30-48941	919	16
17A-30-48951	900	6
	911	6
	918	6
	925	6
	930	6
	936	6
	948	6
	960	6
17A-30-48962	912	28
17A-30-48972	919	28
17A-30-48981	912	21
	919	21
17A-30-48990	1036	5
	1037	5
	1038	1
17A-32-00110	888	
17A-32-00120	889	
17A-32-01050	874	
17A-32-01060	873	

PartNumber	Page	Index
17A-32-01070	875	
17A-32-01080	876	
17A-32-01090	872	
17A-32-01100	877	
17A-32-01110	878	
17A-32-01120	879	
17A-32-01130	880	
17A-32-01140	881	
17A-32-01150	882	
17A-32-01160	883	
17A-32-01170	884	
17A-32-01180	885	
17A-32-01190	886	
17A-32-21201	868	7
	869	7
	870	7
	871	7
	872	7
	873	7
	874	7
	875	7
	876	7
	877	7
	878	7
	884	7
	885	7
	886	7
	887	7
	888	7
17A-43-26211	563	3
	615	3
	666	3
17A-43-26231	564	29
	616	29
	667	29
17A-43-41112	707	1
17A-43-41121	707	2
17A-43-41131	708	11
17A-43-41140	707	3
17A-43-41152	708	35
17A-43-41161	708	33
17A-43-41172	707	29
17A-43-41182	707	27
17A-43-41190	710	19
17A-43-41241	698	4
17A-43-41250	710	9
17A-43-41311	698	1
17A-43-41511	708	8
17A-43-41521	708	4
17A-43-41531	708	1
17A-43-41711	548	1
	600	1
	652	1
17A-43-41722	548	9
	600	9
	652	9
17A-43-41731	548	10
	600	10
	652	10
17A-43-41741	549	25
	601	25
	653	25
17A-43-41751	549	24
	601	24
	653	24
17A-43-41760	548	14
	568	15
	600	14
	621	15
	652	14
	670	15
17A-43-42112	568	1
	621	1
	670	1
17A-43-42122	568	10
	621	10
	670	10
17A-43-42132	568	11
	621	11
	670	11
17A-43-42161	569	26
	622	26
	671	26
17A-43-42171	569	25
	622	25
	671	25
17A-43-42211	587	
	617	
17A-43-42220	587	7
	617	7
17A-43-42230	570	4
	623	4
	686	4
17A-43-42240	570	1
	623	1
	686	1
17A-43-42310	573	18
	591	18
	627	18
	645	18
	687	18
17A-43-42410	565	
	643	
	691	
17A-43-42420	565	5
	643	5
	691	5
17A-43-42430	565	4
	643	4
	691	4
17A-43-42440	565	
	643	
	691	
17A-43-45110	594	9
	685	9
17A-49-15141	346	6
17A-49-15261	278	3
17A-49-15441	374	6
17A-49-15831	278	4
17A-49-17571	351	8
17A-49-21261	351	5
17A-49-21311	351	6
17A-49-41111	346	12
17A-49-41131	348	1
17A-49-41151	350	4
17A-49-41161	350	7
17A-49-41191	346	31
17A-49-41201	374	
17A-49-41221	346	40
17A-49-41231	346	35
17A-49-41241	432	4
17A-49-41251	432	1
17A-49-41261	348	28
17A-49-41270	348	24
17A-49-41280	432	20
17A-49-41291	343	1
17A-49-41310	346	1
17A-49-41320	346	5
17A-49-41331	348	38
17A-49-41341	351	1
17A-49-41372	432	13
17A-49-41381	432	9
17A-49-41391	382	34
	408	34
17A-49-41411	374	25
17A-49-41421	390	1
	416	1
17A-49-41432	398	1
	424	1
17A-49-41451	374	33
17A-49-41471	273	9
17A-49-41482	273	12
	274	12
	464	
	464	30
	466	
	466	30
	468	
	468	30
17A-49-41491	275	2
	276	2
17A-49-41511	382	29
	408	29
17A-49-41542	273	1
	274	1
17A-49-41582	447	32
	449	32
17A-49-41591	399	19
	425	19
17A-49-41622	400	1
	426	1
	433	28
	439	28
17A-49-41630	346	18
17A-49-41641	346	19
	349	43
17A-49-41670	348	29
17A-49-41680	346	25
17A-49-41711	348	9
17A-49-41721	348	13
17A-49-41740	374	21
17A-49-41752	273	27
	274	27
17A-49-41761	351	15
17A-49-41770	351	30
17A-49-41791	389	20
	415	20
17A-49-41811	273	3
	274	3
17A-49-41821	374	1
17A-49-41870	274	9
17A-49-41921	374	16
17A-49-41931	432	15
17A-49-41940	351	4
17A-50-00111	464	
	466	
	468	
17A-50-11130	890	8
	901	8
	912	10
	919	10
	926	10
	932	10
	938	10
	950	10
17A-50-11140	465	6
	467	6
	467	22
	469	6
	469	22
17A-50-11151	465	5
	467	5
	467	21
	469	5
	469	21
17A-50-41120	465	9
	467	9
	469	9
17A-50-41130	465	11
	467	11
	469	11
17A-50-41140	467	24
	469	24
17A-50-41151	444	33
	446	25

PartNumber	Page	Index
	967	39
	971	34
	973	34
	975	30
17A-50-41171	446	34
17A-50-41190	465	8
	467	8
	467	23
	469	8
	469	23
17A-50-41210	890	7
	901	7
	912	9
	919	9
	926	9
	932	9
	938	9
	950	9
17A-50-41321	467	17
	469	17
17A-50-41331	465	1
	467	1
	469	1
17A-50-42120	464	8
	466	8
	468	8
17A-50-42131	464	2
	466	2
	468	2
17A-50-42140	464	13
	466	13
	468	13
17A-50-42151	464	4
	466	4
	468	4
17A-50-42160	464	5
	466	5
	468	5
17A-50-42171	468	17
17A-50-42181	464	20
	466	20
	468	20
17A-50-42211	460	5
	461	7
17A-50-42220	464	14
	466	14
	468	14
17A-50-42273	464	17
	466	17
17A-54-14231	833	3
17A-54-15150	865	9
	866	22
17A-54-18141	719	1
17A-54-25610	573	23
	591	23
	627	23
	645	23
	687	23
17A-54-27180	730	13
	730	20
17A-54-28530	844	44
	848	44
	852	44
	855	45
	860	44
17A-54-41192	722	21
	725	21
17A-54-41310	724	4
17A-54-41412	736	
17A-54-41422	736	
17A-54-41511	728	1
17A-54-41521	729	1
17A-54-41611	722	13
17A-54-41631	724	29
17A-54-41634	720	36

PartNumber	Page	Index
17A-54-41641	724	17
17A-54-41671	722	17
	725	17
17A-54-41691	722	18
	725	18
17A-54-41711	728	4
	729	4
	730	5
	731	4
17A-54-41812	722	1
	725	1
17A-54-41822	722	4
	725	4
17A-54-41922	720	4
17A-54-41941	720	24
17A-54-41981	720	10
17A-54-41991	720	9
17A-54-42161	725	7
17A-54-42162	722	7
17A-54-42171	725	10
17A-54-42172	722	10
17A-54-42191	732	1
	742	1
17A-54-42214	732	
	742	
17A-54-42224	732	
	742	
17A-54-42350	737	41
	740	26
	741	35
	747	41
17A-54-42362	732	26
	742	26
17A-54-42370	732	13
	732	25
	742	13
	742	25
17A-54-42380	737	40
	740	25
	741	34
	747	40
17A-54-42390	732	3
	732	15
	742	3
	742	15
17A-54-42413	732	11
	742	11
17A-54-42423	732	23
	742	23
17A-54-42432	749	1
17A-54-42442	749	4
17A-54-42451	749	10
	750	18
17A-54-42461	722	24
	725	24
17A-54-42471	722	27
	725	27
17A-54-42481	749	13
	750	21
17A-54-42490	749	7
	750	15
17A-54-42524	740	1
	746	22
17A-54-42531	759	13
	808	15
17A-54-42542	741	22
17A-54-42572	736	1
	739	11
	741	1
	746	1
17A-54-42584	736	2
	739	12
	741	2
	746	2
17A-54-42610	732	4

PartNumber	Page	Index
	732	16
	742	4
	742	16
17A-54-42660	732	5
	732	17
	742	5
	742	17
17A-54-42670	736	3
	739	13
	741	3
	746	3
17A-54-42860	736	16
	736	27
	739	25
	740	12
	741	16
	746	16
	746	27
17A-54-42891	759	9
17A-54-42922	759	2
	808	2
17A-54-42932	759	
17A-54-42961	759	3
	808	3
17A-54-42971	759	6
	808	8
17A-54-42981	808	12
17A-54-43131	808	
17A-54-43150	808	6
17A-54-43160	808	7
17A-54-43210	750	1
17A-54-43220	750	8
17A-54-43230	750	2
	750	9
17A-54-43240	750	3
	750	10
17A-54-43250	750	4
	750	11
17A-54-43260	750	5
	750	12
17A-54-43332	720	37
17A-54-44113	762	1
17A-54-44130	787	2
	787	6
	831	2
	831	6
17A-54-44151	785	4
	829	4
	833	16
17A-54-44162	785	1
	829	1
17A-54-44171	763	8
	801	8
	812	8
17A-54-44211	862	1
17A-54-44220	862	9
17A-54-44231	862	12
	864	11
17A-54-44290	864	1
17A-54-44311	833	1
17A-54-44330	833	10
17A-54-44341	833	13
17A-54-44390	833	4
17A-54-44523	762	3
17A-54-44940	736	12
	736	23
	741	12
	741	23
	746	12
	746	23
17A-54-45115	843	1
	851	1
17A-54-45124	843	11
	847	11
	851	11

PartNumber	Page	Index
	859	11
17A-54-45133	843	27
	847	27
	851	27
	859	27
17A-54-45151	843	23
	843	33
	847	23
	847	33
	851	23
	851	33
	854	24
	854	34
	859	23
	859	33
17A-54-45160	580	15
	634	16
	678	16
	701	7
17A-54-45171	844	52
	848	51
	852	52
	855	55
	860	51
17A-54-45212	846	1
	850	1
17A-54-45232	843	2
	847	2
	851	2
	854	2
	859	2
17A-54-45241	843	3
	847	3
	851	3
	854	3
	859	3
17A-54-45251	843	4
	847	4
	851	4
	854	4
	859	4
17A-54-45261	843	5
	847	5
	851	5
	854	5
	859	5
17A-54-45271	843	6
	847	6
	851	6
	854	6
	859	6
17A-54-45281	843	7
	847	7
	851	7
	854	7
	859	7
17A-54-45290	695	1
17A-54-45311	845	1
	849	1
	853	1
	861	1
17A-54-45321	846	9
	850	9
17A-54-45331	845	2
	849	2
	853	2
	856	5
	861	2
17A-54-45341	846	10
	850	10
	857	17
17A-54-45350	844	45
	852	45
17A-54-45380	843	8
	847	8
	851	8
	854	8
	859	8
17A-54-45390	843	9
	847	9
	851	9
	854	9
	859	9
17A-54-45411	843	10
	847	10
	851	10
	854	10
	859	10
17A-54-45421	846	6
	850	6
17A-54-45432	847	1
	849	11
	859	1
	861	11
17A-54-45440	843	26
	843	36
	847	26
	847	36
	851	26
	851	36
	854	27
	854	37
	859	26
	859	36
17A-54-45813	854	1
	856	16
17A-54-45831	854	28
17A-54-45840	854	11
17A-54-45851	854	12
17A-54-45862	808	11
17A-54-45970	276	26
17A-54-45990	704	23
17A-54-46113	547	1
	599	1
	651	1
17A-54-46120	547	13
	598	16
	599	13
	651	13
	684	16
17A-54-46130	693	6
	693	10
17A-54-46141	699	1
17A-54-46152	699	8
17A-54-46162	699	9
17A-54-46182	697	1
17A-54-46192	580	12
	634	13
	678	13
17A-54-46210	699	13
17A-54-46223	701	1
17A-54-46233	573	1
	626	1
	687	1
17A-54-46242	591	1
	645	1
17A-54-46250	702	9
17A-54-46260	702	10
17A-54-46273	580	20
17A-54-46274	635	21
	679	21
17A-54-46280	699	14
17A-54-46291	547	6
	598	9
	599	6
	651	6
	684	9
17A-54-46311	573	9
	591	9
	626	9
	645	9
	687	9
17A-54-46320	699	15
17A-54-46330	547	12
	598	15
	599	12
	651	12
	684	15
17A-54-46343	702	1
17A-54-46351	701	12
17A-54-46411	573	6
	591	6
	626	6
	645	6
	687	6
17A-54-46432	715	1
17A-54-46440	547	10
	598	13
	599	10
	651	10
	684	13
17A-54-46514	703	6
17A-54-46525	703	7
17A-54-46532	704	2
17A-54-46541	703	10
17A-54-46551	703	11
17A-54-46562	703	14
17A-54-46582	706	1
17A-54-46592	706	2
17A-54-46661	704	20
17A-54-46671	704	22
17A-54-46690	547	11
	598	14
	599	11
	651	11
	684	14
17A-54-46712	704	5
17A-54-46721	704	11
17A-54-46731	704	12
17A-54-46751	704	17
17A-54-46761	704	18
17A-54-46771	703	16
17A-54-46780	704	19
17A-54-46812	581	26
	635	34
	679	34
17A-54-46820	704	21
17A-54-46831	580	23
	635	31
	679	31
17A-54-46842	697	6
17A-54-46851	697	9
17A-54-46930	579	33
	633	29
	650	29
	692	29
17A-54-46940	578	11
	632	11
	649	11
	692	11
17A-54-46951	578	17
	632	17
	649	17
	692	17
17A-54-46961	578	15
	632	15
	649	15
	692	15
17A-54-46990	550	8
	602	8
	654	8
17A-54-47320	635	24
	679	24
17A-54-47330	635	28
	679	28

PartNumber	Page	Index
17A-54-47380	635	25
	679	25
17A-54-47430	699	12
17A-54-47440	699	16
17A-54-47450	699	17
17A-54-47511	598	1
	684	1
17A-54-47520	598	2
	684	2
17A-54-47530	598	3
	684	3
17A-54-47541	598	4
	684	4
17A-54-47580	739	1
	740	2
17A-54-47590	739	2
	740	3
17A-54-47610	739	3
	740	4
17A-54-47620	739	4
	740	5
17A-54-47630	739	5
	740	6
17A-54-47640	739	6
17A-54-47651	739	7
17A-54-47660	739	8
17A-54-47690	739	9
17A-54-47710	856	1
17A-54-47720	857	13
17A-54-47730	856	2
17A-54-47740	857	14
17A-54-47750	856	3
17A-54-47760	857	15
17A-54-47780	857	16
17A-54-47810	855	46
17A-54-47821	855	47
17A-54-47831	855	48
17A-54-47850	857	1
17A-54-47860	857	2
17A-54-47871	857	3
17A-54-47881	857	4
17A-54-47910	857	9
17A-54-47960	856	4
17A-54-47970	739	10
	740	7
17A-54-47990	740	8
17A-54-48132	693	5
17A-54-48142	693	9
17A-54-48611	865	8
17A-54-48623	865	1
17A-54-48640	865	2
	866	6
17A-54-48650	865	15
	866	28
17A-54-48810	866	12
17A-54-48820	866	1
17A-54-48831	866	13
17A-54-48840	866	14
17A-54-48851	866	15
17A-54-48860	866	16
17A-54-48870	866	17
17A-54-48880	866	2
17A-54-48890	866	3
17A-54-48910	866	4
17A-54-48921	866	5
17A-54-48941	866	18
17A-54-48951	866	19
17A-54-48961	866	20
17A-54-48971	866	21
17A-54-49111	727	1
17A-54-49121	727	4
17A-54-49151	730	1
17A-54-49161	730	2
17A-54-49170	730	19
17A-54-49190	730	14
17A-54-49211	811	1
17A-54-49220	811	3
17A-54-49230	858	17
17A-54-49240	858	1
17A-54-49250	858	9
17A-54-49260	858	2
17A-54-49270	858	10
17A-54-49311	863	1
17A-54-49320	863	2
17A-54-49331	863	3
17A-54-49430	731	1
17A-54-49610	725	13
17A-57-21170	476	12
	484	15
17A-57-21202	486	1
	488	1
17A-57-23201	472	
	474	
	476	
17A-57-23210	472	
17A-57-23220	474	1
	476	1
	477	1
	478	1
	482	1
	483	2
	484	2
	485	2
17A-57-23230	474	2
	476	2
	482	2
	484	3
17A-57-23241	474	3
	476	3
	482	3
	484	4
17A-57-23270	474	4
	476	4
	477	4
	478	4
	482	4
	483	5
	484	5
	485	5
17A-57-23290	477	2
	478	2
	483	3
	485	3
17A-57-23301	474	
	475	
17A-57-23310	475	
17A-57-23501	472	
	477	
	478	
17A-57-23510	472	
17A-57-23520	478	10
	485	15
17A-57-23531	474	
	476	
	482	
	484	
17A-57-23550	477	
	478	
	483	
	485	
17A-57-23560	477	3
	478	3
	483	4
	485	4
17A-57-41113	700	4
17A-57-41141	480	1
17A-57-41150	480	6
	482	12
	483	13
	484	13
	485	13
17A-57-41161	700	7
17A-57-42310	481	
	484	1
17A-57-42410	483	1
	485	1
17A-60-41120	781	13
	797	13
	826	13
	842	13
17A-60-41130	827	10
17A-60-41131	782	10
17A-60-41141	432	26
17A-60-41211	764	
	813	
17A-60-41511	782	1
	827	1
17A-60-41520	782	4
	827	4
17A-60-41531	782	9
	827	9
17A-60-41602	813	
17A-60-41620	813	32
17A-60-42162	765	41
17A-60-42172	813	9
17A-60-51711	764	1
17A-60-51720	764	9
17A-61-21221	392	4
	418	4
	781	19
	797	19
	826	19
	842	19
17A-61-21331	389	21
	415	21
17A-61-21340	389	19
	415	19
17A-61-41112	434	1
	440	1
17A-61-41124	434	4
	440	4
17A-61-41131	434	7
	440	7
17A-61-41141	444	31
17A-61-41151	444	30
	446	24
17A-61-41161	444	29
	446	23
17A-61-41171	444	32
17A-61-41192	447	17
	449	17
17A-61-41211	447	20
	449	20
17A-61-41221	447	23
	449	23
17A-61-41242	447	26
	449	26
17A-61-41252	434	11
	440	11
17A-61-41263	434	13
	440	13
17A-61-41271	448	1
	450	1
17A-61-41282	448	3
	450	3
17A-61-41291	448	5
17A-61-41311	448	7
17A-61-41340	454	1
	455	1
	457	1
17A-61-41352	448	9
17A-61-41361	448	11
17A-61-41371	444	2
	446	2
17A-61-41383	444	4

PartNumber	Page	Index
17A-61-41391	447	29
	449	29
17A-61-41420	1051	1
17A-61-41432	1050	1
17A-61-41441	444	1
	446	1
17A-61-41451	444	3
17A-61-41460	383	45
	409	45
17A-61-41471	382	15
17A-61-41480	399	22
	425	22
17A-61-41490	399	27
	425	27
17A-61-41501	399	
	425	
17A-61-41511	399	5
	425	5
17A-61-41530	399	32
	425	32
17A-61-41541	399	33
	425	33
17A-61-41551	433	1
	439	1
17A-61-41561	433	2
	439	2
17A-61-41571	453	1
17A-61-41580	453	35
17A-61-41591	454	28
	457	6
17A-61-41592	455	30
17A-61-41611	453	9
17A-61-41622	273	15
	274	15
17A-61-41630	453	2
17A-61-41650	450	5
17A-61-41660	450	7
17A-61-41671	450	9
17A-61-41680	450	11
17A-61-41690	446	9
17A-61-41710	435	4
	441	4
17A-61-41720	435	5
	441	5
17A-61-41741	435	1
	441	1
17A-61-41752	433	3
	439	3
17A-61-41760	451	17
	452	12
17A-61-41770	432	25
17A-61-41780	397	7
	423	7
17A-61-41820	460	11
	461	13
17A-61-41841	444	11
17A-61-41851	444	8
	446	6
17A-61-41881	444	5
	446	3
17A-61-41921	782	17
	827	15
17A-61-41930	389	11
	415	11
17A-61-42130	435	17
	441	17
17A-61-42140	435	18
	441	18
17A-61-42511	435	15
	441	15
17A-61-42521	435	16
	441	16
17A-61-42530	437	6
	443	6
17A-61-42540	400	3
	426	3
17A-61-42700	278	
17A-61-42710	277	52
	278	5
17A-61-42721	276	9
17A-61-42730	276	20
17A-61-42740	276	40
	278	29
17A-61-42750	276	33
17A-61-42910	437	3
	443	3
17A-61-42921	730	12
17A-61-43120	723	1
	726	1
17A-61-43210	718	1
17A-61-43890	393	13
	419	13
17A-61-43910	761	9
	810	9
17A-61-43921	393	1
	419	1
17A-61-43930	761	12
	810	12
17A-61-43941	761	6
	810	6
17A-61-49122	718	2
17A-61-51420	408	15
17A-61-51430	409	46
	782	25
17A-61-51440	782	30
17A-69-41311	1059	6
17A-69-41320	1059	7
17A-69-41330	1059	10
17A-70-71110	977	1
17A-70-71121	977	2
17A-70-71131	977	4
17A-70-71141	977	18
17A-71-00410	984	29
	986	29
	988	23
	990	24
	992	28
	994	29
	996	22
	998	23
	1000	30
	1002	23
	1004	29
	1006	29
	1008	23
	1011	22
	1013	23
	1015	23
	1017	22
17A-71-00420	985	42
	987	44
	988	36
	990	37
	993	41
	995	42
	996	37
	999	38
	1001	45
	1002	36
	1005	42
	1007	44
	1009	38
	1011	37
	1014	38
	1016	38
	1017	37
17A-71-12132	964	27
	969	23
	974	24
	978	21
17A-71-12241	974	4
	974	23
17A-71-12262	968	5
	972	5
	976	6
17A-71-12280	964	7
	969	5
	974	6
	974	25
	978	7
17A-71-12291	966	14
	971	14
	973	14
	975	14
	975	20
17A-71-12331	966	2
	966	27
	971	2
	971	31
	973	2
	973	31
	975	2
	975	27
17A-71-12451	986	34
	987	40
	996	27
	996	33
	998	28
	998	34
	1001	35
	1001	41
	1007	34
	1007	40
	1008	28
	1008	34
	1011	27
	1011	33
	1013	28
	1013	34
	1015	28
	1015	34
	1017	27
	1017	33
17A-71-12471	971	30
	973	30
	975	26
17A-71-12481	964	6
	969	4
	974	5
	978	6
17A-71-41113	988	1
17A-71-41142	984	7
	988	7
	990	7
	992	12
	994	11
	1002	5
	1004	11
17A-71-41153	988	8
	990	8
	992	13
	994	12
	1002	6
	1004	12
17A-71-41163	988	9
	990	9
	992	14
	994	13
	1002	7
	1004	13
17A-71-41171	984	8
	988	10
	990	10
	992	15
	994	14

PartNumber	Page	Index
	1002	8
	1004	14
17A-71-41181	984	9
	988	11
	990	11
	992	16
	994	15
	1002	9
	1004	15
17A-71-41210	984	10
17A-71-41220	984	11
17A-71-41240	984	12
	988	14
	990	14
	992	19
	994	18
17A-71-41250	984	13
	988	15
	990	15
	992	20
	994	19
17A-71-41260	984	14
	988	16
	990	16
	992	21
	994	20
17A-71-41420	984	15
17A-71-41430	984	16
17A-71-41610	984	1
17A-71-41631	978	20
17A-71-41710	1029	3
17A-71-41C10	984	2
17A-71-41C21	984	3
17A-71-41C31	984	4
	988	4
	990	4
	992	9
	994	8
17A-71-41C41	984	5
	988	5
	990	5
	992	10
	994	9
17A-71-41C70	984	6
	988	6
	990	6
	992	11
	994	10
17A-71-42113	992	1
17A-71-42120	984	18
	992	2
17A-71-42130	984	19
	992	3
	994	2
17A-71-42140	984	20
	992	4
	994	3
17A-71-42150	984	21
	992	5
	994	4
17A-71-42160	984	22
	992	6
	994	5
17A-71-42450	988	12
	990	12
	992	17
	994	16
17A-71-42460	988	13
	990	13
	992	18
	994	17
17A-71-42480	988	2
	990	2
	992	7
	994	6
17A-71-42490	988	3
	990	3
	992	8
	994	7
17A-71-45141	986	17
	996	10
	998	10
	1000	16
	1006	17
	1008	10
	1011	10
	1013	10
	1015	10
	1017	10
17A-71-45151	984	17
	986	18
	988	17
	990	17
	992	22
	994	21
	996	11
	998	11
	1000	17
	1002	10
	1004	16
	1006	18
	1008	11
	1011	11
	1013	11
	1015	11
	1017	11
17A-71-45192	986	19
	996	12
	998	12
	1000	18
	1006	19
	1008	12
	1011	12
	1013	12
	1015	12
	1017	12
17A-71-45210	986	33
	996	26
	998	27
	1001	34
	1006	33
	1008	27
	1011	26
	1013	27
	1015	27
	1017	26
17A-71-45220	996	30
	998	31
	1015	31
	1017	30
17A-71-45230	996	31
	998	32
	1015	32
	1017	31
17A-71-45292	986	20
	996	13
	998	13
	1000	19
	1006	20
	1008	13
	1011	13
	1013	13
	1015	13
	1017	13
17A-71-45312	969	1
17A-71-45321	964	4
	969	2
	978	4
17A-71-45331	964	5
	969	3
	978	5
17A-71-45353	966	17
	971	17
	973	17
	975	17
17A-71-45390	984	25
17A-71-45412	969	18
17A-71-45421	964	25
	969	21
	978	22
17A-71-45431	964	26
	969	22
	978	23
17A-71-45453	966	23
17A-71-45460	964	28
	969	24
	978	28
17A-71-45470	971	26
	973	26
17A-71-45490	965	42
	970	38
17A-71-45511	968	1
	972	1
17A-71-45521	968	2
	972	2
17A-71-45531	968	3
	972	3
17A-71-45541	968	4
	972	4
17A-71-45591	968	8
17A-71-45651	966	5
	966	30
	971	5
	973	5
	1035	1
	1035	5
	1036	1
	1037	1
17A-71-45661	1035	17
	1037	16
17A-71-45681	1031	3
	1033	3
17A-71-45712	996	32
	998	33
	1015	33
	1017	32
17A-71-45722	996	36
	998	37
	1015	37
	1017	36
17A-71-45731	1035	10
	1037	9
17A-71-45741	1035	9
	1037	8
17A-71-45750	966	7
	971	7
	973	7
	1035	4
	1036	4
	1037	4
17A-71-45760	966	32
	1035	8
17A-71-45870	1036	9
17A-71-45880	1036	8
17A-71-45890	1036	16
17A-71-45914	986	1
	996	1
	1011	1
	1017	1
17A-71-45923	986	21
	996	14
	998	14
	1000	20
	1006	21
	1008	14

PartNumber	Page	Index
	1011	14
	1013	14
	1015	14
	1017	14
17A-71-45933	986	22
	996	15
	998	15
	1000	21
	1006	22
	1008	15
	1011	15
	1013	15
	1015	15
	1017	15
17A-71-45943	986	23
	996	16
	998	16
	1000	22
	1006	23
	1008	16
	1011	16
	1013	16
	1015	16
	1017	16
17A-71-45962	971	23
	973	23
	975	23
17A-71-45970	972	8
17A-71-45980	1010	1
17A-71-45A91	986	9
	996	2
	998	2
	1000	8
	1006	9
	1008	2
	1011	2
	1013	2
	1015	2
	1017	2
17A-71-45D31	986	14
	996	7
	998	7
	1000	13
	1006	14
	1008	7
	1011	7
	1013	7
	1015	7
	1017	7
17A-71-45D41	986	15
	996	8
	998	8
	1000	14
	1006	15
	1008	8
	1011	8
	1013	8
	1015	8
	1017	8
17A-71-45H52	964	23
	969	19
17A-71-45H62	964	24
	969	20
17A-71-46114	1006	1
17A-71-46121	986	2
	1006	2
17A-71-46130	986	3
	1000	2
	1006	3
17A-71-46140	986	4
	1000	3
	1006	4
17A-71-46150	986	5
	1000	4
	1006	5
17A-71-46160	986	6
	1000	5
	1006	6
17A-71-46171	986	7
	1000	6
	1006	7
17A-71-46181	986	8
	1000	7
	1006	8
17A-71-46190	1000	24
17A-71-46312	964	1
	978	1
17A-71-46320	964	2
	978	2
17A-71-46331	964	3
	978	3
17A-71-46411	964	20
17A-71-46420	964	21
	978	26
17A-71-46431	964	22
	978	27
17A-71-46611	987	39
	1001	40
	1007	39
	1008	33
	1011	32
	1013	33
17A-71-46621	987	43
	1001	44
	1007	43
	1009	37
	1011	36
	1013	37
17A-71-46670	986	37
	1001	38
	1007	37
	1008	31
	1011	30
	1013	31
17A-71-46680	987	38
	1001	39
	1007	38
	1008	32
	1011	31
	1013	32
17A-71-46D10	986	10
	996	3
	998	3
	1000	9
	1006	10
	1008	3
	1011	3
	1013	3
	1015	3
	1017	3
17A-71-46D20	986	12
	996	5
	998	5
	1000	11
	1006	12
	1008	5
	1011	5
	1013	5
	1015	5
	1017	5
17A-71-46D50	986	11
	996	4
	998	4
	1000	10
	1006	11
	1008	4
	1011	4
	1013	4
	1015	4
	1017	4
17A-71-46D60	986	13
	996	6
	998	6
	1000	12
	1006	13
	1008	6
	1011	6
	1013	6
	1015	6
	1017	6
17A-71-46D70	986	16
	996	9
	998	9
	1000	15
	1006	16
	1008	9
	1011	9
	1013	9
	1015	9
	1017	9
17A-71-48390	986	25
	988	19
	990	20
	992	24
	994	25
	996	18
	998	19
	1000	26
	1002	19
	1004	25
	1006	25
	1008	19
	1011	18
	1013	19
	1015	19
	1017	18
17A-71-51910	984	24
17A-71-51920	979	42
17A-71-51931	979	43
17A-71-51940	984	23
17A-71-51941	986	24
	988	18
	990	19
	992	23
	994	24
	996	17
	998	18
	1000	25
	1002	18
	1004	24
	1006	24
	1008	18
	1011	17
	1013	18
	1015	18
	1017	17
17A-71-51H51	978	24
17A-71-51H61	978	25
17A-72-41113	1002	1
17A-72-41120	1002	11
	1004	17
17A-72-41131	1002	12
	1004	18
17A-72-41141	1002	13
	1004	19
17A-72-41F40	1002	16
	1004	22
17A-72-41F50	1002	17
	1004	23
17A-72-42123	1004	1
17A-72-42130	1004	2
17A-72-42140	1004	3
17A-72-42150	1004	4
17A-72-42160	1004	5
17A-72-42170	1004	6

PartNumber	Page	Index
17A-72-42180	1004	7
17A-72-42480	1002	14
	1004	20
17A-72-42490	1002	15
	1004	21
17A-73-11110	982	1
17A-73-11120	982	2
17A-73-41111	982	
17A-73-41120	974	1
17A-73-41130	974	20
17A-73-41140	975	5
17A-73-41150	975	7
17A-78-11190	1039	16
17A-78-11630	594	10
	685	10
17A-78-12120	447	8
	449	8
17A-78-12160	447	7
	449	7
17A-78-41112	1054	1
17A-78-42131	447	1
	449	1
17A-78-42151	447	4
	449	4
	1055	
	1055	9
17A-78-43111	1039	5
17A-78-43121	1040	1
17A-78-43130	1039	9
	1046	9
	1052	9
17A-78-44110	1054	2
	1054	13
17A-78-44120	1039	12
	1046	12
	1052	12
17A-78-44150	1039	13
	1046	13
	1052	13
	1054	7
17A-78-44161	1054	18
17A-78-44180	1039	14
	1046	14
	1052	14
17A-78-44210	1039	2
	1046	2
	1052	2
17A-78-47211	1039	1
	1046	1
	1052	1
17A-78-47920	1054	12
17A-79-41310	451	1
	452	1
	1050	
	1050	13
17A-79-43111	1046	5
17A-79-43210	1046	20
	1052	20
17A-79-43310	1052	5
17A-862-4711	271	1
17A-862-4721	271	2
17A-862-4731	271	3
17A-862-4741	271	4
17A-862-4751	271	5
17A-862-4760	271	8
17A-862-4770	271	9
17A-862-4780	271	10
17A-862-4790	271	11
17A-862-4810	271	12
17A-862-4820	271	13
17A-911-1511	786	8
	830	8
17A-911-1671	786	5
	830	5
17A-911-1830	545	1
17A-911-4201	843	
17A-911-4211	843	37
	851	37
17A-911-4220	843	38
	847	38
	851	38
	854	39
	859	38
17A-911-4244	230	7
	235	7
	239	7
	243	7
17A-911-4300	851	
17A-911-4341	228	21
	232	34
	237	21
	241	21
17A-911-4351	228	17
	237	17
	241	17
17A-911-4361	228	3
	237	3
	241	3
17A-911-4383	244	8
	245	8
17A-911-4391	224	3
	244	9
	245	9
17A-911-4411	759	16
	808	18
17A-911-4421	232	16
	232	23
	582	21
	637	21
	681	21
17A-911-4432	228	38
	234	10
	237	38
	241	38
17A-911-4460	583	24
	637	24
	681	24
17A-911-4470	244	10
17A-911-4510	244	1
	244	4
	245	1
	245	4
17A-911-4520	244	3
	245	3
17A-911-4530	244	6
	245	6
17A-911-4611	232	4
17A-911-4621	232	3
17A-911-4663	228	29
	234	1
	237	29
	241	29
17A-911-4674	228	33
	234	5
	237	33
	241	33
17A-911-4680	229	41
	234	13
	238	41
	242	41
17A-911-4700	859	
17A-911-4762	228	30
	234	2
	237	30
	241	30
17A-911-4772	170	6
	172	6
17A-911-4810	227	
	231	
	236	
17A-911-4901	847	
	854	
17A-911-4911	848	39
	855	40
	859	39
17A-911-5611	633	24
17A-911-5740	633	28
	650	28
	692	28
17A-911-6111	784	4
	788	5
	798	5
	828	4
17A-911-6120	784	
	828	
17A-911-6131	784	13
	828	13
17A-911-6150	784	14
	828	14
17A-937-4112	990	1
17A-937-4212	994	1
17A-937-4512	998	1
	1008	1
	1013	1
	1015	1
17A-937-4520	998	17
	1000	23
	1008	17
	1013	17
	1015	17
17A-937-4612	1000	1
17A-979-1114	490	1
17A-979-1313	509	1
	537	1
17A-979-1321	509	2
	537	2
17A-979-1331	509	4
	537	4
17A-979-1341	509	5
	537	5
17A-979-1351	509	6
	537	6
17A-979-1361	493	10
17A-979-1371	499	10
17A-979-1381	493	11
	499	11
17A-979-1390	493	12
	499	12
17A-979-1420	515	41
	526	41
17A-979-1430	520	11
17A-979-1510	694	2
17A-979-1520	509	3
	537	3
17A-979-1611	522	7
17A-979-1620	495	3
	501	3
	517	15
	518	27
	522	8
17A-979-1630	517	13
17A-979-1640	517	14
17A-979-1691	579	28
17A-979-1710	580	4
	634	5
	678	5
17A-979-1720	517	5
17A-979-1730	517	6
17A-979-1740	517	7
17A-979-1750	517	8
17A-979-1760	517	11
17A-979-1770	541	4
	542	4
	543	4
	544	4

PartNumber	Page	Index
17A-979-1780	517	3
17A-979-1790	517	12
17A-979-1811	694	1
17A-979-1821	694	3
17A-979-1831	694	4
17A-979-1841	694	5
17A-979-1860	694	12
17A-979-1871	694	9
17A-979-1880	300	1
	301	1
17A-979-1890	300	2
	301	2
17A-979-1911	518	21
17A-979-1921	518	24
17A-979-1930	518	22
	518	25
17A-979-1942	518	36
17A-979-1952	518	33
17A-979-2113	578	1
17A-979-2114	632	1
17A-979-2120	576	19
	631	19
	676	19
	701	4
	702	6
17A-979-2131	580	1
	634	1
	678	1
17A-979-2160	579	27
17A-979-2171	576	5
	630	5
	676	5
17A-979-2211	577	27
17A-979-2212	631	27
	677	27
17A-979-2222	230	10
	235	10
	239	10
	243	10
17A-979-2251	578	2
	632	2
	649	2
	692	2
17A-979-2261	578	23
	633	23
	650	23
	692	23
17A-979-2271	700	1
17A-979-2281	578	3
	632	3
	649	3
	692	3
17A-979-2290	579	24
17A-979-2301	517	
17A-979-2310	576	6
	630	6
	676	6
17A-979-2321	582	2
	636	2
	680	2
17A-979-2330	576	7
	630	7
	676	7
17A-979-2351	576	11
	630	11
	676	11
17A-979-2360	576	12
	630	12
	676	12
17A-979-2370	576	15
	630	15
	676	15
17A-979-2380	576	16
	630	16
	676	16
17A-979-2390	578	4
	632	4
	649	4
	692	4
17A-979-2400	522	
17A-979-2411	578	22
	633	22
	650	22
	692	22
17A-979-2430	578	5
17A-979-2441	580	9
	634	10
	678	10
17A-979-2451	703	1
17A-979-2471	712	1
17A-979-2500	522	
17A-979-2511	514	10
	516	15
	524	17
	527	17
17A-979-2522	494	25
	500	25
17A-979-2530	515	31
	525	31
17A-979-2540	515	32
	526	32
17A-979-2571	584	
	638	
	682	
17A-979-2612	517	1
17A-979-2622	517	2
17A-979-2632	522	3
17A-979-2642	522	5
17A-979-2653	518	18
17A-979-2663	518	19
17A-979-2691	516	8
	524	10
	527	10
17A-979-2711	517	4
17A-979-2731	518	23
17A-979-2741	518	26
17A-979-2761	521	17
17A-979-2771	521	23
	545	2
17A-979-2781	521	31
17A-979-2792	520	7
17A-979-2822	582	1
	636	1
	680	1
17A-979-2831	582	3
	636	3
	680	3
17A-979-2841	582	7
	636	7
	680	7
17A-979-2850	515	28
	525	28
17A-979-2860	515	29
	525	29
17A-979-2870	515	30
	525	30
17A-979-2882	540	1
17A-979-2891	578	6
	632	6
	649	6
	692	6
17A-979-2921	300	7
	301	6
17A-979-2930	300	3
17A-979-2941	300	8
	301	7
17A-979-2953	518	32
17A-979-2970	710	20
17A-979-3113	496	17
17A-979-3123	502	17
17A-979-3131	576	1
	630	1
	676	1
17A-979-3140	514	1
	525	1
17A-979-3170	634	2
	678	2
17A-979-3180	576	10
	630	10
	676	10
17A-979-3230	631	32
	677	32
17A-979-3250	631	28
	677	28
17A-979-3260	631	29
	677	29
17A-979-3320	492	26
	533	26
17A-979-3330	498	26
	535	26
17A-979-3350	521	18
	521	27
17A-979-3360	521	19
17A-979-3411	504	1
17A-979-3421	504	6
17A-979-3433	506	35
17A-979-3443	508	29
17A-979-3452	494	21
17A-979-3462	500	21
17A-979-3470	495	10
	501	10
17A-979-3480	505	2
17A-979-3490	505	5
17A-979-3511	505	1
17A-979-3521	507	1
17A-979-3531	505	13
	507	7
17A-979-3561	506	17
17A-979-3571	507	11
17A-979-3581	506	20
17A-979-3591	507	14
17A-979-3611	506	24
17A-979-3621	508	20
17A-979-3632	495	6
17A-979-3642	501	6
17A-979-3651	494	22
	500	22
17A-979-3671	494	33
17A-979-3681	500	33
17A-979-3710	495	11
17A-979-3720	501	11
17A-979-3730	495	14
	501	14
17A-979-3741	492	42
	534	42
17A-979-3751	498	42
	536	42
17A-979-3811	492	45
	498	45
	534	45
	536	45
17A-979-3870	302	18
17A-979-3880	520	9
17A-979-3890	522	4
	522	6
17A-979-3961	529	13
	530	13
17A-979-4120	492	46
	498	46
	534	46
	536	46
17A-979-4140	632	5
17A-979-4160	649	1
	692	1
17A-979-4170	649	5

PartNumber	Page	Index
	692	5
17A-979-4180	650	24
	692	24
17A-979-5210	525	10
17A-98-11160	585	2
	588	2
	589	2
	595	2
	596	2
	639	2
	641	2
	647	2
	648	2
	688	2
	689	2
17A-98-11171	585	3
	589	3
	596	3
	639	3
	648	3
	689	3
17A-98-11180	1062	3
	1063	3
	1064	3
	1065	3
	1066	3
	1067	3
	1068	3
	1069	3
	1070	3
	1071	3
	1072	3
17A-98-19980	1094	1
17A-98-23460	1102	1
17A-98-23920	1062	17
17A-98-23930	1070	16
17A-98-23940	1071	16
17A-98-41111	1062	5
	1063	5
	1064	5
	1065	5
	1066	5
	1067	5
	1068	5
	1069	5
	1070	5
	1071	5
	1072	5
17A-98-41122	1062	6
	1063	6
	1064	6
	1065	6
	1066	6
	1067	6
	1068	6
	1069	6
	1070	6
	1071	6
	1072	6
17A-98-41130	588	1
	589	1
	593	1
	639	1
	641	1
	683	1
17A-98-41140	585	1
	592	1
	646	1
	647	1
	648	1
17A-98-41150	595	1
	596	1
	597	1
	688	1
	689	1
	690	1
17A-98-41160	1062	26
	1063	25
	1064	25
	1065	25
	1066	25
	1067	25
	1068	25
	1069	25
	1070	26
	1071	26
	1072	25
17A-98-41182	1062	21
	1063	20
	1064	20
	1065	20
	1066	20
	1067	20
	1068	20
	1069	20
	1070	21
	1071	21
	1072	20
17A-98-41190	1062	23
	1063	22
	1064	22
	1065	22
	1066	22
	1067	22
	1068	22
	1069	22
	1070	23
	1071	23
	1072	22
17A-98-41210	1062	24
	1063	23
	1064	23
	1065	23
	1066	23
	1067	23
	1068	23
	1069	23
	1070	24
	1071	24
	1072	23
17A-98-41220	1062	25
	1063	24
	1064	24
	1065	24
	1066	24
	1067	24
	1068	24
	1069	24
	1070	25
	1071	25
	1072	24
17A-98-41310	1088	1
17A-98-41320	1089	1
17A-98-41360	1075	1
17A-98-41510	1079	1
17A-Z11-1610	511	
	513	18
	538	
	539	18
17A-Z11-1620	511	18
	513	19
	538	18
	539	19
17A-Z11-1660	511	19
	513	20
	538	19
	539	20
17A-Z11-1810	505	9
	507	3
17A-Z11-1922	519	2
	528	2
	529	2
	530	2
17A-Z11-2240	516	1
17A-Z11-2350	514	7
	525	7
17A-Z11-2420	514	17
	525	17
17A-Z11-2512	515	37
	526	37
17A-Z11-2530	515	38
	526	38
17A-Z11-2581	494	17
	500	17
17A-Z11-2660	515	33
	526	33
17A-Z11-2813	506	38
	508	32
	520	16
	704	10
	704	15
17A-Z11-2941	518	30
17A-Z11-3541	521	42
17A-Z11-3592	504	5
	504	10
	508	35
17A-Z11-3680	505	16
	507	10
17A-Z11-7161	495	15
	501	15
	522	11
	578	9
	580	18
	632	9
	635	19
	649	9
	678	19
	692	9
	700	5
	701	10
	703	4
17M-03-26140	464	25
	466	25
	468	25
17M-09-41120	357	17
	360	17
	363	17
	366	17
	369	17
	372	17
17M-13-27130	307	10
17M-13-44240	310	2
17M-15-00313	322	
17M-15-00323	323	
17M-15-05191	1120	K04
17M-15-39420	329	26
17M-15-39440	317	22
17M-15-42140	317	35
17M-15-42211	317	36
17M-15-42411	317	21
17M-15-42730	313	4
17M-15-45190	319	17
17M-15-45810	325	1
17M-15-45980	339	1
	339	6
17M-15-49270	314	8
	315	37
	317	7
17M-15-49280	316	2
17M-15-49290	316	3
17M-15-55501	321	
	322	
	323	
17M-22-42100	336	20
17M-22-43430	328	20

PartNumber	Page	Index
17M-22-45471	326	2
17M-27-00180	356	
	359	
	362	
	365	
	368	
	371	
17M-27-21390	356	21
	359	21
	362	21
	365	21
	368	21
	371	21
17M-27-21780	358	40
	361	40
	364	40
	367	40
	370	40
	373	40
17M-30-00500	895	
	896	
	906	
	907	
	928	
	934	
	943	
	944	
	955	
	956	
17M-30-56331	895	12
	906	12
	943	12
	955	12
17M-30-56341	896	13
	907	13
	928	13
	934	13
	944	13
	956	13
17M-49-15260	1116	21
17M-49-42310	374	3
17M-54-43210	736	13
	736	24
	739	22
	740	9
	741	13
	746	13
	746	24
17M-61-41280	826	10
	842	10
17M-71-21530	986	35
	987	41
	996	28
	996	34
	998	29
	998	35
	1001	36
	1001	42
	1007	35
	1007	41
	1008	29
	1008	35
	1011	28
	1011	34
	1013	29
	1013	35
	1015	29
	1015	35
	1017	28
	1017	34
17M-71-41920	966	20
	971	20
	973	20
195-01-14540	101	19
	114	19
195-01-16420	87	30
	176	11
	178	47
	182	11
	184	47
	188	11
	190	48
195-03-41380	249	25
	254	25
195-04-14130	284	6
	288	9
195-06-24570	239	27
195-06-43121	1116	1
195-13-12711	305	17
	1120	
195-15-32710	313	11
	313	22
	313	32
	314	18
	314	33
195-15-48140	313	19
	313	29
195-15-71230	325	6
	1120	
195-15-75531	321	1
	1120	
195-15-75740	321	14
	1120	
195-15-76320	323	11
195-15-76330	323	12
195-15-76410	323	13
195-15-77200	321	13
195-15-77341	322	19
195-15-77351	322	20
195-22-12580	355	1
195-30-17960	894	1
	905	1
	914	32
	921	32
	942	1
	954	1
195-30-37250	912	22
	919	22
195-30-62650	892	4
	903	4
	927	4
	933	4
	940	4
	952	4
195-30-62680	892	11
	903	11
	927	11
	933	11
	940	11
	952	11
195-33-11220	232	30
	273	21
	274	21
	275	11
	290	21
	290	38
	454	34
	455	36
	457	12
	722	14
	725	14
	753	30
	799	30
	802	30
	862	8
	864	8
195-49-31280	332	23
195-49-36120	351	2
195-49-37150	433	6
	439	6
195-54-42560	283	7
	287	7
	289	6
195-54-42981	736	21
	736	32
	739	30
	740	17
	741	21
	741	26
	746	21
	746	32
195-54-43210	223	9
195-54-46180	736	36
	740	21
	741	30
	746	36
195-54-68760	573	21
	591	21
	627	21
	645	21
	687	21
	721	42
	736	4
	739	14
	741	4
	746	4
	843	30
	844	40
	847	30
	848	40
	851	30
	852	40
	854	31
	855	41
	859	30
	860	40
195-54-78790	579	31
	633	27
	650	27
	692	27
195-56-11210	844	49
	848	48
	852	49
	855	52
	860	48
195-63-94170	1028	6
	1030	6
	1032	6
	1121	
195-69-11131	1054	26
	1059	4
195-69-11140	1054	24
	1054	27
	1057	4
	1058	21
	1059	2
	1059	5
195-69-11226	1057	
	1058	
	1059	
195-69-11230	1057	6
	1058	13
	1059	18
195-69-11280	1057	7
	1058	11
	1059	19
195-69-12121	1058	2
195-69-12141	1058	6
	1059	13
195-69-12151	1058	7
	1059	14
195-70-12510	980	19
195-71-22681	976	4
195-71-62151	1035	20
	1036	19

PartNumber	Page	Index
	1036	22
	1037	19
	1037	22
195-78-11270	1054	25
	1059	3
195-78-21320	1040	2
	1047	2
195-79-12410	452	9
195-79-52110	1046	24
	1052	24
195-79-52130	1046	23
	1052	23
195-911-1722	546	1
195-979-1550	582	12
	582	16
	582	20
	583	27
	636	12
	636	16
	637	20
	637	27
	680	12
	680	16
	680	20
	681	27
195-979-3570	232	8
195-979-8340	556	20
	609	20
	660	20
195-979-8590	494	28
	500	28
	515	35
	526	35
	584	3
	638	3
	682	3
	784	12
	828	12
195-98-12940	1095	1
195-98-12960	1096	1
195-98-12980	1097	1
195-98-13180	1098	1
195-98-13250	1103	1
195-98-13650	1101	1
195-98-14620	1099	1
195-98-14750	1116	38
195-98-14780	1116	39
195-98-43650	1104	1
195-Z11-1371	511	20
	513	
	538	20
	539	
195-Z11-1381	511	24
	513	24
	538	24
	539	24
195-Z11-2180	519	1
	528	1
	529	1
	530	1
195-Z11-3630	511	21
	513	21
	538	21
	539	21
195-Z11-3640	511	22
	513	22
	538	22
	539	22
195-Z11-3670	511	25
	513	25
	538	25
	539	25
195-Z11-3860	511	23
	513	23
	538	23
	539	23
195-Z11-4510	498	33
	507	4
	535	33
195-Z11-4520	492	33
	505	10
	533	33
195-Z11-7250	232	13
	232	19
	232	26
	232	29
	582	13
	582	17
	636	13
	636	17
	680	13
	680	17
195-Z11-8914	527	1
195-Z11-8943	524	1
198-01-51311	752	4
198-03-61550	264	26
	269	26
198-04-41210	290	6
	290	31
198-06-53510	565	19
	644	19
	691	19
198-06-53520	587	20
	617	20
198-06-56520	398	6
	424	6
198-06-56580	451	14
198-06-62141	705	1
198-06-62830	758	2
	807	2
198-06-62840	758	4
	758	6
	807	4
	807	6
198-15-15570	324	9
198-15-15770	324	7
198-43-15310	277	43
	290	29
	337	23
	454	13
	455	15
	755	12
	863	10
198-49-56150	351	7
198-54-42260	505	3
	505	6
198-54-55990	732	6
	732	18
	742	6
	742	18
198-54-75730	702	11
198-57-65510	479	7
198-57-65590	479	
198-60-19820	764	23
	813	23
198-69-21160	1059	8
198-904-4280	464	26
	466	26
	468	26
198-911-6970	557	26
	609	26
	661	26
198-911-6990	557	27
	609	27
	661	27
	702	12
198-911-9240	514	19
	525	19
198-911-9670	847	37
	851	39
	854	38
198-920-1530	148	31
198-98-16310	1100	1
198-Z11-4611	516	5
	524	7
	527	7
198-Z11-6370	517	10
19M-06-18220	296	6
19M-06-31720	224	2
19M-06-32820	1112	1
19M-06-37171	587	14
	617	14
19M-09-11510	561	22
	565	1
	587	2
	614	22
	617	2
	643	1
	665	22
	691	1
19M-09-34110	564	43
	616	43
	667	43
19M-43-33111	561	21
	614	21
	665	21
19M-43-33140	587	
	617	
19M-43-33141	562	23
	614	23
	665	23
19M-43-33150	587	6
	617	6
19M-43-33151	562	27
	614	27
	665	27
19M-43-33161	562	28
	614	28
	665	28
19M-43-33170	565	2
	587	3
	617	3
	643	2
	691	2
19M-43-33171	562	24
	614	24
	665	24
19M-43-33460	562	25
	587	4
	614	25
	617	4
	665	25
19M-43-33470	562	26
	565	3
	587	5
	614	26
	617	5
	643	3
	665	26
	691	3
19M-43-34120	564	37
	616	37
	667	37
19M-43-34132	564	38
	616	38
	667	38
19M-43-34141	564	39
	616	39
	667	39
19M-43-34150	564	40
	616	40
	667	40
19M-43-34160	564	41
	616	41
	667	41

PartNumber	Page	Index
19M-43-34182	564	42
	616	42
	667	42
19M-43-34190	564	44
	616	44
	667	44
19M-43-34250	563	16
	615	16
	666	16
19M-43-34280	563	17
	616	17
	666	17
19M-43-34290	563	18
	616	18
	666	18
19M-43-34320	563	19
	616	19
	666	19
19M-43-34520	563	12
	615	12
	666	12
19M-43-38211	565	8
	587	10
	617	10
	643	8
	691	8
19M-43-38220	565	6
	587	8
	617	8
	643	6
	691	6
201-46-38220	758	13
	807	13
201-54-13210	302	17
201-62-41910	460	9
	461	11
202-62-21430	464	29
	466	29
	468	29
202-970-1220	708	6
203-06-61730	297	34
203-09-21110	222	23
203-43-56450	706	5
203-54-11170	79	20
203-54-14330	270	2
	272	2
	720	12
203-54-56970	79	13
	80	12
	85	39
	86	41
	86	46
	86	51
	87	7
	88	43
	89	34
	228	35
	234	7
	237	35
	241	35
	348	4
203-54-62670	759	10
203-60-21260	399	2
	425	2
203-60-62220	436	12
	442	12
	771	2
	818	2
203-62-21740	351	3
	389	22
	415	22
	464	24
	466	24
	468	24
203-62-58670	399	4
	425	4
205-01-85160	223	2
205-03-71330	277	46
	332	11
	454	16
	455	18
205-03-71331	374	13
205-04-62130	281	33
	285	33
205-06-62270	977	16
205-30-62650	203	5
205-30-71181	866	9
205-54-67660	843	20
	847	20
	851	20
	854	21
	859	20
205-54-76260	843	16
	847	16
	851	16
	854	17
	859	16
205-54-76280	843	17
	847	17
	851	17
	854	18
	859	17
205-62-54562	434	10
	440	10
205-62-72140	258	5
205-70-51390	710	8
205-70-61560	1039	6
	1046	6
	1052	6
	1054	3
	1054	8
	1054	14
	1054	19
205-70-65780	710	7
205-70-65890	251	4
	251	9
	256	4
	256	9
205-970-2410	486	5
	487	7
205-977-7310	300	12
	301	11
	302	27
207-54-15180	83	33
207-60-71182	764	6
	813	6
	1108	3
	1109	3
207-62-32890	73	1
	77	1
207-62-56250	430	23
	430	28
208-01-11270	230	15
	235	15
	239	15
	243	15
208-53-12220	580	7
	634	8
	678	8
208-53-12680	577	30
208-62-73910	258	30
	258	32
	259	49
208-979-7520	250	1
208-979-7540	576	2
	630	2
	676	2
208-979-7650	582	9
	636	9
	680	9
209-03-41711	258	29
209-06-19680	753	19
	799	19
	802	19
209-06-77460	556	22
	609	22
	661	22
209-30-63150	895	11
	896	12
	906	11
	907	12
	928	12
	934	12
	943	11
	944	12
	955	11
	956	12
209-60-77290	337	1
209-72-12230	784	3
	828	3
20A-43-15311	563	20
	616	20
	667	20
20B-27-11210	386	17
	412	17
20G-26-11240	317	3
20N-60-11143	764	21
	813	21
20N-60-11181	764	22
	813	22
20R-54-11460	728	7
	729	7
	730	3
	730	8
	731	7
20S-62-16160	275	22
20S-71-11250	845	7
	849	7
	853	7
	856	10
	861	7
20T-06-71560	556	10
	608	10
	660	10
20T-06-81230	1116	10
20T-43-71190	561	6
	570	2
	613	6
	623	2
	664	6
	686	2
20T-62-61970	780	20
	825	20
20T-62-71831	297	29
	298	47
20U-62-41710	781	1
	797	1
	826	1
	842	1
20X-62-21950	399	1
	425	1
20Y-00-41530	1062	8
	1063	8
	1064	8
	1065	8
	1066	8
	1067	8
	1068	8
	1069	8
	1070	8
	1071	8
	1072	8
20Y-01-12300	223	
20Y-01-12310	223	3
20Y-03-11220	298	43

PartNumber	Page	Index
	336	27
20Y-03-32610	252	8
	257	8
20Y-06-23472	521	38
20Y-06-23940	565	17
	587	18
	617	18
	644	17
	691	17
20Y-06-24320	705	20
	713	2
20Y-06-41661	302	11
20Y-06-41670	302	7
20Y-06-41681	302	14
20Y-06-41812	758	10
	807	10
20Y-06-42180	516	12
	524	14
	527	14
20Y-06-42190	514	6
	525	6
	705	4
20Y-27-21310	357	30
	360	30
	363	30
	366	30
	369	30
	372	30
20Y-43-41491	521	40
20Y-43-41750	705	7
20Y-43-41790	705	8
20Y-54-18690	517	9
	518	20
20Y-60-21240	764	4
	813	4
20Y-60-21320	764	13
	813	13
20Y-60-31131	764	5
	813	5
20Y-62-22790	290	4
	351	9
	354	9
	388	5
	414	5
	429	2
	571	5
	624	5
	672	5
	705	11
	705	17
	777	43
	791	43
	822	43
	836	43
20Y-62-22810	351	10
	381	3
	407	3
	429	3
	705	12
	705	18
	779	39
	793	39
	824	39
	838	39
20Y-62-22820	351	11
	705	13
	705	19
	795	46
	840	46
20Y-62-22830	351	12
20Y-62-22840	351	13
20Y-62-22850	780	4
	796	4
	825	4
	841	4

PartNumber	Page	Index
20Y-62-22860	780	5
	796	5
	825	5
	841	5
20Y-62-51671	432	31
20Y-62-51681	760	
	809	
20Y-62-51691	760	4
	809	4
20Y-810-1211	574	
	628	
	674	
20Y-810-1240	302	8
20Y-979-3120	786	1
	830	1
20Y-979-3130	228	22
	232	35
	237	22
	241	22
	582	8
	636	8
	680	8
20Y-979-3140	228	18
	237	18
	241	18
20Y-979-3150	228	4
	237	4
	241	4
	582	6
	636	6
	680	6
	786	6
	830	6
20Y-979-6161	705	5
20Y-979-6261	633	25
20Y-979-6771	577	24
	631	24
	677	24
21J-06-13661	551	2
	603	2
	655	2
	705	10
	755	4
	804	4
	1112	3
	1112	5
21K-46-21190	845	8
	849	8
	853	8
	856	11
	861	8
21M-30-14150	914	7
	914	16
	921	7
	921	16
21N-64-36680	398	13
	424	13
21N-64-36690	281	34
	285	34
21T-09-11330	720	1
	724	1
	736	35
	740	20
	741	29
	746	35
21T-09-11460	448	2
	448	4
	450	2
	450	4
21T-09-11480	382	30
	382	35
	408	30
	408	35
21T-54-16150	814	34
21T-60-13650	374	2

PartNumber	Page	Index
21T-62-76830	290	5
	290	30
22B-03-12590	248	32
	253	32
22B-30-00030	892	
	903	
	927	
	933	
	940	
	952	
22B-60-11160	764	15
	813	15
22M-43-21470	549	29
	569	30
	601	29
	622	30
	653	29
	671	30
22M-62-13660	297	16
	297	31
22M-62-21390	382	40
	408	40
22U-54-24411	833	7
22U-60-21232	764	2
	813	2
22U-60-21340	399	17
	425	17
22U-60-21520	280	
	284	
	764	20
	813	20
22X-22-12670	127	4
232-15-14280	278	6
232-15-19530	329	31
234-15-12720	307	12
23A-15-12910	306	40
23S-15-45860	705	6
23T-62-12160	297	28
	298	46
281-15-11392	315	38
287-01-12180	225	5
287-15-15360	314	15
2907-21-6160	262	1
	267	1
361-54-21150	522	1
363-43-38550	563	13
	615	13
	666	13
417-43-28270	549	30
	569	31
	601	30
	622	31
	653	30
	671	31
417-823-1460	143	19
418-17-39311	316	10
418-54-21390	736	5
	739	15
	741	5
	746	5
418-967-2150	516	13
	524	15
	527	15
421-06-26210	514	8
	525	8
421-06-35121	354	1
421-07-11550	699	4
421-07-31270	577	25
	631	25
	677	25
421-60-35170	280	6
	284	7
421-60-35180	280	7
	284	8
421-60-35190	280	8

PartNumber	Page	Index
	284	9
423-22-32870	357	18
	360	18
	363	18
	366	18
	369	18
	372	18
423-54-42790	521	41
423-62-31640	399	8
	425	8
423-70-11160	893	10
	904	10
	941	10
	953	10
424-15-11270	314	20
424-15-12711	305	38
424-15-12720	305	39
424-15-12750	305	35
424-54-14380	736	6
	739	16
	741	6
	746	6
425-15-11270	313	7
425-15-13450	310	25
425-15-19250	313	26
	1120	
426-15-11260	319	24
426-15-15480	324	8
426-15-15490	324	6
426-15-15810	324	12
426-15-16251	324	10
426-15-16261	324	11
426-S62-2520	337	11
427-07-22130	579	29
	650	25
	692	25
561-06-86280	633	26
	650	26
	692	26
561-15-32570	317	23
561-15-32590	329	30
561-15-59510	316	15
	316	25
561-88-48950	964	29
	969	25
	978	29
562-13-16860	308	20
562-15-19230	313	3
	314	9
	1120	
566-15-12880	313	6
566-15-79230	316	23
566-15-79260	313	5
	313	28
	1120	
567-15-12830	307	14
	1120	
568-15-11380	313	2
568-15-12830	307	13
	313	17
	314	29
	1120	
568-15-12840	314	11
	1120	
568-15-12850	305	36
	1120	
569-03-81510	250	4
	255	1
569-06-61960	556	13
	608	13
	660	13
569-13-14460	310	6
569-15-32580	316	19
	317	4
	317	13
569-15-39620	328	17
569-15-41310	314	7
569-15-51721	312	11
	336	11
569-15-51732	312	12
	336	
569-15-59410	317	12
56B-15-25301	311	
581-60-17860	454	31
	455	33
	457	9
582-15-12811	307	11
600-023-2340	208	1
	213	1
	214	1
	215	1
	219	1
600-023-3510	220	2
600-051-2060	174	11
	174	16
	174	25
	174	30
	179	27
	180	11
	180	16
	180	25
	180	30
	185	27
	186	15
600-051-2080	174	15
	174	36
	176	13
	176	28
	179	3
	180	15
	180	36
	182	13
	182	28
	185	3
	186	11
	186	16
	186	25
	186	30
	191	27
600-051-2100	132	22
	176	17
	176	22
	177	29
	178	41
	182	17
	182	22
	183	29
	184	41
	186	36
	188	13
	188	28
	191	3
	230	14
	230	18
	230	21
	235	14
	235	18
	235	21
	239	14
	239	18
	239	21
	243	14
	243	18
	243	21
600-051-2120	177	27
	183	27
	188	17
	188	22
	189	27
	189	29
	190	42
600-051-2140	177	28
	178	42
	183	28
	184	42
	189	28
	224	13
	224	16
	224	28
600-051-2160	177	30
	183	30
	189	30
	190	43
600-051-2180	87	34
	174	12
	174	19
	174	26
	174	29
	176	12
	176	29
	180	12
	180	19
	180	26
	180	29
	182	12
	182	29
	188	12
	189	31
600-051-2190	224	10
600-051-2200	186	12
	186	19
	186	26
	186	29
	188	29
600-051-3100	296	29
	297	12
	735	12
	745	12
	756	7
	805	7
600-051-3120	758	17
	807	17
600-051-3300	757	22
	806	22
600-051-6120	102	15
	115	15
600-181-2430	849	9
	856	12
	861	9
600-181-4990	751	4
600-183-7521	734	1
	744	1
600-184-1632	733	5
	743	5
600-184-1671	733	2
	743	2
600-184-2810	733	6
	743	6
600-185-6100	733	
	743	
600-185-6110	733	3
	743	3
600-211-1340	143	7
	1108	13
	1109	13
600-211-1890	143	5
600-311-3230	166	3
600-311-4500	165	
	166	
600-311-4510	166	2
600-311-7520	193	3
600-319-3550	1108	14
600-319-3841	162	1
	1109	14
600-319-4500	166	

PartNumber	Page	Index
	1108	15
	1109	15
600-319-4540	166	1
600-411-1161	192	15
600-421-6630	168	1
	170	1
	172	1
600-462-1702	158	1
	159	1
600-645-7120	260	1
	265	1
600-813-9322	204	
600-815-2690	757	4
	806	4
600-815-4280	66	4
	68	4
600-815-9240	137	8
600-815-9250	132	21
600-815-9980	199	1
	201	1
600-825-6110	198	
600-825-6270	200	
600-825-7111	196	
600-825-9110	202	
6110-23-6490	132	27
	156	1
6110-73-6231	163	2
	165	4
6114-11-5590	71	1
	74	36
	75	1
6114-11-8910	128	5
6127-51-6822	73	17
	77	17
6128-11-5630	125	9
6131-22-3750	454	19
	455	21
6132-21-4620	135	28
6132-21-4630	81	24
	83	24
	177	16
	183	16
	189	16
6136-11-5120	70	1
	73	2
	77	2
	159	16
6136-41-4520	62	7
6138-13-4240	96	5
	109	5
6138-13-4510	71	2
	75	2
6141-64-7841	124	6
	125	6
6141-71-1710	74	28
	78	28
6142-22-4640	73	22
6143-11-4290	81	33
	179	5
	185	5
	191	5
6144-11-5630	80	18
6150-21-1180	136	8
6150-21-1190	136	9
	137	9
6150-21-4770	135	24
6150-21-5910	135	25
6150-21-5920	131	23
	132	33
6150-21-5930	131	24
	132	34
6150-21-6391	123	6
6150-31-1130	139	2
6150-31-1351	129	2
6150-41-2430	121	9
6150-81-6920	177	11
	183	11
	189	11
6150-81-6940	176	16
	176	25
	176	31
	177	36
	182	16
	182	25
	182	31
	183	36
	188	16
	188	25
	188	31
	189	37
6150-81-8420	121	6
6151-21-4150	128	4
6151-21-4960	128	7
6151-51-5490	74	16
	78	17
6151-51-8151	73	18
	77	18
6151-51-8161	73	3
	77	3
6151-51-8540	101	27
	114	27
6151-61-3781	79	10
	80	9
6156-71-5370	161	10
6156-71-9730	150	1
6162-13-1150	63	22
6162-13-5611	738	5
	748	5
6162-13-5870	738	8
	748	8
6162-13-6440	168	17
	170	17
	172	17
6162-13-8670	177	23
	183	23
	189	23
6162-33-5322	127	9
6162-43-5340	122	3
6162-43-5630	62	6
6162-53-5430	143	4
6162-55-5230	143	3
6162-63-8820	101	15
	102	18
	114	15
	115	18
	163	34
	165	15
6162-73-5940	99	5
	112	5
6164-11-5590	79	21
	80	19
	132	30
6164-11-9190	85	14
	85	16
	85	19
	85	21
	85	30
	85	32
	85	35
	85	37
	86	44
	86	49
	86	56
	86	58
	86	60
	87	4
	87	9
	87	12
	87	15
	87	18
	87	21
	87	27
	87	29
	87	33
	87	38
	88	41
	89	9
	89	17
	89	19
	89	22
	89	24
	89	26
	89	29
	89	31
	89	36
	89	39
	90	41
	90	43
	90	47
6164-21-2490	140	3
6164-62-8230	74	4
6164-62-8241	74	5
	78	6
6165-61-6770	143	14
6166-11-5391	124	13
	125	14
6166-61-6341	91	1
	104	1
6166-75-6821	101	28
	102	1
	114	28
	115	1
	163	12
6204-21-5571	174	21
	180	21
	186	21
6204-41-4510	92	10
	94	10
	105	10
	107	10
6204-41-4520	92	11
	94	11
	105	11
	107	11
6204-41-4541	92	12
	94	12
	105	12
	107	12
6206-11-4490	102	12
	115	12
6206-11-4590	165	19
6207-11-5390	96	6
	96	15
	99	9
	109	6
	109	15
	112	9
6210-11-1140	62	8
6210-11-1150	63	20
6210-11-1820	62	
6210-11-1831	62	
6210-11-1840	62	
6210-11-1940	62	
6210-11-1962	62	
6210-11-4811	66	1
	68	1
6210-11-5820	70	2
	148	40
6210-17-1814	62	3
6210-19-1814	62	
6210-19-1820	62	
6210-19-1831	62	
6210-19-1840	62	
6210-19-1962	62	
6210-21-1390	135	26

PartNumber	Page	Index
6210-21-1491	135	2
6210-21-1910	135	23
6210-21-1950	136	28
	137	32
6210-21-2230	135	38
6210-21-2240	135	37
6210-21-2270	135	36
6210-21-2422	127	14
6210-21-3170	126	2
6210-21-4770	128	13
6210-21-5250	132	1
6210-21-5290	131	1
6210-21-5820	131	2
	132	2
6210-21-6400	123	
6210-21-6410	123	1
6210-21-6471	123	5
6210-21-8000	139	
6210-21-8010	139	
6210-21-8050	139	
6210-22-2410	127	7
6210-22-2420	127	8
6210-22-3910	124	16
	125	17
6210-26-8010	139	
6210-26-8050	139	
6210-27-8010	139	
6210-27-8050	139	
6210-28-8010	139	
6210-28-8050	139	
6210-29-8010	139	
6210-29-8050	139	
6210-31-1120	139	3
6210-31-1350	129	3
6210-31-3310	142	10
6210-32-3040	142	
6210-36-3040	142	
6210-37-3040	142	
6210-38-3040	142	
6210-39-3040	142	
6210-41-1012	120	
6210-41-1120	120	4
6210-41-1131	120	3
6210-41-2320	121	
6210-41-2400	121	
6210-41-2450	121	8
6210-41-3120	121	10
6210-41-4430	62	9
6210-41-4440	62	10
6210-41-4510	62	11
6210-41-5440	122	15
6210-41-5620	62	4
6210-41-5641	62	5
6210-51-8320	99	1
	112	1
	156	22
	156	27
6210-61-1350	169	17
	171	17
	173	17
6210-61-1520	169	11
	171	11
	173	11
6210-61-2130	146	6
6210-61-2160	146	10
6210-61-2520	146	3
6210-61-2550	146	14
6210-61-2811	146	17
6210-61-6421	168	14
	170	14
	172	14
6210-61-6441	169	30
	171	30
	173	30
6210-61-6530	197	4
	199	5
	201	5
	203	4
6210-61-6551	98	1
	98	15
	111	1
	111	15
6210-61-6870	168	3
	170	3
	172	3
6210-81-6490	197	1
	199	2
	201	2
6210-81-6750	197	5
	199	6
	201	6
6210-82-6370	203	15
6210-82-6550	203	19
6210-82-6570	197	16
	199	17
	201	17
6210-82-6840	197	22
	199	23
	201	23
	203	21
6211-11-4821	66	5
	66	16
	68	5
	68	16
6211-11-9790	143	20
6211-22-2220	135	35
6211-31-1420	139	8
6211-31-2410	142	2
6211-61-1533	169	21
	171	21
	173	21
6211-61-6410	168	11
	170	11
	172	11
6211-81-4280	174	1
	180	1
	186	1
6212-21-2450	127	15
6212-21-2511	127	13
6212-25-8710	124	1
	125	1
6212-31-6100	127	
6212-31-6120	127	12
6212-31-6130	127	3
6212-31-6140	127	10
6212-31-6420	127	
6212-31-6440	127	1
6212-31-6490	127	5
6212-61-1330	169	23
	171	23
	173	23
6212-61-1370	169	13
	171	13
	173	13
6212-61-1380	169	14
	171	14
	173	14
6212-61-1410	169	10
	171	10
	173	10
6212-61-6662	66	33
	68	33
6215-11-5920	70	3
	79	8
	80	7
	96	17
	109	17
6215-11-6560	74	30
	78	30
	101	3
	114	3
	161	8
6215-41-4220	62	12
6215-61-2580	146	5
6215-61-6630	136	33
	137	37
6215-61-6670	66	34
	68	34
6215-71-4930	73	4
	77	4
6215-71-4940	73	5
	74	13
	74	14
	77	5
	78	14
	78	15
	192	1
6215-72-1890	111	20
6215-81-6150	197	9
	199	10
	201	10
	203	8
6216-54-6320	66	
	68	
6216-84-9740	136	
	137	
	161	
6217-11-1321	62	18
6217-11-1441	63	19
6217-11-1610	62	1
6217-11-1620	62	2
6217-11-5910	74	35
6217-11-6520	168	19
	170	19
6217-11-8100	64	
6217-11-8110	64	1
6217-11-8830	64	2
	1108	11
	1109	11
6217-11-9540	74	34
6217-11-9841	102	21
	115	21
6217-16-1321	62	
6217-17-1321	62	
6217-18-1321	62	
6217-19-1321	62	
6217-21-1220	136	10
	137	14
6217-21-1710	135	6
6217-21-1940	136	31
	137	35
6217-21-1980	135	9
6217-21-1990	135	11
6217-21-3251	124	17
	125	18
6217-21-3430	130	2
6217-21-3440	130	1
6217-21-3540	119	2
6217-21-3603	119	
6217-21-6110	148	1
6217-21-6120	148	2
6217-21-6880	123	2
	123	4
6217-41-4110	62	13
6217-41-4531	62	14
6217-41-4540	62	15
6217-41-5540	122	18
6217-41-5550	122	5
	122	10
6217-41-5560	122	20
6217-41-5570	122	19
6217-51-5660	143	2
6217-61-6330	169	1
	171	1
	173	1

PartNumber	Page	Index
6217-61-6340	169	2
	171	2
	173	2
6217-61-6350	169	3
	171	3
	173	3
6217-61-8170	192	
6217-61-8211	192	12
6217-61-8221	192	13
6217-61-8231	192	
6217-71-1140	160	19
6217-71-1150	160	9
6217-71-1161	160	12
6217-71-1170	160	10
6217-71-1910	151	4
6217-71-5171	156	2
6217-71-5211	156	3
6217-71-5251	155	3
6217-71-5261	148	18
6217-71-5281	156	4
6217-71-5320	160	6
6217-71-5340	160	8
6217-71-5740	148	17
6217-71-5761	148	19
6217-71-5770	150	2
6217-71-5910	151	5
6217-71-6470	1062	29
	1063	28
6217-71-6480	1065	28
6217-71-6490	1064	28
6217-71-6510	1066	28
	1070	29
6217-71-6520	1072	28
6217-71-6540	1067	28
6217-71-6580	1068	28
6217-71-6610	1069	28
6217-71-6640	101	4
	114	4
	148	20
	156	6
6217-71-6650	101	5
	114	5
	148	21
	156	7
	156	24
6217-71-6660	148	24
6217-71-6670	148	25
6217-71-6820	163	23
6217-71-6830	163	24
6217-71-6840	163	25
6217-71-6850	163	22
6217-71-6870	163	26
6217-71-6890	1071	29
6217-71-7110	160	1
6217-71-9331	208	5
	209	2
	211	2
	213	3
	215	3
	216	2
	219	3
	220	3
6217-71-9770	150	3
6217-71-9780	150	4
6217-71-9791	150	5
6217-81-6550	197	6
	199	7
	201	7
6217-81-6840	203	1
6217-81-8311	122	21
6217-81-9270	208	3
6217-81-9280	208	4
6218-21-1940	136	32
	137	36
6218-21-3811	119	8
6218-21-3820	119	9
6218-21-3831	119	6
6218-21-3871	119	1
6218-31-1530	140	1
6218-61-2620	146	9
6218-61-8730	74	20
	78	20
6218-61-8750	137	12
6218-71-5790	163	14
6218-81-8160	174	4
	180	4
	186	4
6218-81-8430	174	39
	175	43
	176	36
	177	5
	177	20
	179	14
	179	17
	180	39
	181	43
	182	36
	183	5
	183	20
	185	14
	185	17
	186	39
	187	43
	188	36
	189	5
	189	20
	191	14
	191	17
6218-81-8440	176	32
	177	6
	177	13
	177	17
	177	32
	177	37
	178	44
	178	51
	182	32
	183	6
	183	13
	183	17
	183	32
	183	37
	184	44
	184	51
	188	32
	189	6
	189	13
	189	17
	189	33
	189	38
	190	45
	190	52
6218-81-8490	175	44
	175	45
	176	20
	176	33
	176	37
	177	7
	177	8
	177	14
	177	18
	177	21
	177	34
	177	38
	178	45
	178	52
	178	53
	179	7
	179	15
	179	19
	179	20
	179	23
	181	44
	181	45
	182	20
	182	33
	182	37
	183	7
	183	8
	183	14
	183	18
	183	21
	183	34
	183	38
	184	45
	184	52
	184	53
	185	7
	185	15
	185	19
	185	20
	185	23
	187	44
	187	45
	188	20
	188	33
	188	37
	189	7
	189	8
	189	14
	189	18
	189	21
	189	35
	189	39
	190	46
	190	53
	190	54
	191	7
	191	15
	191	19
	191	20
	191	23
6219-71-1150	160	17
6219-71-1160	160	18
6219-71-3150	151	3
6219-81-1961	136	7
	137	7
6219-81-1991	136	
	137	
6221-81-6810	206	1
6221-81-6940	136	21
	137	25
6222-83-6620	132	25
6240-11-9910	734	6
	744	6
6240-81-7402	733	
	743	
6240-81-7411	733	1
	743	1
6240-81-8611	197	7
	199	8
	201	8
	203	6
6245-71-6550	159	12
6251-11-9150	96	22
	99	32
	109	22
	112	28
6251-21-3211	124	14
	125	15
6251-21-3231	124	15
	125	16
6251-21-3250	124	26
	125	27
6251-71-7100	165	

PartNumber	Page	Index
6251-71-7110	165	1
6251-81-7210	158	5
	159	5
6261-11-1100	62	
6261-11-1380	62	17
6261-11-2150	66	14
	68	14
6261-11-2410	85	24
6261-11-2440	86	52
6261-11-2450	89	27
6261-11-2480	112	21
6261-11-2490	110	41
6261-11-2550	85	1
6261-11-2560	85	4
6261-11-2570	85	10
6261-11-2580	85	8
6261-11-2590	85	25
6261-11-2610	85	23
6261-11-2630	85	28
6261-11-2640	85	33
6261-11-2650	86	42
6261-11-2660	86	47
6261-11-2670	86	53
6261-11-2680	86	54
6261-11-2690	86	63
6261-11-2731	89	32
6261-11-2742	89	37
6261-11-2750	90	44
6261-11-2761	85	12
6261-11-2770	85	17
6261-11-2780	109	8
6261-11-2790	87	10
6261-11-2810	87	5
6261-11-2820	87	1
6261-11-2830	87	13
6261-11-2840	87	16
6261-11-2850	87	22
6261-11-2860	87	19
6261-11-2870	87	36
6261-11-2880	87	39
6261-11-2890	87	24
6261-11-2911	89	2
6261-11-2920	89	3
6261-11-2930	89	4
6261-11-2940	89	1
6261-11-2950	89	15
6261-11-2960	89	20
6261-11-2970	89	10
6261-11-2980	89	12
6261-11-2990	87	31
6261-11-3200	160	
6261-11-4111	66	2
	68	2
6261-11-4120	66	35
	68	35
6261-11-4280	112	23
6261-11-4290	112	22
6261-11-4310	66	6
	68	6
6261-11-4420	66	25
	68	25
6261-11-4451	66	27
6261-11-4460	66	28
	68	28
6261-11-4590	68	27
6261-11-4780	99	13
6261-11-4791	99	24
6261-11-4870	99	22
6261-11-4880	99	12
6261-11-4891	99	23
6261-11-5110	70	5
6261-11-5120	70	6
6261-11-5130	70	7
6261-11-5461	80	1
6261-11-5540	79	7

PartNumber	Page	Index
6261-11-5550	79	2
	80	2
6261-11-5570	80	6
6261-11-5631	79	1
6261-11-5640	79	14
6261-11-5650	79	11
	80	10
6261-11-5770	79	6
	80	5
6261-11-5790	80	13
6261-11-5850	71	3
	75	3
6261-11-5880	70	4
6261-11-5910	79	5
6261-11-5990	99	25
6261-11-6520	172	19
6261-11-6670	74	29
	78	29
6261-11-7210	66	9
	68	9
6261-11-7220	66	10
	68	10
6261-11-7410	66	17
	68	17
6261-11-7450	66	18
	68	18
6261-11-7930	83	28
6261-11-8180	81	2
	83	2
6261-11-8190	81	1
	83	1
6261-11-8330	82	43
	84	43
6261-11-8420	81	14
	83	14
6261-11-8430	81	12
	83	12
6261-11-8490	81	21
	83	21
6261-11-8540	81	25
	83	25
6261-11-8551	81	34
	83	34
6261-11-8620	81	28
6261-11-8640	81	3
	83	3
6261-11-8660	81	4
	83	4
6261-11-8710	81	39
	83	39
6261-11-8740	82	44
	84	44
6261-11-8770	82	42
	84	42
6261-11-8880	81	13
	83	13
6261-11-9120	96	7
	109	7
6261-11-9150	96	8
6261-11-9412	99	11
	112	11
6261-11-9422	96	16
	109	16
6261-11-9520	99	10
	112	10
6261-11-9730	96	38
	109	38
6261-11-9740	96	31
	109	31
6261-11-9750	96	19
	109	19
6261-11-9760	97	41
6261-11-9840	96	18
	109	18
6261-11-9870	96	27

PartNumber	Page	Index
	99	18
	109	27
	112	17
6261-11-9880	96	28
	99	19
	109	28
	112	18
6261-11-9960	97	44
	110	44
6261-11-9970	96	35
	109	35
6261-16-1380	62	
6261-17-1380	62	
6261-18-1380	62	
6261-19-1380	62	
6261-21-1100	135	
6261-21-1611	135	27
6261-21-1910	135	31
6261-21-1920	135	32
6261-21-1970	136	2
	137	2
6261-21-1990	136	1
	137	1
6261-21-3210	126	1
6261-21-3880	119	7
6261-21-3920	103	2
6261-21-3940	116	2
6261-21-3970	103	9
	116	9
6261-21-4740	128	1
6261-21-5310	131	21
	132	31
6261-21-5420	131	25
	132	35
6261-21-5430	131	22
	132	32
6261-21-6410	123	3
6261-21-7130	136	13
	137	17
6261-21-7210	136	17
	137	21
6261-21-7290	136	19
	137	23
6261-21-8610	124	4
	125	4
6261-21-8711	124	8
	125	8
6261-31-1200	139	
6261-31-2040	142	
6261-31-2130	142	1
6261-31-3100	142	
6261-31-3130	142	9
6261-31-4100	129	
6261-31-8300	141	1
6261-41-4810	92	3
	94	3
	105	3
	107	3
6261-41-4820	92	4
	94	4
	105	4
	107	4
6261-41-4830	92	5
	94	5
	105	5
	107	5
6261-41-4840	92	6
	94	6
	105	6
	107	6
6261-41-4851	92	7
	94	7
	105	7
	107	7
6261-41-4900	92	

PartNumber	Page	Index
	105	
6261-41-4910	92	1
	105	1
6261-41-4920	92	2
	105	2
6261-41-4960	92	22
	94	22
	105	22
	107	22
6261-41-5040	122	
6261-41-5050	122	
6261-41-5400	122	
6261-41-5420	122	2
6261-41-5500	122	
6261-41-5520	122	8
6261-41-5530	122	14
6261-41-9500	94	
	107	
6261-41-9510	94	1
	107	1
6261-41-9520	94	2
	107	2
6261-41-9530	92	
	94	
	105	
	107	
6261-41-9540	92	13
	94	13
	105	13
	107	13
6261-41-9550	92	30
	94	30
	105	30
	107	30
6261-41-9580	92	28
	94	28
	105	28
	107	28
6261-41-9590	93	39
	95	39
	106	39
	108	39
6261-41-9610	92	9
	94	9
	105	9
	107	9
6261-41-9620	92	29
	94	29
	105	29
	107	29
6261-41-9640	92	20
	94	20
	105	20
	107	20
6261-41-9650	92	8
	105	8
6261-41-9660	94	8
	107	8
6261-41-9690	93	43
	95	43
	106	43
	108	43
6261-51-2000	118	
6261-51-5180	143	23
6261-51-5751	143	15
6261-51-5840	143	29
6261-51-6120	143	10
6261-51-6130	143	11
6261-51-6140	143	27
6261-51-6540	131	10
	132	10
6261-51-6550	131	14
	132	14
6261-51-6601	143	
6261-51-6611	143	1
6261-51-6620	143	6
6261-51-7110	157	1
6261-51-8110	73	19
6261-51-8130	77	24
6261-51-8160	73	6
6261-51-8311	77	6
6261-51-8320	77	19
6261-51-8370	73	25
	73	32
6261-51-8380	73	23
6261-51-8390	73	29
6261-51-9101	100	
	113	
6261-51-9210	101	6
	114	6
6261-51-9310	101	16
	114	16
6261-51-9320	101	30
	114	30
6261-51-9410	101	31
	114	31
6261-51-9450	101	17
	114	17
6261-51-9460	101	18
	114	18
6261-51-9481	101	29
	102	2
	114	29
	115	2
6261-51-9510	102	4
	115	4
6261-51-9530	102	14
	115	14
6261-51-9540	102	24
	115	24
6261-51-9610	102	3
	115	3
6261-51-9630	102	11
	115	11
6261-61-1150	169	18
	171	18
	173	18
6261-61-1170	169	20
	171	20
	173	20
6261-61-1190	169	19
	171	19
	173	19
6261-61-1201	169	
	171	
	173	
6261-61-1210	169	7
	171	7
	173	7
6261-61-1310	169	9
	171	9
	173	9
6261-61-2110	146	1
6261-61-2120	146	2
6261-61-2610	146	8
6261-61-3842	103	1
	116	1
6261-61-6210	173	31
6261-61-6220	173	32
6261-61-6260	169	31
	171	31
6261-61-6270	169	32
	171	32
6261-61-6810	168	2
	170	2
	172	2
6261-61-6820	168	6
6261-61-7110	96	3
	109	3
6261-61-7210	98	2
6261-61-7250	98	3
	111	3
6261-61-7260	98	4
	98	16
	111	4
	111	16
6261-61-7270	98	5
	111	5
6261-61-7310	99	2
	112	2
6261-61-7320	99	3
	112	3
6261-61-7410	98	18
	111	18
6261-61-7431	98	17
	111	17
6261-61-7440	111	19
6261-61-8220	78	4
6261-61-8230	78	5
6261-61-8610	192	9
6261-61-8620	192	8
6261-61-8670	74	1
	78	1
6261-61-8680	74	2
	78	2
6261-61-8720	74	10
6261-61-8730	74	7
6261-61-8740	74	19
	78	19
6261-61-8750	74	21
	78	21
6261-61-8880	78	8
6261-61-8891	78	11
6261-71-1111	152	
	154	
6261-71-1220	155	4
6261-71-3220	151	1
6261-71-4112	156	10
6261-71-5112	148	7
6261-71-5122	148	8
6261-71-5132	148	9
6261-71-5142	148	10
6261-71-5152	148	11
6261-71-5162	148	12
6261-71-5190	148	15
6261-71-5310	163	6
6261-71-5320	164	39
6261-71-5330	163	9
6261-71-5340	165	14
6261-71-5350	163	30
6261-71-5360	163	8
6261-71-5390	163	16
6261-71-5411	156	23
6261-71-5420	101	7
	114	7
6261-71-5430	101	8
	114	8
6261-71-5610	148	22
6261-71-5630	148	23
6261-71-5650	148	26
6261-71-5660	148	34
6261-71-5670	156	8
6261-71-5690	156	9
6261-71-5710	149	45
6261-71-5720	149	44
6261-71-5741	148	36
6261-71-5751	149	41
6261-71-5760	149	43
6261-71-5810	161	7
6261-71-5910	156	5
6261-71-6150	160	13
6261-71-6380	159	7
6261-71-6390	159	6
6261-71-6660	148	14

PartNumber	Page	Index
6261-71-6670	148	16
6261-71-7710	163	
6261-71-7720	163	1
6261-71-8100	163	
6261-71-8110	163	21
6261-71-8240	163	18
6261-71-8651	161	4
6261-71-8820	161	1
6261-81-1350	176	5
	182	5
	188	5
6261-81-1360	176	8
	182	8
	188	8
6261-81-1900	176	7
	182	7
	188	7
6261-81-2902	128	10
6261-81-6420	197	20
6261-81-6520	199	21
	201	21
6261-81-6810	197	21
	199	22
	201	22
	203	20
	1108	12
	1109	12
6261-81-6890	203	2
6261-81-6901	136	27
	137	31
	161	13
6261-81-7100	159	3
6261-81-7200	158	3
6261-81-7310	158	6
	159	17
6261-81-8150	179	21
	185	21
	191	21
6261-81-8190	174	7
6261-81-8210	177	1
	183	1
	189	1
6261-81-8241	180	7
6261-81-8330	174	3
	180	3
6261-81-8340	197	8
	199	9
	201	9
	203	7
6261-81-8350	197	14
	199	15
	201	15
	203	13
6261-81-8411	176	1
	182	1
6261-81-8450	178	46
	184	46
	190	47
6261-81-8460	179	8
	185	8
	191	8
6261-81-8540	174	8
	180	8
	186	8
6261-81-8560	179	24
	185	24
6261-81-8650	179	4
	185	4
	191	4
6261-81-8660	174	40
	180	40
	186	40
6261-81-8920	176	2
	182	2
	188	2
6261-81-9280	160	4
6261-81-9360	188	1
6261-81-9370	186	3
6261-81-9380	191	24
6261-81-9410	186	7
6261-81-9440	177	9
	183	9
	189	9
6261-81-9820	158	10
	159	21
6261-81-9830	158	11
	159	22
6271-81-2980	210	2
	212	2
	214	3
	217	2
	218	2
6271-81-9220	128	
6354-71-5560	99	8
	112	8
6505-11-0450	72	21
	76	21
6505-11-0520	72	18
	76	18
6505-71-2050	72	20
	76	20
6505-71-4920	72	17
	76	17
6505-71-5550	72	
	76	
6505-71-5950	72	
	76	
6505-99-9011	72	22
	76	22
6553-51-2110	92	14
	94	14
	105	14
	107	14
6553-51-2820	92	15
	94	15
	105	15
	107	15
6553-51-3110	92	16
	94	16
	105	16
	107	16
6553-51-3511	92	17
	94	17
	105	17
	107	17
6553-81-7110	93	41
	95	41
	106	41
	108	41
6560-61-7201	66	23
	68	23
6560-61-7211	66	
	68	
6560-61-7300	66	24
	68	24
6560-61-7310	66	
	68	
6631-11-5630	66	26
	68	26
	79	4
	80	4
	81	27
	83	27
	85	6
	85	27
	96	12
	109	12
	192	2
6631-11-6390	192	6
6643-11-4641	734	7
	744	7
6691-41-8230	177	22
	183	22
	189	22
6693-22-5600	131	
	132	
6696-61-9921	136	29
	137	33
6711-21-3521	126	3
6715-11-5270	223	6
6715-11-5280	223	7
6715-11-5290	223	4
6735-21-1930	66	
	68	
6930-21-4120	736	37
	740	22
	741	31
	746	37
6934-42-5300	122	
6934-72-7190	101	9
	114	9
	135	29
	160	2
6991-11-5990	79	15
	80	14
700-11-31940	311	31
	312	6
	335	45
700-11-31980	312	21
700-13-31161	766	21
	789	21
	815	21
	834	21
700-22-11410	436	13
	442	13
	771	15
	818	15
700-61-49160	769	10
	776	23
	778	23
	790	23
	792	23
	794	21
	817	10
	821	23
	823	23
	835	23
	837	23
	839	21
700-80-51390	314	14
700-92-11690	708	7
700-93-11320	396	2
	422	2
	769	16
	776	29
	778	29
	790	29
	792	29
	794	27
	817	16
	821	29
	823	29
	835	29
	837	29
	839	27
700-93-11330	396	3
	422	3
	769	17
	776	30
	778	30
	790	30
	792	30
	794	28
	817	17
	821	30

PartNumber	Page	Index
	823	30
	835	30
	837	30
	839	28
702-16-02242	566	1
702-16-02252	571	1
702-16-02290	560	1
	612	1
	663	1
702-16-02340	619	1
	668	1
702-16-02350	624	1
	672	1
702-16-53920	391	2
	417	2
702-16-59330	560	3
	612	3
	663	3
702-16-61270	560	6
	566	4
	571	4
	612	6
	619	4
	624	4
	663	6
	668	4
	672	4
702-16-62730	560	4
	612	4
	663	4
702-16-62740	560	5
	612	5
	663	5
702-16-71280	566	2
	571	2
	619	2
	624	2
	668	2
	672	2
702-21-00100	436	
	442	
702-21-00200	436	
	442	
702-21-07610	436	11
	442	11
702-21-07630	771	1
	818	1
702-21-09250	391	
	417	
702-21-11800	436	
	442	
702-21-39450	436	14
	442	14
	771	14
	818	14
702-21-53120	391	10
	417	10
702-21-53130	773	11
	819	11
702-21-54910	772	18
	777	41
	779	37
	791	41
	793	37
	795	44
	818	18
	822	41
	823	37
	836	41
	837	37
	840	44
702-21-55310	391	5
	417	5
702-21-55410	391	14
	417	14
702-21-55420	391	7
	417	7
702-21-55440	391	9
	417	9
702-21-55450	771	10
	776	6
	778	5
	790	6
	792	5
	794	5
	818	10
	821	6
	823	5
	835	6
	837	5
	839	5
702-21-55460	391	6
	417	6
702-21-55520	391	8
	417	8
702-21-55530	391	17
	417	17
702-21-55620	384	24
	391	21
	410	24
	417	21
	766	12
	771	5
	776	12
	778	11
	789	12
	790	12
	792	11
	794	11
	815	12
	818	5
	821	12
	823	11
	834	12
	835	12
	837	11
	839	11
702-21-55640	391	20
	417	20
702-21-55710	391	23
	417	23
702-21-55720	391	24
	417	24
702-21-57400	777	39
	779	35
	793	35
	795	42
	822	39
	823	35
	837	35
	840	42
702-21-57600	381	1
	407	1
702-21-57700	386	20
	412	20
702-21-58100	771	16
	791	39
	818	16
	836	39
702-21-81520	436	4
	442	4
702-21-81530	436	5
	436	22
	442	5
	442	22
702-21-81730	436	15
	442	15
702-73-01580	263	
	268	
702-73-11810	263	1
	268	1
702-73-11820	263	2
	268	2
702-73-11830	263	3
	268	3
702-73-11840	263	5
	268	5
702-73-11850	263	6
	268	6
702-73-11860	263	9
	268	9
702-77-03110	396	1
	422	1
702-77-11380	396	5
	422	5
704-17-05811	344	8
705-14-32731	342	
705-17-03140	342	2
705-17-03330	342	13
705-17-03352	342	
705-17-03381	341	6
	342	6
	342	14
705-17-03443	341	4
	342	4
705-17-03473	341	5
	342	5
705-17-03520	342	1
705-17-03610	341	3
	342	3
705-17-03811	341	8
705-17-03870	341	7
705-17-03880	342	17
705-17-04021	344	1
705-17-04120	344	2
705-17-04352	344	
705-17-04382	344	6
705-17-04730	344	15
705-17-04870	344	7
705-17-04980	342	16
	344	16
705-17-40010	341	10
705-17-40730	341	11
705-17-40810	341	12
705-17-43010	344	10
705-17-43410	344	11
705-17-43510	344	12
705-18-03240	341	2
705-18-03350	341	
705-18-03620	341	1
705-18-04470	344	5
705-18-04630	344	4
705-18-04640	344	3
705-18-32010	342	7
705-18-32450	342	8
705-18-32510	342	9
705-22-40160	341	
705-22-43070	344	
705-52-30A00	341	
	342	
706-73-40890	385	2
	411	2
706-75-74540	394	7
	420	7
706-75-74550	394	8
	394	18
	420	8
	420	18
706-75-74850	394	9
	394	19
	420	9
	420	19
706-75-75280	263	4
	268	4
706-76-71390	760	5

PartNumber	Page	Index
	809	5
706-7H-01101	394	
	396	
	420	
	422	
706-7H-05010	394	
	420	
706-7H-05020	395	
	421	
706-7H-05910	394	29
	420	29
706-7H-12310	394	1
	420	1
706-7H-41110	394	25
	420	25
706-7H-41120	394	27
	420	27
706-7H-41210	394	28
	420	28
706-7H-41730	395	37
	421	37
706-7H-41740	395	38
	421	38
706-7H-71120	394	11
	420	11
706-7H-71130	394	13
	420	13
706-7H-71150	394	17
	420	17
706-7H-71160	394	14
	420	14
706-8E-14191	394	5
	420	5
706-8H-41120	395	36
	421	36
706-8H-41160	395	41
	421	41
706-8H-41260	395	39
	421	39
706-8J-41010	394	26
	420	26
707-01-0K410	1041	
707-01-0K420	1043	
707-02-00660	1019	
	1023	
707-02-00670	1021	
	1025	
707-04-00190	1030	
707-04-00200	1028	
707-04-00210	1048	
707-04-00220	1032	
707-04-00240	1034	
707-12-11140	1019	1
	1023	1
707-12-11150	1021	1
	1025	1
707-12-11170	1120	
707-13-18370	1041	1
707-13-20490	1043	1
707-27-16700	1028	5
	1030	5
	1032	5
	1034	5
707-27-18940	1041	7
707-27-20740	1043	7
707-29-11680	1120	
707-29-11980	1019	9
	1021	9
	1023	9
	1025	9
707-29-60930	1048	6
707-34-10600	1048	5
	1121	
707-35-52910	1028	21
	1030	21
	1032	21
	1034	21
	1121	
707-35-90030	1041	24
	1121	
707-35-99600	1048	4
	1121	
707-36-16410	1028	17
	1030	17
	1032	17
	1034	17
707-36-18060	1041	20
707-36-20600	1043	20
707-37-11080	1019	19
	1021	19
	1023	19
	1025	19
707-40-11270	1019	26
	1021	26
	1023	26
	1025	26
707-40-11430	1019	24
	1021	24
	1023	24
	1025	24
707-40-18070	1028	22
	1030	22
	1032	22
	1034	22
707-41-11840	1019	8
	1021	8
	1023	8
	1025	8
707-44-11150	1019	22
	1021	22
	1023	22
	1025	22
	1120	
707-44-16190	1028	18
	1030	18
	1032	18
	1034	18
	1121	
707-44-18190	1041	21
	1121	
707-44-20190	1043	21
	1121	
707-51-10030	1041	10
	1121	
707-51-10640	1041	11
	1121	
707-51-11030	1043	10
	1121	
707-51-11640	1043	11
	1121	
707-51-30210	1048	9
	1121	
707-51-75030	1019	11
	1021	11
	1023	11
	1025	11
	1120	
707-51-75640	1019	17
	1021	17
	1023	17
	1025	17
	1120	
707-51-75650	1120	
707-51-90030	1028	8
	1030	8
	1032	8
	1034	8
	1121	
707-51-90640	1028	9
	1030	9
	1032	9
	1034	9
	1121	
707-52-15050	1048	10
707-52-90501	1019	10
	1021	10
	1023	10
	1025	10
707-52-90681	1028	10
	1030	10
	1032	10
	1034	10
707-52-90781	1041	12
707-52-90851	1043	12
707-56-10740	1041	8
	1121	
707-56-11740	1043	8
	1121	
707-56-30740	1048	7
	1121	
707-56-75740	1019	12
	1021	12
	1023	12
	1025	12
	1120	
707-56-90740	1034	6
	1121	
707-58-11870	1043	2
707-60-30020	1048	3
707-60-75070	1019	4
	1021	4
	1023	4
	1025	4
707-60-90080	1030	3
707-60-90090	1032	3
707-60-90100	1028	3
707-60-90180	1034	3
707-66-75020	1019	5
	1021	5
	1023	5
	1025	5
707-69-11000	1019	27
	1021	27
	1023	27
	1025	27
	1120	
707-75-10160	1041	19
707-75-11040	1043	19
707-75-75110	1019	18
	1021	18
	1023	18
	1025	18
707-75-90110	1028	16
	1030	16
	1032	16
	1034	16
707-76-10050	1043	5
707-76-10380	1043	3
707-76-90520	1041	3
707-76-90530	1041	5
707-83-10073	1019	31
	1021	31
	1023	31
	1025	31
707-83-10270	1019	20
	1021	20
	1023	20
	1025	20
707-84-10240	1019	21
	1021	21
	1023	21
	1025	21
707-86-13520	1041	26
707-86-13530	1043	26
707-86-68060	1019	32

PartNumber	Page	Index
	1023	32
707-86-68070	1021	32
	1025	32
707-86-68740	1120	
707-88-02660	1019	37
	1021	37
	1023	37
	1025	37
707-88-03881	1120	
707-88-05701	1041	18
707-88-05711	1043	18
707-88-15010	1019	6
	1021	6
	1023	6
	1025	6
707-88-33040	1041	30
	1043	30
707-91-01150	1019	
	1021	
	1023	
	1025	
707-98-11700	1121	K16
707-99-38740	1120	K07
707-99-64230	1120	K10
707-99-64250	1121	K11
707-99-66660	1121	K13
707-99-74200	1121	K14
708-17-05010	376	19
	402	19
708-17-12780	376	20
	402	20
708-18-13230	377	3
	394	22
	403	3
	420	22
708-1H-00251	376	
	377	
	379	
	380	
	381	
	402	
	403	
	405	
	406	
	407	
708-1H-01252	376	
	377	
	379	
	402	
	403	
	405	
708-1H-03240	377	
	403	
708-1H-03250	379	1
	405	1
708-1H-03260	377	
	403	
708-1H-04230	376	
	402	
708-1H-04330	376	
	402	
708-1H-21760	379	3
	405	3
708-1H-22150	376	21
	402	21
708-1H-31630	379	5
	405	5
708-1H-32140	376	18
	402	18
708-1H-32150	379	4
	405	4
708-1H-35910	381	4
	407	4
708-1L-29340	376	11
	402	11
708-1S-03340	386	
	412	
708-1S-03920	386	
	412	
708-1S-12280	385	5
	411	5
708-1S-12330	385	6
	411	6
708-1S-12340	385	7
	411	7
708-1S-12350	385	9
	411	9
708-1S-13380	385	17
	411	17
708-1S-13420	384	7
	410	7
708-1S-13430	384	9
	410	9
708-1S-14210	385	20
	411	20
708-1S-14220	385	21
	411	21
708-1S-14230	385	23
708-1S-14241	385	24
	411	24
708-1S-15240	386	8
	412	8
708-1S-15260	386	15
	412	15
708-1S-15270	386	12
	412	12
708-1S-15280	386	14
	412	14
708-1S-15420	386	3
	412	3
708-1S-15430	386	4
	412	4
708-1S-15441	386	9
	412	9
708-1S-15470	386	7
	412	7
708-1S-15480	386	13
	412	13
708-1S-18180	261	23
	266	23
708-1S-19710	384	14
	410	14
708-1S-19920	384	15
	410	15
708-1S-19930	388	1
	414	1
708-1T-00470	384	
	385	
	386	
	387	
	388	
	410	
	411	
	412	
	413	
	414	
708-1T-01470	384	
	385	
	386	
	387	
	410	
	411	
	412	
	413	
708-1T-04610	384	
	410	
708-1T-04620	384	
	410	
708-1T-12410	385	1
	411	1
708-1T-12420	385	3
	411	3
708-1T-13310	385	19
	411	19
708-1T-13510	385	11
	411	11
708-1T-13540	385	16
	411	16
708-1T-13550	385	18
	411	18
708-1T-13580	384	4
	410	4
708-1T-13590	385	12
	411	12
708-1T-14610	384	6
	410	6
708-21-12541	63	24
	92	18
	94	18
	105	18
	107	18
	436	24
	442	24
	818	13
708-21-12970	385	8
	411	8
708-23-12350	395	40
	421	40
708-25-19160	767	10
	816	10
708-25-52861	262	8
	267	8
708-27-22811	394	31
	420	31
708-2G-14340	377	31
	403	31
708-2G-15140	377	28
	403	28
708-2G-15230	377	33
	403	33
708-2G-15260	377	34
	403	34
708-2G-15290	377	27
	403	27
708-2G-15310	378	38
	404	38
708-2G-15320	377	20
	403	20
708-2G-15330	378	42
	404	42
708-2G-15390	378	35
	404	35
708-2H-03620	380	
	406	
708-2H-04690	377	
	403	
708-2H-04760	377	
	403	
708-2H-12430	376	9
	402	9
708-2H-15210	377	26
	403	26
708-2H-15310	377	21
	403	21
708-2H-15330	377	29
	403	29
708-2H-15350	377	30
	403	30
708-2H-15410	380	3
	406	3
708-2H-22160	376	23
	394	32
	402	23
	420	32
708-2H-22570	376	22

PartNumber	Page	Index
	402	22
708-2H-23141	377	7
	403	7
708-2H-23350	377	8
	403	8
708-2H-23360	377	9
	403	9
708-2H-33140	377	5
	403	5
708-2H-33150	377	6
	403	6
708-2H-33311	377	11
	403	11
708-2H-33343	377	10
	403	10
708-2H-34150	377	17
	403	17
708-2L-22160	262	9
	267	9
708-2L-24680	380	2
	406	2
708-2L-25480	376	15
	384	13
	402	15
	410	13
708-2L-25490	261	18
	266	18
	384	12
	410	12
708-2L-28540	380	4
	406	4
708-2L-33350	262	19
	267	19
708-2L-35170	377	25
	403	25
708-2L-35290	378	41
	404	41
708-2L-35311	380	1
	406	1
708-2L-35331	380	6
	406	6
708-2L-35341	380	8
	406	8
708-2L-35351	380	9
	406	9
708-2L-35360	380	5
	406	5
708-2L-35410	380	7
	406	7
708-2L-35690	377	24
	403	24
708-2L-35760	377	22
	403	22
708-2L-35770	377	23
	403	23
708-2L-44161	378	39
	404	39
708-3S-13150	385	14
708-3S-13160	385	13
	411	13
708-3S-13430	411	14
708-3S-14290	411	23
708-7H-16410	394	12
	420	12
708-7L-05010	262	7
	267	7
708-7L-12140	262	6
	267	6
708-7L-13140	262	15
	267	15
708-7L-13410	262	21
	267	21
708-7R-01631	261	16
	266	16
708-7R-18230	775	7
	820	7
708-7S-21610	261	6
	266	6
708-7T-05010	385	4
	411	4
708-7W-00140	261	
	262	
	263	
	266	
	267	
	268	
708-7W-01050	261	
	266	
708-7W-11190	261	1
	266	1
708-7W-12120	262	5
	267	5
708-7W-12130	262	4
	267	4
708-7W-18150	261	9
	266	9
708-7W-18160	261	10
	266	10
708-7W-18170	261	11
	266	11
708-8E-16150	311	29
	312	4
	376	16
	402	16
708-8E-16160	770	18
	817	18
708-8F-33121	262	11
	267	11
708-8F-33160	262	16
	267	16
708-8F-33230	262	12
	267	12
708-8F-33310	262	20
	267	20
708-8F-33350	262	18
	267	18
708-8F-33360	262	14
	267	14
709-25-11361	261	5
	266	5
709-25-11390	780	2
	795	34
	796	2
	825	2
	839	34
	841	2
709-25-11650	261	4
	266	4
709-25-11670	336	9
	336	31
709-74-91510	794	33
	839	33
709-74-91860	766	10
	789	10
	815	10
	834	10
709-74-92821	769	13
	776	26
	778	26
	790	26
	792	26
	794	24
	817	13
	821	26
	823	26
	835	26
	837	26
	839	24
709-94-91751	769	15
	776	28
	778	28
	790	28
	792	28
	794	26
	817	15
	821	28
	823	28
	835	28
	837	28
	839	26
709-94-92811	769	14
	776	27
	778	27
	790	27
	792	27
	794	25
	817	14
	821	27
	823	27
	835	27
	837	27
	839	25
711-16-11560	307	6
711-53-11770	307	7
711-68-18130	305	28
714-07-35501	312	1
714-10-17151	708	5
714-12-19380	317	29
714-23-15690	311	26
	312	3
	335	38
	337	3
720-68-19610	262	13
	267	13
	384	21
	410	21
721-11-60950	1048	1
721-13-16160	1028	1
	1030	1
721-13-16170	1032	1
	1034	1
721-58-10150	1041	2
722-12-19070	771	11
	818	11
722-12-19120	766	6
	789	6
	815	6
	834	6
723-11-18190	436	20
	442	20
723-11-18430	261	20
	266	20
723-11-19960	771	17
	777	40
	779	36
	791	40
	793	36
	795	43
	818	17
	822	40
	823	36
	836	40
	837	36
	840	43
723-20-65700	773	5
	819	5
723-40-85100	780	1
	796	1
	825	1
	841	1
723-56-31630	386	10
	412	10
723-60-21800	773	1
	819	1
723-60-22230	263	10

PartNumber	Page	Index
	268	10
	388	2
	414	2
723-60-23100	773	12
	819	12
723-60-23400	775	5
	820	5
723-60-23501	775	10
	820	10
723-60-23601	775	1
	794	29
	820	1
	839	29
723-60-23800	775	12
	820	12
723-60-24501	777	35
	778	31
	791	35
	792	31
	821	35
	823	31
	835	35
	837	31
723-60-27200	391	1
	417	1
723-61-25300	794	
	839	
723-61-25400	778	
	792	
	823	
	837	
723-61-25500	790	
	835	
723-61-25600	776	
	821	
723-63-31520	766	18
	789	18
	815	18
	834	18
723-63-31530	766	19
	789	19
	815	19
	834	19
723-63-31540	766	23
	789	23
	815	23
	834	23
723-63-31550	766	24
	789	24
	815	24
	834	24
723-63-31610	776	31
	790	31
	821	31
	835	31
723-63-31640	767	4
	816	4
723-63-31660	768	18
	816	18
723-63-31670	768	19
	776	9
	778	8
	790	9
	792	8
	794	8
	816	19
	821	9
	823	8
	835	9
	837	8
	839	8
723-63-31680	768	20
	816	20
723-63-31720	768	23
	776	15
	778	14
	790	15
	792	14
	816	23
	821	15
	823	14
	835	15
	837	14
723-63-31730	768	24
	776	16
	778	15
	790	16
	792	15
	794	14
	816	24
	821	16
	823	15
	835	16
	837	15
	839	14
723-63-31740	768	25
	776	17
	778	16
	790	17
	792	16
	794	15
	816	25
	821	17
	823	16
	835	17
	837	16
	839	15
723-63-31760	768	26
	816	26
723-63-31770	768	27
	816	27
723-63-31850	769	11
	776	24
	778	24
	790	24
	792	24
	794	22
	817	11
	821	24
	823	24
	835	24
	837	24
	839	22
723-63-31860	769	12
	776	25
	778	25
	790	25
	792	25
	794	23
	817	12
	821	25
	823	25
	835	25
	837	25
	839	23
723-63-31930	767	13
	795	39
	816	13
	840	39
723-63-31940	769	5
	817	5
723-63-31960	769	9
	817	9
723-63-31970	769	6
	817	6
723-63-31990	773	14
	819	14
723-63-32520	769	3
	794	19
	817	3
	839	19
723-63-32530	769	7
	794	20
	817	7
	839	20
723-63-32540	767	11
	795	37
	816	11
	839	37
723-63-32550	767	12
	795	38
	816	12
	840	38
723-63-32560	766	26
	789	26
	815	26
	834	26
723-63-32620	789	7
	834	7
723-63-32630	776	21
	790	21
	821	21
	835	21
723-63-32640	769	4
	778	20
	792	20
	817	4
	823	20
	837	20
723-63-32650	769	8
	817	8
723-63-32710	766	22
	789	22
	815	22
	834	22
723-63-32730	771	3
	818	3
723-63-32740	771	4
	818	4
723-63-32750	776	18
	778	17
	790	18
	792	17
	794	16
	821	18
	823	17
	835	18
	837	17
	839	16
723-63-32760	776	10
	778	9
	790	10
	792	9
	794	9
	821	10
	823	9
	835	10
	837	9
	839	9
723-63-32770	776	22
	778	21
	790	22
	792	21
	821	22
	823	21
	835	22
	837	21
723-63-32780	778	22
	792	22
	823	22
	837	22
723-63-32790	773	7
	819	7
723-63-32810	771	7
	818	7

PartNumber	Page	Index
723-63-32910	780	6
	796	6
	825	6
	841	6
723-63-32920	780	7
	796	7
	825	7
	841	7
723-63-32930	780	8
	796	8
	825	8
	841	8
723-63-32950	780	21
	825	21
723-63-41510	768	21
	816	21
723-63-41520	768	28
	816	28
723-65-21700	766	
	767	
	769	
	771	
	773	
	775	
	776	
	778	
	780	
	815	
	816	
	817	
	818	
	819	
	820	
	821	
	823	
	825	
723-66-05101	796	
	841	
723-66-05201	780	
	825	
723-66-21100	767	
	769	
	771	
	773	
	775	
	789	
	790	
	792	
	794	
	796	
	816	
	817	
	818	
	819	
	820	
	834	
	835	
	837	
	839	
	841	
729-11-11180	92	35
	94	35
	105	35
	107	35
729-12-11001	92	
	94	
	105	
	107	
729-12-11100	92	33
	94	33
	105	33
	107	33
729-12-11201	92	
729-12-11700	92	34
	94	34
	105	34
	107	34
7825-30-1301	562	32
	614	32
	665	32
7826-23-3012	299	1
7830-54-2008	550	4
	550	6
7830-54-2009	602	4
	602	6
	654	4
	654	6
7831-69-1106	704	1
7835-33-1001	302	
7835-33-1100	302	1
7835-33-1201	302	2
7835-33-1310	302	3
7835-33-1320	302	4
7835-33-1330	302	5
7835-33-1340	302	6
7835-33-8100	531	1
	532	1
7861-74-5100	514	18
	525	18
	556	11
	608	11
	660	11
7861-93-1422	744	17
7861-93-1652	429	9
7861-93-2330	333	53
7861-93-3320	354	2
	429	8
7861-93-4132	707	22
7861-93-4520	296	9
7861-93-4940	280	2
	284	2
	288	5
7861-93-5390	757	16
	806	16
8A13-10-1410	713	1
8A13-10-2100	529	10
	530	10
8A13-10-2200	529	11
	530	11
8A13-10-4320	529	8
	530	8
AS167544	473	13
AS167554	475	13
	481	10
AS167566	473	12
AS170373	473	11
	475	11
	481	12
AS175319	481	13
AS177303	481	17
AS183675	475	
AS183676	475	1
	481	5
AS183678	475	2
AS183679	475	3
	481	2
AS183680	481	3
AS183681	475	4
AS183682	475	5
	481	4
AS183683	472	6
	475	6
AS183684	472	7
	475	7
	481	7
AS183685	472	8
	475	9
AS183686	472	9
AS183687	472	10
	475	10
AS183688	473	14
	475	14
AS183689	473	15
	475	15
	481	6
AS183704	472	
AS183705	472	2
AS183706	472	4
AS183707	472	1
AS183708	472	3
AS183709	472	5
AS193156	481	16
AS193158	475	8
AS195653	481	15
AS196618	481	14
AS198304	475	12
AS198316	481	11
AS198488	481	8
AS198489	481	9
AS198529	481	1
GJ1076975	479	9
GJ1076979	479	16
GJ1076987	479	24
GJ1077152	479	12
GJ1077153	479	13
GJ1078590	479	11
GJ1081312	479	8
GJ1081315	479	17
GJ1089165	479	22
GJ1090446	479	25
GJ1090447	479	19
GJ1090779	479	20
GJ1096565	479	21
GJ1096588	479	23
GJ1096687	479	18
GJ1104066	479	26
GJ131834	479	14
GJ138628	479	15
GJ140907	479	1
GJ140912	479	3
GJ2048193	479	2
GJ2048660	479	4
GJ2048661	479	5
GJ2048662	479	6
GJTS40102	479	
GJTSM4NB	479	28
KD0-0020-05062	204	39
KD0-0055-05082	204	37
KD0-0055-05122	202	28
KD0-0080-06142	202	22
KD0-0083-00802	202	13
KD0-0270-06202	204	15
KD0-0270-06602	205	43
KD0-0275-06802	198	12
	200	12
KD0-0276-08402	204	32
KD0-0280-16022	198	17
	200	17
KD0-0290-20022	202	34
KD0-0291-08010	202	27
KD0-0330-16012	198	15
	200	15
KD0-09001-4380	204	30
KD0-09006-0660	205	47
KD0-09006-0670	205	48
KD0-09011-3140	204	27
KD0-09057-0110	204	33
KD0-09057-0190	204	38
KD0-09057-0220	198	29
	200	29
KD0-09170-2501	198	21
	200	21
KD0-09201-0760	202	9
KD0-09201-0770	202	4
KD0-09201-0850	204	12

PartNumber	Page	Index
KD0-09201-0980	198	4
	200	4
KD0-09201-1140	198	7
	200	7
KD0-09271-3620	204	21
KD0-09275-1430	205	50
KD0-23100-0430	204	18
KD0-23120-0180	204	8
KD0-23200-0671	204	20
KD0-23303-0020	204	5
KD0-23310-1670	204	9
KD0-23500-0410	204	13
KD0-23511-1101	204	14
KD0-23710-0221	204	29
KD0-23740-0351	204	23
KD0-23750-0490	204	24
KD0-25000-8332	205	42
KD0-33902-0080	202	18
KD0-33902-0090	202	17
KD0-33902-0100	202	24
KD0-35100-0230	202	1
KD0-35100-0300	198	1
	200	1
KD0-35120-0250	202	11
KD0-35120-0290	198	18
	200	18
KD0-35200-0320	202	12
KD0-35200-0460	198	5
	200	5
KD0-35300-0200	202	5
KD0-35300-0350	198	6
	200	6
KD0-35411-0630	198	13
KD0-35411-0680	202	31
KD0-35411-0700	200	13
KD0-35421-0230	198	14
	200	14
KD0-35700-0760	202	
KD0-35700-0920	198	
	200	
KD0-35710-0890	202	14
KD0-35710-1010	198	19
	200	19
KD0-35719-0210	198	30
	200	30
KD0-35730-0162	202	15
KD0-35730-0700	198	20
	200	20
KD0-35761-0190	202	29
KD0-35761-0250	198	31
	200	31
KD0-35784-0210	198	27
	200	27
KD0-35784-0290	198	28
	200	28
KD0-35923-0130	198	26
	200	26
KD0-35923-0160	198	3
	200	3
KD0-35926-0070	198	8
	200	8
KD0-35926-0080	202	6
KD0-35926-0090	198	10
	200	10
KD0-35943-0100	202	23
KD0-35943-0140	198	22
	200	22
KD0-35943-0150	198	23
	200	23
KD0-35943-0160	198	24
	200	24
KD0-35943-0170	198	25
	200	25
KD0-35943-0210	202	16
KD0-35951-0060	198	9
	200	9
KD0-35951-0080	202	7
KD0-47100-4651	204	19
KD0-47761-2671	205	45
KD0-47761-2681	204	25
KD0-47761-2691	204	26
KD0-47927-1390	205	44
KD1-0020-06452	202	19
KD1-0240-06305	205	41
KD1-0330-06012	202	20
KD1-0330-08022	204	3
KD1-0331-08020	202	26
KD1-0335-06002	202	21
KD1-0335-08002	202	25
	204	2
KD1-0335-16002	198	16
	200	16
KD1-0335-22002	202	33
KD1-0345-05001	205	40
KD1-0345-08001	204	4
KD1-0400-30100	204	17
KD1-0416-04160	202	35
KD1-09211-0081	204	28
KD1-09211-0981	205	46
KD1-09211-1120	204	22
KD1-09257-0050	205	49
KD1-09279-0090	204	1
KD1-23181-0020	204	7
KD1-23320-0290	204	11
KD1-23500-0970	204	10
KD1-23914-0020	204	6
KD1-23921-0130	204	36
KD1-23921-0140	204	35
KD1-23941-0040	204	34
KD1-23951-0051	204	16
KD1-33923-0030	202	3
KD1-33923-0790	198	2
	200	2
KD1-33923-0890	202	2
KD1-33926-0660	202	8
KD1-33926-0730	198	11
	200	11
KD1-33926-0790	202	10
KD1-35421-0180	202	32
KD1-47921-0790	204	31
KD7-35719-0181	202	30
ND017231-0700	575	28
	629	28
	675	28
ND047372-0660	227	6
	231	6
	236	6
	240	6
ND047410-1570	227	4
	231	4
	236	4
	240	4
ND047410-1580	227	
	231	
	236	
	240	
ND063600-4580	575	35
	629	35
	675	35
ND063800-0300	575	27
	629	27
	675	27
ND077500-5650	575	36
	629	36
	675	36
ND077500-5890	575	29
	629	29
	675	29
ND077800-0750	575	33
	629	33
	675	33
ND090207-0100	153	34
ND090222-0070	153	28
	154	19
ND090222-0120	153	30
ND090244-0010	153	35
ND090310-0490	154	20
ND090310-0500	152	27
ND090317-0060	154	16
ND090317-0480	153	33
ND092121-0011	154	12
ND092124-0010	154	11
ND092125-0010	154	15
ND092126-0010	154	13
ND092130-0360	154	14
ND092220-0040	154	21
ND092223-0042	154	22
ND094040-0380	152	2
ND094082-0040	154	7
ND094086-0090	152	3
ND094086-0100	152	5
ND094086-0150	152	16
ND094086-0160	152	20
ND094086-0170	152	21
ND094086-0200	154	8
ND094086-0210	153	37
ND094087-0050	154	9
ND094092-0010	152	18
ND094093-0090	152	22
ND094093-0100	152	
ND094093-0110	152	
ND094093-0120	152	
ND094095-0330	152	17
ND094095-0340	152	
ND094095-0350	152	
ND094095-0360	152	
ND094095-0370	152	
ND094096-0050	152	24
ND094096-0060	152	
ND094096-0070	152	
ND094096-0080	152	
ND094100-0472	152	
ND094104-0160	152	14
ND094110-0230	152	1
ND094140-0040	152	4
ND094162-0031	152	8
ND094164-0030	152	9
ND094165-0031	152	10
ND094170-0110	152	11
ND094191-0590	152	12
ND094200-0400	154	
ND094205-0060	154	10
ND094210-0090	154	1
ND094230-0080	154	3
ND094231-0060	154	2
ND094241-0040	154	4
ND094244-0040	154	5
ND094251-0050	154	6
ND095400-0310	155	5
ND095420-0440	155	6
ND095438-0090	155	9
ND095444-0020	155	8
ND096449-0070	154	24
ND116140-0050	574	14
	628	14
	674	14
ND116340-7350	575	38
	629	38
	675	38
ND116576-3810	574	3
	628	3
	674	3
ND116576-3820	574	4
	628	4
	674	4

PartNumber	Page	Index
ND116576-3852	575	25
	629	25
	675	25
ND116576-3862	575	26
	629	26
	675	26
ND116650-6850	574	16
	629	16
	674	16
ND116660-7570	574	15
	628	15
	674	15
ND116662-7670	575	23
	629	23
	675	23
ND116662-7681	575	24
	629	24
	675	24
ND116662-8320	575	44
	629	44
	675	44
ND116780-2481	574	17
	629	17
	674	17
ND116780-2491	574	18
	629	18
	674	18
ND116780-2501	574	19
	629	19
	675	19
ND116780-2510	574	20
	629	20
	675	20
ND116780-3130	575	22
	629	22
	675	22
ND116780-3920	575	31
	629	31
	675	31
ND116781-3000	574	21
	629	21
	675	21
ND146340-0560	575	34
	629	34
	675	34
ND146657-8841	574	10
	628	10
	674	10
ND146657-8850	574	12
	628	12
	674	12
ND146657-8860	575	37
	629	37
	675	37
ND146657-9811	574	11
	628	11
	674	11
ND146667-0440	575	32
	629	32
	675	32
ND146691-4470	227	12
	231	12
	236	12
	240	12
ND147310-0110	227	2
	231	2
	236	2
ND147310-1750	240	2
ND147350-1640	227	3
	231	3
	236	3
	240	3
ND245450-5831	574	1
	628	1
	674	1

PartNumber	Page	Index
ND245450-5840	574	2
	628	2
	674	2
ND246470-4311	575	42
	629	42
	675	42
ND246790-2060	575	30
	629	30
	675	30
ND247300-4152	240	
ND247300-5320	227	
	231	
	236	
ND443440-0030	582	4
	636	4
	680	4
ND445021-3941	574	13
	628	13
	674	13
ND446010-3132	574	
	628	
	674	
ND446600-0991	574	5
	628	5
	674	5
ND447220-4781	227	1
	231	1
	236	1
	240	1
ND447500-2750	574	8
	628	8
	674	8
ND499000-6160	155	7
ND90107-06161	152	26
ND90200-06081	152	25
ND91310-05081	227	11
	231	11
	236	11
	240	11
ND92156-08081	152	7
ND93950-05003	575	43
	629	43
	675	43
ND949001-1730	575	41
	629	41
	675	41
ND949008-0330	575	40
	629	40
	675	40
ND949008-0460	575	39
	629	39
	675	39
ND949010-2530	155	10
ND949010-3020	153	36
ND949013-5880	152	6
ND949013-7480	227	9
	231	9
	236	9
	240	9
ND949013-7500	227	
	231	
	236	
	240	
ND949013-7510	227	
	231	
	236	
	240	
ND949018-0350	153	32
ND949018-1500	154	17
ND949044-3320	152	19
	154	18
	154	23
ND949046-3100	574	9
	628	9
	674	9

PartNumber	Page	Index
ND949047-2950	227	5
	231	5
	236	5
	240	5
ND949048-0430	227	10
	231	10
	236	10
	240	10
ND949070-0640	227	8
	231	8
	236	8
	240	8
ND949070-1360	227	7
	231	7
	236	7
	240	7
ND949101-0250	152	13
ND949140-6310	152	
ND949142-0020	574	6
	628	6
	674	6
ND949142-0030	574	7
	628	7
	674	7
ND949142-0040	582	5
	636	5
	680	5
ND949150-3200	152	15
ND949180-0060	153	31
ND949180-0310	153	29
ND949979-1300	152	23
PML130-03300	118	2
	118	6
PML136-00201	100	13
	113	13
	118	14
PML136-00501	118	11
PML137-04800	118	15
PML137-05800	118	12
PML137-05901	100	14
	113	14
PML139-01300	118	13
PML139-01520	118	16
PML139-01700	100	15
	113	15
PML150-08501	118	
PML152-07002	100	
	113	
PML152-07110	118	
PML154-09200	118	
PML156-07200	100	
	113	
PML156-07400	118	
PML160-11201	100	
	113	
PML160-11301	118	
PML172-00900	100	12
	113	12
PML199-00210	100	17
	113	17
PMMF14-0229	118	17
SD1211-40300X0	196	1
SD1221-15100X0	196	21
SD1230-18803X0	196	
SD1235-06400X0	196	3
SD1235-06410X0	196	4
SD1240-07200X0	196	
SD1251-00700X0	196	20
SD1510-02911X0	196	15
SD1982-03200X0	196	30
SD2080-28900X0	196	31
SD2202-01401X0	196	17
SD2202-02200X0	196	26
SD2240-19500X0	196	2
SD2242-08600X0	196	22

PartNumber	Page	Index
SD3000-07800X0	196	32
SD3002-04600X0	196	34
SD3220-38800X0	196	6
SD3409-00300X0	196	19
SD3600-17300X0	196	29
SD4041-00900X0	196	10
SD4041-05700X0	196	14
SD4041-07500X0	196	8
SD4142-00900X0	196	25
SD4142-01000X0	196	16
SD4215-01300X0	196	13
SD4215-03900X0	196	9
SD4215-04000X0	196	7
SD5010-04750X0	196	28
SD5010-21500X0	196	27
SD5010-26400X0	196	5
SD6060-11920X0	196	11
SD6206-01660X0	196	18
SD6206-04100X0	196	24
SD6410-02000X0	196	23
SD8140-0503010	196	12
SD8264-1830010	196	33