D375A-6R

PARTBOOK

RUTHZIL TRATOR COMERCIAL DE PEÇAS LTDA 11 97083-6812 ROLANDO



BULLDOZER

D375A-6R

SN : 65001 - uP

Printed By : Dwi Iswanto (airafather6107170)

Printed By : Dwi Iswanto (airafather6107170)

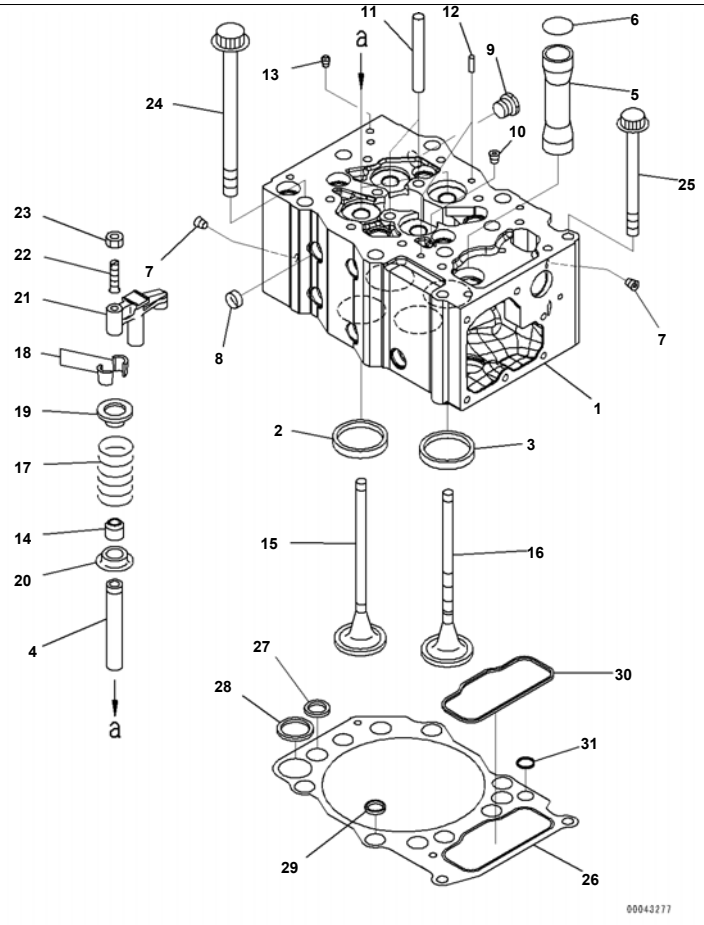

Index	Code	Part Number	Description	Qty	Serial No.
		6245-11-1100	Cylinder Head Assembly	6	610984-
1	C1		· Head, Cylinder	1	610984-
2		6240-11-1330	· Insert, Intake Valve, Standard	2	610984-
		6240-16-1330	· Insert, Intake Valve, Oversize 1.00mm	2	610984-
		6240-17-1330	· Insert, Intake Valve, Oversize 0.75mm	2	610984-
		6240-18-1330	· Insert, Intake Valve, Oversize 0.50mm	2	610984-
		6240-19-1330	· Insert, Intake Valve, Oversize 0.25mm	2	610984-
3		6245-11-1320	· Insert, Exhaust Valve, Standard	2	610984-
		6245-16-1320	· Insert, Exhaust Valve, Oversize 1.00mm	2	610984-
		6245-17-1320	· Insert, Exhaust Valve, Oversize 0.75mm	2	610984-
		6245-18-1320	· Insert, Exhaust Valve, Oversize 0.50mm	2	610984-
		6245-19-1320	· Insert, Exhaust Valve, Oversize 0.25mm	2	610984-
4		6240-16-1340	· Guide	4	610984-
5		6240-11-1160	· Tube	1	610984-
6		07000-73038	· O-ring	1	610984-
7		07043-70108	· Plug	3	610984-
8		6162-13-1150	· Plug, Expansion	17	610984-
9		6215-81-9530	· Plug	1	610984-
10		07043-70312	· Plug	1	610984-
11		6240-11-1140	· Guide	2	610984-
12		04020-00820	· Pin, Dowel	2	610984-
13		07042-00108	· Plug, Taper	1	610984-
14		6240-11-1370	Seal	24	610984-
15		6240-41-4110	Valve, Intake	12	610984-
16		6240-41-4220	Valve, Exhaust	12	610984-
17		6240-41-4411	Spring	24	610984-
18		6240-41-4520	Cotter	48	610984-
19		6240-41-4430	Seat	24	610984-
20		6240-41-4440	Seat	24	610984-
21		6240-41-5610	Crosshead	12	610984-
22		6240-41-5641	Screw, Adjusting	12	610984-

Printed By : Dwi Iswanto (airafather6107170)

Index	Code	Part Number	Description	Qty	Serial No.
23		6162-43-5630	Nut, Lock	12	610984-
24		6240-11-1610	Bolt	42	610984-
25		01438-01270	Bolt	12	610984-
26		6240-11-1810	Gasket Assembly, Standard	6	610984-
27	C1		· Grommet, Water	4	610984-
28	C1		· Grommet, Water	1	610984-
29	C1		· Grommet, Water	7	610984-
30	C1		· Grommet, Oil	1	610984-
31	C1		· Grommet, Oil, Standard	1	610984-

Printed By : Dwi Iswanto (airafather6107170)

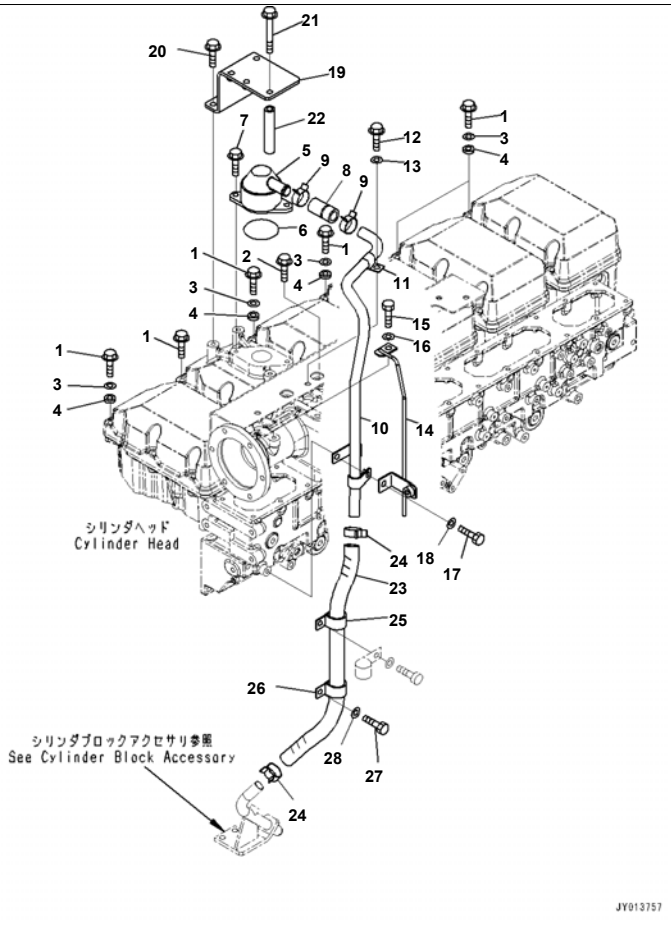

SAA6D170E-5EE S/N 610984-UP (For D375A-6R)
Cylinder Head Cover, For VHMS (#610984-)

Index	Code	Part Number	Description	Qty	Serial No.
1		01435-01045	Bolt	35	610984-
2		01435-01070	Bolt	1	610984-
3		01640-21016	Washer	30	610984-
4		6150-11-8820	Rubber, Seal	30	610984-
5		6210-21-8711	Breather	1	610984-
6		07000-72060	O-ring	1	610984-
7		01435-01025	Bolt	2	610984-
8		6245-21-8830	Hose	1	610984-
9		07285-00280	Clip	2	610984-
10		6245-21-8770	Tube, Breather, Breather	1	610984-
11		112-946-4170	Clip	1	610984-
12		01435-01030	Bolt	1	610984-
13		01643-31032	Washer	1	610984-
14		6245-81-5140	Bracket	1	610984-
15		01010-81020	Bolt	1	610984-
16		01643-31032	Washer	1	610984-
17		01010-81025	Bolt	1	610984-
18		01643-31032	Washer	1	610984-
19		6245-21-7120	Bracket	1	610984-
20		01435-01020	Bolt	2	610984-
21		01436-01030	Bolt	1	610984-
22		6206-81-9870	Spacer	1	610984-
23		6245-21-8840	Hose	1	610984-
24		07285-00280	Clip	2	610984-
25		04434-53211	Clip	1	610984-
26		04434-53211	Clip	1	610984-
27		01010-81020	Bolt	1	610984-
28		01643-31032	Washer	1	610984-

Printed By : Dwi Iswanto (airafather6107170)

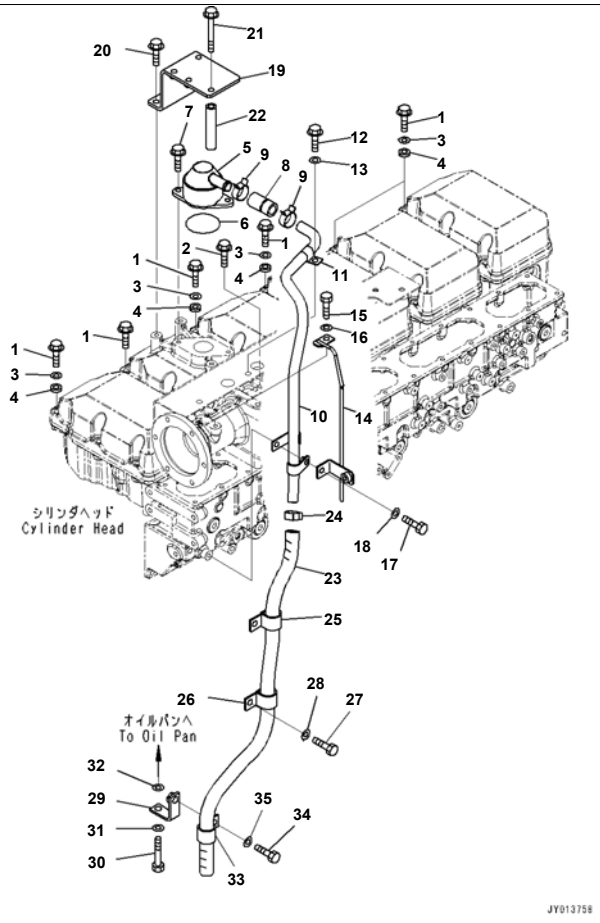

Index	Code	Part Number	Description	Qty	Serial No.
1		01435-01045	Bolt	35	610984-
2		01435-01070	Bolt	1	610984-
3		01640-21016	Washer	30	610984-
4		6150-11-8820	Rubber, Seal	30	610984-
5		6210-21-8711	Breather	1	610984-
6		07000-72060	O-ring	1	610984-
7		01435-01025	Bolt	2	610984-
8		6245-21-8830	Hose	1	610984-
9		07285-00280	Clip	2	610984-
10		6245-21-8770	Tube, Breather, Breather	1	610984-
11		112-946-4170	Clip	1	610984-
12		01435-01030	Bolt	1	610984-
13		01643-31032	Washer	1	610984-
14		6245-81-5140	Bracket	1	610984-
15		01010-81020	Bolt	1	610984-
16		01643-31032	Washer	1	610984-
17		01010-81025	Bolt	1	610984-
18		01643-31032	Washer	1	610984-
19		6245-21-7120	Bracket	1	610984-
20		01435-01020	Bolt	2	610984-
21		01436-01030	Bolt	1	610984-
22		6206-81-9870	Spacer	1	610984-
23		07287-01910	Hose	1	610984-
24		07285-00220	Clip	1	610984-
25		04434-52511	Clip	1	610984-
26		04434-52511	Clip	1	610984-
27		01010-81020	Bolt	1	610984-
28		01643-31032	Washer	1	610984-
29		6934-71-5860	Bracket	1	610984-
30		01010-81055	Bolt	1	610984-
31		01643-31032	Washer	1	610984-

Printed By : Dwi Iswanto (airafather6107170)

Index	Code	Part Number	Description	Qty	Serial No.
32		01643-31032	Washer	1	610984-
33		04434-52511	Clip	1	610984-
34		01010-81020	Bolt	1	610984-
35		01643-31032	Washer	1	610984-

Printed By : Dwi Iswanto (airafather6107170)

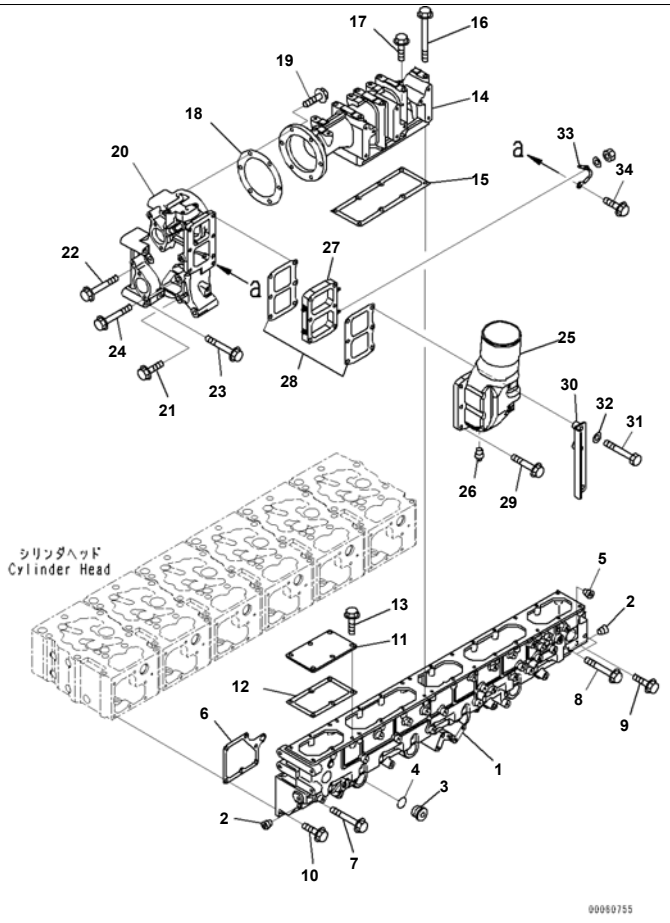

Index	Code	Part Number	Description	Qty	Serial No.
1		6245-11-4110	Manifold, Air Intake	1	610984-
2		07043-70108	Plug	2	610984-
3		6215-81-9540	Plug	6	610984-
4		6215-81-9740	O-ring	6	610984-
5		07043-A0108	Plug	1	610984-
6		6245-11-4810	Gasket	6	610984-
7		01436-01045	Bolt	15	610984-
8		01436-01040	Bolt	2	610984-
9		01435-01055	Bolt	1	610984-
10		01435-01030	Bolt	18	610984-
11		6245-11-4120	Plate	1	610984-
12		6245-11-4130	Gasket	1	610984-
13		01435-01020	Bolt	6	610984-
14		6245-11-7410	Connector, Air	1	610984-
15		6245-11-4140	Gasket	1	610984-
16		01436-01080	Bolt	7	610984-
17		01435-01035	Bolt	1	610984-
18		6245-11-7420	Gasket	1	610984-
19		01435-01030	Bolt	6	610984-
20		6245-11-4210	Connector, Air Junction	1	610984-
21		01435-01235	Bolt	1	610984-
22		01436-01200	Bolt	1	610984-
23		01436-01205	Bolt	3	610984-
24		01436-01220	Bolt	2	610984-
25		6245-11-4310	Connector, Air Intake	1	610984-
26		07042-A0108	Plug	1	610984-
27		600-815-3812	Heater	1	610984-
28		6150-11-4821	Gasket	2	610984-
29		01435-01060	Bolt	4	610984-
30		6245-81-5450	Bracket	1	610984-
31		01011-81090	Bolt	2	610984-

Printed By : Dwi Iswanto (airafather6107170)

Index	Code	Part Number	Description	Qty	Serial No.
32		01643-31032	Washer	2	610984-
33		6212-82-4350	Wire	1	610984-
34		01435-01016	Bolt	1	610984-

Printed By : Dwi Iswanto (airafather6107170)

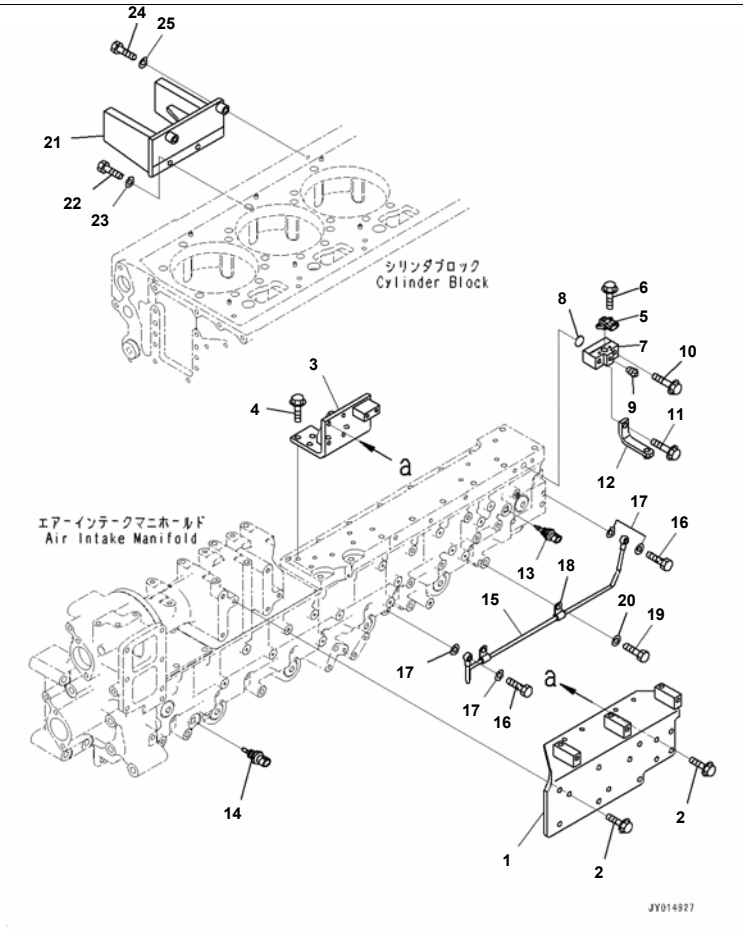

Reference:A1310-001002 Page:A004002

SAA6D170E-5EE S/N 610984-UP (For D375A-6R)
Air Intake Manifold, Sensor and Spill Tube (#610984-)

Index	Code	Part Number	Description	Qty	Serial No.
1		6245-81-5440	Bracket	1	610984-
2		01435-01025	Bolt	7	610984-
3		6245-11-4240	Bracket	1	610984-
4		01435-01025	Bolt	4	610984-
5		6261-81-2700	Sensor Assembly	1	610984-
		6261-81-2710	· Sensor	1	610984-
		6261-81-2720	· O-ring	1	610984-
6		01435-00614	Bolt	2	610984-
7		6245-71-5580	Block, Sensor	1	610984-
8		07000-A2021	O-ring	1	610984-
9		07042-A0108	Plug	1	610984-
10		01435-01055	Bolt	1	610984-
11		01435-01065	Bolt	1	610984-
12		6245-71-6290	Bracket	1	610984-
13		6560-61-7300	Sensor Assembly, Intake Air Temperature	1	610984-
		6560-61-7310	· Sensor	1	610984-
		6735-21-1930	· O-ring	1	610984-
14		6261-81-6901	Sensor Assembly, Fuel Temperature	1	610984-
		6216-84-9740	· Seal	1	610984-
15		6245-71-5390	Tube, Spill	1	610984-
16		07206-30812	Bolt, Joint	2	610984-
17		07005-01212	Seal, Washer	4	610984-
18		6210-51-8320	Clip	2	610984-
19		01010-81020	Bolt	2	610984-
20		01643-31032	Washer	2	610984-
21		195-03-64281	Bracket	1	610984-
22		01010-81030	Bolt	2	610984-
23		01643-31032	Washer	2	610984-
24		01010-81050	Bolt	2	610984-
25		01643-31032	Washer	2	610984-

Printed By : Dwi Iswanto (airafather6107170)

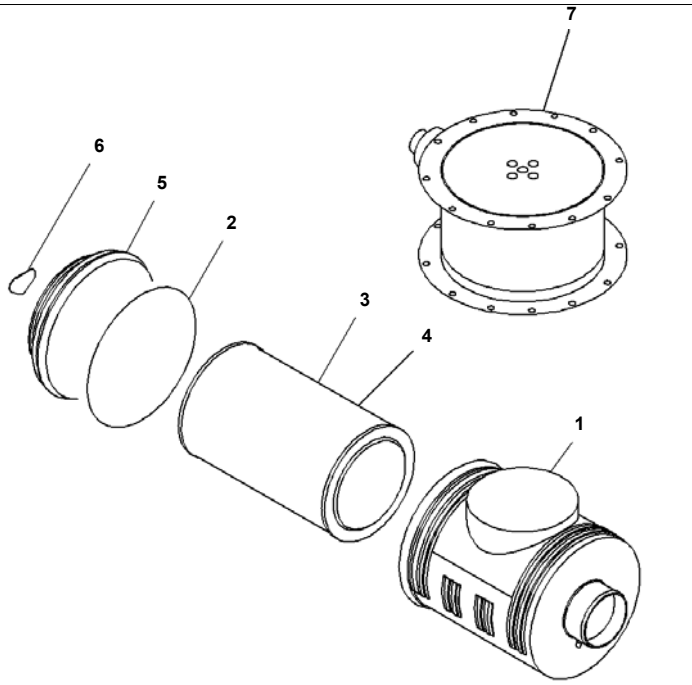

Index	Code	Part Number	Description	Qty	Serial No.
1		6245-81-7100	Air Cleaner Assembly	1	610984-
		600-185-6100	· Element Assembly	1	610984-
2	C2	600-184-1671	· · O-ring	1	610984-
3	C2	600-185-6110	· · Element	1	610984-
4		600-185-6120	· · Element	1	610984-
5		600-184-1632	· Cover	1	610984-
6		600-184-2810	· Plate, Mark	1	610984-
7		600-183-7552	Air Cleaner	1	610984-

Printed By : Dwi Iswanto (airafather6107170)

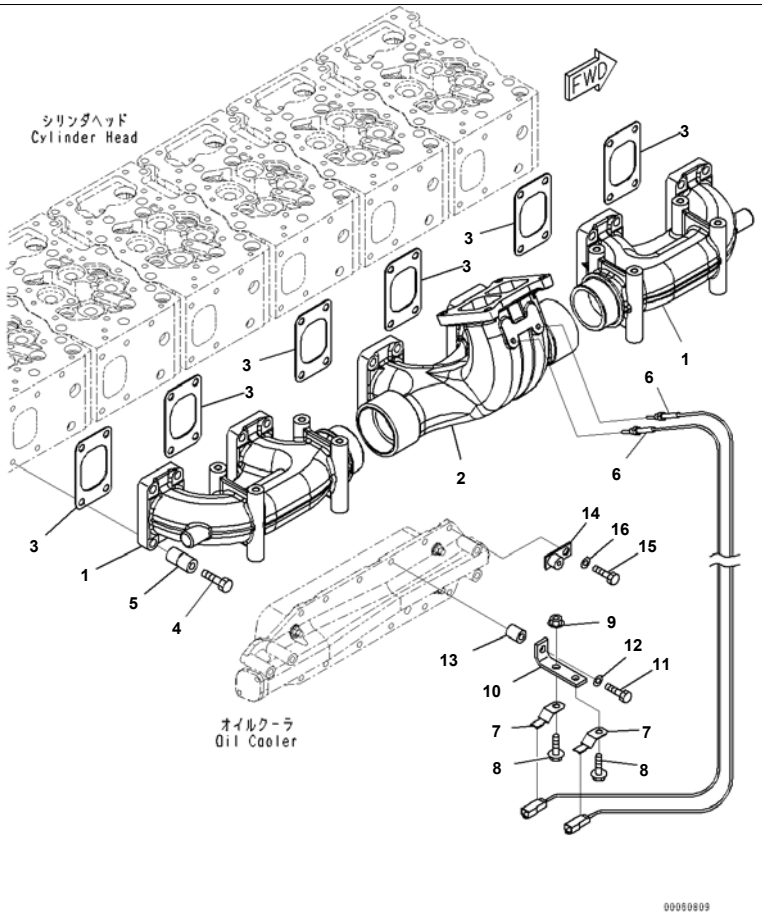

Index	Code	Part Number	Description	Qty	Serial No.
1		6240-11-5110	Manifold, Front And Rear	2	610984-
2		6245-11-5230	Manifold,Center	1	610984-
3		6240-11-5820	Gasket	6	610984-
4		01010-E1290	Bolt	24	610984-
5		6245-11-5190	Spacer	24	610984-
6		6166-15-8181	Sensor, Exhaust Temperature	2	610984-
7		08193-20010	Clip	2	610984-
8		01435-01025	Bolt	2	610984-
9		01584-01008	Nut	1	610984-
10		6166-91-6850	Bracket	1	610984-
11		01010-81060	Bolt	1	610984-
12		01643-31032	Washer	1	610984-
13		6128-21-6730	Spacer	1	610984-
14		426-06-11570	Bracket	1	610984-
15		01010-81030	Bolt	1	610984-
16		01643-31032	Washer	1	610984-

Printed By : Dwi Iswanto (airafather6107170)

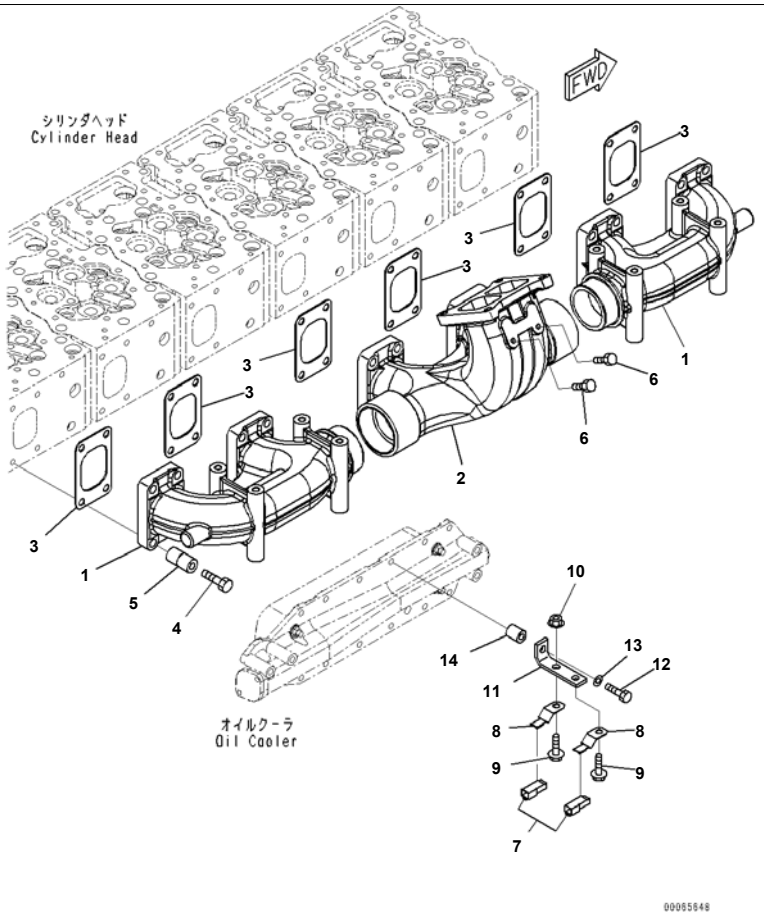

Reference:A1510-003001 Page:A007001

SAA6D170E-5EE S/N 610984-UP (For D375A-6R)
Exhaust Manifold (#610984-)

Index	Code	Part Number	Description	Qty	Serial No.
1		6240-11-5110	Manifold, Front And Rear	2	610984-
2		6245-11-5230	Manifold,Center	1	610984-
3		6240-11-5820	Gasket	6	610984-
4		01010-E1290	Bolt	24	610984-
5		6245-11-5190	Spacer	24	610984-
6		6215-11-5920	Plug	2	610984-
7		6245-81-5280	Connector	2	610984-
8		08193-20010	Clip	2	610984-
9		01435-01025	Bolt	2	610984-
10		01584-01008	Nut	1	610984-
11		6166-91-6850	Bracket	1	610984-
12		01010-81060	Bolt	1	610984-
13		01643-31032	Washer	1	610984-
14		6128-21-6730	Spacer	1	610984-

Printed By : Dwi Iswanto (airafather6107170)

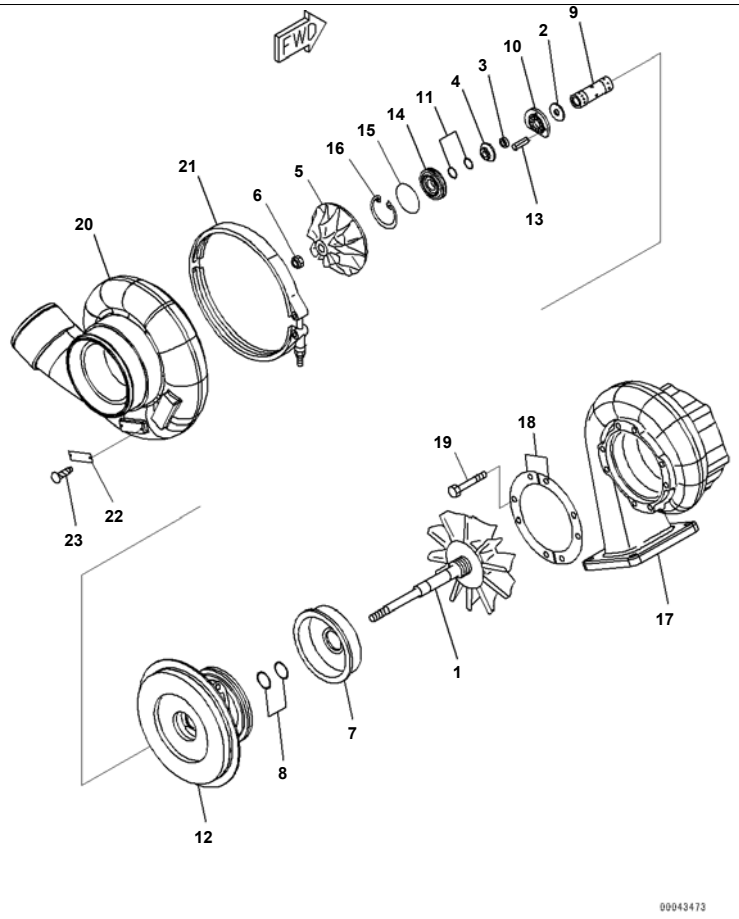

SAA6D170E-5EE S/N 610984-UP (For D375A-6R)
Turbocharger, Inner Parts (#610984-)

Index	Code	Part Number	Description	Qty	Serial No.
		6502-52-5040	Turbocharger Assembly, (KTR130E-33AAW)	1	610984-
		6502-52-5810	· Core Assembly	1	610984-
1	C1		· · Rotor, Turbine	1	610984-
2	C1		· · Plate, Collar	1	610984-
3	C1		· · Spacer	1	610984-
4	C1		· · Flinger	1	610984-
5	C1		· · Impeller, Blower	1	610984-
6	C1		· · Nut	1	610984-
7	C1		· · Shield, Heat	1	610984-
8	C1		· · Seal Ring	2	610984-
9	C1		· · Bearing, Jurnal	1	610984-
10	C1		· · Bearing, Thrust	1	610984-
11	C1		· · Seal Ring	2	610984-
12	C1		· · Housing,Center	1	610984-
13	C1		· · Pin, Dowel, Dowel	1	610984-
14	C1		· · Insert	1	610984-
15	C1		· · O-ring	1	610984-
16	C1		· · Ring, Snap	1	610984-
17		6502-52-4410	· Housing, Turbine	1	610984-
18		6502-51-0510	· Plate	2	610984-
19		01020-01016	· Bolt	8	610984-
20		6502-52-2010	· Housing, Blower	1	610984-
21		6502-12-1722	· V-band Assembly	1	610984-
22		6505-99-9011	· Plate, Name	1	610984-
23		04418-02550	· Screw	2	610984-

Printed By : Dwi Iswanto (airafather6107170)

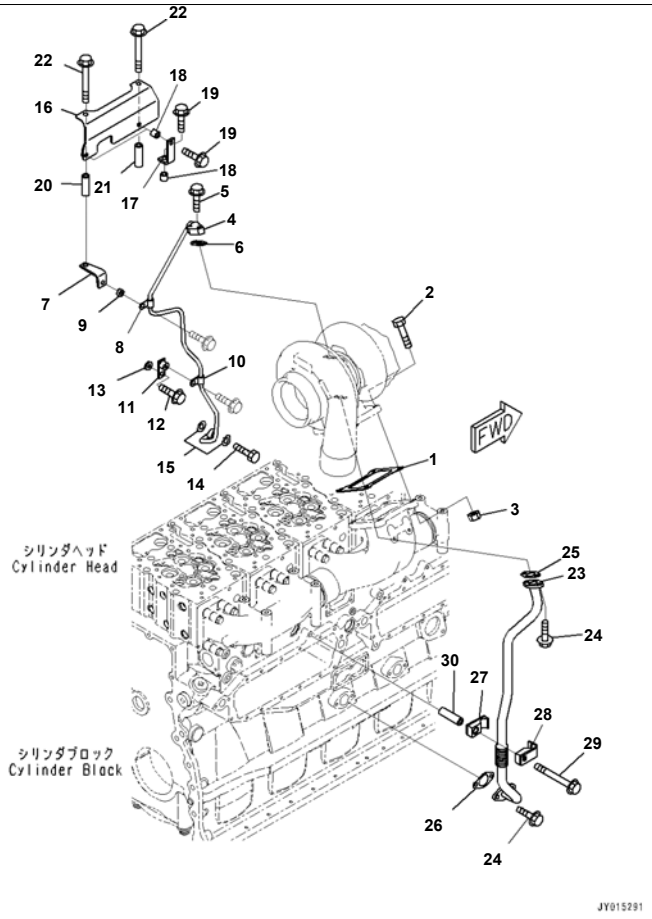

Index	Code	Part Number	Description	Qty	Serial No.
1		6240-11-5920	Gasket	1	610984-
2		6166-11-9910	Bolt	4	610984-
3		6685-11-5550	Nut	4	610984-
4		6245-51-8150	Tube	1	610984-
5		01435-01030	Bolt	2	610984-
6		6151-51-8161	Gasket	1	610984-
7		6240-51-8910	Bracket	1	610984-
8		6151-53-8280	Clip	1	610984-
9		21T-72-14930	Boss	1	610984-
10		6151-53-8280	Clip	1	610984-
11		426-06-11570	Bracket	1	610984-
12		01435-01030	Bolt	1	610984-
13		6110-23-6490	Spacer	1	610984-
14		07206-31014	Bolt, Joint	1	610984-
15		07005-01412	Gasket	2	610984-
16		6240-51-8710	Cover	1	610984-
17		6136-21-5630	Bracket	2	610984-
18		6631-11-5630	Spacer	4	610984-
19		01435-01035	Bolt	4	610984-
20		6240-51-8760	Spacer	1	610984-
21		6240-51-8770	Spacer	1	610984-
22		01435-01095	Bolt	2	610984-
23		6245-51-8120	Tube	1	610984-
24		01435-01025	Bolt	4	610984-
25		6151-51-8151	Gasket	1	610984-
26		6127-51-6822	Gasket	1	610984-
27		6245-51-8350	Clamp	1	610984-
28		6245-51-8340	Clamp	1	610984-
29		01436-01035	Bolt	1	610984-
30		6130-12-4571	Spacer	1	610984-

Printed By : Dwi Iswanto (airafather6107170)

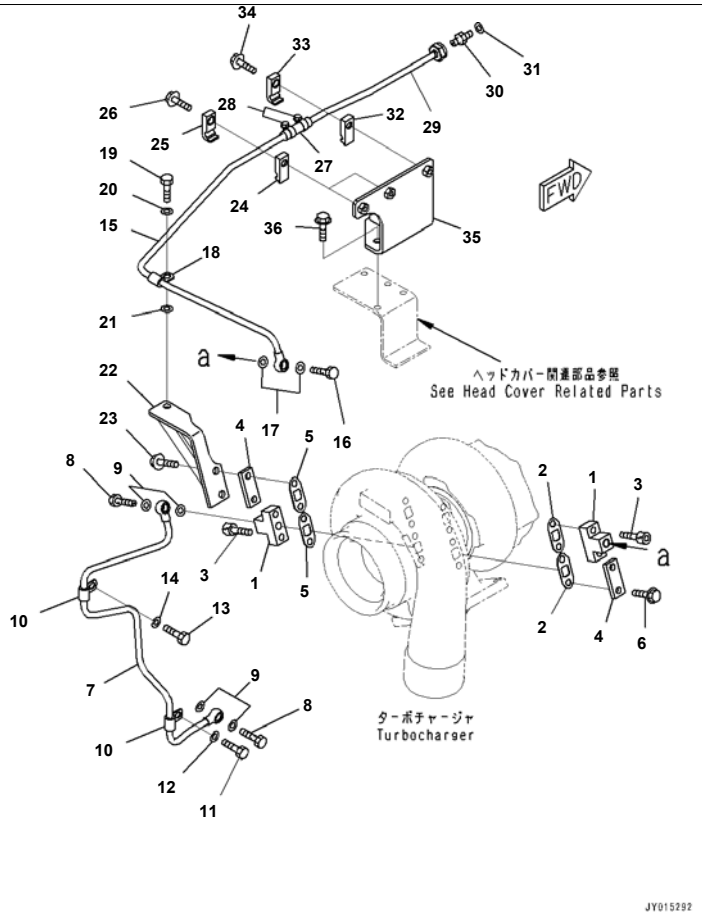

Index	Code	Part Number	Description	Qty	Serial No.
1		6162-63-8570	Joint, Water	2	610984-
2		6164-62-8241	Gasket	2	610984-
3		01252-31035	Bolt, Hexagon Socket Head	4	610984-
4		6164-62-8230	Plate	2	610984-
5		6164-62-8241	Gasket	2	610984-
6		01435-01020	Bolt	2	610984-
7		6245-61-6810	Tube, Inlet	1	610984-
8		07206-31014	Bolt, Joint	2	610984-
9		07003-01419	Gasket	4	610984-
10		6151-53-8280	Clip	2	610984-
11		01010-81020	Bolt	1	610984-
12		01643-31032	Washer	1	610984-
13		01010-81035	Bolt	1	610984-
14		01643-31032	Washer	1	610984-
15		6245-61-6820	Tube, Return	1	610984-
16		07206-31014	Bolt, Joint	1	610984-
17		07003-01419	Gasket	2	610984-
18		6151-53-8280	Clip	1	610984-
19		01010-81030	Bolt	1	610984-
20		01643-31032	Washer	1	610984-
21		01643-31032	Washer	1	610984-
22		6245-61-6840	Bracket	1	610984-
23		01435-01025	Bolt	2	610984-
24		6240-51-8350	Clamp	2	610984-
25		6240-51-8340	Clamp	2	610984-
26		01435-01040	Bolt	2	610984-
27		6245-61-6790	Hose	1	610984-
28		07281-00197	Clamp	2	610984-
29		6245-61-6830	Tube, Retrn	1	610984-
30		07211-81016	Connector	1	610984-
31		07005-01612	Seal, Washer	1	610984-

Printed By : Dwi Iswanto (airafather6107170)

Turbocharger, Water Piping (#610984-)

Index	Code	Part Number	Description	Qty	Serial No.
32		6240-51-8350	Clamp	1	610984-
33		6240-51-8340	Clamp	1	610984-
34		01435-01040	Bolt	1	610984-
35		6245-61-6460	Bracket	1	610984-
36		01435-01025	Bolt	3	610984-

Printed By : Dwi Iswanto (airafather6107170)

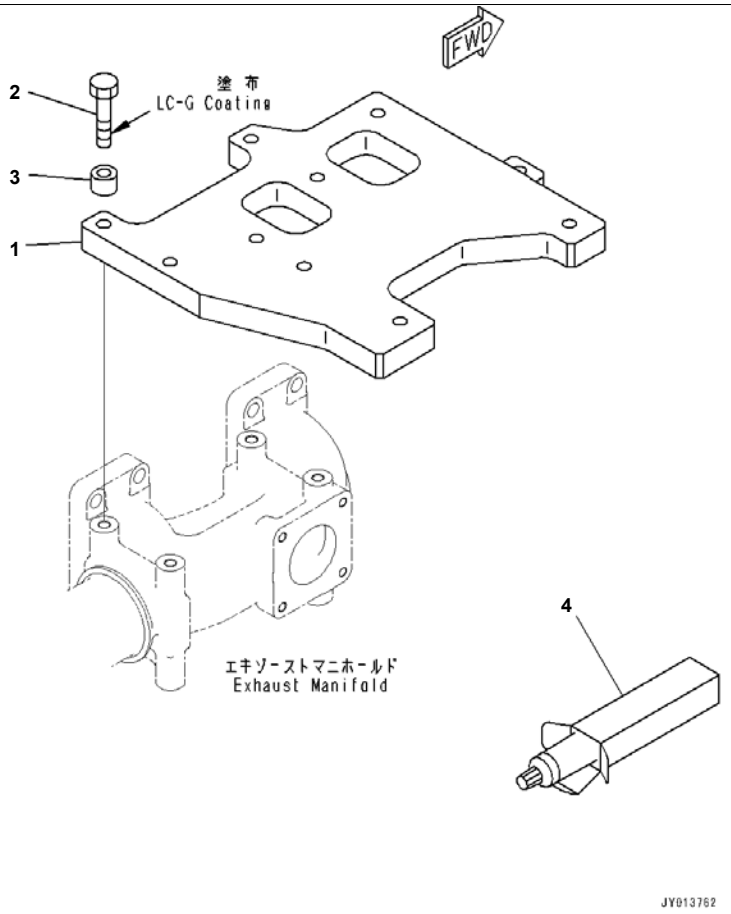

SAA6D170E-5EE S/N 610984-UP (For D375A-6R)
Exhaust Muffler (#610984-)

Index	Code	Part Number	Description	Qty	Serial No.
1		6245-11-5470	Plate	1	610984-
2		01010-E1265	Bolt	4	610984-
3		21T-72-14350	Spacer	4	610984-
4		09920-00150	Liquid gasket, LG-7, 150G	AR	610984-

Printed By : Dwi Iswanto (airafather6107170)

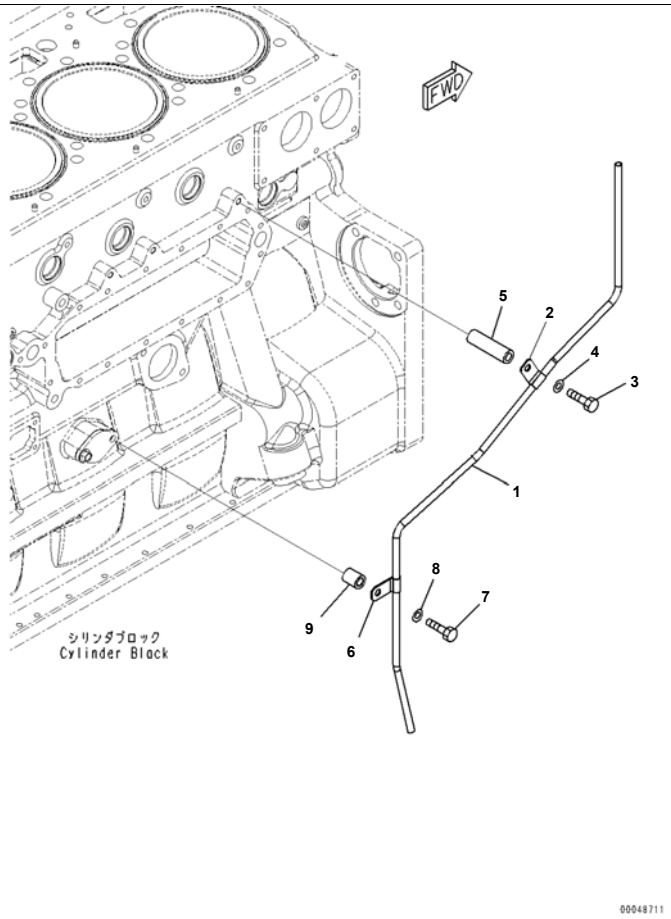

Index	Code	Part Number	Description	Qty	Serial No.
1		6245-11-5530	Tube	1	610984-
2		6162-13-5660	Clamp	1	610984-
3		01010-81095	Bolt	1	610984-
4		01643-31032	Washer	1	610984-
5		6130-12-4571	Spacer	1	610984-
6		6162-13-5660	Clamp	1	610984-
7		01010-81055	Bolt	1	610984-
8		01643-31032	Washer	1	610984-
9		6128-21-6730	Spacer	1	610984-

Printed By : Dwi Iswanto (airafather6107170)

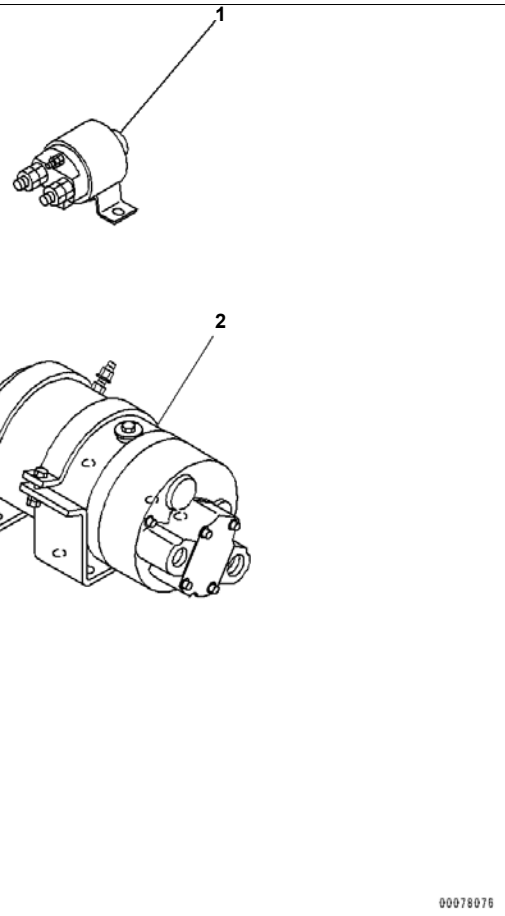

SAA6D170E-5EE S/N 610984-UP (For D375A-6R)
Exhaust Muffler Piping (#610984-)

Index	Code	Part Number	Description	Qty	Serial No.
1		600-815-7510	Switch, Heater	1	610984-
2		600-815-9510	Pump Assembly	1	610984-

Printed By : Dwi Iswanto (airafather6107170)

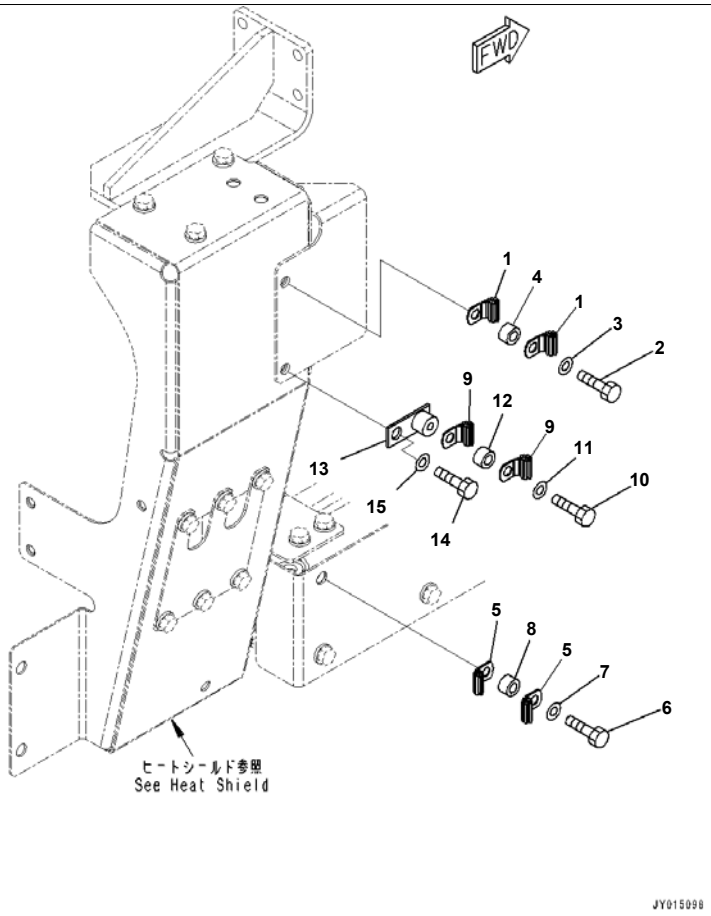

SAA6D170E-5EE S/N 610984-UP (For D375A-6R)
Water Temperature Sensor (#610984-)

Index	Code	Part Number	Description	Qty	Serial No.
1		6240-81-4431	Clip	2	610984-
2		01010-81030	Bolt	1	610984-
3		01643-31032	Washer	1	610984-
4		6131-12-5920	Spacer	1	610984-
5		6240-81-4431	Clip	2	610984-
6		01010-81030	Bolt	1	610984-
7		01643-31032	Washer	1	610984-
8		6131-12-5920	Spacer	1	610984-
9		6240-81-4431	Clip	2	610984-
10		01010-81030	Bolt	1	610984-
11		01643-31032	Washer	1	610984-
12		6131-12-5920	Spacer	1	610984-
13		426-06-11570	Bracket	1	610984-
14		01010-81030	Bolt	1	610984-
15		01643-31032	Washer	1	610984-

Printed By : Dwi Iswanto (airafather6107170)

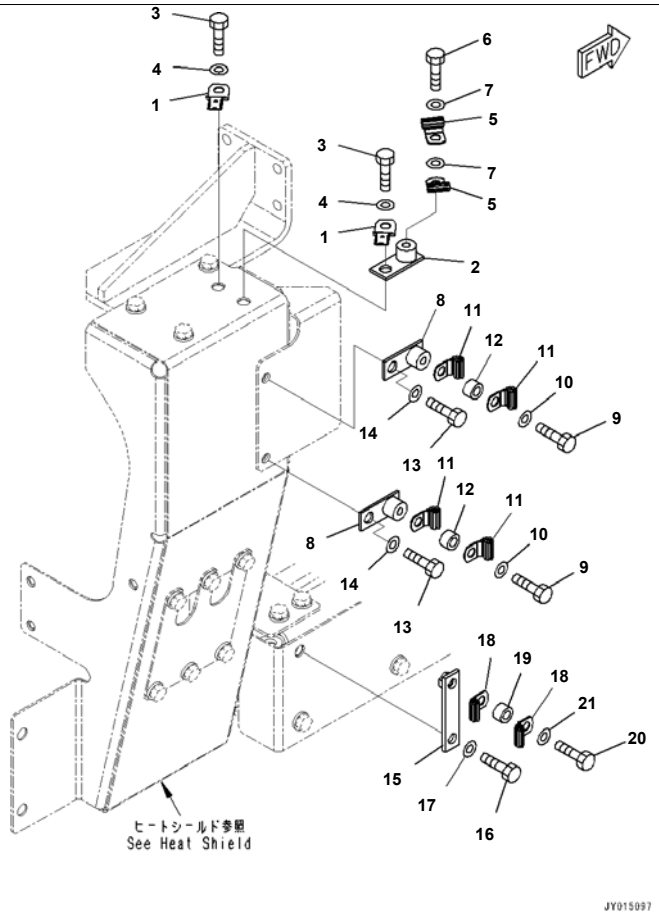

SAA6D170E-5EE S/N 610984-UP (For D375A-6R)
Water Temperature Sensor, PM Clinic Piping (#610984-)

Index	Code	Part Number	Description	Qty	Serial No.
1		08193-20010	Clip	2	610984-
2		426-06-11570	Bracket	1	610984-
3		01010-81030	Bolt	2	610984-
4		01643-31032	Washer	2	610984-
5		6240-81-4431	Clip	2	610984-
6		01010-81020	Bolt	1	610984-
7		01643-31032	Washer	2	610984-
8		426-06-11570	Bracket	2	610984-
9		01010-81030	Bolt	2	610984-
10		01643-31032	Washer	2	610984-
11		6240-81-4431	Clip	4	610984-
12		6131-12-5920	Spacer	2	610984-
13		01010-81030	Bolt	2	610984-
14		01643-31032	Washer	2	610984-
15		421-62-11940	Plate	1	610984-
16		01010-81030	Bolt	1	610984-
17		01643-31032	Washer	1	610984-
18		6240-81-4431	Clip	2	610984-
19		6131-12-5920	Spacer	1	610984-
20		01010-81035	Bolt	1	610984-
21		01643-31032	Washer	1	610984-

Printed By : Dwi Iswanto (airafather6107170)

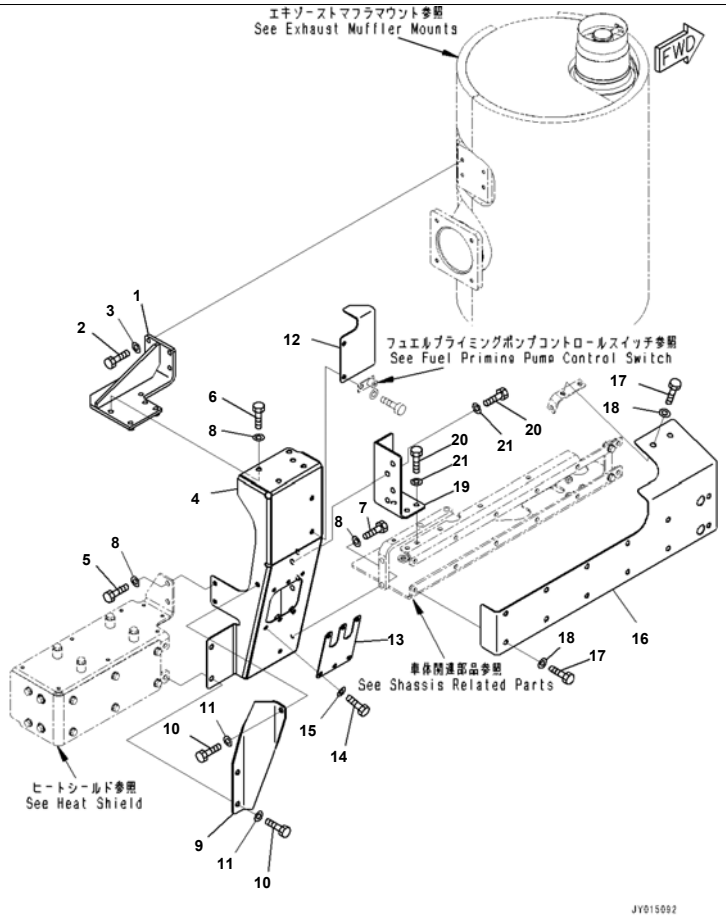

Heat Shield (#610984-)

Index	Code	Part Number	Description	Qty	Serial No.
1		6245-11-7660	Bracket	1	610984-
2		01010-E1025	Bolt	4	610984-
3		01643-31032	Washer	4	610984-
4		6245-11-7671	Cover,Center	1	610984-
5		01010-81020	Bolt	2	610984-
6		01010-81025	Bolt	5	610984-
7		01010-81030	Bolt	2	610984-
8		01643-31032	Washer	9	610984-
9		6245-11-7680	Cover	1	610984-
10		01010-81025	Bolt	3	610984-
11		01643-31032	Washer	3	610984-
12		6245-11-7870	Cover	1	610984-
13		6245-11-7880	Plate	1	610984-
14		01010-81025	Bolt	6	610984-
15		01643-31032	Washer	6	610984-
16		6245-11-7640	Cover,Front	1	610984-
17		01010-81025	Bolt	13	610984-
18		01643-31032	Washer	13	610984-
19		6245-11-7480	Bracket	1	610984-
20		01010-81025	Bolt	7	610984-
21		01643-31032	Washer	7	610984-

Printed By : Dwi Iswanto (airafather6107170)

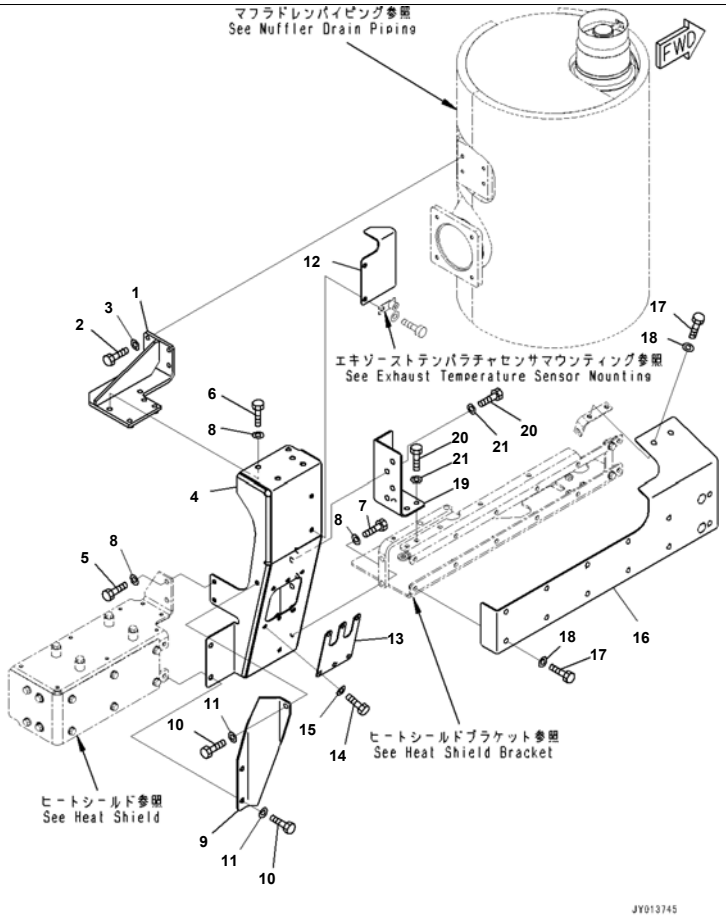

SAA6D170E-5EE S/N 610984-UP (For D375A-6R)
Heat Shield, PM Clinic Piping (#610984-)

Index	Code	Part Number	Description	Qty	Serial No.
1		6245-11-7660	Bracket	1	610984-
2		01010-E1025	Bolt	4	610984-
3		01643-31032	Washer	4	610984-
4		6245-11-7671	Cover,Center	1	610984-
5		01010-81020	Bolt	2	610984-
6		01010-81025	Bolt	3	610984-
7		01010-81030	Bolt	2	610984-
8		01643-31032	Washer	7	610984-
9		6245-11-7680	Cover	1	610984-
10		01010-81025	Bolt	3	610984-
11		01643-31032	Washer	3	610984-
12		6245-11-7870	Cover	1	610984-
13		6245-11-7880	Plate	1	610984-
14		01010-81025	Bolt	6	610984-
15		01643-31032	Washer	6	610984-
16		6245-11-7640	Cover,Front	1	610984-
17		01010-81025	Bolt	13	610984-
18		01643-31032	Washer	13	610984-
19		6245-11-7480	Bracket	1	610984-
20		01010-81025	Bolt	7	610984-
21		01643-31032	Washer	7	610984-

Printed By : Dwi Iswanto (airafather6107170)

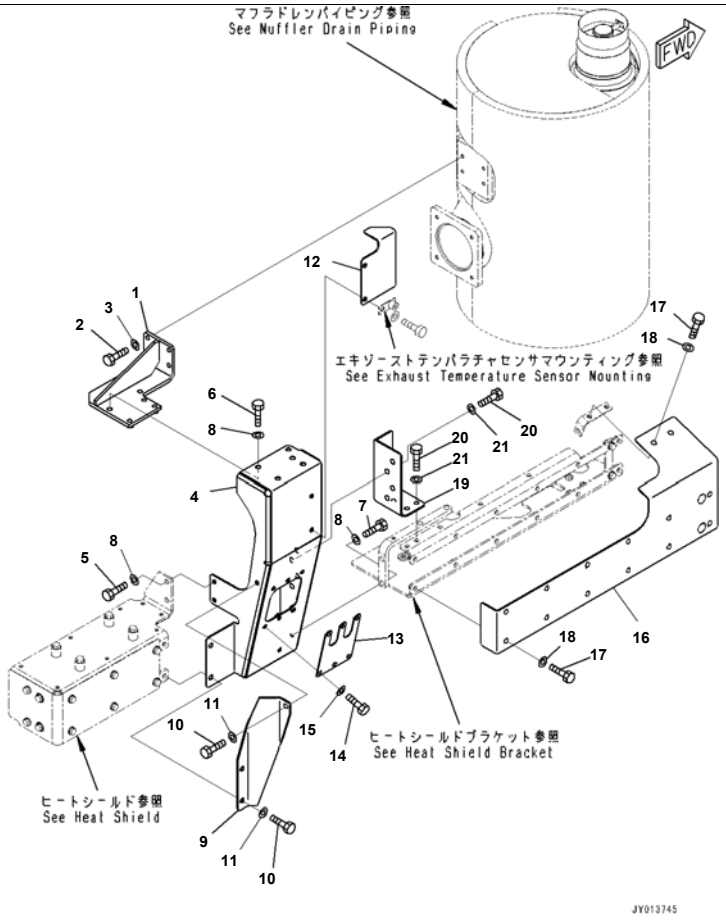

SAA6D170E-5EE S/N 610984-UP (For D375A-6R)
Heat Shield (#610984-)

Index	Code	Part Number	Description	Qty	Serial No.
1		6245-11-7660	Bracket	1	610984-
2		01010-E1025	Bolt	4	610984-
3		01643-31032	Washer	4	610984-
4		6245-11-7671	Cover,Center	1	610984-
5		01010-81020	Bolt	2	610984-
6		01010-81025	Bolt	5	610984-
7		01010-81030	Bolt	2	610984-
8		01643-31032	Washer	9	610984-
9		6245-11-7680	Cover	1	610984-
10		01010-81025	Bolt	3	610984-
11		01643-31032	Washer	3	610984-
12		6245-11-7870	Cover	1	610984-
13		6245-11-7880	Plate	1	610984-
14		01010-81025	Bolt	6	610984-
15		01643-31032	Washer	6	610984-
16		6245-11-7640	Cover,Front	1	610984-
17		01010-81025	Bolt	14	610984-
18		01643-31032	Washer	14	610984-
19		6245-11-7480	Bracket	1	610984-
20		01010-81025	Bolt	7	610984-
21		01643-31032	Washer	7	610984-

Printed By : Dwi Iswanto (airafather6107170)

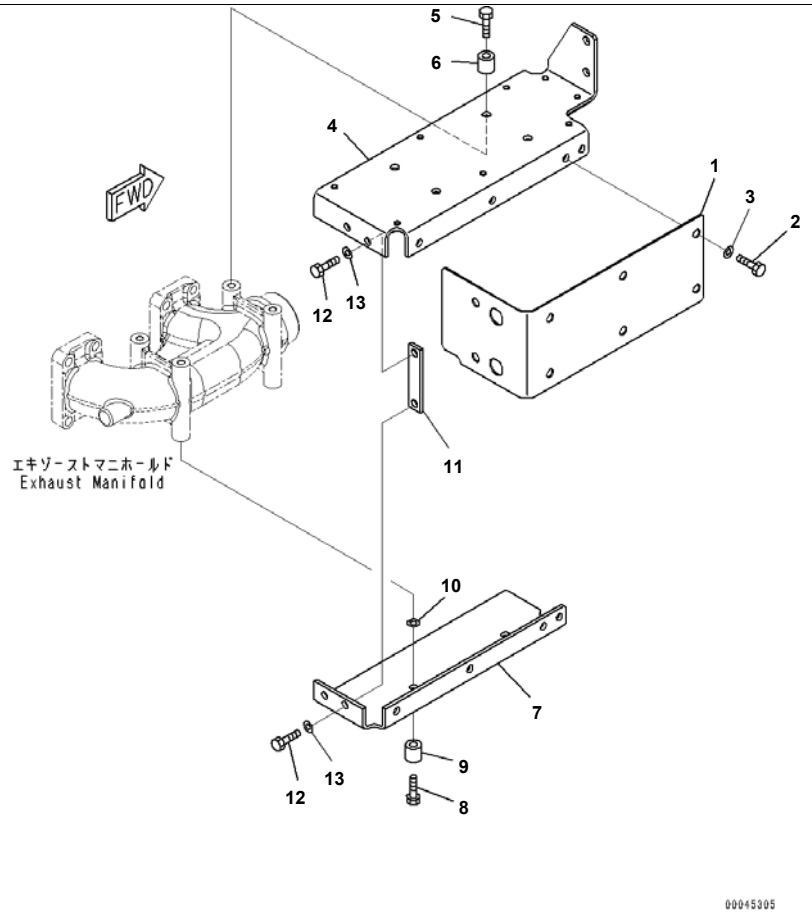

Index	Code	Part Number	Description	Qty	Serial No.
1		6245-11-7630	Plate	1	610984-
2		01010-81025	Bolt	8	610984-
3		01643-31032	Washer	8	610984-
4		6245-11-7690	Bracket	1	610984-
5		01010-E1255	Bolt	4	610984-
6		6144-81-6680	Spacer	4	610984-
7		6245-11-7710	Bracket	1	610984-
8		01010-E1255	Bolt	2	610984-
9		6144-81-6680	Spacer	2	610984-
10		6162-43-5350	Washer	2	610984-
11		6245-11-7720	Plate	1	610984-
12		01010-81025	Bolt	2	610984-
13		01643-31032	Washer	2	610984-

Printed By : Dwi Iswanto (airafather6107170)

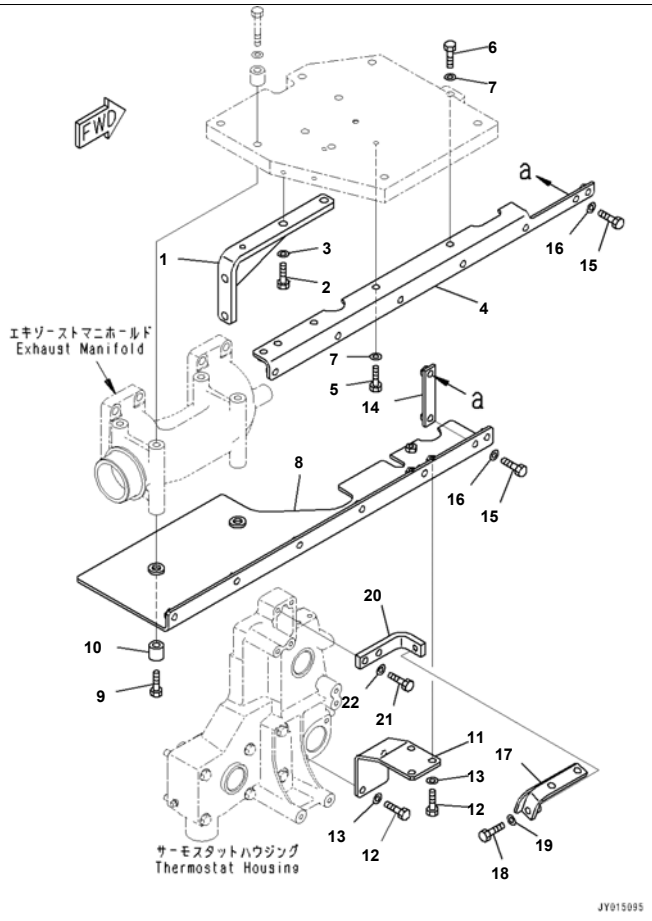

Heat Shield, Bracket (#610984-)

Index	Code	Part Number	Description	Qty	Serial No.
1		6245-11-7731	Bracket	1	610984-
2		01010-81030	Bolt	2	610984-
3		01643-31032	Washer	2	610984-
4		6245-11-7590	Bracket	1	610984-
5		01010-81025	Bolt	2	610984-
6		01010-81030	Bolt	1	610984-
7		01643-31032	Washer	3	610984-
8		6245-11-7740	Bracket	1	610984-
9		01010-E1255	Bolt	2	610984-
10		6144-81-6680	Spacer	2	610984-
11		6245-11-7990	Bracket	1	610984-
12		01010-81025	Bolt	5	610984-
13		01643-31032	Washer	5	610984-
14		6245-11-7980	Plate	1	610984-
15		01010-81025	Bolt	2	610984-
16		01643-31032	Washer	2	610984-
17		6245-11-7890	Bracket	1	610984-
18		01010-81040	Bolt	1	610984-
19		01643-31032	Washer	1	610984-
20		6245-11-7960	Bracket	1	610984-
21		01010-81030	Bolt	2	610984-
22		01643-31032	Washer	2	610984-

Printed By : Dwi Iswanto (airafather6107170)

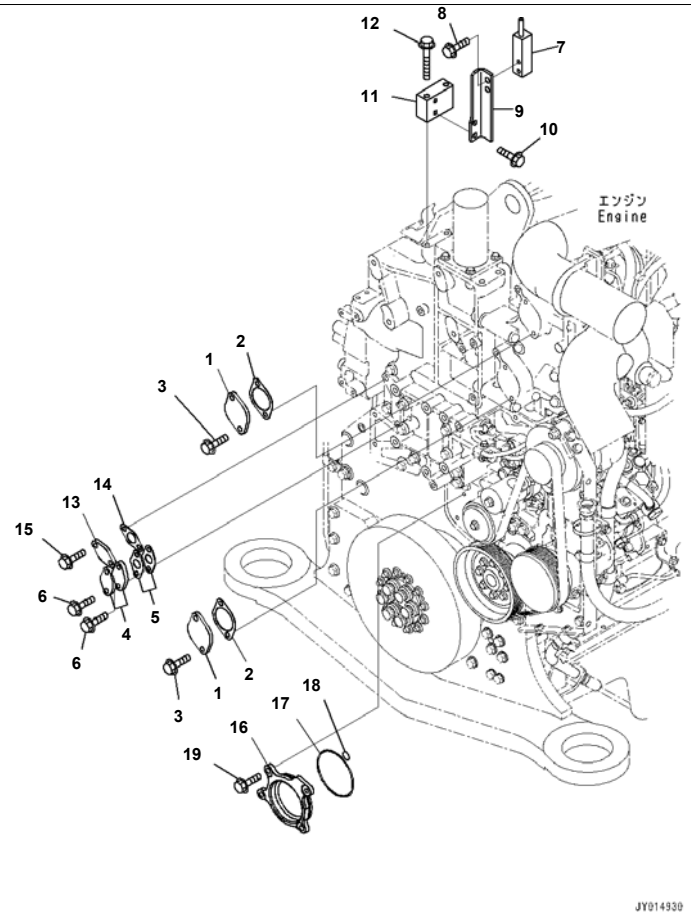

Reference:A1550-001001 Page:A019001

SAA6D170E-5EE S/N 610984-UP (For D375A-6R)
Cover For Exhaust Gas Re-circulation (EGR) Less (#610984-)

Index	Code	Part Number	Description	Qty	Serial No.
1		6245-11-4220	Cover	2	610984-
2		6166-61-6341	Gasket	2	610984-
3		01435-01025	Bolt	4	610984-
4		6245-61-6490	Cover	2	610984-
5		6110-51-6811	Gasket	2	610984-
6		01435-01025	Bolt	4	610984-
7		6245-61-6280	Block	1	610984-
8		01435-01020	Bolt	2	610984-
9		6245-61-6390	Bracket	1	610984-
10		01435-01020	Bolt	2	610984-
11		6245-61-6380	Block	1	610984-
12		01435-01075	Bolt	2	610984-
13		6933-21-5970	Plate	1	610984-
14		6151-51-8151	Gasket	1	610984-
15		01435-01025	Bolt	2	610984-
16		6245-51-9130	Cover	1	610984-
17		07000-72110	O-ring	1	610984-
18		07000-72018	O-ring	1	610984-
19		01435-01020	Bolt	4	610984-

Printed By : Dwi Iswanto (airafather6107170)

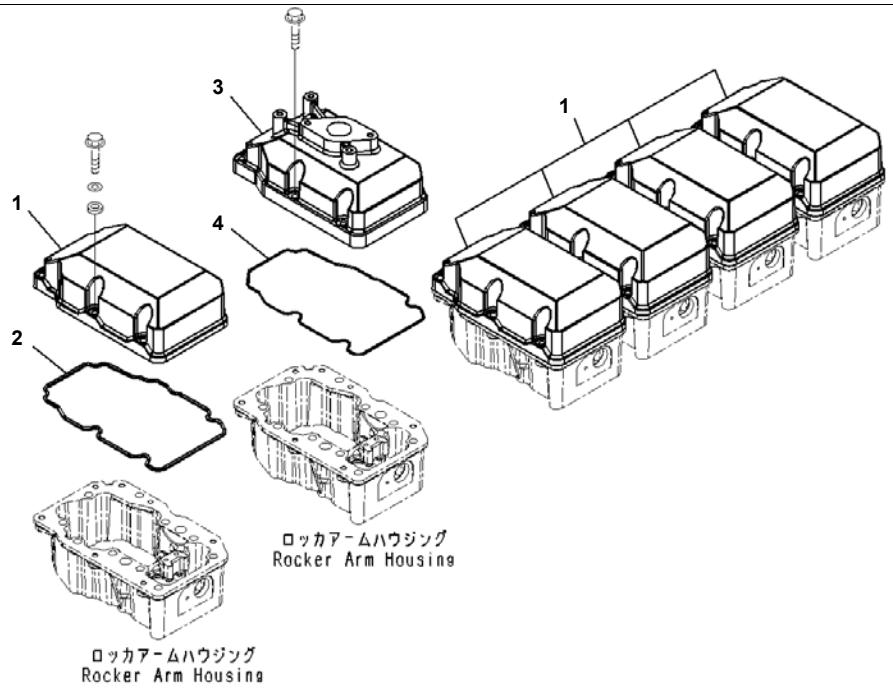

Rocker Arm Housing Cover (#610984-)

Index	Code	Part Number	Description	Qty	Serial No.
		6240-11-8500	Cover Assembly	5	610984-
1		6240-11-8110	· Cover	1	610984-
2		6240-11-8810	· Gasket	1	610984-
3		6245-11-8110	Cover, For Breather	1	610984-
4		6245-11-8120	O-ring	1	610984-

Printed By : Dwi Iswanto (airafather6107170)

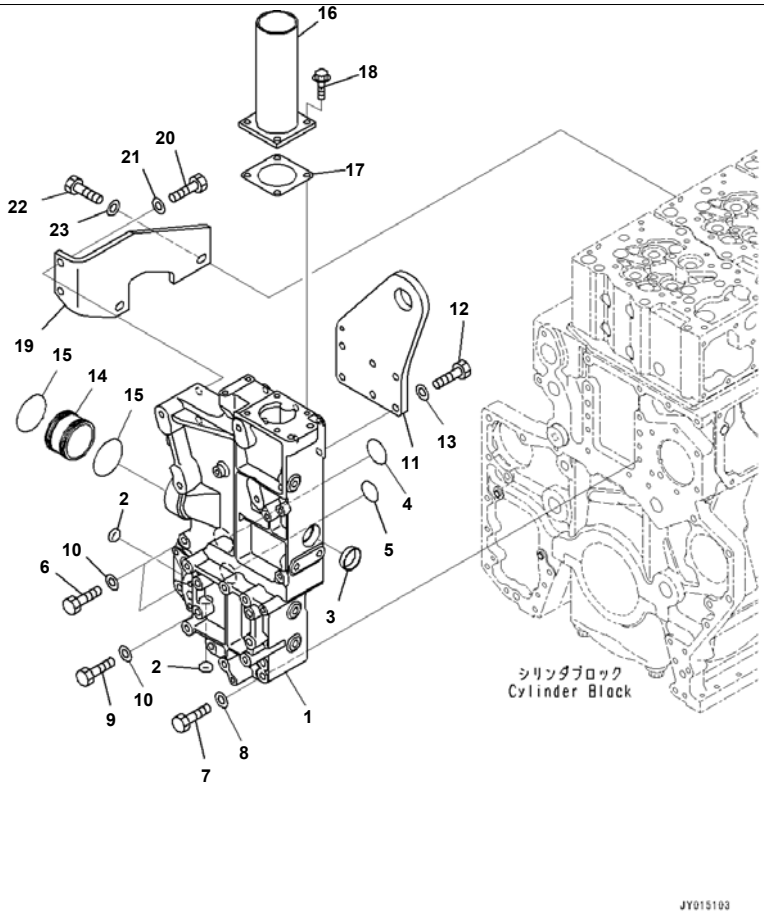

Index	Code	Part Number	Description	Qty	Serial No.
1		6245-21-6110	Block	1	610984-
2		07046-42516	Plug	2	610984-
3		07046-44516	Plug	1	610984-
4		07000-A3050	O-ring	1	610984-
5		07000-A3042	O-ring	1	610984-
6		01010-81280	Bolt	2	610984-
7		01643-31232	Washer	2	610984-
8		01011-81225	Bolt	4	610984-
9		01011-81260	Bolt	4	610984-
10		01643-31232	Washer	8	610984-
11		6245-21-3410	Plate	1	610984-
12		01010-81235	Bolt	6	610984-
13		01643-31232	Washer	6	610984-
14		6245-61-6210	Tube	1	610984-
15		07000-A2075	O-ring	2	610984-
16		6245-61-6230	Tube	1	610984-
17		6162-63-7480	Gasket	1	610984-
18		01435-01025	Bolt	4	610984-
19		6245-21-6190	Bracket	1	610984-
20		01010-81235	Bolt	2	610984-
21		01643-31232	Washer	2	610984-
22		01010-E1235	Bolt	2	610984-
23		01643-31232	Washer	2	610984-

Printed By : Dwi Iswanto (airafather6107170)

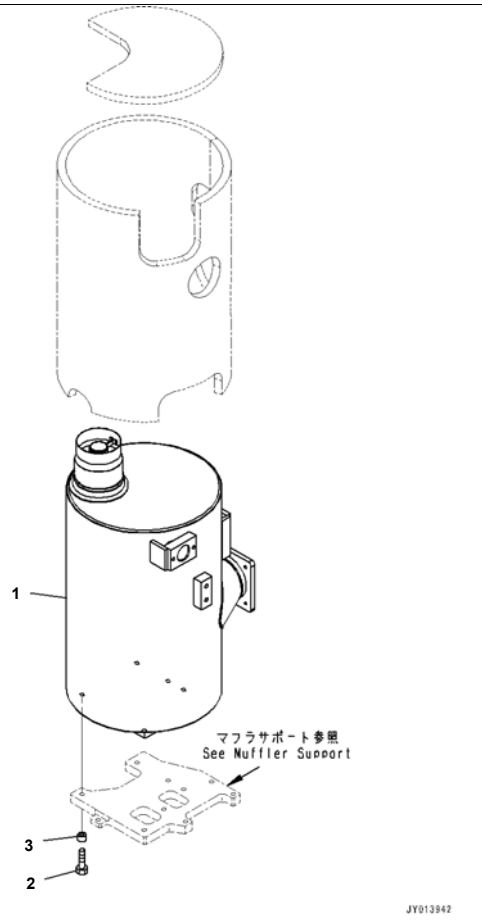

Index	Code	Part Number	Description	Qty	Serial No.
1		6245-11-5300	Muffler	1	610984-
2		01010-E1265	Bolt	5	610984-
3		21T-72-14350	Spacer	5	610984-

Printed By : Dwi Iswanto (airafather6107170)

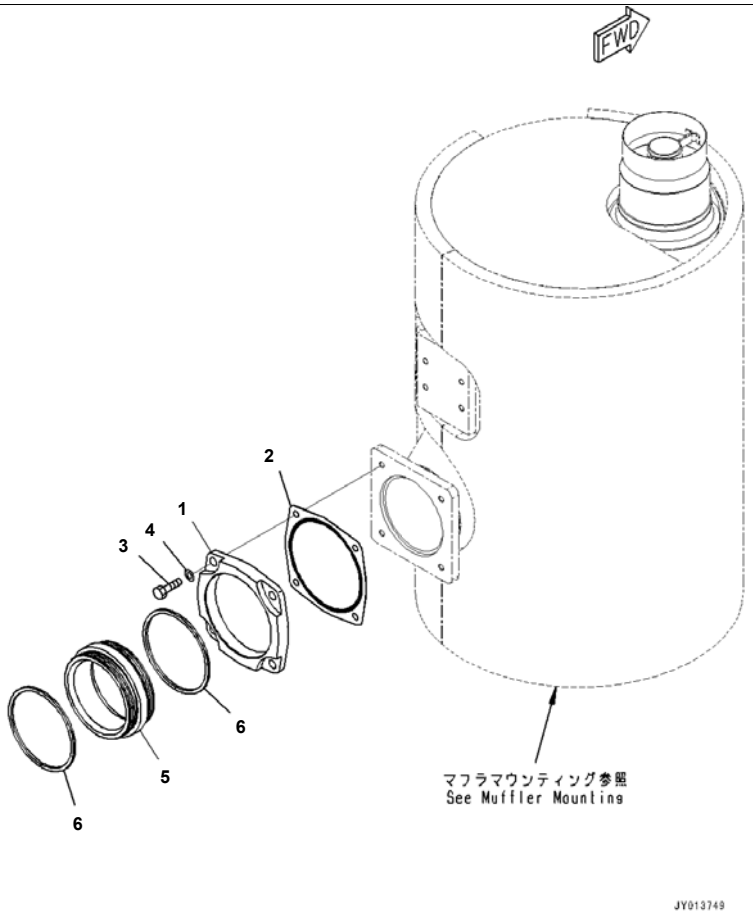

SAA6D170E-5EE S/N 610984-UP (For D375A-6R)
Exhaust Muffler Joint Parts (#610984-)

Index	Code	Part Number	Description	Qty	Serial No.
1		6245-11-5750	Flange	1	610984-
2		6240-11-5760	Gasket	1	610984-
3		01020-11025	Bolt, Stainless	4	610984-
4		01643-31032	Washer	4	610984-
5		6245-11-5740	Joint	1	610984-
6		6162-13-5480	Seal Ring	2	610984-

Printed By : Dwi Iswanto (airafather6107170)

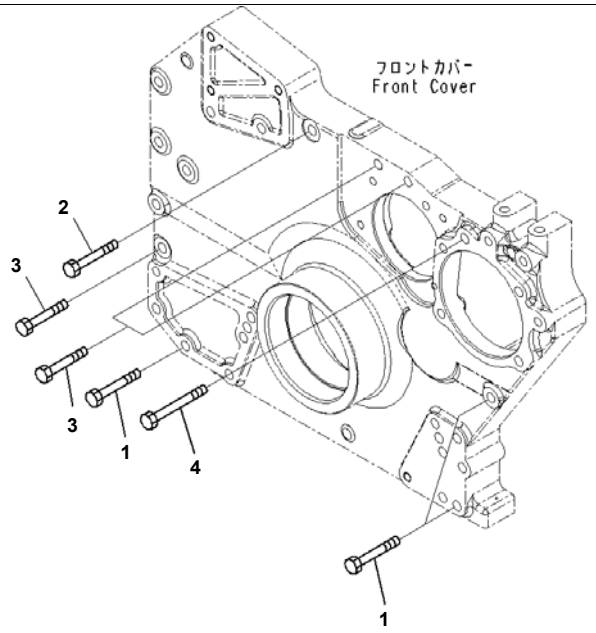

SAA6D170E-5EE S/N 610984-UP (For D375A-6R)
Front Cover Mounting, Related Parts (#610984-)

Index	Code	Part Number	Description	Qty	Serial No.
1		01010-81275	Bolt	14	610984-
2		01010-81270	Bolt	1	610984-
3		01010-81265	Bolt	3	610984-
4		01011-81215	Bolt	1	610984-

Printed By : Dwi Iswanto (airafather6107170)

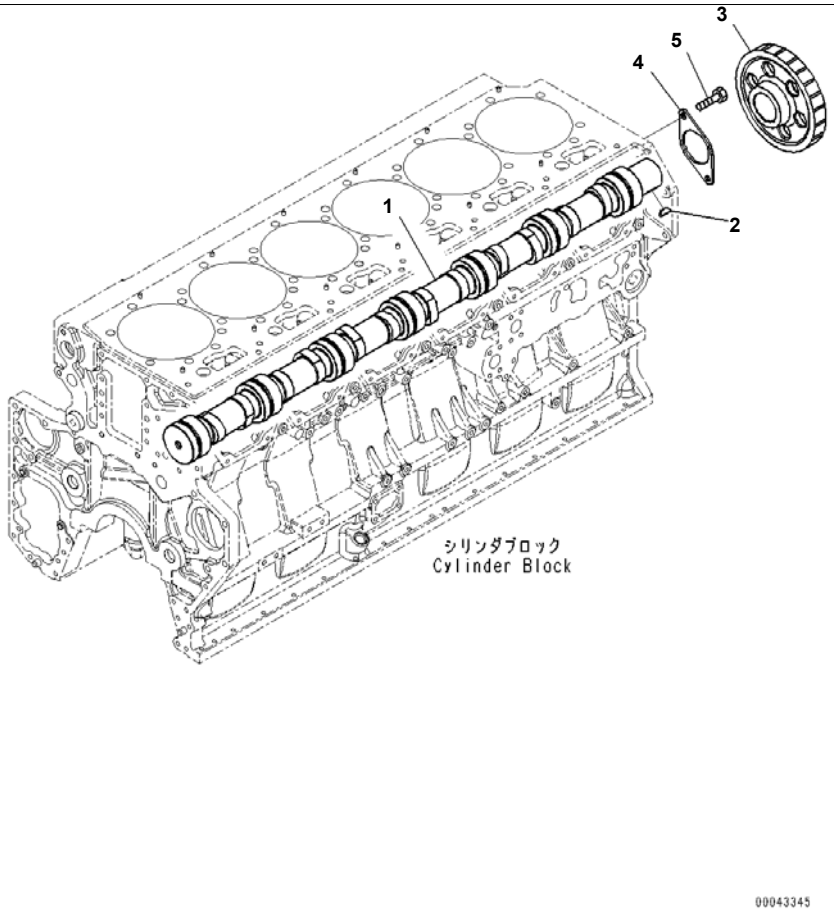

Index	Code	Part Number	Description	Qty	Serial No.
		6245-41-1100	Camshaft Assembly	1	610984-
1	C1		· Camshaft	1	610984-
2		04010-00728	· Key	1	610984-
3		6245-41-1120	· Gear, Camshaft	1	610984-
4		6245-41-1130	· Plate, Thrust	1	610984-
5		01010-81225	Bolt	2	610984-

Printed By : Dwi Iswanto (airafather6107170)

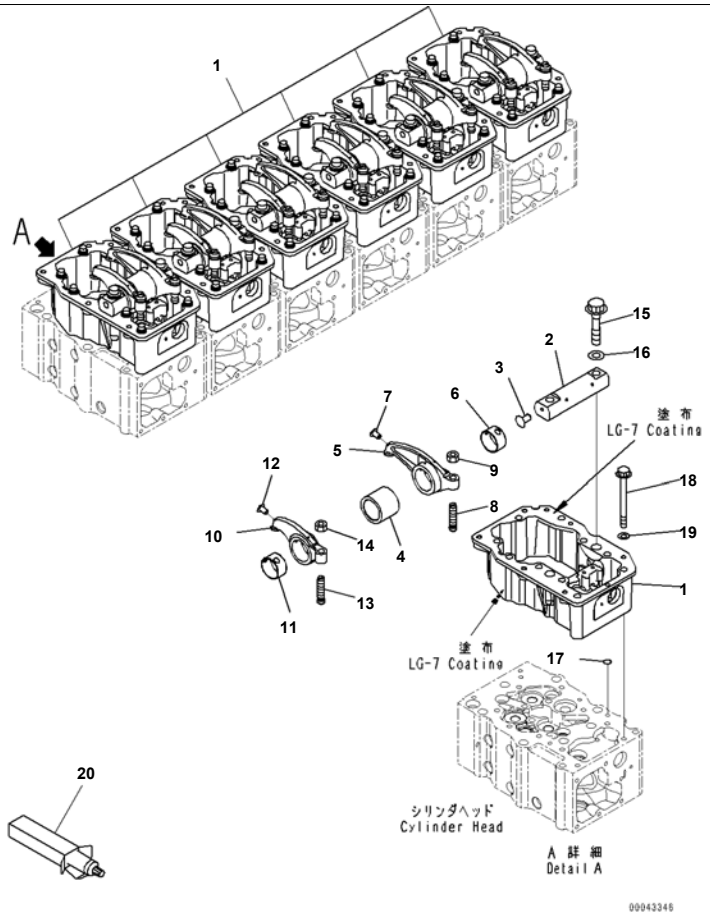

SAA6D170E-5EE S/N 610984-UP (For D375A-6R)
Camshaft, Rocker Arm and Housing (#610984-)

Index	Code	Part Number	Description	Qty	Serial No.
1		6245-11-7111	Housing, Rocker	6	610984-
		6245-41-5300	Shaft Assembly	6	610984-
2	C1		· Shaft, Arm	1	610984-
3		6240-41-5340	· Rivet	1	610984-
4		6245-41-5440	Spacer	6	610984-
		6240-41-5400	Rocker Arm Assembly, Exhaust	6	610984-
5	C1		· Arm, Rocker	1	610984-
6		6240-41-5420	· Bushing	1	610984-
7		6240-41-5430	· Rivet	1	610984-
8		6240-41-5460	Screw, Adjusting	6	610984-
9		6127-41-5431	Nut, Lock	6	610984-
		6240-41-5500	Rocker Arm Assembly, Intake	6	610984-
10	C1		· Arm, Rocker	1	610984-
11		6240-41-5420	· Bushing	1	610984-
12		6240-41-5430	· Rivet	1	610984-
13		6240-41-5460	Screw, Adjusting	6	610984-
14		6127-41-5431	Nut, Lock	6	610984-
15		6240-41-5350	Bolt	12	610984-
16		6150-31-1810	Washer	12	610984-
17		07000-72012	O-ring	6	610984-
18		01438-01220	Bolt	60	610984-
19		6240-11-7150	Washer	60	610984-
20		09920-00150	Liquid gasket, LG-7, 150G	AR	610984-

Printed By : Dwi Iswanto (airafather6107170)

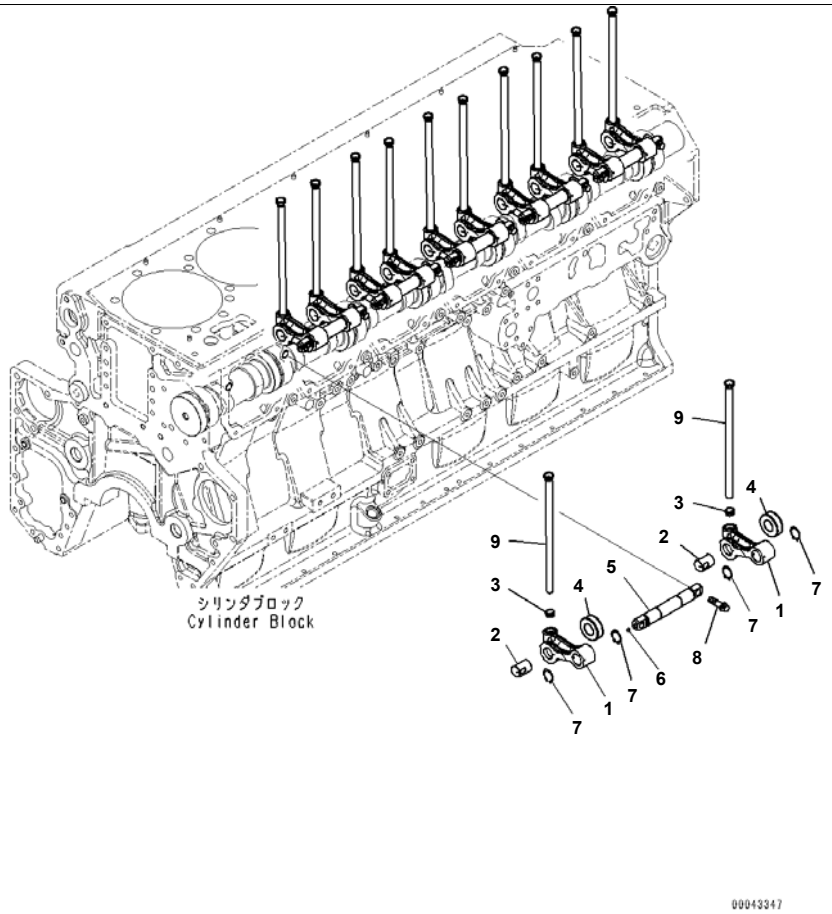

Index	Code	Part Number	Description	Qty	Serial No.
		6240-41-2300	Cam Follower Assembly	12	610984-
1	C1		· Follower, Cam	1	610984-
2	C1		· Pin	1	610984-
3	C1		· Socket	1	610984-
4	C1		· Roller	1	610984-
		6245-41-2400	Shaft Assembly	6	610984-
5		6245-41-2410	· Shaft	1	610984-
6		04260-00635	· Ball, Steel	1	610984-
7		04064-02512	Ring, Snap	24	610984-
8		6240-41-2450	Bolt	12	610984-
9		6245-41-3110	Rod ,Push	12	610984-

Printed By : Dwi Iswanto (airafather6107170)

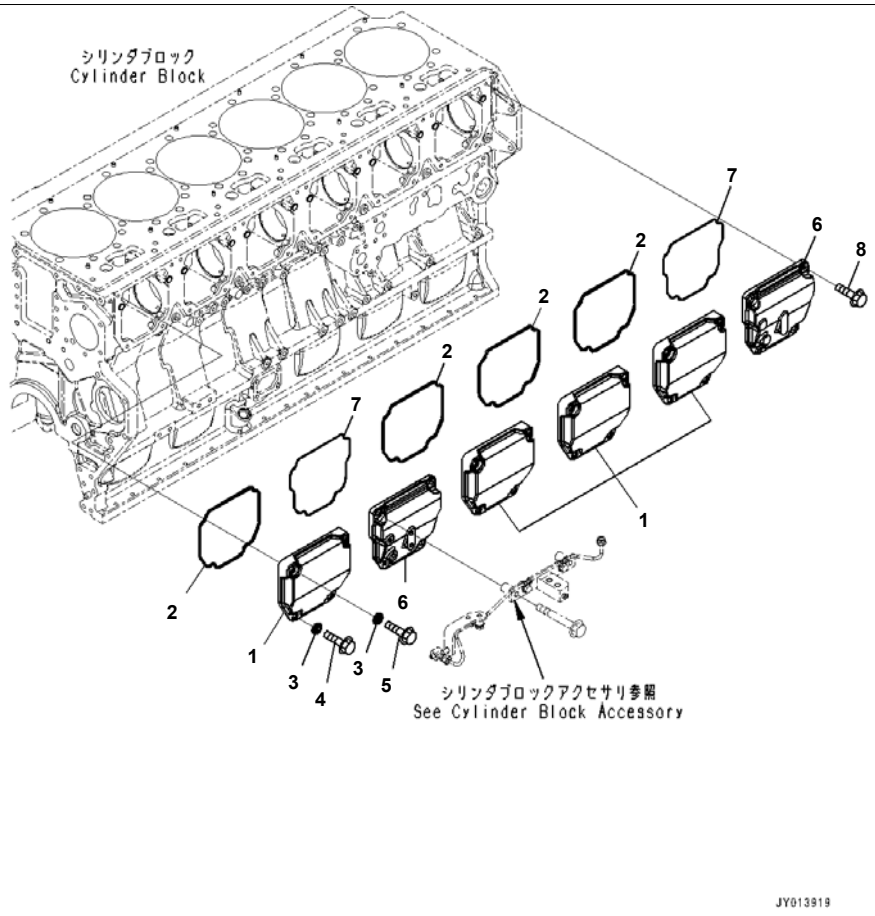

SAA6D170E-5EE S/N 610984-UP (For D375A-6R)
Cam Follower Cover (#610984-)

Index	Code	Part Number	Description	Qty	Serial No.
		6240-21-6400	Cover Assembly	4	610984-
1		6240-21-6410	· Cover	1	610984-
2		6240-21-6450	· O-ring	1	610984-
3		6150-21-6391	Packing	16	610984-
4		01435-01030	Bolt	8	610984-
5		01435-01050	Bolt	8	610984-
6		6245-21-6411	Cover	2	610984-
7		6245-21-6420	O-ring	2	610984-
8		01435-01025	Bolt	6	610984-

Printed By : Dwi Iswanto (airafather6107170)

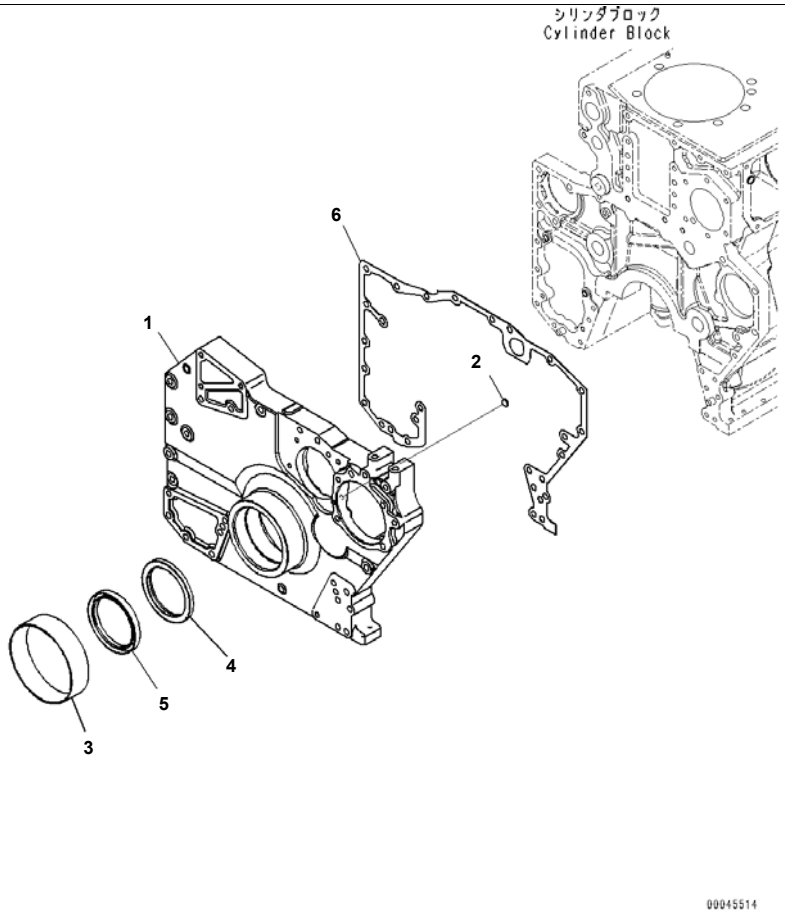

SAA6D170E-5EE S/N 610984-UP (For D375A-6R)
Front Cover (#610984-)

Index	Code	Part Number	Description	Qty	Serial No.
1		6245-21-3220	Cover,Front	1	610984-
2		07046-11216	Plug	1	610984-
3		6162-25-3151	Bushing	1	610984-
4		6245-21-3121	Seal,Front	1	610984-
5		6245-21-3111	Ring	1	610984-
6		6245-21-3290	Gasket	1	610984-

Printed By : Dwi Iswanto (airafather6107170)

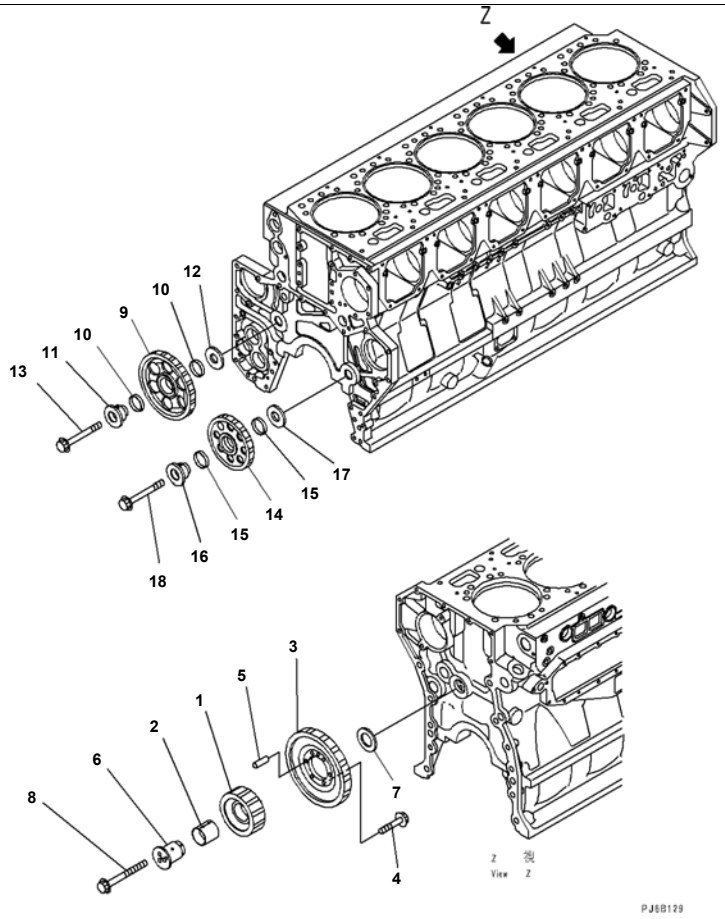

Reference:A2050-001001 Page:B005001

SAA6D170E-5EE S/N 610984-UP (For D375A-6R)
Idle Gears (#610984-)

Index	Code	Part Number	Description	Qty	Serial No.
		6240-31-6102	Gear Assembly	1	610984-
1	C1		· Gear, Idler	1	610984-
2		6240-31-6121	· Bushing	1	610984-
3		6240-31-6330	Gear	1	610984-
4		01437-01230	Bolt	6	610984-
5		04020-01024	Pin, Dowel, Dowel	1	610984-
6		6240-21-2461	Shaft	1	610984-
7		6240-21-2471	Plate	1	610984-
8		6240-21-2430	Bolt	3	610984-
		6240-31-6500	Gear Assembly	1	610984-
9	C1		· Gear, Idler	1	610984-
10		6150-31-6220	· Bushing	2	610984-
11		6150-21-2411	Shaft	1	610984-
12		6150-21-2421	Plate, Thrust	1	610984-
13		01437-21680	Bolt	1	610984-
		6240-31-6600	Gear Assembly	1	610984-
14	C1		· Gear, Idler	1	610984-
15		6150-31-6220	· Bushing	2	610984-
16		6150-21-2411	Shaft	1	610984-
17		6150-21-2421	Plate, Thrust	1	610984-
18		01437-21680	Bolt	1	610984-

Printed By : Dwi Iswanto (airafather6107170)

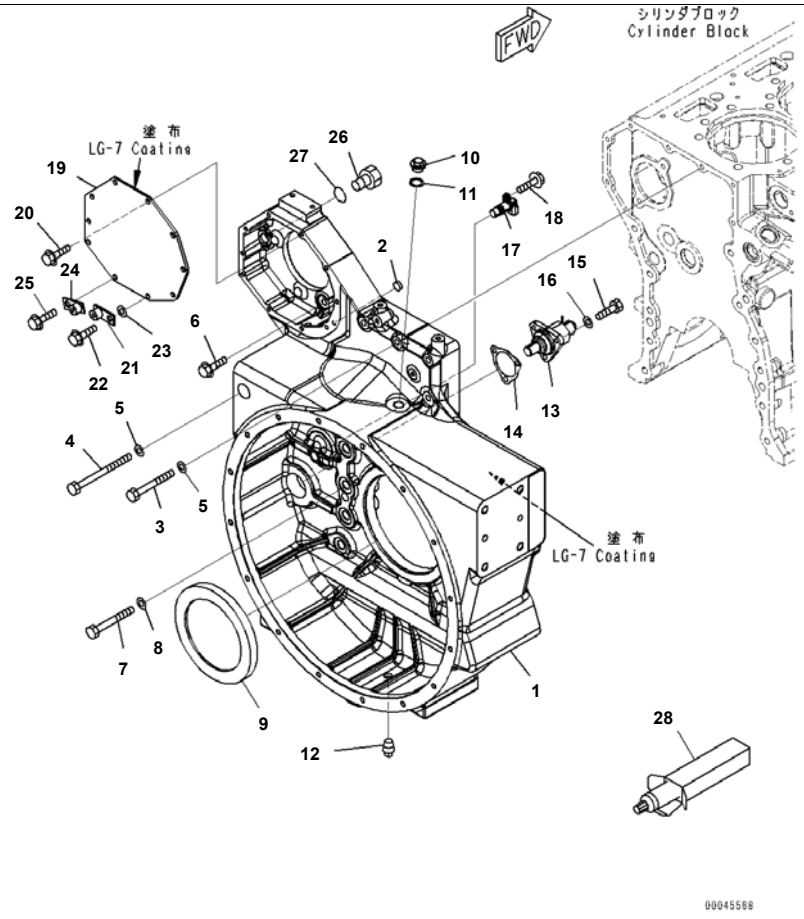

SAA6D170E-5EE S/N 610984-UP (For D375A-6R)
Flywheel Housing (#610984-)

Index	Code	Part Number	Description	Qty	Serial No.
1		6245-21-4120	Housing, Flywheel	1	610984-
2		07046-21210	Plug	1	610984-
3		01011-81200	Bolt	4	610984-
4		01011-E1290	Bolt	1	610984-
5		01643-31232	Washer	5	610984-
6		6245-21-4220	Bolt	2	610984-
7		01011-61810	Bolt	11	610984-
8		01643-21845	Washer	11	610984-
9		6162-25-4251	Seal	1	610984-
10		6204-21-5190	Plug	1	610984-
11		07005-02216	Gasket	1	610984-
12		07042-70415	Plug	1	610984-
13		6162-23-4500	Gear Assembly	1	610984-
	C1		· Case	1	610984-
	C1		· Shaft	1	610984-
	C1		· Gear	1	610984-
	C1		· Spring	1	610984-
	C1		· Pin, Snap	1	610984-
	C1		· Seal, Dust	1	610984-
14		6162-23-4941	Gasket	1	610984-
15		01010-81030	Bolt	3	610984-
16		01643-31032	Washer	3	610984-
17		6261-81-2902	Sensor Assembly, Speed, Revolution	1	610984-
18		01435-00816	Bolt	1	610984-
19		6245-21-4150	Plate	1	610984-
20		01435-01020	Bolt	8	610984-
21		426-06-11570	Bracket	1	610984-
22		01435-01025	Bolt	1	610984-
23		01643-31032	Washer	1	610984-
24		426-06-11570	Bracket	1	610984-
25		01435-01025	Bolt	1	610984-

Printed By : Dwi Iswanto (airafather6107170)

Index	Code	Part Number	Description	Qty	Serial No.
26		07040-12412	Plug	1	610984-
27		07002-22434	O-ring	1	610984-
28		09920-00150	Liquid gasket, LG-7, 150G	AR	610984-

Printed By : Dwi Iswanto (airafather6107170)

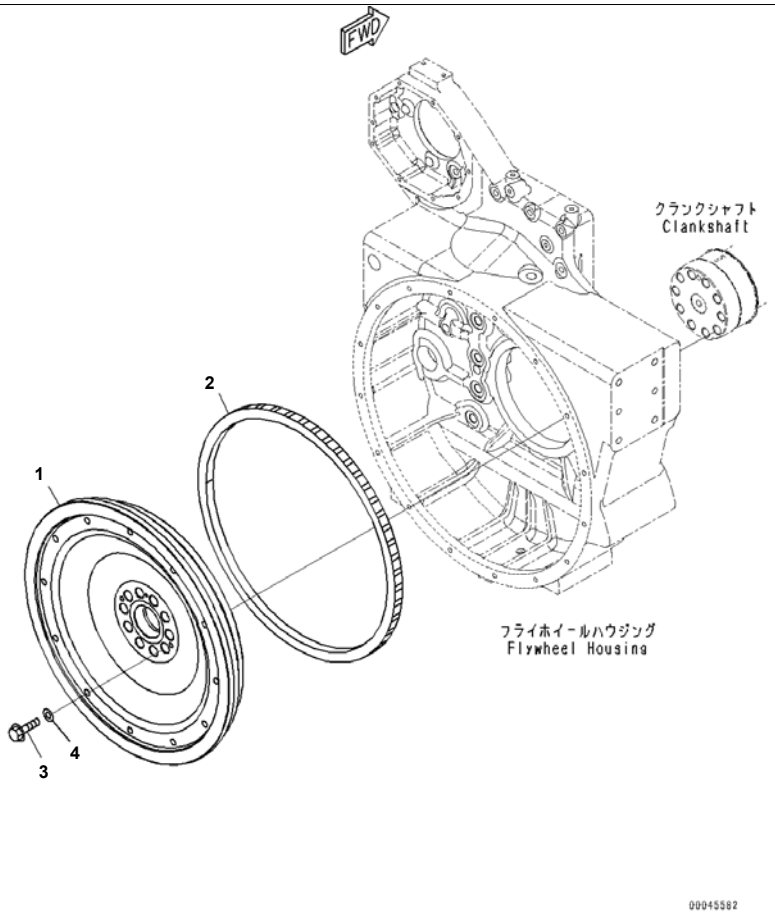

SAA6D170E-5EE S/N 610984-UP (For D375A-6R)
Flywheel (#610984-)

Index	Code	Part Number	Description	Qty	Serial No.
		6245-31-1221	Flywheel Assembly	1	610984-
1	C1		· Flywheel	1	610984-
2		6645-31-1321	· Gear, Ring	1	610984-
3		6245-31-1420	Bolt	10	610984-
4		6162-33-1740	Washer	10	610984-

Printed By : Dwi Iswanto (airafather6107170)

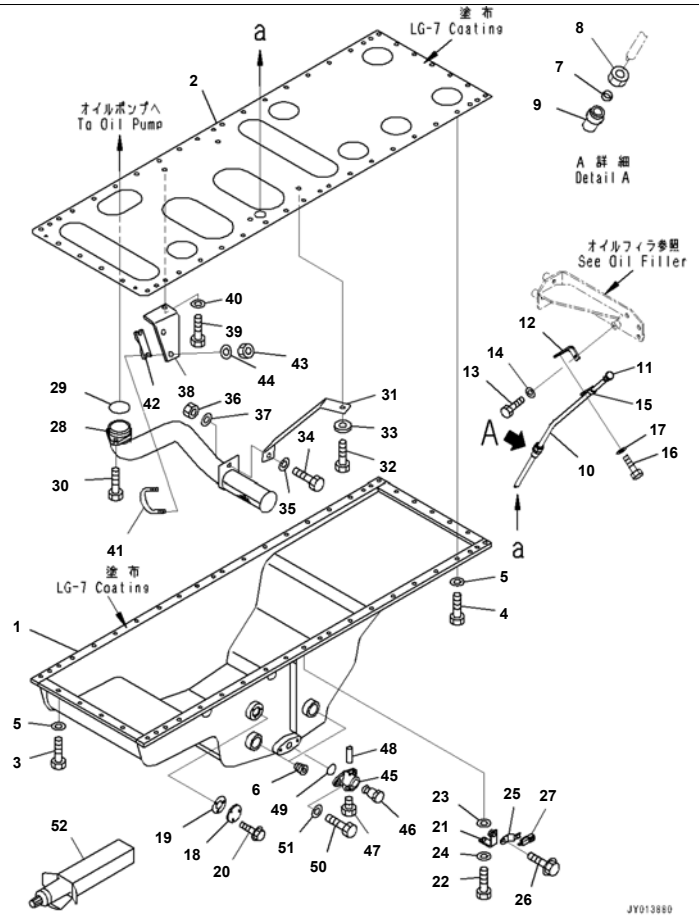

SAA6D170E-5EE S/N 610984-UP (For D375A-6R)
Engine Oil Pan, For VHMS (#610984-)

Index	Code	Part Number	Description	Qty	Serial No.
1		6245-21-5111	Pan, Oil	1	610984-
2		6240-21-5290	Plate, Under	1	610984-
3		01010-81035	Bolt	19	610984-
4		01010-81045	Bolt	27	610984-
5		01640-21016	Washer	46	610984-
6		02720-41616	Plug	2	610984-
7		6150-21-5920	Collar	1	610984-
8		6150-21-5930	Nut	1	610984-
9		6150-21-5910	Bushing	1	610984-
10		6162-25-5410	Guide, Oil Gauge	1	610984-
11		6245-21-5320	Gauge, Oil Level	1	610984-
12		6162-23-5820	Clamp	1	610984-
13		01010-80820	Bolt	1	610984-
14		01643-30823	Washer	1	610984-
15		6205-51-8490	Bracket	1	610984-
16		01010-80820	Bolt	1	610984-
17		01643-30823	Washer	1	610984-
18		6136-21-5770	Plate	1	610984-
19		6136-21-5870	Gasket	1	610984-
20		01435-00612	Bolt	3	610984-
21		6934-71-5860	Bracket	1	610984-
22		01010-81055	Bolt	1	610984-
23		01643-31032	Washer	1	610984-
24		01643-31032	Washer	1	610984-
25		08193-20010	Clip	1	610984-
26		01435-01016	Bolt	1	610984-
27		198-06-63170	Wiring Harness	1	610984-
28		6245-51-6310	Tube, Suction	1	610984-
29		07000-E2060	O-ring	1	610984-
30		01010-81030	Bolt	1	610984-
31		6245-51-6320	Bracket	1	610984-

Printed By : Dwi Iswanto (airafather6107170)

Engine Oil Pan, For VHMS (#610984-)

Index	Code	Part Number	Description	Qty	Serial No.
32		01010-81030	Bolt	1	610984-
33		6110-23-6490	Spacer	1	610984-
34		01010-81025	Bolt	1	610984-
35		01643-31032	Washer	1	610984-
36		01580-01008	Nut	1	610984-
37		01643-31032	Washer	1	610984-
38		6245-51-6330	Bracket	1	610984-
39		01010-81030	Bolt	1	610984-
40		01643-31032	Washer	1	610984-
41		07283-36163	Clip	1	610984-
42		6240-51-6391	Plate	1	610984-
43		01597-01009	Nut	2	610984-
44		01643-31032	Washer	2	610984-
		6693-22-5600	Valve Assembly	1	610984-
45	C1		· Body	1	610984-
46	C1		· Valve, Oil Drain	1	610984-
47		07040-02412	· Plug	1	610984-
48		04020-00514	· Pin, Dowel	1	610984-
49		07000-73028	O-ring	1	610984-
50		01010-81025	Bolt	2	610984-
51		01640-21016	Washer	4	610984-
52		09920-00150	Liquid gasket, LG-7, 150G	AR	610984-

Printed By : Dwi Iswanto (airafather6107170)

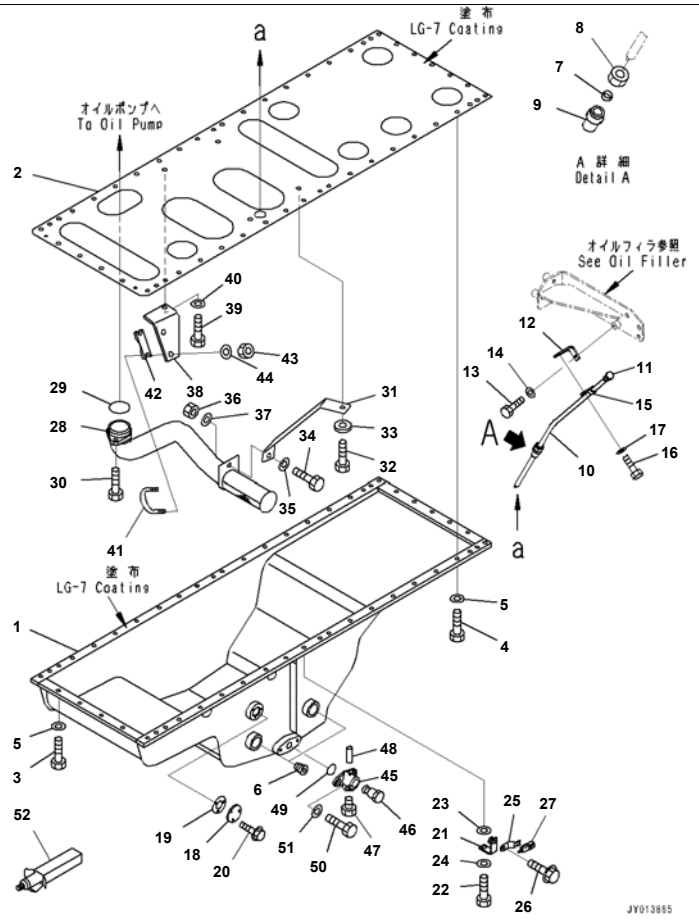

SAA6D170E-5EE S/N 610984-UP (For D375A-6R)
Engine Oil Pan (#610984-)

Index	Code	Part Number	Description	Qty	Serial No.
1		6245-21-5111	Pan, Oil	1	610984-
2		6240-21-5290	Plate	1	610984-
3		01010-81035	Bolt	20	610984-
4		01010-81045	Bolt	27	610984-
5		01640-21016	Washer	47	610984-
6		02720-41616	Plug	2	610984-
7		6150-21-5920	Collar	1	610984-
8		6150-21-5930	Nut	1	610984-
9		6150-21-5910	Bushing	1	610984-
10		6162-25-5410	Guide, Oil Gauge	1	610984-
11		6245-21-5320	Gauge, Oil Level	1	610984-
12		6162-23-5820	Clamp	1	610984-
13		01010-80820	Bolt	1	610984-
14		01643-30823	Washer	1	610984-
15		6205-51-8490	Bracket	1	610984-
16		01010-80820	Bolt	1	610984-
17		01643-30823	Washer	1	610984-
18		6136-21-5770	Plate	1	610984-
19		6136-21-5870	Gasket	1	610984-
20		01435-00612	Bolt	3	610984-
21		6934-71-5860	Bracket	1	610984-
22		01010-81055	Bolt	1	610984-
23		01643-31032	Washer	1	610984-
24		01643-31032	Washer	1	610984-
25		08193-20010	Clip	1	610984-
26		01435-01016	Bolt	1	610984-
27		198-06-63170	Wiring Harness	1	610984-
28		6245-51-6310	Tube, Suction	1	610984-
29		07000-E2060	O-ring	1	610984-
30		01010-81030	Bolt	1	610984-
31		6245-51-6320	Bracket	1	610984-

Printed By : Dwi Iswanto (airafather6107170)

Index	Code	Part Number	Description	Qty	Serial No.
32		01010-81030	Bolt	1	610984-
33		6110-23-6490	Spacer	1	610984-
34		01010-81025	Bolt	1	610984-
35		01643-31032	Washer	1	610984-
36		01580-01008	Nut	1	610984-
37		01643-31032	Washer	1	610984-
38		6245-51-6330	Bracket	1	610984-
39		01010-81030	Bolt	1	610984-
40		01643-31032	Washer	1	610984-
41		07283-36163	Clip	1	610984-
42		6240-51-6391	Plate	1	610984-
43		01597-01009	Nut	2	610984-
44		01643-31032	Washer	2	610984-
		6693-22-5600	Valve Assembly	1	610984-
45	C1		· Body	1	610984-
46	C1		· Valve	1	610984-
47		07040-02412	· Plug	1	610984-
48		04020-00514	· Pin, Dowel	1	610984-
49		07000-73028	O-ring	1	610984-
50		01010-81025	Bolt	2	610984-
51		01640-21016	Washer	2	610984-
52		09920-00150	Liquid gasket, LG-7, 150G	AR	610984-

Printed By : Dwi Iswanto (airafather6107170)

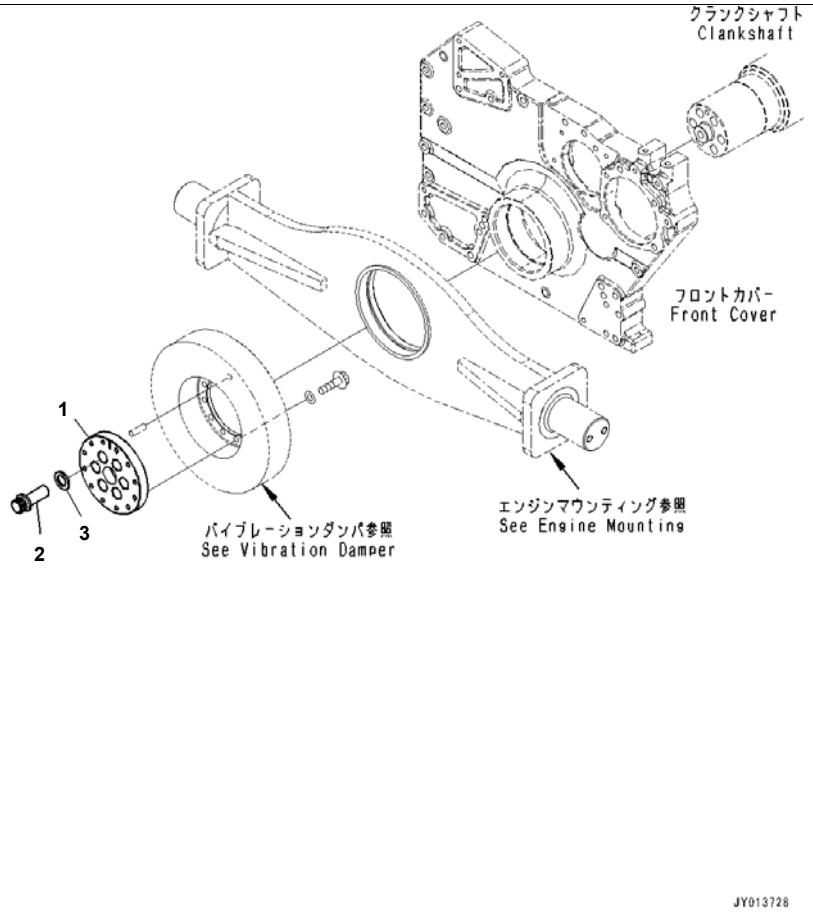

Index	Code	Part Number	Description	Qty	Serial No.
1		6245-31-8130	Adapter	1	610984-
2		6245-31-1720	Bolt	6	610984-
3		6162-13-1620	Washer	6	610984-

Printed By : Dwi Iswanto (airafather6107170)

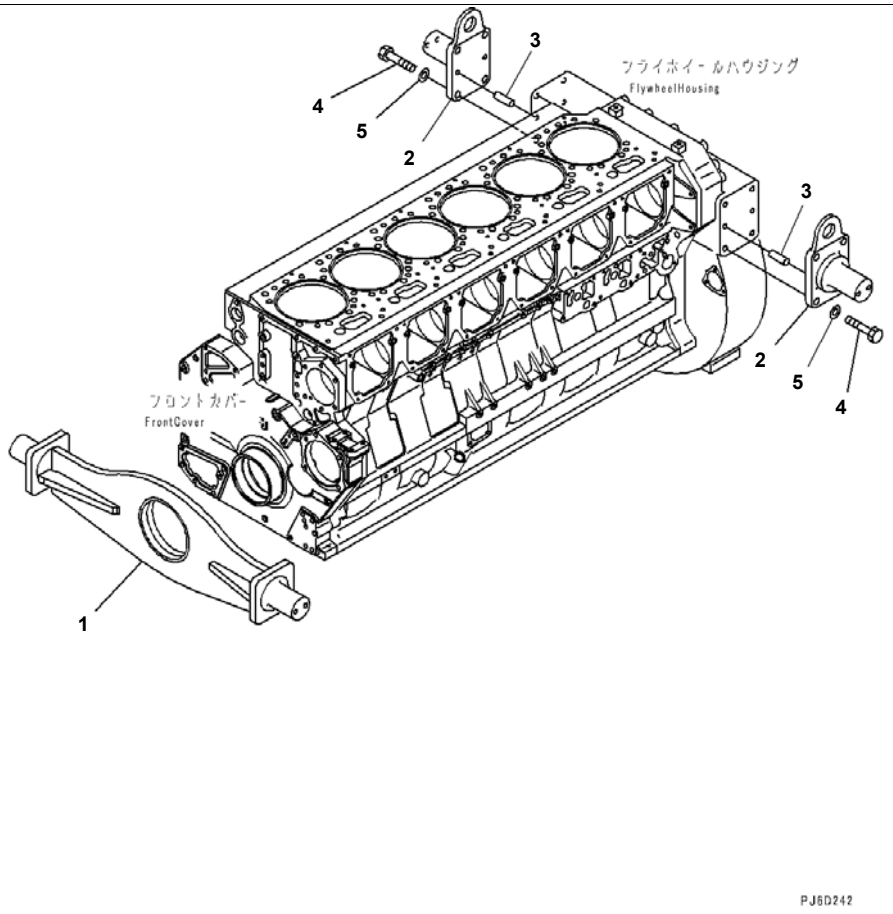

Index	Code	Part Number	Description	Qty	Serial No.
1		6162-23-3713	Support,Front	1	610984-
2		195-01-31140	Pin	2	610984-
3		04020-01434	Pin, Dowel	4	610984-
4		01010-61850	Bolt	8	610984-
5		01643-31845	Washer	8	610984-

Printed By : Dwi Iswanto (airafather6107170)

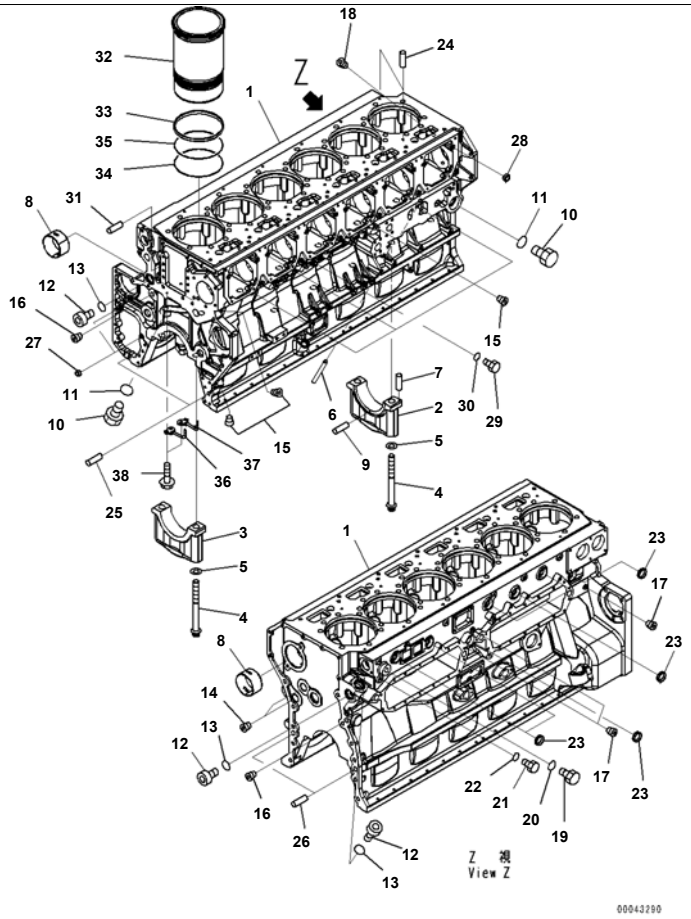

Index	Code	Part Number	Description	Qty	Serial No.
		6245-21-1100	Cylinder Block Assembly	1	610984-610984
1	C1		· Block, Cylinder	1	610984-610984
2	C3	6240-29-1250	· Cap, Main Metal, No.6	1	610984-610984
3	C3	6240-29-1210	· Cap, Main Metal, No.1,2,3,4,5,7	6	610984-610984
4		6215-21-1710	· Bolt, Mian Cap	14	610984-610984
5		01643-32460	· Washer	14	610984-610984
6		6162-23-1140	· Tube, Oil Transfer	1	610984-610984
7		04020-00514	· Pin, Dowel	2	610984-610984
8		6245-21-1482	· Bushing	7	610984-610984
9		6162-23-1260	· Pin, Dowel	2	610984-610984
10		07040-14220	· Plug	2	610984-610984
11		07002-34234	· O-ring	2	610984-610984
12		07040-13316	· Plug	3	610984-610984
13		07002-33334	· O-ring	3	610984-610984
14		07043-71019	· Plug	2	610984-610984
15		07043-70211	· Plug	6	610984-610984
16		07043-70415	· Plug	2	610984-610984
17		07043-70108	· Plug	3	610984-610984
18		07043-00108	· Plug, Taper	6	610984-610984
19		07040-12012	· Plug	1	610984-610984
20		07002-62034	· O-ring	1	610984-610984
21		07040-11409	· Plug	1	610984-610984
22		07005-01412	· Gasket	1	610984-610984
23		07046-44016	· Plug	7	610984-610984
24		04020-00820	· Pin, Dowel	12	610984-610984
25		04020-01434	· Pin, Dowel	2	610984-610984
26		6127-21-1160	· Pin, Dowel	2	610984-610984
27		6150-41-2430	· Pin	2	610984-610984
28		6162-43-2430	· Ring	12	610984-610984
29		07040-11409	· Plug	1	610984-610984
30		07002-31423	· O-ring	1	610984-610984

Printed By : Dwi Iswanto (airafather6107170)

Index	Code	Part Number	Description	Qty	Serial No.
31		04020-01228	· Pin, Dowel	2	610984-610984
32		6240-21-2220	Liner, Cylinder	3	610984-610984
33		6162-23-2250	Seal, Crevice	6	610984-610984
34		6162-23-2240	O-ring, Lower	6	610984-610984
35		6162-23-2220	O-ring,Center	6	610984-610984
36		6240-21-1810	Nozzle, Pinton Cooling Front	6	610984-610984
37		6245-21-1910	Nozzle, Pinton Cooling Rear	6	610984-610984
38		01435-00816	Bolt	12	610984-610984

Printed By : Dwi Iswanto (airafather6107170)

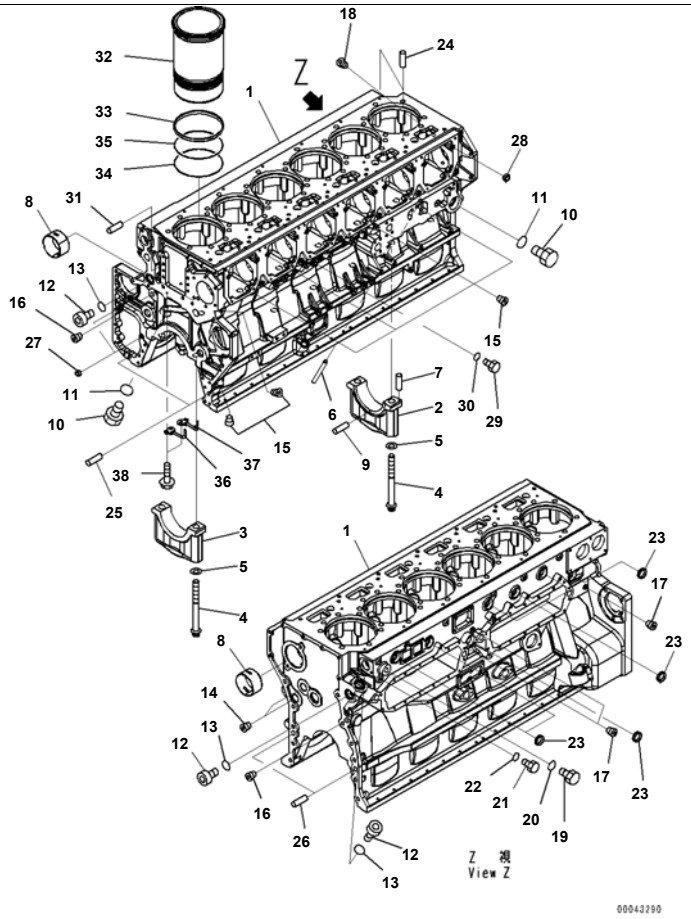

Index	Code	Part Number	Description	Qty	Serial No.
1	C1		Block, Cylinder	1	610985-
2	C3	6240-29-1250	Cap, Main Metal, No.6	1	610985-
3	C3	6240-29-1210	Cap, Main Metal, No.1,2,3,4,5,7	6	610985-
4		6215-21-1710	Bolt	14	610985-
5		01643-32460	Washer	14	610985-
6		6162-23-1140	Tube	1	610985-
7		04020-00514	Pin, Dowel	2	610985-
8		6245-21-1482	Bushing	7	610985-
9		6162-23-1260	Pin	2	610985-
10		07040-14220	Plug	2	610985-
11		07002-34234	O-ring	2	610985-
12		07040-13316	Plug	3	610985-
13		07002-33334	O-ring	3	610985-
14		07043-71019	Plug	2	610985-
15		07043-70211	Plug	6	610985-
16		07043-70415	Plug	2	610985-
17		07043-70108	Plug	3	610985-
18		07043-00108	Plug, Taper	6	610985-
19		07040-12012	Plug	1	610985-
20		07002-62034	O-ring	1	610985-
21		07040-11409	Plug	1	610985-
22		07005-01412	Gasket	1	610985-
23		07046-44016	Plug	7	610985-
24		04020-00820	Pin, Dowel	12	610985-
25		04020-01434	Pin, Dowel	2	610985-
26		6127-21-1160	Pin, Dowel	2	610985-
27		6150-41-2430	Pin	2	610985-
28		6162-43-2430	Ring	12	610985-
29		07040-11409	Plug	1	610985-
30		07002-31423	O-ring	1	610985-
31		04020-01228	Pin, Dowel	2	610985-

Printed By : Dwi Iswanto (airafather6107170)

Index	Code	Part Number	Description	Qty	Serial No.
32		6240-21-2220	Liner, Cylinder	3	610985-
33		6162-23-2250	Seal	6	610985-
34		6162-23-2240	O-ring	6	610985-
35		6162-23-2220	O-ring	6	610985-
36		6240-21-1810	Nozzle	6	610985-
37		6245-21-1910	Nozzle	6	610985-
38		01435-00816	Bolt	12	610985-

Printed By : Dwi Iswanto (airafather6107170)

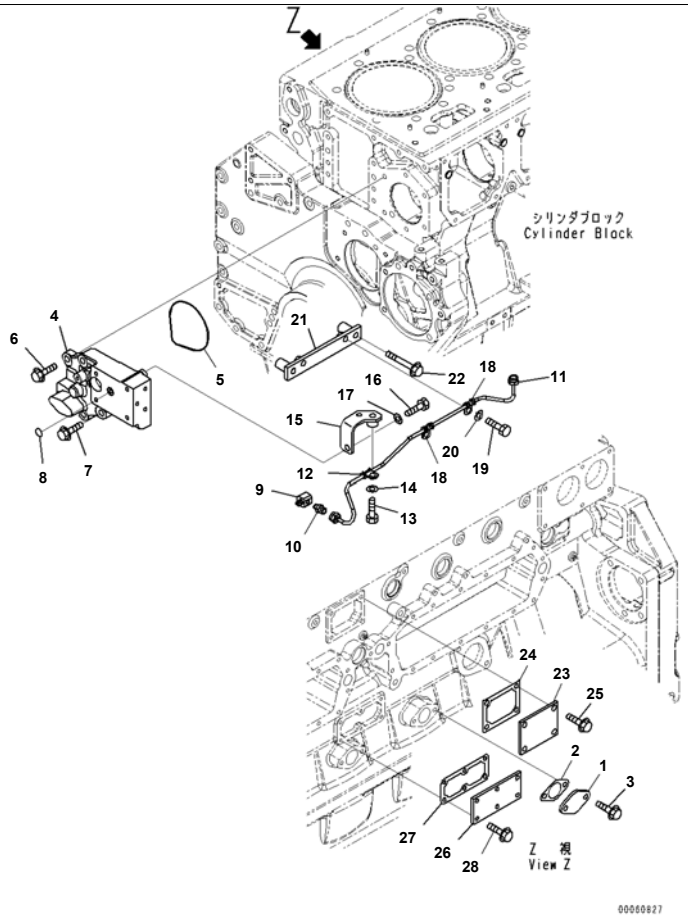

Cylinder Block Accessory, For VHMS, Grease Fitting Tube and Blind Cover (#610984-)

Index	Code	Part Number	Description	Qty	Serial No.
1		6162-23-6530	Plate	1	610984-
2		6127-51-6822	Gasket	1	610984-
3		01435-01020	Bolt	2	610984-
4		6245-81-6130	Block	1	610984-
5		07000-72115	O-ring	1	610984-
6		01435-01235	Bolt	1	610984-
7		01435-01250	Bolt	5	610984-
8		07000-72014	O-ring	1	610984-
9		6127-81-4690	Nipple	1	610984-
10		07213-50710	Connector	1	610984-
11		6245-81-6710	Tube	1	610984-
12		6150-71-8231	Clip	1	610984-
13		01010-81025	Bolt	1	610984-
14		01643-31032	Washer	1	610984-
15		6245-81-6730	Bracket	1	610984-
16		01010-81025	Bolt	1	610984-
17		01643-31032	Washer	1	610984-
18		6150-71-8231	Clip	2	610984-
19		01010-81025	Bolt	2	610984-
20		01643-31032	Washer	2	610984-
21		6245-81-6720	Bracket	1	610984-
22		01435-01070	Bolt	2	610984-
23		6240-21-1960	Plate	1	610984-
24		6210-21-1971	Gasket	1	610984-
25		01435-01020	Bolt	3	610984-
26		6162-63-6710	Plate	1	610984-
27		6162-63-6731	Gasket	1	610984-
28		01435-00820	Bolt	6	610984-

Printed By : Dwi Iswanto (airafather6107170)

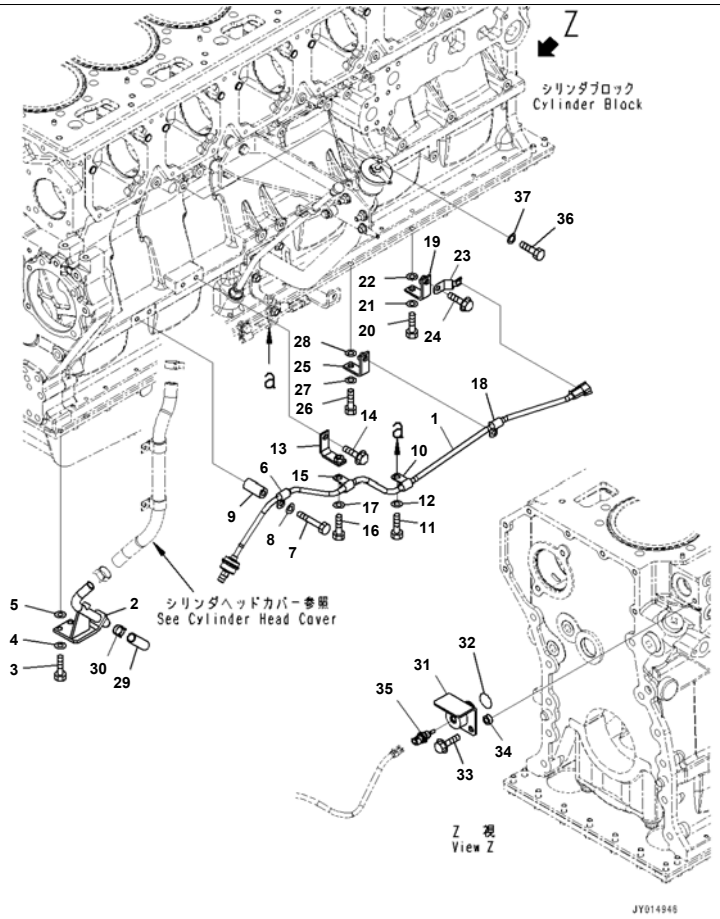

SAA6D170E-5EE S/N 610984-UP (For D375A-6R)
Cylinder Block Accessory, For VHMS, Blowby Sensor and Water Temperature Sensor (#610984-)

Index	Code	Part Number	Description	Qty	Serial No.
1		6218-81-4111	Sensor Assembly, Blowby	1	610984-
2		6245-21-6220	Tube	1	610984-
3		01010-81050	Bolt	2	610984-
4		01643-31032	Washer	2	610984-
5		01643-31032	Washer	2	610984-
6		600-051-2100	Clip	1	610984-
7		01010-81065	Bolt	1	610984-
8		01643-31032	Washer	1	610984-
9		6152-21-6590	Spacer	1	610984-
10		600-051-2100	Clip	1	610984-
11		01010-81020	Bolt	1	610984-
12		01643-31032	Washer	1	610984-
13		6934-71-5860	Bracket	1	610984-
14		01435-01020	Bolt	1	610984-
15		600-051-2100	Clip	1	610984-
16		01010-81020	Bolt	1	610984-
17		01643-31032	Washer	1	610984-
18		600-051-2100	Clip	1	610984-
19		6934-71-5860	Bracket	1	610984-
20		01010-81055	Bolt	1	610984-
21		01643-31032	Washer	1	610984-
22		01643-31032	Washer	1	610984-
23		08193-20010	Clip	1	610984-
24		01435-01016	Bolt	1	610984-
25		6934-71-5860	Bracket	1	610984-
26		01010-81055	Bolt	1	610984-
27		01643-31032	Washer	1	610984-
28		01643-31032	Washer	1	610984-
29		07286-01935	Hose	1	610984-
30		07285-00220	Clip	1	610984-
31		6245-21-6810	Adapter	1	610984-

Printed By : Dwi Iswanto (airafather6107170)

Cylinder Block Accessory, For VHMS, Blowby Sensor and Water Temperature Sensor (#610984-)

Index	Code	Part Number	Description	Qty	Serial No.
32		6240-61-6370	O-ring	1	610984-
33		01435-01025	Bolt	1	610984-
34		417-823-1460	Spacer	1	610984-
35		6261-81-6901	Sensor Assembly, Water Temperature	1	610984-
		6216-84-9740	· Seal	1	610984-
36		01050-51012	Bolt	1	610984-
37		07005-01012	Gasket	1	610984-

Printed By : Dwi Iswanto (airafather6107170)

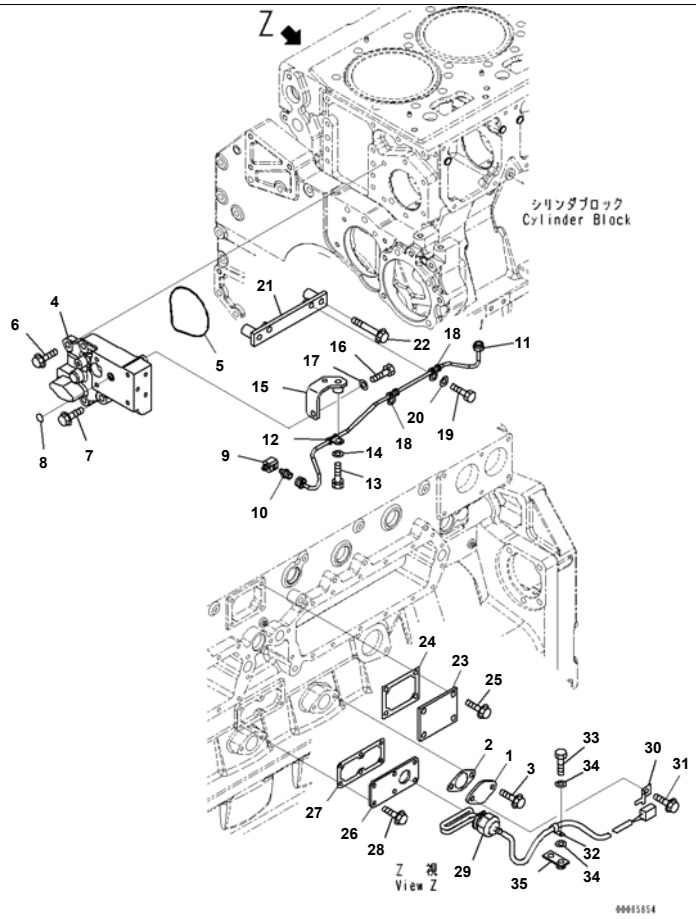

Index	Code	Part Number	Description	Qty	Serial No.
1		6162-23-6530	Plate	1	610984-
2		6127-51-6822	Gasket	1	610984-
3		01435-01020	Bolt	1	610984-
4		6245-81-6130	Block	1	610984-
5		07000-72115	O-ring	1	610984-
6		01435-01235	Bolt	1	610984-
7		01435-01250	Bolt	5	610984-
8		07000-72014	O-ring	1	610984-
9		6127-81-4690	Nipple	1	610984-
10		07213-50710	Connector	1	610984-
11		6245-81-6710	Tube	1	610984-
12		6150-71-8231	Clip	1	610984-
13		01010-81025	Bolt	1	610984-
14		01643-31032	Washer	1	610984-
15		6245-81-6730	Bracket	1	610984-
16		01010-81025	Bolt	1	610984-
17		01643-31032	Washer	1	610984-
18		6150-71-8231	Clip	2	610984-
19		01010-81025	Bolt	2	610984-
20		01643-31032	Washer	2	610984-
21		6245-81-6720	Bracket	1	610984-
22		01435-01070	Bolt	2	610984-
23		6240-21-1960	Plate	1	610984-
24		6210-21-1971	Gasket	1	610984-
25		01435-01020	Bolt	3	610984-
26		6162-63-6630	Plate	1	610984-
27		6162-63-6731	Gasket	1	610984-
28		01435-00820	Bolt	6	610984-
29		600-815-9350	Heater, Block	1	610984-
30		08193-20010	Clip	1	610984-

Printed By : Dwi Iswanto (airafather6107170)

Index	Code	Part Number	Description	Qty	Serial No.
31		01435-01025	Bolt	1	610984-
32		600-051-2080	Clip	1	610984-
33		01010-81025	Bolt	1	610984-
34		01643-31032	Washer	2	610984-
35		426-01-11310	Bracket	1	610984-

Printed By : Dwi Iswanto (airafather6107170)

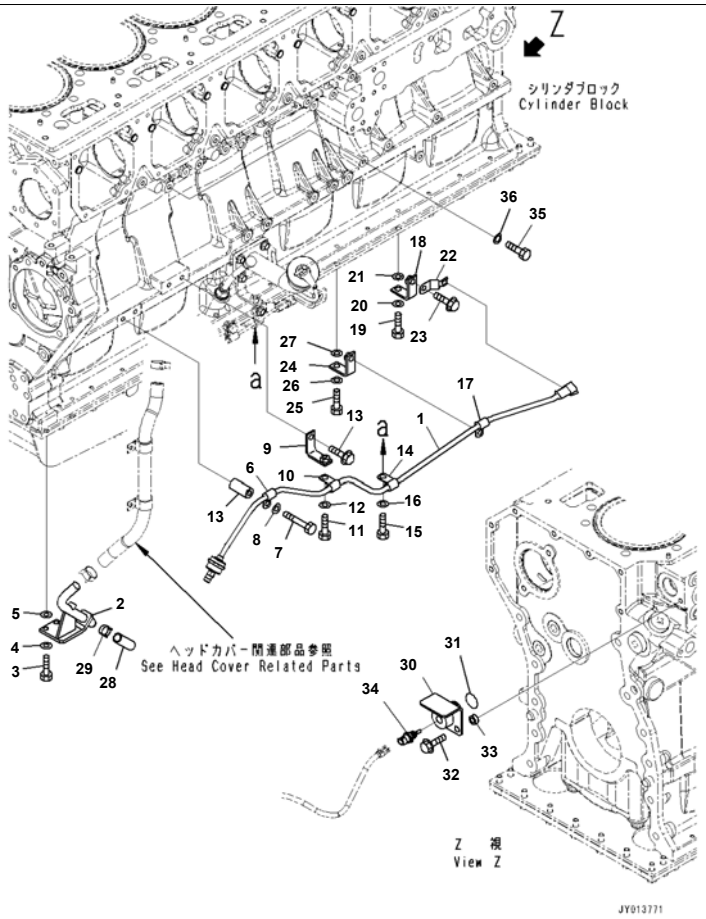

Reference:A2011-004002 Page:B015002

SAA6D170E-5EE S/N 610984-UP (For D375A-6R)
Cylinder Block Accessory, For Engine Oil Pan And Coolant Heater, Extra Bad Fuel And Poor Fuel Arrangement, Water+Dust, Additiona

Index	Code	Part Number	Description	Qty	Serial No.
1		6218-81-4111	Sensor Assembly	1	610984-
2		6245-21-6220	Tube	1	610984-
3		01010-81050	Bolt	2	610984-
4		01643-31032	Washer	2	610984-
5		01643-31032	Washer	2	610984-
6		600-051-2100	Clip	1	610984-
7		01010-81020	Bolt	1	610984-
8		01643-31032	Washer	1	610984-
9		6934-71-5860	Bracket	1	610984-
10		600-051-2100	Clip	1	610984-
11		01010-81070	Bolt	1	610984-
12		01643-31032	Washer	1	610984-
13		6152-21-6590	Spacer	1	610984-
14		600-051-2100	Clip	1	610984-
15		01010-81020	Bolt	1	610984-
16		01643-31032	Washer	1	610984-
17		600-051-2100	Clip	1	610984-
18		6934-71-5860	Bracket	1	610984-
19		01010-81055	Bolt	1	610984-
20		01643-31032	Washer	1	610984-
21		01643-31032	Washer	1	610984-
22		08193-20010	Clip	1	610984-
23		01435-01016	Bolt	1	610984-
24		6934-71-5860	Bracket	1	610984-
25		01010-81055	Bolt	1	610984-
26		01643-31032	Washer	1	610984-
27		01643-31032	Washer	1	610984-
28		07286-01935	Hose	1	610984-
29		07285-00220	Clip	1	610984-
30		6245-21-6810	Adapter	1	610984-

Reference:A2011-004002 Page:B015002

Printed By : Dwi Iswanto (airafather6107170)

Index	Code	Part Number	Description	Qty	Serial No.
31		6240-61-6370	O-ring	1	610984-
32		01435-01025	Bolt	1	610984-
33		417-823-1460	Spacer	1	610984-
34		6261-81-6901	Sensor Assembly	1	610984-
		6216-84-9740	· Seal	1	610984-
35		01050-51012	Bolt	1	610984-
36		07005-01012	Gasket	1	610984-

Printed By : Dwi Iswanto (airafather6107170)

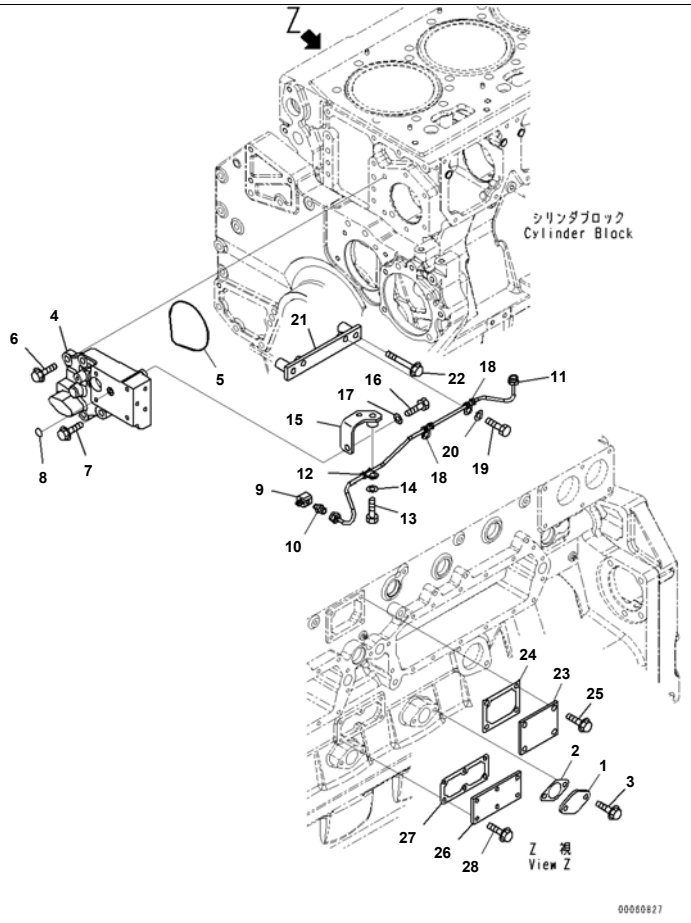

Cylinder Block Accessory, Grease Fitting Tube and Blind Cover (#610984-)

Index	Code	Part Number	Description	Qty	Serial No.
1		6162-23-6530	Plate	1	610984-
2		6127-51-6822	Gasket	1	610984-
3		01435-01020	Bolt	2	610984-
4		6245-81-6130	Block	1	610984-
5		07000-72115	O-ring	1	610984-
6		01435-01235	Bolt	1	610984-
7		01435-01250	Bolt	5	610984-
8		07000-72014	O-ring	1	610984-
9		6127-81-4690	Nipple	1	610984-
10		07213-50710	Connector	1	610984-
11		6245-81-6710	Tube	1	610984-
12		6150-71-8231	Clip	1	610984-
13		01010-81025	Bolt	1	610984-
14		01643-31032	Washer	1	610984-
15		6245-81-6730	Bracket	1	610984-
16		01010-81025	Bolt	1	610984-
17		01643-31032	Washer	1	610984-
18		6150-71-8231	Clip	2	610984-
19		01010-81025	Bolt	2	610984-
20		01643-31032	Washer	2	610984-
21		6245-81-6720	Bracket	1	610984-
22		01435-01070	Bolt	2	610984-
23		6240-21-1960	Plate	1	610984-
24		6210-21-1971	Gasket	1	610984-
25		01435-01020	Bolt	3	610984-
26		6162-63-6710	Plate	1	610984-
27		6162-63-6731	Gasket	1	610984-
28		01435-00820	Bolt	6	610984-

Printed By : Dwi Iswanto (airafather6107170)

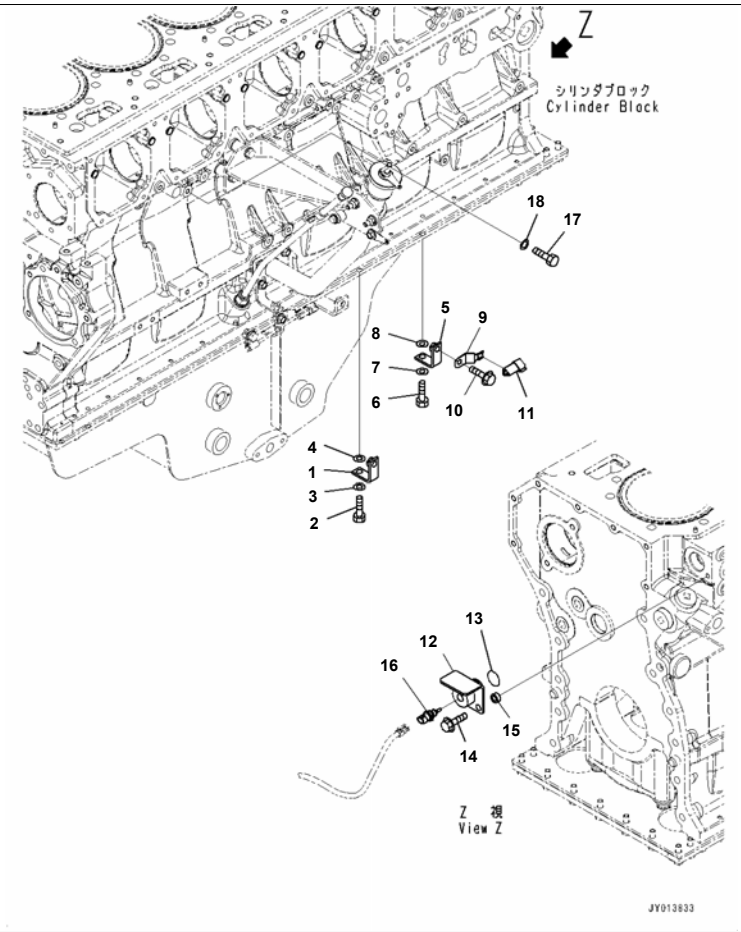

SAA6D170E-5EE S/N 610984-UP (For D375A-6R)
Cylinder Block Accessory, Blowby Sensor and Water Temperature Sensor (#610984-)

Index	Code	Part Number	Description	Qty	Serial No.
1		6934-71-5860	Bracket	1	610984-
2		01010-81055	Bolt	1	610984-
3		01643-31032	Washer	1	610984-
4		01643-31032	Washer	1	610984-
5		6934-71-5860	Bracket	1	610984-
6		01010-81055	Bolt	1	610984-
7		01643-31032	Washer	1	610984-
8		01643-31032	Washer	1	610984-
9		08193-20010	Clip	1	610984-
10		01435-01016	Bolt	1	610984-
11		6245-81-5290	Connector	1	610984-
12		6245-21-6810	Adapter	1	610984-
13		6240-61-6370	O-ring	1	610984-
14		01435-01025	Bolt	1	610984-
15		417-823-1460	Spacer	1	610984-
16		6261-81-6901	Sensor Assembly, Water Temperature	1	610984-
		6216-84-9740	· Seal	1	610984-
17		01050-51012	Bolt	1	610984-
18		07005-01012	Gasket	1	610984-

Printed By : Dwi Iswanto (airafather6107170)

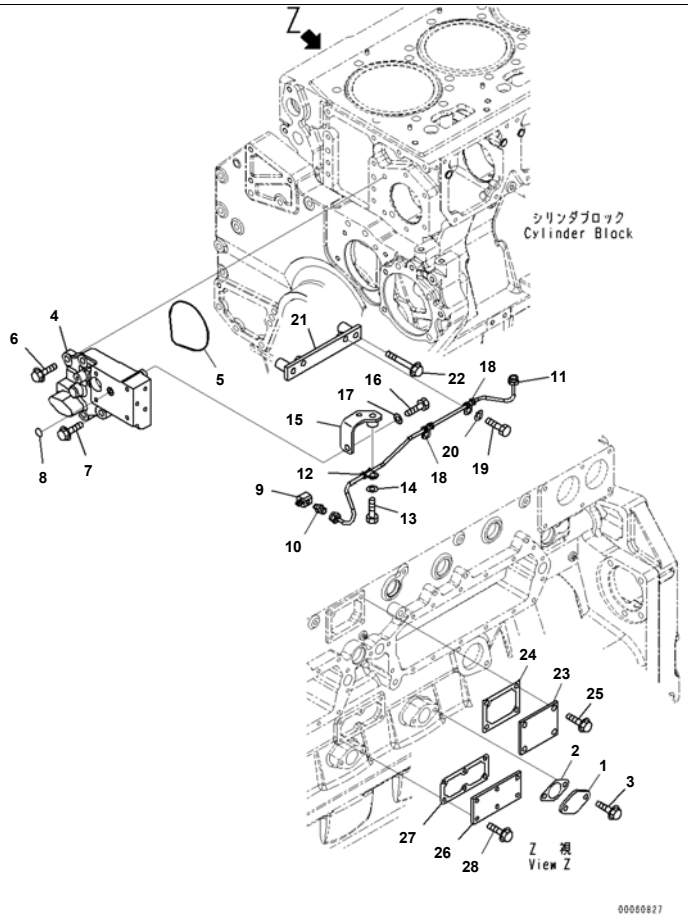

Cylinder Block Accessory, For Engine Pre-lubrication System, (1/2) (#610984-)

Index	Code	Part Number	Description	Qty	Serial No.
1		6162-23-6530	Plate	1	610984-
2		6127-51-6822	Gasket	1	610984-
3		01435-01020	Bolt	2	610984-
4		6245-81-6130	Block	1	610984-
5		07000-72115	O-ring	1	610984-
6		01435-01235	Bolt	1	610984-
7		01435-01250	Bolt	5	610984-
8		07000-72014	O-ring	1	610984-
9		6127-81-4690	Nipple	1	610984-
10		07213-50710	Connector	1	610984-
11		6245-81-6710	Tube	1	610984-
12		6150-71-8231	Clip	1	610984-
13		01010-81025	Bolt	1	610984-
14		01643-31032	Washer	1	610984-
15		6245-81-6730	Bracket	1	610984-
16		01010-81025	Bolt	1	610984-
17		01643-31032	Washer	1	610984-
18		6150-71-8231	Clip	2	610984-
19		01010-81025	Bolt	2	610984-
20		01643-31032	Washer	2	610984-
21		6245-81-6720	Bracket	1	610984-
22		01435-01070	Bolt	2	610984-
23		6240-21-1960	Plate	1	610984-
24		6210-21-1971	Gasket	1	610984-
25		01435-01020	Bolt	3	610984-
26		6162-63-6710	Plate	1	610984-
27		6162-63-6731	Gasket	1	610984-
28		01435-00820	Bolt	6	610984-

Printed By : Dwi Iswanto (airafather6107170)

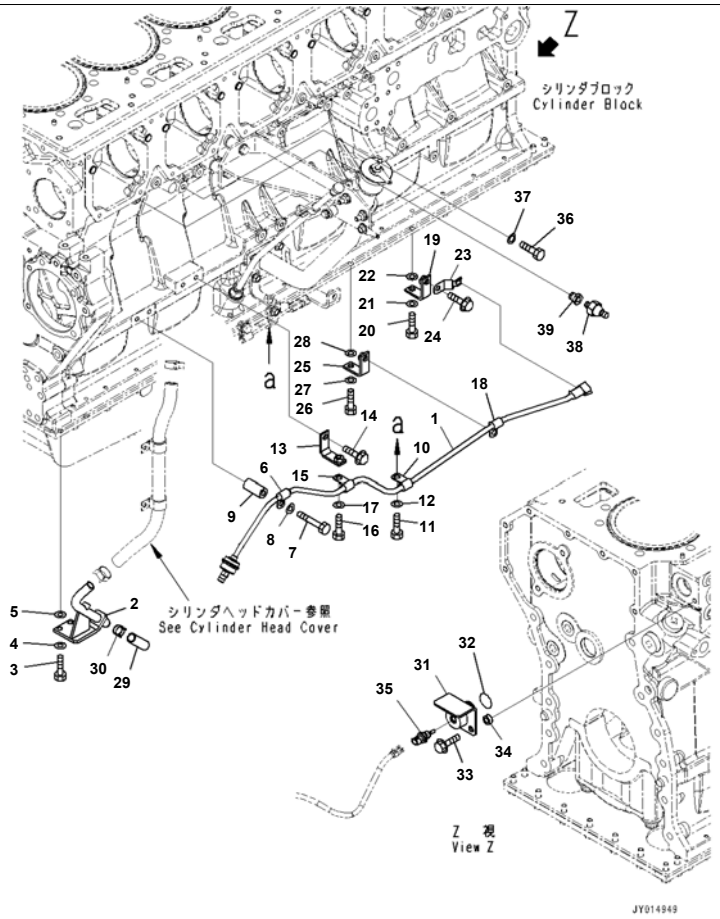

Reference:A2011-008002 Page:B017002

SAA6D170E-5EE S/N 610984-UP (For D375A-6R)
Cylinder Block Accessory, For Engine Pre-lubrication System, (2/2) (#610984-)

Index	Code	Part Number	Description	Qty	Serial No.
1		6218-81-4111	Sensor Assembly, Blowby	1	610984-
2		6245-21-6220	Tube	1	610984-
3		01010-81050	Bolt	2	610984-
4		01643-31032	Washer	2	610984-
5		01643-31032	Washer	2	610984-
6		600-051-2100	Clip	1	610984-
7		01010-81065	Bolt	1	610984-
8		01643-31032	Washer	1	610984-
9		6152-21-6590	Spacer	1	610984-
10		600-051-2100	Clip	1	610984-
11		01010-81020	Bolt	1	610984-
12		01643-31032	Washer	1	610984-
13		6934-71-5860	Bracket	1	610984-
14		01435-01020	Bolt	1	610984-
15		600-051-2100	Clip	1	610984-
16		01010-81020	Bolt	1	610984-
17		01643-31032	Washer	1	610984-
18		600-051-2100	Clip	1	610984-
19		6934-71-5860	Bracket	1	610984-
20		01010-81055	Bolt	1	610984-
21		01643-31032	Washer	1	610984-
22		01643-31032	Washer	1	610984-
23		08193-20010	Clip	1	610984-
24		01435-01016	Bolt	1	610984-
25		6934-71-5860	Bracket	1	610984-
26		01010-81055	Bolt	1	610984-
27		01643-31032	Washer	1	610984-
28		01643-31032	Washer	1	610984-
29		07286-01935	Hose	1	610984-
30		07285-00220	Clip	1	610984-
31		6245-21-6810	Adapter	1	610984-

Reference:A2011-008002 Page:B017002

Printed By : Dwi Iswanto (airafather6107170)

Cylinder Block Accessory, For Engine Pre-lubrication System, (2/2) (#610984-)

Index	Code	Part Number	Description	Qty	Serial No.
32		6240-61-6370	O-ring	1	610984-
33		01435-01025	Bolt	1	610984-
34		417-823-1460	Spacer	1	610984-
35		6261-81-6901	Sensor Assembly, Water Temperature	1	610984-
		6216-84-9740	· Seal	1	610984-
36		01050-51012	Bolt	1	610984-
37		07005-01012	Gasket	1	610984-
38		7861-91-1320	Switch, Oil Pressure	1	610984-
39		07326-00201	Adapter	1	610984-

Printed By : Dwi Iswanto (airafather6107170)

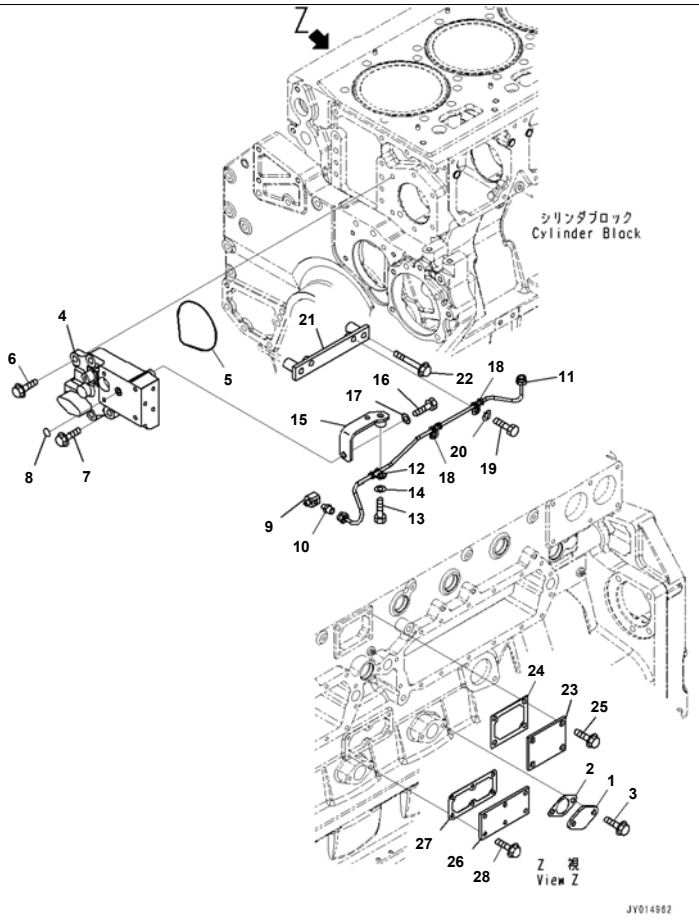

Reference:A2011-010001 Page:B018001

SAA6D170E-5EE S/N 610984-UP (For D375A-6R)
Cylinder Block Accessory, For Engine Pre-lubrication System, VHMS and ORB, (1/2) (#610984-)

Index	Code	Part Number	Description	Qty	Serial No.
1		6162-23-6530	Plate	1	610984-
2		6127-51-6822	Gasket	1	610984-
3		01435-01020	Bolt	2	610984-
4		6245-81-6130	Block	1	610984-
5		07000-72115	O-ring	1	610984-
6		01435-01235	Bolt	1	610984-
7		01435-01250	Bolt	5	610984-
8		07000-72014	O-ring	1	610984-
9		6127-81-4690	Nipple	1	610984-
10		07213-50710	Connector	1	610984-
11		6245-81-6710	Tube	1	610984-
12		6150-71-8231	Clip	1	610984-
13		01010-81025	Bolt	1	610984-
14		01643-31032	Washer	1	610984-
15		6245-81-6730	Bracket	1	610984-
16		01010-81025	Bolt	1	610984-
17		01643-31032	Washer	1	610984-
18		6150-71-8231	Clip	2	610984-
19		01010-81025	Bolt	2	610984-
20		01643-31032	Washer	2	610984-
21		6245-81-6720	Bracket	1	610984-
22		01435-01070	Bolt	2	610984-
23		6240-21-1960	Plate	1	610984-
24		6210-21-1971	Gasket	1	610984-
25		01435-01020	Bolt	3	610984-
26		6162-63-6710	Plate	1	610984-
27		6162-63-6731	Gasket	1	610984-
28		01435-00820	Bolt	6	610984-

Printed By : Dwi Iswanto (airafather6107170)

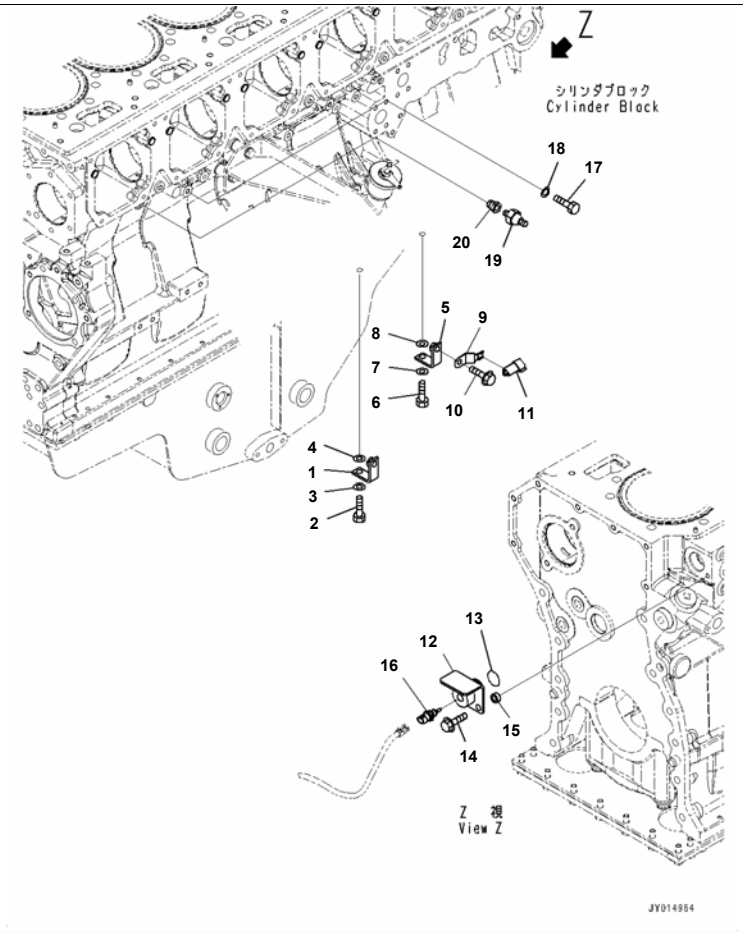

SAA6D170E-5EE S/N 610984-UP (For D375A-6R)
Cylinder Block Accessory, For Engine Pre-lubrication System, VHMS and ORB, (2/2) (#610984-)

Index	Code	Part Number	Description	Qty	Serial No.
1		6934-71-5860	Bracket	1	610984-
2		01010-81055	Bolt	1	610984-
3		01643-31032	Washer	1	610984-
4		01643-31032	Washer	1	610984-
5		6934-71-5860	Bracket	1	610984-
6		01010-81055	Bolt	1	610984-
7		01643-31032	Washer	1	610984-
8		01643-31032	Washer	1	610984-
9		08193-20010	Clip	1	610984-
10		01435-01016	Bolt	1	610984-
11		6245-81-5290	Connector	1	610984-
12		6245-21-6810	Adapter	1	610984-
13		6240-61-6370	O-ring	1	610984-
14		01435-01025	Bolt	1	610984-
15		417-823-1460	Spacer	1	610984-
16		6261-81-6901	Sensor Assembly, Water Temperature	1	610984-
		6216-84-9740	· Seal	1	610984-
17		01050-51012	Bolt	1	610984-
18		07005-01012	Gasket	1	610984-
19		7861-91-1320	Switch, Oil Temperature	1	610984-
20		07326-00201	Adapter	1	610984-

Printed By : Dwi Iswanto (airafather6107170)

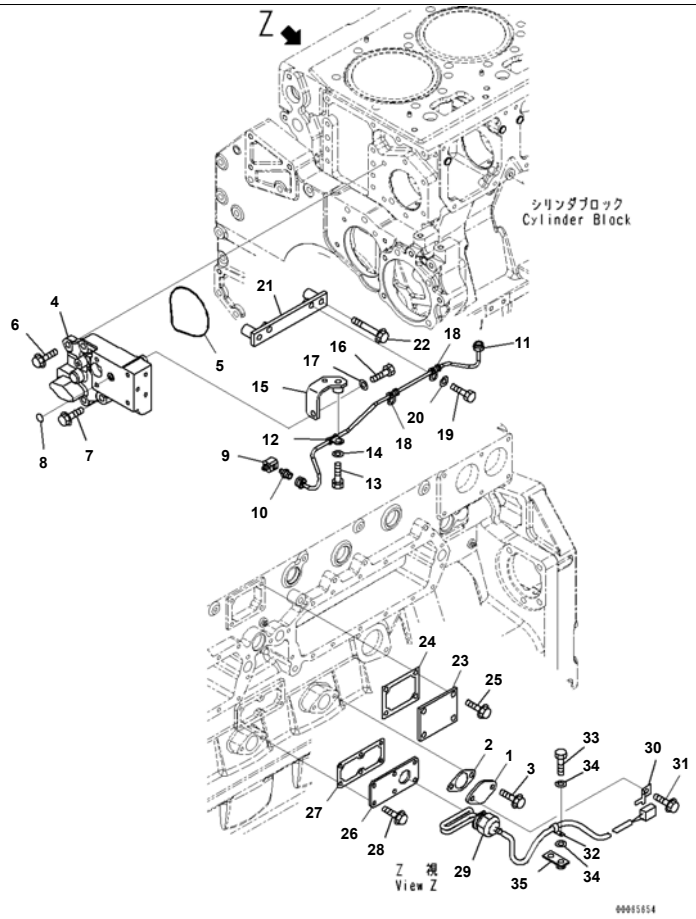

Index	Code	Part Number	Description	Qty	Serial No.
1		6162-23-6530	Plate	1	610984-
2		6127-51-6822	Gasket	1	610984-
3		01435-01020	Bolt	1	610984-
4		6245-81-6130	Block	1	610984-
5		07000-72115	O-ring	1	610984-
6		01435-01235	Bolt	1	610984-
7		01435-01250	Bolt	5	610984-
8		07000-72014	O-ring	1	610984-
9		6127-81-4690	Nipple	1	610984-
10		07213-50710	Connector	1	610984-
11		6245-81-6710	Tube	1	610984-
12		6150-71-8231	Clip	1	610984-
13		01010-81025	Bolt	1	610984-
14		01643-31032	Washer	1	610984-
15		6245-81-6730	Bracket	1	610984-
16		01010-81025	Bolt	1	610984-
17		01643-31032	Washer	1	610984-
18		6150-71-8231	Clip	2	610984-
19		01010-81025	Bolt	2	610984-
20		01643-31032	Washer	2	610984-
21		6245-81-6720	Bracket	1	610984-
22		01435-01070	Bolt	2	610984-
23		6240-21-1960	Plate	1	610984-
24		6210-21-1971	Gasket	1	610984-
25		01435-01020	Bolt	3	610984-
26		6162-63-6630	Plate	1	610984-
27		6162-63-6731	Gasket	1	610984-
28		01435-00820	Bolt	6	610984-
29		600-815-9350	Heater, Block	1	610984-
30		08193-20010	Clip	1	610984-

Printed By : Dwi Iswanto (airafather6107170)

Index	Code	Part Number	Description	Qty	Serial No.
31		01435-01025	Bolt	1	610984-
32		600-051-2080	Clip	1	610984-
33		01010-81025	Bolt	1	610984-
34		01643-31032	Washer	2	610984-
35		426-01-11310	Bracket	1	610984-

Printed By : Dwi Iswanto (airafather6107170)

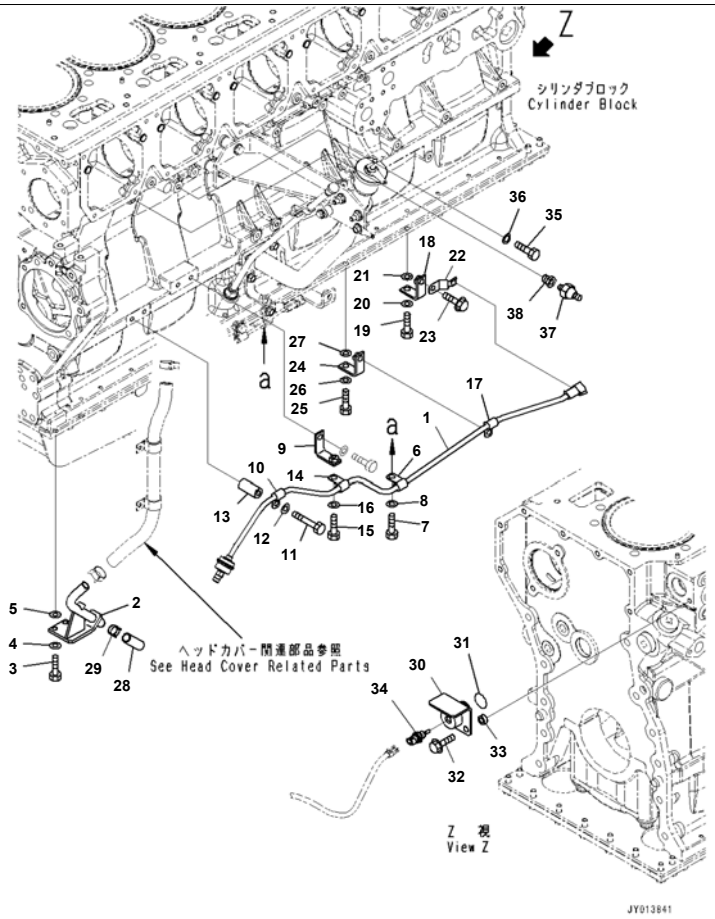

Index	Code	Part Number	Description	Qty	Serial No.
1		6218-81-4111	Sensor Assembly, Blowby	1	610984-
2		6245-21-6220	Tube	1	610984-
3		01010-81050	Bolt	2	610984-
4		01643-31032	Washer	2	610984-
5		01643-31032	Washer	2	610984-
6		600-051-2100	Clip	1	610984-
7		01010-81020	Bolt	1	610984-
8		01643-31032	Washer	1	610984-
9		6934-71-5860	Bracket	1	610984-
10		600-051-2100	Clip	1	610984-
11		01010-81070	Bolt	1	610984-
12		01643-31032	Washer	1	610984-
13		6152-21-6590	Spacer	1	610984-
14		600-051-2100	Clip	1	610984-
15		01010-81020	Bolt	1	610984-
16		01643-31032	Washer	1	610984-
17		600-051-2100	Clip	1	610984-
18		6934-71-5860	Bracket	1	610984-
19		01010-81055	Bolt	1	610984-
20		01643-31032	Washer	1	610984-
21		01643-31032	Washer	1	610984-
22		08193-20010	Clip	1	610984-
23		01435-01016	Bolt	1	610984-
24		6934-71-5860	Bracket	1	610984-
25		01010-81055	Bolt	1	610984-
26		01643-31032	Washer	1	610984-
27		01643-31032	Washer	1	610984-
28		07286-01935	Hose	1	610984-
29		07285-00220	Clip	1	610984-
30		6245-21-6810	Adapter	1	610984-

Printed By : Dwi Iswanto (airafather6107170)

Index	Code	Part Number	Description	Qty	Serial No.
31		6240-61-6370	O-ring	1	610984-
32		01435-01025	Bolt	1	610984-
33		417-823-1460	Spacer	1	610984-
34		6261-81-6901	Sensor Assembly, Water Temperature	1	610984-
		6216-84-9740	· Seal	1	610984-
35		01050-51012	Bolt	1	610984-
36		07005-01012	Gasket	1	610984-
37		7861-91-1320	Switch, Oil Pressure	1	610984-
38		07326-00201	Adapter	1	610984-

Printed By : Dwi Iswanto (airafather6107170)

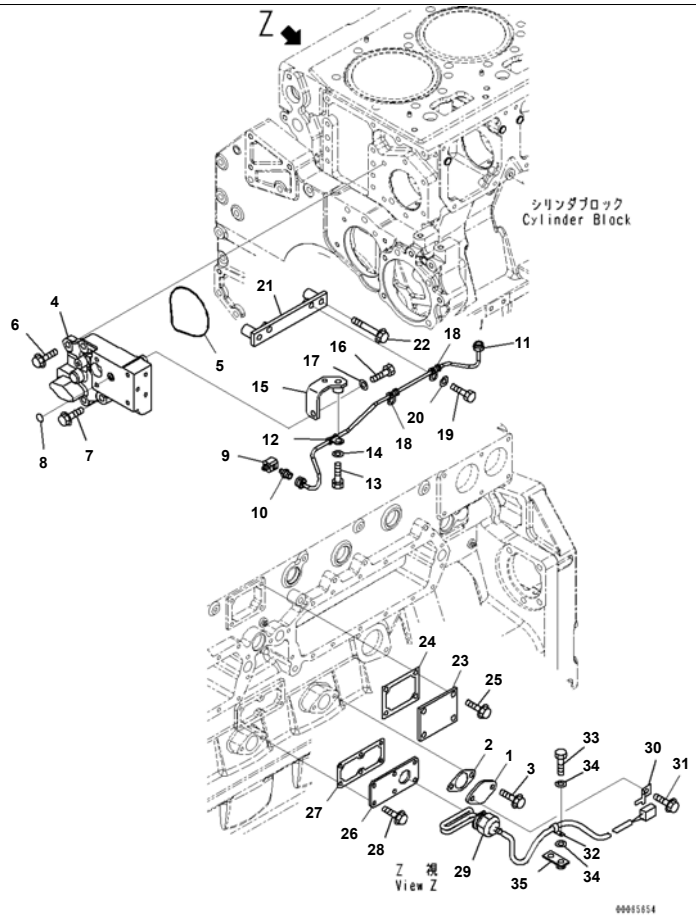

Cylinder Block Accessory, Provision For Engine Oil Pan And Coolant Heater, (1/2) (#610984-)

Index	Code	Part Number	Description	Qty	Serial No.
1		6162-23-6530	Plate	1	610984-
2		6127-51-6822	Gasket	1	610984-
3		01435-01020	Bolt	1	610984-
4		6245-81-6130	Block	1	610984-
5		07000-72115	O-ring	1	610984-
6		01435-01235	Bolt	1	610984-
7		01435-01250	Bolt	5	610984-
8		07000-72014	O-ring	1	610984-
9		6127-81-4690	Nipple	1	610984-
10		07213-50710	Connector	1	610984-
11		6245-81-6710	Tube	1	610984-
12		6150-71-8231	Clip	1	610984-
13		01010-81025	Bolt	1	610984-
14		01643-31032	Washer	1	610984-
15		6245-81-6730	Bracket	1	610984-
16		01010-81025	Bolt	1	610984-
17		01643-31032	Washer	1	610984-
18		6150-71-8231	Clip	2	610984-
19		01010-81025	Bolt	2	610984-
20		01643-31032	Washer	2	610984-
21		6245-81-6720	Bracket	1	610984-
22		01435-01070	Bolt	2	610984-
23		6240-21-1960	Plate	1	610984-
24		6210-21-1971	Gasket	1	610984-
25		01435-01020	Bolt	3	610984-
26		6162-63-6630	Plate	1	610984-
27		6162-63-6731	Gasket	1	610984-
28		01435-00820	Bolt	6	610984-
29		600-815-9350	Heater, Block	1	610984-
30		08193-20010	Clip	1	610984-
31		01435-01025	Bolt	1	610984-

Printed By : Dwi Iswanto (airafather6107170)

Cylinder Block Accessory, Provision For Engine Oil Pan And Coolant Heater, (1/2) (#610984-)

Index	Code	Part Number	Description	Qty	Serial No.
32		600-051-2080	Clip	1	610984-
33		01010-81025	Bolt	1	610984-
34		01643-31032	Washer	2	610984-
35		426-01-11310	Bracket	1	610984-

Printed By : Dwi Iswanto (airafather6107170)

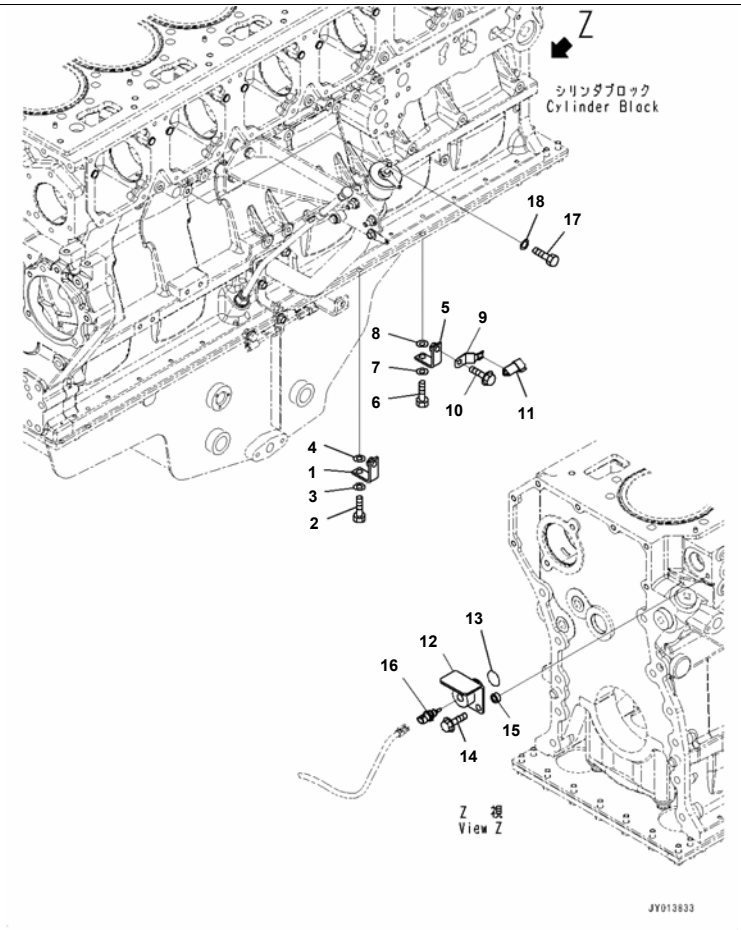

SAA6D170E-5EE S/N 610984-UP (For D375A-6R)
Cylinder Block Accessory, Provision For Engine Oil Pan And Coolant Heater, (2/2) (#610984-)

Index	Code	Part Number	Description	Qty	Serial No.
1		6934-71-5860	Bracket	1	610984-
2		01010-81055	Bolt	1	610984-
3		01643-31032	Washer	1	610984-
4		01643-31032	Washer	1	610984-
5		6934-71-5860	Bracket	1	610984-
6		01010-81055	Bolt	1	610984-
7		01643-31032	Washer	1	610984-
8		01643-31032	Washer	1	610984-
9		08193-20010	Clip	1	610984-
10		01435-01016	Bolt	1	610984-
11		6245-81-5290	Connector	1	610984-
12		6245-21-6810	Adapter	1	610984-
13		6240-61-6370	O-ring	1	610984-
14		01435-01025	Bolt	1	610984-
15		417-823-1460	Spacer	1	610984-
16		6261-81-6901	Sensor Assembly, Water Temperature	1	610984-
		6216-84-9740	· Seal	1	610984-
17		01050-51012	Bolt	1	610984-
18		07005-01012	Gasket	1	610984-

Printed By : Dwi Iswanto (airafather6107170)

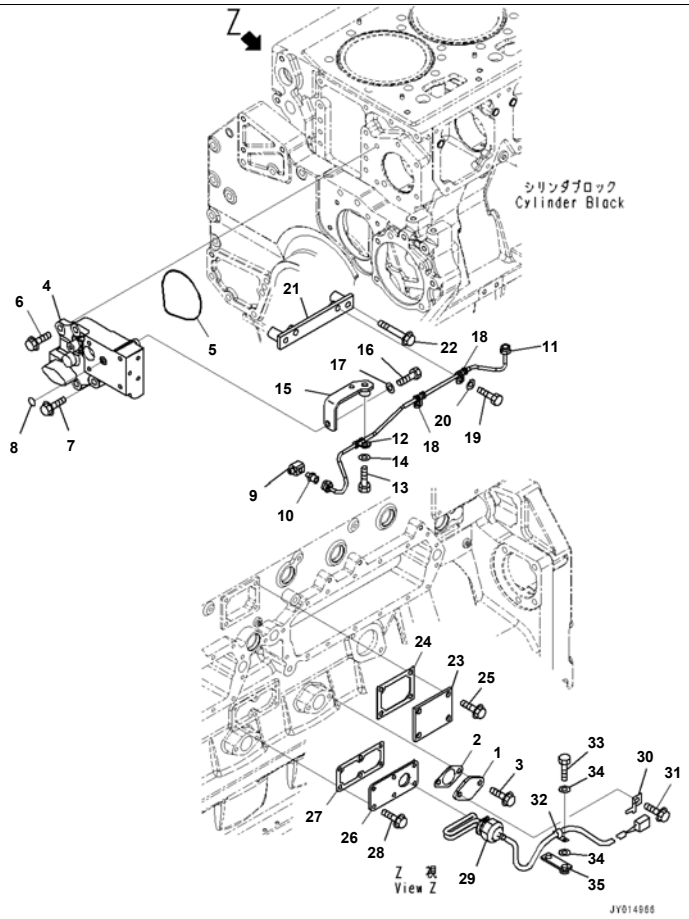

SAA6D170E-5EE S/N 610984-UP (For D375A-6R)

Cylinder Block Accessory, For Engine Oil Pan And Coolant Heater, Engine Pre-lubrication System, (1/2) (#610984-)

Index	Code	Part Number	Description	Qty	Serial No.
1		6162-23-6530	Plate	1	610984-
2		6127-51-6822	Gasket	1	610984-
3		01435-01020	Bolt	1	610984-
4		6245-81-6130	Block	1	610984-
5		07000-72115	O-ring	1	610984-
6		01435-01235	Bolt	1	610984-
7		01435-01250	Bolt	5	610984-
8		07000-72014	O-ring	1	610984-
9		6127-81-4690	Nipple	1	610984-
10		07213-50710	Connector	1	610984-
11		6245-81-6710	Tube	1	610984-
12		6150-71-8231	Clip	1	610984-
13		01010-81025	Bolt	1	610984-
14		01643-31032	Washer	1	610984-
15		6245-81-6730	Bracket	1	610984-
16		01010-81025	Bolt	1	610984-
17		01643-31032	Washer	1	610984-
18		6150-71-8231	Clip	2	610984-
19		01010-81025	Bolt	2	610984-
20		01643-31032	Washer	2	610984-
21		6245-81-6720	Bracket	1	610984-
22		01435-01070	Bolt	2	610984-
23		6240-21-1960	Plate	1	610984-
24		6210-21-1971	Gasket	1	610984-
25		01435-01020	Bolt	3	610984-
26		6162-63-6630	Plate	1	610984-
27		6162-63-6731	Gasket	1	610984-
28		01435-00820	Bolt	6	610984-
29		600-815-9350	Heater, Block	1	610984-
30		08193-20010	Clip	1	610984-
31		01435-01025	Bolt	1	610984-

Printed By : Dwi Iswanto (airafather6107170)

Cylinder Block Accessory, For Engine Oil Pan And Coolant Heater, Engine Pre-lubrication System, (1/2) (#610984-)

Index	Code	Part Number	Description	Qty	Serial No.
32		600-051-2080	Clip	1	610984-
33		01010-81025	Bolt	1	610984-
34		01643-31032	Washer	2	610984-
35		426-01-11310	Bracket	1	610984-

Printed By : Dwi Iswanto (airafather6107170)

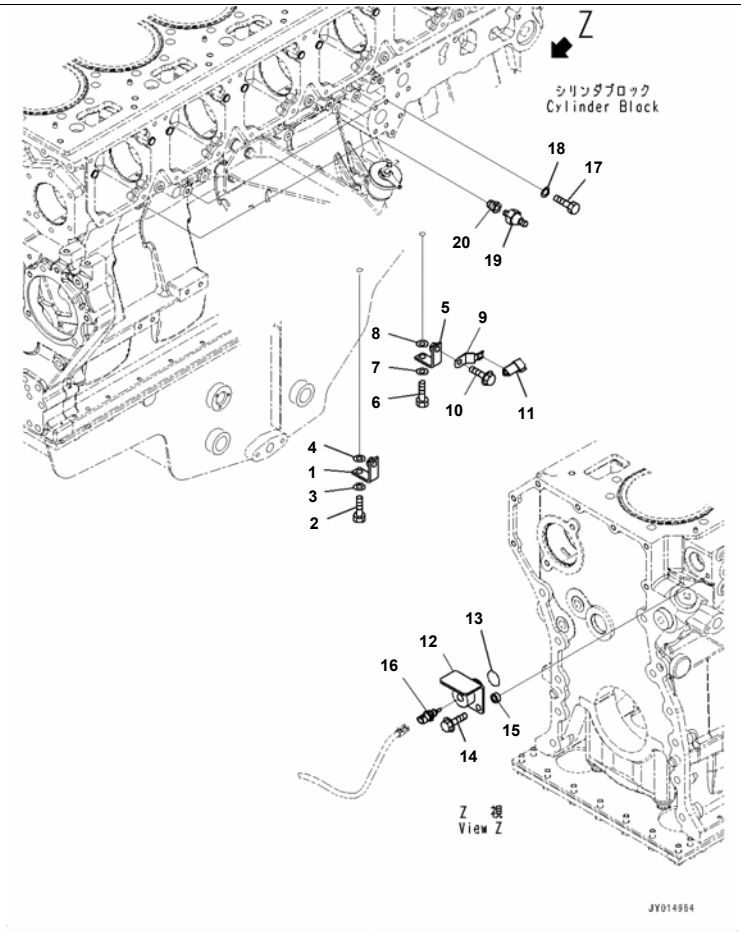

SAA6D170E-5EE S/N 610984-UP (For D375A-6R)

Cylinder Block Accessory, For Engine Oil Pan And Coolant Heater, Engine Pre-lubrication System, (2/2) (#610984-)

Index	Code	Part Number	Description	Qty	Serial No.
1		6934-71-5860	Bracket	1	610984-
2		01010-81055	Bolt	1	610984-
3		01643-31032	Washer	1	610984-
4		01643-31032	Washer	1	610984-
5		6934-71-5860	Bracket	1	610984-
6		01010-81055	Bolt	1	610984-
7		01643-31032	Washer	1	610984-
8		01643-31032	Washer	1	610984-
9		08193-20010	Clip	1	610984-
10		01435-01016	Bolt	1	610984-
11		6245-81-5290	Connector	1	610984-
12		6245-21-6810	Adapter	1	610984-
13		6240-61-6370	O-ring	1	610984-
14		01435-01025	Bolt	1	610984-
15		417-823-1460	Spacer	1	610984-
16		6261-81-6901	Sensor Assembly, Water Temperature	1	610984-
		6216-84-9740	· Seal	1	610984-
17		01050-51012	Bolt	1	610984-
18		07005-01012	Gasket	1	610984-
19		7861-91-1320	Switch, Oil Pressure	1	610984-
20		07326-00201	Adapter	1	610984-

Printed By : Dwi Iswanto (airafather6107170)

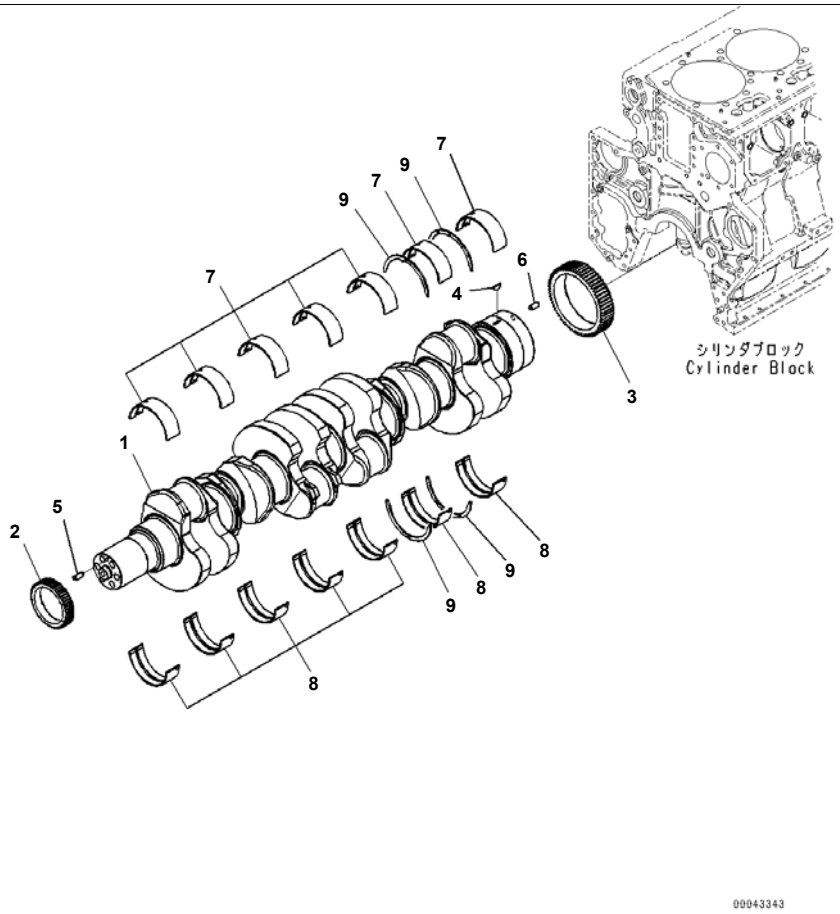

SAA6D170E-5EE S/N 610984-UP (For D375A-6R)
Crankshaft (#610984-)

Index	Code	Part Number	Description	Qty	Serial No.
		6245-31-1100	Crankshaft Assembly	1	610984-
1	C1		· Crankshaft	1	610984-
2		6240-31-1410	· Gear, Crank, Front	1	610984-
3		6245-31-1510	· Gear, Crank, Rear	1	610984-
4		04010-00728	· Key	1	610984-
5		04020-01024	· Pin, Dowel	1	610984-
6		04020-01228	· Pin, Dowel	1	610984-
		6240-21-8100	Main Metal Assembly, Standard	7	610984-
		6240-29-8100	Main Metal Assembly, Undersize 0.25mm	7	610984-
		6240-28-8100	Main Metal Assembly, Undersize 0.50mm	7	610984-
		6240-27-8100	Main Metal Assembly, Undersize 0.75mm	7	610984-
		6240-26-8100	Main Metal Assembly, Undersize 1.00mm	7	610984-
7		6240-21-8110	· Metal, Upper, Standard	1	610984-
	C1		· Metal, Upper, Undersize 0.25mm	1	610984-
	C1		· Metal, Upper, Undersize 0.50mm	1	610984-
	C1		· Metal, Upper, Undersize 0.75mm	1	610984-
	C1		· Metal, Upper, Undersize 1.00mm	1	610984-
8		6240-21-8120	· Metal, Lower, Standard	1	610984-
	C1		· Metal, Lower, Undersize 0.25mm	1	610984-
	C1		· Metal, Lower, Undersize 0.50mm	1	610984-
	C1		· Metal, Lower, Undersize 0.75mm	1	610984-
	C1		· Metal, Lower, Undersize 1.00mm	1	610984-
9		6162-23-8050	Metal Assembly, Standard	1	610984-
		6162-29-8050	Metal Assembly, Oversize 0.25mm	1	610984-
		6162-28-8050	Metal Assembly, Oversize 0.50mm	1	610984-
		6162-27-8050	Metal Assembly, Oversize 0.75mm	1	610984-
		6162-26-8050	Metal Assembly, Oversize 1.00mm	1	610984-
	C1		· Metal, Thrust, Oversize 0.25mm	4	610984-
	C1		· Metal, Thrust, Oversize 0.50mm	4	610984-
	C1		· Metal, Thrust, Oversize 0.75mm	4	610984-
	C1		· Metal, Thrust, Oversize 1.00mm	4	610984-

Printed By : Dwi Iswanto (airafather6107170)

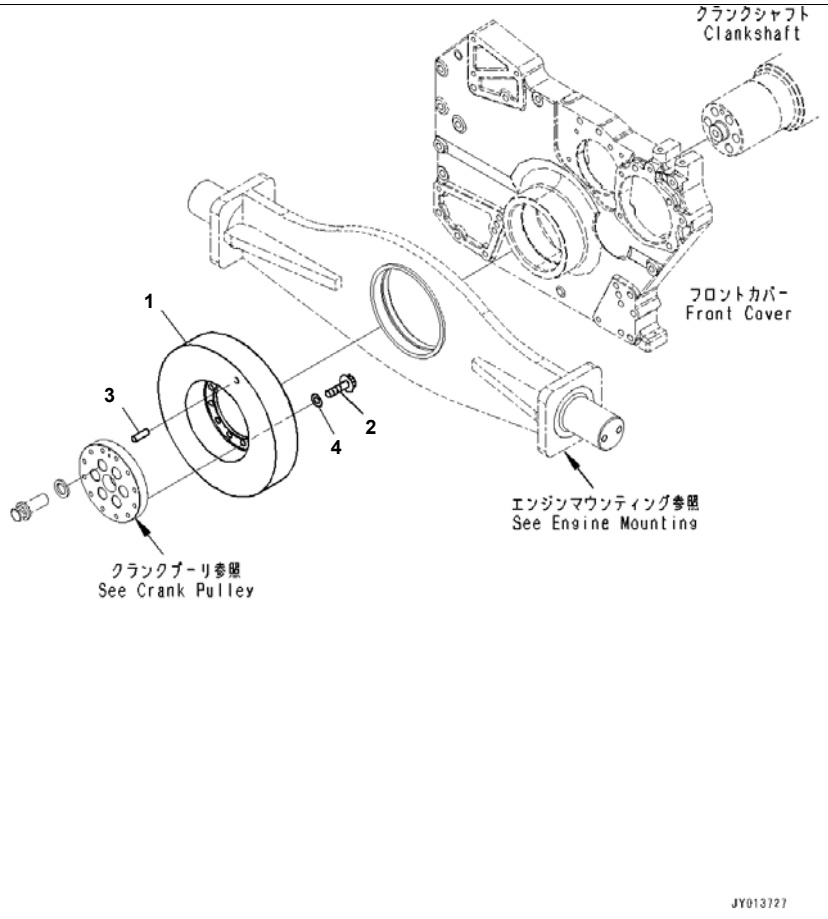

SAA6D170E-5EE S/N 610984-UP (For D375A-6R)
Vibration Damper (#610984-)

Index	Code	Part Number	Description	Qty	Serial No.
1		6240-31-8700	Damper Assembly, Vibration	1	610984-
2		01437-11025	Bolt	12	610984-
3		04020-01024	Pin, Dowel, Dowel	1	610984-
4		01640-21016	Washer	12	610984-

Printed By : Dwi Iswanto (airafather6107170)

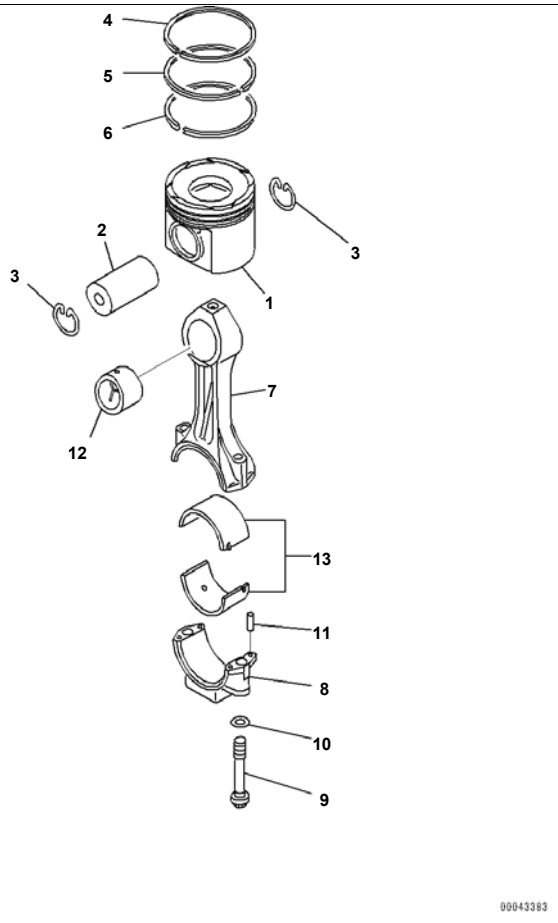

Index	Code	Part Number	Description	Qty	Serial No.
1		6245-31-2110	Piston	6	610984-
2		6248-31-2410	Pin, Piston	6	610984-
3		6162-33-2420	Ring, Snap	12	610984-
		6245-31-2010	Ring Assembly, Piston	6	610984-
4	C1		· Ring, Top	1	610984-
5	C1		· Ring, Second	1	610984-
6	C1		· Ring, Oil	1	610984-
		6245-31-3100	Rod Assembly, Connecting	6	610984-
7	C1		· Rod, Connecting	1	610984-
8	C1		· Cap, Connecting Rod	1	610984-
9		6162-33-3310	· Bolt	2	610984-
10		6162-33-3330	· Washer	2	610984-
11		02400-10413	· Pin, Dowel	4	610984-
12		6245-31-3130	· Bushing	1	610984-
13		6162-33-3041	Metal Assembly, Standard	6	610984-
		6162-39-3041	Metal Assembly, Undersize 0.25mm	6	610984-
		6162-38-3041	Metal Assembly, Undersize 0.50mm	6	610984-
		6162-37-3041	Metal Assembly, Undersize 0.75mm	6	610984-
		6162-36-3041	Metal Assembly, Undersize 1.00mm	6	610984-
	C1		· Metal, Standard	2	610984-
	C1		· Metal, Undersize 0.25mm	2	610984-
	C1		· Metal, Undersize 0.50mm	2	610984-
	C1		· Metal, Undersize 0.75mm	2	610984-
	C1		· Metal, Undersize 1.00mm	2	610984-

Printed By : Dwi Iswanto (airafather6107170)

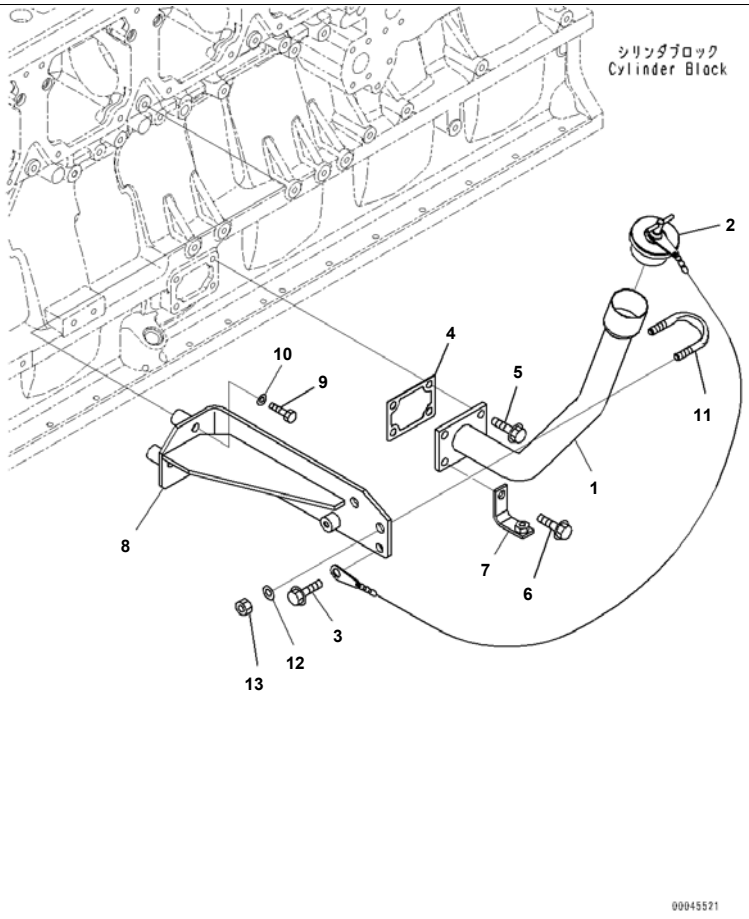

Index	Code	Part Number	Description	Qty	Serial No.
1		6245-21-7510	Filler, Oil	1	610984-
2		07025-00050	Cap, Oil Filler	1	610984-
3		01435-01025	Bolt	1	610984-
4		6206-21-6871	Gasket	1	610984-
5		01435-01025	Bolt	3	610984-
6		01435-01030	Bolt	1	610984-
7		6934-71-5860	Bracket	1	610984-
8		6245-21-7430	Bracket	1	610984-
9		01010-81055	Bolt	3	610984-
10		01643-31032	Washer	3	610984-
11		07283-34346	Clip, Pipe	1	610984-
12		01643-31032	Washer	2	610984-
13		01597-01009	Nut	2	610984-

Printed By : Dwi Iswanto (airafather6107170)

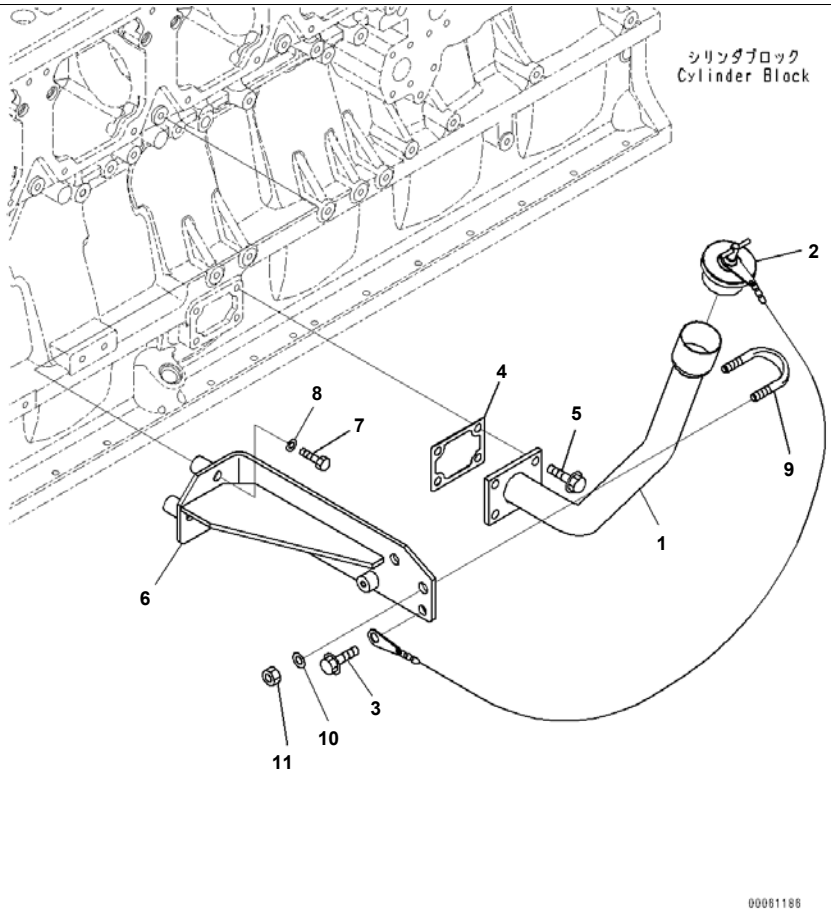

Index	Code	Part Number	Description	Qty	Serial No.
1		6245-21-7510	Filler, Oil	1	610984-
2		07025-00050	Cap, Oil Filler	1	610984-
3		01435-01025	Bolt	1	610984-
4		6206-21-6871	Gasket	1	610984-
5		01435-01025	Bolt	4	610984-
6		6245-21-7430	Bracket	1	610984-
7		01010-81055	Bolt	3	610984-
8		01643-31032	Washer	3	610984-
9		07283-34346	Clip, Pipe	1	610984-
10		01643-31032	Washer	2	610984-
11		01597-01009	Nut	2	610984-

Printed By : Dwi Iswanto (airafather6107170)

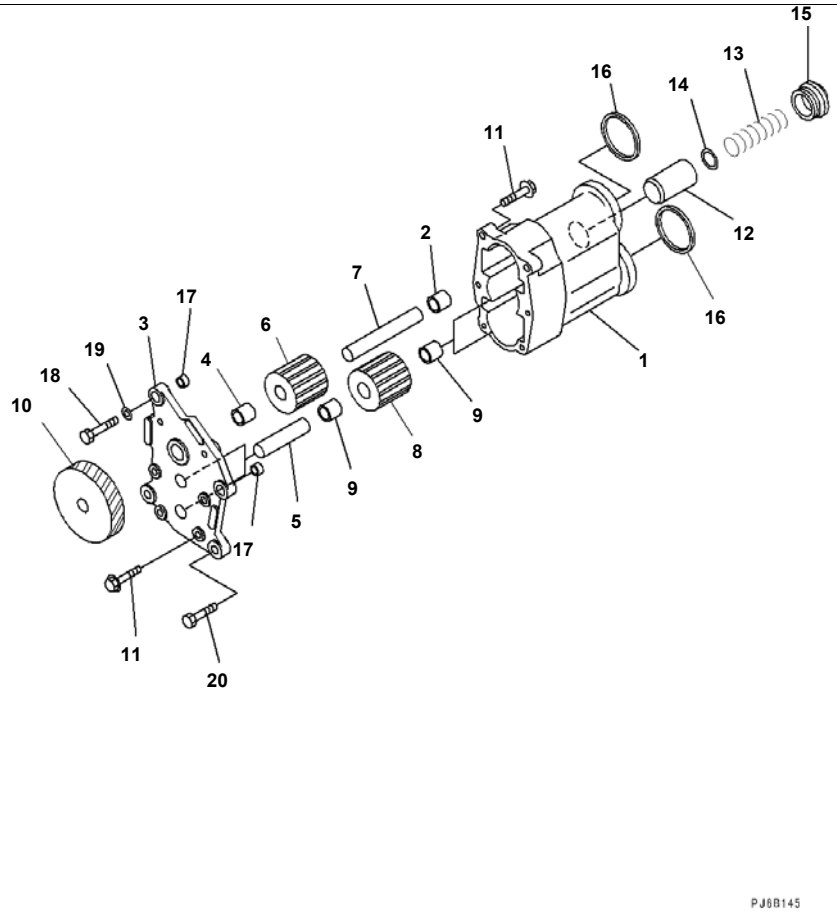

Index	Code	Part Number	Description	Qty	Serial No.
		6240-51-1100	Pump Assembly	1	610984-
		6240-51-1130	· Body Assembly	1	610984-
1	C1		· · Body	1	610984-
2		6151-51-1421	· · Bushing	1	610984-
		6240-51-1200	· Cover Assembly	1	610984-
3	C1		· · Cover	1	610984-
4		6151-51-1421	· · Bushing	1	610984-
5		6212-51-1320	· · Shaft, Driven	2	610984-
		6240-51-1300	· Gear Assembly	1	610984-
6	C1		· · Gear, Drive, Drive	1	610984-
7		6240-51-1310	· · Shaft, Drive	1	610984-
		6212-51-1250	· Gear Assembly	2	610984-
8	C1		· · Gear, Drive, Drive	1	610984-
9		6151-51-1421	· · Bushing	2	610984-
10		6240-51-1610	· Gear	1	610984-
11		01435-00830	· Bolt	6	610984-
12		6240-51-1710	· Valve	1	610984-
13		6240-51-1750	· Spring	1	610984-
14		6240-51-1780	· Shim, T=1.00mm	1	610984-
15		6240-51-1760	· Plug	1	610984-
16		6240-51-1810	Gasket	2	610984-
17		6150-41-2430	Pin	2	610984-
18		01010-81040	Bolt	2	610984-
19		01643-31032	Washer	2	610984-
20		01010-81030	Bolt	2	610984-

Printed By : Dwi Iswanto (airafather6107170)

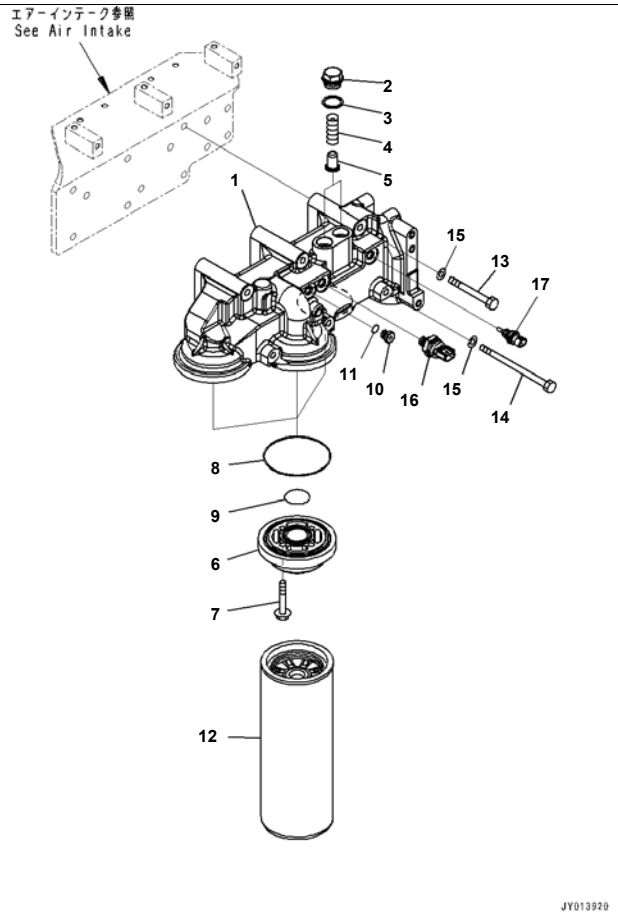

SAA6D170E-5EE S/N 610984-UP (For D375A-6R)
Engine Oil Filter, (1/2) (#610984-)

Index	Code	Part Number	Description	Qty	Serial No.
		6245-51-5101	Head Assembly	1	610984-
1		6245-51-5110	· Head, Oil Filter	1	610984-
2		6162-55-5210	· Cap	2	610984-
3		6162-53-5430	· Packing	2	610984-
4		600-211-1990	· Spring	2	610984-
5		6162-55-5230	· Valve	2	610984-
6		6261-51-5121	· Adapter	3	610984-
7		01435-00845	· Bolt	12	610984-
8		07000-72105	· O-ring	3	610984-
9		07000-72040	· O-ring	3	610984-
10		6215-81-9520	· Plug	1	610984-
11		6215-81-9720	· O-ring	1	610984-
12		600-211-1340	Cartridge	3	610984-
13		01011-81040	Bolt	3	610984-
14		6164-61-7170	Bolt	3	610984-
15		01643-31032	Washer	6	610984-
16		6219-81-1961	Sensor Assembly, Oil Pressure	1	610984-
		6219-81-1991	· O-ring	1	610984-
17		6261-81-6901	Sensor Assembly, Oil Temperature	1	610984-
		6216-84-9740	· Seal	1	610984-

Printed By : Dwi Iswanto (airafather6107170)

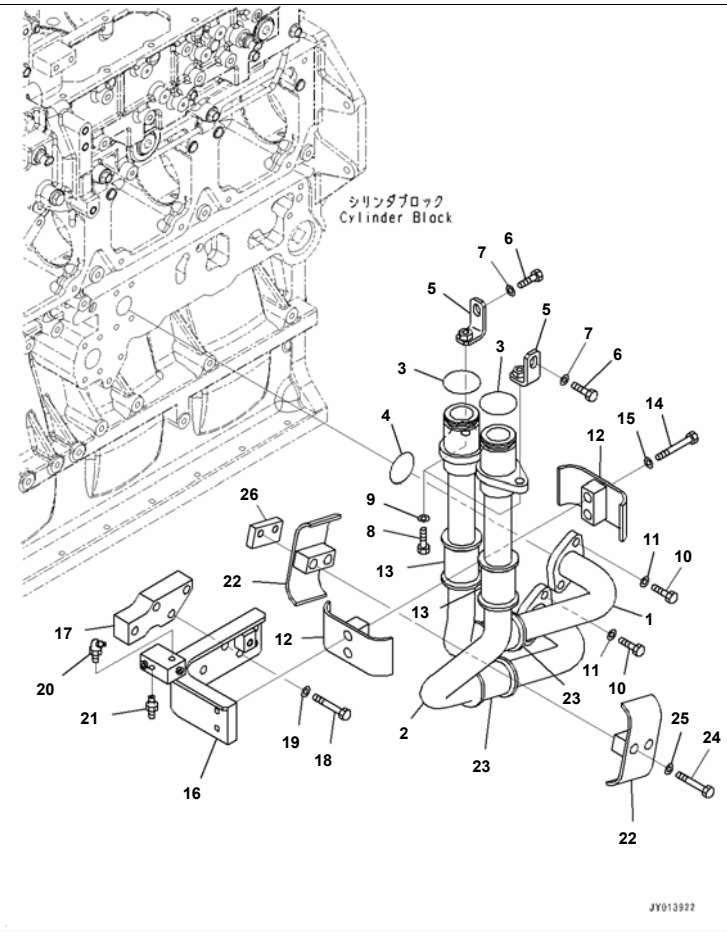

Reference:A3110-003002 Page:C002002

SAA6D170E-5EE S/N 610984-UP (For D375A-6R)
Engine Oil Filter, (2/2) (#610984-)

Index	Code	Part Number	Description	Qty	Serial No.
1		6245-51-5130	Tube, Outlet	1	610984-
2		6245-51-5140	Tube, Inlet	1	610984-
3		6219-51-5610	O-ring	2	610984-
4		07000-E3042	O-ring	2	610984-
5		6245-51-5170	Bracket	2	610984-
6		01010-81025	Bolt	2	610984-
7		01643-31032	Washer	2	610984-
8		01010-81035	Bolt	2	610984-
9		01643-31032	Washer	2	610984-
10		01010-81030	Bolt	4	610984-
11		01643-51032	Washer	4	610984-
12		07094-31024	Clamp	2	610984-
13		6245-51-5190	Cushion	2	610984-
14		01010-81075	Bolt	2	610984-
15		01643-31032	Washer	2	610984-
16		6245-51-5230	Bracket	1	610984-
17		6245-51-5220	Plate	1	610984-
18		01010-81060	Bolt	4	610984-
19		01643-31032	Washer	4	610984-
20		07020-00675	Fitting, Grease	1	610984-
21		07213-50710	Connector	1	610984-
22		07094-31024	Clamp	2	610984-
23		6245-51-5190	Cushion	2	610984-
24		01010-81075	Bolt	2	610984-
25		01643-31032	Washer	2	610984-
26		22X-22-13140	Plate	1	610984-

Printed By : Dwi Iswanto (airafather6107170)

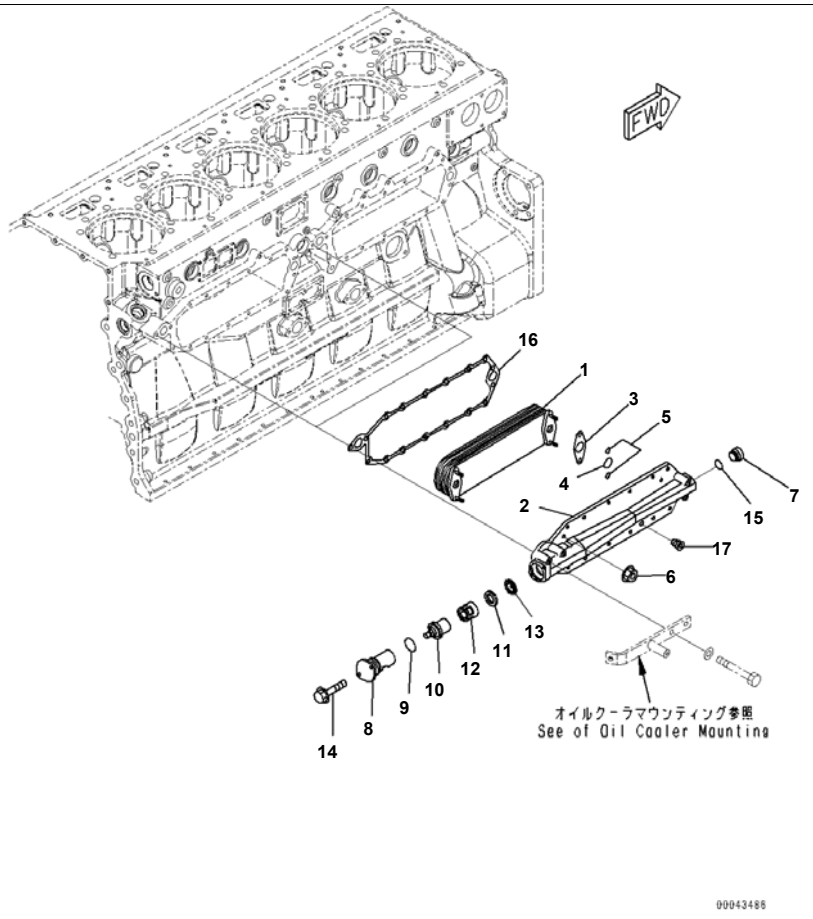

Index	Code	Part Number	Description	Qty	Serial No.
1		6240-61-2111	Element	2	610984-
2		6240-61-2120	Cover	2	610984-
3		6240-61-2560	Gasket	4	610984-
4		6150-61-2510	O-ring	4	610984-
5		6150-61-2520	O-ring	8	610984-
6		6150-61-2580	Nut	8	610984-
7		6150-61-2530	Plug	2	610984-
8		6151-62-2130	Cover	2	610984-
9		07000-63042	O-ring	2	610984-
10		6212-65-2610	Thermostat	2	610984-
11		6150-61-2540	Seal	2	610984-
12		6150-61-2141	Case	2	610984-
13		6150-61-2151	Plate	2	610984-
14		01435-00825	Bolt	4	610984-
15		6150-61-2550	O-ring	2	610984-
16		6150-61-2815	Gasket	2	610984-
17		07043-70312	Plug	2	610984-

Printed By : Dwi Iswanto (airafather6107170)

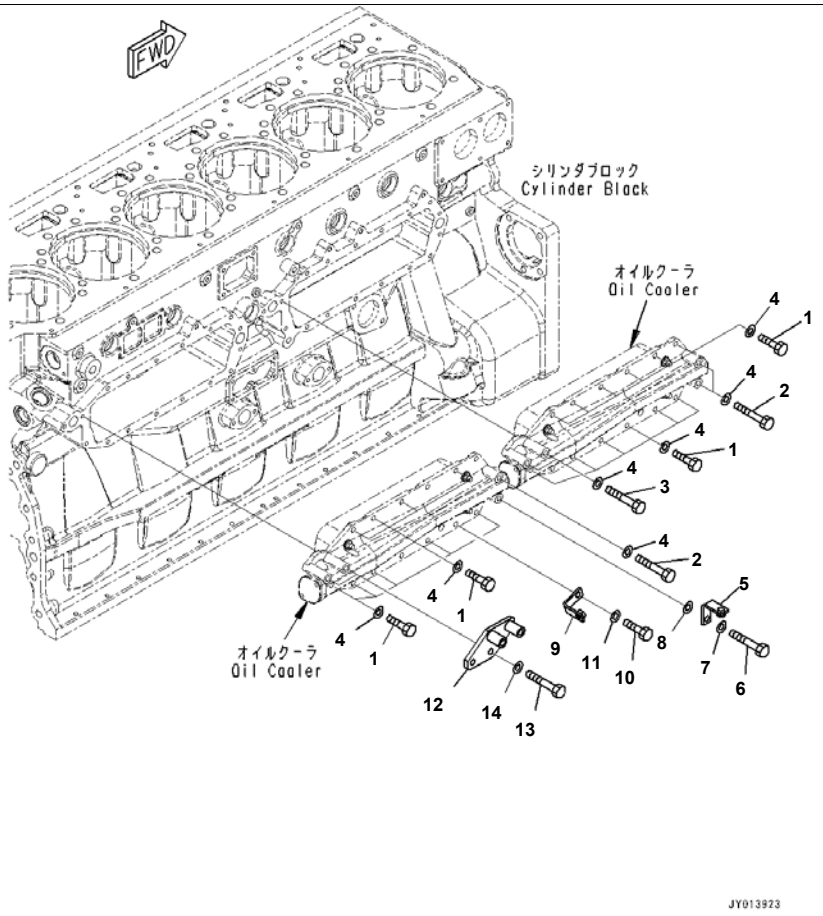

Engine Oil Cooler Related Parts, For VHMS, ORBCOMM, Related Parts (#610984-)

Index	Code	Part Number	Description	Qty	Serial No.
1		01010-81025	Bolt	22	610984-
2		01010-81065	Bolt	3	610984-
3		01010-81080	Bolt	2	610984-
4		01640-21016	Washer	27	610984-
5		6934-71-5860	Bracket	1	610984-
6		01010-81075	Bolt	1	610984-
7		01643-31032	Washer	1	610984-
8		01643-31032	Washer	1	610984-
9		6934-71-5860	Bracket	1	610984-
10		01010-81030	Bolt	1	610984-
11		01643-31032	Washer	1	610984-
12		6245-81-5430	Bracket	1	610984-
13		01010-81090	Bolt	2	610984-
14		01643-31032	Washer	2	610984-

Printed By : Dwi Iswanto (airafather6107170)

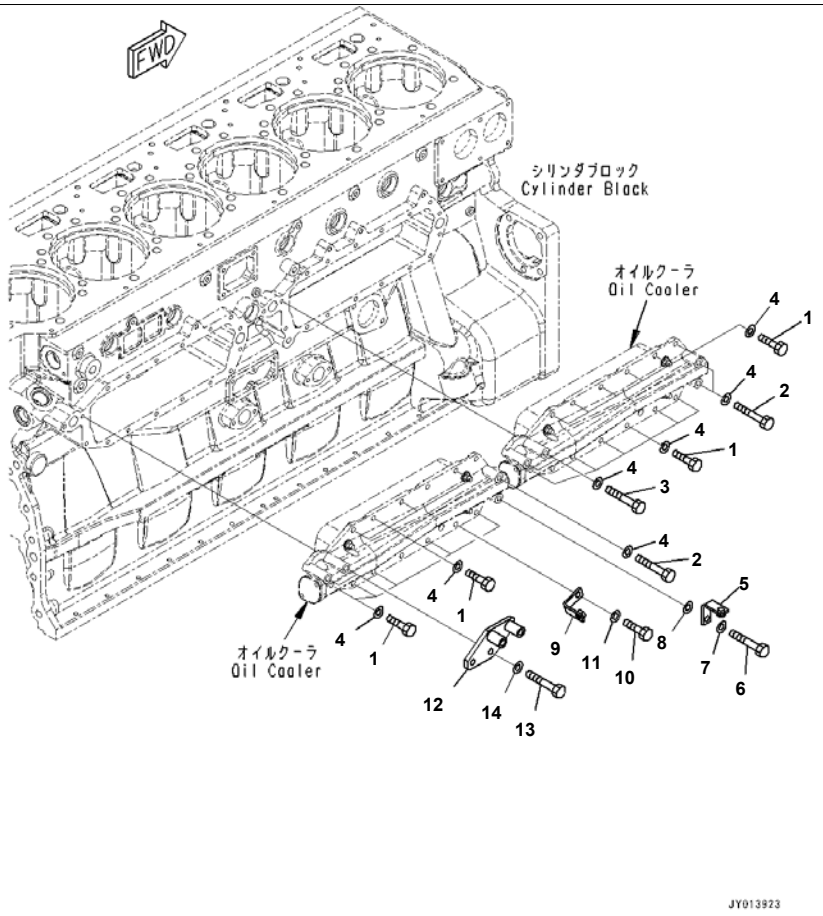

Engine Oil Cooler Related Parts (#610984-)

Index	Code	Part Number	Description	Qty	Serial No.
1		01010-81025	Bolt	23	610984-
2		01010-81065	Bolt	3	610984-
3		01010-81080	Bolt	2	610984-
4		01640-21016	Washer	28	610984-
5		6934-71-5860	Bracket	1	610984-
6		01010-81075	Bolt	1	610984-
7		01643-31032	Washer	1	610984-
8		01643-31032	Washer	1	610984-
9		6934-71-5860	Bracket	1	610984-
10		01010-81030	Bolt	1	610984-
11		01643-31032	Washer	1	610984-
12		6245-81-5430	Bracket	1	610984-
13		01010-81090	Bolt	2	610984-
14		01643-31032	Washer	2	610984-

Printed By : Dwi Iswanto (airafather6107170)

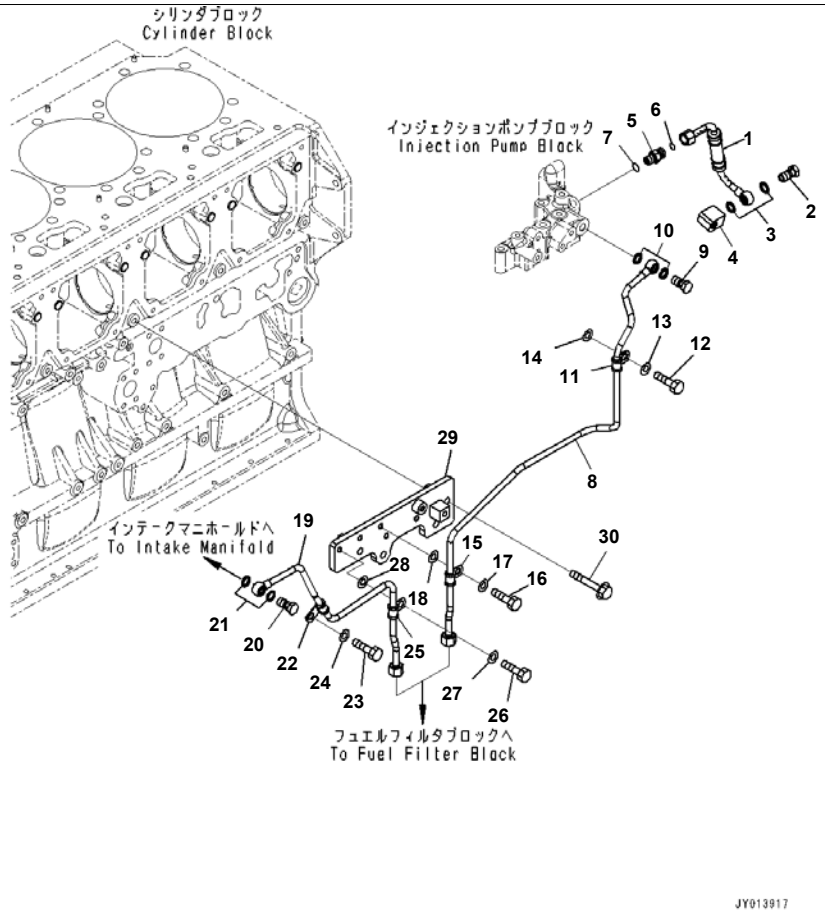

SAA6D170E-5EE S/N 610984-UP (For D375A-6R)
Fuel Return Piping (#610984-)

Index	Code	Part Number	Description	Qty	Serial No.
1		6245-71-5380	Hose	1	610984-
2		07206-31014	Bolt, Joint	1	610984-
3		07005-01412	Gasket	2	610984-
4		6245-71-5760	Block	1	610984-
5		02781-0031D	Union	1	610984-
6		02896-11009	O-ring	1	610984-
7		07002-11423	O-ring	1	610984-
8		6245-71-5530	Tube	1	610984-
9		07206-31014	Bolt, Joint	1	610984-
10		07005-01412	Gasket	2	610984-
11		6933-71-8220	Clip	1	610984-
12		01010-81020	Bolt	1	610984-
13		01643-31032	Washer	1	610984-
14		01643-31032	Washer	1	610984-
15		6933-71-8220	Clip	1	610984-
16		01010-81020	Bolt	1	610984-
17		01643-31032	Washer	1	610984-
18		01643-31032	Washer	1	610984-
19		6245-71-5540	Tube	1	610984-
20		07206-31014	Bolt, Joint	1	610984-
21		07005-01412	Gasket	2	610984-
22		6933-71-8220	Clip	1	610984-
23		01010-81020	Bolt	1	610984-
24		01643-31032	Washer	1	610984-
25		6933-71-8220	Clip	1	610984-
26		01010-81020	Bolt	1	610984-
27		01643-31032	Washer	1	610984-
28		01643-31032	Washer	1	610984-
29		6245-71-5590	Bracket	1	610984-
30		01435-01065	Bolt	4	610984-

Printed By : Dwi Iswanto (airafather6107170)

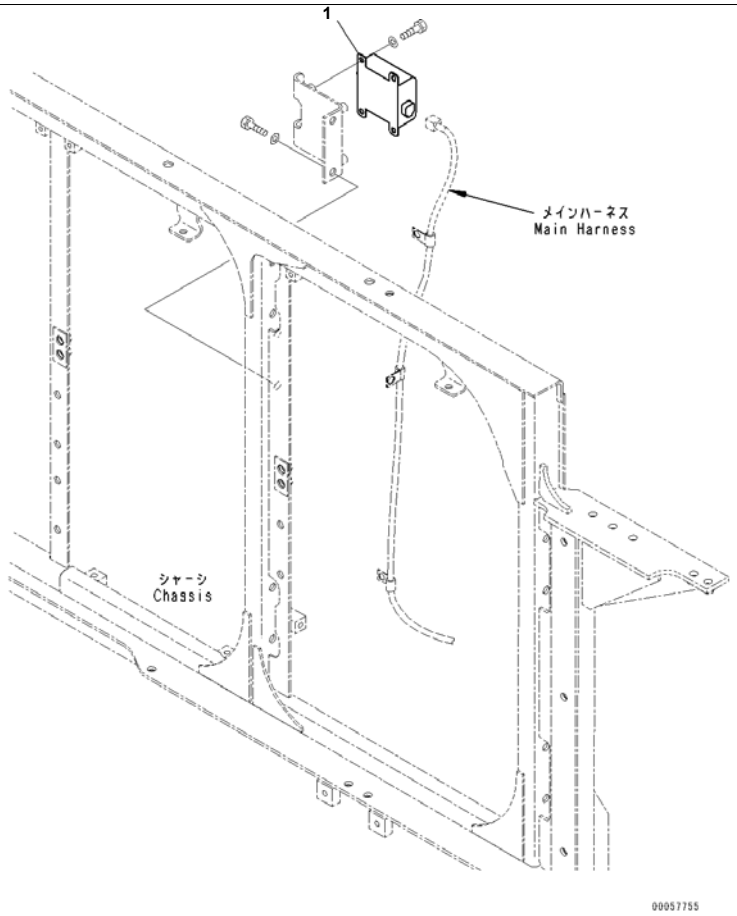

Index	Code	Part Number	Description	Qty	Serial No.
1		600-815-9471	Switch, Timer	1	610984-

Printed By : Dwi Iswanto (airafather6107170)

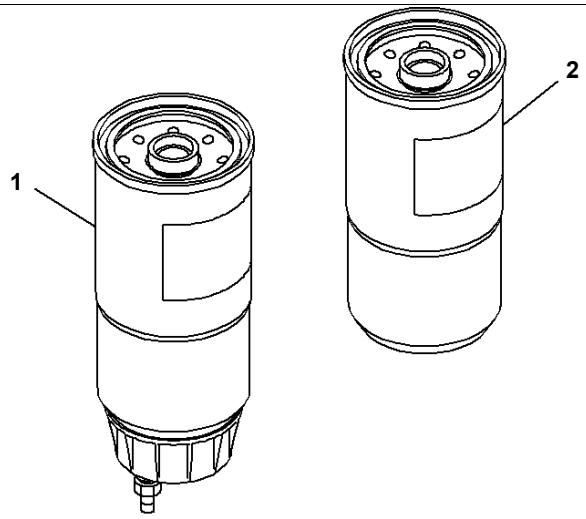

SAA6D170E-5EE S/N 610984-UP (For D375A-6R)
Fuel Pre-Filter, Supply Parts (#610984-)

Index	Code	Part Number	Description	Qty	Serial No.
1		600-319-4500	Cartridge Assembly	2	610984-
2		600-319-4540	Cartridge	2	610984-

Printed By : Dwi Iswanto (airafather6107170)

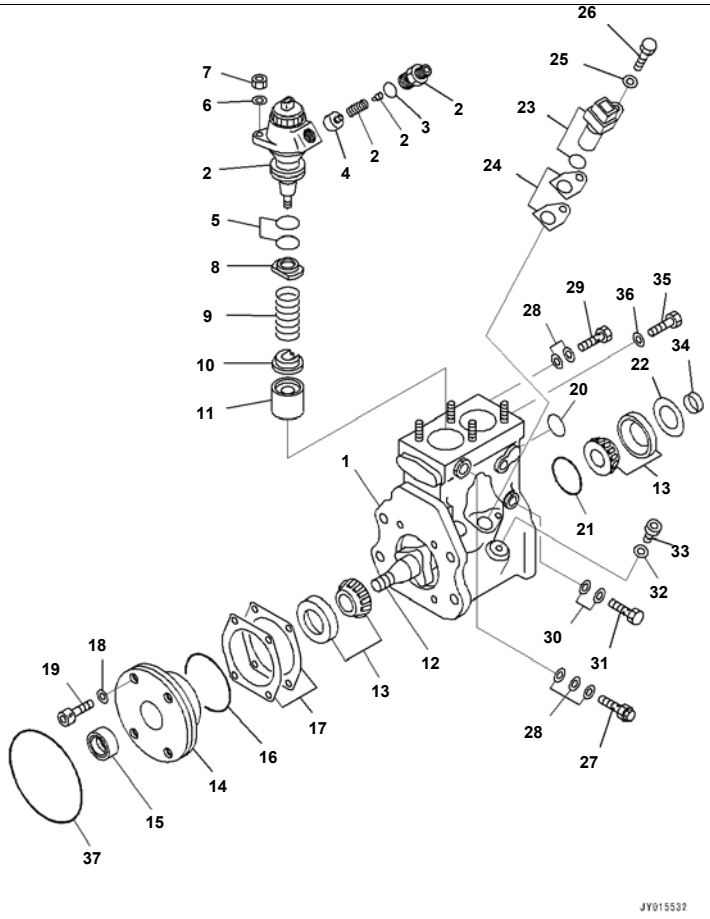

Index	Code	Part Number	Description	Qty	Serial No.
		6245-71-1111	Pump Assembly, Supply	1	610984-
	C2	ND094100-0490	· Body Assembly	1	610984-
1	C2	ND094110-0230	· · Housing Assembly	1	610984-
2	C2	ND094040-0380	· · Element Assembly	2	610984-
3	C2	ND094086-0090	· · · O-ring	2	610984-
4	C2	ND094140-0040	· · · Valve Assembly	2	610984-
5	C2	ND094086-0100	· · O-ring	4	610984-
6	C2	ND949013-5880	· · Washer	4	610984-
7	C2	ND92156-08081	· · Nut	4	610984-
8	C2	ND094162-0031	· · Seat, Spring, Upper	2	610984-
9	C2	ND094164-0030	· · Spring, Plunger	2	610984-
10	C2	ND094165-0031	· · Seat, Spring, Lower	2	610984-
11	C2	ND094170-0110	· · Tappet Assembly	2	610984-
12	C2	ND094191-0540	· · Camshaft	1	610984-
13	C2	ND949101-0250	· · Bearing, Roller	2	610984-
14	C2	ND094104-0160	· · Cover, Bearing	1	610984-
15	C2	ND949150-3200	· · Seal, Oil	1	610984-
16	C2	ND094086-0150	· · O-ring	1	610984-
17	C2	ND094095-0330	· · Shim, T=0.05mm	AR	610984-
	C2	ND094095-0340	· · Shim, T=0.10mm	AR	610984-
	C2	ND094095-0350	· · Shim, T=0.20mm	AR	610984-
	C2	ND094095-0360	· · Shim, T=0.30mm	AR	610984-
	C2	ND094095-0370	· · Shim, T=0.50mm	AR	610984-
18	C2	ND094092-0010	· · Washer	4	610984-
19	C2	ND949044-3320	· · Bolt	4	610984-
20	C2	ND094086-0160	· · O-ring	1	610984-
21	C2	ND094086-0170	· · O-ring	1	610984-
22	C2	ND094093-0090	· · Shim, T=0.40mm	AR	610984-
	C2	ND094093-0100	· · Shim, T=0.60mm	AR	610984-
	C2	ND094093-0110	· · Shim, T=0.80mm	AR	610984-
	C2	ND094093-0120	· · Shim, T=1.00mm	AR	610984-

Printed By : Dwi Iswanto (airafather6107170)

Index	Code	Part Number	Description	Qty	Serial No.
23	C2	ND949979-1300	・・ Sensor Assembly	1	610984-
	C2	ND949140-6310	・・・ O-ring	1	610984-
24	C2	ND094096-0050	・・ Shim, T=0.15mm	AR	610984-
	C2	ND094096-0060	・・ Shim, T=0.20mm	AR	610984-
	C2	ND094096-0070	・・ Shim, T=0.25mm	AR	610984-
	C2	ND094096-0080	・・ Shim, T=0.40mm	AR	610984-
25	C2	ND90200-06081	・・ Washer	1	610984-
26	C2	ND90107-06161	・・ Bolt	1	610984-
27		ND090310-0500	・・ Valve Assembly, Overflow	1	610984-
28		ND090222-0070	・・ Washer	5	610984-
29		ND949180-0310	・・ Screw	1	610984-
30		ND090222-0120	・・ Washer	2	610984-
31		ND949180-0060	・・ Screw	1	610984-
32		ND949018-0350	・・ Washer	1	610984-
33		ND090317-0480	・・ Plug, Screw	1	610984-
34	C2	ND090207-0100	・・ Ring	1	610984-
35		ND090244-0010	・・ Screw	1	610984-
36		ND949010-3020	・・ Washer	1	610984-
37		ND094086-0210	・ O-ring	1	610984-

Printed By : Dwi Iswanto (airafather6107170)

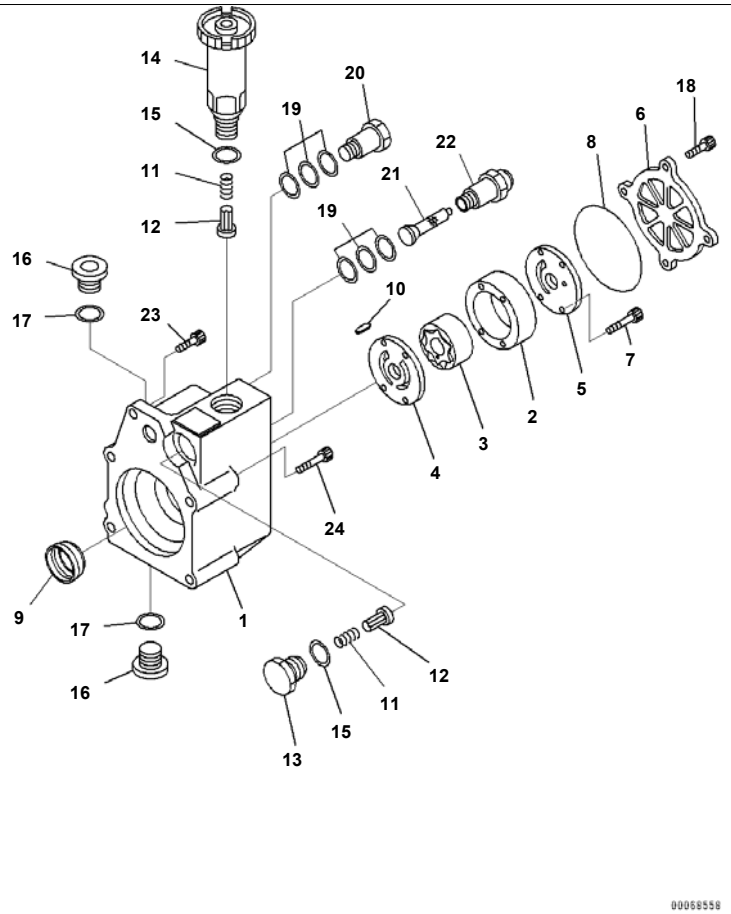

Index	Code	Part Number	Description	Qty	Serial No.
		6245-71-1111	Pump Assembly, Supply	1	610984-
	C2	ND094200-0400	· Feeder Assembly	1	610984-
1	C2	ND094210-0090	· · Housing Assembly	1	610984-
2	C2	ND094231-0060	· · Case	1	610984-
3	C2	ND094230-0080	· · Pump Subassembly	1	610984-
4	C2	ND094241-0040	· · Plate	1	610984-
5	C2	ND094244-0040	· · Plate	1	610984-
6	C2	ND094251-0050	· · Cover	1	610984-
7	C2	ND094082-0040	· · Screw	4	610984-
8	C2	ND094086-0200	· · O-ring	1	610984-
9	C2	ND094087-0050	· · Seal, Oil	1	610984-
10	C2	ND094205-0060	· · Key	1	610984-
11		ND092124-0010	· · Spring, Check Valve	2	610984-
12		ND092121-0011	· · Valve, Check	2	610984-
13		ND092126-0010	· · Plug, Chamber	1	610984-
14		ND092130-0360	· · Pump, Fuel Priming	1	610984-
15		ND092125-0010	· · Gasket	2	610984-
16	C2	ND090317-0060	· · Plug, Screw	2	610984-
17	C2	ND949018-1500	· · Washer, T=1.0mm	2	610984-
18	C2	ND949044-3320	· · Bolt	4	610984-
19		ND090222-0070	· · Washer	6	610984-
20		ND090310-0490	· · Valve, Overflow	1	610984-
21		ND092220-0040	· · Filter	1	610984-
22		ND092223-0042	· · Screw	1	610984-
23	C2	ND949044-3320	· Bolt	1	610984-
24		ND096449-0070	· Bolt, Socet	4	610984-

Printed By : Dwi Iswanto (airafather6107170)

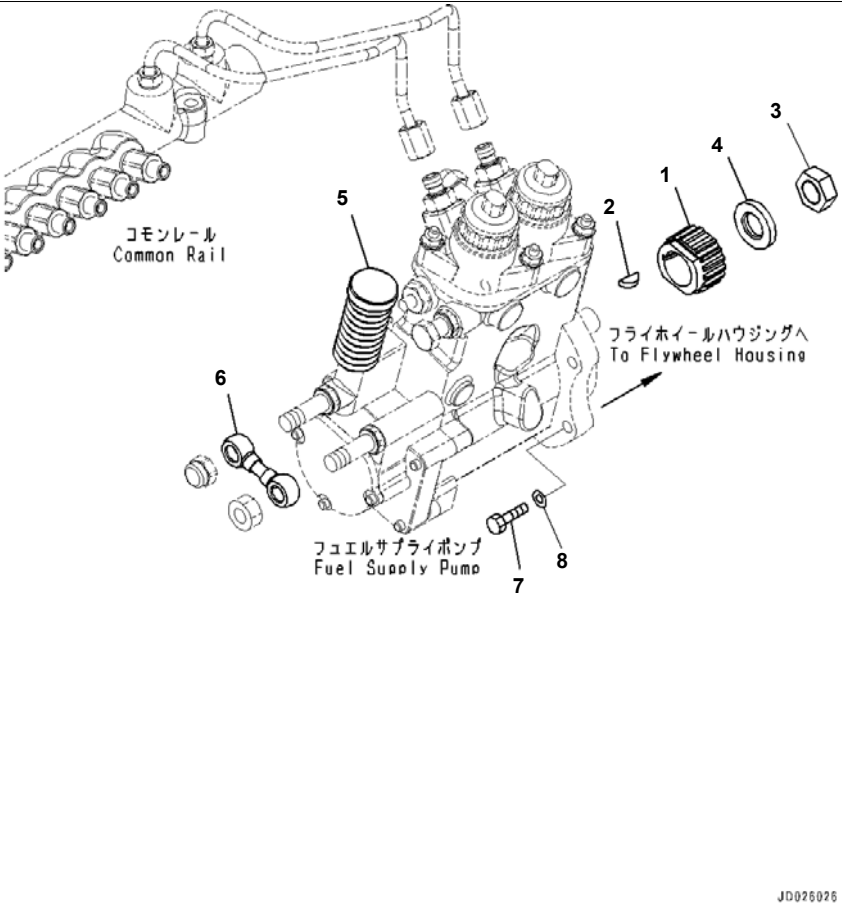

SAA6D170E-5EE S/N 610984-UP (For D375A-6R)
Fuel Injection Pump, Fuel Supply Pump and Coupling (#610984-)

Index	Code	Part Number	Description	Qty	Serial No.
1		6245-71-3150	Coupling	1	610984-
2		04010-00519	Key, Woodruff, Woodruff	1	610984-
3		01583-02012	Nut	1	610984-
4		01643-32060	Washer	1	610984-
5		6217-71-1910	Cover, Priming Pump, Priming Pump	1	610984-
6		6217-71-5910	Tube	1	610984-
7		01010-81035	Bolt	4	610984-
8		01643-31032	Washer	4	610984-

Printed By : Dwi Iswanto (airafather6107170)

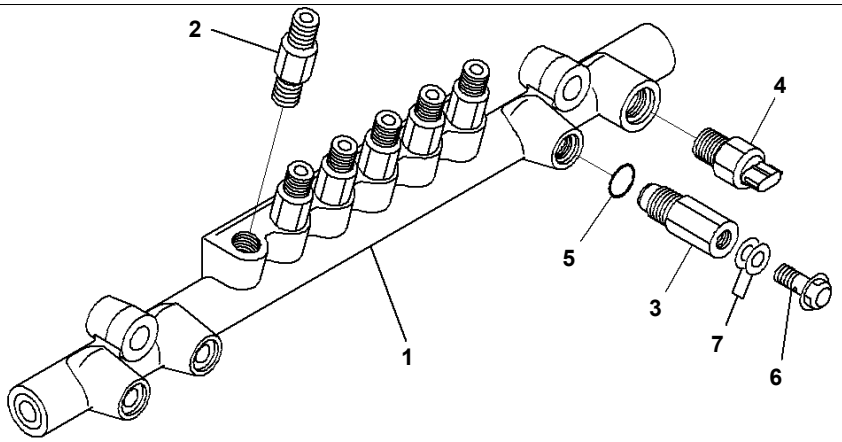

Index	Code	Part Number	Description	Qty	Serial No.
1		6261-71-1220	Common Rail Assembly	1	610984-
2		ND095400-0310	· Limiter Assembly, Fuel Flow	6	610984-
3		ND095420-0440	· Limiter Assembly, Fuel Pressure	1	610984-
4		ND499000-6160	· Sensor Assembly, Fuel Pressure	1	610984-
5		ND095444-0020	· Ring	1	610984-
6		ND095438-0090	· Bolt, Joint	1	610984-
7		ND949010-2530	· Gasket	2	610984-

Printed By : Dwi Iswanto (airafather6107170)

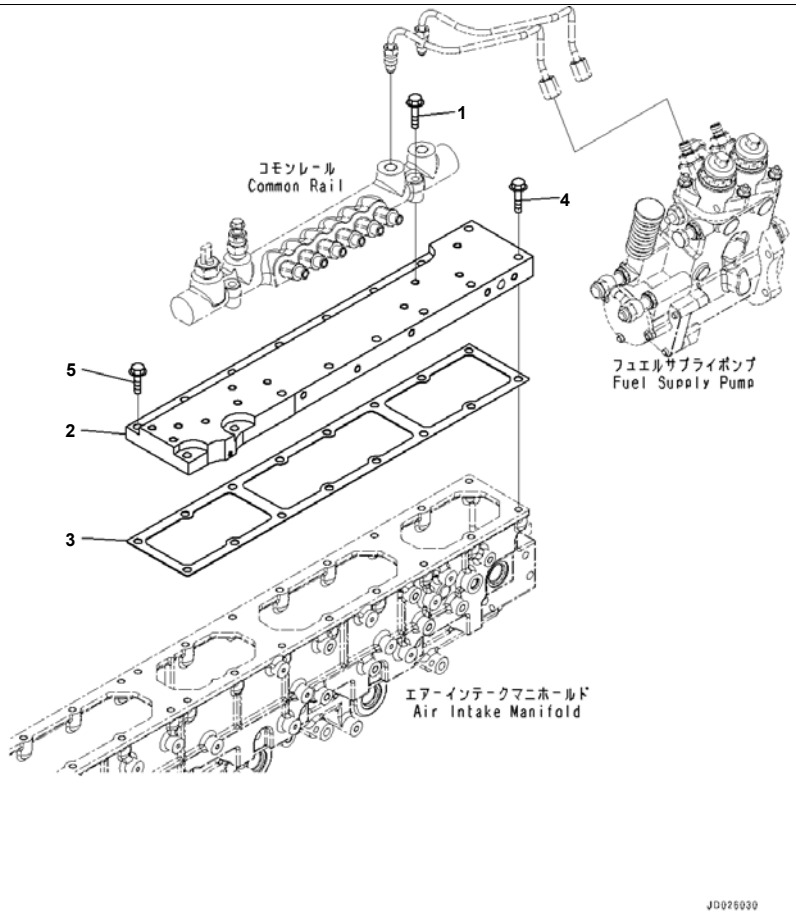

SAA6D170E-5EE S/N 610984-UP (For D375A-6R)
Fuel Injection Pump, Common Rail Mounting (#610984-)

Index	Code	Part Number	Description	Qty	Serial No.
1		01435-01045	Bolt	2	610984-
2		6245-71-5210	Plate	1	610984-
3		6245-11-4170	Gasket	1	610984-
4		01435-01050	Bolt	7	610984-
5		01435-01035	Bolt	9	610984-

Printed By : Dwi Iswanto (airafather6107170)

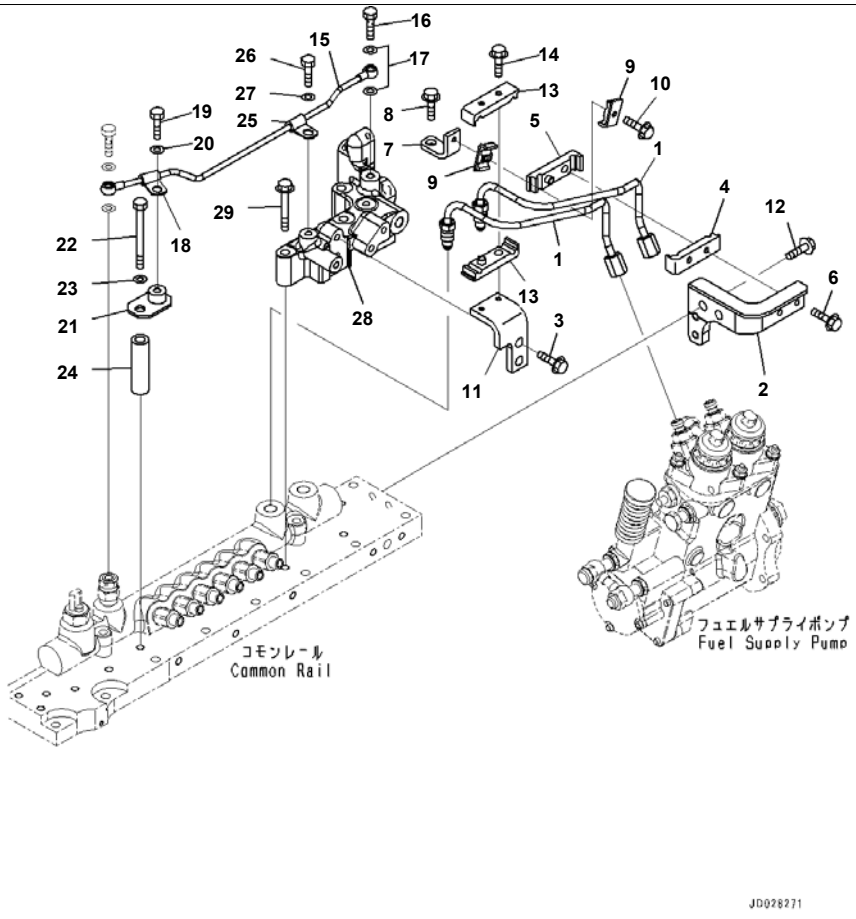

Index	Code	Part Number	Description	Qty	Serial No.
1		6245-71-5181	Tube	2	610984-
2		6245-71-5410	Bracket	1	610984-
3		01435-01025	Bolt	2	610984-
4		6217-71-5211	Clamp	1	611010-
	A2	6217-71-5210	Clamp	1	610984-611009
5		6217-71-5171	Clamp	1	611010-
	A2	6217-71-5170	Clamp	1	610984-611009
6		01435-00635	Bolt	2	610984-
7		6245-71-5420	Bracket	1	610984-
8		01435-01020	Bolt	1	610984-
9		6162-75-5820	Clamp	2	610984-
10		01435-00625	Bolt	1	610984-
11		6245-71-5490	Bracket	1	610984-
12		01435-01025	Bolt	2	610984-
13		6217-71-5211	Clamp	2	611010-
	A2	6217-71-5210	Clamp	2	610984-611009
14		01435-00630	Bolt	2	610984-
15		6245-71-5520	Tube	1	610984-
16		07206-30710	Bolt, Joint	1	610984-
17		07005-01012	Gasket	2	610984-
18		6933-71-8230	Clip	1	610984-
19		01010-81020	Bolt	1	610984-
20		01643-31032	Washer	1	610984-
21		6245-71-5570	Bracket	1	610984-
22		01010-81095	Bolt	1	610984-
23		01643-31032	Washer	1	610984-
24		6130-12-4571	Spacer	1	610984-
25		6933-71-8230	Clip	1	610984-
26		01010-81020	Bolt	1	610984-
27		01643-31032	Washer	1	610984-
28		6245-71-5430	Block	1	610984-

Printed By : Dwi Iswanto (airafather6107170)

Index	Code	Part Number	Description	Qty	Serial No.
29		01435-01060	Bolt	3	610984-

Printed By : Dwi Iswanto (airafather6107170)

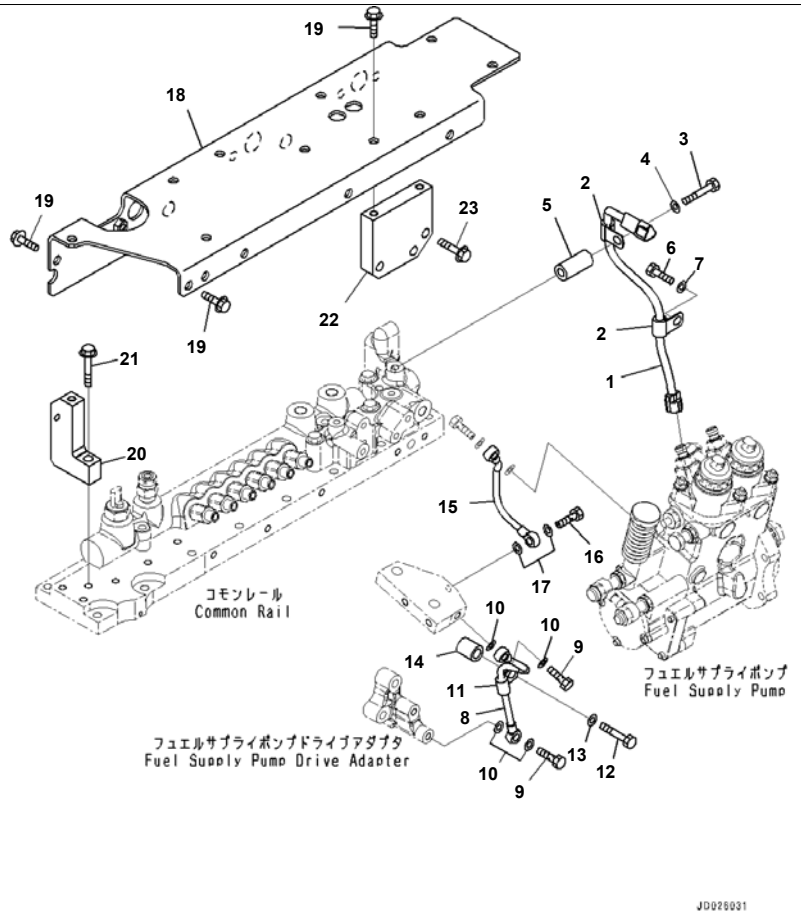

Reference:A4010-001007 Page:D004007

SAA6D170E-5EE S/N 610984-UP (For D375A-6R)
Fuel Injection Pump, Fuel Supply Pump Wiring and Lubricator (#610984-)

Index	Code	Part Number	Description	Qty	Serial No.
1		6245-81-9130	Wiring Harness	1	610984-
2		600-051-2100	Clip	2	610984-
3		01010-81065	Bolt	1	610984-
4		01643-31032	Washer	1	610984-
5		6152-21-6590	Spacer	1	610984-
6		01010-81020	Bolt	1	610984-
7		01643-31032	Washer	1	610984-
8		6245-51-6130	Tube	1	610984-
9		07206-30710	Bolt, Joint	2	610984-
10		07005-01012	Gasket	4	610984-
11		6210-51-8320	Clip	1	610984-
12		01010-81045	Bolt	1	610984-
13		01643-31032	Washer	1	610984-
14		6128-21-6730	Spacer	1	610984-
15		6245-51-6120	Tube	1	610984-
16		07206-30710	Bolt, Joint	1	610984-
17		07005-01012	Gasket	2	610984-
18		6245-11-4151	Bracket	1	610984-
19		01435-01020	Bolt	5	610984-
20		6245-11-4230	Block	1	610984-
21		01435-01055	Bolt	1	610984-
22		6245-11-4250	Plate	1	610984-
23		01435-01040	Bolt	3	610984-

Printed By : Dwi Iswanto (airafather6107170)

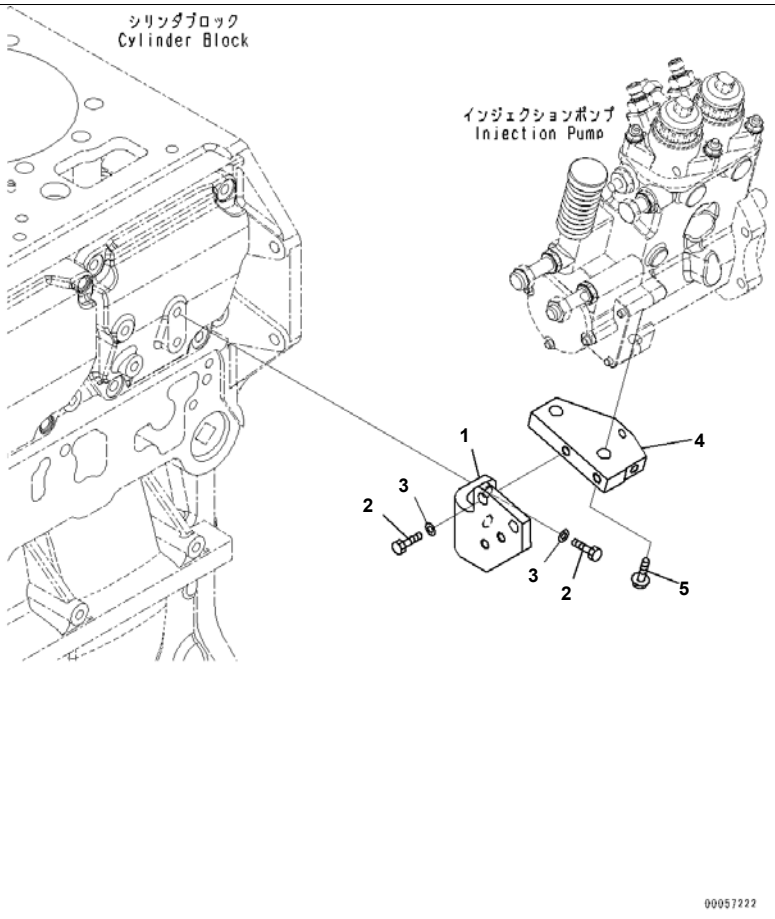

SAA6D170E-5EE S/N 610984-UP (For D375A-6R)
Fuel Injection Pump, Bracket (#610984-)

Index	Code	Part Number	Description	Qty	Serial No.
1		6245-21-6150	Bracket	1	610984-
2		01010-81030	Bolt	4	610984-
3		01643-31032	Washer	4	610984-
4		6245-21-6160	Plate	1	610984-
5		01435-01230	Bolt	2	610984-

Printed By : Dwi Iswanto (airafather6107170)

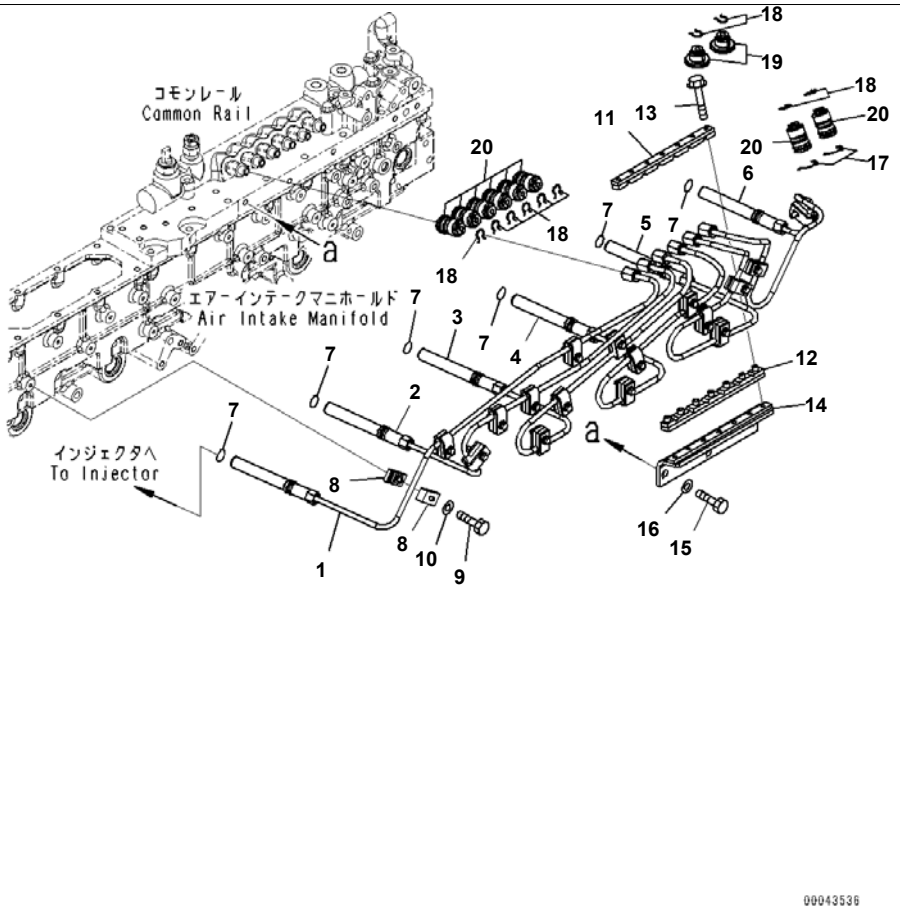

SAA6D170E-5EE S/N 610984-UP (For D375A-6R)
Fuel Injection Pump, Piping (#610984-)

Index	Code	Part Number	Description	Qty	Serial No.
1		6245-71-5111	Tube, Fuel Supply, No.1	1	610984-
2		6245-71-5121	Tube, Fuel Supply, No.2	1	610984-
3		6245-71-5131	Tube, Fuel Supply, No.3	1	610984-
4		6245-71-5141	Tube, Fuel Supply, No.4	1	610984-
5		6245-71-5151	Tube, Fuel Supply, No.5	1	610984-
6		6245-71-5161	Tube, Fuel Supply, No.6	1	610984-
7		07000-E2018	O-ring	6	610984-
8		6245-71-5270	Clamp	34	610984-
9		01010-80635	Bolt	17	610984-
10		01643-30623	Washer	17	610984-
11		6217-71-5761	Clamp	1	611010-
	A2	6217-71-5760	Clamp	1	610984-611009
12		6245-71-5740	Clamp	1	610984-
13		01435-00640	Bolt	7	610984-
14		6245-71-5750	Bracket	1	610984-
15		01010-81025	Bolt	3	610984-
16		01643-31032	Washer	3	610984-
17		6156-71-9730	Clip	2	610984-
18		6217-71-5770	Clamp	10	610984-
19		6217-71-9780	Cap	2	610984-
20		6217-71-9791	Cover	8	610984-

Printed By : Dwi Iswanto (airafather6107170)

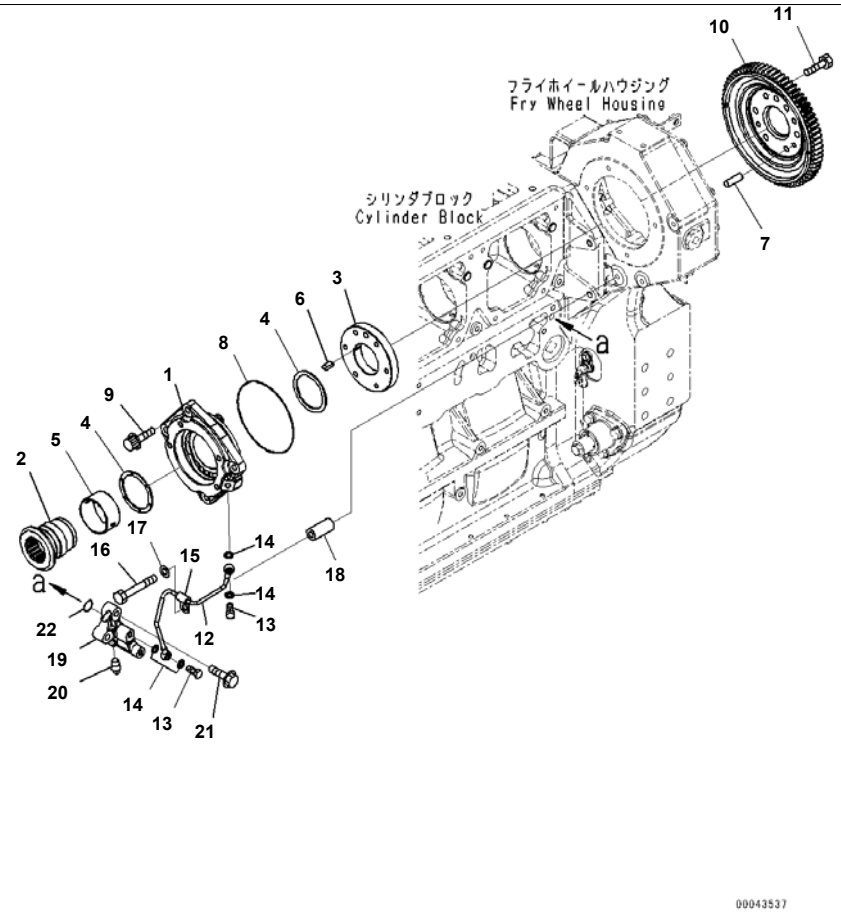

Index	Code	Part Number	Description	Qty	Serial No.
		6245-71-3100	Housing Assembly	1	610984-
1		6245-71-3110	· Housing	1	610984-
2		6245-71-3120	· Shaft	1	610984-
3		6245-71-3130	· Flange	1	610984-
4		6212-81-3550	· Bearing	2	610984-
5		6210-21-1491	· Bushing	1	610984-
6		04000-00515	· Key	1	610984-
7		04020-00820	· Pin, Dowel	1	610984-
8		07000-72135	O-ring	1	610984-
9		01437-01030	Bolt	4	610984-
10		6245-71-3140	Gear	1	610984-
11		01010-81025	Bolt	6	610984-
12		6245-51-6110	Tube	1	610984-
13		07206-30710	Bolt, Joint	2	610984-
14		07005-01012	Gasket	4	610984-
15		6933-71-8230	Clip	1	610984-
16		01010-81070	Bolt	1	610984-
17		01643-31032	Washer	1	610984-
18		6152-21-6590	Spacer	1	610984-
19		6245-21-6130	Adapter	1	610984-
20		07042-70108	Plug	1	610984-
21		01435-01040	Bolt	2	610984-
22		07000-72018	O-ring	1	610984-

Printed By : Dwi Iswanto (airafather6107170)

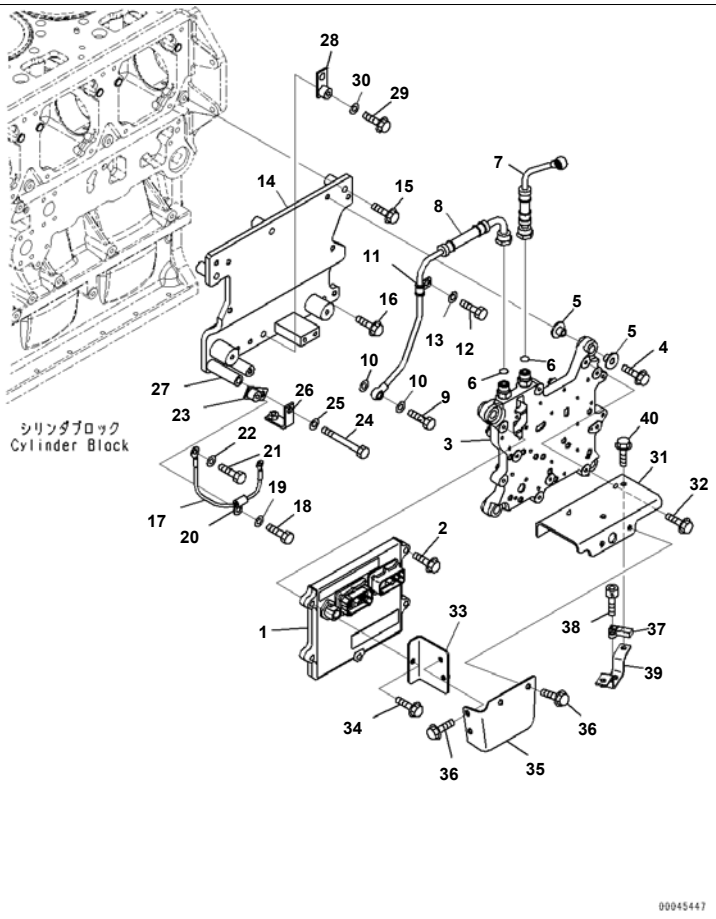

Index	Code	Part Number	Description	Qty	Serial No.
1		600-463-9500	Controller Assembly	1	610984-
2		01435-00840	Bolt	4	610984-
3		6261-81-7100	Cooler, Fuel	1	610984-
4		01435-01045	Bolt	4	610984-
5		6251-81-7210	Cushion	8	610984-
6		02896-11012	O-ring	2	610984-
7		6245-71-5290	Hose, Inlet	1	610984-
8		6245-71-5310	Hose, Return	1	610984-
9		07206-31014	Bolt, Joint	1	610984-
10		07005-01412	Gasket	2	610984-
11		6933-71-8220	Clip	1	610984-
12		01010-81020	Bolt	1	610984-
13		01643-31032	Washer	1	610984-
14		6245-21-6120	Bracket	1	610984-
15		01435-01060	Bolt	3	610984-
16		01435-01025	Bolt	1	610984-
17		6245-81-5820	Wire	1	610984-
18		01010-81020	Bolt	1	610984-
19		01643-31032	Washer	1	610984-
20		600-051-2080	Clip	1	610984-
21		01010-81020	Bolt	1	610984-
22		01643-31032	Washer	1	610984-
23		426-06-11570	Bracket	1	610984-
24		01011-81015	Bolt	1	610984-
25		01643-31032	Washer	1	610984-
26		6934-71-5860	Bracket	1	610984-
27		6130-12-4571	Spacer	1	610984-
28		426-06-11570	Bracket	1	610984-
29		01435-01035	Bolt	1	610984-
30		01643-31032	Washer	1	610984-
31		6245-81-9350	Cover	1	610984-

Printed By : Dwi Iswanto (airafather6107170)

Index	Code	Part Number	Description	Qty	Serial No.
32		01435-00820	Bolt	2	610984-
33		6245-81-9360	Bracket	1	610984-
34		01435-00845	Bolt	1	610984-
35		6245-81-9380	Cover	1	610984-
36		01435-00820	Bolt	4	610984-
37		6261-81-2600	Sensor, Atmosphere Pressure	1	610984-
38		01252-60520	Bolt, Hexagon Socket Head	1	610984-
39		6245-81-9210	Bracket	1	610984-
40		01435-00820	Bolt	2	610984-

Printed By : Dwi Iswanto (airafather6107170)

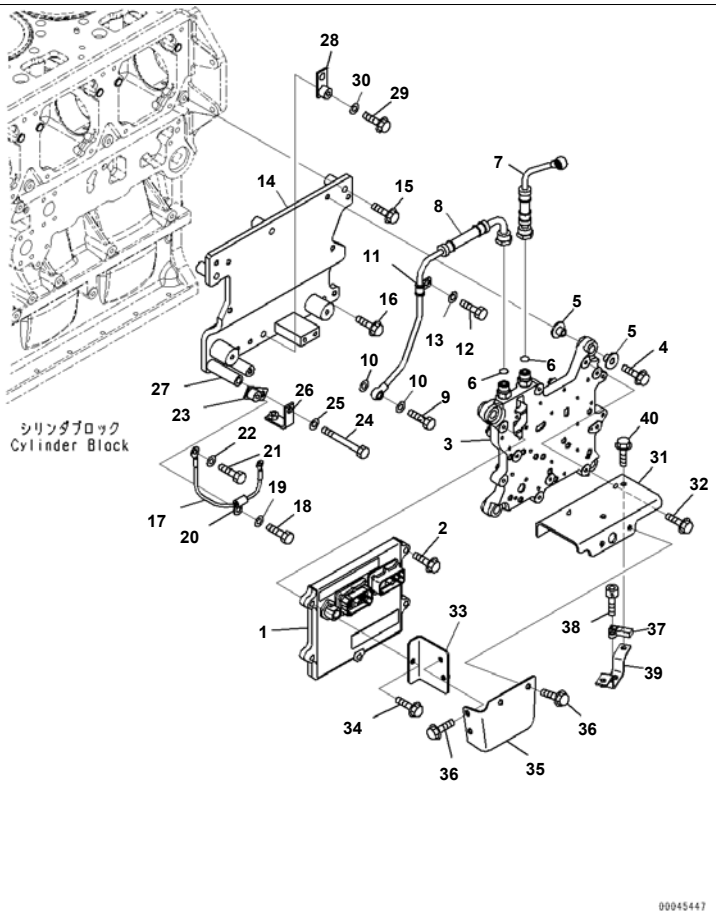

Index	Code	Part Number	Description	Qty	Serial No.
1		600-463-9600	Controller Assembly	1	610984-
2		01435-00840	Bolt	4	610984-
3		6261-81-7100	Cooler	1	610984-
4		01435-01045	Bolt	4	610984-
5		6251-81-7210	Cushion	8	610984-
6		02896-11012	O-ring	2	610984-
7		6245-71-5290	Hose	1	610984-
8		6245-71-5310	Hose	1	610984-
9		07206-31014	Bolt, Joint	1	610984-
10		07005-01412	Gasket	2	610984-
11		6933-71-8220	Clip	1	610984-
12		01010-81020	Bolt	1	610984-
13		01643-31032	Washer	1	610984-
14		6245-21-6120	Bracket	1	610984-
15		01435-01060	Bolt	3	610984-
16		01435-01025	Bolt	1	610984-
17		6245-81-5820	Wire	1	610984-
18		01010-81020	Bolt	1	610984-
19		01643-31032	Washer	1	610984-
20		600-051-2080	Clip	1	610984-
21		01010-81020	Bolt	1	610984-
22		01643-31032	Washer	1	610984-
23		426-06-11570	Bracket	1	610984-
24		01011-81015	Bolt	1	610984-
25		01643-31032	Washer	1	610984-
26		6934-71-5860	Bracket	1	610984-
27		6130-12-4571	Spacer	1	610984-
28		426-06-11570	Bracket	1	610984-
29		01435-01035	Bolt	1	610984-
30		01643-31032	Washer	1	610984-
31		6245-81-9350	Cover	1	610984-

Printed By : Dwi Iswanto (airafather6107170)

Index	Code	Part Number	Description	Qty	Serial No.
32		01435-00820	Bolt	2	610984-
33		6245-81-9360	Bracket	1	610984-
34		01435-00845	Bolt	1	610984-
35		6245-81-9380	Cover	1	610984-
36		01435-00820	Bolt	4	610984-
37		6261-81-2600	Sensor	1	610984-
38		01252-60520	Bolt, Hexagon Socket Head	1	610984-
39		6245-81-9210	Bracket	1	610984-
40		01435-00820	Bolt	2	610984-

Printed By : Dwi Iswanto (airafather6107170)

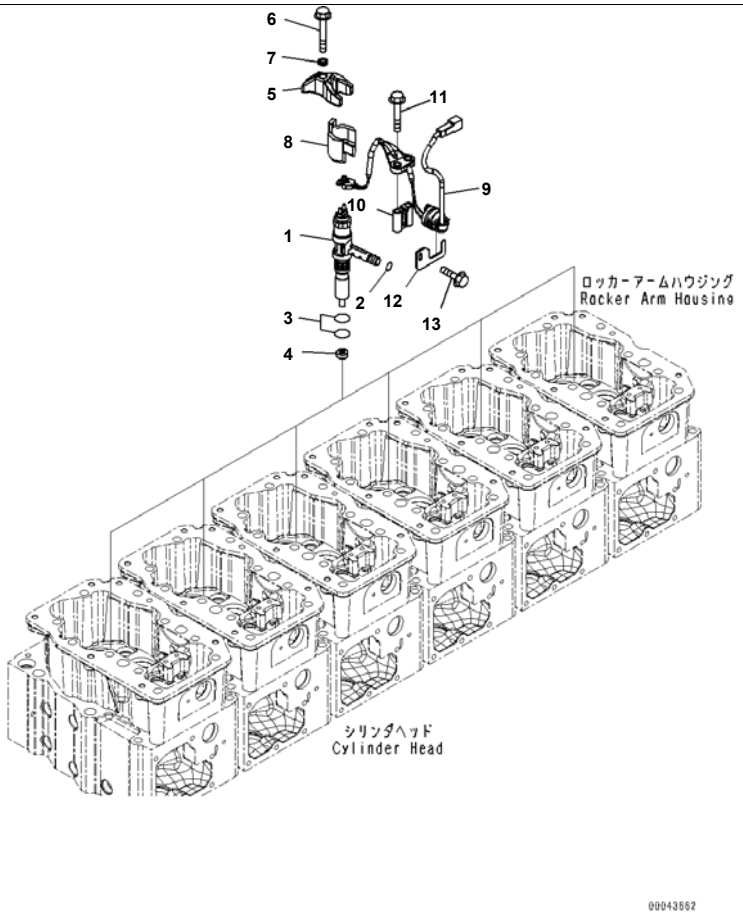

Reference:A4210-001001 Page:D009001

Index	Code	Part Number	Description	Qty	Serial No.
1		6245-11-3100	Injector Assembly	6	610984-
	C1		· Holder	1	610984-
	C1		· Nozzle	1	610984-
2		6219-71-1160	O-ring	6	610984-
3		6219-71-1150	O-ring	12	610984-
4		6261-71-6150	Gasket	6	610984-
5		6245-71-1160	Holder, Injector	6	610984-
6		01437-01075	Bolt	6	610984-
7		6217-71-1140	Washer	6	610984-
8		6245-71-1170	Adapter	6	610984-
9		6245-81-9110	Wiring Harness	6	610984-
10		6245-81-9140	Spacer	6	610984-
11		01435-00865	Bolt	12	610984-
12		6245-81-9120	Plate	6	610984-
13		01435-00614	Bolt	6	610984-

Printed By : Dwi Iswanto (airafather6107170)

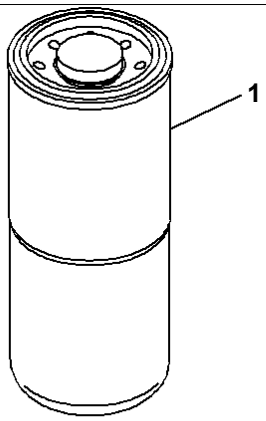

SAA6D170E-5EE S/N 610984-UP (For D375A-6R)
Fuel Filter Cartridge, Supply Parts (#610984-)

Index	Code	Part Number	Description	Qty	Serial No.
1		600-319-3841	Cartridge, (1-3/8)	1	610984-

Printed By : Dwi Iswanto (airafather6107170)

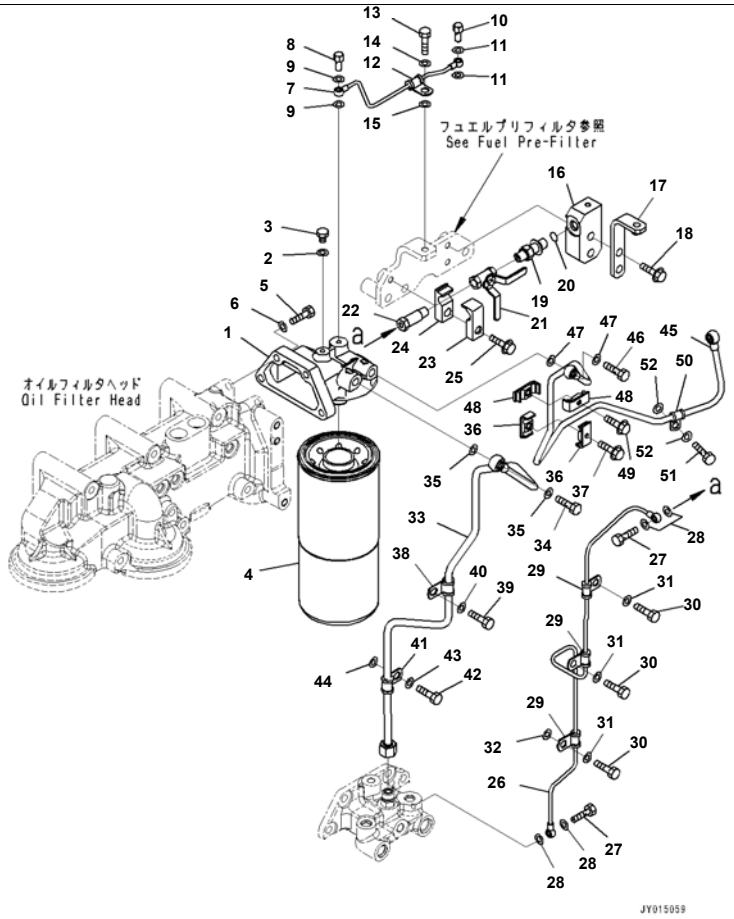

Index	Code	Part Number	Description	Qty	Serial No.
1		6261-71-7720	Head	1	610984-
2		07005-00812	Gasket	1	610984-
3		6110-73-6231	Plug	1	610984-
4	C1		Cartridge, (1-5/8)	1	610984-
5		01010-81040	Bolt	4	610984-
6		01643-31032	Washer	4	610984-
7		6245-71-6160	Tube, Air Blow	1	610984-
8		6245-71-5960	Bolt	1	610984-
9		07005-00812	Gasket	2	610984-
10		07206-30508	Bolt, Joint	1	610984-
11		07005-00812	Gasket	2	610984-
12		6245-71-5950	Clip	1	610984-
13		01010-81020	Bolt	1	610984-
14		01643-31032	Washer	1	610984-
15		01643-31032	Washer	1	610984-
16		6245-71-6240	Block	1	610984-
17		6245-71-6340	Bracket	1	610984-
18		01435-01045	Bolt	2	610984-
19		205-62-74690	Nipple	1	610984-
20		07002-11423	O-ring	1	610984-
21		6128-81-4810	Valve	1	610984-
22		6245-71-6180	Bolt	1	610984-
23		6240-71-6530	Clamp	1	610984-
24		6240-71-6540	Clamp	1	610984-
25		01435-01040	Bolt	1	610984-
26		6245-71-6171	Tube, Bypass	1	610984-
27		07206-30508	Bolt, Joint	2	610984-
28		07005-00812	Gasket	4	610984-
29		6245-71-5950	Clip	3	610984-
30		01010-81020	Bolt	3	610984-
31		01643-31032	Washer	3	610984-

Printed By : Dwi Iswanto (airafather6107170)

Index	Code	Part Number	Description	Qty	Serial No.
32		01643-31032	Washer	1	610984-
33		6245-71-5461	Tube, Inlet	1	610984-
34		07206-31014	Bolt, Joint	1	610984-
35		07005-01412	Gasket	2	610984-
36		6166-75-6821	Clamp, half	2	610984-
37		01435-00830	Bolt	1	610984-
38		6933-71-8220	Clip	1	610984-
39		01010-81020	Bolt	1	610984-
40		01643-31032	Washer	1	610984-
41		6933-71-8220	Clip	1	610984-
42		01010-81020	Bolt	1	610984-
43		01643-31032	Washer	1	610984-
44		01643-31032	Washer	1	610984-
45		6245-71-6280	Tube, Return	1	610984-
46		07206-31014	Bolt, Joint	1	610984-
47		07005-01412	Gasket	2	610984-
48		6166-75-6821	Clamp, half	2	610984-
49		01435-00835	Bolt	1	610984-
50		6933-71-8220	Clip	1	610984-
51		01010-81025	Bolt	1	610984-
52		01643-31032	Washer	2	610984-

Printed By : Dwi Iswanto (airafather6107170)

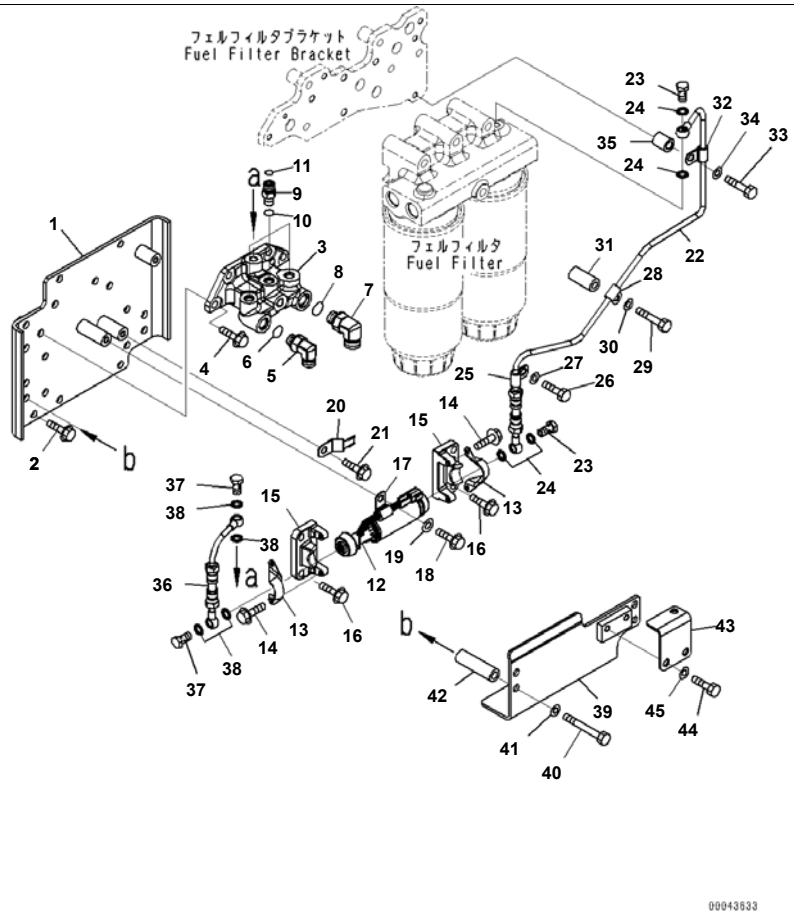

SAA6D170E-5EE S/N 610984-UP (For D375A-6R)
Fuel Filter, Priming Pump and Piping (#610984-)

Index	Code	Part Number	Description	Qty	Serial No.
1		6245-71-5510	Bracket	1	610984-
2		01435-01020	Bolt	5	610984-
3		6245-71-5650	Block	1	610984-
4		01435-01030	Bolt	4	610984-
5		02782-10420	Elbow	1	610984-
6		07002-11823	O-ring	1	610984-
7		02782-10516	Elbow	1	610984-
8		07002-12034	O-ring	1	610984-
9		02781-0031D	Union	3	610984-
10		07002-11423	O-ring	3	610984-
11		02896-11009	O-ring	3	610984-
12		6245-71-8110	Pump Assembly, Priming	1	610984-
13		6245-71-5680	Bracket	2	610984-
14		01435-00612	Bolt	4	610984-
15		6245-71-5640	Block	2	610984-
16		01435-01030	Bolt	4	610984-
17		600-051-2100	Clip	1	610984-
18		01435-01016	Bolt	1	610984-
19		01643-31032	Washer	1	610984-
20		08193-20010	Clip	1	610984-
21		01435-01016	Bolt	1	610984-
22		6245-71-5620	Hose	1	610984-
23		07206-30812	Bolt, Joint	2	610984-
24		07005-01212	Seal, Washer	4	610984-
25		6210-51-8320	Clip	1	610984-
26		01010-81020	Bolt	1	610984-
27		01643-31032	Washer	1	610984-
28		6210-51-8320	Clip	1	610984-
29		01010-81065	Bolt	1	610984-
30		01643-31032	Washer	1	610984-
31		6152-21-6590	Spacer	1	610984-

Printed By : Dwi Iswanto (airafather6107170)

Index	Code	Part Number	Description	Qty	Serial No.
32		6210-51-8320	Clip	1	610984-
33		01010-81045	Bolt	1	610984-
34		01643-31032	Washer	1	610984-
35		6128-21-6730	Spacer	1	610984-
36		6245-71-5610	Hose	1	610984-
37		07206-30812	Bolt, Joint	2	610984-
38		07005-01212	Seal, Washer	4	610984-
39		6245-71-5660	Cover	1	610984-
40		01011-81000	Bolt	4	610984-
41		01643-31032	Washer	4	610984-
42		6130-12-4571	Spacer	4	610984-
43		6245-71-5940	Bracket	1	610984-
44		01010-81020	Bolt	2	610984-
45		01643-31032	Washer	2	610984-

Printed By : Dwi Iswanto (airafather6107170)

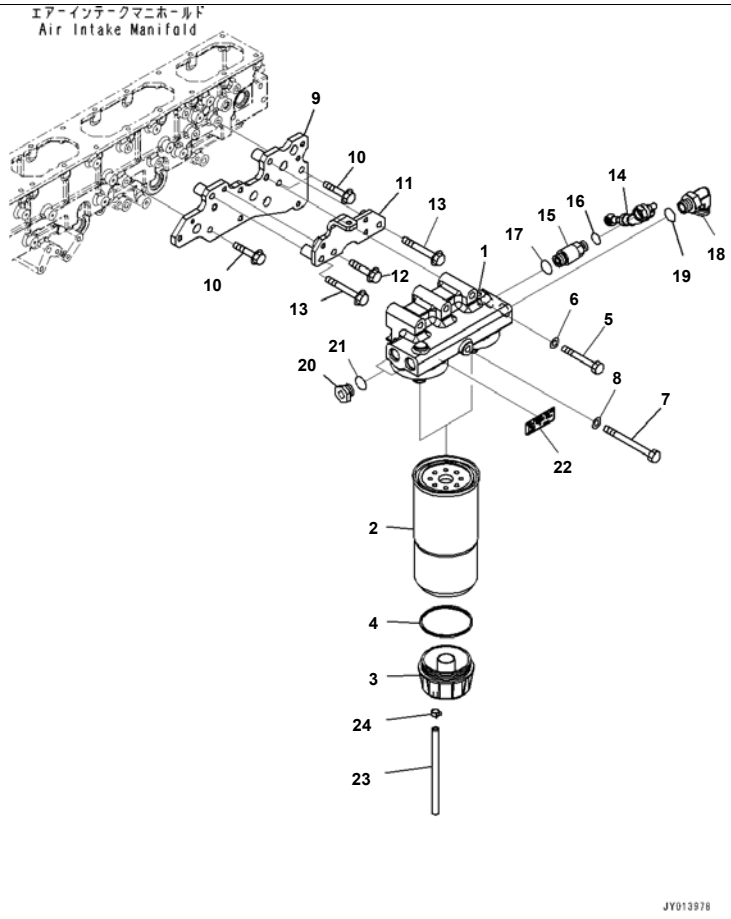

Index	Code	Part Number	Description	Qty	Serial No.
1		6245-71-6111	Head, Pre filter	1	610984-
		600-311-4500	Filter Assembly, (1-1/4)	2	610984-
2	C1		· Cartridge, (1-1/4)	1	610984-
3		600-311-3220	· Cap	1	610984-
4		600-311-3230	· Seal	1	610984-
5		01010-81290	Bolt	3	610984-
6		01643-31232	Washer	3	610984-
7		01011-81255	Bolt	1	610984-
8		01643-31232	Washer	1	610984-
9		6245-71-6420	Bracket	1	610984-
10		01435-01055	Bolt	3	610984-
11		6245-71-6190	Bracket	1	610984-
12		01435-01060	Bolt	1	610984-
13		01436-01000	Bolt	2	610984-
14		6245-71-5470	Hose	1	610984-
15		6245-71-6150	Union	1	610984-
16		02896-11012	O-ring	1	610984-
17		07002-12434	O-ring	1	610984-
18		02782-10628	Elbow	1	610984-
19		07002-12434	O-ring	1	610984-
20		07040-12412	Plug	2	610984-
21		07002-12434	O-ring	2	610984-
22		6245-81-9420	Plate	1	610984-
23		07270-20855	Hose	2	610984-
24		07285-00125	Clip	2	610984-

Printed By : Dwi Iswanto (airafather6107170)

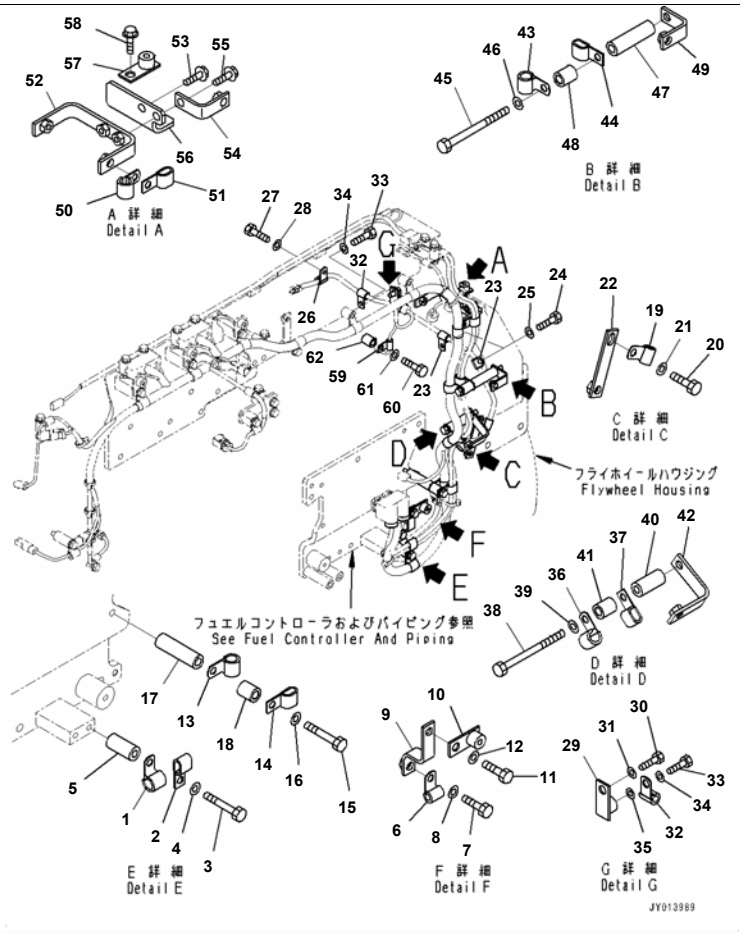

Cable Support, (1/5) (#610984-)

Index	Code	Part Number	Description	Qty	Serial No.
1		600-051-2160	Clip	1	610984-
2		04435-51010	Clip	1	610984-
3		01010-81070	Bolt	1	610984-
4		01643-31032	Washer	1	610984-
5		6152-21-6590	Spacer	1	610984-
6		600-051-2100	Clip	1	610984-
7		01010-81020	Bolt	1	610984-
8		01643-31032	Washer	1	610984-
9		6245-81-9220	Bracket	1	610984-
10		426-06-11570	Bracket	1	610984-
11		01010-81025	Bolt	1	610984-
12		01643-31032	Washer	1	610984-
13		600-051-2160	Clip	1	610984-
14		04435-51010	Clip	1	610984-
15		01011-81025	Bolt	1	610984-
16		01643-31032	Washer	1	610984-
17		6130-12-4571	Spacer	1	610984-
18		6128-21-6730	Spacer	1	610984-
19		600-051-2100	Clip	1	610984-
20		01010-81025	Bolt	1	610984-
21		01643-31032	Washer	1	610984-
22		6212-65-6390	Plate	1	610984-
23		600-051-2100	Clip	2	610984-
24		01010-81020	Bolt	2	610984-
25		01643-31032	Washer	2	610984-
26		600-051-2100	Clip	1	610984-
27		01010-81020	Bolt	1	610984-
28		01643-31032	Washer	1	610984-
29		426-06-11570	Bracket	1	610984-
30		01010-81020	Bolt	1	610984-
31		01643-31032	Washer	1	610984-

Printed By : Dwi Iswanto (airafather6107170)

Index	Code	Part Number	Description	Qty	Serial No.
32		600-051-2100	Clip	2	610984-
33		01010-81020	Bolt	2	610984-
34		01643-31032	Washer	2	610984-
35		01643-31032	Washer	1	610984-
36		600-051-2160	Clip	1	610984-
37		04435-51010	Clip	1	610984-
38		01011-81000	Bolt	1	610984-
39		01643-31032	Washer	1	610984-
40		6152-21-6590	Spacer	1	610984-
41		6128-21-6730	Spacer	1	610984-
42		17M-911-1220	Plate	1	610984-
43		600-051-2160	Clip	1	610984-
44		04435-51010	Clip	1	610984-
45		01011-81030	Bolt	1	610984-
46		01643-31032	Washer	1	610984-
47		6130-12-4571	Spacer	1	610984-
48		6128-21-6730	Spacer	1	610984-
49		6934-71-5860	Bracket	1	610984-
50		600-051-2160	Clip	1	610984-
51		04435-51010	Clip	1	610984-
52		6245-81-5210	Bracket	1	610984-
53		01435-01020	Bolt	1	610984-
54		6934-71-5860	Bracket	1	610984-
55		01435-01025	Bolt	1	610984-
56		6245-81-5190	Bracket	1	610984-
57		426-06-11570	Bracket	2	610984-
58		01435-01025	Bolt	2	610984-
59		600-051-2060	Clip	1	610984-
60		01010-81045	Bolt	1	610984-
61		01643-31032	Washer	1	610984-
62		6128-21-6730	Spacer	1	610984-

Printed By : Dwi Iswanto (airafather6107170)

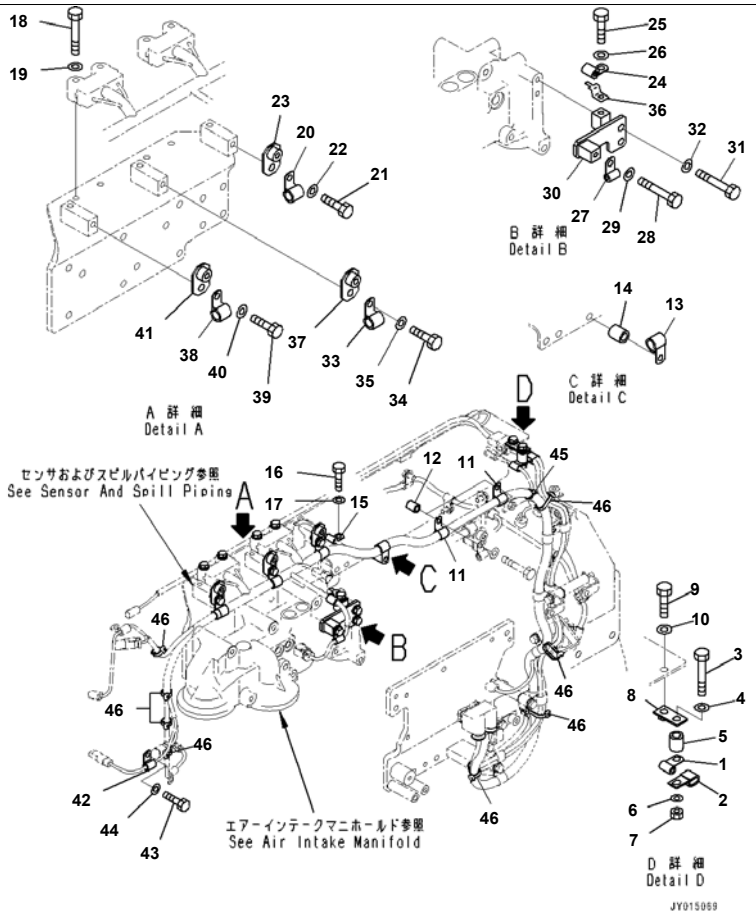

SAA6D170E-5EE S/N 610984-UP (For D375A-6R)
Cable Support, (2/5) (#610984-)

Index	Code	Part Number	Description	Qty	Serial No.
1		600-051-2060	Clip	1	610984-
2		04435-51010	Clip	1	610984-
3		01010-81050	Bolt	1	610984-
4		01643-31032	Washer	1	610984-
5		6128-21-6730	Spacer	1	610984-
6		01643-31032	Washer	1	610984-
7		01580-01008	Nut	1	610984-
8		426-01-11310	Bracket	1	610984-
9		01010-81020	Bolt	1	610984-
10		01643-31032	Washer	1	610984-
11		600-051-2160	Clip	2	610984-
12		6128-21-6730	Spacer	2	610984-
13		600-051-2160	Clip	1	610984-
14		6128-21-6730	Spacer	1	610984-
15		600-051-2060	Clip	1	610984-
16		01010-81020	Bolt	1	610984-
17		01643-31032	Washer	1	610984-
18		01010-81050	Bolt	2	610984-
19		01643-31032	Washer	2	610984-
20		600-051-2160	Clip	1	610984-
21		01010-81025	Bolt	1	610984-
22		01643-31032	Washer	1	610984-
23		6245-71-5570	Bracket	1	610984-
24		600-051-2100	Clip	1	610984-
25		01010-81020	Bolt	1	610984-
26		01643-31032	Washer	1	610984-
27		600-051-2060	Clip	1	610984-
28		01010-81020	Bolt	1	610984-
29		01643-31032	Washer	1	610984-
30		6245-81-9340	Bracket	1	610984-
31		01010-81025	Bolt	2	610984-

Printed By : Dwi Iswanto (airafather6107170)

Index	Code	Part Number	Description	Qty	Serial No.
32		01643-31032	Washer	2	610984-
33		600-051-2140	Clip	1	610984-
34		01010-81025	Bolt	1	610984-
35		01643-31032	Washer	1	610984-
36		08193-20010	Clip	1	610984-
37		6245-71-5570	Bracket	1	610984-
38		600-051-2120	Clip	1	610984-
39		01010-81025	Bolt	1	610984-
40		01643-31032	Washer	1	610984-
41		6245-71-5570	Bracket	1	610984-
42		600-051-2100	Clip	1	610984-
43		01010-81020	Bolt	1	610984-
44		01643-31032	Washer	1	610984-
45		6218-81-8480	Band	1	610984-
46		6218-81-8490	Band	9	610984-

Printed By : Dwi Iswanto (airafather6107170)

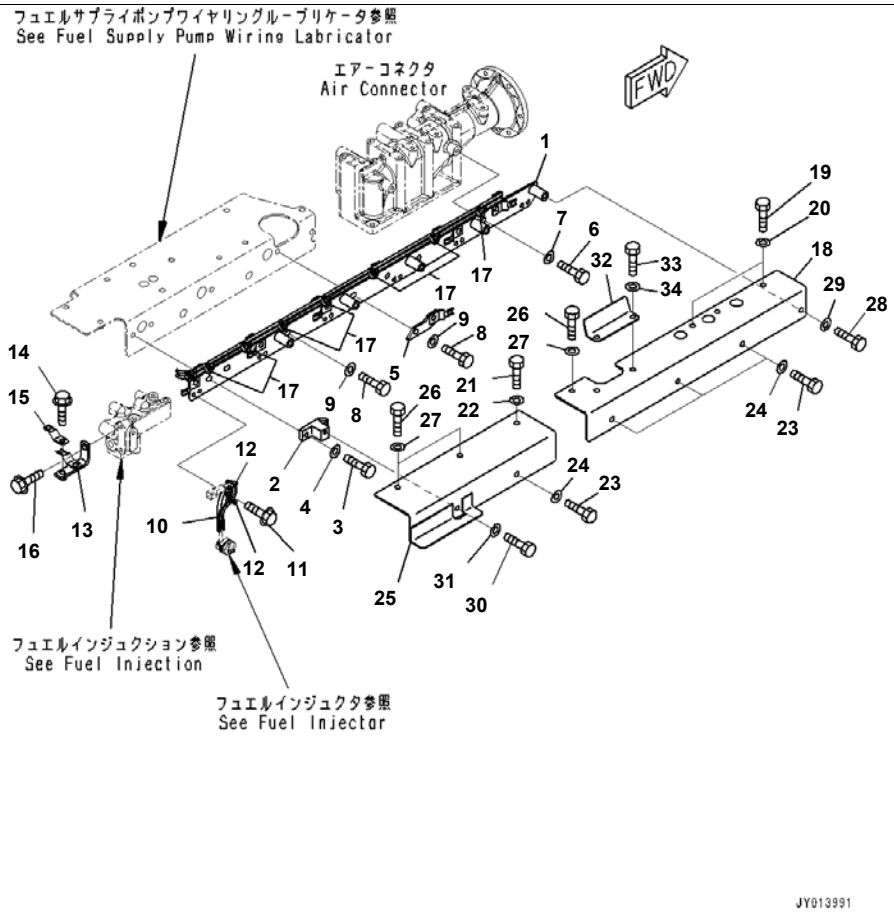

SAA6D170E-5EE S/N 610984-UP (For D375A-6R)
Cable Support, (3/5) (#610984-)

Index	Code	Part Number	Description	Qty	Serial No.
1		6245-81-5131	Bracket	1	610984-
2		6245-81-5250	Block	1	610984-
3		01010-81045	Bolt	2	610984-
4		01643-31032	Washer	2	610984-
5		6245-81-5240	Plate	1	610984-
6		01010-81020	Bolt	2	610984-
7		01643-31032	Washer	2	610984-
8		01010-81035	Bolt	3	610984-
9		01643-31032	Washer	3	610984-
10		6245-81-9330	Holder	6	610984-
11		01435-00825	Bolt	6	610984-
12		6218-81-8480	Band	12	610984-
13		6245-81-5180	Bracket	1	610984-
14		01435-01020	Bolt	1	610984-
15		08193-20010	Clip	1	610984-
16		01435-01020	Bolt	1	610984-
17		6218-81-8490	Band	8	610984-
18		6245-81-5151	Cover	1	610984-
19		01010-81030	Bolt	2	610984-
20		01643-31032	Washer	2	610984-
21		01010-81035	Bolt	1	610984-
22		01643-31032	Washer	1	610984-
23		01010-81060	Bolt	4	610984-
24		01643-31032	Washer	4	610984-
25		6245-81-5160	Cover	1	610984-
26		01010-81035	Bolt	3	610984-
27		01643-31032	Washer	3	610984-
28		01010-81060	Bolt	1	610984-
29		01643-31032	Washer	1	610984-
30		01010-81020	Bolt	1	610984-
31		01643-31032	Washer	1	610984-

Printed By : Dwi Iswanto (airafather6107170)

Index	Code	Part Number	Description	Qty	Serial No.
32		6245-81-5170	Cover	1	610984-
33		01010-81020	Bolt	2	610984-
34		01643-31032	Washer	2	610984-

Printed By : Dwi Iswanto (airafather6107170)

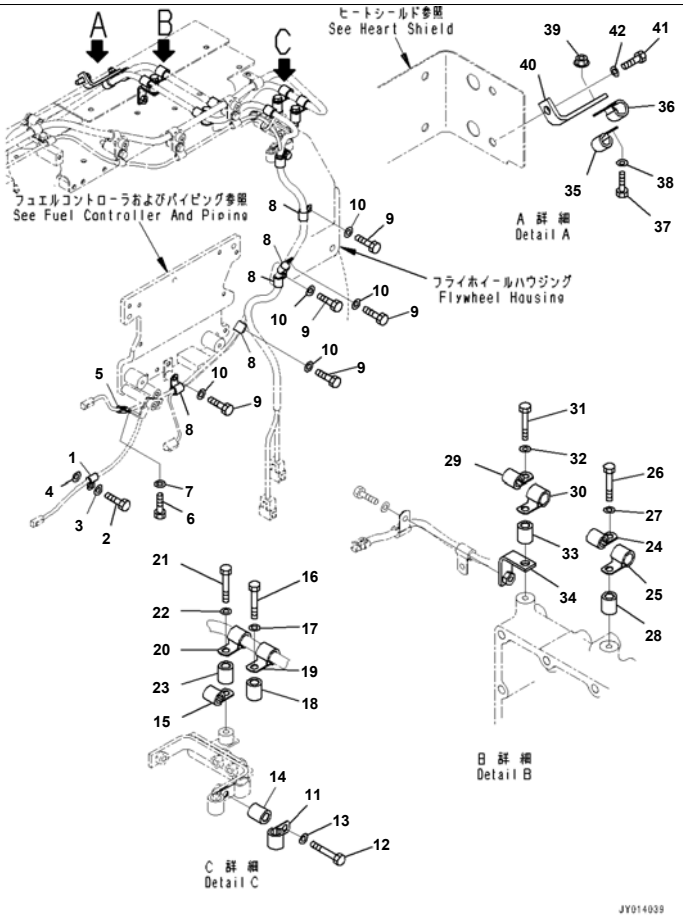

Index	Code	Part Number	Description	Qty	Serial No.
1		600-051-2080	Clip	1	610984-
2		01010-81025	Bolt	1	610984-
3		01643-31032	Washer	1	610984-
4		01643-31032	Washer	1	610984-
5		600-051-2080	Clip	1	610984-
6		01010-81020	Bolt	1	610984-
7		01643-31032	Washer	1	610984-
8		600-051-2140	Clip	5	610984-
9		01010-81020	Bolt	5	610984-
10		01643-31032	Washer	5	610984-
11		600-051-2160	Clip	1	610984-
12		01010-81050	Bolt	1	610984-
13		01643-31032	Washer	1	610984-
14		6128-21-6730	Spacer	1	610984-
15		600-051-2180	Clip	1	610984-
16		01010-81040	Bolt	1	610984-
17		01643-31032	Washer	1	610984-
18		6128-21-6730	Spacer	1	610984-
19		600-051-2140	Clip	1	610984-
20		600-051-2180	Clip	1	610984-
21		01010-81045	Bolt	1	610984-
22		01643-31032	Washer	1	610984-
23		6128-21-6730	Spacer	1	610984-
24		600-051-2140	Clip	1	610984-
25		600-051-2180	Clip	1	610984-
26		01010-81050	Bolt	1	610984-
27		01643-31032	Washer	1	610984-
28		6128-21-6730	Spacer	1	610984-
29		600-051-2140	Clip	1	610984-
30		600-051-2180	Clip	1	610984-
31		01010-81050	Bolt	1	610984-

Printed By : Dwi Iswanto (airafather6107170)

Index	Code	Part Number	Description	Qty	Serial No.
32		01643-31032	Washer	1	610984-
33		6128-21-6730	Spacer	1	610984-
34		6934-71-5860	Bracket	1	610984-
35		600-051-2140	Clip	1	610984-
36		600-051-2180	Clip	1	610984-
37		01010-81025	Bolt	1	610984-
38		01643-31032	Washer	1	610984-
39		01584-01008	Nut	1	610984-
40		6166-91-6850	Bracket	1	610984-
41		01010-81030	Bolt	1	610984-
42		01643-31032	Washer	1	610984-

Printed By : Dwi Iswanto (airafather6107170)

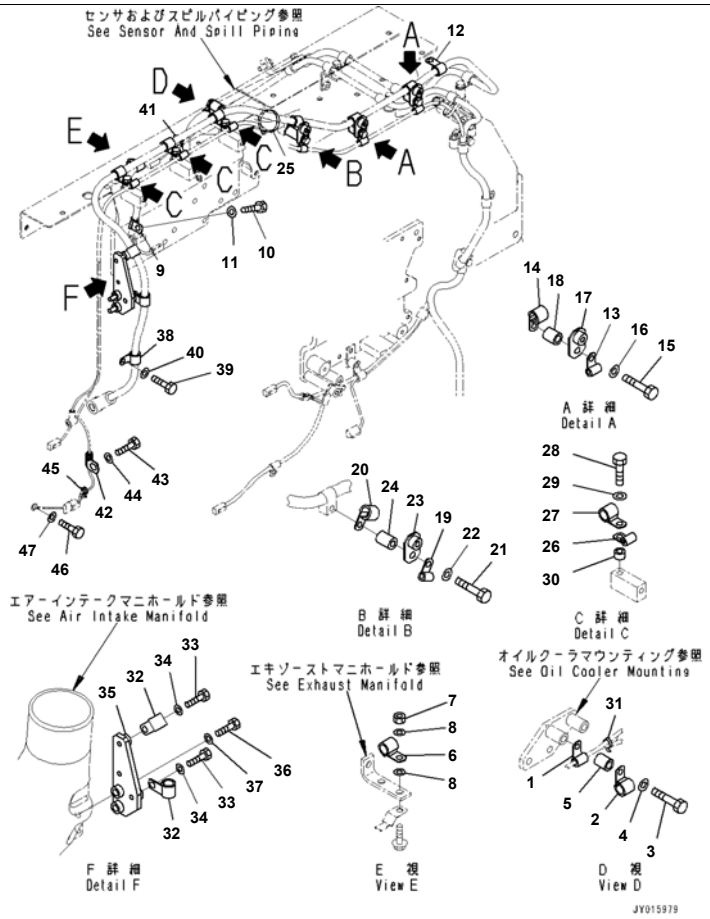

Index	Code	Part Number	Description	Qty	Serial No.
1		600-051-2140	Clip	1	610984-
2		600-051-2180	Clip	1	610984-
3		01010-81080	Bolt	1	610984-
4		01643-31032	Washer	1	610984-
5		6128-21-6730	Spacer	1	610984-
6		600-051-2100	Clip	1	610984-
7		01580-01008	Nut	1	610984-
8		01643-31032	Washer	2	610984-
9		600-051-2120	Clip	1	610984-
10		01010-81020	Bolt	1	610984-
11		01643-31032	Washer	1	610984-
12		600-051-2180	Clip	1	610984-
13		600-051-2080	Clip	2	610984-
14		600-051-2180	Clip	2	610984-
15		01010-81080	Bolt	2	610984-
16		01643-31032	Washer	2	610984-
17		6245-71-5570	Bracket	2	610984-
18		6128-21-6730	Spacer	2	610984-
19		600-051-2080	Clip	1	610984-
20		600-051-2180	Clip	1	610984-
21		01010-81080	Bolt	1	610984-
22		01643-31032	Washer	1	610984-
23		6245-71-5570	Bracket	1	610984-
24		6128-21-6730	Spacer	1	610984-
25		6218-81-8480	Band	1	610984-
26		600-051-2080	Clip	3	610984-
27		600-051-2180	Clip	3	610984-
28		01010-81035	Bolt	3	610984-
29		01643-31032	Washer	3	610984-
30		6131-12-5920	Spacer	3	610984-
31		6218-81-8480	Band	1	611010-

Printed By : Dwi Iswanto (airafather6107170)

Index	Code	Part Number	Description	Qty	Serial No.
32		600-051-2180	Clip	2	610984-
33		01010-81030	Bolt	2	610984-
34		01643-31032	Washer	2	610984-
35		6245-81-5410	Bracket	1	610984-
36		01010-81040	Bolt	2	610984-
37		01643-31032	Washer	2	610984-
38		600-051-2180	Clip	1	610984-
39		01010-81020	Bolt	1	610984-
40		01643-31032	Washer	1	610984-
41		6218-81-8480	Band	1	610984-
42		6240-81-4431	Clip	1	610984-
43		01010-81020	Bolt	1	610984-
44		01643-31032	Washer	1	610984-
45		6218-81-8480	Band	1	610984-
46		01010-81020	Bolt	1	610984-
47		01643-31032	Washer	1	610984-

Printed By : Dwi Iswanto (airafather6107170)

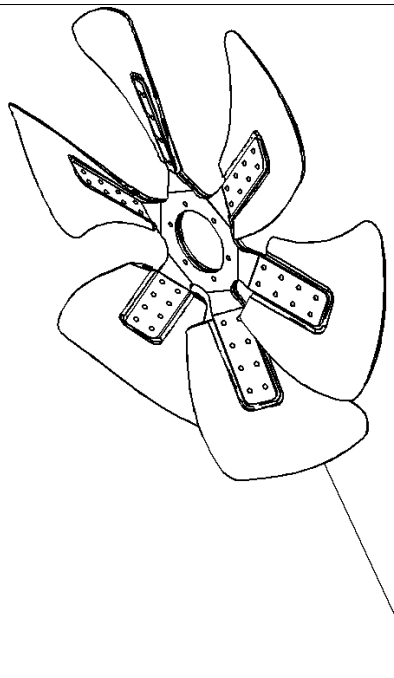

Index	Code	Part Number	Description	Qty	Serial No.
1		600-645-1351	Fan	1	610984-

Printed By : Dwi Iswanto (airafather6107170)

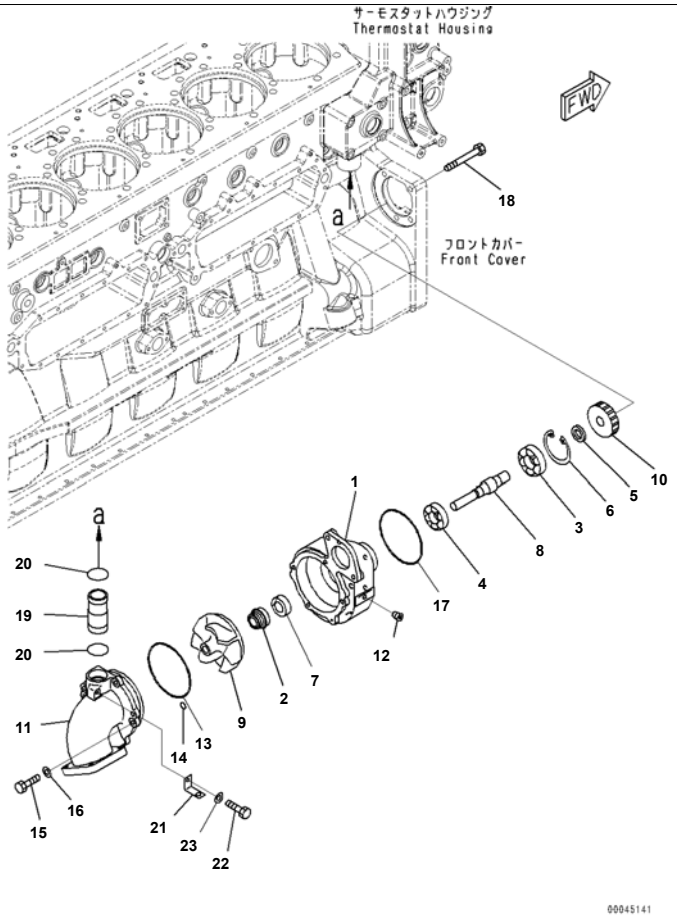

Index	Code	Part Number	Description	Qty	Serial No.
		6240-61-1102	Pump Assembly, Water	1	610984-
1		6240-61-1110	· Body	1	610984-
2		6162-63-1515	· Seal	1	610984-
3		06340-06305	· Bearing, Ball	1	610984-
4		06030-06205	· Bearing, Ball	1	610984-
5		6240-61-1470	· Spacer	1	610984-
6		6240-61-1440	· Ring, Snap	1	610984-
7		07012-D0022	· Seal, Oil	1	610984-
8		6240-61-1312	· Shaft	1	610984-
9		6240-61-1210	· Impeller	1	610984-
10		6240-61-1410	· Gear, Drive	1	610984-
11		6240-61-1150	· Cover	1	610984-
12		07043-70211	· Plug	1	610984-
13		07000-G2140	· O-ring	1	610984-
14		07000-G2012	· O-ring	1	610984-
15		01010-81030	· Bolt	4	610984-
16		01643-31032	· Washer	4	610984-
17		07000-72095	O-ring	1	610984-
18		01011-81215	Bolt	4	610984-
19		6240-61-1560	Tube	1	610984-
20		07000-A3039	O-ring	2	610984-
21		6150-21-5720	Bracket	1	610984-
22		01010-80812	Bolt	1	610984-
23		01640-20816	Washer	1	610984-

Printed By : Dwi Iswanto (airafather6107170)

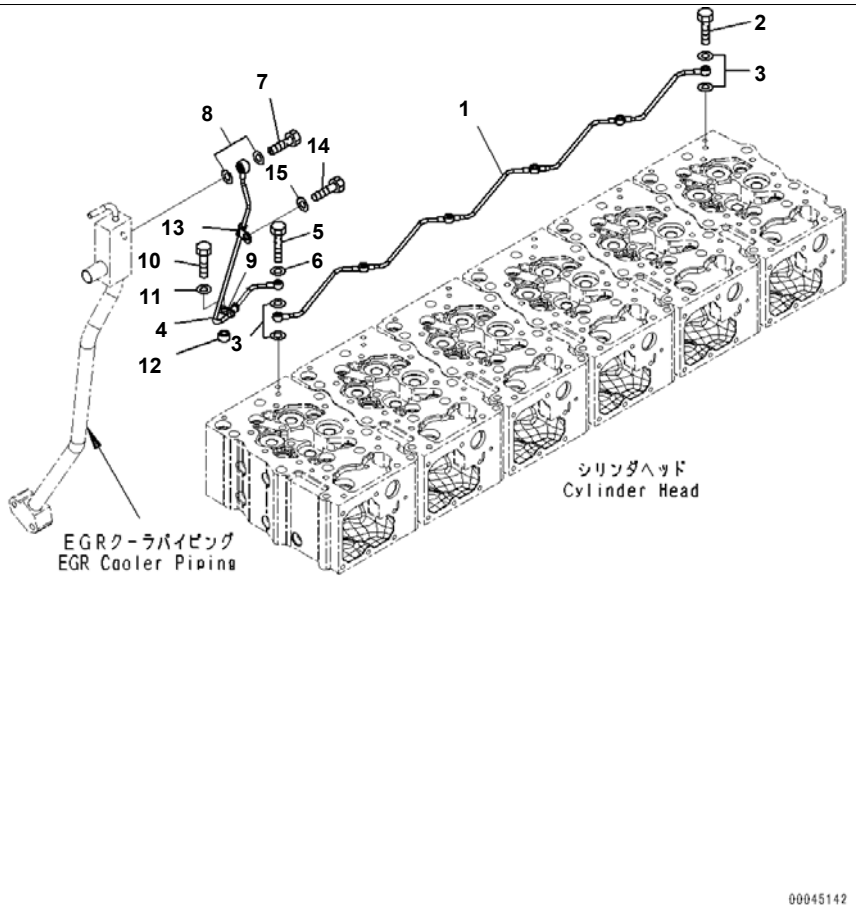

SAA6D170E-5EE S/N 610984-UP (For D375A-6R)
Water Pump, Air Vent (#610984-)

Index	Code	Part Number	Description	Qty	Serial No.
1		6245-11-6510	Tube, Air Vent	1	610984-
2		07206-30710	Bolt, Joint	5	610984-
3		07003-01015	Gasket	12	610984-
4		6245-11-6520	Tube	1	610984-
5		6215-11-6560	Bolt, Joint	1	610984-
6		07003-01015	Gasket	1	610984-
7		07206-31014	Bolt, Joint	1	610984-
8		07005-01412	Gasket	2	610984-
9		6245-61-8310	Clip	1	610984-
10		01010-81030	Bolt	1	610984-
11		01643-31032	Washer	1	610984-
12		6131-12-5920	Spacer	1	610984-
13		6245-61-8310	Clip	1	610984-
14		01010-81020	Bolt	1	610984-
15		01643-31032	Washer	1	610984-

Printed By : Dwi Iswanto (airafather6107170)

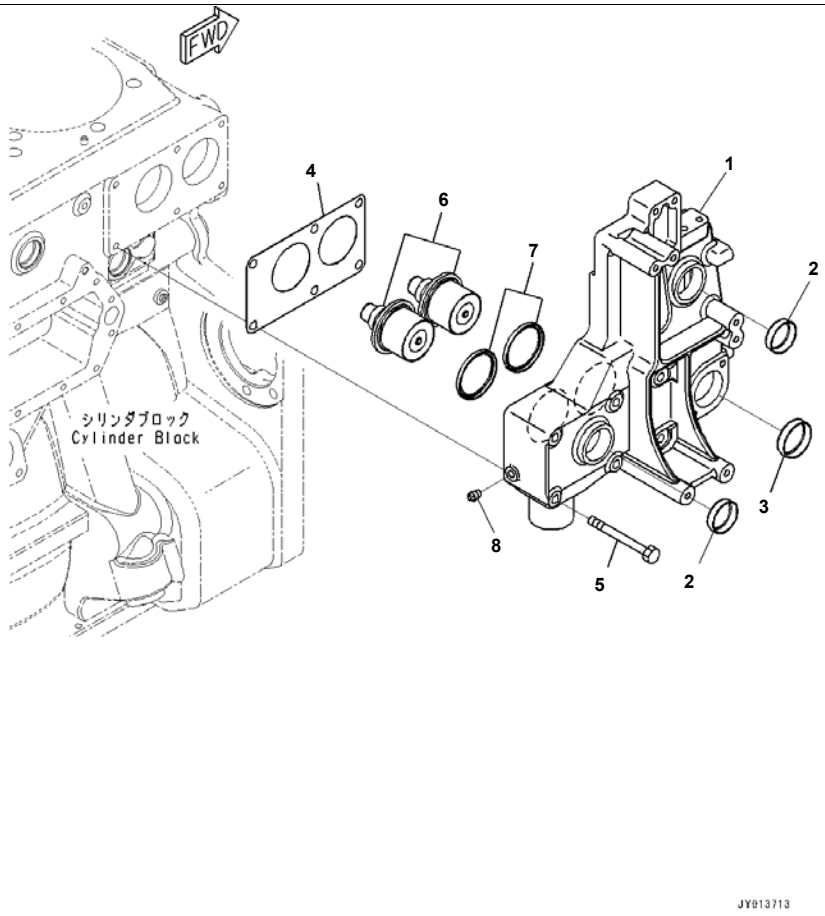

Index	Code	Part Number	Description	Qty	Serial No.
		6245-11-6401	Housing Assembly	1	610984-
1	C1		· Housing, Thermostat	1	610984-
2		07046-44516	· Plug	2	610984-
3		07046-45016	· Plug	1	610984-
4		6240-11-6470	Gasket	1	610984-
5		01010-81095	Bolt	6	610984-
6		600-421-6630	Thermostat	2	610984-
7		6162-13-6440	Seal	2	610984-
8		07042-A0108	Plug	1	610984-

Printed By : Dwi Iswanto (airafather6107170)

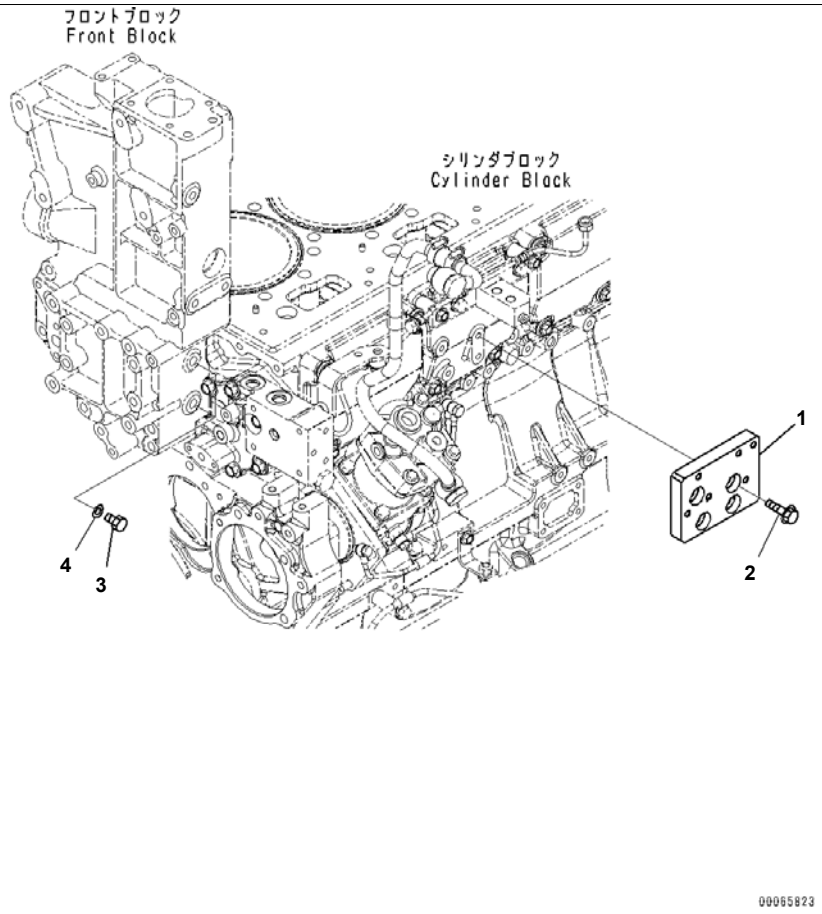

Index	Code	Part Number	Description	Qty	Serial No.
1		6245-61-8110	Plate	1	610984-
2		01435-01025	Bolt	4	610984-
3		07040-11409	Plug	2	610984-
4		07005-01412	Gasket	2	610984-

Printed By : Dwi Iswanto (airafather6107170)

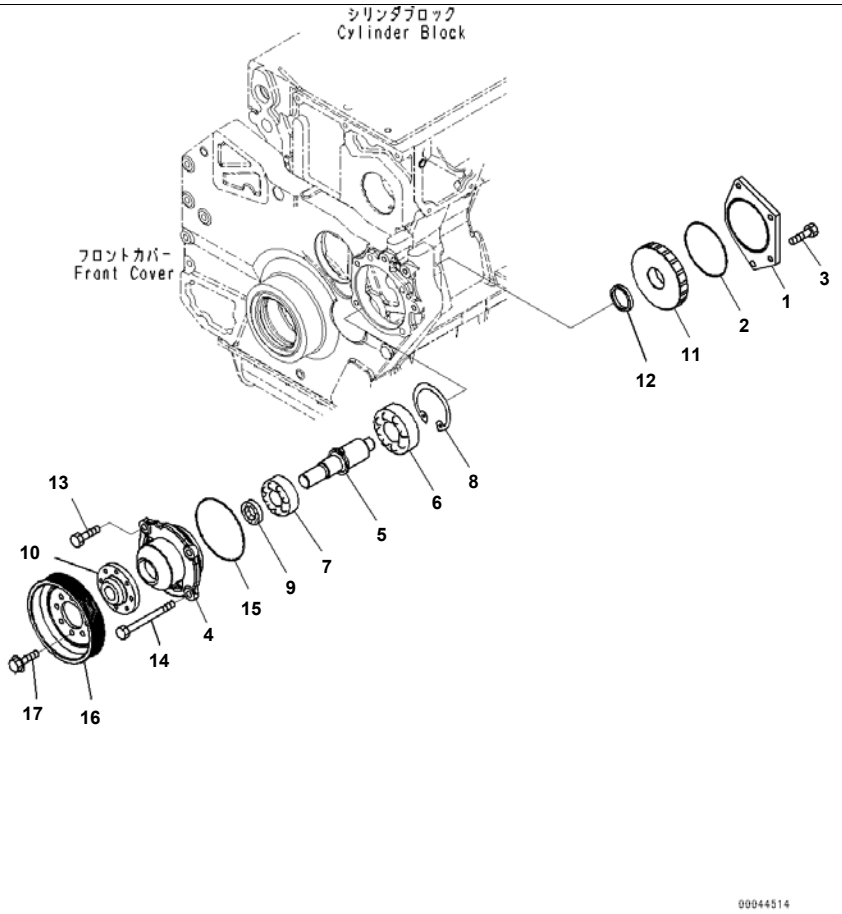

SAA6D170E-5EE S/N 610984-UP (For D375A-6R)
Alternator Drive (#610984-)

Index	Code	Part Number	Description	Qty	Serial No.
1		6245-21-6710	Cover	1	610984-
2		07000-72115	O-ring	1	610984-
3		01010-81260	Bolt	1	610984-
		6240-61-4201	Housing Assembly	1	610984-
4		6240-61-4210	· Housing	1	610984-
5		6240-61-4251	· Shaft	1	610984-
6		06330-06309	· Bearing, Ball	1	610984-
7		06330-06307	· Bearing, Ball	1	610984-
8		04065-01030	· Ring	1	610984-
9		6151-71-3150	· Seal, Oil	1	610984-
10		6240-61-4171	· Flange	1	610984-
11		6240-61-1620	Gear, Drive	1	610984-
12		6240-61-4260	Spacer	1	610984-
13		01010-81230	Bolt	2	610984-
14		01011-81230	Bolt	2	610984-
15		07000-72135	O-ring	1	610984-
16		6245-81-6150	Pulley	1	610984-
17		01435-01020	Bolt	8	610984-

Printed By : Dwi Iswanto (airafather6107170)

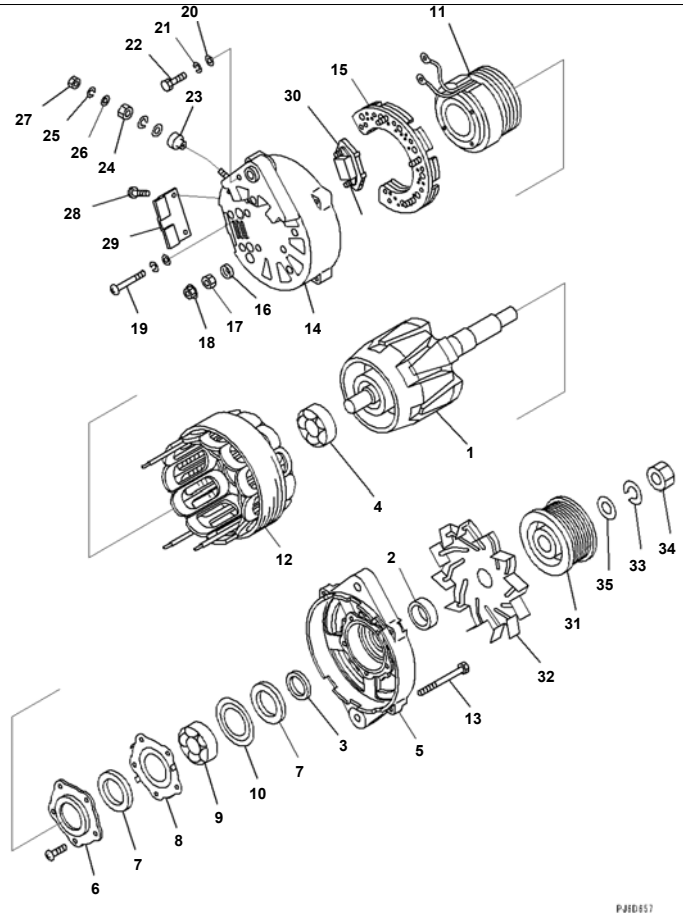

Index	Code	Part Number	Description	Qty	Serial No.
		600-861-9120	Alternator Assembly, 90Amp.	1	610984-
1		KD0-35100-0310	· Rotor Assembly	1	610984-
2		KD1-33923-0890	· Collar	1	610984-
3		KD1-35923-0030	· Collar	1	610984-
4		KD0-09201-0770	· Bearing, Ball	1	610984-
5		KD0-35300-0200	· Bracket Assembly,Front	1	610984-
6		KD0-35926-0080	· Retainer	1	610984-
7		KD0-35951-0080	· Packing	2	610984-
8		KD1-33926-0660	· Retainer	1	610984-
9		KD0-09201-0760	· Bearing, Ball	1	610984-
10		KD1-33926-0790	· Retainer	1	610984-
11		KD0-35120-0250	· Coil Assembly, Field	1	610984-
12		KD0-35200-0320	· Stator Assembly	1	610984-
13		KD0-0083-08802	· Bolt	4	610984-
		KD0-35700-0970	· Bracket Assembly	1	610984-
14		KD0-35710-1190	· Bracket	1	610984-
15		KD0-35730-0162	· · Rectifier Assembly	1	610984-
16		KD0-35943-0210	· · Bushing	1	610984-
17		KD0-33902-0090	· · Nut	1	610984-
18		KD0-33902-0080	· · Nut	6	610984-
19		KD1-0020-06452	· · Screw	4	610984-
20		KD1-0330-06012	· · Washer, Prain	5	610984-
21		KD1-0335-06002	· · Washer, Spring	5	610984-
22		KD0-0080-06142	· · Bolt	1	610984-
23		KD0-35943-0100	· · Bushing, Insulate	1	610984-
24		KD0-33902-0100	· · Nut	1	610984-
25		KD1-0335-08002	· · Washer, Spring	2	610984-
26		KD1-0331-08020	· · Washer	2	610984-
27		KD0-0291-08010	· · Nut	1	610984-
28		KD0-0055-05122	· · Screw	2	610984-
29		KD0-35761-0190	· · Cover	1	610984-

Printed By : Dwi Iswanto (airafather6107170)

Index	Code	Part Number	Description	Qty	Serial No.
30		KD7-35719-0181	・・ Regulator Assembly	1	610984-
31		KD0-35411-0650	・ Pulley	1	610984-
32		KD0-35421-0190	・ Fan	1	610984-
33		KD1-0335-20002	・ Washer, Spring	1	610984-
34		KD0-0290-20022	・ Nut	1	610984-
35		KD1-35921-0010	・ Washer	1	610984-

Printed By : Dwi Iswanto (airafather6107170)

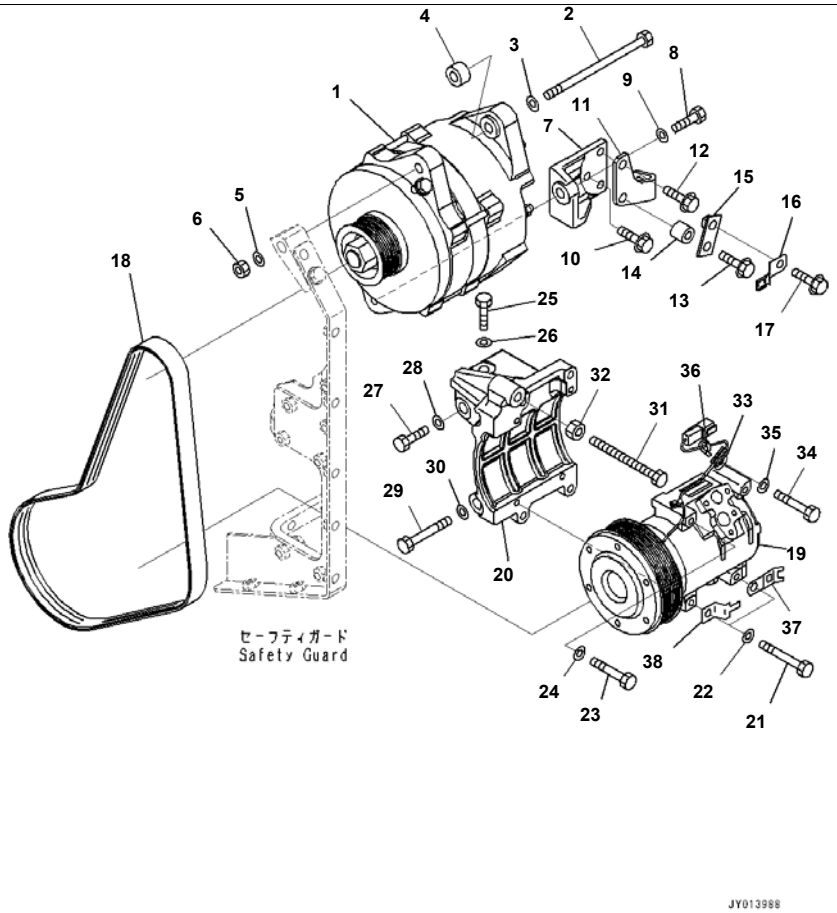

Index	Code	Part Number	Description	Qty	Serial No.
1		600-861-9120	Alternator Assembly, 90Amp.	1	610984-
2		6217-81-6840	Bolt	1	610984-
3		01640-21323	Washer	1	610984-
4		6245-81-6190	Spacer	1	610984-
5		01643-31232	Washer	1	610984-
6		01582-11210	Nut	1	610984-
7		6245-81-6610	Bracket	1	610984-
8		01050-51240	Bolt	1	610984-
9		01643-31232	Washer	1	610984-
10		01435-01025	Bolt	1	610984-
11		6245-81-6650	Bracket	1	610984-
12		01435-01030	Bolt	1	610984-
13		01435-01050	Bolt	1	610984-
14		6152-11-4970	Spacer	1	610984-
15		426-01-11310	Bracket	1	610984-
16		08193-20010	Clip	1	610984-
17		01435-01016	Bolt	1	610984-
18		6245-81-6360	V-belt	1	610984-
19		14X-911-7112	Compressor Assembly, For Air Conditioner	1	610984-
20		6245-81-6810	Bracket	1	610984-
21		01010-80875	Bolt	3	610984-
22		01643-30823	Washer	3	610984-
23		01010-80890	Bolt	1	610984-
24		01643-30823	Washer	1	610984-
25		01010-81225	Bolt	2	610984-
26		01643-31232	Washer	2	610984-
27		01010-81230	Bolt	2	610984-
28		01643-31232	Washer	2	610984-
29		01010-81290	Bolt	1	610984-
30		01643-31232	Washer	1	610984-
31		6212-61-3980	Bolt, Adjusting	1	610984-

Printed By : Dwi Iswanto (airafather6107170)

Index	Code	Part Number	Description	Qty	Serial No.
32		01580-11210	Nut	1	610984-
33		6240-81-4431	Clip	1	610984-
34		01435-01035	Bolt	1	610984-
35		01643-31032	Washer	1	610984-
36		6218-81-8480	Band	1	610984-
37		6218-81-8430	Clamp	1	610984-
38		08193-20010	Clip	1	610984-

Printed By : Dwi Iswanto (airafather6107170)

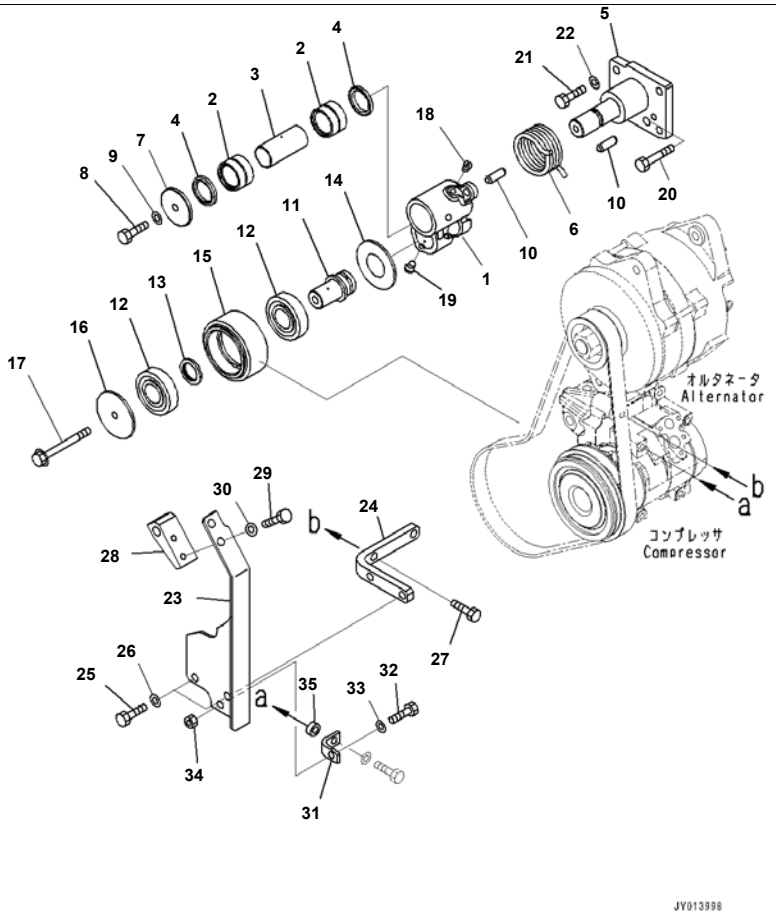

Index	Code	Part Number	Description	Qty	Serial No.
		6245-81-6902	Tension Pulley Assembly	1	610984-
1		6245-81-6912	· Bracket	1	610984-
2		6162-64-3910	· Bearing, Needle	2	610984-
3		6245-81-6840	· Race,Inner	1	610984-
4		6162-64-3930	· Seal, Dust	2	610984-
5		6245-81-6941	· Shaft	1	610984-
6		6245-81-6950	· Spring, Tension	1	610984-
7		6245-81-6961	· Plate	1	610984-
8		01010-81020	· Bolt	1	610984-
9		01643-31032	· Washer	1	610984-
10		04022-12035	· Pin, Dowel	2	610984-
11		6245-81-6971	· Shaft	1	610984-
12		06301-06306	· Bearing, Ball, Ball	2	610984-
13		6245-81-6981	· Spacer	1	610984-
14		6245-81-6990	· Plate	1	610984-
15		6245-81-6820	· Pulley, Tension, Tension	1	610984-
16		6245-81-6830	· Plate	1	610984-
17		01435-01020	· Bolt	1	610984-
18		07043-00108	· Plug, Taper	3	610984-
19		07029-00000	· Valve, Relief	1	610984-
20		01010-81090	· Bolt	1	610984-
21		01010-81030	Bolt	4	610984-
22		01643-31032	Washer	4	610984-
23		6245-81-6521	Bracket	1	610984-
24		6245-81-6561	Bracket	1	610984-
25		01010-81025	Bolt	2	610984-
26		01643-31032	Washer	2	610984-
27		01435-01025	Bolt	1	610984-
28		6245-81-6290	Block	1	610984-
29		01010-81020	Bolt	2	610984-
30		01643-31032	Washer	2	610984-

Printed By : Dwi Iswanto (airafather6107170)

Index	Code	Part Number	Description	Qty	Serial No.
31		6215-51-8180	Bracket	1	610984-
32		01010-81025	Bolt	1	610984-
33		01643-31032	Washer	1	610984-
34		01584-01008	Nut	1	610984-
35		21T-72-14930	Boss	1	610984-

Printed By : Dwi Iswanto (airafather6107170)

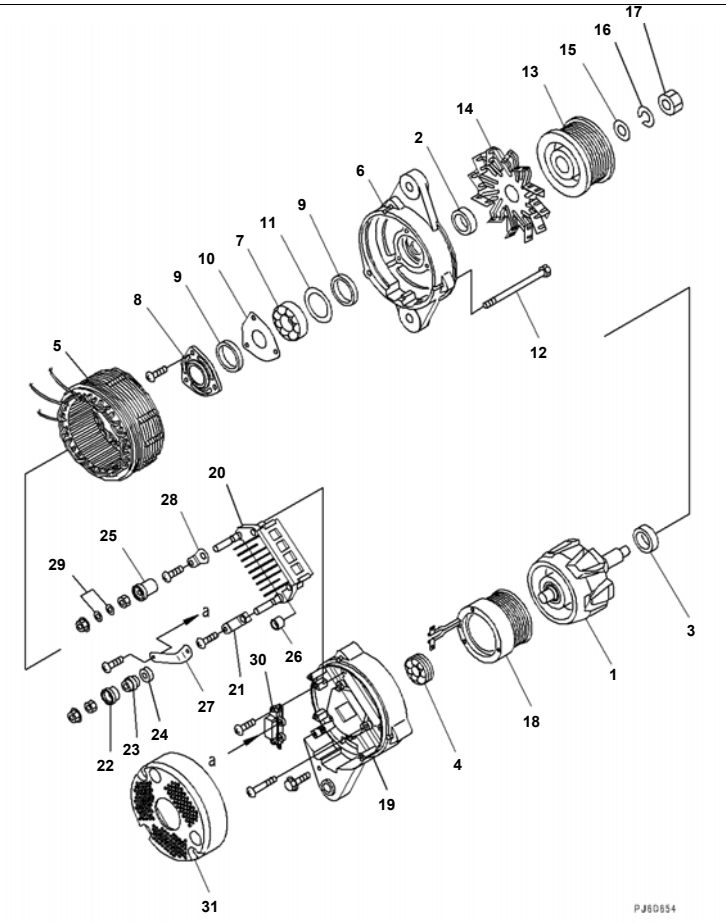

Index	Code	Part Number	Description	Qty	Serial No.
		600-861-6110	Alternator, 60Amp.	1	610984-
1		KD0-35100-0300	· Rotor Assembly	1	610984-
2		KD1-33923-0790	· Collar	1	610984-
3		KD1-35923-0160	· Collar	1	610984-
4		KD0-09201-0980	· Bearing, Ball	1	610984-
5		KD0-35200-0460	· Stator Assembly	1	610984-
6		KD0-35300-0350	· Bracket Assembly	1	610984-
7		KD0-09201-1140	· · Bearing, Ball	1	610984-
8		KD0-35926-0070	· · Retainer	1	610984-
9		KD0-35951-0060	· · Packing	1	610984-
10		KD0-35926-0090	· · Retainer	2	610984-
11		KD1-33926-0730	· · Retainer	1	610984-
12		KD0-0275-06802	· Bolt	1	610984-
13		KD0-35411-0640	· Pulley	3	610984-
14		KD0-35421-0240	· Fan	1	610984-
15		KD1-0330-16012	· Washer	1	610984-
16		KD1-0335-16002	· Washer, Spring	1	610984-
17		KD0-0280-16022	· Nut	1	610984-
18		KD0-35120-0290	· Coil, Field	1	610984-
		KD0-35700-0950	· Bracket Assembly	1	610984-
19		KD0-35710-1150	· · Bracket,Rear	1	610984-
20		KD0-35730-0700	· · Rectifier Assembly	1	610984-
21		KD0-09170-2501	· · Condenser	1	610984-
22		KD0-35943-0150	· · Bushing, Insulate, Insulate	1	610984-
23		KD0-35923-0130	· · Collar	1	610984-
24		KD0-35943-0160	· · Bushing, Insulate, Insulate	1	610984-
25		KD0-35943-0140	· · Bushing, Insulate, Insulate	1	610984-
26		KD0-35943-0170	· · Bushing, Insulate, Insulate	2	610984-
27		KD0-35784-0210	· · Bar, Connect, Connect	1	610984-
28		KD0-35784-0290	· · Bar, Plate, Plate	1	610984-
29		KD0-09057-0220	· · Washer	2	610984-

Printed By : Dwi Iswanto (airafather6107170)

Index	Code	Part Number	Description	Qty	Serial No.
30		KD7-35719-0211	・・ Regulator Assembly	1	610984-
31		KD0-35761-0250	・ Cover	1	610984-

Printed By : Dwi Iswanto (airafather6107170)

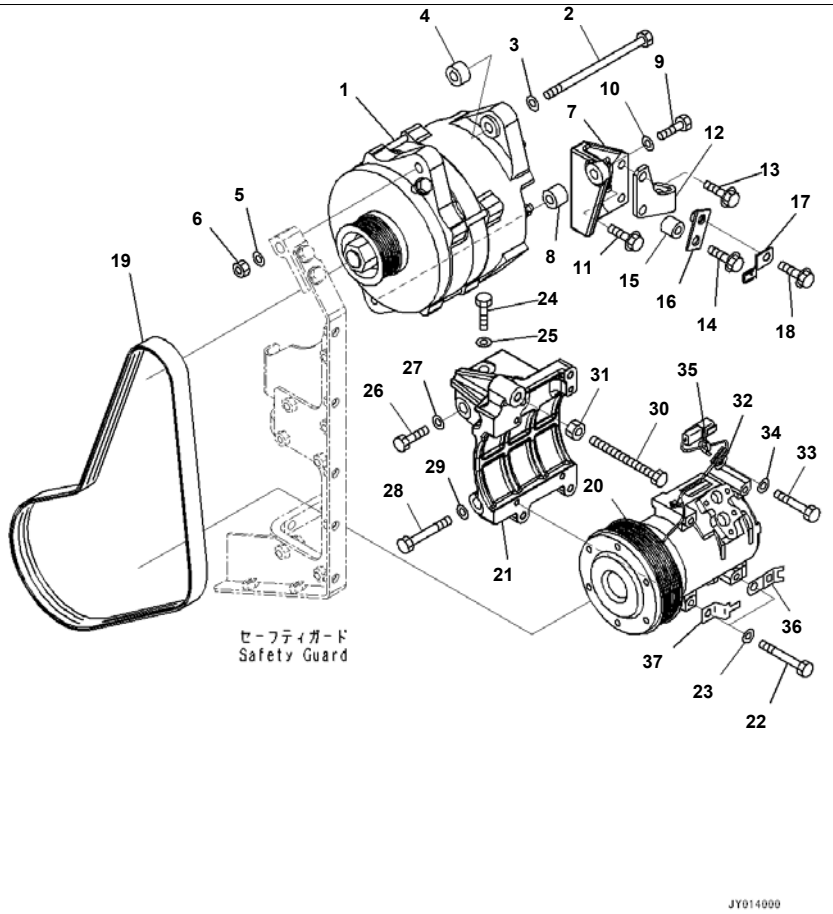

Index	Code	Part Number	Description	Qty	Serial No.
1		600-861-6110	Alternator, 60Amp.	1	610984-
2		6732-81-6840	Bolt	1	610984-
3		01640-21323	Washer	1	610984-
4		6245-81-6190	Spacer	1	610984-
5		01643-31232	Washer	1	610984-
6		01582-11210	Nut	1	610984-
7		6245-81-6621	Bracket	1	610984-
8		6127-92-1250	Spacer	1	610984-
9		01050-51255	Bolt	1	610984-
10		01643-31232	Washer	1	610984-
11		01435-01025	Bolt	1	610984-
12		6245-81-6650	Bracket	1	610984-
13		01435-01030	Bolt	1	610984-
14		01435-01050	Bolt	1	610984-
15		6152-11-4970	Spacer	1	610984-
16		426-01-11310	Bracket	1	610984-
17		08193-20010	Clip	1	610984-
18		01435-01016	Bolt	1	610984-
19		6245-81-6370	Belt	1	610984-
20		14X-911-7112	Compressor Assembly	1	610984-
21		6245-81-6810	Bracket	1	610984-
22		01010-80875	Bolt	4	610984-
23		01643-30823	Washer	4	610984-
24		01010-81225	Bolt	2	610984-
25		01643-31232	Washer	2	610984-
26		01010-81230	Bolt	2	610984-
27		01643-31232	Washer	2	610984-
28		01010-81290	Bolt	1	610984-
29		01643-31232	Washer	1	610984-
30		6212-61-3980	Bolt, Adjusting	1	610984-
31		01580-11210	Nut	1	610984-

Printed By : Dwi Iswanto (airafather6107170)

Index	Code	Part Number	Description	Qty	Serial No.
32		6240-81-4431	Clip	1	610984-
33		01435-01035	Bolt	1	610984-
34		01643-31032	Washer	1	610984-
35		6218-81-8480	Band	1	610984-
36		6218-81-8430	Clamp	1	610984-
37		08193-20010	Clip	1	610984-

Printed By : Dwi Iswanto (airafather6107170)

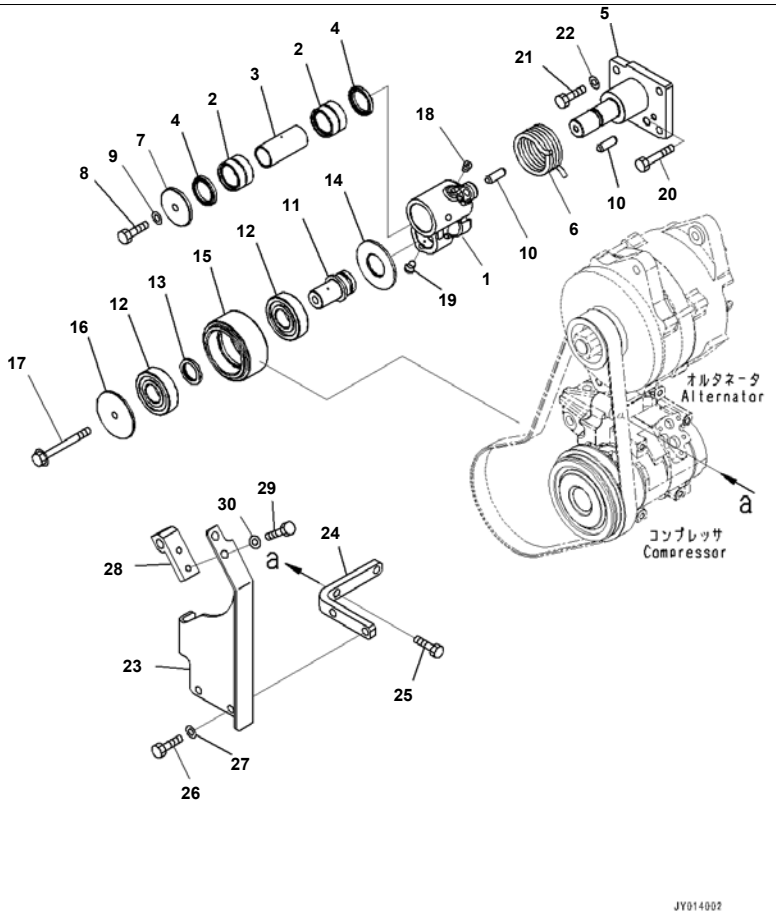

Index	Code	Part Number	Description	Qty	Serial No.
		6245-81-6902	Tension Pulley Assembly	1	610984-
1		6245-81-6912	· Bracket	1	610984-
2		6162-64-3910	· Bearing, Needle	2	610984-
3		6245-81-6840	· Race,Inner	1	610984-
4		6162-64-3930	· Seal, Dust	2	610984-
5		6245-81-6941	· Shaft	1	610984-
6		6245-81-6950	· Spring, Tension	1	610984-
7		6245-81-6961	· Plate	1	610984-
8		01010-81020	· Bolt	1	610984-
9		01643-31032	· Washer	1	610984-
10		04022-12035	· Pin, Dowel	2	610984-
11		6245-81-6971	· Shaft	1	610984-
12		06301-06306	· Bearing, Ball, Ball	2	610984-
13		6245-81-6981	· Spacer	1	610984-
14		6245-81-6990	· Plate	1	610984-
15		6245-81-6820	· Pulley, Tension, Tension	1	610984-
16		6245-81-6830	· Plate	1	610984-
17		01435-01020	· Bolt	1	610984-
18		07043-00108	· Plug, Taper	3	610984-
19		07029-00000	· Valve, Relief	1	610984-
20		01010-81090	· Bolt	1	610984-
21		01010-81030	Bolt	4	610984-
22		01643-31032	Washer	4	610984-
23		6245-81-6531	Bracket	1	610984-
24		6245-81-6561	Bracket	1	610984-
25		01435-01025	Bolt	1	610984-
26		01010-81025	Bolt	2	610984-
27		01643-31032	Washer	2	610984-
28		6245-81-6321	Block	1	610984-
29		01010-81020	Bolt	2	610984-
30		01643-31032	Washer	2	610984-

Printed By : Dwi Iswanto (airafather6107170)

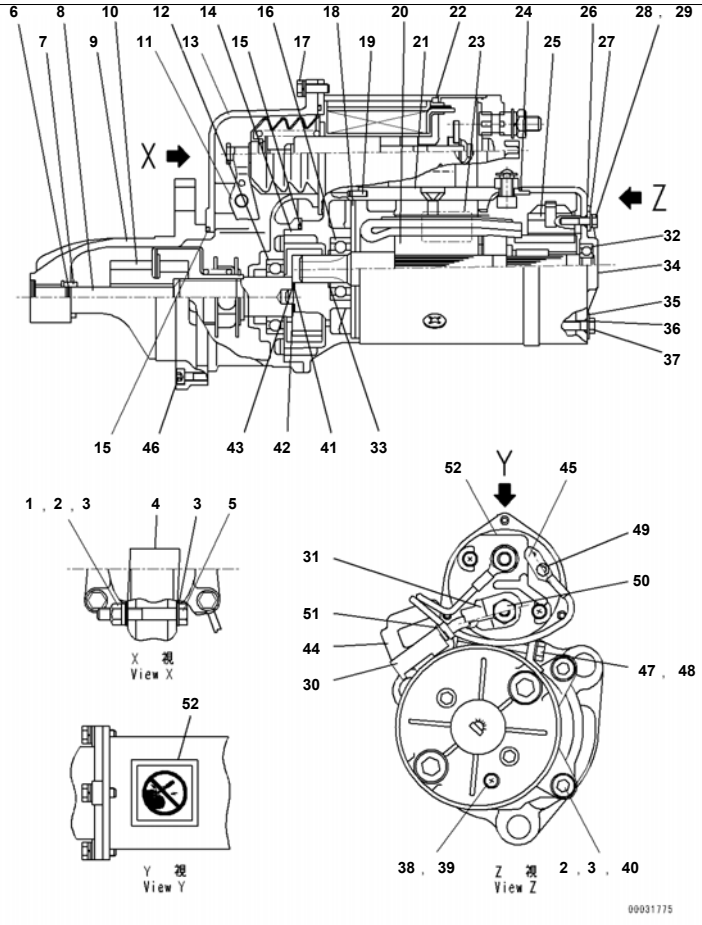

Index	Code	Part Number	Description	Qty	Serial No.
		600-813-7152	Starting Motor, 7.5kw	2	610984-
1		KD1-09279-0090	· Nut	1	610984-
2		KD1-0335-08002	· Washer, Spring	4	610984-
3		KD1-0330-08022	· Washer	5	610984-
4		KD1-0345-08001	· Washer, Seal	2	610984-
5		KD0-23303-0020	· Pin, Lever	1	610984-
6		KD1-23914-0020	· Ring	1	610984-
7		KD1-23181-0020	· Stopper	1	610984-
8		KD1-23111-0160	· Shaft	1	610984-
9		KD0-23300-0270	· Bracket Assembly,Front	1	610984-
10		KD1-23500-0160	· Clutch Assembly, Over Running	1	610984-
11		KD1-23320-0190	· Lever Assembly	1	610984-
12		KD1-0456-60067	· Bearing, Ball	1	610984-
13		KD0-23600-0270	· Bracket Assembly,Center	1	610984-
14		KD1-23611-0080	· Bracket,Center	1	610984-
15		KD1-09211-0981	· O-ring	2	610984-
16		KD1-0456-62047	· Bearing, Ball	1	610984-
17		KD0-0274-06202	· Bolt	3	610984-
18		KD1-23951-0051	· Packing	1	610984-
19		KD1-0400-30100	· Pin, Straight	1	610984-
20		KD0-23100-0231	· Armature Assembly	1	610984-
21		KD0-23200-0155	· Yoke Assembly	1	610984-
22		KD0-47100-4830	· Switch Assembly, Magnetic	1	610984-
23		KD0-09271-3620	· Name Plate	1	610984-
24		KD1-09211-1120	· O-ring	1	610984-
25		KD0-23750-0390	· Holder Assembly, Brush	1	610984-
26		KD1-0505-00501	· O-ring	2	610984-
27		KD1-47921-1000	· Washer	2	610984-
28		KD0-09001-4181	· Bolt	2	610984-
29		KD1-0335-05002	· Washer, Spring	2	610984-
30		KD0-47761-2691	· Cover	1	610984-

Printed By : Dwi Iswanto (airafather6107170)

Index	Code	Part Number	Description	Qty	Serial No.
31		KD0-47761-2681	· Cover	1	610984-
32		KD1-0456-62007	· Bearing, Ball	1	610984-
33		KD0-23921-0230	· Washer	1	610984-
34		KD0-23711-0221	· Bracket	1	610984-
35		KD1-47921-0790	· Washer	2	610984-
36		KD1-0505-00601	· O-ring	2	610984-
37		KD0-09001-4380	· Bolt	2	610984-
38		KD0-0020-05062	· Screw	1	610984-
39		KD1-0345-05001	· Washer, Seal	1	610984-
40		KD1-0240-08405	· Bolt	3	610984-
41		KD1-23941-0040	· Washer, Insulate, Insulate	1	610984-
42		KD1-23921-0140	· Washer	1	610984-
43		KD1-23921-0130	· Washer	1	610984-
44		KD0-25000-8521	· Switch Assembly	1	610984-
45		KD0-47761-2671	· Cover	1	610984-
46		KD1-0240-06305	· Bolt	6	610984-
47		KD0-0270-06602	· Bolt	1	610984-
48		KD1-47927-0940	· Holder	1	610984-
49		KD0-09006-0660	· Nut	1	610984-
50		KD0-09006-0670	· Nut	1	610984-
51		KD1-09257-0050	· Band	1	610984-
52		KD0-09275-1430	· Plate, Caution	1	610984-

Printed By : Dwi Iswanto (airafather6107170)

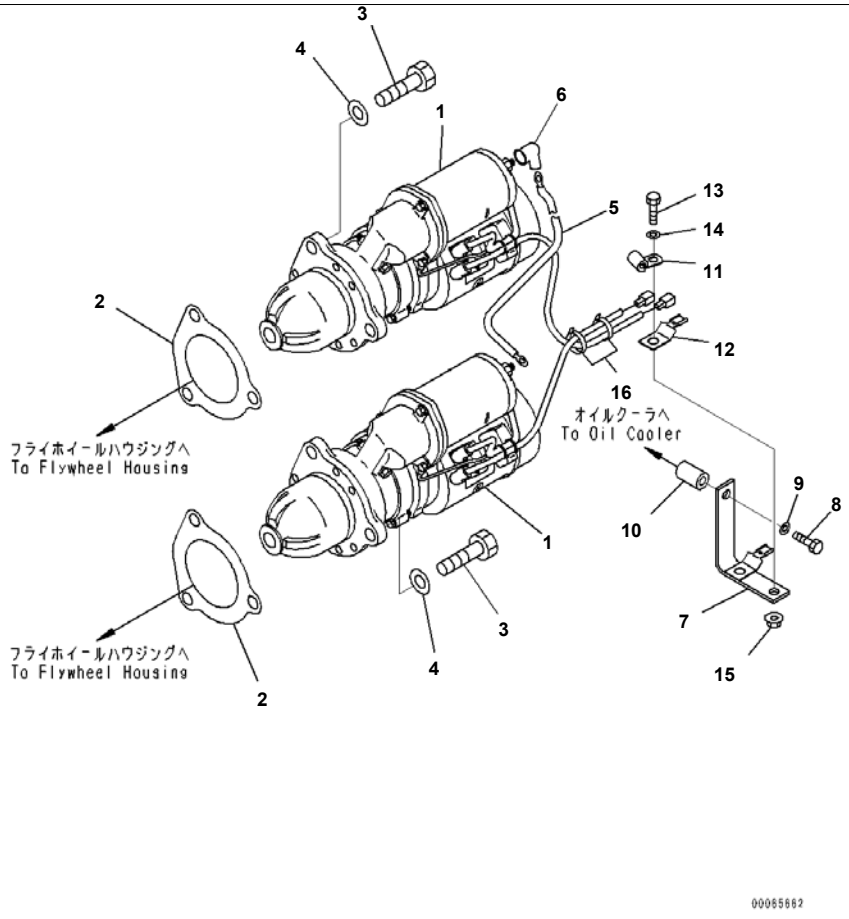

SAA6D170E-5EE S/N 610984-UP (For D375A-6R)
Starter Motor, For 7.5KW (#610984-)

Index	Code	Part Number	Description	Qty	Serial No.
1		600-813-7152	Starting Motor, 7.5kw	2	610984-
2		6221-81-6810	Gasket	2	610984-
3		01010-81645	Bolt	6	610984-
4		01643-31645	Washer	6	610984-
5		08028-73035	Cable, Ground	1	610984-
6		154-06-13130	Cap, Terminal, Terminal	1	610984-
7		6245-81-6120	Bracket	1	610984-
8		01010-81070	Bolt	1	610984-
9		01643-31032	Washer	1	610984-
10		6150-81-6920	Spacer	1	610984-
11		600-051-2080	Clip	1	610984-
12		08193-20010	Clip	1	610984-
13		01010-81025	Bolt	1	610984-
14		01643-31032	Washer	1	610984-
15		01584-01008	Nut	1	610984-
16		6218-81-8470	Band	2	610984-

Printed By : Dwi Iswanto (airafather6107170)

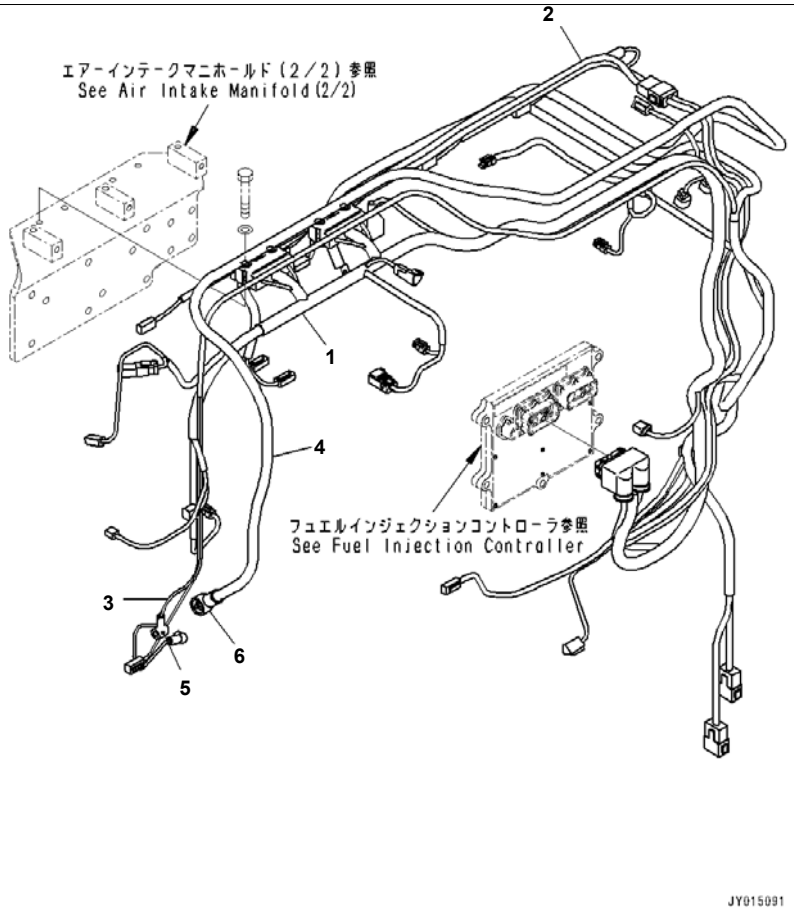

Reference:A6810-001001 Page:F005001

SAA6D170E-5EE S/N 610984-UP (For D375A-6R)
Wiring Harness (#610984-)

Index	Code	Part Number	Description	Qty	Serial No.
1		6245-81-5460	Wiring Harness	1	610984-
2		6245-81-5370	Wiring Harness	1	610984-
3		6245-81-9490	Wiring Harness	1	610984-
4		6245-81-9320	Wire	1	610984-
5		6162-83-4970	Cap	1	610984-
6		203-06-71420	Cap	1	610984-

Printed By : Dwi Iswanto (airafather6107170)

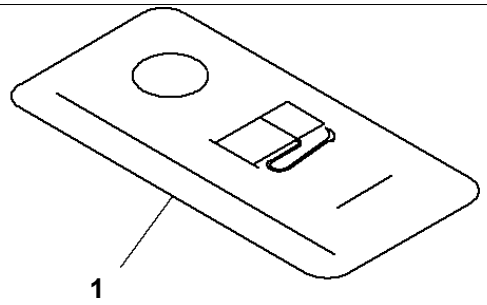

00057910

Index	Code	Part Number	Description	Qty	Serial No.
1		6245-81-9410	Plate	1	610984-

Printed By : Dwi Iswanto (airafather6107170)

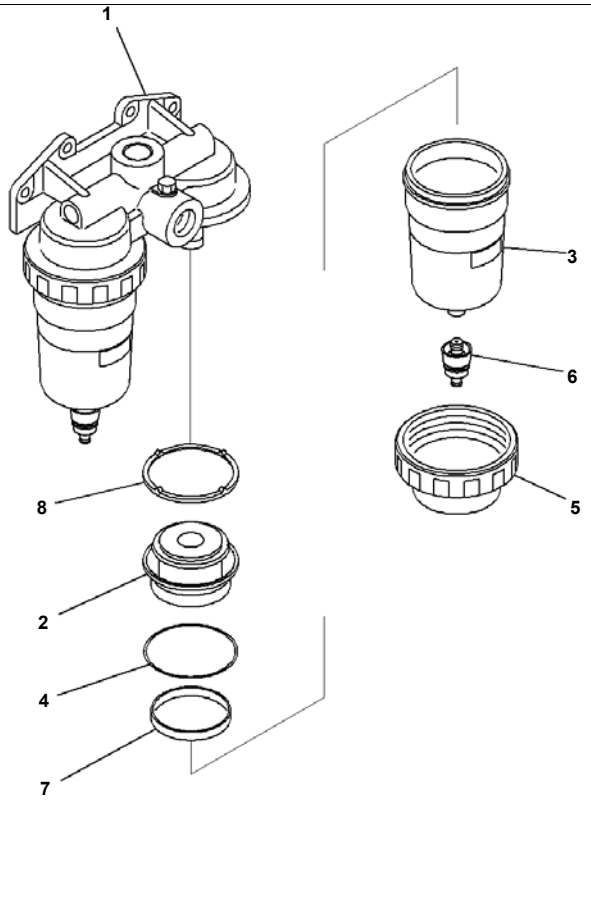

Index	Code	Part Number	Description	Qty	Serial No.
		600-311-9330	Water Separator	1	610984-
1		600-311-9410	· Head	1	610984-
2		600-311-9370	· Screen	2	610984-
3		600-311-9350	· Case	2	610984-
4		600-311-9360	· O-ring	2	610984-
5		600-311-9380	· Ring	2	610984-
6		600-311-9480	· Plug	2	610984-
7		600-311-9390	· Ring	2	610984-
8		600-311-9460	· Gasket	2	610984-

Printed By : Dwi Iswanto (airafather6107170)

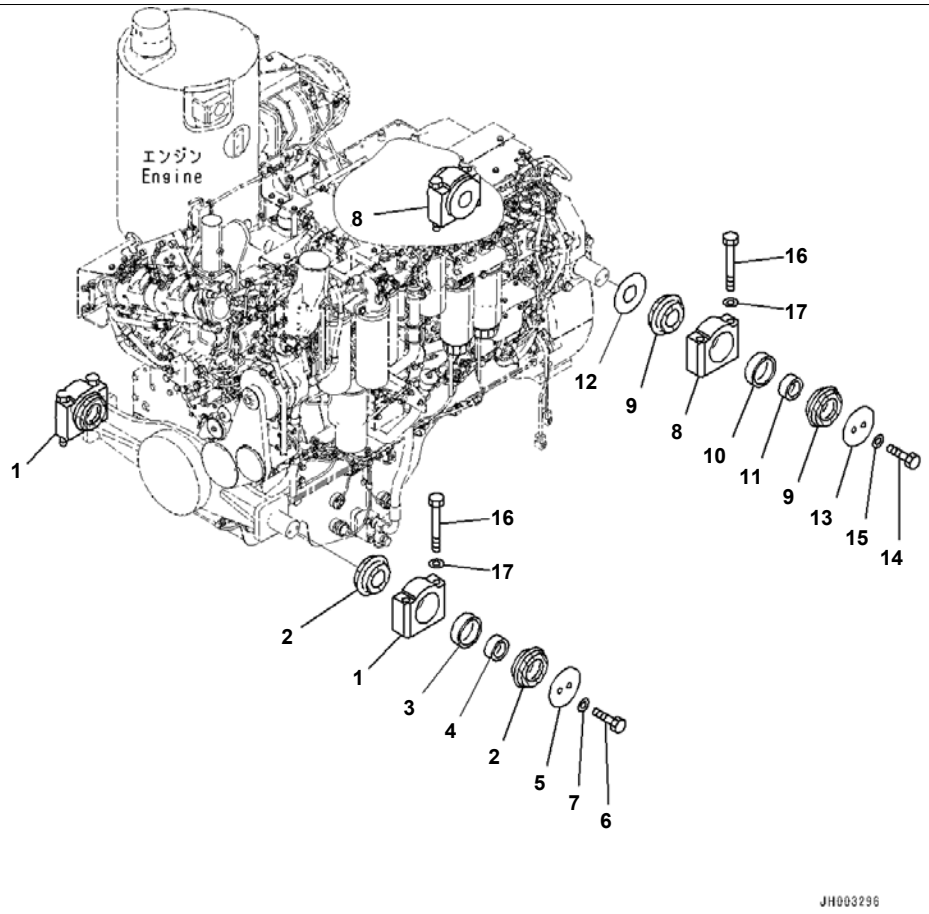

D375A-6R S/N 65001-UP
Engine Mounts (#65001-)

Index	Code	Part Number	Description	Qty	Serial No.
1		17M-01-22160	Cap	2	65001-
2		195-01-32110	Cushion	4	65001-
3		195-01-32120	Cushion	2	65001-
4		195-01-32130	Spacer	2	65001-
5		17M-01-22180	Plate	2	65001-
6		01010-81430	Bolt	4	65001-
7		01643-31445	Washer	4	65001-
8		17M-01-22160	Cap	2	65001-
9		195-01-32110	Cushion	4	65001-
10		195-01-32120	Cushion	2	65001-
11		195-01-32130	Spacer	2	65001-
12		17M-01-22170	Spacer	2	65001-
13		17M-01-22180	Plate	2	65001-
14		01010-81430	Bolt	4	65001-
15		01643-31445	Washer	4	65001-
16		01011-82485	Bolt	8	65001-
17		01643-32460	Washer	8	65001-

Printed By : Dwi Iswanto (airafather6107170)

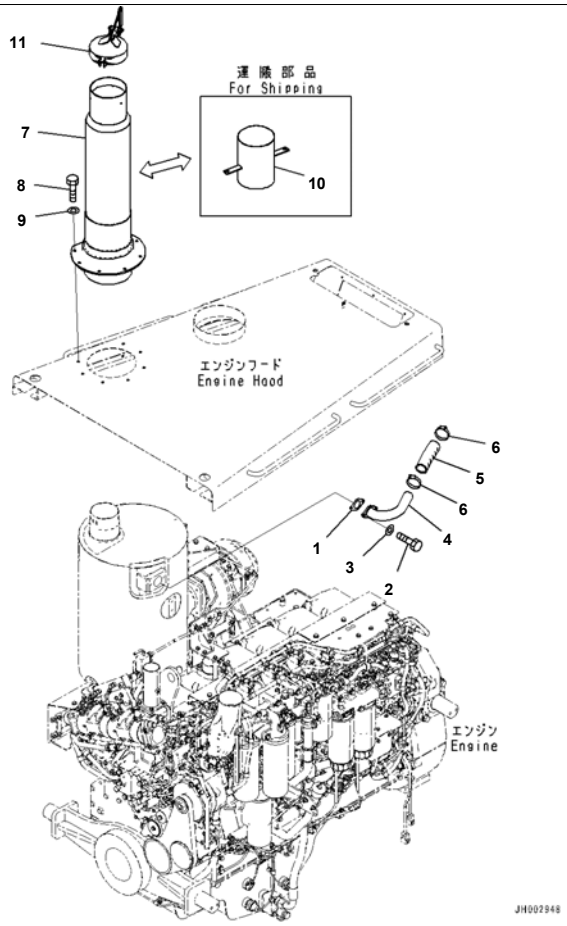

Reference:B0300-009001 Page:B002001

D375A-6R S/N 65001-UP
Exhaust Muffler, With Exhaust Pipe, Rain Cap, VHMS (#65001-)

Index	Code	Part Number	Description	Qty	Serial No.
1		6162-13-5611	Gasket	1	65001-
2		01010-E1030	Bolt	2	65001-
3		01643-31032	Washer	2	65001-
4		195-01-41121	Tube	1	65001-
5		195-01-41130	Hose	1	65001-
6		07289-00070	Clamp	2	65001-
7		195-01-42110	Pipe	1	65001-
8		195-54-43210	Bolt	7	65001-
9		01643-31232	Washer	7	65001-
10		195-01-41190	Duct, For Shipping	1	65001-
11		6162-14-5640	Rain Cap	1	65001-

Reference:B0300-009001 Page:B002001

Printed By : Dwi Iswanto (airafather6107170)

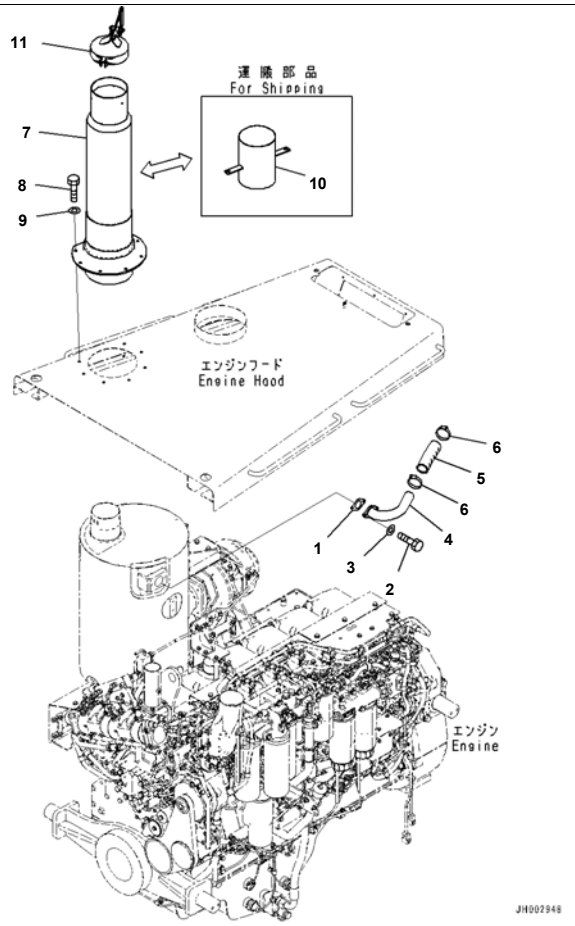

Reference:B0300-010001 Page:B003001

D375A-6R S/N 65001-UP
Exhaust Muffler, With Exhaust Pipe, Rain Cap (#65001-)

Index	Code	Part Number	Description	Qty	Serial No.
1		6162-13-5611	Gasket	1	65001-
2		01010-E1030	Bolt	2	65001-
3		01643-31032	Washer	2	65001-
4		195-01-41121	Tube	1	65001-
5		195-01-41130	Hose	1	65001-
6		07289-00070	Clamp	2	65001-
7		195-01-42110	Pipe	1	65001-
8		195-54-43210	Bolt	7	65001-
9		01643-31232	Washer	7	65001-
10		195-01-41190	Duct, For Shipping	1	65001-
11		6162-14-5640	Rain Cap	1	65001-

Printed By : Dwi Iswanto (airafather6107170)

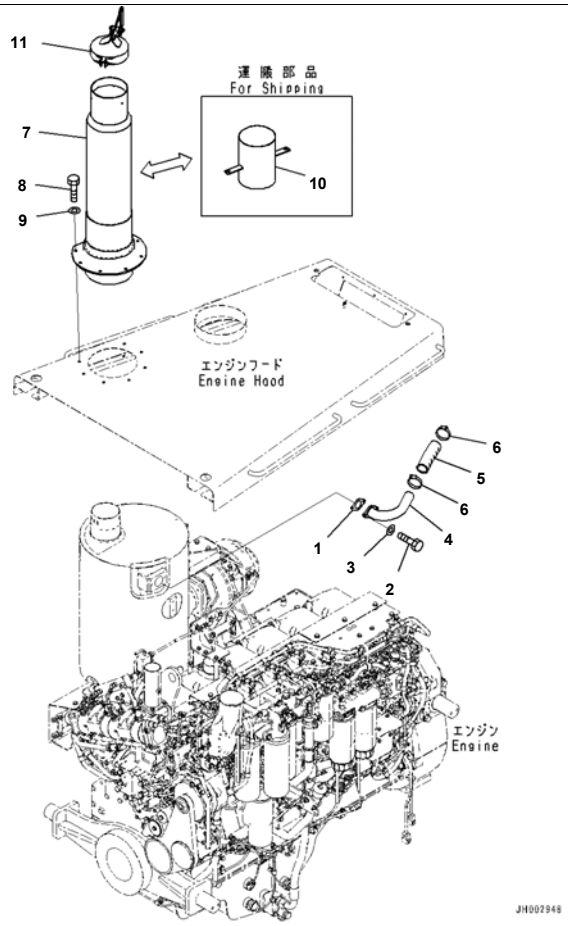

Reference:B0300-008001 Page:B004001

D375A-6R S/N 65001-UP
Exhaust Muffler, With Exhaust Pipe, Rain Cap, Preventive Maintenance Service Connectors (#65001-)

Index	Code	Part Number	Description	Qty	Serial No.
1		6162-13-5611	Gasket	1	65001-
2		01010-E1030	Bolt	2	65001-
3		01643-31032	Washer	2	65001-
4		195-01-41121	Tube	1	65001-
5		195-01-41130	Hose	1	65001-
6		07289-00070	Clamp	2	65001-
7		195-01-42110	Pipe	1	65001-
8		195-54-43210	Bolt	7	65001-
9		01643-31232	Washer	7	65001-
10		195-01-41190	Duct, For Shipping	1	65001-
11		6162-14-5640	Rain Cap	1	65001-

Printed By : Dwi Iswanto (airafather6107170)

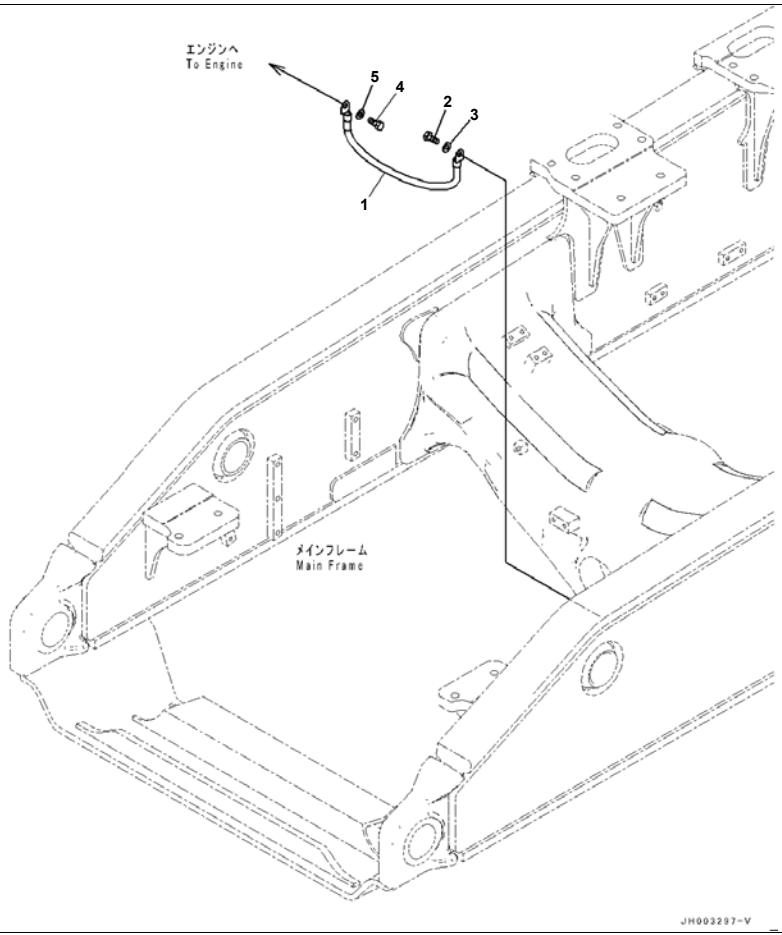

D375A-6R S/N 65001-UP

Engine Wiring Harness, Wiring Harness, Part No. And Manufacturing Date Code, Earth (#65001-)

Index	Code	Part Number	Description	Qty	Serial No.
1		175-06-51440	Wire	1	65001-
2		01010-81220	Bolt	1	65001-
3		01643-31232	Washer	1	65001-
4		01010-81020	Bolt	1	65001-
5		01643-31032	Washer	1	65001-

Printed By : Dwi Iswanto (airafather6107170)

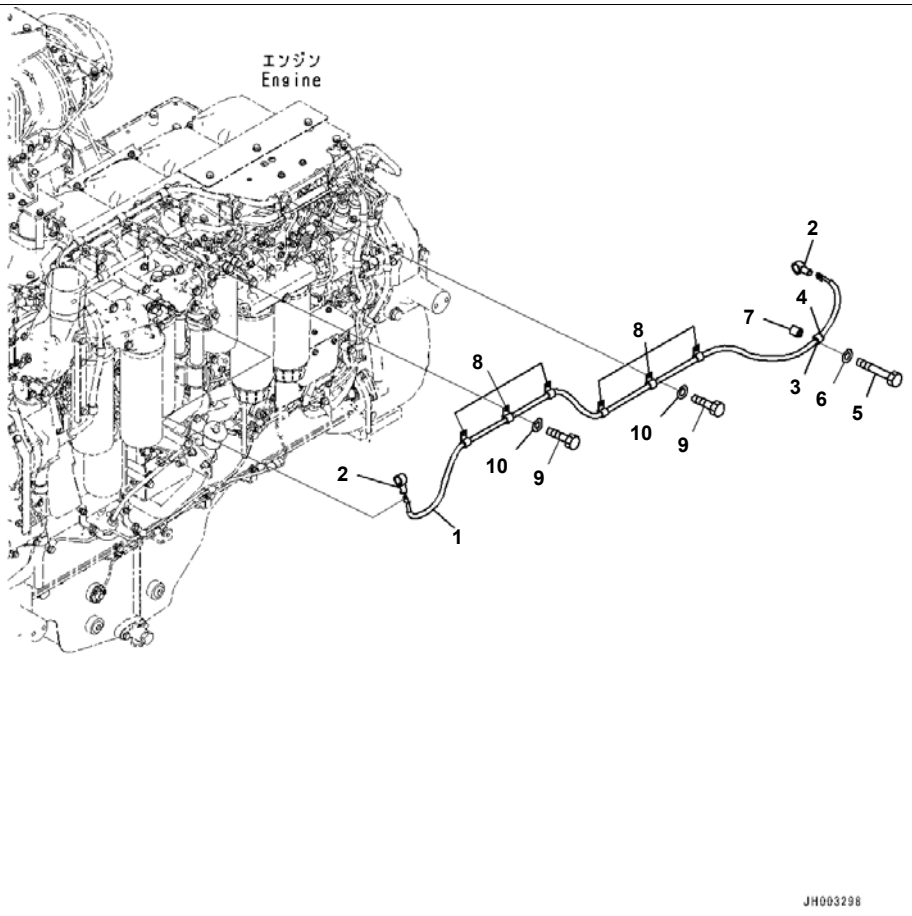

Engine Wiring Harness, Wiring Harness, Part No. And Manufacturing Date Code, Ribbon Heater (#65001-)

Index	Code	Part Number	Description	Qty	Serial No.
1		195-06-54730	Wiring Harness	1	65001-
2		08038-02027	Cap	2	65001-
3		04434-52112	Clip	1	65001-
4		07095-20314	Cushion	1	65001-
5		01010-81255	Bolt	1	65001-
6		01643-31232	Washer	1	65001-
7		195-33-11220	Spacer	1	65001-
8		04434-51410	Clip	6	65001-
9		01010-81020	Bolt	6	65001-
10		01643-31032	Washer	6	65001-

Printed By : Dwi Iswanto (airafather6107170)

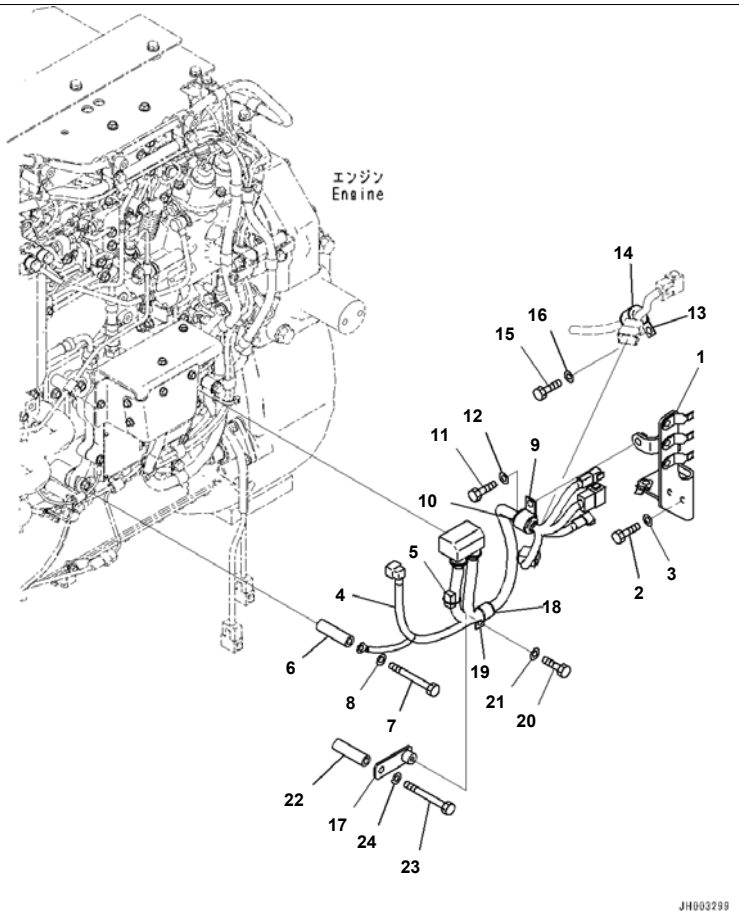

Reference:B0500-001003 Page:B005003

D375A-6R S/N 65001-UP

Engine Wiring Harness, Wiring Harness, Part No. And Manufacturing Date Code, Engine Main Harness (#65001-)

Index	Code	Part Number	Description	Qty	Serial No.
1		195-06-71831	Bracket	1	65001-
2		01010-81225	Bolt	2	65001-
3		01643-31232	Washer	2	65001-
4		195-06-55621	Wiring Harness	1	65001-
5		19M-06-31720	· Resistor	1	65001-
6		195-01-16420	Collar	1	65001-
7		01011-81015	Bolt	1	65001-
8		01643-31032	Washer	1	65001-
9		04434-53412	Clip	1	65001-
10		07095-20627	Cushion	1	65001-
11		01010-81225	Bolt	1	65001-
12		01643-31232	Washer	1	65001-
13		04434-52112	Clip	1	65001-
14		07095-20314	Cushion	1	65001-
15		01010-81225	Bolt	1	65001-
16		01643-31232	Washer	1	65001-
17		195-06-71851	Bracket	1	65001-
18		07095-20627	Cushion	1	65001-
19		04434-53411	Clip	1	65001-
20		01010-81025	Bolt	1	65001-
21		01643-31032	Washer	1	65001-
22		6130-12-4571	Spacer	1	65001-
23		01010-81095	Bolt	1	65001-
24		01643-31032	Washer	1	65001-

Printed By : Dwi Iswanto (airafather6107170)

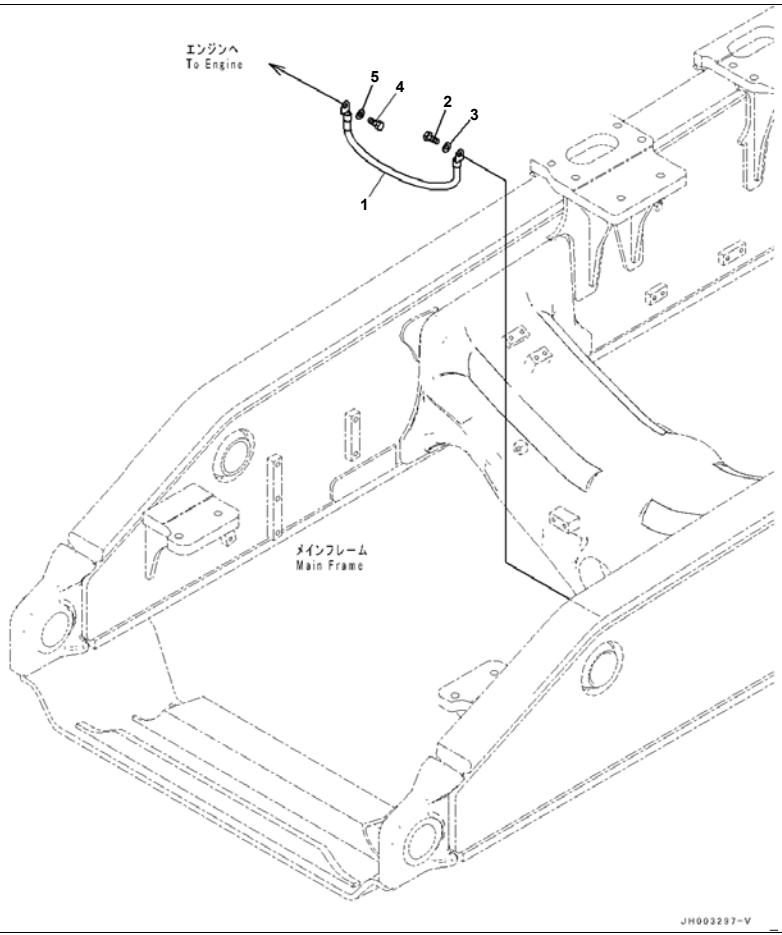

D375A-6R S/N 65001-UP

Engine Wiring Harness, Without Wiring Harness, Part No. And Manufacturing Date Code, Earth (#65001-)

Index	Code	Part Number	Description	Qty	Serial No.
1		175-06-51440	Wire	1	65001-
2		01010-81220	Bolt	1	65001-
3		01643-31232	Washer	1	65001-
4		01010-81020	Bolt	1	65001-
5		01643-31032	Washer	1	65001-

Printed By : Dwi Iswanto (airafather6107170)

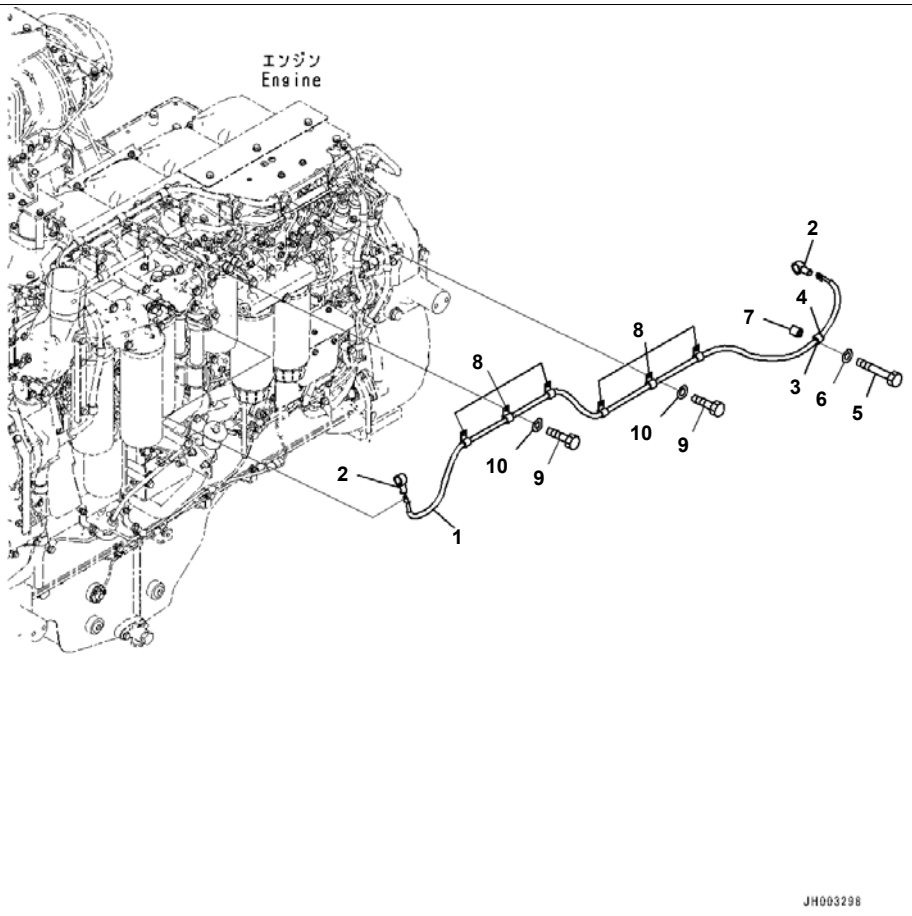

Engine Wiring Harness, Without Wiring Harness, Part No. And Manufacturing Date Code, Ribbon Heater (#65001-)

Index	Code	Part Number	Description	Qty	Serial No.
1		195-06-54730	Wiring Harness	1	65001-
2		08038-02027	Cap	2	65001-
3		04434-52112	Clip	1	65001-
4		07095-20314	Cushion	1	65001-
5		01010-81255	Bolt	1	65001-
6		01643-31232	Washer	1	65001-
7		195-33-11220	Spacer	1	65001-
8		04434-51410	Clip	6	65001-
9		01010-81020	Bolt	6	65001-
10		01643-31032	Washer	6	65001-

Printed By : Dwi Iswanto (airafather6107170)

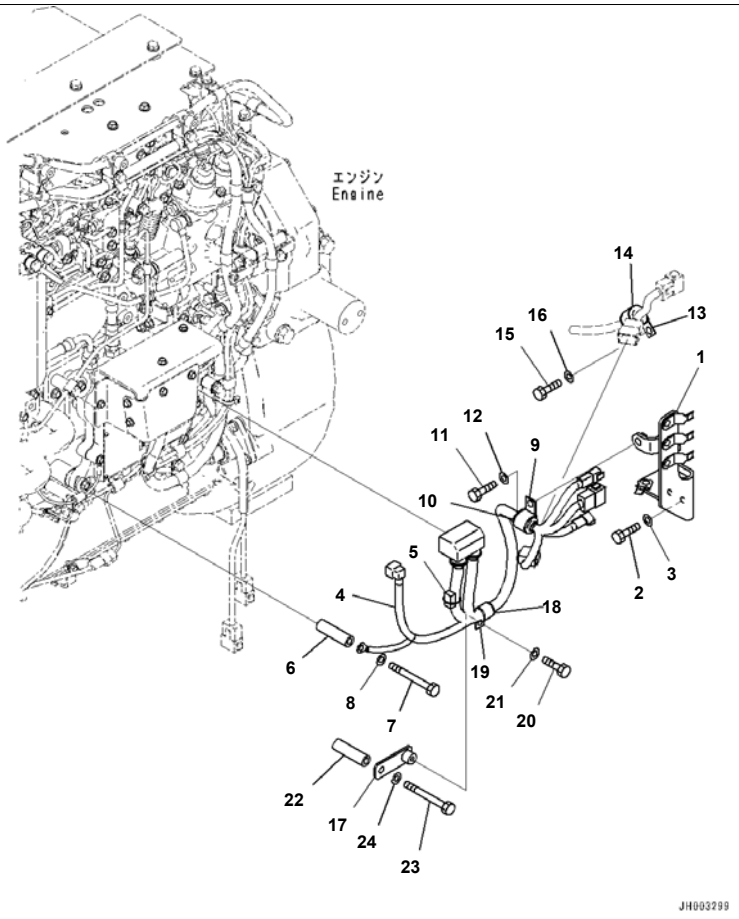

Reference:B0500-002003 Page:B006003

D375A-6R S/N 65001-UP

Engine Wiring Harness, Without Wiring Harness, Part No. And Manufacturing Date Code, Engine Main Harness (#65001-)

Index	Code	Part Number	Description	Qty	Serial No.
1		195-06-71831	Bracket	1	65001-
2		01010-81225	Bolt	2	65001-
3		01643-31232	Washer	2	65001-
4		195-06-57620	Wiring Harness	1	65001-
5		19M-06-31720	・ Resistor	1	65001-
6		195-01-16420	Collar	1	65001-
7		01011-81015	Bolt	1	65001-
8		01643-31032	Washer	1	65001-
9		04434-53412	Clip	1	65001-
10		07095-20627	Cushion	1	65001-
11		01010-81225	Bolt	1	65001-
12		01643-31232	Washer	1	65001-
13		04434-52112	Clip	1	65001-
14		07095-20314	Cushion	1	65001-
15		01010-81225	Bolt	1	65001-
16		01643-31232	Washer	1	65001-
17		195-06-71851	Bracket	1	65001-
18		07095-20627	Cushion	1	65001-
19		04434-53411	Clip	1	65001-
20		01010-81025	Bolt	1	65001-
21		01643-31032	Washer	1	65001-
22		6130-12-4571	Spacer	1	65001-
23		01010-81095	Bolt	1	65001-
24		01643-31032	Washer	1	65001-

Printed By : Dwi Iswanto (airafather6107170)

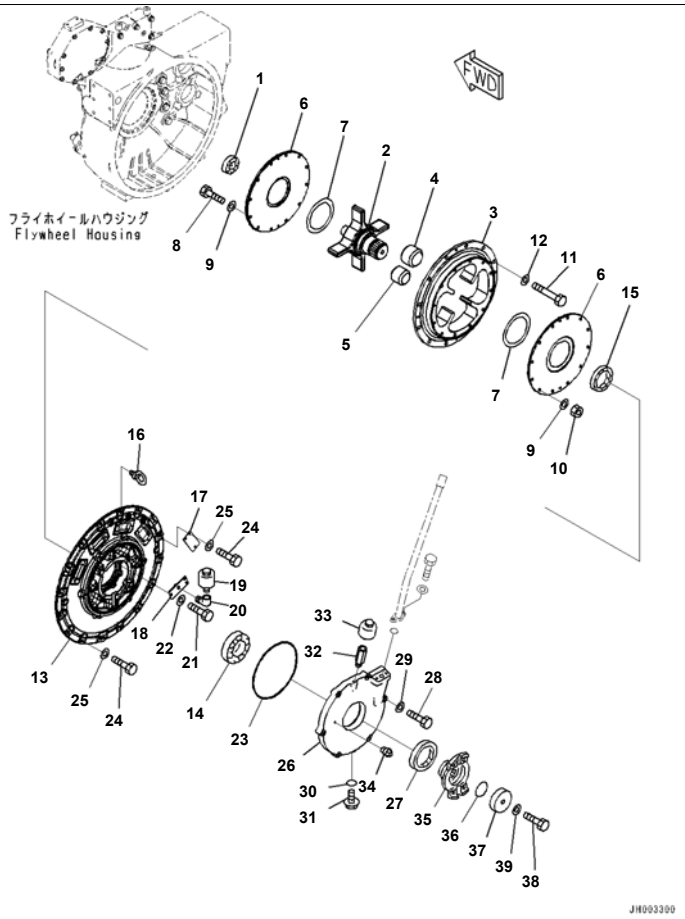

Index	Code	Part Number	Description	Qty	Serial No.
1		195-09-18450	Bearing	1	65001-
2		195-12-42121	Shaft	1	65001-
3		195-12-42171	Body	1	65001-
4		195-12-42311	Rubber	4	65001-
5		195-12-42321	Rubber	4	65001-
6		195-12-42140	Flange	2	65001-
7		198-12-11240	Seal	2	65001-
8		01011-81215	Bolt	12	65001-
9		01643-31232	Washer	24	65001-
10		01580-11210	Nut	12	65001-
11		01010-81670	Bolt	12	65001-
12		01643-31645	Washer	12	65001-
13		195-12-42111	Cover	1	65001-
14		06030-06317	Bearing	1	65001-
15		195-09-18520	Seal	1	65001-
16		04530-11018	Bolt, Eye	1	65001-
17		195-12-42411	Plate	3	65001-
18		195-12-42421	Plate	1	65001-
19		07030-00252	Breather	1	65001-
20		07323-30200	Elbow	1	65001-
21		01010-80816	Bolt	12	65001-
22		01643-30823	Washer	12	65001-
23		07000-15360	O-ring	1	65001-
24		01010-81235	Bolt	16	65001-
25		01643-31232	Washer	16	65001-
26		195-12-31122	Retainer	1	65001-
27		195-09-18520	Seal	1	65001-
28		01010-81255	Bolt	6	65001-
29		01643-31232	Washer	6	65001-
30		07002-12434	O-ring	1	65001-
31		07044-12412	Plug	1	65001-

Printed By : Dwi Iswanto (airafather6107170)

Index	Code	Part Number	Description	Qty	Serial No.
32		170-21-11190	Elbow	1	65001-
33		07030-00252	Breather	1	65001-
34		07042-30108	Plug	1	65001-
35		195-12-42151	Coupling	1	65001-
36		07000-15075	O-ring	1	65001-
37		195-12-11210	Holder	1	65001-
38		01011-81600	Bolt	1	65001-
39		01643-31645	Washer	1	65001-

Printed By : Dwi Iswanto (airafather6107170)

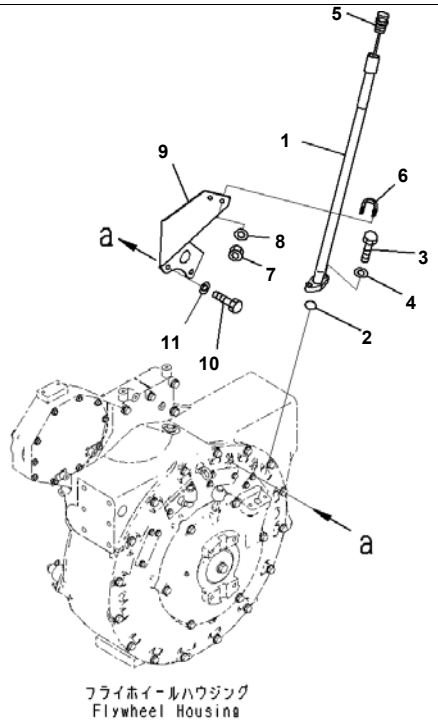

JH003301

Reference:B0600-001002 Page:B007002

D375A-6R S/N 65001-UP
Damper, Lubrication (#65001-)

Index	Code	Part Number	Description	Qty	Serial No.
1		195-12-42181	Tube	1	65001-
2		07000-13028	O-ring	1	65001-
3		01010-81040	Bolt	2	65001-
4		01643-31032	Washer	2	65001-
5		195-12-42241	Gauge	1	65001-
6		07283-32738	Clip, Pipe	1	65001-
7		01597-01009	Nut	2	65001-
8		01643-31032	Washer	2	65001-
9		195-12-42191	Bracket	1	65001-
10		01010-81240	Bolt	2	65001-
11		01643-31232	Washer	2	65001-

Printed By : Dwi Iswanto (airafather6107170)

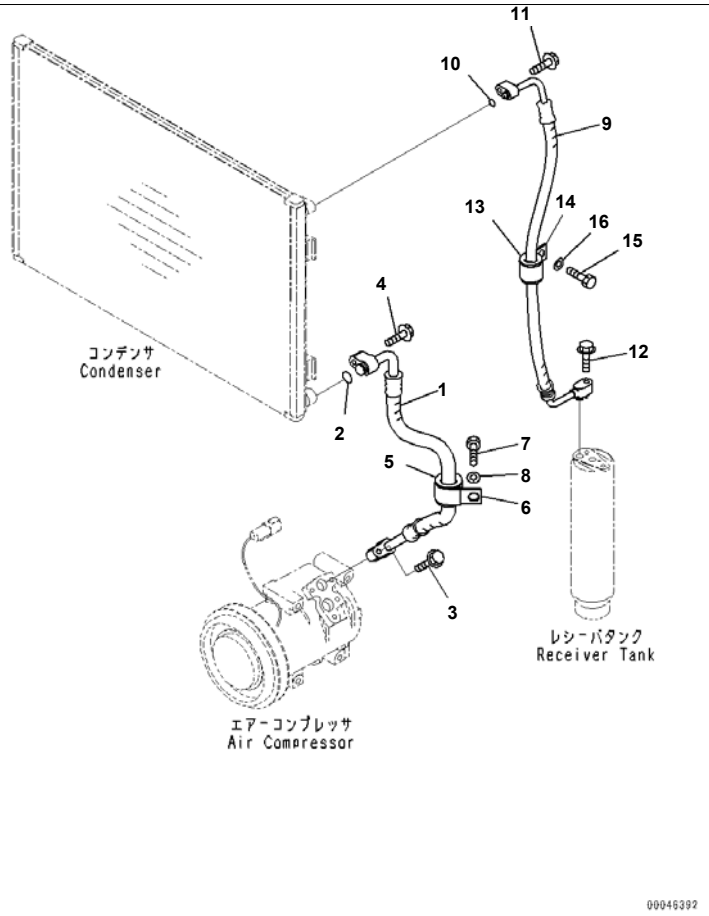

Index	Code	Part Number	Description	Qty	Serial No.
1		195-911-7911	Hose	1	65001-
2		20Y-979-3140	· O-ring	1	65001-
3		01435-00630	Bolt	1	65001-
4		01435-00630	Bolt	1	65001-
5		07095-20523	Cushion	1	65001-
6		04434-53212	Clip	1	65001-
7		01010-81225	Bolt	1	65001-
8		01643-31232	Washer	1	65001-
9		195-911-7921	Hose	1	65001-
10		20Y-979-3150	· O-ring	1	65001-
11		01435-00625	Bolt	1	65001-
12		01435-00625	Bolt	1	65001-
13		07095-20318	Cushion	1	65001-
14		04434-52512	Clip	1	65001-
15		01010-81225	Bolt	1	65001-
16		01643-31232	Washer	1	65001-

Printed By : Dwi Iswanto (airafather6107170)

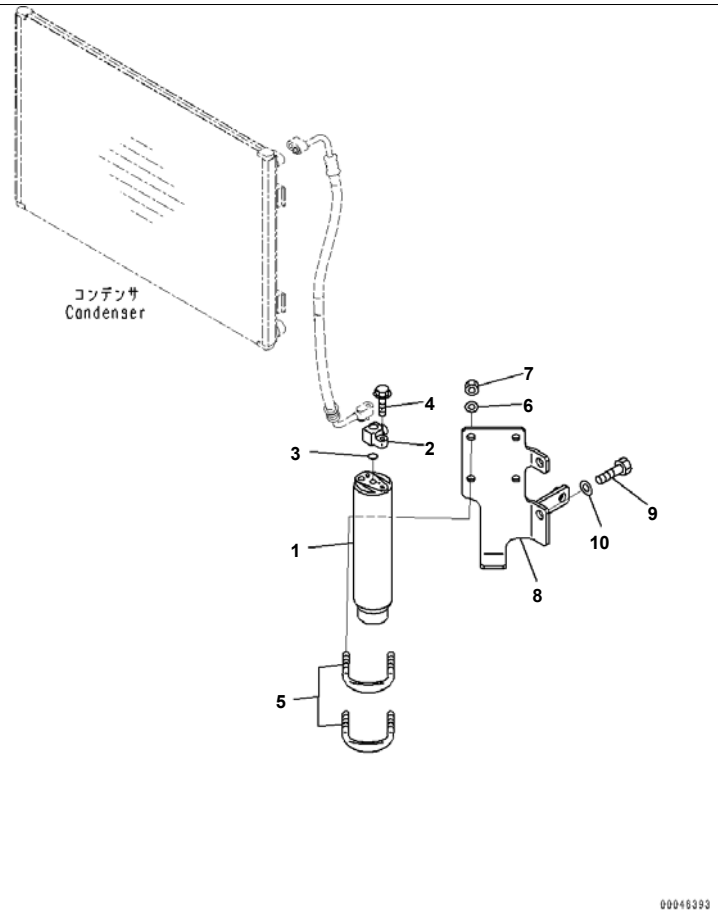

Reference:B0710-001002 Page:B008002

D375A-6R S/N 65001-UP
Air Conditioner Compressor, Air Conditioner, Large Cab, Receiver Tank (#65001-)

Index	Code	Part Number	Description	Qty	Serial No.
1		20Y-979-3120	Tank	1	65001-
2		17A-911-1671	Joint	1	65001-
3		20Y-979-3150	· O-ring	1	65001-
4		01435-00625	Bolt	1	65001-
5		07283-36155	Clip, Pipe	2	65001-
6		01643-31032	Washer	4	65001-
7		01597-01009	Nut	4	65001-
8		195-911-7971	Bracket	1	65001-
9		01010-81225	Bolt	2	65001-
10		01643-31232	Washer	2	65001-

Printed By : Dwi Iswanto (airafather6107170)

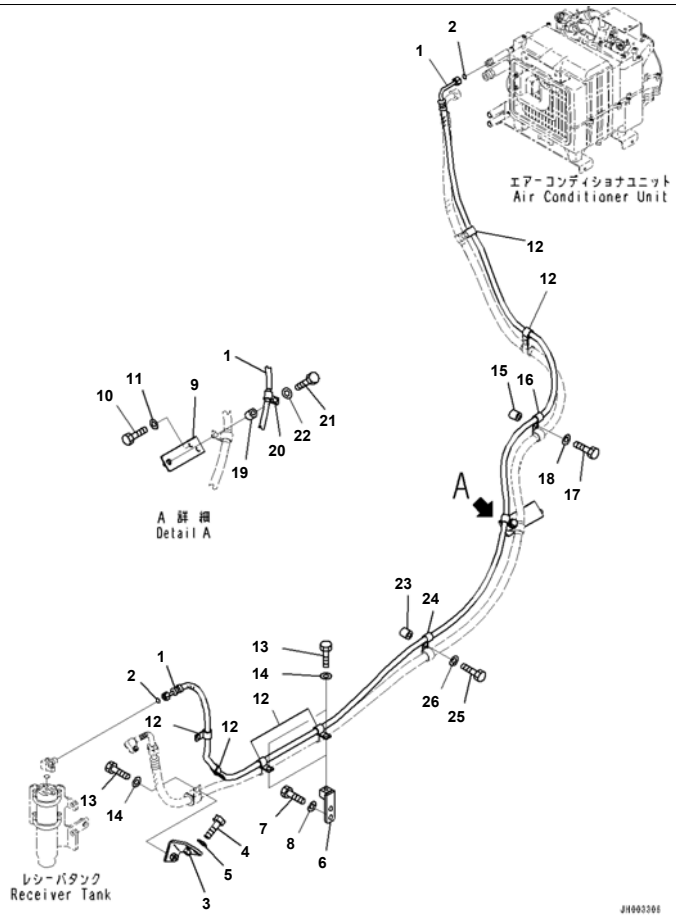

Reference:B0710-001003 Page:B008003

D375A-6R S/N 65001-UP
Air Conditioner Compressor, Air Conditioner, Large Cab, Liquid Circuit (#65001-65000)

Index	Code	Part Number	Description	Qty	Serial No.
1		195-911-7731	Hose	1	65001-
2		20Y-979-3150	· O-ring	2	65001-
3		195-911-7650	Bracket	1	65001-
4		01010-81225	Bolt	2	65001-
5		01643-31232	Washer	2	65001-
6		195-911-7660	Bracket	2	65001-
7		01010-81225	Bolt	4	65001-
8		01643-31232	Washer	4	65001-
9		195-911-7981	Bracket	1	65001-
10		01010-81225	Bolt	2	65001-
11		01643-31232	Washer	2	65001-
12		04434-51612	Clip	6	65001-
13		01010-81225	Bolt	7	65001-
14		01643-31232	Washer	7	65001-
15		198-43-15310	Collar, T=10mm	1	65001-
16		04434-51612	Clip	1	65001-
17		01010-81240	Bolt	1	65001-
18		01643-31232	Washer	1	65001-
19		195-33-11220	Spacer	1	65001-
20		04434-51612	Clip	1	65001-
21		01010-81255	Bolt	1	65001-
22		01643-31232	Washer	1	65001-
23		195-33-11220	Spacer	1	65001-
24		04434-51612	Clip	1	65001-
25		01010-81255	Bolt	1	65001-
26		01643-31232	Washer	1	65001-

Printed By : Dwi Iswanto (airafather6107170)

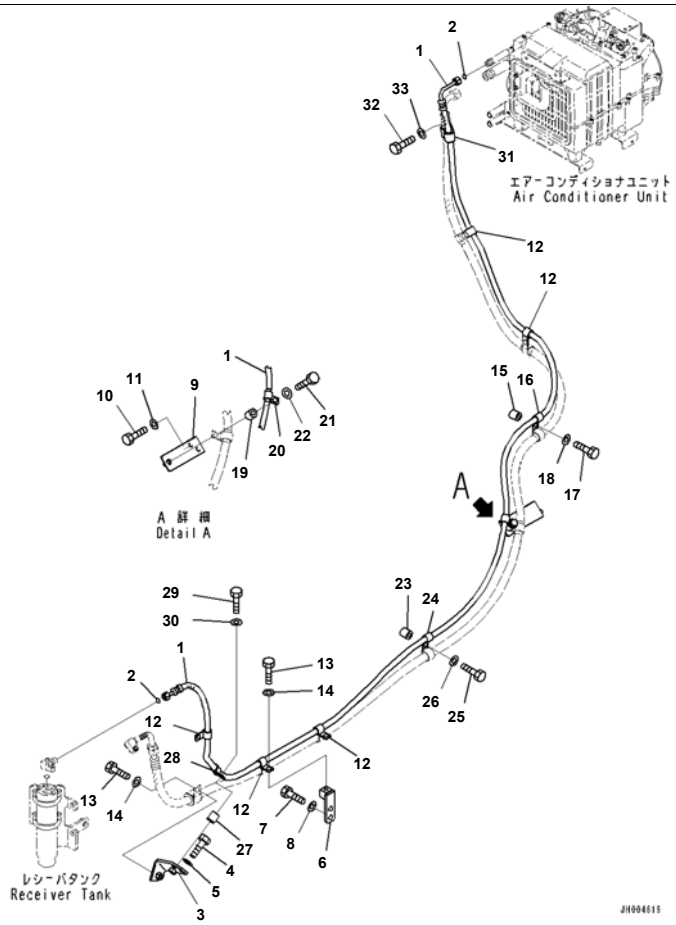

Reference:B0710-001003A Page:B008004

D375A-6R S/N 65001-UP
Air Conditioner Compressor, Air Conditioner, Large Cab, Liquid Circuit (#65001-)

Index	Code	Part Number	Description	Qty	Serial No.
1		195-911-7731	Hose	1	65001-
2		20Y-979-3150	· O-ring	2	65001-
3		195-911-7650	Bracket	1	65001-
4		01010-81225	Bolt	2	65001-
5		01643-31232	Washer	2	65001-
6		195-911-7660	Bracket	2	65001-
7		01010-81225	Bolt	4	65001-
8		01643-31232	Washer	4	65001-
9		195-911-7981	Bracket	1	65001-
10		01010-81225	Bolt	2	65001-
11		01643-31232	Washer	2	65001-
12		04434-51612	Clip	5	65001-
13		01010-81225	Bolt	6	65001-
14		01643-31232	Washer	6	65001-
15		198-43-15310	Collar, T=10mm	1	65001-
16		04434-51612	Clip	1	65001-
17		01010-81240	Bolt	1	65001-
18		01643-31232	Washer	1	65001-
19		195-33-11220	Spacer	1	65001-
20		04434-51612	Clip	1	65001-
21		01010-81260	Bolt	1	65001-
22		01643-31232	Washer	1	65001-
23		195-33-11220	Spacer	1	65001-
24		04434-51612	Clip	1	65001-
25		01010-81260	Bolt	1	65001-
26		01643-31232	Washer	1	65001-
27		195-33-11220	Spacer	1	65001-
28		04434-51612	Clip	1	65001-
29		01010-81250	Bolt	1	65001-
30		01643-31232	Washer	1	65001-
31		195-Z11-7250	Clip	1	65001-

Printed By : Dwi Iswanto (airafather6107170)

Index	Code	Part Number	Description	Qty	Serial No.
32		01010-81225	Bolt	1	65001-
33		01643-31232	Washer	1	65001-

Printed By : Dwi Iswanto (airafather6107170)

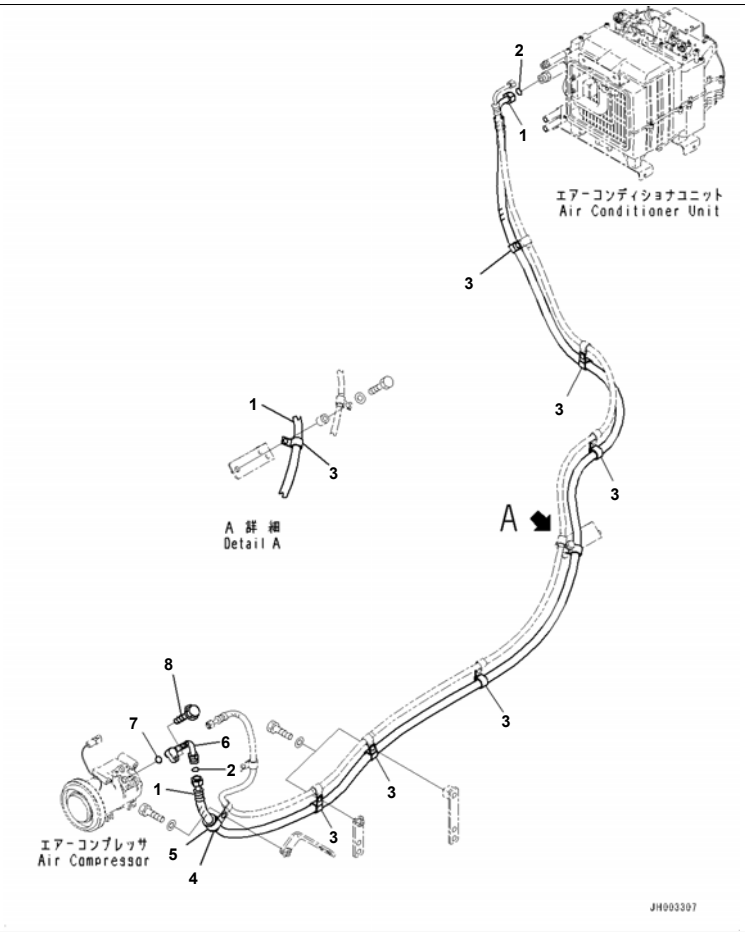

Reference:B0710-001004 Page:B008005

D375A-6R S/N 65001-UP
Air Conditioner Compressor, Air Conditioner, Large Cab, Suction Piping (#65001-)

Index	Code	Part Number	Description	Qty	Serial No.
1		195-911-6911	Hose	1	65001-
2		20Y-979-3130	· O-ring	2	65001-
3		04434-52312	Clip	7	65001-
4		07095-20523	Cushion	1	65001-
5		04434-53212	Clip	1	65001-
6		195-911-6921	Tube	1	65001-
7		20Y-979-3130	· O-ring	1	65001-
8		01435-00630	Bolt	1	65001-

Printed By : Dwi Iswanto (airafather6107170)

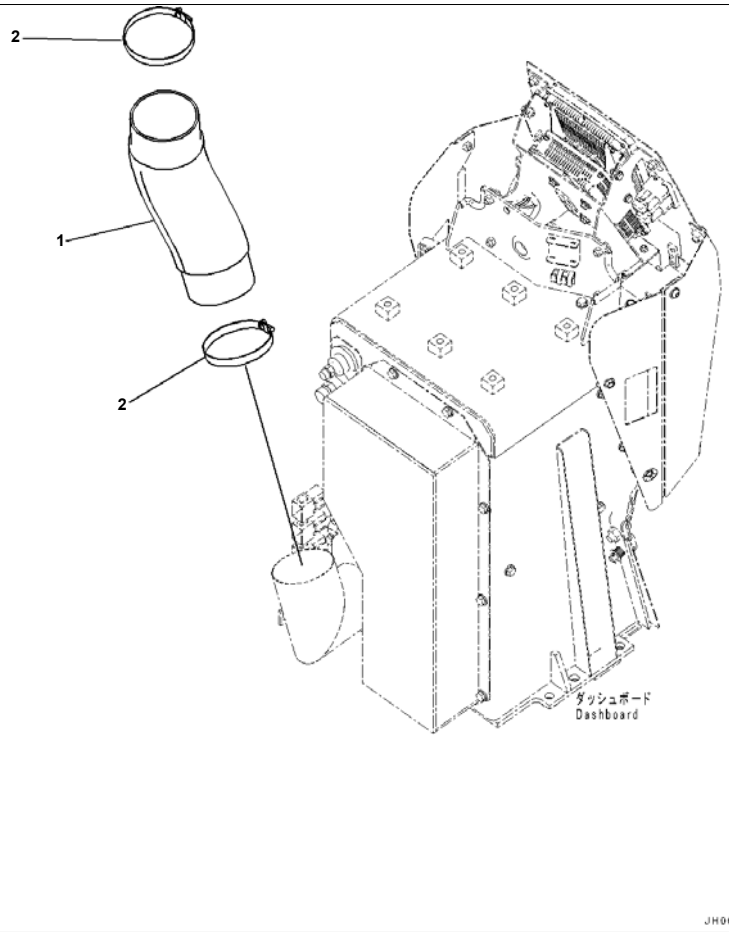

Index	Code	Part Number	Description	Qty	Serial No.
1		195-911-7990	Hose	1	65001-
2		07281-01159	Clamp	2	65001-

Printed By : Dwi Iswanto (airafather6107170)

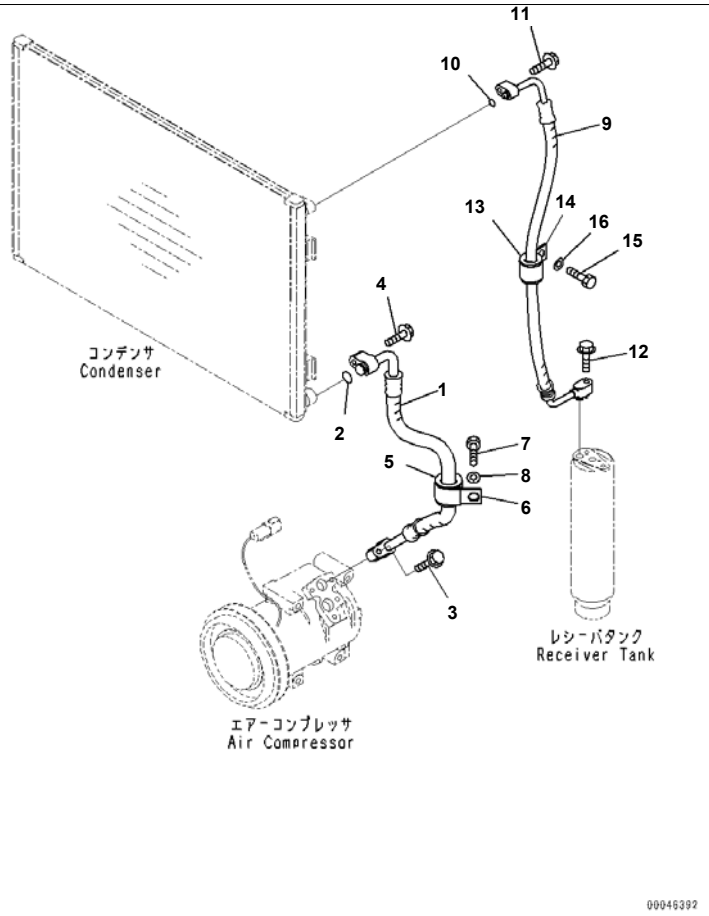

Reference:B0710-002001 Page:B009001

D375A-6R S/N 65001-UP
Air Conditioner Compressor, Air Conditioner, Large Cab, With Engine Oil Pan And Coolant Heater, Discharge Circuit (#65001-)

Index	Code	Part Number	Description	Qty	Serial No.
1		195-911-7911	Hose	1	65001-
2		20Y-979-3140	· O-ring	1	65001-
3		01435-00630	Bolt	1	65001-
4		01435-00630	Bolt	1	65001-
5		07095-20523	Cushion	1	65001-
6		04434-53212	Clip	1	65001-
7		01010-81225	Bolt	1	65001-
8		01643-31232	Washer	1	65001-
9		195-911-7921	Hose	1	65001-
10		20Y-979-3150	· O-ring	1	65001-
11		01435-00625	Bolt	1	65001-
12		01435-00625	Bolt	1	65001-
13		07095-20318	Cushion	1	65001-
14		04434-52512	Clip	1	65001-
15		01010-81225	Bolt	1	65001-
16		01643-31232	Washer	1	65001-

Printed By : Dwi Iswanto (airafather6107170)

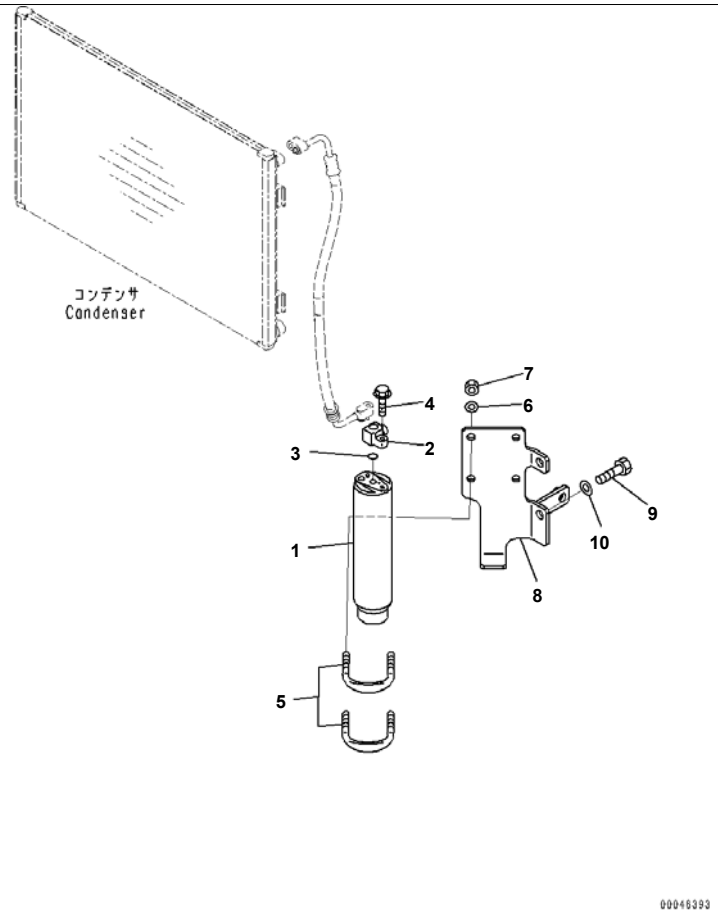

Index	Code	Part Number	Description	Qty	Serial No.
1		20Y-979-3120	Tank	1	65001-
2		17A-911-1671	Joint	1	65001-
3		20Y-979-3150	· O-ring	1	65001-
4		01435-00625	Bolt	1	65001-
5		07283-36155	Clip, Pipe	2	65001-
6		01643-31032	Washer	4	65001-
7		01597-01009	Nut	4	65001-
8		195-911-7971	Bracket	1	65001-
9		01010-81225	Bolt	2	65001-
10		01643-31232	Washer	2	65001-

Printed By : Dwi Iswanto (airafather6107170)

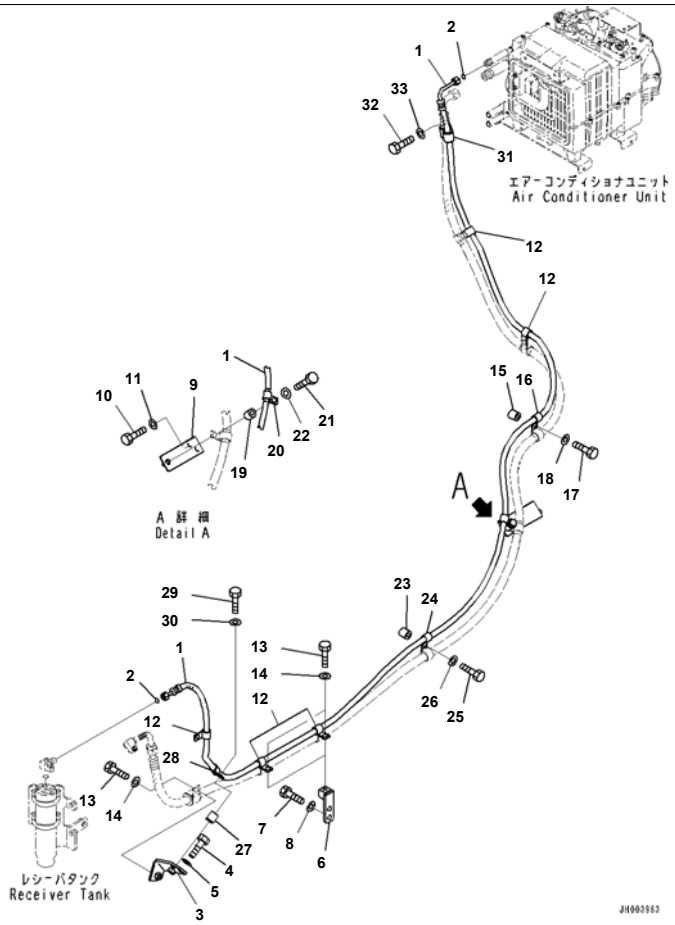

Reference:B0710-002003 Page:B009003

D375A-6R S/N 65001-UP
Air Conditioner Compressor, Air Conditioner, Large Cab, With Engine Oil Pan And Coolant Heater, Liquid Circuit (#65001-)

Index	Code	Part Number	Description	Qty	Serial No.
1		195-911-7731	Hose	1	65001-
2		20Y-979-3150	・ O-ring	2	65001-
3		195-911-7650	Bracket	1	65001-
4		01010-81225	Bolt	2	65001-
5		01643-31232	Washer	2	65001-
6		195-911-7660	Bracket	1	65001-
7		01010-81225	Bolt	2	65001-
8		01643-31232	Washer	2	65001-
9		195-911-7981	Bracket	1	65001-
10		01010-81225	Bolt	2	65001-
11		01643-31232	Washer	2	65001-
12		04434-51612	Clip	5	65001-
13		01010-81225	Bolt	6	65001-
14		01643-31232	Washer	6	65001-
15		198-43-15310	Collar, T=10mm	1	65001-
16		04434-51612	Clip	1	65001-
17		01010-81240	Bolt	1	65001-
18		01643-31232	Washer	1	65001-
19		195-33-11220	Spacer	1	65001-
20		04434-51612	Clip	1	65001-
21		01010-81260	Bolt	1	65001-
22		01643-31232	Washer	1	65001-
23		195-33-11220	Spacer	1	65001-
24		04434-51612	Clip	1	65001-
25		01010-81260	Bolt	1	65001-
26		01643-31232	Washer	1	65001-
27		195-33-11220	Spacer	1	65001-
28		04434-51612	Clip	1	65001-
29		01010-81250	Bolt	1	65001-
30		01643-31232	Washer	1	65001-

Printed By : Dwi Iswanto (airafather6107170)

Index	Code	Part Number	Description	Qty	Serial No.
31		195-Z11-7250	Clip	1	65001-
32		01010-81225	Bolt	1	65001-
33		01643-31232	Washer	1	65001-

Printed By : Dwi Iswanto (airafather6107170)

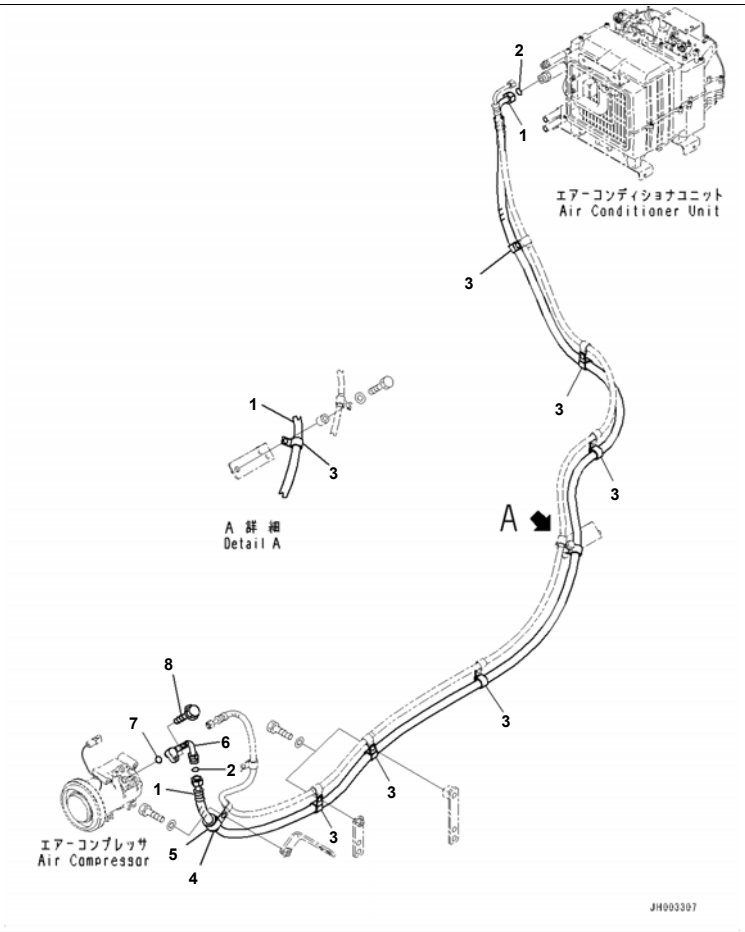

Reference:B0710-002004 Page:B009004

D375A-6R S/N 65001-UP
Air Conditioner Compressor, Air Conditioner, Large Cab, With Engine Oil Pan And Coolant Heater, Suction Piping (#65001-)

Index	Code	Part Number	Description	Qty	Serial No.
1		195-911-6911	Hose	1	65001-
2		20Y-979-3130	・ O-ring	2	65001-
3		04434-52312	Clip	7	65001-
4		07095-20523	Cushion	1	65001-
5		04434-53212	Clip	1	65001-
6		195-911-6921	Tube	1	65001-
7		20Y-979-3130	・ O-ring	1	65001-
8		01435-00630	Bolt	1	65001-

Printed By : Dwi Iswanto (airafather6107170)

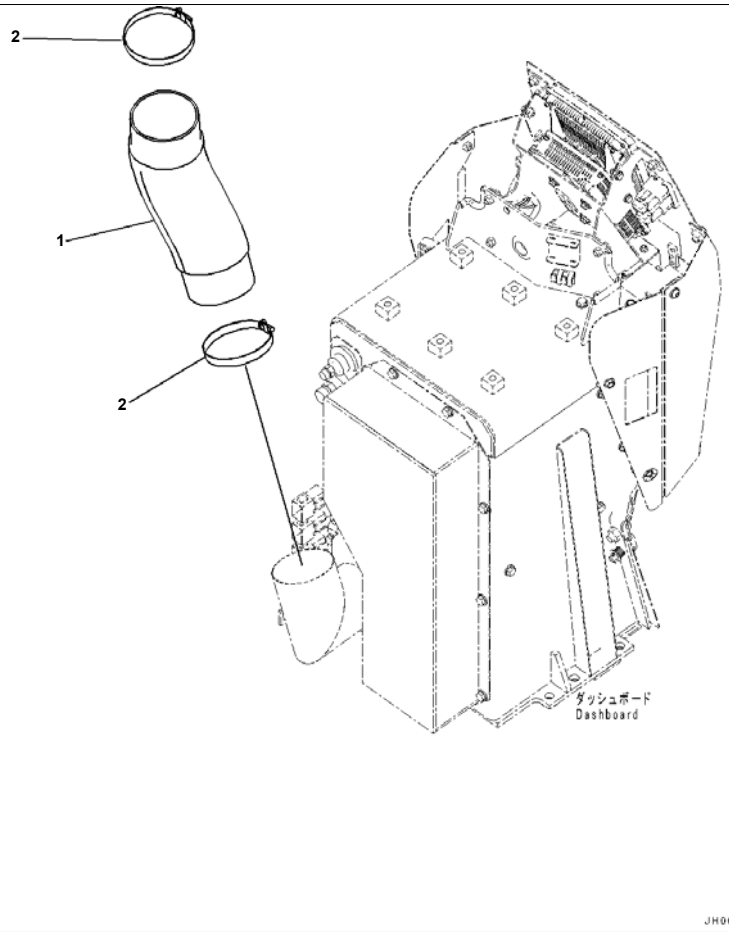

Index	Code	Part Number	Description	Qty	Serial No.
1		195-911-7990	Hose	1	65001-
2		07281-01159	Clamp	2	65001-

Printed By : Dwi Iswanto (airafather6107170)

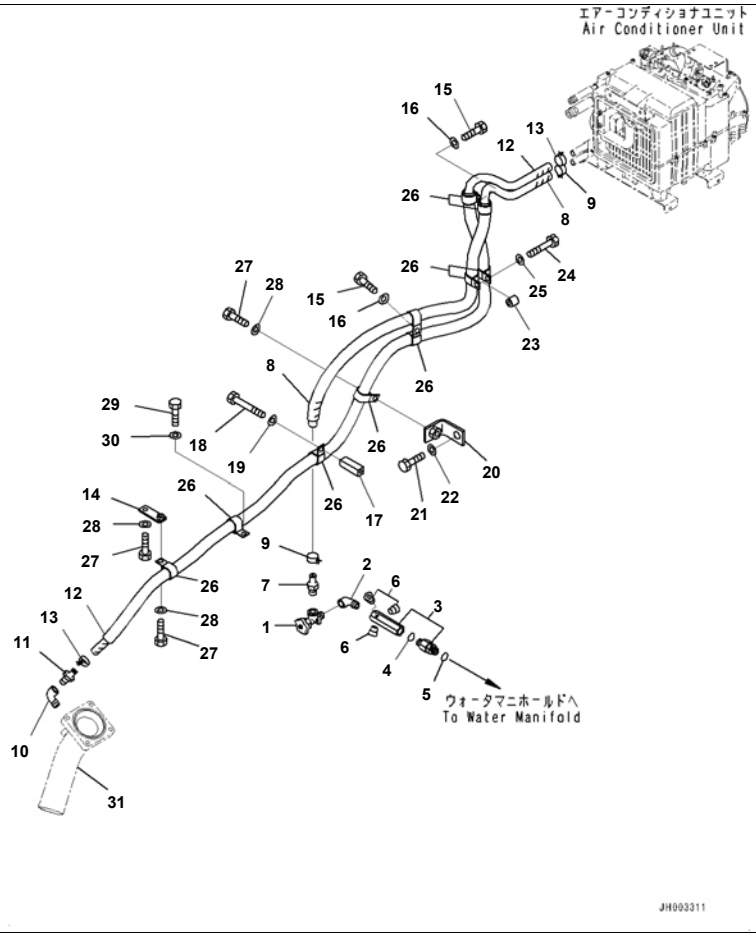

D375A-6R S/N 65001-UP
Cab Heater Piping (#65001-)

Index	Code	Part Number	Description	Qty	Serial No.
1		195-911-5591	Valve	1	65001-
2		07323-30400	Elbow	1	65001-
3		195-911-7811	Union	1	65001-
4		07002-12034	· O-ring	1	65001-
5		07002-62034	O-ring	1	65001-
6		07043-70108	Plug	3	65001-
7		195-Z11-7740	Joint	1	65001-
8		195-911-7952	Hose	1	65001-
9		09479-02400	Clamp	2	65001-
10		07323-30400	Elbow	1	65001-
11		145-Z79-5610	Joint	1	65001-
12		195-911-7962	Hose	1	65001-
13		09479-02400	Clamp	2	65001-
14		154-Z11-5340	Bracket	1	65001-
15		01010-81225	Bolt	2	65001-
16		01643-31232	Washer	2	65001-
17		175-06-25180	Spacer	1	65001-
18		01011-81030	Bolt	1	65001-
19		01643-31032	Washer	1	65001-
20		17M-49-15260	Bracket	1	65001-
21		01010-81225	Bolt	1	65001-
22		01643-31232	Washer	1	65001-
23		195-33-11220	Spacer	1	65001-
24		01010-81250	Bolt	1	65001-
25		01643-31232	Washer	1	65001-
26		04434-53412	Clip	10	65001-
27		01010-81225	Bolt	3	65001-
28		01643-31232	Washer	3	65001-
29		01010-81025	Bolt	1	65001-
30		01643-31032	Washer	1	65001-
31		(195-03-64232)	Tube		

Printed By : Dwi Iswanto (airafather6107170)

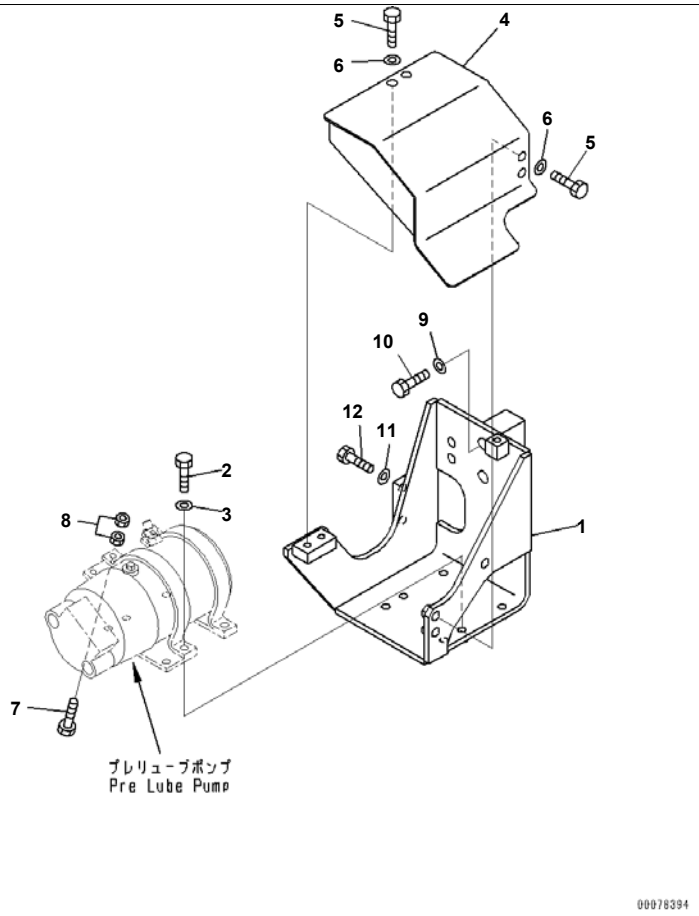

Reference:B0800-001001 Page:B011001

D375A-6R S/N 65001-UP
Engine Pre-lube Unit, Pump Mounting (#65001-)

Index	Code	Part Number	Description	Qty	Serial No.
1		195-01-61251	Bracket	1	65001-
2		01010-81035	Bolt	6	65001-
3		01643-31032	Washer	6	65001-
4		195-01-61271	Cover	1	65001-
5		01010-81230	Bolt	4	65001-
6		01643-31232	Washer	4	65001-
7		01010-80835	Bolt	2	65001-
8		01580-10806	Nut	4	65001-
9		01643-31645	Washer	2	65001-
10		01010-81695	Bolt	2	65001-
11		01643-31645	Washer	2	65001-
12		01010-81630	Bolt	2	65001-

Printed By : Dwi Iswanto (airafather6107170)

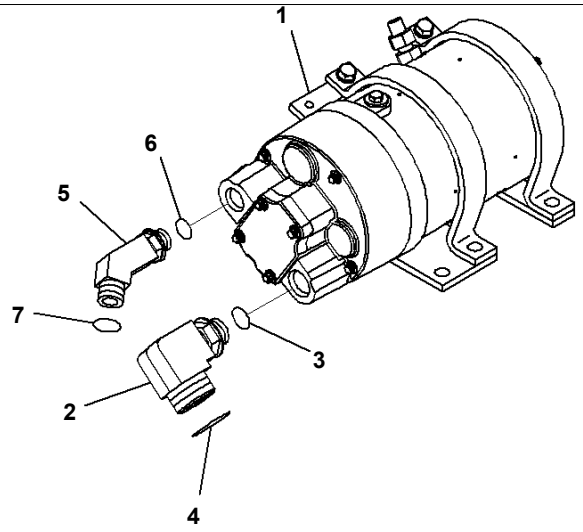

Index	Code	Part Number	Description	Qty	Serial No.
1		600-815-9510	Pump Assembly	1	65001-
2		198-01-61261	Elbow	1	65001-
3		6216-74-6220	O-ring	1	65001-
4		207-62-64740	O-ring	1	65001-
5		23D-40-31760	Elbow	1	65001-
6		02896-11012	O-ring	1	65001-
7		6735-21-4160	O-ring	1	65001-

Printed By : Dwi Iswanto (airafather6107170)

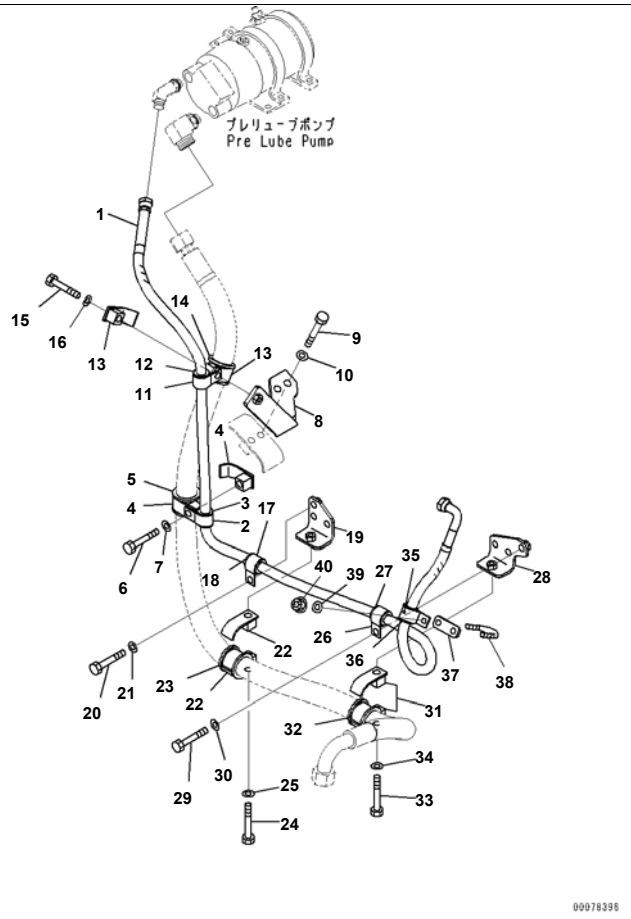

Index	Code	Part Number	Description	Qty	Serial No.
1		195-01-61330	Hose	1	65001-@
2		04434-52712	Clip	1	65001-@
3		07095-20418	Cushion	1	65001-@
4		198-61-44210	Clamp	2	65001-@
5		198-04-41210	Cushion	1	65001-@
6		01010-81285	Bolt	1	65001-@
7		01643-31232	Washer	1	65001-@
8		195-01-61260	Bracket	1	65001-@
9		01010-81295	Bolt	2	65001-@
10		01643-31232	Washer	2	65001-@
11		04434-52712	Clip	1	65001-@
12		07095-20418	Cushion	1	65001-@
13		198-61-44210	Clamp	2	65001-@
14		198-04-41210	Cushion	1	65001-@
15		01010-81280	Bolt	1	65001-@
16		01643-31232	Washer	1	65001-@
17		04434-52712	Clip	1	65001-@
18		07095-20418	Cushion	1	65001-@
19		195-01-61230	Bracket	1	65001-@
20		01010-81225	Bolt	3	65001-@
21		01643-31232	Washer	3	65001-@
22		198-61-44210	Clamp	2	65001-@
23		198-04-41210	Cushion	1	65001-@
24		01010-81280	Bolt	1	65001-@
25		01643-31232	Washer	1	65001-@
26		04434-52712	Clip	1	65001-@
27		07095-20418	Cushion	1	65001-@
28		195-01-61240	Bracket	1	65001-@
29		01010-81225	Bolt	3	65001-@
30		01643-31232	Washer	3	65001-@
31		198-61-44210	Clamp	2	65001-@

Printed By : Dwi Iswanto (airafather6107170)

Engine Pre-lube Unit, Piping and Hose (#65001-65000)

Index	Code	Part Number	Description	Qty	Serial No.
32		198-04-41210	Cushion	1	65001-@
33		01010-81280	Bolt	1	65001-@
34		01643-31232	Washer	1	65001-@
35		04434-52711	Clip	1	65001-@
36		07095-20418	Cushion	1	65001-@
37		195-01-61320	Plate	1	65001-@
38		07283-33442	Clip	1	65001-@
39		01643-31032	Washer	2	65001-@
40		01597-01009	Nut	2	65001-@

Printed By : Dwi Iswanto (airafather6107170)

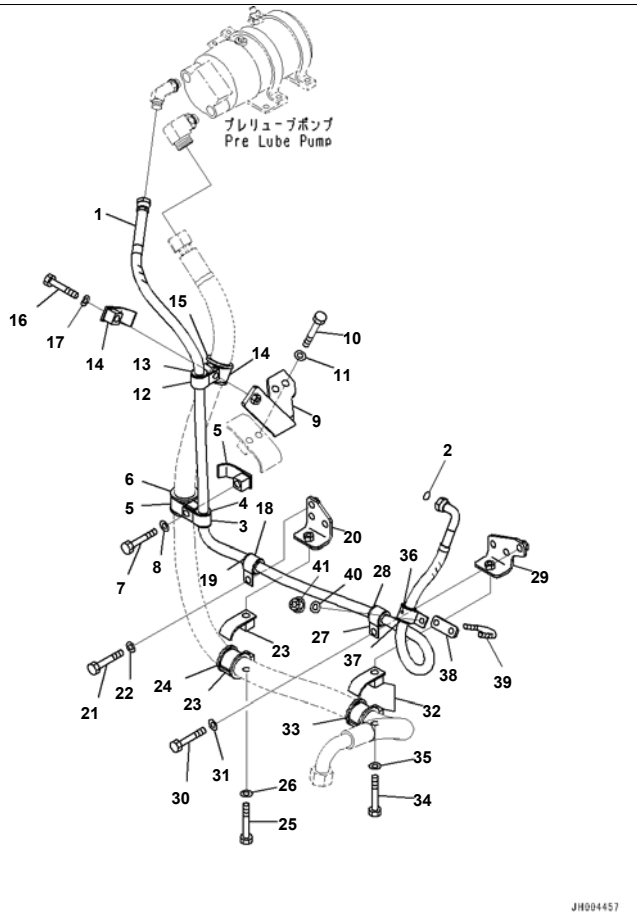

D375A-6R S/N 65001-UP
Engine Pre-lube Unit, Piping and Hose (#65001-)

Index	Code	Part Number	Description	Qty	Serial No.
1		195-01-61330	Hose	1	65001-
2		02896-11012	O-ring	1	65001-
3		04434-52712	Clip	1	65001-
4		07095-20418	Cushion	1	65001-
5		198-61-44210	Clamp	2	65001-
6		198-04-41210	Cushion	1	65001-
7		01010-81285	Bolt	1	65001-
8		01643-31232	Washer	1	65001-
9		195-01-61260	Bracket	1	65001-
10		01010-81295	Bolt	2	65001-
11		01643-31232	Washer	2	65001-
12		04434-52712	Clip	1	65001-
13		07095-20418	Cushion	1	65001-
14		198-61-44210	Clamp	2	65001-
15		198-04-41210	Cushion	1	65001-
16		01010-81280	Bolt	1	65001-
17		01643-31232	Washer	1	65001-
18		04434-52712	Clip	1	65001-
19		07095-20418	Cushion	1	65001-
20		195-01-61230	Bracket	1	65001-
21		01010-81225	Bolt	3	65001-
22		01643-31232	Washer	3	65001-
23		198-61-44210	Clamp	2	65001-
24		198-04-41210	Cushion	1	65001-
25		01010-81280	Bolt	1	65001-
26		01643-31232	Washer	1	65001-
27		04434-52712	Clip	1	65001-
28		07095-20418	Cushion	1	65001-
29		195-01-61240	Bracket	1	65001-
30		01010-81225	Bolt	3	65001-
31		01643-31232	Washer	3	65001-

Printed By : Dwi Iswanto (airafather6107170)

Engine Pre-lube Unit, Piping and Hose (#65001-)

Index	Code	Part Number	Description	Qty	Serial No.
32		198-61-44210	Clamp	2	65001-
33		198-04-41210	Cushion	1	65001-
34		01010-81280	Bolt	1	65001-
35		01643-31232	Washer	1	65001-
36		04434-52711	Clip	1	65001-
37		07095-20418	Cushion	1	65001-
38		195-01-61320	Plate	1	65001-
39		07283-33442	Clip	1	65001-
40		01643-31032	Washer	2	65001-
41		01597-01009	Nut	2	65001-

Printed By : Dwi Iswanto (airafather6107170)

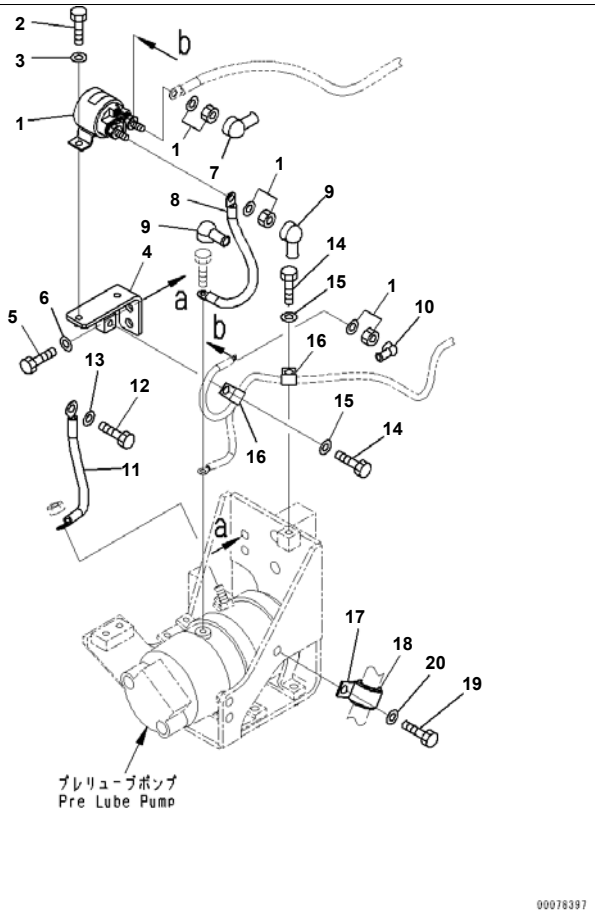

Index	Code	Part Number	Description	Qty	Serial No.
1		600-815-7510	Switch, Heater	1	65001-
2		01010-80820	Bolt	2	65001-
3		01643-30823	Washer	2	65001-
4		195-01-61281	Bracket	1	65001-
5		01010-81230	Bolt	2	65001-
6		01643-31232	Washer	2	65001-
7		08038-12027	Cap	1	65001-
8		195-06-61460	Wiring Harness	1	65001-
9		08038-12027	Cap	2	65001-
10		08038-10519	Cap	1	65001-
11		195-06-61470	Wiring Harness	1	65001-
12		01010-81225	Bolt	1	65001-
13		01643-31232	Washer	1	65001-
14		01010-81225	Bolt	2	65001-
15		01643-31232	Washer	2	65001-
16		04434-51012	Clip	2	65001-
17		04434-53412	Clip	1	65001-
18		198-06-53630	Cushion	1	65001-
19		01010-81225	Bolt	1	65001-
20		01643-31232	Washer	1	65001-

Printed By : Dwi Iswanto (airafather6107170)

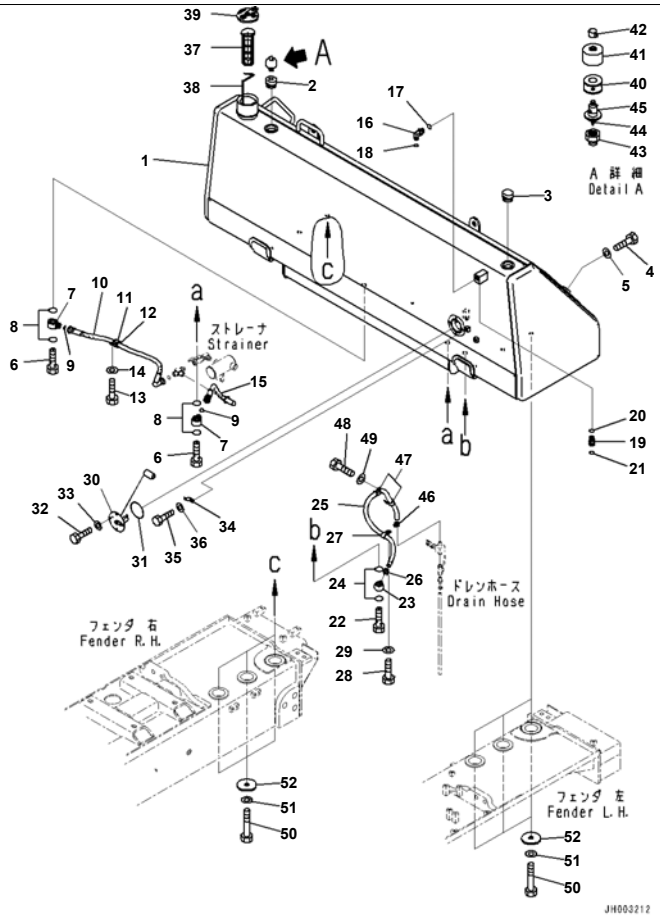

Reference:D0100-001001 Page:D001001

D375A-6R S/N 65001-UP
Fuel Tank, Fuel Piping (#65001-65000)

Index	Code	Part Number	Description	Qty	Serial No.
1		195-04-42812	Tank	1	65001-65000
2		17A-04-42150	Adapter	1	65001-65000
3		195-04-14130	Plug	1	65001-65000
4		01010-81220	Bolt	4	65001-65000
5		01643-31232	Washer	4	65001-65000
6		195-04-11280	Bolt, Joint	2	65001-65000
7		195-04-42311	Joint, Eye	2	65001-65000
8		07000-13035	O-ring	4	65001-65000
9		02896-11018	O-ring	2	65001-65000
10		02763-00609	Hose, Face Seal Type	1	65001-65000
11		04434-53412	Clip	1	65001-65000
12		07095-20625	Cushion	1	65001-65000
13		01010-81220	Bolt	1	65001-65000
14		01643-31232	Washer	1	65001-65000
15		02763-006A6	Hose, Face Seal Type	1	65001-65000
16		02782-10422	Elbow	1	65001-65000
17		07002-12034	O-ring	1	65001-65000
18		02896-11012	O-ring	1	65001-65000
19		02781-00516	Union	1	65001-65000
20		07002-12034	O-ring	1	65001-65000
21		02896-11015	O-ring	1	65001-65000
22		195-04-11280	Bolt, Joint	1	65001-65000
23		195-04-31210	Joint, Eye	1	65001-65000
24		07000-13035	O-ring	2	65001-65000
25		07261-21411	Hose	1	65001-65000
26		07281-00259	Clamp	1	65001-65000
27		04434-52512	Clip	1	65001-65000
28		01010-81220	Bolt	1	65001-65000
29		01643-31232	Washer	1	65001-65000
30		7861-93-4930	Sensor	1	65001-65000
31		07000-12085	O-ring	1	65001-65000

Printed By : Dwi Iswanto (airafather6107170)

Index	Code	Part Number	Description	Qty	Serial No.
32		01010-81020	Bolt	4	65001-65000
33		01643-31032	Washer	4	65001-65000
34		08193-21012	Clip	1	65001-65000
35		01010-81220	Bolt	1	65001-65000
36		01643-31232	Washer	1	65001-65000
37		07056-18422	Strainer	1	65001-65000
38		195-04-42790	Gauge	1	65001-65000
39		17A-04-41411	Cap	1	65001-65000
40		421-60-35170	· Element	1	65001-65000
41		421-60-35180	· Cover	1	65001-65000
42		421-60-35190	· Nut	1	65001-65000
43	C1		· Body	1	65001-65000
44	C1		· Valve Assembly	1	65001-65000
45	C1		· Case	1	65001-65000
46		07281-00259	Clamp	1	65001-65000
47		04434-52512	Clip	2	65001-65000
48		01010-81220	Bolt	2	65001-65000
49		01643-31232	Washer	2	65001-65000
50		01011-82405	Bolt	6	65001-65000
51		01643-32460	Washer	6	65001-65000
52		195-04-31150	Plate	6	65001-65000

Printed By : Dwi Iswanto (airafather6107170)

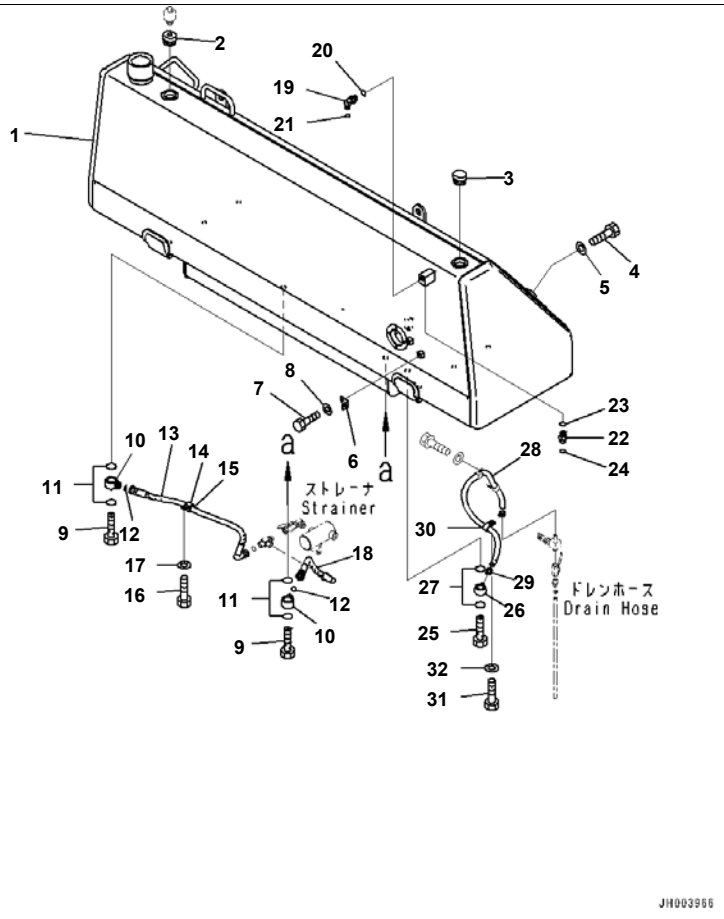

D375A-6R S/N 65001-UP
Fuel Tank, Fuel Piping (#65001-)

Index	Code	Part Number	Description	Qty	Serial No.
1		195-04-42812	Tank	1	65001-
2		17A-04-42150	Adapter	1	65001-
3		195-04-14130	Plug	1	65001-
4		01010-81220	Bolt	4	65001-
5		01643-31232	Washer	4	65001-
6		17M-49-15260	Bracket	1	65001-
7		01010-81220	Bolt	1	65001-
8		01643-31232	Washer	1	65001-
9		195-04-11280	Bolt, Joint	2	65001-
10		195-04-42311	Joint, Eye	2	65001-
11		07000-13035	O-ring	4	65001-
12		02896-11018	O-ring	2	65001-
13		02763-00609	Hose, Face Seal Type	1	65001-
14		04434-53412	Clip	1	65001-
15		07095-20625	Cushion	1	65001-
16		01010-81220	Bolt	1	65001-
17		01643-31232	Washer	1	65001-
18		02763-006A6	Hose, Face Seal Type	1	65001-
19		02782-10422	Elbow	1	65001-
20		07002-12034	O-ring	1	65001-
21		02896-11012	O-ring	1	65001-
22		02781-00516	Union	1	65001-
23		07002-12034	O-ring	1	65001-
24		02896-11015	O-ring	1	65001-
25		195-04-11280	Bolt, Joint	1	65001-
26		195-04-31210	Joint, Eye	1	65001-
27		07000-13035	O-ring	2	65001-
28		07261-21411	Hose	1	65001-
29		07281-00259	Clamp	1	65001-
30		04434-52512	Clip	1	65001-
31		01010-81220	Bolt	1	65001-

Printed By : Dwi Iswanto (airafather6107170)

Index	Code	Part Number	Description	Qty	Serial No.
32		01643-31232	Washer	1	65001-

Printed By : Dwi Iswanto (airafather6107170)

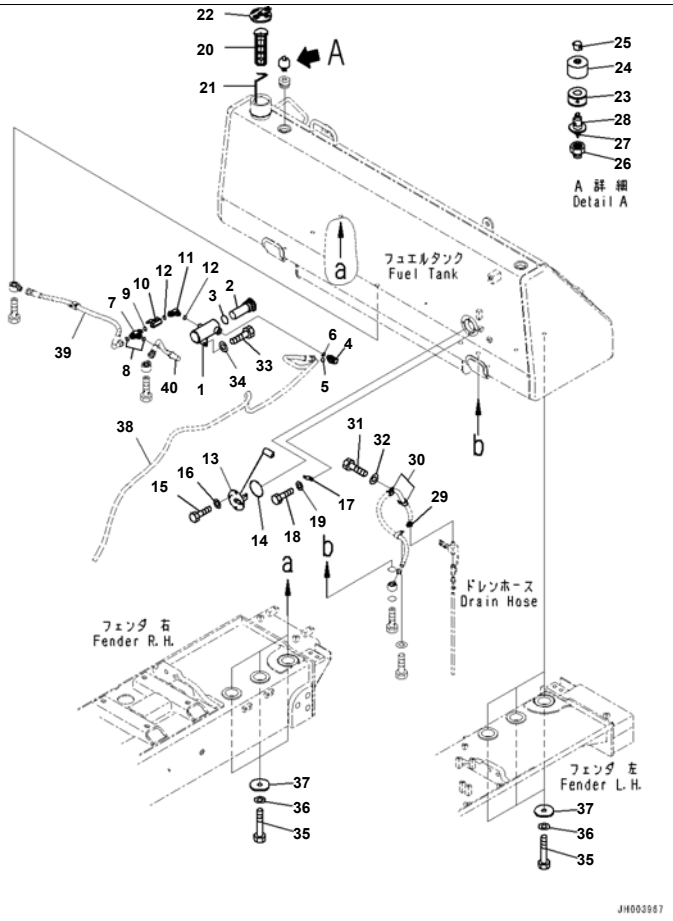

Reference:D0100-001002 Page:D001003

D375A-6R S/N 65001-UP
Fuel Tank, Related Parts (#65001-)

Index	Code	Part Number	Description	Qty	Serial No.
		195-04-00280	Strainer Assembly	1	65001-
1	C1		· Case	1	65001-
2		195-04-11150	· Strainer	1	65001-
3		07000-13065	· O-ring	1	65001-
4		02782-10628	Elbow	1	65001-
5		02896-11018	O-ring	1	65001-
6		07002-12434	O-ring	1	65001-
7		195-04-42751	Tee	1	65001-
8		02896-11018	O-ring	2	65001-
9		07002-12034	O-ring	1	65001-
10		14X-04-21620	Valve	1	65001-
11		14X-04-21630	Elbow	1	65001-
12		07002-12034	O-ring	2	65001-
13		7861-93-4930	Sensor	1	65001-
14		07000-12085	O-ring	1	65001-
15		01010-81020	Bolt	4	65001-
16		01643-31032	Washer	4	65001-
17		08193-21012	Clip	1	65001-
18		01010-81220	Bolt	1	65001-
19		01643-31232	Washer	1	65001-
20		07056-18422	Strainer	1	65001-
21		195-04-42790	Gauge	1	65001-
22		17A-04-41411	Cap	1	65001-
		22U-60-21520	Breather	1	65001-
23		421-60-35170	· Element	1	65001-
24		421-60-35180	· Cover	1	65001-
25		421-60-35190	· Nut	1	65001-
26	C1		· Body	1	65001-
27	C1		· Valve Assembly	1	65001-
28	C1		· Case	1	65001-
29		07281-00259	Clamp	1	65001-

Reference:D0100-001002 Page:D001003

Printed By : Dwi Iswanto (airafather6107170)

Index	Code	Part Number	Description	Qty	Serial No.
30		04434-52512	Clip	2	65001-
31		01010-81220	Bolt	2	65001-
32		01643-31232	Washer	2	65001-
33		01010-81230	Bolt	2	65001-
34		01643-31232	Washer	2	65001-
35		01011-82405	Bolt	6	65001-
36		01643-32460	Washer	6	65001-
37		195-04-31150	Plate	6	65001-
38		(195-04-45191)	Hose		
39		(02763-00609)	Hose, Face Seal Type		
40		(02763-006A6)	Hose, Face Seal Type		

Printed By : Dwi Iswanto (airafather6107170)

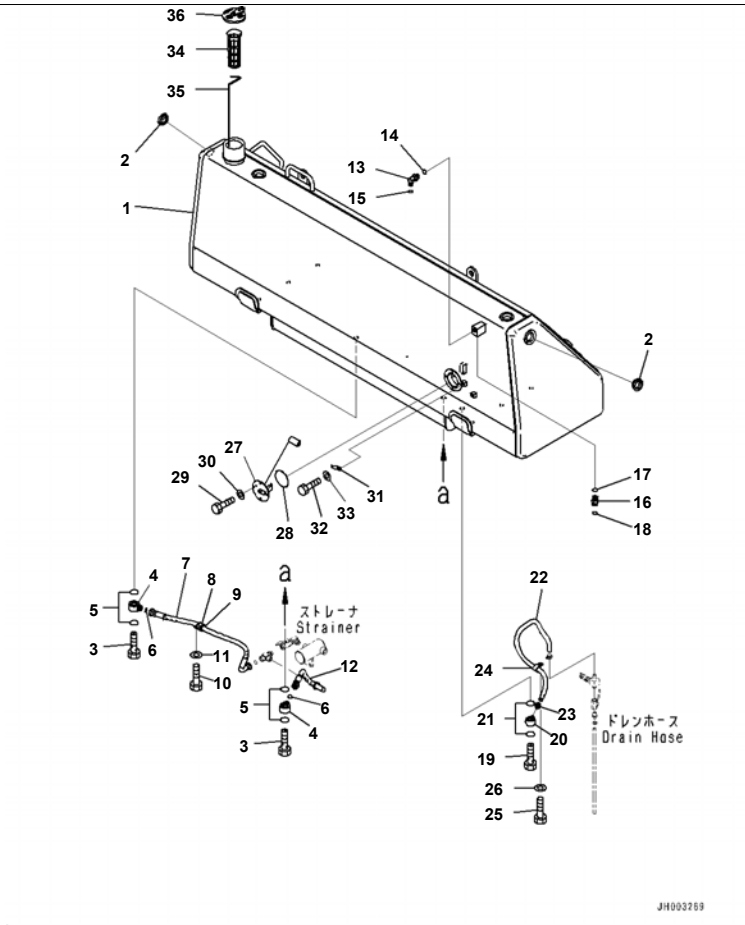

Fuel Tank, For Machine With Fuel Quick Charge, Fuel Piping (#65001-65000)

Index	Code	Part Number	Description	Qty	Serial No.
1		195-04-42820	Tank	1	65001-65000
2		198-03-62490	Gauge	2	65001-65000
3		195-04-11280	Bolt, Joint	2	65001-65000
4		195-04-42311	Joint, Eye	2	65001-65000
5		07000-13035	O-ring	4	65001-65000
6		02896-11018	O-ring	2	65001-65000
7		02763-00609	Hose, Face Seal Type	1	65001-65000
8		04434-53412	Clip	1	65001-65000
9		07095-20625	Cushion	1	65001-65000
10		01010-81220	Bolt	1	65001-65000
11		01643-31232	Washer	1	65001-65000
12		02763-006A6	Hose, Face Seal Type	1	65001-65000
13		02782-10422	Elbow	1	65001-65000
14		07002-12034	O-ring	1	65001-65000
15		02896-11012	O-ring	1	65001-65000
16		02781-00516	Union	1	65001-65000
17		07002-12034	O-ring	1	65001-65000
18		02896-11015	O-ring	1	65001-65000
19		195-04-11280	Bolt, Joint	1	65001-65000
20		195-04-31210	Joint, Eye	1	65001-65000
21		07000-13035	O-ring	2	65001-65000
22		07261-21411	Hose	1	65001-65000
23		07281-00259	Clamp	1	65001-65000
24		04434-52512	Clip	1	65001-65000
25		01010-81220	Bolt	1	65001-65000
26		01643-31232	Washer	1	65001-65000
27		7861-93-4930	Sensor	1	65001-65000
28		07000-12085	O-ring	1	65001-65000
29		01010-81020	Bolt	4	65001-65000
30		01643-31032	Washer	4	65001-65000
31		08193-21012	Clip	1	65001-65000

Printed By : Dwi Iswanto (airafather6107170)

Fuel Tank, For Machine With Fuel Quick Charge, Fuel Piping (#65001-65000)

Index	Code	Part Number	Description	Qty	Serial No.
32		01010-81220	Bolt	1	65001-65000
33		01643-31232	Washer	1	65001-65000
34		07056-18422	Strainer	1	65001-65000
35		195-04-42790	Gauge	1	65001-65000
36		17A-04-41411	Cap	1	65001-65000

Printed By : Dwi Iswanto (airafather6107170)

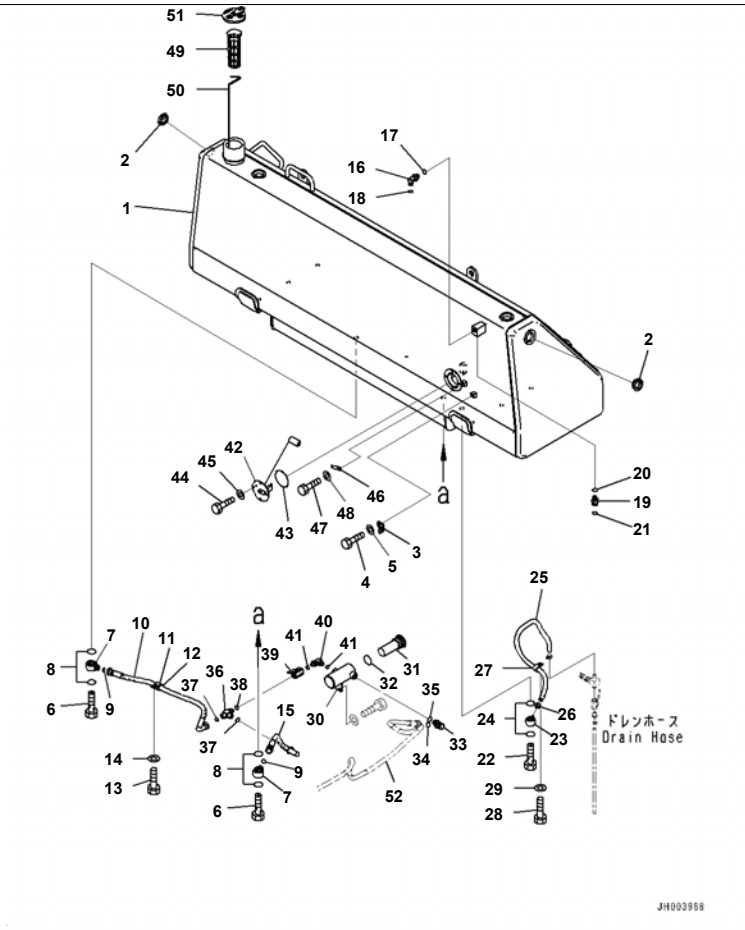

Reference:D0100-002001A Page:D002002

D375A-6R S/N 65001-UP
Fuel Tank, For Machine With Fuel Quick Charge, Fuel Piping (#65001-)

Index	Code	Part Number	Description	Qty	Serial No.
1		195-04-42820	Tank	1	65001-
2		198-03-62490	Gauge	2	65001-
3		17M-49-15260	Bracket	1	65001-
4		01010-81220	Bolt	1	65001-
5		01643-31232	Washer	1	65001-
6		195-04-11280	Bolt, Joint	2	65001-
7		195-04-42311	Joint, Eye	2	65001-
8		07000-13035	O-ring	4	65001-
9		02896-11018	O-ring	2	65001-
10		02763-00609	Hose, Face Seal Type	1	65001-
11		04434-53412	Clip	1	65001-
12		07095-20625	Cushion	1	65001-
13		01010-81220	Bolt	1	65001-
14		01643-31232	Washer	1	65001-
15		02763-006A6	Hose, Face Seal Type	1	65001-
16		02782-10422	Elbow	1	65001-
17		07002-12034	O-ring	1	65001-
18		02896-11012	O-ring	1	65001-
19		02781-00516	Union	1	65001-
20		07002-12034	O-ring	1	65001-
21		02896-11015	O-ring	1	65001-
22		195-04-11280	Bolt, Joint	1	65001-
23		195-04-31210	Joint, Eye	1	65001-
24		07000-13035	O-ring	2	65001-
25		07261-21411	Hose	1	65001-
26		07281-00259	Clamp	1	65001-
27		04434-52512	Clip	1	65001-
28		01010-81220	Bolt	1	65001-
29		01643-31232	Washer	1	65001-
		195-04-00280	Strainer Assembly	1	65001-
30	C1		· Case	1	65001-

Printed By : Dwi Iswanto (airafather6107170)

Fuel Tank, For Machine With Fuel Quick Charge, Fuel Piping (#65001-)

Index	Code	Part Number	Description	Qty	Serial No.
31		195-04-11150	· Strainer	1	65001-
32		07000-13065	· O-ring	1	65001-
33		02782-10628	Elbow	1	65001-
34		02896-11018	O-ring	1	65001-
35		07002-12434	O-ring	1	65001-
36		195-04-42751	Tee	1	65001-
37		02896-11018	O-ring	2	65001-
38		07002-12034	O-ring	1	65001-
39		14X-04-21620	Valve	1	65001-
40		14X-04-21630	Elbow	1	65001-
41		07002-12034	O-ring	2	65001-
42		7861-93-4930	Sensor	1	65001-
43		07000-12085	O-ring	1	65001-
44		01010-81020	Bolt	4	65001-
45		01643-31032	Washer	4	65001-
46		08193-21012	Clip	1	65001-
47		01010-81220	Bolt	1	65001-
48		01643-31232	Washer	1	65001-
49		07056-18422	Strainer	1	65001-
50		195-04-42790	Gauge	1	65001-
51		17A-04-41411	Cap	1	65001-
52		(195-04-45191)	Hose		

Printed By : Dwi Iswanto (airafather6107170)

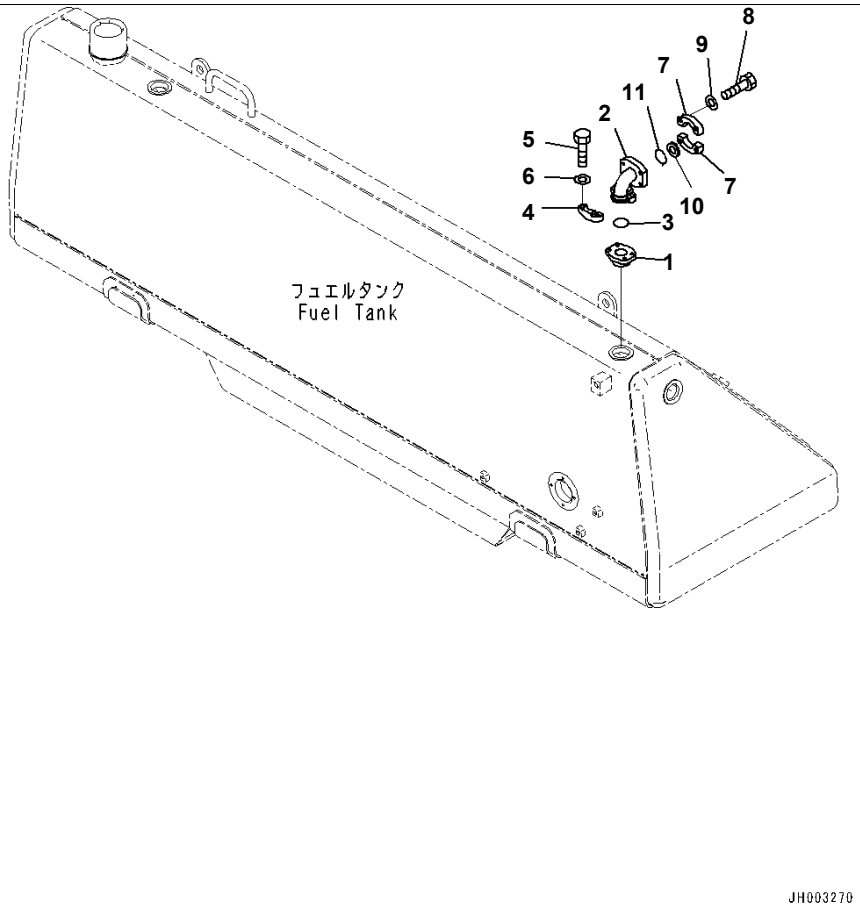

D375A-6R S/N 65001-UP
Fuel Tank, For Machine With Fuel Quick Charge, Quick Charge Related Parts (#65001-)

Index	Code	Part Number	Description	Qty	Serial No.
1		198-04-66111	Flange	1	65001-
2		198-04-66121	Tube	1	65001-
3		07000-13048	O-ring	1	65001-
4		07371-31465	Flange	2	65001-
5		07372-21235	Bolt	4	65001-
6		01643-51232	Washer	4	65001-
7		07371-32076	Flange, Split	2	65001-
8		07372-21240	Bolt	4	65001-
9		01643-51232	Washer	4	65001-
10		07378-12000	Head	1	65001-
11		07000-12060	O-ring	1	65001-

Printed By : Dwi Iswanto (airafather6107170)

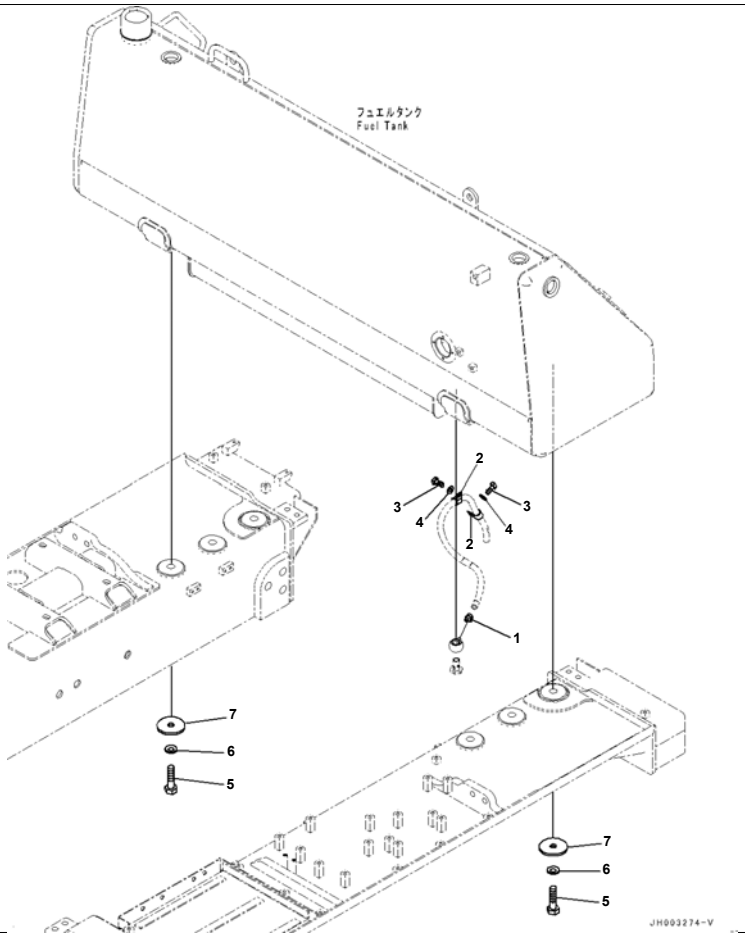

Reference:D0100-002003 Page:D002004

D375A-6R S/N 65001-UP
Fuel Tank, For Machine With Fuel Quick Charge, Related Parts (#65001-65000)

Index	Code	Part Number	Description	Qty	Serial No.
1		07281-00259	Clamp	1	65001-65000
2		04434-52512	Clip	2	65001-65000
3		01010-81220	Bolt	2	65001-65000
4		01643-31232	Washer	2	65001-65000
5		01011-82405	Bolt	6	65001-65000
6		01643-32460	Washer	6	65001-65000
7		195-04-31150	Plate	6	65001-65000

Reference:D0100-002003 Page:D002004

Printed By : Dwi Iswanto (airafather6107170)

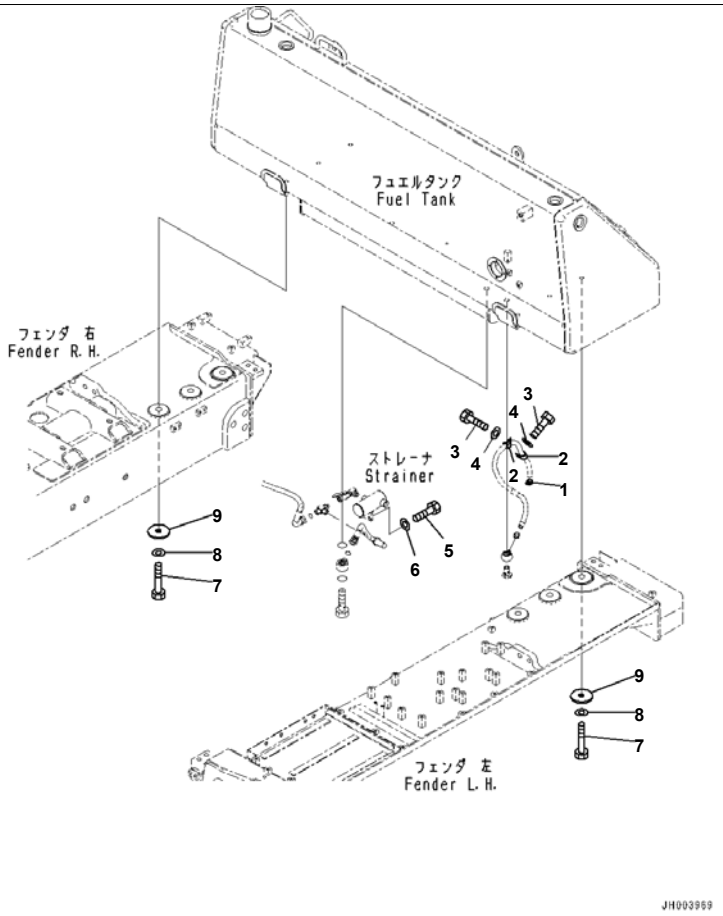

D375A-6R S/N 65001-UP
Fuel Tank, For Machine With Fuel Quick Charge, Related Parts (#65001-)

Index	Code	Part Number	Description	Qty	Serial No.
1		07281-00259	Clamp	1	65001-
2		04434-52512	Clip	2	65001-
3		01010-81220	Bolt	2	65001-
4		01643-31232	Washer	2	65001-
5		01010-81230	Bolt	2	65001-
6		01643-31232	Washer	2	65001-
7		01011-82405	Bolt	6	65001-
8		01643-32460	Washer	6	65001-
9		195-04-31150	Plate	6	65001-

Printed By : Dwi Iswanto (airafather6107170)

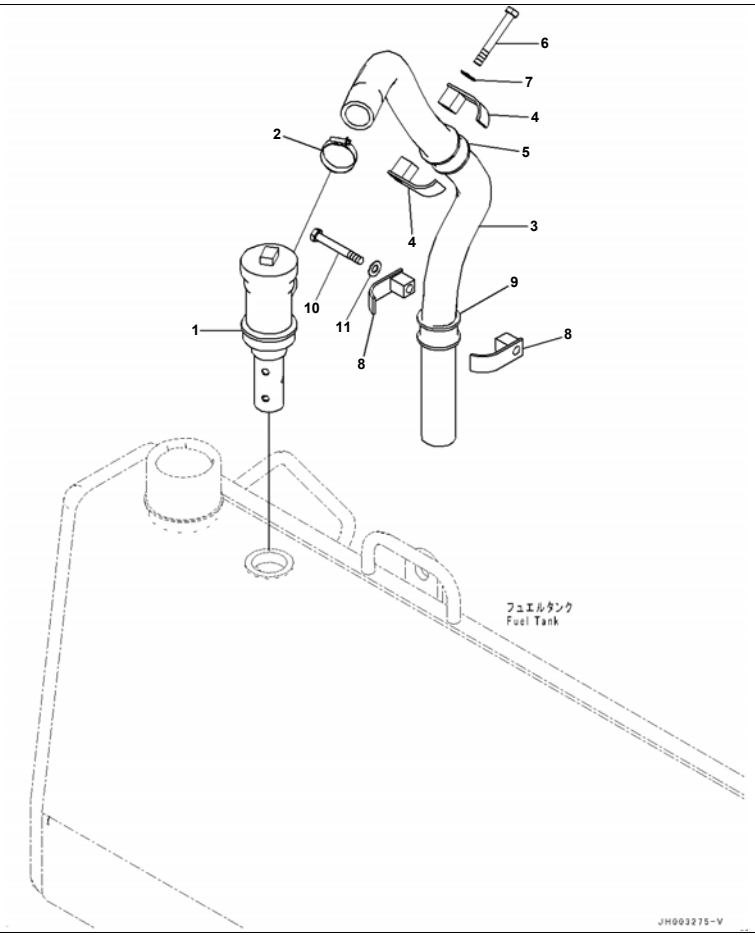

Index	Code	Part Number	Description	Qty	Serial No.
1		21T-04-31130	Vent Assembly	1	65001-
2		07281-00609	Clamp	1	65001-
3		07261-24117	Hose	1	65001-
4		198-61-44220	Clamp	2	65002-
5		198-61-44130	Cushion	1	65001-
6		01010-81290	Bolt	1	65001-
7		01643-31232	Washer	1	65001-
8		198-61-44220	Clamp	2	65002-
9		198-61-44130	Cushion	1	65001-
10		01010-81290	Bolt	1	65001-
11		01643-31232	Washer	1	65001-

Printed By : Dwi Iswanto (airafather6107170)

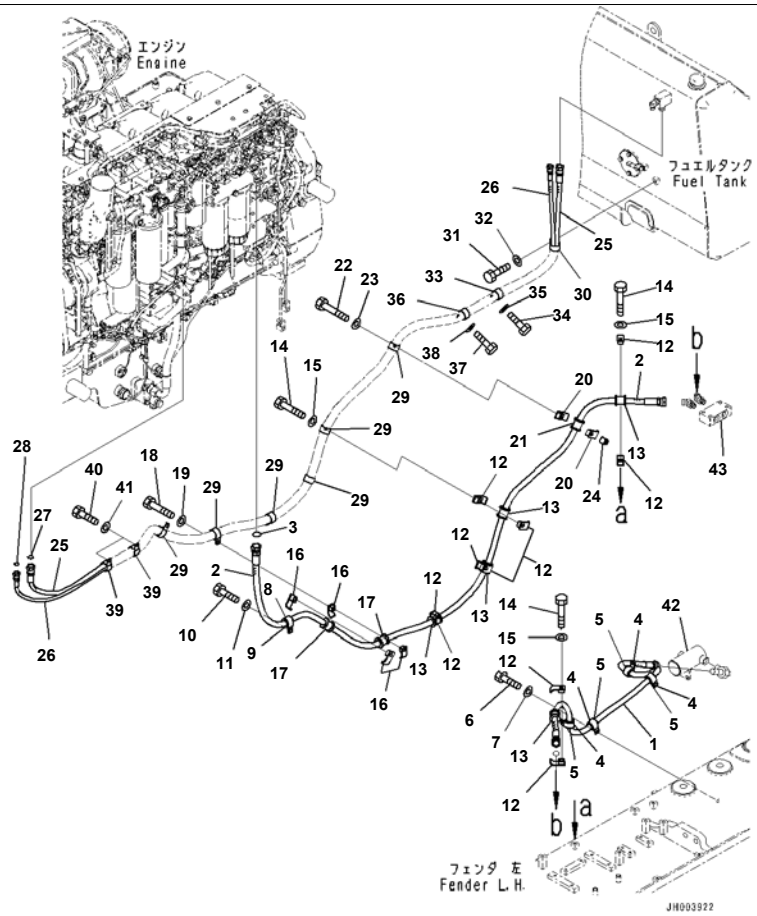

Reference:D0200-002001 Page:D003001

D375A-6R S/N 65001-UP
Fuel Supply Circuit, Fuel Main Circuit (#65001-)

Index	Code	Part Number	Description	Qty	Serial No.
1		195-04-45191	Hose	1	65001-
2		195-04-45170	Hose	1	65001-
3		02896-11018	O-ring	1	65001-
4		04434-53412	Clip	4	65001-
5		07095-20625	Cushion	4	65001-
6		01010-81220	Bolt	4	65001-
7		01643-31232	Washer	4	65001-
8		04434-53412	Clip	1	65001-
9		07095-20625	Cushion	1	65001-
10		01010-81230	Bolt	1	65001-
11		01643-31232	Washer	1	65001-
12		07094-10518	Clamp	10	65001-
13		07095-00525	Cushion	5	65001-
14		01010-81265	Bolt	5	65001-
15		01643-31232	Washer	5	65001-
16		07094-10518	Clamp	4	65001-
17		07095-00525	Cushion	2	65001-
18		01010-81265	Bolt	2	65001-
19		01643-31232	Washer	2	65001-
20		07094-10518	Clamp	2	65001-
21		07095-00525	Cushion	1	65001-
22		01010-81290	Bolt	1	65001-
23		01643-31232	Washer	1	65001-
24		195-33-11220	Spacer	1	65001-
25		02762-00542	Hose, Face Seal Type	1	65001-
26		02762-00443	Hose, Face Seal Type	1	65001-
27		02896-11015	O-ring	1	65001-
28		02896-11012	O-ring	1	65001-
29		208-06-19170	Clip	6	65001-
30		208-06-19170	Clip	1	65001-
31		01010-81220	Bolt	1	65001-

Reference:D0200-002001 Page:D003001

Printed By : Dwi Iswanto (airafather6107170)

Index	Code	Part Number	Description	Qty	Serial No.
32		01643-31232	Washer	1	65001-
33		208-06-19170	Clip	1	65001-
34		01010-81230	Bolt	1	65001-
35		01643-31232	Washer	1	65001-
36		208-06-19170	Clip	1	65001-
37		01010-81230	Bolt	1	65001-
38		01643-31232	Washer	1	65001-
39		208-06-19170	Clip	2	65001-
40		01010-81230	Bolt	2	65001-
41		01643-31232	Washer	2	65001-
42		(195-04-00280)	Strainer Assembly		
		(195-04-00280)	Strainer Assembly		
43		(195-04-42150)	Joint		

Printed By : Dwi Iswanto (airafather6107170)

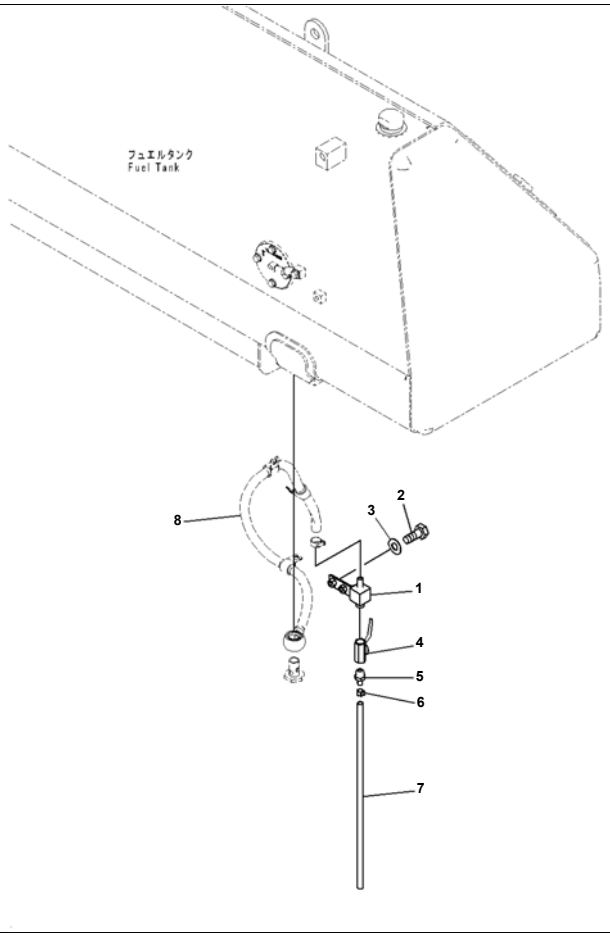

Reference:D0200-002002 Page:D003002

Index	Code	Part Number	Description	Qty	Serial No.
1		195-04-42760	Bracket	1	65001-
2		01010-81240	Bolt	2	65001-
3		01643-31232	Washer	2	65001-
4		07700-40460	Valve, Fuel Drain	1	65001-
5		154-04-12480	Nipple	1	65001-
6		07285-00130	Clip	1	65001-
7		07270-01260	Tube	1	65001-
8		(07261-21411)	Hose		
		(07261-21411)	Hose		

Reference:D0200-002002 Page:D003002

Printed By : Dwi Iswanto (airafather6107170)

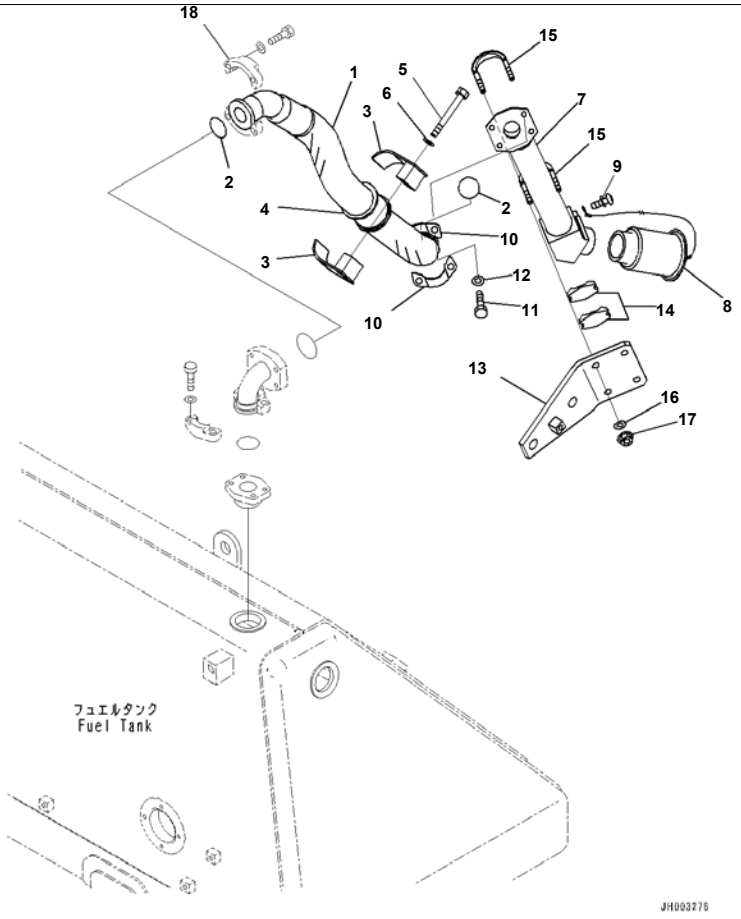

D375A-6R S/N 65001-UP
Fuel Quick Charge Receiver (#65001-)

Index	Code	Part Number	Description	Qty	Serial No.
1		195-04-42660	Hose	1	65001-
2		07000-12060	O-ring	2	65001-
3		42C-16-11510	Clamp	2	65001-
4		07095-02062	Cushion	1	65001-
5		01011-81210	Bolt	2	65001-
6		01643-31232	Washer	2	65001-
7		195-04-42670	Tube	1	65001-
8		198-04-66170	Receiver Assembly	1	65001-
9		01023-10610	Screw	1	65001-
10		07371-32076	Flange, Split	2	65001-
11		07372-21240	Bolt	4	65001-
12		01643-51232	Washer	4	65001-
13		195-04-42630	Bracket	1	65001-
14		07283-56170	Seat, Pipe Clip	2	65001-
15		07283-36163	Clip	2	65001-
16		01643-31032	Washer	4	65001-
17		01597-01009	Nut	4	65001-
18		(07371-32076)	Flange, Split		

Printed By : Dwi Iswanto (airafather6107170)

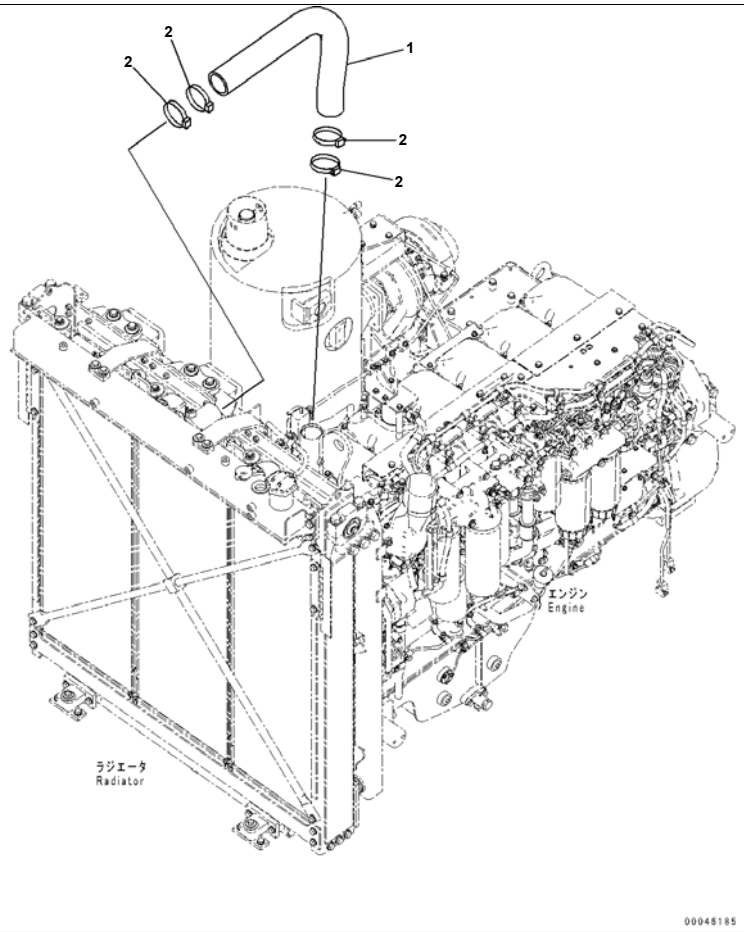

Index	Code	Part Number	Description	Qty	Serial No.
1		195-03-64241	Hose	1	65001-
2		07289-00095	Clamp	4	65001-

Printed By : Dwi Iswanto (airafather6107170)

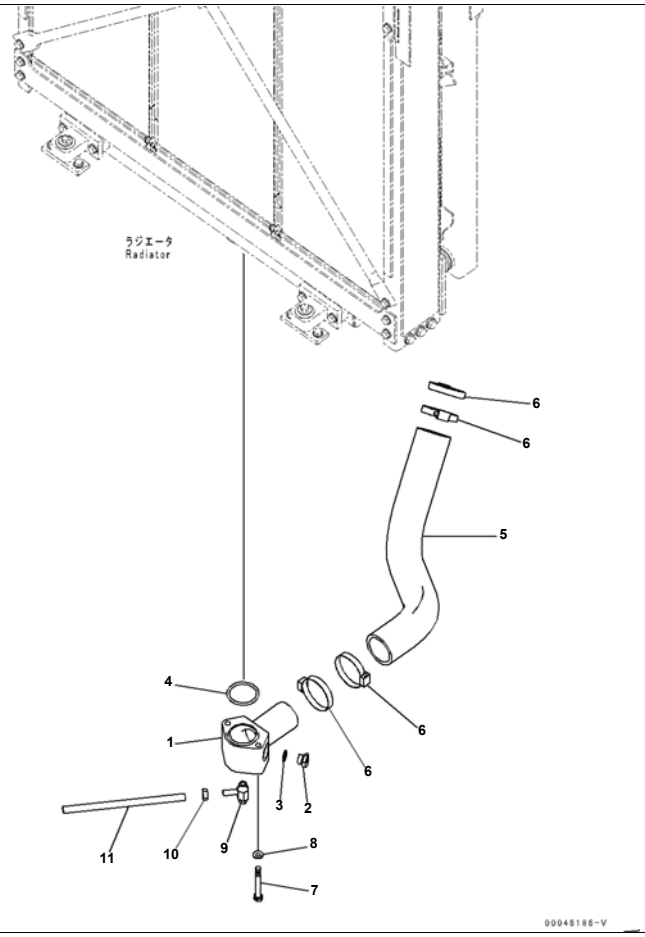

Index	Code	Part Number	Description	Qty	Serial No.
1		195-03-64212	Tube	1	65001-
2		07040-12412	Plug	1	65001-
3		07002-62434	O-ring	1	65001-
4		07000-G2075	O-ring	1	65001-
5		195-03-64222	Hose	1	65001-
6		07289-00095	Clamp	4	65001-
7		01011-81215	Bolt	2	65001-
8		01643-31232	Washer	2	65001-
9		07730-50004	Valve	1	65001-
10		07285-00155	Clip	1	65001-
11		175-03-31530	Hose	1	65001-

Printed By : Dwi Iswanto (airafather6107170)

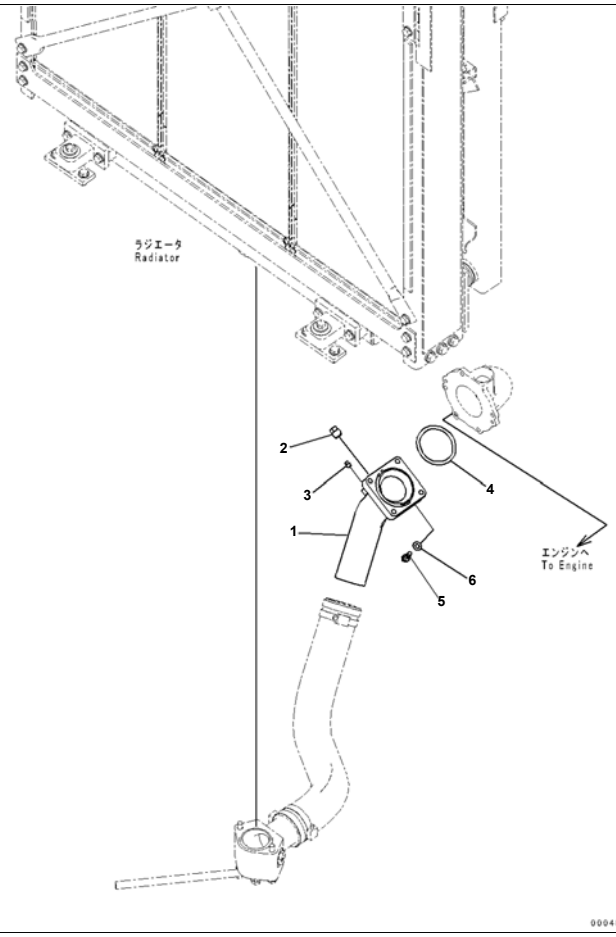

Index	Code	Part Number	Description	Qty	Serial No.
1		195-03-64232	Tube	1	65001-
2		07042-70415	Plug	1	65001-
3		07042-30108	Plug	1	65001-
4		07000-G2100	O-ring	1	65001-
5		01010-81040	Bolt	4	65001-
6		01643-31032	Washer	4	65001-

Printed By : Dwi Iswanto (airafather6107170)

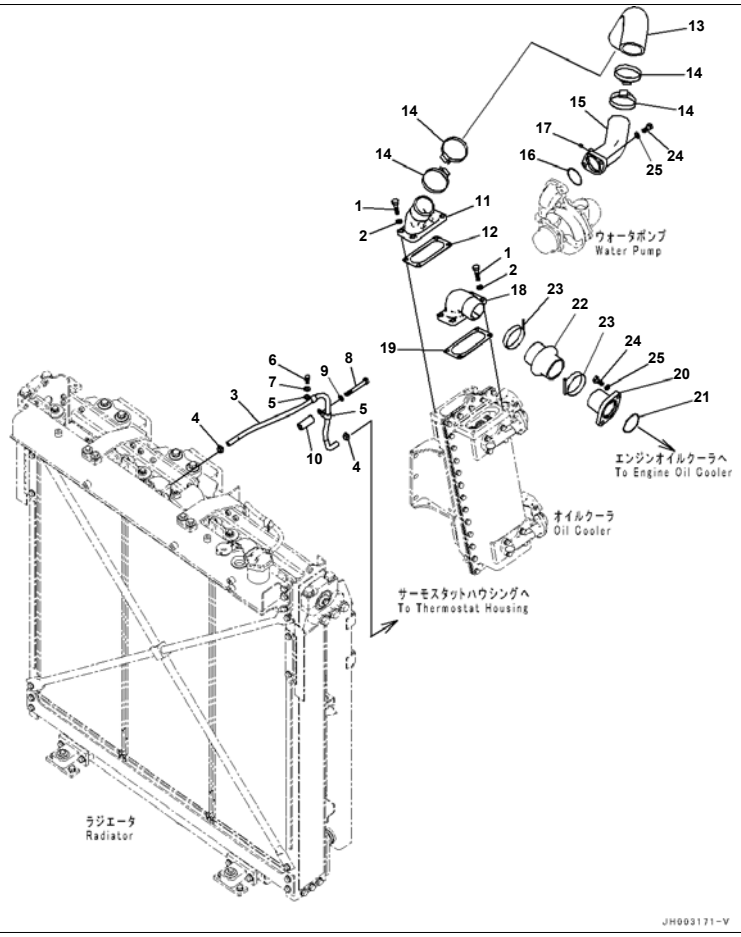

Index	Code	Part Number	Description	Qty	Serial No.
1		01010-81245	Bolt	8	65001-
2		01643-51232	Washer	8	65001-
3		195-03-65370	Hose	1	65001-
4		11Y-09-11140	Clip	2	65001-
5		04434-51612	Clip	2	65001-
6		01010-81220	Bolt	1	65001-
7		01643-31232	Washer	1	65001-
8		01010-81285	Bolt	1	65001-
9		01643-31232	Washer	1	65001-
10		281-01-17790	Seat	1	65001-
11		195-03-43380	Tube	1	65001-
12		195-03-43390	Gasket	1	65001-
13		195-03-43350	Hose	1	65001-
14		07289-00095	Clamp	4	65001-
15		195-03-58110	Tube	1	65001-
16		07000-G2075	O-ring	1	65001-
17		07042-30108	Plug	1	65001-
18		195-03-43370	Tube	1	65001-
19		195-03-43390	Gasket	1	65001-
20		195-03-43490	Tube	1	65001-
21		07000-G2075	O-ring	1	65001-
22		195-03-43190	Hose	1	65001-
23		195-03-43210	Clamp	2	65001-
24		01010-81240	Bolt	4	65001-
25		01643-51232	Washer	4	65001-

Printed By : Dwi Iswanto (airafather6107170)

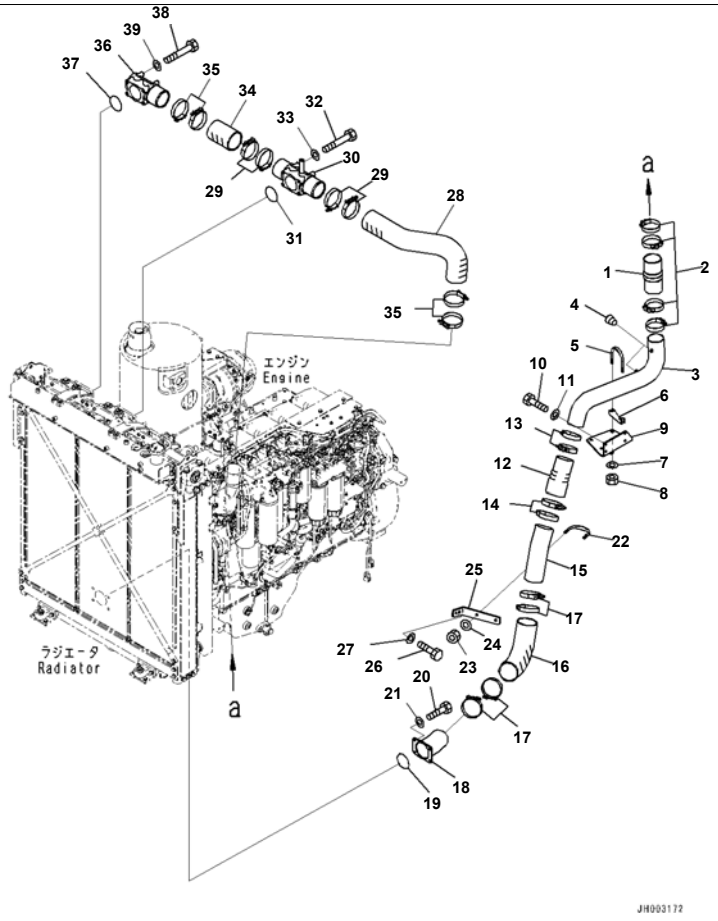

Index	Code	Part Number	Description	Qty	Serial No.
1		195-03-64441	Hose	1	65001-
2		07299-00120	Clamp	4	65001-
3		195-03-64251	Tube	1	65001-
4		07043-A0108	Plug	2	65001-
5		07283-31087	Clip, Pipe	2	65001-
6		6218-11-4971	Seat	2	65001-
7		01643-31232	Washer	4	65001-
8		01597-01211	Nut	4	65001-
9		195-03-64261	Bracket	1	65001-
10		01010-81025	Bolt	4	65001-
11		01643-31032	Washer	4	65001-
12		195-03-64451	Hose	1	65001-
13		20Y-62-51671	Clamp	2	65001-
14		208-62-73910	Clamp	2	65001-
15		195-03-64180	Tube	1	65001-
16		195-03-64171	Hose	1	65001-
17		208-62-73910	Clamp	4	65001-
18		195-03-64162	Tube	1	65001-
19		07000-E2110	O-ring	1	65001-
20		01010-81240	Bolt	4	65001-
21		01643-31232	Washer	4	65001-
22		07283-31185	Clip	1	65001-
23		01597-01211	Nut	2	65001-
24		01643-31232	Washer	2	65001-
25		195-03-64191	Bracket	1	65001-
26		01010-81225	Bolt	2	65001-
27		01643-31232	Washer	2	65001-
28		195-03-65410	Hose	1	65001-
29		208-62-73910	Clamp	4	65001-
30		195-03-65431	Duct	1	65001-
31		07000-E2110	O-ring	1	65001-

Printed By : Dwi Iswanto (airafather6107170)

Index	Code	Part Number	Description	Qty	Serial No.
32		01011-81255	Bolt	4	65001-
33		01643-31232	Washer	4	65001-
34		195-03-64122	Hose	1	65001-
35		208-62-73910	Clamp	4	65001-
36		195-03-65440	Duct	1	65001-
37		07000-E2110	O-ring	1	65001-
38		01011-81255	Bolt	4	65001-
39		01643-31232	Washer	4	65001-

Printed By : Dwi Iswanto (airafather6107170)

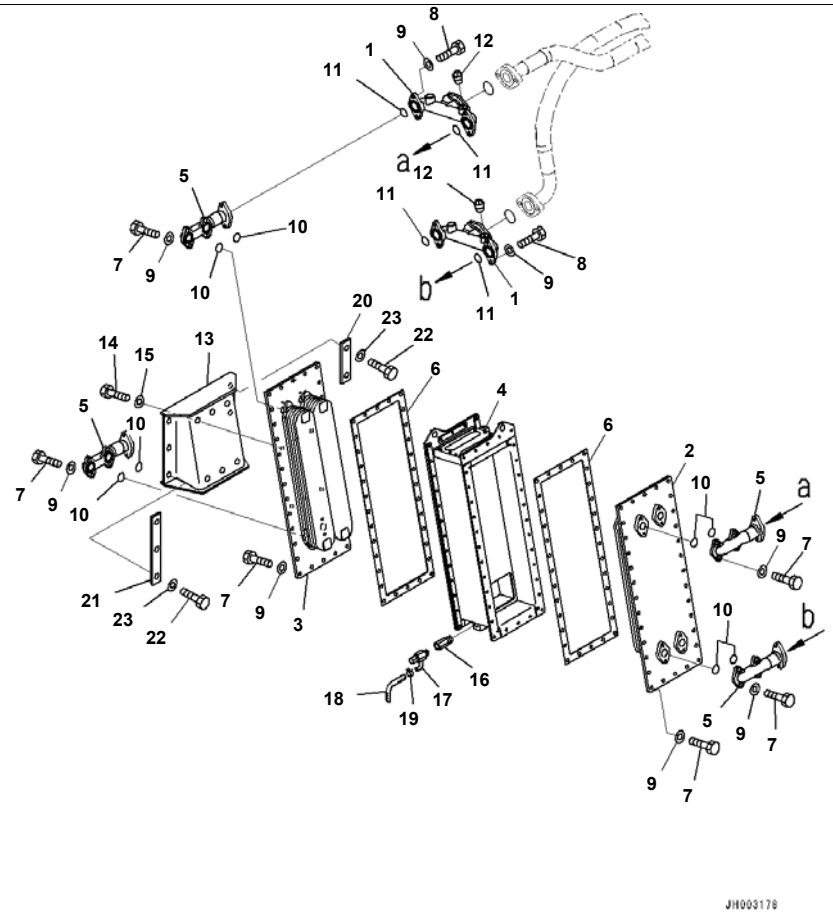

D375A-6R S/N 65001-UP
Power Train Oil Cooler Piping, Oil Cooler (#65001-)

Index	Code	Part Number	Description	Qty	Serial No.
		195-03-43400	Oil Cooler	1	65001-
1		195-03-43271	· Tube	2	65001-
2		195-03-43410	· Cover	1	65001-
3		195-03-43420	· Cover	1	65001-
4	C1		· Case	1	65001-
5		195-03-43460	· Tube	4	65001-
6		195-03-43470	· Gasket	2	65001-
7		01010-81025	· Bolt	80	65001-
8		01010-81030	· Bolt	8	65001-
9		01643-51032	· Washer	88	65001-
10		07000-73032	· O-ring	8	65001-
11		07000-73038	· O-ring	4	65001-
12		07042-30108	· Plug	2	65001-
13		195-03-43441	Bracket	1	65001-
14		01010-81630	Bolt	6	65001-
15		01643-31645	Washer	6	65001-
16		281-81-12930	Joint	1	65001-
17		07730-40004	Valve, Coolant Drain	1	65001-
18		07286-01450	Hose	1	65001-
19		07285-00180	Clip	1	65001-
20		195-03-43331	Plate	1	65001-
21		195-03-43341	Plate	1	65001-
22		01010-81640	Bolt	5	65001-
23		01643-31645	Washer	5	65001-

Printed By : Dwi Iswanto (airafather6107170)

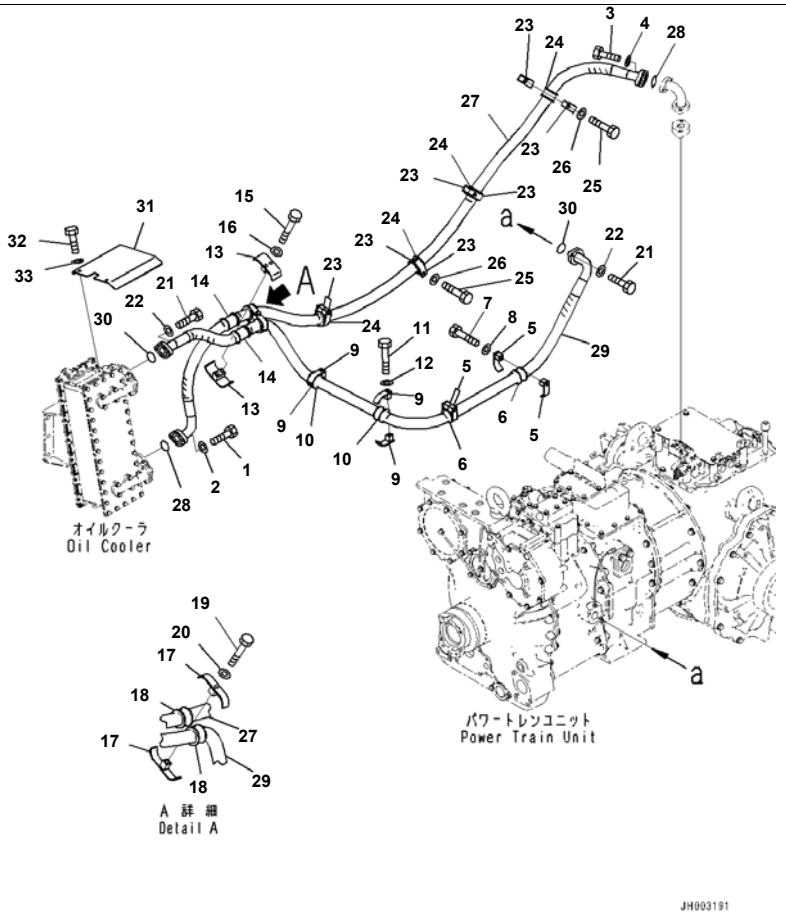

Reference:C0400-001002 Page:C002002

D375A-6R S/N 65001-UP
Power Train Oil Cooler Piping, Oil Cooler Piping (#65001-)

Index	Code	Part Number	Description	Qty	Serial No.
1		01010-81240	Bolt	2	65001-
2		01643-31232	Washer	2	65001-
3		01010-81240	Bolt	2	65001-
4		01643-31232	Washer	2	65001-
5		198-61-44220	Clamp	4	65001-
6		198-61-44130	Cushion	2	65001-
7		01010-81290	Bolt	2	65001-
8		01643-31232	Washer	2	65001-
9		198-61-44220	Clamp	4	65001-
10		198-61-44130	Cushion	2	65001-
11		01011-81200	Bolt	2	65001-
12		01643-31232	Washer	2	65001-
13		07094-31228	Clip	2	65001-
14		07095-01245	Cushion	2	65001-
15		01010-81290	Bolt	2	65001-
16		01643-31232	Washer	2	65001-
17		198-61-44310	Clamp	2	65001-
18		198-61-44130	Cushion	2	65001-
19		01011-81200	Bolt	1	65001-
20		01643-31232	Washer	1	65001-
21		01010-81240	Bolt	4	65001-
22		01643-31232	Washer	4	65001-
23		198-61-44220	Clamp	8	65001-
24		198-61-44130	Cushion	4	65001-
25		01010-81290	Bolt	4	65001-
26		01643-31232	Washer	4	65001-
27		195-49-44131	Hose	1	65001-
28		07000-F3048	O-ring	2	65001-
29		195-49-44141	Hose	1	65001-
30		07000-F3048	O-ring	2	65001-
31		195-03-43480	Plate	1	65001-

Reference:C0400-001002 Page:C002002

Printed By : Dwi Iswanto (airafather6107170)

Index	Code	Part Number	Description	Qty	Serial No.
32		01010-81225	Bolt	2	65001-
33		01643-31232	Washer	2	65001-

Printed By : Dwi Iswanto (airafather6107170)

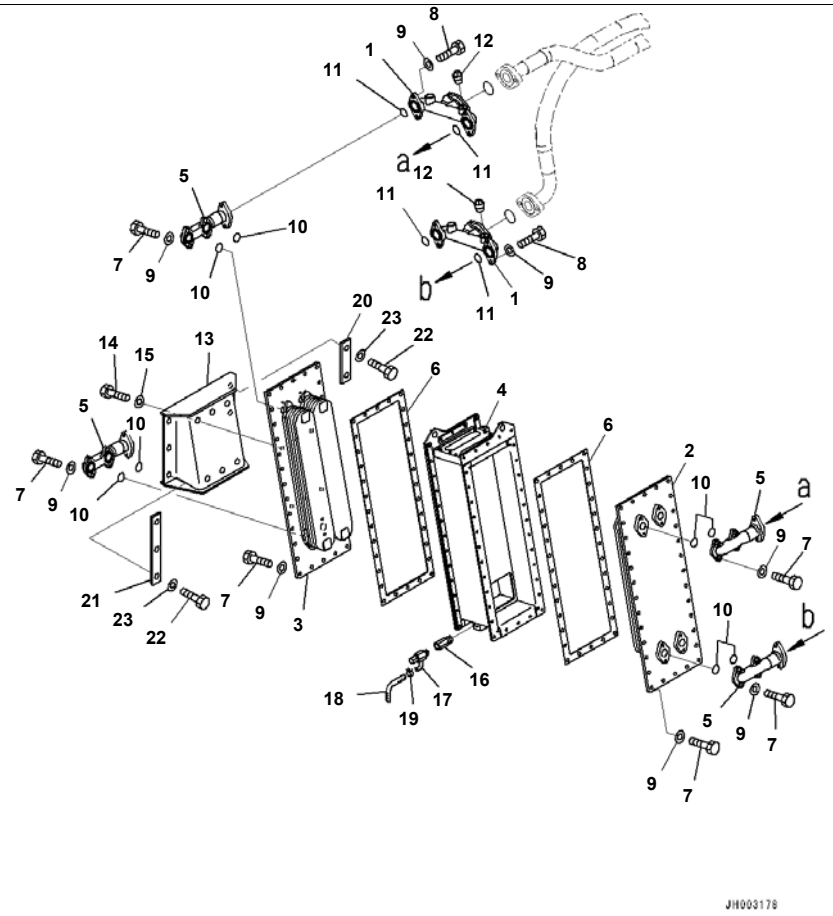

D375A-6R S/N 65001-UP
Power Train Oil Cooler Piping, With Engine Oil Pan And Coolant Heater, Oil Cooler (#65001-)

Index	Code	Part Number	Description	Qty	Serial No.
		195-03-43400	Oil Cooler	1	65001-
1		195-03-43271	· Tube	2	65001-
2		195-03-43410	· Cover	1	65001-
3		195-03-43420	· Cover	1	65001-
4	C1		· Case	1	65001-
5		195-03-43460	· Tube	4	65001-
6		195-03-43470	· Gasket	2	65001-
7		01010-81025	· Bolt	80	65001-
8		01010-81030	· Bolt	8	65001-
9		01643-51032	· Washer	88	65001-
10		07000-73032	· O-ring	8	65001-
11		07000-73038	· O-ring	4	65001-
12		07042-30108	· Plug	2	65001-
13		195-03-43441	Bracket	1	65001-
14		01010-81630	Bolt	6	65001-
15		01643-31645	Washer	6	65001-
16		281-81-12930	Joint	1	65001-
17		07730-40004	Valve, Coolant Drain	1	65001-
18		07286-01450	Hose	1	65001-
19		07285-00180	Clip	1	65001-
20		195-03-43331	Plate	1	65001-
21		195-03-43341	Plate	1	65001-
22		01010-81640	Bolt	5	65001-
23		01643-31645	Washer	5	65001-

Printed By : Dwi Iswanto (airafather6107170)

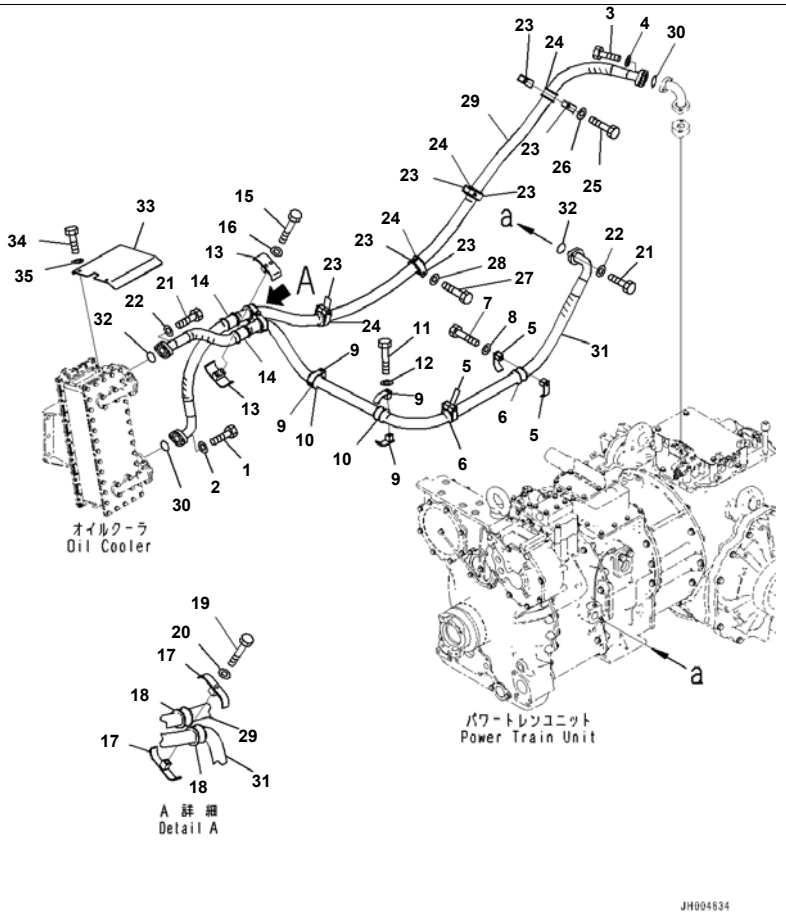

D375A-6R S/N 65001-UP

Power Train Oil Cooler Piping, With Engine Oil Pan And Coolant Heater, Oil Cooler Piping (#65001-)

Index	Code	Part Number	Description	Qty	Serial No.
1		01010-81240	Bolt	2	65001-
2		01643-31232	Washer	2	65001-
3		01010-81240	Bolt	2	65001-
4		01643-31232	Washer	2	65001-
5		198-61-44220	Clamp	4	65001-
6		198-61-44130	Cushion	2	65001-
7		01010-81290	Bolt	2	65001-
8		01643-31232	Washer	2	65001-
9		198-61-44220	Clamp	4	65001-
10		198-61-44130	Cushion	2	65001-
11		01011-81200	Bolt	2	65001-
12		01643-31232	Washer	2	65001-
13		07094-31228	Clip	2	65001-
14		07095-01245	Cushion	2	65001-
15		01010-81290	Bolt	2	65001-
16		01643-31232	Washer	2	65001-
17		198-61-44310	Clamp	2	65001-
18		198-61-44130	Cushion	2	65001-
19		01011-81200	Bolt	1	65001-
20		01643-31232	Washer	1	65001-
21		01010-81240	Bolt	4	65001-
22		01643-31232	Washer	4	65001-
23		198-61-44220	Clamp	8	65001-
24		198-61-44130	Cushion	4	65001-
25		01010-81290	Bolt	1	65001-
26		01643-31232	Washer	1	65001-
27		01010-81200	Bolt	3	65001-
28		01643-31232	Washer	3	65001-
29		195-49-44131	Hose	1	65001-
30		07000-F3048	O-ring	2	65001-
31		195-49-44141	Hose	1	65001-

Printed By : Dwi Iswanto (airafather6107170)

Power Train Oil Cooler Piping, With Engine Oil Pan And Coolant Heater, Oil Cooler Piping (#65001-)

Index	Code	Part Number	Description	Qty	Serial No.
32		07000-F3048	O-ring	2	65001-
33		195-03-43480	Plate	1	65001-
34		01010-81225	Bolt	2	65001-
35		01643-31232	Washer	2	65001-

Printed By : Dwi Iswanto (airafather6107170)

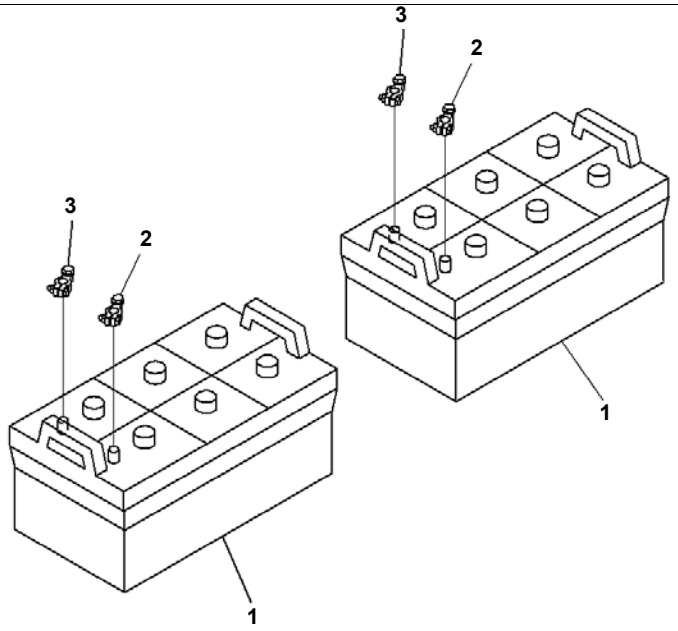

Index	Code	Part Number	Description	Qty	Serial No.
1		08000-12221	Battery, Dry, (C200)	2	65001-
2		08000-00000	Terminal, (+)	2	65001-
3		08000-00001	Terminal, (-)	2	65001-

Printed By : Dwi Iswanto (airafather6107170)

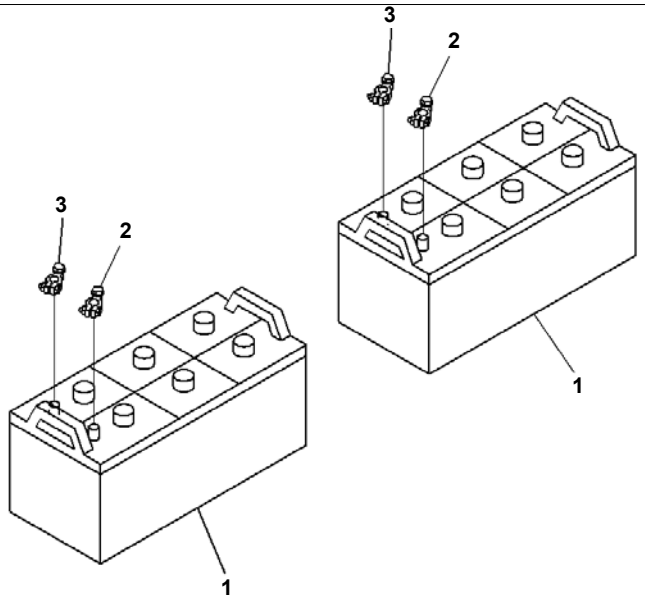

Index	Code	Part Number	Description	Qty	Serial No.
1		08000-42220	Battery, Dry, (165G51)	2	65001-
2		08000-00000	Terminal, (+)	2	65001-
3		08000-00001	Terminal, (-)	2	65001-

Printed By : Dwi Iswanto (airafather6107170)

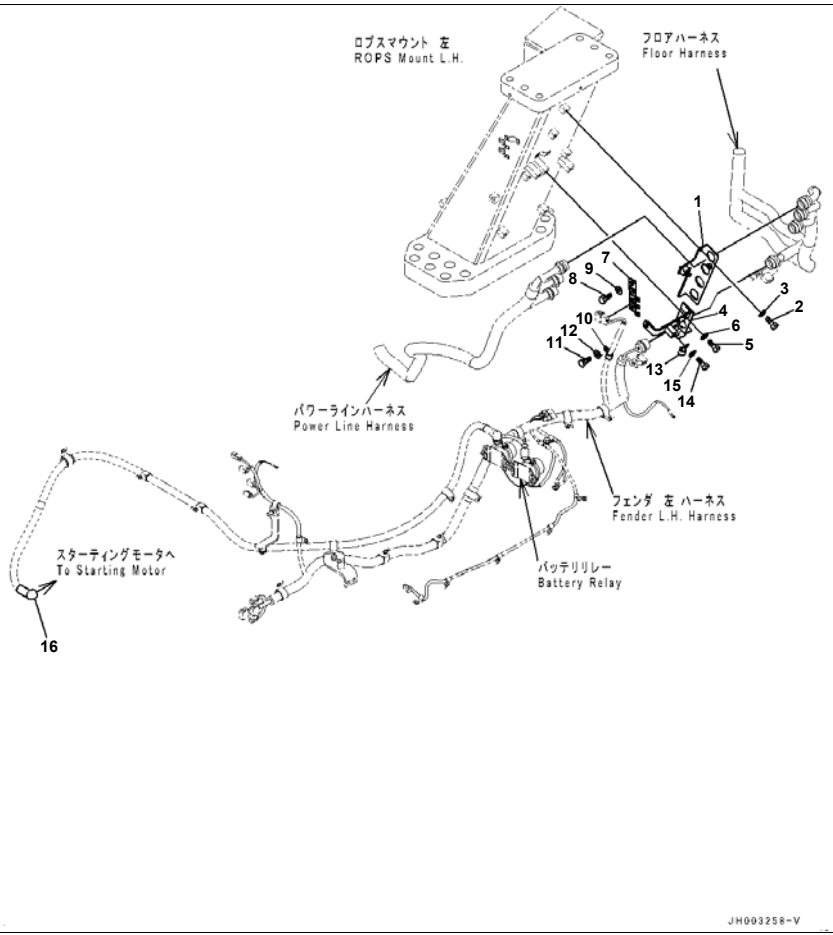

Reference:E0200-001001 Page:E003001

D375A-6R S/N 65001-UP
Electric Wiring, For Machine With Shoe Slip Control, Fender Harness Clamp (#65001-)

Index	Code	Part Number	Description	Qty	Serial No.
1		195-06-55960	Bracket	1	65001-
2		01010-81225	Bolt	2	65001-
3		01643-31232	Washer	2	65001-
4		195-06-55411	Bracket	1	65001-
5		01010-81225	Bolt	2	65001-
6		01643-31232	Washer	2	65001-
7		195-06-55712	Bracket	1	65001-
8		01010-81225	Bolt	2	65001-
9		01643-31232	Washer	2	65001-
10		04434-51712	Clip	1	65001-
11		01010-81225	Bolt	1	65001-
12		01643-31232	Washer	1	65001-
13		04434-51812	Clip	1	65001-
14		01010-81225	Bolt	1	65001-
15		01643-31232	Washer	1	65001-
16		154-06-13130	Cap, Terminal	1	65001-

Printed By : Dwi Iswanto (airafather6107170)

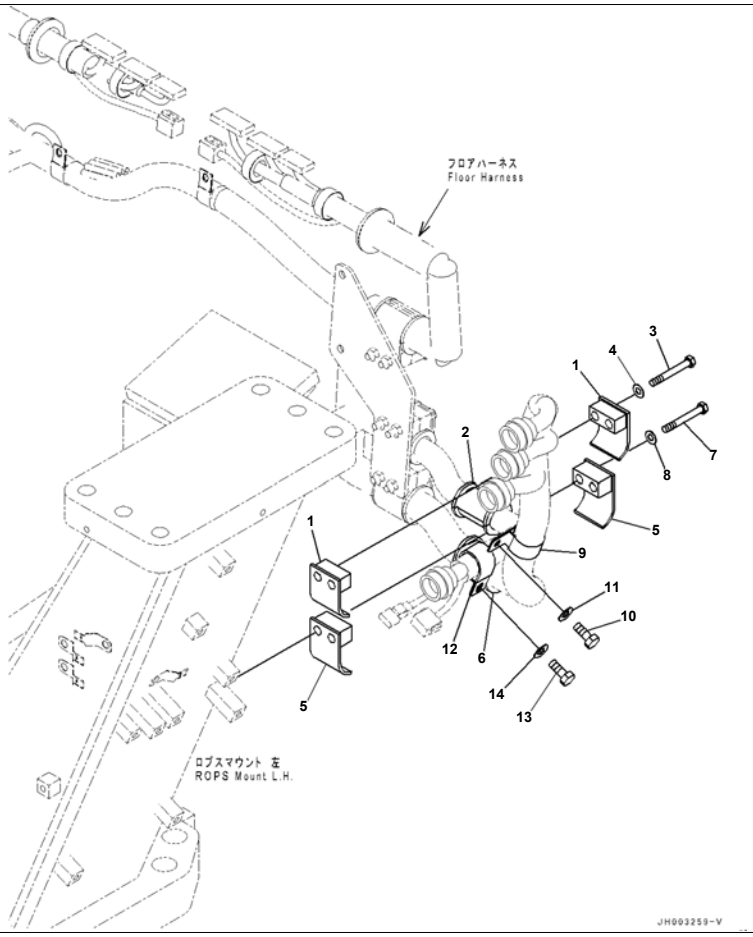

Index	Code	Part Number	Description	Qty	Serial No.
1		07094-11024	Clamp	2	65001-
2		07095-01038	Cushion	1	65001-
3		01010-81285	Bolt	2	65001-
4		01643-31232	Washer	2	65001-
5		07094-11228	Clamp	2	65001-
6		07095-01241	Cushion	1	65001-
7		01010-81285	Bolt	2	65001-
8		01643-31232	Washer	2	65001-
9		23S-62-25850	Clip	1	65001-
10		01010-81225	Bolt	1	65001-
11		01643-31232	Washer	1	65001-
12		23S-61-24870	Clip	1	65001-
13		01010-81225	Bolt	1	65001-
14		01643-31232	Washer	1	65001-

Printed By : Dwi Iswanto (airafather6107170)

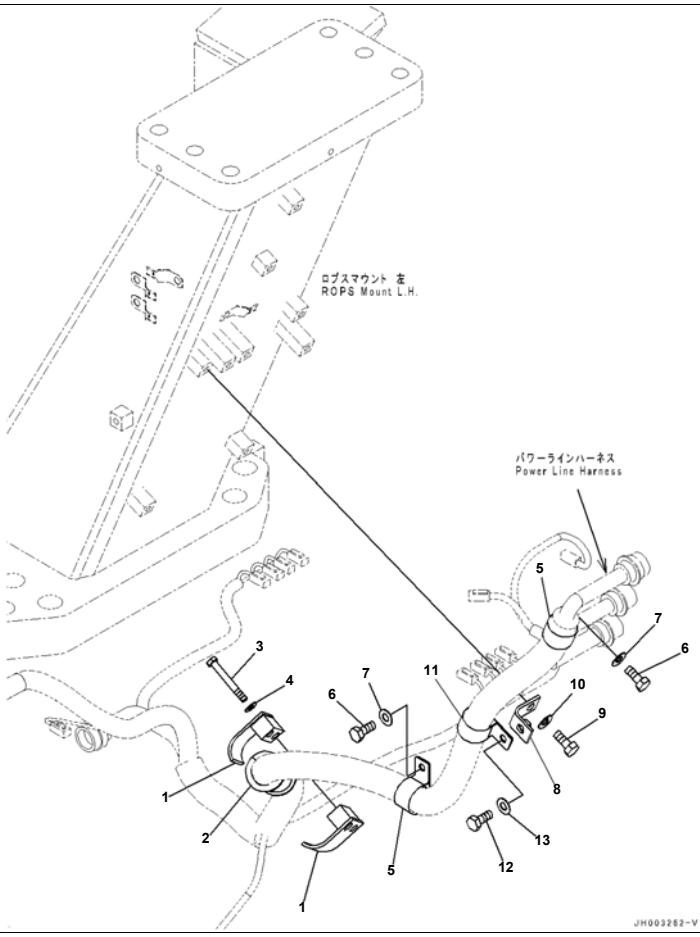

Reference:E0200-001003 Page:E003003

D375A-6R S/N 65001-UP
Electric Wiring, For Machine With Shoe Slip Control, Power Line Harness Clamp (#65001-)

Index	Code	Part Number	Description	Qty	Serial No.
1		07094-11228	Clamp	2	65001-
2		07095-01245	Cushion	1	65001-
3		01010-81285	Bolt	2	65001-
4		01643-31232	Washer	2	65001-
5		23S-62-25850	Clip	2	65001-
6		01010-81225	Bolt	2	65001-
7		01643-31232	Washer	2	65001-
8		17M-49-15260	Bracket	1	65001-
9		01010-81225	Bolt	1	65001-
10		01643-31232	Washer	1	65001-
11		23S-62-25850	Clip	1	65001-
12		01010-81220	Bolt	1	65001-
13		01643-31232	Washer	1	65001-

Printed By : Dwi Iswanto (airafather6107170)

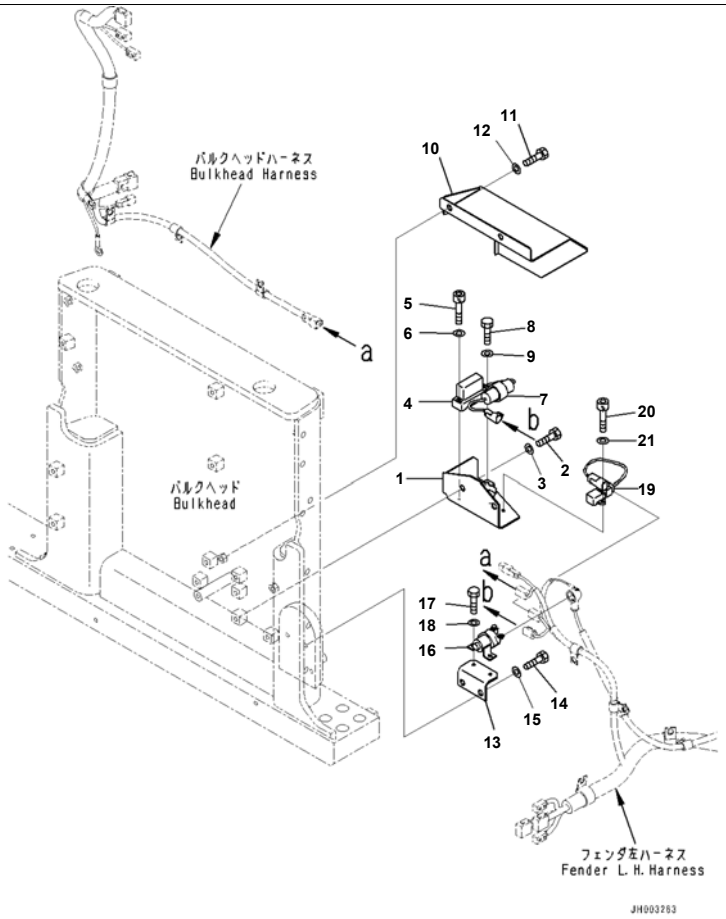

Reference:E0200-001004 Page:E003004

D375A-6R S/N 65001-UP
Electric Wiring, For Machine With Shoe Slip Control, Sensor (#65001-)

Index	Code	Part Number	Description	Qty	Serial No.
1		17M-06-43340	Bracket	1	65001-
2		01010-81230	Bolt	2	65001-
3		01643-31232	Washer	2	65001-
4		7861-93-5390	Sensor, Angle	1	65001-
5		01252-60635	Bolt	2	65001-
6		01643-30623	Washer	2	65001-
7		600-051-3300	Clip	1	65001-
8		01010-81220	Bolt	1	65001-
9		01643-31232	Washer	1	65001-
10		195-06-54432	Cover	1	65001-
11		01010-81230	Bolt	2	65001-
12		01643-31232	Washer	2	65001-
13		195-06-71291	Bracket	1	65001-
14		01010-81230	Bolt	2	65001-
15		01643-31232	Washer	2	65001-
16		600-815-2170	Switch, Heater	1	65001-
17		01010-80616	Bolt	2	65001-
18		01643-30623	Washer	2	65001-
19		7861-93-5410	Sensor	1	65001-
20		01252-60616	Bolt	2	65001-
21		01643-30623	Washer	2	65001-

Reference:E0200-001004 Page:E003004

Printed By : Dwi Iswanto (airafather6107170)

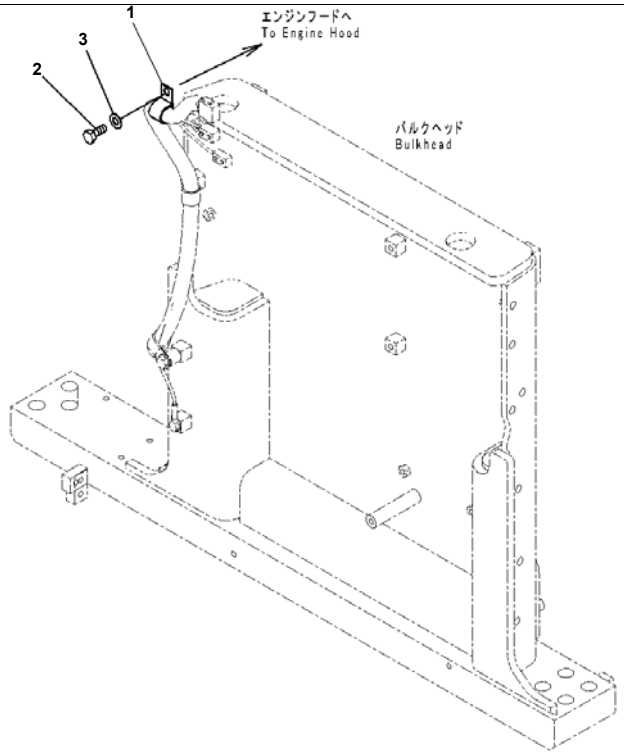

Index	Code	Part Number	Description	Qty	Serial No.
1		04434-52712	Clip	1	65001-
2		01010-81225	Bolt	1	65001-
3		01643-31232	Washer	1	65001-

Printed By : Dwi Iswanto (airafather6107170)

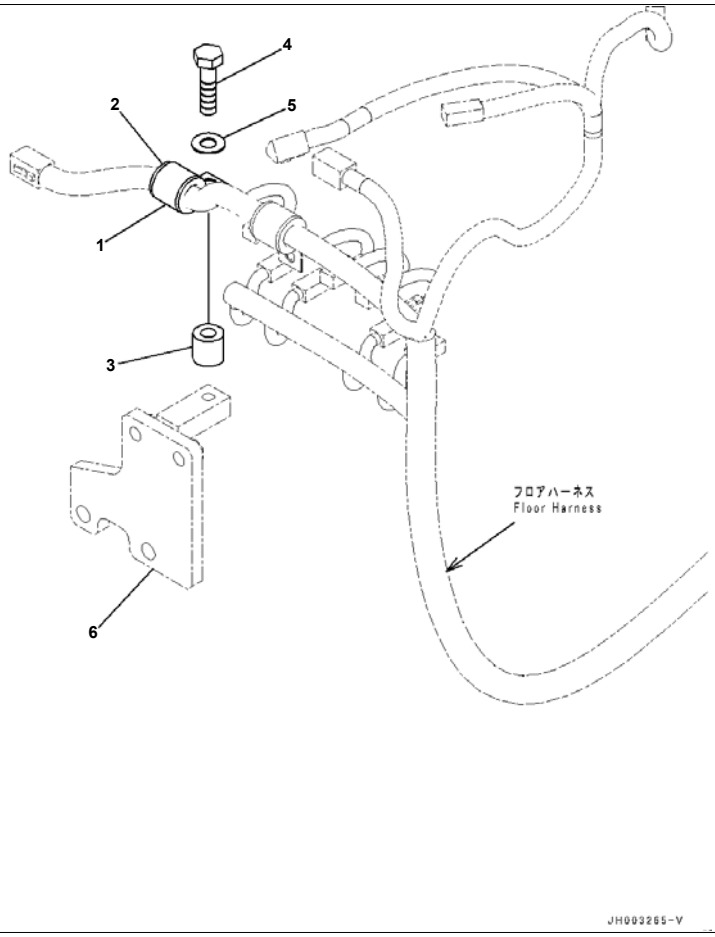

Reference:E0200-001006 Page:E003006

D375A-6R S/N 65001-UP
Electric Wiring, For Machine With Shoe Slip Control, Floor Harness Clamp, Floor RHS (#65001-)

Index	Code	Part Number	Description	Qty	Serial No.
1		04434-52712	Clip	1	65001-
2		07095-20419	Cushion	1	65001-
3		195-33-11220	Spacer	1	65001-
4		01010-81250	Bolt	1	65001-
5		01643-31232	Washer	1	65001-
6		(195-61-62111)	Bracket		

Printed By : Dwi Iswanto (airafather6107170)

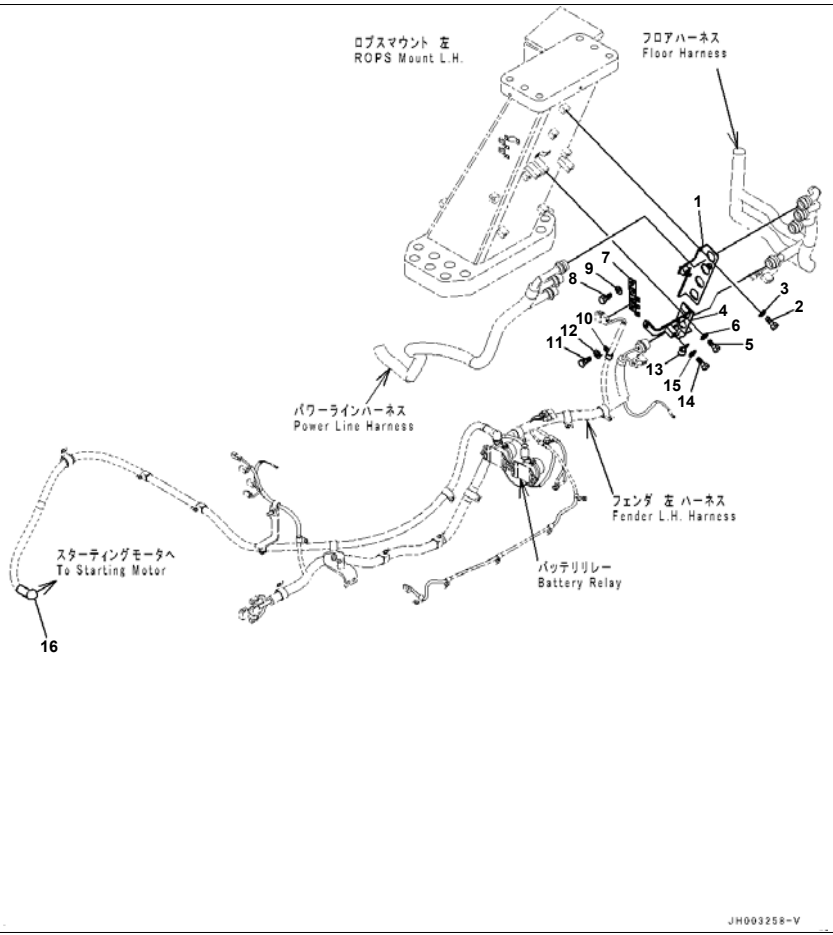

Reference:E0200-002001 Page:E004001

D375A-6R S/N 65001-UP
Electric Wiring, Without Shoe Slip Control, Fender Harness Clamp (#65001-)

Index	Code	Part Number	Description	Qty	Serial No.
1		195-06-55960	Bracket	1	65001-
2		01010-81225	Bolt	2	65001-
3		01643-31232	Washer	2	65001-
4		195-06-55411	Bracket	1	65001-
5		01010-81225	Bolt	2	65001-
6		01643-31232	Washer	2	65001-
7		195-06-55712	Bracket	1	65001-
8		01010-81225	Bolt	2	65001-
9		01643-31232	Washer	2	65001-
10		04434-51712	Clip	1	65001-
11		01010-81225	Bolt	1	65001-
12		01643-31232	Washer	1	65001-
13		04434-51812	Clip	1	65001-
14		01010-81225	Bolt	1	65001-
15		01643-31232	Washer	1	65001-
16		154-06-13130	Cap, Terminal	1	65001-

Reference:E0200-002001 Page:E004001

Printed By : Dwi Iswanto (airafather6107170)

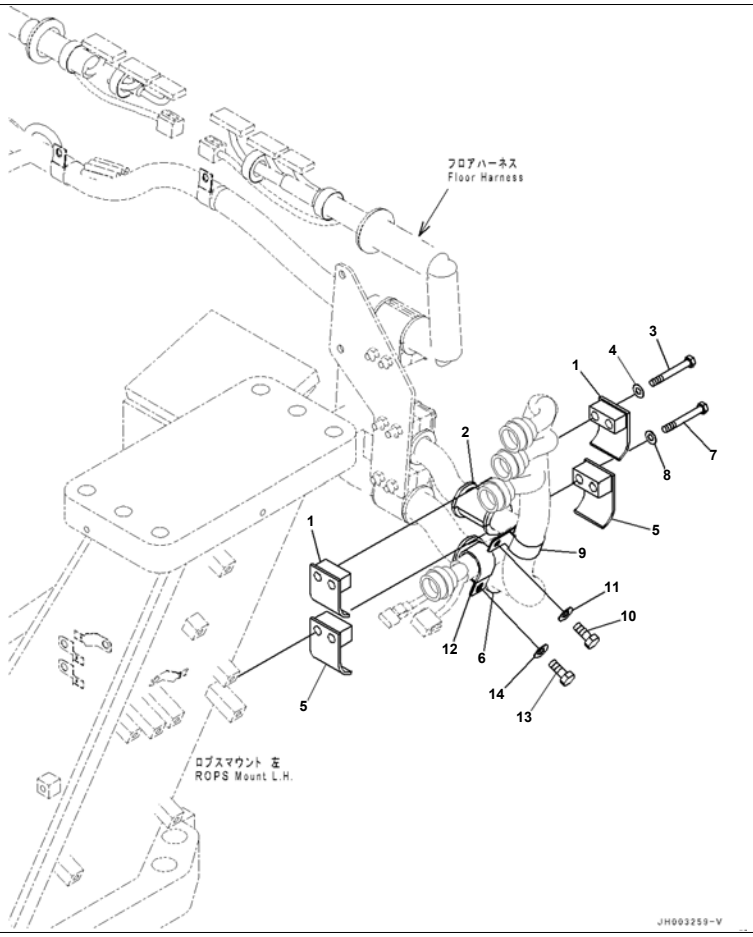

Electric Wiring, Without Shoe Slip Control, Floor Harness Clamp (#65001-)

Index	Code	Part Number	Description	Qty	Serial No.
1		07094-11024	Clamp	2	65001-
2		07095-01038	Cushion	1	65001-
3		01010-81285	Bolt	2	65001-
4		01643-31232	Washer	2	65001-
5		07094-11228	Clamp	2	65001-
6		07095-01241	Cushion	1	65001-
7		01010-81285	Bolt	2	65001-
8		01643-31232	Washer	2	65001-
9		23S-62-25850	Clip	1	65001-
10		01010-81225	Bolt	1	65001-
11		01643-31232	Washer	1	65001-
12		23S-61-24870	Clip	1	65001-
13		01010-81225	Bolt	1	65001-
14		01643-31232	Washer	1	65001-

Printed By : Dwi Iswanto (airafather6107170)

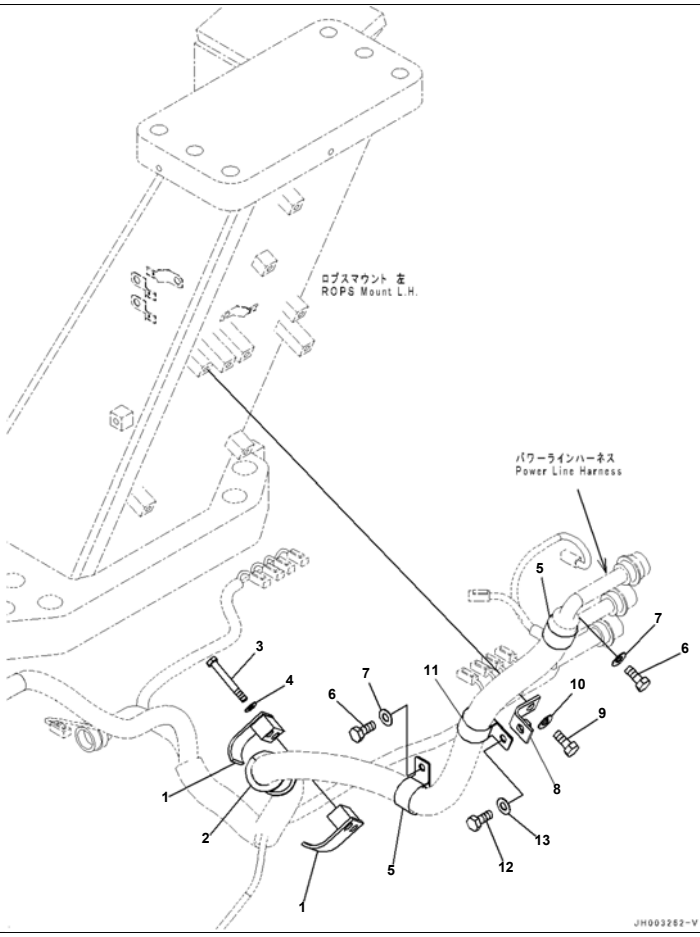

Reference:E0200-002003 Page:E004003

D375A-6R S/N 65001-UP
Electric Wiring, Without Shoe Slip Control, Power Line Harness Clamp (#65001-)

Index	Code	Part Number	Description	Qty	Serial No.
1		07094-11228	Clamp	2	65001-
2		07095-01245	Cushion	1	65001-
3		01010-81285	Bolt	2	65001-
4		01643-31232	Washer	2	65001-
5		23S-62-25850	Clip	2	65001-
6		01010-81225	Bolt	2	65001-
7		01643-31232	Washer	2	65001-
8		17M-49-15260	Bracket	1	65001-
9		01010-81225	Bolt	1	65001-
10		01643-31232	Washer	1	65001-
11		23S-62-25850	Clip	1	65001-
12		01010-81220	Bolt	1	65001-
13		01643-31232	Washer	1	65001-

Printed By : Dwi Iswanto (airafather6107170)

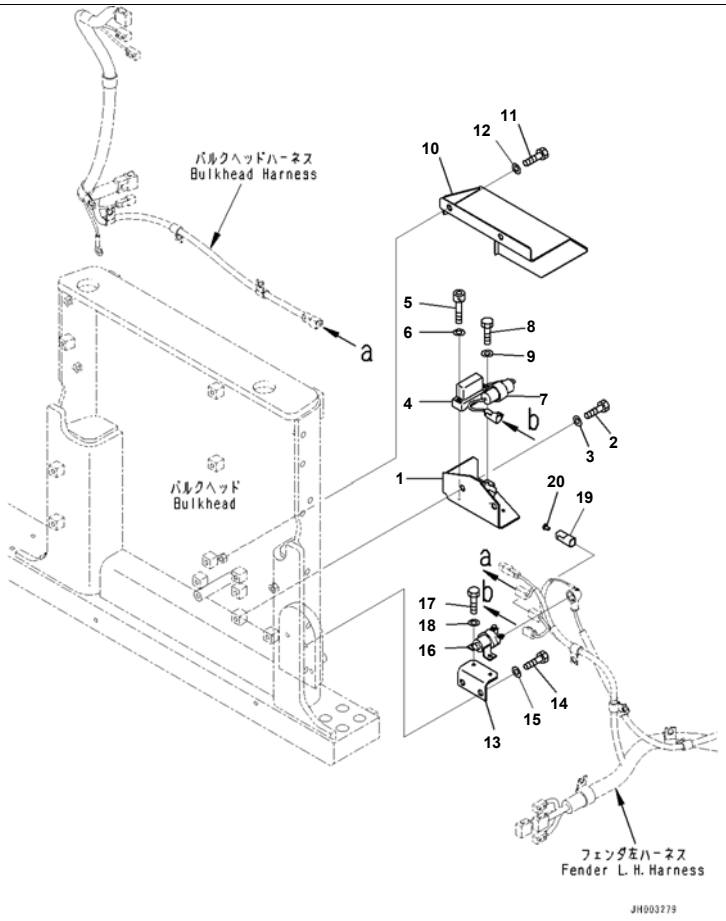

Reference:E0200-002004 Page:E004004

D375A-6R S/N 65001-UP
Electric Wiring, Without Shoe Slip Control, Sensor (#65001-)

Index	Code	Part Number	Description	Qty	Serial No.
1		17M-06-43340	Bracket	1	65001-
2		01010-81230	Bolt	2	65001-
3		01643-31232	Washer	2	65001-
4		7861-93-5390	Sensor, Angle	1	65001-
5		01252-60635	Bolt	2	65001-
6		01643-30623	Washer	2	65001-
7		600-051-3300	Clip	1	65001-
8		01010-81220	Bolt	1	65001-
9		01643-31232	Washer	1	65001-
10		195-06-54432	Cover	1	65001-
11		01010-81230	Bolt	2	65001-
12		01643-31232	Washer	2	65001-
13		195-06-71291	Bracket	1	65001-
14		01010-81230	Bolt	2	65001-
15		01643-31232	Washer	2	65001-
16		600-815-2170	Switch, Heater	1	65001-
17		01010-80616	Bolt	2	65001-
18		01643-30623	Washer	2	65001-
19		08192-14100	Connector Body	1	65001-
20		08191-00770	Plug, Connector	4	65001-

Reference:E0200-002004 Page:E004004

Printed By : Dwi Iswanto (airafather6107170)

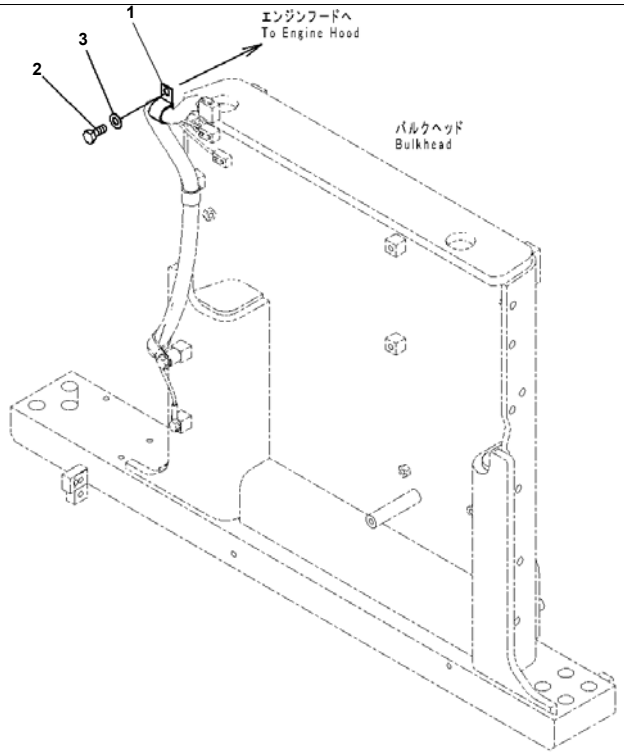

Index	Code	Part Number	Description	Qty	Serial No.
1		04434-52712	Clip	1	65001-
2		01010-81225	Bolt	1	65001-
3		01643-31232	Washer	1	65001-

Printed By : Dwi Iswanto (airafather6107170)

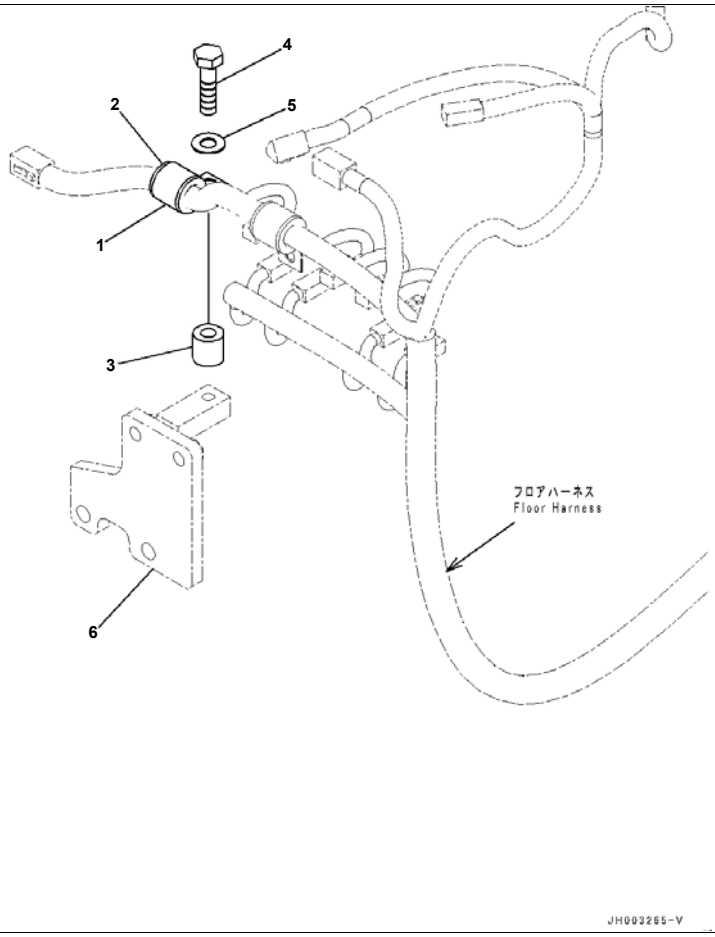

Reference:E0200-002006 Page:E004006

D375A-6R S/N 65001-UP
Electric Wiring, Without Shoe Slip Control, Floor Harness Clamp, Floor RHS (#65001-)

Index	Code	Part Number	Description	Qty	Serial No.
1		04434-52712	Clip	1	65001-
2		07095-20419	Cushion	1	65001-
3		195-33-11220	Spacer	1	65001-
4		01010-81250	Bolt	1	65001-
5		01643-31232	Washer	1	65001-
6		(195-61-62111)	Bracket		

Printed By : Dwi Iswanto (airafather6107170)

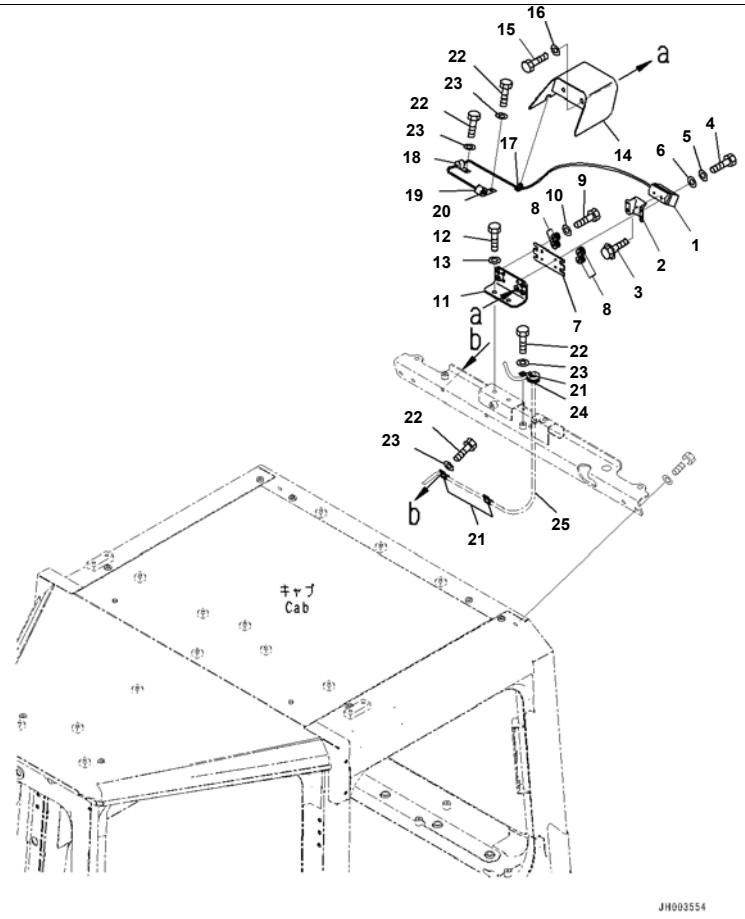

Rearview Camera, With Rear View Monitoring System (#65001-)

Index	Code	Part Number	Description	Qty	Serial No.
		7835-33-1001	Camera Assembly	1	65001-
1		7835-33-1100	· Camera	1	65001-
2		7835-33-1201	· Bracket	1	65001-
3		7835-33-1310	· Bolt	2	65001-
4		7835-33-1320	· Bolt	4	65001-
5		7835-33-1330	· Washer	4	65001-
6		7835-33-1340	· Washer	4	65001-
7		20Y-06-41670	Bracket	1	65001-
8		20Y-810-1240	Cushion	4	65001-
9		01010-D0835	Bolt	4	65001-
10		01643-70823	Washer	4	65001-
11		20Y-06-41661	Bracket	1	65001-
12		01010-D1025	Bolt	2	65001-
13		01643-71032	Washer	2	65001-
14		20Y-06-41681	Cover	1	65001-
15		01010-D1020	Bolt	2	65001-
16		01643-71032	Washer	2	65001-
17		201-54-13210	Grommet	1	65001-
18		04434-50610	Clip	1	65001-
19		04434-53211	Clip	1	65001-
20		07095-00317	Cushion	1	65001-
21		04434-51010	Clip	3	65001-
22		01010-D1020	Bolt	5	65001-
23		01643-71032	Washer	5	65001-
24		205-977-7310	Grommet	1	65001-
25		(7835-33-8100)	Cable Assembly		
		(7835-33-8100)	Cable Assembly		
		(7835-33-8100)	Cable Assembly		

Printed By : Dwi Iswanto (airafather6107170)

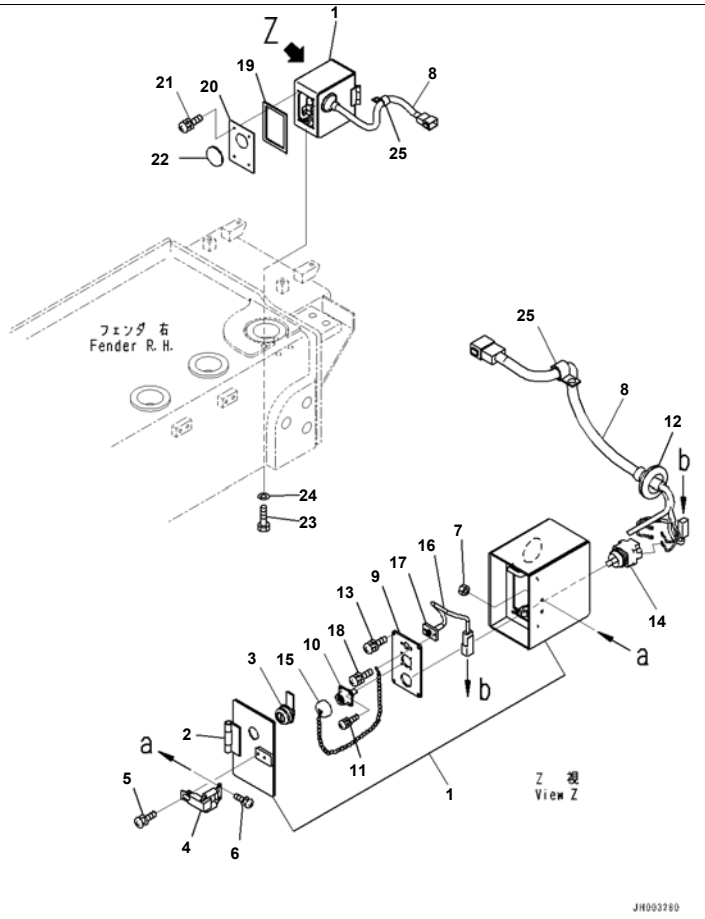

D375A-6R S/N 65001-UP
VHMS Wiring, With VHMS (#65001-)

Index	Code	Part Number	Description	Qty	Serial No.
		195-06-82710	Box Subassembly	1	65001-
1	C1		· Box, Control	1	65001-
2		198-06-62820	· · Hinge,Welded	1	65001-
3		205-60-71220	· Lock Assembly	1	65001-
4		8295-75-3220	· Catcher	1	65001-
5		01023-10408	· Screw	2	65001-
6		01023-10410	· Screw	2	65001-
7		01580-60403	· Nut	2	65001-
8		195-06-82770	Wiring Harness	1	65001-
9		195-06-72760	· Panel	1	65001-
10		21T-06-67370	· Connector	1	65001-
11		01023-70310	· Screw	4	65001-
12		08037-12036	· Grommet	1	65001-
13		01023-70416	Screw	4	65001-
14		569-97-82580	Switch	1	65001-
15		562-43-15810	Cap	1	65001-
16		195-06-72780	Wiring Harness	1	65001-
17		198-06-62790	· Plate	1	65001-
18		01023-70310	Screw	2	65001-
		195-06-83750	Cover	1	65001-
19		195-06-72830	· Sheet	1	65001-
20	C1		· Cover	1	65001-
21		01023-70416	Screw	4	65001-
22		22B-54-22341	Cap	1	65001-
23		01010-81230	Bolt	4	65001-
24		01643-31232	Washer	4	65001-
25		04435-51512	Clip	1	65001-

Printed By : Dwi Iswanto (airafather6107170)

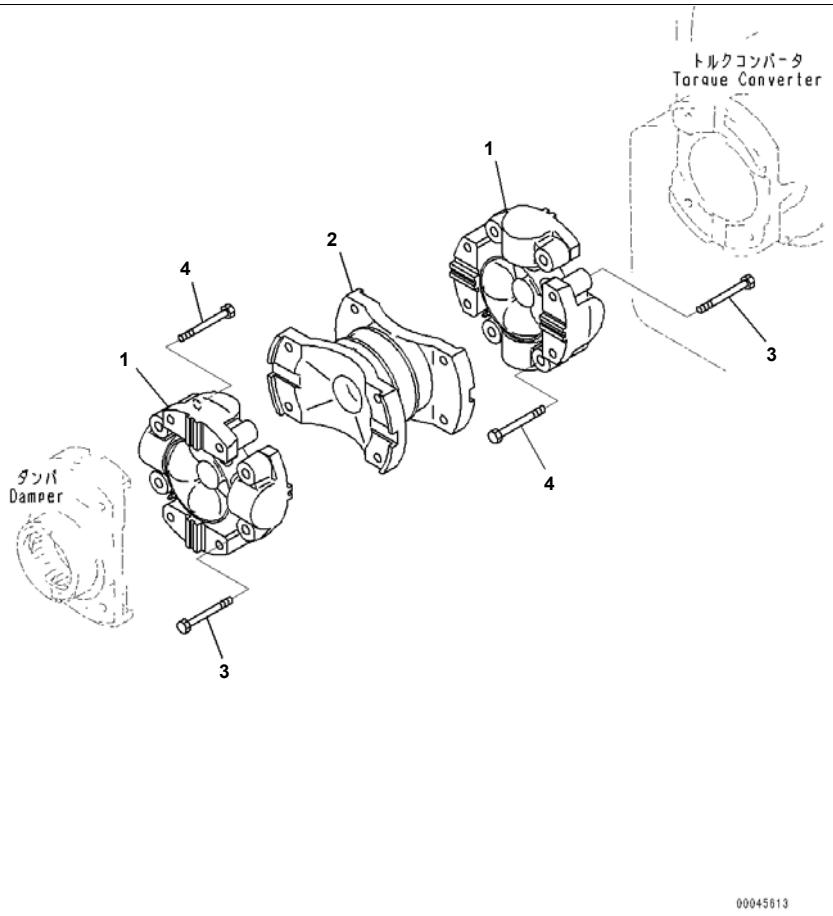

Index	Code	Part Number	Description	Qty	Serial No.
		195-20-34100	Universal Joint	1	65001-
1		195-20-34110	· Spider Assembly	2	65001-
2	C1		· Coupling	1	65001-
3		426-20-12690	· Bolt	8	65001-
4		01010-81470	Bolt	8	65001-

Printed By : Dwi Iswanto (airafather6107170)

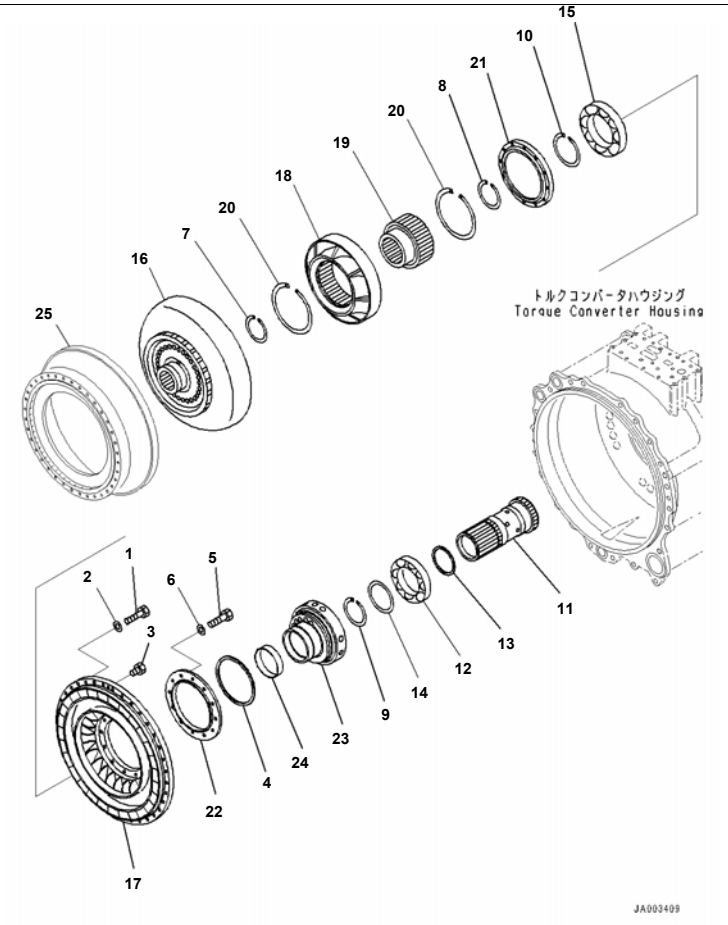

Power Train, For Machine With Vehicle Health Monitoring System (VHMS), Pump and Turbine (#65001-)

Index	Code	Part Number	Description	Qty	Serial No.
		195-22-80050	Power Train Assembly	1	65001-
		195-13-81100	· Torque Converter Assembly	1	65001-
1		01010-81035	· · Bolt	36	65001-
2		01643-31032	· · Washer	36	65001-
3		07040-11007	· · Plug	2	65001-
4		198-13-42710	· · Seal Ring, (Kit : K01)	1	65001-
5		01010-81050	· · Bolt	12	65001-
6		01643-31032	· · Washer	12	65001-
7		04070-00105	· · Ring, Snap	1	65001-
8		04070-00110	· · Ring, Snap	1	65001-
9		04070-00110	· · Ring, Snap	1	65001-
10		04070-00130	· · Ring, Snap	1	65001-
11		711-67-18520	· · Shaft, STATOR	1	65001-
12		06040-06022	· · Bearing	1	65001-
13		07018-31104	· · Seal Ring, (Kit : K01)	1	65001-
14		711-67-18770	· · Spacer	1	65001-
15		711-66-11160	· · Bearing	1	65001-
16		195-13-71510	· · Turbine, COMPLETE	1	65001-
17		711-66-11122	· · Pump	1	65001-
18		711-60-22120	· · Stator	1	65001-
19		711-60-22130	· · Race	1	65001-
20		04071-00180	· · Ring, Snap	2	65001-
21		711-66-11190	· · Guide	1	65001-
22		195-13-71140	· · Retainer	1	65001-
23		195-13-82520	· · Shaft, PUMP	1	65001-
24		711-66-12530	· · Bushing	1	65001-
25		(711-66-11210)	Case		

Printed By : Dwi Iswanto (airafather6107170)

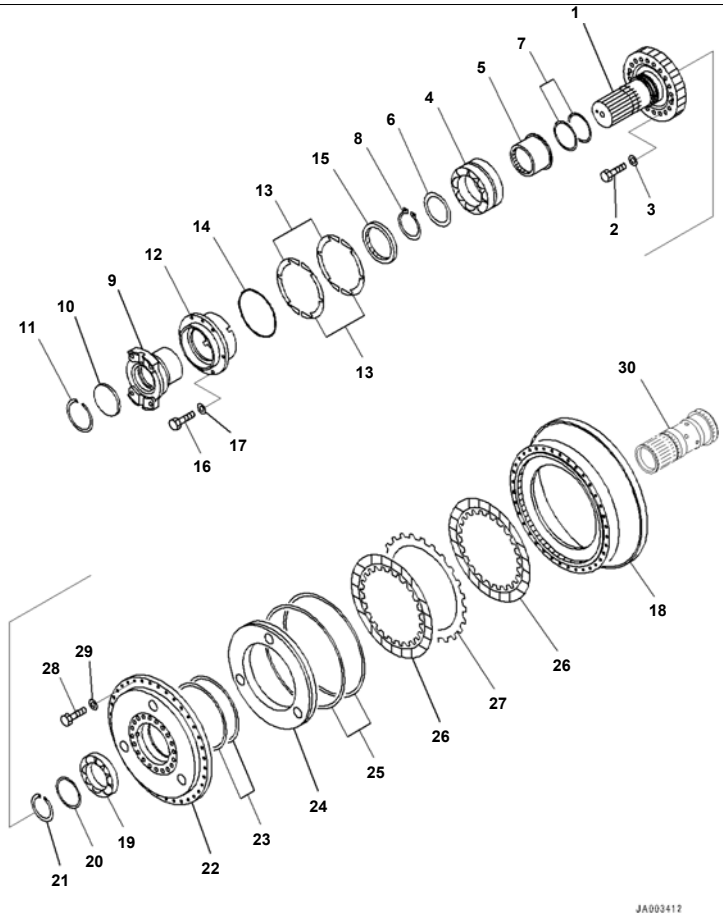

D375A-6R S/N 65001-UP

Power Train, For Machine With Vehicle Health Monitoring System (VHMS), Input shaft and Drive Case (#65001-)

Index	Code	Part Number	Description	Qty	Serial No.
		195-22-80050	Power Train Assembly	1	65001-
		195-13-81100	· Torque Converter Assembly	1	65001-
1		195-13-71331	· · Shaft	1	65001-
2		01010-61475	· · Bolt	20	65001-
3		01643-31445	· · Washer	20	65001-
4		19M-13-23360	· · Bearing	1	65001-
5		711-66-11343	· · Race	1	65001-
6		711-66-11771	· · Plate	1	65001-
7		07018-21155	· · Seal Ring	2	65001-
8		04064-01030	· · Ring, Snap, for Shaft Side	1	65001-
9		711-67-11662	· · Coupling, COMPLETE	1	65001-
10		711-60-11392	· · Cap	1	65001-
11		04071-00120	· · Ring, Snap, for Hole Side	1	65001-
12		711-67-13370	· · Retainer	1	65001-
13		711-66-14270	· · Shim, T=0.15mm	6	65001-
		711-66-14280	· · Shim, T=0.2mm	6	65001-
		711-66-14290	· · Shim, T=0.5mm	4	65001-
14		07000-75175	· · O-ring, (Kit : K01)	1	65001-
15		07012-50125	· · Seal, Oil, (Kit : K01)	1	65001-
16		01010-81035	· · Bolt	6	65001-
17		01643-31032	· · Washer	6	65001-
18		711-66-11210	· · Case	1	65001-
19		711-62-21550	· · Bearing	1	65001-
20		711-60-11770	· · Plate	1	65001-
21		04070-00105	· · Ring, Snap	1	65001-
22		198-13-47111	· · Housing, COMPLETE	1	65001-
23		566-15-49210	· · Ring, (Kit : K01)	2	65001-
24		195-13-77210	· · Piston	1	65001-
25		175-15-59250	· · Seal Ring, (Kit : K01)	2	65001-
26		195-15-32710	· · Disc	2	65001-
27		281-15-12720	· · Plate	1	65001-

Printed By : Dwi Iswanto (airafather6107170)

Index	Code	Part Number	Description	Qty	Serial No.
28		01010-81240	・・ Bolt	36	65001-
29		01643-31232	・・ Washer	36	65001-
30		(711-67-18520)	Shaft		

Printed By : Dwi Iswanto (airafather6107170)

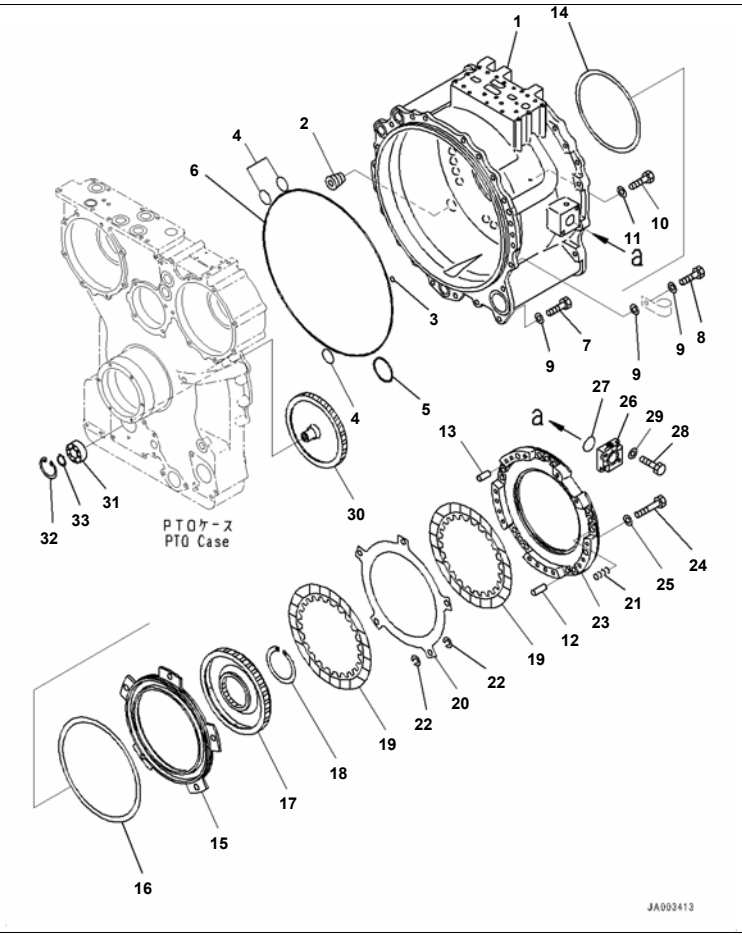

Power Train, For Machine With Vehicle Health Monitoring System (VHMS), Rear Housing (#65001-)

Index	Code	Part Number	Description	Qty	Serial No.
		195-22-80050	Power Train Assembly	1	65001-
		195-13-81100	· Torque Converter Assembly	1	65001-
1		195-13-83110	· · Housing,Rear	1	65001-
2		07043-71422	· · Plug, Taper	1	65001-
3		07000-73034	· · O-ring, (Kit : K01)	1	65001-
4		07000-73048	· · O-ring, (Kit : K01)	3	65001-
5		07000-72085	· · O-ring, (Kit : K01)	1	65001-
6		198-13-49110	· · O-ring, (Kit : K01)	1	65001-
7		01010-61645	· · Bolt	16	65001-
8		01010-61650	· · Bolt	1	65001-
9		01643-51645	· · Washer	17	65001-
10		01010-81030	· · Bolt	6	65001-
11		01643-31032	· · Washer	6	65001-
12		711-66-18130	· · Pin	5	65001-
13		566-15-11260	· · Pin, Dowel	2	65001-
14		145-15-42810	· · Ring, Seal, (Kit : K01)	1	65001-
15		711-66-18210	· · Piston	1	65001-
16		155-15-12820	· · Seal Ring, (Kit : K01)	1	65001-
17		711-67-18310	· · Gear	1	65001-
18		04070-00125	· · Ring, Snap, for Shaft Side	1	65001-
19		195-15-32710	· · Disc	2	65001-
20		566-15-12721	· · Plate	1	65001-
21		711-66-18650	· · Spring	10	65001-
22		711-66-18661	· · Spring	10	65001-
23		711-66-18120	· · Housing	1	65001-
24		01010-81265	· · Bolt	16	65001-
25		01643-31232	· · Washer	16	65001-
26		195-13-87130	· · Block	1	65001-
27		07000-72055	· · O-ring, (Kit : K01)	1	65001-
28		01010-81235	· · Bolt	2	65001-
29		01643-31232	· · Washer	2	65001-

Printed By : Dwi Iswanto (airafather6107170)

Index	Code	Part Number	Description	Qty	Serial No.
30		711-60-14511	・・Gear	1	65001-
31		17A-13-24490	・・Bearing	1	65001-
32		04065-07225	・・Ring, Snap	1	65001-
33		04064-03515	・・Ring	1	65001-

Printed By : Dwi Iswanto (airafather6107170)

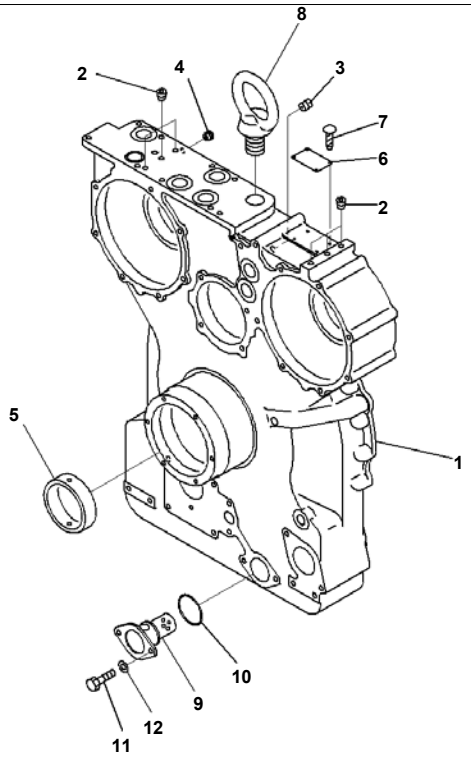

JA003590

Reference:F2300-001004 Page:F002004

D375A-6R S/N 65001-UP
Power Train, For Machine With Vehicle Health Monitoring System (VHMS), Power takeoff Case (#65001-)

Index	Code	Part Number	Description	Qty	Serial No.
		195-22-80050	Power Train Assembly	1	65001-
		195-13-81100	· Torque Converter Assembly	1	65001-
1		195-13-83162	· · Housing,Front	1	65001-
2		07043-70108	· · Plug	6	65001-
3		711-21-13850	· · Nozzle, D=1.6mm	1	65001-
4		17A-22-46260	· · Orifice	1	65001-
5		711-66-13140	· · Sleeve	1	65001-
6		09607-05080	· · Plate, Name	1	65001-
7		04418-13060	· · Screw	4	65001-
8		04530-14265	· · Bolt, Eye	1	65001-
9		711-60-13400	· · Filter	1	65001-
10		07000-72070	· · O-ring, (Kit : K01)	1	65001-
11		01010-81225	· · Bolt	2	65001-
12		01643-31232	· · Washer	2	65001-

Printed By : Dwi Iswanto (airafather6107170)

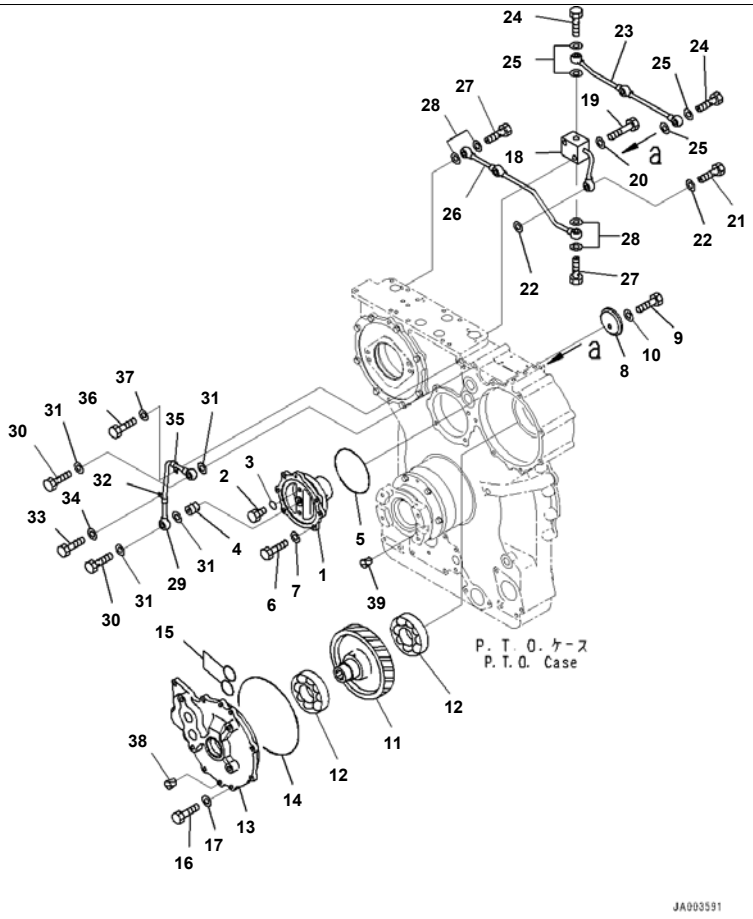

Reference:F2300-001005 Page:F002005

D375A-6R S/N 65001-UP
Power Train, For Machine With Vehicle Health Monitoring System (VHMS), Power takeoff Gear and Piping (#65001-)

Index	Code	Part Number	Description	Qty	Serial No.
		195-22-80050	Power Train Assembly	1	65001-
		195-13-81100	· Torque Converter Assembly	1	65001-
1		195-13-84240	· · Shaft	1	65001-
2		07040-11409	· · Plug	2	65001-
3		07002-61423	· · O-ring, (Kit : K01)	2	65001-
4		711-21-13850	· · Nozzle, D=1.6mm	1	65001-
5		07000-75150	· · O-ring, (Kit : K01)	1	65001-
6		01010-81235	· · Bolt	4	65001-
7		01643-31232	· · Washer	4	65001-
8		711-60-14250	· · Plate	1	65001-
9		01010-81235	· · Bolt	1	65001-
10		01643-31232	· · Washer	1	65001-
11		195-13-84410	· · Gear	1	65001-
12		06330-06313	· · Bearing	2	65001-
13		195-13-84350	· · Cover	1	65001-
14		07000-75270	· · O-ring, (Kit : K01)	1	65001-
15		07000-72055	· · O-ring, (Kit : K01)	2	65001-
16		01010-81235	· · Bolt	8	65001-
17		01643-31232	· · Washer	8	65001-
18		711-60-16920	· · Tube	1	65001-
19		01010-81050	· · Bolt	2	65001-
20		01643-31032	· · Washer	2	65001-
21		07206-30812	· · Bolt, Joint	1	65001-
22		07005-01212	· · Seal, Washer, (Kit : K01)	2	65001-
23		711-60-16930	· · Tube	1	65001-
24		07206-30812	· · Bolt, Joint	3	65001-
25		07005-01212	· · Seal, Washer, (Kit : K01)	6	65001-
26		711-60-16940	· · Tube	1	65001-
27		07206-30812	· · Bolt, Joint	3	65001-
28		07005-01212	· · Seal, Washer, (Kit : K01)	6	65001-
29		711-60-16950	· · Tube	1	65001-

Reference:F2300-001005 Page:F002005

Printed By : Dwi Iswanto (airafather6107170)

Power Train, For Machine With Vehicle Health Monitoring System (VHMS), Power takeoff Gear and Piping (#65001-)

Index	Code	Part Number	Description	Qty	Serial No.
30		07206-30812	・・ Bolt, Joint	2	65001-
31		07005-01212	・・ Seal, Washer	4	65001-
32		04434-00808	・・ Clip	1	65001-
33		01010-80816	・・ Bolt	1	65001-
34		01643-30823	・・ Washer	1	65001-
35		04434-50810	・・ Clip	1	65001-
36		01010-81020	・・ Bolt	1	65001-
37		01643-31032	・・ Washer	1	65001-
38		07049-01215	・・ Plug	6	65001-
39		07049-01012	・・ Plug	2	65001-

Printed By : Dwi Iswanto (airafather6107170)

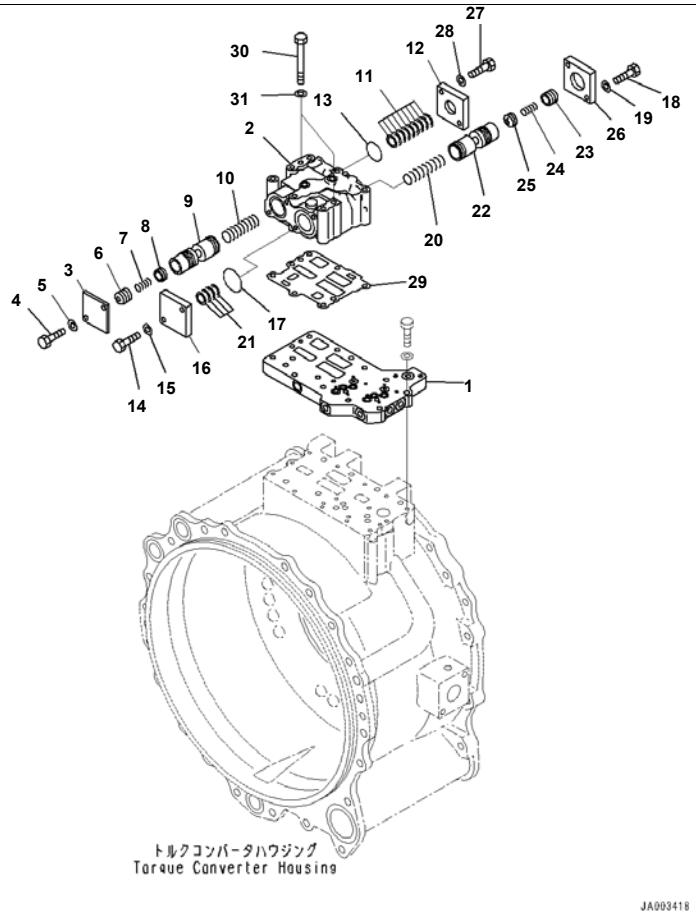

Reference:F2300-001006 Page:F002006

D375A-6R S/N 65001-UP

Power Train, For Machine With Vehicle Health Monitoring System (VHMS), Torque Converter Valve (#65001-)

Index	Code	Part Number	Description	Qty	Serial No.
		195-22-80050	Power Train Assembly	1	65001-
		195-13-81100	· Torque Converter Assembly	1	65001-
		195-13-86000	· · Valve Group	1	65001-
1		195-13-86110	· · · Valve, SEAT	1	65001-
		195-13-86800	· · · Valve Assembly	1	65001-
2		195-13-86610	· · · · Valve Body	1	65001-
3		711-44-16340	· · · · Plate	1	65001-
4		01010-81025	· · · · Bolt	2	65001-
5		01643-31032	· · · · Washer	2	65001-
6		427-15-15480	· · · · Valve	1	65001-
7		427-15-16130	· · · · Spring	1	65001-
8		427-15-15490	· · · · Valve	1	65001-
9		711-66-16620	· · · · Spool	1	65001-
10		711-66-16650	· · · · Spring	1	65001-
11		23S-15-45860	· · · · Shim, T=0.5mm	9	65001-
12		711-66-16670	· · · · Plate	1	65001-
13		07000-73045	· · · · O-ring	2	65001-
14		01010-81035	· · · · Bolt	2	65001-
15		01643-31032	· · · · Washer	2	65001-
16		19M-13-26670	· · · · Plate	1	65001-
17		07000-72055	· · · · O-ring	2	65001-
18		01010-81035	· · · · Bolt	2	65001-
19		01643-31032	· · · · Washer	2	65001-
20		711-66-16640	· · · · Spring	1	65001-
21		23S-15-45860	· · · · Shim, T=0.5mm	4	65001-
22		17M-13-26620	· · · · Spool	1	65001-
23		427-15-15480	· · · · Valve	1	65001-
24		427-15-16130	· · · · Spring	1	65001-
25		427-15-15490	· · · · Valve	1	65001-
26		711-66-16660	· · · · Plate	1	65001-
27		01010-81035	· · · · Bolt	2	65001-

Reference:F2300-001006 Page:F002006

Printed By : Dwi Iswanto (airafather6107170)

Index	Code	Part Number	Description	Qty	Serial No.
28		01643-31032	・・・・ Washer	2	65001-
29		195-13-86921	・・・ Gasket	1	65001-
30		01011-81005	・・・ Bolt	2	65001-
31		01643-31032	・・・ Washer	2	65001-

Printed By : Dwi Iswanto (airafather6107170)

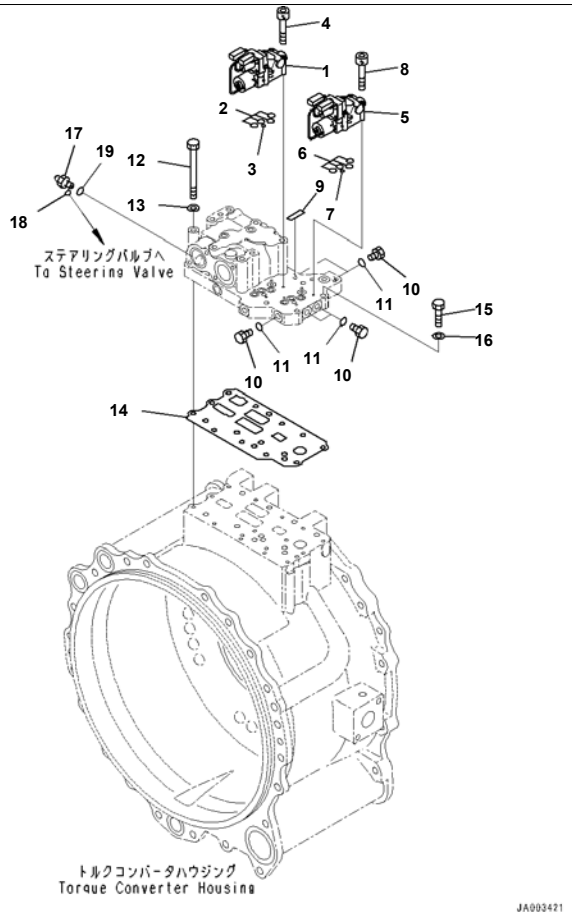

Reference:F2300-001007 Page:F002007

D375A-6R S/N 65001-UP
Power Train, For Machine With Vehicle Health Monitoring System (VHMS), ECMV Valve Mounting (#65001-)

Index	Code	Part Number	Description	Qty	Serial No.
		195-22-80050	Power Train Assembly	1	65001-
		195-13-81100	· Torque Converter Assembly	1	65001-
		195-13-86000	· · Valve Group	1	65001-
1		23C-15-65200	· · · Valve Assembly	1	65001-
2		07000-72015	· · · O-ring	4	65001-
3		07000-71007	· · · O-ring	1	65001-
4		01252-70650	· · · Bolt	4	65001-
5		14X-15-55600	· · · ECMV Assembly	1	65001-
6		07000-72015	· · · O-ring	4	65001-
7		07000-71007	· · · O-ring	1	65001-
8		01252-70650	· · · Bolt	4	65001-
9		700-11-31980	· · · Plate, Name (Limited Supply)	1	65001-
10		07040-11209	· · · Plug	5	65001-
11		07002-61223	· · · O-ring	5	65001-
12		01011-81035	· · Bolt	3	65001-
13		01643-31032	· · Washer	3	65001-
14		195-13-86911	· · Gasket, (Kit : K01)	1	65001-
15		01010-81050	· · Bolt	3	65001-
16		01643-31032	· · Washer	3	65001-
17		02782-10422	· · Elbow	1	65001-
18		02896-61012	· · O-ring, (Kit : K01)	1	65001-
19		07002-62034	· · O-ring, (Kit : K01)	1	65001-

Printed By : Dwi Iswanto (airafather6107170)

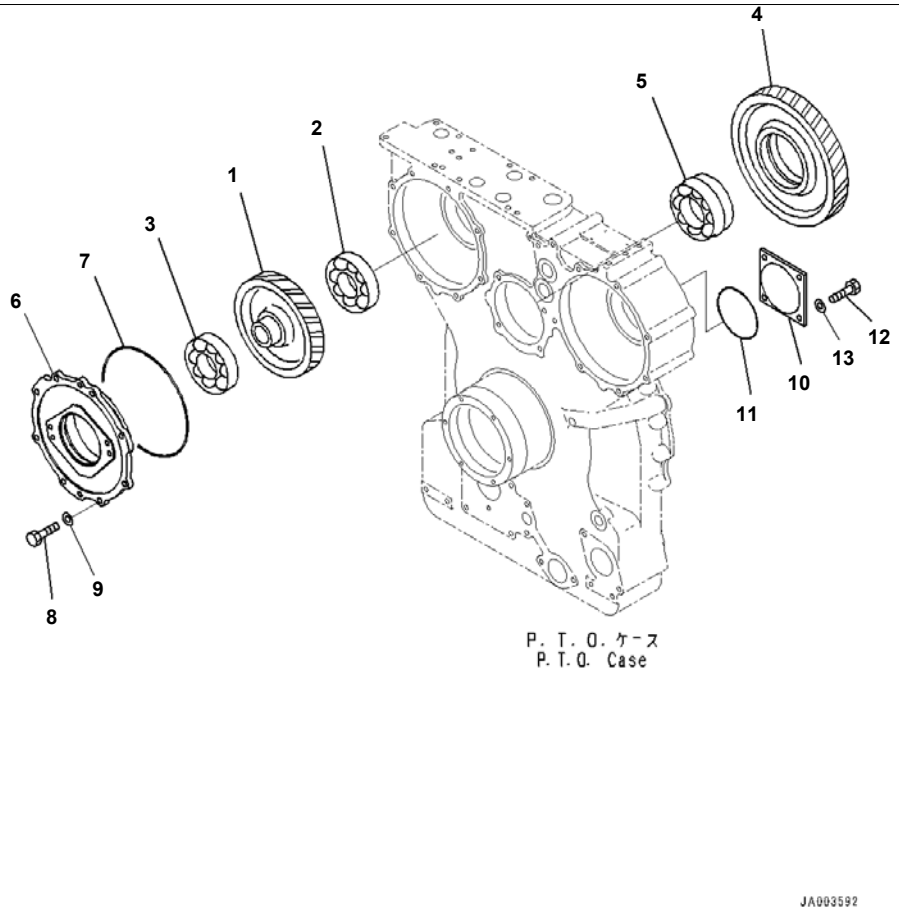

D375A-6R S/N 65001-UP
Power Train, For Machine With Vehicle Health Monitoring System (VHMS), Inner Parts, Charge Pump (#65001-)

Index	Code	Part Number	Description	Qty	Serial No.
		195-22-80050	Power Train Assembly	1	65001-
		195-13-81100	· Torque Converter Assembly	1	65001-
1		195-13-84310	· · Gear	1	65001-
2		06330-06313	· · Bearing	1	65001-
3		06330-06315	· · Bearing	1	65001-
4		711-60-14211	· · Gear	1	65001-
5		569-13-14460	· · Bearing	1	65001-
6		195-13-84451	· · Cover	1	65001-
7		07000-75270	· · O-ring, (Kit : K01)	1	65001-
8		01010-81240	· · Bolt	8	65001-
9		01643-31232	· · Washer	8	65001-
10		711-60-14470	· · Cover	1	65001-
11		07000-72130	· · O-ring, (Kit : K01)	1	65001-
12		01010-81230	· · Bolt	4	65001-
13		01643-31232	· · Washer	4	65001-

Printed By : Dwi Iswanto (airafather6107170)

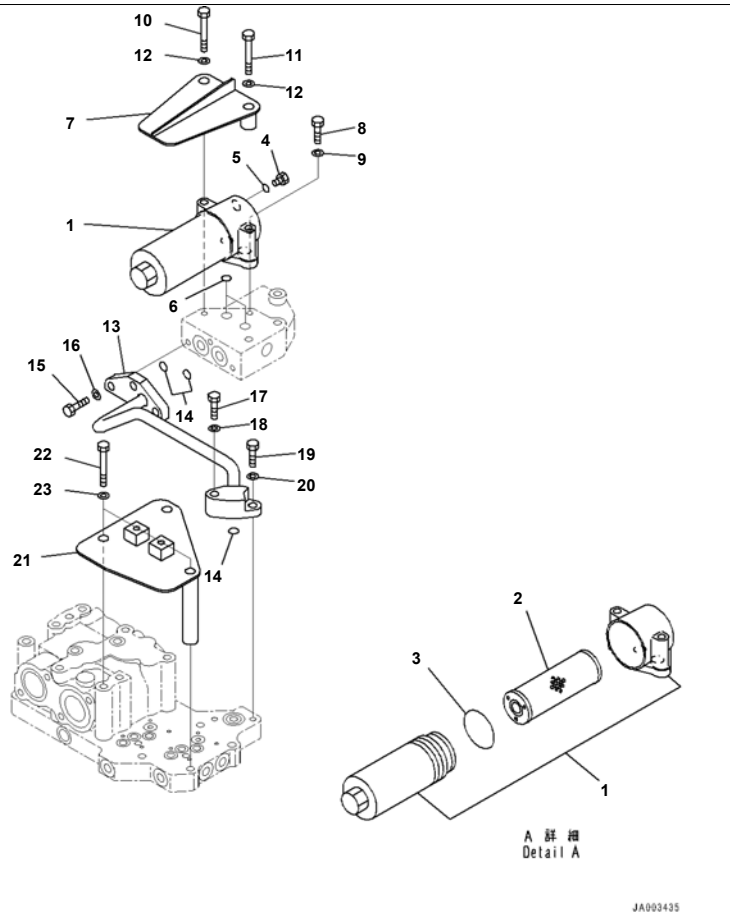

Reference:F2300-001009 Page:F002009

D375A-6R S/N 65001-UP

Power Train, For Machine With Vehicle Health Monitoring System (VHMS), Torque Converter Filter (#65001-)

Index	Code	Part Number	Description	Qty	Serial No.
		195-22-80050	Power Train Assembly	1	65001-
1		569-15-51721	· Filter Assembly	1	65001-
2		569-15-51732	· · Element Assembly	1	65001-
3		07000-A2060	· · O-ring	1	65001-
4		07040-11812	· Plug	1	65001-
5		07002-61823	· O-ring	1	65001-
6		07000-73022	· O-ring	2	65001-
7		17A-22-46151	· Cover	1	65001-
8		01010-81030	· Bolt	1	65001-
9		01643-31032	· Washer	1	65001-
10		01011-81015	· Bolt	1	65001-
11		01011-81060	· Bolt	1	65001-
12		01643-31032	· Washer	2	65001-
13		195-22-86131	· Tube	1	65001-
14		07000-73025	· O-ring	3	65001-
15		01010-81035	· Bolt	3	65001-
16		01643-31032	· Washer	3	65001-
17		01010-81050	· Bolt	1	65001-
18		01643-31032	· Washer	1	65001-
19		01010-81030	· Bolt	1	65001-
20		01643-31032	· Washer	1	65001-
21		195-13-86141	· Cover	1	65001-
22		01011-81070	· Bolt	3	65001-
23		01643-31032	· Washer	3	65001-

Reference:F2300-001009 Page:F002009

Printed By : Dwi Iswanto (airafather6107170)

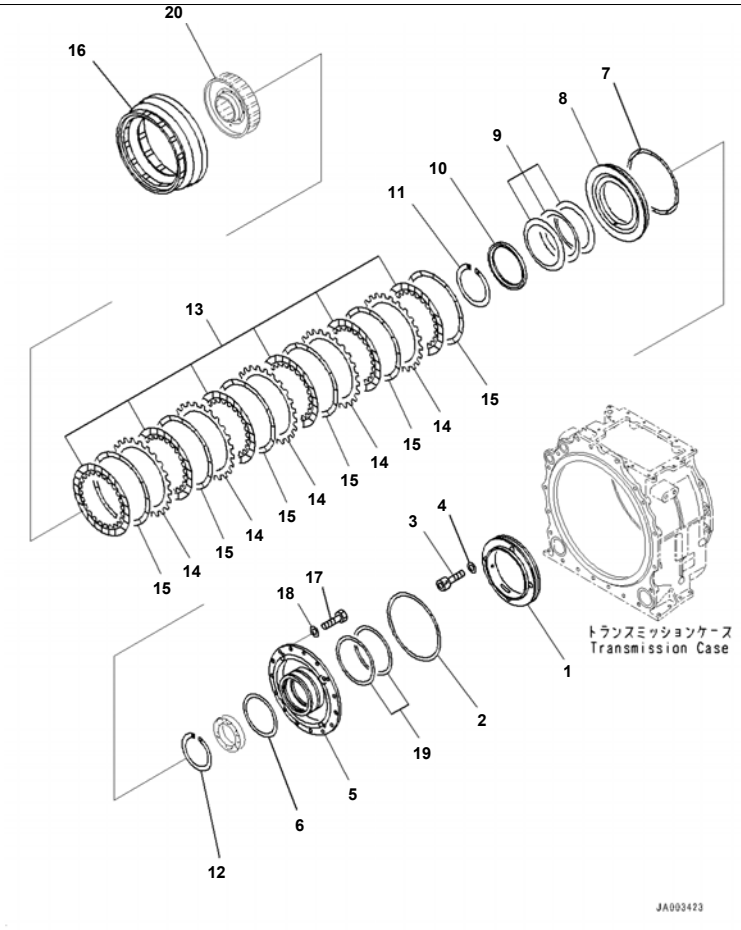

Reference:F2300-001010 Page:F002010

D375A-6R S/N 65001-UP
Power Train, For Machine With Vehicle Health Monitoring System (VHMS), 1st Housing (#65001-)

Index	Code	Part Number	Description	Qty	Serial No.
		195-22-80050	Power Train Assembly	1	65001-
		195-15-81000	· Transmission Assembly	1	65001-
1		195-15-43140	· · Collar	1	65001-
2		145-15-42810	· · Ring, (Kit : K02)	1	65001-
3		01252-41240	· · Bolt, Hexagon Socket Head	4	65001-
4		01602-21236	· · Washer, Spring	4	65001-
5		195-15-42843	· · Housing Assembly	1	65001-
6		145-15-42820	· · Seal Ring, (Kit : K02)	1	65001-
7		195-15-49210	· · Seal Ring, (Kit : K02)	1	65001-
8		195-15-42733	· · Piston	1	65001-
9		195-15-42951	· · Spring	3	65001-
10		195-15-41211	· · Spacer	1	65001-
11		04070-00190	· · Ring, Snap, for Shaft Side	1	65001-
12		04071-00160	· · Ring, Snap, for Hole Side	1	65001-
13		424-15-12711	· · Disc	6	65001-
14		195-15-42850	· · Plate	5	65001-
15		287-15-12920	· · Spring	6	65001-
16		195-15-42690	· · Gear, Ring	1	65001-
17		01010-61445	· · Bolt	15	65001-
18		01643-31445	· · Washer	15	65001-
19		425-15-19270	· · Seal Ring	2	65001-
20		(195-15-82270)	Hub		

Reference:F2300-001010 Page:F002010

Printed By : Dwi Iswanto (airafather6107170)

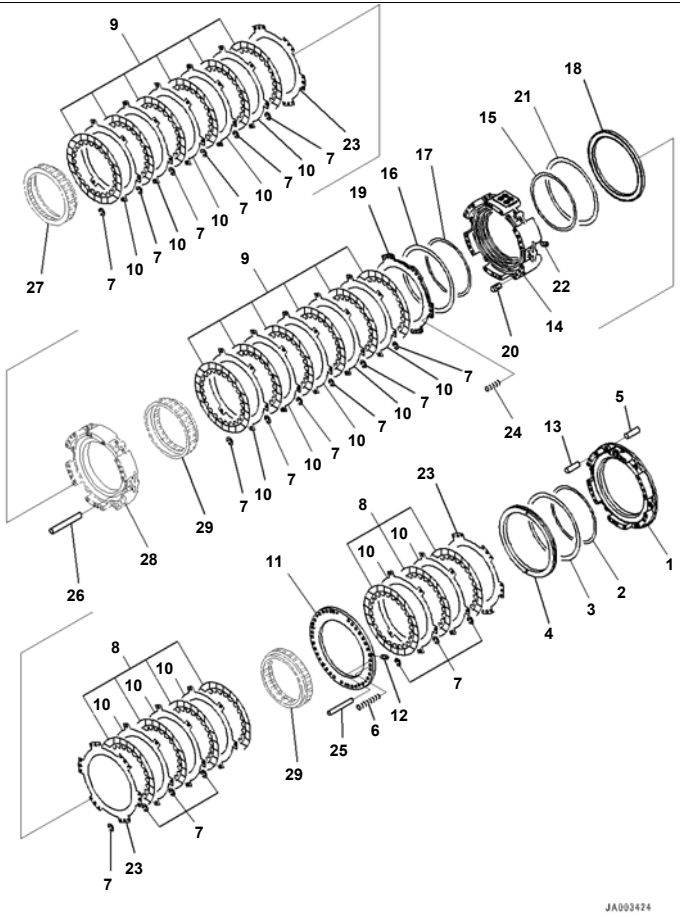

D375A-6R S/N 65001-UP
Power Train, For Machine With Vehicle Health Monitoring System (VHMS), 2nd and 3rd Housing (#65001-)

Index	Code	Part Number	Description	Qty	Serial No.
		195-22-80050	Power Train Assembly	1	65001-
		195-15-81000	· Transmission Assembly	1	65001-
1		195-15-71130	· · Housing	1	65001-
2		175-15-59250	· · Seal Ring, (Kit : K02)	1	65001-
3		195-15-29220	· · Seal Ring, (Kit : K02)	1	65001-
4		195-15-42741	· · Piston	1	65001-
5		04020-01228	· · Pin, Dowel	6	65001-
6		195-15-42980	· · Spring	12	65001-
7		175-15-42880	· · Spring	114	65001-
8		195-15-42721	· · Disc	7	65001-
9		195-15-42721	· · Disc	12	65001-
10		195-15-42780	· · Plate	15	65001-
11		195-15-71140	· · Plate	1	65001-
12		145-14-11320	· · Plug	2	65001-
13		175-15-31210	· · Pin	2	65001-
14		195-15-71150	· · Housing	1	65001-
15		582-15-19250	· · Seal Ring, (Kit : K02)	1	65001-
16		195-15-39210	· · Seal Ring, (Kit : K02)	1	65001-
17		175-15-59270	· · Seal Ring, (Kit : K02)	1	65001-
18		195-15-42751	· · Piston	1	65001-
19		195-15-42764	· · Piston	1	65001-
20		561-15-51310	· · Sleeve	17	65001-
21		195-15-29220	· · Seal Ring, (Kit : K02)	1	65001-
22		145-14-11320	· · Plug	2	65001-
23		195-15-42790	· · Plate	3	65001-
24		145-14-33731	· · Spring	12	65001-
25		135-15-22820	· · Pin	6	65001-
26		144-15-22760	· · Pin	6	65001-
27		(195-15-72640)	Gear		
28		(195-15-51160)	Housing		
29		(195-15-42622)	Gear		

Printed By : Dwi Iswanto (airafather6107170)

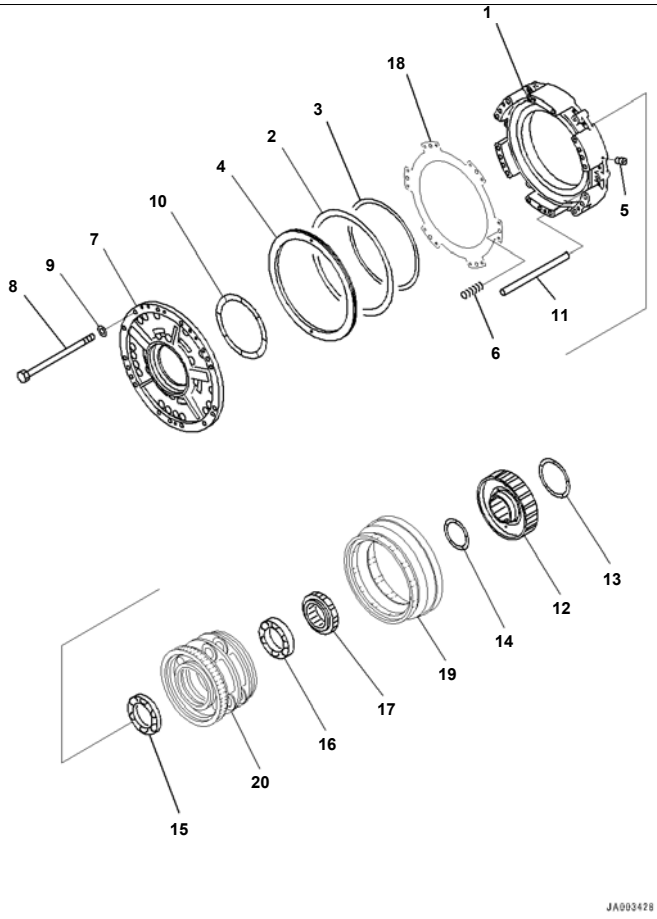

Power Train, For Machine With Vehicle Health Monitoring System (VHMS), Forward and Reverse Housing (#65001-)

Index	Code	Part Number	Description	Qty	Serial No.
		195-22-80050	Power Train Assembly	1	65001-
		195-15-81000	· Transmission Assembly	1	65001-
1		195-15-51160	· · Housing	1	65001-
2		175-15-59240	· · Seal Ring, (Kit : K02)	1	65001-
3		155-15-12820	· · Seal Ring, (Kit : K02)	1	65001-
4		195-15-42771	· · Piston	1	65001-
5		145-14-11320	· · Plug	2	65001-
6		175-15-42781	· · Spring	12	65001-
7		195-15-71171	· · Housing	1	65001-
8		195-15-41251	· · Bolt	17	65001-
9		195-15-11290	· · Washer	17	65001-
10		175-15-59292	· · Seal Ring	1	65001-
11		195-15-41290	· · Pin	12	65001-
12		195-15-82270	· · Hub	1	65001-
13		195-15-49250	· · Seal Ring	1	65001-
14		195-15-49230	· · Seal Ring	1	65001-
15		06330-06924	· · Bearing	1	65001-
16		06330-06924	· · Bearing	1	65001-
17		195-15-42290	· · Gear	1	65001-
18		(195-15-42780)	Plate		
19		(195-15-42690)	Gear		
20		(195-15-42324)	Carrier		

Printed By : Dwi Iswanto (airafather6107170)

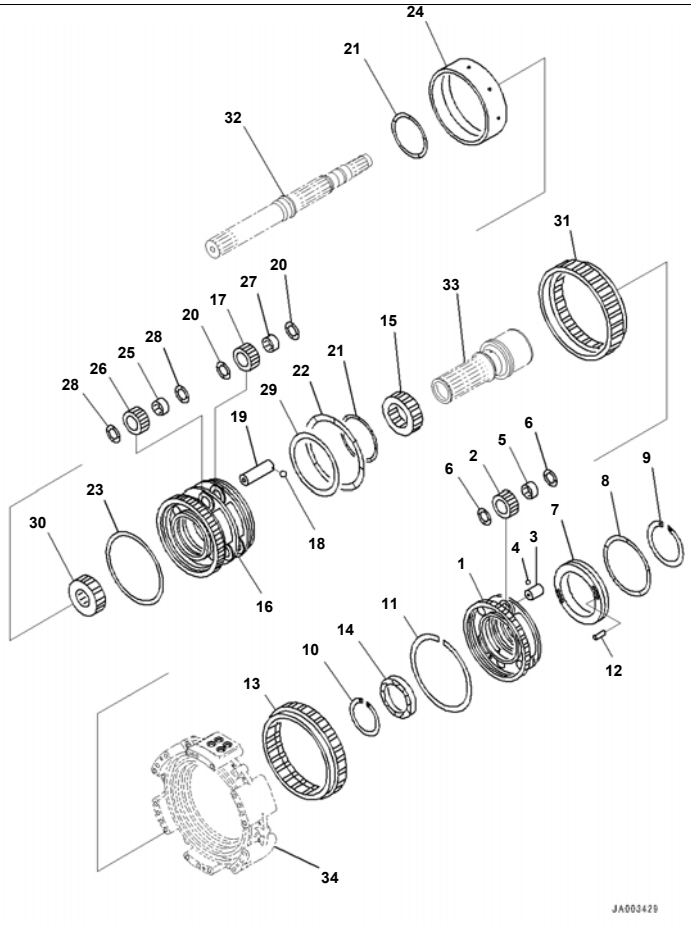

Power Train, For Machine With Vehicle Health Monitoring System (VHMS), Carrier (1/2) (#65001-)

Index	Code	Part Number	Description	Qty	Serial No.
		195-22-80050	Power Train Assembly	1	65001-
		195-15-81000	· Transmission Assembly	1	65001-
1		195-15-42391	· · Carrier	1	65001-
2		195-15-42490	· · Gear	4	65001-
3		195-15-82541	· · Shaft	4	65001-
4		04260-00635	· · Ball, Steel	4	65001-
5		195-15-89490	· · Bearing	4	65001-
6		195-15-42550	· · Washer, Thrust	8	65001-
7		195-15-42920	· · Collar	1	65001-
8		195-15-49270	· · Seal Ring	1	65001-
9		04070-00190	· · Ring, Snap, for Shaft Side	1	65001-
10		04071-00165	· · Ring, Snap, for Hole Side	1	65001-
11		195-15-49540	· · Ring	1	65001-
12		04020-00820	· · Pin, Dowel	1	65001-
13		195-15-42622	· · Gear, Ring	1	65001-
14		06330-06924	· · Bearing	1	65001-
15		195-15-42221	· · Gear	1	65001-
16		195-15-42324	· · Carrier	1	65001-
17		195-15-42421	· · Gear	4	65001-
18		04260-00635	· · Ball, Steel	4	65001-
19		195-15-82520	· · Shaft	4	65001-
20		195-15-32570	· · Washer, Thrust	8	65001-
21		195-15-49240	· · Seal Ring	2	65001-
22		195-15-49281	· · Seal Ring	1	65001-
23		195-15-49520	· · Ring	1	65001-
24		195-15-42653	· · Gear, Ring	1	65001-
25		195-15-79430	· · Bearing	4	65001-
26		195-15-42431	· · Gear	4	65001-
27		195-15-79420	· · Bearing	4	65001-
28		195-15-32570	· · Washer, Thrust	8	65001-
29		195-15-49530	· · Ring	1	65001-

Printed By : Dwi Iswanto (airafather6107170)

Index	Code	Part Number	Description	Qty	Serial No.
30		195-15-42230	・・ Gear	1	65001-
31		195-15-42632	・・ Gear, Ring	1	65001-
32		(195-15-72110)	Shaft		
33		(195-15-42132)	Shaft		
34		(195-15-71150)	Housing		

Printed By : Dwi Iswanto (airafather6107170)

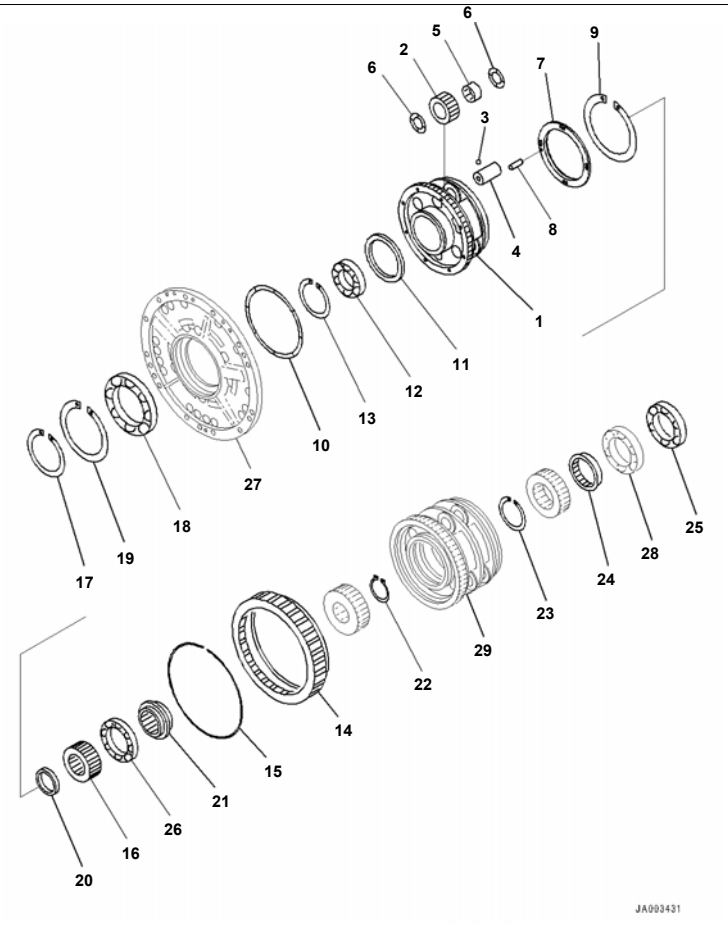

Index	Code	Part Number	Description	Qty	Serial No.
		195-22-80050	Power Train Assembly	1	65001-
		195-15-81000	· Transmission Assembly	1	65001-
1		195-15-72331	· · Carrier	1	65001-
2		195-15-42431	· · Gear	4	65001-
3		04260-00635	· · Ball, Steel	4	65001-
4		195-15-82531	· · Shaft	4	65001-
5		195-15-79430	· · Bearing	4	65001-
6		195-15-32570	· · Washer, Thrust	8	65001-
7		195-15-72930	· · Collar	1	65001-
8		04020-00820	· · Pin, Dowel	1	65001-
9		04071-00240	· · Ring, Snap, for Hole Side	1	65001-
10		175-15-59292	· · Seal Ring	1	65001-
11		195-15-72590	· · Spacer	1	65001-
12		195-15-79110	· · Bearing	1	65001-
13		04071-00140	· · Ring, Snap	1	65001-
14		195-15-72640	· · Gear, Ring	1	65001-
15		195-15-49540	· · Ring	1	65001-
16		195-15-42244	· · Gear	1	65001-
17		04070-00160	· · Ring, Snap, for Shaft Side	1	65001-
18		06000-06932	· · Bearing	1	65001-
19		04071-00220	· · Ring, Snap, for Hole Side	1	65001-
20		195-15-42581	· · Spacer	1	65001-
21		195-15-82570	· · Spacer	1	65001-
22		04064-07525	· · Ring, Snap	1	65001-
23		04070-00105	· · Ring, Snap	1	65001-
24		195-15-82151	· · Collar	1	65001-
25		06000-06021	· · Bearing	1	65001-
26		06330-06921	· · Bearing	1	65001-
27		(195-15-71171)	Housing		
28		(06330-06924)	Bearing		
29		(195-15-42324)	Carrier		

Printed By : Dwi Iswanto (airafather6107170)

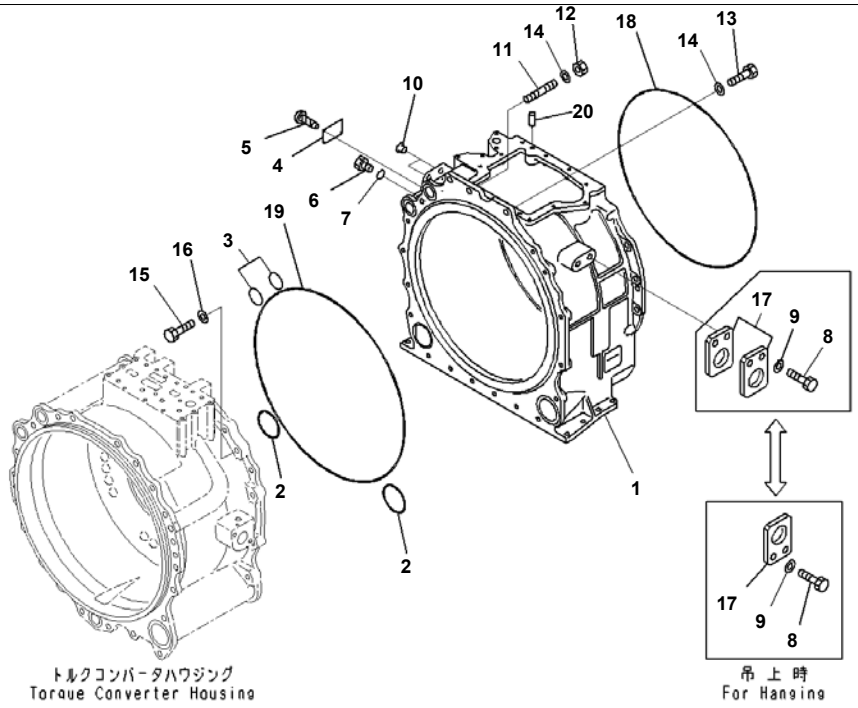

D375A-6R S/N 65001-UP
Power Train, For Machine With Vehicle Health Monitoring System (VHMS), Transmission Case (#65001-)

Index	Code	Part Number	Description	Qty	Serial No.
		195-22-80050	Power Train Assembly	1	65001-
		195-15-81000	· Transmission Assembly	1	65001-
1		195-15-81110	· · Case	1	65001-
2		07000-72085	· · O-ring, (Kit : K02)	2	65001-
3		07000-73048	· · O-ring, (Kit : K02)	2	65001-
4		09608-05080	· · Plate, Name (Limited Supply)	1	65001-
5		04418-13060	· · Screw	4	65001-
6		07040-11007	· · Plug	1	65001-
7		07002-61023	· · O-ring, (Kit : K02)	1	65001-
8		01010-62055	· · Bolt	2	65001-
9		01643-32060	· · Washer	2	65001-
10		07048-01815	· · Plug, Plastic	2	65001-
11		01144-51640	· · Stud	1	65001-
12		01580-11613	· · Nut	1	65001-
13		01010-61645	· · Bolt	2	65001-
14		01643-31645	· · Washer	3	65001-
15		01010-61660	· · Bolt	14	65001-
16		01643-31645	· · Washer	14	65001-
17		195-15-41710	· · Plate	2	65001-
18		195-15-79620	· · O-ring, (Kit : K02)	1	65001-
19		198-13-49110	· · O-ring, (Kit : K02)	1	65001-
20		04020-01024	· · Pin, Dowel	2	65001-

Printed By : Dwi Iswanto (airafather6107170)

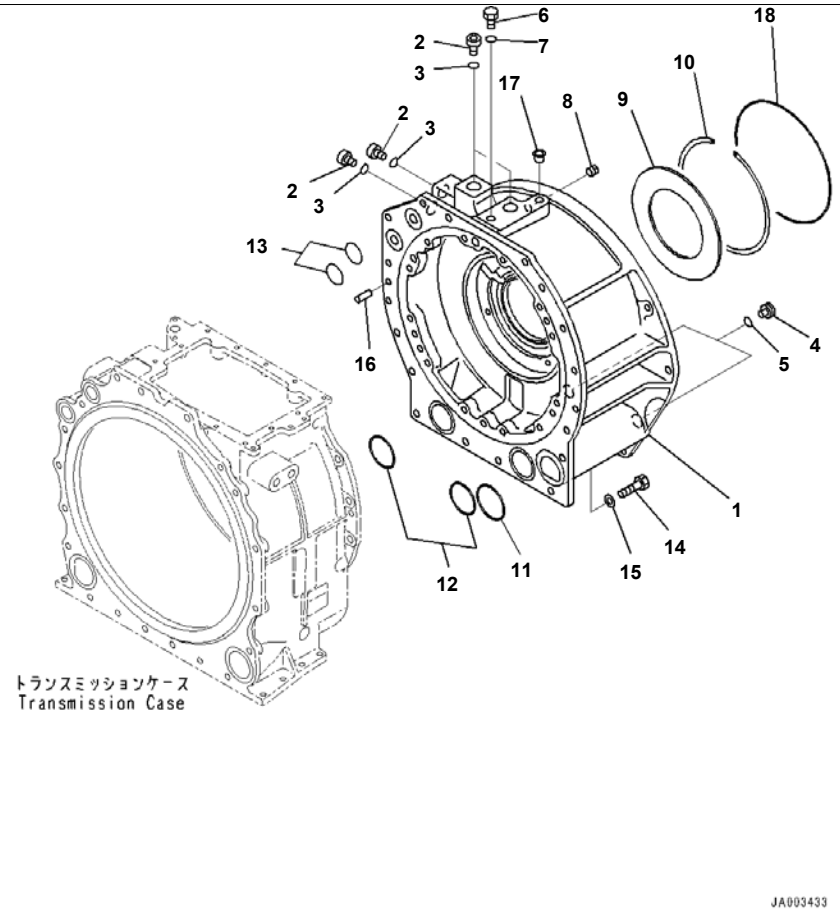

Reference:F2300-001016 Page:F002016

D375A-6R S/N 65001-UP
Power Train, For Machine With Vehicle Health Monitoring System (VHMS), Transfer Case (#65001-)

Index	Code	Part Number	Description	Qty	Serial No.
		195-22-80050	Power Train Assembly	1	65001-
		195-15-81000	· Transmission Assembly	1	65001-
		195-15-03062	· · Case Assembly	1	65001-
1		195-15-83111	· · · Case	1	65001-
2		07040-13618	· · · Plug	4	65001-
3		07002-63634	· · · O-ring, (Kit : K02)	4	65001-
4		104-15-25330	· · · Stopper	2	65001-
5		07000-73025	· · · O-ring, (Kit : K02)	2	65001-
6		07040-11007	· · · Plug	1	65001-
7		07002-61023	· · · O-ring	1	65001-
8		562-15-11460	· · · Plug	1	65001-
9		195-15-43150	· · Plate	1	65001-
10		04071-00290	· · Ring, Snap, for Hole Side	1	65001-
11		07000-72085	· · O-ring, (Kit : K03)	1	65001-
12		07000-72080	· · O-ring, (Kit : K02)	2	65001-
13		07000-73045	· · O-ring, (Kit : K02)	2	65001-
14		01010-61645	· · Bolt	15	65001-
15		01643-31645	· · Washer	15	65001-
16		04020-01638	· · Pin, Dowel	1	65001-
17		07048-01815	· · Plug, Plastic	1	65001-
18		07000-75305	· · O-ring, (Kit : K02)	1	65001-

Printed By : Dwi Iswanto (airafather6107170)

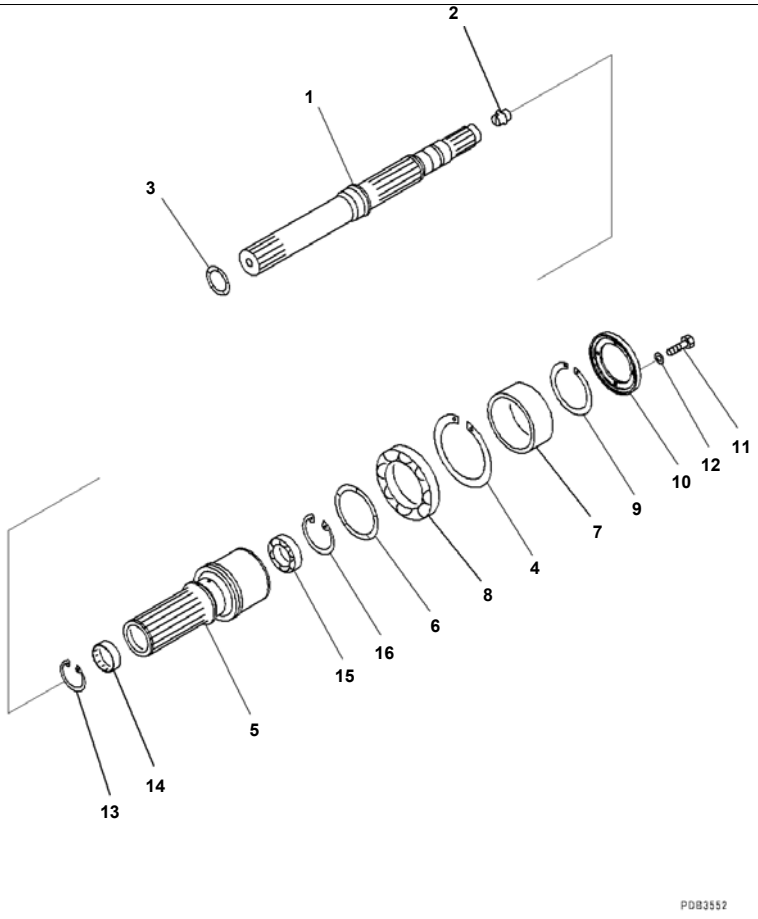

Power Train, For Machine With Vehicle Health Monitoring System (VHMS), Input and Output Shaft (#65001-)

Index	Code	Part Number	Description	Qty	Serial No.
		195-22-80050	Power Train Assembly	1	65001-
		195-15-81000	· Transmission Assembly	1	65001-
1		195-15-72110	· · Shaft	1	65001-
2		198-15-22180	· · Boss	1	65001-
3		07018-20854	· · Seal Ring	1	65001-
4		04071-00210	· · Ring	1	65001-
5		195-15-42132	· · Shaft	1	65001-
6		195-15-49220	· · Seal Ring	1	65001-
7		195-15-72190	· · Spacer	1	65001-
8		06000-06930	· · Bearing	1	65001-
9		04070-00150	· · Ring, Snap	1	65001-
10		195-15-32140	· · Plate	1	65001-
11		01010-80820	· · Bolt	4	65001-
12		01643-50823	· · Washer	4	65001-
13		04065-08025	· · Ring, Snap	1	65001-
14		195-15-79330	· · Bearing	1	65001-
15		195-15-49380	· · Bearing	1	65001-
16		04065-01030	· · Ring	1	65001-

Printed By : Dwi Iswanto (airafather6107170)

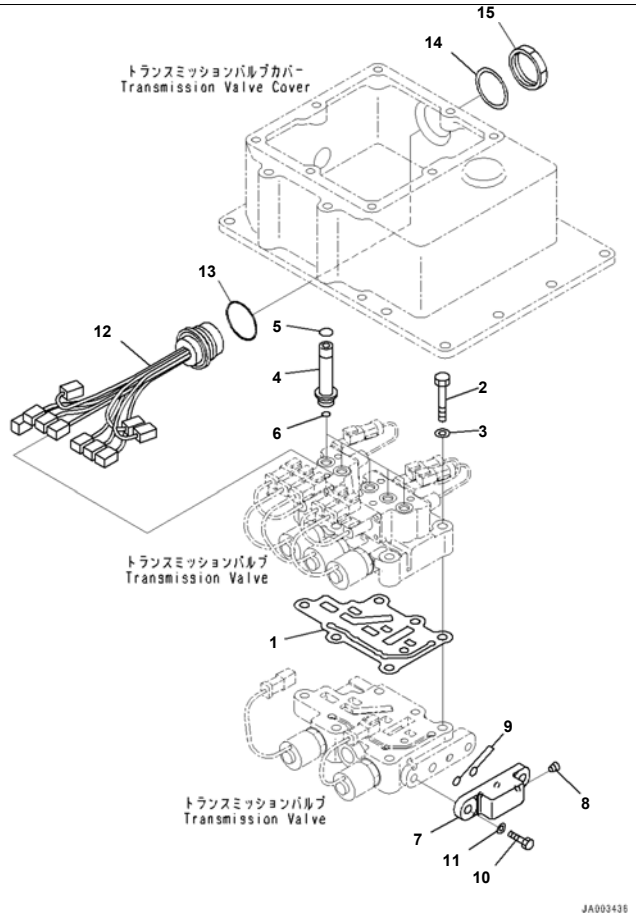

Reference:F2300-001018 Page:F002018

D375A-6R S/N 65001-UP

Power Train, For Machine With Vehicle Health Monitoring System (VHMS), Filter and Transfer Piping (#65001-)

Index	Code	Part Number	Description	Qty	Serial No.
		195-22-80050	Power Train Assembly	1	65001-
		195-15-81000	· Transmission Assembly	1	65001-
		195-15-85100	· · Valve Assembly, Transmission Control	1	65001-
1		195-15-75531	· · · Gasket	1	65001-
2		01010-81055	· · · Bolt	2	65001-
3		01643-31032	· · · Washer	2	65001-
4		195-15-76310	· · · Sleeve	5	65001-
5		07000-72016	· · · O-ring	5	65001-
6		07002-61823	· · · O-ring	5	65001-
7		195-15-85130	· · · Block	1	65001-
8		07043-70108	· · · Plug	1	65001-
9		07000-72014	· · · O-ring	2	65001-
10		01010-81030	· · · Bolt	2	65001-
11		01643-31032	· · · Washer	2	65001-
12		195-15-77200	· · · Wiring Harness	1	65001-
13		195-15-75740	· · · · O-ring	1	65001-
14		08191-50809	· · · · Washer, Lock	1	65001-
15		08191-50808	· · · · Nut	1	65001-

Reference:F2300-001018 Page:F002018

Printed By : Dwi Iswanto (airafather6107170)

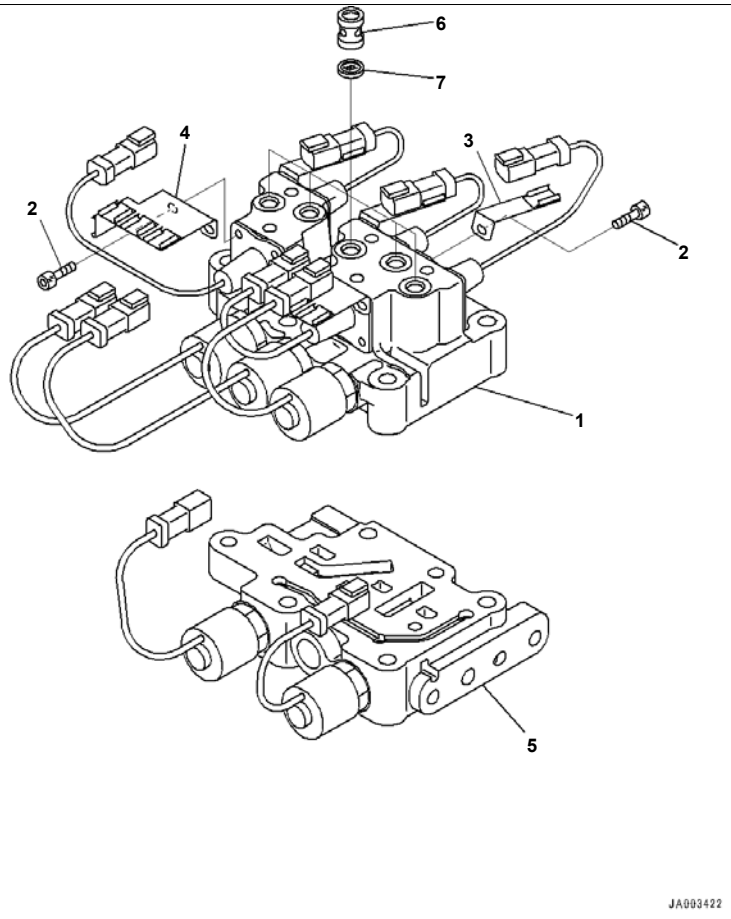

Power Train, For Machine With Vehicle Health Monitoring System (VHMS), Transmission Control Valve (ECMV) (#65001-)

Index	Code	Part Number	Description	Qty	Serial No.
		195-22-80050	Power Train Assembly	1	65001-
		195-15-81000	· Transmission Assembly	1	65001-
		195-15-85100	· · Valve Assembly, Transmission Control	1	65001-
1		195-15-00314	· · · Valve Assembly,Upper	1	65001-
2		01252-60510	· · · · Bolt	20	65001-
3		195-15-77341	· · · · Bracket	3	65001-
4		195-15-77351	· · · · Bracket	2	65001-
5		195-15-00324	· · · Valve Assembly,Lower	1	65001-
6		195-15-76320	· · · Sleeve	5	65001-
7		195-15-76330	· · · Filter	5	65001-

Printed By : Dwi Iswanto (airafather6107170)

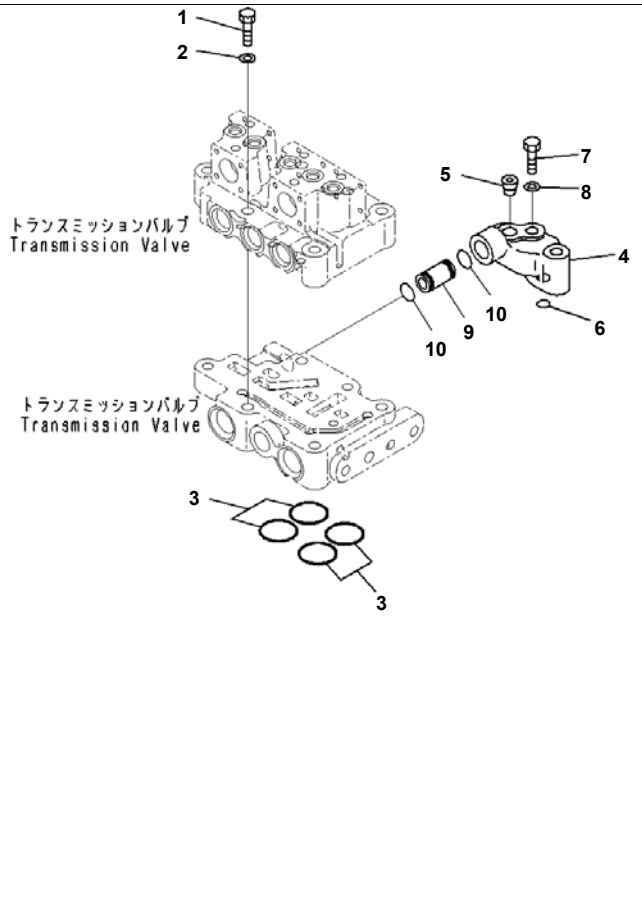

Reference:F2300-001020 Page:F002020

D375A-6R S/N 65001-UP
Power Train, For Machine With Vehicle Health Monitoring System (VHMS), Transmission E.C.M.V. Valve Mounts (#65001-)

Index	Code	Part Number	Description	Qty	Serial No.
		195-22-80050	Power Train Assembly	1	65001-
		195-15-81000	・ Transmission Assembly	1	65001-
1		195-15-76410	・・ Bolt	4	65001-
2		01643-51032	・・ Washer	4	65001-
3		07000-73030	・・ O-ring, (Kit : K02)	4	65001-
4		195-15-75150	・・ Block	1	65001-
5		07043-70211	・・ Plug	1	65001-
6		07000-72020	・・ O-ring, (Kit : K02)	1	65001-
7		01010-81060	・・ Bolt	2	65001-
8		01643-31032	・・ Washer	2	65001-
9		103-15-31770	・・ Sleeve	1	65001-
10		07000-72014	・・ O-ring, (Kit : K02)	2	65001-

Reference:F2300-001020 Page:F002020

Printed By : Dwi Iswanto (airafather6107170)

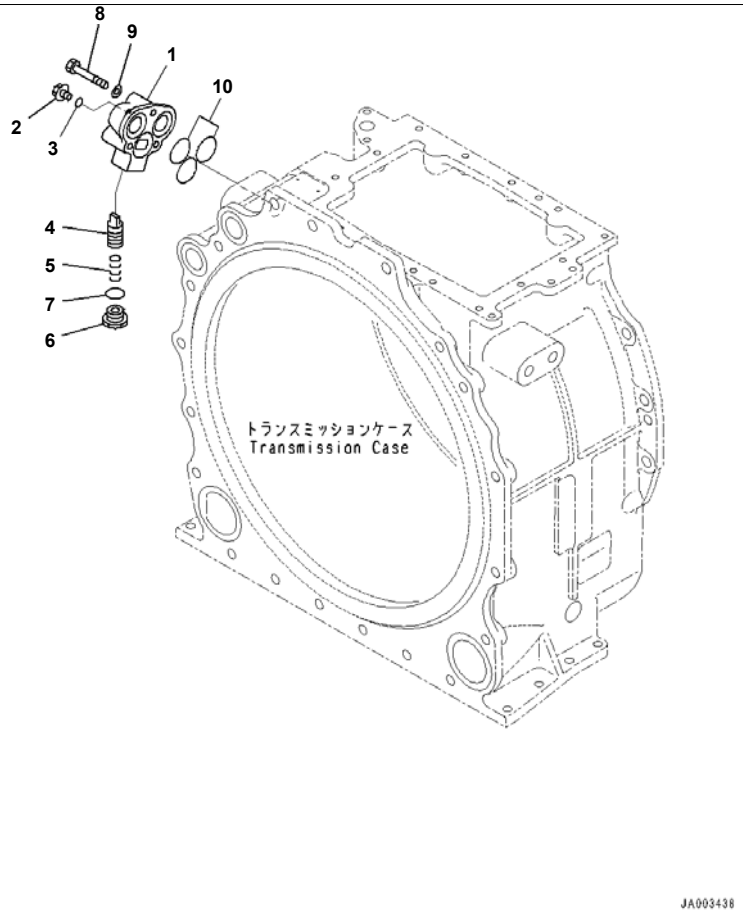

Index	Code	Part Number	Description	Qty	Serial No.
		195-22-80050	Power Train Assembly	1	65001-
		195-15-81000	· Transmission Assembly	1	65001-
		195-15-84000	· · Valve Assembly, Lubrication	1	65001-
1		195-15-84110	· · · Valve Body	1	65001-
2		708-8E-16150	· · · Plug	1	65001-
3		07002-61023	· · · O-ring	1	65001-
4		561-15-54230	· · · Valve	1	65001-
5		103-40-21211	· · · Spring	1	65001-
6		232-15-14280	· · · Plug	1	65001-
7		07002-62434	· · · O-ring	1	65001-
8		01010-81065	· · Bolt	3	65001-
9		01643-31032	· · Washer	3	65001-
10		07000-73035	· · O-ring, (Kit : K02)	3	65001-

Printed By : Dwi Iswanto (airafather6107170)

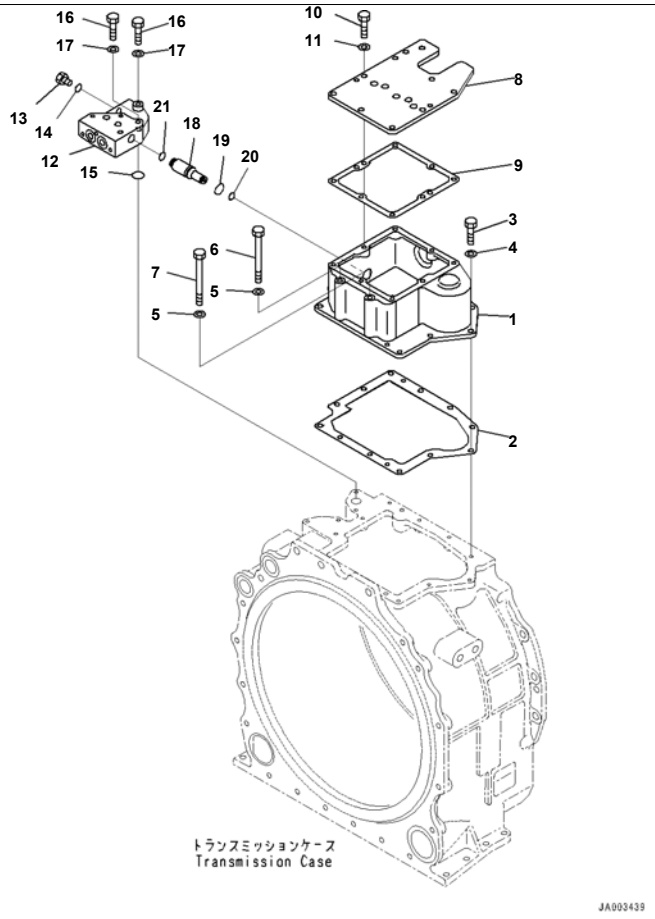

Reference:F2300-001022 Page:F002022

D375A-6R S/N 65001-UP
Power Train, For Machine With Vehicle Health Monitoring System (VHMS), Valve Cover (#65001-)

Index	Code	Part Number	Description	Qty	Serial No.
		195-22-80050	Power Train Assembly	1	65001-
		195-15-81000	· Transmission Assembly	1	65001-
1		195-15-81210	· · Cover	1	65001-
2		195-15-81240	· · Gasket, (Kit : K02)	1	65001-
3		01010-81030	· · Bolt	10	65001-
4		01643-31032	· · Washer	10	65001-
5		01643-31032	· · Washer	2	65001-
6		01011-81035	· · Bolt	1	65001-
7		01011-81035	· · Bolt	1	65001-
8		195-15-81270	· · Cover	1	65001-
9		195-15-71230	· · Gasket, (Kit : K02)	1	65001-
10		01010-81035	· · Bolt	3	65001-
11		01643-31032	· · Washer	3	65001-
12		195-15-85640	· · Block	1	65001-
13		07040-11612	· · Plug	1	65001-
14		07002-61623	· · O-ring, (Kit : K02)	1	65001-
15		07000-73032	· · O-ring, (Kit : K02)	1	65001-
16		01010-81065	· · Bolt	2	65001-
17		01643-31032	· · Washer	2	65001-
18		195-15-75631	· · Sleeve	1	65001-
19		195-15-75750	· · O-ring, (Kit : K02)	1	65001-
20		07000-72014	· · O-ring, (Kit : K02)	1	65001-
21		07000-72016	· · O-ring, (Kit : K02)	1	65001-

Printed By : Dwi Iswanto (airafather6107170)

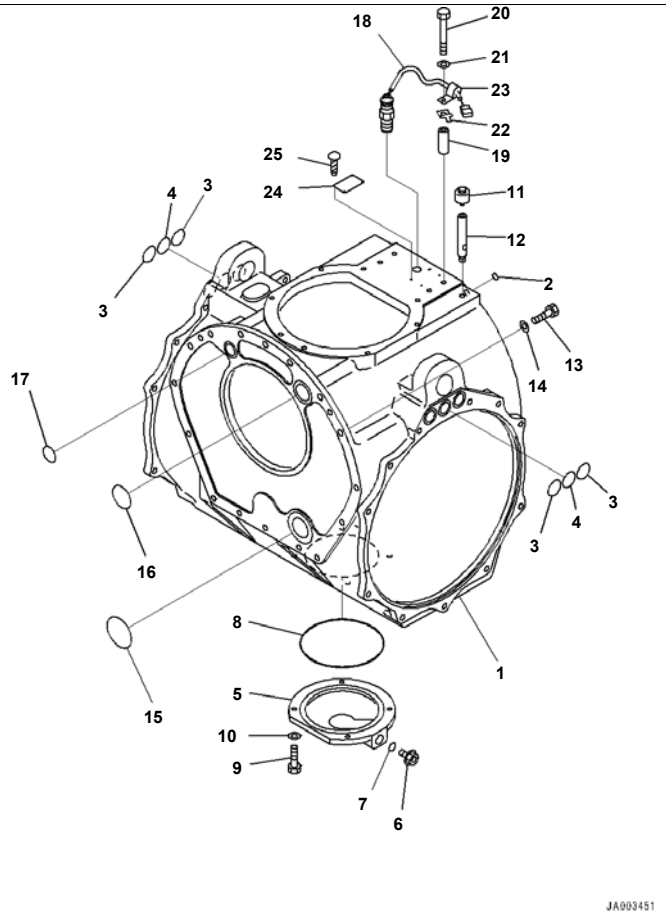

D375A-6R S/N 65001-UP
Power Train, For Machine With Vehicle Health Monitoring System (VHMS), Steering Case (#65001-)

Index	Code	Part Number	Description	Qty	Serial No.
		195-22-80050	Power Train Assembly	1	65001-
		195-22-81050	· Steering Assembly	1	65001-
1		195-22-72112	· · Case	1	65001-
2		07000-72018	· · O-ring, (Kit : K04)	1	65001-
3		07000-73042	· · O-ring, (Kit : K04)	4	65001-
4		07000-73042	· · O-ring, (Kit : K04)	2	65001-
5		195-22-12230	· · Cover	1	65001-
6		07044-12412	· · Plug	1	65001-
7		07002-62434	· · O-ring, (Kit : K04)	1	65001-
8		07000-75220	· · O-ring, (Kit : K04)	1	65001-
9		01010-81240	· · Bolt	4	65001-
10		01643-31232	· · Washer	4	65001-
11		07030-00252	· · Breather	1	65001-
12		195-22-72370	· · Nipple	1	65001-
13		01010-61645	· · Bolt	12	65001-
14		01643-31645	· · Washer	12	65001-
15		07000-72085	· · O-ring, (Kit : K04)	1	65001-
16		07000-72065	· · O-ring, (Kit : K04)	1	65001-
17		07000-73042	· · O-ring, (Kit : K04)	1	65001-
18		7861-93-2330	· · Sensor	1	65001-
19		175-61-17240	· · Collar	1	65001-
20		01010-81280	· · Bolt	1	65001-
21		01643-31232	· · Washer	1	65001-
22		08193-21012	· · Clip	1	65001-
23		21T-38-12270	· · Clip	1	65001-
24	C2	09604-05080	· · Plate, Limited supply	1	65001-
25		04418-13060	· · Screw	4	65001-

Printed By : Dwi Iswanto (airafather6107170)

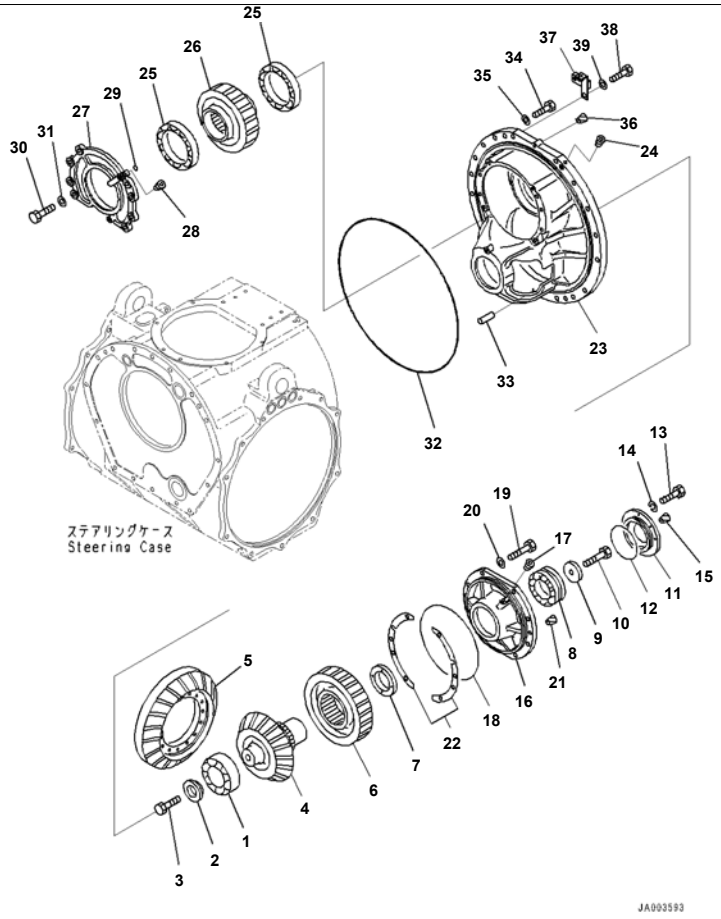

D375A-6R S/N 65001-UP
Power Train, For Machine With Vehicle Health Monitoring System (VHMS), Pinion and Cage (#65001-)

Index	Code	Part Number	Description	Qty	Serial No.
		195-22-80050	Power Train Assembly	1	65001-
		195-22-81050	· Steering Assembly	1	65001-
1		195-09-18310	· · Bearing	1	65001-
2		195-22-12461	· · Holder	1	65001-
3		01010-61680	· · Bolt	1	65001-
		195-22-82300	· · Pinion and Gear Assembly	1	65001-
4	C1		· · · Pinion	1	65001-
5	C1		· · · Gear	1	65001-
6		195-22-12250	· · Gear	1	65001-
7		195-22-12510	· · Spacer	1	65001-
8		195-09-18320	· · Bearing	1	65001-
9		195-22-72520	· · Holder	1	65001-
10		01010-61680	· · Bolt	1	65001-
11		195-22-12240	· · Cover	1	65001-
12		07000-72135	· · O-ring, (Kit : K04)	1	65001-
13		01010-81035	· · Bolt	4	65001-
14		01643-31032	· · Washer	4	65001-
15		07049-01012	· · Plug	2	65001-
16		195-22-12180	· · Cage	1	65001-
17		07043-70108	· · Plug	1	65001-
18		07000-75295	· · O-ring, (Kit : K04)	1	65001-
19		01010-61445	· · Bolt	8	65001-
20		01643-31445	· · Washer	8	65001-
21		07049-01418	· · Plug, Cork	2	65001-
22		195-22-00020	· · Shim Assembly	1	65001-
		195-22-12560	· · · Shim	10	65001-
		195-22-12480	· · · Shim	10	65001-
		195-22-12490	· · · Shim	8	65001-
23		195-22-72131	· · Case	1	65001-
24		07043-70211	· · Plug	1	65001-
25		195-09-18270	· · Bearing	2	65001-

Printed By : Dwi Iswanto (airafather6107170)

Power Train, For Machine With Vehicle Health Monitoring System (VHMS), Pinion and Cage (#65001-)

Index	Code	Part Number	Description	Qty	Serial No.
26		195-22-12190	· · Gear	1	65001-
27		195-22-12290	· · Cage	1	65001-
28		07043-70108	· · Plug	1	65001-
29		07000-72015	· · O-ring, (Kit : K04)	1	65001-
30		01010-61445	· · Bolt	8	65001-
31		01643-31445	· · Washer	8	65001-
32		195-15-49620	· · O-ring, (Kit : K04)	1	65001-
33		04020-01638	· · Pin, Dowel	1	65001-
34		01010-61660	· · Bolt	20	65001-
35		01643-31645	· · Washer	20	65001-
36		07049-01620	· · Plug	2	65001-
37		198-06-61380	· · Bracket	1	65001-
38		01010-81225	· · Bolt	1	65001-
39		01643-31232	· · Washer	1	65001-

Printed By : Dwi Iswanto (airafather6107170)

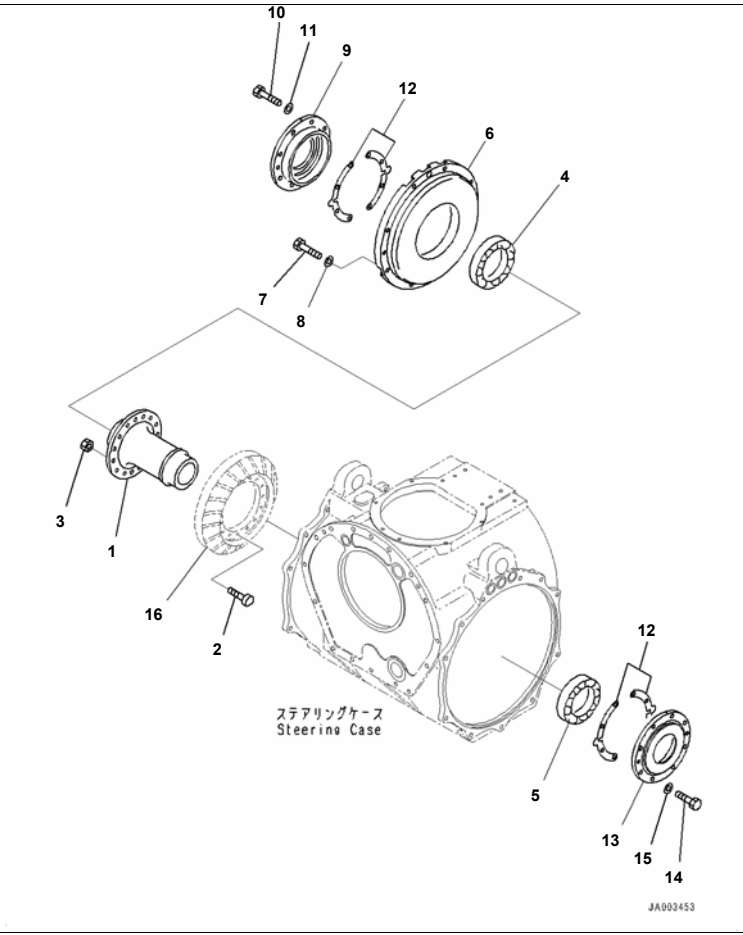

Reference:F2300-001025 Page:F002025

D375A-6R S/N 65001-UP

Power Train, For Machine With Vehicle Health Monitoring System (VHMS), Bevel Gear and Shaft (#65001-)

Index	Code	Part Number	Description	Qty	Serial No.
		195-22-80050	Power Train Assembly	1	65001-
		195-22-81050	· Steering Assembly	1	65001-
1		195-22-12160	· · Shaft	1	65001-
2		01084-01650	· · Bolt	18	65001-
3		01582-11613	· · Nut	18	65001-
4		06002-32026	· · Bearing	1	65001-
5		06002-32024	· · Bearing	1	65001-
6		195-22-12271	· · Cage	1	65001-
7		01010-61450	· · Bolt	8	65001-
8		01643-31445	· · Washer	8	65001-
9		195-22-12171	· · Cage	1	65001-
10		01010-61450	· · Bolt	8	65001-
11		01643-31445	· · Washer	8	65001-
12		195-22-00030	· · Shim Assembly	1	65001-
		195-22-12550	· · · Shim	20	65001-
		195-22-12440	· · · Shim	20	65001-
		195-22-12450	· · · Shim	16	65001-
13		195-22-12140	· · Cage	1	65001-
14		01010-61445	· · Bolt	8	65001-
15		01643-31445	· · Washer	8	65001-
16		(195-22-82150)	Gear		

Reference:F2300-001025 Page:F002025

Printed By : Dwi Iswanto (airafather6107170)

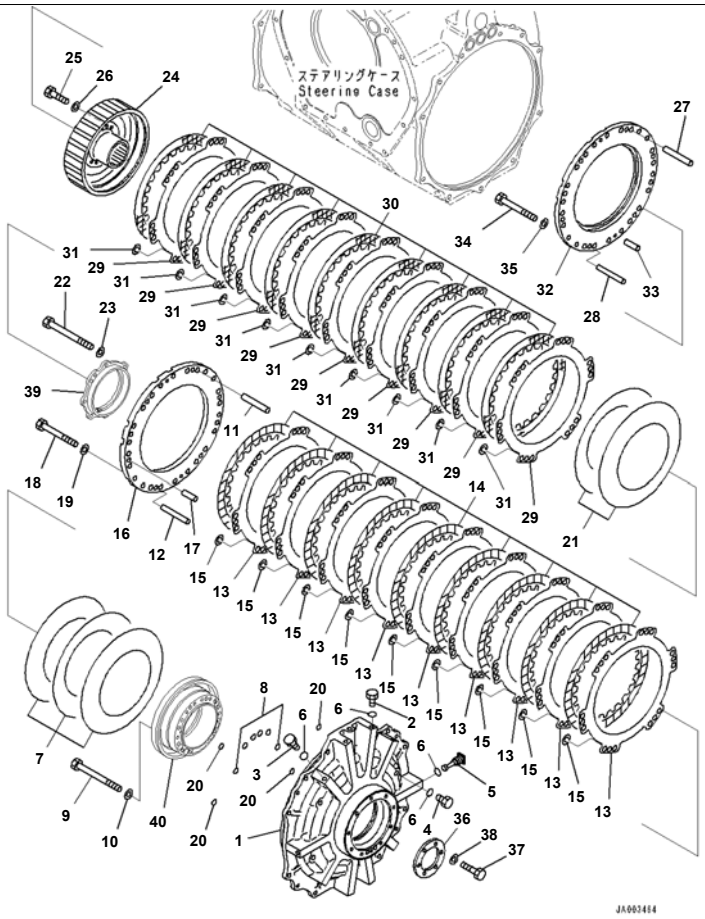

Reference:F2300-001026 Page:F002026

D375A-6R S/N 65001-UP
Power Train, For Machine With Vehicle Health Monitoring System (VHMS), Steering Clutch and Steering Brake (1/2)
(#65001-)

Index	Code	Part Number	Description	Qty	Serial No.
		195-22-80050	Power Train Assembly	1	65001-
		195-22-81050	· Steering Assembly	1	65001-
		195-22-00207	· · Clutch and Brake Assembly	2	65001-
1		195-22-83110	· · · Case	1	65001-
2		07040-12012	· · · Plug	5	65001-
3		07040-12012	· · · Plug	2	65001-
4		07040-12012	· · · Plug	4	65001-
5		195-22-73560	· · · Plug	1	65001-
6		07002-62034	· · · O-ring, (Kit : K04)	12	65001-
7		195-22-13143	· · · Spring Assembly	1	65001-
	C1		· · · · Spring	3	65001-
8		07000-72018	· · · O-ring, (Kit : K04)	6	65001-
9		01011-81235	· · · Bolt	12	65001-
10		01643-31232	· · · Washer	12	65001-
11		195-22-13160	· · · Pin	12	65001-
12		195-22-13170	· · · Pin	6	65001-
13		195-22-13370	· · · Plate	9	65001-
14		195-22-73340	· · · Disc	9	65001-
15		195-15-12880	· · · Spring	54	65001-
16		195-22-13182	· · · Stopper	1	65001-
17		04020-01228	· · · Pin, Dowel	2	65001-
18		01011-61610	· · · Bolt	12	65001-
19		01643-31645	· · · Washer	12	65001-
20		07000-72018	· · · O-ring, (Kit : K04)	6	65001-
21		195-22-13550	· · · Spring	1	65001-
22		01011-81240	· · · Bolt	8	65001-
23		01643-31232	· · · Washer	8	65001-
24		195-22-15120	· · · Hub	1	65001-
25		01010-81035	· · · Bolt	8	65001-
26		01643-31032	· · · Washer	8	65001-

Reference:F2300-001026 Page:F002026

Printed By : Dwi Iswanto (airafather6107170)

Index	Code	Part Number	Description	Qty	Serial No.
27		195-22-15150	· · · Pin	12	65001-
28		195-22-15140	· · · Pin	6	65001-
29		195-22-13370	· · · Plate	9	65001-
30		195-22-13441	· · · Disc	9	65001-
31		195-15-12880	· · · Spring	54	65001-
32		195-22-15130	· · · Stopper	1	65001-
33		04020-01228	· · · Pin, Dowel	2	65001-
34		01011-61615	· · · Bolt	12	65001-
35		01643-31645	· · · Washer	12	65001-
36		195-22-13230	· · · Plate	1	65001-
37		01010-81270	· · · Bolt	6	65001-
38		01643-31232	· · · Washer	6	65001-
39		(195-22-13250)	Flange		
40		(195-22-13131)	Cage		

Printed By : Dwi Iswanto (airafather6107170)

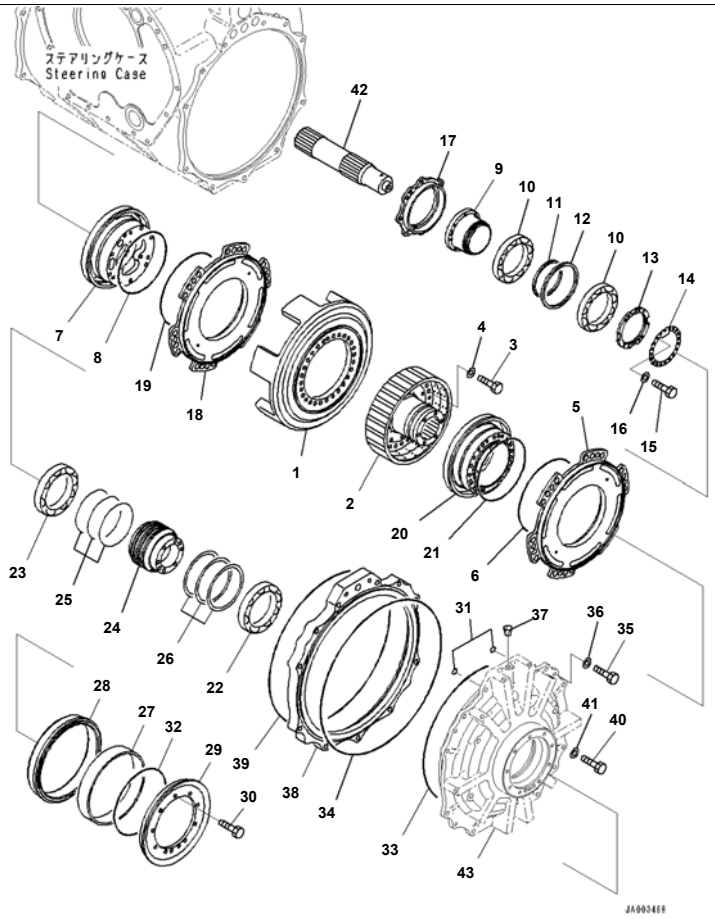

Reference:F2300-001027 Page:F002027

D375A-6R S/N 65001-UP
Power Train, For Machine With Vehicle Health Monitoring System (VHMS), Steering Clutch and Steering Brake (2/2)
(#65001-)

Index	Code	Part Number	Description	Qty	Serial No.
		195-22-80050	Power Train Assembly	1	65001-
		195-22-81050	・ Steering Assembly	1	65001-
		195-22-00207	・・ Clutch and Brake Assembly	2	65001-
1		195-22-15110	・・・ Housing	1	65001-
2		195-22-73211	・・・ Hub	1	65001-
3		01010-61445	・・・ Bolt	27	65001-
4		01643-31445	・・・ Washer	27	65001-
5		195-22-13150	・・・ Piston	1	65001-
6		562-15-19320	・・・ Seal Ring, (Kit : K04)	1	65001-
7		195-22-73240	・・・ Cage	1	65001-
8		113-15-12861	・・・ Seal Ring, (Kit : K04)	1	65001-
9		195-22-13280	・・・ Cage	1	65001-
10		195-09-18260	・・・ Bearing	2	65001-
11		195-22-13310	・・・ Spacer	1	65001-
12		195-22-13290	・・・ Spacer	1	65001-
13		195-22-13320	・・・ Nut	1	65001-
14		195-22-73330	・・・ Lock	1	65001-
15		01010-80816	・・・ Bolt	2	65001-
16		01643-30823	・・・ Washer	2	65001-
17		195-22-13250	・・・ Flange	1	65001-
18		195-22-13150	・・・ Piston	1	65001-
19		562-15-19320	・・・ Seal Ring, (Kit : K04)	1	65001-
20		195-22-13131	・・・ Cage	1	65001-
21		113-15-12861	・・・ Seal Ring, (Kit : K04)	1	65001-
22		195-09-18290	・・・ Bearing	1	65001-
23		195-09-18290	・・・ Bearing	1	65001-
24		195-22-13221	・・・ Sleeve	1	65001-
25		07000-75140	・・・ O-ring, (Kit : K04)	3	65001-
26		195-09-18361	・・・ Seal Ring, (Kit : K04)	3	65001-
27		195-21-32341	・・・ Bushing	1	65001-

Printed By : Dwi Iswanto (airafather6107170)

Index	Code	Part Number	Description	Qty	Serial No.
28		195-21-32361	· · · Cushion	1	65001-
29		195-21-32540	· · · Flange	1	65001-
30		01010-81230	· · · Bolt	9	65001-
31		07000-73022	· · O-ring, (Kit : K04)	4	65001-
32		195-22-79650	· · O-ring, (Kit : K04)	2	65001-
33		566-13-43140	· · O-ring, (Kit : K04)	2	65001-
34		195-22-79640	· · O-ring, (Kit : K04)	2	65001-
35		01010-81240	· · Bolt	8	65001-
36		01643-31232	· · Washer	8	65001-
37		07049-01620	· · Plug	2	65001-
38		195-22-13120	· · Cover	2	65001-
39		195-22-79640	· · O-ring, (Kit : K04)	2	65001-
40		01010-61690	· · Bolt	22	65001-
41		01643-31645	· · Washer	22	65001-
42		195-22-12320	· · Shaft	2	65001-
43		(195-22-83110)	Case		

Printed By : Dwi Iswanto (airafather6107170)

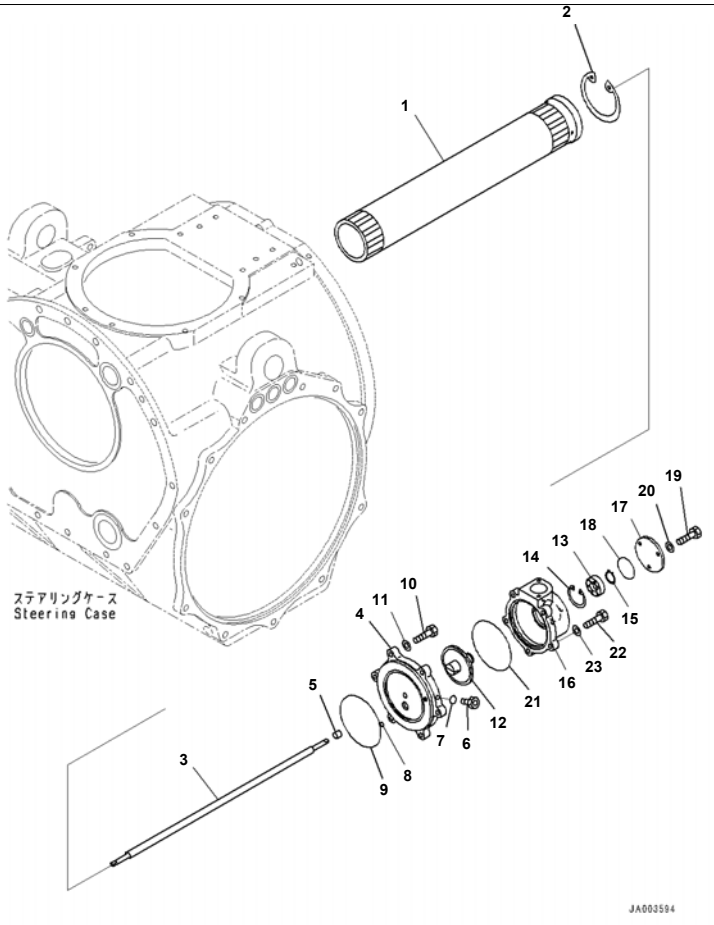

Reference:F2300-001028 Page:F002028

D375A-6R S/N 65001-UP
Power Train, For Machine With Vehicle Health Monitoring System (VHMS), Final Drive, Torque Shaft (#65001-)

Index	Code	Part Number	Description	Qty	Serial No.
		195-22-80050	Power Train Assembly	1	65001-
		195-22-81050	· Steering Assembly	1	65001-
1		195-22-12310	· · Shaft	1	65001-
2		04065-01204	· · Ring, Snap	1	65001-
3		195-22-12531	· · Shaft	1	65001-
4		195-22-82220	· · Cage	1	65001-
5		287-15-13830	· · Bushing	1	65001-
6		723-11-18190	· · Plug	1	65001-
7		07002-61023	· · O-ring, (Kit : K04)	1	65001-
8		07000-71008	· · O-ring, (Kit : K04)	1	65001-
9		07000-72135	· · O-ring, (Kit : K04)	1	65001-
10		01010-81040	· · Bolt	6	65001-
11		01643-31032	· · Washer	6	65001-
12		198-22-42110	· · Drum	1	65001-
13		06030-05205	· · Bearing	1	65001-
14		04065-05220	· · Ring, Snap	1	65001-
15		04064-02512	· · Ring, Snap	1	65001-
16		287-15-13860	· · Cage	1	65001-
17		287-15-13870	· · Cover	1	65001-
18		07000-73050	· · O-ring, (Kit : K04)	1	65001-
19		01010-80820	· · Bolt	3	65001-
20		01643-30823	· · Washer	3	65001-
21		07000-72125	· · O-ring	1	65001-
22		01010-81035	· · Bolt	5	65001-
23		01643-31032	· · Washer	5	65001-

Reference:F2300-001028 Page:F002028

Printed By : Dwi Iswanto (airafather6107170)

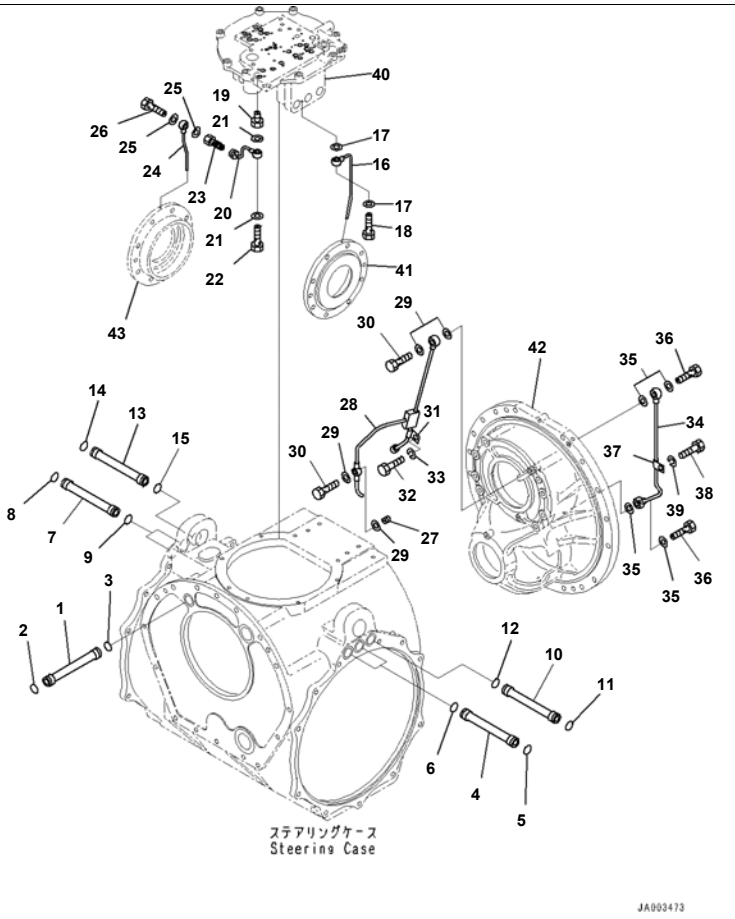

Reference:F2300-001029 Page:F002029

D375A-6R S/N 65001-UP
Power Train, For Machine With Vehicle Health Monitoring System (VHMS), Brake Piping (#65001-)

Index	Code	Part Number	Description	Qty	Serial No.
		195-22-80050	Power Train Assembly	1	65001-
		195-22-81050	· Steering Assembly	1	65001-
1		195-22-72350	· · Tube	1	65001-
2		07000-73028	· · O-ring, (Kit : K04)	1	65001-
3		07000-73025	· · O-ring, (Kit : K04)	1	65001-
4		195-22-72350	· · Tube	2	65001-
5		07000-73028	· · O-ring	2	65001-
6		07000-73025	· · O-ring, (Kit : K04)	2	65001-
7		195-22-72360	· · Tube	2	65001-
8		07000-73028	· · O-ring	2	65001-
9		07000-73025	· · O-ring, (Kit : K04)	2	65001-
10		195-22-72350	· · Tube	1	65001-
11		07000-73028	· · O-ring	1	65001-
12		07000-73025	· · O-ring, (Kit : K04)	1	65001-
13		195-22-72360	· · Tube	1	65001-
14		07000-73028	· · O-ring	1	65001-
15		07000-73025	· · O-ring, (Kit : K04)	1	65001-
16		195-22-12420	· · Tube	1	65001-
17		07005-00812	· · Gasket, (Kit : K04)	2	65001-
18		07206-30508	· · Bolt, Joint	1	65001-
19		195-22-12410	· · Nipple	1	65001-
20		195-22-12390	· · Tube	1	65001-
21		07005-00812	· · Gasket, (Kit : K04)	2	65001-
22		07206-30508	· · Bolt, Joint	1	65001-
23		195-22-12380	· · Connector	1	65001-
24		195-22-12371	· · Tube	1	65001-
25		07005-00812	· · Gasket, (Kit : K04)	2	65001-
26		07206-30508	· · Bolt, Joint	1	65001-
27		17A-22-46250	· · Orifice	1	65001-
28		195-22-82470	· · Tube	1	65001-
29		07005-01012	· · Gasket, (Kit : K04)	4	65001-

Reference:F2300-001029 Page:F002029

Printed By : Dwi Iswanto (airafather6107170)

Index	Code	Part Number	Description	Qty	Serial No.
30		07206-30710	・・Bolt, Joint	2	65001-
31		195-22-12330	・・Clip	1	65001-
32		01010-81020	・・Bolt	1	65001-
33		01643-31032	・・Washer	1	65001-
34		195-22-12340	・・Tube	1	65001-
35		07005-01012	・・Gasket, (Kit : K04)	4	65001-
36		07206-30710	・・Bolt, Joint	2	65001-
37		195-22-12330	・・Clip	1	65001-
38		01010-81020	・・Bolt	1	65001-
39		01643-31032	・・Washer	1	65001-
40		(195-22-82810)	Cover		
41		(195-22-12140)	Cage		
42		(195-22-72131)	Case		
43		(195-22-12171)	Cage		

Printed By : Dwi Iswanto (airafather6107170)

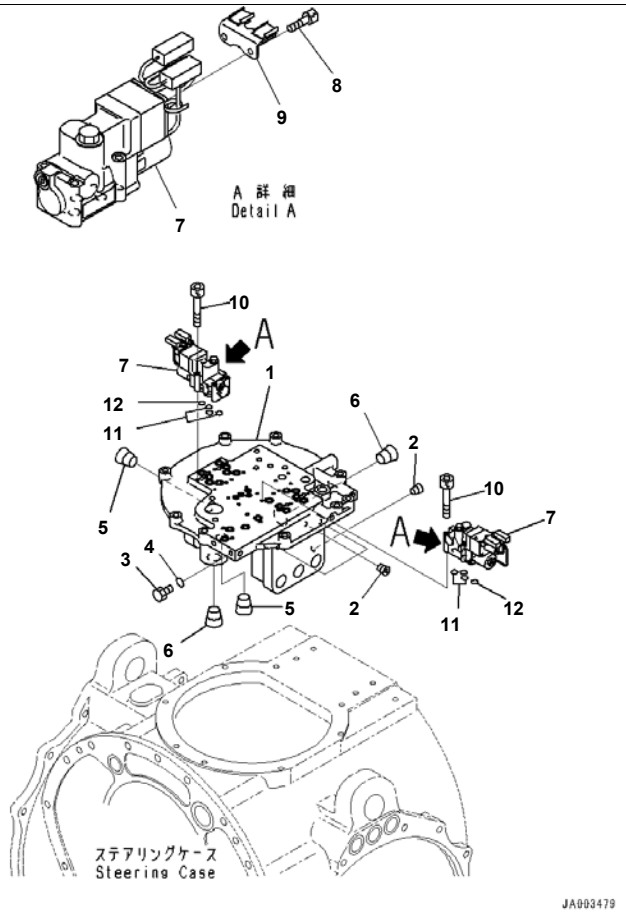

Reference:F2300-001030 Page:F002030

D375A-6R S/N 65001-UP
Power Train, For Machine With Vehicle Health Monitoring System (VHMS), Steering Valve (#65001-)

Index	Code	Part Number	Description	Qty	Serial No.
		195-22-80050	Power Train Assembly	1	65001-
		195-22-81050	· Steering Assembly	1	65001-
		195-22-82000	· · Valve Assembly	1	65001-
1		195-22-82810	· · · Cover	1	65001-
2		07043-70211	· · · Plug	17	65001-
3		07040-11209	· · · Plug	6	65001-
4		07002-61223	· · · O-ring	6	65001-
5		07043-70617	· · · Plug	2	65001-
6		07043-71222	· · · Plug, Taper	2	65001-
7		17A-22-46401	· · · ECMV Assembly	4	65001-
8		01252-70540	· · · · Bolt	4	65001-
9		714-23-15690	· · · · Bracket	1	65001-
10		01252-A0650	· · · Bolt, Hexagon Socket Head	16	65001-
11		07000-72015	· · · O-ring	16	65001-
12		07000-71007	· · · O-ring	4	65001-

Reference:F2300-001030 Page:F002030

Printed By : Dwi Iswanto (airafather6107170)

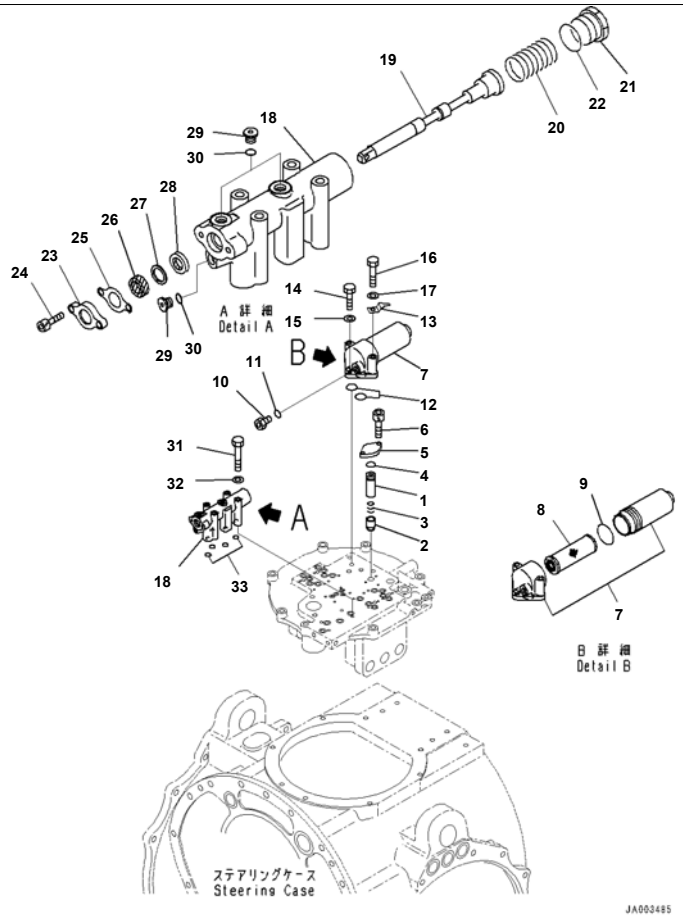

Reference:F2300-001031 Page:F002031

D375A-6R S/N 65001-UP
Power Train, For Machine With Vehicle Health Monitoring System (VHMS), Parking Brake Valve (#65001-)

Index	Code	Part Number	Description	Qty	Serial No.
		195-22-80050	Power Train Assembly	1	65001-
		195-22-81050	· Steering Assembly	1	65001-
		195-22-82000	· · Valve Assembly	1	65001-
1		195-22-72190	· · · Sleeve	1	65001-
2		07750-01623	· · · Valve	1	65001-
3		07750-01628	· · · Spring	1	65001-
4		07000-72012	· · · O-ring	1	65001-
5		709-25-11670	· · · Cover	1	65001-
6		01252-90616	· · · Bolt, Hexagon Socket Head	2	65001-
7		569-15-51721	· · · Filter Assembly	1	65001-
8		569-15-51732	· · · · Element Assembly	1	65001-
9		07000-A3024	· · · · · O-ring	1	65001-
10		07040-11812	· · · Plug	1	65001-
11		07002-61823	· · · O-ring	1	65001-
12		07000-73022	· · · O-ring	2	65001-
13		08193-20010	· · · Clip	1	65001-
14		01010-81030	· · · Bolt	1	65001-
15		01643-31032	· · · Washer	1	65001-
16		01010-81080	· · · Bolt	2	65001-
17		01643-31032	· · · Washer	2	65001-
		195-22-71101	· · · Valve Assembly	1	65001-
18		195-22-71111	· · · · Valve Body	1	65001-
19		195-22-71120	· · · · Spool	1	65001-
20		195-22-76130	· · · · Spring	1	65001-
21		362-15-15550	· · · · Plug	1	65001-
22		07002-63034	· · · · O-ring	1	65001-
23		700-22-11270	· · · · Plate	1	65001-
24		01252-70616	· · · · Bolt, Hexagon Socket Head	2	65001-
25		700-22-11421	· · · · Gasket	1	65001-
26		700-22-11261	· · · · Seal, Dust	1	65001-
27		700-22-11430	· · · · Collar	1	65001-

Reference:F2300-001031 Page:F002031

Printed By : Dwi Iswanto (airafather6107170)

Index	Code	Part Number	Description	Qty	Serial No.
28		700-22-11252	· · · · U-packing	1	65001-
29		723-11-18190	· · · · Plug	3	65001-
30		07002-61023	· · · · O-ring	3	65001-
31		01010-80895	· · · Bolt	4	65001-
32		01643-30823	· · · Washer	4	65001-
33		07000-72015	· · · O-ring	4	65001-

Printed By : Dwi Iswanto (airafather6107170)

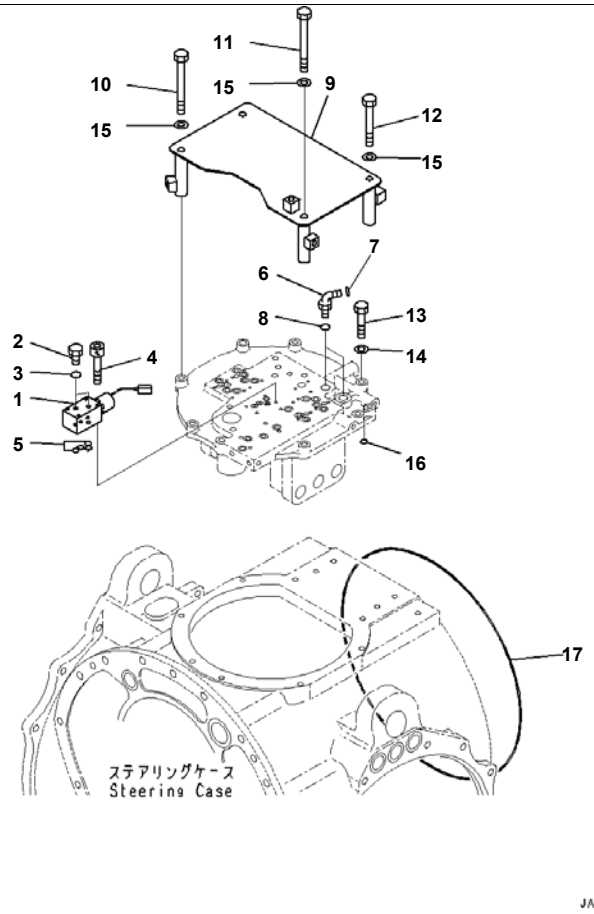

Reference:F2300-001032 Page:F002032

D375A-6R S/N 65001-UP
Power Train, For Machine With Vehicle Health Monitoring System (VHMS), Prevent Steep Brake Valve (#65001-)

Index	Code	Part Number	Description	Qty	Serial No.
		195-22-80050	Power Train Assembly	1	65001-
		195-22-81050	· Steering Assembly	1	65001-
		195-22-82000	· · Valve Assembly	1	65001-
1		195-22-82100	· · · Valve Assembly	1	65001-
2		07040-11007	· · · · Plug	2	65001-
3		07002-61023	· · · · O-ring	2	65001-
4		01252-A0650	· · · Bolt, Hexagon Socket Head	4	65001-
5		07000-72010	· · · O-ring	4	65001-
6		02782-10315	· · · Elbow	2	65001-
7		02896-61009	· · · O-ring	2	65001-
8		07002-62034	· · · O-ring, (Kit : K04)	2	65001-
9		195-22-85810	· · Cover	1	65001-
10		01011-81270	· · Bolt	2	65001-
11		01011-81270	· · Bolt	1	65001-
12		01011-81240	· · Bolt	1	65001-
13		01010-81250	· · Bolt	5	65001-
14		01643-31232	· · Washer	5	65001-
15		01643-31232	· · Washer	4	65001-
16		07000-72018	· · O-ring, (Kit : K04)	1	65001-
17		07000-75375	· · O-ring, (Kit : K04)	1	65001-

Printed By : Dwi Iswanto (airafather6107170)

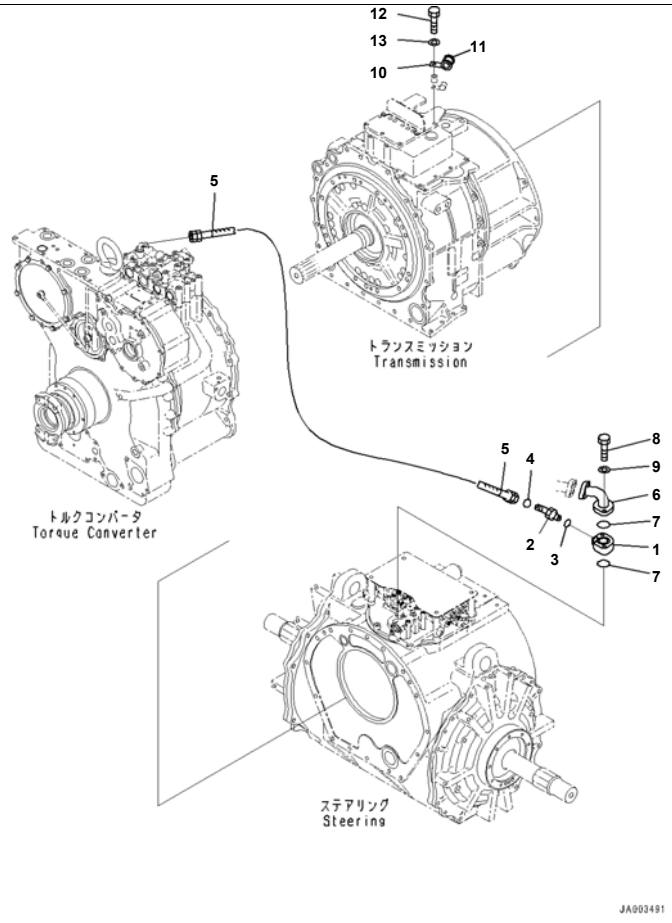

Reference:F2300-001033 Page:F002033

D375A-6R S/N 65001-UP
Power Train, For Machine With Vehicle Health Monitoring System (VHMS), Piping (#65001-)

Index	Code	Part Number	Description	Qty	Serial No.
		195-22-80050	Power Train Assembly	1	65001-
1		195-22-78111	· Block	1	65001-
2		02782-10422	· Elbow	1	65001-
3		02896-61012	· O-ring	1	65001-
4		07002-62034	· O-ring	1	65001-
5		02762-00410	· Hose	1	65001-
6		195-49-37180	· Elbow	1	65001-
7		07000-73048	· O-ring	2	65001-
8		01010-81275	· Bolt	2	65001-
9		01643-31232	· Washer	2	65001-
10		04434-52711	· Clip	1	65001-
11		07095-20418	· Cushion	1	65001-
12		01010-81025	· Bolt	1	65001-
13		01643-31032	· Washer	1	65001-

Printed By : Dwi Iswanto (airafather6107170)

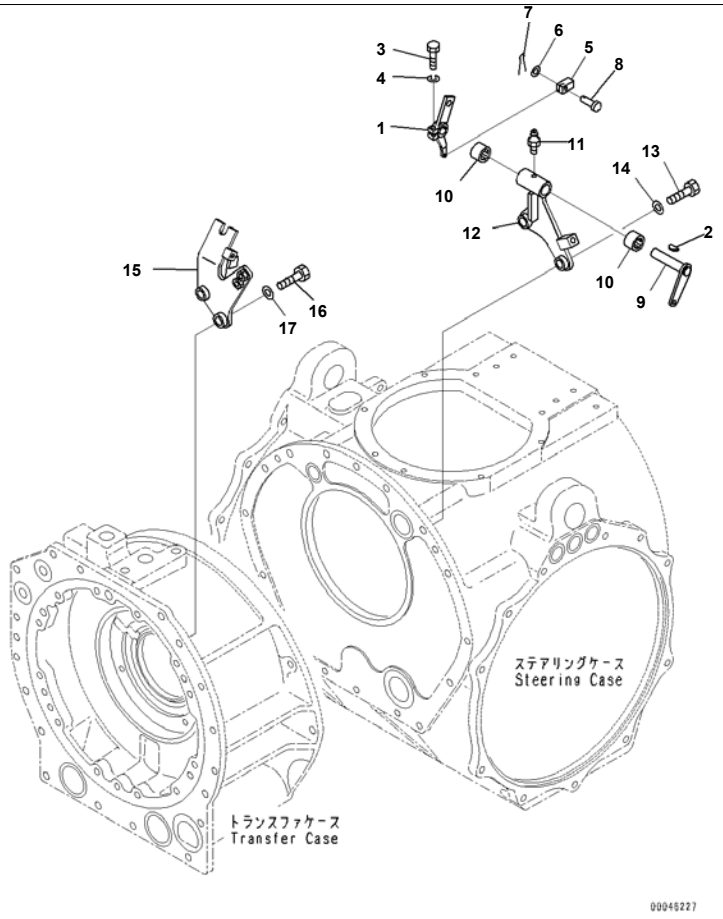

Reference:F2300-001034 Page:F002034

D375A-6R S/N 65001-UP
Power Train, For Machine With Vehicle Health Monitoring System (VHMS), Brake Linkage (#65001-)

Index	Code	Part Number	Description	Qty	Serial No.
		195-22-80050	Power Train Assembly	1	65001-
1		195-43-65340	· Lever	1	65001-
2		04010-00519	· Key, Woodruff	1	65001-
3		01010-80830	· Bolt	1	65001-
4		01602-20825	· Washer, Spring	1	65001-
5		04213-20625	· Yoke	1	65001-
6		01641-20608	· Washer	2	65001-
7		04050-11612	· Pin, Cotter	2	65001-
8		04205-10620	· Pin	2	65001-
9		195-43-65330	· Shaft	1	65001-
10		06123-02018	· Bearing, Needle	2	65001-
11		07020-00000	· Fitting, Grease	1	65001-
12		195-43-65320	· Bracket	1	65001-
13		01010-61665	· Bolt	2	65001-
14		01643-31645	· Washer	2	65001-
15		195-43-65362	· Bracket	1	65001-
16		01010-61665	· Bolt	2	65001-
17		01643-31645	· Washer	2	65001-

Printed By : Dwi Iswanto (airafather6107170)

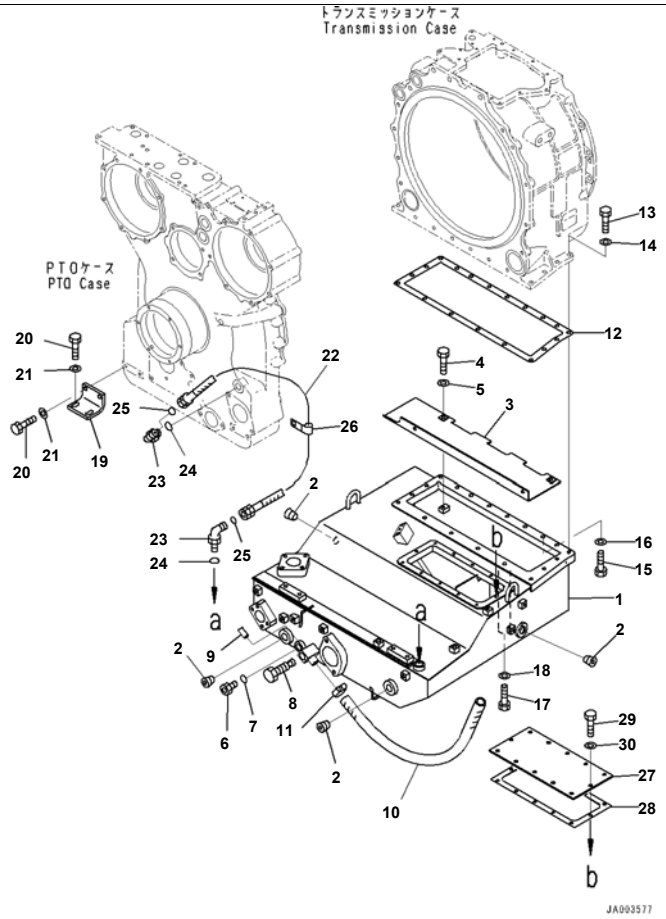

Reference:F2300-001035 Page:F002035

D375A-6R S/N 65001-UP
Power Train, For Machine With Vehicle Health Monitoring System (VHMS), Tank (#65001-)

Index	Code	Part Number	Description	Qty	Serial No.
		195-22-80050	Power Train Assembly	1	65001-
1		195-49-73341	· Tank	1	65001-
2		02720-11616	· Plug, Tapered	4	65001-
3		195-49-31480	· Plate	1	65001-
4		01010-81020	· Bolt	4	65001-
5		01643-31032	· Washer	4	65001-
6		07040-12412	· Plug	1	65001-
7		07002-62434	· O-ring	1	65001-
8		195-49-31280	· Valve	1	65001-
9		04020-00514	· Pin, Dowel	1	65001-
10		07260-32680	· Hose	1	65001-
11		07281-00419	· Clamp, Hose	1	65001-
12		17M-22-25141	· Gasket	1	65001-
13		01010-81235	· Bolt	8	65001-
14		01643-31232	· Washer	8	65001-
15		01010-81250	· Bolt	7	65001-
16		01643-31232	· Washer	7	65001-
17		01010-81250	· Bolt	4	65001-
18		01643-31232	· Washer	4	65001-
19		195-49-31270	· Bracket	2	65001-
20		01010-81230	· Bolt	8	65001-
21		01643-31232	· Washer	8	65001-
22		02762-00608	· Hose, Face Seal Type	1	65001-
23		02782-10628	· Elbow	2	65001-
24		07002-62434	· O-ring	2	65001-
25		02896-61018	· O-ring	2	65001-
26		195-49-31470	· Clip	1	65001-
27		195-49-72270	· Cover	1	65001-
28		195-49-72280	· Gasket	1	65001-
29		01010-81025	· Bolt	12	65001-
30		01643-31032	· Washer	12	65001-

Printed By : Dwi Iswanto (airafather6107170)

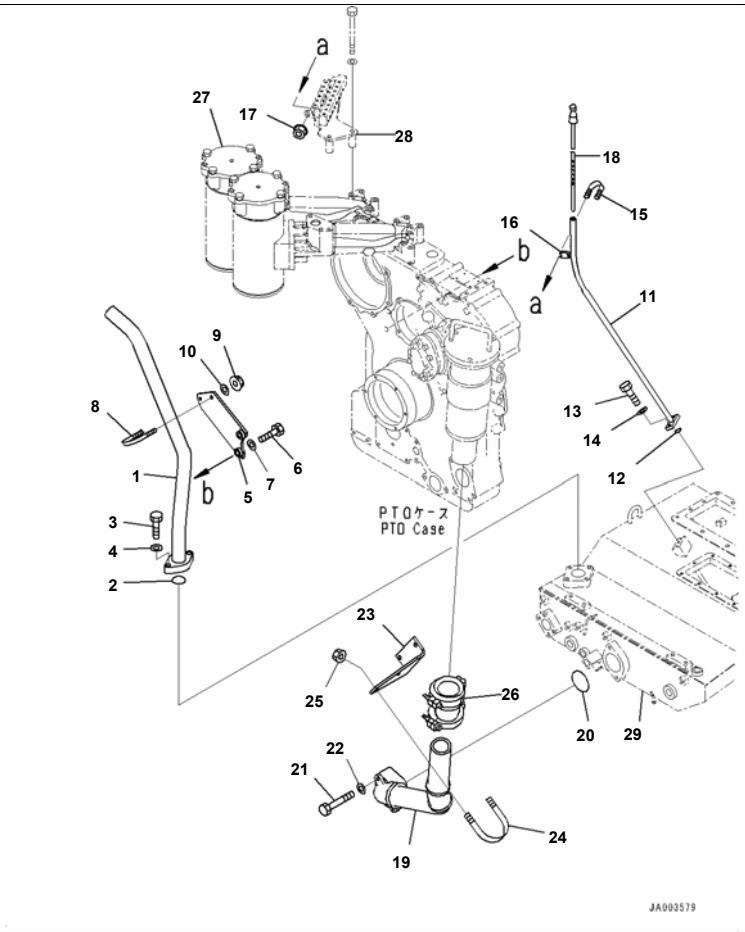

Power Train, For Machine With Vehicle Health Monitoring System (VHMS), Suction Tube (#65001-)

Index	Code	Part Number	Description	Qty	Serial No.
		195-22-80050	Power Train Assembly	1	65001-
1		195-49-73311	· Tube	1	65001-
2		07000-72060	· O-ring	1	65001-
3		01010-81250	· Bolt	2	65001-
4		01643-31232	· Washer	2	65001-
5		195-49-73411	· Bracket	1	65001-
6		01010-61665	· Bolt	2	65001-
7		01643-31645	· Washer	2	65001-
8		07283-36155	· Clip, Pipe	1	65001-
9		01597-01009	· Nut	2	65001-
10		01643-31032	· Washer	2	65001-
11		195-49-72311	· Tube	1	65001-
12		07000-72016	· O-ring	1	65001-
13		01010-81230	· Bolt	2	65001-
14		01643-31232	· Washer	2	65001-
15		07283-31529	· Clip, Pipe	1	65001-
16		07283-51523	· Seat	1	65001-
17		01594-00807	· Nut, Flanged	2	65001-
18		195-49-31350	· Gauge	1	65001-
19		195-49-31432	· Tube	1	65001-
20		07000-72090	· O-ring	1	65001-
21		01010-81295	· Bolt	2	65001-
22		01643-31232	· Washer	2	65001-
23		195-49-51450	· Bracket	1	65001-
24		07283-38973	· Clip, Pipe	1	65001-
25		01595-01210	· Nut, Flanged	2	65001-
26		07332-03000	· Coupling	1	65001-
27		(195-49-73320)	Case		
28		(195-49-73331)	Block		
29		(195-49-73341)	Tank		

Printed By : Dwi Iswanto (airafather6107170)

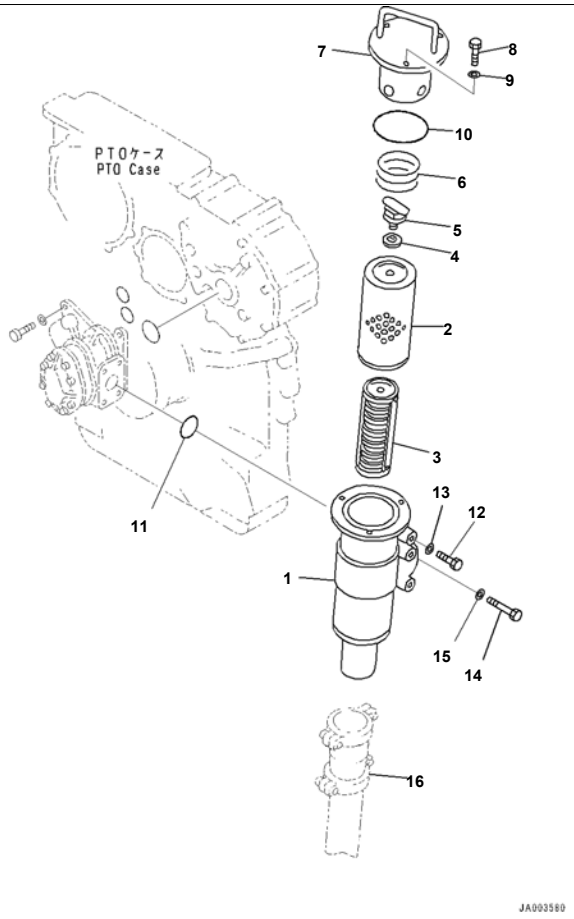

Power Train, For Machine With Vehicle Health Monitoring System (VHMS), Strainer (#65001-)

Index	Code	Part Number	Description	Qty	Serial No.
		195-22-80050	Power Train Assembly	1	65001-
1		195-49-35112	· Case	1	65001-
2		195-49-35122	· Screen	1	65001-
3		195-49-35141	· Magnet	1	65001-
4		01643-32780	· Washer	1	65001-
5		195-49-35151	· Bolt	1	65001-
6		21T-60-13650	· Spring	1	65001-
7		195-49-35131	· Cover	1	65001-
8		01010-81235	· Bolt	3	65001-
9		01643-31232	· Washer	3	65001-
10		07000-75165	· O-ring	1	65001-
11		07000-72085	· O-ring	1	65001-
12		01010-61665	· Bolt	2	65001-
13		01643-31645	· Washer	2	65001-
14		01011-61615	· Bolt	2	65001-
15		01643-31645	· Washer	2	65001-
16		(195-49-31432)	Tube		

Printed By : Dwi Iswanto (airafather6107170)

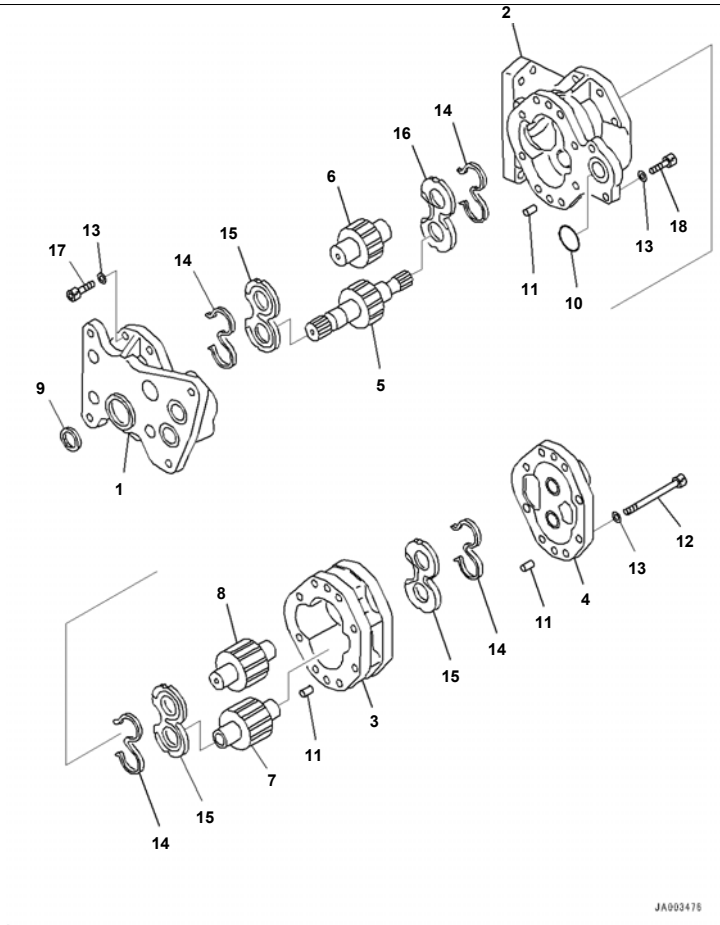

Power Train, For Machine With Vehicle Health Monitoring System (VHMS), Gear Pump, BAL (4) 112+ 180 (#65001-)

Index	Code	Part Number	Description	Qty	Serial No.
		195-22-80050	Power Train Assembly	1	65001-
		704-71-44060	· Pump Assembly	1	65001-
1	C2	704-28-04012	· · Bracket	1	65001-
	C2	704-27-04612	· · · Bushing	2	65001-
2	C2	704-28-41052	· · Body	1	65001-
	C2	704-27-04612	· · · Bushing	4	65001-
3	C2	704-27-45010	· · Case	1	65001-
4	C2	704-28-04412	· · Housing	1	65001-
	C2	704-27-04612	· · · Bushing	2	65001-
5	C2	704-28-41452	· · Gear, Drive	1	65001-
6	C2	704-28-41552	· · Gear, Driven	1	65001-
7	C2	704-28-45420	· · Gear, Drive	1	65001-
8	C2	704-27-45510	· · Gear, Driven	1	65001-
9	C2	07438-71260	· · Seal, Oil	1	65001-
10	C2	07000-73040	· · O-ring	1	65001-
11	C2	04020-01228	· · Pin, Dowel	6	65001-
12	C2	01253-61210	· · Bolt, Hexagon Socket Head	8	65001-
13	C2	01643-51232	· · Washer	18	65001-
14	C2	705-18-04470	· · Seal	4	65001-
15	C2	705-17-04611	· · Plate	3	65001-
16	C2	705-18-04610	· · Plate	1	65001-
17	C2	01252-61240	· · Bolt	8	65001-
18	C2	01252-61255	· · Bolt, Hexagon Socket Head	2	65001-

Printed By : Dwi Iswanto (airafather6107170)

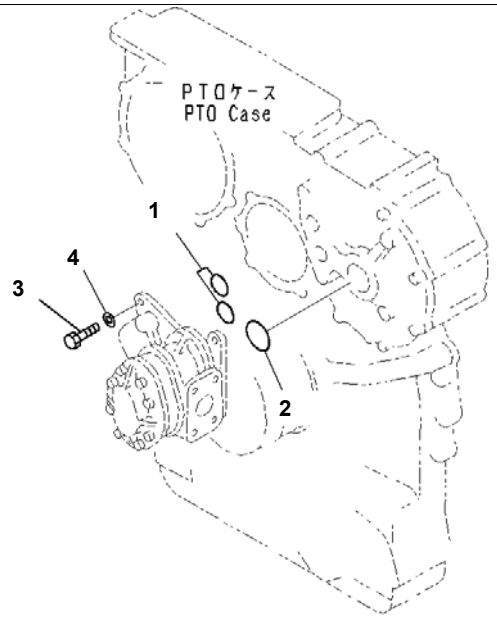

D375A-6R S/N 65001-UP
Power Train, For Machine With Vehicle Health Monitoring System (VHMS), Pump Mounting (#65001-)

Index	Code	Part Number	Description	Qty	Serial No.
		195-22-80050	Power Train Assembly	1	65001-
1		07000-73040	· O-ring	2	65001-
2		07000-72070	· O-ring	1	65001-
3		01010-81240	· Bolt	4	65001-
4		01643-31232	· Washer	4	65001-

Printed By : Dwi Iswanto (airafather6107170)

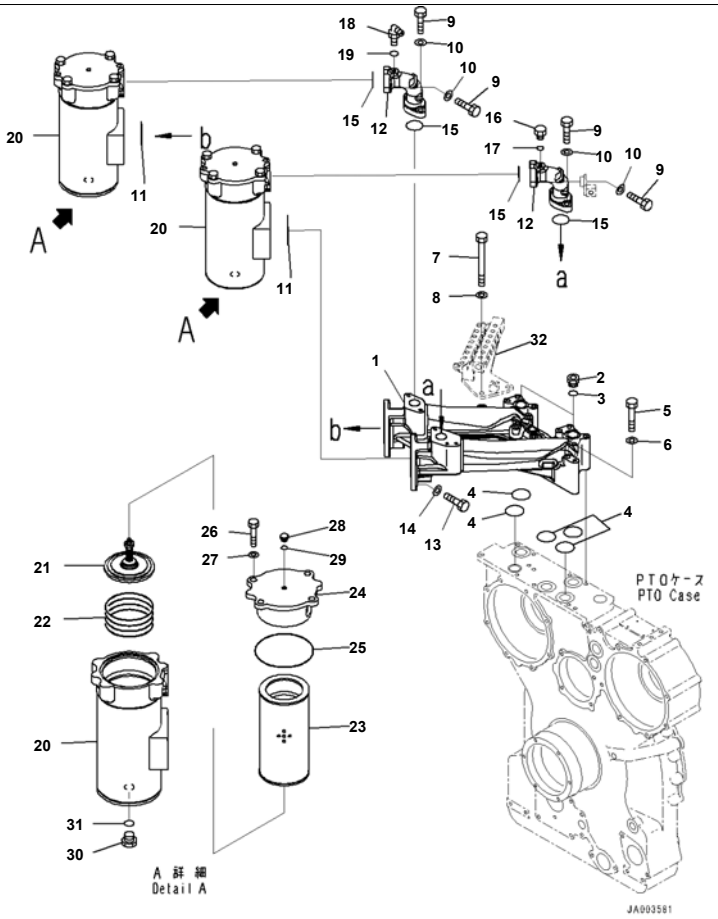

Reference:F2300-001040 Page:F002040

D375A-6R S/N 65001-UP
Power Train, For Machine With Vehicle Health Monitoring System (VHMS), Delivery Piping (#65001-)

Index	Code	Part Number	Description	Qty	Serial No.
		195-22-80050	Power Train Assembly	1	65001-
1		195-49-73381	· Seat	1	65001-
2		07040-13016	· Plug	2	65001-
3		07002-63034	· O-ring	2	65001-
4		07000-72055	· O-ring	5	65001-
5		01011-81245	· Bolt	8	65001-
6		01643-31232	· Washer	8	65001-
7		01011-81255	· Bolt	4	65001-
8		01643-31232	· Washer	4	65001-
9		01010-81240	· Bolt	8	65001-
10		01643-31232	· Washer	8	65001-
11		07000-72095	· O-ring	2	65001-
12		195-49-73390	· Elbow	2	65001-
13		01010-81240	· Bolt	7	65001-
14		01643-31232	· Washer	7	65001-
15		07000-73048	· O-ring	4	65001-
16		07040-11007	· Plug	1	65001-
17		07002-61023	· O-ring	1	65001-
18		124-62-61531	· Elbow	1	65001-
19		07002-61023	· O-ring	1	65001-
20		195-49-73320	· Case	2	65001-
21		198-49-62171	· Valve Assembly	2	65001-
22		195-60-16330	· Spring	2	65001-
23		07063-51142	· Element, Oil Filter	2	65001-
24		198-49-62161	· Cap	2	65001-
25		07000-A5165	· O-ring	2	65001-
26		01010-81640	· Bolt	8	65001-
27		01643-31645	· Washer	8	65001-
28		07040-11007	· Plug	2	65001-
29		07002-61023	· O-ring	2	65001-
30		07040-12412	· Plug	2	65001-

Printed By : Dwi Iswanto (airafather6107170)

Index	Code	Part Number	Description	Qty	Serial No.
31		07002-62434	· O-ring	2	65001-
32		(195-49-73331)	Block		

Printed By : Dwi Iswanto (airafather6107170)

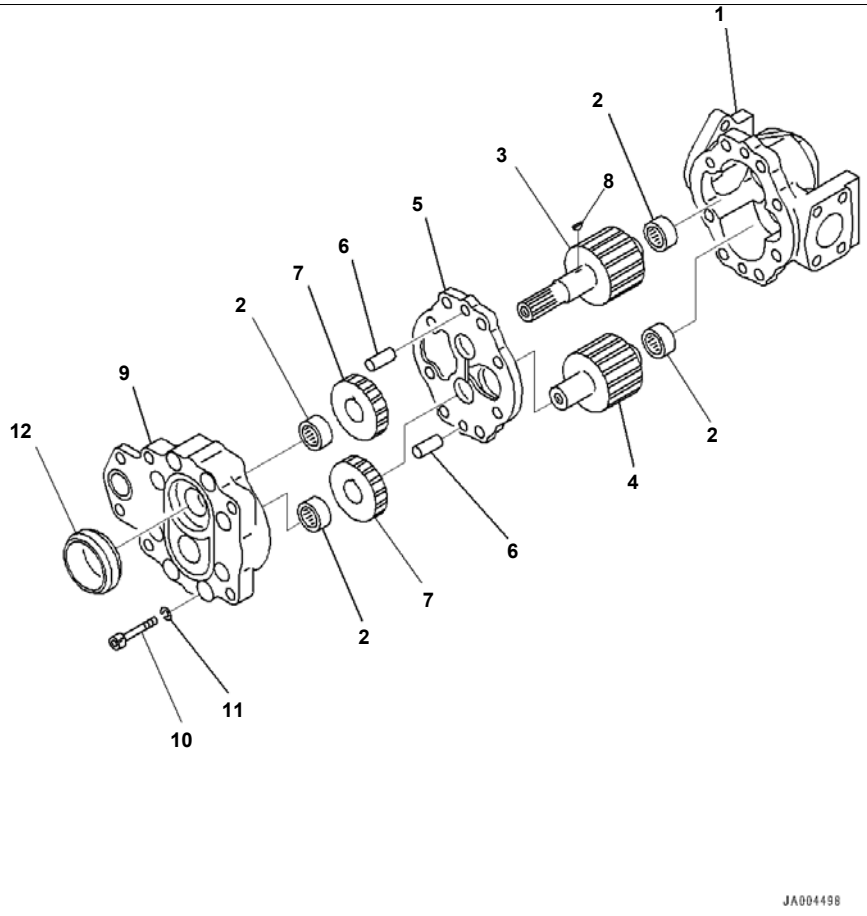

D375A-6R S/N 65001-UP
Power Train, For Machine With Vehicle Health Monitoring System (VHMS), Inner Parts, Scavenging Pump (#65001-)

Index	Code	Part Number	Description	Qty	Serial No.
		195-22-80050	Power Train Assembly	1	65001-
		198-49-34100	· Pump Assembly	1	65001-
1		198-49-34230	· · Housing	1	65001-
2		06120-03020	· · Bearing	4	65001-
3		198-49-34150	· · Shaft	1	65001-
4		198-49-34160	· · Shaft	1	65001-
5		195-49-34220	· · Plate	1	65001-
6		04022-12040	· · Pin, Dowel	1	65001-
7		195-49-34170	· · Gear	2	65001-
8		04010-00413	· · Key	1	65001-
9		195-49-34210	· · Bracket	1	65001-
10		01252-31270	· · Bolt	8	65001-
11		01602-21236	· · Washer, Spring	8	65001-
12		198-49-34190	· · Collar	1	65001-

Printed By : Dwi Iswanto (airafather6107170)

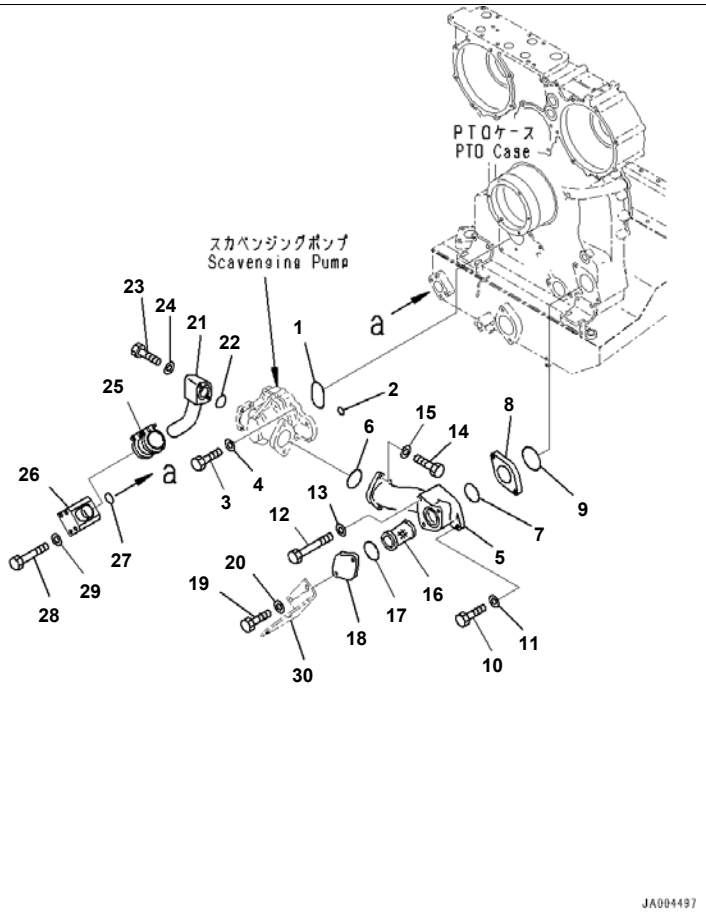

Reference:F2300-001042 Page:F002042

D375A-6R S/N 65001-UP
Power Train, For Machine With Vehicle Health Monitoring System (VHMS), Return Piping (#65001-)

Index	Code	Part Number	Description	Qty	Serial No.
		195-22-80050	Power Train Assembly	1	65001-
1		07000-72125	· O-ring	1	65001-
2		07000-73040	· O-ring	1	65001-
3		01010-81245	· Bolt	6	65001-
4		01643-31232	· Washer	6	65001-
5		195-49-34110	· Tube	1	65001-
6		07000-72080	· O-ring	1	65001-
7		07000-72090	· O-ring	1	65001-
8		198-49-34210	· Spacer	1	65001-
9		07000-72090	· O-ring	1	65001-
10		01010-81265	· Bolt	1	65001-
11		01643-31232	· Washer	1	65001-
12		01011-81240	· Bolt	1	65001-
13		01643-31232	· Washer	1	65001-
14		01010-81240	· Bolt	2	65001-
15		01643-31232	· Washer	2	65001-
16		195-49-31160	· Strainer	1	65001-
17		07000-72090	· O-ring	1	65001-
18		195-49-31170	· Plate	1	65001-
19		01010-81240	· Bolt	2	65001-
20		01643-31232	· Washer	2	65001-
21		195-49-31180	· Tube	1	65001-
22		07000-72055	· O-ring	1	65001-
23		01010-81285	· Bolt	2	65001-
24		01643-31232	· Washer	2	65001-
25		07332-01400	· Coupling	1	65001-
26		195-49-51460	· Tube	1	65001-
27		07000-72055	· O-ring	1	65001-
28		01011-81225	· Bolt	4	65001-
29		01643-31232	· Washer	4	65001-
30		(195-49-51450)	Bracket		

Reference:F2300-001042 Page:F002042

Printed By : Dwi Iswanto (airafather6107170)

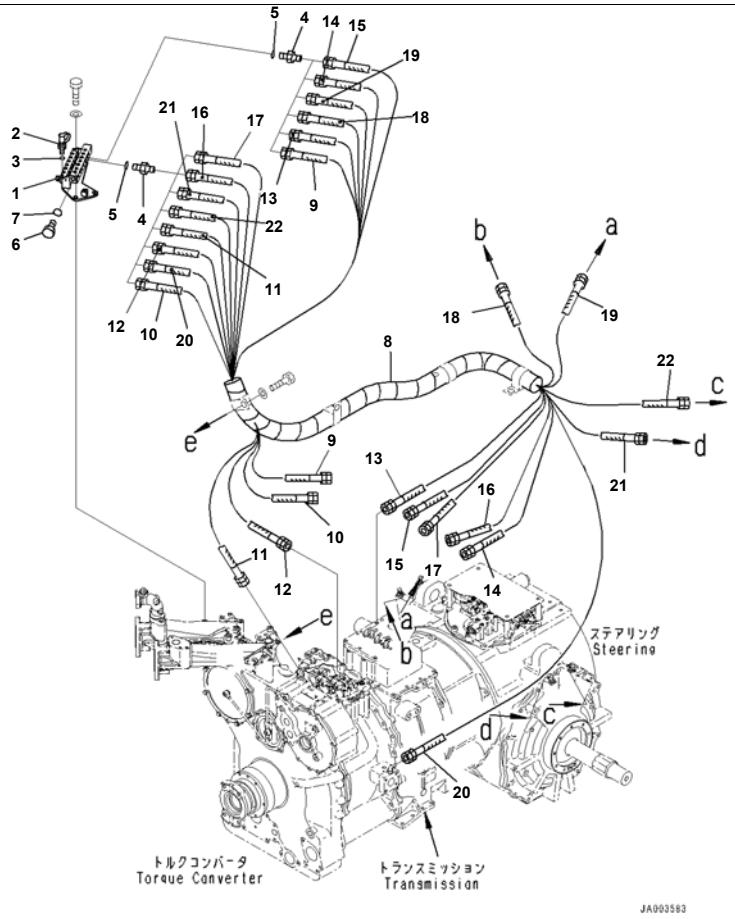

Reference:F2300-001043 Page:F002043

D375A-6R S/N 65001-UP
Power Train, For Machine With Vehicle Health Monitoring System (VHMS), Concentrated Piping (#65001-)

Index	Code	Part Number	Description	Qty	Serial No.
		195-22-80050	Power Train Assembly	1	65001-
1		195-49-73331	· Block	1	65001-
2		799-101-5220	· Nipple	15	65001-
3		07002-61023	· O-ring	15	65001-
4		124-62-61910	· Nipple	15	65001-
5		07002-61023	· O-ring	15	65001-
6		195-49-73470	· Plug	1	65001-
7		07000-12014	· O-ring	1	65001-
8		195-49-73351	· Hose Assembly	1	65001-
9		195-49-73430	· · Hose	1	65001-
10		195-49-73430	· · Hose, Blue	1	65001-
11		195-49-73251	· · Hose, Yellow-Blue	1	65001-
12		154-49-75450	· · Hose, Yellow-Red	1	65001-
13		17A-49-21321	· · Hose, Red	1	65001-
14		195-49-72341	· · Hose, White-Blue	1	65001-
15		195-49-72341	· · Hose, Yellow-Black	1	65001-
16		195-49-73261	· · Hose, White-Yellow	1	65001-
17		195-49-73261	· · Hose, Red-Blue	1	65001-
18		154-49-75420	· · Hose, White-Black	1	65001-
19		17A-49-17480	· · Hose, Yellow	1	65001-
20		195-49-73271	· · Hose, White-Red	1	65001-
21		195-49-36460	· · Hose, White	1	65001-
22		195-49-73281	· · Hose, Black	1	65001-

Reference:F2300-001043 Page:F002043

Printed By : Dwi Iswanto (airafather6107170)

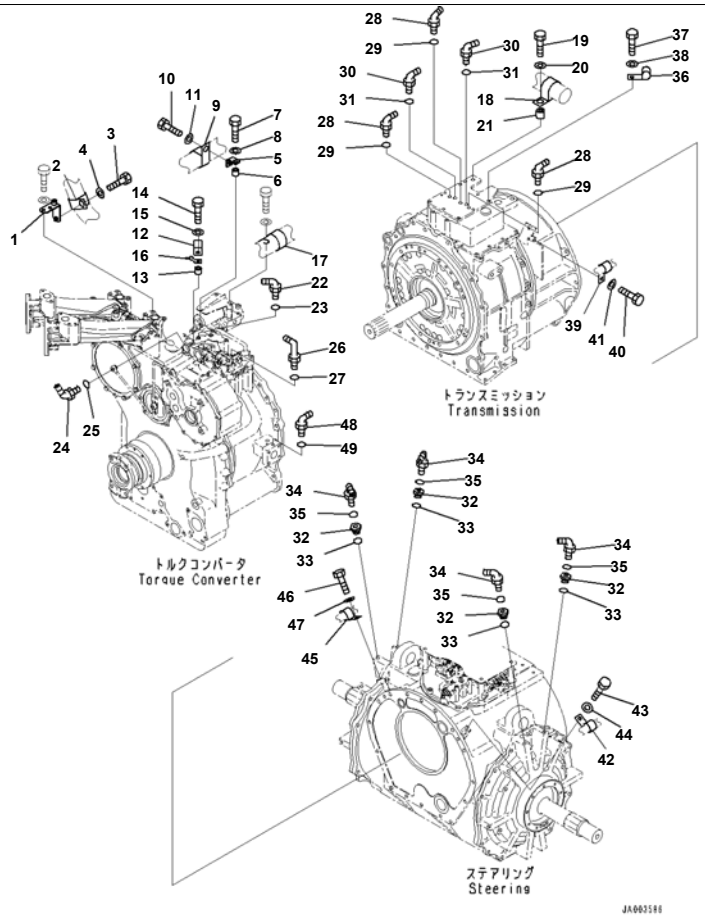

Reference:F2300-001044 Page:F002044

D375A-6R S/N 65001-UP
Power Train, For Machine With Vehicle Health Monitoring System (VHMS), Bracket (1/2) (#65001-)

Index	Code	Part Number	Description	Qty	Serial No.
		195-22-80050	Power Train Assembly	1	65001-
1		195-06-71682	· Bracket	1	65001-
2		20Y-62-15951	· Clip	1	65001-
3		01010-81230	· Bolt	1	65001-
4		01643-31232	· Washer	1	65001-
5		17M-49-15260	· Bracket	1	65001-
6		6631-11-5630	· Spacer	1	65001-
7		01011-81055	· Bolt	1	65001-
8		01643-31032	· Washer	1	65001-
9		04434-53412	· Clip	1	65001-
10		01010-81230	· Bolt	1	65001-
11		01643-31232	· Washer	1	65001-
12		04434-50812	· Clip	1	65001-
13		6631-11-5630	· Spacer	1	65001-
14		01011-81055	· Bolt	1	65001-
15		01643-31032	· Washer	1	65001-
16		08193-20010	· Clip	1	65001-
17		04434-53412	· Clip	1	65001-
18		04434-53211	· Clip	1	65001-
19		01010-81050	· Bolt	1	65001-
20		01643-31032	· Washer	1	65001-
21		195-33-11220	· Spacer	1	65001-
22		124-62-61531	· Elbow	2	65001-
23		07002-61023	· O-ring	2	65001-
24		17A-15-41380	· Elbow	1	65001-
25		07002-61223	· O-ring	1	65001-
26		17A-15-41360	· Elbow	1	65001-
27		07002-61023	· O-ring	1	65001-
28		124-62-61531	· Elbow	3	65001-
29		07002-61023	· O-ring	3	65001-
30		17A-15-41360	· Elbow	2	65001-

Reference:F2300-001044 Page:F002044

Printed By : Dwi Iswanto (airafather6107170)

Power Train, For Machine With Vehicle Health Monitoring System (VHMS), Bracket (1/2) (#65001-)

Index	Code	Part Number	Description	Qty	Serial No.
31		07002-61023	· O-ring	2	65001-
32		195-22-81310	· Plug	4	65001-
33		07002-62034	· O-ring	4	65001-
34		124-62-61531	· Elbow	4	65001-
35		07002-61023	· O-ring	4	65001-
36		04434-52110	· Clip	1	65001-
37		01010-81035	· Bolt	1	65001-
38		01643-31032	· Washer	1	65001-
39		04434-51812	· Clip	1	65001-
40		01010-81020	· Bolt	1	65001-
41		01643-31032	· Washer	1	65001-
42		04434-51812	· Clip	1	65001-
43		01010-81225	· Bolt	1	65001-
44		01643-31232	· Washer	1	65001-
45		04434-51812	· Clip	1	65001-
46		01010-81225	· Bolt	1	65001-
47		01643-31232	· Washer	1	65001-
48		124-62-61531	· Elbow	1	65001-
49		07002-61023	· O-ring	1	65001-

Printed By : Dwi Iswanto (airafather6107170)

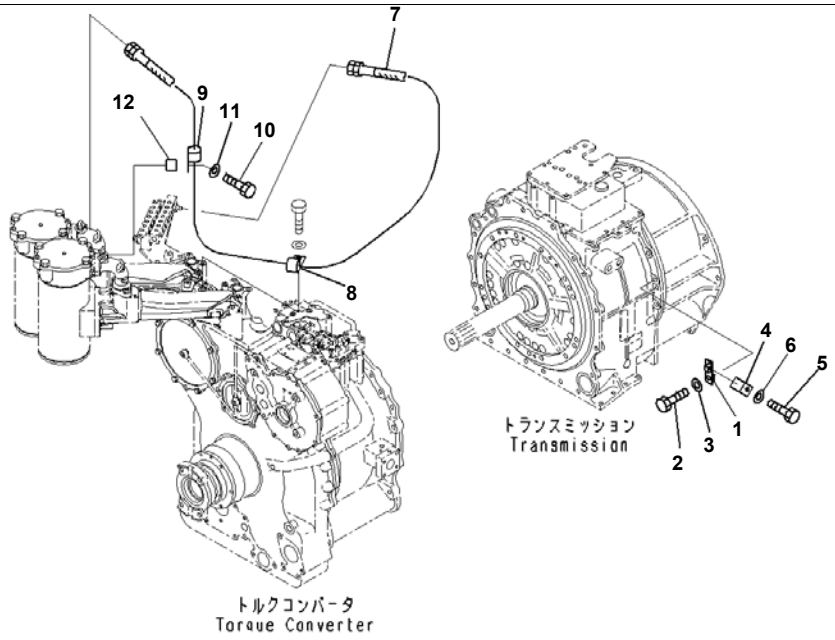

Power Train, For Machine With Vehicle Health Monitoring System (VHMS), Hose and Bracket (#65001-)

Index	Code	Part Number	Description	Qty	Serial No.
		195-22-80050	Power Train Assembly	1	65001-
1		195-49-73481	· Bracket	1	65001-
2		01010-61660	· Bolt	1	65001-
3		01643-31645	· Washer	1	65001-
4		04434-51012	· Clip	1	65001-
5		01010-81225	· Bolt	1	65001-
6		01643-31232	· Washer	1	65001-
7		195-49-73520	· Hose	1	65001-
8		04434-50812	· Clip	1	65001-
9		04434-50812	· Clip	1	65001-
10		01010-81265	· Bolt	1	65001-
11		01643-31232	· Washer	1	65001-
12		195-33-11220	· Spacer	1	65001-

Printed By : Dwi Iswanto (airafather6107170)

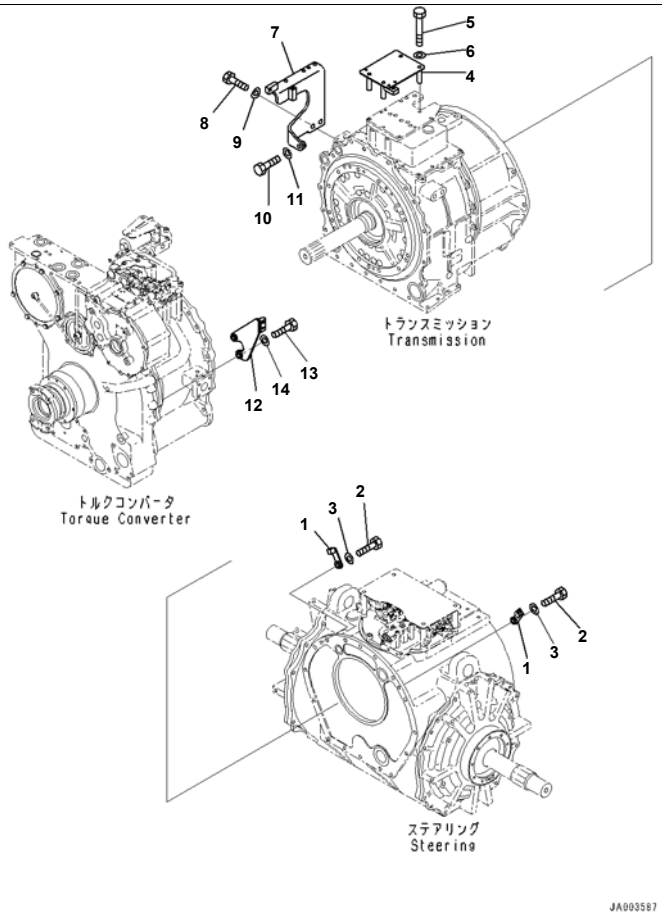

Reference:F2300-001046 Page:F002046

D375A-6R S/N 65001-UP
Power Train, For Machine With Vehicle Health Monitoring System (VHMS), Bracket (2/2) (#65001-)

Index	Code	Part Number	Description	Qty	Serial No.
		195-22-80050	Power Train Assembly	1	65001-
1		198-49-46260	· Bracket	2	65001-
2		01010-61660	· Bolt	2	65001-
3		01643-31645	· Washer	2	65001-
4		195-49-73511	· Cover	1	65001-
5		01011-81015	· Bolt	4	65001-
6		01643-31032	· Washer	4	65001-
7		195-60-52361	· Bracket	1	65001-
8		01010-62050	· Bolt	2	65001-
9		01643-32060	· Washer	2	65001-
10		01010-61690	· Bolt	1	65001-
11		01643-31645	· Washer	1	65001-
12		195-03-66210	· Bracket	1	65001-
13		01010-61665	· Bolt	2	65001-
14		01643-31645	· Washer	2	65001-

Reference:F2300-001046 Page:F002046

Printed By : Dwi Iswanto (airafather6107170)

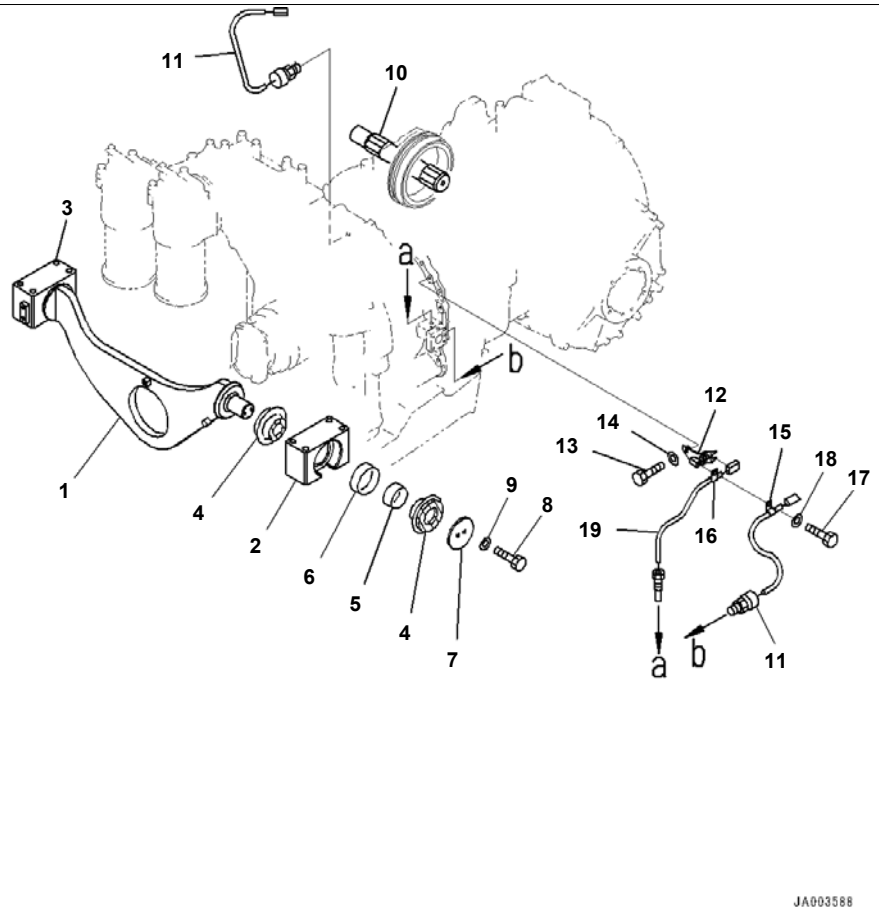

Power Train, For Machine With Vehicle Health Monitoring System (VHMS), Mounting Parts (#65001-)

Index	Code	Part Number	Description	Qty	Serial No.
		195-22-80050	Power Train Assembly	1	65001-
1		195-21-32911	· Bracket	1	65001-
2		195-21-32590	· Support	1	65001-
3		195-21-32331	· Support	1	65001-
4		195-01-32110	· Cushion	4	65001-
5		195-01-32120	· Cushion	2	65001-
6		195-01-32130	· Spacer	2	65001-
7		195-01-31130	· Plate	2	65001-
8		01010-61435	· Bolt	4	65001-
9		01643-31445	· Washer	4	65001-
10		195-22-12430	· Shaft	2	65001-
11		421-06-35121	· Sensor, Pressure	2	65001-
12		195-06-55651	· Bracket	1	65001-
13		01010-61675	· Bolt	1	65001-
14		01643-31645	· Washer	1	65001-
15		04434-51012	· Clip	1	65001-
16		04434-50812	· Clip	1	65001-
17		01010-81225	· Bolt	1	65001-
18		01643-31232	· Washer	1	65001-
19		7861-93-3320	· Sensor	1	65001-

Printed By : Dwi Iswanto (airafather6107170)

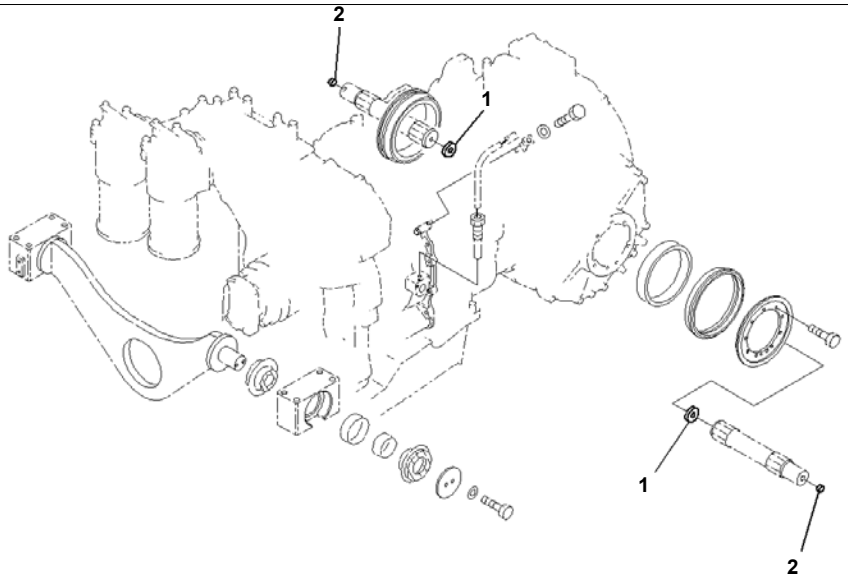

Index	Code	Part Number	Description	Qty	Serial No.
1		195-22-12570	Button	2	65001-
2		195-22-12580	Button	2	65001-

Printed By : Dwi Iswanto (airafather6107170)

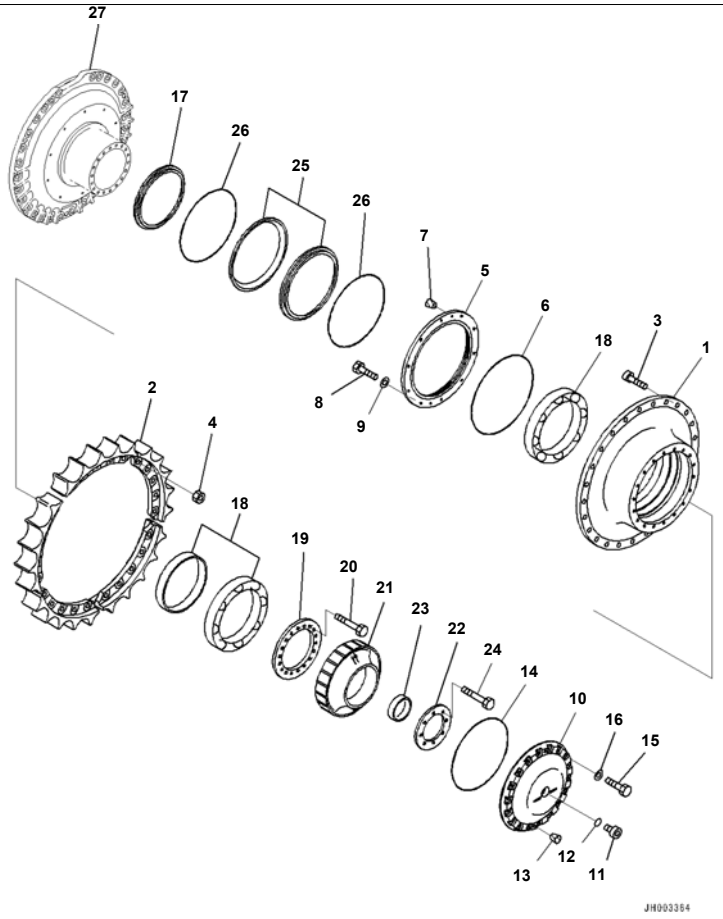

D375A-6R S/N 65001-UP
Final Drive, Track Frame, Sprocket Drum LHS (#65001-)

Index	Code	Part Number	Description	Qty	Serial No.
		195-27-00820	Final Drive Assembly	1	65001-
1		195-27-34111	· Hub	1	65001-
2		195-27-33111	· Tooth	5	65001-
3		195-27-33130	· Bolt	25	65001-
4		195-27-33141	· Nut	25	65001-
5		195-27-34340	· Cover	1	65001-
6		07000-15500	· O-ring	1	65001-
7		07049-01215	· Plug	2	65001-
8		01010-81230	· Bolt	10	65001-
9		01643-31232	· Washer	10	65001-
10		195-27-34120	· Cover	1	65001-
11		198-27-31420	· Plug	1	65001-
12		07002-13634	· O-ring	1	65001-
13		07049-01620	· Plug	2	65001-
14		07000-15455	· O-ring	1	65001-
15		01010-81650	· Bolt	18	65001-
16		01643-31645	· Washer	18	65001-
17		195-27-34171	· Collar	1	65001-
18		195-09-18410	· Bearing	1	65001-
19		195-27-31390	· Holder	1	65001-
20		01010-81650	· Bolt	18	65001-
21		195-27-31581	· Hub	1	65001-
22		195-27-34280	· Plate	1	65001-
23		195-27-34270	· Spacer	1	65001-
24		01010-81635	· Bolt	8	65001-
		195-27-00102	· Seal Ring Assembly	1	65001-
25	C1		· · Seal	2	65001-
26	C1		· · O-ring	2	65001-
27		(195-27-34130)	Cover		
		(195-27-34130)	Cover		

Printed By : Dwi Iswanto (airafather6107170)

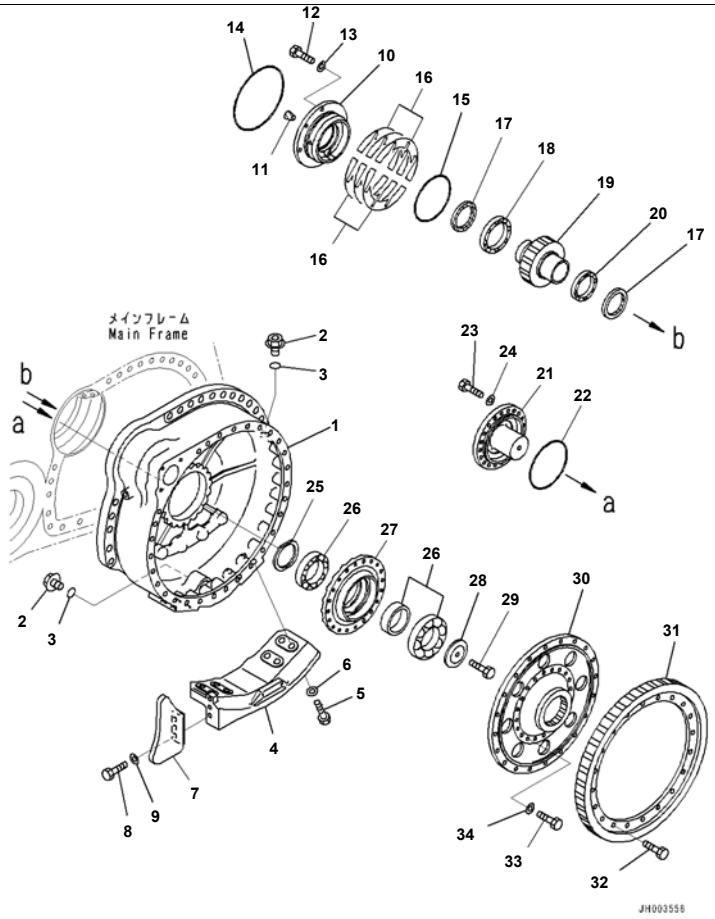

Reference:F2380-003002 Page:F004002

D375A-6R S/N 65001-UP
Final Drive, Track Frame, Final Gear Case LHS (#65001-)

Index	Code	Part Number	Description	Qty	Serial No.
		195-27-00820	Final Drive Assembly	1	65001-
1		195-27-34211	· Case	1	65001-
2		07044-13620	· Plug	2	65001-
3		07002-13634	· O-ring	2	65001-
4		195-27-41150	· Guard	1	65001-
5		01010-82775	· Bolt	8	65001-
6		01643-32780	· Washer	8	65001-
7		195-30-62270	· Cover	1	65001-
8		01010-62060	· Bolt	3	65001-
9		01643-32060	· Washer	3	65001-
10		195-27-31180	· Cage	1	65001-
11		07049-01620	· Plug	2	65001-
12		01010-81645	· Bolt	4	65001-
13		01643-31645	· Washer	4	65001-
14		07000-15220	· O-ring	1	65001-
15		07000-15230	· O-ring	1	65001-
16		195-27-00060	· Shim Assembly	1	65001-
	C1		· · Shim, T=1.00mm	4	65001-
	C1		· · Shim, T=0.50mm	2	65001-
	C1		· · Shim, T=0.10mm	10	65001-
17		195-09-33250	· Seal, Oil	2	65001-
18		06002-32026	· Bearing	1	65001-
19		195-27-31211	· Gear	1	65001-
20		195-09-33270	· Bearing	1	65001-
21		195-27-31220	· Shaft	1	65001-
22		07000-15240	· O-ring	1	65001-
23		01010-81655	· Bolt	20	65001-
24		01643-31645	· Washer	20	65001-
25		195-27-31230	· Collar	1	65001-
26		195-09-18380	· Bearing	1	65001-
27		195-27-31250	· Boss	1	65001-

Reference:F2380-003002 Page:F004002

Printed By : Dwi Iswanto (airafather6107170)

Index	Code	Part Number	Description	Qty	Serial No.
28		195-27-31240	· Holder	1	65001-
29		01010-82050	· Bolt	1	65001-
30		195-27-31260	· Hub	1	65001-
31		195-27-31272	· Gear	1	65001-
32		01010-82050	· Bolt	20	65001-
33		01010-81650	· Bolt	20	65001-
34		01643-31645	· Washer	20	65001-

Printed By : Dwi Iswanto (airafather6107170)

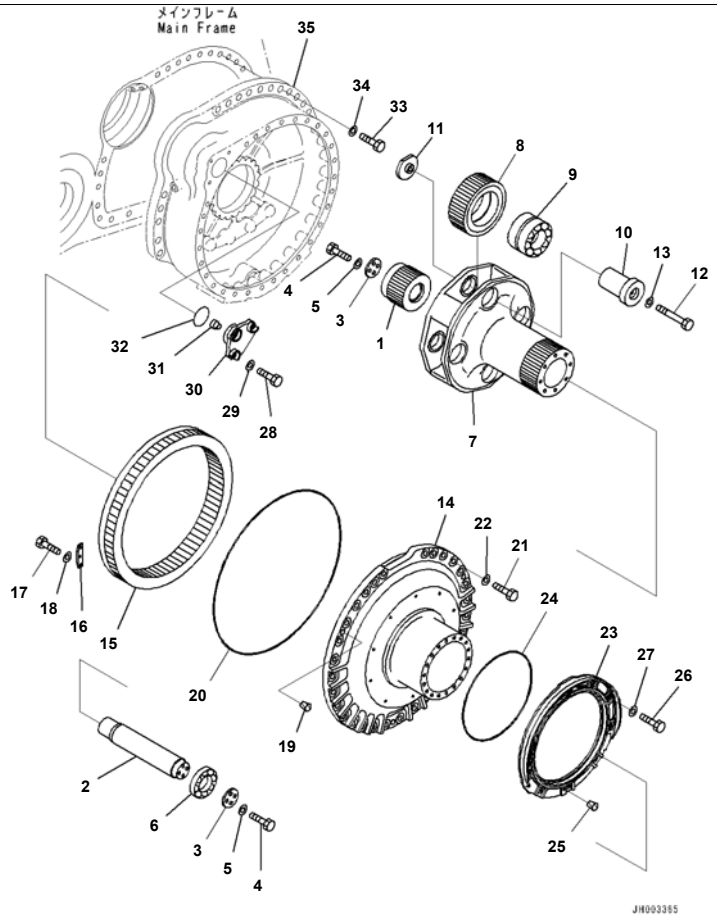

Reference:F2380-003003 Page:F004003

D375A-6R S/N 65001-UP
Final Drive, Track Frame, Gear and Cover LHS (#65001-)

Index	Code	Part Number	Description	Qty	Serial No.
		195-27-00820	Final Drive Assembly	1	65001-
1		195-27-31284	· Gear	1	65001-
2		195-27-34250	· Shaft	1	65001-
3		195-27-34260	· Plate	2	65001-
4		01010-81640	· Bolt	8	65001-
5		01643-31645	· Washer	8	65001-
6		06043-00217	· Bearing	1	65001-
7		195-27-31321	· Carrier	1	65001-
8		195-27-31313	· Gear	4	65001-
9		17M-09-21141	· Bearing	4	65001-
10		17M-27-21330	· Shaft	4	65001-
11		17M-27-11260	· Holder	4	65001-
12		01011-62070	· Bolt	4	65001-
13		01643-32060	· Washer	4	65001-
14		195-27-34130	· Cover	1	65001-
15		195-27-31360	· Gear	1	65001-
16		195-27-31370	· Plate	8	65001-
17		01010-81230	· Bolt	24	65001-
18		01643-31232	· Washer	24	65001-
19		07049-02430	· Plug	3	65001-
20		195-27-31490	· O-ring	1	65001-
21		01010-62480	· Bolt	30	65001-
22		01643-32460	· Washer	30	65001-
23		195-27-34350	· Cover	1	65001-
24		07000-15500	· O-ring	1	65001-
25		07049-01215	· Plug	2	65001-
26		01010-81230	· Bolt	10	65001-
27		01643-31232	· Washer	10	65001-
28		01010-81640	· Bolt	3	65001-
29		01643-31645	· Washer	3	65001-
30		195-27-31190	· Cover	1	65001-

Reference:F2380-003003 Page:F004003

Printed By : Dwi Iswanto (airafather6107170)

Index	Code	Part Number	Description	Qty	Serial No.
31		195-27-31471	· Button	1	65001-
32		07000-12095	· O-ring	1	65001-
33		01010-83095	Bolt	25	65001-
34		01643-33080	Washer	25	65001-
35		(195-27-34211)	Case		
		(195-27-34211)	Case		

Printed By : Dwi Iswanto (airafather6107170)

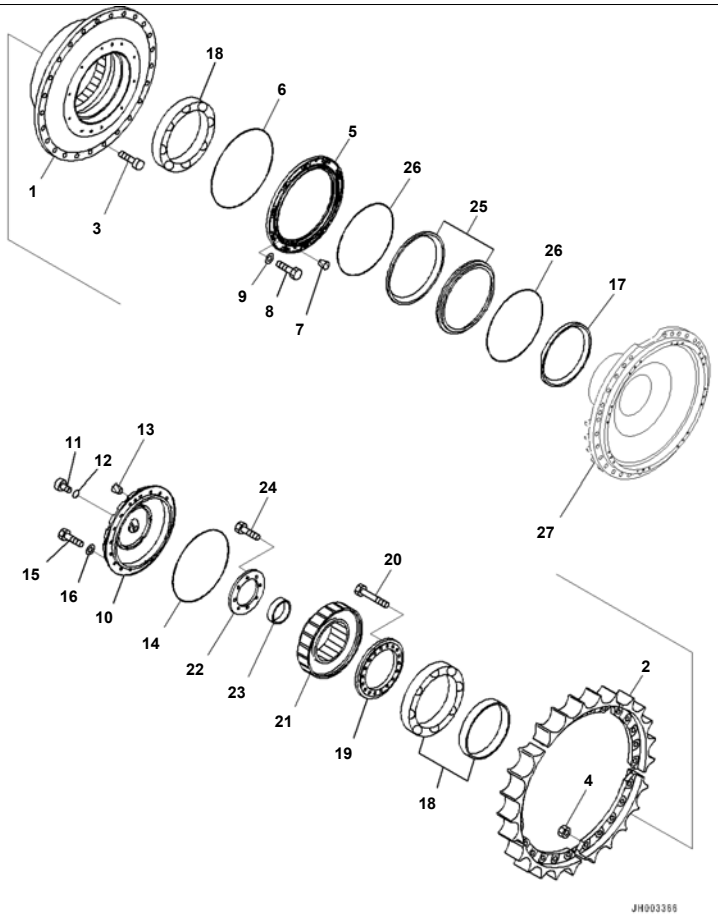

D375A-6R S/N 65001-UP
Final Drive, Track Frame, Sprocket Drum RHS (#65001-)

Index	Code	Part Number	Description	Qty	Serial No.
		195-27-00830	Final Drive Assembly	1	65001-
1		195-27-34111	· Hub	1	65001-
2		195-27-33111	· Tooth	5	65001-
3		195-27-33130	· Bolt	25	65001-
4		195-27-33141	· Nut	25	65001-
5		195-27-34340	· Cover	1	65001-
6		07000-15500	· O-ring	1	65001-
7		07049-01215	· Plug	2	65001-
8		01010-81230	· Bolt	10	65001-
9		01643-31232	· Washer	10	65001-
10		195-27-34120	· Cover	1	65001-
11		198-27-31420	· Plug	1	65001-
12		07002-13634	· O-ring	1	65001-
13		07049-01620	· Plug	2	65001-
14		07000-15455	· O-ring	1	65001-
15		01010-81650	· Bolt	18	65001-
16		01643-31645	· Washer	18	65001-
17		195-27-34171	· Collar	1	65001-
18		195-09-18410	· Bearing	1	65001-
19		195-27-31390	· Holder	1	65001-
20		01010-81650	· Bolt	18	65001-
21		195-27-31581	· Hub	1	65001-
22		195-27-34280	· Plate	1	65001-
23		195-27-34270	· Spacer	1	65001-
24		01010-81635	· Bolt	8	65001-
		195-27-00102	· Seal Ring Assembly	1	65001-
25	C1		· · Seal	2	65001-
26	C1		· · O-ring	2	65001-
27		(195-27-34140)	Cover		
		(195-27-34140)	Cover		

Printed By : Dwi Iswanto (airafather6107170)

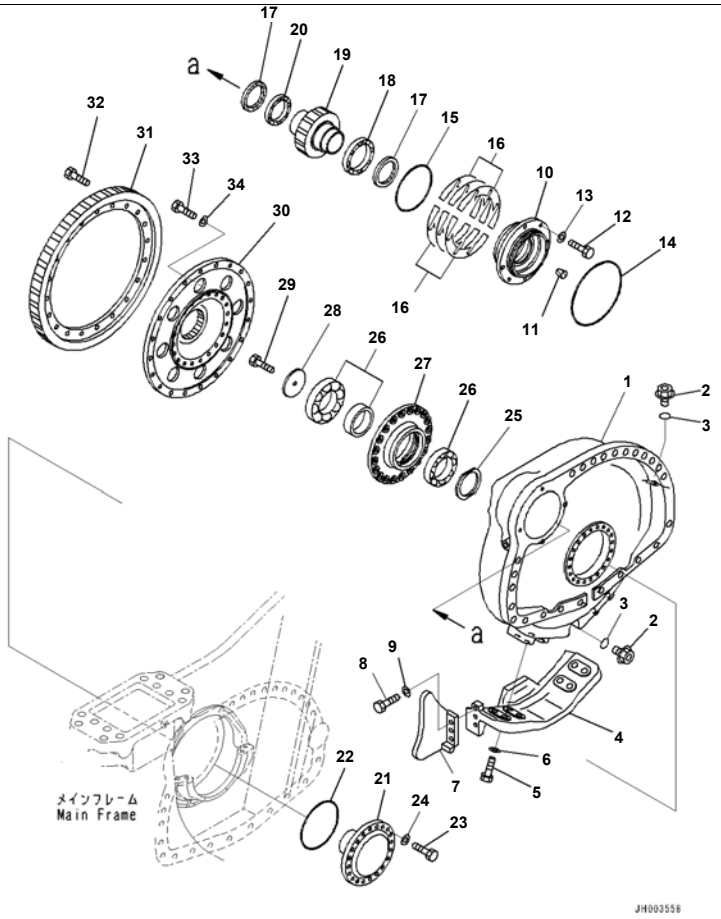

Reference:F2380-003005 Page:F004005

D375A-6R S/N 65001-UP
Final Drive, Track Frame, Final Gear Case RHS (#65001-)

Index	Code	Part Number	Description	Qty	Serial No.
		195-27-00830	Final Drive Assembly	1	65001-
1		195-27-34221	· Case	1	65001-
2		07044-13620	· Plug	2	65001-
3		07002-13634	· O-ring	2	65001-
4		195-27-41160	· Guard	1	65001-
5		01010-82775	· Bolt	8	65001-
6		01643-32780	· Washer	8	65001-
7		195-30-62280	· Cover	1	65001-
8		01010-62060	· Bolt	3	65001-
9		01643-32060	· Washer	3	65001-
10		195-27-31180	· Cage	1	65001-
11		07049-01620	· Plug	2	65001-
12		01010-81645	· Bolt	4	65001-
13		01643-31645	· Washer	4	65001-
14		07000-15220	· O-ring	1	65001-
15		07000-15230	· O-ring	1	65001-
16		195-27-00060	· Shim Assembly	1	65001-
	C1		· · Shim, T=1.00mm	4	65001-
	C1		· · Shim, T=0.50mm	2	65001-
	C1		· · Shim, T=0.10mm	10	65001-
17		195-09-33250	· Seal, Oil	2	65001-
18		06002-32026	· Bearing	1	65001-
19		195-27-31211	· Gear	1	65001-
20		195-09-33270	· Bearing	1	65001-
21		195-27-31220	· Shaft	1	65001-
22		07000-15240	· O-ring	1	65001-
23		01010-81655	· Bolt	20	65001-
24		01643-31645	· Washer	20	65001-
25		195-27-31230	· Collar	1	65001-
26		195-09-18380	· Bearing	1	65001-
27		195-27-31250	· Boss	1	65001-

Reference:F2380-003005 Page:F004005

Printed By : Dwi Iswanto (airafather6107170)

Index	Code	Part Number	Description	Qty	Serial No.
28		195-27-31240	· Holder	1	65001-
29		01010-82050	· Bolt	1	65001-
30		195-27-31260	· Hub	1	65001-
31		195-27-31272	· Gear	1	65001-
32		01010-82050	· Bolt	20	65001-
33		01010-81650	· Bolt	20	65001-
34		01643-31645	· Washer	20	65001-

Printed By : Dwi Iswanto (airafather6107170)

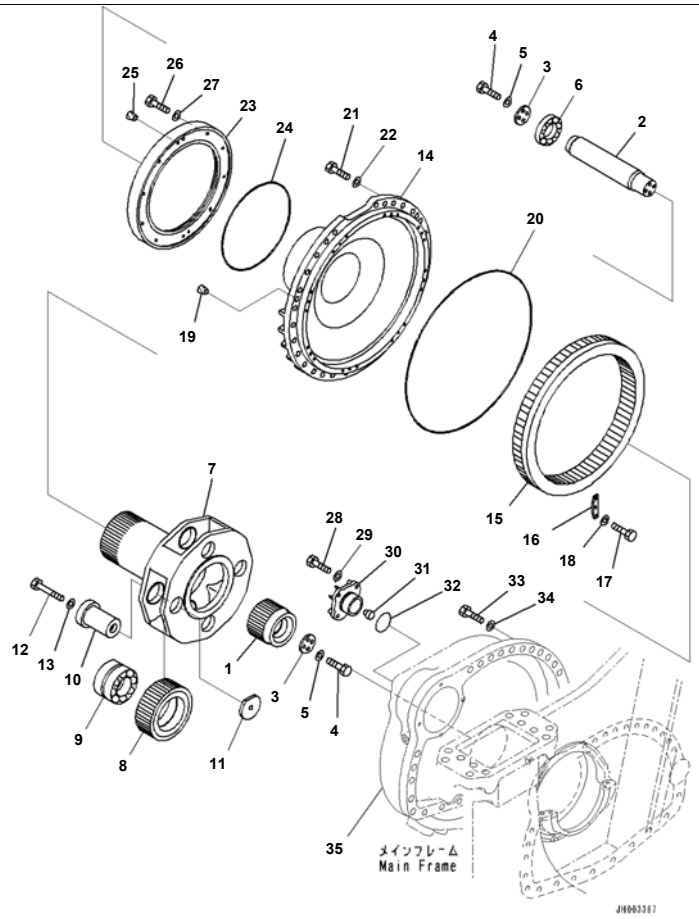

D375A-6R S/N 65001-UP
Final Drive, Track Frame, Gear and Cover RHS (#65001-)

Index	Code	Part Number	Description	Qty	Serial No.
		195-27-00830	Final Drive Assembly	1	65001-
1		195-27-31284	· Gear	1	65001-
2		195-27-34250	· Shaft	1	65001-
3		195-27-34260	· Plate	2	65001-
4		01010-81640	· Bolt	8	65001-
5		01643-31645	· Washer	8	65001-
6		06043-00217	· Bearing	1	65001-
7		195-27-31321	· Carrier	1	65001-
8		195-27-31313	· Gear	4	65001-
9		17M-09-21141	· Bearing	4	65001-
10		17M-27-21330	· Shaft	4	65001-
11		17M-27-11260	· Holder	4	65001-
12		01011-62070	· Bolt	4	65001-
13		01643-32060	· Washer	4	65001-
14		195-27-34140	· Cover	1	65001-
15		195-27-31360	· Gear	1	65001-
16		195-27-31370	· Plate	8	65001-
17		01010-81230	· Bolt	24	65001-
18		01643-31232	· Washer	24	65001-
19		07049-02430	· Plug	3	65001-
20		195-27-31490	· O-ring	1	65001-
21		01010-62480	· Bolt	30	65001-
22		01643-32460	· Washer	30	65001-
23		195-27-34350	· Cover	1	65001-
24		07000-15500	· O-ring	1	65001-
25		07049-01215	· Plug	2	65001-
26		01010-81230	· Bolt	10	65001-
27		01643-31232	· Washer	10	65001-
28		01010-81640	· Bolt	3	65001-
29		01643-31645	· Washer	3	65001-
30		195-27-31190	· Cover	1	65001-

Printed By : Dwi Iswanto (airafather6107170)

Final Drive, Track Frame, Gear and Cover RHS (#65001-)

Index	Code	Part Number	Description	Qty	Serial No.
31		195-27-31471	· Button	1	65001-
32		07000-12095	· O-ring	1	65001-
33		01010-83095	Bolt	25	65001-
34		01643-33080	Washer	25	65001-
35		(195-27-34221)	Case		
		(195-27-34221)	Case		

Printed By : Dwi Iswanto (airafather6107170)

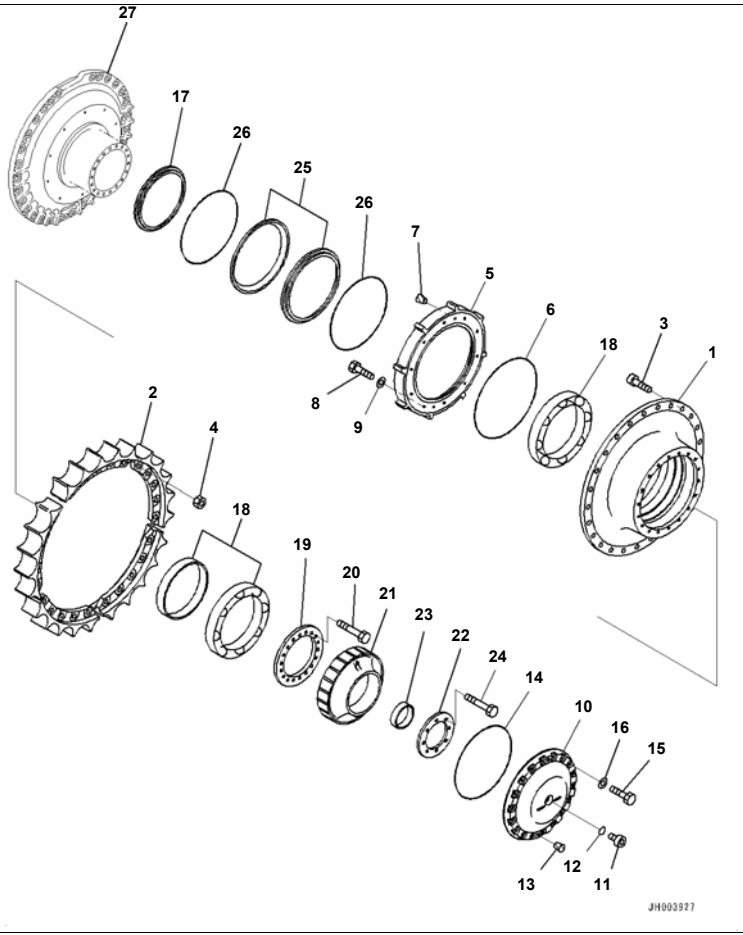

D375A-6R S/N 65001-UP
Final Drive, Track Frame, For Indonesia, Sprocket Drum LHS (#65001-)

Index	Code	Part Number	Description	Qty	Serial No.
		195-27-00860	Final Drive Assembly	1	65001-
1		195-27-34111	· Hub	1	65001-
2		195-27-33111	· Tooth	5	65001-
3		195-27-33130	· Bolt	25	65001-
4		195-27-33141	· Nut	25	65001-
5		195-27-34381	· Cover	1	65001-
6		07000-15500	· O-ring	1	65001-
7		07049-01215	· Plug	2	65001-
8		01010-81230	· Bolt	10	65001-
9		01643-31232	· Washer	10	65001-
10		195-27-34120	· Cover	1	65001-
11		198-27-31420	· Plug	1	65001-
12		07002-13634	· O-ring	1	65001-
13		07049-01620	· Plug	2	65001-
14		07000-15455	· O-ring	1	65001-
15		01010-81650	· Bolt	18	65001-
16		01643-31645	· Washer	18	65001-
17		195-27-34171	· Collar	1	65001-
18		195-09-18410	· Bearing	1	65001-
19		195-27-31390	· Holder	1	65001-
20		01010-81650	· Bolt	18	65001-
21		195-27-31581	· Hub	1	65001-
22		195-27-34280	· Plate	1	65001-
23		195-27-34270	· Spacer	1	65001-
24		01010-81635	· Bolt	8	65001-
		195-27-00170	· Seal Ring Assembly	1	65001-
25	C1		· · Seal	2	65001-
26	C1		· · O-ring	2	65001-
27		(195-27-34130)	Cover		

Printed By : Dwi Iswanto (airafather6107170)

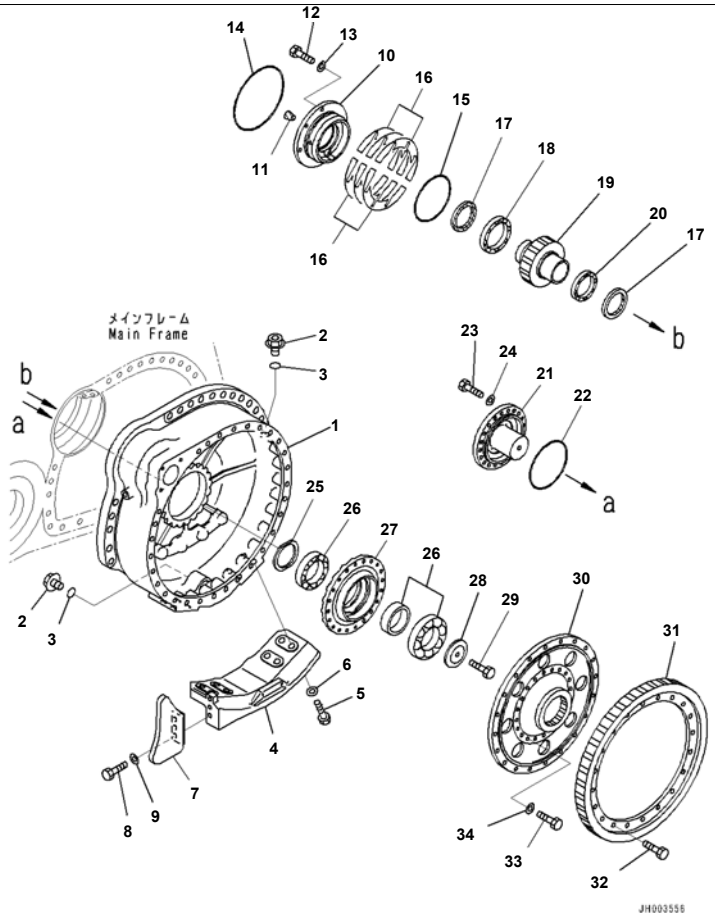

Reference:F2380-004002 Page:F005002

D375A-6R S/N 65001-UP
Final Drive, Track Frame, For Indonesia, Final Gear Case LHS (#65001-)

Index	Code	Part Number	Description	Qty	Serial No.
		195-27-00860	Final Drive Assembly	1	65001-
1		195-27-34211	· Case	1	65001-
2		07044-13620	· Plug	2	65001-
3		07002-13634	· O-ring	2	65001-
4		195-27-41150	· Guard	1	65001-
5		01010-82775	· Bolt	8	65001-
6		01643-32780	· Washer	8	65001-
7		195-30-62270	· Cover	1	65001-
8		01010-62060	· Bolt	3	65001-
9		01643-32060	· Washer	3	65001-
10		195-27-31180	· Cage	1	65001-
11		07049-01620	· Plug	2	65001-
12		01010-81645	· Bolt	4	65001-
13		01643-31645	· Washer	4	65001-
14		07000-15220	· O-ring	1	65001-
15		07000-15230	· O-ring	1	65001-
16		195-27-00060	· Shim Assembly	1	65001-
	C1		· · Shim, T=1.00mm	4	65001-
	C1		· · Shim, T=0.50mm	2	65001-
	C1		· · Shim, T=0.10mm	10	65001-
17		195-09-33250	· Seal, Oil	2	65001-
18		06002-32026	· Bearing	1	65001-
19		195-27-31211	· Gear	1	65001-
20		195-09-33270	· Bearing	1	65001-
21		195-27-31220	· Shaft	1	65001-
22		07000-15240	· O-ring	1	65001-
23		01010-81655	· Bolt	20	65001-
24		01643-31645	· Washer	20	65001-
25		195-27-31230	· Collar	1	65001-
26		195-09-18380	· Bearing	1	65001-
27		195-27-31250	· Boss	1	65001-

Printed By : Dwi Iswanto (airafather6107170)

Index	Code	Part Number	Description	Qty	Serial No.
28		195-27-31240	· Holder	1	65001-
29		01010-82050	· Bolt	1	65001-
30		195-27-31260	· Hub	1	65001-
31		195-27-31272	· Gear	1	65001-
32		01010-82050	· Bolt	20	65001-
33		01010-81650	· Bolt	20	65001-
34		01643-31645	· Washer	20	65001-

Printed By : Dwi Iswanto (airafather6107170)

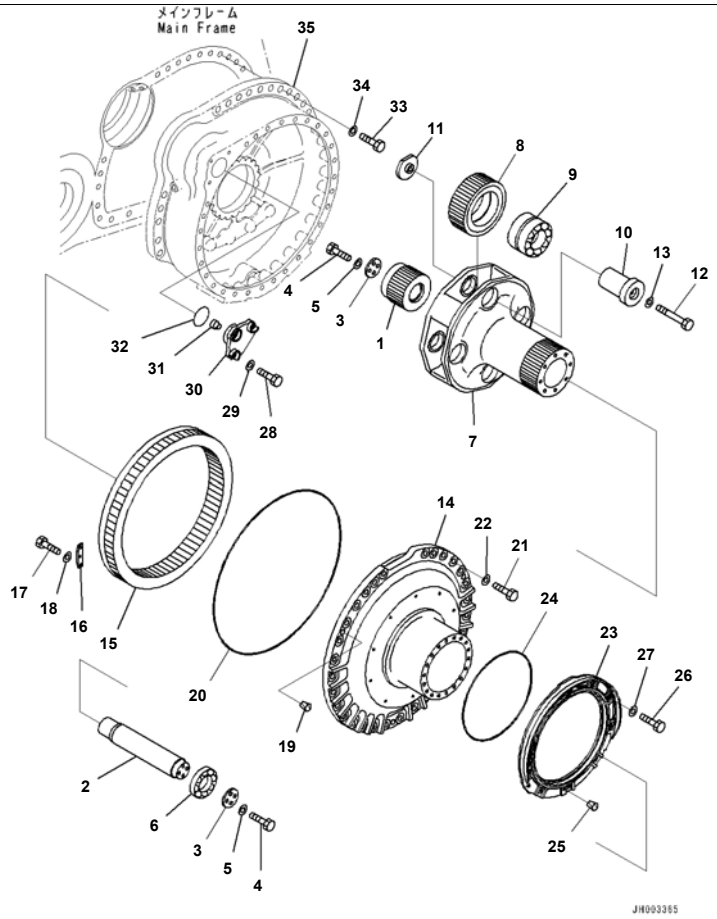

Reference:F2380-004003 Page:F005003

D375A-6R S/N 65001-UP
Final Drive, Track Frame, For Indonesia, Gear and Cover LHS (#65001-)

Index	Code	Part Number	Description	Qty	Serial No.
		195-27-00860	Final Drive Assembly	1	65001-
1		195-27-31284	· Gear	1	65001-
2		195-27-34250	· Shaft	1	65001-
3		195-27-34260	· Plate	2	65001-
4		01010-81640	· Bolt	8	65001-
5		01643-31645	· Washer	8	65001-
6		06043-00217	· Bearing	1	65001-
7		195-27-31321	· Carrier	1	65001-
8		195-27-31313	· Gear	4	65001-
9		17M-09-21141	· Bearing	4	65001-
10		17M-27-21330	· Shaft	4	65001-
11		17M-27-11260	· Holder	4	65001-
12		01011-62070	· Bolt	4	65001-
13		01643-32060	· Washer	4	65001-
14		195-27-34130	· Cover	1	65001-
15		195-27-31360	· Gear	1	65001-
16		195-27-31370	· Plate	8	65001-
17		01010-81230	· Bolt	24	65001-
18		01643-31232	· Washer	24	65001-
19		07049-02430	· Plug	3	65001-
20		195-27-31490	· O-ring	1	65001-
21		01010-62480	· Bolt	30	65001-
22		01643-32460	· Washer	30	65001-
23		195-27-34371	· Cover	1	65001-
24		07000-15500	· O-ring	1	65001-
25		07049-01215	· Plug	2	65001-
26		01010-81230	· Bolt	10	65001-
27		01643-31232	· Washer	10	65001-
28		01010-81640	· Bolt	3	65001-
29		01643-31645	· Washer	3	65001-
30		195-27-31190	· Cover	1	65001-

Printed By : Dwi Iswanto (airafather6107170)

Final Drive, Track Frame, For Indonesia, Gear and Cover LHS (#65001-)

Index	Code	Part Number	Description	Qty	Serial No.
31		195-27-31471	· Button	1	65001-
32		07000-12095	· O-ring	1	65001-
33		01010-83095	Bolt	25	65001-
34		01643-33080	Washer	25	65001-
35		(195-27-34211)	Case		

Printed By : Dwi Iswanto (airafather6107170)

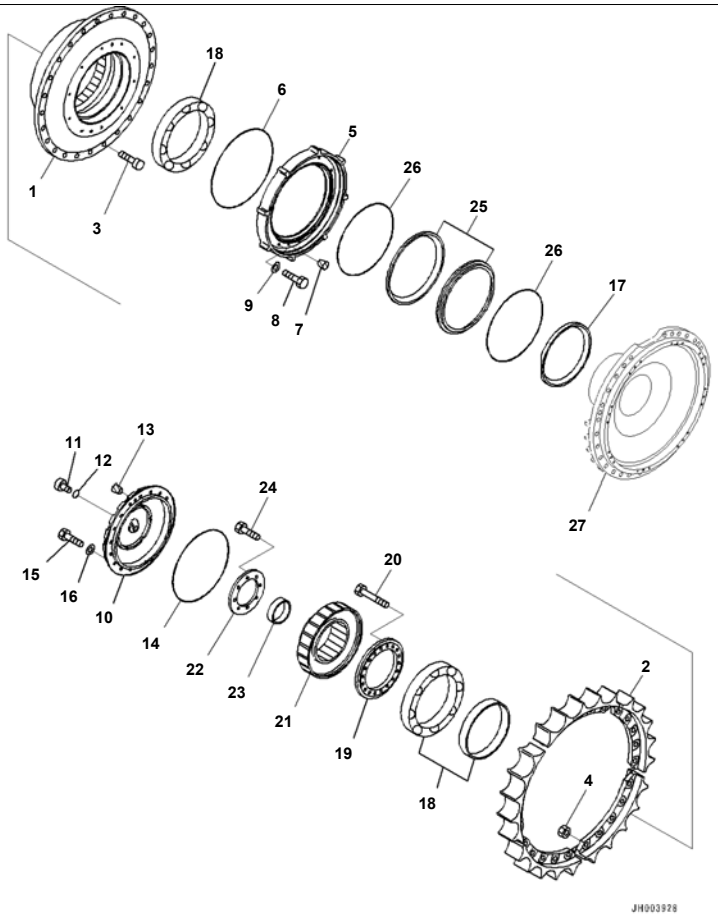

D375A-6R S/N 65001-UP
Final Drive, Track Frame, For Indonesia, Sprocket Drum RHS (#65001-)

Index	Code	Part Number	Description	Qty	Serial No.
		195-27-00870	Final Drive Assembly	1	65001-
1		195-27-34111	· Hub	1	65001-
2		195-27-33111	· Tooth	5	65001-
3		195-27-33130	· Bolt	25	65001-
4		195-27-33141	· Nut	25	65001-
5		195-27-34381	· Cover	1	65001-
6		07000-15500	· O-ring	1	65001-
7		07049-01215	· Plug	2	65001-
8		01010-81230	· Bolt	10	65001-
9		01643-31232	· Washer	10	65001-
10		195-27-34120	· Cover	1	65001-
11		198-27-31420	· Plug	1	65001-
12		07002-13634	· O-ring	1	65001-
13		07049-01620	· Plug	2	65001-
14		07000-15455	· O-ring	1	65001-
15		01010-81650	· Bolt	18	65001-
16		01643-31645	· Washer	18	65001-
17		195-27-34171	· Collar	1	65001-
18		195-09-18410	· Bearing	1	65001-
19		195-27-31390	· Holder	1	65001-
20		01010-81650	· Bolt	18	65001-
21		195-27-31581	· Hub	1	65001-
22		195-27-34280	· Plate	1	65001-
23		195-27-34270	· Spacer	1	65001-
24		01010-81635	· Bolt	8	65001-
		195-27-00170	· Seal Ring Assembly	1	65001-
25	C1		· · Seal	2	65001-
26	C1		· · O-ring	2	65001-
27		(195-27-34140)	Cover		

Printed By : Dwi Iswanto (airafather6107170)

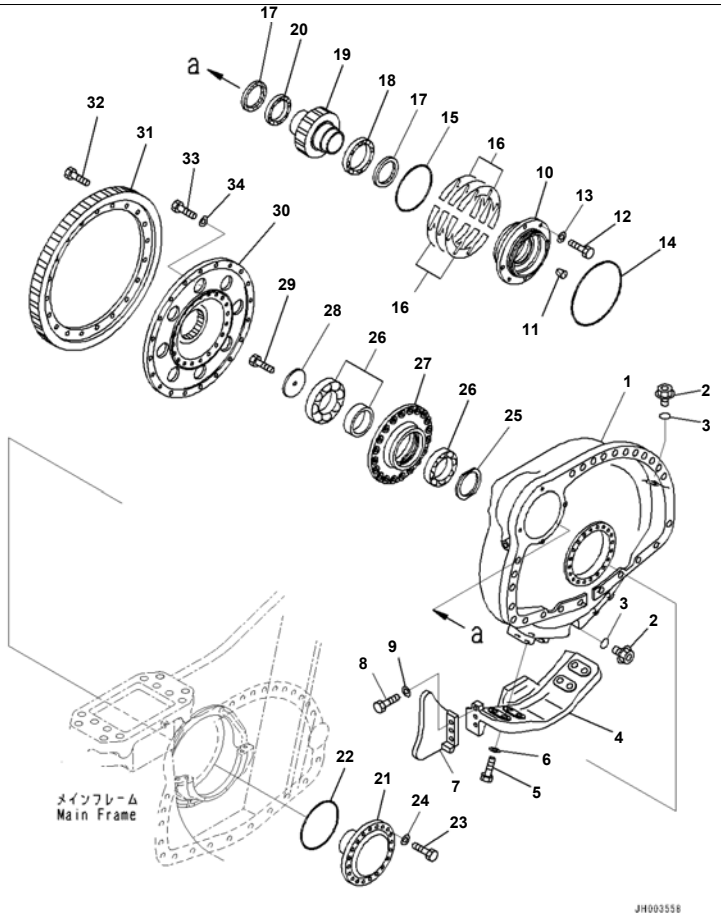

Index	Code	Part Number	Description	Qty	Serial No.
		195-27-00870	Final Drive Assembly	1	65001-
1		195-27-34221	· Case	1	65001-
2		07044-13620	· Plug	2	65001-
3		07002-13634	· O-ring	2	65001-
4		195-27-41160	· Guard	1	65001-
5		01010-82775	· Bolt	8	65001-
6		01643-32780	· Washer	8	65001-
7		195-30-62280	· Cover	1	65001-
8		01010-62060	· Bolt	3	65001-
9		01643-32060	· Washer	3	65001-
10		195-27-31180	· Cage	1	65001-
11		07049-01620	· Plug	2	65001-
12		01010-81645	· Bolt	4	65001-
13		01643-31645	· Washer	4	65001-
14		07000-15220	· O-ring	1	65001-
15		07000-15230	· O-ring	1	65001-
16		195-27-00060	· Shim Assembly	1	65001-
	C1		· · Shim, T=1.00mm	4	65001-
	C1		· · Shim, T=0.50mm	2	65001-
	C1		· · Shim, T=0.10mm	10	65001-
17		195-09-33250	· Seal, Oil	2	65001-
18		06002-32026	· Bearing	1	65001-
19		195-27-31211	· Gear	1	65001-
20		195-09-33270	· Bearing	1	65001-
21		195-27-31220	· Shaft	1	65001-
22		07000-15240	· O-ring	1	65001-
23		01010-81655	· Bolt	20	65001-
24		01643-31645	· Washer	20	65001-
25		195-27-31230	· Collar	1	65001-
26		195-09-18380	· Bearing	1	65001-
27		195-27-31250	· Boss	1	65001-

Printed By : Dwi Iswanto (airafather6107170)

Index	Code	Part Number	Description	Qty	Serial No.
28		195-27-31240	· Holder	1	65001-
29		01010-82050	· Bolt	1	65001-
30		195-27-31260	· Hub	1	65001-
31		195-27-31272	· Gear	1	65001-
32		01010-82050	· Bolt	20	65001-
33		01010-81650	· Bolt	20	65001-
34		01643-31645	· Washer	20	65001-

Printed By : Dwi Iswanto (airafather6107170)

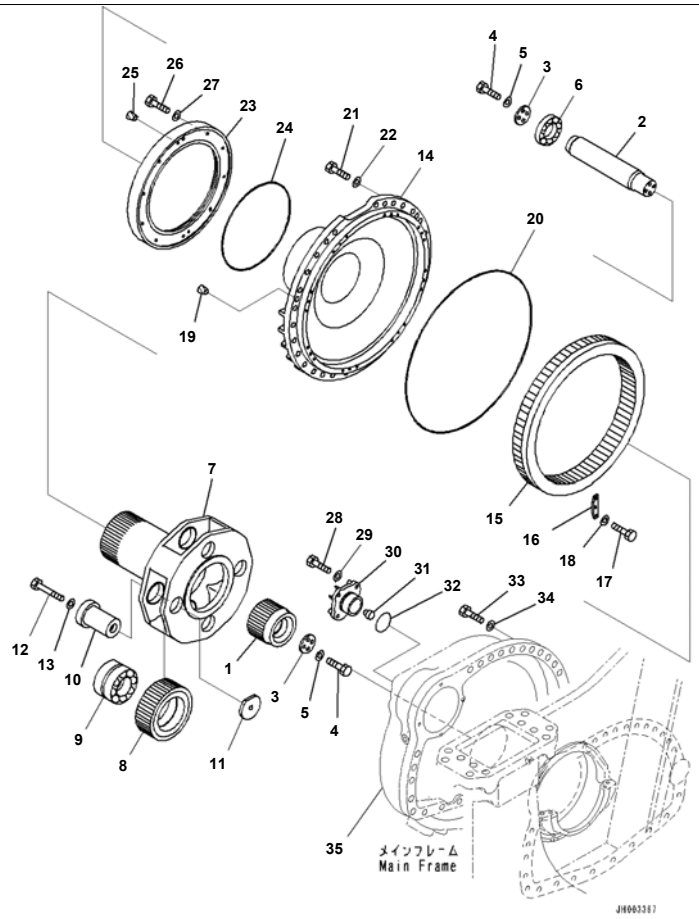

Reference:F2380-004006 Page:F005006

D375A-6R S/N 65001-UP
Final Drive, Track Frame, For Indonesia, Gear and Cover RHS (#65001-)

Index	Code	Part Number	Description	Qty	Serial No.
		195-27-00870	Final Drive Assembly	1	65001-
1		195-27-31284	· Gear	1	65001-
2		195-27-34250	· Shaft	1	65001-
3		195-27-34260	· Plate	2	65001-
4		01010-81640	· Bolt	8	65001-
5		01643-31645	· Washer	8	65001-
6		06043-00217	· Bearing	1	65001-
7		195-27-31321	· Carrier	1	65001-
8		195-27-31313	· Gear	4	65001-
9		17M-09-21141	· Bearing	4	65001-
10		17M-27-21330	· Shaft	4	65001-
11		17M-27-11260	· Holder	4	65001-
12		01011-62070	· Bolt	4	65001-
13		01643-32060	· Washer	4	65001-
14		195-27-34140	· Cover	1	65001-
15		195-27-31360	· Gear	1	65001-
16		195-27-31370	· Plate	8	65001-
17		01010-81230	· Bolt	24	65001-
18		01643-31232	· Washer	24	65001-
19		07049-02430	· Plug	3	65001-
20		195-27-31490	· O-ring	1	65001-
21		01010-62480	· Bolt	30	65001-
22		01643-32460	· Washer	30	65001-
23		195-27-34371	· Cover	1	65001-
24		07000-15500	· O-ring	1	65001-
25		07049-01215	· Plug	2	65001-
26		01010-81230	· Bolt	10	65001-
27		01643-31232	· Washer	10	65001-
28		01010-81640	· Bolt	3	65001-
29		01643-31645	· Washer	3	65001-
30		195-27-31190	· Cover	1	65001-

Reference:F2380-004006 Page:F005006

Printed By : Dwi Iswanto (airafather6107170)

Final Drive, Track Frame, For Indonesia, Gear and Cover RHS (#65001-)

Index	Code	Part Number	Description	Qty	Serial No.
31		195-27-31471	· Button	1	65001-
32		07000-12095	· O-ring	1	65001-
33		01010-83095	Bolt	25	65001-
34		01643-33080	Washer	25	65001-
35		(195-27-34221)	Case		

Printed By : Dwi Iswanto (airafather6107170)

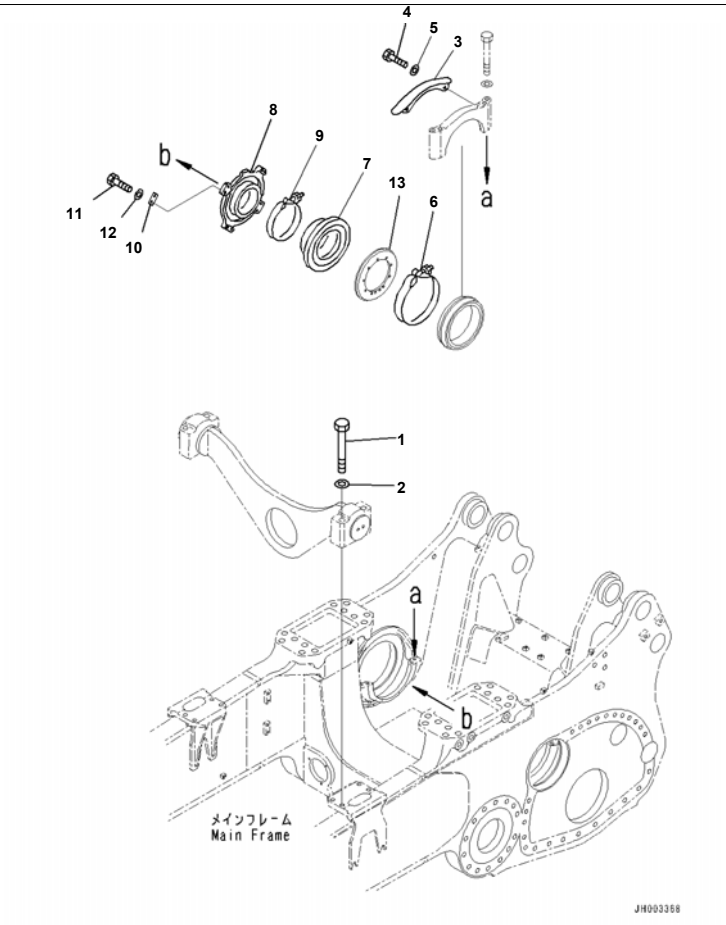

Index	Code	Part Number	Description	Qty	Serial No.
1		203-09-21110	Bolt	8	65001-
2		01643-32460	Washer	8	65001-
3		195-21-32461	Cover	2	65001-
4		01010-81220	Bolt	4	65001-
5		01643-31232	Washer	4	65001-
6		195-21-32430	Coupling	2	65001-
7		195-21-32421	Seal	2	65001-
8		195-21-32370	Cage	2	65001-
9		195-21-32390	Clamp	2	65001-
10		195-21-32380	Plate	8	65001-
11		01010-81025	Bolt	16	65001-
12		01643-31032	Washer	16	65001-
13		(195-21-32540)	Flange		

Printed By : Dwi Iswanto (airafather6107170)

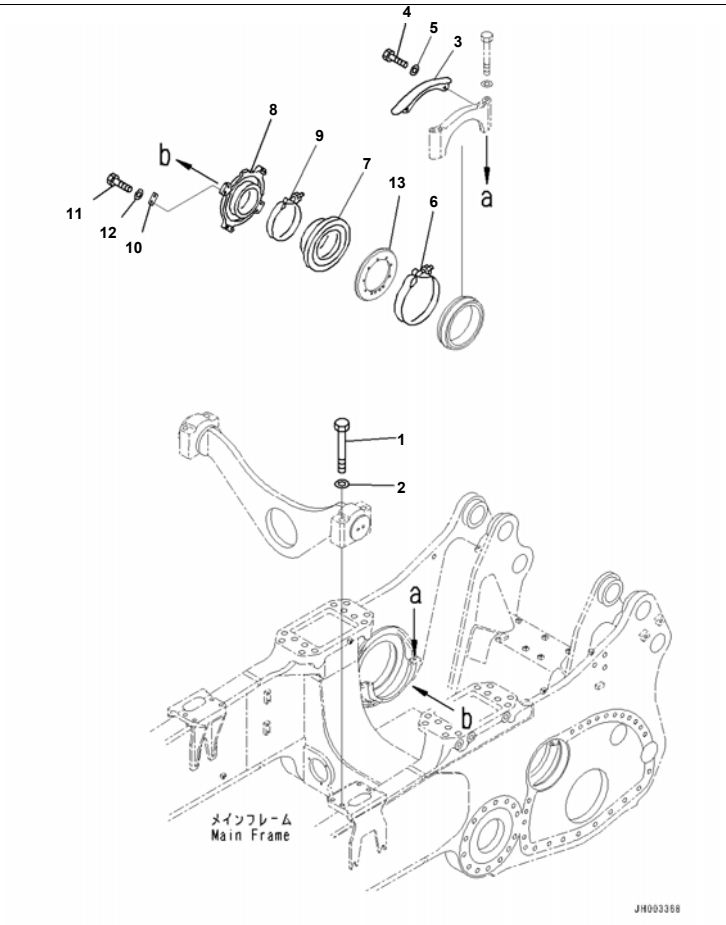

Index	Code	Part Number	Description	Qty	Serial No.
1		203-09-21110	Bolt	8	65001-
2		01643-32460	Washer	8	65001-
3		195-21-32461	Cover	2	65001-
4		01010-81220	Bolt	4	65001-
5		01643-31232	Washer	4	65001-
6		195-21-32821	Coupling	2	65001-
7		195-21-32421	Seal	2	65001-
8		195-21-32370	Cage	2	65001-
9		195-21-32810	Clamp	2	65001-
10		195-21-32380	Plate	8	65001-
11		01010-81025	Bolt	16	65001-
12		01643-31032	Washer	16	65001-
13		(195-21-32540)	Flange		

Printed By : Dwi Iswanto (airafather6107170)

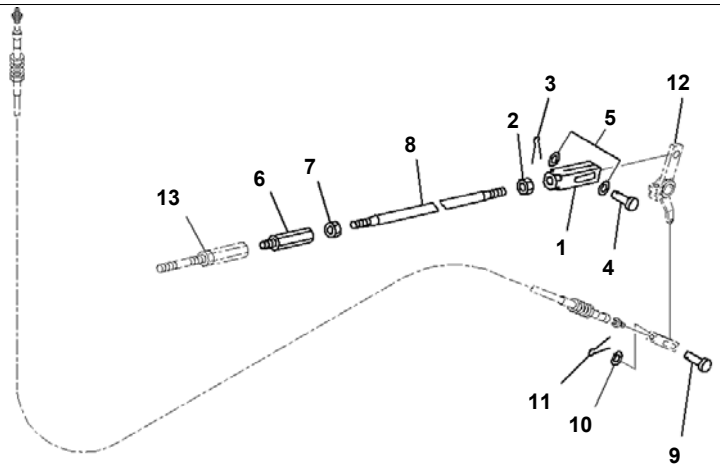

D375A-6R S/N 65001-UP
Brake Rod Control (#65001-)

Index	Code	Part Number	Description	Qty	Serial No.
1		114-B90-1490	Yoke	1	65001-
2		01582-11411	Nut	1	65001-
3		04050-14028	Pin, Cotter	1	65001-
4		04205-11442	Pin	1	65001-
5		01641-21423	Washer, Flat	2	65001-
6		17A-43-24170	Joint	1	65001-
7		01582-11411	Nut	1	65001-
8		195-43-65310	Rod	1	65001-
9		04205-11030	Pin	1	65001-
10		01640-21016	Washer	2	65001-
11		04050-13020	Pin, Cotter	1	65001-
12		(195-43-65340)	Lever		
13		(17A-43-24160)	Joint		
		(17A-43-24160)	Joint		

Printed By : Dwi Iswanto (airafather6107170)

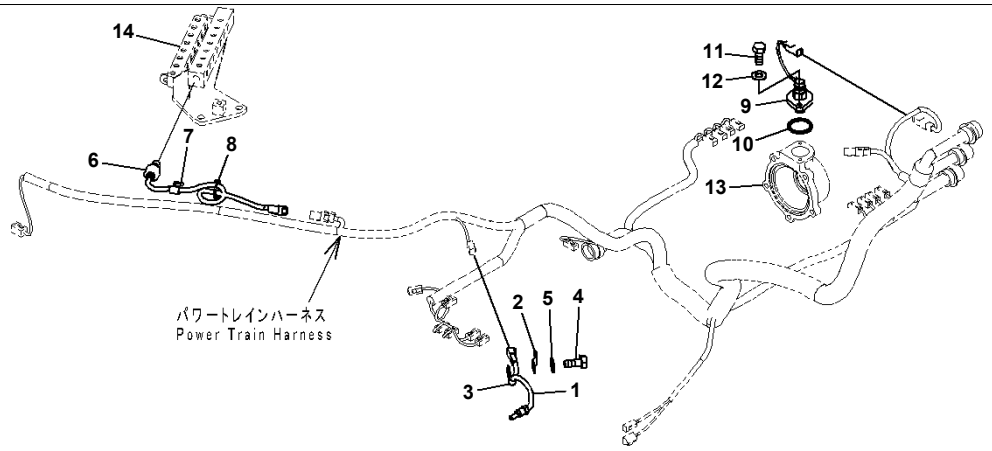

D375A-6R S/N 65001-UP
Electric Wiring For Powertrain Control, With VHMS, Sensor (#65001-65000)

Index	Code	Part Number	Description	Qty	Serial No.
1		7861-93-3320	Sensor	1	65001-@
2		08193-20012	Clip	1	65001-@
3		04434-50812	Clip	1	65001-@
4		01010-81220	Bolt	1	65001-@
5		01643-31232	Washer	1	65001-@
6		421-06-35121	Sensor, Pressure	1	65001-@
7		04434-51012	Clip	1	65001-@
8		08034-20414	Band	1	65001-@
9		7861-93-2220	Sensor	1	65001-@
10		07000-33045	O-ring	1	65001-@
11		01010-80825	Bolt	2	65001-@
12		01643-30823	Washer	2	65001-@
13		(287-15-13860)	Cage		
14		(195-49-73331)	Block		

Printed By : Dwi Iswanto (airafather6107170)

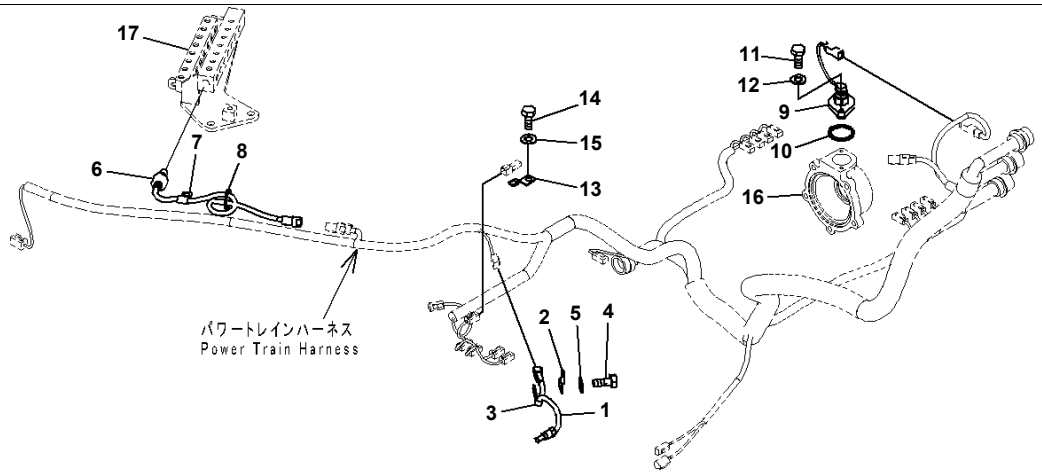

D375A-6R S/N 65001-UP
Electric Wiring For Powertrain Control, With VHMS, Sensor (#65001-)

Index	Code	Part Number	Description	Qty	Serial No.
1		7861-93-3320	Sensor	1	65001-
2		08193-20012	Clip	1	65001-
3		04434-50812	Clip	1	65001-
4		01010-81220	Bolt	1	65001-
5		01643-31232	Washer	1	65001-
6		421-06-35121	Sensor, Pressure	1	65001-
7		04434-51012	Clip	1	65001-
8		08034-20414	Band	1	65001-
9		7861-93-2220	Sensor	1	65001-
10		07000-33045	O-ring	1	65001-
11		01010-80825	Bolt	2	65001-
12		01643-30823	Washer	2	65001-
13		08193-20012	Clip	1	65001-
14		01010-81220	Bolt	1	65001-
15		01643-31232	Washer	1	65001-
16		(287-15-13860)	Cage		
17		(195-49-73331)	Block		

Printed By : Dwi Iswanto (airafather6107170)

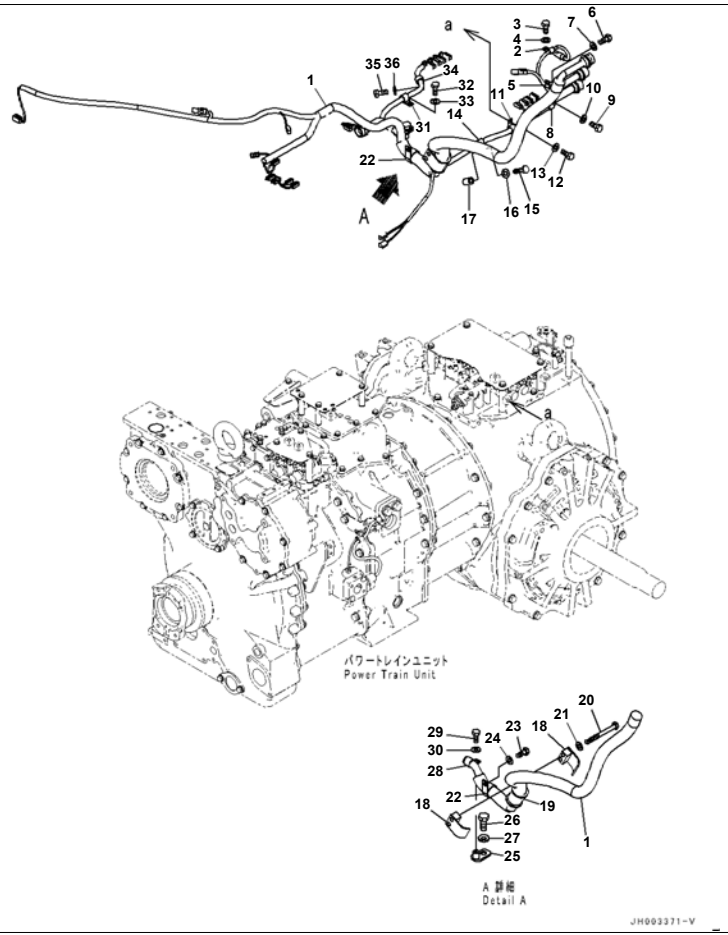

Reference:F2830-001002 Page:F009003

D375A-6R S/N 65001-UP
Electric Wiring For Powertrain Control, With VHMS, Harness Clamp (#65001-)

Index	Code	Part Number	Description	Qty	Serial No.
1		195-06-55591	Wiring Harness	1	65001-
2		04434-51212	Clip	1	65001-
3		01010-81220	Bolt	1	65001-
4		01643-31232	Washer	1	65001-
5		04434-51712	Clip	1	65001-
6		01010-81220	Bolt	1	65001-
7		01643-31232	Washer	1	65001-
8		04434-51712	Clip	1	65001-
9		01010-81220	Bolt	1	65001-
10		01643-31232	Washer	1	65001-
11		04434-52112	Clip	1	65001-
12		01010-81220	Bolt	1	65001-
13		01643-31232	Washer	1	65001-
14		04434-52112	Clip	1	65001-
15		01010-81255	Bolt	1	65001-
16		01643-31232	Washer	1	65001-
17		20Y-03-11220	Collar	1	65001-
18		07094-11228	Clamp	2	65001-
19		07095-01245	Cushion	1	65001-
20		01010-81295	Bolt	2	65001-
21		01643-31232	Washer	2	65001-
22		419-09-11150	Clip	1	65001-
23		01010-81220	Bolt	1	65001-
24		01643-31232	Washer	1	65001-
25		195-06-55760	Bracket	1	65001-
26		01010-82045	Bolt	1	65001-
27		01643-32060	Washer	1	65001-
28		04434-52712	Clip	1	65001-
29		01010-81220	Bolt	1	65001-
30		01643-31232	Washer	1	65001-
31		04434-52112	Clip	1	65001-

Reference:F2830-001002 Page:F009003

Printed By : Dwi Iswanto (airafather6107170)

Index	Code	Part Number	Description	Qty	Serial No.
32		01010-81220	Bolt	1	65001-
33		01643-31232	Washer	1	65001-
34		04434-52112	Clip	1	65001-
35		01010-81220	Bolt	1	65001-
36		01643-31232	Washer	1	65001-

Printed By : Dwi Iswanto (airafather6107170)

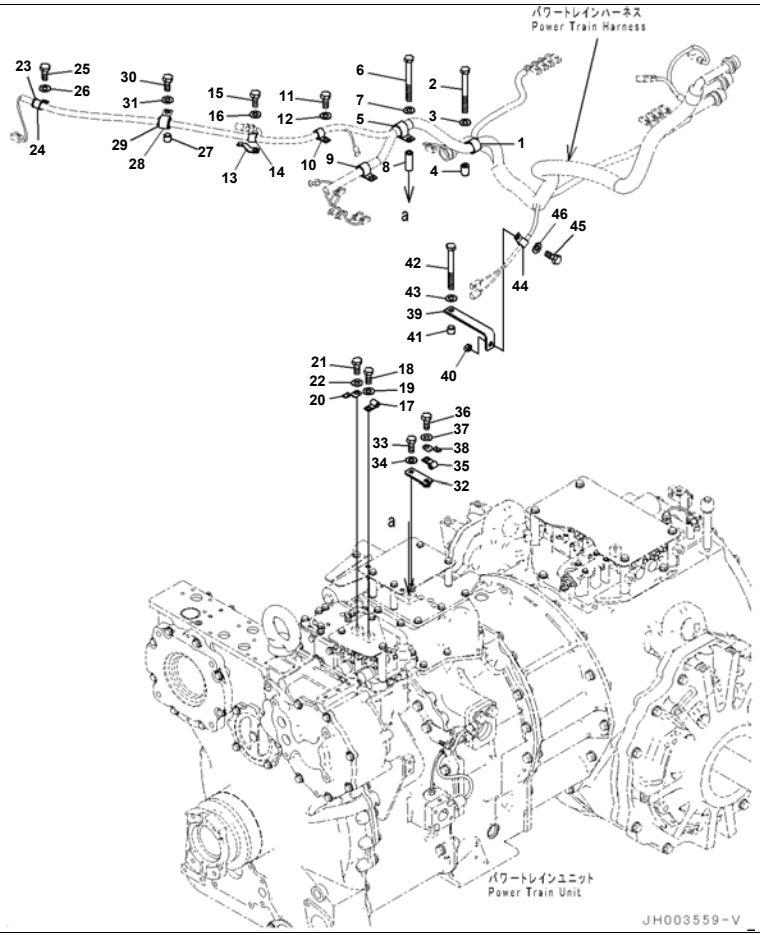

Index	Code	Part Number	Description	Qty	Serial No.
1		04434-53211	Clip	1	65001-
2		01010-81060	Bolt	1	65001-
3		01643-31032	Washer	1	65001-
4		6167-21-5910	Spacer	1	65001-
5		04434-53212	Clip	1	65001-
6		01010-81280	Bolt	1	65001-
7		01643-31232	Washer	1	65001-
8		175-61-17240	Collar	1	65001-
9		04434-52712	Clip	1	65001-
10		04434-51912	Clip	1	65001-
11		01010-81220	Bolt	1	65001-
12		01643-31232	Washer	1	65001-
13		08193-20012	Clip	1	65001-
14		04434-51912	Clip	1	65001-
15		01010-81220	Bolt	1	65001-
16		01643-31232	Washer	1	65001-
17		04434-51012	Clip	1	65001-
18		01010-81220	Bolt	1	65001-
19		01643-31232	Washer	1	65001-
20		08193-20012	Clip	1	65001-
21		01010-81220	Bolt	1	65001-
22		01643-31232	Washer	1	65001-
23		04434-52712	Clip	1	65001-
24		07095-20418	Cushion	1	65001-
25		01010-81240	Bolt	1	65001-
26		01643-31232	Washer	1	65001-
27		418-09-11130	Spacer	1	65001-
28		04434-52712	Clip	1	65001-
29		07095-20418	Cushion	1	65001-
30		01010-81220	Bolt	1	65001-
31		01643-31232	Washer	1	65001-

Printed By : Dwi Iswanto (airafather6107170)

Index	Code	Part Number	Description	Qty	Serial No.
32		154-Z11-5340	Bracket	1	65001-
33		01010-81220	Bolt	1	65001-
34		01643-31232	Washer	1	65001-
35		04434-51012	Clip	1	65001-
36		01010-81220	Bolt	1	65001-
37		01643-31232	Washer	1	65001-
38		08193-20012	Clip	1	65001-
39		154-916-3550	Bracket	1	65001-
40		01580-01210	Nut	1	65001-
41		6631-11-5630	Spacer	1	65001-
42		01010-81050	Bolt	1	65001-
43		01643-31032	Washer	1	65001-
44		04434-51512	Clip	1	65001-
45		01010-81220	Bolt	1	65001-
46		01643-31232	Washer	1	65001-

Printed By : Dwi Iswanto (airafather6107170)

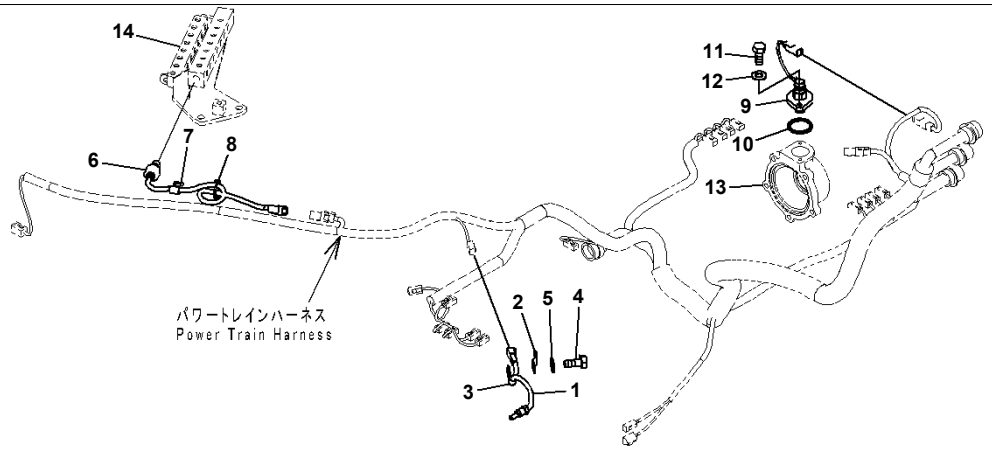

D375A-6R S/N 65001-UP
Electric Wiring For Powertrain Control, With VHMS, Wiring Harness, Part No. And Manufacturing Date Code, Sensor (#65001-)

Index	Code	Part Number	Description	Qty	Serial No.
1		7861-93-3320	Sensor	1	65001-
2		08193-20012	Clip	1	65001-
3		04434-50812	Clip	1	65001-
4		01010-81220	Bolt	1	65001-
5		01643-31232	Washer	1	65001-
6		421-06-35121	Sensor, Pressure	1	65001-
7		04434-51012	Clip	1	65001-
8		08034-20414	Band	1	65001-
9		7861-93-2220	Sensor	1	65001-
10		07000-33045	O-ring	1	65001-
11		01010-80825	Bolt	2	65001-
12		01643-30823	Washer	2	65001-
13		(287-15-13860)	Cage		
14		(195-49-73331)	Block		

Printed By : Dwi Iswanto (airafather6107170)

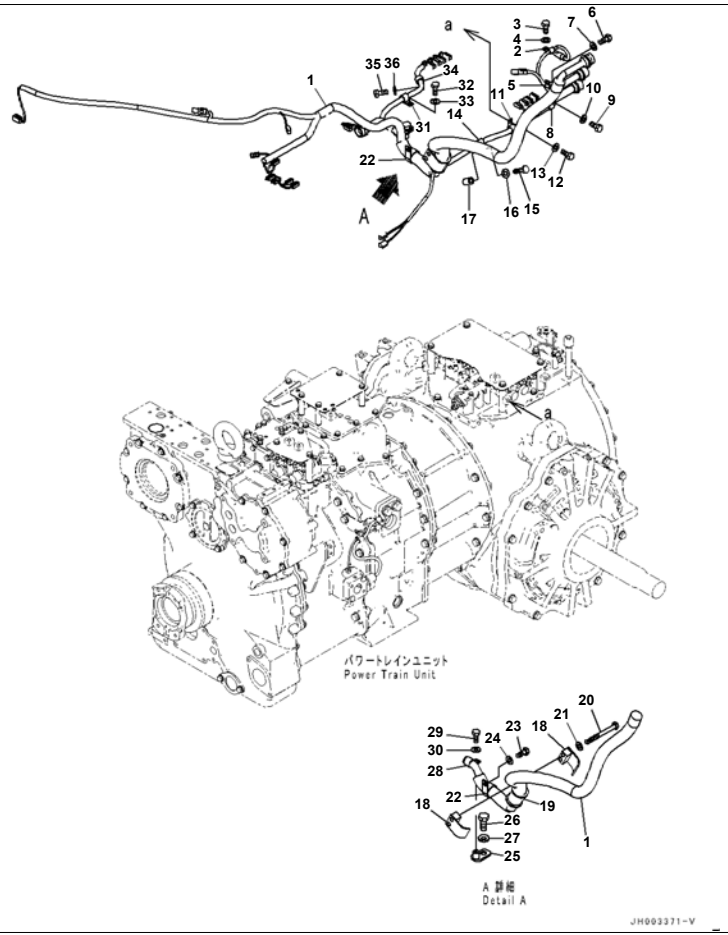

Reference:F2830-002002 Page:F010002

Index	Code	Part Number	Description	Qty	Serial No.
1		195-06-65591	Wiring Harness	1	65001-
2		04434-51212	Clip	1	65001-
3		01010-81220	Bolt	1	65001-
4		01643-31232	Washer	1	65001-
5		04434-51712	Clip	1	65001-
6		01010-81220	Bolt	1	65001-
7		01643-31232	Washer	1	65001-
8		04434-51712	Clip	1	65001-
9		01010-81220	Bolt	1	65001-
10		01643-31232	Washer	1	65001-
11		04434-52112	Clip	1	65001-
12		01010-81220	Bolt	1	65001-
13		01643-31232	Washer	1	65001-
14		04434-52112	Clip	1	65001-
15		01010-81255	Bolt	1	65001-
16		01643-31232	Washer	1	65001-
17		20Y-03-11220	Collar	1	65001-
18		07094-11228	Clamp	2	65001-
19		07095-01245	Cushion	1	65001-
20		01010-81295	Bolt	2	65001-
21		01643-31232	Washer	2	65001-
22		419-09-11150	Clip	1	65001-
23		01010-81220	Bolt	1	65001-
24		01643-31232	Washer	1	65001-
25		195-06-55760	Bracket	1	65001-
26		01010-82045	Bolt	1	65001-
27		01643-32060	Washer	1	65001-
28		04434-52712	Clip	1	65001-
29		01010-81220	Bolt	1	65001-
30		01643-31232	Washer	1	65001-

Reference:F2830-002002 Page:F010002

Printed By : Dwi Iswanto (airafather6107170)

Electric Wiring For Powertrain Control, With VHMS, Wiring Harness, Part No. And Manufacturing Date Code, Harness Clamp (#65001-)

Index	Code	Part Number	Description	Qty	Serial No.
31		04434-52112	Clip	1	65001-
32		01010-81220	Bolt	1	65001-
33		01643-31232	Washer	1	65001-
34		04434-52112	Clip	1	65001-
35		01010-81220	Bolt	1	65001-
36		01643-31232	Washer	1	65001-

Printed By : Dwi Iswanto (airafather6107170)

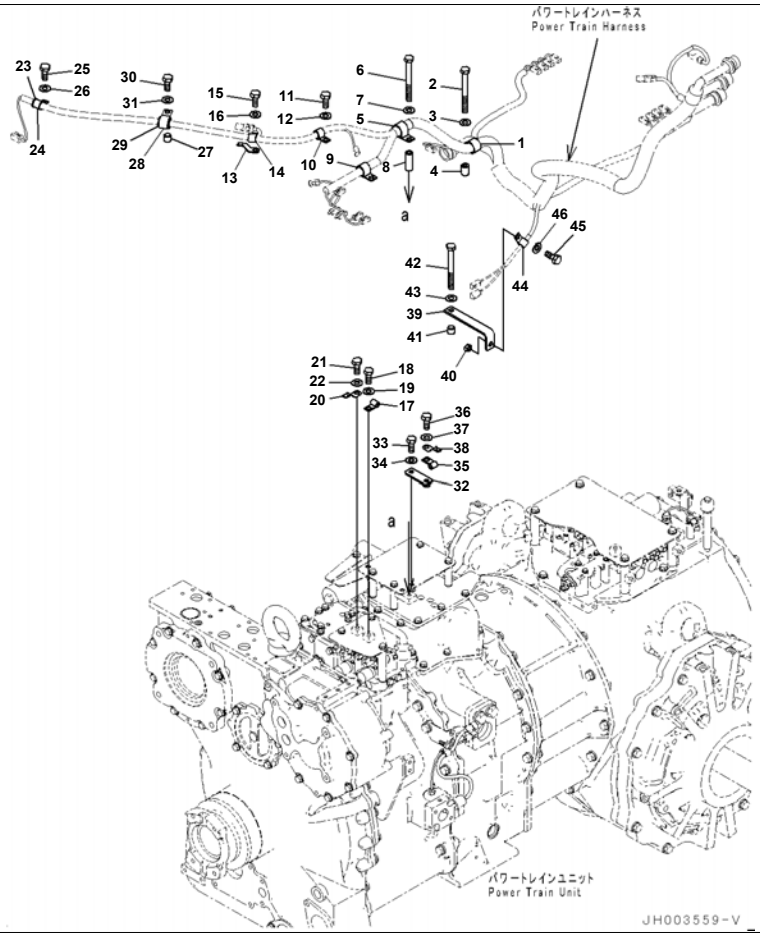

Index	Code	Part Number	Description	Qty	Serial No.
1		04434-53211	Clip	1	65001-
2		01010-81060	Bolt	1	65001-
3		01643-31032	Washer	1	65001-
4		6167-21-5910	Spacer	1	65001-
5		04434-53212	Clip	1	65001-
6		01010-81280	Bolt	1	65001-
7		01643-31232	Washer	1	65001-
8		175-61-17240	Collar	1	65001-
9		04434-52712	Clip	1	65001-
10		04434-51912	Clip	1	65001-
11		01010-81220	Bolt	1	65001-
12		01643-31232	Washer	1	65001-
13		08193-20012	Clip	1	65001-
14		04434-51912	Clip	1	65001-
15		01010-81220	Bolt	1	65001-
16		01643-31232	Washer	1	65001-
17		04434-51012	Clip	1	65001-
18		01010-81220	Bolt	1	65001-
19		01643-31232	Washer	1	65001-
20		08193-20012	Clip	1	65001-
21		01010-81220	Bolt	1	65001-
22		01643-31232	Washer	1	65001-
23		04434-52712	Clip	1	65001-
24		07095-20418	Cushion	1	65001-
25		01010-81240	Bolt	1	65001-
26		01643-31232	Washer	1	65001-
27		418-09-11130	Spacer	1	65001-
28		04434-52712	Clip	1	65001-
29		07095-20418	Cushion	1	65001-
30		01010-81220	Bolt	1	65001-

Printed By : Dwi Iswanto (airafather6107170)

Index	Code	Part Number	Description	Qty	Serial No.
31		01643-31232	Washer	1	65001-
32		154-Z11-5340	Bracket	1	65001-
33		01010-81220	Bolt	1	65001-
34		01643-31232	Washer	1	65001-
35		04434-51012	Clip	1	65001-
36		01010-81220	Bolt	1	65001-
37		01643-31232	Washer	1	65001-
38		08193-20012	Clip	1	65001-
39		154-916-3550	Bracket	1	65001-
40		01580-01210	Nut	1	65001-
41		6631-11-5630	Spacer	1	65001-
42		01010-81050	Bolt	1	65001-
43		01643-31032	Washer	1	65001-
44		04434-51512	Clip	1	65001-
45		01010-81220	Bolt	1	65001-
46		01643-31232	Washer	1	65001-

Printed By : Dwi Iswanto (airafather6107170)

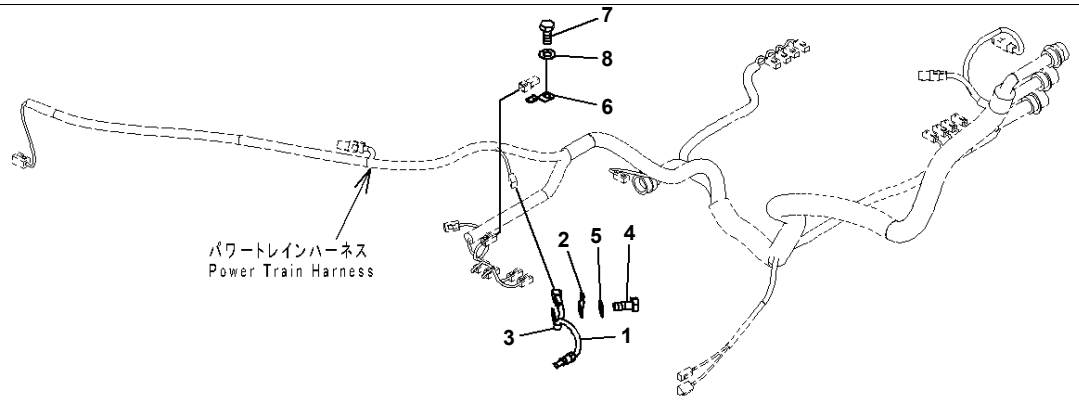

D375A-6R S/N 65001-UP
Electric Wiring For Powertrain Control, Without VHMS, Sensor (#65001-)

Index	Code	Part Number	Description	Qty	Serial No.
1		7861-93-3320	Sensor	1	65001-
2		08193-20012	Clip	1	65001-
3		04434-50812	Clip	1	65001-
4		01010-81220	Bolt	1	65001-
5		01643-31232	Washer	1	65001-
6		08193-20012	Clip	1	65001-
7		01010-81220	Bolt	1	65001-
8		01643-31232	Washer	1	65001-

Printed By : Dwi Iswanto (airafather6107170)

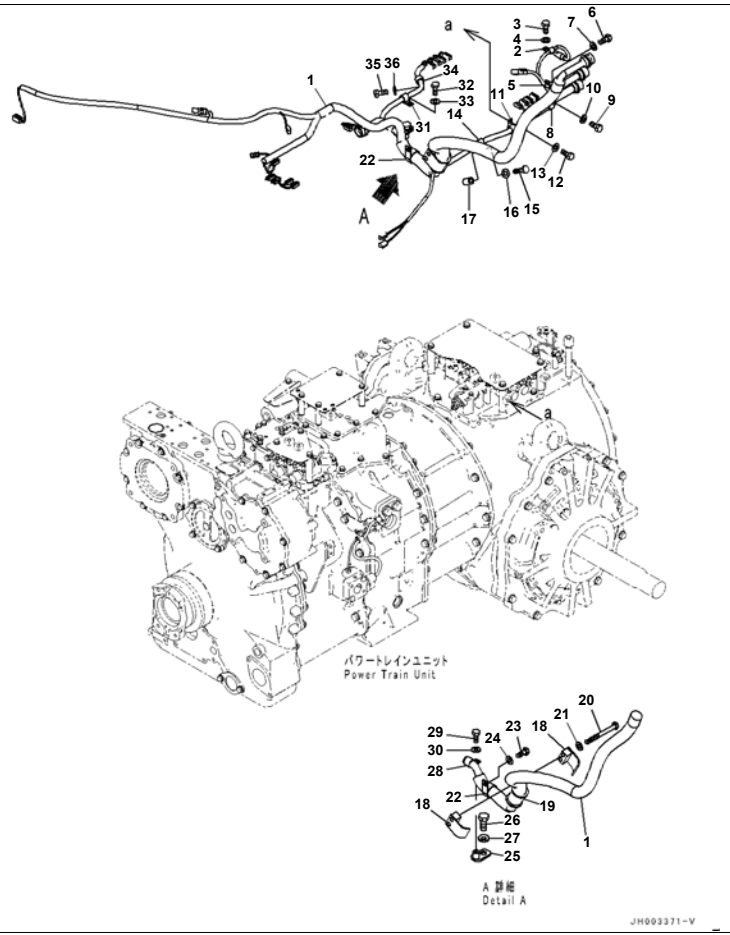

Reference:F2830-003002 Page:F011002

D375A-6R S/N 65001-UP
Electric Wiring For Powertrain Control, Without VHMS, Harness Clamp (#65001-)

Index	Code	Part Number	Description	Qty	Serial No.
1		195-06-55591	Wiring Harness	1	65001-
2		04434-51212	Clip	1	65001-
3		01010-81220	Bolt	1	65001-
4		01643-31232	Washer	1	65001-
5		04434-51712	Clip	1	65001-
6		01010-81220	Bolt	1	65001-
7		01643-31232	Washer	1	65001-
8		04434-51712	Clip	1	65001-
9		01010-81220	Bolt	1	65001-
10		01643-31232	Washer	1	65001-
11		04434-52112	Clip	1	65001-
12		01010-81220	Bolt	1	65001-
13		01643-31232	Washer	1	65001-
14		04434-52112	Clip	1	65001-
15		01010-81255	Bolt	1	65001-
16		01643-31232	Washer	1	65001-
17		20Y-03-11220	Collar	1	65001-
18		07094-11228	Clamp	2	65001-
19		07095-01245	Cushion	1	65001-
20		01010-81295	Bolt	2	65001-
21		01643-31232	Washer	2	65001-
22		419-09-11150	Clip	1	65001-
23		01010-81220	Bolt	1	65001-
24		01643-31232	Washer	1	65001-
25		195-06-55760	Bracket	1	65001-
26		01010-82045	Bolt	1	65001-
27		01643-32060	Washer	1	65001-
28		04434-52712	Clip	1	65001-
29		01010-81220	Bolt	1	65001-
30		01643-31232	Washer	1	65001-
31		04434-52112	Clip	1	65001-

Reference:F2830-003002 Page:F011002

Printed By : Dwi Iswanto (airafather6107170)

Index	Code	Part Number	Description	Qty	Serial No.
32		01010-81220	Bolt	1	65001-
33		01643-31232	Washer	1	65001-
34		04434-52112	Clip	1	65001-
35		01010-81220	Bolt	1	65001-
36		01643-31232	Washer	1	65001-

Printed By : Dwi Iswanto (airafather6107170)

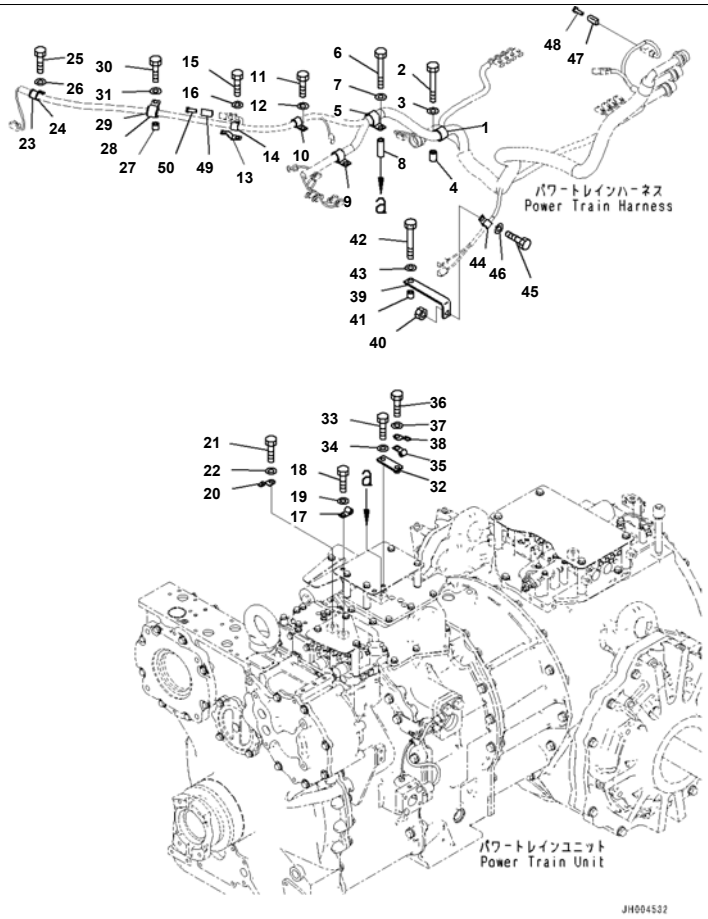

Index	Code	Part Number	Description	Qty	Serial No.
1		04434-53211	Clip	1	65001-
2		01010-81060	Bolt	1	65001-
3		01643-31032	Washer	1	65001-
4		6167-21-5910	Spacer	1	65001-
5		04434-53212	Clip	1	65001-
6		01010-81280	Bolt	1	65001-
7		01643-31232	Washer	1	65001-
8		175-61-17240	Collar	1	65001-
9		04434-52712	Clip	1	65001-
10		04434-51912	Clip	1	65001-
11		01010-81220	Bolt	1	65001-
12		01643-31232	Washer	1	65001-
13		08193-20012	Clip	1	65001-
14		04434-51912	Clip	1	65001-
15		01010-81220	Bolt	1	65001-
16		01643-31232	Washer	1	65001-
17		04434-51012	Clip	1	65001-
18		01010-81220	Bolt	1	65001-
19		01643-31232	Washer	1	65001-
20		08193-20012	Clip	1	65001-
21		01010-81220	Bolt	1	65001-
22		01643-31232	Washer	1	65001-
23		04434-52712	Clip	1	65001-
24		07095-20418	Cushion	1	65001-
25		01010-81240	Bolt	1	65001-
26		01643-31232	Washer	1	65001-
27		418-09-11130	Spacer	1	65001-
28		04434-52712	Clip	1	65001-
29		07095-20418	Cushion	1	65001-
30		01010-81220	Bolt	1	65001-65000
31		01643-31232	Washer	1	65001-

Printed By : Dwi Iswanto (airafather6107170)

Index	Code	Part Number	Description	Qty	Serial No.
32		154-Z11-5340	Bracket	1	65001-
33		01010-81220	Bolt	1	65001-
34		01643-31232	Washer	1	65001-
35		04434-51012	Clip	1	65001-
36		01010-81220	Bolt	1	65001-
37		01643-31232	Washer	1	65001-
38		08193-20012	Clip	1	65001-
39		154-916-3550	Bracket	1	65001-
40		01580-01210	Nut	1	65001-
41		6631-11-5630	Spacer	1	65001-
42		01010-81050	Bolt	1	65001-
43		01643-31032	Washer	1	65001-
44		04434-51512	Clip	1	65001-
45		01010-81220	Bolt	1	65001-
46		01643-31232	Washer	1	65001-
47		08192-12100	Connector Assembly	1	65001-60001
48		08191-00770	Plug, Connector	2	65001-60001
49		08192-13100	Connector Body	1	65001-60001
50		08191-00770	Plug, Connector	3	65001-60001

Printed By : Dwi Iswanto (airafather6107170)

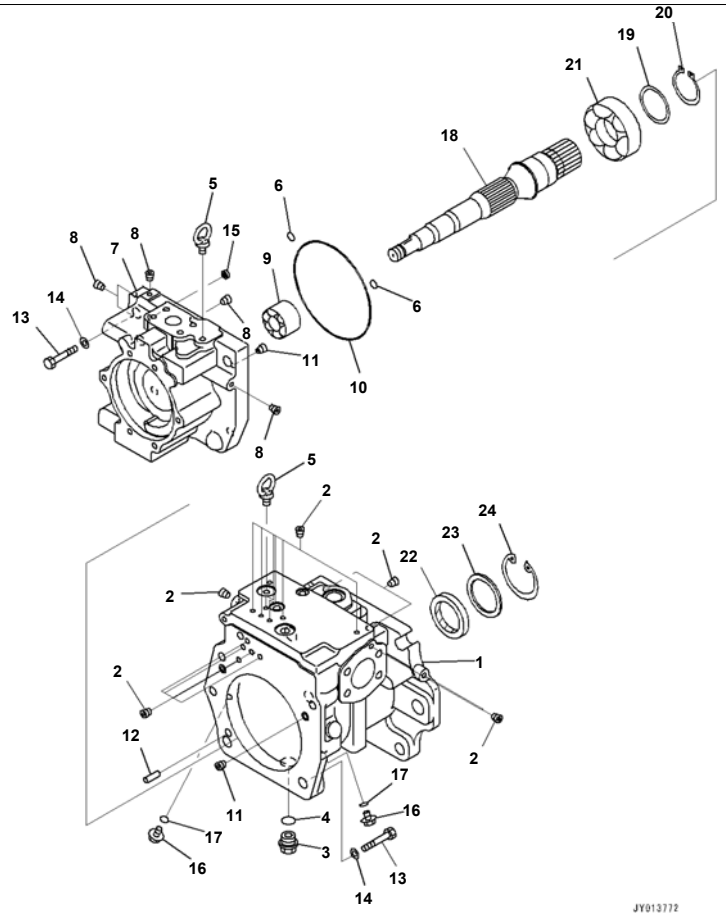

D375A-6R S/N 65001-UP
Hydraulic Oil Pump, Inner Parts, Hydraulic Oil Pump (1/5) (#65001-)

Index	Code	Part Number	Description	Qty	Serial No.
		708-1H-00260	Pump Assembly	1	65001-
		708-1H-01260	· Pump Subassembly	1	65001-
	C2	708-1H-04350	· · Case Assembly	1	65001-
1	C1		· · · Case	1	65001-
2	C1		· · · Plug	19	65001-
3		07044-12412	· · Plug	1	65001-
4		07002-62434	· · O-ring	1	65001-
5		04530-11222	· · Bolt, Eye	2	65001-
6		07000-B2012	· · O-ring	2	65001-
	C2	708-1H-04360	· · End Cap Subassembly	1	65001-
7	C1		· · · Cap, End	1	65001-
8	C1		· · · Plug	5	65001-
9	C2	708-2H-12430	· · Bearing	1	65001-
10	C2	07000-A5190	· · O-ring	1	65001-
11	C2	708-1L-29340	· · Orifice	2	65001-
12	C2	04020-01434	· · Pin, Dowel	1	65001-
13	C2	01010-61860	· · Bolt	5	65001-
14	C2	01643-31845	· · Washer	5	65001-
15		708-2L-25480	· · Filter	1	65001-
16		708-8E-16150	· · Plug	2	65001-
17		07002-61023	· · O-ring	2	65001-
18	C2	708-1H-32130	· · Shaft	1	65001-
19	C2	708-17-05010	· · Washer Kit	1	65001-
	C1		· · · Washer, T=3.0mm	1	65001-
	C1		· · · Washer, T=3.1mm	1	65001-
	C1		· · · Washer, T=3.2mm	1	65001-
20	C2	708-17-12780	· · Ring, Snap	1	65001-
21	C2	708-1H-22150	· · Bearing	1	65001-
22		708-27-22811	· · Seal, Oil	1	65001-
23		708-2H-22160	· · Spacer	1	65001-
24		04065-08225	· · Ring, Snap	1	65001-

Printed By : Dwi Iswanto (airafather6107170)

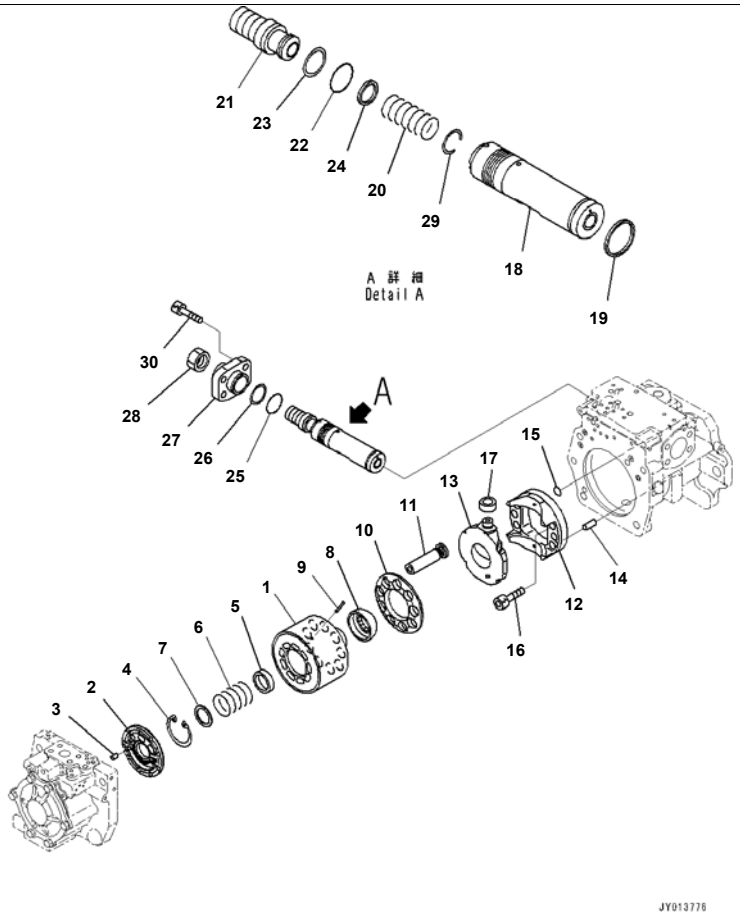

D375A-6R S/N 65001-UP
Hydraulic Oil Pump, Inner Parts, Hydraulic Oil Pump (2/5) (#65001-)

Index	Code	Part Number	Description	Qty	Serial No.
		708-1H-00260	Pump Assembly	1	65001-
		708-1H-01260	· Pump Subassembly	1	65001-
	C2	708-2H-04760	· · Block Assembly	1	65001-
1	C1		· · · Block, Cylinder	1	65001-
2	C1		· · · Plate, Valve	1	65001-
3	C2	708-18-13230	· · Pin	1	65001-
4	C2	04065-05820	· · Ring, Snap	1	65001-
5	C2	708-2H-33140	· · Seat	1	65001-
6	C2	708-2H-33150	· · Spring	1	65001-
7	C2	708-2H-23141	· · Seat	1	65001-
8	C2	708-2H-23350	· · Guide	1	65001-
9		708-2H-23360	· · Pin	3	65001-
10		708-2H-33343	· · Retainer	1	65001-
11	C2	708-2H-33311	· · Piston Subassembly	9	65001-
	C2	708-2H-04690	· · Cradle Subassembly	1	65001-
12	C1		· · · Cradle	1	65001-
13	C1		· · · Cam	1	65001-
14	C2	04020-01434	· · Pin, Dowel	1	65001-
15	C2	07000-B1009	· · O-ring	1	65001-
16	C2	01252-61235	· · Bolt	6	65001-
17	C2	708-2H-34150	· · Slider	1	65001-
		708-1H-03270	· · Piston Assembly	1	65001-
18	C2	708-1H-34120	· · · Piston	1	65001-
19	C1		· · · Seal	1	65001-
20	C2	708-2H-15330	· · · Spring	1	65001-
21	C2	708-2G-14350	· · · Screw	1	65001-
22	C2	07000-B3038	· · · O-ring	1	65001-
23	C2	708-2G-15230	· · · Ring, Back-up	1	65001-
24	C2	708-2G-15260	· · · Seal	1	65001-
25	C2	07000-B2050	· · · O-ring	1	65001-
26	C2	708-2G-15310	· · · Ring	1	65001-

Printed By : Dwi Iswanto (airafather6107170)

Index	Code	Part Number	Description	Qty	Serial No.
27	C2	708-2L-44161	・・・ Cover	1	65001-
28	C2	708-2L-35290	・・・ Nut	1	65001-
29	C2	708-2G-15330	・・・ Ring, Wear	1	65001-
30	C2	01252-61645	・・ Bolt	4	65001-

Printed By : Dwi Iswanto (airafather6107170)

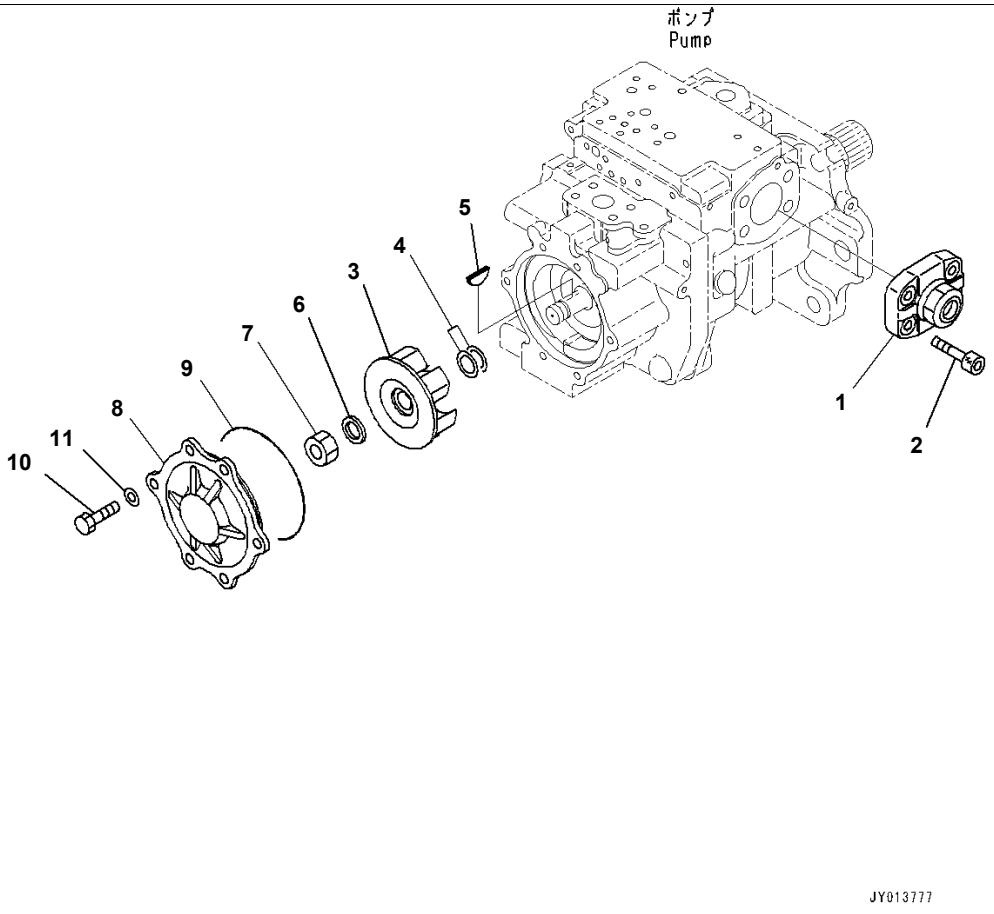

D375A-6R S/N 65001-UP
Hydraulic Oil Pump, Inner Parts, Hydraulic Oil Pump (3/5) (#65001-)

Index	Code	Part Number	Description	Qty	Serial No.
		708-1H-00260	Pump Assembly	1	65001-
		708-1H-01260	· Pump Subassembly	1	65001-
1		708-1H-03250	· · Cover Assembly	1	65001-
2		01252-61645	· · Bolt	4	65001-
3	C2	708-1H-21660	· · Impeller	1	65001-
4	C2	708-1E-05010	· · Washer Kit	1	65001-
	C1		· · · Washer, T=2.7mm	1	65001-
	C1		· · · Washer, T=3.0mm	1	65001-
	C1		· · · Washer, T=3.3mm	1	65001-
	C1		· · · Washer, T=3.6mm	1	65001-
5	C2	04010-00522	· · Key	1	65001-
6	C2	708-1E-11640	· · Washer	1	65001-
7	C2	01583-12414	· · Nut	1	65001-
8	C2	708-1H-31620	· · Cover	1	65001-
9	C2	708-1H-32530	· · O-ring	1	65001-
10		01010-81230	· · Bolt	6	65001-
11		01643-31232	· · Washer	6	65001-

Printed By : Dwi Iswanto (airafather6107170)

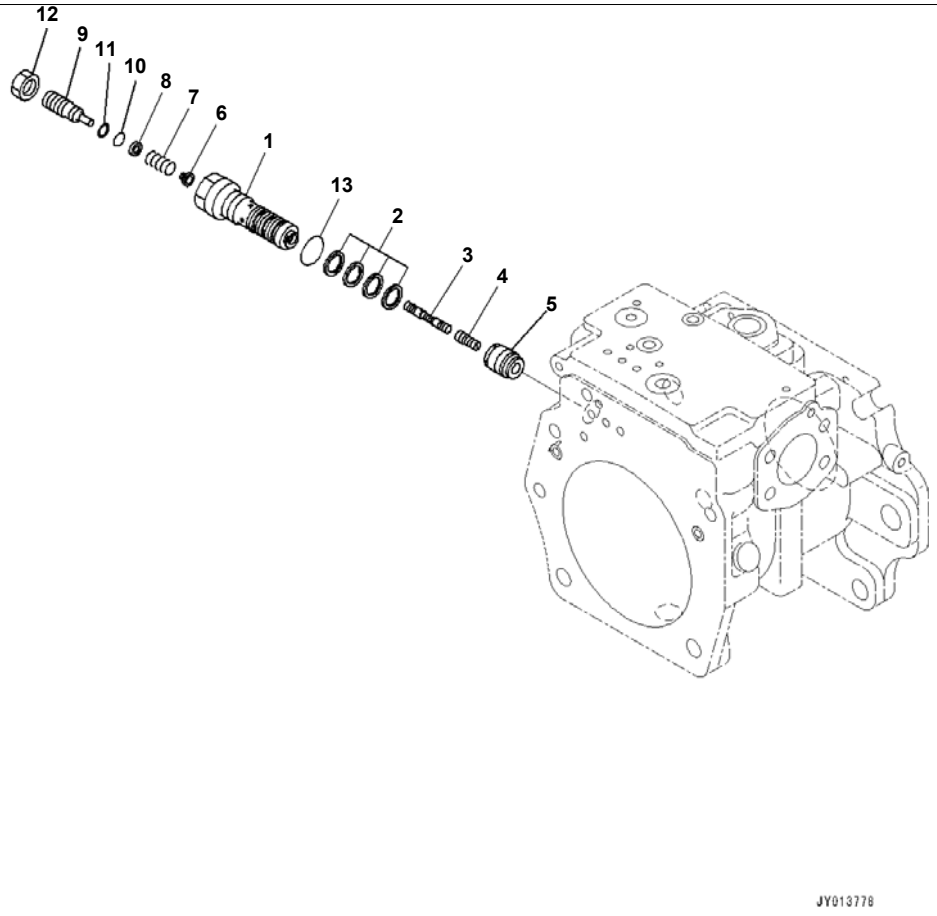

D375A-6R S/N 65001-UP
Hydraulic Oil Pump, Inner Parts, Hydraulic Oil Pump (4/5) (#65001-)

Index	Code	Part Number	Description	Qty	Serial No.
		708-1H-00260	Pump Assembly	1	65001-
		708-2H-03620	· Valve Assembly	1	65001-
1	C2	708-2L-35311	· · Sleeve	1	65001-
2		708-2L-24680	· · Seal	4	65001-
3	C2	708-2H-15410	· · Spool	1	65001-
4	C2	708-2L-28540	· · Piston	1	65001-
5	C2	708-2L-35360	· · Sleeve	1	65001-
6	C2	708-2L-35331	· · Seat	1	65001-
7	C2	708-2L-35410	· · Spring	1	65001-
8	C2	708-2L-35341	· · Seat	1	65001-
9	C2	708-2L-35351	· · Plug	1	65001-
10	C2	07000-B1009	· · O-ring	1	65001-
11	C2	07001-01009	· · Ring, Back-up	1	65001-
12		01583-11408	· · Nut	1	65001-
13		07002-62434	· · O-ring	1	65001-

Printed By : Dwi Iswanto (airafather6107170)

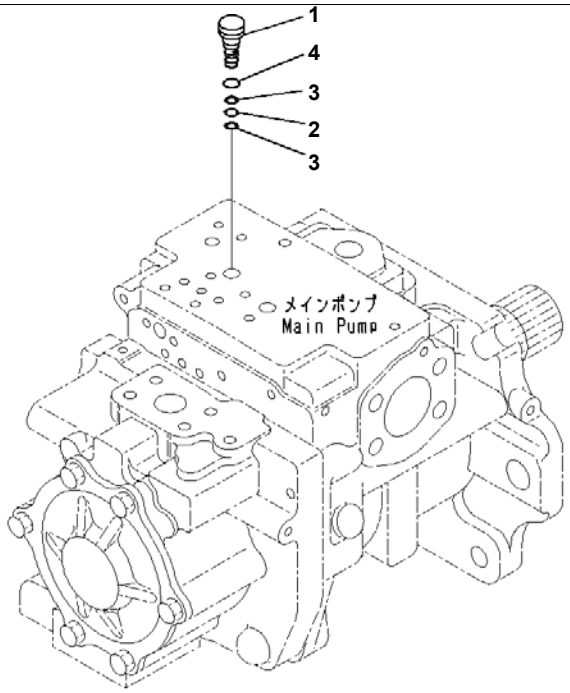

Reference:H0210-001005 Page:H001005

D375A-6R S/N 65001-UP
Hydraulic Oil Pump, Inner Parts, Hydraulic Oil Pump (5/5) (#65001-)

Index	Code	Part Number	Description	Qty	Serial No.
		708-1H-00260	Pump Assembly	1	65001-
1	C2	708-2G-15650	· Plug	1	65001-
2		07000-B1008	· O-ring	1	65001-
3		07001-01008	· Ring	2	65001-
4		07002-61423	· O-ring	1	65001-

Reference:H0210-001005 Page:H001005

Printed By : Dwi Iswanto (airafather6107170)

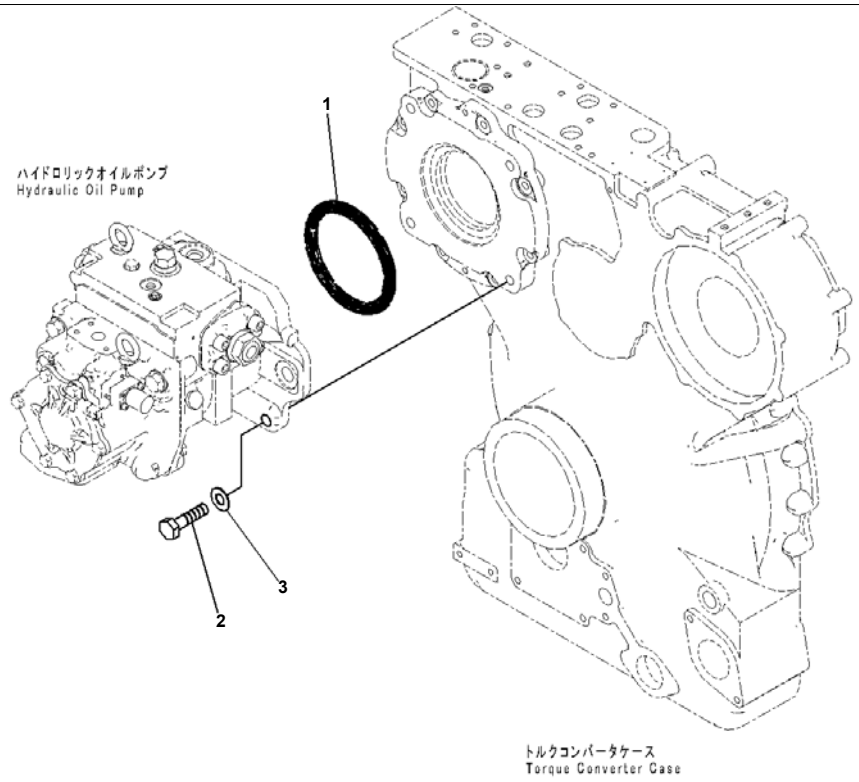

Reference:H0210-001006 Page:H001006

D375A-6R S/N 65001-UP
Hydraulic Oil Pump, Hydraulic Oil Pump Mounting (#65001-)

Index	Code	Part Number	Description	Qty	Serial No.
1		07000-75170	O-ring	1	65001-
2		01010-82060	Bolt	4	65001-
3		01643-32060	Washer	4	65001-

Printed By : Dwi Iswanto (airafather6107170)

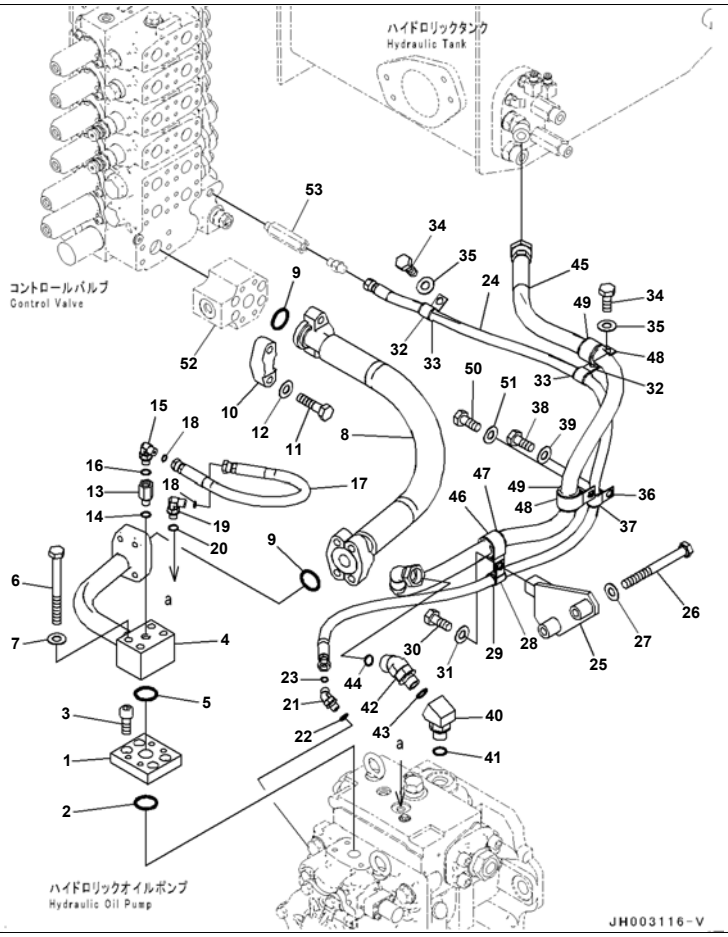

D375A-6R S/N 65001-UP
Hydraulic Oil Pump Circuit, Delivery Piping (#65001-)

Index	Code	Part Number	Description	Qty	Serial No.
1		195-60-52371	Plate	1	65001-
2		07000-13038	O-ring	1	65001-
3		01252-71225	Bolt	4	65001-
4		195-60-52381	Tube	1	65001-
5		07000-13038	O-ring	1	65001-
6		01010-81280	Bolt	4	65001-
7		01643-31232	Washer	4	65001-
8		07085-01208	Hose, Flange Type	1	65001-
9		07000-13038	O-ring	2	65001-
10		07371-51260	Flange	4	65001-
11		01010-81250	Bolt	8	65001-
12		01643-31232	Washer	8	65001-
13		203-62-58880	Adapter	1	65001-
14		07002-11423	O-ring	1	65001-
15		02782-10210	Elbow	1	65001-
16		07002-11423	O-ring	1	65001-
17		02777-00205	Hose, Face Seal Type	1	65001-
18		02896-11008	O-ring	2	65001-
19		02782-10210	Elbow	1	65001-
20		07002-11423	O-ring	1	65001-
21		154-61-75761	Elbow	1	65001-
22		07002-11423	O-ring	1	65001-
23		02896-11008	O-ring	1	65001-
24		02756-00215	Hose, Face Seal Type	1	65001-
25		195-60-52391	Bracket	1	65001-
26		01010-81270	Bolt	2	65001-
27		01643-31232	Washer	2	65001-
28		04434-51912	Clip	1	65001-
29		07095-20213	Cushion	1	65001-
30		01010-81230	Bolt	1	65001-
31		01643-31232	Washer	1	65001-

Printed By : Dwi Iswanto (airafather6107170)

Index	Code	Part Number	Description	Qty	Serial No.
32		04434-51912	Clip	2	65001-
33		07095-20213	Cushion	2	65001-
34		01010-81230	Bolt	2	65001-
35		01643-31232	Washer	2	65001-
36		04434-51912	Clip	1	65001-
37		07095-20213	Cushion	1	65001-
38		01010-81230	Bolt	1	65001-
39		01643-31232	Washer	1	65001-
40		20Y-62-12511	Elbow	1	65001-
41		07002-12434	O-ring	1	65001-
42		02783-10628	Elbow	1	65001-
43		07002-12434	O-ring	1	65001-
44		02896-11018	O-ring	1	65001-
45		02764-00613	Hose, Face Seal Type	1	65001-
46		04434-53412	Clip	1	65001-
47		07095-20627	Cushion	1	65001-
48		04434-53412	Clip	2	65001-
49		07095-20627	Cushion	2	65001-
50		01010-81230	Bolt	1	65001-
51		01643-31232	Washer	1	65001-
52		(195-60-52551)	Block		
53		(20Y-62-27680)	Adapter		

Printed By : Dwi Iswanto (airafather6107170)

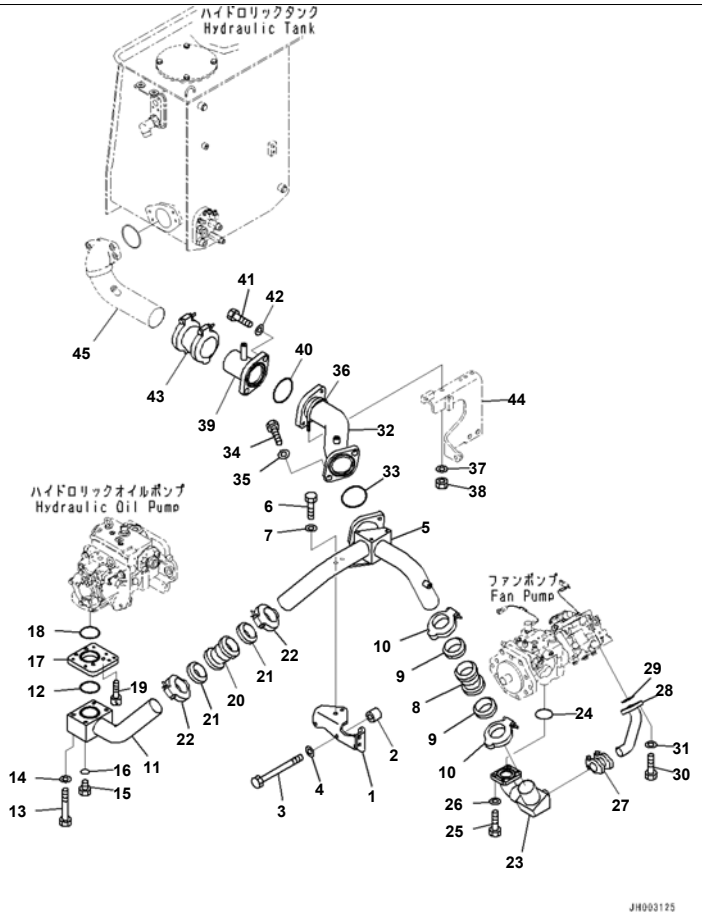

Reference:H0310-001002 Page:H002002

D375A-6R S/N 65001-UP
Hydraulic Oil Pump Circuit, Suction Piping (#65001-)

Index	Code	Part Number	Description	Qty	Serial No.
1		195-60-52351	Bracket	1	65001-
2		6131-22-3750	Boss	3	65001-
3		01010-81270	Bolt	3	65001-
4		01643-31232	Washer	3	65001-
5		195-60-52311	Tube	1	65001-
6		01010-81240	Bolt	2	65001-
7		01643-31232	Washer	2	65001-
8		07332-02400	Coupling	1	65001-
9		07332-52400	· Gasket	2	65001-
10		07332-62400	· Clamp	2	65001-
11		195-60-52321	Tube	1	65001-
12		07000-12080	O-ring	1	65001-
13		01011-81210	Bolt	4	65001-
14		01643-31232	Washer	4	65001-
15		07040-12412	Plug	1	65001-
16		07002-12434	O-ring	1	65001-
17		17A-49-41251	Flange	1	65001-
18		07000-12080	O-ring	1	65001-
19		01252-71225	Bolt	4	65001-
20		07332-02400	Coupling	1	65001-
21		07332-52400	· Gasket	2	65001-
22		07332-62400	· Clamp	2	65001-
23		195-60-52331	Tube	1	65001-
24		07000-12075	O-ring	1	65001-
25		01010-81240	Bolt	4	65001-
26		01643-31232	Washer	4	65001-
27		07332-01200	Coupling	1	65001-
28		195-60-52341	Tube	1	65001-
29		07000-13048	O-ring	1	65001-
30		01010-81240	Bolt	4	65001-
31		01643-31232	Washer	4	65001-

Printed By : Dwi Iswanto (airafather6107170)

Index	Code	Part Number	Description	Qty	Serial No.
32		195-60-52411	Tube	1	65001-
33		07000-12110	O-ring	1	65001-
34		01010-81660	Bolt	2	65001-
35		21T-54-16150	Washer	2	65001-
36		07283-31079	Clip, Pipe	1	65001-
37		01643-31232	Washer	2	65001-
38		01597-01211	Nut	2	65001-
39		195-60-52452	Tube	1	65001-
40		07000-12110	O-ring	1	65001-
41		01010-81660	Bolt	2	65001-
42		21T-54-16150	Washer	2	65001-
43		07332-03400	Coupling	1	65001-
44		(195-60-52361)	Bracket		
45		(195-60-52421)	Tube		

Printed By : Dwi Iswanto (airafather6107170)

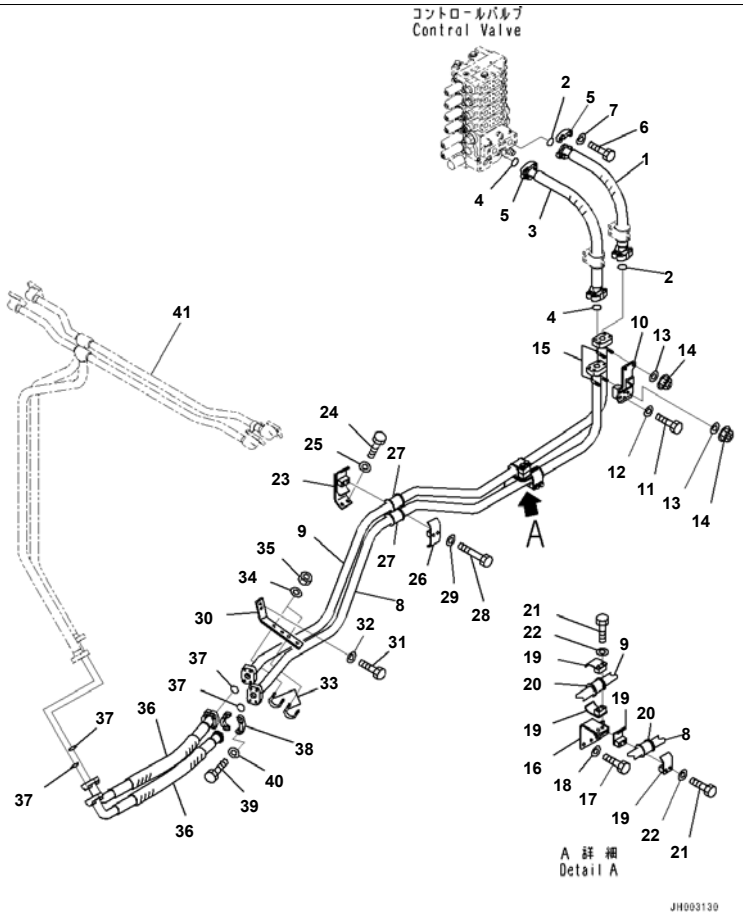

D375A-6R S/N 65001-UP
Dozer Blade Lift Piping (#65001-)

Index	Code	Part Number	Description	Qty	Serial No.
1		07099-012A7	Hose, Flange Type	1	65001-
2		07000-13038	O-ring	2	65001-
3		07099-01209	Hose, Flange Type	1	65001-
4		07000-13038	O-ring	2	65001-
5		07371-51260	Flange	8	65001-
6		01010-81245	Bolt	16	65001-
7		01643-31232	Washer	16	65001-
8		195-61-62711	Tube	1	65001-
9		195-61-62722	Tube	1	65001-
10		195-61-62941	Bracket	1	65001-
11		01010-81270	Bolt	2	65001-
12		01643-31232	Washer	2	65001-
13		01643-31032	Washer	4	65001-
14		01597-01009	Nut	4	65001-
15		07283-34346	Clip	2	65001-
16		195-61-62950	Bracket	1	65001-
17		01010-81230	Bolt	2	65001-
18		01643-31232	Washer	2	65001-
19		07094-11228	Clamp	4	65001-
20		07095-01241	Cushion	2	65001-
21		01010-81290	Bolt	4	65001-
22		01643-31232	Washer	4	65001-
23		195-61-61731	Bracket	1	65001-
24		01010-81230	Bolt	2	65001-
25		01643-31232	Washer	2	65001-
26		07094-31228	Clip	1	65001-
27		07095-01241	Cushion	2	65001-
28		01011-81200	Bolt	2	65001-
29		01643-31232	Washer	2	65001-
30		195-61-61740	Bracket	1	65001-
31		01010-81225	Bolt	2	65001-

Printed By : Dwi Iswanto (airafather6107170)

Index	Code	Part Number	Description	Qty	Serial No.
32		01643-31232	Washer	2	65001-
33		07283-34346	Clip	2	65001-
34		01643-31032	Washer	4	65001-
35		01597-01009	Nut	4	65001-
36		07098-012A9	Hose, Flange Type	2	65001-
37		07000-13038	O-ring	4	65001-
38		07371-51260	Flange	8	65001-
39		01010-81245	Bolt	16	65001-
40		01643-31232	Washer	16	65001-
41		(195-61-62761)	Tube		
		(195-61-62761)	Tube		

Printed By : Dwi Iswanto (airafather6107170)

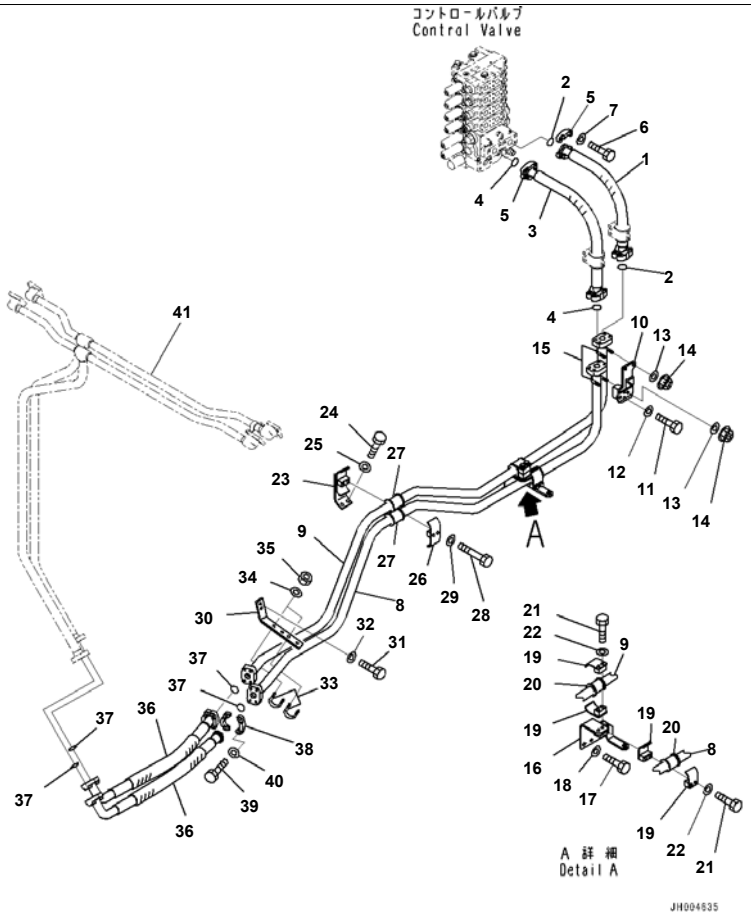

Reference:H2210-002001 Page:H004001

D375A-6R S/N 65001-UP
Dozer Blade Lift Piping, With Engine Oil Pan And Coolant Heater (#65001-)

Index	Code	Part Number	Description	Qty	Serial No.
1		07099-012A7	Hose, Flange Type	1	65001-
2		07000-13038	O-ring	2	65001-
3		07099-01209	Hose, Flange Type	1	65001-
4		07000-13038	O-ring	2	65001-
5		07371-51260	Flange	8	65001-
6		01010-81245	Bolt	16	65001-
7		01643-31232	Washer	16	65001-
8		195-61-62711	Tube	1	65001-
9		195-61-62722	Tube	1	65001-
10		195-61-62941	Bracket	1	65001-
11		01010-81270	Bolt	2	65001-
12		01643-31232	Washer	2	65001-
13		01643-31032	Washer	4	65001-
14		01597-01009	Nut	4	65001-
15		07283-34346	Clip	2	65001-
16		195-61-63150	Bracket	1	65001-
17		01010-81230	Bolt	2	65001-
18		01643-31232	Washer	2	65001-
19		07094-11228	Clamp	4	65001-
20		07095-01241	Cushion	2	65001-
21		01010-81290	Bolt	4	65001-
22		01643-31232	Washer	4	65001-
23		195-61-61731	Bracket	1	65001-
24		01010-81230	Bolt	2	65001-
25		01643-31232	Washer	2	65001-
26		07094-31228	Clip	1	65001-
27		07095-01241	Cushion	2	65001-
28		01011-81200	Bolt	2	65001-
29		01643-31232	Washer	2	65001-
30		195-61-61740	Bracket	1	65001-
31		01010-81225	Bolt	2	65001-

Reference:H2210-002001 Page:H004001

Printed By : Dwi Iswanto (airafather6107170)

Dozer Blade Lift Piping, With Engine Oil Pan And Coolant Heater (#65001-)

Index	Code	Part Number	Description	Qty	Serial No.
32		01643-31232	Washer	2	65001-
33		07283-34346	Clip	2	65001-
34		01643-31032	Washer	4	65001-
35		01597-01009	Nut	4	65001-
36		07098-012A9	Hose, Flange Type	2	65001-
37		07000-13038	O-ring	4	65001-
38		07371-51260	Flange	8	65001-
39		01010-81245	Bolt	16	65001-
40		01643-31232	Washer	16	65001-
41		(195-61-62761)	Tube		

Printed By : Dwi Iswanto (airafather6107170)

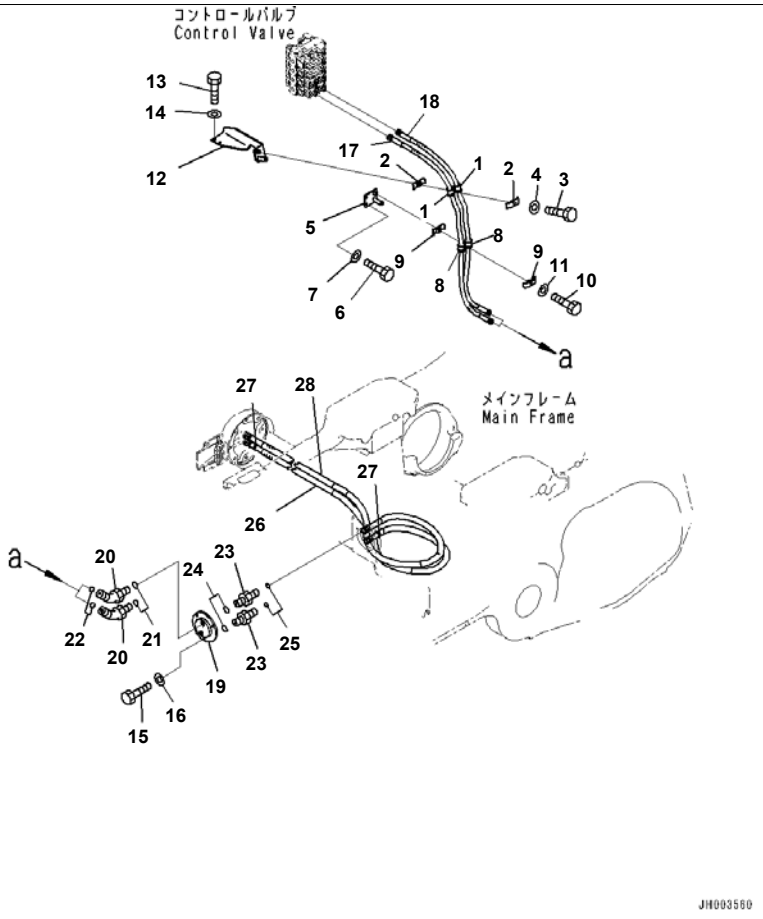

D375A-6R S/N 65001-UP
Dozer Blade Tilt Circuit, For Single Tilt Dozer, Blade Tilt Piping (#65001-65003)

Index	Code	Part Number	Description	Qty	Serial No.
1		07095-00524	Cushion	2	65001-@
2		07094-30518	Clamp	2	65001-@
3		01010-81270	Bolt	1	65001-@
4		01643-31232	Washer	1	65001-@
5		195-61-62931	Bracket	1	65001-@
6		01010-81230	Bolt	2	65001-@
7		01643-31232	Washer	2	65001-@
8		07095-00524	Cushion	2	65001-@
9		07094-30518	Clamp	2	65001-@
10		01010-81270	Bolt	1	65001-@
11		01643-31232	Washer	1	65001-@
12		195-61-62912	Bracket	1	65001-@
13		01010-81230	Bolt	2	65001-@
14		01643-31232	Washer	2	65001-@
15		01010-81230	Bolt	3	65001-@
16		01643-31232	Washer	3	65001-@
17		195-61-62971	Hose	1	65001-@
18		02756-00518	Hose, Face Seal Type	1	65001-@
19		195-61-54540	Flange	1	65001-@
20		02783-10522	Elbow	2	65001-@
21		07002-12434	O-ring	2	65001-@
22		02896-11015	O-ring	2	65001-@
23		02781-00522	Union	2	65001-@
24		07002-12434	O-ring	2	65001-@
25		02896-11015	O-ring	2	65001-@
26		195-61-55371	Hose	1	65001-@
27		20Y-62-22790	· Band, Red	2	65001-@
28		195-61-55381	Hose	1	65001-@

Printed By : Dwi Iswanto (airafather6107170)

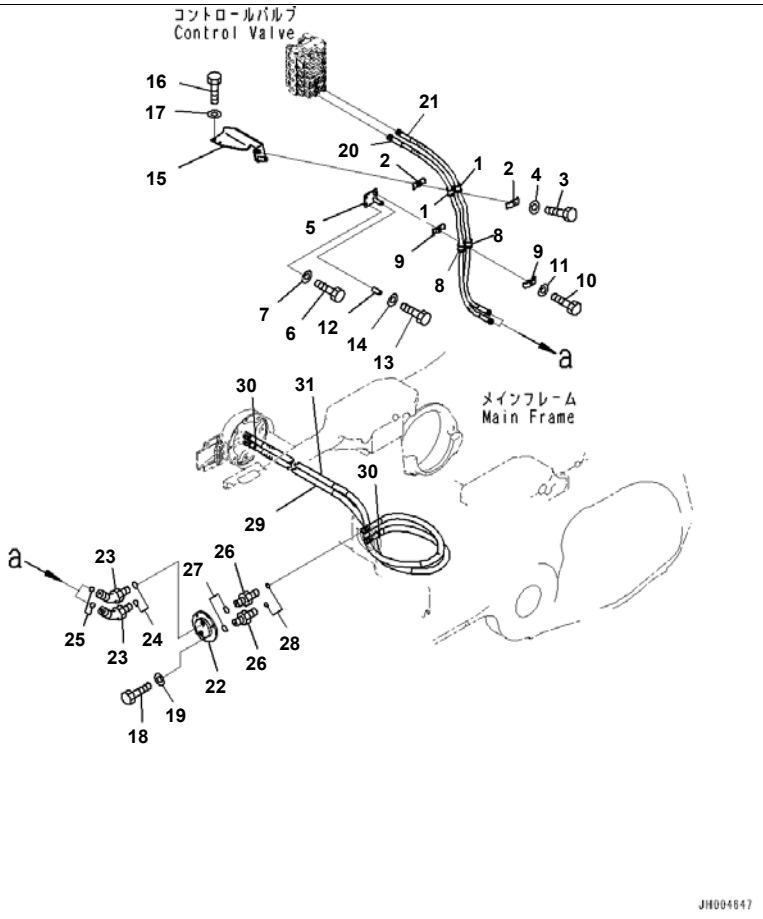

Reference:H2220-002001A Page:H005002

D375A-6R S/N 65001-UP
Dozer Blade Tilt Circuit, For Single Tilt Dozer, Blade Tilt Piping (#65004-)

Index	Code	Part Number	Description	Qty	Serial No.
1		07095-00524	Cushion	2	65001-
2		07094-30518	Clamp	2	65001-
3		01010-81270	Bolt	1	65001-
4		01643-31232	Washer	1	65001-
5		195-61-62931	Bracket	1	65001-
6		01010-81230	Bolt	2	65001-
7		01643-31232	Washer	2	65001-
8		07095-00524	Cushion	2	65001-
9		07094-30518	Clamp	2	65001-
10		01010-81270	Bolt	1	65001-
11		01643-31232	Washer	1	65001-
12		195-979-5190	Collar	1	65004-
13		01010-81270	Bolt	1	65004-
14		01643-31232	Washer	1	65004-
15		195-61-62912	Bracket	1	65001-
16		01010-81230	Bolt	2	65001-
17		01643-31232	Washer	2	65001-
18		01010-81230	Bolt	3	65001-
19		01643-31232	Washer	3	65001-
20		195-61-62971	Hose	1	65001-
21		02756-00518	Hose, Face Seal Type	1	65001-
22		195-61-54540	Flange	1	65001-
23		02783-10522	Elbow	2	65001-
24		07002-12434	O-ring	2	65001-
25		02896-11015	O-ring	2	65001-
26		02781-00522	Union	2	65001-
27		07002-12434	O-ring	2	65001-
28		02896-11015	O-ring	2	65001-
29		195-61-55371	Hose	1	65001-
30		20Y-62-22790	· Band, Red	2	65001-
31		195-61-55381	Hose	1	65001-

Reference:H2220-002001A Page:H005002

Printed By : Dwi Iswanto (airafather6107170)

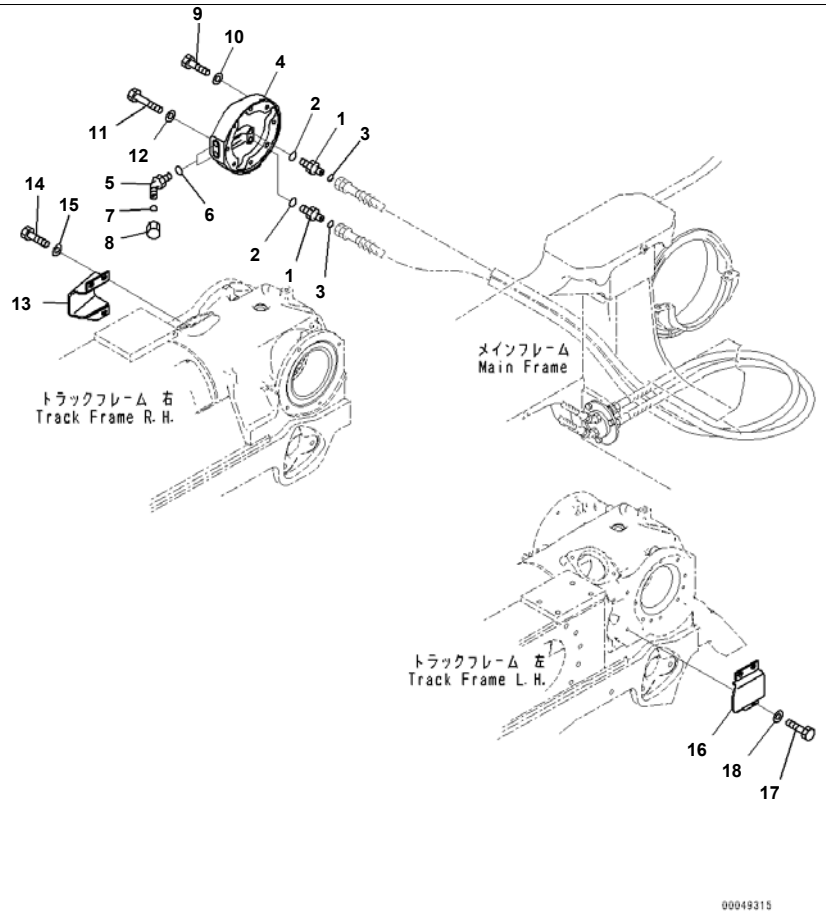

Reference:H2220-002002 Page:H005003

D375A-6R S/N 65001-UP
Dozer Blade Tilt Circuit, For Single Tilt Dozer, Elbow and Cover (#65001-)

Index	Code	Part Number	Description	Qty	Serial No.
1		02781-00522	Union	2	65001-
2		07002-12434	O-ring	2	65001-
3		02896-11015	O-ring	2	65001-
4		195-50-22132	Cover	1	65001-
5		02783-10522	Elbow	2	65001-
6		07002-12434	O-ring	2	65001-
7		02896-11015	O-ring	2	65001-
8		02789-10522	Plug	2	65001-
9		01010-81695	Bolt	7	65001-
10		01643-31645	Washer	7	65001-
11		01011-81615	Bolt	1	65001-
12		01643-31645	Washer	1	65001-
13		195-30-62531	Cover	1	65001-
14		01010-61635	Bolt	3	65001-
15		01643-31645	Washer	3	65001-
16		195-30-62510	Plate	1	65001-
17		01010-61635	Bolt	3	65001-
18		01643-31645	Washer	3	65001-

Printed By : Dwi Iswanto (airafather6107170)

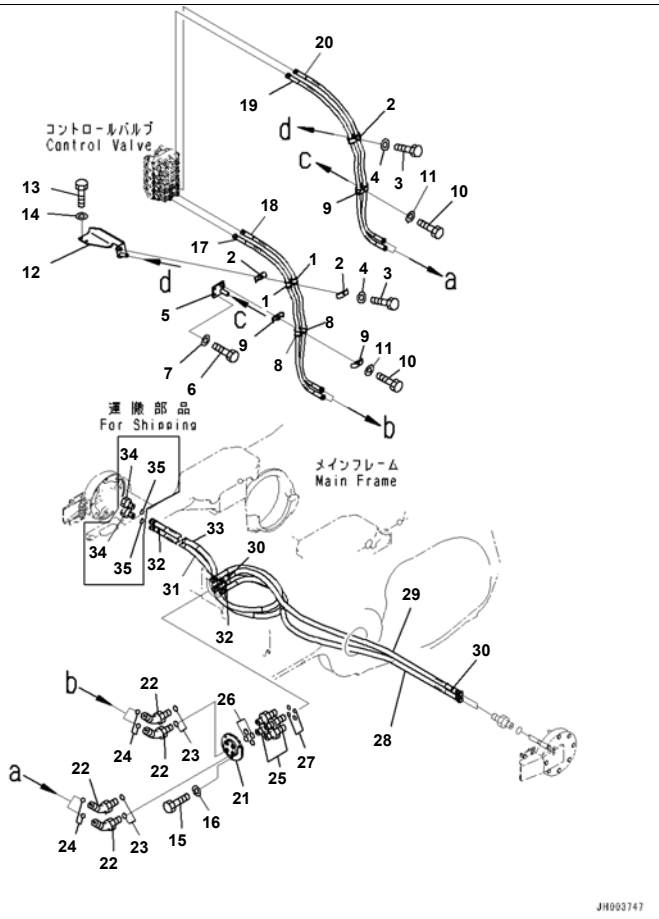

Reference:H2220-004001 Page:H006001

D375A-6R S/N 65001-UP
Dozer Blade Tilt Circuit, For Dual Tilt Pitch Dozer, Blade Tilt Piping (#65001-)

Index	Code	Part Number	Description	Qty	Serial No.
1		07095-00524	Cushion	4	65001-
2		07094-30518	Clamp	4	65001-
3		01010-81270	Bolt	2	65001-
4		01643-31232	Washer	2	65001-
5		195-61-62931	Bracket	1	65001-
6		01010-81230	Bolt	2	65001-
7		01643-31232	Washer	2	65001-
8		07095-00524	Cushion	4	65001-
9		07094-30518	Clamp	4	65001-
10		01010-81270	Bolt	2	65001-
11		01643-31232	Washer	2	65001-
12		195-61-62912	Bracket	1	65001-
13		01010-81230	Bolt	2	65001-
14		01643-31232	Washer	2	65001-
15		01010-81230	Bolt	3	65001-
16		01643-31232	Washer	3	65001-
17		195-61-62971	Hose	1	65001-
18		02756-00518	Hose, Face Seal Type	1	65001-
19		195-61-62981	Hose	1	65001-
20		195-61-62971	Hose	1	65001-
21		195-61-54341	Flange	1	65001-
22		02783-10522	Elbow	4	65001-
23		07002-12434	O-ring	4	65001-
24		02896-11015	O-ring	4	65001-
25		02781-00522	Union	4	65001-
26		07002-12434	O-ring	4	65001-
27		02896-11015	O-ring	4	65001-
28		195-61-55351	Hose	1	65001-
29		195-61-55361	Hose	1	65001-
30		20Y-62-22820	· Band, Blue	2	65001-
31		195-61-55371	Hose	1	65001-

Reference:H2220-004001 Page:H006001

Printed By : Dwi Iswanto (airafather6107170)

Index	Code	Part Number	Description	Qty	Serial No.
32		20Y-62-22790	· Band, Red	2	65001-
33		195-61-55381	Hose	1	65001-
34		07376-70522	Plug	4	65001-
35		02896-11015	O-ring	4	65001-

Printed By : Dwi Iswanto (airafather6107170)

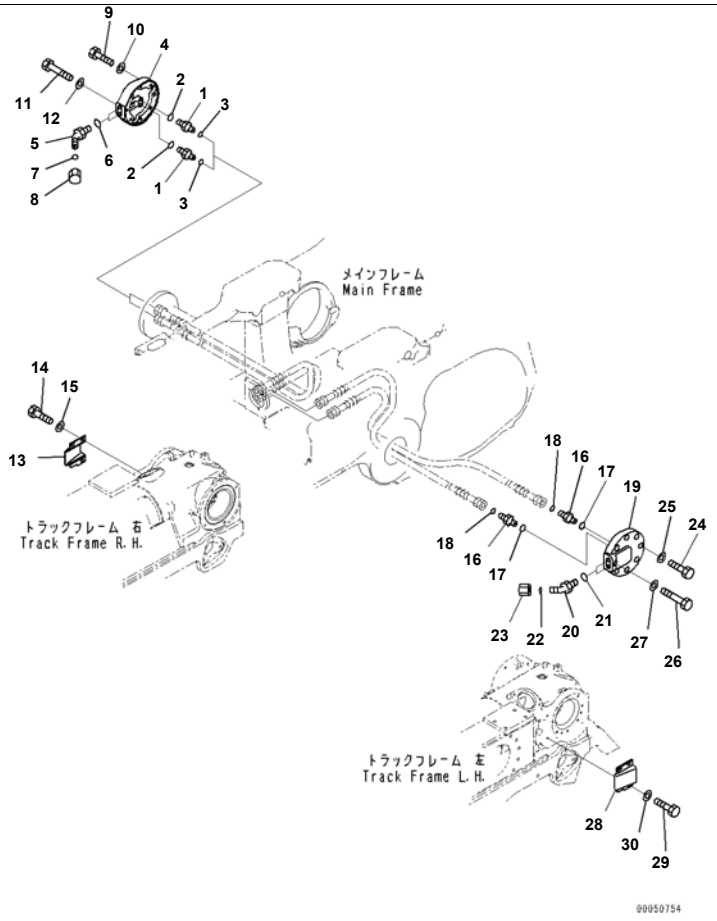

Reference:H2220-004002 Page:H006002

D375A-6R S/N 65001-UP
Dozer Blade Tilt Circuit, For Dual Tilt Pitch Dozer, Elbow and Cover (#65001-)

Index	Code	Part Number	Description	Qty	Serial No.
1		02781-00522	Union	2	65001-
2		07002-12434	O-ring	2	65001-
3		02896-11015	O-ring	2	65001-
4		195-50-22132	Cover	1	65001-
5		02783-10522	Elbow	2	65001-
6		07002-12434	O-ring	2	65001-
7		02896-11015	O-ring	2	65001-
8		02789-10522	Plug	2	65001-
9		01010-81695	Bolt	7	65001-
10		01643-31645	Washer	7	65001-
11		01011-81615	Bolt	1	65001-
12		01643-31645	Washer	1	65001-
13		195-30-62531	Cover	1	65001-
14		01010-61635	Bolt	3	65001-
15		01643-31645	Washer	3	65001-
16		02781-00522	Union	2	65001-
17		07002-12434	O-ring	2	65001-
18		02896-11015	O-ring	2	65001-
19		195-50-22132	Cover	1	65001-
20		02783-10522	Elbow	2	65001-
21		07002-12434	O-ring	2	65001-
22		02896-11015	O-ring	2	65001-
23		02789-10522	Plug	2	65001-
24		01010-81695	Bolt	7	65001-
25		01643-31645	Washer	7	65001-
26		01011-81615	Bolt	1	65001-
27		01643-31645	Washer	1	65001-
28		195-30-62521	Cover,LHS	1	65001-
29		01010-61635	Bolt	3	65001-
30		01643-31645	Washer	3	65001-

Reference:H2220-004002 Page:H006002

Printed By : Dwi Iswanto (airafather6107170)

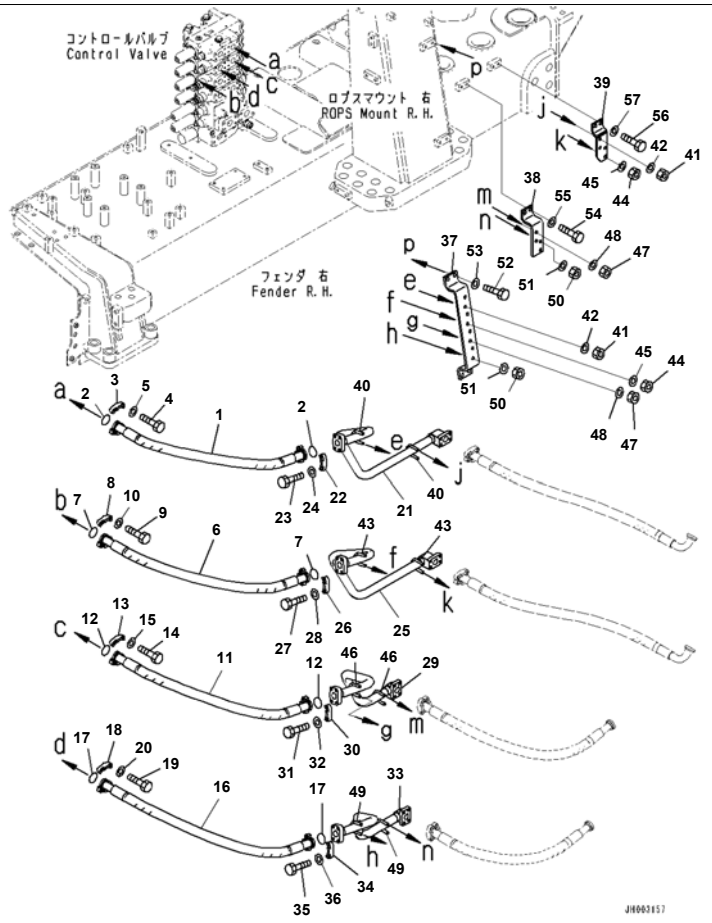

Reference:H2250-001001 Page:H007001

D375A-6R S/N 65001-UP
Ripper Circuit, Main Piping (#65001-)

Index	Code	Part Number	Description	Qty	Serial No.
1		07099-01009	Hose, Flange Type	1	65001-
2		07000-F3032	O-ring	2	65001-
3		07371-31049	Flange, Split	2	65001-
4		07372-21035	Bolt	4	65001-
5		01643-51032	Washer	4	65001-
6		07099-01010	Hose, Flange Type	1	65001-
7		07000-F3032	O-ring	2	65001-
8		07371-31049	Flange, Split	2	65001-
9		07372-21035	Bolt	4	65001-
10		01643-51032	Washer	4	65001-
11		07099-010A9	Hose, Flange Type	1	65001-
12		07000-F3032	O-ring	2	65001-
13		07371-31049	Flange, Split	2	65001-
14		07372-21035	Bolt	4	65001-
15		01643-51032	Washer	4	65001-
16		195-61-62510	Hose	1	65001-
17		07000-F3032	O-ring	2	65001-
18		07371-31049	Flange, Split	2	65001-
19		07372-21035	Bolt	4	65001-
20		01643-51032	Washer	4	65001-
21		195-61-62410	Tube	1	65001-
22		07371-31049	Flange, Split	4	65001-
23		07372-21035	Bolt	8	65001-
24		01643-51032	Washer	8	65001-
25		195-61-62420	Tube	1	65001-
26		07371-31049	Flange, Split	4	65001-
27		07372-21035	Bolt	8	65001-
28		01643-51032	Washer	8	65001-
29		195-61-62431	Tube	1	65001-
30		07371-31049	Flange, Split	4	65001-
31		07372-21035	Bolt	8	65001-

Reference:H2250-001001 Page:H007001

Printed By : Dwi Iswanto (airafather6107170)

Index	Code	Part Number	Description	Qty	Serial No.
32		01643-51032	Washer	8	65001-
33		195-61-62441	Tube	1	65001-
34		07371-31049	Flange, Split	4	65001-
35		07372-21035	Bolt	8	65001-
36		01643-51032	Washer	8	65001-
37		195-61-62450	Bracket	1	65001-
38		195-61-62461	Bracket	1	65001-
39		195-61-62471	Bracket	1	65001-
40		07283-33442	Clip	2	65001-
41		01597-01009	Nut	4	65001-
42		01643-31032	Washer	4	65001-
43		07283-33442	Clip	2	65001-
44		01597-01009	Nut	4	65001-
45		01643-31032	Washer	4	65001-
46		07283-33442	Clip	2	65001-
47		01597-01009	Nut	4	65001-
48		01643-31032	Washer	4	65001-
49		07283-33442	Clip	2	65001-
50		01597-01009	Nut	4	65001-
51		01643-31032	Washer	4	65001-
52		01010-81230	Bolt	4	65001-
53		01643-31232	Washer	4	65001-
54		01010-81230	Bolt	2	65001-
55		01643-31232	Washer	2	65001-
56		01010-81230	Bolt	2	65001-
57		01643-31232	Washer	2	65001-

Printed By : Dwi Iswanto (airafather6107170)

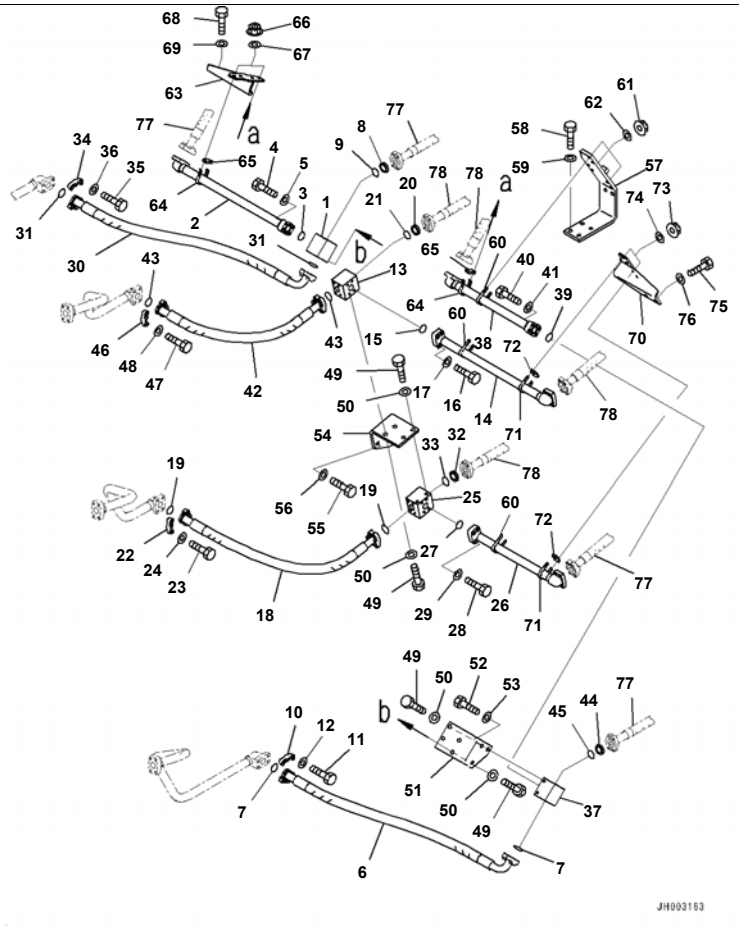

D375A-6R S/N 65001-UP
Ripper Circuit, Return Piping (#65001-)

Index	Code	Part Number	Description	Qty	Serial No.
1		195-78-71771	Block	1	65001-
2		195-78-71740	Tube	1	65001-
3		07000-F3035	O-ring	1	65001-
4		07372-21040	Bolt	4	65001-
5		01643-51032	Washer	4	65001-
6		195-61-62480	Hose	1	65001-
7		07000-F3032	O-ring	2	65001-
8		07378-11000	Head	1	65001-
9		07000-13032	O-ring	1	65001-
10		07371-31049	Flange, Split	4	65001-
11		07372-21035	Bolt	8	65001-
12		01643-51032	Washer	8	65001-
13		195-78-71771	Block	1	65001-
14		195-78-71740	Tube	1	65001-
15		07000-F3035	O-ring	1	65001-
16		07372-21040	Bolt	4	65001-
17		01643-51032	Washer	4	65001-
18		195-61-62510	Hose	1	65001-
19		07000-F3032	O-ring	2	65001-
20		07378-11000	Head	1	65001-
21		07000-13032	O-ring	1	65001-
22		07371-31049	Flange, Split	4	65001-
23		07372-21035	Bolt	8	65001-
24		01643-51032	Washer	8	65001-
25		195-78-71771	Block	1	65001-
26		195-78-71750	Tube	1	65001-
27		07000-F3035	O-ring	1	65001-
28		07372-21040	Bolt	4	65001-
29		01643-51032	Washer	4	65001-
30		07098-01011	Hose, Flange Type	1	65001-
31		07000-F3032	O-ring	2	65001-

Printed By : Dwi Iswanto (airafather6107170)

Index	Code	Part Number	Description	Qty	Serial No.
32		07378-11000	Head	1	65001-
33		07000-13032	O-ring	1	65001-
34		07371-31049	Flange, Split	4	65001-
35		07372-21035	Bolt	8	65001-
36		01643-51032	Washer	8	65001-
37		195-78-71771	Block	1	65001-
38		195-78-71750	Tube	1	65001-
39		07000-F3035	O-ring	1	65001-
40		07372-21040	Bolt	4	65001-
41		01643-51032	Washer	4	65001-
42		07099-010A8	Hose, Flange Type	1	65001-
43		07000-F3032	O-ring	2	65001-
44		07378-11000	Head	1	65001-
45		07000-13032	O-ring	1	65001-
46		07371-31049	Flange, Split	4	65001-
47		07372-21035	Bolt	8	65001-
48		01643-51032	Washer	8	65001-
49		01010-81230	Bolt	8	65001-
50		01643-31232	Washer	8	65001-
51		195-78-71760	Bracket	1	65001-
52		01010-81230	Bolt	3	65001-
53		01643-31232	Washer	3	65001-
54		195-78-71811	Bracket	1	65001-
55		01010-81230	Bolt	3	65001-
56		01643-31232	Washer	3	65001-
57		195-78-71781	Bracket	1	65001-
58		01010-81230	Bolt	4	65001-
59		01643-31232	Washer	4	65001-
60		07283-33450	Clip	3	65001-
61		01597-01009	Nut	6	65001-
62		01643-31032	Washer	6	65001-
63		195-78-71861	Bracket	1	65001-
64		07283-33442	Clip	2	65001-
65		07283-53444	Seat	2	65001-
66		01597-01009	Nut	4	65001-
67		01643-31032	Washer	4	65001-
68		01010-81230	Bolt	2	65001-
69		01643-31232	Washer	2	65001-
70		195-78-71851	Bracket	1	65001-
71		07283-33442	Clip	2	65001-
72		07283-53444	Seat	2	65001-
73		01597-01009	Nut	4	65001-
74		01643-31032	Washer	4	65001-
75		01010-81230	Bolt	2	65001-
76		01643-31232	Washer	2	65001-
77		(07099-010A9)	Hose, Flange Type		
		(07099-010A9)	Hose, Flange Type		
		(07099-010A9)	Hose, Flange Type		
		(07099-010A9)	Hose, Flange Type		
		(07099-010A9)	Hose, Flange Type		
78		(07098-010A8)	Hose, Flange Type		
		(07098-010A8)	Hose, Flange Type		
		(07098-010A8)	Hose, Flange Type		
		(07098-010A8)	Hose, Flange Type		
		(07098-010A8)	Hose, Flange Type		

Printed By : Dwi Iswanto (airafather6107170)

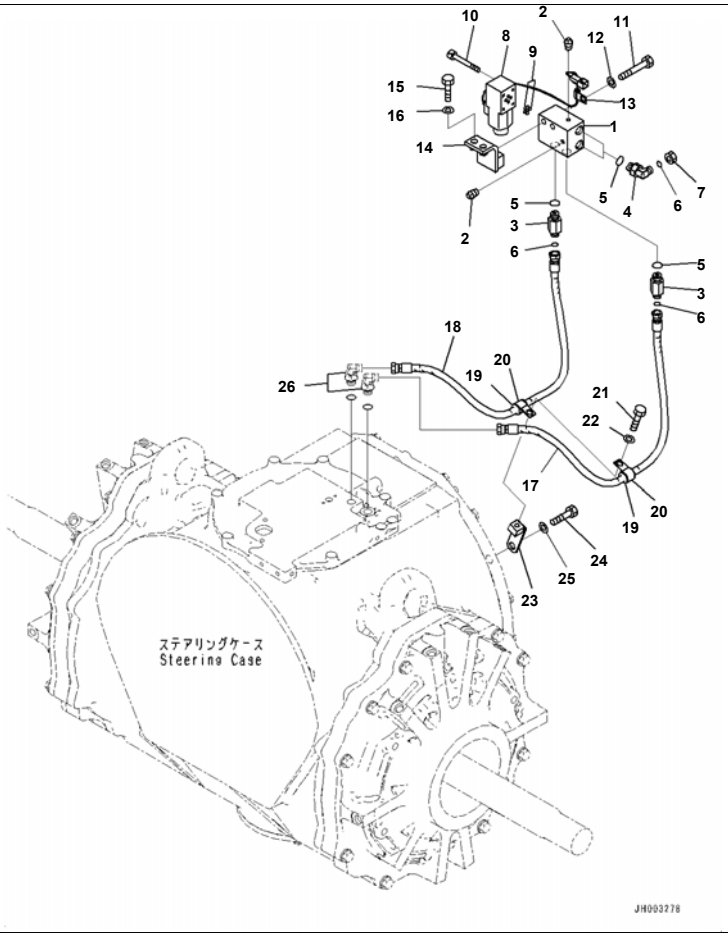

D375A-6R S/N 65001-UP
Ripper Pin Puller Circuit, For Giant Ripper (#65001-)

Index	Code	Part Number	Description	Qty	Serial No.
1		17A-79-41310	Body	1	65001-
2		07042-70108	Plug	3	65001-
3		21N-64-36730	Union	2	65001-
4		02782-10315	Elbow	2	65001-
5		07002-12034	O-ring	4	65001-
6		02896-11009	O-ring	4	65001-
7		02789-10315	Plug	2	65001-
8		198-06-56580	Valve	1	65001-
9		07000-11009	O-ring	4	65001-
10		01252-70545	Bolt, Hexagon Socket Head	4	65001-
11		01010-81275	Bolt	2	65001-
12		01643-31232	Washer	2	65001-
13		04434-50610	Clip	1	65001-
14		195-78-71830	Bracket	1	65001-
15		01010-81235	Bolt	2	65001-
16		01643-31232	Washer	2	65001-
17		02762-00309	Hose, Face Seal Type	1	65001-
18		02762-003A9	Hose, Face Seal Type	1	65001-
19		07095-20314	Cushion	2	65001-
20		04434-52112	Clip	2	65001-
21		01010-81225	Bolt	1	65001-
22		01643-31232	Washer	1	65001-
23		195-49-37150	Bracket	1	65001-
24		01010-81665	Bolt	1	65001-
25		01643-31645	Washer	1	65001-
26		(02782-10315)	Elbow		

Printed By : Dwi Iswanto (airafather6107170)

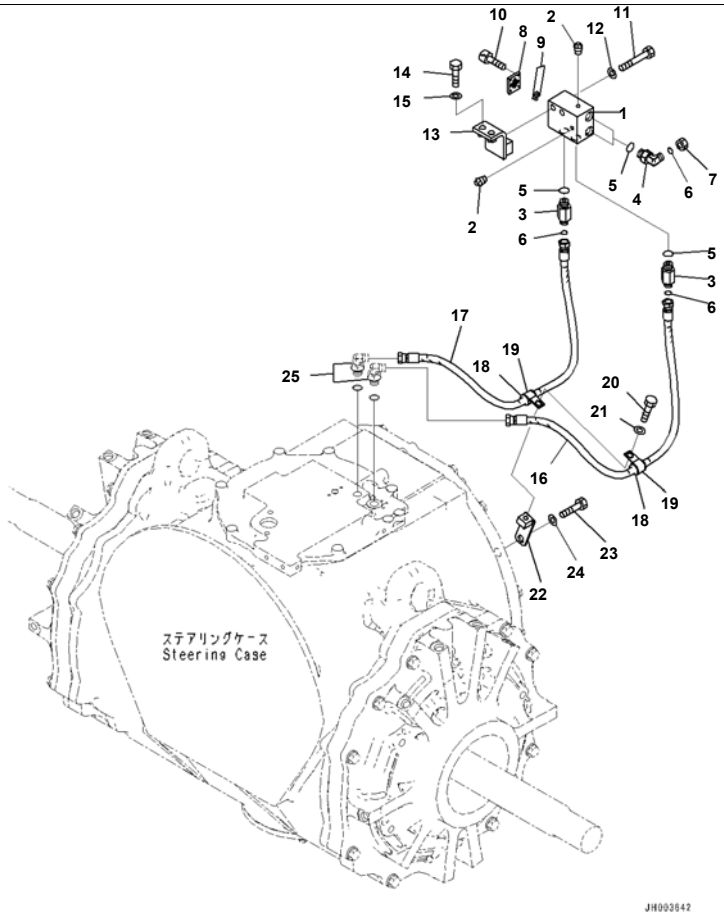

D375A-6R S/N 65001-UP
Ripper Pin Puller Circuit, For Variable Multi Ripper (#65001-)

Index	Code	Part Number	Description	Qty	Serial No.
1		17A-79-41310	Body	1	65001-
2		07042-70108	Plug	3	65001-
3		21N-64-36730	Union	2	65001-
4		02782-10315	Elbow	2	65001-
5		07002-12034	O-ring	4	65001-
6		02896-11009	O-ring	4	65001-
7		02789-10315	Plug	2	65001-
8		195-79-12410	Plate	1	65001-
9		07000-11009	O-ring	4	65001-
10		01252-70516	Bolt	4	65001-
11		01010-81275	Bolt	2	65001-
12		01643-31232	Washer	2	65001-
13		195-78-71830	Bracket	1	65001-
14		01010-81235	Bolt	2	65001-
15		01643-31232	Washer	2	65001-
16		02762-00309	Hose, Face Seal Type	1	65001-
17		02762-003A9	Hose, Face Seal Type	1	65001-
18		07095-20314	Cushion	2	65001-
19		04434-52112	Clip	2	65001-
20		01010-81225	Bolt	1	65001-
21		01643-31232	Washer	1	65001-
22		195-49-37150	Bracket	1	65001-
23		01010-81665	Bolt	1	65001-
24		01643-31645	Washer	1	65001-
25		(02782-10315)	Elbow		

Printed By : Dwi Iswanto (airafather6107170)

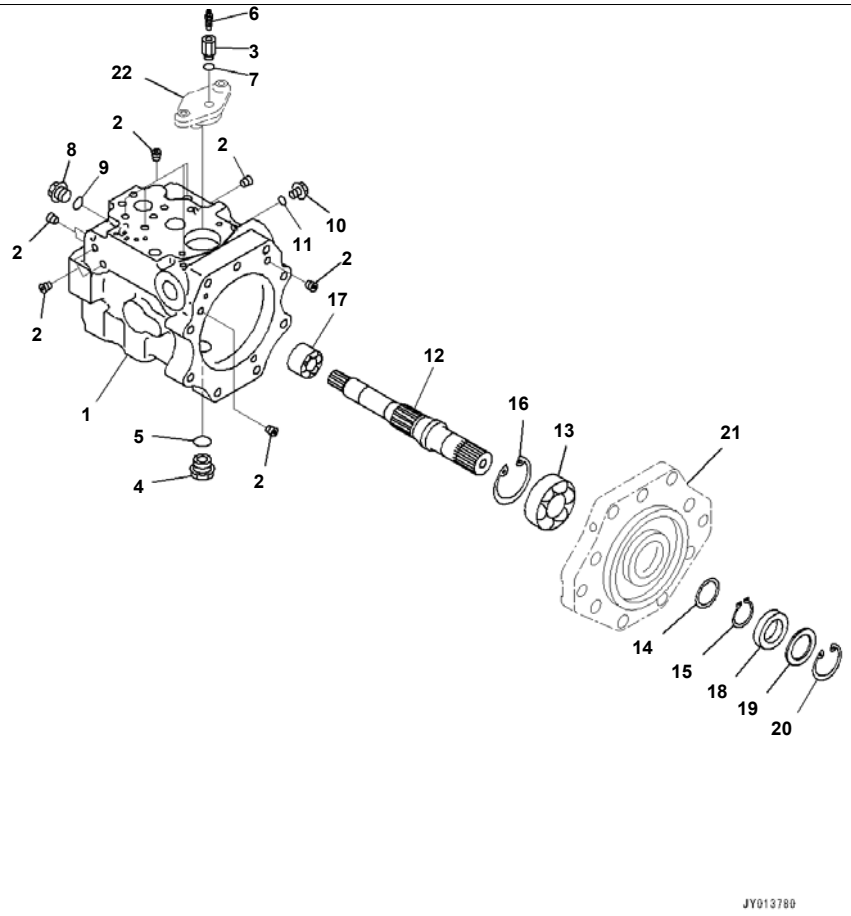

D375A-6R S/N 65001-UP
Cooling Fan Drive Piping, Inner Parts, Fan Pump (1/11) (#65001-)

Index	Code	Part Number	Description	Qty	Serial No.
		708-1W-00670	Pump Assembly	1	65001-
		708-1W-01670	· Pump Subassembly	1	65001-
	C2	708-1W-04222	· · Case Assembly	1	65001-
1	C1		· · · Case	1	65001-
2	C1		· · · Plug	11	65001-
3		708-1W-28940	· · Plug	1	65001-
4		07044-12412	· · Plug	1	65001-
5		07002-62434	· · O-ring	1	65001-
6		20B-27-11210	· · Bleeder	1	65001-
7		07002-61223	· · O-ring	1	65001-
8		706-8E-14191	· · Plug	1	65001-
9		07002-61823	· · O-ring	1	65001-
10		708-8E-16150	· · Plug	1	65001-
11		07002-61023	· · O-ring	1	65001-
12	C2	708-1W-22310	· · Shaft	1	65001-
13	C2	708-1W-22140	· · Bearing	1	65001-
14	C2	708-23-05011	· · Washer Kit	1	65001-
	C1		· · · Washer, T=2.6mm	1	65001-
	C1		· · · Washer, T=2.7mm	1	65001-
	C1		· · · Washer, T=2.8mm	1	65001-
	C1		· · · Washer, T=2.5mm	1	65001-
15	C2	708-23-12840	· · Ring, Snap	1	65001-
16	C2	04065-07225	· · Ring, Snap	1	65001-
17	C2	708-1W-22320	· · Bearing	1	65001-
18		708-8D-12221	· · Seal, Oil	1	65001-
19		708-1W-22160	· · Spacer	1	65001-
20		04065-05520	· · Ring, Snap, for Hole Side	1	65001-
21		(708-1W-23910)	Cradle		
22		(708-1W-26113)	Cover		

Printed By : Dwi Iswanto (airafather6107170)

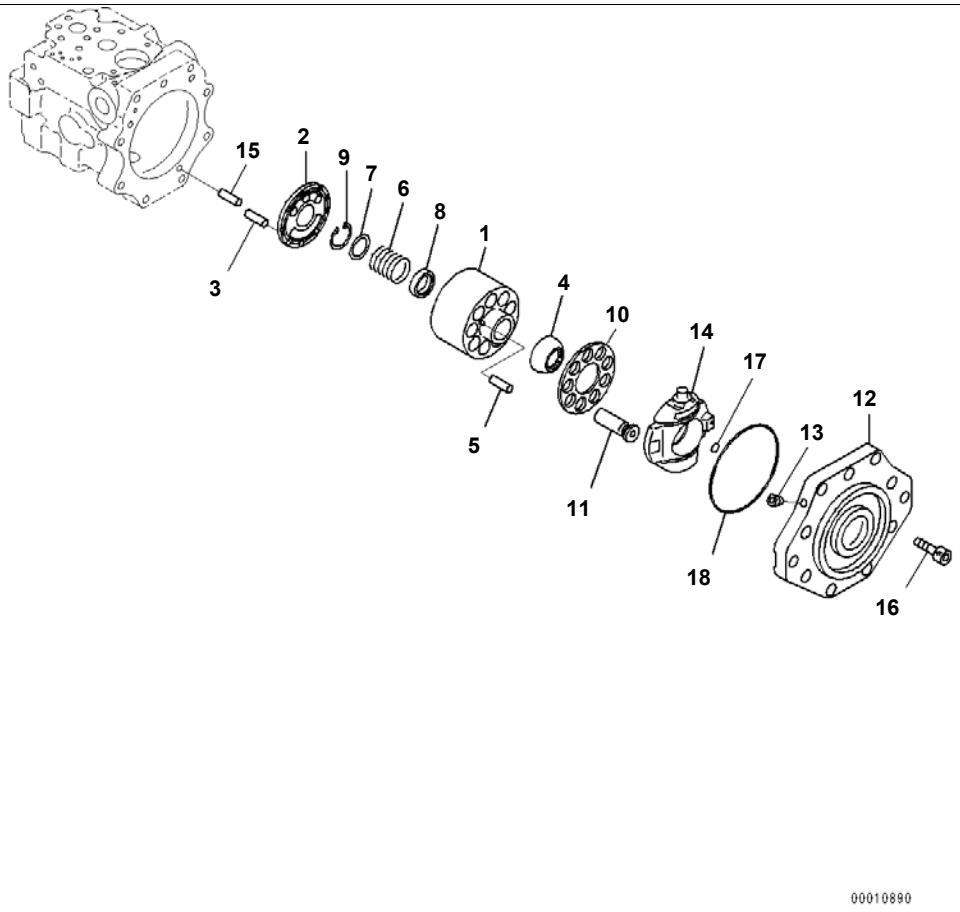

D375A-6R S/N 65001-UP
Cooling Fan Drive Piping, Inner Parts, Fan Pump (2/11) (#65001-)

Index	Code	Part Number	Description	Qty	Serial No.
		708-1W-00670	Pump Assembly	1	65001-
		708-1W-01670	· Pump Subassembly	1	65001-
	C2	708-1W-04190	· · Cylinder Block Assembly	1	65001-
1	C1		· · · Block, Cylinder	1	65001-
2	C1		· · · Plate, Valve	1	65001-
3	C2	720-68-19610	· · Pin	1	65001-
4	C2	708-1W-23351	· · Guide, Retainer	1	65001-
5	C2	708-7L-13360	· · Pin	3	65001-
6	C2	708-1W-23150	· · Spring	1	65001-
7	C2	708-1W-23130	· · Seat	1	65001-
8	C2	708-1W-23140	· · Seat	1	65001-
9	C2	04065-04218	· · Ring	1	65001-
10	C2	708-1W-33340	· · Retainer, Shoe	1	65001-
11	C2	708-1W-33310	· · Piston Subassembly	9	65001-
	C2	708-1W-04310	· · Cradle Assembly	1	65001-
	C2	708-1W-04280	· · · Cradle Subassembly	1	65001-
12	C1		· · · · Cradle	1	65001-
13	C1		· · · · Plug	1	65001-
14	C2	708-1W-23450	· · · Cam, Rocker	1	65001-
15	C2	04020-01024	· · Pin, Dowel, Dowel	1	65001-
16	C2	01252-61230	· · Bolt	9	65001-
17	C2	07000-B2011	· · O-ring	1	65001-
18	C2	07000-B2145	· · O-ring	1	65001-

Printed By : Dwi Iswanto (airafather6107170)

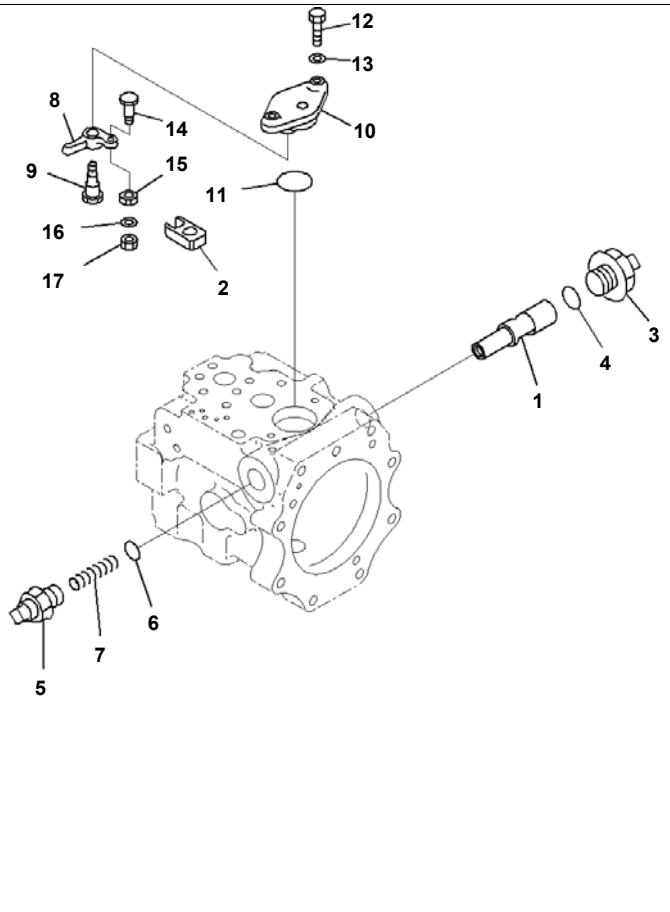

D375A-6R S/N 65001-UP
Cooling Fan Drive Piping, Inner Parts, Fan Pump (3/11) (#65001-)

Index	Code	Part Number	Description	Qty	Serial No.
		708-1W-00670	Pump Assembly	1	65001-
		708-1W-01670	· Pump Subassembly	1	65001-
1	C2	708-1W-24170	· · Piston, Servo	1	65001-
2	C2	708-1W-24450	· · Slider	1	65001-
3	C2	708-1W-24250	· · Bolt, Adjusting	1	65001-
4	C2	07002-63334	· · O-ring	1	65001-
5	C2	708-1W-24311	· · Bolt, Adjusting	1	65001-
6	C2	07002-62434	· · O-ring	1	65001-
7	C2	708-1W-24350	· · Spring	1	65001-
8	C2	708-1W-25840	· · Lever	1	65001-
9	C2	708-1W-26132	· · Pin	1	65001-
10	C2	708-1W-26113	· · Cover	1	65001-
11	C2	07000-B3045	· · O-ring	1	65001-
12	C2	01010-80830	· · Bolt	2	65001-
13	C2	01643-30823	· · Washer	2	65001-
14	C2	708-1W-26210	· · Pin	1	65001-
15	C2	708-1W-26221	· · Slider	1	65001-
16	C2	708-1W-26230	· · Washer	1	65001-
17	C2	01580-10605	· · Nut	1	65001-

Printed By : Dwi Iswanto (airafather6107170)

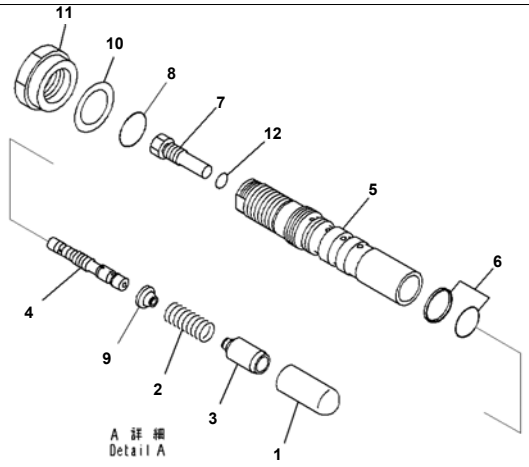

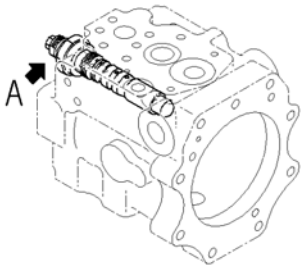

00010892

Reference:H2260-001004 Page:H010004

D375A-6R S/N 65001-UP
Cooling Fan Drive Piping, Inner Parts, Fan Pump (4/11) (#65001-)

Index	Code	Part Number	Description	Qty	Serial No.
		708-1W-00670	Pump Assembly	1	65001-
		708-1W-04562	・ Valve Assembly	1	65001-
1	C1		・・ Piston	1	65001-
2	C1		・・ Spring	1	65001-
3	C1		・・ Seat	1	65001-
4	C1		・・ Spool	1	65001-
5	C1		・・ Sleeve	1	65001-
6		708-1W-26760	・・ Seal	1	65001-
7	C1		・・ Plug	1	65001-
8		07002-63034	・・ O-ring	1	65001-
9		708-1W-25170	・・ Seat	1	65001-
10		708-1W-25351	・・ Washer	1	65001-
11		708-1W-25311	・・ Nut	1	65001-
12		07002-61223	・・ O-ring	1	65001-

Reference:H2260-001004 Page:H010004

Printed By : Dwi Iswanto (airafather6107170)

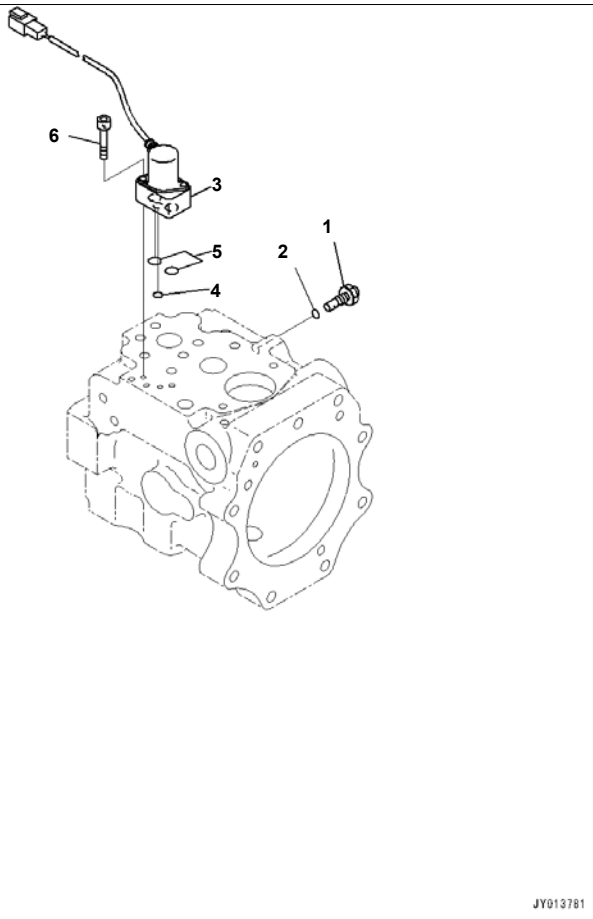

Cooling Fan Drive Piping, Inner Parts, Fan Pump (5/11) (#65001-)

Index	Code	Part Number	Description	Qty	Serial No.
		708-1W-00670	Pump Assembly	1	65001-
1		708-1W-25740	· Orifice	1	65001-
2		07002-61023	· O-ring	1	65001-
3		702-21-57400	· Valve, Pilot	1	65001-
4	C1		· · O-ring	1	65001-
5	C1		· · O-ring	2	65001-
6		01252-60635	· Bolt	2	65001-

Printed By : Dwi Iswanto (airafather6107170)

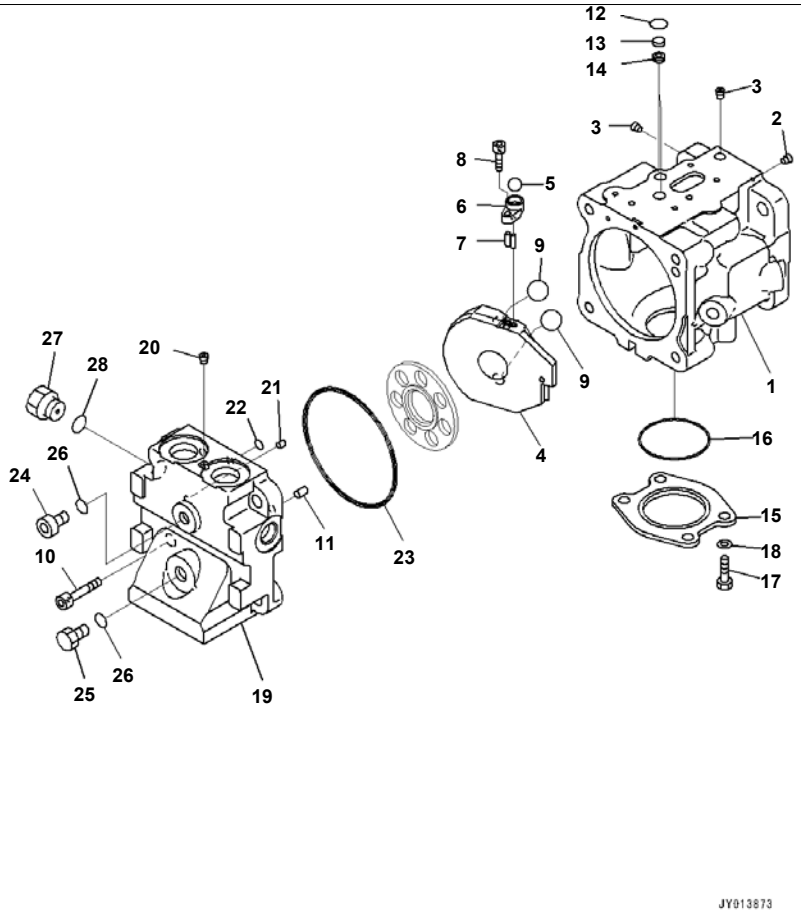

D375A-6R S/N 65001-UP
Cooling Fan Drive Piping, Inner Parts, Fan Pump (6/11) (#65001-)

Index	Code	Part Number	Description	Qty	Serial No.
		708-1S-00950	Pump Assembly	1	65001-
	C1		· Pump Subassembly	1	65001-
	C2	708-1T-04410	· · Case Subassembly	1	65001-
1	C1		· · · Case	1	65001-
2	C1		· · · Plug	1	65001-
3	C1		· · · Plug	2	65001-
4	C2	708-1S-13411	· · Cam, Rocker	1	65001-
5	C2	04260-01270	· · Ball	1	65001-
6	C2	708-3S-14140	· · Spacer	1	65001-
7	C2	708-1S-13420	· · Pin	2	65001-
8	C2	01252-60616	· · Bolt	1	65001-
9	C2	708-1S-13430	· · Ball	2	65001-
10		01252-61235	· · Bolt	4	65001-
11		04020-01024	· · Pin, Dowel	2	65001-
12		708-2L-25490	· · O-ring	2	65001-
13		708-2L-25480	· · Filter	2	65001-
14		708-1S-19710	· · Orifice	2	65001-
15		708-1S-19920	· · Plate	1	65001-
16		07000-12065	· · O-ring	1	65001-
17		01010-81025	· · Bolt	4	65001-
18		01643-31032	· · Washer	4	65001-
	C2	708-1S-04390	· · Cap Subassembly	1	65001-
19	C1		· · · Cap, End	1	65001-
20	C1		· · · Plug	1	65001-
21	C2	720-68-19610	· · Pin	1	65001-
22		07000-11006	· · O-ring	1	65001-
23		07000-12125	· · O-ring	1	65001-
24		702-21-55620	· · Plug	1	65001-
25		07040-11409	· · Plug	1	65001-
26		07002-11423	· · O-ring	2	65001-
27		07040-12012	· · Plug	1	65001-

Printed By : Dwi Iswanto (airafather6107170)

Index	Code	Part Number	Description	Qty	Serial No.
28		07002-12034	・・O-ring	1	65001-

Printed By : Dwi Iswanto (airafather6107170)

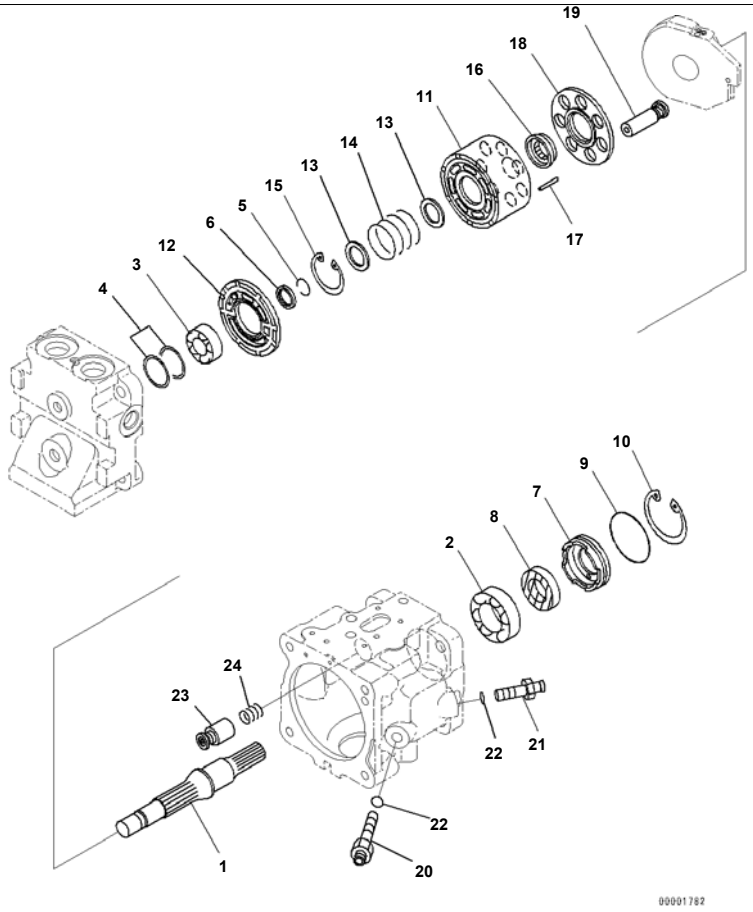

D375A-6R S/N 65001-UP
Cooling Fan Drive Piping, Inner Parts, Fan Pump (7/11) (#65001-)

Index	Code	Part Number	Description	Qty	Serial No.
		708-1S-00950	Pump Assembly	1	65001-
	C1		· Pump Subassembly	1	65001-
1	C2	708-1S-12320	· · Shaft	1	65001-
2	C2	708-1S-12260	· · Bearing	1	65001-
3	C2	706-73-40890	· · Bearing	1	65001-
4	C1		· · Spacer Kit	1	65001-
	C2	708-7T-12260	· · · Spacer, T=1.6mm	1	65001-
	C2	708-7T-12270	· · · Spacer, T=1.7mm	1	65001-
	C2	708-7T-12360	· · · Spacer, T=1.8mm	1	65001-
	C2	708-7T-12370	· · · Spacer, T=1.9mm	1	65001-
	C2	708-7T-12380	· · · Spacer, T=2.0mm	1	65001-
	C2	708-7T-12390	· · · Spacer, T=2.1mm	1	65001-
	C2	708-7T-12460	· · · Spacer, T=2.2mm	1	65001-
5	C2	708-1S-12280	· · Ring, Wear, Wire	1	65001-
6	C2	708-1S-12330	· · Retainer	1	65001-
7	C2	708-1S-12340	· · Case	1	65001-
8	C2	708-1T-11880	· · Seal, Oil	1	65001-
9	C2	207-09-11140	· · O-ring	1	65001-
10	C2	04065-06220	· · Ring, Snap	1	65001-
11	C2	708-1S-13130	· · Block, Cylinder	1	65001-
12	C2	708-1S-13460	· · Plate, Valve	1	65001-
13	C2	708-3S-13160	· · Washer	2	65001-
14	C2	708-3S-13150	· · Spring	1	65001-
15	C2	04065-03515	· · Ring, Snap	1	65001-
16	C2	708-1S-13370	· · Guide	1	65001-
17	C2	708-1S-13380	· · Pin	3	65001-
18	C2	708-1S-13360	· · Retainer	1	65001-
19	C2	708-1S-13320	· · Piston Subassembly	7	65001-
20	C2	708-1S-14210	· · Plug	1	65001-
21	C2	708-1S-14220	· · Plug	1	65001-
22	C2	07002-11223	· · O-ring	2	65001-

Printed By : Dwi Iswanto (airafather6107170)

Index	Code	Part Number	Description	Qty	Serial No.
23	C2	708-1S-14230	・・ Piston Subassembly	1	65001-
24	C2	708-1S-14241	・・ Spring	1	65001-

Printed By : Dwi Iswanto (airafather6107170)

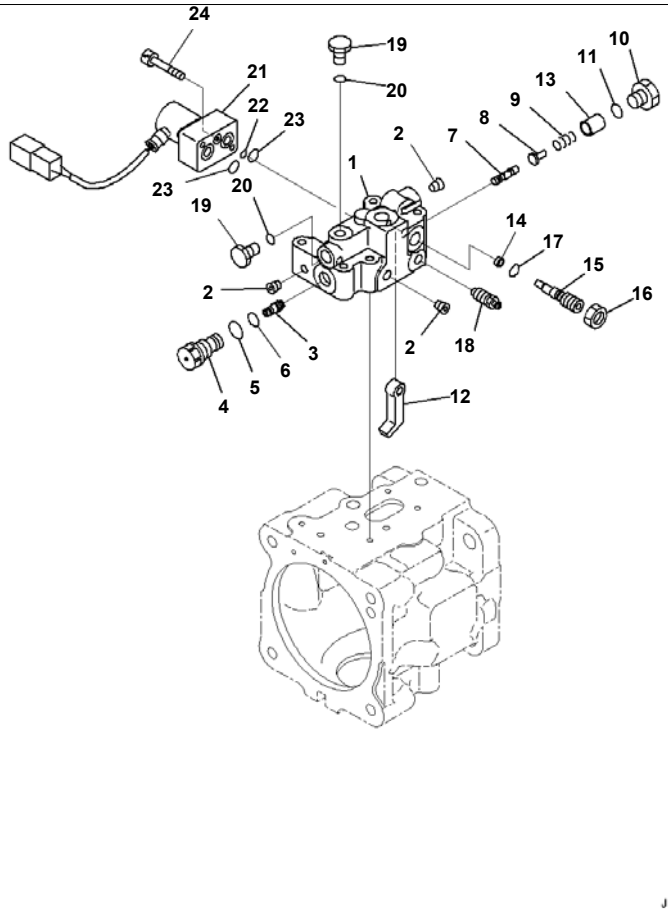

D375A-6R S/N 65001-UP
Cooling Fan Drive Piping, Inner Parts, Fan Pump (8/11) (#65001-)

Index	Code	Part Number	Description	Qty	Serial No.
		708-1S-00950	Pump Assembly	1	65001-
	C1		· Pump Subassembly	1	65001-
		708-1S-03950	· · Valve Assembly	1	65001-
	C1		· · · Body Subassembly	1	65001-
1	C1		· · · · Body	1	65001-
2	C1		· · · · Plug	4	65001-
3	C1		· · · Piston	1	65001-
4	C1		· · · Sleeve	1	65001-
5		07002-21623	· · · O-ring	1	65001-
6		07000-B1010	· · · O-ring	1	65001-
7	C1		· · · Spool	1	65001-
8	C1		· · · Seat	1	65001-
9	C1		· · · Spring	1	65001-
10	C1		· · · Plug	1	65001-
11		07002-21623	· · · O-ring	1	65001-
12	C1		· · · Lever	1	65001-
13	C1		· · · Retainer	1	65001-
14	C1		· · · Spacer	1	65001-
15	C1		· · · Plug	1	65001-
16	C1		· · · Nut	1	65001-
17		07000-F1006	· · · O-ring	1	65001-
18		20B-27-11210	· · · Bleeder	1	65001-
19		07040-11007	· · · Plug	2	65001-
20		07002-21023	· · · O-ring	2	65001-
21		702-21-57700	· · · Valve, Pilot	1	65001-
22	C1		· · · · O-ring	1	65001-
23	C1		· · · · O-ring	2	65001-
24		01252-60635	· · · Bolt	2	65001-

Printed By : Dwi Iswanto (airafather6107170)

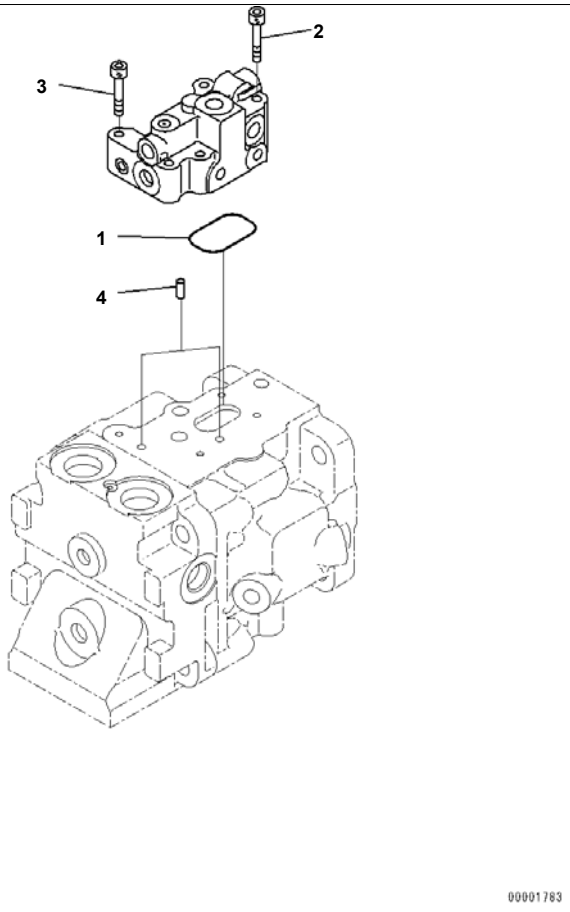

Cooling Fan Drive Piping, Inner Parts, Fan Pump (9/11) (#65001-)

Index	Code	Part Number	Description	Qty	Serial No.
		708-1S-00950	Pump Assembly	1	65001-
	C1		· Pump Subassembly	1	65001-
1		07000-13040	· · O-ring	1	65001-
2		01252-60650	· · Bolt	1	65001-
3		01252-60635	· · Bolt	3	65001-
4		04020-00616	· · Pin, Dowel	2	65001-

Printed By : Dwi Iswanto (airafather6107170)

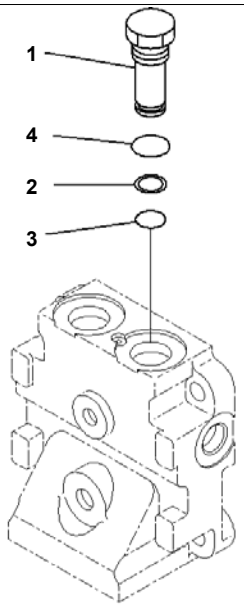

Index	Code	Part Number	Description	Qty	Serial No.
		708-1S-00950	Pump Assembly	1	65001-
1		708-1S-19930	· Plug	1	65001-
2		723-60-22230	· Ring, Back-up	1	65001-
3		07000-F2016	· O-ring	1	65001-
4		07002-12434	· O-ring	1	65001-

Printed By : Dwi Iswanto (airafather6107170)

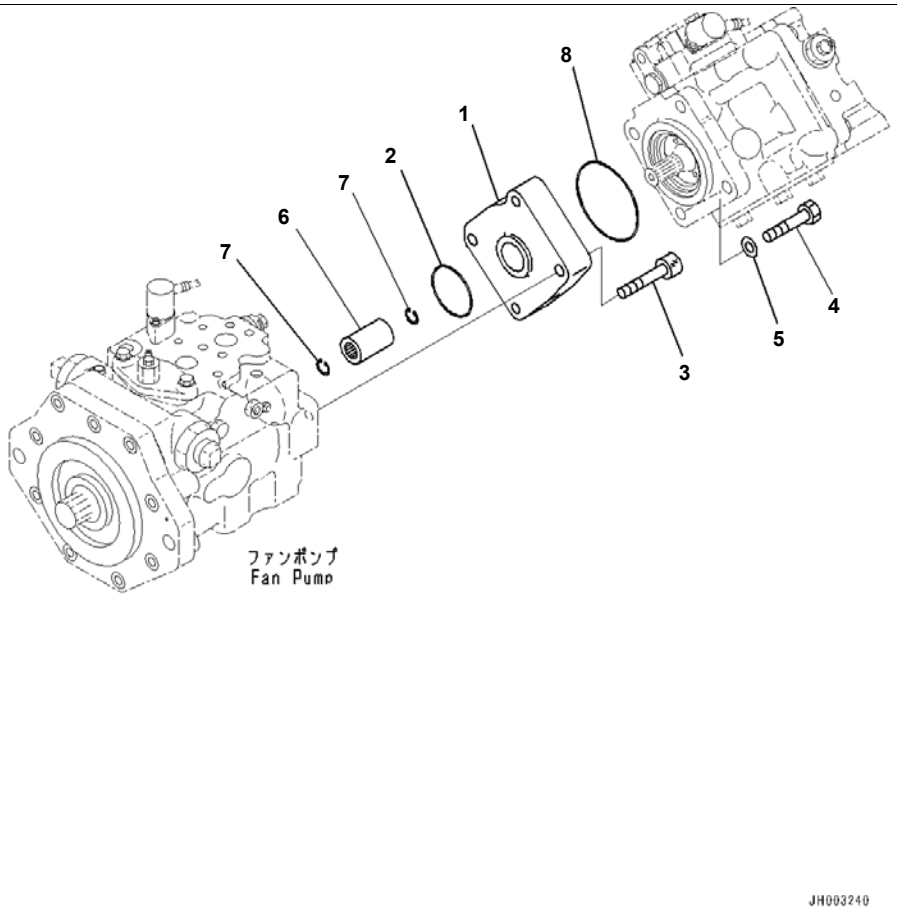

D375A-6R S/N 65001-UP
Cooling Fan Drive Piping, Inner Parts, Fan Pump (11/11) (#65001-)

Index	Code	Part Number	Description	Qty	Serial No.
1		195-03-66381	Plate	1	65001-
2		07000-B2060	O-ring	1	65001-
3		01252-61245	Bolt, Hexagon Socket Head	2	65001-
4		01010-81240	Bolt	2	65001-
5		01643-31232	Washer	2	65001-
6		708-1W-28810	Coupling	1	65001-
7		04065-02012	Ring, Snap	2	65001-
8		07000-B2105	O-ring	1	65001-

Printed By : Dwi Iswanto (airafather6107170)

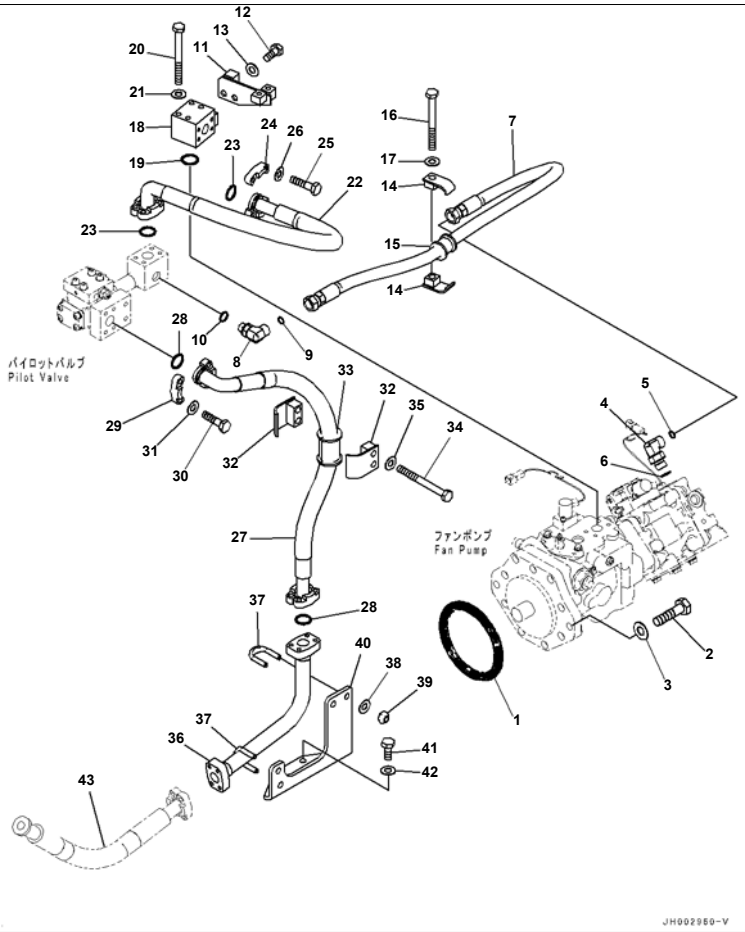

Index	Code	Part Number	Description	Qty	Serial No.
1		07000-15160	O-ring	1	65001-
2		01010-81650	Bolt	2	65001-
3		01643-31645	Washer	2	65001-
4		02782-10522	Elbow	1	65001-
5		02896-11015	O-ring	1	65001-
6		07002-12434	O-ring	1	65001-
7		02765-00510	Hose, Face Seal Type	1	65001-
8		02782-10516	Elbow	1	65001-
9		02896-11015	O-ring	1	65001-
10		07002-12034	O-ring	1	65001-
11		195-03-66361	Bracket	1	65001-
12		01010-81225	Bolt	2	65001-
13		01643-31232	Washer	2	65001-
14		07094-10518	Clamp	2	65001-
15		07095-00523	Cushion	1	65001-
16		01010-81265	Bolt	1	65001-
17		01643-31232	Washer	1	65001-
18		195-03-66241	Block	1	65001-
19		07000-13035	O-ring	1	65001-
20		205-62-74740	Bolt	4	65001-
21		01643-51032	Washer	4	65001-
22		07088-010A8	Hose, Flange Type	1	65001-
23		07000-13032	O-ring	2	65001-
24		07371-31049	Flange, Split	4	65001-
25		07372-21035	Bolt	8	65001-
26		01643-51032	Washer	8	65001-
27		07088-01009	Hose, Flange Type	1	65001-
28		07000-13032	O-ring	2	65001-
29		07371-31049	Flange, Split	4	65001-
30		07372-21035	Bolt	8	65001-
31		01643-51032	Washer	8	65001-

Printed By : Dwi Iswanto (airafather6107170)

Index	Code	Part Number	Description	Qty	Serial No.
32		07094-11024	Clamp	2	65001-
33		07095-01034	Cushion	1	65001-
34		01010-81280	Bolt	2	65001-
35		01643-31232	Washer	2	65001-
36		195-03-66121	Tube	1	65001-
37		07283-33442	Clip	2	65001-
38		01643-31032	Washer	4	65001-
39		01597-01009	Nut	4	65001-
40		195-03-66131	Plate	1	65001-
41		01010-81230	Bolt	2	65001-
42		01643-31232	Washer	2	65001-
43		(07089-01006)	Hose, Flange Type		

Printed By : Dwi Iswanto (airafather6107170)

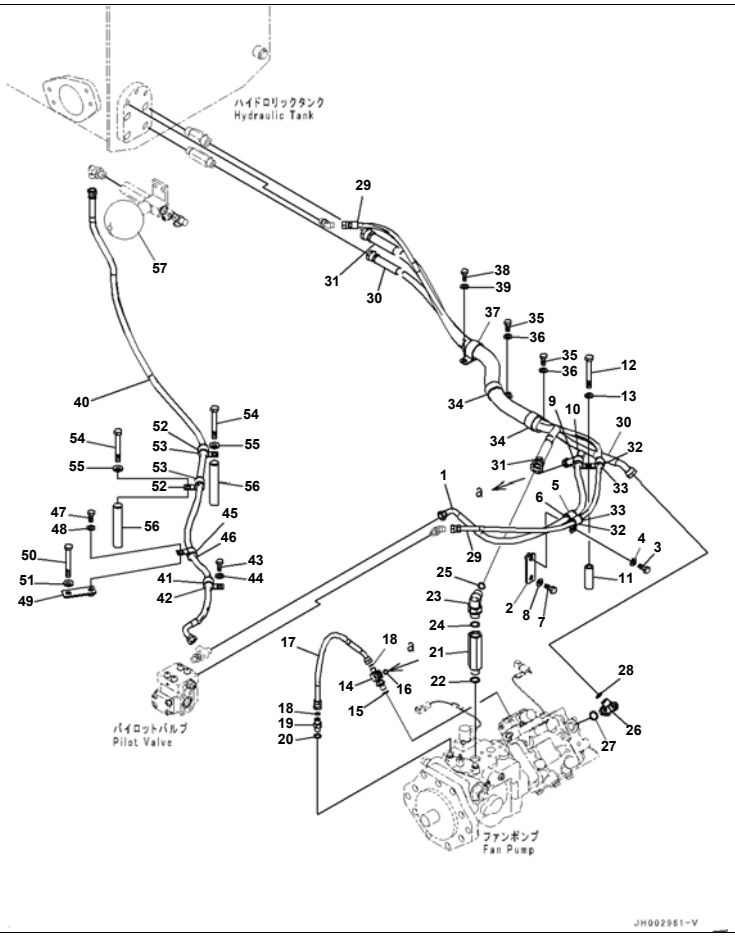

D375A-6R S/N 65001-UP
Cooling Fan Drive Piping, Drain Piping (#65001-)

Index	Code	Part Number	Description	Qty	Serial No.
1		02763-003A9	Hose, Face Seal Type	1	65001-
2		154-Z11-5340	Bracket	1	65001-
3		01010-81225	Bolt	1	65001-
4		01643-31232	Washer	1	65001-
5		04434-52112	Clip	1	65001-
6		07095-20314	Cushion	1	65001-
7		01010-81225	Bolt	1	65001-
8		01643-31232	Washer	1	65001-
9		04434-52112	Clip	1	65001-
10		07095-20314	Cushion	1	65001-
11		195-979-3570	Collar	1	65001-
12		01010-81295	Bolt	1	65001-
13		01643-31232	Washer	1	65001-
14		20Y-62-51191	Tee	1	65001-
15		07002-11423	O-ring	1	65001-
16		02896-11009	O-ring	1	65001-
17		02764-002A4	Hose, Face Seal Type	1	65001-
18		02896-11008	O-ring	2	65001-
19		02781-0021D	Union	1	65001-
20		07002-11423	O-ring	1	65001-
21		203-62-63770	Joint	1	65001-
22		07002-12434	O-ring	1	65001-
23		02782-10522	Elbow	1	65001-
24		07002-12434	O-ring	1	65001-
25		02896-11015	O-ring	1	65001-
26		02782-50422	Elbow	1	65001-
27		07002-12034	O-ring	1	65001-
28		02896-11012	O-ring	1	65001-
29		02762-00221	Hose, Face Seal Type	1	65001-
30		02764-00412	Hose, Face Seal Type	1	65001-
31		02762-00513	Hose	1	65001-

Printed By : Dwi Iswanto (airafather6107170)

Index	Code	Part Number	Description	Qty	Serial No.
32		04434-51712	Clip	2	65001-
33		07095-20211	Cushion	2	65001-
34		208-06-19170	Clip	2	65001-
35		01010-81225	Bolt	2	65001-
36		01643-31232	Washer	2	65001-
37		208-06-19170	Clip	1	65001-
38		01010-81235	Bolt	1	65001-
39		01643-31232	Washer	1	65001-
40		02763-00319	Hose, Face Seal Type	1	65001-
41		04434-52112	Clip	1	65001-
42		07095-20314	Cushion	1	65001-
43		01010-81225	Bolt	1	65001-
44		01643-31232	Washer	1	65001-
45		04434-52112	Clip	1	65001-
46		07095-20314	Cushion	1	65001-
47		01010-81225	Bolt	1	65001-
48		01643-31232	Washer	1	65001-
49		154-Z11-5340	Bracket	1	65001-
50		01011-81255	Bolt	1	65001-
51		01643-31232	Washer	1	65001-
52		04434-52112	Clip	2	65001-
53		07095-20314	Cushion	2	65001-
54		01011-81265	Bolt	2	65001-
55		01643-31232	Washer	2	65001-
56		22D-03-11320	Washer	2	65001-
57		(20Y-60-11430)	Accumulator		

Printed By : Dwi Iswanto (airafather6107170)

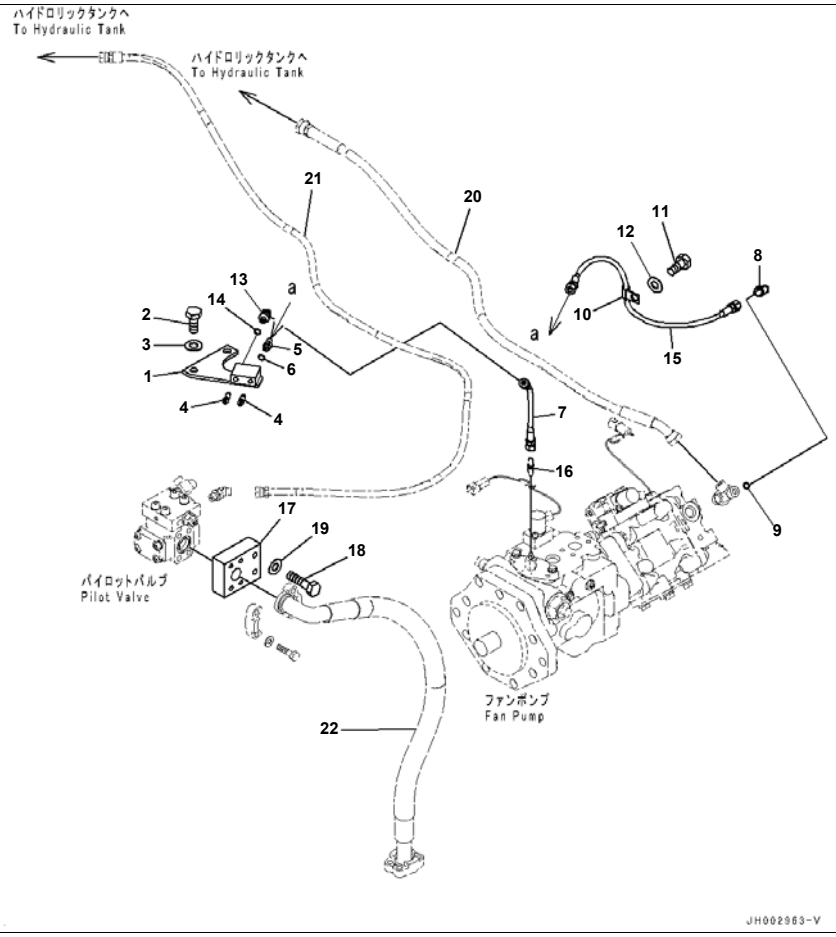

D375A-6R S/N 65001-UP
Cooling Fan Drive Piping, Air Vent (#65001-)

Index	Code	Part Number	Description	Qty	Serial No.
1		195-03-66311	Bracket	1	65001-
2		01010-81225	Bolt	2	65001-
3		01643-31232	Washer	2	65001-
4		20B-27-11210	Bleeder	2	65001-
5		124-62-61910	Nipple	1	65001-
6		07002-11023	O-ring	1	65001-
7		195-03-66321	Hose	1	65001-
8		124-62-61531	Elbow	1	65001-
9		07002-11023	O-ring	1	65001-
10		04434-50812	Clip	1	65001-
11		01010-81225	Bolt	1	65001-
12		01643-31232	Washer	1	65001-
13		17A-15-41370	Elbow	1	65001-
14		07002-11023	O-ring	1	65001-
15		195-03-66390	Hose	1	65001-
16		17A-61-21340	Nipple	1	65001-
17		195-03-66221	Plate	1	65001-
18		01010-81235	Bolt	2	65001-
19		01643-31232	Washer	2	65001-
20		(02762-00221)	Hose, Face Seal Type		
21		(02764-00412)	Hose, Face Seal Type		
22		(07088-01009)	Hose, Flange Type		

Printed By : Dwi Iswanto (airafather6107170)

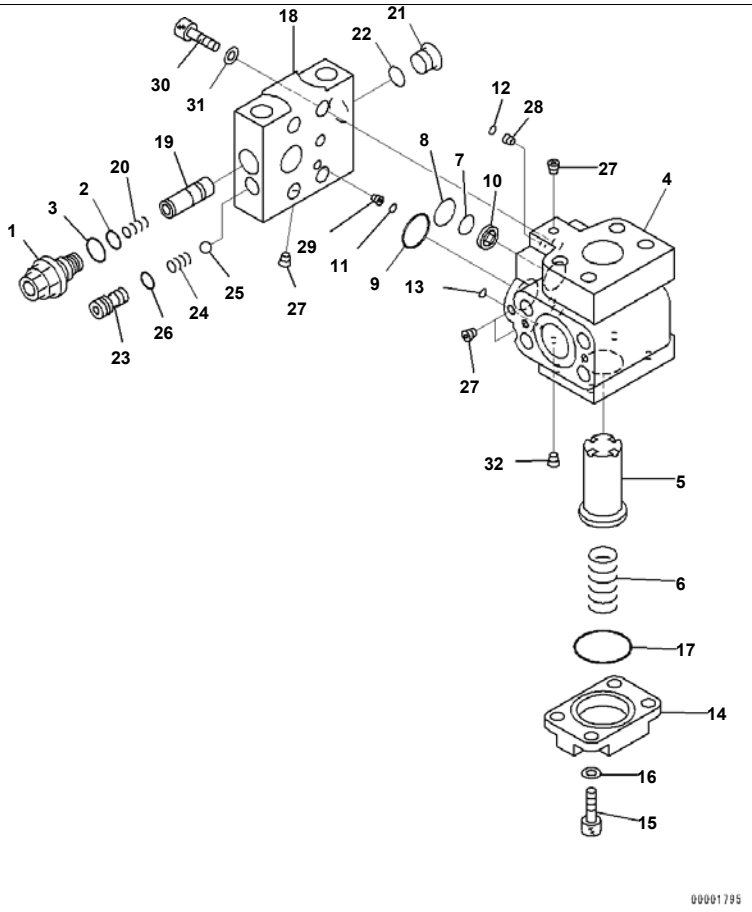

D375A-6R S/N 65001-UP
Cooling Fan Drive Piping, Pilot Valve (#65001-)

Index	Code	Part Number	Description	Qty	Serial No.
		702-21-09250	Valve Assembly, Pilot	1	65001-
1		723-60-27200	· Valve Assembly, Relief	1	65001-
2		702-16-53920	· · O-ring	1	65001-
3		07002-11623	· · O-ring	1	65001-
4	C1		· Block	1	65001-
5		702-21-55310	· Valve	1	65001-
6		702-21-55460	· Spring	1	65001-
7		702-21-55420	· O-ring	1	65001-
8		702-21-55520	· O-ring	1	65001-
9		702-21-55440	· O-ring	1	65001-
10		702-21-53120	· Filter	1	65001-
11		07000-11009	· O-ring	1	65001-
12		07000-11010	· O-ring	1	65001-
13		07000-11006	· O-ring	1	65001-
14		702-21-55410	· Plate	1	65001-
15		01252-60820	· Bolt	4	65001-
16		01643-50823	· Washer	4	65001-
17		702-21-55530	· O-ring	1	65001-
18	C1		· Block	1	65001-
19	C1		· Spool	1	65001-
20		702-21-55640	· Spring	1	65001-
21		702-21-55620	· Plug	1	65001-
22		07002-11423	· O-ring	1	65001-
23		702-21-55710	· Seat	1	65001-
24		702-21-55720	· Spring	1	65001-
25		04260-00793	· Ball	1	65001-
26		07000-11009	· O-ring	1	65001-
27	C1		· Plug	4	65001-
28	C1		· Orifice	1	65001-
29	C1		· Orifice	1	65001-
30		01252-61040	· Bolt	4	65001-

Printed By : Dwi Iswanto (airafather6107170)

Index	Code	Part Number	Description	Qty	Serial No.
31		01643-51032	· Washer	4	65001-
32	C1		· Screw	1	65001-

Printed By : Dwi Iswanto (airafather6107170)

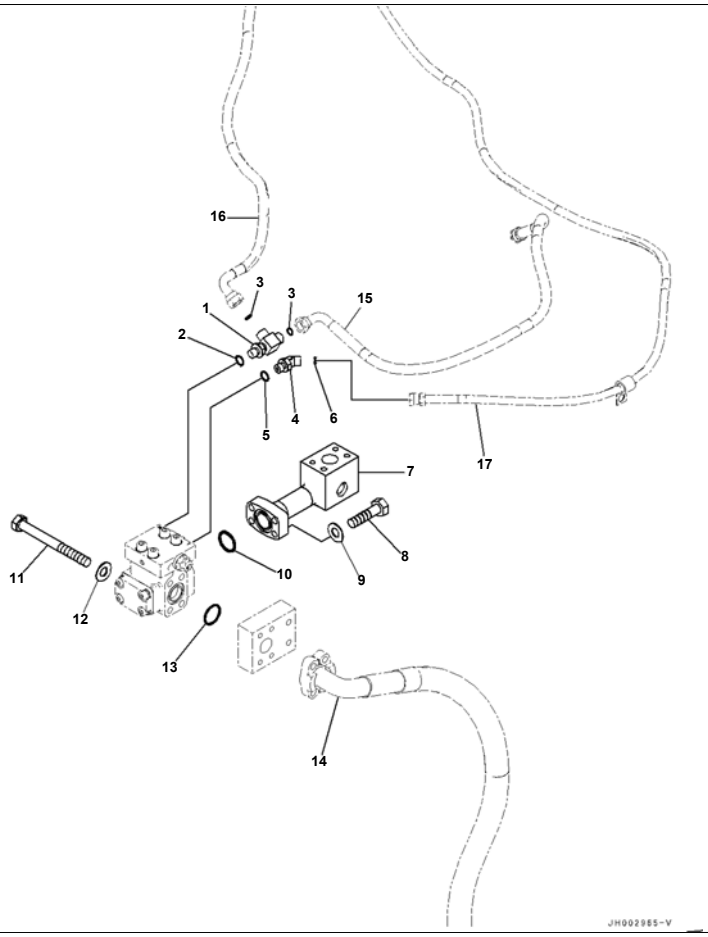

D375A-6R S/N 65001-UP
Cooling Fan Drive Piping, Pilot Valve Mounting (#65001-)

Index	Code	Part Number	Description	Qty	Serial No.
1		207-62-84980	Tee	1	65001-
2		07002-11423	O-ring	1	65001-
3		02896-11009	O-ring	2	65001-
4		02783-10210	Elbow	1	65001-
5		07002-11423	O-ring	1	65001-
6		02896-11008	O-ring	1	65001-
7		195-03-66231	Tube	1	65001-
8		07372-21040	Bolt	4	65001-
9		01643-51032	Washer	4	65001-
10		07000-13035	O-ring	1	65001-
11		01252-71085	Bolt	4	65001-
12		01643-51032	Washer	4	65001-
13		07000-13032	O-ring	1	65001-
14		(07088-01009)	Hose, Flange Type		
15		(02762-00221)	Hose, Face Seal Type		
16		(02763-00319)	Hose, Face Seal Type		
17		(02763-003A9)	Hose, Face Seal Type		

Printed By : Dwi Iswanto (airafather6107170)

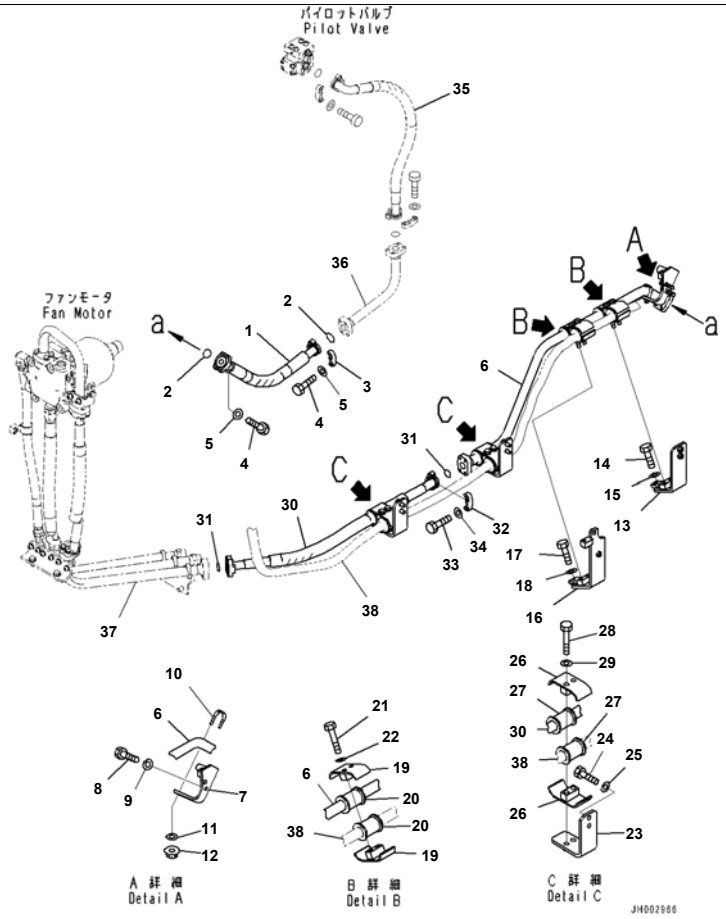

Reference:H2260-001017 Page:H010017

D375A-6R S/N 65001-UP
Cooling Fan Drive Piping, Fan Motor Delivery Circuit (#65001-)

Index	Code	Part Number	Description	Qty	Serial No.
1		07089-01006	Hose, Flange Type	1	65001-
2		07000-13032	O-ring	2	65001-
3		07371-31049	Flange, Split	4	65001-
4		07372-21035	Bolt	8	65001-
5		01643-51032	Washer	8	65001-
6		195-03-66111	Tube	1	65001-
7		195-03-66411	Bracket	1	65001-
8		01010-81230	Bolt	2	65001-
9		01643-31232	Washer	2	65001-
10		07283-33442	Clip	1	65001-
11		01643-31032	Washer	2	65001-
12		01597-01009	Nut	2	65001-
13		195-03-66420	Bracket	1	65001-
14		01010-81230	Bolt	2	65001-
15		01643-31232	Washer	2	65001-
16		195-03-66450	Bracket	1	65001-
17		01010-81230	Bolt	2	65001-
18		01643-31232	Washer	2	65001-
19		07094-31024	Clamp	4	65001-
20		07095-01034	Cushion	4	65001-
21		01010-81290	Bolt	4	65001-
22		01643-31232	Washer	4	65001-
23		195-03-63581	Bracket	2	65001-
24		01010-81230	Bolt	4	65001-
25		01643-31232	Washer	4	65001-
26		07094-31024	Clamp	4	65001-
27		07095-01034	Cushion	4	65001-
28		01010-81290	Bolt	4	65001-
29		01643-31232	Washer	4	65001-
30		07089-01010	Hose, Flange Type	1	65001-
31		07000-13032	O-ring	2	65001-

Printed By : Dwi Iswanto (airafather6107170)

Cooling Fan Drive Piping, Fan Motor Delivery Circuit (#65001-)

Index	Code	Part Number	Description	Qty	Serial No.
32		07371-31049	Flange, Split	4	65001-
33		07372-21035	Bolt	8	65001-
34		01643-51032	Washer	8	65001-
35		(07088-01009)	Hose, Flange Type		
36		(195-03-66121)	Tube		
37		(195-03-63621)	Tube		
		(195-03-63621)	Tube		
38		(195-03-66281)	Hose		

Printed By : Dwi Iswanto (airafather6107170)

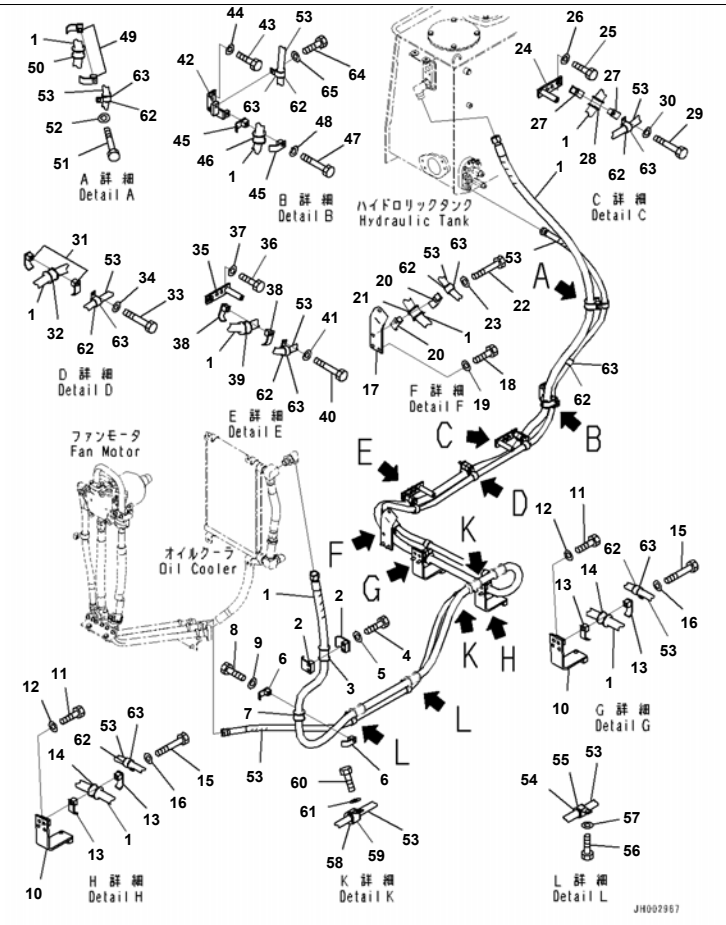

Reference:H2260-001018 Page:H010018

D375A-6R S/N 65001-UP
Cooling Fan Drive Piping, Fan Motor Return and Drain Circuit (#65001-)

Index	Code	Part Number	Description	Qty	Serial No.
1		195-03-66281	Hose	1	65001-
2		07094-11024	Clamp	2	65001-
3		07095-01034	Cushion	1	65001-
4		01010-81280	Bolt	2	65001-
5		01643-31232	Washer	2	65001-
6		198-61-44210	Clamp	2	65001-
7		198-04-41210	Cushion	1	65001-
8		01010-81275	Bolt	1	65001-
9		01643-31232	Washer	1	65001-
10		195-03-66261	Bracket	2	65001-
11		01010-81230	Bolt	4	65001-
12		01643-31232	Washer	4	65001-
13		198-61-44210	Clamp	4	65001-
14		198-04-41210	Cushion	2	65001-
15		01010-81290	Bolt	2	65001-
16		01643-31232	Washer	2	65001-
17		195-49-44222	Bracket	1	65001-
18		01010-81230	Bolt	2	65001-
19		01643-31232	Washer	2	65001-
20		198-61-44210	Clamp	2	65001-
21		198-04-41210	Cushion	1	65001-
22		01010-81290	Bolt	1	65001-
23		01643-31232	Washer	1	65001-
24		195-03-66271	Bracket	1	65001-
25		01010-81230	Bolt	2	65001-
26		01643-31232	Washer	2	65001-
27		198-61-44210	Clamp	2	65001-
28		198-04-41210	Cushion	1	65001-
29		01010-81290	Bolt	1	65001-
30		01643-31232	Washer	1	65001-
31		198-61-44210	Clamp	2	65001-

Reference:H2260-001018 Page:H010018

Printed By : Dwi Iswanto (airafather6107170)

Cooling Fan Drive Piping, Fan Motor Return and Drain Circuit (#65001-)

Index	Code	Part Number	Description	Qty	Serial No.
32		198-04-41210	Cushion	1	65001-
33		01010-81290	Bolt	1	65001-
34		01643-31232	Washer	1	65001-
35		195-03-66271	Bracket	1	65001-
36		01010-81230	Bolt	2	65001-
37		01643-31232	Washer	2	65001-
38		198-61-44210	Clamp	2	65001-
39		198-04-41210	Cushion	1	65001-
40		01010-81290	Bolt	1	65001-
41		01643-31232	Washer	1	65001-
42		195-49-44211	Bracket	1	65001-
43		01010-81230	Bolt	2	65001-
44		01643-31232	Washer	2	65001-
45		198-61-44210	Clamp	2	65001-
46		198-04-41210	Cushion	1	65001-
47		01010-81280	Bolt	1	65001-
48		01643-31232	Washer	1	65001-
49		198-61-44210	Clamp	2	65001-
50		198-04-41210	Cushion	1	65001-
51		01010-81280	Bolt	1	65001-
52		01643-31232	Washer	1	65001-
53		195-03-66291	Hose	1	65001-
54		07095-20627	Cushion	2	65001-
55		04434-53412	Clip	2	65001-
56		01010-81220	Bolt	2	65001-
57		01643-31232	Washer	2	65001-
58		07095-20627	Cushion	2	65001-
59		04434-53412	Clip	2	65001-
60		01010-81230	Bolt	2	65001-
61		01643-31232	Washer	2	65001-
62		07095-20627	Cushion	9	65001-
63		04434-53412	Clip	9	65001-
64		01010-81230	Bolt	1	65001-
65		01643-31232	Washer	1	65001-

Printed By : Dwi Iswanto (airafather6107170)

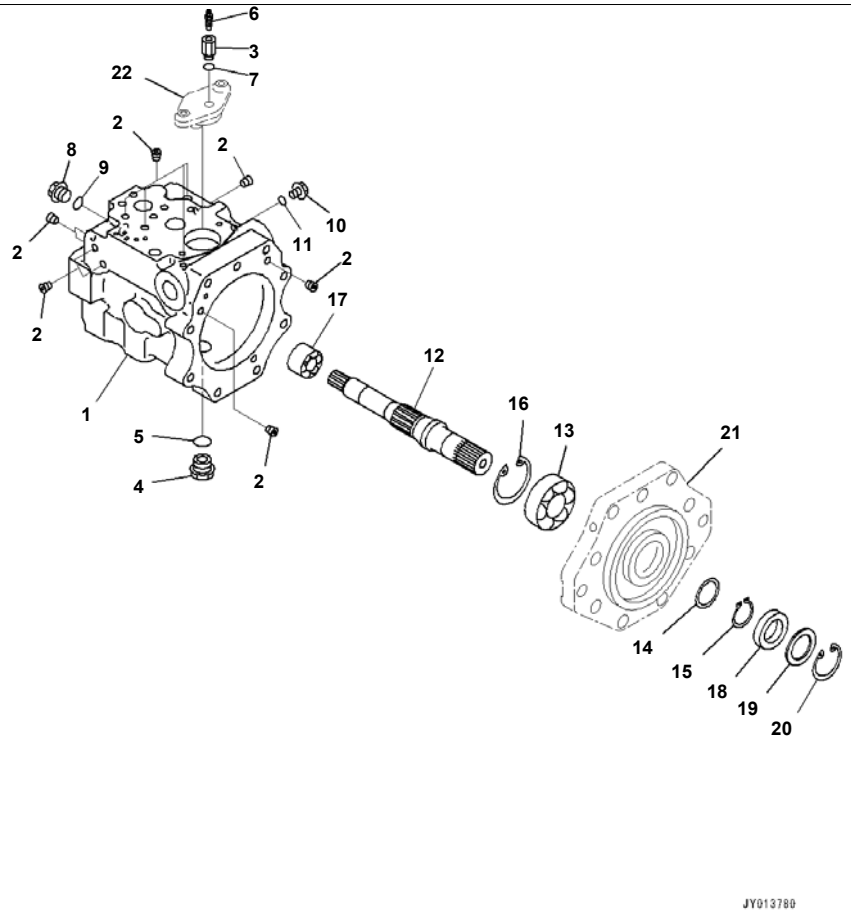

D375A-6R S/N 65001-UP

Cooling Fan Drive Piping, With Engine Oil Pan And Coolant Heater, Inner Parts, Fan Pump (1/11) (#65001-)

Index	Code	Part Number	Description	Qty	Serial No.
		708-1W-00670	Pump Assembly	1	65001-
		708-1W-01670	· Pump Subassembly	1	65001-
	C2	708-1W-04222	· · Case Assembly	1	65001-
1	C1		· · · Case	1	65001-
2	C1		· · · Plug	11	65001-
3		708-1W-28940	· · Plug	1	65001-
4		07044-12412	· · Plug	1	65001-
5		07002-62434	· · O-ring	1	65001-
6		20B-27-11210	· · Bleeder	1	65001-
7		07002-61223	· · O-ring	1	65001-
8		706-8E-14191	· · Plug	1	65001-
9		07002-61823	· · O-ring	1	65001-
10		708-8E-16150	· · Plug	1	65001-
11		07002-61023	· · O-ring	1	65001-
12	C2	708-1W-22310	· · Shaft	1	65001-
13	C2	708-1W-22140	· · Bearing	1	65001-
14	C2	708-23-05011	· · Washer Kit	1	65001-
	C1		· · · Washer, T=2.6mm	1	65001-
	C1		· · · Washer, T=2.7mm	1	65001-
	C1		· · · Washer, T=2.8mm	1	65001-
	C1		· · · Washer, T=2.5mm	1	65001-
15	C2	708-23-12840	· · Ring, Snap	1	65001-
16	C2	04065-07225	· · Ring, Snap	1	65001-
17	C2	708-1W-22320	· · Bearing	1	65001-
18		708-8D-12221	· · Seal, Oil	1	65001-
19		708-1W-22160	· · Spacer	1	65001-
20		04065-05520	· · Ring, Snap, for Hole Side	1	65001-
21		(708-1W-23910)	Cradle		
22		(708-1W-26113)	Cover		

Printed By : Dwi Iswanto (airafather6107170)

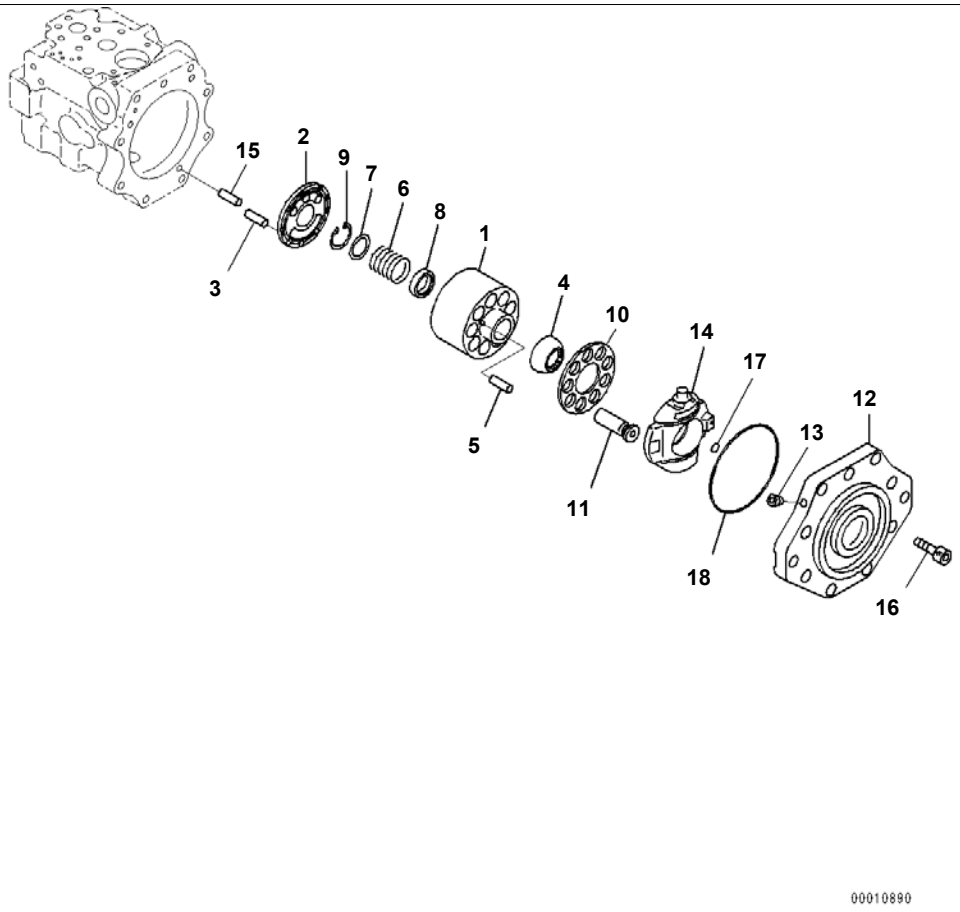

Cooling Fan Drive Piping, With Engine Oil Pan And Coolant Heater, Inner Parts, Fan Pump (2/11) (#65001-)

Index	Code	Part Number	Description	Qty	Serial No.
		708-1W-00670	Pump Assembly	1	65001-
		708-1W-01670	· Pump Subassembly	1	65001-
	C2	708-1W-04190	· · Cylinder Block Assembly	1	65001-
1	C1		· · · Block, Cylinder	1	65001-
2	C1		· · · Plate, Valve	1	65001-
3	C2	720-68-19610	· · Pin	1	65001-
4	C2	708-1W-23351	· · Guide, Retainer	1	65001-
5	C2	708-7L-13360	· · Pin	3	65001-
6	C2	708-1W-23150	· · Spring	1	65001-
7	C2	708-1W-23130	· · Seat	1	65001-
8	C2	708-1W-23140	· · Seat	1	65001-
9	C2	04065-04218	· · Ring	1	65001-
10	C2	708-1W-33340	· · Retainer, Shoe	1	65001-
11	C2	708-1W-33310	· · Piston Subassembly	9	65001-
	C2	708-1W-04310	· · Cradle Assembly	1	65001-
	C2	708-1W-04280	· · · Cradle Subassembly	1	65001-
12	C1		· · · · Cradle	1	65001-
13	C1		· · · · Plug	1	65001-
14	C2	708-1W-23450	· · · Cam, Rocker	1	65001-
15	C2	04020-01024	· · Pin, Dowel, Dowel	1	65001-
16	C2	01252-61230	· · Bolt	9	65001-
17	C2	07000-B2011	· · O-ring	1	65001-
18	C2	07000-B2145	· · O-ring	1	65001-

Printed By : Dwi Iswanto (airafather6107170)

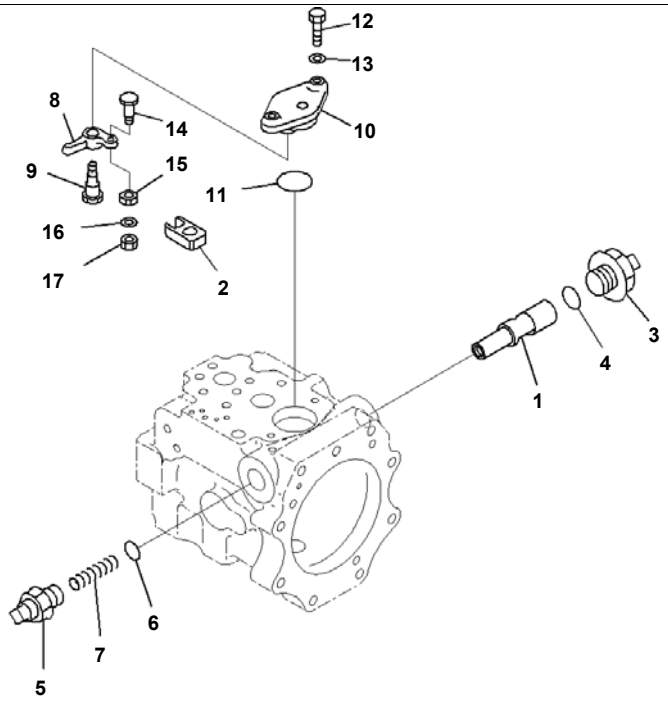

Cooling Fan Drive Piping, With Engine Oil Pan And Coolant Heater, Inner Parts, Fan Pump (3/11) (#65001-)

Index	Code	Part Number	Description	Qty	Serial No.
		708-1W-00670	Pump Assembly	1	65001-
		708-1W-01670	· Pump Subassembly	1	65001-
1	C2	708-1W-24170	· · Piston, Servo	1	65001-
2	C2	708-1W-24450	· · Slider	1	65001-
3	C2	708-1W-24250	· · Bolt, Adjusting	1	65001-
4	C2	07002-63334	· · O-ring	1	65001-
5	C2	708-1W-24311	· · Bolt, Adjusting	1	65001-
6	C2	07002-62434	· · O-ring	1	65001-
7	C2	708-1W-24350	· · Spring	1	65001-
8	C2	708-1W-25840	· · Lever	1	65001-
9	C2	708-1W-26132	· · Pin	1	65001-
10	C2	708-1W-26113	· · Cover	1	65001-
11	C2	07000-B3045	· · O-ring	1	65001-
12	C2	01010-80830	· · Bolt	2	65001-
13	C2	01643-30823	· · Washer	2	65001-
14	C2	708-1W-26210	· · Pin	1	65001-
15	C2	708-1W-26221	· · Slider	1	65001-
16	C2	708-1W-26230	· · Washer	1	65001-
17	C2	01580-10605	· · Nut	1	65001-

Printed By : Dwi Iswanto (airafather6107170)

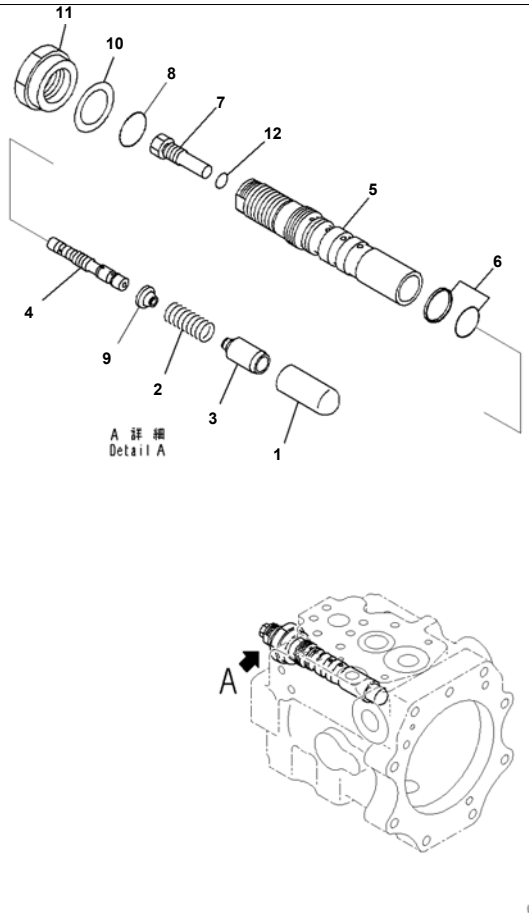

Reference:H2260-002004 Page:H011004

Cooling Fan Drive Piping, With Engine Oil Pan And Coolant Heater, Inner Parts, Fan Pump (4/11) (#65001-)

Index	Code	Part Number	Description	Qty	Serial No.
		708-1W-00670	Pump Assembly	1	65001-
		708-1W-04562	・ Valve Assembly	1	65001-
1	C1		・・ Piston	1	65001-
2	C1		・・ Spring	1	65001-
3	C1		・・ Seat	1	65001-
4	C1		・・ Spool	1	65001-
5	C1		・・ Sleeve	1	65001-
6		708-1W-26760	・・ Seal	1	65001-
7	C1		・・ Plug	1	65001-
8		07002-63034	・・ O-ring	1	65001-
9		708-1W-25170	・・ Seat	1	65001-
10		708-1W-25351	・・ Washer	1	65001-
11		708-1W-25311	・・ Nut	1	65001-
12		07002-61223	・・ O-ring	1	65001-

Reference:H2260-002004 Page:H011004

Printed By : Dwi Iswanto (airafather6107170)

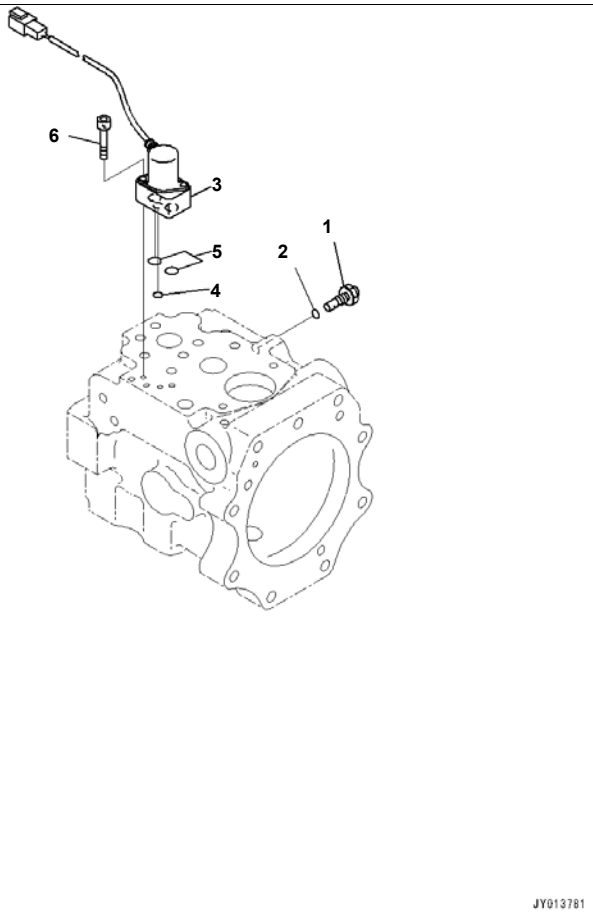

Reference:H2260-002005 Page:H011005

D375A-6R S/N 65001-UP

Cooling Fan Drive Piping, With Engine Oil Pan And Coolant Heater, Inner Parts, Fan Pump (5/11) (#65001-)

Index	Code	Part Number	Description	Qty	Serial No.
		708-1W-00670	Pump Assembly	1	65001-
1		708-1W-25740	· Orifice	1	65001-
2		07002-61023	· O-ring	1	65001-
3		702-21-57400	· Valve, Pilot	1	65001-
4	C1		· · O-ring	1	65001-
5	C1		· · O-ring	2	65001-
6		01252-60635	· Bolt	2	65001-

Printed By : Dwi Iswanto (airafather6107170)

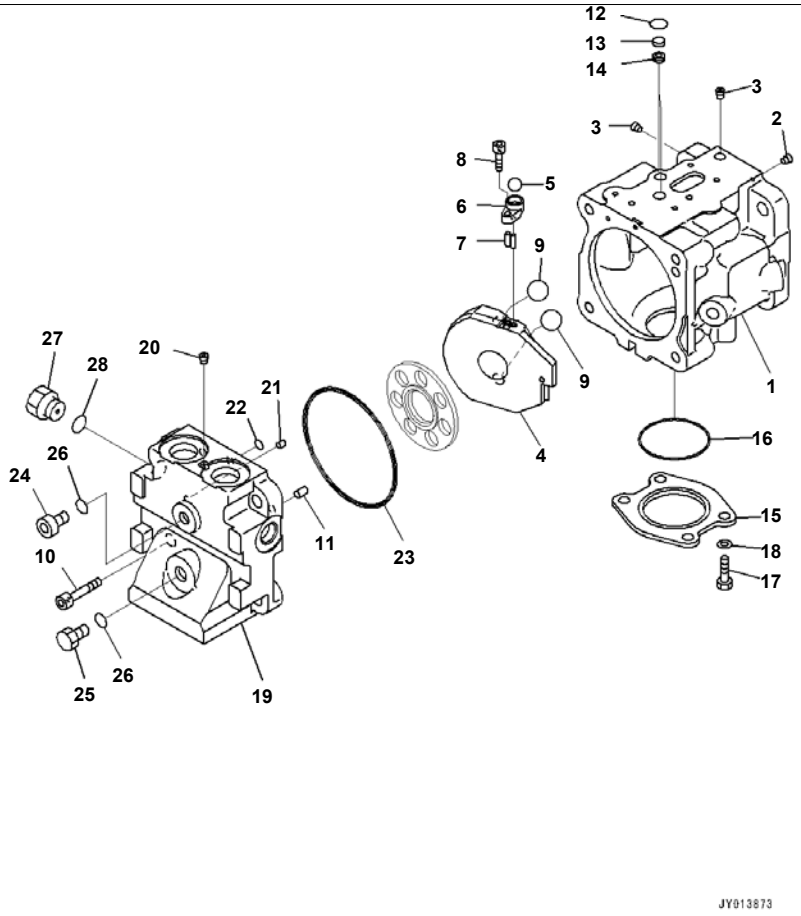

D375A-6R S/N 65001-UP

Cooling Fan Drive Piping, With Engine Oil Pan And Coolant Heater, Inner Parts, Fan Pump (6/11) (#65001-)

Index	Code	Part Number	Description	Qty	Serial No.
		708-1S-00950	Pump Assembly	1	65001-
	C1		· Pump Subassembly	1	65001-
	C2	708-1T-04410	· · Case Subassembly	1	65001-
1	C1		· · · Case	1	65001-
2	C1		· · · Plug	1	65001-
3	C1		· · · Plug	2	65001-
4	C2	708-1S-13411	· · Cam, Rocker	1	65001-
5	C2	04260-01270	· · Ball	1	65001-
6	C2	708-3S-14140	· · Spacer	1	65001-
7	C2	708-1S-13420	· · Pin	2	65001-
8	C2	01252-60616	· · Bolt	1	65001-
9	C2	708-1S-13430	· · Ball	2	65001-
10		01252-61235	· · Bolt	4	65001-
11		04020-01024	· · Pin, Dowel	2	65001-
12		708-2L-25490	· · O-ring	2	65001-
13		708-2L-25480	· · Filter	2	65001-
14		708-1S-19710	· · Orifice	2	65001-
15		708-1S-19920	· · Plate	1	65001-
16		07000-12065	· · O-ring	1	65001-
17		01010-81025	· · Bolt	4	65001-
18		01643-31032	· · Washer	4	65001-
	C2	708-1S-04390	· · Cap Subassembly	1	65001-
19	C1		· · · Cap, End	1	65001-
20	C1		· · · Plug	1	65001-
21	C2	720-68-19610	· · Pin	1	65001-
22		07000-11006	· · O-ring	1	65001-
23		07000-12125	· · O-ring	1	65001-
24		702-21-55620	· · Plug	1	65001-
25		07040-11409	· · Plug	1	65001-
26		07002-11423	· · O-ring	2	65001-
27		07040-12012	· · Plug	1	65001-

Printed By : Dwi Iswanto (airafather6107170)

Cooling Fan Drive Piping, With Engine Oil Pan And Coolant Heater, Inner Parts, Fan Pump (6/11) (#65001-)

Index	Code	Part Number	Description	Qty	Serial No.
28		07002-12034	・・O-ring	1	65001-

Printed By : Dwi Iswanto (airafather6107170)

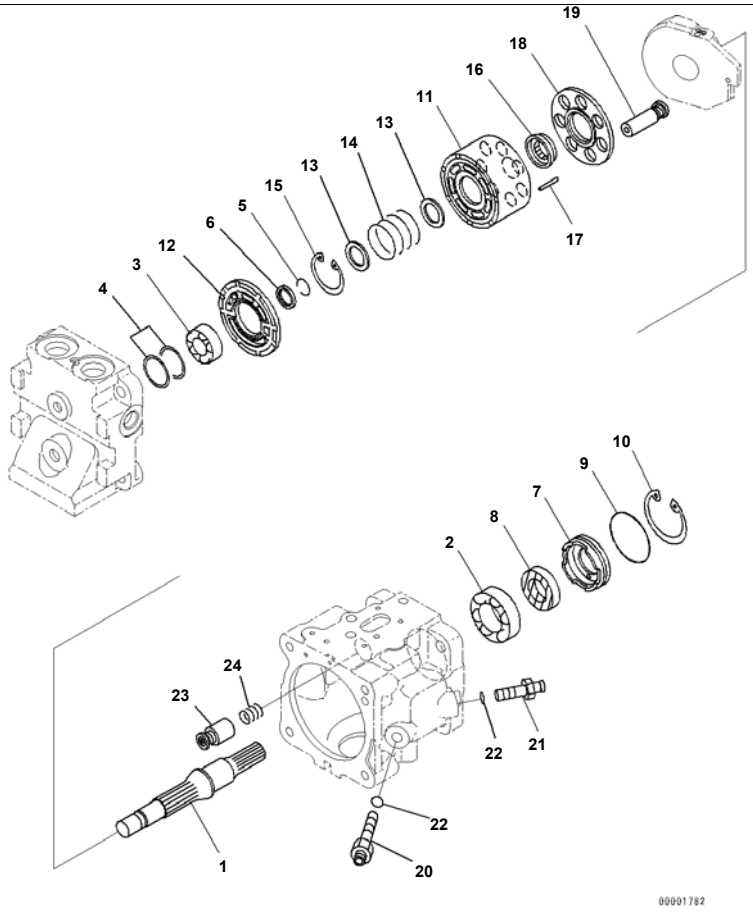

Reference:H2260-002007 Page:H011007

D375A-6R S/N 65001-UP
Cooling Fan Drive Piping, With Engine Oil Pan And Coolant Heater, Inner Parts, Fan Pump (7/11) (#65001-)

Index	Code	Part Number	Description	Qty	Serial No.
		708-1S-00950	Pump Assembly	1	65001-
	C1		· Pump Subassembly	1	65001-
1	C2	708-1S-12320	· · Shaft	1	65001-
2	C2	708-1S-12260	· · Bearing	1	65001-
3	C2	706-73-40890	· · Bearing	1	65001-
4	C1		· · Spacer Kit	1	65001-
	C2	708-7T-12260	· · · Spacer, T=1.6mm	1	65001-
	C2	708-7T-12270	· · · Spacer, T=1.7mm	1	65001-
	C2	708-7T-12360	· · · Spacer, T=1.8mm	1	65001-
	C2	708-7T-12370	· · · Spacer, T=1.9mm	1	65001-
	C2	708-7T-12380	· · · Spacer, T=2.0mm	1	65001-
	C2	708-7T-12390	· · · Spacer, T=2.1mm	1	65001-
	C2	708-7T-12460	· · · Spacer, T=2.2mm	1	65001-
5	C2	708-1S-12280	· · Ring, Wear, Wire	1	65001-
6	C2	708-1S-12330	· · Retainer	1	65001-
7	C2	708-1S-12340	· · Case	1	65001-
8	C2	708-1T-11880	· · Seal, Oil	1	65001-
9	C2	207-09-11140	· · O-ring	1	65001-
10	C2	04065-06220	· · Ring, Snap	1	65001-
11	C2	708-1S-13130	· · Block, Cylinder	1	65001-
12	C2	708-1S-13460	· · Plate, Valve	1	65001-
13	C2	708-3S-13160	· · Washer	2	65001-
14	C2	708-3S-13430	· · Spring	1	65001-
15	C2	04065-03515	· · Ring, Snap	1	65001-
16	C2	708-1S-13370	· · Guide	1	65001-
17	C2	708-1S-13380	· · Pin	3	65001-
18	C2	708-1S-13360	· · Retainer	1	65001-
19	C2	708-1S-13320	· · Piston Subassembly	7	65001-
20	C2	708-1S-14210	· · Plug	1	65001-
21	C2	708-1S-14220	· · Plug	1	65001-
22	C2	07002-11223	· · O-ring	2	65001-

Printed By : Dwi Iswanto (airafather6107170)

Cooling Fan Drive Piping, With Engine Oil Pan And Coolant Heater, Inner Parts, Fan Pump (7/11) (#65001-)

Index	Code	Part Number	Description	Qty	Serial No.
23	C2	708-1S-14230	・・ Piston Subassembly	1	65001-
24	C2	708-1S-14241	・・ Spring	1	65001-

Printed By : Dwi Iswanto (airafather6107170)

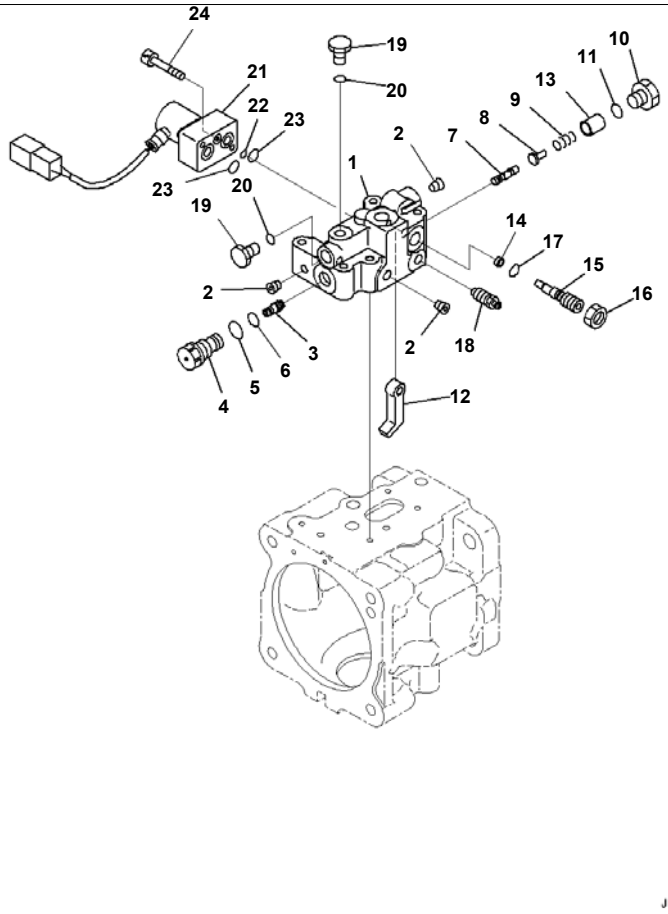

D375A-6R S/N 65001-UP

Cooling Fan Drive Piping, With Engine Oil Pan And Coolant Heater, Inner Parts, Fan Pump (8/11) (#65001-)

Index	Code	Part Number	Description	Qty	Serial No.
		708-1S-00950	Pump Assembly	1	65001-
	C1		· Pump Subassembly	1	65001-
		708-1S-03950	· · Valve Assembly	1	65001-
	C1		· · · Body Subassembly	1	65001-
1	C1		· · · · Body	1	65001-
2	C1		· · · · Plug	4	65001-
3	C1		· · · Piston	1	65001-
4	C1		· · · Sleeve	1	65001-
5		07002-21623	· · · O-ring	1	65001-
6		07000-B1010	· · · O-ring	1	65001-
7	C1		· · · Spool	1	65001-
8	C1		· · · Seat	1	65001-
9	C1		· · · Spring	1	65001-
10	C1		· · · Plug	1	65001-
11		07002-21623	· · · O-ring	1	65001-
12	C1		· · · Lever	1	65001-
13	C1		· · · Retainer	1	65001-
14	C1		· · · Spacer	1	65001-
15	C1		· · · Plug	1	65001-
16	C1		· · · Nut	1	65001-
17		07000-F1006	· · · O-ring	1	65001-
18		20B-27-11210	· · · Bleeder	1	65001-
19		07040-11007	· · · Plug	2	65001-
20		07002-21023	· · · O-ring	2	65001-
21		702-21-57700	· · · Valve, Pilot	1	65001-
22	C1		· · · · O-ring	1	65001-
23	C1		· · · · O-ring	2	65001-
24		01252-60635	· · · Bolt	2	65001-

Printed By : Dwi Iswanto (airafather6107170)

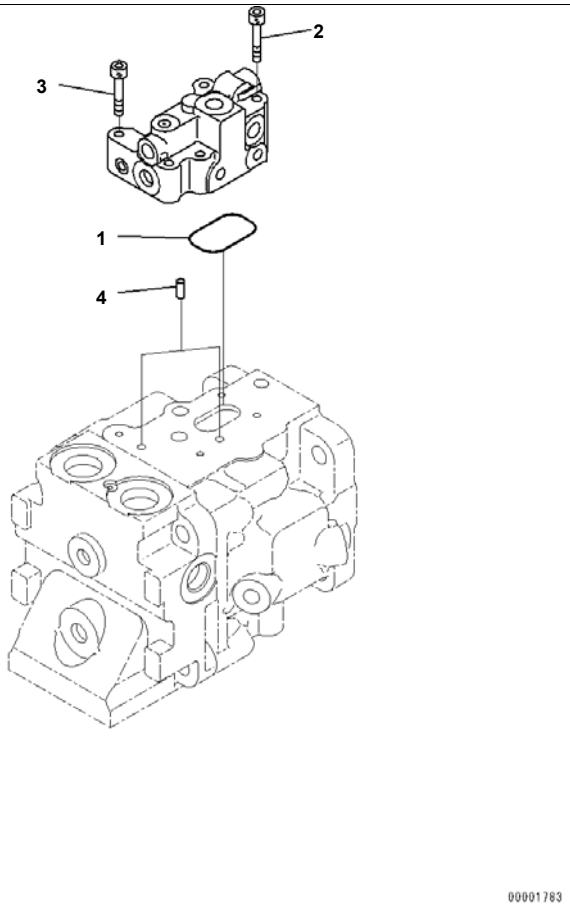

Reference:H2260-002009 Page:H011009

Cooling Fan Drive Piping, With Engine Oil Pan And Coolant Heater, Inner Parts, Fan Pump (9/11) (#65001-)

Index	Code	Part Number	Description	Qty	Serial No.
		708-1S-00950	Pump Assembly	1	65001-
	C1		· Pump Subassembly	1	65001-
1		07000-13040	· · O-ring	1	65001-
2		01252-60650	· · Bolt	1	65001-
3		01252-60635	· · Bolt	3	65001-
4		04020-00616	· · Pin, Dowel	2	65001-

Reference:H2260-002009 Page:H011009

Printed By : Dwi Iswanto (airafather6107170)

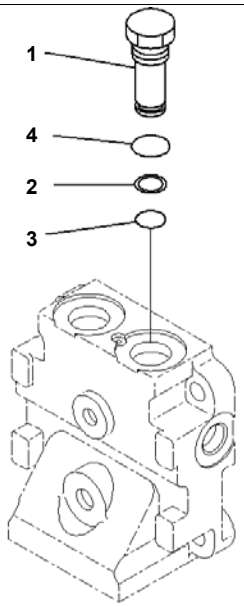

00001784

Cooling Fan Drive Piping, With Engine Oil Pan And Coolant Heater, Inner Parts, Fan Pump (10/11) (#65001-)

Index	Code	Part Number	Description	Qty	Serial No.
		708-1S-00950	Pump Assembly	1	65001-
1		708-1S-19930	· Plug	1	65001-
2		723-60-22230	· Ring, Back-up	1	65001-
3		07000-F2016	· O-ring	1	65001-
4		07002-12434	· O-ring	1	65001-

Printed By : Dwi Iswanto (airafather6107170)

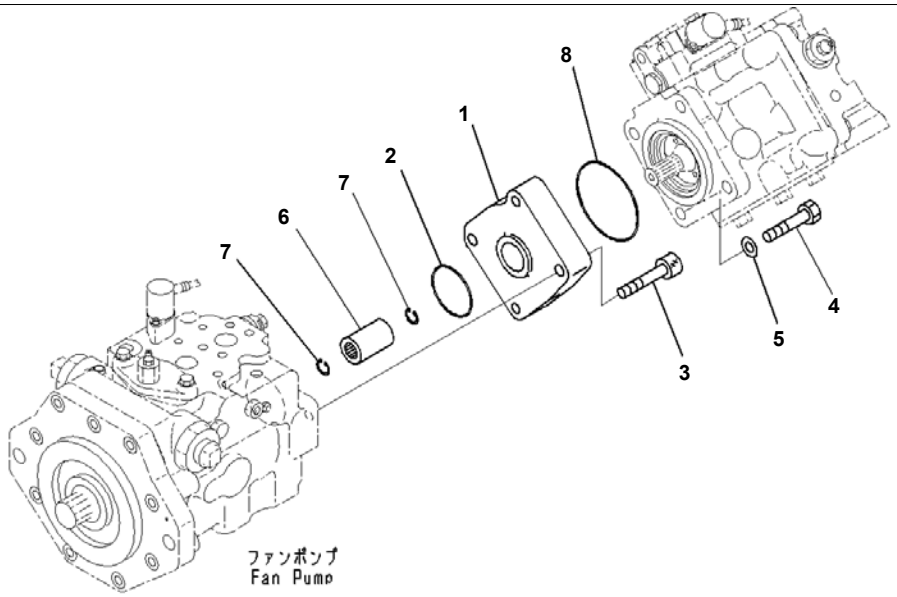

Reference:H2260-002011 Page:H011011

D375A-6R S/N 65001-UP
Cooling Fan Drive Piping, With Engine Oil Pan And Coolant Heater, Inner Parts, Fan Pump (11/11) (#65001-)

Index	Code	Part Number	Description	Qty	Serial No.
1		195-03-66381	Plate	1	65001-
2		07000-B2060	O-ring	1	65001-
3		01252-61245	Bolt, Hexagon Socket Head	2	65001-
4		01010-81240	Bolt	2	65001-
5		01643-31232	Washer	2	65001-
6		708-1W-28810	Coupling	1	65001-
7		04065-02012	Ring, Snap	2	65001-
8		07000-B2105	O-ring	1	65001-

Printed By : Dwi Iswanto (airafather6107170)

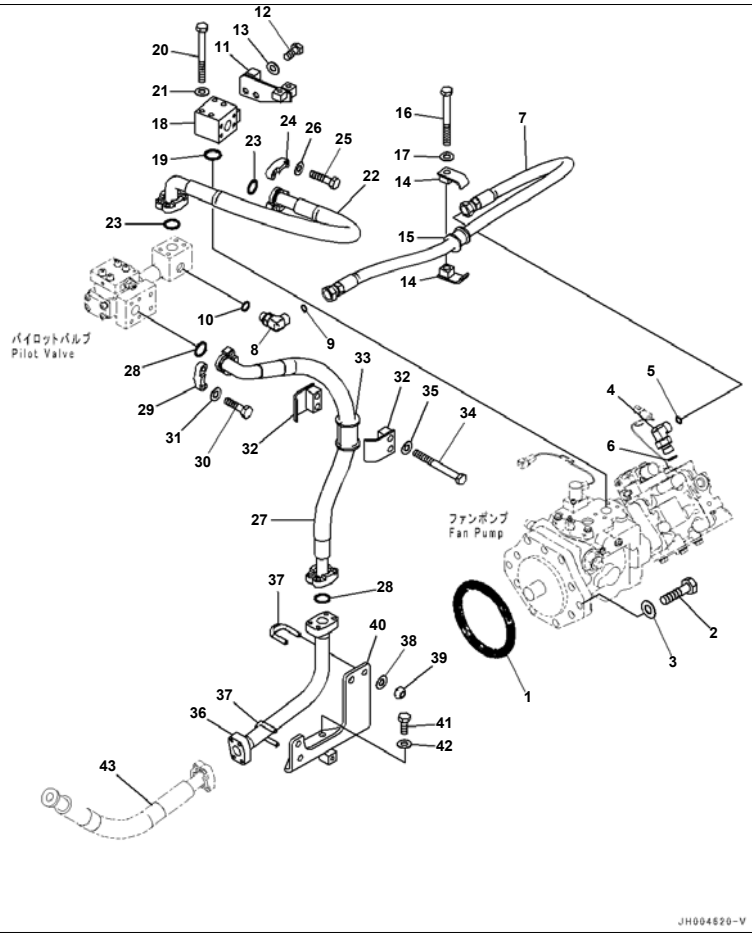

Cooling Fan Drive Piping, With Engine Oil Pan And Coolant Heater, Fan Pump Piping (#65001-)

Index	Code	Part Number	Description	Qty	Serial No.
1		07000-15160	O-ring	1	65001-
2		01010-81650	Bolt	2	65001-
3		01643-31645	Washer	2	65001-
4		02782-10522	Elbow	1	65001-
5		02896-11015	O-ring	1	65001-
6		07002-12434	O-ring	1	65001-
7		02765-00510	Hose, Face Seal Type	1	65001-
8		02782-10516	Elbow	1	65001-
9		02896-11015	O-ring	1	65001-
10		07002-12034	O-ring	1	65001-
11		195-03-66361	Bracket	1	65001-
12		01010-81225	Bolt	2	65001-
13		01643-31232	Washer	2	65001-
14		07094-10518	Clamp	2	65001-
15		07095-00523	Cushion	1	65001-
16		01010-81265	Bolt	1	65001-
17		01643-31232	Washer	1	65001-
18		195-03-66241	Block	1	65001-
19		07000-13035	O-ring	1	65001-
20		205-62-74740	Bolt	4	65001-
21		01643-51032	Washer	4	65001-
22		07088-010A8	Hose, Flange Type	1	65001-
23		07000-13032	O-ring	2	65001-
24		07371-31049	Flange, Split	4	65001-
25		07372-21035	Bolt	8	65001-
26		01643-51032	Washer	8	65001-
27		07088-01009	Hose, Flange Type	1	65001-
28		07000-13032	O-ring	2	65001-
29		07371-31049	Flange, Split	4	65001-
30		07372-21035	Bolt	8	65001-
31		01643-51032	Washer	8	65001-

Printed By : Dwi Iswanto (airafather6107170)

Cooling Fan Drive Piping, With Engine Oil Pan And Coolant Heater, Fan Pump Piping (#65001-)

Index	Code	Part Number	Description	Qty	Serial No.
32		07094-11024	Clamp	2	65001-
33		07095-01034	Cushion	1	65001-
34		01010-81280	Bolt	2	65001-
35		01643-31232	Washer	2	65001-
36		195-03-66121	Tube	1	65001-
37		07283-33442	Clip	2	65001-
38		01643-31032	Washer	4	65001-
39		01597-01009	Nut	4	65001-
40		195-03-66170	Bracket	1	65001-
41		01010-81230	Bolt	2	65001-
42		01643-31232	Washer	2	65001-
43		(07089-01006)	Hose, Flange Type		

Printed By : Dwi Iswanto (airafather6107170)

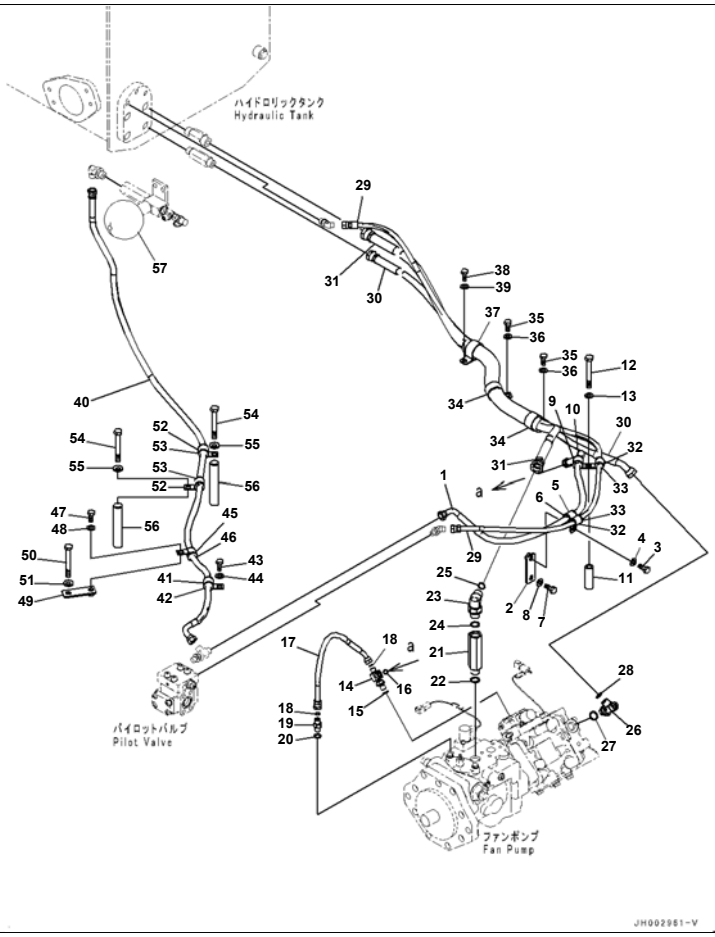

Reference:H2260-002013 Page:H011013

D375A-6R S/N 65001-UP
Cooling Fan Drive Piping, With Engine Oil Pan And Coolant Heater, Drain Piping (#65001-)

Index	Code	Part Number	Description	Qty	Serial No.
1		02763-003A9	Hose, Face Seal Type	1	65001-
2		154-Z11-5340	Bracket	1	65001-
3		01010-81225	Bolt	1	65001-
4		01643-31232	Washer	1	65001-
5		04434-52112	Clip	1	65001-
6		07095-20314	Cushion	1	65001-
7		01010-81225	Bolt	1	65001-
8		01643-31232	Washer	1	65001-
9		04434-52112	Clip	1	65001-
10		07095-20314	Cushion	1	65001-
11		195-979-3570	Collar	1	65001-
12		01010-81295	Bolt	1	65001-
13		01643-31232	Washer	1	65001-
14		20Y-62-51191	Tee	1	65001-
15		07002-11423	O-ring	1	65001-
16		02896-11009	O-ring	1	65001-
17		02764-002A4	Hose, Face Seal Type	1	65001-
18		02896-11008	O-ring	2	65001-
19		02781-0021D	Union	1	65001-
20		07002-11423	O-ring	1	65001-
21		203-62-63770	Joint	1	65001-
22		07002-12434	O-ring	1	65001-
23		02782-10522	Elbow	1	65001-
24		07002-12434	O-ring	1	65001-
25		02896-11015	O-ring	1	65001-
26		02782-50422	Elbow	1	65001-
27		07002-12034	O-ring	1	65001-
28		02896-11012	O-ring	1	65001-
29		02762-00221	Hose, Face Seal Type	1	65001-
30		02764-00412	Hose, Face Seal Type	1	65001-
31		02762-00513	Hose	1	65001-

Reference:H2260-002013 Page:H011013

Printed By : Dwi Iswanto (airafather6107170)

Cooling Fan Drive Piping, With Engine Oil Pan And Coolant Heater, Drain Piping (#65001-)

Index	Code	Part Number	Description	Qty	Serial No.
32		04434-51712	Clip	2	65001-
33		07095-20211	Cushion	2	65001-
34		208-06-19170	Clip	2	65001-
35		01010-81225	Bolt	2	65001-
36		01643-31232	Washer	2	65001-
37		208-06-19170	Clip	1	65001-
38		01010-81235	Bolt	1	65001-
39		01643-31232	Washer	1	65001-
40		02763-00319	Hose, Face Seal Type	1	65001-
41		04434-52112	Clip	1	65001-
42		07095-20314	Cushion	1	65001-
43		01010-81225	Bolt	1	65001-
44		01643-31232	Washer	1	65001-
45		04434-52112	Clip	1	65001-
46		07095-20314	Cushion	1	65001-
47		01010-81225	Bolt	1	65001-
48		01643-31232	Washer	1	65001-
49		154-Z11-5340	Bracket	1	65001-
50		01011-81255	Bolt	1	65001-
51		01643-31232	Washer	1	65001-
52		04434-52112	Clip	2	65001-
53		07095-20314	Cushion	2	65001-
54		01011-81265	Bolt	2	65001-
55		01643-31232	Washer	2	65001-
56		22D-03-11320	Washer	2	65001-
57		(20Y-60-11430)	Accumulator		

Printed By : Dwi Iswanto (airafather6107170)

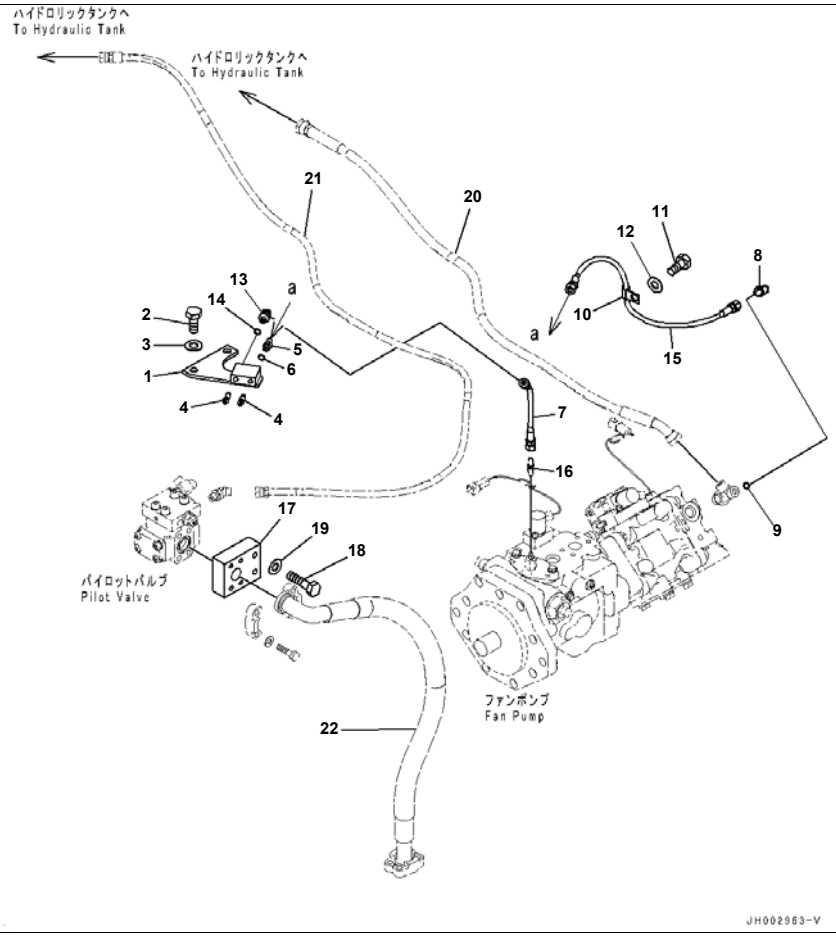

Reference:H2260-002014 Page:H011014

D375A-6R S/N 65001-UP
Cooling Fan Drive Piping, With Engine Oil Pan And Coolant Heater, Air Vent (#65001-)

Index	Code	Part Number	Description	Qty	Serial No.
1		195-03-66311	Bracket	1	65001-
2		01010-81225	Bolt	2	65001-
3		01643-31232	Washer	2	65001-
4		20B-27-11210	Bleeder	2	65001-
5		124-62-61910	Nipple	1	65001-
6		07002-11023	O-ring	1	65001-
7		195-03-66321	Hose	1	65001-
8		124-62-61531	Elbow	1	65001-
9		07002-11023	O-ring	1	65001-
10		04434-50812	Clip	1	65001-
11		01010-81225	Bolt	1	65001-
12		01643-31232	Washer	1	65001-
13		17A-15-41370	Elbow	1	65001-
14		07002-11023	O-ring	1	65001-
15		195-03-66390	Hose	1	65001-
16		17A-61-21340	Nipple	1	65001-
17		195-03-66221	Plate	1	65001-
18		01010-81235	Bolt	2	65001-
19		01643-31232	Washer	2	65001-
20		(02762-00221)	Hose, Face Seal Type		
21		(02764-00412)	Hose, Face Seal Type		
22		(07088-01009)	Hose, Flange Type		

Reference:H2260-002014 Page:H011014

Printed By : Dwi Iswanto (airafather6107170)

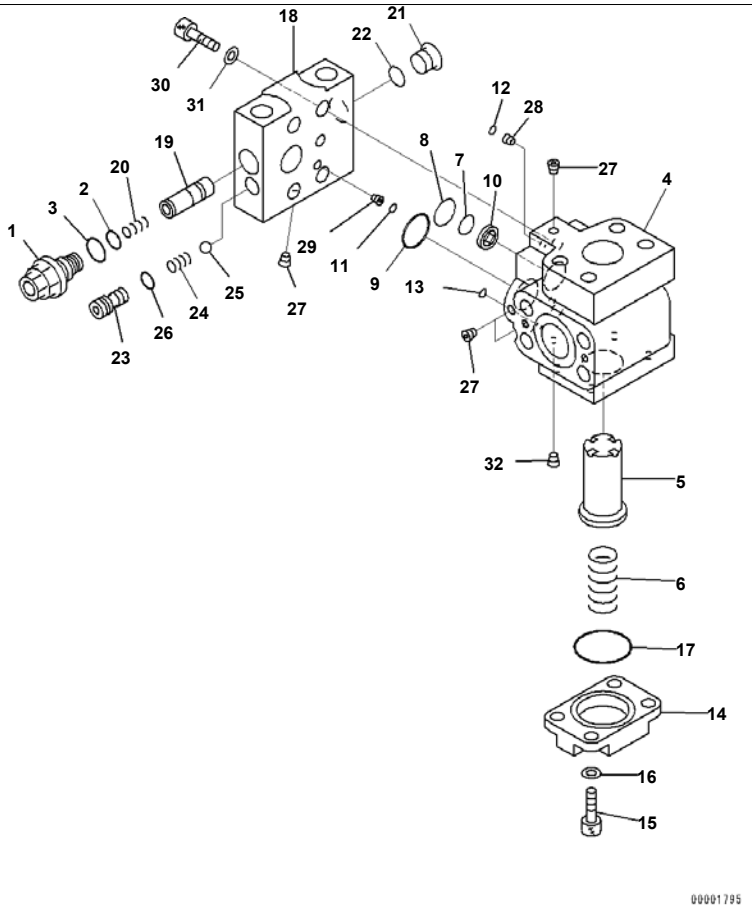

Reference:H2260-002015 Page:H011015

D375A-6R S/N 65001-UP
Cooling Fan Drive Piping, With Engine Oil Pan And Coolant Heater, Pilot Valve (#65001-)

Index	Code	Part Number	Description	Qty	Serial No.
		702-21-09250	Valve Assembly, Pilot	1	65001-
1		723-60-27200	· Valve Assembly, Relief	1	65001-
2		702-16-53920	· · O-ring	1	65001-
3		07002-11623	· · O-ring	1	65001-
4	C1		· Block	1	65001-
5		702-21-55310	· Valve	1	65001-
6		702-21-55460	· Spring	1	65001-
7		702-21-55420	· O-ring	1	65001-
8		702-21-55520	· O-ring	1	65001-
9		702-21-55440	· O-ring	1	65001-
10		702-21-53120	· Filter	1	65001-
11		07000-11009	· O-ring	1	65001-
12		07000-11010	· O-ring	1	65001-
13		07000-11006	· O-ring	1	65001-
14		702-21-55410	· Plate	1	65001-
15		01252-60820	· Bolt	4	65001-
16		01643-50823	· Washer	4	65001-
17		702-21-55530	· O-ring	1	65001-
18	C1		· Block	1	65001-
19	C1		· Spool	1	65001-
20		702-21-55640	· Spring	1	65001-
21		702-21-55620	· Plug	1	65001-
22		07002-11423	· O-ring	1	65001-
23		702-21-55710	· Seat	1	65001-
24		702-21-55720	· Spring	1	65001-
25		04260-00793	· Ball	1	65001-
26		07000-11009	· O-ring	1	65001-
27	C1		· Plug	4	65001-
28	C1		· Orifice	1	65001-
29	C1		· Orifice	1	65001-
30		01252-61040	· Bolt	4	65001-

Printed By : Dwi Iswanto (airafather6107170)

Cooling Fan Drive Piping, With Engine Oil Pan And Coolant Heater, Pilot Valve (#65001-)

Index	Code	Part Number	Description	Qty	Serial No.
31		01643-51032	· Washer	4	65001-
32	C1		· Screw	1	65001-

Printed By : Dwi Iswanto (airafather6107170)

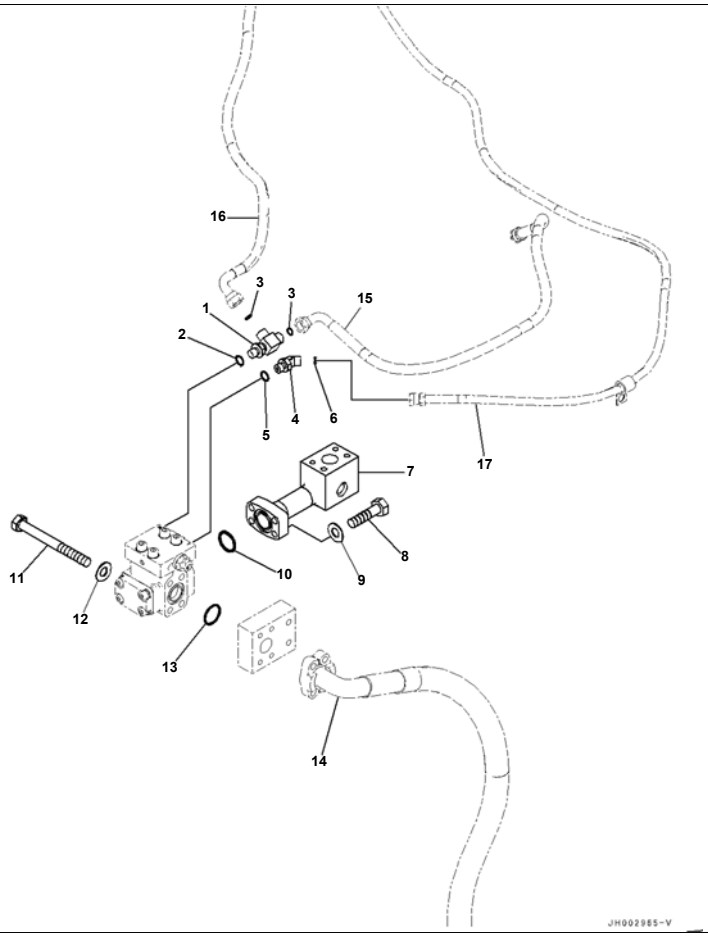

Cooling Fan Drive Piping, With Engine Oil Pan And Coolant Heater, Pilot Valve Mounting (#65001-)

Index	Code	Part Number	Description	Qty	Serial No.
1		207-62-84980	Tee	1	65001-
2		07002-11423	O-ring	1	65001-
3		02896-11009	O-ring	2	65001-
4		02783-10210	Elbow	1	65001-
5		07002-11423	O-ring	1	65001-
6		02896-11008	O-ring	1	65001-
7		195-03-66231	Tube	1	65001-
8		07372-21040	Bolt	4	65001-
9		01643-51032	Washer	4	65001-
10		07000-13035	O-ring	1	65001-
11		01252-71085	Bolt	4	65001-
12		01643-51032	Washer	4	65001-
13		07000-13032	O-ring	1	65001-
14		(07088-01009)	Hose, Flange Type		
15		(02762-00221)	Hose, Face Seal Type		
16		(02763-00319)	Hose, Face Seal Type		
17		(02763-003A9)	Hose, Face Seal Type		

Printed By : Dwi Iswanto (airafather6107170)

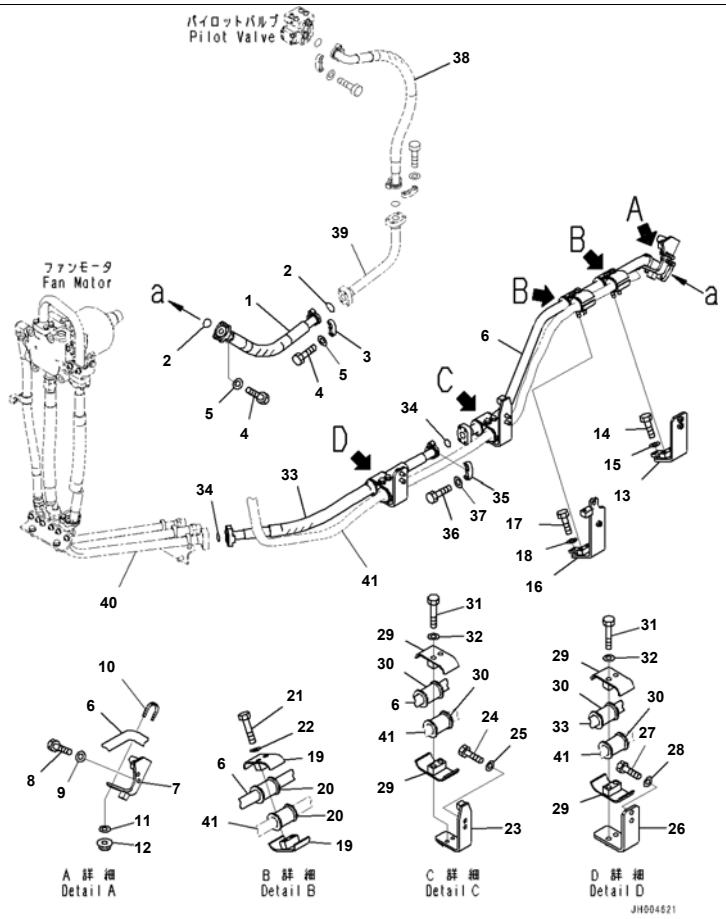

Reference:H2260-002017 Page:H011017

D375A-6R S/N 65001-UP

Cooling Fan Drive Piping, With Engine Oil Pan And Coolant Heater, Fan Motor Delivery Circuit (#65001-)

Index	Code	Part Number	Description	Qty	Serial No.
1		07089-01006	Hose, Flange Type	1	65001-
2		07000-13032	O-ring	2	65001-
3		07371-31049	Flange, Split	4	65001-
4		07372-21035	Bolt	8	65001-
5		01643-51032	Washer	8	65001-
6		195-03-66111	Tube	1	65001-
7		195-03-66520	Bracket	1	65001-
8		01010-81230	Bolt	2	65001-
9		01643-31232	Washer	2	65001-
10		07283-33442	Clip	1	65001-
11		01643-31032	Washer	2	65001-
12		01597-01009	Nut	2	65001-
13		195-03-66420	Bracket	1	65001-
14		01010-81230	Bolt	2	65001-
15		01643-31232	Washer	2	65001-
16		195-03-66450	Bracket	1	65001-
17		01010-81230	Bolt	2	65001-
18		01643-31232	Washer	2	65001-
19		07094-31024	Clamp	4	65001-
20		07095-01034	Cushion	4	65001-
21		01010-81290	Bolt	4	65001-
22		01643-31232	Washer	4	65001-
23		195-03-64880	Bracket	1	65001-
24		01010-81230	Bolt	2	65001-
25		01643-31232	Washer	2	65001-
26		195-03-63581	Bracket	1	65001-
27		01010-81240	Bolt	2	65001-
28		01643-31232	Washer	2	65001-
29		07094-31024	Clamp	4	65001-
30		07095-01034	Cushion	4	65001-
31		01010-81290	Bolt	4	65001-

Reference:H2260-002017 Page:H011017

Printed By : Dwi Iswanto (airafather6107170)

Cooling Fan Drive Piping, With Engine Oil Pan And Coolant Heater, Fan Motor Delivery Circuit (#65001-)

Index	Code	Part Number	Description	Qty	Serial No.
32		01643-31232	Washer	4	65001-
33		07089-01010	Hose, Flange Type	1	65001-
34		07000-13032	O-ring	2	65001-
35		07371-31049	Flange, Split	4	65001-
36		07372-21035	Bolt	8	65001-
37		01643-51032	Washer	8	65001-
38		(07088-01009)	Hose, Flange Type		
39		(195-03-66121)	Tube		
40		(195-03-63621)	Tube		
		(195-03-63621)	Tube		
41		(195-03-66281)	Hose		

Printed By : Dwi Iswanto (airafather6107170)

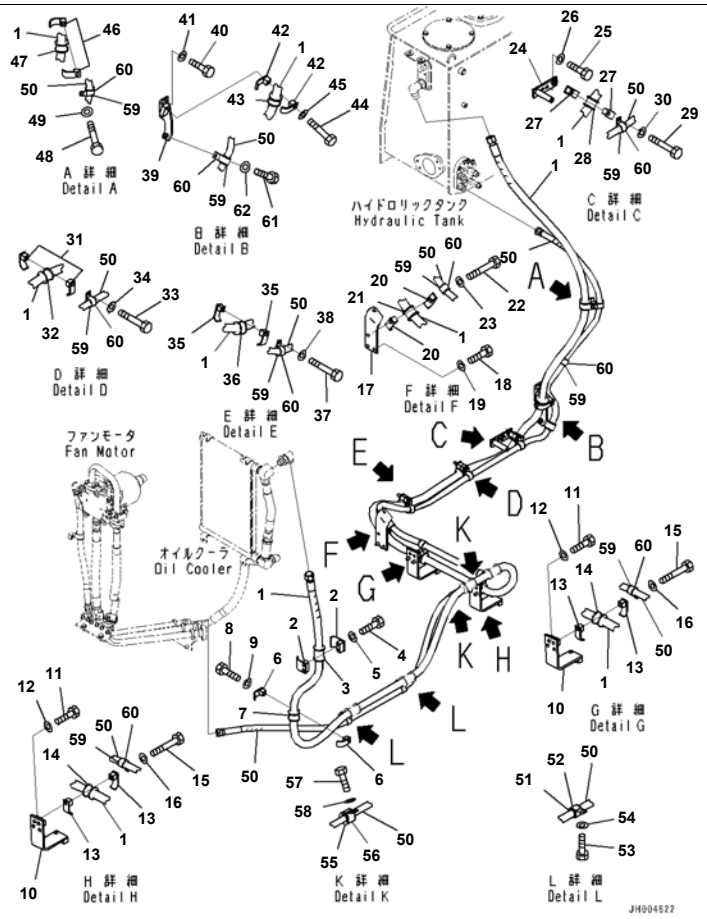

Reference:H2260-002018 Page:H011018

D375A-6R S/N 65001-UP

Cooling Fan Drive Piping, With Engine Oil Pan And Coolant Heater, Fan Motor Return and Drain Circuit (#65001-)

Index	Code	Part Number	Description	Qty	Serial No.
1		195-03-66281	Hose	1	65001-
2		07094-11024	Clamp	2	65001-
3		07095-01034	Cushion	1	65001-
4		01010-81280	Bolt	2	65001-
5		01643-31232	Washer	2	65001-
6		198-61-44210	Clamp	2	65001-
7		198-04-41210	Cushion	1	65001-
8		01010-81275	Bolt	1	65001-
9		01643-31232	Washer	1	65001-
10		195-03-66261	Bracket	2	65001-
11		01010-81230	Bolt	4	65001-
12		01643-31232	Washer	4	65001-
13		198-61-44210	Clamp	4	65001-
14		198-04-41210	Cushion	2	65001-
15		01010-81290	Bolt	2	65001-
16		01643-31232	Washer	2	65001-
17		195-49-44222	Bracket	1	65001-
18		01010-81230	Bolt	2	65001-
19		01643-31232	Washer	2	65001-
20		198-61-44210	Clamp	2	65001-
21		198-04-41210	Cushion	1	65001-
22		01010-81290	Bolt	1	65001-
23		01643-31232	Washer	1	65001-
24		195-03-66510	Bracket	1	65001-
25		01010-81230	Bolt	2	65001-
26		01643-31232	Washer	2	65001-
27		198-61-44210	Clamp	2	65001-
28		198-04-41210	Cushion	1	65001-
29		01010-81290	Bolt	1	65001-
30		01643-31232	Washer	1	65001-
31		198-61-44210	Clamp	2	65001-

Reference:H2260-002018 Page:H011018

Printed By : Dwi Iswanto (airafather6107170)

Cooling Fan Drive Piping, With Engine Oil Pan And Coolant Heater, Fan Motor Return and Drain Circuit (#65001-)

Index	Code	Part Number	Description	Qty	Serial No.
32		198-04-41210	Cushion	1	65001-
33		01010-81290	Bolt	1	65001-
34		01643-31232	Washer	1	65001-
35		198-61-44210	Clamp	2	65001-
36		198-04-41210	Cushion	1	65001-
37		01010-81290	Bolt	1	65001-
38		01643-31232	Washer	1	65001-
39		195-49-44240	Bracket	1	65001-
40		01010-81230	Bolt	2	65001-
41		01643-31232	Washer	2	65001-
42		198-61-44210	Clamp	2	65001-
43		198-04-41210	Cushion	1	65001-
44		01010-81280	Bolt	1	65001-
45		01643-31232	Washer	1	65001-
46		198-61-44210	Clamp	2	65001-
47		198-04-41210	Cushion	1	65001-
48		01010-81280	Bolt	1	65001-
49		01643-31232	Washer	1	65001-
50		195-03-66291	Hose	1	65001-
51		07095-20627	Cushion	2	65001-
52		04434-53412	Clip	2	65001-
53		01010-81220	Bolt	2	65001-
54		01643-31232	Washer	2	65001-
55		07095-20627	Cushion	2	65001-
56		04434-53412	Clip	2	65001-
57		01010-81230	Bolt	2	65001-
58		01643-31232	Washer	2	65001-
59		07095-20627	Cushion	9	65001-
60		04434-53412	Clip	9	65001-
61		01010-81230	Bolt	1	65001-
62		01643-31232	Washer	1	65001-

Printed By : Dwi Iswanto (airafather6107170)

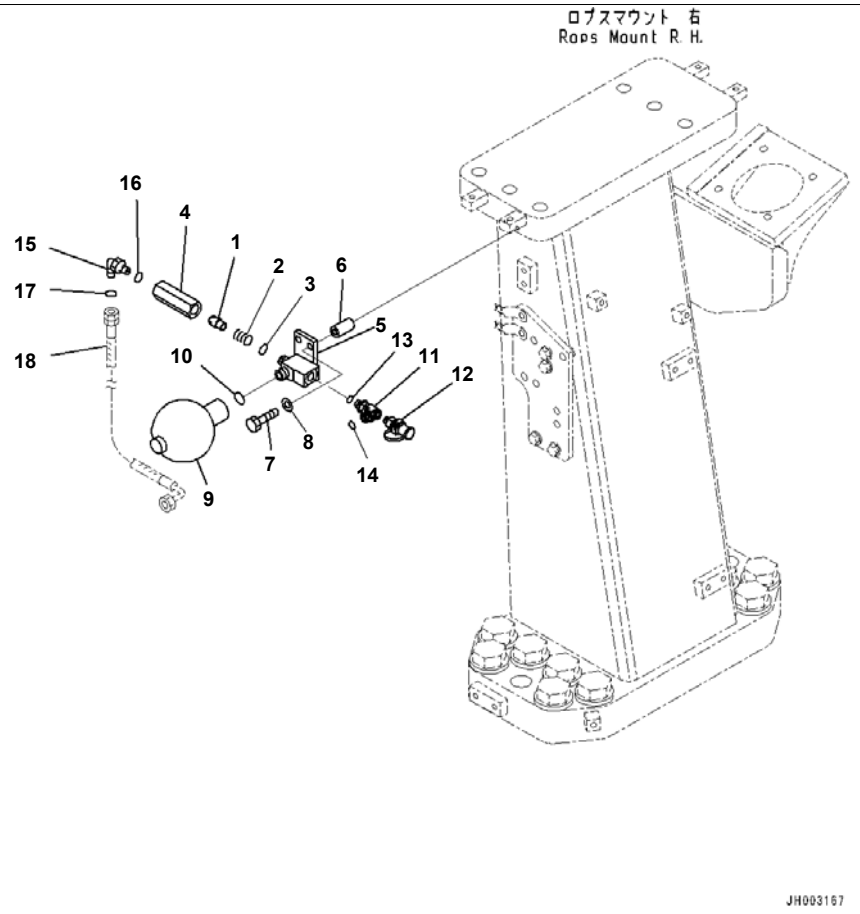

Proportional Pressure Control (PPC) Circuit, For Dual Tilt Pitch Dozer, PPC Pressure Circuit (#65001-)

Index	Code	Part Number	Description	Qty	Serial No.
		195-60-51300	Valve Assembly	1	65001-
1		20X-62-21950	· Valve	1	65001-
2		203-60-21260	· Spring	1	65001-
3		07002-02034	· O-ring	1	65001-
4		203-62-58670	· Body	1	65001-
5		195-60-51161	· Tee	1	65001-
6		22D-62-12440	Spacer	2	65001-
7		01010-81070	Bolt	2	65001-
8		01643-31032	Washer	2	65001-
9		20Y-60-11430	Accumulator	1	65001-
10		07002-12034	O-ring	1	65001-
11		21M-62-14450	Elbow	1	65001-
12		195-49-36120	Nipple	1	65001-
13		07002-11423	O-ring	1	65001-
14		02896-11009	O-ring	1	65001-
15		02782-10315	Elbow	1	65001-
16		07002-12034	O-ring	1	65001-
17		02896-11009	O-ring	1	65001-
18		(02763-00319)	Hose, Face Seal Type		

Printed By : Dwi Iswanto (airafather6107170)

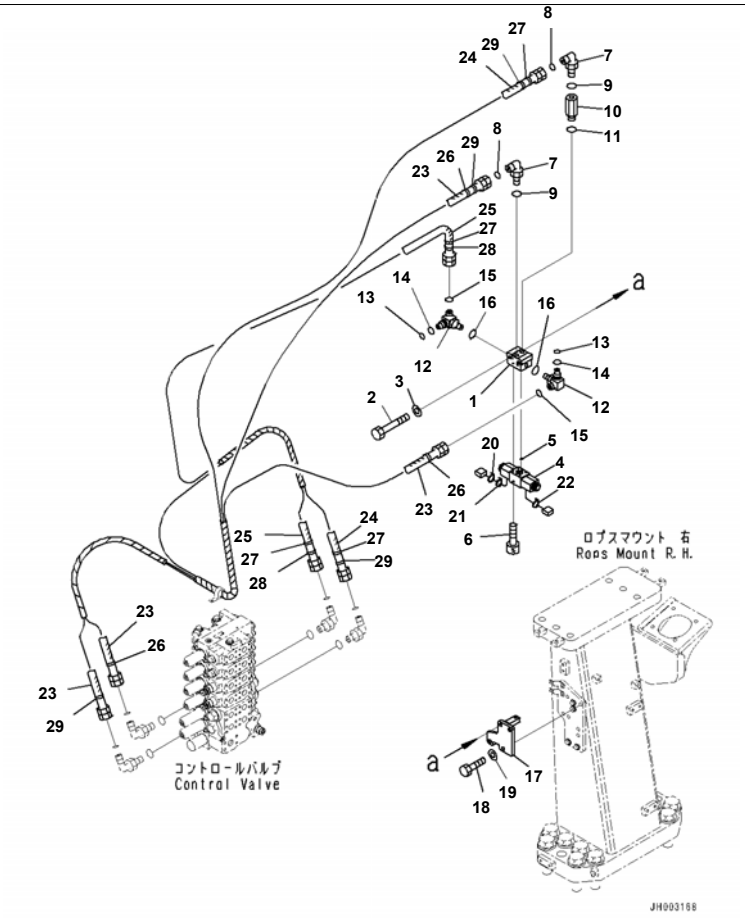

Reference:H2270-001002 Page:H012002

D375A-6R S/N 65001-UP
Proportional Pressure Control (PPC) Circuit, For Dual Tilt Pitch Dozer, Solenoid Valve (#65001-)

Index	Code	Part Number	Description	Qty	Serial No.
1		17M-61-42340	Block	1	65001-
2		01010-81085	Bolt	2	65001-
3		01643-31032	Washer	2	65001-
4		198-06-56530	Valve	1	65001-
5		07000-11009	O-ring	4	65001-
6		01252-70545	Bolt, Hexagon Socket Head	4	65001-
7		02782-10210	Elbow	2	65001-
8		02896-11008	O-ring	2	65001-
9		07002-11423	O-ring	2	65001-
10		20Y-62-22160	Adapter	1	65001-
11		07002-11423	O-ring	1	65001-
12		17M-61-42350	Tee	2	65001-
13		201-60-11390	· O-ring	1	65001-
14		20Y-62-19560	· O-ring	1	65001-
15		02896-11008	O-ring	2	65001-
16		07002-11423	O-ring	2	65001-
17		195-61-62111	Bracket	1	65001-
18		01010-81240	Bolt	2	65001-
19		01643-31232	Washer	2	65001-
20		20Y-62-22840	Band, Black	1	65001-
21		20Y-62-22820	Band, Blue	1	65001-
22		20Y-62-22810	Band, Yellow	1	65001-
23		195-61-44661	Hose	2	65001-
24		195-61-44671	Hose	1	65001-
25		195-61-44681	Hose	1	65001-
26		20Y-62-22810	Band, Yellow	2	65001-
27		20Y-62-22820	Band, Blue	4	65001-
28		20Y-62-22840	Band, Black	2	65001-
29		20Y-62-22850	Band, Green	4	65001-

Printed By : Dwi Iswanto (airafather6107170)

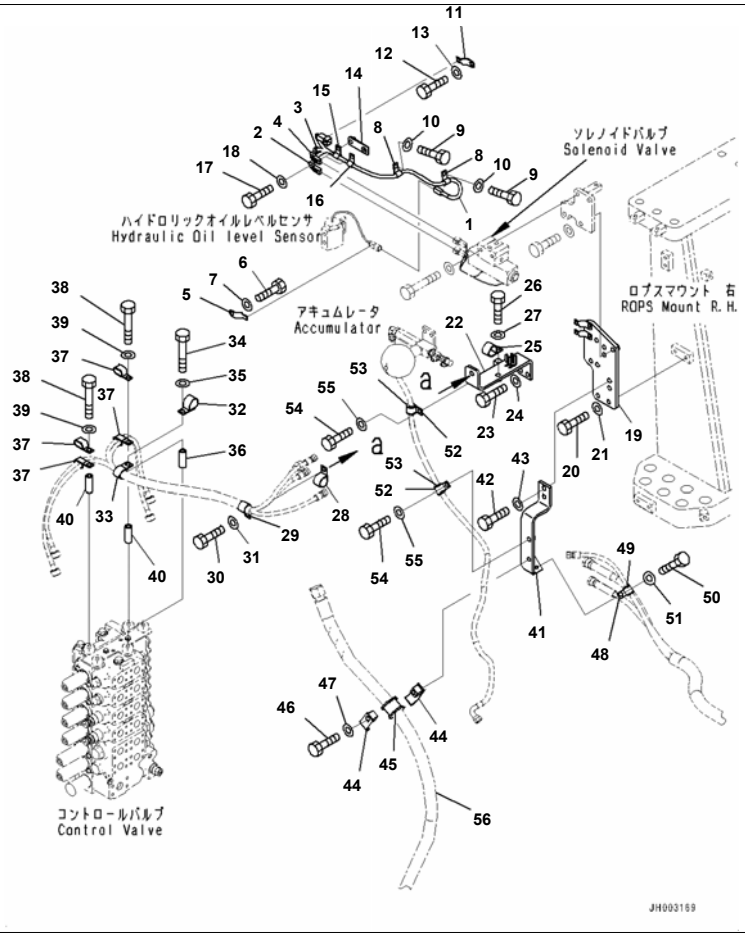

Reference:H2270-001003 Page:H012003

D375A-6R S/N 65001-UP
Proportional Pressure Control (PPC) Circuit, For Dual Tilt Pitch Dozer, Hydraulic Sensor Wiring and Hose Clamp (#65001-65000)

Index	Code	Part Number	Description	Qty	Serial No.
1		195-06-55742	Wiring Harness	1	65001-@
2		20Y-62-22810	· Band, Yellow	1	65001-@
3		20Y-62-22820	· Band, Blue	1	65001-@
4		20Y-62-22840	· Band, Black	1	65001-@
5		08193-20012	Clip	1	65001-@
6		01010-81220	Bolt	1	65001-@
7		01643-31232	Washer	1	65001-@
8		04434-51012	Clip	2	65001-@
9		01010-81220	Bolt	2	65001-@
10		01643-31232	Washer	2	65001-@
11		08193-20012	Clip	1	65001-@
12		01010-81220	Bolt	1	65001-@
13		01643-31232	Washer	1	65001-@
14		195-61-62540	Bracket	1	65001-@
15		04434-51012	Clip	1	65001-@
16		04434-51212	Clip	1	65001-@
17		01010-81230	Bolt	2	65001-65000
18		01643-31232	Washer	2	65001-65000
19		195-61-44411	Bracket	1	65001-@
20		01010-81230	Bolt	4	65001-@
21		01643-31232	Washer	4	65001-@
22		195-61-44421	Bracket	1	65001-@
23		01010-81240	Bolt	2	65001-@
24		01643-31232	Washer	2	65001-@
25		04434-53412	Clip	1	65001-@
26		01010-81230	Bolt	1	65001-@
27		01643-31232	Washer	1	65001-@
28		04434-53212	Clip	1	65001-@
29		04434-52712	Clip	1	65001-@
30		01010-81230	Bolt	1	65001-@

Reference:H2270-001003 Page:H012003

Printed By : Dwi Iswanto (airafather6107170)

Index	Code	Part Number	Description	Qty	Serial No.
31		01643-31232	Washer	1	65001-@
32		04434-53412	Clip	1	65001-@
33		04434-52712	Clip	1	65001-@
34		01010-81290	Bolt	1	65001-@
35		01643-31232	Washer	1	65001-@
36		175-61-17240	Collar	1	65001-@
37		04435-51412	Clip	4	65001-@
38		01010-81290	Bolt	2	65001-@
39		01643-31232	Washer	2	65001-@
40		175-61-17240	Collar	2	65001-@
41		195-61-44430	Bracket	1	65001-@
42		01010-81240	Bolt	2	65001-@
43		01643-31232	Washer	2	65001-@
44		198-61-44210	Clamp	2	65001-@
45		198-04-41210	Cushion	1	65001-@
46		01010-81290	Bolt	1	65001-@
47		01643-31232	Washer	1	65001-@
48		04434-51712	Clip	1	65001-@
49		07095-20211	Cushion	1	65001-@
50		01010-81230	Bolt	1	65001-@
51		01643-31232	Washer	1	65001-@
52		04434-52112	Clip	2	65001-@
53		07095-20314	Cushion	2	65001-@
54		01010-81230	Bolt	2	65001-@
55		01643-31232	Washer	2	65001-@
56		(195-03-66281)	Hose		

Printed By : Dwi Iswanto (airafather6107170)

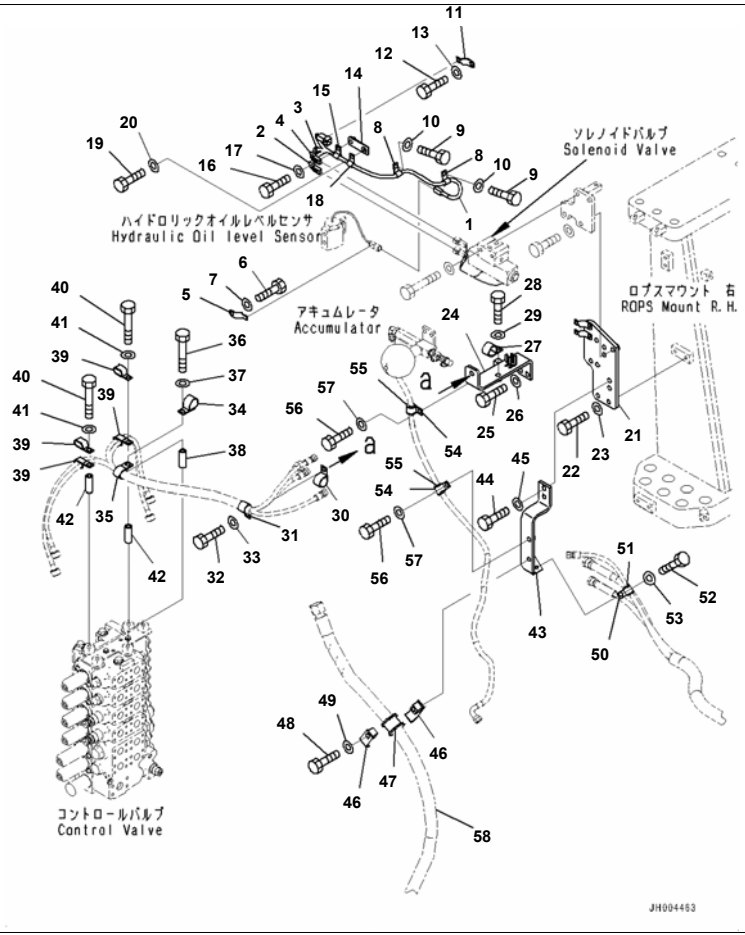

Reference:H2270-001003A Page:H012004

D375A-6R S/N 65001-UP
Proportional Pressure Control (PPC) Circuit, For Dual Tilt Pitch Dozer, Hydraulic Sensor Wiring and Hose Clamp
(#65001-)

Index	Code	Part Number	Description	Qty	Serial No.
1		195-06-55742	Wiring Harness	1	65001-
2		20Y-62-22810	· Band, Yellow	1	65001-
3		20Y-62-22820	· Band, Blue	1	65001-
4		20Y-62-22840	· Band, Black	1	65001-
5		08193-20012	Clip	1	65001-
6		01010-81220	Bolt	1	65001-
7		01643-31232	Washer	1	65001-
8		04434-51012	Clip	2	65001-
9		01010-81220	Bolt	2	65001-
10		01643-31232	Washer	2	65001-
11		08193-20012	Clip	1	65001-
12		01010-81220	Bolt	1	65001-
13		01643-31232	Washer	1	65001-
14		195-61-62540	Bracket	1	65001-
15		04434-51012	Clip	1	65001-
16		01010-81230	Bolt	1	65001-
17		01643-31232	Washer	1	65001-
18		04434-51212	Clip	1	65001-
19		01010-81220	Bolt	1	65001-
20		01643-31232	Washer	1	65001-
21		195-61-44411	Bracket	1	65001-
22		01010-81230	Bolt	4	65001-
23		01643-31232	Washer	4	65001-
24		195-61-44421	Bracket	1	65001-
25		01010-81240	Bolt	2	65001-
26		01643-31232	Washer	2	65001-
27		04434-53412	Clip	1	65001-
28		01010-81230	Bolt	1	65001-
29		01643-31232	Washer	1	65001-
30		04434-53212	Clip	1	65001-

Reference:H2270-001003A Page:H012004

Printed By : Dwi Iswanto (airafather6107170)

Index	Code	Part Number	Description	Qty	Serial No.
31		04434-52712	Clip	1	65001-
32		01010-81230	Bolt	1	65001-
33		01643-31232	Washer	1	65001-
34		04434-53412	Clip	1	65001-
35		04434-52712	Clip	1	65001-
36		01010-81290	Bolt	1	65001-
37		01643-31232	Washer	1	65001-
38		175-61-17240	Collar	1	65001-
39		04435-51412	Clip	4	65001-
40		01010-81290	Bolt	2	65001-
41		01643-31232	Washer	2	65001-
42		175-61-17240	Collar	2	65001-
43		195-61-44430	Bracket	1	65001-
44		01010-81240	Bolt	2	65001-
45		01643-31232	Washer	2	65001-
46		198-61-44210	Clamp	2	65001-
47		198-04-41210	Cushion	1	65001-
48		01010-81290	Bolt	1	65001-
49		01643-31232	Washer	1	65001-
50		04434-51712	Clip	1	65001-
51		07095-20211	Cushion	1	65001-
52		01010-81230	Bolt	1	65001-
53		01643-31232	Washer	1	65001-
54		04434-52112	Clip	2	65001-
55		07095-20314	Cushion	2	65001-
56		01010-81230	Bolt	2	65001-
57		01643-31232	Washer	2	65001-
58		(195-03-66281)	Hose		

Printed By : Dwi Iswanto (airafather6107170)

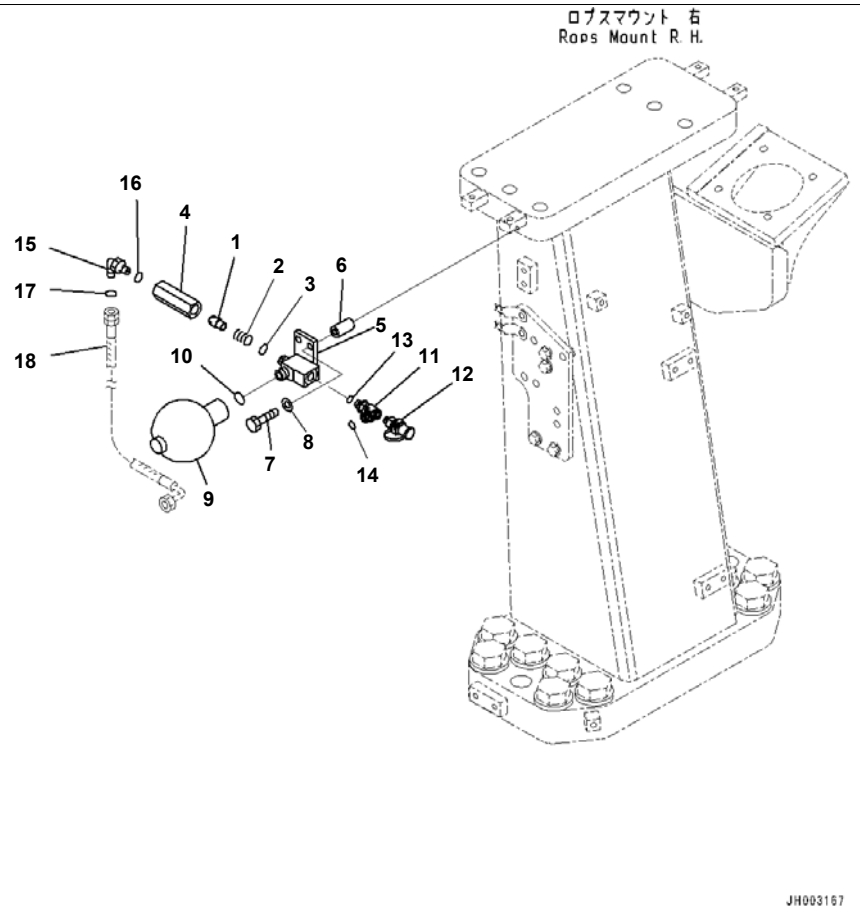

Reference:H2270-002001 Page:H013001

D375A-6R S/N 65001-UP
Proportional Pressure Control (PPC) Circuit, Wiring Harness, Part No. And Manufacturing Date Code, PPC Pressure Circuit (#65001-

Index	Code	Part Number	Description	Qty	Serial No.
		195-60-51300	Valve Assembly	1	65001-
1		20X-62-21950	· Valve	1	65001-
2		203-60-21260	· Spring	1	65001-
3		07002-02034	· O-ring	1	65001-
4		203-62-58670	· Body	1	65001-
5		195-60-51161	· Tee	1	65001-
6		22D-62-12440	Spacer	2	65001-
7		01010-81070	Bolt	2	65001-
8		01643-31032	Washer	2	65001-
9		20Y-60-11430	Accumulator	1	65001-
10		07002-12034	O-ring	1	65001-
11		21M-62-14450	Elbow	1	65001-
12		195-49-36120	Nipple	1	65001-
13		07002-11423	O-ring	1	65001-
14		02896-11009	O-ring	1	65001-
15		02782-10315	Elbow	1	65001-
16		07002-12034	O-ring	1	65001-
17		02896-11009	O-ring	1	65001-
18		(02763-00319)	Hose, Face Seal Type		

Printed By : Dwi Iswanto (airafather6107170)

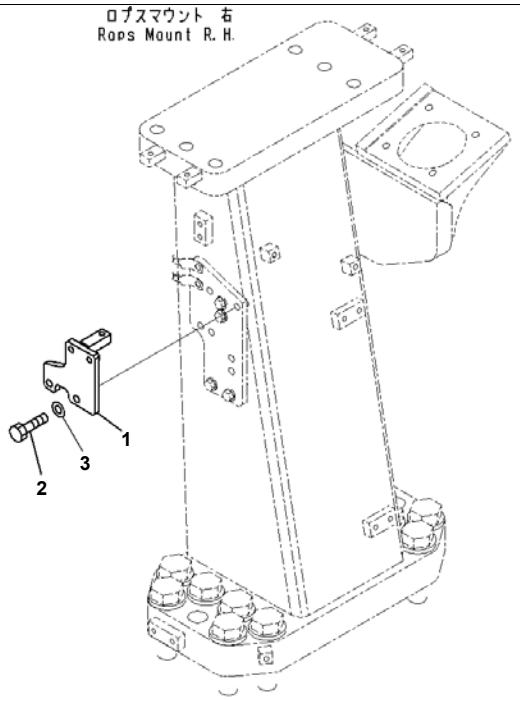

Reference:H2270-002002 Page:H013002

Proportional Pressure Control (PPC) Circuit, Wiring Harness, Part No. And Manufacturing Date Code, Bracket (#65001-)

Index	Code	Part Number	Description	Qty	Serial No.
1		195-61-62111	Bracket	1	65001-
2		01010-81240	Bolt	2	65001-
3		01643-31232	Washer	2	65001-

Reference:H2270-002002 Page:H013002

Printed By : Dwi Iswanto (airafather6107170)

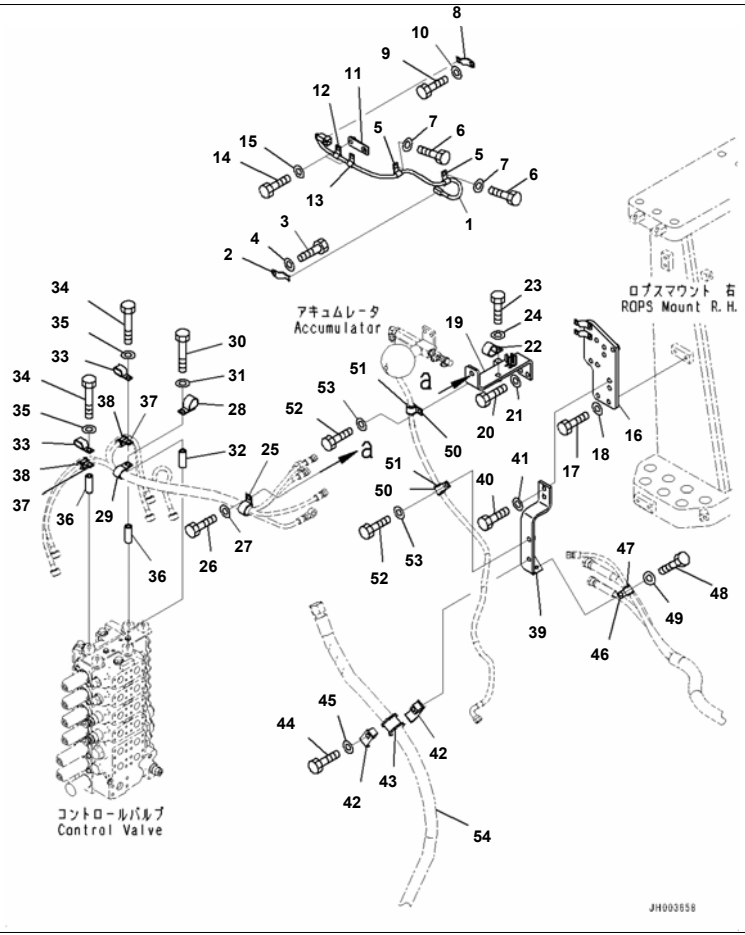

Reference:H2270-002003 Page:H013003

D375A-6R S/N 65001-UP
Proportional Pressure Control (PPC) Circuit, Wiring Harness, Part No. And Manufacturing Date Code, Hydraulic Sensor Wiring and H

Index	Code	Part Number	Description	Qty	Serial No.
1		195-06-55310	Wiring Harness	1	65001-@
2		08193-20012	Clip	1	65001-@
3		01010-81220	Bolt	1	65001-@
4		01643-31232	Washer	1	65001-@
5		04434-51012	Clip	2	65001-@
6		01010-81220	Bolt	2	65001-@
7		01643-31232	Washer	2	65001-@
8		08193-20012	Clip	1	65001-@
9		01010-81220	Bolt	1	65001-@
10		01643-31232	Washer	1	65001-@
11		195-61-62540	Bracket	1	65001-@
12		04434-51012	Clip	1	65001-@
13		04434-51212	Clip	1	65001-65000
14		01010-81230	Bolt	2	65001-65000
15		01643-31232	Washer	2	65001-65000
16		195-61-44411	Bracket	1	65001-@
17		01010-81230	Bolt	4	65001-@
18		01643-31232	Washer	4	65001-@
19		195-61-44421	Bracket	1	65001-@
20		01010-81240	Bolt	2	65001-@
21		01643-31232	Washer	2	65001-@
22		04434-53412	Clip	1	65001-@
23		01010-81230	Bolt	1	65001-@
24		01643-31232	Washer	1	65001-@
25		04434-53412	Clip	1	65001-@
26		01010-81230	Bolt	1	65001-@
27		01643-31232	Washer	1	65001-@
28		04434-53412	Clip	1	65001-65000
29		04434-53412	Clip	1	65001-@
30		01010-81290	Bolt	1	65001-@

Reference:H2270-002003 Page:H013003

Printed By : Dwi Iswanto (airafather6107170)

Index	Code	Part Number	Description	Qty	Serial No.
31		01643-31232	Washer	1	65001-@
32		175-61-17240	Collar	1	65001-@
33		04435-51712	Clip	2	65001-65000
34		01010-81290	Bolt	2	65001-@
35		01643-31232	Washer	2	65001-@
36		175-61-17240	Collar	2	65001-@
37		04434-52112	Clip	2	65001-@
38		07095-20314	Cushion	2	65001-@
39		195-61-44430	Bracket	1	65001-@
40		01010-81240	Bolt	2	65001-@
41		01643-31232	Washer	2	65001-@
42		198-61-44210	Clamp	2	65001-@
43		198-04-41210	Cushion	1	65001-@
44		01010-81290	Bolt	1	65001-@
45		01643-31232	Washer	1	65001-@
46		04434-51712	Clip	1	65001-@
47		07095-20211	Cushion	1	65001-@
48		01010-81230	Bolt	1	65001-@
49		01643-31232	Washer	1	65001-@
50		04434-52112	Clip	2	65001-@
51		07095-20314	Cushion	2	65001-@
52		01010-81230	Bolt	2	65001-@
53		01643-31232	Washer	2	65001-@
54		(195-03-66281)	Hose		

Printed By : Dwi Iswanto (airafather6107170)

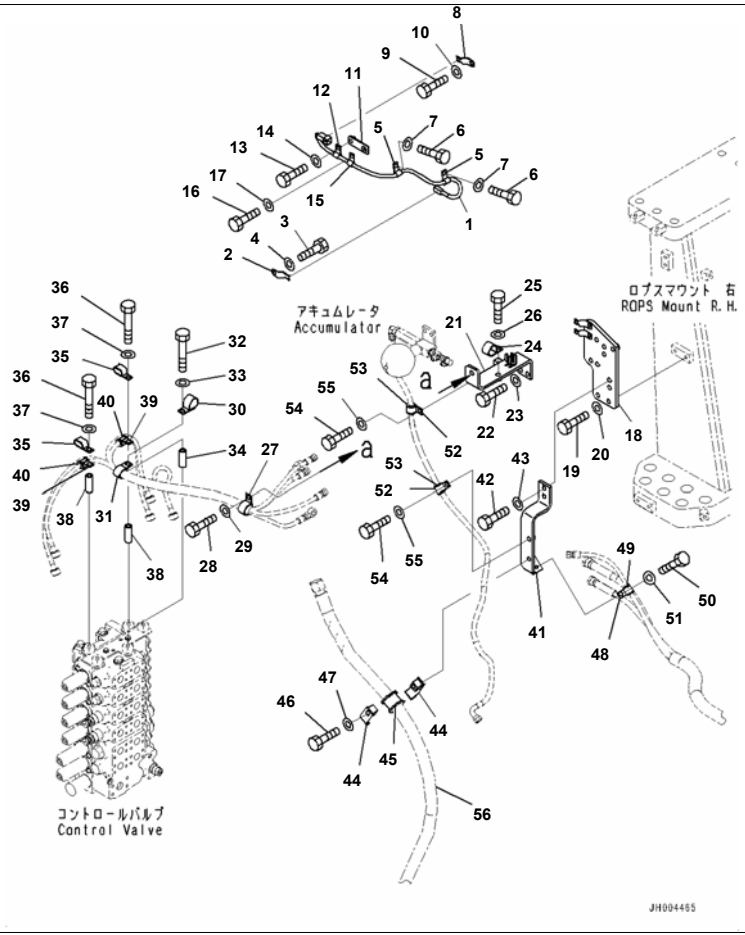

D375A-6R S/N 65001-UP
Proportional Pressure Control (PPC) Circuit, Wiring Harness, Part No. And Manufacturing Date Code, Hydraulic Sensor Wiring and H

Index	Code	Part Number	Description	Qty	Serial No.
1		195-06-55310	Wiring Harness	1	65001-
2		08193-20012	Clip	1	65001-
3		01010-81220	Bolt	1	65001-
4		01643-31232	Washer	1	65001-
5		04434-51012	Clip	2	65001-
6		01010-81220	Bolt	2	65001-
7		01643-31232	Washer	2	65001-
8		08193-20012	Clip	1	65001-
9		01010-81220	Bolt	1	65001-
10		01643-31232	Washer	1	65001-
11		195-61-62540	Bracket	1	65001-
12		04434-51012	Clip	1	65001-
13		01010-81230	Bolt	1	65001-
14		01643-31232	Washer	1	65001-
15		04434-51012	Clip	1	65001-
16		01010-81220	Bolt	1	65001-
17		01643-31232	Washer	1	65001-
18		195-61-44411	Bracket	1	65001-
19		01010-81230	Bolt	4	65001-
20		01643-31232	Washer	4	65001-
21		195-61-44421	Bracket	1	65001-
22		01010-81240	Bolt	2	65001-
23		01643-31232	Washer	2	65001-
24		04434-53412	Clip	1	65001-
25		01010-81230	Bolt	1	65001-
26		01643-31232	Washer	1	65001-
27		04434-53412	Clip	1	65001-
28		01010-81230	Bolt	1	65001-
29		01643-31232	Washer	1	65001-
30		04435-51412	Clip	1	65001-

Printed By : Dwi Iswanto (airafather6107170)

Index	Code	Part Number	Description	Qty	Serial No.
31		04434-53412	Clip	1	65001-
32		01010-81290	Bolt	1	65001-
33		01643-31232	Washer	1	65001-
34		175-61-17240	Collar	1	65001-
35		04435-51412	Clip	2	65001-
36		01010-81290	Bolt	2	65001-
37		01643-31232	Washer	2	65001-
38		175-61-17240	Collar	2	65001-
39		04434-52112	Clip	2	65001-
40		07095-20314	Cushion	2	65001-
41		195-61-44430	Bracket	1	65001-
42		01010-81240	Bolt	2	65001-
43		01643-31232	Washer	2	65001-
44		198-61-44210	Clamp	2	65001-
45		198-04-41210	Cushion	1	65001-
46		01010-81290	Bolt	1	65001-
47		01643-31232	Washer	1	65001-
48		04434-51712	Clip	1	65001-
49		07095-20211	Cushion	1	65001-
50		01010-81230	Bolt	1	65001-
51		01643-31232	Washer	1	65001-
52		04434-52112	Clip	2	65001-
53		07095-20314	Cushion	2	65001-
54		01010-81230	Bolt	2	65001-
55		01643-31232	Washer	2	65001-
56		(195-03-66281)	Hose		

Printed By : Dwi Iswanto (airafather6107170)

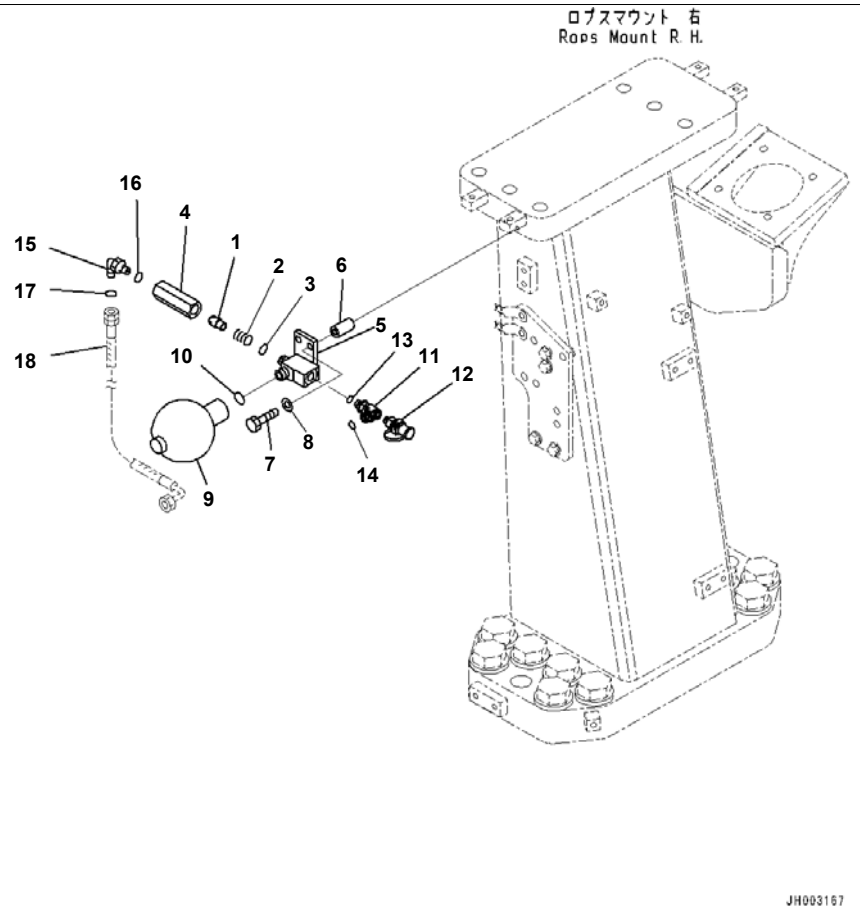

Index	Code	Part Number	Description	Qty	Serial No.
		195-60-51300	Valve Assembly	1	65001-
1		20X-62-21950	· Valve	1	65001-
2		203-60-21260	· Spring	1	65001-
3		07002-02034	· O-ring	1	65001-
4		203-62-58670	· Body	1	65001-
5		195-60-51161	· Tee	1	65001-
6		22D-62-12440	Spacer	2	65001-
7		01010-81070	Bolt	2	65001-
8		01643-31032	Washer	2	65001-
9		20Y-60-11430	Accumulator	1	65001-
10		07002-12034	O-ring	1	65001-
11		21M-62-14450	Elbow	1	65001-
12		195-49-36120	Nipple	1	65001-
13		07002-11423	O-ring	1	65001-
14		02896-11009	O-ring	1	65001-
15		02782-10315	Elbow	1	65001-
16		07002-12034	O-ring	1	65001-
17		02896-11009	O-ring	1	65001-
18		(02763-00319)	Hose, Face Seal Type		

Printed By : Dwi Iswanto (airafather6107170)

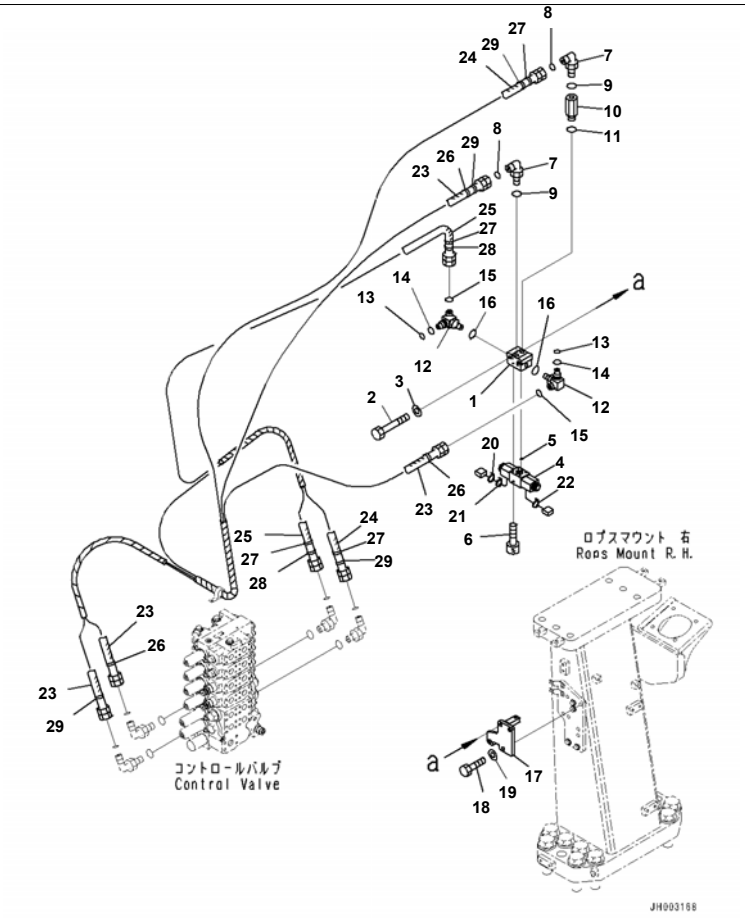

Reference:H2270-003002 Page:H014002

D375A-6R S/N 65001-UP
Proportional Pressure Control (PPC) Circuit, For Dual Tilt Dozer, Solenoid Valve (#65001-)

Index	Code	Part Number	Description	Qty	Serial No.
1		17M-61-42340	Block	1	65001-
2		01010-81085	Bolt	2	65001-
3		01643-31032	Washer	2	65001-
4		198-06-56530	Valve	1	65001-
5		07000-11009	O-ring	4	65001-
6		01252-70545	Bolt, Hexagon Socket Head	4	65001-
7		02782-10210	Elbow	2	65001-
8		02896-11008	O-ring	2	65001-
9		07002-11423	O-ring	2	65001-
10		20Y-62-22160	Adapter	1	65001-
11		07002-11423	O-ring	1	65001-
12		17M-61-42350	Tee	2	65001-
13		201-60-11390	· O-ring	1	65001-
14		20Y-62-19560	· O-ring	1	65001-
15		02896-11008	O-ring	2	65001-
16		07002-11423	O-ring	2	65001-
17		195-61-62111	Bracket	1	65001-
18		01010-81240	Bolt	2	65001-
19		01643-31232	Washer	2	65001-
20		20Y-62-22840	Band, Black	1	65001-
21		20Y-62-22820	Band, Blue	1	65001-
22		20Y-62-22810	Band, Yellow	1	65001-
23		195-61-44661	Hose	2	65001-
24		195-61-44671	Hose	1	65001-
25		195-61-44681	Hose	1	65001-
26		20Y-62-22810	Band, Yellow	2	65001-
27		20Y-62-22820	Band, Blue	4	65001-
28		20Y-62-22840	Band, Black	2	65001-
29		20Y-62-22850	Band, Green	4	65001-

Printed By : Dwi Iswanto (airafather6107170)

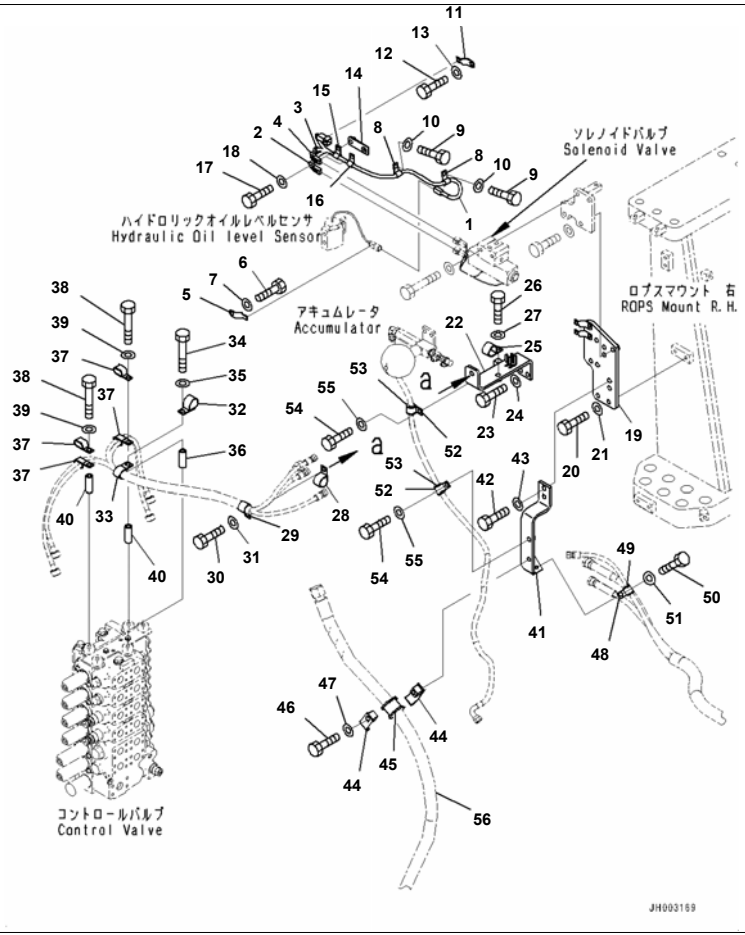

Reference:H2270-003003 Page:H014003

D375A-6R S/N 65001-UP
Proportional Pressure Control (PPC) Circuit, For Dual Tilt Dozer, Hydraulic Sensor Wiring and Hose Clamp (#65001-65000)

Index	Code	Part Number	Description	Qty	Serial No.
1		195-06-57740	Wiring Harness	1	65001-@
2		20Y-62-22810	· Band, Yellow	1	65001-@
3		20Y-62-22820	· Band, Blue	1	65001-@
4		20Y-62-22840	· Band, Black	1	65001-@
5		08193-20012	Clip	1	65001-@
6		01010-81220	Bolt	1	65001-@
7		01643-31232	Washer	1	65001-@
8		04434-51012	Clip	2	65001-@
9		01010-81220	Bolt	2	65001-@
10		01643-31232	Washer	2	65001-@
11		08193-20012	Clip	1	65001-@
12		01010-81220	Bolt	1	65001-65000
13		01643-31232	Washer	1	65001-65000
14		195-61-62540	Bracket	1	65001-@
15		04434-51012	Clip	1	65001-65000
16		04434-51212	Clip	1	65001-@
17		01010-81230	Bolt	2	65001-65000
18		01643-31232	Washer	2	65001-@
19		195-61-44411	Bracket	1	65001-@
20		01010-81230	Bolt	4	65001-@
21		01643-31232	Washer	4	65001-65000
22		195-61-44421	Bracket	1	65001-@
23		01010-81240	Bolt	2	65001-@
24		01643-31232	Washer	2	65001-@
25		04434-53412	Clip	1	65001-@
26		01010-81230	Bolt	1	65001-@
27		01643-31232	Washer	1	65001-@
28		04434-53212	Clip	1	65001-@
29		04434-52712	Clip	1	65001-@
30		01010-81230	Bolt	1	65001-@

Reference:H2270-003003 Page:H014003

Printed By : Dwi Iswanto (airafather6107170)

Index	Code	Part Number	Description	Qty	Serial No.
31		01643-31232	Washer	1	65001-@
32		04434-53412	Clip	1	65001-@
33		04434-52712	Clip	1	65001-@
34		01010-81290	Bolt	1	65001-@
35		01643-31232	Washer	1	65001-@
36		175-61-17240	Collar	1	65001-@
37		04435-51412	Clip	4	65001-@
38		01010-81290	Bolt	2	65001-@
39		01643-31232	Washer	2	65001-@
40		175-61-17240	Collar	2	65001-@
41		195-61-44430	Bracket	1	65001-@
42		01010-81240	Bolt	2	65001-@
43		01643-31232	Washer	2	65001-@
44		198-61-44210	Clamp	2	65001-@
45		198-04-41210	Cushion	1	65001-@
46		01010-81290	Bolt	1	65001-@
47		01643-31232	Washer	1	65001-@
48		04434-51712	Clip	1	65001-@
49		07095-20211	Cushion	1	65001-@
50		01010-81230	Bolt	1	65001-@
51		01643-31232	Washer	1	65001-@
52		04434-52112	Clip	2	65001-@
53		07095-20314	Cushion	2	65001-@
54		01010-81230	Bolt	2	65001-@
55		01643-31232	Washer	2	65001-@
56		(195-03-66281)	Hose		

Printed By : Dwi Iswanto (airafather6107170)

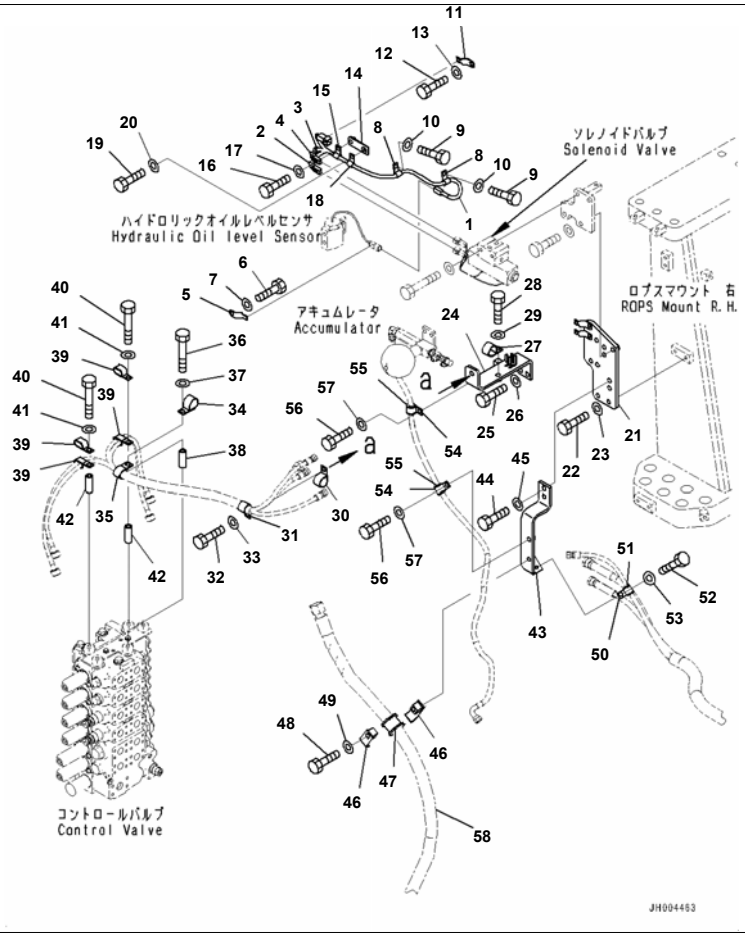

Reference:H2270-003003A Page:H014004

D375A-6R S/N 65001-UP

Proportional Pressure Control (PPC) Circuit, For Dual Tilt Dozer, Hydraulic Sensor Wiring and Hose Clamp (#65001-)

Index	Code	Part Number	Description	Qty	Serial No.
1		195-06-57740	Wiring Harness	1	65001-
2		20Y-62-22810	· Band, Yellow	1	65001-
3		20Y-62-22820	· Band, Blue	1	65001-
4		20Y-62-22840	· Band, Black	1	65001-
5		08193-20012	Clip	1	65001-
6		01010-81220	Bolt	1	65001-
7		01643-31232	Washer	1	65001-
8		04434-51012	Clip	2	65001-
9		01010-81220	Bolt	2	65001-
10		01643-31232	Washer	2	65001-
11		08193-20012	Clip	1	65001-
12		01010-81220	Bolt	1	65001-
13		01643-31232	Washer	1	65001-
14		195-61-62540	Bracket	1	65001-
15		04434-51012	Clip	1	65001-
16		01010-81230	Bolt	1	65001-
17		01643-31232	Washer	1	65001-
18		04434-51212	Clip	1	65001-
19		01010-81220	Bolt	1	65001-
20		01643-31232	Washer	1	65001-
21		195-61-44411	Bracket	1	65001-
22		01010-81230	Bolt	4	65001-
23		01643-31232	Washer	4	65001-
24		195-61-44421	Bracket	1	65001-
25		01010-81240	Bolt	2	65001-
26		01643-31232	Washer	2	65001-
27		04434-53412	Clip	1	65001-
28		01010-81230	Bolt	1	65001-
29		01643-31232	Washer	1	65001-
30		04434-53212	Clip	1	65001-
31		04434-52712	Clip	1	65001-

Reference:H2270-003003A Page:H014004

Printed By : Dwi Iswanto (airafather6107170)

Proportional Pressure Control (PPC) Circuit, For Dual Tilt Dozer, Hydraulic Sensor Wiring and Hose Clamp (#65001-)

Index	Code	Part Number	Description	Qty	Serial No.
32		01010-81230	Bolt	1	65001-
33		01643-31232	Washer	1	65001-
34		04434-53412	Clip	1	65001-
35		04434-52712	Clip	1	65001-
36		01010-81290	Bolt	1	65001-
37		01643-31232	Washer	1	65001-
38		175-61-17240	Collar	1	65001-
39		04435-51412	Clip	4	65001-
40		01010-81290	Bolt	2	65001-
41		01643-31232	Washer	2	65001-
42		175-61-17240	Collar	2	65001-
43		195-61-44430	Bracket	1	65001-
44		01010-81240	Bolt	2	65001-
45		01643-31232	Washer	2	65001-
46		198-61-44210	Clamp	2	65001-
47		198-04-41210	Cushion	1	65001-
48		01010-81290	Bolt	1	65001-
49		01643-31232	Washer	1	65001-
50		04434-51712	Clip	1	65001-
51		07095-20211	Cushion	1	65001-
52		01010-81230	Bolt	1	65001-
53		01643-31232	Washer	1	65001-
54		04434-52112	Clip	2	65001-
55		07095-20314	Cushion	2	65001-
56		01010-81230	Bolt	2	65001-
57		01643-31232	Washer	2	65001-
58		(195-03-66281)	Hose		

Printed By : Dwi Iswanto (airafather6107170)

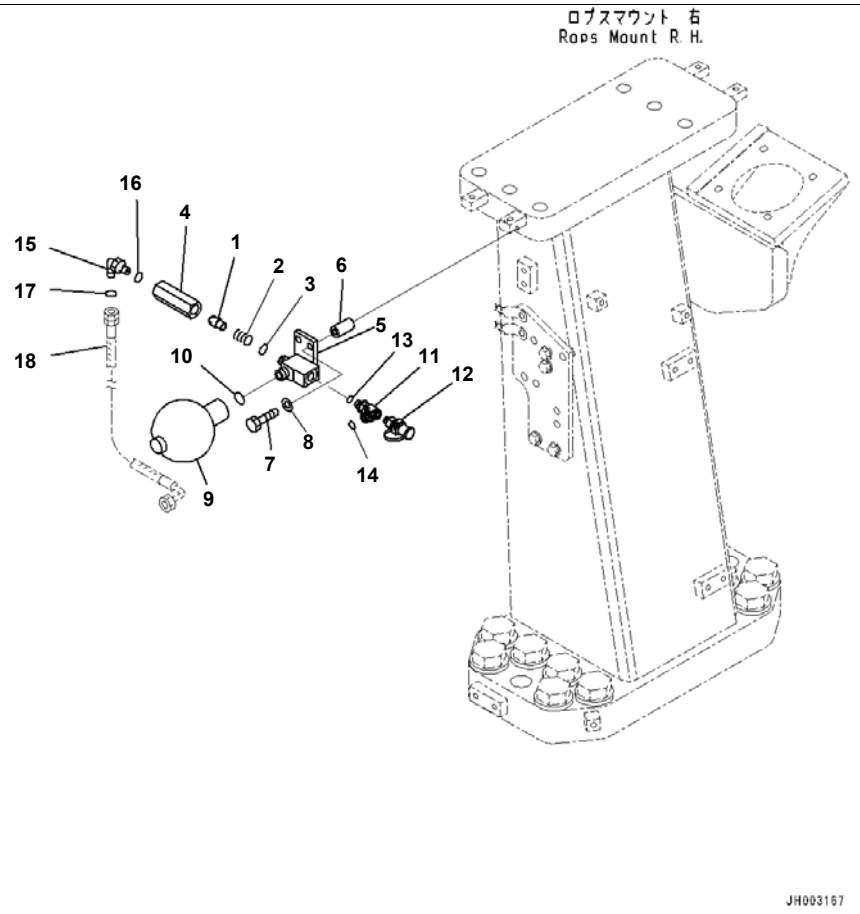

Index	Code	Part Number	Description	Qty	Serial No.
		195-60-51300	Valve Assembly	1	65001-
1		20X-62-21950	· Valve	1	65001-
2		203-60-21260	· Spring	1	65001-
3		07002-02034	· O-ring	1	65001-
4		203-62-58670	· Body	1	65001-
5		195-60-51161	· Tee	1	65001-
6		22D-62-12440	Spacer	2	65001-
7		01010-81070	Bolt	2	65001-
8		01643-31032	Washer	2	65001-
9		20Y-60-11430	Accumulator	1	65001-
10		07002-12034	O-ring	1	65001-
11		21M-62-14450	Elbow	1	65001-
12		195-49-36120	Nipple	1	65001-
13		07002-11423	O-ring	1	65001-
14		02896-11009	O-ring	1	65001-
15		02782-10315	Elbow	1	65001-
16		07002-12034	O-ring	1	65001-
17		02896-11009	O-ring	1	65001-
18		(02763-00319)	Hose, Face Seal Type		

Printed By : Dwi Iswanto (airafather6107170)

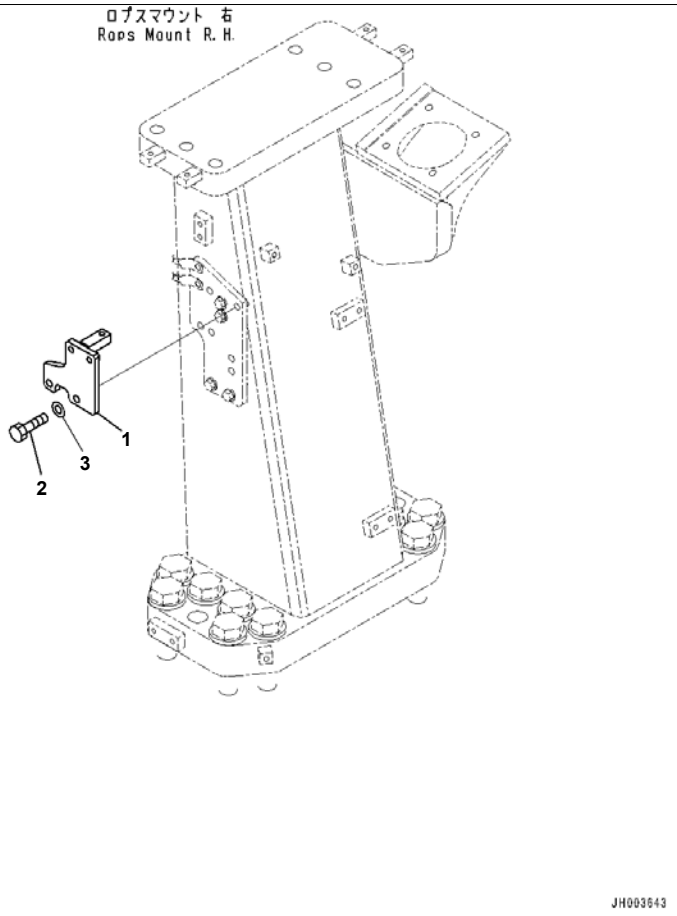

D375A-6R S/N 65001-UP
Proportional Pressure Control (PPC) Circuit, Bracket (#65001-)

Index	Code	Part Number	Description	Qty	Serial No.
1		195-61-62111	Bracket	1	65001-
2		01010-81240	Bolt	2	65001-
3		01643-31232	Washer	2	65001-

Printed By : Dwi Iswanto (airafather6107170)

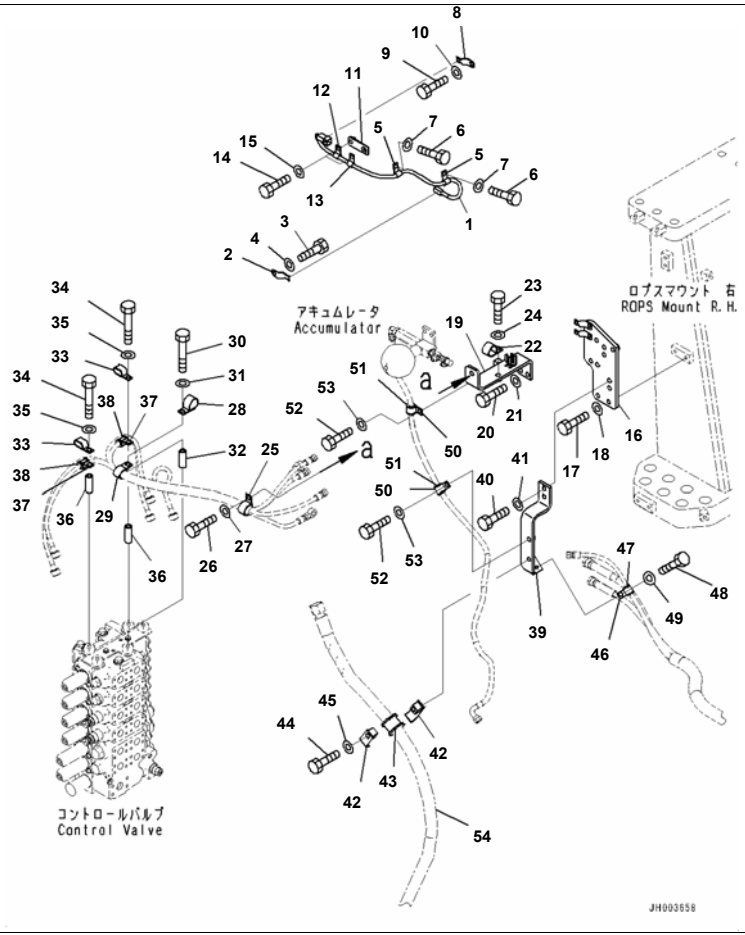

Reference:H2270-004003 Page:H015003

D375A-6R S/N 65001-UP
Proportional Pressure Control (PPC) Circuit, Hydraulic Sensor Wiring and Hose Clamp (#65001-65000)

Index	Code	Part Number	Description	Qty	Serial No.
1		195-06-57310	Wiring Harness	1	65001-@
2		08193-20012	Clip	1	65001-@
3		01010-81220	Bolt	1	65001-@
4		01643-31232	Washer	1	65001-@
5		04434-51012	Clip	2	65001-@
6		01010-81220	Bolt	2	65001-@
7		01643-31232	Washer	2	65001-@
8		08193-20012	Clip	1	65001-@
9		01010-81220	Bolt	1	65001-@
10		01643-31232	Washer	1	65001-@
11		195-61-62540	Bracket	1	65001-@
12		04434-51012	Clip	1	65001-@
13		04434-51212	Clip	1	65001-65000
14		01010-81230	Bolt	2	65001-65000
15		01643-31232	Washer	2	65001-65000
16		195-61-44411	Bracket	1	65001-@
17		01010-81230	Bolt	4	65001-@
18		01643-31232	Washer	4	65001-@
19		195-61-44421	Bracket	1	65001-@
20		01010-81240	Bolt	2	65001-@
21		01643-31232	Washer	2	65001-@
22		04434-53412	Clip	1	65001-@
23		01010-81230	Bolt	1	65001-@
24		01643-31232	Washer	1	65001-@
25		04434-53412	Clip	1	65001-@
26		01010-81230	Bolt	1	65001-@
27		01643-31232	Washer	1	65001-@
28		04434-53412	Clip	1	65001-65000
29		04434-53412	Clip	1	65001-@
30		01010-81290	Bolt	1	65001-@
31		01643-31232	Washer	1	65001-@

Printed By : Dwi Iswanto (airafather6107170)

Proportional Pressure Control (PPC) Circuit, Hydraulic Sensor Wiring and Hose Clamp (#65001-65000)

Index	Code	Part Number	Description	Qty	Serial No.
32		175-61-17240	Collar	1	65001-@
33		04435-51712	Clip	2	65001-65000
34		01010-81290	Bolt	2	65001-@
35		01643-31232	Washer	2	65001-@
36		175-61-17240	Collar	2	65001-@
37		04434-52112	Clip	2	65001-@
38		07095-20314	Cushion	2	65001-@
39		195-61-44430	Bracket	1	65001-@
40		01010-81240	Bolt	2	65001-@
41		01643-31232	Washer	2	65001-@
42		198-61-44210	Clamp	2	65001-@
43		198-04-41210	Cushion	1	65001-@
44		01010-81290	Bolt	1	65001-@
45		01643-31232	Washer	1	65001-@
46		04434-51712	Clip	1	65001-@
47		07095-20211	Cushion	1	65001-@
48		01010-81230	Bolt	1	65001-@
49		01643-31232	Washer	1	65001-@
50		04434-52112	Clip	2	65001-@
51		07095-20314	Cushion	2	65001-@
52		01010-81230	Bolt	2	65001-@
53		01643-31232	Washer	2	65001-@
54		(195-03-66281)	Hose		

Printed By : Dwi Iswanto (airafather6107170)

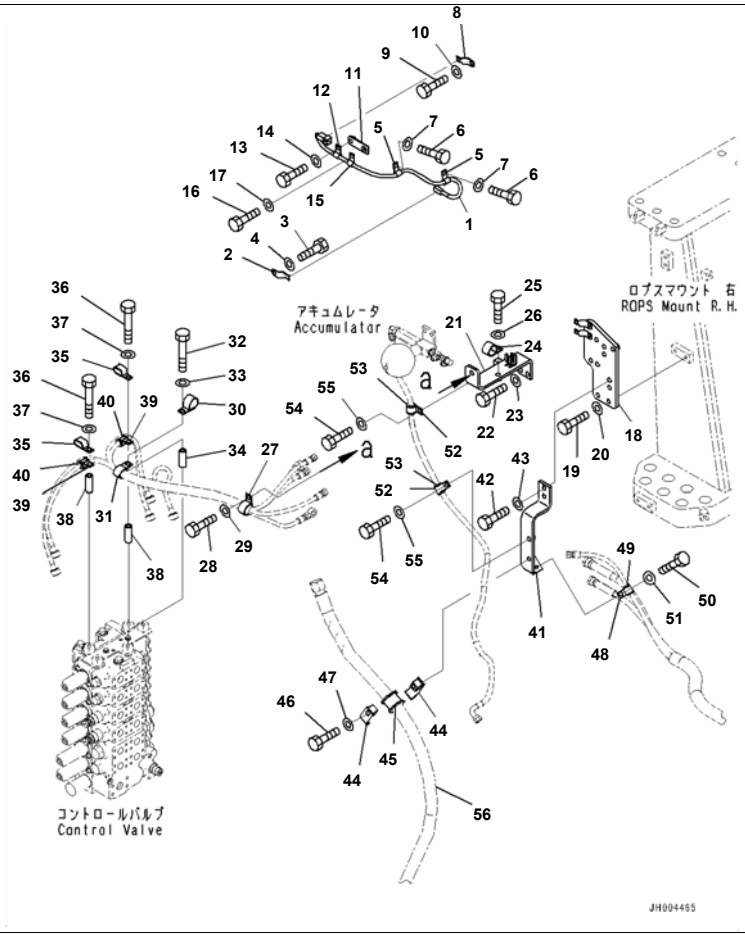

Reference:H2270-004003A Page:H015004

D375A-6R S/N 65001-UP
Proportional Pressure Control (PPC) Circuit, Hydraulic Sensor Wiring and Hose Clamp (#65001-)

Index	Code	Part Number	Description	Qty	Serial No.
1		195-06-57310	Wiring Harness	1	65001-
2		08193-20012	Clip	1	65001-
3		01010-81220	Bolt	1	65001-
4		01643-31232	Washer	1	65001-
5		04434-51012	Clip	2	65001-
6		01010-81220	Bolt	2	65001-
7		01643-31232	Washer	2	65001-
8		08193-20012	Clip	1	65001-
9		01010-81220	Bolt	1	65001-
10		01643-31232	Washer	1	65001-
11		195-61-62540	Bracket	1	65001-
12		04434-51012	Clip	1	65001-
13		01010-81230	Bolt	1	65001-
14		01643-31232	Washer	1	65001-
15		04434-51012	Clip	1	65001-
16		01010-81220	Bolt	1	65001-
17		01643-31232	Washer	1	65001-
18		195-61-44411	Bracket	1	65001-
19		01010-81230	Bolt	4	65001-
20		01643-31232	Washer	4	65001-
21		195-61-44421	Bracket	1	65001-
22		01010-81240	Bolt	2	65001-
23		01643-31232	Washer	2	65001-
24		04434-53412	Clip	1	65001-
25		01010-81230	Bolt	1	65001-
26		01643-31232	Washer	1	65001-
27		04434-53412	Clip	1	65001-
28		01010-81230	Bolt	1	65001-
29		01643-31232	Washer	1	65001-
30		04435-51412	Clip	1	65001-
31		04434-53412	Clip	1	65001-

Printed By : Dwi Iswanto (airafather6107170)

Proportional Pressure Control (PPC) Circuit, Hydraulic Sensor Wiring and Hose Clamp (#65001-)

Index	Code	Part Number	Description	Qty	Serial No.
32		01010-81290	Bolt	1	65001-
33		01643-31232	Washer	1	65001-
34		175-61-17240	Collar	1	65001-
35		04435-51412	Clip	2	65001-
36		01010-81290	Bolt	2	65001-
37		01643-31232	Washer	2	65001-
38		175-61-17240	Collar	2	65001-
39		04434-52112	Clip	2	65001-
40		07095-20314	Cushion	2	65001-
41		195-61-44430	Bracket	1	65001-
42		01010-81240	Bolt	2	65001-
43		01643-31232	Washer	2	65001-
44		198-61-44210	Clamp	2	65001-
45		198-04-41210	Cushion	1	65001-
46		01010-81290	Bolt	1	65001-
47		01643-31232	Washer	1	65001-
48		04434-51712	Clip	1	65001-
49		07095-20211	Cushion	1	65001-
50		01010-81230	Bolt	1	65001-
51		01643-31232	Washer	1	65001-
52		04434-52112	Clip	2	65001-
53		07095-20314	Cushion	2	65001-
54		01010-81230	Bolt	2	65001-
55		01643-31232	Washer	2	65001-
56		(195-03-66281)	Hose		

Printed By : Dwi Iswanto (airafather6107170)

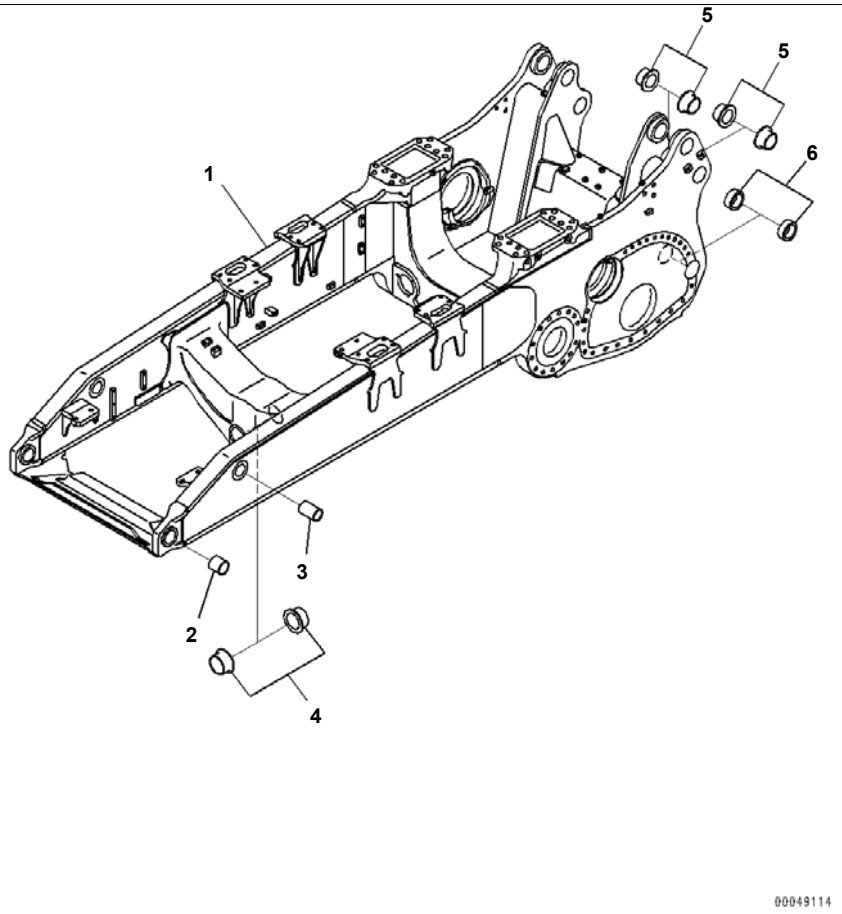

Index	Code	Part Number	Description	Qty	Serial No.
1		195-21-42710	Frame	1	65001-
2		195-21-32510	Bushing	2	65001-
3		195-21-32522	Bushing	2	65001-
4		195-50-41140	Bushing	2	65001-
5		195-21-32670	Bushing	8	65001-
6		195-21-32480	Bushing	4	65001-

Printed By : Dwi Iswanto (airafather6107170)

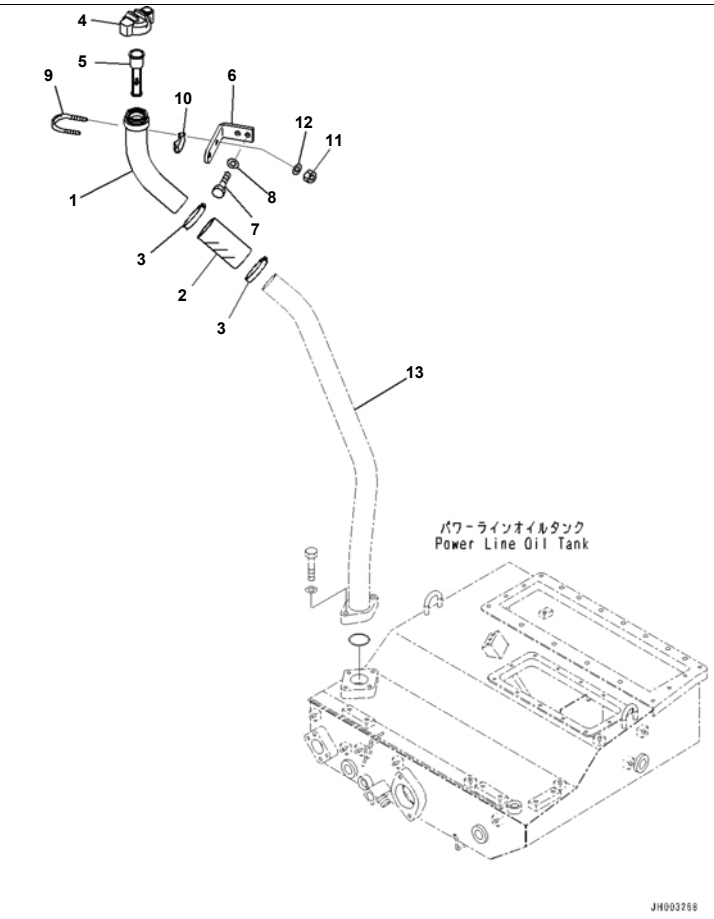

Index	Code	Part Number	Description	Qty	Serial No.
1		195-49-73451	Tube	1	65001-
2		07260-25814	Hose	1	65001-
3		07281-00809	Clamp, Hose	2	65001-
4		175-21-35231	Cap	1	65001-
5		07056-10045	Strainer	1	65001-
6		195-49-73461	Plate	1	65001-
7		01010-81235	Bolt	2	65001-
8		01643-31232	Washer	2	65001-
9		07283-36163	Clip	1	65001-
10		07283-56170	Seat, Pipe Clip	1	65001-
11		01597-01009	Nut	2	65001-
12		01643-31032	Washer	2	65001-
13		(195-49-73311)	Tube		

Printed By : Dwi Iswanto (airafather6107170)

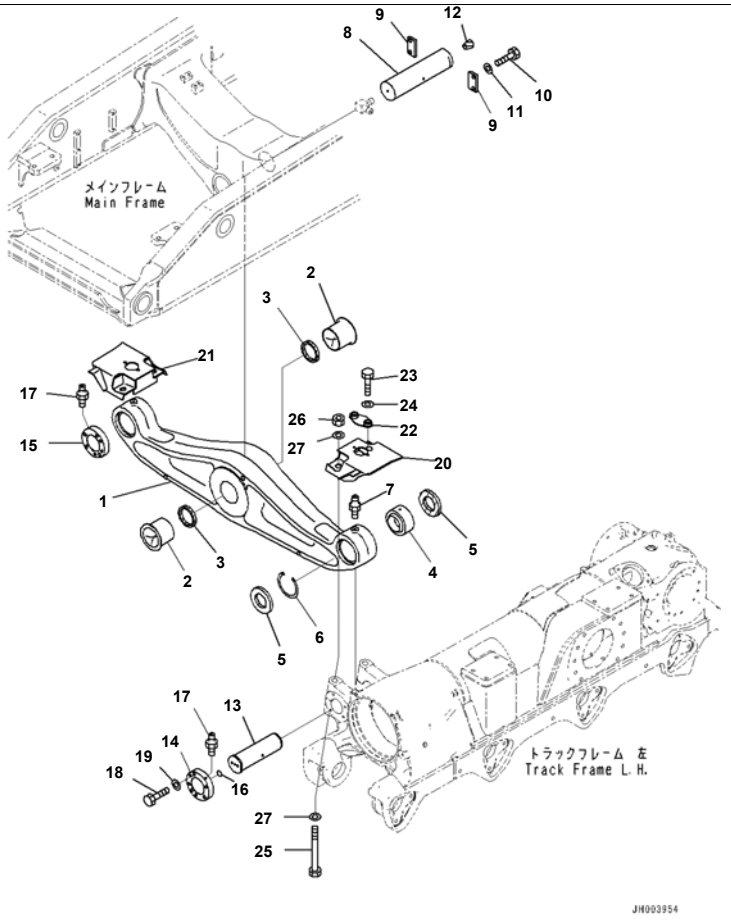

Reference:J2700-004001 Page:J003001

D375A-6R S/N 65001-UP
Equalizer Bar And Pivot Shaft, For Dual Tilt Dozer, Equalizer Bar (#65001-)

Index	Code	Part Number	Description	Qty	Serial No.
		195-50-00182	Equalizer Bar Assembly	1	65001-
1	C1		· Equalizer Bar	1	65001-
2		195-50-41132	· Bushing	2	65001-
3		195-78-41320	· Seal, Dust	2	65001-
4		195-50-41161	· Bushing	2	65001-
5		195-50-41170	· Seal	4	65001-
6		04071-00160	· Ring, Snap, for Hole Side	2	65001-
7		07020-00000	· Fitting, Grease	2	65001-
8		195-50-41120	Pin	1	65001-
9		195-50-11320	Plate	2	65001-
10		01010-82050	Bolt	4	65001-
11		01643-32060	Washer	4	65001-
12		07049-02430	Plug	1	65001-
13		195-50-51150	Shaft	2	65001-
14		195-50-51360	Cover,LHS	1	65001-
15		195-50-51370	Cover,RHS	1	65001-
16		07000-12020	O-ring	2	65001-
17		07213-50710	Connector	2	65001-
18		01010-81665	Bolt	8	65001-
19		01643-31645	Washer	8	65001-
20		195-50-51310	Cover,LHS	1	65001-
21		195-50-51320	Cover,RHS	1	65001-
22		198-50-61350	Cover	2	65001-
23		01010-81225	Bolt	4	65001-
24		01643-31232	Washer	4	65001-
25		195-50-51510	Bolt	4	65001-
26		01803-03034	Nut	4	65001-
27		01643-33080	Washer	8	65001-

Reference:J2700-004001 Page:J003001

Printed By : Dwi Iswanto (airafather6107170)

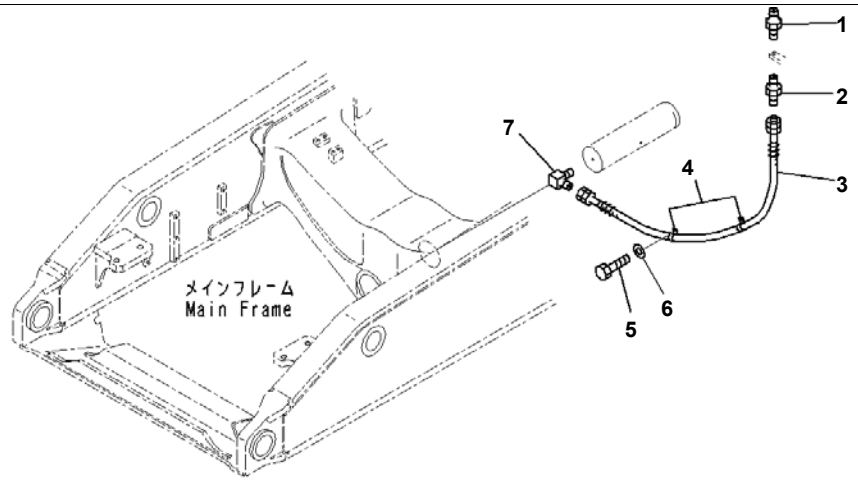

Reference:J2700-004002 Page:J003002

Index	Code	Part Number	Description	Qty	Serial No.
1		07020-00000	Fitting, Grease	1	65001-
2		203-62-21740	Nipple	1	65001-
3		175-54-35340	Hose	1	65001-
4		198-904-4280	Clip	2	65001-
5		01010-81016	Bolt	2	65001-
6		01643-31032	Washer	2	65001-
7		202-62-21430	Elbow	1	65001-

Reference:J2700-004002 Page:J003002

Printed By : Dwi Iswanto (airafather6107170)

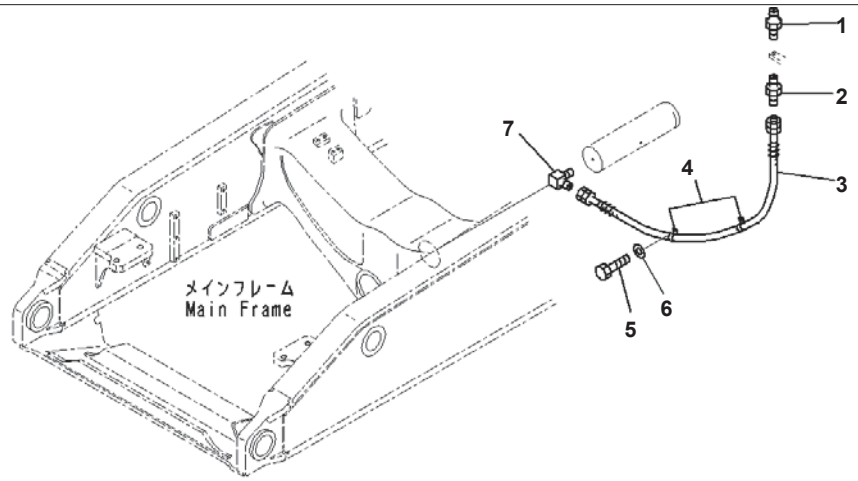

Reference:J2700-004002 Page:J003002

D375A-6R S/N 65001-UP
Equalizer Bar And Pivot Shaft, For Dual Tilt Dozer, Lubrication (#65001-)

Index	Code	Part Number	Description	Qty	Serial No.
1		07020-00000	Fitting, Grease	1	65001-
2		203-62-21740	Nipple	1	65001-
3		175-54-35340	Hose	1	65001-
4		198-904-4280	Clip	2	65001-
5		01010-81016	Bolt	2	65001-
6		01643-31032	Washer	2	65001-
7		202-62-21430	Elbow	1	65001-

Reference:J2700-004002 Page:J003002

Printed By : Dwi Iswanto (airafather6107170)

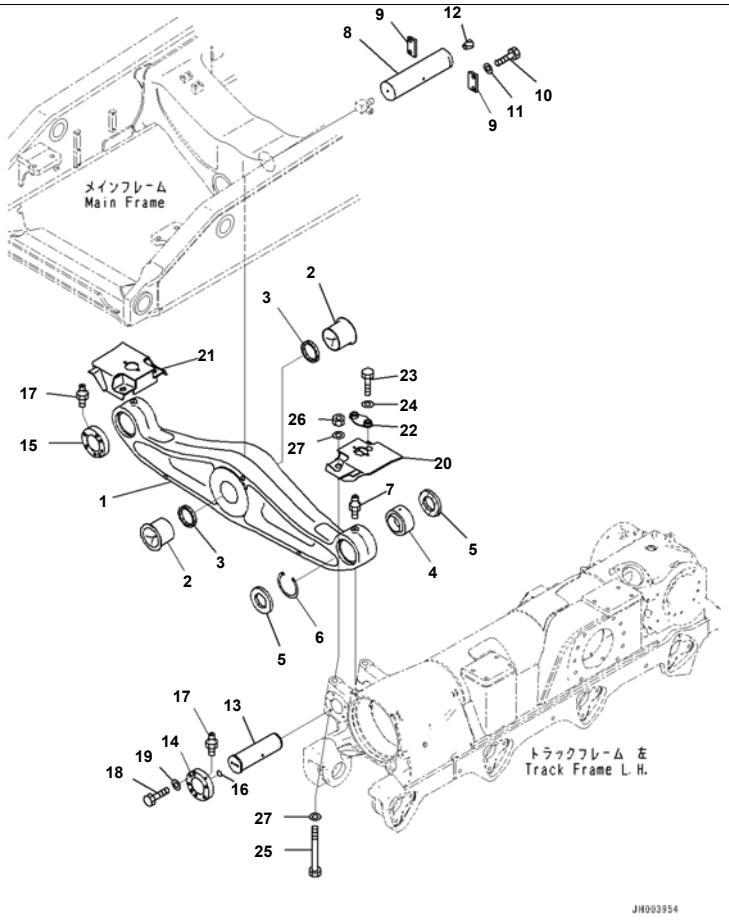

D375A-6R S/N 65001-UP
Equalizer Bar And Pivot Shaft, Equalizer Bar (#65001-)

Index	Code	Part Number	Description	Qty	Serial No.
		195-50-00182	Equalizer Bar Assembly	1	65001-
1	C1		· Equalizer Bar	1	65001-
2		195-50-41132	· Bushing	2	65001-
3		195-78-41320	· Seal, Dust	2	65001-
4		195-50-41161	· Bushing	2	65001-
5		195-50-41170	· Seal	4	65001-
6		04071-00160	· Ring, Snap, for Hole Side	2	65001-
7		07020-00000	· Fitting, Grease	2	65001-
8		195-50-41120	Pin	1	65001-
9		195-50-11320	Plate	2	65001-
10		01010-82050	Bolt	4	65001-
11		01643-32060	Washer	4	65001-
12		07049-02430	Plug	1	65001-
13		195-50-51150	Shaft	2	65001-
14		195-50-51360	Cover,LHS	1	65001-
15		195-50-51370	Cover,RHS	1	65001-
16		07000-12020	O-ring	2	65001-
17		07213-50710	Connector	2	65001-
18		01010-81665	Bolt	8	65001-
19		01643-31645	Washer	8	65001-
20		195-50-51310	Cover,LHS	1	65001-
21		195-50-51320	Cover,RHS	1	65001-
22		198-50-61350	Cover	2	65001-
23		01010-81225	Bolt	4	65001-
24		01643-31232	Washer	4	65001-
25		195-50-51510	Bolt	4	65001-
26		01803-03034	Nut	4	65001-
27		01643-33080	Washer	8	65001-

Printed By : Dwi Iswanto (airafather6107170)

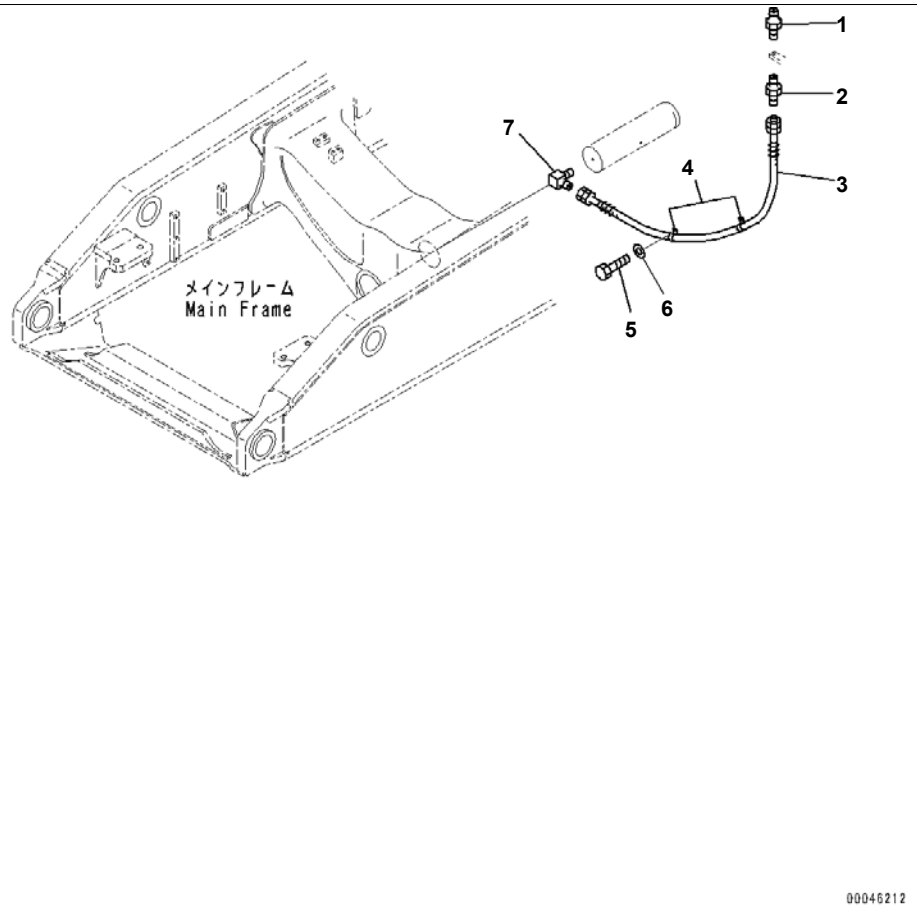

Reference:J2700-003002 Page:J004002

Index	Code	Part Number	Description	Qty	Serial No.
1		07020-00000	Fitting, Grease	1	65001-
2		203-62-21740	Nipple	1	65001-
3		175-54-35340	Hose	1	65001-
4		198-904-4280	Clip	2	65001-
5		01010-81016	Bolt	2	65001-
6		01643-31032	Washer	2	65001-
7		202-62-21430	Elbow	1	65001-

Reference:J2700-003002 Page:J004002

Printed By : Dwi Iswanto (airafather6107170)

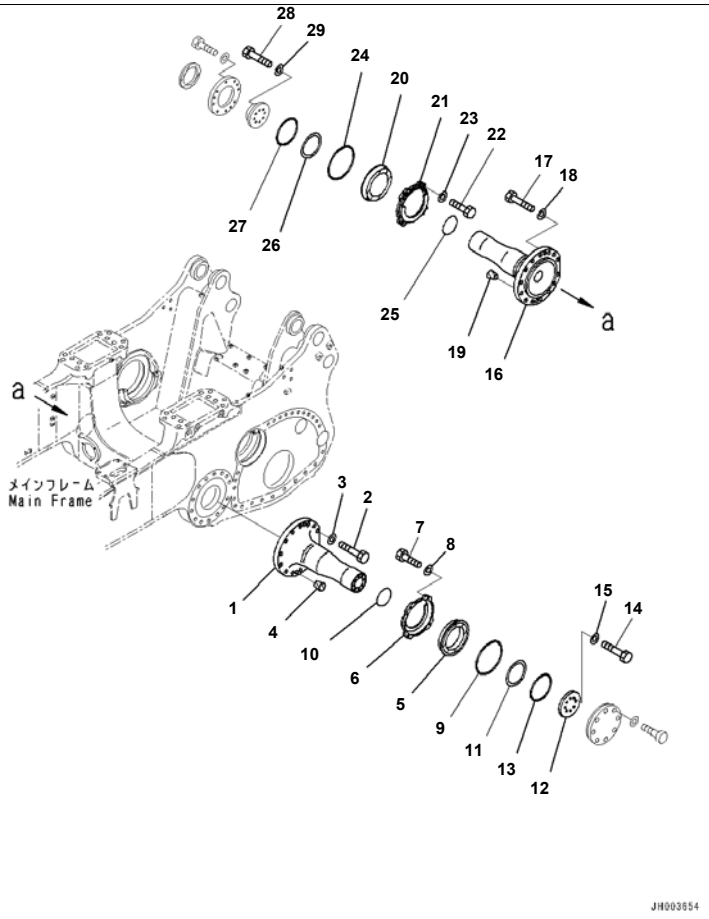

Reference:J2700-003003 Page:J004003

D375A-6R S/N 65001-UP
Equalizer Bar And Pivot Shaft, Pivot Shaft (#65001-)

Index	Code	Part Number	Description	Qty	Serial No.
1		195-50-42210	Shaft	1	65001-
2		01011-83000	Bolt	14	65001-
3		01643-33080	Washer	14	65001-
4		07049-03038	Plug	2	65001-
5		195-50-22151	Seal	1	65001-
6		195-50-22140	Cover	1	65001-
7		01010-81645	Bolt	4	65001-
8		01643-31645	Washer	4	65001-
9		07000-15300	O-ring	1	65001-
10		07000-15155	O-ring	1	65001-
11		195-50-22170	Spacer	1	65001-
12		195-50-42260	Washer	1	65001-
13		07000-15250	O-ring	1	65001-
14		01010-81650	Bolt	8	65001-
15		01643-51645	Washer	8	65001-
16		195-50-42111	Shaft	1	65001-
17		01011-83000	Bolt	14	65001-
18		01643-33080	Washer	14	65001-
19		07049-03038	Plug	2	65001-
20		195-50-22151	Seal	1	65001-
21		195-50-22140	Cover	1	65001-
22		01010-81645	Bolt	4	65001-
23		01643-31645	Washer	4	65001-
24		07000-15300	O-ring	1	65001-
25		07000-15155	O-ring	1	65001-
26		195-50-22170	Spacer	1	65001-
27		07000-15250	O-ring	1	65001-
28		01010-81690	Bolt	8	65001-
29		01643-51645	Washer	8	65001-

Printed By : Dwi Iswanto (airafather6107170)

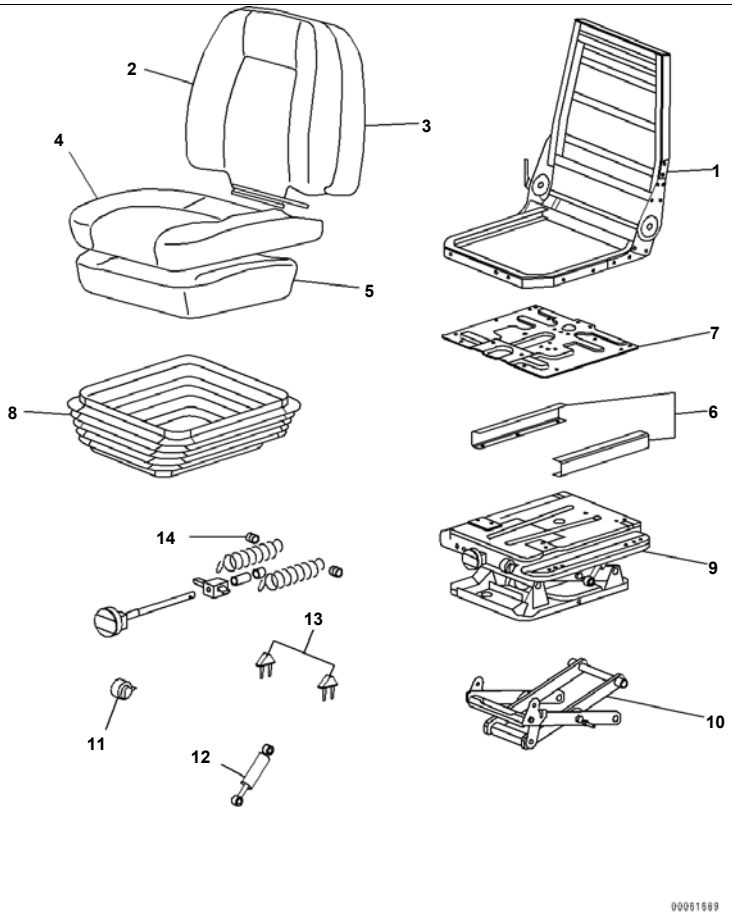

Index	Code	Part Number	Description	Qty	Serial No.
		195-57-46100	Operator's Seat Assembly	1	65001-
		195-57-46111	· Seat Assembly	1	65001-
		AS187333	· · Seat Assembly	1	65001-
1		AS187335	· · · Frame	1	65001-
2		AS183677	· · · Cover	1	65001-
3		AS183679	· · · Cushion	1	65001-
4		AS183680	· · · Cover	1	65001-
5		AS183682	· · · Seat	1	65001-
6		AS187336	· · Bracket	1	65001-
7		AS184897	· · Swivel Assembly	1	65001-
8		AS183868	· · Cover	1	65001-
9		AS183685	· · Suspension Assembly	1	65001-
10		AS183687	· · · Bearing Kit	1	65001-
11		AS170373	· · · Indicator	1	65001-
12		AS167566	· · · Damper	1	65001-
13		AS167544	· · · Stopper	1	65001-
14		AS183688	· · · Adjuster Kit	1	65001-

Printed By : Dwi Iswanto (airafather6107170)

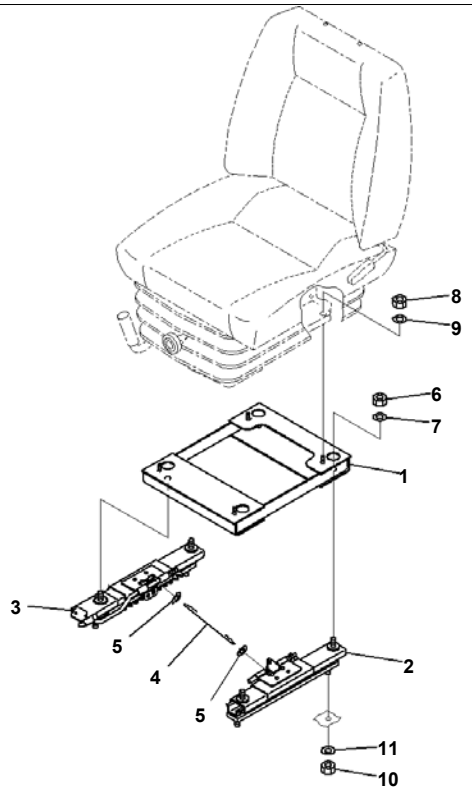

Operator's Seat, Fabric Type, Mounting Parts (#65001-)

Index	Code	Part Number	Description	Qty	Serial No.
		195-57-46100	Operator's Seat Assembly	1	65001-
		195-57-46130	· Adjuster Assembly	1	65001-
1		17A-57-23220	· · Bracket	1	65001-
2		195-57-42310	· · Adjuster	1	65001-
3		195-57-42320	· · Adjuster	1	65001-
4		17A-57-23270	· · Wire	1	65001-
5		01640-20816	· · Washer	2	65001-
6		01582-11210	· · Nut	4	65001-
7		01643-51232	· · Washer	4	65001-
8		01580-00806	· Nut	4	65001-
9		01643-50823	· Washer	4	65001-
10		01582-11210	Nut	4	65001-
11		01643-31232	Washer	4	65001-

Printed By : Dwi Iswanto (airafather6107170)

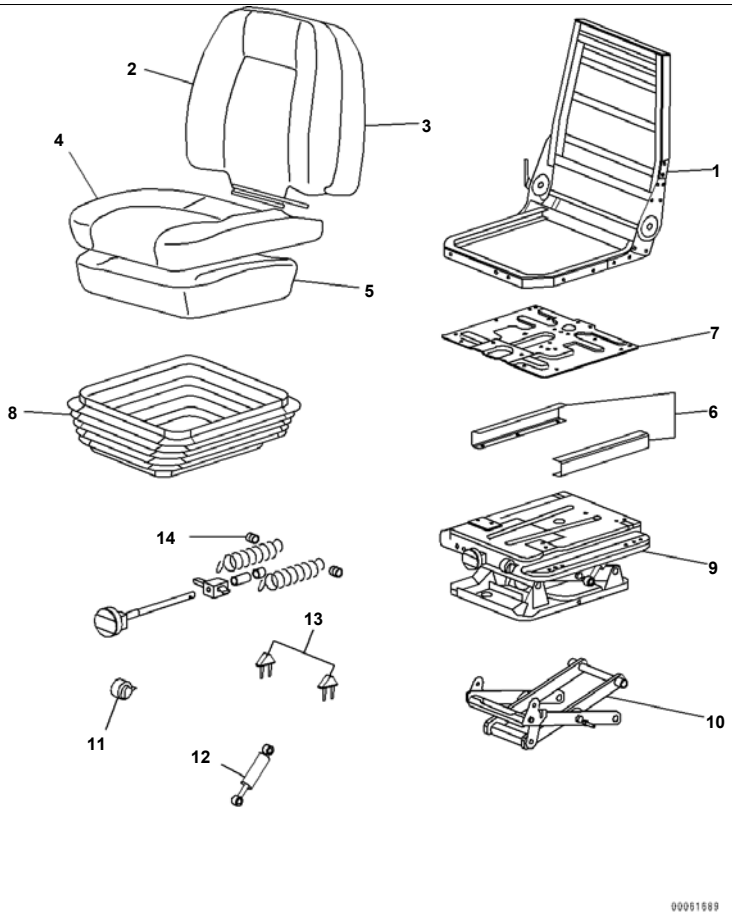

Index	Code	Part Number	Description	Qty	Serial No.
		195-57-46200	Operator's Seat Assembly	1	65001-
		195-57-46211	· Seat Assembly	1	65001-
		AS187334	· · Seat Assembly	1	65001-
1		AS187335	· · · Frame	1	65001-
2		AS183678	· · · Cover, Black	1	65001-
3		AS183679	· · · Cushion	1	65001-
4		AS183681	· · · Cover, Black	1	65001-
5		AS183682	· · · Seat	1	65001-
6		AS187336	· · Bracket	1	65001-
7		AS184897	· · Swivel Assembly	1	65001-
8		AS183686	· · Cover	1	65001-
9		AS183685	· · Suspension Assembly	1	65001-
10		AS183687	· · · Bearing Kit	1	65001-
11		AS170373	· · · Indicator	1	65001-
12		AS167566	· · · Damper	1	65001-
13		AS167544	· · · Stopper	1	65001-
14		AS183688	· · · Adjuster Kit	1	65001-

Printed By : Dwi Iswanto (airafather6107170)

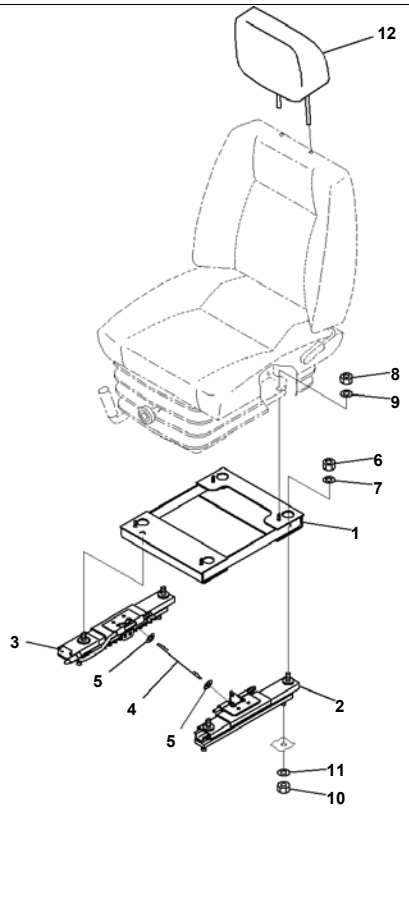

Index	Code	Part Number	Description	Qty	Serial No.
		195-57-46200	Operator's Seat Assembly	1	65001-
		195-57-46130	· Adjuster Assembly	1	65001-
1		17A-57-23220	· · Bracket	1	65001-
2		195-57-42310	· · Adjuster	1	65001-
3		195-57-42320	· · Adjuster	1	65001-
4		17A-57-23270	· · Wire	1	65001-
5		01640-20816	· · Washer	2	65001-
6		01582-11210	· · Nut	4	65001-
7		01643-51232	· · Washer	4	65001-
8		01580-00806	· Nut	4	65001-
9		01643-50823	· Washer	4	65001-
10		01582-11210	Nut	4	65001-
11		01643-31232	Washer	4	65001-
12		134-57-61160	Head Assembly	1	65001-

Printed By : Dwi Iswanto (airafather6107170)

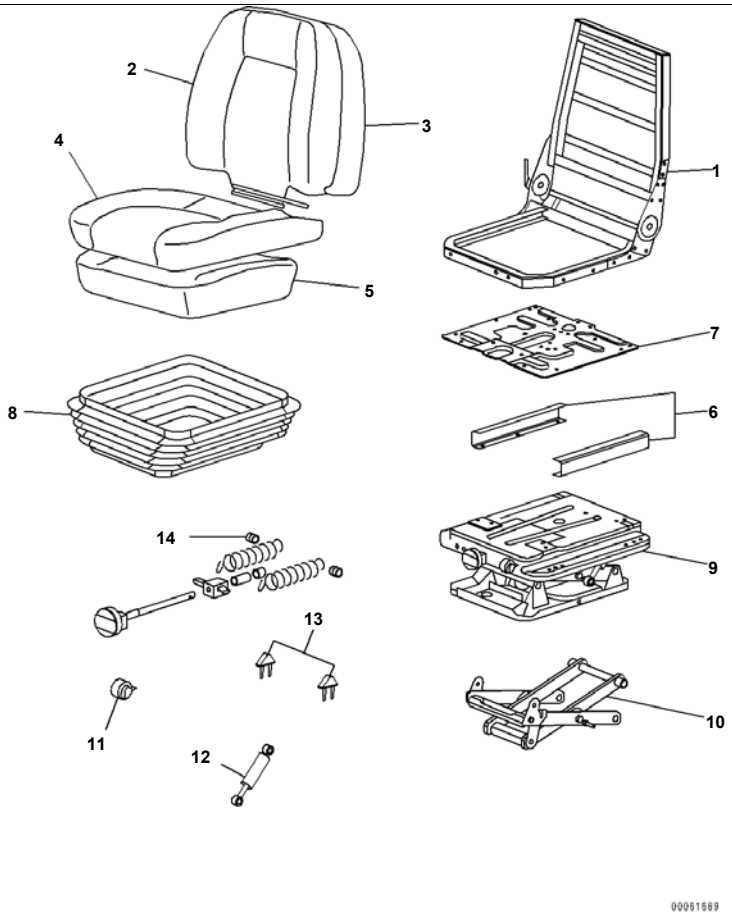

Index	Code	Part Number	Description	Qty	Serial No.
		195-57-46200	Operator's Seat Assembly	1	65001-
		195-57-46211	· Seat Assembly	1	65001-
		AS187334	· · Seat Assembly	1	65001-
1		AS187335	· · · Frame	1	65001-
2		AS183678	· · · Cover, Black	1	65001-
3		AS183679	· · · Cushion	1	65001-
4		AS183681	· · · Cover, Black	1	65001-
5		AS183682	· · · Seat	1	65001-
6		AS187336	· · Bracket	1	65001-
7		AS184897	· · Swivel Assembly	1	65001-
8		AS183686	· · Cover	1	65001-
9		AS183685	· · Suspension Assembly	1	65001-
10		AS183687	· · · Bearing Kit	1	65001-
11		AS170373	· · · Indicator	1	65001-
12		AS167566	· · · Damper	1	65001-
13		AS167544	· · · Stopper	1	65001-
14		AS183688	· · · Adjuster Kit	1	65001-

Printed By : Dwi Iswanto (airafather6107170)

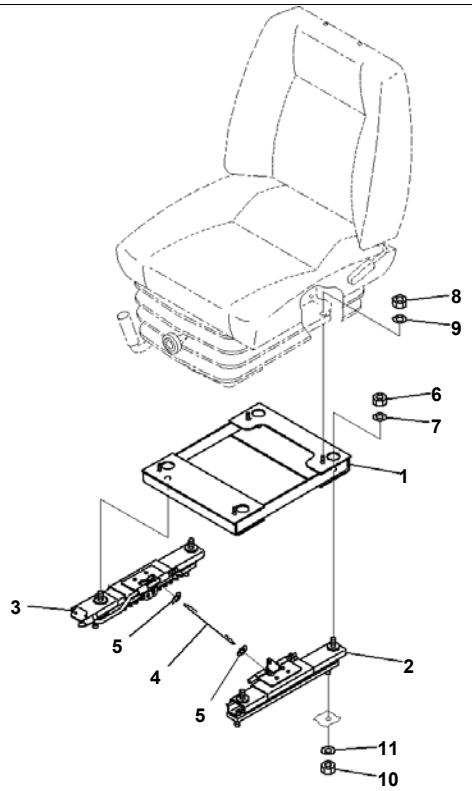

D375A-6R S/N 65001-UP
Operator's Seat, Leather type, Mounting Parts (#65001-)

Index	Code	Part Number	Description	Qty	Serial No.
		195-57-46200	Operator's Seat Assembly	1	65001-
		195-57-46130	· Adjuster Assembly	1	65001-
1		17A-57-23220	· · Bracket	1	65001-
2		195-57-42310	· · Adjuster	1	65001-
3		195-57-42320	· · Adjuster	1	65001-
4		17A-57-23270	· · Wire	1	65001-
5		01640-20816	· · Washer	2	65001-
6		01582-11210	· · Nut	4	65001-
7		01643-51232	· · Washer	4	65001-
8		01580-00806	· Nut	4	65001-
9		01643-50823	· Washer	4	65001-
10		01582-11210	Nut	4	65001-
11		01643-31232	Washer	4	65001-

Printed By : Dwi Iswanto (airafather6107170)

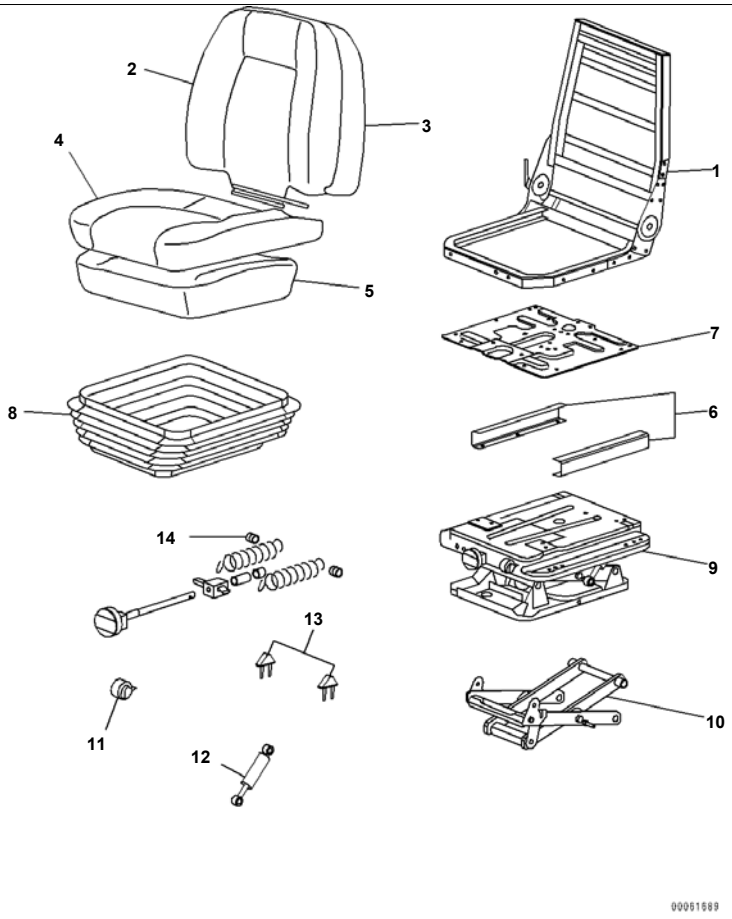

Index	Code	Part Number	Description	Qty	Serial No.
		195-57-46100	Operator's Seat Assembly	1	65001-
		195-57-46111	· Seat Assembly	1	65001-
		AS187333	· · Seat Assembly	1	65001-
1		AS187335	· · · Frame	1	65001-
2		AS183677	· · · Cover	1	65001-
3		AS183679	· · · Cushion	1	65001-
4		AS183680	· · · Cover	1	65001-
5		AS183682	· · · Seat	1	65001-
6		AS187336	· · Bracket	1	65001-
7		AS184897	· · Swivel Assembly	1	65001-
8		AS183868	· · Cover	1	65001-
9		AS183685	· · Suspension Assembly	1	65001-
10		AS183687	· · · Bearing Kit	1	65001-
11		AS170373	· · · Indicator	1	65001-
12		AS167566	· · · Damper	1	65001-
13		AS167544	· · · Stopper	1	65001-
14		AS183688	· · · Adjuster Kit	1	65001-

Printed By : Dwi Iswanto (airafather6107170)

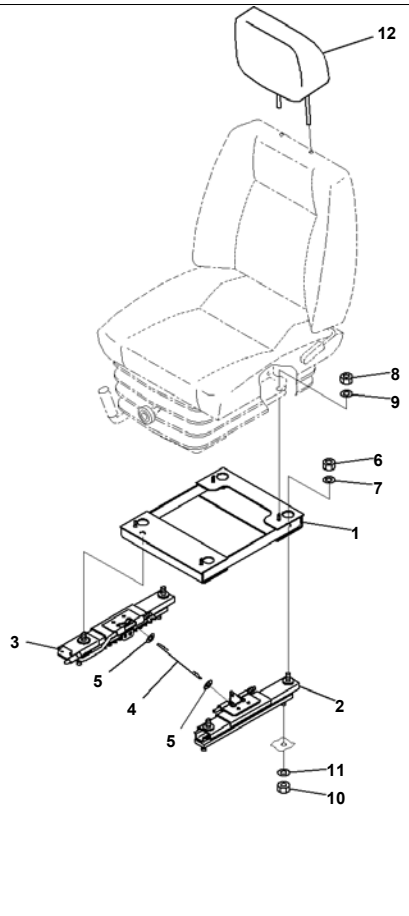

Operator's Seat, Suspension Type, Fabric, Turn Type, Reclining, With Headrest, Mounting Parts (#65001-)

Index	Code	Part Number	Description	Qty	Serial No.
		195-57-46100	Operator's Seat Assembly	1	65001-
		195-57-46130	· Adjuster Assembly	1	65001-
1		17A-57-23220	· · Bracket	1	65001-
2		195-57-42310	· · Adjuster	1	65001-
3		195-57-42320	· · Adjuster	1	65001-
4		17A-57-23270	· · Wire	1	65001-
5		01640-20816	· · Washer	2	65001-
6		01582-11210	· · Nut	4	65001-
7		01643-51232	· · Washer	4	65001-
8		01580-00806	· Nut	4	65001-
9		01643-50823	· Washer	4	65001-
10		01582-11210	Nut	4	65001-
11		01643-31232	Washer	4	65001-
12		17A-57-21170	Head Assembly	1	65001-

Printed By : Dwi Iswanto (airafather6107170)

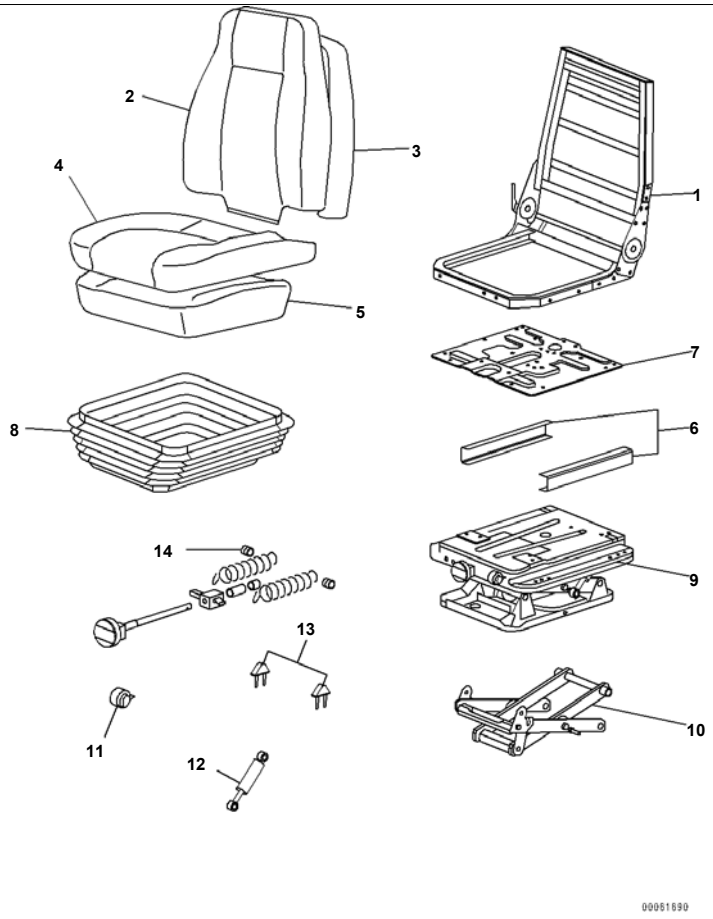

D375A-6R S/N 65001-UP
Operator's Seat, Hi-Back Type Operator's Seat, Fabric Type, Inner Parts (#65001-)

Index	Code	Part Number	Description	Qty	Serial No.
		195-57-46300	Operator's Seat Assembly	1	65001-
		195-57-46311	· Seat Assembly	1	65001-
		AS187337	· · Seat Assembly	1	65001-
1		AS187338	· · · Frame Kit	1	65001-
2		AS183705	· · · Cover	1	65001-
3		AS183708	· · · Back Seat Foam Kit	1	65001-
4		AS183706	· · · Cover	1	65001-
5		AS183709	· · · Seat Foam Kit	1	65001-
6		AS187336	· · Bracket	1	65001-
7		AS184897	· · Swivel Assembly	1	65001-
8		AS183686	· · Cover	1	65001-
9		AS183685	· · Suspension Assembly	1	65001-
10		AS183687	· · · Bearing Kit	1	65001-
11		AS170373	· · · Indicator	1	65001-
12		AS167566	· · · Damper	1	65001-
13		AS167544	· · · Stopper	1	65001-
14		AS183688	· · · Adjuster Kit	1	65001-

Printed By : Dwi Iswanto (airafather6107170)

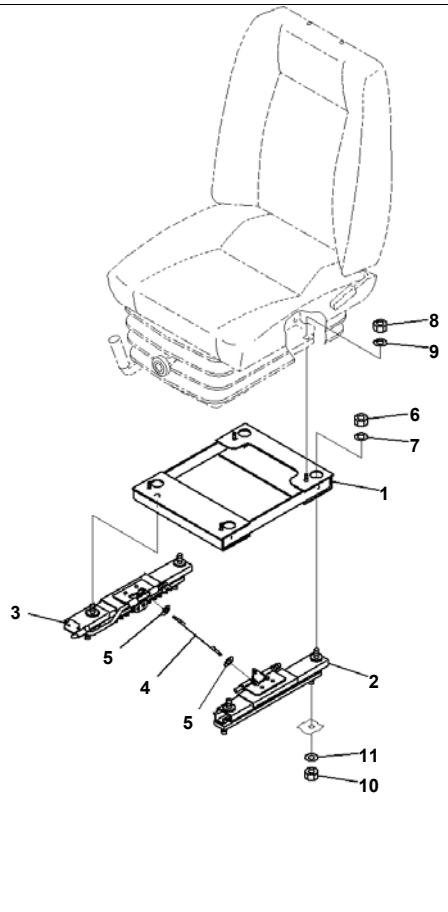

Operator's Seat, Hi-Back Type Operator's Seat, Fabric Type, Mounting Parts (#65001-)

Index	Code	Part Number	Description	Qty	Serial No.
		195-57-46300	Operator's Seat Assembly	1	65001-
		195-57-46130	· Adjuster Assembly	1	65001-
1		17A-57-23220	· · Bracket	1	65001-
2		195-57-42310	· · Adjuster	1	65001-
3		195-57-42320	· · Adjuster	1	65001-
4		17A-57-23270	· · Wire	1	65001-
5		01640-20816	· · Washer	2	65001-
6		01582-11210	· · Nut	4	65001-
7		01643-51232	· · Washer	4	65001-
8		01580-00806	· Nut	4	65001-
9		01643-50823	· Washer	4	65001-
10		01582-11210	Nut	4	65001-
11		01643-31232	Washer	4	65001-

Printed By : Dwi Iswanto (airafather6107170)

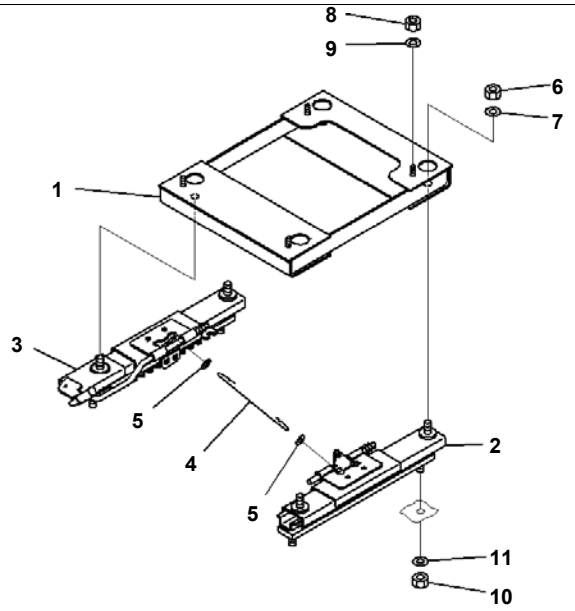

Operator's Seat Adjuster, Operator's Seat Less (#65001-)

Index	Code	Part Number	Description	Qty	Serial No.
		195-57-46130	Adjuster Assembly	1	65001-
1		17A-57-23220	· Bracket	1	65001-
2		195-57-42310	· Adjuster	1	65001-
3		195-57-42320	· Adjuster	1	65001-
4		17A-57-23270	· Wire	1	65001-
5		01640-20816	· Washer	2	65001-
6		01582-11210	· Nut	4	65001-
7		01643-51232	· Washer	4	65001-
8		01580-00806	Nut	4	65001-
9		01643-50823	Washer	4	65001-
10		01582-11210	Nut	4	65001-
11		01643-31232	Washer	4	65001-

Printed By : Dwi Iswanto (airafather6107170)

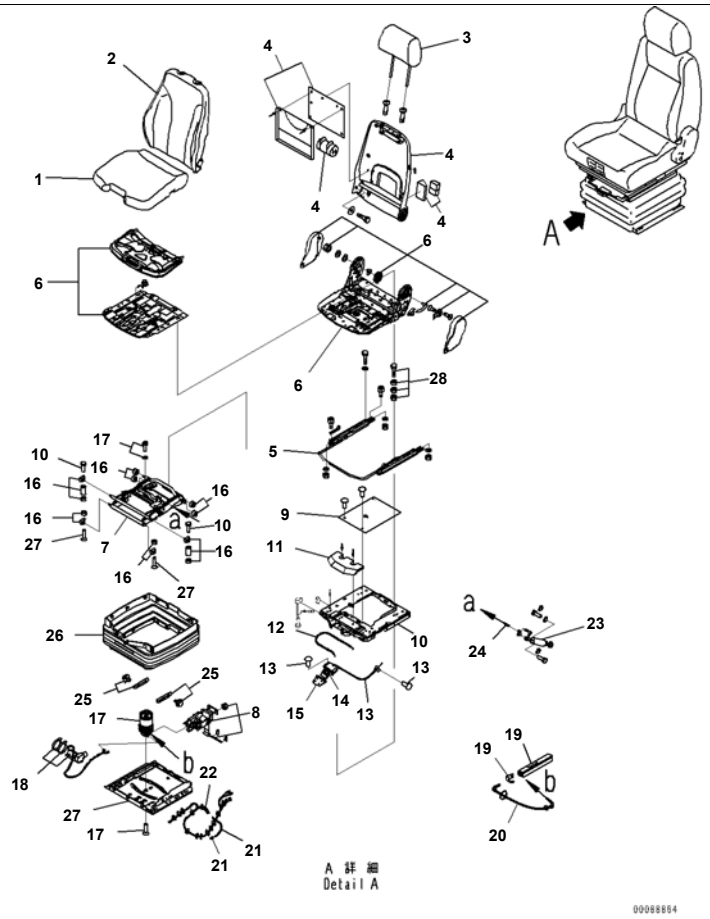

D375A-6R S/N 65001-UP

Operator's Seat, Air Suspension Type, Fabric Type, Tilt Type, Inner Parts (#65001-)

Index	Code	Part Number	Description	Qty	Serial No.
		198-57-65590	Seat Assembly	1	65001-
1		GJ140907	· Seat, Fabric	1	65001-
2		GJ2048193	· Backrest, Cushion	1	65001-
3		GJ140912	· Rest	1	65001-
4		GJ2048660	· Backrest, Frame	1	65001-
5		GJ2048661	· Slide Rail Kit	1	65001-
6		GJ2048662	· Seat	1	65001-
		GJTS40102	· Suspension Assembly	1	65001-
7		198-57-65510	· · Suspension	1	65001-
8		GJ1081312	· · Control, Level	1	65001-
9		GJ1076975	· · Cover	1	65001-
10	C1		· · Suspension	1	65001-
11		GJ1078590	· · Cover	1	65001-
12		GJ1077152	· · Cable	1	65001-
13		GJ1077153	· · Cable	1	65001-
14		GJ131834	· · Control	1	65001-
15		GJ138628	· · Handle	1	65001-
16		GJ1076979	· · Wear Plate Assembly	1	65001-
17		GJ1081315	· · Spring	1	65001-
18		GJ1096687	· · Compressor	1	65001-
19		GJ1090447	· · Reservoir	1	65001-
20		GJ1090779	· · Hose, Air	1	65001-
21		GJ1096565	· · Hose, Air	1	65001-
22		GJ1089165	· · Cable	1	65001-
23		GJ1096588	· · Absorber, Shock	1	65001-
24		GJ1076987	· · Cable	1	65001-
25		GJ1090446	· · Stopper	1	65001-
26		GJ1104066	· · Mount	1	65001-
27	C1		· · Suspension	1	65001-
28		GJTSM4NB	· · Bolt	4	65001-

Printed By : Dwi Iswanto (airafather6107170)

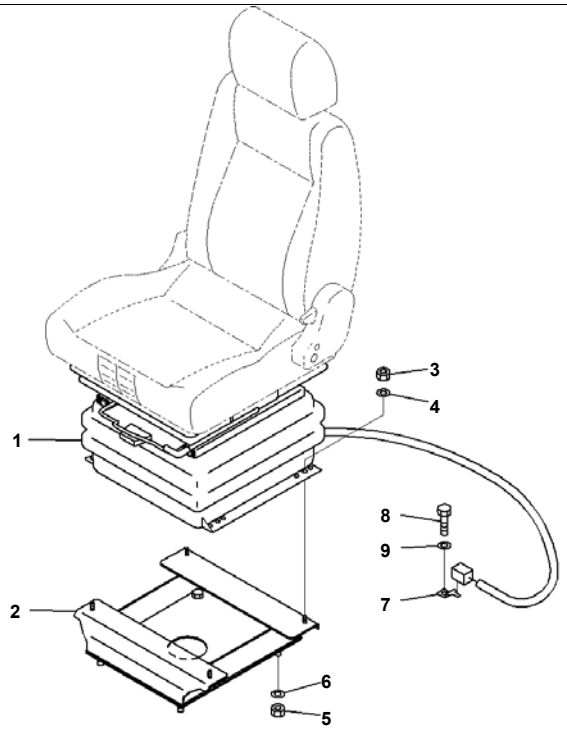

D375A-6R S/N 65001-UP
Operator's Seat, Air Suspension Type, Fabric Type, Tilt Type, Mounting Parts (#65001-)

Index	Code	Part Number	Description	Qty	Serial No.
		198-57-65590	Seat Assembly	1	65001-
1		198-57-65510	· Suspension	1	65001-
2		198-57-65261	Bracket	1	65001-
3		01580-10806	Nut	4	65001-
4		01643-50823	Washer	4	65001-
5		01582-11210	Nut	4	65001-
6		01643-31232	Washer	4	65001-
7		08193-20010	Clip	1	65001-
8		01010-81016	Bolt	1	65001-
9		01643-31032	Washer	1	65001-

Printed By : Dwi Iswanto (airafather6107170)

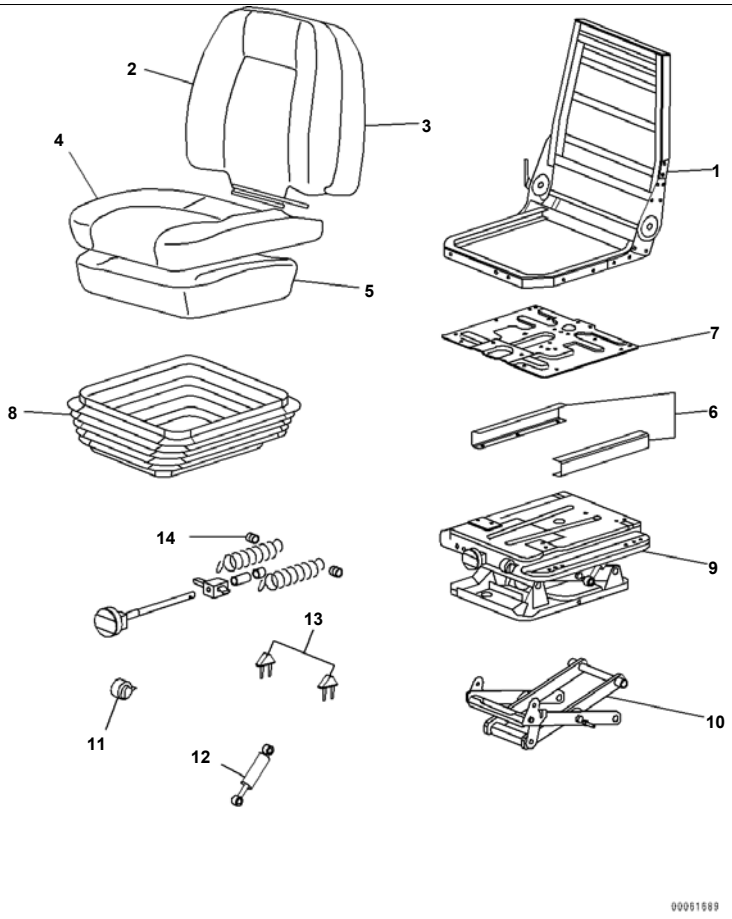

D375A-6R S/N 65001-UP
Operator's Seat, Hi-Back Type Operator's Seat, Fabric Type, Tilt Type, With Headrest, Inner Parts (#65001-)

Index	Code	Part Number	Description	Qty	Serial No.
		198-57-65200	Seat Assembly	1	65001-
		198-57-65210	· Seat Assembly	1	65001-
		AS187337	· · Seat Assembly	1	65001-
1		AS187338	· · · Frame Kit	1	65001-
2		AS183705	· · · Cover	1	65001-
3		AS183708	· · · Back Seat Foam Kit	1	65001-
4		AS183706	· · · Cover	1	65001-
5		AS183709	· · · Seat Foam Kit	1	65001-
6		AS187336	· · Bracket	1	65001-
7		AS184897	· · Swivel Assembly	1	65001-
8		AS183686	· · Cover	1	65001-
9		AS183685	· · Suspension Assembly	1	65001-
10		AS183687	· · · Bearing Kit	1	65001-
11		AS170373	· · · Indicator	1	65001-
12		AS167566	· · · Damper	1	65001-
13		AS167544	· · · Stopper	1	65001-
14		AS183688	· · · Adjuster Kit	1	65001-

Printed By : Dwi Iswanto (airafather6107170)

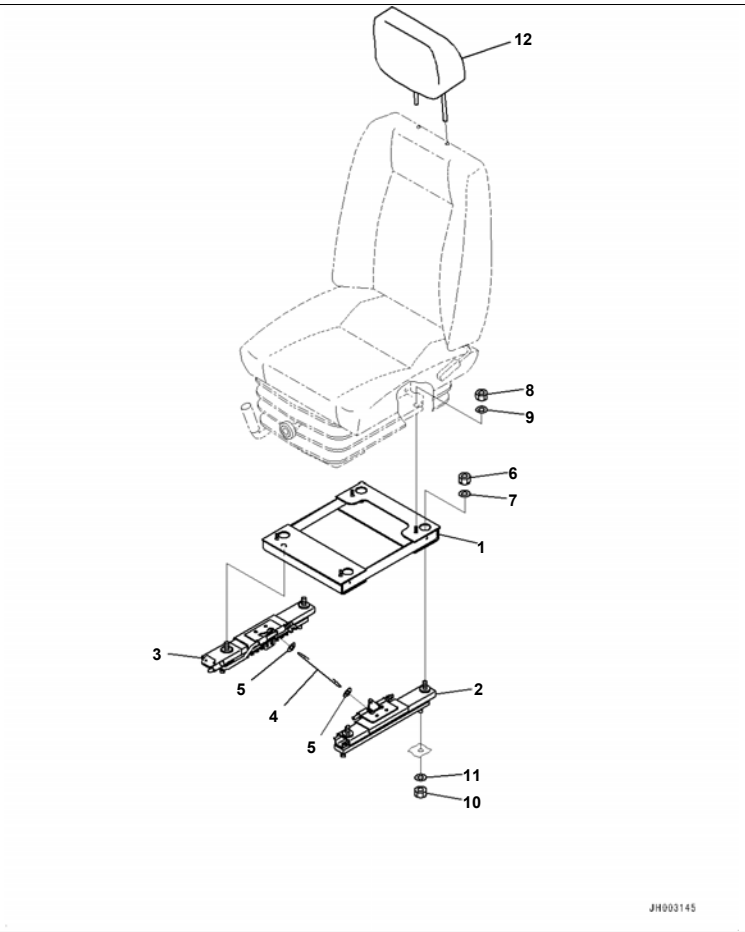

Operator's Seat, Hi-Back Type Operator's Seat, Fabric Type, Tilt Type, With Headrest, Mounting Parts (#65001-)

Index	Code	Part Number	Description	Qty	Serial No.
		198-57-65200	Seat Assembly	1	65001-
		198-57-65220	· Adjuster Assembly	1	65001-
1		198-57-65250	· · Bracket	1	65001-
2		198-57-65230	· · Adjuster	1	65001-
3		198-57-65240	· · Adjuster	1	65001-
4		17A-57-23270	· · Wire	1	65001-
5		01640-20816	· · Washer	2	65001-
6		01582-11210	· · Nut	4	65001-
7		01643-51232	· · Washer	4	65001-
8		01580-10806	· Nut	4	65001-
9		01643-50823	· Washer	4	65001-
10		01582-11210	Nut	4	65001-
11		01643-31232	Washer	4	65001-
12		17A-57-23520	Head Assembly	1	65001-

Printed By : Dwi Iswanto (airafather6107170)

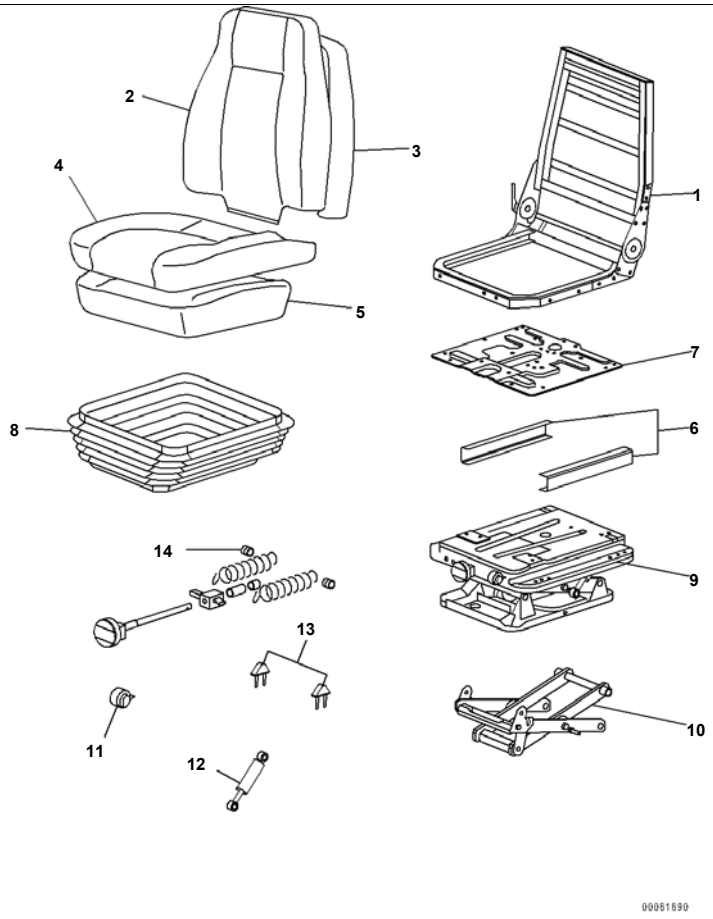

D375A-6R S/N 65001-UP
Operator's Seat, Hi-Back Type Operator's Seat, Fabric Type, Tilt Type, Inner Parts (#65001-)

Index	Code	Part Number	Description	Qty	Serial No.
		198-57-65200	Seat Assembly	1	65001-
		198-57-65210	· Seat Assembly	1	65001-
		AS187337	· · Seat Assembly	1	65001-
1		AS187338	· · · Frame Kit	1	65001-
2		AS183705	· · · Cover	1	65001-
3		AS183708	· · · Back Seat Foam Kit	1	65001-
4		AS183706	· · · Cover	1	65001-
5		AS183709	· · · Seat Foam Kit	1	65001-
6		AS187336	· · Bracket	1	65001-
7		AS184897	· · Swivel Assembly	1	65001-
8		AS183686	· · Cover	1	65001-
9		AS183685	· · Suspension Assembly	1	65001-
10		AS183687	· · · Bearing Kit	1	65001-
11		AS170373	· · · Indicator	1	65001-
12		AS167566	· · · Damper	1	65001-
13		AS167544	· · · Stopper	1	65001-
14		AS183688	· · · Adjuster Kit	1	65001-

Printed By : Dwi Iswanto (airafather6107170)

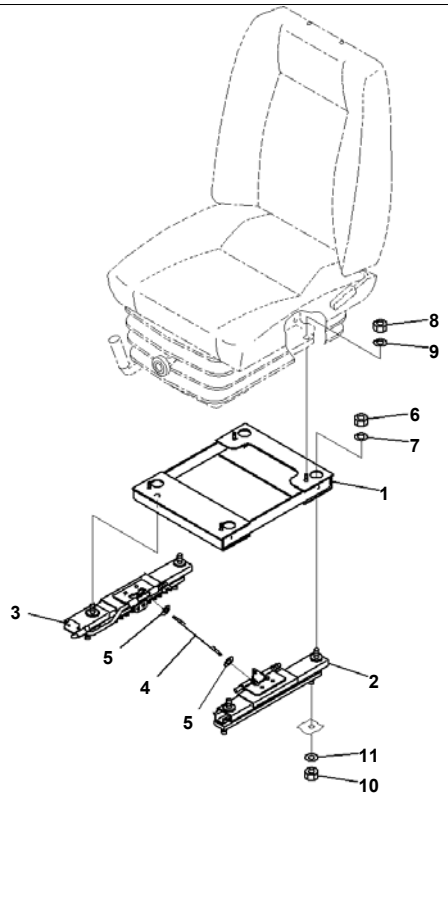

Operator's Seat, Hi-Back Type Operator's Seat, Fabric Type, Tilt Type, Mounting Parts (#65001-)

Index	Code	Part Number	Description	Qty	Serial No.
		198-57-65200	Seat Assembly	1	65001-
		198-57-65220	· Adjuster Assembly	1	65001-
1		198-57-65250	· · Bracket	1	65001-
2		198-57-65230	· · Adjuster	1	65001-
3		198-57-65240	· · Adjuster	1	65001-
4		17A-57-23270	· · Wire	1	65001-
5		01640-20816	· · Washer	2	65001-
6		01582-11210	· · Nut	4	65001-
7		01643-51232	· · Washer	4	65001-
8		01580-10806	· Nut	4	65001-
9		01643-50823	· Washer	4	65001-
10		01582-11210	Nut	4	65001-
11		01643-31232	Washer	4	65001-

Printed By : Dwi Iswanto (airafather6107170)

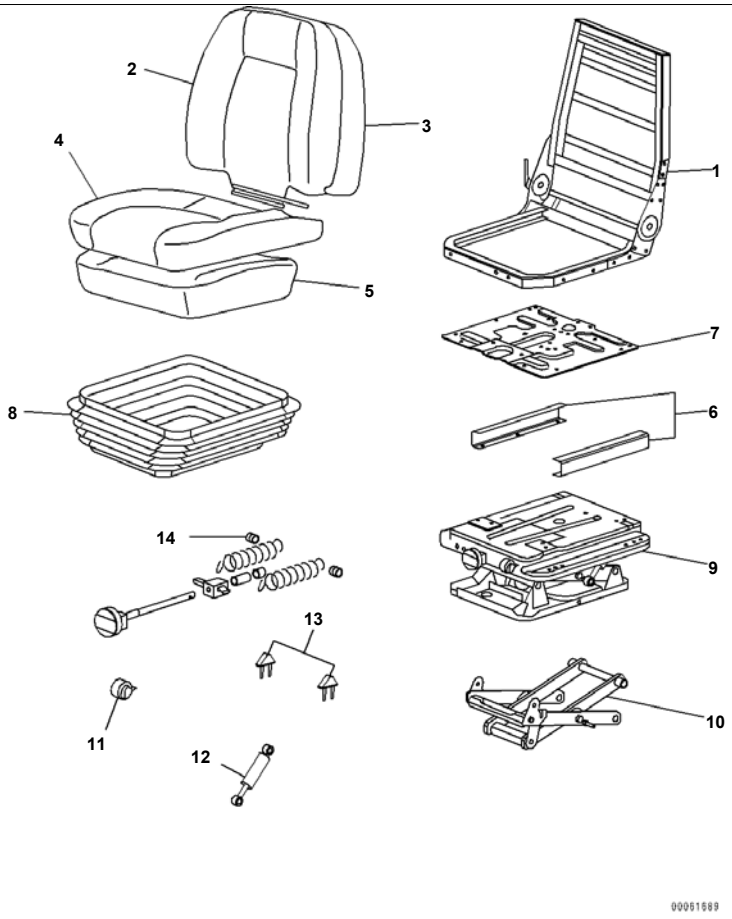

Operator's Seat, Suspension Type, Fabric, Reclining, Tilt, With Headrest, Inner Parts (#65001-)

Index	Code	Part Number	Description	Qty	Serial No.
		198-57-64000	Seat Assembly	1	65001-
		198-57-64100	· Seat Assembly	1	65001-
		AS187333	· · Seat Assembly	1	65001-
1		AS187335	· · · Frame	1	65001-
2		AS183677	· · · Cover	1	65001-
3		AS183679	· · · Cushion	1	65001-
4		AS183680	· · · Cover	1	65001-
5		AS183682	· · · Seat	1	65001-
6		AS187336	· · Bracket	1	65001-
7		AS184897	· · Swivel Assembly	1	65001-
8		AS183686	· · Cover	1	65001-
9		AS183685	· · Suspension Assembly	1	65001-
10		AS183687	· · · Bearing Kit	1	65001-
11		AS170373	· · · Indicator	1	65001-
12		AS167566	· · · Damper	1	65001-
13		AS167544	· · · Stopper	1	65001-
14		AS183688	· · · Adjuster Kit	1	65001-

Printed By : Dwi Iswanto (airafather6107170)

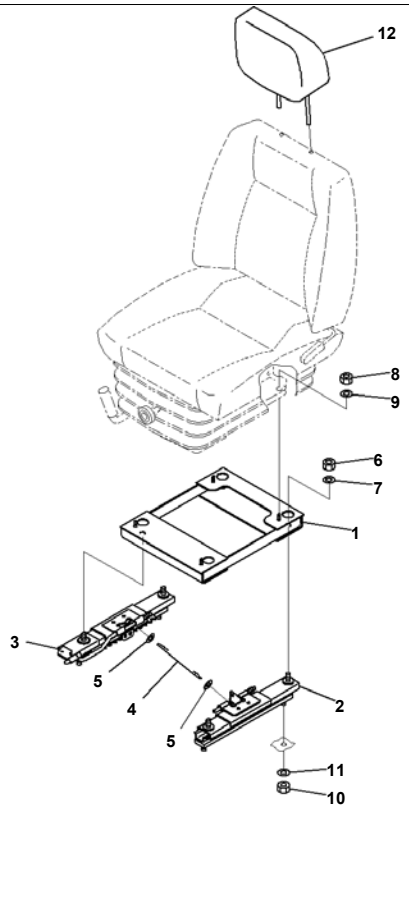

Operator's Seat, Suspension Type, Fabric, Reclining, Tilt, With Headrest, Mounting Parts (#65001-)

Index	Code	Part Number	Description	Qty	Serial No.
		198-57-64000	Seat Assembly	1	65001-
		195-57-46131	· Adjuster Assembly	1	65001-
1		17A-57-23220	· · Bracket	1	65001-
2		195-57-42310	· · Adjuster	1	65001-
3		195-57-42320	· · Adjuster	1	65001-
4		17A-57-23270	· · Wire	1	65001-
5		01640-20816	· · Washer	2	65001-
6		01582-11210	· · Nut	4	65001-
7		01643-51232	· · Washer	4	65001-
8		01580-00806	· Nut	4	65001-
9		01643-50823	· Washer	4	65001-
10		01582-11210	Nut	4	65001-
11		01643-31232	Washer	4	65001-
12		17A-57-21170	Head Assembly	1	65001-

Printed By : Dwi Iswanto (airafather6107170)

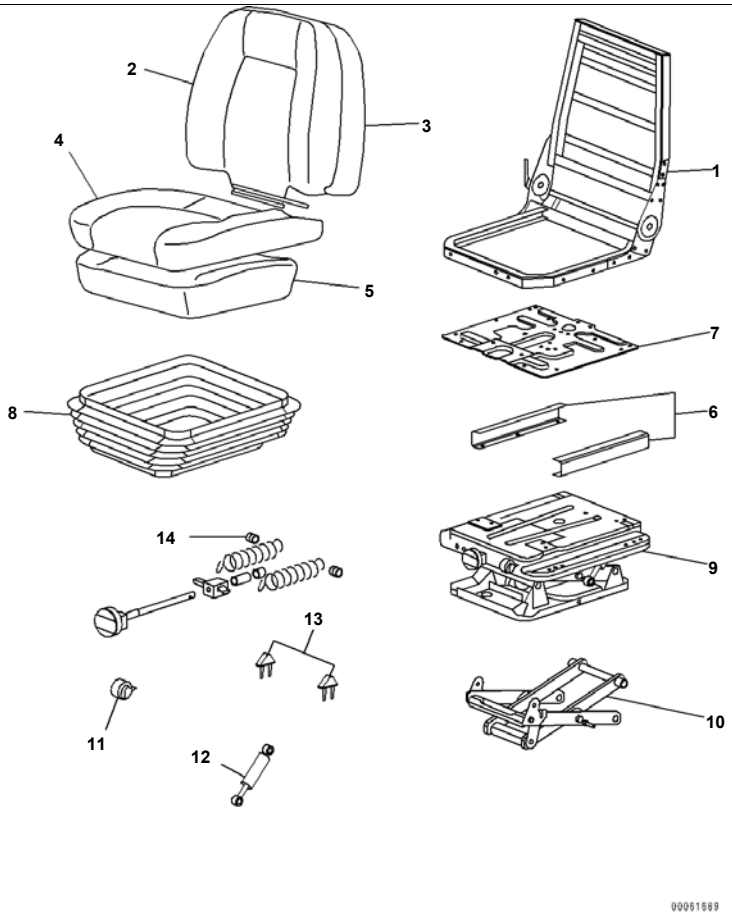

D375A-6R S/N 65001-UP
Operator's Seat, Fabric Type, Tilt Type, Inner Parts (#65001-)

Index	Code	Part Number	Description	Qty	Serial No.
		198-57-64000	Seat Assembly	1	65001-
		198-57-64100	· Seat Assembly	1	65001-
		AS187333	· · Seat Assembly	1	65001-
1		AS187335	· · · Frame	1	65001-
2		AS183677	· · · Cover	1	65001-
3		AS183679	· · · Cushion	1	65001-
4		AS183680	· · · Cover	1	65001-
5		AS183682	· · · Seat	1	65001-
6		AS187336	· · Bracket	1	65001-
7		AS184897	· · Swivel Assembly	1	65001-
8		AS183686	· · Cover	1	65001-
9		AS183685	· · Suspension Assembly	1	65001-
10		AS183687	· · · Bearing Kit	1	65001-
11		AS170373	· · · Indicator	1	65001-
12		AS167566	· · · Damper	1	65001-
13		AS167544	· · · Stopper	1	65001-
14		AS183688	· · · Adjuster Kit	1	65001-

Printed By : Dwi Iswanto (airafather6107170)

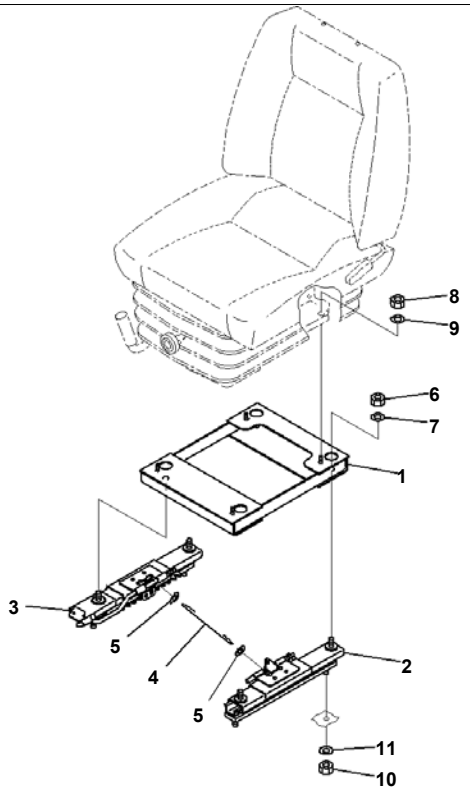

Reference:K0110-008002 Page:K011002

D375A-6R S/N 65001-UP
Operator's Seat, Fabric Type, Tilt Type, Mounting Parts (#65001-)

Index	Code	Part Number	Description	Qty	Serial No.
		198-57-64000	Seat Assembly	1	65001-
		195-57-46131	· Adjuster Assembly	1	65001-
1		17A-57-23220	· · Bracket	1	65001-
2		195-57-42310	· · Adjuster	1	65001-
3		195-57-42320	· · Adjuster	1	65001-
4		17A-57-23270	· · Wire	1	65001-
5		01640-20816	· · Washer	2	65001-
6		01582-11210	· · Nut	4	65001-
7		01643-51232	· · Washer	4	65001-
8		01580-00806	· Nut	4	65001-
9		01643-50823	· Washer	4	65001-
10		01582-11210	Nut	4	65001-
11		01643-31232	Washer	4	65001-

Printed By : Dwi Iswanto (airafather6107170)

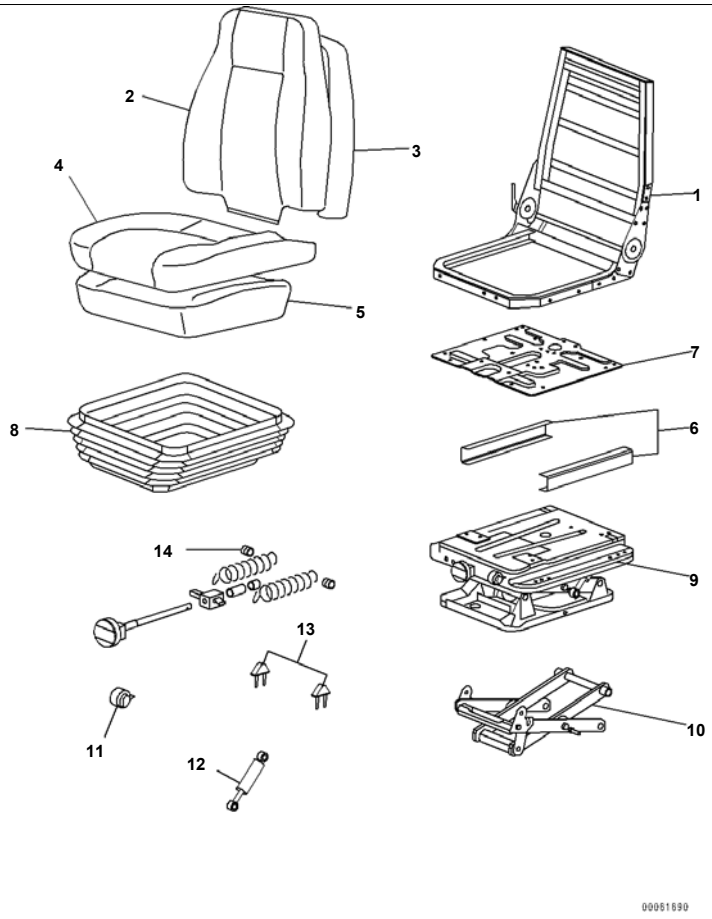

Index	Code	Part Number	Description	Qty	Serial No.
		195-57-46300	Operator's Seat Assembly	1	65001-
		195-57-46311	· Seat Assembly	1	65001-
		AS187337	· · Seat Assembly	1	65001-
1		AS187338	· · · Frame Kit	1	65001-
2		AS183705	· · · Cover	1	65001-
3		AS183708	· · · Back Seat Foam Kit	1	65001-
4		AS183706	· · · Cover	1	65001-
5		AS183709	· · · Seat Foam Kit	1	65001-
6		AS187336	· · Bracket	1	65001-
7		AS184897	· · Swivel Assembly	1	65001-
8		AS183686	· · Cover	1	65001-
9		AS183685	· · Suspension Assembly	1	65001-
10		AS183687	· · · Bearing Kit	1	65001-
11		AS170373	· · · Indicator	1	65001-
12		AS167566	· · · Damper	1	65001-
13		AS167544	· · · Stopper	1	65001-
14		AS183688	· · · Adjuster Kit	1	65001-

Printed By : Dwi Iswanto (airafather6107170)

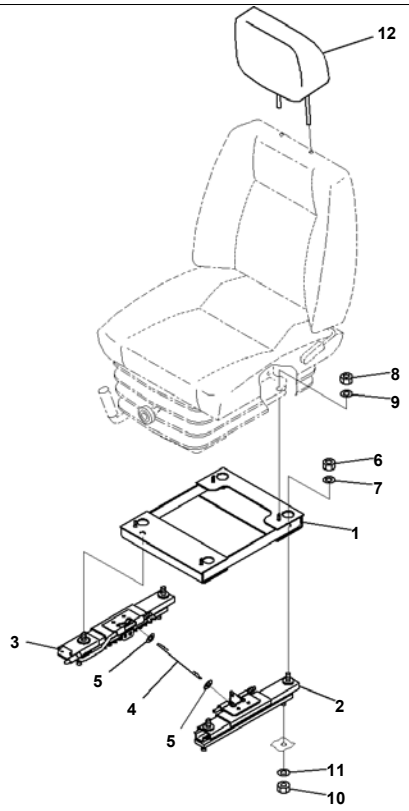

Index	Code	Part Number	Description	Qty	Serial No.
		195-57-46300	Operator's Seat Assembly	1	65001-
		195-57-46130	· Adjuster Assembly	1	65001-
1		17A-57-23220	· · Bracket	1	65001-
2		195-57-42310	· · Adjuster	1	65001-
3		195-57-42320	· · Adjuster	1	65001-
4		17A-57-23270	· · Wire	1	65001-
5		01640-20816	· · Washer	2	65001-
6		01582-11210	· · Nut	4	65001-
7		01643-51232	· · Washer	4	65001-
8		01580-00806	· Nut	4	65001-
9		01643-50823	· Washer	4	65001-
10		01582-11210	Nut	4	65001-
11		01643-31232	Washer	4	65001-
12		17A-57-23520	Head Assembly	1	65001-

Printed By : Dwi Iswanto (airafather6107170)

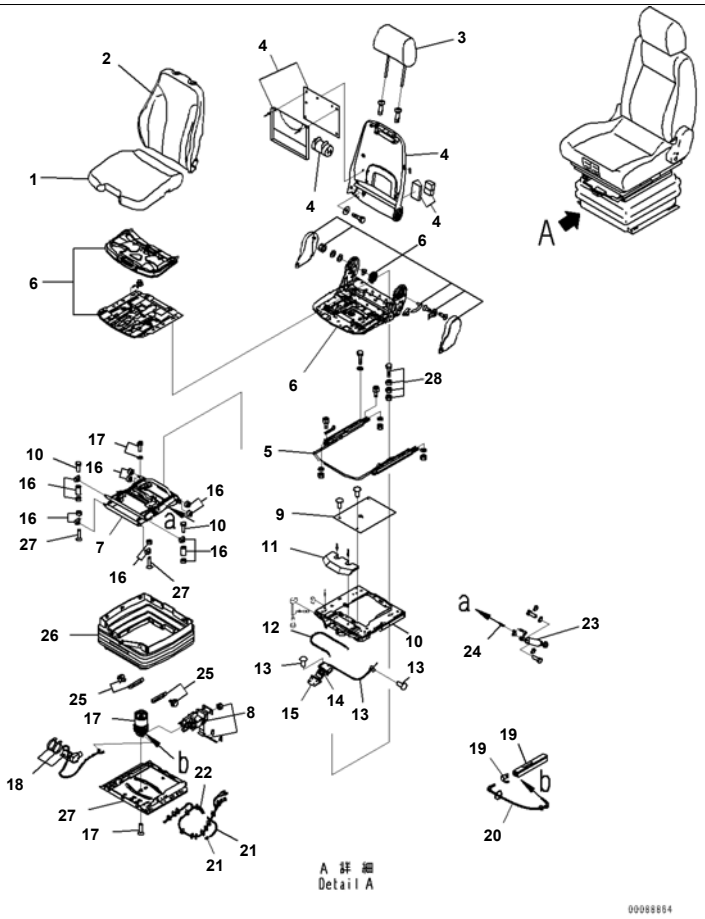

D375A-6R S/N 65001-UP

Operator's Seat, With Air Suspension Type Operator's Seat, With Headrest, With Isolator, (1/2) (#65001-)

Index	Code	Part Number	Description	Qty	Serial No.
		198-57-65590	Seat Assembly	1	65001-
1		GJ140907	· Seat, Fabric	1	65001-
2		GJ2048193	· Backrest, Cushion	1	65001-
3		GJ140912	· Rest	1	65001-
4		GJ2048660	· Backrest, Frame	1	65001-
5		GJ2048661	· Slide Rail Kit	1	65001-
6		GJ2048662	· Seat	1	65001-
		GJTS40102	· Suspension Assembly	1	65001-
7		198-57-65510	· · Suspension	1	65001-
8		GJ1081312	· · Control, Level	1	65001-
9		GJ1076975	· · Cover	1	65001-
10	C1		· · Suspension	1	65001-
11		GJ1078590	· · Cover	1	65001-
12		GJ1077152	· · Cable	1	65001-
13		GJ1077153	· · Cable	1	65001-
14		GJ131834	· · Control	1	65001-
15		GJ138628	· · Handle	1	65001-
16		GJ1076979	· · Wear Plate Assembly	1	65001-
17		GJ1081315	· · Spring	1	65001-
18		GJ1096687	· · Compressor	1	65001-
19		GJ1090447	· · Reservoir	1	65001-
20		GJ1090779	· · Hose, Air	1	65001-
21		GJ1096565	· · Hose, Air	1	65001-
22		GJ1089165	· · Cable	1	65001-
23		GJ1096588	· · Absorber, Shock	1	65001-
24		GJ1076987	· · Cable	1	65001-
25		GJ1090446	· · Stopper	1	65001-
26		GJ1104066	· · Mount	1	65001-
27	C1		· · Suspension	1	65001-
28		GJTSM4NB	· · Bolt	4	65001-

Printed By : Dwi Iswanto (airafather6107170)

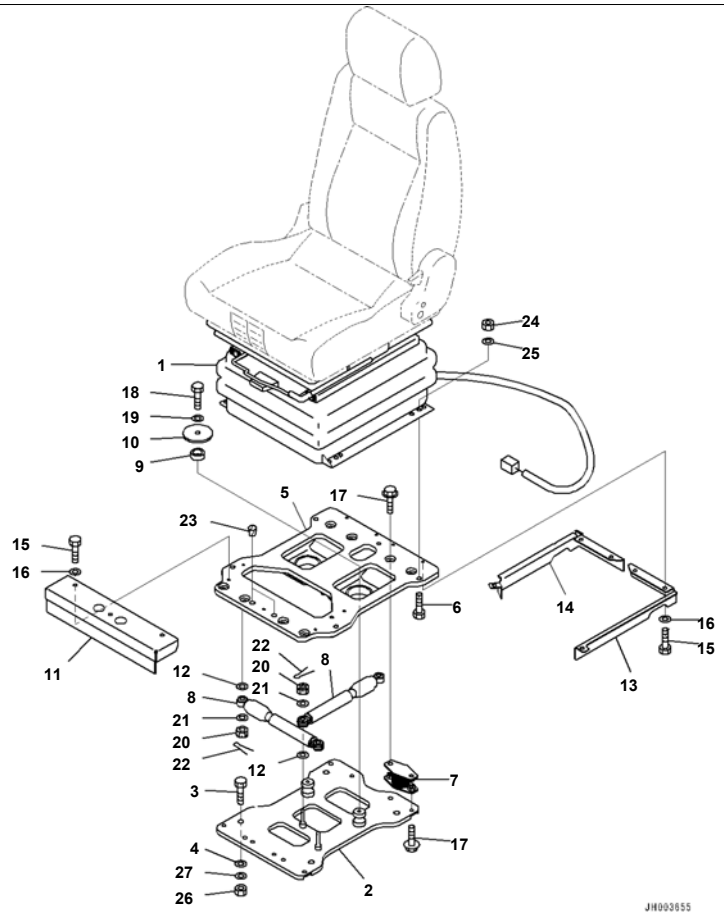

D375A-6R S/N 65001-UP
Operator's Seat, With Air Suspension Type Operator's Seat, With Headrest, With Isolator, (2/2) (#65001-)

Index	Code	Part Number	Description	Qty	Serial No.
		198-57-65590	Seat Assembly	1	65001-
1		198-57-65510	· Suspension	1	65001-
2		195-57-48111	Plate	1	65001-
3		01010-61245	· Bolt	4	65001-
4		01643-31232	· Washer	4	65001-
5		195-57-48121	Plate	1	65001-
6		01010-60830	· Bolt	4	65001-
7		195-57-48152	Cushion	4	65001-
8		195-57-48160	Damper	2	65001-
9		195-57-48171	Rubber	2	65001-
10		195-57-48180	Plate	2	65001-
11		195-57-48192	Plate	1	65001-
12		195-57-48210	Spacer	4	65001-
13		195-57-48221	Cover	1	65001-
14		195-57-48231	Cover	1	65001-
15		01010-80816	Bolt	9	65001-
16		01643-30823	Washer	9	65001-
17		01435-01020	Bolt	16	65001-
18		01010-81030	Bolt	2	65001-
19		01643-31032	Washer	2	65001-
20		01590-30809	Nut	4	65001-
21		01643-30823	Washer	4	65001-
22		04050-12015	Pin, Cotter	4	65001-
23		07049-01822	Plug	2	65001-
24		01580-10806	Nut	4	65001-
25		01643-50823	Washer	4	65001-
26		01582-11210	Nut	4	65001-
27		01643-31232	Washer	4	65001-

Printed By : Dwi Iswanto (airafather6107170)

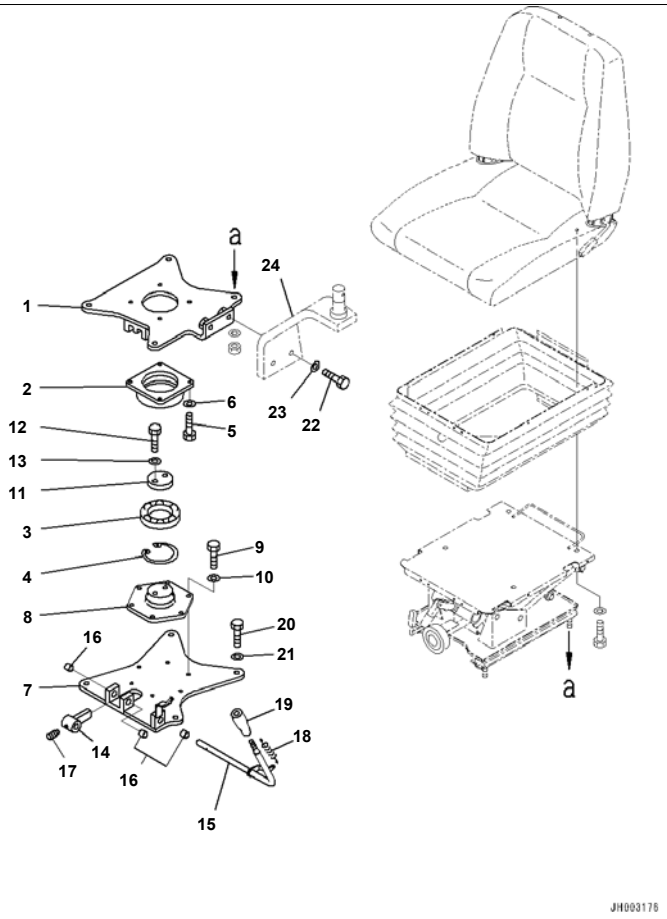

Index	Code	Part Number	Description	Qty	Serial No.
1		195-57-48310	Plate	1	65001-
2		198-57-61120	Cage	1	65001-
3		06304-06014	Bearing	1	65001-
4		04065-01104	Ring, Snap	1	65001-
5		01010-81025	Bolt	4	65001-
6		01643-31032	Washer	4	65001-
7		198-57-61150	Plate	1	65001-
8		198-57-61140	Boss	1	65001-
9		01010-81025	Bolt	6	65001-
10		01643-31032	Washer	6	65001-
11		198-57-61130	Holder	1	65001-
12		01010-81440	Bolt	2	65001-
13		01643-31445	Washer	2	65001-
14		19M-57-31770	Lever	1	65001-
15		19M-57-31791	Lever	1	65001-
16		09350-01615	Bushing	3	65001-
17		01312-20616	Screw	1	65001-
18		154-44-12460	Spring	1	65001-
19		14Z-43-11310	Knob	1	65001-
20		01010-81235	Bolt	4	65001-
21		01643-31232	Washer	4	65001-
22		01010-81655	Bolt	2	65001-
23		01643-31645	Washer	2	65001-
24		(195-43-68111)	Link		
		(195-43-68111)	Link		

Printed By : Dwi Iswanto (airafather6107170)

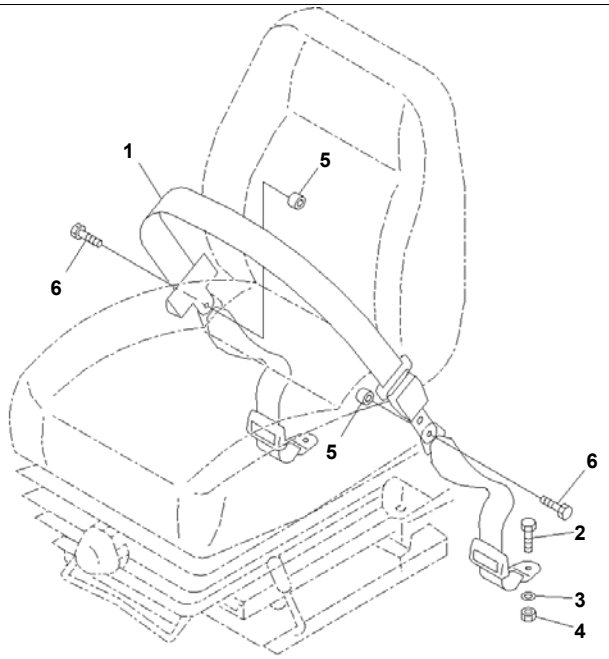

Index	Code	Part Number	Description	Qty	Serial No.
1		17A-57-21202	Seat Belt, Lap	1	65001-
		09409-20000	Belt, Tether	2	65001-
2		09409-00001	· Bolt	4	65001-
3		09409-00002	· Washer	4	65001-
4		09409-00003	· Nut	4	65001-
5		205-970-2410	Pipe	2	65001-
6		02030-70757	Bolt	2	65001-

Printed By : Dwi Iswanto (airafather6107170)

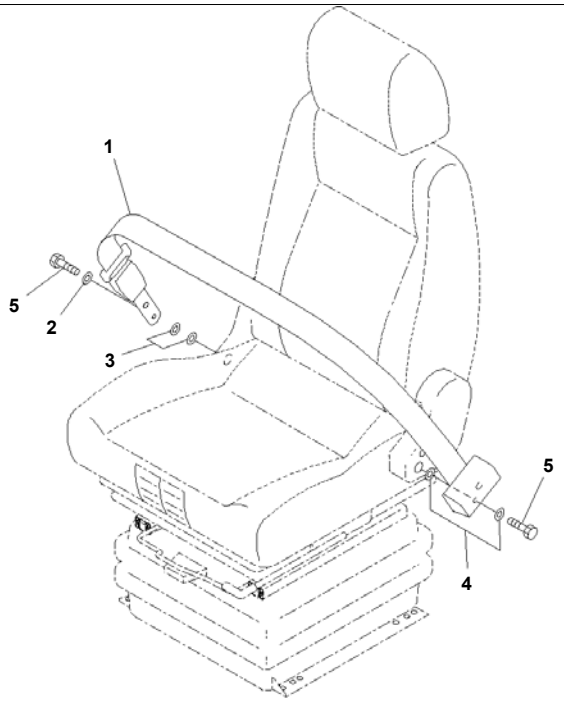

Index	Code	Part Number	Description	Qty	Serial No.
1		17A-57-21202	Seat Belt, Lap	1	65001-
2		01643-51232	Washer	1	65001-
3		01643-51232	Washer	2	65001-
4		01643-51232	Washer	2	65001-
5		02030-70732	Bolt, Unified	2	65001-

Printed By : Dwi Iswanto (airafather6107170)

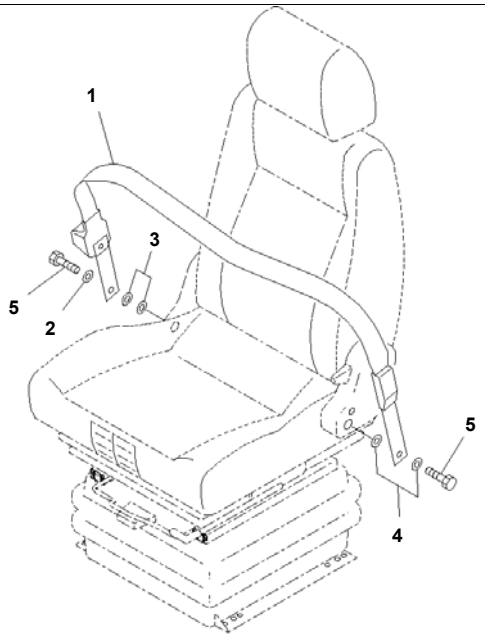

Seat Belt, Air Suspension Type, With Tilt, With Belt Retractor (#65001-)

Index	Code	Part Number	Description	Qty	Serial No.
1		09409-70000	Seat Belt Kit, Lap	1	65001-
2		01643-51232	Washer	1	65001-
3		01643-51232	Washer	2	65001-
4		01643-51232	Washer	2	65001-
5		02030-70732	Bolt, Unified	2	65001-

Printed By : Dwi Iswanto (airafather6107170)

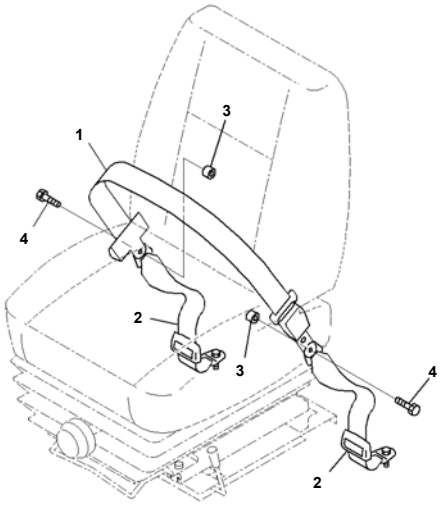

PWB5523

D375A-6R S/N 65001-UP
Seat Belt, 78mm Width (#65001-)

Index	Code	Part Number	Description	Qty	Serial No.
1		09409-70000	Seat Belt Kit, Lap	1	65001-
2		09409-20000	Belt, Tether	2	65001-
3		205-970-2410	Pipe	2	65001-
4		02030-70757	Bolt	2	65001-

Printed By : Dwi Iswanto (airafather6107170)

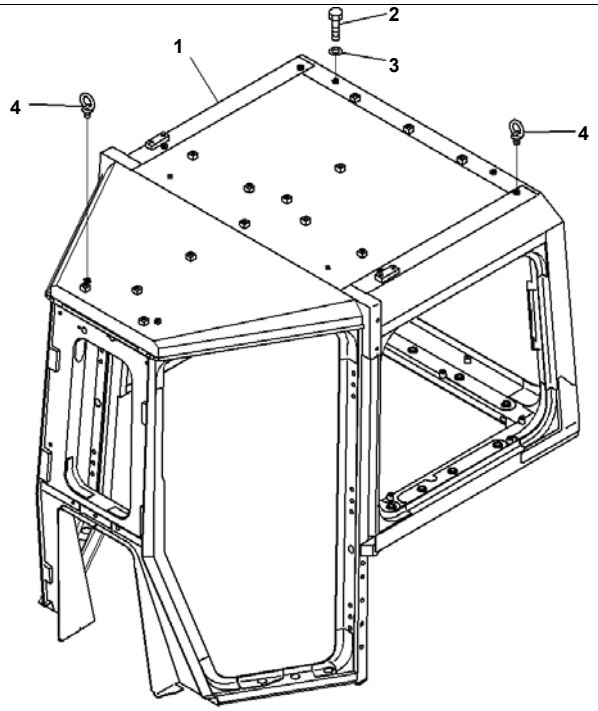

Index	Code	Part Number	Description	Qty	Serial No.
1		198-Z11-6111	Cab	1	65001-
2		01010-D1220	Bolt	27	65001-
3		01643-71232	Washer	27	65001-
4		04530-11222	Bolt, Eye	4	65001-

Printed By : Dwi Iswanto (airafather6107170)

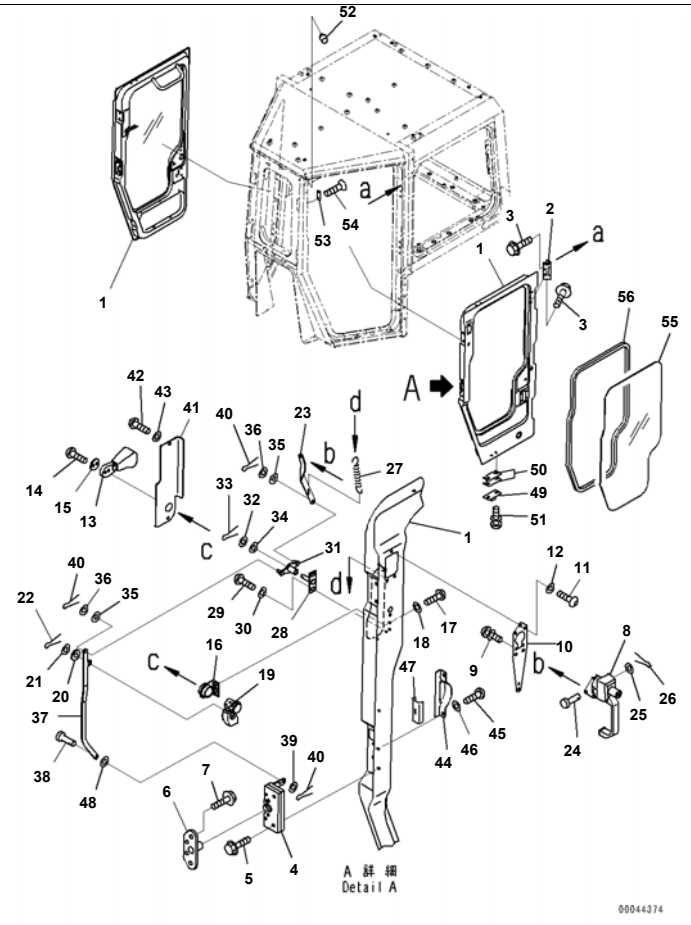

Reference:K0210-006002 Page:K019002

D375A-6R S/N 65001-UP
ROPS Cab, Without Radio, Door and Lock (1/2) (#65001-)

Index	Code	Part Number	Description	Qty	Serial No.
1		198-Z11-3111	Door	1	65001-
		198-Z11-3121	Door	1	65001-
2		14X-911-1330	Hinge	6	65001-
3		01435-41025	Bolt	36	65001-
4		195-Z11-4510	Lock	1	65001-
		195-Z11-4520	Lock	1	65001-
5		01435-40630	Bolt	8	65001-
6		198-Z11-3450	Striker	2	65001-
7		01435-40820	Bolt	8	65001-
8		198-Z11-3710	Handle Assembly	2	65001-
9		01023-10520	Screw	10	65001-
10		198-Z11-3210	Plate	2	65001-
11		01245-00616	Screw, Hexagon Socket Head	8	65001-
12		01643-70623	Washer	8	65001-
13		198-Z11-5680	Knob Assembly	2	65001-
14		01245-00620	Screw	4	65001-
15		198-Z11-3650	Plate	2	65001-
16		198-Z11-5250	Plate	2	65001-
17		01245-00616	Screw, Hexagon Socket Head	4	65001-
18		01643-70623	Washer	4	65001-
19		198-Z11-5260	Lever	1	65001-
		198-Z11-5270	Lever	1	65001-
20		14X-Z11-3110	Rubber	4	65001-
21		01641-20608	Washer	2	65001-
22		04050-11612	Pin, Cotter	2	65001-
23		198-Z11-3241	Plate	1	65001-
		198-Z11-3251	Plate	1	65001-
24		04205-10614	Pin	2	65001-
25		01641-20608	Washer	2	65001-
26		04050-11612	Pin, Cotter	2	65001-
27		176-06-42170	Spring	2	65001-

Reference:K0210-006002 Page:K019002

Printed By : Dwi Iswanto (airafather6107170)

Index	Code	Part Number	Description	Qty	Serial No.
28		198-Z11-5690	Plate	2	65001-
29		01245-00616	Screw, Hexagon Socket Head	4	65001-
30		01643-70623	Washer	4	65001-
31		198-Z11-3280	Plate	2	65001-
32		01643-50823	Washer	2	65001-
33		04050-12020	Pin, Cotter	2	65001-
34		198-Z11-7310	Rubber	2	65001-
35		14X-Z11-3110	Rubber	4	65001-
36		01643-30623	Washer	4	65001-
37		198-Z11-5280	Plate	1	65001-
		198-Z11-5290	Plate	1	65001-
38		04205-10614	Pin	2	65001-
39		01641-20608	Washer	4	65001-
40		04050-11612	Pin, Cotter	4	65001-
41		198-Z11-3261	Cover	1	65001-
		198-Z11-3290	Cover	1	65001-
42		01245-00616	Screw, Hexagon Socket Head	4	65001-
43		01643-70623	Washer	4	65001-
44		198-Z11-3430	Cover	2	65001-
45		01245-00616	Screw, Hexagon Socket Head	4	65001-
46		01643-70623	Washer	4	65001-
47		14X-911-1780	Seal	2	65001-
48		198-Z11-7310	Rubber	2	65001-
49		14X-911-1690	Damper	8	65001-
50		14X-911-1761	Shim, T=1.2mm	16	65001-
51		01023-20616	Screw	16	65001-
52		20Y-54-35780	Stopper	2	65001-
53		198-Z11-3590	Plate	4	65001-
54		01240-00820	Screw, Hexagon Socket Head	8	65001-
55		198-Z11-2231	Glass	2	65001-
56		198-Z11-2270	Strip	2	65001-

Printed By : Dwi Iswanto (airafather6107170)

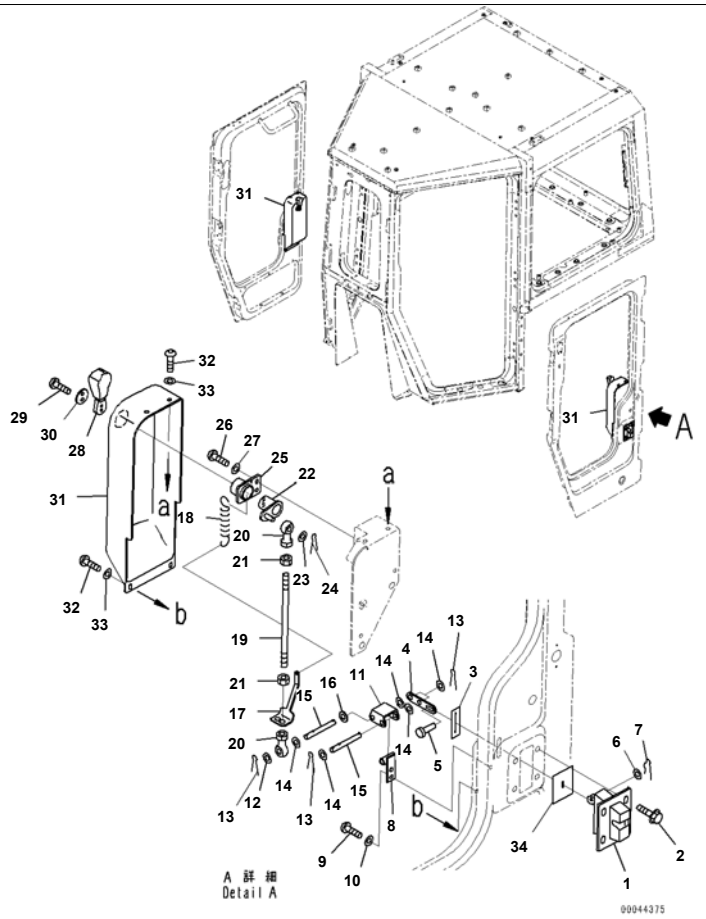

Reference:K0210-006003 Page:K019003

D375A-6R S/N 65001-UP
ROPS Cab, Without Radio, Door and Lock (2/2) (#65001-)

Index	Code	Part Number	Description	Qty	Serial No.
1		20Y-54-36380	Lock	2	65001-
2		01435-40820	Bolt	8	65001-
3		198-Z11-3490	Sheet	2	65001-
4		198-Z11-6480	Plate	2	65001-
5		04205-10520	Pin	2	65001-
6		01640-20508	Washer	2	65001-
7		04050-11215	Pin, Cotter	2	65001-
8		198-Z11-6471	Bracket	2	65001-
9		01245-00616	Screw, Hexagon Socket Head	4	65001-
10		01643-70623	Washer	4	65001-
11		198-Z11-6440	Plate	2	65001-
12		01643-50823	Washer	10	65001-
13		04050-13020	Pin, Cotter	8	65001-
14		01641-20812	Washer	12	65001-
15		198-Z11-6490	Shaft	4	65001-
16		198-Z11-7310	Rubber	2	65001-
17		198-Z11-6450	Plate	2	65001-
18		176-06-42170	Spring	2	65001-
19		04245-40820	Rod	2	65001-
20		04250-80847	Rod End	4	65001-
21		01580-10806	Nut	4	65001-
22		198-Z11-3421	Lever	2	65001-
23		01640-20816	Washer	2	65001-
24		04050-12020	Pin, Cotter	2	65001-
25		198-Z11-3460	Plate	2	65001-
26		01245-00616	Screw, Hexagon Socket Head	4	65001-
27		01643-70623	Washer	4	65001-
28		198-Z11-5680	Knob Assembly	2	65001-
29		01245-00620	Screw	4	65001-
30		198-Z11-3650	Plate	2	65001-
31		198-Z11-3322	Cover	1	65001-

Printed By : Dwi Iswanto (airafather6107170)

Index	Code	Part Number	Description	Qty	Serial No.
		198-Z11-3332	Cover	1	65001-
32		01245-00616	Screw, Hexagon Socket Head	4	65001-
33		01643-70623	Washer	4	65001-
34		14X-911-1780	Seal	2	65001-

Printed By : Dwi Iswanto (airafather6107170)

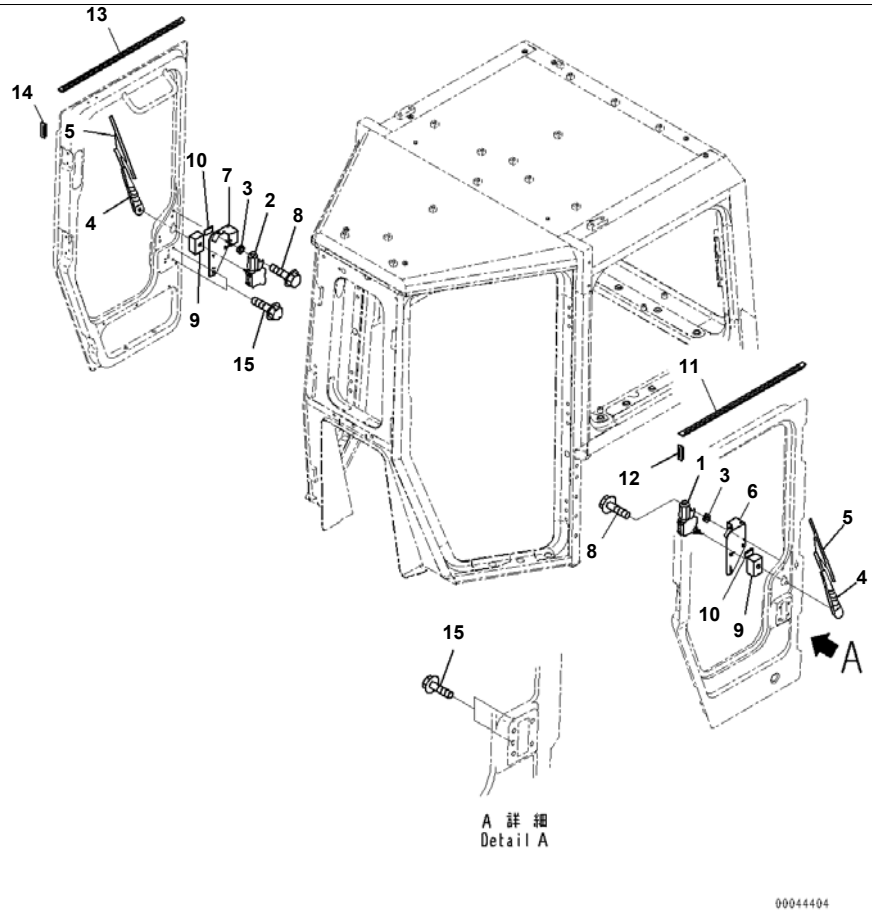

D375A-6R S/N 65001-UP
ROPS Cab, Without Radio, Door Wiper (#65001-)

Index	Code	Part Number	Description	Qty	Serial No.
1		14X-911-3120	Wiper Motor Assembly	1	65001-
2		14X-911-3130	Wiper Motor Assembly	1	65001-
3		22X-70-12690	Shim, T=3.2mm	2	65001-
4		198-Z11-2690	Arm, Wiper	2	65001-
5		14X-911-3321	Wiper Blade	2	65001-
6		198-Z11-2561	Bracket	1	65001-
7		198-Z11-2571	Bracket	1	65001-
8		01435-01016	Bolt	4	65001-
9		198-Z11-6790	Sheet	2	65001-
10		198-Z11-6380	Sheet	2	65001-
11		198-Z11-4130	Seal	1	65001-
12		198-Z11-4150	Seal	1	65001-
13		198-Z11-4140	Seal	1	65001-
14		198-Z11-4160	Seal	1	65001-
15		01435-40812	Bolt	2	65001-

Printed By : Dwi Iswanto (airafather6107170)

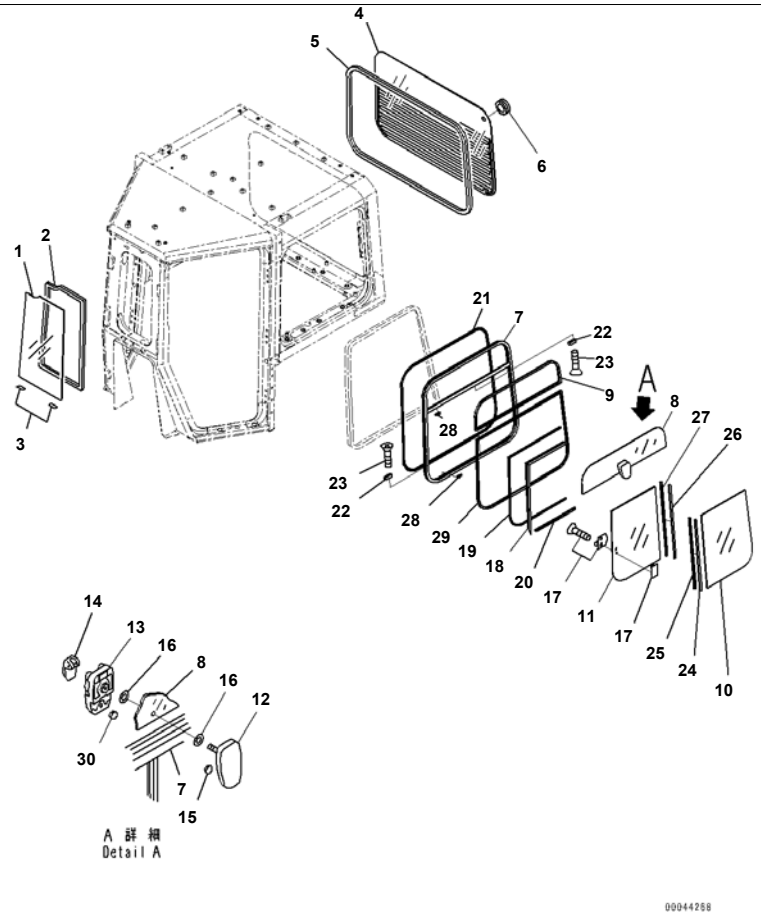

D375A-6R S/N 65001-UP
ROPS Cab, Without Radio, Window Sash (1/2) (#65001-)

Index	Code	Part Number	Description	Qty	Serial No.
1		198-Z11-2211	Glass	1	65001-
2		198-Z11-2260	Glass	1	65001-
3		198-Z11-2290	Plate	2	65001-
4		198-Z11-7870	Glass	1	65001-
5		198-Z11-2251	Glass	1	65001-
6		09415-02512	Cap	1	65001-
		198-Z11-7500	Sash Assembly	1	65001-
7	C1		· Frame	1	65001-
8		198-Z11-4820	· Glass	1	65001-
9		198-Z11-4910	· Seal	1	65001-
10		198-Z11-4840	· Glass	1	65001-
11		198-Z11-4830	· Glass	1	65001-
12		14X-911-2620	· Bracket	1	65001-
13		14X-911-2630	· Bracket	1	65001-
14		14X-911-2661	· Lever Assembly	1	65001-
15		14X-911-2640	· Cushion	2	65001-
16		14X-911-2650	· Seal	2	65001-
17		20Y-54-13322	· Lock Assembly	1	65001-
18		198-Z11-4850	· Seal	1	65001-
19		198-Z11-4880	· Seal	1	65001-
20		198-Z11-4860	· Seal	1	65001-
21		198-Z11-4870	· Seal	1	65001-
22		14X-911-6710	· Stopper	2	65001-
23		01224-40316	· Screw, Philips Head	4	65001-
24		198-Z11-4920	· Frame	1	65001-
25		14X-911-6730	· Seal	1	65001-
26		14X-911-6770	· Frame	1	65001-
27		14X-911-6740	· Seal	1	65001-
28		14X-911-6750	· Stopper	2	65001-
29		198-Z11-4960	· Seal	1	65001-
30		198-Z11-7450	· Cushion	1	65001-

Printed By : Dwi Iswanto (airafather6107170)

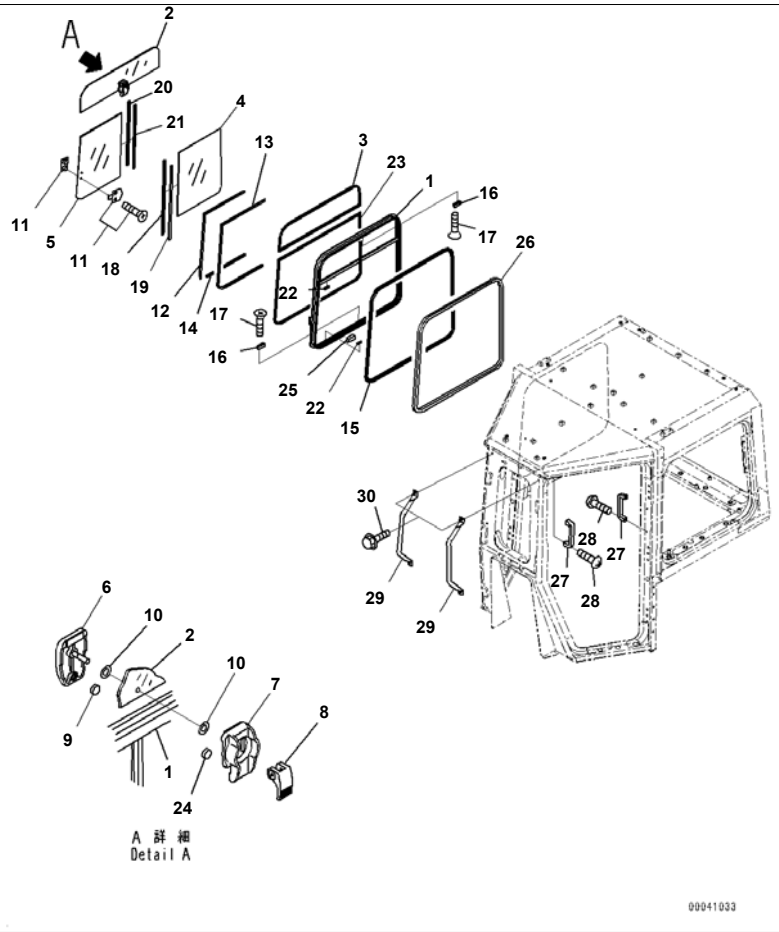

Index	Code	Part Number	Description	Qty	Serial No.
		198-Z11-7600	Sash Assembly	1	65001-
1	C1		· Frame	1	65001-
2		198-Z11-4820	· Glass	1	65001-
3		198-Z11-4910	· Seal	1	65001-
4		198-Z11-4840	· Glass	1	65001-
5		198-Z11-4830	· Glass	1	65001-
6		14X-911-2620	· Bracket	1	65001-
7		14X-911-2630	· Bracket	1	65001-
8		14X-911-2661	· Lever Assembly	1	65001-
9		14X-911-2640	· Cushion	2	65001-
10		14X-911-2650	· Seal	2	65001-
11		20Y-54-13322	· Lock Assembly	1	65001-
12		198-Z11-4990	· Seal	1	65001-
13		198-Z11-4880	· Seal	1	65001-
14		198-Z11-4860	· Seal	1	65001-
15		198-Z11-4870	· Seal	1	65001-
16		14X-911-6710	· Stopper	2	65001-
17		01224-40316	· Screw, Philips Head	4	65001-
18		198-Z11-4920	· Frame	1	65001-
19		14X-911-6730	· Seal	1	65001-
20		14X-911-6770	· Frame	1	65001-
21		14X-911-6740	· Seal	1	65001-
22		14X-911-6750	· Stopper	2	65001-
23		198-Z11-4960	· Seal	1	65001-
24		198-Z11-7450	· Cushion	1	65001-
25		198-Z11-2480	Seat	44	65001-
26		198-Z11-2490	Trim	2	65001-
27		361-54-21150	Handle	2	65001-
28		01220-40820	Screw, Philips Head	4	65001-
29		198-Z11-3520	Grip	2	65001-
30		01435-41025	Bolt	4	65001-

Printed By : Dwi Iswanto (airafather6107170)

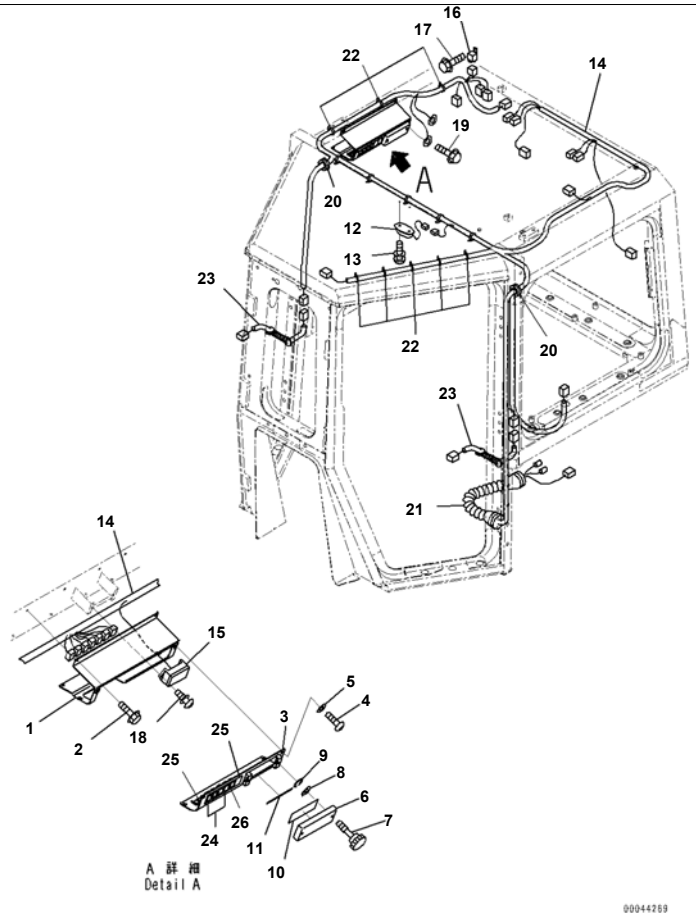

Reference:K0210-006007 Page:K019007

D375A-6R S/N 65001-UP
ROPS Cab, Without Radio, Switch Panel (#65001-)

Index	Code	Part Number	Description	Qty	Serial No.
1		198-Z11-6520	Bracket	1	65001-
2		01435-40616	Bolt	4	65001-
3		198-Z11-6530	Cover	1	65001-
4		01245-00616	Screw, Hexagon Socket Head	4	65001-
5		01643-70623	Washer	4	65001-
6		198-Z11-6390	Cover	1	65001-
7		01232-10616	Screw, Knurled Head	2	65001-
8		01643-70623	Washer	2	65001-
9		195-54-78790	Ring, Snap	2	65001-
10		17M-Z11-1120	Plate	1	65001-
11		198-Z11-6590	Plate	1	65001-
12		421-06-26210	Lamp Assembly, Working	1	65001-
13		01023-10520	Screw	2	65001-
14		17M-Z11-1110	Wiring Harness	1	65001-
15		08044-01000	· Box Assembly, Fuse	1	65001-
		08041-01000	· Fuse, 10Amp.	6	65001-
		08041-02000	· Fuse, 20Amp.	3	65001-
16		287-06-16410	Relay	1	65001-
17		01435-40616	Bolt	1	65001-
18		01023-20520	Screw	2	65001-
19		01435-00816	Bolt	1	65001-
20		124-911-5790	Cushion	2	65001-
21		14X-911-4541	Boot	1	65001-
22		14X-911-4551	Clip	15	65001-
23		14X-911-4521	Wire Assembly	2	65001-
24		20T-06-71410	Switch	4	65001-
25		14X-911-4280	Cover	3	65001-
26		362-56-42390	Switch	1	65001-

Printed By : Dwi Iswanto (airafather6107170)

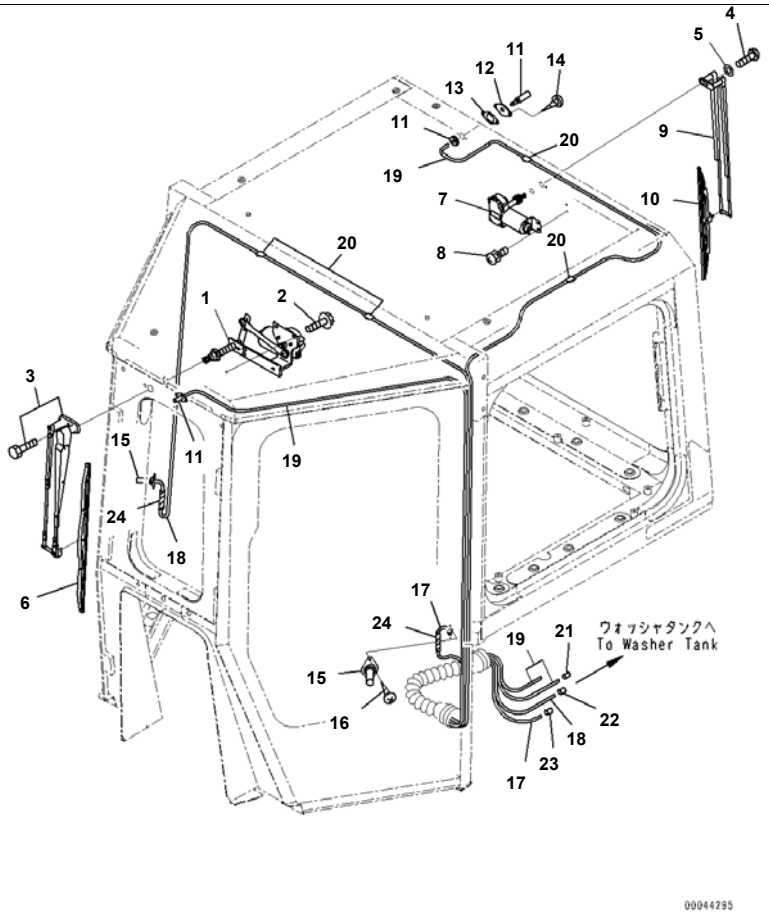

Reference:K0210-006008 Page:K019008

D375A-6R S/N 65001-UP
ROPS Cab, Without Radio, Wipers, Front and Rear (#65001-)

Index	Code	Part Number	Description	Qty	Serial No.
1		14X-911-3111	Wiper Motor	1	65001-
2		01435-40616	Bolt	4	65001-
3		14X-911-3210	Arm Assembly, Wiper	1	65001-
4		01245-00616	Screw, Hexagon Socket Head	1	65001-
5		01643-70623	Washer	1	65001-
6		195-Z11-8550	Wiper Blade	1	65001-
7		198-Z11-2540	Wiper Motor	1	65001-
8		01023-20516	Screw	2	65001-
9		421-56-21760	Arm, Wiper	1	65001-
10		421-56-21770	Wiper Blade	1	65001-
11		205-06-61220	Nozzle Assembly	2	65001-
12		14X-911-3560	Bracket	2	65001-
13		14X-911-3570	Packing	2	65001-
14		01370-00408	Screw	4	65001-
15		20Y-54-39511	Nozzle	2	65001-
16		01370-10520	Screw	4	65001-
17		14X-911-3531	Hose	1	65001-
18		14X-911-3541	Hose	1	65001-
19		21T-06-11390	Hose	2	65001-
20		08051-00801	Clip	10	65001-
21		14X-911-1130	Tube	1	65001-
22		14X-911-1140	Tube	1	65001-
23		14X-911-1150	Tube	1	65001-
24		08210-00401	Tube, Spiral	2	65001-

Reference:K0210-006008 Page:K019008

Printed By : Dwi Iswanto (airafather6107170)

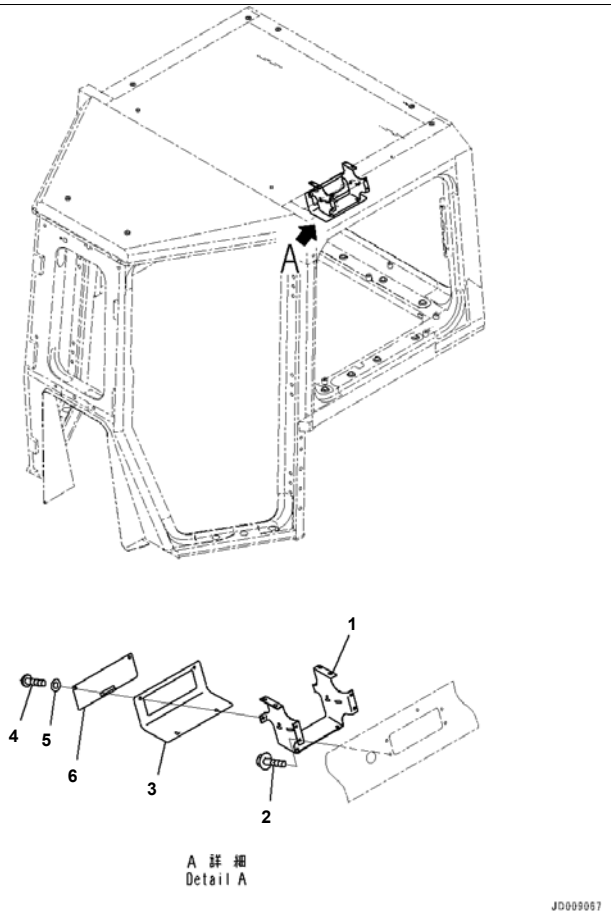

Reference:K0210-006009 Page:K019009

D375A-6R S/N 65001-UP
ROPS Cab, Without Radio, Cover (#65001-)

Index	Code	Part Number	Description	Qty	Serial No.
1		198-Z11-2581	Bracket	1	65001-
2		01435-40616	Bolt	4	65001-
3		198-Z11-2591	Cover	1	65001-
4		01245-00616	Screw, Hexagon Socket Head	4	65001-
5		01643-70623	Washer	4	65001-
6		198-Z11-3680	Cover	1	65001-

Reference:K0210-006009 Page:K019009

Printed By : Dwi Iswanto (airafather6107170)

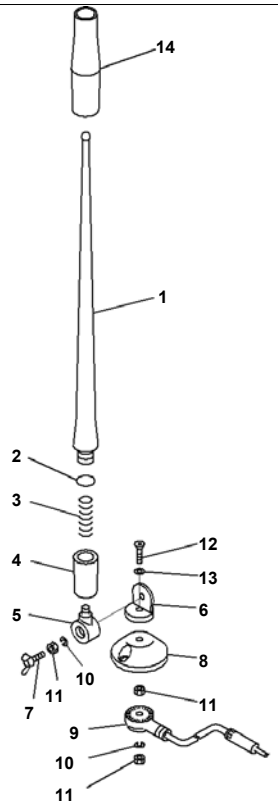

Index	Code	Part Number	Description	Qty	Serial No.
		198-Z11-4610	Rubber Antenna	1	65001-
		EP72-540-901	· Rubber Element Assembly	1	65001-
1		EP72-540-90101	· · Antenna	1	65001-
2		EP72-540-90102	· · Ring	1	65001-
3		EP72-540-90103	· · Spring	1	65001-
4		EP72-540-90104	· · Collar	1	65001-
5		EP72-540-90105	· · Joint	1	65001-
6	C1		· Holder	1	65001-
7		EP23-141-001	· Bolt, Wing	1	65001-
8	C1		· Base	1	65001-
9	C1		· Wiring Harness	1	65001-
10		EP23-141-003	· Washer, Spring	2	65001-
11		EP23-141-004	· Nut	3	65001-
12	C1		· Screw	1	65001-
13	C1		· Washer	1	65001-
14	C1		· Tube	1	65001-

Printed By : Dwi Iswanto (airafather6107170)

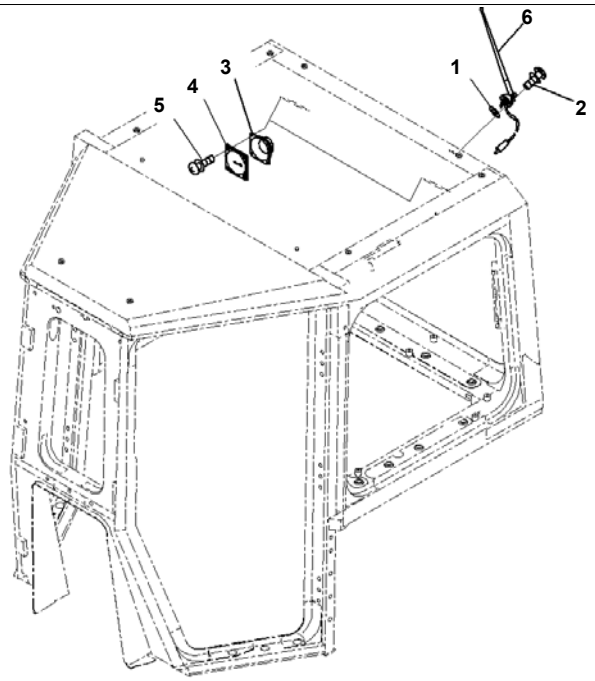

D375A-6R S/N 65001-UP
ROPS Cab, Without Radio, Rubber Antenna Mounting and Speaker (#65001-)

Index	Code	Part Number	Description	Qty	Serial No.
1		01643-30623	Washer	1	65001-
2		01023-10420	Screw	2	65001-
3		08910-10000	Speaker	2	65001-
4		14X-911-4220	Panel	2	65001-
5		01023-20420	Screw	8	65001-
6		(198-Z11-4610)	Rubber Antenna		

Printed By : Dwi Iswanto (airafather6107170)

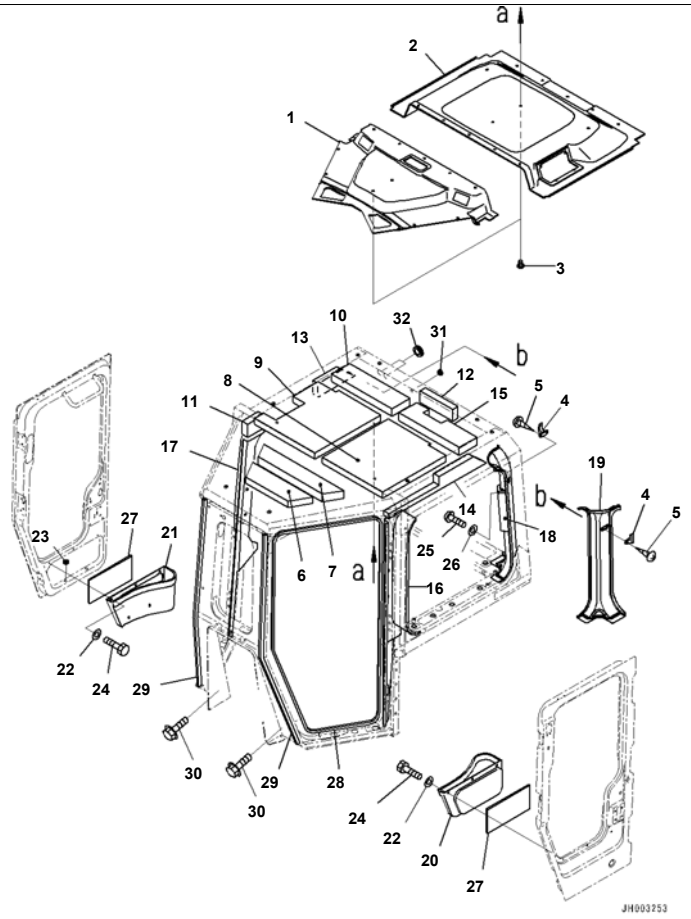

D375A-6R S/N 65001-UP
ROPS Cab, Without Radio, Roof Lining and Garnish (#65001-)

Index	Code	Part Number	Description	Qty	Serial No.
1		198-Z11-6710	Roof Lining	1	65001-
2		198-Z11-6720	Roof Lining	1	65001-
3		198-Z11-6370	Clip	20	65001-
4		205-54-51250	Hanger	2	65001-
5		01370-30416	Screw	4	65001-
6		198-Z11-2730	Absorber	1	65001-
7		198-Z11-2740	Absorber	1	65001-
8		198-Z11-6750	Absorber	1	65001-
9		198-Z11-6760	Absorber	1	65001-
10		198-Z11-2770	Absorber	1	65001-
11		198-Z11-6780	Absorber	2	65001-
12		198-Z11-6730	Absorber	1	65001-
13		198-Z11-6740	Absorber	1	65001-
14		198-Z11-6770	Absorber	1	65001-
15		198-Z11-7550	Absorber	1	65001-
16		198-Z11-6810	Cover	1	65001-
17		198-Z11-6820	Cover	1	65001-
18		198-Z11-6831	Cover	1	65001-
19		198-Z11-6841	Cover	1	65001-
20		14X-911-5412	Pocket	1	65001-
21		14X-911-5422	Pocket	1	65001-
22		01643-70623	Washer	6	65001-
23		08037-01008	Grommet	4	65001-
24		01010-D0616	Bolt	6	65001-
25		01245-00616	Screw, Hexagon Socket Head	6	65001-
26		01643-71232	Washer	6	65001-
27		198-Z11-2780	Absorber	2	65001-
28		198-Z11-2910	Trim	2	65001-
29		198-Z11-3530	Trim	2	65001-
30		01435-41025	Bolt	8	65001-
31		09415-01008	Cap	1	65001-

Printed By : Dwi Iswanto (airafather6107170)

Index	Code	Part Number	Description	Qty	Serial No.
32		09415-02512	Cap	2	65001-

Printed By : Dwi Iswanto (airafather6107170)

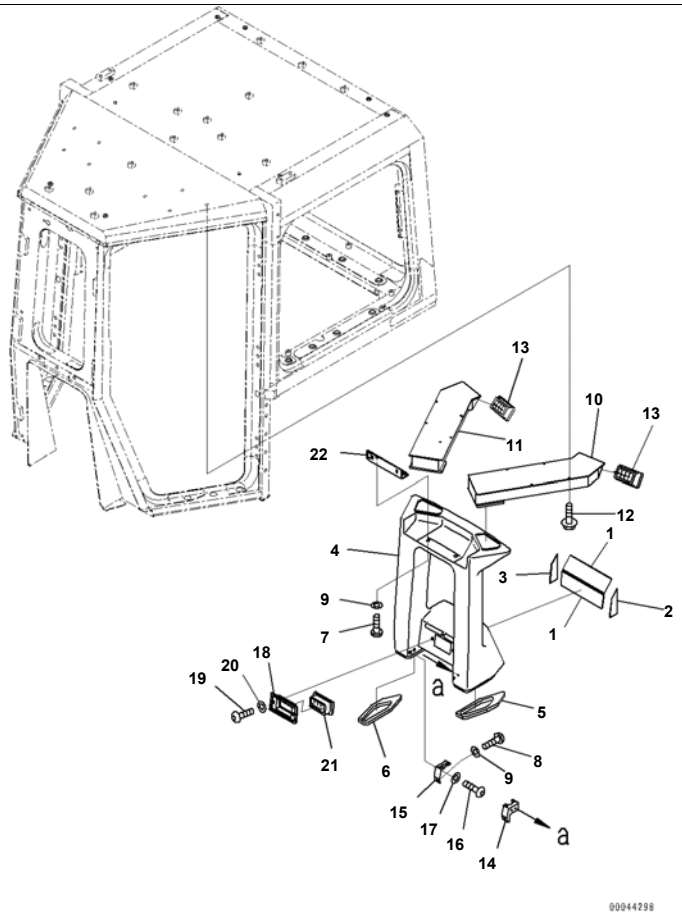

D375A-6R S/N 65001-UP
ROPS Cab, Without Radio, Air Conditioner Duct (#65001-)

Index	Code	Part Number	Description	Qty	Serial No.
		195-Z11-8770	Duct	1	65001-
1		195-Z11-8780	· Sheet	2	65001-
2		195-Z11-8950	· Sheet	1	65001-
3		195-Z11-8960	· Sheet	1	65001-
4	C1		· Duct	1	65001-
5		198-Z11-6350	· · Seal	1	65001-
6		198-Z11-6360	· · Seal	1	65001-
7		01245-00835	Screw	2	65001-
8		01245-00820	Screw	2	65001-
9		01643-70823	Washer	4	65001-
10		198-Z11-3821	Duct	1	65001-
11		198-Z11-3831	Duct	1	65001-
12		01435-40616	Bolt	8	65001-
13		14X-54-18270	Grille Assembly	2	65001-
14		198-Z11-3850	Bracket	1	65001-
15		198-Z11-3860	Bracket	1	65001-
16		01245-00616	Screw, Hexagon Socket Head	4	65001-
17		01643-70623	Washer	4	65001-
18		198-Z11-6850	Bracket	1	65001-
19		01245-00616	Screw, Hexagon Socket Head	2	65001-
20		01643-70623	Washer	2	65001-
21		17A-54-18270	Grille Assembly	1	65001-
22		198-Z11-3910	Plate	1	65001-

Printed By : Dwi Iswanto (airafather6107170)

D375A-6R S/N 65001-UP
JH003196

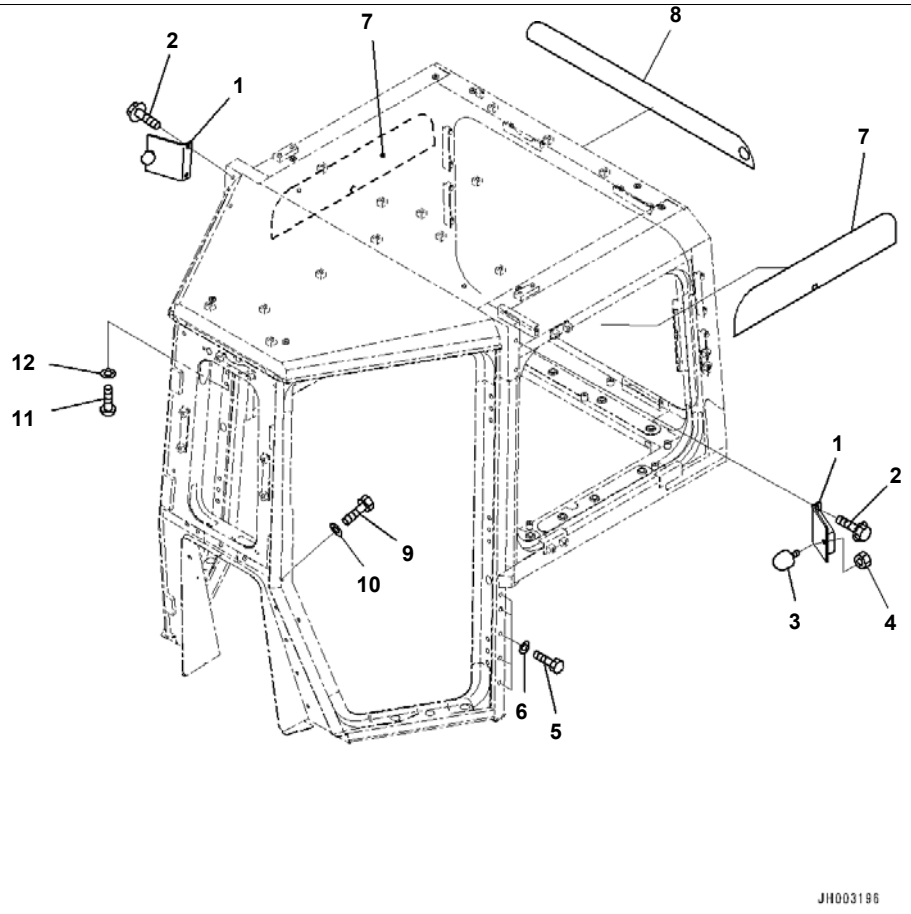

Reference:K0210-006014 Page:K019014

D375A-6R S/N 65001-UP
ROPS Cab, Without Radio, Open Lock Stopper (#65001-)

Index	Code	Part Number	Description	Qty	Serial No.
1		198-Z11-3361	Bracket	2	65001-
2		01435-41025	Bolt	4	65001-
3		09453-00002	Stopper	2	65001-
4		01580-11210	Nut	2	65001-
5		01010-D1230	Bolt	10	65001-
6		01643-71232	Washer	10	65001-
7		198-Z11-6210	Sunshade Film	2	65001-
8		198-Z11-6220	Sunshade Film	1	65001-
9		01010-D1230	Bolt	4	65001-
10		01643-71232	Washer	4	65001-
11		01245-00820	Screw	2	65001-
12		01643-70823	Washer	2	65001-

Reference:K0210-006014 Page:K019014

Printed By : Dwi Iswanto (airafather6107170)

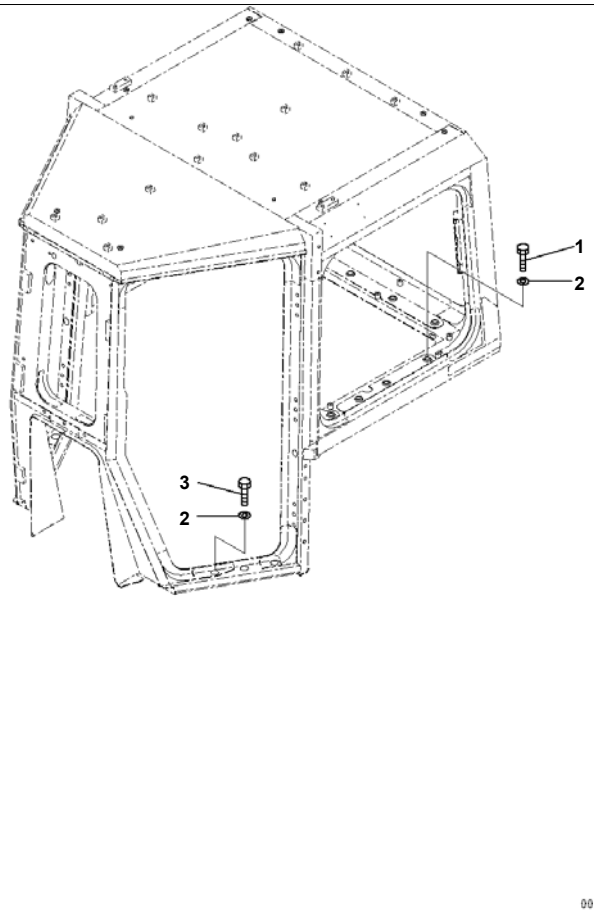

Index	Code	Part Number	Description	Qty	Serial No.
1		01010-81275	Bolt	15	65001-
2		124-54-26540	Washer	21	65001-
3		01010-81245	Bolt	6	65001-

Printed By : Dwi Iswanto (airafather6107170)

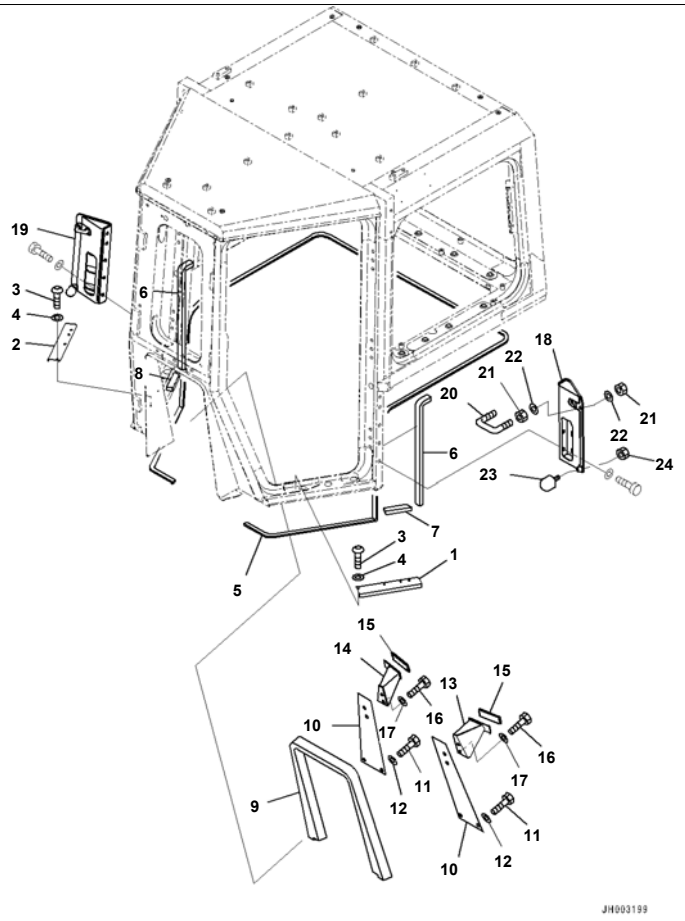

D375A-6R S/N 65001-UP
ROPS Cab, Without Radio, Envelope Parts (1/2) (#65001-)

Index	Code	Part Number	Description	Qty	Serial No.
1		198-Z11-2941	Cover	1	65001-
2		198-Z11-2951	Cover	1	65001-
3		01245-00616	Screw, Hexagon Socket Head	8	65001-
4		01643-70623	Washer	8	65001-
5		14X-911-5911	Seal	5	65001-
6		198-Z11-7420	Sheet	2	65001-
7		198-Z11-7410	Sheet	1	65001-
8		198-Z11-7430	Sheet	1	65001-
9		198-Z11-3540	Seal	1	65001-
10		198-Z11-2961	Plate	2	65001-
11		01010-D1230	Bolt	4	65001-
12		01643-71232	Washer	4	65001-
13		14X-911-5711	Bracket	1	65001-
14		14X-911-5721	Bracket	1	65001-
15		203-43-56450	Cap	2	65001-
16		01010-D1230	Bolt	4	65001-
17		01643-71232	Washer	4	65001-
18		198-Z11-3341	Bracket	1	65001-
19		198-Z11-3351	Bracket	1	65001-
20		14X-911-1921	Striker	2	65001-
21		01580-11008	Nut	8	65001-
22		01643-31032	Washer	8	65001-
23		09453-00002	Stopper	2	65001-
24		01580-11210	Nut	2	65001-

Printed By : Dwi Iswanto (airafather6107170)

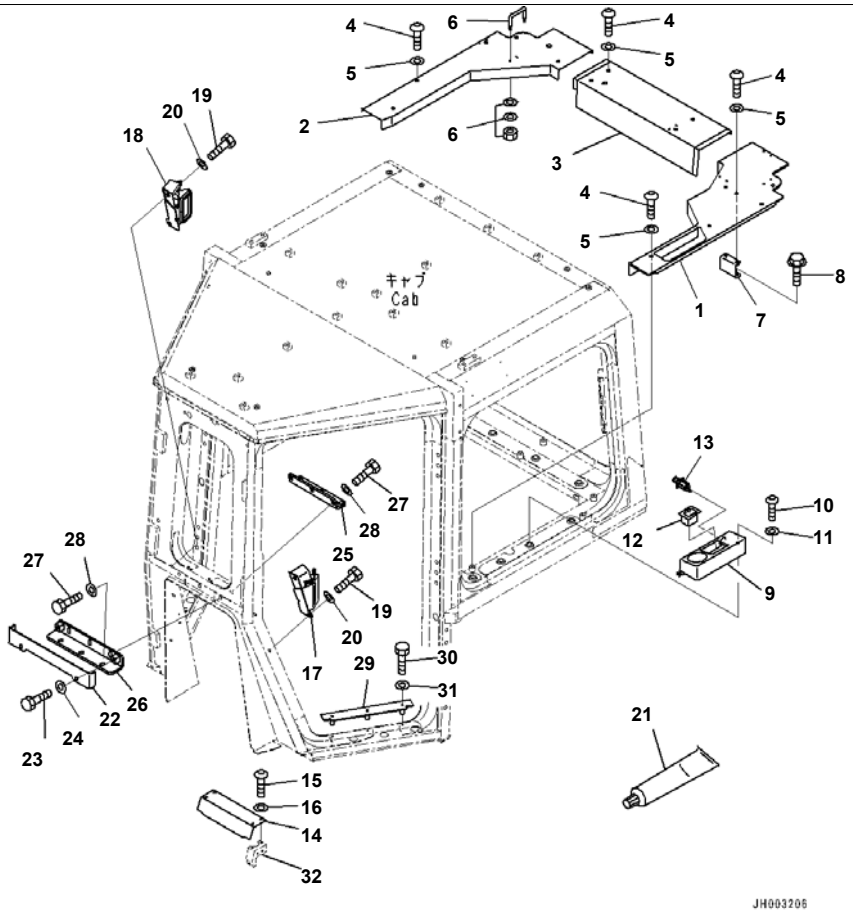

Reference:K0210-006017 Page:K019017

D375A-6R S/N 65001-UP
ROPS Cab, Without Radio, Envelope Parts (2/2) (#65001-)

Index	Code	Part Number	Description	Qty	Serial No.
1		198-Z11-2872	Cover	1	65001-
2		198-Z11-2882	Cover	1	65001-
3		198-Z11-2892	Cover	1	65001-
4		01245-00820	Screw	13	65001-
5		01643-70823	Washer	13	65001-
6		198-Z11-2850	Handle	6	65001-
7		198-Z11-3990	Bracket	1	65001-
8		01435-30825	Bolt	2	65001-
9		198-Z11-7490	Box	1	65001-
10		01245-00820	Screw	2	65001-
11		01643-70823	Washer	2	65001-
12		20G-54-13420	Ashtray	1	65001-
13		20Y-06-23472	Cigarette Lighter	1	65001-
14		195-54-68282	Plate	1	65001-
15		01245-00616	Screw, Hexagon Socket Head	4	65001-
16		01643-70623	Washer	4	65001-
17		198-911-9511	Damper Assembly	1	65001-
18		198-911-9521	Damper Assembly	1	65001-
19		01010-D1230	Bolt	4	65001-
20		01643-71232	Washer	4	65001-
21		198-Z11-3960	Seal	1	65001-
22		198-Z11-7991	Cover	1	65001-
23		01010-D1230	Bolt	2	65001-
24		01643-71232	Washer	2	65001-
25		198-Z11-3571	Bracket	1	65001-
26		198-Z11-7980	Plate	1	65001-
27		01010-D1230	Bolt	12	65001-
28		01643-71232	Washer	12	65001-
29		198-Z11-7590	Plate	2	65001-
30		01010-D0650	Bolt	6	65001-
31		01643-70623	Washer	6	65001-

Printed By : Dwi Iswanto (airafather6107170)

Index	Code	Part Number	Description	Qty	Serial No.
32		(198-Z11-3850)	Bracket		

Printed By : Dwi Iswanto (airafather6107170)

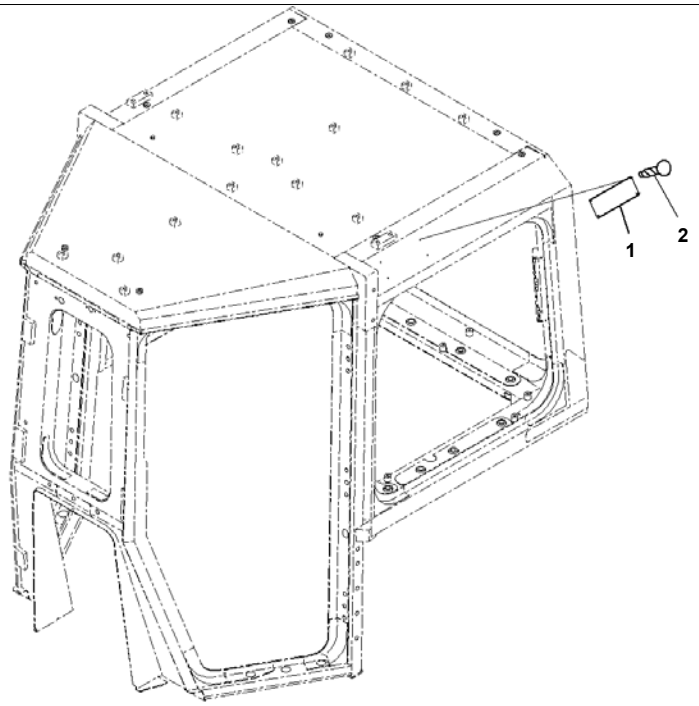

Index	Code	Part Number	Description	Qty	Serial No.
1	C2	09620-C2000	Plate, Name, FOPS (Limited Supply)	1	65001-
2		04418-13060	Screw	4	65001-

Printed By : Dwi Iswanto (airafather6107170)

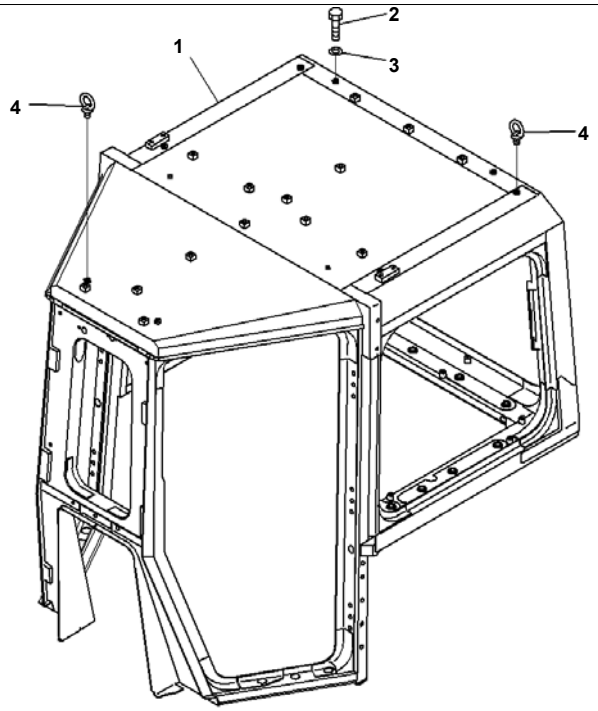

Index	Code	Part Number	Description	Qty	Serial No.
1		198-Z11-6111	Cab	1	65001-
2		01010-D1220	Bolt	27	65001-
3		01643-71232	Washer	27	65001-
4		04530-11222	Bolt, Eye	4	65001-

Printed By : Dwi Iswanto (airafather6107170)

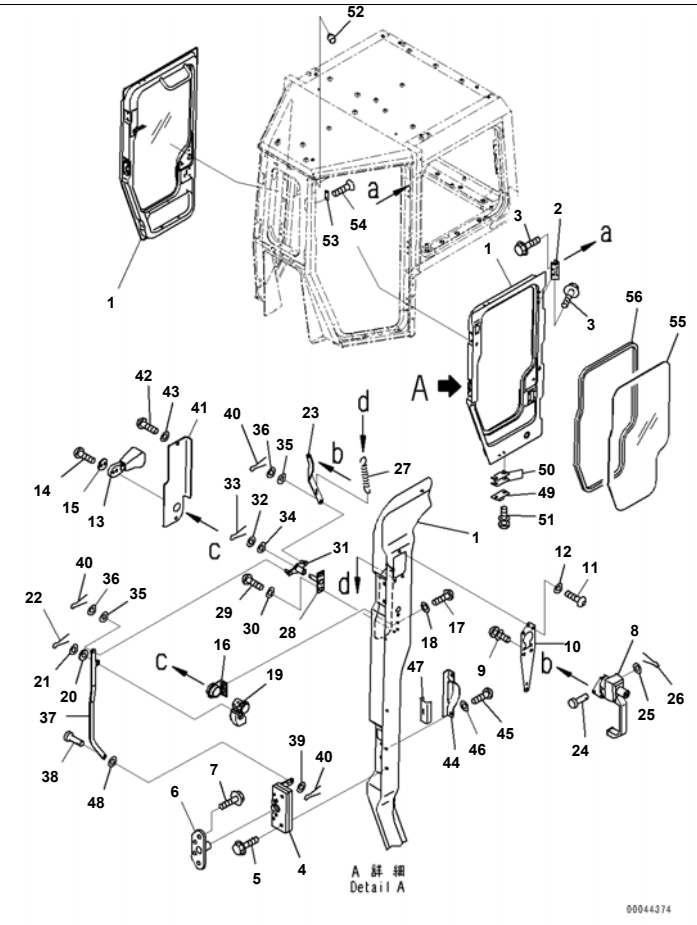

Reference:K0210-007002 Page:K020002

D375A-6R S/N 65001-UP
ROPS Cab, With AM/FM Radio For Asia and EU, Door and Lock (1/2) (#65001-)

Index	Code	Part Number	Description	Qty	Serial No.
1		198-Z11-3111	Door	1	65001-
		198-Z11-3121	Door	1	65001-
2		14X-911-1330	Hinge	6	65001-
3		01435-41025	Bolt	36	65001-
4		195-Z11-4510	Lock,LHS	1	65001-
		195-Z11-4520	Lock,RHS	1	65001-
5		01435-40630	Bolt	8	65001-
6		198-Z11-3450	Striker	2	65001-
7		01435-40820	Bolt	8	65001-
8		198-Z11-3710	Handle Assembly	2	65001-
9		01023-10520	Screw	10	65001-
10		198-Z11-3210	Plate	2	65001-
11		01245-00616	Screw, Hexagon Socket Head	8	65001-
12		01643-70623	Washer	8	65001-
13		198-Z11-5680	Knob Assembly	2	65001-
14		01245-00620	Screw	4	65001-
15		198-Z11-3650	Plate	2	65001-
16		198-Z11-5250	Plate	2	65001-
17		01245-00616	Screw, Hexagon Socket Head	4	65001-
18		01643-70623	Washer	4	65001-
19		198-Z11-5260	Lever,LHS	1	65001-
		198-Z11-5270	Lever,RHS	1	65001-
20		14X-Z11-3110	Rubber	4	65001-
21		01641-20608	Washer	2	65001-
22		04050-11612	Pin, Cotter	2	65001-
23		198-Z11-3241	Plate,LHS	1	65001-
		198-Z11-3251	Plate,RHS	1	65001-
24		04205-10614	Pin	2	65001-
25		01641-20608	Washer	2	65001-
26		04050-11612	Pin, Cotter	2	65001-
27		176-06-42170	Spring	2	65001-

Reference:K0210-007002 Page:K020002

Printed By : Dwi Iswanto (airafather6107170)

ROPS Cab, With AM/FM Radio For Asia and EU, Door and Lock (1/2) (#65001-)

Index	Code	Part Number	Description	Qty	Serial No.
28		198-Z11-5690	Plate	2	65001-
29		01245-00616	Screw, Hexagon Socket Head	4	65001-
30		01643-70623	Washer	4	65001-
31		198-Z11-3280	Plate	2	65001-
32		01643-50823	Washer	2	65001-
33		04050-12020	Pin, Cotter	2	65001-
34		198-Z11-7310	Rubber	2	65001-
35		14X-Z11-3110	Rubber	4	65001-
36		01643-30623	Washer	4	65001-
37		198-Z11-5280	Plate,LHS	1	65001-
		198-Z11-5290	Plate,RHS	1	65001-
38		04205-10614	Pin	2	65001-
39		01641-20608	Washer	4	65001-
40		04050-11612	Pin, Cotter	4	65001-
41		198-Z11-3261	Cover	1	65001-
		198-Z11-3290	Cover	1	65001-
42		01245-00616	Screw, Hexagon Socket Head	4	65001-
43		01643-70623	Washer	4	65001-
44		198-Z11-3430	Cover	2	65001-
45		01245-00616	Screw, Hexagon Socket Head	4	65001-
46		01643-70623	Washer	4	65001-
47		14X-911-1780	Seal	2	65001-
48		198-Z11-7310	Rubber	2	65001-
49		14X-911-1690	Damper	8	65001-
50		14X-911-1761	Shim, T=1.2mm	16	65001-
51		01023-20616	Screw	16	65001-
52		20Y-54-35780	Stopper	2	65001-
53		198-Z11-3590	Plate	4	65001-
54		01240-00820	Screw, Hexagon Socket Head	8	65001-
55		198-Z11-2231	Glass	2	65001-
56		198-Z11-2270	Strip	2	65001-

Printed By : Dwi Iswanto (airafather6107170)

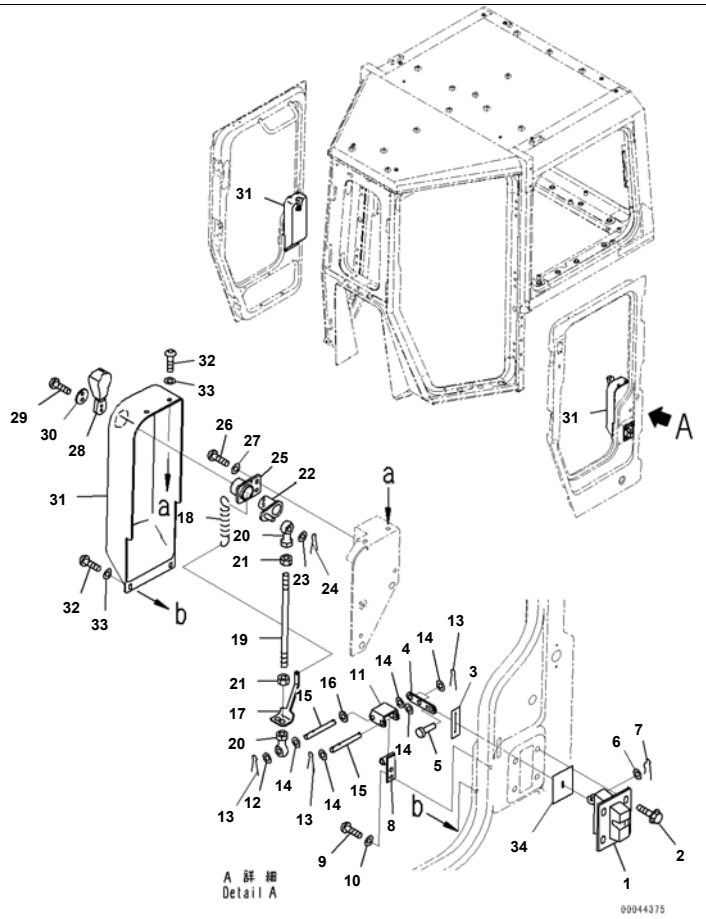

Reference:K0210-007003 Page:K020003

D375A-6R S/N 65001-UP
ROPS Cab, With AM/FM Radio For Asia and EU, Door and Lock (2/2) (#65001-)

Index	Code	Part Number	Description	Qty	Serial No.
1		20Y-54-36380	Lock	2	65001-
2		01435-40820	Bolt	8	65001-
3		198-Z11-3490	Sheet	2	65001-
4		198-Z11-6480	Plate	2	65001-
5		04205-10520	Pin	2	65001-
6		01640-20508	Washer	2	65001-
7		04050-11215	Pin, Cotter	2	65001-
8		198-Z11-6471	Bracket	2	65001-
9		01245-00616	Screw, Hexagon Socket Head	4	65001-
10		01643-70623	Washer	4	65001-
11		198-Z11-6440	Plate	2	65001-
12		01643-50823	Washer	10	65001-
13		04050-13020	Pin, Cotter	8	65001-
14		01641-20812	Washer	12	65001-
15		198-Z11-6490	Shaft	4	65001-
16		198-Z11-7310	Rubber	2	65001-
17		198-Z11-6450	Plate	2	65001-
18		176-06-42170	Spring	2	65001-
19		04245-40820	Rod	2	65001-
20		04250-80847	Rod End	4	65001-
21		01580-10806	Nut	4	65001-
22		198-Z11-3421	Lever	2	65001-
23		01640-20816	Washer	2	65001-
24		04050-12020	Pin, Cotter	2	65001-
25		198-Z11-3460	Plate	2	65001-
26		01245-00616	Screw, Hexagon Socket Head	4	65001-
27		01643-70623	Washer	4	65001-
28		198-Z11-5680	Knob Assembly	2	65001-
29		01245-00620	Screw	4	65001-
30		198-Z11-3650	Plate	2	65001-
31		198-Z11-3322	Cover	1	65001-

Reference:K0210-007003 Page:K020003

Printed By : Dwi Iswanto (airafather6107170)

ROPS Cab, With AM/FM Radio For Asia and EU, Door and Lock (2/2) (#65001-)

Index	Code	Part Number	Description	Qty	Serial No.
		198-Z11-3332	Cover	1	65001-
32		01245-00616	Screw, Hexagon Socket Head	4	65001-
33		01643-70623	Washer	4	65001-
34		14X-911-1780	Seal	2	65001-

Printed By : Dwi Iswanto (airafather6107170)

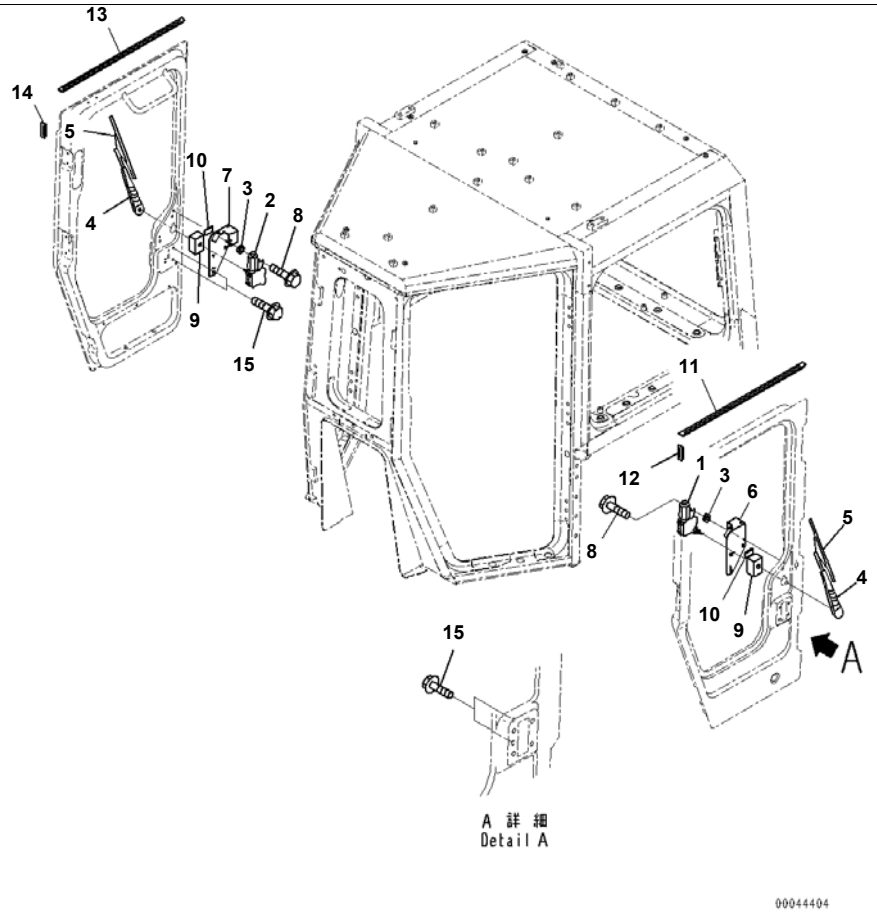

Reference:K0210-007004 Page:K020004

D375A-6R S/N 65001-UP
ROPS Cab, With AM/FM Radio For Asia and EU, Door Wiper (#65001-)

Index	Code	Part Number	Description	Qty	Serial No.
1		14X-911-3120	Wiper Motor Assembly	1	65001-
2		14X-911-3130	Wiper Motor Assembly	1	65001-
3		22X-70-12690	Shim, T=3.2mm	2	65001-
4		198-Z11-2690	Arm, Wiper	2	65001-
5		14X-911-3321	Wiper Blade	2	65001-
6		198-Z11-2561	Bracket	1	65001-
7		198-Z11-2571	Bracket	1	65001-
8		01435-01016	Bolt	4	65001-
9		198-Z11-6790	Sheet	2	65001-
10		198-Z11-6380	Sheet	2	65001-
11		198-Z11-4130	Seal	1	65001-
12		198-Z11-4150	Seal	1	65001-
13		198-Z11-4140	Seal	1	65001-
14		198-Z11-4160	Seal	1	65001-
15		01435-40812	Bolt	2	65001-

Reference:K0210-007004 Page:K020004

Printed By : Dwi Iswanto (airafather6107170)

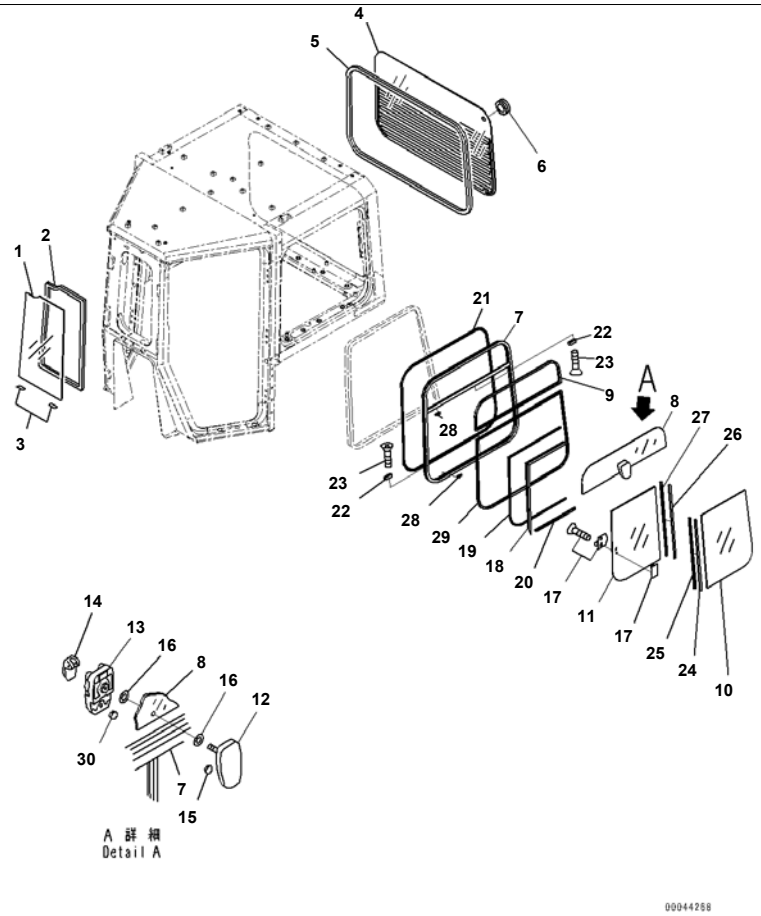

Reference:K0210-007005 Page:K020005

D375A-6R S/N 65001-UP
ROPS Cab, With AM/FM Radio For Asia and EU, Window Sash (1/2) (#65001-)

Index	Code	Part Number	Description	Qty	Serial No.
1		198-Z11-2211	Glass	1	65001-
2		198-Z11-2260	Glass	1	65001-
3		198-Z11-2290	Plate	2	65001-
4		198-Z11-7870	Glass	1	65001-
5		198-Z11-2251	Glass	1	65001-
6		09415-02512	Cap	1	65001-
		198-Z11-7500	Sash Assembly	1	65001-
7	C1		· Frame	1	65001-
8		198-Z11-4820	· Glass	1	65001-
9		198-Z11-4910	· Seal	1	65001-
10		198-Z11-4840	· Glass	1	65001-
11		198-Z11-4830	· Glass	1	65001-
12		14X-911-2620	· Bracket	1	65001-
13		14X-911-2630	· Bracket	1	65001-
14		14X-911-2661	· Lever Assembly	1	65001-
15		14X-911-2640	· Cushion	2	65001-
16		14X-911-2650	· Seal	2	65001-
17		20Y-54-13322	· Lock Assembly	1	65001-
18		198-Z11-4850	· Seal	1	65001-
19		198-Z11-4880	· Seal	1	65001-
20		198-Z11-4860	· Seal	1	65001-
21		198-Z11-4870	· Seal	1	65001-
22		14X-911-6710	· Stopper	2	65001-
23		01224-40316	· Screw, Philips Head	4	65001-
24		198-Z11-4920	· Frame	1	65001-
25		14X-911-6730	· Seal	1	65001-
26		14X-911-6770	· Frame	1	65001-
27		14X-911-6740	· Seal	1	65001-
28		14X-911-6750	· Stopper	2	65001-
29		198-Z11-4960	· Seal	1	65001-
30		198-Z11-7450	· Cushion	1	65001-

Reference:K0210-007005 Page:K020005

Printed By : Dwi Iswanto (airafather6107170)

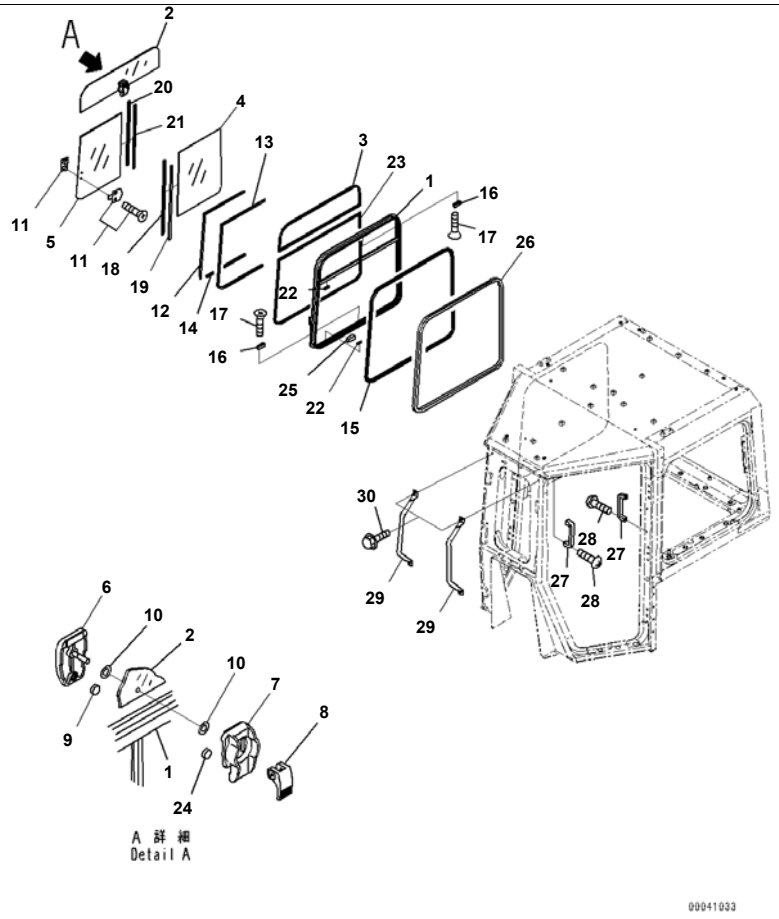

Reference:K0210-007006 Page:K020006

D375A-6R S/N 65001-UP
ROPS Cab, With AM/FM Radio For Asia and EU, Window Sash (2/2) (#65001-)

Index	Code	Part Number	Description	Qty	Serial No.
		198-Z11-7600	Sash Assembly	1	65001-
1	C1		· Frame	1	65001-
2		198-Z11-4820	· Glass	1	65001-
3		198-Z11-4910	· Seal	1	65001-
4		198-Z11-4840	· Glass	1	65001-
5		198-Z11-4830	· Glass	1	65001-
6		14X-911-2620	· Bracket	1	65001-
7		14X-911-2630	· Bracket	1	65001-
8		14X-911-2661	· Lever Assembly	1	65001-
9		14X-911-2640	· Cushion	2	65001-
10		14X-911-2650	· Seal	2	65001-
11		20Y-54-13322	· Lock Assembly	1	65001-
12		198-Z11-4990	· Seal	1	65001-
13		198-Z11-4880	· Seal	1	65001-
14		198-Z11-4860	· Seal	1	65001-
15		198-Z11-4870	· Seal	1	65001-
16		14X-911-6710	· Stopper	2	65001-
17		01224-40316	· Screw, Philips Head	4	65001-
18		198-Z11-4920	· Frame	1	65001-
19		14X-911-6730	· Seal	1	65001-
20		14X-911-6770	· Frame	1	65001-
21		14X-911-6740	· Seal	1	65001-
22		14X-911-6750	· Stopper	2	65001-
23		198-Z11-4960	· Seal	1	65001-
24		198-Z11-7450	· Cushion	1	65001-
25		198-Z11-2480	Seat	44	65001-
26		198-Z11-2490	Trim	2	65001-
27		361-54-21150	Handle	2	65001-
28		01220-40820	Screw, Philips Head	4	65001-
29		198-Z11-3520	Grip	2	65001-
30		01435-41025	Bolt	4	65001-

Reference:K0210-007006 Page:K020006

Printed By : Dwi Iswanto (airafather6107170)

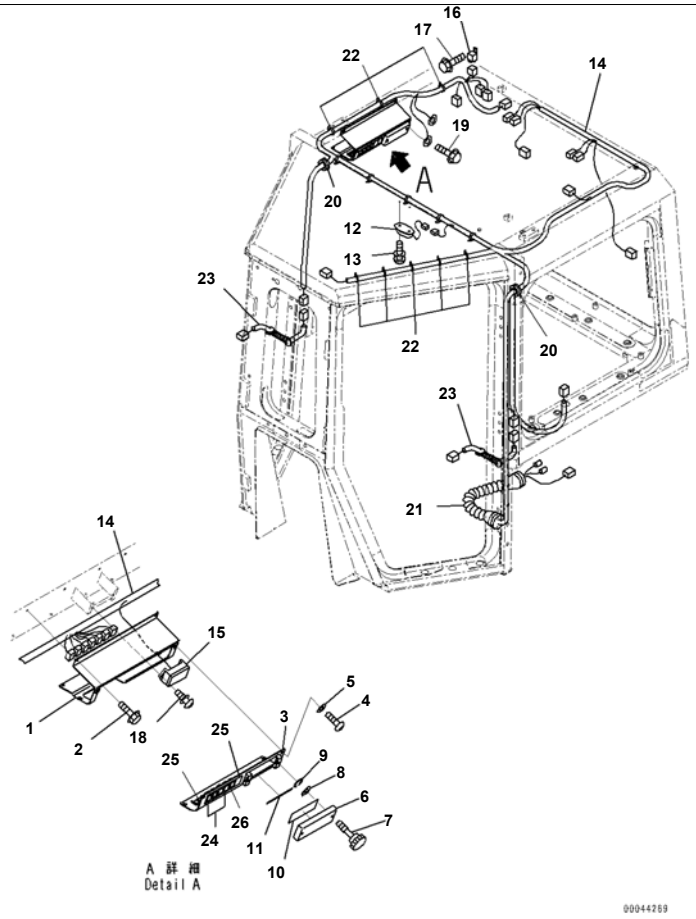

Reference:K0210-007007 Page:K020007

D375A-6R S/N 65001-UP
ROPS Cab, With AM/FM Radio For Asia and EU, Switch Panel (#65001-)

Index	Code	Part Number	Description	Qty	Serial No.
1		198-Z11-6520	Bracket	1	65001-
2		01435-40616	Bolt	4	65001-
3		198-Z11-6530	Cover	1	65001-
4		01245-00616	Screw, Hexagon Socket Head	4	65001-
5		01643-70623	Washer	4	65001-
6		198-Z11-6390	Cover	1	65001-
7		01232-10616	Screw, Knurled Head	2	65001-
8		01643-70623	Washer	2	65001-
9		195-54-78790	Ring, Snap	2	65001-
10		17M-Z11-1120	Plate	1	65001-
11		198-Z11-6590	Plate	1	65001-
12		421-06-26210	Lamp Assembly, Working	1	65001-
13		01023-10520	Screw	2	65001-
14		17M-Z11-1110	Wiring Harness	1	65001-
15		08044-01000	· Box Assembly, Fuse	1	65001-
		08041-01000	· Fuse, 10Amp.	6	65001-
		08041-02000	· Fuse, 20Amp.	3	65001-
16		287-06-16410	Relay	1	65001-
17		01435-40616	Bolt	1	65001-
18		01023-20520	Screw	2	65001-
19		01435-00816	Bolt	1	65001-
20		124-911-5790	Cushion	2	65001-
21		14X-911-4541	Boot	1	65001-
22		14X-911-4551	Clip	15	65001-
23		14X-911-4521	Wire Assembly	2	65001-
24		20T-06-71410	Switch	4	65001-
25		14X-911-4280	Cover	3	65001-
26		362-56-42390	Switch	1	65001-

Reference:K0210-007007 Page:K020007

Printed By : Dwi Iswanto (airafather6107170)

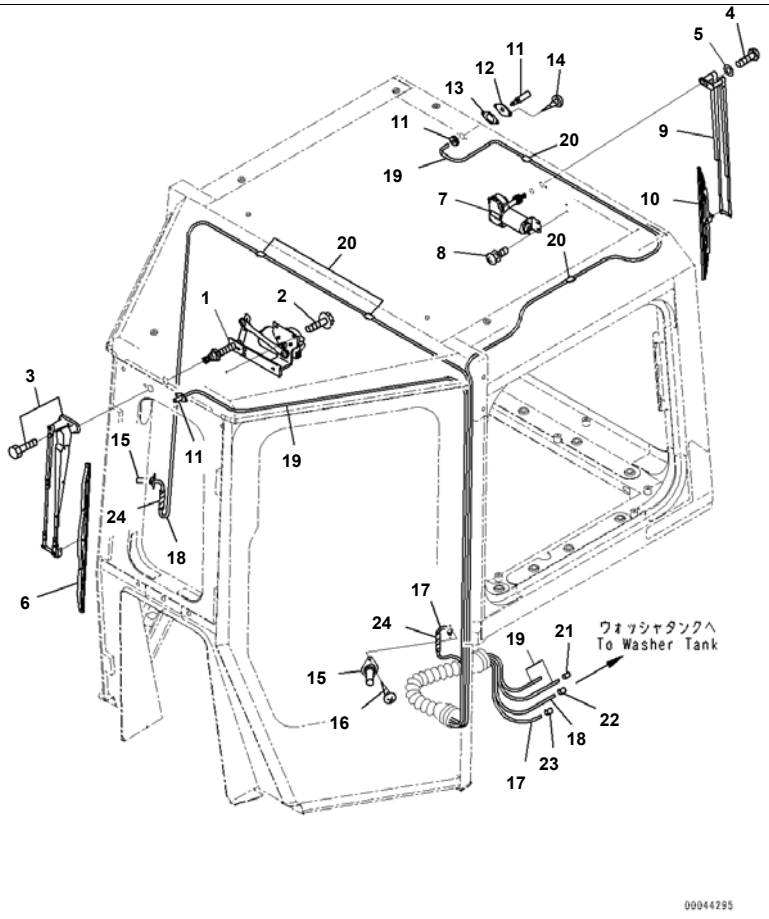

Reference:K0210-007008 Page:K020008

D375A-6R S/N 65001-UP
ROPS Cab, With AM/FM Radio For Asia and EU, Wipers, Front and Rear (#65001-)

Index	Code	Part Number	Description	Qty	Serial No.
1		14X-911-3111	Wiper Motor	1	65001-
2		01435-40616	Bolt	4	65001-
3		14X-911-3210	Arm Assembly, Wiper	1	65001-
4		01245-00616	Screw, Hexagon Socket Head	1	65001-
5		01643-70623	Washer	1	65001-
6		195-Z11-8550	Wiper Blade	1	65001-
7		198-Z11-2540	Wiper Motor	1	65001-
8		01023-20516	Screw	2	65001-
9		421-56-21760	Arm, Wiper	1	65001-
10		421-56-21770	Wiper Blade	1	65001-
11		205-06-61220	Nozzle Assembly	2	65001-
12		14X-911-3560	Bracket	2	65001-
13		14X-911-3570	Packing	2	65001-
14		01370-00408	Screw	4	65001-
15		20Y-54-39511	Nozzle	2	65001-
16		01370-10520	Screw	4	65001-
17		14X-911-3531	Hose	1	65001-
18		14X-911-3541	Hose	1	65001-
19		21T-06-11390	Hose	2	65001-
20		08051-00801	Clip	10	65001-
21		14X-911-1130	Tube	1	65001-
22		14X-911-1140	Tube	1	65001-
23		14X-911-1150	Tube	1	65001-
24		08210-00401	Tube, Spiral	2	65001-

Reference:K0210-007008 Page:K020008

Printed By : Dwi Iswanto (airafather6107170)

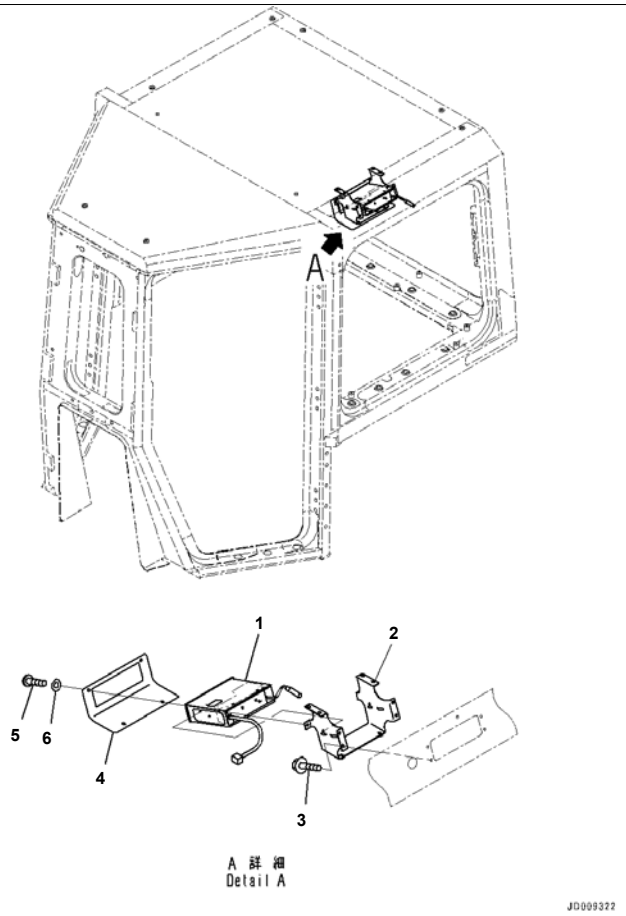

Reference:K0210-007009 Page:K020009

D375A-6R S/N 65001-UP
ROPS Cab, With AM/FM Radio For Asia and EU, AM-FM Radio and Cassette Stereo (#65001-)

Index	Code	Part Number	Description	Qty	Serial No.
1		195-Z11-8913	Radio	1	65001-
2		198-Z11-2581	Bracket	1	65001-
3		01435-40616	Bolt	4	65001-
4		198-Z11-2591	Cover	1	65001-
5		01245-00616	Screw, Hexagon Socket Head	4	65001-
6		01643-70623	Washer	4	65001-

Printed By : Dwi Iswanto (airafather6107170)

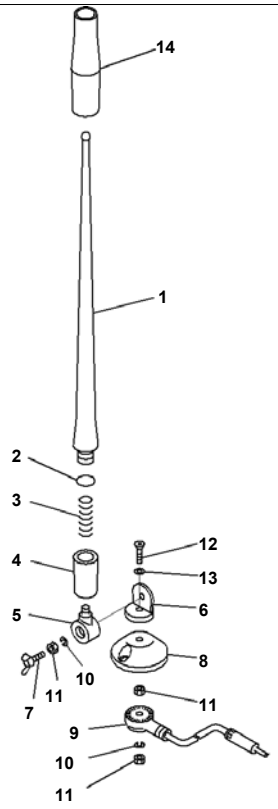

D375A-6R S/N 65001-UP
ROPS Cab, With AM/FM Radio For Asia and EU, Rubber Antenna (#65001-)

Index	Code	Part Number	Description	Qty	Serial No.
		198-Z11-4610	Rubber Antenna	1	65001-
		EP72-540-901	· Rubber Element Assembly	1	65001-
1		EP72-540-90101	· · Antenna	1	65001-
2		EP72-540-90102	· · Ring	1	65001-
3		EP72-540-90103	· · Spring	1	65001-
4		EP72-540-90104	· · Collar	1	65001-
5		EP72-540-90105	· · Joint	1	65001-
6	C1		· Holder	1	65001-
7		EP23-141-001	· Bolt, Wing	1	65001-
8	C1		· Base	1	65001-
9	C1		· Wiring Harness	1	65001-
10		EP23-141-003	· Washer, Spring	2	65001-
11		EP23-141-004	· Nut	3	65001-
12	C1		· Screw	1	65001-
13	C1		· Washer	1	65001-
14	C1		· Tube	1	65001-

Printed By : Dwi Iswanto (airafather6107170)

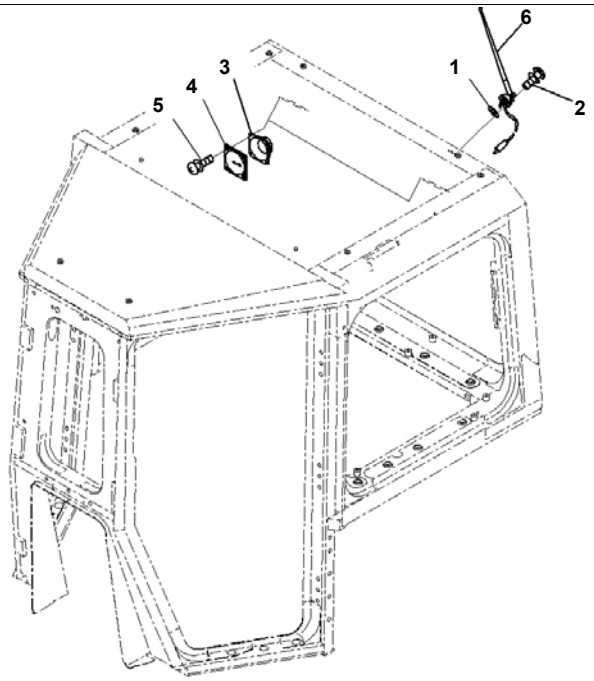

D375A-6R S/N 65001-UP
ROPS Cab, With AM/FM Radio For Asia and EU, Rubber Antenna Mounting and Speaker (#65001-)

Index	Code	Part Number	Description	Qty	Serial No.
1		01643-30623	Washer	1	65001-
2		01023-10420	Screw	2	65001-
3		08910-10000	Speaker	2	65001-
4		14X-911-4220	Panel	2	65001-
5		01023-20420	Screw	8	65001-
6		(198-Z11-4610)	Rubber Antenna		

Printed By : Dwi Iswanto (airafather6107170)

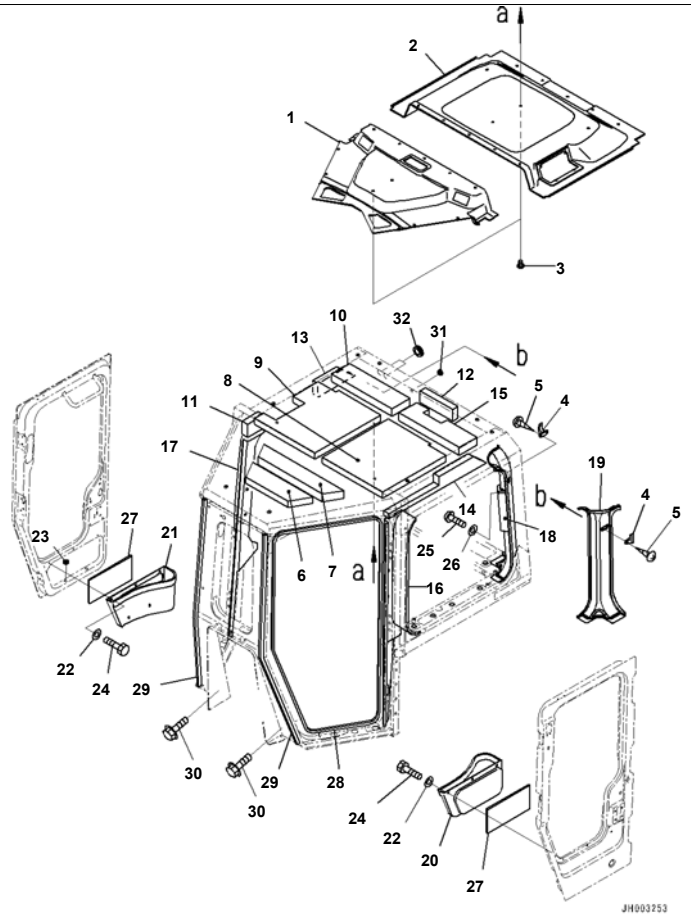

D375A-6R S/N 65001-UP
ROPS Cab, With AM/FM Radio For Asia and EU, Roof Lining and Garnish (#65001-)

Index	Code	Part Number	Description	Qty	Serial No.
1		198-Z11-6710	Roof Lining	1	65001-
2		198-Z11-6720	Roof Lining	1	65001-
3		198-Z11-6370	Clip	20	65001-
4		205-54-51250	Hanger	2	65001-
5		01370-30416	Screw	4	65001-
6		198-Z11-2730	Absorber	1	65001-
7		198-Z11-2740	Absorber	1	65001-
8		198-Z11-6750	Absorber	1	65001-
9		198-Z11-6760	Absorber	1	65001-
10		198-Z11-2770	Absorber	1	65001-
11		198-Z11-6780	Absorber	2	65001-
12		198-Z11-6730	Absorber	1	65001-
13		198-Z11-6740	Absorber	1	65001-
14		198-Z11-6770	Absorber	1	65001-
15		198-Z11-7550	Absorber	1	65001-
16		198-Z11-6810	Cover	1	65001-
17		198-Z11-6820	Cover	1	65001-
18		198-Z11-6831	Cover	1	65001-
19		198-Z11-6841	Cover	1	65001-
20		14X-911-5412	Pocket	1	65001-
21		14X-911-5422	Pocket	1	65001-
22		01643-70623	Washer	6	65001-
23		08037-01008	Grommet	4	65001-
24		01010-D0616	Bolt	6	65001-
25		01245-00616	Screw, Hexagon Socket Head	6	65001-
26		01643-71232	Washer	6	65001-
27		198-Z11-2780	Absorber	2	65001-
28		198-Z11-2910	Trim	2	65001-
29		198-Z11-3530	Trim	2	65001-
30		01435-41025	Bolt	8	65001-
31		09415-01008	Cap	1	65001-

Printed By : Dwi Iswanto (airafather6107170)

Index	Code	Part Number	Description	Qty	Serial No.
32		09415-02512	Cap	2	65001-

Printed By : Dwi Iswanto (airafather6107170)

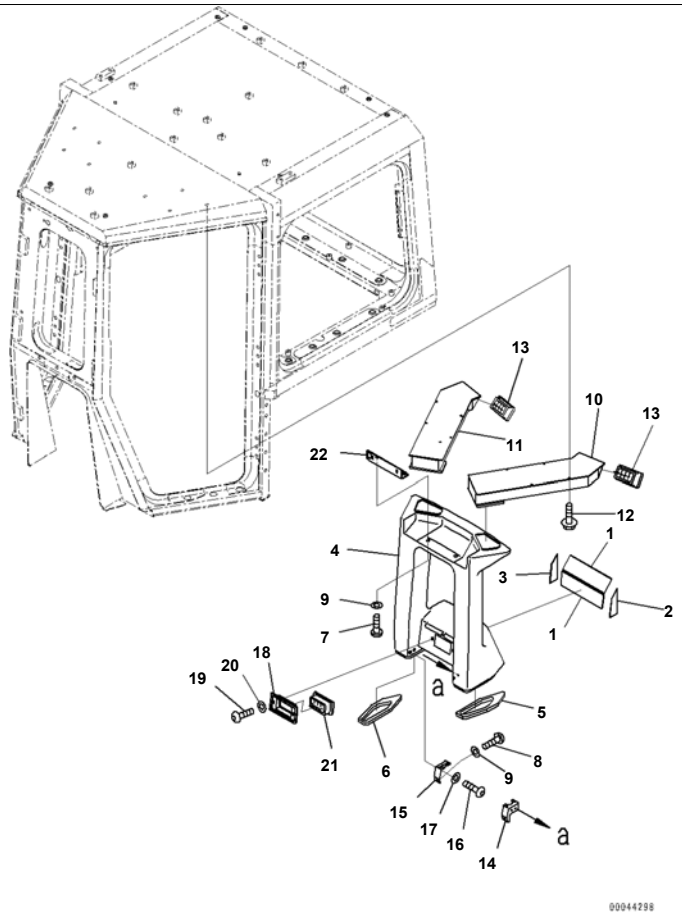

Index	Code	Part Number	Description	Qty	Serial No.
		195-Z11-8770	Duct	1	65001-
1		195-Z11-8780	· Sheet	2	65001-
2		195-Z11-8950	· Sheet	1	65001-
3		195-Z11-8960	· Sheet	1	65001-
4	C1		· Duct	1	65001-
5		198-Z11-6350	· · Seal	1	65001-
6		198-Z11-6360	· · Seal	1	65001-
7		01245-00835	Screw	2	65001-
8		01245-00820	Screw	2	65001-
9		01643-70823	Washer	4	65001-
10		198-Z11-3821	Duct	1	65001-
11		198-Z11-3831	Duct	1	65001-
12		01435-40616	Bolt	8	65001-
13		14X-54-18270	Grille Assembly	2	65001-
14		198-Z11-3850	Bracket	1	65001-
15		198-Z11-3860	Bracket	1	65001-
16		01245-00616	Screw, Hexagon Socket Head	4	65001-
17		01643-70623	Washer	4	65001-
18		198-Z11-6850	Bracket	1	65001-
19		01245-00616	Screw, Hexagon Socket Head	2	65001-
20		01643-70623	Washer	2	65001-
21		17A-54-18270	Grille Assembly	1	65001-
22		198-Z11-3910	Plate	1	65001-

Printed By : Dwi Iswanto (airafather6107170)

D375A-6R S/N 65001-UP
JH003196

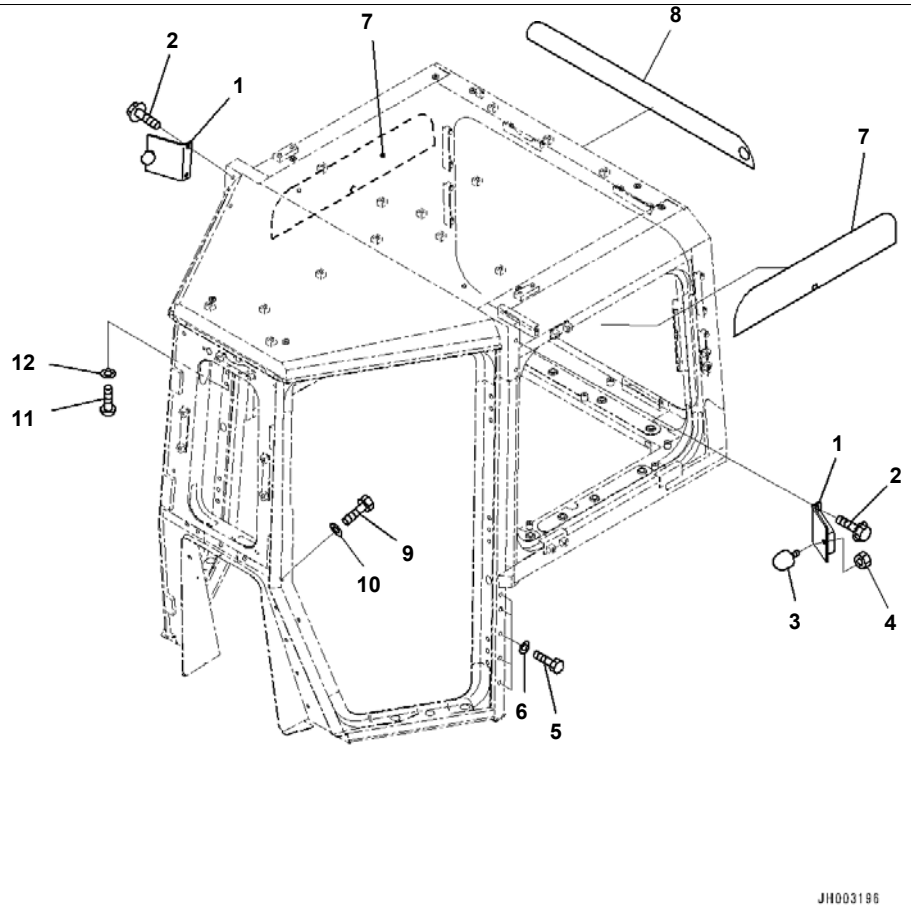

Reference:K0210-007014 Page:K020014

D375A-6R S/N 65001-UP
ROPS Cab, With AM/FM Radio For Asia and EU, Open Lock Stopper (#65001-)

Index	Code	Part Number	Description	Qty	Serial No.
1		198-Z11-3361	Bracket	2	65001-
2		01435-41025	Bolt	4	65001-
3		09453-00002	Stopper	2	65001-
4		01580-11210	Nut	2	65001-
5		01010-D1230	Bolt	10	65001-
6		01643-71232	Washer	10	65001-
7		198-Z11-6210	Sunshade Film	2	65001-
8		198-Z11-6220	Sunshade Film	1	65001-
9		01010-D1230	Bolt	4	65001-
10		01643-71232	Washer	4	65001-
11		01245-00820	Screw	2	65001-
12		01643-70823	Washer	2	65001-

Reference:K0210-007014 Page:K020014

Printed By : Dwi Iswanto (airafather6107170)

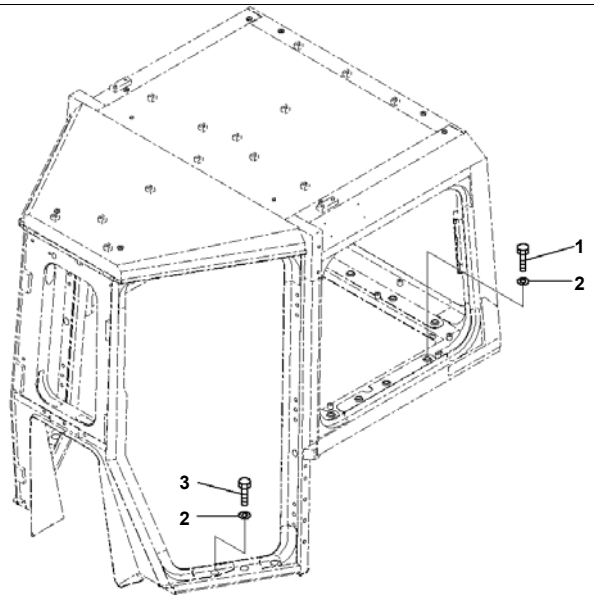

Index	Code	Part Number	Description	Qty	Serial No.
1		01010-81275	Bolt	15	65001-
2		124-54-26540	Washer	21	65001-
3		01010-81245	Bolt	6	65001-

Printed By : Dwi Iswanto (airafather6107170)

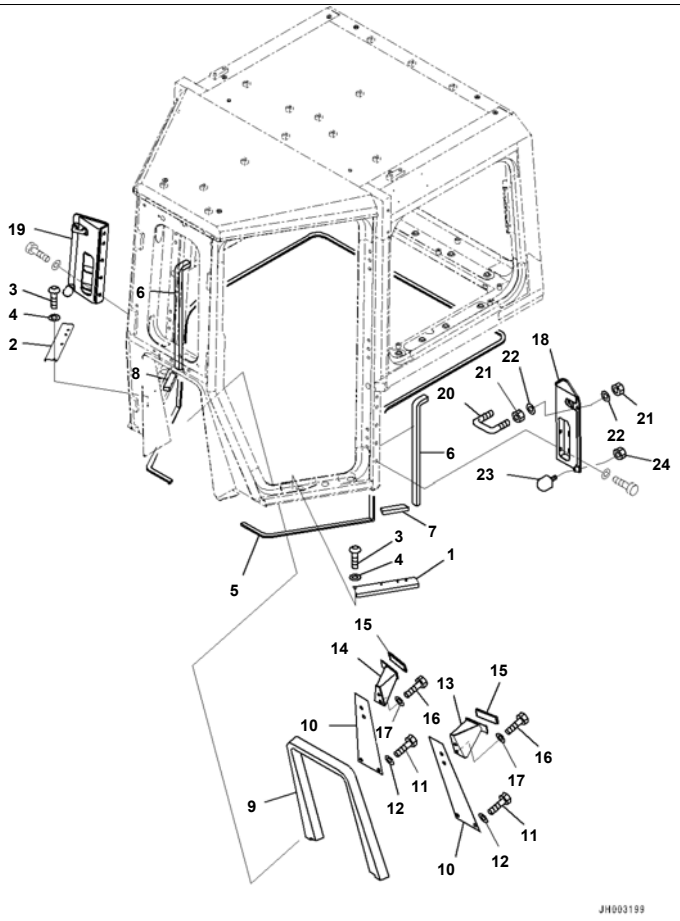

D375A-6R S/N 65001-UP
ROPS Cab, With AM/FM Radio For Asia and EU, Envelope Parts (1/2) (#65001-)

Index	Code	Part Number	Description	Qty	Serial No.
1		198-Z11-2941	Cover	1	65001-
2		198-Z11-2951	Cover	1	65001-
3		01245-00616	Screw, Hexagon Socket Head	8	65001-
4		01643-70623	Washer	8	65001-
5		14X-911-5911	Seal	5	65001-
6		198-Z11-7420	Sheet	2	65001-
7		198-Z11-7410	Sheet	1	65001-
8		198-Z11-7430	Sheet	1	65001-
9		198-Z11-3540	Seal	1	65001-
10		198-Z11-2961	Plate	2	65001-
11		01010-D1230	Bolt	4	65001-
12		01643-71232	Washer	4	65001-
13		14X-911-5711	Bracket	1	65001-
14		14X-911-5721	Bracket	1	65001-
15		203-43-56450	Cap	2	65001-
16		01010-D1230	Bolt	4	65001-
17		01643-71232	Washer	4	65001-
18		198-Z11-3341	Bracket	1	65001-
19		198-Z11-3351	Bracket	1	65001-
20		14X-911-1921	Striker	2	65001-
21		01580-11008	Nut	8	65001-
22		01643-31032	Washer	8	65001-
23		09453-00002	Stopper	2	65001-
24		01580-11210	Nut	2	65001-

Printed By : Dwi Iswanto (airafather6107170)

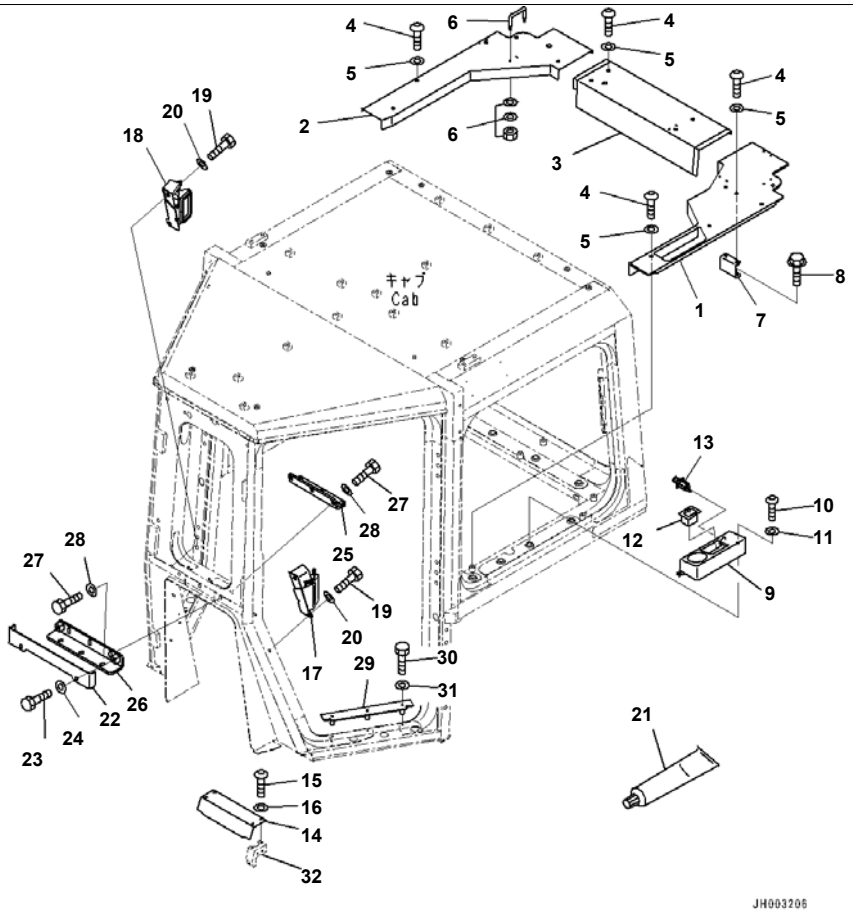

Reference:K0210-007017 Page:K020017

D375A-6R S/N 65001-UP
ROPS Cab, With AM/FM Radio For Asia and EU, Envelope Parts (2/2) (#65001-)

Index	Code	Part Number	Description	Qty	Serial No.
1		198-Z11-2872	Cover	1	65001-
2		198-Z11-2882	Cover	1	65001-
3		198-Z11-2892	Cover	1	65001-
4		01245-00820	Screw	13	65001-
5		01643-70823	Washer	13	65001-
6		198-Z11-2850	Handle	6	65001-
7		198-Z11-3990	Bracket	1	65001-
8		01435-30825	Bolt	2	65001-
9		198-Z11-7490	Box	1	65001-
10		01245-00820	Screw	2	65001-
11		01643-70823	Washer	2	65001-
12		20G-54-13420	Ashtray	1	65001-
13		20Y-06-23472	Cigarette Lighter	1	65001-
14		195-54-68282	Plate	1	65001-
15		01245-00616	Screw, Hexagon Socket Head	4	65001-
16		01643-70623	Washer	4	65001-
17		198-911-9511	Damper Assembly	1	65001-
18		198-911-9521	Damper Assembly	1	65001-
19		01010-D1230	Bolt	4	65001-
20		01643-71232	Washer	4	65001-
21		198-Z11-3960	Seal	1	65001-
22		198-Z11-7991	Cover	1	65001-
23		01010-D1230	Bolt	2	65001-
24		01643-71232	Washer	2	65001-
25		198-Z11-3571	Bracket	1	65001-
26		198-Z11-7980	Plate	1	65001-
27		01010-D1230	Bolt	12	65001-
28		01643-71232	Washer	12	65001-
29		198-Z11-7590	Plate	2	65001-
30		01010-D0650	Bolt	6	65001-
31		01643-70623	Washer	6	65001-

Printed By : Dwi Iswanto (airafather6107170)

Index	Code	Part Number	Description	Qty	Serial No.
32		(198-Z11-3850)	Bracket		

Printed By : Dwi Iswanto (airafather6107170)

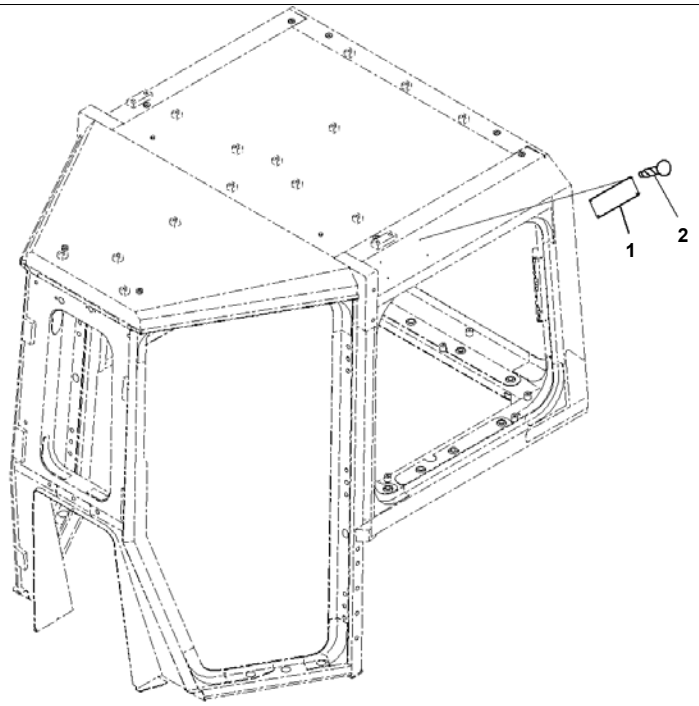

Index	Code	Part Number	Description	Qty	Serial No.
1	C2	09620-C2000	Plate, Name, FOPS (Limited Supply)	1	65001-
2		04418-13060	Screw	4	65001-

Printed By : Dwi Iswanto (airafather6107170)

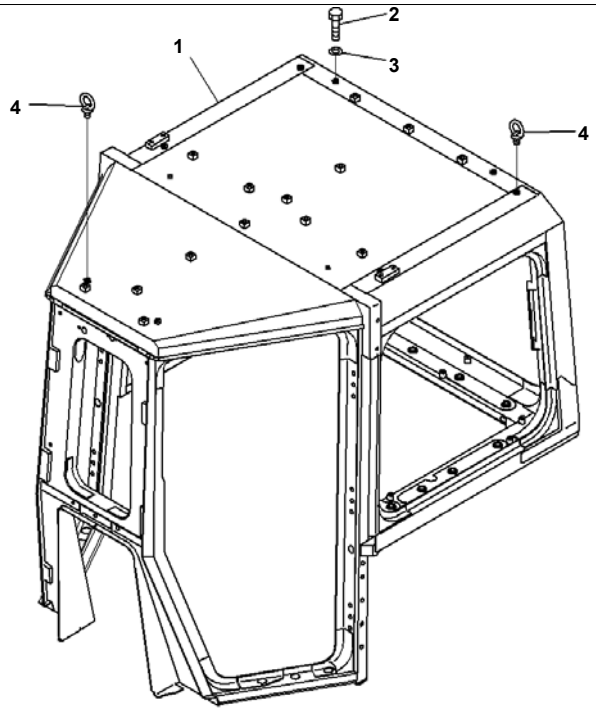

Index	Code	Part Number	Description	Qty	Serial No.
1		198-Z11-6111	Cab	1	65001-
2		01010-D1220	Bolt	27	65001-
3		01643-71232	Washer	27	65001-
4		04530-11222	Bolt, Eye	4	65001-

Printed By : Dwi Iswanto (airafather6107170)

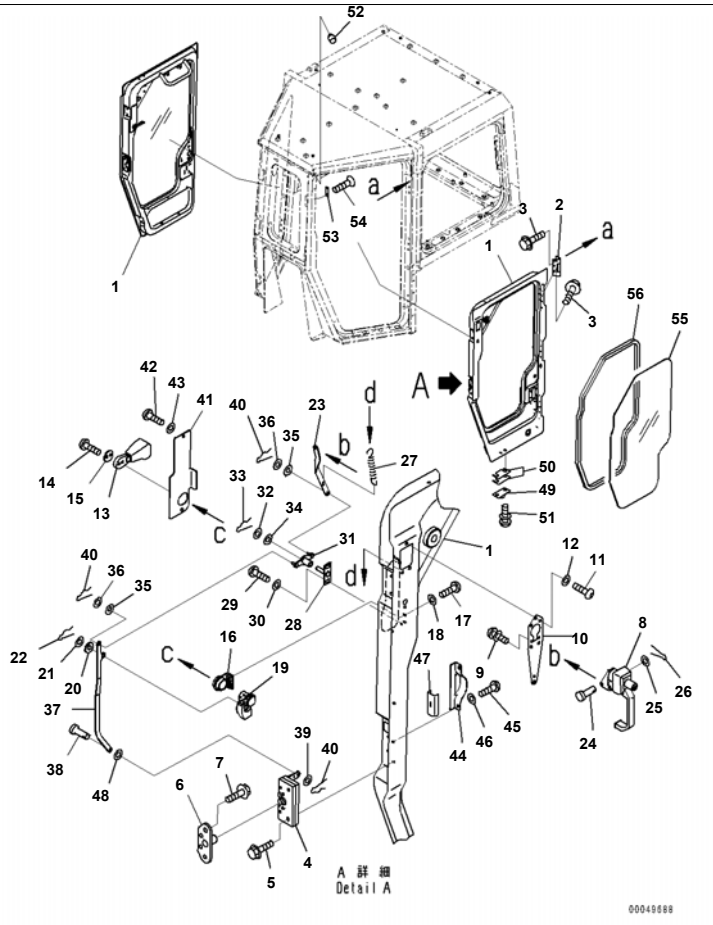

Index	Code	Part Number	Description	Qty	Serial No.
1		198-Z11-6564	Door,LHS	1	65001-
		198-Z11-6573	Door,RHS	1	65001-
2		14X-911-1330	Hinge	6	65001-
3		01435-41025	Bolt	36	65001-
4		195-Z11-4510	Lock,LHS	1	65001-
		195-Z11-4520	Lock,RHS	1	65001-
5		01435-40630	Bolt	8	65001-
6		198-Z11-3450	Striker	2	65001-
7		01435-40820	Bolt	8	65001-
8		198-Z11-3710	Handle Assembly	2	65001-
9		01023-10520	Screw	10	65001-
10		198-Z11-3210	Plate	2	65001-
11		01245-00616	Screw, Hexagon Socket Head	8	65001-
12		01643-70623	Washer	8	65001-
13		198-Z11-5680	Knob Assembly	2	65001-
14		01245-00620	Screw	4	65001-
15		198-Z11-3650	Plate	2	65001-
16		198-Z11-5250	Plate	2	65001-
17		01245-00616	Screw, Hexagon Socket Head	4	65001-
18		01643-70623	Washer	4	65001-
19		198-Z11-5260	Lever,LHS	1	65001-
		198-Z11-5270	Lever,RHS	1	65001-
20		14X-Z11-3110	Rubber	4	65001-
21		01641-20608	Washer	2	65001-
22		04050-11612	Pin, Cotter	2	65001-
23		198-Z11-3241	Plate,LHS	1	65001-
		198-Z11-3251	Plate,RHS	1	65001-
24		04205-10614	Pin	2	65001-
25		01641-20608	Washer	2	65001-
26		04050-11612	Pin, Cotter	2	65001-
27		176-06-42170	Spring	2	65001-

Printed By : Dwi Iswanto (airafather6107170)

ROPS Cab, Double Windshield Wiper, Door and Lock (1/2) (#65001-)

Index	Code	Part Number	Description	Qty	Serial No.
28		198-Z11-5690	Plate	2	65001-
29		01245-00616	Screw, Hexagon Socket Head	4	65001-
30		01643-70623	Washer	4	65001-
31		198-Z11-3280	Plate	2	65001-
32		01643-50823	Washer	2	65001-
33		04050-12020	Pin, Cotter	2	65001-
34		198-Z11-7310	Rubber	2	65001-
35		14X-Z11-3110	Rubber	4	65001-
36		01643-30623	Washer	4	65001-
37		198-Z11-5280	Plate,LHS	1	65001-
		198-Z11-5290	Plate,RHS	1	65001-
38		04205-10614	Pin	2	65001-
39		01641-20608	Washer	4	65001-
40		04050-11612	Pin, Cotter	4	65001-
41		198-Z11-6970	Cover,LHS	1	65001-
		198-Z11-6980	Cover,RHS	1	65001-
42		01245-00616	Screw, Hexagon Socket Head	4	65001-
43		01643-70623	Washer	4	65001-
44		198-Z11-3430	Cover	2	65001-
45		01245-00616	Screw, Hexagon Socket Head	4	65001-
46		01643-70623	Washer	4	65001-
47		14X-911-1780	Seal	2	65001-
48		198-Z11-7310	Rubber	2	65001-
49		14X-911-1690	Damper	8	65001-
50		14X-911-1761	Shim, T=1.2mm	16	65001-
51		01023-20616	Screw	16	65001-
52		20Y-54-35780	Stopper	2	65001-
53		198-Z11-3590	Plate	4	65001-
54		01240-00820	Screw, Hexagon Socket Head	8	65001-
55		198-Z11-6630	Glass	2	65001-
56		198-Z11-6640	Weather Strip	2	65001-

Printed By : Dwi Iswanto (airafather6107170)

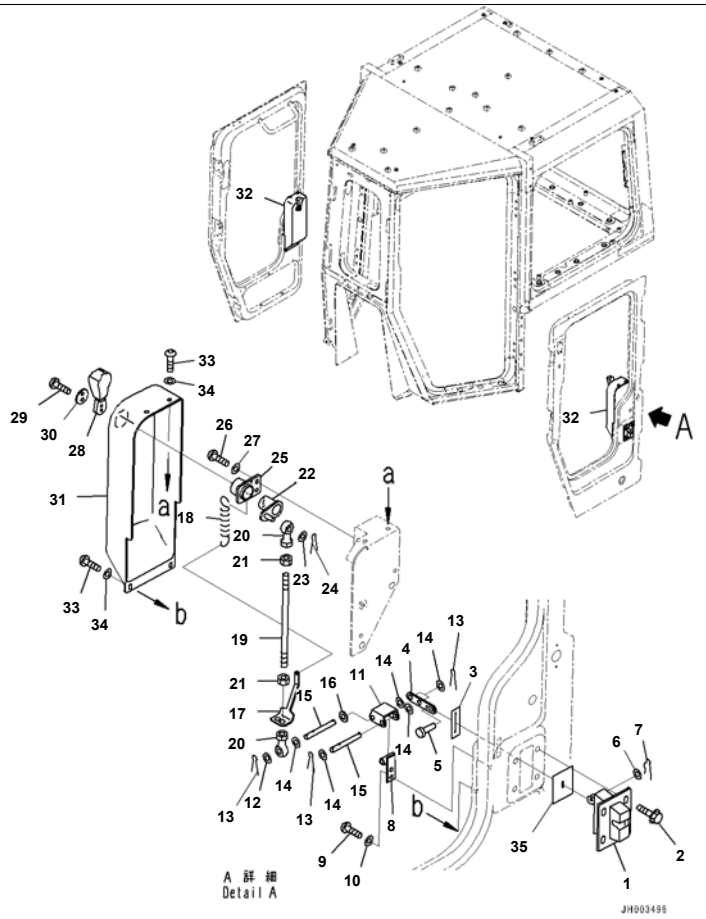

Reference:K0210-009003 Page:K022003

D375A-6R S/N 65001-UP
ROPS Cab, Double Windshield Wiper, Door and Lock (2/2) (#65001-)

Index	Code	Part Number	Description	Qty	Serial No.
1		20Y-54-36380	Lock	2	65001-
2		01435-40820	Bolt	8	65001-
3		198-Z11-3490	Sheet	2	65001-
4		198-Z11-6480	Plate	2	65001-
5		04205-10520	Pin	2	65001-
6		01640-20508	Washer	2	65001-
7		04050-11215	Pin, Cotter	2	65001-
8		198-Z11-6471	Bracket	2	65001-
9		01245-00616	Screw, Hexagon Socket Head	4	65001-
10		01643-70623	Washer	4	65001-
11		198-Z11-6440	Plate	2	65001-
12		01643-50823	Washer	10	65001-
13		04050-13020	Pin, Cotter	8	65001-
14		01641-20812	Washer	12	65001-
15		198-Z11-6490	Shaft	4	65001-
16		198-Z11-7310	Rubber	2	65001-
17		198-Z11-6450	Plate	2	65001-
18		176-06-42170	Spring	2	65001-
19		04245-40820	Rod	2	65001-
20		04250-80847	Rod End	4	65001-
21		01580-10806	Nut	4	65001-
22		198-Z11-3421	Lever	2	65001-
23		01640-20816	Washer	2	65001-
24		04050-12020	Pin, Cotter	2	65001-
25		198-Z11-3460	Plate	2	65001-
26		01245-00616	Screw, Hexagon Socket Head	4	65001-
27		01643-70623	Washer	4	65001-
28		198-Z11-5680	Knob Assembly	2	65001-
29		01245-00620	Screw	4	65001-
30		198-Z11-3650	Plate	2	65001-
31		198-Z11-6950	Cover	1	65001-

Printed By : Dwi Iswanto (airafather6107170)

Index	Code	Part Number	Description	Qty	Serial No.
32		198-Z11-6960	Cover	1	65001-
33		01245-00616	Screw, Hexagon Socket Head	4	65001-
34		01643-70623	Washer	4	65001-
35		14X-911-1780	Seal	2	65001-

Printed By : Dwi Iswanto (airafather6107170)

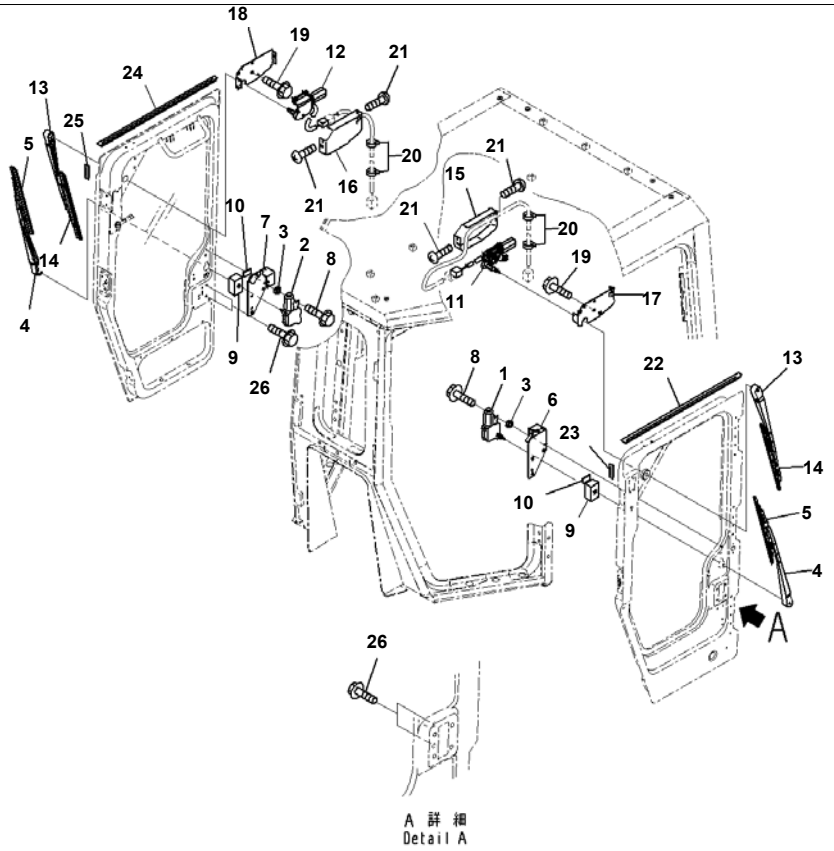

Reference:K0210-009004 Page:K022004

D375A-6R S/N 65001-UP
ROPS Cab, Double Windshield Wiper, Door Wiper (#65001-)

Index	Code	Part Number	Description	Qty	Serial No.
1		14X-911-3120	Wiper Motor Assembly	1	65001-
2		14X-911-3130	Wiper Motor Assembly	1	65001-
3		22X-70-12690	Shim, T=3.2mm	2	65001-
4		14X-911-3221	Arm, Wiper	2	65001-
5		198-Z11-5630	Wiper Blade	2	65001-
6		198-Z11-6930	Bracket	1	65001-
7		198-Z11-6940	Bracket	1	65001-
8		01435-01016	Bolt	4	65001-
9		198-Z11-6790	Sheet	2	65001-
10		198-Z11-6380	Sheet	2	65001-
11		14X-911-3120	Wiper Motor Assembly	1	65001-
12		14X-911-3130	Wiper Motor Assembly	1	65001-
13		198-Z11-6660	Arm, Wiper	2	65001-
14		426-U53-2160	Blade	2	65001-
15		198-Z11-6670	Cover	1	65001-
16		14X-911-3431	Cover	1	65001-
17		198-Z11-6261	Bracket	1	65001-
18		198-Z11-6271	Bracket	1	65001-
19		01435-01014	Bolt	4	65001-
20		08059-00413	Clip	8	65001-
21		14X-911-1770	Screw, Tapping	8	65001-
22		198-Z11-4130	Seal	1	65001-
23		198-Z11-4150	Seal	1	65001-
24		198-Z11-4140	Seal	1	65001-
25		198-Z11-4160	Seal	1	65001-
26		01435-40812	Bolt	2	65001-

Reference:K0210-009004 Page:K022004

Printed By : Dwi Iswanto (airafather6107170)

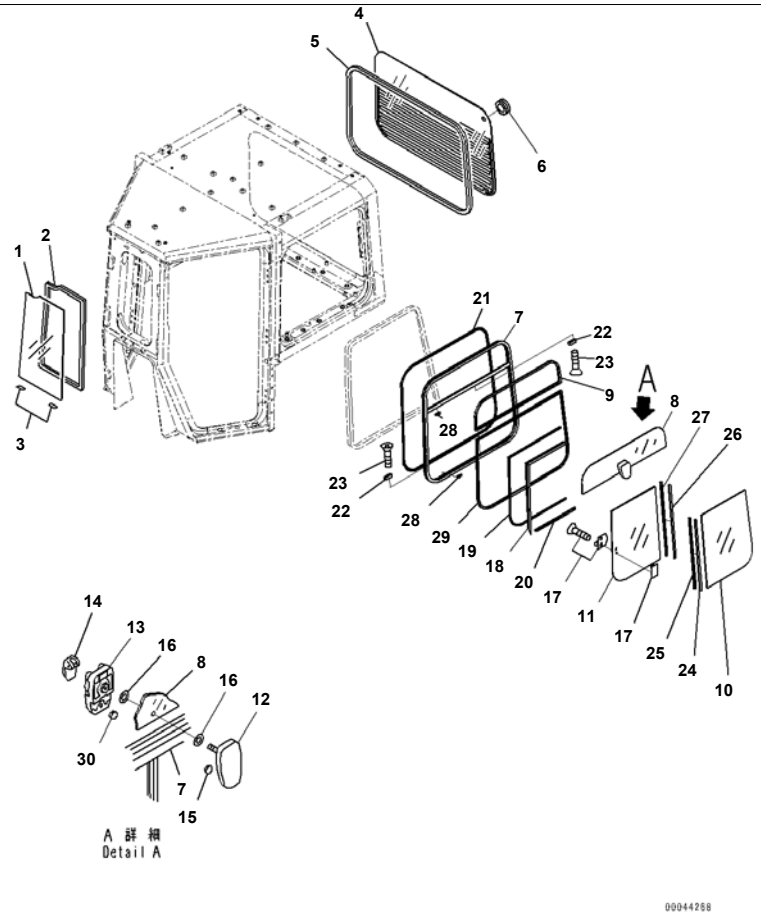

Reference:K0210-009005 Page:K022005

D375A-6R S/N 65001-UP
ROPS Cab, Double Windshield Wiper, Window Sash (1/2) (#65001-)

Index	Code	Part Number	Description	Qty	Serial No.
1		198-Z11-2211	Glass	1	65001-
2		198-Z11-2260	Glass	1	65001-
3		198-Z11-2290	Plate	2	65001-
4		198-Z11-7870	Glass	1	65001-
5		198-Z11-2251	Glass	1	65001-
6		09415-02512	Cap	1	65001-
		198-Z11-7500	Sash Assembly	1	65001-
7	C1		· Frame	1	65001-
8		198-Z11-4820	· Glass	1	65001-
9		198-Z11-4910	· Seal	1	65001-
10		198-Z11-4840	· Glass	1	65001-
11		198-Z11-4830	· Glass	1	65001-
12		14X-911-2620	· Bracket	1	65001-
13		14X-911-2630	· Bracket	1	65001-
14		14X-911-2661	· Lever Assembly	1	65001-
15		14X-911-2640	· Cushion	2	65001-
16		14X-911-2650	· Seal	2	65001-
17		20Y-54-13322	· Lock Assembly	1	65001-
18		198-Z11-4850	· Seal	1	65001-
19		198-Z11-4880	· Seal	1	65001-
20		198-Z11-4860	· Seal	1	65001-
21		198-Z11-4870	· Seal	1	65001-
22		14X-911-6710	· Stopper	2	65001-
23		01224-40316	· Screw, Philips Head	4	65001-
24		198-Z11-4920	· Frame	1	65001-
25		14X-911-6730	· Seal	1	65001-
26		14X-911-6770	· Frame	1	65001-
27		14X-911-6740	· Seal	1	65001-
28		14X-911-6750	· Stopper	2	65001-
29		198-Z11-4960	· Seal	1	65001-
30		198-Z11-7450	· Cushion	1	65001-

Reference:K0210-009005 Page:K022005

Printed By : Dwi Iswanto (airafather6107170)

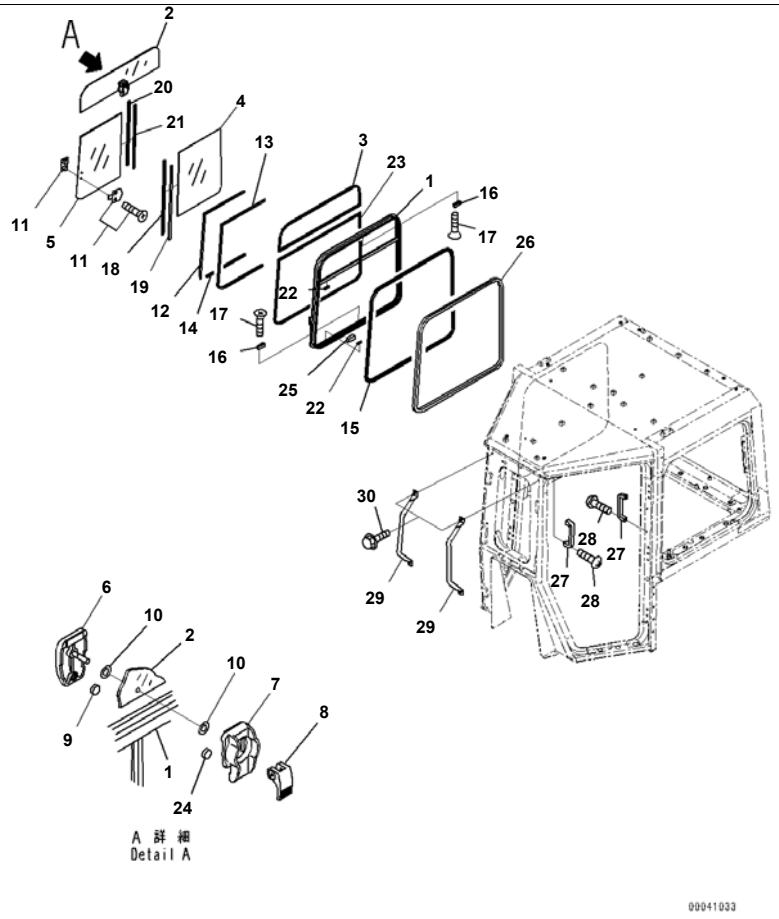

Reference:K0210-009006 Page:K022006

D375A-6R S/N 65001-UP
ROPS Cab, Double Windshield Wiper, Window Sash (2/2) (#65001-)

Index	Code	Part Number	Description	Qty	Serial No.
		198-Z11-7600	Sash Assembly	1	65001-
1	C1		· Frame	1	65001-
2		198-Z11-4820	· Glass	1	65001-
3		198-Z11-4910	· Seal	1	65001-
4		198-Z11-4840	· Glass	1	65001-
5		198-Z11-4830	· Glass	1	65001-
6		14X-911-2620	· Bracket	1	65001-
7		14X-911-2630	· Bracket	1	65001-
8		14X-911-2661	· Lever Assembly	1	65001-
9		14X-911-2640	· Cushion	2	65001-
10		14X-911-2650	· Seal	2	65001-
11		20Y-54-13322	· Lock Assembly	1	65001-
12		198-Z11-4990	· Seal	1	65001-
13		198-Z11-4880	· Seal	1	65001-
14		198-Z11-4860	· Seal	1	65001-
15		198-Z11-4870	· Seal	1	65001-
16		14X-911-6710	· Stopper	2	65001-
17		01224-40316	· Screw, Philips Head	4	65001-
18		198-Z11-4920	· Frame	1	65001-
19		14X-911-6730	· Seal	1	65001-
20		14X-911-6770	· Frame	1	65001-
21		14X-911-6740	· Seal	1	65001-
22		14X-911-6750	· Stopper	2	65001-
23		198-Z11-4960	· Seal	1	65001-
24		198-Z11-7450	· Cushion	1	65001-
25		198-Z11-2480	Seat	44	65001-
26		198-Z11-2490	Trim	2	65001-
27		361-54-21150	Handle	2	65001-
28		01220-40820	Screw, Philips Head	4	65001-
29		198-Z11-3520	Grip	2	65001-
30		01435-41025	Bolt	4	65001-

Reference:K0210-009006 Page:K022006

Printed By : Dwi Iswanto (airafather6107170)

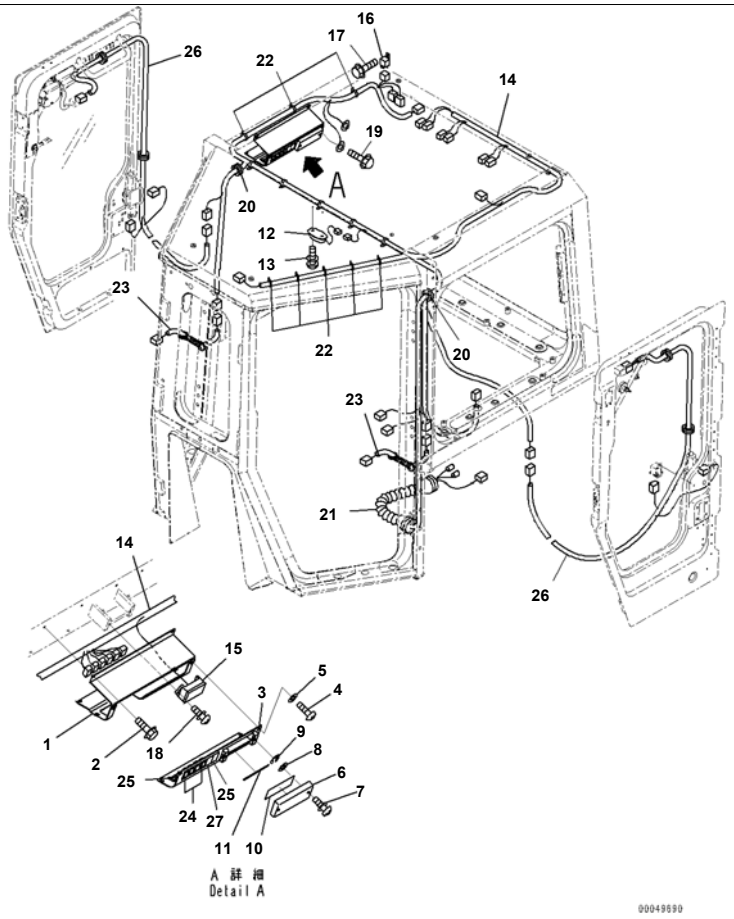

Reference:K0210-009007 Page:K022007

D375A-6R S/N 65001-UP
ROPS Cab, Double Windshield Wiper, Switch Panel (#65001-)

Index	Code	Part Number	Description	Qty	Serial No.
1		198-Z11-6520	Bracket	1	65001-
2		01435-40616	Bolt	4	65001-
3		198-Z11-6530	Cover	1	65001-
4		01245-00616	Screw, Hexagon Socket Head	4	65001-
5		01643-70623	Washer	4	65001-
6		198-Z11-6390	Cover	1	65001-
7		01232-10616	Screw, Knurled Head	2	65001-
8		01643-70623	Washer	2	65001-
9		195-54-78790	Ring, Snap	2	65001-
10		17M-Z11-1150	Plate	1	65001-
11		198-Z11-6590	Plate	1	65001-
12		421-06-26210	Lamp Assembly, Working	1	65001-
13		01023-10520	Screw	2	65001-
14		17M-Z11-1140	Wiring Harness	1	65001-
15		08044-01000	· Box Assembly, Fuse	1	65001-
		08041-01000	· Fuse, 10Amp.	6	65001-
		08041-01500	· Fuse, 15Amp.	2	65001-
		08041-02000	· Fuse, 20Amp.	2	65001-
		198-911-9240	· Relay Assembly	1	65001-
16		287-06-16410	Relay	1	65001-
17		01435-40616	Bolt	1	65001-
18		01023-20520	Screw	2	65001-
19		01435-00816	Bolt	1	65001-
20		124-911-5790	Cushion	2	65001-
21		14X-911-4541	Boot	1	65001-
22		14X-911-4551	Clip	15	65001-
23		198-Z11-6870	Wiring Harness	2	65001-
24		20T-06-71410	Switch	4	65001-
25		14X-911-4280	Cover	3	65001-
26		198-Z11-6880	Wiring Harness	2	65001-
27		362-56-42390	Switch	1	65001-

Reference:K0210-009007 Page:K022007

Printed By : Dwi Iswanto (airafather6107170)

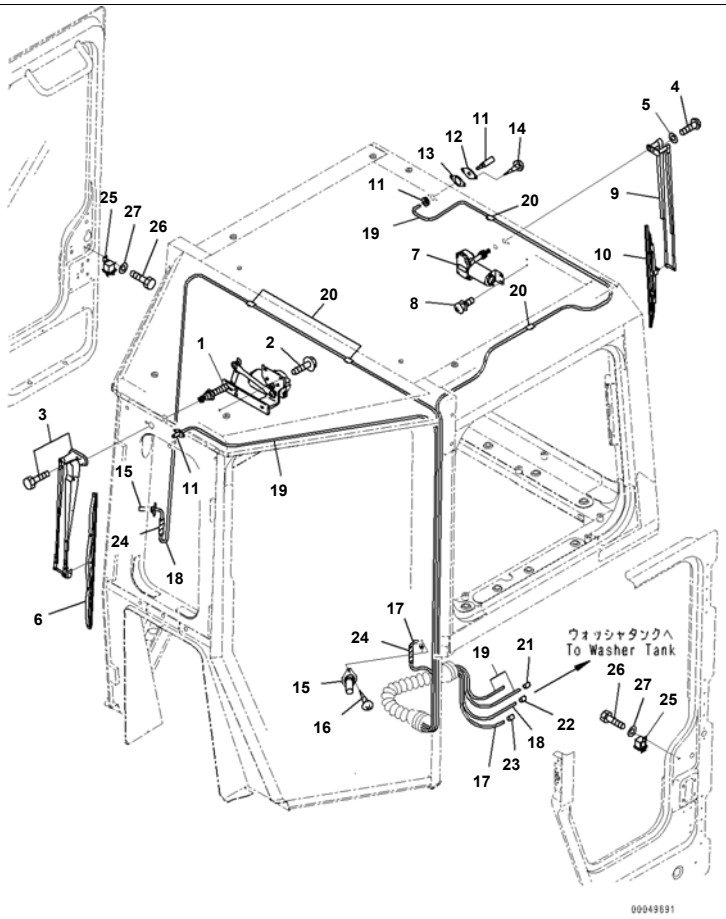

Reference:K0210-009008 Page:K022008

D375A-6R S/N 65001-UP
ROPS Cab, Double Windshield Wiper, Wipers, Front and Rear (#65001-)

Index	Code	Part Number	Description	Qty	Serial No.
1		14X-911-3111	Wiper Motor	1	65001-
2		01435-40616	Bolt	4	65001-
3		14X-911-3210	Arm Assembly, Wiper	1	65001-
4		01245-00616	Screw, Hexagon Socket Head	1	65001-
5		01643-70623	Washer	1	65001-
6		195-Z11-8550	Wiper Blade	1	65001-
7		198-Z11-2540	Wiper Motor	1	65001-
8		01023-20516	Screw	2	65001-
9		421-56-21760	Arm, Wiper	1	65001-
10		421-56-21770	Wiper Blade	1	65001-
11		205-06-61220	Nozzle Assembly	2	65001-
12		14X-911-3560	Bracket	2	65001-
13		14X-911-3570	Packing	2	65001-
14		01370-00408	Screw	4	65001-
15		20Y-54-39511	Nozzle	2	65001-
16		01370-10520	Screw	4	65001-
17		14X-911-3531	Hose	1	65001-
18		14X-911-3541	Hose	1	65001-
19		21T-06-11390	Hose	2	65001-
20		08051-00801	Clip	10	65001-
21		14X-911-1130	Tube	1	65001-
22		14X-911-1140	Tube	1	65001-
23		14X-911-1150	Tube	1	65001-
24		08210-00401	Tube, Spiral	2	65001-
25		569-06-61960	Relay	2	65001-
26		01010-80616	Bolt	2	65001-
27		01643-30623	Washer	2	65001-

Reference:K0210-009008 Page:K022008

Printed By : Dwi Iswanto (airafather6107170)

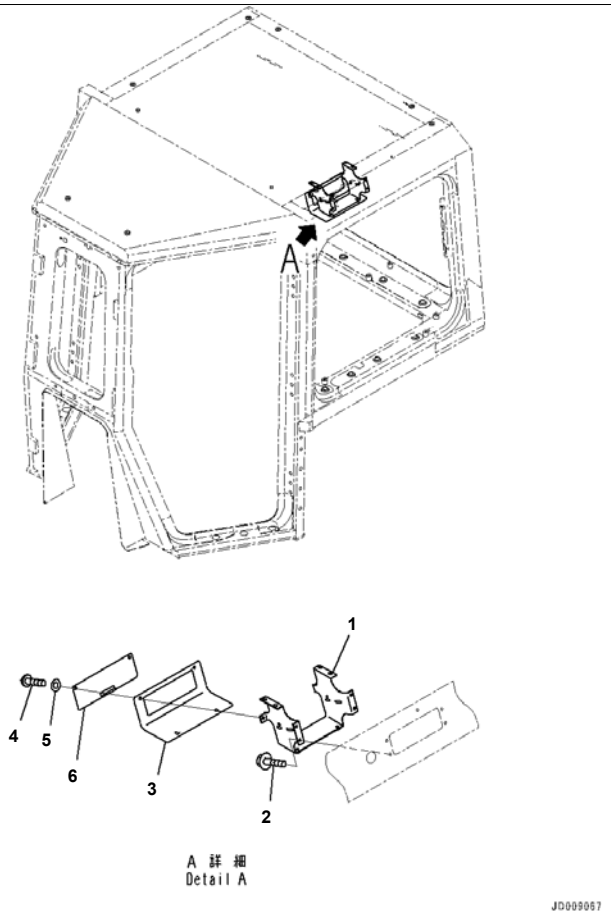

Reference:K0210-009009 Page:K022009

D375A-6R S/N 65001-UP
ROPS Cab, Double Windshield Wiper, Cover (#65001-)

Index	Code	Part Number	Description	Qty	Serial No.
1		198-Z11-2581	Bracket	1	65001-
2		01435-40616	Bolt	4	65001-
3		198-Z11-2591	Cover	1	65001-
4		01245-00616	Screw, Hexagon Socket Head	4	65001-
5		01643-70623	Washer	4	65001-
6		198-Z11-3680	Cover	1	65001-

Printed By : Dwi Iswanto (airafather6107170)

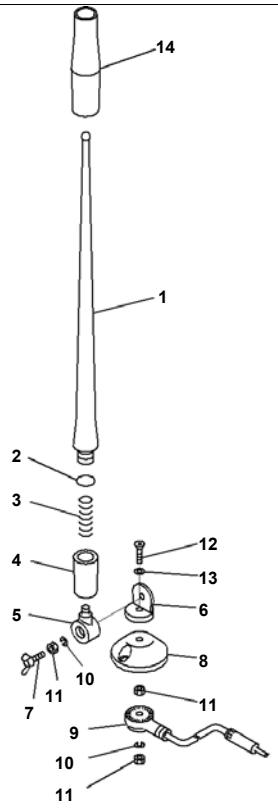

D375A-6R S/N 65001-UP
ROPS Cab, Double Windshield Wiper, Rubber Antenna (#65001-)

Index	Code	Part Number	Description	Qty	Serial No.
		198-Z11-4610	Rubber Antenna	1	65001-
		EP72-540-901	· Rubber Element Assembly	1	65001-
1		EP72-540-90101	· · Antenna	1	65001-
2		EP72-540-90102	· · Ring	1	65001-
3		EP72-540-90103	· · Spring	1	65001-
4		EP72-540-90104	· · Collar	1	65001-
5		EP72-540-90105	· · Joint	1	65001-
6	C1		· Holder	1	65001-
7		EP23-141-001	· Bolt, Wing	1	65001-
8	C1		· Base	1	65001-
9	C1		· Wiring Harness	1	65001-
10		EP23-141-003	· Washer, Spring	2	65001-
11		EP23-141-004	· Nut	3	65001-
12	C1		· Screw	1	65001-
13	C1		· Washer	1	65001-
14	C1		· Tube	1	65001-

Printed By : Dwi Iswanto (airafather6107170)

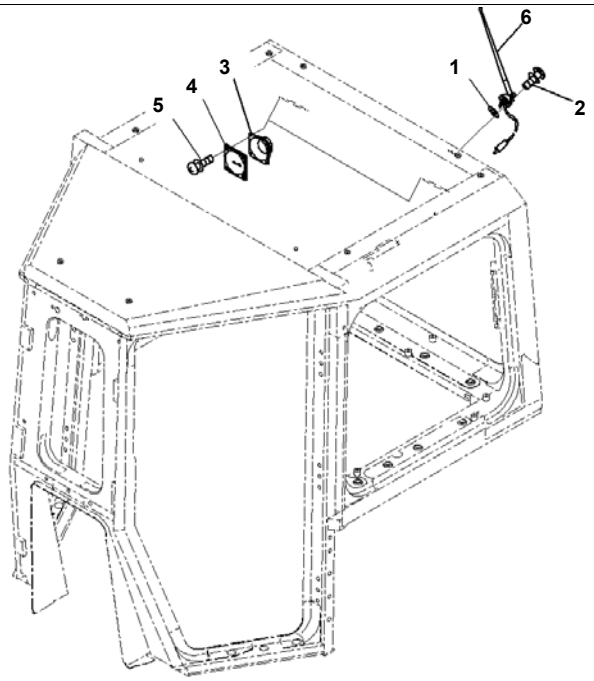

D375A-6R S/N 65001-UP
ROPS Cab, Double Windshield Wiper, Rubber Antenna Mounting and Speaker (#65001-)

Index	Code	Part Number	Description	Qty	Serial No.
1		01643-30623	Washer	1	65001-
2		01023-10420	Screw	2	65001-
3		08910-10000	Speaker	2	65001-
4		14X-911-4220	Panel	2	65001-
5		01023-20420	Screw	8	65001-
6		(198-Z11-4610)	Rubber Antenna		

Printed By : Dwi Iswanto (airafather6107170)

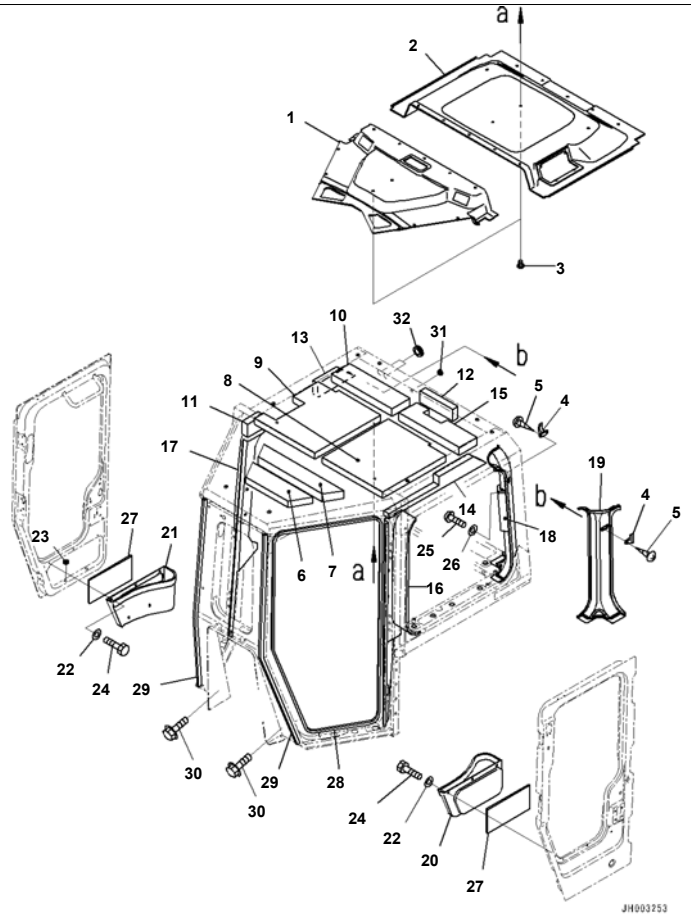

D375A-6R S/N 65001-UP
ROPS Cab, Double Windshield Wiper, Roof Lining and Garnish (#65001-)

Index	Code	Part Number	Description	Qty	Serial No.
1		198-Z11-6710	Roof Lining	1	65001-
2		198-Z11-6720	Roof Lining	1	65001-
3		198-Z11-6370	Clip	20	65001-
4		205-54-51250	Hanger	2	65001-
5		01370-30416	Screw	4	65001-
6		198-Z11-2730	Absorber	1	65001-
7		198-Z11-2740	Absorber	1	65001-
8		198-Z11-6750	Absorber	1	65001-
9		198-Z11-6760	Absorber	1	65001-
10		198-Z11-2770	Absorber	1	65001-
11		198-Z11-6780	Absorber	2	65001-
12		198-Z11-6730	Absorber	1	65001-
13		198-Z11-6740	Absorber	1	65001-
14		198-Z11-6770	Absorber	1	65001-
15		198-Z11-7550	Absorber	1	65001-
16		198-Z11-6810	Cover	1	65001-
17		198-Z11-6820	Cover	1	65001-
18		198-Z11-6831	Cover	1	65001-
19		198-Z11-6841	Cover	1	65001-
20		14X-911-5412	Pocket	1	65001-
21		14X-911-5422	Pocket	1	65001-
22		01643-70623	Washer	6	65001-
23		08037-01008	Grommet	4	65001-
24		01010-D0616	Bolt	6	65001-
25		01245-00616	Screw, Hexagon Socket Head	6	65001-
26		01643-71232	Washer	6	65001-
27		198-Z11-2780	Absorber	2	65001-
28		198-Z11-2910	Trim	2	65001-
29		198-Z11-3530	Trim	2	65001-
30		01435-41025	Bolt	8	65001-
31		09415-01008	Cap	1	65001-

Printed By : Dwi Iswanto (airafather6107170)

Index	Code	Part Number	Description	Qty	Serial No.
32		09415-02512	Cap	2	65001-

Printed By : Dwi Iswanto (airafather6107170)

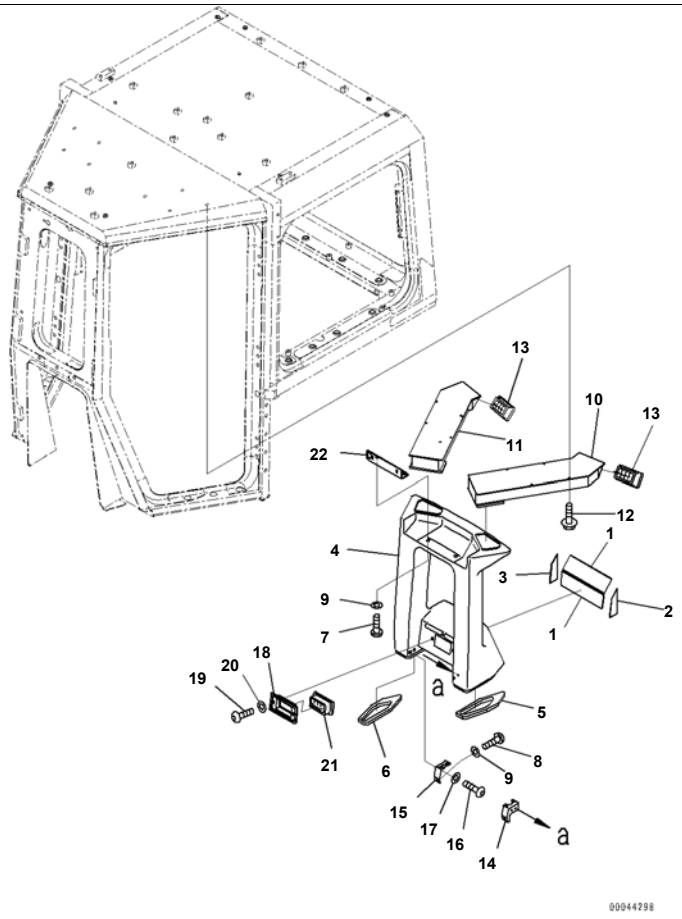

D375A-6R S/N 65001-UP
ROPS Cab, Double Windshield Wiper, Air Conditioner Duct (#65001-)

Index	Code	Part Number	Description	Qty	Serial No.
		195-Z11-8770	Duct	1	65001-
1		195-Z11-8780	· Sheet	2	65001-
2		195-Z11-8950	· Sheet	1	65001-
3		195-Z11-8960	· Sheet	1	65001-
4	C1		· Duct	1	65001-
5		198-Z11-6350	· · Seal	1	65001-
6		198-Z11-6360	· · Seal	1	65001-
7		01245-00835	Screw	2	65001-
8		01245-00820	Screw	2	65001-
9		01643-70823	Washer	4	65001-
10		198-Z11-3821	Duct	1	65001-
11		198-Z11-3831	Duct	1	65001-
12		01435-40616	Bolt	8	65001-
13		14X-54-18270	Grille Assembly	2	65001-
14		198-Z11-3850	Bracket	1	65001-
15		198-Z11-3860	Bracket	1	65001-
16		01245-00616	Screw, Hexagon Socket Head	4	65001-
17		01643-70623	Washer	4	65001-
18		198-Z11-6850	Bracket	1	65001-
19		01245-00616	Screw, Hexagon Socket Head	2	65001-
20		01643-70623	Washer	2	65001-
21		17A-54-18270	Grille Assembly	1	65001-
22		198-Z11-3910	Plate	1	65001-

Printed By : Dwi Iswanto (airafather6107170)

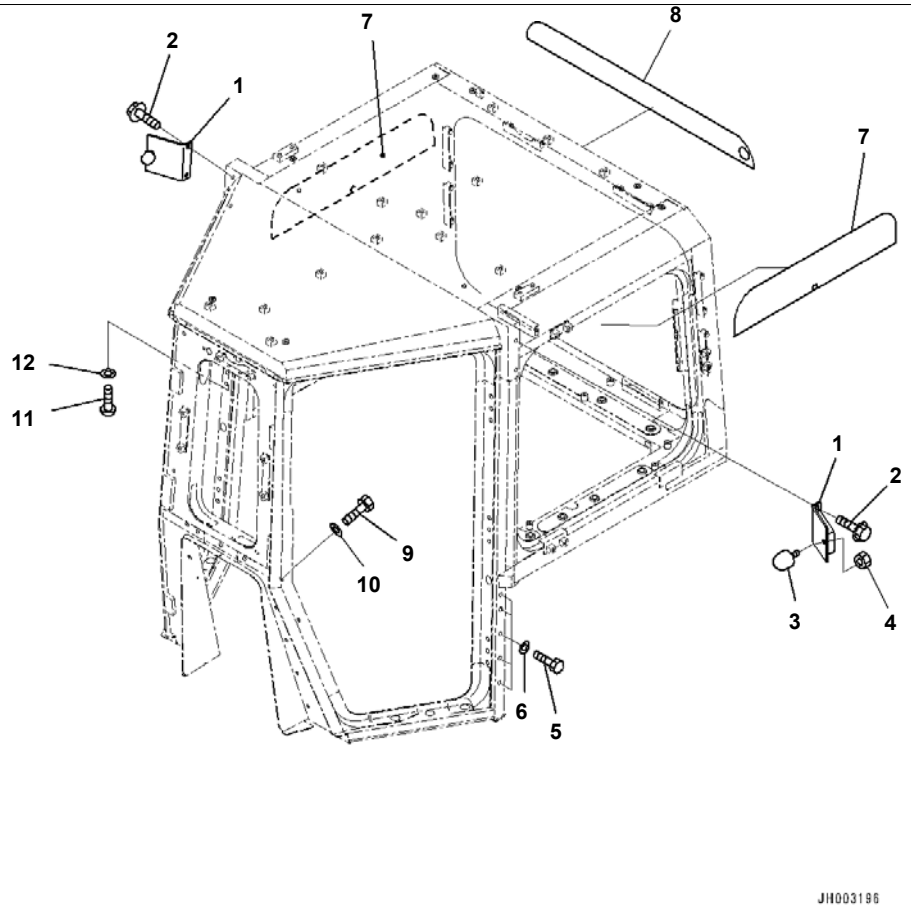

D375A-6R S/N 65001-UP
ROPS Cab, Double Windshield Wiper, Open Lock Stopper (#65001-)

Index	Code	Part Number	Description	Qty	Serial No.
1		198-Z11-3361	Bracket	2	65001-
2		01435-41025	Bolt	4	65001-
3		09453-00002	Stopper	2	65001-
4		01580-11210	Nut	2	65001-
5		01010-D1230	Bolt	10	65001-
6		01643-71232	Washer	10	65001-
7		198-Z11-6210	Sunshade Film	2	65001-
8		198-Z11-6220	Sunshade Film	1	65001-
9		01010-D1230	Bolt	4	65001-
10		01643-71232	Washer	4	65001-
11		01245-00820	Screw	2	65001-
12		01643-70823	Washer	2	65001-

Printed By : Dwi Iswanto (airafather6107170)

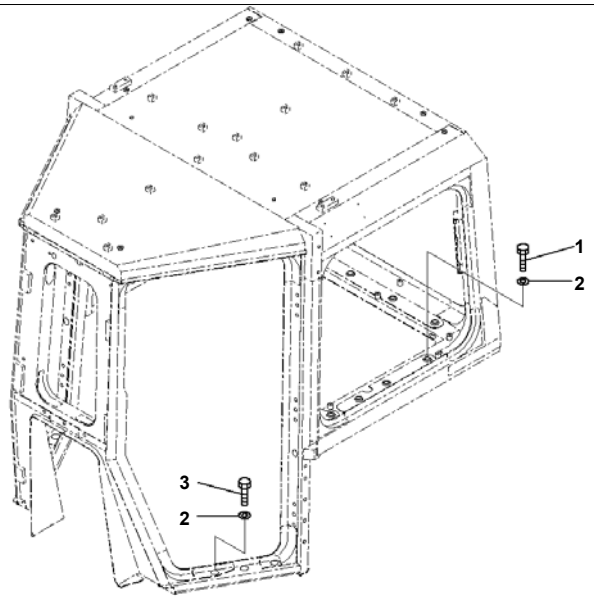

Index	Code	Part Number	Description	Qty	Serial No.
1		01010-81275	Bolt	15	65001-
2		124-54-26540	Washer	21	65001-
3		01010-81245	Bolt	6	65001-

Printed By : Dwi Iswanto (airafather6107170)

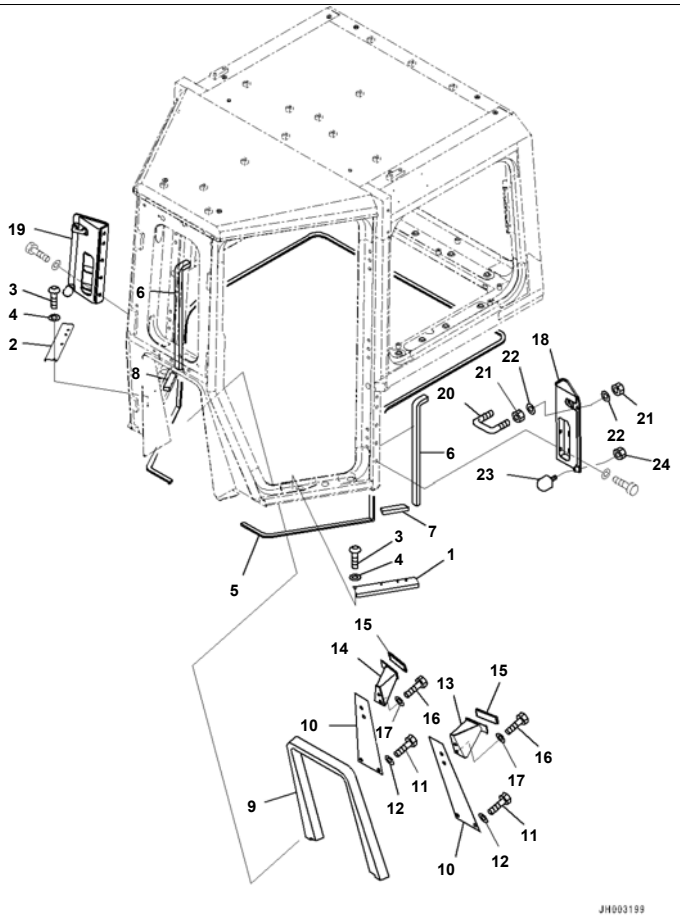

D375A-6R S/N 65001-UP
ROPS Cab, Double Windshield Wiper, Envelope Parts (1/2) (#65001-)

Index	Code	Part Number	Description	Qty	Serial No.
1		198-Z11-2941	Cover	1	65001-
2		198-Z11-2951	Cover	1	65001-
3		01245-00616	Screw, Hexagon Socket Head	8	65001-
4		01643-70623	Washer	8	65001-
5		14X-911-5911	Seal	5	65001-
6		198-Z11-7420	Sheet	2	65001-
7		198-Z11-7410	Sheet	1	65001-
8		198-Z11-7430	Sheet	1	65001-
9		198-Z11-3540	Seal	1	65001-
10		198-Z11-2961	Plate	2	65001-
11		01010-D1230	Bolt	4	65001-
12		01643-71232	Washer	4	65001-
13		14X-911-5711	Bracket	1	65001-
14		14X-911-5721	Bracket	1	65001-
15		203-43-56450	Cap	2	65001-
16		01010-D1230	Bolt	4	65001-
17		01643-71232	Washer	4	65001-
18		198-Z11-3341	Bracket	1	65001-
19		198-Z11-3351	Bracket	1	65001-
20		14X-911-1921	Striker	2	65001-
21		01580-11008	Nut	8	65001-
22		01643-31032	Washer	8	65001-
23		09453-00002	Stopper	2	65001-
24		01580-11210	Nut	2	65001-

Printed By : Dwi Iswanto (airafather6107170)

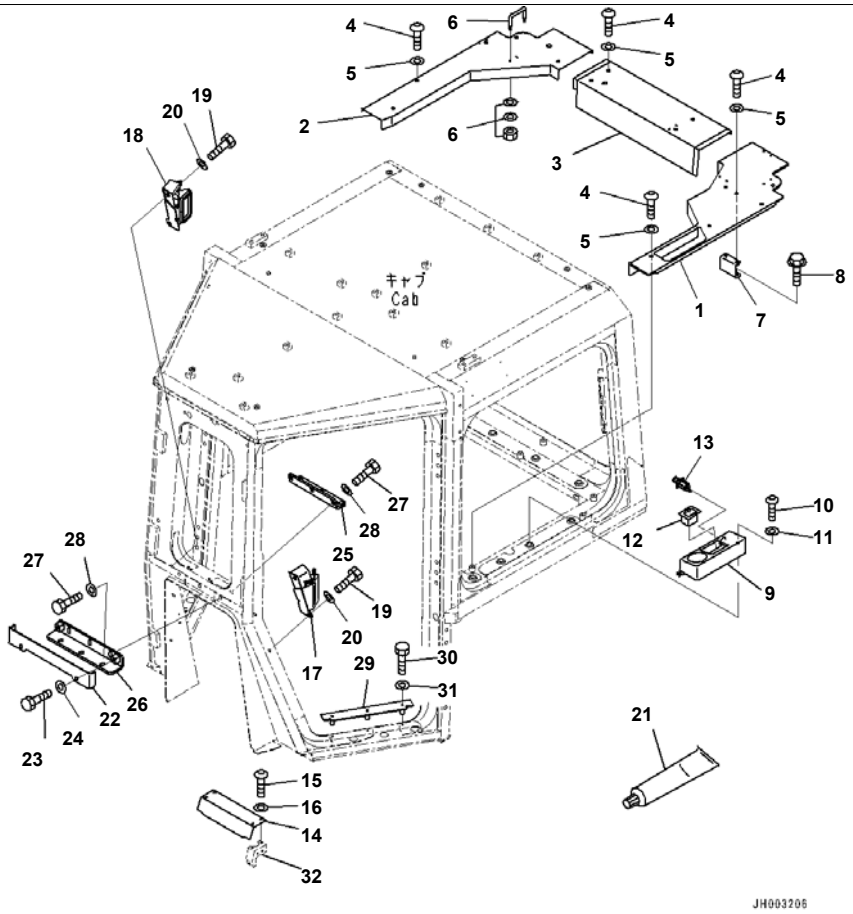

Reference:K0210-009017 Page:K022017

D375A-6R S/N 65001-UP
ROPS Cab, Double Windshield Wiper, Envelope Parts (2/2) (#65001-)

Index	Code	Part Number	Description	Qty	Serial No.
1		198-Z11-2872	Cover	1	65001-
2		198-Z11-2882	Cover	1	65001-
3		198-Z11-2892	Cover	1	65001-
4		01245-00820	Screw	13	65001-
5		01643-70823	Washer	13	65001-
6		198-Z11-2850	Handle	6	65001-
7		198-Z11-3990	Bracket	1	65001-
8		01435-30825	Bolt	2	65001-
9		198-Z11-7490	Box	1	65001-
10		01245-00820	Screw	2	65001-
11		01643-70823	Washer	2	65001-
12		20G-54-13420	Ashtray	1	65001-
13		20Y-06-23472	Cigarette Lighter	1	65001-
14		195-54-68282	Plate	1	65001-
15		01245-00616	Screw, Hexagon Socket Head	4	65001-
16		01643-70623	Washer	4	65001-
17		198-911-9511	Damper Assembly	1	65001-
18		198-911-9521	Damper Assembly	1	65001-
19		01010-D1230	Bolt	4	65001-
20		01643-71232	Washer	4	65001-
21		198-Z11-3960	Seal	1	65001-
22		198-Z11-7991	Cover	1	65001-
23		01010-D1230	Bolt	2	65001-
24		01643-71232	Washer	2	65001-
25		198-Z11-3571	Bracket	1	65001-
26		198-Z11-7980	Plate	1	65001-
27		01010-D1230	Bolt	12	65001-
28		01643-71232	Washer	12	65001-
29		198-Z11-7590	Plate	2	65001-
30		01010-D0650	Bolt	6	65001-
31		01643-70623	Washer	6	65001-

Reference:K0210-009017 Page:K022017

Printed By : Dwi Iswanto (airafather6107170)

Index	Code	Part Number	Description	Qty	Serial No.
32		(198-Z11-3850)	Bracket		

Printed By : Dwi Iswanto (airafather6107170)

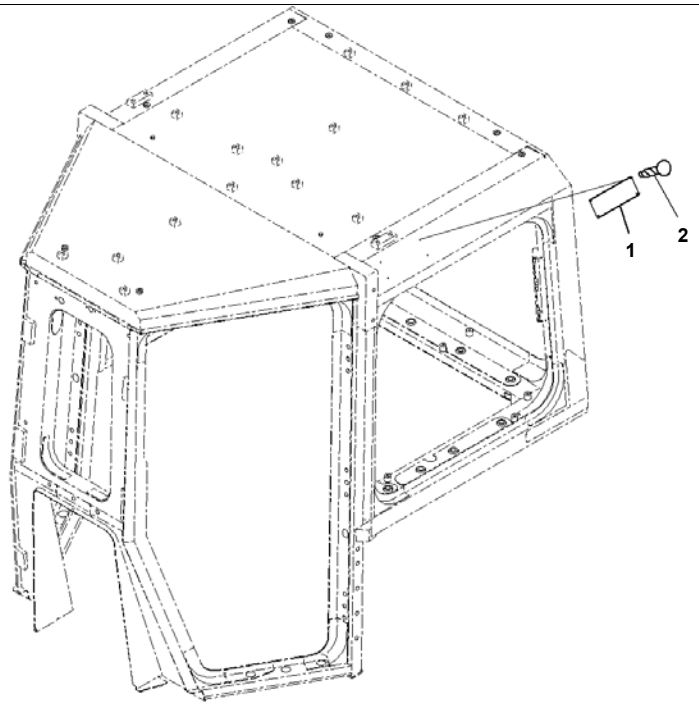

Index	Code	Part Number	Description	Qty	Serial No.
1	C2	09620-C2000	Plate, Name, FOPS (Limited Supply)	1	65001-
2		04418-13060	Screw	4	65001-

Printed By : Dwi Iswanto (airafather6107170)

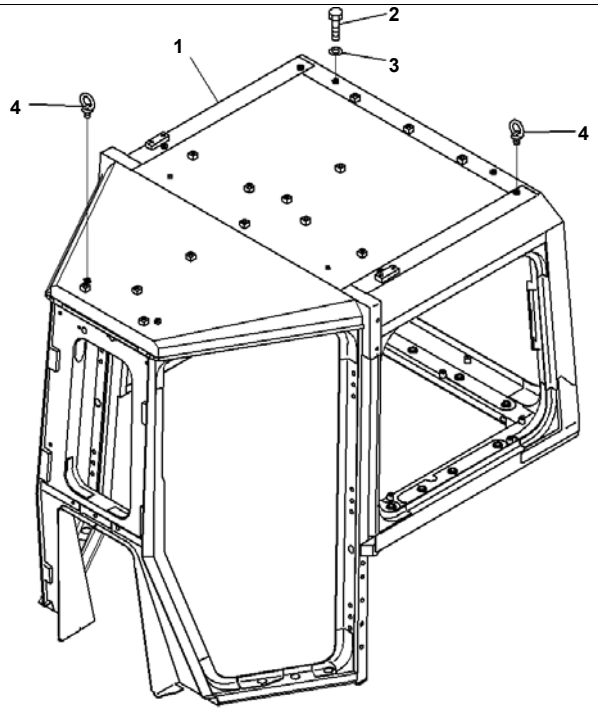

Index	Code	Part Number	Description	Qty	Serial No.
1		198-Z11-6111	Cab	1	65001-
2		01010-D1220	Bolt	27	65001-
3		01643-71232	Washer	27	65001-
4		04530-11222	Bolt, Eye	4	65001-

Printed By : Dwi Iswanto (airafather6107170)

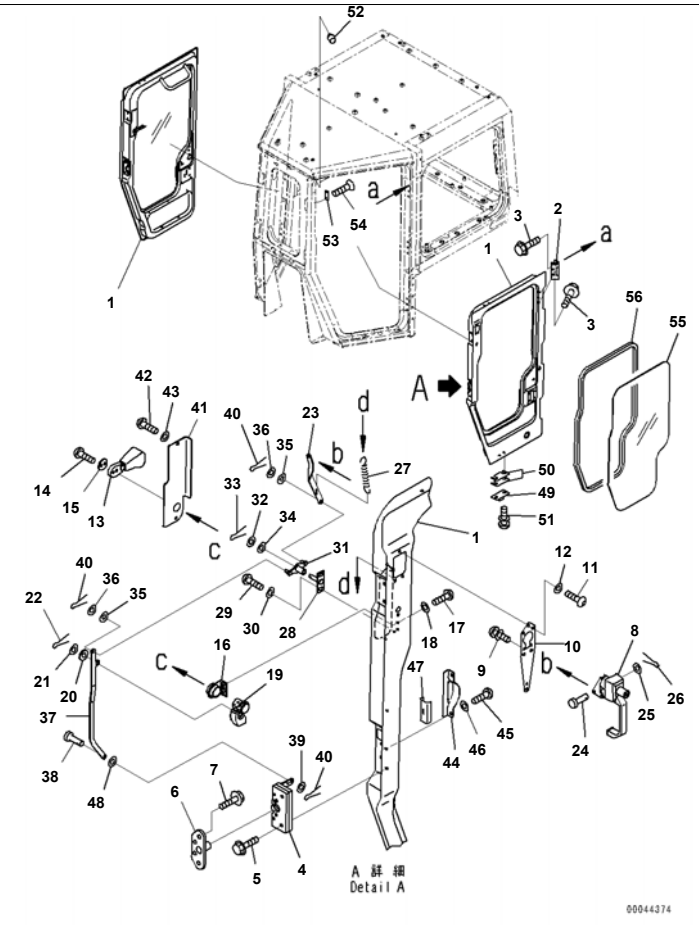

Reference:K0210-010002 Page:K023002

D375A-6R S/N 65001-UP
ROPS Cab, With Rear View Monitoring System, With AM-FM Radio For EU, Door and Lock (1/2) (#65001-)

Index	Code	Part Number	Description	Qty	Serial No.
1		198-Z11-3111	Door	1	65001-
		198-Z11-3121	Door	1	65001-
2		14X-911-1330	Hinge	6	65001-
3		01435-41025	Bolt	36	65001-
4		195-Z11-4510	Lock	1	65001-
		195-Z11-4520	Lock	1	65001-
5		01435-40630	Bolt	8	65001-
6		198-Z11-3450	Striker	2	65001-
7		01435-40820	Bolt	8	65001-
8		198-Z11-3710	Handle Assembly	2	65001-
9		01023-10520	Screw	10	65001-
10		198-Z11-3210	Plate	2	65001-
11		01245-00616	Screw, Hexagon Socket Head	8	65001-
12		01643-70623	Washer	8	65001-
13		198-Z11-5680	Knob Assembly	2	65001-
14		01245-00620	Screw	4	65001-
15		198-Z11-3650	Plate	2	65001-
16		198-Z11-5250	Plate	2	65001-
17		01245-00616	Screw, Hexagon Socket Head	4	65001-
18		01643-70623	Washer	4	65001-
19		198-Z11-5260	Lever	1	65001-
		198-Z11-5270	Lever	1	65001-
20		14X-Z11-3110	Rubber	4	65001-
21		01641-20608	Washer	2	65001-
22		04050-11612	Pin, Cotter	2	65001-
23		198-Z11-3241	Plate	1	65001-
		198-Z11-3251	Plate	1	65001-
24		04205-10614	Pin	2	65001-
25		01641-20608	Washer	2	65001-
26		04050-11612	Pin, Cotter	2	65001-
27		176-06-42170	Spring	2	65001-

Reference:K0210-010002 Page:K023002

Printed By : Dwi Iswanto (airafather6107170)

ROPS Cab, With Rear View Monitoring System, With AM-FM Radio For EU, Door and Lock (1/2) (#65001-)

Index	Code	Part Number	Description	Qty	Serial No.
28		198-Z11-5690	Plate	2	65001-
29		01245-00616	Screw, Hexagon Socket Head	4	65001-
30		01643-70623	Washer	4	65001-
31		198-Z11-3280	Plate	2	65001-
32		01643-50823	Washer	2	65001-
33		04050-12020	Pin, Cotter	2	65001-
34		198-Z11-7310	Rubber	2	65001-
35		14X-Z11-3110	Rubber	4	65001-
36		01643-30623	Washer	4	65001-
37		198-Z11-5280	Plate	1	65001-
		198-Z11-5290	Plate	1	65001-
38		04205-10614	Pin	2	65001-
39		01641-20608	Washer	4	65001-
40		04050-11612	Pin, Cotter	4	65001-
41		198-Z11-3261	Cover	1	65001-
		198-Z11-3290	Cover	1	65001-
42		01245-00616	Screw, Hexagon Socket Head	4	65001-
43		01643-70623	Washer	4	65001-
44		198-Z11-3430	Cover	2	65001-
45		01245-00616	Screw, Hexagon Socket Head	4	65001-
46		01643-70623	Washer	4	65001-
47		14X-911-1780	Seal	2	65001-
48		198-Z11-7310	Rubber	2	65001-
49		14X-911-1690	Damper	8	65001-
50		14X-911-1761	Shim, T=1.2mm	16	65001-
51		01023-20616	Screw	16	65001-
52		20Y-54-35780	Stopper	2	65001-
53		198-Z11-3590	Plate	4	65001-
54		01240-00820	Screw, Hexagon Socket Head	8	65001-
55		198-Z11-2231	Glass	2	65001-
56		198-Z11-2270	Strip	2	65001-

Printed By : Dwi Iswanto (airafather6107170)

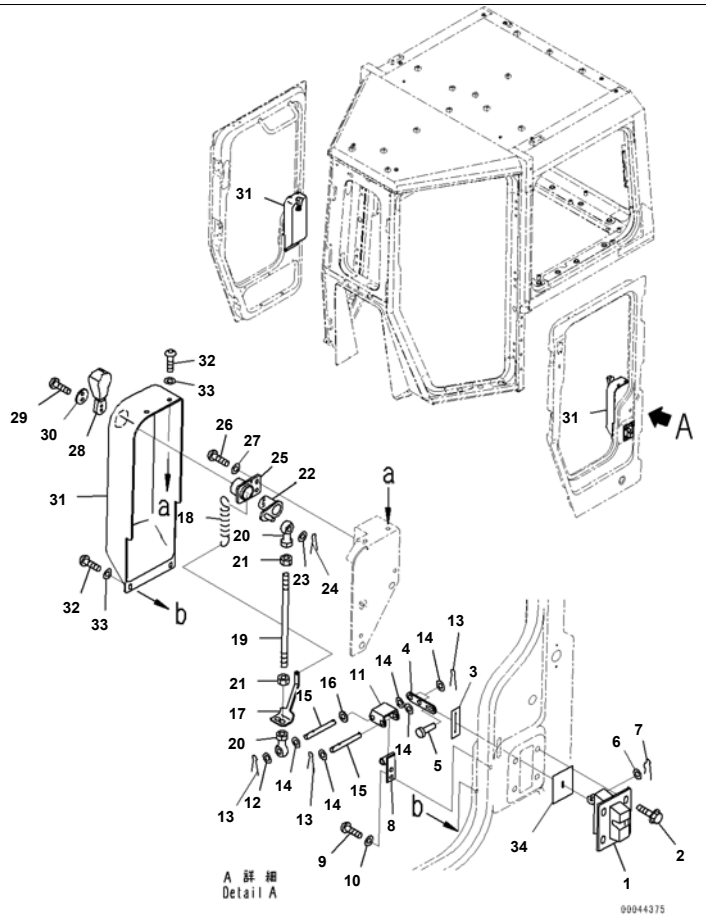

Reference:K0210-010003 Page:K023003

D375A-6R S/N 65001-UP
ROPS Cab, With Rear View Monitoring System, With AM-FM Radio For EU, Door and Lock (2/2) (#65001-)

Index	Code	Part Number	Description	Qty	Serial No.
1		20Y-54-36380	Lock	2	65001-
2		01435-40820	Bolt	8	65001-
3		198-Z11-3490	Sheet	2	65001-
4		198-Z11-6480	Plate	2	65001-
5		04205-10520	Pin	2	65001-
6		01640-20508	Washer	2	65001-
7		04050-11215	Pin, Cotter	2	65001-
8		198-Z11-6471	Bracket	2	65001-
9		01245-00616	Screw, Hexagon Socket Head	4	65001-
10		01643-70623	Washer	4	65001-
11		198-Z11-6440	Plate	2	65001-
12		01643-50823	Washer	10	65001-
13		04050-13020	Pin, Cotter	8	65001-
14		01641-20812	Washer	12	65001-
15		198-Z11-6490	Shaft	4	65001-
16		198-Z11-7310	Rubber	2	65001-
17		198-Z11-6450	Plate	2	65001-
18		176-06-42170	Spring	2	65001-
19		04245-40820	Rod	2	65001-
20		04250-80847	Rod End	4	65001-
21		01580-10806	Nut	4	65001-
22		198-Z11-3421	Lever	2	65001-
23		01640-20816	Washer	2	65001-
24		04050-12020	Pin, Cotter	2	65001-
25		198-Z11-3460	Plate	2	65001-
26		01245-00616	Screw, Hexagon Socket Head	4	65001-
27		01643-70623	Washer	4	65001-
28		198-Z11-5680	Knob Assembly	2	65001-
29		01245-00620	Screw	4	65001-
30		198-Z11-3650	Plate	2	65001-
31		198-Z11-3322	Cover	1	65001-

Printed By : Dwi Iswanto (airafather6107170)

ROPS Cab, With Rear View Monitoring System, With AM-FM Radio For EU, Door and Lock (2/2) (#65001-)

Index	Code	Part Number	Description	Qty	Serial No.
		198-Z11-3332	Cover	1	65001-
32		01245-00616	Screw, Hexagon Socket Head	4	65001-
33		01643-70623	Washer	4	65001-
34		14X-911-1780	Seal	2	65001-

Printed By : Dwi Iswanto (airafather6107170)

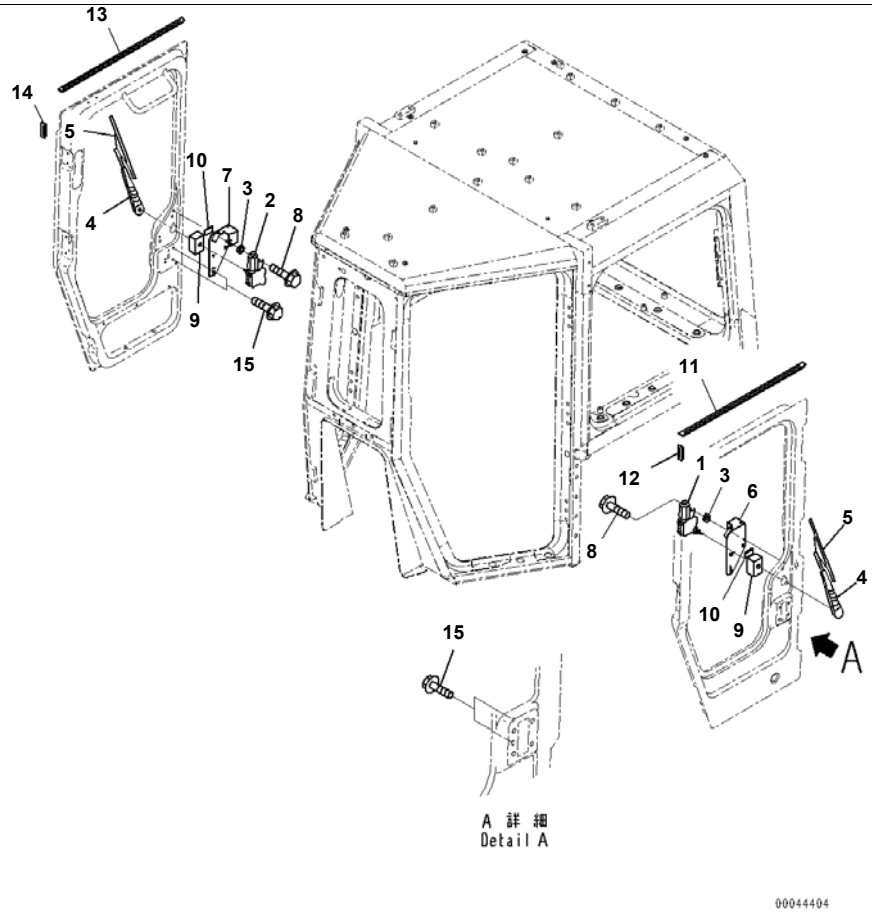

Reference:K0210-010004 Page:K023004

D375A-6R S/N 65001-UP
ROPS Cab, With Rear View Monitoring System, With AM-FM Radio For EU, Door Wiper (#65001-)

Index	Code	Part Number	Description	Qty	Serial No.
1		14X-911-3120	Wiper Motor Assembly	1	65001-
2		14X-911-3130	Wiper Motor Assembly	1	65001-
3		22X-70-12690	Shim, T=3.2mm	2	65001-
4		198-Z11-2690	Arm, Wiper	2	65001-
5		14X-911-3321	Wiper Blade	2	65001-
6		198-Z11-2561	Bracket	1	65001-
7		198-Z11-2571	Bracket	1	65001-
8		01435-01016	Bolt	4	65001-
9		198-Z11-6790	Sheet	2	65001-
10		198-Z11-6380	Sheet	2	65001-
11		198-Z11-4130	Seal	1	65001-
12		198-Z11-4150	Seal	1	65001-
13		198-Z11-4140	Seal	1	65001-
14		198-Z11-4160	Seal	1	65001-
15		01435-40812	Bolt	2	65001-

Reference:K0210-010004 Page:K023004

Printed By : Dwi Iswanto (airafather6107170)

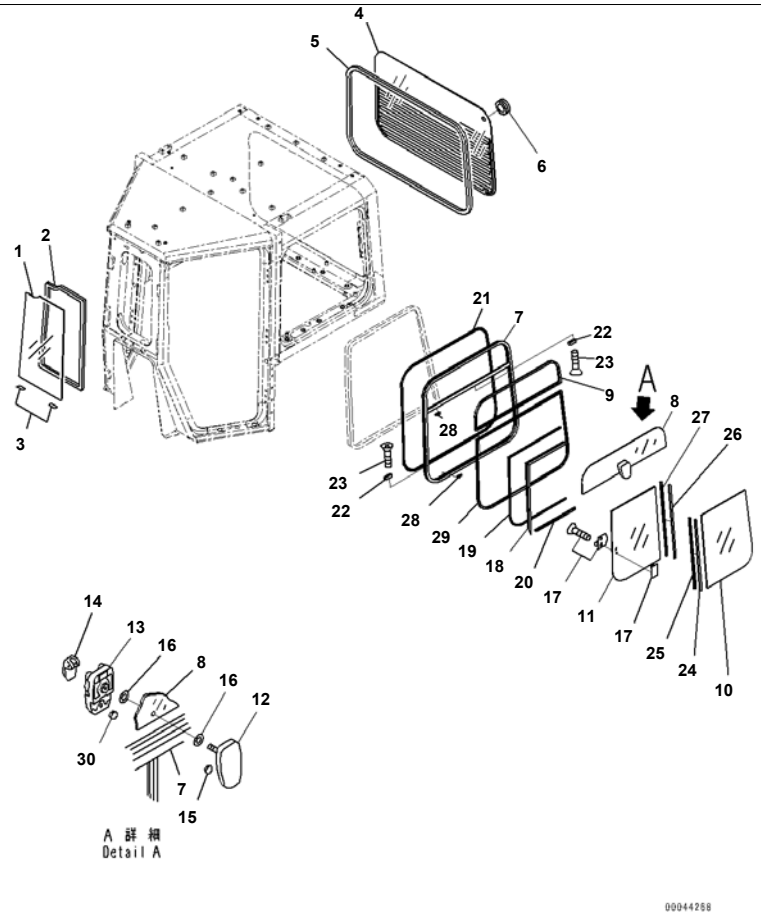

Reference:K0210-010005 Page:K023005

D375A-6R S/N 65001-UP
ROPS Cab, With Rear View Monitoring System, With AM-FM Radio For EU, Window Sash (1/2) (#65001-)

Index	Code	Part Number	Description	Qty	Serial No.
1		198-Z11-2211	Glass	1	65001-
2		198-Z11-2260	Glass	1	65001-
3		198-Z11-2290	Plate	2	65001-
4		198-Z11-7870	Glass	1	65001-
5		198-Z11-2251	Glass	1	65001-
6		09415-02512	Cap	1	65001-
		198-Z11-7500	Sash Assembly	1	65001-
7	C1		· Frame	1	65001-
8		198-Z11-4820	· Glass	1	65001-
9		198-Z11-4910	· Seal	1	65001-
10		198-Z11-4840	· Glass	1	65001-
11		198-Z11-4830	· Glass	1	65001-
12		14X-911-2620	· Bracket	1	65001-
13		14X-911-2630	· Bracket	1	65001-
14		14X-911-2661	· Lever Assembly	1	65001-
15		14X-911-2640	· Cushion	2	65001-
16		14X-911-2650	· Seal	2	65001-
17		20Y-54-13322	· Lock Assembly	1	65001-
18		198-Z11-4850	· Seal	1	65001-
19		198-Z11-4880	· Seal	1	65001-
20		198-Z11-4860	· Seal	1	65001-
21		198-Z11-4870	· Seal	1	65001-
22		14X-911-6710	· Stopper	2	65001-
23		01224-40316	· Screw, Philips Head	4	65001-
24		198-Z11-4920	· Frame	1	65001-
25		14X-911-6730	· Seal	1	65001-
26		14X-911-6770	· Frame	1	65001-
27		14X-911-6740	· Seal	1	65001-
28		14X-911-6750	· Stopper	2	65001-
29		198-Z11-4960	· Seal	1	65001-
30		198-Z11-7450	· Cushion	1	65001-

Reference:K0210-010005 Page:K023005

Printed By : Dwi Iswanto (airafather6107170)

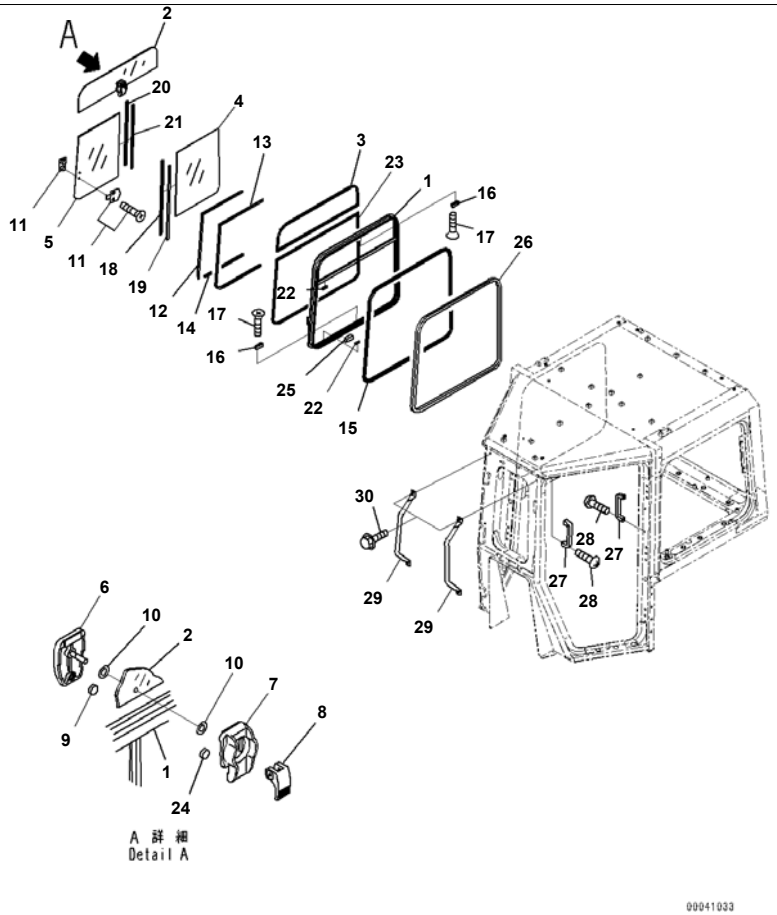

Reference:K0210-010006 Page:K023006

D375A-6R S/N 65001-UP
ROPS Cab, With Rear View Monitoring System, With AM-FM Radio For EU, Window Sash (2/2) (#65001-)

Index	Code	Part Number	Description	Qty	Serial No.
		198-Z11-7600	Sash Assembly	1	65001-
1	C1		· Frame	1	65001-
2		198-Z11-4820	· Glass	1	65001-
3		198-Z11-4910	· Seal	1	65001-
4		198-Z11-4840	· Glass	1	65001-
5		198-Z11-4830	· Glass	1	65001-
6		14X-911-2620	· Bracket	1	65001-
7		14X-911-2630	· Bracket	1	65001-
8		14X-911-2661	· Lever Assembly	1	65001-
9		14X-911-2640	· Cushion	2	65001-
10		14X-911-2650	· Seal	2	65001-
11		20Y-54-13322	· Lock Assembly	1	65001-
12		198-Z11-4990	· Seal	1	65001-
13		198-Z11-4880	· Seal	1	65001-
14		198-Z11-4860	· Seal	1	65001-
15		198-Z11-4870	· Seal	1	65001-
16		14X-911-6710	· Stopper	2	65001-
17		01224-40316	· Screw, Philips Head	4	65001-
18		198-Z11-4920	· Frame	1	65001-
19		14X-911-6730	· Seal	1	65001-
20		14X-911-6770	· Frame	1	65001-
21		14X-911-6740	· Seal	1	65001-
22		14X-911-6750	· Stopper	2	65001-
23		198-Z11-4960	· Seal	1	65001-
24		198-Z11-7450	· Cushion	1	65001-
25		198-Z11-2480	Seat	44	65001-
26		198-Z11-2490	Trim	2	65001-
27		361-54-21150	Handle	2	65001-
28		01220-40820	Screw, Philips Head	4	65001-
29		198-Z11-3520	Grip	2	65001-
30		01435-41025	Bolt	4	65001-

Printed By : Dwi Iswanto (airafather6107170)

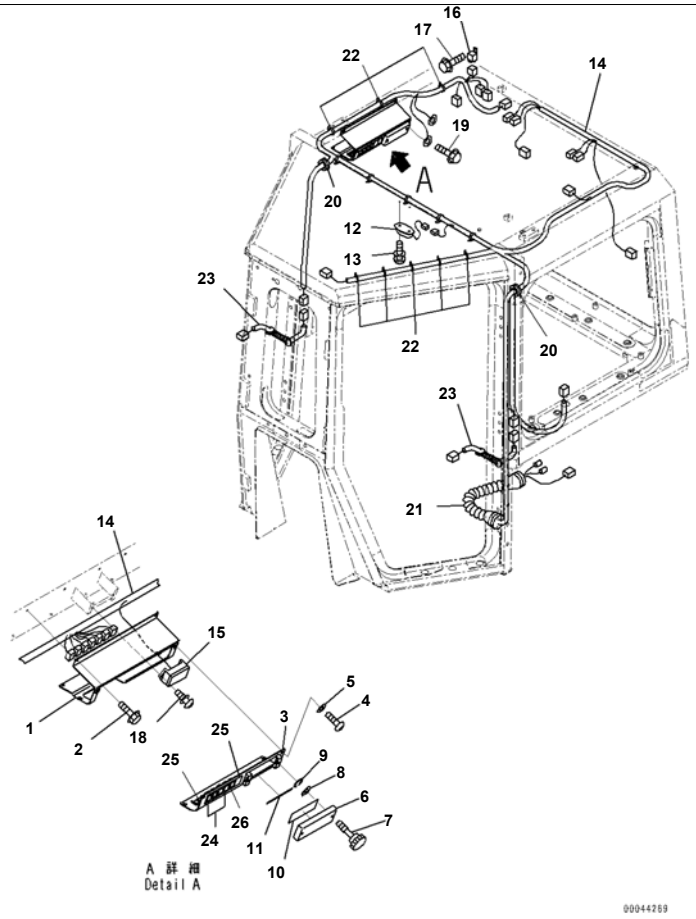

Reference:K0210-010007 Page:K023007

D375A-6R S/N 65001-UP
ROPS Cab, With Rear View Monitoring System, With AM-FM Radio For EU, Switch Panel (#65001-)

Index	Code	Part Number	Description	Qty	Serial No.
1		198-Z11-6520	Bracket	1	65001-
2		01435-40616	Bolt	4	65001-
3		198-Z11-6530	Cover	1	65001-
4		01245-00616	Screw, Hexagon Socket Head	4	65001-
5		01643-70623	Washer	4	65001-
6		198-Z11-6390	Cover	1	65001-
7		01232-10616	Screw, Knurled Head	2	65001-
8		01643-70623	Washer	2	65001-
9		195-54-78790	Ring, Snap	2	65001-
10		17M-Z11-1120	Plate	1	65001-
11		198-Z11-6590	Plate	1	65001-
12		421-06-26210	Lamp Assembly, Working	1	65001-
13		01023-10520	Screw	2	65001-
14		17M-Z11-1110	Wiring Harness	1	65001-
15		08044-01000	· Box Assembly, Fuse	1	65001-
		08041-01000	· Fuse, 10Amp.	6	65001-
		08041-02000	· Fuse, 20Amp.	3	65001-
16		287-06-16410	Relay	1	65001-
17		01435-40616	Bolt	1	65001-
18		01023-20520	Screw	2	65001-
19		01435-00816	Bolt	1	65001-
20		124-911-5790	Cushion	2	65001-
21		14X-911-4541	Boot	1	65001-
22		14X-911-4551	Clip	15	65001-
23		14X-911-4521	Wire Assembly	2	65001-
24		20T-06-71410	Switch	4	65001-
25		14X-911-4280	Cover	3	65001-
26		362-56-42390	Switch	1	65001-

Reference:K0210-010007 Page:K023007

Printed By : Dwi Iswanto (airafather6107170)

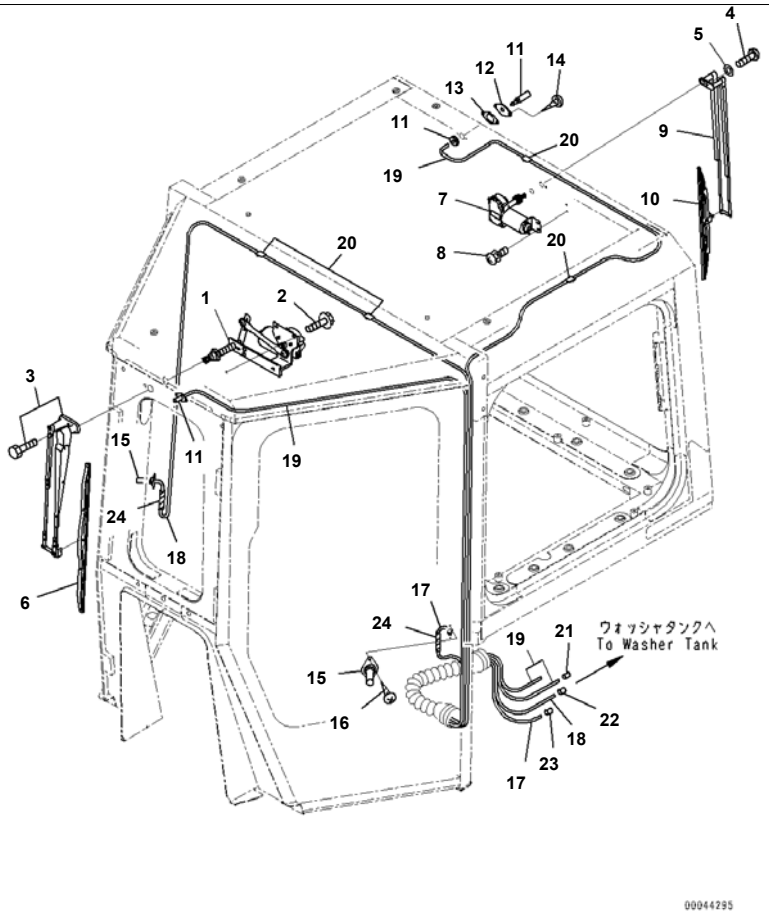

Reference:K0210-010008 Page:K023008

D375A-6R S/N 65001-UP
ROPS Cab, With Rear View Monitoring System, With AM-FM Radio For EU, Wipers, Front and Rear (#65001-)

Index	Code	Part Number	Description	Qty	Serial No.
1		14X-911-3111	Wiper Motor	1	65001-
2		01435-40616	Bolt	4	65001-
3		14X-911-3210	Arm Assembly, Wiper	1	65001-
4		01245-00616	Screw, Hexagon Socket Head	1	65001-
5		01643-70623	Washer	1	65001-
6		195-Z11-8550	Wiper Blade	1	65001-
7		198-Z11-2540	Wiper Motor	1	65001-
8		01023-20516	Screw	2	65001-
9		421-56-21760	Arm, Wiper	1	65001-
10		421-56-21770	Wiper Blade	1	65001-
11		205-06-61220	Nozzle Assembly	2	65001-
12		14X-911-3560	Bracket	2	65001-
13		14X-911-3570	Packing	2	65001-
14		01370-00408	Screw	4	65001-
15		20Y-54-39511	Nozzle	2	65001-
16		01370-10520	Screw	4	65001-
17		14X-911-3531	Hose	1	65001-
18		14X-911-3541	Hose	1	65001-
19		21T-06-11390	Hose	2	65001-
20		08051-00801	Clip	10	65001-
21		14X-911-1130	Tube	1	65001-
22		14X-911-1140	Tube	1	65001-
23		14X-911-1150	Tube	1	65001-
24		08210-00401	Tube, Spiral	2	65001-

Printed By : Dwi Iswanto (airafather6107170)

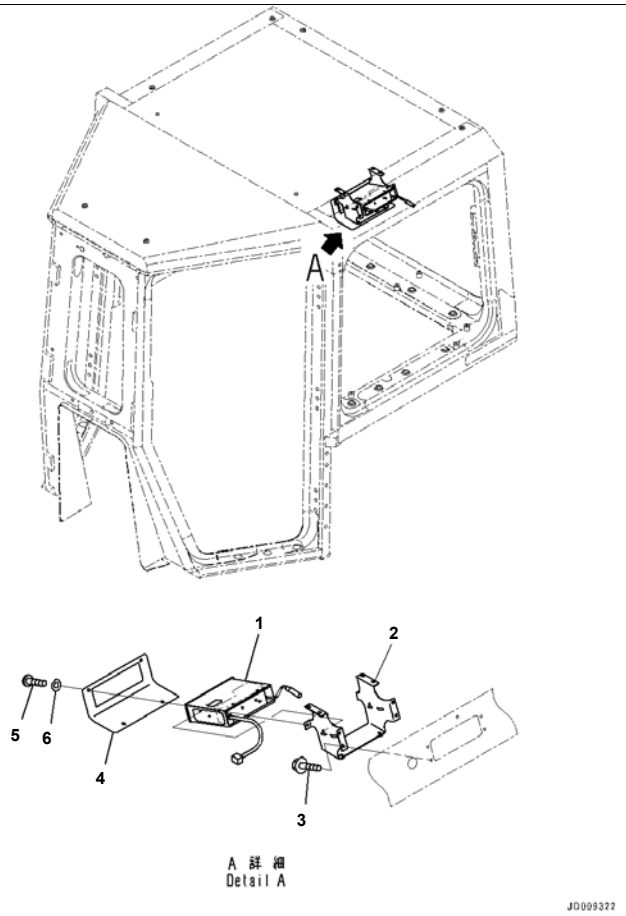

Reference:K0210-010009 Page:K023009

D375A-6R S/N 65001-UP
ROPS Cab, With Rear View Monitoring System, With AM-FM Radio For EU, AM-FM Radio and Cassette Stereo (#65001-)

Index	Code	Part Number	Description	Qty	Serial No.
1		195-Z11-8913	Radio	1	65001-
2		198-Z11-2581	Bracket	1	65001-
3		01435-40616	Bolt	4	65001-
4		198-Z11-2591	Cover	1	65001-
5		01245-00616	Screw, Hexagon Socket Head	4	65001-
6		01643-70623	Washer	4	65001-

Printed By : Dwi Iswanto (airafather6107170)

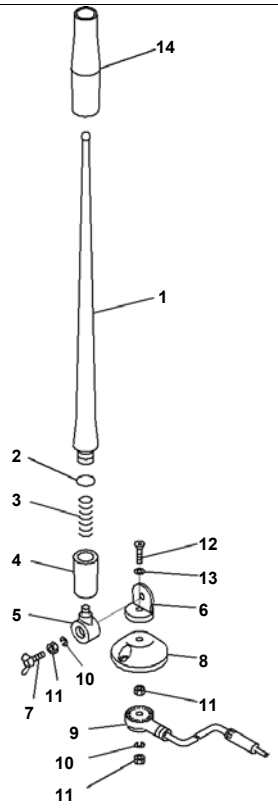

D375A-6R S/N 65001-UP
ROPS Cab, With Rear View Monitoring System, With AM-FM Radio For EU, Rubber Antenna (#65001-)

Index	Code	Part Number	Description	Qty	Serial No.
		198-Z11-4610	Rubber Antenna	1	65001-
		EP72-540-901	· Rubber Element Assembly	1	65001-
1		EP72-540-90101	· · Antenna	1	65001-
2		EP72-540-90102	· · Ring	1	65001-
3		EP72-540-90103	· · Spring	1	65001-
4		EP72-540-90104	· · Collar	1	65001-
5		EP72-540-90105	· · Joint	1	65001-
6	C1		· Holder	1	65001-
7		EP23-141-001	· Bolt, Wing	1	65001-
8	C1		· Base	1	65001-
9	C1		· Wiring Harness	1	65001-
10		EP23-141-003	· Washer, Spring	2	65001-
11		EP23-141-004	· Nut	3	65001-
12	C1		· Screw	1	65001-
13	C1		· Washer	1	65001-
14	C1		· Tube	1	65001-

Printed By : Dwi Iswanto (airafather6107170)

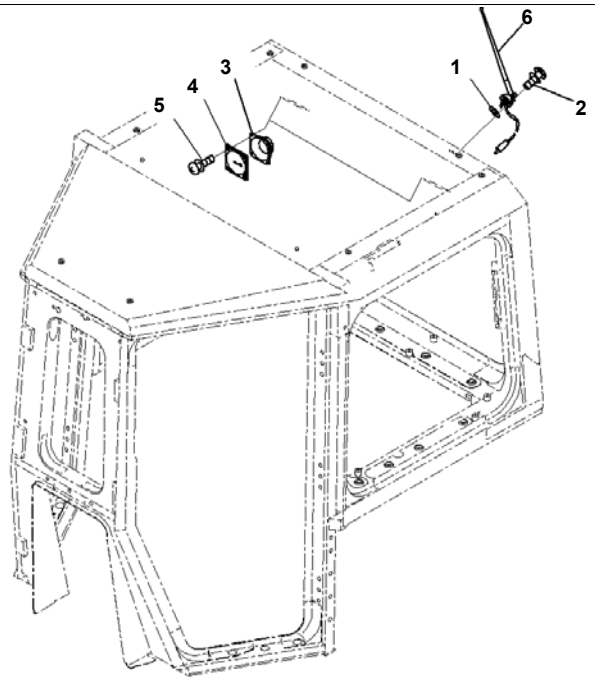

Index	Code	Part Number	Description	Qty	Serial No.
1		01643-30623	Washer	1	65001-
2		01023-10420	Screw	2	65001-
3		08910-10000	Speaker	2	65001-
4		14X-911-4220	Panel	2	65001-
5		01023-20420	Screw	8	65001-
6		(198-Z11-4610)	Rubber Antenna		

Printed By : Dwi Iswanto (airafather6107170)

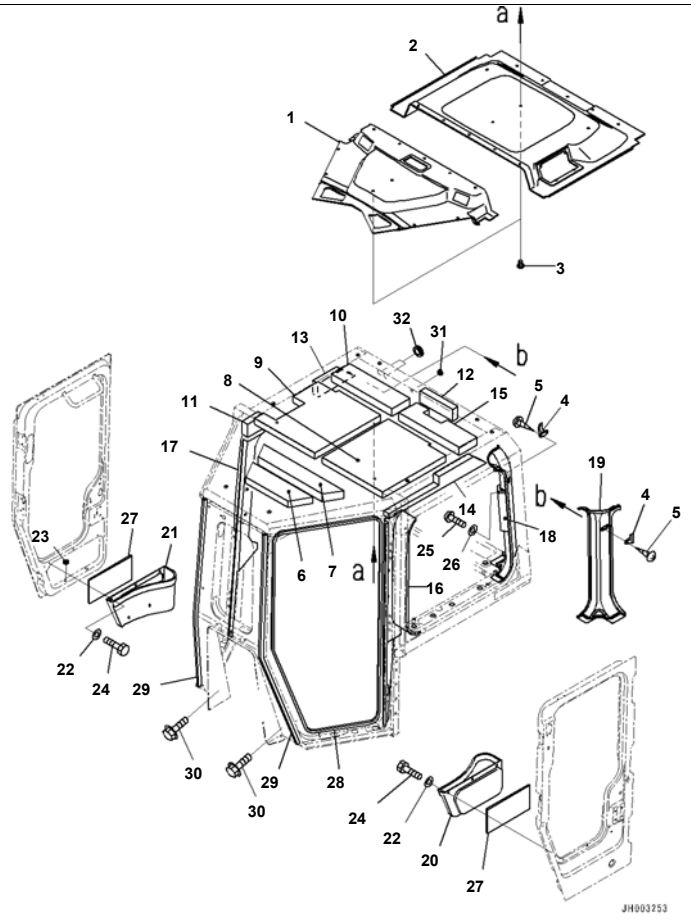

D375A-6R S/N 65001-UP
ROPS Cab, With Rear View Monitoring System, With AM-FM Radio For EU, Roof Lining and Garnish (#65001-)

Index	Code	Part Number	Description	Qty	Serial No.
1		198-Z11-6710	Roof Lining	1	65001-
2		198-Z11-6720	Roof Lining	1	65001-
3		198-Z11-6370	Clip	20	65001-
4		205-54-51250	Hanger	2	65001-
5		01370-30416	Screw	4	65001-
6		198-Z11-2730	Absorber	1	65001-
7		198-Z11-2740	Absorber	1	65001-
8		198-Z11-6750	Absorber	1	65001-
9		198-Z11-6760	Absorber	1	65001-
10		198-Z11-2770	Absorber	1	65001-
11		198-Z11-6780	Absorber	2	65001-
12		198-Z11-6730	Absorber	1	65001-
13		198-Z11-6740	Absorber	1	65001-
14		198-Z11-6770	Absorber	1	65001-
15		198-Z11-7550	Absorber	1	65001-
16		198-Z11-6810	Cover	1	65001-
17		198-Z11-6820	Cover	1	65001-
18		198-Z11-6831	Cover	1	65001-
19		198-Z11-6841	Cover	1	65001-
20		14X-911-5412	Pocket	1	65001-
21		14X-911-5422	Pocket	1	65001-
22		01643-70623	Washer	6	65001-
23		08037-01008	Grommet	4	65001-
24		01010-D0616	Bolt	6	65001-
25		01245-00616	Screw, Hexagon Socket Head	6	65001-
26		01643-71232	Washer	6	65001-
27		198-Z11-2780	Absorber	2	65001-
28		198-Z11-2910	Trim	2	65001-
29		198-Z11-3530	Trim	2	65001-
30		01435-41025	Bolt	8	65001-
31		09415-01008	Cap	1	65001-

Printed By : Dwi Iswanto (airafather6107170)

Index	Code	Part Number	Description	Qty	Serial No.
32		09415-02512	Cap	2	65001-

Printed By : Dwi Iswanto (airafather6107170)

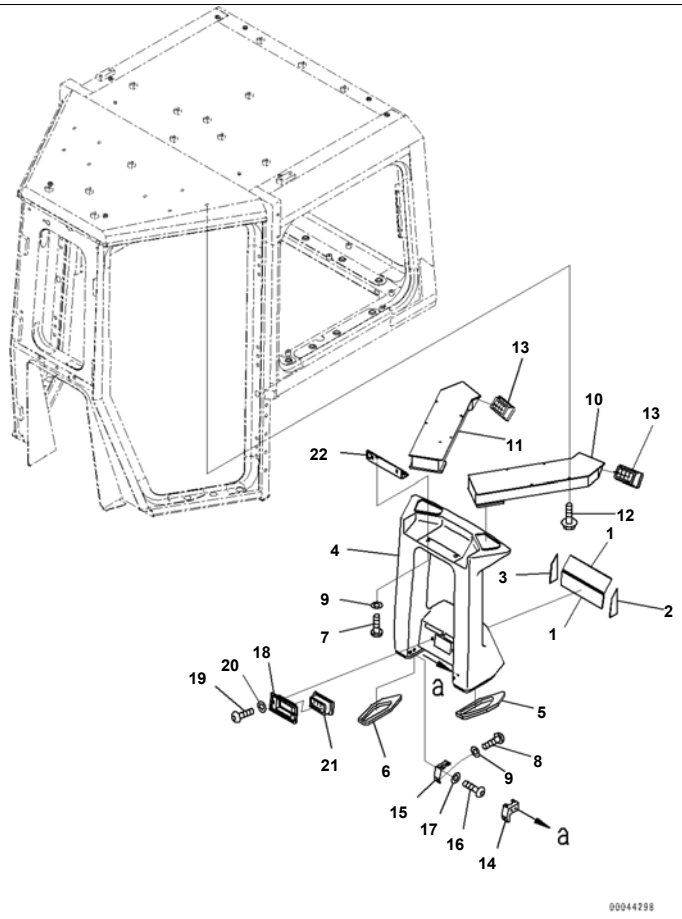

D375A-6R S/N 65001-UP
ROPS Cab, With Rear View Monitoring System, With AM-FM Radio For EU, Air Conditioner Duct (#65001-)

Index	Code	Part Number	Description	Qty	Serial No.
		195-Z11-8770	Duct	1	65001-
1		195-Z11-8780	· Sheet	2	65001-
2		195-Z11-8950	· Sheet	1	65001-
3		195-Z11-8960	· Sheet	1	65001-
4	C1		· Duct	1	65001-
5		198-Z11-6350	· · Seal	1	65001-
6		198-Z11-6360	· · Seal	1	65001-
7		01245-00835	Screw	2	65001-
8		01245-00820	Screw	2	65001-
9		01643-70823	Washer	4	65001-
10		198-Z11-3821	Duct	1	65001-
11		198-Z11-3831	Duct	1	65001-
12		01435-40616	Bolt	8	65001-
13		14X-54-18270	Grille Assembly	2	65001-
14		198-Z11-3850	Bracket	1	65001-
15		198-Z11-3860	Bracket	1	65001-
16		01245-00616	Screw, Hexagon Socket Head	4	65001-
17		01643-70623	Washer	4	65001-
18		198-Z11-6850	Bracket	1	65001-
19		01245-00616	Screw, Hexagon Socket Head	2	65001-
20		01643-70623	Washer	2	65001-
21		17A-54-18270	Grille Assembly	1	65001-
22		198-Z11-3910	Plate	1	65001-

Printed By : Dwi Iswanto (airafather6107170)

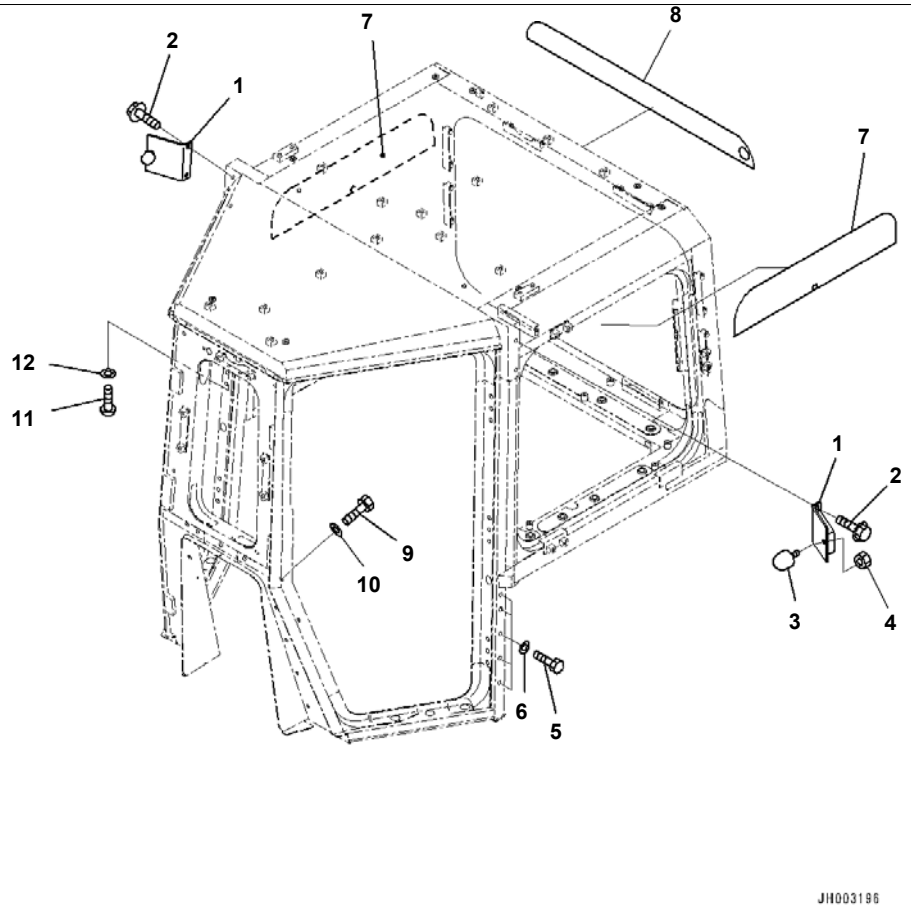

Reference:K0210-010014 Page:K023014

D375A-6R S/N 65001-UP
ROPS Cab, With Rear View Monitoring System, With AM-FM Radio For EU, Open Lock Stopper (#65001-)

Index	Code	Part Number	Description	Qty	Serial No.
1		198-Z11-3361	Bracket	2	65001-
2		01435-41025	Bolt	4	65001-
3		09453-00002	Stopper	2	65001-
4		01580-11210	Nut	2	65001-
5		01010-D1230	Bolt	10	65001-
6		01643-71232	Washer	10	65001-
7		198-Z11-6210	Sunshade Film	2	65001-
8		198-Z11-6220	Sunshade Film	1	65001-
9		01010-D1230	Bolt	4	65001-
10		01643-71232	Washer	4	65001-
11		01245-00820	Screw	2	65001-
12		01643-70823	Washer	2	65001-

Printed By : Dwi Iswanto (airafather6107170)

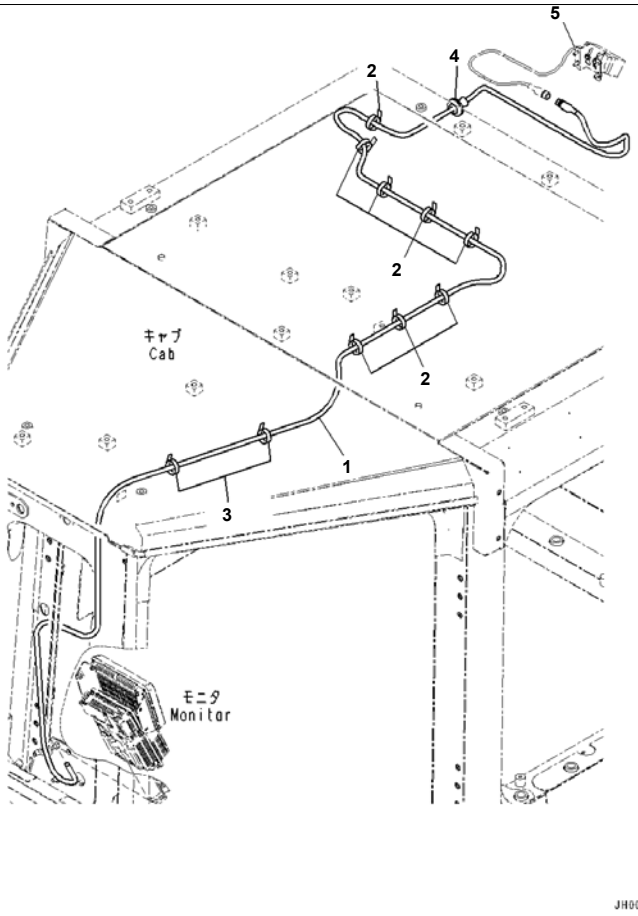

Reference:K0210-010015 Page:K023015

Index	Code	Part Number	Description	Qty	Serial No.
1		7835-33-8100	Cable Assembly	1	65001-
2		08034-20519	Band	8	65001-
3		14X-911-4551	Clip	2	65001-
4		08037-11425	Grommet	1	65001-
5		(7835-33-1100)	Camera		

Reference:K0210-010015 Page:K023015

Printed By : Dwi Iswanto (airafather6107170)

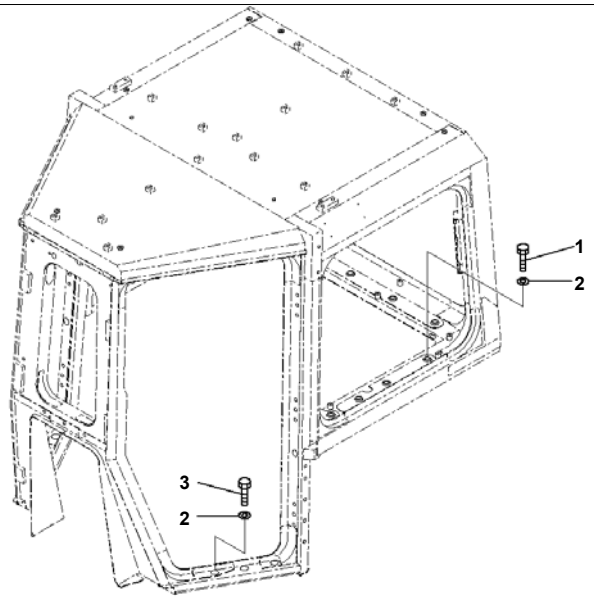

Index	Code	Part Number	Description	Qty	Serial No.
1		01010-81275	Bolt	15	65001-
2		124-54-26540	Washer	21	65001-
3		01010-81245	Bolt	6	65001-

Printed By : Dwi Iswanto (airafather6107170)

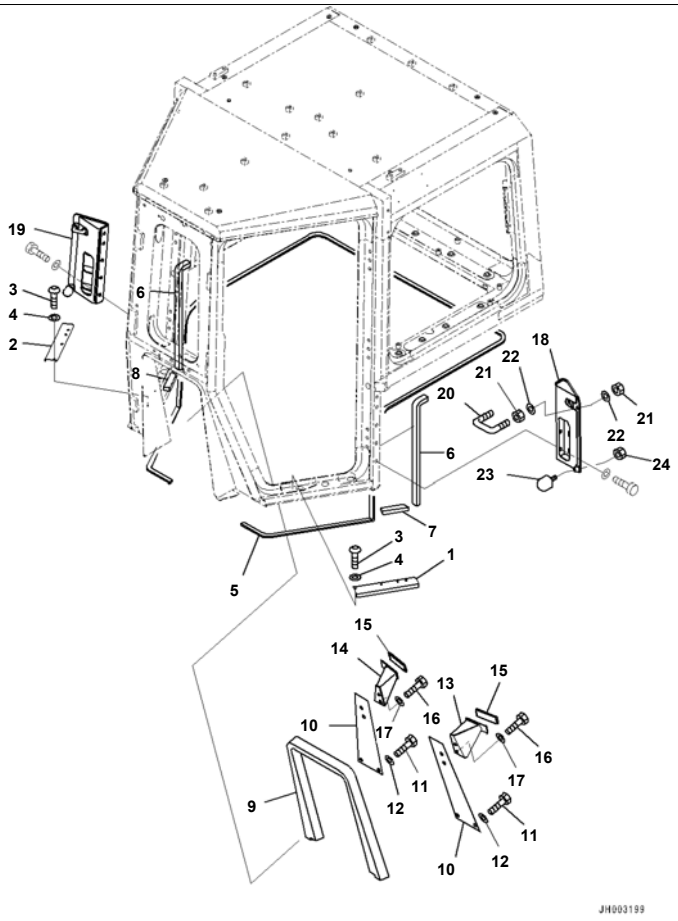

D375A-6R S/N 65001-UP
ROPS Cab, With Rear View Monitoring System, With AM-FM Radio For EU, Envelope Parts (1/2) (#65001-)

Index	Code	Part Number	Description	Qty	Serial No.
1		198-Z11-2941	Cover	1	65001-
2		198-Z11-2951	Cover	1	65001-
3		01245-00616	Screw, Hexagon Socket Head	8	65001-
4		01643-70623	Washer	8	65001-
5		14X-911-5911	Seal	5	65001-
6		198-Z11-7420	Sheet	2	65001-
7		198-Z11-7410	Sheet	1	65001-
8		198-Z11-7430	Sheet	1	65001-
9		198-Z11-3540	Seal	1	65001-
10		198-Z11-2961	Plate	2	65001-
11		01010-D1230	Bolt	4	65001-
12		01643-71232	Washer	4	65001-
13		14X-911-5711	Bracket	1	65001-
14		14X-911-5721	Bracket	1	65001-
15		203-43-56450	Cap	2	65001-
16		01010-D1230	Bolt	4	65001-
17		01643-71232	Washer	4	65001-
18		198-Z11-3341	Bracket	1	65001-
19		198-Z11-3351	Bracket	1	65001-
20		14X-911-1921	Striker	2	65001-
21		01580-11008	Nut	8	65001-
22		01643-31032	Washer	8	65001-
23		09453-00002	Stopper	2	65001-
24		01580-11210	Nut	2	65001-

Printed By : Dwi Iswanto (airafather6107170)

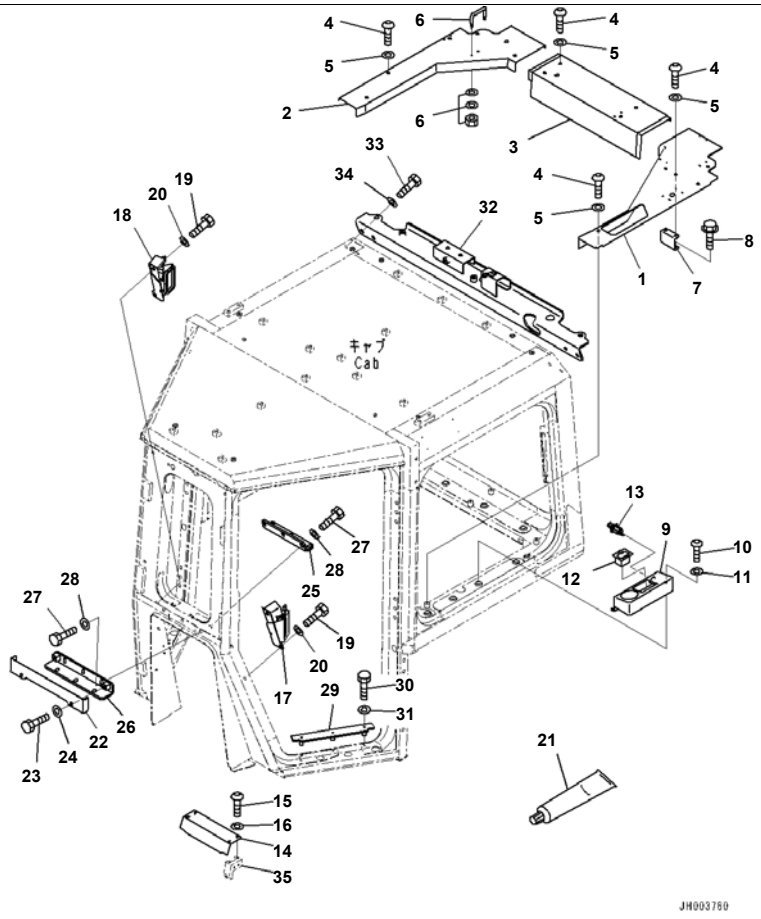

Reference:K0210-010018 Page:K023018

D375A-6R S/N 65001-UP
ROPS Cab, With Rear View Monitoring System, With AM-FM Radio For EU, Envelope Parts (2/2) (#65001-)

Index	Code	Part Number	Description	Qty	Serial No.
1		198-Z11-2872	Cover	1	65001-
2		198-Z11-2882	Cover	1	65001-
3		198-Z11-2892	Cover	1	65001-
4		01245-00820	Screw	13	65001-
5		01643-70823	Washer	13	65001-
6		198-Z11-2850	Handle	6	65001-
7		198-Z11-3990	Bracket	1	65001-
8		01435-30825	Bolt	2	65001-
9		198-Z11-7490	Box	1	65001-
10		01245-00820	Screw	2	65001-
11		01643-70823	Washer	2	65001-
12		20G-54-13420	Ashtray	1	65001-
13		20Y-06-23472	Cigarette Lighter	1	65001-
14		195-54-68282	Plate	1	65001-
15		01245-00616	Screw, Hexagon Socket Head	4	65001-
16		01643-70623	Washer	4	65001-
17		198-911-9511	Damper Assembly	1	65001-
18		198-911-9521	Damper Assembly	1	65001-
19		01010-D1230	Bolt	4	65001-
20		01643-71232	Washer	4	65001-
21		198-Z11-3960	Seal	1	65001-
22		198-Z11-7991	Cover	1	65001-
23		01010-D1230	Bolt	2	65001-
24		01643-71232	Washer	2	65001-
25		198-Z11-3571	Bracket	1	65001-
26		198-Z11-7980	Plate	1	65001-
27		01010-D1230	Bolt	12	65001-
28		01643-71232	Washer	12	65001-
29		198-Z11-7590	Plate	2	65001-
30		01010-D0650	Bolt	6	65001-
31		01643-70623	Washer	6	65001-

Reference:K0210-010018 Page:K023018

Printed By : Dwi Iswanto (airafather6107170)

ROPS Cab, With Rear View Monitoring System, With AM-FM Radio For EU, Envelope Parts (2/2) (#65001-)

Index	Code	Part Number	Description	Qty	Serial No.
32		195-06-55491	Bracket	1	65001-
33		01010-D1225	Bolt	4	65001-
34		01643-71232	Washer	4	65001-
35		(198-Z11-3850)	Bracket		

Printed By : Dwi Iswanto (airafather6107170)

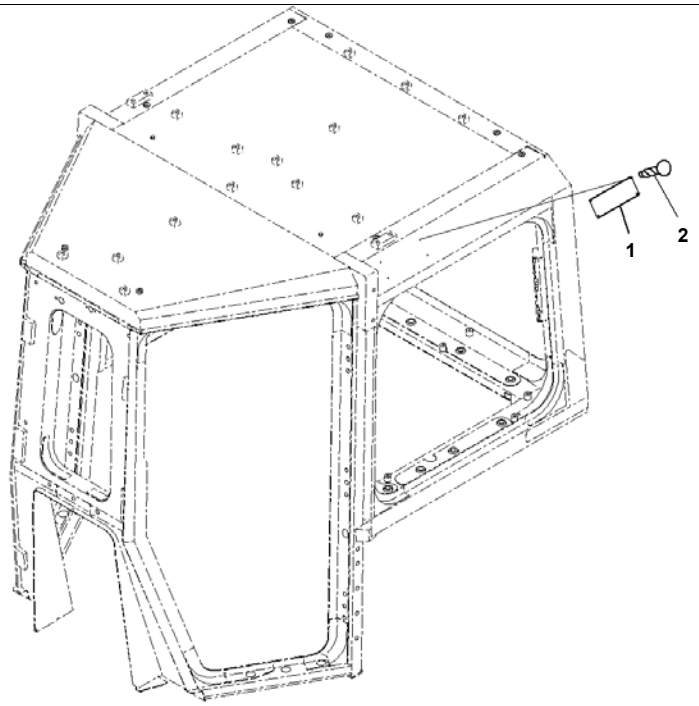

Index	Code	Part Number	Description	Qty	Serial No.
1	C2	09620-C2000	Plate, Name, FOPS (Limited Supply)	1	65001-
2		04418-13060	Screw	4	65001-

Printed By : Dwi Iswanto (airafather6107170)

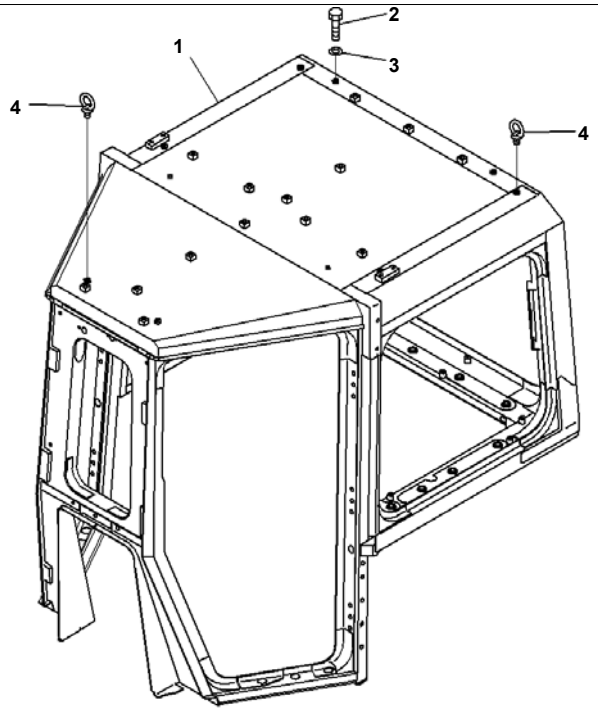

Index	Code	Part Number	Description	Qty	Serial No.
1		198-Z11-6111	Cab	1	65001-
2		01010-D1220	Bolt	27	65001-
3		01643-71232	Washer	27	65001-
4		04530-11222	Bolt, Eye	4	65001-

Printed By : Dwi Iswanto (airafather6107170)

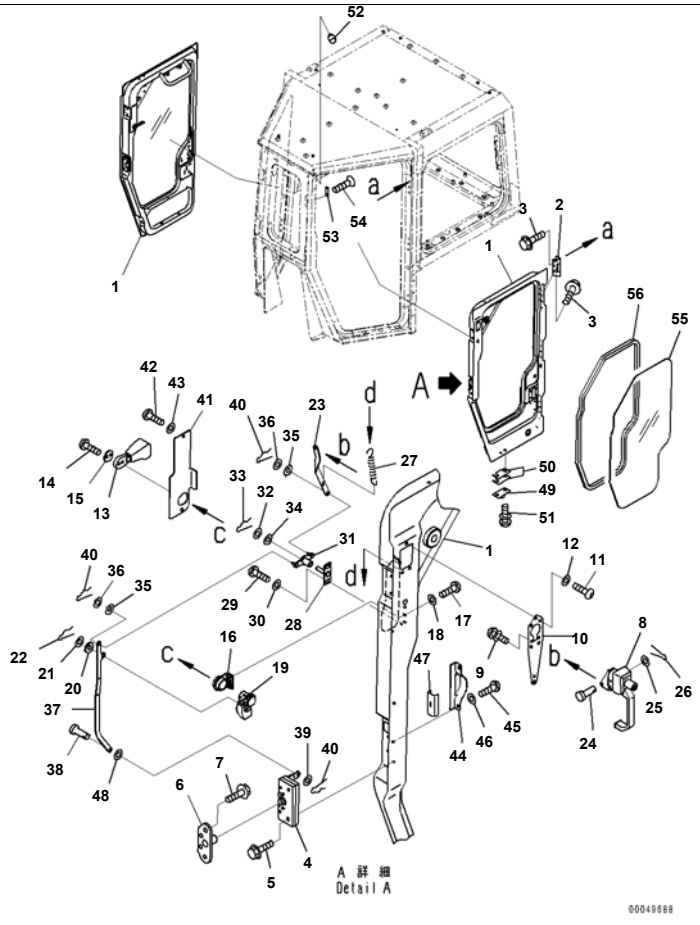

Reference:K0210-011002 Page:K024002

D375A-6R S/N 65001-UP
ROPS Cab, With Rear View Monitoring System, With AM-FM Radio For EU, Double Wiper, Door and Lock (1/2) (#65001-)

Index	Code	Part Number	Description	Qty	Serial No.
1		198-Z11-6564	Door,LHS	1	65001-
		198-Z11-6573	Door,RHS	1	65001-
2		14X-911-1330	Hinge	6	65001-
3		01435-41025	Bolt	36	65001-
4		195-Z11-4510	Lock,LHS	1	65001-
		195-Z11-4520	Lock,RHS	1	65001-
5		01435-40630	Bolt	8	65001-
6		198-Z11-3450	Striker	2	65001-
7		01435-40820	Bolt	8	65001-
8		198-Z11-3710	Handle Assembly	2	65001-
9		01023-10520	Screw	10	65001-
10		198-Z11-3210	Plate	2	65001-
11		01245-00616	Screw, Hexagon Socket Head	8	65001-
12		01643-70623	Washer	8	65001-
13		198-Z11-5680	Knob Assembly	2	65001-
14		01245-00620	Screw	4	65001-
15		198-Z11-3650	Plate	2	65001-
16		198-Z11-5250	Plate	2	65001-
17		01245-00616	Screw, Hexagon Socket Head	4	65001-
18		01643-70623	Washer	4	65001-
19		198-Z11-5260	Lever,LHS	1	65001-
		198-Z11-5270	Lever,RHS	1	65001-
20		14X-Z11-3110	Rubber	4	65001-
21		01641-20608	Washer	2	65001-
22		04050-11612	Pin, Cotter	2	65001-
23		198-Z11-3241	Plate,LHS	1	65001-
		198-Z11-3251	Plate,RHS	1	65001-
24		04205-10614	Pin	2	65001-
25		01641-20608	Washer	2	65001-
26		04050-11612	Pin, Cotter	2	65001-
27		176-06-42170	Spring	2	65001-

Reference:K0210-011002 Page:K024002

Printed By : Dwi Iswanto (airafather6107170)

ROPS Cab, With Rear View Monitoring System, With AM-FM Radio For EU, Double Wiper, Door and Lock (1/2) (#65001-)

Index	Code	Part Number	Description	Qty	Serial No.
28		198-Z11-5690	Plate	2	65001-
29		01245-00616	Screw, Hexagon Socket Head	4	65001-
30		01643-70623	Washer	4	65001-
31		198-Z11-3280	Plate	2	65001-
32		01643-50823	Washer	2	65001-
33		04050-12020	Pin, Cotter	2	65001-
34		198-Z11-7310	Rubber	2	65001-
35		14X-Z11-3110	Rubber	4	65001-
36		01643-30623	Washer	4	65001-
37		198-Z11-5280	Plate,LHS	1	65001-
		198-Z11-5290	Plate,RHS	1	65001-
38		04205-10614	Pin	2	65001-
39		01641-20608	Washer	4	65001-
40		04050-11612	Pin, Cotter	4	65001-
41		198-Z11-6970	Cover,LHS	1	65001-
		198-Z11-6980	Cover,RHS	1	65001-
42		01245-00616	Screw, Hexagon Socket Head	4	65001-
43		01643-70623	Washer	4	65001-
44		198-Z11-3430	Cover	2	65001-
45		01245-00616	Screw, Hexagon Socket Head	4	65001-
46		01643-70623	Washer	4	65001-
47		14X-911-1780	Seal	2	65001-
48		198-Z11-7310	Rubber	2	65001-
49		14X-911-1690	Damper	8	65001-
50		14X-911-1761	Shim, T=1.2mm	16	65001-
51		01023-20616	Screw	16	65001-
52		20Y-54-35780	Stopper	2	65001-
53		198-Z11-3590	Plate	4	65001-
54		01240-00820	Screw, Hexagon Socket Head	8	65001-
55		198-Z11-6630	Glass	2	65001-
56		198-Z11-6640	Weather Strip	2	65001-

Printed By : Dwi Iswanto (airafather6107170)

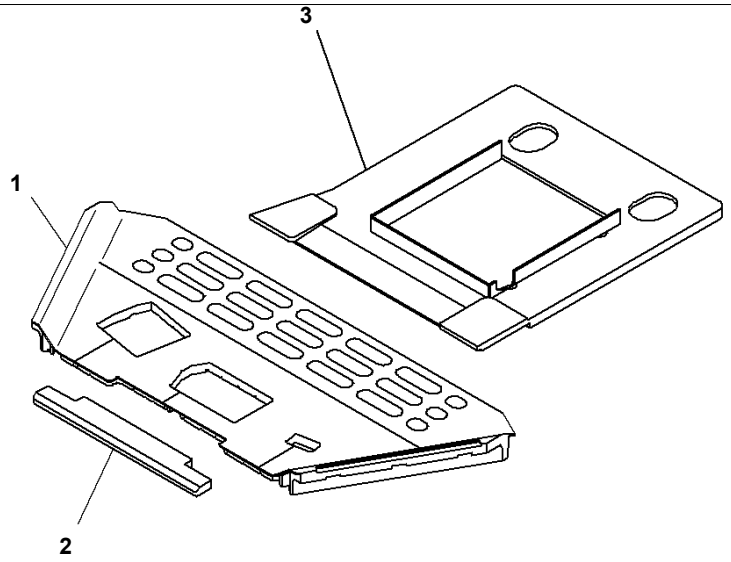

00045118

Index	Code	Part Number	Description	Qty	Serial No.
1		17M-54-54481	Mat	1	65001-
2		195-54-68640	Mat	1	65001-
3		195-54-78550	Mat	1	65001-

Printed By : Dwi Iswanto (airafather6107170)

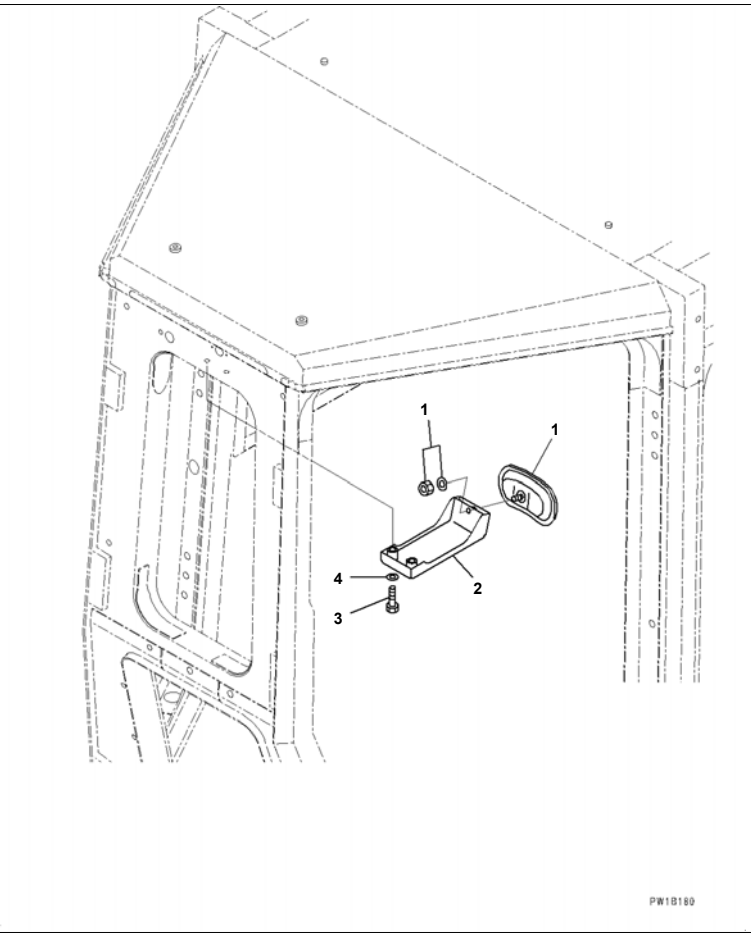

Index	Code	Part Number	Description	Qty	Serial No.
1		14X-911-6140	Mirror, Rearview	1	65001-
2		198-Z11-3670	Bracket	1	65001-
3		01010-D0845	Bolt	2	65001-
4		01643-70823	Washer	2	65001-

Printed By : Dwi Iswanto (airafather6107170)

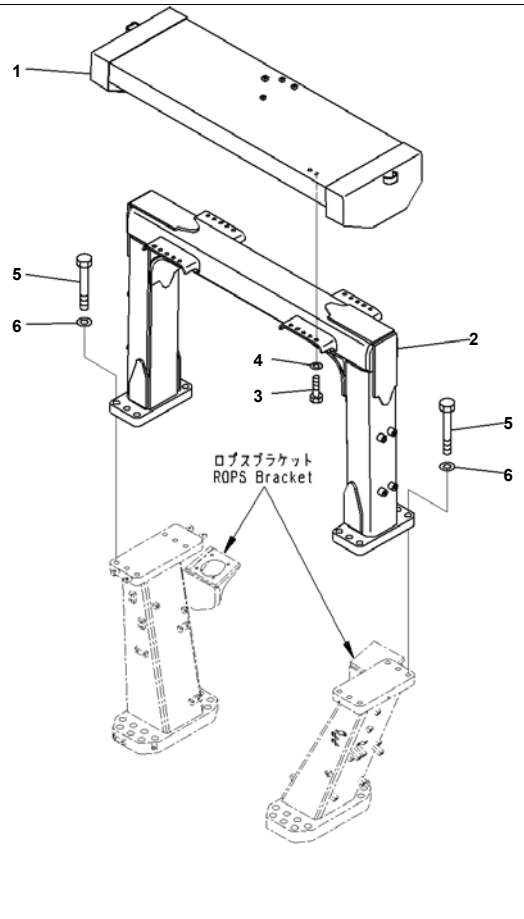

D375A-6R S/N 65001-UP
ROPS Guard (#65001-)

Index	Code	Part Number	Description	Qty	Serial No.
1		17M-978-4251	Cover	1	65001-
2		195-978-5810	Guard	1	65001-
3		01010-81640	Bolt	20	65001-
4		01643-31645	Washer	20	65001-
5		01011-83010	Bolt	12	65001-
6		01643-33080	Washer	12	65001-

Printed By : Dwi Iswanto (airafather6107170)

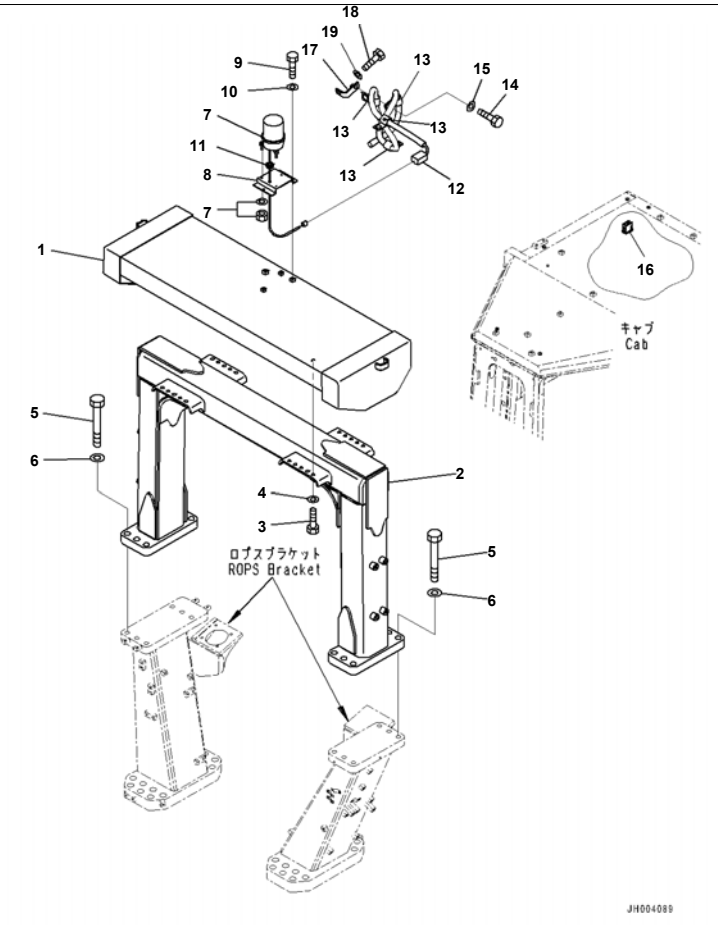

Index	Code	Part Number	Description	Qty	Serial No.
1		17M-978-4251	Cover	1	65001-
2		01572-20816	· Seat	1	65001-
		195-978-5810	Guard	1	65001-
3		01010-81640	Bolt	20	65001-
4		01643-31645	Washer	20	65001-
5		01011-83010	Bolt	12	65001-
6		01643-33080	Washer	12	65001-
7		14X-890-1160	Lamp Assembly, Working	1	65001-
8		154-06-31310	Bracket	1	65001-
9		01010-81020	Bolt	3	65001-
10		01643-31032	Washer	3	65001-
11		08037-01008	Grommet	1	65001-
12		195-06-43490	Wiring Harness	1	65001-
13		04434-51412	Clip	4	65001-
14		01010-81220	Bolt	4	65001-
15		01643-31232	Washer	4	65001-
16		22U-06-22310	Switch Assembly	1	65001-
17		207-62-51270	Bracket	1	65001-
18		01010-81220	Bolt	1	65001-
19		01643-31232	Washer	1	65001-

Printed By : Dwi Iswanto (airafather6107170)

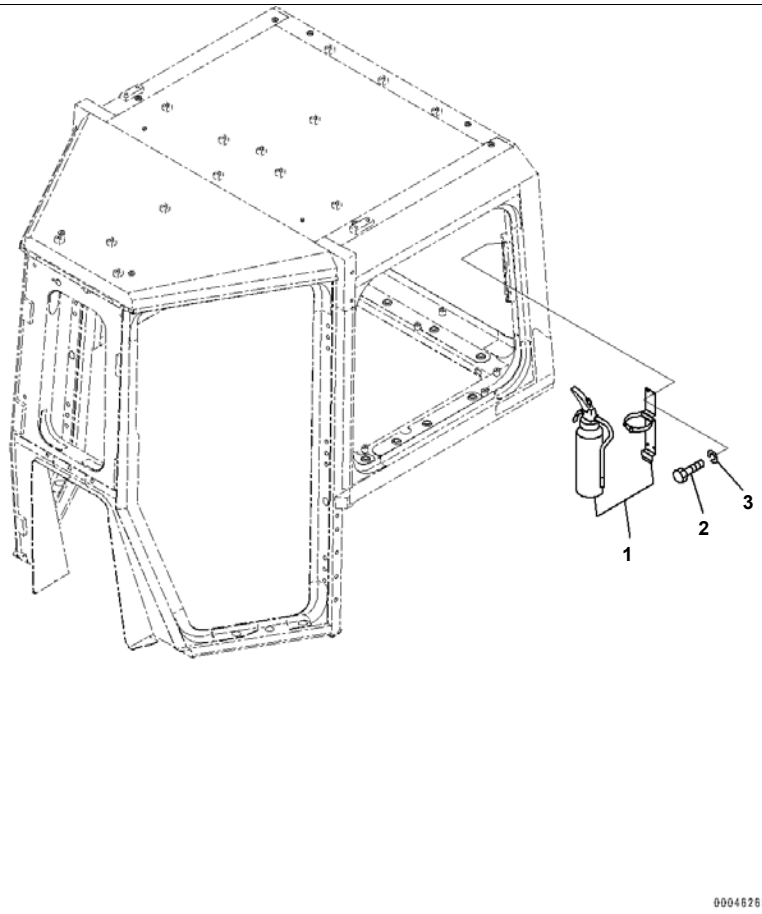

Index	Code	Part Number	Description	Qty	Serial No.
1		09495-40010	Fire Extinguisher, English	1	65001-
2		01010-80620	Bolt	6	65001-
3		01602-20619	Washer	6	65001-

Printed By : Dwi Iswanto (airafather6107170)

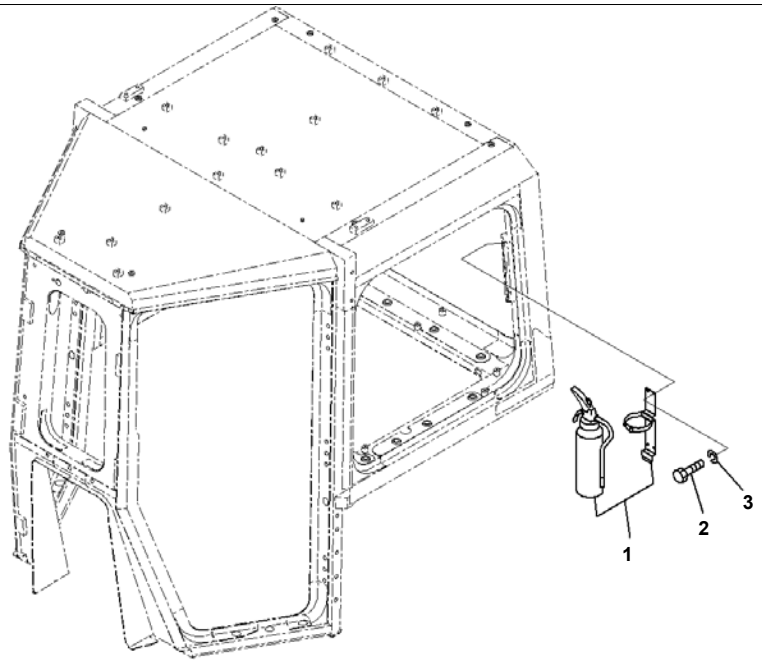

Index	Code	Part Number	Description	Qty	Serial No.
1		09495-31010	Fire Extinguisher, Indonesian	1	65001-
2		01010-80620	Bolt	6	65001-
3		01602-20619	Washer	6	65001-

Printed By : Dwi Iswanto (airafather6107170)

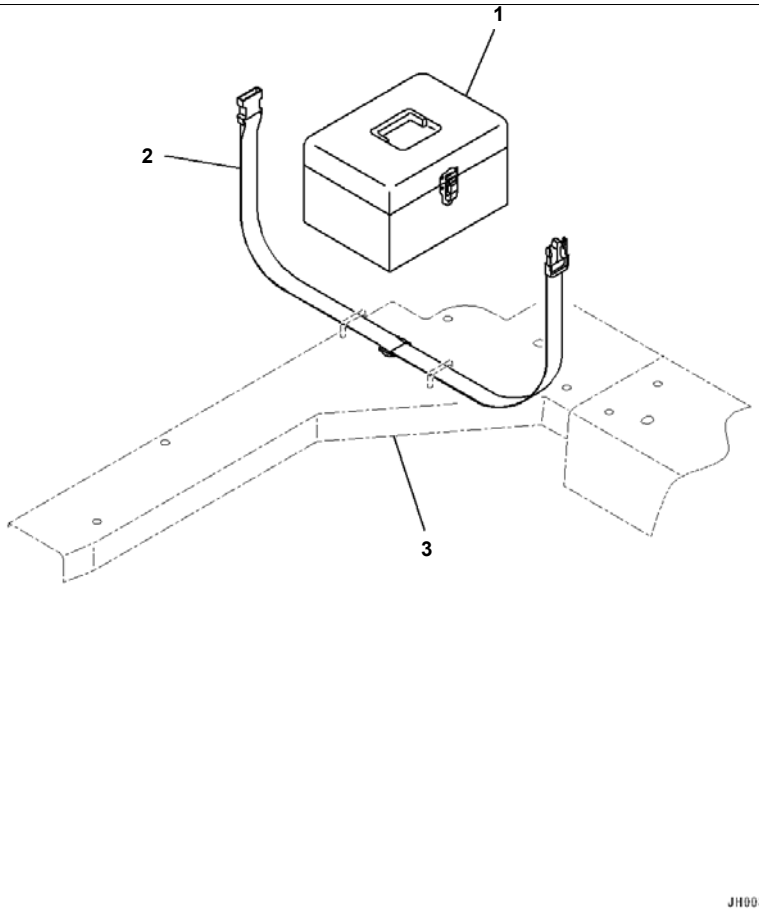

Index	Code	Part Number	Description	Qty	Serial No.
1		195-911-6531	Box	1	65001-
2		198-911-7340	Band	1	65001-
3		(198-Z11-2882)	Cover		

Printed By : Dwi Iswanto (airafather6107170)

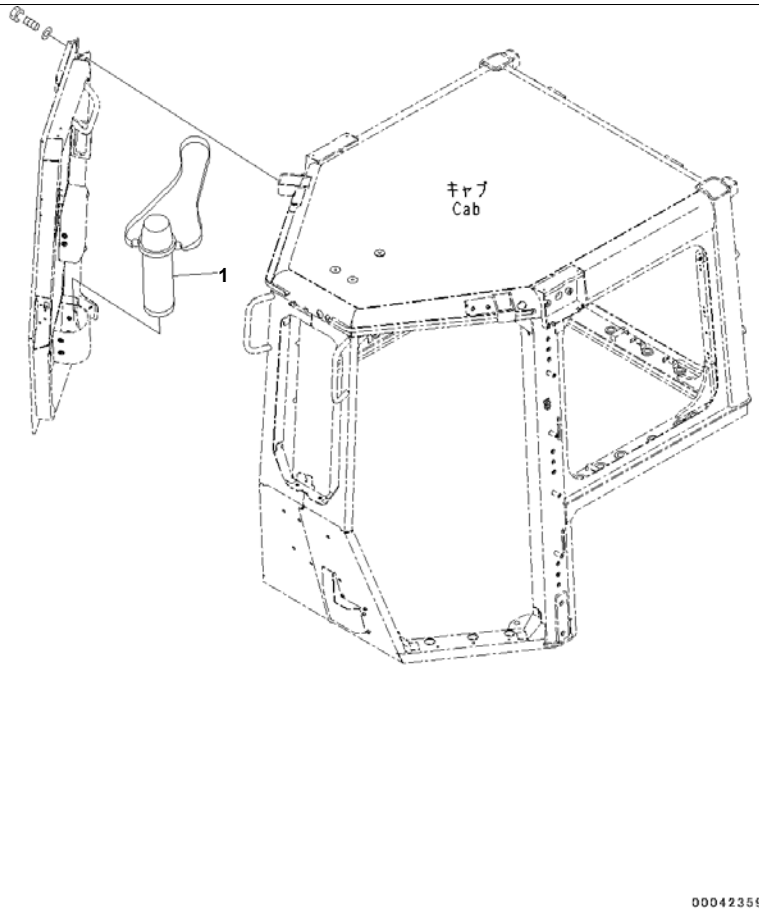

Index	Code	Part Number	Description	Qty	Serial No.
1		195-911-1722	Thermos Bottle	1	65001-

Printed By : Dwi Iswanto (airafather6107170)

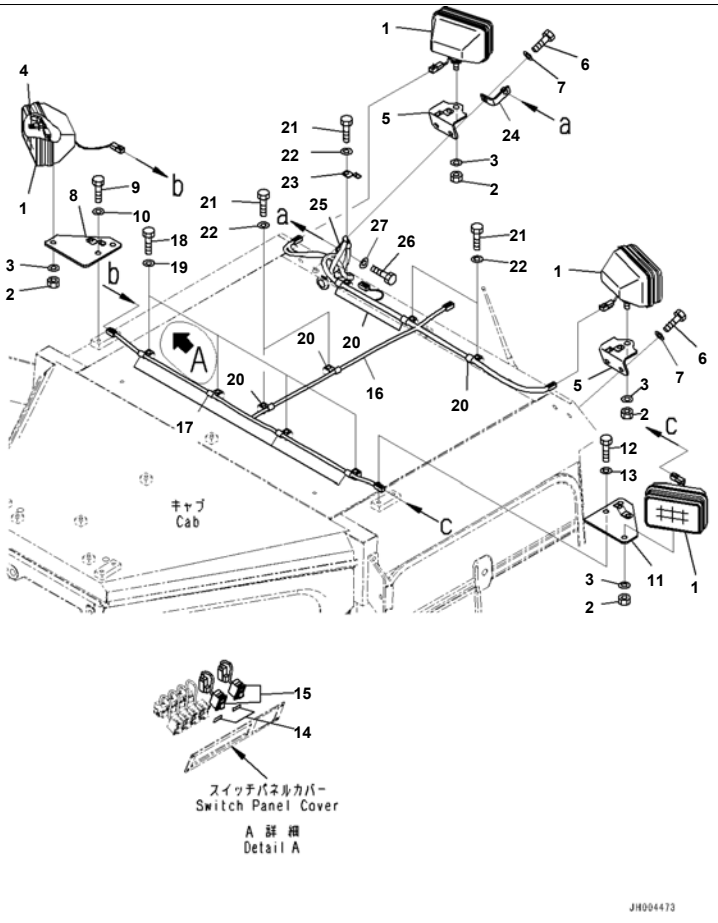

D375A-6R S/N 65001-UP
Working Lamp, With Additional HID Cab Light, Front And Rear, (#65001-65001)

Index	Code	Part Number	Description	Qty	Serial No.
1		21T-06-33980	Working Lamp Assembly	4	65001-@
2		01582-11411	· Nut	1	65001-@
3		01643-31445	· Washer	1	65001-@
4		21T-06-33970	· Bulb, 24/42watt	1	65001-@
5		198-Z11-5490	Bracket	2	65001-@
6		01010-D1225	Bolt	4	65001-@
7		01643-71232	Washer	4	65001-@
8		195-Z11-7840	Bracket	1	65002-@
	B1	198-Z11-7840	Bracket	1	(65001-65001)
9		01010-D1225	Bolt	2	65001-@
10		01643-71232	Washer	2	65001-@
11		195-Z11-7830	Bracket	1	65002-@
	B1	198-Z11-7830	Bracket	1	(65001-65001)
12		01010-D1225	Bolt	2	65001-@
13		01643-71232	Washer	2	65001-@
14		198-Z11-5650	Plate	2	65001-@
15		14X-911-3710	Switch	2	65001-@
16		195-Z11-7350	Wiring Harness	1	65001-@
17		04434-51012	Clip	4	65001-@
18		01010-81220	Bolt	4	65001-@
19		01643-31232	Washer	4	65001-@
20		04434-51412	Clip	6	65001-@
21		01010-81220	Bolt	6	65001-@
22		01643-31232	Washer	6	65001-@
23		08193-21012	Clip	1	65001-@
24		207-62-51270	Bracket	1	65001-@
25		04434-51412	Clip	1	65001-@
26		01010-81220	Bolt	1	65001-@
27		01643-31232	Washer	1	65001-@

Printed By : Dwi Iswanto (airafather6107170)

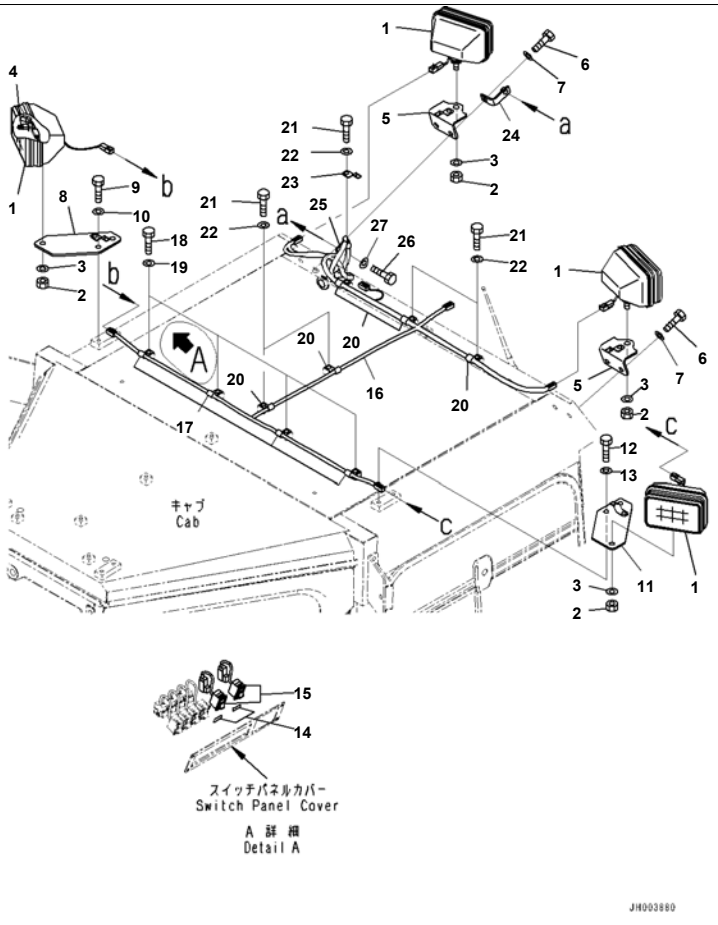

D375A-6R S/N 65001-UP
Working Lamp, With Additional HID Cab Light, Front And Rear, (#65002-)

Index	Code	Part Number	Description	Qty	Serial No.
1		21T-06-33980	Working Lamp Assembly	4	65001-
2		01582-11411	· Nut	1	65001-
3		01643-31445	· Washer	1	65001-
4		21T-06-33970	· Bulb, 24/42watt	1	65001-
5		198-Z11-5490	Bracket	2	65001-
6		01010-D1225	Bolt	4	65001-
7		01643-71232	Washer	4	65001-
8		195-Z11-7840	Bracket	1	65002-
9		01010-D1225	Bolt	2	65001-
10		01643-71232	Washer	2	65001-
11		195-Z11-7830	Bracket	1	65002-
12		01010-D1225	Bolt	2	65001-
13		01643-71232	Washer	2	65001-
14		198-Z11-5650	Plate	2	65001-
15		14X-911-3710	Switch	2	65001-
16		195-Z11-7350	Wiring Harness	1	65001-
17		04434-51012	Clip	4	65001-
18		01010-81220	Bolt	4	65001-
19		01643-31232	Washer	4	65001-
20		04434-51412	Clip	6	65001-
21		01010-81220	Bolt	6	65001-
22		01643-31232	Washer	6	65001-
23		08193-21012	Clip	1	65001-
24		207-62-51270	Bracket	1	65001-
25		04434-51412	Clip	1	65001-
26		01010-81220	Bolt	1	65001-
27		01643-31232	Washer	1	65001-

Printed By : Dwi Iswanto (airafather6107170)

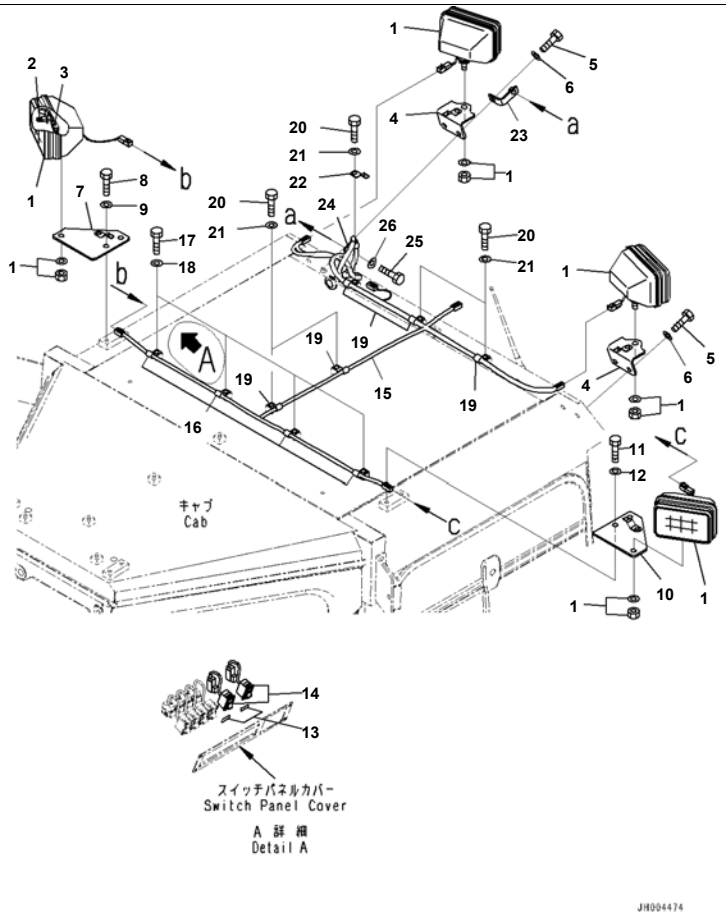

D375A-6R S/N 65001-UP
Working Lamp, With Additional Cab Light, Front And Rear, (#65001-65001)

Index	Code	Part Number	Description	Qty	Serial No.
1		17A-06-17931	Lamp Assembly, Working	4	65001-@
2		17A-06-17970	· Bulb, 70watt	1	65001-@
3		17A-06-17980	· Sleeve	1	65001-@
4		198-Z11-5490	Bracket	2	65001-@
5		01010-D1225	Bolt	4	65001-@
6		01643-71232	Washer	4	65001-@
7		195-Z11-7840	Bracket	1	65002-@
	B1	198-Z11-7840	Bracket	1	(65001-65001)
8		01010-D1225	Bolt	2	65001-@
9		01643-71232	Washer	2	65001-@
10		195-Z11-7830	Bracket	1	65002-@
	B1	198-Z11-7830	Bracket	1	(65001-65001)
11		01010-D1225	Bolt	2	65001-@
12		01643-71232	Washer	2	65001-@
13		198-Z11-5650	Plate	2	65001-@
14		14X-911-3710	Switch	2	65001-@
15		195-Z11-7350	Wiring Harness	1	65001-@
16		04434-51012	Clip	4	65001-@
17		01010-81220	Bolt	4	65001-@
18		01643-31232	Washer	4	65001-@
19		04434-51412	Clip	6	65001-@
20		01010-81220	Bolt	6	65001-@
21		01643-31232	Washer	6	65001-@
22		08193-21012	Clip	1	65001-@
23		207-62-51270	Bracket	1	65001-@
24		04434-51412	Clip	1	65001-@
25		01010-81220	Bolt	1	65001-@
26		01643-31232	Washer	1	65001-@

Printed By : Dwi Iswanto (airafather6107170)

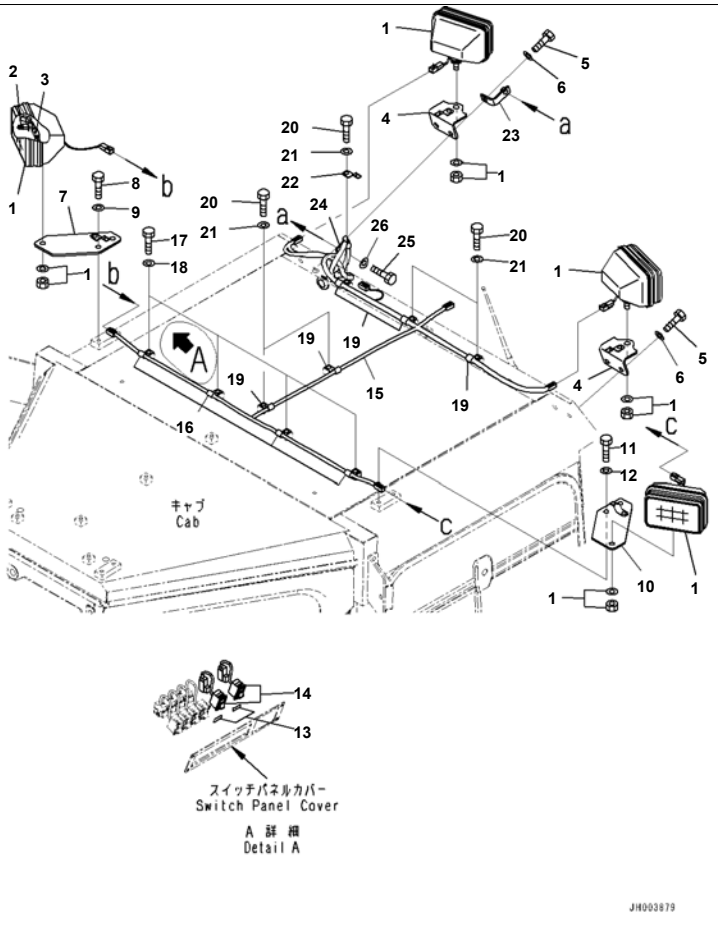

D375A-6R S/N 65001-UP
Working Lamp, With Additional Cab Light, Front And Rear, (#65002-)

Index	Code	Part Number	Description	Qty	Serial No.
1		17A-06-17931	Lamp Assembly, Working	4	65001-
2		17A-06-17970	· Bulb, 70watt	1	65001-
3		17A-06-17980	· Sleeve	1	65001-
4		198-Z11-5490	Bracket	2	65001-
5		01010-D1225	Bolt	4	65001-
6		01643-71232	Washer	4	65001-
7		195-Z11-7840	Bracket	1	65002-
8		01010-D1225	Bolt	2	65001-
9		01643-71232	Washer	2	65001-
10		195-Z11-7830	Bracket	1	65002-
11		01010-D1225	Bolt	2	65001-
12		01643-71232	Washer	2	65001-
13		198-Z11-5650	Plate	2	65001-
14		14X-911-3710	Switch	2	65001-
15		195-Z11-7350	Wiring Harness	1	65001-
16		04434-51012	Clip	4	65001-
17		01010-81220	Bolt	4	65001-
18		01643-31232	Washer	4	65001-
19		04434-51412	Clip	6	65001-
20		01010-81220	Bolt	6	65001-
21		01643-31232	Washer	6	65001-
22		08193-21012	Clip	1	65001-
23		207-62-51270	Bracket	1	65001-
24		04434-51412	Clip	1	65001-
25		01010-81220	Bolt	1	65001-
26		01643-31232	Washer	1	65001-

Printed By : Dwi Iswanto (airafather6107170)

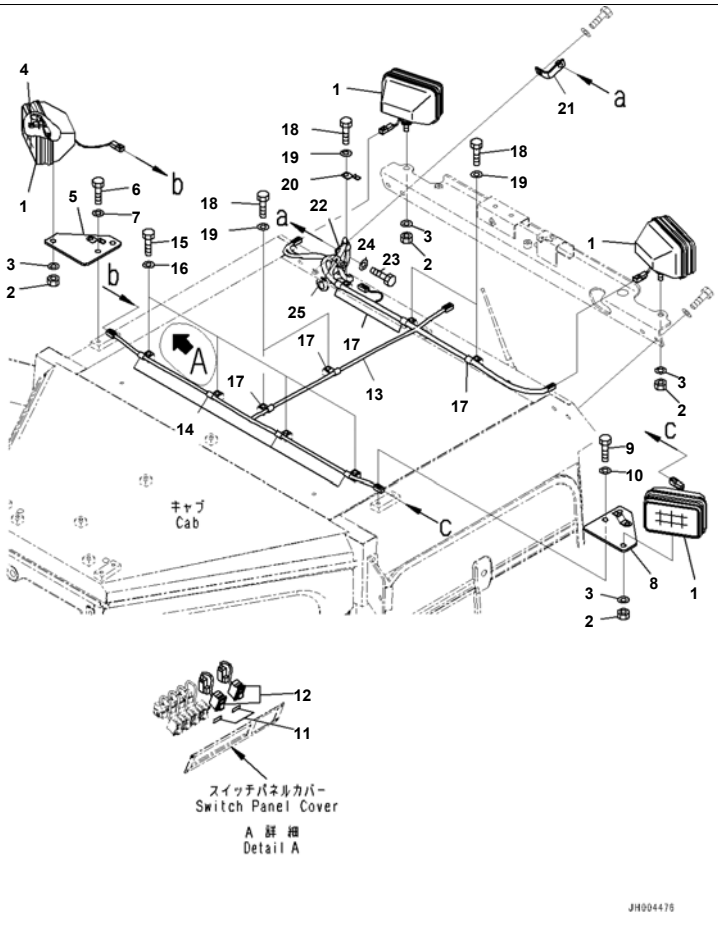

D375A-6R S/N 65001-UP

Working Lamp, With Additional HID Cab Light, Front And Rear, Rear View Monitoring System, (#65001-65001)

Index	Code	Part Number	Description	Qty	Serial No.
1		21T-06-33980	Working Lamp Assembly	4	65001-@
2		01582-11411	· Nut	1	65001-@
3		01643-31445	· Washer	1	65001-@
4		21T-06-33970	· Bulb, 24/42watt	1	65001-@
5		195-Z11-7840	Bracket	1	65002-@
	B1	198-Z11-7840	Bracket	1	(65001-65001)
6		01010-D1225	Bolt	2	65001-@
7		01643-71232	Washer	2	65001-@
8		195-Z11-7830	Bracket	1	65002-@
	B1	198-Z11-7830	Bracket	1	(65001-65001)
9		01010-D1225	Bolt	2	65001-@
10		01643-71232	Washer	2	65001-@
11		198-Z11-5650	Plate	2	65001-@
12		14X-911-3710	Switch	2	65001-@
13		195-Z11-7350	Wiring Harness	1	65001-@
14		04434-51012	Clip	4	65001-@
15		01010-81220	Bolt	4	65001-@
16		01643-31232	Washer	4	65001-@
17		04434-51412	Clip	6	65001-@
18		01010-81220	Bolt	6	65001-@
19		01643-31232	Washer	6	65001-@
20		08193-21012	Clip	1	65001-@
21		207-62-51270	Bracket	1	65001-@
22		04434-51412	Clip	1	65001-@
23		01010-81220	Bolt	1	65001-@
24		01643-31232	Washer	1	65001-@
25		04434-51410	Clip	1	65001-@

Printed By : Dwi Iswanto (airafather6107170)

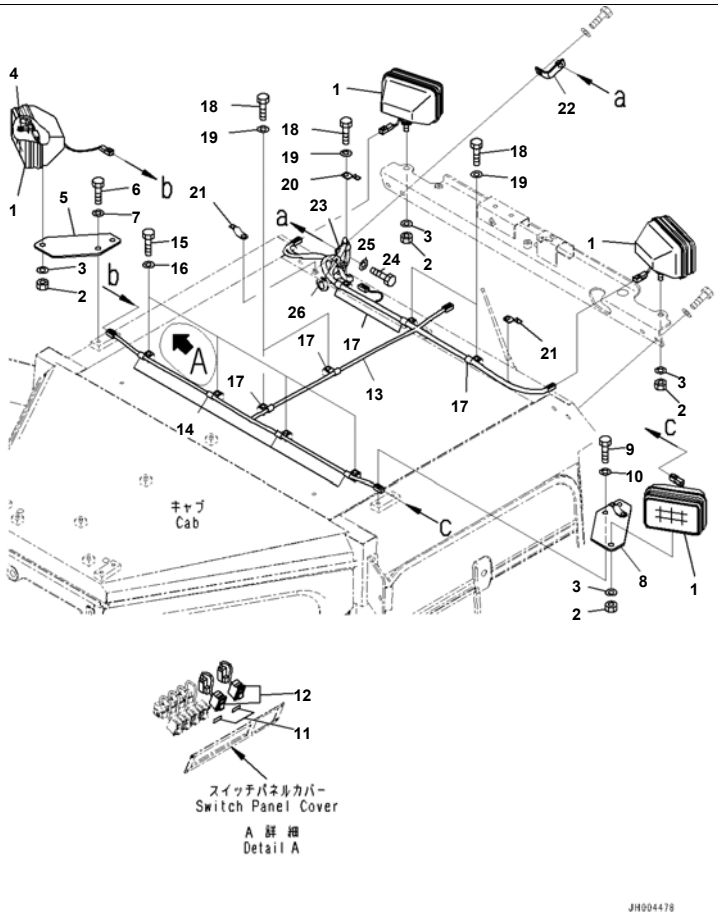

D375A-6R S/N 65001-UP

Working Lamp, With Additional HID Cab Light, Front And Rear, Rear View Monitoring System, (#65002-)

Index	Code	Part Number	Description	Qty	Serial No.
1		21T-06-33980	Working Lamp Assembly	4	65001-
2		01582-11411	· Nut	1	65001-
3		01643-31445	· Washer	1	65001-
4		21T-06-33970	· Bulb, 24/42watt	1	65001-
5		195-Z11-7840	Bracket	1	65002-
6		01010-D1225	Bolt	2	65001-
7		01643-71232	Washer	2	65001-
8		195-Z11-7830	Bracket	1	65002-
9		01010-D1225	Bolt	2	65001-
10		01643-71232	Washer	2	65001-
11		198-Z11-5650	Plate	2	65001-
12		14X-911-3710	Switch	2	65001-
13		195-Z11-7350	Wiring Harness	1	65001-
14		04434-51012	Clip	4	65001-
15		01010-81220	Bolt	4	65001-
16		01643-31232	Washer	4	65001-
17		04434-51412	Clip	6	65001-
18		01010-81220	Bolt	6	65001-
19		01643-31232	Washer	6	65001-
20		08193-21012	Clip	1	65001-
21		08193-20012	Clip	2	65002-
22		207-62-51270	Bracket	1	65001-
23		04434-51412	Clip	1	65001-
24		01010-81220	Bolt	1	65001-
25		01643-31232	Washer	1	65001-
26		04434-51410	Clip	1	65001-

Printed By : Dwi Iswanto (airafather6107170)

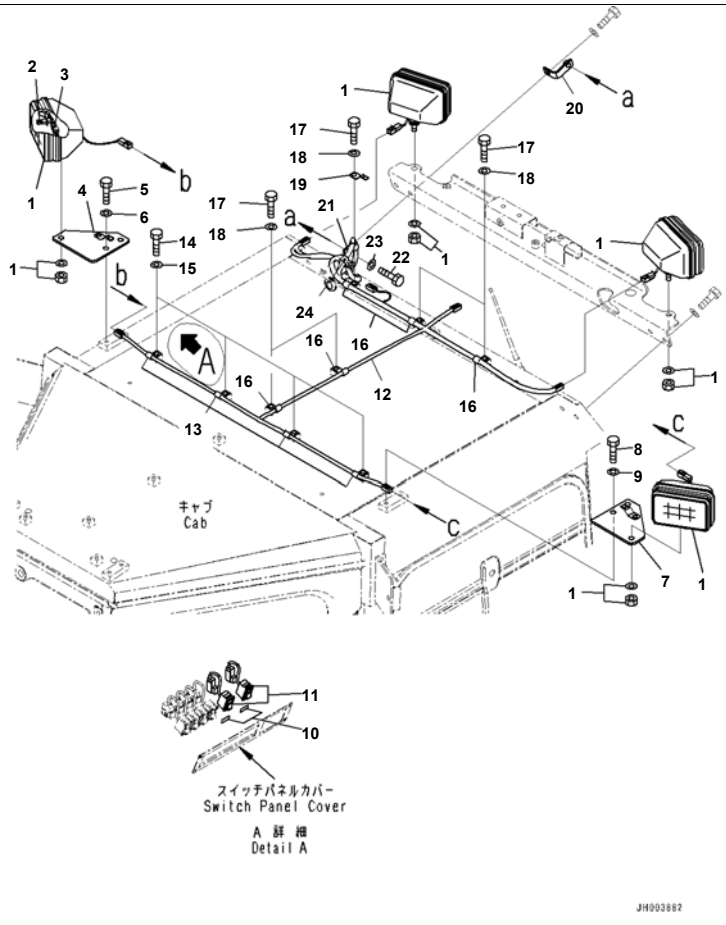

D375A-6R S/N 65001-UP
Working Lamp, With Additional Cab Light, Front And Rear, Rear View Monitoring System, (#65001-65001)

Index	Code	Part Number	Description	Qty	Serial No.
1		17A-06-17931	Lamp Assembly, Working	4	65001-@
2		17A-06-17970	· Bulb, 70watt	1	65001-@
3		17A-06-17980	· Sleeve	1	65001-@
4		195-Z11-7840	Bracket	1	65002-@
	B1	198-Z11-7840	Bracket	1	(65001-65001)
5		01010-D1225	Bolt	2	65001-@
6		01643-71232	Washer	2	65001-@
7		195-Z11-7830	Bracket	1	65002-@
	B1	198-Z11-7830	Bracket	1	(65001-65001)
8		01010-D1225	Bolt	2	65001-@
9		01643-71232	Washer	2	65001-@
10		198-Z11-5650	Plate	2	65001-@
11		14X-911-3710	Switch	2	65001-@
12		195-Z11-7350	Wiring Harness	1	65001-@
13		04434-51012	Clip	4	65001-@
14		01010-81220	Bolt	4	65001-@
15		01643-31232	Washer	4	65001-@
16		04434-51412	Clip	6	65001-@
17		01010-81220	Bolt	6	65001-@
18		01643-31232	Washer	6	65001-@
19		08193-21012	Clip	1	65001-@
20		207-62-51270	Bracket	1	65001-@
21		04434-51412	Clip	1	65001-@
22		01010-81220	Bolt	1	65001-@
23		01643-31232	Washer	1	65001-@
24		04434-51410	Clip	1	65001-@

Printed By : Dwi Iswanto (airafather6107170)

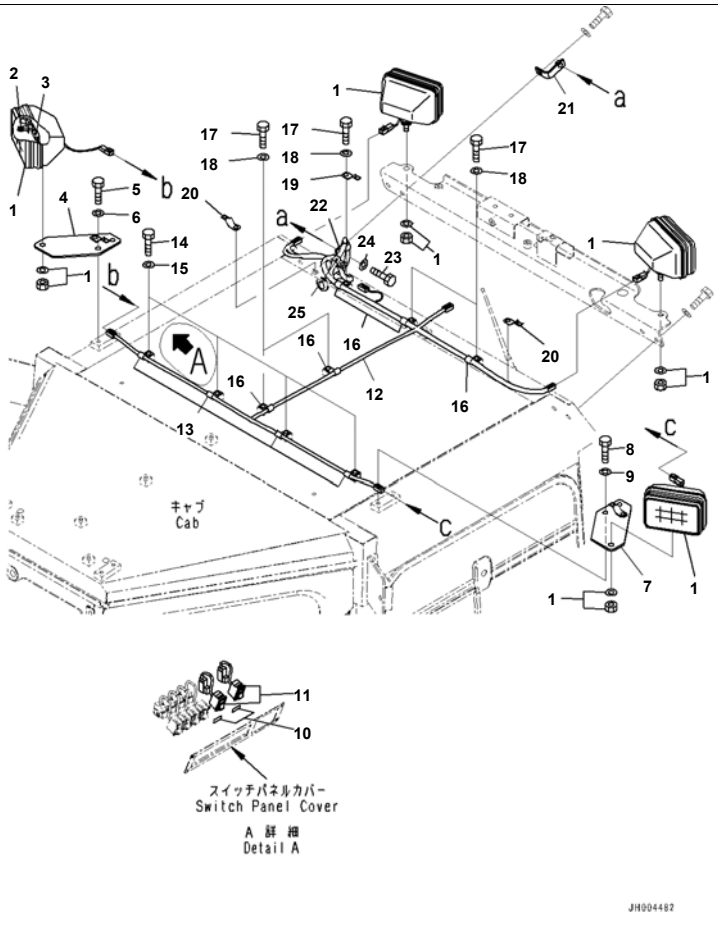

D375A-6R S/N 65001-UP

Working Lamp, With Additional Cab Light, Front And Rear, Rear View Monitoring System, (#65002-)

Index	Code	Part Number	Description	Qty	Serial No.
1		17A-06-17931	Lamp Assembly, Working	4	65001-
2		17A-06-17970	· Bulb, 70watt	1	65001-
3		17A-06-17980	· Sleeve	1	65001-
4		195-Z11-7840	Bracket	1	65002-
5		01010-D1225	Bolt	2	65001-
6		01643-71232	Washer	2	65001-
7		195-Z11-7830	Bracket	1	65002-
8		01010-D1225	Bolt	2	65001-
9		01643-71232	Washer	2	65001-
10		198-Z11-5650	Plate	2	65001-
11		14X-911-3710	Switch	2	65001-
12		195-Z11-7350	Wiring Harness	1	65001-
13		04434-51012	Clip	4	65001-
14		01010-81220	Bolt	4	65001-
15		01643-31232	Washer	4	65001-
16		04434-51412	Clip	6	65001-
17		01010-81220	Bolt	6	65001-
18		01643-31232	Washer	6	65001-
19		08193-21012	Clip	1	65001-
20		08193-20012	Clip	2	65002-
21		207-62-51270	Bracket	1	65001-
22		04434-51412	Clip	1	65001-
23		01010-81220	Bolt	1	65001-
24		01643-31232	Washer	1	65001-
25		04434-51410	Clip	1	65001-

Printed By : Dwi Iswanto (airafather6107170)

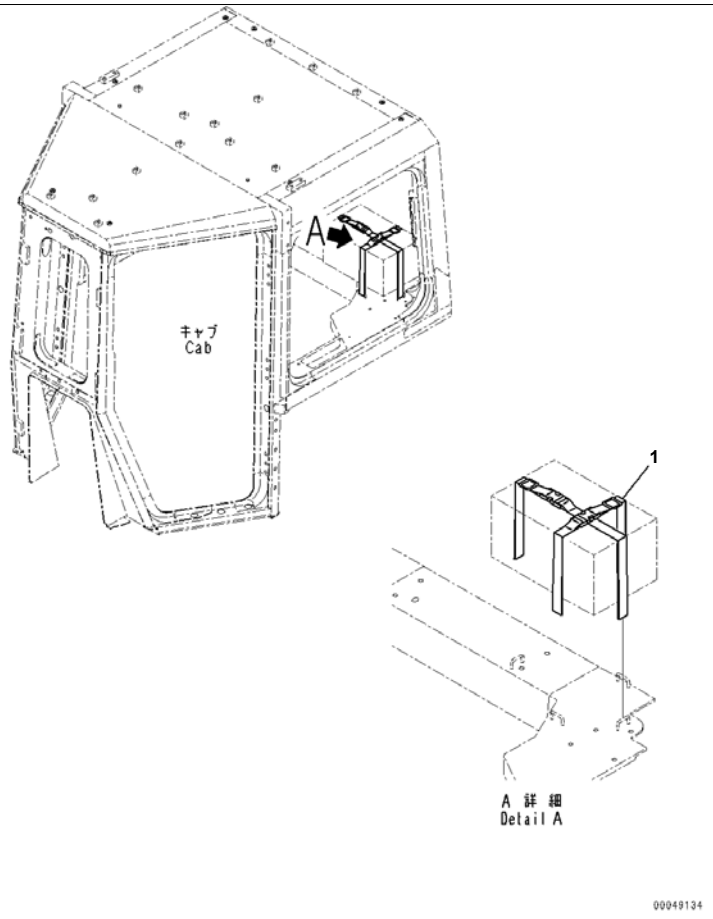

D375A-6R S/N 65001-UP
Lunch Box Holder, Cab - Steel (#65001-)

Index	Code	Part Number	Description	Qty	Serial No.
1		198-911-7340	Band	2	65001-

Printed By : Dwi Iswanto (airafather6107170)

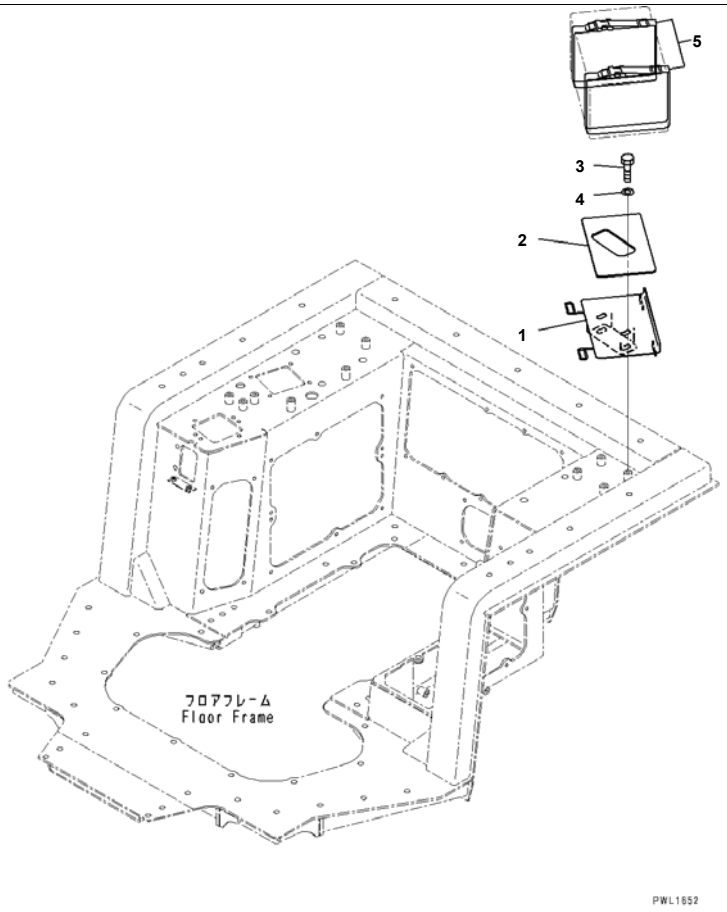

D375A-6R S/N 65001-UP
Lunch Box Holder (#65001-)

Index	Code	Part Number	Description	Qty	Serial No.
1		195-911-9110	Bracket	1	65001-
2		195-911-9120	· Sheet	1	65001-
3		01010-81030	Bolt	2	65001-
4		175-15-45660	Washer	2	65001-
5		198-911-7340	Band	2	65001-

Printed By : Dwi Iswanto (airafather6107170)

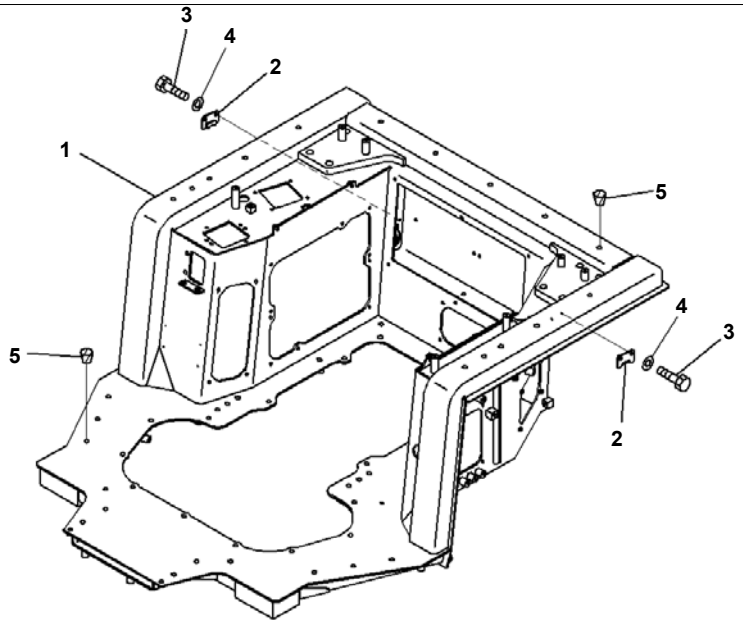

Floor Frame, Variable Digging Angle Giant Ripper, Floor, Frame (#65001-)

Index	Code	Part Number	Description	Qty	Serial No.
1		195-54-85150	Frame	1	65001-
2		195-54-85160	Cover	2	65001-
3		01010-81025	Bolt	4	65001-
4		01643-31032	Washer	4	65001-
5		07049-01215	Plug	23	65001-

Printed By : Dwi Iswanto (airafather6107170)

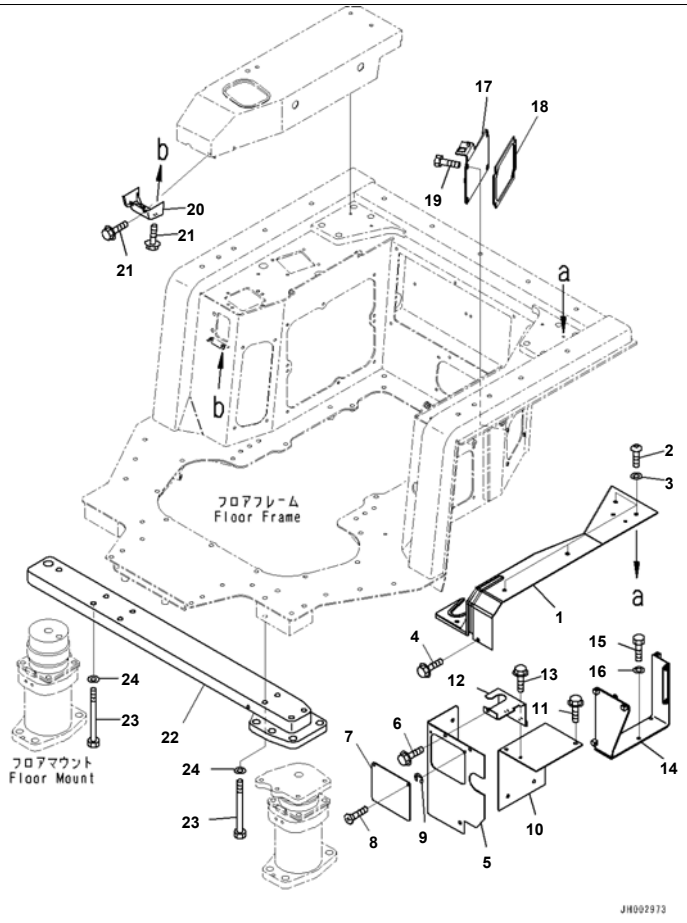

Reference:K2110-008002 Page:K047002

D375A-6R S/N 65001-UP
Floor Frame, Variable Digging Angle Giant Ripper, Armrest (1/2) (#65001-)

Index	Code	Part Number	Description	Qty	Serial No.
1		17M-54-58311	Cover	1	65001-
2		01245-00820	Screw	4	65001-
3		01643-70823	Washer	4	65001-
4		01435-00814	Bolt	2	65001-
5		195-54-85440	Cover	1	65001-
6		01435-00814	Bolt	4	65001-
7		195-54-85450	Cover	1	65001-
8		01232-10616	Screw, Knurled Head	2	65001-
9		195-54-78790	Ring, Snap	2	65001-
10		195-54-85460	Cover	1	65001-
11		01435-00814	Bolt	4	65001-
12		195-54-85470	Cover	1	65001-
13		01435-00814	Bolt	3	65001-
14		17M-54-44311	Cover	1	65001-
15		01010-80820	Bolt	3	65001-
16		01643-30823	Washer	3	65001-
17		195-54-73431	Cover	1	65001-
18		17M-54-44370	・ Sheet,Bonded	1	65001-
19		01435-00825	Bolt	4	65001-
20		195-54-68710	Cover	1	65001-
21		01435-00814	Bolt	4	65001-
22		195-54-85180	Support	1	65001-
23		01010-81675	Bolt	8	65001-
24		01643-31645	Washer	8	65001-

Reference:K2110-008002 Page:K047002

Printed By : Dwi Iswanto (airafather6107170)

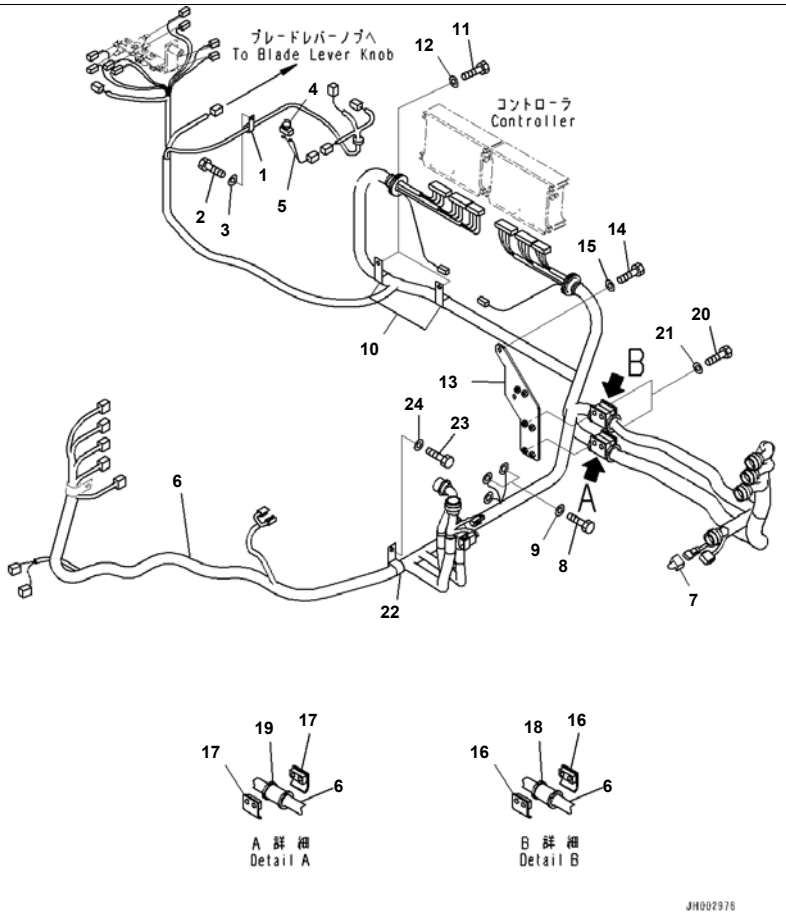

Reference:K2110-008003 Page:K047003

D375A-6R S/N 65001-UP
Floor Frame, Variable Digging Angle Giant Ripper, Wiring Harness (1/2) (#65001-)

Index	Code	Part Number	Description	Qty	Serial No.
1		04434-51010	Clip	1	65001-
2		01010-81020	Bolt	1	65001-
3		01643-31032	Washer	1	65001-
4		08064-10000	Switch, Horn	1	65001-
5		17A-06-41860	Wiring Harness	1	65001-
6		195-06-55572	Wiring Harness	1	65010-
	A2	195-06-55571	Wiring Harness	1	65001-65009
7		21J-06-13661	· Diode	1	65001-
8		01010-81020	Bolt	2	65001-
9		01643-31032	Washer	2	65001-
10		04434-53411	Clip	2	65001-
11		01010-81020	Bolt	2	65001-
12		01643-31032	Washer	2	65001-
13		195-06-55841	Plate	1	65001-
14		01010-81030	Bolt	2	65001-
15		01643-31032	Washer	2	65001-
16		07094-11228	Clamp	2	65001-
17		07094-11024	Clamp	2	65001-
18		07095-01038	Cushion	1	65001-
19		07095-01241	Cushion	1	65001-
20		01010-81090	Bolt	4	65001-
21		01643-31032	Washer	4	65001-
22		208-06-19170	Clip	1	65001-
23		01010-81020	Bolt	1	65001-
24		01643-31032	Washer	1	65001-

Reference:K2110-008003 Page:K047003

Printed By : Dwi Iswanto (airafather6107170)

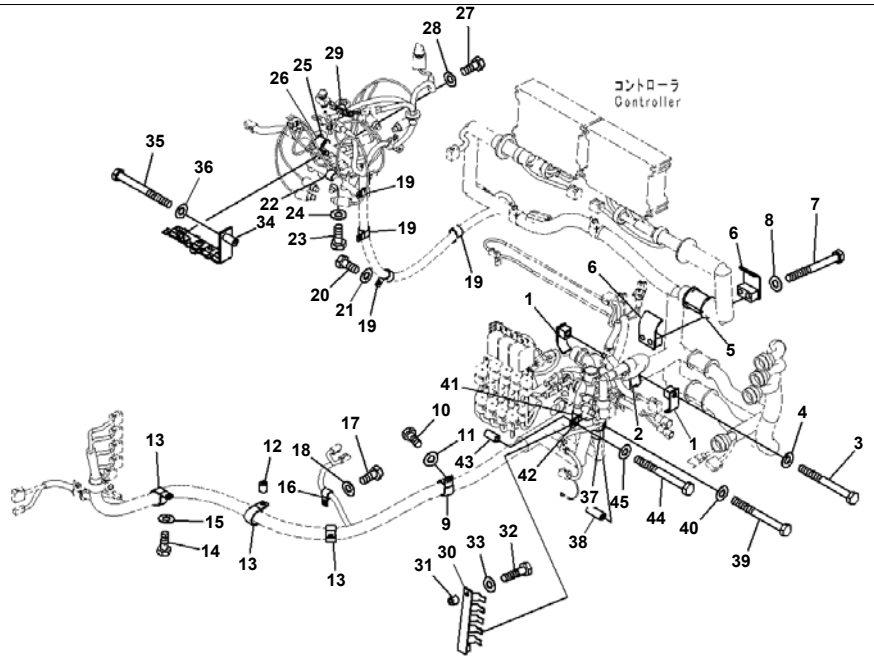

Reference:K2110-008004 Page:K047004

D375A-6R S/N 65001-UP
Floor Frame, Variable Digging Angle Giant Ripper, Wiring Harness (2/2) (#65001-)

Index	Code	Part Number	Description	Qty	Serial No.
1		198-61-44220	Clamp	2	65001-
2		198-61-44130	Cushion	1	65001-
3		01010-81090	Bolt	1	65001-
4		01643-31032	Washer	1	65001-
5		07095-01245	Cushion	1	65001-
6		07094-11228	Clamp	2	65001-
7		01010-81090	Bolt	2	65001-
8		01643-31032	Washer	2	65001-
9		208-06-19170	Clip	1	65001-
10		01010-81045	Bolt	1	65001-
11		01643-31032	Washer	1	65001-
12		144-874-7470	Boss	1	65001-
13		208-06-19170	Clip	3	65001-
14		01010-81020	Bolt	3	65001-
15		01643-31032	Washer	3	65001-
16		04434-51610	Clip	1	65001-
17		01010-81020	Bolt	1	65001-
18		01643-31032	Washer	1	65001-
19		04434-52310	Clip	4	65001-
20		01010-81020	Bolt	4	65001-
21		01643-31032	Washer	4	65001-
22		04434-51910	Clip	1	65001-
23		01010-81020	Bolt	1	65001-
24		01643-31032	Washer	1	65001-
25		04434-52711	Clip	1	65001-
26		07095-20419	Cushion	1	65001-
27		01010-81020	Bolt	1	65001-
28		01643-31032	Washer	1	65001-
29		04434-51410	Clip	1	65001-
30		195-06-56911	Bracket	1	65001-
31		175-79-83760	Spacer	1	65001-

Reference:K2110-008004 Page:K047004

Printed By : Dwi Iswanto (airafather6107170)

Floor Frame, Variable Digging Angle Giant Ripper, Wiring Harness (2/2) (#65001-)

Index	Code	Part Number	Description	Qty	Serial No.
32		01010-81045	Bolt	1	65001-
33		01643-31032	Washer	1	65001-
34		195-06-55950	Bracket	1	65001-
35		01010-81060	Bolt	1	65001-
36		01643-31032	Washer	1	65001-
37		04434-52711	Clip	1	65001-
38		6150-81-6940	Spacer	1	65001-
39		01010-81080	Bolt	1	65001-
40		01643-31032	Washer	1	65001-
41		04434-52711	Clip	1	65001-
42		04434-53211	Clip	1	65001-
43		22D-62-12440	Spacer	1	65001-
44		01010-81060	Bolt	1	65001-
45		01643-31032	Washer	1	65001-

Printed By : Dwi Iswanto (airafather6107170)

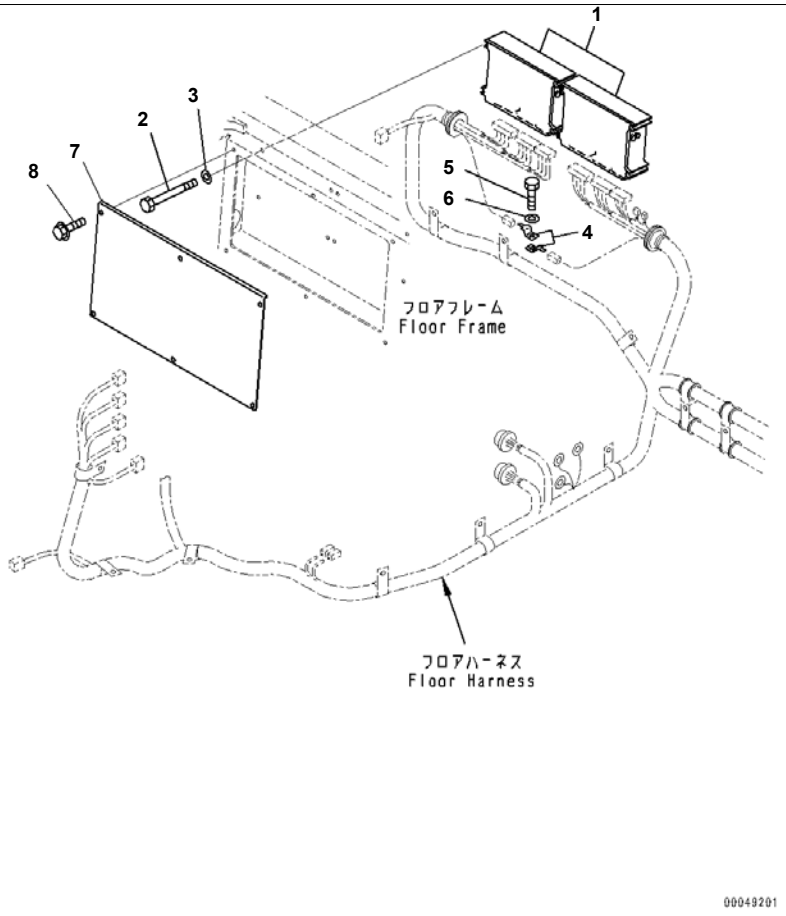

Reference:K2110-008005 Page:K047005

D375A-6R S/N 65001-UP
Floor Frame, Variable Digging Angle Giant Ripper, Controller (#65001-)

Index	Code	Part Number	Description	Qty	Serial No.
1		7830-14-5000	Controller	2	65001-
2		01010-80885	Bolt	8	65001-
3		01643-30823	Washer	8	65001-
4		08053-01510	Clip	2	65001-
5		01010-81020	Bolt	1	65001-
6		01643-31032	Washer	1	65001-
7		195-54-85490	Cover	1	65001-
8		01435-00825	Bolt	6	65001-

Reference:K2110-008005 Page:K047005

Printed By : Dwi Iswanto (airafather6107170)

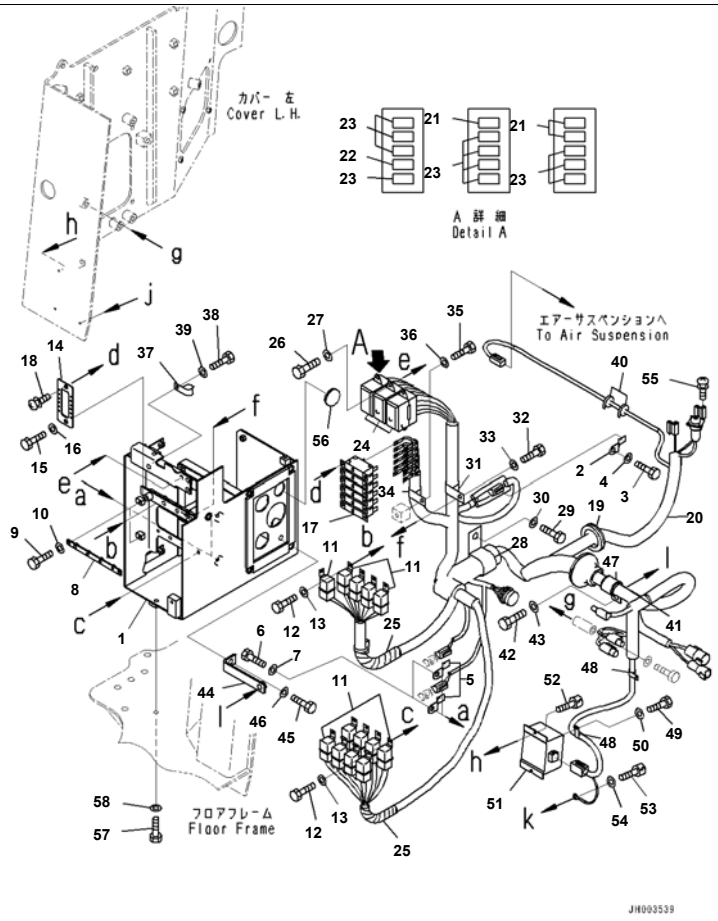

Reference:K2110-008006 Page:K047006

D375A-6R S/N 65001-UP
Floor Frame, Variable Digging Angle Giant Ripper, Fuse Box and Relay (#65001-)

Index	Code	Part Number	Description	Qty	Serial No.
1		195-06-55721	Bracket	1	65001-
2		08193-20010	Clip	1	65001-
3		01010-81020	Bolt	1	65001-
4		01643-31032	Washer	1	65001-
5		08193-20010	Clip	2	65001-
6		01010-80816	Bolt	2	65001-
7		01643-30823	Washer	2	65001-
8		195-06-55671	Bracket	2	65001-
9		01010-80612	Bolt	4	65001-
10		01643-30623	Washer	4	65001-
11		569-06-61960	Relay	13	65001-
12		01010-80612	Bolt	13	65001-
13		01643-30623	Washer	13	65001-
14		195-06-56480	Plate	1	65001-
15		01010-80816	Bolt	2	65001-
16		01641-20812	Washer	2	65001-
17		195-979-8340	Breaker	6	65001-
18		01023-10308	Screw	12	65001-
19		08037-05016	Grommet	1	65001-
20		195-06-55581	Wiring Harness	1	65001-
21		08041-00500	· Fuse, 5Amp.	5	65001-
22		08041-01000	· Fuse, 10Amp.	2	65001-
23		08041-02000	· Fuse, 20Amp.	14	65001-
24		20T-06-71560	· Box, Fuse	3	65001-
25		08210-00601	Tube, Spiral	13	65001-
26		01010-80816	Bolt	6	65001-
27		01641-20812	Washer	6	65001-
28		23S-62-25850	Clip	1	65001-
29		01010-81020	Bolt	1	65001-
30		01643-31032	Washer	1	65001-
31		04434-52310	Clip	1	65001-

Reference:K2110-008006 Page:K047006

Printed By : Dwi Iswanto (airafather6107170)

Floor Frame, Variable Digging Angle Giant Ripper, Fuse Box and Relay (#65001-)

Index	Code	Part Number	Description	Qty	Serial No.
32		01010-80816	Bolt	1	65001-
33		01643-30823	Washer	1	65001-
34		04434-51908	Clip	1	65001-
35		01010-80816	Bolt	1	65001-
36		01643-30823	Washer	1	65001-
37		04434-51708	Clip	1	65001-
38		01010-80816	Bolt	1	65001-
39		01643-30823	Washer	1	65001-
40		08034-20414	Band	2	65001-
41		07095-20420	Cushion	1	65001-
42		01010-81020	Bolt	1	65001-
43		01643-31032	Washer	1	65001-
44		427-04-11130	Plate	1	65001-
45		01010-81030	Bolt	1	65001-
46		01643-31032	Washer	1	65001-
47		04434-52711	Clip	1	65001-
48		04434-51210	Clip	1	65001-
49		01010-81020	Bolt	1	65001-
50		01643-31032	Washer	1	65001-
51		12Y-06-11650	Converter	1	65001-
52		01252-70512	Bolt, Hexagon Socket Head	2	65001-
53		01252-70510	Bolt	1	65001-
54		01640-20508	Washer	1	65001-
55		01023-70310	Screw	5	65001-
56		09415-02512	Cap	1	65001-
57		01010-80825	Bolt	7	65001-
58		01643-30823	Washer	7	65001-

Printed By : Dwi Iswanto (airafather6107170)

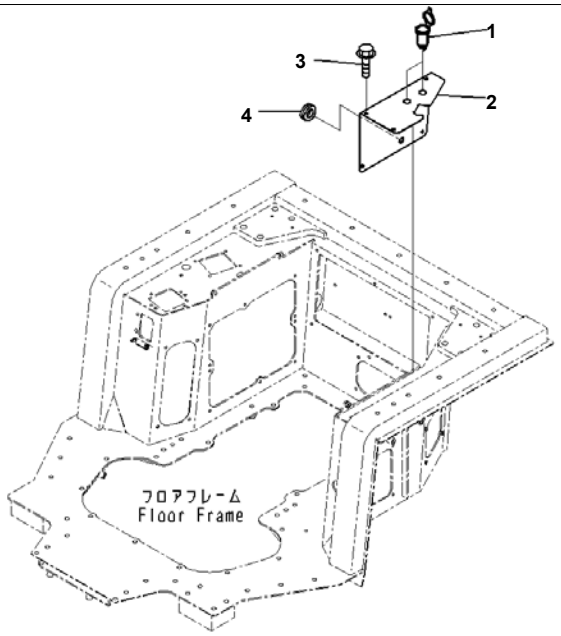

Reference:K2110-008007 Page:K047007

D375A-6R S/N 65001-UP
Floor Frame, Variable Digging Angle Giant Ripper, Socket Cover (#65001-)

Index	Code	Part Number	Description	Qty	Serial No.
1		198-Z11-6890	Socket Assembly	2	65001-
2		195-54-82551	Cover	1	65001-
3		01435-00825	Bolt	5	65001-
4		09415-01610	Cap	1	65001-

Printed By : Dwi Iswanto (airafather6107170)

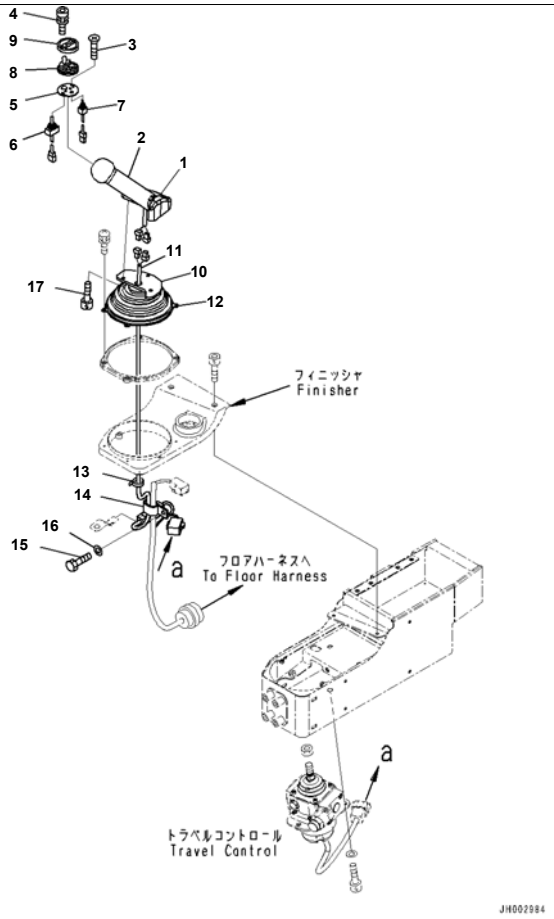

Reference:K2110-008008 Page:K047008

D375A-6R S/N 65001-UP
Floor Frame, Variable Digging Angle Giant Ripper, Travel Control Lever (1/2) (#65001-)

Index	Code	Part Number	Description	Qty	Serial No.
		19M-43-33111	Knob Assembly	1	65001-
1	C1		· Knob Assembly, Body	1	65001-
2	C1		· Knob Assembly, Cover	1	65001-
3	C1		· Knob Assembly, Screw	2	65001-
4		19M-09-11510	· Bolt	2	65001-
		19M-43-33141	· Switch Assembly	1	65001-
5	C1		· · Plate	1	65001-
6		19M-43-33460	· · Switch	1	65001-
7		19M-43-33470	· · Switch	1	65001-
8		19M-43-33151	· Rubber	1	65001-
9		19M-43-33161	· Cover	1	65001-
		14X-06-31311	Wiring Harness	1	65001-
10		154-43-73531	· Bracket	1	65001-
11		154-43-73560	· Wiring Harness	1	65001-
12		14X-43-34331	· Boot	1	65001-
13		08034-20519	Band	1	65001-
14		04435-51408	Clip	1	65001-
15		01010-80816	Bolt	1	65001-
16		01643-30823	Washer	1	65001-
17		01252-80514	Bolt	3	65001-

Printed By : Dwi Iswanto (airafather6107170)

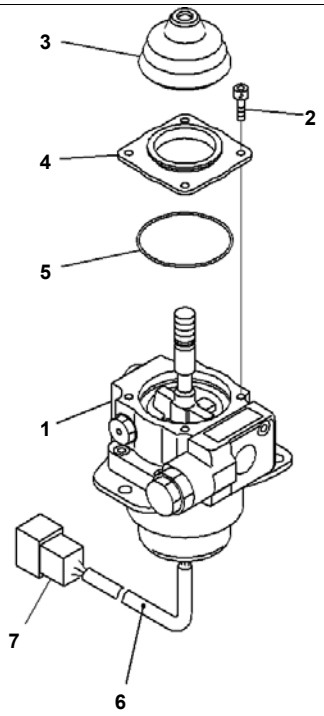

Reference:K2110-008009 Page:K047009

D375A-6R S/N 65001-UP
Floor Frame, Variable Digging Angle Giant Ripper, Travel Control Lever (2/2) (#65001-)

Index	Code	Part Number	Description	Qty	Serial No.
1		702-16-02280	Lever Assembly	1	65001-
2		01252-60512	· Bolt	4	65001-
3		702-16-59330	· Boot	1	65001-
4		702-16-62730	· Cover	1	65001-
5		702-16-62740	· O-ring	1	65001-
6		702-16-61270	· Tube	1	65001-
7		08192-28812	· Connector	1	65001-

Printed By : Dwi Iswanto (airafather6107170)

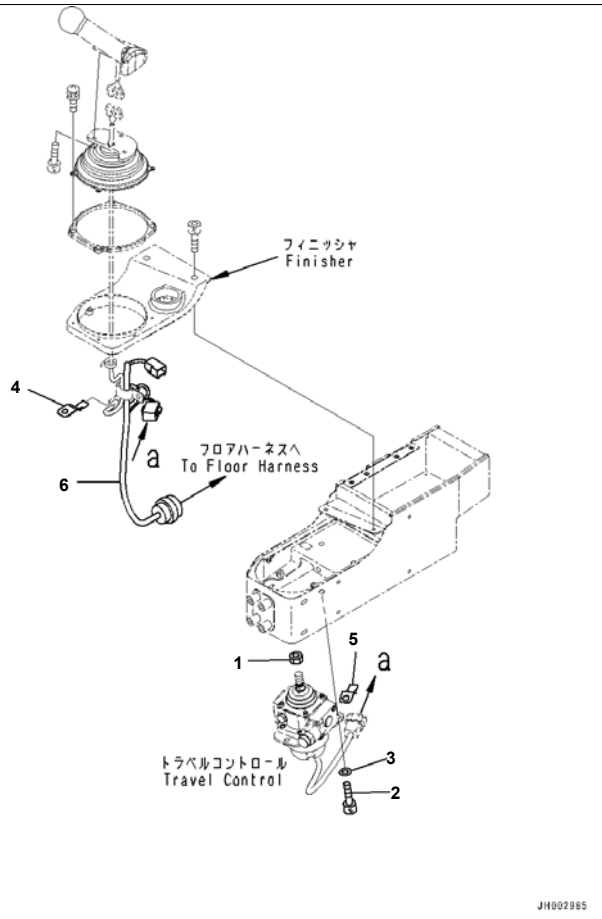

Reference:K2110-008010 Page:K047010

D375A-6R S/N 65001-UP
Floor Frame, Variable Digging Angle Giant Ripper, Travel Piping (#65001-)

Index	Code	Part Number	Description	Qty	Serial No.
1		20T-43-71190	Nut	1	65001-
2		01252-70825	Bolt	3	65001-
3		01643-30823	Washer	3	65001-
4		08193-20010	Clip	1	65001-
5		08193-30010	Clip	1	65001-
6		195-06-55941	Wiring Harness	1	65001-

Printed By : Dwi Iswanto (airafather6107170)

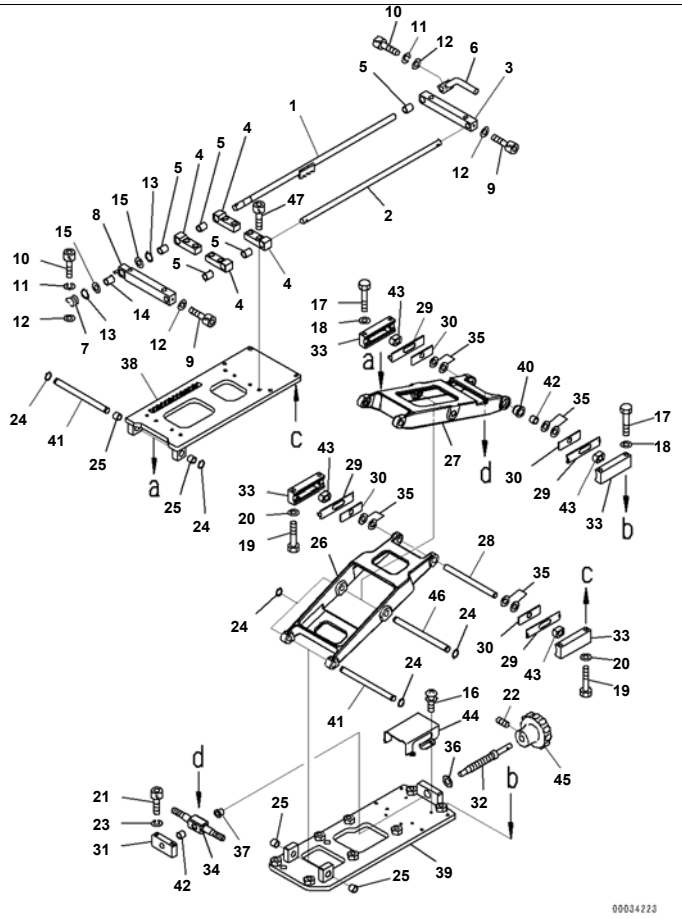

Index	Code	Part Number	Description	Qty	Serial No.
		19M-43-33303	Lifter Assembly	1	65001-
		19M-43-33314	· Slider Assembly	1	65001-
1		19M-43-34112	· · Shaft	1	65001-
2		19M-43-34120	· · Shaft	1	65001-
3		19M-43-34132	· · Guide	1	65001-
4		19M-43-34141	· · Guide	3	65001-
5		19M-43-34150	· · Bushing	4	65001-
6		19M-43-34160	· · Lever	1	65001-
7		19M-43-34171	· · Spring	1	65001-
8		19M-43-34182	· · Guide	1	65001-
9		01252-80412	· · Bolt	2	65001-
10		01252-80414	· · Bolt	2	65001-
11		01601-20411	· · Washer	2	65001-
12		01640-20408	· · Washer, Flat	4	65001-
13		04064-01010	· · Ring, Snap	2	65001-
14		19M-43-34190	· · Bushing	2	65001-
15		19M-09-34110	· · Washer	2	65001-
		19M-43-33321	· Lifter Assembly	1	65001-
16		01023-20406	· · Screw	4	65001-
17		01010-80635	· · Bolt	4	65001-
18		01643-30623	· · Washer	4	65001-
19		01010-80635	· · Bolt	4	65001-
20		01643-30623	· · Washer	4	65001-
21		01252-80530	· · Bolt	2	65001-
22		01312-20612	· · Screw	1	65001-
23		01601-50512	· · Washer, Spring	2	65001-
24		04064-01010	· · Ring, Snap	6	65001-
25		06600-01008	· · Bushing	4	65001-
26		17A-43-26211	· · Arm	1	65001-
27		154-43-73850	· · Arm	1	65001-
28		154-43-73860	· · Shaft	1	65001-

Printed By : Dwi Iswanto (airafather6107170)

Index	Code	Part Number	Description	Qty	Serial No.
29		154-43-73870	・・ Plate	4	65001-
30		154-43-73880	・・ Plate	4	65001-
31		154-43-73890	・・ Block	1	65001-
32		154-43-73910	・・ Shaft	1	65001-
33		154-43-73920	・・ Box	4	65001-
34		154-43-73930	・・ Shaft	1	65001-
35		154-43-73940	・・ Shim, T=0.5mm	8	65001-
36		154-43-73950	・・ Shim, T=0.5mm	4	65001-
37		154-43-73960	・・ Bushing	1	65001-
38		198-43-63210	・・ Plate	1	65001-
39		198-43-63830	・・ Plate	1	65001-
40		19M-43-34250	・・ Bushing	1	65001-
41		19M-43-34280	・・ Shaft	2	65001-
42		19M-43-34290	・・ Bushing	2	65001-
43		19M-43-34320	・・ Bushing	4	65001-
44		19M-43-34410	・・ Cover	1	65001-
45		20A-43-15311	・・ Knob	1	65001-
46		17A-43-26231	・・ Shaft	1	65001-
47		01252-80512	・ Bolt, Hexagon Socket Head	8	65001-

Printed By : Dwi Iswanto (airafather6107170)

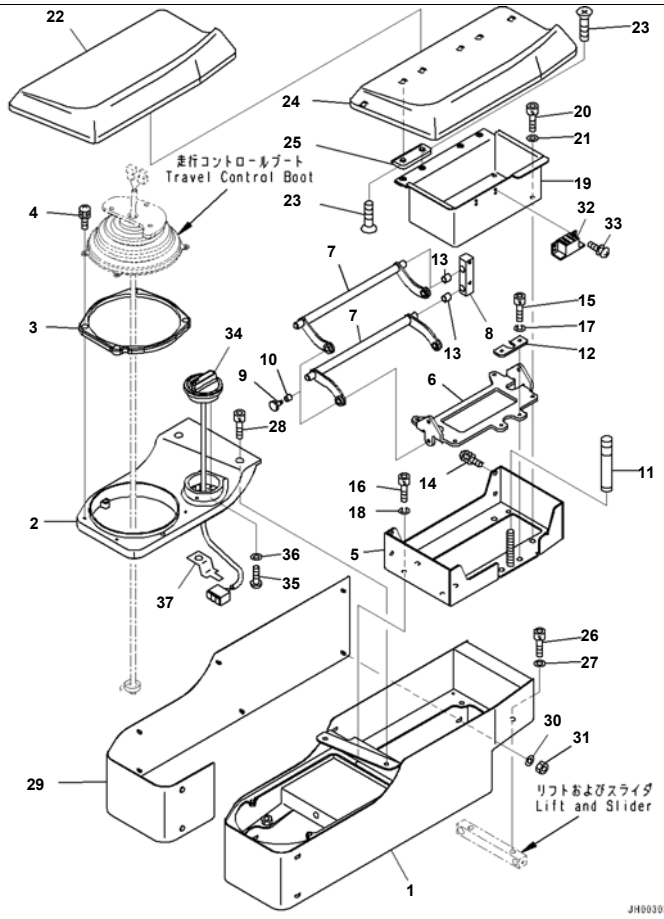

Reference:K2110-008012 Page:K047012

D375A-6R S/N 65001-UP
Floor Frame, Variable Digging Angle Giant Ripper, Console Box (#65001-)

Index	Code	Part Number	Description	Qty	Serial No.
1		198-43-63611	Box	1	65001-
2		154-43-73620	Finisher Assembly	1	65001-
3		14X-43-34341	Cover	1	65001-
4		01023-70414	Screw	4	65001-
		19M-43-33610	Lifter Assembly	1	65001-
5	C1		· Bracket	1	65001-
6		19M-43-33720	· Bracket	1	65001-
7		19M-43-33730	· Arm	2	65001-
8		19M-43-33740	· Block	2	65001-
9		19M-43-33750	· Pin	4	65001-
10		19M-43-33760	· Bushing	4	65001-
11		19M-43-33770	· Knob	1	65001-
12		19M-43-33780	· Plate	1	65001-
13		19M-43-34330	· Bushing	4	65001-
14		01023-60516	· Screw	4	65001-
15		01252-80410	· Bolt, Hexagon Socket Head	2	65001-
16		01252-80510	· Bolt	4	65001-
17		01601-20410	· Washer	2	65001-
18		01601-20512	· Washer	4	65001-
19		198-43-63652	Box	1	65001-
20		01252-80510	Bolt	4	65001-
21		01601-50513	Washer, Spring	4	65001-
22		198-43-63641	Pad	1	65001-
23		01224-70408	· Screw, Philips Head	8	65001-
24		19M-43-33630	· Pad	1	65001-
25		19M-43-33660	· Hinge	2	65001-
26		01252-70816	Bolt	4	65001-
27		01643-30823	Washer	4	65001-
28		01252-70520	Bolt	4	65001-
29		198-43-63281	Cover	1	65001-
30		01640-20408	Washer, Flat	8	65001-

Printed By : Dwi Iswanto (airafather6107170)

Index	Code	Part Number	Description	Qty	Serial No.
31		01580-20403	Nut	8	65001-
32		154-43-73651	Magnet	1	65001-
33		01023-10308	Screw	4	65001-
34		7825-30-1301	Dial	1	65001-
35		01220-40408	Screw	2	65001-
36		01641-20405	Washer	2	65001-
37		08053-01510	Clip	1	65001-

Printed By : Dwi Iswanto (airafather6107170)

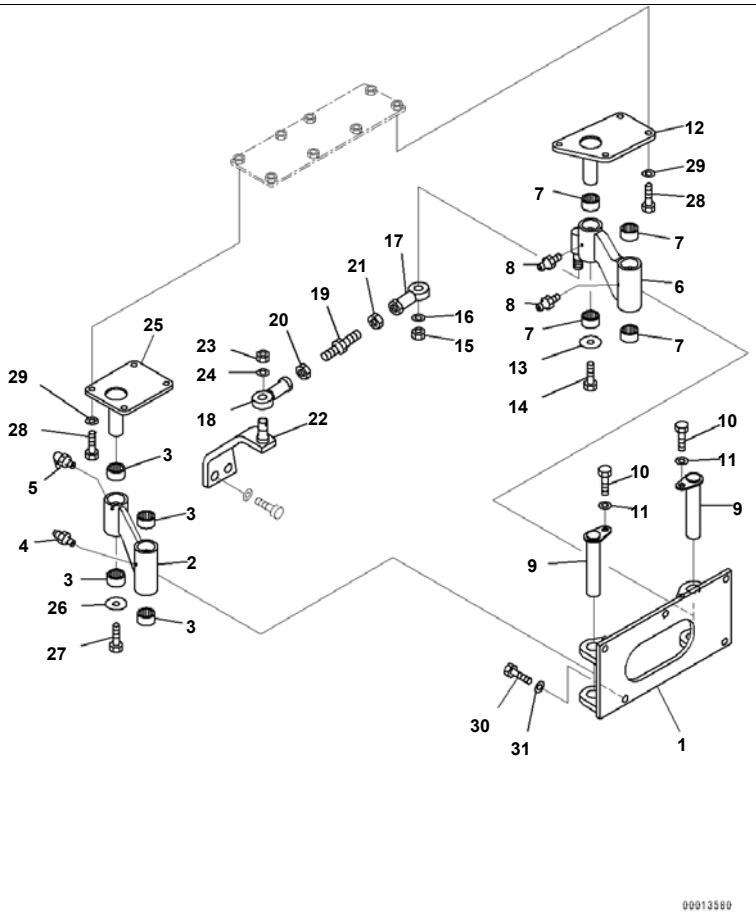

D375A-6R S/N 65001-UP
Floor Frame, Variable Digging Angle Giant Ripper, Adjust Link (#65001-)

Index	Code	Part Number	Description	Qty	Serial No.
1		19M-43-31181	Bracket	1	65001-
2		19M-43-31112	Link	1	65001-
3		06123-02518	Bearing, Needle	4	65001-
4		07020-00000	Fitting, Grease	1	65001-
5		07020-00900	Fitting, Grease	1	65001-
6		19M-43-31122	Link	1	65001-
7		06123-02518	Bearing, Needle	4	65001-
8		07020-00000	Fitting, Grease	2	65001-
9		19M-43-31160	Pin	2	65001-
10		01010-81025	Bolt	2	65001-
11		01643-31032	Washer	2	65001-
12		195-43-68121	Support	1	65001-
13		209-54-14650	Washer	1	65001-
14		01010-81230	Bolt	1	65001-
15		01582-11613	Nut	1	65001-
16		04254-11645	Spacer	1	65001-
17		04250-81683	Rod End	1	65001-
18		04250-91683	Rod End, Left-handed Thread	1	65001-
19		144-916-3170	Bolt	1	65001-
20		01508-31610	Nut, Left-handed	1	65001-
21		01582-01613	Nut	1	65001-
22		195-43-68111	Link	1	65001-
23		01582-11613	Nut	1	65001-
24		04254-11645	Spacer	1	65001-
25		195-43-68131	Support	1	65001-
26		209-54-14650	Washer	1	65001-
27		01010-81230	Bolt	1	65001-
28		01010-81025	Bolt	8	65001-
29		01643-31032	Washer	8	65001-
30		01010-81230	Bolt	5	65001-
31		01643-31232	Washer	5	65001-

Printed By : Dwi Iswanto (airafather6107170)

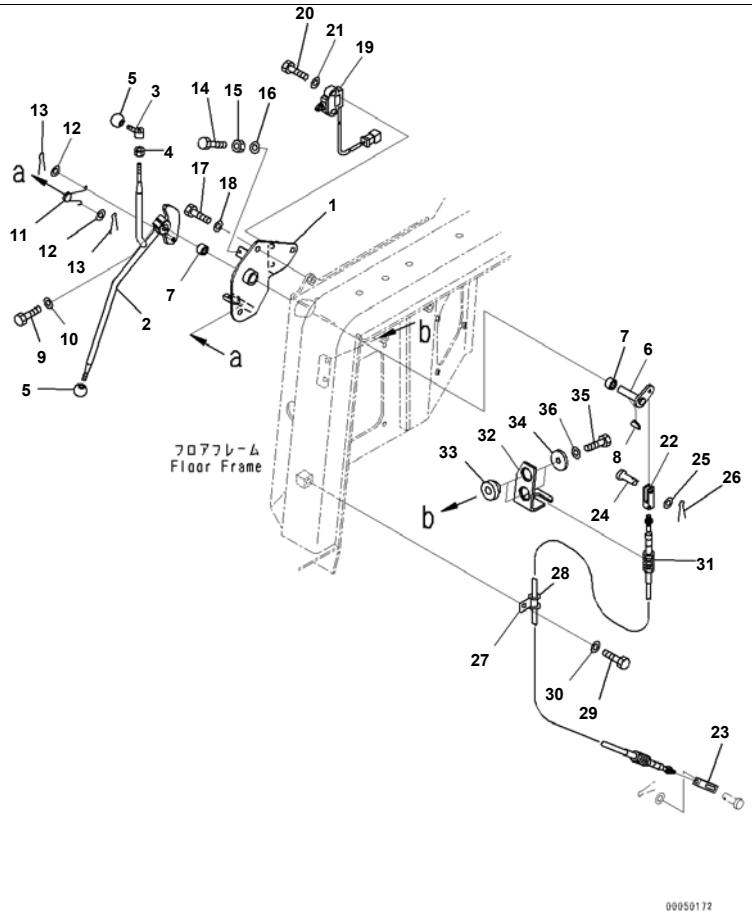

Reference:K2110-008014 Page:K047014

D375A-6R S/N 65001-UP
Floor Frame, Variable Digging Angle Giant Ripper, Parking Brake Lever (#65001-)

Index	Code	Part Number	Description	Qty	Serial No.
1		17M-43-42570	Bracket	1	65001-
2		17M-43-42511	Lever	1	65001-
3		17M-43-41530	Lever	1	65001-
4		17M-09-41110	Nut	1	65001-
5		09304-10835	Knob	2	65001-
6		17M-43-42590	Shaft	1	65001-
7		06123-01614	Bearing	2	65001-
8		04010-00519	Key, Woodruff	1	65001-
9		01010-80830	Bolt	1	65001-
10		01643-30823	Washer	1	65001-
11		09463-00002	Spring	1	65001-
12		01640-20610	Washer	2	65001-
13		04050-11612	Pin, Cotter	2	65001-
14		01010-80620	Bolt	1	65001-
15		01580-10605	Nut	1	65001-
16		01643-30623	Washer	1	65001-
17		01010-81025	Bolt	3	65001-
18		01643-31032	Washer	3	65001-
19		11Y-06-22150	Switch	1	65001-
20		01010-81030	Bolt	2	65001-
21		01643-31032	Washer	2	65001-
22		04211-20844	Yoke	1	65001-
23		154-43-14470	Yoke	1	65001-
24		04205-10825	Pin	1	65001-
25		01640-20816	Washer	1	65001-
26		04050-12015	Pin, Cotter	1	65001-
27		04434-51712	Clip	1	65001-
28		07095-20211	Cushion	1	65001-
29		01010-81220	Bolt	1	65001-
30		01643-31232	Washer	1	65001-
31		22D-43-14430	Cable	1	65001-

Reference:K2110-008014 Page:K047014

Printed By : Dwi Iswanto (airafather6107170)

Floor Frame, Variable Digging Angle Giant Ripper, Parking Brake Lever (#65001-)

Index	Code	Part Number	Description	Qty	Serial No.
32		17M-43-42150	Bracket	1	65001-
33		195-03-41380	Cushion	2	65001-
34		178-60-12250	Collar	2	65001-
35		01010-81045	Bolt	2	65001-
36		01643-31032	Washer	2	65001-

Printed By : Dwi Iswanto (airafather6107170)

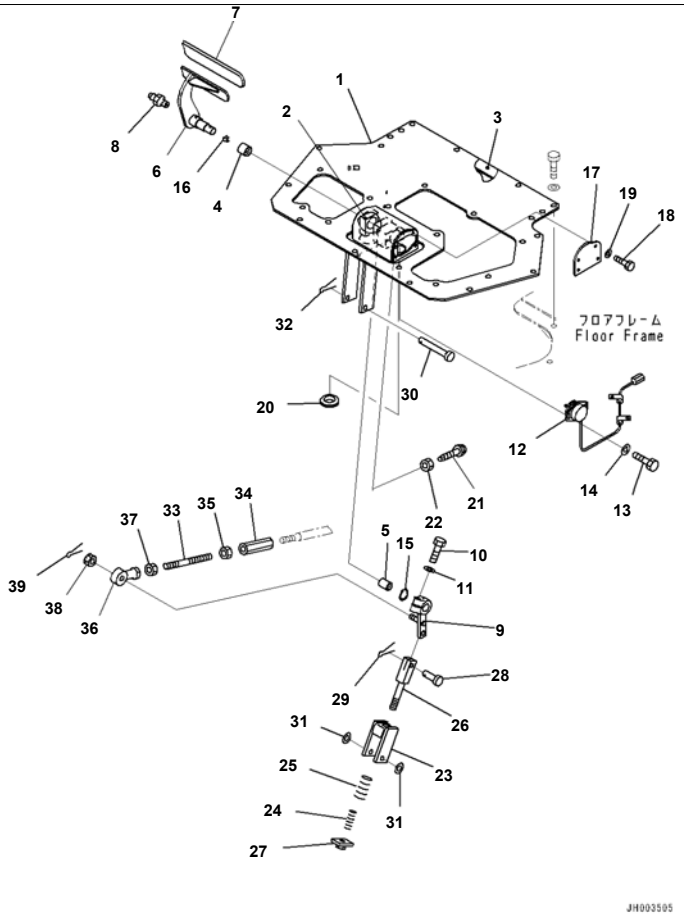

Index	Code	Part Number	Description	Qty	Serial No.
1		195-43-53120	Floor	1	65001-
2		17A-43-14120	· Bracket	1	65001-
3		195-43-72360	· Sheet	1	65001-
4		06124-03020	Bearing	1	65001-
5		06124-02020	Bearing	1	65001-
6		17A-43-14130	Pedal	1	65001-
7		14X-43-12110	Pedal Cap	1	65001-
8		07020-00000	Fitting, Grease	1	65001-
9		17A-43-24140	Lever	1	65001-
10		01010-81245	Bolt	1	65001-
11		01643-51232	Washer	1	65001-
12		7861-93-4132	Sensor	1	65001-
13		01010-80620	Bolt	2	65001-
14		01643-30623	Washer	2	65001-
15		04064-01610	Ring, Snap	1	65001-
16		142-43-13180	Spring	1	65001-
17		17A-43-14140	Plate	1	65001-
18		01010-80620	Bolt	4	65001-
19		01643-30623	Washer	4	65001-
20		08037-03614	Grommet	1	65001-
21		113-43-21340	Bumper	1	65001-
22		01580-11008	Nut	1	65001-
23		14X-43-12251	Holder	1	65001-
24		195-43-49540	Spring	1	65001-
25		700-84-11660	Spring	1	65001-
26		195-43-49550	Rod	1	65001-
27		14X-43-12260	Plate	1	65001-
28		04205-11238	Pin	1	65001-
29		04050-13022	Pin, Cotter	1	65001-
30		14X-43-11270	Pin	1	65001-
31		01641-21223	Washer	2	65001-

Printed By : Dwi Iswanto (airafather6107170)

Index	Code	Part Number	Description	Qty	Serial No.
32		04050-13022	Pin, Cotter	1	65001-
33		14X-43-12410	Rod	1	65001-
34		17A-43-24160	Joint	1	65001-
35		01508-41408	Nut	1	65001-
36		04250-81474	End	1	65001-
37		01582-11411	Nut	1	65001-
38		01593-31411	Nut	1	65001-
39		04050-13022	Pin, Cotter	1	65001-

Printed By : Dwi Iswanto (airafather6107170)

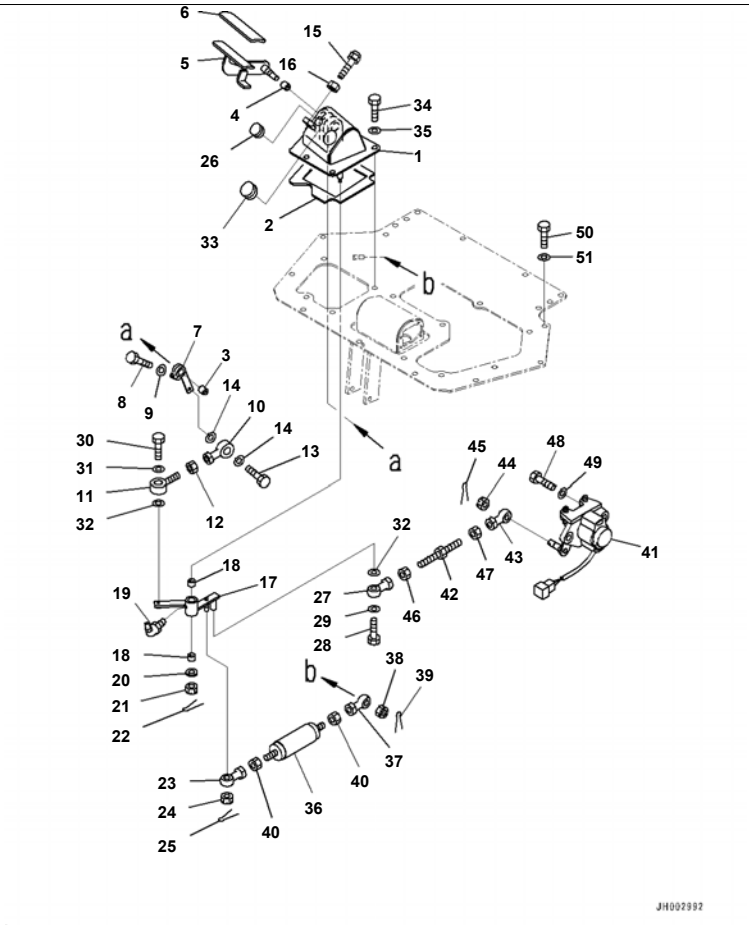

Reference:K2110-008016 Page:K047016

D375A-6R S/N 65001-UP
Floor Frame, Variable Digging Angle Giant Ripper, Decelerator Pedal (#65001-)

Index	Code	Part Number	Description	Qty	Serial No.
1		198-43-51280	Lever	1	65001-
2		17A-43-21211	· Bracket	1	65001-
3		06124-02020	Bearing	1	65001-
4		06124-01616	Bearing	1	65001-
5		17A-43-21311	Pedal	1	65001-
6		14X-43-13760	Cap	1	65001-
7		17A-43-13310	Lever	1	65001-
8		01010-80830	Bolt	1	65001-
9		01643-30823	Washer	1	65001-
10		04250-80847	Rod End	1	65001-
11		04252-20853	End	1	65001-
12		01580-10806	Nut	1	65001-
13		01010-80830	Bolt	2	65001-
14		04254-10823	Spacer	2	65001-
15		175-43-35210	Screw	1	65001-
16		01582-11008	Nut	1	65001-
17		198-43-51182	Lever	1	65001-
18		06123-01414	Bearing	2	65001-
19		07020-00900	Fitting, Grease	1	65001-
20		113-43-23230	Washer	1	65001-
21		01590-30809	Nut	1	65001-
22		04050-12015	Pin, Cotter	1	65001-
23		04250-81056	End	1	65001-
24		01593-31008	Nut, Slotted	1	65001-
25		04050-12018	Pin, Cotter	1	65001-
26		195-06-22430	Cap	1	65001-
27		04250-90847	Rod End	1	65001-
28		01010-80825	Bolt	1	65001-
29		01643-30823	Washer	1	65001-
30		01010-80830	Bolt	1	65001-
31		01643-30823	Washer	1	65001-

Printed By : Dwi Iswanto (airafather6107170)

Index	Code	Part Number	Description	Qty	Serial No.
32		04254-10823	Spacer	2	65001-
33		09415-03614	Cap	1	65001-
34		01010-81230	Bolt	4	65001-
35		01643-31232	Washer	4	65001-
36		195-43-45311	Rod Assembly	1	65001-
37		04250-81056	End	1	65001-
38		01593-31008	Nut, Slotted	1	65001-
39		04050-12018	Pin, Cotter	1	65001-
40		01582-11008	Nut	2	65001-
41		7861-93-4040	Sensor, Angle	1	65001-
42		04248-30808	Rod	1	65001-
43		04250-80847	Rod End	1	65001-
44		01590-30809	Nut	1	65001-
45		04050-12015	Pin, Cotter	1	65001-
46		01508-40805	Nut	1	65001-
47		01508-10806	Nut, Left-handed	1	65001-
48		01010-80820	Bolt	2	65001-
49		01643-30823	Washer	2	65001-
50		01010-81230	Bolt	15	65001-
51		01643-31232	Washer	15	65001-

Printed By : Dwi Iswanto (airafather6107170)

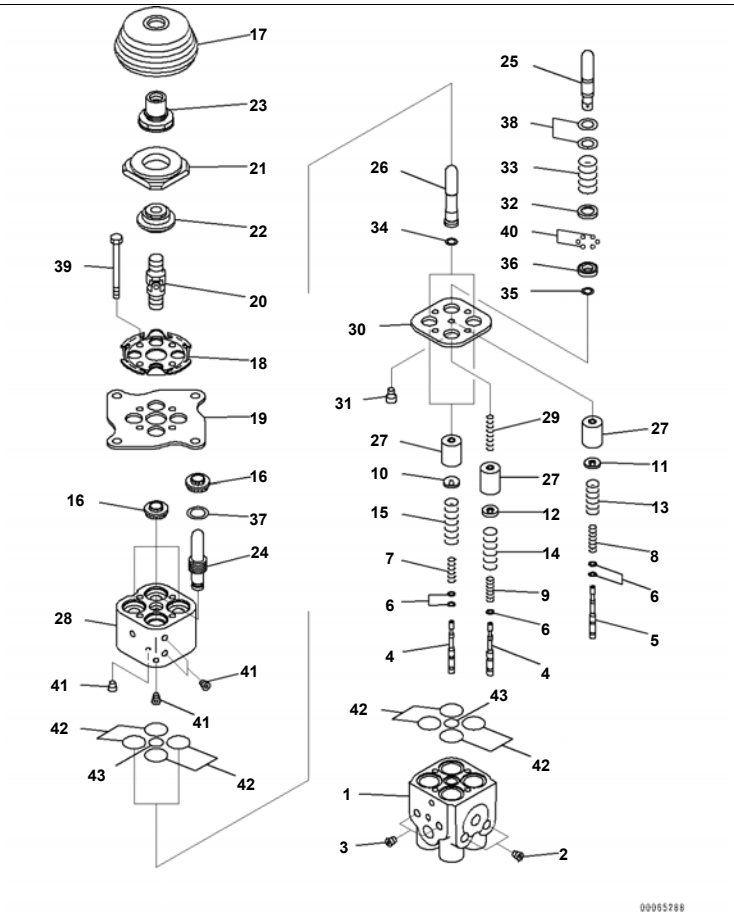

D375A-6R S/N 65001-UP
Floor Frame, Variable Digging Angle Giant Ripper, Inner Parts, PPC Valve (1/2) (#65001-)

Index	Code	Part Number	Description	Qty	Serial No.
		702-16-06161	Valve, Pilot	1	65001-
1	C1		· Body	1	65001-
2	C1		· Plug	2	65001-
3	C1		· Plug	2	65001-
4	C1		· Valve	3	65001-
5	C1		· Valve	1	65001-
6		702-16-51140	· Shim, T=0.30mm	4	65001-
		702-16-54670	· Shim, T=0.20mm	5	65001-
7		702-16-53420	· Spring	2	65001-
8		702-16-75860	· Spring	1	65001-
9		702-16-75870	· Spring	1	65001-
10		702-16-53140	· Retainer	2	65001-
11		702-16-75880	· Retainer	1	65001-
12		702-16-75890	· Retainer	1	65001-
13		702-16-76140	· Spring	1	65001-
14		702-16-53460	· Spring	1	65001-
15		702-16-54420	· Spring	2	65001-
16		702-16-71150	· Seal	4	65001-
17		702-16-71280	· Boot	1	65001-
18		702-16-71131	· Plate	1	65001-
19		702-16-71141	· Plate	1	65001-
20		702-16-51240	· Universal Joint	1	65001-
21	C1		· Disc	1	65001-
22		702-16-71270	· Nut	1	65001-
23		702-16-71260	· Nut	1	65001-
24	C1		· Piston	1	65001-
25	C1		· Piston	1	65001-
26	C1		· Piston	2	65001-
27	C1		· Piston	4	65001-
28	C1		· Body	1	65001-
29	C1		· Spring	1	65001-

Printed By : Dwi Iswanto (airafather6107170)

Floor Frame, Variable Digging Angle Giant Ripper, Inner Parts, PPC Valve (1/2) (#65001-)

Index	Code	Part Number	Description	Qty	Serial No.
30	C1		· Plate	1	65001-
31	C1		· Orifice	1	65001-
32	C1		· Collar	1	65001-
33	C1		· Spring	1	65001-
34	C1		· Shim	2	65001-
35	C1		· Shim	1	65001-
	C1		· Shim	1	65001-
	C1		· Shim	1	65001-
36	C1		· Retainer	1	65001-
37		702-16-72810	· Seat	1	65001-
38	C1		· Spacer	4	65001-
39		01010-80670	· Bolt	4	65001-
40	C1		· Ball	13	65001-
41	C1		· Screw	4	65001-
42	C1		· O-ring	8	65001-
43	C1		· O-ring	2	65001-

Printed By : Dwi Iswanto (airafather6107170)

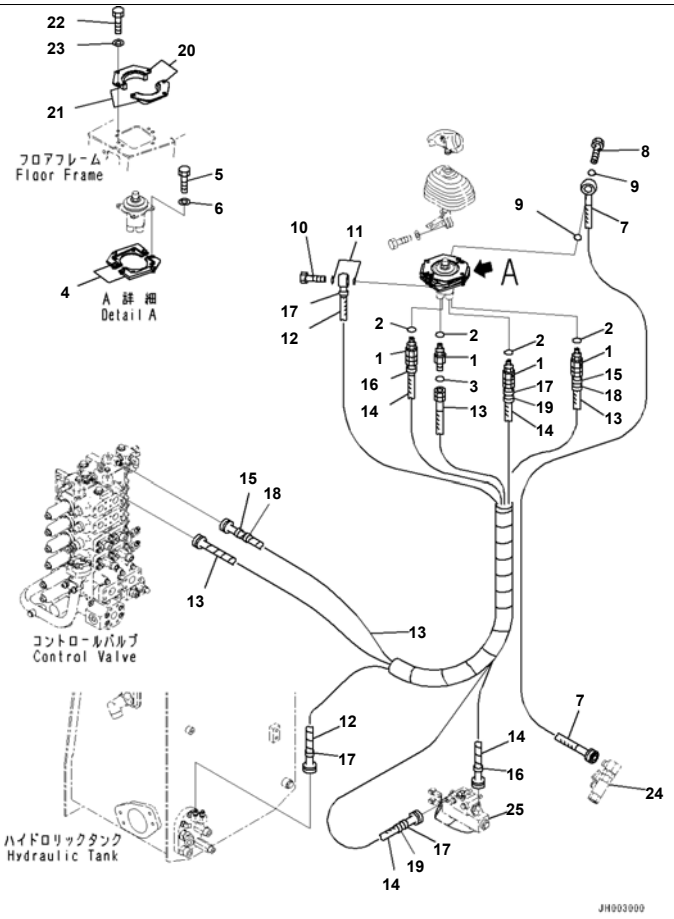

Reference:K2110-008018 Page:K047018

D375A-6R S/N 65001-UP
Floor Frame, Variable Digging Angle Giant Ripper, PPC Valve for Blade (#65001-)

Index	Code	Part Number	Description	Qty	Serial No.
1		17M-61-42540	Union	4	65001-
2		07002-11423	O-ring	4	65001-
3		02896-11009	O-ring	4	65001-
4		195-43-58161	Bracket	2	65001-
5		01010-80825	Bolt	4	65001-
6		01643-30823	Washer	4	65001-
7		195-61-41331	Hose	1	65001-
8		702-16-53240	Plug	1	65001-
9		07000-12018	O-ring	2	65001-
10		203-62-57730	Bolt, Eye	1	65001-
11		07000-12018	O-ring	2	65001-
12		195-61-44121	Hose	1	65001-
13		195-61-44591	Hose	2	65001-
14		154-61-78630	Hose	2	65001-
15		20Y-62-22790	Band, Red	2	65001-
16		20Y-62-22810	Band, Yellow	2	65001-
17		20Y-62-22820	Band, Blue	4	65001-
18		20Y-62-22830	Band, White	2	65001-
19		20Y-62-22840	Band, Black	2	65001-
20		17M-43-42991	Bracket	2	65001-
21		195-43-58141	・ Sheet	1	65001-
22		01010-80830	Bolt	6	65001-
23		01643-30823	Washer	6	65001-
24		(20Y-62-15651)	Valve		
25		(17M-61-42340)	Block		

Reference:K2110-008018 Page:K047018

Printed By : Dwi Iswanto (airafather6107170)

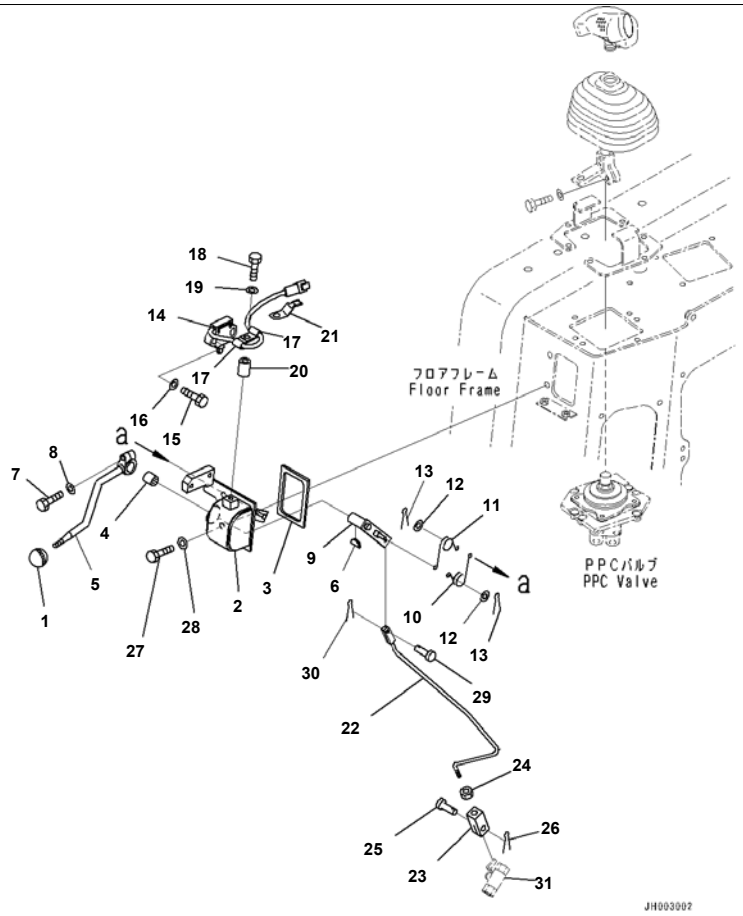

Reference:K2110-008019 Page:K047019

D375A-6R S/N 65001-UP
Floor Frame, Variable Digging Angle Giant Ripper, Blade Lock Lever (#65001-)

Index	Code	Part Number	Description	Qty	Serial No.
1		09304-10835	Knob	1	65001-
2		195-43-49510	Bracket	1	65001-
3		17A-43-15190	· Sheet	1	65001-
4		06124-02020	Bearing	1	65001-
5		195-43-49520	Lever	1	65001-
6		04010-00516	Key	1	65001-
7		01010-80830	Bolt	1	65001-
8		01643-30823	Washer	1	65001-
9		17A-43-25460	Lever	1	65001-
10		09463-00002	Spring	1	65001-
11		09463-00006	Spring	1	65001-
12		01641-20608	Washer	2	65001-
13		04050-11612	Pin, Cotter	2	65001-
14		198-06-56540	Switch	1	65001-
15		01010-81035	Bolt	2	65001-
16		01643-31032	Washer	2	65001-
17		04434-51010	Clip	2	65001-
18		01010-81050	Bolt	1	65001-
19		01643-31032	Washer	1	65001-
20		6167-21-5910	Spacer	1	65001-
21		08193-20010	Clip	1	65001-
22		198-43-51241	Rod	1	65001-
23		04211-20634	Yoke	1	65001-
24		01580-10605	Nut	1	65001-
25		04205-10618	Pin	1	65001-
26		04050-11612	Pin, Cotter	1	65001-
27		01010-81025	Bolt	2	65001-
28		01643-31032	Washer	2	65001-
29		04205-10618	Pin	1	65001-
30		04050-11612	Pin, Cotter	1	65001-
31		(20Y-62-15651)	Valve		

Printed By : Dwi Iswanto (airafather6107170)

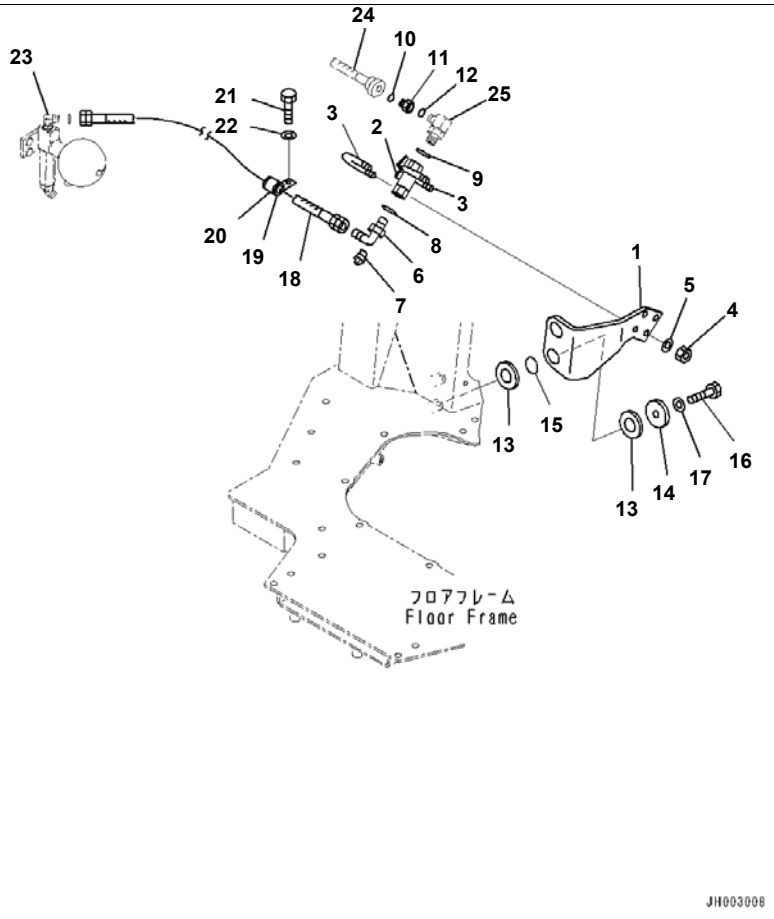

Reference:K2110-008020 Page:K047020

D375A-6R S/N 65001-UP
Floor Frame, Variable Digging Angle Giant Ripper, Blade Lock Valve Piping (#65001-)

Index	Code	Part Number	Description	Qty	Serial No.
1		198-43-51260	Plate	1	65001-
2		20Y-62-15651	Valve	1	65001-
3		07283-23442	Clip	2	65001-
4		01599-01011	Nut	4	65001-
5		01643-31032	Washer	4	65001-
6		02782-50315	Elbow	1	65001-
7		07040-11007	Plug	1	65001-
8		07002-11023	O-ring	1	65001-
9		07002-12034	O-ring	1	65001-
10		02896-11009	O-ring	1	65001-
11		19M-61-31140	Nipple	1	65001-
12		02896-11009	O-ring	1	65001-
13		14X-60-12120	Cushion	4	65001-
14		20Y-03-11210	Plate	2	65001-
15		07000-13025	O-ring	2	65001-
16		01010-81225	Bolt	2	65001-
17		01643-31232	Washer	2	65001-
18		02760-003A6	Hose	1	65001-
19		07095-20314	Cushion	1	65001-
20		04434-52112	Clip	1	65001-
21		01010-81220	Bolt	1	65001-
22		01643-31232	Washer	1	65001-
23		(20Y-60-11430)	Accumulator		
24		(195-61-41331)	Hose		
25		(17A-61-16271)	Tee		

Printed By : Dwi Iswanto (airafather6107170)

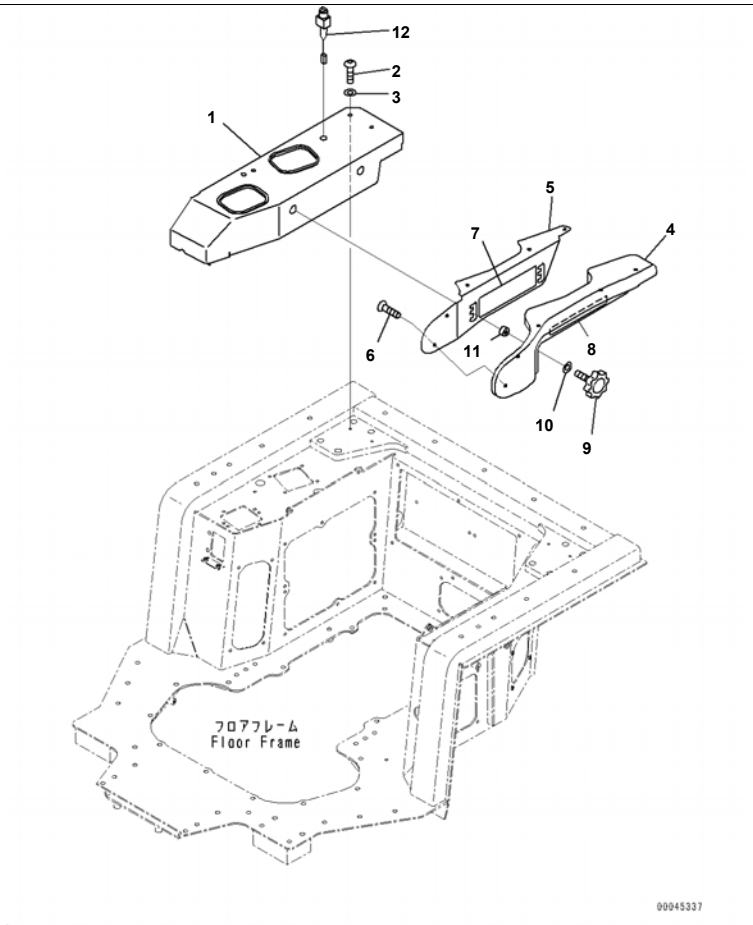

Reference:K2110-008021 Page:K047021

D375A-6R S/N 65001-UP
Floor Frame, Variable Digging Angle Giant Ripper, Armrest (2/2) (#65001-)

Index	Code	Part Number	Description	Qty	Serial No.
1		17M-54-54451	Cover	1	65001-
2		01245-00820	Screw	3	65001-
3		01643-70823	Washer	3	65001-
4		19M-54-38570	Arm Rest	1	65001-
5		19M-54-36470	Plate	1	65001-
6		01236-40816	Screw	5	65001-
7		134-54-66190	Plate	1	65001-
8		134-54-66290	Plate	1	65001-
9		195-54-68760	Knob	2	65001-
10		01643-31032	Washer	2	65001-
11		195-54-76181	Spacer	2	65001-
12		17A-06-41850	Switch Assembly	1	65001-

Reference:K2110-008021 Page:K047021

Printed By : Dwi Iswanto (airafather6107170)

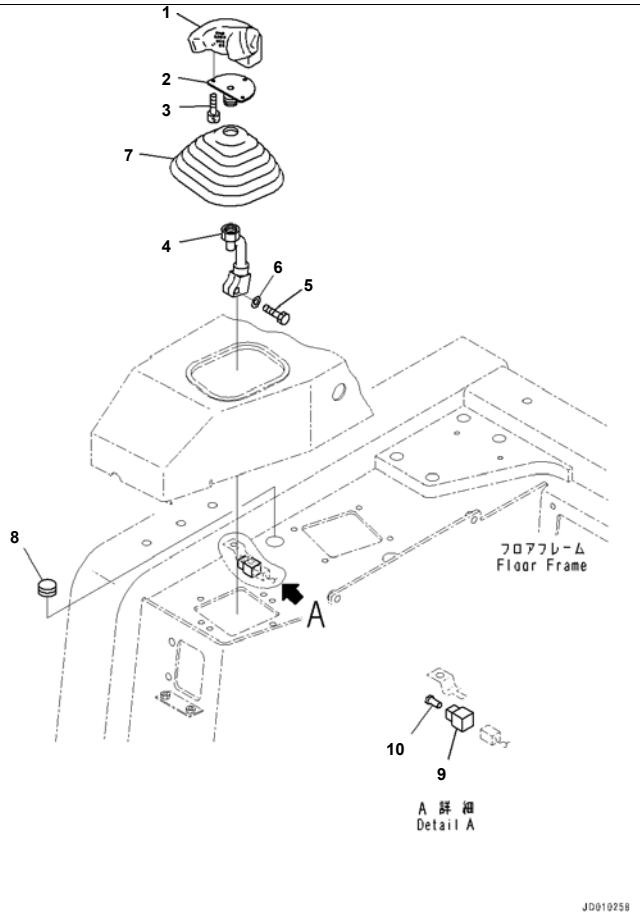

Reference:K2110-008022 Page:K047022

D375A-6R S/N 65001-UP
Floor Frame, Variable Digging Angle Giant Ripper, Blade Control Lever (#65001-)

Index	Code	Part Number	Description	Qty	Serial No.
1		195-43-64411	Knob Assembly	1	65001-
2		19M-43-38220	Bracket	1	65001-
3		01252-80510	Bolt	3	65001-
4		19M-43-38211	Lever	1	65001-
5		01010-81030	Bolt	1	65001-
6		01643-31032	Washer	1	65001-
7		11Y-43-11181	Boot	1	65001-
8		09415-02520	Cap	1	65001-
9		08192-16100	Connector Body	1	65001-
10		08191-00770	Plug, Connector	6	65001-

Printed By : Dwi Iswanto (airafather6107170)

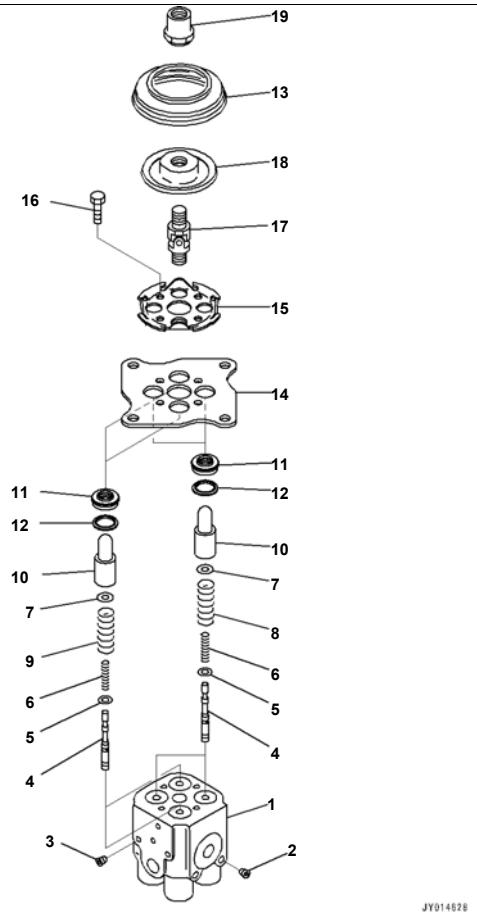

D375A-6R S/N 65001-UP
Floor Frame, Variable Digging Angle Giant Ripper, Inner Parts, PPC Valve (2/2) (#65001-)

Index	Code	Part Number	Description	Qty	Serial No.
		702-16-05240	Valve Assembly, Pilot	1	65001-
1	C1		· Valve Body	1	65001-
2	C1		· Plug	2	65001-
3	C1		· Plug	2	65001-
4	C1		· Valve	4	65001-
5		702-16-51140	· Shim, T=0.30mm	4	65001-
6		702-16-53420	· Spring	4	65001-
7		702-16-53140	· Retainer	4	65001-
8		702-16-53160	· Spring	2	65001-
9		702-16-53150	· Spring	2	65001-
10		702-16-53170	· Piston	4	65001-
11		702-16-71150	· Seal	4	65001-
12		702-16-71160	· Seat	4	65001-
13		702-16-71280	· Boot	1	65001-
14		702-16-71141	· Plate	1	65001-
15		702-16-71131	· Plate	1	65001-
16		01010-80620	· Bolt	4	65001-
17		702-16-51240	· Universal Joint	1	65001-
18		702-16-71361	· Disc	1	65001-
19		702-16-71441	· Nut	1	65001-

Printed By : Dwi Iswanto (airafather6107170)

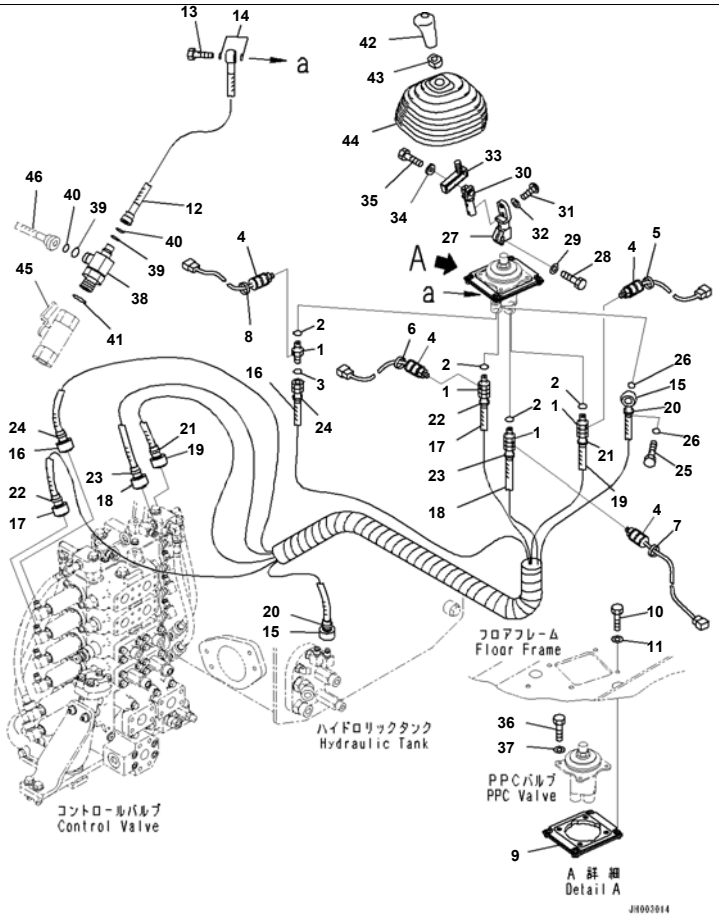

Reference:K2110-008024 Page:K047024

D375A-6R S/N 65001-UP
Floor Frame, Variable Digging Angle Giant Ripper, PPC Valve for Ripper (#65001-)

Index	Code	Part Number	Description	Qty	Serial No.
1		17M-61-42540	Union	4	65001-
2		07002-11423	O-ring	4	65001-
3		02896-11009	O-ring	4	65001-
4		195-06-55120	Switch	4	65001-
5		20Y-62-22830	Band, White	1	65001-
6		20Y-62-22840	Band, Black	1	65001-
7		20Y-62-22850	Band, Green	1	65001-
8		20Y-62-22860	Band, Brown	1	65001-
9		14X-78-11133	Cover	1	65001-
10		01010-80830	Bolt	4	65001-
11		01643-30823	Washer	4	65001-
12		17M-61-42380	Hose	1	65001-
13		702-16-53240	Plug	1	65001-
14		07000-12018	O-ring	2	65001-
15		195-61-44611	Hose	1	65001-
16		195-61-44621	Hose	1	65001-
17		195-61-44631	Hose	1	65001-
18		195-61-44641	Hose	1	65001-
19		195-61-44651	Hose	1	65001-
20		20Y-62-22820	Band, Blue	2	65001-
21		20Y-62-22830	Band, White	2	65001-
22		20Y-62-22840	Band, Black	2	65001-
23		20Y-62-22850	Band, Green	2	65001-
24		20Y-62-22860	Band, Brown	2	65001-
25		203-62-57730	Bolt, Eye	1	65001-
26		07000-12018	O-ring	2	65001-
27		195-43-67111	Lever	1	65001-
28		01010-81030	Bolt	1	65001-
29		01643-31032	Washer	1	65001-
30		195-43-67121	Shaft	1	65001-
31		01245-00825	Screw	2	65001-

Reference:K2110-008024 Page:K047024

Printed By : Dwi Iswanto (airafather6107170)

Floor Frame, Variable Digging Angle Giant Ripper, PPC Valve for Ripper (#65001-)

Index	Code	Part Number	Description	Qty	Serial No.
32		01643-30823	Washer	2	65001-
33		195-43-67131	Lever	1	65001-
34		195-09-11130	Washer	1	65001-
35		01010-D1020	Bolt	1	65001-
36		01010-80825	Bolt	4	65001-
37		01643-30823	Washer	4	65001-
38		17A-61-16271	Tee	1	65001-
39		201-60-11390	· O-ring	2	65001-
40		20Y-62-19560	· O-ring	2	65001-
41		07002-12034	O-ring	1	65001-
42		14X-43-14171	Knob	1	65001-
43		20T-43-71190	Nut	1	65001-
44		11Y-43-11181	Boot	1	65001-
45		(20Y-62-15651)	Valve		
46		(195-61-44121)	Hose		

Printed By : Dwi Iswanto (airafather6107170)

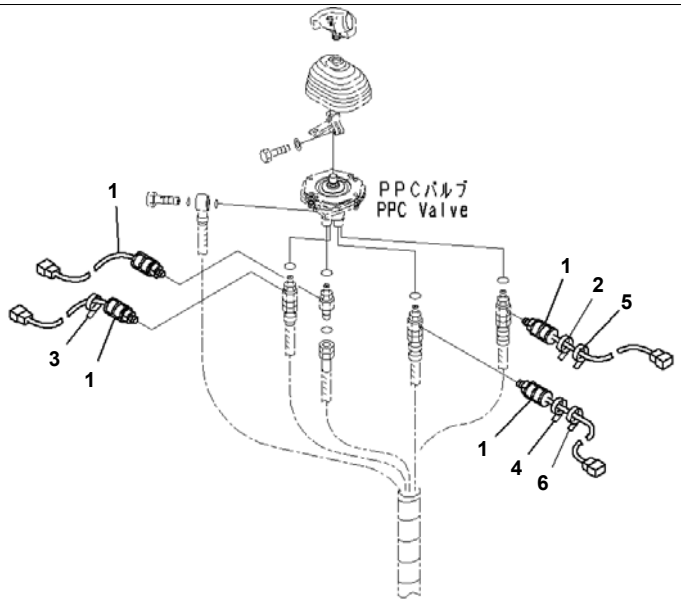

Reference:K2110-008025 Page:K047025

D375A-6R S/N 65001-UP
Floor Frame, Variable Digging Angle Giant Ripper, Blade Control Dual Switch (#65001-)

Index	Code	Part Number	Description	Qty	Serial No.
1		195-06-55120	Switch	4	65001-
2		20Y-62-22790	Band, Red	1	65001-
3		20Y-62-22810	Band, Yellow	1	65001-
4		20Y-62-22820	Band, Blue	1	65001-
5		20Y-62-22830	Band, White	1	65001-
6		20Y-62-22840	Band, Black	1	65001-

Reference:K2110-008025 Page:K047025

Printed By : Dwi Iswanto (airafather6107170)

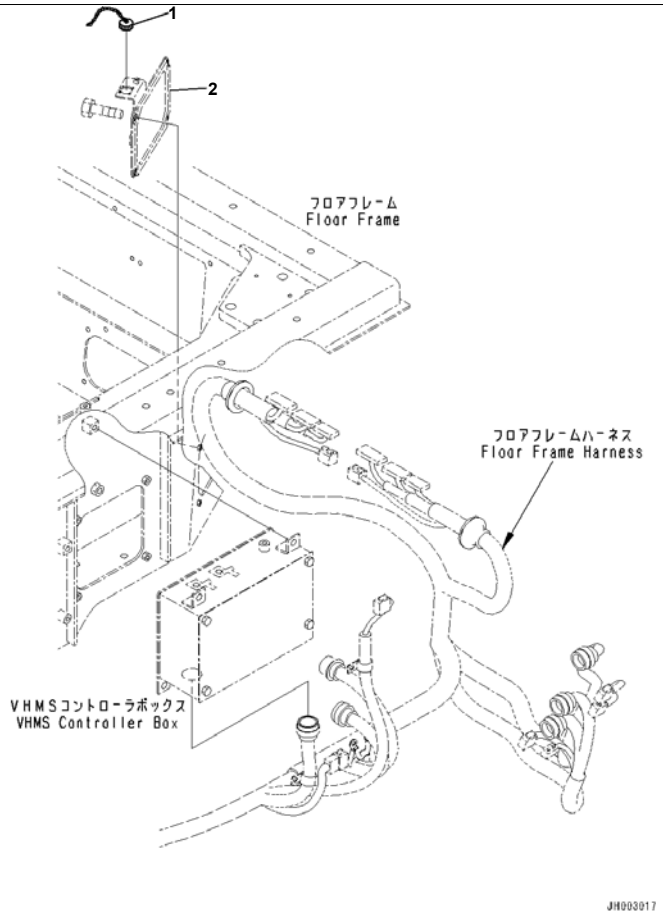

Reference:K2110-008026 Page:K047026

D375A-6R S/N 65001-UP
Floor Frame, Variable Digging Angle Giant Ripper, VHMS Parts (#65001-)

Index	Code	Part Number	Description	Qty	Serial No.
1		562-43-15810	Cap	1	65001-
2		(195-54-73431)	Cover		

Printed By : Dwi Iswanto (airafather6107170)

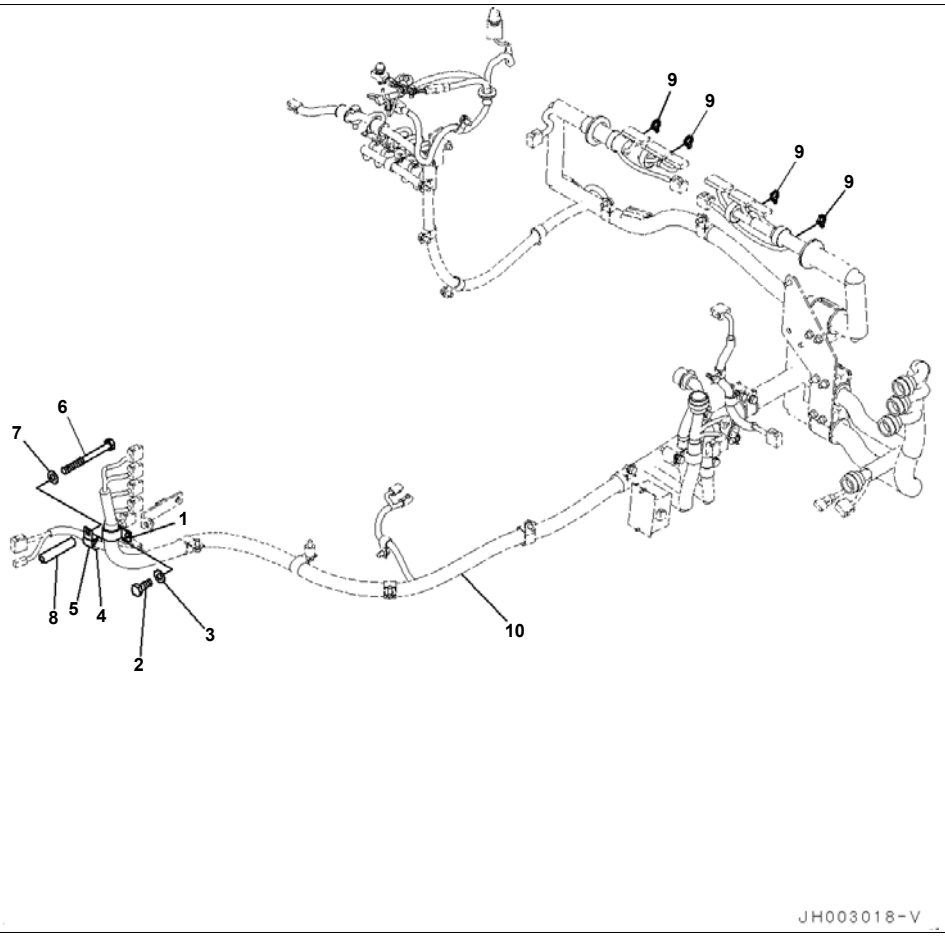

D375A-6R S/N 65001-UP
Floor Frame, Variable Digging Angle Giant Ripper, Harness Clamp (#65001-)

Index	Code	Part Number	Description	Qty	Serial No.
1		04434-53412	Clip	1	65001-
2		01010-81225	Bolt	1	65001-
3		01643-31232	Washer	1	65001-
4		07095-20318	Cushion	1	65001-
5		04434-52512	Clip	1	65001-
6		01011-81225	Bolt	1	65001-
7		01643-31232	Washer	1	65001-
8		6124-61-5720	Spacer	1	65001-
9		08034-20834	Band	4	65001-
10		(195-06-55571)	Wiring Harness		

Printed By : Dwi Iswanto (airafather6107170)

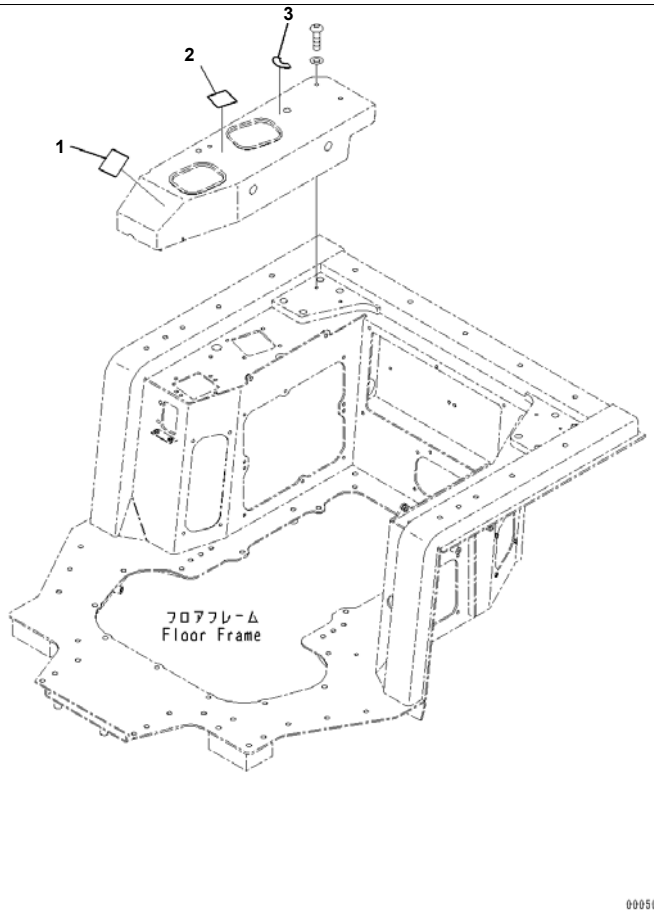

Reference:K2110-008028 Page:K047028

D375A-6R S/N 65001-UP
Floor Frame, Variable Digging Angle Giant Ripper, Plate (#65001-)

Index	Code	Part Number	Description	Qty	Serial No.
1		14X-98-11250	Plate	1	65001-
2		17A-98-11160	Plate	1	65001-
3		17A-98-11171	Plate	1	65001-

Printed By : Dwi Iswanto (airafather6107170)

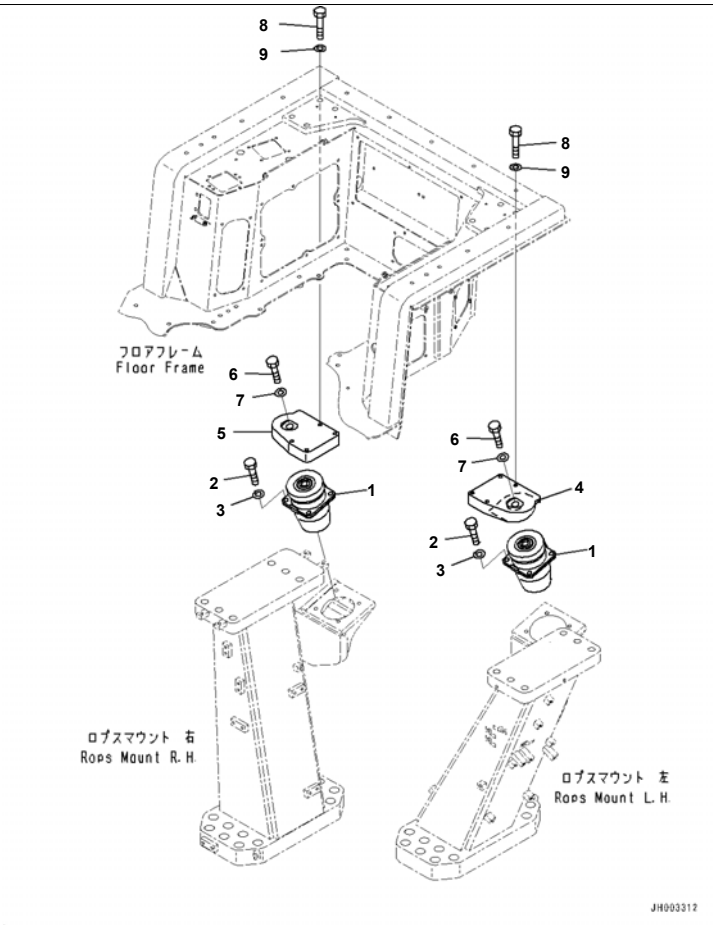

Reference:K2120-001001 Page:K052001

D375A-6R S/N 65001-UP
Floor Frame Mounts, Rear (#65001-)

Index	Code	Part Number	Description	Qty	Serial No.
1		195-54-78561	Cushion	2	65001-
2		01010-81640	Bolt	8	65001-
3		01643-31645	Washer	8	65001-
4		195-54-78471	Plate	1	65001-
5		195-54-78491	Plate	1	65001-
6		195-09-11120	Bolt	2	65001-
7		01643-32780	Washer	2	65001-
8		01010-81660	Bolt	8	65001-
9		21T-54-16150	Washer	8	65001-

Printed By : Dwi Iswanto (airafather6107170)

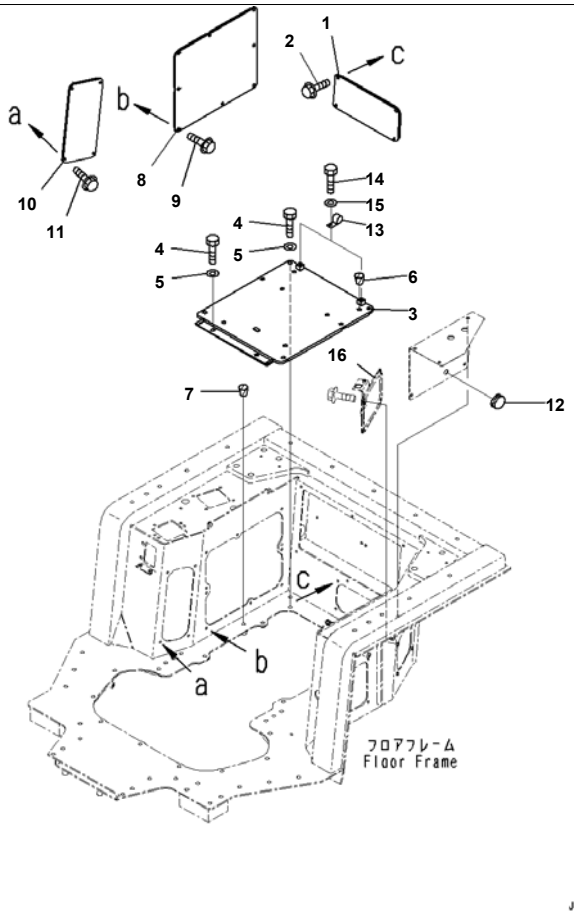

Index	Code	Part Number	Description	Qty	Serial No.
1		195-54-64110	Cover	1	65001-
2		01435-00825	Bolt	4	65001-
3		17M-54-54390	Bracket	1	65001-
4		01010-81235	Bolt	8	65001-
5		01643-31232	Washer	8	65001-
6		07049-01215	Plug	2	65001-
7		07049-01620	Plug	5	65001-
8		195-54-79950	Cover	1	65001-
9		01435-00825	Bolt	8	65001-
10		195-54-64110	Cover	1	65001-
11		01435-00825	Bolt	4	65001-
12		08037-01610	Grommet	1	65001-
13		04434-51010	Clip	2	65001-
14		01010-81020	Bolt	2	65001-
15		01643-31032	Washer	2	65001-
16		(195-54-73431)	Cover		
		(195-54-73431)	Cover		

Printed By : Dwi Iswanto (airafather6107170)

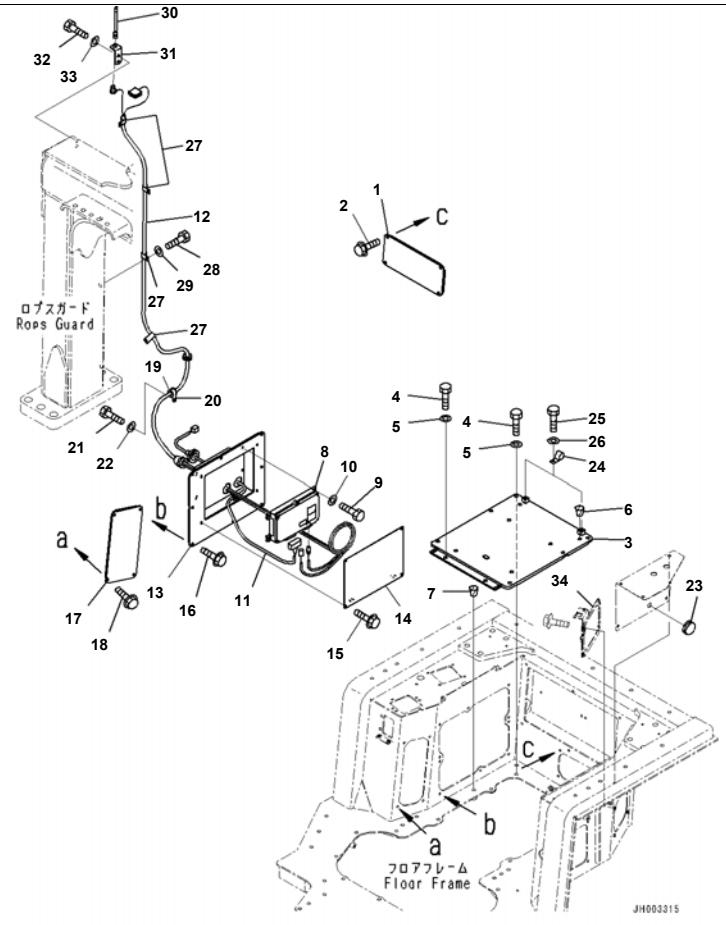

Reference:K2130-002001 Page:K054001

D375A-6R S/N 65001-UP
Floor Frame Cover, For Machine With Vehicle Health Monitoring System (VHMS), With Orbcomm (#65001-)

Index	Code	Part Number	Description	Qty	Serial No.
1		195-54-64110	Cover	1	65001-
2		01435-00825	Bolt	4	65001-
3		17M-54-54390	Bracket	1	65001-
4		01010-81235	Bolt	8	65001-
5		01643-31232	Washer	8	65001-
6		07049-01215	Plug	2	65001-
7		07049-01620	Plug	5	65001-
8		7826-12-2502	Controller	1	65001-
		7826-12-2501	Controller, Orbcomm	1	65001-65001
		7826-12-2500	Controller	1	65001-65001
9		01010-80825	Bolt	4	65001-
10		01643-30823	Washer	4	65001-
11		195-06-75211	Wiring Harness	1	65001-
12		17M-06-41622	Wiring Harness	1	65004-
	A1	17M-06-41621	Wiring Harness	1	65001-65003
13		195-54-79940	Cover	1	65001-
14		17M-54-46520	Cover	1	65001-
15		01435-00825	Bolt	4	65001-
16		01435-00825	Bolt	8	65001-
17		195-54-64110	Cover	1	65001-
18		01435-00825	Bolt	4	65001-
19		07095-20314	Cushion	1	65001-
20		04434-52112	Clip	1	65001-
21		01010-81225	Bolt	1	65001-
22		01643-31232	Washer	1	65001-
23		08037-01610	Grommet	1	65001-
24		04434-51010	Clip	2	65001-
25		01010-81020	Bolt	2	65001-
26		01643-31032	Washer	2	65001-
27		04434-51408	Clip	4	65001-
28		01010-80816	Bolt	4	65001-

Printed By : Dwi Iswanto (airafather6107170)

Floor Frame Cover, For Machine With Vehicle Health Monitoring System (VHMS), With Orbcomm (#65001-)

Index	Code	Part Number	Description	Qty	Serial No.
29		01643-30823	Washer	4	65001-
30		8A13-10-2100	Antenna	1	65001-
31		195-54-73450	Bracket	1	65001-
32		01010-81016	Bolt	2	65001-
33		01643-31032	Washer	2	65001-
34		(195-54-73431)	Cover		
		(195-54-73431)	Cover		

Printed By : Dwi Iswanto (airafather6107170)

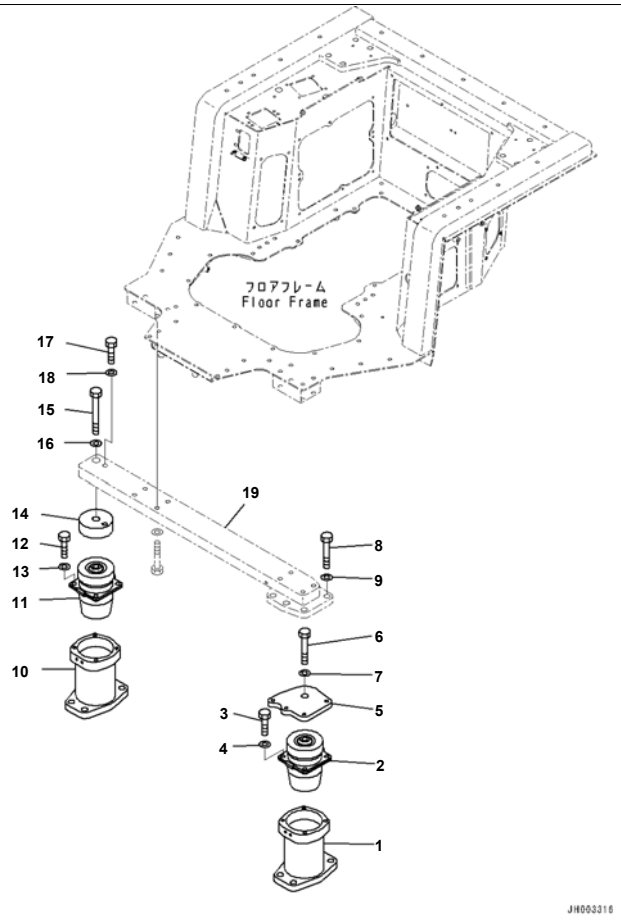

D375A-6R S/N 65001-UP
Floor Frame Mounts, Front (#65001-)

Index	Code	Part Number	Description	Qty	Serial No.
1		195-54-78421	Bracket	1	65001-
2		195-54-78412	Cushion	1	65001-
3		01010-81640	Bolt	4	65001-
4		01643-31645	Washer	4	65001-
5		195-54-78431	Flange	1	65001-
6		01010-82765	Bolt	1	65001-
7		01643-32780	Washer	1	65001-
8		01010-81660	Bolt	4	65001-
9		21T-54-16150	Washer	4	65001-
10		195-54-78421	Bracket	1	65001-
11		195-54-78412	Cushion	1	65001-
12		01010-81640	Bolt	4	65001-
13		01643-31645	Washer	4	65001-
14		195-54-78441	Spacer	1	65001-
15		01011-82745	Bolt	1	65001-
16		01643-32780	Washer	1	65001-
17		01010-81270	Bolt	1	65001-
18		01643-31232	Washer	1	65001-
19		(195-54-85180)	Support		
		(195-54-85180)	Support		

Printed By : Dwi Iswanto (airafather6107170)

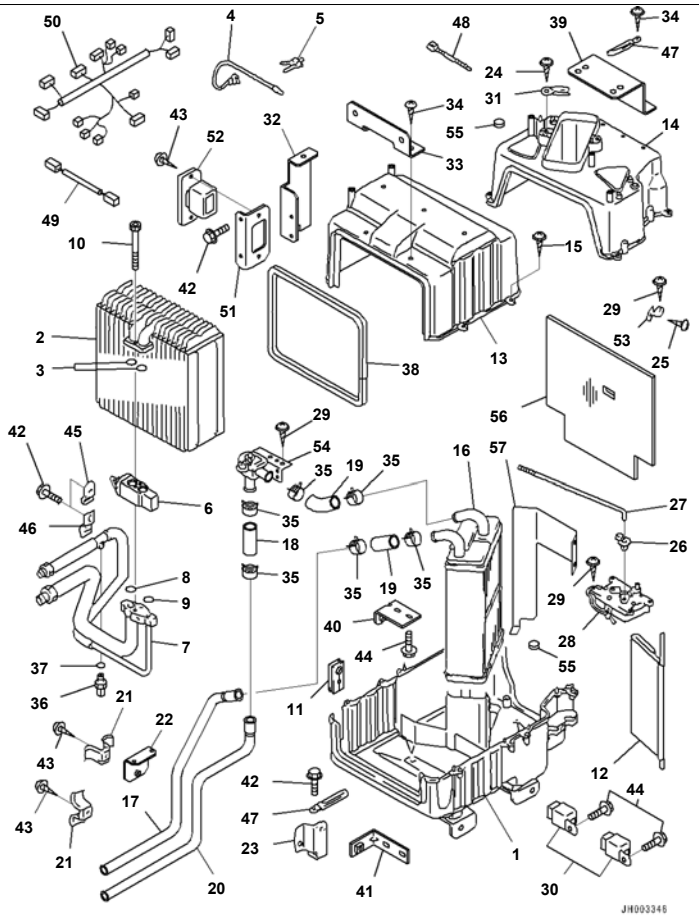

D375A-6R S/N 65001-UP
Dashboard, Air Conditioner For Large Cab, With Wiring Harness, Part No. And Manufacturing Date Code, Air Conditioner Unit (#6500

Index	Code	Part Number	Description	Qty	Serial No.
		198-911-9141	Air Conditioner	1	65001-
1		ND245420-7160	· Case	1	65001-
2		ND447600-0651	· Evaporator	1	65001-
3		ND949142-0030	· · O-ring	2	65001-
4		ND077500-2580	· Thermistor	1	65001-
5		ND246690-2840	· Clamp	1	65001-
6		ND447500-1031	· Valve	1	65001-
7		ND446870-9160	· Tube	1	65001-
8		ND949142-0030	· · O-ring	1	65001-
9		ND949142-0010	· · O-ring	1	65001-
10		ND949046-2150	· Bolt	2	65001-
11		ND146984-5680	· Grommet	1	65001-
12		ND116730-0500	· Door Assembly	1	65001-
13		ND245420-6001	· Case	1	65001-
14		ND116452-6060	· Case	1	65001-
15		ND949001-1730	· Screw, Tapping	11	65001-
16		ND116420-2781	· Core Assembly	1	65001-
17		ND116427-8981	· Pipe	1	65001-
18		ND7052-200500	· Hose	1	65001-
19		ND017265-5480	· Hose	2	65001-
20		ND116427-8991	· Pipe	1	65001-
21		ND017220-0160	· Clamp	2	65001-
22		ND146525-7160	· Bracket	1	65001-
23		ND146525-7170	· Bracket	1	65001-
24		ND90930-05121	· Screw	2	65001-
25		ND91370-03081	· Screw	1	65001-
26		ND146625-5040	· Bushing	1	65001-
27		ND116662-5950	· Shaft	1	65001-
28		ND063700-6390	· Servo Motor Assembly	1	65001-
29		ND90930-05201	· Screw	4	65001-

Printed By : Dwi Iswanto (airafather6107170)

Index	Code	Part Number	Description	Qty	Serial No.
30		ND056700-8170	· Relay Assembly	2	65001-
31		ND017660-3490	· Bracket	1	65001-
32		ND146530-0930	· Bracket	1	65001-
33		ND146530-0940	· Bracket	1	65001-
34		ND90930-06141	· Screw	6	65001-
35		ND949351-0860	· Clip	6	65001-
36		ND443440-0030	· Switch, Pressure	1	65001-
37		ND949142-0040	· O-ring	1	65001-
38		ND146668-2030	· Packing	1	65001-
39		ND146530-0950	· Bracket	1	65001-
40		ND146530-0960	· Bracket	1	65001-
41		ND146530-0970	· Bracket	1	65001-
42		ND91570-06161	· Bolt	7	65001-
43		ND91370-04161	· Screw	4	65001-
44		ND91478-08161	· Bolt	4	65001-
45		ND146780-9270	· Clamp	1	65001-
46		ND146780-2610	· Clamp	1	65001-
47		ND146691-2790	· Clamp	2	65001-
48		ND040031-0110	· Band	3	65001-
49		ND246460-1830	· Wiring Harness	1	65001-
50		ND246460-5021	· Wiring Harness	1	65001-
51		ND146525-7180	· Bracket	1	65001-
52		ND246810-2530	· Resistor	1	65001-
53		ND146525-7190	· Bracket	1	65001-
54		ND113600-9771	· Valve	1	65001-
55		ND146622-5690	· Packing	2	65001-
56		ND145522-4100	· Net	1	65001-
57		ND146525-7520	· Bracket	1	65001-

Printed By : Dwi Iswanto (airafather6107170)

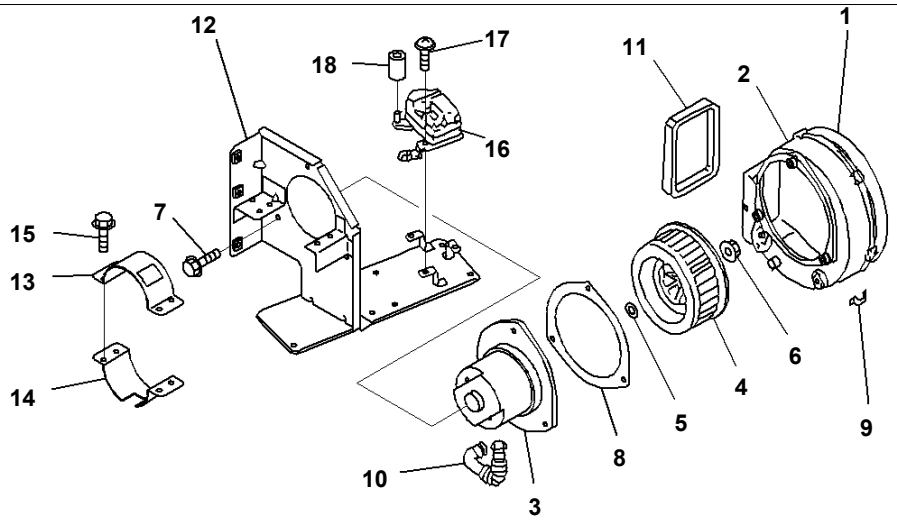

Index	Code	Part Number	Description	Qty	Serial No.
		198-911-9111	Blower Assembly	1	65001-
1		ND140240-0682	· Case	1	65001-
2		ND514024-0121	· Case	1	65001-
3		ND529250-0049	· Motor Assembly	1	65001-
4		ND116221-0430	· Fan	1	65001-
5		ND949011-7650	· Washer	1	65001-
6		ND949056-2230	· Nut	1	65001-
7		ND949047-4120	· Screw	3	65001-
8		ND146622-1920	· Packing	1	65001-
9		ND116632-0171	· Spring	6	65001-
10		ND146651-0920	· Pipe	1	65001-
11		ND040016-4780	· Insulator	1	65001-
12		ND514546-0515	· Bracket	1	65001-
13		ND145461-7530	· Bracket	1	65001-
14		ND514546-1550	· Bracket	1	65001-
15		ND91470-06201	· Bolt	4	65001-
16		ND063700-6270	· Motor	1	65001-
17		ND913700-5161	· Bolt	3	65001-
18		ND146625-0930	· Bushing	1	65001-

Printed By : Dwi Iswanto (airafather6107170)

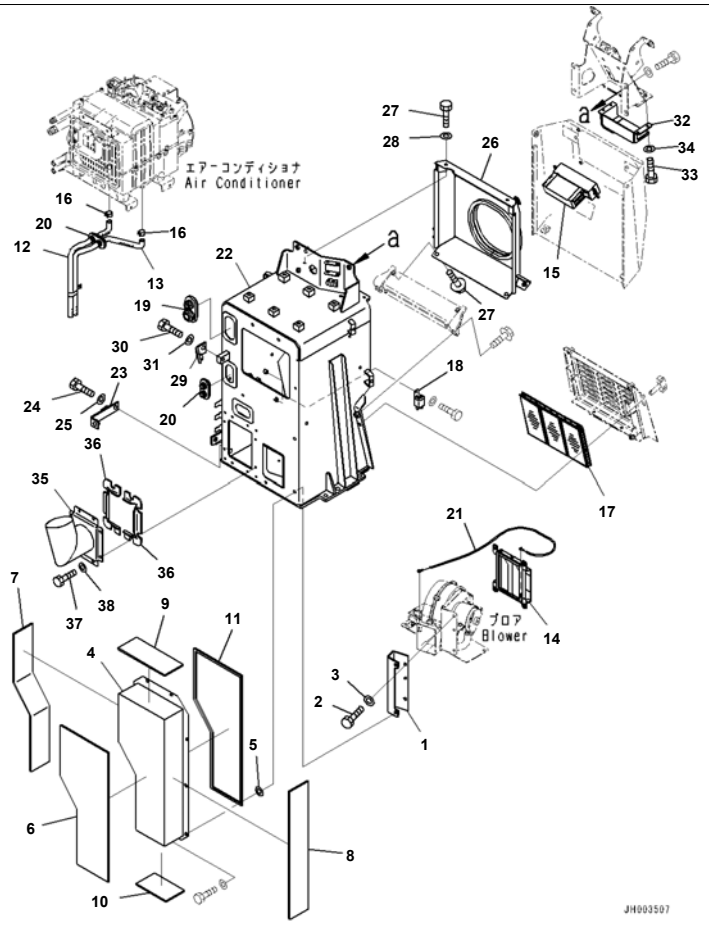

Reference:K2210-001003 Page:K056003

D375A-6R S/N 65001-UP
Dashboard, Air Conditioner For Large Cab, With Wiring Harness, Part No. And Manufacturing Date Code, Air Conditioner Kit and Box

Index	Code	Part Number	Description	Qty	Serial No.
1		195-911-9331	Bracket	1	65001-
2		01010-80820	Bolt	3	65001-
3		01643-30823	Washer	3	65001-
4		195-911-9341	Duct	1	65001-
5		01643-31032	· Washer	7	65001-
		01643-41032	· Washer, Flat	7	65001-65001
6		195-911-9350	· Sheet	1	65001-
7		195-911-9360	· Sheet	1	65001-
8		195-911-9370	· Sheet	1	65001-
9		195-911-9380	· Sheet	1	65001-
10		195-911-9390	· Sheet	1	65001-
11		195-911-9410	· Sheet	1	65001-
12		17M-911-6470	Hose	1	65001-
13		17M-911-6480	Hose	1	65001-
14		14X-911-7620	Damper	1	65001-
15		421-07-31240	Controller	1	65001-
16		14X-911-7690	Clamp	2	65001-
17		20Y-979-3380	Filter	1	65001-
18		198-911-9240	Relay Assembly	4	65001-
19		195-911-9430	Grommet	1	65001-
20		195-911-9440	Grommet	2	65001-
21		198-911-9210	Cable	1	65001-
22		195-911-7751	Bracket	1	65001-
23		195-911-7630	Bracket	1	65001-
24		01010-81225	Bolt	1	65001-
25		01643-31232	Washer	1	65001-
26		195-911-7762	Cover	1	65010-
	A2	195-911-7761	Cover	1	65001-65009
27		01010-80820	Bolt	4	65001-
28		01643-30823	Washer	4	65001-

Reference:K2210-001003 Page:K056003

Printed By : Dwi Iswanto (airafather6107170)

Index	Code	Part Number	Description	Qty	Serial No.
29		195-911-7770	Bracket	1	65001-
30		01010-81225	Bolt	1	65001-
31		01643-31232	Washer	1	65001-
32		195-54-83651	Bracket	1	65001-
33		01010-80616	Bolt	4	65001-
34		01643-30623	Washer	4	65001-
35		17M-911-6130	Duct	1	65001-
36		195-911-9190	· Sheet	2	65001-
37		01010-80820	Bolt	8	65001-
38		01643-30823	Washer	8	65001-

Printed By : Dwi Iswanto (airafather6107170)

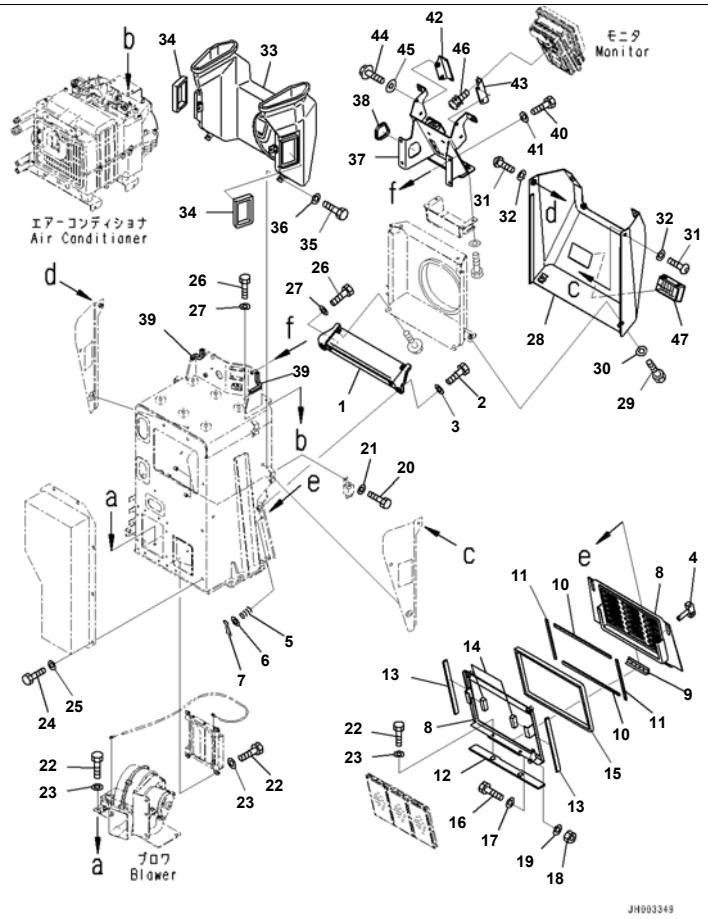

Reference:K2210-001004 Page:K056004

D375A-6R S/N 65001-UP

Dashboard, Air Conditioner For Large Cab, With Wiring Harness, Part No. And Manufacturing Date Code, Filter Cover and Dashboard

Index	Code	Part Number	Description	Qty	Serial No.
1		198-911-9820	Bracket	1	65001-
2		01010-81230	Bolt	2	65001-
3		01643-31232	Washer	2	65001-
4		09459-11033	Lock	2	65001-
5		09459-01614	Spring	2	65001-
6		01642-01016	Washer, Flat	2	65001-
7		04050-03015	Pin, Cotter	2	65001-
8		195-54-83750	Cover	1	65001-
9		142-54-13640	· Hinge,Welded	1	65001-
10		198-911-9451	· Sheet	2	65001-
11		198-911-9481	· Sheet	2	65001-
12		198-911-9830	· Seal	1	65001-
13		198-911-9851	· Sheet	2	65001-
14		198-911-9861	· Sheet	2	65001-
15		198-911-9871	· Sheet	1	65001-
16		01010-D0816	· Bolt	1	65001-
17		01643-70823	· Washer	1	65001-
18		01580-10806	· Nut	1	65001-
19		01643-70823	· Washer	1	65001-
20		01010-80612	Bolt	4	65001-
21		01643-30623	Washer	4	65001-
22		01010-80816	Bolt	10	65001-
23		01643-30823	Washer	10	65001-
24		01010-80820	Bolt	13	65001-
25		01643-30823	Washer	13	65001-
26		01010-80830	Bolt	4	65001-
27		01643-30823	Washer	4	65001-
28		195-54-83621	Cover	1	65001-
29		01010-80820	Bolt	2	65001-
30		01643-30823	Washer	2	65001-

Printed By : Dwi Iswanto (airafather6107170)

Dashboard, Air Conditioner For Large Cab, With Wiring Harness, Part No. And Manufacturing Date Code, Filter Cover and Dashboard

Index	Code	Part Number	Description	Qty	Serial No.
31		01245-00816	Screw	2	65001-
32		01643-70823	Washer	2	65001-
33		198-911-9161	Duct	1	65001-
34		198-911-9530	· Seal	2	65001-
35		01010-80820	Bolt	4	65001-
36		01643-30823	Washer	4	65001-
37		195-54-83631	Bracket	1	65001-
38		12Y-43-12861	Seal	1	65001-
39		12Y-979-1850	Trim	2	65001-
40		01010-80820	Bolt	4	65001-
41		01643-30823	Washer	4	65001-
42		195-54-83611	Bracket	1	65001-
43		195-54-83740	Bracket	1	65001-
44		01435-00616	Bolt	4	65001-
45		17A-Z11-2813	Plate	4	65001-
46		01023-60410	Screw	4	65001-
47		14X-54-18270	Grille Assembly	1	65001-

Printed By : Dwi Iswanto (airafather6107170)

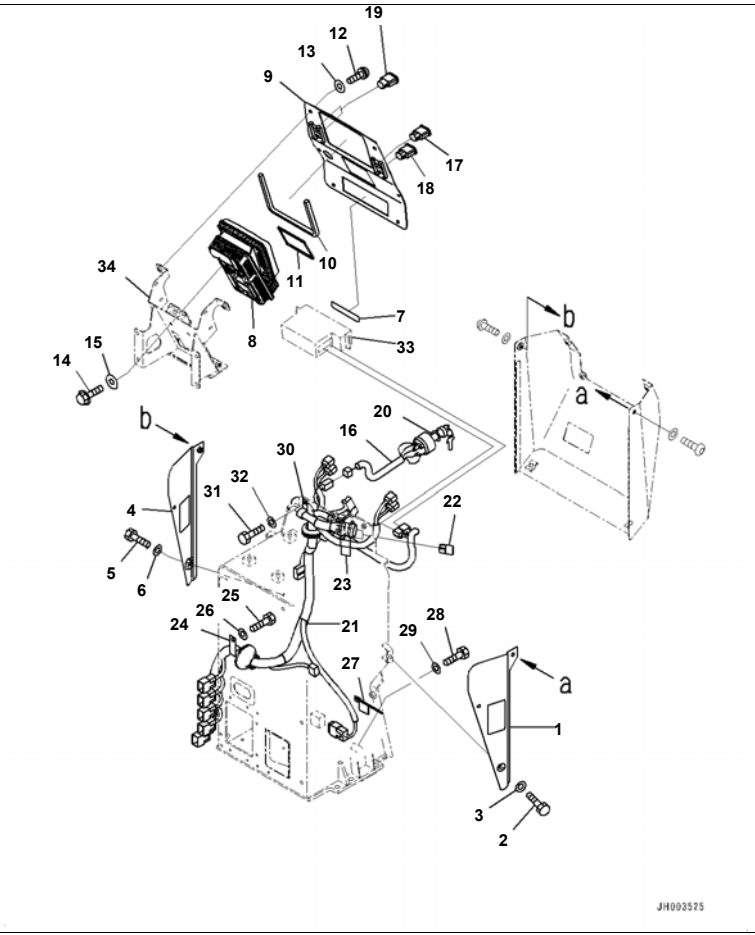

D375A-6R S/N 65001-UP
Dashboard, Air Conditioner For Large Cab, With Wiring Harness, Part No. And Manufacturing Date Code, Dashboard, Monitor and Elec

Index	Code	Part Number	Description	Qty	Serial No.
1		195-54-72211	Cover	1	65001-
2		01010-80820	Bolt	2	65001-
3		01643-30823	Washer	2	65001-
4		195-54-72221	Cover	1	65001-
5		01010-80820	Bolt	2	65001-
6		01643-30823	Washer	2	65001-
7		17A-Z11-7570	Plate	1	65001-
8		7831-69-1302	Monitor	1	65002-
		7831-69-1301	Monitor	1	65001-65001
9		195-54-83691	Cover	1	65001-
10		195-54-83730	Sheet	1	65001-
11		195-54-83680	Sheet	1	65001-
12		01245-00816	Screw	6	65001-
13		01643-70823	Washer	6	65001-
14		01435-00616	Bolt	4	65001-
15		17A-Z11-2813	Plate	4	65001-
16		195-06-55891	Wiring Harness	1	65001-
17		17A-06-42250	Switch, Light, Front	1	65001-
18		17A-06-42260	Switch, Light, Rear	1	65001-
19		20Y-06-42190	Cover	2	65001-
20		20Y-43-41750	Washer	4	65001-
21		195-06-55613	Wiring Harness	1	65001-
22		21J-06-13661	· Diode	2	65001-
23		08034-20519	Band	2	65001-
	A2	08034-20414	Band	2	65001-65001
24		155-911-1790	Clip	1	65001-
25		01010-81225	Bolt	1	65001-
26		01643-31232	Washer	1	65001-
27		17M-06-43760	Bracket	1	65001-
28		01010-81020	Bolt	1	65001-

Printed By : Dwi Iswanto (airafather6107170)

Index	Code	Part Number	Description	Qty	Serial No.
29		01643-31032	Washer	1	65001-
30		04434-52511	Clip	1	65001-
31		01010-81020	Bolt	1	65001-
32		01643-31032	Washer	1	65001-
33		(421-07-31240)	Controller		
34		(195-54-83631)	Bracket		

Printed By : Dwi Iswanto (airafather6107170)

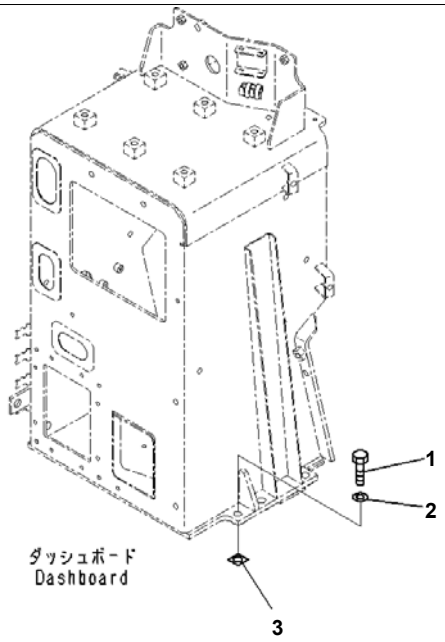

Reference:K2210-001006 Page:K056006

D375A-6R S/N 65001-UP
Dashboard, Air Conditioner For Large Cab, With Wiring Harness, Part No. And Manufacturing Date Code, Dashboard Mounting (#65001-

Index	Code	Part Number	Description	Qty	Serial No.
1		01010-81235	Bolt	6	65001-
2		01643-31232	Washer	6	65001-
3		17M-54-48110	Shim, T=0.8mm	2	65001-

Reference:K2210-001006 Page:K056006

Printed By : Dwi Iswanto (airafather6107170)

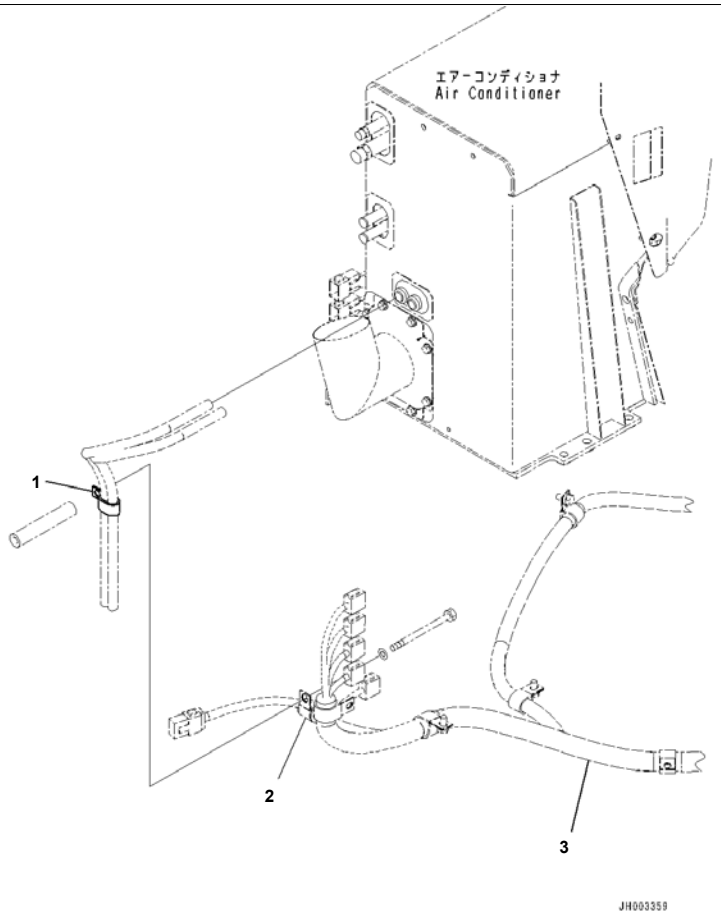

Reference:K2210-001007 Page:K056007

D375A-6R S/N 65001-UP
Dashboard, Air Conditioner For Large Cab, With Wiring Harness, Part No. And Manufacturing Date Code, Air Conditioner Drain Hose

Index	Code	Part Number	Description	Qty	Serial No.
1		04435-51712	Clip	1	65001-
2		(04434-52512)	Clip		
		(04434-52512)	Clip		
3		(195-06-55571)	Wiring Harness		
		(195-06-55571)	Wiring Harness		

Printed By : Dwi Iswanto (airafather6107170)

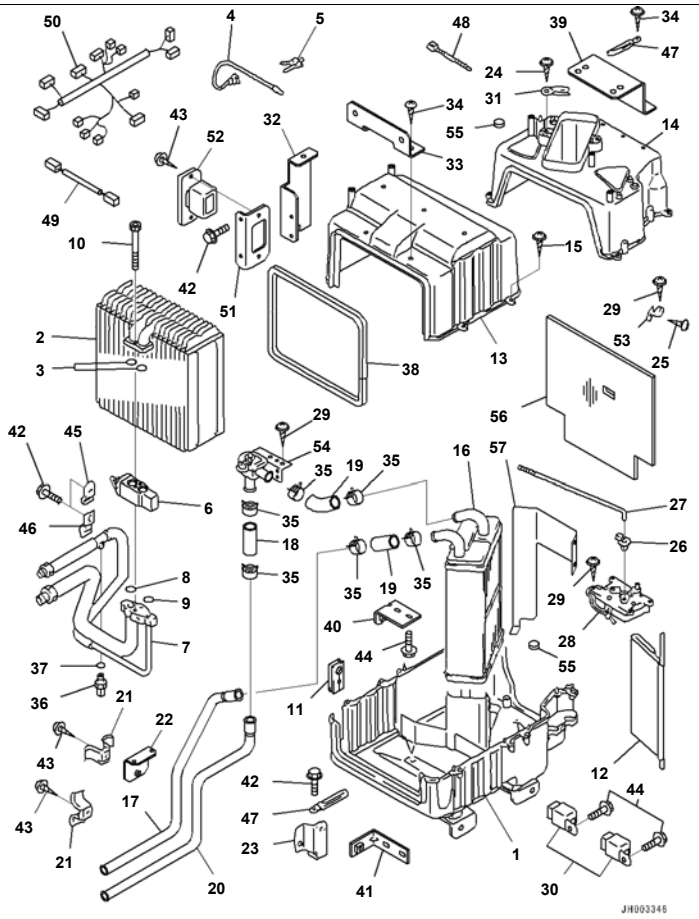

D375A-6R S/N 65001-UP
Dashboard, Air Conditioner, Large Cab, Air Conditioner Unit (#65001-)

Index	Code	Part Number	Description	Qty	Serial No.
		198-911-9141	Air Conditioner	1	65001-
1		ND245420-7160	· Case	1	65001-
2		ND447600-0651	· Evaporator	1	65001-
3		ND949142-0030	· · O-ring	2	65001-
4		ND077500-2580	· Thermistor	1	65001-
5		ND246690-2840	· Clamp	1	65001-
6		ND447500-1031	· Valve	1	65001-
7		ND446870-9160	· Tube	1	65001-
8		ND949142-0030	· · O-ring	1	65001-
9		ND949142-0010	· · O-ring	1	65001-
10		ND949046-2150	· Bolt	2	65001-
11		ND146984-5680	· Grommet	1	65001-
12		ND116730-0500	· Door Assembly	1	65001-
13		ND245420-6001	· Case	1	65001-
14		ND116452-6060	· Case	1	65001-
15		ND949001-1730	· Screw, Tapping	11	65001-
16		ND116420-2781	· Core Assembly	1	65001-
17		ND116427-8981	· Pipe	1	65001-
18		ND7052-200500	· Hose	1	65001-
19		ND017265-5480	· Hose	2	65001-
20		ND116427-8991	· Pipe	1	65001-
21		ND017220-0160	· Clamp	2	65001-
22		ND146525-7160	· Bracket	1	65001-
23		ND146525-7170	· Bracket	1	65001-
24		ND90930-05121	· Screw	2	65001-
25		ND91370-03081	· Screw	1	65001-
26		ND146625-5040	· Bushing	1	65001-
27		ND116662-5950	· Shaft	1	65001-
28		ND063700-6390	· Servo Motor Assembly	1	65001-
29		ND90930-05201	· Screw	4	65001-
30		ND056700-8170	· Relay Assembly	2	65001-

Printed By : Dwi Iswanto (airafather6107170)

Dashboard, Air Conditioner, Large Cab, Air Conditioner Unit (#65001-)

Index	Code	Part Number	Description	Qty	Serial No.
31		ND017660-3490	· Bracket	1	65001-
32		ND146530-0930	· Bracket	1	65001-
33		ND146530-0940	· Bracket	1	65001-
34		ND90930-06141	· Screw	6	65001-
35		ND949351-0860	· Clip	6	65001-
36		ND443440-0030	· Switch, Pressure	1	65001-
37		ND949142-0040	· O-ring	1	65001-
38		ND146668-2030	· Packing	1	65001-
39		ND146530-0950	· Bracket	1	65001-
40		ND146530-0960	· Bracket	1	65001-
41		ND146530-0970	· Bracket	1	65001-
42		ND91570-06161	· Bolt	7	65001-
43		ND91370-04161	· Screw	4	65001-
44		ND91478-08161	· Bolt	4	65001-
45		ND146780-9270	· Clamp	1	65001-
46		ND146780-2610	· Clamp	1	65001-
47		ND146691-2790	· Clamp	2	65001-
48		ND040031-0110	· Band	3	65001-
49		ND246460-1830	· Wiring Harness	1	65001-
50		ND246460-5021	· Wiring Harness	1	65001-
51		ND146525-7180	· Bracket	1	65001-
52		ND246810-2530	· Resistor	1	65001-
53		ND146525-7190	· Bracket	1	65001-
54		ND113600-9771	· Valve	1	65001-
55		ND146622-5690	· Packing	2	65001-
56		ND145522-4100	· Net	1	65001-
57		ND146525-7520	· Bracket	1	65001-

Printed By : Dwi Iswanto (airafather6107170)

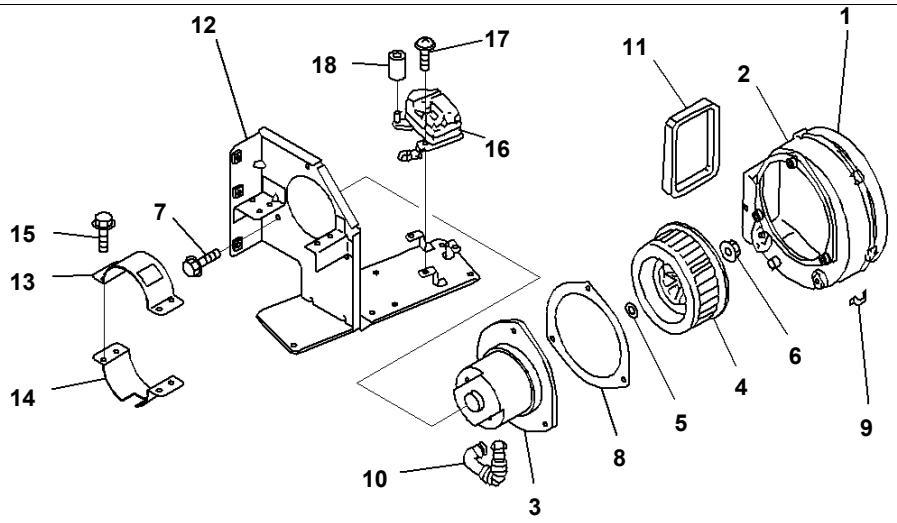

Index	Code	Part Number	Description	Qty	Serial No.
		198-911-9111	Blower Assembly	1	65001-
1		ND140240-0682	· Case	1	65001-
2		ND514024-0121	· Case	1	65001-
3		ND529250-0049	· Motor Assembly	1	65001-
4		ND116221-0430	· Fan	1	65001-
5		ND949011-7650	· Washer	1	65001-
6		ND949056-2230	· Nut	1	65001-
7		ND949047-4120	· Screw	3	65001-
8		ND146622-1920	· Packing	1	65001-
9		ND116632-0171	· Spring	6	65001-
10		ND146651-0920	· Pipe	1	65001-
11		ND040016-4780	· Insulator	1	65001-
12		ND514546-0515	· Bracket	1	65001-
13		ND145461-7530	· Bracket	1	65001-
14		ND514546-1550	· Bracket	1	65001-
15		ND91470-06201	· Bolt	4	65001-
16		ND063700-6270	· Motor	1	65001-
17		ND913700-5161	· Bolt	3	65001-
18		ND146625-0930	· Bushing	1	65001-

Printed By : Dwi Iswanto (airafather6107170)

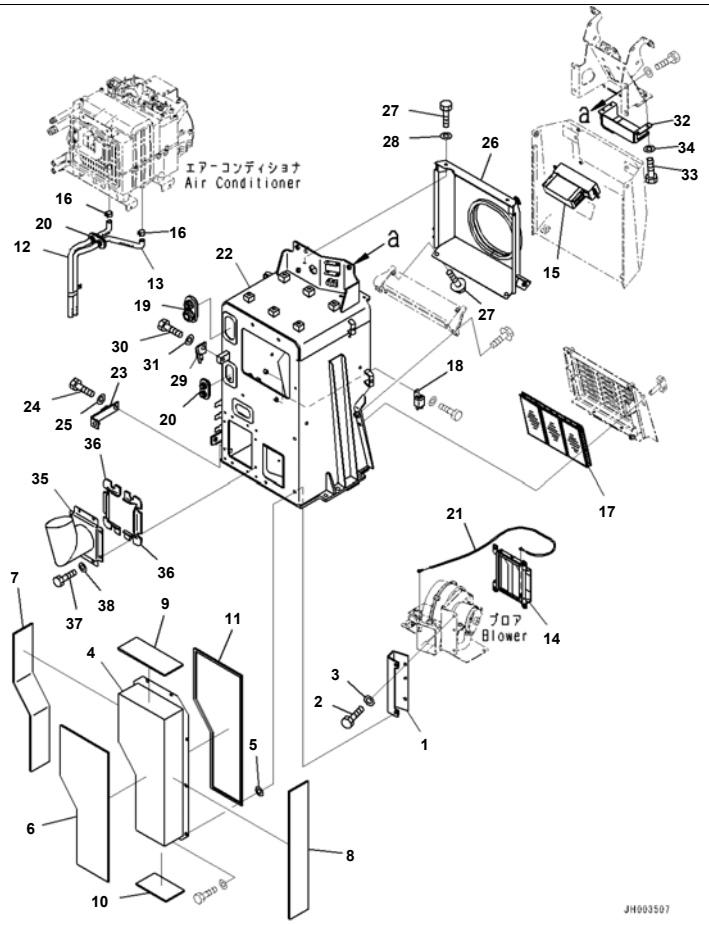

Reference:K2210-004003 Page:K057003

D375A-6R S/N 65001-UP
Dashboard, Air Conditioner, Large Cab, Air Conditioner Kit and Box (#65001-)

Index	Code	Part Number	Description	Qty	Serial No.
1		195-911-9331	Bracket	1	65001-
2		01010-80820	Bolt	3	65001-
3		01643-30823	Washer	3	65001-
4		195-911-9341	Duct	1	65001-
5		01643-31032	· Washer	7	65001-
6		195-911-9350	· Sheet	1	65001-
7		195-911-9360	· Sheet	1	65001-
8		195-911-9370	· Sheet	1	65001-
9		195-911-9380	· Sheet	1	65001-
10		195-911-9390	· Sheet	1	65001-
11		195-911-9410	· Sheet	1	65001-
12		17M-911-6470	Hose	1	65001-
13		17M-911-6480	Hose	1	65001-
14		14X-911-7620	Damper	1	65001-
15		421-07-31240	Controller	1	65001-
16		14X-911-7690	Clamp	2	65001-
17		20Y-979-3380	Filter	1	65001-
18		198-911-9240	Relay Assembly	4	65001-
19		195-911-9430	Grommet	1	65001-
20		195-911-9440	Grommet	2	65001-
21		198-911-9210	Cable	1	65001-
22		195-911-7751	Bracket	1	65001-
23		195-911-7630	Bracket	1	65001-
24		01010-81225	Bolt	1	65001-
25		01643-31232	Washer	1	65001-
	A2	195-911-7761	Cover	1	65001-65009
26		195-911-7762	Cover	1	65010-
27		01010-80820	Bolt	4	65001-
28		01643-30823	Washer	4	65001-
29		195-911-7770	Bracket	1	65001-
30		01010-81225	Bolt	1	65001-

Printed By : Dwi Iswanto (airafather6107170)

Dashboard, Air Conditioner, Large Cab, Air Conditioner Kit and Box (#65001-)

Index	Code	Part Number	Description	Qty	Serial No.
31		01643-31232	Washer	1	65001-
32		195-54-83651	Bracket	1	65001-
33		01010-80616	Bolt	4	65001-
34		01643-30623	Washer	4	65001-
35		17M-911-6130	Duct	1	65001-
36		195-911-9190	· Sheet	2	65001-
37		01010-80820	Bolt	8	65001-
38		01643-30823	Washer	8	65001-

Printed By : Dwi Iswanto (airafather6107170)

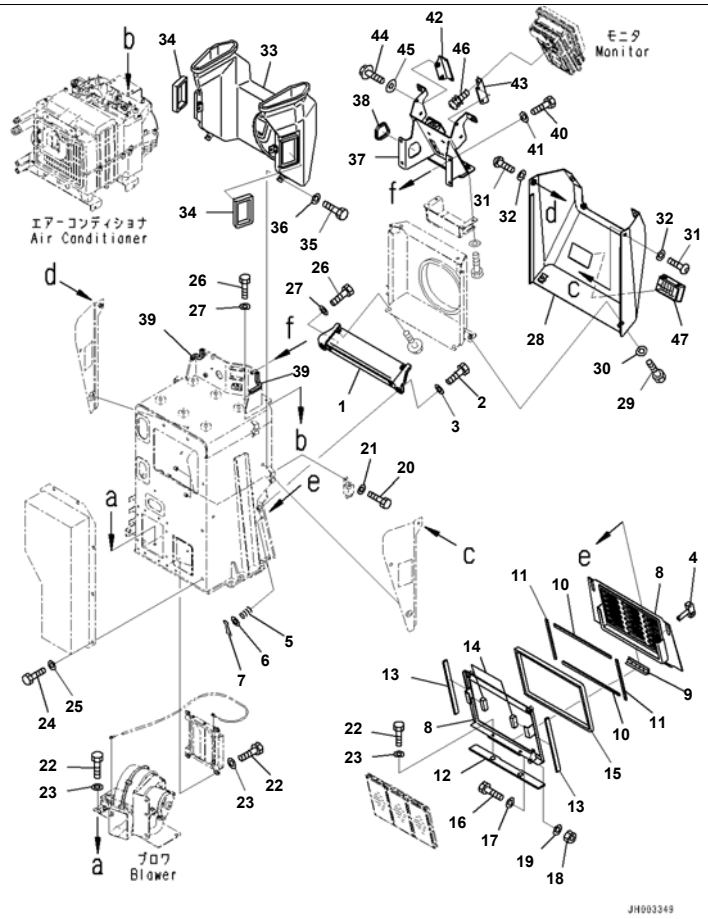

Reference:K2210-004004 Page:K057004

D375A-6R S/N 65001-UP
Dashboard, Air Conditioner, Large Cab, Filter Cover and Dashboard (#65001-)

Index	Code	Part Number	Description	Qty	Serial No.
1		198-911-9820	Bracket	1	65001-
2		01010-81230	Bolt	2	65001-
3		01643-31232	Washer	2	65001-
4		09459-11033	Lock	2	65001-
5		09459-01614	Spring	2	65001-
6		01642-01016	Washer, Flat	2	65001-
7		04050-03015	Pin, Cotter	2	65001-
8		195-54-83750	Cover	1	65001-
9		142-54-13640	· Hinge,Welded	1	65001-
10		198-911-9451	· Sheet	2	65001-
11		198-911-9481	· Sheet	2	65001-
12		198-911-9830	· Seal	1	65001-
13		198-911-9851	· Sheet	2	65001-
14		198-911-9861	· Sheet	2	65001-
15		198-911-9871	· Sheet	1	65001-
16		01010-D0816	· Bolt	1	65001-
17		01643-70823	· Washer	1	65001-
18		01580-10806	· Nut	1	65001-
19		01643-70823	· Washer	1	65001-
20		01010-80612	Bolt	4	65001-
21		01643-30623	Washer	4	65001-
22		01010-80816	Bolt	10	65001-
23		01643-30823	Washer	10	65001-
24		01010-80820	Bolt	13	65001-
25		01643-30823	Washer	13	65001-
26		01010-80830	Bolt	4	65001-
27		01643-30823	Washer	4	65001-
28		195-54-83621	Cover	1	65001-
29		01010-80820	Bolt	2	65001-
30		01643-30823	Washer	2	65001-
31		01245-00816	Screw	2	65001-

Reference:K2210-004004 Page:K057004

Printed By : Dwi Iswanto (airafather6107170)

Dashboard, Air Conditioner, Large Cab, Filter Cover and Dashboard (#65001-)

Index	Code	Part Number	Description	Qty	Serial No.
32		01643-70823	Washer	2	65001-
33		198-911-9161	Duct	1	65001-
34		198-911-9530	· Seal	2	65001-
35		01010-80820	Bolt	4	65001-
36		01643-30823	Washer	4	65001-
37		195-54-83631	Bracket	1	65001-
38		12Y-43-12861	Seal	1	65001-
39		12Y-979-1850	Trim	2	65001-
40		01010-80820	Bolt	4	65001-
41		01643-30823	Washer	4	65001-
42		195-54-83611	Bracket	1	65001-
43		195-54-83740	Bracket	1	65001-
44		01435-00616	Bolt	4	65001-
45		17A-Z11-2813	Plate	4	65001-
46		01023-60410	Screw	4	65001-
47		14X-54-18270	Grille Assembly	1	65001-

Printed By : Dwi Iswanto (airafather6107170)

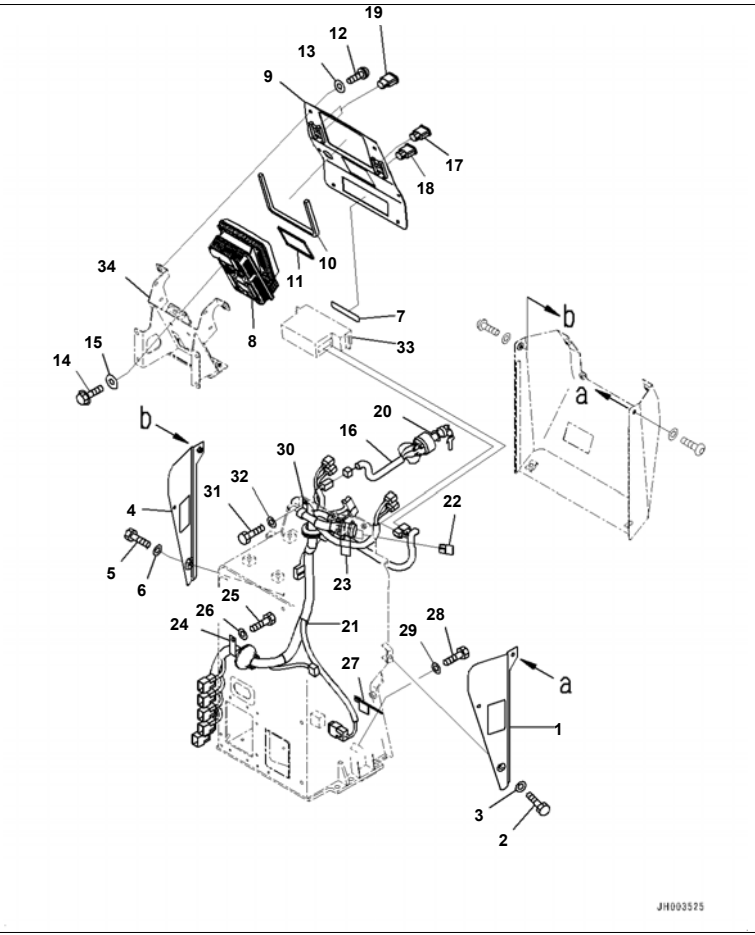

D375A-6R S/N 65001-UP
Dashboard, Air Conditioner, Large Cab, Dashboard, Monitor and Electric Wiring (#65001-)

Index	Code	Part Number	Description	Qty	Serial No.
1		195-54-72211	Cover	1	65001-
2		01010-80820	Bolt	2	65001-
3		01643-30823	Washer	2	65001-
4		195-54-72221	Cover	1	65001-
5		01010-80820	Bolt	2	65001-
6		01643-30823	Washer	2	65001-
7		17A-Z11-7570	Plate	1	65001-
8		7831-69-1302	Monitor	1	65004-
		7831-69-1301	Monitor	1	65001-65003
9		195-54-83691	Cover	1	65001-
10		195-54-83730	Sheet	1	65001-
11		195-54-83680	Sheet	1	65001-
12		01245-00816	Screw	6	65001-
13		01643-70823	Washer	6	65001-
14		01435-00616	Bolt	4	65001-
15		17A-Z11-2813	Plate	4	65001-
16		195-06-55891	Wiring Harness	1	65001-
17		17A-06-42250	Switch, Light, Front	1	65001-
18		17A-06-42260	Switch, Light, Rear	1	65001-
19		20Y-06-42190	Cover	2	65001-
20		20Y-43-41750	Washer	4	65001-
21		195-06-57610	Wiring Harness	1	65001-
22		21J-06-13661	· Diode	2	65001-
23		08034-20519	Band	2	65001-
24		155-911-1790	Clip	1	65001-
25		01010-81225	Bolt	1	65001-
26		01643-31232	Washer	1	65001-
27		17M-06-43760	Bracket	1	65001-
28		01010-81020	Bolt	1	65001-
29		01643-31032	Washer	1	65001-
30		04434-52511	Clip	1	65001-

Printed By : Dwi Iswanto (airafather6107170)

Index	Code	Part Number	Description	Qty	Serial No.
31		01010-81020	Bolt	1	65001-
32		01643-31032	Washer	1	65001-
33		(421-07-31240)	Controller		
34		(195-54-83631)	Bracket		

Printed By : Dwi Iswanto (airafather6107170)

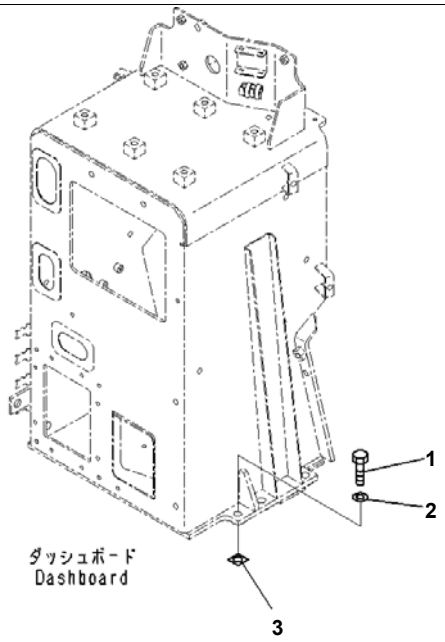

JH003360

Reference:K2210-004006 Page:K057006

D375A-6R S/N 65001-UP
Dashboard, Air Conditioner, Large Cab, Dashboard Mounting (#65001-)

Index	Code	Part Number	Description	Qty	Serial No.
1		01010-81235	Bolt	6	65001-
2		01643-31232	Washer	6	65001-
3		17M-54-48110	Shim, T=0.8mm	2	65001-

Reference:K2210-004006 Page:K057006

Printed By : Dwi Iswanto (airafather6107170)

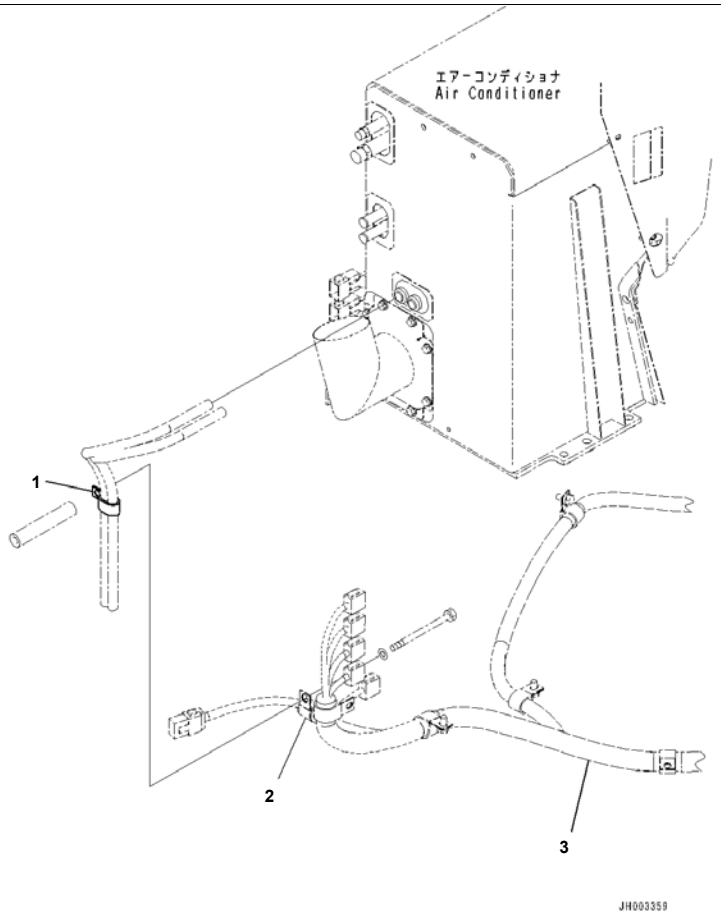

Reference:K2210-004007 Page:K057007

D375A-6R S/N 65001-UP
Dashboard, Air Conditioner, Large Cab, Air Conditioner Drain Hose Clip (#65001-)

Index	Code	Part Number	Description	Qty	Serial No.
1		04435-51712	Clip	1	65001-
2		(04434-52512)	Clip		
		(04434-52512)	Clip		
3		(195-06-55571)	Wiring Harness		
		(195-06-55571)	Wiring Harness		

Reference:K2210-004007 Page:K057007

Printed By : Dwi Iswanto (airafather6107170)

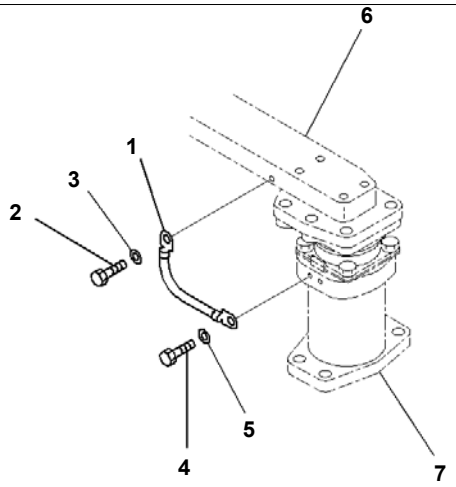

JH003352

D375A-6R S/N 65001-UP
Floor Frame Electric Wiring (#65001-)

Index	Code	Part Number	Description	Qty	Serial No.
1		175-06-51440	Wire	1	65001-
2		01010-81220	Bolt	1	65001-
3		01643-31232	Washer	1	65001-
4		01010-81220	Bolt	1	65001-
5		01643-31232	Washer	1	65001-
6		(195-54-85180)	Support		
		(195-54-85180)	Support		
7		(195-54-78421)	Bracket		

Printed By : Dwi Iswanto (airafather6107170)

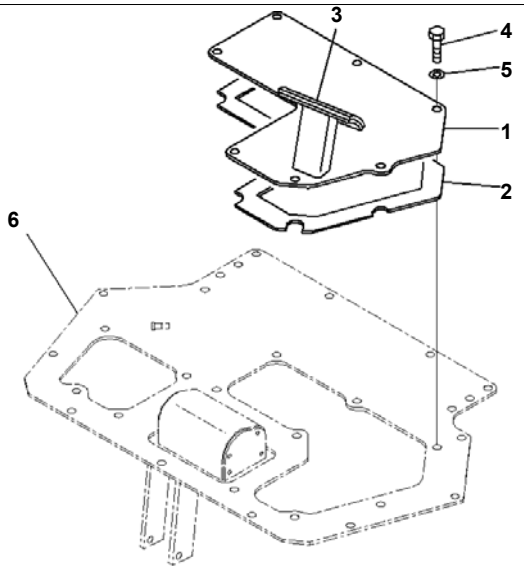

Index	Code	Part Number	Description	Qty	Serial No.
1		17A-43-14171	Cover	1	65001-
2		17A-43-14181	· Sheet	1	65001-
3		14X-43-13760	Cap	1	65001-
4		01010-81230	Bolt	8	65001-
5		01643-31232	Washer	8	65001-
6		(195-43-53120)	Floor		
		(195-43-53120)	Floor		

Printed By : Dwi Iswanto (airafather6107170)

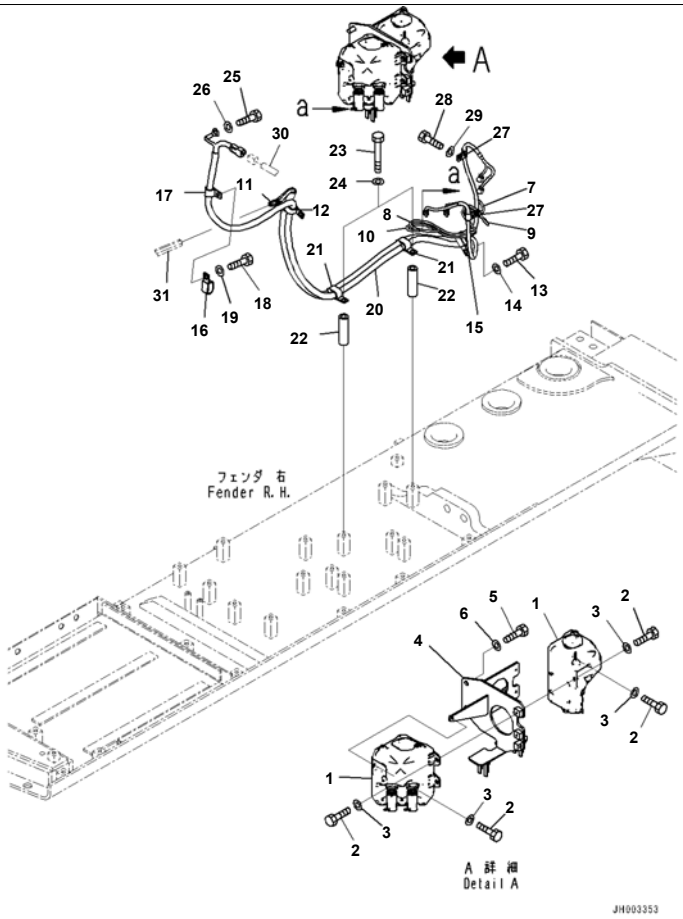

Reference:K2910-001001 Page:K060001

Index	Code	Part Number	Description	Qty	Serial No.
1		14X-Y11-2110	Tank Assembly	2	65001-
2		01010-80612	Bolt	6	65001-
3		209-72-12230	Washer	6	65001-
4		195-911-7611	Bracket	1	65001-
5		01010-81230	Bolt	2	65001-
6		01643-31232	Washer	2	65001-
		195-911-7640	Hose Assembly	1	65001-
7	C1		· Hose Assembly	1	65001-
8	C1		· Hose Assembly	1	65001-
9	C1		· Hose Assembly	1	65001-
10	C1		· Hose Assembly	1	65001-
11		195-979-8590	· Valve	4	65001-
12		04435-51812	Clip	1	65001-
13		01010-81220	Bolt	1	65001-
14		01643-31232	Washer	1	65001-
15		04435-51812	Clip	1	65001-
16		04435-51910	Clip	1	65001-
17		04434-51910	Clip	1	65001-
18		01010-81020	Bolt	1	65001-
19		01643-31032	Washer	1	65001-
20		195-06-54720	Wiring Harness	1	65001-
21		04435-51812	Clip	2	65001-
22		195-78-47130	Spacer	2	65001-
23		01011-81220	Bolt	2	65001-
24		01643-31232	Washer	2	65001-
25		01010-81020	Bolt	1	65001-
26		01643-31032	Washer	1	65001-
27		04434-51010	Clip	2	65001-
28		01010-81020	Bolt	2	65001-
29		01643-31032	Washer	2	65001-
30		(14X-911-4521)	Wire Assembly		

Reference:K2910-001001 Page:K060001

Printed By : Dwi Iswanto (airafather6107170)

Index	Code	Part Number	Description	Qty	Serial No.
		(14X-911-4521)	Wire Assembly		
		(14X-911-4521)	Wire Assembly		
		(198-Z11-6870)	Wiring Harness		
		(198-Z11-6870)	Wiring Harness		
		(198-Z11-6870)	Wiring Harness		
31		(14X-911-3531)	Hose		
		(14X-911-3531)	Hose		
		(14X-911-3531)	Hose		
		(14X-911-3531)	Hose		
		(14X-911-3531)	Hose		
		(14X-911-3531)	Hose		
		(14X-911-3531)	Hose		
		(14X-911-3531)	Hose		

Printed By : Dwi Iswanto (airafather6107170)

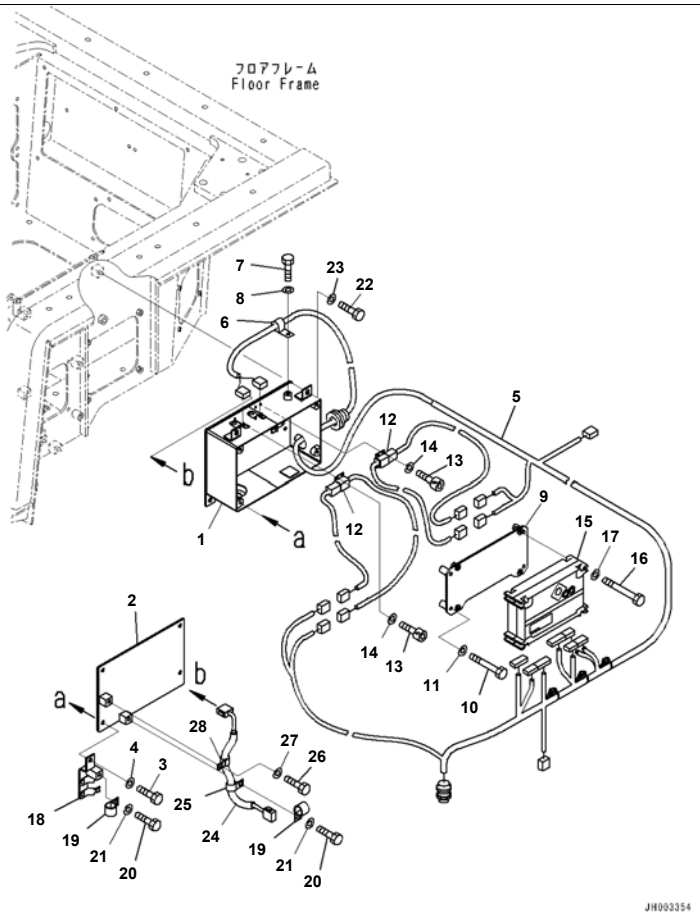

D375A-6R S/N 65001-UP
Vehicle Health Monitoring System (VHMS) And KOMTRAX Controllers (#65001-)

Index	Code	Part Number	Description	Qty	Serial No.
1		195-06-75511	Cover	1	65001-
2		195-06-55990	Cover	1	65001-
3		01010-81020	Bolt	4	65001-
4		01643-31032	Washer	4	65001-
5		195-06-54153	Wiring Harness	1	65001-
6		04434-52510	Clip	1	65001-
7		01010-81020	Bolt	1	65001-
8		01643-31032	Washer	1	65001-
9		195-06-75331	Bracket	1	65001-
10		01010-80855	Bolt	4	65001-
11		01643-30823	Washer	4	65001-
12		6215-81-8150	Amplifier	2	65001-
13		01252-70616	Bolt, Hexagon Socket Head	8	65001-
14		01640-20610	Washer	8	65001-
15		7826-14-7502	Controller	1	65001-
		7826-14-7501	Controller	1	65001-65001
16		01010-80895	Bolt	4	65001-
17		01643-30823	Washer	4	65001-
18		195-06-55971	Bracket	1	65001-
19		04434-52712	Clip	2	65001-
20		01010-81220	Bolt	2	65001-
21		01643-31232	Washer	2	65001-
22		01010-81230	Bolt	4	65001-
23		01643-31232	Washer	4	65001-
24		195-06-55931	Wiring Harness	1	65001-
25		04434-51912	Clip	1	65001-
26		01010-81220	Bolt	1	65001-
27		01643-31232	Washer	1	65001-
28		04434-51912	Clip	1	65001-

Printed By : Dwi Iswanto (airafather6107170)

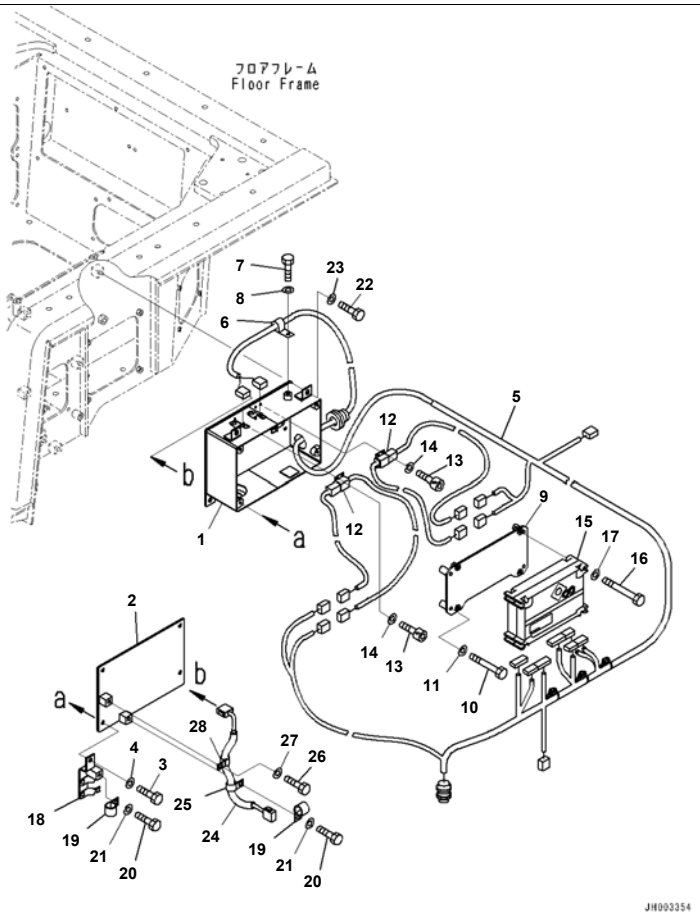

D375A-6R S/N 65001-UP
Vehicle Health Monitoring System (VHMS) And KOMTRAX Controllers, Wire Harness With Numbering (#65001-)

Index	Code	Part Number	Description	Qty	Serial No.
1		195-06-75511	Cover	1	65001-
2		195-06-55990	Cover	1	65001-
3		01010-81020	Bolt	4	65001-
4		01643-31032	Washer	4	65001-
5		195-06-65150	Wiring Harness	1	65001-
6		04434-52510	Clip	1	65001-
7		01010-81020	Bolt	1	65001-
8		01643-31032	Washer	1	65001-
9		195-06-75331	Bracket	1	65001-
10		01010-80855	Bolt	4	65001-
11		01643-30823	Washer	4	65001-
12		6215-81-8150	Amplifier	2	65001-
13		01252-70616	Bolt, Hexagon Socket Head	8	65001-
14		01640-20610	Washer	8	65001-
15		7826-14-7502	Controller	1	65001-
16		01010-80895	Bolt	4	65001-
17		01643-30823	Washer	4	65001-
18		195-06-55971	Bracket	1	65001-
19		04434-52712	Clip	2	65001-
20		01010-81220	Bolt	2	65001-
21		01643-31232	Washer	2	65001-
22		01010-81230	Bolt	4	65001-
23		01643-31232	Washer	4	65001-
24		195-06-55931	Wiring Harness	1	65001-
25		04434-51912	Clip	1	65001-
26		01010-81220	Bolt	1	65001-
27		01643-31232	Washer	1	65001-
28		04434-51912	Clip	1	65001-

Printed By : Dwi Iswanto (airafather6107170)

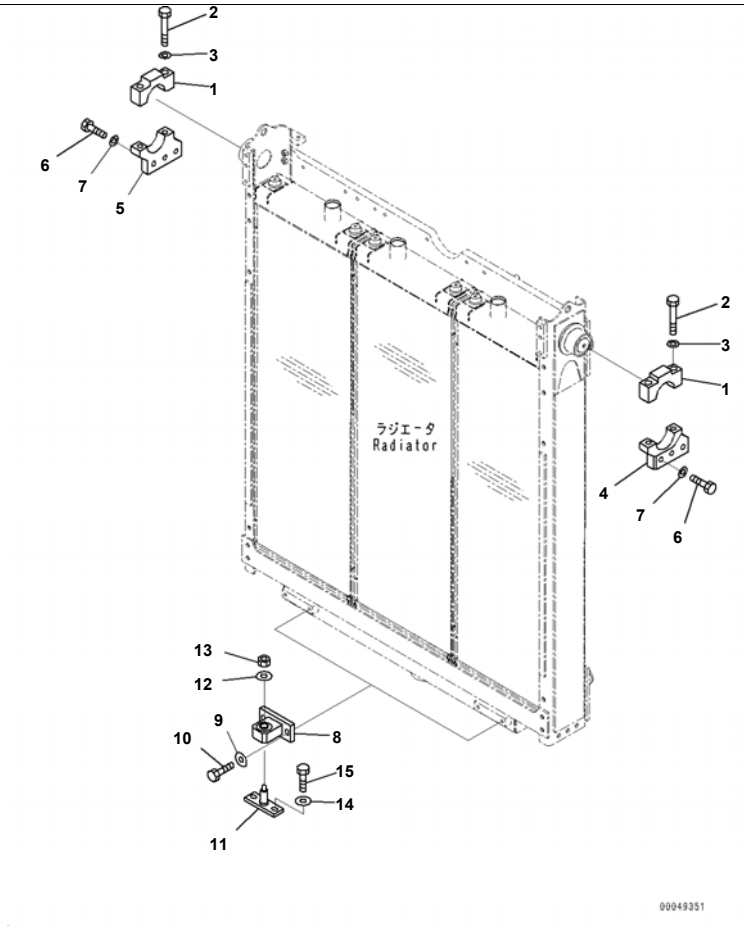

Radiator Guard, Without Wiring Harness, Part No. And Manufacturing Date Code, Radiator Mounting (#65001-)

Index	Code	Part Number	Description	Qty	Serial No.
1		195-03-63270	Cap	2	65001-
2		01010-82095	Bolt	4	65001-
3		01643-32060	Washer	4	65001-
4		195-03-63281	Bracket,LHS	1	65001-
5		195-03-63291	Bracket,RHS	1	65001-
6		01010-82060	Bolt	6	65001-
7		01643-32060	Washer	6	65001-
8		195-03-65200	Isolator	2	65001-
9		124-54-26540	Washer	4	65001-
10		01010-81240	Bolt	4	65001-
11		17A-03-11271	Bracket	2	65001-
12		175-54-34170	Washer	2	65001-
13		01580-11210	Nut	2	65001-
14		124-54-26540	Washer	4	65001-
15		01010-81240	Bolt	4	65001-

Printed By : Dwi Iswanto (airafather6107170)

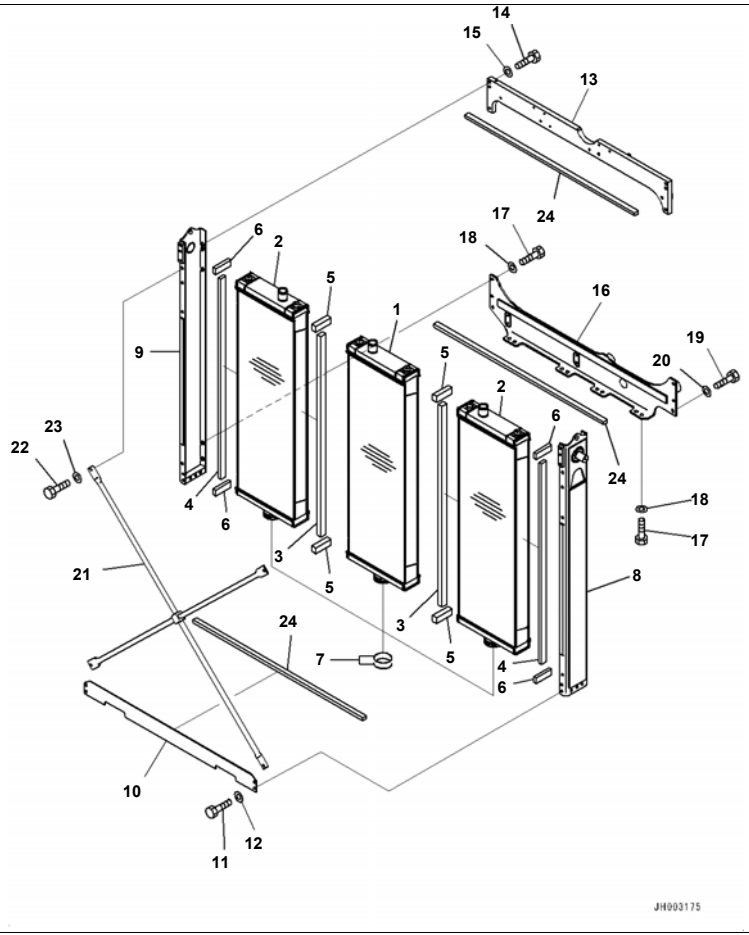

D375A-6R S/N 65001-UP
Radiator Guard, Without Wiring Harness, Part No. And Manufacturing Date Code, Cooling and Cage (#65001-)

Index	Code	Part Number	Description	Qty	Serial No.
1		195-03-63113	Radiator	1	65001-
		195-03-64961	Radiator Assembly	2	65001-
2		195-03-63113	· Radiator	1	65001-
3		195-03-65110	· Sheet	1	65001-
4		195-03-65120	· Sheet	1	65001-
5		195-03-65130	· Sheet	2	65001-
6		195-03-65140	· Sheet	2	65001-
7		17A-03-41220	O-ring	6	65001-
8		195-03-65240	Bracket,LHS	1	65001-
9		195-03-65250	Bracket,RHS	1	65001-
10		195-03-65351	Bracket	1	65001-
11		01010-81230	Bolt	4	65001-
12		01643-31232	Washer	4	65001-
13		195-03-65171	Bracket	1	65001-
14		01010-81250	Bolt	6	65001-
15		01643-31232	Washer	6	65001-
16		195-03-65160	Bracket	1	65001-
17		01010-81230	Bolt	12	65001-
18		01643-31232	Washer	12	65001-
19		01010-81240	Bolt	2	65001-
20		01643-31232	Washer	2	65001-
21		195-03-65260	Pipe	1	65001-
22		01010-81230	Bolt	4	65001-
23		01643-31232	Washer	4	65001-
24		195-03-65150	Sheet	3	65001-

Printed By : Dwi Iswanto (airafather6107170)

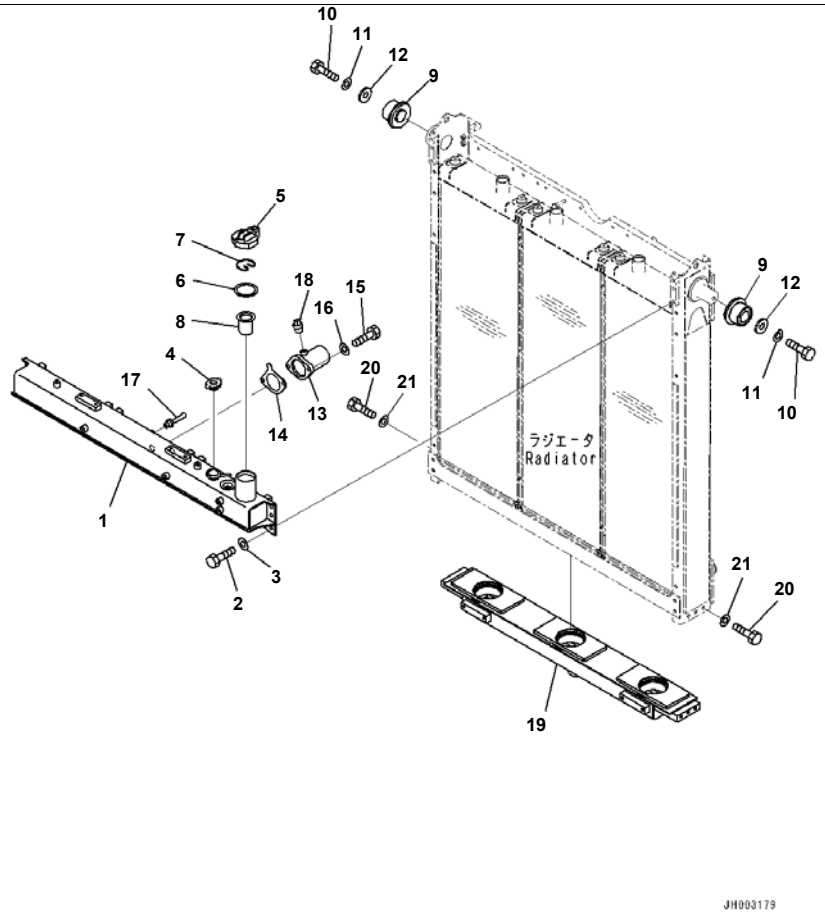

D375A-6R S/N 65001-UP
Radiator Guard, Without Wiring Harness, Part No. And Manufacturing Date Code, Tank (#65001-)

Index	Code	Part Number	Description	Qty	Serial No.
1		195-03-63132	Tank	1	65001-
2		01010-81430	Bolt	6	65001-
3		01643-31445	Washer	6	65001-
4		201-03-51310	Cap	1	65001-
5		07093-20000	Cap	1	65001-
6		07053-00002	Gasket	1	65001-
7		07057-03271	Ring, Snap	1	65001-
8		07056-00048	Strainer	1	65001-
9		17A-03-11281	Rubber	2	65001-
10		01010-81230	Bolt	2	65001-
11		01643-31232	Washer	2	65001-
12		565-43-14630	Spacer	2	65001-
13		195-03-63350	Tube	1	65001-
14		195-03-63360	Gasket	1	65001-
15		01010-81240	Bolt	2	65001-
16		01643-31232	Washer	2	65001-
17		195-03-11531	Nipple	1	65001-
18		07042-70108	Plug	1	65001-
19		195-03-65290	Tank	1	65001-
20		01010-81470	Bolt	6	65001-
21		01643-31445	Washer	6	65001-

Printed By : Dwi Iswanto (airafather6107170)

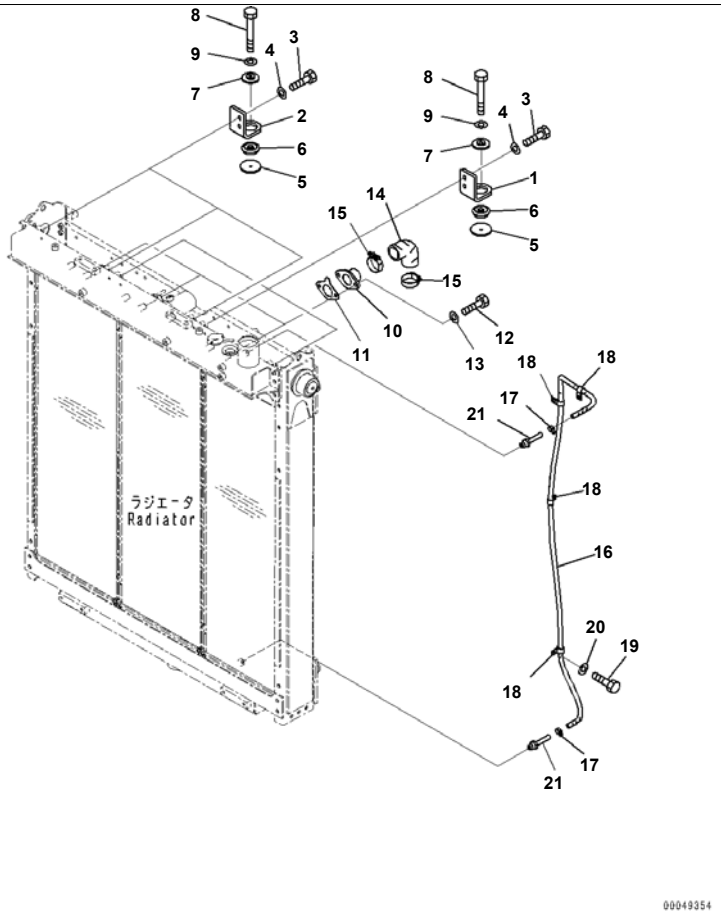

Radiator Guard, Without Wiring Harness, Part No. And Manufacturing Date Code, Core Mount and Piping (#65001-)

Index	Code	Part Number	Description	Qty	Serial No.
1		195-03-63212	Bracket	3	65001-
2		195-03-63222	Bracket	3	65001-
3		01010-81030	Bolt	12	65001-
4		01643-31032	Washer	12	65001-
5		17M-03-51440	Spacer	6	65001-
6		17M-03-51430	Cushion	6	65001-
7		154-03-75480	Spacer	6	65001-
8		01010-81080	Bolt	6	65001-
9		01643-31032	Washer	6	65001-
10		17M-03-51270	Tube	3	65001-
11		17A-03-41240	Gasket	3	65001-
12		01010-81030	Bolt	6	65001-
13		01643-31032	Washer	6	65001-
14		17A-03-41211	Hose	3	65001-
15		17A-03-41540	Clamp	6	65001-
16		09483-10321	Hose	1	65001-
17		07281-00197	Clamp	2	65001-
18		04434-51610	Clip	4	65001-
19		01010-81020	Bolt	4	65001-
20		01643-31032	Washer	4	65001-
21		195-03-11531	Nipple	2	65001-

Printed By : Dwi Iswanto (airafather6107170)

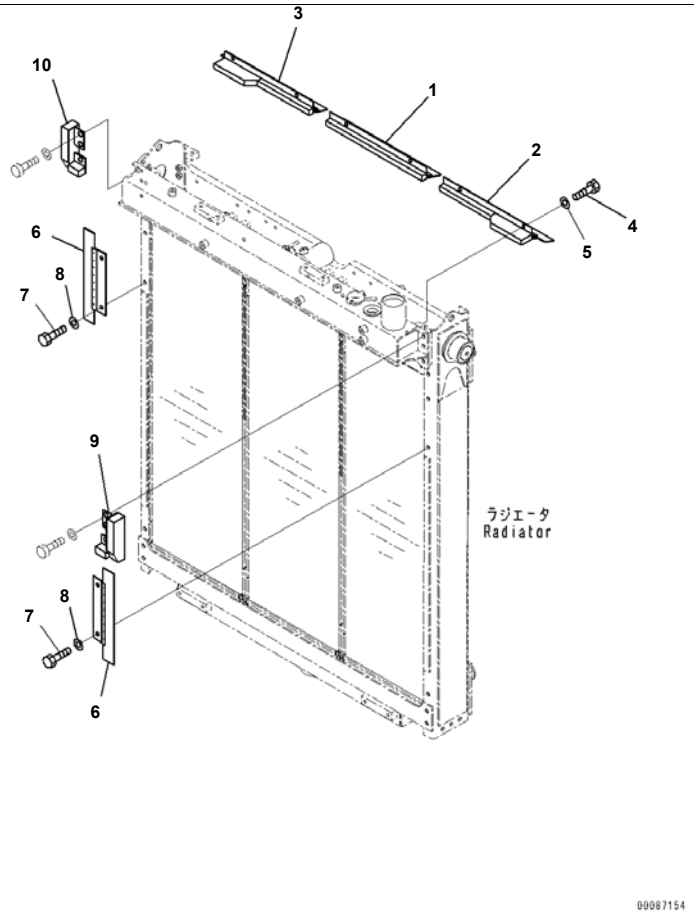

Radiator Guard, Without Wiring Harness, Part No. And Manufacturing Date Code, Wind Brake (1/2) (#65001-)

Index	Code	Part Number	Description	Qty	Serial No.
1		195-03-63231	Brake	1	65001-
2		195-03-65951	Brake	1	65001-
3		195-03-65961	Brake	1	65001-
4		01010-81030	Bolt	6	65001-
5		01643-31032	Washer	6	65001-
6		195-03-63240	Brake	2	65001-
7		01010-81230	Bolt	4	65001-
8		01643-31232	Washer	4	65001-
9		195-03-65912	Brake	1	65001-
10		195-03-65922	Brake	1	65001-

Printed By : Dwi Iswanto (airafather6107170)

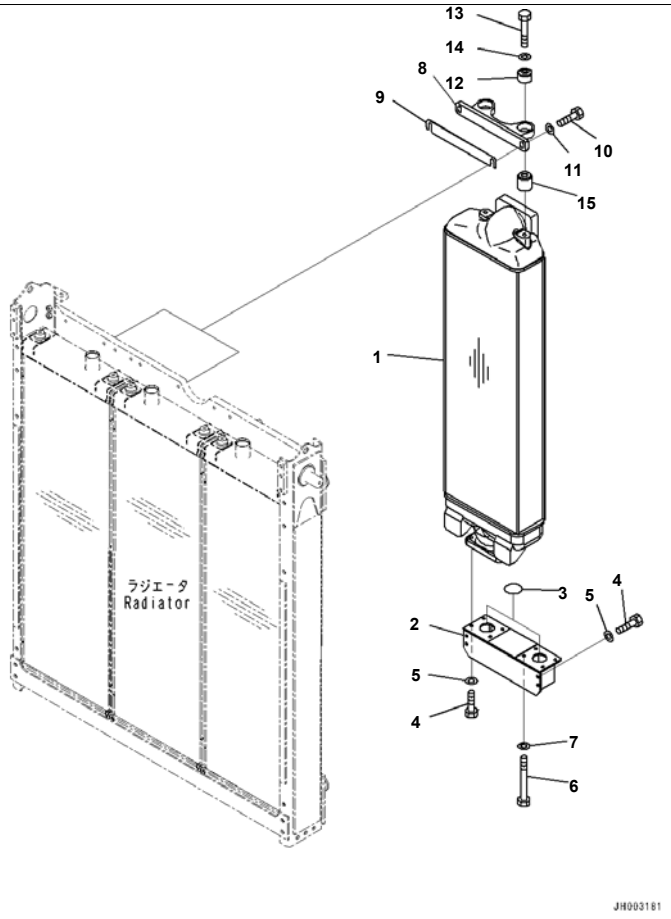

Reference:M2110-004006 Page:M001006

D375A-6R S/N 65001-UP
Radiator Guard, Without Wiring Harness, Part No. And Manufacturing Date Code, Aftercooler (#65001-)

Index	Code	Part Number	Description	Qty	Serial No.
1		195-03-65181	Aftercooler Assembly	2	65001-
2		195-03-65190	Duct	1	65001-
3		07000-E2085	O-ring	2	65001-
4		01010-81230	Bolt	8	65001-
5		01643-31232	Washer	8	65001-
6		01011-81285	Bolt	4	65001-
7		01643-31232	Washer	4	65001-
8		195-03-65531	Bracket	2	65001-
9		195-03-65551	Shim	16	65001-
10		01010-81240	Bolt	4	65001-
11		124-54-26540	Washer	4	65001-
12		135-03-12110	Damper	4	65001-
13		01011-81400	Bolt	4	65001-
14		01643-31445	Washer	4	65001-
15		195-03-65360	Spacer	4	65001-

Reference:M2110-004006 Page:M001006

Printed By : Dwi Iswanto (airafather6107170)

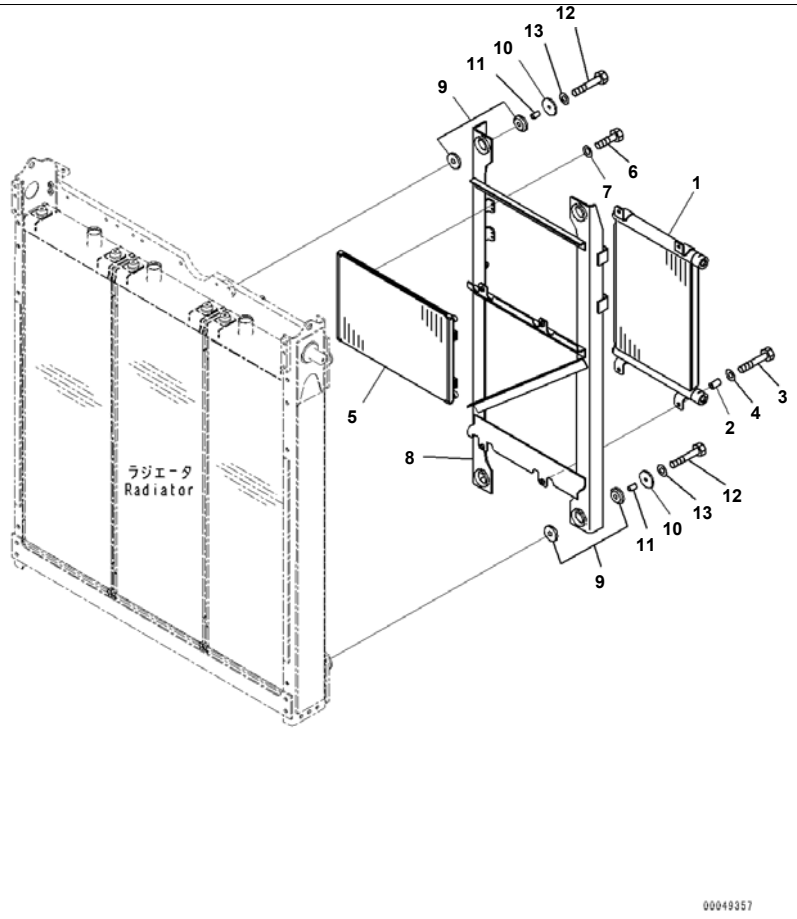

Reference:M2110-004007 Page:M001007

D375A-6R S/N 65001-UP
Radiator Guard, Without Wiring Harness, Part No. And Manufacturing Date Code, Hydraulic Oil Cooler and Condenser (#65001-)

Index	Code	Part Number	Description	Qty	Serial No.
1		17A-03-41510	Cooler	1	65001-
2		22D-62-18450	Collar	4	65001-
3		01010-81060	Bolt	4	65001-
4		01643-31032	Washer	4	65001-
5		208-979-7520	Condenser Assembly	1	65001-
6		01010-80616	Bolt	8	65001-
7		01643-30623	Washer	8	65001-
8		195-03-63252	Bracket	1	65001-
9		195-03-64921	Cushion	8	65001-
10		17M-03-51440	Spacer	4	65001-
11		195-57-14260	Spacer	4	65001-
12		01010-81060	Bolt	4	65001-
13		01643-31032	Washer	4	65001-

Reference:M2110-004007 Page:M001007

Printed By : Dwi Iswanto (airafather6107170)

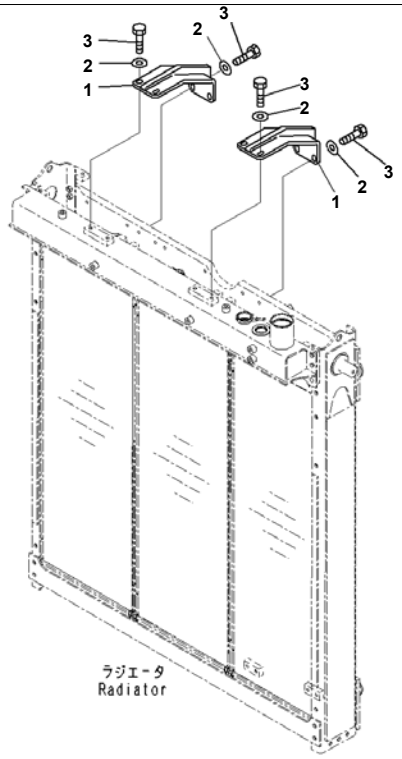

Reference:M2110-004008 Page:M001008

Index	Code	Part Number	Description	Qty	Serial No.
1		195-03-65710	Bracket	2	65001-
2		124-54-26540	Washer	8	65001-
3		01010-81230	Bolt	8	65001-

Reference:M2110-004008 Page:M001008

Printed By : Dwi Iswanto (airafather6107170)

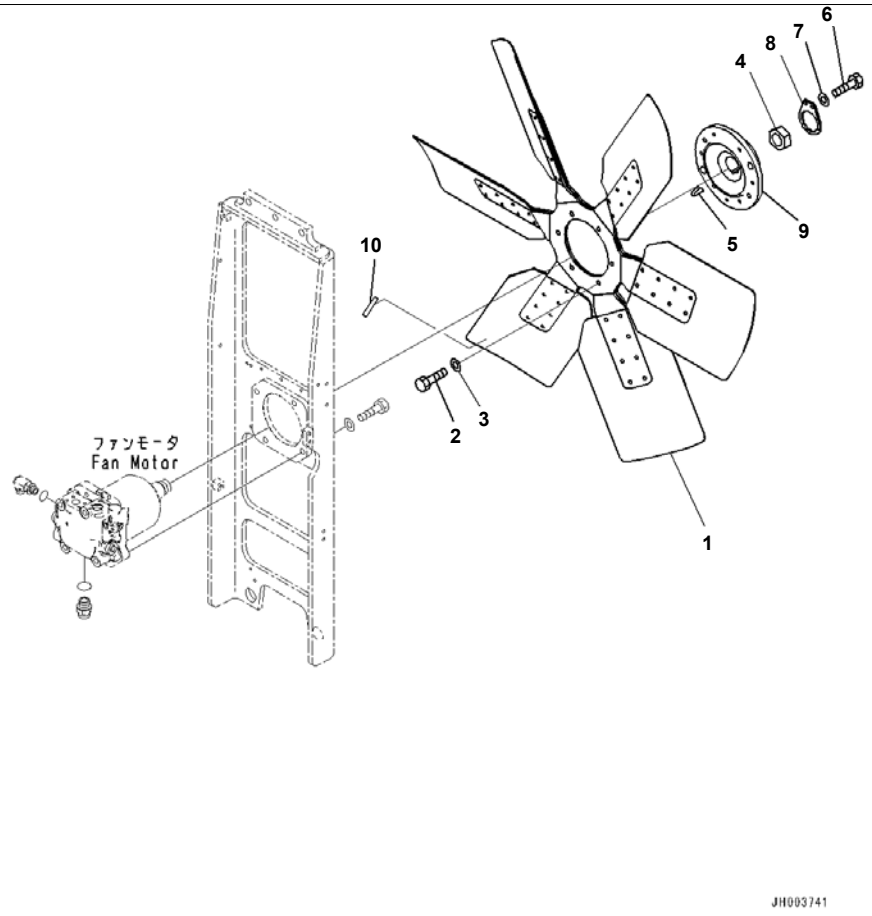

Reference:M2110-004009 Page:M001009

D375A-6R S/N 65001-UP
Radiator Guard, Without Wiring Harness, Part No. And Manufacturing Date Code, Fan (#65001-)

Index	Code	Part Number	Description	Qty	Serial No.
1		600-645-1351	Fan	1	65001-
2		01010-81245	Bolt	6	65001-
3		01643-31232	Washer	6	65001-
4		01583-14225	Nut	1	65001-
5		04010-01045	Key, Woodruff	1	65001-
6		01010-81025	Bolt	1	65001-
7		01643-31032	Washer	1	65001-
8		198-03-71560	Lock	1	65001-
9		195-03-62111	Boss	1	65001-
10		799-203-8500	Tape	1	65001-

Printed By : Dwi Iswanto (airafather6107170)

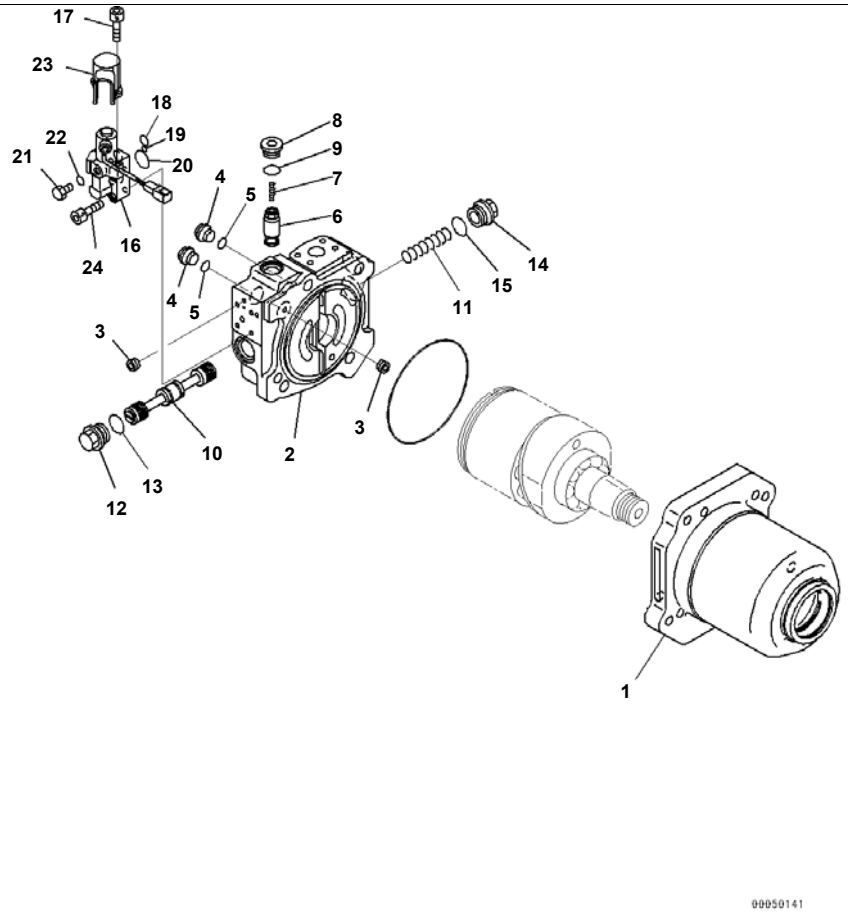

Radiator Guard, Without Wiring Harness, Part No. And Manufacturing Date Code, Fan Motor (1/2) (#65001-)

Index	Code	Part Number	Description	Qty	Serial No.
		708-7H-00660	Motor Assembly	1	65001-
1	C2	708-7H-11430	· Case	1	65001-
	C2	708-7H-04720	· Cover Subassembly	1	65001-
2	C1		· · Cover, End	1	65001-
3	C1		· · Plug	2	65001-
4		706-8E-14191	· Plug	2	65001-
5		07002-11823	· O-ring	2	65001-
6		702-77-03600	· Valve, Relief	1	65001-
7		720-2M-15250	· Spring	1	65001-
8		720-2M-15270	· Plug	1	65001-
9		07002-12434	· O-ring	1	65001-
10	C2	708-7H-16820	· Spool	1	65001-
11	C2	708-7H-16790	· Spring	1	65001-
12		706-77-71670	· Plug	1	65001-
13		07002-13034	· O-ring	1	65001-
14		708-7H-16810	· Plug	1	65001-
15		07002-13034	· O-ring	1	65001-
16		708-7S-01330	· Valve Assembly, Pilot	1	65001-
17		01252-60616	· · Bolt	2	65001-
18		708-7S-18360	· · O-ring	1	65001-
19		07000-F1008	· · O-ring	1	65001-
20		708-7S-18230	· · O-ring	1	65001-
21		07040-11007	· · Plug	1	65001-
22		07002-21023	· · O-ring	1	65001-
23		708-1S-18180	· · Cover	1	65001-
24		01252-60835	· Bolt	4	65001-

Printed By : Dwi Iswanto (airafather6107170)

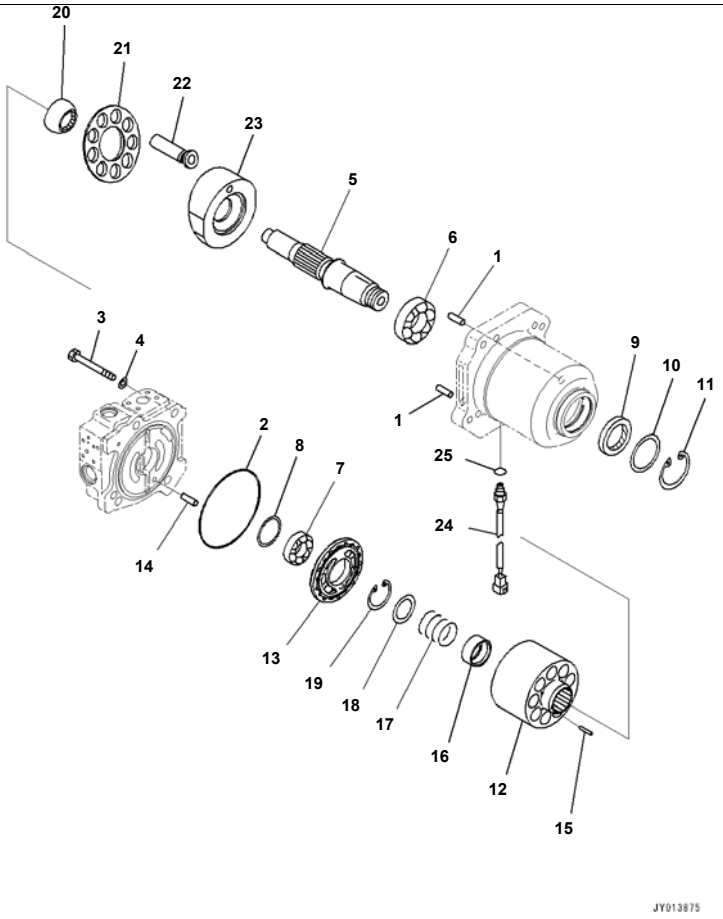

Reference:M2110-004011 Page:M001011

Radiator Guard, Without Wiring Harness, Part No. And Manufacturing Date Code, Fan Motor (2/2) (#65001-)

Index	Code	Part Number	Description	Qty	Serial No.
		708-7H-00660	Motor Assembly	1	65001-
1	C2	04020-01638	· Pin, Dowel	2	65001-
2	C2	07000-15160	· O-ring	1	65001-
3		01010-61695	· Bolt	4	65001-
4		01643-51645	· Washer	4	65001-
5	C2	708-7H-12920	· Shaft	1	65001-
6	C2	708-8H-32150	· Bearing	1	65001-
7	C2	708-8H-32170	· Bearing	1	65001-
8	C2	708-8H-05050	· Spacer Kit	1	65001-
	C1		· · Spacer, T=1.6mm	1	65001-
	C1		· · Spacer, T=1.7mm	1	65001-
	C1		· · Spacer, T=1.8mm	1	65001-
	C1		· · Spacer, T=1.9mm	1	65001-
	C1		· · Spacer, T=2.0mm	1	65001-
	C1		· · Spacer, T=2.1mm	1	65001-
	C1		· · Spacer, T=2.2mm	1	65001-
9	C2	708-1F-12281	· Seal, Oil	1	65001-
10		708-8H-32160	· Spacer	1	65001-
11		04065-07825	· Ring, Snap	1	65001-
	C2	708-7H-04820	· Block Assembly, Cylinder	1	65001-
12	C1		· · Cylinder Block	1	65001-
13	C1		· · Plate, Valve	1	65001-
14	C2	708-18-13230	· Pin	1	65001-
15	C2	708-2H-23360	· Pin	3	65001-
16	C2	708-2H-23130	· Seat	1	65001-
17	C2	708-2H-33120	· Spring	1	65001-
18	C2	708-2H-23141	· Seat	1	65001-
19	C2	04065-05820	· Ring, Snap	1	65001-
20	C2	708-2H-23350	· Guide	1	65001-
21	C2	708-2H-33350	· Retainer	1	65001-
22	C2	708-7H-13910	· Piston Subassembly	9	65001-

Printed By : Dwi Iswanto (airafather6107170)

Radiator Guard, Without Wiring Harness, Part No. And Manufacturing Date Code, Fan Motor (2/2) (#65001-)

Index	Code	Part Number	Description	Qty	Serial No.
23	C2	708-7H-13610	· Plate	1	65001-
24		729-11-41000	· Sensor, Pick-Up	1	65001-
25		07002-21423	· O-ring	1	65001-

Printed By : Dwi Iswanto (airafather6107170)

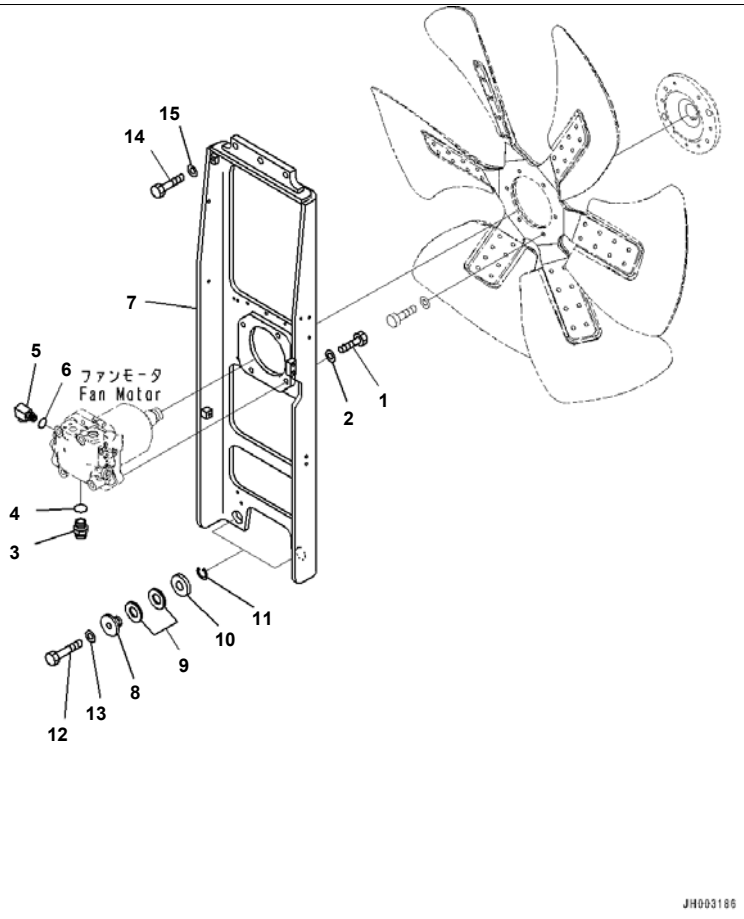

Reference:M2110-004012 Page:M001012

Radiator Guard, Without Wiring Harness, Part No. And Manufacturing Date Code, Fan Motor Related Parts (#65001-)

Index	Code	Part Number	Description	Qty	Serial No.
1		01010-81665	Bolt	4	65001-
2		01643-31645	Washer	4	65001-
3		20U-62-41720	Nipple	1	65001-
4		07002-13334	O-ring	1	65001-
5		195-03-66490	Elbow	1	65001-
6		07002-12434	O-ring	1	65001-
7		195-03-64741	Bracket	1	65001-
		195-54-41300	Collar Assembly	2	65001-
8		195-54-41310	· Collar	1	65001-
9		175-03-C1160	· Spring	2	65001-
10		175-03-C1170	· Spacer	1	65001-
11		195-54-41320	· Ring	1	65001-
12		01010-82075	Bolt	2	65001-
13		01643-32060	Washer	2	65001-
14		01010-82060	Bolt	3	65001-
15		01643-32060	Washer	3	65001-

Reference:M2110-004012 Page:M001012

Printed By : Dwi Iswanto (airafather6107170)

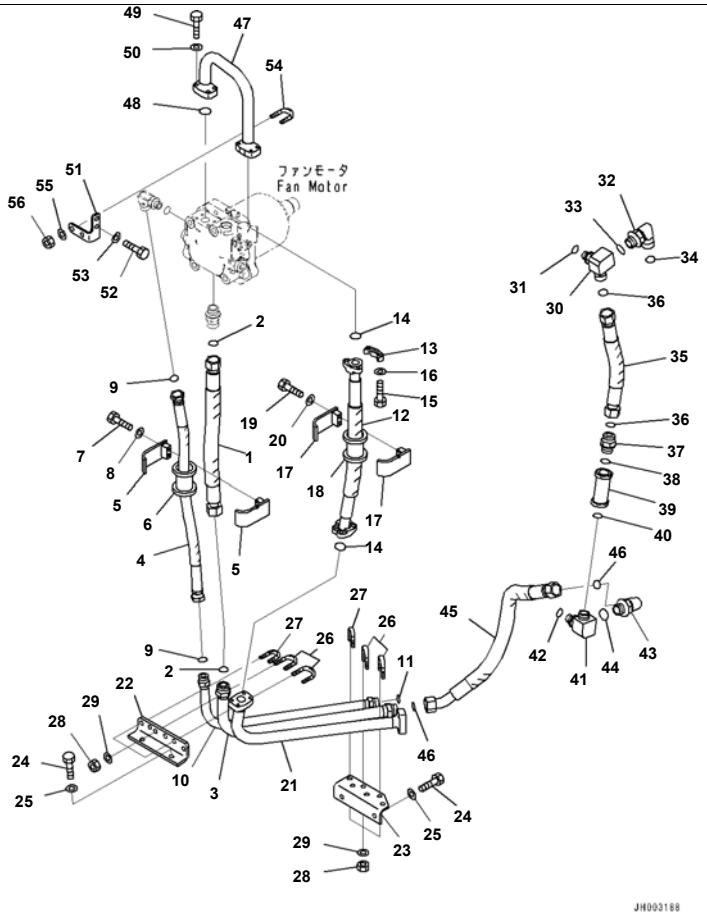

D375A-6R S/N 65001-UP
Radiator Guard, Without Wiring Harness, Part No. And Manufacturing Date Code, Fan Motor Piping (#65001-)

Index	Code	Part Number	Description	Qty	Serial No.
1		195-03-63681	Hose	1	65001-
2		207-62-64740	O-ring	2	65001-
3		195-03-63641	Tube	1	65001-
4		198-03-72290	Hose	1	65001-
5		198-61-44210	Clamp	2	65001-
6		198-04-41210	Cushion	1	65001-
7		01010-81275	Bolt	1	65001-
8		01643-31232	Washer	1	65001-
9		207-62-64740	O-ring	2	65001-
10		195-03-66471	Tube	1	65001-
11		02896-11018	O-ring	1	65001-
12		195-03-64680	Hose	1	65001-
13		07371-31049	Flange, Split	4	65001-
14		07000-13032	O-ring	2	65001-
15		07372-21035	Bolt	8	65001-
16		01643-51032	Washer	8	65001-
17		198-61-44210	Clamp	2	65001-
18		198-04-41210	Cushion	1	65001-
19		01010-81275	Bolt	1	65001-
20		01643-31232	Washer	1	65001-
21		195-03-63621	Tube	1	65001-
22		195-03-63651	Bracket	1	65001-
23		195-03-63661	Bracket	1	65001-
24		01010-81230	Bolt	4	65001-
25		01643-31232	Washer	4	65001-
26		07283-33442	Clip	4	65001-
27		07283-32738	Clip, Pipe	2	65001-
28		01597-01009	Nut	12	65001-
29		01643-31032	Washer	12	65001-
30		195-03-63731	Elbow	1	65001-
31		07002-12434	O-ring	1	65001-

Printed By : Dwi Iswanto (airafather6107170)

Radiator Guard, Without Wiring Harness, Part No. And Manufacturing Date Code, Fan Motor Piping (#65001-)

Index	Code	Part Number	Description	Qty	Serial No.
32		21W-62-42640	Elbow	1	65001-
33		07002-13334	O-ring	1	65001-
34		207-62-64740	O-ring	1	65001-
35		195-03-63710	Hose	1	65001-
36		207-62-64740	O-ring	2	65001-
37		20U-62-41720	Nipple	1	65001-
38		07002-13334	O-ring	1	65001-
39		20S-62-16160	Valve Assembly	1	65001-
40		07002-13334	O-ring	1	65001-
41		195-03-63741	Elbow	1	65001-
42		07002-12434	O-ring	1	65001-
43		21W-62-42640	Elbow	1	65001-
44		07002-13334	O-ring	1	65001-
45		195-03-63690	Hose	1	65001-
46		207-62-64740	O-ring	2	65001-
47		195-03-63471	Tube	1	65001-
48		07000-13035	O-ring	1	65001-
49		07372-21040	Bolt	4	65001-
50		01643-51032	Washer	4	65001-
51		195-03-63481	Bracket	1	65001-
52		01010-81225	Bolt	2	65001-
53		01643-31232	Washer	2	65001-
54		07283-33442	Clip	1	65001-
55		01643-31032	Washer	2	65001-
56		01597-01009	Nut	2	65001-

Printed By : Dwi Iswanto (airafather6107170)

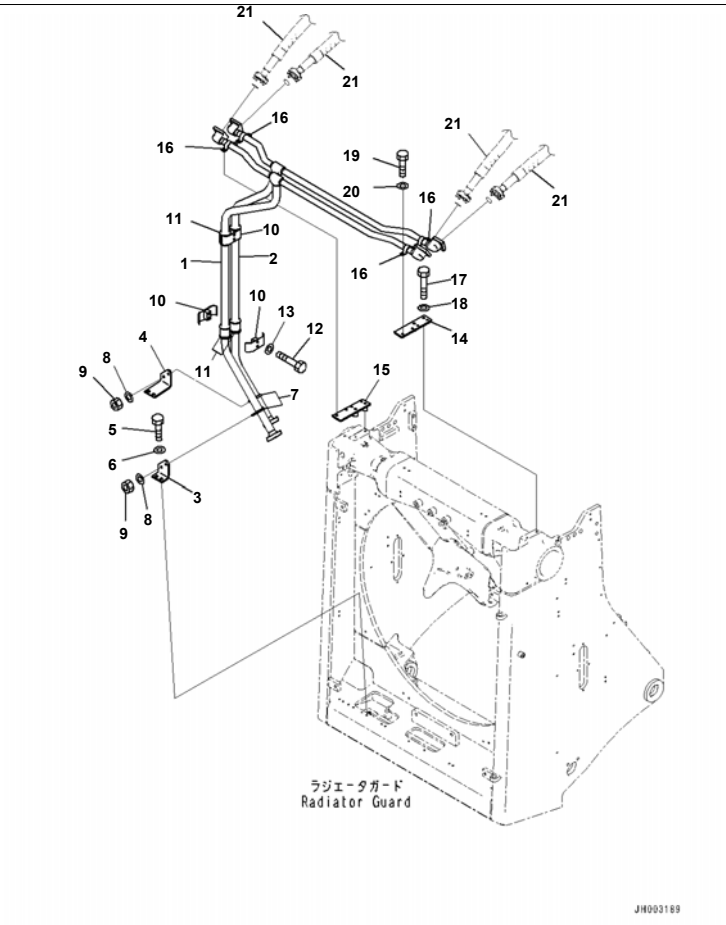

Radiator Guard, Without Wiring Harness, Part No. And Manufacturing Date Code, Blade Lift Piping (#65001-)

Index	Code	Part Number	Description	Qty	Serial No.
1		195-61-62751	Tube	1	65001-
2		195-61-62761	Tube	1	65001-
3		195-61-61770	Bracket	1	65001-
4		195-61-61780	Bracket	1	65001-
5		01010-81230	Bolt	4	65001-
6		01643-31232	Washer	4	65001-
7		07283-34346	Clip	2	65001-
8		01643-31032	Washer	4	65001-
9		01597-01009	Nut	4	65001-
10		07094-31228	Clip	4	65001-
11		07095-01241	Cushion	4	65001-
12		01010-81285	Bolt	4	65001-
13		01643-31232	Washer	4	65001-
14		195-61-61831	Bracket,LHS	1	65001-
15		195-61-61841	Bracket,RHS	1	65001-
16		07282-13411	Clip	4	65001-
17		01010-81265	Bolt	4	65001-
18		01643-31232	Washer	4	65001-
19		01010-81030	Bolt	8	65001-
20		01643-31032	Washer	8	65001-
21		(07099-01016)	Hose, Flange Type		
		(07099-01016)	Hose, Flange Type		

Printed By : Dwi Iswanto (airafather6107170)

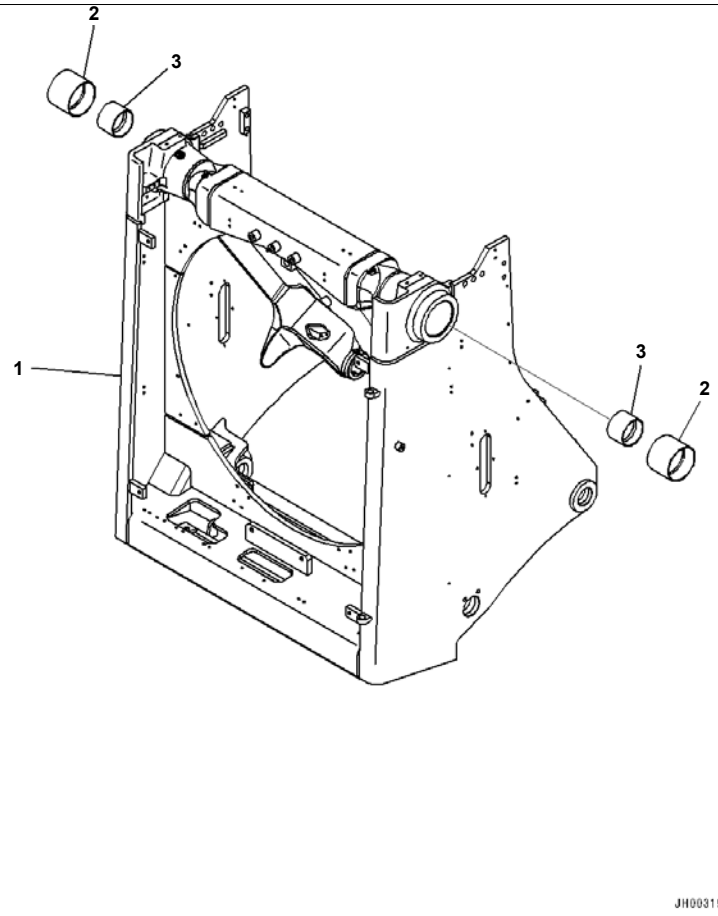

Radiator Guard, Without Wiring Harness, Part No. And Manufacturing Date Code, Radiator Guard (#65001-)

Index	Code	Part Number	Description	Qty	Serial No.
1		195-54-85221	Guard	1	65001-
2		195-61-41131	Bushing	2	65001-
3		195-61-41160	Bushing	2	65001-

Printed By : Dwi Iswanto (airafather6107170)

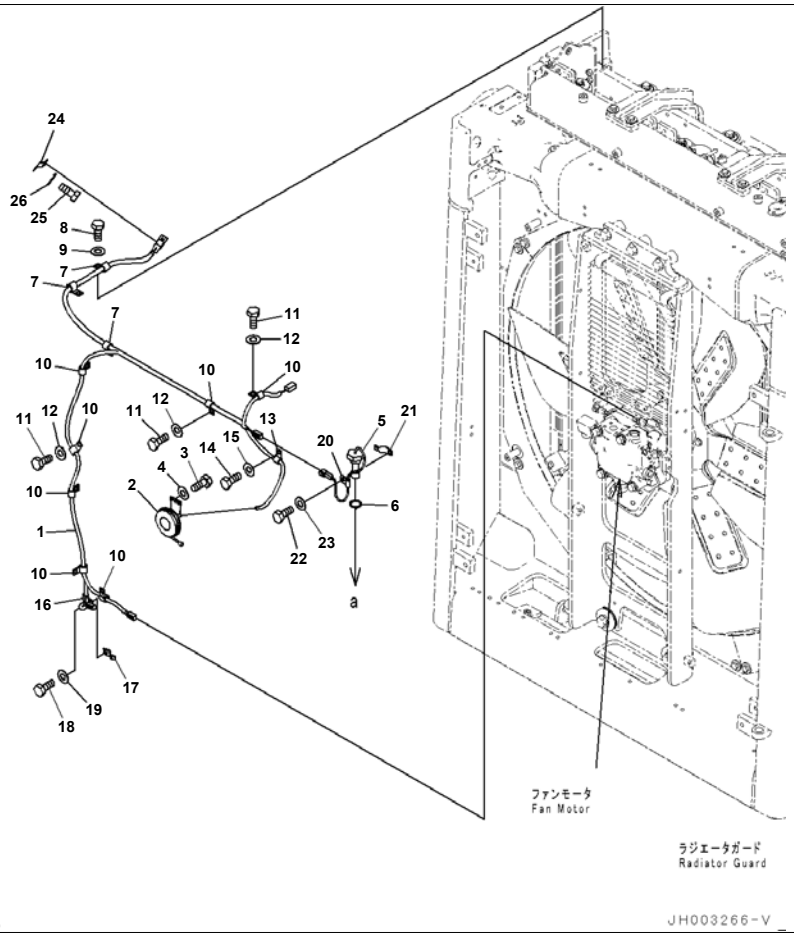

D375A-6R S/N 65001-UP
Radiator Guard, Without Wiring Harness, Part No. And Manufacturing Date Code, Wiring Harness (#65001-65003)

Index	Code	Part Number	Description	Qty	Serial No.
1		195-06-57520	Wiring Harness	1	65001-@
2		19M-06-18220	Horn	1	65001-@
3		01010-80820	Bolt	2	65001-@
4		01643-30823	Washer	2	65001-@
5		7861-93-4520	Sensor	1	65001-@
6		07002-13634	O-ring	1	65001-@
7		04434-51912	Clip	3	65001-@
8		01010-81220	Bolt	3	65001-@
9		01643-31232	Washer	3	65001-@
10		04434-51512	Clip	7	65001-@
11		01010-81220	Bolt	6	65001-@
12		01643-31232	Washer	6	65001-@
13		04434-51212	Clip	1	65001-@
14		01010-81220	Bolt	1	65001-@
15		01643-31232	Washer	1	65001-@
16		04434-51012	Clip	1	65001-@
17		08193-21012	Clip	1	65001-@
18		01010-81230	Bolt	1	65001-65003
19		01643-31232	Washer	1	65001-@
20		21T-38-12270	Clip	1	65001-@
21		08193-21012	Clip	1	65001-@
22		01010-81220	Bolt	1	65001-@
23		01643-31232	Washer	1	65001-@
24		08193-21012	Clip	1	65001-@
25		01010-81220	Bolt	1	65001-@
26		01643-31232	Washer	1	65001-@

Printed By : Dwi Iswanto (airafather6107170)

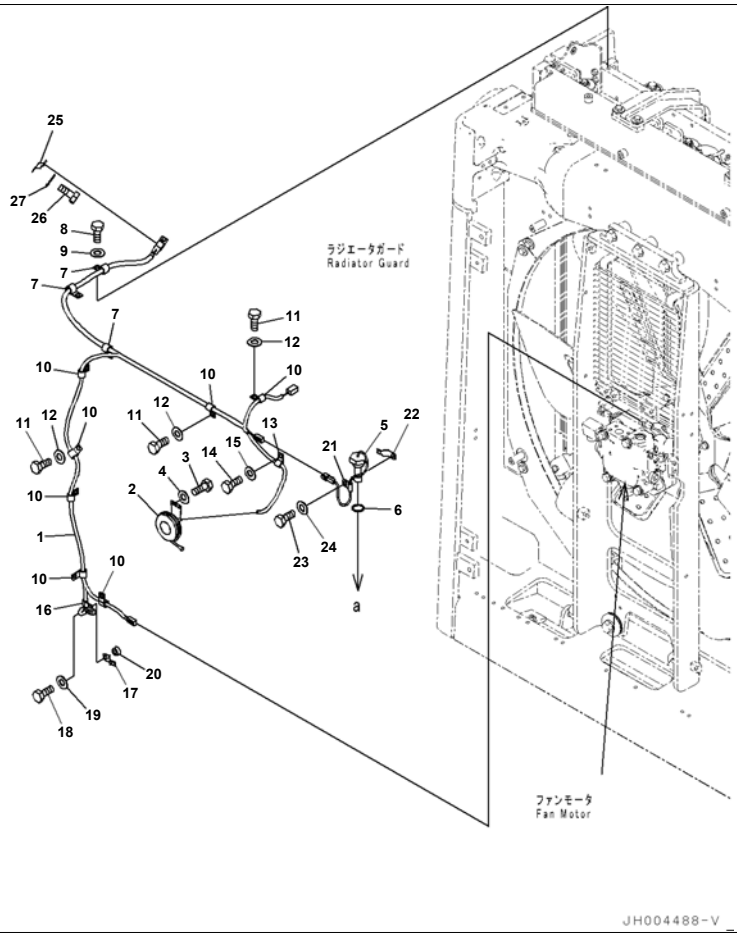

Reference:M2110-004016A Page:M001017

D375A-6R S/N 65001-UP
Radiator Guard, Without Wiring Harness, Part No. And Manufacturing Date Code, Wiring Harness (#65004-)

Index	Code	Part Number	Description	Qty	Serial No.
1		195-06-57520	Wiring Harness	1	65001-
2		19M-06-18220	Horn	1	65001-
3		01010-80820	Bolt	2	65001-
4		01643-30823	Washer	2	65001-
5		7861-93-4520	Sensor	1	65001-
6		07002-13634	O-ring	1	65001-
7		04434-51912	Clip	3	65001-
8		01010-81220	Bolt	3	65001-
9		01643-31232	Washer	3	65001-
10		04434-51512	Clip	7	65001-
11		01010-81220	Bolt	6	65001-
12		01643-31232	Washer	6	65001-
13		04434-51212	Clip	1	65001-
14		01010-81220	Bolt	1	65001-
15		01643-31232	Washer	1	65001-
16		04434-51012	Clip	1	65001-
17		08193-21012	Clip	1	65001-
18		01010-81240	Bolt	1	65004-
19		01643-31232	Washer	1	65001-
20		23S-43-53140	Spacer	1	65004-
21		21T-38-12270	Clip	1	65001-
22		08193-21012	Clip	1	65001-
23		01010-81220	Bolt	1	65001-
24		01643-31232	Washer	1	65001-
25		08193-21012	Clip	1	65001-
26		01010-81220	Bolt	1	65001-
27		01643-31232	Washer	1	65001-

Printed By : Dwi Iswanto (airafather6107170)

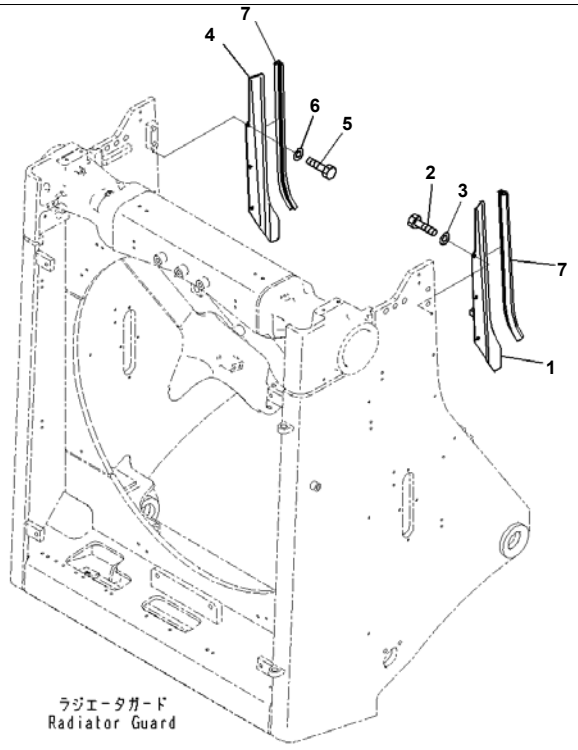

Reference:M2110-004017 Page:M001018

D375A-6R S/N 65001-UP
Radiator Guard, Without Wiring Harness, Part No. And Manufacturing Date Code, Cover (#65001-)

Index	Code	Part Number	Description	Qty	Serial No.
1		195-54-81643	Plate,LHS	1	65001-
2		01010-81025	Bolt	3	65001-
3		01643-31032	Washer	3	65001-
4		195-54-81653	Plate,RHS	1	65001-
5		01010-81025	Bolt	3	65001-
6		01643-31032	Washer	3	65001-
7		198-54-73770	Seal	2	65001-

Printed By : Dwi Iswanto (airafather6107170)

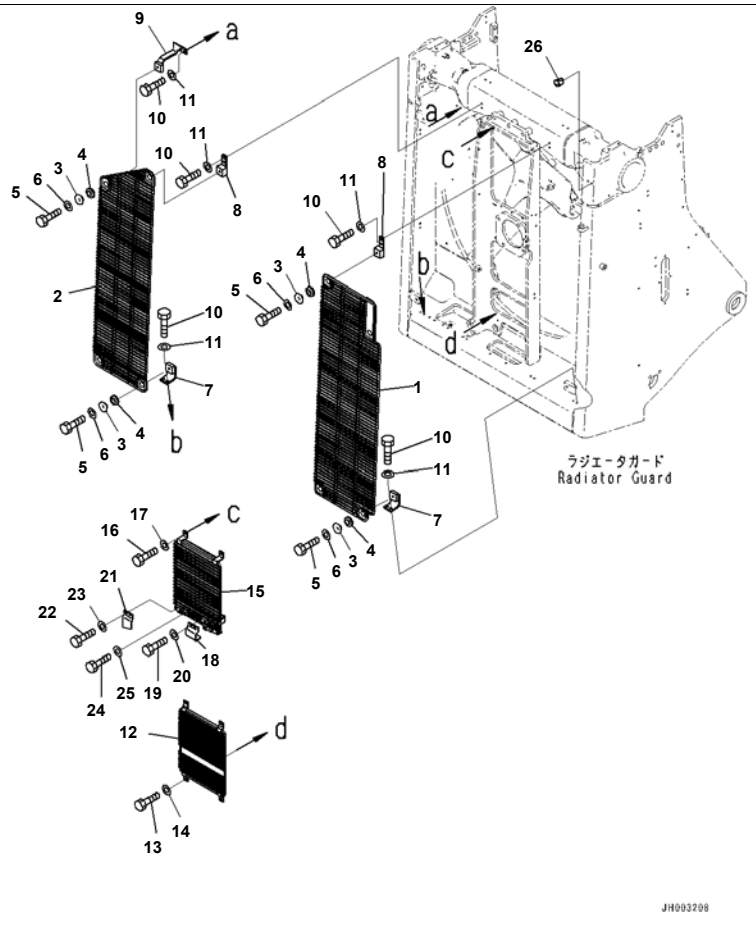

D375A-6R S/N 65001-UP
Radiator Guard, Without Wiring Harness, Part No. And Manufacturing Date Code, Net (#65001-)

Index	Code	Part Number	Description	Qty	Serial No.
1		195-03-63811	Net,LHS	1	65001-
2		195-03-63821	Net,RHS	1	65001-
3		203-54-14330	Collar	8	65001-
4		175-03-42140	Rubber	8	65001-
5		01010-81235	Bolt	8	65001-
6		01643-31232	Washer	8	65001-
7		195-03-63850	Bracket	4	65001-
8		195-03-63860	Bracket	2	65001-
9		195-03-63871	Bracket	1	65001-
10		01010-81230	Bolt	14	65001-
11		01643-31232	Washer	14	65001-
12		195-03-63841	Net	1	65001-
13		01010-81020	Bolt	4	65001-
14		01643-31032	Washer	4	65001-
15		195-03-64691	Net	1	65001-
16		01010-81020	Bolt	4	65001-
17		01643-31032	Washer	4	65001-
18		195-06-71841	Cover	1	65001-
19		01010-81020	Bolt	2	65001-
20		01643-31032	Washer	2	65001-
21		195-06-55770	Cover	1	65001-
22		01010-81020	Bolt	2	65001-
23		01643-31032	Washer	2	65001-
24		01010-81020	Bolt	1	65001-
25		01643-31032	Washer	1	65001-
26		07049-01215	Plug	2	65001-

Printed By : Dwi Iswanto (airafather6107170)

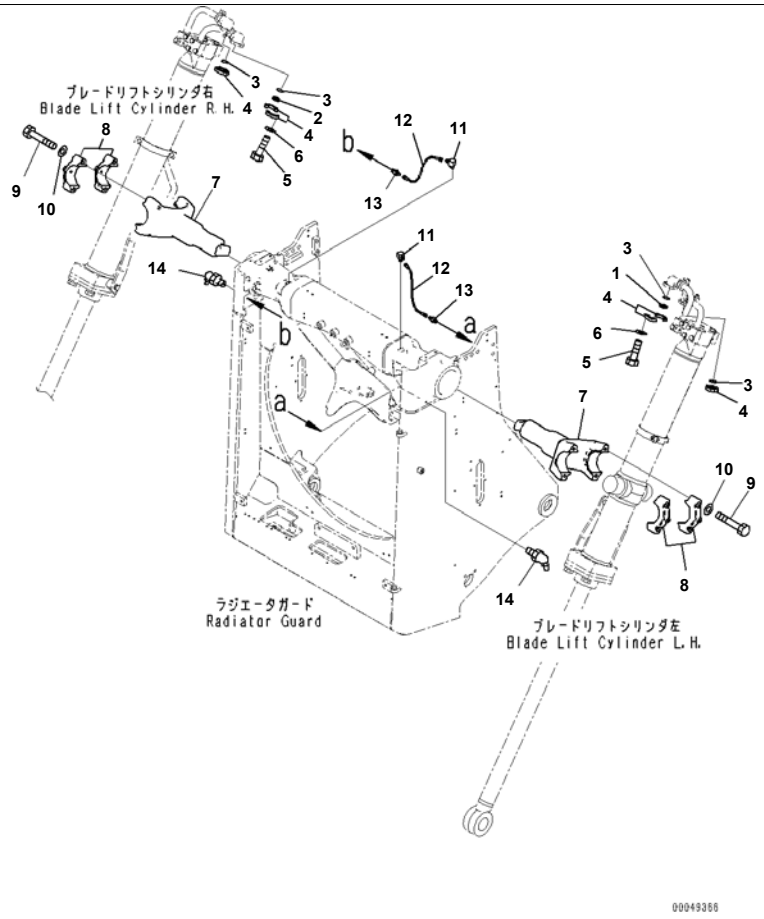

Reference:M2110-004019 Page:M001020

D375A-6R S/N 65001-UP

Radiator Guard, Without Wiring Harness, Part No. And Manufacturing Date Code, Blade Lift Cylinder Yoke (#65001-)

Index	Code	Part Number	Description	Qty	Serial No.
1		07378-11000	Head	2	65001-
2		07378-11000	Head	2	65001-
3		07000-13032	O-ring	4	65001-
4		07371-31049	Flange, Split	8	65001-
5		07372-21035	Bolt	16	65001-
6		01643-51032	Washer	16	65001-
7		195-61-41113	Yoke	2	65001-
8		195-61-41121	Cap	4	65001-
9		01011-82000	Bolt	8	65001-
10		01643-32060	Washer	8	65001-
11		202-62-21430	Elbow	2	65001-
12		198-03-16470	Hose	2	65001-
13		203-62-21740	Nipple	2	65001-
14		07020-00675	Fitting, Grease	2	65001-

Reference:M2110-004019 Page:M001020

Printed By : Dwi Iswanto (airafather6107170)

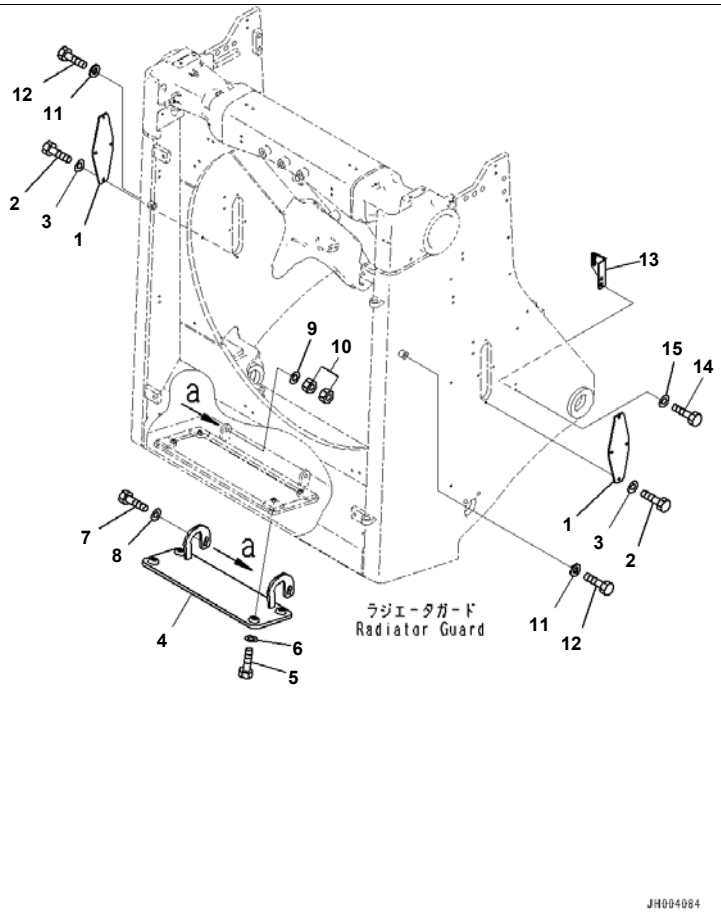

Radiator Guard, Without Wiring Harness, Part No. And Manufacturing Date Code, Radiator Guard Related (#65001-)

Index	Code	Part Number	Description	Qty	Serial No.
1		17M-54-41190	Plate	2	65001-
2		01010-81020	Bolt	8	65001-
3		01643-31032	Washer	8	65001-
4		195-54-81161	Cover	1	65001-
5		01010-81235	Bolt	4	65001-
6		01643-31232	Washer	4	65001-
7		01010-81260	Bolt	2	65001-
8		01643-31232	Washer	2	65001-
9		01643-31232	Washer	2	65001-
10		01580-01210	Nut	4	65001-
11		21T-09-11330	Washer	2	65001-
12		01010-81630	Bolt	2	65001-
13		195-03-66160	Bracket	1	65001-
14		01010-81225	Bolt	2	65001-
15		01643-31232	Washer	2	65001-

Printed By : Dwi Iswanto (airafather6107170)

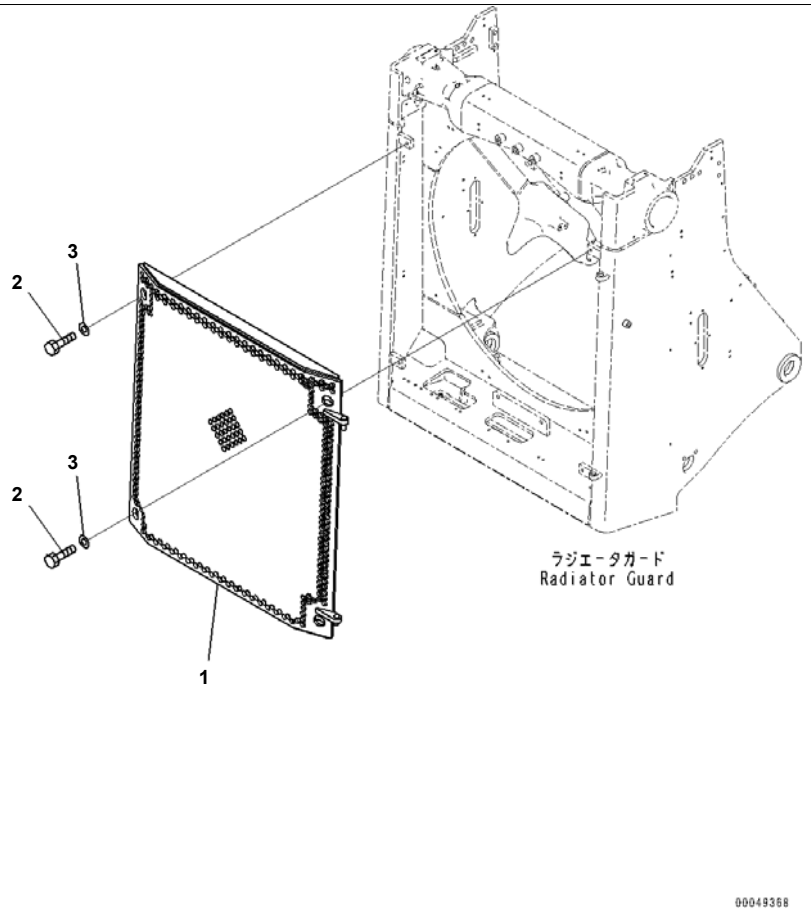

Reference:M2110-004021 Page:M001022

D375A-6R S/N 65001-UP
Radiator Guard, Without Wiring Harness, Part No. And Manufacturing Date Code, Radiator Mask (#65001-)

Index	Code	Part Number	Description	Qty	Serial No.
1		195-54-81211	Mask	1	65001-
2		01010-81645	Bolt	4	65001-
3		01643-31645	Washer	4	65001-

Printed By : Dwi Iswanto (airafather6107170)

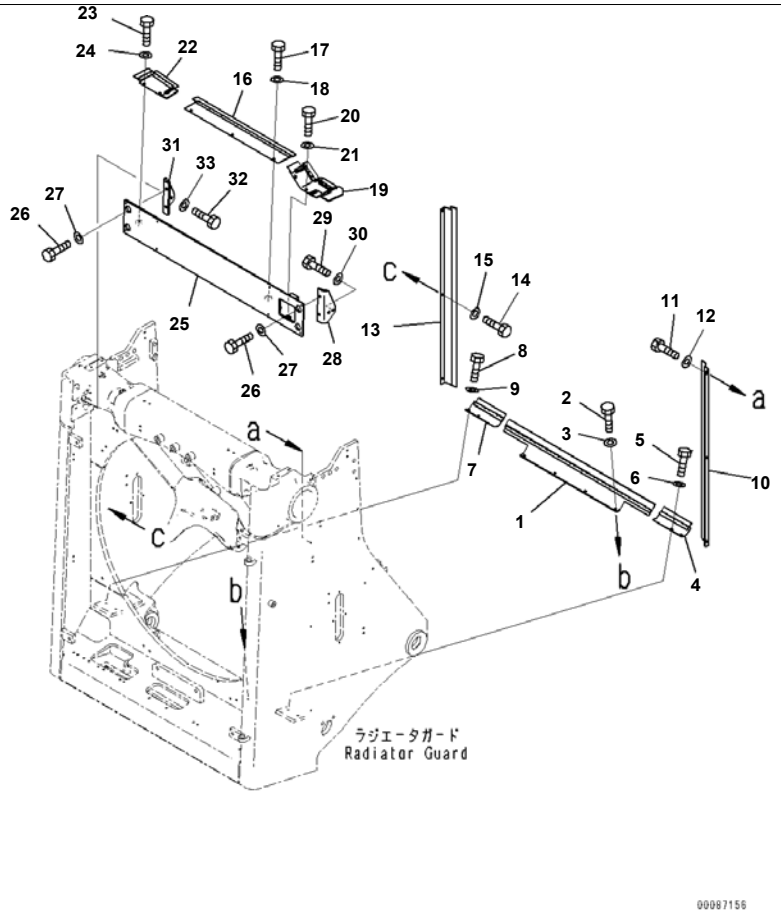

D375A-6R S/N 65001-UP
Radiator Guard, Without Wiring Harness, Part No. And Manufacturing Date Code, Wind Brake (2/2) (#65001-)

Index	Code	Part Number	Description	Qty	Serial No.
1		195-03-63920	Brake	1	65001-
2		01010-81025	Bolt	4	65001-
3		01643-31032	Washer	4	65001-
4		195-03-65930	Brake,LHS	1	65001-
5		01010-81025	Bolt	2	65001-
6		01643-31032	Washer	2	65001-
7		195-03-65940	Brake,RHS	1	65001-
8		01010-81025	Bolt	2	65001-
9		01643-31032	Washer	2	65001-
10		195-03-63950	Brake,LHS	1	65001-
11		01010-81025	Bolt	3	65001-
12		01643-31032	Washer	3	65001-
13		195-03-63960	Brake,LHS,RHS	1	65001-
14		01010-81025	Bolt	3	65001-
15		01643-31032	Washer	3	65001-
16		195-03-63990	Brake	1	65001-
17		01010-81025	Bolt	3	65001-
18		01643-31032	Washer	3	65001-
19		195-03-65970	Brake	1	65001-
20		01010-81025	Bolt	2	65001-
21		01643-31032	Washer	2	65001-
22		195-03-63981	Brake	1	65001-
23		01010-81025	Bolt	2	65001-
24		01643-31032	Washer	2	65001-
25		195-54-81221	Bracket	1	65001-
26		01010-81230	Bolt	4	65001-
27		01643-31232	Washer	4	65001-
28		195-54-81232	Bracket,LHS	1	65001-
29		01010-81230	Bolt	2	65001-
30		01643-31232	Washer	2	65001-
31		195-54-81242	Bracket,RHS	1	65001-

Printed By : Dwi Iswanto (airafather6107170)

Radiator Guard, Without Wiring Harness, Part No. And Manufacturing Date Code, Wind Brake (2/2) (#65001-)

Index	Code	Part Number	Description	Qty	Serial No.
32		01010-81230	Bolt	2	65001-
33		01643-31232	Washer	2	65001-

Printed By : Dwi Iswanto (airafather6107170)

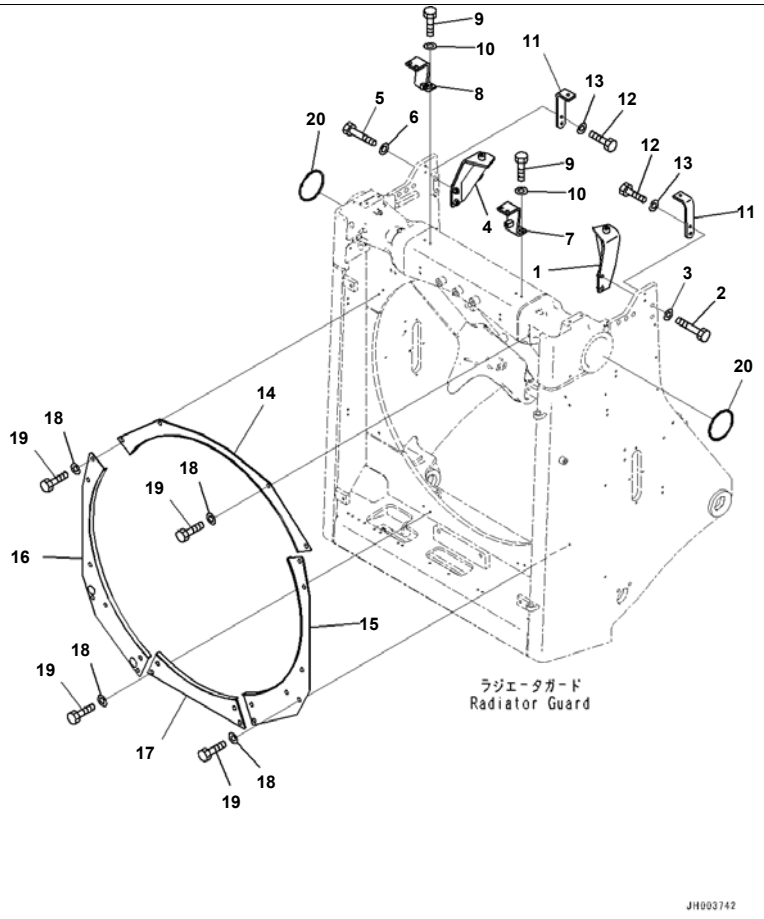

D375A-6R S/N 65001-UP
Radiator Guard, Without Wiring Harness, Part No. And Manufacturing Date Code, Hood Mounting (#65001-)

Index	Code	Part Number	Description	Qty	Serial No.
1		195-54-81561	Bracket,LHS	1	65001-
2		01010-81680	Bolt	2	65001-
3		01643-31645	Washer	2	65001-
4		195-54-81571	Bracket,RHS	1	65001-
5		01010-81680	Bolt	2	65001-
6		01643-31645	Washer	2	65001-
7		195-54-83540	Bracket	1	65001-
8		195-54-83440	Bracket	1	65001-
9		01010-81230	Bolt	4	65001-
10		01643-31232	Washer	4	65001-
11		195-54-81432	Bracket	2	65001-
12		01010-81235	Bolt	4	65001-
13		01643-31232	Washer	4	65001-
14		195-03-65311	Shroud	1	65001-
15		195-03-65321	Shroud	1	65001-
16		195-03-65331	Shroud	1	65001-
17		195-03-65341	Shroud	1	65001-
18		175-54-34170	Washer	22	65001-
19		01010-81230	Bolt	22	65001-
20		195-61-41230	Seal	2	65001-

Printed By : Dwi Iswanto (airafather6107170)

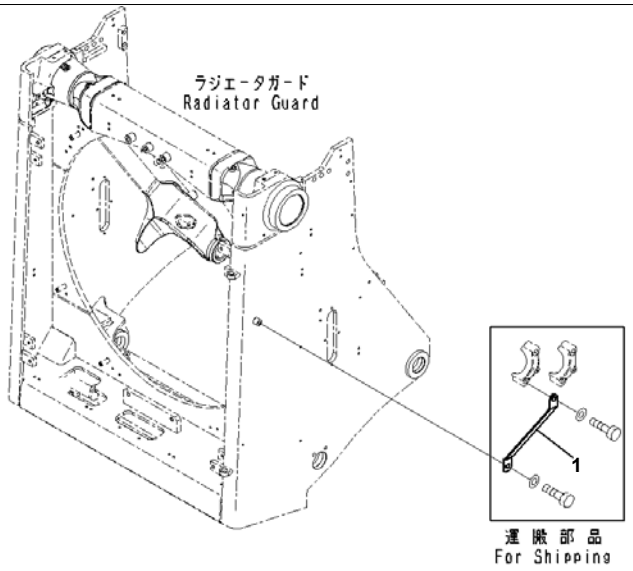

JH003204

Reference:M2110-004024 Page:M001025

D375A-6R S/N 65001-UP
Radiator Guard, Without Wiring Harness, Part No. And Manufacturing Date Code, Shipping Parts (#65001-)

Index	Code	Part Number	Description	Qty	Serial No.
1		195-61-61240	Bracket	2	65001-

Printed By : Dwi Iswanto (airafather6107170)

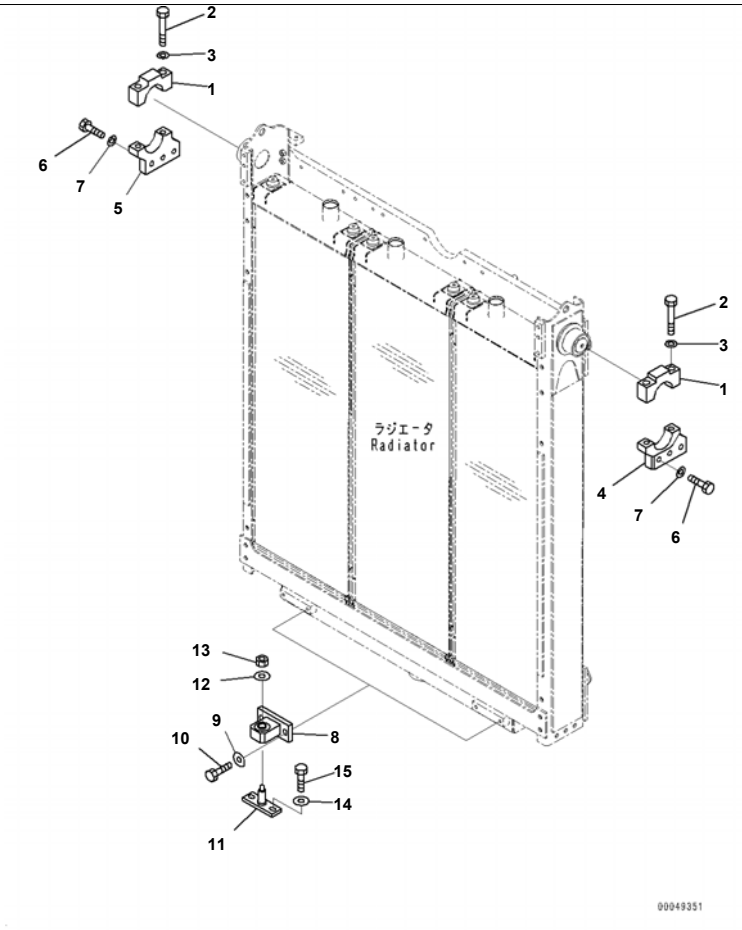

Reference:M2110-005001 Page:M002001

D375A-6R S/N 65001-UP
Radiator Guard, With Wiring Harness, Part No. And Manufacturing Date Code, Radiator Mounting (#65001-)

Index	Code	Part Number	Description	Qty	Serial No.
1		195-03-63270	Cap	2	65001-
2		01010-82095	Bolt	4	65001-
3		01643-32060	Washer	4	65001-
4		195-03-63281	Bracket,LHS	1	65001-
5		195-03-63291	Bracket,RHS	1	65001-
6		01010-82060	Bolt	6	65001-
7		01643-32060	Washer	6	65001-
8		195-03-65200	Isolator	2	65001-
9		124-54-26540	Washer	4	65001-
10		01010-81240	Bolt	4	65001-
11		17A-03-11271	Bracket	2	65001-
12		175-54-34170	Washer	2	65001-
13		01580-11210	Nut	2	65001-
14		124-54-26540	Washer	4	65001-
15		01010-81240	Bolt	4	65001-

Printed By : Dwi Iswanto (airafather6107170)

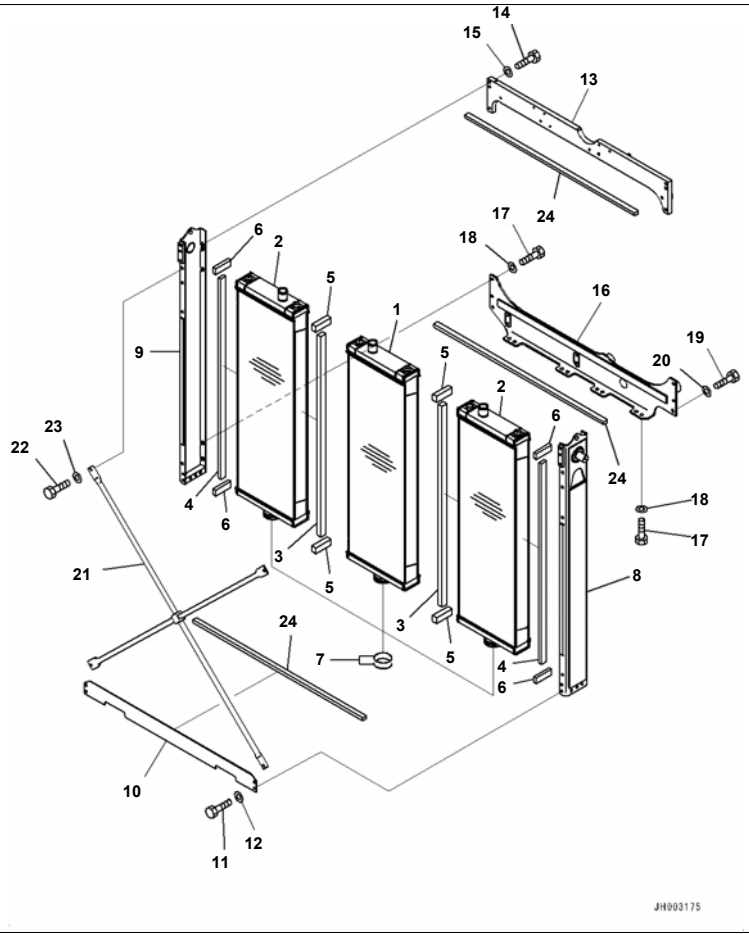

D375A-6R S/N 65001-UP
Radiator Guard, With Wiring Harness, Part No. And Manufacturing Date Code, Cooling and Cage (#65001-)

Index	Code	Part Number	Description	Qty	Serial No.
1		195-03-63113	Radiator	1	65001-
		195-03-64961	Radiator Assembly	2	65001-
2		195-03-63113	· Radiator	1	65001-
3		195-03-65110	· Sheet	1	65001-
4		195-03-65120	· Sheet	1	65001-
5		195-03-65130	· Sheet	2	65001-
6		195-03-65140	· Sheet	2	65001-
7		17A-03-41220	O-ring	6	65001-
8		195-03-65240	Bracket,LHS	1	65001-
9		195-03-65250	Bracket,RHS	1	65001-
10		195-03-65351	Bracket	1	65001-
11		01010-81230	Bolt	4	65001-
12		01643-31232	Washer	4	65001-
13		195-03-65171	Bracket	1	65001-
14		01010-81250	Bolt	6	65001-
15		01643-31232	Washer	6	65001-
16		195-03-65160	Bracket	1	65001-
17		01010-81230	Bolt	12	65001-
18		01643-31232	Washer	12	65001-
19		01010-81240	Bolt	2	65001-
20		01643-31232	Washer	2	65001-
21		195-03-65260	Pipe	1	65001-
22		01010-81230	Bolt	4	65001-
23		01643-31232	Washer	4	65001-
24		195-03-65150	Sheet	3	65001-

Printed By : Dwi Iswanto (airafather6107170)

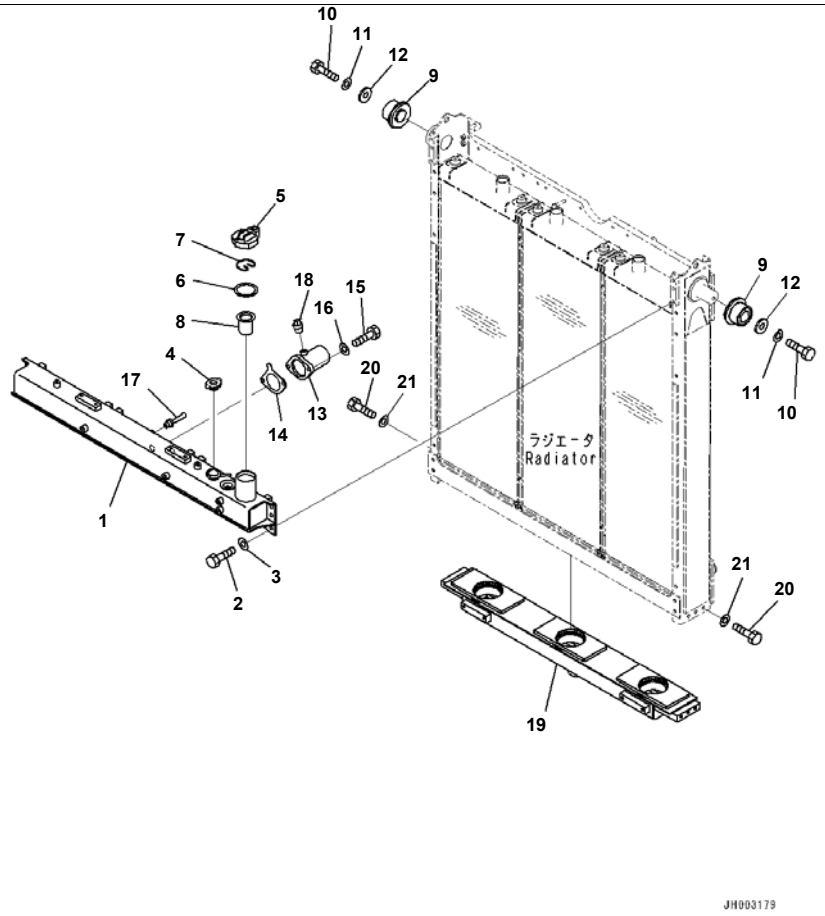

D375A-6R S/N 65001-UP
Radiator Guard, With Wiring Harness, Part No. And Manufacturing Date Code, Tank (#65001-)

Index	Code	Part Number	Description	Qty	Serial No.
1		195-03-63132	Tank	1	65001-
2		01010-81430	Bolt	6	65001-
3		01643-31445	Washer	6	65001-
4		201-03-51310	Cap	1	65001-
5		07093-20000	Cap	1	65001-
6		07053-00002	Gasket	1	65001-
7		07057-03271	Ring, Snap	1	65001-
8		07056-00048	Strainer	1	65001-
9		17A-03-11281	Rubber	2	65001-
10		01010-81230	Bolt	2	65001-
11		01643-31232	Washer	2	65001-
12		565-43-14630	Spacer	2	65001-
13		195-03-63350	Tube	1	65001-
14		195-03-63360	Gasket	1	65001-
15		01010-81240	Bolt	2	65001-
16		01643-31232	Washer	2	65001-
17		195-03-11531	Nipple	1	65001-
18		07042-70108	Plug	1	65001-
19		195-03-65290	Tank	1	65001-
20		01010-81470	Bolt	6	65001-
21		01643-31445	Washer	6	65001-

Printed By : Dwi Iswanto (airafather6107170)

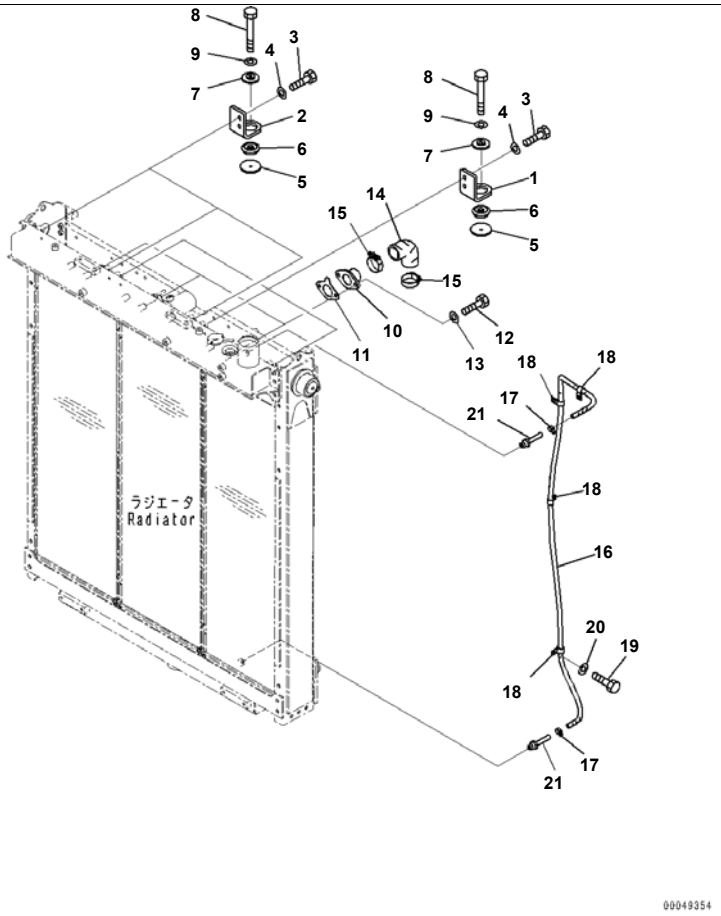

Radiator Guard, With Wiring Harness, Part No. And Manufacturing Date Code, Core Mount and Piping (#65001-)

Index	Code	Part Number	Description	Qty	Serial No.
1		195-03-63212	Bracket	3	65001-
2		195-03-63222	Bracket	3	65001-
3		01010-81030	Bolt	12	65001-
4		01643-31032	Washer	12	65001-
5		17M-03-51440	Spacer	6	65001-
6		17M-03-51430	Cushion	6	65001-
7		154-03-75480	Spacer	6	65001-
8		01010-81080	Bolt	6	65001-
9		01643-31032	Washer	6	65001-
10		17M-03-51270	Tube	3	65001-
11		17A-03-41240	Gasket	3	65001-
12		01010-81030	Bolt	6	65001-
13		01643-31032	Washer	6	65001-
14		17A-03-41211	Hose	3	65001-
15		17A-03-41540	Clamp	6	65001-
16		09483-10321	Hose	1	65001-
17		07281-00197	Clamp	2	65001-
18		04434-51610	Clip	4	65001-
19		01010-81020	Bolt	4	65001-
20		01643-31032	Washer	4	65001-
21		195-03-11531	Nipple	2	65001-

Printed By : Dwi Iswanto (airafather6107170)

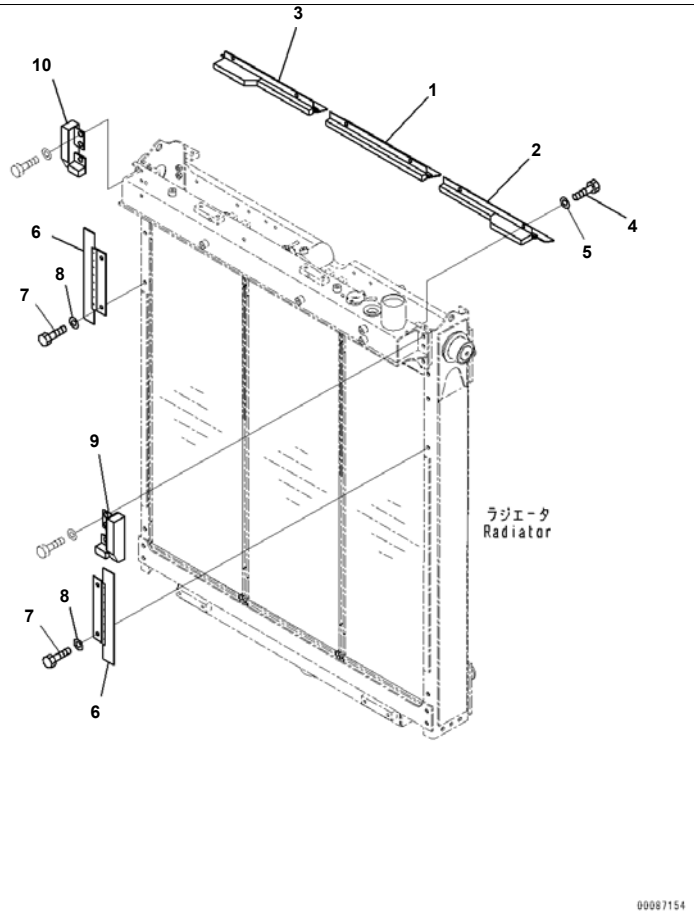

Reference:M2110-005005 Page:M002005

D375A-6R S/N 65001-UP
Radiator Guard, With Wiring Harness, Part No. And Manufacturing Date Code, Wind Brake (1/2) (#65001-)

Index	Code	Part Number	Description	Qty	Serial No.
1		195-03-63231	Brake	1	65001-
2		195-03-65951	Brake	1	65001-
3		195-03-65961	Brake	1	65001-
4		01010-81030	Bolt	6	65001-
5		01643-31032	Washer	6	65001-
6		195-03-63240	Brake	2	65001-
7		01010-81230	Bolt	4	65001-
8		01643-31232	Washer	4	65001-
9		195-03-65912	Brake	1	65001-
10		195-03-65922	Brake	1	65001-

Printed By : Dwi Iswanto (airafather6107170)

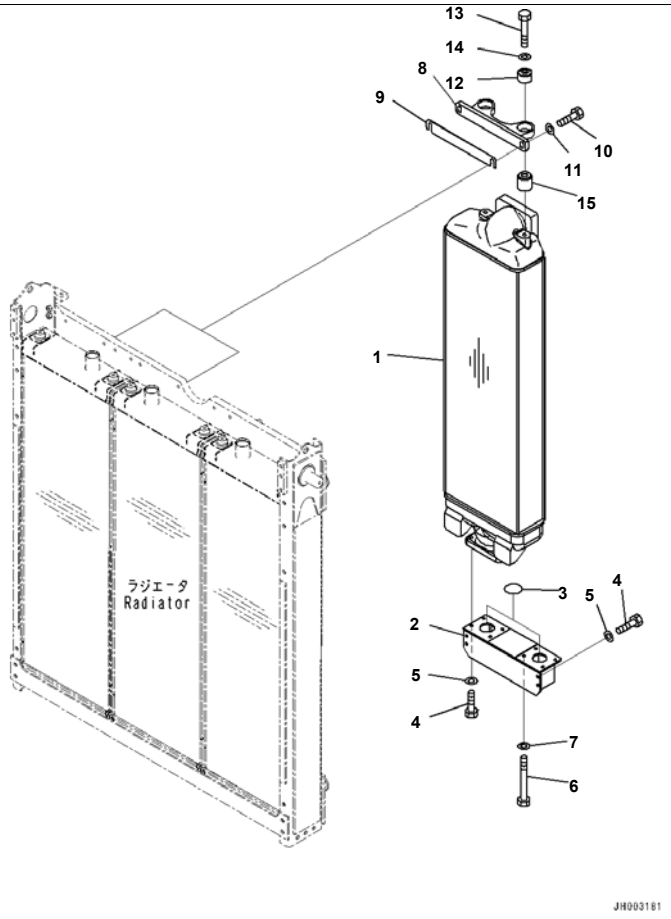

Reference:M2110-005006 Page:M002006

D375A-6R S/N 65001-UP
Radiator Guard, With Wiring Harness, Part No. And Manufacturing Date Code, Aftercooler (#65001-)

Index	Code	Part Number	Description	Qty	Serial No.
1		195-03-65181	Aftercooler Assembly	2	65001-
2		195-03-65190	Duct	1	65001-
3		07000-E2085	O-ring	2	65001-
4		01010-81230	Bolt	8	65001-
5		01643-31232	Washer	8	65001-
6		01011-81285	Bolt	4	65001-
7		01643-31232	Washer	4	65001-
8		195-03-65531	Bracket	2	65001-
9		195-03-65551	Shim	16	65001-
10		01010-81240	Bolt	4	65001-
11		124-54-26540	Washer	4	65001-
12		135-03-12110	Damper	4	65001-
13		01011-81400	Bolt	4	65001-
14		01643-31445	Washer	4	65001-
15		195-03-65360	Spacer	4	65001-

Reference:M2110-005006 Page:M002006

Printed By : Dwi Iswanto (airafather6107170)

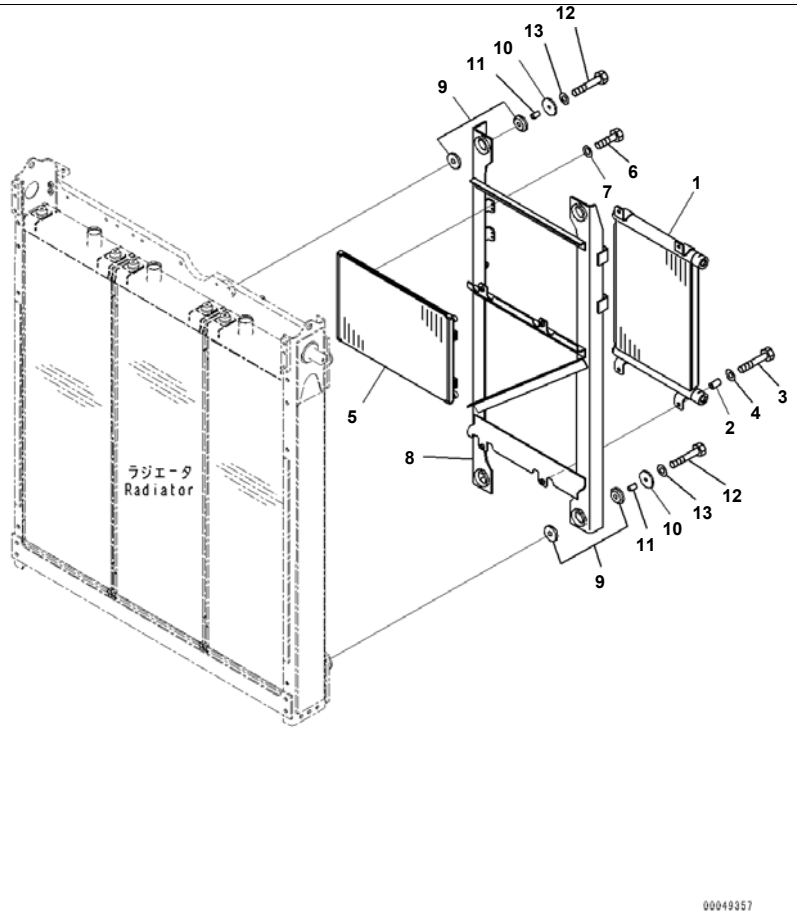

D375A-6R S/N 65001-UP
Radiator Guard, With Wiring Harness, Part No. And Manufacturing Date Code, Hydraulic Oil Cooler and Condenser
(#65001-)

Index	Code	Part Number	Description	Qty	Serial No.
1		17A-03-41510	Cooler	1	65001-
2		22D-62-18450	Collar	4	65001-
3		01010-81060	Bolt	4	65001-
4		01643-31032	Washer	4	65001-
5		208-979-7520	Condenser Assembly	1	65001-
6		01010-80616	Bolt	8	65001-
7		01643-30623	Washer	8	65001-
8		195-03-63252	Bracket	1	65001-
9		195-03-64921	Cushion	8	65001-
10		17M-03-51440	Spacer	4	65001-
11		195-57-14260	Spacer	4	65001-
12		01010-81060	Bolt	4	65001-
13		01643-31032	Washer	4	65001-

Printed By : Dwi Iswanto (airafather6107170)

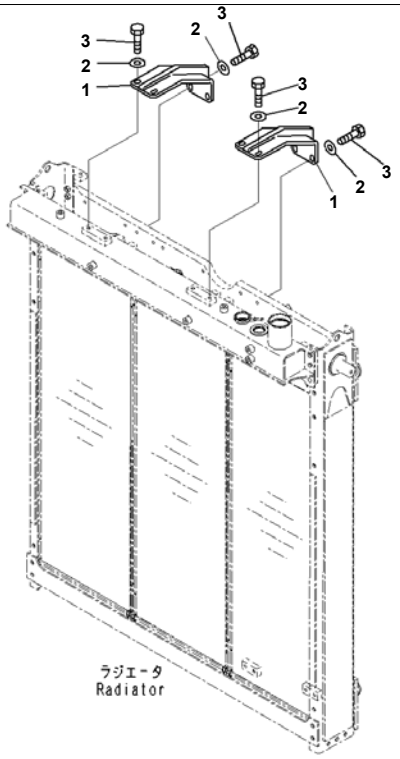

Reference:M2110-005008 Page:M002008

Radiator Guard, With Wiring Harness, Part No. And Manufacturing Date Code, Bracket (#65001-)

Index	Code	Part Number	Description	Qty	Serial No.
1		195-03-65710	Bracket	2	65001-
2		124-54-26540	Washer	8	65001-
3		01010-81230	Bolt	8	65001-

Printed By : Dwi Iswanto (airafather6107170)

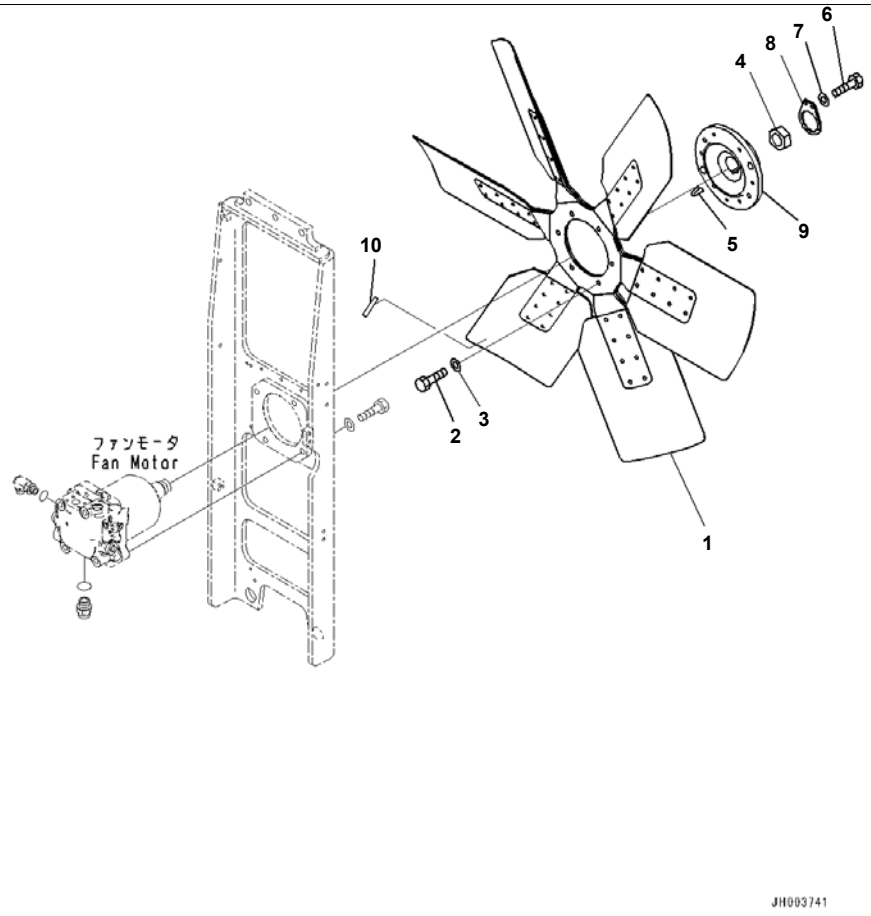

D375A-6R S/N 65001-UP
Radiator Guard, With Wiring Harness, Part No. And Manufacturing Date Code, Fan (#65001-)

Index	Code	Part Number	Description	Qty	Serial No.
1		600-645-1351	Fan	1	65001-
2		01010-81245	Bolt	6	65001-
3		01643-31232	Washer	6	65001-
4		01583-14225	Nut	1	65001-
5		04010-01045	Key, Woodruff	1	65001-
6		01010-81025	Bolt	1	65001-
7		01643-31032	Washer	1	65001-
8		198-03-71560	Lock	1	65001-
9		195-03-62111	Boss	1	65001-
10		799-203-8500	Tape	1	65001-

Printed By : Dwi Iswanto (airafather6107170)

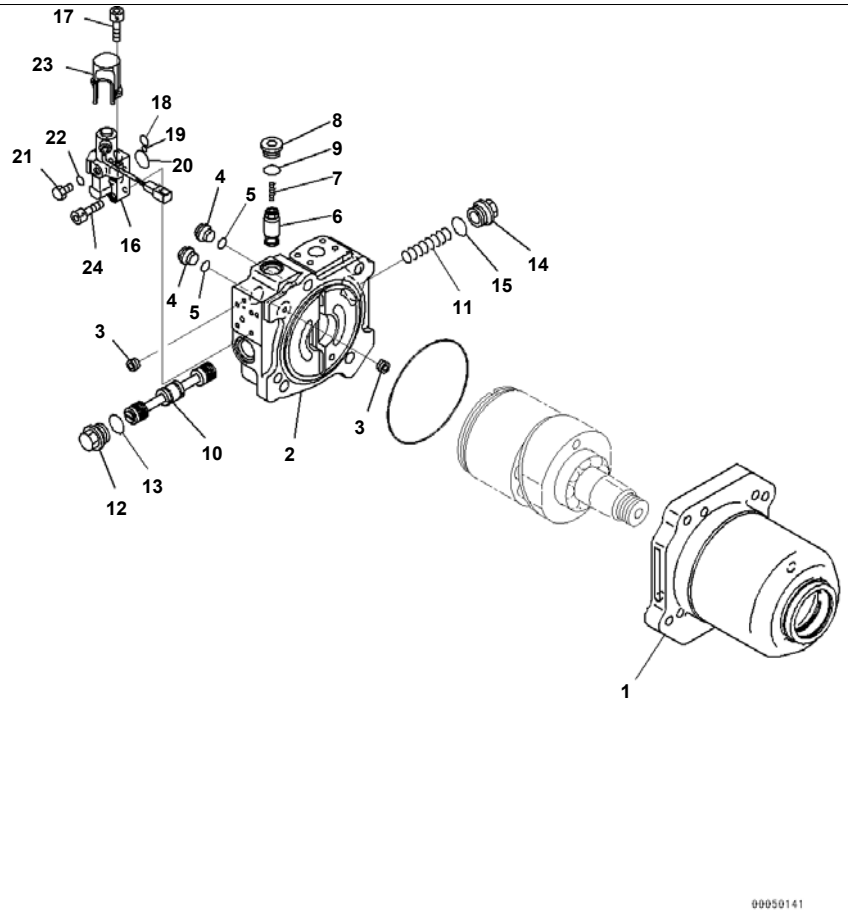

Radiator Guard, With Wiring Harness, Part No. And Manufacturing Date Code, Fan Motor (1/2) (#65001-)

Index	Code	Part Number	Description	Qty	Serial No.
		708-7H-00660	Motor Assembly	1	65001-
1	C2	708-7H-11430	· Case	1	65001-
	C2	708-7H-04720	· Cover Subassembly	1	65001-
2	C1		· · Cover, End	1	65001-
3	C1		· · Plug	2	65001-
4		706-8E-14191	· Plug	2	65001-
5		07002-11823	· O-ring	2	65001-
6		702-77-03600	· Valve, Relief	1	65001-
7		720-2M-15250	· Spring	1	65001-
8		720-2M-15270	· Plug	1	65001-
9		07002-12434	· O-ring	1	65001-
10	C2	708-7H-16820	· Spool	1	65001-
11	C2	708-7H-16790	· Spring	1	65001-
12		706-77-71670	· Plug	1	65001-
13		07002-13034	· O-ring	1	65001-
14		708-7H-16810	· Plug	1	65001-
15		07002-13034	· O-ring	1	65001-
16		708-7S-01330	· Valve Assembly, Pilot	1	65001-
17		01252-60616	· · Bolt	2	65001-
18		708-7S-18360	· · O-ring	1	65001-
19		07000-F1008	· · O-ring	1	65001-
20		708-7S-18230	· · O-ring	1	65001-
21		07040-11007	· · Plug	1	65001-
22		07002-21023	· · O-ring	1	65001-
23		708-1S-18180	· · Cover	1	65001-
24		01252-60835	· Bolt	4	65001-

Printed By : Dwi Iswanto (airafather6107170)

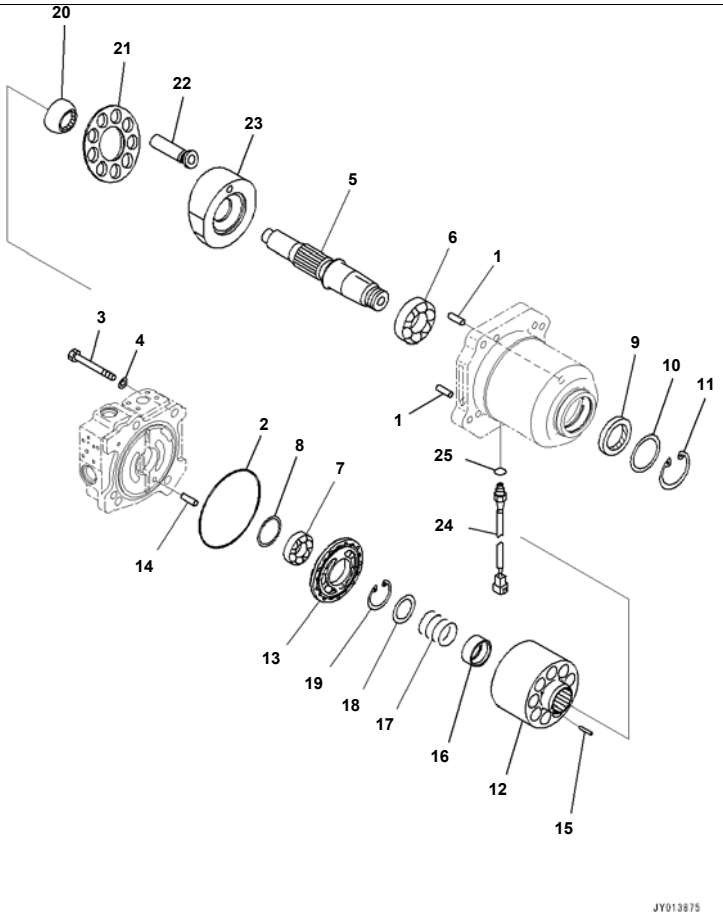

Radiator Guard, With Wiring Harness, Part No. And Manufacturing Date Code, Fan Motor (2/2) (#65001-)

Index	Code	Part Number	Description	Qty	Serial No.
		708-7H-00660	Motor Assembly	1	65001-
1	C2	04020-01638	· Pin, Dowel	2	65001-
2	C2	07000-15160	· O-ring	1	65001-
3		01010-61695	· Bolt	4	65001-
4		01643-51645	· Washer	4	65001-
5	C2	708-7H-12920	· Shaft	1	65001-
6	C2	708-8H-32150	· Bearing	1	65001-
7	C2	708-8H-32170	· Bearing	1	65001-
8	C2	708-8H-05050	· Spacer Kit	1	65001-
	C1		· · Spacer, T=1.6mm	1	65001-
	C1		· · Spacer, T=1.7mm	1	65001-
	C1		· · Spacer, T=1.8mm	1	65001-
	C1		· · Spacer, T=1.9mm	1	65001-
	C1		· · Spacer, T=2.0mm	1	65001-
	C1		· · Spacer, T=2.1mm	1	65001-
	C1		· · Spacer, T=2.2mm	1	65001-
9	C2	708-1F-12281	· Seal, Oil	1	65001-
10		708-8H-32160	· Spacer	1	65001-
11		04065-07825	· Ring, Snap	1	65001-
	C2	708-7H-04820	· Block Assembly, Cylinder	1	65001-
12	C1		· · Cylinder Block	1	65001-
13	C1		· · Plate, Valve	1	65001-
14	C2	708-18-13230	· Pin	1	65001-
15	C2	708-2H-23360	· Pin	3	65001-
16	C2	708-2H-23130	· Seat	1	65001-
17	C2	708-2H-33120	· Spring	1	65001-
18	C2	708-2H-23141	· Seat	1	65001-
19	C2	04065-05820	· Ring, Snap	1	65001-
20	C2	708-2H-23350	· Guide	1	65001-
21	C2	708-2H-33350	· Retainer	1	65001-
22	C2	708-7H-13910	· Piston Subassembly	9	65001-

Printed By : Dwi Iswanto (airafather6107170)

Radiator Guard, With Wiring Harness, Part No. And Manufacturing Date Code, Fan Motor (2/2) (#65001-)

Index	Code	Part Number	Description	Qty	Serial No.
23	C2	708-7H-13610	· Plate	1	65001-
24		729-11-41000	· Sensor, Pick-Up	1	65001-
25		07002-21423	· O-ring	1	65001-

Printed By : Dwi Iswanto (airafather6107170)

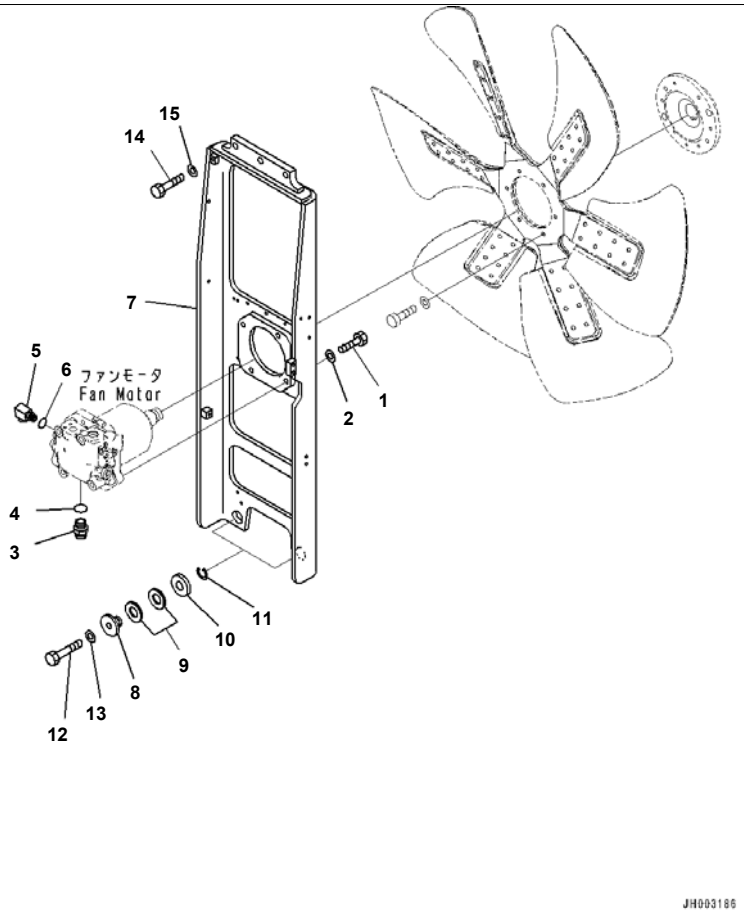

Radiator Guard, With Wiring Harness, Part No. And Manufacturing Date Code, Fan Motor Related Parts (#65001-)

Index	Code	Part Number	Description	Qty	Serial No.
1		01010-81665	Bolt	4	65001-
2		01643-31645	Washer	4	65001-
3		20U-62-41720	Nipple	1	65001-
4		07002-13334	O-ring	1	65001-
5		195-03-66490	Elbow	1	65001-
6		07002-12434	O-ring	1	65001-
7		195-03-64741	Bracket	1	65001-
		195-54-41300	Collar Assembly	2	65001-
8		195-54-41310	· Collar	1	65001-
9		175-03-C1160	· Spring	2	65001-
10		175-03-C1170	· Spacer	1	65001-
11		195-54-41320	· Ring	1	65001-
12		01010-82075	Bolt	2	65001-
13		01643-32060	Washer	2	65001-
14		01010-82060	Bolt	3	65001-
15		01643-32060	Washer	3	65001-

Printed By : Dwi Iswanto (airafather6107170)

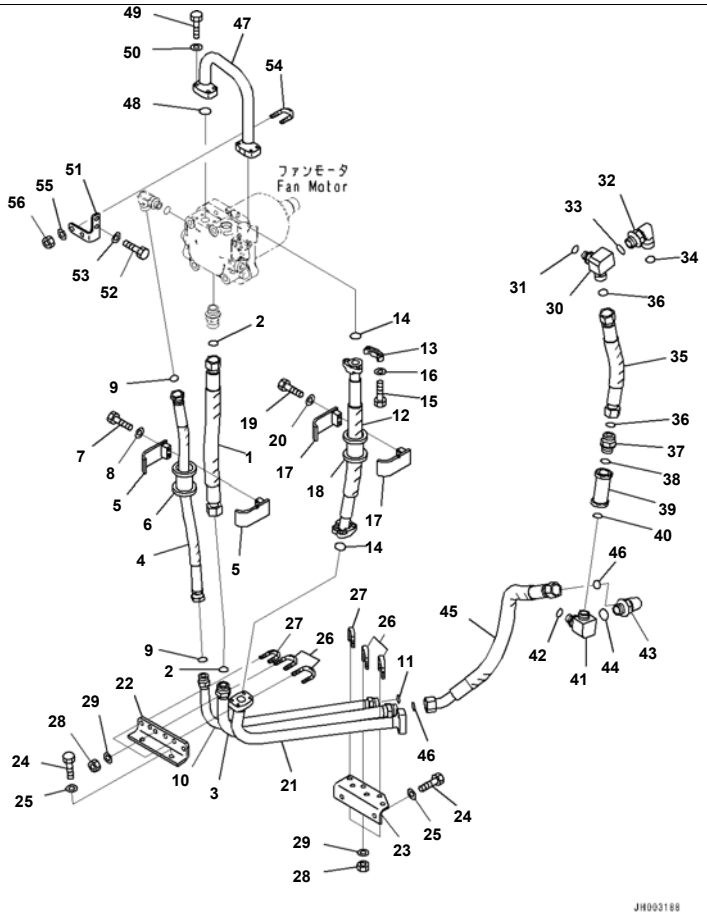

Index	Code	Part Number	Description	Qty	Serial No.
1		195-03-63681	Hose	1	65001-
2		207-62-64740	O-ring	2	65001-
3		195-03-63641	Tube	1	65001-
4		198-03-72290	Hose	1	65001-
5		198-61-44210	Clamp	2	65001-
6		198-04-41210	Cushion	1	65001-
7		01010-81275	Bolt	1	65001-
8		01643-31232	Washer	1	65001-
9		207-62-64740	O-ring	2	65001-
10		195-03-66471	Tube	1	65001-
11		02896-11018	O-ring	1	65001-
12		195-03-64680	Hose	1	65001-
13		07371-31049	Flange, Split	4	65001-
14		07000-13032	O-ring	2	65001-
15		07372-21035	Bolt	8	65001-
16		01643-51032	Washer	8	65001-
17		198-61-44210	Clamp	2	65001-
18		198-04-41210	Cushion	1	65001-
19		01010-81275	Bolt	1	65001-
20		01643-31232	Washer	1	65001-
21		195-03-63621	Tube	1	65001-
22		195-03-63651	Bracket	1	65001-
23		195-03-63661	Bracket	1	65001-
24		01010-81230	Bolt	4	65001-
25		01643-31232	Washer	4	65001-
26		07283-33442	Clip	4	65001-
27		07283-32738	Clip, Pipe	2	65001-
28		01597-01009	Nut	12	65001-
29		01643-31032	Washer	12	65001-
30		195-03-63731	Elbow	1	65001-
31		07002-12434	O-ring	1	65001-

Printed By : Dwi Iswanto (airafather6107170)

Radiator Guard, With Wiring Harness, Part No. And Manufacturing Date Code, Fan Motor Piping (#65001-)

Index	Code	Part Number	Description	Qty	Serial No.
32		21W-62-42640	Elbow	1	65001-
33		07002-13334	O-ring	1	65001-
34		207-62-64740	O-ring	1	65001-
35		195-03-63710	Hose	1	65001-
36		207-62-64740	O-ring	2	65001-
37		20U-62-41720	Nipple	1	65001-
38		07002-13334	O-ring	1	65001-
39		20S-62-16160	Valve Assembly	1	65001-
40		07002-13334	O-ring	1	65001-
41		195-03-63741	Elbow	1	65001-
42		07002-12434	O-ring	1	65001-
43		21W-62-42640	Elbow	1	65001-
44		07002-13334	O-ring	1	65001-
45		195-03-63690	Hose	1	65001-
46		207-62-64740	O-ring	2	65001-
47		195-03-63471	Tube	1	65001-
48		07000-13035	O-ring	1	65001-
49		07372-21040	Bolt	4	65001-
50		01643-51032	Washer	4	65001-
51		195-03-63481	Bracket	1	65001-
52		01010-81225	Bolt	2	65001-
53		01643-31232	Washer	2	65001-
54		07283-33442	Clip	1	65001-
55		01643-31032	Washer	2	65001-
56		01597-01009	Nut	2	65001-

Printed By : Dwi Iswanto (airafather6107170)

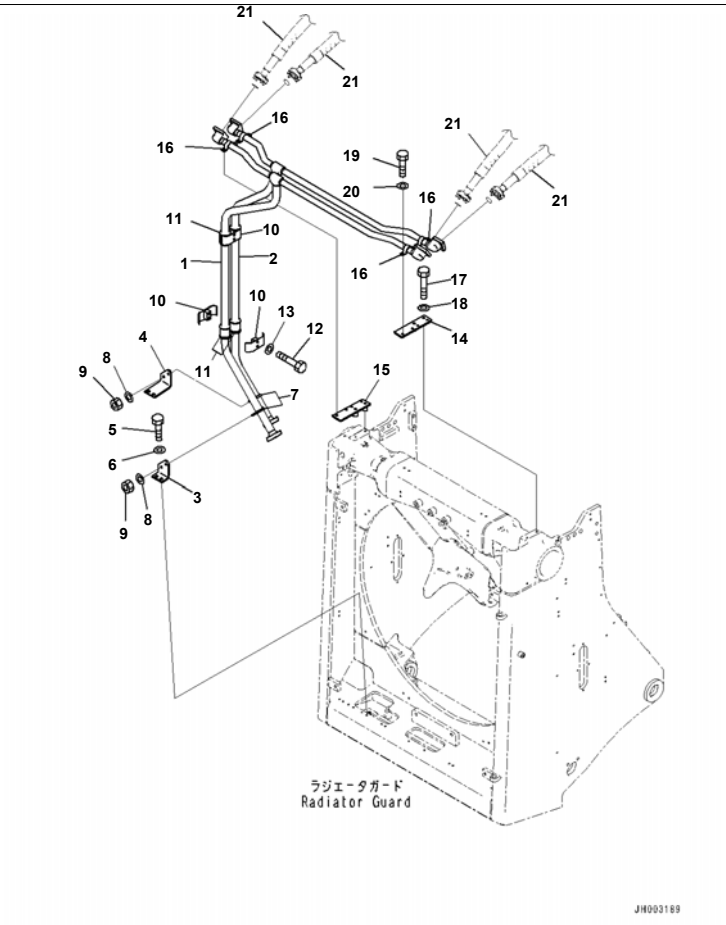

Radiator Guard, With Wiring Harness, Part No. And Manufacturing Date Code, Blade Lift Piping (#65001-)

Index	Code	Part Number	Description	Qty	Serial No.
1		195-61-62751	Tube	1	65001-
2		195-61-62761	Tube	1	65001-
3		195-61-61770	Bracket	1	65001-
4		195-61-61780	Bracket	1	65001-
5		01010-81230	Bolt	4	65001-
6		01643-31232	Washer	4	65001-
7		07283-34346	Clip	2	65001-
8		01643-31032	Washer	4	65001-
9		01597-01009	Nut	4	65001-
10		07094-31228	Clip	4	65001-
11		07095-01241	Cushion	4	65001-
12		01010-81285	Bolt	4	65001-
13		01643-31232	Washer	4	65001-
14		195-61-61831	Bracket,LHS	1	65001-
15		195-61-61841	Bracket,RHS	1	65001-
16		07282-13411	Clip	4	65001-
17		01010-81265	Bolt	4	65001-
18		01643-31232	Washer	4	65001-
19		01010-81030	Bolt	8	65001-
20		01643-31032	Washer	8	65001-
21		(07099-01016)	Hose, Flange Type		
		(07099-01016)	Hose, Flange Type		

Printed By : Dwi Iswanto (airafather6107170)

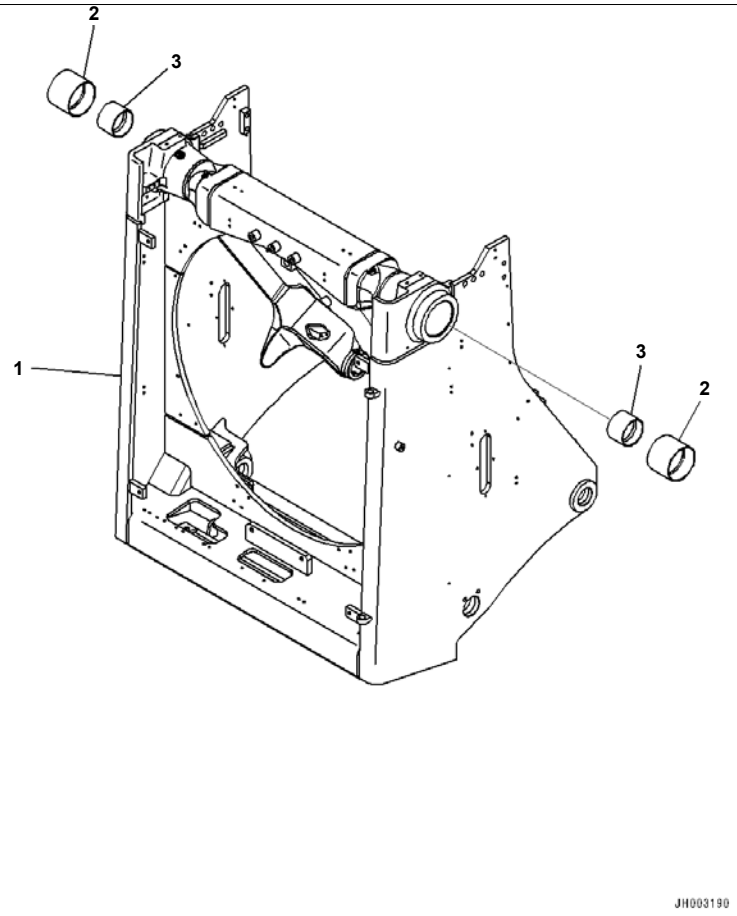

Radiator Guard, With Wiring Harness, Part No. And Manufacturing Date Code, Radiator Guard (#65001-)

Index	Code	Part Number	Description	Qty	Serial No.
1		195-54-85221	Guard	1	65001-
2		195-61-41131	Bushing	2	65001-
3		195-61-41160	Bushing	2	65001-

Printed By : Dwi Iswanto (airafather6107170)

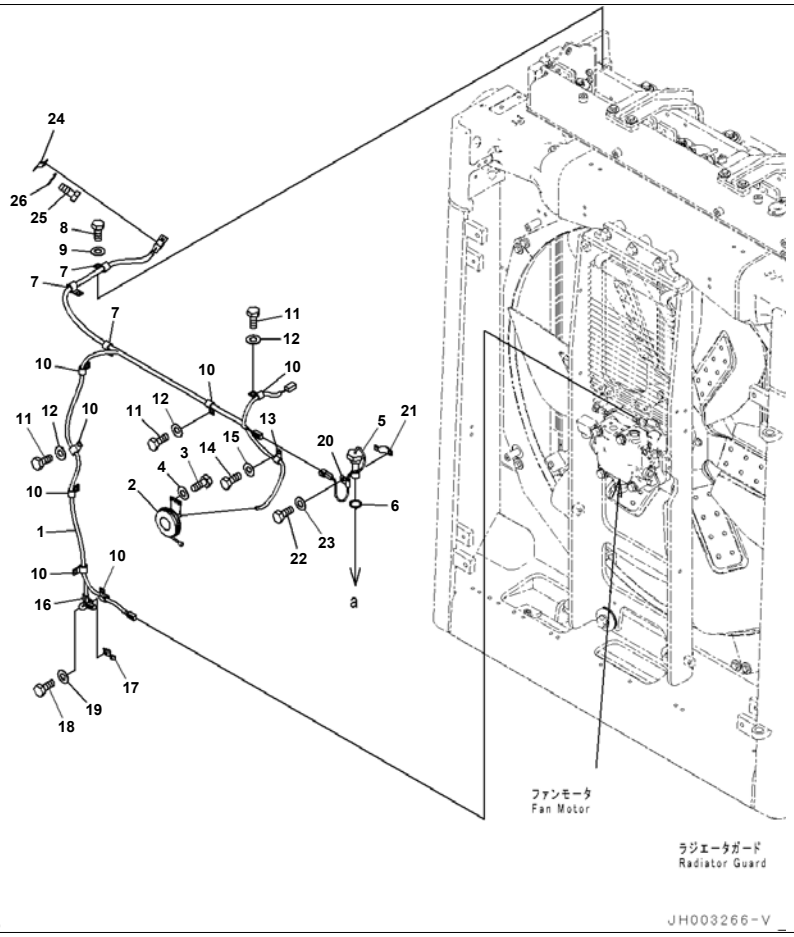

D375A-6R S/N 65001-UP
Radiator Guard, With Wiring Harness, Part No. And Manufacturing Date Code, Wiring Harness (#65001-65000)

Index	Code	Part Number	Description	Qty	Serial No.
1		195-06-55521	Wiring Harness	1	65001-@
2		19M-06-18220	Horn	1	65001-@
3		01010-80820	Bolt	2	65001-@
4		01643-30823	Washer	2	65001-@
5		7861-93-4520	Sensor	1	65001-@
6		07002-13634	O-ring	1	65001-@
7		04434-51912	Clip	3	65001-@
8		01010-81220	Bolt	3	65001-@
9		01643-31232	Washer	3	65001-@
10		04434-51512	Clip	7	65001-@
11		01010-81220	Bolt	6	65001-@
12		01643-31232	Washer	6	65001-@
13		04434-51212	Clip	1	65001-@
14		01010-81220	Bolt	1	65001-@
15		01643-31232	Washer	1	65001-@
16		04434-51012	Clip	1	65001-@
17		08193-21012	Clip	1	65001-@
18		01010-81230	Bolt	1	65001-65000
19		01643-31232	Washer	1	65001-@
20		21T-38-12270	Clip	1	65001-@
21		08193-21012	Clip	1	65001-@
22		01010-81220	Bolt	1	65001-@
23		01643-31232	Washer	1	65001-@
24		08193-21012	Clip	1	65001-@
25		01010-81220	Bolt	1	65001-@
26		01643-31232	Washer	1	65001-@

Printed By : Dwi Iswanto (airafather6107170)

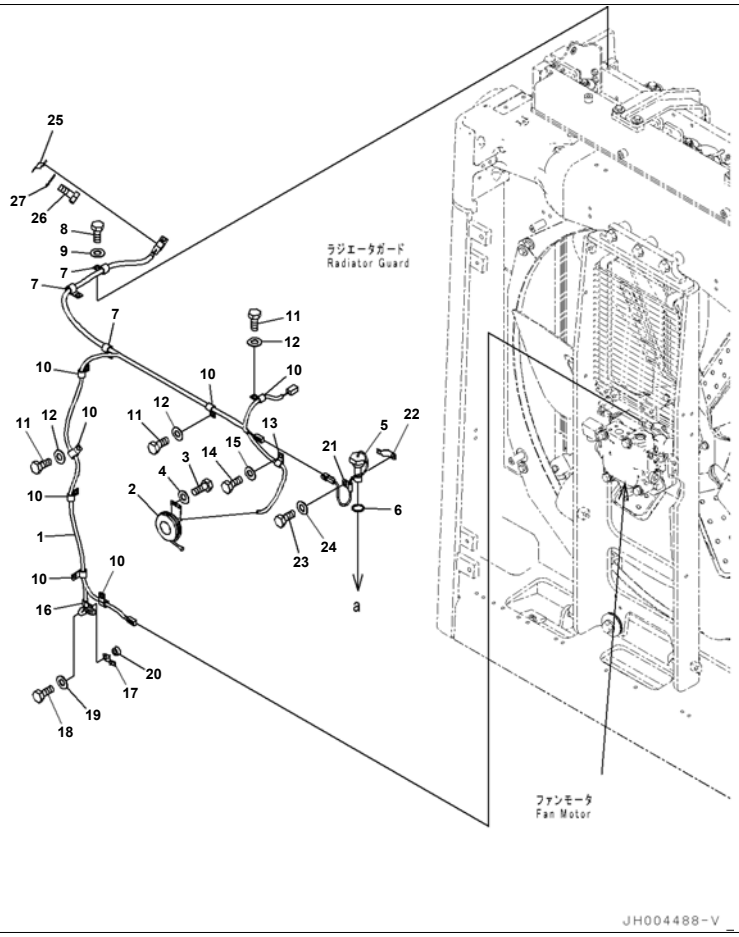

D375A-6R S/N 65001-UP
Radiator Guard, With Wiring Harness, Part No. And Manufacturing Date Code, Wiring Harness (#65001-)

Index	Code	Part Number	Description	Qty	Serial No.
1		195-06-55521	Wiring Harness	1	65001-
2		19M-06-18220	Horn	1	65001-
3		01010-80820	Bolt	2	65001-
4		01643-30823	Washer	2	65001-
5		7861-93-4520	Sensor	1	65001-
6		07002-13634	O-ring	1	65001-
7		04434-51912	Clip	3	65001-
8		01010-81220	Bolt	3	65001-
9		01643-31232	Washer	3	65001-
10		04434-51512	Clip	7	65001-
11		01010-81220	Bolt	6	65001-
12		01643-31232	Washer	6	65001-
13		04434-51212	Clip	1	65001-
14		01010-81220	Bolt	1	65001-
15		01643-31232	Washer	1	65001-
16		04434-51012	Clip	1	65001-
17		08193-21012	Clip	1	65001-
18		01010-81240	Bolt	1	65001-
19		01643-31232	Washer	1	65001-
20		23S-43-53140	Spacer	1	65001-
21		21T-38-12270	Clip	1	65001-
22		08193-21012	Clip	1	65001-
23		01010-81220	Bolt	1	65001-
24		01643-31232	Washer	1	65001-
25		08193-21012	Clip	1	65001-
26		01010-81220	Bolt	1	65001-
27		01643-31232	Washer	1	65001-

Printed By : Dwi Iswanto (airafather6107170)

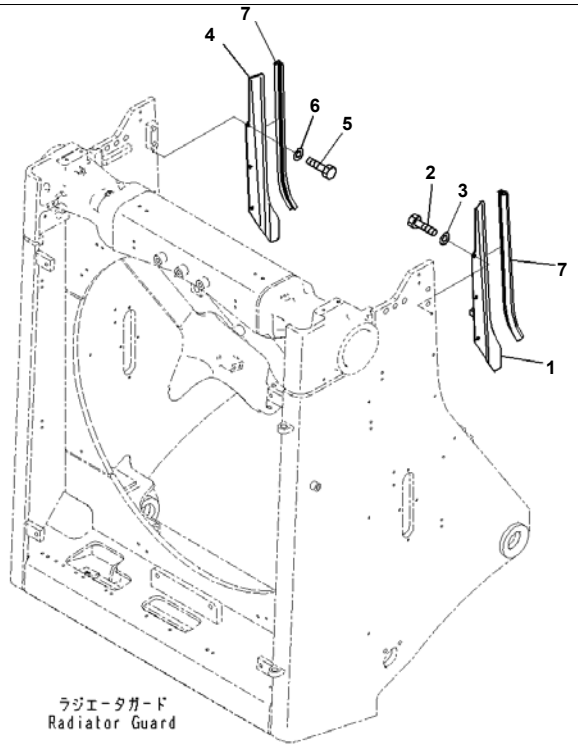

Reference:M2110-005017 Page:M002018

D375A-6R S/N 65001-UP
Radiator Guard, With Wiring Harness, Part No. And Manufacturing Date Code, Cover (#65001-)

Index	Code	Part Number	Description	Qty	Serial No.
1		195-54-81643	Plate,LHS	1	65001-
2		01010-81025	Bolt	3	65001-
3		01643-31032	Washer	3	65001-
4		195-54-81653	Plate,RHS	1	65001-
5		01010-81025	Bolt	3	65001-
6		01643-31032	Washer	3	65001-
7		198-54-73770	Seal	2	65001-

Printed By : Dwi Iswanto (airafather6107170)

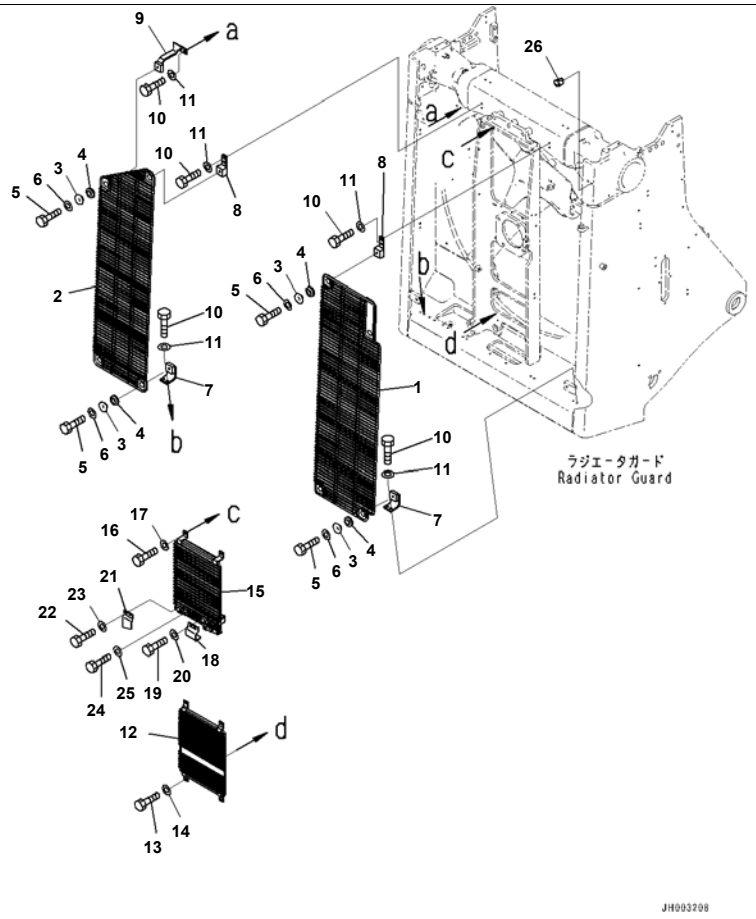

Radiator Guard, With Wiring Harness, Part No. And Manufacturing Date Code, Net (#65001-)

Index	Code	Part Number	Description	Qty	Serial No.
1		195-03-63811	Net,LHS	1	65001-
2		195-03-63821	Net,RHS	1	65001-
3		203-54-14330	Collar	8	65001-
4		175-03-42140	Rubber	8	65001-
5		01010-81235	Bolt	8	65001-
6		01643-31232	Washer	8	65001-
7		195-03-63850	Bracket	4	65001-
8		195-03-63860	Bracket	2	65001-
9		195-03-63871	Bracket	1	65001-
10		01010-81230	Bolt	14	65001-
11		01643-31232	Washer	14	65001-
12		195-03-63841	Net	1	65001-
13		01010-81020	Bolt	4	65001-
14		01643-31032	Washer	4	65001-
15		195-03-64691	Net	1	65001-
16		01010-81020	Bolt	4	65001-
17		01643-31032	Washer	4	65001-
18		195-06-71841	Cover	1	65001-
19		01010-81020	Bolt	2	65001-
20		01643-31032	Washer	2	65001-
21		195-06-55770	Cover	1	65001-
22		01010-81020	Bolt	2	65001-
23		01643-31032	Washer	2	65001-
24		01010-81020	Bolt	1	65001-
25		01643-31032	Washer	1	65001-
26		07049-01215	Plug	2	65001-

Printed By : Dwi Iswanto (airafather6107170)

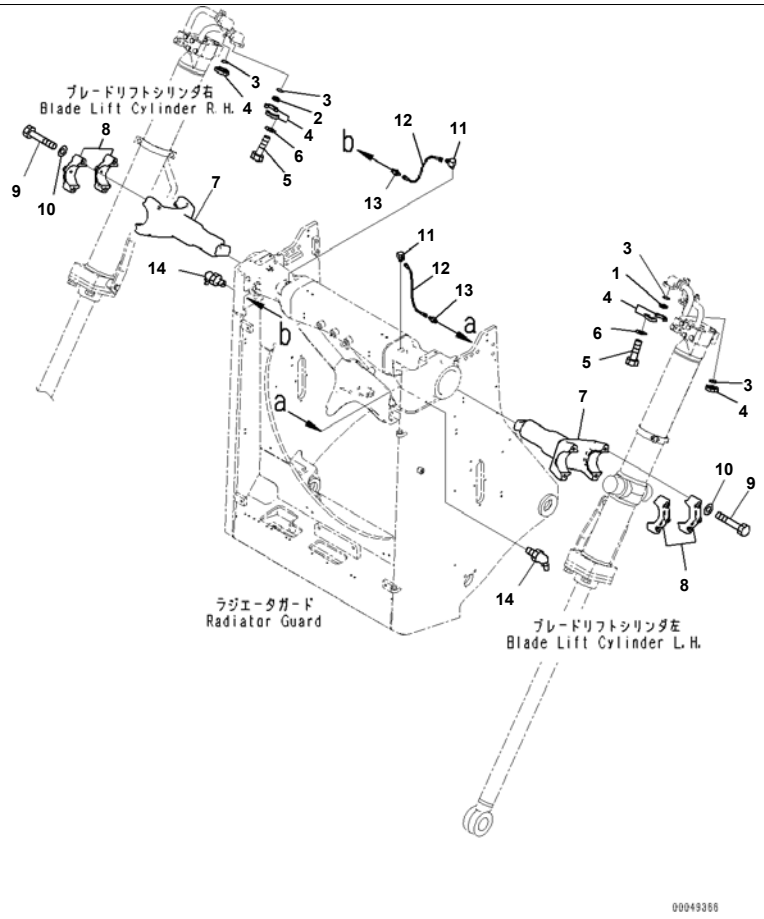

Reference:M2110-005019 Page:M002020

D375A-6R S/N 65001-UP

Radiator Guard, With Wiring Harness, Part No. And Manufacturing Date Code, Blade Lift Cylinder Yoke (#65001-)

Index	Code	Part Number	Description	Qty	Serial No.
1		07378-11000	Head	2	65001-
2		07378-11000	Head	2	65001-
3		07000-13032	O-ring	4	65001-
4		07371-31049	Flange, Split	8	65001-
5		07372-21035	Bolt	16	65001-
6		01643-51032	Washer	16	65001-
7		195-61-41113	Yoke	2	65001-
8		195-61-41121	Cap	4	65001-
9		01011-82000	Bolt	8	65001-
10		01643-32060	Washer	8	65001-
11		202-62-21430	Elbow	2	65001-
12		198-03-16470	Hose	2	65001-
13		203-62-21740	Nipple	2	65001-
14		07020-00675	Fitting, Grease	2	65001-

Reference:M2110-005019 Page:M002020

Printed By : Dwi Iswanto (airafather6107170)

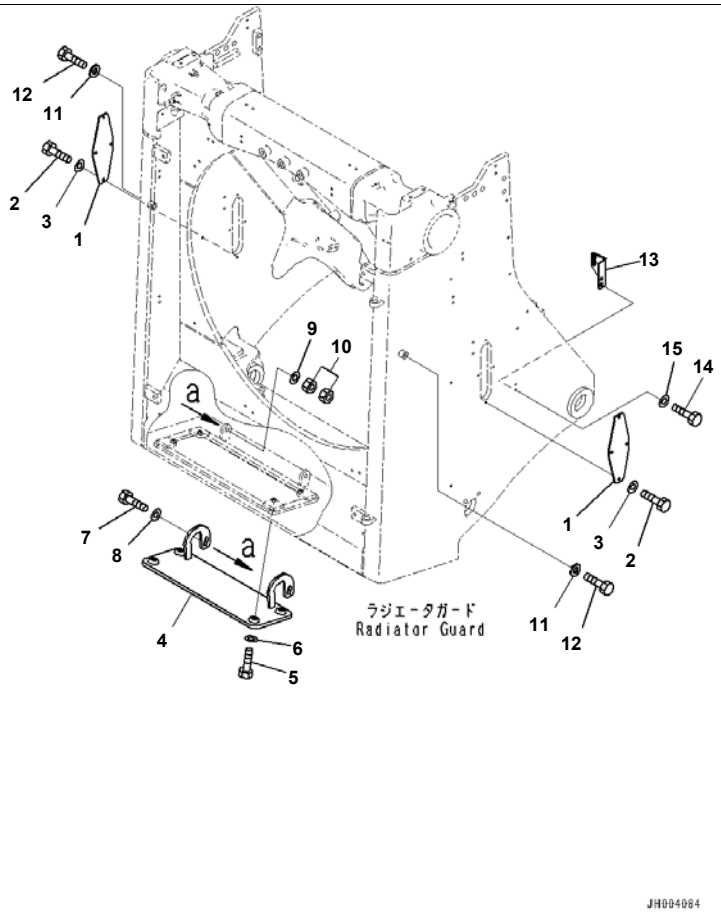

Radiator Guard, With Wiring Harness, Part No. And Manufacturing Date Code, Radiator Guard Related (#65001-)

Index	Code	Part Number	Description	Qty	Serial No.
1		17M-54-41190	Plate	2	65001-
2		01010-81020	Bolt	8	65001-
3		01643-31032	Washer	8	65001-
4		195-54-81161	Cover	1	65001-
5		01010-81235	Bolt	4	65001-
6		01643-31232	Washer	4	65001-
7		01010-81260	Bolt	2	65001-
8		01643-31232	Washer	2	65001-
9		01643-31232	Washer	2	65001-
10		01580-01210	Nut	4	65001-
11		21T-09-11330	Washer	2	65001-
12		01010-81630	Bolt	2	65001-
13		195-03-66160	Bracket	1	65001-
14		01010-81225	Bolt	2	65001-
15		01643-31232	Washer	2	65001-

Printed By : Dwi Iswanto (airafather6107170)

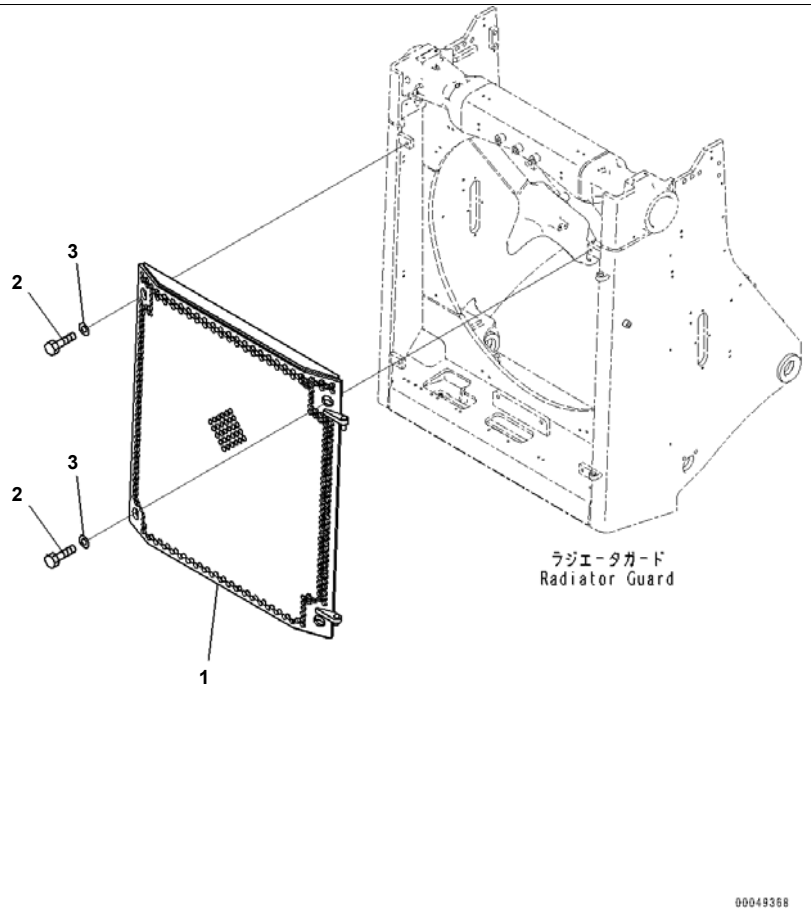

D375A-6R S/N 65001-UP
Radiator Guard, With Wiring Harness, Part No. And Manufacturing Date Code, Radiator Mask (#65001-)

Index	Code	Part Number	Description	Qty	Serial No.
1		195-54-81211	Mask	1	65001-
2		01010-81645	Bolt	4	65001-
3		01643-31645	Washer	4	65001-

Printed By : Dwi Iswanto (airafather6107170)

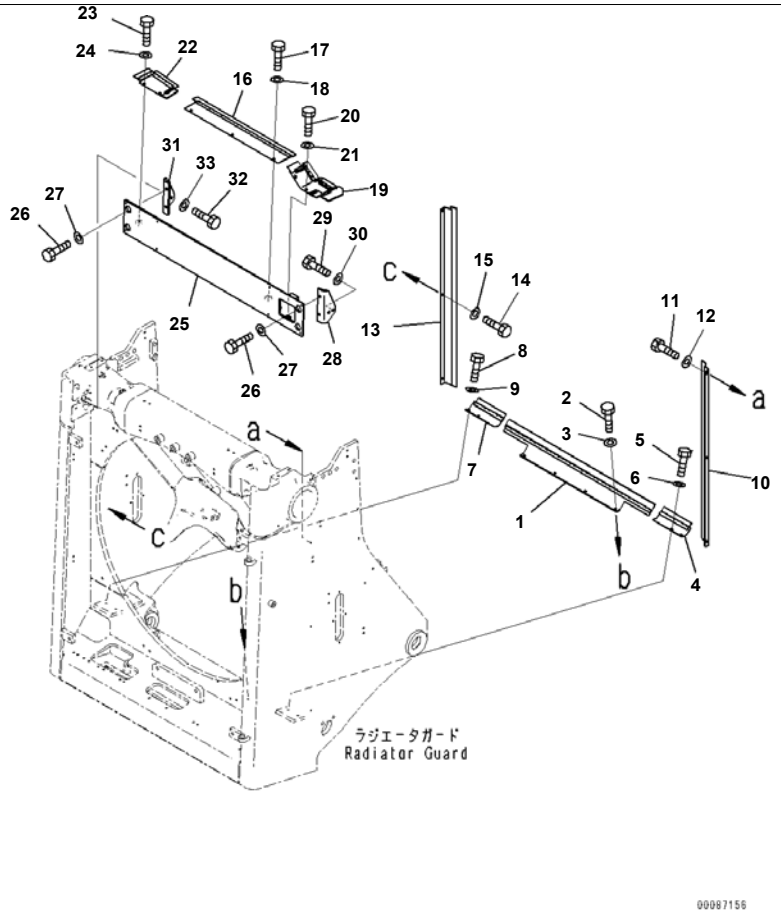

D375A-6R S/N 65001-UP
Radiator Guard, With Wiring Harness, Part No. And Manufacturing Date Code, Wind Brake (2/2) (#65001-)

Index	Code	Part Number	Description	Qty	Serial No.
1		195-03-63920	Brake	1	65001-
2		01010-81025	Bolt	4	65001-
3		01643-31032	Washer	4	65001-
4		195-03-65930	Brake,LHS	1	65001-
5		01010-81025	Bolt	2	65001-
6		01643-31032	Washer	2	65001-
7		195-03-65940	Brake,RHS	1	65001-
8		01010-81025	Bolt	2	65001-
9		01643-31032	Washer	2	65001-
10		195-03-63950	Brake,LHS	1	65001-
11		01010-81025	Bolt	3	65001-
12		01643-31032	Washer	3	65001-
13		195-03-63960	Brake,LHS,RHS	1	65001-
14		01010-81025	Bolt	3	65001-
15		01643-31032	Washer	3	65001-
16		195-03-63990	Brake	1	65001-
17		01010-81025	Bolt	3	65001-
18		01643-31032	Washer	3	65001-
19		195-03-65970	Brake	1	65001-
20		01010-81025	Bolt	2	65001-
21		01643-31032	Washer	2	65001-
22		195-03-63981	Brake	1	65001-
23		01010-81025	Bolt	2	65001-
24		01643-31032	Washer	2	65001-
25		195-54-81221	Bracket	1	65001-
26		01010-81230	Bolt	4	65001-
27		01643-31232	Washer	4	65001-
28		195-54-81232	Bracket,LHS	1	65001-
29		01010-81230	Bolt	2	65001-
30		01643-31232	Washer	2	65001-
31		195-54-81242	Bracket,RHS	1	65001-

Printed By : Dwi Iswanto (airafather6107170)

Radiator Guard, With Wiring Harness, Part No. And Manufacturing Date Code, Wind Brake (2/2) (#65001-)

Index	Code	Part Number	Description	Qty	Serial No.
32		01010-81230	Bolt	2	65001-
33		01643-31232	Washer	2	65001-

Printed By : Dwi Iswanto (airafather6107170)

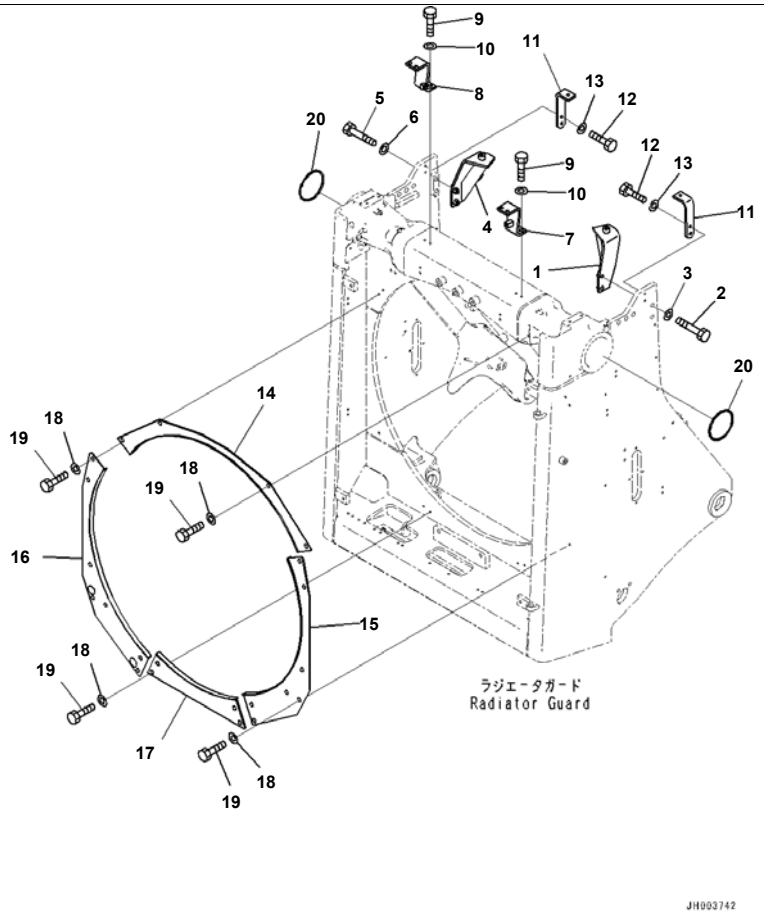

D375A-6R S/N 65001-UP
Radiator Guard, With Wiring Harness, Part No. And Manufacturing Date Code, Hood Mounting (#65001-)

Index	Code	Part Number	Description	Qty	Serial No.
1		195-54-81561	Bracket,LHS	1	65001-
2		01010-81680	Bolt	2	65001-
3		01643-31645	Washer	2	65001-
4		195-54-81571	Bracket,RHS	1	65001-
5		01010-81680	Bolt	2	65001-
6		01643-31645	Washer	2	65001-
7		195-54-83540	Bracket	1	65001-
8		195-54-83440	Bracket	1	65001-
9		01010-81230	Bolt	4	65001-
10		01643-31232	Washer	4	65001-
11		195-54-81432	Bracket	2	65001-
12		01010-81235	Bolt	4	65001-
13		01643-31232	Washer	4	65001-
14		195-03-65311	Shroud	1	65001-
15		195-03-65321	Shroud	1	65001-
16		195-03-65331	Shroud	1	65001-
17		195-03-65341	Shroud	1	65001-
18		175-54-34170	Washer	22	65001-
19		01010-81230	Bolt	22	65001-
20		195-61-41230	Seal	2	65001-

Printed By : Dwi Iswanto (airafather6107170)

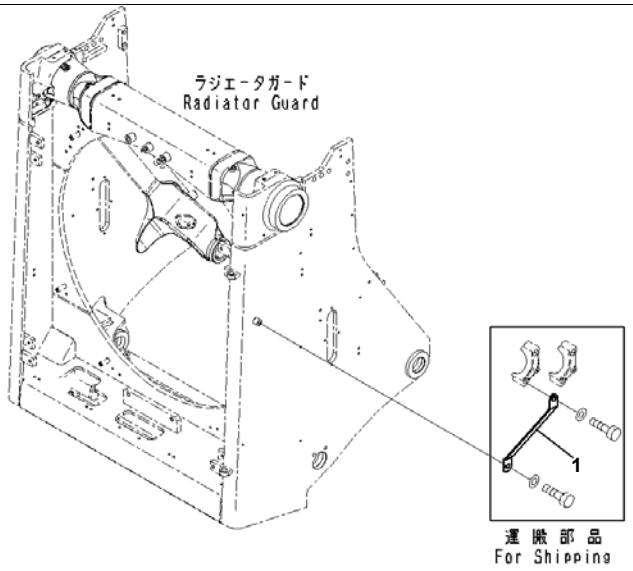

Reference:M2110-005024 Page:M002025

D375A-6R S/N 65001-UP
Radiator Guard, With Wiring Harness, Part No. And Manufacturing Date Code, Shipping Parts (#65001-)

Index	Code	Part Number	Description	Qty	Serial No.
1		195-61-61240	Bracket	2	65001-

Printed By : Dwi Iswanto (airafather6107170)

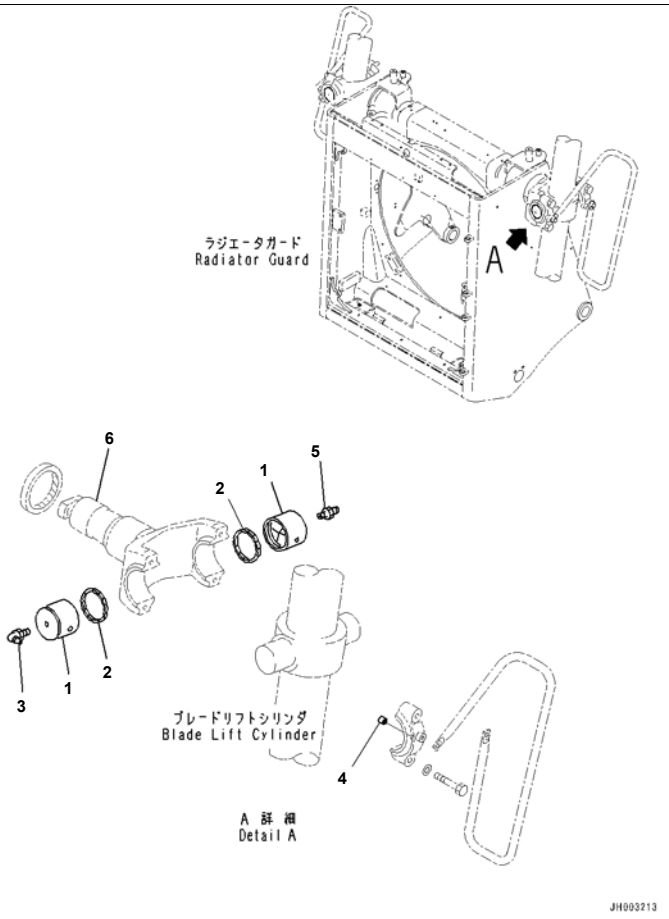

Index	Code	Part Number	Description	Qty	Serial No.
1		195-61-41140	Bushing	4	65001-
2		195-61-41151	Seal	4	65001-
3		07020-00900	Fitting, Grease	2	65001-
4		170-70-15190	Pin	4	65001-
5		07020-00000	Fitting, Grease	2	65001-
6		(195-61-41113)	Yoke		
		(195-61-41113)	Yoke		

Printed By : Dwi Iswanto (airafather6107170)

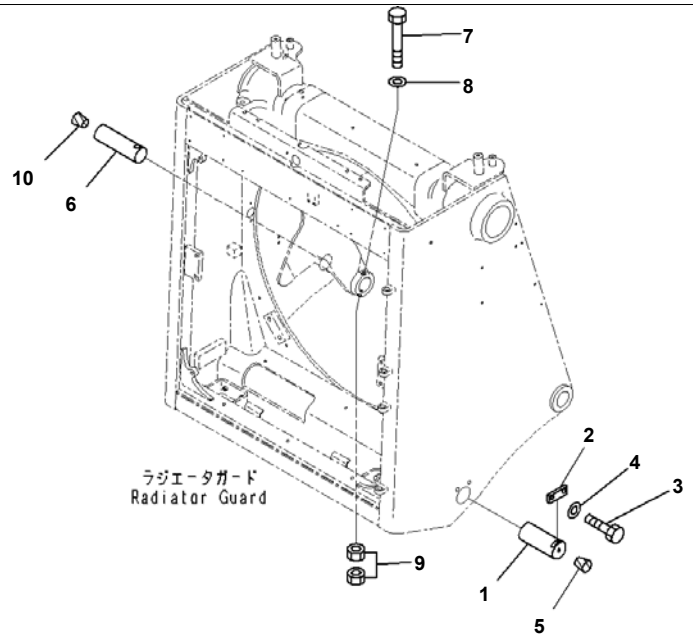

Radiator Guard Related Parts, Guard Mount (#65001-)

Index	Code	Part Number	Description	Qty	Serial No.
1		195-54-41240	Pin	2	65001-
2		198-54-41990	Plate	2	65001-
3		01010-82050	Bolt	4	65001-
4		01643-32060	Washer	4	65001-
5		07049-02430	Plug	2	65001-
6		195-54-41250	Pin	2	65001-
7		01011-81655	Bolt	2	65001-
8		01643-31645	Washer	2	65001-
9		01580-11613	Nut	4	65001-
10		07049-02430	Plug	2	65001-

Printed By : Dwi Iswanto (airafather6107170)

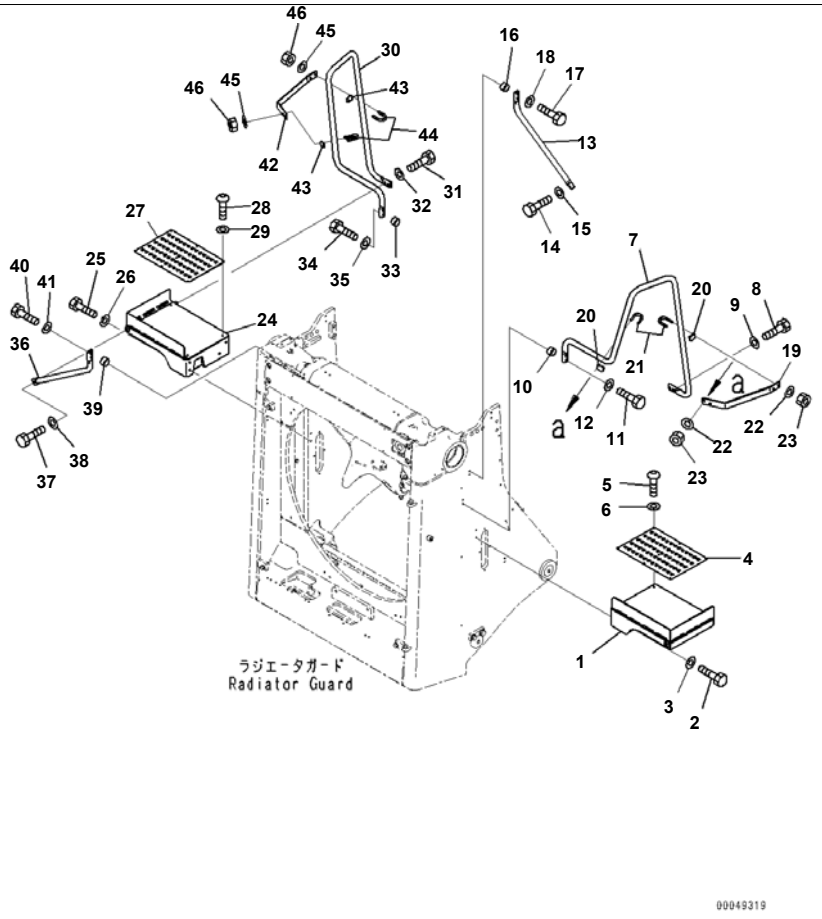

D375A-6R S/N 65001-UP
Radiator Guard Related Parts, Grip (#65001-)

Index	Code	Part Number	Description	Qty	Serial No.
1		195-54-81312	Step,LHS	1	65001-
2		01010-81225	Bolt	4	65001-
3		01643-31232	Washer	4	65001-
4		198-54-79441	Plate	1	65001-
5		01245-00816	Screw	7	65001-
6		01643-70823	Washer	7	65001-
7		195-54-81331	Grip,LHS	1	65001-
8		01010-81240	Bolt	2	65001-
9		01643-31232	Washer	2	65001-
10		198-33-12380	Washer	2	65001-
11		01010-81255	Bolt	2	65001-
12		01643-31232	Washer	2	65001-
13		195-54-81351	Grip	1	65001-
14		01010-81240	Bolt	1	65001-
15		01643-31232	Washer	1	65001-
16		198-33-12380	Washer	2	65001-
17		01010-81255	Bolt	2	65001-
18		01643-31232	Washer	2	65001-
19		195-54-81370	Plate,LHS	1	65001-
20		07283-53444	Seat	2	65001-
21		07283-33450	Clip	2	65001-
22		01643-31032	Washer	4	65001-
23		01597-01009	Nut	4	65001-
24		195-54-81322	Step,RHS	1	65001-
25		01010-81225	Bolt	4	65001-
26		01643-31232	Washer	4	65001-
27		198-54-79441	Plate	1	65001-
28		01245-00816	Screw	7	65001-
29		01643-70823	Washer	7	65001-
30		195-54-81341	Grip,RHS	1	65001-
31		01010-81240	Bolt	2	65001-

Printed By : Dwi Iswanto (airafather6107170)

Radiator Guard Related Parts, Grip (#65001-)

Index	Code	Part Number	Description	Qty	Serial No.
32		01643-31232	Washer	2	65001-
33		198-33-12380	Washer	2	65001-
34		01010-81255	Bolt	2	65001-
35		01643-31232	Washer	2	65001-
36		195-54-81351	Grip	1	65001-
37		01010-81240	Bolt	1	65001-
38		01643-31232	Washer	1	65001-
39		198-33-12380	Washer	2	65001-
40		01010-81255	Bolt	2	65001-
41		01643-31232	Washer	2	65001-
42		195-54-81380	Plate,RHS	1	65001-
43		07283-53444	Seat	2	65001-
44		07283-33450	Clip	2	65001-
45		01643-31032	Washer	4	65001-
46		01597-01009	Nut	4	65001-

Printed By : Dwi Iswanto (airafather6107170)

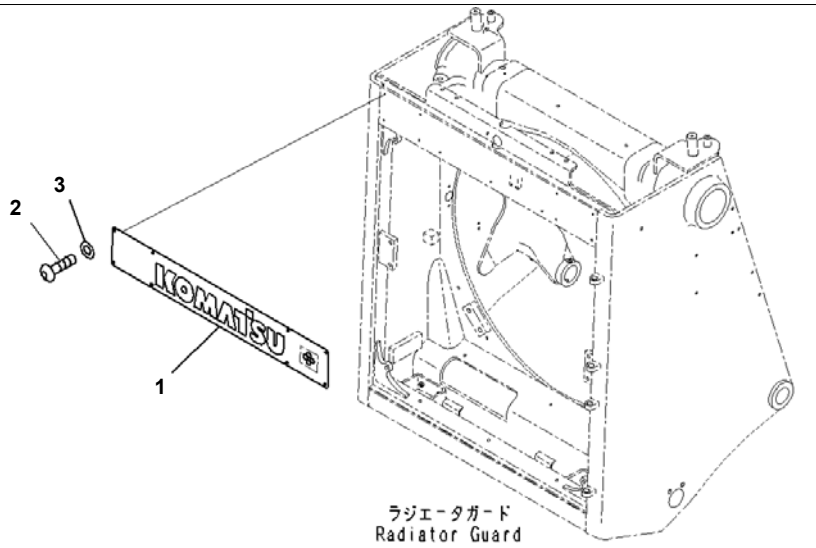

D375A-6R S/N 65001-UP
Radiator Guard Related Parts, KOMATSU Mark (#65001-)

Index	Code	Part Number	Description	Qty	Serial No.
1		195-54-81251	Plate	1	65001-
2		01245-00820	Screw	8	65001-
3		01643-70823	Washer	8	65001-

Printed By : Dwi Iswanto (airafather6107170)

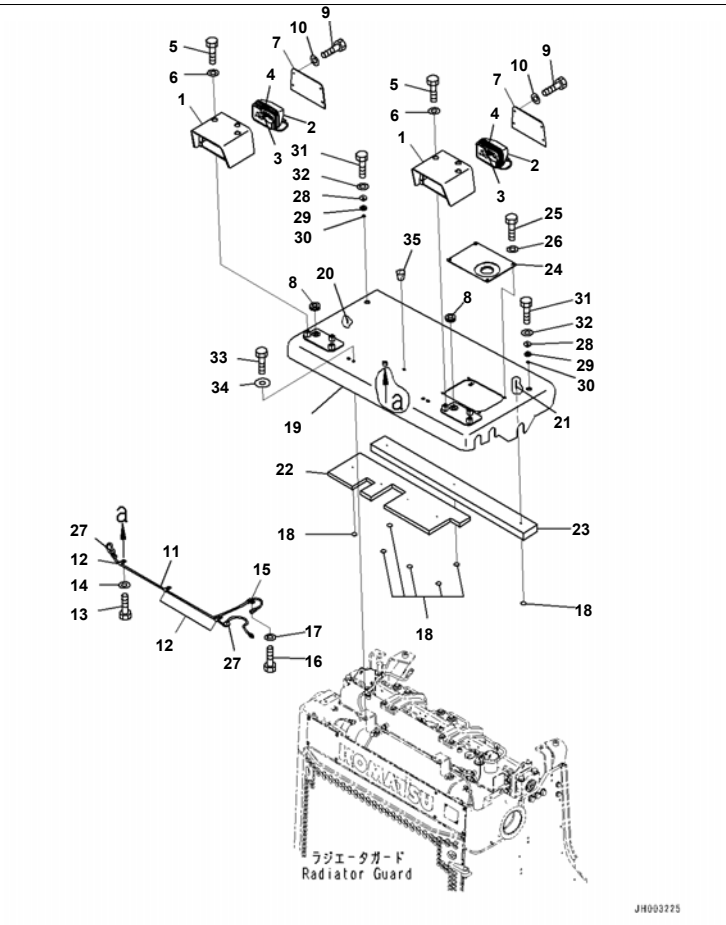

Head Lamp And Wiring, Wiring Harness, Part No. And Manufacturing Date Code, (#65001-65000)

Index	Code	Part Number	Description	Qty	Serial No.
1		17A-06-41681	Cover	2	65001-65000
2		17A-06-17931	Lamp Assembly, Working	2	65001-65000
3		17A-06-17970	· Bulb, 70watt	1	65001-65000
4		17A-06-17980	· Sleeve	1	65001-65000
5		01010-81230	Bolt	6	65001-65000
6		01643-31232	Washer	6	65001-65000
7		17A-06-41690	Plate	2	65001-65000
8		08037-03614	Grommet	2	65001-65000
9		01010-D0816	Bolt	8	65001-65000
10		01643-70823	Washer	8	65001-65000
11		195-06-55511	Wiring Harness	1	65001-65000
12		04434-51012	Clip	3	65001-65000
13		01010-81220	Bolt	3	65001-65000
14		01643-31232	Washer	3	65001-65000
15		04434-51412	Clip	1	65001-65000
16		01010-81220	Bolt	1	65001-65000
17		01643-31232	Washer	1	65001-65000
18		124-A62-1920	· Cap	7	65001-65000
19	C1		· Cover	1	65001-65000
20		124-A62-1910	· · Stud	4	65001-65000
21		154-862-7240	· · Stud	3	65001-65000
22	A2	195-862-8931	· Sheet	1	65001-65000
23		195-862-8941	· Sheet	1	65001-65000
24		195-54-81270	Cover	1	65001-65000
25		01010-81220	Bolt	4	65001-65000
26		01643-31232	Washer	4	65001-65000
27		201-54-13210	Grommet	2	65001-65000
28		15B-54-14220	Collar	2	65001-65000
29		175-54-27350	Spring	4	65001-65000
30		175-54-28770	Ring	2	65001-65000
31		01010-81250	Bolt	2	65001-65000

Printed By : Dwi Iswanto (airafather6107170)

Head Lamp And Wiring, Wiring Harness, Part No. And Manufacturing Date Code, (#65001-65000)

Index	Code	Part Number	Description	Qty	Serial No.
32		01643-31232	Washer	2	65001-65000
33		01010-81240	Bolt	4	65001-65000
34		175-54-34170	Washer	4	65001-65000
35		07049-01215	Plug	4	65001-65000

Printed By : Dwi Iswanto (airafather6107170)

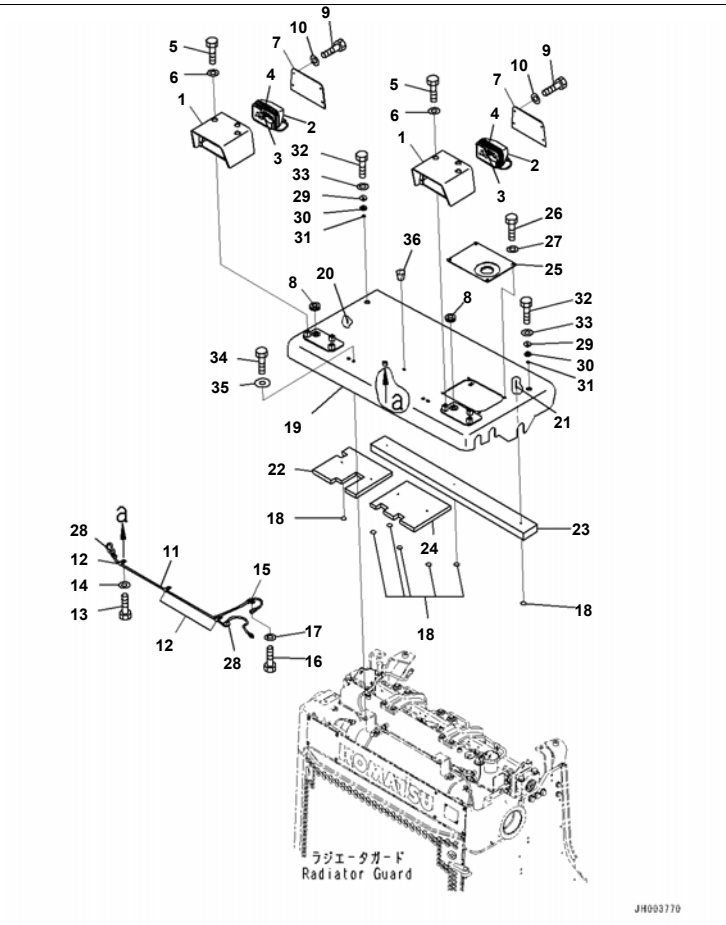

Head Lamp And Wiring, Wiring Harness, Part No. And Manufacturing Date Code, (#65001-)

Index	Code	Part Number	Description	Qty	Serial No.
1		17A-06-41681	Cover	2	65001-
2		17A-06-17931	Lamp Assembly, Working	2	65001-
3		17A-06-17970	· Bulb, 70watt	1	65001-
4		17A-06-17980	· Sleeve	1	65001-
5		01010-81230	Bolt	6	65001-
6		01643-31232	Washer	6	65001-
7		17A-06-41690	Plate	2	65001-
8		08037-03614	Grommet	2	65001-
9		01010-D0816	Bolt	8	65001-
10		01643-70823	Washer	8	65001-
11		195-06-55511	Wiring Harness	1	65001-
12		04434-51012	Clip	3	65001-
13		01010-81220	Bolt	3	65001-
14		01643-31232	Washer	3	65001-
15		04434-51412	Clip	1	65001-
16		01010-81220	Bolt	1	65001-
17		01643-31232	Washer	1	65001-
		195-862-8571	Cover Assembly	1	65001-
18		124-A62-1920	· Cap	7	65001-
19	C1		· Cover	1	65001-
20		124-A62-1910	· · Stud,Welded	4	65001-
21		154-862-7240	· · Stud,Welded	3	65001-
22		195-862-8932	· Sheet	1	65001-
23		195-862-8941	· Sheet	1	65001-
24		195-862-8790	· Sheet	1	65001-
25		195-54-81270	Cover	1	65001-
26		01010-81220	Bolt	4	65001-
27		01643-31232	Washer	4	65001-
28		201-54-13210	Grommet	2	65001-
29		15B-54-14220	Collar	2	65001-
30		175-54-27350	Spring	4	65001-

Printed By : Dwi Iswanto (airafather6107170)

Head Lamp And Wiring, Wiring Harness, Part No. And Manufacturing Date Code, (#65001-)

Index	Code	Part Number	Description	Qty	Serial No.
31		175-54-28770	Ring	2	65001-
32		01010-81250	Bolt	2	65001-
33		01643-31232	Washer	2	65001-
34		01010-81240	Bolt	4	65001-
35		175-54-34170	Washer	4	65001-
36		07049-01215	Plug	4	65001-

Printed By : Dwi Iswanto (airafather6107170)

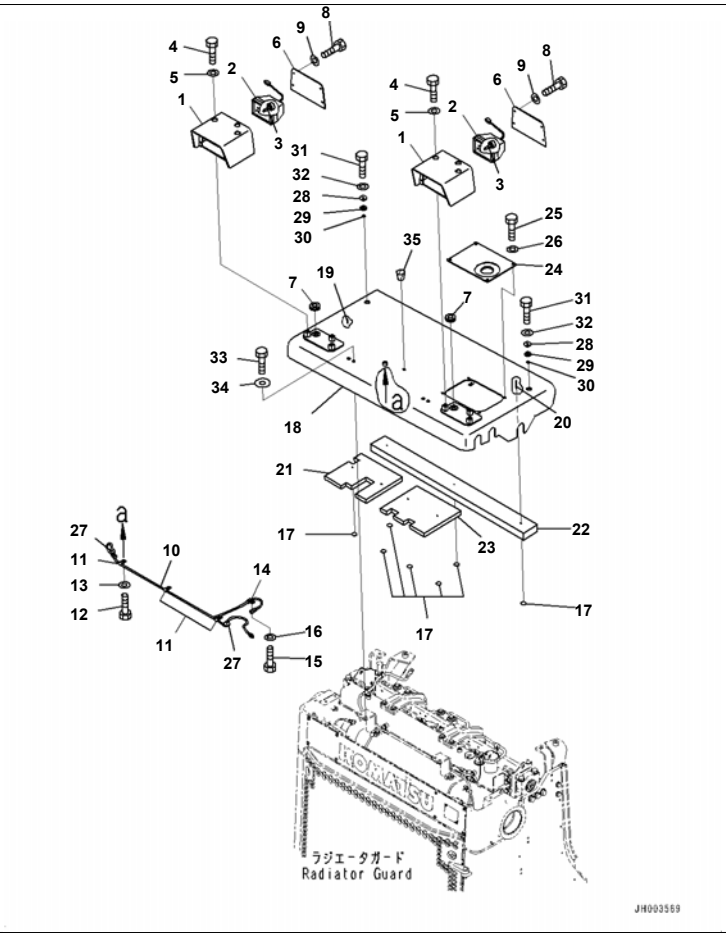

Head Lamp And Wiring, High Intensity Discharge(HID) Lamp (#65001-)

Index	Code	Part Number	Description	Qty	Serial No.
1		17A-06-41681	Cover	2	65001-
2		21T-06-33980	Working Lamp Assembly	2	65001-
3		21T-06-33970	· Bulb, 24/42watt	1	65001-
4		01010-81230	Bolt	6	65001-
5		01643-31232	Washer	6	65001-
6		17A-06-41690	Plate	2	65001-
7		08037-03614	Grommet	2	65001-
8		01010-D0816	Bolt	8	65001-
9		01643-70823	Washer	8	65001-
10		195-06-55511	Wiring Harness	1	65001-
11		04434-51012	Clip	3	65001-
12		01010-81220	Bolt	3	65001-
13		01643-31232	Washer	3	65001-
14		04434-51412	Clip	1	65001-
15		01010-81220	Bolt	1	65001-
16		01643-31232	Washer	1	65001-
		195-862-8571	Cover Assembly	1	65001-
17		124-A62-1920	· Cap	7	65001-
18	C1		· Cover	1	65001-
19		124-A62-1910	· · Stud,Welded	4	65001-
20		154-862-7240	· · Stud,Welded	3	65001-
21		195-862-8932	· Sheet	1	65001-
22		195-862-8941	· Sheet	1	65001-
23		195-862-8790	· Sheet	1	65001-
24		195-54-81270	Cover	1	65001-
25		01010-81220	Bolt	4	65001-
26		01643-31232	Washer	4	65001-
27		201-54-13210	Grommet	2	65001-
28		15B-54-14220	Collar	2	65001-
29		175-54-27350	Spring	4	65001-
30		175-54-28770	Ring	2	65001-

Printed By : Dwi Iswanto (airafather6107170)

Head Lamp And Wiring, High Intensity Discharge(HID) Lamp (#65001-)

Index	Code	Part Number	Description	Qty	Serial No.
31		01010-81250	Bolt	2	65001-
32		01643-31232	Washer	2	65001-
33		01010-81240	Bolt	4	65001-
34		175-54-34170	Washer	4	65001-
35		07049-01215	Plug	4	65001-

Printed By : Dwi Iswanto (airafather6107170)

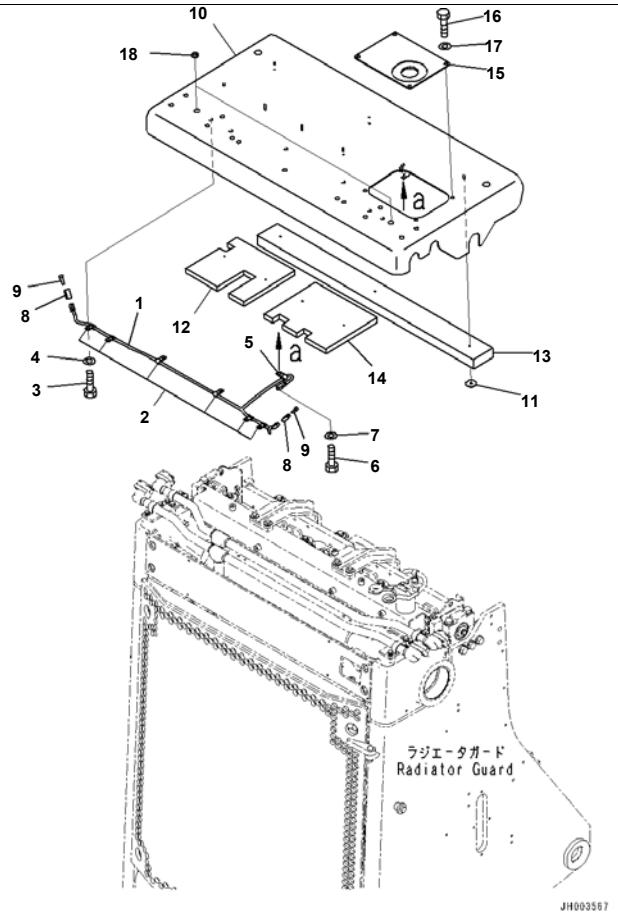

Head Lamp And Wiring, HID Light, High Mounted Head Lamp, Small Hood (#65001-)

Index	Code	Part Number	Description	Qty	Serial No.
1		195-06-55511	Wiring Harness	1	65001-
2		04434-51012	Clip	6	65001-
3		01010-81220	Bolt	6	65001-
4		01643-31232	Washer	6	65001-
5		04434-51412	Clip	1	65001-
6		01010-81220	Bolt	1	65001-
7		01643-31232	Washer	1	65001-
8		08192-12100	Connector Assembly	2	65001-
9		08191-00770	Plug, Connector	4	65001-
10		195-862-8881	Cover	1	65001-
11		124-A62-1920	Cap	7	65001-
12		195-862-8951	Sheet	1	65001-
13		195-862-8941	Sheet	1	65001-
14		195-862-8790	Sheet	1	65001-
15		195-54-81270	Cover	1	65001-
16		01010-81220	Bolt	4	65001-
17		01643-31232	Washer	4	65001-
18		201-54-13210	Grommet	2	65001-

Printed By : Dwi Iswanto (airafather6107170)

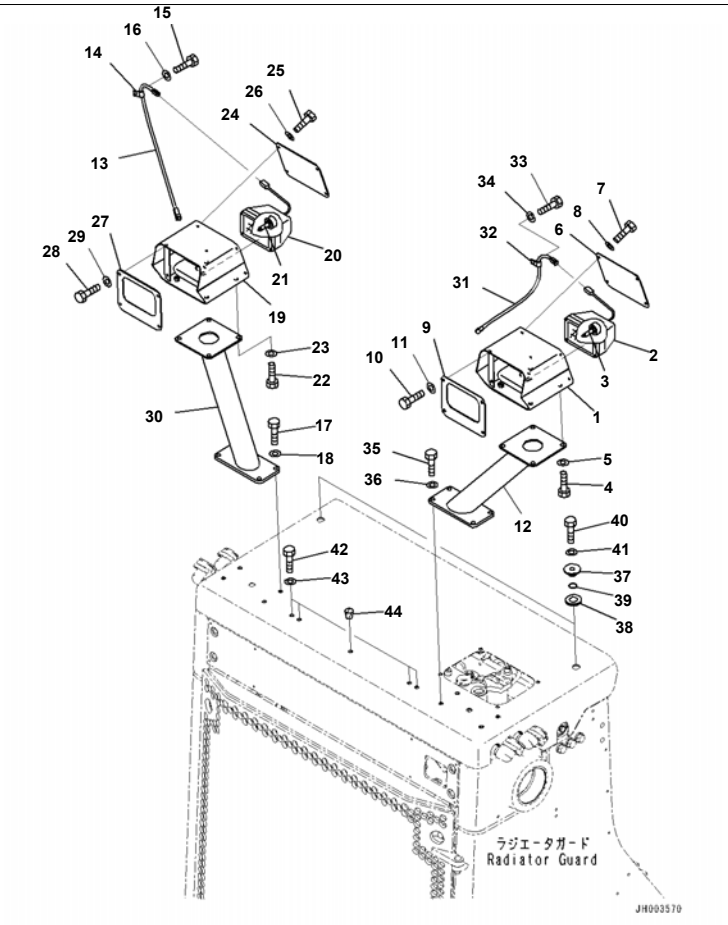

Reference:M2115-004002 Page:M007002

D375A-6R S/N 65001-UP
Head Lamp And Wiring, HID Light, High Mounted Head Lamp, Head Lamp (#65001-)

Index	Code	Part Number	Description	Qty	Serial No.
1		195-54-83511	Cover	1	65001-
2		21T-06-33980	Working Lamp Assembly	1	65001-
3		21T-06-33970	· Bulb, 24/42watt	1	65001-
4		01010-D1230	Bolt	4	65001-
5		01643-71232	Washer	4	65001-
6		195-54-83471	Cover	1	65001-
7		01010-D0820	Bolt	4	65001-
8		01643-70823	Washer	4	65001-
9		195-54-83461	Cover	1	65001-
10		01010-D0820	Bolt	4	65001-
11		01643-70823	Washer	4	65001-
12		195-54-83481	Support	1	65001-
13		195-06-54471	Wiring Harness	1	65001-
14		04434-51412	Clip	1	65001-
15		01010-81220	Bolt	1	65001-
16		01643-31232	Washer	1	65001-
17		01010-D1240	Bolt	4	65001-
18		01643-71232	Washer	4	65001-
19		195-54-83511	Cover	1	65001-
20		21T-06-33980	Working Lamp Assembly	1	65001-
21		21T-06-33970	· Bulb, 24/42watt	1	65001-
22		01010-D1230	Bolt	4	65001-
23		01643-71232	Washer	4	65001-
24		195-54-83471	Cover	1	65001-
25		01010-D0820	Bolt	4	65001-
26		01643-70823	Washer	4	65001-
27		195-54-83461	Cover	1	65001-
28		01010-D0820	Bolt	4	65001-
29		01643-70823	Washer	4	65001-
30		195-54-83491	Support	1	65001-
31		195-06-54481	Wiring Harness	1	65001-

Reference:M2115-004002 Page:M007002

Printed By : Dwi Iswanto (airafather6107170)

Index	Code	Part Number	Description	Qty	Serial No.
32		04434-51412	Clip	1	65001-
33		01010-81220	Bolt	1	65001-
34		01643-31232	Washer	1	65001-
35		01010-D1240	Bolt	4	65001-
36		01643-71232	Washer	4	65001-
37		15B-54-14220	Collar	2	65001-
38		175-54-27350	Spring	4	65001-
39		175-54-28770	Ring	2	65001-
40		01010-81250	Bolt	2	65001-
41		01643-31232	Washer	2	65001-
42		01010-81240	Bolt	4	65001-
43		175-54-34170	Washer	4	65001-
44		07049-01215	Plug	4	65001-

Printed By : Dwi Iswanto (airafather6107170)

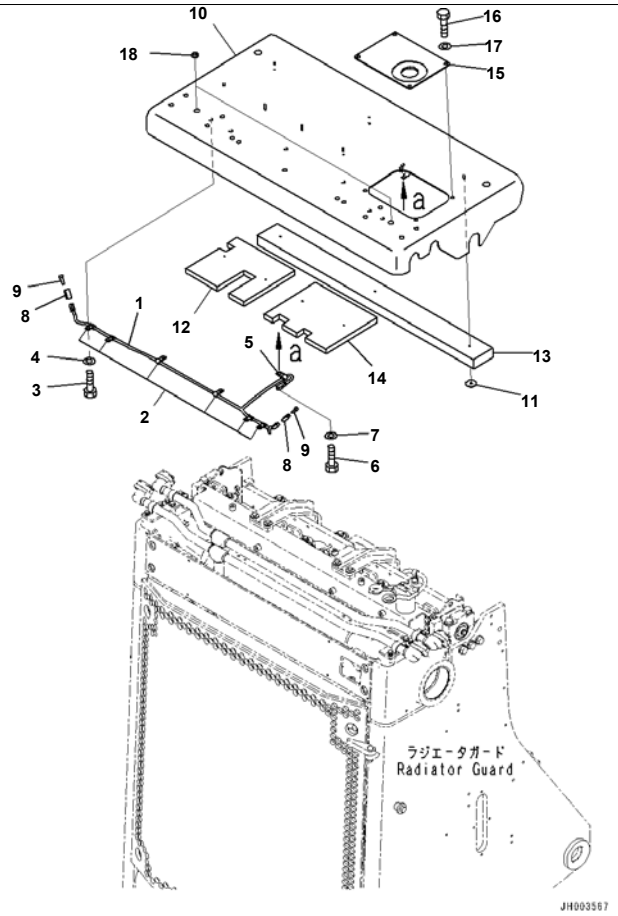

Index	Code	Part Number	Description	Qty	Serial No.
1		195-06-55511	Wiring Harness	1	65001-
2		04434-51012	Clip	6	65001-
3		01010-81220	Bolt	6	65001-
4		01643-31232	Washer	6	65001-
5		04434-51412	Clip	1	65001-
6		01010-81220	Bolt	1	65001-
7		01643-31232	Washer	1	65001-
8		08192-12100	Connector Assembly	2	65001-
9		08191-00770	Plug, Connector	4	65001-
10		195-862-8881	Cover	1	65001-
11		124-A62-1920	Cap	7	65001-
12		195-862-8951	Sheet	1	65001-
13		195-862-8941	Sheet	1	65001-
14		195-862-8790	Sheet	1	65001-
15		195-54-81270	Cover	1	65001-
16		01010-81220	Bolt	4	65001-
17		01643-31232	Washer	4	65001-
18		201-54-13210	Grommet	2	65001-

Printed By : Dwi Iswanto (airafather6107170)

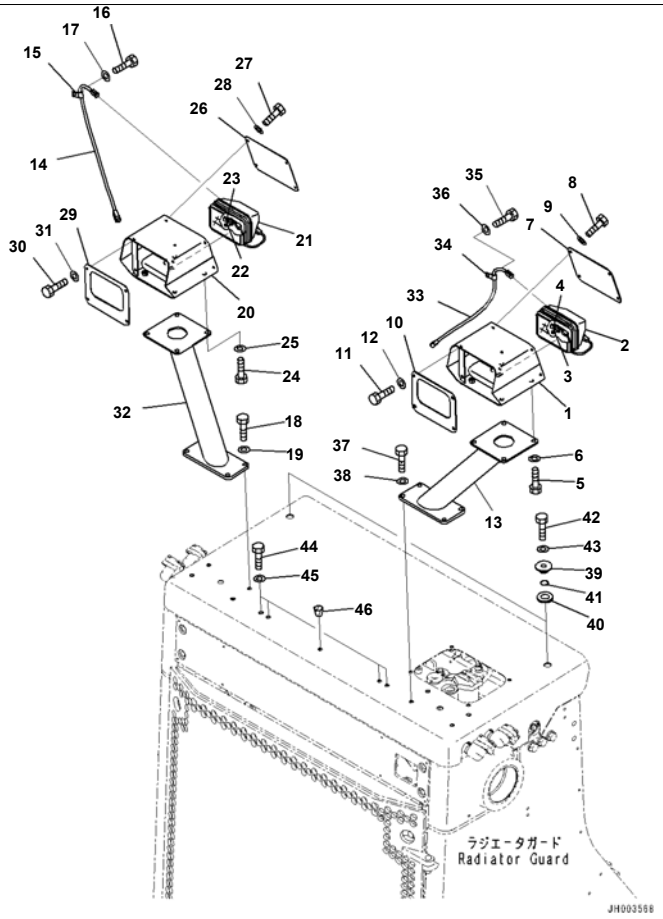

Index	Code	Part Number	Description	Qty	Serial No.
1		195-54-83511	Cover	1	65001-
2		17A-06-17931	Lamp Assembly, Working	1	65001-
3		17A-06-17970	· Bulb, 70watt	1	65001-
4		17A-06-17980	· Sleeve	1	65001-
5		01010-D1230	Bolt	4	65001-
6		01643-71232	Washer	4	65001-
7		195-54-83471	Cover	1	65001-
8		01010-D0820	Bolt	4	65001-
9		01643-70823	Washer	4	65001-
10		195-54-83461	Cover	1	65001-
11		01010-D0820	Bolt	4	65001-
12		01643-70823	Washer	4	65001-
13		195-54-83481	Support	1	65001-
14		195-06-54471	Wiring Harness	1	65001-
15		04434-51412	Clip	1	65001-
16		01010-81220	Bolt	1	65001-
17		01643-31232	Washer	1	65001-
18		01010-D1240	Bolt	4	65001-
19		01643-71232	Washer	4	65001-
20		195-54-83511	Cover	1	65001-
21		17A-06-17931	Lamp Assembly, Working	1	65001-
22		17A-06-17970	· Bulb, 70watt	1	65001-
23		17A-06-17980	· Sleeve	1	65001-
24		01010-D1230	Bolt	4	65001-
25		01643-71232	Washer	4	65001-
26		195-54-83471	Cover	1	65001-
27		01010-D0820	Bolt	4	65001-
28		01643-70823	Washer	4	65001-
29		195-54-83461	Cover	1	65001-
30		01010-D0820	Bolt	4	65001-
31		01643-70823	Washer	4	65001-

Printed By : Dwi Iswanto (airafather6107170)

Index	Code	Part Number	Description	Qty	Serial No.
32		195-54-83491	Support	1	65001-
33		195-06-54481	Wiring Harness	1	65001-
34		04434-51412	Clip	1	65001-
35		01010-81220	Bolt	1	65001-
36		01643-31232	Washer	1	65001-
37		01010-D1240	Bolt	4	65001-
38		01643-71232	Washer	4	65001-
39		15B-54-14220	Collar	2	65001-
40		175-54-27350	Spring	4	65001-
41		175-54-28770	Ring	2	65001-
42		01010-81250	Bolt	2	65001-
43		01643-31232	Washer	2	65001-
44		01010-81240	Bolt	4	65001-
45		175-54-34170	Washer	4	65001-
46		07049-01215	Plug	4	65001-

Printed By : Dwi Iswanto (airafather6107170)

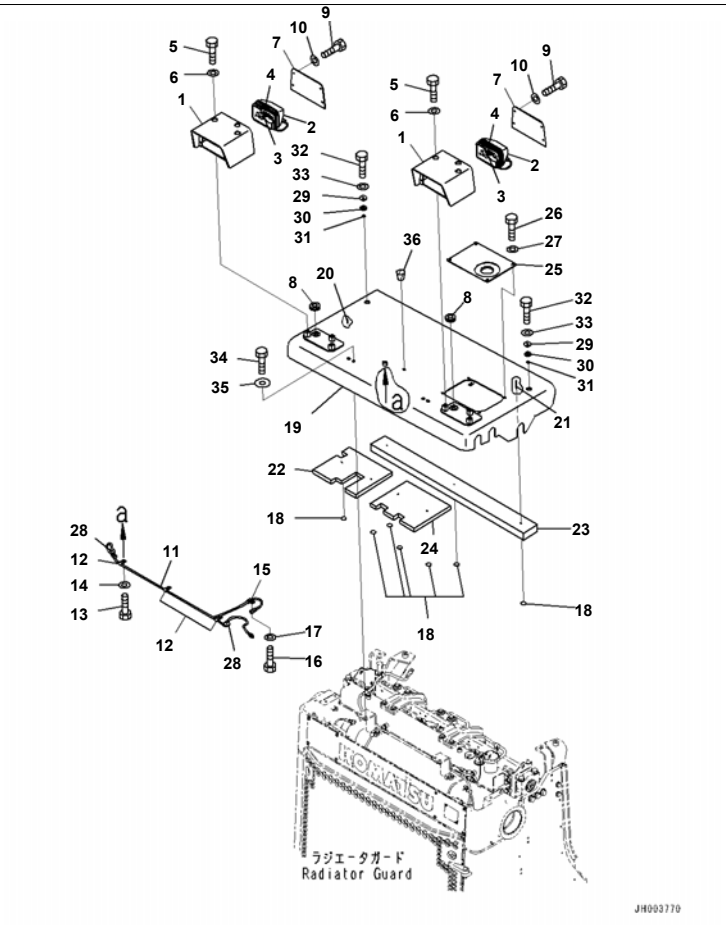

Reference:M2115-007001 Page:M009001

D375A-6R S/N 65001-UP

Head Lamp And Wiring, Without Wiring Harness, Part No. And Manufacturing Date Code, (#65001-65000)

Index	Code	Part Number	Description	Qty	Serial No.
1		17A-06-41681	Cover	2	65001-@
2		17A-06-17931	Lamp Assembly, Working	2	65001-@
3		17A-06-17970	· Bulb, 70watt	1	65001-@
4		17A-06-17980	· Sleeve	1	65001-@
5		01010-81230	Bolt	6	65001-@
6		01643-31232	Washer	6	65001-@
7		17A-06-41690	Plate	2	65001-@
8		08037-03614	Grommet	2	65001-@
9		01010-D0816	Bolt	8	65001-@
10		01643-70823	Washer	8	65001-@
11		195-06-57510	Wiring Harness	1	65001-@
12		04434-51012	Clip	3	65001-@
13		01010-81220	Bolt	3	65001-@
14		01643-31232	Washer	3	65001-@
15		04434-51412	Clip	1	65001-@
16		01010-81220	Bolt	1	65001-@
17		01643-31232	Washer	1	65001-@
18		124-A62-1920	· Cap	7	65001-
19	C1		· Cover	1	65001-
20		124-A62-1910	· · Stud,Welded	4	65001-
21		154-862-7240	· · Stud,Welded	3	65001-
22		195-862-8932	· Sheet	1	65001-
23		195-862-8941	· Sheet	1	65001-
24		195-862-8790	· Sheet	1	65001-
25		195-54-81270	Cover	1	65001-@
26		01010-81220	Bolt	4	65001-@
27		01643-31232	Washer	4	65001-@
28		201-54-13210	Grommet	2	65001-@
29		15B-54-14220	Collar	2	65001-@
30		175-54-27350	Spring	4	65001-@
31		175-54-28770	Ring	2	65001-@

Reference:M2115-007001 Page:M009001

Printed By : Dwi Iswanto (airafather6107170)

Head Lamp And Wiring, Without Wiring Harness, Part No. And Manufacturing Date Code, (#65001-65000)

Index	Code	Part Number	Description	Qty	Serial No.
32		01010-81250	Bolt	2	65001-@
33		01643-31232	Washer	2	65001-@
34		01010-81240	Bolt	4	65001-@
35		175-54-34170	Washer	4	65001-@
36		07049-01215	Plug	4	65001-@

Printed By : Dwi Iswanto (airafather6107170)

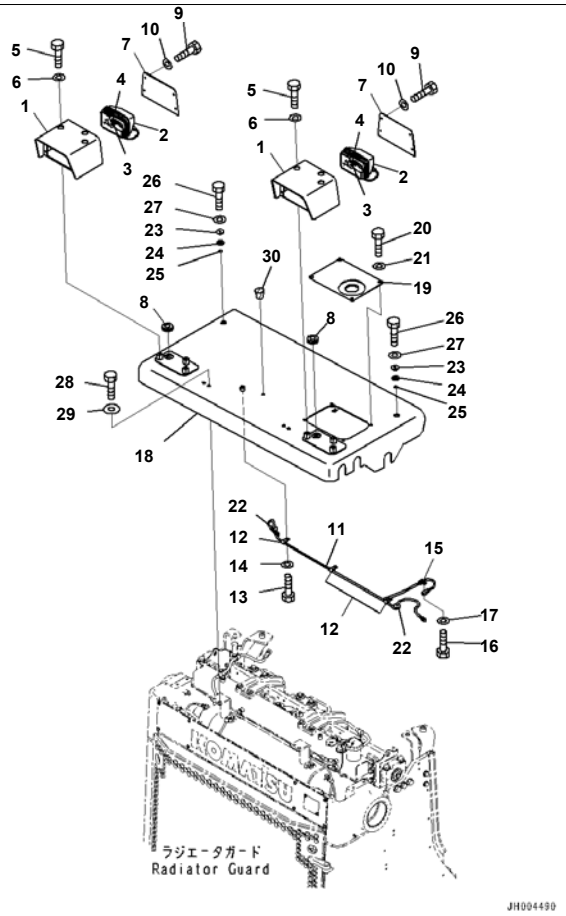

D375A-6R S/N 65001-UP

Head Lamp And Wiring, Without Wiring Harness, Part No. And Manufacturing Date Code, (#65001-)

Index	Code	Part Number	Description	Qty	Serial No.
1		17A-06-41681	Cover	2	65001-
2		17A-06-17931	Lamp Assembly, Working	2	65001-
3		17A-06-17970	· Bulb, 70watt	1	65001-
4		17A-06-17980	· Sleeve	1	65001-
5		01010-81230	Bolt	6	65001-
6		01643-31232	Washer	6	65001-
7		17A-06-41690	Plate	2	65001-
8		08037-03614	Grommet	2	65001-
9		01010-D0816	Bolt	8	65001-
10		01643-70823	Washer	8	65001-
11		195-06-57510	Wiring Harness	1	65001-
12		04434-51012	Clip	3	65001-
13		01010-81220	Bolt	3	65001-
14		01643-31232	Washer	3	65001-
15		04434-51412	Clip	1	65001-
16		01010-81220	Bolt	1	65001-
17		01643-31232	Washer	1	65001-
18		195-54-85190	Cover	1	65001-
19		195-54-81270	Cover	1	65001-
20		01010-81220	Bolt	4	65001-
21		01643-31232	Washer	4	65001-
22		201-54-13210	Grommet	2	65001-
23		15B-54-14220	Collar	2	65001-
24		175-54-27350	Spring	4	65001-
25		175-54-28770	Ring	2	65001-
26		01010-81250	Bolt	2	65001-
27		01643-31232	Washer	2	65001-
28		01010-81240	Bolt	4	65001-
29		175-54-34170	Washer	4	65001-
30		07049-01215	Plug	4	65001-

Printed By : Dwi Iswanto (airafather6107170)

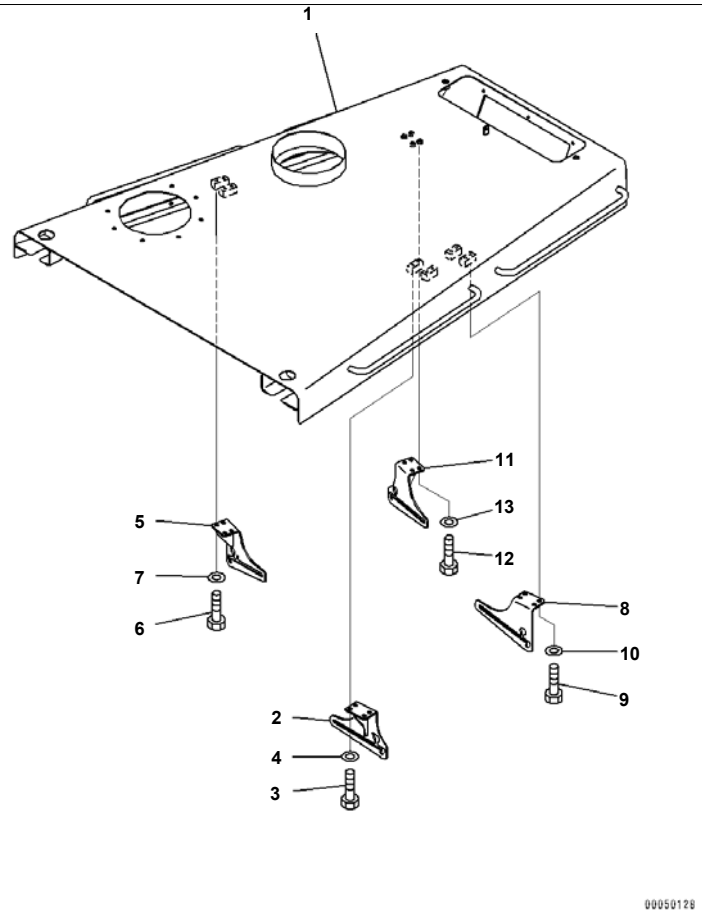

D375A-6R S/N 65001-UP
Engine Hood And Side Cover Group, With Side Covers Perforated, Hood (#65001-)

Index	Code	Part Number	Description	Qty	Serial No.
1		195-54-86511	Hood	1	65001-
2		195-54-81971	Bracket,LHS	1	65001-
3		01010-81230	Bolt	4	65001-
4		01643-31232	Washer	4	65001-
5		195-54-81981	Bracket,RHS	1	65001-
6		01010-81230	Bolt	4	65001-
7		01643-31232	Washer	4	65001-
8		195-54-81591	Bracket,LHS	1	65001-
9		01010-81230	Bolt	4	65001-
10		01643-31232	Washer	4	65001-
11		195-54-81581	Bracket,RHS	1	65001-
12		01010-81230	Bolt	4	65001-
13		01643-31232	Washer	4	65001-

Printed By : Dwi Iswanto (airafather6107170)

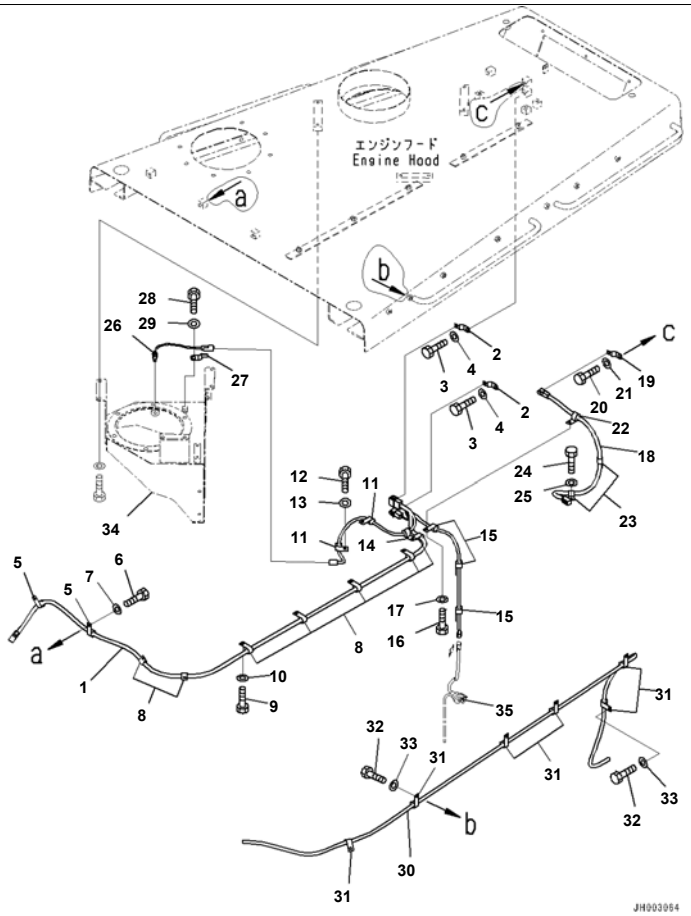

Reference:M2140-001002 Page:M010002

D375A-6R S/N 65001-UP
Engine Hood And Side Cover Group, With Side Covers Perforated, Harness (#65001-)

Index	Code	Part Number	Description	Qty	Serial No.
1		195-06-55531	Wiring Harness	1	65001-
2		08193-21012	Clip	3	65001-
3		01010-81220	Bolt	3	65001-
4		01643-31232	Washer	3	65001-
5		04434-51912	Clip	2	65001-
6		01010-81230	Bolt	2	65001-
7		01643-31232	Washer	2	65001-
8		04434-51912	Clip	7	65001-
9		01010-81230	Bolt	7	65001-
10		01643-31232	Washer	7	65001-
11		04434-51012	Clip	2	65001-
12		01010-81230	Bolt	2	65001-
13		01643-31232	Washer	2	65001-
14		04434-51012	Clip	1	65001-
15		04434-51012	Clip	3	65001-
16		01010-81230	Bolt	3	65001-
17		01643-31232	Washer	3	65001-
18		195-06-54321	Wiring Harness	1	65001-
19		08193-21012	Clip	1	65001-
20		01010-81220	Bolt	1	65001-
21		01643-31232	Washer	1	65001-
22		04434-51412	Clip	1	65001-
23		04434-51412	Clip	2	65001-
24		01010-81230	Bolt	2	65001-
25		01643-31232	Washer	2	65001-
26		7861-93-3510	Sensor, Temperature	1	65001-
27		08193-21012	Clip	1	65001-
28		01010-81220	Bolt	1	65001-
29		01643-31232	Washer	1	65001-
30		561-03-6A450	Hose	1	65001-
31		04434-51412	Clip	4	65001-

Reference:M2140-001002 Page:M010002

Printed By : Dwi Iswanto (airafather6107170)

Engine Hood And Side Cover Group, With Side Covers Perforated, Harness (#65001-)

Index	Code	Part Number	Description	Qty	Serial No.
32		01010-81230	Bolt	4	65001-
33		01643-31232	Washer	4	65001-
34		(195-01-41211)	Duct		
35		(7861-93-1420)	Sensor		

Printed By : Dwi Iswanto (airafather6107170)

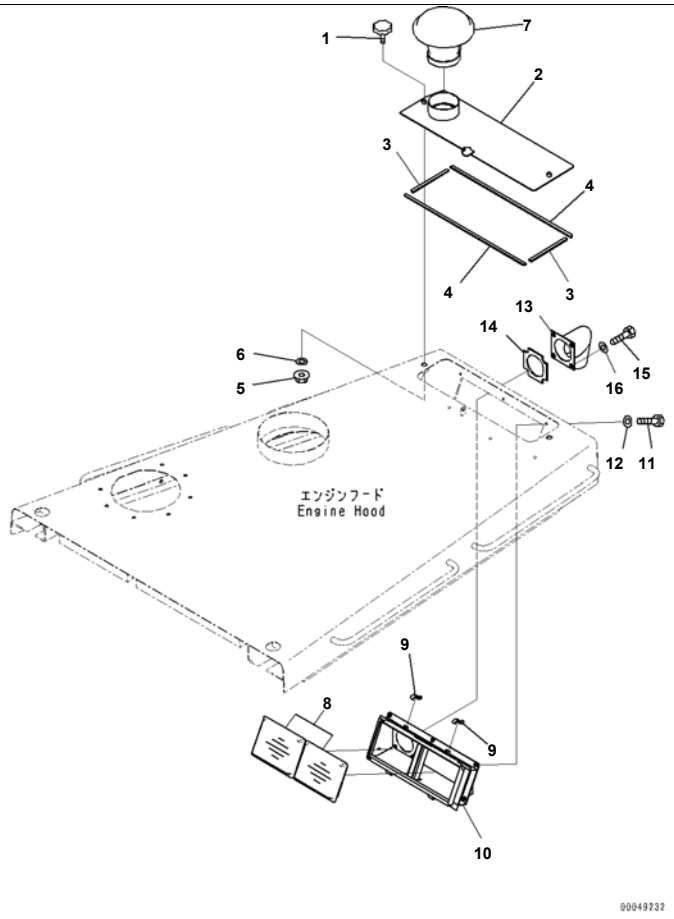

Index	Code	Part Number	Description	Qty	Serial No.
1		195-54-68760	Knob	2	65001-
2		195-54-81950	Cover	1	65001-
3		195-54-75760	· Seal	2	65001-
4		195-54-81960	· Seal	2	65001-
5		01594-01008	Nut	2	65001-
6		01640-21016	Washer	2	65001-
7		124-911-1430	Hood	1	65001-
8		14X-911-7750	Filter	2	65001-
9		195-Z11-5880	Clamp	2	65001-
10		195-54-81910	Duct	1	65001-
11		01010-80820	Bolt	6	65001-
12		01643-30823	Washer	6	65001-
13		195-54-81921	Duct	1	65001-
14		195-54-81931	· Sheet	1	65001-
15		01010-80820	Bolt	4	65001-
16		01643-30823	Washer	4	65001-

Printed By : Dwi Iswanto (airafather6107170)

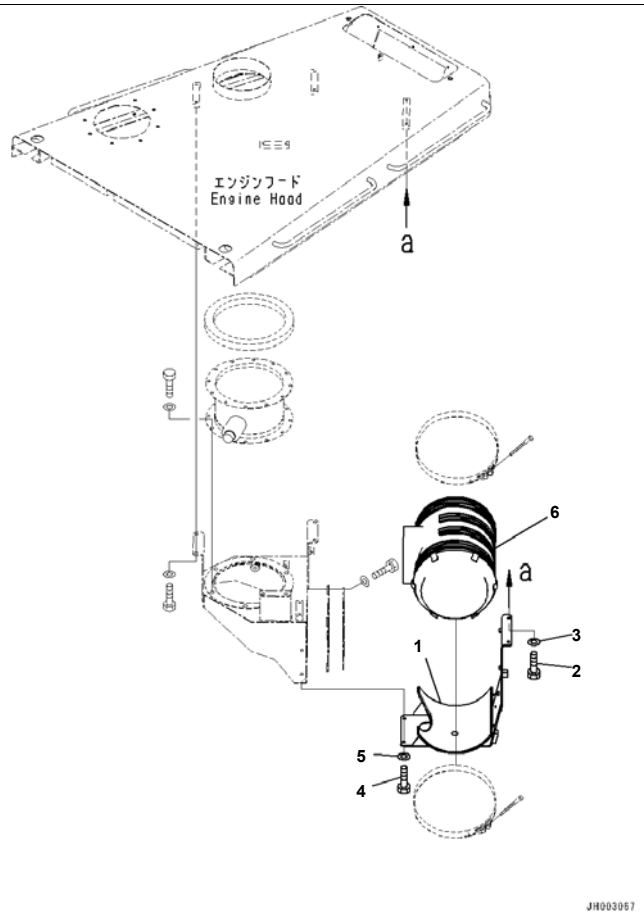

Engine Hood And Side Cover Group, With Side Covers Perforated, Air Cleaner Related Parts (1/2) (#65001-)

Index	Code	Part Number	Description	Qty	Serial No.
1		195-01-41221	Bracket	1	65001-
2		01010-81230	Bolt	2	65001-
3		01643-31232	Washer	2	65001-
4		01010-81230	Bolt	2	65001-
5		01643-31232	Washer	2	65001-
6		6245-81-7100	Air Cleaner Assembly	1	65001-

Printed By : Dwi Iswanto (airafather6107170)

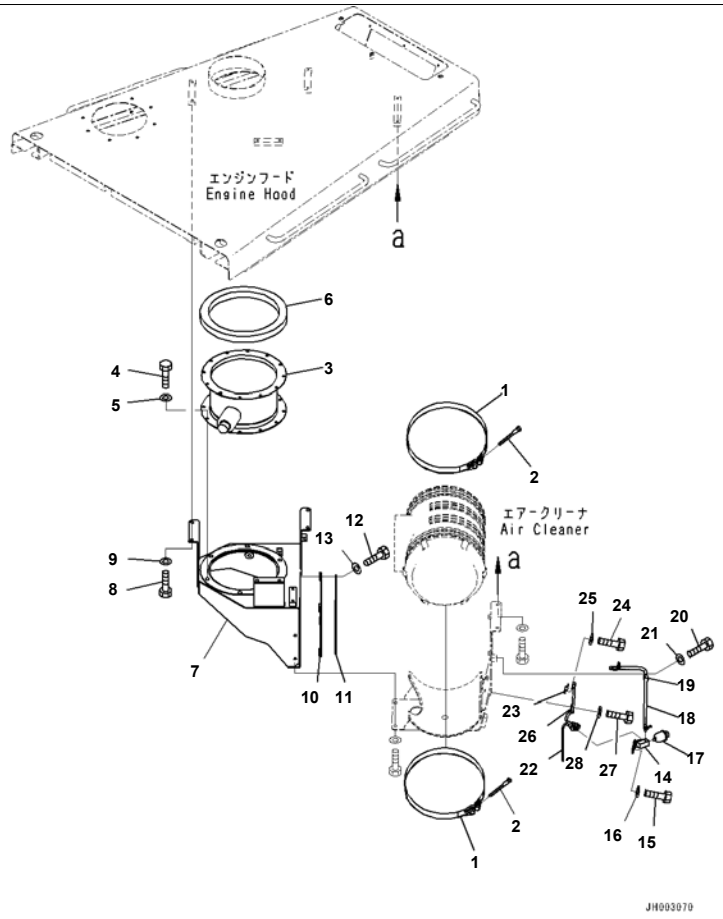

Reference:M2140-001005 Page:M010005

D375A-6R S/N 65001-UP

Engine Hood And Side Cover Group, With Side Covers Perforated, Air Cleaner Related Parts (2/2) (#65001-)

Index	Code	Part Number	Description	Qty	Serial No.
1		6240-11-9910	Band	2	65001-
2		6643-11-4641	Bolt	2	65001-
3		600-183-7552	Air Cleaner	1	65001-
4		01010-81025	Bolt	6	65001-
5		01643-31032	Washer	6	65001-
6		195-01-41240	Sheet	1	65001-
7		195-01-41211	Duct	1	65001-
8		01010-81230	Bolt	6	65001-
9		01643-31232	Washer	6	65001-
10		195-01-41251	Cover	1	65001-
11		195-01-41261	Sheet	1	65001-
12		01010-81230	Bolt	4	65001-
13		01643-31232	Washer	4	65001-
14		195-01-41310	Bracket	1	65001-
15		01010-81230	Bolt	2	65001-
16		01643-31232	Washer	2	65001-
17		08672-01000	Indicator, Dust	1	65001-
18		08671-70080	Hose	1	65001-
19		04434-51412	Clip	1	65001-
20		01010-81230	Bolt	1	65001-
21		01643-31232	Washer	1	65001-
22		7861-93-1421	Sensor, Switch	1	65001-
23		08193-21012	Clip	1	65001-
24		01010-81220	Bolt	1	65001-
25		01643-31232	Washer	1	65001-
26		04434-51012	Clip	1	65001-
27		01010-81230	Bolt	1	65001-
28		01643-31232	Washer	1	65001-

Printed By : Dwi Iswanto (airafather6107170)

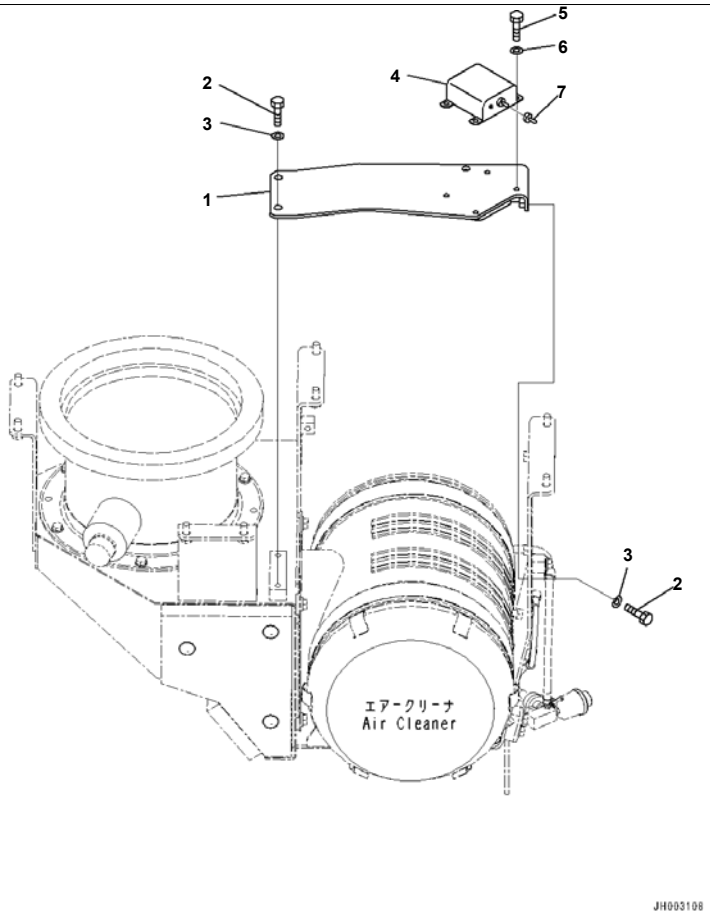

Index	Code	Part Number	Description	Qty	Serial No.
1		195-01-41320	Bracket	1	65001-
2		01010-81230	Bolt	4	65001-
3		01643-31232	Washer	4	65001-
4		600-815-9471	Switch	1	65001-
5		01010-80820	Bolt	4	65001-
6		01643-30823	Washer	4	65001-
7		08504-10000	Cap	1	65001-

Printed By : Dwi Iswanto (airafather6107170)

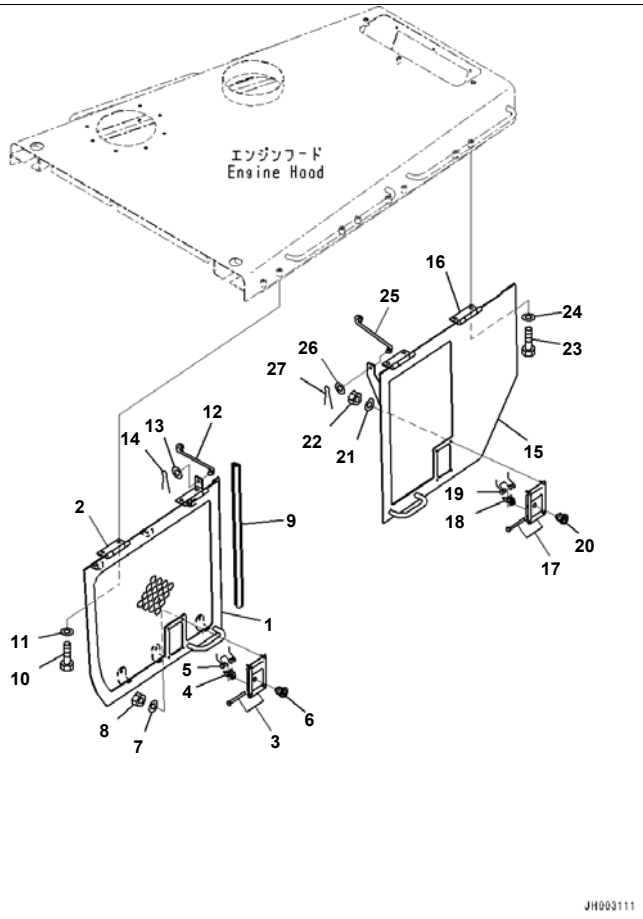

D375A-6R S/N 65001-UP
Engine Hood And Side Cover Group, With Side Covers Perforated, Side Cover Top, LHS (#65001-)

Index	Code	Part Number	Description	Qty	Serial No.
1		195-54-81611	Cover,LHS	1	65001-
2		198-54-72510	· Hinge,Welded	2	65001-
3		198-54-55990	Lock Assembly	1	65001-
4		198-54-42480	· Hook	1	65001-
5		198-54-42491	· Spring	1	65001-
6		421-54-11381	· Lock	1	65001-
7		01643-30823	Washer	4	65001-
8		01580-10806	Nut	4	65001-
9		195-54-81530	Seal	1	65001-
10		01010-81230	Bolt	4	65001-
11		01643-31232	Washer	4	65001-
12		198-54-72580	Bar	1	65001-
13		01643-31232	Washer	1	65001-
14		04050-13020	Pin, Cotter	1	65001-
15		195-54-81662	Cover,LHS	1	65001-
16		198-54-72510	· Hinge,Welded	2	65001-
17		198-54-55990	Lock Assembly	1	65001-
18		198-54-42480	· Hook	1	65001-
19		198-54-42491	· Spring	1	65001-
20		421-54-11381	· Lock	1	65001-
21		01643-30823	Washer	4	65001-
22		01580-10806	Nut	4	65001-
23		01010-81230	Bolt	4	65001-
24		01643-31232	Washer	4	65001-
25		198-54-72580	Bar	1	65001-
26		01643-31232	Washer	1	65001-
27		04050-13020	Pin, Cotter	1	65001-

Printed By : Dwi Iswanto (airafather6107170)

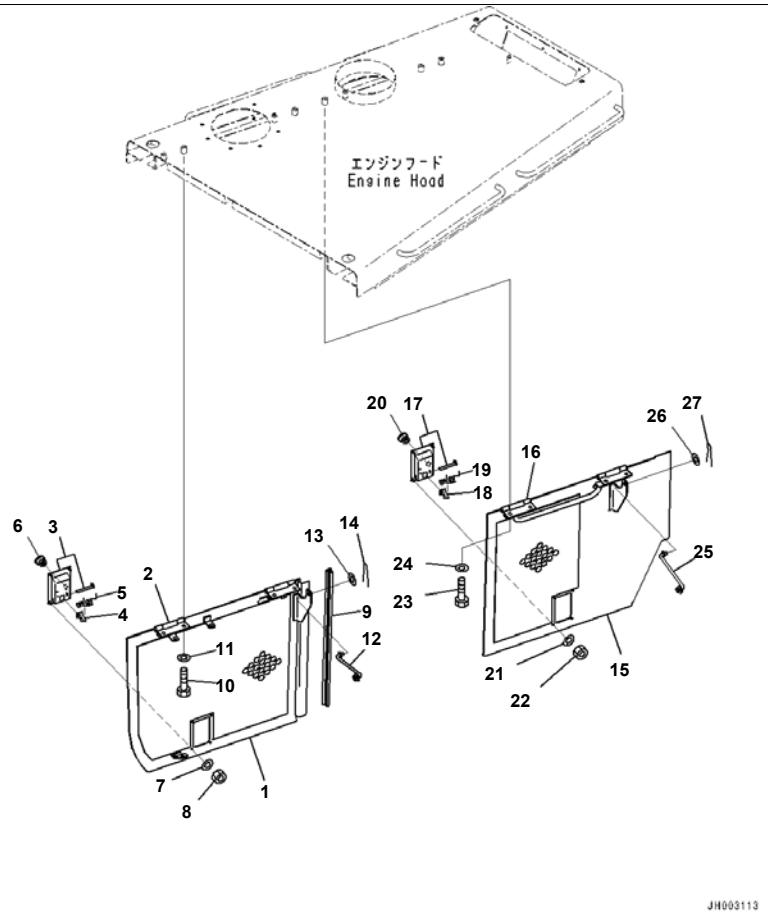

D375A-6R S/N 65001-UP

Engine Hood And Side Cover Group, With Side Covers Perforated, Side Cover Top, RHS (#65001-)

Index	Code	Part Number	Description	Qty	Serial No.
1		195-54-81621	Cover,RHS	1	65001-
2		198-54-72510	· Hinge,Welded	2	65001-
3		198-54-55990	Lock Assembly	1	65001-
4		198-54-42480	· Hook	1	65001-
5		198-54-42491	· Spring	1	65001-
6		421-54-11381	· Lock	1	65001-
7		01643-30823	Washer	4	65001-
8		01580-10806	Nut	4	65001-
9		195-54-81530	Seal	1	65001-
10		01010-81230	Bolt	4	65001-
11		01643-31232	Washer	4	65001-
12		198-54-72580	Bar	1	65001-
13		01643-31232	Washer	1	65001-
14		04050-13020	Pin, Cotter	1	65001-
15		195-54-81671	Cover,RHS	1	65001-
16		198-54-72510	· Hinge,Welded	2	65001-
17		198-54-55990	Lock Assembly	1	65001-
18		198-54-42480	· Hook	1	65001-
19		198-54-42491	· Spring	1	65001-
20		421-54-11381	· Lock	1	65001-
21		01643-30823	Washer	4	65001-
22		01580-10806	Nut	4	65001-
23		01010-81230	Bolt	4	65001-
24		01643-31232	Washer	4	65001-
25		198-54-72580	Bar	1	65001-
26		01643-31232	Washer	1	65001-
27		04050-13020	Pin, Cotter	1	65001-

Printed By : Dwi Iswanto (airafather6107170)

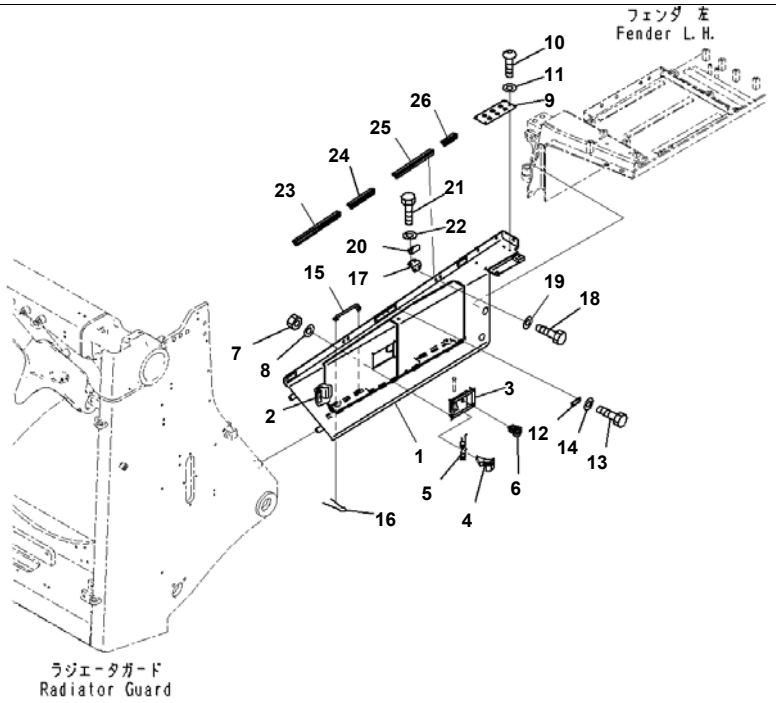

Reference:M2140-001009 Page:M010009

D375A-6R S/N 65001-UP
Engine Hood And Side Cover Group, With Side Covers Perforated, Side Cover Bottom, LHS (#65001-)

Index	Code	Part Number	Description	Qty	Serial No.
1		195-54-83851	Cover,LHS	1	65001-
2		154-54-72490	· Hinge,Welded	4	65001-
3		198-54-55990	· Lock Assembly	1	65001-
4		198-54-42480	· · Hook	1	65001-
5		198-54-42491	· · Spring	1	65001-
6		421-54-11381	· · Lock	1	65001-
7		01580-10806	· Nut	4	65001-
8		01643-30823	· Washer	4	65001-
9		195-54-85290	Plate	1	65001-
10		01245-00816	Screw	4	65001-
11		01643-70823	Washer	4	65001-
12		205-54-53550	Dovetail	4	65001-
13		01010-80616	Bolt	8	65001-
14		01643-30623	Washer	8	65001-
15		195-54-81791	Rod	2	65001-
16		04050-13020	Pin, Cotter	2	65001-
17		195-54-81691	Bracket	2	65001-
18		01010-81025	Bolt	4	65001-
19		01643-31032	Washer	4	65001-
20		198-54-79390	Bracket	2	65001-
21		01010-81025	Bolt	4	65001-
22		01643-31032	Washer	4	65001-
23		195-54-81541	Seal	1	65001-
24		154-54-72580	Seal	1	65001-
25		195-54-81551	Seal	1	65001-
26		198-54-73890	Seal	1	65001-

Printed By : Dwi Iswanto (airafather6107170)

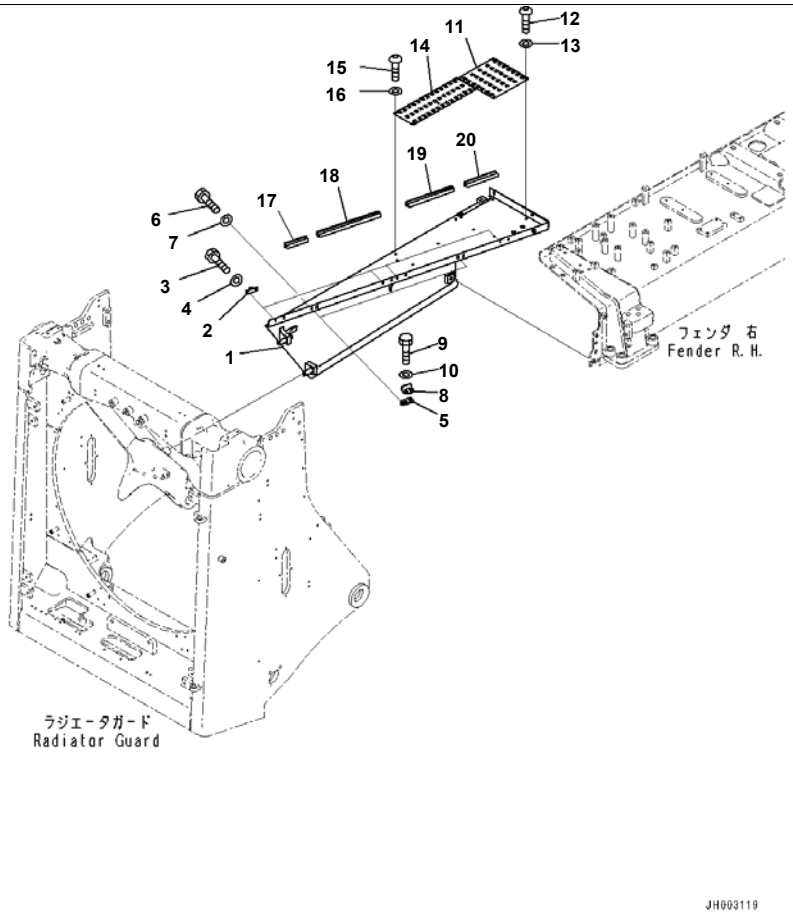

D375A-6R S/N 65001-UP
Engine Hood And Side Cover Group, With Side Covers Perforated, Side Cover Bottom, RHS (#65001-)

Index	Code	Part Number	Description	Qty	Serial No.
1		195-54-81723	Cover,RHS	1	65001-
2		205-54-53550	Dovetail	4	65001-
3		01010-80616	Bolt	8	65001-
4		01643-30623	Washer	8	65001-
5		195-54-81691	Bracket	2	65001-
6		01010-81025	Bolt	4	65001-
7		01643-31032	Washer	4	65001-
8		198-54-79390	Bracket	2	65001-
9		01010-81025	Bolt	4	65001-
10		01643-31032	Washer	4	65001-
11		195-54-81771	Plate	1	65001-
12		01245-00816	Screw	4	65001-
13		01643-70823	Washer	4	65001-
14		198-54-78891	Plate	1	65001-
15		01245-00816	Screw	5	65001-
16		01643-70823	Washer	5	65001-
17		17M-54-53410	Seal	1	65001-
18		198-54-73850	Seal	1	65001-
19		195-54-81551	Seal	1	65001-
20		17M-54-53440	Seal	1	65001-

Printed By : Dwi Iswanto (airafather6107170)

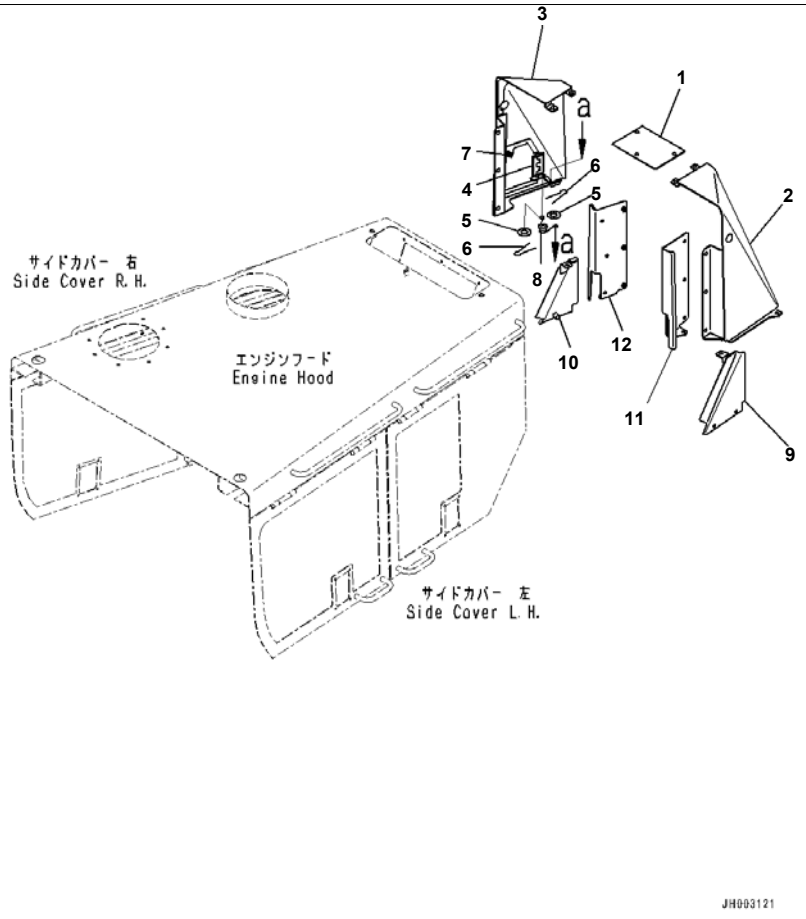

Reference:M2140-001011 Page:M010011

D375A-6R S/N 65001-UP
Engine Hood And Side Cover Group, With Side Covers Perforated, Rear Cover (#65001-)

Index	Code	Part Number	Description	Qty	Serial No.
1		195-54-83811	Plate	1	65001-
2		195-54-83821	Cover,LHS	1	65001-
3		195-54-83831	Cover,RHS	1	65001-
4		144-851-1960	・ Hinge,Welded	1	65001-
5		01640-20610	Washer	2	65001-
6		04050-11610	Pin, Cotter	2	65001-
7		09459-20000	Lock Assembly	1	65001-
8		09463-00002	Spring	1	65001-
9		195-54-81862	Cover,LHS	1	65001-
10		195-54-81871	Cover,RHS	1	65001-
11		195-54-81841	Bracket,LHS	1	65001-
12		195-54-81851	Bracket,RHS	1	65001-

Printed By : Dwi Iswanto (airafather6107170)

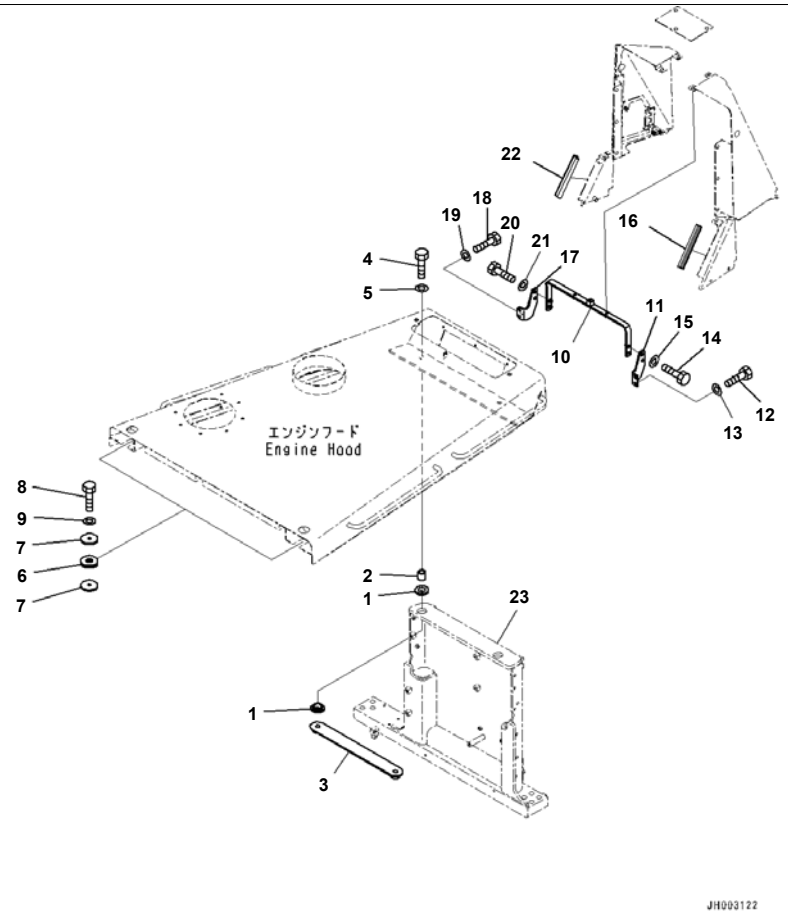

D375A-6R S/N 65001-UP
Engine Hood And Side Cover Group, With Side Covers Perforated, Hood Mounting (#65001-)

Index	Code	Part Number	Description	Qty	Serial No.
1		195-54-42550	Cushion	4	65001-
2		195-54-42560	Boss	2	65001-
3		195-54-81681	Plate	1	65001-
4		01010-82085	Bolt	2	65001-
5		01643-32060	Washer	2	65001-
6		195-54-42680	Plate	2	65001-
7		195-54-46180	Plate	4	65001-
8		01010-81635	Bolt	2	65001-
9		01643-31645	Washer	2	65001-
10		195-54-82411	Bracket	1	65001-
11		195-54-82421	Bracket,LHS	1	65001-
12		01010-81230	Bolt	2	65001-
13		01643-31232	Washer	2	65001-
14		01010-81240	Bolt	2	65001-
15		01643-31232	Washer	2	65001-
16		198-54-73820	Seal	1	65001-
17		195-54-82431	Bracket,RHS	1	65001-
18		01010-81230	Bolt	2	65001-
19		01643-31232	Washer	2	65001-
20		01010-81240	Bolt	2	65001-
21		01643-31232	Washer	2	65001-
22		198-54-73820	Seal	1	65001-
23		(195-54-85132)	Bracket		

Printed By : Dwi Iswanto (airafather6107170)

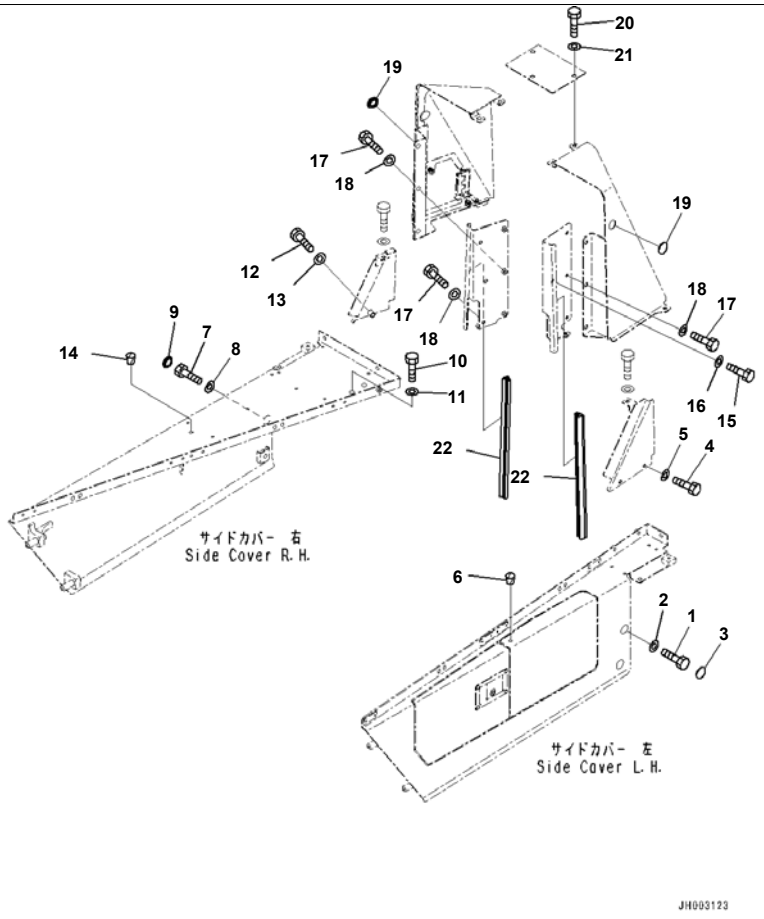

Index	Code	Part Number	Description	Qty	Serial No.
1		01010-81230	Bolt	2	65001-
2		01643-31232	Washer	2	65001-
3		195-54-42981	Cap	2	65001-
4		01010-81245	Bolt	2	65001-
5		01643-31232	Washer	2	65001-
6		07049-01215	Plug	1	65001-
7		01010-81230	Bolt	2	65001-
8		01643-31232	Washer	2	65001-
9		195-54-42981	Cap	2	65001-
10		01010-81265	Bolt	2	65001-
11		175-54-34170	Washer	2	65001-
12		01010-81245	Bolt	1	65001-
13		01643-31232	Washer	1	65001-
14		07049-01215	Plug	1	65001-
15		01010-81230	Bolt	6	65001-
16		01643-31232	Washer	6	65001-
17		01010-81230	Bolt	8	65001-
18		01643-31232	Washer	8	65001-
19		195-Z11-2970	Cap	2	65001-
20		01010-81230	Bolt	3	65001-
21		01643-31232	Washer	3	65001-
22		17M-54-52360	Seal	2	65001-

Printed By : Dwi Iswanto (airafather6107170)

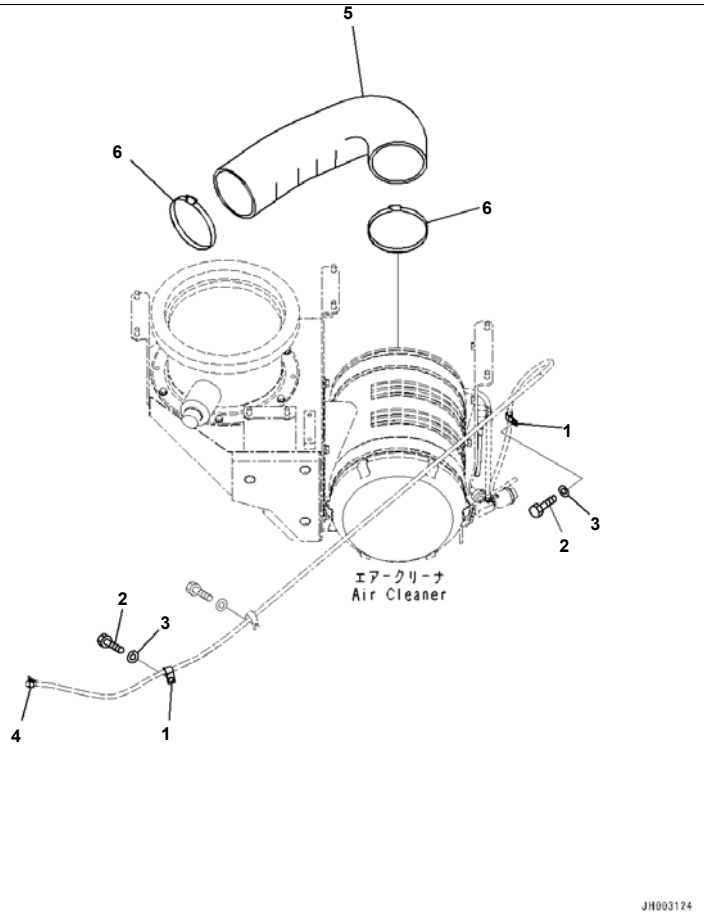

Index	Code	Part Number	Description	Qty	Serial No.
1		04434-51412	Clip	2	65001-
2		01010-81230	Bolt	2	65001-
3		01643-31232	Washer	2	65001-
4		11Y-09-11130	Clamp	2	65001-
5		195-01-41161	Hose	1	65001-
6		07289-00170	Clamp, Hose	2	65001-

Printed By : Dwi Iswanto (airafather6107170)

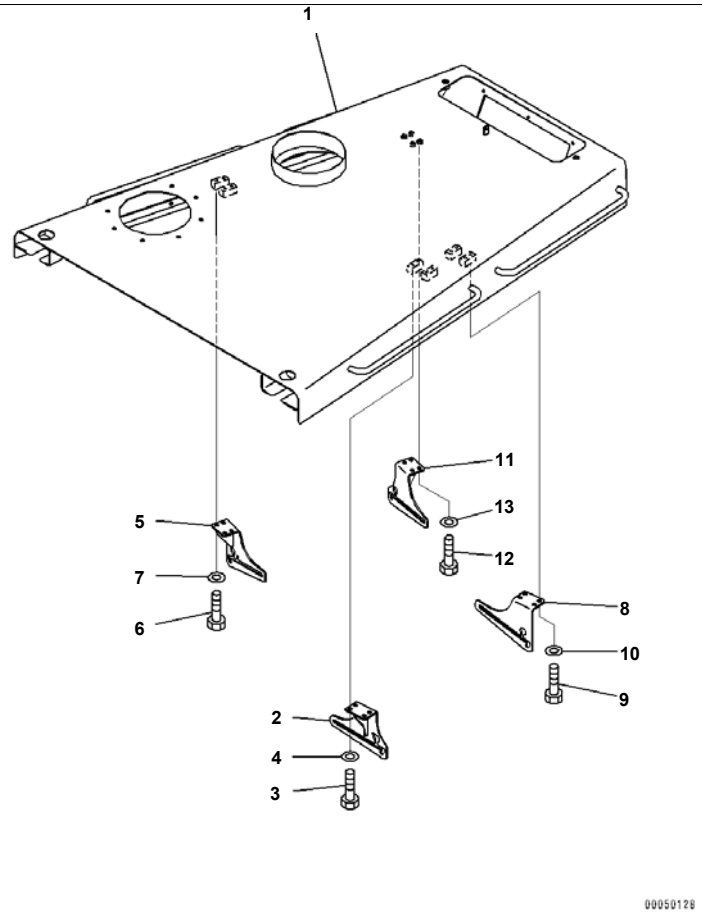

D375A-6R S/N 65001-UP
Engine Hood And Side Cover Group, With Perforated Hood And Side Cover, Hood (#65001-)

Index	Code	Part Number	Description	Qty	Serial No.
1		195-54-86511	Hood	1	65001-
2		195-54-81971	Bracket,LHS	1	65001-
3		01010-81230	Bolt	4	65001-
4		01643-31232	Washer	4	65001-
5		195-54-81981	Bracket,RHS	1	65001-
6		01010-81230	Bolt	4	65001-
7		01643-31232	Washer	4	65001-
8		195-54-81591	Bracket,LHS	1	65001-
9		01010-81230	Bolt	4	65001-
10		01643-31232	Washer	4	65001-
11		195-54-81581	Bracket,RHS	1	65001-
12		01010-81230	Bolt	4	65001-
13		01643-31232	Washer	4	65001-

Printed By : Dwi Iswanto (airafather6107170)

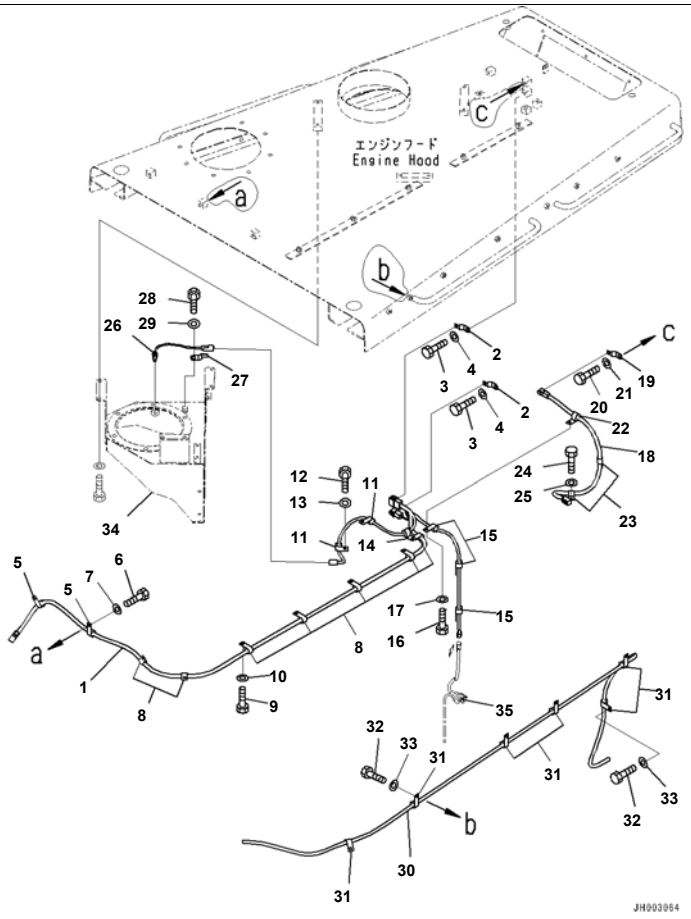

Reference:M2140-003002 Page:M011002

D375A-6R S/N 65001-UP
Engine Hood And Side Cover Group, With Perforated Hood And Side Cover, Harness (#65001-)

Index	Code	Part Number	Description	Qty	Serial No.
1		195-06-57530	Wiring Harness	1	65001-
2		08193-21012	Clip	3	65001-
3		01010-81220	Bolt	3	65001-
4		01643-31232	Washer	3	65001-
5		04434-51912	Clip	2	65001-
6		01010-81230	Bolt	2	65001-
7		01643-31232	Washer	2	65001-
8		04434-51912	Clip	7	65001-
9		01010-81230	Bolt	7	65001-
10		01643-31232	Washer	7	65001-
11		04434-51012	Clip	2	65001-
12		01010-81230	Bolt	2	65001-
13		01643-31232	Washer	2	65001-
14		04434-51012	Clip	1	65001-
15		04434-51012	Clip	3	65001-
16		01010-81230	Bolt	3	65001-
17		01643-31232	Washer	3	65001-
18		195-06-54321	Wiring Harness	1	65001-
19		08193-21012	Clip	1	65001-
20		01010-81220	Bolt	1	65001-
21		01643-31232	Washer	1	65001-
22		04434-51412	Clip	1	65001-
23		04434-51412	Clip	2	65001-
24		01010-81230	Bolt	2	65001-
25		01643-31232	Washer	2	65001-
26		7861-93-3510	Sensor, Temperature	1	65001-
27		08193-21012	Clip	1	65001-
28		01010-81220	Bolt	1	65001-
29		01643-31232	Washer	1	65001-
30		561-03-6A450	Hose	1	65001-
31		04434-51412	Clip	4	65001-

Reference:M2140-003002 Page:M011002

Printed By : Dwi Iswanto (airafather6107170)

Engine Hood And Side Cover Group, With Perforated Hood And Side Cover, Harness (#65001-)

Index	Code	Part Number	Description	Qty	Serial No.
32		01010-81230	Bolt	4	65001-
33		01643-31232	Washer	4	65001-
34		(195-01-41211)	Duct		
35		(7861-93-1420)	Sensor		

Printed By : Dwi Iswanto (airafather6107170)

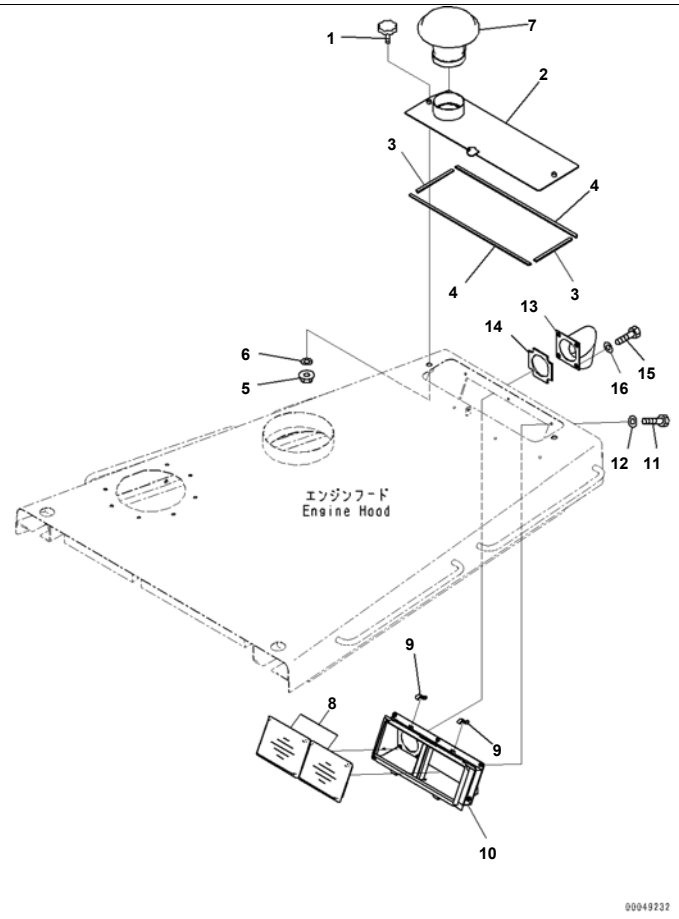

Reference:M2140-003003 Page:M011003

D375A-6R S/N 65001-UP
Engine Hood And Side Cover Group, With Perforated Hood And Side Cover, Air Cleaner Duct (#65001-)

Index	Code	Part Number	Description	Qty	Serial No.
1		195-54-68760	Knob	2	65001-
2		195-54-81950	Cover	1	65001-
3		195-54-75760	· Seal	2	65001-
4		195-54-81960	· Seal	2	65001-
5		01594-01008	Nut	2	65001-
6		01640-21016	Washer	2	65001-
7		124-911-1430	Hood	1	65001-
8		14X-911-7750	Filter	2	65001-
9		195-Z11-5880	Clamp	2	65001-
10		195-54-81910	Duct	1	65001-
11		01010-80820	Bolt	6	65001-
12		01643-30823	Washer	6	65001-
13		195-54-81921	Duct	1	65001-
14		195-54-81931	· Sheet	1	65001-
15		01010-80820	Bolt	4	65001-
16		01643-30823	Washer	4	65001-

Printed By : Dwi Iswanto (airafather6107170)

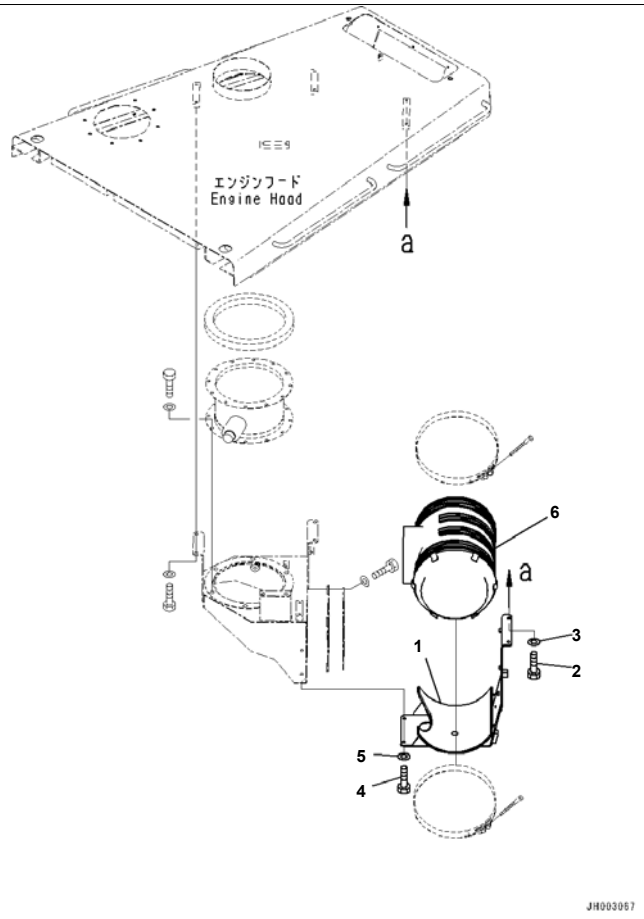

D375A-6R S/N 65001-UP

Engine Hood And Side Cover Group, With Perforated Hood And Side Cover, Air Cleaner Related Parts (1/2) (#65001-)

Index	Code	Part Number	Description	Qty	Serial No.
1		195-01-41221	Bracket	1	65001-
2		01010-81230	Bolt	2	65001-
3		01643-31232	Washer	2	65001-
4		01010-81230	Bolt	2	65001-
5		01643-31232	Washer	2	65001-
6		6245-81-7100	Air Cleaner Assembly	1	65001-

Printed By : Dwi Iswanto (airafather6107170)

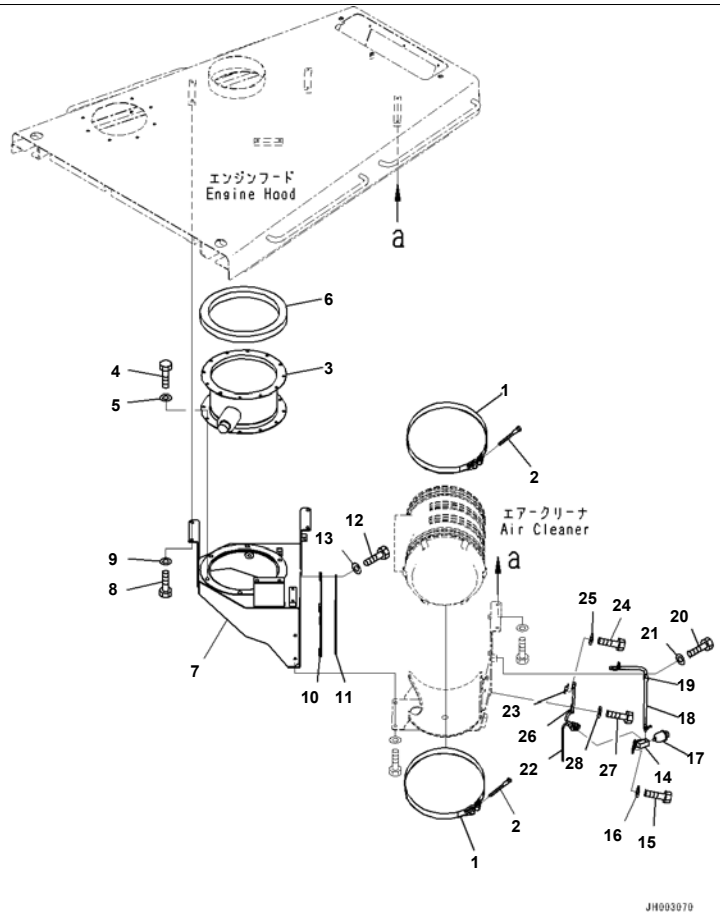

Reference:M2140-003005 Page:M011005

D375A-6R S/N 65001-UP

Engine Hood And Side Cover Group, With Perforated Hood And Side Cover, Air Cleaner Related Parts (2/2) (#65001-)

Index	Code	Part Number	Description	Qty	Serial No.
1		6240-11-9910	Band	2	65001-
2		6643-11-4641	Bolt	2	65001-
3		600-183-7552	Air Cleaner	1	65001-
4		01010-81025	Bolt	6	65001-
5		01643-31032	Washer	6	65001-
6		195-01-41240	Sheet	1	65001-
7		195-01-41211	Duct	1	65001-
8		01010-81230	Bolt	6	65001-
9		01643-31232	Washer	6	65001-
10		195-01-41251	Cover	1	65001-
11		195-01-41261	Sheet	1	65001-
12		01010-81230	Bolt	4	65001-
13		01643-31232	Washer	4	65001-
14		195-01-41310	Bracket	1	65001-
15		01010-81230	Bolt	2	65001-
16		01643-31232	Washer	2	65001-
17		08672-01000	Indicator, Dust	1	65001-
18		08671-70080	Hose	1	65001-
19		04434-51412	Clip	1	65001-
20		01010-81230	Bolt	1	65001-
21		01643-31232	Washer	1	65001-
22		7861-93-1421	Sensor, Switch	1	65001-
23		08193-21012	Clip	1	65001-
24		01010-81220	Bolt	1	65001-
25		01643-31232	Washer	1	65001-
26		04434-51012	Clip	1	65001-
27		01010-81230	Bolt	1	65001-
28		01643-31232	Washer	1	65001-

Printed By : Dwi Iswanto (airafather6107170)

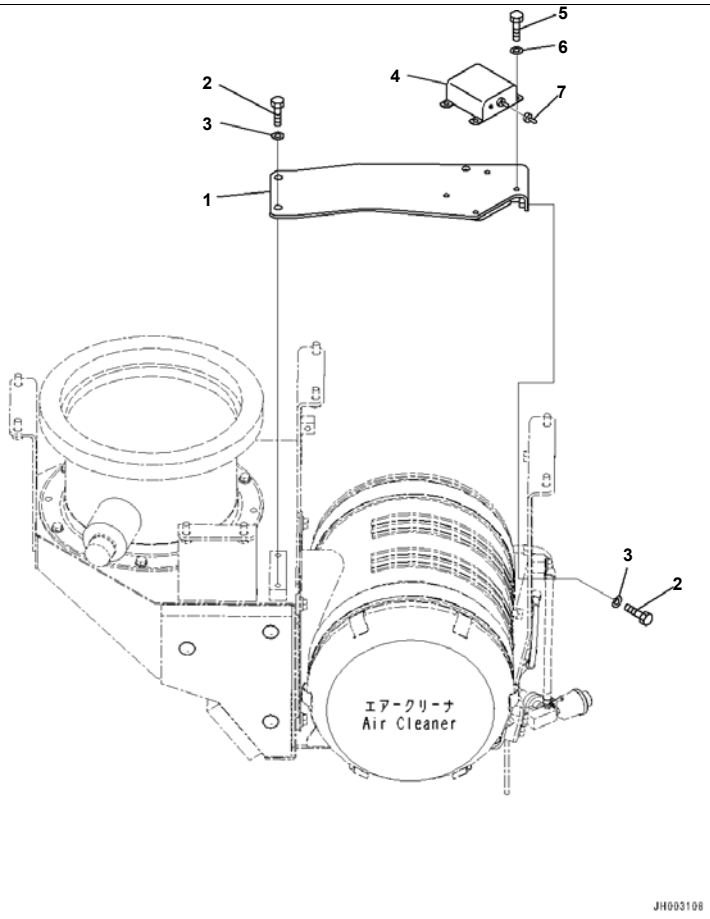

Reference:M2140-003006 Page:M011006

D375A-6R S/N 65001-UP
Engine Hood And Side Cover Group, With Perforated Hood And Side Cover, Fuel Priming Pump Switch (#65001-)

Index	Code	Part Number	Description	Qty	Serial No.
1		195-01-41320	Bracket	1	65001-
2		01010-81230	Bolt	4	65001-
3		01643-31232	Washer	4	65001-
4		600-815-9471	Switch	1	65001-
5		01010-80820	Bolt	4	65001-
6		01643-30823	Washer	4	65001-
7		08504-10000	Cap	1	65001-

Printed By : Dwi Iswanto (airafather6107170)

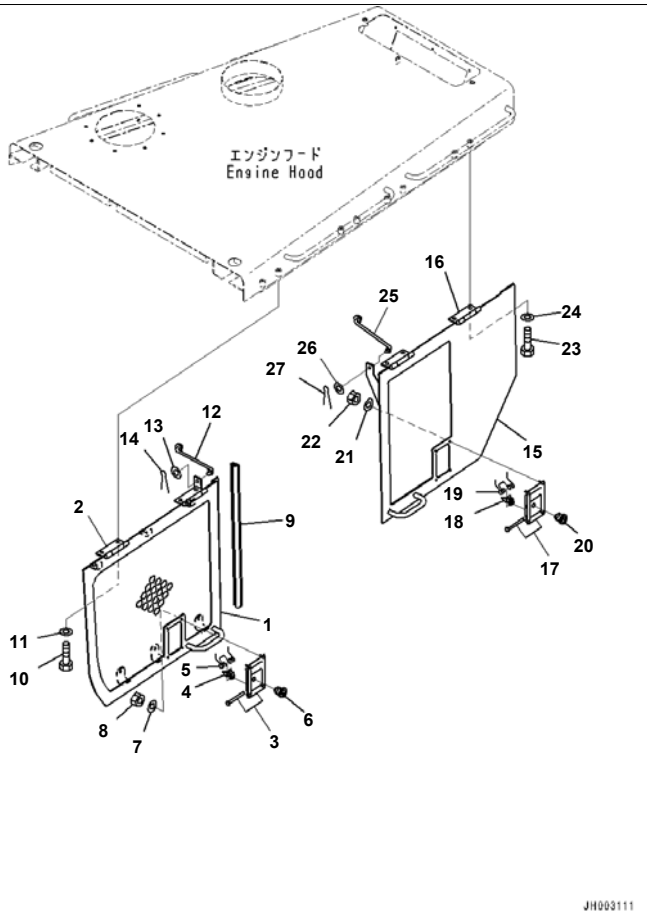

D375A-6R S/N 65001-UP

Engine Hood And Side Cover Group, With Perforated Hood And Side Cover, Side Cover Top, LHS (#65001-)

Index	Code	Part Number	Description	Qty	Serial No.
1		195-54-81611	Cover,LHS	1	65001-
2		198-54-72510	· Hinge,Welded	2	65001-
3		198-54-55990	Lock Assembly	1	65001-
4		198-54-42480	· Hook	1	65001-
5		198-54-42491	· Spring	1	65001-
6		421-54-11381	· Lock	1	65001-
7		01643-30823	Washer	4	65001-
8		01580-10806	Nut	4	65001-
9		195-54-81530	Seal	1	65001-
10		01010-81230	Bolt	4	65001-
11		01643-31232	Washer	4	65001-
12		198-54-72580	Bar	1	65001-
13		01643-31232	Washer	1	65001-
14		04050-13020	Pin, Cotter	1	65001-
15		195-54-81662	Cover,LHS	1	65001-
16		198-54-72510	· Hinge,Welded	2	65001-
17		198-54-55990	Lock Assembly	1	65001-
18		198-54-42480	· Hook	1	65001-
19		198-54-42491	· Spring	1	65001-
20		421-54-11381	· Lock	1	65001-
21		01643-30823	Washer	4	65001-
22		01580-10806	Nut	4	65001-
23		01010-81230	Bolt	4	65001-
24		01643-31232	Washer	4	65001-
25		198-54-72580	Bar	1	65001-
26		01643-31232	Washer	1	65001-
27		04050-13020	Pin, Cotter	1	65001-

Printed By : Dwi Iswanto (airafather6107170)

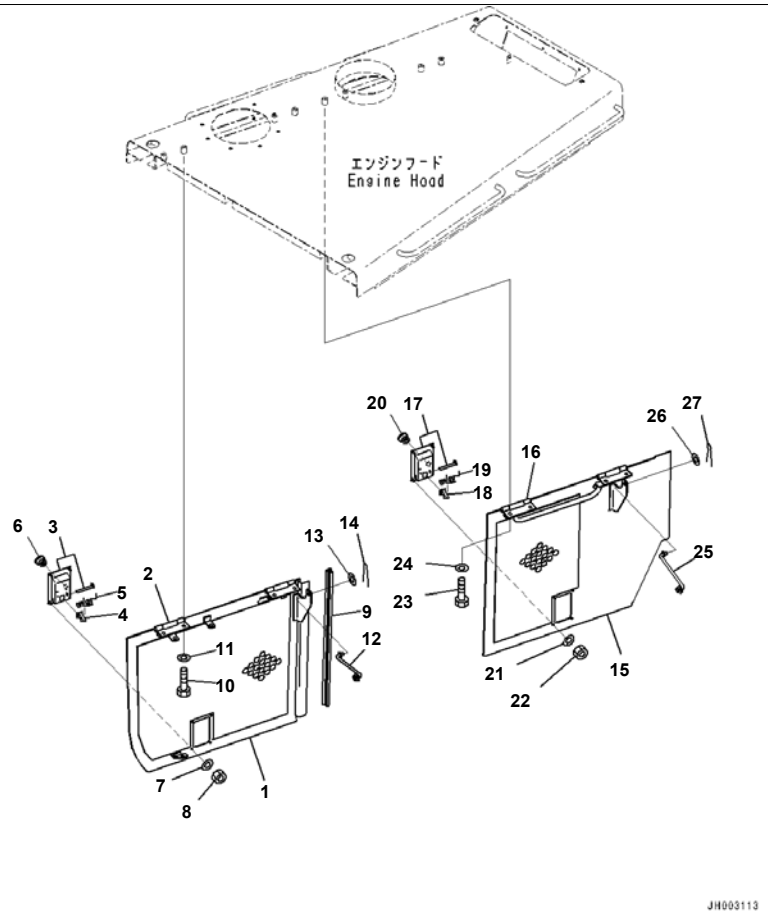

Reference:M2140-003008 Page:M011008

D375A-6R S/N 65001-UP

Engine Hood And Side Cover Group, With Perforated Hood And Side Cover, Side Cover Top, RHS (#65001-)

Index	Code	Part Number	Description	Qty	Serial No.
1		195-54-81621	Cover,RHS	1	65001-
2		198-54-72510	· Hinge,Welded	2	65001-
3		198-54-55990	Lock Assembly	1	65001-
4		198-54-42480	· Hook	1	65001-
5		198-54-42491	· Spring	1	65001-
6		421-54-11381	· Lock	1	65001-
7		01643-30823	Washer	4	65001-
8		01580-10806	Nut	4	65001-
9		195-54-81530	Seal	1	65001-
10		01010-81230	Bolt	4	65001-
11		01643-31232	Washer	4	65001-
12		198-54-72580	Bar	1	65001-
13		01643-31232	Washer	1	65001-
14		04050-13020	Pin, Cotter	1	65001-
15		195-54-81671	Cover,RHS	1	65001-
16		198-54-72510	· Hinge,Welded	2	65001-
17		198-54-55990	Lock Assembly	1	65001-
18		198-54-42480	· Hook	1	65001-
19		198-54-42491	· Spring	1	65001-
20		421-54-11381	· Lock	1	65001-
21		01643-30823	Washer	4	65001-
22		01580-10806	Nut	4	65001-
23		01010-81230	Bolt	4	65001-
24		01643-31232	Washer	4	65001-
25		198-54-72580	Bar	1	65001-
26		01643-31232	Washer	1	65001-
27		04050-13020	Pin, Cotter	1	65001-

Printed By : Dwi Iswanto (airafather6107170)

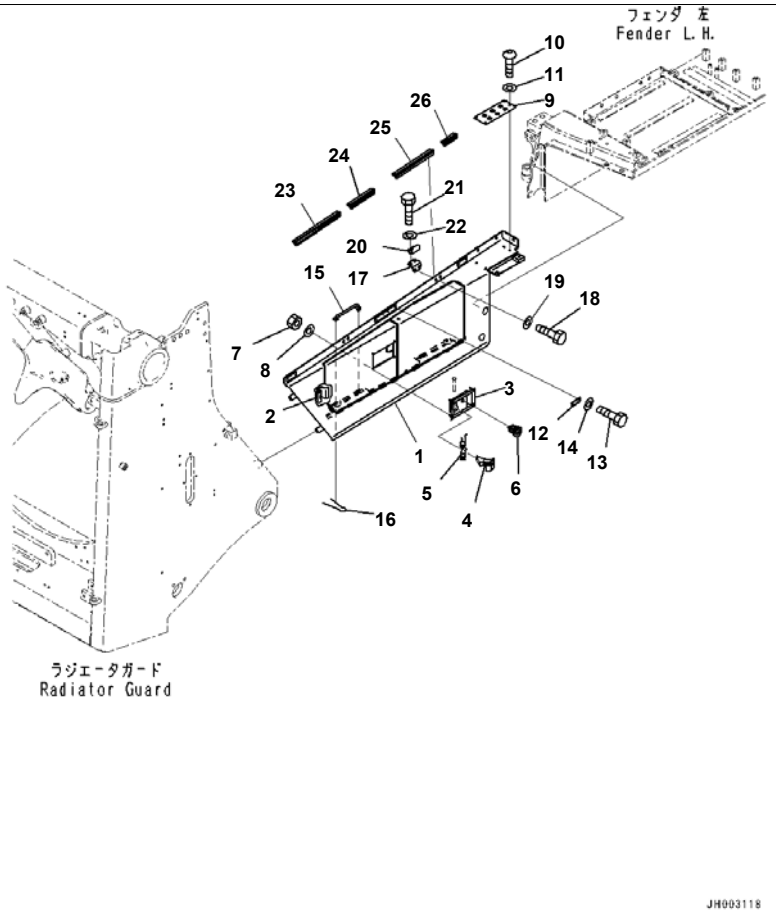

Reference:M2140-003009 Page:M011009

D375A-6R S/N 65001-UP
Engine Hood And Side Cover Group, With Perforated Hood And Side Cover, Side Cover Bottom, LHS (#65001-)

Index	Code	Part Number	Description	Qty	Serial No.
1		195-54-83851	Cover,LHS	1	65001-
2		154-54-72490	· Hinge,Welded	4	65001-
3		198-54-55990	· Lock Assembly	1	65001-
4		198-54-42480	· · Hook	1	65001-
5		198-54-42491	· · Spring	1	65001-
6		421-54-11381	· · Lock	1	65001-
7		01580-10806	· Nut	4	65001-
8		01643-30823	· Washer	4	65001-
9		195-54-85290	Plate	1	65001-
10		01245-00816	Screw	4	65001-
11		01643-70823	Washer	4	65001-
12		205-54-53550	Dovetail	4	65001-
13		01010-80616	Bolt	8	65001-
14		01643-30623	Washer	8	65001-
15		195-54-81791	Rod	2	65001-
16		04050-13020	Pin, Cotter	2	65001-
17		195-54-81691	Bracket	2	65001-
18		01010-81025	Bolt	4	65001-
19		01643-31032	Washer	4	65001-
20		198-54-79390	Bracket	2	65001-
21		01010-81025	Bolt	4	65001-
22		01643-31032	Washer	4	65001-
23		195-54-81541	Seal	1	65001-
24		154-54-72580	Seal	1	65001-
25		195-54-81551	Seal	1	65001-
26		198-54-73890	Seal	1	65001-

Printed By : Dwi Iswanto (airafather6107170)

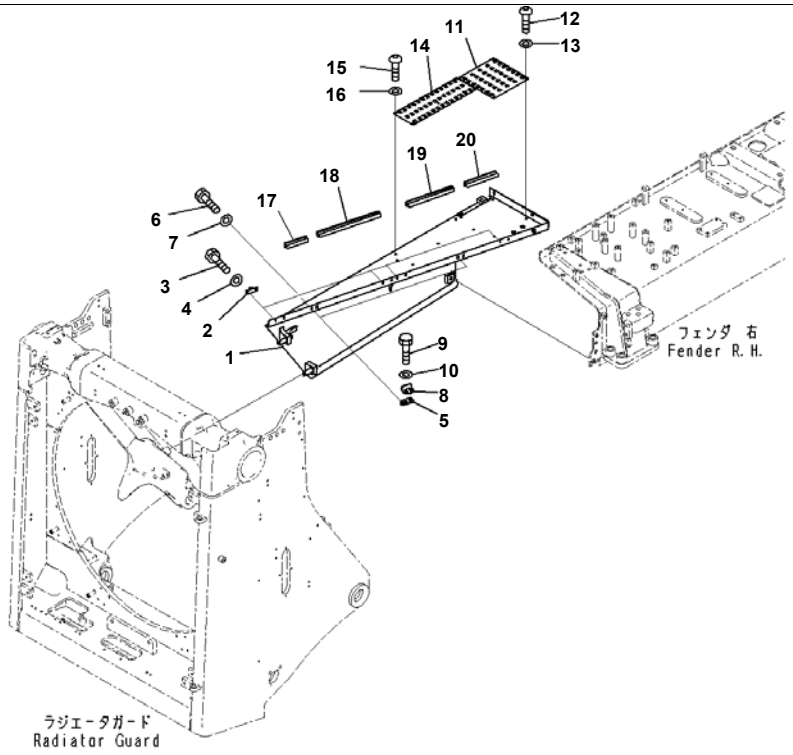

D375A-6R S/N 65001-UP
Engine Hood And Side Cover Group, With Perforated Hood And Side Cover, Side Cover Bottom, RHS (#65001-)

Index	Code	Part Number	Description	Qty	Serial No.
1		195-54-81723	Cover,RHS	1	65001-
2		205-54-53550	Dovetail	4	65001-
3		01010-80616	Bolt	8	65001-
4		01643-30623	Washer	8	65001-
5		195-54-81691	Bracket	2	65001-
6		01010-81025	Bolt	4	65001-
7		01643-31032	Washer	4	65001-
8		198-54-79390	Bracket	2	65001-
9		01010-81025	Bolt	4	65001-
10		01643-31032	Washer	4	65001-
11		195-54-81771	Plate	1	65001-
12		01245-00816	Screw	4	65001-
13		01643-70823	Washer	4	65001-
14		198-54-78891	Plate	1	65001-
15		01245-00816	Screw	5	65001-
16		01643-70823	Washer	5	65001-
17		17M-54-53410	Seal	1	65001-
18		198-54-73850	Seal	1	65001-
19		195-54-81551	Seal	1	65001-
20		17M-54-53440	Seal	1	65001-

Printed By : Dwi Iswanto (airafather6107170)

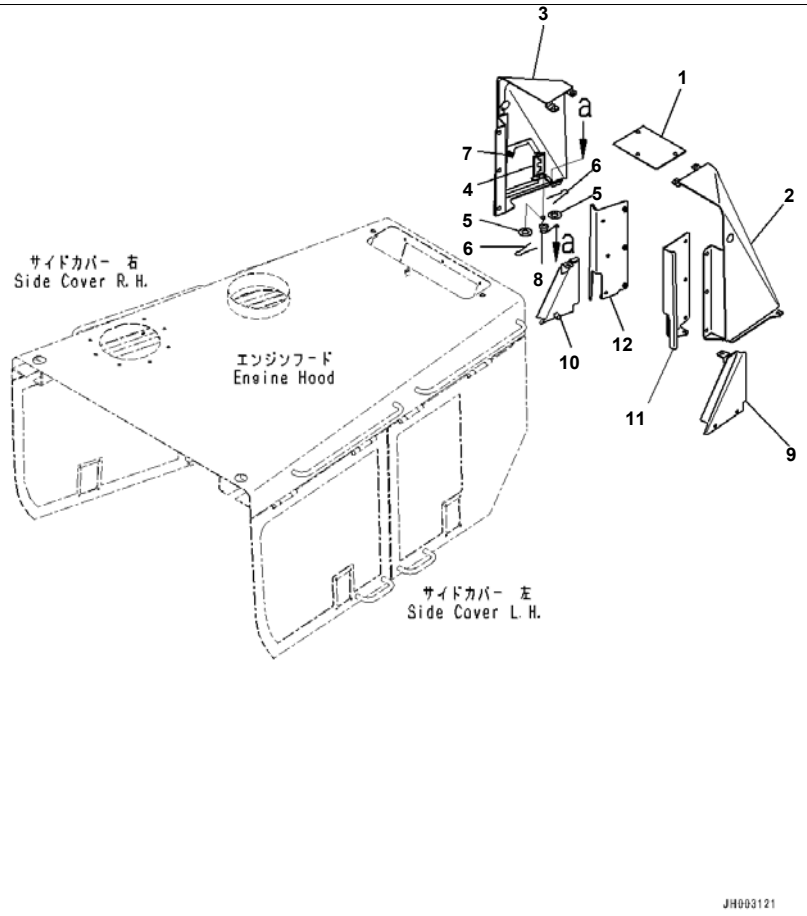

Reference:M2140-003011 Page:M011011

D375A-6R S/N 65001-UP
Engine Hood And Side Cover Group, With Perforated Hood And Side Cover, Rear Cover (#65001-)

Index	Code	Part Number	Description	Qty	Serial No.
1		195-54-83811	Plate	1	65001-
2		195-54-83821	Cover,LHS	1	65001-
3		195-54-83831	Cover,RHS	1	65001-
4		144-851-1960	・ Hinge,Welded	1	65001-
5		01640-20610	Washer	2	65001-
6		04050-11610	Pin, Cotter	2	65001-
7		09459-20000	Lock Assembly	1	65001-
8		09463-00002	Spring	1	65001-
9		195-54-81862	Cover,LHS	1	65001-
10		195-54-81871	Cover,RHS	1	65001-
11		195-54-81841	Bracket,LHS	1	65001-
12		195-54-81851	Bracket,RHS	1	65001-

Printed By : Dwi Iswanto (airafather6107170)

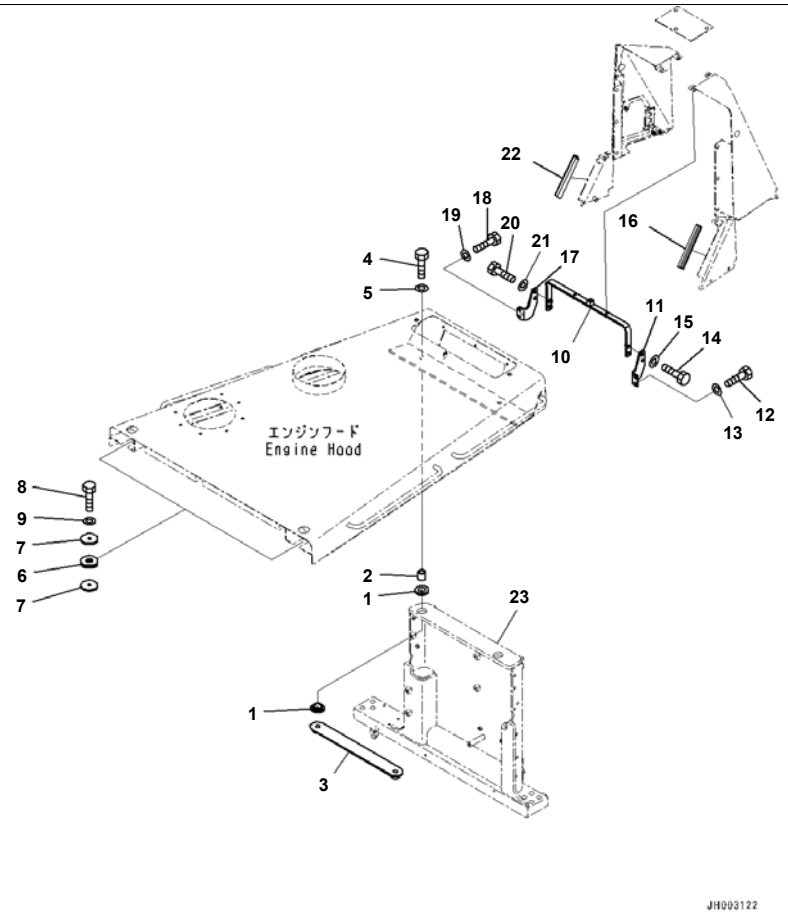

D375A-6R S/N 65001-UP
Engine Hood And Side Cover Group, With Perforated Hood And Side Cover, Hood Mounting (#65001-)

Index	Code	Part Number	Description	Qty	Serial No.
1		195-54-42550	Cushion	4	65001-
2		195-54-42560	Boss	2	65001-
3		195-54-81681	Plate	1	65001-
4		01010-82085	Bolt	2	65001-
5		01643-32060	Washer	2	65001-
6		195-54-42680	Plate	2	65001-
7		195-54-46180	Plate	4	65001-
8		01010-81635	Bolt	2	65001-
9		01643-31645	Washer	2	65001-
10		195-54-82411	Bracket	1	65001-
11		195-54-82421	Bracket,LHS	1	65001-
12		01010-81230	Bolt	2	65001-
13		01643-31232	Washer	2	65001-
14		01010-81240	Bolt	2	65001-
15		01643-31232	Washer	2	65001-
16		198-54-73820	Seal	1	65001-
17		195-54-82431	Bracket,RHS	1	65001-
18		01010-81230	Bolt	2	65001-
19		01643-31232	Washer	2	65001-
20		01010-81240	Bolt	2	65001-
21		01643-31232	Washer	2	65001-
22		198-54-73820	Seal	1	65001-
23		(195-54-85132)	Bracket		

Printed By : Dwi Iswanto (airafather6107170)

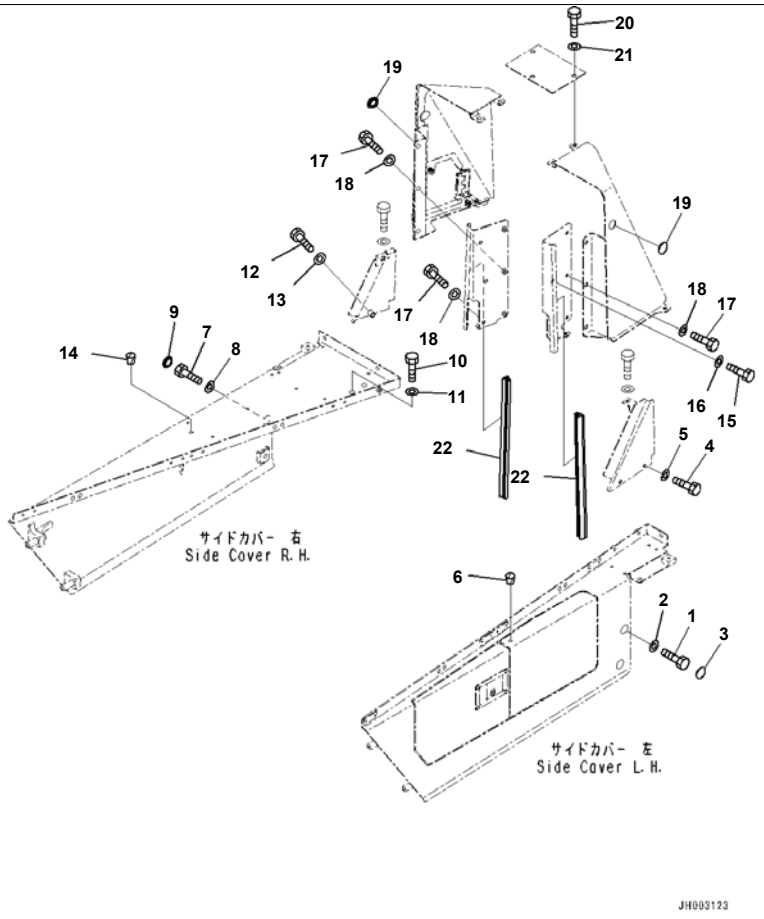

Reference:M2140-003013 Page:M011013

D375A-6R S/N 65001-UP
Engine Hood And Side Cover Group, With Perforated Hood And Side Cover, Side Cover and Rear Cover Mounts (#65001-)

Index	Code	Part Number	Description	Qty	Serial No.
1		01010-81230	Bolt	2	65001-
2		01643-31232	Washer	2	65001-
3		195-54-42981	Cap	2	65001-
4		01010-81245	Bolt	2	65001-
5		01643-31232	Washer	2	65001-
6		07049-01215	Plug	1	65001-
7		01010-81230	Bolt	2	65001-
8		01643-31232	Washer	2	65001-
9		195-54-42981	Cap	2	65001-
10		01010-81265	Bolt	2	65001-
11		175-54-34170	Washer	2	65001-
12		01010-81245	Bolt	1	65001-
13		01643-31232	Washer	1	65001-
14		07049-01215	Plug	1	65001-
15		01010-81230	Bolt	6	65001-
16		01643-31232	Washer	6	65001-
17		01010-81230	Bolt	8	65001-
18		01643-31232	Washer	8	65001-
19		195-Z11-2970	Cap	2	65001-
20		01010-81230	Bolt	3	65001-
21		01643-31232	Washer	3	65001-
22		17M-54-52360	Seal	2	65001-

Printed By : Dwi Iswanto (airafather6107170)

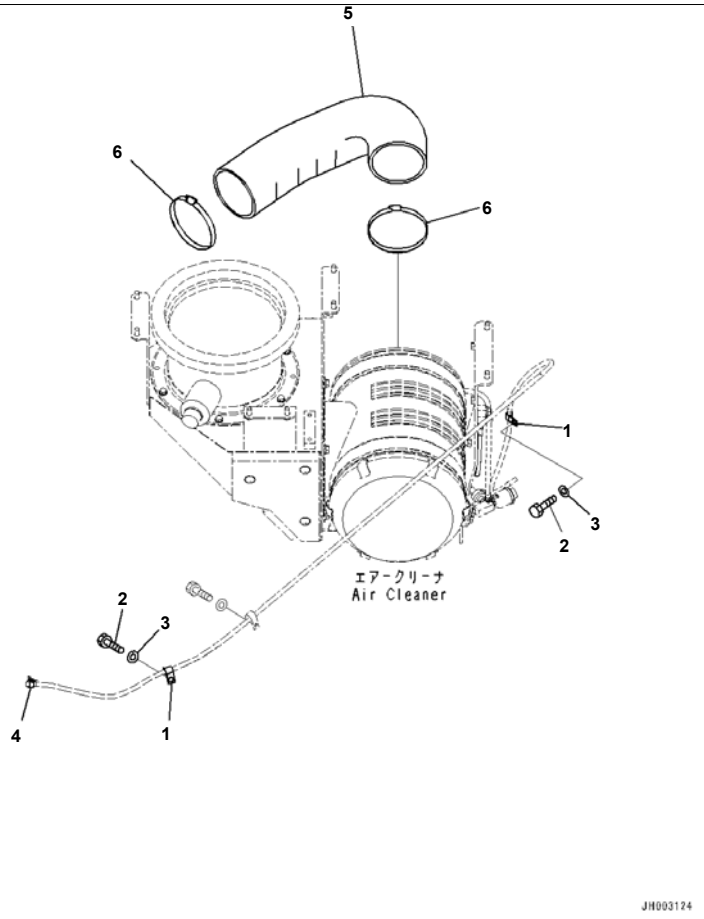

Reference:M2140-003014 Page:M011014

D375A-6R S/N 65001-UP
Engine Hood And Side Cover Group, With Perforated Hood And Side Cover, Hose Clamp (#65001-)

Index	Code	Part Number	Description	Qty	Serial No.
1		04434-51412	Clip	2	65001-
2		01010-81230	Bolt	2	65001-
3		01643-31232	Washer	2	65001-
4		11Y-09-11130	Clamp	2	65001-
5		195-01-41161	Hose	1	65001-
6		07289-00170	Clamp, Hose	2	65001-

Printed By : Dwi Iswanto (airafather6107170)

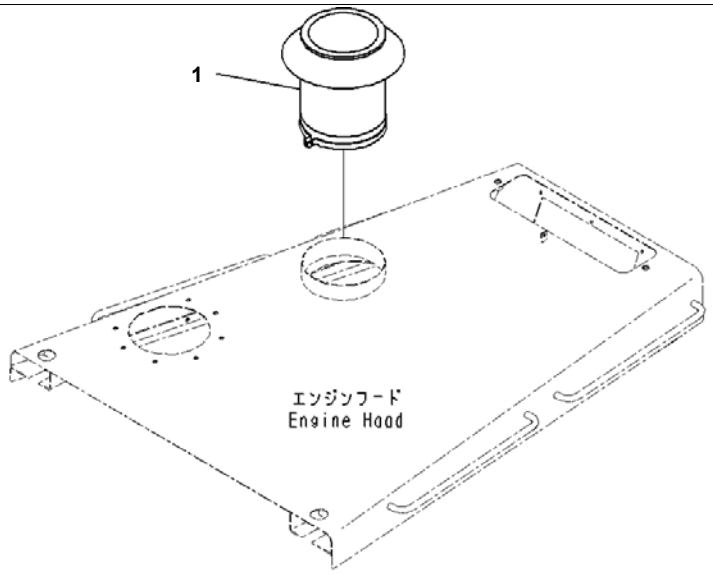

Index	Code	Part Number	Description	Qty	Serial No.
1		6128-11-5180	Hood Assembly	1	65001-

Printed By : Dwi Iswanto (airafather6107170)

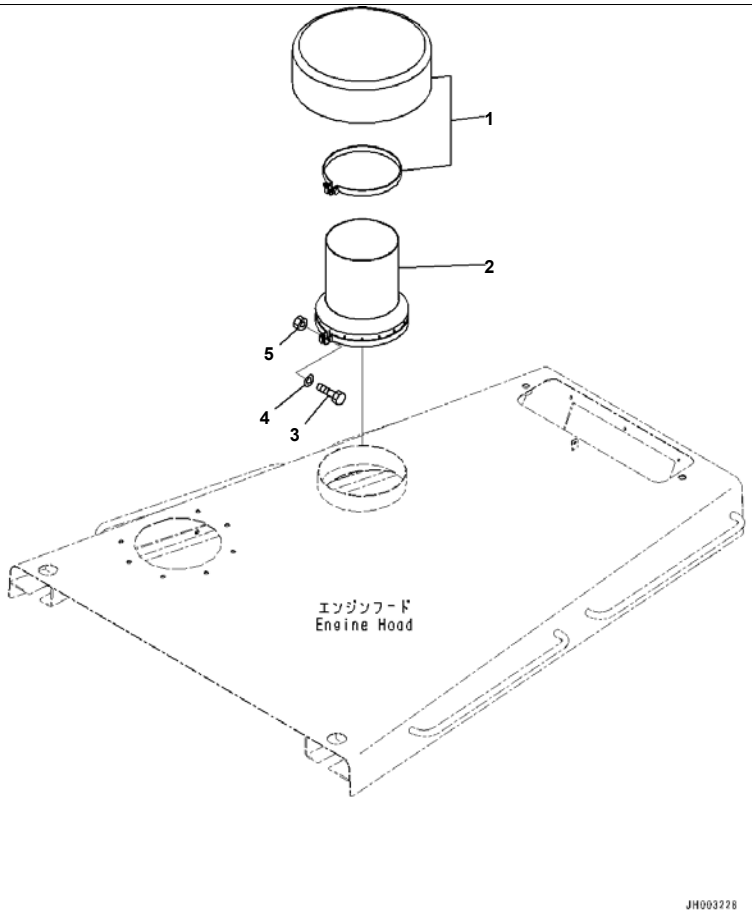

D375A-6R S/N 65001-UP
Pre Cleaner Hood, With Pre-cleaner (#65001-)

Index	Code	Part Number	Description	Qty	Serial No.
1		195-01-35211	Cleaner Assembly	1	65001-
2		195-54-68880	Duct	1	65001-
3		01016-51045	Bolt	1	65001-
4		01643-31032	Washer	1	65001-
5		01580-11008	Nut	1	65001-

Printed By : Dwi Iswanto (airafather6107170)

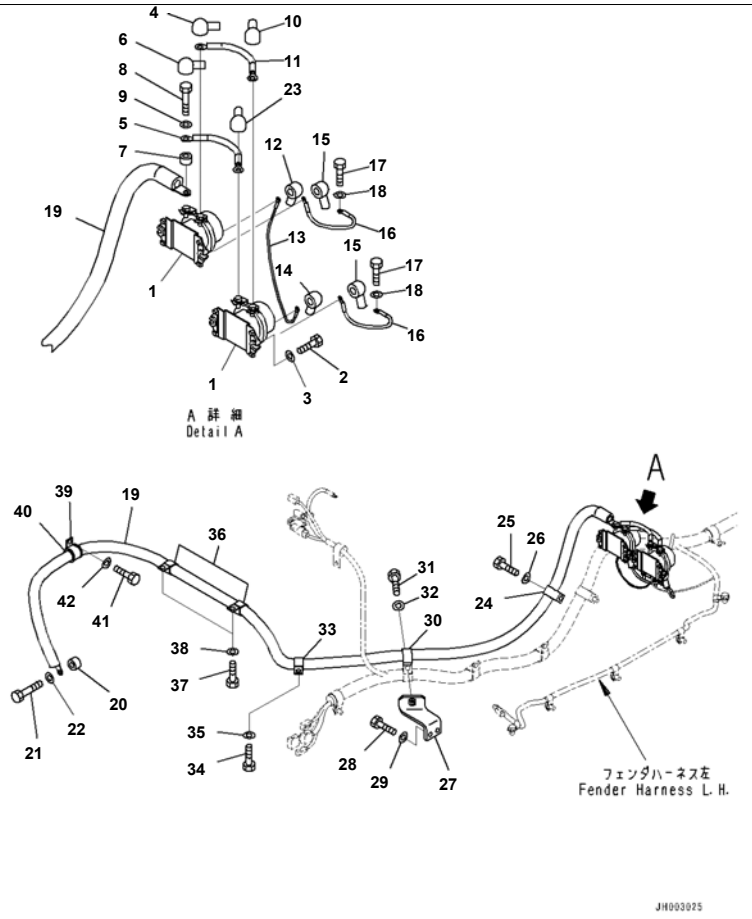

Reference:M2210-004001 Page:M014001

D375A-6R S/N 65001-UP
Fender, Extremely Bad Fuel And Poor Fuel Arrangement Spec.+Filter (Water+Dust), Starting Harness (#65001-)

Index	Code	Part Number	Description	Qty	Serial No.
1		08088-30000	Switch	2	65001-
2		01010-80825	Bolt	4	65001-
3		01643-30823	Washer	4	65001-
4		08038-00035	Cap, Terminal	1	65001-
5		195-06-54570	Cable	1	65001-
6		08038-04030	Cap, Terminal	1	65001-
7		175-79-83760	Spacer	1	65001-
8		01010-80840	Bolt	1	65001-
9		01643-30823	Washer	1	65001-
10		08038-04030	Cap, Terminal	1	65001-
11		195-06-54570	Cable	1	65001-
12		08038-00218	Cap, Terminal	1	65001-
13		195-06-54550	Wire	1	65001-
14		08038-00218	Cap, Terminal	1	65001-
15		08038-02027	Cap	2	65001-
16		195-06-54560	Wire	2	65001-
17		01010-80820	Bolt	2	65001-
18		01643-30823	Washer	2	65001-
19		195-06-54510	Wiring Harness	1	65001-
20		175-79-83760	Spacer	1	65001-
21		01010-80840	Bolt	1	65001-
22		01643-30823	Washer	1	65001-
23		08038-00035	Cap, Terminal	1	65001-
24		04434-52712	Clip	1	65001-
25		01010-81220	Bolt	1	65001-
26		01643-31232	Washer	1	65001-
27		195-06-71331	Bracket	1	65001-
28		01010-81230	Bolt	2	65001-
29		01643-31232	Washer	2	65001-
30		04434-52712	Clip	1	65001-
31		01010-81230	Bolt	1	65001-

Printed By : Dwi Iswanto (airafather6107170)

Fender, Extremely Bad Fuel And Poor Fuel Arrangement Spec.+Filter (Water+Dust), Starting Harness (#65001-)

Index	Code	Part Number	Description	Qty	Serial No.
32		01643-31232	Washer	1	65001-
33		04434-52712	Clip	1	65001-
34		01010-81220	Bolt	1	65001-
35		01643-31232	Washer	1	65001-
36		04434-52712	Clip	2	65001-
37		01010-81220	Bolt	2	65001-
38		01643-31232	Washer	2	65001-
39		04434-53412	Clip	1	65001-
40		07095-40627	Cushion	1	65001-
41		01010-81220	Bolt	1	65001-
42		01643-31232	Washer	1	65001-

Printed By : Dwi Iswanto (airafather6107170)

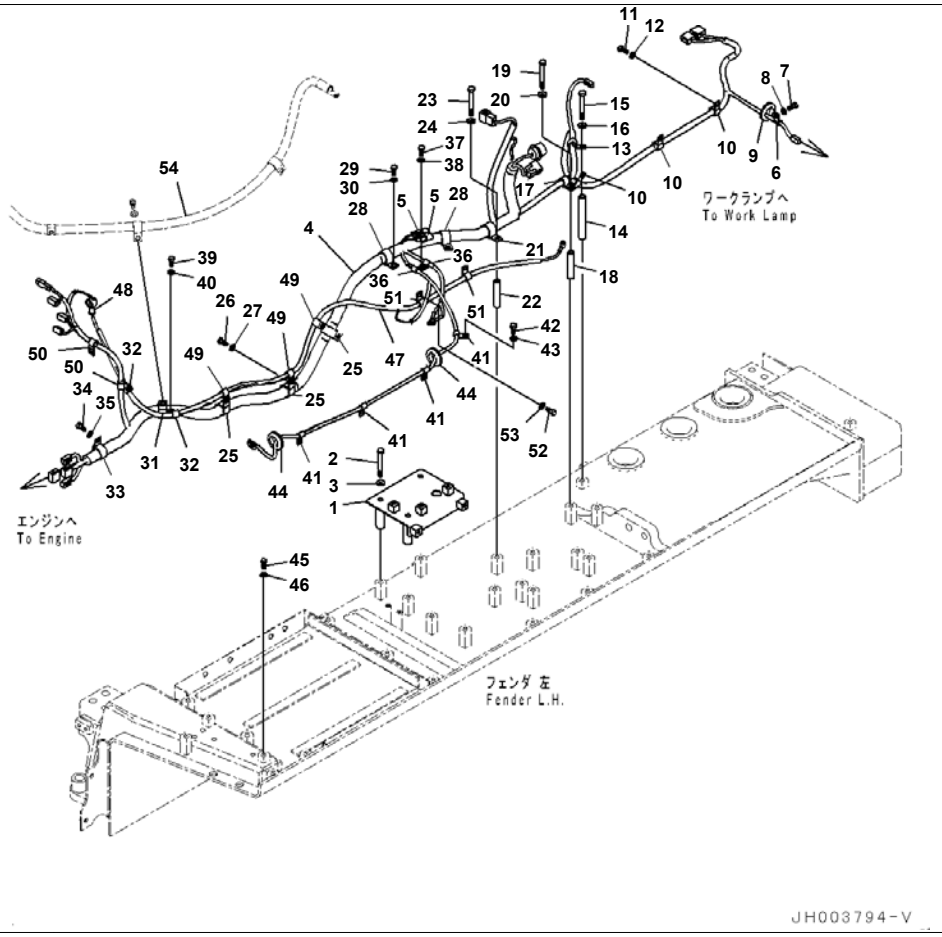

Reference:M2210-004002 Page:M014002

D375A-6R S/N 65001-UP
Fender, Extremely Bad Fuel And Poor Fuel Arrangement Spec.+Filter (Water+Dust), Harness, LHS (#65001-65009)

Index	Code	Part Number	Description	Qty	Serial No.
1		195-06-55420	Cover	1	65001-@
2		01011-81230	Bolt	3	65001-@
3		01643-31232	Washer	3	65001-@
4		195-06-57551	Wiring Harness	1	65001-@
5		21J-06-13661	· Diode	2	65001-@
6		04434-51012	Clip	1	65001-@
7		01010-81220	Bolt	1	65001-@
8		01643-31232	Washer	1	65001-@
9		08037-03614	Grommet	1	65001-@
10		04434-52112	Clip	3	65001-@
11		01010-81220	Bolt	3	65001-@
12		01643-31232	Washer	3	65001-@
13		04434-52112	Clip	1	65001-@
14		195-61-21440	Spacer	1	65001-@
15		01011-81280	Bolt	1	65001-@
16		01643-31232	Washer	1	65001-@
17		04434-52112	Clip	1	65001-@
18		6240-51-5140	Spacer	1	65001-65009
19		01011-81220	Bolt	1	65001-@
20		01643-31232	Washer	1	65001-@
21		04434-53412	Clip	1	65001-@
22		6240-51-5140	Spacer	1	65001-65009
23		01011-81220	Bolt	1	65001-@
24		01643-31232	Washer	1	65001-@
25		04434-53412	Clip	3	65001-@
26		01010-81220	Bolt	3	65001-@
27		01643-31232	Washer	3	65001-@
28		04434-53412	Clip	2	65001-@
29		01010-81220	Bolt	2	65001-@
30		01643-31232	Washer	2	65001-@
31		04434-53412	Clip	1	65001-@

Reference:M2210-004002 Page:M014002

Printed By : Dwi Iswanto (airafather6107170)

Fender, Extremely Bad Fuel And Poor Fuel Arrangement Spec.+Filter (Water+Dust), Harness, LHS (#65001-65009)

Index	Code	Part Number	Description	Qty	Serial No.
32		04434-51412	Clip	2	65001-@
33		04434-53412	Clip	1	65001-@
34		01010-81220	Bolt	1	65001-@
35		01643-31232	Washer	1	65001-@
36		04434-51012	Clip	2	65001-@
37		01010-81230	Bolt	1	65001-@
38		01643-31232	Washer	1	65001-@
39		01010-81220	Bolt	1	65001-@
40		01643-31232	Washer	1	65001-@
41		04434-51012	Clip	4	65001-@
42		01010-81220	Bolt	4	65001-@
43		01643-31232	Washer	4	65001-@
44		08037-03614	Grommet	2	65001-@
45		01010-81220	Bolt	1	65001-@
46		01643-31232	Washer	1	65001-@
47		195-06-55250	Wiring Harness	1	65001-@
48		08038-02027	Cap	1	65001-@
49		04434-51412	Clip	3	65001-@
50		04434-51412	Clip	2	65001-@
51		04434-51412	Clip	2	65001-@
52		01010-81220	Bolt	2	65001-@
53		01643-31232	Washer	2	65001-@
54		(195-06-54510)	Wiring Harness		

Printed By : Dwi Iswanto (airafather6107170)

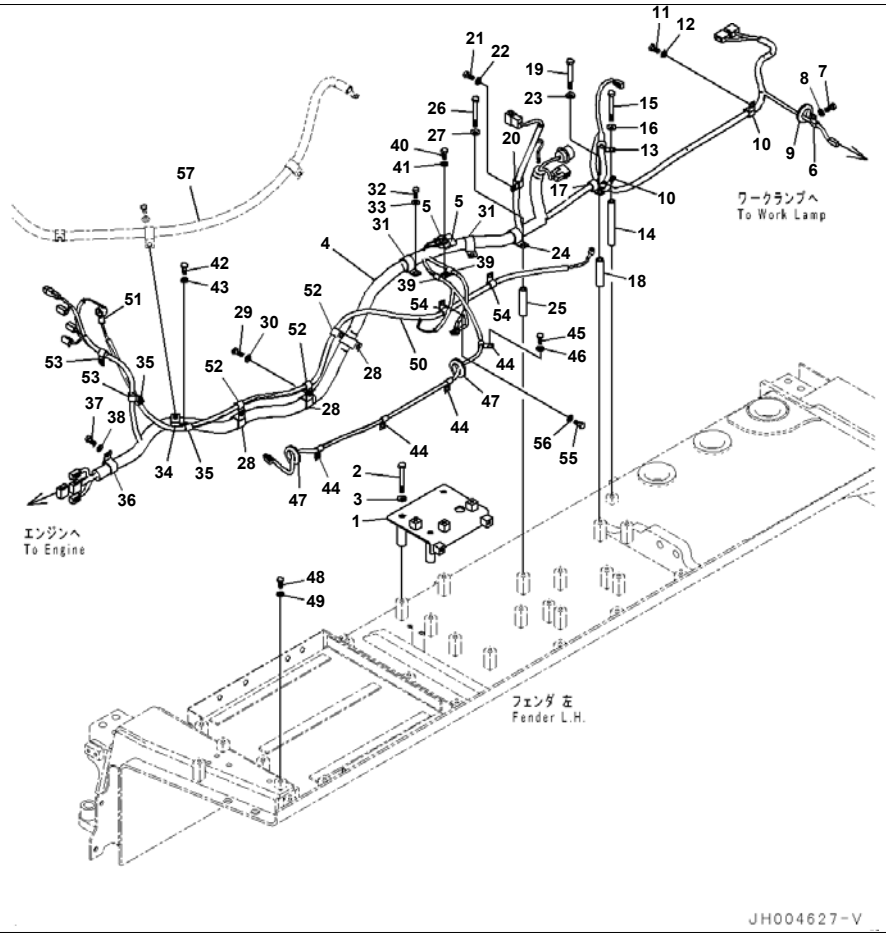

Reference:M2210-004002A Page:M014003

Index	Code	Part Number	Description	Qty	Serial No.
1		195-06-55420	Cover	1	65001-
2		01011-81230	Bolt	3	65001-
3		01643-31232	Washer	3	65001-
4		195-06-57551	Wiring Harness	1	65001-
5		21J-06-13661	・ Diode	2	65001-
6		04434-51012	Clip	1	65001-
7		01010-81220	Bolt	1	65001-
8		01643-31232	Washer	1	65001-
9		08037-03614	Grommet	1	65001-
10		04434-52112	Clip	3	65001-
11		01010-81220	Bolt	3	65001-
12		01643-31232	Washer	3	65001-
13		04434-52112	Clip	1	65001-
14		195-61-21440	Spacer	1	65001-
15		01011-81280	Bolt	1	65001-
16		01643-31232	Washer	1	65001-
17		04434-52112	Clip	1	65001-
18		6240-51-5140	Spacer	1	65001-
19		01011-81220	Bolt	1	65001-
20		04434-51712	Clip	1	65010-
21		01010-81230	Bolt	1	65010-
22		01643-31232	Washer	1	65010-
23		01643-31232	Washer	1	65001-
24		04434-53412	Clip	1	65001-
25		6240-51-5140	Spacer	1	65001-
26		01011-81220	Bolt	1	65001-
27		01643-31232	Washer	1	65001-
28		04434-53412	Clip	3	65001-
29		01010-81220	Bolt	3	65001-
30		01643-31232	Washer	3	65001-
31		04434-53412	Clip	2	65001-

Reference:M2210-004002A Page:M014003

Printed By : Dwi Iswanto (airafather6107170)

Fender, Extremely Bad Fuel And Poor Fuel Arrangement Spec.+Filter (Water+Dust), Harness, LHS (#65010-)

Index	Code	Part Number	Description	Qty	Serial No.
32		01010-81220	Bolt	2	65001-
33		01643-31232	Washer	2	65001-
34		04434-53412	Clip	1	65001-
35		04434-51412	Clip	2	65001-
36		04434-53412	Clip	1	65001-
37		01010-81220	Bolt	1	65001-
38		01643-31232	Washer	1	65001-
39		04434-51012	Clip	2	65001-
40		01010-81230	Bolt	1	65001-
41		01643-31232	Washer	1	65001-
42		01010-81220	Bolt	1	65001-
43		01643-31232	Washer	1	65001-
44		04434-51012	Clip	4	65001-
45		01010-81220	Bolt	4	65001-
46		01643-31232	Washer	4	65001-
47		08037-03614	Grommet	2	65001-
48		01010-81220	Bolt	1	65001-
49		01643-31232	Washer	1	65001-
50		195-06-55250	Wiring Harness	1	65001-
51		08038-02027	Cap	1	65001-
52		04434-51412	Clip	3	65001-
53		04434-51412	Clip	2	65001-
54		04434-51412	Clip	2	65001-
55		01010-81220	Bolt	2	65001-
56		01643-31232	Washer	2	65001-
57		(195-06-54510)	Wiring Harness		

Printed By : Dwi Iswanto (airafather6107170)

D375A-6R S/N 65001-UP
JH003801

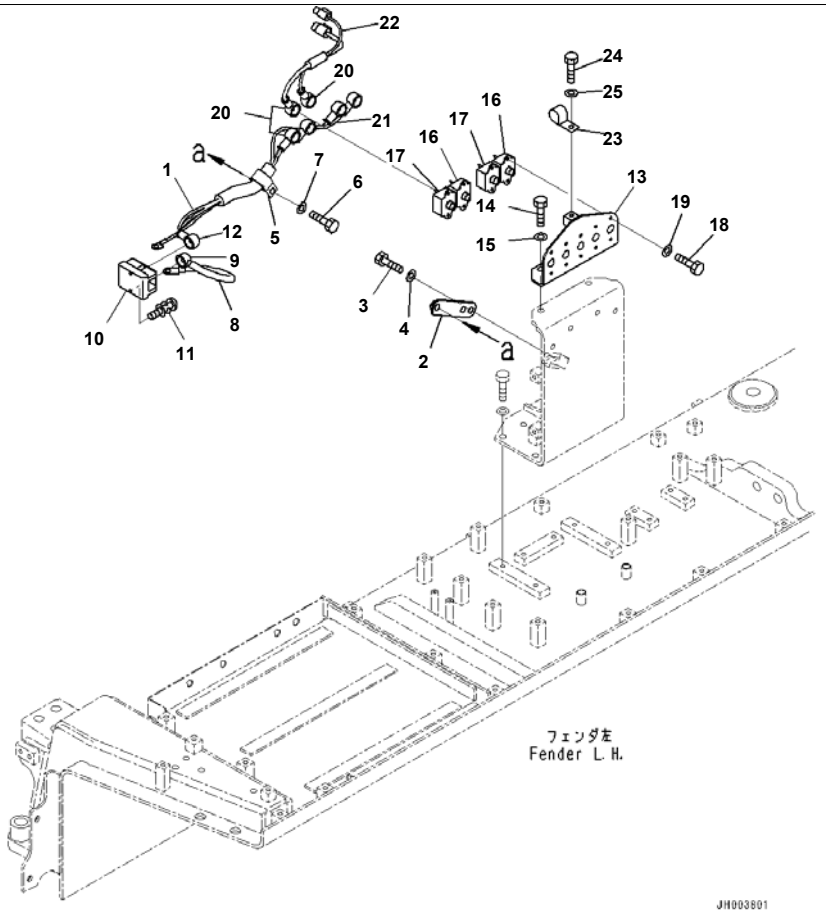

Reference:M2210-004003 Page:M014004

D375A-6R S/N 65001-UP
Fender, Extremely Bad Fuel And Poor Fuel Arrangement Spec.+Filter (Water+Dust), Breaker Harness (#65001-)

Index	Code	Part Number	Description	Qty	Serial No.
1		195-06-55240	Wiring Harness	1	65001-
2		195-06-73840	Bracket	1	65001-
3		01010-81230	Bolt	2	65001-
4		01643-31232	Washer	2	65001-
5		04434-53412	Clip	1	65001-
6		01010-81230	Bolt	1	65001-
7		01643-31232	Washer	1	65001-
8		195-06-54590	Cable	1	65001-
9		08038-06031	Cap	1	65001-
10		21T-06-12540	Terminal	1	65001-
11		01023-60630	Screw	2	65001-
12		08038-02027	Cap	1	65001-
13		195-06-73821	Bracket	1	65001-
14		01010-81230	Bolt	2	65001-
15		01643-31232	Washer	2	65001-
16		198-06-62830	Circuit Breaker	2	65001-
17		198-06-62840	Circuit Breaker	2	65001-
18		01010-80616	Bolt	8	65001-
19		01643-30623	Washer	8	65001-
20		08038-02027	Cap	8	65001-
21		195-06-54270	Wiring Harness	1	65001-
22		195-06-55230	Wiring Harness	1	65001-
23		04434-51712	Clip	1	65001-
24		01010-81230	Bolt	1	65001-
25		01643-31232	Washer	1	65001-

Reference:M2210-004003 Page:M014004

Printed By : Dwi Iswanto (airafather6107170)

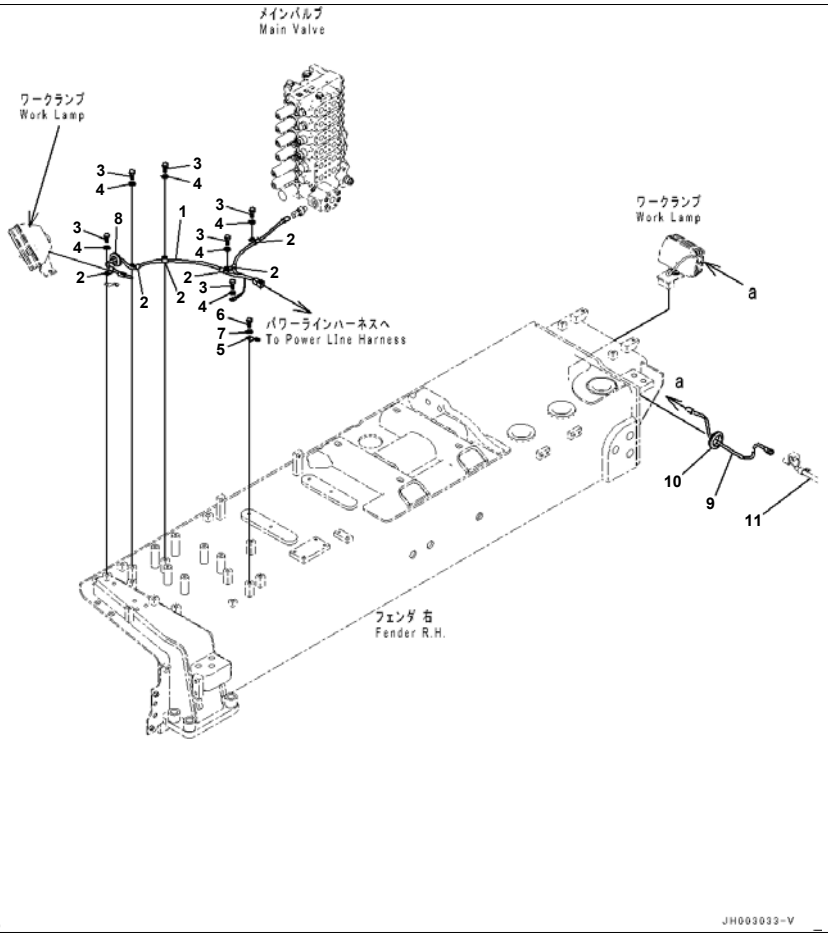

Reference:M2210-004004 Page:M014005

Fender, Extremely Bad Fuel And Poor Fuel Arrangement Spec.+Filter (Water+Dust), Harness,RHS (#65001-)

Index	Code	Part Number	Description	Qty	Serial No.
1		195-06-57560	Wiring Harness	1	65001-
2		04434-51012	Clip	6	65001-
3		01010-81220	Bolt	6	65001-
4		01643-31232	Washer	6	65001-
5		08193-21012	Clip	1	65001-
6		01010-81220	Bolt	1	65001-
7		01643-31232	Washer	1	65001-
8		08037-03614	Grommet	1	65001-
9		195-06-55730	Wiring Harness	1	65001-
10		08037-05016	Grommet	1	65001-
11		(195-06-55631)	Wiring Harness		

Printed By : Dwi Iswanto (airafather6107170)

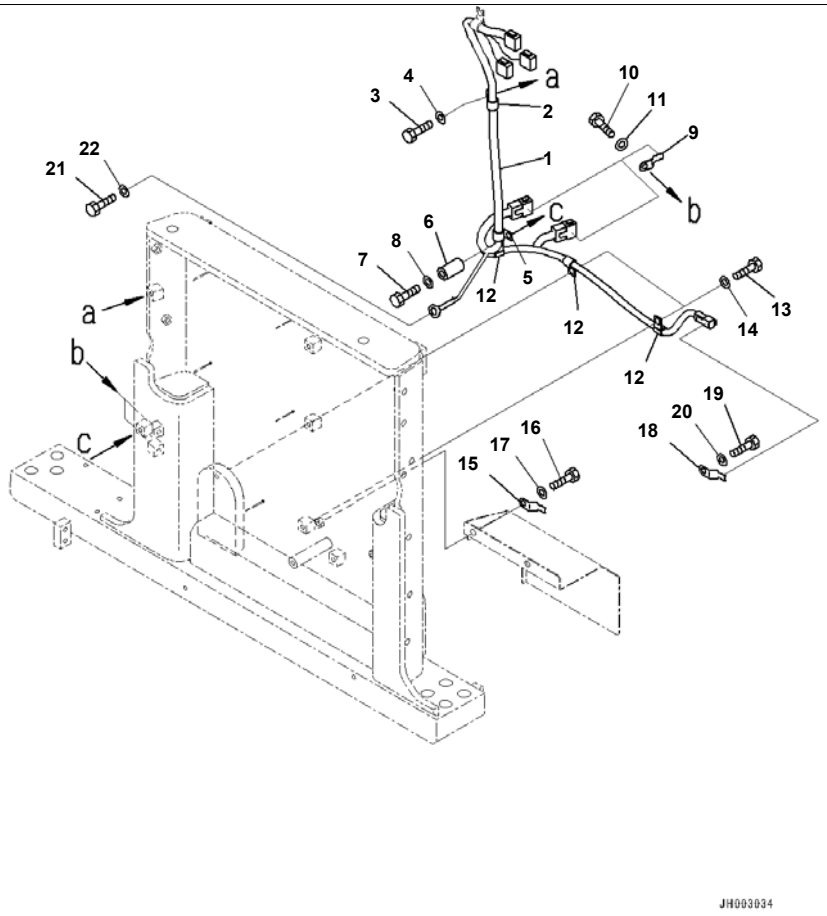

Index	Code	Part Number	Description	Qty	Serial No.
1		195-06-57540	Wiring Harness	1	65001-
2		04434-52712	Clip	1	65001-
3		01010-81225	Bolt	1	65001-
4		01643-31232	Washer	1	65001-
5		04434-52712	Clip	1	65001-
6		195-33-11220	Spacer	1	65001-
7		01010-81250	Bolt	1	65001-
8		01643-31232	Washer	1	65001-
9		08193-21012	Clip	2	65001-
10		01010-81225	Bolt	2	65001-
11		01643-31232	Washer	2	65001-
12		04434-51412	Clip	3	65001-
13		01010-81225	Bolt	2	65001-
14		01643-31232	Washer	2	65001-
15		08193-21012	Clip	1	65001-
16		01010-81225	Bolt	1	65001-
17		01643-31232	Washer	1	65001-
18		08193-21012	Clip	1	65001-
19		01010-81225	Bolt	1	65001-
20		01643-31232	Washer	1	65001-
21		01010-81225	Bolt	1	65001-
22		01643-31232	Washer	1	65001-

Printed By : Dwi Iswanto (airafather6107170)

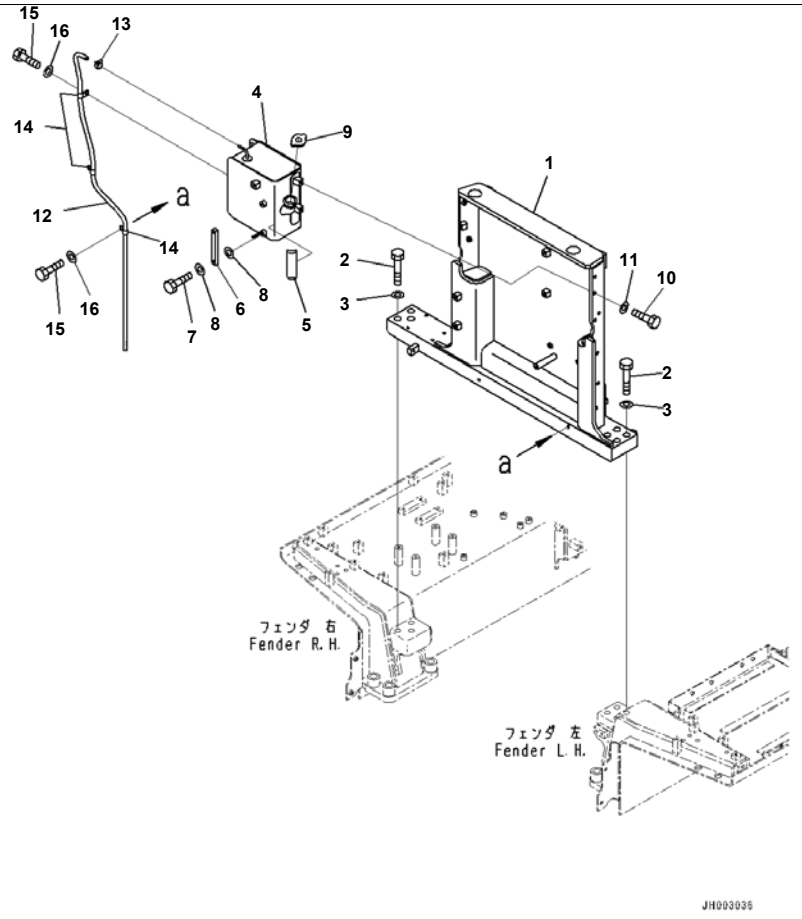

Reference:M2210-004006 Page:M014007

D375A-6R S/N 65001-UP
Fender, Extremely Bad Fuel And Poor Fuel Arrangement Spec.+Filter (Water+Dust), Reserve Tank (#65001-)

Index	Code	Part Number	Description	Qty	Serial No.
1		195-54-85132	Bracket	1	65001-
2		195-09-11110	Bolt	7	65001-
3		01643-32780	Washer	7	65001-
4		195-03-65450	Tank	1	65001-
5		195-03-61540	Plate	1	65001-
6		195-03-61550	Gauge	1	65001-
7		20N-60-41360	· Bolt	2	65001-
8		20N-60-41371	· Gasket	4	65001-
9		195-03-41390	Cap	1	65001-
10		01010-81230	Bolt	4	65001-
11		01643-31232	Washer	4	65001-
12		195-03-61440	Hose	1	65001-
13		07285-00125	Clip	1	65001-
14		04434-51312	Clip	3	65001-
15		01010-81225	Bolt	3	65001-
16		01643-31232	Washer	3	65001-

Reference:M2210-004006 Page:M014007

Printed By : Dwi Iswanto (airafather6107170)

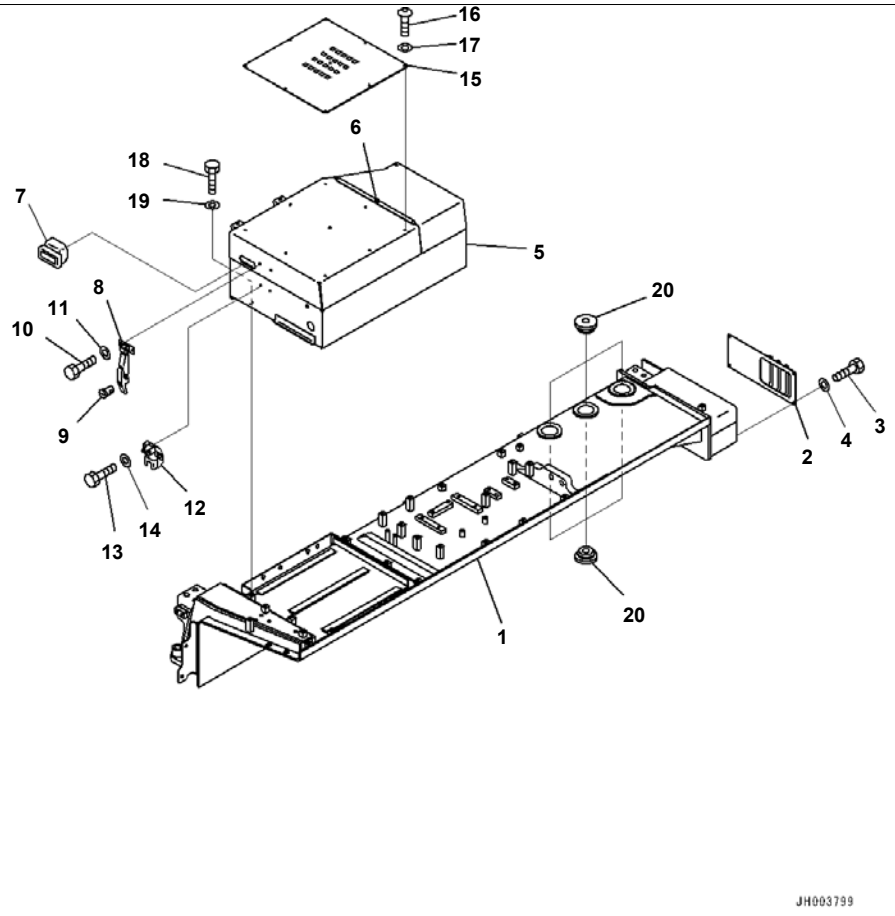

D375A-6R S/N 65001-UP
Fender, Extremely Bad Fuel And Poor Fuel Arrangement Spec.+Filter (Water+Dust), Fender,LHS (#65001-)

Index	Code	Part Number	Description	Qty	Serial No.
1		195-54-86310	Fender	1	65001-
2		17M-54-55161	Cover	1	65001-
3		01010-80825	Bolt	4	65001-
4		01643-30823	Washer	4	65001-
5		195-54-82631	Cover	1	65001-
6		09457-00495	· Hinge,Welded	1	65001-
7		209-54-12280	Handle	1	65001-
8		205-54-76260	Catcher	1	65001-
9		205-54-76280	· Rotor Assembly	1	65001-
10		01010-80820	Bolt	2	65001-
11		01643-30823	Washer	2	65001-
12		205-54-67660	Support	1	65001-
13		01010-80820	Bolt	2	65001-
14		01643-30823	Washer	2	65001-
15		198-54-78931	Plate	1	65001-
16		01245-00816	Screw	9	65001-
17		01643-70823	Washer	9	65001-
18		01010-81230	Bolt	6	65001-
19		01643-31232	Washer	6	65001-
20		195-04-31140	Rubber	6	65001-

Printed By : Dwi Iswanto (airafather6107170)

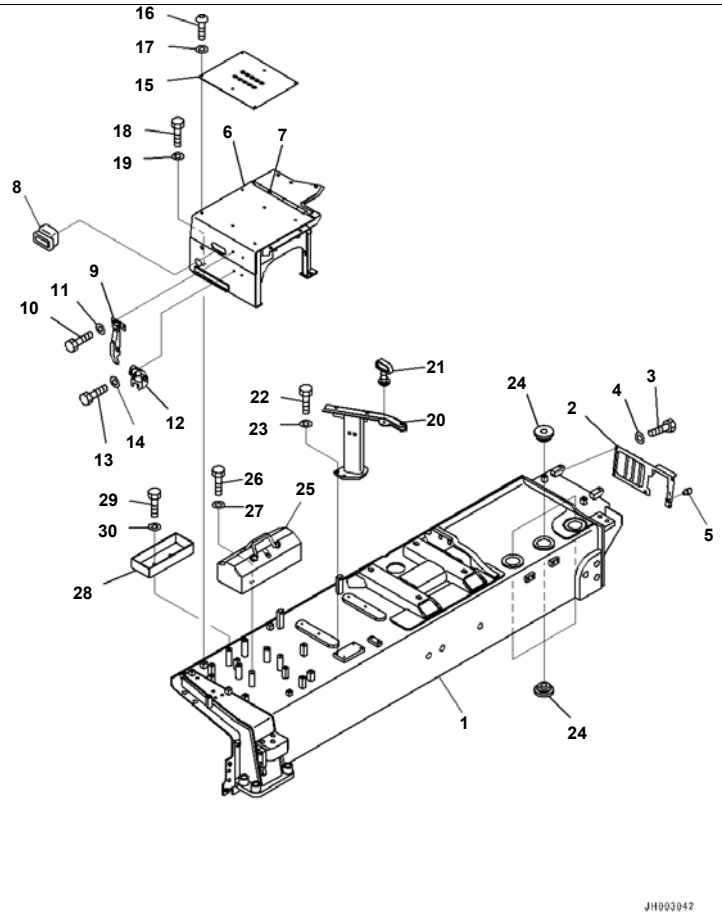

D375A-6R S/N 65001-UP
Fender, Extremely Bad Fuel And Poor Fuel Arrangement Spec.+Filter (Water+Dust), Fender,RHS (#65001-)

Index	Code	Part Number	Description	Qty	Serial No.
1		195-54-85121	Fender	1	65001-
2		195-54-83550	Cover	1	65001-
3		01010-80825	Bolt	5	65001-
4		01643-30823	Washer	5	65001-
5		20Y-54-35780	Stopper	1	65001-
6		195-54-83221	Cover	1	65001-
7		195-54-53210	· Hinge,Welded	1	65001-
8		209-54-12280	Handle	1	65001-
9		205-54-76530	Catcher	1	65001-
10		01010-80820	Bolt	2	65001-
11		01643-30823	Washer	2	65001-
12		205-54-67660	Support	1	65001-
13		01010-80820	Bolt	2	65001-
14		01643-30823	Washer	2	65001-
15		195-54-81490	Plate	1	65001-
16		01245-00816	Screw	6	65001-
17		01643-70823	Washer	6	65001-
18		01010-81230	Bolt	5	65001-
19		01643-31232	Washer	5	65001-
20		195-54-83342	Bracket	1	65001-
21		09459-20000	Lock Assembly	1	65001-
22		01010-81230	Bolt	4	65001-
23		175-54-34170	Washer	4	65001-
24		195-04-31140	Rubber	6	65001-
25		175-98-21171	Box, Tool	1	65001-
26		01010-81230	Bolt	4	65001-
27		01643-31232	Washer	4	65001-
28		195-54-83391	Case	1	65001-
29		01010-81230	Bolt	2	65001-
30		01643-31232	Washer	2	65001-

Printed By : Dwi Iswanto (airafather6107170)

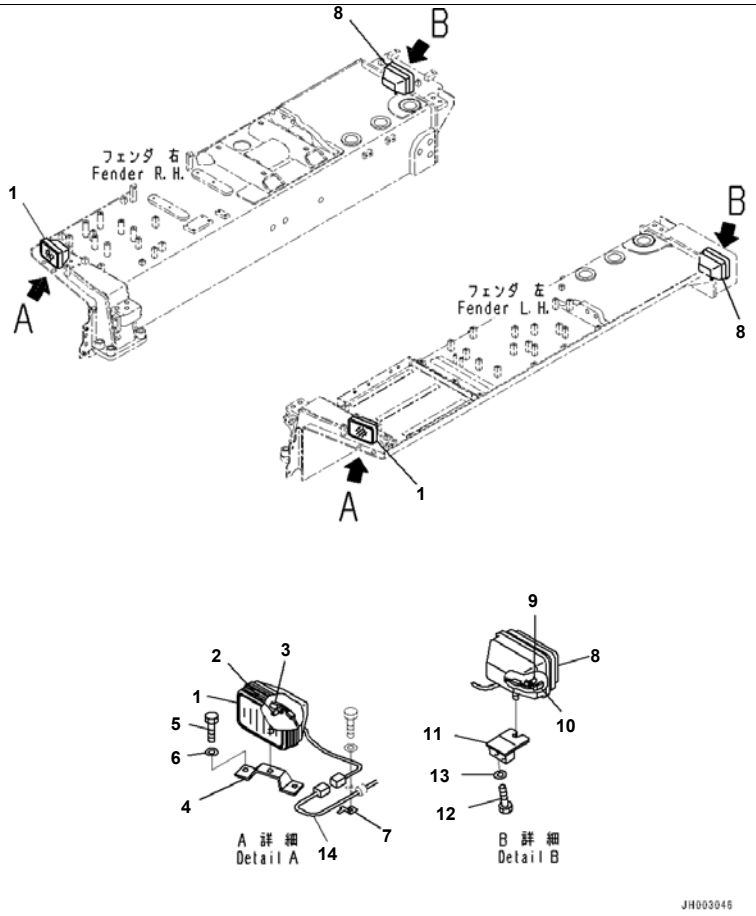

Reference:M2210-004009 Page:M014010

Index	Code	Part Number	Description	Qty	Serial No.
1		17A-06-17931	Lamp Assembly, Working	2	65001-
2		17A-06-17970	· Bulb, 70watt	1	65001-
3		17A-06-17980	· Sleeve	1	65001-
4		195-06-41150	Bracket	2	65001-
5		01010-81235	Bolt	4	65001-
6		01643-31232	Washer	4	65001-
7		08193-21012	Clip	2	65001-
8		17A-06-17931	Lamp Assembly, Working	2	65001-
9		17A-06-17970	· Bulb, 70watt	1	65001-
10		17A-06-17980	· Sleeve	1	65001-
11		195-54-85430	Bracket	2	65001-
12		01010-81230	Bolt	4	65001-
13		01643-31232	Washer	4	65001-
14		(195-06-55561)	Wiring Harness		

Reference:M2210-004009 Page:M014010

Printed By : Dwi Iswanto (airafather6107170)

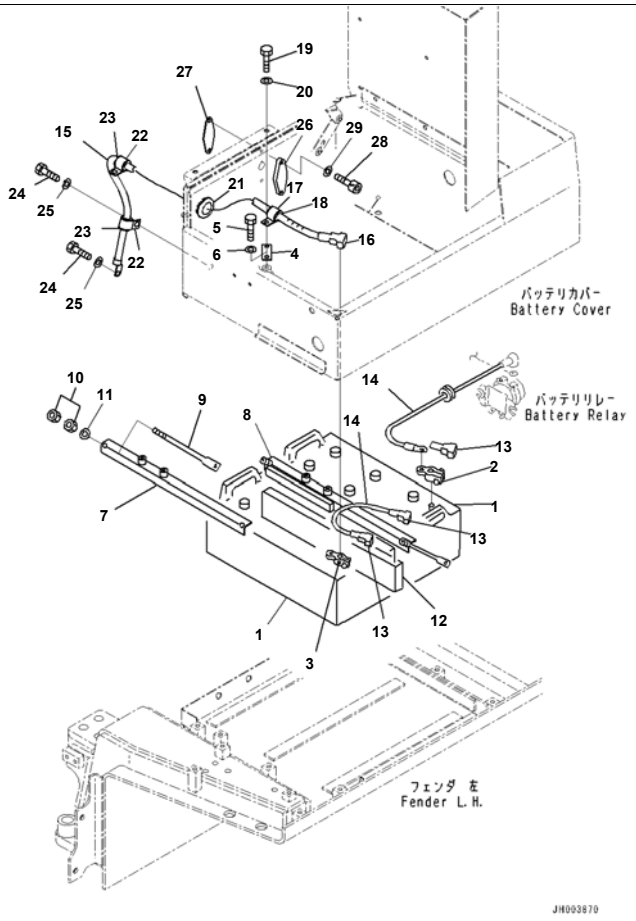

Reference:M2210-004010 Page:M014011

D375A-6R S/N 65001-UP
Fender, Extremely Bad Fuel And Poor Fuel Arrangement Spec.+Filter (Water+Dust), Battery and Starting Harness (#65001-)

Index	Code	Part Number	Description	Qty	Serial No.
1		08000-32220	Battery, Wet, 165G51	2	65001-
2		08000-00000	Terminal, (+)	2	65001-
3		08000-00001	Terminal, (-)	2	65001-
4		154-Z11-5340	Bracket	1	65001-
5		01010-81230	Bolt	1	65001-
6		01643-31232	Washer	1	65001-
7		195-06-73850	Holder	1	65001-
8		195-06-74850	Holder	1	65001-
9		08006-40255	Rod	4	65001-
10		01580-11008	Nut	8	65001-
11		01643-31032	Washer	4	65001-
12		154-06-13262	Seat	1	65001-
13		08038-42511	Cap	3	65001-
14		195-06-54540	Cable	2	65001-
15		195-06-54670	Cable	1	65001-
16		08038-22511	Cap	1	65001-
17		04434-52512	Clip	1	65001-
18		07095-20318	Cushion	1	65001-
19		01010-81220	Bolt	1	65001-
20		01643-31232	Washer	1	65001-
21		08037-03614	Grommet	1	65001-
22		04434-52512	Clip	2	65001-
23		07095-20318	Cushion	2	65001-
24		01010-81220	Bolt	3	65001-
25		01643-31232	Washer	3	65001-
26		195-54-82650	Plate	1	65001-
27		195-54-82660	Plate	1	65001-
28		01252-A0835	Bolt, Hexagon Socket Head	2	65001-
29		01643-30823	Washer	2	65001-

Reference:M2210-004010 Page:M014011

Printed By : Dwi Iswanto (airafather6107170)

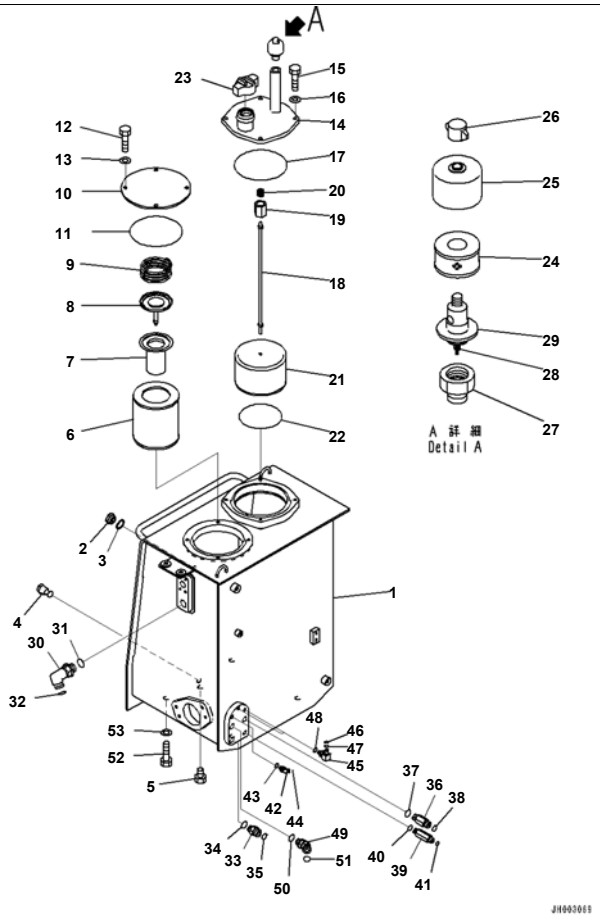

Reference:M2210-004011 Page:M014012

Fender, Extremely Bad Fuel And Poor Fuel Arrangement Spec.+Filter (Water+Dust), Hydraulic Tank (#65001-)

Index	Code	Part Number	Description	Qty	Serial No.
1		195-60-53111	Tank	1	65001-
2		20N-60-11143	Gauge	1	65001-
3		20N-60-11181	· Gasket	1	65001-
4		195-49-31280	Valve	1	65001-
5		07040-12412	Plug	1	65001-
6		208-60-71123	Element	1	65001-
7		07069-25400	Strainer	1	65001-
8		208-60-71160	Valve Assembly	1	65001-
9		07069-34075	Spring	1	65001-
10		208-60-71130	Plate	1	65001-
11		07000-15210	O-ring	1	65001-
12		01010-81225	Bolt	4	65001-
13		01643-31232	Washer	4	65001-
14		195-60-53140	Cover	1	65001-
15		01010-81235	Bolt	4	65001-
16		01643-31232	Washer	4	65001-
17		07000-05230	O-ring	1	65001-
		195-60-51140	Strainer Assembly	1	65001-
18		195-60-51150	· Rod Assembly	1	65001-
19		20Y-60-21320	· · Holder	1	65001-
20		12R-60-11230	· · Spring	1	65001-
21	C1		· Strainer	1	65001-
22		21N-09-11140	O-ring	1	65001-
23		07092-01000	Cap	1	65001-
		22U-60-21520	Breather	1	65001-
24		421-60-35170	· Element	1	65001-
25		421-60-35180	· Cover	1	65001-
26		421-60-35190	· Nut	1	65001-
27	C1		· Body	1	65001-
28	C1		· Valve Assembly	1	65001-
29	C1		· Case	1	65001-

Reference:M2210-004011 Page:M014012

Printed By : Dwi Iswanto (airafather6107170)

Fender, Extremely Bad Fuel And Poor Fuel Arrangement Spec.+Filter (Water+Dust), Hydraulic Tank (#65001-)

Index	Code	Part Number	Description	Qty	Serial No.
30		421-09-31210	Elbow	1	65001-
31		07002-13334	O-ring	1	65001-
32		207-62-64740	O-ring	1	65001-
33		02781-00628	Union	1	65001-
34		07002-12434	O-ring	1	65001-
35		02896-11018	O-ring	1	65001-
36		21W-62-42481	Nipple	1	65001-
37		07002-12434	O-ring	1	65001-
38		02896-11015	O-ring	1	65001-
39		21W-62-42470	Nipple	1	65001-
40		07002-12034	O-ring	1	65001-
41		02896-11012	O-ring	1	65001-
42		02783-10210	Elbow	1	65001-
43		07002-11423	O-ring	1	65001-
44		02896-11008	O-ring	1	65001-
45		20Y-62-22271	Elbow	2	65001-
46		201-60-11390	· O-ring	1	65001-
47		20Y-62-19560	· O-ring	1	65001-
48		07002-11423	O-ring	2	65001-
49		02783-10628	Elbow	1	65001-
50		07002-12434	O-ring	1	65001-
51		02896-11018	O-ring	1	65001-
52		01010-82050	Bolt	4	65001-
53		01643-32060	Washer	4	65001-

Printed By : Dwi Iswanto (airafather6107170)

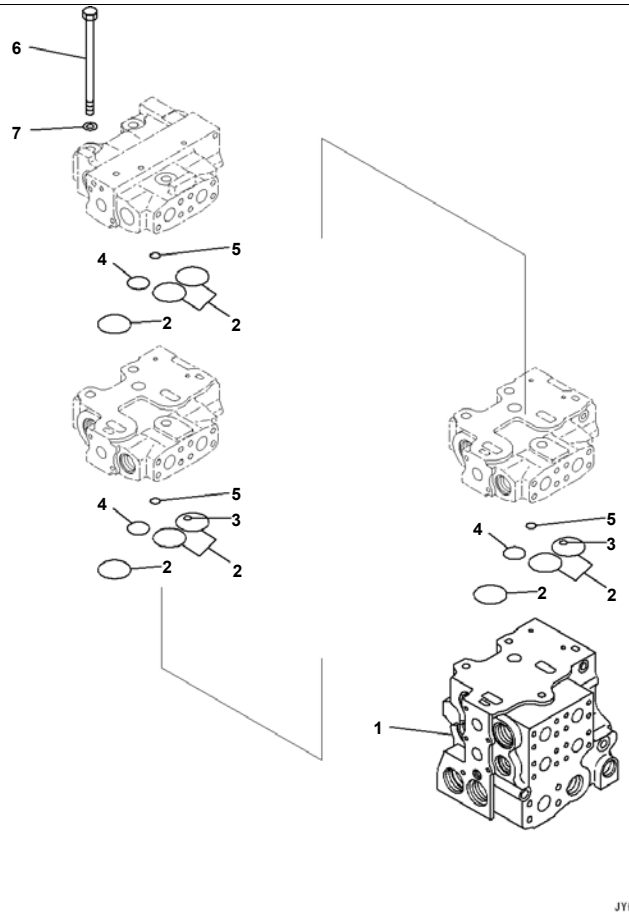

Fender, Extremely Bad Fuel And Poor Fuel Arrangement Spec.+Filter (Water+Dust), Control Valve (1/10) (#65001-)

Index	Code	Part Number	Description	Qty	Serial No.
		723-65-22100	Valve Assembly, Control	1	65001-
1	C1		· Valve Body	1	65001-
2		07000-13048	· O-ring	9	65001-
3		07000-11009	· O-ring	2	65001-
4		07000-13030	· O-ring	3	65001-
5		07000-12012	· O-ring	3	65001-
6		723-63-32620	· Bolt	3	65001-
7		01643-31445	· Washer	3	65001-

Printed By : Dwi Iswanto (airafather6107170)

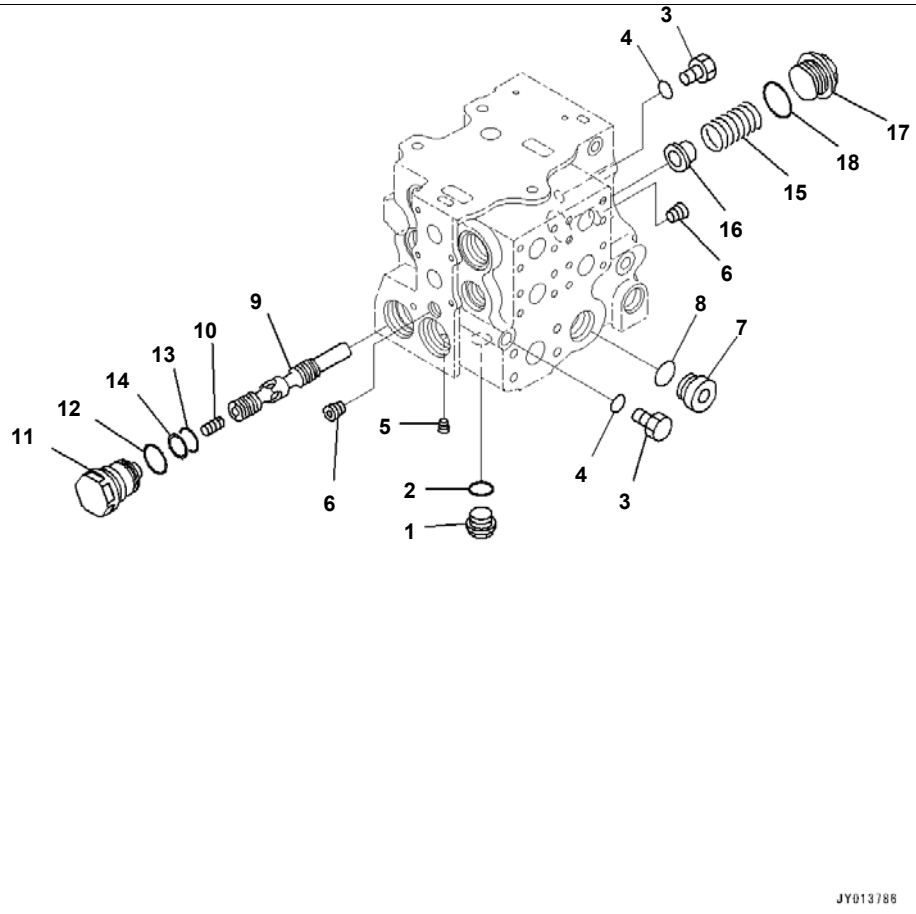

D375A-6R S/N 65001-UP
Fender, Extremely Bad Fuel And Poor Fuel Arrangement Spec.+Filter (Water+Dust), Control Valve (2/10) (#65001-)

Index	Code	Part Number	Description	Qty	Serial No.
		723-65-22100	Valve Assembly, Control	1	65001-
1		709-74-91860	· Plug	1	65001-
2		07002-12434	· O-ring	1	65001-
3		702-21-55620	· Plug	2	65001-
4		07002-11423	· O-ring	2	65001-
5		708-21-12541	· Plug	11	65001-
6		708-21-12520	· Plug	2	65001-
7		07040-13316	· Plug	1	65001-
8		07002-13334	· O-ring	1	65001-
9		723-63-31510	· Spool	1	65001-
10		723-63-31520	· Piston	1	65001-
11		723-63-32570	· Plug	1	65001-
12		07002-14234	· O-ring	1	65001-
13		07000-13032	· O-ring	1	65001-
14		07001-03032	· Ring, Back-up	1	65001-
15		723-63-32560	· Spring	1	65001-
16		723-63-31540	· Retainer	1	65001-
17		723-63-31550	· Plug	1	65001-
18		07002-14234	· O-ring	1	65001-

Printed By : Dwi Iswanto (airafather6107170)

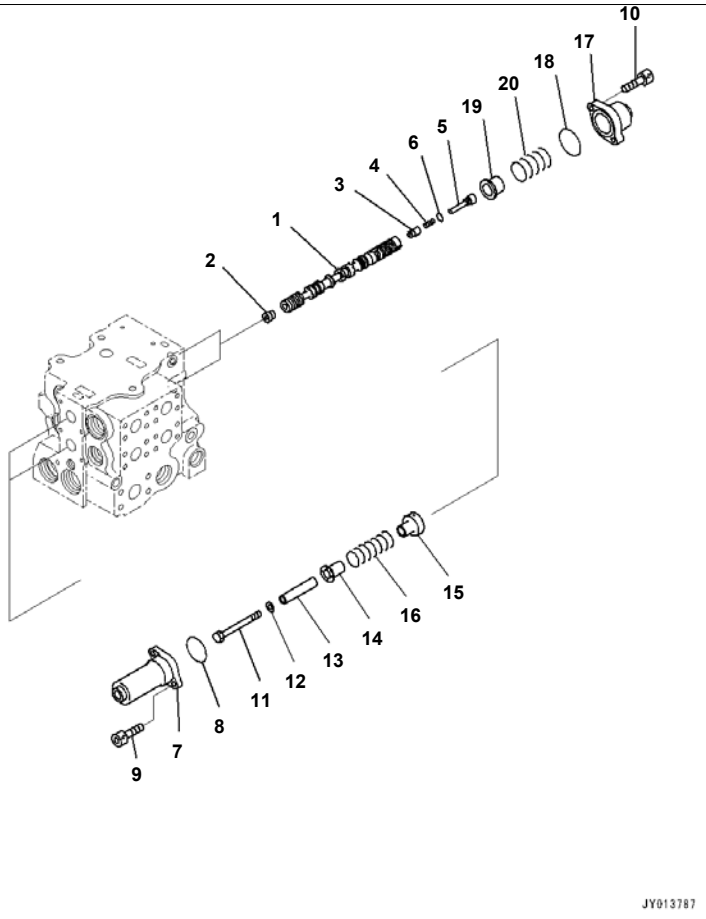

Reference:M2210-004014 Page:M014015

D375A-6R S/N 65001-UP
Fender, Extremely Bad Fuel And Poor Fuel Arrangement Spec.+Filter (Water+Dust), Control Valve (3/10) (#65001-)

Index	Code	Part Number	Description	Qty	Serial No.
		723-65-22100	Valve Assembly, Control	1	65001-
1	C1		· Spool	2	65001-
2		02720-10104	· Plug, Tapered	2	65001-
3		723-63-31630	· Valve	2	65001-
4		706-76-71130	· Spring	2	65001-
5		723-63-31640	· Plug	2	65001-
6		07002-11023	· O-ring	2	65001-
7		723-63-31650	· Case	2	65001-
8		07430-71380	· O-ring	2	65001-
9		01252-60820	· Bolt	4	65001-
10		01252-60825	· Bolt	4	65001-
11		01010-81095	· Bolt	2	65001-
12		01643-31032	· Washer	2	65001-
13		723-63-31660	· Spacer	2	65001-
14		723-63-31670	· Retainer	2	65001-
15		723-63-31680	· Retainer	2	65001-
16	C1		· Spring	2	65001-
17		723-63-31980	· Case	2	65001-
18		723-63-31760	· O-ring	2	65001-
19		723-63-31770	· Retainer	2	65001-
20		723-63-41520	· Spring	2	65001-

Printed By : Dwi Iswanto (airafather6107170)

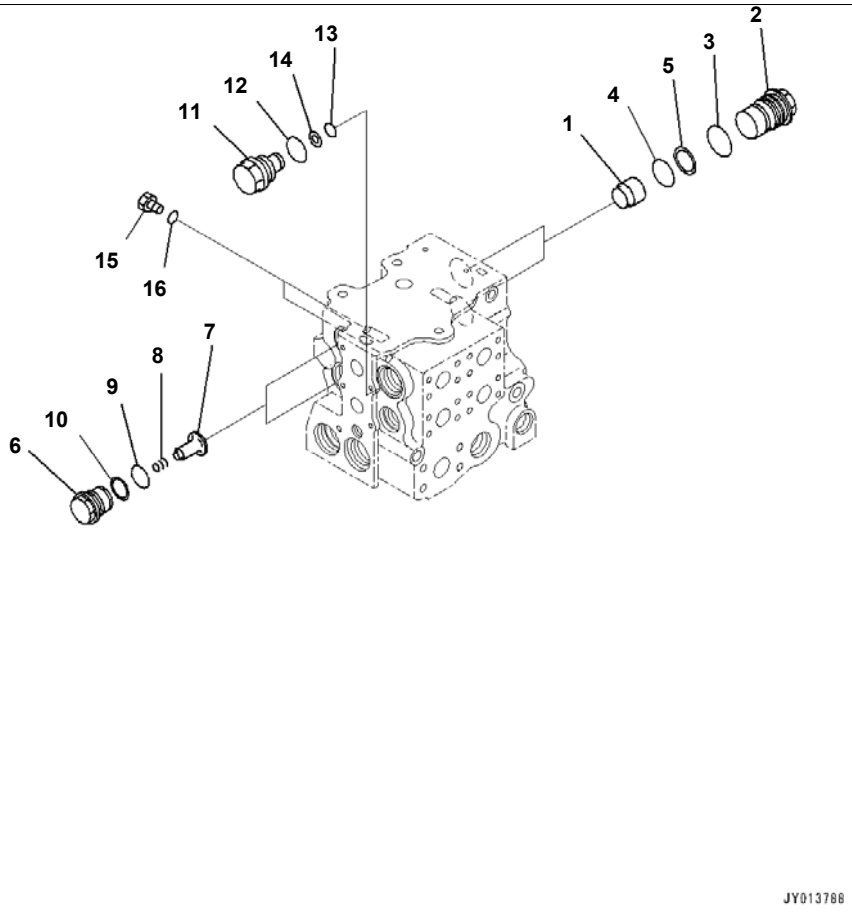

Reference:M2210-004015 Page:M014016

D375A-6R S/N 65001-UP
Fender, Extremely Bad Fuel And Poor Fuel Arrangement Spec.+Filter (Water+Dust), Control Valve (4/10) (#65001-)

Index	Code	Part Number	Description	Qty	Serial No.
		723-65-22100	Valve Assembly, Control	1	65001-
1		723-62-31740	· Retainer	2	65001-
2		723-62-31720	· Plug	2	65001-
3		700-61-49160	· O-ring	2	65001-
4		723-63-31850	· O-ring	2	65001-
5		723-63-31860	· Ring	2	65001-
6		709-74-92821	· Plug	2	65001-
7		709-94-92811	· Valve	2	65001-
8		709-94-91751	· Spring	2	65001-
9		700-93-11320	· O-ring	2	65001-
10		700-93-11330	· Ring, Back-up	2	65001-
11		723-63-31880	· Plug	2	65001-
12		07002-13634	· O-ring	2	65001-
13		07000-12018	· O-ring	2	65001-
14		07001-02018	· Ring, Back-up	2	65001-
15		708-8E-16160	· Plug	2	65001-
16		07002-11023	· O-ring	2	65001-

Printed By : Dwi Iswanto (airafather6107170)

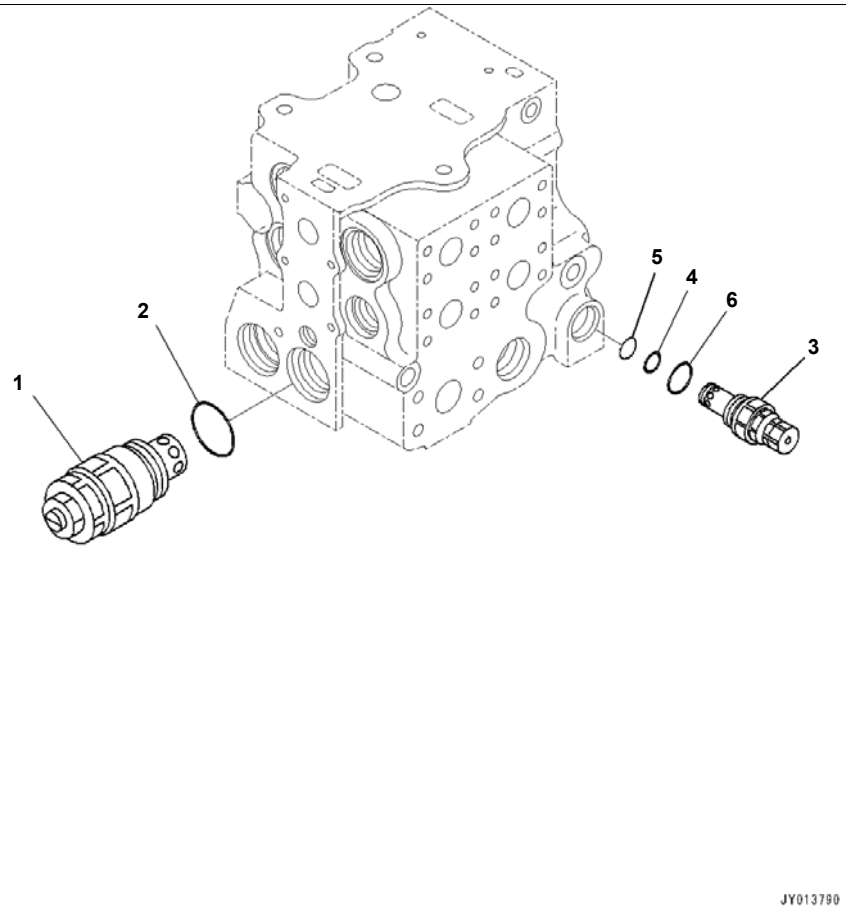

Reference:M2210-004016 Page:M014017

Fender, Extremely Bad Fuel And Poor Fuel Arrangement Spec.+Filter (Water+Dust), Control Valve (5/10) (#65001-)

Index	Code	Part Number	Description	Qty	Serial No.
		723-65-22100	Valve Assembly, Control	1	65001-
1		723-60-24100	· Valve Assembly, Suction and Relief	1	65001-
2		07002-13634	· · O-ring	1	65001-
3		723-60-22500	· Valve Assembly, Relief	1	65001-
4		700-80-64220	· · Ring	1	65001-
5		700-22-11410	· · O-ring	1	65001-
6		07000-13024	· · O-ring	1	65001-

Printed By : Dwi Iswanto (airafather6107170)

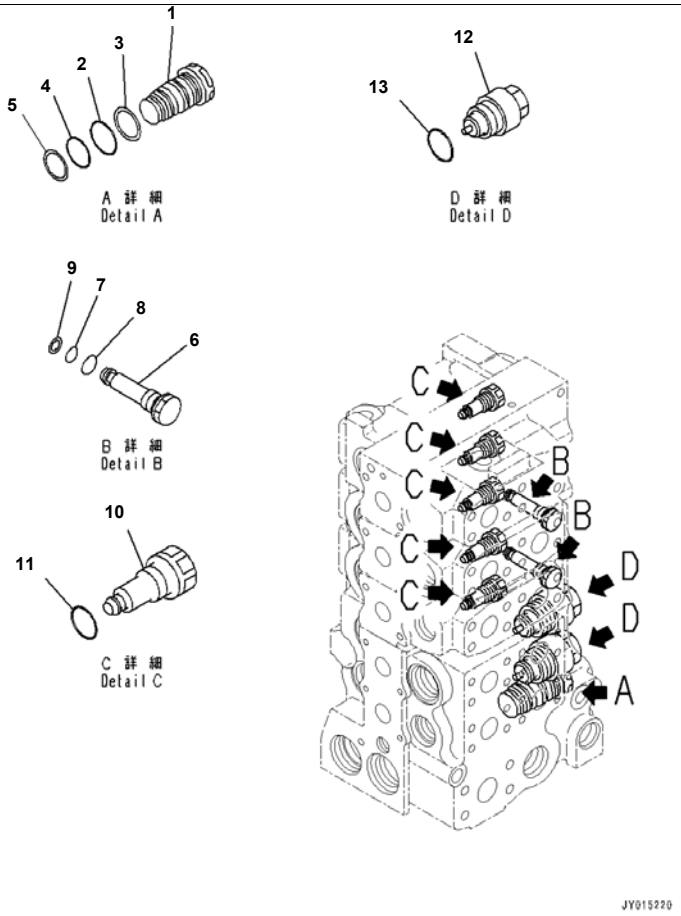

Reference:M2210-004017 Page:M014018

D375A-6R S/N 65001-UP

Fender, Extremely Bad Fuel And Poor Fuel Arrangement Spec.+Filter (Water+Dust), Control Valve (6/10) (#65001-)

Index	Code	Part Number	Description	Qty	Serial No.
		723-65-22100	Valve Assembly, Control	1	65001-
1		723-63-31990	· Plug	1	65001-
2		07000-13035	· O-ring	1	65001-
3		07001-03035	· Ring, Back-up	1	65001-
4		07000-13030	· O-ring	1	65001-
5		07001-03030	· Ring, Back-up	1	65001-
6		723-63-31621	· Plug	2	65001-
7		07002-11023	· O-ring	2	65001-
8		07000-11005	· O-ring	2	65001-
9		07001-01005	· Ring, Back-up	2	65001-
10		723-60-23400	· Valve Assembly, Check	5	65001-
11		07002-11823	· · O-ring	1	65001-
12		723-60-23800	· Valve Assembly, Suction	2	65001-
13		07002-13634	· · O-ring	1	65001-

Reference:M2210-004017 Page:M014018

Printed By : Dwi Iswanto (airafather6107170)

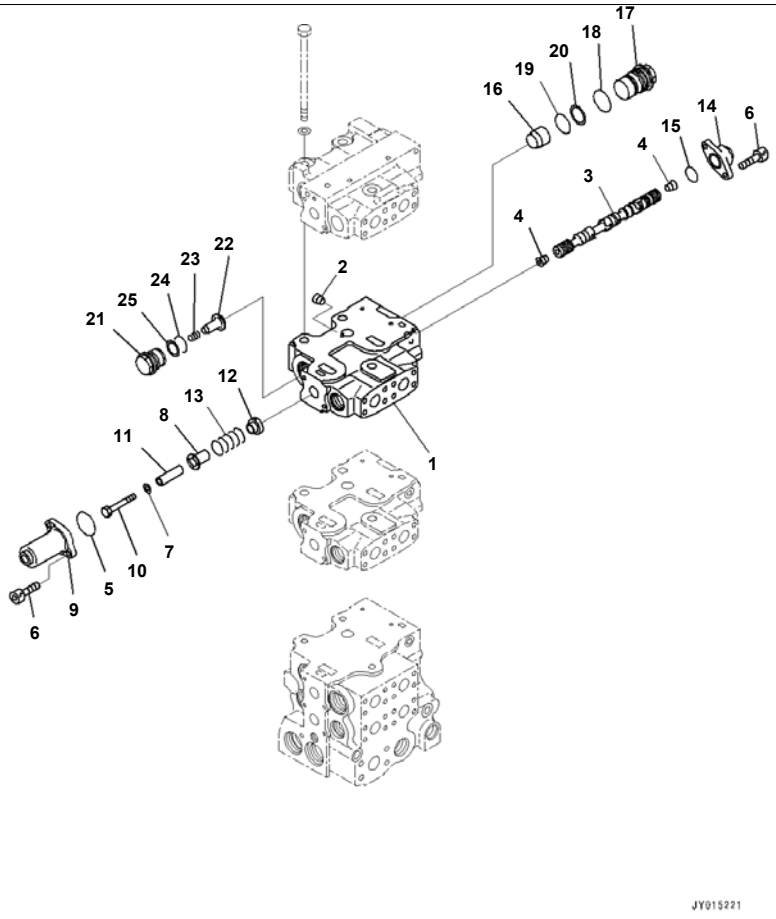

Fender, Extremely Bad Fuel And Poor Fuel Arrangement Spec.+Filter (Water+Dust), Control Valve (7/10) (#65001-)

Index	Code	Part Number	Description	Qty	Serial No.
		723-65-22100	Valve Assembly, Control	1	65001-
	C1		· Valve Assembly	1	65001-
1	C1		· · Valve Body	1	65001-
2		708-21-12541	· · Plug	1	65001-
3	C1		· · Spool	1	65001-
4		02720-10104	· · Plug, Tapered	2	65001-
5		07430-71380	· · O-ring	1	65001-
6		01252-60820	· · Bolt	4	65001-
7		01643-31032	· · Washer	1	65001-
8		723-63-31670	· · Retainer	1	65001-
9		723-63-31710	· · Case	1	65001-
10		01010-81075	· · Bolt	1	65001-
11		723-63-31720	· · Spacer	1	65001-
12		723-63-31730	· · Retainer	1	65001-
13		723-63-31740	· · Spring	1	65001-
14		723-63-31790	· · Case	1	65001-
15		100-30-15140	· · O-ring	1	65001-
16		723-62-31740	· · Retainer	1	65001-
17		723-62-31720	· · Plug	1	65001-
18		700-61-49160	· · O-ring	1	65001-
19		723-63-31850	· · O-ring	1	65001-
20		723-63-31860	· · Ring	1	65001-
21		709-74-92821	· · Plug	1	65001-
22		709-94-92811	· · Valve	1	65001-
23		709-94-91751	· · Spring	1	65001-
24		700-93-11320	· · O-ring	1	65001-
25		700-93-11330	· · Ring, Back-up	1	65001-

Printed By : Dwi Iswanto (airafather6107170)

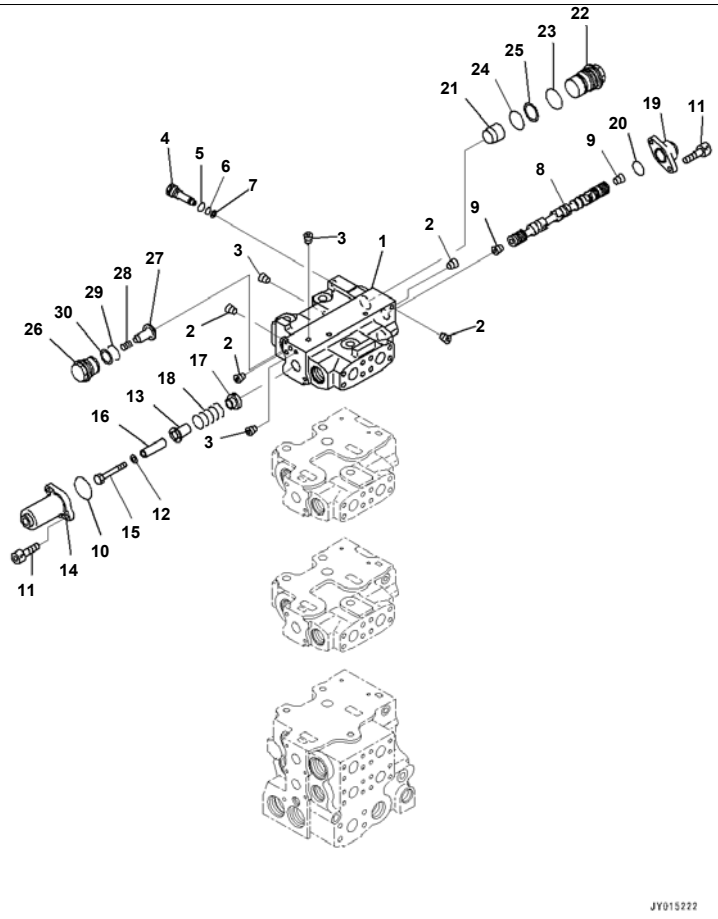

Reference:M2210-004019 Page:M014020

D375A-6R S/N 65001-UP
Fender, Extremely Bad Fuel And Poor Fuel Arrangement Spec.+Filter (Water+Dust), Control Valve (8/10) (#65001-)

Index	Code	Part Number	Description	Qty	Serial No.
		723-65-22100	Valve Assembly, Control	1	65001-
	C1		· Valve Assembly	1	65001-
1	C1		· · Valve Body	1	65001-
2		708-8F-31620	· · Plug	4	65001-
3		708-21-12541	· · Plug	3	65001-
4		723-63-31610	· · Plug	1	65001-
5		07002-11423	· · O-ring	1	65001-
6		07000-11007	· · O-ring	1	65001-
7		07001-01007	· · Ring, Back-up	1	65001-
8	C1		· · Spool	1	65001-
9		02720-10104	· · Plug, Tapered	2	65001-
10		07430-71380	· · O-ring	1	65001-
11		01252-60820	· · Bolt	4	65001-
12		01643-31032	· · Washer	1	65001-
13		723-63-31670	· · Retainer	1	65001-
14		723-63-31710	· · Case	1	65001-
15		01010-81075	· · Bolt	1	65001-
16		723-63-31720	· · Spacer	1	65001-
17		723-63-31730	· · Retainer	1	65001-
18		723-63-31740	· · Spring	1	65001-
19		723-63-31790	· · Case	1	65001-
20		100-30-15140	· · O-ring	1	65001-
21		723-62-31740	· · Retainer	1	65001-
22		723-62-31720	· · Plug	1	65001-
23		700-61-49160	· · O-ring	1	65001-
24		723-63-31850	· · O-ring	1	65001-
25		723-63-31860	· · Ring	1	65001-
26		709-74-92821	· · Plug	1	65001-
27		709-94-92811	· · Valve	1	65001-
28		709-94-91751	· · Spring	1	65001-
29		700-93-11320	· · O-ring	1	65001-

Reference:M2210-004019 Page:M014020

Printed By : Dwi Iswanto (airafather6107170)

Index	Code	Part Number	Description	Qty	Serial No.
30		700-93-11330	・・ Ring, Back-up	1	65001-

Printed By : Dwi Iswanto (airafather6107170)

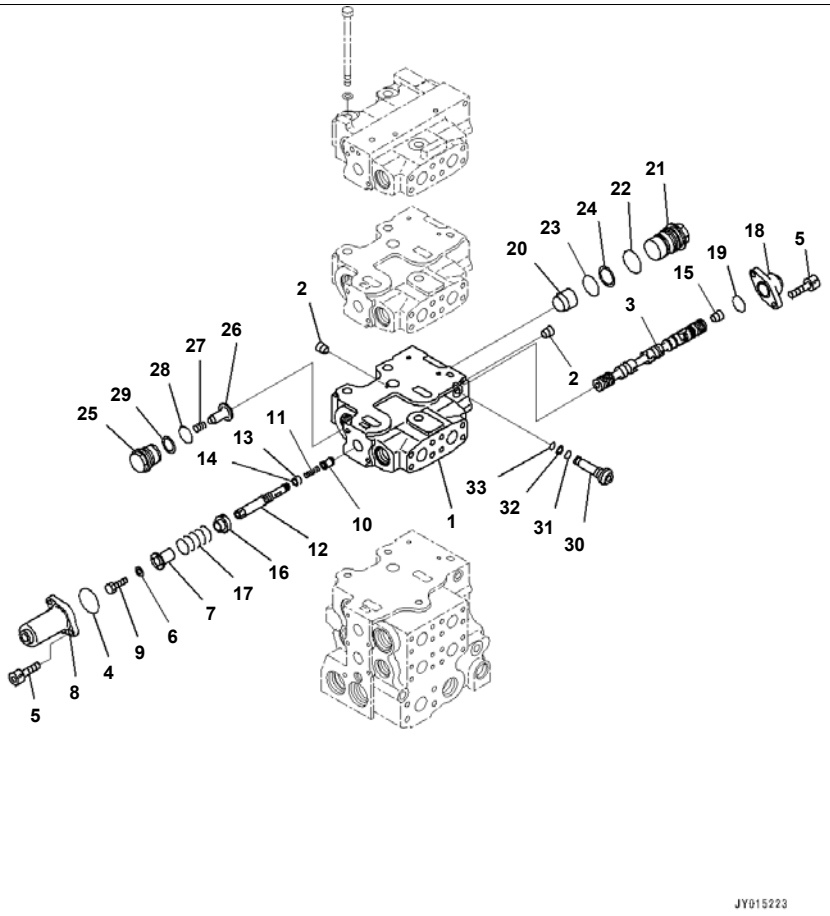

Reference:M2210-004020 Page:M014021

D375A-6R S/N 65001-UP
Fender, Extremely Bad Fuel And Poor Fuel Arrangement Spec.+Filter (Water+Dust), Control Valve (9/10) (#65001-)

Index	Code	Part Number	Description	Qty	Serial No.
		723-65-22100	Valve Assembly, Control	1	65001-
	C1		· Valve Assembly	1	65001-
1		723-61-31210	· · Block	1	65001-
2		708-21-12541	· · Plug	2	65001-
3	C1		· · Spool	1	65001-
4		07430-71380	· · O-ring	1	65001-
5		01252-60820	· · Bolt	4	65001-
6		01643-31032	· · Washer	1	65001-
7	C1		· · Retainer	1	65001-
8		723-63-31710	· · Case	1	65001-
9		01010-81016	· · Bolt	1	65001-
10		723-63-32540	· · Valve	1	65001-
11		723-63-32550	· · Spring	1	65001-
12		723-63-31930	· · Plug	1	65001-
13		07000-11009	· · O-ring	1	65001-
14		07001-01009	· · Ring, Back-up	1	65001-
15		02720-10104	· · Plug, Tapered	1	65001-
16		723-63-31730	· · Retainer	1	65001-
17	C1		· · Spring	1	65001-
18		723-63-31790	· · Case	1	65001-
19		100-30-15140	· · O-ring	1	65001-
20		723-62-31740	· · Retainer	1	65001-
21		723-62-31720	· · Plug	1	65001-
22		700-61-49160	· · O-ring	1	65001-
23		723-63-31850	· · O-ring	1	65001-
24		723-63-31860	· · Ring	1	65001-
25		709-74-92821	· · Plug	1	65001-
26		709-94-92811	· · Valve	1	65001-
27		709-94-91751	· · Spring	1	65001-
28		700-93-11320	· · O-ring	1	65001-
29		700-93-11330	· · Ring, Back-up	1	65001-

Reference:M2210-004020 Page:M014021

Printed By : Dwi Iswanto (airafather6107170)

Index	Code	Part Number	Description	Qty	Serial No.
30		723-63-31621	・・ Plug	1	65001-
31		07002-11023	・・ O-ring	1	65001-
32		07001-01005	・・ Ring, Back-up	1	65001-
33		07000-11005	・・ O-ring	1	65001-

Printed By : Dwi Iswanto (airafather6107170)

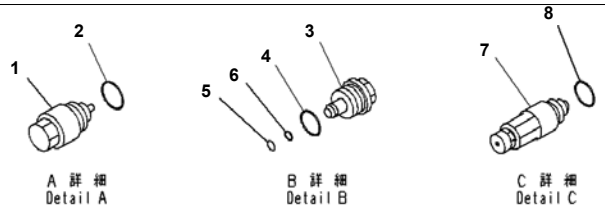

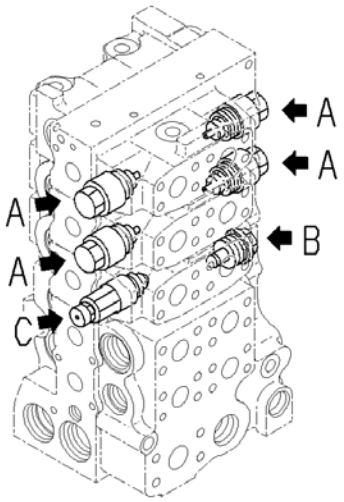

JY015224

Reference:M2210-004021 Page:M014022

D375A-6R S/N 65001-UP
Fender, Extremely Bad Fuel And Poor Fuel Arrangement Spec.+Filter (Water+Dust), Control Valve (10/10) (#65001-)

Index	Code	Part Number	Description	Qty	Serial No.
		723-65-22100	Valve Assembly, Control	1	65001-
1		723-40-85100	· Valve Assembly, Suction	4	65001-
2		709-25-11390	· · O-ring	1	65001-
3		709-74-91510	· Plug	1	65001-
4		07000-13024	· O-ring	1	65001-
5		07000-11009	· O-ring	1	65001-
6		07001-01009	· Ring, Back-up	1	65001-
7		723-40-91200	· Valve Assembly, Suction and Relief	1	65001-
8		709-25-11390	· · O-ring	1	65001-

Reference:M2210-004021 Page:M014022

Printed By : Dwi Iswanto (airafather6107170)

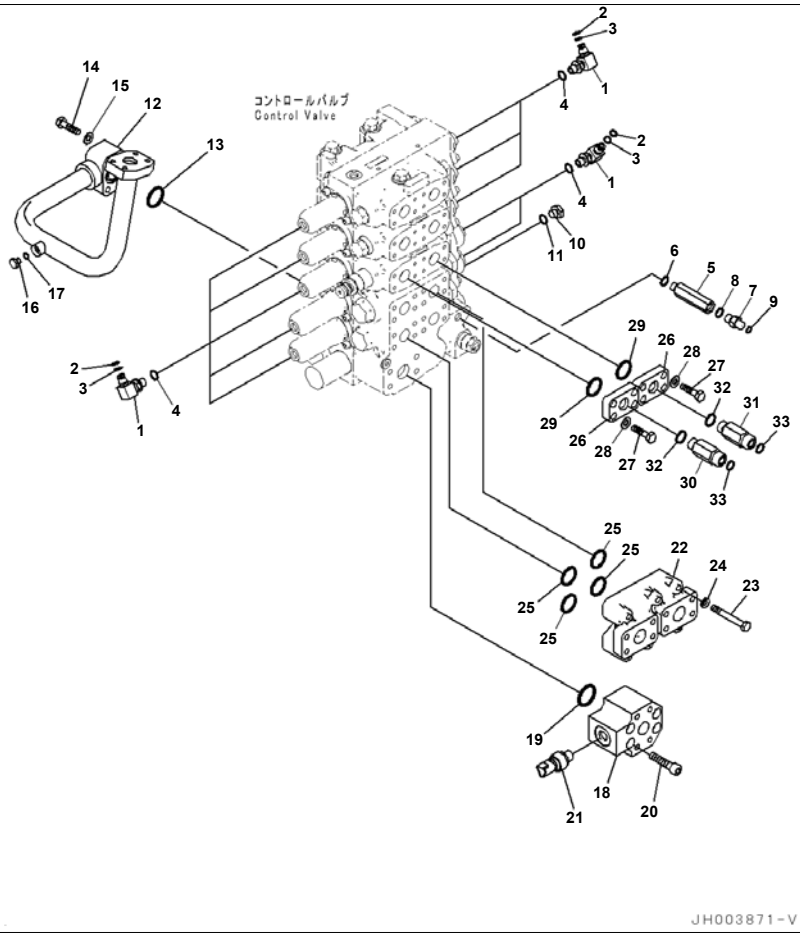

Reference:M2210-004022 Page:M014023

D375A-6R S/N 65001-UP
Fender, Extremely Bad Fuel And Poor Fuel Arrangement Spec.+Filter (Water+Dust), Control Valve Related Parts (1/2)
(#65001-)

Index	Code	Part Number	Description	Qty	Serial No.
1		20Y-62-22271	Elbow	10	65001-
2		201-60-11390	· O-ring	1	65001-
3		20Y-62-19560	· O-ring	1	65001-
4		07002-11423	O-ring	10	65001-
5		20Y-62-27680	Adapter	1	65001-
6		07002-11423	O-ring	1	65001-
7		20Y-62-41910	Nipple	1	65001-
8		07002-11423	O-ring	1	65001-
9		02896-11008	O-ring	1	65001-
10		07040-11409	Plug	1	65001-
11		07002-11423	O-ring	1	65001-
12		195-60-52521	Tube	1	65001-
13		07000-13035	O-ring	1	65001-
14		01010-81060	Bolt	4	65001-
15		01643-31032	Washer	4	65001-
16		07040-11007	Plug	1	65001-
17		07002-11023	O-ring	1	65001-
18		195-60-52551	Block	1	65001-
19		07000-13038	O-ring	1	65001-
20		01252-A1275	Bolt, Hexagon Socket Head	4	65001-
21		7861-93-1651	Sensor	1	65001-
		7861-93-1650	Sensor	1	65001-65001
22		195-61-61971	Joint	1	65001-
23		195-78-63210	Bolt	6	65001-
24		01643-51032	Washer	6	65001-
25		07000-13032	O-ring	4	65001-
26		17M-61-43180	Plate	2	65001-
27		07372-21035	Bolt	8	65001-
28		01643-51032	Washer	8	65001-
29		07000-13032	O-ring	2	65001-

Reference:M2210-004022 Page:M014023

Printed By : Dwi Iswanto (airafather6107170)

Index	Code	Part Number	Description	Qty	Serial No.
30		21W-62-43121	Nipple	1	65001-
31		419-62-43120	Nipple	1	65001-
32		07002-12034	O-ring	2	65001-
33		02896-11015	O-ring	2	65001-

Printed By : Dwi Iswanto (airafather6107170)

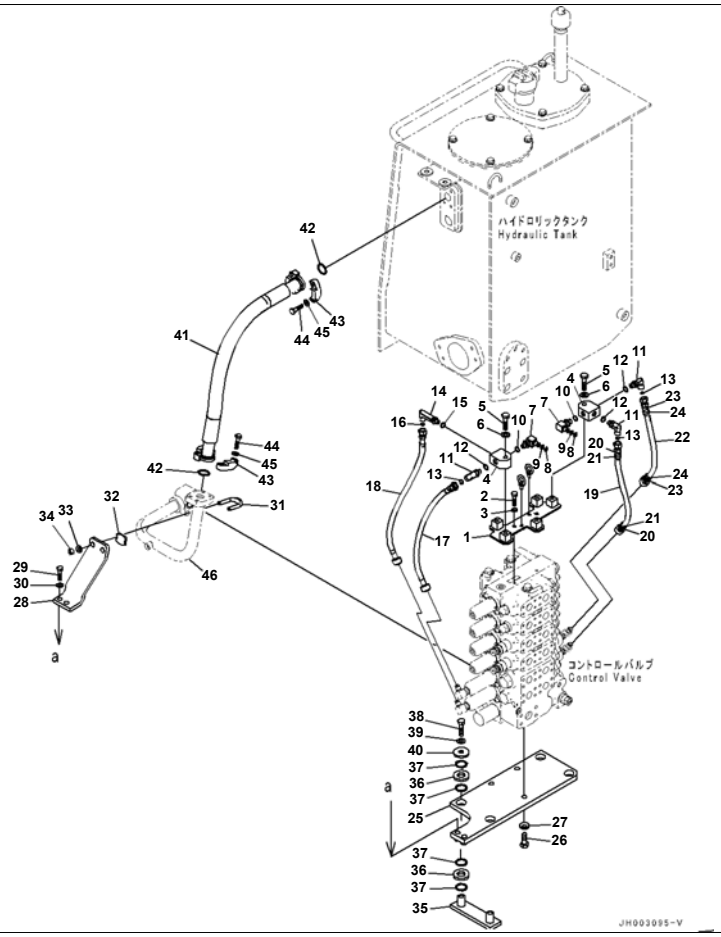

Reference:M2210-004023 Page:M014024

D375A-6R S/N 65001-UP
Fender, Extremely Bad Fuel And Poor Fuel Arrangement Spec.+Filter (Water+Dust), Control Valve Related Parts (2/2)
(#65001-)

Index	Code	Part Number	Description	Qty	Serial No.
1		195-60-52531	Bracket	1	65001-
2		01010-80835	Bolt	2	65001-
3		01643-30823	Washer	2	65001-
4		207-62-52550	Tee	2	65001-
5		01010-81255	Bolt	2	65001-
6		01643-31232	Washer	2	65001-
7		20Y-62-22271	Elbow	2	65001-
8		201-60-11390	· O-ring	1	65001-
9		20Y-62-19560	· O-ring	1	65001-
10		07002-11423	O-ring	2	65001-
11		02782-10311	Elbow	3	65001-
12		07002-11423	O-ring	3	65001-
13		02896-11009	O-ring	3	65001-
14		02782-10312	Elbow	1	65001-
15		07002-11423	O-ring	1	65001-
16		02896-11009	O-ring	1	65001-
17		195-61-44830	Hose Assembly	1	65001-
18		195-61-44840	Hose Assembly	1	65001-
19		195-61-44760	Hose Assembly	1	65001-
20		20Y-62-22790	· Band, Red	2	65001-
21		20Y-62-22830	· Band, White	2	65001-
22		195-61-44770	Hose Assembly	1	65001-
23		20Y-62-22790	· Band, Red	2	65001-
24		20Y-62-22830	· Band, White	2	65001-
25		195-60-52511	Bracket	1	65001-
26		01010-81440	Bolt	3	65001-
27		01643-31445	Washer	3	65001-
28		195-60-52541	Plate	1	65001-
29		01010-81250	Bolt	2	65001-
30		01643-31232	Washer	2	65001-

Printed By : Dwi Iswanto (airafather6107170)

Index	Code	Part Number	Description	Qty	Serial No.
31		07283-33450	Clip	1	65001-
32		07283-53444	Seat	1	65001-
33		01643-31032	Washer	2	65001-
34		01597-01009	Nut	2	65001-
35		17A-60-12321	Bracket	2	65001-
36		14X-60-12120	Cushion	8	65001-
37		07000-13025	O-ring	16	65001-
38		01010-81275	Bolt	4	65001-
39		01643-31232	Washer	4	65001-
40		561-74-61750	Washer	4	65001-
41		07296-012A7	Hose, Flange Type	1	65001-
42		07000-13038	O-ring	2	65001-
43		07371-31255	Flange, Split	4	65001-
44		07372-21035	Bolt	8	65001-
45		01643-51032	Washer	8	65001-
46		(195-60-52521)	Tube		

Printed By : Dwi Iswanto (airafather6107170)

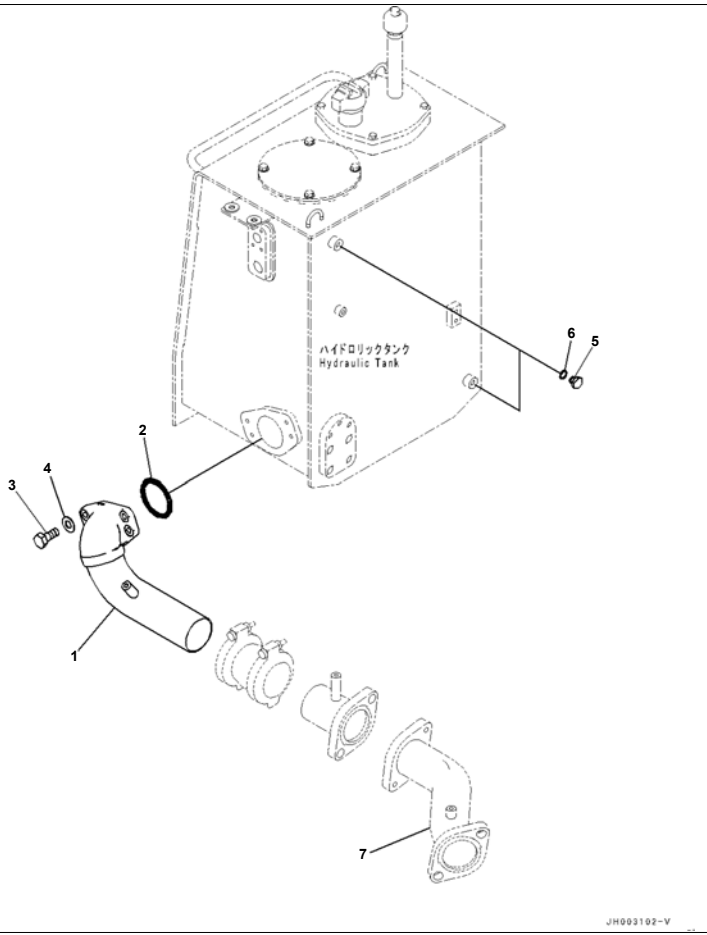

Reference:M2210-004024 Page:M014025

D375A-6R S/N 65001-UP
Fender, Extremely Bad Fuel And Poor Fuel Arrangement Spec.+Filter (Water+Dust), Suction Tube (#65001-)

Index	Code	Part Number	Description	Qty	Serial No.
1		195-60-52421	Tube	1	65001-
2		07000-12110	O-ring	1	65001-
3		01010-81235	Bolt	4	65001-
4		01643-31232	Washer	4	65001-
5		07040-11409	Plug	2	65001-
6		07002-11423	O-ring	2	65001-
7		(195-60-52411)	Tube		

Printed By : Dwi Iswanto (airafather6107170)

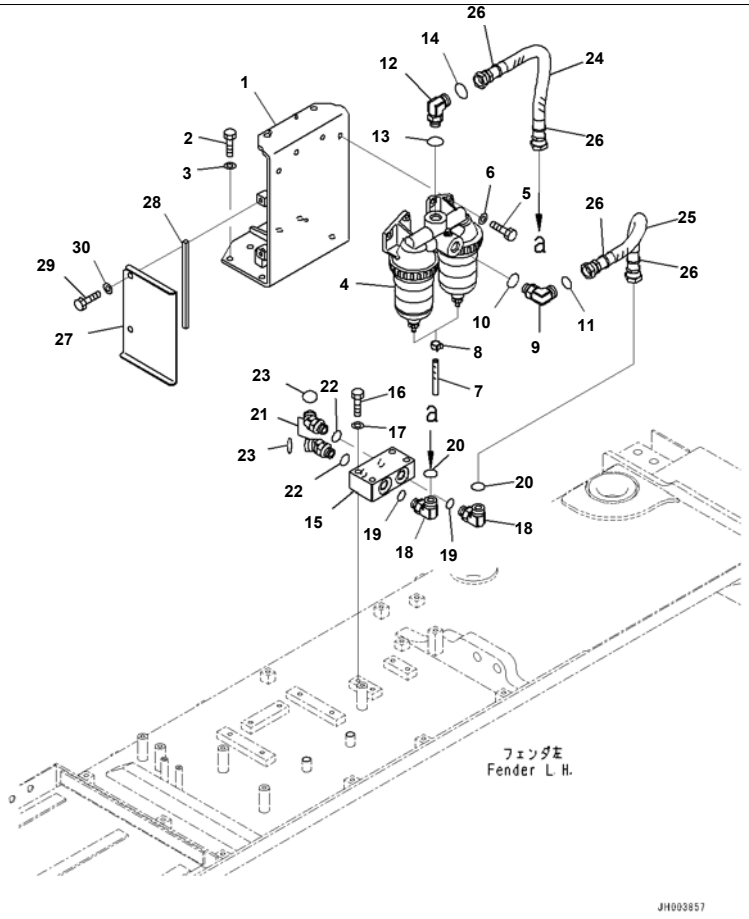

Reference:M2210-004025 Page:M014026

D375A-6R S/N 65001-UP
Fender, Extremely Bad Fuel And Poor Fuel Arrangement Spec.+Filter (Water+Dust), Water Separator Piping (#65001-)

Index	Code	Part Number	Description	Qty	Serial No.
1		195-04-45111	Bracket	1	65001-
2		01010-81230	Bolt	6	65001-
3		01643-31232	Washer	6	65001-
4		600-311-9330	Water Separator	1	65001-
5		01010-81035	Bolt	4	65001-
6		01643-31032	Washer	4	65001-
7		07286-00809	Hose	2	65001-
8		11Y-09-11130	Clamp	2	65001-
9		02782-10628	Elbow	1	65001-
10		07002-12434	O-ring	1	65001-
11		02896-11018	O-ring	1	65001-
12		02782-10628	Elbow	1	65001-
13		07002-12434	O-ring	1	65001-
14		02896-11018	O-ring	1	65001-
15		195-04-42150	Joint	1	65001-
16		01010-81270	Bolt	4	65001-
17		01643-31232	Washer	4	65001-
18		02782-10628	Elbow	2	65001-
19		02896-11018	O-ring	2	65001-
20		07002-12434	O-ring	2	65001-
21		02783-10628	Elbow	2	65001-
22		02896-11018	O-ring	2	65001-
23		07002-12434	O-ring	2	65001-
24		02762-00605	Hose, Face Seal Type	1	65001-
25		02762-006A5	Hose, Face Seal Type	1	65001-
26		20Y-62-22810	Band, Yellow	4	65001-
27		195-04-45121	Cover	1	65001-
28		195-04-45130	· Sheet	1	65001-
29		01010-81230	Bolt	2	65001-
30		01643-31232	Washer	2	65001-

Printed By : Dwi Iswanto (airafather6107170)

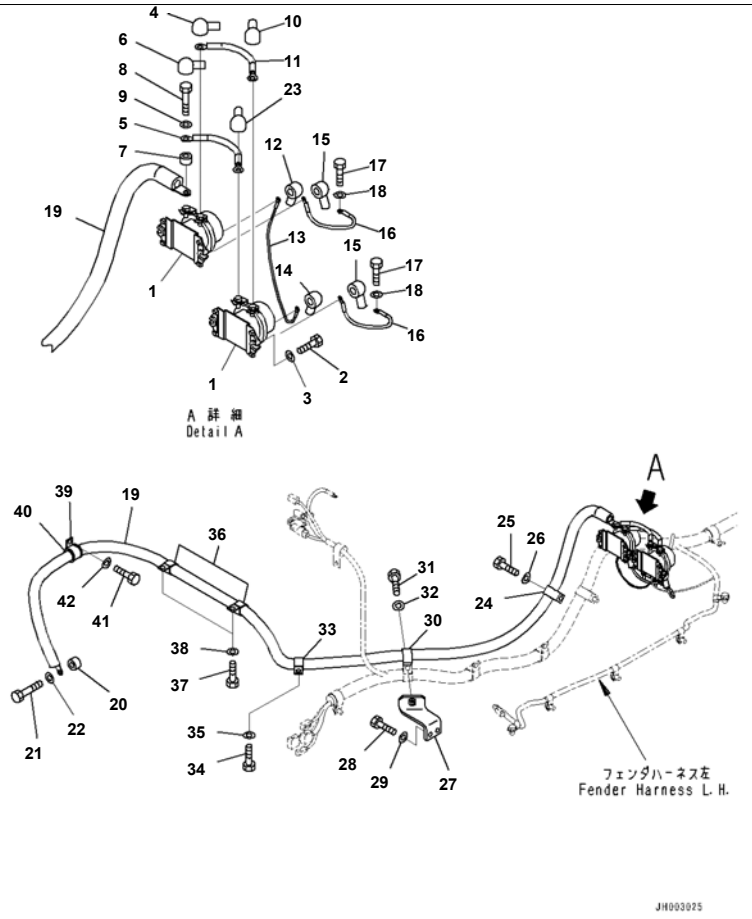

Reference:M2210-012001 Page:M015001

D375A-6R S/N 65001-UP
Fender, Large Capacity Battery, Extra Bad Fuel And Poor Fuel Arrangement, Water+Dust, Additional Filter, Starting Harness (#6500

Index	Code	Part Number	Description	Qty	Serial No.
1		08088-30000	Switch	2	65001-
2		01010-80825	Bolt	4	65001-
3		01643-30823	Washer	4	65001-
4		08038-00035	Cap, Terminal	1	65001-
5		195-06-54570	Cable	1	65001-
6		08038-04030	Cap, Terminal	1	65001-
7		175-79-83760	Spacer	1	65001-
8		01010-80840	Bolt	1	65001-
9		01643-30823	Washer	1	65001-
10		08038-04030	Cap, Terminal	1	65001-
11		195-06-54570	Cable	1	65001-
12		08038-00218	Cap, Terminal	1	65001-
13		195-06-54550	Wire	1	65001-
14		08038-00218	Cap, Terminal	1	65001-
15		08038-02027	Cap	2	65001-
16		195-06-54560	Wire	2	65001-
17		01010-80820	Bolt	2	65001-
18		01643-30823	Washer	2	65001-
19		195-06-54510	Wiring Harness	1	65001-
20		175-79-83760	Spacer	1	65001-
21		01010-80840	Bolt	1	65001-
22		01643-30823	Washer	1	65001-
23		08038-00035	Cap, Terminal	1	65001-
24		04434-52712	Clip	1	65001-
25		01010-81220	Bolt	1	65001-
26		01643-31232	Washer	1	65001-
27		195-06-71331	Bracket	1	65001-
28		01010-81230	Bolt	2	65001-
29		01643-31232	Washer	2	65001-
30		04434-52712	Clip	1	65001-

Printed By : Dwi Iswanto (airafather6107170)

Index	Code	Part Number	Description	Qty	Serial No.
31		01010-81230	Bolt	1	65001-
32		01643-31232	Washer	1	65001-
33		04434-52712	Clip	1	65001-
34		01010-81220	Bolt	1	65001-
35		01643-31232	Washer	1	65001-
36		04434-52712	Clip	2	65001-
37		01010-81220	Bolt	2	65001-
38		01643-31232	Washer	2	65001-
39		04434-53412	Clip	1	65001-
40		07095-40627	Cushion	1	65001-
41		01010-81220	Bolt	1	65001-
42		01643-31232	Washer	1	65001-

Printed By : Dwi Iswanto (airafather6107170)

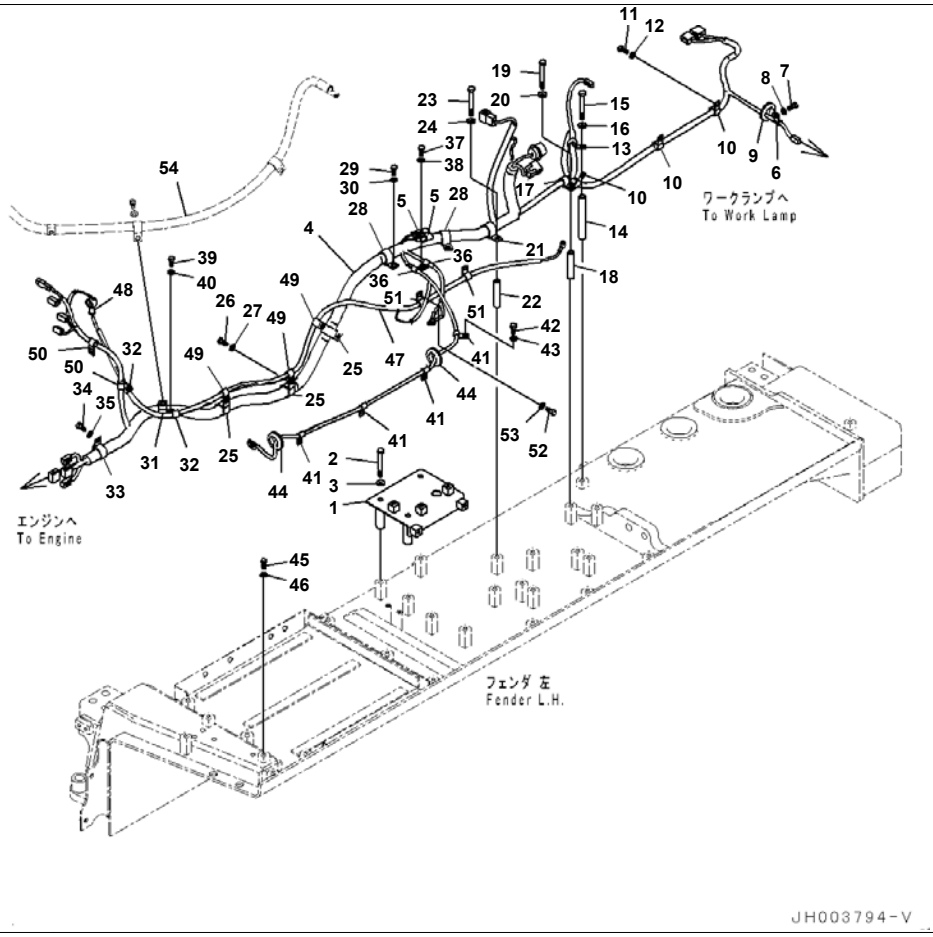

Reference:M2210-012002 Page:M015002

Index	Code	Part Number	Description	Qty	Serial No.
1		195-06-55420	Cover	1	65001-@
2		01011-81230	Bolt	3	65001-@
3		01643-31232	Washer	3	65001-@
4		195-06-57551	Wiring Harness	1	65001-@
5		21J-06-13661	・ Diode	2	65001-@
6		04434-51012	Clip	1	65001-@
7		01010-81220	Bolt	1	65001-@
8		01643-31232	Washer	1	65001-@
9		08037-03614	Grommet	1	65001-@
10		04434-52112	Clip	3	65001-@
11		01010-81220	Bolt	3	65001-@
12		01643-31232	Washer	3	65001-@
13		04434-52112	Clip	1	65001-@
14		195-61-21440	Spacer	1	65001-@
15		01011-81280	Bolt	1	65001-@
16		01643-31232	Washer	1	65001-@
17		04434-52112	Clip	1	65001-@
18		6240-51-5140	Spacer	1	65001-65009
19		01011-81220	Bolt	1	65001-@
20		01643-31232	Washer	1	65001-@
21		04434-53412	Clip	1	65001-@
22		6240-51-5140	Spacer	1	65001-65009
23		01011-81220	Bolt	1	65001-@
24		01643-31232	Washer	1	65001-@
25		04434-53412	Clip	3	65001-@
26		01010-81220	Bolt	3	65001-@
27		01643-31232	Washer	3	65001-@
28		04434-53412	Clip	2	65001-@
29		01010-81220	Bolt	2	65001-@
30		01643-31232	Washer	2	65001-@

Reference:M2210-012002 Page:M015002

Printed By : Dwi Iswanto (airafather6107170)

Index	Code	Part Number	Description	Qty	Serial No.
31		04434-53412	Clip	1	65001-@
32		04434-51412	Clip	2	65001-@
33		04434-53412	Clip	1	65001-@
34		01010-81220	Bolt	1	65001-@
35		01643-31232	Washer	1	65001-@
36		04434-51012	Clip	2	65001-@
37		01010-81230	Bolt	1	65001-@
38		01643-31232	Washer	1	65001-@
39		01010-81220	Bolt	1	65001-@
40		01643-31232	Washer	1	65001-@
41		04434-51012	Clip	4	65001-@
42		01010-81220	Bolt	4	65001-@
43		01643-31232	Washer	4	65001-@
44		08037-03614	Grommet	2	65001-@
45		01010-81220	Bolt	1	65001-@
46		01643-31232	Washer	1	65001-@
47		195-06-55250	Wiring Harness	1	65001-@
48		08038-02027	Cap	1	65001-@
49		04434-51412	Clip	3	65001-@
50		04434-51412	Clip	2	65001-@
51		04434-51412	Clip	2	65001-@
52		01010-81220	Bolt	2	65001-@
53		01643-31232	Washer	2	65001-@
54		(195-06-54510)	Wiring Harness		

Printed By : Dwi Iswanto (airafather6107170)

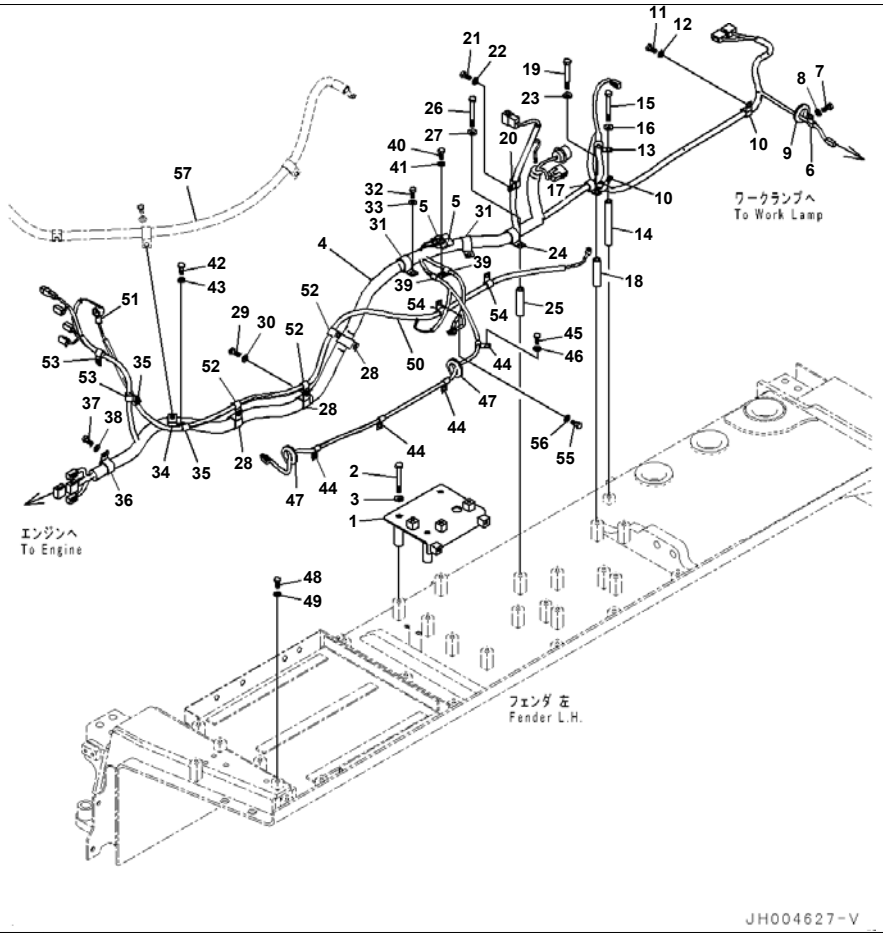

Reference:M2210-012002A Page:M015003

D375A-6R S/N 65001-UP
Fender, Large Capacity Battery, Extra Bad Fuel And Poor Fuel Arrangement, Water+Dust, Additional Filter, Harness, LHS (#65010-)

Index	Code	Part Number	Description	Qty	Serial No.
1		195-06-55420	Cover	1	65001-
2		01011-81230	Bolt	3	65001-
3		01643-31232	Washer	3	65001-
4		195-06-57551	Wiring Harness	1	65001-
5		21J-06-13661	· Diode	2	65001-
6		04434-51012	Clip	1	65001-
7		01010-81220	Bolt	1	65001-
8		01643-31232	Washer	1	65001-
9		08037-03614	Grommet	1	65001-
10		04434-52112	Clip	3	65001-
11		01010-81220	Bolt	3	65001-
12		01643-31232	Washer	3	65001-
13		04434-52112	Clip	1	65001-
14		195-61-21440	Spacer	1	65001-
15		01011-81280	Bolt	1	65001-
16		01643-31232	Washer	1	65001-
17		04434-52112	Clip	1	65001-
18		6240-51-5140	Spacer	1	65010-
19		01011-81220	Bolt	1	65001-
20		04434-51712	Clip	1	65010-
21		01010-81230	Bolt	1	65010-
22		01643-31232	Washer	1	65010-
23		01643-31232	Washer	1	65001-
24		04434-53412	Clip	1	65001-
25		6240-51-5140	Spacer	1	65010-
26		01011-81220	Bolt	1	65001-
27		01643-31232	Washer	1	65001-
28		04434-53412	Clip	3	65001-
29		01010-81220	Bolt	3	65001-
30		01643-31232	Washer	3	65001-

Printed By : Dwi Iswanto (airafather6107170)

Fender, Large Capacity Battery, Extra Bad Fuel And Poor Fuel Arrangement, Water+Dust, Additional Filter, Harness, LHS (#65010-)

Index	Code	Part Number	Description	Qty	Serial No.
31		04434-53412	Clip	2	65001-
32		01010-81220	Bolt	2	65001-
33		01643-31232	Washer	2	65001-
34		04434-53412	Clip	1	65001-
35		04434-51412	Clip	2	65001-
36		04434-53412	Clip	1	65001-
37		01010-81220	Bolt	1	65001-
38		01643-31232	Washer	1	65001-
39		04434-51012	Clip	2	65001-
40		01010-81230	Bolt	1	65001-
41		01643-31232	Washer	1	65001-
42		01010-81220	Bolt	1	65001-
43		01643-31232	Washer	1	65001-
44		04434-51012	Clip	4	65001-
45		01010-81220	Bolt	4	65001-
46		01643-31232	Washer	4	65001-
47		08037-03614	Grommet	2	65001-
48		01010-81220	Bolt	1	65001-
49		01643-31232	Washer	1	65001-
50		195-06-55250	Wiring Harness	1	65001-
51		08038-02027	Cap	1	65001-
52		04434-51412	Clip	3	65001-
53		04434-51412	Clip	2	65001-
54		04434-51412	Clip	2	65001-
55		01010-81220	Bolt	2	65001-
56		01643-31232	Washer	2	65001-
57		(195-06-54510)	Wiring Harness		

Printed By : Dwi Iswanto (airafather6107170)

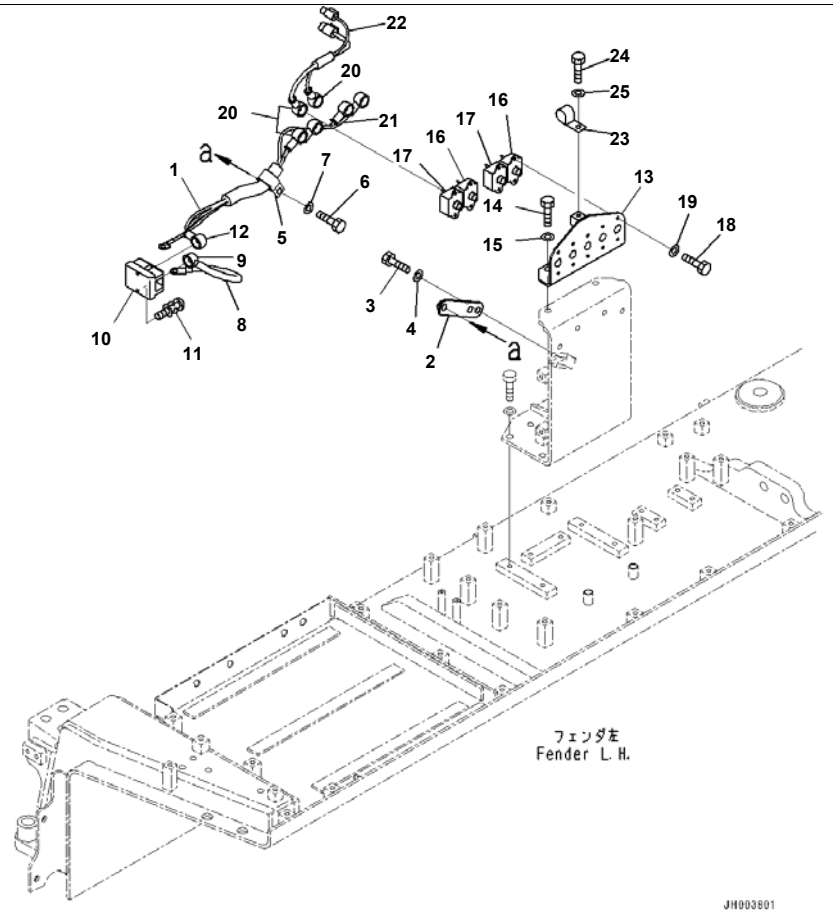

Reference:M2210-012003 Page:M015004

D375A-6R S/N 65001-UP
Fender, Large Capacity Battery, Extra Bad Fuel And Poor Fuel Arrangement, Water+Dust, Additional Filter, Breaker Harness (#65001

Index	Code	Part Number	Description	Qty	Serial No.
1		195-06-55240	Wiring Harness	1	65001-
2		195-06-73840	Bracket	1	65001-
3		01010-81230	Bolt	2	65001-
4		01643-31232	Washer	2	65001-
5		04434-53412	Clip	1	65001-
6		01010-81230	Bolt	1	65001-
7		01643-31232	Washer	1	65001-
8		195-06-54590	Cable	1	65001-
9		08038-06031	Cap	1	65001-
10		21T-06-12540	Terminal	1	65001-
11		01023-60630	Screw	2	65001-
12		08038-02027	Cap	1	65001-
13		195-06-73821	Bracket	1	65001-
14		01010-81230	Bolt	2	65001-
15		01643-31232	Washer	2	65001-
16		198-06-62830	Circuit Breaker	2	65001-
17		198-06-62840	Circuit Breaker	2	65001-
18		01010-80616	Bolt	8	65001-
19		01643-30623	Washer	8	65001-
20		08038-02027	Cap	8	65001-
21		195-06-54270	Wiring Harness	1	65001-
22		195-06-55230	Wiring Harness	1	65001-
23		04434-51712	Clip	1	65001-
24		01010-81230	Bolt	1	65001-
25		01643-31232	Washer	1	65001-

Reference:M2210-012003 Page:M015004

Printed By : Dwi Iswanto (airafather6107170)

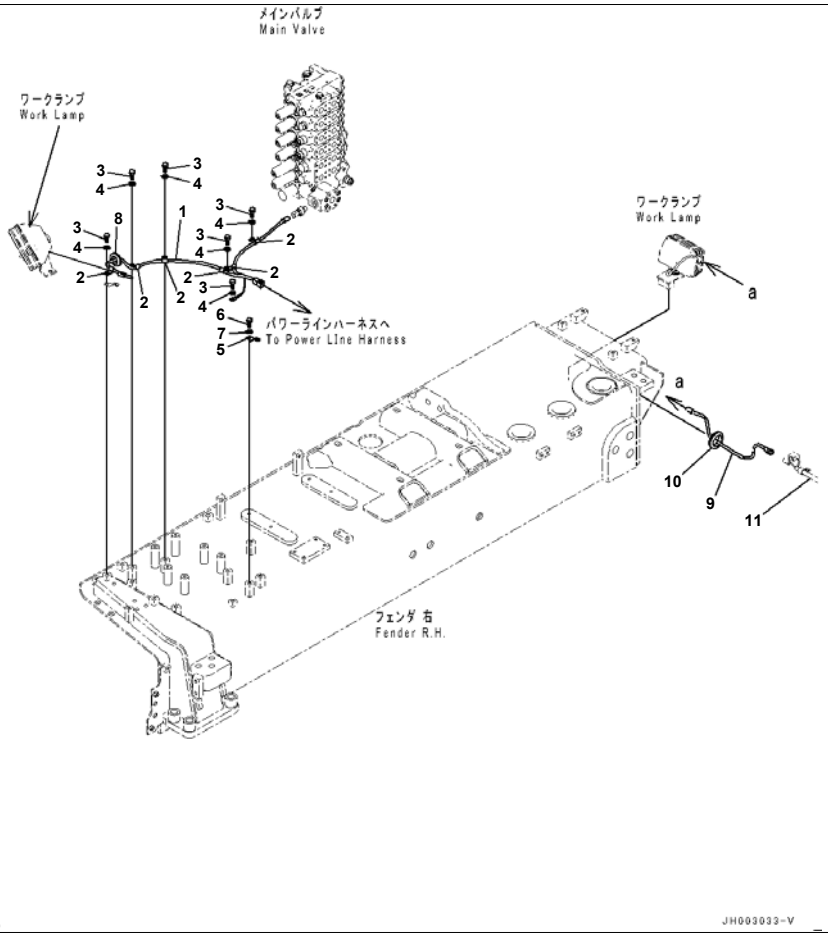

Reference:M2210-012004 Page:M015005

D375A-6R S/N 65001-UP

Fender, Large Capacity Battery, Extra Bad Fuel And Poor Fuel Arrangement, Water+Dust, Additional Filter, Harness, RHS (#65001-)

Index	Code	Part Number	Description	Qty	Serial No.
1		195-06-57560	Wiring Harness	1	65001-
2		04434-51012	Clip	6	65001-
3		01010-81220	Bolt	6	65001-
4		01643-31232	Washer	6	65001-
5		08193-21012	Clip	1	65001-
6		01010-81220	Bolt	1	65001-
7		01643-31232	Washer	1	65001-
8		08037-03614	Grommet	1	65001-
9		195-06-55730	Wiring Harness	1	65001-
10		08037-05016	Grommet	1	65001-
11		(195-06-55631)	Wiring Harness		

Printed By : Dwi Iswanto (airafather6107170)

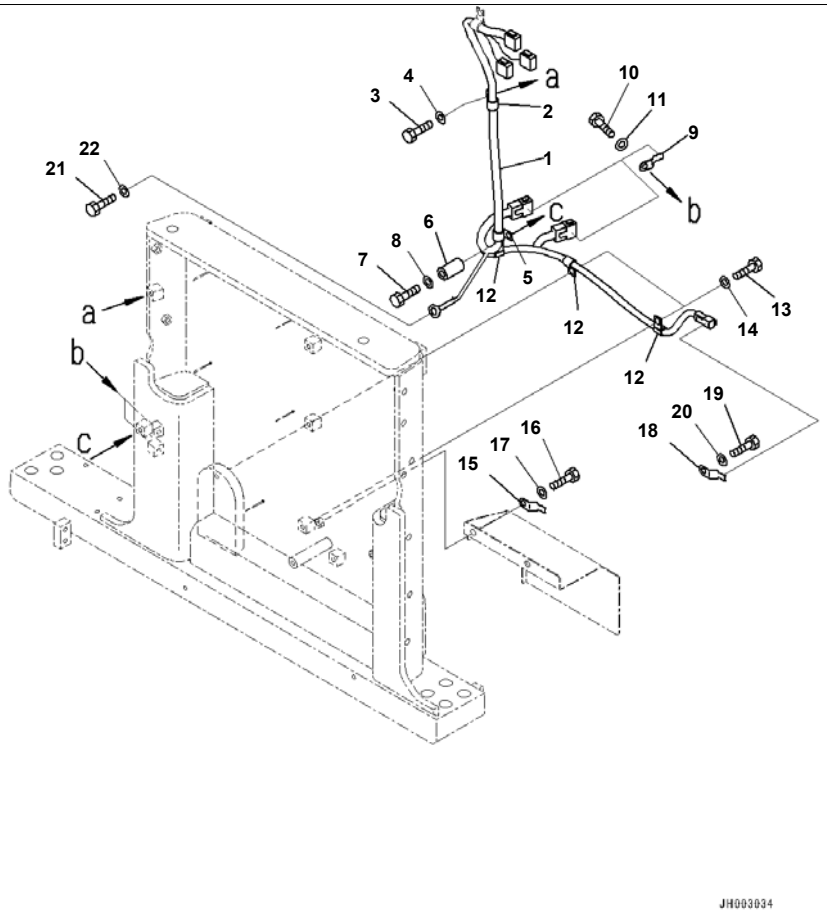

D375A-6R S/N 65001-UP
Fender, Large Capacity Battery, Extra Bad Fuel And Poor Fuel Arrangement, Water+Dust, Additional Filter, Harness, Front (#65001-

Index	Code	Part Number	Description	Qty	Serial No.
1		195-06-57540	Wiring Harness	1	65001-
2		04434-52712	Clip	1	65001-
3		01010-81225	Bolt	1	65001-
4		01643-31232	Washer	1	65001-
5		04434-52712	Clip	1	65001-
6		195-33-11220	Spacer	1	65001-
7		01010-81250	Bolt	1	65001-
8		01643-31232	Washer	1	65001-
9		08193-21012	Clip	2	65001-
10		01010-81225	Bolt	2	65001-
11		01643-31232	Washer	2	65001-
12		04434-51412	Clip	3	65001-
13		01010-81225	Bolt	2	65001-
14		01643-31232	Washer	2	65001-
15		08193-21012	Clip	1	65001-
16		01010-81225	Bolt	1	65001-
17		01643-31232	Washer	1	65001-
18		08193-21012	Clip	1	65001-
19		01010-81225	Bolt	1	65001-
20		01643-31232	Washer	1	65001-
21		01010-81225	Bolt	1	65001-
22		01643-31232	Washer	1	65001-

Printed By : Dwi Iswanto (airafather6107170)

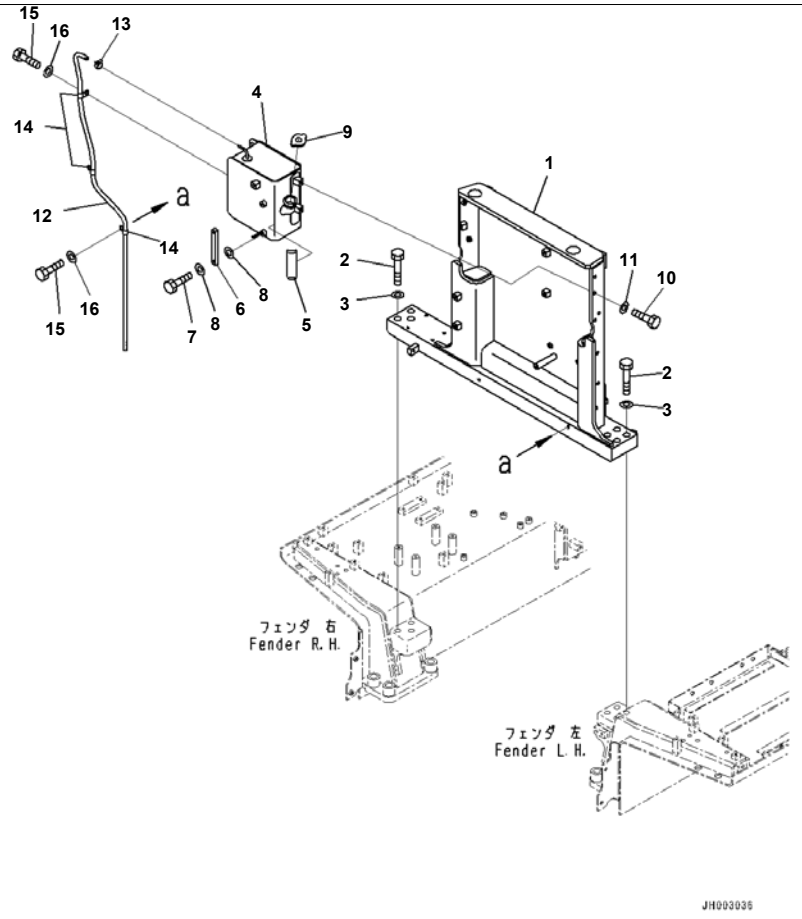

Reference:M2210-012006 Page:M015007

D375A-6R S/N 65001-UP
Fender, Large Capacity Battery, Extra Bad Fuel And Poor Fuel Arrangement, Water+Dust, Additional Filter, Reserve Tank (#65001-)

Index	Code	Part Number	Description	Qty	Serial No.
1		195-54-85132	Bracket	1	65001-
2		195-09-11110	Bolt	7	65001-
3		01643-32780	Washer	7	65001-
4		195-03-65450	Tank	1	65001-
5		195-03-61540	Plate	1	65001-
6		195-03-61550	Gauge	1	65001-
7		20N-60-41360	· Bolt	2	65001-
8		20N-60-41371	· Gasket	4	65001-
9		195-03-41390	Cap	1	65001-
10		01010-81230	Bolt	4	65001-
11		01643-31232	Washer	4	65001-
12		195-03-61440	Hose	1	65001-
13		07285-00125	Clip	1	65001-
14		04434-51312	Clip	3	65001-
15		01010-81225	Bolt	3	65001-
16		01643-31232	Washer	3	65001-

Printed By : Dwi Iswanto (airafather6107170)

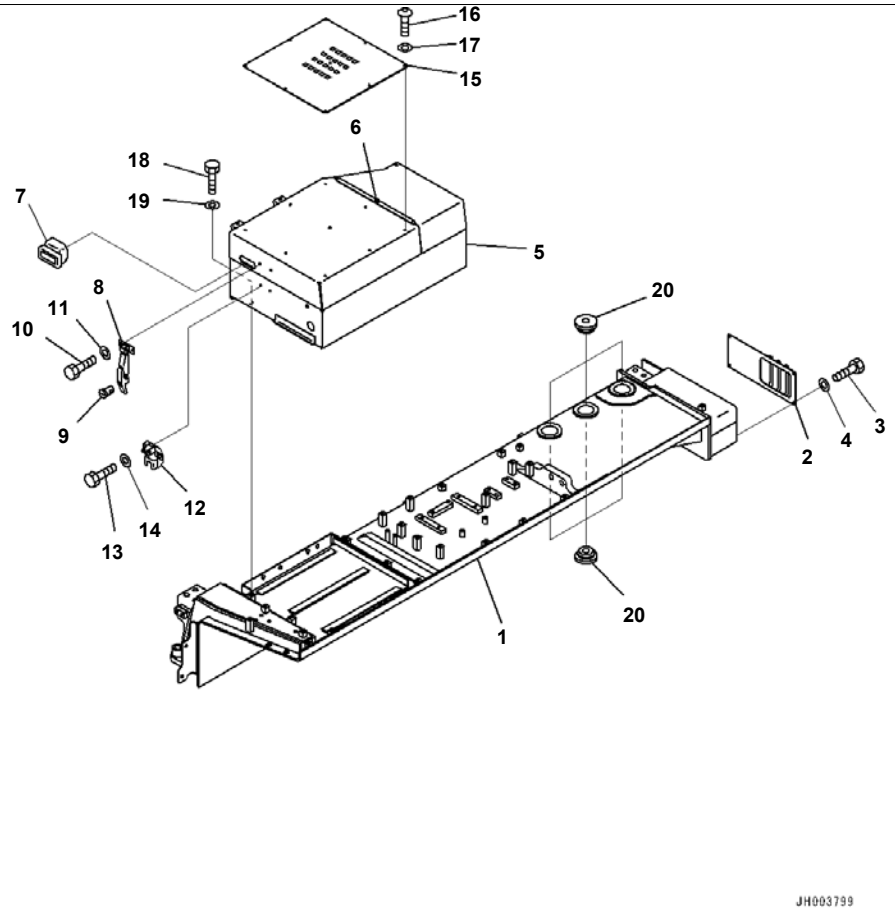

D375A-6R S/N 65001-UP

Fender, Large Capacity Battery, Extra Bad Fuel And Poor Fuel Arrangement, Water+Dust, Additional Filter, Fender,LHS (#65001-)

Index	Code	Part Number	Description	Qty	Serial No.
1		195-54-86310	Fender	1	65001-
2		17M-54-55161	Cover	1	65001-
3		01010-80825	Bolt	4	65001-
4		01643-30823	Washer	4	65001-
5		195-54-82631	Cover	1	65001-
6		09457-00495	· Hinge,Welded	1	65001-
7		209-54-12280	Handle	1	65001-
8		205-54-76260	Catcher	1	65001-
9		205-54-76280	· Rotor Assembly	1	65001-
10		01010-80820	Bolt	2	65001-
11		01643-30823	Washer	2	65001-
12		205-54-67660	Support	1	65001-
13		01010-80820	Bolt	2	65001-
14		01643-30823	Washer	2	65001-
15		198-54-78931	Plate	1	65001-
16		01245-00816	Screw	9	65001-
17		01643-70823	Washer	9	65001-
18		01010-81230	Bolt	6	65001-
19		01643-31232	Washer	6	65001-
20		195-04-31140	Rubber	6	65001-

Printed By : Dwi Iswanto (airafather6107170)

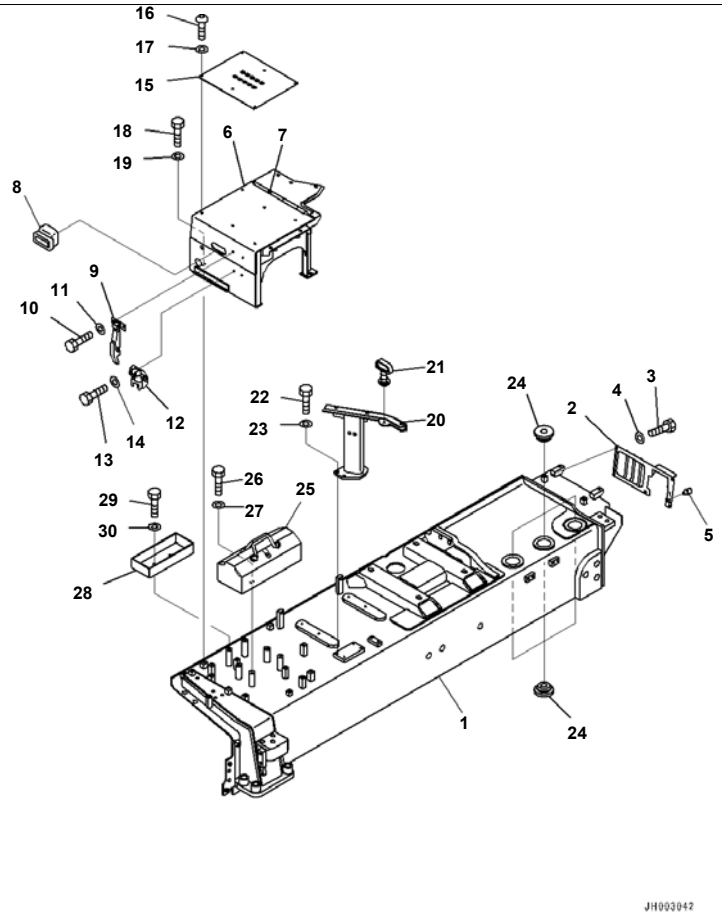

D375A-6R S/N 65001-UP

Fender, Large Capacity Battery, Extra Bad Fuel And Poor Fuel Arrangement, Water+Dust, Additional Filter, Fender,RHS (#65001-)

Index	Code	Part Number	Description	Qty	Serial No.
1		195-54-85121	Fender	1	65001-
2		195-54-83550	Cover	1	65001-
3		01010-80825	Bolt	5	65001-
4		01643-30823	Washer	5	65001-
5		20Y-54-35780	Stopper	1	65001-
6		195-54-83221	Cover	1	65001-
7		195-54-53210	· Hinge,Welded	1	65001-
8		209-54-12280	Handle	1	65001-
9		205-54-76530	Catcher	1	65001-
10		01010-80820	Bolt	2	65001-
11		01643-30823	Washer	2	65001-
12		205-54-67660	Support	1	65001-
13		01010-80820	Bolt	2	65001-
14		01643-30823	Washer	2	65001-
15		195-54-81490	Plate	1	65001-
16		01245-00816	Screw	6	65001-
17		01643-70823	Washer	6	65001-
18		01010-81230	Bolt	5	65001-
19		01643-31232	Washer	5	65001-
20		195-54-83342	Bracket	1	65001-
21		09459-20000	Lock Assembly	1	65001-
22		01010-81230	Bolt	4	65001-
23		175-54-34170	Washer	4	65001-
24		195-04-31140	Rubber	6	65001-
25		175-98-21171	Box, Tool	1	65001-
26		01010-81230	Bolt	4	65001-
27		01643-31232	Washer	4	65001-
28		195-54-83391	Case	1	65001-
29		01010-81230	Bolt	2	65001-
30		01643-31232	Washer	2	65001-

Printed By : Dwi Iswanto (airafather6107170)

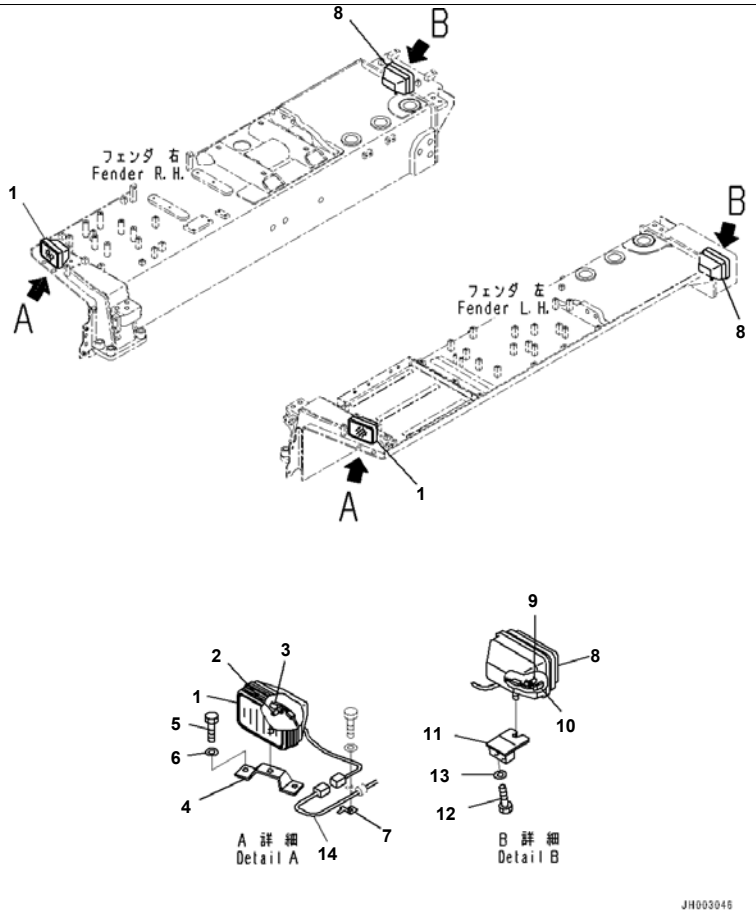

Reference:M2210-012009 Page:M015010

Index	Code	Part Number	Description	Qty	Serial No.
1		17A-06-17931	Lamp Assembly, Working	2	65001-
2		17A-06-17970	· Bulb, 70watt	1	65001-
3		17A-06-17980	· Sleeve	1	65001-
4		195-06-41150	Bracket	2	65001-
5		01010-81235	Bolt	4	65001-
6		01643-31232	Washer	4	65001-
7		08193-21012	Clip	2	65001-
8		17A-06-17931	Lamp Assembly, Working	2	65001-
9		17A-06-17970	· Bulb, 70watt	1	65001-
10		17A-06-17980	· Sleeve	1	65001-
11		195-54-85430	Bracket	2	65001-
12		01010-81230	Bolt	4	65001-
13		01643-31232	Washer	4	65001-
14		(195-06-57560)	Wiring Harness		

Printed By : Dwi Iswanto (airafather6107170)

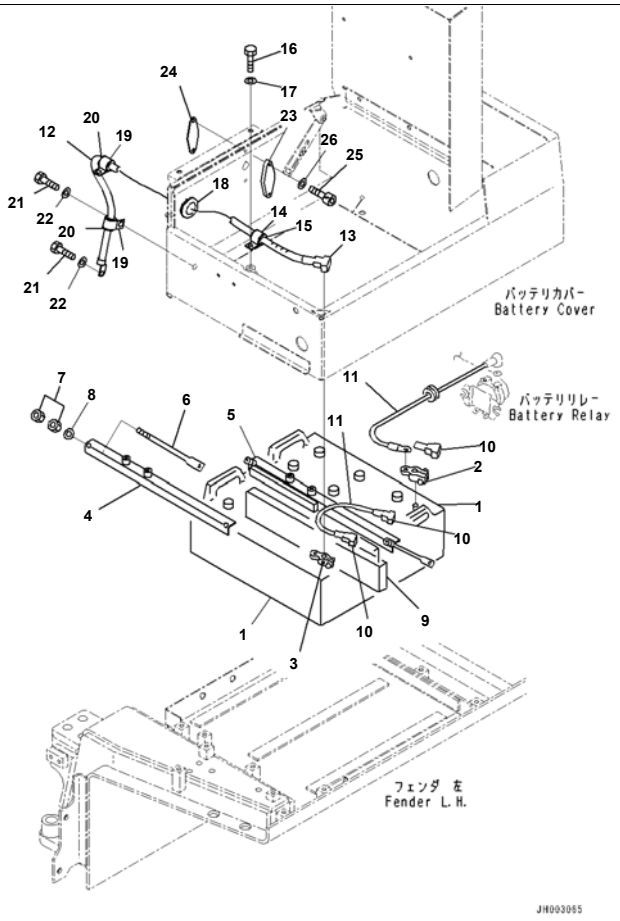

Reference:M2210-012010 Page:M015011

D375A-6R S/N 65001-UP
Fender, Large Capacity Battery, Extra Bad Fuel And Poor Fuel Arrangement, Water+Dust, Additional Filter, Battery and Starting Ha

Index	Code	Part Number	Description	Qty	Serial No.
1		08000-02221	Battery, Wet, C200	2	65001-
2		08000-00000	Terminal, (+)	2	65001-
3		08000-00001	Terminal, (-)	2	65001-
4		195-06-73850	Holder	1	65001-
5		195-06-74850	Holder	1	65001-
6		08006-40255	Rod	4	65001-
7		01580-11008	Nut	8	65001-
8		01643-31032	Washer	4	65001-
9		154-06-13262	Seat	1	65001-
10		08038-42511	Cap	3	65001-
11		195-06-54540	Cable	2	65001-
12		195-06-54670	Cable	1	65001-
13		08038-22511	Cap	1	65001-
14		04434-52512	Clip	1	65001-
15		07095-20318	Cushion	1	65001-
16		01010-81220	Bolt	1	65001-
17		01643-31232	Washer	1	65001-
18		08037-03614	Grommet	1	65001-
19		04434-52512	Clip	2	65001-
20		07095-20318	Cushion	2	65001-
21		01010-81220	Bolt	3	65001-
22		01643-31232	Washer	3	65001-
23		195-54-82650	Plate	1	65001-
24		195-54-82660	Plate	1	65001-
25		01252-A0835	Bolt, Hexagon Socket Head	2	65001-
26		01643-30823	Washer	2	65001-

Printed By : Dwi Iswanto (airafather6107170)

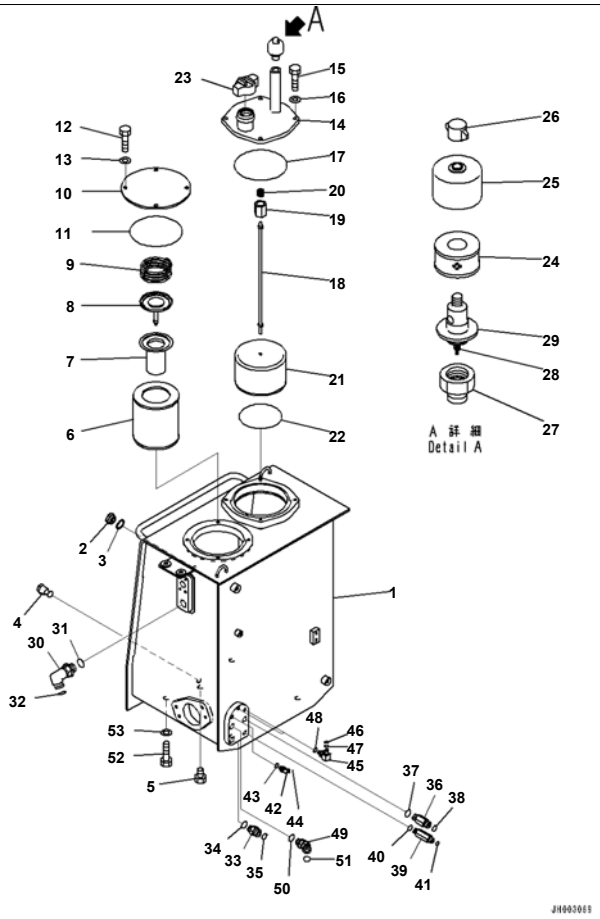

Reference:M2210-012011 Page:M015012

D375A-6R S/N 65001-UP
Fender, Large Capacity Battery, Extra Bad Fuel And Poor Fuel Arrangement, Water+Dust, Additional Filter, Hydraulic Tank (#65001-

Index	Code	Part Number	Description	Qty	Serial No.
1		195-60-53111	Tank	1	65001-
2		20N-60-11143	Gauge	1	65001-
3		20N-60-11181	· Gasket	1	65001-
4		195-49-31280	Valve	1	65001-
5		07040-12412	Plug	1	65001-
6		208-60-71123	Element	1	65001-
7		07069-25400	Strainer	1	65001-
8		208-60-71160	Valve Assembly	1	65001-
9		07069-34075	Spring	1	65001-
10		208-60-71130	Plate	1	65001-
11		07000-15210	O-ring	1	65001-
12		01010-81225	Bolt	4	65001-
13		01643-31232	Washer	4	65001-
14		195-60-53140	Cover	1	65001-
15		01010-81235	Bolt	4	65001-
16		01643-31232	Washer	4	65001-
17		07000-05230	O-ring	1	65001-
		195-60-51140	Strainer Assembly	1	65001-
18		195-60-51150	· Rod Assembly	1	65001-
19		20Y-60-21320	· · Holder	1	65001-
20		12R-60-11230	· · Spring	1	65001-
21	C1		· Strainer	1	65001-
22		21N-09-11140	O-ring	1	65001-
23		07092-01000	Cap	1	65001-
		22U-60-21520	Breather	1	65001-
24		421-60-35170	· Element	1	65001-
25		421-60-35180	· Cover	1	65001-
26		421-60-35190	· Nut	1	65001-
27	C1		· Body	1	65001-
28	C1		· Valve Assembly	1	65001-

Reference:M2210-012011 Page:M015012

Printed By : Dwi Iswanto (airafather6107170)

Index	Code	Part Number	Description	Qty	Serial No.
29	C1		· Case	1	65001-
30		421-09-31210	Elbow	1	65001-
31		07002-13334	O-ring	1	65001-
32		207-62-64740	O-ring	1	65001-
33		02781-00628	Union	1	65001-
34		07002-12434	O-ring	1	65001-
35		02896-11018	O-ring	1	65001-
36		21W-62-42481	Nipple	1	65001-
37		07002-12434	O-ring	1	65001-
38		02896-11015	O-ring	1	65001-
39		21W-62-42470	Nipple	1	65001-
40		07002-12034	O-ring	1	65001-
41		02896-11012	O-ring	1	65001-
42		02783-10210	Elbow	1	65001-
43		07002-11423	O-ring	1	65001-
44		02896-11008	O-ring	1	65001-
45		20Y-62-22271	Elbow	2	65001-
46		201-60-11390	· O-ring	1	65001-
47		20Y-62-19560	· O-ring	1	65001-
48		07002-11423	O-ring	2	65001-
49		02783-10628	Elbow	1	65001-
50		07002-12434	O-ring	1	65001-
51		02896-11018	O-ring	1	65001-
52		01010-82050	Bolt	4	65001-
53		01643-32060	Washer	4	65001-

Printed By : Dwi Iswanto (airafather6107170)

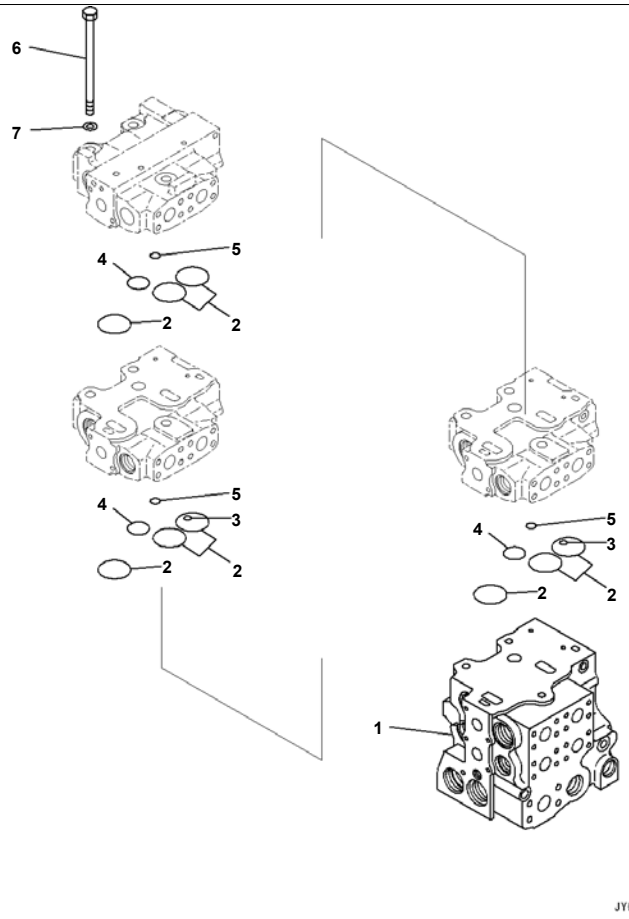

Index	Code	Part Number	Description	Qty	Serial No.
		723-65-22100	Valve Assembly, Control	1	65001-
1	C1		· Valve Body	1	65001-
2		07000-13048	· O-ring	9	65001-
3		07000-11009	· O-ring	2	65001-
4		07000-13030	· O-ring	3	65001-
5		07000-12012	· O-ring	3	65001-
6		723-63-32620	· Bolt	3	65001-
7		01643-31445	· Washer	3	65001-

Printed By : Dwi Iswanto (airafather6107170)

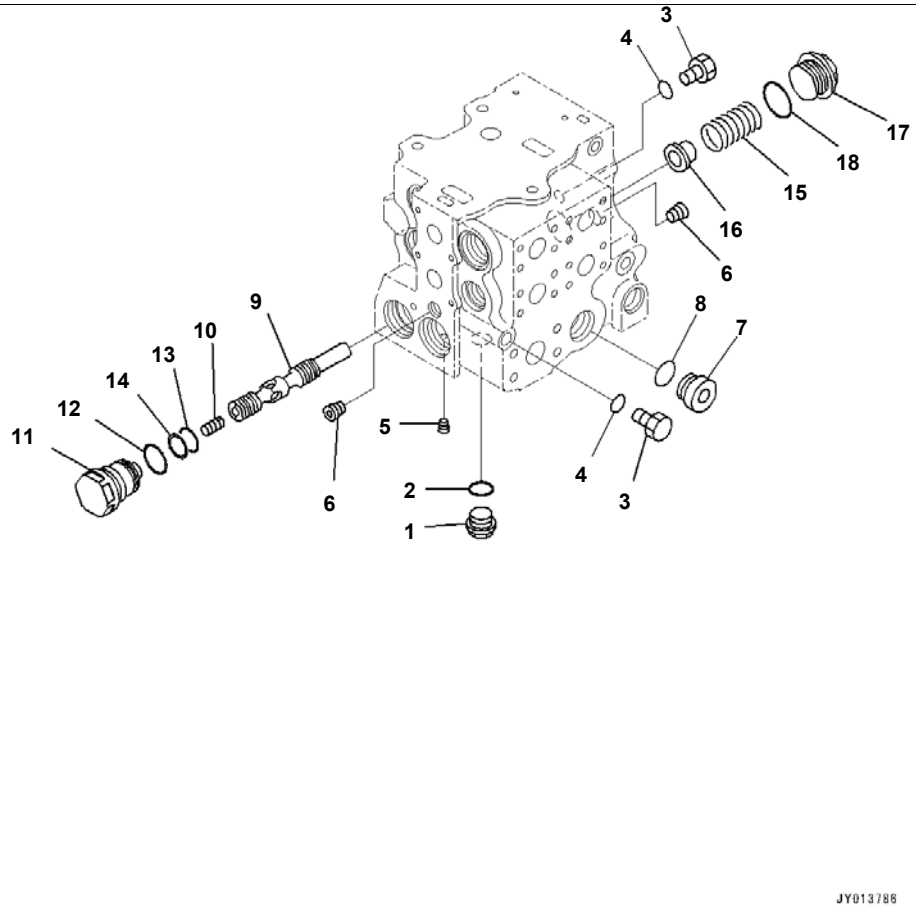

D375A-6R S/N 65001-UP
Fender, Large Capacity Battery, Extra Bad Fuel And Poor Fuel Arrangement, Water+Dust, Additional Filter, Control Valve (2/10) (#

Index	Code	Part Number	Description	Qty	Serial No.
		723-65-22100	Valve Assembly, Control	1	65001-
1		709-74-91860	· Plug	1	65001-
2		07002-12434	· O-ring	1	65001-
3		702-21-55620	· Plug	2	65001-
4		07002-11423	· O-ring	2	65001-
5	C1		· Plug	11	65001-
6	C1		· Plug	2	65001-
7		07040-13316	· Plug	1	65001-
8		07002-13334	· O-ring	1	65001-
9	C1		· Spool	1	65001-
10		723-63-31520	· Piston	1	65001-
11		723-63-32570	· Plug	1	65001-
12		07002-14234	· O-ring	1	65001-
13		07000-13032	· O-ring	1	65001-
14		07001-03032	· Ring, Back-up	1	65001-
15		723-63-32560	· Spring	1	65001-
16		723-63-31540	· Retainer	1	65001-
17		723-63-31550	· Plug	1	65001-
18		07002-14234	· O-ring	1	65001-

Printed By : Dwi Iswanto (airafather6107170)

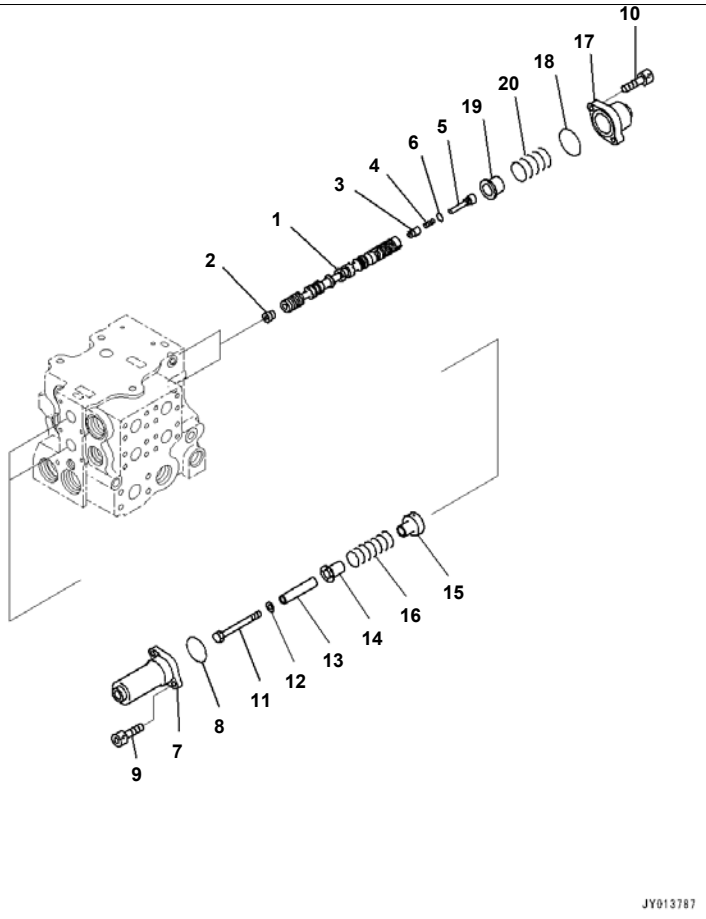

D375A-6R S/N 65001-UP
Fender, Large Capacity Battery, Extra Bad Fuel And Poor Fuel Arrangement, Water+Dust, Additional Filter, Control Valve (3/10) (#

Index	Code	Part Number	Description	Qty	Serial No.
		723-65-22100	Valve Assembly, Control	1	65001-
1	C1		· Spool	2	65001-
2	C1		· Plug, Tapered	2	65001-
3		723-63-31630	· Valve	2	65001-
4		706-76-71130	· Spring	2	65001-
5		723-63-31640	· Plug	2	65001-
6		07002-11023	· O-ring	2	65001-
7		723-63-31650	· Case	2	65001-
8		07430-71380	· O-ring	2	65001-
9		01252-60820	· Bolt	4	65001-
10		01252-60825	· Bolt	4	65001-
11		01010-81095	· Bolt	2	65001-
12		01643-31032	· Washer	2	65001-
13		723-63-31660	· Spacer	2	65001-
14		723-63-31670	· Retainer	2	65001-
15		723-63-31680	· Retainer	2	65001-
16		723-63-32830	· Spring	2	65001-
17		723-63-31980	· Case	2	65001-
18		723-63-31760	· O-ring	2	65001-
19		723-63-31770	· Retainer	2	65001-
20		723-63-41520	· Spring	2	65001-

Printed By : Dwi Iswanto (airafather6107170)

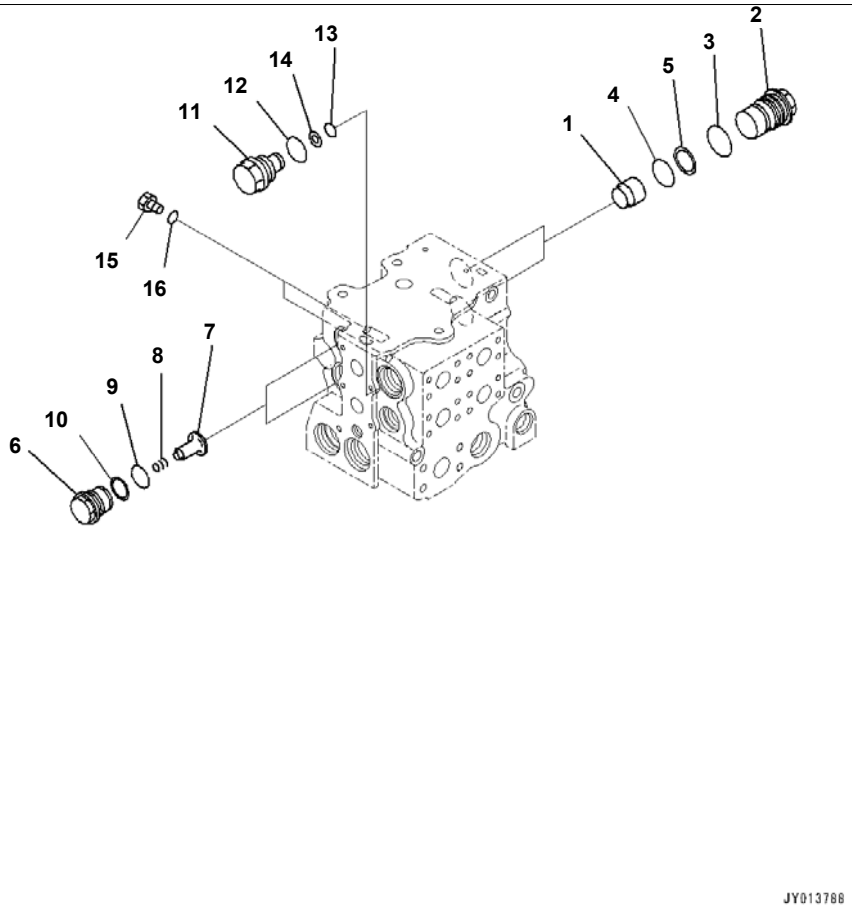

Reference:M2210-012015 Page:M015016

D375A-6R S/N 65001-UP
Fender, Large Capacity Battery, Extra Bad Fuel And Poor Fuel Arrangement, Water+Dust, Additional Filter, Control Valve (4/10) (#

Index	Code	Part Number	Description	Qty	Serial No.
		723-65-22100	Valve Assembly, Control	1	65001-
1	C1		· Retainer	2	65001-
2		723-62-31720	· Plug	2	65001-
3		700-61-49160	· O-ring	2	65001-
4		723-63-31850	· O-ring	2	65001-
5		723-63-31860	· Ring	2	65001-
6		709-74-92821	· Plug	2	65001-
7		709-94-92811	· Valve	2	65001-
8		709-94-91751	· Spring	2	65001-
9		700-93-11320	· O-ring	2	65001-
10		700-93-11330	· Ring, Back-up	2	65001-
11		723-63-31880	· Plug	2	65001-
12		07002-13634	· O-ring	2	65001-
13		07000-12018	· O-ring	2	65001-
14		07001-02018	· Ring, Back-up	2	65001-
15		708-8E-16160	· Plug	2	65001-
16		07002-11023	· O-ring	2	65001-

Printed By : Dwi Iswanto (airafather6107170)

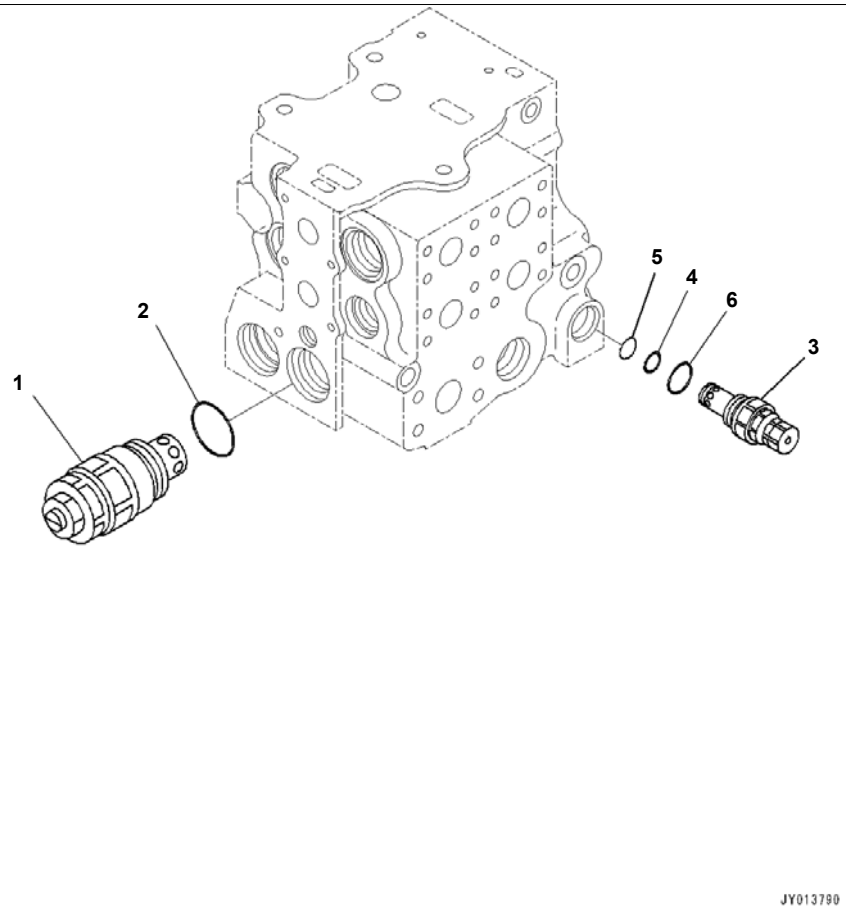

Index	Code	Part Number	Description	Qty	Serial No.
		723-65-22100	Valve Assembly, Control	1	65001-
1		723-60-24100	· Valve Assembly, Suction and Relief	1	65001-
2		07002-13634	· · O-ring	1	65001-
3		723-60-22500	· Valve Assembly, Relief	1	65001-
4		700-80-64220	· · Ring	1	65001-
5		700-22-11410	· · O-ring	1	65001-
6		07000-13024	· · O-ring	1	65001-

Printed By : Dwi Iswanto (airafather6107170)

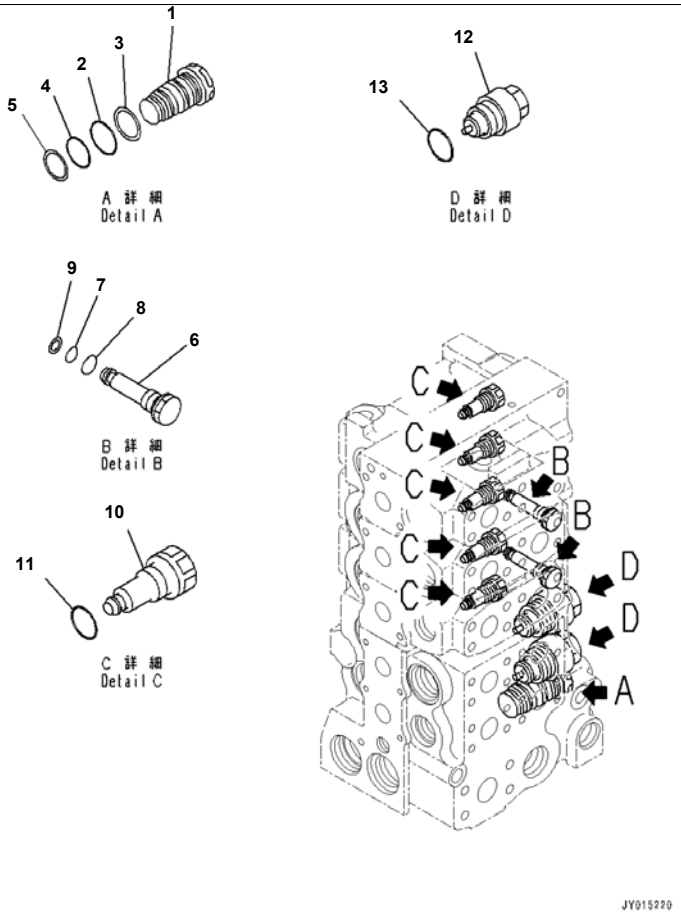

Reference:M2210-012017 Page:M015018

D375A-6R S/N 65001-UP
Fender, Large Capacity Battery, Extra Bad Fuel And Poor Fuel Arrangement, Water+Dust, Additional Filter, Control Valve (6/10) (#

Index	Code	Part Number	Description	Qty	Serial No.
		723-65-22100	Valve Assembly, Control	1	65001-
1		723-63-31990	· Plug	1	65001-
2		07000-13035	· O-ring	1	65001-
3		07001-03035	· Ring, Back-up	1	65001-
4		07000-13030	· O-ring	1	65001-
5		07001-03030	· Ring, Back-up	1	65001-
6		723-63-31621	· Plug	2	65001-
7		07002-11023	· O-ring	2	65001-
8		07000-11005	· O-ring	2	65001-
9		07001-01005	· Ring, Back-up	2	65001-
10		723-60-23400	· Valve Assembly, Check	5	65001-
11		07002-11823	· · O-ring	1	65001-
12		723-60-23800	· Valve Assembly, Suction	2	65001-
13		07002-13634	· · O-ring	1	65001-

Printed By : Dwi Iswanto (airafather6107170)

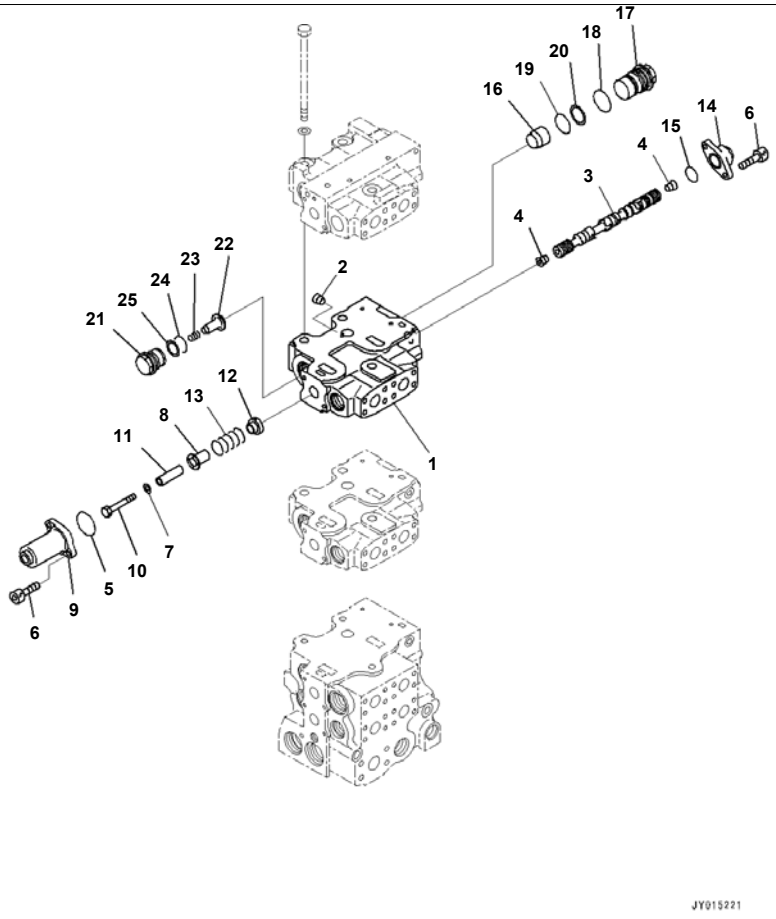

Reference:M2210-012018 Page:M015019

D375A-6R S/N 65001-UP
Fender, Large Capacity Battery, Extra Bad Fuel And Poor Fuel Arrangement, Water+Dust, Additional Filter, Control Valve (7/10) (#

Index	Code	Part Number	Description	Qty	Serial No.
		723-65-22100	Valve Assembly, Control	1	65001-
	C1		· Valve Assembly	1	65001-
1	C1		· · Valve Body	1	65001-
2	C1		· · Plug	1	65001-
3	C1		· · Spool	1	65001-
4	C1		· · Plug, Tapered	2	65001-
5		07430-71380	· · O-ring	1	65001-
6		01252-60820	· · Bolt	4	65001-
7		01643-31032	· · Washer	1	65001-
8		723-63-31670	· · Retainer	1	65001-
9		723-63-31710	· · Case	1	65001-
10		01010-81075	· · Bolt	1	65001-
11		723-63-31720	· · Spacer	1	65001-
12		723-63-31730	· · Retainer	1	65001-
13		723-63-31740	· · Spring	1	65001-
14		723-63-31790	· · Case	1	65001-
15		100-30-15140	· · O-ring	1	65001-
16	C1		· · Retainer	1	65001-
17		723-62-31720	· · Plug	1	65001-
18		700-61-49160	· · O-ring	1	65001-
19		723-63-31850	· · O-ring	1	65001-
20		723-63-31860	· · Ring	1	65001-
21		709-74-92821	· · Plug	1	65001-
22		709-94-92811	· · Valve	1	65001-
23		709-94-91751	· · Spring	1	65001-
24		700-93-11320	· · O-ring	1	65001-
25		700-93-11330	· · Ring, Back-up	1	65001-

Printed By : Dwi Iswanto (airafather6107170)

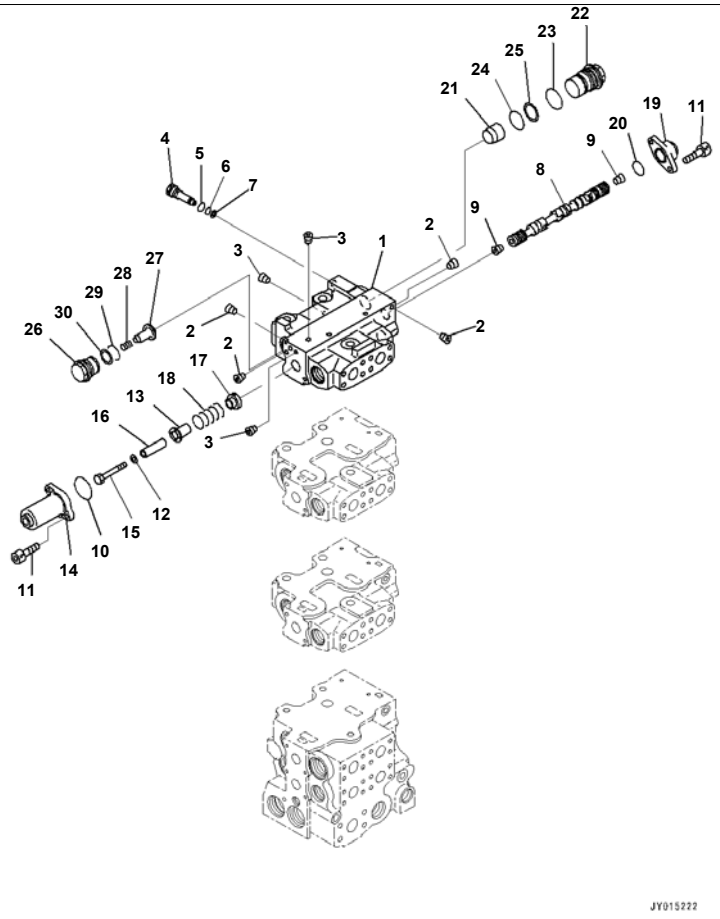

D375A-6R S/N 65001-UP
Fender, Large Capacity Battery, Extra Bad Fuel And Poor Fuel Arrangement, Water+Dust, Additional Filter, Control Valve (8/10) (#

Index	Code	Part Number	Description	Qty	Serial No.
		723-65-22100	Valve Assembly, Control	1	65001-
	C1		· Valve Assembly	1	65001-
1	C1		· · Valve Body	1	65001-
2	C1		· · Plug	4	65001-
3	C1		· · Plug	3	65001-
4		723-63-31610	· · Plug	1	65001-
5		07002-11423	· · O-ring	1	65001-
6		07000-11007	· · O-ring	1	65001-
7		07001-01007	· · Ring, Back-up	1	65001-
8	C1		· · Spool	1	65001-
9	C1		· · Plug, Tapered	2	65001-
10		07430-71380	· · O-ring	1	65001-
11		01252-60820	· · Bolt	4	65001-
12		01643-31032	· · Washer	1	65001-
13		723-63-31670	· · Retainer	1	65001-
14		723-63-31710	· · Case	1	65001-
15		01010-81075	· · Bolt	1	65001-
16		723-63-31720	· · Spacer	1	65001-
17		723-63-31730	· · Retainer	1	65001-
18		723-63-31740	· · Spring	1	65001-
19		723-63-31790	· · Case	1	65001-
20		100-30-15140	· · O-ring	1	65001-
21	C1		· · Retainer	1	65001-
22		723-62-31720	· · Plug	1	65001-
23		700-61-49160	· · O-ring	1	65001-
24		723-63-31850	· · O-ring	1	65001-
25		723-63-31860	· · Ring	1	65001-
26		709-74-92821	· · Plug	1	65001-
27		709-94-92811	· · Valve	1	65001-
28		709-94-91751	· · Spring	1	65001-

Printed By : Dwi Iswanto (airafather6107170)

Index	Code	Part Number	Description	Qty	Serial No.
29		700-93-11320	· · O-ring	1	65001-
30		700-93-11330	· · Ring, Back-up	1	65001-

Printed By : Dwi Iswanto (airafather6107170)

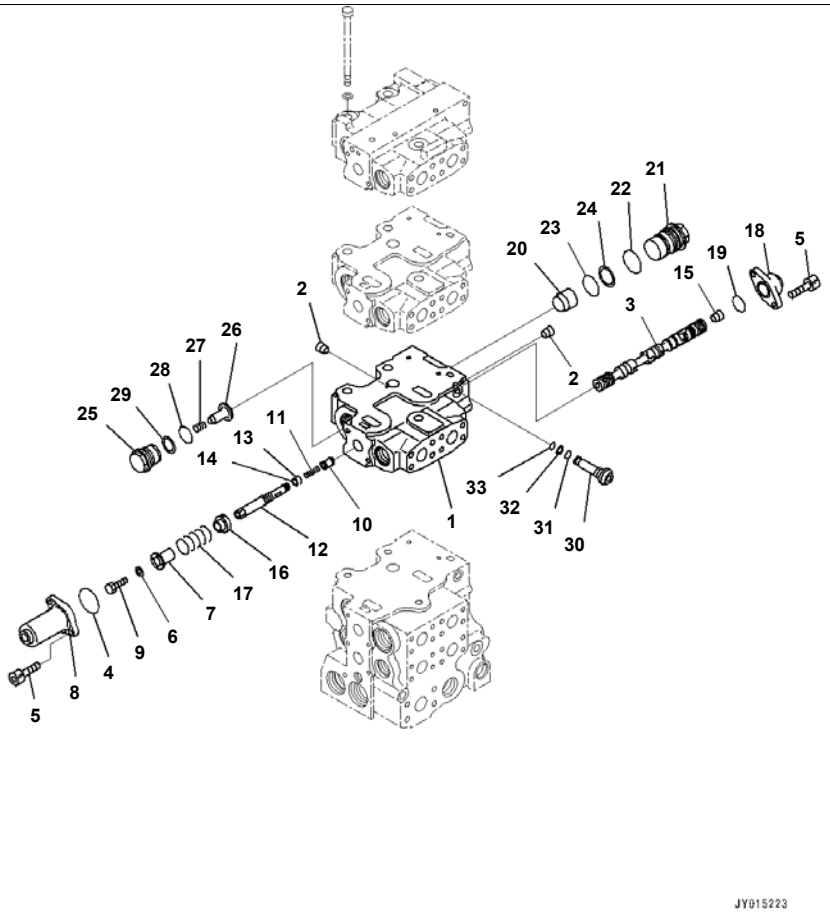

D375A-6R S/N 65001-UP
Fender, Large Capacity Battery, Extra Bad Fuel And Poor Fuel Arrangement, Water+Dust, Additional Filter, Control Valve (9/10) (#

Index	Code	Part Number	Description	Qty	Serial No.
		723-65-22100	Valve Assembly, Control	1	65001-
	C1		· Valve Assembly	1	65001-
1	C1		· · Block	1	65001-
2	C1		· · Plug	2	65001-
3	C1		· · Spool	1	65001-
4		07430-71380	· · O-ring	1	65001-
5		01252-60820	· · Bolt	4	65001-
6		01643-31032	· · Washer	1	65001-
7		723-63-32850	· · Retainer	1	65001-
8		723-63-31710	· · Case	1	65001-
9		01010-81016	· · Bolt	1	65001-
10		723-63-32540	· · Valve	1	65001-
11		723-63-32550	· · Spring	1	65001-
12		723-63-31930	· · Plug	1	65001-
13		07000-11009	· · O-ring	1	65001-
14		07001-01009	· · Ring, Back-up	1	65001-
15	C1		· · Plug, Tapered	1	65001-
16		723-63-31730	· · Retainer	1	65001-
17		723-63-32840	· · Spring	1	65001-
18		723-63-31790	· · Case	1	65001-
19		100-30-15140	· · O-ring	1	65001-
20	C1		· · Retainer	1	65001-
21		723-62-31720	· · Plug	1	65001-
22		700-61-49160	· · O-ring	1	65001-
23		723-63-31850	· · O-ring	1	65001-
24		723-63-31860	· · Ring	1	65001-
25		709-74-92821	· · Plug	1	65001-
26		709-94-92811	· · Valve	1	65001-
27		709-94-91751	· · Spring	1	65001-
28		700-93-11320	· · O-ring	1	65001-

Printed By : Dwi Iswanto (airafather6107170)

Index	Code	Part Number	Description	Qty	Serial No.
29		700-93-11330	· · Ring, Back-up	1	65001-
30		723-63-31621	· · Plug	1	65001-
31		07002-11023	· · O-ring	1	65001-
32		07001-01005	· · Ring, Back-up	1	65001-
33		07000-11005	· · O-ring	1	65001-

Printed By : Dwi Iswanto (airafather6107170)

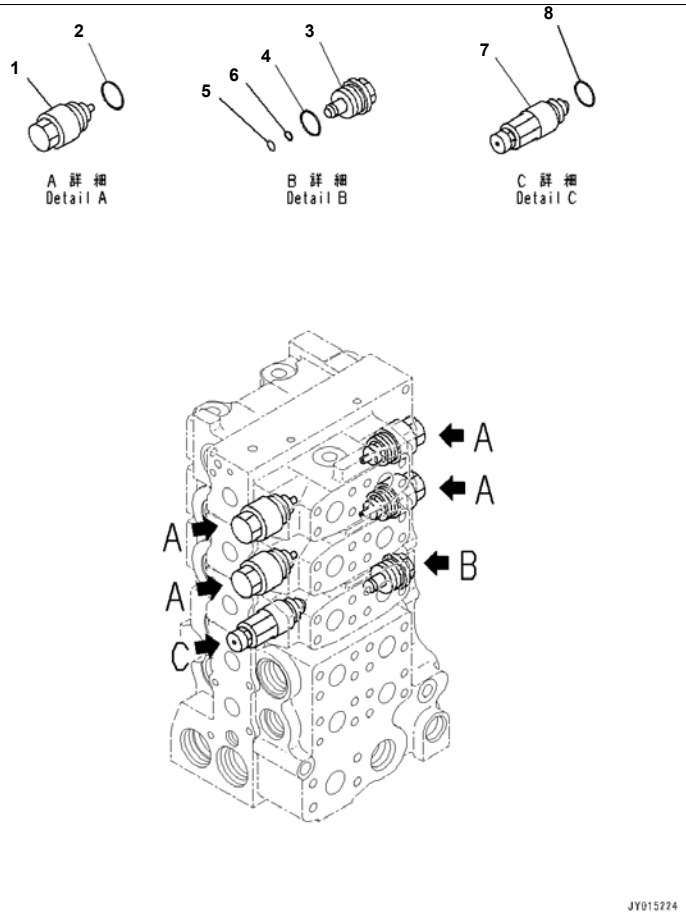

D375A-6R S/N 65001-UP
Fender, Large Capacity Battery, Extra Bad Fuel And Poor Fuel Arrangement, Water+Dust, Additional Filter, Control Valve (10/10) (

Index	Code	Part Number	Description	Qty	Serial No.
		723-65-22100	Valve Assembly, Control	1	65001-
1		723-40-85100	· Valve Assembly, Suction	4	65001-
2		709-25-11390	· · O-ring	1	65001-
3		709-74-91510	· Plug	1	65001-
4		07000-13024	· O-ring	1	65001-
5		07000-11009	· O-ring	1	65001-
6		07001-01009	· Ring, Back-up	1	65001-
7		723-40-91200	· Valve Assembly, Suction and Relief	1	65001-
8		709-25-11390	· · O-ring	1	65001-

Printed By : Dwi Iswanto (airafather6107170)

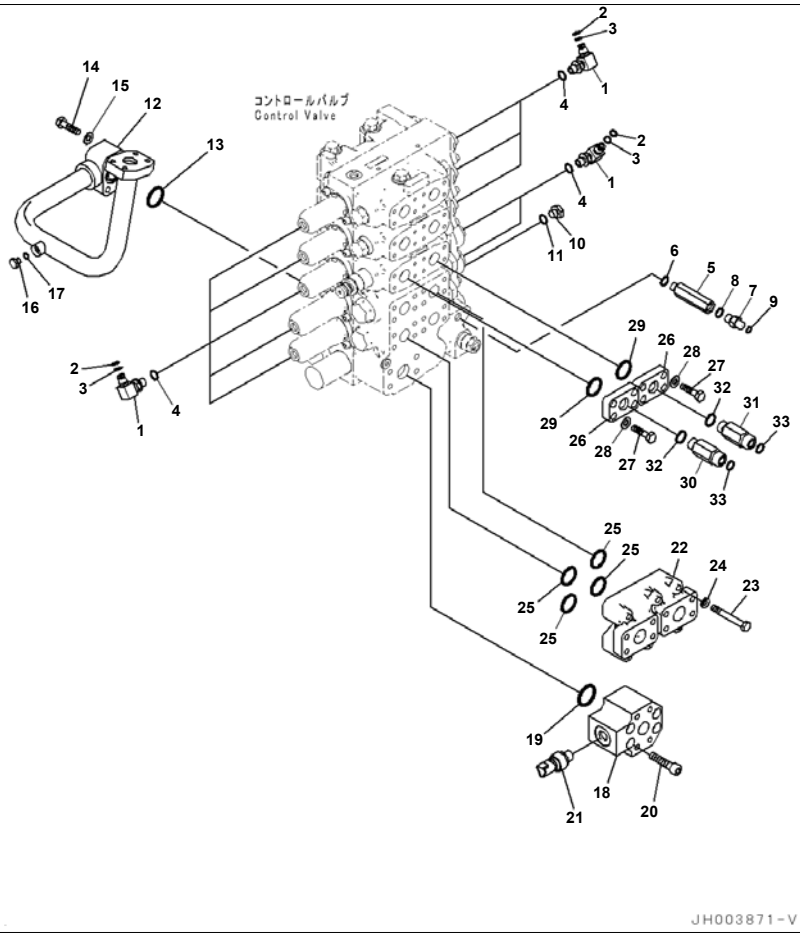

Index	Code	Part Number	Description	Qty	Serial No.
1		20Y-62-22271	Elbow	10	65001-
2		201-60-11390	· O-ring	1	65001-
3		20Y-62-19560	· O-ring	1	65001-
4		07002-11423	O-ring	10	65001-
5		20Y-62-27680	Adapter	1	65001-
6		07002-11423	O-ring	1	65001-
7		20Y-62-41910	Nipple	1	65001-
8		07002-11423	O-ring	1	65001-
9		02896-11008	O-ring	1	65001-
10		07040-11409	Plug	1	65001-
11		07002-11423	O-ring	1	65001-
12		195-60-52521	Tube	1	65001-
13		07000-13035	O-ring	1	65001-
14		01010-81060	Bolt	4	65001-
15		01643-31032	Washer	4	65001-
16		07040-11007	Plug	1	65001-
17		07002-11023	O-ring	1	65001-
18		195-60-52551	Block	1	65001-
19		07000-13038	O-ring	1	65001-
20		01252-A1275	Bolt, Hexagon Socket Head	4	65001-
21		7861-93-1651	Sensor	1	65001-
22		195-61-61971	Joint	1	65001-
23		195-78-63210	Bolt	6	65001-
24		01643-51032	Washer	6	65001-
25		07000-13032	O-ring	4	65001-
26		17M-61-43180	Plate	2	65001-
27		07372-21035	Bolt	8	65001-
28		01643-51032	Washer	8	65001-
29		07000-13032	O-ring	2	65001-
30		21W-62-43121	Nipple	1	65001-

Printed By : Dwi Iswanto (airafather6107170)

Index	Code	Part Number	Description	Qty	Serial No.
31		419-62-43120	Nipple	1	65001-
32		07002-12034	O-ring	2	65001-
33		02896-11015	O-ring	2	65001-

Printed By : Dwi Iswanto (airafather6107170)

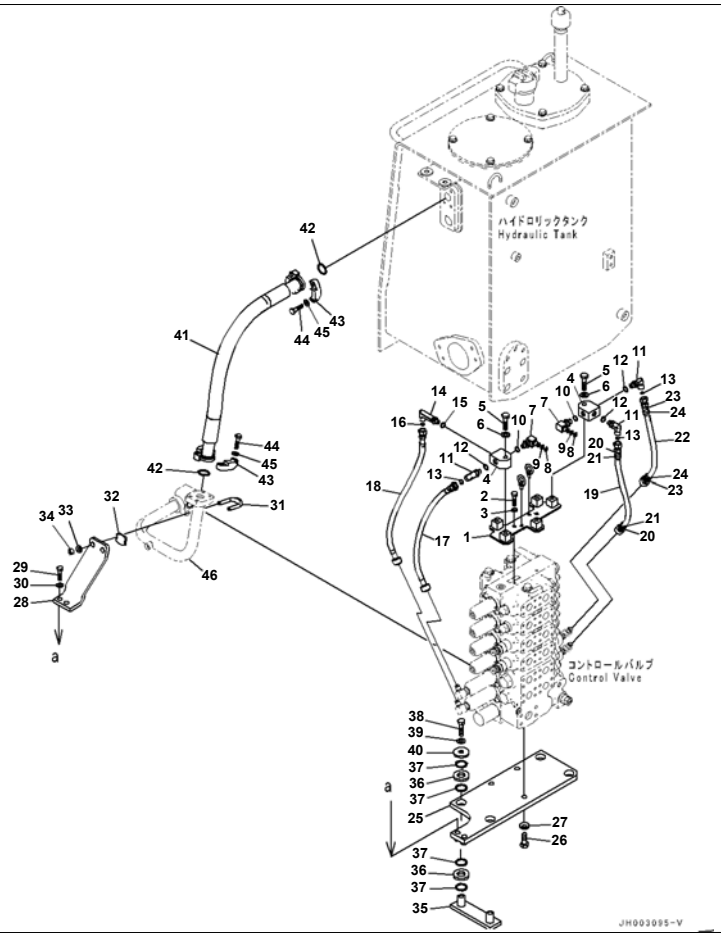

Reference:M2210-012023 Page:M015024

D375A-6R S/N 65001-UP
Fender, Large Capacity Battery, Extra Bad Fuel And Poor Fuel Arrangement, Water+Dust, Additional Filter, Control Valve Related P

Index	Code	Part Number	Description	Qty	Serial No.
1		195-60-52531	Bracket	1	65001-
2		01010-80835	Bolt	2	65001-
3		01643-30823	Washer	2	65001-
4		207-62-52550	Tee	2	65001-
5		01010-81255	Bolt	2	65001-
6		01643-31232	Washer	2	65001-
7		20Y-62-22271	Elbow	2	65001-
8		201-60-11390	· O-ring	1	65001-
9		20Y-62-19560	· O-ring	1	65001-
10		07002-11423	O-ring	2	65001-
11		02782-10311	Elbow	3	65001-
12		07002-11423	O-ring	3	65001-
13		02896-11009	O-ring	3	65001-
14		02782-10312	Elbow	1	65001-
15		07002-11423	O-ring	1	65001-
16		02896-11009	O-ring	1	65001-
17		195-61-44830	Hose Assembly	1	65001-
18		195-61-44840	Hose Assembly	1	65001-
19		195-61-44760	Hose Assembly	1	65001-
20		20Y-62-22790	· Band, Red	2	65001-
21		20Y-62-22830	· Band, White	2	65001-
22		195-61-44770	Hose Assembly	1	65001-
23		20Y-62-22790	· Band, Red	2	65001-
24		20Y-62-22830	· Band, White	2	65001-
25		195-60-52511	Bracket	1	65001-
26		01010-81440	Bolt	3	65001-
27		01643-31445	Washer	3	65001-
28		195-60-52541	Plate	1	65001-
29		01010-81250	Bolt	2	65001-
30		01643-31232	Washer	2	65001-

Reference:M2210-012023 Page:M015024

Printed By : Dwi Iswanto (airafather6107170)

Index	Code	Part Number	Description	Qty	Serial No.
31		07283-33450	Clip	1	65001-
32		07283-53444	Seat	1	65001-
33		01643-31032	Washer	2	65001-
34		01597-01009	Nut	2	65001-
35		17A-60-12321	Bracket	2	65001-
36		14X-60-12120	Cushion	8	65001-
37		07000-13025	O-ring	16	65001-
38		01010-81275	Bolt	4	65001-
39		01643-31232	Washer	4	65001-
40		561-74-61750	Washer	4	65001-
41		07296-012A7	Hose, Flange Type	1	65001-
42		07000-13038	O-ring	2	65001-
43		07371-31255	Flange, Split	4	65001-
44		07372-21035	Bolt	8	65001-
45		01643-51032	Washer	8	65001-
46		(195-60-52521)	Tube		

Printed By : Dwi Iswanto (airafather6107170)

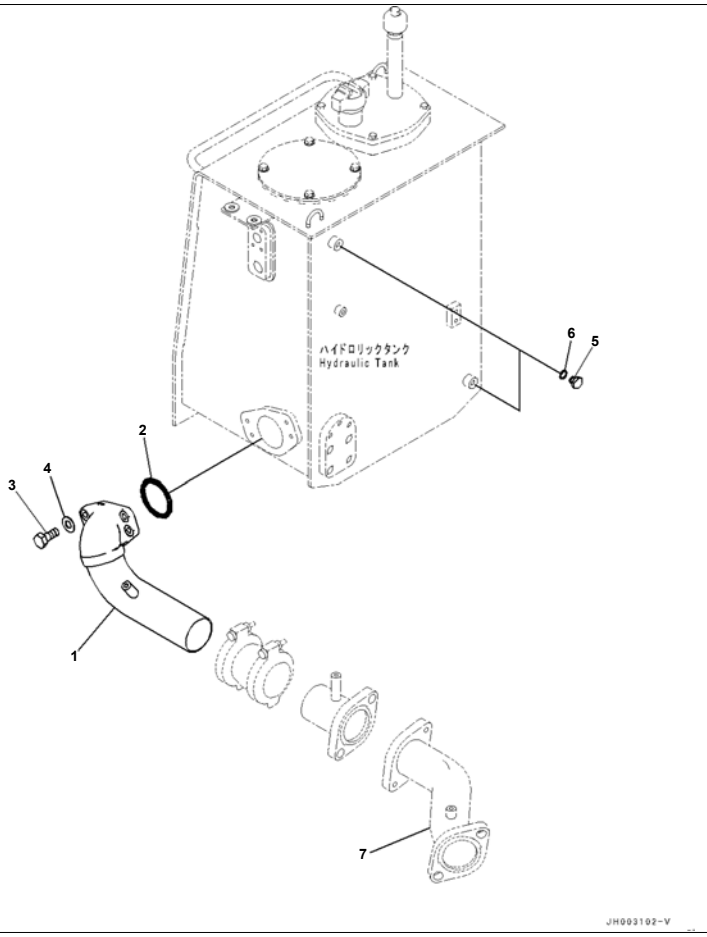

Index	Code	Part Number	Description	Qty	Serial No.
1		195-60-52421	Tube	1	65001-
2		07000-12110	O-ring	1	65001-
3		01010-81235	Bolt	4	65001-
4		01643-31232	Washer	4	65001-
5		07040-11409	Plug	2	65001-
6		07002-11423	O-ring	2	65001-
7		(195-60-52411)	Tube		

Printed By : Dwi Iswanto (airafather6107170)

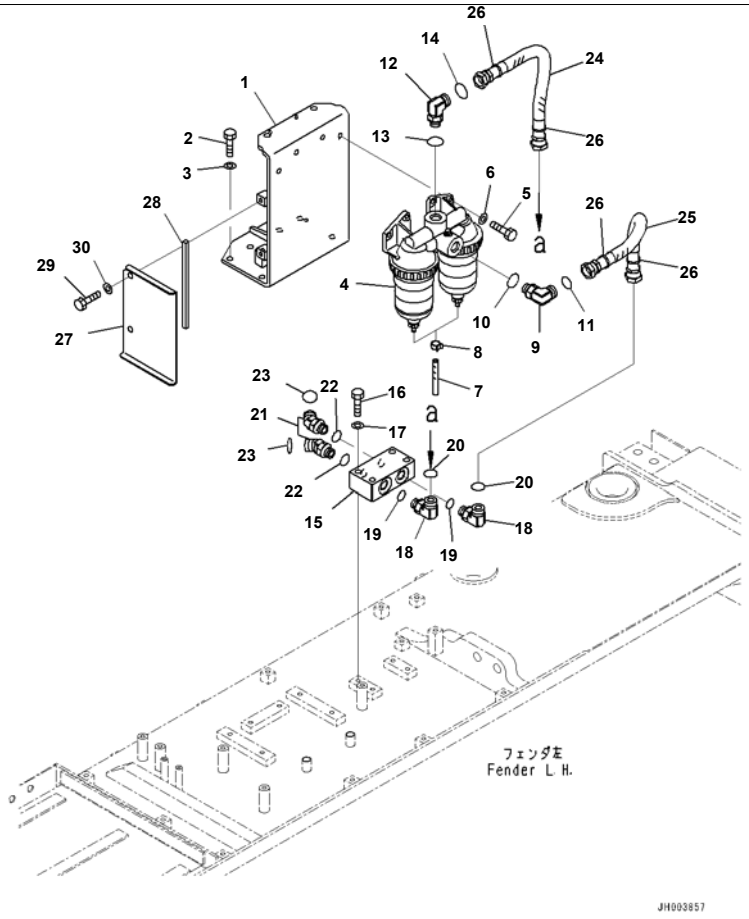

Index	Code	Part Number	Description	Qty	Serial No.
1		195-04-45111	Bracket	1	65001-
2		01010-81230	Bolt	6	65001-
3		01643-31232	Washer	6	65001-
4		600-311-9330	Water Separator	1	65001-
5		01010-81035	Bolt	4	65001-
6		01643-31032	Washer	4	65001-
7		07286-00809	Hose	2	65001-
8		11Y-09-11130	Clamp	2	65001-
9		02782-10628	Elbow	1	65001-
10		07002-12434	O-ring	1	65001-
11		02896-11018	O-ring	1	65001-
12		02782-10628	Elbow	1	65001-
13		07002-12434	O-ring	1	65001-
14		02896-11018	O-ring	1	65001-
15		195-04-42150	Joint	1	65001-
16		01010-81270	Bolt	4	65001-
17		01643-31232	Washer	4	65001-
18		02782-10628	Elbow	2	65001-
19		02896-11018	O-ring	2	65001-
20		07002-12434	O-ring	2	65001-
21		02783-10628	Elbow	2	65001-
22		02896-11018	O-ring	2	65001-
23		07002-12434	O-ring	2	65001-
24		02762-00605	Hose, Face Seal Type	1	65001-
25		02762-006A5	Hose, Face Seal Type	1	65001-
26		20Y-62-22810	Band, Yellow	4	65001-
27		195-04-45121	Cover	1	65001-
28		195-04-45130	･ Sheet	1	65001-
29		01010-81230	Bolt	2	65001-
30		01643-31232	Washer	2	65001-

Printed By : Dwi Iswanto (airafather6107170)

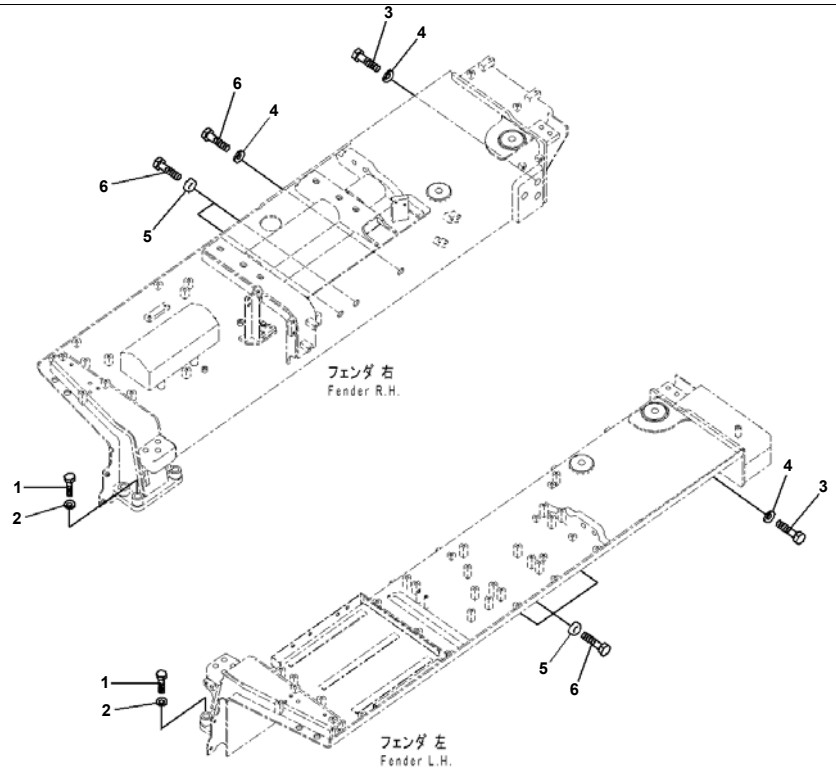

Reference:M2214-003001 Page:M019001

D375A-6R S/N 65001-UP
Fender Related Parts, Bolt (#65001-)

Index	Code	Part Number	Description	Qty	Serial No.
1		01011-82405	Bolt	8	65001-
2		01643-32460	Washer	8	65001-
3		01011-83000	Bolt	6	65001-
4		01643-33080	Washer	7	65001-
5		198-978-9987	Spacer	5	65001-
6		01010-83075	Bolt	6	65001-

Printed By : Dwi Iswanto (airafather6107170)

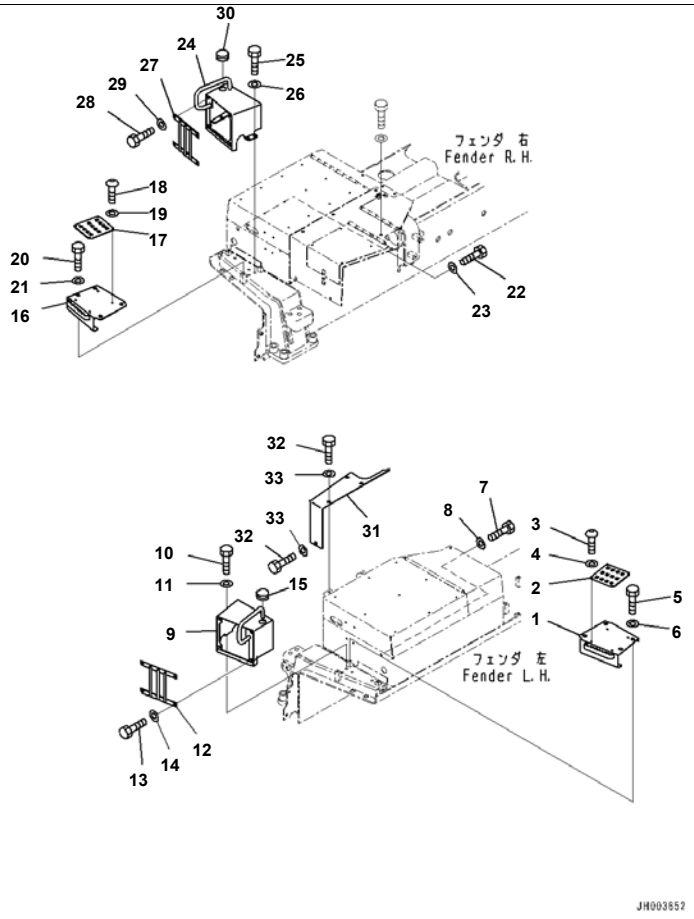

Reference:M2214-003002 Page:M019002

D375A-6R S/N 65001-UP
Fender Related Parts, Fender Cover (#65001-)

Index	Code	Part Number	Description	Qty	Serial No.
1		195-54-85251	Cover	1	65001-
2		195-54-85271	Plate	1	65001-
3		01245-00816	Screw	4	65001-
4		01643-70823	Washer	4	65001-
5		01010-81230	Bolt	4	65001-
6		175-54-34170	Washer	4	65001-
7		01010-81230	Bolt	1	65001-
8		175-54-34170	Washer	1	65001-
9		195-54-82171	Cover	1	65001-
10		01010-81240	Bolt	3	65001-
11		01643-31232	Washer	3	65001-
12		198-54-75110	Cover	1	65001-
13		01010-81230	Bolt	4	65001-
14		01643-31232	Washer	4	65001-
15		09415-03614	Cap	1	65001-
16		195-54-85261	Cover	1	65001-
17		195-54-85281	Plate	1	65001-
18		01245-00816	Screw	4	65001-
19		01643-70823	Washer	4	65001-
20		01010-81230	Bolt	4	65001-
21		175-54-34170	Washer	4	65001-
22		01010-81230	Bolt	1	65001-
23		175-54-34170	Washer	1	65001-
24		195-54-82181	Cover	1	65001-
25		01010-81240	Bolt	3	65001-
26		01643-31232	Washer	3	65001-
27		198-54-75110	Cover	1	65001-
28		01010-81230	Bolt	4	65001-
29		01643-31232	Washer	4	65001-
30		09415-03614	Cap	1	65001-
31		195-54-82311	Cover	1	65001-

Printed By : Dwi Iswanto (airafather6107170)

Index	Code	Part Number	Description	Qty	Serial No.
32		01010-81230	Bolt	4	65001-
33		01643-31232	Washer	4	65001-

Printed By : Dwi Iswanto (airafather6107170)

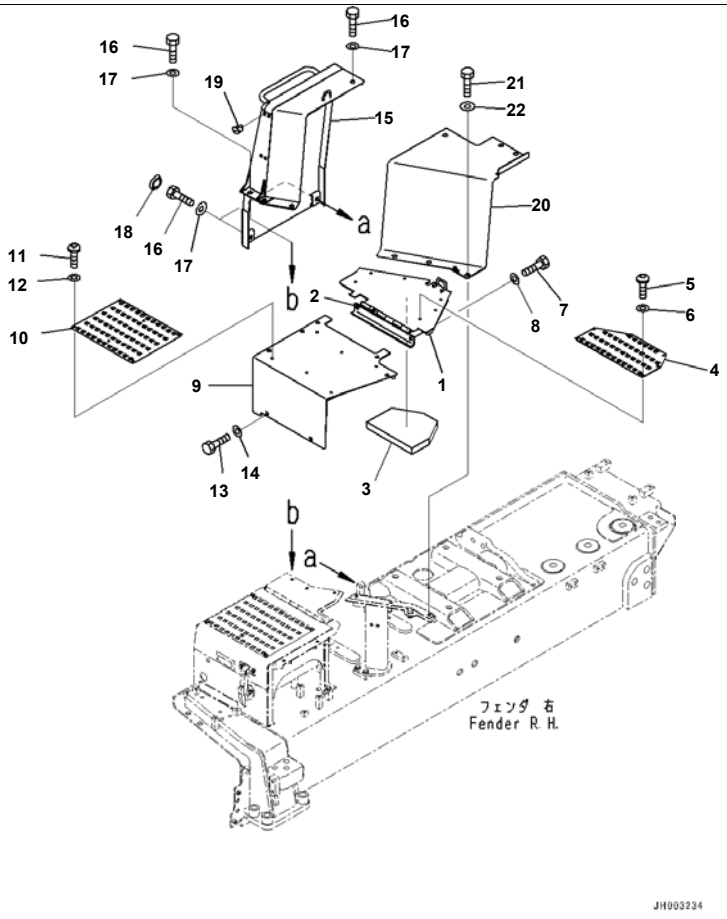

Index	Code	Part Number	Description	Qty	Serial No.
1		195-54-83251	Cover	1	65001-
2		195-54-83421	· Hinge,Welded	1	65001-
3		195-862-9581	· Sheet	1	65001-
4		195-54-82390	Plate	1	65001-
5		01245-00816	Screw	6	65001-
6		01643-70823	Washer	6	65001-
7		01010-81230	Bolt	2	65001-
8		01643-31232	Washer	2	65001-
9		195-54-83371	Cover	1	65001-
10		195-54-81490	Plate	1	65001-
11		01245-00816	Screw	6	65001-
12		01643-70823	Washer	6	65001-
13		01010-81230	Bolt	7	65001-
14		01643-31232	Washer	7	65001-
15		195-54-83281	Cover	1	65001-
16		01010-81230	Bolt	6	65001-
17		130-43-64260	Collar	6	65001-
18		195-54-42981	Cap	2	65001-
19		07049-01215	Plug	4	65001-
20		195-54-83261	Cover	1	65001-
21		01010-81230	Bolt	6	65001-
22		130-43-64260	Collar	6	65001-

Printed By : Dwi Iswanto (airafather6107170)

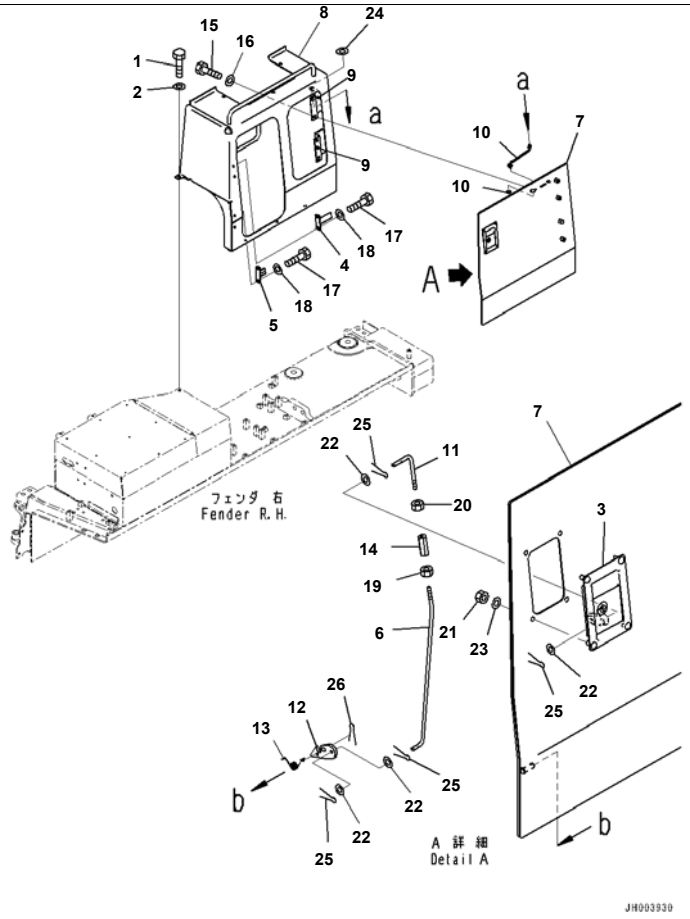

Reference:M2214-003004 Page:M019004

D375A-6R S/N 65001-UP
Fender Related Parts, Fender Cover,LHS (#65001-)

Index	Code	Part Number	Description	Qty	Serial No.
1		01010-81230	Bolt	7	65001-
2		01643-31232	Washer	7	65001-
3		17M-54-45720	Lock	1	65001-
4		17M-54-45730	Bracket	1	65001-
5		195-54-82370	Bracket	1	65001-
6		195-54-82380	Rod	1	65001-
7		195-54-84272	Cover	1	65001-
8		195-54-84361	Cover	1	65001-
9		198-54-66280	· Hinge,Welded	2	65001-
10		195-54-88770	Rod	1	65001-
11		198-54-66321	Rod	1	65001-
12		198-54-66330	Hook	1	65001-
13		417-54-21610	Spring	1	65001-
14		421-54-21780	Joint	1	65001-
15		01010-81220	Bolt	4	65001-
16		01643-31232	Washer	4	65001-
17		01010-81225	Bolt	4	65001-
18		01643-31232	Washer	4	65001-
19		01508-40603	Nut, Left-handed	1	65001-
20		01580-10605	Nut	1	65001-
21		01580-10806	Nut	4	65001-
22		01640-20610	Washer	4	65001-
23		01643-30823	Washer	4	65001-
24		01643-31032	Washer	1	65001-
25		04050-11612	Pin, Cotter	4	65001-
26		04050-13020	Pin, Cotter	2	65001-

Reference:M2214-003004 Page:M019004

Printed By : Dwi Iswanto (airafather6107170)

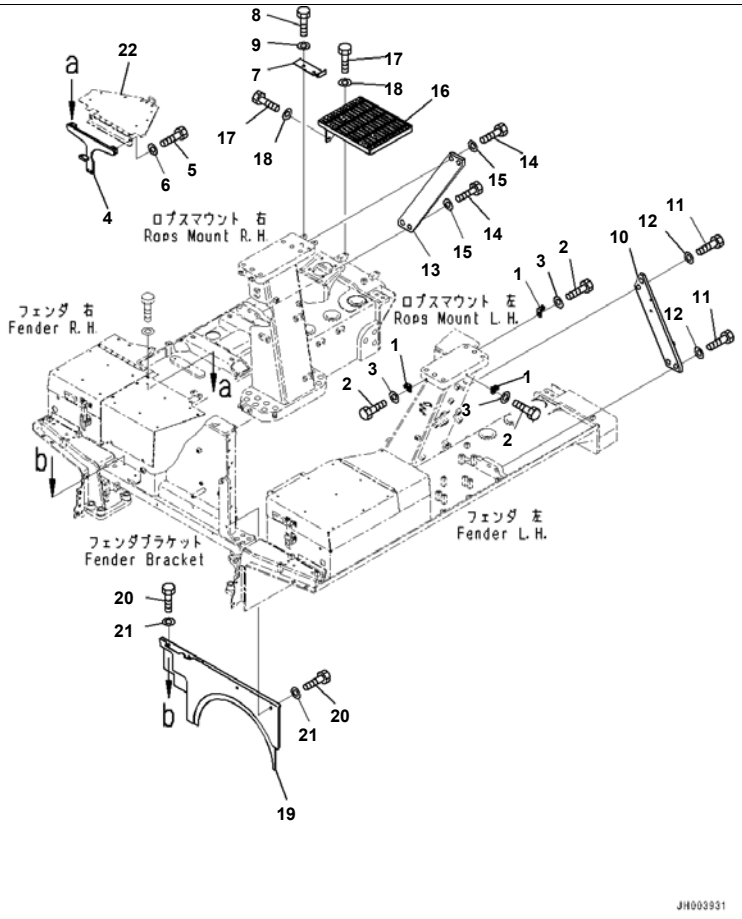

Reference:M2214-003005 Page:M019005

D375A-6R S/N 65001-UP
Fender Related Parts, Fender Cover Other Parts (#65001-)

Index	Code	Part Number	Description	Qty	Serial No.
1		195-54-82291	Bracket	3	65001-
2		01010-81230	Bolt	3	65001-
3		01643-31232	Washer	3	65001-
4		195-54-82442	Bracket	1	65001-
5		01010-81230	Bolt	2	65001-
6		01643-31232	Washer	2	65001-
7		195-54-83271	Cover	1	65001-
8		01010-81230	Bolt	2	65001-
9		130-43-64260	Collar	2	65001-
10		195-54-77350	Plate	1	65001-
11		01010-82765	Bolt	4	65001-
12		01643-32780	Washer	4	65001-
13		195-54-67250	Plate	1	65001-
14		01010-82765	Bolt	4	65001-
15		01643-32780	Washer	4	65001-
16		198-54-76361	Step	1	65001-
17		01010-81230	Bolt	5	65001-
18		01643-31232	Washer	5	65001-
19		195-54-82142	Cover	1	65001-
20		01010-81225	Bolt	4	65001-
21		01643-31232	Washer	4	65001-
22		(195-54-83251)	Cover		

Reference:M2214-003005 Page:M019005

Printed By : Dwi Iswanto (airafather6107170)

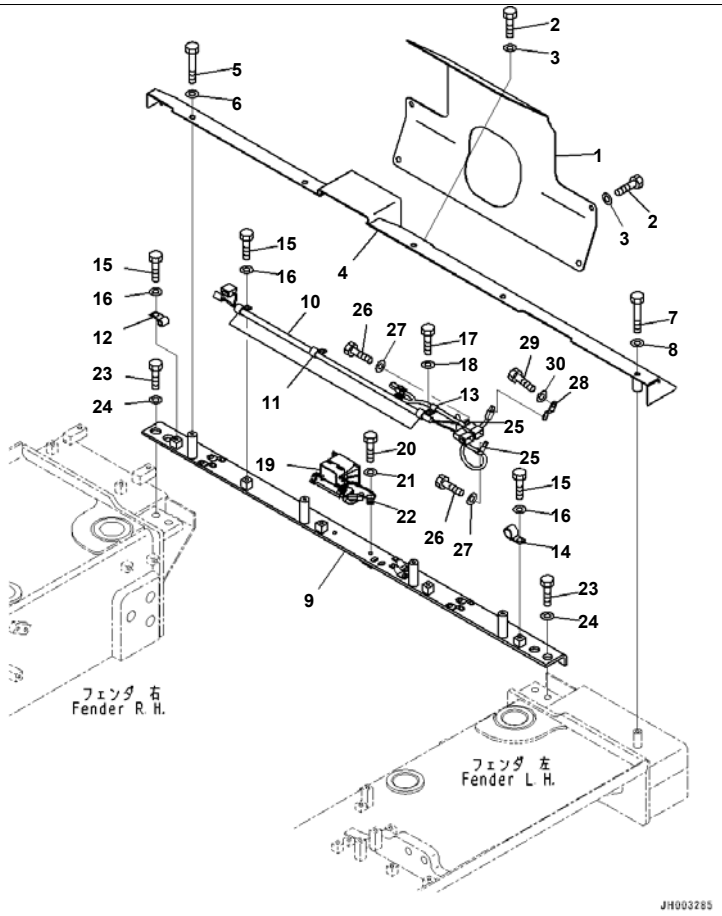

D375A-6R S/N 65001-UP
Rear Cover, (#65001-65000)

Index	Code	Part Number	Description	Qty	Serial No.
1		195-54-86130	Plate	1	65001-@
2		01010-81230	Bolt	6	65001-@
3		01643-31232	Washer	6	65001-@
4		195-54-86121	Cover	1	65001-@
5		01010-81220	Bolt	4	65001-@
6		01643-31232	Washer	4	65001-@
7		01010-81280	Bolt	1	65001-@
8		01643-31232	Washer	1	65001-@
9		195-54-86111	Bracket	1	65001-@
10		195-06-55631	Wiring Harness	1	65001-@
11		04434-51912	Clip	3	65001-@
12		04434-51212	Clip	1	65001-@
13		04434-51012	Clip	1	65001-@
14		04434-52112	Clip	1	65001-@
15		01010-81220	Bolt	4	65001-@
16		01643-31232	Washer	4	65001-@
17		01010-81230	Bolt	1	65001-@
18		01643-31232	Washer	1	65001-@
19		20Y-06-41812	Alarm, Back-up	1	65001-@
20		01010-81030	Bolt	2	65001-65000
21		01643-31032	Washer	2	65001-65000
22		04434-50610	Clip	1	65001-@
23		01010-82450	Bolt	4	65001-@
24		01643-32460	Washer	4	65001-@
25		04434-51012	Clip	2	65001-@
26		01010-81220	Bolt	2	65001-@
27		01643-31232	Washer	2	65001-@
28		08193-21012	Clip	1	65001-@
29		01010-81220	Bolt	1	65001-@
30		01643-31232	Washer	1	65001-@

Printed By : Dwi Iswanto (airafather6107170)

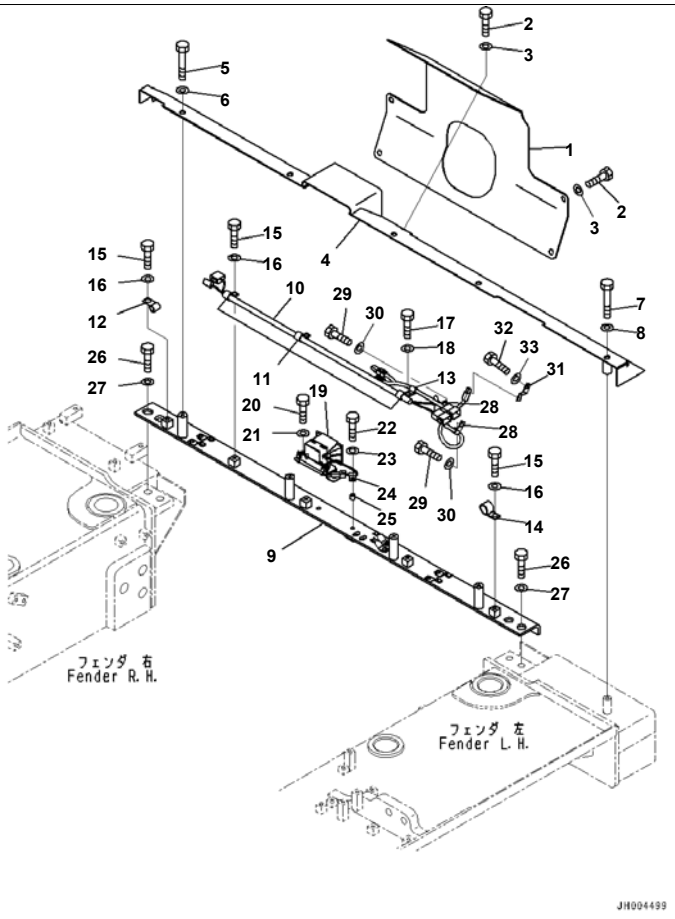

Index	Code	Part Number	Description	Qty	Serial No.
1		195-54-86130	Plate	1	65001-
2		01010-81230	Bolt	6	65001-
3		01643-31232	Washer	6	65001-
4		195-54-86121	Cover	1	65001-
5		01010-81220	Bolt	4	65001-
6		01643-31232	Washer	4	65001-
7		01010-81280	Bolt	1	65001-
8		01643-31232	Washer	1	65001-
9		195-54-86111	Bracket	1	65001-
10		195-06-55631	Wiring Harness	1	65001-
11		04434-51912	Clip	3	65001-
12		04434-51212	Clip	1	65001-
13		04434-51012	Clip	1	65001-
14		04434-52112	Clip	1	65001-
15		01010-81220	Bolt	4	65001-
16		01643-31232	Washer	4	65001-
17		01010-81230	Bolt	1	65001-
18		01643-31232	Washer	1	65001-
19		20Y-06-41812	Alarm, Back-up	1	65001-
20		01010-81030	Bolt	1	65001-
21		01643-31032	Washer	1	65001-
22		01010-81045	Bolt	1	65001-
23		01643-31032	Washer	1	65001-
24		04434-50610	Clip	1	65001-
25		23B-54-71450	Spacer	1	65001-
26		01010-82450	Bolt	4	65001-
27		01643-32460	Washer	4	65001-
28		04434-51012	Clip	2	65001-
29		01010-81220	Bolt	2	65001-
30		01643-31232	Washer	2	65001-
31		08193-21012	Clip	1	65001-

Printed By : Dwi Iswanto (airafather6107170)

Index	Code	Part Number	Description	Qty	Serial No.
32		01010-81220	Bolt	1	65001-
33		01643-31232	Washer	1	65001-

Printed By : Dwi Iswanto (airafather6107170)

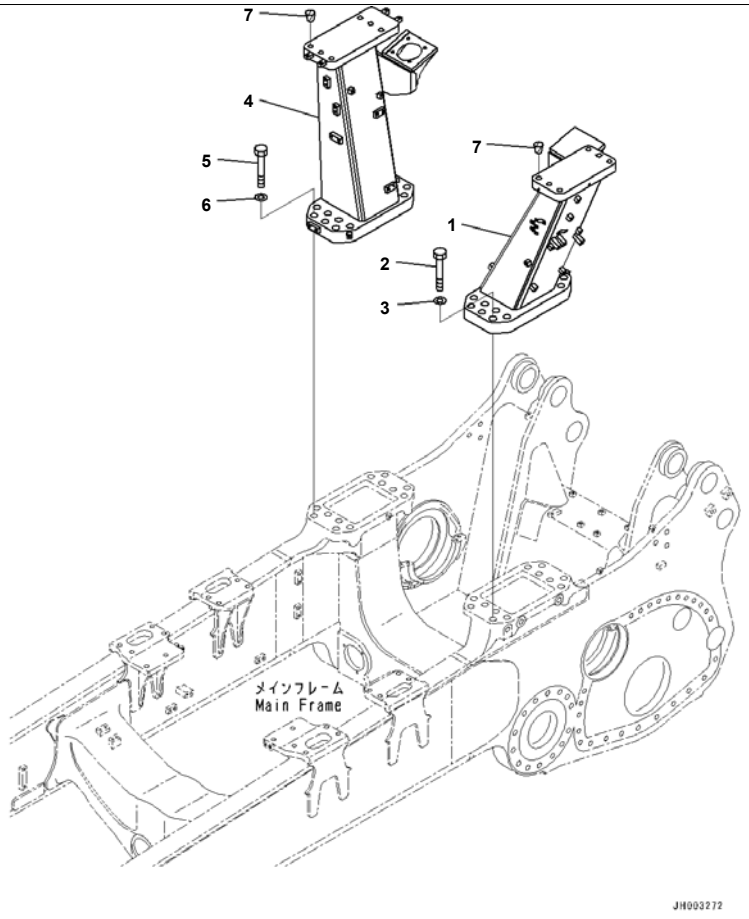

D375A-6R S/N 65001-UP
ROPS Mounts (#65001-)

Index	Code	Part Number	Description	Qty	Serial No.
1		195-54-83231	Bracket	1	65001-
2		01011-83640	Bolt	12	65001-
3		01643-33690	Washer	12	65001-
4		195-54-83241	Bracket	1	65001-
5		01011-83640	Bolt	12	65001-
6		01643-33690	Washer	12	65001-
7		07049-03038	Plug	12	65001-

Printed By : Dwi Iswanto (airafather6107170)

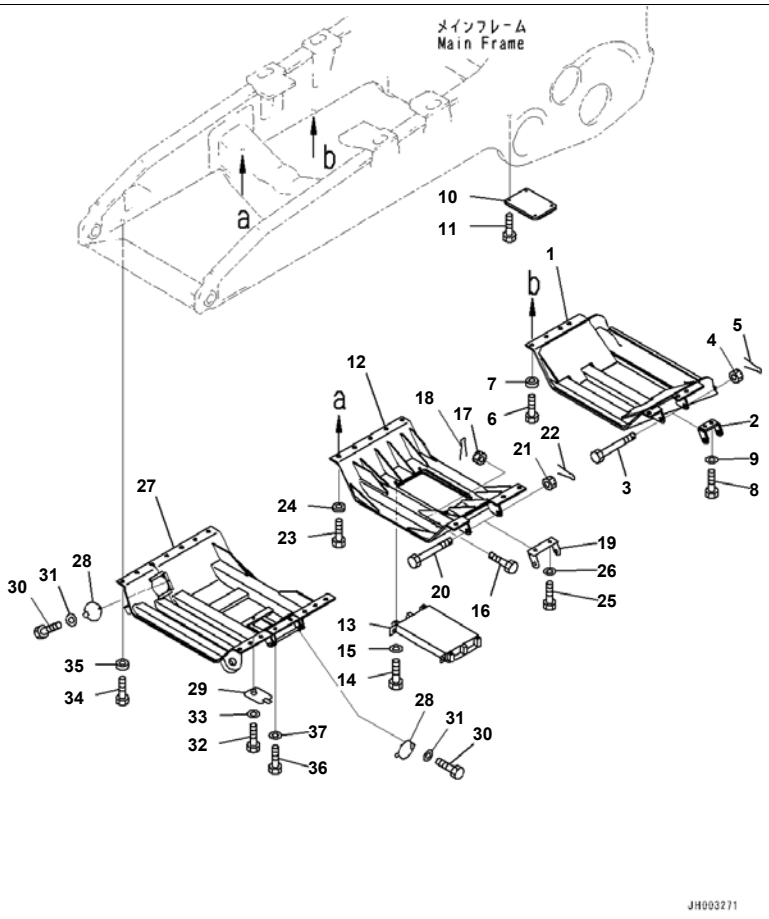

D375A-6R S/N 65001-UP
Under Guard, Hinged Under Guard (#65001-)

Index	Code	Part Number	Description	Qty	Serial No.
1		195-54-85420	Cover	1	65001-
2		195-54-46431	Bracket	1	65001-
3		141-30-37310	Bolt	1	65001-
4		01590-33033	Nut, Slotted	1	65001-
5		04050-16055	Pin, Cotter	1	65001-
6		01010-82470	Bolt	7	65001-
7		176-50-11170	Spacer	7	65001-
8		01010-82450	Bolt	2	65001-
9		01643-32460	Washer	2	65001-
10		195-54-46164	Cover	1	65001-
11		01010-81640	Bolt	4	65001-
12		195-54-85410	Cover	1	65001-
13		195-54-56140	Cover	1	65001-
14		01010-81280	Bolt	4	65001-
15		01643-31232	Washer	4	65001-
16		01012-81270	Bolt	2	65001-
17		01590-31215	Nut, Slotted	2	65001-
18		04050-13022	Pin, Cotter	2	65001-
19		195-54-46350	Bracket	1	65001-
20		175-54-23471	Bolt	1	65001-
21		01590-33033	Nut, Slotted	1	65001-
22		04050-16055	Pin, Cotter	1	65001-
23		01010-82470	Bolt	8	65001-
24		176-50-11170	Spacer	8	65001-
25		01010-82450	Bolt	2	65001-
26		01643-32460	Washer	2	65001-
27		195-54-85210	Cover	1	65001-
28		195-54-46150	Cover	2	65001-
29		175-54-23240	Cover	1	65001-
30		01010-81220	Bolt	2	65001-
31		01643-31232	Washer	2	65001-

Printed By : Dwi Iswanto (airafather6107170)

Index	Code	Part Number	Description	Qty	Serial No.
32		01010-81225	Bolt	1	65001-
33		01643-31232	Washer	1	65001-
34		01010-82470	Bolt	13	65001-
35		176-50-11170	Spacer	13	65001-
36		01010-82450	Bolt	2	65001-
37		01643-32460	Washer	2	65001-

Printed By : Dwi Iswanto (airafather6107170)

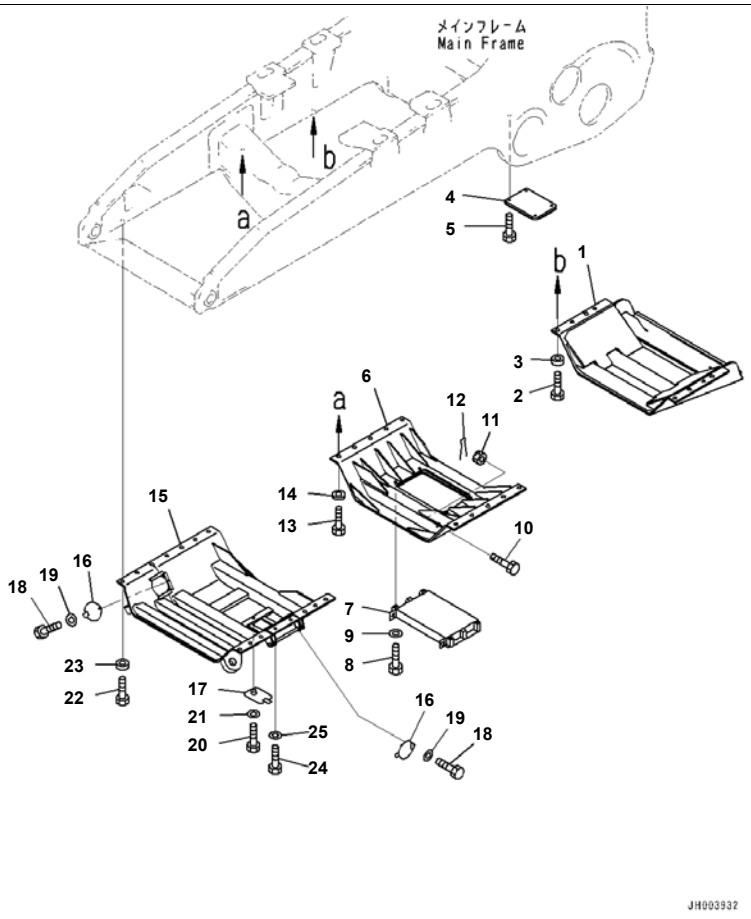

D375A-6R S/N 65001-UP
Under Guard, Pull Hook (#65001-)

Index	Code	Part Number	Description	Qty	Serial No.
1		195-54-56130	Cover	1	65001-
2		01010-82470	Bolt	8	65001-
3		176-50-11170	Spacer	8	65001-
4		195-54-46164	Cover	1	65001-
5		01010-81640	Bolt	4	65001-
6		195-54-56120	Cover	1	65001-
7		195-54-56140	Cover	1	65001-
8		01010-81280	Bolt	4	65001-
9		01643-31232	Washer	4	65001-
10		01012-81270	Bolt	2	65001-
11		01590-31215	Nut, Slotted	2	65001-
12		04050-13022	Pin, Cotter	2	65001-
13		01010-82470	Bolt	10	65001-
14		176-50-11170	Spacer	10	65001-
15		195-54-85210	Cover	1	65001-
16		195-54-46150	Cover	2	65001-
17		175-54-23240	Cover	1	65001-
18		01010-81220	Bolt	2	65001-
19		01643-31232	Washer	2	65001-
20		01010-81225	Bolt	1	65001-
21		01643-31232	Washer	1	65001-
22		01010-82470	Bolt	13	65001-
23		176-50-11170	Spacer	13	65001-
24		01010-82450	Bolt	2	65001-
25		01643-32460	Washer	2	65001-

Printed By : Dwi Iswanto (airafather6107170)

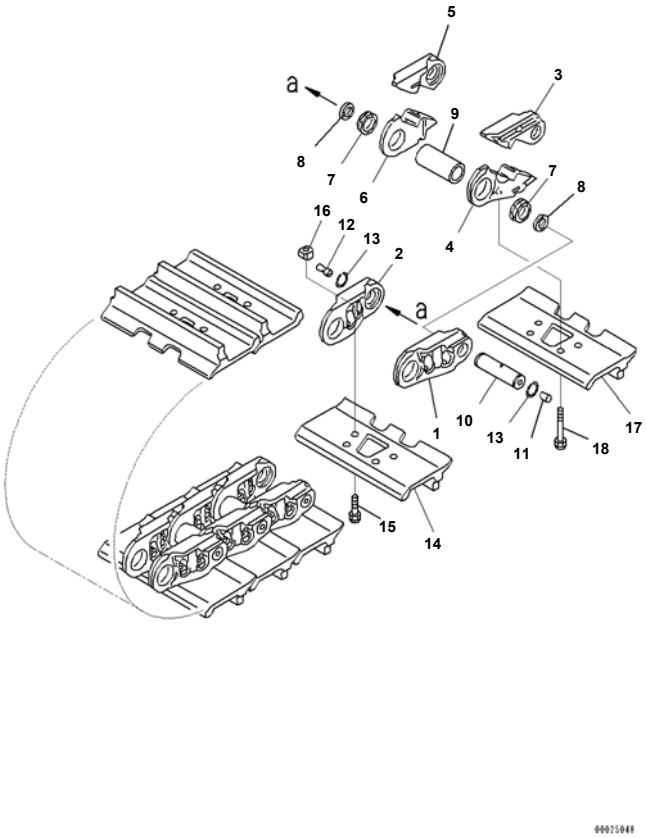

D375A-6R S/N 65001-UP
Track Shoe Assembly, Single Shoe Grouser, Heavy Duty, With Large Holed, 610mm Width (#65001-)

Index	Code	Part Number	Description	Qty	Serial No.
		195-32-04532	Track Shoe Assembly	1	65001-
1		195-32-63120	· Link,LHS	78	65001-
2		195-32-63130	· Link,RHS	78	65001-
		195-32-08410	· Link Kit, Master,LHS	2	65001-
3	C1		· · Link, Master,LHS	1	65001-
4	C1		· · Link, Master,LHS	1	65001-
		195-32-08420	· Link Kit, Master,RHS	2	65001-
5	C1		· · Link, Master,RHS	1	65001-
6	C1		· · Link, Master,RHS	1	65001-
7		195-32-61201	· Seal Assembly	160	65001-
8		195-32-61181	· Spacer	160	65001-
9		195-32-61341	· Bushing	80	65001-
10		195-32-63152	· Pin	80	65001-
11		195-32-41290	· Plug, Large	80	65001-
12		07059-20721	· Plug, Small	80	65001-
13		195-32-63230	· Ring	160	65001-
14		195-32-61411	· Shoe, W=610mm	78	65001-
15		195-32-61210	· Bolt, (Kit : K06)	312	65001-
16		195-32-61220	· Nut, (Kit : K06)	312	65001-
17		195-32-61411	· Shoe, W=610mm	2	65001-
18		195-32-61350	· Bolt, Master Track Shoe	8	65001-

Printed By : Dwi Iswanto (airafather6107170)

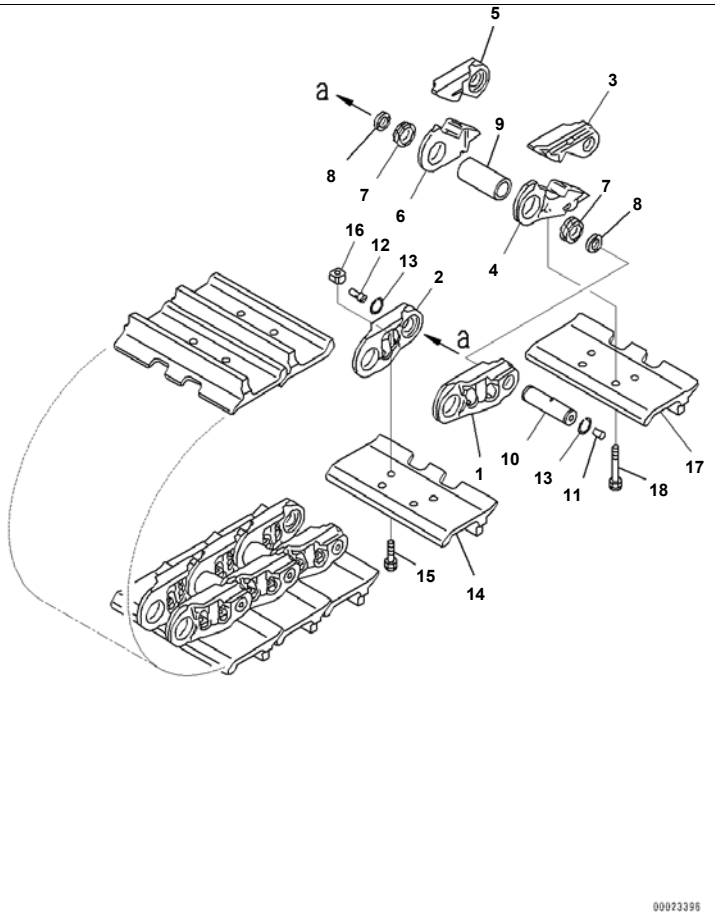

D375A-6R S/N 65001-UP
Track Shoe Assembly, For Heavy Single Grouser Shoe, 610mm Width, Sealed And Lubricated Links, Extreme Cold Area Arrangement (#65

Index	Code	Part Number	Description	Qty	Serial No.
		195-32-04573	Track Shoe Assembly	1	65001-
1		195-32-63120	· Link,LHS	78	65001-
2		195-32-63130	· Link,RHS	78	65001-
		195-32-08410	· Link Kit, Master,LHS	2	65001-
3	C1		· · Link, Master,LHS	1	65001-
4	C1		· · Link, Master,LHS	1	65001-
		195-32-08420	· Link Kit, Master,RHS	2	65001-
5	C1		· · Link, Master,RHS	1	65001-
6	C1		· · Link, Master,RHS	1	65001-
7		195-32-62201	· Seal Assembly	160	65001-
8		195-32-61181	· Spacer	160	65001-
9		195-32-61341	· Bushing	80	65001-
10		195-32-63153	· Pin	80	65001-
11		195-32-41290	· Plug, Large	80	65001-
12		07059-20721	· Plug, Small	80	65001-
13		195-32-63230	· Ring	160	65001-
14		195-32-61111	· Shoe, W=610mm	78	65001-
15		195-32-61210	· Bolt, (Kit : K06)	312	65001-
16		195-32-61220	· Nut, (Kit : K06)	312	65001-
17		195-32-61111	· Shoe, W=610mm	2	65001-
18		195-32-61350	· Bolt, Master Track Shoe	8	65001-

Printed By : Dwi Iswanto (airafather6107170)

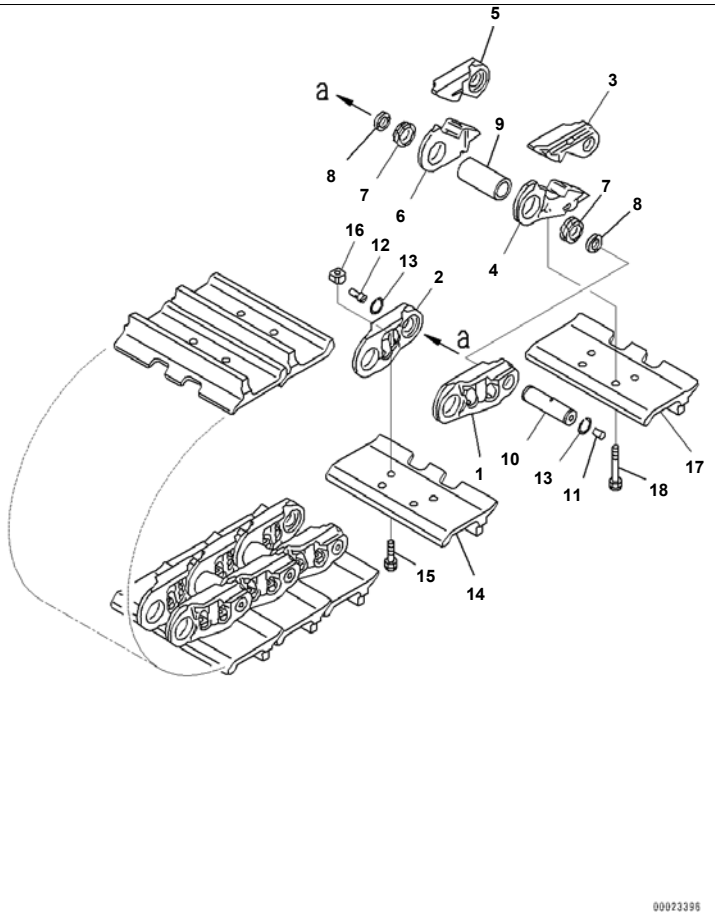

D375A-6R S/N 65001-UP
Track Shoe Assembly, For Heavy Single Grouser Shoe, 610mm Width, Sealed And Lubricated Links (#65001-)

Index	Code	Part Number	Description	Qty	Serial No.
		195-32-04503	Track Shoe Assembly	1	65001-
1		195-32-63120	· Link,LHS	78	65001-
2		195-32-63130	· Link,RHS	78	65001-
		195-32-08410	· Link Kit, Master,LHS	2	65001-
3	C1		· · Link, Master,LHS	1	65001-
4	C1		· · Link, Master,LHS	1	65001-
		195-32-08420	· Link Kit, Master,RHS	2	65001-
5	C1		· · Link, Master,RHS	1	65001-
6	C1		· · Link, Master,RHS	1	65001-
7		195-32-61201	· Seal Assembly	160	65001-
8		195-32-61181	· Spacer	160	65001-
9		195-32-61341	· Bushing	80	65001-
10		195-32-63153	· Pin	80	65001-
11		195-32-41290	· Plug, Large	80	65001-
12		07059-20721	· Plug, Small	80	65001-
13		195-32-63230	· Ring	160	65001-
14		195-32-61111	· Shoe, W=610mm	78	65001-
15		195-32-61210	· Bolt, (Kit : K06)	312	65001-
16		195-32-61220	· Nut, (Kit : K06)	312	65001-
17		195-32-61111	· Shoe, W=610mm	2	65001-
18		195-32-61350	· Bolt, Master Track Shoe	8	65001-

Printed By : Dwi Iswanto (airafather6107170)

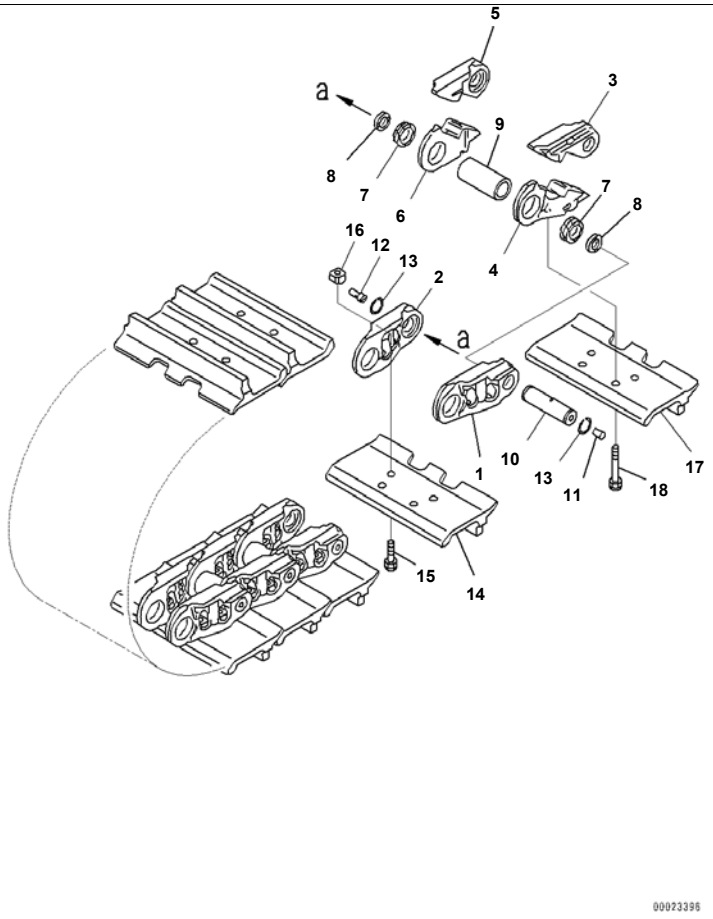

D375A-6R S/N 65001-UP
Track Shoe Assembly, For Heavy Single Grouser Shoe, 710mm Width, Sealed And Lubricated Links (#65001-)

Index	Code	Part Number	Description	Qty	Serial No.
		195-32-04513	Track Shoe Assembly	1	65001-
1		195-32-63120	· Link,LHS	78	65001-
2		195-32-63130	· Link,RHS	78	65001-
		195-32-08410	· Link Kit, Master,LHS	2	65001-
3	C1		· · Link, Master,LHS	1	65001-
4	C1		· · Link, Master,LHS	1	65001-
		195-32-08420	· Link Kit, Master,RHS	2	65001-
5	C1		· · Link, Master,RHS	1	65001-
6	C1		· · Link, Master,RHS	1	65001-
7		195-32-61201	· Seal Assembly	160	65001-
8		195-32-61181	· Spacer	160	65001-
9		195-32-61341	· Bushing	80	65001-
10		195-32-63153	· Pin	80	65001-
11		195-32-41290	· Plug, Large	80	65001-
12		07059-20721	· Plug, Small	80	65001-
13		195-32-63230	· Ring	160	65001-
14		195-32-61371	· Shoe, W=710mm	78	65001-
15		195-32-61210	· Bolt, (Kit : K06)	312	65001-
16		195-32-61220	· Nut, (Kit : K06)	312	65001-
17		195-32-61371	· Shoe, W=710mm	2	65001-
18		195-32-61350	· Bolt, Master Track Shoe	8	65001-

Printed By : Dwi Iswanto (airafather6107170)

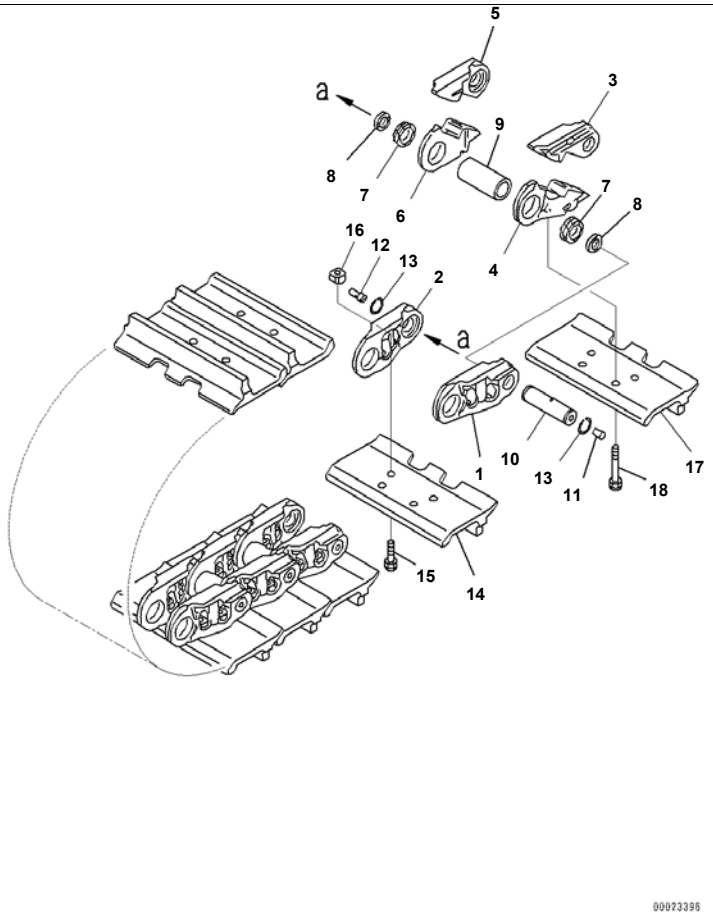

D375A-6R S/N 65001-UP
Track Shoe Assembly, For Heavy Single Grouser Shoe, 810mm Width, Sealed And Lubricated Links (#65001-)

Index	Code	Part Number	Description	Qty	Serial No.
		195-32-04523	Track Shoe Assembly	1	65001-
1		195-32-63120	· Link,LHS	78	65001-
2		195-32-63130	· Link,RHS	78	65001-
		195-32-08410	· Link Kit, Master,LHS	2	65001-
3	C1		· · Link, Master,LHS	1	65001-
4	C1		· · Link, Master,LHS	1	65001-
		195-32-08420	· Link Kit, Master,RHS	2	65001-
5	C1		· · Link, Master,RHS	1	65001-
6	C1		· · Link, Master,RHS	1	65001-
7		195-32-61201	· Seal Assembly	160	65001-
8		195-32-61181	· Spacer	160	65001-
9		195-32-61341	· Bushing	80	65001-
10		195-32-63153	· Pin	80	65001-
11		195-32-41290	· Plug, Large	80	65001-
12		07059-20721	· Plug, Small	80	65001-
13		195-32-63230	· Ring	160	65001-
14		195-32-61391	· Shoe, W=810mm	78	65001-
15		195-32-61210	· Bolt, (Kit : K06)	312	65001-
16		195-32-61220	· Nut, (Kit : K06)	312	65001-
17		195-32-61391	· Shoe, W=810mm	2	65001-
18		195-32-61350	· Bolt, Master Track Shoe	8	65001-

Printed By : Dwi Iswanto (airafather6107170)

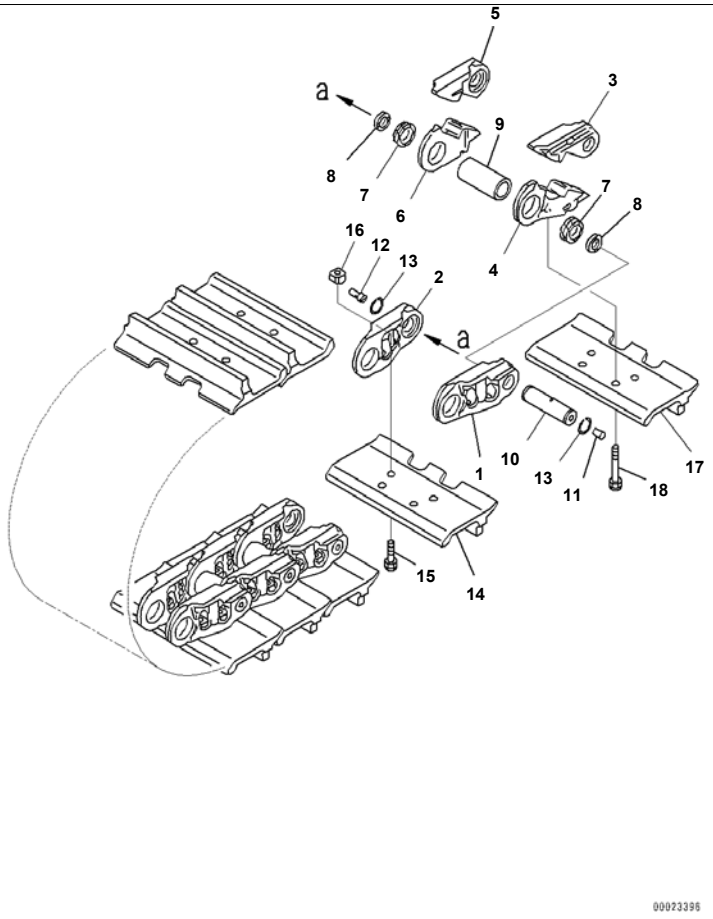

D375A-6R S/N 65001-UP
Track Shoe Assembly, For Heavy Single Grouser Shoe, 710mm Width, Sealed And Lubricated Links, Extreme Cold Area Arrangement (#65

Index	Code	Part Number	Description	Qty	Serial No.
		195-32-04553	Track Shoe Assembly	1	65001-
1		195-32-63120	· Link,LHS	78	65001-
2		195-32-63130	· Link,RHS	78	65001-
		195-32-08410	· Link Kit, Master,LHS	2	65001-
3	C1		· · Link, Master,LHS	1	65001-
4	C1		· · Link, Master,LHS	1	65001-
		195-32-08420	· Link Kit, Master,RHS	2	65001-
5	C1		· · Link, Master,RHS	1	65001-
6	C1		· · Link, Master,RHS	1	65001-
7		195-32-62201	· Seal Assembly	160	65001-
8		195-32-61181	· Spacer	160	65001-
9		195-32-61341	· Bushing	80	65001-
10		195-32-63153	· Pin	80	65001-
11		195-32-41290	· Plug, Large	80	65001-
12		07059-20721	· Plug, Small	80	65001-
13		195-32-63230	· Ring	160	65001-
14		195-32-61371	· Shoe, W=710mm	78	65001-
15		195-32-61210	· Bolt, (Kit : K06)	312	65001-
16		195-32-61220	· Nut, (Kit : K06)	312	65001-
17		195-32-61371	· Shoe, W=710mm	2	65001-
18		195-32-61350	· Bolt, Master Track Shoe	8	65001-

Printed By : Dwi Iswanto (airafather6107170)

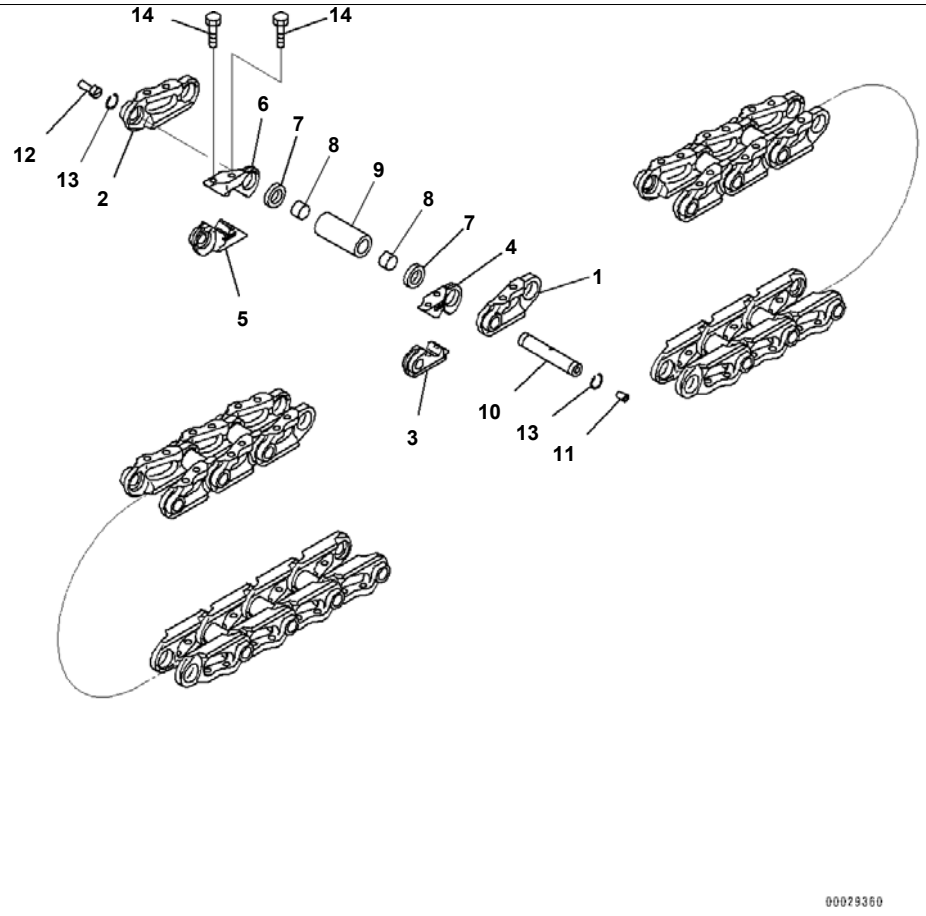

D375A-6R S/N 65001-UP
Track Link Assembly (#65001-)

Index	Code	Part Number	Description	Qty	Serial No.
		195-32-00661	Track Link Assembly	1	65001-
1		195-32-63120	· Link,LHS	80	65001-
2		195-32-63130	· Link,RHS	80	65001-
		195-32-08410	· Link Kit, Master,LHS	2	65001-
3	C1		· · Link, Master,LHS	1	65001-
4	C1		· · Link, Master,LHS	1	65001-
		195-32-08420	· Link Kit, Master,RHS	2	65001-
5	C1		· · Link, Master,RHS	1	65001-
6	C1		· · Link, Master,RHS	1	65001-
7		195-32-61201	· Seal Assembly	164	65001-
8		195-32-61181	· Spacer	164	65001-
9		195-32-61341	· Bushing	82	65001-
10		195-32-63153	· Pin	82	65001-
11		195-32-41290	· Plug, Large	82	65001-
12		07059-20721	· Plug, Small	82	65001-
13		195-32-63230	· Ring	164	65001-
14		195-32-61350	· Bolt, Master Track Shoe	8	65001-

Printed By : Dwi Iswanto (airafather6107170)

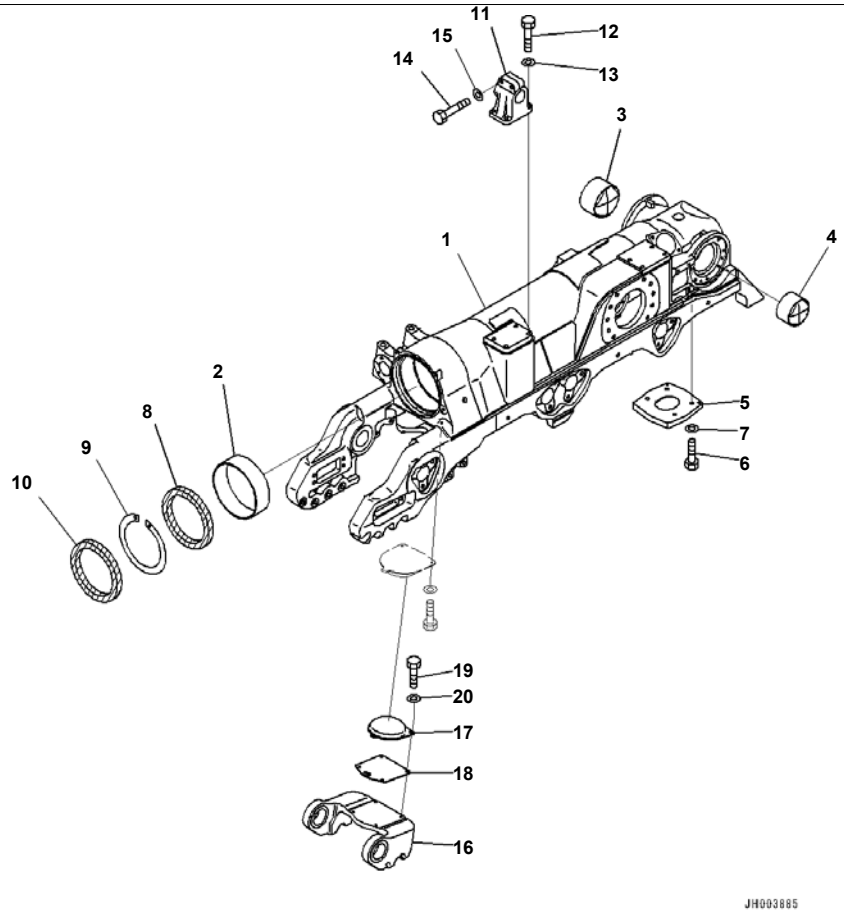

Track Frame, With Track Roller Guard, LHS (#65001-)

Index	Code	Part Number	Description	Qty	Serial No.
		195-30-01751	Track Frame Assembly	1	65001-
1		195-30-61313	· Track Frame	1	65001-
2		195-30-31221	· Bushing	1	65001-
3		195-50-22190	· Bushing	1	65001-
4		195-50-22210	· Bushing	1	65001-
5		195-30-61492	· Bracket	1	65001-
6		01010-81640	· Bolt	4	65001-
7		01643-31645	· Washer	4	65001-
8		195-30-31231	Seal	1	65001-
9		195-30-31250	Ring, Snap	1	65001-
10		195-30-31240	Seal	1	65001-
11		195-30-25143	Support	2	65001-
12		01010-62265	Bolt	8	65001-
13		01643-32260	Washer	8	65001-
14		01010-62285	Bolt	4	65001-
15		01643-32260	Washer	4	65001-
16		195-30-66550	Bogie	1	65001-
17		198-30-56132	Pad	1	65001-
18		195-30-66590	Plate	1	65001-
19		01010-81230	Bolt	4	65001-
20		01643-31232	Washer	4	65001-

Printed By : Dwi Iswanto (airafather6107170)

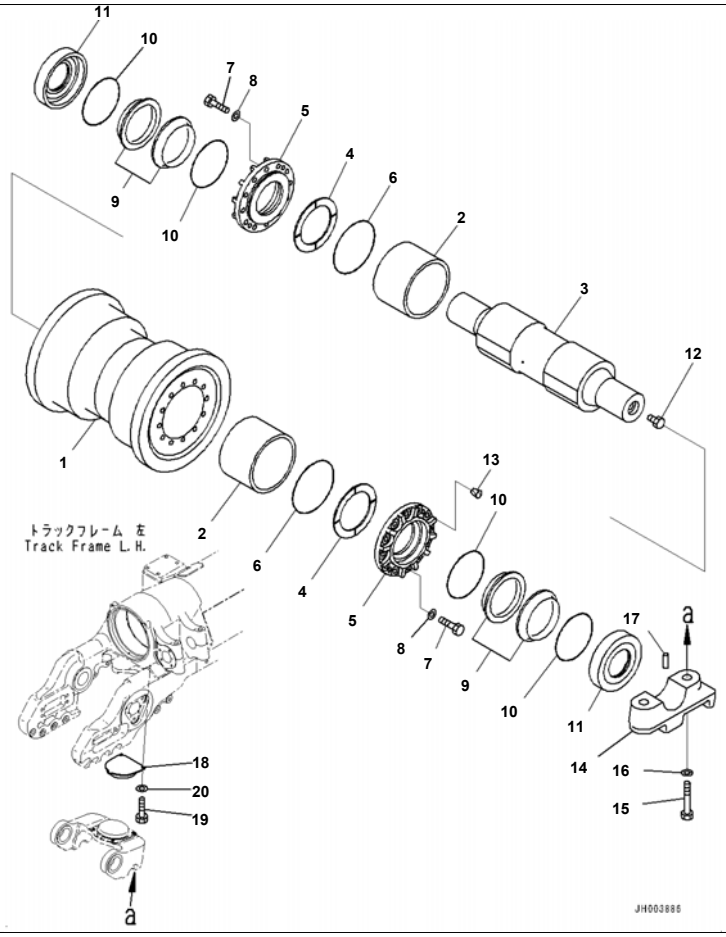

Reference:R2100-004002 Page:R009002

D375A-6R S/N 65001-UP
Track Frame, With Track Roller Guard, Track Roller Single Flange, LHS (1/4) (#65001-)

Index	Code	Part Number	Description	Qty	Serial No.
		195-30-01411	Track Roller Assembly	1	65001-
1		195-30-62610	· Roller, Track, Single Flanged	1	65001-
2		195-30-36140	· Bushing	2	65001-
3		195-30-62630	· Shaft	1	65001-
4		195-30-62650	· Plate	2	65001-
5		195-30-62640	· Retainer	2	65001-
6		07000-12145	· O-ring	2	65001-
7		01010-81240	· Bolt	24	65001-
8		01643-31232	· Washer	24	65001-
		195-30-00860	· Floating Seal Assembly	2	65001-
9	C1		· · Seal	2	65001-
10	C1		· · O-ring	2	65001-
11		195-30-62681	· Ring	2	65001-
12		07052-31624	· Plug	1	65001-
13		07049-01215	· Plug	4	65001-
14		195-30-62141	Cap	2	65001-
15		01011-62710	Bolt	4	65001-
16		01643-32780	Washer	4	65001-
17		04020-00616	Pin, Dowel	1	65001-
18		198-30-56132	Pad	1	65001-
19		01010-81225	Bolt	2	65001-
20		01643-31232	Washer	2	65001-

Reference:R2100-004002 Page:R009002

Printed By : Dwi Iswanto (airafather6107170)

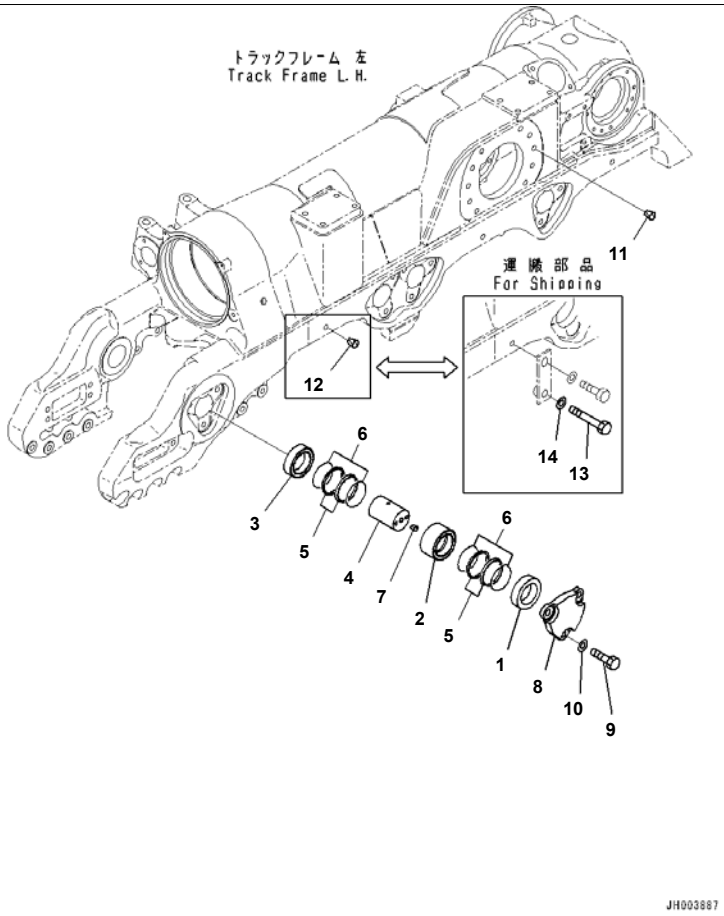

Reference:R2100-004003 Page:R009003

D375A-6R S/N 65001-UP
Track Frame, With Track Roller Guard, Cartridge Pin, LHS (1/2) (#65001-)

Index	Code	Part Number	Description	Qty	Serial No.
		195-30-62100	Pin Assembly	2	65001-
1		195-30-62470	· Ring, Out	1	65001-
2		195-30-62460	· Ring, Center	1	65001-
3		195-30-62480	· Ring, In	1	65001-
4		195-30-69941	· Shaft	1	65001-
		17M-30-00550	· Floating Seal Assembly	2	65001-
5	C1		· · Seal	2	65001-
6	C1		· · O-ring	2	65001-
7		209-30-63150	· Plug	1	65001-
8		195-30-66571	Cover	2	65001-
9		01010-62455	Bolt	6	65001-
10		01643-32460	Washer	6	65001-
11		07049-02430	Plug	10	65001-
12		07049-02430	Plug	5	65001-
13		01010-62455	Bolt	3	65001-
14		01643-32460	Washer	3	65001-

Printed By : Dwi Iswanto (airafather6107170)

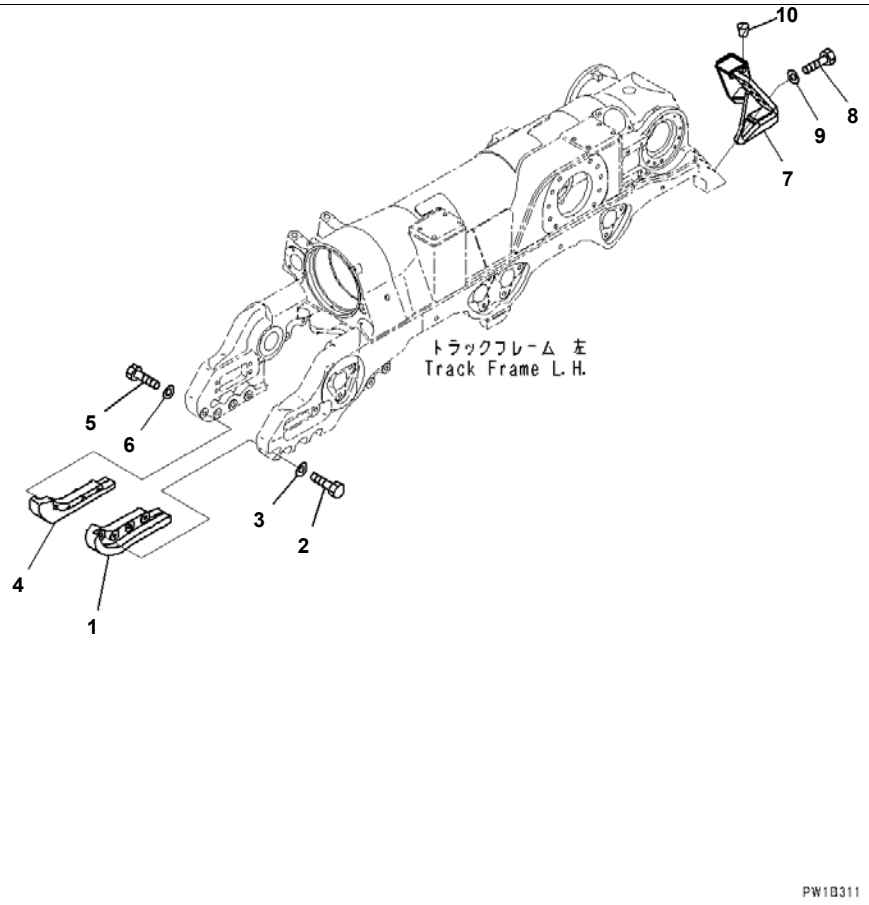

Reference:R2100-004004 Page:R009004

D375A-6R S/N 65001-UP
Track Frame, With Track Roller Guard, Track Frame Guard, LHS (#65001-)

Index	Code	Part Number	Description	Qty	Serial No.
1		195-30-67240	Guard,LHS	1	65001-
2		01010-62465	Bolt	4	65001-
3		01643-32460	Washer	4	65001-
4		195-30-67250	Guard,RHS	1	65001-
5		01010-62465	Bolt	4	65001-
6		01643-32460	Washer	4	65001-
7		195-30-62250	Cover	1	65001-
8		01010-62045	Bolt	6	65001-
9		01643-32060	Washer	6	65001-
10		07049-01215	Plug	1	65001-

Printed By : Dwi Iswanto (airafather6107170)

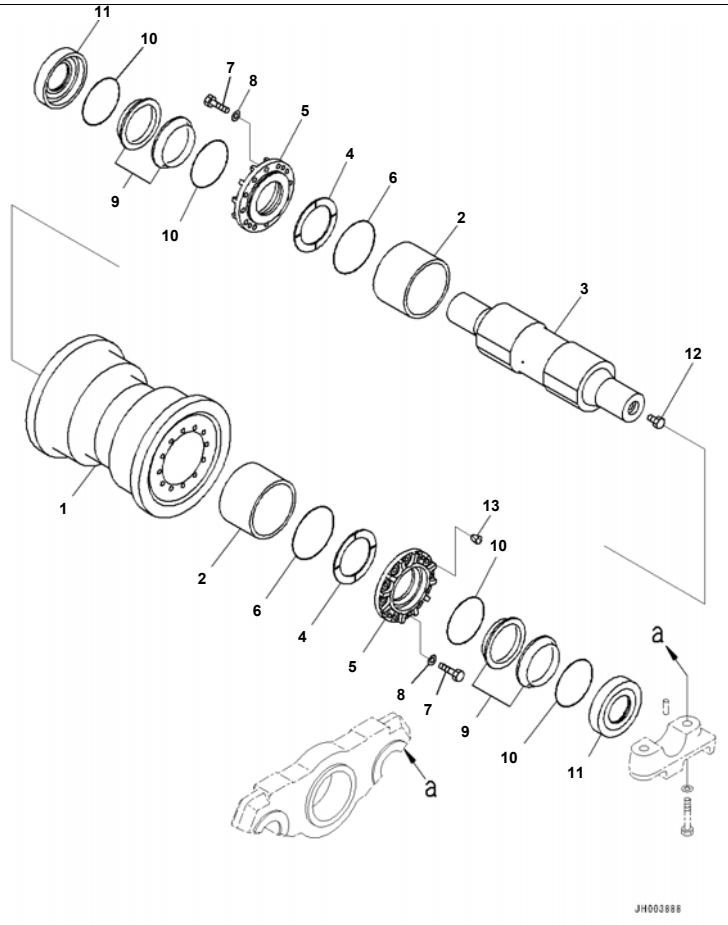

Reference:R2100-004005 Page:R009005

D375A-6R S/N 65001-UP
Track Frame, With Track Roller Guard, Track Roller Single Flange, LHS (2/4) (#65001-)

Index	Code	Part Number	Description	Qty	Serial No.
		195-30-01411	Track Roller Assembly	1	65001-
1		195-30-62610	· Roller, Track, Single Flanged	1	65001-
2		195-30-36140	· Bushing	2	65001-
3		195-30-62630	· Shaft	1	65001-
4		195-30-62650	· Plate	2	65001-
5		195-30-62640	· Retainer	2	65001-
6		07000-12145	· O-ring	2	65001-
7		01010-81240	· Bolt	24	65001-
8		01643-31232	· Washer	24	65001-
		195-30-00860	· Floating Seal Assembly	2	65001-
9	C1		· · Seal	2	65001-
10	C1		· · O-ring	2	65001-
11		195-30-62681	· Ring	2	65001-
12		07052-31624	· Plug	1	65001-
13		07049-01215	· Plug	4	65001-

Reference:R2100-004005 Page:R009005

Printed By : Dwi Iswanto (airafather6107170)

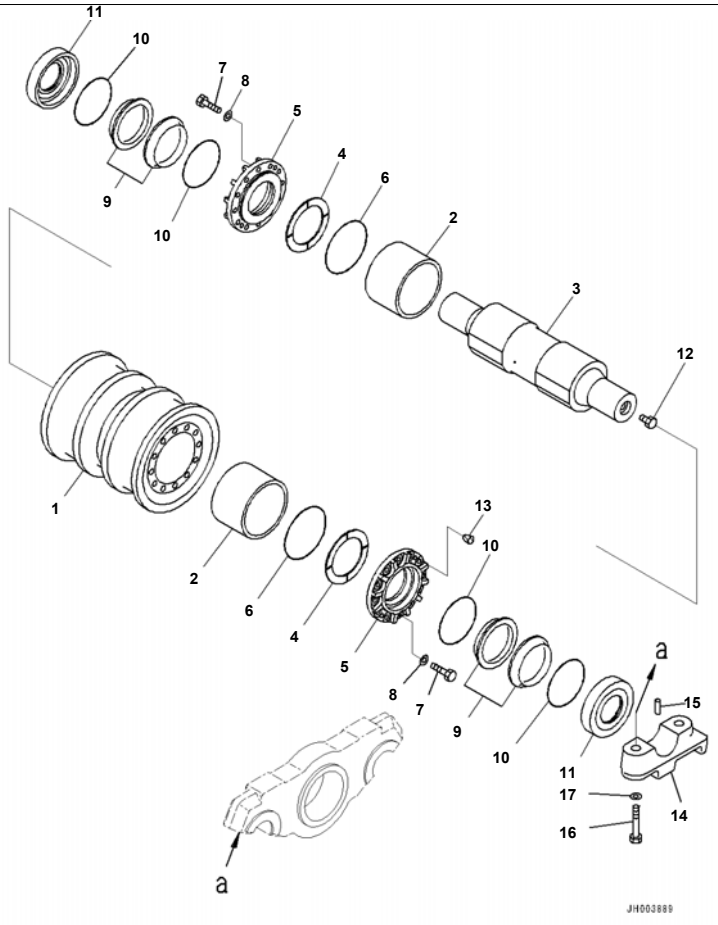

D375A-6R S/N 65001-UP
Track Frame, With Track Roller Guard, Track Roller Double Flange, LHS (1/2) (#65001-)

Index	Code	Part Number	Description	Qty	Serial No.
		195-30-01421	Track Roller Assembly	1	65001-
1		195-30-62620	· Roller, Track, Double Flanged	1	65001-
2		195-30-36140	· Bushing	2	65001-
3		195-30-62630	· Shaft	1	65001-
4		195-30-62650	· Plate	2	65001-
5		195-30-62640	· Retainer	2	65001-
6		07000-12145	· O-ring	2	65001-
7		01010-81240	· Bolt	24	65001-
8		01643-31232	· Washer	24	65001-
		195-30-00860	· Floating Seal Assembly	2	65001-
9	C1		· · Seal	2	65001-
10	C1		· · O-ring	2	65001-
11		195-30-62681	· Ring	2	65001-
12		07052-31624	· Plug	1	65001-
13		07049-01215	· Plug	4	65001-
14		195-30-62141	Cap	4	65001-
15		04020-00616	Pin, Dowel	2	65001-
16		01011-62710	Bolt	8	65001-
17		01643-32780	Washer	8	65001-

Printed By : Dwi Iswanto (airafather6107170)

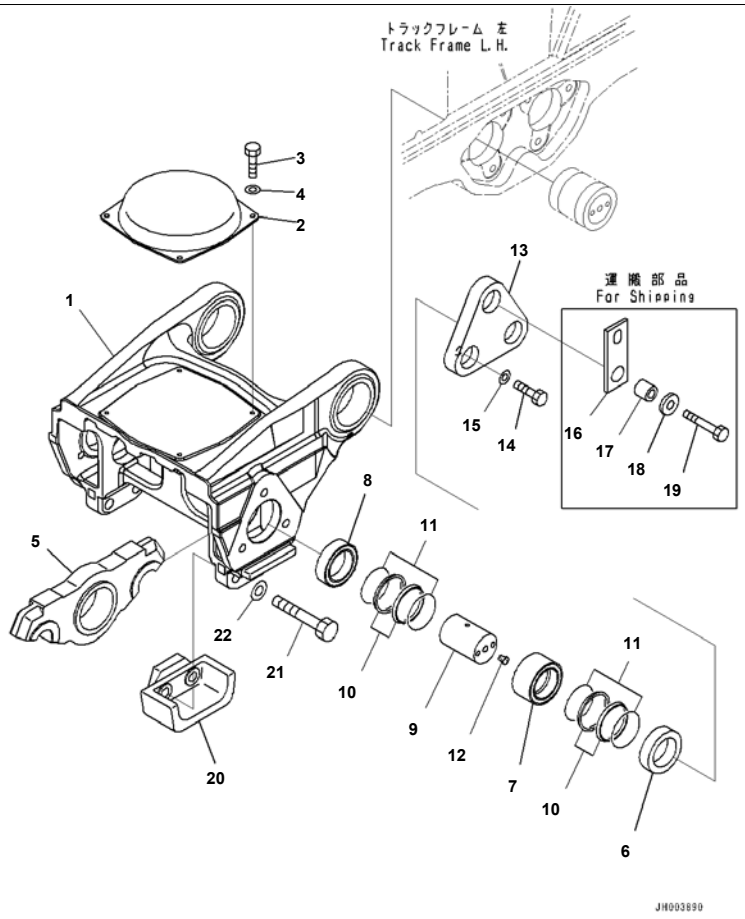

Reference:R2100-004007 Page:R009007

D375A-6R S/N 65001-UP
Track Frame, With Track Roller Guard, Bogie, 1st, LHS (#65001-)

Index	Code	Part Number	Description	Qty	Serial No.
		195-30-01772	Bogie Assembly	1	65001-
1		195-30-66510	· Bogie, Major	1	65001-
2		195-30-66531	· Pad	1	65001-
3		01010-81225	· Bolt	4	65001-
4		01643-31232	· Washer	4	65001-
5		195-30-66520	· Bogie, Minor	2	65001-
		195-30-62100	· Pin Assembly	2	65001-
6		195-30-62470	· · Ring, Out	1	65001-
7		195-30-62460	· · Ring, Center	1	65001-
8		195-30-62480	· · Ring, In	1	65001-
9		195-30-69941	· · Shaft	1	65001-
		17M-30-00550	· · Floating Seal Assembly	2	65001-
10	C1		· · · Seal	2	65001-
11	C1		· · · O-ring	2	65001-
12		209-30-63150	· · Plug	1	65001-
13		195-30-66580	· Cover	2	65001-
14		01010-62455	· Bolt	5	65001-
15		01643-32460	· Washer	5	65001-
16		195-30-66611	· Plate	1	65001-
17		198-30-66190	· Collar	1	65001-
18		19M-54-11770	· Plate	1	65001-
19		01011-62410	· Bolt	1	65001-
20		195-30-67230	· Guide	2	65001-
21		01010-62795	· Bolt	4	65001-
22		01643-32780	· Washer	4	65001-

Printed By : Dwi Iswanto (airafather6107170)

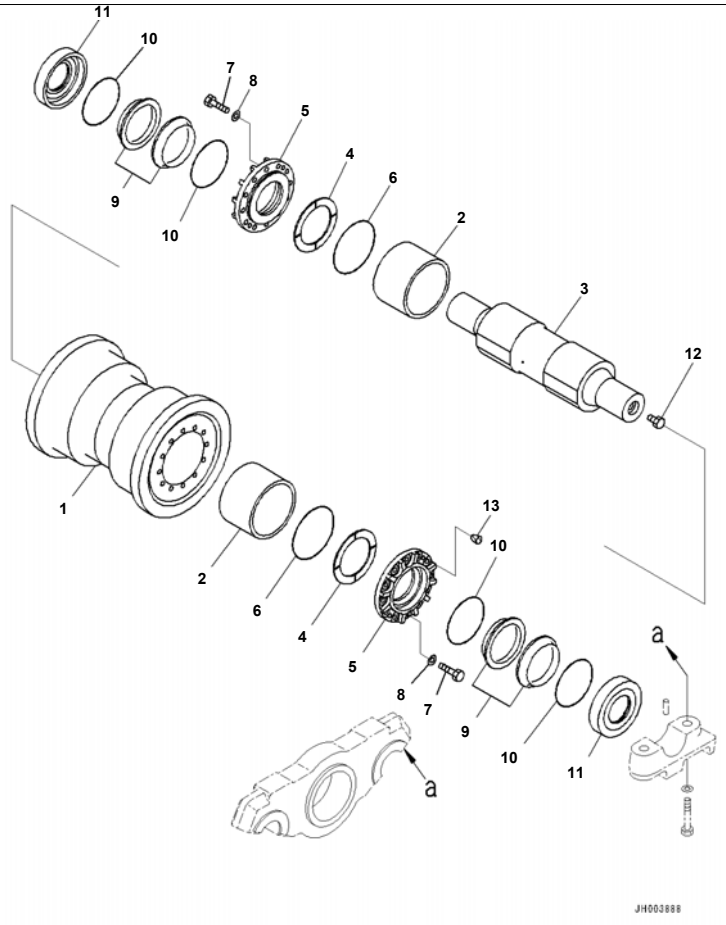

Track Frame, With Track Roller Guard, Track Roller Single Flange, LHS (3/4) (#65001-)

Index	Code	Part Number	Description	Qty	Serial No.
		195-30-01411	Track Roller Assembly	2	65001-
1		195-30-62610	· Roller, Track, Single Flanged	1	65001-
2		195-30-36140	· Bushing	2	65001-
3		195-30-62630	· Shaft	1	65001-
4		195-30-62650	· Plate	2	65001-
5		195-30-62640	· Retainer	2	65001-
6		07000-12145	· O-ring	2	65001-
7		01010-81240	· Bolt	24	65001-
8		01643-31232	· Washer	24	65001-
		195-30-00860	· Floating Seal Assembly	2	65001-
9	C1		· · Seal	2	65001-
10	C1		· · O-ring	2	65001-
11		195-30-62681	· Ring	2	65001-
12		07052-31624	· Plug	1	65001-
13		07049-01215	· Plug	4	65001-

Printed By : Dwi Iswanto (airafather6107170)

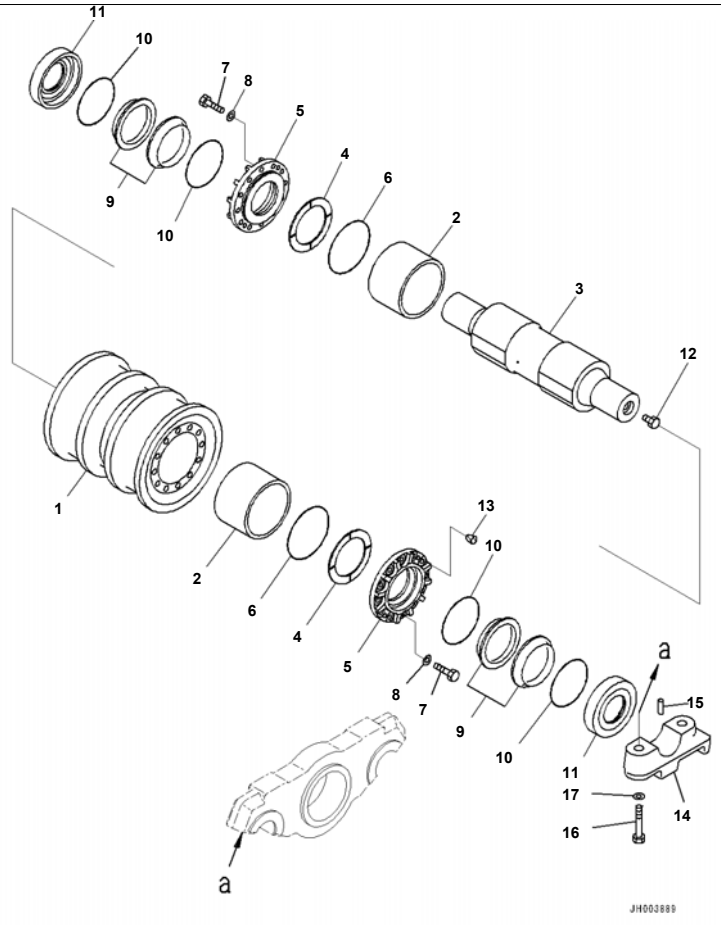

D375A-6R S/N 65001-UP
Track Frame, With Track Roller Guard, Track Roller Double Flange, LHS (2/2) (#65001-)

Index	Code	Part Number	Description	Qty	Serial No.
		195-30-01421	Track Roller Assembly	2	65001-
1		195-30-62620	· Roller, Track, Double Flanged	1	65001-
2		195-30-36140	· Bushing	2	65001-
3		195-30-62630	· Shaft	1	65001-
4		195-30-62650	· Plate	2	65001-
5		195-30-62640	· Retainer	2	65001-
6		07000-12145	· O-ring	2	65001-
7		01010-81240	· Bolt	24	65001-
8		01643-31232	· Washer	24	65001-
		195-30-00860	· Floating Seal Assembly	2	65001-
9	C1		· · Seal	2	65001-
10	C1		· · O-ring	2	65001-
11		195-30-62681	· Ring	2	65001-
12		07052-31624	· Plug	1	65001-
13		07049-01215	· Plug	4	65001-
14		195-30-62141	Cap	8	65001-
15		04020-00616	Pin, Dowel	4	65001-
16		01011-62710	Bolt	16	65001-
17		01643-32780	Washer	16	65001-

Printed By : Dwi Iswanto (airafather6107170)

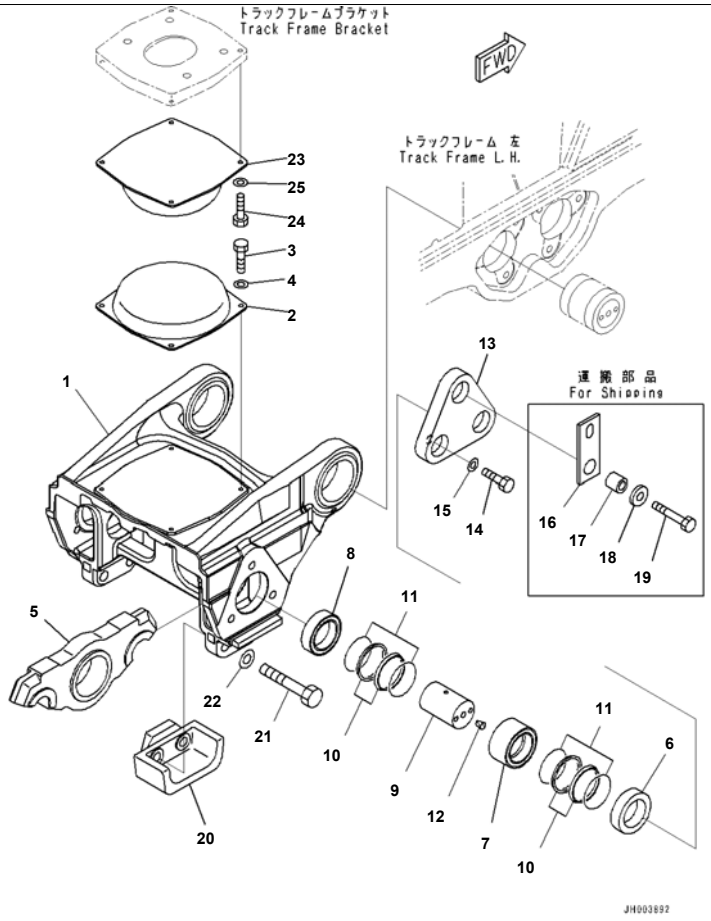

Reference:R2100-004010 Page:R009010

D375A-6R S/N 65001-UP
Track Frame, With Track Roller Guard, Bogie, 2nd and 3rd, LHS (#65001-)

Index	Code	Part Number	Description	Qty	Serial No.
		195-30-01772	Bogie Assembly	2	65001-
1		195-30-66510	· Bogie, Major	1	65001-
2		195-30-66531	· Pad	1	65001-
3		01010-81225	· Bolt	4	65001-
4		01643-31232	· Washer	4	65001-
5		195-30-66520	· Bogie, Minor	2	65001-
		195-30-62100	· Pin Assembly	2	65001-
6		195-30-62470	· · Ring, Out	1	65001-
7		195-30-62460	· · Ring, Center	1	65001-
8		195-30-62480	· · Ring, In	1	65001-
9		195-30-69941	· · Shaft	1	65001-
		17M-30-00550	· · Floating Seal Assembly	2	65001-
10	C1		· · · Seal	2	65001-
11	C1		· · · O-ring	2	65001-
12		209-30-63150	· · Plug	1	65001-
13		195-30-66580	· Cover	2	65001-
14		01010-62455	· Bolt	5	65001-
15		01643-32460	· Washer	5	65001-
16		195-30-66611	· Plate	1	65001-
17		198-30-66190	· Collar	1	65001-
18		19M-54-11770	· Plate	1	65001-
19		01011-62410	· Bolt	1	65001-
20		195-30-67230	· Guide	2	65001-
21		01010-62795	· Bolt	4	65001-
22		01643-32780	· Washer	4	65001-
23		195-30-66531	Pad	3	65001-
24		01010-81225	Bolt	12	65001-
25		01643-31232	Washer	12	65001-

Reference:R2100-004010 Page:R009010

Printed By : Dwi Iswanto (airafather6107170)

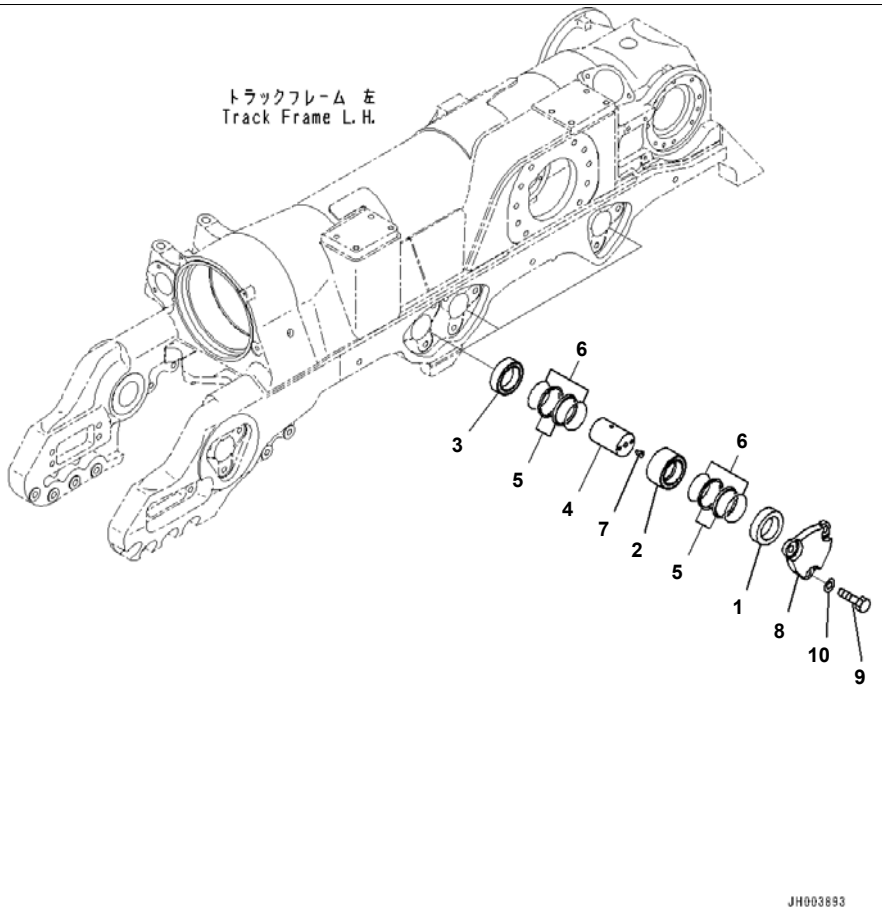

Reference:R2100-004011 Page:R009011

D375A-6R S/N 65001-UP
Track Frame, With Track Roller Guard, Cartridge Pin, LHS (2/2) (#65001-)

Index	Code	Part Number	Description	Qty	Serial No.
		195-30-62100	Pin Assembly	6	65001-
1		195-30-62470	· Ring, Out	1	65001-
2		195-30-62460	· Ring, Center	1	65001-
3		195-30-62480	· Ring, In	1	65001-
4		195-30-69941	· Shaft	1	65001-
		17M-30-00550	· Floating Seal Assembly	2	65001-
5	C1		· · Seal	2	65001-
6	C1		· · O-ring	2	65001-
7		209-30-63150	· Plug	1	65001-
8		195-30-66571	Cover	6	65001-
9		01010-62455	Bolt	18	65001-
10		01643-32460	Washer	18	65001-

Reference:R2100-004011 Page:R009011

Printed By : Dwi Iswanto (airafather6107170)

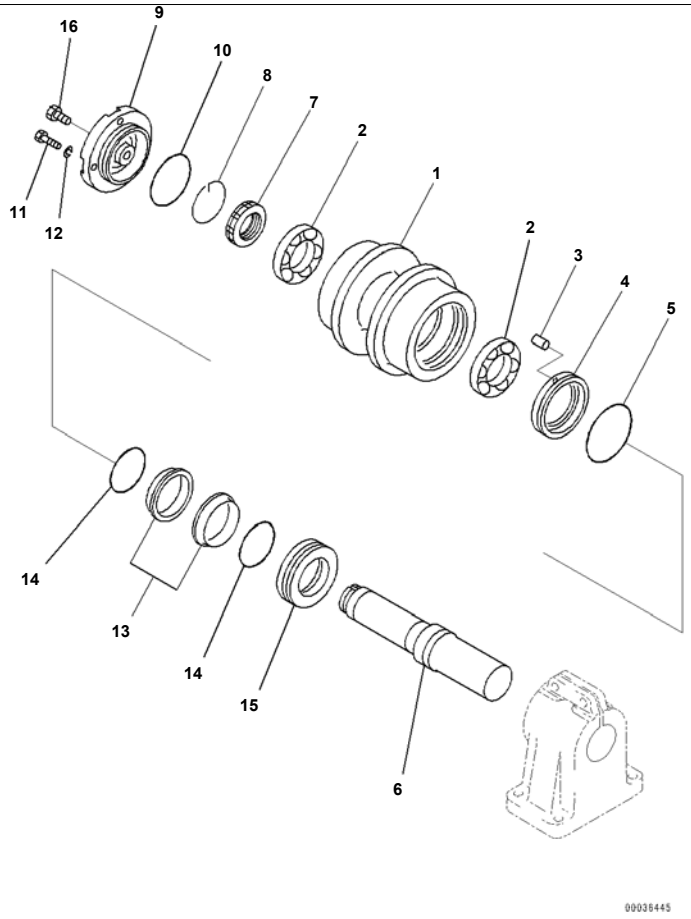

D375A-6R S/N 65001-UP
Track Frame, With Track Roller Guard, Carrier Roller, LHS (#65001-)

Index	Code	Part Number	Description	Qty	Serial No.
		195-30-01041	Roller Assembly, Carrier	2	65001-
1		195-30-55110	· Roller	1	65001-
2		06000-32215	· Bearing	2	65001-
3		04020-00616	· Pin, Dowel	1	65001-
4		195-30-35120	· Ring	1	65001-
5		07000-12145	· O-ring	1	65001-
6		195-30-55130	· Shaft	1	65001-
7		180-30-15180	· Nut	1	65001-
8		180-30-15190	· Ring	1	65001-
9		195-30-35180	· Cover	1	65001-
10		07000-12125	· O-ring	1	65001-
11		01010-81230	· Bolt	4	65001-
12		01602-21236	· Washer, Spring	4	65001-
		205-30-00052	· Floating Seal Assembly	1	65001-
13	C1		· · Ring	2	65001-
14	C1		· · O-ring	2	65001-
15		195-30-55121	· Ring	1	65001-
16		07052-31624	· Plug	1	65001-

Printed By : Dwi Iswanto (airafather6107170)

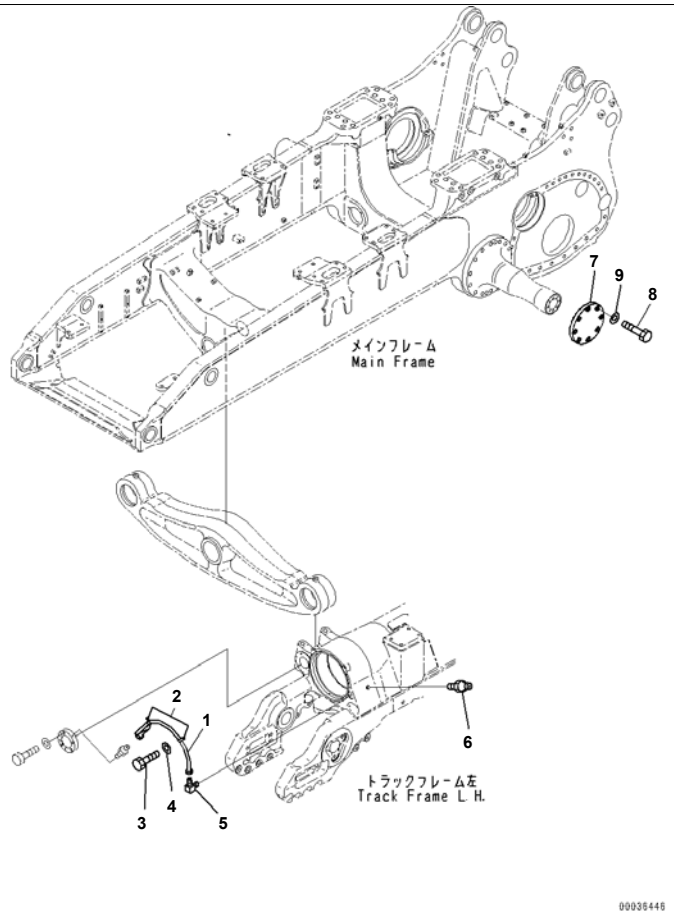

Reference:R2100-004013 Page:R009013

D375A-6R S/N 65001-UP
Track Frame, With Track Roller Guard, Equalizer Bar and Lubrication (1/2) (#65001-)

Index	Code	Part Number	Description	Qty	Serial No.
1		195-50-51330	Tube	1	65001-
2		566-16-11970	Clip	2	65001-
3		01010-81020	Bolt	2	65001-
4		01643-31032	Washer	2	65001-
5		20D-68-11780	Elbow	1	65001-
6		07020-00000	Fitting, Grease	1	65001-
7		195-50-52140	Cover	1	65001-
8		01010-81665	Bolt	8	65001-
9		01643-31645	Washer	8	65001-

Printed By : Dwi Iswanto (airafather6107170)

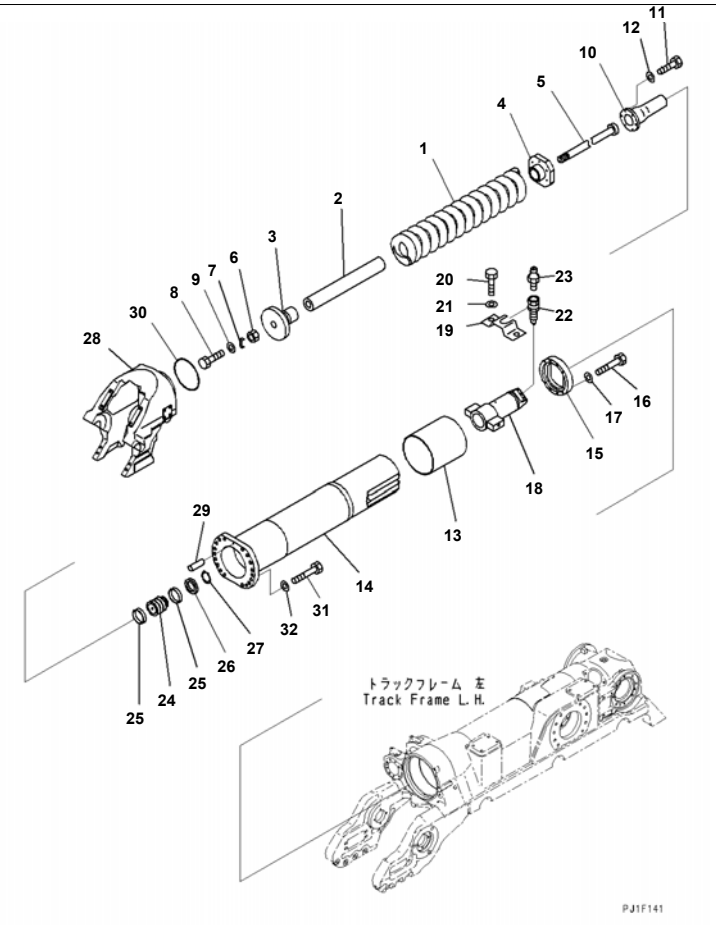

D375A-6R S/N 65001-UP
Track Frame, With Track Roller Guard, Recoil Spring, LHS (#65001-)

Index	Code	Part Number	Description	Qty	Serial No.
1		195-30-64212	Spring	1	65001-
2		195-30-64251	Spacer	1	65001-
3		195-30-34220	Pilot	1	65001-
4		195-30-51450	Pilot	1	65001-
5		195-30-64241	Bolt	1	65001-
6		198-30-14233	Nut	1	65001-
7		198-30-14242	Plate	1	65001-
8		01010-81230	Bolt	2	65001-
9		01643-31232	Washer	2	65001-
10		195-30-51431	Holder	1	65001-
11		01010-81245	Bolt	6	65001-
12		01643-31232	Washer	6	65001-
		195-30-01112	Case Assembly	1	65001-
13		195-30-34121	· Bushing	1	65001-
14	C1		· Case	1	65001-
15		195-30-34340	Ring	1	65001-
16		01010-81280	Bolt	8	65001-
17		01643-31232	Washer	8	65001-
18		195-30-51481	Cylinder	1	65001-
19		195-30-34380	Plate	1	65001-
20		01010-81020	Bolt	2	65001-
21		01643-31032	Washer	2	65001-
22		07959-30000	Valve	1	65001-
23		07020-00000	Fitting, Grease	1	65001-
24		195-30-34331	Piston	1	65001-
25		198-30-14270	Ring	2	65001-
26		195-30-34420	Packing	1	65001-
27		04064-01030	Ring, Snap, for Shaft Side	1	65001-
28		195-30-64162	Yoke	1	65001-
29		04020-01434	Pin, Dowel	1	65001-
30		07000-15295	O-ring	1	65001-

Printed By : Dwi Iswanto (airafather6107170)

Track Frame, With Track Roller Guard, Recoil Spring, LHS (#65001-)

Index	Code	Part Number	Description	Qty	Serial No.
31		195-30-34170	Bolt	18	65001-
32		01643-32780	Washer	18	65001-

Printed By : Dwi Iswanto (airafather6107170)

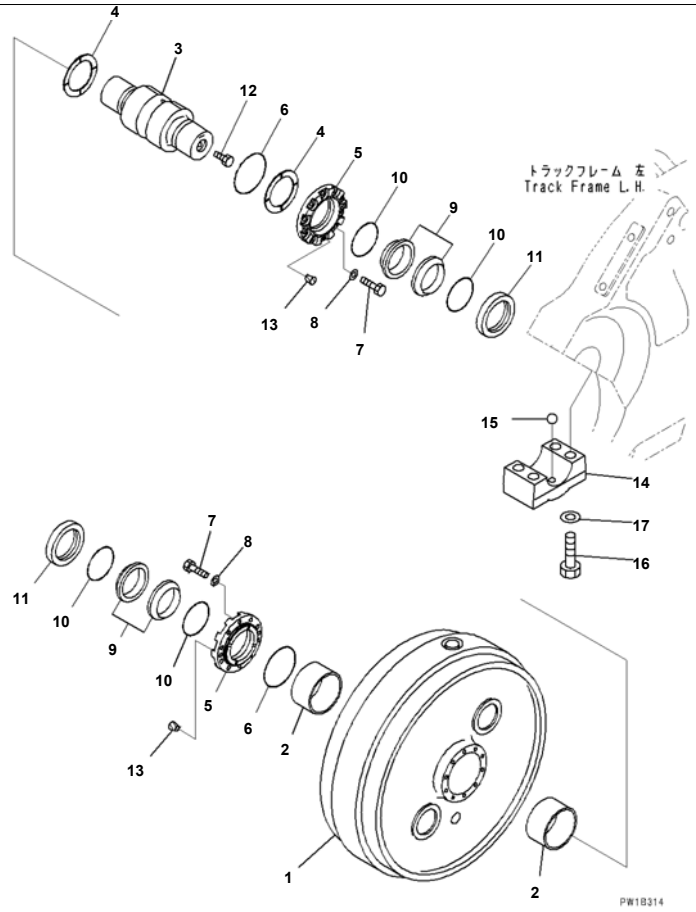

D375A-6R S/N 65001-UP
Track Frame, With Track Roller Guard, Front Idler, LHS (#65001-)

Index	Code	Part Number	Description	Qty	Serial No.
		195-30-01430	Idler Assembly	1	65001-
1		195-30-61510	· Idler	1	65001-
2		195-30-33140	· Bushing	2	65001-
3		195-30-61530	· Shaft	1	65001-
4		195-30-61560	· Plate	2	65001-
5		195-30-61540	· Retainer	2	65001-
6		195-30-33190	· O-ring	2	65001-
7		01010-81445	· Bolt	20	65001-
8		01643-31445	· Washer	20	65001-
		205-30-00052	· Floating Seal Assembly	2	65001-
9	C1		· · Ring	2	65001-
10	C1		· · O-ring	2	65001-
11		195-30-61570	· Ring	2	65001-
12		07052-31624	· Plug	1	65001-
13		07049-01418	· Plug, Cork	4	65001-
14		195-30-51570	Cap	2	65001-
15		04260-01905	Ball	1	65001-
16		195-09-18490	Bolt	8	65001-
17		01643-32780	Washer	8	65001-

Printed By : Dwi Iswanto (airafather6107170)

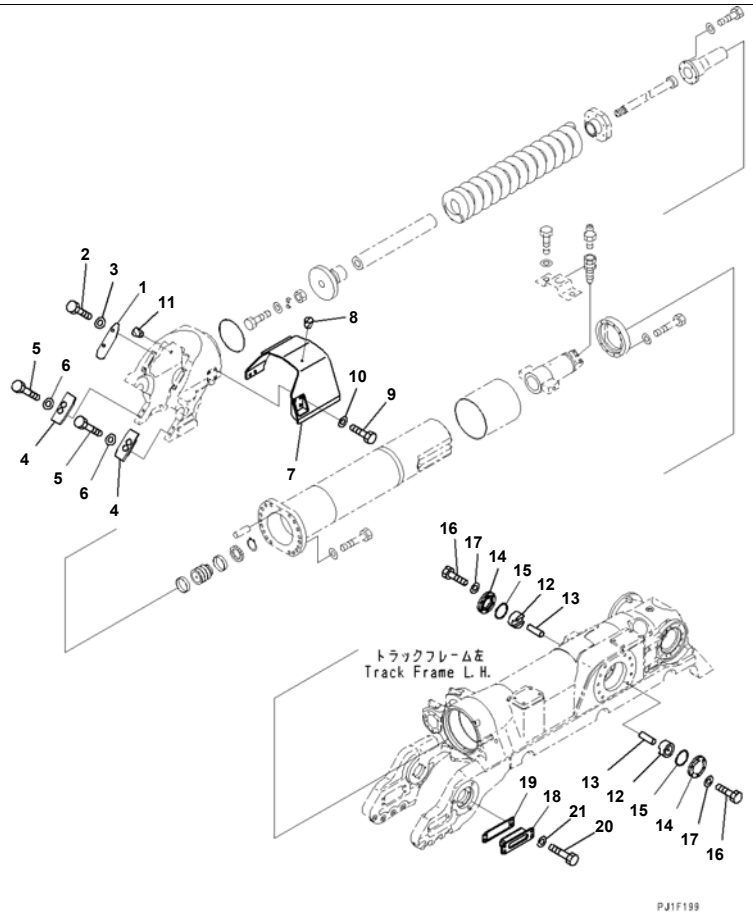

Reference:R2100-004016 Page:R009016

D375A-6R S/N 65001-UP
Track Frame, With Track Roller Guard, Cover and Cushion Mount, LHS (#65001-)

Index	Code	Part Number	Description	Qty	Serial No.
1		195-30-64320	Cover	2	65001-
2		01010-62040	Bolt	4	65001-
3		01643-32060	Washer	4	65001-
4		195-30-64172	Cover	2	65001-
5		01010-62060	Bolt	4	65001-
6		01643-32060	Washer	4	65001-
7		195-30-64122	Cover	1	65001-
8		07049-01215	Plug	1	65001-
9		01010-62040	Bolt	6	65001-
10		01643-32060	Washer	6	65001-
11		07049-02025	Plug	2	65001-
12		195-30-51470	Guide	2	65001-
13		04022-20040	Pin, Dowel	2	65001-
14		195-30-34360	Cover	2	65001-
15		07000-12135	O-ring	2	65001-
16		01010-61645	Bolt	12	65001-
17		01643-31645	Washer	12	65001-
18		195-30-61580	Guide	2	65001-
19		195-30-05070	Shim Assembly	2	65001-
	C1		· Shim, T=0.5mm	1	65001-
	C1		· Shim, T=1.0mm	12	65001-
20		01010-62465	Bolt	8	65001-
21		01643-32460	Washer	8	65001-

Reference:R2100-004016 Page:R009016

Printed By : Dwi Iswanto (airafather6107170)

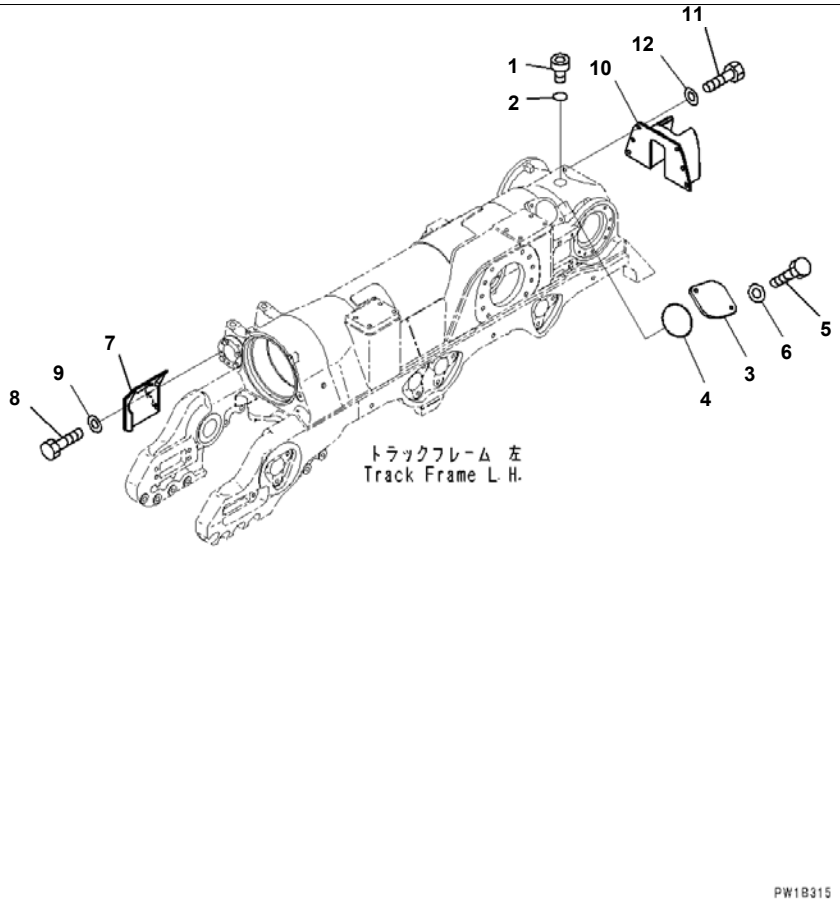

Reference:R2100-004017 Page:R009017

D375A-6R S/N 65001-UP
Track Frame, With Track Roller Guard, Rear Cover (1/2) (#65001-)

Index	Code	Part Number	Description	Qty	Serial No.
1		07040-13618	Plug	1	65001-
2		07002-03634	O-ring	1	65001-
3		195-30-31260	Cover	1	65001-
4		07000-15155	O-ring	1	65001-
5		01010-61645	Bolt	2	65001-
6		01643-31645	Washer	2	65001-
7		195-30-62230	Cover	1	65001-
8		01010-61650	Bolt	3	65001-
9		01643-31645	Washer	3	65001-
10		195-30-62290	Cover	1	65001-
11		01010-62045	Bolt	5	65001-
12		01643-32060	Washer	5	65001-

Printed By : Dwi Iswanto (airafather6107170)

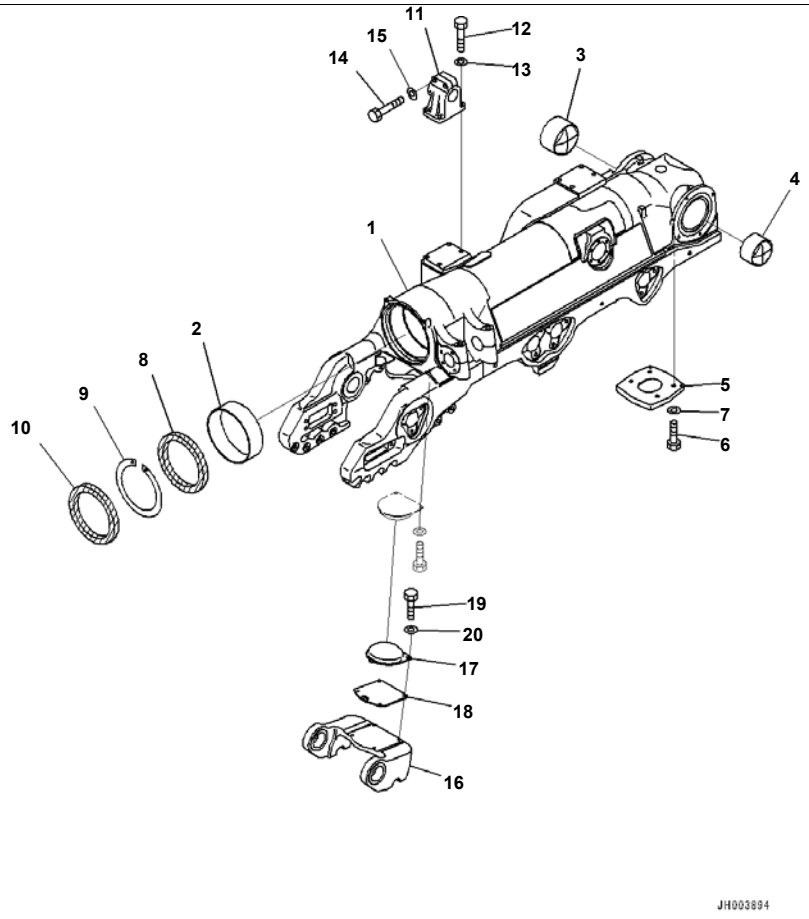

Index	Code	Part Number	Description	Qty	Serial No.
		195-30-01761	Track Frame Assembly	1	65001-
1		195-30-61323	· Track Frame	1	65001-
2		195-30-31221	· Bushing	1	65001-
3		195-50-22190	· Bushing	1	65001-
4		195-50-22210	· Bushing	1	65001-
5		195-30-61492	· Bracket	1	65001-
6		01010-81640	· Bolt	4	65001-
7		01643-31645	· Washer	4	65001-
8		195-30-31231	Seal	1	65001-
9		195-30-31250	Ring, Snap	1	65001-
10		195-30-31240	Seal	1	65001-
11		195-30-25143	Support	2	65001-
12		01010-62265	Bolt	8	65001-
13		01643-32260	Washer	8	65001-
14		01010-62285	Bolt	4	65001-
15		01643-32260	Washer	4	65001-
16		195-30-66550	Bogie	1	65001-
17		198-30-56132	Pad	1	65001-
18		195-30-66590	Plate	1	65001-
19		01010-81230	Bolt	4	65001-
20		01643-31232	Washer	4	65001-

Printed By : Dwi Iswanto (airafather6107170)

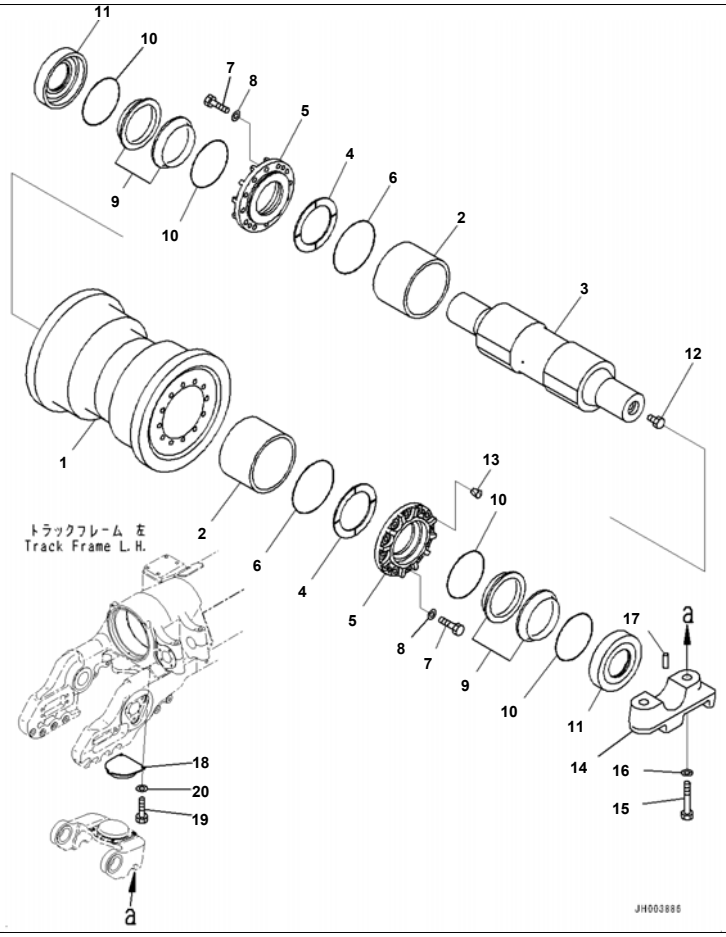

Reference:R2100-004019 Page:R009019

D375A-6R S/N 65001-UP
Track Frame, With Track Roller Guard, Track Roller Single Flange, LHS (4/4) (#65001-)

Index	Code	Part Number	Description	Qty	Serial No.
		195-30-01411	Track Roller Assembly	1	65001-
1		195-30-62610	· Roller, Track, Single Flanged	1	65001-
2		195-30-36140	· Bushing	2	65001-
3		195-30-62630	· Shaft	1	65001-
4		195-30-62650	· Plate	2	65001-
5		195-30-62640	· Retainer	2	65001-
6		07000-12145	· O-ring	2	65001-
7		01010-81240	· Bolt	24	65001-
8		01643-31232	· Washer	24	65001-
		195-30-00860	· Floating Seal Assembly	2	65001-
9	C1		· · Seal	2	65001-
10	C1		· · O-ring	2	65001-
11		195-30-62681	· Ring	2	65001-
12		07052-31624	· Plug	1	65001-
13		07049-01215	· Plug	4	65001-
14		195-30-62141	Cap	2	65001-
15		01011-62710	Bolt	4	65001-
16		01643-32780	Washer	4	65001-
17		04020-00616	Pin, Dowel	1	65001-
18		198-30-56132	Pad	1	65001-
19		01010-81225	Bolt	2	65001-
20		01643-31232	Washer	2	65001-

Reference:R2100-004019 Page:R009019

Printed By : Dwi Iswanto (airafather6107170)

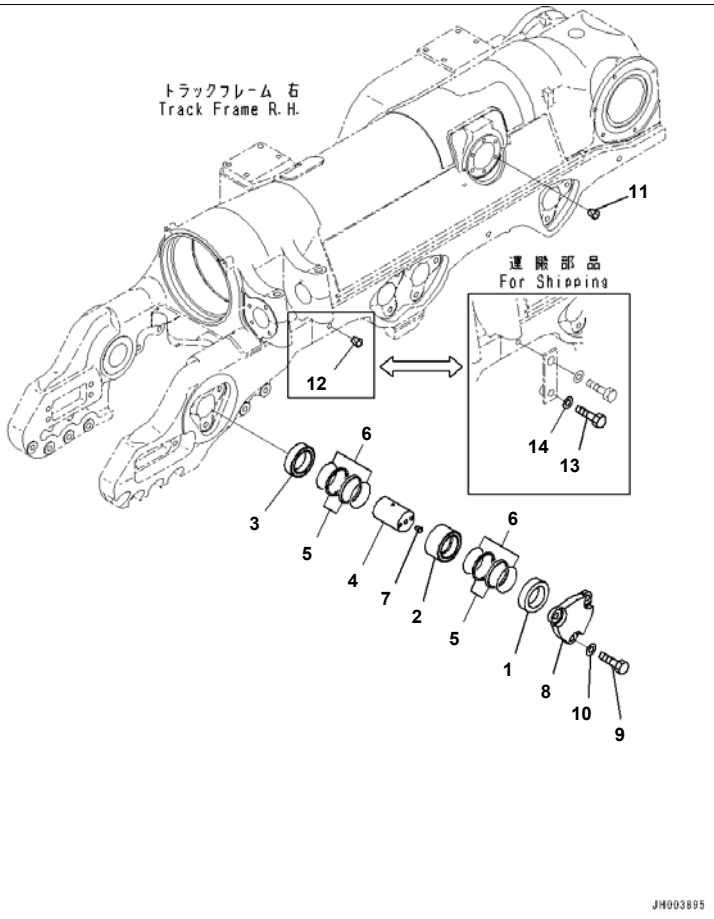

Reference:R2100-004020 Page:R009020

D375A-6R S/N 65001-UP
Track Frame, With Track Roller Guard, Cartridge Pin, RHS (1/2) (#65001-)

Index	Code	Part Number	Description	Qty	Serial No.
		195-30-62100	Pin Assembly	2	65001-
1		195-30-62470	· Ring, Out	1	65001-
2		195-30-62460	· Ring, Center	1	65001-
3		195-30-62480	· Ring, In	1	65001-
4		195-30-69941	· Shaft	1	65001-
		17M-30-00550	· Floating Seal Assembly	2	65001-
5	C1		· · Seal	2	65001-
6	C1		· · O-ring	2	65001-
7		209-30-63150	· Plug	1	65001-
8		195-30-66571	Cover	2	65001-
9		01010-62455	Bolt	6	65001-
10		01643-32460	Washer	6	65001-
11		07049-02430	Plug	10	65001-
12		07049-02430	Plug	5	65001-
13		01010-62455	Bolt	3	65001-
14		01643-32460	Washer	3	65001-

Printed By : Dwi Iswanto (airafather6107170)

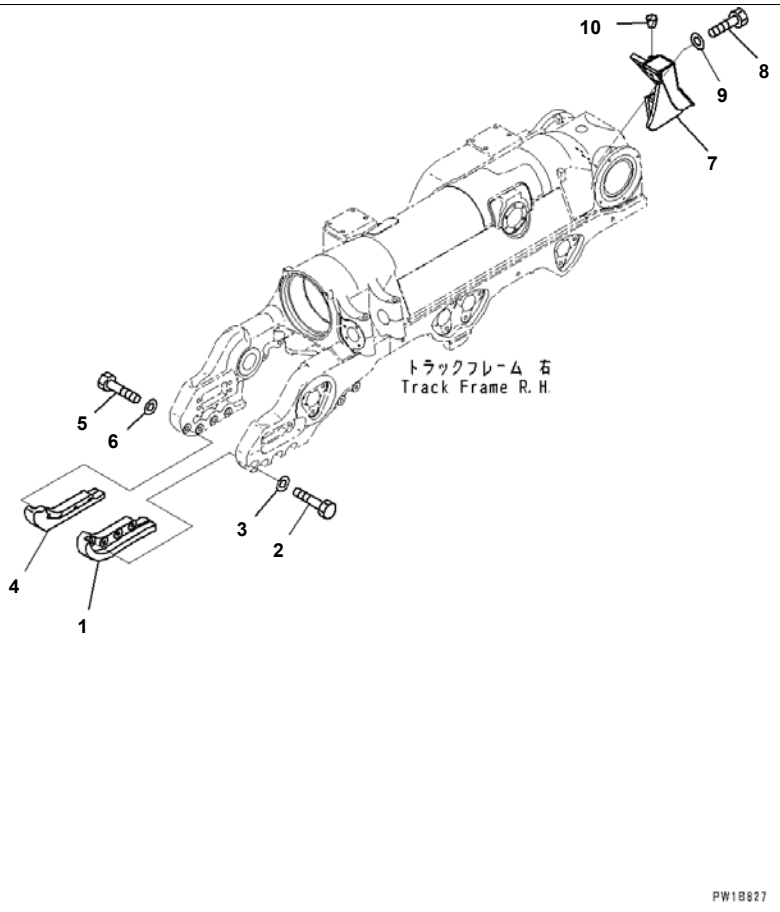

Reference:R2100-004021 Page:R009021

D375A-6R S/N 65001-UP
Track Frame, With Track Roller Guard, Track Frame Guard, RHS (#65001-)

Index	Code	Part Number	Description	Qty	Serial No.
1		195-30-67240	Guard,LHS	1	65001-
2		01010-62465	Bolt	4	65001-
3		01643-32460	Washer	4	65001-
4		195-30-67250	Guard,RHS	1	65001-
5		01010-62465	Bolt	4	65001-
6		01643-32460	Washer	4	65001-
7		195-30-62260	Cover	1	65001-
8		01010-62045	Bolt	6	65001-
9		01643-32060	Washer	6	65001-
10		07049-01215	Plug	1	65001-

Printed By : Dwi Iswanto (airafather6107170)

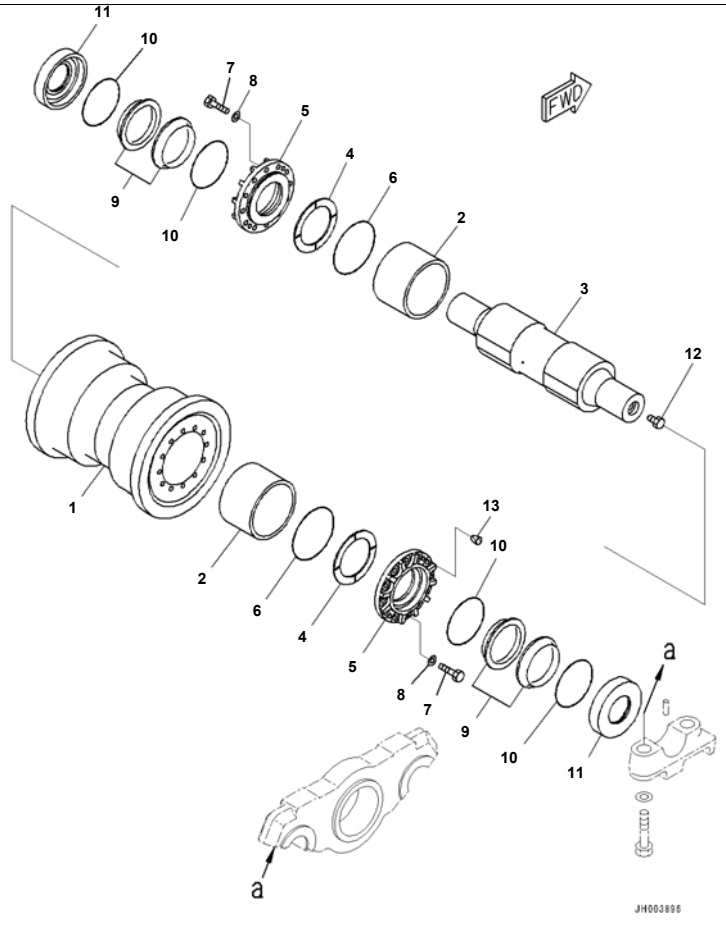

Track Frame, With Track Roller Guard, Track Roller Single Flange, RHS (1/2) (#65001-)

Index	Code	Part Number	Description	Qty	Serial No.
		195-30-01411	Track Roller Assembly	1	65001-
1		195-30-62610	· Roller, Track, Single Flanged	1	65001-
2		195-30-36140	· Bushing	2	65001-
3		195-30-62630	· Shaft	1	65001-
4		195-30-62650	· Plate	2	65001-
5		195-30-62640	· Retainer	2	65001-
6		07000-12145	· O-ring	2	65001-
7		01010-81240	· Bolt	24	65001-
8		01643-31232	· Washer	24	65001-
		195-30-00860	· Floating Seal Assembly	2	65001-
9	C1		· · Seal	2	65001-
10	C1		· · O-ring	2	65001-
11		195-30-62681	· Ring	2	65001-
12		07052-31624	· Plug	1	65001-
13		07049-01215	· Plug	4	65001-

Printed By : Dwi Iswanto (airafather6107170)

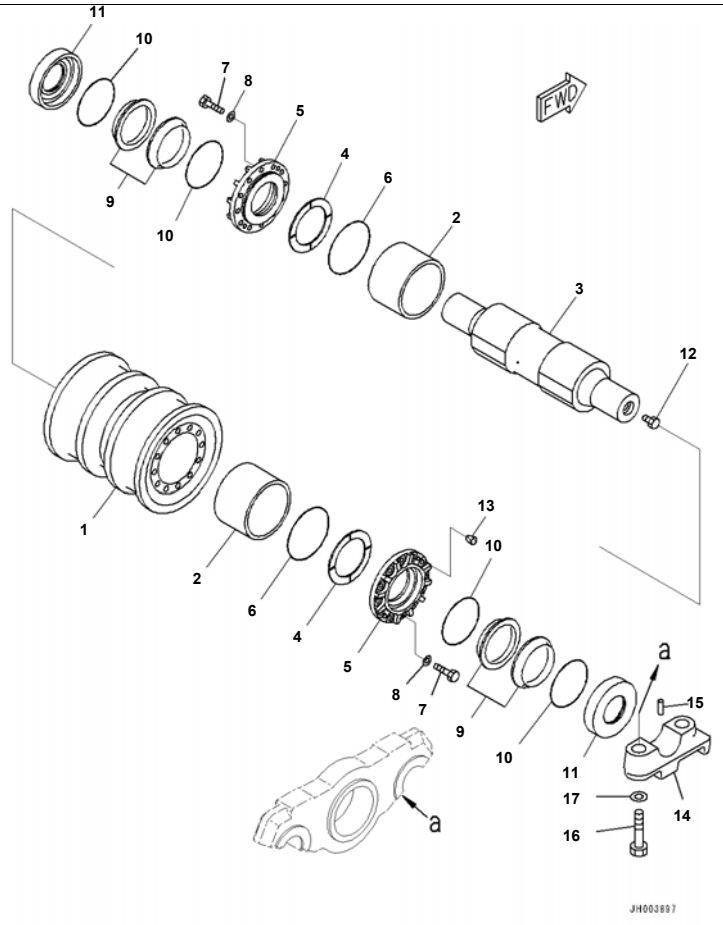

D375A-6R S/N 65001-UP
Track Frame, With Track Roller Guard, Track Roller Double Flange, RHS (1/2) (#65001-)

Index	Code	Part Number	Description	Qty	Serial No.
		195-30-01421	Track Roller Assembly	1	65001-
1		195-30-62620	· Roller, Track, Double Flanged	1	65001-
2		195-30-36140	· Bushing	2	65001-
3		195-30-62630	· Shaft	1	65001-
4		195-30-62650	· Plate	2	65001-
5		195-30-62640	· Retainer	2	65001-
6		07000-12145	· O-ring	2	65001-
7		01010-81240	· Bolt	24	65001-
8		01643-31232	· Washer	24	65001-
		195-30-00860	· Floating Seal Assembly	2	65001-
9	C1		· · Seal	2	65001-
10	C1		· · O-ring	2	65001-
11		195-30-62681	· Ring	2	65001-
12		07052-31624	· Plug	1	65001-
13		07049-01215	· Plug	4	65001-
14		195-30-62141	Cap	4	65001-
15		04020-00616	Pin, Dowel	2	65001-
16		01011-62710	Bolt	8	65001-
17		01643-32780	Washer	8	65001-

Printed By : Dwi Iswanto (airafather6107170)

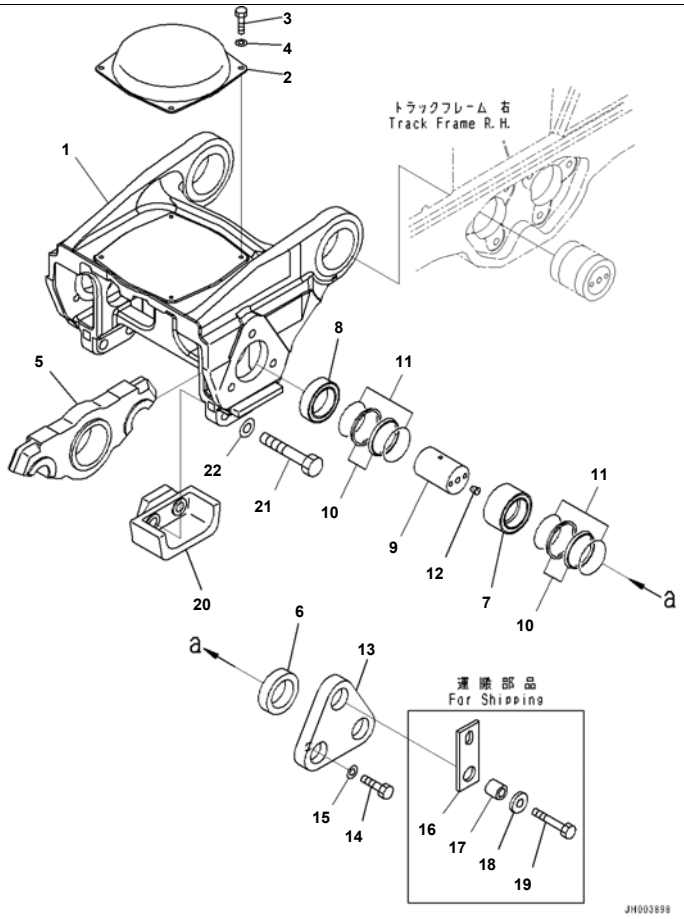

Reference:R2100-004024 Page:R009024

D375A-6R S/N 65001-UP
Track Frame, With Track Roller Guard, Bogie, 1st, RHS (#65001-)

Index	Code	Part Number	Description	Qty	Serial No.
		195-30-01772	Bogie Assembly	1	65001-
1		195-30-66510	· Bogie, Major	1	65001-
2		195-30-66531	· Pad	1	65001-
3		01010-81225	· Bolt	4	65001-
4		01643-31232	· Washer	4	65001-
5		195-30-66520	· Bogie, Minor	2	65001-
		195-30-62100	· Pin Assembly	2	65001-
6		195-30-62470	· · Ring, Out	1	65001-
7		195-30-62460	· · Ring, Center	1	65001-
8		195-30-62480	· · Ring, In	1	65001-
9		195-30-69941	· · Shaft	1	65001-
		17M-30-00550	· · Floating Seal Assembly	2	65001-
10	C1		· · · Seal	2	65001-
11	C1		· · · O-ring	2	65001-
12		209-30-63150	· · Plug	1	65001-
13		195-30-66580	· Cover	2	65001-
14		01010-62455	· Bolt	5	65001-
15		01643-32460	· Washer	5	65001-
16		195-30-66611	· Plate	1	65001-
17		198-30-66190	· Collar	1	65001-
18		19M-54-11770	· Plate	1	65001-
19		01011-62410	· Bolt	1	65001-
20		195-30-67230	· Guide	2	65001-
21		01010-62795	· Bolt	4	65001-
22		01643-32780	· Washer	4	65001-

Reference:R2100-004024 Page:R009024

Printed By : Dwi Iswanto (airafather6107170)

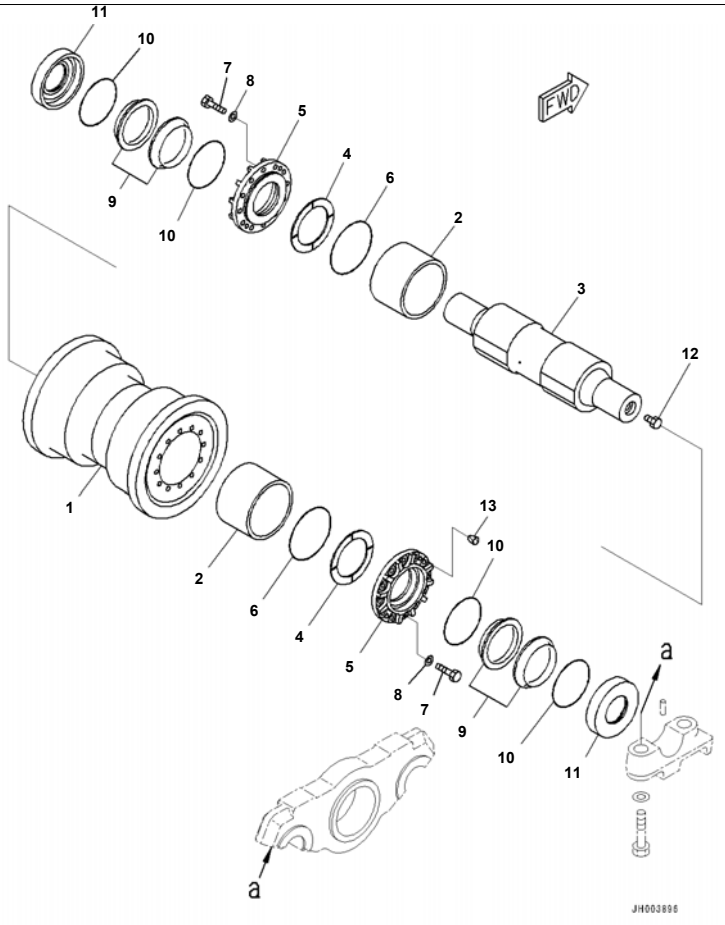

D375A-6R S/N 65001-UP
Track Frame, With Track Roller Guard, Track Roller Single Flange, RHS (2/2) (#65001-)

Index	Code	Part Number	Description	Qty	Serial No.
		195-30-01411	Track Roller Assembly	2	65001-
1		195-30-62610	· Roller, Track, Single Flanged	1	65001-
2		195-30-36140	· Bushing	2	65001-
3		195-30-62630	· Shaft	1	65001-
4		195-30-62650	· Plate	2	65001-
5		195-30-62640	· Retainer	2	65001-
6		07000-12145	· O-ring	2	65001-
7		01010-81240	· Bolt	24	65001-
8		01643-31232	· Washer	24	65001-
		195-30-00860	· Floating Seal Assembly	2	65001-
9	C1		· · Seal	2	65001-
10	C1		· · O-ring	2	65001-
11		195-30-62681	· Ring	2	65001-
12		07052-31624	· Plug	1	65001-
13		07049-01215	· Plug	4	65001-

Printed By : Dwi Iswanto (airafather6107170)

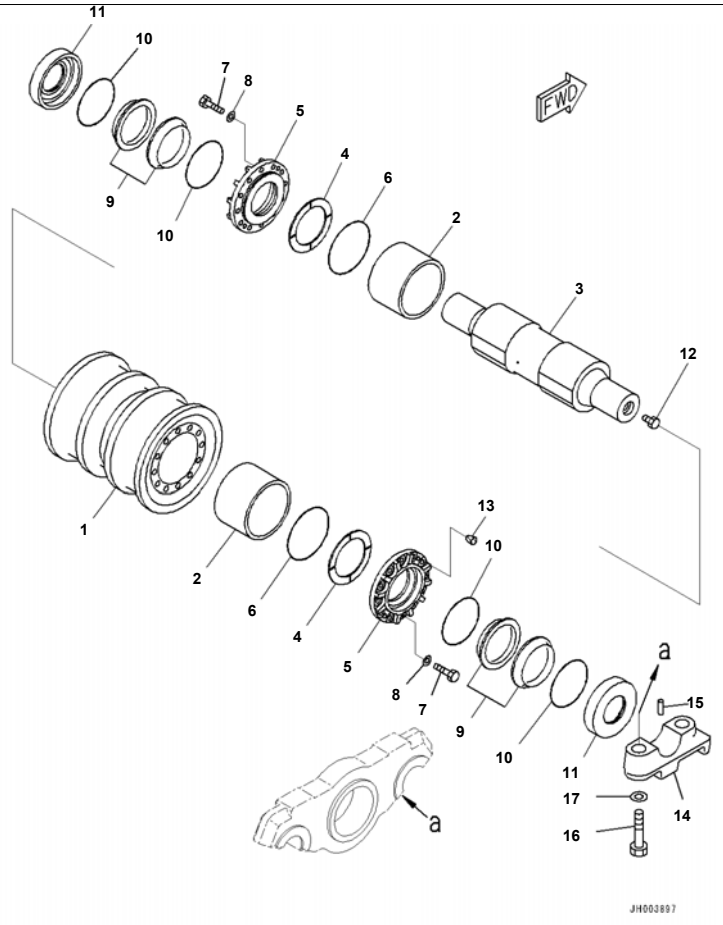

D375A-6R S/N 65001-UP
Track Frame, With Track Roller Guard, Track Roller Double Flange, RHS (2/2) (#65001-)

Index	Code	Part Number	Description	Qty	Serial No.
		195-30-01421	Track Roller Assembly	2	65001-
1		195-30-62620	· Roller, Track, Double Flanged	1	65001-
2		195-30-36140	· Bushing	2	65001-
3		195-30-62630	· Shaft	1	65001-
4		195-30-62650	· Plate	2	65001-
5		195-30-62640	· Retainer	2	65001-
6		07000-12145	· O-ring	2	65001-
7		01010-81240	· Bolt	24	65001-
8		01643-31232	· Washer	24	65001-
		195-30-00860	· Floating Seal Assembly	2	65001-
9	C1		· · Seal	2	65001-
10	C1		· · O-ring	2	65001-
11		195-30-62681	· Ring	2	65001-
12		07052-31624	· Plug	1	65001-
13		07049-01215	· Plug	4	65001-
14		195-30-62141	Cap	8	65001-
15		04020-00616	Pin, Dowel	4	65001-
16		01011-62710	Bolt	16	65001-
17		01643-32780	Washer	16	65001-

Printed By : Dwi Iswanto (airafather6107170)

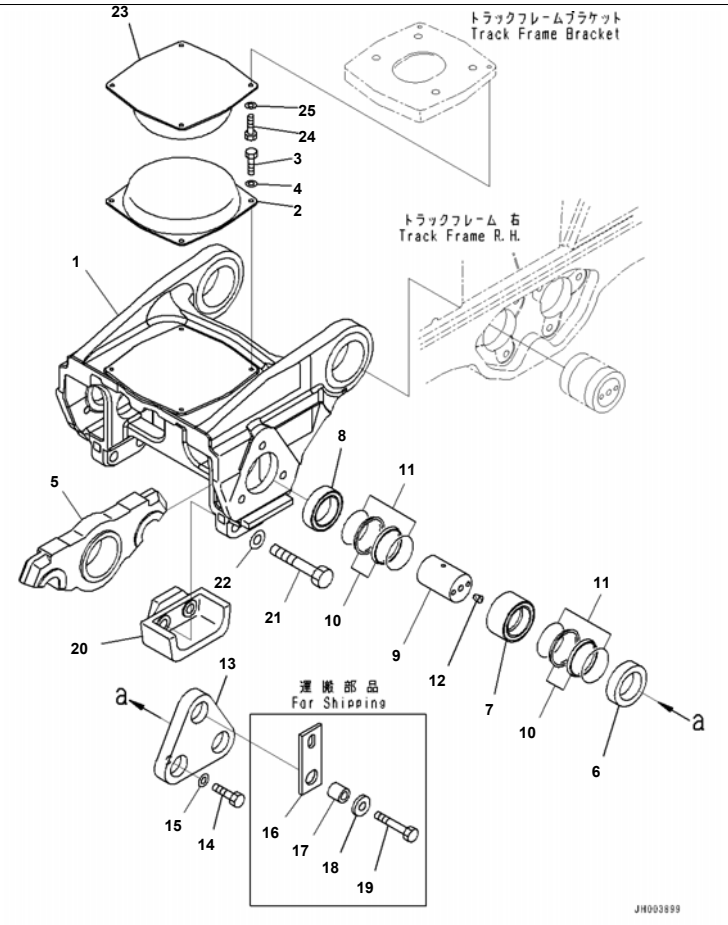

Reference:R2100-004027 Page:R009027

D375A-6R S/N 65001-UP
Track Frame, With Track Roller Guard, Bogie, 2nd and 3rd, RHS (#65001-)

Index	Code	Part Number	Description	Qty	Serial No.
		195-30-01772	Bogie Assembly	2	65001-
1		195-30-66510	· Bogie, Major	1	65001-
2		195-30-66531	· Pad	1	65001-
3		01010-81225	· Bolt	4	65001-
4		01643-31232	· Washer	4	65001-
5		195-30-66520	· Bogie, Minor	2	65001-
		195-30-62100	· Pin Assembly	2	65001-
6		195-30-62470	· · Ring, Out	1	65001-
7		195-30-62460	· · Ring, Center	1	65001-
8		195-30-62480	· · Ring, In	1	65001-
9		195-30-69941	· · Shaft	1	65001-
		17M-30-00550	· · Floating Seal Assembly	2	65001-
10	C1		· · · Seal	2	65001-
11	C1		· · · O-ring	2	65001-
12		209-30-63150	· · Plug	1	65001-
13		195-30-66580	· Cover	2	65001-
14		01010-62455	· Bolt	5	65001-
15		01643-32460	· Washer	5	65001-
16		195-30-66611	· Plate	1	65001-
17		198-30-66190	· Collar	1	65001-
18		19M-54-11770	· Plate	1	65001-
19		01011-62410	· Bolt	1	65001-
20		195-30-67230	· Guide	2	65001-
21		01010-62795	· Bolt	4	65001-
22		01643-32780	· Washer	4	65001-
23		195-30-66531	Pad	3	65001-
24		01010-81225	Bolt	12	65001-
25		01643-31232	Washer	12	65001-

Reference:R2100-004027 Page:R009027

Printed By : Dwi Iswanto (airafather6107170)

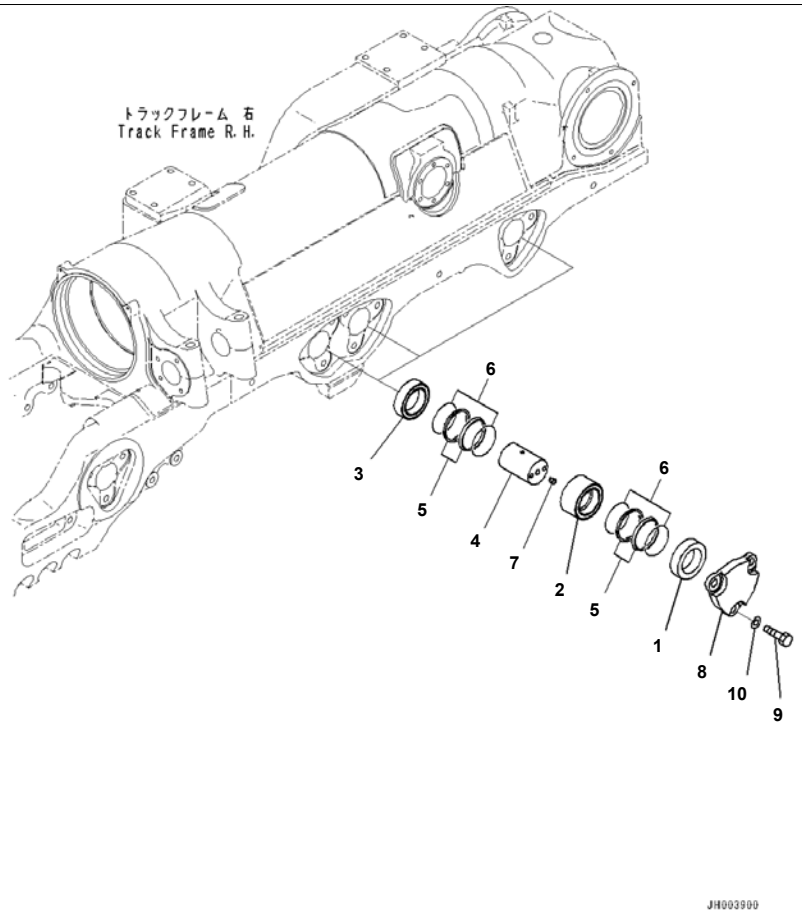

Reference:R2100-004028 Page:R009028

D375A-6R S/N 65001-UP
Track Frame, With Track Roller Guard, Cartridge Pin, RHS (2/2) (#65001-)

Index	Code	Part Number	Description	Qty	Serial No.
		195-30-62100	Pin Assembly	6	65001-
1		195-30-62470	· Ring, Out	1	65001-
2		195-30-62460	· Ring, Center	1	65001-
3		195-30-62480	· Ring, In	1	65001-
4		195-30-69941	· Shaft	1	65001-
		17M-30-00550	· Floating Seal Assembly	2	65001-
5	C1		· · Seal	2	65001-
6	C1		· · O-ring	2	65001-
7		209-30-63150	· Plug	1	65001-
8		195-30-66571	Cover	6	65001-
9		01010-62455	Bolt	18	65001-
10		01643-32460	Washer	18	65001-

Printed By : Dwi Iswanto (airafather6107170)

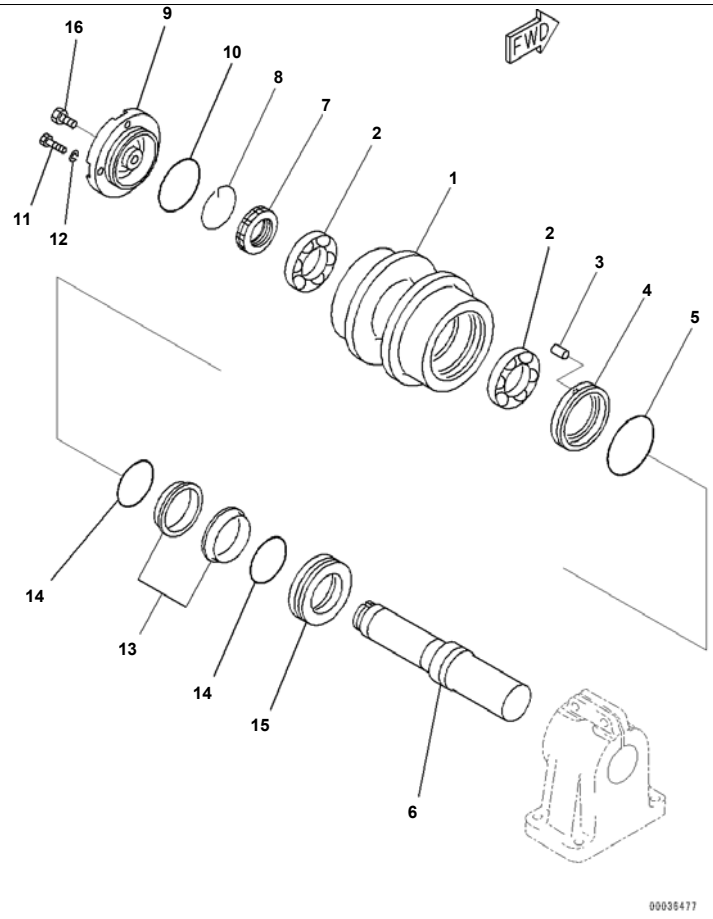

D375A-6R S/N 65001-UP
Track Frame, With Track Roller Guard, Carrier Roller, RHS (#65001-)

Index	Code	Part Number	Description	Qty	Serial No.
		195-30-01041	Roller Assembly, Carrier	2	65001-
1		195-30-55110	· Roller	1	65001-
2		06000-32215	· Bearing	2	65001-
3		04020-00616	· Pin, Dowel	1	65001-
4		195-30-35120	· Ring	1	65001-
5		07000-12145	· O-ring	1	65001-
6		195-30-55130	· Shaft	1	65001-
7		180-30-15180	· Nut	1	65001-
8		180-30-15190	· Ring	1	65001-
9		195-30-35180	· Cover	1	65001-
10		07000-12125	· O-ring	1	65001-
11		01010-81230	· Bolt	4	65001-
12		01602-21236	· Washer, Spring	4	65001-
		205-30-00052	· Floating Seal Assembly	1	65001-
13	C1		· · Ring	2	65001-
14	C1		· · O-ring	2	65001-
15		195-30-55121	· Ring	1	65001-
16		07052-31624	· Plug	1	65001-

Printed By : Dwi Iswanto (airafather6107170)

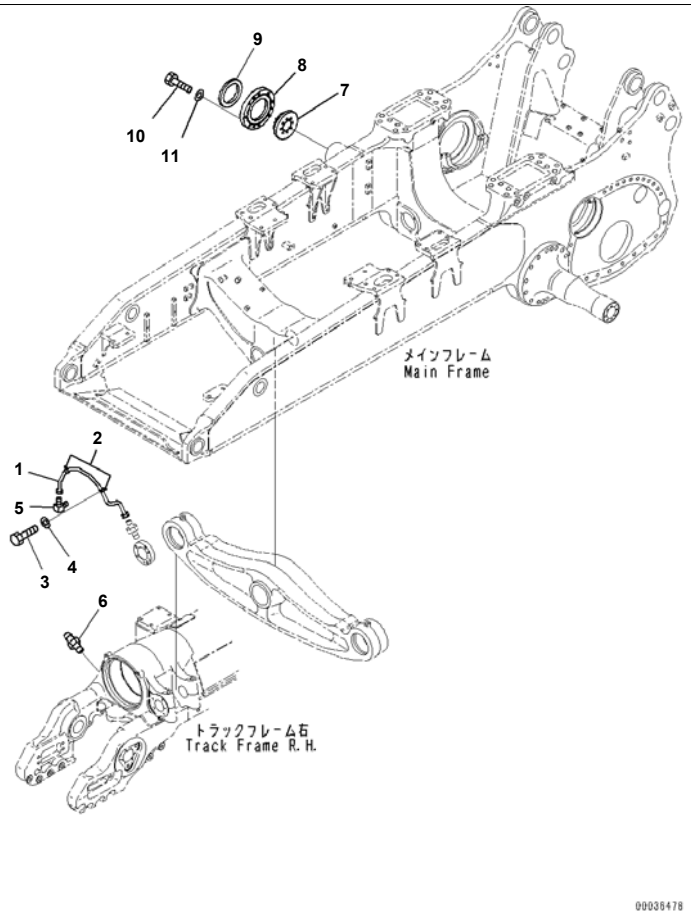

Reference:R2100-004030 Page:R009030

D375A-6R S/N 65001-UP
Track Frame, With Track Roller Guard, Equalizer Bar and Lubrication (2/2) (#65001-)

Index	Code	Part Number	Description	Qty	Serial No.
1		195-50-51340	Tube	1	65001-
2		566-16-11970	Clip	2	65001-
3		01010-81020	Bolt	2	65001-
4		01643-31032	Washer	2	65001-
5		20D-68-11780	Elbow	1	65001-
6		07020-00000	Fitting, Grease	1	65001-
7		195-50-52120	Washer	1	65001-
8		195-50-52130	Washer	1	65001-
9		195-50-22181	Seal	1	65001-
10		01010-81665	Bolt	3	65001-
11		01643-31645	Washer	3	65001-

Printed By : Dwi Iswanto (airafather6107170)

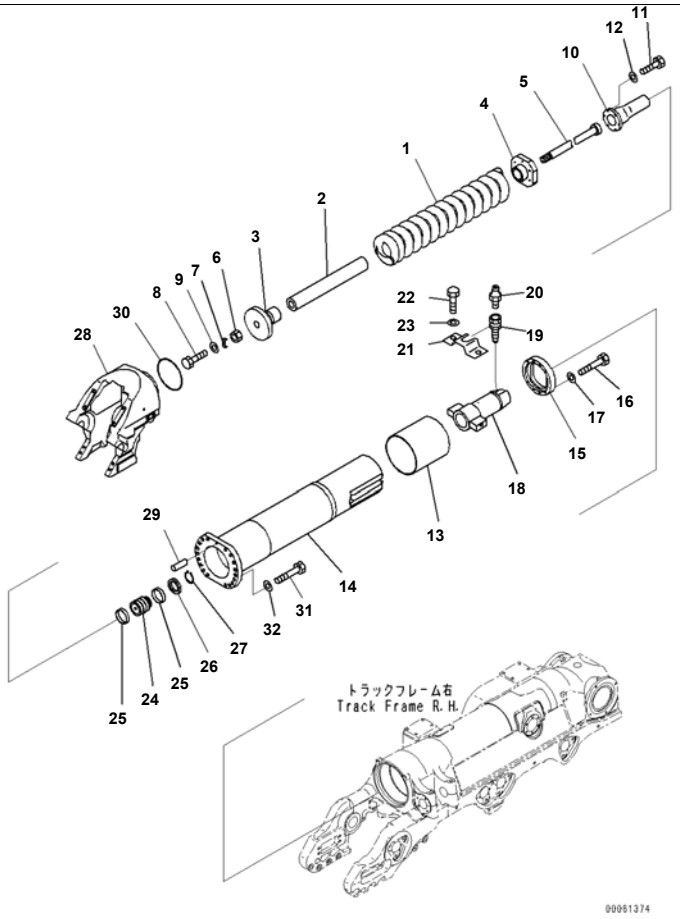

Reference:R2100-004031 Page:R009031

D375A-6R S/N 65001-UP
Track Frame, With Track Roller Guard, Recoil Spring, RHS (#65001-)

Index	Code	Part Number	Description	Qty	Serial No.
1		195-30-64212	Spring	1	65001-
2		195-30-64251	Spacer	1	65001-
3		195-30-34220	Pilot	1	65001-
4		195-30-51450	Pilot	1	65001-
5		195-30-64241	Bolt	1	65001-
6		198-30-14233	Nut	1	65001-
7		198-30-14242	Plate	1	65001-
8		01010-81230	Bolt	2	65001-
9		01643-31232	Washer	2	65001-
10		195-30-51431	Holder	1	65001-
11		01010-81245	Bolt	6	65001-
12		01643-31232	Washer	6	65001-
		195-30-01112	Case Assembly	1	65001-
13		195-30-34121	· Bushing	1	65001-
14	C1		· Case	1	65001-
15		195-30-34340	Ring	1	65001-
16		01010-81280	Bolt	8	65001-
17		01643-31232	Washer	8	65001-
18		195-30-51491	Cylinder	1	65001-
19		07959-30000	Valve	1	65001-
20		07020-00000	Fitting, Grease	1	65001-
21		195-30-34380	Plate	1	65001-
22		01010-81020	Bolt	2	65001-
23		01643-31032	Washer	2	65001-
24		195-30-34331	Piston	1	65001-
25		198-30-14270	Ring	2	65001-
26		195-30-34420	Packing	1	65001-
27		04064-01030	Ring, Snap, for Shaft Side	1	65001-
28		195-30-64162	Yoke	1	65001-
29		04020-01434	Pin, Dowel	1	65001-
30		07000-15295	O-ring	1	65001-

Reference:R2100-004031 Page:R009031

Printed By : Dwi Iswanto (airafather6107170)

Track Frame, With Track Roller Guard, Recoil Spring, RHS (#65001-)

Index	Code	Part Number	Description	Qty	Serial No.
31		195-30-34170	Bolt	18	65001-
32		01643-32780	Washer	18	65001-

Printed By : Dwi Iswanto (airafather6107170)

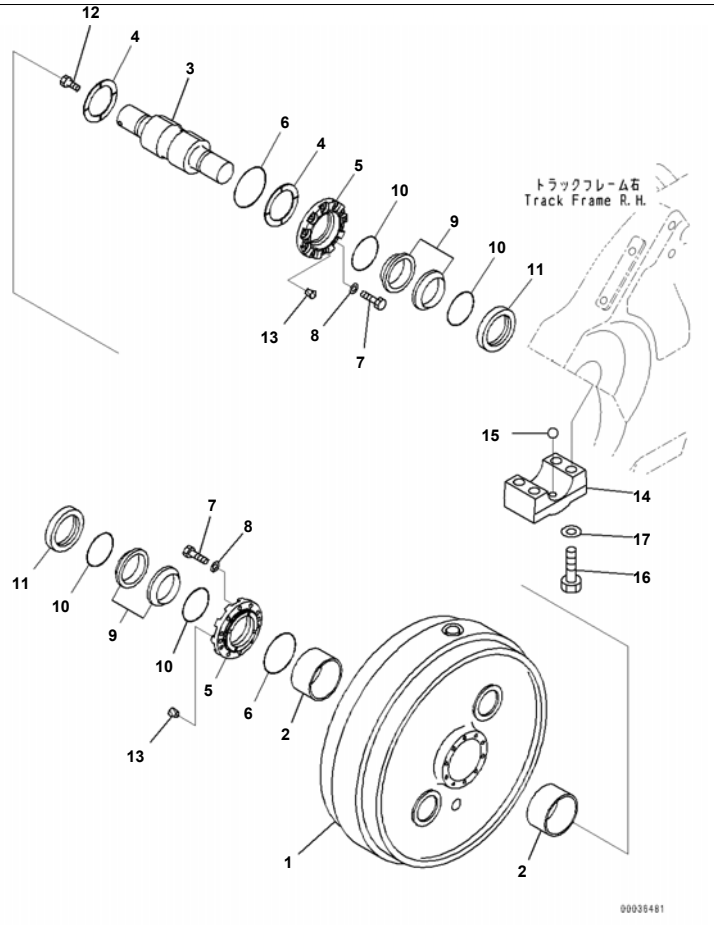

Reference:R2100-004032 Page:R009032

D375A-6R S/N 65001-UP
Track Frame, With Track Roller Guard, Front Idler, RHS (#65001-)

Index	Code	Part Number	Description	Qty	Serial No.
		195-30-01430	Idler Assembly	1	65001-
1		195-30-61510	· Idler	1	65001-
2		195-30-33140	· Bushing	2	65001-
3		195-30-61530	· Shaft	1	65001-
4		195-30-61560	· Plate	2	65001-
5		195-30-61540	· Retainer	2	65001-
6		195-30-33190	· O-ring	2	65001-
7		01010-81445	· Bolt	20	65001-
8		01643-31445	· Washer	20	65001-
		205-30-00052	· Floating Seal Assembly	2	65001-
9	C1		· · Ring	2	65001-
10	C1		· · O-ring	2	65001-
11		195-30-61570	· Ring	2	65001-
12		07052-31624	· Plug	1	65001-
13		07049-01418	· Plug, Cork	4	65001-
14		195-30-51570	Cap	2	65001-
15		04260-01905	Ball	1	65001-
16		195-09-18490	Bolt	8	65001-
17		01643-32780	Washer	8	65001-

Reference:R2100-004032 Page:R009032

Printed By : Dwi Iswanto (airafather6107170)

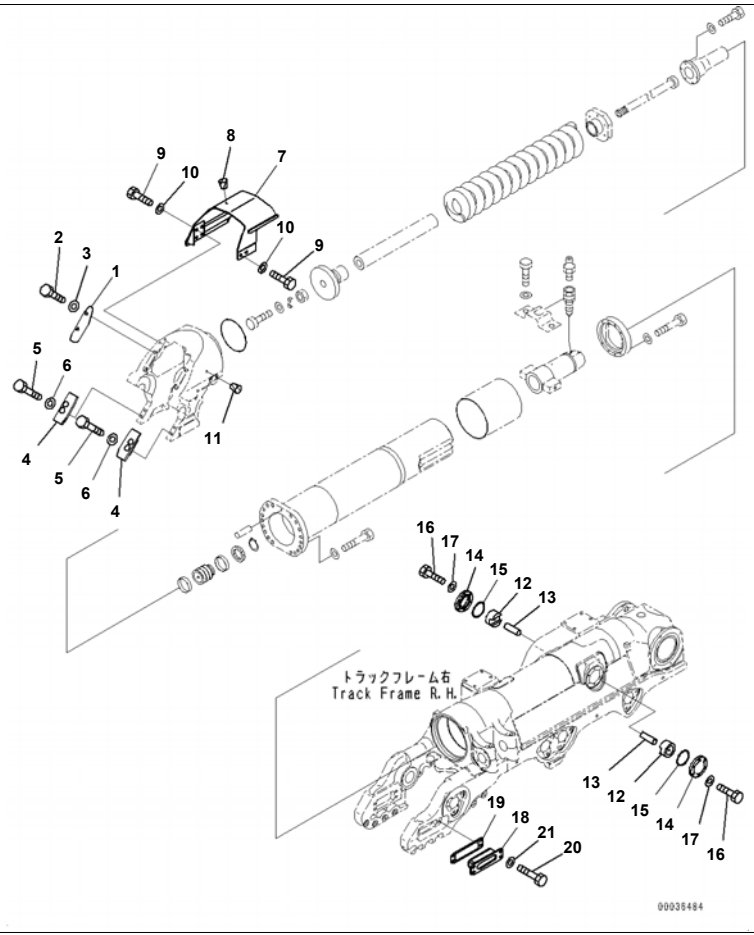

D375A-6R S/N 65001-UP
Track Frame, With Track Roller Guard, Cover and Cushion Mount, RHS (#65001-)

Index	Code	Part Number	Description	Qty	Serial No.
1		195-30-64320	Cover	2	65001-
2		01010-62040	Bolt	4	65001-
3		01643-32060	Washer	4	65001-
4		195-30-64172	Cover	2	65001-
5		01010-62060	Bolt	4	65001-
6		01643-32060	Washer	4	65001-
7		195-30-64132	Cover	1	65001-
8		07049-01215	Plug	1	65001-
9		01010-62040	Bolt	6	65001-
10		01643-32060	Washer	6	65001-
11		07049-02025	Plug	2	65001-
12		195-30-51470	Guide	2	65001-
13		04022-20040	Pin, Dowel	2	65001-
14		195-30-34360	Cover	2	65001-
15		07000-12135	O-ring	2	65001-
16		01010-61645	Bolt	12	65001-
17		01643-31645	Washer	12	65001-
18		195-30-61580	Guide	2	65001-
19		195-30-05070	Shim Assembly	2	65001-
	C1		· Shim, T=0.5mm	1	65001-
	C1		· Shim, T=1.0mm	12	65001-
20		01010-62465	Bolt	8	65001-
21		01643-32460	Washer	8	65001-

Printed By : Dwi Iswanto (airafather6107170)

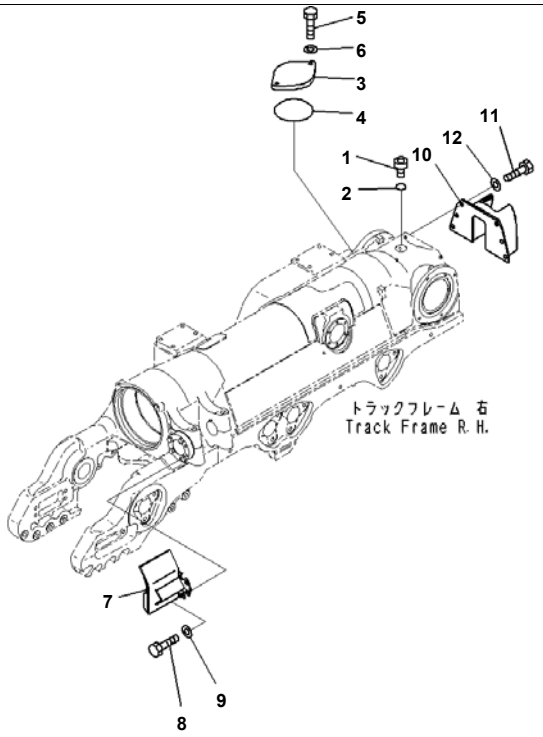

Reference:R2100-004034 Page:R009034

D375A-6R S/N 65001-UP
Track Frame, With Track Roller Guard, Rear Cover (2/2) (#65001-)

Index	Code	Part Number	Description	Qty	Serial No.
1		07040-13618	Plug	1	65001-
2		07002-03634	O-ring	1	65001-
3		195-30-31260	Cover	1	65001-
4		07000-15155	O-ring	1	65001-
5		01010-61645	Bolt	2	65001-
6		01643-31645	Washer	2	65001-
7		195-30-62240	Cover	1	65001-
8		01010-61650	Bolt	3	65001-
9		01643-31645	Washer	3	65001-
10		195-30-62290	Cover	1	65001-
11		01010-62045	Bolt	5	65001-
12		01643-32060	Washer	5	65001-

Printed By : Dwi Iswanto (airafather6107170)

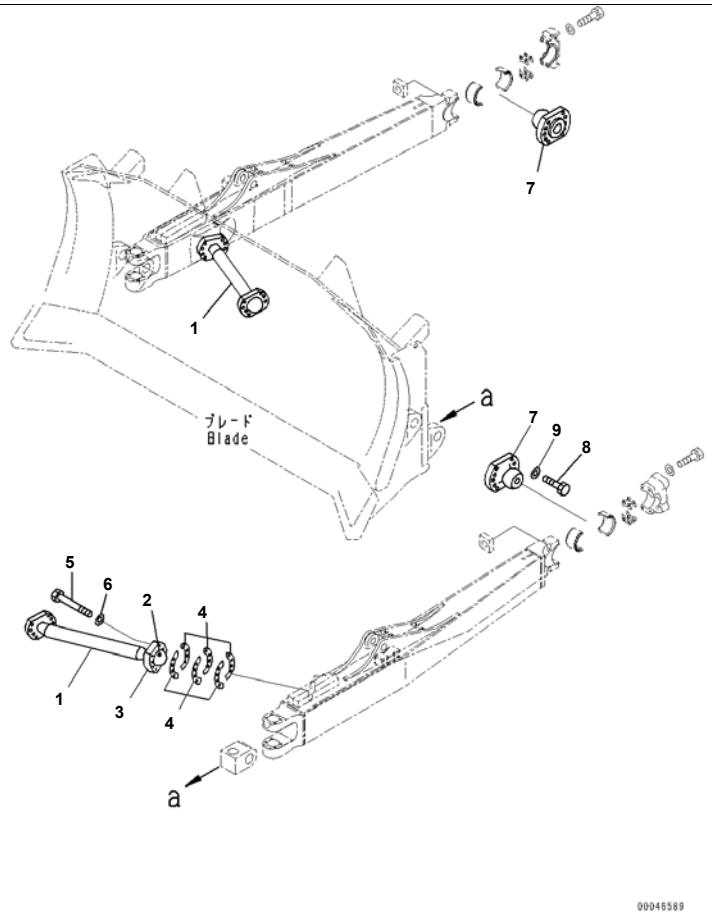

D375A-6R S/N 65001-UP
Dozer Frame, Remote Greasing, Dozer, Arm (#65001-)

Index	Code	Part Number	Description	Qty	Serial No.
1		195-71-71120	Arm	2	65001-65003
2		195-71-61271	Ball	4	65001-
3		195-71-61291	Cap	4	65001-
4		195-71-00560	Shim Assembly	1	65001-
	C1		· Shim, T=2.0mm	4	65001-
	C1		· Shim, T=1.0mm	8	65001-
	C1		· Shim, T=0.5mm	4	65001-
5		01011-62720	Bolt	16	65001-
6		01643-32780	Washer	16	65001-
7		195-71-51191	Trunnion	2	65004-
8		01010-62475	Bolt	20	65001-
9		01643-32460	Washer	20	65001-

Printed By : Dwi Iswanto (airafather6107170)

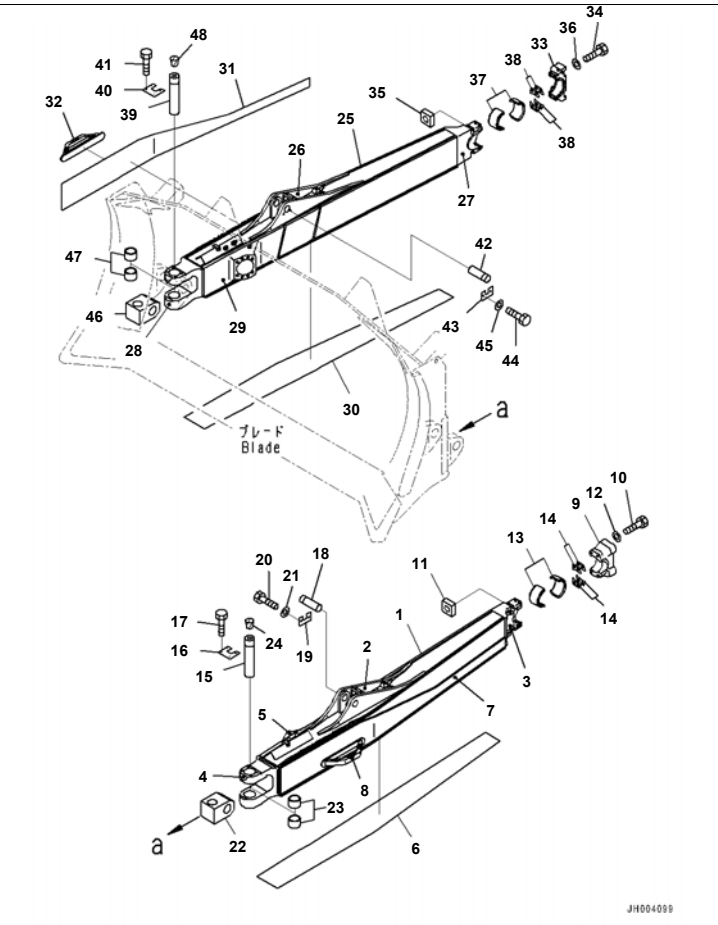

Reference:T2110-003002 Page:T002002

D375A-6R S/N 65001-UP
Dozer Frame, Remote Greasing, Dozer, Frame (#65001-)

Index	Code	Part Number	Description	Qty	Serial No.
1		195-71-75810	Frame	1	65001-
2		195-71-61350	· Bracket,LHS,Welded	1	65001-
3		195-71-74191	· Bracket,Welded	1	65001-
4		195-71-74211	· Bracket,LHS,Welded	1	65001-
5		195-71-75210	· Bracket,LHS,Welded	1	65001-
6		195-71-75330	· Plate,LHS,Welded	1	65001-
7		195-71-75351	· Plate,LHS,Welded	1	65001-
8		198-71-51250	· Step,Welded	1	65001-
9		195-71-74231	Cap	1	65001-
10		207-46-12141	Bolt	4	65001-
11		195-71-11512	Nut	4	65001-
12		01643-32780	Washer	4	65001-
13		195-71-74250	Bushing	2	65001-
14		195-71-74260	Plate	4	65001-
15		195-71-61390	Pin	1	65001-
16		195-71-74290	Lock	1	65001-
17		01010-62045	Bolt	4	65001-
18		195-71-61630	Pin	1	65001-
19		195-71-51450	Lock	1	65001-
20		01010-62050	Bolt	2	65001-
21		01643-32060	Washer	2	65001-
22		195-71-61380	Joint	1	65001-
23		195-71-74270	Bushing	2	65001-
24		07049-02025	Plug	1	65001-
25		195-71-75820	Frame	1	65001-
26		195-71-61360	· Bracket,RHS,Welded	1	65001-
27		195-71-74191	· Bracket,RHS,Welded	1	65001-
28		195-71-74221	· Bracket,RHS,Welded	1	65001-
29		195-71-75220	· Bracket,RHS,Welded	1	65001-
30		195-71-75340	· Plate,RHS,Welded	1	65001-
31		195-71-75361	· Plate,RHS,Welded	1	65001-

Reference:T2110-003002 Page:T002002

Printed By : Dwi Iswanto (airafather6107170)

Dozer Frame, Remote Greasing, Dozer, Frame (#65001-)

Index	Code	Part Number	Description	Qty	Serial No.
32		198-71-51250	· Step,Welded	1	65001-
33		195-71-74231	Cap	1	65001-
34		207-46-12141	Bolt	4	65001-
35		195-71-11512	Nut	4	65001-
36		01643-32780	Washer	4	65001-
37		195-71-74250	Bushing	2	65001-
38		195-71-74260	Plate	4	65001-
39		195-71-61390	Pin	1	65001-
40		195-71-74290	Lock	1	65001-
41		01010-62045	Bolt	4	65001-
42		195-71-61630	Pin	1	65001-
43		195-71-51450	Lock	1	65001-
44		01010-62050	Bolt	2	65001-
45		01643-32060	Washer	2	65001-
46		195-71-61380	Joint	1	65001-
47		195-71-74270	Bushing	2	65001-
48		07049-02025	Plug	1	65001-

Printed By : Dwi Iswanto (airafather6107170)

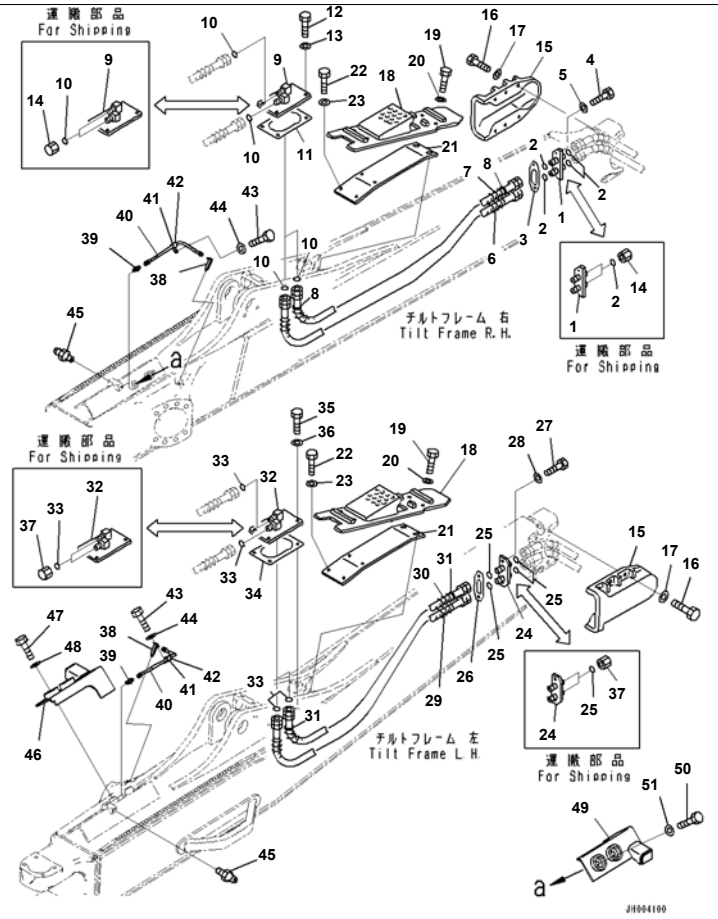

Reference:T2110-003003 Page:T002003

D375A-6R S/N 65001-UP
Dozer Frame, Remote Greasing, Dozer, Blade Tilt Piping (#65001-)

Index	Code	Part Number	Description	Qty	Serial No.
1		195-71-75611	Flange	1	65001-
2		02896-11015	O-ring	4	65001-
3		195-71-52151	Gasket	1	65001-
4		01010-81235	Bolt	2	65001-
5		01643-31232	Washer	2	65001-
6		195-71-76681	Hose	1	65001-
7		195-71-76711	Hose	1	65001-
8		20Y-62-22790	· Band, Red	2	65001-
9		195-71-75621	Flange	1	65001-
10		02896-11015	O-ring	4	65001-
11		195-71-62121	Gasket	1	65001-
12		01010-81225	Bolt	4	65001-
13		01643-31232	Washer	4	65001-
14		02789-00522	Plug, Face Seal Type	4	65001-
15		195-71-74240	Cover	2	65001-
16		01010-62050	Bolt	12	65001-
17		01643-32060	Washer	12	65001-
18		195-71-61611	Cover	2	65001-
19		01010-62050	Bolt	8	65001-
20		01643-32060	Washer	8	65001-
21		195-71-62140	Cover	2	65001-
22		01010-81225	Bolt	8	65001-
23		01643-31232	Washer	8	65001-
24		195-71-75611	Flange	1	65001-
25		02896-11015	O-ring	4	65001-
26		195-71-52151	Gasket	1	65001-
27		01010-81235	Bolt	2	65001-
28		01643-31232	Washer	2	65001-
29		195-71-76681	Hose	1	65001-
30		195-71-76641	Hose	1	65001-
31		20Y-62-22820	· Band, Blue	2	65001-

Printed By : Dwi Iswanto (airafather6107170)

Dozer Frame, Remote Greasing, Dozer, Blade Tilt Piping (#65001-)

Index	Code	Part Number	Description	Qty	Serial No.
32		195-71-75621	Flange	1	65001-
33		02896-11015	O-ring	4	65001-
34		195-71-62121	Gasket	1	65001-
35		01010-81225	Bolt	4	65001-
36		01643-31232	Washer	4	65001-
37		02789-00522	Plug, Face Seal Type	4	65001-
38		198-68-11921	Elbow	2	65001-
39		203-62-21740	Nipple	2	65001-
40		195-68-11510	Hose	2	65001-
41		04434-51712	Clip	2	65001-
42		07095-20211	Cushion	2	65001-
43		01010-81230	Bolt	2	65001-
44		01643-31232	Washer	2	65001-
45		07020-00000	Fitting, Grease	2	65001-
46		195-68-11340	Cover	1	65001-
47		01010-82040	Bolt	2	65001-
48		01643-32060	Washer	2	65001-
49		195-68-11350	Cover	1	65001-
50		01010-82040	Bolt	2	65001-
51		01643-32060	Washer	2	65001-

Printed By : Dwi Iswanto (airafather6107170)

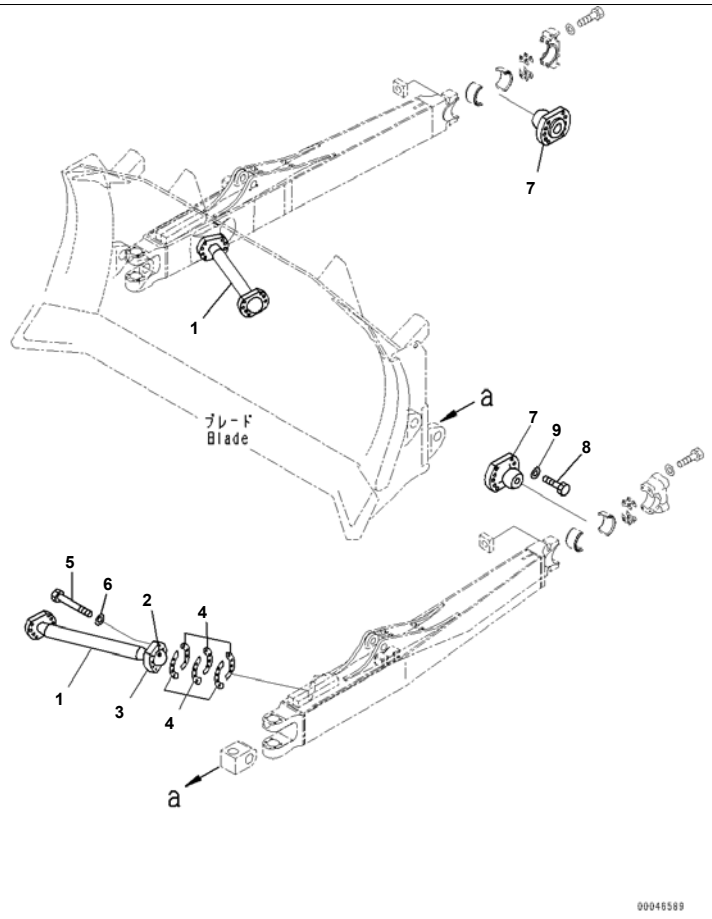

D375A-6R S/N 65001-UP
Dozer Frame, Strengthened Semi U Dozer, Arm (#65001-)

Index	Code	Part Number	Description	Qty	Serial No.
1		195-71-71120	Arm	2	65001-65003
2		195-71-61271	Ball	4	65001-
3		195-71-61291	Cap	4	65001-
4		195-71-00560	Shim Assembly	1	65001-
	C1		· Shim, T=2.0mm	4	65001-
	C1		· Shim, T=1.0mm	8	65001-
	C1		· Shim, T=0.5mm	4	65001-
5		01011-62720	Bolt	16	65001-
6		01643-32780	Washer	16	65001-
7		195-71-51191	Trunnion	2	65004-
8		01010-62475	Bolt	20	65001-
9		01643-32460	Washer	20	65001-

Printed By : Dwi Iswanto (airafather6107170)

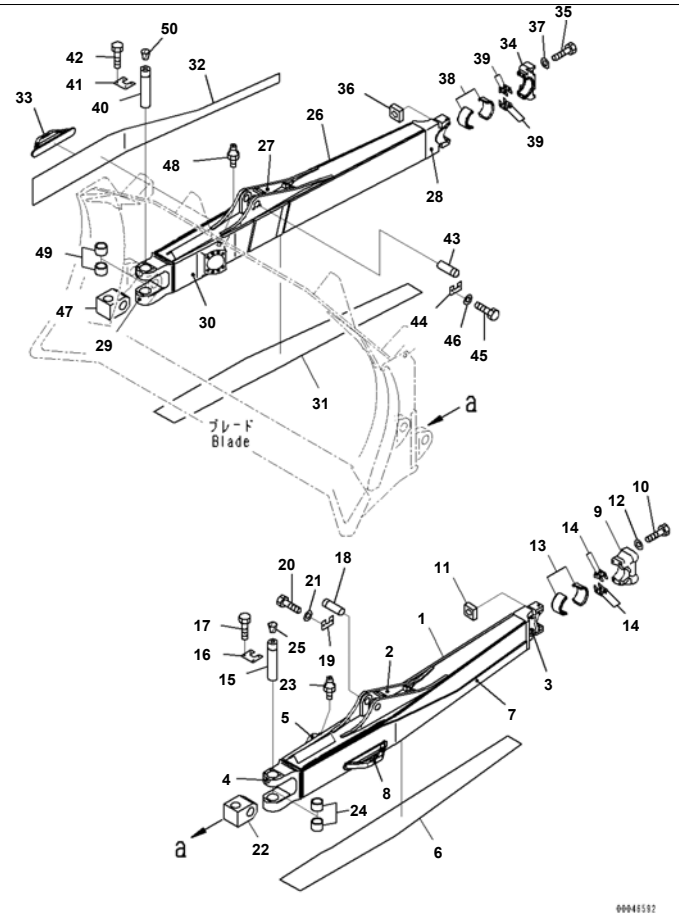

Dozer Frame, Strengthened Semi U Dozer, Frame (#65001-)

Index	Code	Part Number	Description	Qty	Serial No.
1		195-71-75312	Frame,LHS	1	65001-
2		195-71-61350	· Bracket,LHS,Welded	1	65001-
3		195-71-74191	· Bracket,Welded	1	65001-
4		195-71-74211	· Bracket,LHS,Welded	1	65001-
5		195-71-75210	· Bracket,LHS,Welded	1	65001-
6		195-71-75330	· Plate,LHS,Welded	1	65001-
7		195-71-75351	· Plate,LHS,Welded	1	65001-
8		198-71-51250	· Step,Welded	1	65001-
9		195-71-74231	Cap	1	65001-
10		207-46-12141	Bolt	4	65001-
11		195-71-11512	Nut	4	65001-
12		01643-32780	Washer	4	65001-
13		195-71-74250	Bushing	2	65001-
14		195-71-74260	Plate	4	65001-
15		195-71-61390	Pin	1	65001-
16		195-71-74290	Lock	1	65001-
17		01010-62045	Bolt	4	65001-
18		195-71-61630	Pin	1	65001-
19		195-71-51450	Lock	1	65001-
20		01010-62050	Bolt	2	65001-
21		01643-32060	Washer	2	65001-
22		195-71-61380	Joint	1	65001-
23		07020-00000	Fitting, Grease	1	65001-
24		195-71-74270	Bushing	2	65001-
25		07049-02025	Plug	1	65001-
26		195-71-75322	Frame,RHS	1	65001-
27		195-71-61360	· Bracket,RHS,Welded	1	65001-
28		195-71-74191	· Bracket,Welded	1	65001-
29		195-71-74221	· Bracket,RHS,Welded	1	65001-
30		195-71-75220	· Bracket,RHS,Welded	1	65001-
31		195-71-75340	· Plate,RHS,Welded	1	65001-

Printed By : Dwi Iswanto (airafather6107170)

Dozer Frame, Strengthened Semi U Dozer, Frame (#65001-)

Index	Code	Part Number	Description	Qty	Serial No.
32		195-71-75361	· Plate,RHS,Welded	1	65001-
33		198-71-51250	· Step,Welded	1	65001-
34		195-71-74231	Cap	1	65001-
35		207-46-12141	Bolt	4	65001-
36		195-71-11512	Nut	4	65001-
37		01643-32780	Washer	4	65001-
38		195-71-74250	Bushing	2	65001-
39		195-71-74260	Plate	4	65001-
40		195-71-61390	Pin	1	65001-
41		195-71-74290	Lock	1	65001-
42		01010-62045	Bolt	4	65001-
43		195-71-61630	Pin	1	65001-
44		195-71-51450	Lock	1	65001-
45		01010-62050	Bolt	2	65001-
46		01643-32060	Washer	2	65001-
47		195-71-61380	Joint	1	65001-
48		07020-00000	Fitting, Grease	1	65001-
49		195-71-74270	Bushing	2	65001-
50		07049-02025	Plug	1	65001-

Printed By : Dwi Iswanto (airafather6107170)

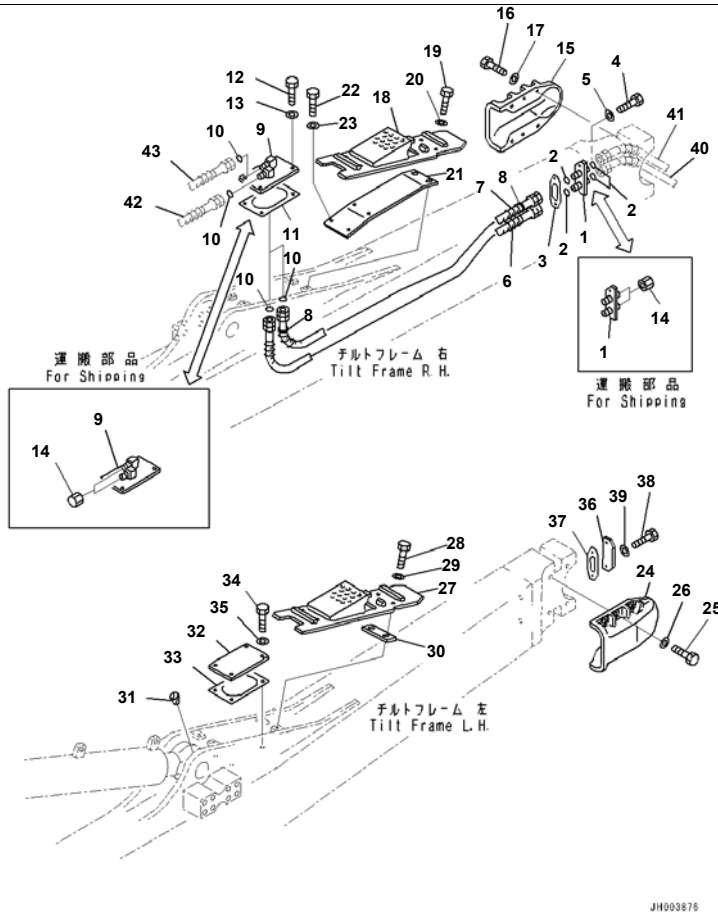

Reference:T2110-002003 Page:T003003

D375A-6R S/N 65001-UP
Dozer Frame, Strengthened Semi U Dozer, Blade Tilt Piping (#65001-)

Index	Code	Part Number	Description	Qty	Serial No.
1		195-71-75611	Flange	1	65001-
2		02896-11015	O-ring	4	65001-
3		195-71-52151	Gasket	1	65001-
4		01010-81235	Bolt	2	65001-
5		01643-31232	Washer	2	65001-
6		195-71-76681	Hose	1	65001-
7		195-71-76711	Hose	1	65001-
8		20Y-62-22790	· Band, Red	2	65001-
9		195-71-75621	Flange	1	65001-
10		02896-11015	O-ring	4	65001-
11		195-71-62121	Gasket	1	65001-
12		01010-81225	Bolt	4	65001-
13		01643-31232	Washer	4	65001-
14		02789-00522	Plug, Face Seal Type	4	65001-
15		195-71-74240	Cover	1	65001-
16		01010-62050	Bolt	6	65001-
17		01643-32060	Washer	6	65001-
18		195-71-61611	Cover	1	65001-
19		01010-62050	Bolt	4	65001-
20		01643-32060	Washer	4	65001-
21		195-71-62140	Cover	1	65001-
22		01010-81225	Bolt	4	65001-
23		01643-31232	Washer	4	65001-
24		195-71-74240	Cover	1	65001-
25		01010-62050	Bolt	6	65001-
26		01643-32060	Washer	6	65001-
27		195-71-61611	Cover	1	65001-
28		01010-62050	Bolt	4	65001-
29		01643-32060	Washer	4	65001-
30		195-71-62180	Plate	1	65001-
31		07049-01215	Plug	4	65001-

Reference:T2110-002003 Page:T003003

Printed By : Dwi Iswanto (airafather6107170)

Dozer Frame, Strengthened Semi U Dozer, Blade Tilt Piping (#65001-)

Index	Code	Part Number	Description	Qty	Serial No.
32		195-71-62170	Plate	1	65001-
33		195-71-62121	Gasket	1	65001-
34		01010-81225	Bolt	4	65001-
35		01643-31232	Washer	4	65001-
36		195-71-62160	Plate	1	65001-
37		195-71-52151	Gasket	1	65001-
38		01010-81235	Bolt	2	65001-
39		01643-31232	Washer	2	65001-
40		(195-71-76671)	Hose		
41		(195-71-76691)	Hose		
42		(195-71-76650)	Hose		
43		(195-71-76660)	Hose		

Printed By : Dwi Iswanto (airafather6107170)

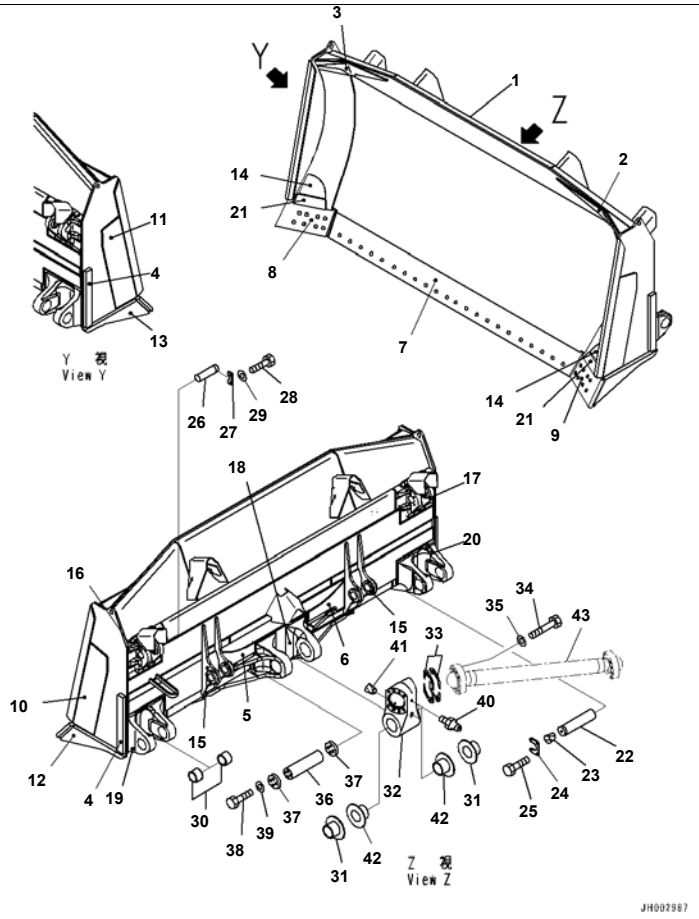

Reference:T2120-004001 Page:T004001

D375A-6R S/N 65001-UP
Dozer Blade, For Machine With Semi U Dozer, With Spill Guard, Thick Wall End Bit Type, Blade (#65001-)

Index	Code	Part Number	Description	Qty	Serial No.
1		195-71-77111	Blade	1	65001-
2		195-71-77E71	· Plate, LHS, Welded	1	65001-
3		195-71-77E80	· Plate, RHS, Welded	1	65001-
4		195-71-51530	· Plate, Welded	2	65001-
5		195-71-71670	· Plate, Welded	1	65001-
6		195-71-71680	· Plate, Welded	1	65001-
7		195-71-71A40	· Plate, Welded	1	65001-
8		195-71-71A50	· Plate, Welded	1	65001-
9		195-71-71A60	· Plate, Welded	1	65001-
10		195-71-77141	· Plate, LHS, Welded	1	65001-
11		195-71-77151	· Plate, RHS, Welded	1	65001-
12		195-71-77650	· Plate, LHS, Welded	1	65001-
13		195-71-77660	· Plate, RHS, Welded	1	65001-
14		195-71-77680	· Plate,Welded	2	65001-
15		195-72-74420	· Bracket,Welded	2	65001-
16		195-72-74711	· Bracket,Welded	1	65001-
17		195-72-74721	· Bracket,Welded	1	65001-
18		195-72-75121	· Bracket,Welded	1	65001-
19		195-72-75141	· Bracket,Welded	1	65001-
20		195-72-75151	· Bracket,Welded	1	65001-
21		198-72-11151	· Stopper,Welded	2	65001-
22		195-71-71220	Pin	2	65001-
23		07049-02025	Plug	2	65001-
24		195-71-74290	Lock	2	65001-
25		01010-62045	Bolt	8	65001-
26		195-71-61590	Pin	2	65001-
27		195-71-51450	Lock	2	65001-
28		01010-62050	Bolt	4	65001-
29		01643-32060	Washer	4	65001-
30		195-71-74270	Bushing	4	65001-
31		195-71-74160	Bushing	2	65001-

Printed By : Dwi Iswanto (airafather6107170)

Dozer Blade, For Machine With Semi U Dozer, With Spill Guard, Thick Wall End Bit Type, Blade (#65001-)

Index	Code	Part Number	Description	Qty	Serial No.
32		195-71-74281	Bracket	1	65001-
33		195-71-00560	Shim Assembly	1	65001-
	C1		· Shim, T=2.0mm	4	65001-
	C1		· Shim, T=1.0mm	8	65001-
	C1		· Shim, T=0.5mm	4	65001-
34		01011-62720	Bolt	16	65001-
35		01643-32780	Washer	16	65001-
36		195-71-71641	Pin	1	65001-
37		195-71-71630	Plate	2	65001-
38		01010-82470	Bolt	8	65001-
39		01643-32460	Washer	8	65001-
40		07020-00000	Fitting, Grease	2	65001-
41		07049-01620	Plug	1	65001-
42		195-71-74160	Bushing	2	65001-
43		(195-71-71120)	Arm		

Printed By : Dwi Iswanto (airafather6107170)

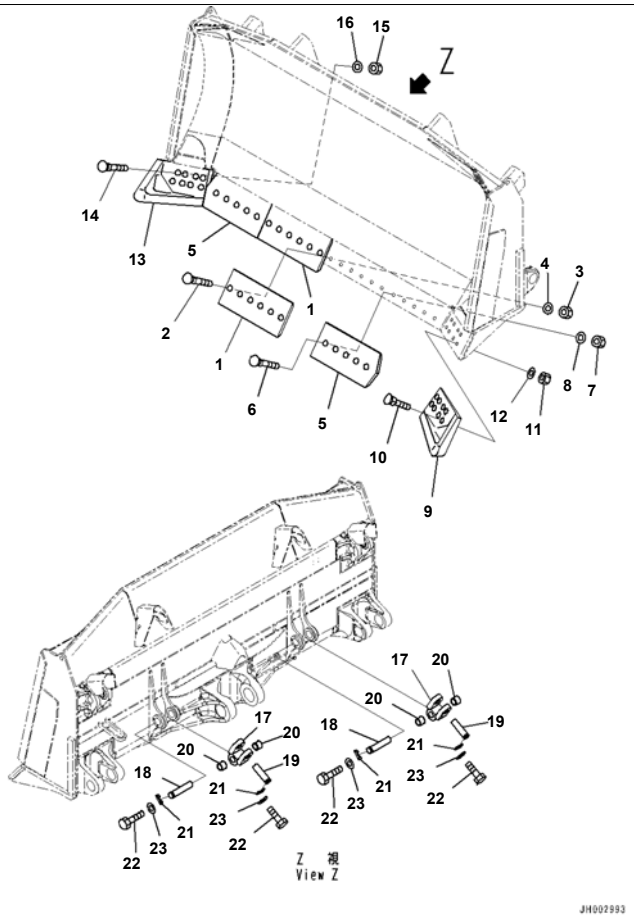

Reference:T2120-004002 Page:T004002

D375A-6R S/N 65001-UP
Dozer Blade, For Machine With Semi U Dozer, With Spill Guard, Thick Wall End Bit Type, Cutting Edge and End Bit (#65001-)

Index	Code	Part Number	Description	Qty	Serial No.
1		195-71-61550	Cutting Edge	2	65001-
2		198-71-21710	Bolt	12	65001-
3		195-71-61950	Nut	12	65001-
4		198-71-11230	Washer	12	65001-
5		198-72-11181	Cutting Edge	2	65001-
6		198-71-21710	Bolt	10	65001-
7		195-71-61950	Nut	10	65001-
8		198-71-11230	Washer	10	65001-
9		195-71-61930	End Bit	1	65001-
10		198-71-21720	Bolt	8	65001-
11		195-71-61950	Nut	8	65001-
12		198-71-11230	Washer	8	65001-
13		195-71-61940	End Bit	1	65001-
14		198-71-21720	Bolt	8	65001-
15		195-71-61950	Nut	8	65001-
16		198-71-11230	Washer	8	65001-
17		198-72-62121	Joint	2	65001-
18		198-72-62130	Pin	2	65001-
19		198-72-62140	Pin	2	65001-
20		198-72-62190	Bushing	4	65001-
21		198-72-62170	Lock	4	65001-
22		01010-81635	Bolt	8	65001-
23		01643-31645	Washer	8	65001-

Reference:T2120-004002 Page:T004002

Printed By : Dwi Iswanto (airafather6107170)

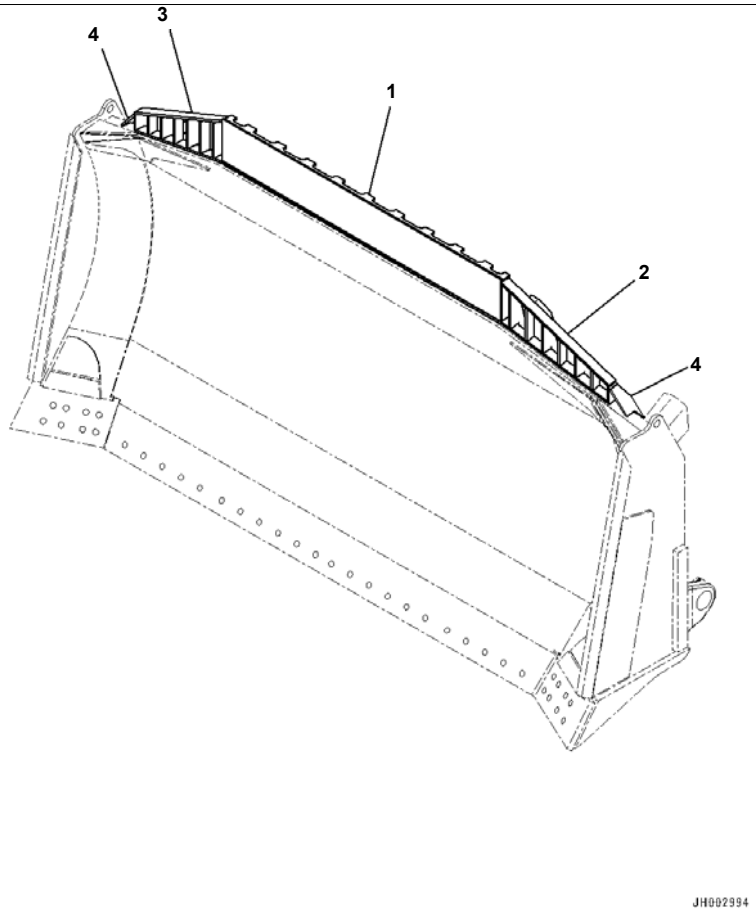

Dozer Blade, For Machine With Semi U Dozer, With Spill Guard, Thick Wall End Bit Type, Spill Guard (#65001-)

Index	Code	Part Number	Description	Qty	Serial No.
1		195-71-77611	Guard,Welded	1	65001-
2		195-71-77621	Guard,Welded	1	65001-
3		195-71-77631	Guard,Welded	1	65001-
4		195-71-77690	Plate,Welded	2	65001-

Printed By : Dwi Iswanto (airafather6107170)

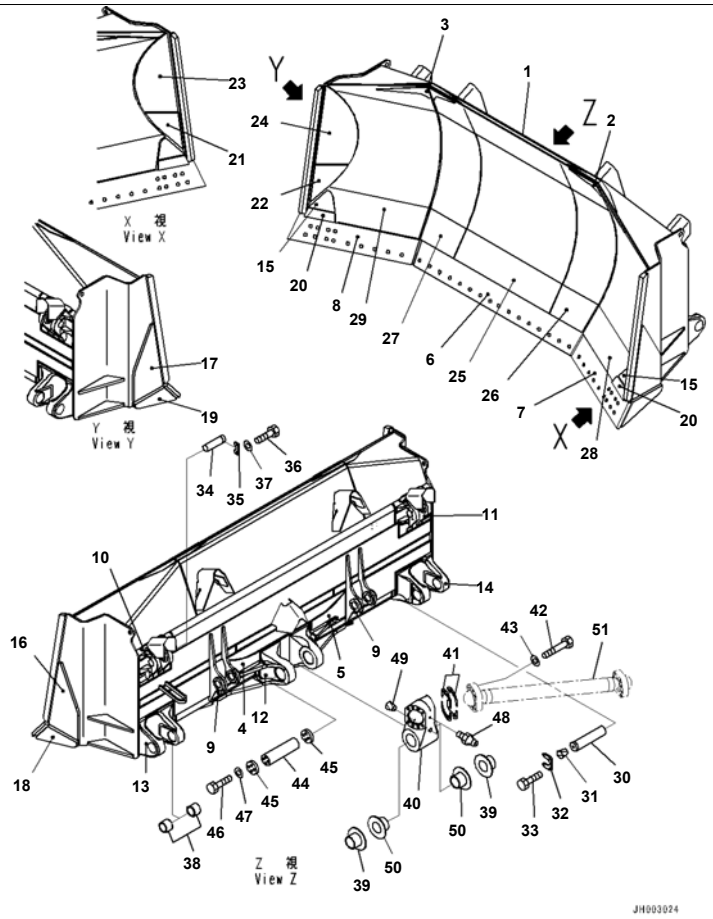

Reference:T2120-002001 Page:T005001

D375A-6R S/N 65001-UP
Dozer Blade, For Strengthened U Dozer Blade, With Spill Guard, Blade (#65001-)

Index	Code	Part Number	Description	Qty	Serial No.
		195-72-75311	Blade	1	65001-
1	C1		· Blade	1	65001-
2		195-72-75C90	· · Plate,LHS,Welded	1	65001-
3		195-72-75D10	· · Plate,RHS,Welded	1	65001-
4		195-71-71670	· · Plate, Welded	1	65001-
5		195-71-71680	· · Plate, Welded	1	65001-
6		195-72-71A40	· · Plate,Welded	1	65001-
7		195-72-71A50	· · Plate,Welded	1	65001-
8		195-72-71A60	· · Plate,Welded	1	65001-
9		195-72-74420	· · Bracket,Welded	2	65001-
10		195-72-74711	· · Bracket,LHS,Welded	1	65001-
11		195-72-74721	· · Bracket,RHS,Welded	1	65001-
12		195-72-75121	· · Bracket,Welded	1	65001-
13		195-72-75141	· · Bracket,LHS,Welded	1	65001-
14		195-72-75151	· · Bracket,RHS,Welded	1	65001-
15		195-72-75190	· · Plate,Welded	2	65001-
16		195-72-75240	· · Plate,LHS,Welded	1	65001-
17		195-72-75250	· · Plate,RHS,Welded	1	65001-
18		195-72-75260	· · Plate,LHS,Welded	1	65001-
19		195-72-75270	· · Plate,RHS,Welded	1	65001-
20		198-72-11151	· · Stopper,Welded	2	65001-
21		195-72-75360	· Plate,LHS,Welded	1	65001-
22		195-72-75370	· Plate,RHS,Welded	1	65001-
23		195-72-75381	· Plate,LHS,Welded	1	65001-
24		195-72-75391	· Plate,RHS,Welded	1	65001-
25		195-72-75510	· Plate,Welded	1	65001-
26		195-72-75520	· Plate,LHS,Welded	1	65001-
27		195-72-75530	· Plate,RHS,Welded	1	65001-
28		195-72-75540	· Plate,LHS,Welded	1	65001-
29		195-72-75550	· Plate,RHS,Welded	1	65001-
30		195-71-71220	Pin	2	65001-

Printed By : Dwi Iswanto (airafather6107170)

Dozer Blade, For Strengthened U Dozer Blade, With Spill Guard, Blade (#65001-)

Index	Code	Part Number	Description	Qty	Serial No.
31		07049-02025	Plug	2	65001-
32		195-71-74290	Lock	2	65001-
33		01010-62045	Bolt	8	65001-
34		195-71-61590	Pin	2	65001-
35		195-71-51450	Lock	2	65001-
36		01010-62050	Bolt	4	65001-
37		01643-32060	Washer	4	65001-
38		195-71-74270	Bushing	4	65001-
39		195-71-74160	Bushing	2	65001-
40		195-71-74281	Bracket	1	65001-
41		195-71-00560	Shim Assembly	1	65001-
	C1		· Shim, T=2.0mm	4	65001-
	C1		· Shim, T=1.0mm	8	65001-
	C1		· Shim, T=0.5mm	4	65001-
42		01011-62720	Bolt	16	65001-
43		01643-32780	Washer	16	65001-
44		195-71-71641	Pin	1	65001-
45		195-71-71630	Plate	2	65001-
46		01010-82470	Bolt	8	65001-
47		01643-32460	Washer	8	65001-
48		07020-00000	Fitting, Grease	2	65001-
49		07049-01620	Plug	1	65001-
50		195-71-74160	Bushing	2	65001-
51		(195-71-71120)	Arm		

Printed By : Dwi Iswanto (airafather6107170)

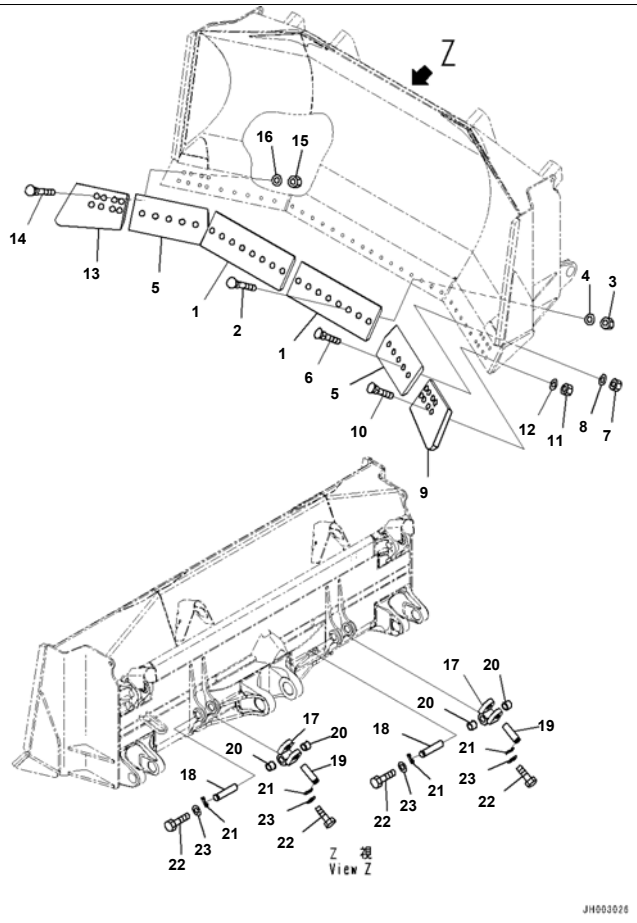

D375A-6R S/N 65001-UP
Dozer Blade, For Strengthened U Dozer Blade, With Spill Guard, Cutting Edge and End Bit (#65001-)

Index	Code	Part Number	Description	Qty	Serial No.
1		198-71-11181	Cutting Edge	2	65001-
2		198-71-21710	Bolt	16	65001-
3		195-71-61950	Nut	16	65001-
4		198-71-11230	Washer	16	65001-
5		198-72-11181	Cutting Edge	2	65001-
6		198-71-21710	Bolt	10	65001-
7		195-71-61950	Nut	10	65001-
8		198-71-11230	Washer	10	65001-
9		195-71-62931	End	1	65001-
10		198-71-21720	Bolt	8	65001-
11		195-71-61950	Nut	8	65001-
12		198-71-11230	Washer	8	65001-
13		195-71-62941	End	1	65001-
14		198-71-21720	Bolt	8	65001-
15		195-71-61950	Nut	8	65001-
16		198-71-11230	Washer	8	65001-
17		198-72-62121	Joint	2	65001-
18		198-72-62130	Pin	2	65001-
19		198-72-62140	Pin	2	65001-
20		198-72-62190	Bushing	4	65001-
21		198-72-62170	Lock	4	65001-
22		01010-81635	Bolt	8	65001-
23		01643-31645	Washer	8	65001-

Printed By : Dwi Iswanto (airafather6107170)

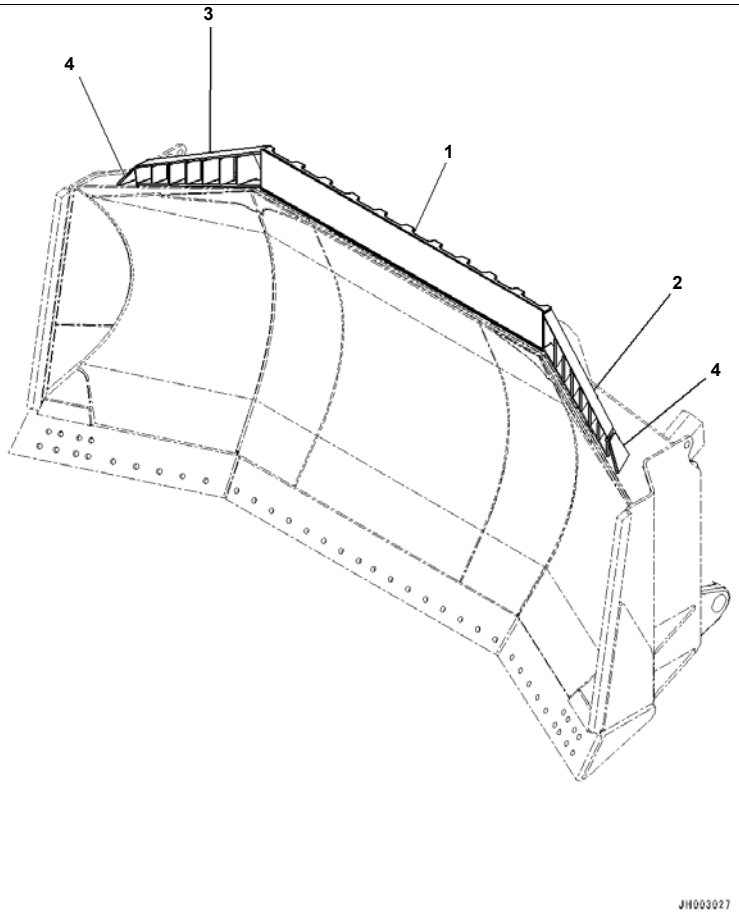

D375A-6R S/N 65001-UP
Dozer Blade, For Strengthened U Dozer Blade, With Spill Guard, Spill Guard (#65001-)

Index	Code	Part Number	Description	Qty	Serial No.
1		195-72-75611	Guard	1	65001-
2		195-72-75621	Guard	1	65001-
3		195-72-75631	Guard	1	65001-
4		195-72-75690	Plate	2	65001-

Printed By : Dwi Iswanto (airafather6107170)

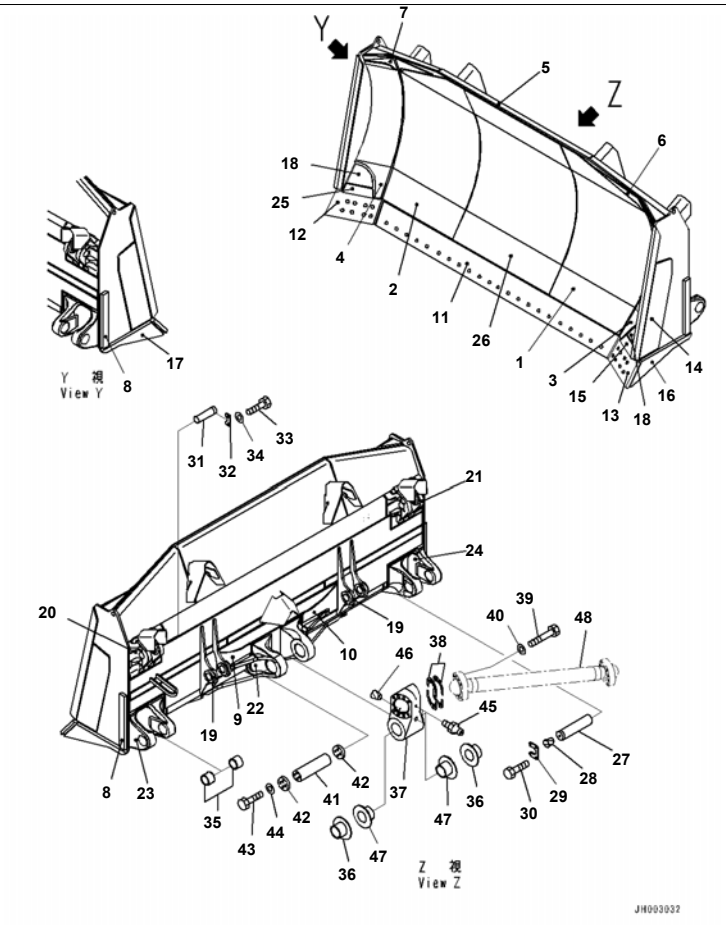

Reference:T2120-003001 Page:T006001

D375A-6R S/N 65001-UP
Dozer Blade, For Strengthened Semi U Dozer Blade, Blade (#65001-)

Index	Code	Part Number	Description	Qty	Serial No.
		195-71-77310	Blade	1	65001-
1		195-71-77330	· Plate, LHS, Welded	1	65001-
2		195-71-77340	· Plate, RHS, Welded	1	65001-
3		195-71-77350	· Plate, LHS, Welded	1	65001-
4		195-71-77360	· Plate, RHS, Welded	1	65001-
5	C1		· Blade	1	65001-
6		195-71-77E71	· · Plate, LHS, Welded	1	65001-
7		195-71-77E80	· · Plate, RHS, Welded	1	65001-
8		195-71-51530	· · Plate, Welded	2	65001-
9		195-71-71670	· · Plate, Welded	1	65001-
10		195-71-71680	· · Plate, Welded	1	65001-
11		195-71-71A40	· · Plate, Welded	1	65001-
12		195-71-71A50	· · Plate, Welded	1	65001-
13		195-71-71A60	· · Plate, Welded	1	65001-
14		195-71-77141	· · Plate, LHS, Welded	1	65001-
15		195-71-77151	· · Plate, RHS, Welded	1	65001-
16		195-71-77650	· · Plate, LHS, Welded	1	65001-
17		195-71-77660	· · Plate, RHS, Welded	1	65001-
18		195-71-77680	· · Plate	2	65001-
19		195-72-74420	· · Bracket	2	65001-
20		195-72-74711	· · Bracket	1	65001-
21		195-72-74721	· · Bracket	1	65001-
22		195-72-75121	· · Bracket	1	65001-
23		195-72-75141	· · Bracket	1	65001-
24		195-72-75151	· · Bracket	1	65001-
25		198-72-11151	· · Stopper	2	65001-
26		195-72-75510	· Plate	1	65001-
27		195-71-71220	Pin	2	65001-
28		07049-02025	Plug	2	65001-
29		195-71-74290	Lock	2	65001-
30		01010-62045	Bolt	8	65001-

Printed By : Dwi Iswanto (airafather6107170)

Dozer Blade, For Strengthened Semi U Dozer Blade, Blade (#65001-)

Index	Code	Part Number	Description	Qty	Serial No.
31		195-71-61590	Pin	2	65001-
32		195-71-51450	Lock	2	65001-
33		01010-62050	Bolt	4	65001-
34		01643-32060	Washer	4	65001-
35		195-71-74270	Bushing	4	65001-
36		195-71-74160	Bushing	2	65001-
37		195-71-74281	Bracket	1	65001-
38		195-71-00560	Shim Assembly	1	65001-
	C1		· Shim, T=2.0mm	4	65001-
	C1		· Shim, T=1.0mm	8	65001-
	C1		· Shim, T=0.5mm	4	65001-
39		01011-62720	Bolt	16	65001-
40		01643-32780	Washer	16	65001-
41		195-71-71641	Pin	1	65001-
42		195-71-71630	Plate	2	65001-
43		01010-82470	Bolt	8	65001-
44		01643-32460	Washer	8	65001-
45		07020-00000	Fitting, Grease	2	65001-
46		07049-01620	Plug	1	65001-
47		195-71-74160	Bushing	2	65001-
48		(195-71-71120)	Arm		

Printed By : Dwi Iswanto (airafather6107170)

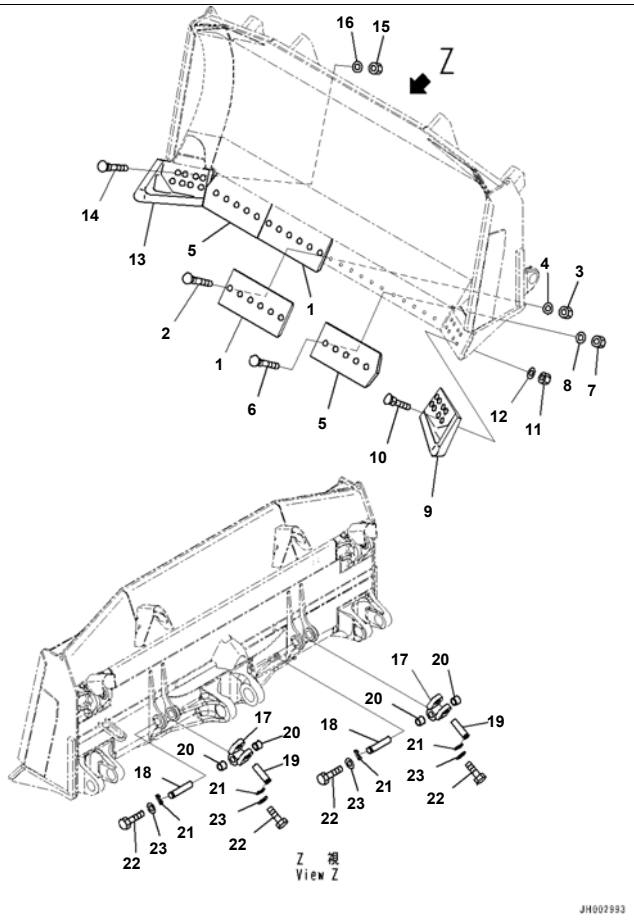

Reference:T2120-003002 Page:T006002

D375A-6R S/N 65001-UP
Dozer Blade, For Strengthened Semi U Dozer Blade, Cutting Edge and End Bit (#65001-)

Index	Code	Part Number	Description	Qty	Serial No.
1		195-71-61550	Cutting Edge	2	65001-
2		198-71-21710	Bolt	12	65001-
3		195-71-61950	Nut	12	65001-
4		198-71-11230	Washer	12	65001-
5		198-72-11181	Cutting Edge	2	65001-
6		198-71-21710	Bolt	10	65001-
7		195-71-61950	Nut	10	65001-
8		198-71-11230	Washer	10	65001-
9		195-71-61930	End Bit	1	65001-
10		198-71-21720	Bolt	8	65001-
11		195-71-61950	Nut	8	65001-
12		198-71-11230	Washer	8	65001-
13		195-71-61940	End Bit	1	65001-
14		198-71-21720	Bolt	8	65001-
15		195-71-61950	Nut	8	65001-
16		198-71-11230	Washer	8	65001-
17		198-72-62121	Joint	2	65001-
18		198-72-62130	Pin	2	65001-
19		198-72-62140	Pin	2	65001-
20		198-72-62190	Bushing	4	65001-
21		198-72-62170	Lock	4	65001-
22		01010-81635	Bolt	8	65001-
23		01643-31645	Washer	8	65001-

Reference:T2120-003002 Page:T006002

Printed By : Dwi Iswanto (airafather6107170)

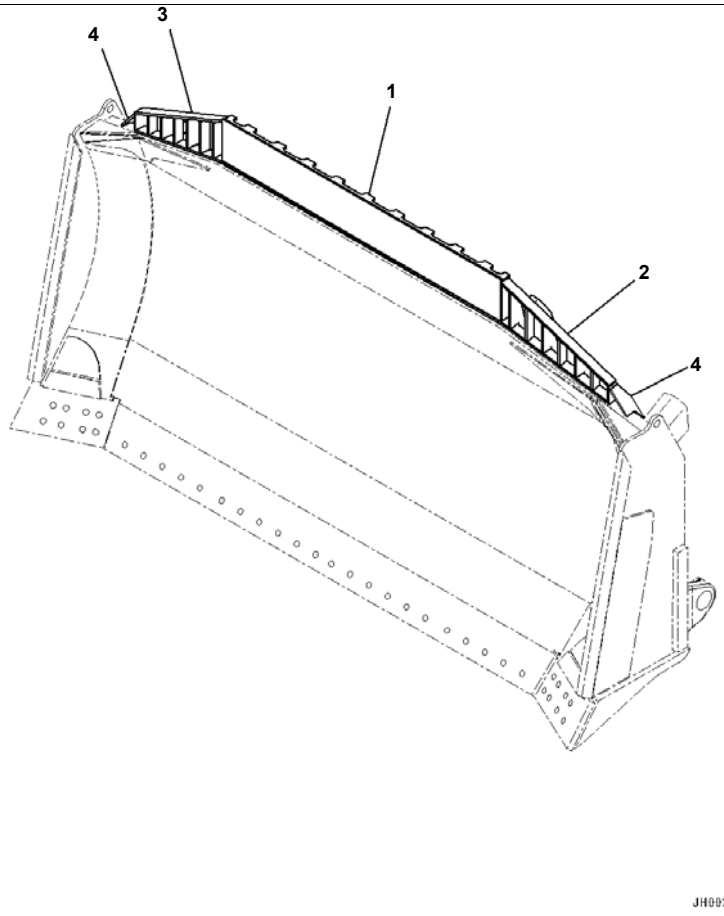

Index	Code	Part Number	Description	Qty	Serial No.
1		195-71-77611	Guard,Welded	1	65001-
2		195-71-77621	Guard,Welded	1	65001-
3		195-71-77631	Guard,Welded	1	65001-
4		195-71-77690	Plate,Welded	2	65001-

Printed By : Dwi Iswanto (airafather6107170)

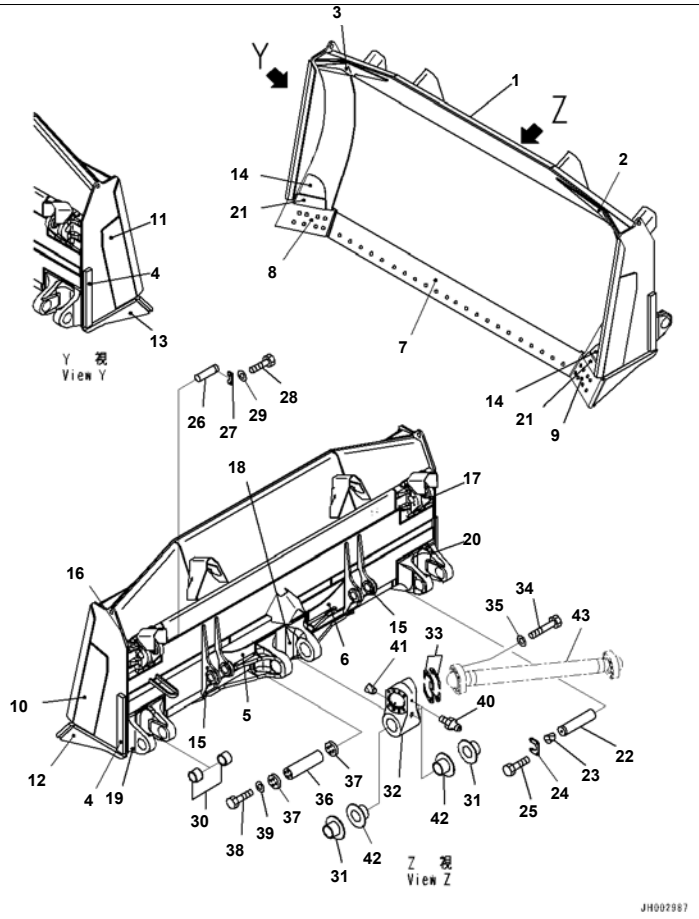

Index	Code	Part Number	Description	Qty	Serial No.
1		195-71-77111	Blade	1	65001-
2		195-71-77E71	· Plate, LHS, Welded	1	65001-
3		195-71-77E80	· Plate, RHS, Welded	1	65001-
4		195-71-51530	· Plate, Welded	2	65001-
5		195-71-71670	· Plate, Welded	1	65001-
6		195-71-71680	· Plate, Welded	1	65001-
7		195-71-71A40	· Plate, Welded	1	65001-
8		195-71-71A50	· Plate, Welded	1	65001-
9		195-71-71A60	· Plate, Welded	1	65001-
10		195-71-77141	· Plate, LHS, Welded	1	65001-
11		195-71-77151	· Plate, RHS, Welded	1	65001-
12		195-71-77650	· Plate, LHS, Welded	1	65001-
13		195-71-77660	· Plate, RHS, Welded	1	65001-
14		195-71-77680	· Plate,Welded	2	65001-
15		195-72-74420	· Bracket,Welded	2	65001-
16		195-72-74711	· Bracket,Welded	1	65001-
17		195-72-74721	· Bracket,Welded	1	65001-
18		195-72-75121	· Bracket,Welded	1	65001-
19		195-72-75141	· Bracket,Welded	1	65001-
20		195-72-75151	· Bracket,Welded	1	65001-
21		198-72-11151	· Stopper,Welded	2	65001-
22		195-71-71220	Pin	2	65001-
23		07049-02025	Plug	2	65001-
24		195-71-74290	Lock	2	65001-
25		01010-62045	Bolt	8	65001-
26		195-71-61590	Pin	2	65001-
27		195-71-51450	Lock	2	65001-
28		01010-62050	Bolt	4	65001-
29		01643-32060	Washer	4	65001-
30		195-71-74270	Bushing	4	65001-
31		195-71-74160	Bushing	2	65001-

Printed By : Dwi Iswanto (airafather6107170)

Index	Code	Part Number	Description	Qty	Serial No.
32		195-71-74281	Bracket	1	65001-
33		195-71-00560	Shim Assembly	1	65001-
	C1		· Shim, T=2.0mm	4	65001-
	C1		· Shim, T=1.0mm	8	65001-
	C1		· Shim, T=0.5mm	4	65001-
34		01011-62720	Bolt	16	65001-
35		01643-32780	Washer	16	65001-
36		195-71-71641	Pin	1	65001-
37		195-71-71630	Plate	2	65001-
38		01010-82470	Bolt	8	65001-
39		01643-32460	Washer	8	65001-
40		07020-00000	Fitting, Grease	2	65001-
41		07049-01620	Plug	1	65001-
42		195-71-74160	Bushing	2	65001-
43		(195-71-71120)	Arm		

Printed By : Dwi Iswanto (airafather6107170)

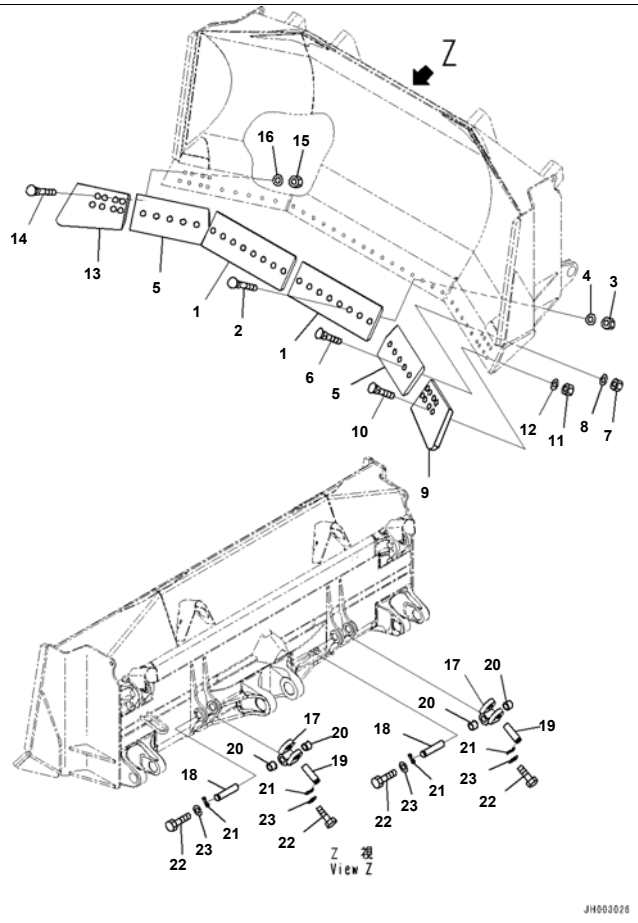

D375A-6R S/N 65001-UP
Dozer Blade, For Semi U Dozer, Cutting Edge and End Bit (#65001-)

Index	Code	Part Number	Description	Qty	Serial No.
1		195-71-61550	Cutting Edge	2	65001-
2		198-71-21710	Bolt	12	65001-
3		195-71-61950	Nut	12	65001-
4		198-71-11230	Washer	12	65001-
5		198-72-11181	Cutting Edge	2	65001-
6		198-71-21710	Bolt	10	65001-
7		195-71-61950	Nut	10	65001-
8		198-71-11230	Washer	10	65001-
9		195-71-62931	End	1	65001-
10		198-71-21720	Bolt	8	65001-
11		195-71-61950	Nut	8	65001-
12		198-71-11230	Washer	8	65001-
13		195-71-62941	End	1	65001-
14		198-71-21720	Bolt	8	65001-
15		195-71-61950	Nut	8	65001-
16		198-71-11230	Washer	8	65001-
17		198-72-62121	Joint	2	65001-
18		198-72-62130	Pin	2	65001-
19		198-72-62140	Pin	2	65001-
20		198-72-62190	Bushing	4	65001-
21		198-72-62170	Lock	4	65001-
22		01010-81635	Bolt	8	65001-
23		01643-31645	Washer	8	65001-

Printed By : Dwi Iswanto (airafather6107170)

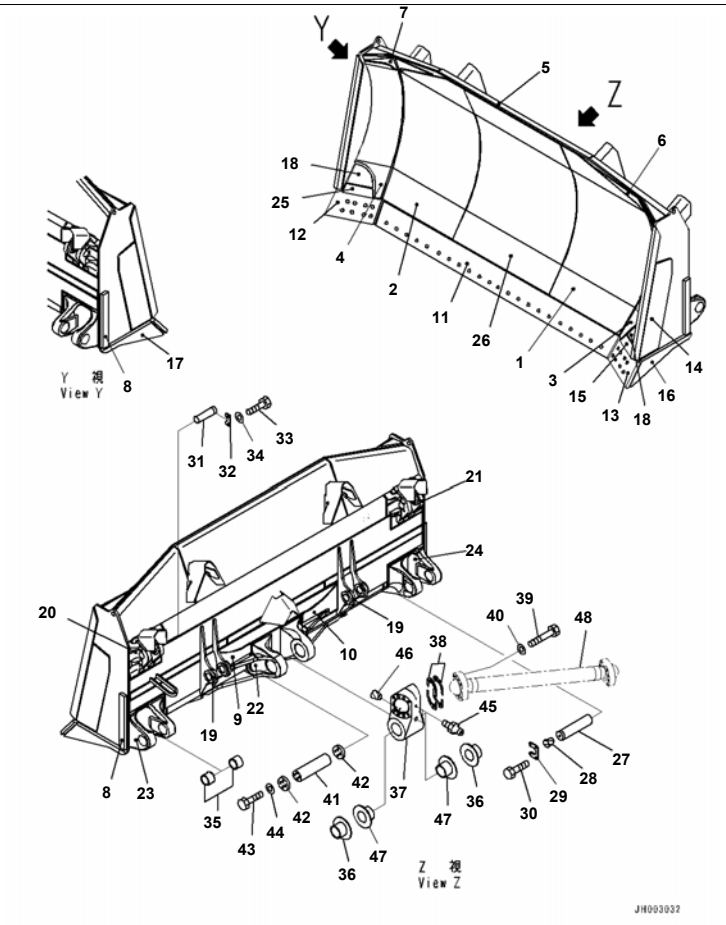

Reference:T2120-016001 Page:T008001

D375A-6R S/N 65001-UP
Dozer Blade, For Strengthened Semi U Dozer, Blade (#65001-)

Index	Code	Part Number	Description	Qty	Serial No.
		195-71-77310	Blade	1	65001-
1		195-71-77330	· Plate, LHS, Welded	1	65001-
2		195-71-77340	· Plate, RHS, Welded	1	65001-
3		195-71-77350	· Plate, LHS, Welded	1	65001-
4		195-71-77360	· Plate, RHS, Welded	1	65001-
5	C1		· Blade	1	65001-
6		195-71-77E71	· · Plate, LHS, Welded	1	65001-
7		195-71-77E80	· · Plate, RHS, Welded	1	65001-
8		195-71-51530	· · Plate, Welded	2	65001-
9		195-71-71670	· · Plate, Welded	1	65001-
10		195-71-71680	· · Plate, Welded	1	65001-
11		195-71-71A40	· · Plate, Welded	1	65001-
12		195-71-71A50	· · Plate, Welded	1	65001-
13		195-71-71A60	· · Plate, Welded	1	65001-
14		195-71-77141	· · Plate, LHS, Welded	1	65001-
15		195-71-77151	· · Plate, RHS, Welded	1	65001-
16		195-71-77650	· · Plate, LHS, Welded	1	65001-
17		195-71-77660	· · Plate, RHS, Welded	1	65001-
18		195-71-77680	· · Plate	2	65001-
19		195-72-74420	· · Bracket	2	65001-
20		195-72-74711	· · Bracket	1	65001-
21		195-72-74721	· · Bracket	1	65001-
22		195-72-75121	· · Bracket	1	65001-
23		195-72-75141	· · Bracket	1	65001-
24		195-72-75151	· · Bracket	1	65001-
25		198-72-11151	· · Stopper	2	65001-
26		195-72-75510	· Plate	1	65001-
27		195-71-71220	Pin	2	65001-
28		07049-02025	Plug	2	65001-
29		195-71-74290	Lock	2	65001-
30		01010-62045	Bolt	8	65001-

Reference:T2120-016001 Page:T008001

Printed By : Dwi Iswanto (airafather6107170)

Index	Code	Part Number	Description	Qty	Serial No.
31		195-71-61590	Pin	2	65001-
32		195-71-51450	Lock	2	65001-
33		01010-62050	Bolt	4	65001-
34		01643-32060	Washer	4	65001-
35		195-71-74270	Bushing	4	65001-
36		195-71-74160	Bushing	2	65001-
37		195-71-74281	Bracket	1	65001-
38		195-71-00560	Shim Assembly	1	65001-
	C1		· Shim, T=2.0mm	4	65001-
	C1		· Shim, T=1.0mm	8	65001-
	C1		· Shim, T=0.5mm	4	65001-
39		01011-62720	Bolt	16	65001-
40		01643-32780	Washer	16	65001-
41		195-71-71641	Pin	1	65001-
42		195-71-71630	Plate	2	65001-
43		01010-82470	Bolt	8	65001-
44		01643-32460	Washer	8	65001-
45		07020-00000	Fitting, Grease	2	65001-
46		07049-01620	Plug	1	65001-
47		195-71-74160	Bushing	2	65001-
48		(195-71-71120)	Arm		

Printed By : Dwi Iswanto (airafather6107170)

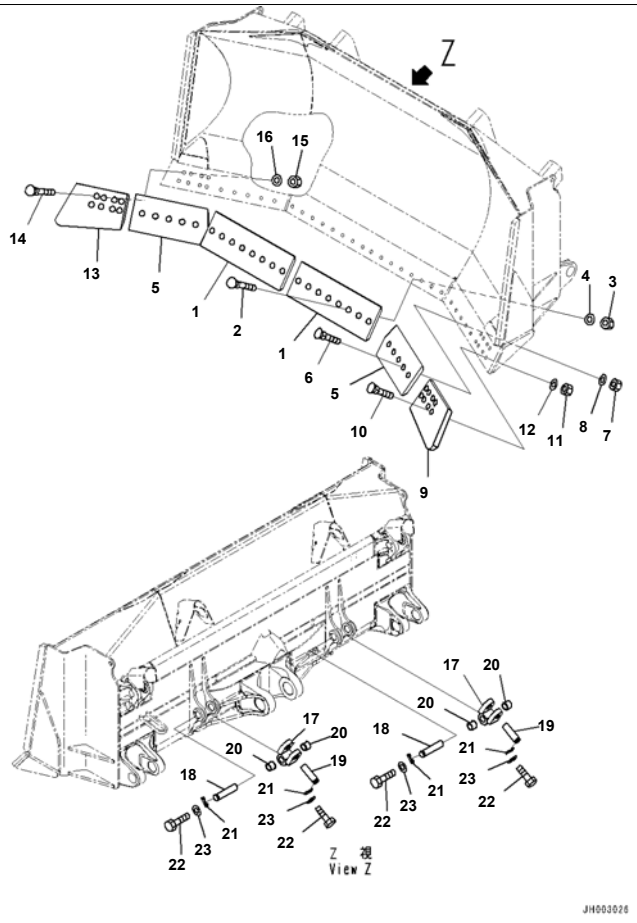

D375A-6R S/N 65001-UP
Dozer Blade, For Strengthened Semi U Dozer, Cutting Edge and End Bit (#65001-)

Index	Code	Part Number	Description	Qty	Serial No.
1		195-71-61550	Cutting Edge	2	65001-
2		198-71-21710	Bolt	12	65001-
3		195-71-61950	Nut	12	65001-
4		198-71-11230	Washer	12	65001-
5		198-72-11181	Cutting Edge	2	65001-
6		198-71-21710	Bolt	10	65001-
7		195-71-61950	Nut	10	65001-
8		198-71-11230	Washer	10	65001-
9		195-71-62931	End	1	65001-
10		198-71-21720	Bolt	8	65001-
11		195-71-61950	Nut	8	65001-
12		198-71-11230	Washer	8	65001-
13		195-71-62941	End	1	65001-
14		198-71-21720	Bolt	8	65001-
15		195-71-61950	Nut	8	65001-
16		198-71-11230	Washer	8	65001-
17		198-72-62121	Joint	2	65001-
18		198-72-62130	Pin	2	65001-
19		198-72-62140	Pin	2	65001-
20		198-72-62190	Bushing	4	65001-
21		198-72-62170	Lock	4	65001-
22		01010-81635	Bolt	8	65001-
23		01643-31645	Washer	8	65001-

Printed By : Dwi Iswanto (airafather6107170)

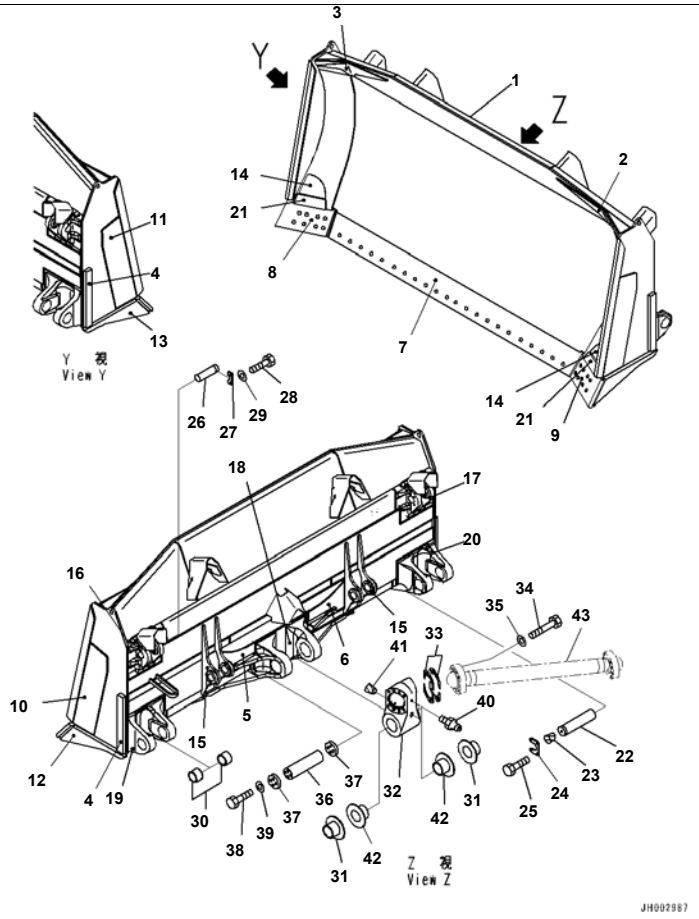

Reference:T2120-013001 Page:T009001

D375A-6R S/N 65001-UP
Dozer Blade, For Semi U Dozer, Thick Wall End Bit Type, Blade (#65001-)

Index	Code	Part Number	Description	Qty	Serial No.
1		195-71-77111	Blade	1	65001-
2		195-71-77E71	· Plate, LHS, Welded	1	65001-
3		195-71-77E80	· Plate, RHS, Welded	1	65001-
4		195-71-51530	· Plate, Welded	2	65001-
5		195-71-71670	· Plate, Welded	1	65001-
6		195-71-71680	· Plate, Welded	1	65001-
7		195-71-71A40	· Plate, Welded	1	65001-
8		195-71-71A50	· Plate, Welded	1	65001-
9		195-71-71A60	· Plate, Welded	1	65001-
10		195-71-77141	· Plate, LHS, Welded	1	65001-
11		195-71-77151	· Plate, RHS, Welded	1	65001-
12		195-71-77650	· Plate, LHS, Welded	1	65001-
13		195-71-77660	· Plate, RHS, Welded	1	65001-
14		195-71-77680	· Plate,Welded	2	65001-
15		195-72-74420	· Bracket,Welded	2	65001-
16		195-72-74711	· Bracket,Welded	1	65001-
17		195-72-74721	· Bracket,Welded	1	65001-
18		195-72-75121	· Bracket,Welded	1	65001-
19		195-72-75141	· Bracket,Welded	1	65001-
20		195-72-75151	· Bracket,Welded	1	65001-
21		198-72-11151	· Stopper,Welded	2	65001-
22		195-71-71220	Pin	2	65001-
23		07049-02025	Plug	2	65001-
24		195-71-74290	Lock	2	65001-
25		01010-62045	Bolt	8	65001-
26		195-71-61590	Pin	2	65001-
27		195-71-51450	Lock	2	65001-
28		01010-62050	Bolt	4	65001-
29		01643-32060	Washer	4	65001-
30		195-71-74270	Bushing	4	65001-
31		195-71-74160	Bushing	2	65001-

Printed By : Dwi Iswanto (airafather6107170)

Dozer Blade, For Semi U Dozer, Thick Wall End Bit Type, Blade (#65001-)

Index	Code	Part Number	Description	Qty	Serial No.
32		195-71-74281	Bracket	1	65001-
33		195-71-00560	Shim Assembly	1	65001-
	C1		· Shim, T=2.0mm	4	65001-
	C1		· Shim, T=1.0mm	8	65001-
	C1		· Shim, T=0.5mm	4	65001-
34		01011-62720	Bolt	16	65001-
35		01643-32780	Washer	16	65001-
36		195-71-71641	Pin	1	65001-
37		195-71-71630	Plate	2	65001-
38		01010-82470	Bolt	8	65001-
39		01643-32460	Washer	8	65001-
40		07020-00000	Fitting, Grease	2	65001-
41		07049-01620	Plug	1	65001-
42		195-71-74160	Bushing	2	65001-
43		(195-71-71120)	Arm		

Printed By : Dwi Iswanto (airafather6107170)

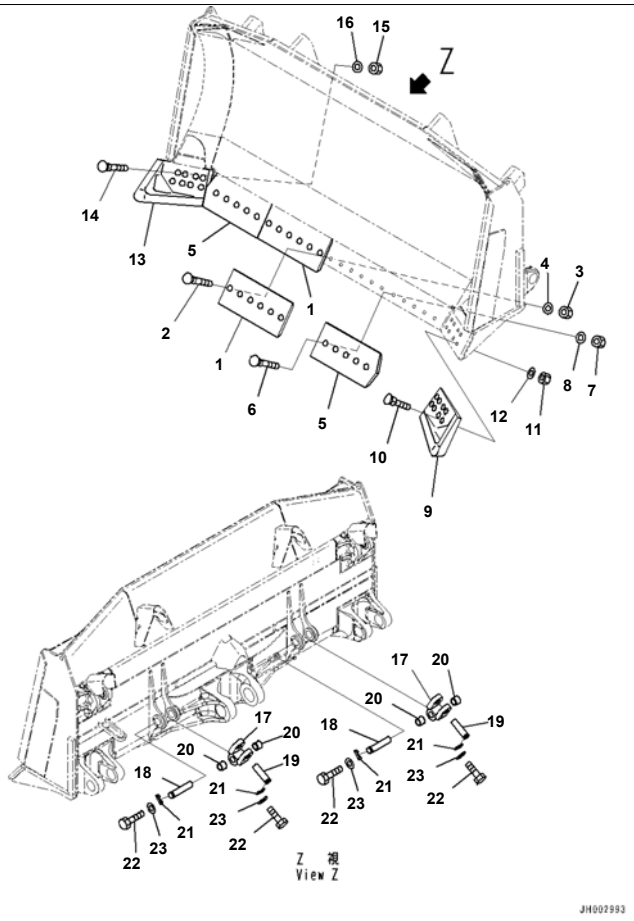

Reference:T2120-013002 Page:T009002

D375A-6R S/N 65001-UP
Dozer Blade, For Semi U Dozer, Thick Wall End Bit Type, Cutting Edge and End Bit (#65001-)

Index	Code	Part Number	Description	Qty	Serial No.
1		195-71-61550	Cutting Edge	2	65001-
2		198-71-21710	Bolt	12	65001-
3		195-71-61950	Nut	12	65001-
4		198-71-11230	Washer	12	65001-
5		198-72-11181	Cutting Edge	2	65001-
6		198-71-21710	Bolt	10	65001-
7		195-71-61950	Nut	10	65001-
8		198-71-11230	Washer	10	65001-
9		195-71-61930	End Bit	1	65001-
10		198-71-21720	Bolt	8	65001-
11		195-71-61950	Nut	8	65001-
12		198-71-11230	Washer	8	65001-
13		195-71-61940	End Bit	1	65001-
14		198-71-21720	Bolt	8	65001-
15		195-71-61950	Nut	8	65001-
16		198-71-11230	Washer	8	65001-
17		198-72-62121	Joint	2	65001-
18		198-72-62130	Pin	2	65001-
19		198-72-62140	Pin	2	65001-
20		198-72-62190	Bushing	4	65001-
21		198-72-62170	Lock	4	65001-
22		01010-81635	Bolt	8	65001-
23		01643-31645	Washer	8	65001-

Reference:T2120-013002 Page:T009002

Printed By : Dwi Iswanto (airafather6107170)

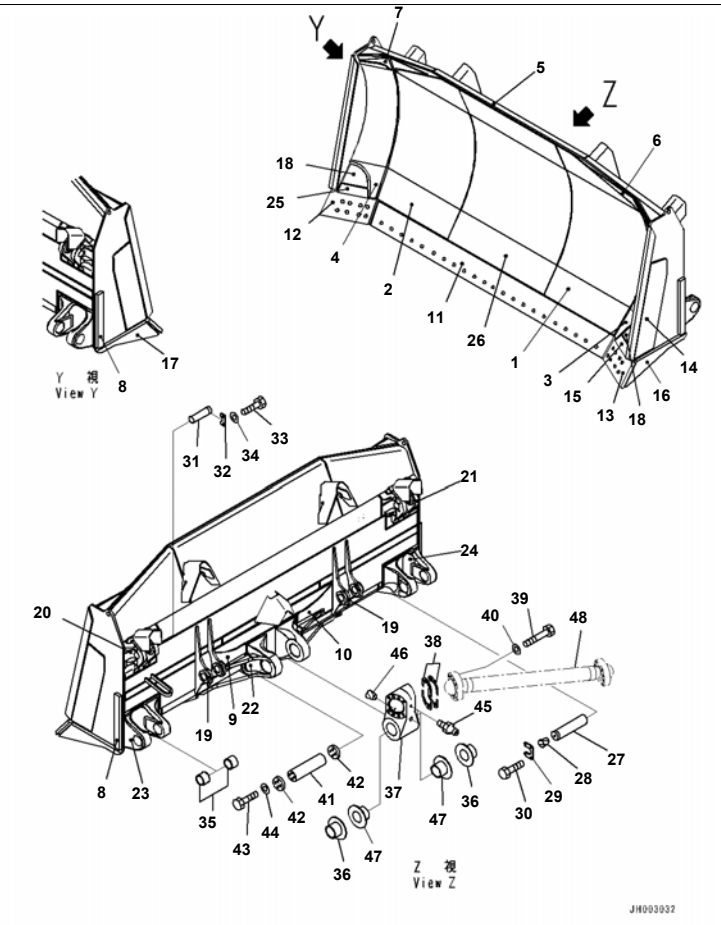

D375A-6R S/N 65001-UP
Dozer Blade, For Strengthened Semi U Dozer, Thick Wall End Bit Type, Blade (#65001-)

Index	Code	Part Number	Description	Qty	Serial No.
		195-71-77310	Blade	1	65001-
1		195-71-77330	· Plate, LHS, Welded	1	65001-
2		195-71-77340	· Plate, RHS, Welded	1	65001-
3		195-71-77350	· Plate, LHS, Welded	1	65001-
4		195-71-77360	· Plate, RHS, Welded	1	65001-
5	C1		· Blade	1	65001-
6		195-71-77E71	· · Plate, LHS, Welded	1	65001-
7		195-71-77E80	· · Plate, RHS, Welded	1	65001-
8		195-71-51530	· · Plate, Welded	2	65001-
9		195-71-71670	· · Plate, Welded	1	65001-
10		195-71-71680	· · Plate, Welded	1	65001-
11		195-71-71A40	· · Plate, Welded	1	65001-
12		195-71-71A50	· · Plate, Welded	1	65001-
13		195-71-71A60	· · Plate, Welded	1	65001-
14		195-71-77141	· · Plate, LHS, Welded	1	65001-
15		195-71-77151	· · Plate, RHS, Welded	1	65001-
16		195-71-77650	· · Plate, LHS, Welded	1	65001-
17		195-71-77660	· · Plate, RHS, Welded	1	65001-
18		195-71-77680	· · Plate	2	65001-
19		195-72-74420	· · Bracket	2	65001-
20		195-72-74711	· · Bracket	1	65001-
21		195-72-74721	· · Bracket	1	65001-
22		195-72-75121	· · Bracket	1	65001-
23		195-72-75141	· · Bracket	1	65001-
24		195-72-75151	· · Bracket	1	65001-
25		198-72-11151	· · Stopper	2	65001-
26		195-72-75510	· Plate	1	65001-
27		195-71-71220	Pin	2	65001-
28		07049-02025	Plug	2	65001-
29		195-71-74290	Lock	2	65001-
30		01010-62045	Bolt	8	65001-

Printed By : Dwi Iswanto (airafather6107170)

Index	Code	Part Number	Description	Qty	Serial No.
31		195-71-61590	Pin	2	65001-
32		195-71-51450	Lock	2	65001-
33		01010-62050	Bolt	4	65001-
34		01643-32060	Washer	4	65001-
35		195-71-74270	Bushing	4	65001-
36		195-71-74160	Bushing	2	65001-
37		195-71-74281	Bracket	1	65001-
38		195-71-00560	Shim Assembly	1	65001-
	C1		· Shim, T=2.0mm	4	65001-
	C1		· Shim, T=1.0mm	8	65001-
	C1		· Shim, T=0.5mm	4	65001-
39		01011-62720	Bolt	16	65001-
40		01643-32780	Washer	16	65001-
41		195-71-71641	Pin	1	65001-
42		195-71-71630	Plate	2	65001-
43		01010-82470	Bolt	8	65001-
44		01643-32460	Washer	8	65001-
45		07020-00000	Fitting, Grease	2	65001-
46		07049-01620	Plug	1	65001-
47		195-71-74160	Bushing	2	65001-
48		(195-71-71120)	Arm		

Printed By : Dwi Iswanto (airafather6107170)

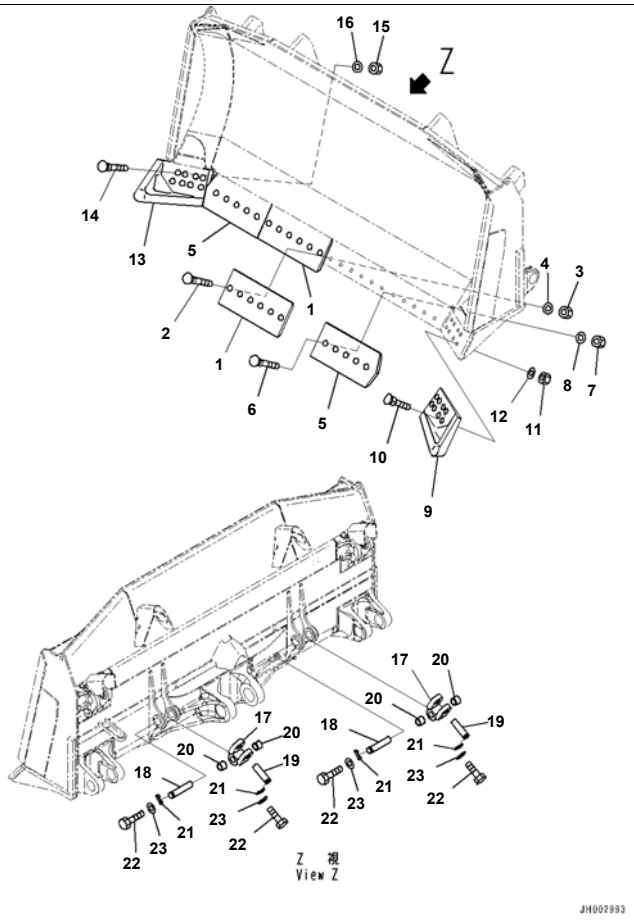

Reference:T2120-014002 Page:T010002

D375A-6R S/N 65001-UP

Dozer Blade, For Strengthened Semi U Dozer, Thick Wall End Bit Type, Cutting Edge and End Bit (#65001-)

Index	Code	Part Number	Description	Qty	Serial No.
1		195-71-61550	Cutting Edge	2	65001-
2		198-71-21710	Bolt	12	65001-
3		195-71-61950	Nut	12	65001-
4		198-71-11230	Washer	12	65001-
5		198-72-11181	Cutting Edge	2	65001-
6		198-71-21710	Bolt	10	65001-
7		195-71-61950	Nut	10	65001-
8		198-71-11230	Washer	10	65001-
9		195-71-61930	End Bit	1	65001-
10		198-71-21720	Bolt	8	65001-
11		195-71-61950	Nut	8	65001-
12		198-71-11230	Washer	8	65001-
13		195-71-61940	End Bit	1	65001-
14		198-71-21720	Bolt	8	65001-
15		195-71-61950	Nut	8	65001-
16		198-71-11230	Washer	8	65001-
17		198-72-62121	Joint	2	65001-
18		198-72-62130	Pin	2	65001-
19		198-72-62140	Pin	2	65001-
20		198-72-62190	Bushing	4	65001-
21		198-72-62170	Lock	4	65001-
22		01010-81635	Bolt	8	65001-
23		01643-31645	Washer	8	65001-

Reference:T2120-014002 Page:T010002

Printed By : Dwi Iswanto (airafather6107170)

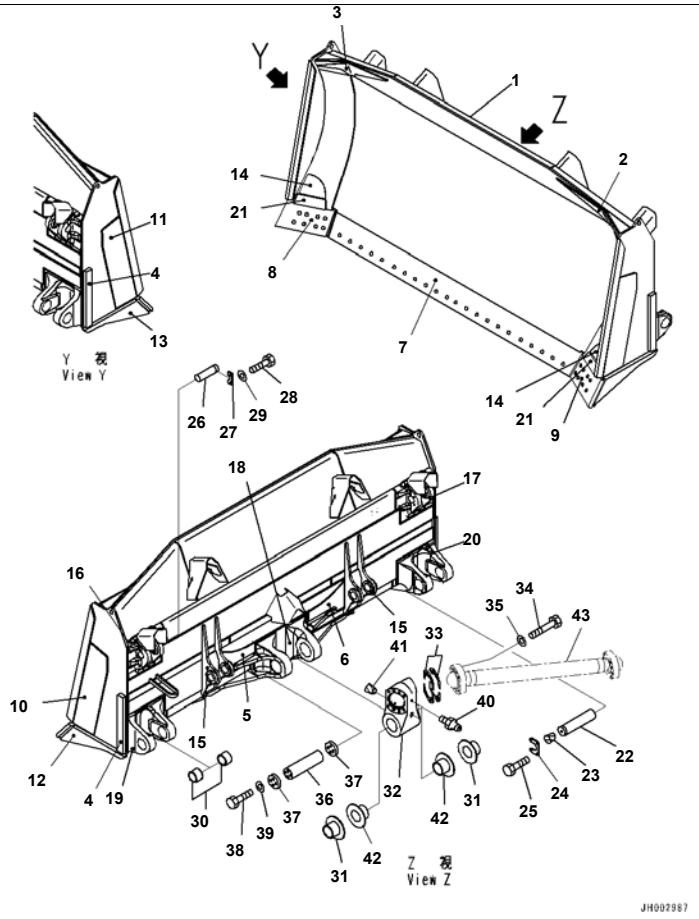

D375A-6R S/N 65001-UP
Dozer Blade, For Semi U Dozer, Spill Guard, Blade (#65001-)

Index	Code	Part Number	Description	Qty	Serial No.
1		195-71-77111	Blade	1	65001-
2		195-71-77E71	· Plate, LHS, Welded	1	65001-
3		195-71-77E80	· Plate, RHS, Welded	1	65001-
4		195-71-51530	· Plate, Welded	2	65001-
5		195-71-71670	· Plate, Welded	1	65001-
6		195-71-71680	· Plate, Welded	1	65001-
7		195-71-71A40	· Plate, Welded	1	65001-
8		195-71-71A50	· Plate, Welded	1	65001-
9		195-71-71A60	· Plate, Welded	1	65001-
10		195-71-77141	· Plate, LHS, Welded	1	65001-
11		195-71-77151	· Plate, RHS, Welded	1	65001-
12		195-71-77650	· Plate, LHS, Welded	1	65001-
13		195-71-77660	· Plate, RHS, Welded	1	65001-
14		195-71-77680	· Plate,Welded	2	65001-
15		195-72-74420	· Bracket,Welded	2	65001-
16		195-72-74711	· Bracket,Welded	1	65001-
17		195-72-74721	· Bracket,Welded	1	65001-
18		195-72-75121	· Bracket,Welded	1	65001-
19		195-72-75141	· Bracket,Welded	1	65001-
20		195-72-75151	· Bracket,Welded	1	65001-
21		198-72-11151	· Stopper,Welded	2	65001-
22		195-71-71220	Pin	2	65001-
23		07049-02025	Plug	2	65001-
24		195-71-74290	Lock	2	65001-
25		01010-62045	Bolt	8	65001-
26		195-71-61590	Pin	2	65001-
27		195-71-51450	Lock	2	65001-
28		01010-62050	Bolt	4	65001-
29		01643-32060	Washer	4	65001-
30		195-71-74270	Bushing	4	65001-
31		195-71-74160	Bushing	2	65001-

Printed By : Dwi Iswanto (airafather6107170)

Index	Code	Part Number	Description	Qty	Serial No.
32		195-71-74281	Bracket	1	65001-
33		195-71-00560	Shim Assembly	1	65001-
	C1		· Shim, T=2.0mm	4	65001-
	C1		· Shim, T=1.0mm	8	65001-
	C1		· Shim, T=0.5mm	4	65001-
34		01011-62720	Bolt	16	65001-
35		01643-32780	Washer	16	65001-
36		195-71-71641	Pin	1	65001-
37		195-71-71630	Plate	2	65001-
38		01010-82470	Bolt	8	65001-
39		01643-32460	Washer	8	65001-
40		07020-00000	Fitting, Grease	2	65001-
41		07049-01620	Plug	1	65001-
42		195-71-74160	Bushing	2	65001-
43		(195-71-71120)	Arm		

Printed By : Dwi Iswanto (airafather6107170)

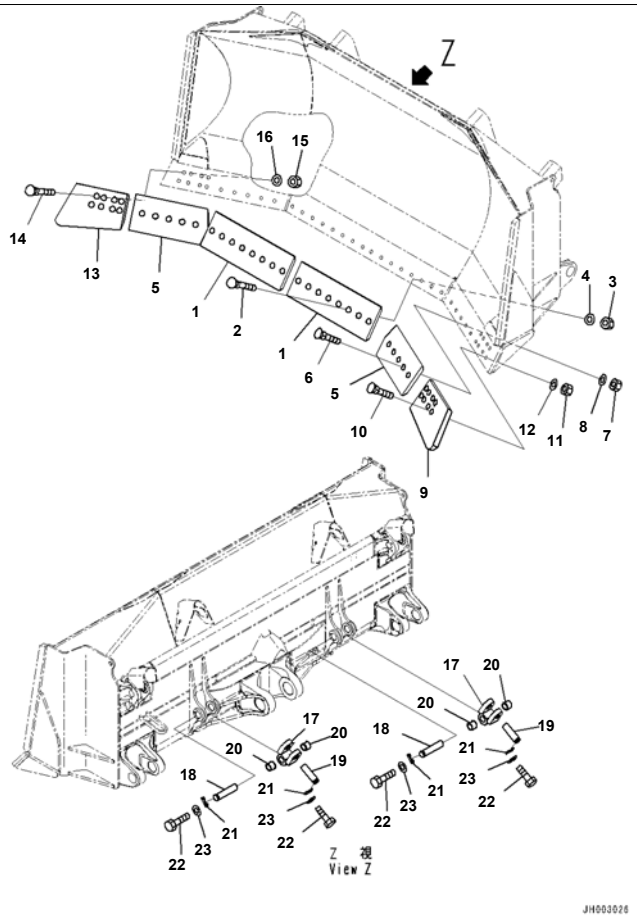

D375A-6R S/N 65001-UP
Dozer Blade, For Semi U Dozer, Spill Guard, Cutting Edge and End Bit (#65001-)

Index	Code	Part Number	Description	Qty	Serial No.
1		195-71-61550	Cutting Edge	2	65001-
2		198-71-21710	Bolt	12	65001-
3		195-71-61950	Nut	12	65001-
4		198-71-11230	Washer	12	65001-
5		198-72-11181	Cutting Edge	2	65001-
6		198-71-21710	Bolt	10	65001-
7		195-71-61950	Nut	10	65001-
8		198-71-11230	Washer	10	65001-
9		195-71-62931	End	1	65001-
10		198-71-21720	Bolt	8	65001-
11		195-71-61950	Nut	8	65001-
12		198-71-11230	Washer	8	65001-
13		195-71-62941	End	1	65001-
14		198-71-21720	Bolt	8	65001-
15		195-71-61950	Nut	8	65001-
16		198-71-11230	Washer	8	65001-
17		198-72-62121	Joint	2	65001-
18		198-72-62130	Pin	2	65001-
19		198-72-62140	Pin	2	65001-
20		198-72-62190	Bushing	4	65001-
21		198-72-62170	Lock	4	65001-
22		01010-81635	Bolt	8	65001-
23		01643-31645	Washer	8	65001-

Printed By : Dwi Iswanto (airafather6107170)

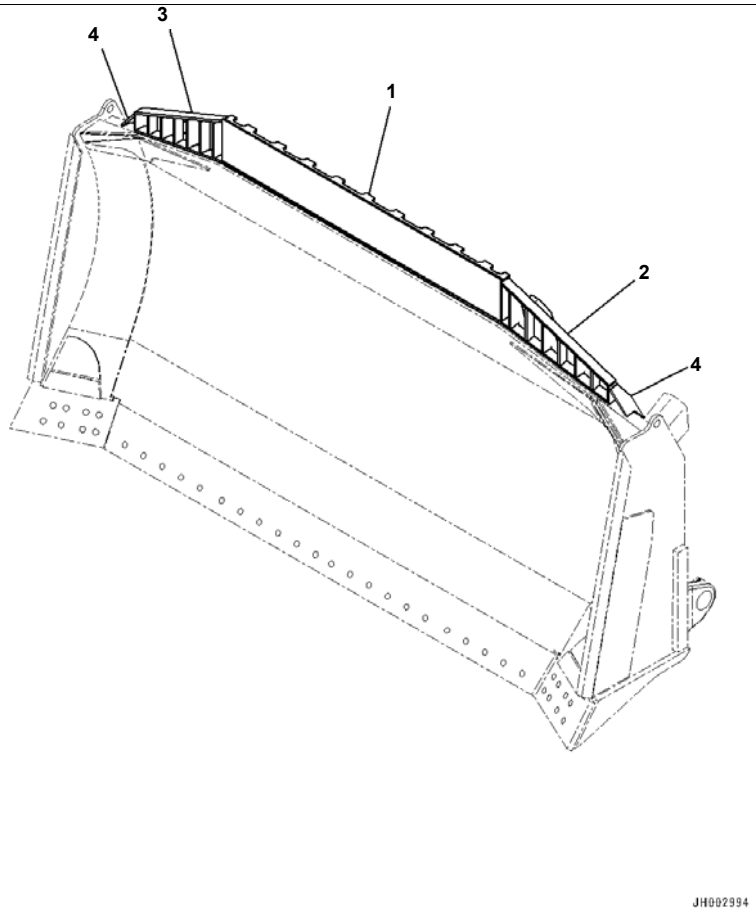

Index	Code	Part Number	Description	Qty	Serial No.
1		195-71-77611	Guard,Welded	1	65001-
2		195-71-77621	Guard,Welded	1	65001-
3		195-71-77631	Guard,Welded	1	65001-
4		195-71-77690	Plate,Welded	2	65001-

Printed By : Dwi Iswanto (airafather6107170)

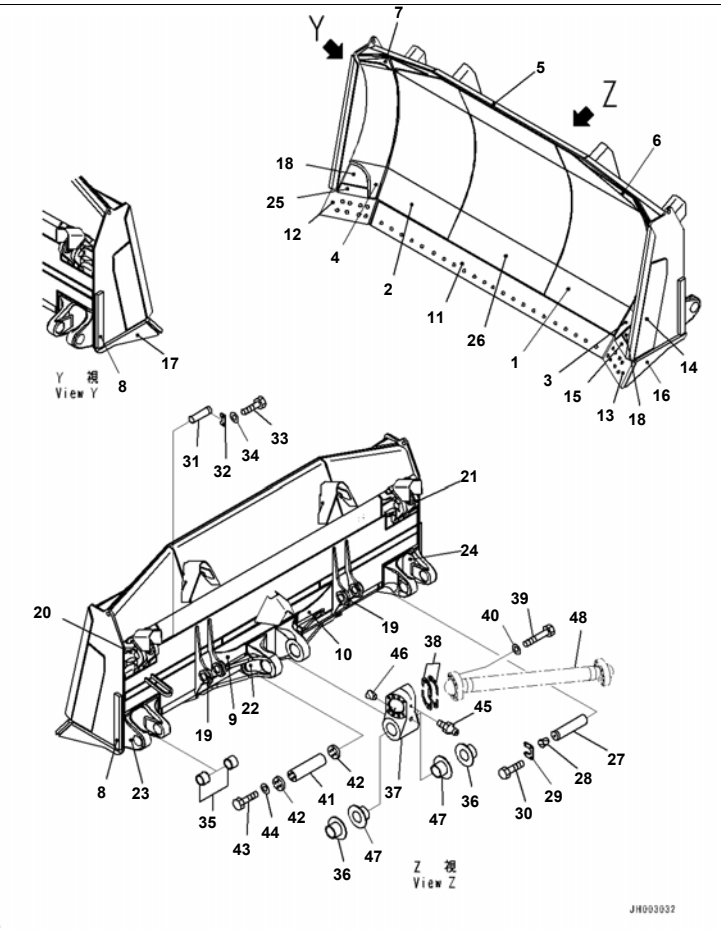

Reference:T2120-012001 Page:T012001

D375A-6R S/N 65001-UP
Dozer Blade, For Strengthened Semi U Dozer, Spill Guard, Blade (#65001-)

Index	Code	Part Number	Description	Qty	Serial No.
		195-71-77310	Blade	1	65001-
1		195-71-77330	· Plate, LHS, Welded	1	65001-
2		195-71-77340	· Plate, RHS, Welded	1	65001-
3		195-71-77350	· Plate, LHS, Welded	1	65001-
4		195-71-77360	· Plate, RHS, Welded	1	65001-
5	C1		· Blade	1	65001-
6		195-71-77E71	· · Plate, LHS, Welded	1	65001-
7		195-71-77E80	· · Plate, RHS, Welded	1	65001-
8		195-71-51530	· · Plate, Welded	2	65001-
9		195-71-71670	· · Plate, Welded	1	65001-
10		195-71-71680	· · Plate, Welded	1	65001-
11		195-71-71A40	· · Plate, Welded	1	65001-
12		195-71-71A50	· · Plate, Welded	1	65001-
13		195-71-71A60	· · Plate, Welded	1	65001-
14		195-71-77141	· · Plate, LHS, Welded	1	65001-
15		195-71-77151	· · Plate, RHS, Welded	1	65001-
16		195-71-77650	· · Plate, LHS, Welded	1	65001-
17		195-71-77660	· · Plate, RHS, Welded	1	65001-
18		195-71-77680	· · Plate	2	65001-
19		195-72-74420	· · Bracket	2	65001-
20		195-72-74711	· · Bracket	1	65001-
21		195-72-74721	· · Bracket	1	65001-
22		195-72-75121	· · Bracket	1	65001-
23		195-72-75141	· · Bracket	1	65001-
24		195-72-75151	· · Bracket	1	65001-
25		198-72-11151	· · Stopper	2	65001-
26		195-72-75510	· Plate	1	65001-
27		195-71-71220	Pin	2	65001-
28		07049-02025	Plug	2	65001-
29		195-71-74290	Lock	2	65001-
30		01010-62045	Bolt	8	65001-

Printed By : Dwi Iswanto (airafather6107170)

Dozer Blade, For Strengthened Semi U Dozer, Spill Guard, Blade (#65001-)

Index	Code	Part Number	Description	Qty	Serial No.
31		195-71-61590	Pin	2	65001-
32		195-71-51450	Lock	2	65001-
33		01010-62050	Bolt	4	65001-
34		01643-32060	Washer	4	65001-
35		195-71-74270	Bushing	4	65001-
36		195-71-74160	Bushing	2	65001-
37		195-71-74281	Bracket	1	65001-
38		195-71-00560	Shim Assembly	1	65001-
	C1		· Shim, T=2.0mm	4	65001-
	C1		· Shim, T=1.0mm	8	65001-
	C1		· Shim, T=0.5mm	4	65001-
39		01011-62720	Bolt	16	65001-
40		01643-32780	Washer	16	65001-
41		195-71-71641	Pin	1	65001-
42		195-71-71630	Plate	2	65001-
43		01010-82470	Bolt	8	65001-
44		01643-32460	Washer	8	65001-
45		07020-00000	Fitting, Grease	2	65001-
46		07049-01620	Plug	1	65001-
47		195-71-74160	Bushing	2	65001-
48		(195-71-71120)	Arm		

Printed By : Dwi Iswanto (airafather6107170)

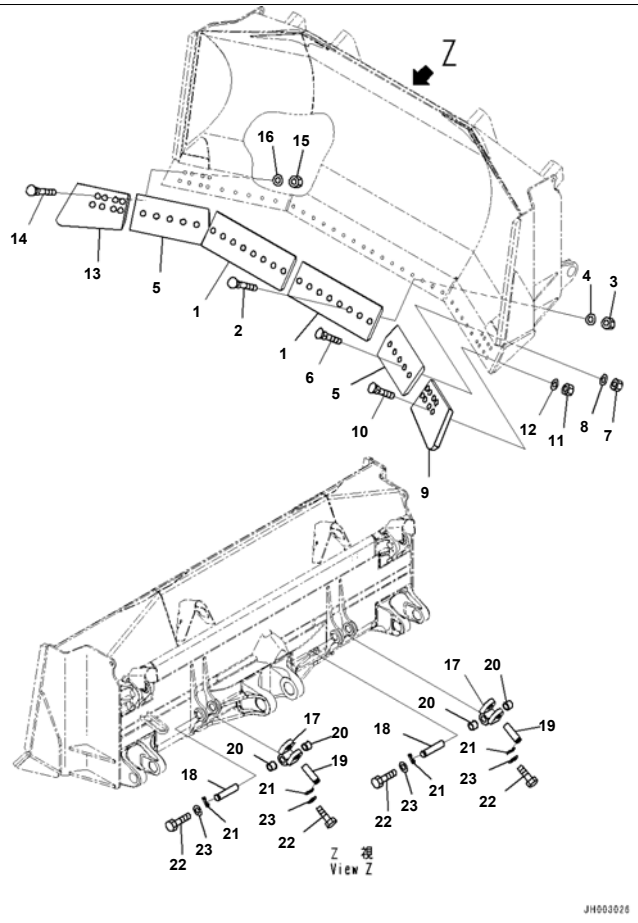

D375A-6R S/N 65001-UP
Dozer Blade, For Strengthened Semi U Dozer, Spill Guard, Cutting Edge and End Bit (#65001-)

Index	Code	Part Number	Description	Qty	Serial No.
1		195-71-61550	Cutting Edge	2	65001-
2		198-71-21710	Bolt	12	65001-
3		195-71-61950	Nut	12	65001-
4		198-71-11230	Washer	12	65001-
5		198-72-11181	Cutting Edge	2	65001-
6		198-71-21710	Bolt	10	65001-
7		195-71-61950	Nut	10	65001-
8		198-71-11230	Washer	10	65001-
9		195-71-62931	End	1	65001-
10		198-71-21720	Bolt	8	65001-
11		195-71-61950	Nut	8	65001-
12		198-71-11230	Washer	8	65001-
13		195-71-62941	End	1	65001-
14		198-71-21720	Bolt	8	65001-
15		195-71-61950	Nut	8	65001-
16		198-71-11230	Washer	8	65001-
17		198-72-62121	Joint	2	65001-
18		198-72-62130	Pin	2	65001-
19		198-72-62140	Pin	2	65001-
20		198-72-62190	Bushing	4	65001-
21		198-72-62170	Lock	4	65001-
22		01010-81635	Bolt	8	65001-
23		01643-31645	Washer	8	65001-

Printed By : Dwi Iswanto (airafather6107170)

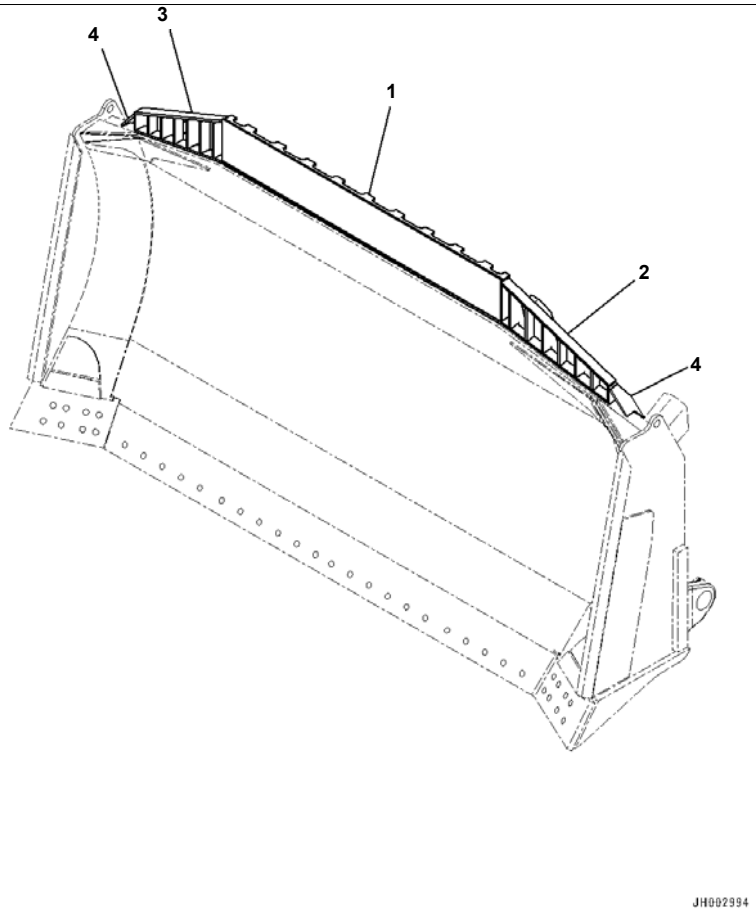

Index	Code	Part Number	Description	Qty	Serial No.
1		195-71-77611	Guard,Welded	1	65001-
2		195-71-77621	Guard,Welded	1	65001-
3		195-71-77631	Guard,Welded	1	65001-
4		195-71-77690	Plate,Welded	2	65001-

Printed By : Dwi Iswanto (airafather6107170)

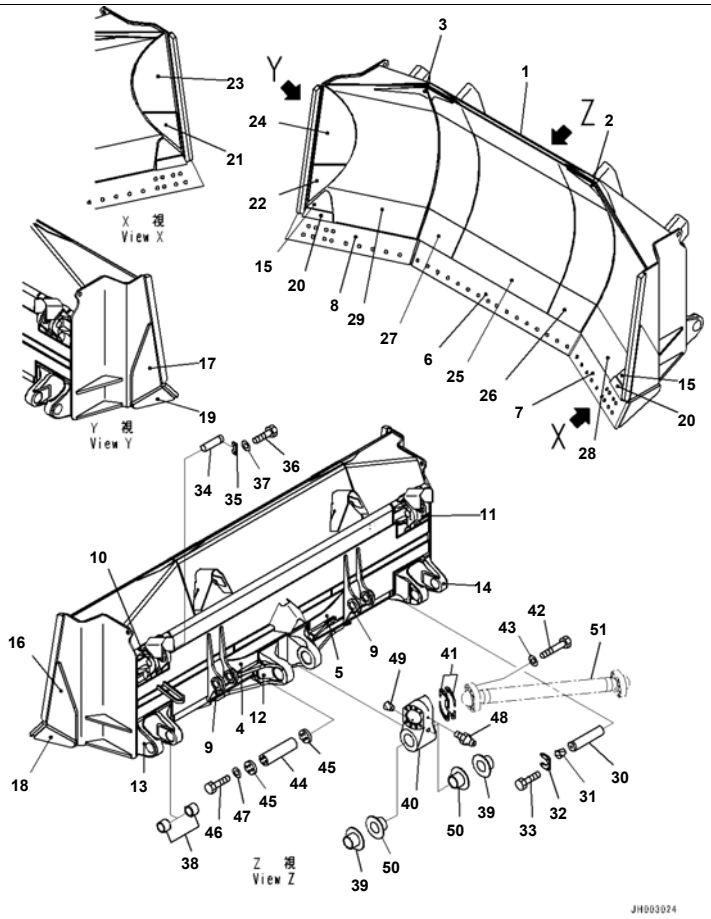

Reference:T2120-017001 Page:T013001

D375A-6R S/N 65001-UP
Dozer Blade, For Strengthened U Dozer, Thick Wall End Bit Type, Blade (#65001-)

Index	Code	Part Number	Description	Qty	Serial No.
		195-72-75311	Blade	1	65001-
1	C1		· Blade	1	65001-
2		195-72-75C90	· · Plate,LHS,Welded	1	65001-
3		195-72-75D10	· · Plate,RHS,Welded	1	65001-
4		195-71-71670	· · Plate, Welded	1	65001-
5		195-71-71680	· · Plate, Welded	1	65001-
6		195-72-71A40	· · Plate,Welded	1	65001-
7		195-72-71A50	· · Plate,Welded	1	65001-
8		195-72-71A60	· · Plate,Welded	1	65001-
9		195-72-74420	· · Bracket,Welded	2	65001-
10		195-72-74711	· · Bracket,LHS,Welded	1	65001-
11		195-72-74721	· · Bracket,RHS,Welded	1	65001-
12		195-72-75121	· · Bracket,Welded	1	65001-
13		195-72-75141	· · Bracket,LHS,Welded	1	65001-
14		195-72-75151	· · Bracket,RHS,Welded	1	65001-
15		195-72-75190	· · Plate,Welded	2	65001-
16		195-72-75240	· · Plate,LHS,Welded	1	65001-
17		195-72-75250	· · Plate,RHS,Welded	1	65001-
18		195-72-75260	· · Plate,LHS,Welded	1	65001-
19		195-72-75270	· · Plate,RHS,Welded	1	65001-
20		198-72-11151	· · Stopper,Welded	2	65001-
21		195-72-75360	· Plate,LHS,Welded	1	65001-
22		195-72-75370	· Plate,RHS,Welded	1	65001-
23		195-72-75381	· Plate,LHS,Welded	1	65001-
24		195-72-75391	· Plate,RHS,Welded	1	65001-
25		195-72-75510	· Plate,Welded	1	65001-
26		195-72-75520	· Plate,LHS,Welded	1	65001-
27		195-72-75530	· Plate,RHS,Welded	1	65001-
28		195-72-75540	· Plate,LHS,Welded	1	65001-
29		195-72-75550	· Plate,RHS,Welded	1	65001-
30		195-71-71220	Pin	2	65001-

Reference:T2120-017001 Page:T013001

Printed By : Dwi Iswanto (airafather6107170)

Index	Code	Part Number	Description	Qty	Serial No.
31		07049-02025	Plug	2	65001-
32		195-71-74290	Lock	2	65001-
33		01010-62045	Bolt	8	65001-
34		195-71-61590	Pin	2	65001-
35		195-71-51450	Lock	2	65001-
36		01010-62050	Bolt	4	65001-
37		01643-32060	Washer	4	65001-
38		195-71-74270	Bushing	4	65001-
39		195-71-74160	Bushing	2	65001-
40		195-71-74281	Bracket	1	65001-
41		195-71-00560	Shim Assembly	1	65001-
	C1		· Shim, T=2.0mm	4	65001-
	C1		· Shim, T=1.0mm	8	65001-
	C1		· Shim, T=0.5mm	4	65001-
42		01011-62720	Bolt	16	65001-
43		01643-32780	Washer	16	65001-
44		195-71-71641	Pin	1	65001-
45		195-71-71630	Plate	2	65001-
46		01010-82470	Bolt	8	65001-
47		01643-32460	Washer	8	65001-
48		07020-00000	Fitting, Grease	2	65001-
49		07049-01620	Plug	1	65001-
50		195-71-74160	Bushing	2	65001-
51		(195-71-71120)	Arm		

Printed By : Dwi Iswanto (airafather6107170)

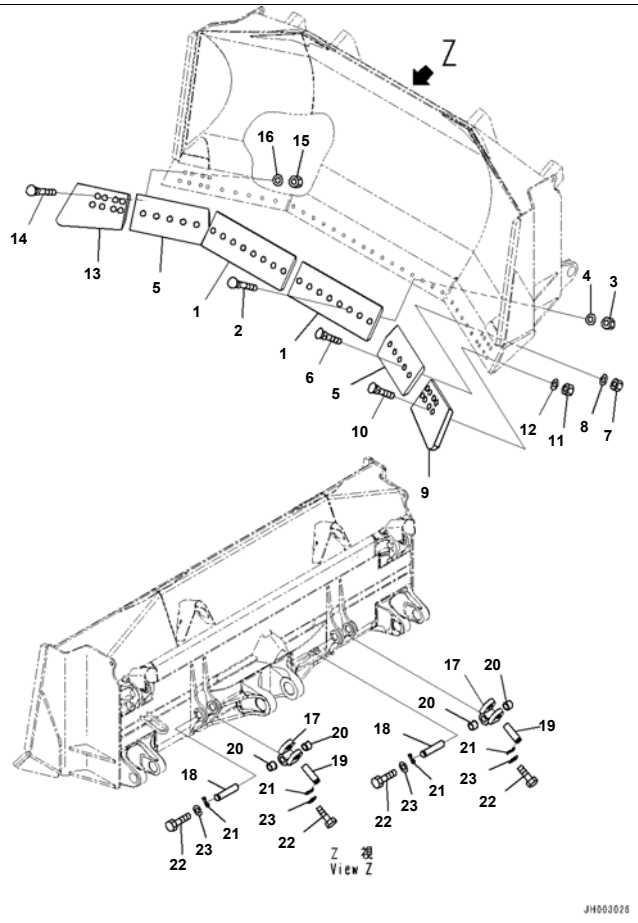

D375A-6R S/N 65001-UP
Dozer Blade, For Strengthened U Dozer, Thick Wall End Bit Type, Cutting Edge and End Bit (#65001-)

Index	Code	Part Number	Description	Qty	Serial No.
1		198-71-11181	Cutting Edge	2	65001-
2		198-71-21710	Bolt	16	65001-
3		195-71-61950	Nut	16	65001-
4		198-71-11230	Washer	16	65001-
5		198-72-11181	Cutting Edge	2	65001-
6		198-71-21710	Bolt	10	65001-
7		195-71-61950	Nut	10	65001-
8		198-71-11230	Washer	10	65001-
9		195-71-61930	End Bit	1	65001-
10		198-71-21720	Bolt	8	65001-
11		195-71-61950	Nut	8	65001-
12		198-71-11230	Washer	8	65001-
13		195-71-61940	End Bit	1	65001-
14		198-71-21720	Bolt	8	65001-
15		195-71-61950	Nut	8	65001-
16		198-71-11230	Washer	8	65001-
17		198-72-62121	Joint	2	65001-
18		198-72-62130	Pin	2	65001-
19		198-72-62140	Pin	2	65001-
20		198-72-62190	Bushing	4	65001-
21		198-72-62170	Lock	4	65001-
22		01010-81635	Bolt	8	65001-
23		01643-31645	Washer	8	65001-

Printed By : Dwi Iswanto (airafather6107170)

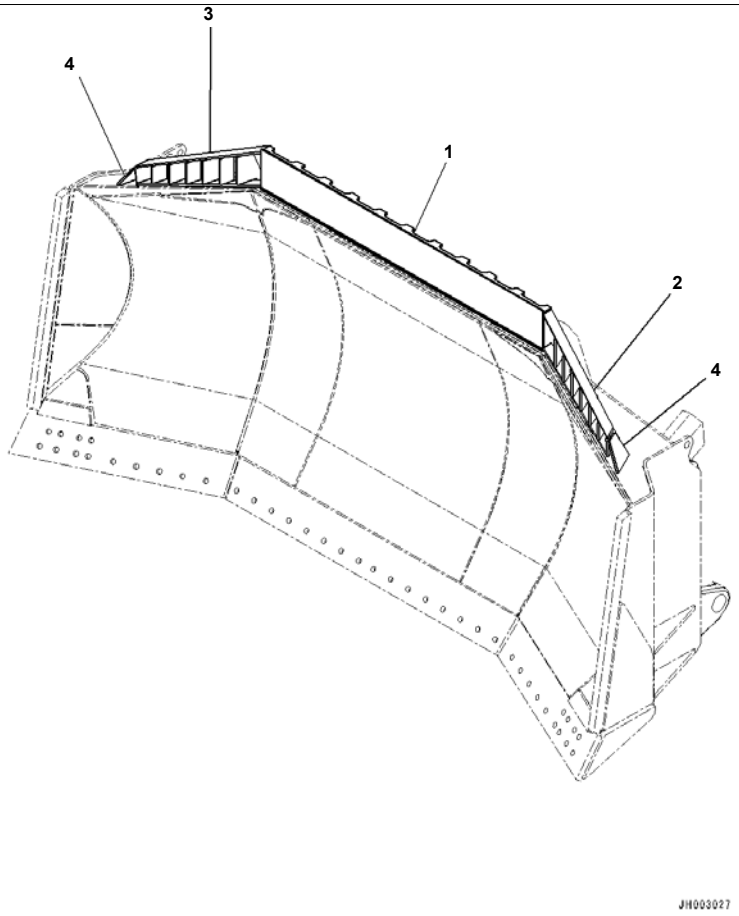

D375A-6R S/N 65001-UP
Dozer Blade, For Strengthened U Dozer, Thick Wall End Bit Type, Spill Guard (#65001-)

Index	Code	Part Number	Description	Qty	Serial No.
1		195-72-75611	Guard	1	65001-
2		195-72-75621	Guard	1	65001-
3		195-72-75631	Guard	1	65001-
4		195-72-75690	Plate	2	65001-

Printed By : Dwi Iswanto (airafather6107170)

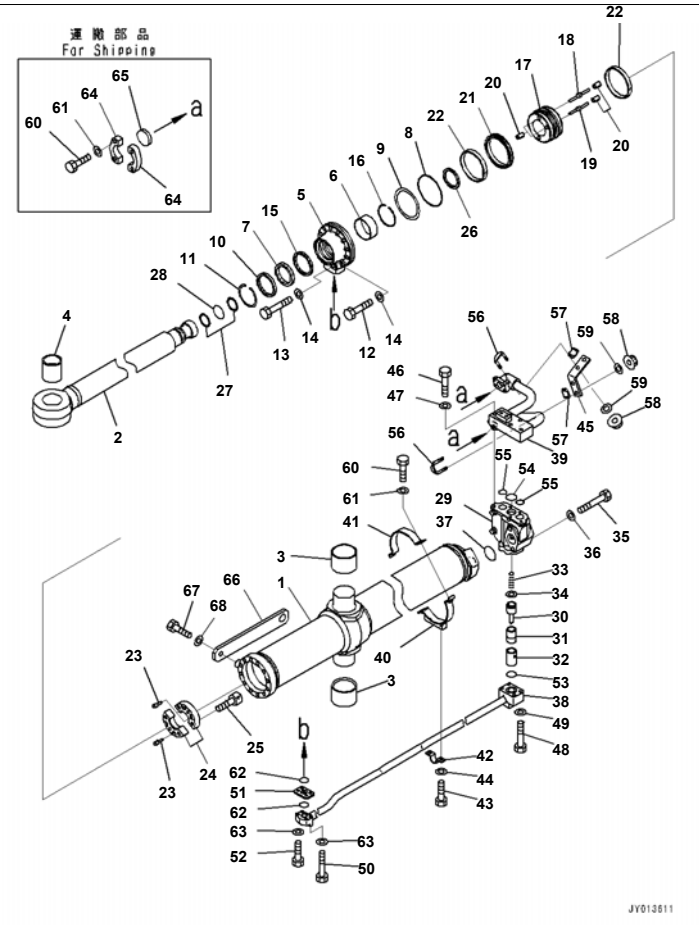

D375A-6R S/N 65001-UP
Dozer Blade Lift Cylinder, Inner Parts, LHS (#65001-)

Index	Code	Part Number	Description	Qty	Serial No.
		707-03-00340	Cylinder Assembly	1	65001-
1		707-12-14050	· Cylinder	1	65001-
2		707-58-90G40	· Rod	1	65001-
3		195-63-13390	· Bushing	2	65001-
4		707-76-65570	· Bushing	1	65001-
5		707-27-14800	· Head	1	65001-
6		707-52-90651	· Bushing	1	65001-
7		707-51-90030	· Packing, Rod, (Kit : K07)	1	65001-
8		07000-12135	· O-ring, (Kit : K07)	1	65001-
9		07146-02136	· Ring, Back-up, (Kit : K07)	1	65001-
10		707-56-90740	· Seal, Dust, (Kit : K07)	1	65001-
11		07179-13104	· Ring, Snap	1	65001-
12		01010-81455	· Bolt	10	65001-
13		01010-81480	· Bolt	2	65001-
14		01643-31445	· Washer	12	65001-
15		707-51-90650	· Ring, Buffer, (Kit : K07)	1	65001-
16		707-75-90110	· Ring, Snap	1	65001-
		707-91-01460	· Piston	1	65001-
17		707-37-14080	· · Piston	1	65001-
18		707-83-10020	· · Valve, Piston	2	65001-
19		707-83-10320	· · Valve, Piston	1	65001-
20		707-84-10220	· · Seat, Valve	6	65001-
21		707-44-14150	· Ring, Piston, (Kit : K07)	1	65001-
22		707-39-14820	· Ring, Wear, (Kit : K07)	2	65001-
23		707-83-10073	· Valve	3	65001-
24		707-40-14270	· Spacer	2	65001-
25		01252-61235	· Bolt	6	65001-
26		707-40-14370	· Retainer	1	65001-
27		07001-02065	· Ring, Back-up, (Kit : K07)	2	65001-
28		07000-B2065	· O-ring, (Kit : K07)	1	65001-
		707-79-90210	Valve Assembly	1	65001-

Printed By : Dwi Iswanto (airafather6107170)

Index	Code	Part Number	Description	Qty	Serial No.
29		195-63-14111	· Body	1	65001-
30		195-63-14140	· Valve	1	65001-
31		195-63-14150	· Valve	1	65001-
32		198-63-14260	· Collar	1	65001-
33		195-63-14180	· Spring	1	65001-
34		01642-21216	· Washer	1	65001-
35		01011-81615	Bolt	2	65001-
36		01643-31645	Washer	2	65001-
37		07000-12055	O-ring, (Kit : K07)	1	65001-
38		707-86-68840	Tube	1	65001-
39		707-86-13900	Tube	1	65001-
40		707-88-50730	Bracket	1	65001-
41		707-88-95380	Band	1	65001-
42		07282-12793	Clamp	1	65001-
43		01010-81020	Bolt	2	65001-
44		01643-31032	Washer	2	65001-
45		707-88-05950	Plate	1	65001-
46		01010-81270	Bolt	5	65001-
47		01643-31232	Washer	5	65001-
48		01010-81060	Bolt	4	65001-
49		01643-31032	Washer	4	65001-
50		01010-81065	Bolt	2	65001-
51		707-88-38940	Flange	1	65001-
52		01010-81050	Bolt	2	65001-
53		07000-13048	O-ring, (Kit : K07)	1	65001-
54		07000-13045	O-ring, (Kit : K07)	1	65001-
55		07000-13038	O-ring, (Kit : K07)	2	65001-
56		07283-33450	Clip	2	65001-
57		07283-53444	Seat	2	65001-
58		01597-01009	Nut	4	65001-
59		01643-31032	Washer	4	65001-
60		07372-21035	Bolt	10	65001-
61		01643-51032	Washer	10	65001-
62		07000-13030	O-ring, (Kit : K07)	2	65001-
63		01643-51032	Washer	4	65001-
64		07371-31049	Flange, Split	4	65001-
65		707-88-33040	Cap	2	65001-
66		707-88-38910	Plate	1	65001-
67		01010-81635	Bolt	1	65001-
68		01643-31645	Washer	1	65001-

Printed By : Dwi Iswanto (airafather6107170)

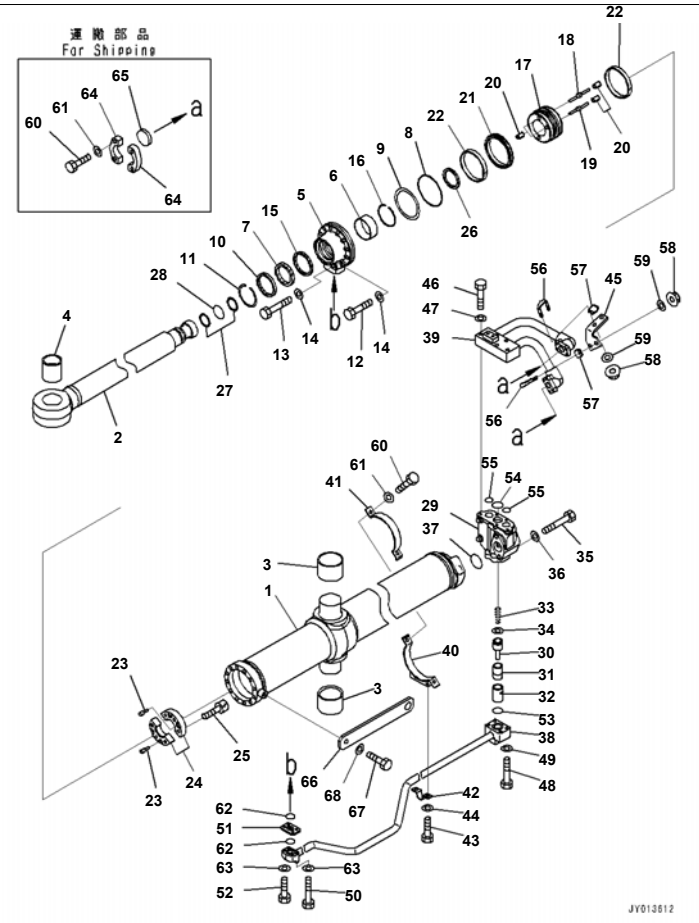

Reference:T2140-001002 Page:T014002

D375A-6R S/N 65001-UP
Dozer Blade Lift Cylinder, Inner Parts, Reduction Gear (#65001-)

Index	Code	Part Number	Description	Qty	Serial No.
		707-03-00350	Cylinder Assembly	1	65001-
1		707-12-14060	· Cylinder	1	65001-
2		707-58-90G40	· Rod	1	65001-
3		195-63-13390	· Bushing	2	65001-
4		707-76-65570	· Bushing	1	65001-
5		707-27-14800	· Head	1	65001-
6		707-52-90651	· Bushing	1	65001-
7		707-51-90030	· Packing, Rod, (Kit : K07)	1	65001-
8		07000-12135	· O-ring, (Kit : K07)	1	65001-
9		07146-02136	· Ring, Back-up, (Kit : K07)	1	65001-
10		707-56-90740	· Seal, Dust, (Kit : K07)	1	65001-
11		07179-13104	· Ring, Snap	1	65001-
12		01010-81455	· Bolt	10	65001-
13		01010-81480	· Bolt	2	65001-
14		01643-31445	· Washer	12	65001-
15		707-51-90650	· Ring, Buffer, (Kit : K07)	1	65001-
16		707-75-90110	· Ring, Snap	1	65001-
		707-91-01460	· Piston	1	65001-
17		707-37-14080	· · Piston	1	65001-
18		707-83-10020	· · Valve, Piston	2	65001-
19		707-83-10320	· · Valve, Piston	1	65001-
20		707-84-10220	· · Seat, Valve	6	65001-
21		707-44-14150	· Ring, Piston, (Kit : K07)	1	65001-
22		707-39-14820	· Ring, Wear, (Kit : K07)	2	65001-
23		707-83-10073	· Valve	3	65001-
24		707-40-14270	· Spacer	2	65001-
25		01252-61235	· Bolt	6	65001-
26		707-40-14370	· Retainer	1	65001-
27		07001-02065	· Ring, Back-up, (Kit : K07)	2	65001-
28		07000-B2065	· O-ring, (Kit : K07)	1	65001-
		707-79-90210	Valve Assembly	1	65001-

Reference:T2140-001002 Page:T014002

Printed By : Dwi Iswanto (airafather6107170)

Index	Code	Part Number	Description	Qty	Serial No.
29		195-63-14111	· Body	1	65001-
30		195-63-14140	· Valve	1	65001-
31		195-63-14150	· Valve	1	65001-
32		198-63-14260	· Collar	1	65001-
33		195-63-14180	· Spring	1	65001-
34		01642-21216	· Washer	1	65001-
35		01011-81615	Bolt	2	65001-
36		01643-31645	Washer	2	65001-
37		07000-12055	O-ring, (Kit : K07)	1	65001-
38		707-86-68850	Tube	1	65001-
39		707-86-13430	Tube	1	65001-
40		707-88-50730	Bracket	1	65001-
41		707-88-95380	Band	1	65001-
42		07282-12793	Clamp	1	65001-
43		01010-81020	Bolt	2	65001-
44		01643-31032	Washer	2	65001-
45		707-88-05960	Plate	1	65001-
46		01010-81270	Bolt	5	65001-
47		01643-31232	Washer	5	65001-
48		01010-81060	Bolt	4	65001-
49		01643-31032	Washer	4	65001-
50		01010-81065	Bolt	2	65001-
51		707-88-38940	Flange	1	65001-
52		01010-81050	Bolt	2	65001-
53		07000-13048	O-ring, (Kit : K07)	1	65001-
54		07000-13045	O-ring, (Kit : K07)	1	65001-
55		07000-13038	O-ring, (Kit : K07)	2	65001-
56		07283-33450	Clip	2	65001-
57		07283-53444	Seat	2	65001-
58		01597-01009	Nut	4	65001-
59		01643-31032	Washer	4	65001-
60		07372-21035	Bolt	10	65001-
61		01643-51032	Washer	10	65001-
62		07000-13030	O-ring, (Kit : K07)	2	65001-
63		01643-51032	Washer	4	65001-
64		07371-31049	Flange, Split	4	65001-
65		707-88-33040	Cap	2	65001-
66		707-88-38910	Plate	1	65001-
67		01010-81635	Bolt	1	65001-
68		01643-31645	Washer	1	65001-

Printed By : Dwi Iswanto (airafather6107170)

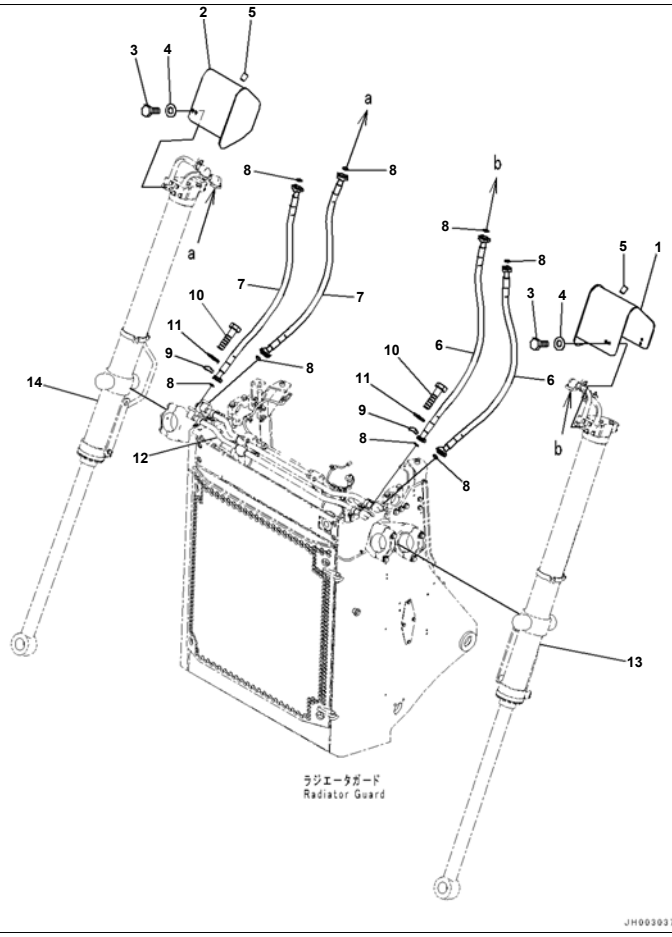

Index	Code	Part Number	Description	Qty	Serial No.
1		195-61-62861	Cover	1	65001-
2		195-61-62871	Cover	1	65001-
3		01010-81225	Bolt	8	65001-
4		01643-31232	Washer	8	65001-
5		07049-01215	Plug	2	65001-
6		07099-01016	Hose, Flange Type	2	65001-
7		07099-01016	Hose, Flange Type	2	65001-
8		07000-13032	O-ring	8	65001-
9		07371-31049	Flange, Split	16	65001-
10		07372-21035	Bolt	32	65001-
11		01643-51032	Washer	32	65001-
12		(195-61-62751)	Tube		
		(195-61-62751)	Tube		
13		(707-03-X7620)	Cylinder Group		
14		(707-03-X7630)	Cylinder Group		

Printed By : Dwi Iswanto (airafather6107170)

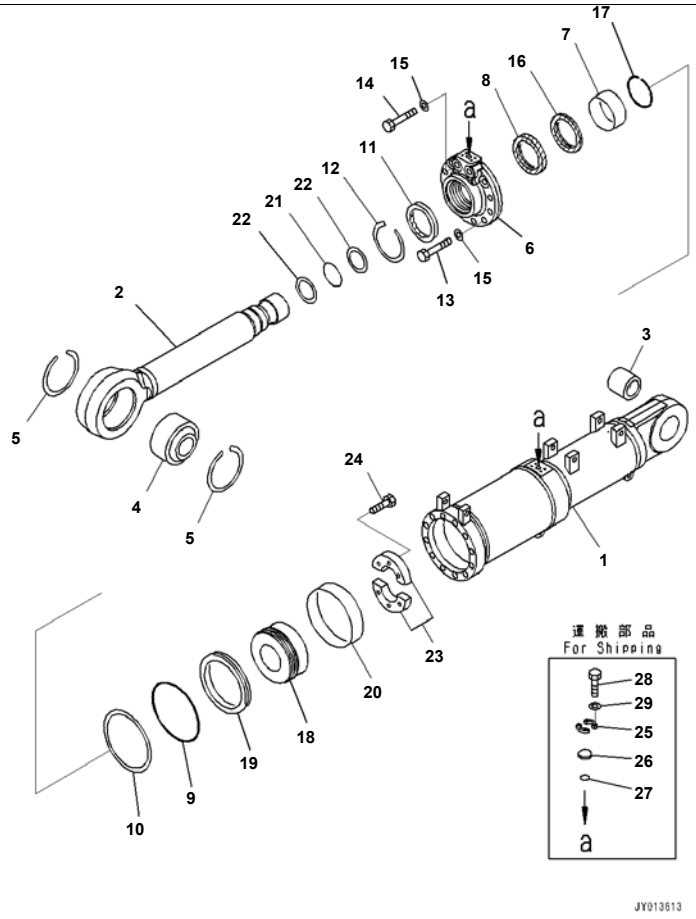

D375A-6R S/N 65001-UP
Dozer Blade Tilt Cylinder, Inner Parts (#65001-)

Index	Code	Part Number	Description	Qty	Serial No.
		707-01-0AY40	Cylinder Assembly	4	65001-
1		707-13-20660	· Cylinder	1	65001-
2		707-58-11300	· Rod	1	65001-
3		707-76-75060	· Bushing	1	65001-
4		195-71-51263	· Bushing	1	65001-
5		04071-00160	· Ring, Snap, for Hole Side	2	65001-
6		707-27-20100	· Head	1	65001-
7		707-52-90851	· Bushing	1	65001-
8		707-51-11030	· Packing, Rod, (Kit : K08)	1	65001-
9		07000-15190	· O-ring, (Kit : K08)	1	65001-
10		07146-05192	· Ring, Back-up, (Kit : K08)	1	65001-
11		707-56-11740	· Seal, Dust, (Kit : K08)	1	65001-
12		07179-13126	· Ring, Snap	1	65001-
13		01010-82075	· Bolt	10	65001-
14		01011-82000	· Bolt	2	65001-
15		01643-32060	· Washer	12	65001-
16		707-51-11650	· Ring, Buffer, (Kit : K08)	1	65001-
17		707-75-11040	· Ring, Snap	1	65001-
18		707-36-20620	· Piston	1	65001-
19		707-44-20150	· Ring, Piston, (Kit : K08)	1	65001-
20		07155-02045	· Ring, Wear, (Kit : K08)	1	65001-
21		07000-B2090	· O-ring, (Kit : K08)	1	65001-
22		707-35-52930	· Ring, Back-up, (Kit : K08)	2	65001-
23		707-40-22150	· Spacer	2	65001-
24		01010-61455	· Bolt	6	65001-
25		07371-30500	· Flange, Split	4	65001-
26		07378-10500	· Head	2	65001-
27		07000-13022	· O-ring, (Kit : K08)	2	65001-
28		01010-80830	· Bolt	8	65001-
29		01643-50823	· Washer	8	65001-

Printed By : Dwi Iswanto (airafather6107170)

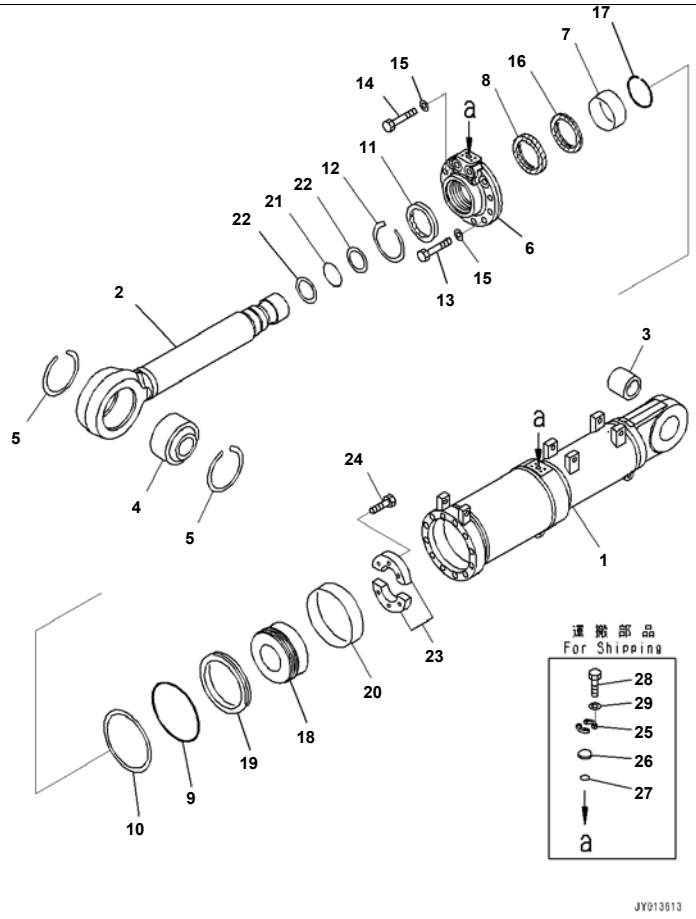

D375A-6R S/N 65001-UP

Dozer Blade Tilt Cylinder And Brace, Semi U Dozer, Inner Parts, Blade Cylinder (#65001-)

Index	Code	Part Number	Description	Qty	Serial No.
		707-01-0AY50	Cylinder Assembly	2	65001-
1		707-13-20670	· Cylinder	1	65001-
2		707-58-11400	· Rod	1	65001-
3		707-76-75060	· Bushing	1	65001-
4		195-71-51263	· Bushing	1	65001-
5		04071-00160	· Ring, Snap, for Hole Side	2	65001-
6		707-27-20100	· Head	1	65001-
7		707-52-90851	· Bushing	1	65001-
8		707-51-11030	· Packing, Rod, (Kit : K08)	1	65001-
9		07000-15190	· O-ring, (Kit : K08)	1	65001-
10		07146-05192	· Ring, Back-up, (Kit : K08)	1	65001-
11		707-56-11740	· Seal, Dust, (Kit : K08)	1	65001-
12		07179-13126	· Ring, Snap	1	65001-
13		01010-82075	· Bolt	10	65001-
14		01011-82000	· Bolt	2	65001-
15		01643-32060	· Washer	12	65001-
16		707-51-11650	· Ring, Buffer, (Kit : K08)	1	65001-
17		707-75-11040	· Ring, Snap	1	65001-
18		707-36-20620	· Piston	1	65001-
19		707-44-20150	· Ring, Piston, (Kit : K08)	1	65001-
20		07155-02045	· Ring, Wear, (Kit : K08)	1	65001-
21		07000-B2090	· O-ring, (Kit : K08)	1	65001-
22		707-35-52930	· Ring, Back-up, (Kit : K08)	2	65001-
23		707-40-22150	· Spacer	2	65001-
24		01010-61455	· Bolt	6	65001-
25		07371-30500	· Flange, Split	4	65001-
26		07378-10500	· Head	2	65001-
27		07000-13022	· O-ring, (Kit : K08)	2	65001-
28		01010-80830	· Bolt	8	65001-
29		01643-50823	· Washer	8	65001-

Printed By : Dwi Iswanto (airafather6107170)

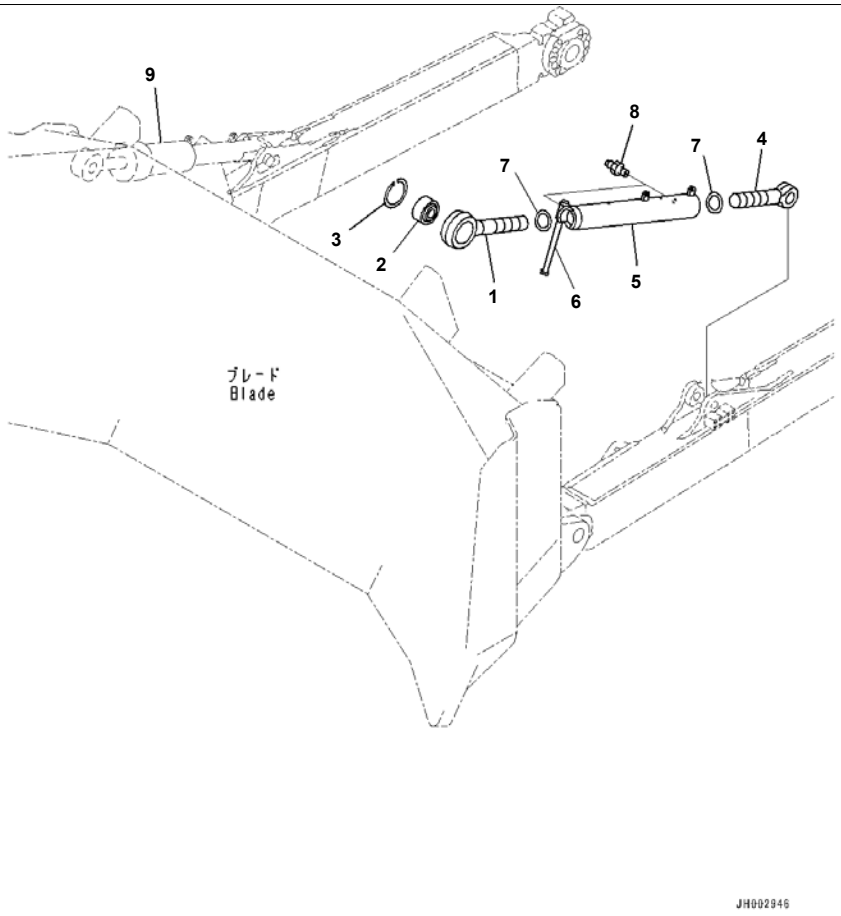

Reference:T2150-002002 Page:T016002

D375A-6R S/N 65001-UP
Dozer Blade Tilt Cylinder And Brace, Semi U Dozer, Brace (#65001-)

Index	Code	Part Number	Description	Qty	Serial No.
1		195-70-51152	Screw	1	65001-
2		195-71-51263	Bushing	1	65001-
3		04071-00160	Ring, Snap, for Hole Side	1	65001-
4		195-71-61540	Screw	1	65001-
5		195-71-61561	Brace	1	65001-
6		198-71-11580	· Rod	1	65001-
7		177-50-11170	Seal, Dust	2	65001-
8		07020-00000	Fitting, Grease	2	65001-
9		(707-01-0ZT80)	Cylinder Assembly		

Printed By : Dwi Iswanto (airafather6107170)

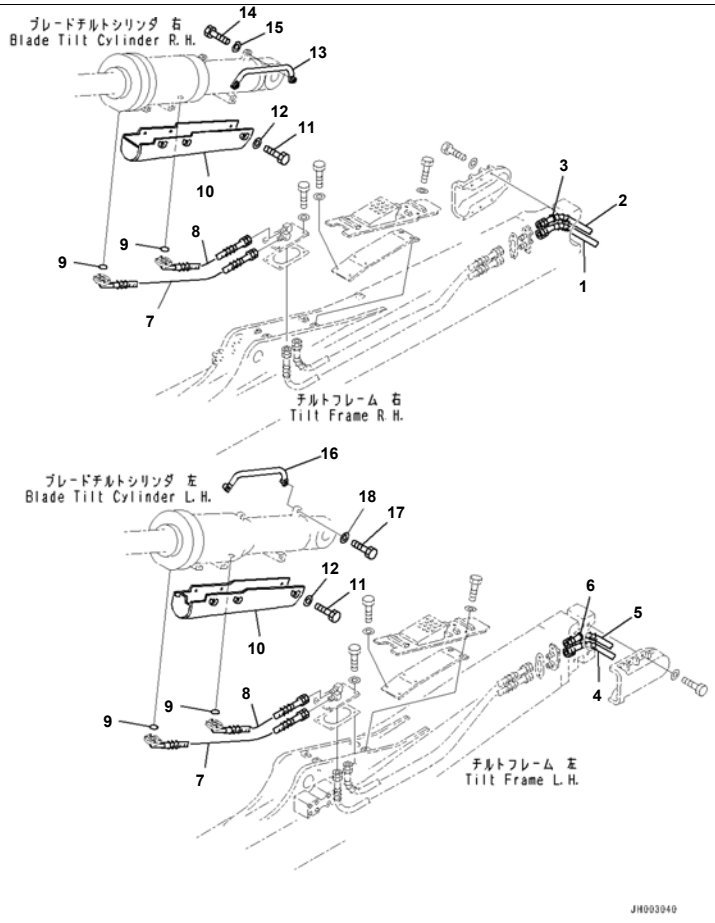

Reference:T2160-001001 Page:T017001

D375A-6R S/N 65001-UP
Dozer Blade Tilt Cylinder Circuit, For Machine With Dual Tilt Pitch Dozer (#65001-)

Index	Code	Part Number	Description	Qty	Serial No.
1		195-71-76671	Hose	1	65001-
2		195-71-76691	Hose	1	65001-
3		20Y-62-22790	· Band, Red	2	65001-
4		195-71-76671	Hose	1	65001-
5		195-71-76631	Hose	1	65001-
6		20Y-62-22820	· Band, Blue	2	65001-
7		195-71-76650	Hose	2	65001-
8		195-71-76660	Hose	2	65001-
9		07000-13022	O-ring	4	65001-
10		195-71-63651	Cover	2	65001-
11		01010-82050	Bolt	12	65001-
12		01643-32060	Washer	12	65001-
13		195-71-62151	Handle	1	65001-
14		01010-61660	Bolt	2	65001-
15		01643-31645	Washer	2	65001-
16		195-71-62151	Handle	1	65001-
17		01010-61660	Bolt	2	65001-
18		01643-31645	Washer	2	65001-

Reference:T2160-001001 Page:T017001

Printed By : Dwi Iswanto (airafather6107170)

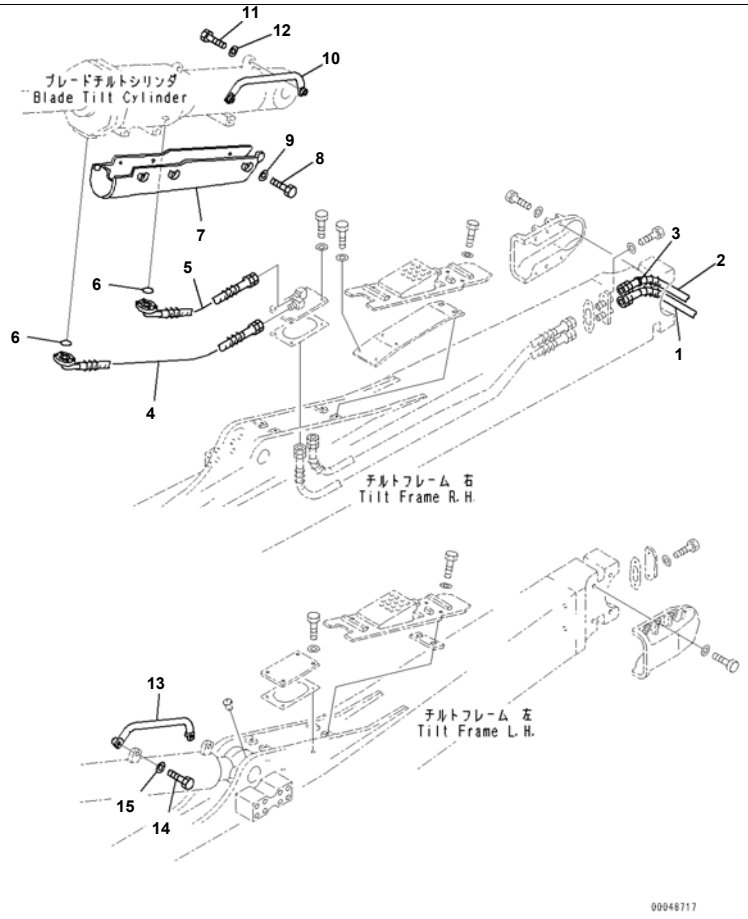

Reference:T2160-002001 Page:T018001

D375A-6R S/N 65001-UP
Dozer Blade Tilt Cylinder Circuit, Strengthened Semi U Dozer (#65001-)

Index	Code	Part Number	Description	Qty	Serial No.
1		195-71-76671	Hose	1	65001-
2		195-71-76691	Hose	1	65001-
3		20Y-62-22790	· Band, Red	2	65001-
4		195-71-76731	Hose	1	65001-
5		195-71-76660	Hose	1	65001-
6		07000-13022	O-ring	2	65001-
7		195-71-63661	Cover	1	65001-
8		01010-82050	Bolt	6	65001-
9		01643-32060	Washer	6	65001-
10		195-71-62151	Handle	1	65001-
11		01010-61660	Bolt	2	65001-
12		01643-31645	Washer	2	65001-
13		195-71-62151	Handle	1	65001-
14		01010-61660	Bolt	2	65001-
15		01643-31645	Washer	2	65001-

Reference:T2160-002001 Page:T018001

Printed By : Dwi Iswanto (airafather6107170)

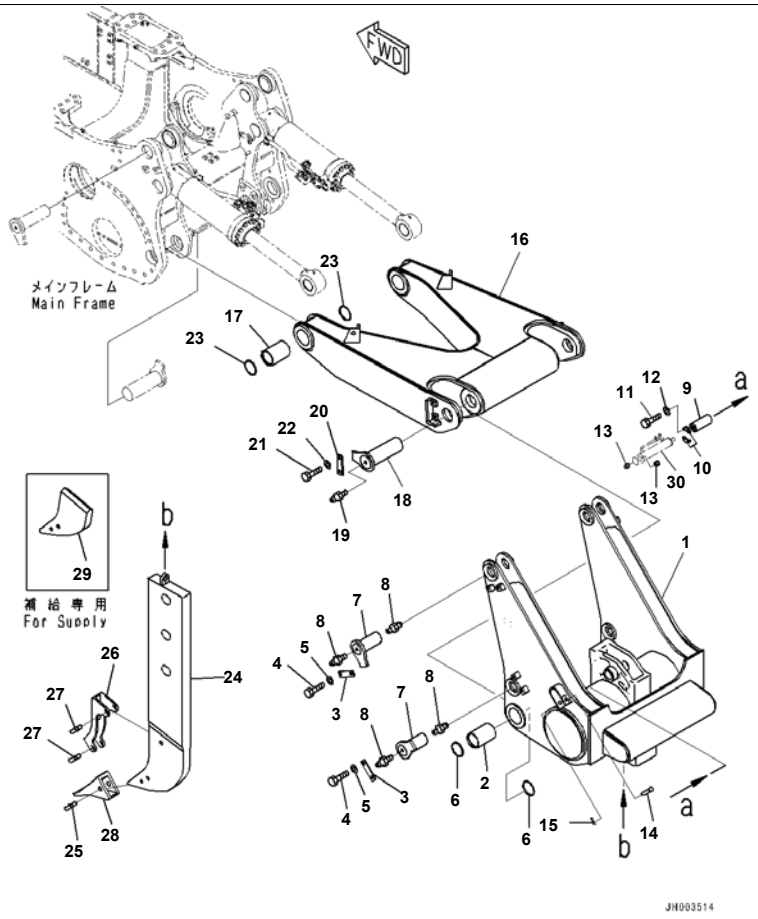

D375A-6R S/N 65001-UP
Ripper Group, Variable Digging Angle Giant Ripper, Beam and Arm (#65001-)

Index	Code	Part Number	Description	Qty	Serial No.
1		195-79-51131	Beam	1	65001-
2		195-78-71220	Bushing	2	65001-
3		195-78-21171	Plate	4	65001-
4		01010-62040	Bolt	8	65001-
5		01643-32060	Washer	8	65001-
6		195-78-41320	Seal, Dust	4	65001-
7		195-78-73180	Pin	4	65001-
8		07020-00000	Fitting, Grease	8	65001-
9		17M-79-11120	Pin	1	65001-
10		175-79-61160	Plate	2	65001-
11		01010-81030	Bolt	4	65001-
12		01643-51032	Washer	4	65001-
13		195-79-52110	Collar	2	65001-
14		195-79-52130	Pin	1	65001-
15		04050-16040	Pin, Cotter	1	65001-
16		195-78-71161	Arm	1	65001-
17		195-78-71220	Bushing	2	65001-
18		195-78-71210	Pin	2	65001-
19		07020-00000	Fitting, Grease	2	65001-
20		195-78-21171	Plate	2	65001-
21		01010-62040	Bolt	4	65001-
22		01643-32060	Washer	4	65001-
23		195-78-41320	Seal, Dust	4	65001-
24		195-79-51150	Shank	1	65001-
25		195-78-71360	Pin	1	65001-
26		195-78-71111	Protector	1	65001-
27		195-78-71360	Pin	2	65001-
28		195-78-71320	Point	1	65001-
29		195-78-71380	Shank, For Supply	1	65001-
30		(707-04-X0070)	Cylinder Group		

Printed By : Dwi Iswanto (airafather6107170)

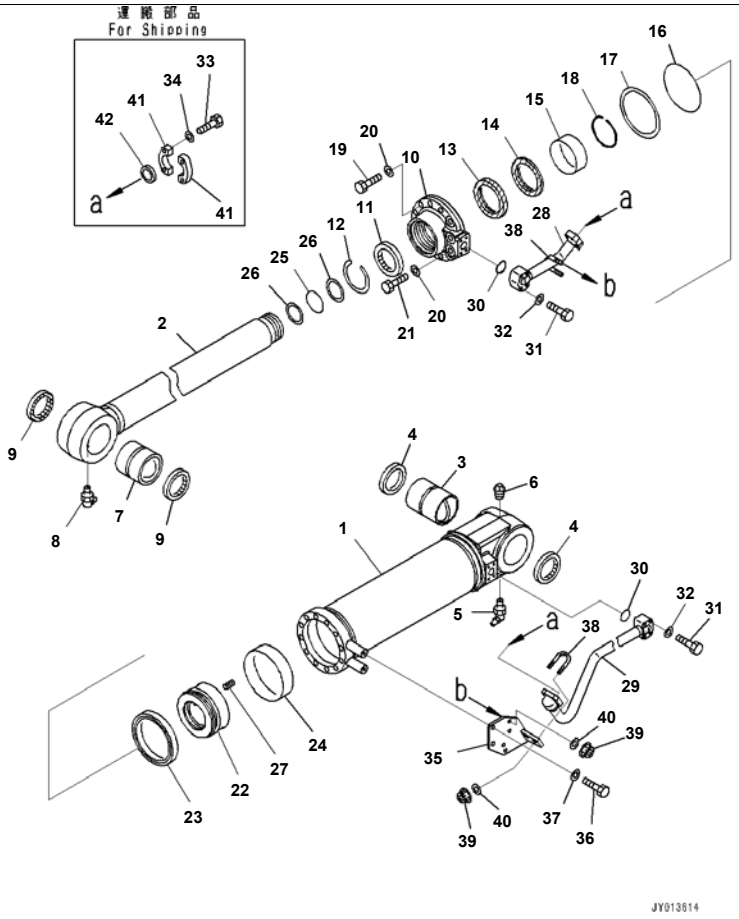

D375A-6R S/N 65001-UP
Ripper Group, Variable Digging Angle Giant Ripper, Inner Parts, Ripper Tilt Cylinder, LHS (#65001-)

Index	Code	Part Number	Description	Qty	Serial No.
		707-01-0AY60	Cylinder Assembly	1	65001-
1		707-13-18390	Cylinder	1	65001-
2		707-58-11200	Rod	1	65001-
3		707-76-10120	Bushing	1	65001-
4		07145-00100	Seal, Dust, (Kit : K10)	2	65001-
5		07020-00675	Fitting, Grease	1	65001-
6		07042-00108	Plug, Taper	1	65001-
7		707-76-10110	Bushing	1	65001-
8		07020-00900	Fitting, Grease	1	65001-
9		07145-00100	Seal, Dust	2	65001-
10		707-27-18A50	Head	1	65001-
11		707-56-11740	Seal, Dust, (Kit : K10)	1	65001-
12		07179-13126	Ring, Snap	1	65001-
13		707-51-11030	Packing, Rod, (Kit : K10)	1	65001-
14		707-51-11650	Ring, Buffer, (Kit : K10)	1	65001-
15		707-52-90871	Bushing	1	65001-
16		07000-15170	O-ring, (Kit : K10)	1	65001-
17		07146-05172	Ring, Back-up, (Kit : K10)	1	65001-
18		707-75-11040	Ring, Snap	1	65001-
19		01010-81865	Bolt	10	65001-
20		01643-31845	Washer	12	65001-
21		01010-81890	Bolt	2	65001-
22		707-36-18440	Piston	1	65001-
23		707-44-18150	Ring, Piston, (Kit : K10)	1	65001-
24		07155-01845	Ring, Wear, (Kit : K10)	1	65001-
25		07000-B5110	O-ring, (Kit : K10)	1	65001-
26		07001-05110	Ring, Back-up, (Kit : K10)	2	65001-
27		01310-01225	Screw	1	65001-
28		707-86-13500	Tube	1	65001-
29		707-86-13601	Tube	1	65001-
30		07000-13035	O-ring, (Kit : K10)	2	65001-

Printed By : Dwi Iswanto (airafather6107170)

Ripper Group, Variable Digging Angle Giant Ripper, Inner Parts, Ripper Tilt Cylinder, LHS (#65001-)

Index	Code	Part Number	Description	Qty	Serial No.
31		07372-21060	Bolt	8	65001-
32		01643-51032	Washer	8	65001-
33		07372-21035	Bolt	8	65001-
34		01643-51032	Washer	8	65001-
35		707-88-50801	Bracket	1	65001-
36		01010-81230	Bolt	2	65001-
37		01643-31232	Washer	2	65001-
38		07283-33450	Clip	2	65001-
39		01597-01009	Nut	4	65001-
40		01643-31032	Washer	4	65001-
41		07371-31049	Flange, Split	4	65001-
42		707-88-33040	Cap	2	65001-

Printed By : Dwi Iswanto (airafather6107170)

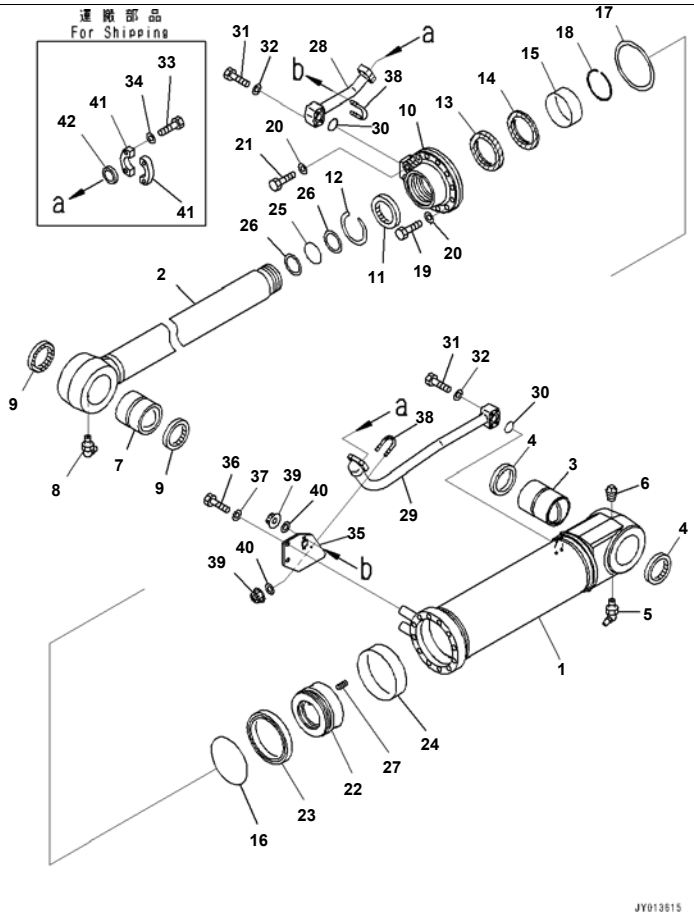

Reference:T2400-007003 Page:T019003

D375A-6R S/N 65001-UP

Ripper Group, Variable Digging Angle Giant Ripper, Inner Parts, Ripper Tilt Cylinder, RHS (#65001-)

Index	Code	Part Number	Description	Qty	Serial No.
		707-01-0AY70	Cylinder Assembly	1	65001-
1		707-13-18390	Cylinder	1	65001-
2		707-58-11200	Rod	1	65001-
3		707-76-10120	Bushing	1	65001-
4		07145-00100	Seal, Dust, (Kit : K10)	2	65001-
5		07020-00675	Fitting, Grease	1	65001-
6		07042-00108	Plug, Taper	1	65001-
7		707-76-10110	Bushing	1	65001-
8		07020-00900	Fitting, Grease	1	65001-
9		07145-00100	Seal, Dust, (Kit : K10)	2	65001-
10		707-27-18A50	Head	1	65001-
11		707-56-11740	Seal, Dust, (Kit : K10)	1	65001-
12		07179-13126	Ring, Snap	1	65001-
13		707-51-11030	Packing, Rod, (Kit : K10)	1	65001-
14		707-51-11650	Ring, Buffer, (Kit : K10)	1	65001-
15		707-52-90871	Bushing	1	65001-
16		07000-15170	O-ring, (Kit : K10)	1	65001-
17		07146-05172	Ring, Back-up, (Kit : K10)	1	65001-
18		707-75-11040	Ring, Snap	1	65001-
19		01010-81865	Bolt	10	65001-
20		01643-31845	Washer	12	65001-
21		01010-81890	Bolt	2	65001-
22		707-36-18440	Piston	1	65001-
23		707-44-18150	Ring, Piston, (Kit : K10)	1	65001-
24		07155-01845	Ring, Wear, (Kit : K10)	1	65001-
25		07000-B5110	O-ring, (Kit : K10)	1	65001-
26		07001-05110	Ring, Back-up, (Kit : K10)	2	65001-
27		01310-01225	Screw	1	65001-
28		707-86-13700	Tube	1	65001-
29		707-86-13801	Tube	1	65001-
30		07000-13035	O-ring, (Kit : K10)	2	65001-

Reference:T2400-007003 Page:T019003

Printed By : Dwi Iswanto (airafather6107170)

Ripper Group, Variable Digging Angle Giant Ripper, Inner Parts, Ripper Tilt Cylinder, RHS (#65001-)

Index	Code	Part Number	Description	Qty	Serial No.
31		07372-21060	Bolt	8	65001-
32		01643-51032	Washer	8	65001-
33		07372-21035	Bolt	8	65001-
34		01643-51032	Washer	8	65001-
35		707-88-50811	Bracket	1	65001-
36		01010-81230	Bolt	2	65001-
37		01643-31232	Washer	2	65001-
38		07283-33450	Clip	2	65001-
39		01597-01009	Nut	4	65001-
40		01643-31032	Washer	4	65001-
41		07371-31049	Flange, Split	4	65001-
42		707-88-33040	Cap	2	65001-

Printed By : Dwi Iswanto (airafather6107170)

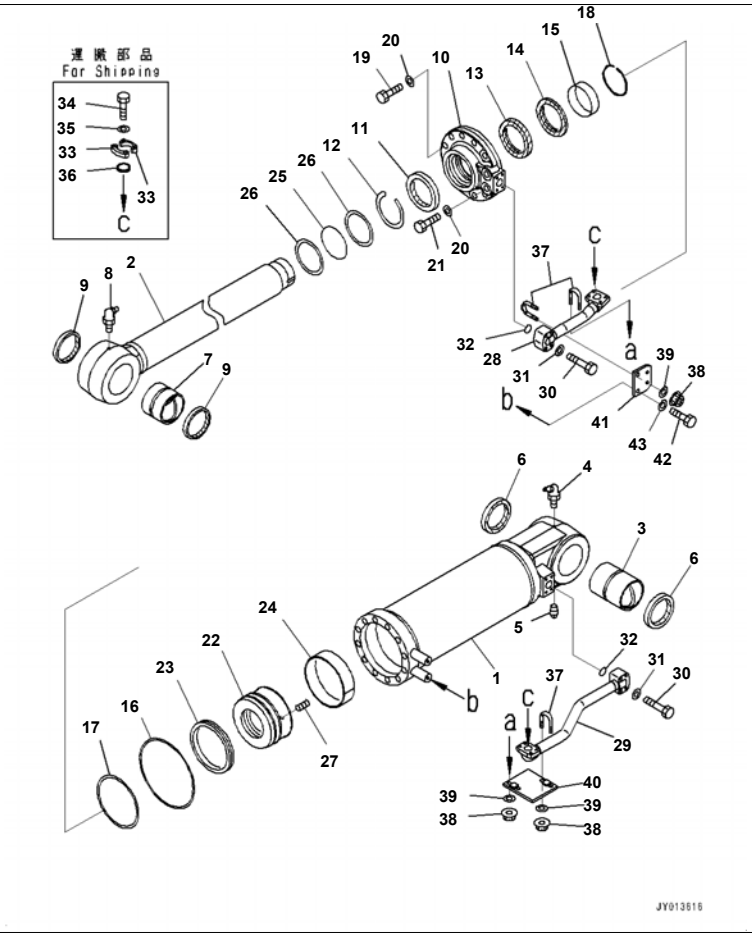

D375A-6R S/N 65001-UP

Ripper Group, Variable Digging Angle Giant Ripper, Inner Parts, Ripper Lift Cylinder, LHS (#65001-)

Index	Code	Part Number	Description	Qty	Serial No.
		707-01-0AY20	Cylinder Assembly	1	65001-
1		707-13-20650	· Cylinder	1	65001-
2		707-58-11100	· Rod	1	65001-
3		707-76-10120	· Bushing	1	65001-
4		07020-00675	· Fitting, Grease	1	65001-
5		07042-80108	· Plug	1	65001-
6		07145-00100	· Seal, Dust, (Kit : K11)	2	65001-
7		707-76-10110	· Bushing	1	65001-
8		07020-00900	· Fitting, Grease	1	65001-
9		07145-00100	· Seal, Dust, (Kit : K11)	2	65001-
10		707-27-20741	· Head	1	65001-
11		707-56-11740	· Seal, Dust, (Kit : K11)	1	65001-
12		07179-13126	· Ring, Snap	1	65001-
13		707-51-11030	· Packing, Rod, (Kit : K11)	1	65001-
14		707-51-11650	· Ring, Buffer, (Kit : K11)	1	65001-
15		707-52-90851	· Bushing	1	65001-
16		07000-15190	· O-ring, (Kit : K11)	1	65001-
17		07146-05192	· Ring, Back-up, (Kit : K11)	1	65001-
18		707-75-11040	· Ring, Snap	1	65001-
19		01010-82075	· Bolt	10	65001-
20		01643-32060	· Washer	12	65001-
21		01011-82000	· Bolt	2	65001-
22		707-36-20600	· Piston	1	65001-
23		707-44-20150	· Ring, Piston, (Kit : K11)	1	65001-
24		07155-02045	· Ring, Wear, (Kit : K11)	1	65001-
25		07000-B5110	· O-ring, (Kit : K11)	1	65001-
26		07001-05110	· Ring, Back-up, (Kit : K11)	2	65001-
27		01310-01225	· Screw	1	65001-
28		707-86-00501	Spiral Tube	1	65001-
29		707-86-00490	Tube	1	65001-
30		07372-21060	Bolt	8	65001-

Printed By : Dwi Iswanto (airafather6107170)

Ripper Group, Variable Digging Angle Giant Ripper, Inner Parts, Ripper Lift Cylinder, LHS (#65001-)

Index	Code	Part Number	Description	Qty	Serial No.
31		01643-51032	Washer	8	65001-
32		07000-13035	O-ring, (Kit : K11)	2	65001-
33		07371-31049	Flange, Split	4	65001-
34		07372-21035	Bolt	8	65001-
35		01643-51032	Washer	8	65001-
36		707-88-33040	Cap	2	65001-
37		07283-33450	Clip	3	65001-
38		01597-01009	Nut	6	65001-
39		01643-31032	Washer	6	65001-
40		707-88-50780	Plate	1	65001-
41		707-88-50770	Plate	1	65001-
42		01010-81230	Bolt	2	65001-
43		01643-31232	Washer	2	65001-

Printed By : Dwi Iswanto (airafather6107170)

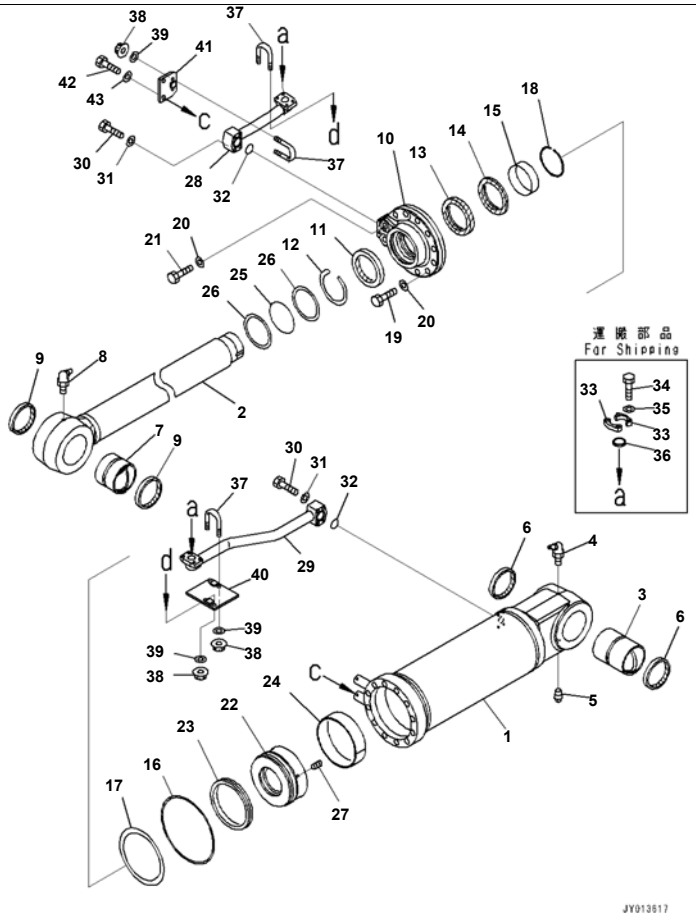

Index	Code	Part Number	Description	Qty	Serial No.
		707-01-0AY30	Cylinder Assembly	1	65001-
1		707-13-20650	· Cylinder	1	65001-
2		707-58-11100	· Rod	1	65001-
3		707-76-10120	· Bushing	1	65001-
4		07020-00675	· Fitting, Grease	1	65001-
5		07042-80108	· Plug	1	65001-
6		07145-00100	· Seal, Dust, (Kit : K11)	2	65001-
7		707-76-10110	· Bushing	1	65001-
8		07020-00900	· Fitting, Grease	1	65001-
9		07145-00100	· Seal, Dust, (Kit : K11)	2	65001-
10		707-27-20741	· Head	1	65001-
11		707-56-11740	· Seal, Dust, (Kit : K11)	1	65001-
12		07179-13126	· Ring, Snap	1	65001-
13		707-51-11030	· Packing, Rod, (Kit : K11)	1	65001-
14		707-51-11650	· Ring, Buffer, (Kit : K11)	1	65001-
15		707-52-90851	· Bushing	1	65001-
16		07000-15190	· O-ring, (Kit : K11)	1	65001-
17		07146-05192	· Ring, Back-up, (Kit : K11)	1	65001-
18		707-75-11040	· Ring, Snap	1	65001-
19		01010-82075	· Bolt	10	65001-
20		01643-32060	· Washer	12	65001-
21		01011-82000	· Bolt	2	65001-
22		707-36-20600	· Piston	1	65001-
23		707-44-20150	· Ring, Piston, (Kit : K11)	1	65001-
24		07155-02045	· Ring, Wear, (Kit : K11)	1	65001-
25		07000-B5110	· O-ring, (Kit : K11)	1	65001-
26		07001-05110	· Ring, Back-up, (Kit : K11)	2	65001-
27		01310-01225	· Screw	1	65001-
28		707-86-00521	Tube	1	65001-
29		707-86-00510	Tube	1	65001-
30		07372-21060	Bolt	8	65001-

Printed By : Dwi Iswanto (airafather6107170)

Index	Code	Part Number	Description	Qty	Serial No.
31		01643-51032	Washer	8	65001-
32		07000-13035	O-ring, (Kit : K11)	2	65001-
33		07371-31049	Flange, Split	4	65001-
34		07372-21035	Bolt	8	65001-
35		01643-51032	Washer	8	65001-
36		707-88-33040	Cap	2	65001-
37		07283-33450	Clip	3	65001-
38		01597-01009	Nut	6	65001-
39		01643-31032	Washer	6	65001-
40		707-88-50790	Plate	1	65001-
41		707-88-50770	Plate	1	65001-
42		01010-81230	Bolt	2	65001-
43		01643-31232	Washer	2	65001-

Printed By : Dwi Iswanto (airafather6107170)

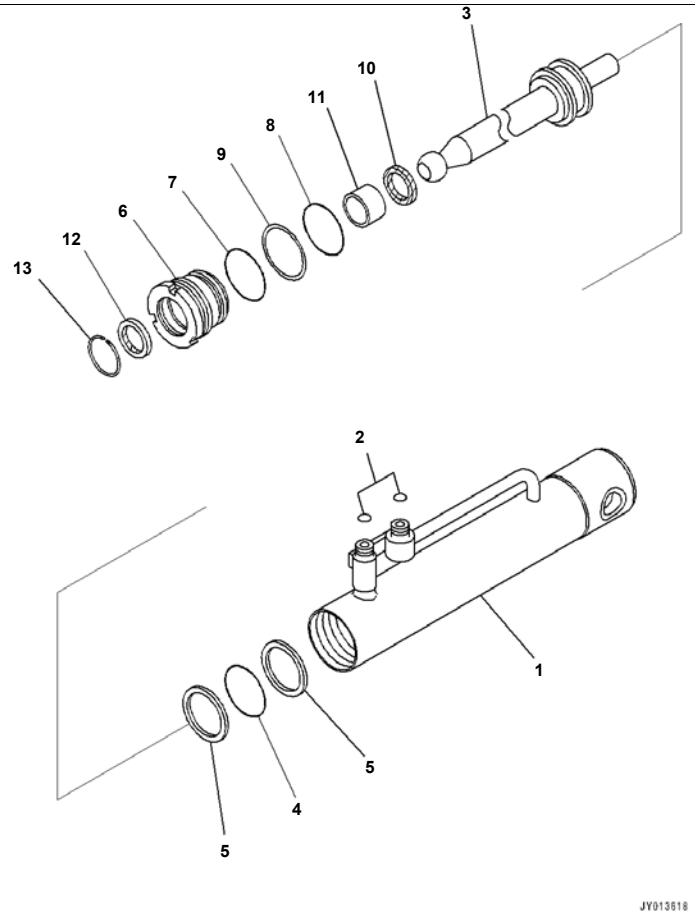

D375A-6R S/N 65001-UP
Ripper Group, Variable Digging Angle Giant Ripper, Inner Parts, Pin Puller Cylinder (#65001-)

Index	Code	Part Number	Description	Qty	Serial No.
		707-04-07200	Cylinder Group	1	65001-
		707-04-X0070	Cylinder Group	1	65001-
1		707-16-60060	· Cylinder	1	65001-
2		02896-11009	· O-ring, (Kit : K09)	2	65001-
3		198-63-49220	· Rod, Piston	1	65001-
4		707-34-10600	· O-ring, (Kit : K09)	1	65001-
5		707-35-99600	· Ring, Back-up, (Kit : K09)	2	65001-
6		707-29-60930	· Head, Cylinder	1	65001-
7		07000-12060	· O-ring, (Kit : K09)	1	65001-
8		07000-12055	· O-ring, (Kit : K09)	1	65001-
9		07001-02055	· Ring, Back-up, (Kit : K09)	1	65001-
10		707-51-30210	· Packing, Rod, (Kit : K09)	1	65001-
11		707-52-15050	· Bushing	1	65001-
12		707-56-30510	· Seal, Dust, (Kit : K09)	1	65001-
13		07179-00049	· Ring, Snap	1	65001-

Printed By : Dwi Iswanto (airafather6107170)

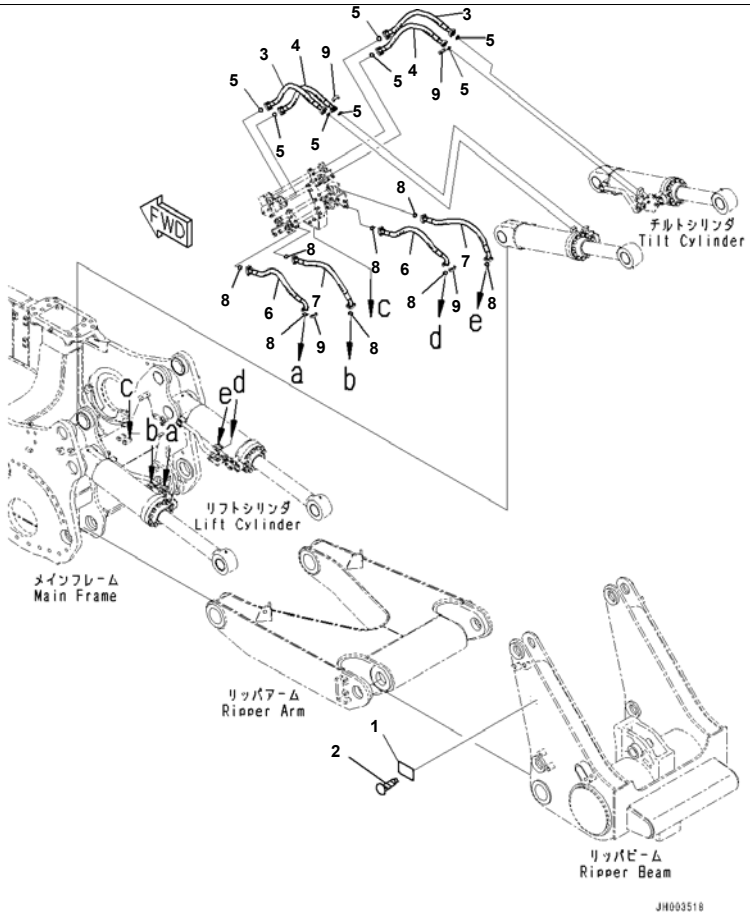

Reference:T2400-007007 Page:T019007

Ripper Group, Variable Digging Angle Giant Ripper, Ripper Piping (#65001-)

Index	Code	Part Number	Description	Qty	Serial No.
1	C2	09601-50000	Plate, Name (Limited Supply), EU Regulation	1	65001-
	C2	09601-60000	Plate, Name (Limited Supply)	1	65001-
2		04418-13060	Screw	4	65001-
3		07099-010A9	Hose, Flange Type	2	65001-
4		07098-010A9	Hose, Flange Type	2	65001-
5		07000-13032	O-ring	8	65001-
6		07098-010A8	Hose, Flange Type	2	65001-
7		07097-01009	Hose, Flange Type	2	65001-
8		07000-13032	O-ring	8	65001-
9		(07371-31049)	Flange, Split		

Printed By : Dwi Iswanto (airafather6107170)

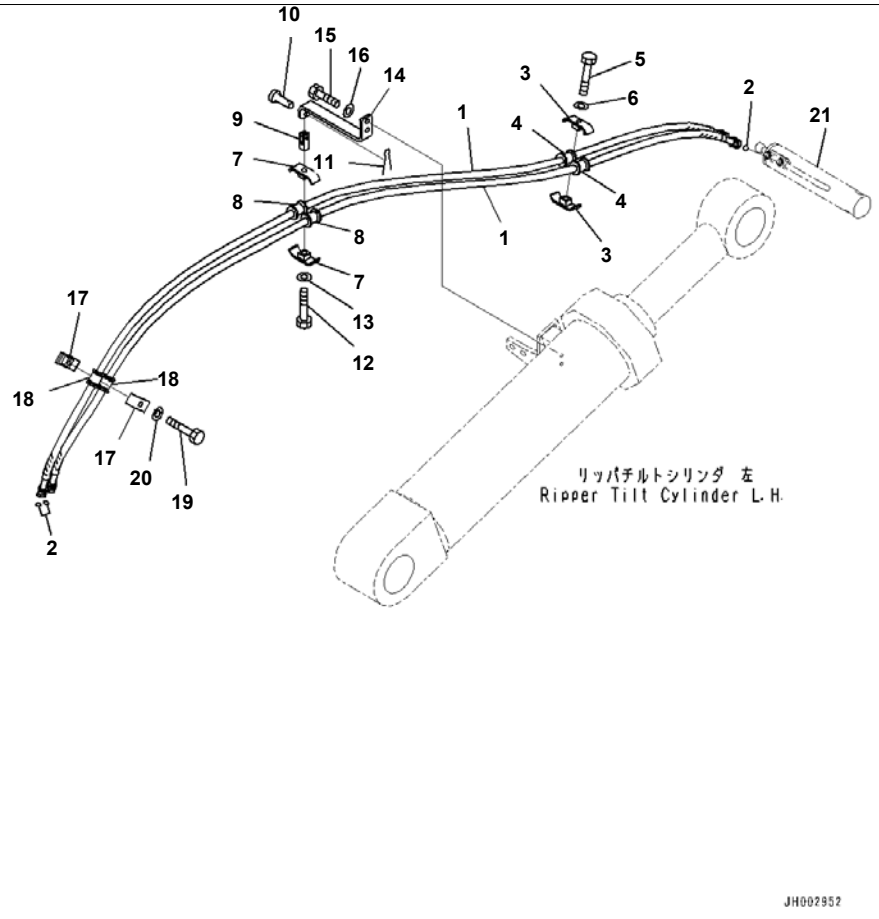

Reference:T2400-007008 Page:T019008

D375A-6R S/N 65001-UP
Ripper Group, Variable Digging Angle Giant Ripper, Pin Puller Cylinder Piping (#65001-60003)

Index	Code	Part Number	Description	Qty	Serial No.
1		02760-00332	Hose, Face Seal Type	2	65001-60003
2		02896-21009	O-ring	4	65001-60003
3		07094-30315	Clamp	2	65001-60003
4		07095-00314	Cushion	2	65001-60003
5		01010-81065	Bolt	1	65001-60003
6		01643-31032	Washer	1	65001-60003
7		07094-30315	Clamp	2	65001-60003
8		07095-00314	Cushion	2	65001-60003
9		144-947-2850	Yoke	1	65001-60003
10		04205-11028	Pin	1	65001-60003
11		04050-13015	Pin	1	65001-60003
12		01010-81065	Bolt	1	65001-60003
13		01643-31032	Washer	1	65001-60003
14		195-78-72571	Plate	1	65001-60003
15		01010-81240	Bolt	2	65001-60003
16		01643-31232	Washer	2	65001-60003
17		07094-30315	Clamp	2	65001-60003
18		07095-00314	Cushion	2	65001-60003
19		01010-81065	Bolt	1	65001-60003
20		01643-31032	Washer	1	65001-60003
21		(707-04-X0070)	Cylinder Group		

Reference:T2400-007008 Page:T019008

Printed By : Dwi Iswanto (airafather6107170)

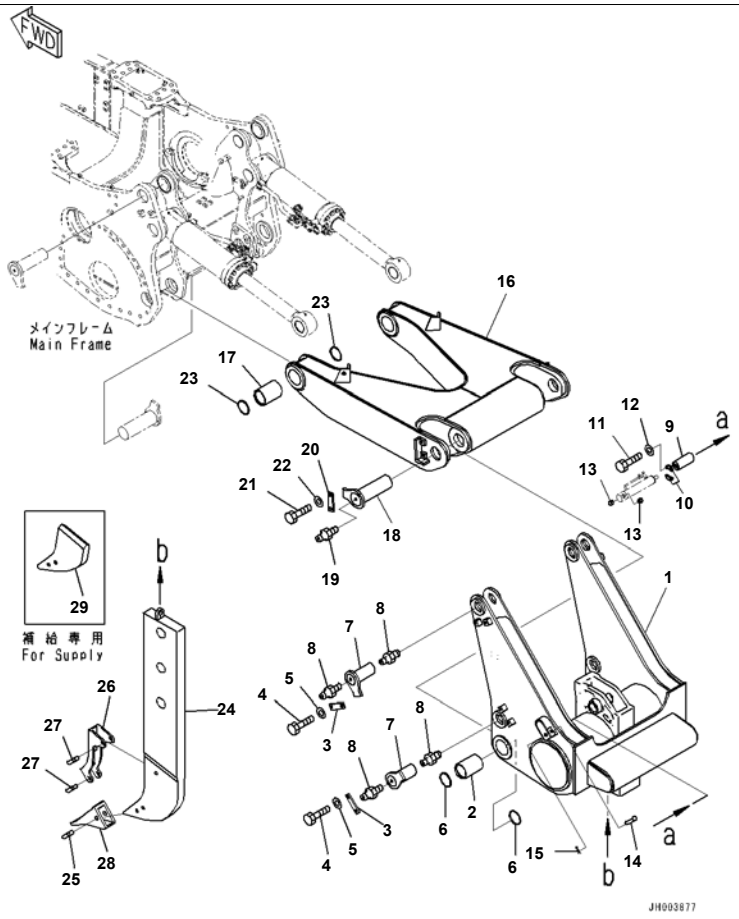

Reference:T2400-015001 Page:T020001

D375A-6R S/N 65001-UP

Ripper Group, With Variable Digging Angle Giant Ripper, Short Protector, Pusher Block, Beam and Arm (#65001-)

Index	Code	Part Number	Description	Qty	Serial No.
1		195-79-51131	Beam	1	65001-
2		195-78-71220	Bushing	2	65001-
3		195-78-21171	Plate	4	65001-
4		01010-62040	Bolt	8	65001-
5		01643-32060	Washer	8	65001-
6		195-78-41320	Seal, Dust	4	65001-
7		195-78-73180	Pin	4	65001-
8		07020-00000	Fitting, Grease	8	65001-
9		17M-79-11120	Pin	1	65001-
10		175-79-61160	Plate	2	65001-
11		01010-81030	Bolt	4	65001-
12		01643-51032	Washer	4	65001-
13		195-79-52110	Collar	2	65001-
14		195-79-52130	Pin	1	65001-
15		04050-16040	Pin, Cotter	1	65001-
16		195-78-71161	Arm	1	65001-
17		195-78-71220	Bushing	2	65001-
18		195-78-71210	Pin	2	65001-
19		07020-00000	Fitting, Grease	2	65001-
20		195-78-21171	Plate	2	65001-
21		01010-62040	Bolt	4	65001-
22		01643-32060	Washer	4	65001-
23		195-78-41320	Seal, Dust	4	65001-
24		195-79-51151	Shank	1	65001-
25		195-78-71360	Pin	1	65001-
26		195-78-71111	Protector	1	65001-
27		195-78-71360	Pin	2	65001-
28		195-78-71320	Point	1	65001-
29		195-78-71380	Shank, For Supply	1	65001-

Reference:T2400-015001 Page:T020001

Printed By : Dwi Iswanto (airafather6107170)

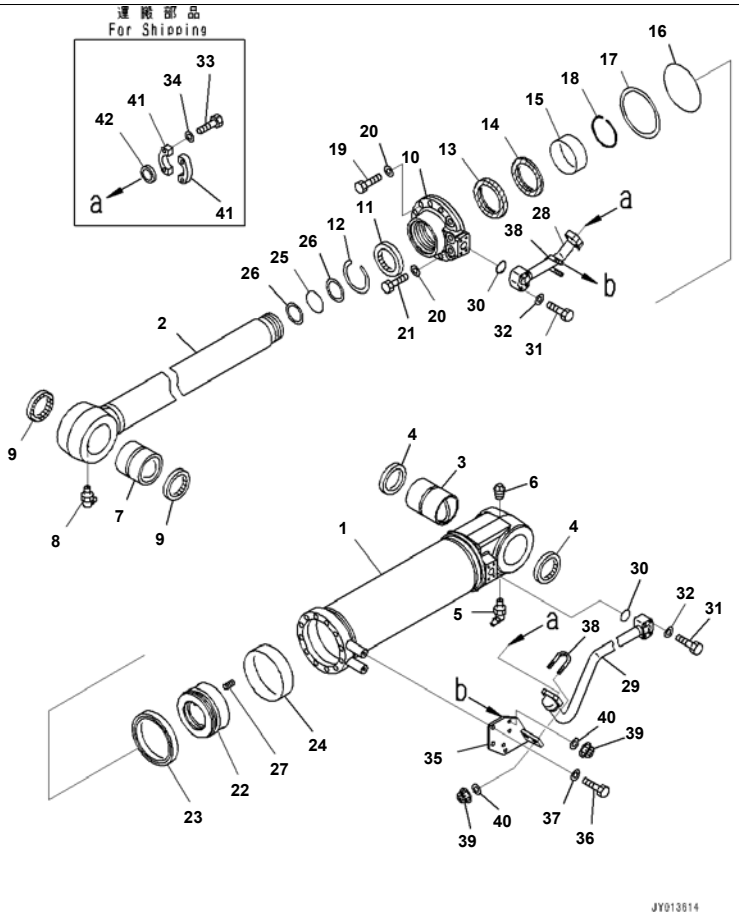

D375A-6R S/N 65001-UP
Ripper Group, With Variable Digging Angle Giant Ripper, Short Protector, Pusher Block, Inner Parts, Ripper Tilt Cylinder, LHS (#

Index	Code	Part Number	Description	Qty	Serial No.
		707-01-0AY60	Cylinder Assembly	1	65001-
1		707-13-18390	Cylinder	1	65001-
2		707-58-11200	Rod	1	65001-
3		707-76-10120	Bushing	1	65001-
4		07145-00100	Seal, Dust, (Kit : K10)	2	65001-
5		07020-00675	Fitting, Grease	1	65001-
6		07042-00108	Plug, Taper	1	65001-
7		707-76-10110	Bushing	1	65001-
8		07020-00900	Fitting, Grease	1	65001-
9		07145-00100	Seal, Dust	2	65001-
10		707-27-18A50	Head	1	65001-
11		707-56-11740	Seal, Dust, (Kit : K10)	1	65001-
12		07179-13126	Ring, Snap	1	65001-
13		707-51-11030	Packing, Rod, (Kit : K10)	1	65001-
14		707-51-11650	Ring, Buffer, (Kit : K10)	1	65001-
15		707-52-90871	Bushing	1	65001-
16		07000-15170	O-ring, (Kit : K10)	1	65001-
17		07146-05172	Ring, Back-up, (Kit : K10)	1	65001-
18		707-75-11040	Ring, Snap	1	65001-
19		01010-81865	Bolt	10	65001-
20		01643-31845	Washer	12	65001-
21		01010-81890	Bolt	2	65001-
22		707-36-18440	Piston	1	65001-
23		707-44-18150	Ring, Piston, (Kit : K10)	1	65001-
24		07155-01845	Ring, Wear, (Kit : K10)	1	65001-
25		07000-B5110	O-ring, (Kit : K10)	1	65001-
26		07001-05110	Ring, Back-up, (Kit : K10)	2	65001-
27		01310-01225	Screw	1	65001-
28		707-86-13500	Tube	1	65001-
29		707-86-13601	Tube	1	65001-

Printed By : Dwi Iswanto (airafather6107170)

Index	Code	Part Number	Description	Qty	Serial No.
30		07000-13035	O-ring, (Kit : K10)	2	65001-
31		07372-21060	Bolt	8	65001-
32		01643-51032	Washer	8	65001-
33		07372-21035	Bolt	8	65001-
34		01643-51032	Washer	8	65001-
35		707-88-50801	Bracket	1	65001-
36		01010-81230	Bolt	2	65001-
37		01643-31232	Washer	2	65001-
38		07283-33450	Clip	2	65001-
39		01597-01009	Nut	4	65001-
40		01643-31032	Washer	4	65001-
41		07371-31049	Flange, Split	4	65001-
42		707-88-33040	Cap	2	65001-

Printed By : Dwi Iswanto (airafather6107170)

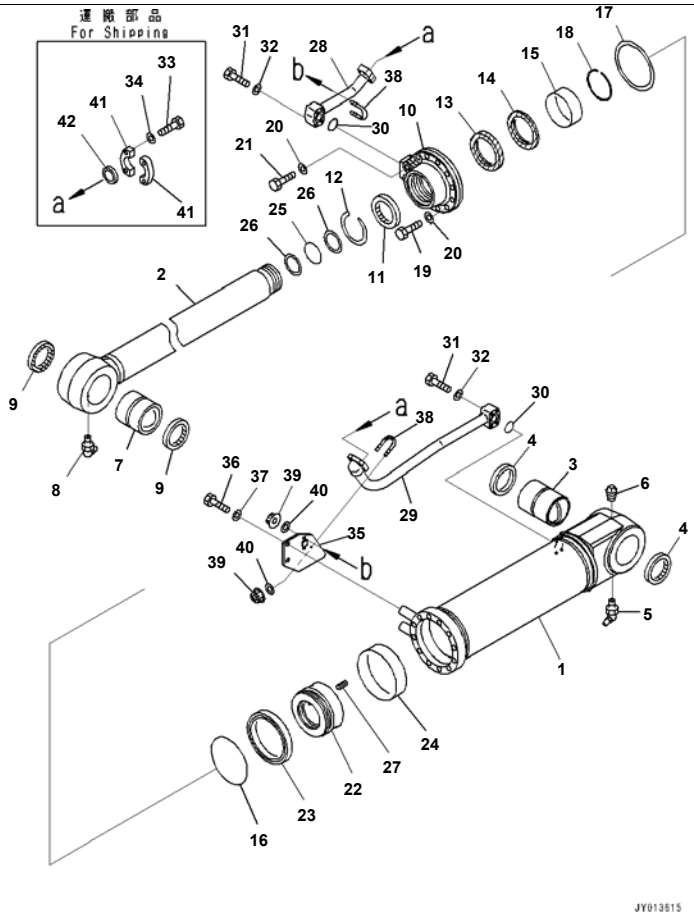

Reference:T2400-015003 Page:T020003

D375A-6R S/N 65001-UP
Ripper Group, With Variable Digging Angle Giant Ripper, Short Protector, Pusher Block, Inner Parts, Ripper Tilt Cylinder, RHS (#

Index	Code	Part Number	Description	Qty	Serial No.
		707-01-0AY70	Cylinder Assembly	1	65001-
1		707-13-18390	Cylinder	1	65001-
2		707-58-11200	Rod	1	65001-
3		707-76-10120	Bushing	1	65001-
4		07145-00100	Seal, Dust, (Kit : K10)	2	65001-
5		07020-00675	Fitting, Grease	1	65001-
6		07042-00108	Plug, Taper	1	65001-
7		707-76-10110	Bushing	1	65001-
8		07020-00900	Fitting, Grease	1	65001-
9		07145-00100	Seal, Dust, (Kit : K10)	2	65001-
10		707-27-18A50	Head	1	65001-
11		707-56-11740	Seal, Dust, (Kit : K10)	1	65001-
12		07179-13126	Ring, Snap	1	65001-
13		707-51-11030	Packing, Rod, (Kit : K10)	1	65001-
14		707-51-11650	Ring, Buffer, (Kit : K10)	1	65001-
15		707-52-90871	Bushing	1	65001-
16		07000-15170	O-ring, (Kit : K10)	1	65001-
17		07146-05172	Ring, Back-up, (Kit : K10)	1	65001-
18		707-75-11040	Ring, Snap	1	65001-
19		01010-81865	Bolt	10	65001-
20		01643-31845	Washer	12	65001-
21		01010-81890	Bolt	2	65001-
22		707-36-18440	Piston	1	65001-
23		707-44-18150	Ring, Piston, (Kit : K10)	1	65001-
24		07155-01845	Ring, Wear, (Kit : K10)	1	65001-
25		07000-B5110	O-ring, (Kit : K10)	1	65001-
26		07001-05110	Ring, Back-up, (Kit : K10)	2	65001-
27		01310-01225	Screw	1	65001-
28		707-86-13700	Tube	1	65001-
29		707-86-13801	Tube	1	65001-

Printed By : Dwi Iswanto (airafather6107170)

Index	Code	Part Number	Description	Qty	Serial No.
30		07000-13035	O-ring, (Kit : K10)	2	65001-
31		07372-21060	Bolt	8	65001-
32		01643-51032	Washer	8	65001-
33		07372-21035	Bolt	8	65001-
34		01643-51032	Washer	8	65001-
35		707-88-50811	Bracket	1	65001-
36		01010-81230	Bolt	2	65001-
37		01643-31232	Washer	2	65001-
38		07283-33450	Clip	2	65001-
39		01597-01009	Nut	4	65001-
40		01643-31032	Washer	4	65001-
41		07371-31049	Flange, Split	4	65001-
42		707-88-33040	Cap	2	65001-

Printed By : Dwi Iswanto (airafather6107170)

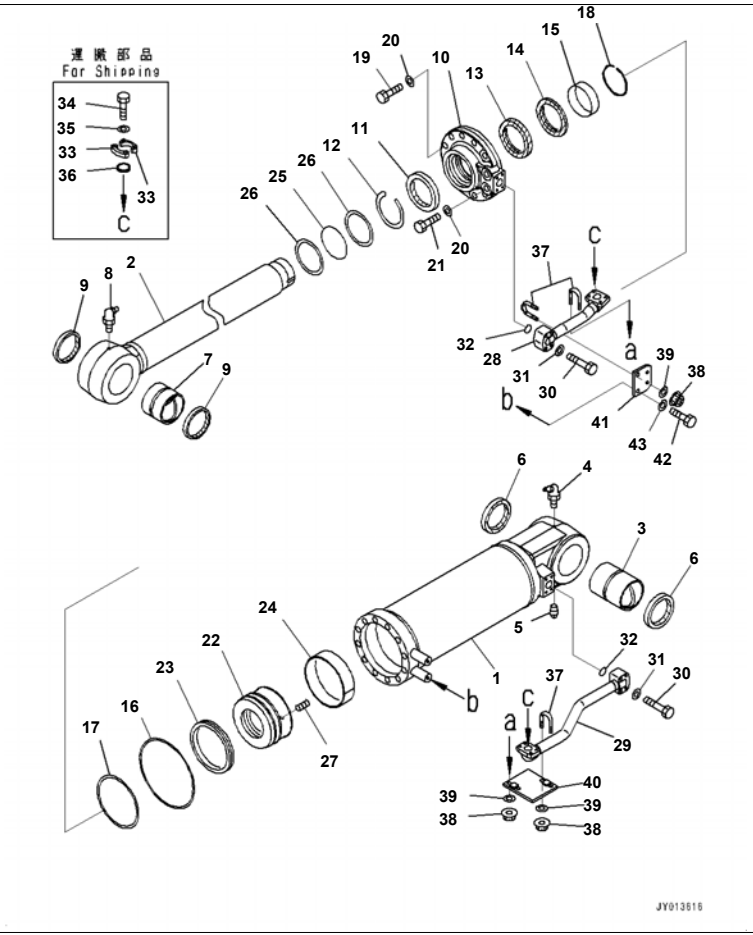

D375A-6R S/N 65001-UP
Ripper Group, With Variable Digging Angle Giant Ripper, Short Protector, Pusher Block, Inner Parts, Ripper Lift Cylinder, LHS (#

Index	Code	Part Number	Description	Qty	Serial No.
		707-01-0AY20	Cylinder Assembly	1	65001-
1		707-13-20650	· Cylinder	1	65001-
2		707-58-11100	· Rod	1	65001-
3		707-76-10120	· Bushing	1	65001-
4		07020-00675	· Fitting, Grease	1	65001-
5		07042-80108	· Plug	1	65001-
6		07145-00100	· Seal, Dust, (Kit : K11)	2	65001-
7		707-76-10110	· Bushing	1	65001-
8		07020-00900	· Fitting, Grease	1	65001-
9		07145-00100	· Seal, Dust, (Kit : K11)	2	65001-
10		707-27-20741	· Head	1	65001-
11		707-56-11740	· Seal, Dust, (Kit : K11)	1	65001-
12		07179-13126	· Ring, Snap	1	65001-
13		707-51-11030	· Packing, Rod, (Kit : K11)	1	65001-
14		707-51-11650	· Ring, Buffer, (Kit : K11)	1	65001-
15		707-52-90851	· Bushing	1	65001-
16		07000-15190	· O-ring, (Kit : K11)	1	65001-
17		07146-05192	· Ring, Back-up, (Kit : K11)	1	65001-
18		707-75-11040	· Ring, Snap	1	65001-
19		01010-82075	· Bolt	10	65001-
20		01643-32060	· Washer	12	65001-
21		01011-82000	· Bolt	2	65001-
22		707-36-20600	· Piston	1	65001-
23		707-44-20150	· Ring, Piston, (Kit : K11)	1	65001-
24		07155-02045	· Ring, Wear, (Kit : K11)	1	65001-
25		07000-B5110	· O-ring, (Kit : K11)	1	65001-
26		07001-05110	· Ring, Back-up, (Kit : K11)	2	65001-
27		01310-01225	· Screw	1	65001-
28		707-86-00501	Spiral Tube	1	65001-
29		707-86-00490	Tube	1	65001-

Printed By : Dwi Iswanto (airafather6107170)

Index	Code	Part Number	Description	Qty	Serial No.
30		07372-21060	Bolt	8	65001-
31		01643-51032	Washer	8	65001-
32		07000-13035	O-ring, (Kit : K11)	2	65001-
33		07371-31049	Flange, Split	4	65001-
34		07372-21035	Bolt	8	65001-
35		01643-51032	Washer	8	65001-
36		707-88-33040	Cap	2	65001-
37		07283-33450	Clip	3	65001-
38		01597-01009	Nut	6	65001-
39		01643-31032	Washer	6	65001-
40		707-88-50780	Plate	1	65001-
41		707-88-50770	Plate	1	65001-
42		01010-81230	Bolt	2	65001-
43		01643-31232	Washer	2	65001-

Printed By : Dwi Iswanto (airafather6107170)

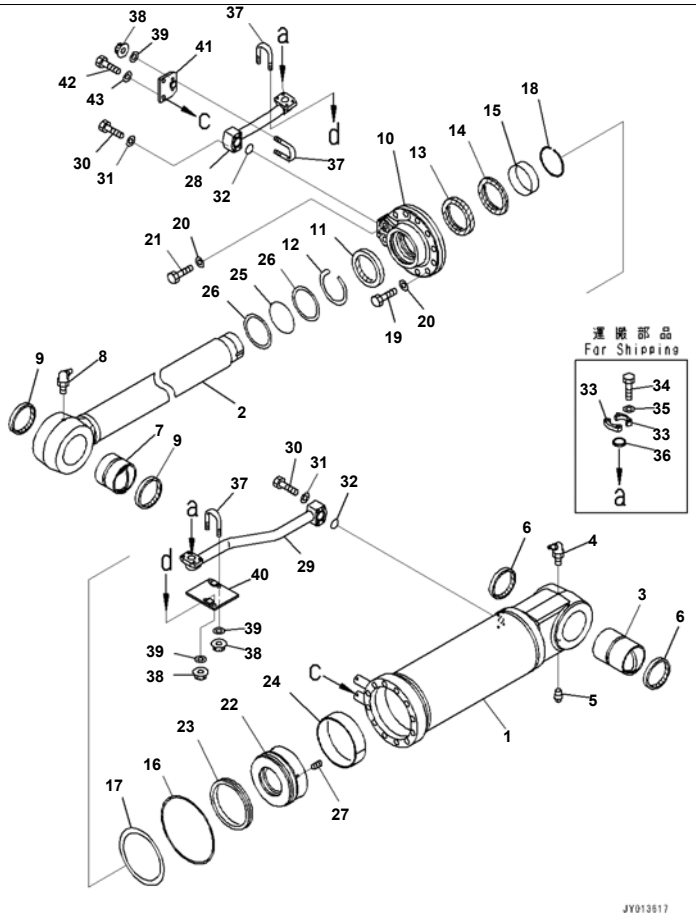

Index	Code	Part Number	Description	Qty	Serial No.
		707-01-0AY30	Cylinder Assembly	1	65001-
1		707-13-20650	· Cylinder	1	65001-
2		707-58-11100	· Rod	1	65001-
3		707-76-10120	· Bushing	1	65001-
4		07020-00675	· Fitting, Grease	1	65001-
5		07042-80108	· Plug	1	65001-
6		07145-00100	· Seal, Dust, (Kit : K11)	2	65001-
7		707-76-10110	· Bushing	1	65001-
8		07020-00900	· Fitting, Grease	1	65001-
9		07145-00100	· Seal, Dust, (Kit : K11)	2	65001-
10		707-27-20741	· Head	1	65001-
11		707-56-11740	· Seal, Dust, (Kit : K11)	1	65001-
12		07179-13126	· Ring, Snap	1	65001-
13		707-51-11030	· Packing, Rod, (Kit : K11)	1	65001-
14		707-51-11650	· Ring, Buffer, (Kit : K11)	1	65001-
15		707-52-90851	· Bushing	1	65001-
16		07000-15190	· O-ring, (Kit : K11)	1	65001-
17		07146-05192	· Ring, Back-up, (Kit : K11)	1	65001-
18		707-75-11040	· Ring, Snap	1	65001-
19		01010-82075	· Bolt	10	65001-
20		01643-32060	· Washer	12	65001-
21		01011-82000	· Bolt	2	65001-
22		707-36-20600	· Piston	1	65001-
23		707-44-20150	· Ring, Piston, (Kit : K11)	1	65001-
24		07155-02045	· Ring, Wear, (Kit : K11)	1	65001-
25		07000-B5110	· O-ring, (Kit : K11)	1	65001-
26		07001-05110	· Ring, Back-up, (Kit : K11)	2	65001-
27		01310-01225	· Screw	1	65001-
28		707-86-00521	Tube	1	65001-
29		707-86-00510	Tube	1	65001-

Printed By : Dwi Iswanto (airafather6107170)

Index	Code	Part Number	Description	Qty	Serial No.
30		07372-21060	Bolt	8	65001-
31		01643-51032	Washer	8	65001-
32		07000-13035	O-ring, (Kit : K11)	2	65001-
33		07371-31049	Flange, Split	4	65001-
34		07372-21035	Bolt	8	65001-
35		01643-51032	Washer	8	65001-
36		707-88-33040	Cap	2	65001-
37		07283-33450	Clip	3	65001-
38		01597-01009	Nut	6	65001-
39		01643-31032	Washer	6	65001-
40		707-88-50790	Plate	1	65001-
41		707-88-50770	Plate	1	65001-
42		01010-81230	Bolt	2	65001-
43		01643-31232	Washer	2	65001-

Printed By : Dwi Iswanto (airafather6107170)

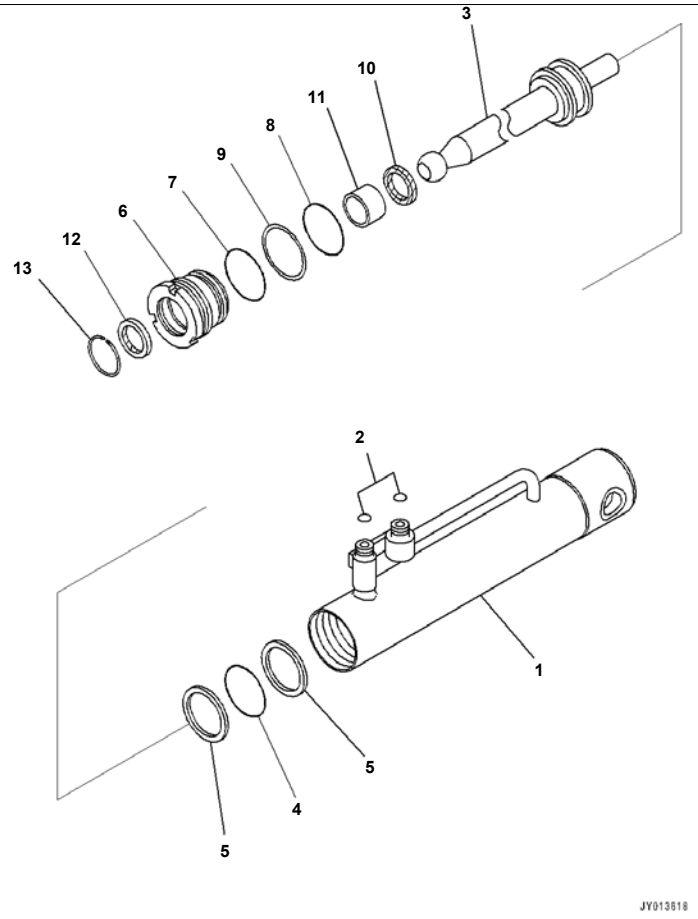

D375A-6R S/N 65001-UP
Ripper Group, With Variable Digging Angle Giant Ripper, Short Protector, Pusher Block, Inner Parts, Pin Puller Cylinder (#65001-

Index	Code	Part Number	Description	Qty	Serial No.
		707-04-07200	Cylinder Group	1	65001-
		707-04-X0070	Cylinder Group	1	65001-
1		707-16-60060	· Cylinder	1	65001-
2		02896-11009	· O-ring, (Kit : K09)	2	65001-
3		198-63-49220	· Rod, Piston	1	65001-
4		707-34-10600	· O-ring, (Kit : K09)	1	65001-
5		707-35-99600	· Ring, Back-up, (Kit : K09)	2	65001-
6		707-29-60930	· Head, Cylinder	1	65001-
7		07000-12060	· O-ring, (Kit : K09)	1	65001-
8		07000-12055	· O-ring, (Kit : K09)	1	65001-
9		07001-02055	· Ring, Back-up, (Kit : K09)	1	65001-
10		707-51-30210	· Packing, Rod, (Kit : K09)	1	65001-
11		707-52-15050	· Bushing	1	65001-
12		707-56-30510	· Seal, Dust, (Kit : K09)	1	65001-
13		07179-00049	· Ring, Snap	1	65001-

Printed By : Dwi Iswanto (airafather6107170)

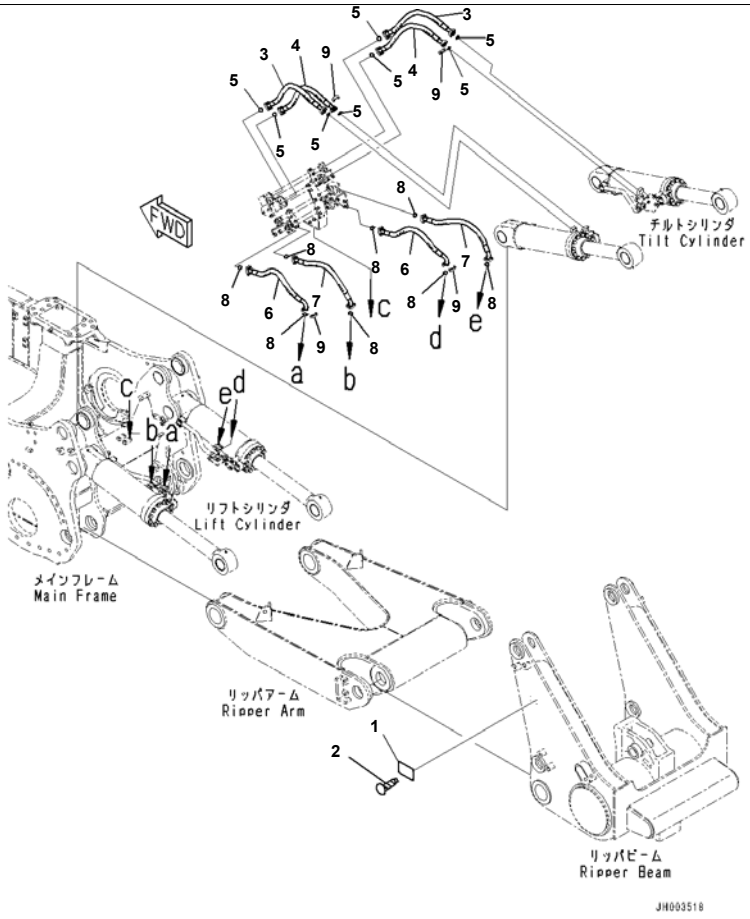

Reference:T2400-015007 Page:T020007

D375A-6R S/N 65001-UP

Ripper Group, With Variable Digging Angle Giant Ripper, Short Protector, Pusher Block, Ripper Piping (#65001-)

Index	Code	Part Number	Description	Qty	Serial No.
1	C2	09601-50000	Plate, Name (Limited Supply), EU Regulation	1	65001-
	C2	09601-60000	Plate, Name (Limited Supply)	1	65001-
2		04418-13060	Screw	4	65001-
3		07099-010A9	Hose, Flange Type	2	65001-
4		07098-010A9	Hose, Flange Type	2	65001-
5		07000-13032	O-ring	8	65001-
6		07098-010A8	Hose, Flange Type	2	65001-
7		07097-01009	Hose, Flange Type	2	65001-
8		07000-13032	O-ring	8	65001-
9		(07371-31049)	Flange, Split		

Printed By : Dwi Iswanto (airafather6107170)

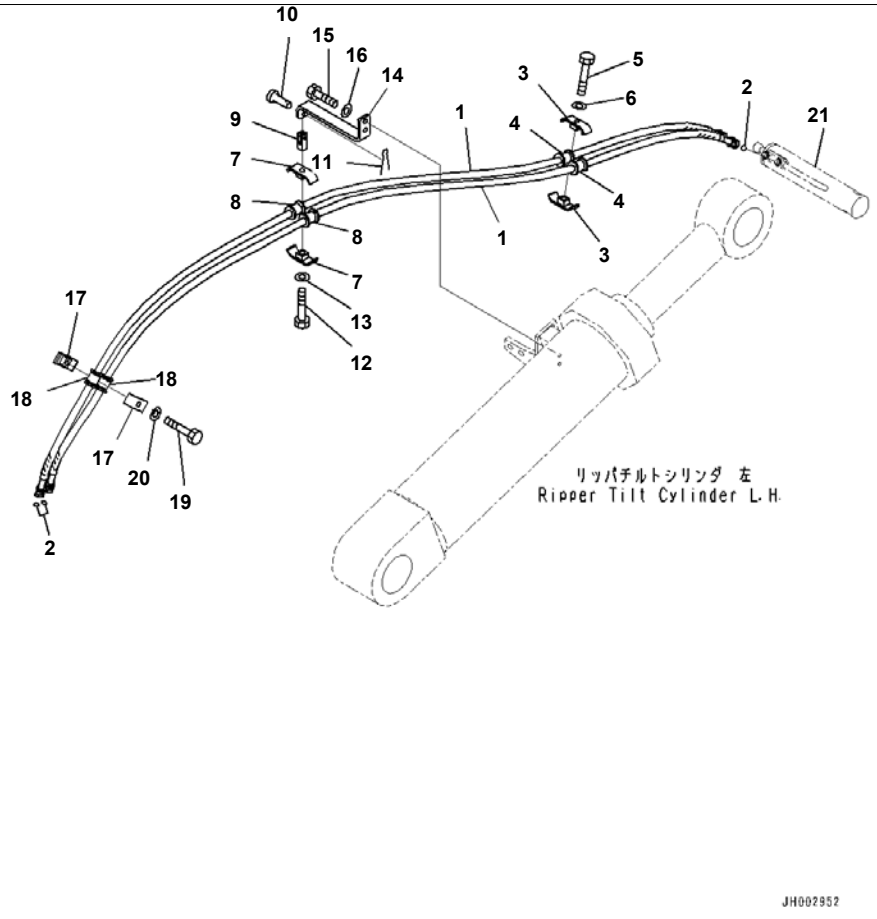

Index	Code	Part Number	Description	Qty	Serial No.
1		02760-00332	Hose, Face Seal Type	2	65001-
2		02896-21009	O-ring	4	65001-
3		07094-30315	Clamp	2	65001-
4		07095-00314	Cushion	2	65001-
5		01010-81065	Bolt	1	65001-
6		01643-31032	Washer	1	65001-
7		07094-30315	Clamp	2	65001-
8		07095-00314	Cushion	2	65001-
9		144-947-2850	Yoke	1	65001-
10		04205-11028	Pin	1	65001-
11		04050-13015	Pin	1	65001-
12		01010-81065	Bolt	1	65001-
13		01643-31032	Washer	1	65001-
14		195-78-72571	Plate	1	65001-
15		01010-81240	Bolt	2	65001-
16		01643-31232	Washer	2	65001-
17		07094-30315	Clamp	2	65001-
18		07095-00314	Cushion	2	65001-
19		01010-81065	Bolt	1	65001-
20		01643-31032	Washer	1	65001-
21		(707-04-X0070)	Cylinder Group		

Printed By : Dwi Iswanto (airafather6107170)

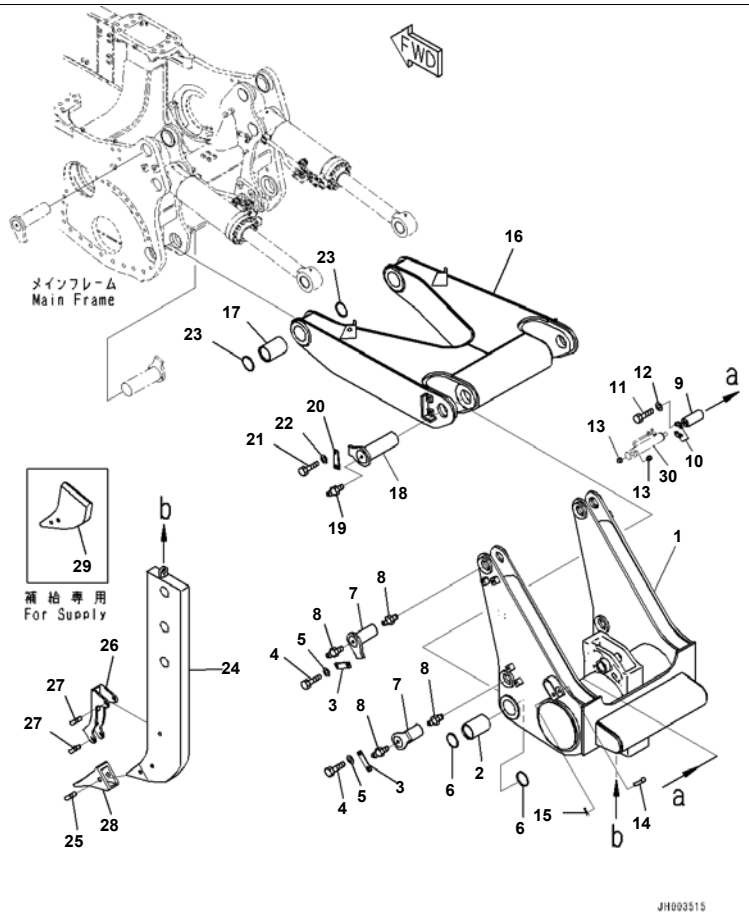

D375A-6R S/N 65001-UP
Ripper Group, Variable Digging Angle Giant Ripper, Reinforced Type, Beam and Arm (#65001-)

Index	Code	Part Number	Description	Qty	Serial No.
1		195-79-51131	Beam	1	65001-
2		195-78-71220	Bushing	2	65001-
3		195-78-21171	Plate	4	65001-
4		01010-62040	Bolt	8	65001-
5		01643-32060	Washer	8	65001-
6		195-78-41320	Seal, Dust	4	65001-
7		195-78-73180	Pin	4	65001-
8		07020-00000	Fitting, Grease	8	65001-
9		17M-79-11120	Pin	1	65001-
10		175-79-61160	Plate	2	65001-
11		01010-81030	Bolt	4	65001-
12		01643-51032	Washer	4	65001-
13		195-79-52110	Collar	2	65001-
14		195-79-52130	Pin	1	65001-
15		04050-16040	Pin, Cotter	1	65001-
16		195-78-71161	Arm	1	65001-
17		195-78-71220	Bushing	2	65001-
18		195-78-71210	Pin	2	65001-
19		07020-00000	Fitting, Grease	2	65001-
20		195-78-21171	Plate	2	65001-
21		01010-62040	Bolt	4	65001-
22		01643-32060	Washer	4	65001-
23		195-78-41320	Seal, Dust	4	65001-
24		195-79-51310	Shank	1	65001-
25		198-78-21410	Pin Assembly	1	65001-
26		198-78-21330	Protector	1	65001-
27		198-78-21410	Pin Assembly	2	65001-
28		198-78-21340	Point	1	65001-
29		195-78-71380	Shank, For Supply	1	65001-
30		(707-04-X0070)	Cylinder Group		

Printed By : Dwi Iswanto (airafather6107170)

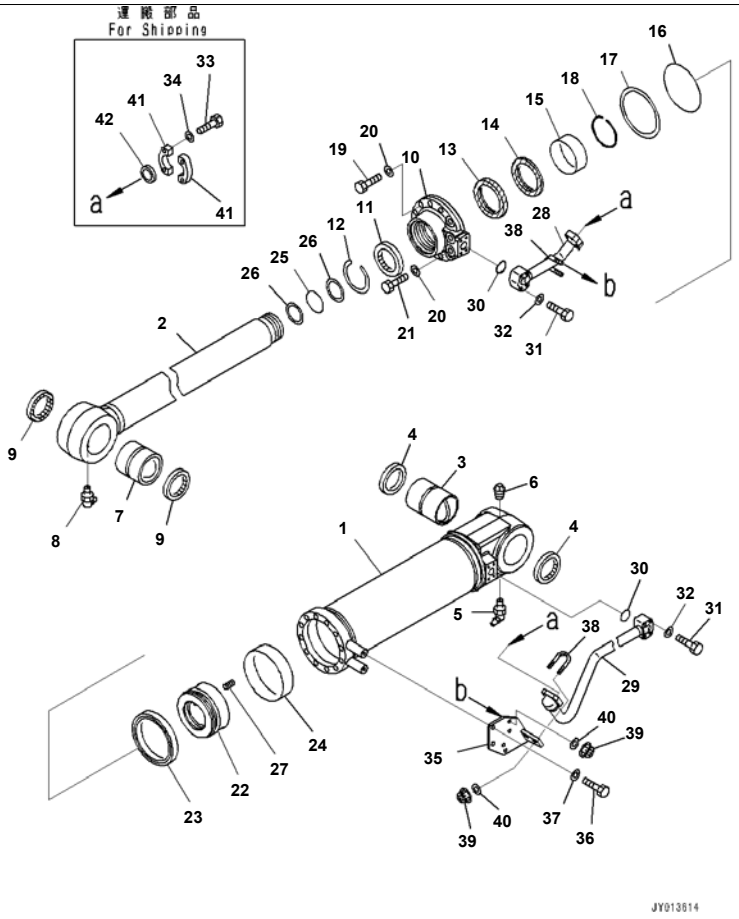

Reference:T2400-008002 Page:T021002

D375A-6R S/N 65001-UP

Ripper Group, Variable Digging Angle Giant Ripper, Reinforced Type, Inner Parts, Ripper Tilt Cylinder, LHS (#65001-)

Index	Code	Part Number	Description	Qty	Serial No.
		707-01-0AY60	Cylinder Assembly	1	65001-
1		707-13-18390	Cylinder	1	65001-
2		707-58-11200	Rod	1	65001-
3		707-76-10120	Bushing	1	65001-
4		07145-00100	Seal, Dust, (Kit : K10)	2	65001-
5		07020-00675	Fitting, Grease	1	65001-
6		07042-00108	Plug, Taper	1	65001-
7		707-76-10110	Bushing	1	65001-
8		07020-00900	Fitting, Grease	1	65001-
9		07145-00100	Seal, Dust	2	65001-
10		707-27-18A50	Head	1	65001-
11		707-56-11740	Seal, Dust, (Kit : K10)	1	65001-
12		07179-13126	Ring, Snap	1	65001-
13		707-51-11030	Packing, Rod, (Kit : K10)	1	65001-
14		707-51-11650	Ring, Buffer, (Kit : K10)	1	65001-
15		707-52-90871	Bushing	1	65001-
16		07000-15170	O-ring, (Kit : K10)	1	65001-
17		07146-05172	Ring, Back-up, (Kit : K10)	1	65001-
18		707-75-11040	Ring, Snap	1	65001-
19		01010-81865	Bolt	10	65001-
20		01643-31845	Washer	12	65001-
21		01010-81890	Bolt	2	65001-
22		707-36-18440	Piston	1	65001-
23		707-44-18150	Ring, Piston, (Kit : K10)	1	65001-
24		07155-01845	Ring, Wear, (Kit : K10)	1	65001-
25		07000-B5110	O-ring, (Kit : K10)	1	65001-
26		07001-05110	Ring, Back-up, (Kit : K10)	2	65001-
27		01310-01225	Screw	1	65001-
28		707-86-13500	Tube	1	65001-
29		707-86-13601	Tube	1	65001-
30		07000-13035	O-ring, (Kit : K10)	2	65001-

Printed By : Dwi Iswanto (airafather6107170)

Ripper Group, Variable Digging Angle Giant Ripper, Reinforced Type, Inner Parts, Ripper Tilt Cylinder, LHS (#65001-)

Index	Code	Part Number	Description	Qty	Serial No.
31		07372-21060	Bolt	8	65001-
32		01643-51032	Washer	8	65001-
33		07372-21035	Bolt	8	65001-
34		01643-51032	Washer	8	65001-
35		707-88-50801	Bracket	1	65001-
36		01010-81230	Bolt	2	65001-
37		01643-31232	Washer	2	65001-
38		07283-33450	Clip	2	65001-
39		01597-01009	Nut	4	65001-
40		01643-31032	Washer	4	65001-
41		07371-31049	Flange, Split	4	65001-
42		707-88-33040	Cap	2	65001-

Printed By : Dwi Iswanto (airafather6107170)

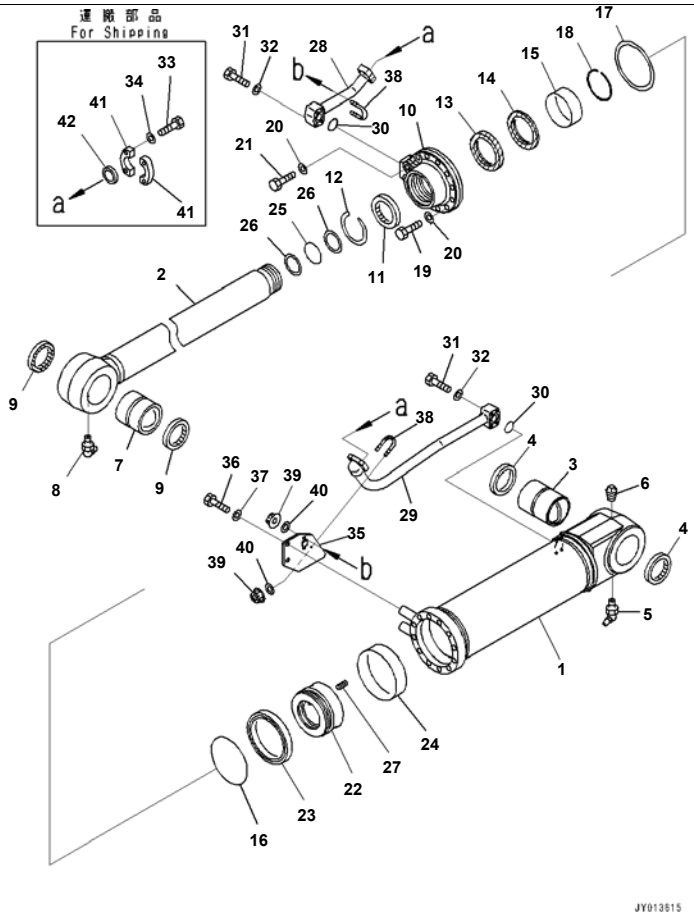

Reference:T2400-008003 Page:T021003

D375A-6R S/N 65001-UP

Ripper Group, Variable Digging Angle Giant Ripper, Reinforced Type, Inner Parts, Ripper Tilt Cylinder, RHS (#65001-)

Index	Code	Part Number	Description	Qty	Serial No.
		707-01-0AY70	Cylinder Assembly	1	65001-
1		707-13-18390	Cylinder	1	65001-
2		707-58-11200	Rod	1	65001-
3		707-76-10120	Bushing	1	65001-
4		07145-00100	Seal, Dust, (Kit : K10)	2	65001-
5		07020-00675	Fitting, Grease	1	65001-
6		07042-00108	Plug, Taper	1	65001-
7		707-76-10110	Bushing	1	65001-
8		07020-00900	Fitting, Grease	1	65001-
9		07145-00100	Seal, Dust, (Kit : K10)	2	65001-
10		707-27-18A50	Head	1	65001-
11		707-56-11740	Seal, Dust, (Kit : K10)	1	65001-
12		07179-13126	Ring, Snap	1	65001-
13		707-51-11030	Packing, Rod, (Kit : K10)	1	65001-
14		707-51-11650	Ring, Buffer, (Kit : K10)	1	65001-
15		707-52-90871	Bushing	1	65001-
16		07000-15170	O-ring, (Kit : K10)	1	65001-
17		07146-05172	Ring, Back-up, (Kit : K10)	1	65001-
18		707-75-11040	Ring, Snap	1	65001-
19		01010-81865	Bolt	10	65001-
20		01643-31845	Washer	12	65001-
21		01010-81890	Bolt	2	65001-
22		707-36-18440	Piston	1	65001-
23		707-44-18150	Ring, Piston, (Kit : K10)	1	65001-
24		07155-01845	Ring, Wear, (Kit : K10)	1	65001-
25		07000-B5110	O-ring, (Kit : K10)	1	65001-
26		07001-05110	Ring, Back-up, (Kit : K10)	2	65001-
27		01310-01225	Screw	1	65001-
28		707-86-13700	Tube	1	65001-
29		707-86-13801	Tube	1	65001-
30		07000-13035	O-ring, (Kit : K10)	2	65001-

Printed By : Dwi Iswanto (airafather6107170)

Ripper Group, Variable Digging Angle Giant Ripper, Reinforced Type, Inner Parts, Ripper Tilt Cylinder, RHS (#65001-)

Index	Code	Part Number	Description	Qty	Serial No.
31		07372-21060	Bolt	8	65001-
32		01643-51032	Washer	8	65001-
33		07372-21035	Bolt	8	65001-
34		01643-51032	Washer	8	65001-
35		707-88-50811	Bracket	1	65001-
36		01010-81230	Bolt	2	65001-
37		01643-31232	Washer	2	65001-
38		07283-33450	Clip	2	65001-
39		01597-01009	Nut	4	65001-
40		01643-31032	Washer	4	65001-
41		07371-31049	Flange, Split	4	65001-
42		707-88-33040	Cap	2	65001-

Printed By : Dwi Iswanto (airafather6107170)

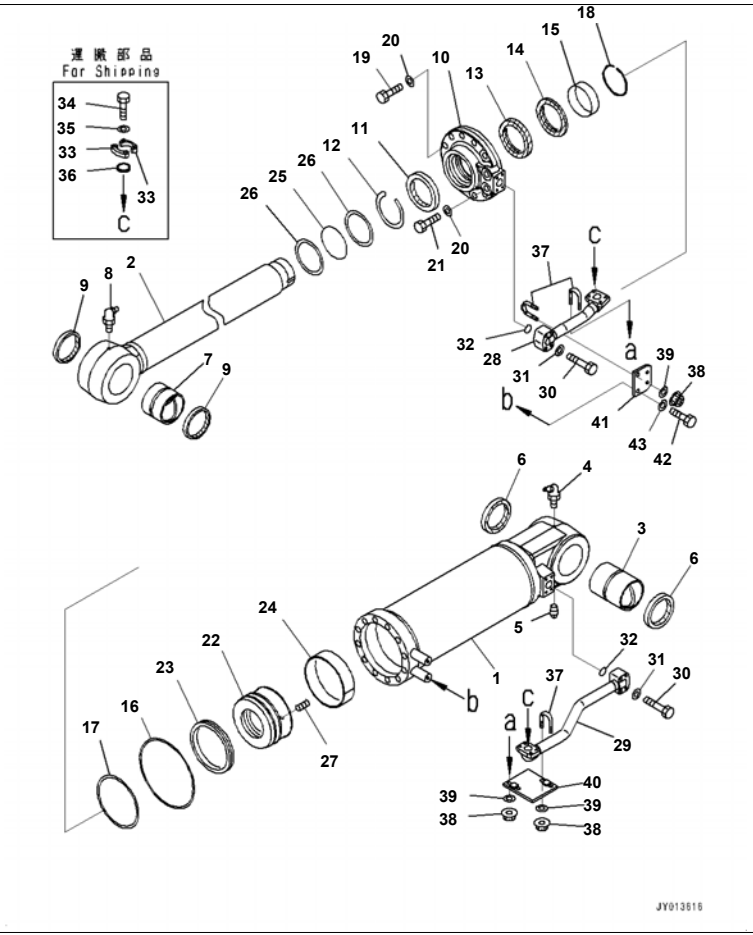

D375A-6R S/N 65001-UP

Ripper Group, Variable Digging Angle Giant Ripper, Reinforced Type, Inner Parts, Ripper Lift Cylinder, LHS (#65001-)

Index	Code	Part Number	Description	Qty	Serial No.
		707-01-0AY20	Cylinder Assembly	1	65001-
1		707-13-20650	· Cylinder	1	65001-
2		707-58-11100	· Rod	1	65001-
3		707-76-10120	· Bushing	1	65001-
4		07020-00675	· Fitting, Grease	1	65001-
5		07042-80108	· Plug	1	65001-
6		07145-00100	· Seal, Dust, (Kit : K11)	2	65001-
7		707-76-10110	· Bushing	1	65001-
8		07020-00900	· Fitting, Grease	1	65001-
9		07145-00100	· Seal, Dust, (Kit : K11)	2	65001-
10		707-27-20741	· Head	1	65001-
11		707-56-11740	· Seal, Dust, (Kit : K11)	1	65001-
12		07179-13126	· Ring, Snap	1	65001-
13		707-51-11030	· Packing, Rod, (Kit : K11)	1	65001-
14		707-51-11650	· Ring, Buffer, (Kit : K11)	1	65001-
15		707-52-90851	· Bushing	1	65001-
16		07000-15190	· O-ring, (Kit : K11)	1	65001-
17		07146-05192	· Ring, Back-up, (Kit : K11)	1	65001-
18		707-75-11040	· Ring, Snap	1	65001-
19		01010-82075	· Bolt	10	65001-
20		01643-32060	· Washer	12	65001-
21		01011-82000	· Bolt	2	65001-
22		707-36-20600	· Piston	1	65001-
23		707-44-20150	· Ring, Piston, (Kit : K11)	1	65001-
24		07155-02045	· Ring, Wear, (Kit : K11)	1	65001-
25		07000-B5110	· O-ring, (Kit : K11)	1	65001-
26		07001-05110	· Ring, Back-up, (Kit : K11)	2	65001-
27		01310-01225	· Screw	1	65001-
28		707-86-00501	Spiral Tube	1	65001-
29		707-86-00490	Tube	1	65001-
30		07372-21060	Bolt	8	65001-

Printed By : Dwi Iswanto (airafather6107170)

Ripper Group, Variable Digging Angle Giant Ripper, Reinforced Type, Inner Parts, Ripper Lift Cylinder, LHS (#65001-)

Index	Code	Part Number	Description	Qty	Serial No.
31		01643-51032	Washer	8	65001-
32		07000-13035	O-ring, (Kit : K11)	2	65001-
33		07371-31049	Flange, Split	4	65001-
34		07372-21035	Bolt	8	65001-
35		01643-51032	Washer	8	65001-
36		707-88-33040	Cap	2	65001-
37		07283-33450	Clip	3	65001-
38		01597-01009	Nut	6	65001-
39		01643-31032	Washer	6	65001-
40		707-88-50780	Plate	1	65001-
41		707-88-50770	Plate	1	65001-
42		01010-81230	Bolt	2	65001-
43		01643-31232	Washer	2	65001-

Printed By : Dwi Iswanto (airafather6107170)

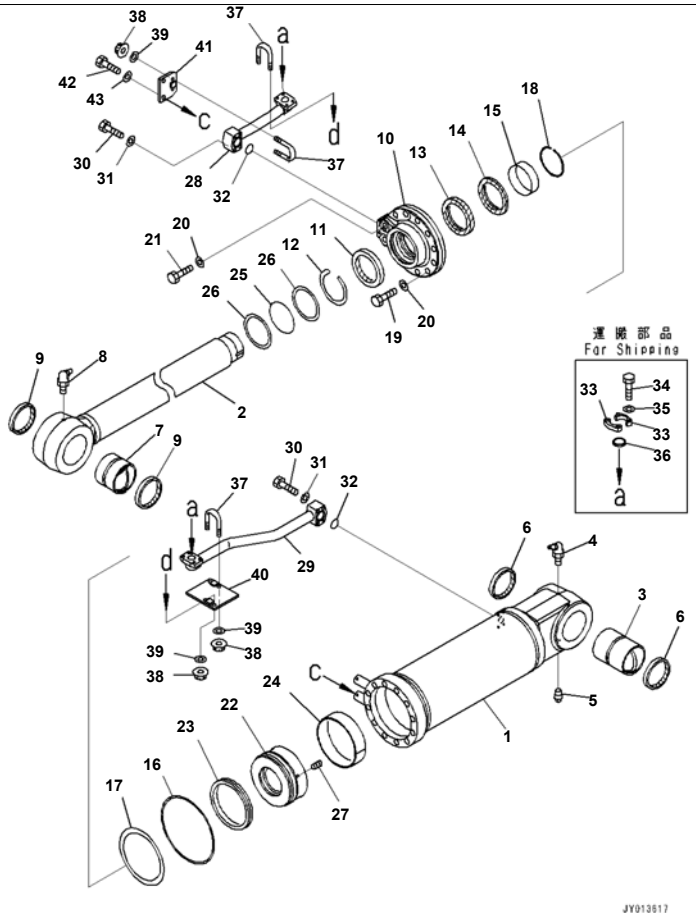

Reference:T2400-008005 Page:T021005

D375A-6R S/N 65001-UP

Ripper Group, Variable Digging Angle Giant Ripper, Reinforced Type, Inner Parts, Ripper Lift Cylinder, RHS (#65001-)

Index	Code	Part Number	Description	Qty	Serial No.
		707-01-0AY30	Cylinder Assembly	1	65001-
1		707-13-20650	· Cylinder	1	65001-
2		707-58-11100	· Rod	1	65001-
3		707-76-10120	· Bushing	1	65001-
4		07020-00675	· Fitting, Grease	1	65001-
5		07042-80108	· Plug	1	65001-
6		07145-00100	· Seal, Dust, (Kit : K11)	2	65001-
7		707-76-10110	· Bushing	1	65001-
8		07020-00900	· Fitting, Grease	1	65001-
9		07145-00100	· Seal, Dust, (Kit : K11)	2	65001-
10		707-27-20741	· Head	1	65001-
11		707-56-11740	· Seal, Dust, (Kit : K11)	1	65001-
12		07179-13126	· Ring, Snap	1	65001-
13		707-51-11030	· Packing, Rod, (Kit : K11)	1	65001-
14		707-51-11650	· Ring, Buffer, (Kit : K11)	1	65001-
15		707-52-90851	· Bushing	1	65001-
16		07000-15190	· O-ring, (Kit : K11)	1	65001-
17		07146-05192	· Ring, Back-up, (Kit : K11)	1	65001-
18		707-75-11040	· Ring, Snap	1	65001-
19		01010-82075	· Bolt	10	65001-
20		01643-32060	· Washer	12	65001-
21		01011-82000	· Bolt	2	65001-
22		707-36-20600	· Piston	1	65001-
23		707-44-20150	· Ring, Piston, (Kit : K11)	1	65001-
24		07155-02045	· Ring, Wear, (Kit : K11)	1	65001-
25		07000-B5110	· O-ring, (Kit : K11)	1	65001-
26		07001-05110	· Ring, Back-up, (Kit : K11)	2	65001-
27		01310-01225	· Screw	1	65001-
28		707-86-00521	Tube	1	65001-
29		707-86-00510	Tube	1	65001-
30		07372-21060	Bolt	8	65001-

Reference:T2400-008005 Page:T021005

Printed By : Dwi Iswanto (airafather6107170)

Ripper Group, Variable Digging Angle Giant Ripper, Reinforced Type, Inner Parts, Ripper Lift Cylinder, RHS (#65001-)

Index	Code	Part Number	Description	Qty	Serial No.
31		01643-51032	Washer	8	65001-
32		07000-13035	O-ring, (Kit : K11)	2	65001-
33		07371-31049	Flange, Split	4	65001-
34		07372-21035	Bolt	8	65001-
35		01643-51032	Washer	8	65001-
36		707-88-33040	Cap	2	65001-
37		07283-33450	Clip	3	65001-
38		01597-01009	Nut	6	65001-
39		01643-31032	Washer	6	65001-
40		707-88-50790	Plate	1	65001-
41		707-88-50770	Plate	1	65001-
42		01010-81230	Bolt	2	65001-
43		01643-31232	Washer	2	65001-

Printed By : Dwi Iswanto (airafather6107170)

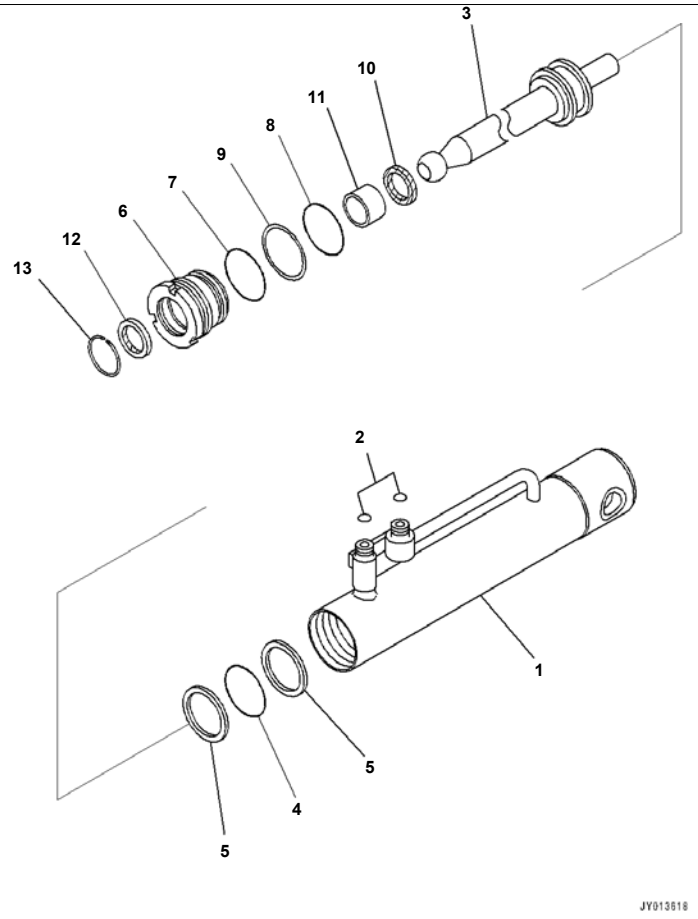

Ripper Group, Variable Digging Angle Giant Ripper, Reinforced Type, Inner Parts, Pin Puller Cylinder (#65001-)

Index	Code	Part Number	Description	Qty	Serial No.
		707-04-07200	Cylinder Group	1	65001-
		707-04-X0070	Cylinder Group	1	65001-
1		707-16-60060	· Cylinder	1	65001-
2		02896-11009	· O-ring, (Kit : K09)	2	65001-
3		198-63-49220	· Rod, Piston	1	65001-
4		707-34-10600	· O-ring, (Kit : K09)	1	65001-
5		707-35-99600	· Ring, Back-up, (Kit : K09)	2	65001-
6		707-29-60930	· Head, Cylinder	1	65001-
7		07000-12060	· O-ring, (Kit : K09)	1	65001-
8		07000-12055	· O-ring, (Kit : K09)	1	65001-
9		07001-02055	· Ring, Back-up, (Kit : K09)	1	65001-
10		707-51-30210	· Packing, Rod, (Kit : K09)	1	65001-
11		707-52-15050	· Bushing	1	65001-
12		707-56-30510	· Seal, Dust, (Kit : K09)	1	65001-
13		07179-00049	· Ring, Snap	1	65001-

Printed By : Dwi Iswanto (airafather6107170)

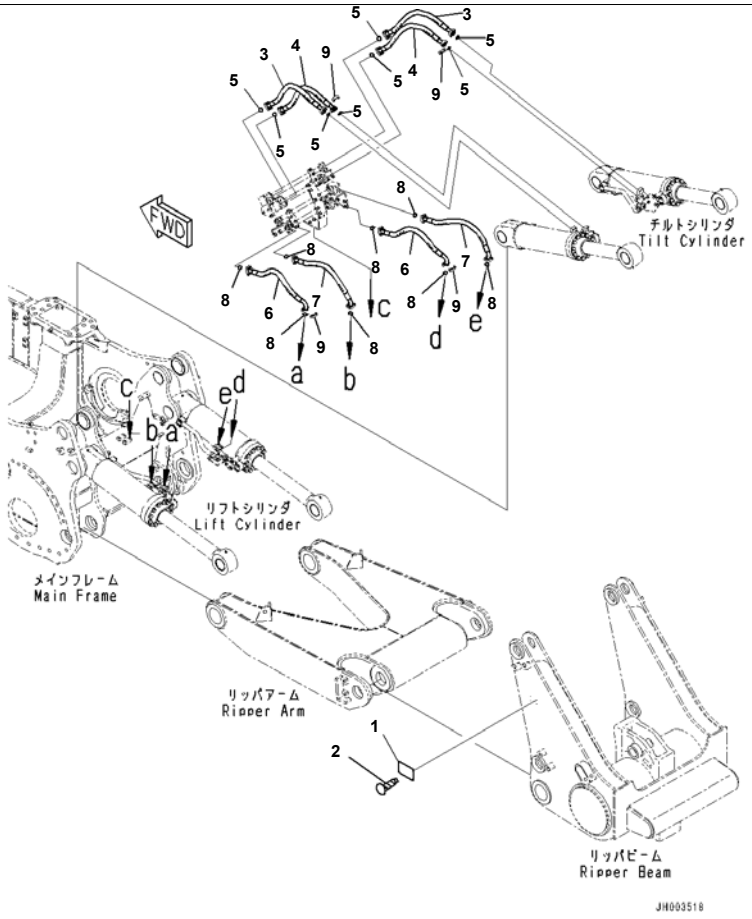

Reference:T2400-008007 Page:T021007

Ripper Group, Variable Digging Angle Giant Ripper, Reinforced Type, Ripper Piping (#65001-)

Index	Code	Part Number	Description	Qty	Serial No.
1	C2	09601-50000	Plate, Name (Limited Supply), EU Regulation	1	65001-
	C2	09601-60000	Plate, Name (Limited Supply)	1	65001-
2		04418-13060	Screw	4	65001-
3		07099-010A9	Hose, Flange Type	2	65001-
4		07098-010A9	Hose, Flange Type	2	65001-
5		07000-13032	O-ring	8	65001-
6		07098-010A8	Hose, Flange Type	2	65001-
7		07097-01009	Hose, Flange Type	2	65001-
8		07000-13032	O-ring	8	65001-
9		(07371-31049)	Flange, Split		

Reference:T2400-008007 Page:T021007

Printed By : Dwi Iswanto (airafather6107170)

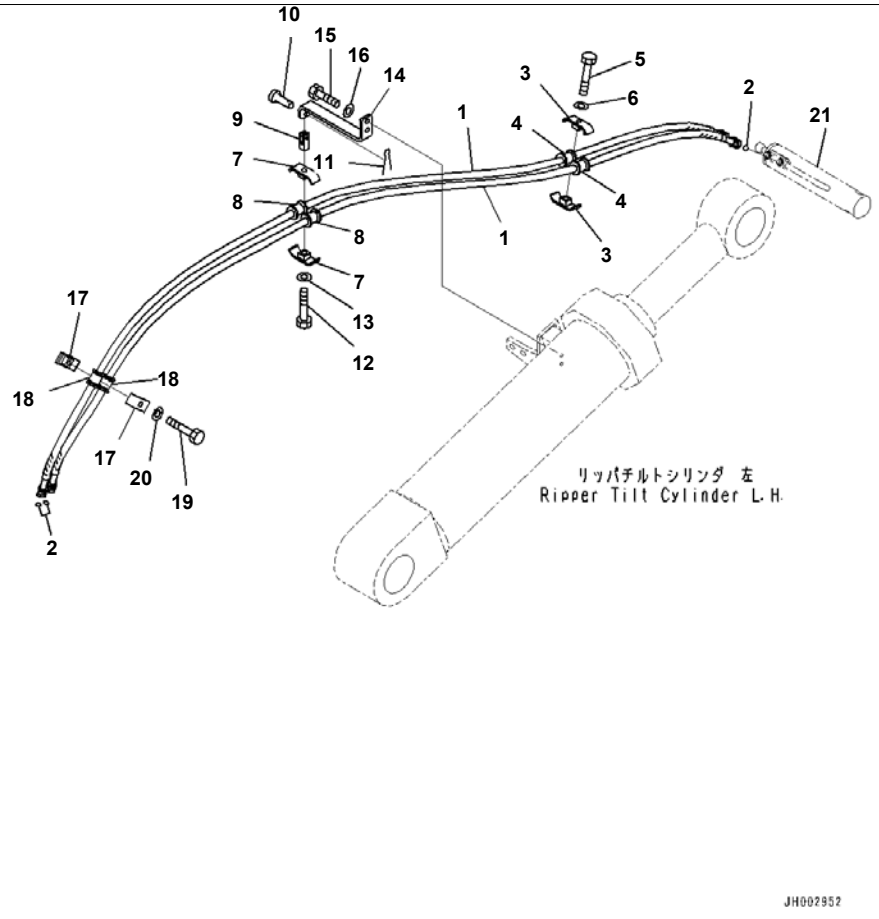

Reference:T2400-008008 Page:T021008

D375A-6R S/N 65001-UP
Ripper Group, Variable Digging Angle Giant Ripper, Reinforced Type, Pin Puller Cylinder Piping (#65001-60003)

Index	Code	Part Number	Description	Qty	Serial No.
1		02760-00332	Hose, Face Seal Type	2	65001-60003
2		02896-21009	O-ring	4	65001-60003
3		07094-30315	Clamp	2	65001-60003
4		07095-00314	Cushion	2	65001-60003
5		01010-81065	Bolt	1	65001-60003
6		01643-31032	Washer	1	65001-60003
7		07094-30315	Clamp	2	65001-60003
8		07095-00314	Cushion	2	65001-60003
9		144-947-2850	Yoke	1	65001-60003
10		04205-11028	Pin	1	65001-60003
11		04050-13015	Pin	1	65001-60003
12		01010-81065	Bolt	1	65001-60003
13		01643-31032	Washer	1	65001-60003
14		195-78-72571	Plate	1	65001-60003
15		01010-81240	Bolt	2	65001-60003
16		01643-31232	Washer	2	65001-60003
17		07094-30315	Clamp	2	65001-60003
18		07095-00314	Cushion	2	65001-60003
19		01010-81065	Bolt	1	65001-60003
20		01643-31032	Washer	1	65001-60003
21		(707-04-X0070)	Cylinder Group		

Printed By : Dwi Iswanto (airafather6107170)

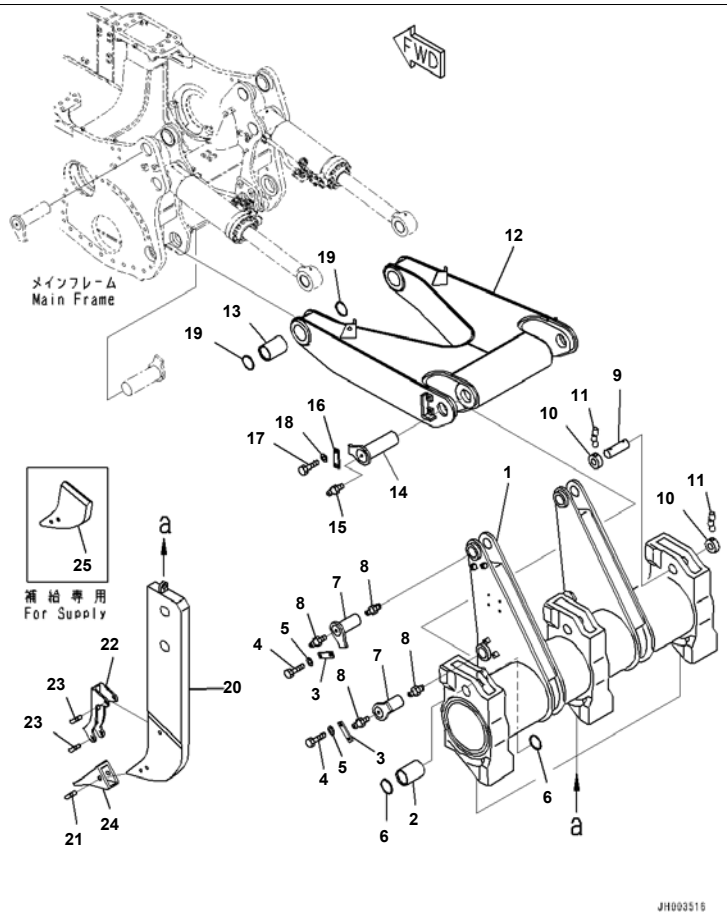

D375A-6R S/N 65001-UP
Ripper Group, Variable Digging Angle Multi Shank Ripper, Beam and Arm (#65001-)

Index	Code	Part Number	Description	Qty	Serial No.
1		195-78-71152	Beam	1	65001-
2		195-78-71220	Bushing	2	65001-
3		195-78-21171	Plate	4	65001-
4		01010-62040	Bolt	8	65001-
5		01643-32060	Washer	8	65001-
6		195-78-41320	Seal, Dust	4	65001-
7		195-78-73180	Pin	4	65001-
8		07020-00000	Fitting, Grease	8	65001-
9		195-78-41370	Pin	3	65001-
10		195-78-41360	Collar	6	65001-
11		09244-02508	Pin	6	65001-
12		195-78-71161	Arm	1	65001-
13		195-78-71220	Bushing	2	65001-
14		195-78-71210	Pin	2	65001-
15		07020-00000	Fitting, Grease	2	65001-
16		195-78-21171	Plate	2	65001-
17		01010-62040	Bolt	4	65001-
18		01643-32060	Washer	4	65001-
19		195-78-41320	Seal, Dust	4	65001-
20		195-78-71310	Shank	3	65001-
21		195-78-71360	Pin	3	65001-
22		195-78-71111	Protector	3	65001-
23		195-78-71360	Pin	6	65001-
24		195-78-71320	Point	3	65001-
25		195-78-71380	Shank, For Supply	1	65001-

Printed By : Dwi Iswanto (airafather6107170)

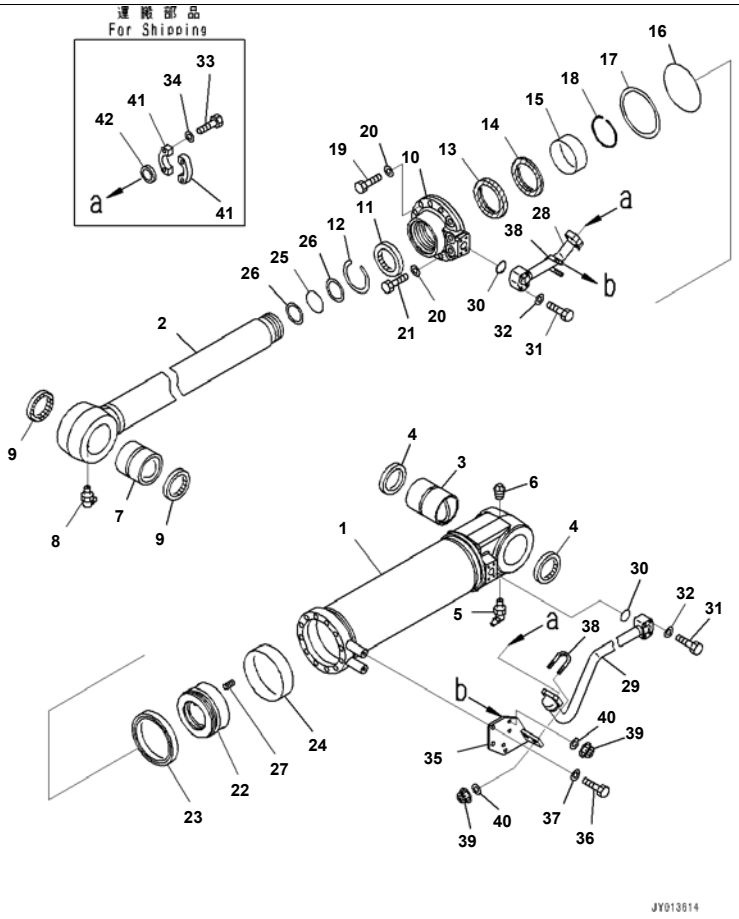

Reference:T2400-009002 Page:T022002

D375A-6R S/N 65001-UP

Ripper Group, Variable Digging Angle Multi Shank Ripper, Inner Parts, Ripper Tilt Cylinder, LHS (#65001-)

Index	Code	Part Number	Description	Qty	Serial No.
		707-01-0AY60	Cylinder Assembly	1	65001-
1		707-13-18390	Cylinder	1	65001-
2		707-58-11200	Rod	1	65001-
3		707-76-10120	Bushing	1	65001-
4		07145-00100	Seal, Dust, (Kit : K10)	2	65001-
5		07020-00675	Fitting, Grease	1	65001-
6		07042-00108	Plug, Taper	1	65001-
7		707-76-10110	Bushing	1	65001-
8		07020-00900	Fitting, Grease	1	65001-
9		07145-00100	Seal, Dust	2	65001-
10		707-27-18A50	Head	1	65001-
11		707-56-11740	Seal, Dust, (Kit : K10)	1	65001-
12		07179-13126	Ring, Snap	1	65001-
13		707-51-11030	Packing, Rod, (Kit : K10)	1	65001-
14		707-51-11650	Ring, Buffer, (Kit : K10)	1	65001-
15		707-52-90871	Bushing	1	65001-
16		07000-15170	O-ring, (Kit : K10)	1	65001-
17		07146-05172	Ring, Back-up, (Kit : K10)	1	65001-
18		707-75-11040	Ring, Snap	1	65001-
19		01010-81865	Bolt	10	65001-
20		01643-31845	Washer	12	65001-
21		01010-81890	Bolt	2	65001-
22		707-36-18440	Piston	1	65001-
23		707-44-18150	Ring, Piston, (Kit : K10)	1	65001-
24		07155-01845	Ring, Wear, (Kit : K10)	1	65001-
25		07000-B5110	O-ring, (Kit : K10)	1	65001-
26		07001-05110	Ring, Back-up, (Kit : K10)	2	65001-
27		01310-01225	Screw	1	65001-
28		707-86-13500	Tube	1	65001-
29		707-86-13601	Tube	1	65001-
30		07000-13035	O-ring, (Kit : K10)	2	65001-

Printed By : Dwi Iswanto (airafather6107170)

Ripper Group, Variable Digging Angle Multi Shank Ripper, Inner Parts, Ripper Tilt Cylinder, LHS (#65001-)

Index	Code	Part Number	Description	Qty	Serial No.
31		07372-21060	Bolt	8	65001-
32		01643-51032	Washer	8	65001-
33		07372-21035	Bolt	8	65001-
34		01643-51032	Washer	8	65001-
35		707-88-50801	Bracket	1	65001-
36		01010-81230	Bolt	2	65001-
37		01643-31232	Washer	2	65001-
38		07283-33450	Clip	2	65001-
39		01597-01009	Nut	4	65001-
40		01643-31032	Washer	4	65001-
41		07371-31049	Flange, Split	4	65001-
42		707-88-33040	Cap	2	65001-

Printed By : Dwi Iswanto (airafather6107170)

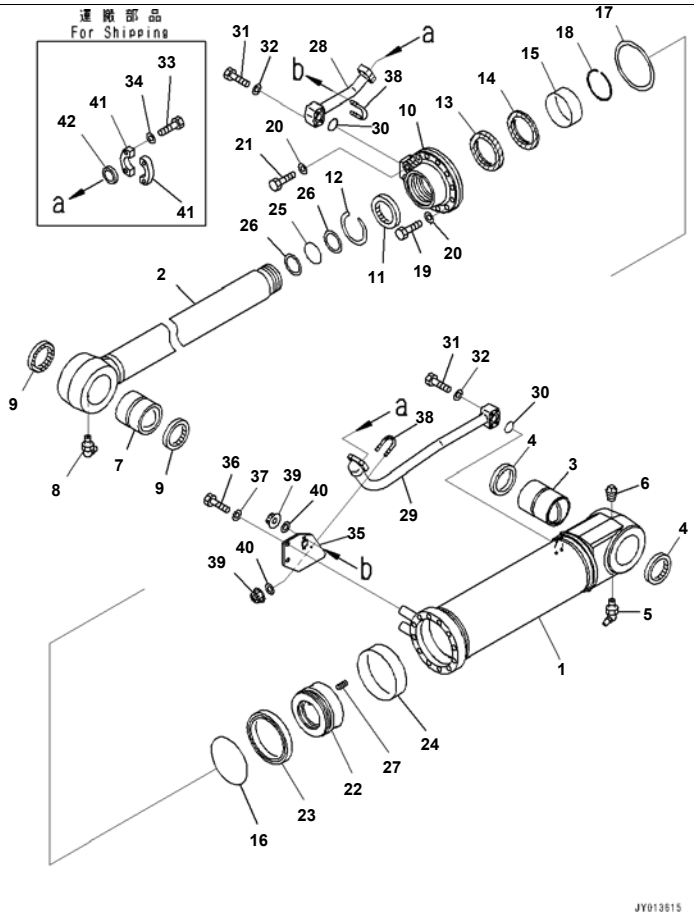

D375A-6R S/N 65001-UP

Ripper Group, Variable Digging Angle Multi Shank Ripper, Inner Parts, Ripper Tilt Cylinder, RHS (#65001-)

Index	Code	Part Number	Description	Qty	Serial No.
		707-01-0AY70	Cylinder Assembly	1	65001-
1		707-13-18390	Cylinder	1	65001-
2		707-58-11200	Rod	1	65001-
3		707-76-10120	Bushing	1	65001-
4		07145-00100	Seal, Dust, (Kit : K10)	2	65001-
5		07020-00675	Fitting, Grease	1	65001-
6		07042-00108	Plug, Taper	1	65001-
7		707-76-10110	Bushing	1	65001-
8		07020-00900	Fitting, Grease	1	65001-
9		07145-00100	Seal, Dust, (Kit : K10)	2	65001-
10		707-27-18A50	Head	1	65001-
11		707-56-11740	Seal, Dust, (Kit : K10)	1	65001-
12		07179-13126	Ring, Snap	1	65001-
13		707-51-11030	Packing, Rod, (Kit : K10)	1	65001-
14		707-51-11650	Ring, Buffer, (Kit : K10)	1	65001-
15		707-52-90871	Bushing	1	65001-
16		07000-15170	O-ring, (Kit : K10)	1	65001-
17		07146-05172	Ring, Back-up, (Kit : K10)	1	65001-
18		707-75-11040	Ring, Snap	1	65001-
19		01010-81865	Bolt	10	65001-
20		01643-31845	Washer	12	65001-
21		01010-81890	Bolt	2	65001-
22		707-36-18440	Piston	1	65001-
23		707-44-18150	Ring, Piston, (Kit : K10)	1	65001-
24		07155-01845	Ring, Wear, (Kit : K10)	1	65001-
25		07000-B5110	O-ring, (Kit : K10)	1	65001-
26		07001-05110	Ring, Back-up, (Kit : K10)	2	65001-
27		01310-01225	Screw	1	65001-
28		707-86-13700	Tube	1	65001-
29		707-86-13801	Tube	1	65001-
30		07000-13035	O-ring, (Kit : K10)	2	65001-

Printed By : Dwi Iswanto (airafather6107170)

Ripper Group, Variable Digging Angle Multi Shank Ripper, Inner Parts, Ripper Tilt Cylinder, RHS (#65001-)

Index	Code	Part Number	Description	Qty	Serial No.
31		07372-21060	Bolt	8	65001-
32		01643-51032	Washer	8	65001-
33		07372-21035	Bolt	8	65001-
34		01643-51032	Washer	8	65001-
35		707-88-50811	Bracket	1	65001-
36		01010-81230	Bolt	2	65001-
37		01643-31232	Washer	2	65001-
38		07283-33450	Clip	2	65001-
39		01597-01009	Nut	4	65001-
40		01643-31032	Washer	4	65001-
41		07371-31049	Flange, Split	4	65001-
42		707-88-33040	Cap	2	65001-

Printed By : Dwi Iswanto (airafather6107170)

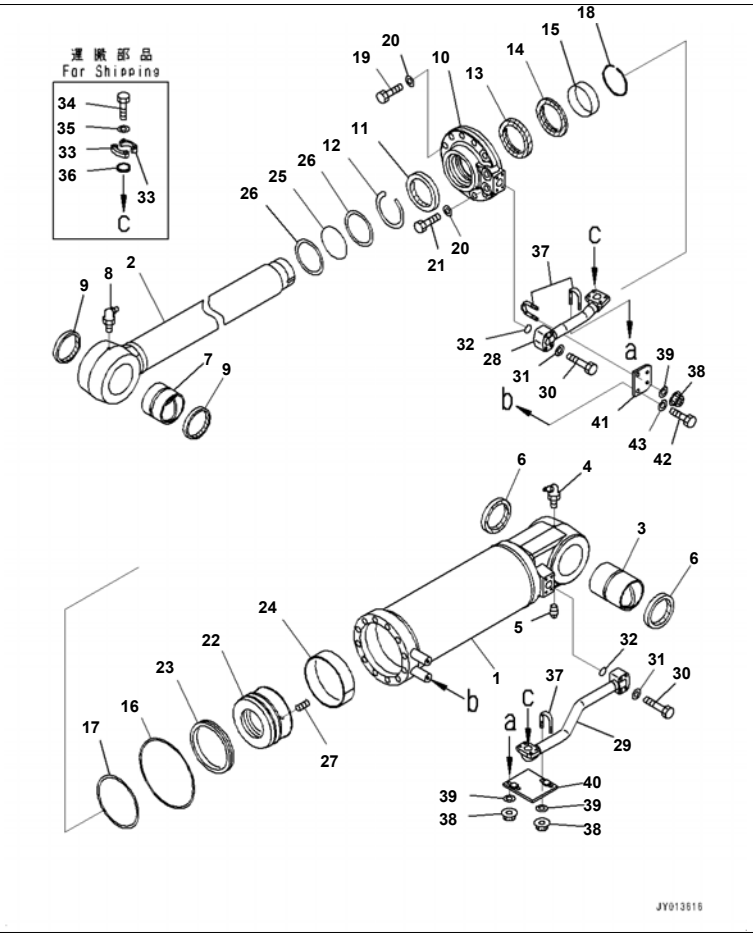

Ripper Group, Variable Digging Angle Multi Shank Ripper, Inner Parts, Ripper Lift Cylinder, LHS (#65001-)

Index	Code	Part Number	Description	Qty	Serial No.
		707-01-0AY20	Cylinder Assembly	1	65001-
1		707-13-20650	· Cylinder	1	65001-
2		707-58-11100	· Rod	1	65001-
3		707-76-10120	· Bushing	1	65001-
4		07020-00675	· Fitting, Grease	1	65001-
5		07042-80108	· Plug	1	65001-
6		07145-00100	· Seal, Dust, (Kit : K11)	2	65001-
7		707-76-10110	· Bushing	1	65001-
8		07020-00900	· Fitting, Grease	1	65001-
9		07145-00100	· Seal, Dust, (Kit : K11)	2	65001-
10		707-27-20741	· Head	1	65001-
11		707-56-11740	· Seal, Dust, (Kit : K11)	1	65001-
12		07179-13126	· Ring, Snap	1	65001-
13		707-51-11030	· Packing, Rod, (Kit : K11)	1	65001-
14		707-51-11650	· Ring, Buffer, (Kit : K11)	1	65001-
15		707-52-90851	· Bushing	1	65001-
16		07000-15190	· O-ring, (Kit : K11)	1	65001-
17		07146-05192	· Ring, Back-up, (Kit : K11)	1	65001-
18		707-75-11040	· Ring, Snap	1	65001-
19		01010-82075	· Bolt	10	65001-
20		01643-32060	· Washer	12	65001-
21		01011-82000	· Bolt	2	65001-
22		707-36-20600	· Piston	1	65001-
23		707-44-20150	· Ring, Piston, (Kit : K11)	1	65001-
24		07155-02045	· Ring, Wear, (Kit : K11)	1	65001-
25		07000-B5110	· O-ring, (Kit : K11)	1	65001-
26		07001-05110	· Ring, Back-up, (Kit : K11)	2	65001-
27		01310-01225	· Screw	1	65001-
28		707-86-00501	Spiral Tube	1	65001-
29		707-86-00490	Tube	1	65001-
30		07372-21060	Bolt	8	65001-

Printed By : Dwi Iswanto (airafather6107170)

Ripper Group, Variable Digging Angle Multi Shank Ripper, Inner Parts, Ripper Lift Cylinder, LHS (#65001-)

Index	Code	Part Number	Description	Qty	Serial No.
31		01643-51032	Washer	8	65001-
32		07000-13035	O-ring, (Kit : K11)	2	65001-
33		07371-31049	Flange, Split	4	65001-
34		07372-21035	Bolt	8	65001-
35		01643-51032	Washer	8	65001-
36		707-88-33040	Cap	2	65001-
37		07283-33450	Clip	3	65001-
38		01597-01009	Nut	6	65001-
39		01643-31032	Washer	6	65001-
40		707-88-50780	Plate	1	65001-
41		707-88-50770	Plate	1	65001-
42		01010-81230	Bolt	2	65001-
43		01643-31232	Washer	2	65001-

Printed By : Dwi Iswanto (airafather6107170)

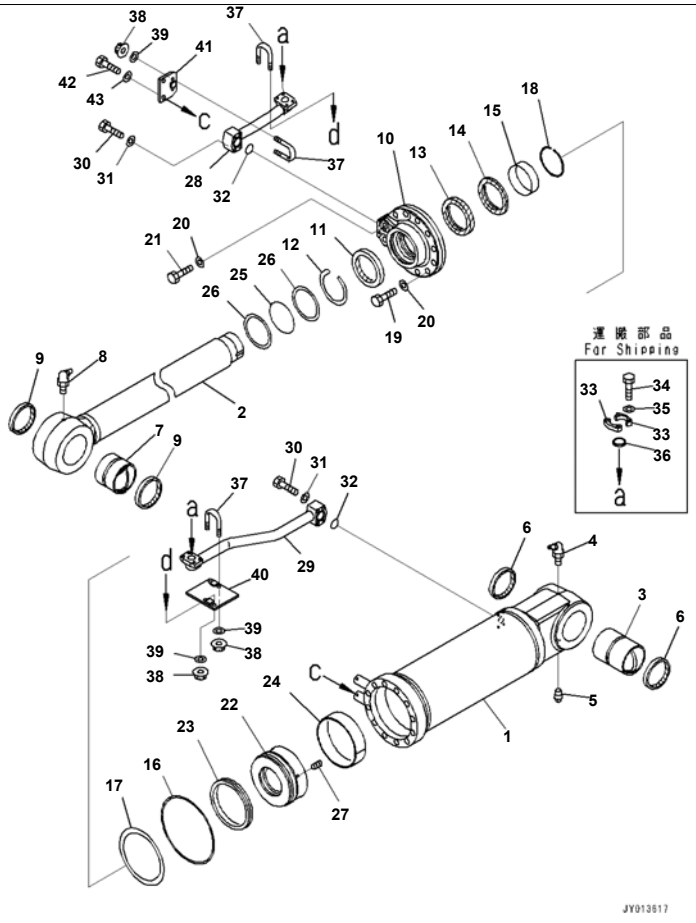

Ripper Group, Variable Digging Angle Multi Shank Ripper, Inner Parts, Ripper Lift Cylinder, RHS (#65001-)

Index	Code	Part Number	Description	Qty	Serial No.
		707-01-0AY30	Cylinder Assembly	1	65001-
1		707-13-20650	· Cylinder	1	65001-
2		707-58-11100	· Rod	1	65001-
3		707-76-10120	· Bushing	1	65001-
4		07020-00675	· Fitting, Grease	1	65001-
5		07042-80108	· Plug	1	65001-
6		07145-00100	· Seal, Dust, (Kit : K11)	2	65001-
7		707-76-10110	· Bushing	1	65001-
8		07020-00900	· Fitting, Grease	1	65001-
9		07145-00100	· Seal, Dust, (Kit : K11)	2	65001-
10		707-27-20741	· Head	1	65001-
11		707-56-11740	· Seal, Dust, (Kit : K11)	1	65001-
12		07179-13126	· Ring, Snap	1	65001-
13		707-51-11030	· Packing, Rod, (Kit : K11)	1	65001-
14		707-51-11650	· Ring, Buffer, (Kit : K11)	1	65001-
15		707-52-90851	· Bushing	1	65001-
16		07000-15190	· O-ring, (Kit : K11)	1	65001-
17		07146-05192	· Ring, Back-up, (Kit : K11)	1	65001-
18		707-75-11040	· Ring, Snap	1	65001-
19		01010-82075	· Bolt	10	65001-
20		01643-32060	· Washer	12	65001-
21		01011-82000	· Bolt	2	65001-
22		707-36-20600	· Piston	1	65001-
23		707-44-20150	· Ring, Piston, (Kit : K11)	1	65001-
24		07155-02045	· Ring, Wear, (Kit : K11)	1	65001-
25		07000-B5110	· O-ring, (Kit : K11)	1	65001-
26		07001-05110	· Ring, Back-up, (Kit : K11)	2	65001-
27		01310-01225	· Screw	1	65001-
28		707-86-00521	Tube	1	65001-
29		707-86-00510	Tube	1	65001-
30		07372-21060	Bolt	8	65001-

Printed By : Dwi Iswanto (airafather6107170)

Ripper Group, Variable Digging Angle Multi Shank Ripper, Inner Parts, Ripper Lift Cylinder, RHS (#65001-)

Index	Code	Part Number	Description	Qty	Serial No.
31		01643-51032	Washer	8	65001-
32		07000-13035	O-ring, (Kit : K11)	2	65001-
33		07371-31049	Flange, Split	4	65001-
34		07372-21035	Bolt	8	65001-
35		01643-51032	Washer	8	65001-
36		707-88-33040	Cap	2	65001-
37		07283-33450	Clip	3	65001-
38		01597-01009	Nut	6	65001-
39		01643-31032	Washer	6	65001-
40		707-88-50790	Plate	1	65001-
41		707-88-50770	Plate	1	65001-
42		01010-81230	Bolt	2	65001-
43		01643-31232	Washer	2	65001-

Printed By : Dwi Iswanto (airafather6107170)

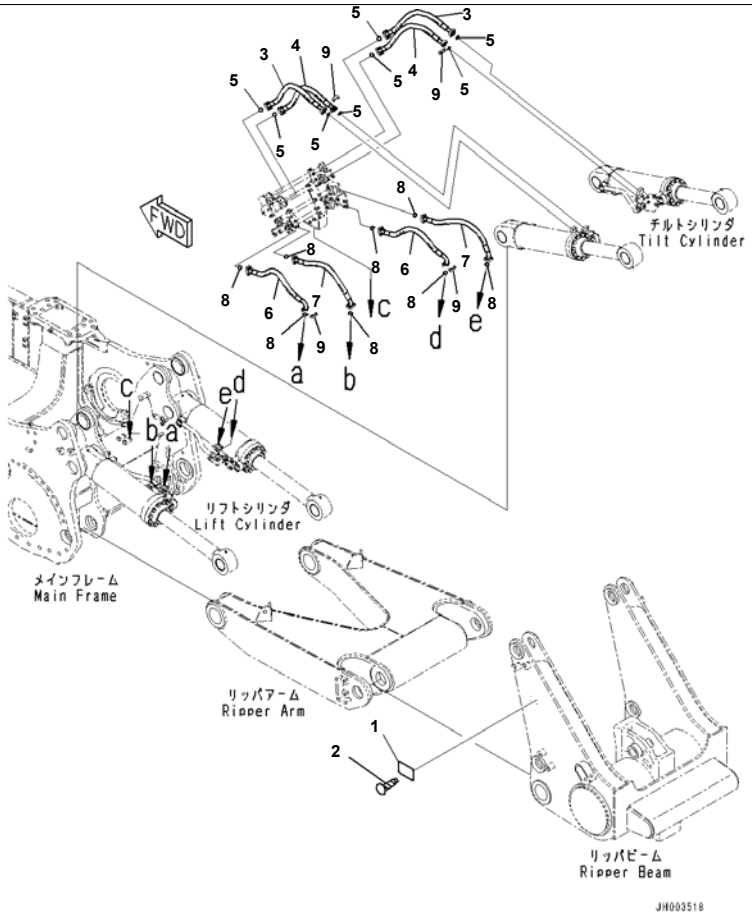

Index	Code	Part Number	Description	Qty	Serial No.
1	C2	09601-50000	Plate, Name (Limited Supply), EU Regulation	1	65001-
	C2	09601-60000	Plate, Name (Limited Supply)	1	65001-
2		04418-13060	Screw	4	65001-
3		07099-010A9	Hose, Flange Type	2	65001-
4		07098-010A9	Hose, Flange Type	2	65001-
5		07000-13032	O-ring	8	65001-
6		07098-010A8	Hose, Flange Type	2	65001-
7		07097-01009	Hose, Flange Type	2	65001-
8		07000-13032	O-ring	8	65001-
9		(07371-31049)	Flange, Split		

Printed By : Dwi Iswanto (airafather6107170)

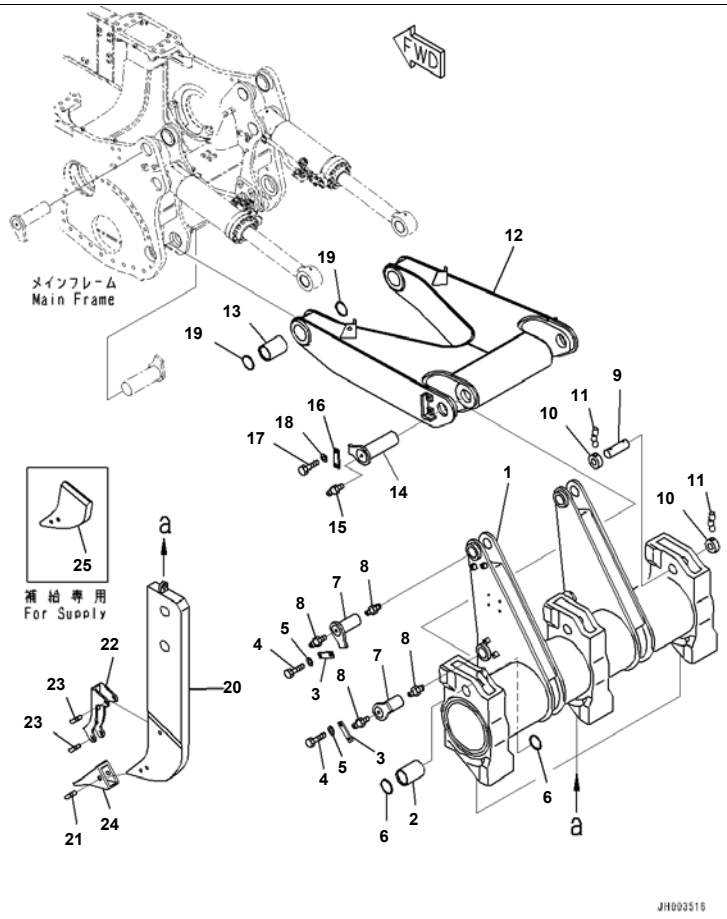

Ripper Group, Variable Digging Angle Multi Shank Ripper, Provision For Japan, Saudi Arabia, Beam and Arm (#65001-)

Index	Code	Part Number	Description	Qty	Serial No.
1		195-78-71152	Beam	1	65001-
2		195-78-71220	Bushing	2	65001-
3		195-78-21171	Plate	4	65001-
4		01010-62040	Bolt	8	65001-
5		01643-32060	Washer	8	65001-
6		195-78-41320	Seal, Dust	4	65001-
7		195-78-73180	Pin	4	65001-
8		07020-00000	Fitting, Grease	8	65001-
9		195-78-41370	Pin	3	65001-
10		195-78-41360	Collar	6	65001-
11		09244-02508	Pin	6	65001-
12		195-78-71161	Arm	1	65001-
13		195-78-71220	Bushing	2	65001-
14		195-78-71210	Pin	2	65001-
15		07020-00000	Fitting, Grease	2	65001-
16		195-78-21171	Plate	2	65001-
17		01010-62040	Bolt	4	65001-
18		01643-32060	Washer	4	65001-
19		195-78-41320	Seal, Dust	4	65001-
20		195-78-71311	Shank	3	65001-
21		195-78-71360	Pin	3	65001-
22		195-78-71111	Protector	3	65001-
23		195-78-71360	Pin	6	65001-
24		195-78-71320	Point	3	65001-
25		195-78-71380	Shank, For Supply	1	65001-

Printed By : Dwi Iswanto (airafather6107170)

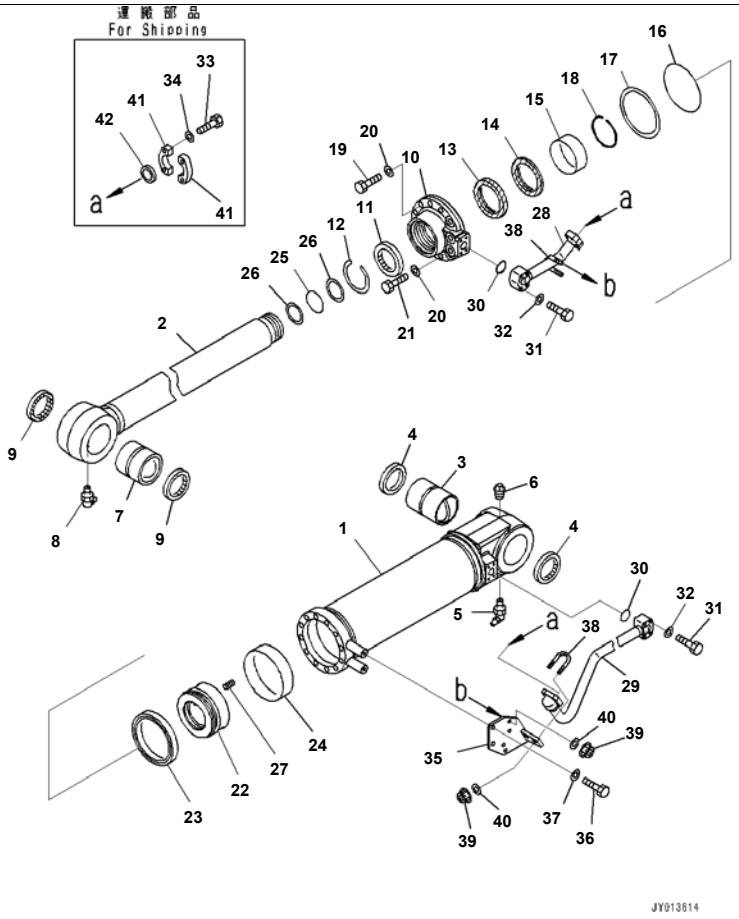

Reference:T2400-010002 Page:T023002

D375A-6R S/N 65001-UP

Ripper Group, Variable Digging Angle Multi Shank Ripper, Provision For Japan, Saudi Arabia, Inner Parts, Ripper Tilt Cylinder, L

Index	Code	Part Number	Description	Qty	Serial No.
		707-01-0AY60	Cylinder Assembly	1	65001-
1		707-13-18390	Cylinder	1	65001-
2		707-58-11200	Rod	1	65001-
3		707-76-10120	Bushing	1	65001-
4		07145-00100	Seal, Dust, (Kit : K10)	2	65001-
5		07020-00675	Fitting, Grease	1	65001-
6		07042-00108	Plug, Taper	1	65001-
7		707-76-10110	Bushing	1	65001-
8		07020-00900	Fitting, Grease	1	65001-
9		07145-00100	Seal, Dust	2	65001-
10		707-27-18A50	Head	1	65001-
11		707-56-11740	Seal, Dust, (Kit : K10)	1	65001-
12		07179-13126	Ring, Snap	1	65001-
13		707-51-11030	Packing, Rod, (Kit : K10)	1	65001-
14		707-51-11650	Ring, Buffer, (Kit : K10)	1	65001-
15		707-52-90871	Bushing	1	65001-
16		07000-15170	O-ring, (Kit : K10)	1	65001-
17		07146-05172	Ring, Back-up, (Kit : K10)	1	65001-
18		707-75-11040	Ring, Snap	1	65001-
19		01010-81865	Bolt	10	65001-
20		01643-31845	Washer	12	65001-
21		01010-81890	Bolt	2	65001-
22		707-36-18440	Piston	1	65001-
23		707-44-18150	Ring, Piston, (Kit : K10)	1	65001-
24		07155-01845	Ring, Wear, (Kit : K10)	1	65001-
25		07000-B5110	O-ring, (Kit : K10)	1	65001-
26		07001-05110	Ring, Back-up, (Kit : K10)	2	65001-
27		01310-01225	Screw	1	65001-
28		707-86-13500	Tube	1	65001-
29		707-86-13601	Tube	1	65001-

Printed By : Dwi Iswanto (airafather6107170)

Ripper Group, Variable Digging Angle Multi Shank Ripper, Provision For Japan, Saudi Arabia, Inner Parts, Ripper Tilt Cylinder, L

Index	Code	Part Number	Description	Qty	Serial No.
30		07000-13035	O-ring, (Kit : K10)	2	65001-
31		07372-21060	Bolt	8	65001-
32		01643-51032	Washer	8	65001-
33		07372-21035	Bolt	8	65001-
34		01643-51032	Washer	8	65001-
35		707-88-50801	Bracket	1	65001-
36		01010-81230	Bolt	2	65001-
37		01643-31232	Washer	2	65001-
38		07283-33450	Clip	2	65001-
39		01597-01009	Nut	4	65001-
40		01643-31032	Washer	4	65001-
41		07371-31049	Flange, Split	4	65001-
42		707-88-33040	Cap	2	65001-

Printed By : Dwi Iswanto (airafather6107170)

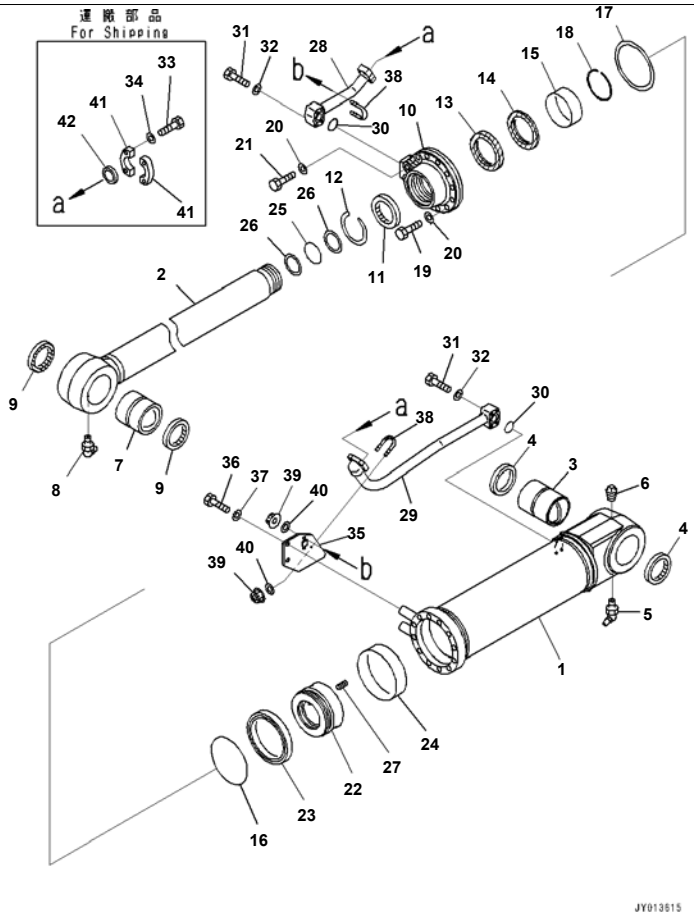

Reference:T2400-010003 Page:T023003

D375A-6R S/N 65001-UP
Ripper Group, Variable Digging Angle Multi Shank Ripper, Provision For Japan, Saudi Arabia, Inner Parts, Ripper Tilt Cylinder, R

Index	Code	Part Number	Description	Qty	Serial No.
		707-01-0AY70	Cylinder Assembly	1	65001-
1		707-13-18390	Cylinder	1	65001-
2		707-58-11200	Rod	1	65001-
3		707-76-10120	Bushing	1	65001-
4		07145-00100	Seal, Dust, (Kit : K10)	2	65001-
5		07020-00675	Fitting, Grease	1	65001-
6		07042-00108	Plug, Taper	1	65001-
7		707-76-10110	Bushing	1	65001-
8		07020-00900	Fitting, Grease	1	65001-
9		07145-00100	Seal, Dust, (Kit : K10)	2	65001-
10		707-27-18A50	Head	1	65001-
11		707-56-11740	Seal, Dust, (Kit : K10)	1	65001-
12		07179-13126	Ring, Snap	1	65001-
13		707-51-11030	Packing, Rod, (Kit : K10)	1	65001-
14		707-51-11650	Ring, Buffer, (Kit : K10)	1	65001-
15		707-52-90871	Bushing	1	65001-
16		07000-15170	O-ring, (Kit : K10)	1	65001-
17		07146-05172	Ring, Back-up, (Kit : K10)	1	65001-
18		707-75-11040	Ring, Snap	1	65001-
19		01010-81865	Bolt	10	65001-
20		01643-31845	Washer	12	65001-
21		01010-81890	Bolt	2	65001-
22		707-36-18440	Piston	1	65001-
23		707-44-18150	Ring, Piston, (Kit : K10)	1	65001-
24		07155-01845	Ring, Wear, (Kit : K10)	1	65001-
25		07000-B5110	O-ring, (Kit : K10)	1	65001-
26		07001-05110	Ring, Back-up, (Kit : K10)	2	65001-
27		01310-01225	Screw	1	65001-
28		707-86-13700	Tube	1	65001-
29		707-86-13801	Tube	1	65001-

Printed By : Dwi Iswanto (airafather6107170)

Index	Code	Part Number	Description	Qty	Serial No.
30		07000-13035	O-ring, (Kit : K10)	2	65001-
31		07372-21060	Bolt	8	65001-
32		01643-51032	Washer	8	65001-
33		07372-21035	Bolt	8	65001-
34		01643-51032	Washer	8	65001-
35		707-88-50811	Bracket	1	65001-
36		01010-81230	Bolt	2	65001-
37		01643-31232	Washer	2	65001-
38		07283-33450	Clip	2	65001-
39		01597-01009	Nut	4	65001-
40		01643-31032	Washer	4	65001-
41		07371-31049	Flange, Split	4	65001-
42		707-88-33040	Cap	2	65001-

Printed By : Dwi Iswanto (airafather6107170)

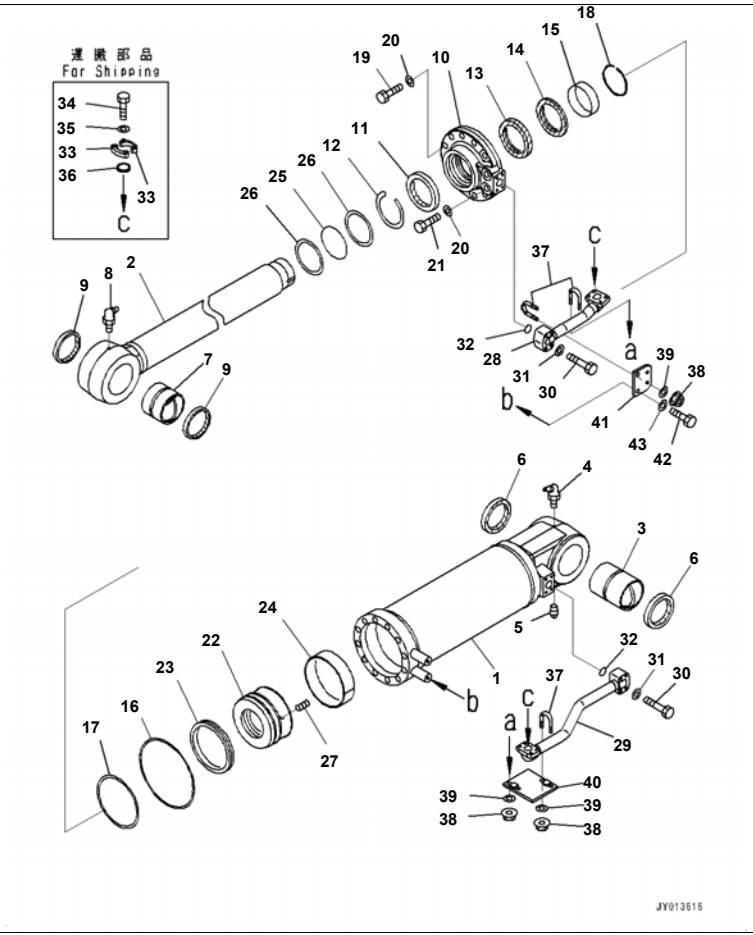

D375A-6R S/N 65001-UP

Ripper Group, Variable Digging Angle Multi Shank Ripper, Provision For Japan, Saudi Arabia, Inner Parts, Ripper Lift Cylinder, L

Index	Code	Part Number	Description	Qty	Serial No.
		707-01-0AY20	Cylinder Assembly	1	65001-
1		707-13-20650	· Cylinder	1	65001-
2		707-58-11100	· Rod	1	65001-
3		707-76-10120	· Bushing	1	65001-
4		07020-00675	· Fitting, Grease	1	65001-
5		07042-80108	· Plug	1	65001-
6		07145-00100	· Seal, Dust, (Kit : K11)	2	65001-
7		707-76-10110	· Bushing	1	65001-
8		07020-00900	· Fitting, Grease	1	65001-
9		07145-00100	· Seal, Dust, (Kit : K11)	2	65001-
10		707-27-20741	· Head	1	65001-
11		707-56-11740	· Seal, Dust, (Kit : K11)	1	65001-
12		07179-13126	· Ring, Snap	1	65001-
13		707-51-11030	· Packing, Rod, (Kit : K11)	1	65001-
14		707-51-11650	· Ring, Buffer, (Kit : K11)	1	65001-
15		707-52-90851	· Bushing	1	65001-
16		07000-15190	· O-ring, (Kit : K11)	1	65001-
17		07146-05192	· Ring, Back-up, (Kit : K11)	1	65001-
18		707-75-11040	· Ring, Snap	1	65001-
19		01010-82075	· Bolt	10	65001-
20		01643-32060	· Washer	12	65001-
21		01011-82000	· Bolt	2	65001-
22		707-36-20600	· Piston	1	65001-
23		707-44-20150	· Ring, Piston, (Kit : K11)	1	65001-
24		07155-02045	· Ring, Wear, (Kit : K11)	1	65001-
25		07000-B5110	· O-ring, (Kit : K11)	1	65001-
26		07001-05110	· Ring, Back-up, (Kit : K11)	2	65001-
27		01310-01225	· Screw	1	65001-
28		707-86-00501	Spiral Tube	1	65001-
29		707-86-00490	Tube	1	65001-

Printed By : Dwi Iswanto (airafather6107170)

Index	Code	Part Number	Description	Qty	Serial No.
30		07372-21060	Bolt	8	65001-
31		01643-51032	Washer	8	65001-
32		07000-13035	O-ring, (Kit : K11)	2	65001-
33		07371-31049	Flange, Split	4	65001-
34		07372-21035	Bolt	8	65001-
35		01643-51032	Washer	8	65001-
36		707-88-33040	Cap	2	65001-
37		07283-33450	Clip	3	65001-
38		01597-01009	Nut	6	65001-
39		01643-31032	Washer	6	65001-
40		707-88-50780	Plate	1	65001-
41		707-88-50770	Plate	1	65001-
42		01010-81230	Bolt	2	65001-
43		01643-31232	Washer	2	65001-

Printed By : Dwi Iswanto (airafather6107170)

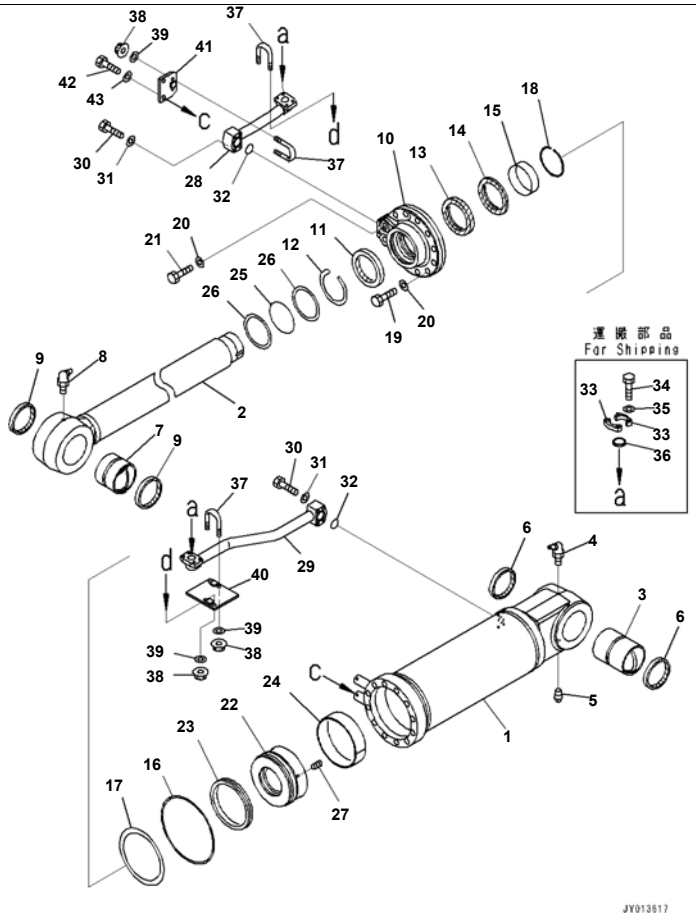

Reference:T2400-010005 Page:T023005

Index	Code	Part Number	Description	Qty	Serial No.
		707-01-0AY30	Cylinder Assembly	1	65001-
1		707-13-20650	· Cylinder	1	65001-
2		707-58-11100	· Rod	1	65001-
3		707-76-10120	· Bushing	1	65001-
4		07020-00675	· Fitting, Grease	1	65001-
5		07042-80108	· Plug	1	65001-
6		07145-00100	· Seal, Dust, (Kit : K11)	2	65001-
7		707-76-10110	· Bushing	1	65001-
8		07020-00900	· Fitting, Grease	1	65001-
9		07145-00100	· Seal, Dust, (Kit : K11)	2	65001-
10		707-27-20741	· Head	1	65001-
11		707-56-11740	· Seal, Dust, (Kit : K11)	1	65001-
12		07179-13126	· Ring, Snap	1	65001-
13		707-51-11030	· Packing, Rod, (Kit : K11)	1	65001-
14		707-51-11650	· Ring, Buffer, (Kit : K11)	1	65001-
15		707-52-90851	· Bushing	1	65001-
16		07000-15190	· O-ring, (Kit : K11)	1	65001-
17		07146-05192	· Ring, Back-up, (Kit : K11)	1	65001-
18		707-75-11040	· Ring, Snap	1	65001-
19		01010-82075	· Bolt	10	65001-
20		01643-32060	· Washer	12	65001-
21		01011-82000	· Bolt	2	65001-
22		707-36-20600	· Piston	1	65001-
23		707-44-20150	· Ring, Piston, (Kit : K11)	1	65001-
24		07155-02045	· Ring, Wear, (Kit : K11)	1	65001-
25		07000-B5110	· O-ring, (Kit : K11)	1	65001-
26		07001-05110	· Ring, Back-up, (Kit : K11)	2	65001-
27		01310-01225	· Screw	1	65001-
28		707-86-00521	Tube	1	65001-
29		707-86-00510	Tube	1	65001-

Printed By : Dwi Iswanto (airafather6107170)

Index	Code	Part Number	Description	Qty	Serial No.
30		07372-21060	Bolt	8	65001-
31		01643-51032	Washer	8	65001-
32		07000-13035	O-ring, (Kit : K11)	2	65001-
33		07371-31049	Flange, Split	4	65001-
34		07372-21035	Bolt	8	65001-
35		01643-51032	Washer	8	65001-
36		707-88-33040	Cap	2	65001-
37		07283-33450	Clip	3	65001-
38		01597-01009	Nut	6	65001-
39		01643-31032	Washer	6	65001-
40		707-88-50790	Plate	1	65001-
41		707-88-50770	Plate	1	65001-
42		01010-81230	Bolt	2	65001-
43		01643-31232	Washer	2	65001-

Printed By : Dwi Iswanto (airafather6107170)

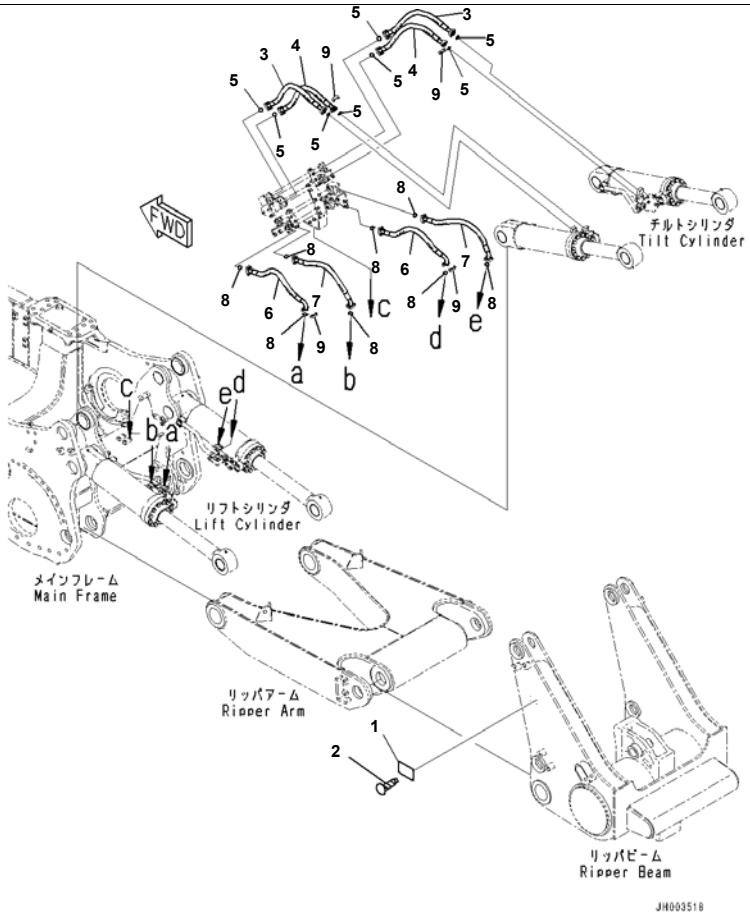

Reference:T2400-010006 Page:T023006

Ripper Group, Variable Digging Angle Multi Shank Ripper, Provision For Japan, Saudi Arabia, Ripper Piping (#65001-)

Index	Code	Part Number	Description	Qty	Serial No.
1	C2	09601-50000	Plate, Name (Limited Supply), EU Regulation	1	65001-
	C2	09601-60000	Plate, Name (Limited Supply)	1	65001-
2		04418-13060	Screw	4	65001-
3		07099-010A9	Hose, Flange Type	2	65001-
4		07098-010A9	Hose, Flange Type	2	65001-
5		07000-13032	O-ring	8	65001-
6		07098-010A8	Hose, Flange Type	2	65001-
7		07097-01009	Hose, Flange Type	2	65001-
8		07000-13032	O-ring	8	65001-
9		(07371-31049)	Flange, Split		

Reference:T2400-010006 Page:T023006

Printed By : Dwi Iswanto (airafather6107170)

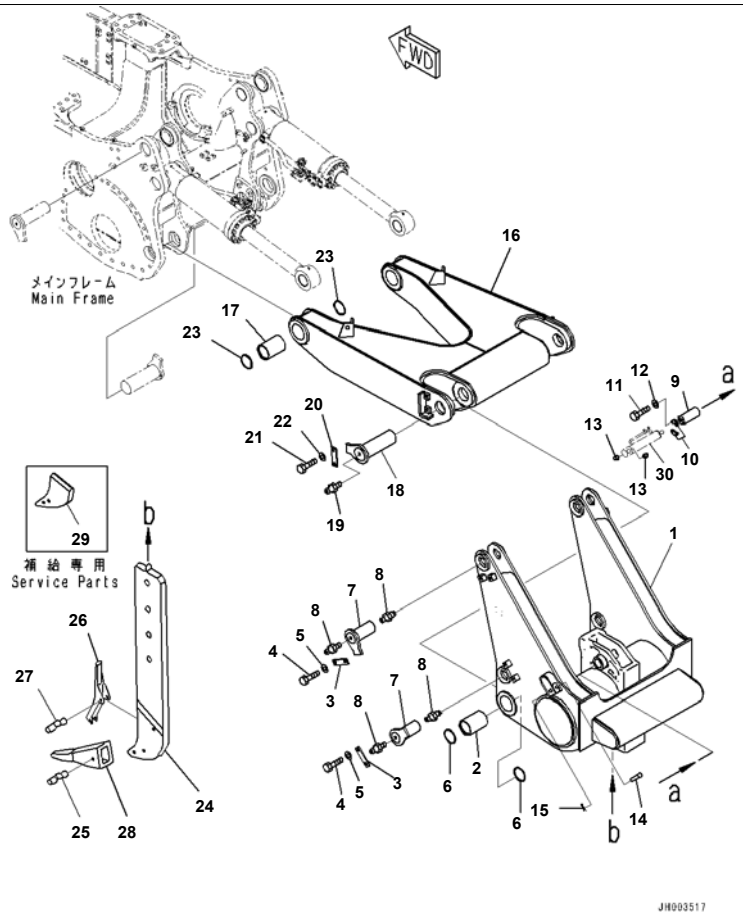

Reference:T2400-011001 Page:T024001

D375A-6R S/N 65001-UP
Ripper Group, Beam and Arm (#65001-)

Index	Code	Part Number	Description	Qty	Serial No.
1		195-79-51131	Beam	1	65001-
2		195-78-71220	Bushing	2	65001-
3		195-78-21171	Plate	4	65001-
4		01010-62040	Bolt	8	65001-
5		01643-32060	Washer	8	65001-
6		195-78-41320	Seal, Dust	4	65001-
7		195-78-73180	Pin	4	65001-
8		07020-00000	Fitting, Grease	8	65001-
9		17M-79-11120	Pin	1	65001-
10		175-79-61160	Plate	2	65001-
11		01010-81030	Bolt	4	65001-
12		01643-51032	Washer	4	65001-
13		195-79-52110	Collar	2	65001-
14		195-79-52130	Pin	1	65001-
15		04050-16040	Pin, Cotter	1	65001-
16		195-78-71161	Arm	1	65001-
17		195-78-71220	Bushing	2	65001-
18		195-78-71210	Pin	2	65001-
19		07020-00000	Fitting, Grease	2	65001-
20		195-78-21171	Plate	2	65001-
21		01010-62040	Bolt	4	65001-
22		01643-32060	Washer	4	65001-
23		195-78-41320	Seal, Dust	4	65001-
24		195-79-51160	Shank	1	65001-
25		195-78-71360	Pin	1	65001-
26		195-78-72410	Protector	1	65001-
27		195-78-71360	Pin	2	65001-
28		195-78-71320	Point	1	65001-
29		195-78-71380	Shank, For Supply	1	65001-
30		(707-04-X0070)	Cylinder Group		

Reference:T2400-011001 Page:T024001

Printed By : Dwi Iswanto (airafather6107170)

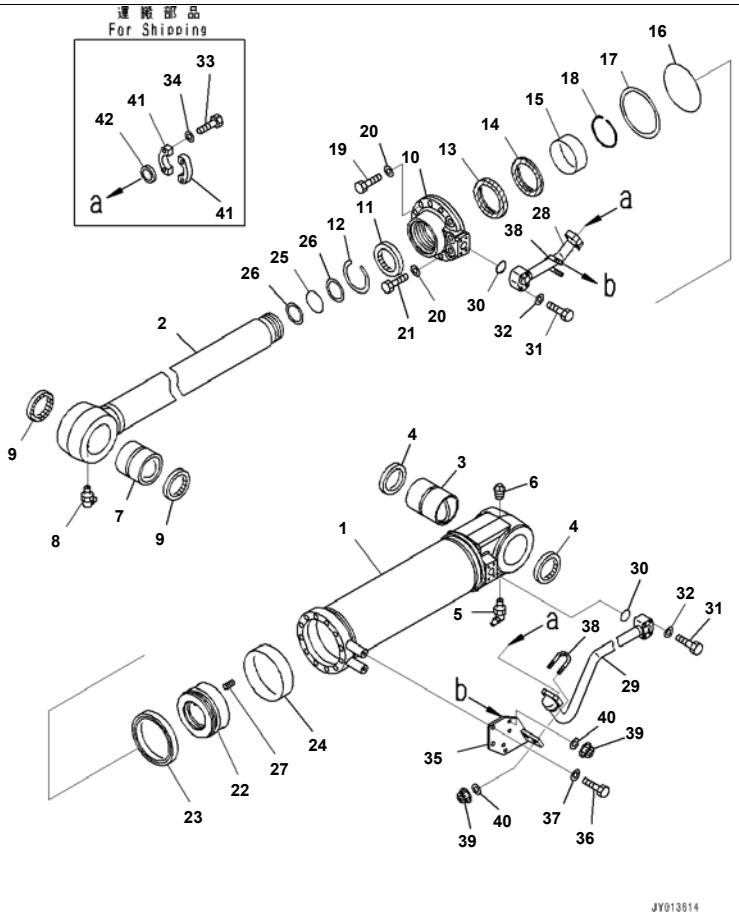

Reference:T2400-011002 Page:T024002

D375A-6R S/N 65001-UP
Ripper Group, Inner Parts, Ripper Tilt Cylinder, LHS (#65001-)

Index	Code	Part Number	Description	Qty	Serial No.
		707-01-0AY60	Cylinder Assembly	1	65001-
1		707-13-18390	Cylinder	1	65001-
2		707-58-11200	Rod	1	65001-
3		707-76-10120	Bushing	1	65001-
4		07145-00100	Seal, Dust, (Kit : K10)	2	65001-
5		07020-00675	Fitting, Grease	1	65001-
6		07042-00108	Plug, Taper	1	65001-
7		707-76-10110	Bushing	1	65001-
8		07020-00900	Fitting, Grease	1	65001-
9		07145-00100	Seal, Dust	2	65001-
10		707-27-18A50	Head	1	65001-
11		707-56-11740	Seal, Dust, (Kit : K10)	1	65001-
12		07179-13126	Ring, Snap	1	65001-
13		707-51-11030	Packing, Rod, (Kit : K10)	1	65001-
14		707-51-11650	Ring, Buffer, (Kit : K10)	1	65001-
15		707-52-90871	Bushing	1	65001-
16		07000-15170	O-ring, (Kit : K10)	1	65001-
17		07146-05172	Ring, Back-up, (Kit : K10)	1	65001-
18		707-75-11040	Ring, Snap	1	65001-
19		01010-81865	Bolt	10	65001-
20		01643-31845	Washer	12	65001-
21		01010-81890	Bolt	2	65001-
22		707-36-18440	Piston	1	65001-
23		707-44-18150	Ring, Piston, (Kit : K10)	1	65001-
24		07155-01845	Ring, Wear, (Kit : K10)	1	65001-
25		07000-B5110	O-ring, (Kit : K10)	1	65001-
26		07001-05110	Ring, Back-up, (Kit : K10)	2	65001-
27		01310-01225	Screw	1	65001-
28		707-86-13500	Tube	1	65001-
29		707-86-13601	Tube	1	65001-
30		07000-13035	O-ring, (Kit : K10)	2	65001-

Reference:T2400-011002 Page:T024002

Printed By : Dwi Iswanto (airafather6107170)

Ripper Group, Inner Parts, Ripper Tilt Cylinder, LHS (#65001-)

Index	Code	Part Number	Description	Qty	Serial No.
31		07372-21060	Bolt	8	65001-
32		01643-51032	Washer	8	65001-
33		07372-21035	Bolt	8	65001-
34		01643-51032	Washer	8	65001-
35		707-88-50801	Bracket	1	65001-
36		01010-81230	Bolt	2	65001-
37		01643-31232	Washer	2	65001-
38		07283-33450	Clip	2	65001-
39		01597-01009	Nut	4	65001-
40		01643-31032	Washer	4	65001-
41		07371-31049	Flange, Split	4	65001-
42		707-88-33040	Cap	2	65001-

Printed By : Dwi Iswanto (airafather6107170)

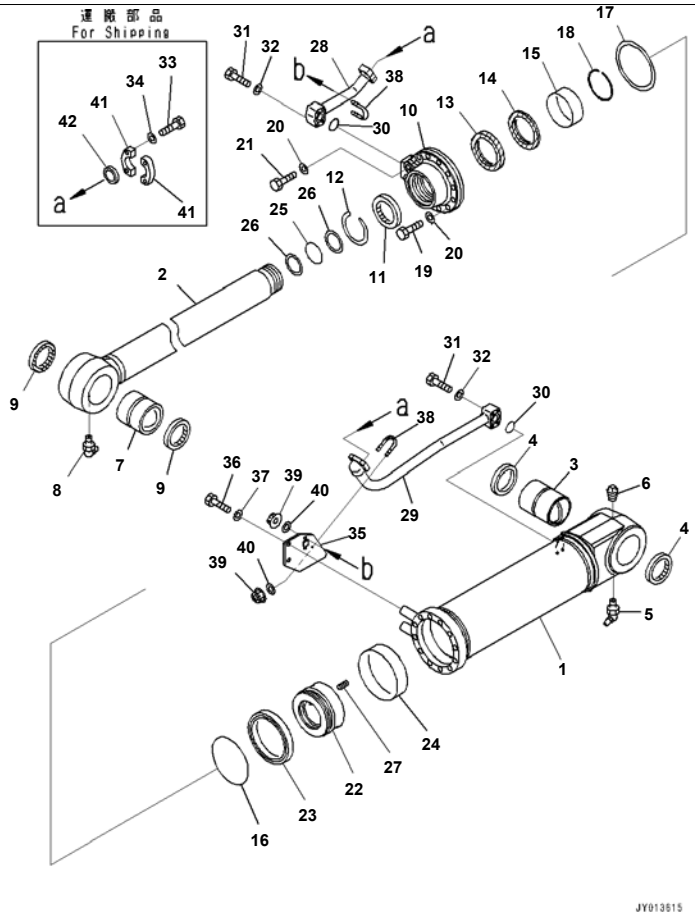

Reference:T2400-011003 Page:T024003

D375A-6R S/N 65001-UP
Ripper Group, Inner Parts, Ripper Tilt Cylinder, RHS (#65001-)

Index	Code	Part Number	Description	Qty	Serial No.
		707-01-0AY70	Cylinder Assembly	1	65001-
1		707-13-18390	Cylinder	1	65001-
2		707-58-11200	Rod	1	65001-
3		707-76-10120	Bushing	1	65001-
4		07145-00100	Seal, Dust, (Kit : K10)	2	65001-
5		07020-00675	Fitting, Grease	1	65001-
6		07042-00108	Plug, Taper	1	65001-
7		707-76-10110	Bushing	1	65001-
8		07020-00900	Fitting, Grease	1	65001-
9		07145-00100	Seal, Dust, (Kit : K10)	2	65001-
10		707-27-18A50	Head	1	65001-
11		707-56-11740	Seal, Dust, (Kit : K10)	1	65001-
12		07179-13126	Ring, Snap	1	65001-
13		707-51-11030	Packing, Rod, (Kit : K10)	1	65001-
14		707-51-11650	Ring, Buffer, (Kit : K10)	1	65001-
15		707-52-90871	Bushing	1	65001-
16		07000-15170	O-ring, (Kit : K10)	1	65001-
17		07146-05172	Ring, Back-up, (Kit : K10)	1	65001-
18		707-75-11040	Ring, Snap	1	65001-
19		01010-81865	Bolt	10	65001-
20		01643-31845	Washer	12	65001-
21		01010-81890	Bolt	2	65001-
22		707-36-18440	Piston	1	65001-
23		707-44-18150	Ring, Piston, (Kit : K10)	1	65001-
24		07155-01845	Ring, Wear, (Kit : K10)	1	65001-
25		07000-B5110	O-ring, (Kit : K10)	1	65001-
26		07001-05110	Ring, Back-up, (Kit : K10)	2	65001-
27		01310-01225	Screw	1	65001-
28		707-86-13700	Tube	1	65001-
29		707-86-13801	Tube	1	65001-
30		07000-13035	O-ring, (Kit : K10)	2	65001-

Printed By : Dwi Iswanto (airafather6107170)

Ripper Group, Inner Parts, Ripper Tilt Cylinder, RHS (#65001-)

Index	Code	Part Number	Description	Qty	Serial No.
31		07372-21060	Bolt	8	65001-
32		01643-51032	Washer	8	65001-
33		07372-21035	Bolt	8	65001-
34		01643-51032	Washer	8	65001-
35		707-88-50811	Bracket	1	65001-
36		01010-81230	Bolt	2	65001-
37		01643-31232	Washer	2	65001-
38		07283-33450	Clip	2	65001-
39		01597-01009	Nut	4	65001-
40		01643-31032	Washer	4	65001-
41		07371-31049	Flange, Split	4	65001-
42		707-88-33040	Cap	2	65001-

Printed By : Dwi Iswanto (airafather6107170)

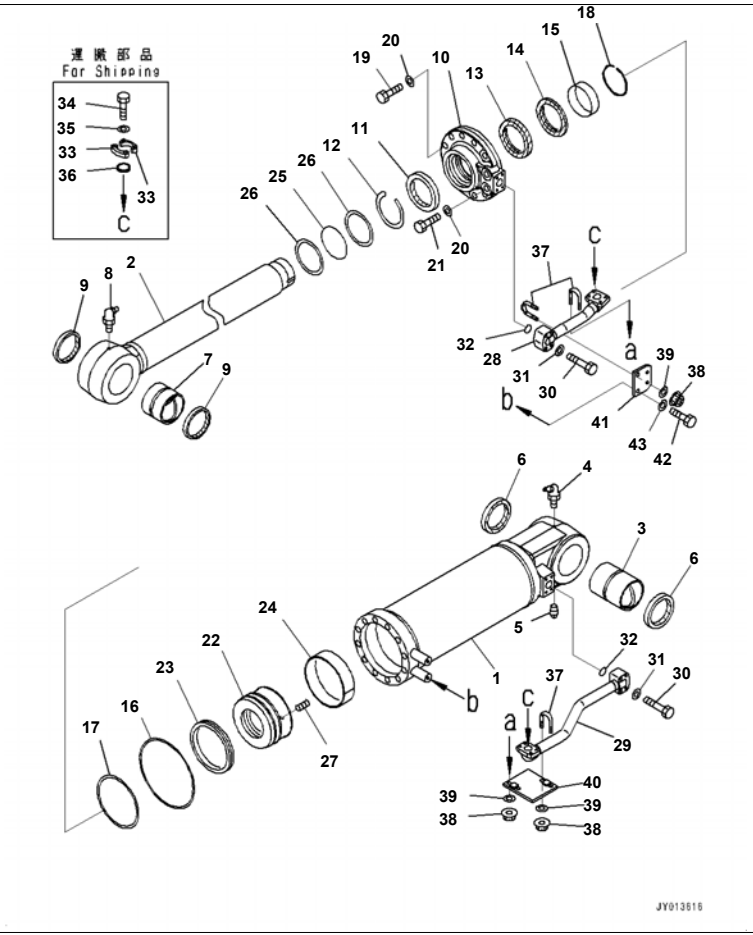

D375A-6R S/N 65001-UP
Ripper Group, Inner Parts, Ripper Lift Cylinder, LHS (#65001-)

Index	Code	Part Number	Description	Qty	Serial No.
		707-01-0AY20	Cylinder Assembly	1	65001-
1		707-13-20650	Cylinder	1	65001-
2		707-58-11100	Rod	1	65001-
3		707-76-10120	Bushing	1	65001-
4		07020-00675	Fitting, Grease	1	65001-
5		07042-80108	Plug	1	65001-
6		07145-00100	Seal, Dust, (Kit : K11)	2	65001-
7		707-76-10110	Bushing	1	65001-
8		07020-00900	Fitting, Grease	1	65001-
9		07145-00100	Seal, Dust, (Kit : K11)	2	65001-
10		707-27-20741	Head	1	65001-
11		707-56-11740	Seal, Dust, (Kit : K11)	1	65001-
12		07179-13126	Ring, Snap	1	65001-
13		707-51-11030	Packing, Rod, (Kit : K11)	1	65001-
14		707-51-11650	Ring, Buffer, (Kit : K11)	1	65001-
15		707-52-90851	Bushing	1	65001-
16		07000-15190	O-ring, (Kit : K11)	1	65001-
17		07146-05192	Ring, Back-up, (Kit : K11)	1	65001-
18		707-75-11040	Ring, Snap	1	65001-
19		01010-82075	Bolt	10	65001-
20		01643-32060	Washer	12	65001-
21		01011-82000	Bolt	2	65001-
22		707-36-20600	Piston	1	65001-
23		707-44-20150	Ring, Piston, (Kit : K11)	1	65001-
24		07155-02045	Ring, Wear, (Kit : K11)	1	65001-
25		07000-B5110	O-ring, (Kit : K11)	1	65001-
26		07001-05110	Ring, Back-up, (Kit : K11)	2	65001-
27		01310-01225	Screw	1	65001-
28		707-86-00501	Spiral Tube	1	65001-
29		707-86-00490	Tube	1	65001-
30		07372-21060	Bolt	8	65001-

Printed By : Dwi Iswanto (airafather6107170)

Ripper Group, Inner Parts, Ripper Lift Cylinder, LHS (#65001-)

Index	Code	Part Number	Description	Qty	Serial No.
31		01643-51032	Washer	8	65001-
32		07000-13035	O-ring, (Kit : K11)	2	65001-
33		07371-31049	Flange, Split	4	65001-
34		07372-21035	Bolt	8	65001-
35		01643-51032	Washer	8	65001-
36		707-88-33040	Cap	2	65001-
37		07283-33450	Clip	3	65001-
38		01597-01009	Nut	6	65001-
39		01643-31032	Washer	6	65001-
40		707-88-50780	Plate	1	65001-
41		707-88-50770	Plate	1	65001-
42		01010-81230	Bolt	2	65001-
43		01643-31232	Washer	2	65001-

Printed By : Dwi Iswanto (airafather6107170)

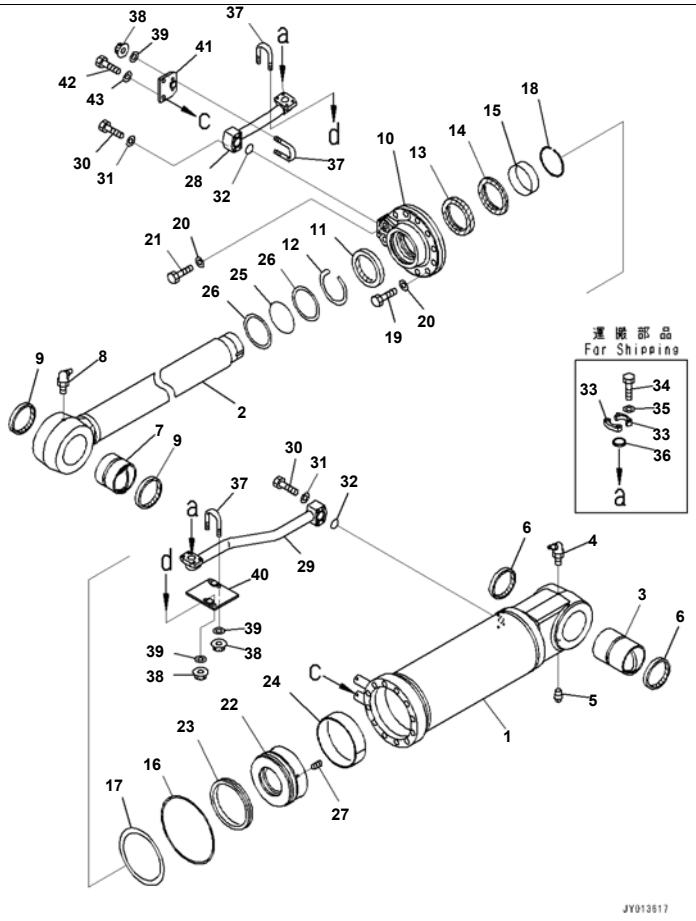

Index	Code	Part Number	Description	Qty	Serial No.
		707-01-0AY30	Cylinder Assembly	1	65001-
1		707-13-20650	Cylinder	1	65001-
2		707-58-11100	Rod	1	65001-
3		707-76-10120	Bushing	1	65001-
4		07020-00675	Fitting, Grease	1	65001-
5		07042-80108	Plug	1	65001-
6		07145-00100	Seal, Dust, (Kit : K11)	2	65001-
7		707-76-10110	Bushing	1	65001-
8		07020-00900	Fitting, Grease	1	65001-
9		07145-00100	Seal, Dust, (Kit : K11)	2	65001-
10		707-27-20741	Head	1	65001-
11		707-56-11740	Seal, Dust, (Kit : K11)	1	65001-
12		07179-13126	Ring, Snap	1	65001-
13		707-51-11030	Packing, Rod, (Kit : K11)	1	65001-
14		707-51-11650	Ring, Buffer, (Kit : K11)	1	65001-
15		707-52-90851	Bushing	1	65001-
16		07000-15190	O-ring, (Kit : K11)	1	65001-
17		07146-05192	Ring, Back-up, (Kit : K11)	1	65001-
18		707-75-11040	Ring, Snap	1	65001-
19		01010-82075	Bolt	10	65001-
20		01643-32060	Washer	12	65001-
21		01011-82000	Bolt	2	65001-
22		707-36-20600	Piston	1	65001-
23		707-44-20150	Ring, Piston, (Kit : K11)	1	65001-
24		07155-02045	Ring, Wear, (Kit : K11)	1	65001-
25		07000-B5110	O-ring, (Kit : K11)	1	65001-
26		07001-05110	Ring, Back-up, (Kit : K11)	2	65001-
27		01310-01225	Screw	1	65001-
28		707-86-00521	Tube	1	65001-
29		707-86-00510	Tube	1	65001-
30		07372-21060	Bolt	8	65001-

Printed By : Dwi Iswanto (airafather6107170)

Ripper Group, Inner Parts, Ripper Lift Cylinder, RHS (#65001-)

Index	Code	Part Number	Description	Qty	Serial No.
31		01643-51032	Washer	8	65001-
32		07000-13035	O-ring, (Kit : K11)	2	65001-
33		07371-31049	Flange, Split	4	65001-
34		07372-21035	Bolt	8	65001-
35		01643-51032	Washer	8	65001-
36		707-88-33040	Cap	2	65001-
37		07283-33450	Clip	3	65001-
38		01597-01009	Nut	6	65001-
39		01643-31032	Washer	6	65001-
40		707-88-50790	Plate	1	65001-
41		707-88-50770	Plate	1	65001-
42		01010-81230	Bolt	2	65001-
43		01643-31232	Washer	2	65001-

Printed By : Dwi Iswanto (airafather6107170)

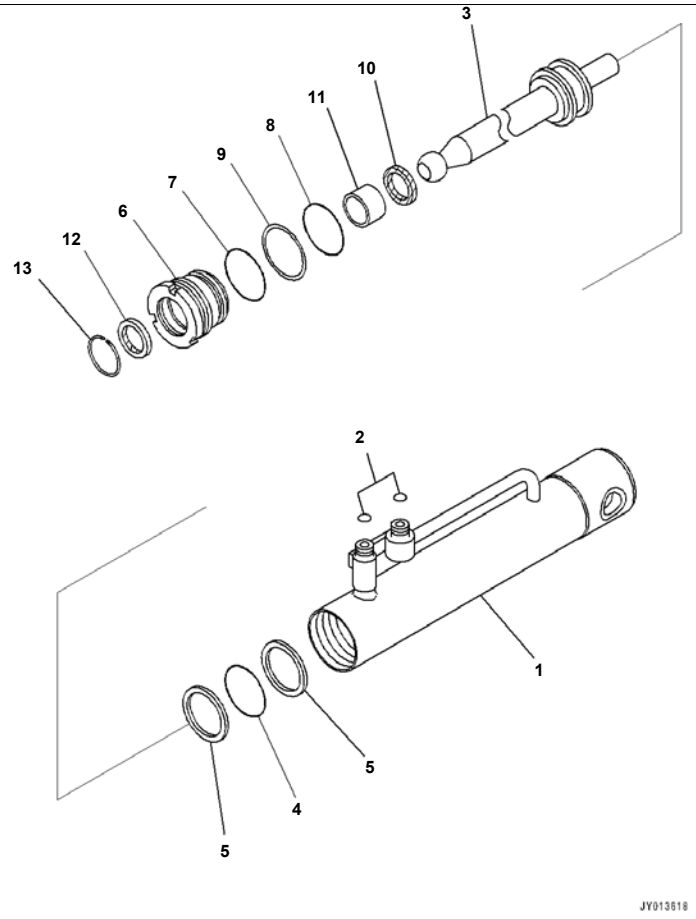

Reference:T2400-011006 Page:T024006

D375A-6R S/N 65001-UP
Ripper Group, Inner Parts, Pin Puller Cylinder (#65001-)

Index	Code	Part Number	Description	Qty	Serial No.
		707-04-07200	Cylinder Group	1	65001-
		707-04-X0070	Cylinder Group	1	65001-
1		707-16-60060	· Cylinder	1	65001-
2		02896-11009	· O-ring, (Kit : K09)	2	65001-
3		198-63-49220	· Rod, Piston	1	65001-
4		707-34-10600	· O-ring, (Kit : K09)	1	65001-
5		707-35-99600	· Ring, Back-up, (Kit : K09)	2	65001-
6		707-29-60930	· Head, Cylinder	1	65001-
7		07000-12060	· O-ring, (Kit : K09)	1	65001-
8		07000-12055	· O-ring, (Kit : K09)	1	65001-
9		07001-02055	· Ring, Back-up, (Kit : K09)	1	65001-
10		707-51-30210	· Packing, Rod, (Kit : K09)	1	65001-
11		707-52-15050	· Bushing	1	65001-
12		707-56-30510	· Seal, Dust, (Kit : K09)	1	65001-
13		07179-00049	· Ring, Snap	1	65001-

Printed By : Dwi Iswanto (airafather6107170)

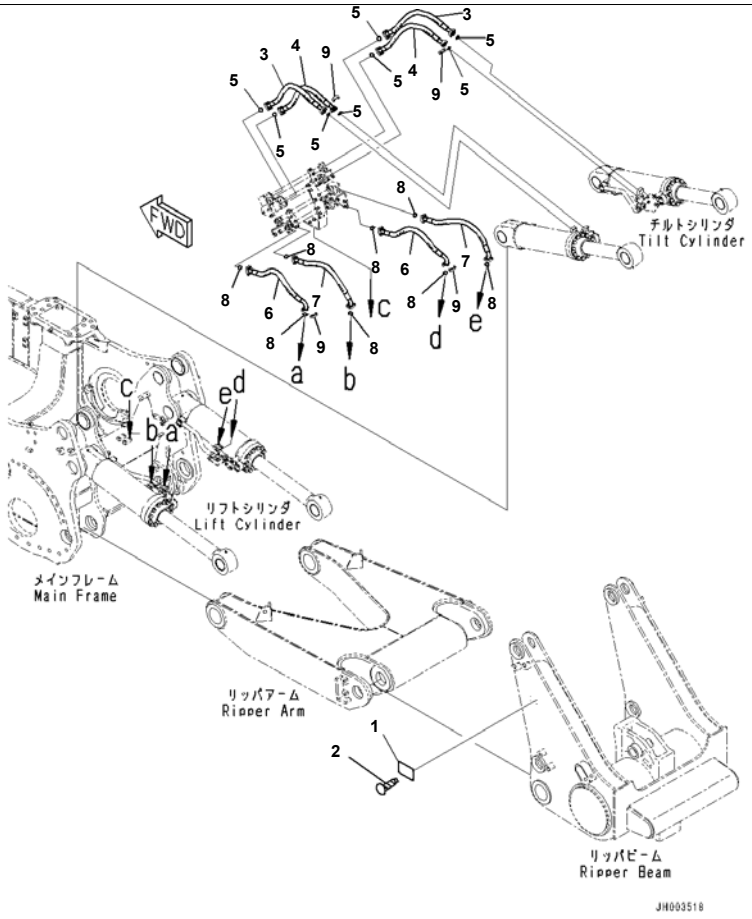

Reference:T2400-011007 Page:T024007

D375A-6R S/N 65001-UP
Ripper Group, Ripper Piping (#65001-)

Index	Code	Part Number	Description	Qty	Serial No.
1	C2	09601-50000	Plate, Name (Limited Supply), EU Regulation	1	65001-
	C2	09601-60000	Plate, Name (Limited Supply)	1	65001-
2		04418-13060	Screw	4	65001-
3		07099-010A9	Hose, Flange Type	2	65001-
4		07098-010A9	Hose, Flange Type	2	65001-
5		07000-13032	O-ring	8	65001-
6		07098-010A8	Hose, Flange Type	2	65001-
7		07097-01009	Hose, Flange Type	2	65001-
8		07000-13032	O-ring	8	65001-
9		(07371-31049)	Flange, Split		
		(07371-31049)	Flange, Split		
		(07371-31049)	Flange, Split		
		(07371-31049)	Flange, Split		

Reference:T2400-011007 Page:T024007

Printed By : Dwi Iswanto (airafather6107170)

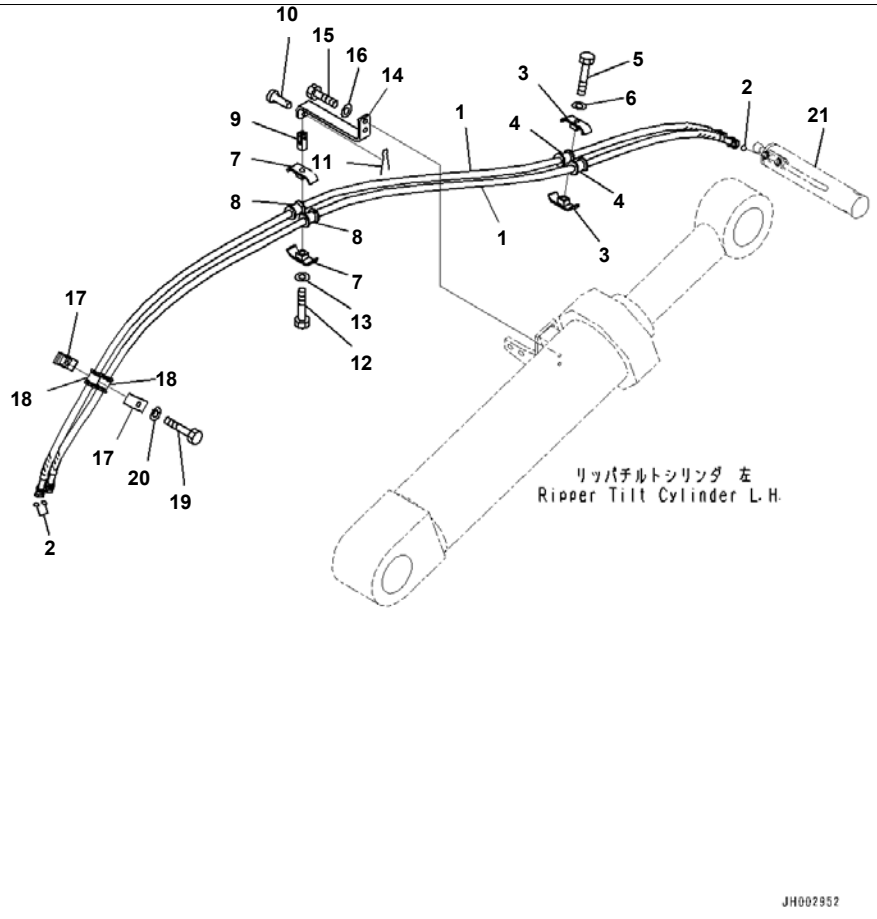

Reference:T2400-011008 Page:T024008

D375A-6R S/N 65001-UP
Ripper Group, Pin Puller Cylinder Piping (#65001-60003)

Index	Code	Part Number	Description	Qty	Serial No.
1		02760-00332	Hose, Face Seal Type	2	65001-60003
2		02896-21009	O-ring	4	65001-60003
3		07094-30315	Clamp	2	65001-60003
4		07095-00314	Cushion	2	65001-60003
5		01010-81065	Bolt	1	65001-60003
6		01643-31032	Washer	1	65001-60003
7		07094-30315	Clamp	2	65001-60003
8		07095-00314	Cushion	2	65001-60003
9		144-947-2850	Yoke	1	65001-60003
10		04205-11028	Pin	1	65001-60003
11		04050-13015	Pin	1	65001-60003
12		01010-81065	Bolt	1	65001-60003
13		01643-31032	Washer	1	65001-60003
14		195-78-72571	Plate	1	65001-60003
15		01010-81240	Bolt	2	65001-60003
16		01643-31232	Washer	2	65001-60003
17		07094-30315	Clamp	2	65001-60003
18		07095-00314	Cushion	2	65001-60003
19		01010-81065	Bolt	1	65001-60003
20		01643-31032	Washer	1	65001-60003
21		(707-04-X0070)	Cylinder Group		

Reference:T2400-011008 Page:T024008

Printed By : Dwi Iswanto (airafather6107170)

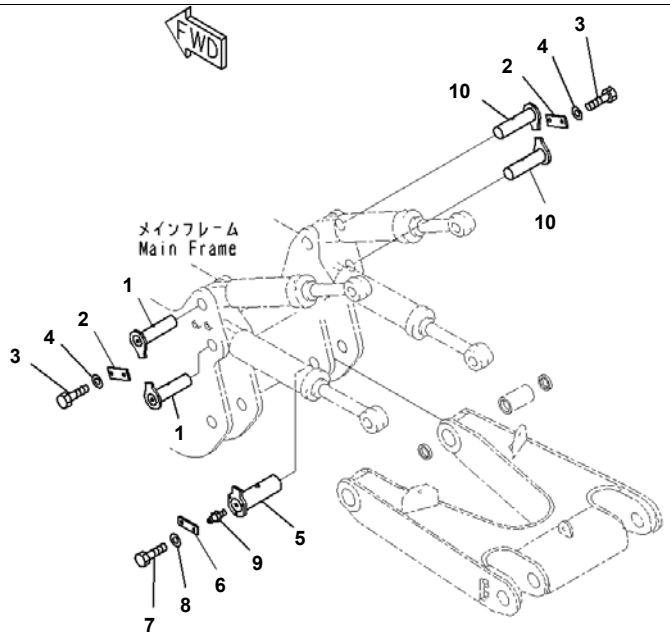

D375A-6R S/N 65001-UP
Ripper Mount Pin (#65001-)

Index	Code	Part Number	Description	Qty	Serial No.
1		195-78-71170	Pin	2	65001-
2		195-78-21171	Plate	2	65001-
3		01010-62040	Bolt	4	65001-
4		01643-32060	Washer	4	65001-
5		195-78-71190	Pin	2	65001-
6		195-78-21171	Plate	2	65001-
7		01010-62040	Bolt	4	65001-
8		01643-32060	Washer	4	65001-
9		07020-00000	Fitting, Grease	2	65001-
10		195-78-71170	Pin	2	65001-

Printed By : Dwi Iswanto (airafather6107170)

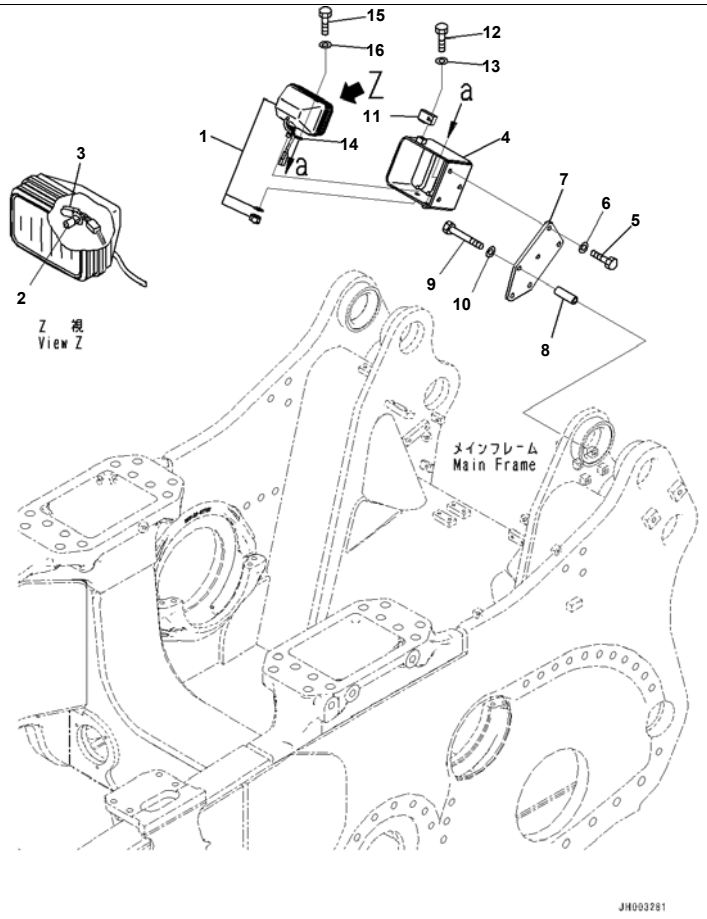

Index	Code	Part Number	Description	Qty	Serial No.
1		17A-06-17931	Lamp Assembly, Working	1	65001-1
2		17A-06-17970	· Bulb, 70watt	1	65001-1
3		17A-06-17980	· Sleeve	1	65001-1
4		195-06-41910	Cover	1	65001-1
5		01010-81235	Bolt	3	65001-1
6		01643-31232	Washer	3	65001-1
7		195-06-55821	Plate	1	65001-1
8		195-06-56210	Spacer	3	65001-1
9		01011-81215	Bolt	3	65001-1
10		01643-31232	Washer	3	65001-1
11		195-06-55831	Bracket	1	65001-1
12		01010-81225	Bolt	1	65001-1
13		01643-31232	Washer	1	65001-1
14		04434-50612	Clip	1	65001-1
15		01010-81225	Bolt	1	65001-1
16		01643-31232	Washer	1	65001-1

Printed By : Dwi Iswanto (airafather6107170)

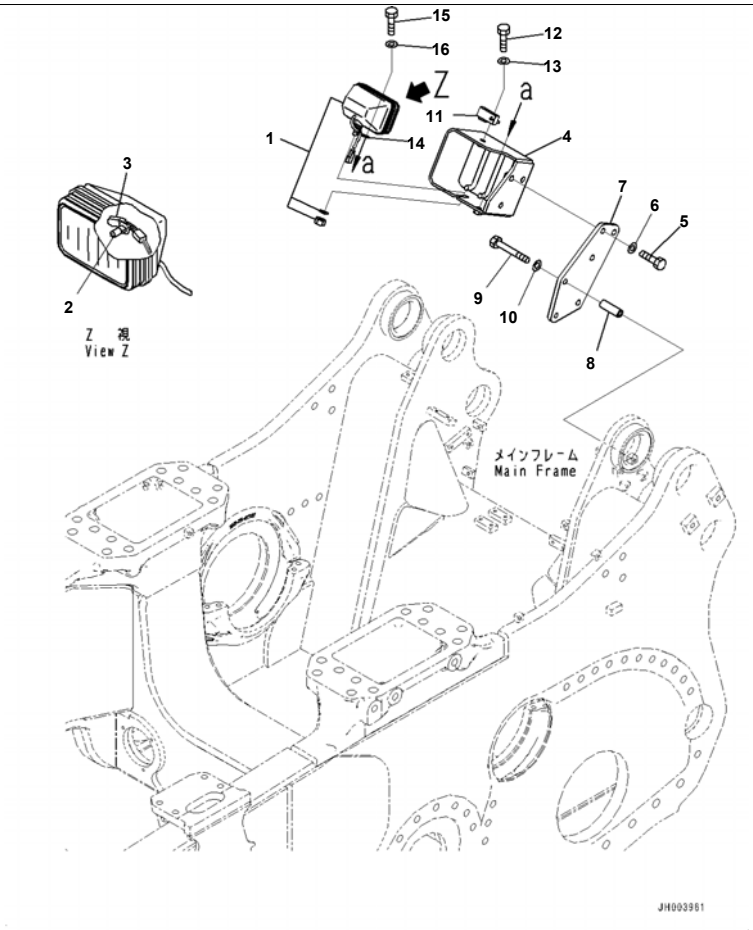

Index	Code	Part Number	Description	Qty	Serial No.
1		17A-06-17931	Lamp Assembly, Working	1	65001-
2		17A-06-17970	· Bulb, 70watt	1	65001-
3		17A-06-17980	· Sleeve	1	65001-
4		195-06-41951	Cover	1	65001-
5		01010-81235	Bolt	3	65001-
6		01643-31232	Washer	3	65001-
7		195-06-55822	Plate	1	65001-
8		195-06-56220	Spacer	3	65001-
9		01011-81240	Bolt	3	65001-
10		01643-31232	Washer	3	65001-
11		195-06-55831	Bracket	1	65001-
12		01010-81235	Bolt	1	65001-
13		01643-31232	Washer	1	65001-
14		04434-50612	Clip	1	65001-
15		01010-81235	Bolt	1	65001-
16		01643-31232	Washer	1	65001-

Printed By : Dwi Iswanto (airafather6107170)

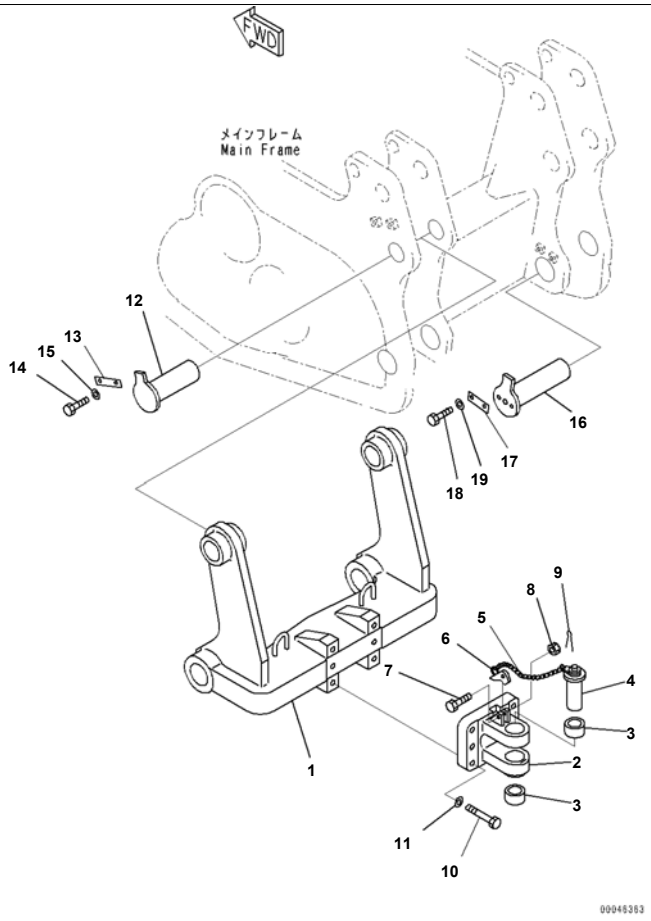

D375A-6R S/N 65001-UP
Drawbar (#65001-)

Index	Code	Part Number	Description	Qty	Serial No.
1		195-69-21140	Bracket	1	65001-
		195-69-00060	Drawbar Assembly	1	65001-
2	C1		· Drawbar	1	65001-
3		19N-69-11150	· Bushing	2	65001-
		19N-69-11100	· Pin Assembly	1	65001-
4	C1		· · Pin	1	65001-
5		09245-04842	· · Chain	1	65001-
6		09249-10016	· · Latch	1	65001-
7		01052-51675	· Bolt	1	65001-
8		01592-31619	· Nut	1	65001-
9		04050-14030	· Pin, Cotter	1	65001-
10		01011-63310	Bolt	6	65001-
11		01643-33380	Washer	6	65001-
12		195-78-71170	Pin	2	65001-
13		195-78-21171	Plate	2	65001-
14		01010-62040	Bolt	4	65001-
15		01643-32060	Washer	4	65001-
16		195-78-71190	Pin	2	65001-
17		195-78-21171	Plate	2	65001-
18		01010-62040	Bolt	4	65001-
19		01643-32060	Washer	4	65001-

Printed By : Dwi Iswanto (airafather6107170)

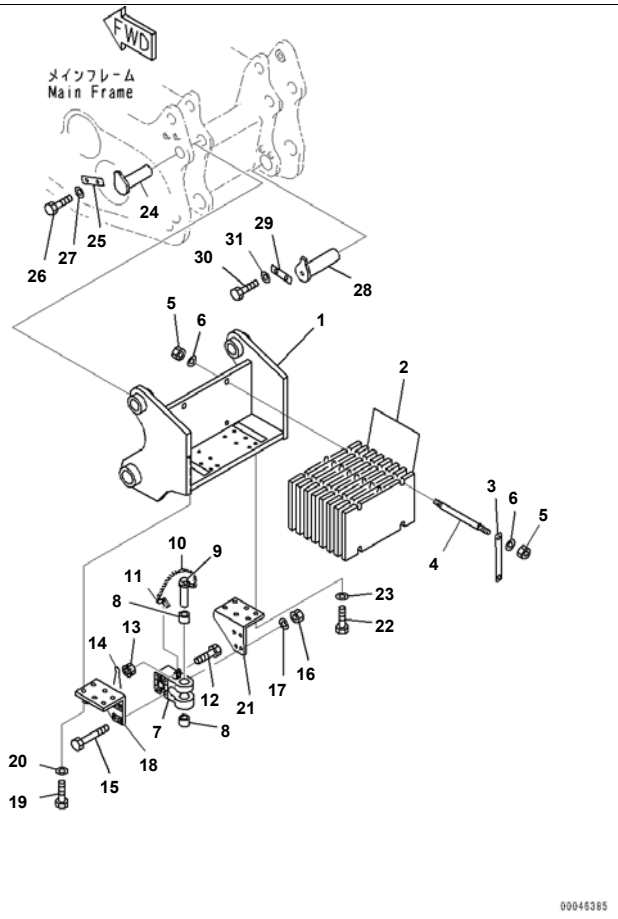

Index	Code	Part Number	Description	Qty	Serial No.
1		195-69-21110	Bracket	1	65001-
2		195-69-12121	Weight	8	65001-
3		198-69-11291	Plate	2	65001-
4		195-69-12131	Bolt	4	65001-
5		01580-13024	Nut	6	65001-
6		01643-33080	Washer	6	65001-
		19N-69-00010	Drawbar Assembly	1	65001-
7	C1		· Drawbar	1	65001-
8		19N-69-11150	· Bushing	2	65001-
		19N-69-11100	Pin Assembly	1	65001-
9	C1		· Pin	1	65001-
10		09245-04842	· Chain	1	65001-
11		09249-10016	· Latch	1	65001-
12		01052-51675	Bolt	1	65001-
13		01592-31619	Nut	1	65001-
14		04050-14030	Pin, Cotter	1	65001-
15		19N-69-11160	Bolt	4	65001-
16		01580-03629	Nut	4	65001-
17		01643-33690	Washer	4	65001-
18		195-69-21120	Bracket	1	65001-
19		01010-63070	Bolt	6	65001-
20		01643-33080	Washer	6	65001-
21		195-69-21130	Bracket	1	65001-
22		01010-63070	Bolt	6	65001-
23		01643-33080	Washer	6	65001-
24		195-78-71170	Pin	2	65001-
25		195-78-21171	Plate	2	65001-
26		01010-62040	Bolt	4	65001-
27		01643-32060	Washer	4	65001-
28		195-78-71190	Pin	2	65001-
29		195-78-21171	Plate	2	65001-

Printed By : Dwi Iswanto (airafather6107170)

Index	Code	Part Number	Description	Qty	Serial No.
30		01010-62040	Bolt	4	65001-
31		01643-32060	Washer	4	65001-

Printed By : Dwi Iswanto (airafather6107170)

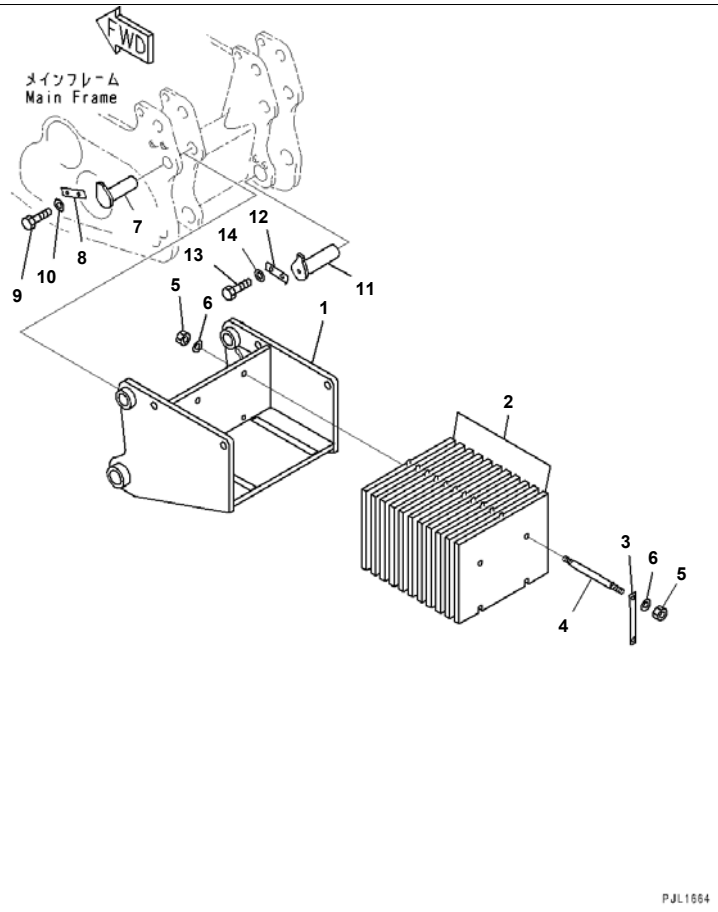

Index	Code	Part Number	Description	Qty	Serial No.
1		195-69-22210	Bracket	1	65001-
2		195-69-21220	Weight	11	65001-
3		198-69-11291	Plate	2	65001-
4		195-69-22220	Bolt	4	65001-
5		01580-13024	Nut	6	65001-
6		01643-33080	Washer	6	65001-
7		195-78-71170	Pin	2	65001-
8		195-78-21171	Plate	2	65001-
9		01010-62040	Bolt	4	65001-
10		01643-32060	Washer	4	65001-
11		195-78-71190	Pin	2	65001-
12		195-78-21171	Plate	2	65001-
13		01010-62040	Bolt	4	65001-
14		01643-32060	Washer	4	65001-

Printed By : Dwi Iswanto (airafather6107170)

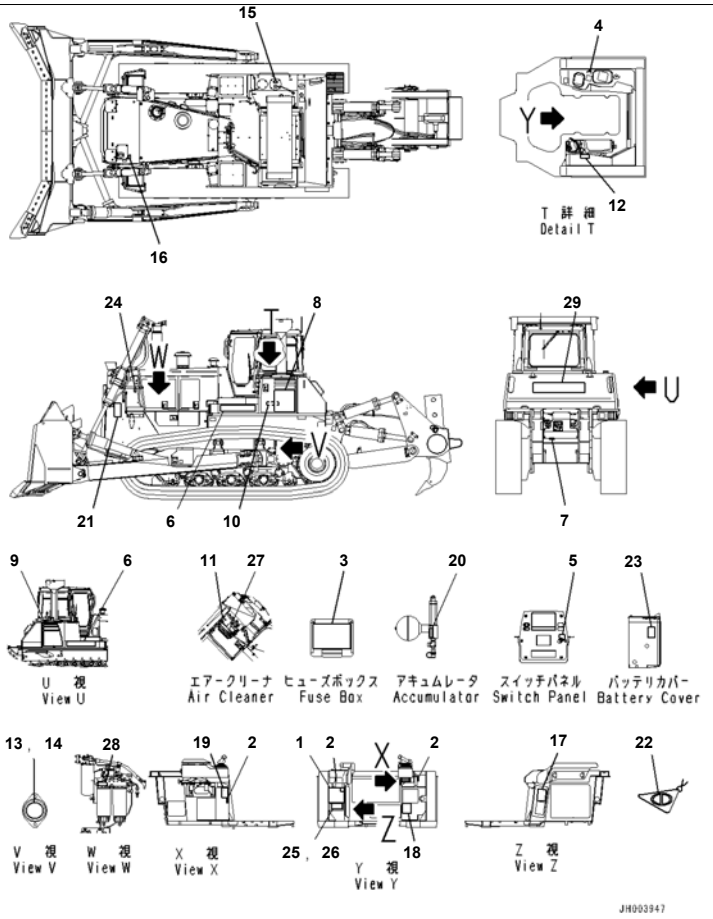

Reference:U0100-012001 Page:U005001

D375A-6R S/N 65001-UP
Marks And Plates, Indonesian-English (#65001-)

Index	Code	Part Number	Description	Qty	Serial No.
1		195-98-27410	Plate	1	65001-
2		14X-98-11170	Plate, Operating	3	65001-
3		195-98-27630	Plate	1	65001-
4		17A-98-11180	Plate	1	65001-
5		195-98-27560	Plate	1	65001-
6		09690-P0900	Mark, Komatsu Logo	2	65001-
7		09690-M0063	Mark, Komatsu Logo	1	65001-
8		195-98-27511	Mark	1	65001-
9		195-98-27521	Mark	1	65001-
10		195-98-27240	Plate	1	65001-
11		6245-81-9410	Plate	1	65001-
12		09649-00512	Plate	1	65001-
13		195-98-23410	Plate	2	65001-
14		01220-60408	Screw, Philips Head	6	65001-
15		09653-A0481	Plate, Warning, High Temperature	1	65001-
16		09653-A0481	Plate, Warning, High Temperature	1	65001-
17		09654-B0641	Plate, Warning, Before Leaving Seat	1	65001-
18		09651-A0641	Plate, Warning, Read Manual Before Operating	1	65001-
19		09802-10500	Plate	1	65001-
20		09659-A057B	Plate, Warning, Explosive Hazard	1	65001-
21		09806-B1683	Plate	2	65001-
22		09963-A1640	Tag, Danger, Do Not Operate	1	65001-
23		09808-A0881	Plate, Warning, Battery Cables	1	65001-
24		09667-A0481	Plate, Caution, Rotating Object	2	65001-
25	C2	09602-10001	Plate, Name (Limited Supply)	1	65001-
26		04418-13060	Screw	4	65001-
27		09637-05163	Plate	1	65001-
28		6217-71-6530	Plate	1	65001-
29		09690-P1800	Decal, Komatsu Logo	1	65001-

Printed By : Dwi Iswanto (airafather6107170)

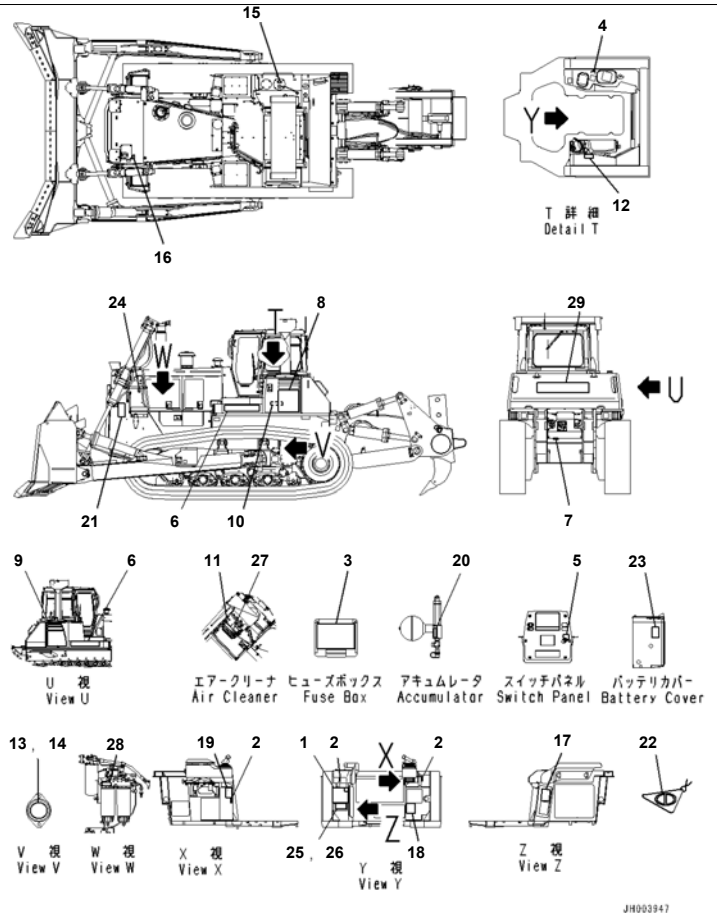

D375A-6R S/N 65001-UP
Marks And Plates, English (#65001-)

Index	Code	Part Number	Description	Qty	Serial No.
1		195-98-27410	Plate	1	65001-
2		14X-98-11170	Plate, Operating	3	65001-
3		195-98-27630	Plate	1	65001-
4		17A-98-11180	Plate	1	65001-
5		195-98-27560	Plate	1	65001-
6		09690-P0900	Mark, Komatsu Logo	2	65001-
7		09690-M0063	Mark, Komatsu Logo	1	65001-
8		195-98-27511	Mark	1	65001-
9		195-98-27521	Mark	1	65001-
10		195-98-27240	Plate	1	65001-
11		6245-81-9410	Plate	1	65001-
12		09649-03012	Plate, Engine Stop	1	65001-
13		195-98-22931	Plate	2	65001-
14		01220-60408	Screw, Philips Head	6	65001-
15		09653-A0481	Plate, Warning, High Temperature	1	65001-
16		09653-A0481	Plate, Warning, High Temperature	1	65001-
17		09654-B0641	Plate, Warning, Before Leaving Seat	1	65001-
18		09651-A0641	Plate, Warning, Read Manual Before Operating	1	65001-
19		09802-13000	Plate, Warning, Back-up	1	65001-
20		09659-A057B	Plate, Warning, Explosive Hazard	1	65001-
21		09806-B1683	Plate	2	65001-
22		09963-A1640	Tag, Danger, Do Not Operate	1	65001-
23		09808-A0881	Plate, Warning, Battery Cables	1	65001-
24		09667-A0481	Plate, Caution, Rotating Object	2	65001-
25	C2	09602-10001	Plate, Name (Limited Supply)	1	65001-
26		04418-13060	Screw	4	65001-
27		09637-30163	Plate, Service Instruction, Air Cleaner	1	65001-
28		6217-71-6470	Plate	1	65001-
29		09690-P1800	Decal, Komatsu Logo	1	65001-

Printed By : Dwi Iswanto (airafather6107170)

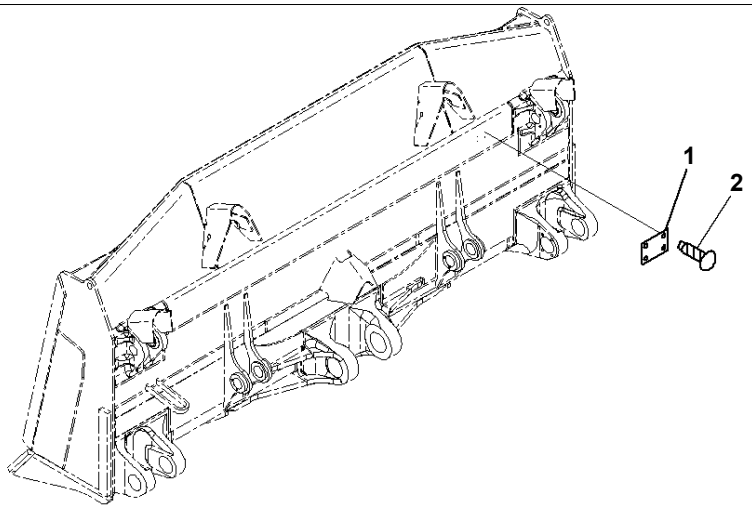

JH003340

D375A-6R S/N 65001-UP
Name Plate (#65001-)

Index	Code	Part Number	Description	Qty	Serial No.
1	C2	09601-60000	Plate, Name (Limited Supply)	1	65001-
2		04418-13060	Screw	4	65001-

Printed By : Dwi Iswanto (airafather6107170)

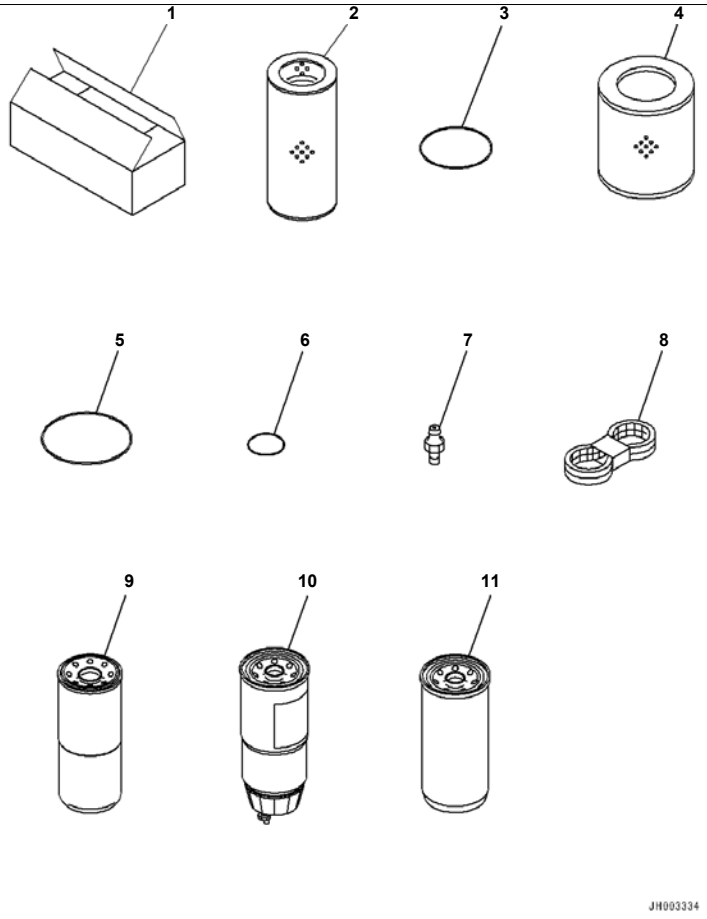

D375A-6R S/N 65001-UP
Spare Parts (#65001-)

Index	Code	Part Number	Description	Qty	Serial No.
1		09059-00800	Box	1	65001-
2		07063-51142	Element, Oil Filter	2	65001-
3		07000-A5165	O-ring	2	65001-
4		208-60-71123	Element	1	65001-
5		07000-15210	O-ring	1	65001-
6		07002-13634	O-ring	6	65001-
7		07020-00000	Fitting, Grease	4	65001-
8		6245-81-6360	V-belt	1	65001-
9		600-319-3550	Cartridge (1-5/8)	1	65001-
10		600-319-4500	Cartridge Assembly	2	65001-
11		600-211-1340	Cartridge	3	65001-

Printed By : Dwi Iswanto (airafather6107170)

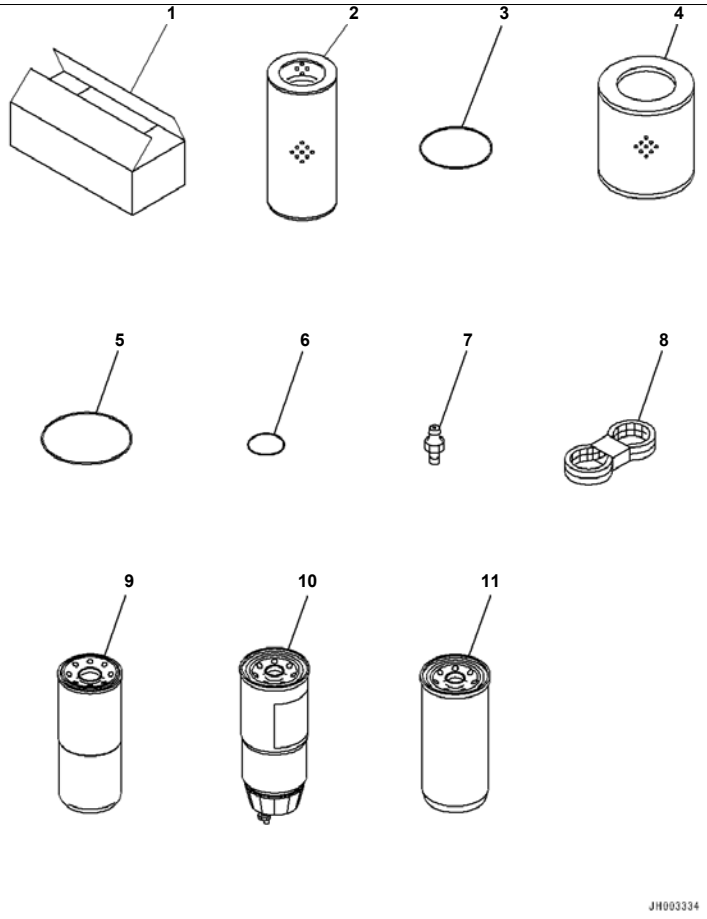

D375A-6R S/N 65001-UP
Spare Parts (#65001-)

Index	Code	Part Number	Description	Qty	Serial No.
1		09059-00800	Box	1	65001-
2		07063-51142	Element, Oil Filter	2	65001-
3		07000-A5165	O-ring	2	65001-
4		208-60-71123	Element	1	65001-
5		07000-15210	O-ring	1	65001-
6		07002-13634	O-ring	6	65001-
7		07020-00000	Fitting, Grease	4	65001-
8		6245-81-6360	V-belt	1	65001-
9		600-319-3841	Cartridge, (1-3/8)	1	65001-
10		600-319-4500	Cartridge Assembly	2	65001-
11		600-211-1340	Cartridge	3	65001-

Printed By : Dwi Iswanto (airafather6107170)

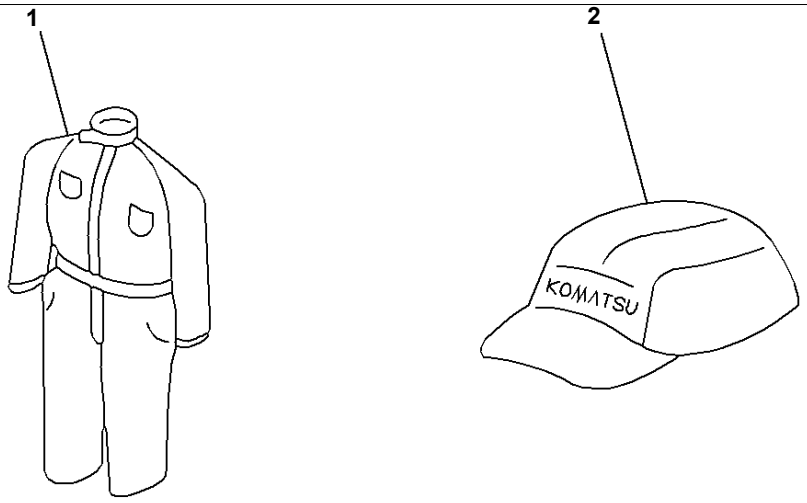

Index	Code	Part Number	Description	Qty	Serial No.
		09980-92550	Cap and Overall Kit	1	65001-
1		09980-10550	· Overall	1	65001-
2		09982-20057	· Cap	1	65001-

Printed By : Dwi Iswanto (airafather6107170)

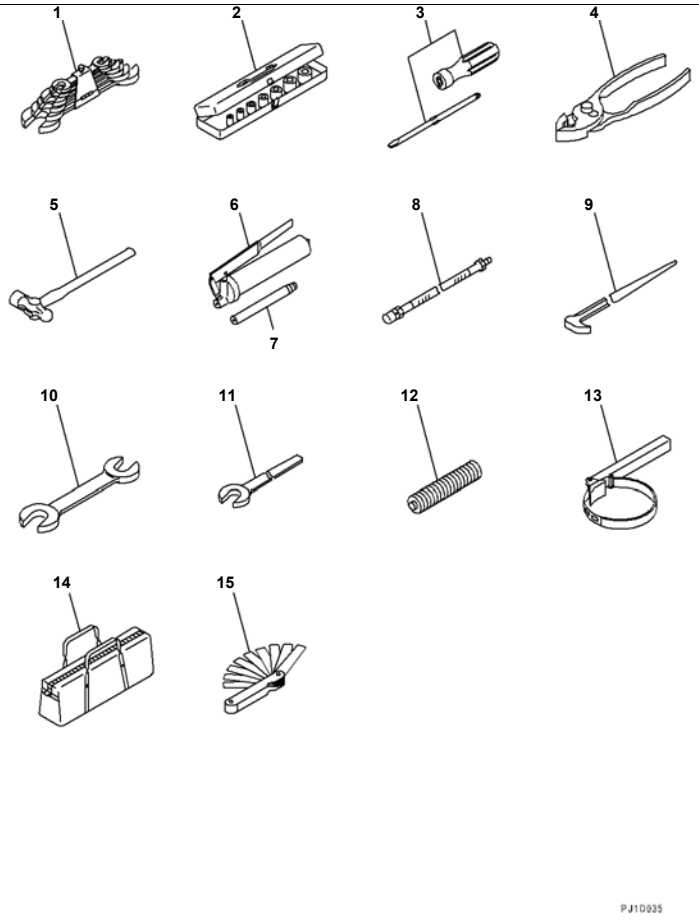

Index	Code	Part Number	Description	Qty	Serial No.
		195-98-05010	Tool Kit	1	65001-
1		09000-30006	· Wrench Set	1	65001-
2		09020-10284	· Socket Wrench Set	1	65001-
3		09033-00190	· Driver	1	65001-
4		09036-00150	· Pliers	1	65001-
5		09039-00150	· Hammer	1	65001-
		07952-70004	· Pump Assembly	1	65001-
6		07950-10450	· · Pump Assembly	1	65001-
7		07951-41017	· · Pump Assembly	1	65001-
8		07951-11400	· Nozzle	1	65001-
9		09055-10390	· Bar	1	65001-
10		09002-03641	· Wrench, W=36X41mm	1	65001-
11		09001-04600	· Wrench	1	65001-
12		07950-90403	· Cartridge	1	65001-
13		09019-28036	· Wrench	1	65001-
14		09056-05513	· Tool Bag	1	65001-
15		09054-00009	· Gauge, Filler	1	65001-

Printed By : Dwi Iswanto (airafather6107170)

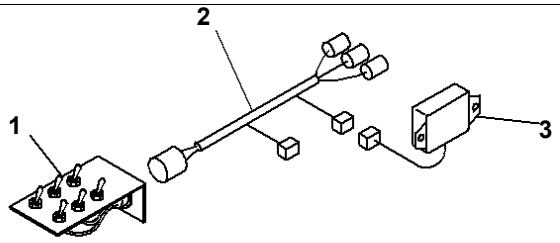

PW1D444

Index	Code	Part Number	Description	Qty	Serial No.
1		19M-06-32820	Switch Assembly	1	65001-
2		195-06-71220	Wiring Harness	1	65001-
		21J-06-13661	· Diode	1	65001-
3		7824-66-6430	Resistor	1	65001-

Printed By : Dwi Iswanto (airafather6107170)

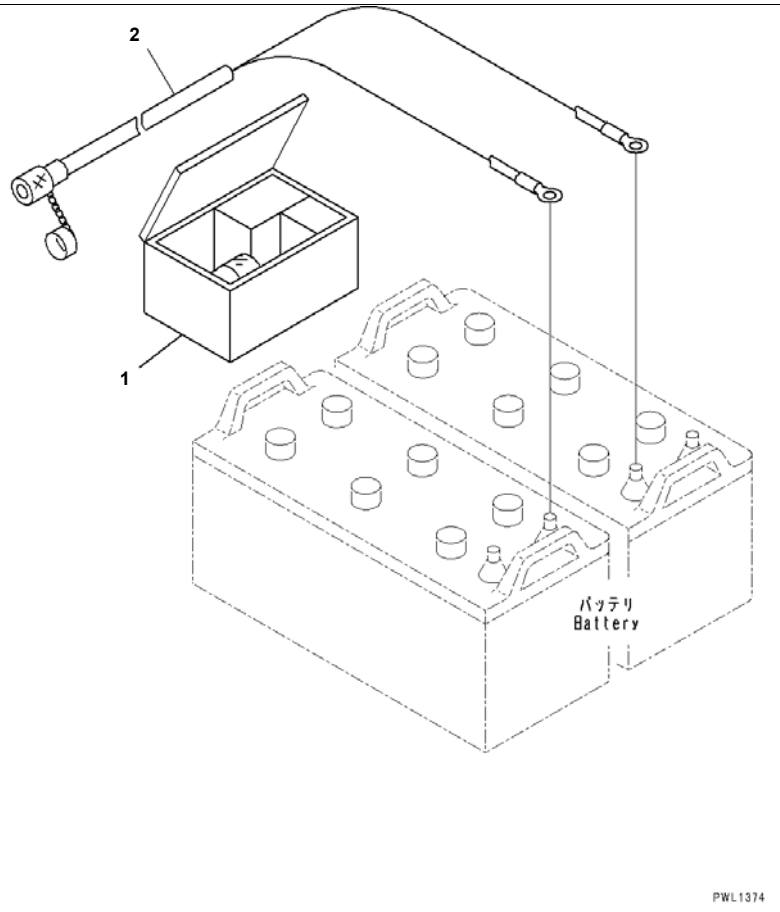

Index	Code	Part Number	Description	Qty	Serial No.
1		175-900-2470	Light	1	65001-
		195-904-5570	· Plug	1	65001-
		08105-12410	· Bulb, 12watt	2	65001-
2		175-98-22370	Cable	1	65001-

Printed By : Dwi Iswanto (airafather6107170)

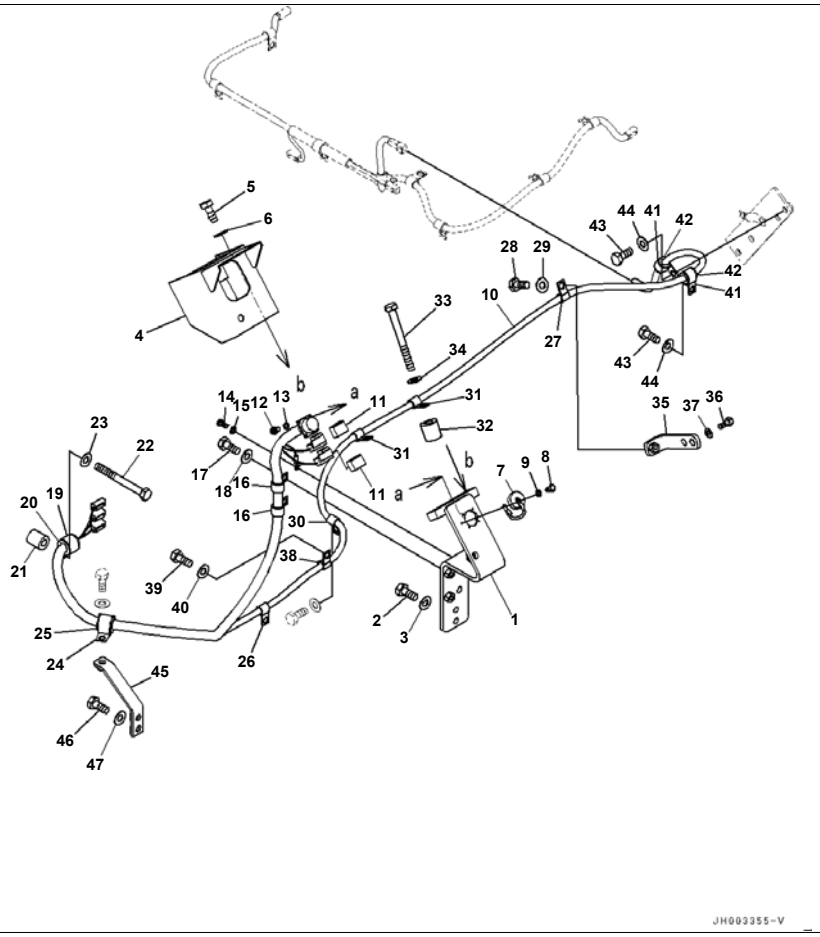

D375A-6R S/N 65001-UP
Coolant and Oil Pan Heater, Main Harness (#65001-65003)

Index	Code	Part Number	Description	Qty	Serial No.
1		195-06-72921	Bracket	1	65001-65003
2		01010-81230	Bolt	2	65001-65003
3		01643-31232	Washer	2	65001-65003
4		195-06-72951	Cover	1	65001-65003
5		01010-81230	Bolt	3	65001-65003
6		01643-31232	Washer	3	65001-65003
7		175-06-39830	Cap	1	65001-65003
8		01220-40312	Screw	1	65001-65003
9		01601-20307	Washer	1	65001-65003
10		195-06-72910	Wiring Harness	1	65001-65003
11		22U-06-11270	· Fusible Link, 65Amp.	2	65001-65003
12		01220-40312	Screw	4	65001-65003
13		01601-20307	Washer	4	65001-65003
14		01220-40610	Screw	1	65001-65003
15		01641-20608	Washer	1	65001-65003
16		04434-52112	Clip	2	65001-65003
17		01010-81230	Bolt	2	65001-65003
18		01643-31232	Washer	2	65001-65003
19		04434-53212	Clip	1	65001-65003
20		07095-20522	Cushion	1	65001-65003
21		144-874-7470	Boss	1	65001-65003
22		01010-81050	Bolt	1	65001-65003
23		01643-31032	Washer	1	65001-65003
24		04434-53212	Clip	1	65001-65003
25		07095-20522	Cushion	1	65001-65003
26		04434-51412	Clip	1	65001-65003
27		04434-51412	Clip	1	65001-65003
28		01010-81230	Bolt	1	65001-65003
29		01643-31232	Washer	1	65001-65003
30		04434-51412	Clip	1	65001-65003
31		04434-51412	Clip	2	65001-65003

Printed By : Dwi Iswanto (airafather6107170)

Coolant and Oil Pan Heater, Main Harness (#65001-65003)

Index	Code	Part Number	Description	Qty	Serial No.
32		195-33-11220	Spacer	2	65001-65003
33		01010-81260	Bolt	2	65001-65003
34		01643-31232	Washer	2	65001-65003
35		195-06-72930	Bracket	1	65001-65003
36		01010-81230	Bolt	2	65001-65003
37		01643-31232	Washer	2	65001-65003
38		04434-51412	Clip	1	65001-65003
39		01010-81230	Bolt	1	65001-65003
40		01643-31232	Washer	1	65001-65003
41		04434-52112	Clip	2	65001-65003
42		07095-20314	Cushion	2	65001-65003
43		01010-81230	Bolt	2	65001-65003
44		01643-31232	Washer	2	65001-65003
45		195-06-72960	Bracket	1	65001-65003
46		01010-81240	Bolt	2	65001-65003
47		01643-31232	Washer	2	65001-65003

Printed By : Dwi Iswanto (airafather6107170)

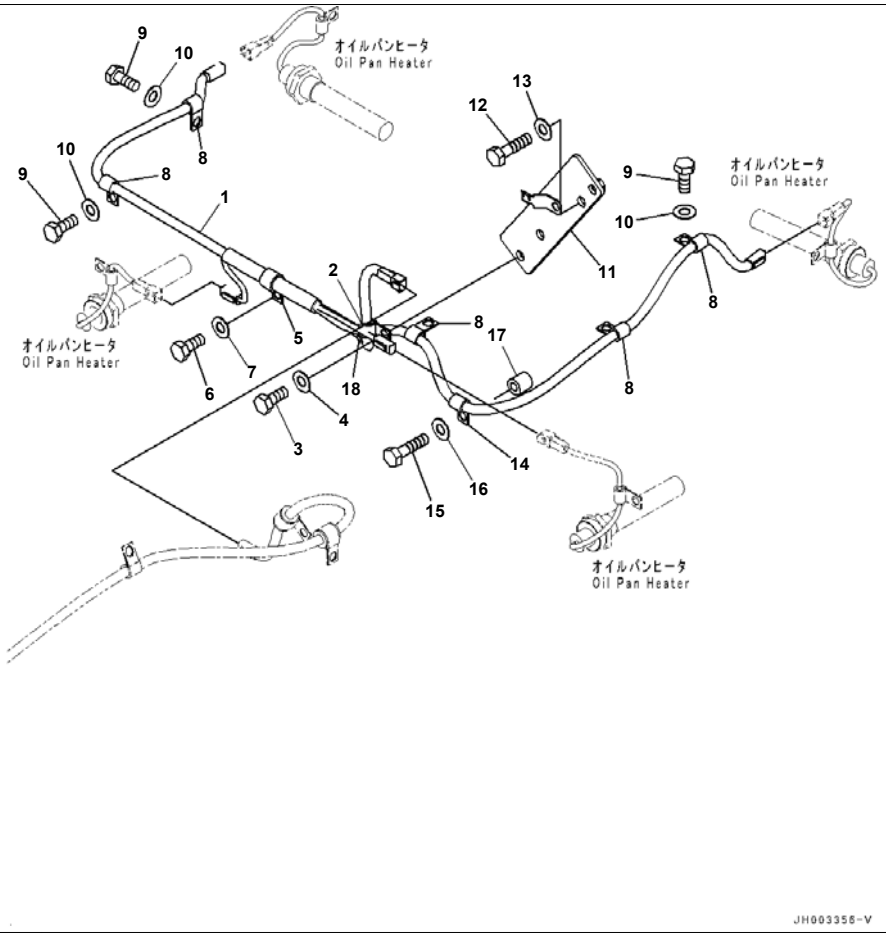

D375A-6R S/N 65001-UP
Coolant and Oil Pan Heater, Power Line Harness Clamp (#65001-65003)

Index	Code	Part Number	Description	Qty	Serial No.
1		195-06-72970	Wiring Harness	1	65001-65003
2		04434-51412	Clip	1	65001-65003
3		01010-81230	Bolt	1	65001-65003
4		01643-31232	Washer	1	65001-65003
5		04434-52112	Clip	1	65001-65003
6		01010-81220	Bolt	1	65001-65003
7		01643-31232	Washer	1	65001-65003
8		04434-51412	Clip	5	65001-65003
9		01010-81220	Bolt	5	65001-65003
10		01643-31232	Washer	5	65001-65003
11		195-06-72940	Bracket	1	65001-65003
12		01010-81245	Bolt	2	65001-65003
13		01643-31232	Washer	2	65001-65003
14		04434-51412	Clip	1	65001-65003
15		01010-81245	Bolt	1	65001-65003
16		01643-31232	Washer	1	65001-65003
17		195-33-11220	Spacer	1	65001-65003
18		08034-20519	Band	1	65001-65003

Printed By : Dwi Iswanto (airafather6107170)

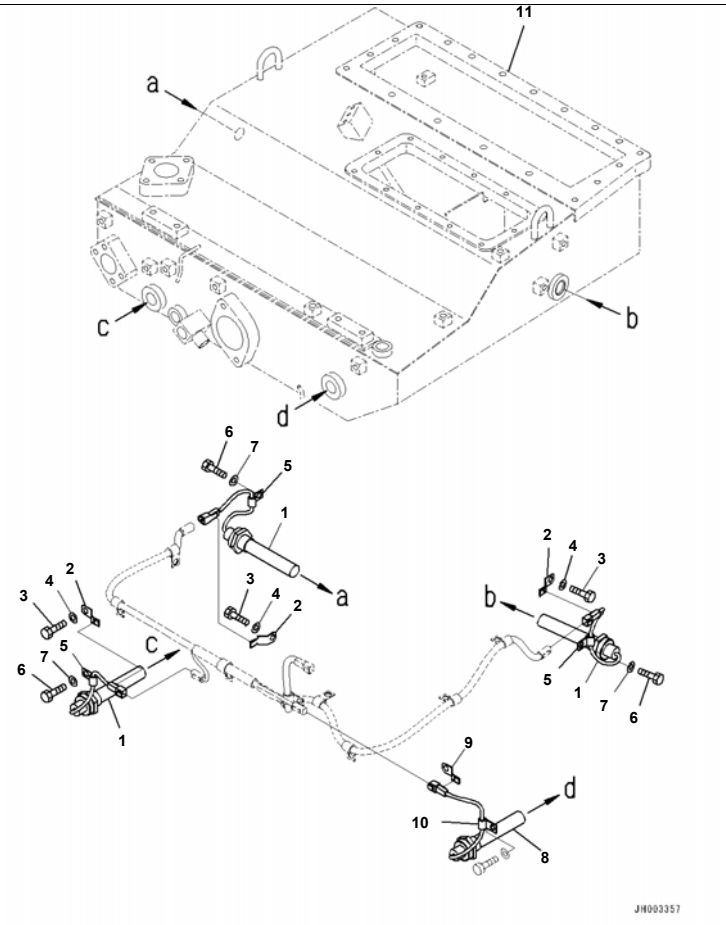

Coolant and Oil Pan Heater, Oil Pan Heater (#65001-65003)

Index	Code	Part Number	Description	Qty	Serial No.
1		600-815-9340	Heater	3	65001-65003
2		08193-21012	Clip	3	65001-65003
3		01010-81220	Bolt	3	65001-65003
4		01643-31232	Washer	3	65001-65003
5		04434-51012	Clip	3	65001-65003
6		01010-81220	Bolt	3	65001-65003
7		01643-31232	Washer	3	65001-65003
8		600-815-9340	Heater	1	65001-65003
9		08193-21012	Clip	1	65001-65003
10		04434-51012	Clip	1	65001-65003
11		(195-49-73341)	Tank		

Printed By : Dwi Iswanto (airafather6107170)

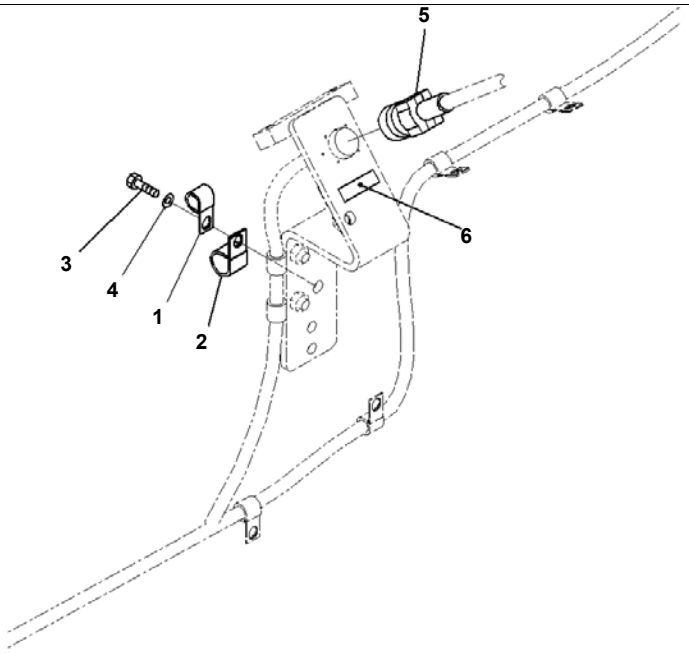

D375A-6R S/N 65001-UP
Coolant and Oil Pan Heater, Plug and Plate (#65001-65003)

Index	Code	Part Number	Description	Qty	Serial No.
1		04434-51712	Clip	1	65001-65003
2		04434-52512	Clip	1	65001-65003
3		01010-81225	Bolt	1	65001-65003
4		01643-31232	Washer	1	65001-65003
5		175-06-37871	Plug	1	65001-65003
6		195-98-14780	Plate, Caution	1	65001-65003

Printed By : Dwi Iswanto (airafather6107170)

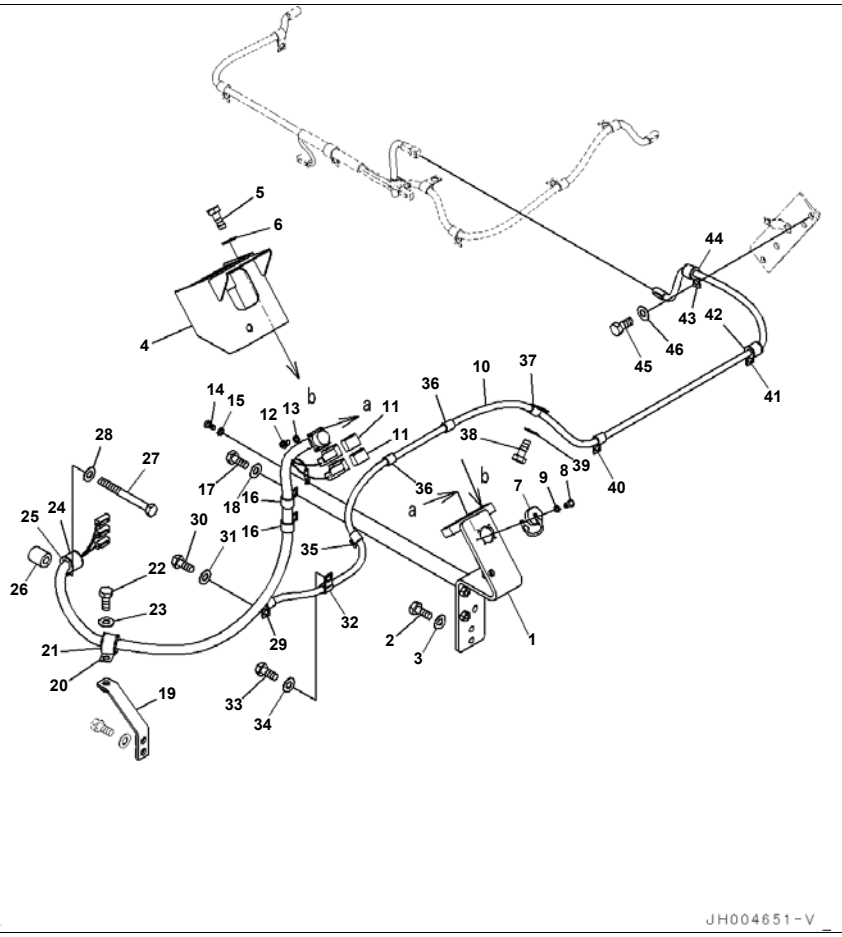

D375A-6R S/N 65001-UP
Coolant and Oil Pan Heater, With Engine Oil Pan And Coolant Heater, Main Harness (#65004-)

Index	Code	Part Number	Description	Qty	Serial No.
1		195-06-72990	Bracket	1	65004-
2		01010-81230	Bolt	2	65004-
3		01643-31232	Washer	2	65004-
4		195-06-72951	Cover	1	65004-
5		01010-81230	Bolt	3	65004-
6		01643-31232	Washer	3	65004-
7		175-06-39830	Cap	1	65004-
8		01220-40312	Screw	1	65004-
9		01601-20307	Washer	1	65004-
10		195-06-73410	Wiring Harness	1	65004-
11		22U-06-11270	· Fusible Link, 65Amp.	2	65004-
12		01220-40312	Screw	4	65004-
13		01601-20307	Washer	4	65004-
14		01220-40610	Screw	1	65004-
15		01641-20608	Washer	1	65004-
16		04434-52112	Clip	2	65004-
17		01010-81230	Bolt	2	65004-
18		01643-31232	Washer	2	65004-
19		195-06-72961	Bracket	1	65004-
20		04434-53212	Clip	1	65004-
21		07095-20522	Cushion	1	65004-
22		01010-81230	Bolt	1	65004-
23		01643-31232	Washer	1	65004-
24		04434-53212	Clip	1	65004-
25		07095-20522	Cushion	1	65004-
26		144-874-7470	Boss	1	65004-
27		01010-81050	Bolt	1	65004-
28		01643-31032	Washer	1	65004-
29		04434-51412	Clip	1	65004-
30		01010-81230	Bolt	1	65004-
31		01643-31232	Washer	1	65004-

Printed By : Dwi Iswanto (airafather6107170)

Coolant and Oil Pan Heater, With Engine Oil Pan And Coolant Heater, Main Harness (#65004-)

Index	Code	Part Number	Description	Qty	Serial No.
32		04434-51412	Clip	1	65004-
33		01010-81230	Bolt	1	65004-
34		01643-31232	Washer	1	65004-
35		04434-51412	Clip	1	65004-
36		04434-51412	Clip	2	65004-
37		04434-51412	Clip	1	65004-
38		01010-81230	Bolt	1	65004-
39		01643-31232	Washer	1	65004-
40		04434-51412	Clip	1	65004-
41		04434-52112	Clip	1	65004-
42		07095-20314	Cushion	1	65004-
43		04434-52112	Clip	1	65004-
44		07095-20314	Cushion	1	65004-
45		01010-81225	Bolt	1	65004-
46		01643-31232	Washer	1	65004-

Printed By : Dwi Iswanto (airafather6107170)

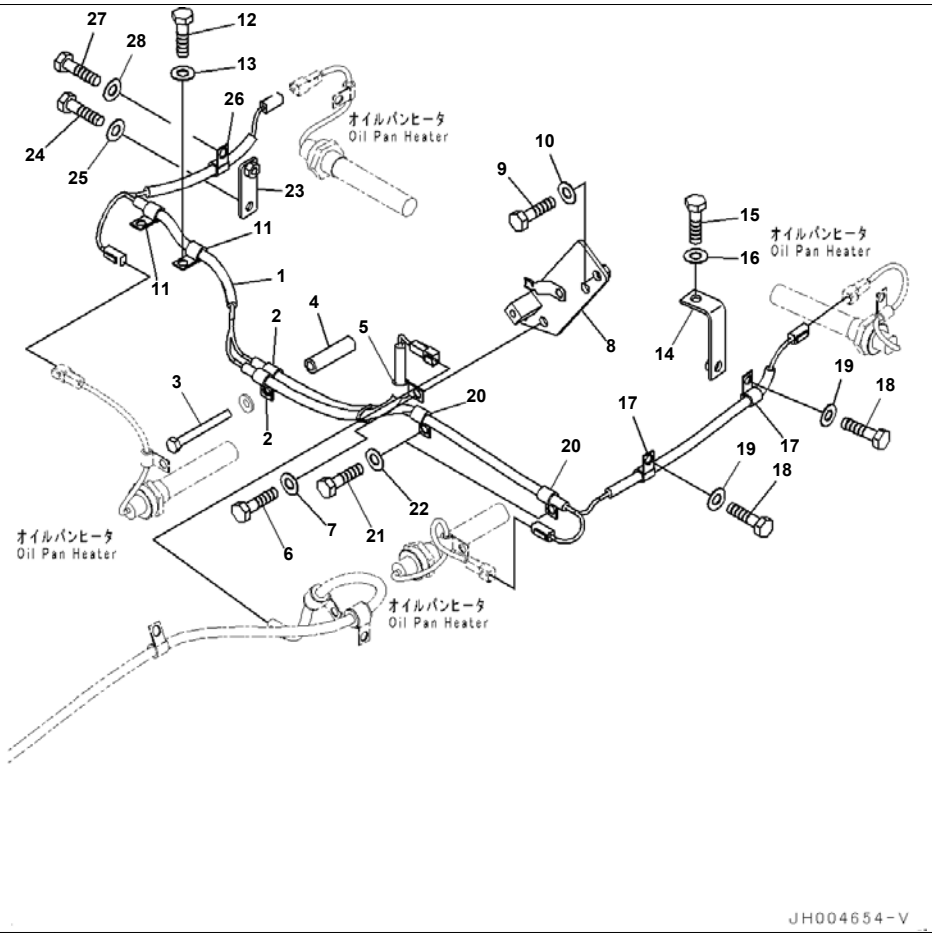

D375A-6R S/N 65001-UP
Coolant and Oil Pan Heater, With Engine Oil Pan And Coolant Heater, Power Line Harness Clamp (#65004-)

Index	Code	Part Number	Description	Qty	Serial No.
1		195-06-72980	Wiring Harness	1	65004-
2		04434-51412	Clip	2	65004-
3		01010-81205	Bolt	1	65004-
4		22S-62-26210	Spacer	1	65004-
5		04434-51412	Clip	1	65004-
6		01010-81225	Bolt	1	65004-
7		01643-31232	Washer	1	65004-
8		195-06-72941	Bracket	1	65004-
9		01010-81245	Bolt	2	65004-
10		01643-31232	Washer	2	65004-
11		04434-51412	Clip	2	65004-
12		01010-81225	Bolt	2	65004-
13		01643-31232	Washer	2	65004-
14		207-62-62770	Bracket	1	65004-
15		01010-81225	Bolt	1	65004-
16		01643-31232	Washer	1	65004-
17		04434-51412	Clip	2	65004-
18		01010-81225	Bolt	2	65004-
19		01643-31232	Washer	2	65004-
20		04434-51412	Clip	2	65004-
21		01010-81225	Bolt	2	65004-
22		01643-31232	Washer	2	65004-
23		154-Z11-5340	Bracket	1	65004-
24		01010-81225	Bolt	1	65004-
25		01643-31232	Washer	1	65004-
26		04434-51412	Clip	1	65004-
27		01010-81225	Bolt	1	65004-
28		01643-31232	Washer	1	65004-

Printed By : Dwi Iswanto (airafather6107170)

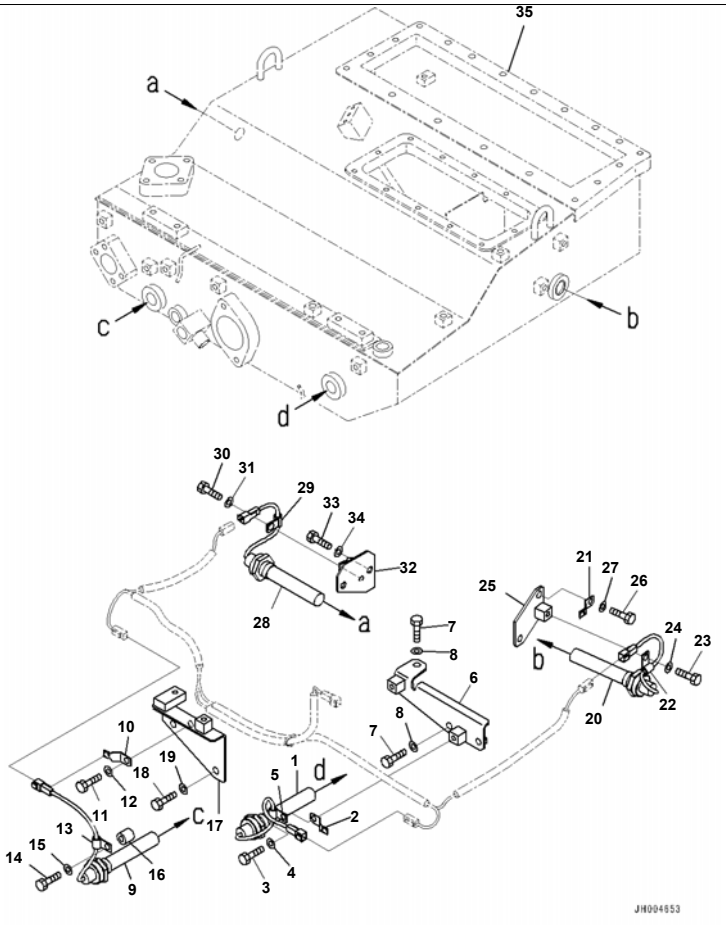

D375A-6R S/N 65001-UP
Coolant and Oil Pan Heater, With Engine Oil Pan And Coolant Heater, Oil Pan Heater (#65004-)

Index	Code	Part Number	Description	Qty	Serial No.
1		600-815-9340	Heater	1	65004-
2		08193-21012	Clip	1	65004-
3		01010-81225	Bolt	1	65004-
4		01643-31232	Washer	1	65004-
5		04434-51012	Clip	1	65004-
6		195-06-73310	Bracket	1	65004-
7		01010-81225	Bolt	2	65004-
8		01643-31232	Washer	2	65004-
9		600-815-9340	Heater	1	65004-
10		08193-21012	Clip	1	65004-
11		01010-81225	Bolt	1	65004-
12		01643-31232	Washer	1	65004-
13		04434-51012	Clip	1	65004-
14		01010-81245	Bolt	1	65004-
15		01643-31232	Washer	1	65004-
16		195-33-11220	Spacer	1	65004-
17		195-06-73320	Bracket	1	65004-
18		01010-81225	Bolt	2	65004-
19		01643-31232	Washer	2	65004-
20		600-815-9340	Heater	1	65004-
21		08193-21012	Clip	1	65004-
22		04434-51012	Clip	1	65004-
23		01010-81225	Bolt	1	65004-
24		01643-31232	Washer	1	65004-
25		195-06-73330	Bracket	1	65004-
26		01010-81225	Bolt	2	65004-
27		01643-31232	Washer	2	65004-
28		600-815-9340	Heater	1	65004-
29		04434-51012	Clip	1	65004-
30		01010-81225	Bolt	1	65004-
31		01643-31232	Washer	1	65004-

Printed By : Dwi Iswanto (airafather6107170)

Coolant and Oil Pan Heater, With Engine Oil Pan And Coolant Heater, Oil Pan Heater (#65004-)

Index	Code	Part Number	Description	Qty	Serial No.
32		195-06-73340	Bracket	1	65004-
33		01010-81225	Bolt	2	65004-
34		01643-31232	Washer	2	65004-
35		(195-49-73341)	Tank		

Printed By : Dwi Iswanto (airafather6107170)

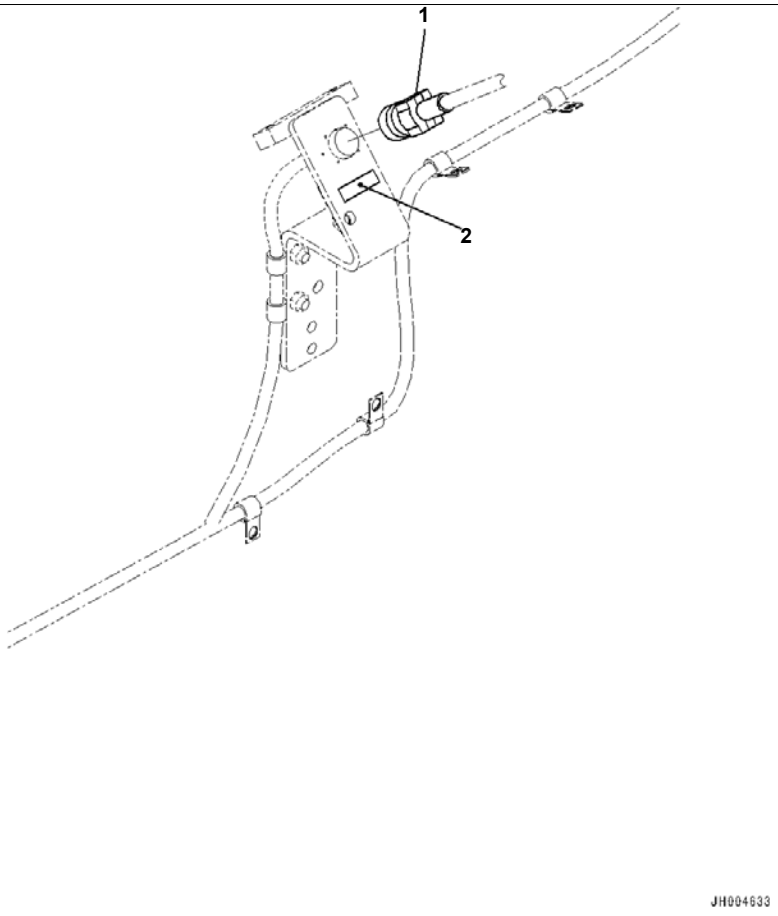

Coolant and Oil Pan Heater, With Engine Oil Pan And Coolant Heater, Plug and Plate (#65004-)

Index	Code	Part Number	Description	Qty	Serial No.
1		175-06-37871	Plug	1	65004-
2		195-98-14780	Plate, Caution	1	65004-

Printed By : Dwi Iswanto (airafather6107170)

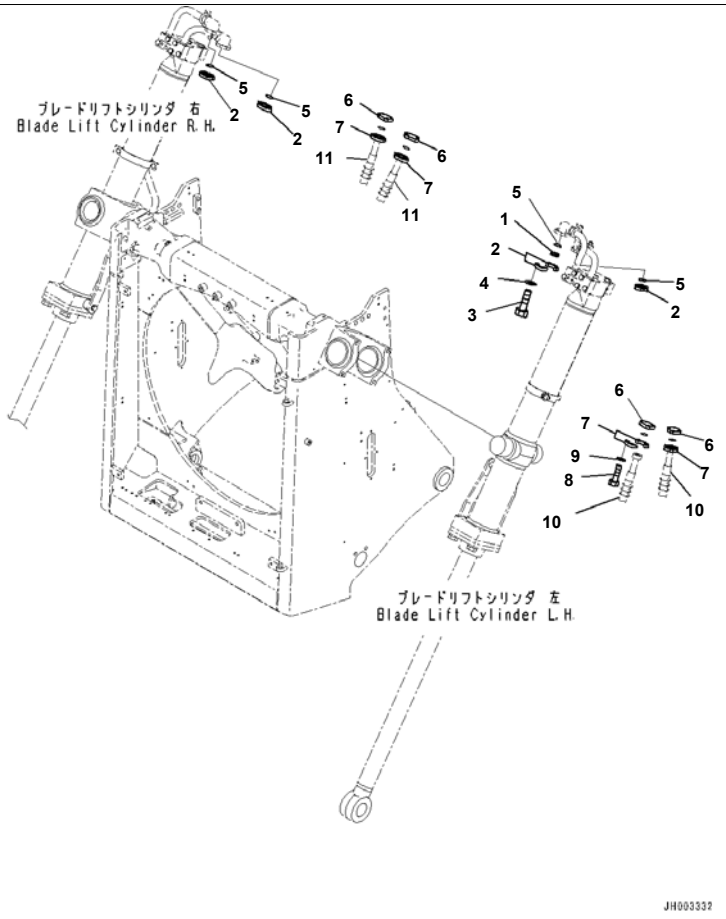

Index	Code	Part Number	Description	Qty	Serial No.
1		07378-11200	Head	4	65001-
2		07371-31255	Flange, Split	8	65001-
3		07372-21035	Bolt	16	65001-
4		01643-51032	Washer	16	65001-
5		07000-13038	O-ring	4	65001-
6		07379-01250	Flange	4	65001-
7		07371-31255	Flange, Split	8	65001-
8		07372-21035	Bolt	16	65001-
9		01643-51032	Washer	16	65001-
10		(07099-01016)	Hose, Flange Type		
11		(07099-01016)	Hose, Flange Type		

Printed By : Dwi Iswanto (airafather6107170)

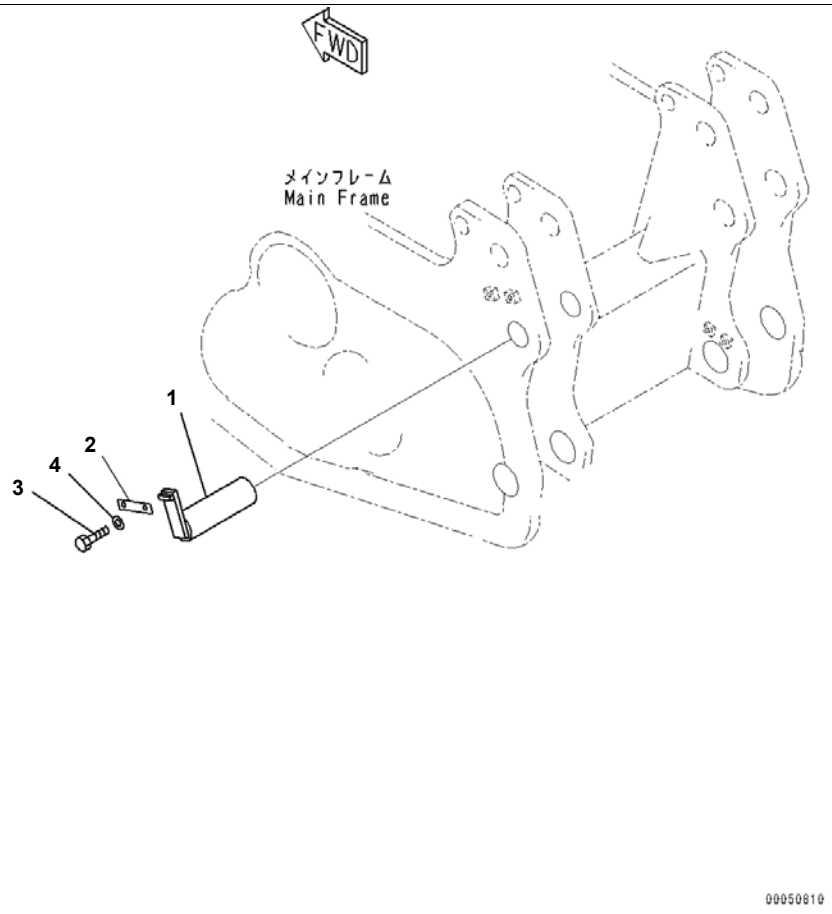

Reference:W9970-002001 Page:W004001

D375A-6R S/N 65001-UP
Hang Pin, Shipping Parts (#65001-)

Index	Code	Part Number	Description	Qty	Serial No.
1		195-78-71540	Pin	2	65001-
2		195-78-21171	Plate	2	65001-
3		01010-62040	Bolt	4	65001-
4		01643-32060	Washer	4	65001-

Printed By : Dwi Iswanto (airafather6107170)

Index	Code	Part Number	Description	Qty	Serial No.
K01		195-13-05200	Service Kit, Transmission		65001-
		02896-61012	· O-ring	1	-
		07000-72055	· O-ring	3	-
		07000-72070	· O-ring	1	-
		07000-72085	· O-ring	1	-
		07000-72130	· O-ring	1	-
		07000-73034	· O-ring	1	-
		07000-73048	· O-ring	1	-
		07000-75150	· O-ring	1	-
		07000-75175	· O-ring	1	-
		07000-75270	· O-ring	2	-
		07002-61423	· O-ring	2	-
		07002-62034	· O-ring	1	-
		07005-01212	· Seal, Washer	18	-
		07012-50125	· Seal, Oil	1	-
		07018-31104	· Seal Ring	1	-
		145-15-42810	· Ring	1	-
		155-15-12820	· Seal Ring	1	-
		175-15-59250	· Seal Ring	2	-
		195-13-86911	· Gasket	1	-
		198-13-42710	· Seal Ring	1	-
		198-13-49110	· O-ring	1	-
		566-15-49210	· Ring	2	-
K02		195-15-05900	Service Kit, Transmission		65001-
		07000-72014	· O-ring	3	-
		07000-72016	· O-ring	1	-
		07000-72020	· O-ring	1	-
		07000-72080	· O-ring	2	-
		07000-72085	· O-ring	3	-
		07000-73025	· O-ring	2	-
		07000-73030	· O-ring	4	-
		07000-73032	· O-ring	1	-
		07000-73035	· O-ring	3	-
		07000-73045	· O-ring	2	-
		07000-73048	· O-ring	2	-
		07000-75305	· O-ring	1	-
		07002-61023	· O-ring	2	-
		07002-61623	· O-ring	1	-
		07002-63634	· O-ring	4	-
		145-15-42810	· Ring	1	-
		145-15-42820	· Seal Ring	1	-
		155-15-12820	· Seal Ring	1	-
		175-15-59240	· Seal Ring	1	-
		175-15-59250	· Seal Ring	1	-
		175-15-59270	· Seal Ring	1	-
		195-15-29220	· Seal Ring	2	-
		195-15-39210	· Seal Ring	1	-
		195-15-49210	· Seal Ring	1	-
		195-15-71230	· Gasket	1	-
		195-15-75750	· O-ring	1	-
		195-15-79620	· O-ring	1	-
		195-15-81240	· Gasket	1	-
		198-13-49110	· O-ring	1	-
		582-15-19250	· Seal Ring	1	-
K03		17M-15-05110	Service Kit, Transmission		65001-
		07000-72014	· O-ring	2	-
		07000-72020	· O-ring	1	-
		07000-72055	· O-ring	2	-
		07000-72085	· O-ring	1	-
		07000-73022	· O-ring	1	-
		07000-73025	· O-ring	2	-
		07000-73028	· O-ring	1	-
		07000-73030	· O-ring	5	-
		07000-73032	· O-ring	1	-
		07000-73035	· O-ring	1	-
		07000-73038	· O-ring	1	-
		07000-73045	· O-ring	1	-
		144-15-22881	· Ring	2	-
		17A-15-25911	· Gasket	1	-

Printed By : Dwi Iswanto (airafather6107170)

Index	Code	Part Number	Description	Qty	Serial No.
		195-15-71230	· Gasket	1	-
		198-16-11290	· O-ring	1	-
		425-15-19250	· Seal Ring	1	-
		562-15-19230	· Seal Ring	2	-
		566-15-79260	· Seal Ring	2	-
		568-15-12830	· Seal Ring	2	-
		568-15-12840	· Seal Ring	1	-
K04		195-22-05010	Service Kit, Transmission		65001-
		07000-71008	· O-ring	1	-
		07000-72015	· O-ring	1	-
		07000-72018	· O-ring	24	-
		07000-72065	· O-ring	1	-
		07000-72085	· O-ring	1	-
		07000-72125	· O-ring	1	-
		07000-72135	· O-ring	1	-
		07000-73022	· O-ring	4	-
		07000-73025	· O-ring	3	-
		07000-73028	· O-ring	3	-
		07000-73042	· O-ring	3	-
		07000-73050	· O-ring	1	-
		07000-75140	· O-ring	6	-
		07000-75220	· O-ring	1	-
		07000-75295	· O-ring	1	-
		07000-75375	· O-ring	1	-
		07002-61023	· O-ring	1	-
		07002-62034	· O-ring	8	-
		07002-62434	· O-ring	1	-
		07005-00812	· Gasket	4	-
		07005-01012	· Gasket	4	-
		113-15-12861	· Seal Ring	2	-
		195-09-18361	· Seal Ring	6	-
		195-15-49620	· O-ring	1	-
		195-22-79640	· O-ring	4	-
		195-22-79650	· O-ring	2	-
		562-15-19320	· Seal Ring	2	-
		566-13-43140	· O-ring	2	-
K06		195-32-05400	Shoe Bolt and Nut Kit		65001-
		195-32-61210	· Bolt	30	-
		195-32-61220	· Nut	30	-
K07		707-99-56240	Service Kit, Blade Lift Cylinder		65001-
		07000-12055	· O-ring	1	-
		07000-12135	· O-ring	1	-
		07000-13030	· O-ring	2	-
		07000-13038	· O-ring	2	-
		07000-13045	· O-ring	1	-
		07000-13048	· O-ring	1	-
		07000-B2065	· O-ring	1	-
		07001-02065	· Ring, Back-up	2	-
		07146-02136	· Ring, Back-up	1	-
		707-39-14820	· Ring, Wear	2	-
		707-44-14150	· Ring, Piston	1	-
		707-51-90030	· Packing, Rod	1	-
		707-51-90650	· Ring, Buffer	1	-
		707-56-90740	· Seal, Dust	1	-
K08		707-99-74230	Service Kit, Blade Tilt Cylinder		65001-
		07000-13022	· O-ring	2	-
		07000-15190	· O-ring	1	-
		07000-B2090	· O-ring	1	-
		07146-05192	· Ring, Back-up	1	-
		07155-02045	· Ring, Wear	1	-
		707-35-52930	· Ring, Back-up	2	-
		707-44-20150	· Ring, Piston	1	-
		707-51-11030	· Packing, Rod	1	-
		707-51-11650	· Ring, Buffer	1	-
		707-56-11740	· Seal, Dust	1	-
K09		707-98-11350	Service Kit, Pin Puller Cylinder		65001-
		02896-11009	· O-ring	2	-
		07000-12055	· O-ring	1	-
		07000-12060	· O-ring	1	-

Printed By : Dwi Iswanto (airafather6107170)

Index	Code	Part Number	Description	Qty	Serial No.
		07001-02055	· Ring, Back-up	1	-
		707-34-10600	· O-ring	1	-
		707-35-99600	· Ring, Back-up	2	-
		707-51-30210	· Packing, Rod	1	-
		707-56-30510	· Seal, Dust	1	-
		707-56-30740	· Seal, Dust	1	-
K10		707-99-67700	Service Kit, Ripper Tilt Cylinder		65001-
		07000-13035	· O-ring	2	-
		07000-15170	· O-ring	1	-
		07000-B5110	· O-ring	1	-
		07001-05110	· Ring, Back-up	2	-
		07145-00100	· Seal, Dust	4	-
		07146-05172	· Ring, Back-up	1	-
		07155-01845	· Ring, Wear	1	-
		707-44-18150	· Ring, Piston	1	-
		707-51-11030	· Packing, Rod	1	-
		707-51-11650	· Ring, Buffer	1	-
		707-56-11740	· Seal, Dust	1	-
K11		707-99-74240	Service Kit, Ripper Lift Cylinder		65001-
		07000-13035	· O-ring	2	-
		07000-15190	· O-ring	1	-
		07000-B5110	· O-ring	1	-
		07001-05110	· Ring, Back-up	2	-
		07145-00100	· Seal, Dust	2	-
		07146-05192	· Ring, Back-up	1	-
		07155-02045	· Ring, Wear	1	-
		707-44-20150	· Ring, Piston	1	-
		707-51-11030	· Packing, Rod	1	-
		707-51-11650	· Ring, Buffer	1	-
		707-56-11740	· Seal, Dust	1	-

Printed By : Dwi Iswanto (airafather6107170)