CATERPILLAR®

SEBP4573-17
June 2011

RUTHZIL TRATOR COMERCIAL DE PEÇAS LTDA 11 97083-6812 ROLANDO

Parts Manual

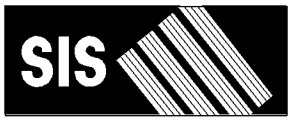

See "General Information" for New Parts Manual Features.

D3K XL & LGP Track Type Tractors

FFF1-Up (Machine)
JTD1-Up (Machine)
LLL1-Up (Machine)
C4E1-Up (Engine)
JMJ1-Up (Ripper)
JAG1-Up (Winch)

Powered By C4.4 Engine

Product and Dealer Information

Note: For product identification plate locations, see the section “Product Identification Information” in the Operation and Maintenance Manual.

Delivery Date: _____

Product Information

Model: _____

Product Identification Number: _____

Engine Serial Number: _____

Transmission Serial Number: _____

Generator Serial Number: _____

Attachment Serial Numbers: _____

Attachment Information: _____

Customer Equipment Number: _____

Dealer Equipment Number: _____

Dealer Information

Name: _____ Branch: _____

Address: _____

_____

_____

	Dealer Contact	Phone Number	Hours
Sales:	_____	_____	_____
Parts:	_____	_____	_____
Service:	_____	_____	_____

MEMORANDA

TABLE OF CONTENTS

Name	Page
GENERAL INFORMATION	A4
REPAIR ALTERNATIVES	A7
SUPPLEMENTAL COOLANT ADDITIVES	A8
MAINTENANCE PARTS	A9
INDEX	A14
MACHINE ARRANGEMENT	1
CHASSIS AR	1
COMMON AR	2
CONVERSION AR-MACHINE OPTION	3
ENGINE ARRANGEMENT	6
ENGINE AR-PRIMARY	6
INSTALLATION AR-ENGINE	7
BASIC ENGINE	8
ADAPTER GP-AUXILIARY DRIVE	8
BELT TENSIONER GP	9
CAMSHAFT GP	11
COVER GP-CYLINDER HEAD	12
COVER GP-VALVE MECHANISM	13
CRANKSHAFT GP	15
CYLINDER BLOCK GP	21
CYLINDER HEAD AS	24
CYLINDER HEAD GP	26
DRIVE GP-AUXILIARY	27
DRIVE GP-FAN	28
FLYWHEEL GP	29
GEAR GP-FRONT	30
HOUSING GP-FLYWHEEL	32
LIFTING GP-ENGINE	33
MOUNTING GP-ENGINE	34
PAN GP-OIL	35
PISTON & ROD GP	37
PLUG GP-CYLINDER HEAD	39
PLUG GP-ENGINE	40
PULLEY GP-CRANKSHAFT	41
ROCKER ARM GP	42
SUPPORT GP-ENGINE & XMSN	43
SUPPRESSION AR-SOUND	44
VALVE GP-MANUAL	45
VALVE MECHANISM GP	46
LUBRICATION SYSTEM	48
FILLER GP-ENGINE OIL	48
FILTER GP-ENGINE OIL	49
PUMP GP-ENGINE OIL	51
VALVE GP-FLUID SAMPLING	52
COOLING SYSTEM	53
CONNECTION GP-WATER	53
COOLER GP-ENGINE OIL	55
FAN GP-BLOWER	59
LINES GP-COOLANT	60
PUMP GP-WATER	61
RADIATOR & HYD OIL COOLER GP	65
TANK GP-COOLANT	67
AIR INLET AND EXHAUST SYSTEM	68
AIR CLEANER GP	68
ARRESTOR GP-SPARK	69
MUFFLER GP	71
TURBOCHARGER GP	72
FUEL SYSTEM	75
BOWL GP-WATER COLLECTION	75
FILTER GP-FUEL	76
FILTER GP-PRIMARY FUEL	79
INJECTOR GP-FUEL	81
LINES GP-FUEL	83
PUMP & MTG GP-UNIT INJ HYD	99
PUMP GP-FUEL INJECTION	100
RAIL GP-FUEL	133
SHUTOFF GP-MANUAL	134
TANK GP-FUEL	135
VALVE GP-CHECK	140
VALVE GP-SOLENOID	141
ELECTRICAL AND STARTING SYSTEM	143
ALTERNATOR GP-CHARGING	143
BATTERY & WIRING GP	145
CABLE AS-COILED	161
CONTROL GP-ENGINE ELECTRONIC	162
CONTROL GP-UNPROGRAMMED	163
CONVERSION GP-ELECTRICAL	164
ELECTRONICS GP-COMMUNICATION	171
ELECTRONICS GP-IMPLEMENT	171
ELECTRONICS GP-MACHINE	171
GLOW PLUG GP	172
GRADE CONTROL AR	173
GRADE CONTROL AR-LASER	175
GRADE CONTROL AR-SATELLITE	175
HEATER GP-JACKET WATER	178
INSTALLATION GP-COMMUNICATION	179
INSTALLATION GP-SECURITY	185
LAMP GP-FLOOD	187
LIGHTING GP-FLOOD	190
MAST GP	194
MOUNTING GP-CONNECTOR	195
MOUNTING GP-GRADE CONTROL	196
MOUNTING GP-RECEIVER	199
PANEL GP-FUSE	201
RECEIVER GP-LASER	210
RECEIVER GP-SATELLITE	210
RELAY GP	214

TABLE OF CONTENTS

Name	Page
SENSOR GP-POSITION	215
SENSOR GP-PRESSURE	217
SENSOR GP-SPEED	218
SERVICE GP-COMMUNICATION	220
STARTING AID GP-ETHER	221
STARTING MOTOR GP-ELECTRIC	223
SWITCH GP-DISCONNECT	224
SWITCH GP-ROTARY	225
TARGET GP-LASER	226
WARNING GP-BACKUP	228
WIRING GP-AIR CONDITIONER	230
WIRING GP-CAB	231
WIRING GP-ELECTROHYDRAULIC	253
WIRING GP-ENGINE	255
WIRING GP-GRADE CONTROL	263
WIRING GP-PLATFORM	289
POWER TRAIN	295
ACTUATOR GP-PUMP	295
BRAKE GP-PARKING	298
DRIVE AR	300
DRIVE GP-FINAL	302
DRIVE GP-HYDROSTATIC	304
FILTER GP-OIL	305
HEAD GP-PUMP	306
LINES GP-HYDROSTATIC	308
LINES GP-POWER TRAIN COOLER	319
LINES GP-TRANSMISSION OIL	335
MOTOR GP-PISTON	352
POWER TRAIN AR	354
PUMP GP-CHARGE	355
PUMP GP-PISTON	359
ROTATING GP-PUMP	368
SEGMENT GP-SPROCKET	372
SPROCKET GP	373
VALVE GP-FLUSHING	374
VALVE GP-PILOT	375
VALVE GP-RELIEF	376
VALVE GP-SOLENOID	380
FRAME AND BODY	384
COUNTERWEIGHT GP-FRONT	384
COVER GP-ACCESS	385
DRAWBAR GP	386
ENCLOSURE GP-PLATFORM	387
FRAME GP	392
FRAME GP-MAIN	402
GRILL AR-RADIATOR	405
GRILL GP-RADIATOR	407
GUARD GP-BOTTOM	409
GUARD GP-BRUSH	416
GUARD GP-FRONT	421
GUARD GP-RADIATOR	422
GUARD GP-REAR	423
HITCH GP-TOWING	427
HOOD & GUARD GP	428
LINER GP-SOUND SUPPRESSION	433
SCREEN GP	434
SWEEP GP	435
UNDERCARRIAGE	438
ADJUSTMENT GP-HYDRAULIC TRACK	438
GUARD GP-IDLER	441
GUARD GP-TRACK GUIDE	445
GUARD GP-TRACK ROLLER	452
IDLER GP-FRONT	454
IDLER GP-TRACK	456
LINK AS-TRACK	458
LINK AS-TRACK BOX	461
ROLLER GP-TRACK	464
ROLLER GP-TRACK CARRIER	466
ROLLER GP-TRACK-DOUBLE FLANGE	470
ROLLER GP-TRACK-SINGLE FLANGE	476
SPRING GP-RECOIL	481
TRACK AR	482
TRACK GP	484
UNDERCARRIAGE AR	487
STEERING AND BRAKING SYSTEM	488
BRAKE GP-SERVICE & PARKING	488
PUMP GP-CHARGE	489
PUMP GP-PISTON	490
ROTATING GP-MOTOR	494
ROTATING GP-PUMP	496
VALVE GP-CONTROL	499
HYDRAULIC SYSTEM	525
CYLINDER GP-ANGLING	525
CYLINDER GP-BULLDOZER LIFT	526
CYLINDER GP-RIPPER	528
CYLINDER GP-TILT	530
HYDRAULIC AR	532
LINES GP-ANGLE & TILT	535
LINES GP-HYDRAULIC	553
LINES GP-PRESSURE TEST	566
LINES GP-PUMP	570
LINES GP-REAR ATTACHMENT	585
LINES GP-RIPPER	591
LINES GP-WINCH	595
MANIFOLD GP-CONTROL	606
MANIFOLD GP-VALVE	607
MOTOR GP-PISTON	608
PUMP GP-GEAR	609
SUPPORT GP-PUMP DRIVE	610
TANK & MTG GP-HYDRAULIC	611
TANK GP-HYDRAULIC	613
VALVE & MTG GP-CONTROL	620
VALVE & MTG GP-IMPLEMENT CONT	622

TABLE OF CONTENTS

Name	Page
VALVE GP-BANK 3	624
VALVE GP-BANK 4	626
VALVE GP-BANK 5	630
VALVE GP-CONTROL	632
VALVE GP-RELIEF	648
VALVE GP-SOLENOID	649
IMPLEMENTS	653
C-FRAME GP-POWER ANGLING	653
LINK GP-PITCH	655
OPERATOR STATION	657
ACCESSORY GP-CAB	657
ACCUMULATOR GP-REFRIGERANT	665
AIR CONDITIONER & MOUNTING GP	667
AIR CONDITIONER GP	670
ARM GP-SEAT SUSPENSION	677
ARMREST GP	680
CABLE GP-CONTROL	684
COMPRESSOR & MTG GP-REFRIG	685
COMPRESSOR GP-REFRIGERANT	686
CONDENSER GP-REFRIGERANT	687
CONSOLE GP	689
CONSOLE GP-OPERATOR	692
CONTROL & MTG GP-PEDAL	694
CONTROL GP-HANDLE	695
CONTROL GP-HYDRAULIC	700
CONTROL GP-JOYSTICK	705
CONTROL GP-RIPPER	710
COVER GP-CAB	714
COVER GP-CONSOLE	733
DISPLAY GP-MONITOR	738
DOOR GP-CAB	741
HEATER GP-CAB	762
INSTALLATION GP-RADIO	771
INSTRUMENT GP	772
LATCH GP	776
LINES GP-AIR CONDITIONER	777
LINES GP-HEATER	782
LITERATURE GP	785
MIRROR GP-REAR VIEW	786
MOTOR GP-WINDOW WIPER	787
MOUNTING GP-CAB	791
MOUNTING GP-RADIO	792
PAN GP-BACKREST	793
PEDAL GP-GOVERNOR & BRAKE	794
ROPS AR	796
SCREEN GP-CAB	798
SCREEN GP-PROTECTION	799
SEAT & SUPPORT GP	801
SEAT BELT GP	802
SEAT GP	804
SEAT GP-SUSPENSION	818
SUPPORT GP-HYDRAULIC CONTROL	825
SUPPORT GP-STEERING CONTROL	827
SUSPENSION GP-SEAT	829
WASHER GP-WINDOW	833
WINDOW GP-CAB	835
WINDOW GP-SLIDING	840
WIPER GP-WINDOW	844
WORK TOOLS	846
BLADE AR-PWR ANGLE & TILT	846
BLADE GP-ANGLING	851
BRAKE & PLANETARY GP-WINCH	870
CASE GP-WINCH	872
CLUTCH & GEAR GP-WINCH	873
CONTROL GP-WINCH	874
DRIVE AR-WINCH	891
EDGE GP-BIT & CUTTING	894
EDGE-CUTTING	899
FILTER GP-OIL	900
GEAR GP-WINCH	901
GEAR GP-WINCH TRANSFER	903
MOTOR & MTG GP-WINCH	904
MOUNTING GP-MAST	906
MOUNTING GP-PUMP	907
MOUNTING GP-RIPPER	908
MOUNTING GP-WINCH	909
PLANETARY GP-WINCH	912
RIPPER AR	913
RIPPER GP	914
SHAFT GP-WINCH DRUM	915
TOOTH GP-RIPPER	917
VALVE & LINES GP-WINCH	918
WINCH AR	920
SERVICE EQUIPMENT AND SUPPLIES	921
FILM GP	921
LOCK GP-VANDALISM	923
PLATE & FILM GP	924
PART NUMBER INDEX	B1

GENERAL INFORMATION

1. MACHINE IDENTIFICATION

Caterpillar machines are identified by Product Identification Numbers (PIN). Some components included in a machine may be identified by Serial Numbers (S/N). Typical components that will be serialized include engines, transmissions, bulldozers, and rippers. The machine and engine are further identified by arrangement numbers and in some cases modification numbers. These numbers are shown on the product identification plate(s) and on the master plate in the operator's compartment.

Caterpillar dealers need all of these numbers to determine accurate parts identification.

SIS *New Feature*

Effective First Quarter 2001 the Caterpillar Product Identification Number (PIN) changed from 8 to 17 characters. In an effort to provide uniform equipment identification, Caterpillar and other construction equipment manufacturers are moving to comply with the latest version of the product identification numbering standard. Non-road machine PINs are defined by ISO 10261. The new PIN format will apply to all Caterpillar machines and generator sets. The PIN plates and frame marking will display the 17 character PIN. The new format will look like the following:

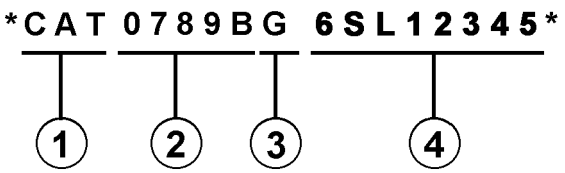

Where:

1. Caterpillar's World Manufacturing Code (characters 1-3)

2. Machine Descriptor (characters 4-8)

3. Check Character (character 9)

4. Machine Indicator Section (MIS) or Product Sequence Number (characters 10-17). These were previously referred to as the Serial Number.

Machines and generator sets produced before First Quarter 2001 will maintain their 8 character PIN format.

Components such as engines, transmissions, axles, etc. and work tools will continue to use an 8 character Serial Number (S/N).

2. ORDERING PARTS

⚠ WARNING

When replacement parts are required for this product Caterpillar recommends using Caterpillar replacement parts or parts with equivalent specifications including, but not limited to, physical dimensions, type, strength and material.

Failure to heed this warning can lead to premature failures, product damage, personal injury or death.

Quality Caterpillar replacement parts are available from Caterpillar dealers throughout the world. Their parts inventories are up to date and include all parts normally required to protect your investment in Caterpillar machines. Dealers may offer repair kits or remanufactured parts to allow selection of the most effective repair alternative for a particular situation. When ordering parts, your order should specify the quantity, part number, part name, and the serial number/product identification number of the machine for which the parts are needed.

3. PARTS MANUAL ORGANIZATION

Product information in this manual is presented as "information elements" that represent all of the components for the specific model. Engine Arrangement and Seat Group are examples of information elements. The information elements are organized alphabetically by part name and secondarily by part number within each major section of the manual.

4. TABLE OF CONTENTS

A table of contents (TOC) is found at the beginning of the manual. The TOC lists each section of the manual with a complete list of all information elements organized as they appear in the manual. Page numbers are provided for quick reference to detailed parts identification illustrations and serviceable consist lists.

5. MAINTENANCE PARTS INDEX

The Maintenance Parts Index, located near the beginning of the manual, references most frequently used maintenance part numbers, providing description, quantity, usage and page number. This information is organized alphabetically by part description.

6. INDEX

The index located near the front of the manual is an alphabetical listing of all information elements included in the manual. Page numbers are provided for quick reference to detailed parts identification illustrations and serviceable consist lists.

7. PART NUMBER INDEX

A numerical index listing all part numbers and the corresponding page number(s) appears at the back of the manual.

8. CAPTIONS

Captions located at the beginning of each information element identify the part number and part name along with additional descriptive information. PIN and S/N information found in each caption should be used to select correct information for a specific machine. Field replacement options, identification of optional attachment components, and where used ("part of") information is also provided.

The first line of a caption is shown in larger type font to indicate the beginning of an information element. Captions for additional pages that may be required to illustrate an information element will be shown in standard type font and will include the term *(contd.)* .

9. NON-SERVICED PARTS

In some instances it is necessary to display non-serviced parts that are a link to a lower level serviceable consist lists. These non-serviced part numbers are shown in *italic* type indicating that they are not available.

10. PARTS LIST REFERENCE NUMBERS

Numbers shown in the Ref No column correspond to numbers used in the associated graphic(s). An alphabetic suffix may be added to a reference number to identify lower level consist items. Numbers shown in the Graphic Ref column refer to the graphic number identifier displayed in the lower left corner of each illustration. The Graphic Ref number may be used in combination with the item Ref No to determine the correct part number. There may be intentional omission of a Ref No in a consist list as information is updated to reflect the latest serviceable part numbers.

11. INDENTED PART NAMES

When a part name is indented in a parts list, it is part of (included in) the group or assembly under which it is indented.

12. ILLUSTRATION REFERENCE LETTERS

When necessary, illustrations contain reference letters (A, B, C etc.) that are intended to track lines and harnesses from one point to another. They are also used to show where to reconnect illustrations that have been separated.

13. ABBREVIATIONS AND SYMBOLS

O.D. – Outside Diameter
I.D. – Inside Diameter
A – Not Part Of This Group
B – Use As Required
C – Change From Previous Type
D – Order By The Meter
E – Order By The Centimeter
F – Not Shown
G – Order By The Inch
I – Refer To Hydraulic Information System
M – Metric Part
R – Remfg Part May Be Available
Y – Separate Illustration
Z – Not Serviced Separately

SIS *New Feature*

14. DESCRIPTION OF TYPE CHANGES

Type - A type is defined as any configuration change that requires an additional Information Element for an Arrangement, Group, or Assembly. If serial number breaks for types are not available, a type # (Type 1, Type 2, etc.) will be displayed in the caption. These "type" changes are identified with a "C" note (change from previous type) in the Parts List. Only the "types" that apply to this Parts Manual will be included. Additional types may exist causing "C" notes to appear on an Information Element when no other types are shown.

15.<END>

This symbol indicates the end of an information element.

NOTE:

Continuing improvement and advancement of product design may cause changes to your machine which may not be included in this publication. Whenever a question arises regarding your Caterpillar product or this publication, please consult your Caterpillar dealer for the latest available information.

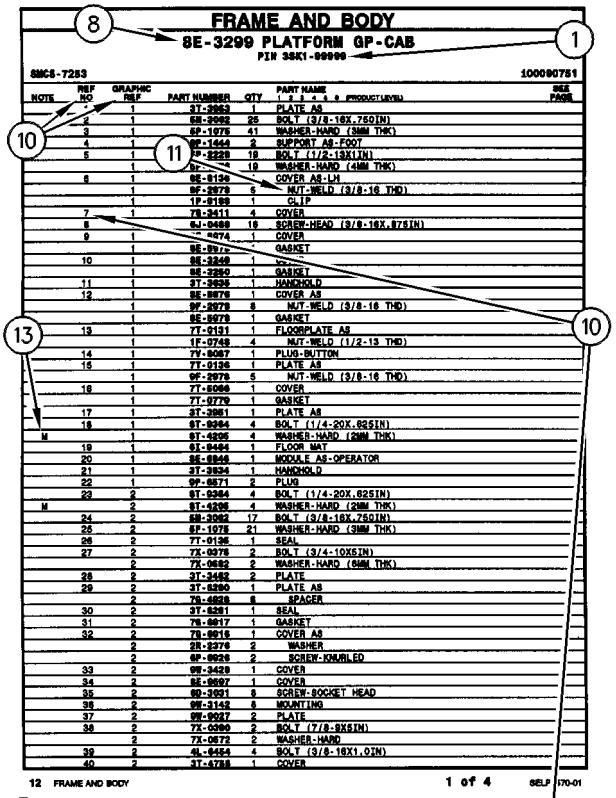
FRAME AND BODY
8E-3299 PLATFORM GP-CAB
PIN 3SK1-99999
SMCS-7283
100090751
1
8
10
11
13
10
12 FRAME AND BODY
1 of 4
SELP4570-01

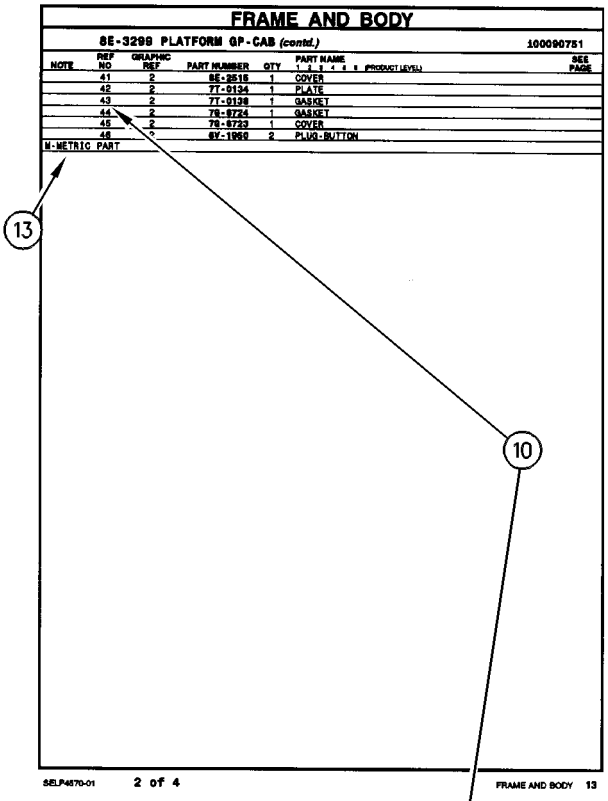
FRAME AND BODY
8E-3299 PLATFORM GP-CAB (contd.)
100090751
13
10
M-METRIC PART
SELP4570-01
2 of 4
FRAME AND BODY 13

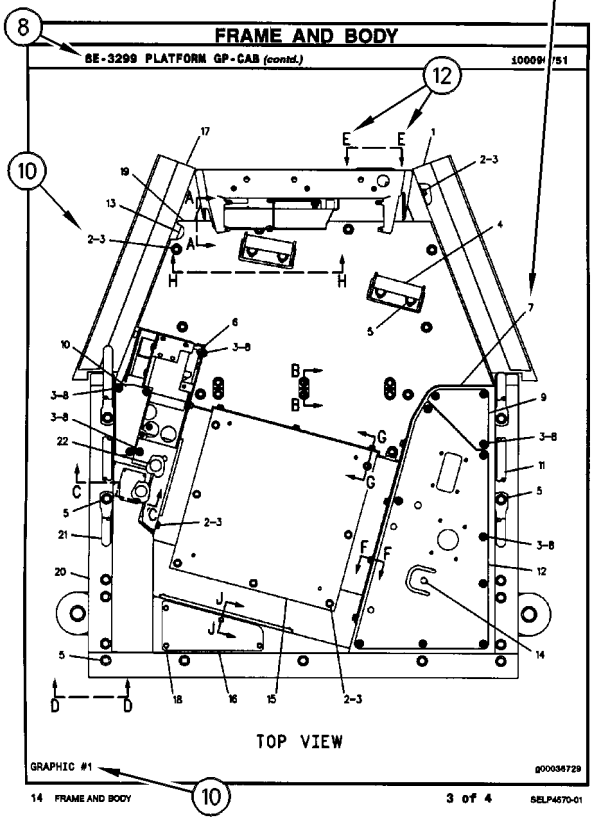
FRAME AND BODY
8E-3299 PLATFORM GP-CAB (contd.)
100090751
8
12
10
TOP VIEW
GRAPHIC #1
g00036729
14 FRAME AND BODY
10
3 of 4
SELP4570-01

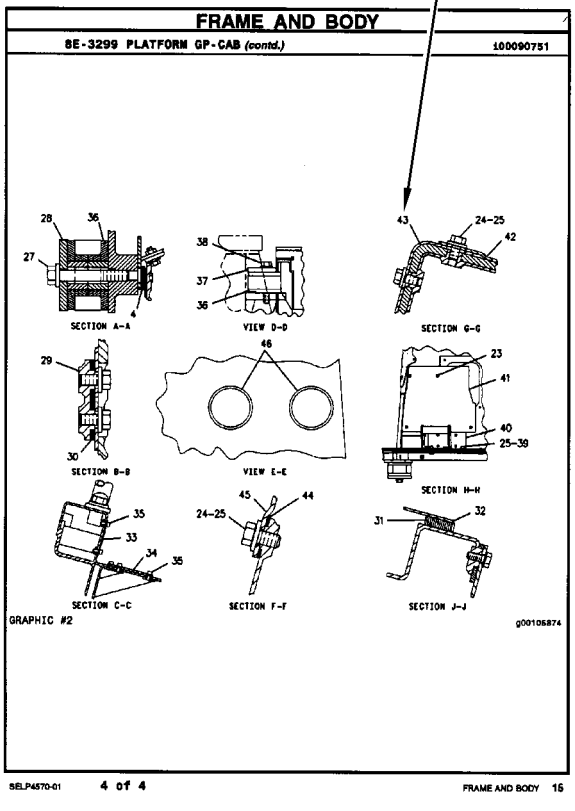
FRAME AND BODY
8E-3299 PLATFORM GP-CAB (contd.)
100090751
SECTION A-A
VIEW D-D
SECTION G-G
SECTION B-B
VIEW E-E
SECTION H-H
SECTION C-C
SECTION F-F
SECTION J-J
GRAPHIC #2
g00105874
SELP4570-01
4 of 4
FRAME AND BODY 15

REPAIR ALTERNATIVES

REMANUFACTURED COMPONENTS

As an option when making repairs consider Caterpillar Remanufactured Components. Components that are available through the Caterpillar Remanufactured Program are identified three ways in the parts book:

- with the letter R in the note field of the parts list
- with an R* at the beginning of the first line of the caption
- with an *R at the end of the first line of the caption

Typical components included in the Remanufacturing Program include:

ALTERNATORS
CONNECTING RODS
CRANKSHAFTS - UNDERSIZE
CRANKSHAFTS - UPGRADE TO NEW
CYLINDER HEADS
ELECTRONIC CONTROL MODULES (ECM)
ELECTRONIC SENSORS
FUEL INJECTORS
FUEL NOZZLES
FUEL PUMPS
GOVERNORS
OIL PUMPS
PISTONS
SHORT BLOCKS
STARTERS
TURBOCHARGERS - COMPLETE
TURBOCHARGER CARTRIDGES
WATER PUMPS

Caterpillar Remanufactured engines for many engine arrangements are also available.

SUPPLEMENTAL COOLANT ADDITIVES

CUSTOMER BENEFITS:

Protects against cavitation, foam, erosion, corrosion, and scale buildup in cooling systems.

- Provides measured coolant conditioner.

DESCRIPTION:

Additives deplete from the coolant with normal operation. For this reason, Supplemental Coolant Additives (SCA) must be added to all heavy duty coolants at regular intervals. In addition, when not using a fully formulated, pre-charged antifreeze, like Caterpillar's DEAC, an initial charge of SCA must be added to the cooling system. The amount of SCA added to the system is dependent on the capacity of the system.

The SCA for initial fill is provided as a liquid. SCA's for maintenance intervals are available in liquid form and as a spin-on element. (No Spin-on available for 3600 Family of Engines)

NOTE:

The amount of SCA added at initial fill is not the same as the amount added at maintenance intervals.

The coolant additive elements can be used with any ethylene or propylene glycol type antifreeze which meets ASTM D4985 or ASTM D5345 Specifications.

NOTE:

For use with standard heavy duty coolant only, not for use with Extended Life Coolant.

PARTS NEEDED:

Cooling System Capacity		Liquid SCA at Initial Fill	Liquid SCA at Maintenance*	Spin-on SCA Maintenance Element*
Liters	Gallons			
22-30	(6-8)	3P-2044 (1)	6V-3542 (1)	111-2370 (1)
30-38	(8-10)	3P-2044 (1) 6V-3542 (1)	111-2372 (1)	111-2369 (1)
38-49	(10-13)	3P-2044 (1) 8T-1589 (1)	111-2372 (1)	111-2369 (1)
49-64	(13-17)	3P-2044 (2)	8T-1589 (1)	9N-3368 (1)
64-83	(17-22)	3P-2044 (2) 8T-1589 (1)	111-2372 (1) 6V-3542 (1)	111-2371 (1)
83-114	(22-30)	3P-2044 (3) 8T-1589 (1)	3P-2044 (1)	9N-3718 (1)
114-163	(30-43)	3P-2044 (5)	3P-2044 (1) 6V-3542 (1)	111-2371 (2)
163-242	(43-64)	3P-2044 (8)	3P-2044 (2)	9N-3718 (2)

** Normal maintenance period is 250 hrs. See your Operation and Maintenance Manual for complete coolant maintenance instructions.*

( ) Indicates quantity required.

MAINTENANCE PARTS

DESCRIPTION	PART NUMBER	QTY	WHERE USED	PAGE
AIR INLET AND EXHAUST SYSTEM				
FILTER ELEMENT-AIR (PRIMARY)	293-4053	1	AIR CLEANER GP	68
FILTER ELEMENT-AIR (SECONDARY)	227-7449	1	AIR CLEANER GP	68
BASIC ENGINE				
BELT-SERPENTINE	298-5874	1	BELT TENSIONER GP	9
	309-6666	1	BELT TENSIONER GP	10
BREATHER (CRANKCASE)	298-4547	1	COVER GP-VALVE MECHANISM	13
GASKET-VALVE COVER (CYLINDER HEAD)	298-4546	1	COVER GP-VALVE MECHANISM	13
PLUG-DRAIN (ENGINE OIL)	7C-0351	2	PAN GP-OIL	35
COOLING SYSTEM				
CAP AS-COOLANT TANK	251-3227	1	TANK GP-COOLANT	67
GASKET-WATER REGULATOR (TEMPERATURE)	281-8744	1	CONNECTION GP-WATER	53
		1	CONNECTION GP-WATER	54
HOSE-RADIATOR (LOWER)	255-1344	1	LINES GP-COOLANT	60
		1	RADIATOR & HYD OIL COOLER GP	65
HOSE-RADIATOR (UPPER)	255-1343	1	LINES GP-COOLANT	60
		1	RADIATOR & HYD OIL COOLER GP	65
REGULATOR AS-WATER TEMPERATURE (CONNECTOR INCLUDED)	277-2974	1	CONNECTION GP-WATER	53

MAINTENANCE PARTS

DESCRIPTION	PART NUMBER	QTY	WHERE USED	PAGE
ELECTRICAL AND STARTING SYSTEM				
BATTERY (12-VOLT, MAINTENANCE FREE, WET)	9X-3404	2	BATTERY & WIRING GP	149
CIRCUIT BREAKER AS (105-AMPERE)	171-2212	1	PANEL GP-FUSE	201
CIRCUIT BREAKER AS (105-AMPERE) (MAIN)	171-2212	1	PANEL GP-FUSE	204
		1	PANEL GP-FUSE	207
CIRCUIT BREAKER AS (15-AMPERE) (FLOODLIGHTS, FRONT)	180-0614	1	CONVERSION GP-ELECTRICAL	164
CIRCUIT BREAKER AS (15-AMPERE) (FRONT LIGHTS)	180-0614	1	CONVERSION GP-ELECTRICAL	164
CIRCUIT BREAKER AS (15-AMPERE) (REAR LIGHTS)	180-0614	1	CONVERSION GP-ELECTRICAL	164
CIRCUIT BREAKER AS (20-AMPERE)	173-3175	2	PANEL GP-FUSE	201
		2	PANEL GP-FUSE	204
CIRCUIT BREAKER AS (30-AMPERE)	180-0613	1	PANEL GP-FUSE	207
CIRCUIT BREAKER AS (35-AMPERE)	229-8377	1	WIRING GP-CAB	237
CIRCUIT BREAKER AS (35-AMPERE) (BLOWER)	229-8377	1	WIRING GP-CAB	247
FUSE (10-AMPERE)	113-8490	1	CONVERSION GP-ELECTRICAL	164
		8	PANEL GP-FUSE	201
		8	PANEL GP-FUSE	204
		4	PANEL GP-FUSE	207
FUSE (15-AMPERE)	113-8491	13	PANEL GP-FUSE	204
		8	PANEL GP-FUSE	207
FUSE (20-AMPERE)	113-8492	5	PANEL GP-FUSE	204
		3	PANEL GP-FUSE	207
FUSE (30-AMPERE)	124-3548	2	PANEL GP-FUSE	201
	274-9872	1	RELAY GP	214
FUSE (50-AMPERE)	274-9877	1	RELAY GP	214
GLOW PLUG (12-VOLT)	292-9880	4	GLOW PLUG GP	172
KEY (BATTERY DISCONNECT)	8H-5306	1	SWITCH GP-DISCONNECT	224
KEY AS-ELECTRONIC (SECURITY)	206-5162	2	INSTALLATION GP-SECURITY	185
LAMP (12-VOLT) (MINIATURE)	210-8754	1	WIRING GP-CAB	231
		1	WIRING GP-CAB	234
		1	WIRING GP-CAB	237
LAMP (12-VOLT, 55-WATT) (FLOODLIGHT)	9W-0607	1	LAMP GP-FLOOD	187
		1	LAMP GP-FLOOD	188
		1	LAMP GP-FLOOD	189
SEAT BELT GP	258-8373	1	CONVERSION GP-ELECTRICAL	168
FRAME AND BODY				
CAP-FILLER (HYDRAULIC TANK)	7H-1447	1	ENCLOSURE GP-PLATFORM	387
		1	ENCLOSURE GP-PLATFORM	389
CAP-FUEL FILLER (LOCKABLE)	276-1243	1	ENCLOSURE GP-PLATFORM	387
		1	ENCLOSURE GP-PLATFORM	389
FILTER ELEMENT-BREATHER (FUEL CAP)	279-9876	1	ENCLOSURE GP-PLATFORM	387
		1	ENCLOSURE GP-PLATFORM	389

MAINTENANCE PARTS

DESCRIPTION	PART NUMBER	QTY	WHERE USED	PAGE
FUEL SYSTEM				
FILTER AS-FUEL	311-2376	1	FILTER GP-PRIMARY FUEL	80
	343-7104	1	FILTER GP-FUEL	77
FILTER AS-FUEL (SECONDARY)	343-7104	1	LINES GP-FUEL	96
FILTER AS-WATER SEP & FUEL	308-7298	1	FILTER GP-FUEL	76
		1	FILTER GP-FUEL	78
FILTER ELEMENT-FUEL (ULTRA HIGH EFFICIENCY)	299-8229	1	FILTER GP-FUEL	77
		1	FILTER GP-PRIMARY FUEL	80
		1	LINES GP-FUEL	96
FILTER-FUEL (ULTRA HIGH EFFICIENCY)	289-0600	1	FILTER GP-PRIMARY FUEL	79
GASKET-SCREEN (FUEL TANK)	110-1010	1	TANK GP-FUEL	138
SCREEN-FILTER (PILOT)	236-5157	1	VALVE GP-SOLENOID	141
HYDRAULIC SYSTEM				
CAP AS	6V-9830	2	LINES GP-REAR ATTACHMENT	589
CAP AS (AUX HYD FUNCTION)	6V-9830	2	LINES GP-REAR ATTACHMENT	585
		2	LINES GP-REAR ATTACHMENT	587
FILTER ELEMENT-BREATHER (HYDRAULIC TANK)	9R-9925	2	TANK & MTG GP-HYDRAULIC	611
		2	TANK GP-HYDRAULIC	613
		2	TANK GP-HYDRAULIC	615
GASKET-SCREEN (HYDRAULIC TANK)	110-1010	1	TANK GP-HYDRAULIC	618
SCREEN-SUCTION (HYDRAULIC TANK)	322-9703	1	TANK GP-HYDRAULIC	617
		1	TANK GP-HYDRAULIC	618
		1	TANK GP-HYDRAULIC	619
LUBRICATION SYSTEM				
CAP-OIL FILLER (ENGINE)	130-9888	1	FILLER GP-ENGINE OIL	48
FILTER AS-ENGINE OIL	7W-2326	1	FILTER GP-ENGINE OIL	49
		1	FILTER GP-ENGINE OIL	50

MAINTENANCE PARTS

DESCRIPTION	PART NUMBER	QTY	WHERE USED	PAGE
OPERATOR STATION				
BLADE AS-WIPER (450-MM) (DOOR, LH)	125-8175	1	DOOR GP-CAB	745
		1	DOOR GP-CAB	748
		1	DOOR GP-CAB	757
		1	DOOR GP-CAB	760
BLADE AS-WIPER (450-MM) (DOOR, RH)	125-8175	1	DOOR GP-CAB	741
		1	DOOR GP-CAB	743
		1	DOOR GP-CAB	751
		1	DOOR GP-CAB	754
BLADE AS-WIPER (500-MM) (FRONT)	5C-8811	1	WIPER GP-WINDOW	844
BLADE AS-WIPER (500-MM) (REAR)	146-6433	1	WIPER GP-WINDOW	844
CAP-VENTED (WINDOW WASHER TANK)	209-4482	1	WASHER GP-WINDOW	833
FILTER (ACTIVATED CHARCOAL)	307-4442	1	AIR CONDITIONER GP	670
		1	AIR CONDITIONER GP	673
FILTER ELEMENT AS-AIR (ADVANCED EFFICIENCY)	268-6705	1	AIR CONDITIONER GP	670
		1	AIR CONDITIONER GP	673
FILTER ELEMENT-CAB AIR (ADVANCED EFFICIENCY)	318-7190	1	AIR CONDITIONER GP	670
		1	AIR CONDITIONER GP	673
FILTER ELEMENT-CAB AIR (STANDARD EFFICIENCY)	209-8217	1	AIR CONDITIONER GP	670
		1	AIR CONDITIONER GP	673
FILTER GP-CAB AIR (STANDARD EFFICIENCY) (LOW RESTRICTION MEDIA)	266-7765	1	AIR CONDITIONER & MOUNTING GP	667
FILTER-AIR (AIR CONDITIONER)	326-8179	1	AIR CONDITIONER GP	676
FUSE (15-AMPERE)	133-9012	1	AIR CONDITIONER GP	674
		1	HEATER GP-CAB	765
GASKET	107-4396	1	LINES GP-AIR CONDITIONER	777
SEAT BELT GP (RETRACTABLE)	272-2272	1	SEAT GP-SUSPENSION	821
		1	SEAT GP-SUSPENSION	822
		1	SEAT GP-SUSPENSION	823
		1	SEAT GP-SUSPENSION	824
POWER TRAIN				
BATTERY (12-VOLT, MAINTENANCE FREE, WET)	3T-5760	2	DRIVE AR	300
	9X-3404	2	DRIVE AR	300
		2	DRIVE AR	301
BATTERY GP (12-VOLT, MAINTENANCE FREE, WET)	115-2422	1	DRIVE AR	301
CAP AS-FILLER (BATTERY)	123-1373	6	DRIVE AR	300
FILTER-OIL (ADVANCED EFFICIENCY)	1G-8878	1	FILTER GP-OIL	305
		1	LINES GP-TRANSMISSION OIL	335
PLUG-MAGNETIC (FINAL DRIVE OIL DRAIN)	126-8921	1	DRIVE GP-FINAL	302
SCREEN-FILTER (PILOT)	236-5157	1	VALVE GP-SOLENOID	380
		1	VALVE GP-SOLENOID	382

MAINTENANCE PARTS

DESCRIPTION	PART NUMBER	QTY	WHERE USED	PAGE
WORK TOOLS				
BATTERY (12-VOLT, MAINTENANCE FREE, WET)	9X-3404	2	DRIVE AR-WINCH	891
		2	DRIVE AR-WINCH	892
		2	DRIVE AR-WINCH	893
FILTER-OIL (ADVANCED EFFICIENCY)	144-6691	1	FILTER GP-OIL	900

INDEX

Name	Page
A	
ACCESSORY GP-CAB–EROPS	657, 659
ACCESSORY GP-CAB–FIRE PLOW	663
ACCESSORY GP-CAB–OROPS	661
ACCUMULATOR GP-REFRIGERANT–CHARGED	666
ACCUMULATOR GP-REFRIGERANT–UNCHARGED	665
ACTUATOR GP-PUMP	297
ACTUATOR GP-PUMP–SERVO	295, 296
ADAPTER GP-AUXILIARY DRIVE	8
ADJUSTMENT GP-HYDRAULIC TRACK	438, 439, 440
AIR CLEANER GP	68
AIR COMPRESSOR GP-SEAT (SUSPENSION)	829
AIR CONDITIONER & MOUNTING GP	667
AIR CONDITIONER GP	670, 673, 676
ALTERNATOR GP-CHARGING	143, 144
ARM GP-SEAT SUSPENSION–CENTER	677
ARM GP-SEAT SUSPENSION–OUTER, LH	679
ARM GP-SEAT SUSPENSION–OUTER, RH	678
ARM GP-WINDOW WIPER (DOOR, LH)	745, 748, 757, 760
ARM GP-WINDOW WIPER (DOOR, RH)	741, 743
ARM GP-WINDOW WIPER (FRONT)	844
ARM GP-WINDOW WIPER (REAR)	844
ARM GP-WINDOW WIPER (RH)	751, 754
ARMREST GP–LH	680
ARMREST GP–RH	682
ARRESTOR GP-SPARK–FIRE PLOW	69
B	
BASE GP-VALVE COVER & INJ HARN	13
BATTERY & WIRING GP	145, 149, 153, 157
BATTERY (12-VOLT, MAINTENANCE FREE, WET)	149, 300, 301, 891, 892, 893
BATTERY GP	300, 891, 892, 893
BATTERY GP (12-VOLT, MAINTENANCE FREE, WET)	301
BELT TENSIONER GP–FAN–EROPS	9
BELT TENSIONER GP–FAN–OROPS	10
BELT-SERPENTINE	9, 10
BLADE AR-PWR ANGLE & TILT	847, 849, 850
BLADE AR-PWR ANGLE & TILT–FORESTRY	849
BLADE AR-PWR ANGLE & TILT–LGP	846, 847, 848, 849
BLADE AR-PWR ANGLE & TILT–XL	846, 847, 848, 849
BLADE AS-WIPER (450-MM) (DOOR, LH)	745, 748, 757, 760
BLADE AS-WIPER (450-MM) (DOOR, RH)	741, 743, 751, 754
BLADE AS-WIPER (500-MM) (FRONT)	844
BLADE AS-WIPER (500-MM) (REAR)	844
BLADE GP-ANGLING	868
BLADE GP-ANGLING–FORESTRY	865
BLADE GP-ANGLING–GRADE CONTROL	869
BLADE GP-ANGLING–LARGE CAPACITY	866
BLADE GP-ANGLING–LOW GROUND PRESSURE	851, 853, 855, 858, 860, 862, 867
BLADE GP-ANGLING–XL GRADE CONTROL	852, 854, 856, 857, 859, 861, 863, 864
BLOCK GP-HYDRAULIC	547

INDEX

Name	Page
BOWL GP-WATER COLLECTION	75
BRAKE & PLANETARY GP-WINCH	870 871
BRAKE GP-PARKING	298 299
BRAKE GP-SERVICE & PARKING	488
BREATHER (CRANKCASE)	13
C	
C-FRAME GP-POWER ANGLING–TILT	653
CABLE AS-COILED–LASER RECEIVER–ACCUGRADE	161
CABLE GP-CONTROL–FIRE PLOW	684
CAMSHAFT GP	11
CAP AS	589
CAP AS (AUX HYD FUNCTION)	585 587
CAP AS-COOLANT TANK	67
CAP AS-FILLER (BATTERY)	300
CAP GP-FUEL FILLER (LOCKABLE, VENTED)	387 389
CAP-FILLER (HYDRAULIC TANK)	387 389
CAP-FUEL FILLER (LOCKABLE)	387 389
CAP-OIL FILLER (ENGINE)	48
CAP-VENTED (WINDOW WASHER TANK)	833
CASE GP-WINCH	872
CHASSIS AR	1 2
CIRCUIT BREAKER AS (105-AMPERE)	201
CIRCUIT BREAKER AS (105-AMPERE) (MAIN)	204 207
CIRCUIT BREAKER AS (15-AMPERE) (FLOODLIGHTS, FRONT)	164
CIRCUIT BREAKER AS (15-AMPERE) (FRONT LIGHTS)	164
CIRCUIT BREAKER AS (15-AMPERE) (REAR LIGHTS)	164
CIRCUIT BREAKER AS (20-AMPERE)	201 204
CIRCUIT BREAKER AS (30-AMPERE)	207
CIRCUIT BREAKER AS (35-AMPERE)	237
CIRCUIT BREAKER AS (35-AMPERE) (BLOWER)	247
CLUTCH & GEAR GP-WINCH	873
COMMON AR	2 3
COMPRESSOR & MTG GP-REFRIG	685
COMPRESSOR GP-REFRIGERANT	686
CONDENSER GP-REFRIGERANT	687
CONNECTION GP-WATER	53 54
CONSOLE GP–LH	689 691
CONSOLE GP-OPERATOR–LH	693
CONSOLE GP-OPERATOR–RH	692
CONTROL & MTG GP-PEDAL–GOVERNOR, BRAKE	694
CONTROL GP-ENGINE ELECTRONIC	162
CONTROL GP-HANDLE–GRADE CONTROL, RH	696 697 698
CONTROL GP-HANDLE–WINCH–RIPPER	695 699
CONTROL GP-HYDRAULIC	700
CONTROL GP-HYDRAULIC–FIRE PLOW	702
CONTROL GP-JOYSTICK	706 707 709
CONTROL GP-JOYSTICK–GRADE CONTROL, RH	705 708
CONTROL GP-RIPPER	710 712
CONTROL GP-UNPROGRAMMED	875 878
CONTROL GP-UNPROGRAMMED (CHASSIS)	289 292
CONTROL GP-UNPROGRAMMED (MACHINE)	700 702
CONTROL GP-UNPROGRAMMED (PRODUCT LINK 300)	163
CONTROL GP-UNPROGRAMMED (RIPPER)	710 712
CONTROL GP-UNPROGRAMMED (WINCH)	881 883 885
CONTROL GP-UNPROGRAMMED–PRODUCT LINK 300	163
CONTROL GP-WINCH	874 877 880 883 884 885
CONTROL GP-WINCH–4TH & 5TH VALVE, FLOAT	889
CONTROL GP-WINCH–4TH VALVE, FLOAT	888
CONVERSION AR-MACHINE OPTION–FIRE PLOW	3 4 5

INDEX

Name	Page
CONVERSION GP-ELECTRICAL–FIRE PLOW	164
COOLER GP-ENGINE OIL	55, 57, 58
COUNTERWEIGHT GP-FRONT	384
COVER GP-ACCESS	385
COVER GP-CAB–EROPS	718, 720, 722, 724, 727, 730
COVER GP-CAB–OROPS	714, 716
COVER GP-CONSOLE–OROPS	734, 736
COVER GP-CONSOLE–STANDARD	733
COVER GP-CYLINDER HEAD	12
COVER GP-VALVE MECHANISM	13
CRANKSHAFT GP	15, 16, 17, 19, 20
CYLINDER BLOCK GP	21, 22
CYLINDER GP-ANGLING	525
CYLINDER GP-BULLDOZER LIFT–LH	527
CYLINDER GP-BULLDOZER LIFT–RH	526
CYLINDER GP-RIPPER–LH	529
CYLINDER GP-RIPPER–RH	528
CYLINDER GP-TILT	530, 531
CYLINDER HEAD AS	24
CYLINDER HEAD GP	26

D

Name	Page
DISPLAY GP-MONITOR (CD610)	740
DISPLAY GP-MONITOR (CD700C)	738
DISPLAY GP-MONITOR–CD610	740
DISPLAY GP-MONITOR–CD700C	738
DISPLAY GP-MONITOR–LIGHT BAR	739
DOOR GP-CAB–LH	745, 748, 757, 760
DOOR GP-CAB–RH	741, 743, 751, 754
DRAWBAR GP	386
DRIVE AR–AUXILIARY	301
DRIVE AR–AUXILIARY PUMP	300, 301
DRIVE AR–STANDARD	300
DRIVE AR-WINCH	891
DRIVE AR-WINCH–FIRE PLOW	892, 893
DRIVE AR-WINCH–HYDRAULIC	892
DRIVE AR-WINCH–OROPS	891
DRIVE GP-AUXILIARY	27
DRIVE GP-FAN	28
DRIVE GP-FINAL	302
DRIVE GP-HYDROSTATIC	304

E

Name	Page
EDGE GP-BIT & CUTTING	894, 895, 896, 898
EDGE GP-BIT & CUTTING–LEVEL CUT	897
EDGE-CUTTING	899
ELECTRONICS GP-COMMUNICATION–PRODUCT LINK 121SR	171
ELECTRONICS GP-IMPLEMENT–ACCUGRADE	171
ELECTRONICS GP-MACHINE	171
ELECTRONICS GP-MACHINE–POWER TRAIN	171
ENCLOSURE GP-PLATFORM	387, 389
ENCLOSURE GP-PLATFORM–FIRE PLOW	391
ENGINE AR-PRIMARY	6
EXTENSION GP-BACKREST (CLOTH)	804, 808
EXTENSION GP-BACKREST (VINYL)	811, 814

F

Name	Page
FAN GP-BLOWER	59
FILLER GP-ENGINE OIL	48
FILM GP	921
FILM GP–LGP	922
FILM-IDENTIFICATION (CAT)	423, 922
FILM-IDENTIFICATION (ELECTRICAL POWER)	202, 205, 208
FILM-IDENTIFICATION (FUSE PANEL)	167, 202, 205, 208
FILM-IDENTIFICATION (GROUP NO., SEQUENCE NO.)	670, 673

INDEX

Name	Page
	765
FILM-IDENTIFICATION (GROUP NO., SEQUENCE NO.) (HEATER)	762
FILM-IDENTIFICATION (GROUP NO., SEQUENCE NO.) (REFRIGERANT CONDENSER)	687
FILM-IDENTIFICATION (HYDRAULIC OIL)	423
FILM-IDENTIFICATION (IGNITION SWITCH)	185
FILM-IDENTIFICATION (IGNITION SWITCH, READ OMM)	185
FILM-IDENTIFICATION (POWER RECEPTACLE, 12-VOLT)	924
	925
	926
	928
	929
	931
FILM-IDENTIFICATION (SERIAL NUMBER)	829
FILM-INFORMATION (ARMREST ADJUSTMENT)	825
	827
FILM-INFORMATION (PRODUCT LINK, READ OMM)	183
FILM-INSTRUCTION (AUXILIARY CONTROL VALVE)	700
	702
	889
FILM-INSTRUCTION (BULLDOZER CONTROL)	714
	716
	718
	720
	722
	724
	727
	730
	734
	736
FILM-INSTRUCTION (BULLDOZER, STER, CRUISE CNTL)	253
FILM-INSTRUCTION (HVAC WATER, DRAINING, FILLING)	671
	674
	762
	765
FILM-INSTRUCTION (KEY START SWITCH)	772
	774
FILM-INSTRUCTION (MACHINE SECURITY, CONSOLE)	185
FILM-INSTRUCTION (PANEL)	168
FILM-INSTRUCTION (RIPPER CONTROL)	710
	712
FILM-INSTRUCTION (SEAT ADJUSTMENT)	829
FILM-INSTRUCTION (WINCH CONTROL)	874
	877
	880
	885
FILM-PANEL (EROPS)	774
FILM-PANEL (OROPS)	772
FILM-STRIPE (ROUND RED REFLECTIVE)	44
	924
	925
	926
	928
FILM-WARNING (BLADE, DO NOT CLIMB, READ OMM)	227
	906
FILM-WARNING (DO NOT LIFT)	396
	397
	404
FILM-WARNING (LASER TRANSMITTER)	906
FILM-WARNING (NO WELD, NO DRILL, READ OMM)	924
	926
	927
	928
	930
	931
FILM-WARNING (PRODUCT LINK 300, INTL)	183
FILM-WARNING (PRODUCT LINK 300, U.S.)	183
FILTER (ACTIVATED CHARCOAL)	670
	673
FILTER AS-ENGINE OIL	49
	50
FILTER AS-FUEL	77
	80
FILTER AS-FUEL (SECONDARY)	96
FILTER AS-WATER SEP & FUEL	76
	78
FILTER ELEMENT AS-AIR (ADVANCED EFFICIENCY)	670
	673
FILTER ELEMENT-AIR (PRIMARY)	68
FILTER ELEMENT-AIR (SECONDARY)	68
FILTER ELEMENT-BREATHER (FUEL CAP)	387
	389
FILTER ELEMENT-BREATHER (HYDRAULIC TANK)	611
	613
	615
FILTER ELEMENT-CAB AIR (ADVANCED EFFICIENCY)	670
	673
FILTER ELEMENT-CAB AIR (STANDARD EFFICIENCY)	670
	673
FILTER ELEMENT-FUEL (ULTRA HIGH EFFICIENCY)	77
	80
	96

INDEX

Name	Page
FILTER GP-CAB AIR (STANDARD EFFICIENCY) (LOW RESTRICTION MEDIA)	667
FILTER GP-ENGINE OIL	50
FILTER GP-ENGINE OIL– INCLUDES SHUTOFF VALVE	49
FILTER GP-FUEL	76
	77
	78
FILTER GP-OIL (REAR)	335
FILTER GP-OIL–FRONT	305
FILTER GP-OIL–HYDRAULIC	900
FILTER GP-PRIMARY FUEL	79
	80
FILTER GP-WATER SEP & FUEL	78
FILTER-AIR (AIR CONDITIONER)	676
FILTER-FUEL (ULTRA HIGH EFFICIENCY)	79
FILTER-OIL (ADVANCED EFFICIENCY)	305
	335
	900
FINAL DRIVE GP	302
FITTING GP-HYDRAULIC	335
	338
	340
	344
	602
FLOOR MAT-FRONT	663
	714
	716
	718
	720
	722
	724
	727
	730
	734
	736
FLOOR MAT-REAR	714
	716
	718
	720
	722
	724
	727
	730
	734
	736
FLYWHEEL GP	29
FRAME GP	392
	394
	398
	400
FRAME GP–FIRE PLOW	396
	397
FRAME GP-MAIN	402
FRAME GP-MAIN–FIRE PLOW	404
FUSE (10-AMPERE)	164
	201
	204
	207
FUSE (15-AMPERE)	204
	207
	674
	765
FUSE (20-AMPERE)	204
	207
FUSE (30-AMPERE)	201
	214
FUSE (50-AMPERE)	214

G

GASKET	777
GASKET-SCREEN (FUEL TANK)	138
GASKET-SCREEN (HYDRAULIC TANK)	618
GASKET-VALVE COVER (CYLINDER HEAD)	13
GASKET-WATER REGULATOR (TEMPERATURE)	53
	54
GAUGE AS-OIL LEVEL (DIPSTICK) (ENGINE)	35
GAUGE GP-SIGHT (HYDRAULIC TANK OIL)	618
	619
GEAR GP-FRONT	30
GEAR GP-WINCH	901
GEAR GP-WINCH TRANSFER	903
GLOW PLUG (12-VOLT)	172
GLOW PLUG GP	172
GRADE CONTROL AR–ACCUGRADE, ADVANCED TRACKING SYSTEM	174
GRADE CONTROL AR–EROPS	173
	174
GRADE CONTROL AR–OROPS	173
	174
GRADE CONTROL AR-LASER–ACCUGRADE, DUAL	175
GRADE CONTROL AR-LASER–ACCUGRADE, SINGLE	175
GRADE CONTROL AR-SATELLITE–ACCUGRADE, DUAL	177
GRADE CONTROL AR-SATELLITE–ACCUGRADE, DUAL GNSS	176
GRADE CONTROL AR-SATELLITE–ACCUGRADE, DUAL GPS	175
GRADE CONTROL AR-SATELLITE–ACCUGRADE, SINGLE	177
GRADE CONTROL AR-SATELLITE–ACCUGRADE, SINGLE GNSS	176
GRILL AR-RADIATOR–HEAVY-DUTY	406
GRILL AR-RADIATOR–STANDARD	405
GRILL GP-RADIATOR–FIRE PLOW	407
GUARD GP-BOTTOM	409

INDEX

Name	Page
GUARD GP-BOTTOM–EXTREME-DUTY	410
	412
	414
GUARD GP-BRUSH–FRONT	418
GUARD GP-BRUSH–OPEN ROPS	416
GUARD GP-BRUSH–SIDE	420
GUARD GP-FRONT	421
GUARD GP-IDLER	441
	443
GUARD GP-RADIATOR	422
GUARD GP-REAR	423
	425
	426
GUARD GP-TRACK GUIDE	445
	446
GUARD GP-TRACK GUIDE–SALT	448
GUARD GP-TRACK GUIDE–SYSTEMONE	447
GUARD GP-TRACK GUIDE–SYSTEMONE, FRONT	449
GUARD GP-TRACK GUIDE–SYSTEMONE, REAR	450
	451
GUARD GP-TRACK ROLLER	452
GUARD GP-TRACK ROLLER–SYSTEMONE	453
GUARD GP-VANDALISM	714
	716
	734
	736

H

Name	Page
HARNESS AS-ALARM	229
HARNESS AS-CAB	166
HARNESS AS-CAB (DASH)	232
	234
	237
	241
	244
	248
	250
HARNESS AS-CAB (OROPS)	247
HARNESS AS-CAB (ROOF)	231
	234
	237
HARNESS AS-CHASSIS	145
	149
	153
	157
	166
HARNESS AS-CONSOLE (EROPS)	231
	235
	238
HARNESS AS-CONSOLE (GRADE CONTROL)	264
	268
	273
	278
	283
	286
HARNESS AS-CONSOLE (OROPS)	241
	244
HARNESS AS-CONTROL	179
	181
	265
	275
	280
	712
HARNESS AS-CONTROL (OROPS)	250
HARNESS AS-CONTROL (PLATFORM)	880
HARNESS AS-CONTROL (WINCH)	700
	702
	885
HARNESS AS-DASH	270
HARNESS AS-DASH (GRADE CONTROL)	263
	269
	274
	279
	283
	286
HARNESS AS-ENGINE	165
	167
	255
	260
HARNESS AS-ENGINE (FUEL INJECTION)	13
HARNESS AS-FRONT (GRADE CONTROL)	263
	268
	273
	278
HARNESS AS-HEATER (SEAT)	823
	824
HARNESS AS-HOOD (GRADE CONTROL)	263
	268
	273
	278
HARNESS AS-LIGHTING	247
HARNESS AS-LIGHTING (OROPS)	241
	244
	250
HARNESS AS-MONITOR	265
	269
	274
	279
HARNESS AS-MOTOR (BLOWER)	670
	673
	762
	765
HARNESS AS-MOTOR (CONDENSER FAN)	687
HARNESS AS-PANEL	201
	204
HARNESS AS-PANEL (FUSE)	207

INDEX

Name	Page
HARNESS AS-PLATFORM	164
	289
	292
HARNESS AS-PUMP (WINCH)	874
	877
	880
	885
HARNESS AS-PUMP (WINDOW WASHER)	833
HARNESS AS-RADIO (GRADE CONTROL)	263
	270
	275
	280
	283
	287
HARNESS AS-SENSOR (ARMREST, LH)	253
HARNESS AS-SENSOR (ARMREST, RH)	253
HARNESS AS-SENSOR (GRADE CONTROL)	264
	269
	274
	279
HARNESS AS-SWITCH	230
HARNESS AS-SWITCH (DOOR, LH)	745
	748
	757
	760
HARNESS AS-SWITCH (DOOR, RH)	741
	743
	751
	754
HARNESS AS-SWITCH (HEATED SEAT)	804
	808
	811
	814
HARNESS AS-VALVE	145
	150
	154
	157
	166
	702
	889
HARNESS AS-VALVE (SEAT AIR COMPRESSOR)	829
HARNESS AS-WIRING	185
	256
HARNESS AS-WIRING (MAST)	194
HARNESS AS-WIRING (POWER SUPPLY MODULE)	263
	268
	273
	278
	283
	286
HARNESS AS-WIRING (PRODUCT LINK)	183
HARNESS AS-WIRING (RECEIVER, LH)	264
	269
	274
	279
HARNESS AS-WIRING (RECEIVER, RH)	264
	269
	274
	279
HARNESS AS-WORK TOOL (PLATFORM)	874
	877
HARNESS AS-WORK TOOL (RIPPER)	710
HARNESS AS-WORK TOOL (WINCH)	874
	877
	880
	885
HEAD GP-PUMP	306
	307
HEATER GP-CAB	762
	765
	769
	770
HEATER GP-CAB–OROPS	768
HEATER GP-JACKET WATER	178
HITCH GP-TOWING	427
HOOD & GUARD GP–SOUND SUPPRESSION	428
	431
HOSE-RADIATOR (LOWER)	60
	65
HOSE-RADIATOR (UPPER)	60
	65
HOUSING GP-FLYWHEEL	32
HYDRAULIC AR	532
	533
HYDRAULIC AR–3-BANK	532
HYDRAULIC AR–4-BANK	532
	533
	534
HYDRAULIC AR–5-BANK	533
	534

I

IDLER GP-FRONT	454
	455
IDLER GP-TRACK	456
	457
INJECTOR GP-FUEL	81
	82
INSTALLATION AR-ENGINE	7
INSTALLATION GP-COMMUNICATION–PRODUCT LINK 121SR	183
INSTALLATION GP-COMMUNICATION–PRODUCT LINK 321SR	179
	181
INSTALLATION GP-RADIO	771
INSTALLATION GP-SECURITY	185

INDEX

Name	Page
INSTRUMENT GP–EROPS	774
INSTRUMENT GP–OROPS	772
K	
KEY (BATTERY DISCONNECT)	224
KEY AS-ELECTRONIC (SECURITY)	185
KIT-SENSOR (AIR PRESSURE)	101
	106
	111
	116
	121
	126
KIT-SENSOR (COOLANT TEMPERATURE)	101
	106
	111
	116
	121
	126
KIT-SENSOR (ENGINE OIL PRESSURE)	101
	106
	111
	116
	121
	126
KIT-SENSOR (ENGINE SPEED)	101
	106
	111
	116
	121
	126
KIT-SENSOR (FUEL RAIL PRESSURE)	101
KNOB GP (PUSH-PULL)	684
L	
LAMP (12-VOLT) (MINIATURE)	231
	234
	237
LAMP (12-VOLT, 55-WATT) (FLOODLIGHT)	187
	188
	189
LAMP GP-DOME (12-VOLT) (CAB)	231
	234
	237
LAMP GP-FLOOD	187
	188
	189
LATCH GP–FIRE PLOW	776
LIFTING GP-ENGINE	33
LIGHTING GP-FLOOD	190
	191
	192
	193
LINER GP-SOUND SUPPRESSION–FRAME	433
LINES GP-AIR CONDITIONER	777
	780
LINES GP-ANGLE & TILT	535
	539
	543
	547
	551
LINES GP-COOLANT	60
LINES GP-FUEL	83
	84
	87
	90
	93
	94
	95
LINES GP-FUEL–IMPLEMENT PUMP	98
LINES GP-FUEL–LOW PRESSURE	96
LINES GP-HEATER	782
	784
LINES GP-HYDRAULIC	553
	556
	559
	561
	563
	565
LINES GP-HYDROSTATIC	308
	310
	312
	313
	315
	317
LINES GP-POWER TRAIN COOLER	319
	321
	323
	325
	327
	329
	331
	333
	334
LINES GP-PRESSURE TEST	566
	568
LINES GP-PUMP	570
	573
	576
	578
	581
	584
LINES GP-REAR ATTACHMENT	585
	587
	589
LINES GP-RIPPER	591
	593
LINES GP-TRANSMISSION OIL–CASE DRAIN	338

INDEX

Name	Page
	340
	342
	344
	346
	348
LINES GP-TRANSMISSION OIL–CHARGE	335
	350
LINES GP-WINCH	595
	598
	602
LINK AS-TRACK	460
LINK AS-TRACK BOX–LINK BOX	462
	463
LINK AS-TRACK BOX–SYSTEMONE	461
LINK AS-TRACK–SYSTEMONE	458
	459
LINK GP-ADJUSTABLE	745
	757
LINK GP-PITCH	655
LITERATURE GP–MACHINE	785
LOCK GP-VANDALISM	923

M

MANIFOLD GP-CONTROL	606
MANIFOLD GP-VALVE (OUTLET)	626
MANIFOLD GP-VALVE–OUTLET	607
MAST GP–LASER RECEIVER	194
MAST GP–SATELLITE RECEIVER	194
MIRROR GP-REAR VIEW–LH	786
MODULE AS-POWER SUPPLY	263
	268
	273
	278
	283
	286
MODULE GP-INTERFACE (KEY)	185
MONITOR GP-OPERATOR (INSTRUMENT CLUSTER)	772
	774
MOTOR & MTG GP-WINCH	904
MOTOR GP-PISTON	608
MOTOR GP-PISTON–POWER TRAIN	352
MOTOR GP-WINDOW WIPER	788
MOTOR GP-WINDOW WIPER (DOOR, LH)	787
	788
MOTOR GP-WINDOW WIPER–DOOR, LH	787
MOTOR GP-WINDOW WIPER–FRONT	790
MOTOR GP-WINDOW WIPER–REAR	789
MOUNTING GP-CAB	791
MOUNTING GP-CONNECTOR–GRADE CONTROL	195
MOUNTING GP-ENGINE	34
MOUNTING GP-ETHER CANISTER	221
MOUNTING GP-GRADE CONTROL	196
	198
MOUNTING GP-MAST–LASER RECEIVER	906
MOUNTING GP-MAST–SATELLITE RECEIVER	906
MOUNTING GP-PUMP	907
MOUNTING GP-RADIO–GRADE CONTROL	792
MOUNTING GP-RECEIVER (TARGET)	212
MOUNTING GP-RECEIVER–MAST	199
MOUNTING GP-RIPPER	908
MOUNTING GP-WINCH	909
	911
MUFFLER GP	71

O

ORIFICE AS-AIR CONDITIONER	777
	780

P

PADLOCK GP	423
	923
PADLOCK GP (LITERATURE COMPARTMENT)	785
PAN GP-BACKREST–LUMBAR	793
PAN GP-OIL	35
PAN GP-SEAT	804
	808
	811
	814
PANEL GP-FUSE	201
	204
	207
PEDAL GP-GOVERNOR & BRAKE	794
PISTON & ROD GP	37
	38
PLANETARY GP-WINCH	912
PLATE & FILM GP–CHINESE	933
PLATE & FILM GP–INTERNATIONAL	926
	927
PLATE & FILM GP–JAPANESE	929
	930
PLATE & FILM GP–U.S.	924
	925
PLATE-SERIAL NUMBER	913
PLATE-SERIAL NUMBER (MACHINE)	928
PLATE-SERIAL NUMBER (MACHINE) (CASE, FRAME)	924
	929
PLUG GP-CYLINDER HEAD	39
PLUG GP-ENGINE	40
PLUG-DRAIN (ENGINE OIL)	35
PLUG-MAGNETIC (FINAL DRIVE OIL DRAIN)	302
POWER TRAIN AR	354
PROTECTION GP-FUEL SYSTEM	79

INDEX

Name	Page
	80
	101
	106
	112
	117
	121
	126
PROTECTION GP-FUEL SYSTEM (LINE, LOW PRESSURE)	77
	84
	87
	90
	93
	94
	95
PULLEY GP-CRANKSHAFT	41
PULLEY GP-ENGINE	27
PUMP & MTG GP-UNIT INJ HYD	99
PUMP GP-CHARGE	358
	489
PUMP GP-CHARGE–SLIPPER	355
	356
PUMP GP-CHARGE–STEERING	357
PUMP GP-ENGINE OIL	51
PUMP GP-FUEL INJECTION	100
	101
	106
	111
	116
	121
	126
	131
	132
PUMP GP-FUEL TRANSFER	99
	100
	131
PUMP GP-GEAR (IMPLEMENT)	609
PUMP GP-GEAR–IMPLEMENT	609
PUMP GP-PISTON	359
	365
	366
PUMP GP-PISTON–HYDROSTATIC	360
PUMP GP-PISTON–SLIPPER	361
	362
	363
	364
PUMP GP-PISTON–WINCH	490
	492
PUMP GP-WATER	61
	63

R

Name	Page
RADIATOR & HYD OIL COOLER GP	65
RAIL GP-FUEL	133
RECEIVER GP-LASER–ACCUGRADE, DUAL	210
RECEIVER GP-LASER–ACCUGRADE, SINGLE	210
RECEIVER GP-SATELLITE–ACCUGRADE, DUAL GNSS, MS992	211
RECEIVER GP-SATELLITE–ACCUGRADE, SINGLE GNSS, MS992	211
RECEIVER GP-SATELLITE–ACCUGRADE, UPGRADE FROM GPS TO GNSS	211
RECEIVER GP-SATELLITE–DUAL GNSS, MS990	213
RECEIVER GP-SATELLITE–DUAL GPS, MS980	210
RECEIVER GP-SATELLITE–GNSS, MS990	212
RECEIVER GP-SATELLITE–SINGLE GNSS, MS990	213
REGULATOR AS-WATER TEMPERATURE (CONNECTOR INCLUDED)	53
RELAY AS (12-VOLT) (BLOWER)	232
	235
	238
	242
	245
	248
	251
RELAY AS (12-VOLT) (CAB ACCESSORIES)	168
RELAY AS (12-VOLT) (FRONT LIGHTS)	201
	205
	208
RELAY AS (12-VOLT) (HORN)	201
	205
	208
RELAY AS (12-VOLT) (REAR LIGHTS)	201
	205
	208
RELAY AS (12-VOLT) (REFRIGERANT CONDENSER)	687
RELAY AS (12-VOLT) (START)	256
RELAY GP–STARTING AID HEATER	214
RESISTOR GP	671
	674
	762
	765
RIPPER AR	913
RIPPER GP	914
ROCKER ARM GP	42
ROLLER GP-TRACK	465
ROLLER GP-TRACK CARRIER	466
ROLLER GP-TRACK CARRIER–SYSTEMONE	467
	468
	469
ROLLER GP-TRACK–SYSTEMONE	464
ROLLER GP-TRACK-DOUBLE FLANGE	470
	472

INDEX

Name	Page
	473
	474
	475
ROLLER GP-TRACK-DOUBLE FLANGE–SEALED, LUBRICATED	471
ROLLER GP-TRACK-SINGLE FLANGE	476
	477
	478
	479
	480
ROPS AR–EROPS	796
	797
ROPS AR–OROPS	796
ROTATING GP-MOTOR	494
ROTATING GP-MOTOR–IMPLEMENT	495
ROTATING GP-PUMP	368
	369
	370
	371
	498
ROTATING GP-PUMP–PROPEL	496

S

SCREEN GP–FRONT	434
SCREEN GP-CAB–OROPS	798
SCREEN GP-PROTECTION–REAR	800
SCREEN GP-PROTECTION–SIDES	799
SCREEN-FILTER (PILOT)	141
	380
	382
SCREEN-SUCTION (HYDRAULIC TANK)	617
	618
	619
SEAL GP-DUO-CONE	456
	457
	466
	467
	470
	472
	473
	476
	477
	478
	479
	480
SEAT & SUPPORT GP–VINYL, HEATED	801
SEAT BELT GP	168
SEAT BELT GP (RETRACTABLE)	821
	822
	823
	824
SEAT BELT GP–RETRACTABLE	802
	803
SEAT GP–CLOTH	808
SEAT GP–CLOTH, HEATED	804
SEAT GP–HEATED SEAT	814
SEAT GP–VINYL	811
SEAT GP-SUSPENSION–CLOTH	819
	821
SEAT GP-SUSPENSION–CLOTH, HEATED	820
	823
SEAT GP-SUSPENSION–VINYL	818
	822
SEAT GP-SUSPENSION–VINYL, HEATED	824
SEGMENT GP-SPROCKET	372
SENDER AS-FUEL LEVEL	146
	150
	154
	158
SENSOR AS-ANGLE (AS400TC)	174
	176
	177
SENSOR AS-POSITION (BULLDOZER CONTROL)	705
	706
	708
	709
SENSOR AS-SPEED (ENGINE)	255
SENSOR GP-POSITION	215
	216
SENSOR GP-POSITION (STEERING)	794
SENSOR GP-POSITION (STEERING, TRANSMISSION)	707
SENSOR GP-PRESSURE	217
SENSOR GP-PRESSURE (HYDRAULIC OIL)	146
	150
	154
SENSOR GP-PRESSURE (HYDROSTATIC DRIVE)	158
SENSOR GP-PRESSURE (WINCH OIL)	874
	877
	880
SENSOR GP-PRESSURE (WINCH)	886
SENSOR GP-SPEED	111
	116
	126
	218
	219
SENSOR GP-SPEED (FUEL PUMP)	99
SENSOR GP-SPEED (INJECTION PUMP)	132
SENSOR GP-SPEED (SECONDARY, TIMING)	100
	131
SENSOR GP-SPEED (TRACK, LH)	146
	149
	153
	158
SENSOR GP-SPEED (TRACK, RH)	146
	149
	153

INDEX

Name	Page
	158
SENSOR GP-TEMPERATURE (HYDRAULIC OIL)	145
	150
	153
	157
SENSOR-PRESSURE (FUEL RAIL PRESSURE)	106
	111
	116
	121
	126
SENSOR-PRESSURE (FUEL)	76
	78
SENSOR-TEMPERATURE (AIR)	106
	111
	116
	121
	126
SERVICE GP-COMMUNICATION (PRODUCT LINK 300)	181
SERVICE GP-COMMUNICATION–PRODUCT LINK 300	220
SHAFT GP-WINCH DRUM	915
SHUTOFF GP-MANUAL–FIRE PLOW	134
SOFTWARE	740
SOFTWARE GP-COMMUNICATION	171
SOFTWARE GP-COMMUNICATION (PRODUCT LINK 300)	220
SOFTWARE GP-MACHINE	171
SOLENOID (AIR FUEL RATIO CONTROL)	72
SOLENOID AS	375
SOLENOID AS (PILOT VALVE)	141
	380
	382
SOLENOID AS (WINCH PUMP)	141
	380
	382
SPRING GP-RECOIL	481
SPROCKET GP	373
STARTING AID GP-ETHER	221
STARTING MOTOR GP-ELECTRIC	223
SUPPORT GP-ENGINE & XMSN	43
SUPPORT GP-HYDRAULIC CONTROL–RH	825
SUPPORT GP-PUMP DRIVE	610
SUPPORT GP-STEERING CONTROL–LH	827
SUPPRESSION AR-SOUND	44
	45
SUSPENSION GP-SEAT	829
SWEEP GP–FRONT	435
	436
SWEEP GP–REAR	437
SWITCH (12-VOLT) (SEAT HEATER ON, OFF)	804
SWITCH (12-VOLT, 24-VOLT)	814
SWITCH AS (LOWER LIMIT)	194
SWITCH AS (UPPER LIMIT)	194
SWITCH AS (WORK LIGHTS)	164
	772
	774
SWITCH AS-LIMIT (GOVERNOR, BRAKE PEDAL)	794
SWITCH AS-LIMIT (OPERATOR PRESENT)	811
SWITCH AS-LIMIT (SEAT ADJUSTMENT)	804
	808
	814
SWITCH AS-MAGNETIC (12-VDC) (MAIN POWER RELAY)	201
	204
	207
SWITCH AS-PRESSURE (HYDRAULIC OIL FILTER)	900
SWITCH AS-PRESSURE (HYDRAULIC OIL)	335
SWITCH AS-PRESSURE (PRESSURE DIFFERENTIAL)	305
SWITCH AS-PRESSURE (REFRIGERANT COMPR, HIGH SIDE)	230
SWITCH AS-ROCKER (12-VOLT) (DRIVE AWAY)	880
SWITCH AS-ROCKER (12-VOLT) (WINCH BRAKE OFF)	874
	877
SWITCH AS-ROCKER (12-VOLT) (WINCH BRAKE)	886
SWITCH AS-ROCKER (12-VOLT) (WINCH FREE SPOOL)	874
	877
SWITCH AS-ROCKER (12-VOLT) (WINCH FREESPOOL)	880
	886
SWITCH AS-ROCKER (4TH VALVE)	883
	884
	888
SWITCH AS-ROCKER (4TH VALVE, FLOAT)	700
	702
	888
	889
SWITCH AS-ROCKER (5TH VALVE, FLOAT)	702
	889
SWITCH AS-ROCKER (AIR CONDITIONER)	774
SWITCH AS-ROCKER (ENGINE SPEED CONTROL)	44
	164
SWITCH AS-ROCKER (FRONT WIPER)	774
SWITCH AS-ROCKER (IMPLEMENT LOCKOUT)	772
	774
SWITCH AS-ROCKER (PARKING BRAKE)	772
	774
SWITCH AS-ROCKER (REAR WIPER)	774
SWITCH AS-ROCKER (SIDE WIPER, LEFT)	774

INDEX

Name	Page
SWITCH AS-ROCKER (SIDE WIPER, RIGHT)	774
SWITCH AS-START (KEY)	772
	774
SWITCH GP-DISCONNECT–BATTERY	224
SWITCH GP-ROTARY–THROTTLE POSITION	225
SWITCH-PRESSURE (AIR CLEANER)	68
T	
TANK & MTG GP-HYDRAULIC–FIRE PLOW	611
TANK GP-COOLANT	67
TANK GP-EXPANSION (COOLANT)	67
TANK GP-FUEL	135
	137
TANK GP-FUEL–FIRE PLOW	138
TANK GP-HYDRAULIC	613
	615
	617
	619
TANK GP-HYDRAULIC–FIRE PLOW	618
TANK GP-WINDOW WASHER	833
TARGET GP-LASER	174
	226
	227
TOOTH GP-RIPPER	917
TRACK AR	482
	483
TRACK AR–SYSTEMONE	483
TRACK GP	487
TRACK GP–2 REQUIRED	484
TRACK GP–2-REQUIRED	484
	485
TRACK GP–2-REQUIRED, SYSTEMONE	485
	486
TURBOCHARGER GP	72
U	
UNDERCARRIAGE AR	487
V	
VALVE & LINES GP-WINCH	918
VALVE & MTG GP-CONTROL	620
	621
VALVE & MTG GP-IMPLEMENT CONT	623
VALVE & MTG GP-IMPLEMENT CONT–STANDARD	622
VALVE AS-PRESSURE RELIEF (REFRIGERANT COMPRESSOR)	686
VALVE AS-RELIEF	111
	121
	126
VALVE AS-RELIEF (FUEL RAIL)	116
	133
VALVE GP-BANK 3–IMPLEMENT	624
VALVE GP-BANK 4–IMPLEMENT	626
	628
VALVE GP-BANK 5–IMPLEMENT	630
VALVE GP-CAB HEATER	770
VALVE GP-CAB HEATER (WATER)	769
VALVE GP-CHECK	140
VALVE GP-CHECK (FUEL)	96
VALVE GP-CHECK (HYDROSTATIC DRIVE MOTOR)	352
VALVE GP-CHECK (IMPLEMENT)	624
	626
	628
	630
VALVE GP-CHECK (LOAD CONTROL)	585
	587
	589
VALVE GP-CHECK (SLOW RETURN)	632
VALVE GP-CONTROL	499
	502
	505
	508
	511
	513
	516
	519
	522
	636
	639
	643
	645
VALVE GP-CONTROL–ANGLE	634
VALVE GP-CONTROL–AUXILIARY	635
	647
VALVE GP-CONTROL–BLADE LIFT	632
VALVE GP-CONTROL–TILT	642
VALVE GP-FLOW CONTROL (WINCH)	918
VALVE GP-FLUID SAMPLING–ENGINE OIL	52
VALVE GP-FLUSHING–HYDROSTATIC DRIVE	374
VALVE GP-LOAD CONTROL	585
	587
VALVE GP-LOAD CONTROL (HYDRAULIC)	589
VALVE GP-MAKEUP (ANGLE)	634
VALVE GP-MAKEUP (AUXILIARY)	635
	647
VALVE GP-MAKEUP (BLADE LIFT)	632
VALVE GP-MAKEUP (TILT)	642
VALVE GP-MANUAL–FIRE PLOW	45
VALVE GP-PILOT–SERVO	375
VALVE GP-RELIEF (12-VOLT) (BLADE LIFT)	632
VALVE GP-RELIEF (AUXILIARY)	635
	647
VALVE GP-RELIEF (CHARGE PRESSURE)	306

INDEX

Name	Page
	492
VALVE GP-RELIEF (LOAD CONTROL)	585
	587
	589
VALVE GP-RELIEF (MULTIFUNCTION)	306
VALVE GP-RELIEF (PUMP HEAD)	307
VALVE GP-RELIEF–CHARGE PRESSURE	377
	648
VALVE GP-RELIEF–CROSSOVER	379
VALVE GP-RELIEF–PRESSURE OVERRIDE–HYDROSTATIC PUMP	376
VALVE GP-SOLENOID	141
	382
	650
VALVE GP-SOLENOID (12-VOLT) (AUXILIARY)	647
VALVE GP-SOLENOID (12-VOLT) (BLADE LIFT)	632
VALVE GP-SOLENOID (12-VOLT) (MOTOR, 2-SPEED)	606
VALVE GP-SOLENOID (12-VOLT) (TILT)	642
VALVE GP-SOLENOID (ANGLE)	634
VALVE GP-SOLENOID (AUXILIARY)	635
VALVE GP-SOLENOID (PARKING BRAKE)	650
VALVE GP-SOLENOID (SERVO)	490
	492
VALVE GP-SOLENOID (WINCH)	918
VALVE GP-SOLENOID–PARKING BRAKE	649
VALVE GP-SOLENOID–SERVO	380
VALVE GP-SOLENOID–WINCH	651
	652
VALVE MECHANISM GP	46

W

Name	Page
WARNING GP-BACKUP	228
	229
WASHER GP-WINDOW	833
WINCH AR	920
WINDOW GP-CAB	835
	836
	837
WINDOW GP-CAB–LH	839
WINDOW GP-CAB–RH	838
WINDOW GP-SLIDING–LH	842
WINDOW GP-SLIDING–RH	840
WIPER GP-WINDOW	844
WIRING GP-AIR CONDITIONER	230
WIRING GP-CAB–EROPS	231
	234
	237
WIRING GP-CAB–OROPS	241
	244
	247
	250
WIRING GP-ELECTROHYDRAULIC	253
WIRING GP-ENGINE	255
	260
	261
WIRING GP-GRADE CONTROL–BASE	283
	286
WIRING GP-GRADE CONTROL–FULL	263
	268
	273
	278
WIRING GP-PLATFORM	289
	292

MEMORANDA

MACHINE ARRANGEMENT

244-7376 CHASSIS AR

S/N: FFF1-UP

PART OF 244-7370 COMMON AR

SMCS-7000 **i02983093**

NOTE	PART NUMBER	QTY	PART NAME 1 2 3 4 5 6 (PRODUCT LEVEL)	SEE PAGE
Y	*245-6017*	1	BATTERY & WIRING GP	145
Y	*255-2098*	1	C-FRAME GP-POWER ANGLING (TILT)	653
Y	*324-0670*	1	CONTROL & MTG GP-PEDAL (GOVERNOR, BRAKE)	694
Y	*244-7512*	1	ENCLOSURE GP-PLATFORM	387
Y	*244-7389*	1	FILM GP	921
Y	*244-7396*	1	FRAME GP-MAIN	402
Y	*254-8900*	1	GUARD GP-BOTTOM	409
Y	*254-7757*	1	GUARD GP-RADIATOR	422
Y	*244-7482*	1	LINES GP-FUEL	83
Y	*255-4241*	1	LINES GP-HEATER	782
Y	*254-3169*	1	MOUNTING GP-CAB	791
Y	*244-7408*	1	TANK GP-FUEL	135
Y	*245-6027*	1	WIRING GP-ELECTROHYDRAULIC	253
Y	*245-6019*	1	WIRING GP-ENGINE	255
Y	*245-6020*	1	WIRING GP-PLATFORM	289

Y-SEPARATE ILLUSTRATION

<END>

244-7377 CHASSIS AR

S/N: LLL1-UP

PART OF 244-7371 COMMON AR

SMCS-7000 **i02983108**

NOTE	PART NUMBER	QTY	PART NAME 1 2 3 4 5 6 (PRODUCT LEVEL)	SEE PAGE
Y	*245-6017*	1	BATTERY & WIRING GP	145
Y	*255-2098*	1	C-FRAME GP-POWER ANGLING (TILT)	653
Y	*324-0670*	1	CONTROL & MTG GP-PEDAL (GOVERNOR, BRAKE)	694
Y	*244-7512*	1	ENCLOSURE GP-PLATFORM	387
Y	*244-7484*	1	FILM GP (LGP)	922
Y	*244-7397*	1	FRAME GP	392
Y	*254-8900*	1	GUARD GP-BOTTOM	409
Y	*254-7757*	1	GUARD GP-RADIATOR	422
Y	*244-7482*	1	LINES GP-FUEL	83
Y	*255-4241*	1	LINES GP-HEATER	782
Y	*254-3169*	1	MOUNTING GP-CAB	791
Y	*244-7408*	1	TANK GP-FUEL	135
Y	*245-6027*	1	WIRING GP-ELECTROHYDRAULIC	253
Y	*245-6019*	1	WIRING GP-ENGINE	255
Y	*245-6020*	1	WIRING GP-PLATFORM	289

Y-SEPARATE ILLUSTRATION

<END>

MACHINE ARRANGEMENT

282-5327 CHASSIS AR

S/N: JTD1-UP

PART OF 282-5325 COMMON AR

SMCS-7000 **i03447621**

NOTE	PART NUMBER	QTY	PART NAME 1 2 3 4 5 6 (PRODUCT LEVEL)	SEE PAGE
Y	*245-6017*	1	BATTERY & WIRING GP	145
Y	*255-2098*	1	C-FRAME GP-POWER ANGLING (TILT)	653
Y	*324-0670*	1	CONTROL & MTG GP-PEDAL (GOVERNOR, BRAKE)	694
Y	*244-7512*	1	ENCLOSURE GP-PLATFORM	387
Y	*244-7484*	1	FILM GP (LGP)	922
Y	*244-7402*	1	FRAME GP	394
Y	*254-8900*	1	GUARD GP-BOTTOM	409
Y	*254-7757*	1	GUARD GP-RADIATOR	422
Y	*244-7482*	1	LINES GP-FUEL	83
Y	*255-4241*	1	LINES GP-HEATER	782
Y	*254-3169*	1	MOUNTING GP-CAB	791
Y	*244-7408*	1	TANK GP-FUEL	135
Y	*245-6027*	1	WIRING GP-ELECTROHYDRAULIC	253
Y	*245-6019*	1	WIRING GP-ENGINE	255
Y	*245-6020*	1	WIRING GP-PLATFORM	289

Y-SEPARATE ILLUSTRATION

<END>

244-7370 COMMON AR

S/N: FFF1-UP

SMCS-7000 **i02642365**

NOTE	PART NUMBER	QTY	PART NAME 1 2 3 4 5 6 (PRODUCT LEVEL)	SEE PAGE
Y	*244-7376*	1	CHASSIS AR	1
Y	*244-7387*	1	ELECTRONICS GP-MACHINE	171
Y	**254-9233**	1	ENGINE AR-PRIMARY	6
Y	*244-7385*	1	HYDRAULIC AR	532
Y	*244-7386*	1	INSTALLATION AR-ENGINE	7
Y	*244-7382*	1	POWER TRAIN AR	354

Y-SEPARATE ILLUSTRATION

<END>

244-7371 COMMON AR

S/N: LLL1-UP

SMCS-7000 **i02642366**

NOTE	PART NUMBER	QTY	PART NAME 1 2 3 4 5 6 (PRODUCT LEVEL)	SEE PAGE
Y	*244-7377*	1	CHASSIS AR	1
Y	*244-7387*	1	ELECTRONICS GP-MACHINE	171
Y	**254-9233**	1	ENGINE AR-PRIMARY	6
Y	*244-7385*	1	HYDRAULIC AR	532
Y	*244-7386*	1	INSTALLATION AR-ENGINE	7
Y	*244-7445*	1	POWER TRAIN AR	354

Y-SEPARATE ILLUSTRATION

<END>

MACHINE ARRANGEMENT

282-5325 COMMON AR

S/N: JTD1-UP

SMCS-7000 **i03447463**

NOTE	PART NUMBER	QTY	PART NAME 1 2 3 4 5 6 (PRODUCT LEVEL)	SEE PAGE
Y	*282-5327*	1	CHASSIS AR	2
Y	*244-7387*	1	ELECTRONICS GP-MACHINE	171
Y	**254-9233**	1	ENGINE AR-PRIMARY	6
Y	*317-2808*	1	HYDRAULIC AR	533
Y	*244-7386*	1	INSTALLATION AR-ENGINE	7
Y	*286-3235*	1	POWER TRAIN AR	354

Y-SEPARATE ILLUSTRATION

<END>

325-6496 CONVERSION AR-MACHINE OPTION—FIRE PLOW

S/N: FFF1-UP

FOR USE WITH 244-7370—PAGE 2, 244-7467—PAGE 435

AN ATTACHMENT

SMCS-7000 **i03697320**

NOTE	PART NUMBER	QTY	PART NAME 1 2 3 4 5 6 (PRODUCT LEVEL)	SEE PAGE
Y	*325-7265*	1	ACCESSORY GP-CAB	663
Y	*325-7267*	1	ARRESTOR GP-SPARK	69
Y	*318-6107*	1	CONVERSION GP-ELECTRICAL	164
Y	*323-7320*	1	ENCLOSURE GP-PLATFORM	391
Y	*325-6504*	1	FRAME GP-MAIN	404
Y	*325-7266*	1	LATCH GP	776
Y	*322-5900*	1	LINES GP-FUEL (LOW PRESSURE)	96
Y	*322-5904*	1	LINES GP-FUEL (IMPLEMENT PUMP)	98
Y	*319-8113*	1	TANK & MTG GP-HYDRAULIC	611
Y	*319-8103*	1	TANK GP-FUEL	138

Y-SEPARATE ILLUSTRATION

<END>

325-6497 CONVERSION AR-MACHINE OPTION—FIRE PLOW

S/N: LLL1-UP

FOR USE WITH 244-7371—PAGE 2, 244-7467—PAGE 435

AN ATTACHMENT

SMCS-7000 **i03697400**

NOTE	PART NUMBER	QTY	PART NAME 1 2 3 4 5 6 (PRODUCT LEVEL)	SEE PAGE
Y	*325-7265*	1	ACCESSORY GP-CAB	663
Y	*325-7267*	1	ARRESTOR GP-SPARK	69
Y	*318-6107*	1	CONVERSION GP-ELECTRICAL	164
Y	*323-7320*	1	ENCLOSURE GP-PLATFORM	391
Y	*325-6505*	1	FRAME GP	396
Y	*325-7266*	1	LATCH GP	776
Y	*322-5900*	1	LINES GP-FUEL (LOW PRESSURE)	96
Y	*322-5904*	1	LINES GP-FUEL (IMPLEMENT PUMP)	98
Y	*319-8113*	1	TANK & MTG GP-HYDRAULIC	611
Y	*319-8103*	1	TANK GP-FUEL	138

Y-SEPARATE ILLUSTRATION

<END>

MACHINE ARRANGEMENT

325-6502 CONVERSION AR-MACHINE OPTION—FIRE PLOW

S/N: JTD1-UP

FOR USE WITH 282-5325—PAGE 3, 244-7467—PAGE 435

AN ATTACHMENT

SMCS-7000 **i03697542**

NOTE	PART NUMBER	QTY	PART NAME 1 2 3 4 5 6 (PRODUCT LEVEL)	SEE PAGE
Y	*325-7265*	1	ACCESSORY GP-CAB	663
Y	*325-7267*	1	ARRESTOR GP-SPARK	69
Y	*318-6107*	1	CONVERSION GP-ELECTRICAL	164
Y	*323-7320*	1	ENCLOSURE GP-PLATFORM	391
Y	*325-6510*	1	FRAME GP	397
Y	*325-7266*	1	LATCH GP	776
Y	*322-5900*	1	LINES GP-FUEL (LOW PRESSURE)	96
Y	*322-5904*	1	LINES GP-FUEL (IMPLEMENT PUMP)	98
Y	*319-8113*	1	TANK & MTG GP-HYDRAULIC	611
Y	*319-8103*	1	TANK GP-FUEL	138

Y-SEPARATE ILLUSTRATION

<END>

325-6541 CONVERSION AR-MACHINE OPTION—FIRE PLOW

S/N: FFF1-UP

FOR USE WITH 325-6496—PAGE 3

AN ATTACHMENT

SMCS-7000 **i03657455**

NOTE	PART NUMBER	QTY	PART NAME 1 2 3 4 5 6 (PRODUCT LEVEL)	SEE PAGE
Y	*328-8602*	1	LINES GP-ANGLE & TILT	551
Y	*329-5632*	1	LINES GP-COOLANT	60
Y	*327-7684*	1	LINES GP-HEATER	784
Y	*327-8890*	1	LINES GP-HYDRAULIC	565
Y	*327-6772*	1	LINES GP-HYDROSTATIC	315
Y	*327-0931*	1	LINES GP-POWER TRAIN COOLER	331
Y	*328-8600*	1	LINES GP-PRESSURE TEST	568
Y	*327-3392*	1	LINES GP-PUMP (FIRE PLOW)	584
Y	*329-1319*	1	LINES GP-TRANSMISSION OIL (CASE DRAIN)	346
Y	*329-1938*	1	LINES GP-TRANSMISSION OIL (CHARGE)	350
Y	*325-0488*	1	LINES GP-HYDRAULIC	559

Y-SEPARATE ILLUSTRATION

<END>

MACHINE ARRANGEMENT

325-6542 CONVERSION AR-MACHINE OPTION—FIRE PLOW

S/N: LLL1-UP
FOR USE WITH 325-6497—PAGE 3
AN ATTACHMENT

SMCS-7000 **i03657465**

NOTE	PART NUMBER	QTY	PART NAME 1 2 3 4 5 6 (PRODUCT LEVEL)	SEE PAGE
Y	*328-8602*	1	LINES GP-ANGLE & TILT	551
Y	*329-5632*	1	LINES GP-COOLANT	60
Y	*327-7684*	1	LINES GP-HEATER	784
Y	*327-8890*	1	LINES GP-HYDRAULIC	565
Y	*327-6772*	1	LINES GP-HYDROSTATIC	315
Y	*327-7665*	1	LINES GP-POWER TRAIN COOLER	333
Y	*328-8600*	1	LINES GP-PRESSURE TEST	568
Y	*327-3392*	1	LINES GP-PUMP (FIRE PLOW)	584
Y	*329-1938*	1	LINES GP-TRANSMISSION OIL (CHARGE)	350
Y	*329-1319*	1	LINES GP-TRANSMISSION OIL (CASE DRAIN)	346
Y	*325-1020*	1	LINES GP-HYDRAULIC	561

Y-SEPARATE ILLUSTRATION

<END>

325-6547 CONVERSION AR-MACHINE OPTION—FIRE PLOW

S/N: JTD1-UP
FOR USE WITH 325-6502—PAGE 4
AN ATTACHMENT

SMCS-7000 **i03657470**

NOTE	PART NUMBER	QTY	PART NAME 1 2 3 4 5 6 (PRODUCT LEVEL)	SEE PAGE
Y	*328-8602*	1	LINES GP-ANGLE & TILT	551
Y	*329-5632*	1	LINES GP-COOLANT	60
Y	*327-7684*	1	LINES GP-HEATER	784
Y	*327-8890*	1	LINES GP-HYDRAULIC	565
Y	*327-8901*	1	LINES GP-HYDROSTATIC	317
Y	*327-7670*	1	LINES GP-POWER TRAIN COOLER	334
Y	*328-8600*	1	LINES GP-PRESSURE TEST	568
Y	*327-3392*	1	LINES GP-PUMP (FIRE PLOW)	584
Y	*329-1938*	1	LINES GP-TRANSMISSION OIL (CHARGE)	350
Y	*329-1937*	1	LINES GP-TRANSMISSION OIL (CASE DRAIN)	348
Y	*325-1327*	1	LINES GP-HYDRAULIC	563

Y-SEPARATE ILLUSTRATION

<END>

ENGINE ARRANGEMENT

254-9233 ENGINE AR-PRIMARY*R

S/N: C4E1-UP

75 BRAKE KW (100 BHP) AT 2000 RPM

PART OF 244-7370, 244-7371, 282-5325 COMMON AR

SMCS-1000 **i04380322**

NOTE	PART NUMBER	QTY	PART NAME 1 2 3 4 5 6 (PRODUCT LEVEL)	SEE PAGE
Y	*303-5775*	1	ADAPTER GP-AUXILIARY DRIVE	8
Y	*303-5774*	1	ALTERNATOR GP-CHARGING	143
			S/N: C4E1-173	
Y	*317-9776*	1	ALTERNATOR GP-CHARGING	144
			S/N: C4E174-UP	
Y	*304-3648*	1	CAMSHAFT GP	11
Y	*301-8243*	1	CONNECTION GP-WATER	53
			—OR—	
Y	*334-2314*	1	CONNECTION GP-WATER	54
Y	*304-3650*	1	CONTROL GP-ENGINE ELECTRONIC	162
Y	*298-5099*	1	COOLER GP-ENGINE OIL	55
Y	*304-3658*	1	COVER GP-CYLINDER HEAD	12
Y	*320-2369*	1	COVER GP-VALVE MECHANISM	13
Y	*304-3642*	1	CRANKSHAFT GP	15
Y	*304-3641*	1	CYLINDER BLOCK GP	21
Y	*304-3645*	1	CYLINDER HEAD GP	26
Y	*303-5770*	1	DRIVE GP-FAN	28
Y	*314-3960*	1	FILLER GP-ENGINE OIL	48
Y	*298-5100*	1	FILTER GP-ENGINE OIL	50
Y	*298-5123*	1	FILTER GP-PRIMARY FUEL	79
			S/N: C4E1-173	
Y	*320-1332*	1	FILTER GP-FUEL	77
			S/N: C4E174-UP	
Y	*304-3654*	1	FLYWHEEL GP	29
Y	*298-5110*	1	GEAR GP-FRONT	30
Y	*304-3660*	1	GLOW PLUG GP	172
Y	*303-5767*	1	HOUSING GP-FLYWHEEL	32
Y	*298-5127*	1	LIFTING GP-ENGINE	33
Y	*304-3659*	1	LINES GP-FUEL (LOW)	84
Y	*304-3662*	1	LINES GP-FUEL	93
Y	*304-3661*	1	MOUNTING GP-ENGINE	34
Y	*304-3656*	1	PAN GP-OIL	35
Y	*304-3643*	1	PISTON & ROD GP	37
Y	*298-5129*	1	PLUG GP-CYLINDER HEAD (TEMPERATURE)	39
Y	*304-3663*	1	PLUG GP-ENGINE	40
Y	*360-7345*	1	PULLEY GP-CRANKSHAFT	41
Y	*298-5112*	1	PUMP GP-ENGINE OIL	51
Y	*304-3649*	1	PUMP GP-FUEL INJECTION	101
Y	*298-5105*	1	PUMP GP-WATER	61
Y	*304-3655*	1	STARTING MOTOR GP-ELECTRIC	223
Y	*304-3657*	1	TURBOCHARGER GP	72
Y	*304-5617*	1	VALVE GP-FLUID SAMPLING (OIL)	52
Y	*304-3647*	1	VALVE MECHANISM GP	46
Y	*299-5092*	1	WIRING GP-ENGINE	260
	359-0737	1	CYLINDER BLOCK GP-SHORT	
	305-8452	1	ELECTRONICS GP-ENGINE RATINGS	

Y-SEPARATE ILLUSTRATION

ENGINE ARRANGEMENT

244-7386 INSTALLATION AR-ENGINE

S/N: JTD1-UP; FFF1-UP; LLL1-UP

PART OF 244-7370, 244-7371, 282-5325 COMMON AR

SMCS-1000 **i03845898**

NOTE	PART NUMBER	QTY	PART NAME 1 2 3 4 5 6 (PRODUCT LEVEL)	SEE PAGE
Y	*244-7427*	1	AIR CLEANER GP	68
Y	*244-7428*	1	FAN GP-BLOWER	59
Y	*283-3426*	1	FILTER GP-ENGINE OIL (INCLUDES SHUTOFF VALVE)	49
Y	*254-8954*	1	MUFFLER GP	71
Y	*244-7430*	1	RADIATOR & HYD OIL COOLER GP	65
Y	*244-7431*	1	SUPPORT GP-ENGINE & XMSN	43
Y	*254-3256*	1	TANK GP-COOLANT	67

Y-SEPARATE ILLUSTRATION

BASIC ENGINE

303-5775 ADAPTER GP-AUXILIARY DRIVE

S/N: C4E1-UP

PART OF 254-9233 ENGINE AR-PRIMARY

SMCS-1207 **i02907611**

NOTE	REF NO	GRAPHIC REF	PART NUMBER	QTY	PART NAME 1 2 3 4 5 6 (PRODUCT LEVEL)	SEE PAGE
	1	1	**235-1063**	1	ADAPTER AS	
	1A	1	**6H-3957**	1	BALL BEARING	
	1B	1	**102-2075**	1	BEARING	
	1C	1	**102-2076**	1	CLIP	
	1D	1	**235-1061**	1	GEAR (33-TEETH)	
	2	1	**102-2073**	1	SEAL-O-RING	
M	3	1	**102-2078**	1	BOLT (M10X1.5X25-MM)	
	5	1	**126-3212**	5	BOLT (M8X1.25X25-MM)	
	6	1	**6I-0646**	1	BOLT (M10X1.5X14-MM)	
	7	1	**214-3203**	1	WASHER (SEALING)	

M-METRIC PART

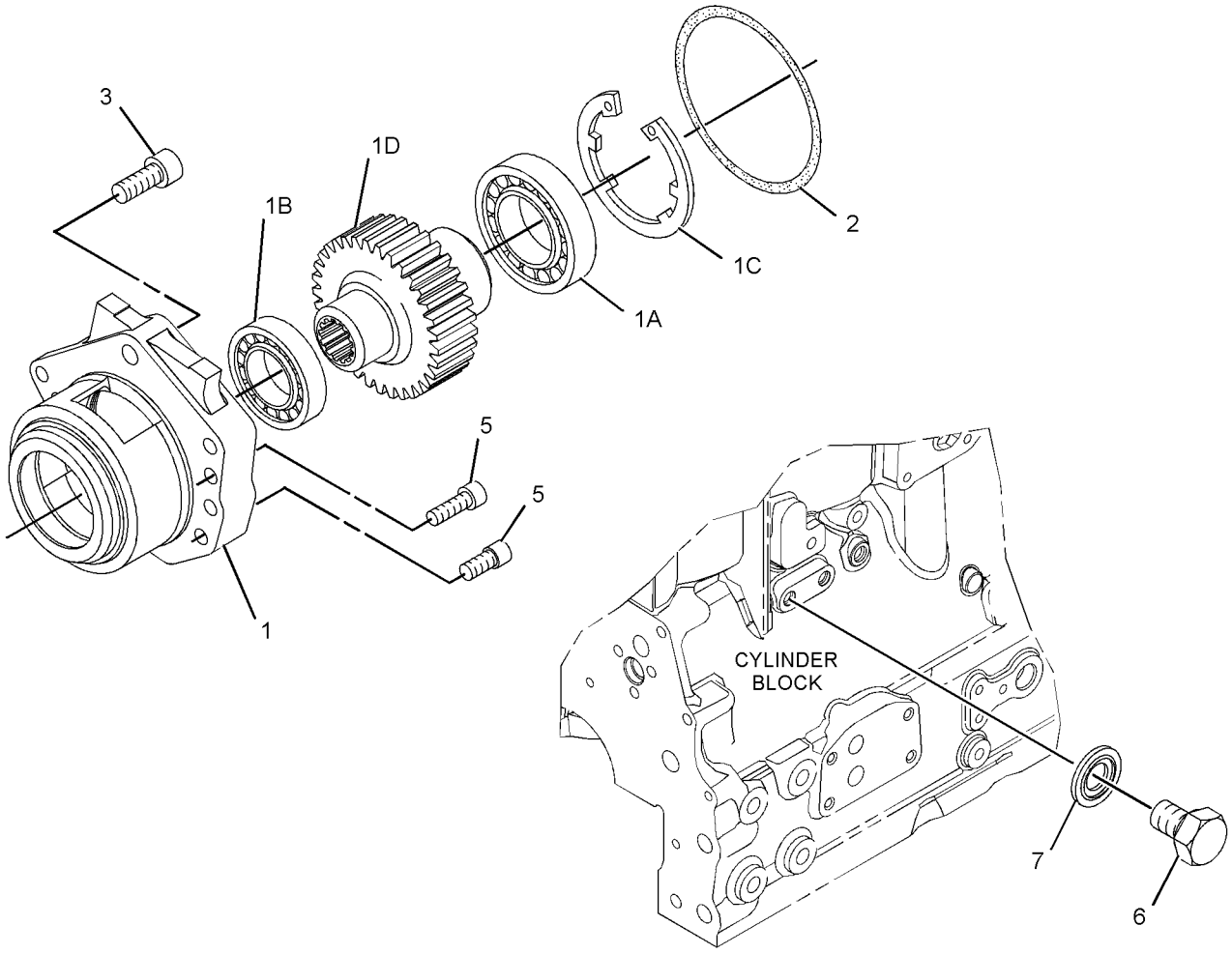

GRAPHIC #1 **<END>** g01447103

260-9294 BELT TENSIONER GP–FAN–EROPS

S/N: JTD1-UP; FFF1-UP; LLL1-UP
PART OF 244-7475, 244-7476 ROPS AR
AN ATTACHMENT

SMCS-1358 **i03918440**

NOTE	REF NO	GRAPHIC REF	PART NUMBER	QTY	PART NAME 1 2 3 4 5 6 (PRODUCT LEVEL)	SEE PAGE
	1	1	**261-0376**	1	BELT TENSIONER	
	2	1	**348-8149**	1	PLATE-MOUNTING	
	3	1	**261-0428**	1	PULLEY AS-IDLER	
M		1	**307-2242**	1	BOLT (M10X1.5X45-MM)	
	4	1	**283-4148**	1	PULLEY	
	5	1	**298-5874**	1	BELT-SERPENTINE	
M	6	1	**6I-0593**	3	BOLT (M10X1.5X30-MM)	

M-METRIC PART

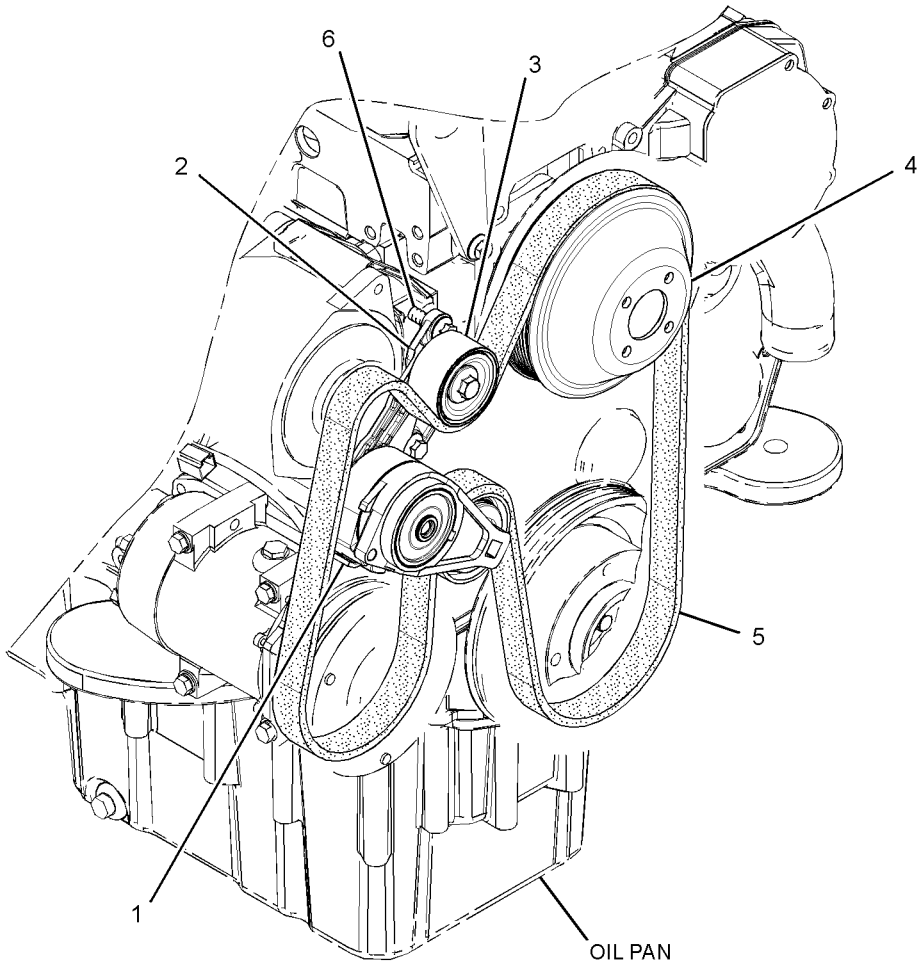

GRAPHIC #1 **<END>** g01440105

BASIC ENGINE

260-9501 BELT TENSIONER GP–FAN–OROPS

S/N: JTD1-UP; FFF1-UP; LLL1-UP
PART OF 244-7474 ROPS AR
AN ATTACHMENT

SMCS-1358 **i03918441**

NOTE	REF NO	GRAPHIC REF	PART NUMBER	QTY	PART NAME 1 2 3 4 5 6 (PRODUCT LEVEL)	SEE PAGE
	1	1	**349-3261**	1	PLATE-TENSIONER	
	2	1	**261-0406**	1	BELT TENSIONER	
	3	1	**283-4148**	1	PULLEY	
	4	1	**309-6666**	1	BELT-SERPENTINE	
M	5	1	**6I-0593**	3	BOLT (M10X1.5X30-MM)	

M-METRIC PART

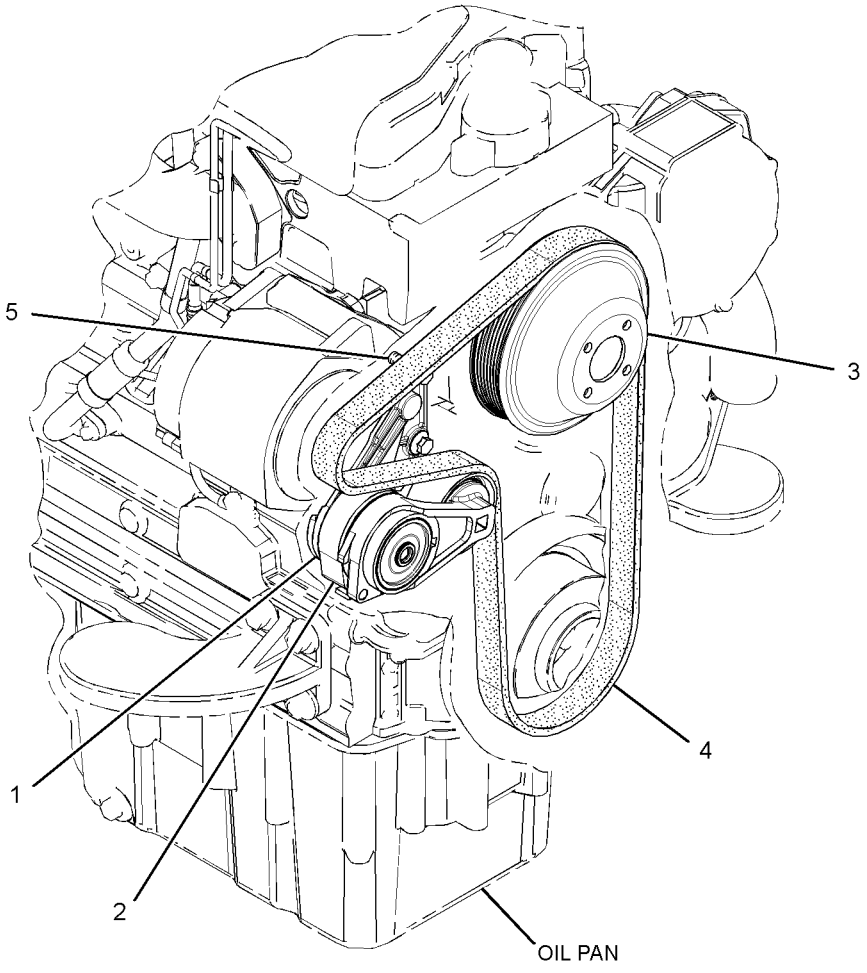

GRAPHIC #1 **<END>** g01440924

BASIC ENGINE

304-3648 CAMSHAFT GP

S/N: C4E1-UP

PART OF 254-9233 ENGINE AR-PRIMARY

SMCS-1210 **i02857647**

NOTE	REF NO	GRAPHIC REF	PART NUMBER	QTY	PART NAME 1 2 3 4 5 6 (PRODUCT LEVEL)	SEE PAGE
	1	1	**315-3384**	8	TAPPET	
	2	1	**278-5126**	8	PUSHROD	
	3	1	**306-2330**	1	CAMSHAFT AS	
	3A	1	**1B-8736**	1	KEY-WOODRUFF	

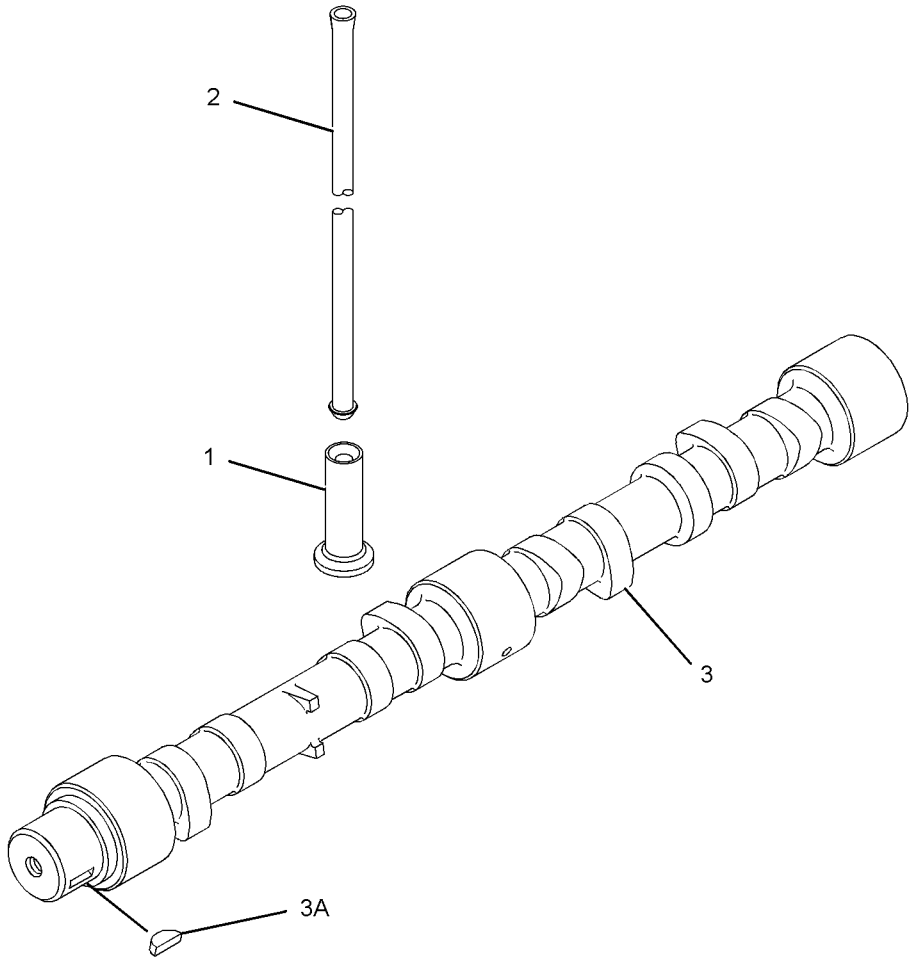

GRAPHIC #1 **<END>** g01304671

304-3658 COVER GP-CYLINDER HEAD

S/N: C4E1-UP

PART OF 254-9233 ENGINE AR-PRIMARY

SMCS-1100 **i03859380**

NOTE	REF NO	GRAPHIC REF	PART NUMBER	QTY	PART NAME 1 2 3 4 5 6 (PRODUCT LEVEL)	SEE PAGE
M	1	1	**124-3815**	4	BOLT (M8X1.25X16-MM)	
	2	1	**111-8222**	4	BOLT (M8X16-MM)	
	3	1	**114-2579**	2	GASKET	
	4	1	**185-6627**	2	PLATE	

M-METRIC PART

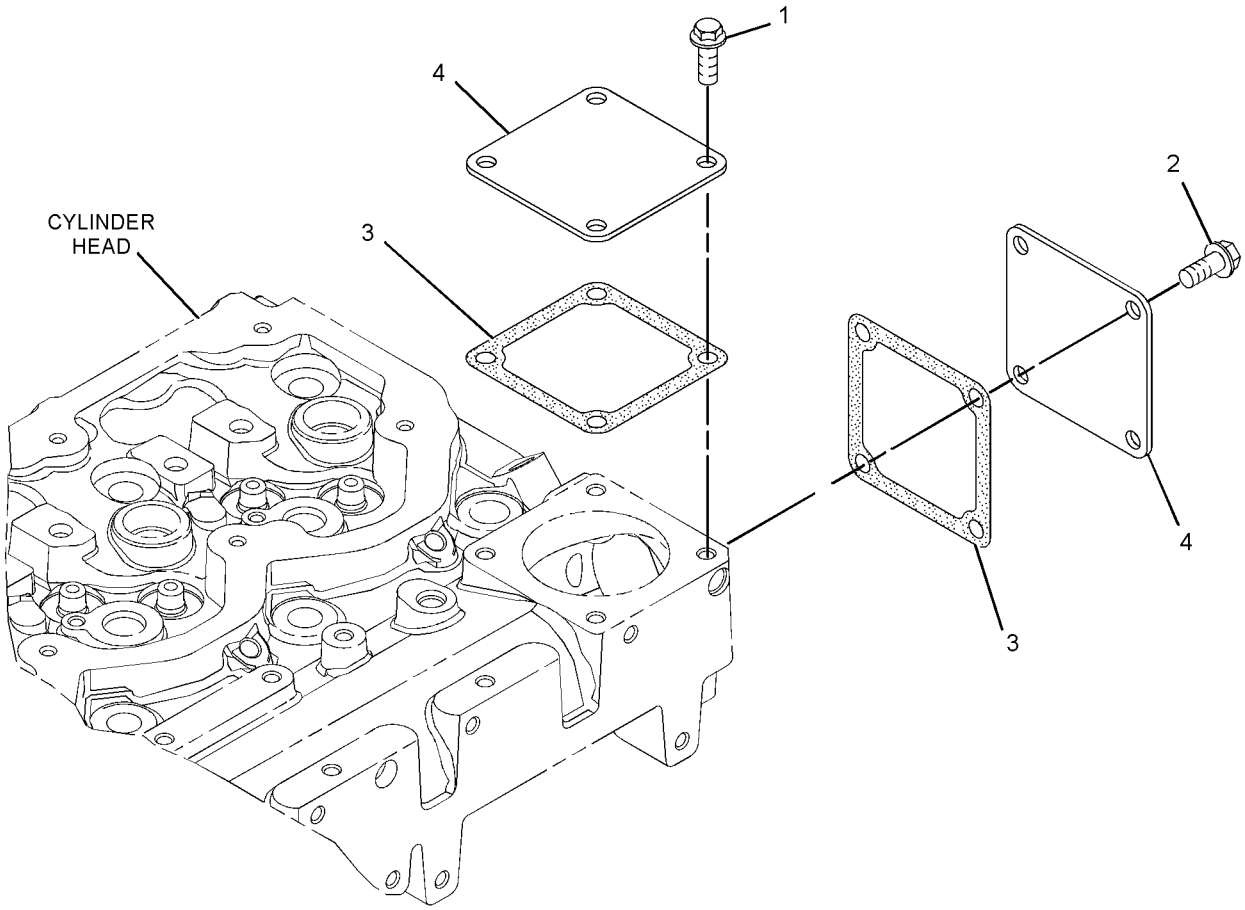

GRAPHIC #1 **<END>** g02122260

320-2369 COVER GP-VALVE MECHANISM

S/N: C4E1-UP

PART OF 254-9233 ENGINE AR-PRIMARY

SMCS-1107 **i03586762**

NOTE	REF NO	GRAPHIC REF	PART NUMBER	QTY	PART NAME 1 2 3 4 5 6 (PRODUCT LEVEL)	SEE PAGE
	1	1	**7C-1281**	1	BRACKET	
	3	1	**6I-0846**	3	BOLT (M6X1X14-MM)	
	4	1	**5D-1026**	1	CLAMP-BAND	
	5	1	**162-1565**	1	SPRING (CRANKCASE BREATHER HOSE)	
	6	1	**320-9921**	1	HOSE	
	7	1	**277-5031**	7	BOLT-SPECIAL (SHOULDER)	
	8	1	**277-5067**	4	SLEEVE	
	10	1	**298-4550**	4	BOLT-SPECIAL (SHOULDER)	
	11	1	**298-4551**	1	BASE GP-VALVE COVER & INJ HARN	
	11A	1	**277-5064**	2	SEAL-O-RING	
	11B	1	**277-5065**	2	CLIP	
	11C	1	**285-1973**	2	HARNESS AS-ENGINE (FUEL INJECTION)	
					(EACH INCLUDES)	
		1	**316-9351**	1	MOUNTING-CABLE TIE	
		1	**180-9339**	4	PIN-CONNECTOR (14-GA TO 18-GA)	
		1	**113-4630**	1	RECEPTACLE AS-CONNECTOR (4-PIN)	
		1	**3E-3377**	1	WEDGE-RECEPTACLE LOCK (4-PIN)	
	11D	1	**298-4552**	1	GASKET (VALVE MECHANISM BASE)	
	12	1	**303-5781**	1	COVER AS-CYLINDER HEAD	
	12A	1	**295-1042**	4	SCREW-TAPPING	
	12B	1	**298-4546**	1	GASKET-VALVE COVER (CYLINDER HEAD)	
	12C	1	**298-4547**	1	BREATHER (CRANKCASE)	
	12D	1	**298-4548**	1	SEPARATOR-OIL	
	12E	1	**298-4549**	1	SEAL-O-RING	
	13	1	**320-2360**	1	SHIELD-HEAT	
	14	1	**320-2362**	1	WASHER	
	15	1	**320-2361**	2	WASHER	
	16	1	**343-8096**	1	CLIP	

320-2369 **COVER GP-VALVE MECHANISM** *(contd.)* **i03586762**

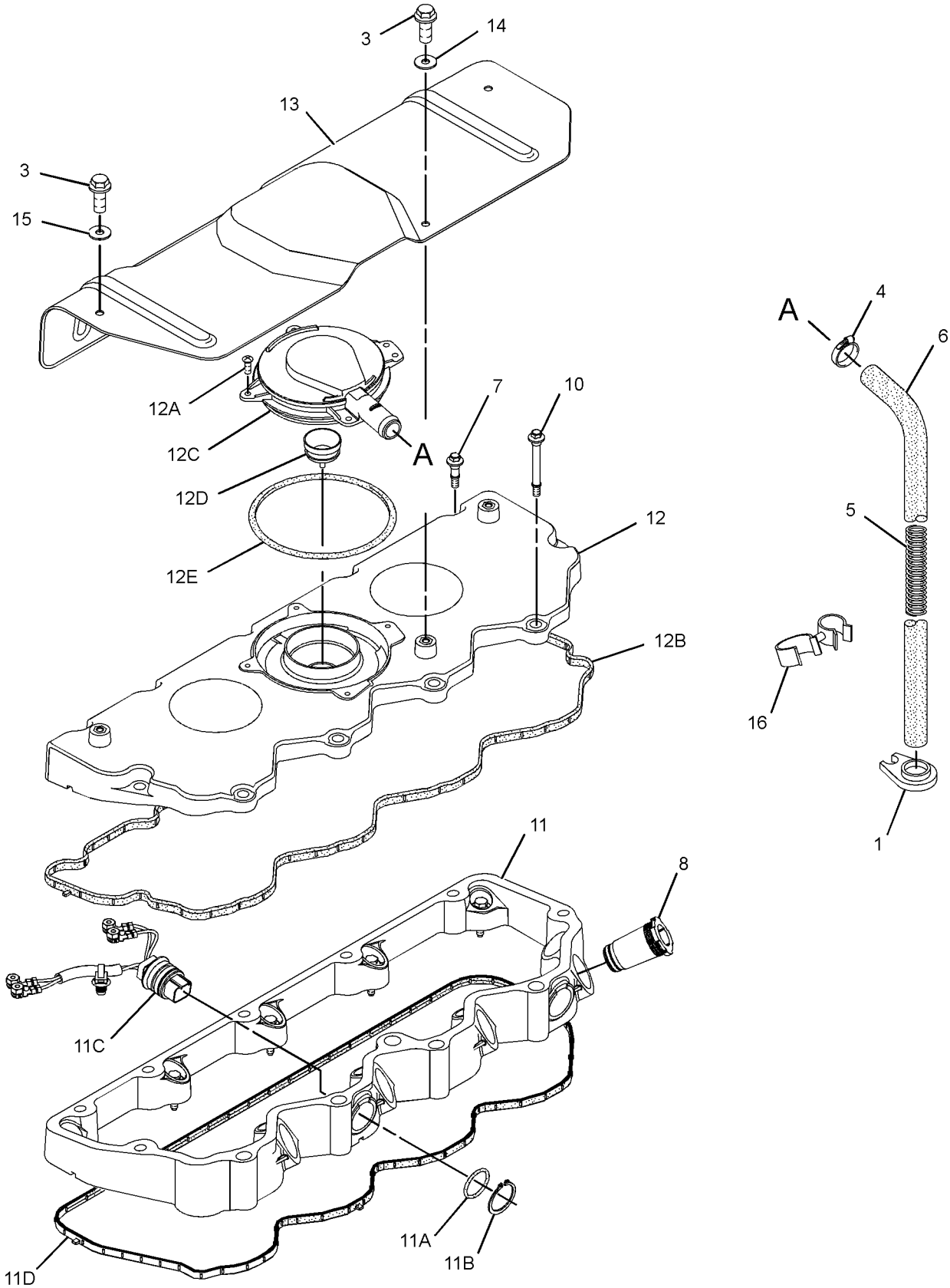

GRAPHIC #1 **<END>** g01626405

304-3642 CRANKSHAFT GP

S/N: C4E1-8929

PART OF 254-9233 ENGINE AR-PRIMARY

SMCS-1202 **i03399180**

NOTE	REF NO	GRAPHIC REF	PART NUMBER	QTY	PART NAME 1 2 3 4 5 6 (PRODUCT LEVEL)	SEE PAGE
Y	1	1	**330-1736**	1	CRANKSHAFT GP	17
	2	1	**276-7394**	3	BOLT	
	3	1	**341-4028**	1	RING-TIMING	

Y-SEPARATE ILLUSTRATION

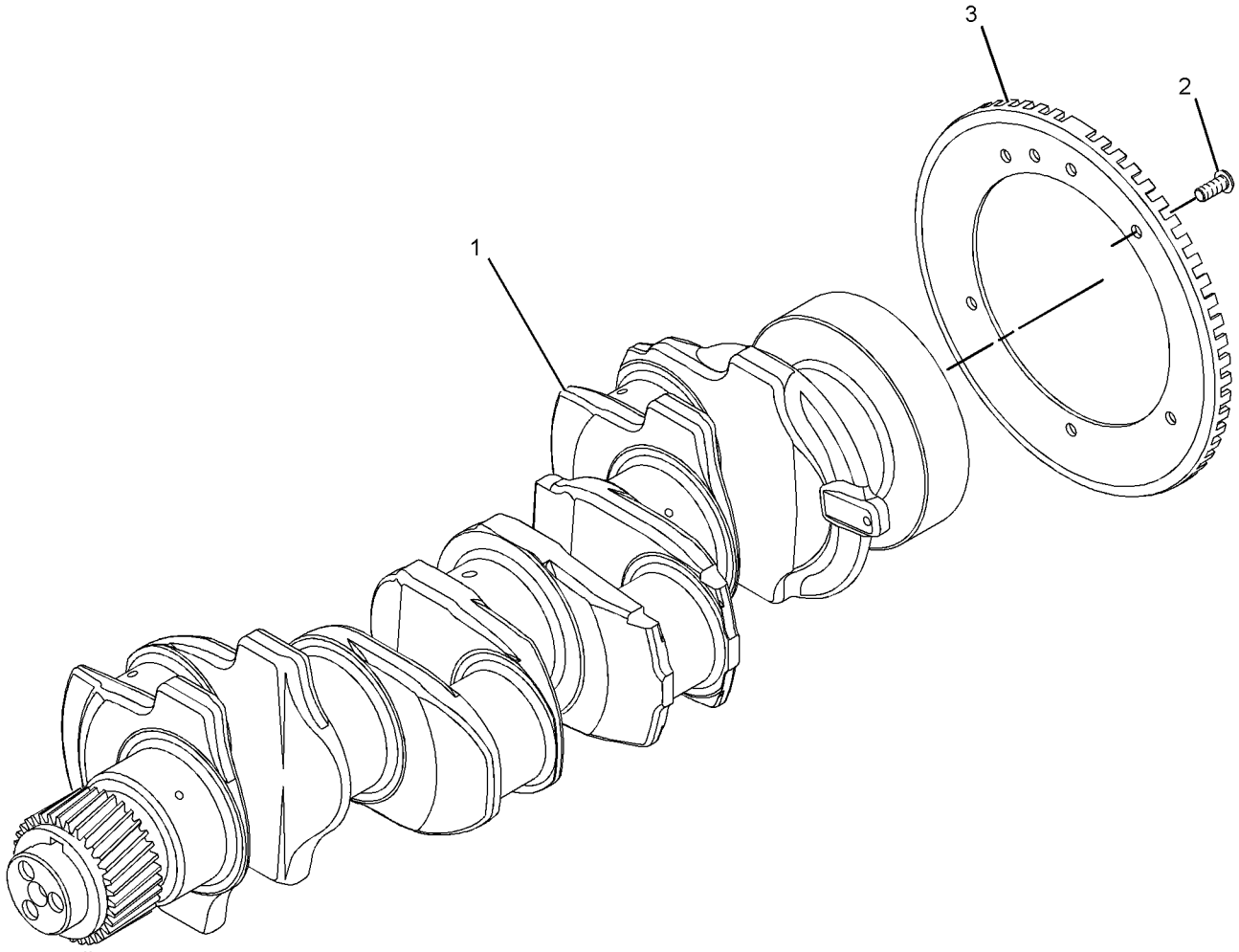

GRAPHIC #1 **<END>** g01763713

BASIC ENGINE

304-3642 CRANKSHAFT GP

S/N: C4E8930-UP

PART OF 254-9233 ENGINE AR-PRIMARY

SMCS-1202 **i04006390**

NOTE	REF NO	GRAPHIC REF	PART NUMBER	QTY	PART NAME 1 2 3 4 5 6 (PRODUCT LEVEL)	SEE PAGE
CY	1	1	**359-0716**	1	CRANKSHAFT GP	19
	2	1	**276-7394**	3	BOLT	
	3	1	**341-4028**	1	RING-TIMING	
C	4	1	**339-8780**	1	DOWEL	
C	5	1	**216-8314**	1	GEAR-CRANKSHAFT (34-TEETH)	
C	6	1	**1B-8736**	1	KEY-WOODRUFF	

C-CHANGE FROM PREVIOUS TYPE
Y-SEPARATE ILLUSTRATION

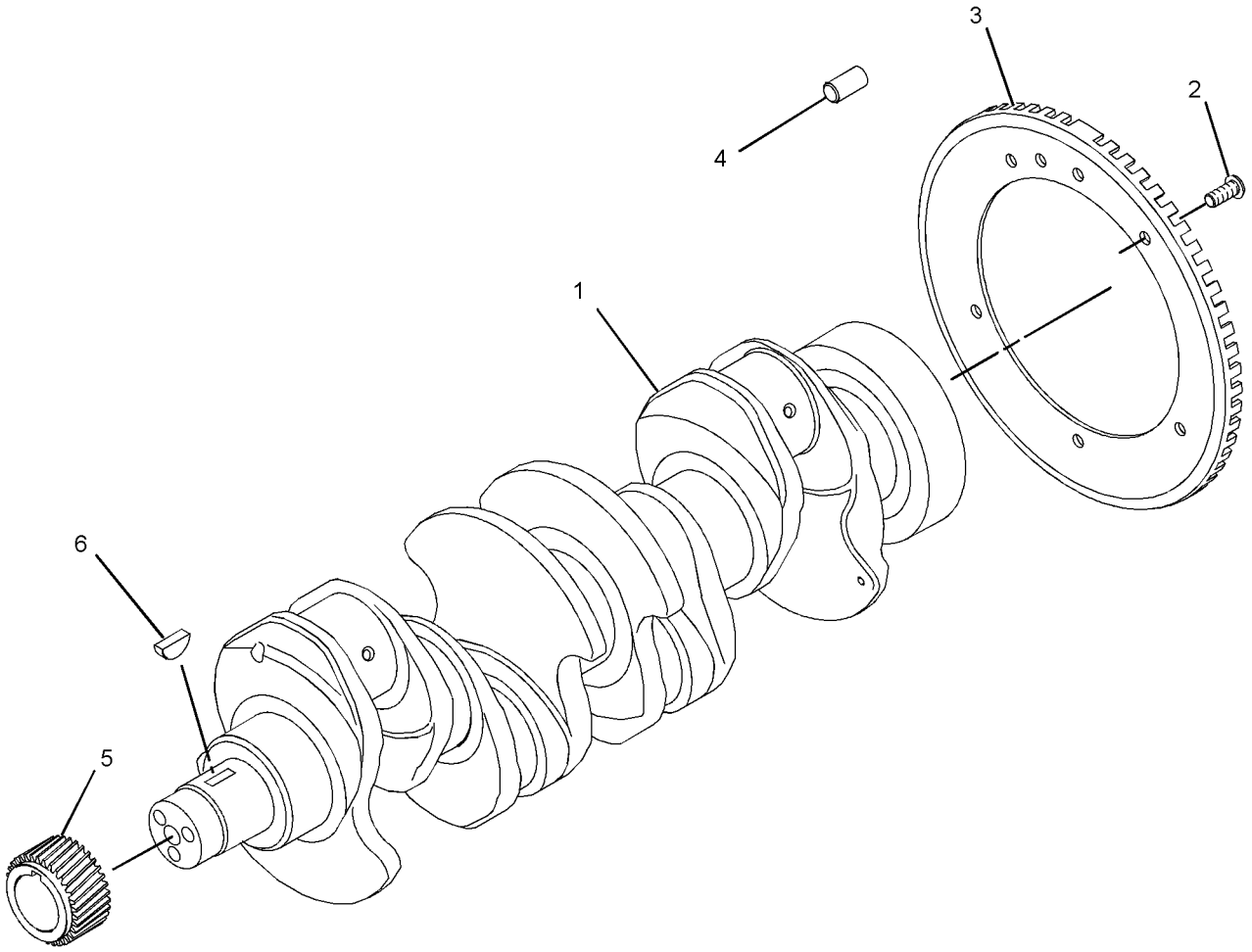

GRAPHIC #1 **<END>** g02189439

330-1736 CRANKSHAFT GP

S/N: C4E1-8929

PART OF 304-3642 CRANKSHAFT GP

FIELD REPLACEMENT ORDER 364-2829—PAGE 20

SMCS-1202 **i03419135**

NOTE	REF NO	GRAPHIC REF	PART NUMBER	QTY	PART NAME 1 2 3 4 5 6 (PRODUCT LEVEL)	SEE PAGE
	1	1	**1B-8736**	1	KEY-WOODRUFF	
	2	1	**032-9090**	2	WASHER-THRUST (STANDARD-UPPER)	
AB		1	**067-6873**		WASHER-THRUST (0.18-MM OS)	
	3	1	**032-9091**	2	WASHER-THRUST (STANDARD-LOWER)	
AB		1	**067-6874**		WASHER-THRUST (0.18-MM OS)	
	4	1	**216-8314**	1	GEAR-CRANKSHAFT (34-TEETH)	
	5	1	**225-7772**	1	BEARING SET-MAIN (STANDARD)	
AB		1	**233-3784**		KIT-CRANKSHAFT BEARING (0.010-IN US ID)	
AB		1	**233-3785**		KIT-CRANKSHAFT BEARING (0.020-IN US ID)	
AB		1	**233-3786**		KIT-CRANKSHAFT BEARING (0.030-IN US ID)	
	6	1	**339-8780**	1	DOWEL	
	7	1	**298-4524**	1	KIT-BEARING	

A-NOT PART OF THIS GROUP
B-USE AS REQUIRED

330-1736 CRANKSHAFT GP *(contd.)* i03419135

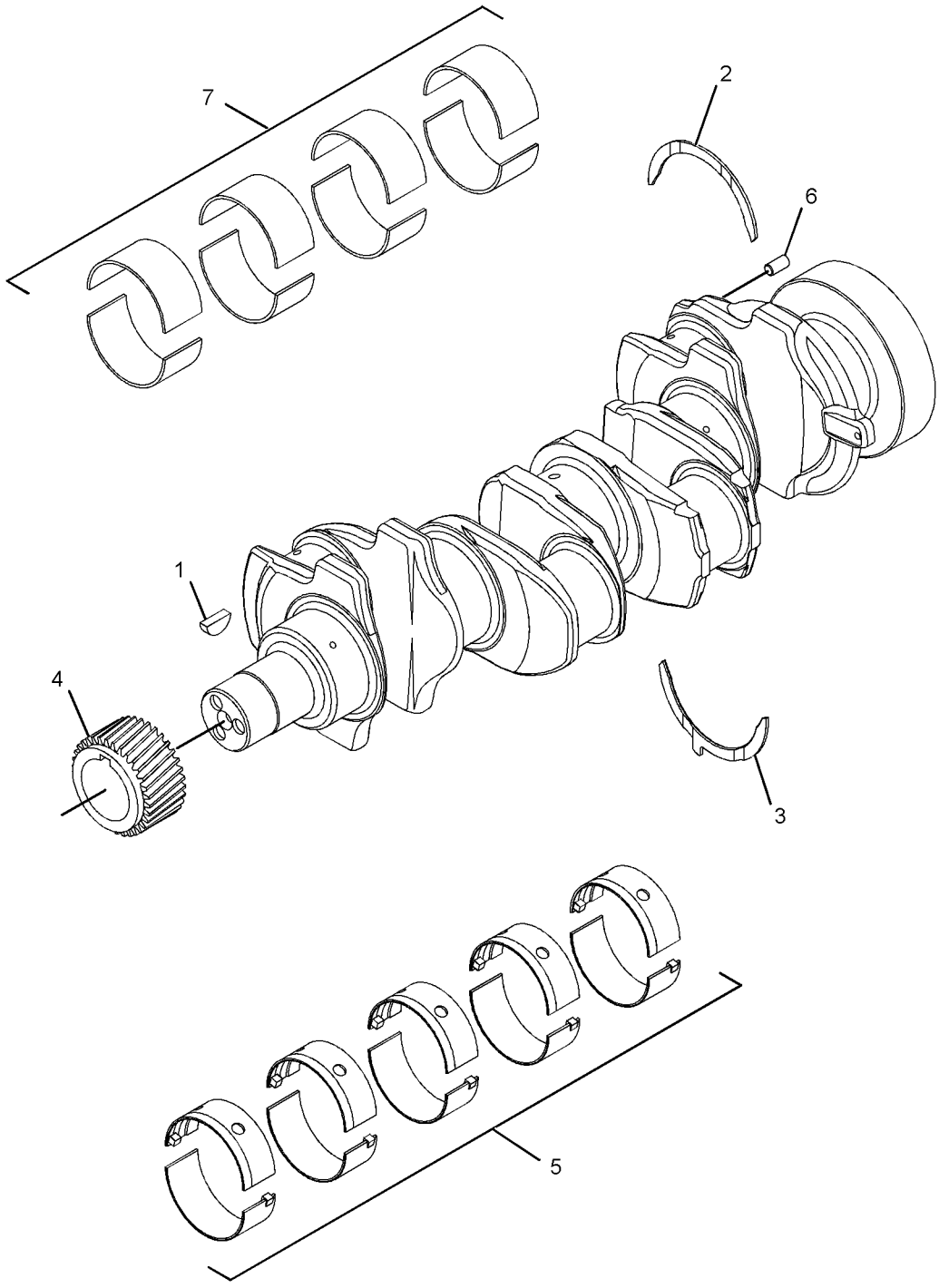

GRAPHIC #1 **<END>** g01541418

359-0716 CRANKSHAFT GP

S/N: C4E8930-UP

PART OF 304-3642 CRANKSHAFT GP

SMCS-1202 **i03956835**

NOTE	REF NO	GRAPHIC REF	PART NUMBER	QTY	PART NAME 1 2 3 4 5 6 (PRODUCT LEVEL)	SEE PAGE
	1	1	**032-9090**	2	WASHER-THRUST (STANDARD-UPPER)	
AB		1	**067-6873**		WASHER-THRUST (0.18-MM OS)	
	2	1	**032-9091**	2	WASHER-THRUST (STANDARD-LOWER)	
AB		1	**067-6874**		WASHER-THRUST (0.18-MM OS)	
	3	1	**353-7423**	1	KIT-BEARING (MAIN)	
AB		1	**233-3786**		KIT-CRANKSHAFT BEARING (0.030-IN US)	
AB		1	**353-7424**		KIT-BEARING (0.25-MM US)	
AB		1	**353-7425**		KIT-BEARING (0.50-MM US)	
	4	1	**353-9667**	1	KIT-ROD BEARING (STANDARD)	

A-NOT PART OF THIS GROUP
B-USE AS REQUIRED

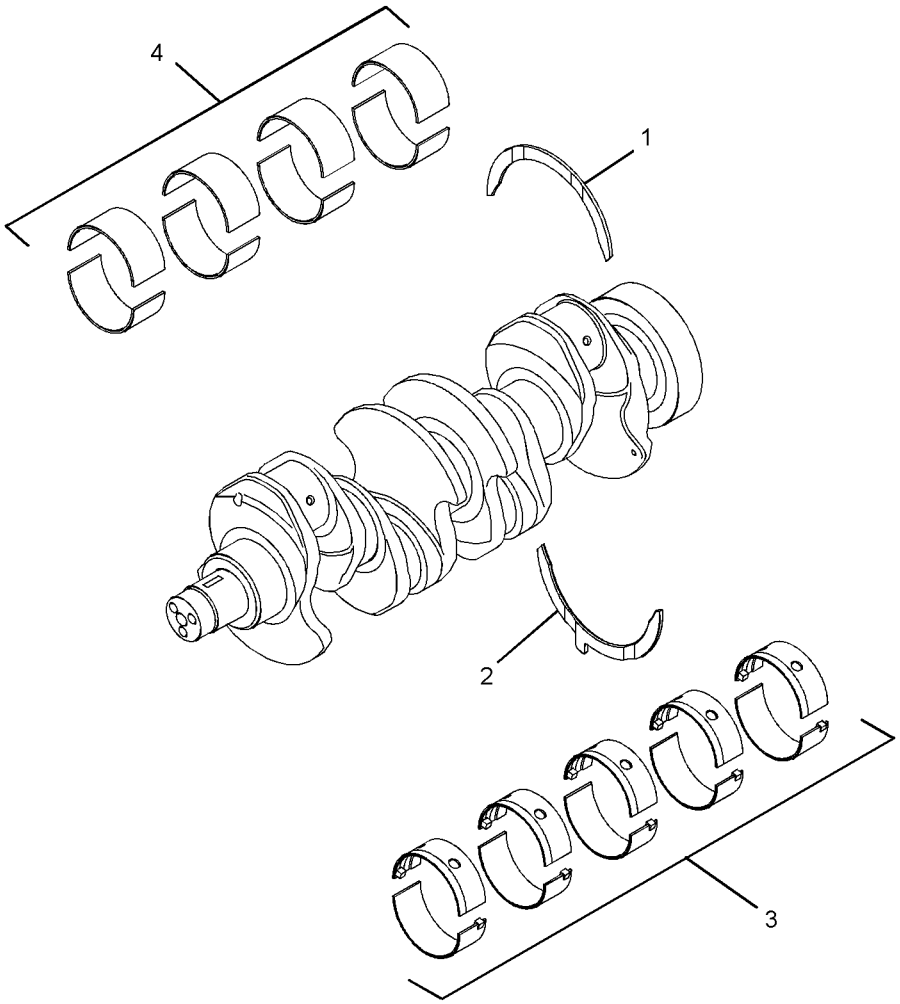

GRAPHIC #1

<END>

g02174712

BASIC ENGINE

364-2829 CRANKSHAFT GP

S/N: C4E1-UP

FIELD REPLACEMENT FOR 330-1736—PAGE 17

SMCS-1202 **i04001607**

NOTE	REF NO	GRAPHIC REF	PART NUMBER	QTY	PART NAME 1 2 3 4 5 6 (PRODUCT LEVEL)	SEE PAGE
	1	1	**1B-8736**	1	KEY-WOODRUFF	
B	2	1	**032-9090**	2	WASHER-THRUST (STANDARD-UPPER)	
AB		1	**067-6873**		WASHER-THRUST (0.18-MM OS)	
B	3	1	**032-9091**	2	WASHER-THRUST (STANDARD-LOWER)	
AB		1	**067-6874**		WASHER-THRUST (0.18-MM OS)	
B	4	1	**353-2205**	1	KIT-ROD BEARING	
AB		1	**353-2206**		KIT-ROD BEARING (0.25-MM US)	
AB		1	**353-2207**		KIT-ROD BEARING (0.5-MM US)	
AB		1	**353-2208**		KIT-ROD BEARING (0.75-MM US)	
B	5	1	**353-7423**	1	KIT-BEARING	
AB		1	**233-3786**		KIT-CRANKSHAFT BEARING (0.030-IN US)	
AB		1	**353-7424**		KIT-BEARING (0.25-MM US)	
AB		1	**353-7425**		KIT-BEARING (0.50-MM US)	

A-NOT PART OF THIS GROUP
B-USE AS REQUIRED

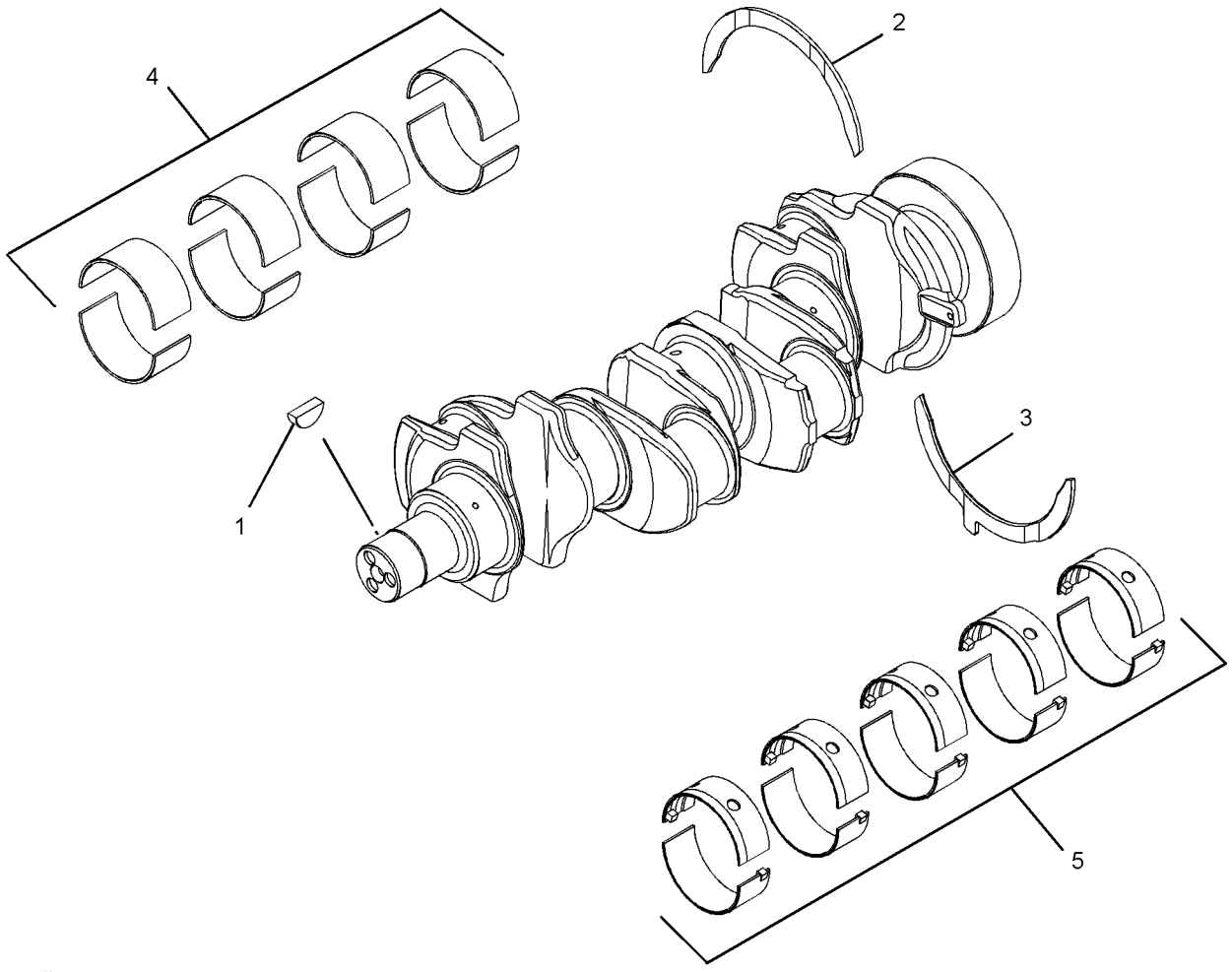

GRAPHIC #1 **<END>** g02178360

BASIC ENGINE

304-3641 CYLINDER BLOCK GP

S/N: C4E1-UP

PART OF 254-9233 ENGINE AR-PRIMARY

SMCS-1201 **i03190979**

NOTE	REF NO	GRAPHIC REF	PART NUMBER	QTY	PART NAME 1 2 3 4 5 6 (PRODUCT LEVEL)	SEE PAGE
M	1	1	**209-9219**	10	BOLT (M8X1.25X16-MM)	
	2	1	**232-7449**	1	HOUSING AS	
Y	3	1	**330-4789**	1	CYLINDER BLOCK GP	22

M-METRIC PART
Y-SEPARATE ILLUSTRATION

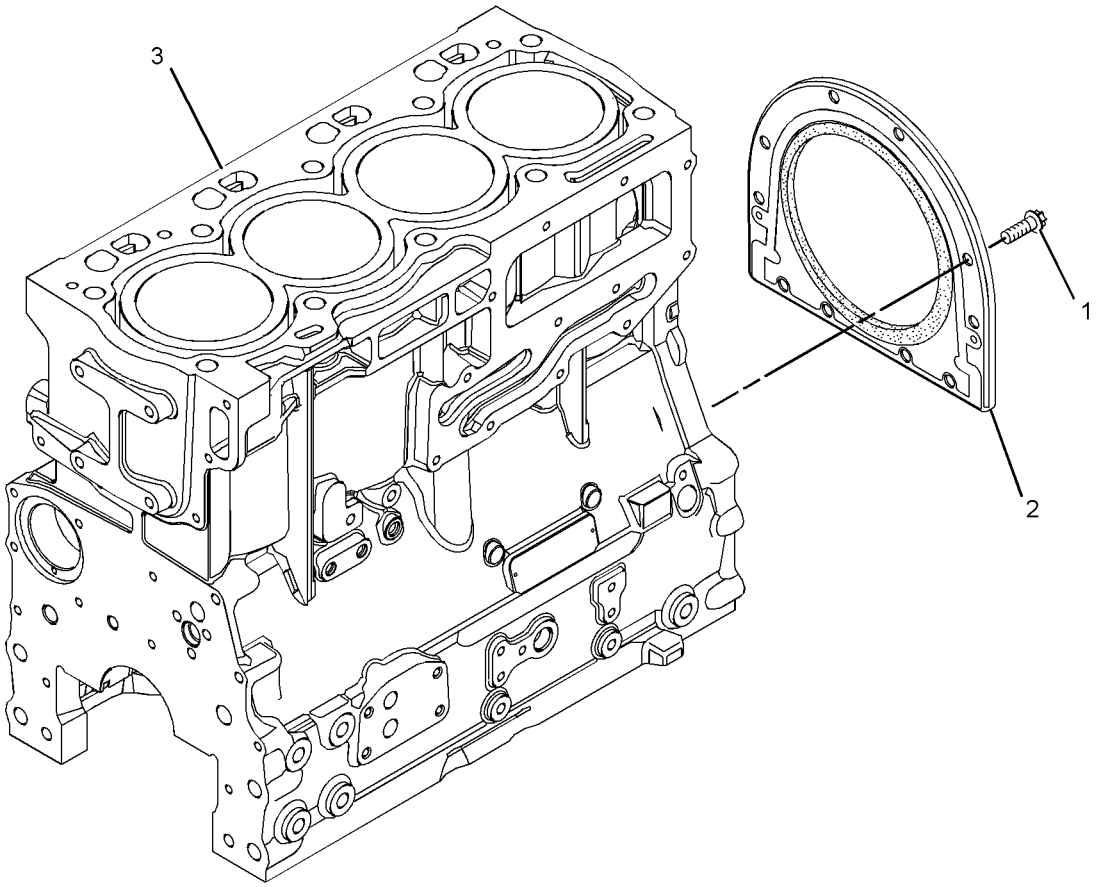

GRAPHIC #1 **<END>** g01630054

BASIC ENGINE

330-4789 CYLINDER BLOCK GP

S/N: C4E1-UP

PART OF 304-3641 CYLINDER BLOCK GP

SMCS-1201 **i03192960**

NOTE	REF NO	GRAPHIC REF	PART NUMBER	QTY	PART NAME 1 2 3 4 5 6 (PRODUCT LEVEL)	SEE PAGE
M	1	1	**6I-0645**	4	BOLT (M8X1.25X25-MM)	
	2	1	**6I-0646**	1	BOLT (M10X1.5X14-MM)	
	3	1	**035-8063**	1	PLUG	
	4	1	**035-8068**	10	BOLT (5/8-18X3.75-IN)	
	5	1	**067-6002**	10	DOWEL	
	6	1	**067-6006**	1	PLUG	
	7	1	**067-6043**	1	PLUG-SIDE	
M	8	1	**100-4841**	4	BOLT (M6X1X10-MM)	
	9	1	**185-0884**	2	DOWEL	
	10	1	**214-3203**	1	WASHER (SEALING)	
	11	1	**225-8858**	1	PLUG	
	12	1	**232-7440**	1	BEARING	
	13	1	**232-7596**	1	PLUG	
	14	1	**232-7597**	2	PLUG	
	15	1	**232-7599**	1	PLUG	
	16	1	**233-9408**	1	GASKET	
	17	1	**252-6318**	1	PLATE	
	18	1	**276-5605**	4	JET AS-PISTON COOLING	

M-METRIC PART

330-4789 **CYLINDER BLOCK GP** *(contd.)* **i03192960**

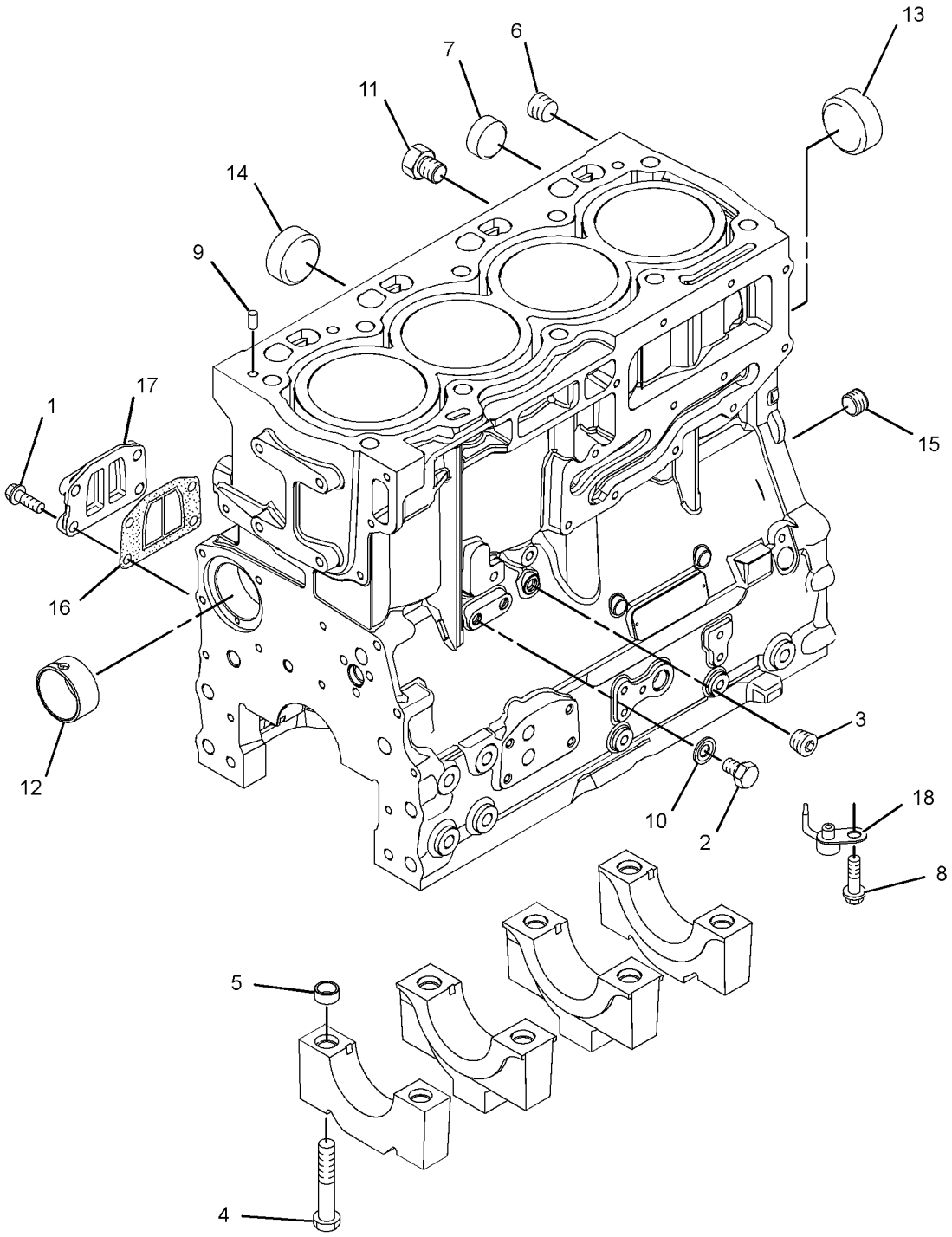

GRAPHIC #1 **<END>** g01586142

BASIC ENGINE

298-4526 CYLINDER HEAD AS

S/N: C4E1-UP

PART OF 304-3645 CYLINDER HEAD GP

SMCS-1100, 1101 **i03536397**

NOTE	REF NO	GRAPHIC REF	PART NUMBER	QTY	PART NAME 1 2 3 4 5 6 (PRODUCT LEVEL)	SEE PAGE
	1	1	**2B-0858**	2	PLUG-PIPE	
	2	1	**199-9751**	1	SEAL-O-RING	
	3	1	**232-1322**	1	PLUG	
	4	1	**276-8116**	4	PLUG-CORE	
	5	1	**276-8117**	9	PLUG-CORE	
	6	1	**309-6678**	8	VALVE-INLET	
	7	1	**276-8123**	32	RETAINER	
	8	1	**339-9637**	8	VALVE-EXHAUST	
	9	1	**299-5511**	16	SEAL-VALVE STEM	
	10	1	**276-8133**	16	CAP-VALVE	
	11	1	**295-6661**	1	PLUG	
	12	1	**298-4527**	1	PLUG-CORE	
	13	1	**298-4528**	1	PLUG-CORE	
	14	1	**298-4530**	16	SPRING-VALVE	

298-4526 CYLINDER HEAD AS *(contd.)* **i03536397**

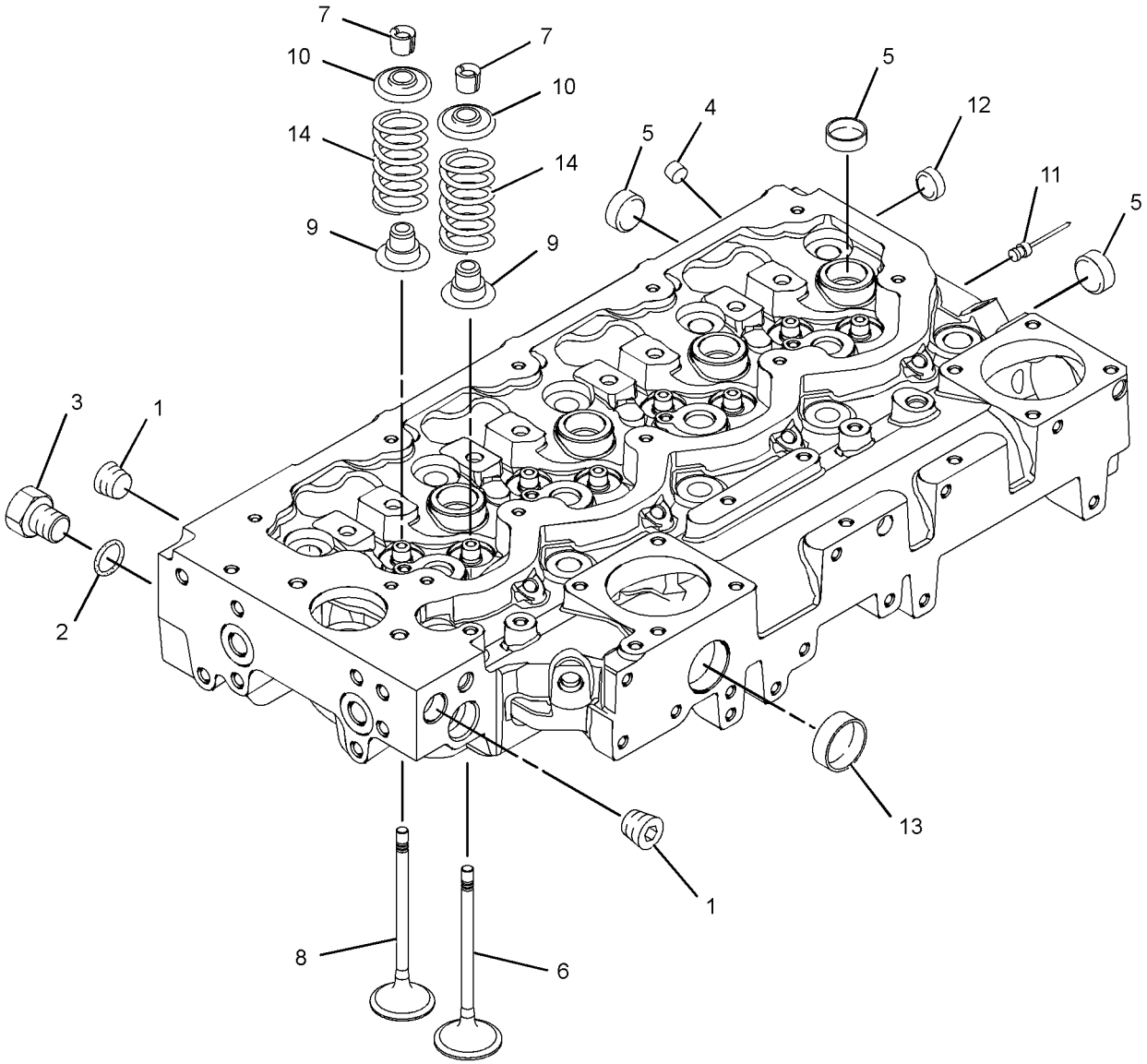

GRAPHIC #1 **<END>** g01305364

BASIC ENGINE

304-3645 CYLINDER HEAD GP

S/N: C4E1-UP

PART OF 254-9233 ENGINE AR-PRIMARY

SMCS-1100 **i02845314**

NOTE	REF NO	GRAPHIC REF	PART NUMBER	QTY	PART NAME 1 2 3 4 5 6 (PRODUCT LEVEL)	SEE PAGE
	1	1	**225-5501**	10	BOLT (M15X1.5X137-MM)	
Y	2	1	**298-4526**	1	CYLINDER HEAD AS	24
	3	1	**310-8520**	1	GASKET-CYLINDER HEAD	

Y-SEPARATE ILLUSTRATION

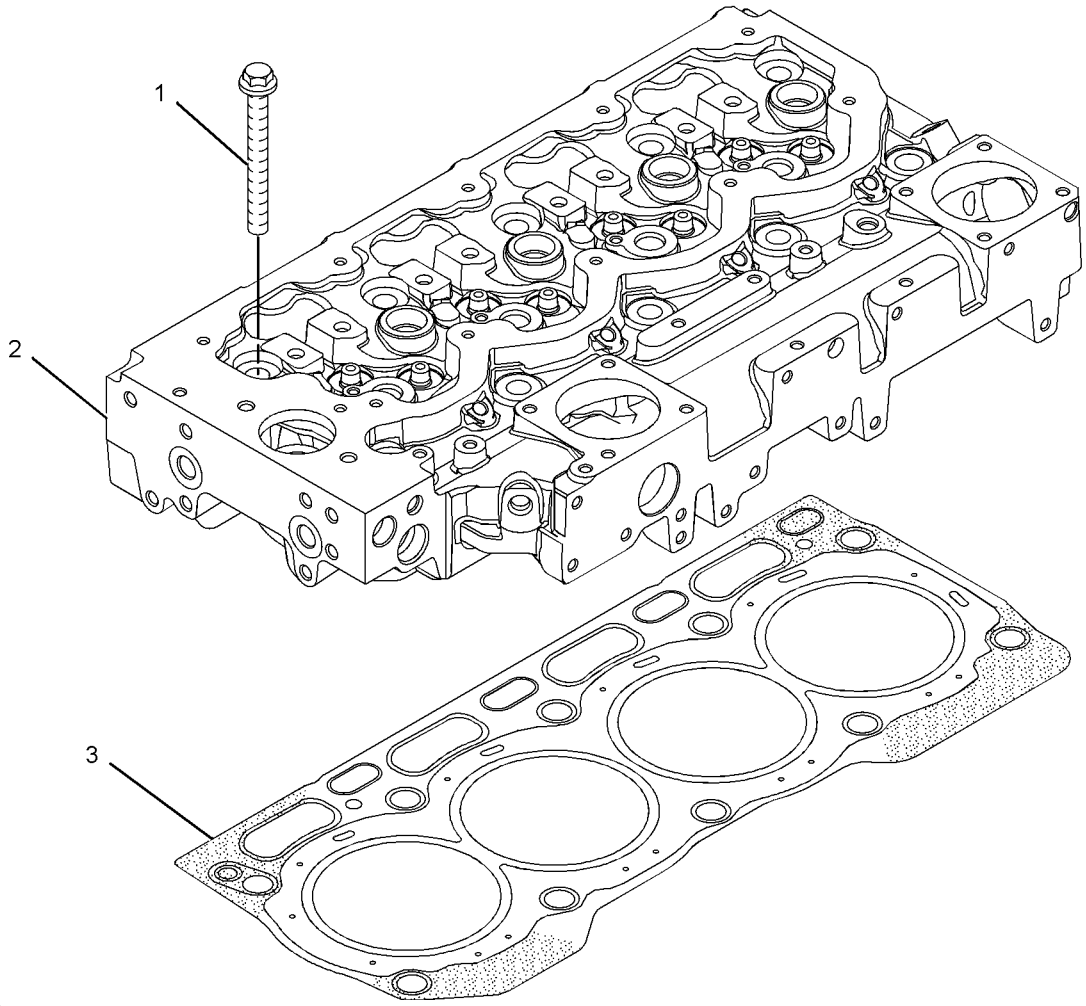

GRAPHIC #1 **<END>** g01307654

306-8855 DRIVE GP-AUXILIARY

S/N: C4E1-UP

PART OF 254-9233 ENGINE AR-PRIMARY

SMCS-1207 **i02724410**

NOTE	REF NO	GRAPHIC REF	PART NUMBER	QTY	PART NAME 1 2 3 4 5 6 (PRODUCT LEVEL)	SEE PAGE
	1	1	**286-7848**	1	PULLEY GP-ENGINE	
	2	1	**306-8857**	1	HUB	
M	3	1	**102-9941**	3	BOLT (M12X1.75X25-MM)	
	4	1	**6I-0501**	1	BLOCK	
	5	1	**7W-4634**	3	BOLT (7/16-20X1.5-IN)	

M-METRIC PART

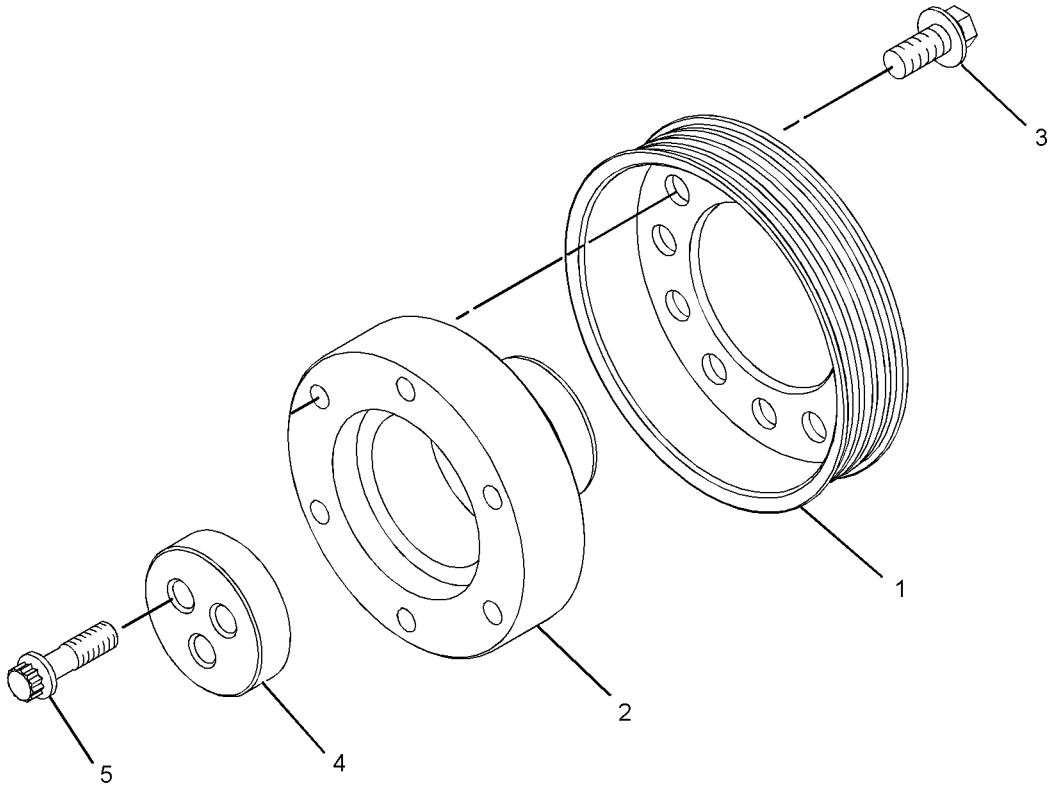

GRAPHIC #1 **<END>** g01377208

BASIC ENGINE

303-5770 DRIVE GP-FAN

S/N: C4E1-UP

PART OF 254-9233 ENGINE AR-PRIMARY

SMCS-1359 **i02974925**

NOTE	REF NO	GRAPHIC REF	PART NUMBER	QTY	PART NAME 1 2 3 4 5 6 (PRODUCT LEVEL)	SEE PAGE
	1	1	**326-1880**	1	HOUSING-FAN DRIVE	
	2	1	**251-2437**	1	PLATE	
	3	1	**111-0859**	8	BOLT (M10X1.5X35-MM)	

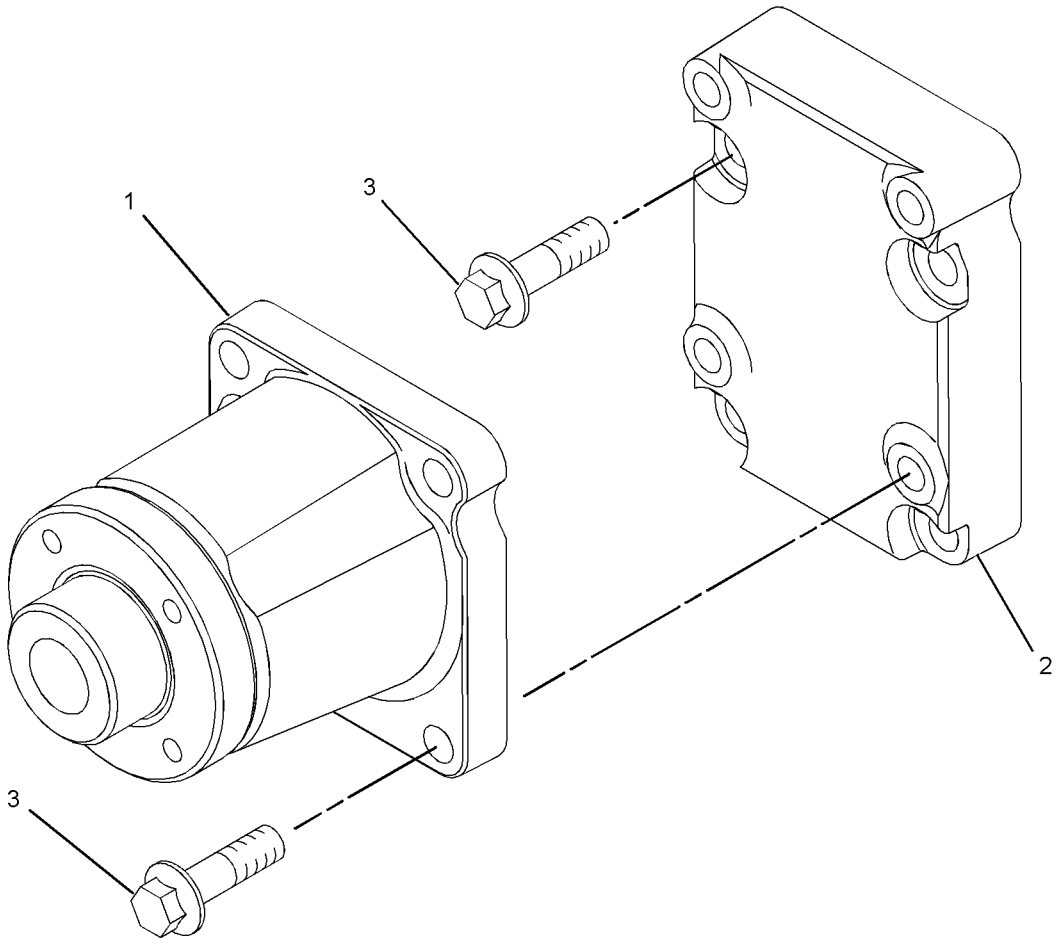

GRAPHIC #1 **<END>** g01340877

BASIC ENGINE

304-3654 FLYWHEEL GP

S/N: C4E1-UP

PART OF 254-9233 ENGINE AR-PRIMARY

SMCS-1156 **i02654847**

NOTE	REF NO	GRAPHIC REF	PART NUMBER	QTY	PART NAME 1 2 3 4 5 6 (PRODUCT LEVEL)	SEE PAGE
	1	1	**103-6131**	1	FLYWHEEL AS	
	1A	1	**033-7687**	1	RING-STARTING MOTOR (126-TEETH)	
	2	1	**0S-1603**	6	BOLT (1/2-20X1.5-IN)	
	3	1	**5P-8245**	6	WASHER-HARD (13.5X25.5X3-MM THK)	

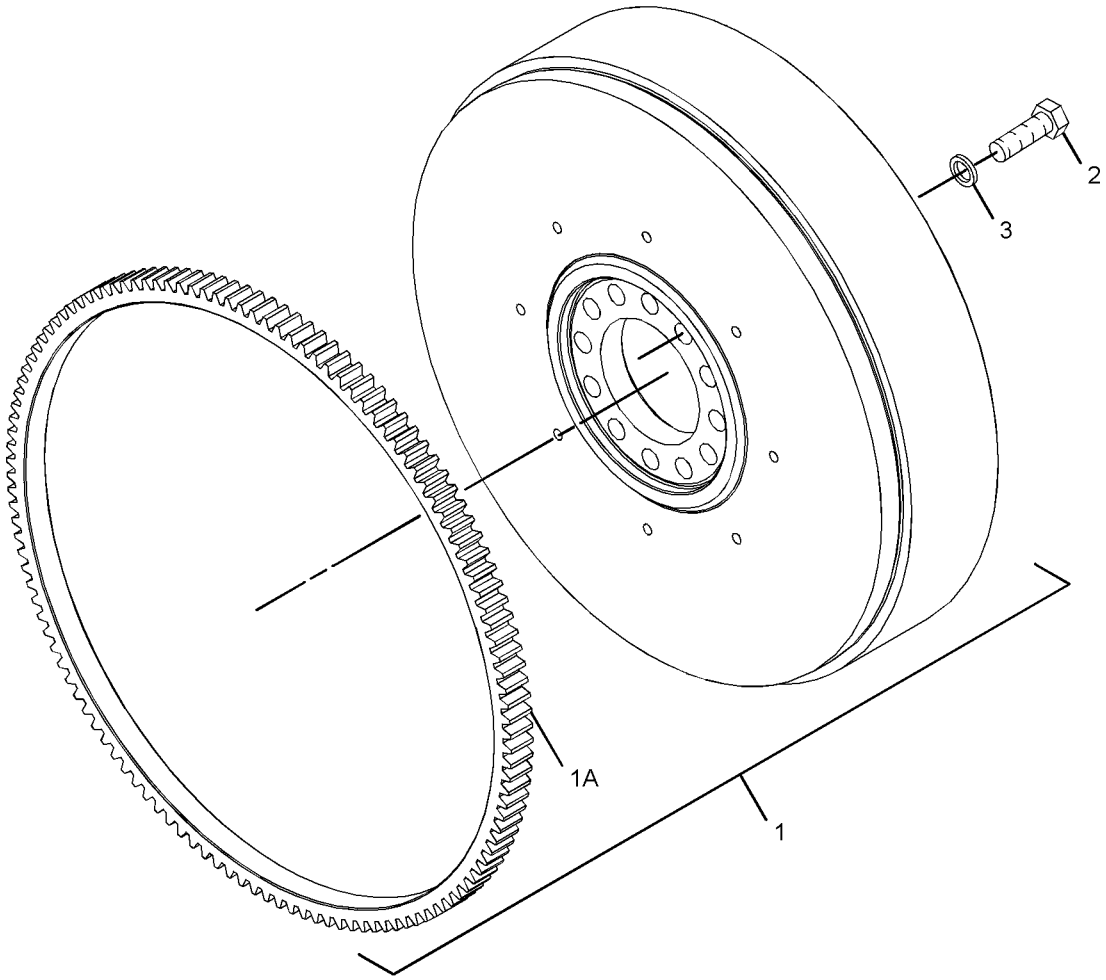

GRAPHIC #1 **<END>** g01280683

BASIC ENGINE

298-5110 GEAR GP-FRONT

S/N: C4E1-UP

PART OF 254-9233 ENGINE AR-PRIMARY

SMCS-1151, 1162, 1206 **i02918670**

NOTE	REF NO	GRAPHIC REF	PART NUMBER	QTY	PART NAME 1 2 3 4 5 6 (PRODUCT LEVEL)	SEE PAGE
M	1	1	**6I-0217**	6	BOLT (M8X1.25X20-MM)	
M	2	1	**6I-0645**	4	BOLT (M8X1.25X25-MM)	
M	3	1	**6I-0650**	3	BOLT (M10X1.5X65-MM)	
	4	1	**7C-4616**	1	BOLT (M12X1.75X45-MM)	
	5	1	**067-6179**	1	DOWEL	
M	6	1	**100-3751**	5	BOLT (M8X1.25X65-MM)	
M	7	1	**100-4830**	1	BOLT (M10X1.5X20-MM)	
M	8	1	**101-3895**	2	BOLT (M8X1.25X35-MM)	
M	9	1	**124-3815**	9	BOLT (M8X16X1.25-MM)	
	10	1	**133-1011**	1	WASHER	
	11	1	**216-8634**	1	GEAR-CAMSHAFT (68-TEETH)	
	12	1	**226-8767**	1	COVER AS-FRONT	
	12A	1	**226-8766**	1	GASKET-COVER	
	13	1	**232-3666**	1	WASHER-THRUST	
	14	1	**251-4336**	1	GEAR AS-IDLER (73-TEETH)	
	15	1	**277-3012**	1	GASKET-COVER (HOUSING)	
	16	1	**324-0444**	1	HUB-IDLER GEAR	
	17	1	**288-0422**	1	SEAL-OIL	
	18	1	**323-3515**	1	HOUSING-FRONT	
	19	1	**295-1711**	1	PLATE-RETAINING	

M-METRIC PART

298-5110 **GEAR GP-FRONT** *(contd.)* **i02918670**

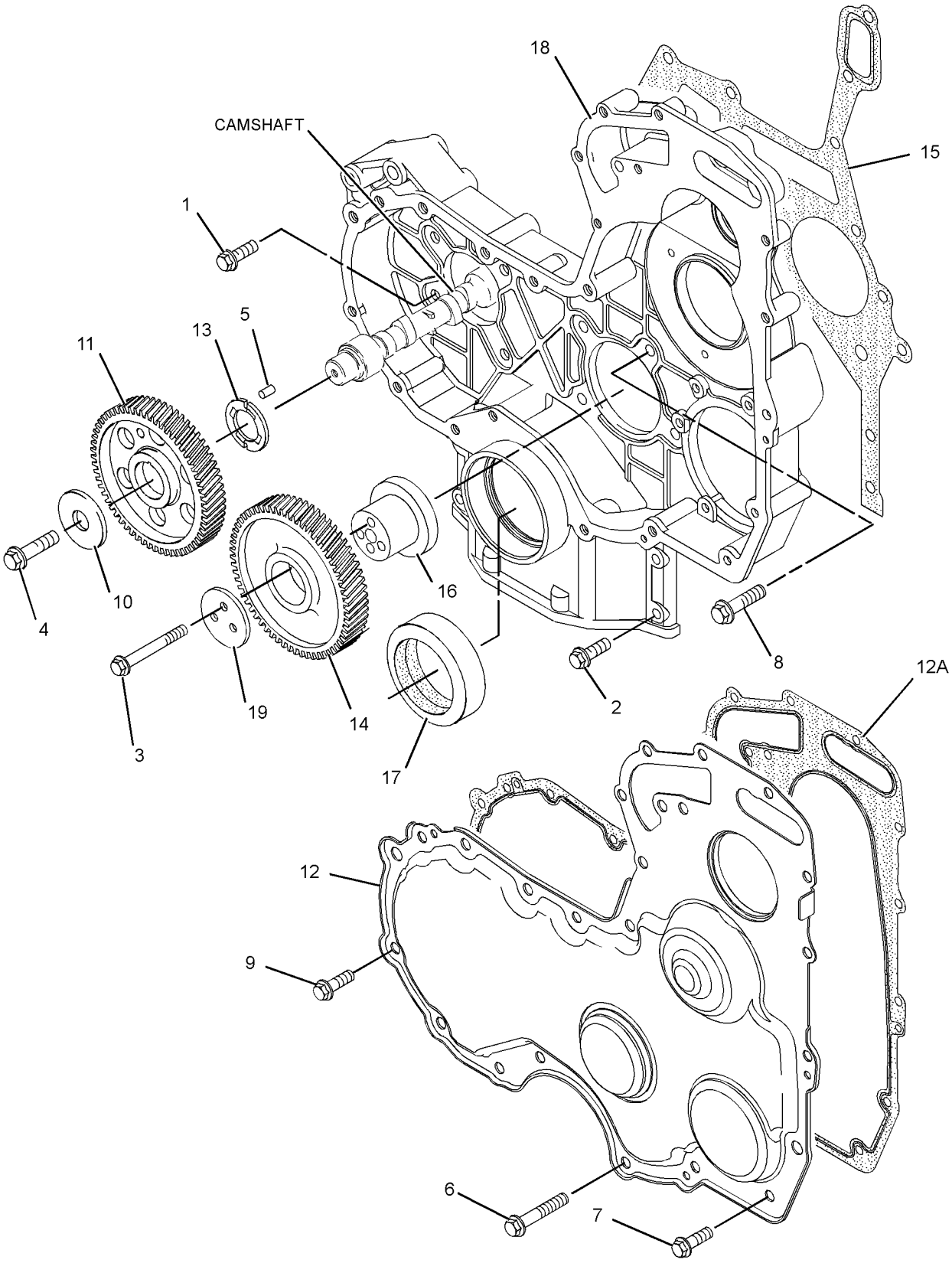

GRAPHIC #1 **<END>** g01304618

303-5767 HOUSING GP-FLYWHEEL

S/N: C4E1-UP

PART OF 254-9233 ENGINE AR-PRIMARY

SMCS-1157 **i02654865**

NOTE	REF NO	GRAPHIC REF	PART NUMBER	QTY	PART NAME 1 2 3 4 5 6 (PRODUCT LEVEL)	SEE PAGE
M	1	1	**6I-0423**	2	BOLT (M12X1.75X30-MM)	
	2	1	**6I-0847**	2	PLUG	
	3	1	**7W-1176**	1	PLATE-COVER	
	4	1	**7W-4642**	1	SHIELD-DUST	
	5	1	**287-8597**	2	DOWEL	
	6	1	**114-4363**	2	BOLT (M8X1.25X12-MM)	
	7	1	**101-3617**	3	PLUG	
M	8	1	**121-0883**	6	BOLT (M10X1.5X30-MM)	
	9	1	**220-8631**	1	HOUSING-FLYWHEEL	

M-METRIC PART

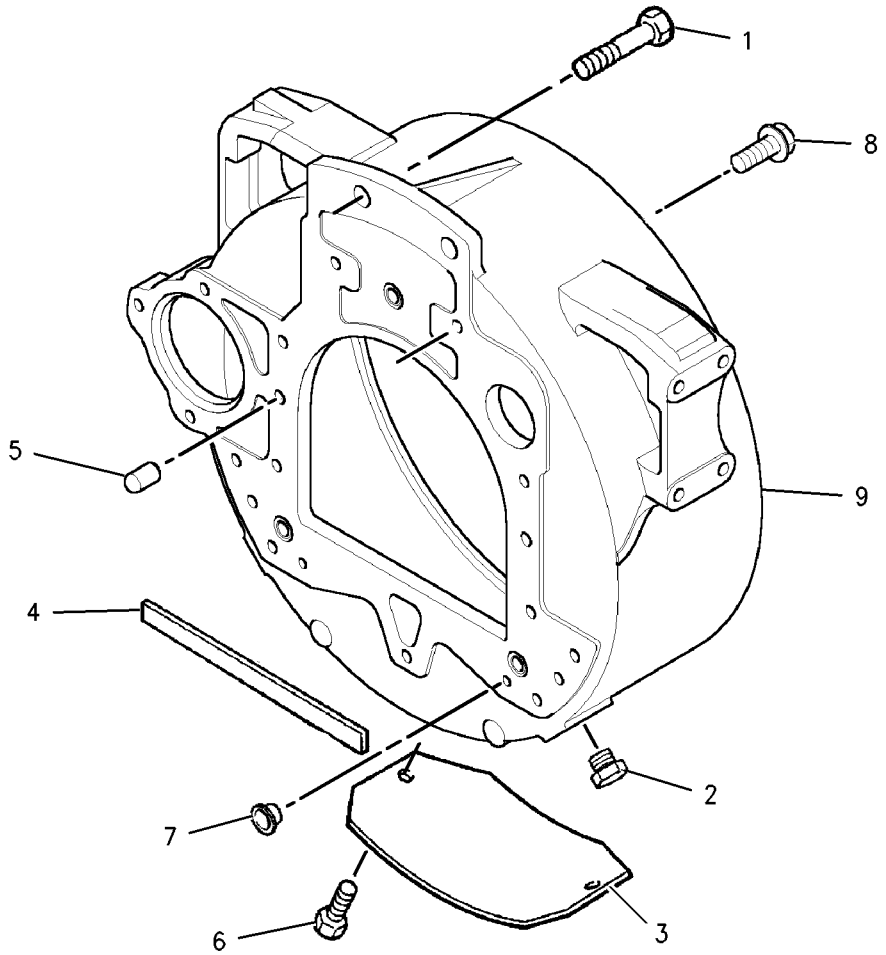

GRAPHIC #1 **<END>** g00902549

298-5127 LIFTING GP-ENGINE

S/N: C4E1-UP

PART OF 254-9233 ENGINE AR-PRIMARY

SMCS-1122 **i02604370**

NOTE	REF NO	GRAPHIC REF	PART NUMBER	QTY	PART NAME 1 2 3 4 5 6 (PRODUCT LEVEL)	SEE PAGE
	1	1	**279-9651**	1	PLATE-LIFTING	
M	2	1	**6I-0654**	4	BOLT (M10X1.5X25-MM)	
	3	1	**298-4604**	1	PLATE-LIFTING	

M-METRIC PART

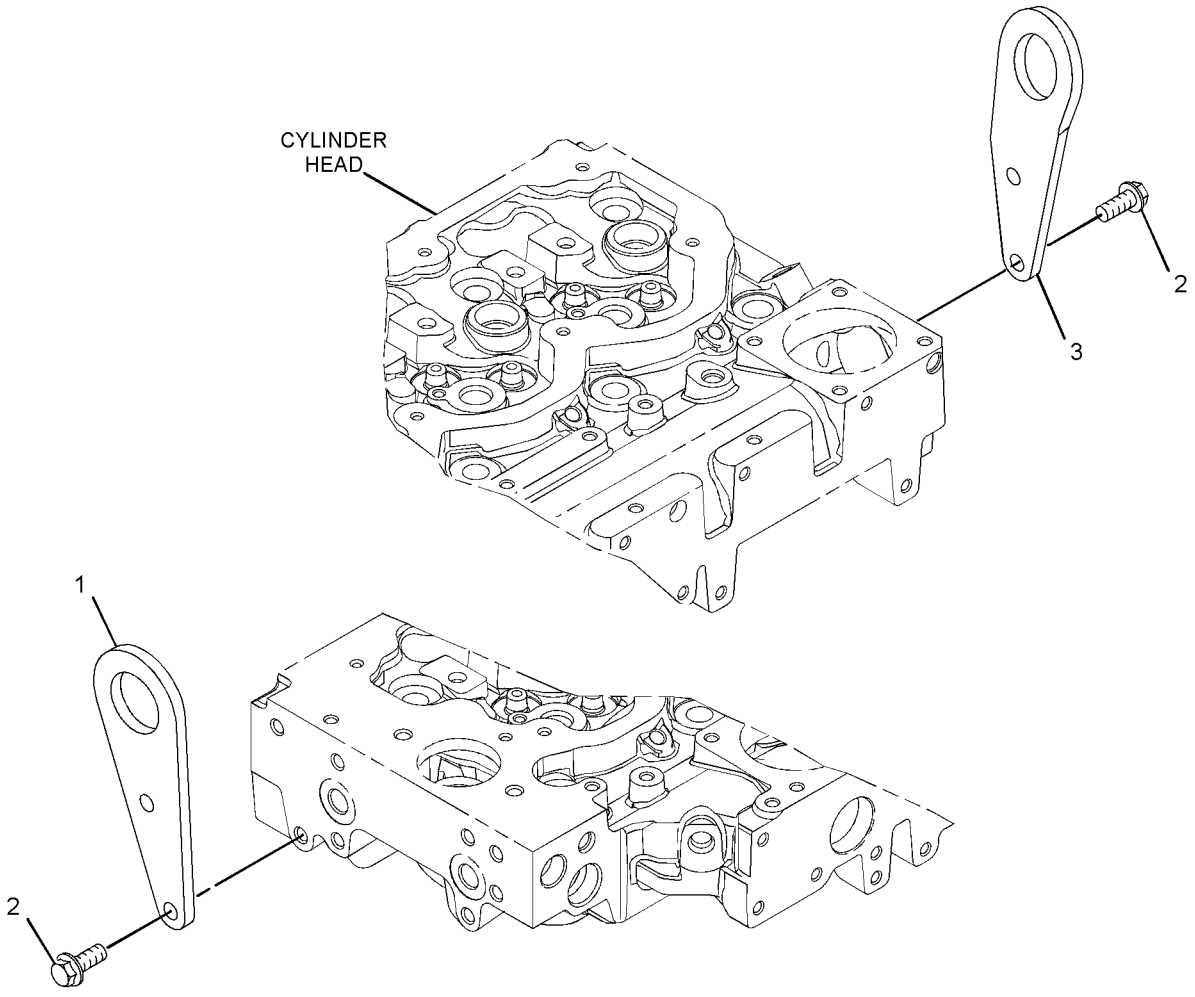

GRAPHIC #1 **<END>** g01305506

BASIC ENGINE

304-3661 MOUNTING GP-ENGINE

S/N: C4E1-UP

PART OF 254-9233 ENGINE AR-PRIMARY

SMCS-1152, 1153, 1154 **i02654852**

NOTE	REF NO	GRAPHIC REF	PART NUMBER	QTY	PART NAME 1 2 3 4 5 6 (PRODUCT LEVEL)	SEE PAGE
	1	1	**6H-3616**	4	PLUG-PROTECTION	
	2	1	**101-2987**	6	PLUG	
	3	1	**195-2136**	8	STUD	
	4	1	**195-2221**	8	NUT (M12X1.75-THD)	
	5	1	**304-3711**	2	MOUNT-ENGINE	

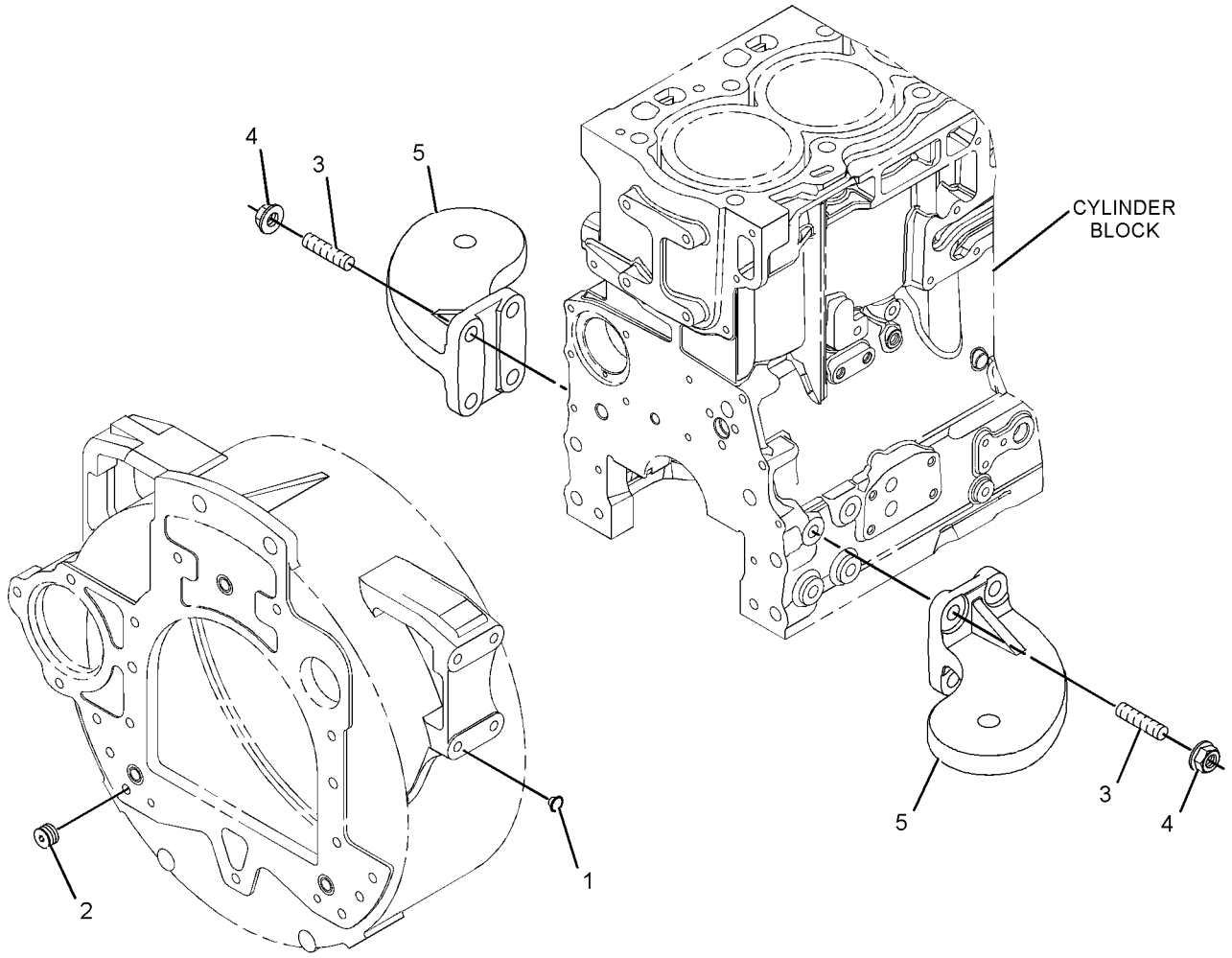

GRAPHIC #1 **<END>** g01340741

BASIC ENGINE

304-3656 PAN GP-OIL

S/N: C4E1-UP

PART OF 254-9233 ENGINE AR-PRIMARY

SMCS-1302 **i02776129**

NOTE	REF NO	GRAPHIC REF	PART NUMBER	QTY	PART NAME 1 2 3 4 5 6 (PRODUCT LEVEL)	SEE PAGE
	1	1	**304-3698**	1	TUBE-OIL SUCTION	
	2	1	**067-6213**	1	GASKET	
M	3	1	**6I-0260**	2	BOLT (M8X1.25X25-MM)	
	4	1	**304-3692**	1	TUBE AS-OIL LEVEL	
	4A	1	**187-0555**	1	CLIP	
	5	1	**304-3693**	1	GAUGE AS-OIL LEVEL (DIPSTICK) (ENGINE)	
	6	1	**6I-1497**	1	SEAL	
	7	1	**304-3695**	1	BRACKET	
	8	1	**6I-0846**	1	BOLT (M6X1X14-MM)	
M	9	1	**124-3815**	1	BOLT (M8X16X1.25-MM)	
	10	1	**306-5911**	1	PAN GP-OIL	
	10A	1	**7C-1224**	2	INSERT	
	11	1	**225-6005**	1	GASKET	
	12	1	**230-8094**	1	BRIDGE	
M	13	1	**6I-0363**	2	BOLT (M6X1X20-MM)	
	14	1	**185-7149**	4	BOLT	
	15	1	**7C-0351**	2	PLUG-DRAIN (ENGINE OIL)	
	16	1	**275-9883**	2	SEAL	
	17	1	**6I-0292**	12	BOLT	
	18	1	**152-6730**	4	BOLT (M8X1.25X120-MM)	

M-METRIC PART

304-3656 **PAN GP-OIL** *(contd.)* **i02776129**

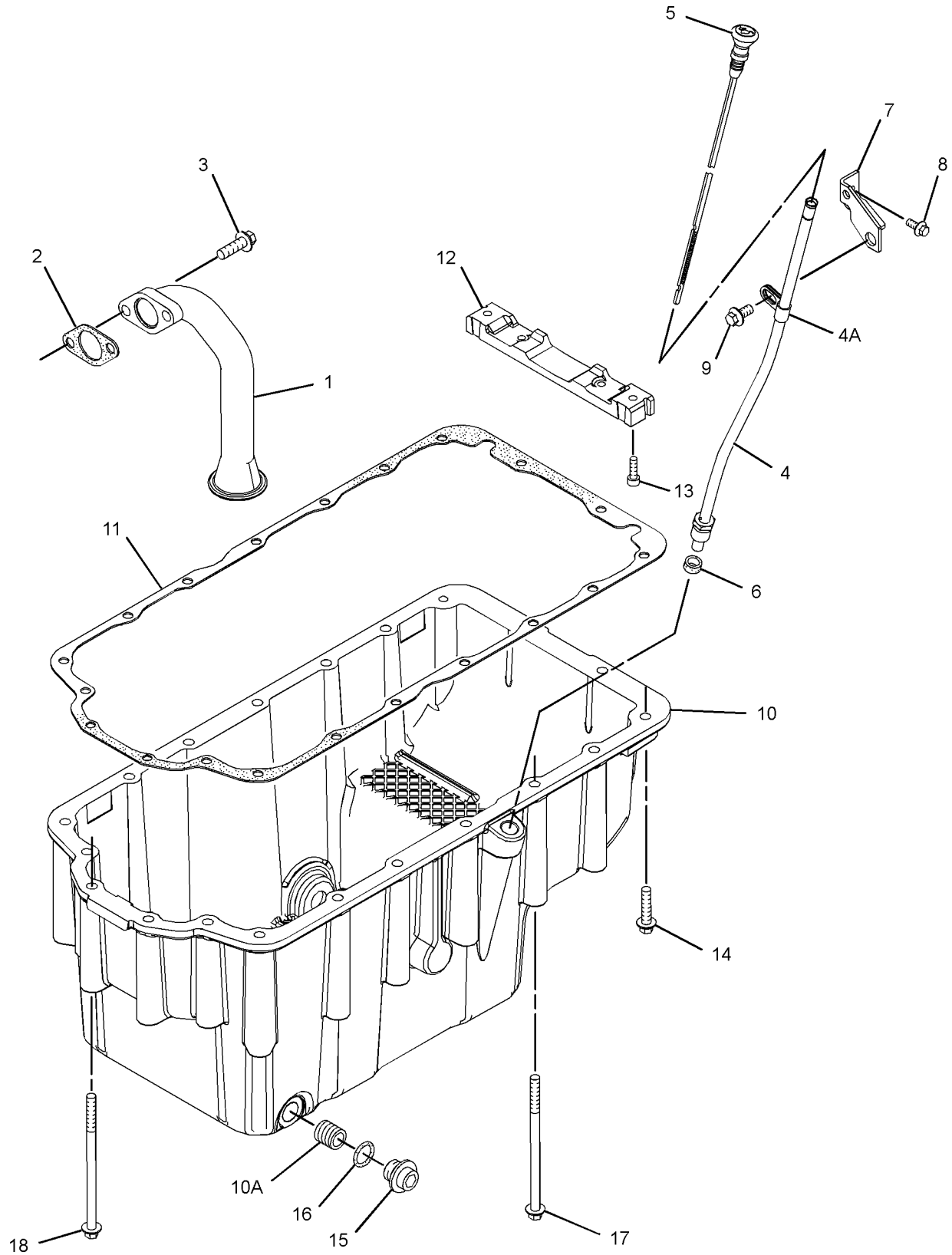

GRAPHIC #1 **<END>** g01351082

304-3643 PISTON & ROD GP

S/N: C4E1-8929

PART OF 254-9233 ENGINE AR-PRIMARY

SMCS-1225 **i02845313**

NOTE	REF NO	GRAPHIC REF	PART NUMBER	QTY	PART NAME 1 2 3 4 5 6 (PRODUCT LEVEL)	SEE PAGE
BJ	1	1	**225-5441**	4	ROD AS-CONNECTING (L-GRADE)	
					—OR—	
BJ		1	**225-5451**	4	ROD AS-CONNECTING (GRADE K)	
					—OR—	
BJ		1	**225-5453**	4	ROD AS-CONNECTING (J-GRADE)	
					—OR—	
BJ		1	**225-5454**	4	ROD AS-CONNECTING (GRADE H)	
					—OR—	
BJ		1	**225-5458**	4	ROD AS-CONNECTING (GRADE G)	
					—OR—	
BJ		1	**225-5459**	4	ROD AS-CONNECTING (F-GRADE)	
					(EACH INCLUDES)	
	1A	1	**225-5438**	1	BUSHING	
	1B	1	**225-5439**	2	BOLT-SPECIAL (CONNECTING ROD)	
	2	1	**310-9269**	4	PISTON AS	
					(EACH INCLUDES)	
	2A	1	**124-3536**	2	RING-RETAINING	
	2B	1	**276-7476**	1	KIT-PISTON RING	

B-USE AS REQUIRED
J-ENSURE THAT CORRECT ROD LENGTH IS FITTED

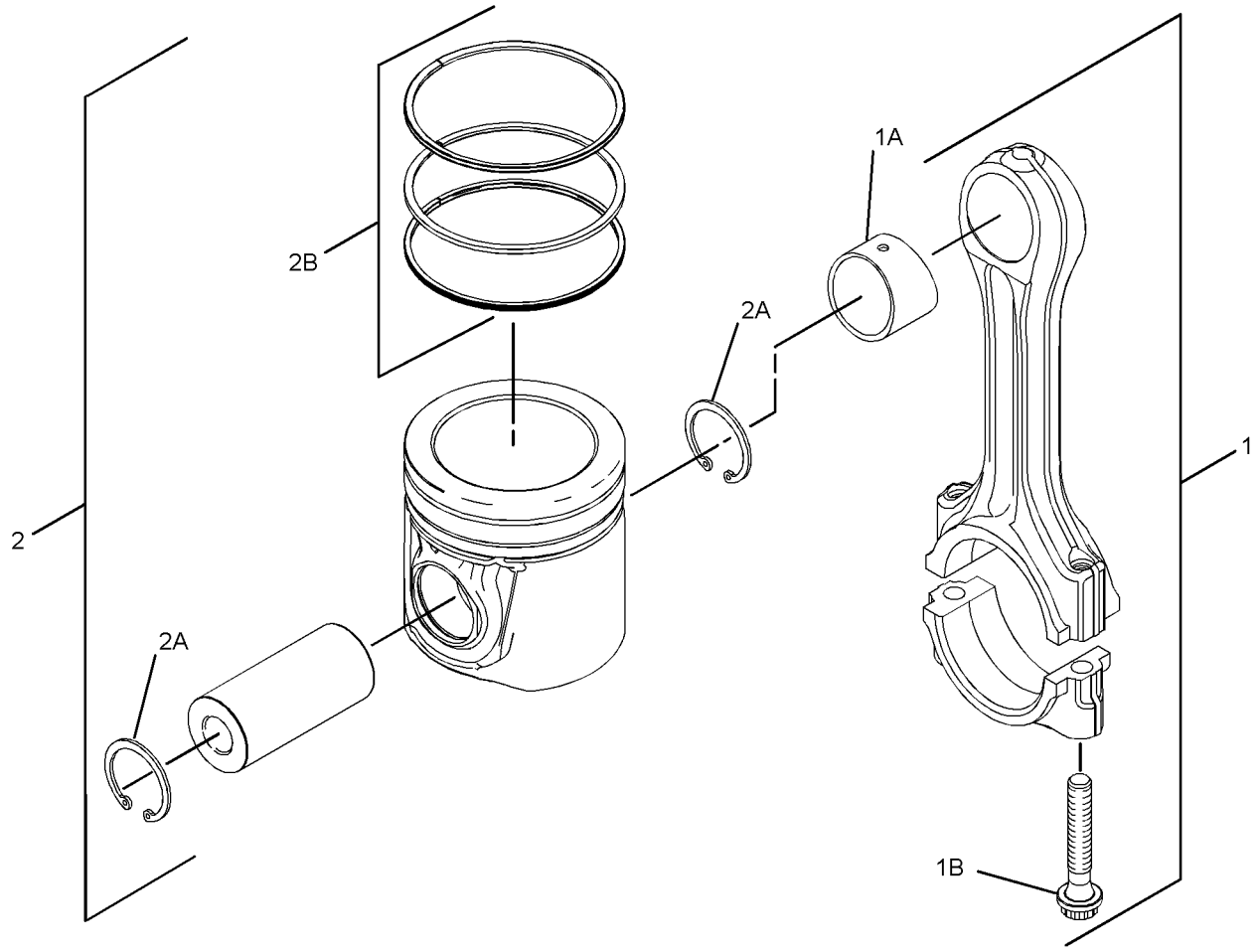

GRAPHIC #1 **<END>** g01369796

BASIC ENGINE

304-3643 PISTON & ROD GP

S/N: C4E8930-UP

PART OF 254-9233 ENGINE AR-PRIMARY

SMCS-1225 **i04003780**

NOTE	REF NO	GRAPHIC REF	PART NUMBER	QTY	PART NAME 1 2 3 4 5 6 (PRODUCT LEVEL)	SEE PAGE
BCJ	1	1	**359-0724**	4	ROD AS-CONNECTING (LENGTH B)	
					—OR—	
BCJ		1	**359-0723**	4	ROD AS-CONNECTING (LENGTH P)	
					—OR—	
BCJ		1	**359-0722**	4	ROD AS-CONNECTING (LENGTH G)	
					—OR—	
BCJ		1	**359-0721**	4	ROD AS-CONNECTING (LENGTH W)	
					—OR—	
BCJ		1	**359-0720**	4	ROD AS-CONNECTING (LENGTH O)	
					—OR—	
BCJ		1	**359-0719**	4	ROD AS-CONNECTING (LENGTH R)	
					(EACH INCLUDES)	
	1A	1	**225-5438**	1	BUSHING	
	1B	1	**323-9312**	2	BOLT	
	2	1	**310-9269**	4	PISTON AS	
					(EACH INCLUDES)	
	2A	1	**124-3536**	2	RING-RETAINING	
	2B	1	**276-7476**	1	KIT-PISTON RING	

B-USE AS REQUIRED
C-CHANGE FROM PREVIOUS TYPE
J-ENSURE THAT CORRECT ROD LENGTH IS FITTED

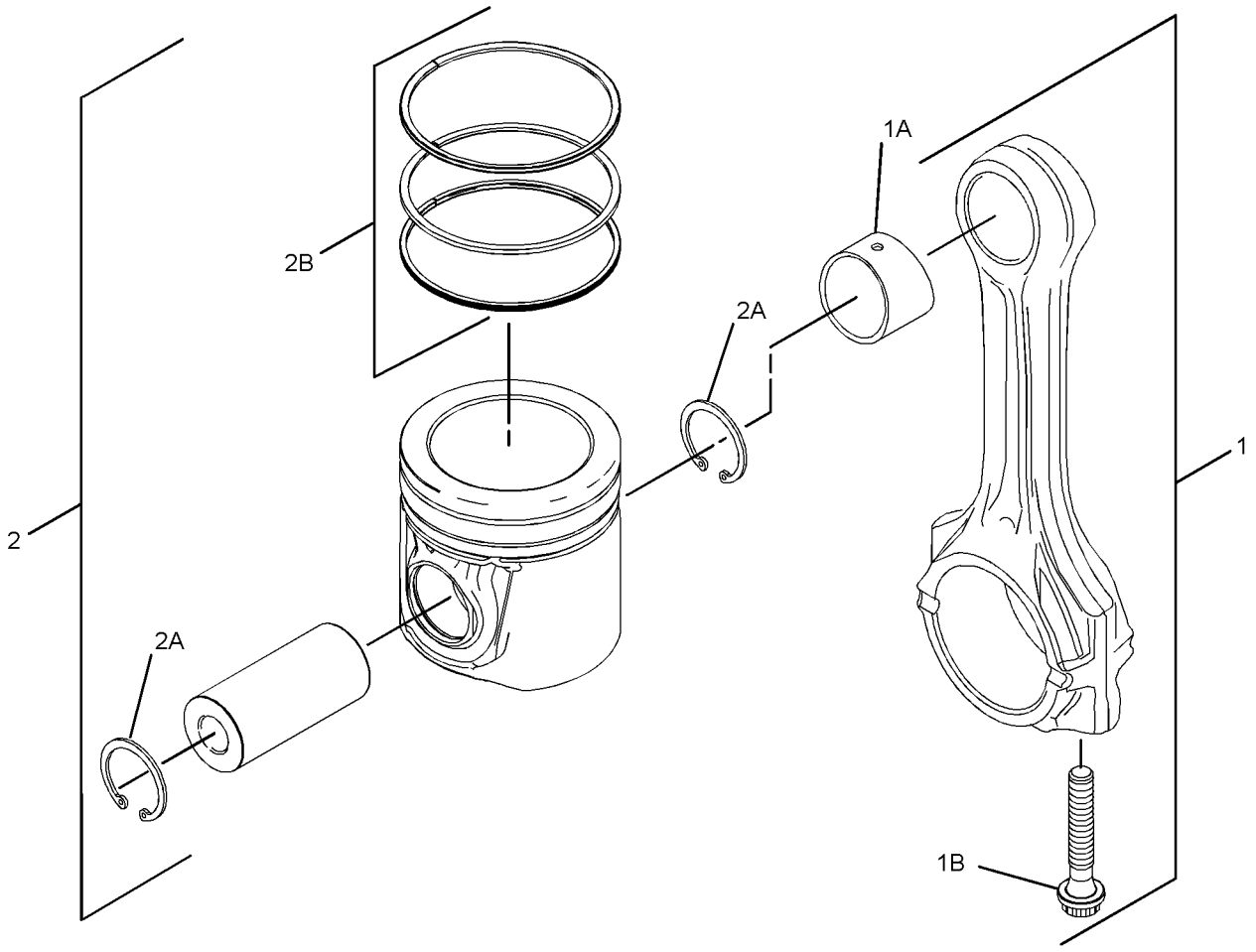

GRAPHIC #1 **<END>** g02241673

298-5129 PLUG GP-CYLINDER HEAD

S/N: C4E1-UP

PART OF 254-9233 ENGINE AR-PRIMARY

SMCS-1100, 1101 **i02604328**

NOTE	REF NO	GRAPHIC REF	PART NUMBER	QTY	PART NAME 1 2 3 4 5 6 (PRODUCT LEVEL)	SEE PAGE
	1	1	**232-1322**	1	PLUG	
	2	1	**199-9751**	1	SEAL-O-RING	

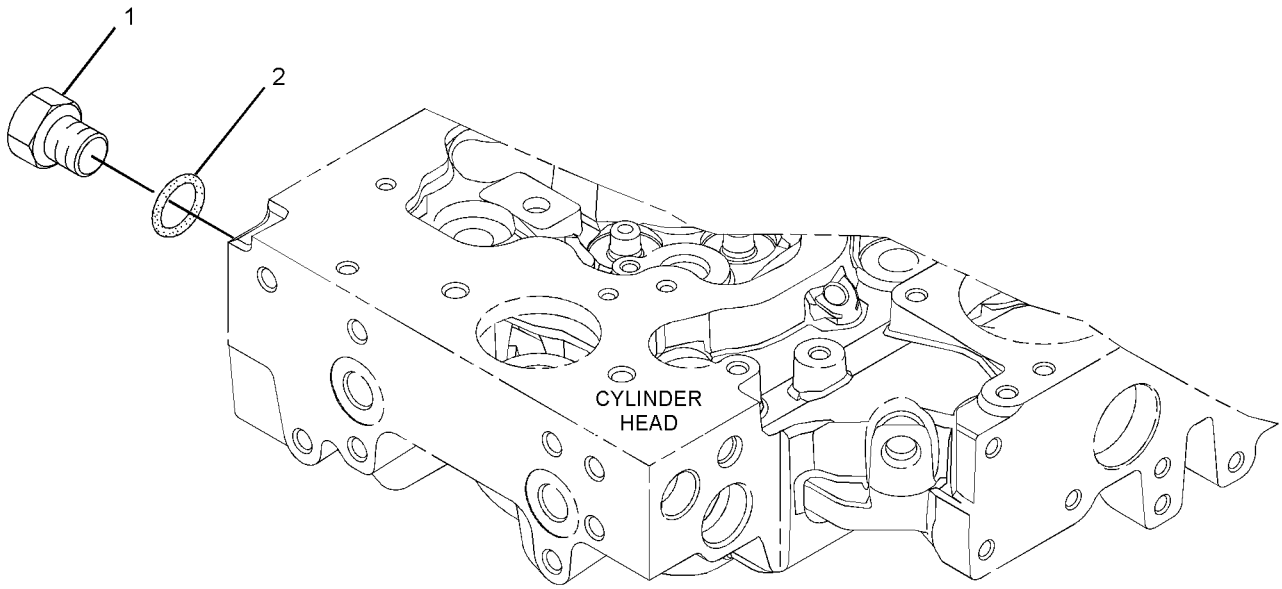

GRAPHIC #1 **<END>** g01305536

304-3663 PLUG GP-ENGINE

S/N: C4E1-UP

PART OF 254-9233 ENGINE AR-PRIMARY

SMCS-1000 **i02654272**

NOTE	REF NO	GRAPHIC REF	PART NUMBER	QTY	PART NAME 1 2 3 4 5 6 (PRODUCT LEVEL)	SEE PAGE
	1	1	**2B-0858**	1	PLUG-PIPE	
	2	1	**7W-4669**	1	ADAPTER	
	3	1	**134-3856**	1	ELBOW	

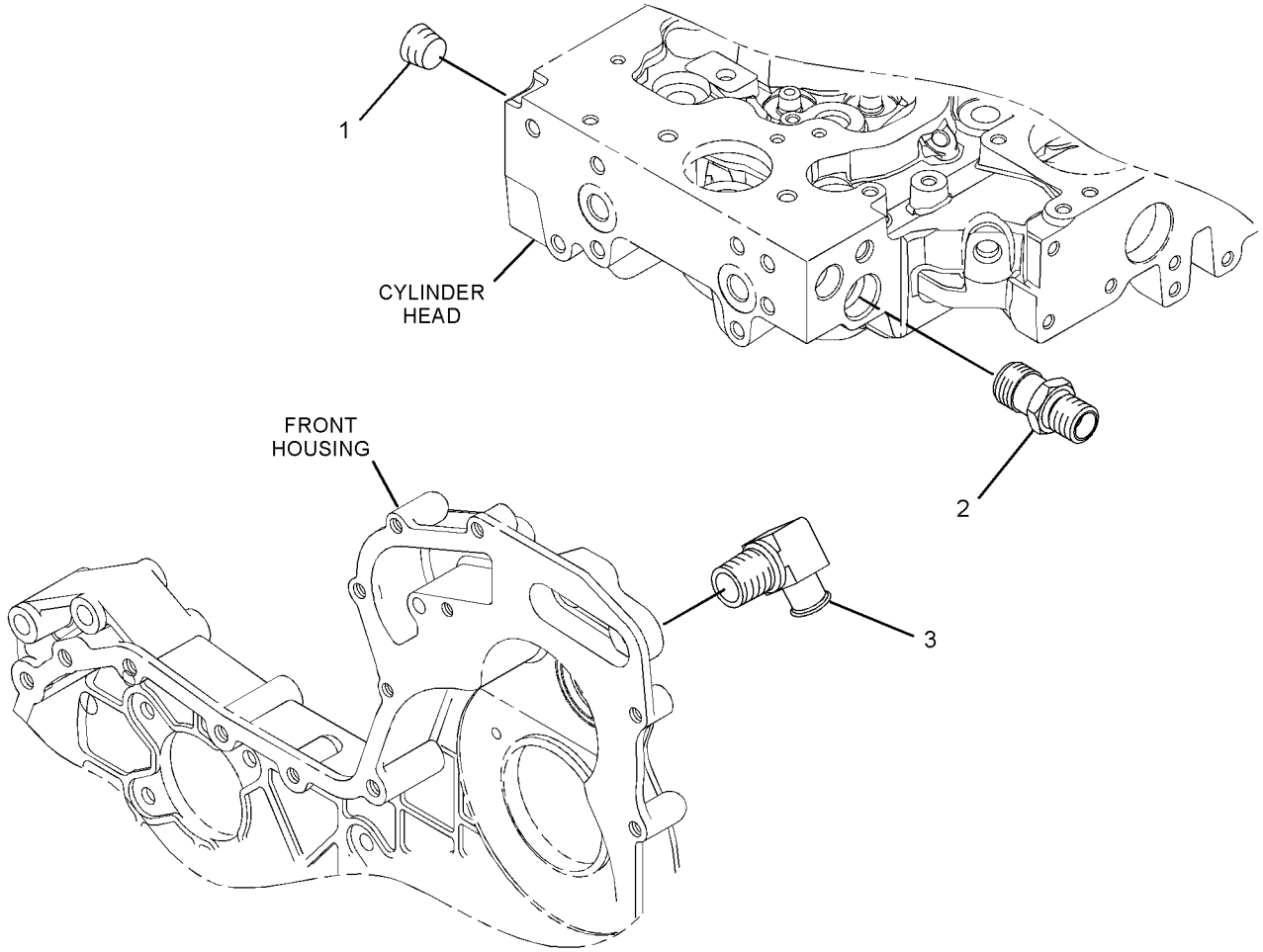

GRAPHIC #1 **<END>** g01346476

BASIC ENGINE

360-7345 PULLEY GP-CRANKSHAFT

S/N: C4E8930-UP

PART OF 254-9233 ENGINE AR-PRIMARY

SMCS-1205 **i03900157**

NOTE	REF NO	GRAPHIC REF	PART NUMBER	QTY	PART NAME 1 2 3 4 5 6 (PRODUCT LEVEL)	SEE PAGE
M	1	1	**102-9941**	3	BOLT (M12X1.75X25-MM)	
	2	1	**286-7848**	1	PULLEY GP-ENGINE	
	3	1	**334-9334**	3	BOLT	
	4	1	**359-0750**	1	PULLEY-CRANKSHAFT	

M-METRIC PART

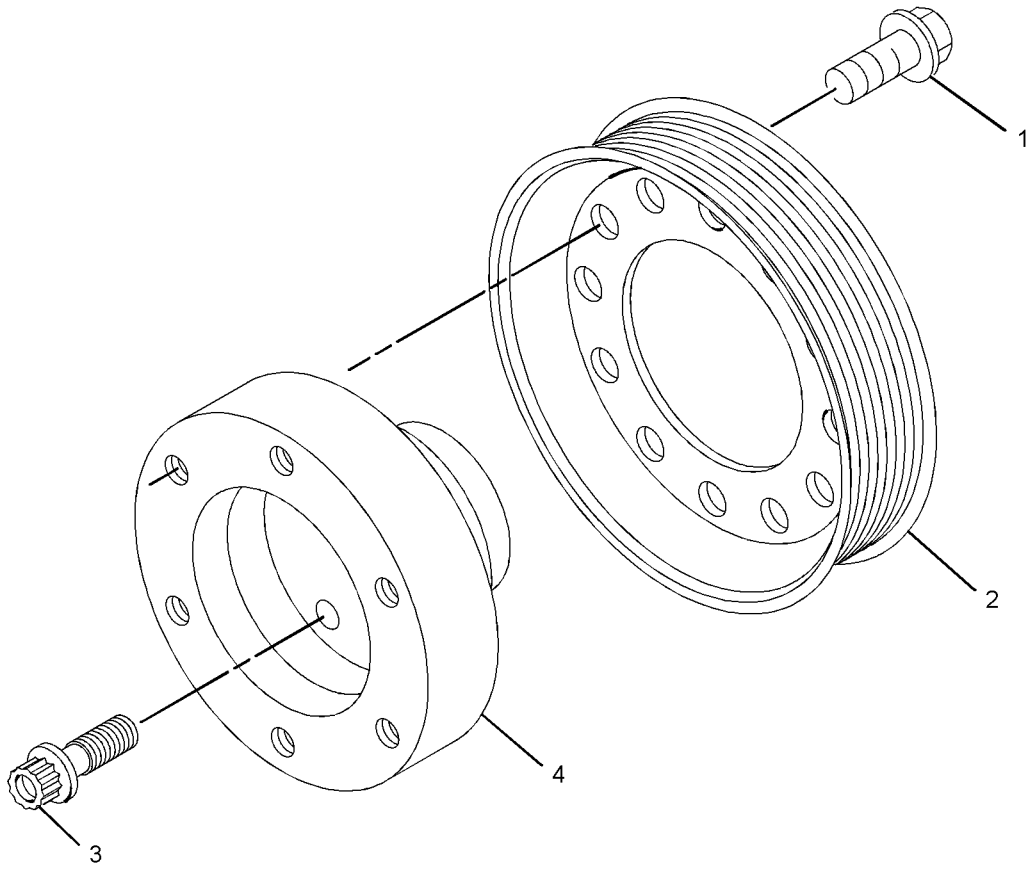

GRAPHIC #1 **<END>** g02156463

298-4533 ROCKER ARM GP

S/N: C4E1-UP

PART OF 304-3647 VALVE MECHANISM GP

SMCS-1123 **i03607223**

NOTE	REF NO	GRAPHIC REF	PART NUMBER	QTY	PART NAME 1 2 3 4 5 6 (PRODUCT LEVEL)	SEE PAGE
	1	1	**276-9200**	2	PLUG-SHAFT END	
	2	1	**276-9201**	1	CLIP	
	3	1	**276-9206**	3	SPRING-SHAFT	
	4	1	**276-9207**	1	SPRING-SHAFT	
	5	1	**278-5111**	4	ROCKER ARM AS	
	5A	1	**276-9230**	1	NUT	
	5B	1	**278-5113**	1	ADJUSTING SCREW (TORX)	
	6	1	**278-5112**	4	ROCKER ARM AS	
	6A	1	**276-9230**	1	NUT	
	6B	1	**278-5113**	1	ADJUSTING SCREW (TORX)	
	7	1	**280-1912**	4	BRACKET	
	8	1	**280-1913**	4	RETAINER	
	9	1	**280-1914**	8	BOLT (M8X1.25X55-MM)	

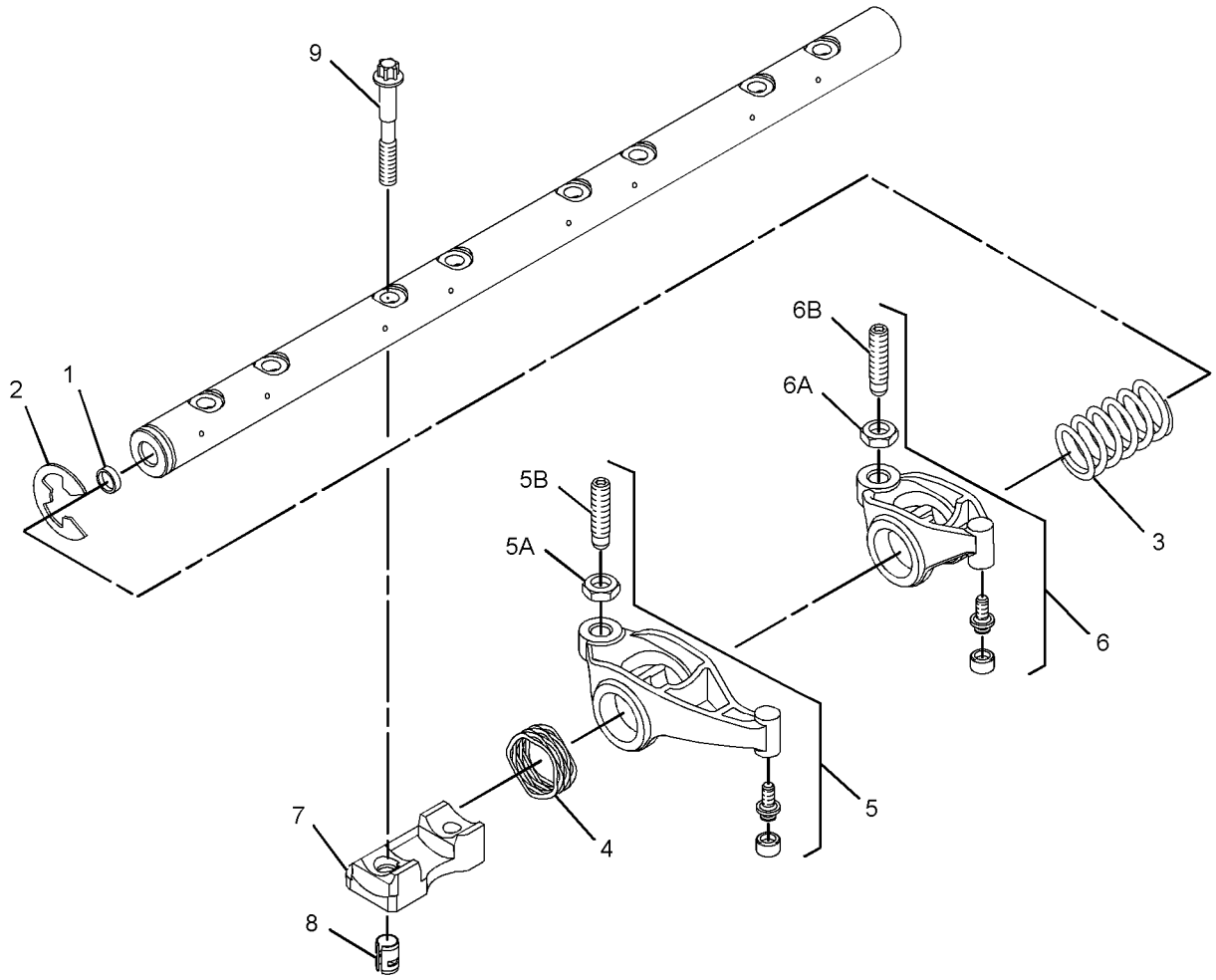

GRAPHIC #1 **<END>** g01532745

244-7431 SUPPORT GP-ENGINE & XMSN

S/N: JTD1-UP; FFF1-UP; LLL1-UP
PART OF 244-7386 INSTALLATION AR-ENGINE

SMCS-1153, 1154, 3082 **i03004929**

NOTE	REF NO	GRAPHIC REF	PART NUMBER	QTY	PART NAME 1 2 3 4 5 6 (PRODUCT LEVEL)	SEE PAGE
	1	1	**9W-9915**	4	MOUNT AS	
	2	1	**9W-9952**	2	WASHER (16.75X86.0X8.0-MM THK)	
	3	1	**9W-9953**	4	SLEEVE	
	4	1	**199-6928**	2	PLATE AS	
					(EACH INCLUDES)	
M		1	**9X-6269**	1	NUT-WELD (M16X2-THD)	
	5	1	**327-4444**	2	PLATE AS	
M	6	1	**8T-4174**	4	BOLT (M16X2X120-MM)	
	7	1	**9X-8257**	4	WASHER (17.5X30.0X3.5-MM THK)	

M-METRIC PART

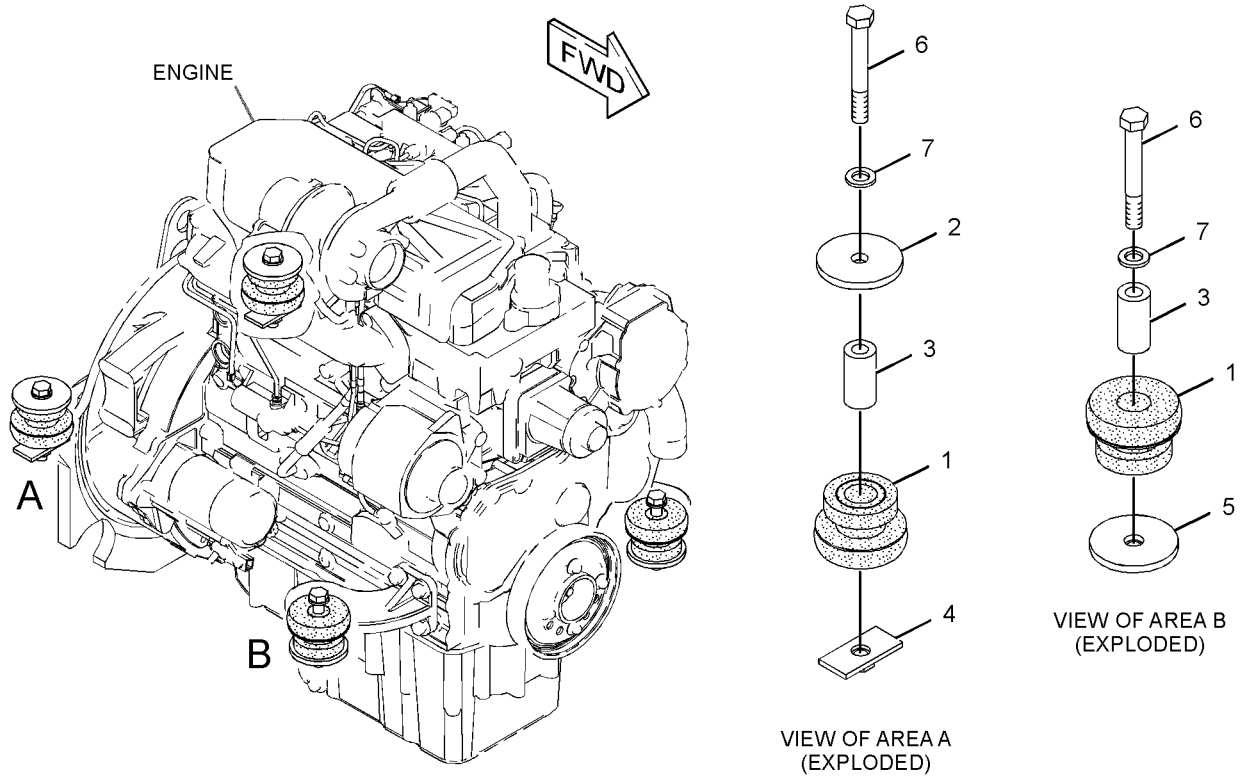

GRAPHIC #1 **<END>** g01577774

244-7479 SUPPRESSION AR-SOUND

S/N: JTD1-UP; FFF1-UP; LLL1-UP
FOR USE WITH 244-7393—PAGE 487
AN ATTACHMENT

SMCS-1801 **i03601088**

NOTE	PART NUMBER	QTY	PART NAME 1 2 3 4 5 6 (PRODUCT LEVEL)	SEE PAGE
Y	*255-1431*	1	HOOD & GUARD GP	428
	311-7070	1	SWITCH AS-ROCKER (ENGINE SPEED CONTROL)	
	111-7899	1	GASKET	
Y-SEPARATE ILLUSTRATION				

<END>

244-7487 SUPPRESSION AR-SOUND

S/N: FFF1-UP; LLL1-UP
FOR USE WITH 244-7393—PAGE 487
AN ATTACHMENT

SMCS-1801 **i04415567**

NOTE	PART NUMBER	QTY	PART NAME 1 2 3 4 5 6 (PRODUCT LEVEL)	SEE PAGE
Y	*255-1452*	1	HOOD & GUARD GP (SOUND SUPPRESSION)	431
Y	*244-7497*	1	LINER GP-SOUND SUPPRESSION (FRAME)	433
	311-7070	1	SWITCH AS-ROCKER (ENGINE SPEED CONTROL)	
	111-7899	1	GASKET	
	190-5386	2	FILM-STRIPE (ROUND RED REFLECTIVE)	
Y-SEPARATE ILLUSTRATION				

<END>

244-7490 SUPPRESSION AR-SOUND

S/N: JTD1-UP; FFF1-UP; LLL1-UP
FOR USE WITH 244-7393—PAGE 487
AN ATTACHMENT

SMCS-1801 **i04415570**

NOTE	PART NUMBER	QTY	PART NAME 1 2 3 4 5 6 (PRODUCT LEVEL)	SEE PAGE
Y	*255-1452*	1	HOOD & GUARD GP (SOUND SUPPRESSION)	431
Y	*244-7497*	1	LINER GP-SOUND SUPPRESSION (FRAME)	433
	311-7070	1	SWITCH AS-ROCKER (ENGINE SPEED CONTROL)	
	111-7899	1	GASKET	
Y-SEPARATE ILLUSTRATION				

<END>

BASIC ENGINE

244-7493 SUPPRESSION AR-SOUND

S/N: JTD1-UP; FFF1-UP; LLL1-UP

AN ATTACHMENT

SMCS-1801 **i04248412**

NOTE	PART NUMBER	QTY	PART NAME 1 2 3 4 5 6 (PRODUCT LEVEL)	SEE PAGE
Y	*361-6059*	1	FRAME GP	398
Y	*255-1452*	1	HOOD & GUARD GP	431
Y	*244-7497*	1	LINER GP-SOUND SUPPRESSION	433
	165-0311	1	PLUG	
			(ON SWITCH PANEL IN RH SIDE CONSOLE NEXT TO THROTTLE DIAL)	
Y-SEPARATE ILLUSTRATION				

<END>

361-6063 SUPPRESSION AR-SOUND

S/N: LLL1-UP

AN ATTACHMENT

SMCS-1801 **i04418709**

NOTE	PART NUMBER	QTY	PART NAME 1 2 3 4 5 6 (PRODUCT LEVEL)	SEE PAGE
Y	*361-6060*	1	FRAME GP	400
Y	*255-1452*	1	HOOD & GUARD GP	431
Y	*244-7497*	1	LINER GP-SOUND SUPPRESSION	433
	165-0311	1	PLUG	
			ON SWITCH PANEL IN RH SIDE CONSOLE NEXT TO THROTTLE DIAL.	
Y-SEPARATE ILLUSTRATION				

<END>

112-1817 VALVE GP-MANUAL—FIRE PLOW

S/N: JTD1-UP; FFF1-UP; LLL1-UP

PART OF 322-5920 SHUTOFF GP-MANUAL, 319-8103 TANK GP-FUEL

AN ATTACHMENT

SMCS-1118, 7450 **i04381471**

NOTE	PART NUMBER	QTY	PART NAME 1 2 3 4 5 6 (PRODUCT LEVEL)	SEE PAGE
			(NO SERVICED PARTS)	
			AVAILABLE REPAIR KIT(S):	
	112-9861	1	KIT-SEAL (MANUAL VALVE)	
			(INCLUDES SEALS, CONNECTOR O-RINGS, THRUST RING & STEM O-RING)	

<END>

BASIC ENGINE

304-3647 VALVE MECHANISM GP

S/N: C4E1-UP

PART OF 254-9233 ENGINE AR-PRIMARY

SMCS-1102, 1121, 1123 **i03592584**

NOTE	REF NO	GRAPHIC REF	PART NUMBER	QTY	PART NAME 1 2 3 4 5 6 (PRODUCT LEVEL)	SEE PAGE
	1	1	**339-3397**	8	LINK	
Y	2	1	**298-4533**	1	ROCKER ARM GP	42

Y-SEPARATE ILLUSTRATION

304-3647 **VALVE MECHANISM GP** *(contd.)* **i03592584**

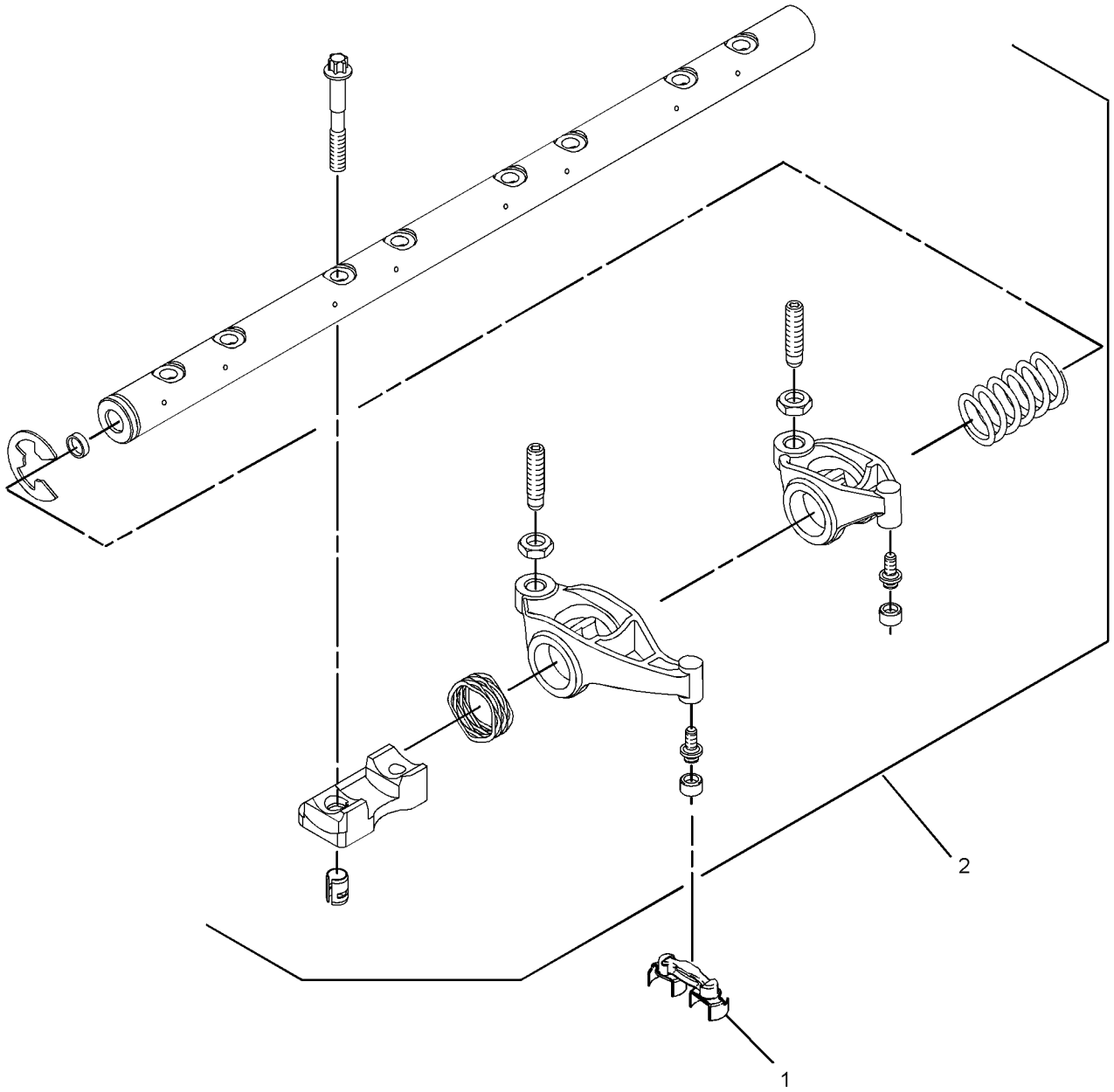

GRAPHIC #1 **<END>** g01932396

314-3960 FILLER GP-ENGINE OIL

S/N: C4E1-UP

PART OF 254-9233 ENGINE AR-PRIMARY

SMCS-1316 **i02912410**

NOTE	REF NO	GRAPHIC REF	PART NUMBER	QTY	PART NAME 1 2 3 4 5 6 (PRODUCT LEVEL)	SEE PAGE
M	1	1	**6I-0217**	1	BOLT (M8X1.25X20-MM)	
M	2	1	**6I-0254**	1	BOLT (M8X1.25X30-MM)	
	3	1	**317-9299**	2	BOLT	
	4	1	**6I-4374**	1	BOLT (M8X1.25X60-MM)	
	5	1	**280-1430**	1	GASKET	
	6	1	**317-3775**	1	FILLER GP-ENGINE OIL	
	6A	1	**306-2337**	1	SEAL-O-RING	
	7	1	**305-7398**	1	WASHER	
	8	1	**314-3956**	1	FILLER AS-OIL (ENGINE)	
	8A	1	**130-9888**	1	CAP-OIL FILLER (ENGINE)	
	8B	1	**113-1504**	1	SEAL-O-RING	
	9	1	**314-3957**	1	BRACKET	

M-METRIC PART

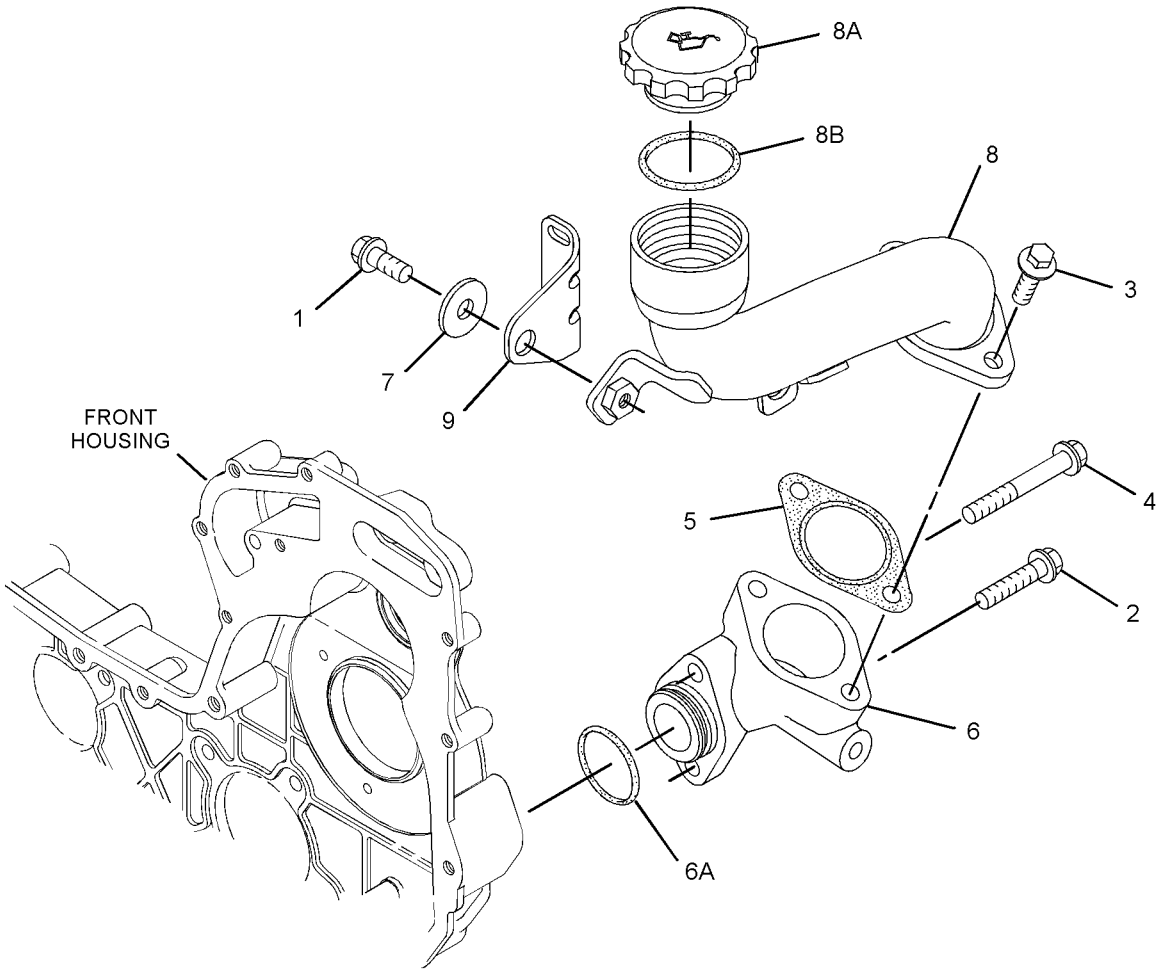

GRAPHIC #1 **<END>** g01397374

283-3426 FILTER GP-ENGINE OIL—INCLUDES SHUTOFF VALVE

S/N: JTD1-UP; FFF1-UP; LLL1-UP

PART OF 244-7386 INSTALLATION AR-ENGINE

SMCS-1306, 1308 **i03845594**

NOTE	REF NO	GRAPHIC REF	PART NUMBER	QTY	PART NAME 1 2 3 4 5 6 (PRODUCT LEVEL)	SEE PAGE
	1	1	**6V-7238**	1	VALVE-SHUTOFF (ENGINE OIL)	
	2	1	**7W-2326**	1	FILTER AS-ENGINE OIL	
	3	1	**159-5255**	1	ADAPTER	
	4	1	**3K-0360**	1	SEAL-O-RING	
	5	1	**5P-6718**	1	SEAL-O-RING	

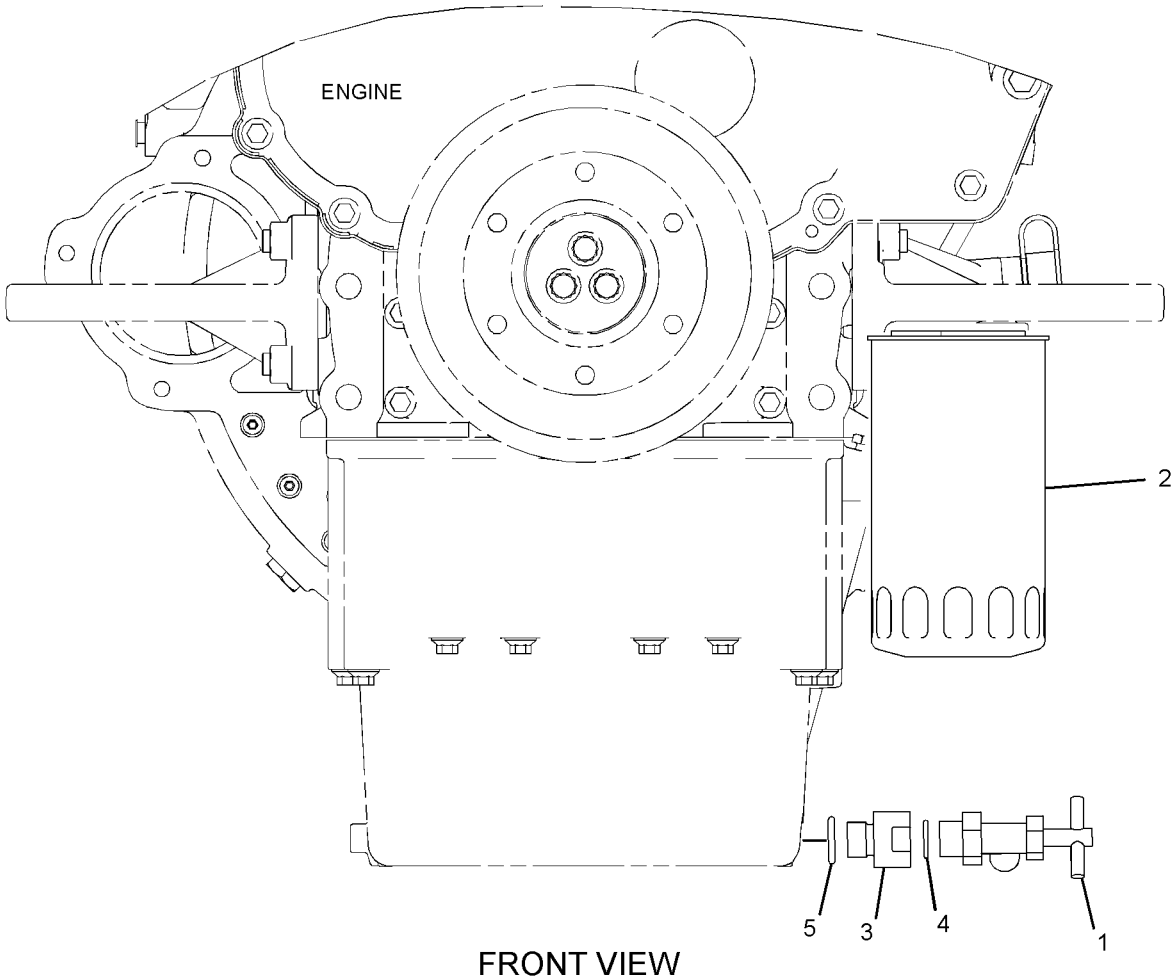

FRONT VIEW

GRAPHIC #1 **<END>** g02096473

LUBRICATION SYSTEM

298-5100 FILTER GP-ENGINE OIL

S/N: C4E1-UP

PART OF 254-9233 ENGINE AR-PRIMARY

SMCS-1306, 1308 **i02604360**

NOTE	REF NO	GRAPHIC REF	PART NUMBER	QTY	PART NAME 1 2 3 4 5 6 (PRODUCT LEVEL)	SEE PAGE
	1	1	**7W-2326**	1	FILTER AS-ENGINE OIL	

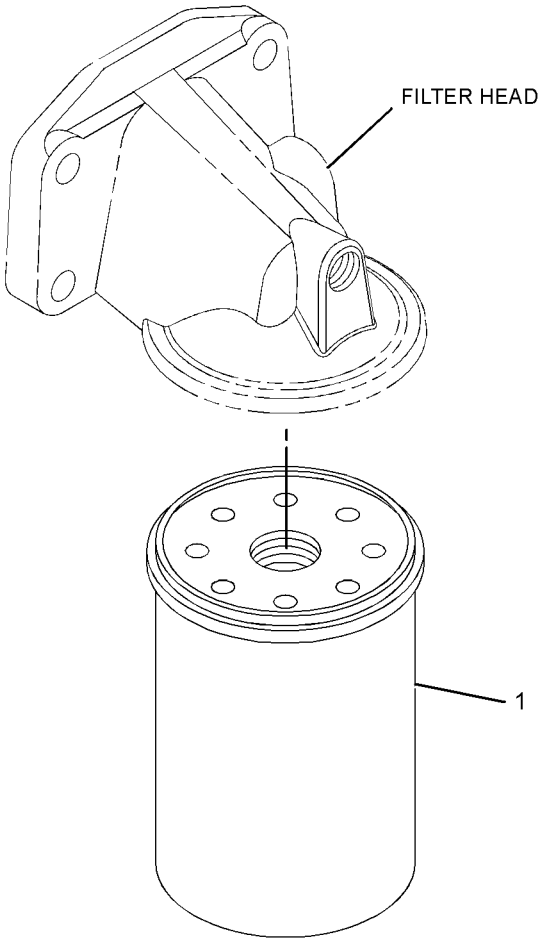

GRAPHIC #1 **<END>** g01304792

LUBRICATION SYSTEM

298-5112 PUMP GP-ENGINE OIL

S/N: C4E1-UP

PART OF 254-9233 ENGINE AR-PRIMARY

SMCS-1304, 1315 **i02604340**

NOTE	REF NO	GRAPHIC REF	PART NUMBER	QTY	PART NAME 1 2 3 4 5 6 (PRODUCT LEVEL)	SEE PAGE
	1	1	**225-8329**	1	PUMP AS-ENGINE OIL	
M	2	1	**100-4461**	5	BOLT (M10X1.50X50-MM)	

M-METRIC PART

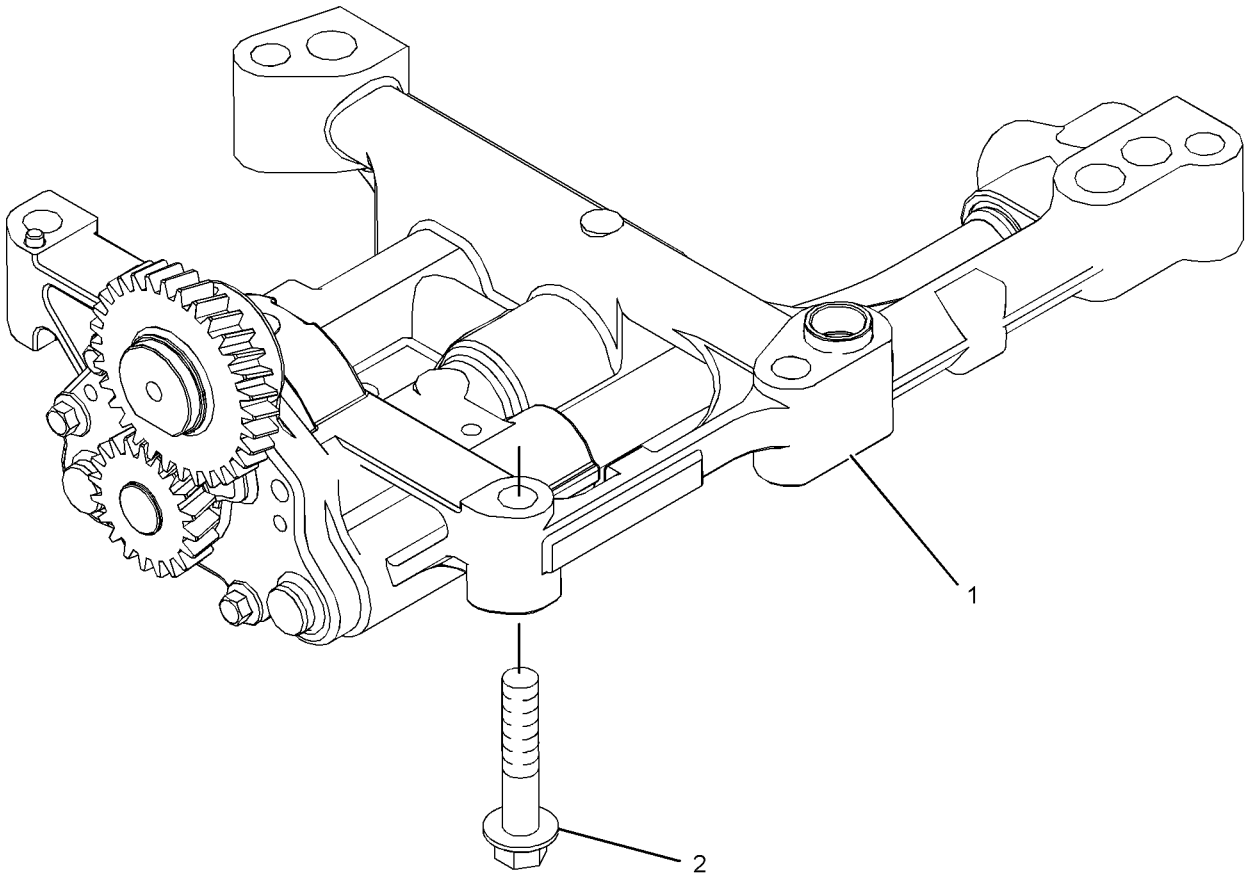

GRAPHIC #1 **<END>** g01304952

304-5617 VALVE GP-FLUID SAMPLING–ENGINE OIL

S/N: C4E1-UP

PART OF 254-9233 ENGINE AR-PRIMARY

SMCS-7542 **i02801742**

NOTE	REF NO	GRAPHIC REF	PART NUMBER	QTY	PART NAME 1 2 3 4 5 6 (PRODUCT LEVEL)	SEE PAGE
	1	1	**8C-3445**	1	CAP-DUST	
	2	1	**035-8063**	1	PLUG	
	3	1	**216-9633**	1	VALVE AS-FLUID SAMPLING	

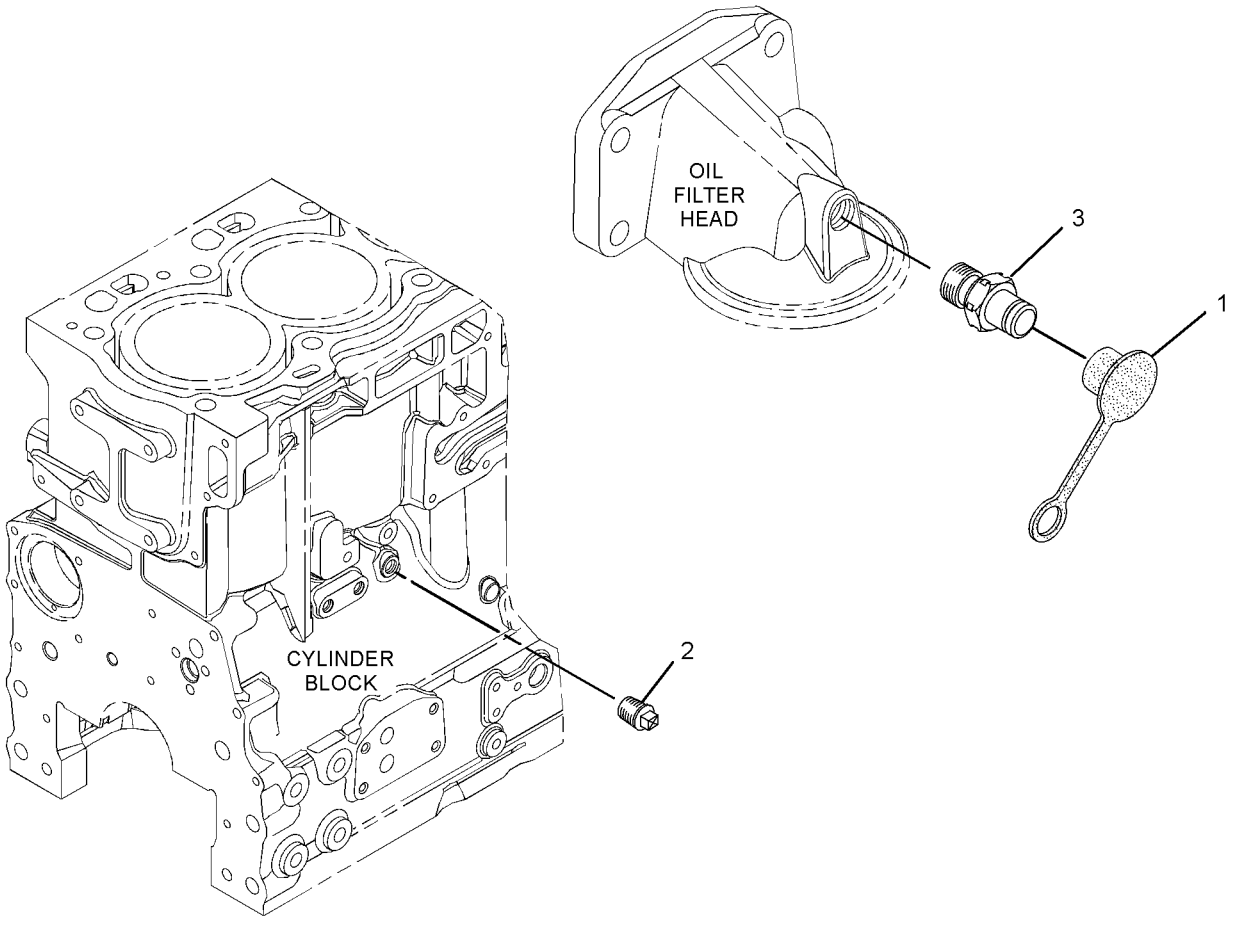

GRAPHIC #1 **<END>** g01438099

301-8243 CONNECTION GP-WATER

S/N: C4E1-UP

PART OF 254-9233 ENGINE AR-PRIMARY

SMCS-1380 **i03437232**

NOTE	REF NO	GRAPHIC REF	PART NUMBER	QTY	PART NAME 1 2 3 4 5 6 (PRODUCT LEVEL)	SEE PAGE
	1	1	**123-2899**	2	BOLT (M10X1.5X40-MM)	
	2	1	**277-2974**	1	REGULATOR AS-WATER TEMPERATURE (CONNECTOR INCLUDED)	
	3	1	**281-8744**	1	GASKET-WATER REGULATOR (TEMPERATURE)	

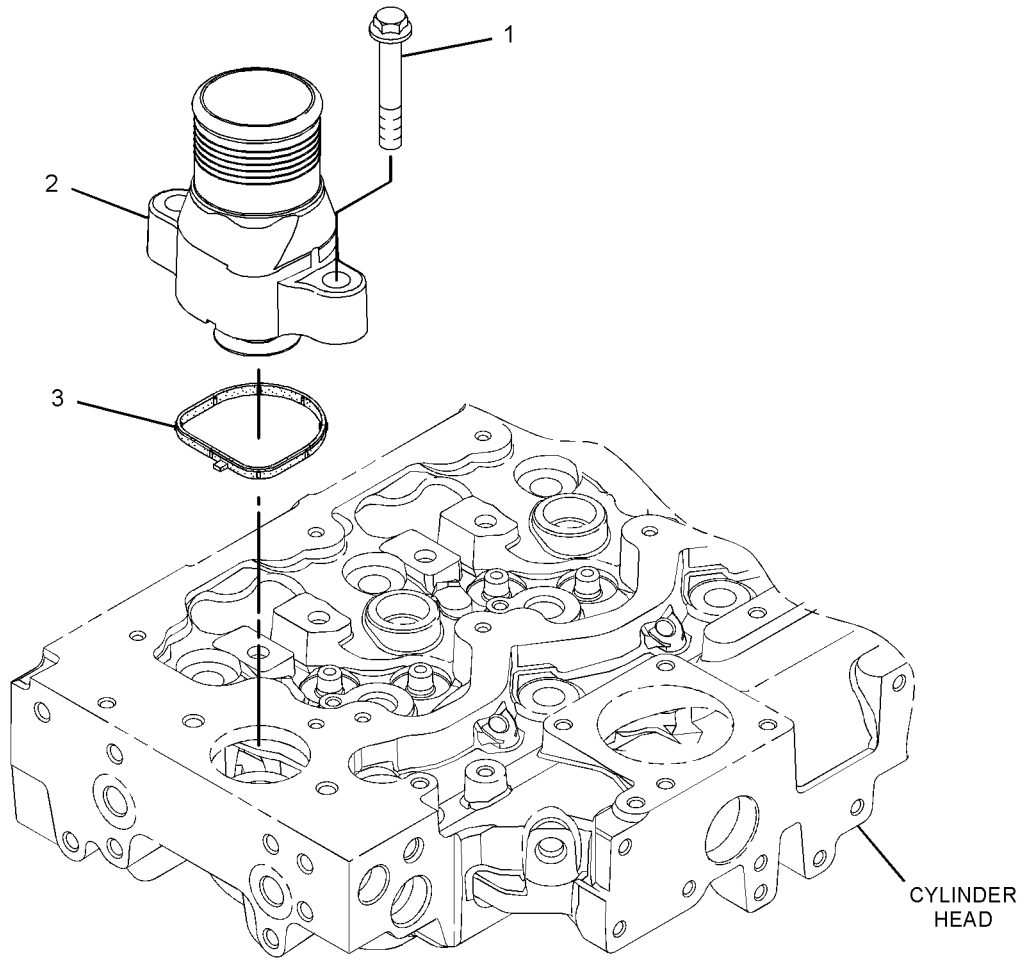

GRAPHIC #1 **<END>** g01371208

COOLING SYSTEM

334-2314 CONNECTION GP-WATER

S/N: C4E174-UP

PART OF 254-9233 ENGINE AR-PRIMARY

SMCS-1380 **i03437244**

NOTE	REF NO	GRAPHIC REF	PART NUMBER	QTY	PART NAME 1 2 3 4 5 6 (PRODUCT LEVEL)	SEE PAGE
	1	1	**123-2899**	2	BOLT (M10X1.5X40-MM)	
	2	1	**281-8744**	1	GASKET-WATER REGULATOR (TEMPERATURE)	
	3	1	**334-1401**	1	HOUSING-REGULATOR (WATER TEMPERATURE)	

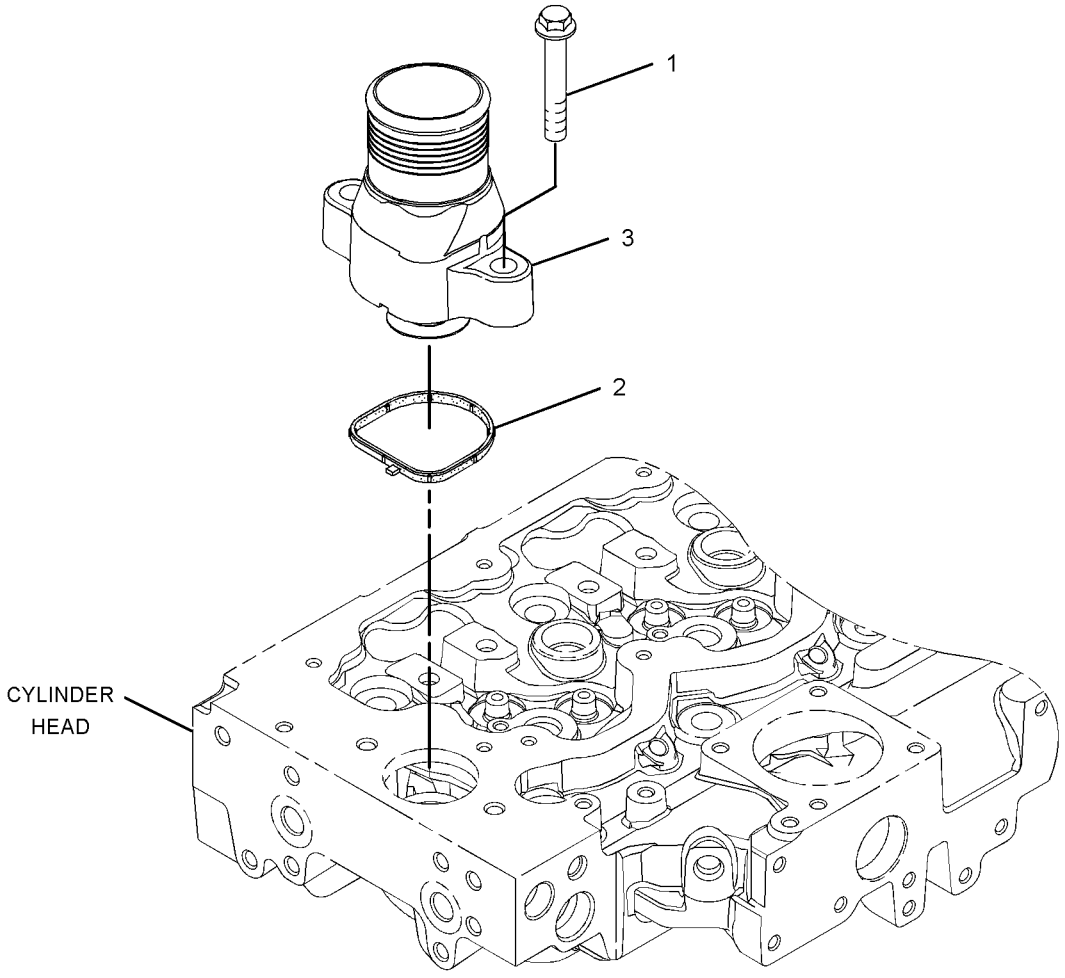

GRAPHIC #1 **<END>** g01699980

298-5099 COOLER GP-ENGINE OIL

S/N: C4E1-UP

PART OF 254-9233 ENGINE AR-PRIMARY

TYPE 1

SMCS-1378 **i02604345**

NOTE	REF NO	GRAPHIC REF	PART NUMBER	QTY	PART NAME 1 2 3 4 5 6 (PRODUCT LEVEL)	SEE PAGE
	1	1	**6I-0572**	4	BOLT (M8X1.25X20-MM)	
M	2	1	**6I-0645**	4	BOLT (M8X1.25X25-MM)	
	3	1	**225-7944**	2	GASKET	
	4	1	**232-3751**	1	PLATE	
	5	1	**249-0974**	1	HEAD AS-OIL FILTER	
	6	1	**298-4553**	1	COOLER AS-OIL (ENGINE)	
	6A	1	**298-4558**	1	COOLER-OIL (ENGINE)	
	6B	1	**298-4559**	1	GASKET	
	6C	1	**298-4560**	2	GASKET	
	6D	1	**6I-1090**	5	BOLT (M8X1.25X40-MM)	
	6E	1	**101-3771**	2	BOLT	
M	6F	1	**6I-0217**	1	BOLT (M8X1.25X20-MM)	
M	6G	1	**6I-0260**	8	BOLT (M8X1.25X25-MM)	

M-METRIC PART

298-5099 **COOLER GP-ENGINE OIL** *(contd.)* **i02604345**

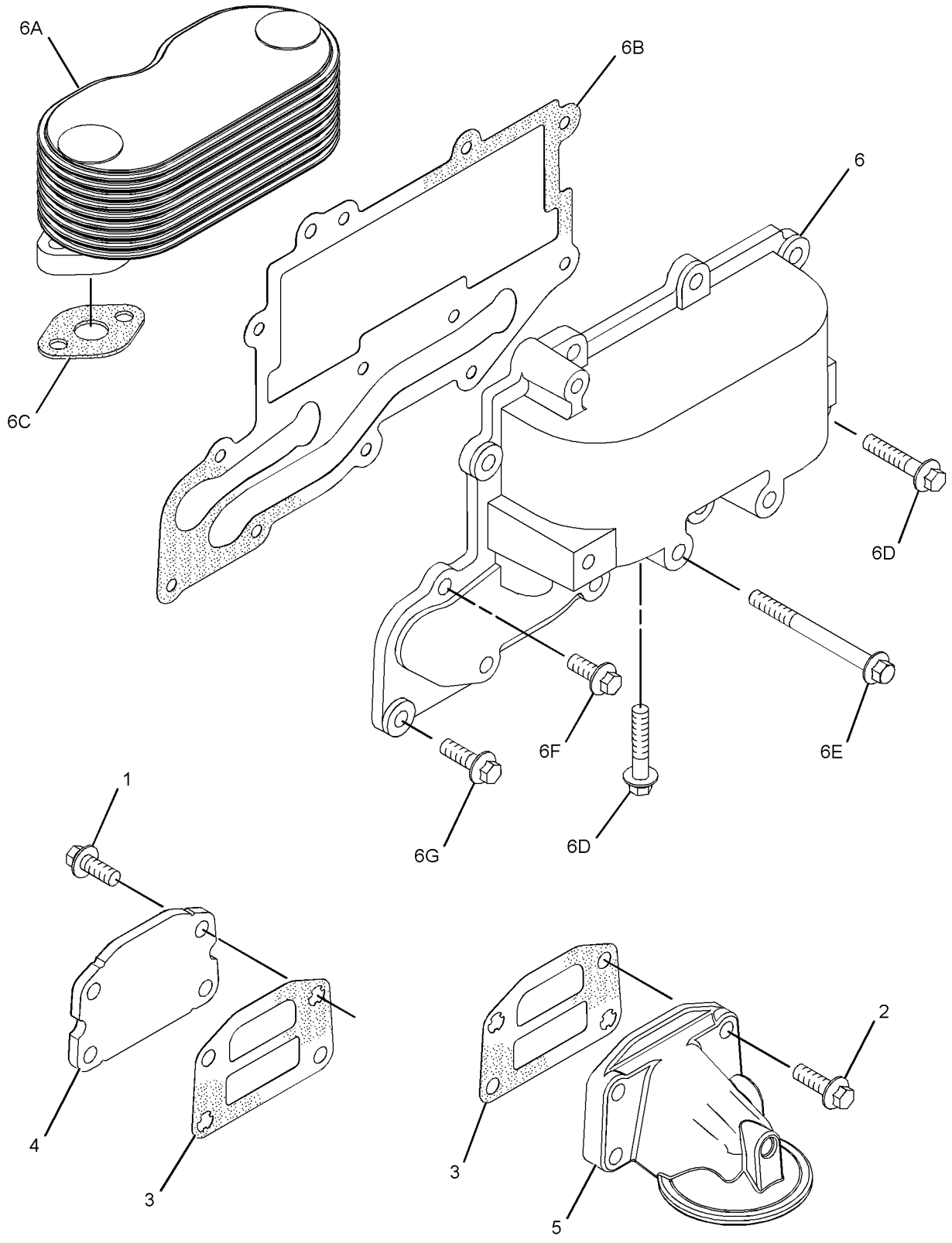

GRAPHIC #1 **<END>** g01304480

298-5099 COOLER GP-ENGINE OIL

S/N: C4E1-UP

PART OF 254-9233 ENGINE AR-PRIMARY

TYPE 2

SMCS-1378 **i03868169**

NOTE	REF NO	GRAPHIC REF	PART NUMBER	QTY	PART NAME 1 2 3 4 5 6 (PRODUCT LEVEL)	SEE PAGE
	1	1	**6I-0572**	4	BOLT (M8X1.25X20-MM)	
M	2	1	**6I-0645**	4	BOLT (M8X1.25X25-MM)	
	3	1	**225-7944**	2	GASKET	
	4	1	**232-3751**	1	PLATE	
	5	1	**249-0974**	1	HEAD AS-OIL FILTER	
CY	6	1	**353-7717**	1	COOLER GP-ENGINE OIL	58

C-CHANGE FROM PREVIOUS TYPE
M-METRIC PART
Y-SEPARATE ILLUSTRATION

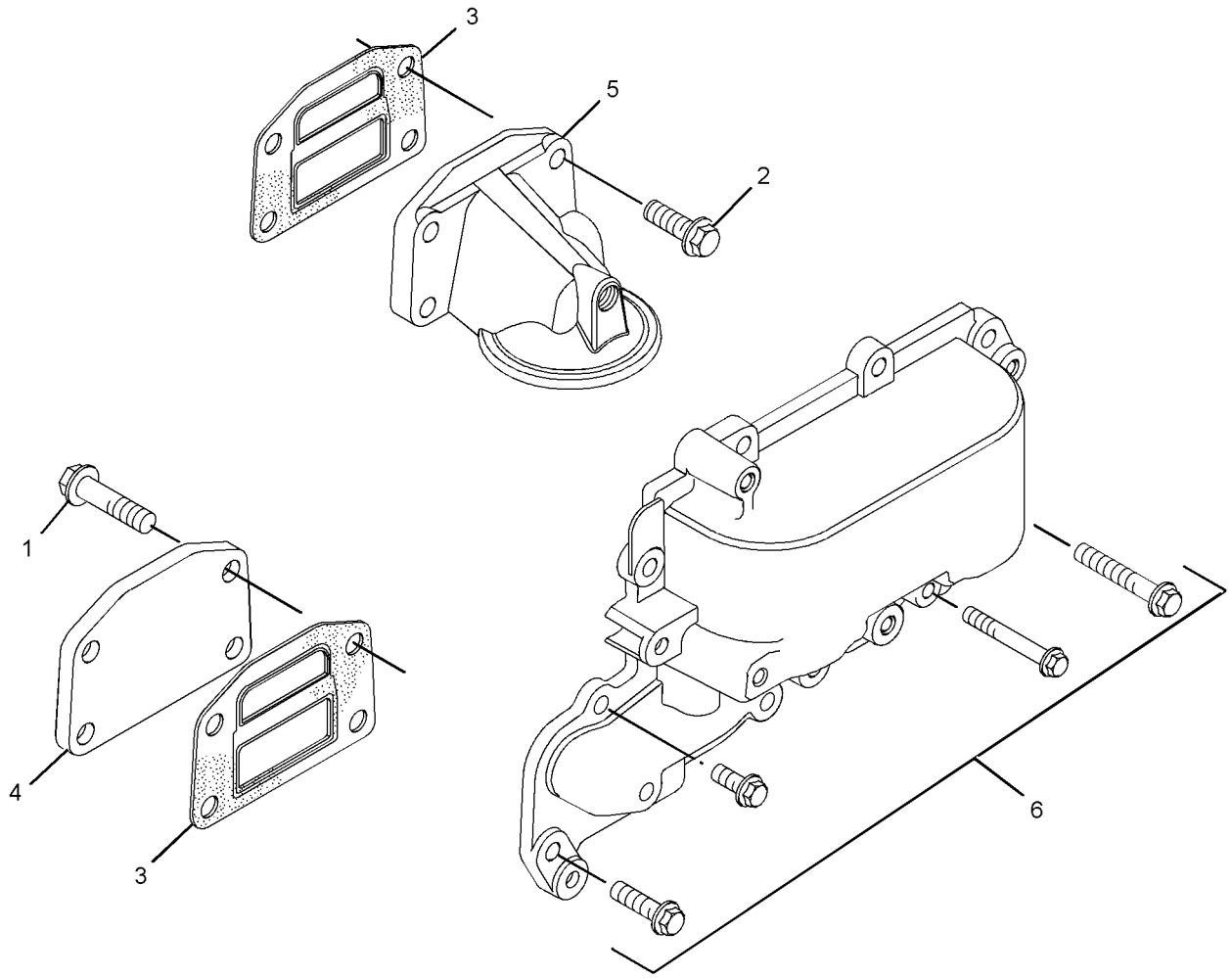

GRAPHIC #1 **<END>** g02124518

353-7717 COOLER GP-ENGINE OIL

S/N: C4E1-UP

PART OF 298-5099 COOLER GP-ENGINE OIL

SMCS-1378 **i04003850**

NOTE	REF NO	GRAPHIC REF	PART NUMBER	QTY	PART NAME 1 2 3 4 5 6 (PRODUCT LEVEL)	SEE PAGE
M	1	1	**6I-0217**	2	BOLT (M8X1.25X20-MM)	
M	2	1	**6I-0260**	7	BOLT (M8X1.25X25-MM)	
	3	1	**6I-1090**	1	BOLT (M8X1.25X40-MM)	
M	4	1	**100-3751**	2	BOLT (M8X1.25X65-MM)	
	5	1	**298-4558**	1	COOLER-OIL	
	6	1	**353-7715**	1	GASKET	
	7	1	**298-4560**	2	GASKET	

M-METRIC PART

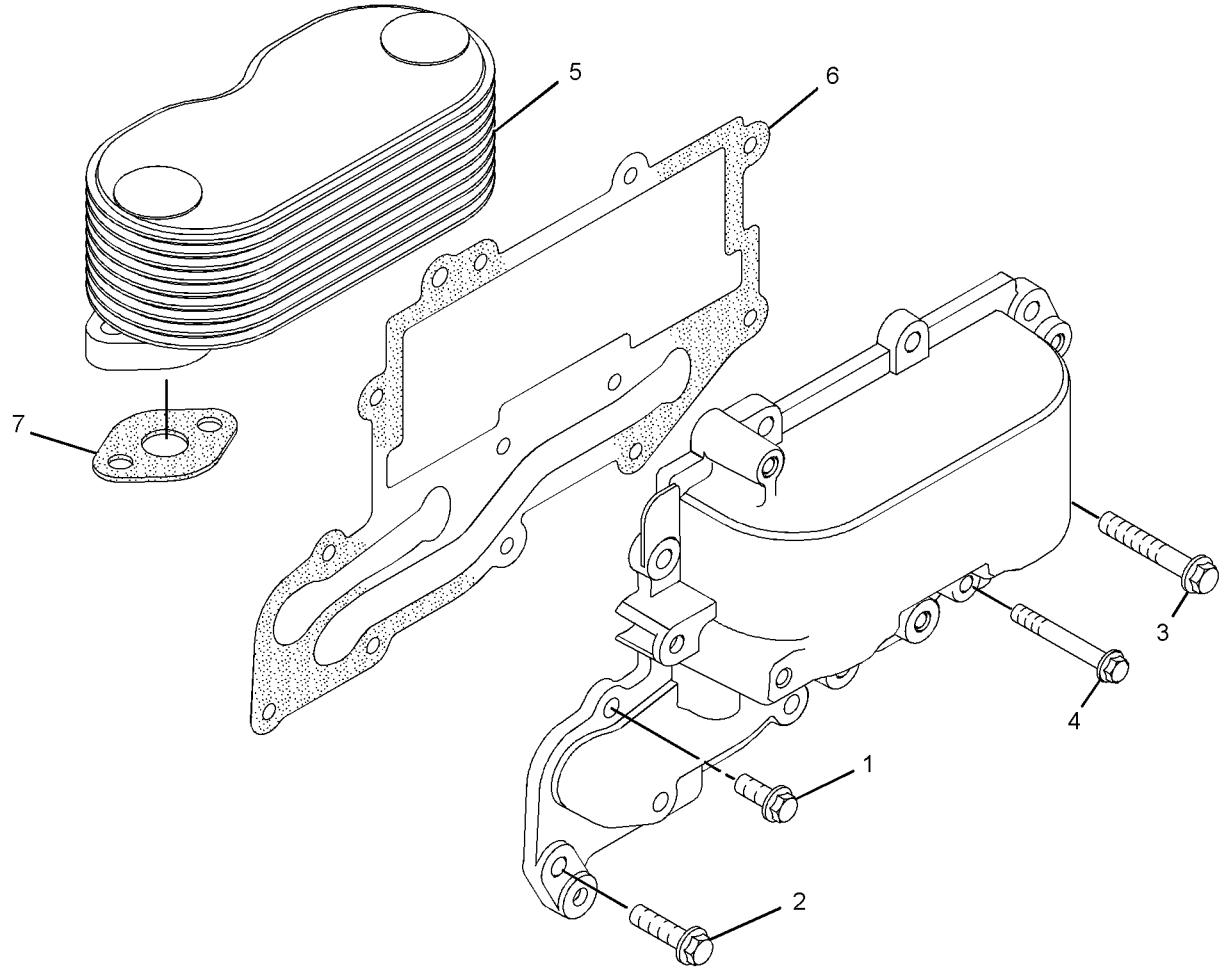

GRAPHIC #1 **<END>** g02196064

244-7428 FAN GP-BLOWER

S/N: JTD1-UP; FFF1-UP; LLL1-UP

PART OF 244-7386 INSTALLATION AR-ENGINE

SMCS-1356, 1360 **i03712903**

NOTE	REF NO	GRAPHIC REF	PART NUMBER	QTY	PART NAME 1 2 3 4 5 6 (PRODUCT LEVEL)	SEE PAGE
	1	1	**207-2554**	1	SPACER-FAN	
	2	1	**337-5633**	1	GUARD AS-FAN	
	3	1	**316-1441**	1	FAN AS-BLOWER (6-BLADES)	
	4	1	**5P-4116**	8	WASHER-HARD (8.8X20.5X2-MM THK)	
M	5	1	**7X-2539**	4	BOLT (M8X1.25X110-MM)	
M	6	1	**8T-4200**	4	BOLT (M8X1.25X16-MM)	

M-METRIC PART

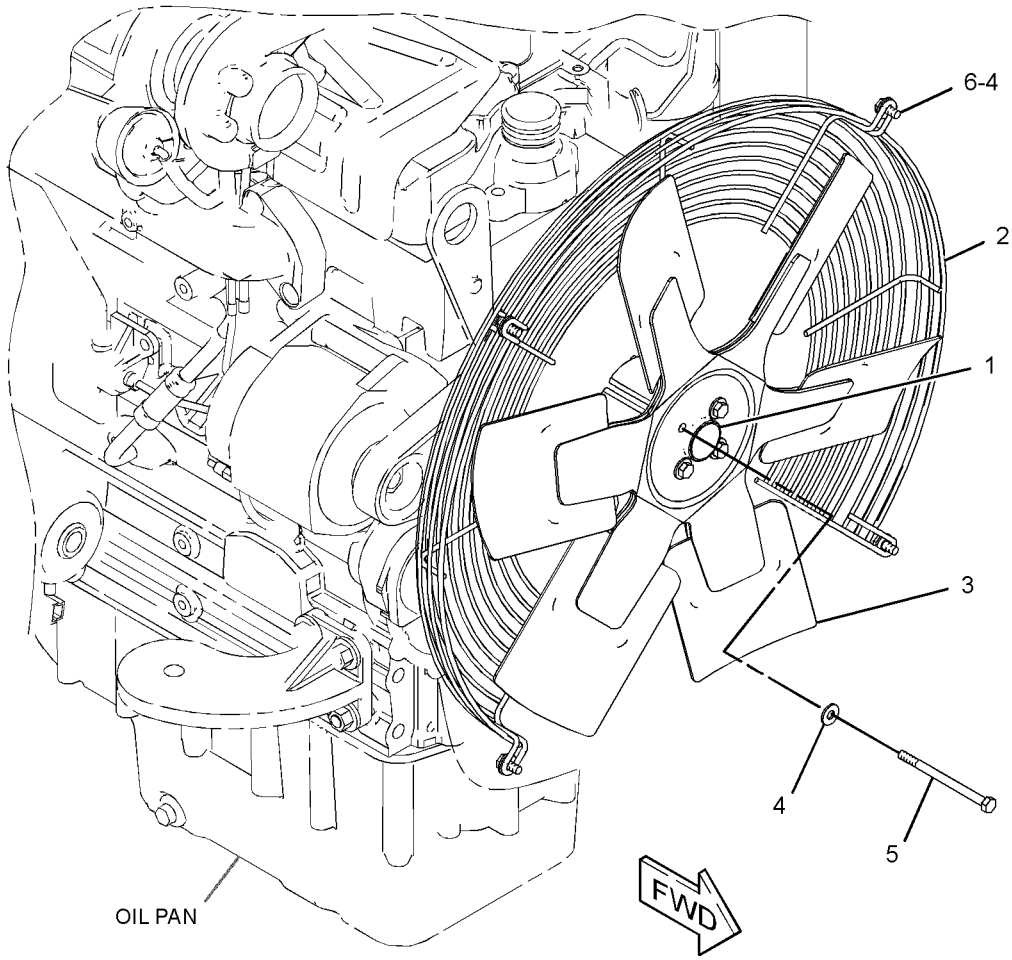

GRAPHIC #1 **<END>** g02004314

329-5632 LINES GP-COOLANT

S/N: JTD1-UP; FFF1-UP; LLL1-UP
PART OF 325-6541, 325-6542, 325-6547 CONVERSION AR-MACHINE OPTION
AN ATTACHMENT

SMCS-1380 **i03776901**

NOTE	REF NO	GRAPHIC REF	PART NUMBER	QTY	PART NAME 1 2 3 4 5 6 (PRODUCT LEVEL)	SEE PAGE
	1	1	**330-5410**	1	HOSE AS	
		1	**255-1343**	1	HOSE-RADIATOR (UPPER)	
E		1	**326-3563**		INSULATION (44-CM)	
	2	1	**330-5411**	1	HOSE AS	
		1	**255-1344**	1	HOSE-RADIATOR (LOWER)	
E		1	**326-3570**		INSULATION (43-CM)	
	3	1	**330-5412**	1	HOSE AS	
		1	**293-4381**	1	HOSE	
E		1	**326-3568**		INSULATION (22-CM)	
E	4	1	**193-6911**		INSULATION (35-CM)	

E-ORDER BY THE CENTIMETER

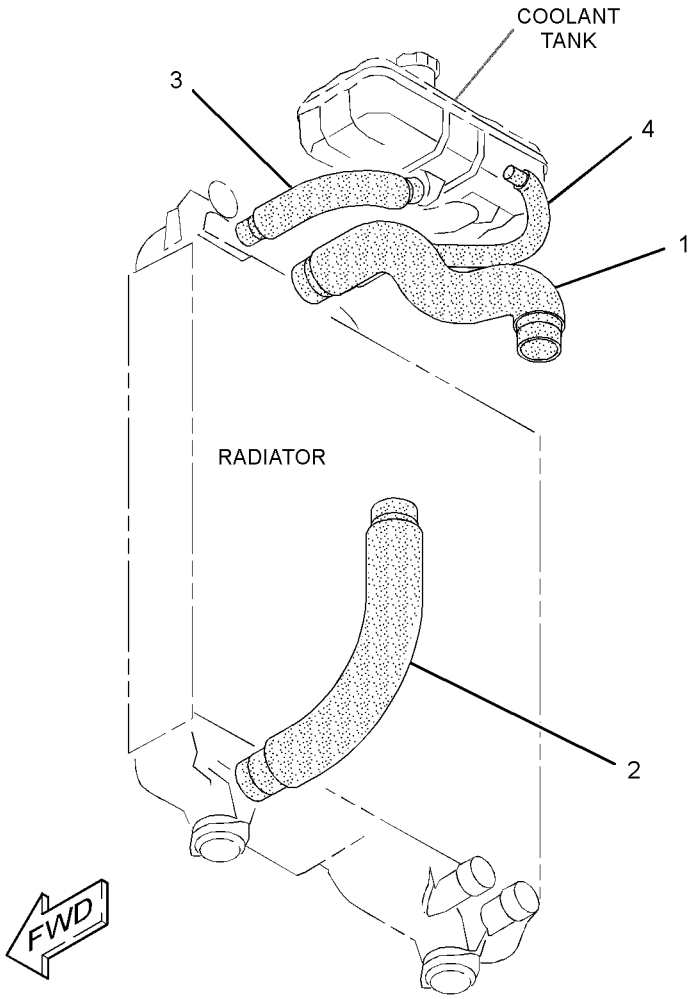

GRAPHIC #1 **<END>** g02023857

COOLING SYSTEM

298-5105 PUMP GP-WATER

S/N: C4E1-UP

PART OF 254-9233 ENGINE AR-PRIMARY

TYPE 1

SMCS-1361 **i02685560**

NOTE	REF NO	GRAPHIC REF	PART NUMBER	QTY	PART NAME 1 2 3 4 5 6 (PRODUCT LEVEL)	SEE PAGE
M	1	1	**6I-0217**	2	BOLT (M8X1.25X20-MM)	
M	2	1	**6I-0254**	2	BOLT (M8X1.25X30-MM)	
	3	1	**113-8129**	7	BOLT (M8X75-MM)	
	4	1	**307-9843**	1	PUMP GP-WATER	
	4A	1	**278-3242**	2	BOLT-FLANGE HEAD	
	4B	1	**287-7430**	1	GASKET-COVER	
	4C	1	**225-8019**	1	GASKET	
	5	1	**277-2925**	1	CONNECTION AS	
	5A	1	**225-7738**	1	SEAL-O-RING	
	5B	1	**277-2923**	1	GASKET	

M-METRIC PART

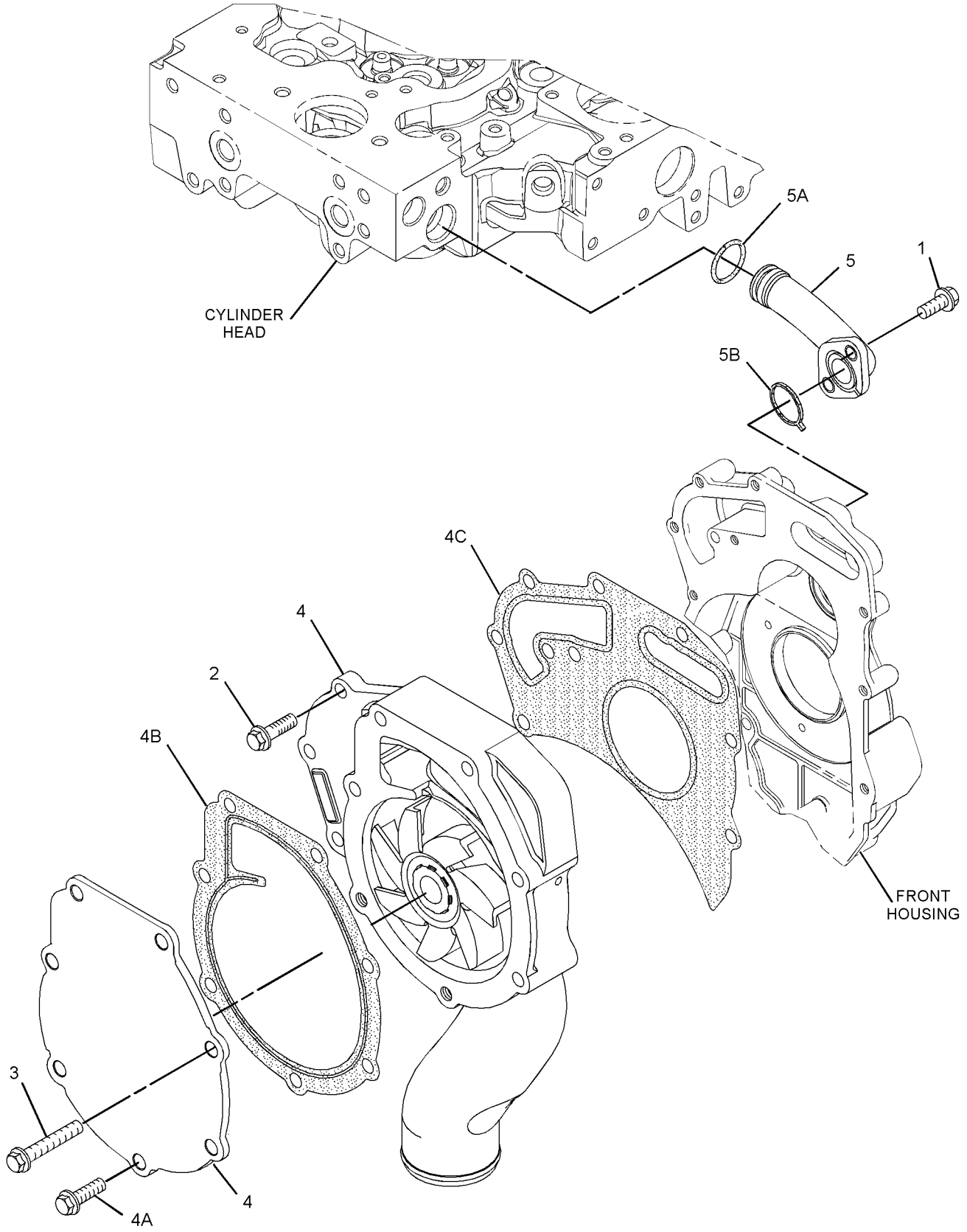

GRAPHIC #1 **<END>** g01305584

COOLING SYSTEM

298-5105 PUMP GP-WATER

S/N: C4E1-UP

PART OF 254-9233 ENGINE AR-PRIMARY

TYPE 2

SMCS-1361 **i03998334**

NOTE	REF NO	GRAPHIC REF	PART NUMBER	QTY	PART NAME 1 2 3 4 5 6 (PRODUCT LEVEL)	SEE PAGE
C	1	1	**354-4754**	1	KIT-WATER PUMP	
	1A	1	**225-8019**	1	GASKET	
M	2	1	**6I-0254**	2	BOLT (M8X1.25X30-MM)	
	3	1	**113-8129**	2	BOLT (M8X1.25X75-MM)	
	4	1	**277-2925**	1	CONNECTION AS	
	4A	1	**225-7738**	1	SEAL-O-RING	
	4B	1	**277-2923**	1	GASKET	
M	5	1	**6I-0217**	2	BOLT (M8X1.25X20-MM)	
	6	1	**6I-0839**	5	BOLT (M8X1.25X70-MM)	

C-CHANGE FROM PREVIOUS TYPE
M-METRIC PART

298-5105 **PUMP GP-WATER** *(contd.)* **i03998334**

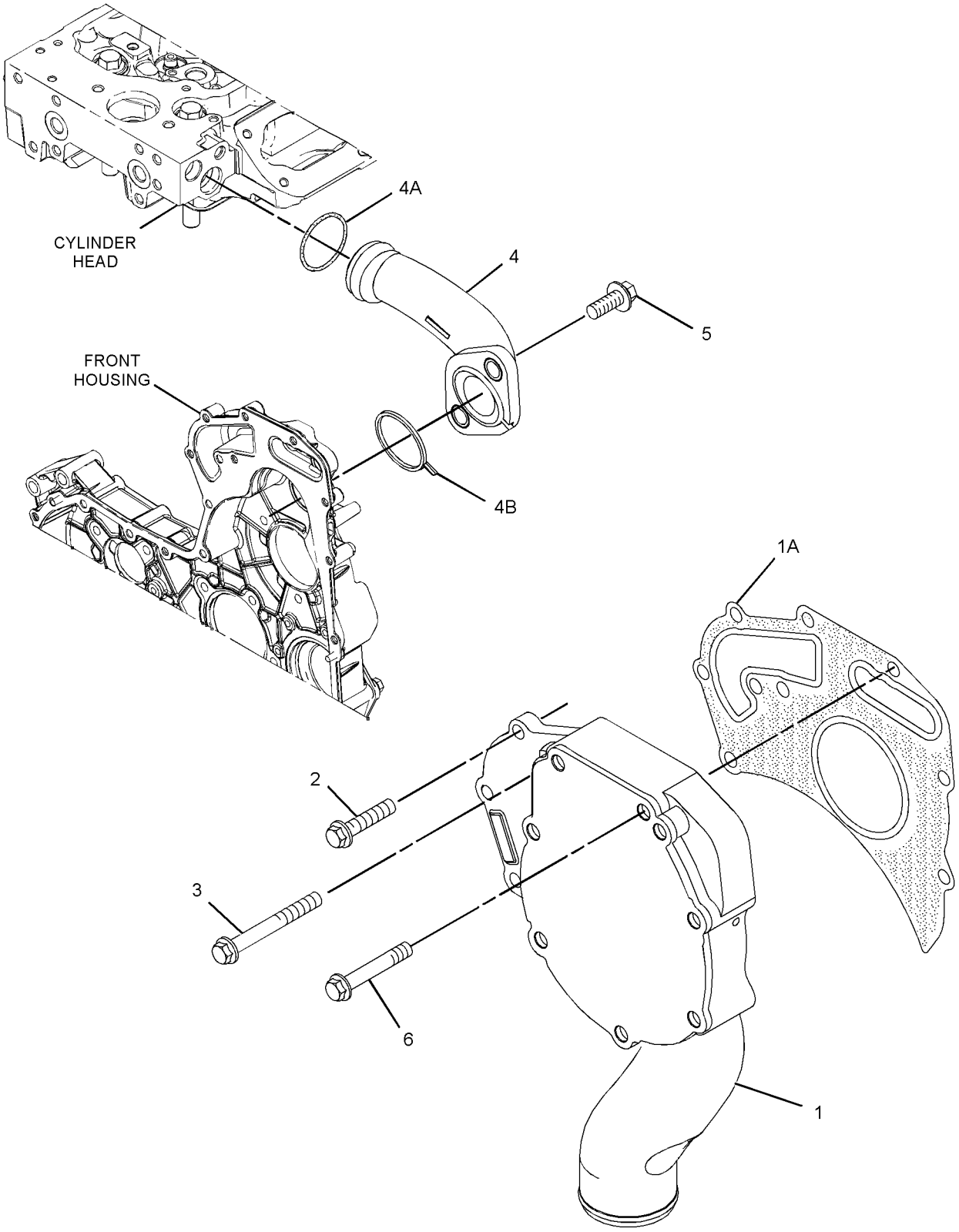

GRAPHIC #1 **<END>** g02177184

244-7430 RADIATOR & HYD OIL COOLER GP

S/N: JTD1-UP; FFF1-UP; LLL1-UP

PART OF 244-7386 INSTALLATION AR-ENGINE

SMCS-1353, 1374 **i03601140**

NOTE	REF NO	GRAPHIC REF	PART NUMBER	QTY	PART NAME 1 2 3 4 5 6 (PRODUCT LEVEL)	SEE PAGE
	1	1	**6V-7238**	1	VALVE-SHUTOFF (RADIATOR DRAIN)	
	2	1	**069-4269**	1	STEM	
	3	1	**247-7954**	1	FITTING	
	4	1	**140-4829**	1	SEAL	
	5	1	**214-7457**	4	CLAMP	
	6	1	**223-0189**	2	MOUNT AS	
	7	1	**8S-9378**	2	MOUNT-FLEXIBLE	
	8	1	**253-1218**	1	COOLER AS	
	9	1	**255-1343**	1	HOSE-RADIATOR (UPPER)	
	10	1	**255-1344**	1	HOSE-RADIATOR (LOWER)	
	11	1	**258-9982**	1	SHROUD AS-FAN	
	12	1	**285-6627**	2	PLATE AS	
	13	1	**198-4777**	4	WASHER-HARD (11X25X10-MM THK)	
	14	1	**3D-2824**	1	SEAL-O-RING	
	15	1	**3K-0360**	1	SEAL-O-RING	
	16	1	**7G-8839**	6	SPACER (13.5X57X6-MM THK)	
	17	1	**7X-7729**	4	WASHER (11X25X3-MM THK)	
	18	1	**8T-4121**	2	WASHER-HARD (11X21X2.5-MM THK)	
M	19	1	**8T-4137**	6	BOLT (M10X1.5X20-MM)	
M	20	1	**8T-4185**	4	BOLT (M10X1.5X50-MM)	
M	21	1	**8T-4189**	4	BOLT (M8X1.25X20-MM)	
	22	1	**8T-4224**	4	WASHER-HARD (8.8X16X2-MM THK)	
M	23	1	**8T-4910**	2	BOLT (M12X1.75X60-MM)	
M	24	1	**8T-6868**	2	BOLT (M12X1.75X80-MM)	
D	25	1	**5P-8309**		SEAL (0.8-M EACH)	
D	25A	1	**5P-8309**		SEAL (0.7-M EACH)	

D-ORDER BY THE METER
M-METRIC PART

244-7430 **RADIATOR & HYD OIL COOLER GP** *(contd.)* **i03601140**

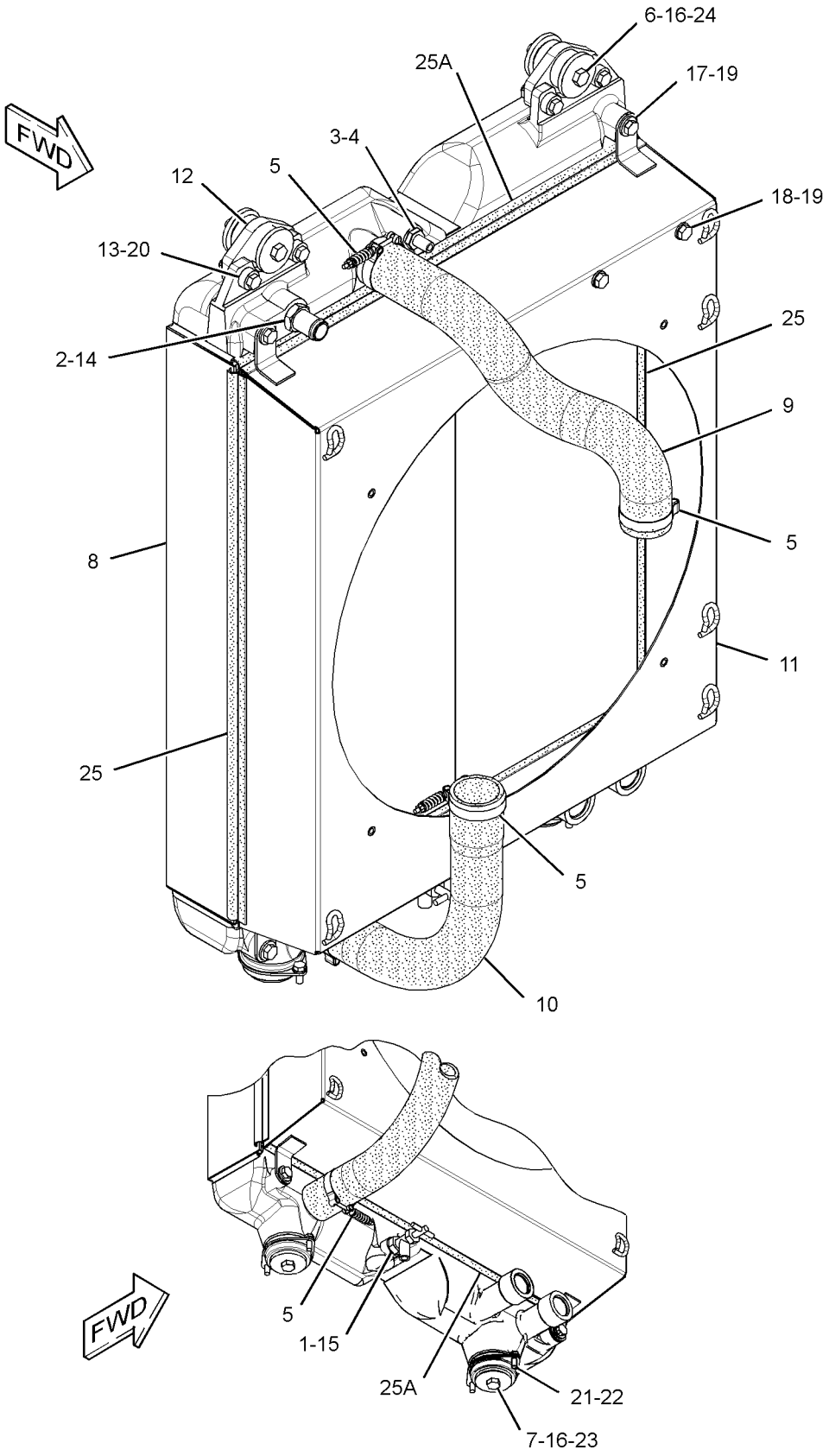

GRAPHIC #1 **<END>** g01622261

COOLING SYSTEM

254-3256 TANK GP-COOLANT

S/N: JTD1-UP; FFF1-UP; LLL1-UP
4.3-LITER (1.2-US GAL)
PART OF 244-7386 INSTALLATION AR-ENGINE

SMCS-1377 **i02883871**

NOTE	REF NO	GRAPHIC REF	PART NUMBER	QTY	PART NAME 1 2 3 4 5 6 (PRODUCT LEVEL)	SEE PAGE
	1	1	**2S-3440**	2	CLAMP-HOSE	
	2	1	**3S-2093**	3	STRAP-CABLE	
	3	1	**5D-1026**	2	CLAMP-BAND	
	4	1	**247-1385**	1	TANK GP-EXPANSION (COOLANT)	
		1	**251-3227**	1	CAP AS-COOLANT TANK	
	5	1	**260-0633**	1	PLATE	
	6	1	**293-4381**	1	HOSE	
	7	1	**5P-4116**	2	WASHER-HARD (8.8X20.5X2-MM THK)	
	8	1	**8T-4121**	2	WASHER-HARD (11X21X2.5-MM THK)	
M	9	1	**8T-4136**	2	BOLT (M10X1.5X25-MM)	
M	10	1	**8T-4200**	2	BOLT (M8X1.25X16-MM)	
E	11	1	**9X-2133**		HOSE (43-CM)	
E	12	1	**8C-3681**		HOSE (120-CM)	

E-ORDER BY THE CENTIMETER
M-METRIC PART

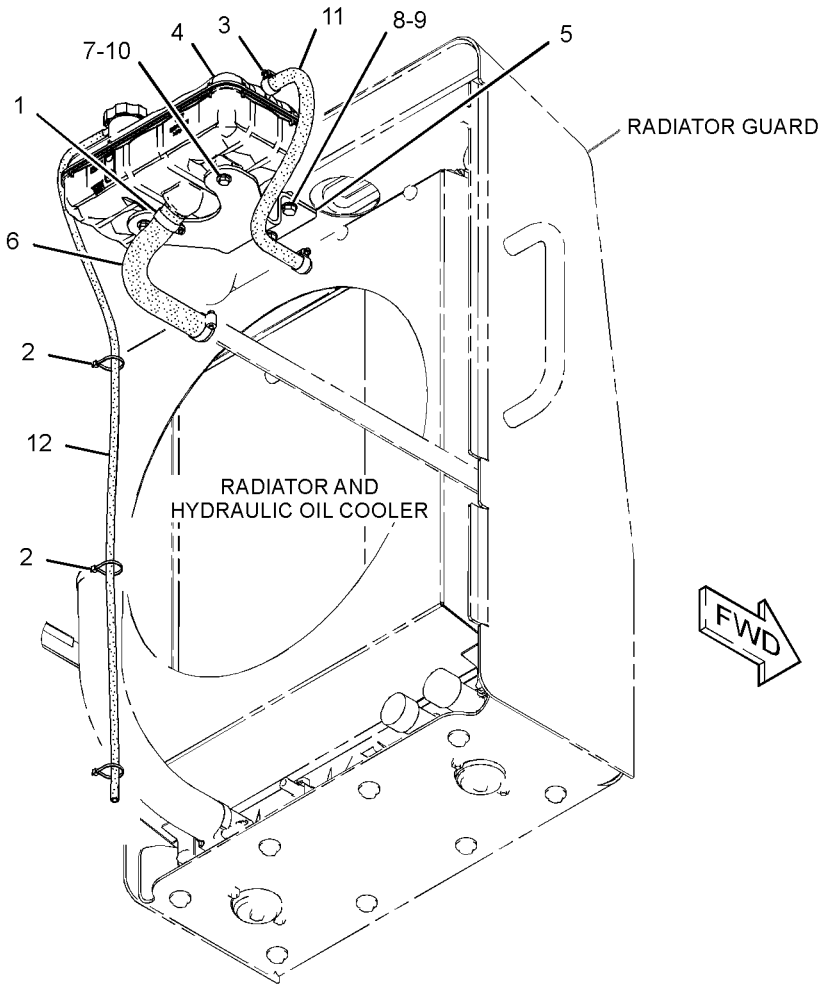

GRAPHIC #1 **<END>** g01330792

AIR INLET AND EXHAUST SYSTEM

244-7427 AIR CLEANER GP

S/N: JTD1-UP; FFF1-UP; LLL1-UP

PART OF 244-7386 INSTALLATION AR-ENGINE

SMCS-1051, 1054 **i03166021**

NOTE	REF NO	GRAPHIC REF	PART NUMBER	QTY	PART NAME 1 2 3 4 5 6 (PRODUCT LEVEL)	SEE PAGE
	1	1	**5P-0598**	2	CLAMP-HOSE	
	2	1	**127-4471**	3	CLAMP-HOSE	
	3	1	**159-0186**	1	CLAMP-HOSE	
	4	1	**224-9476**	1	AIR CLEANER GP	
		1	**227-7446**	1	COVER	
		1	**293-4053**	1	FILTER ELEMENT-AIR (PRIMARY)	
		1	**227-7449**	1	FILTER ELEMENT-AIR (SECONDARY)	
		1	**262-9786**	1	FRAME	
	5	1	**247-9730**	1	VALVE AS-CHECK (AIR CLEANER)	
	6	1	**254-1087**	1	HOSE-AIR	
	7	1	**254-1090**	1	HOSE-AIR	
	8	1	**254-3257**	1	BRACKET AS	
	9	1	**260-0631**	1	HOSE	
	10	1	**260-0634**	1	TUBE	
	11	1	**276-4836**	1	SWITCH-PRESSURE (AIR CLEANER)	
	12	1	**5P-4116**	2	WASHER-HARD (8.8X20.5X2-MM THK)	
	13	1	**8T-4121**	4	WASHER-HARD (11X21X2.5-MM THK)	
M	14	1	**8T-4137**	4	BOLT (M10X1.5X20-MM)	
M	15	1	**8T-4189**	2	BOLT (M8X1.25X20-MM)	

M-METRIC PART

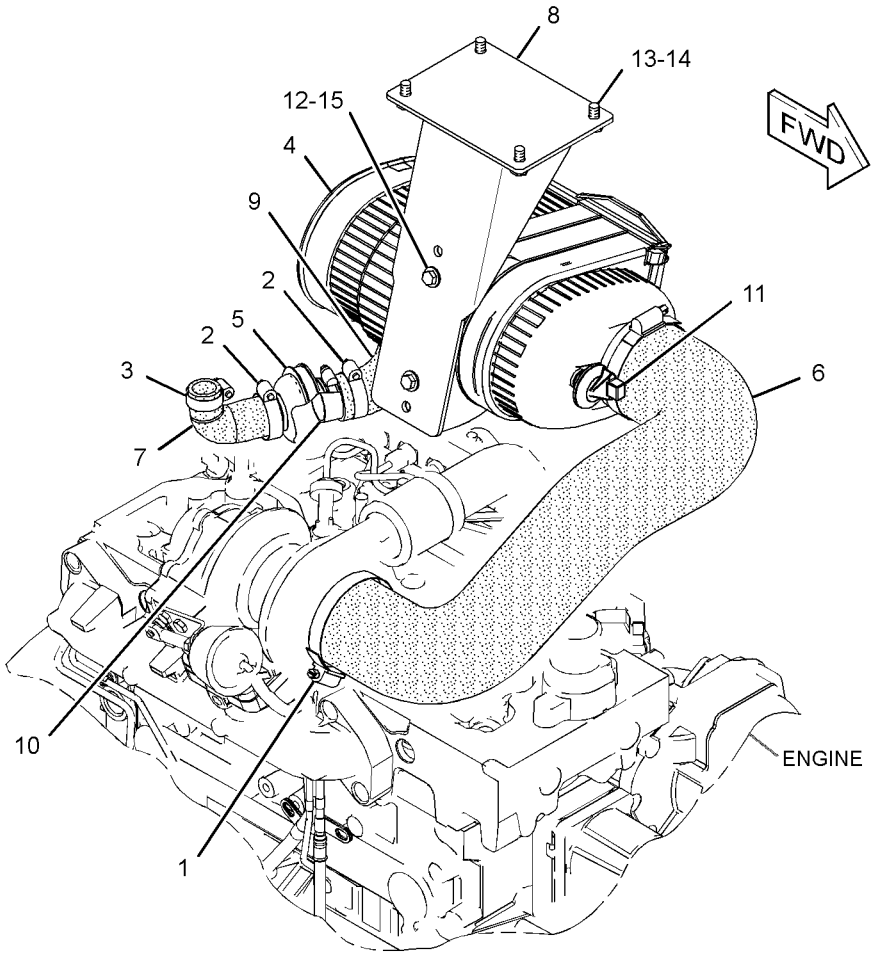

GRAPHIC #1 **<END>** g01331054

AIR INLET AND EXHAUST SYSTEM

325-7267 ARRESTOR GP-SPARK–FIRE PLOW

S/N: JTD1-UP; FFF1-UP; LLL1-UP

PART OF 325-6496, 325-6497, 325-6502 CONVERSION AR-MACHINE OPTION AN ATTACHMENT

SMCS-1062 **i03919062**

NOTE	REF NO	GRAPHIC REF	PART NUMBER	QTY	PART NAME 1 2 3 4 5 6 (PRODUCT LEVEL)	SEE PAGE
	1	1	**3B-7942**	1	ARRESTOR AS	
	2	1	**5E-9091**	2	BAND	
	3	1	**7N-0808**	1	CLAMP	
	4	1	**7S-4992**	1	CAP AS-RAIN (EXHAUST)	
	5	1	**087-8799**	1	CLAMP	
	6	1	**329-4986**	1	TUBE AS	
	7	1	**329-4996**	1	PLATE	
M	8	1	**096-4885**	2	LOCKNUT (M16X2-THD)	
	10	1	**3V-9244**	4	WASHER (16.5X50.0X5.0-MM THK)	
M	11	1	**6V-7743**	2	LOCKNUT (M6X1-THD)	
M	12	1	**7X-2533**	2	BOLT (M6X1X35-MM)	
M	13	1	**8T-0643**	1	BOLT (M10X1.5X80-MM)	
	14	1	**8T-4121**	16	WASHER-HARD (11X21X2.5-MM THK)	
M	15	1	**8T-4133**	8	NUT (M10X1.5-THD)	
M	16	1	**8T-4136**	4	BOLT (M10X1.5X25-MM)	
M	17	1	**8T-4174**	2	BOLT (M16X2X120-MM)	
M	18	1	**8T-4195**	2	BOLT (M10X1.5X30-MM)	
	19	1	**9X-8256**	4	WASHER (6.6X12X2-MM THK)	
M	20	1	**8T-4186**	1	BOLT (M10X1.5X40-MM)	
M	21	1	**5C-2890**	2	NUT (M6X1-THD)	

M-METRIC PART

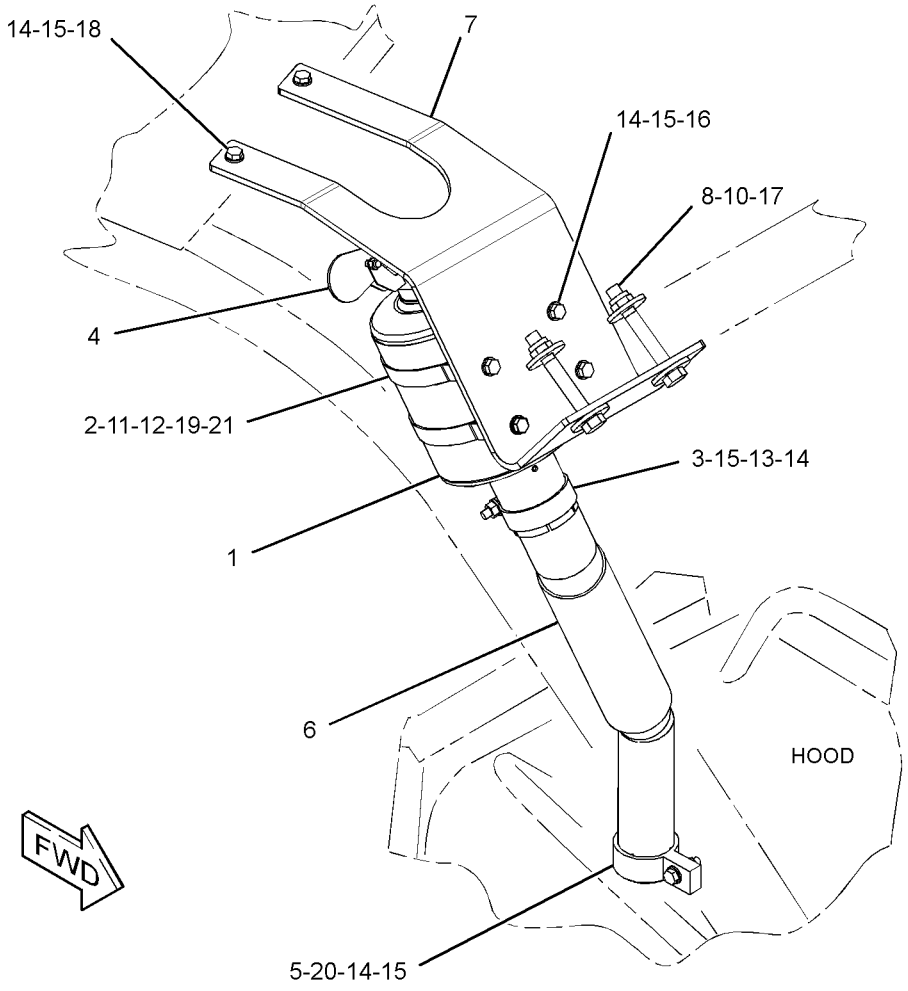

GRAPHIC #1

<END>

g02202533

AIR INLET AND EXHAUST SYSTEM

254-8954 MUFFLER GP

S/N: JTD1-UP; FFF1-UP; LLL1-UP

PART OF 244-7386 INSTALLATION AR-ENGINE

SMCS-1062 **i02635708**

NOTE	REF NO	GRAPHIC REF	PART NUMBER	QTY	PART NAME 1 2 3 4 5 6 (PRODUCT LEVEL)	SEE PAGE
	1	1	**6I-0364**	3	STUD (M10X1.5X30-MM)	
	2	1	**6I-0563**	3	NUT (M10X1.5-THD)	
	3	1	**7E-3870**	1	CLAMP-MUFFLER (BENT BOLT)	
	4	1	**236-2507**	2	CLAMP AS	
	5	1	**246-4960**	1	PIPE-EXTENSION	
	6	1	**255-1204**	1	PLATE	
	7	1	**291-5505**	1	MUFFLER AS	
	8	1	**7X-7729**	8	WASHER (11X25X3-MM THK)	
	9	1	**8T-4121**	6	WASHER-HARD (11X21X2.5-MM THK)	
M	10	1	**8T-4133**	4	NUT (M10X1.5-THD)	
M	11	1	**8T-4195**	10	BOLT (M10X1.5X30-MM)	

M-METRIC PART

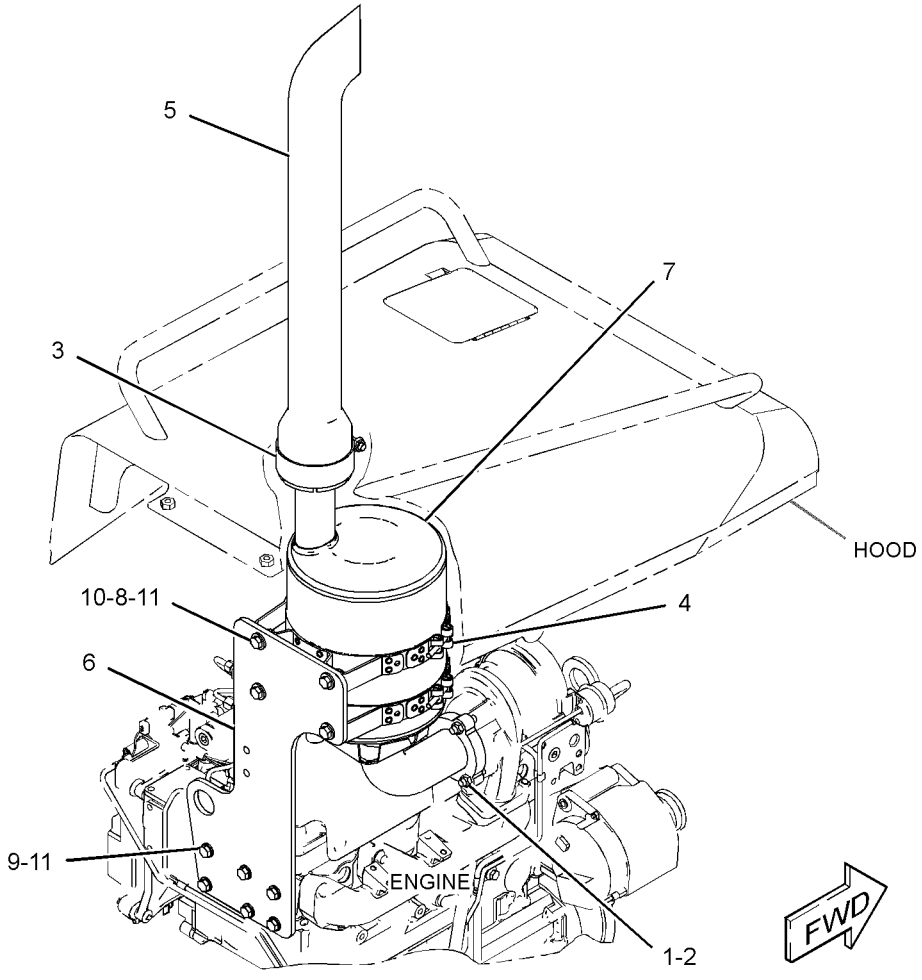

GRAPHIC #1 **<END>** g01334041

AIR INLET AND EXHAUST SYSTEM

304-3657 TURBOCHARGER GP

S/N: C4E1-UP

PART OF 254-9233 ENGINE AR-PRIMARY

SMCS-1052, 1053 **i03089786**

NOTE	REF NO	GRAPHIC REF	PART NUMBER	QTY	PART NAME 1 2 3 4 5 6 (PRODUCT LEVEL)	SEE PAGE
M	1	1	**6I-0217**	2	BOLT (M8X1.25X20-MM)	
M	2	2	**6I-0260**	4	BOLT (M8X1.25X25-MM)	
M	3	1	**6I-0593**	1	BOLT (M10X1.5X30-MM)	
M	4	1	**6I-0654**	1	BOLT (M10X1.5X25-MM)	
	5	2	**6I-0817**	1	ADAPTER	
	6	2	**6I-4200**	2	BOLT (M10X1.5X16-MM)	
	7	2	**9Y-9381**	1	WASHER-HARD	
M	8	2	**100-4830**	1	BOLT (M10X1.5X20-MM)	
	9	1	**106-8916**	2	BOLT (M6X16-MM)	
	10	1	**123-4038**	1	SPACER	
	11	2	**266-7092**	2	CLAMP-HOSE	
	12	1	**172-4325**	1	SPACER	
	13	1	**225-8533**	1	GASKET	
	14	1	**225-8534**	1	GASKET	
	15	2	**234-3030**	1	GASKET-INLET	
	16	1	**238-8292**	1	BOLT-FLANGE HEAD	
	17	2	**263-5376**	1	HOSE	
	18	1	**278-0361**	7	BOLT (M10X1.5X45-MM)	
	19	2	**294-7375**	1	SOLENOID (AIR FUEL RATIO CONTROL)	
	20	1	**298-4570**	1	GASKET-EXHAUST MANIFOLD	
	21	2	**303-2116**	6	CLIP	
	22	1	**303-5786**	1	TUBE AS-TURBOCHARGER OIL (SUPPLY)	
	22A	1	**220-7163**	1	CLIP	
	22B	1	**225-8524**	2	BOLT-SPECIAL (BANJO)	
	22C	1	**225-8526**	4	WASHER (10.4X13.75X1.37-MM THK)	
	23	1	**303-5787**	1	TUBE AS-TURBOCHARGER OIL (DRAIN)	
	23A	1	**103-2135**	1	CLIP	
	24	1	**303-5788**	1	MANIFOLD-EXHAUST	
	25	2	**303-5793**	1	TUBE AS	
	25A	2	**4B-8774**	1	NUT-FLARED	
	25B	2	**032-8047**	1	FERRULE	
	25C	2	**278-0316**	2	CLIP	
	25D	2	**298-4576**	1	CLIP	
	25E	2	**300-6520**	1	HOSE AS	
	25F	2	**107-2348**	2	CLIP	
	26	1	**316-0468**	1	TURBOCHARGER	
	27	2	**304-3702**	1	TUBE-CROSSOVER	
	28	2	**304-3704**	1	TUBE AS	
	28A	2	**133-9469**	2	CLIP	
	28B	2	**035-8014**	1	NUT (7/16-IN)	
	28C	2	**032-8047**	1	FERRULE	
	28D	2	**032-8191**	1	NUT	
	29	1	**6I-0563**	4	NUT (M10X1.5-THD)	
	30	1	**194-5390**	1	GASKET-MANIFOLD	
	31	1	**147-5553**	4	STUD	
	32	2	**127-8165**	1	SPACER	

M-METRIC PART

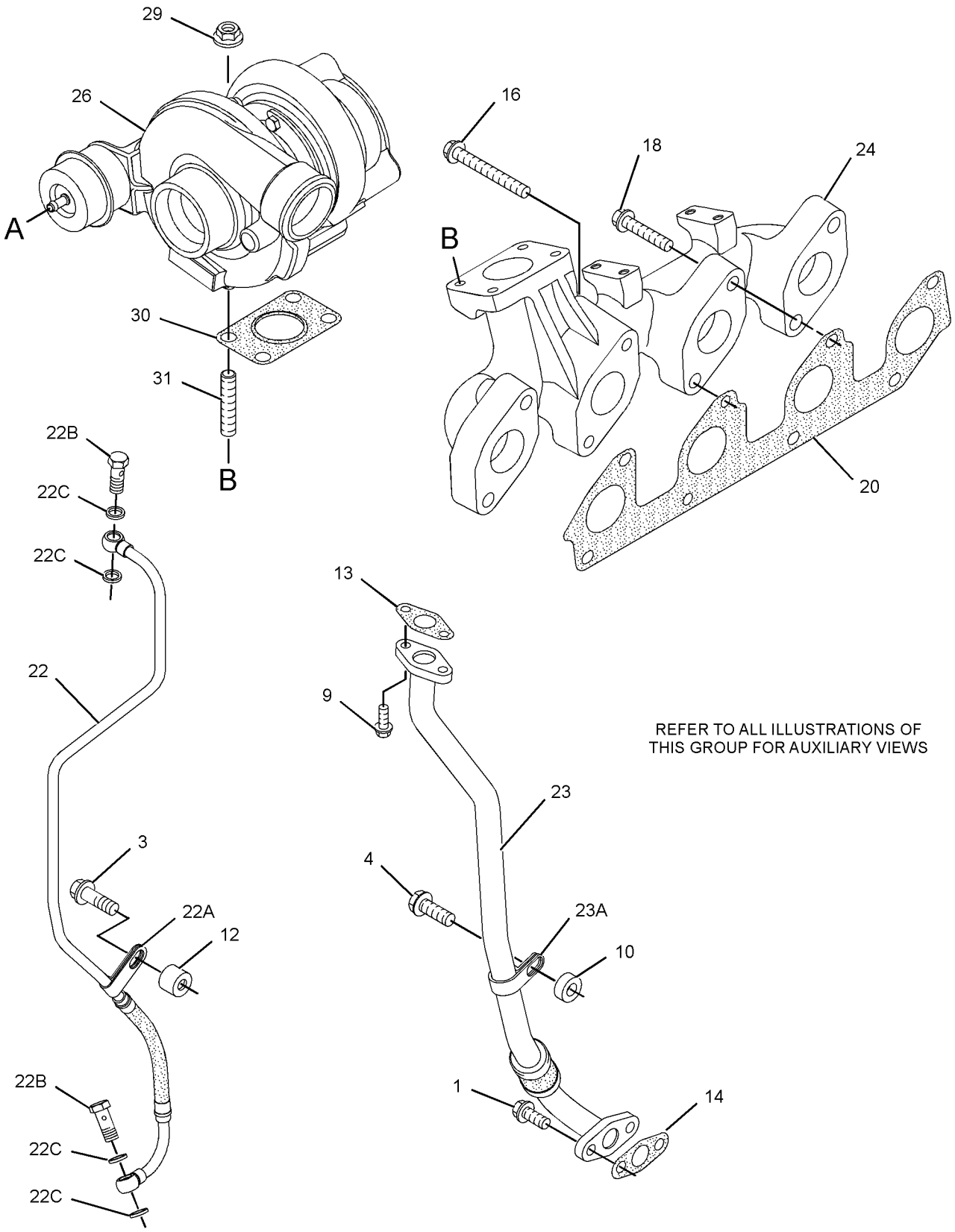

GRAPHIC #1

g01429325

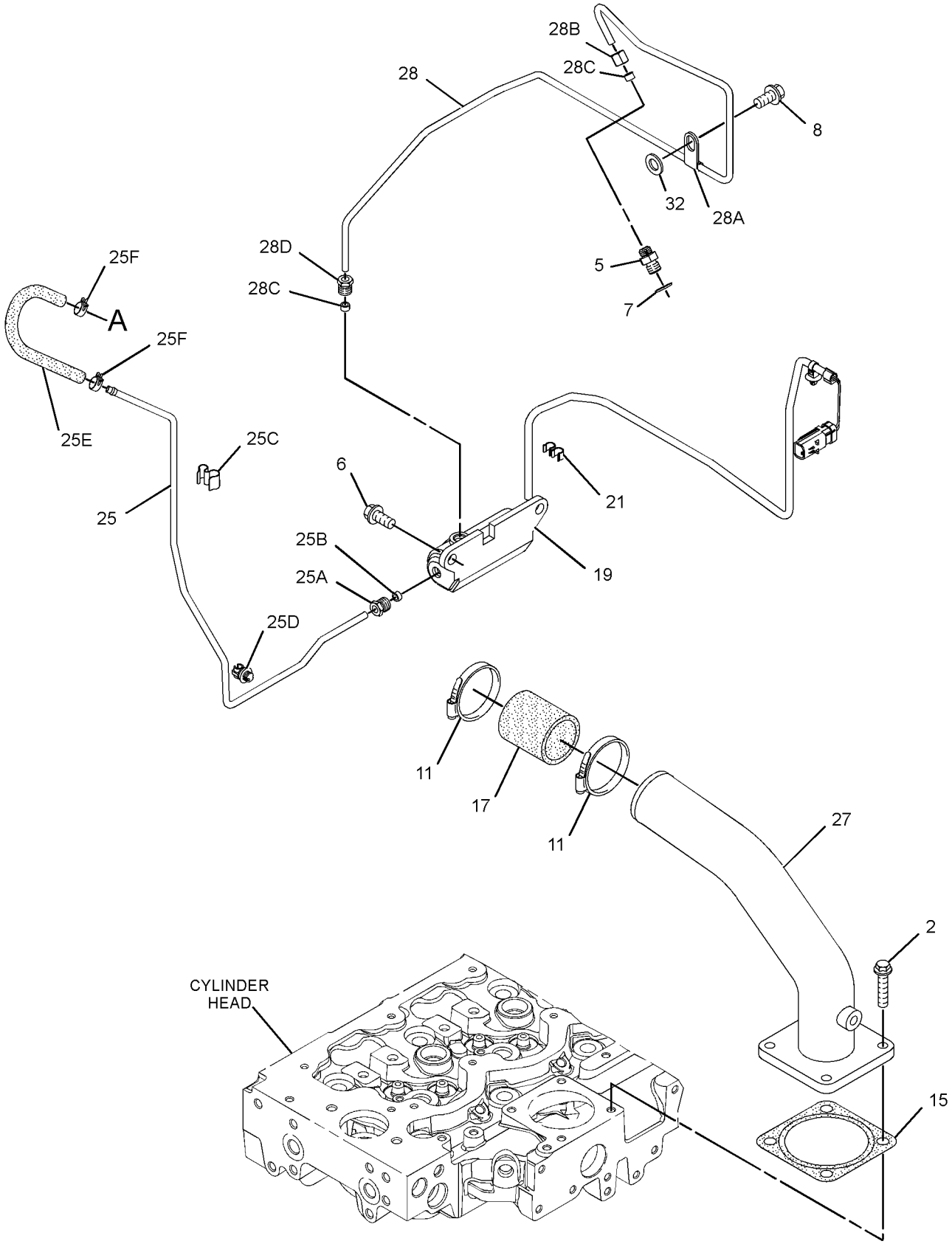

GRAPHIC #2 **<END>** g01686694

327-6347 BOWL GP-WATER COLLECTION

S/N: JTD1-UP; FFF1-UP; LLL1-UP
PART OF 322-5900 LINES GP-FUEL
AN ATTACHMENT

SMCS-1260, 1263 **i04039369**

NOTE	REF NO	GRAPHIC REF	PART NUMBER	QTY	PART NAME 1 2 3 4 5 6 (PRODUCT LEVEL)	SEE PAGE
	1	1	**6V-0681**	1	VALVE-DRAIN	
	2	1	**210-6964**	1	BOLT-FLANGE HEAD (M12X1.75X16-MM)	
	3	1	**9S-4191**	1	PLUG-O-RING	
	4	1	**331-0887**	1	WASHER	
	5	1	**3J-1907**	1	SEAL-O-RING	

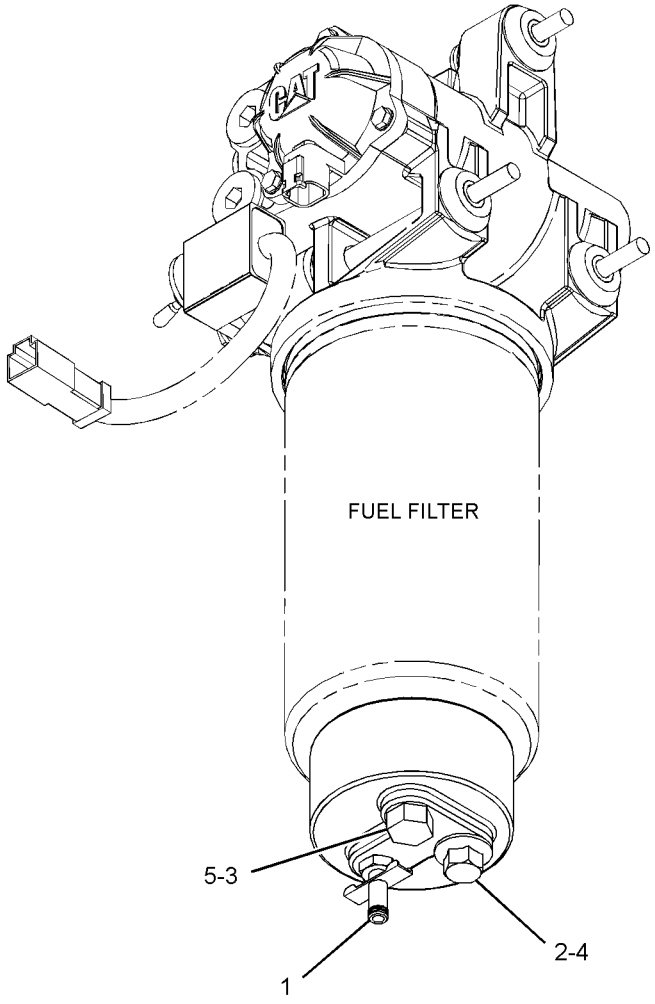

GRAPHIC #1 **<END>** g02264833

318-8063 FILTER GP-FUEL

S/N: C4E1-5303

PART OF 304-3662 LINES GP-FUEL

SMCS-1261 **i03438003**

NOTE	REF NO	GRAPHIC REF	PART NUMBER	QTY	PART NAME 1 2 3 4 5 6 (PRODUCT LEVEL)	SEE PAGE
	1	1	**333-5435**	1	BOLT AS	
	2	1	**313-1663**	1	SENSOR-PRESSURE (FUEL)	
	3	1	**333-9693**	1	KIT-CONNECTION (FUEL, WATER SEPARATOR)	
	4	1	**333-9694**	1	BOOT-SEAL	
	5	1	**308-7298**	1	FILTER AS-WATER SEP & FUEL	
	6	1	**310-5912**	1	BOWL AS	
F			**220-8678**	1	SEAL-RING	

F-NOT SHOWN

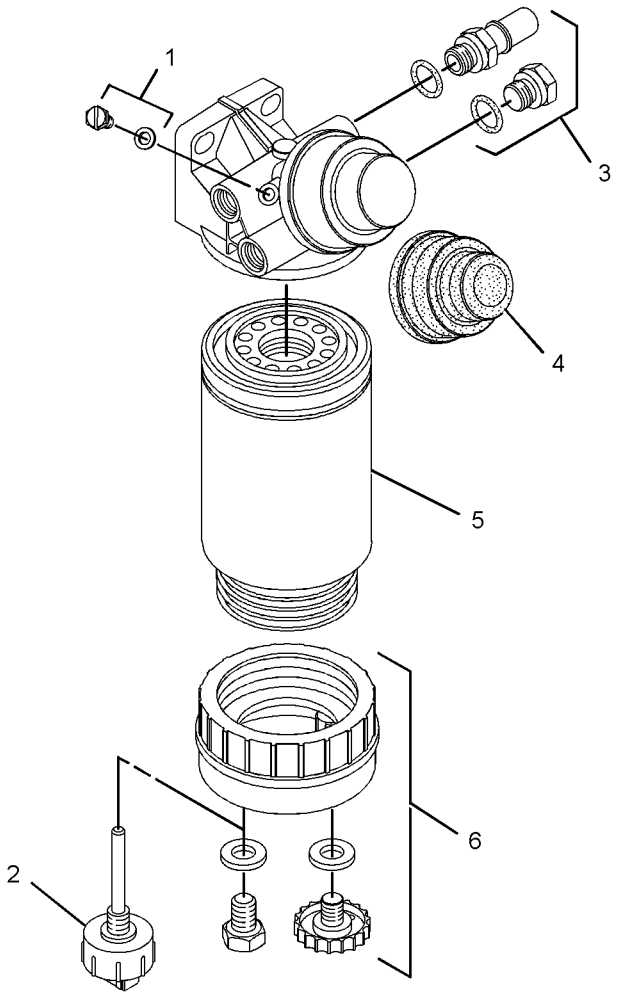

GRAPHIC #1 **<END>** g01621581

FUEL SYSTEM

320-1332 FILTER GP-FUEL

S/N: C4E174-UP

PART OF 254-9233 ENGINE AR-PRIMARY

SMCS-1261 **i03662154**

NOTE	REF NO	GRAPHIC REF	PART NUMBER	QTY	PART NAME 1 2 3 4 5 6 (PRODUCT LEVEL)	SEE PAGE
	1	1	**343-7104**	1	FILTER AS-FUEL	
	1A	1	**299-8229**	1	FILTER ELEMENT-FUEL (ULTRA HIGH EFFICIENCY)	
F			**278-4138**	1	PROTECTION GP-FUEL SYSTEM (LINE, LOW PRESSURE)	

F-NOT SHOWN

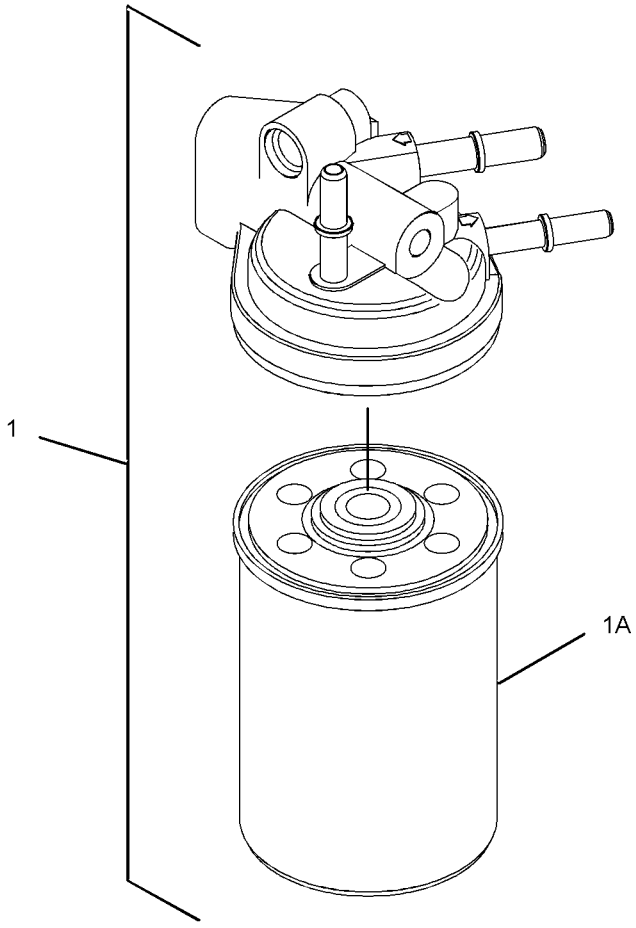

GRAPHIC #1 **<END>** g01962571

334-0808 FILTER GP-FUEL

S/N: JTD1-UP; C4E5304-UP; FFF1-UP; LLL1-UP
PART OF 304-3662, 322-5900 LINES GP-FUEL
ALSO AN ATTACHMENT

SMCS-1261 **i03438020**

NOTE	REF NO	GRAPHIC REF	PART NUMBER	QTY	PART NAME 1 2 3 4 5 6 (PRODUCT LEVEL)	SEE PAGE
	1	1	**308-7576**	1	FILTER GP-WATER SEP & FUEL	
	1A	1	**308-7298**	1	FILTER AS-WATER SEP & FUEL	
	1B	1	**310-5912**	1	BOWL AS	
	2	1	**313-1663**	1	SENSOR-PRESSURE (FUEL)	
	3	1	**333-5435**	1	BOLT AS	
	4	1	**333-9693**	1	KIT-CONNECTION (FUEL, WATER SEPARATOR)	
	5	1	**333-9694**	1	BOOT-SEAL	

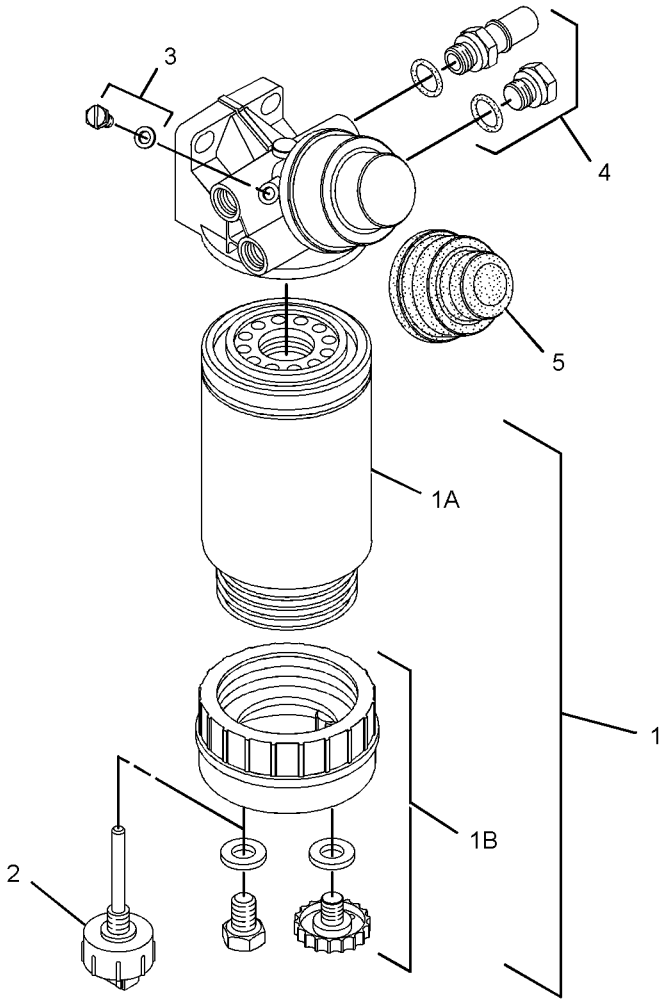

GRAPHIC #1 **<END>** g01719340

FUEL SYSTEM

298-5123 FILTER GP-PRIMARY FUEL

S/N: C4E1-49

PART OF 254-9233 ENGINE AR-PRIMARY

SMCS-1260, 1261 **i02896281**

NOTE	REF NO	GRAPHIC REF	PART NUMBER	QTY	PART NAME 1 2 3 4 5 6 (PRODUCT LEVEL)	SEE PAGE
	1	1	**298-4603**	1	FILTER AS-FUEL (PRIMARY)	
	1A	1	**289-0600**	1	FILTER-FUEL (ULTRA HIGH EFFICIENCY)	
F			**278-4138**	1	PROTECTION GP-FUEL SYSTEM	

F-NOT SHOWN

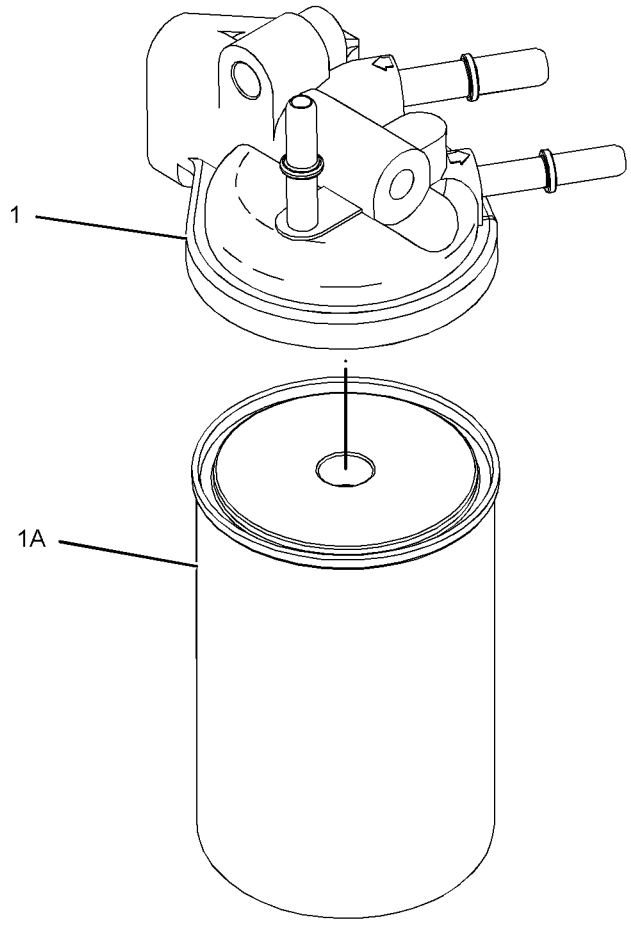

GRAPHIC #1 **<END>** g01304976

298-5123 FILTER GP-PRIMARY FUEL

S/N: C4E50-173

PART OF 254-9233 ENGINE AR-PRIMARY

SMCS-1260, 1261 **i03021825**

NOTE	REF NO	GRAPHIC REF	PART NUMBER	QTY	PART NAME 1 2 3 4 5 6 (PRODUCT LEVEL)	SEE PAGE
	1	1	**311-2376**	1	FILTER AS-FUEL	
	1A	1	**299-8229**	1	FILTER ELEMENT-FUEL (ULTRA HIGH EFFICIENCY)	
F			**278-4138**	1	PROTECTION GP-FUEL SYSTEM	

F-NOT SHOWN

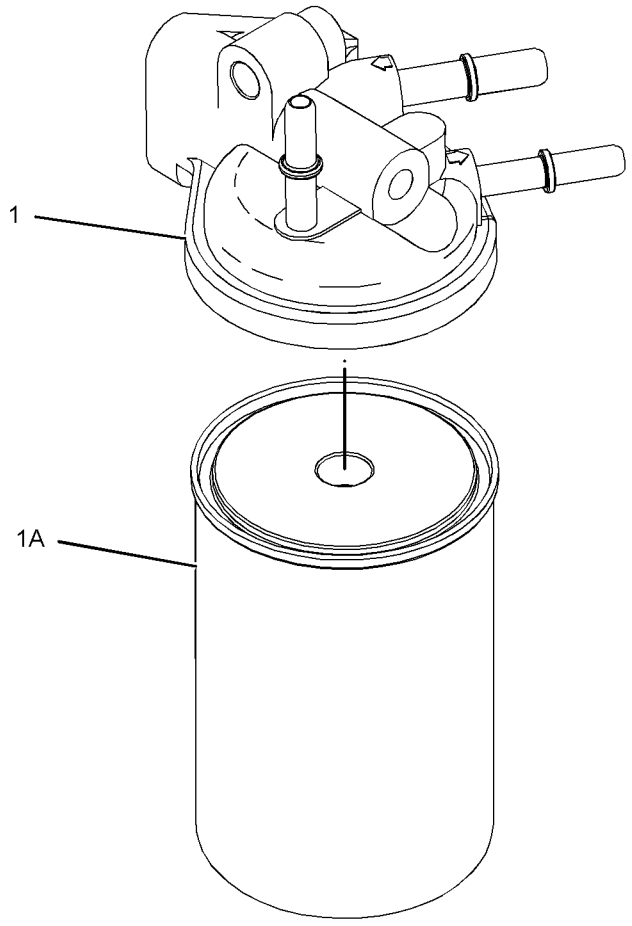

GRAPHIC #1 **<END>** g01304976

FUEL SYSTEM

292-3778 INJECTOR GP-FUEL

S/N: C4E1-3159

PART OF 304-3649 PUMP GP-FUEL INJECTION

SMCS-1251, 1254, 1290 **i02720134**

NOTE	REF NO	GRAPHIC REF	PART NUMBER	QTY	PART NAME 1 2 3 4 5 6 (PRODUCT LEVEL)	SEE PAGE
	1	1	**287-7637**	1	WASHER	
	2	1	**274-1639**	1	SEAL	

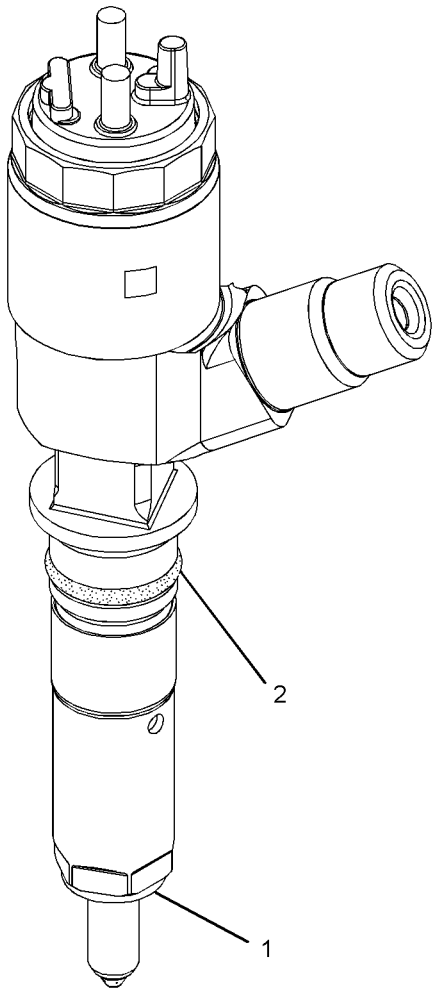

GRAPHIC #1 **<END>** g01321917

320-0677 INJECTOR GP-FUEL

S/N: C4E3160-UP

PART OF 304-3649 PUMP GP-FUEL INJECTION

SMCS-1251, 1254, 1290 **i02966445**

NOTE	REF NO	GRAPHIC REF	PART NUMBER	QTY	PART NAME 1 2 3 4 5 6 (PRODUCT LEVEL)	SEE PAGE
	1	1	**287-7637**	1	WASHER	
	2	1	**274-1639**	1	SEAL	

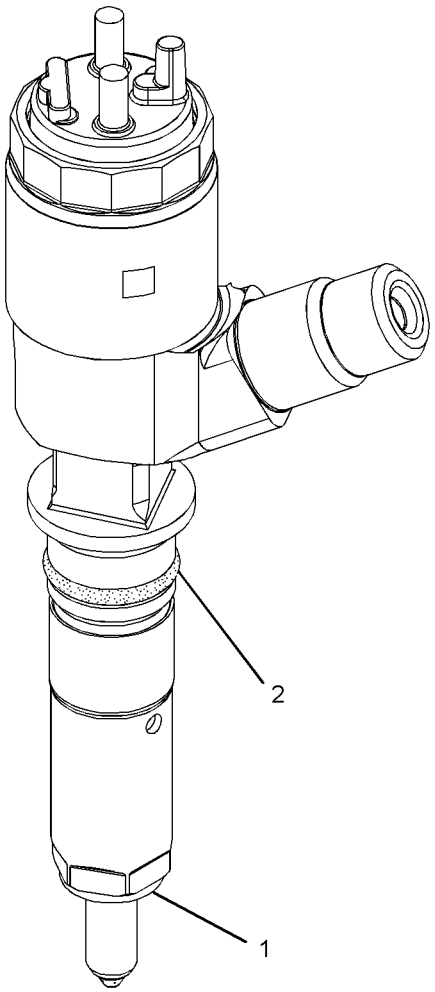

GRAPHIC #1 **<END>** g01321917

244-7482 LINES GP-FUEL

S/N: JTD1-UP; FFF1-UP; LLL1-UP

PART OF 244-7376, 244-7377, 282-5327 CHASSIS AR

SMCS-1274 **i03350183**

NOTE	REF NO	GRAPHIC REF	PART NUMBER	QTY	PART NAME 1 2 3 4 5 6 (PRODUCT LEVEL)	SEE PAGE
	1	1	**1P-4278**	8	CLAMP-HOSE	
	2	1	**7K-1181**	2	STRAP-CABLE	
	3	1	**8T-6725**	1	CONNECTOR	
	4	1	**238-1844**	1	ELBOW (SWIVEL)	
	5	1	**263-1431**	1	TUBE	
	6	1	**263-1432**	1	TUBE	
	7	1	**119-5708**	3	CLIP	
	10	1	**5K-8451**	4	CLIP	
	11	1	**5P-4116**	3	WASHER-HARD (8.8X20.5X2-MM THK)	
	12	1	**5P-9085**	3	CLIP	
	13	1	**6V-8397**	1	SEAL-O-RING	
	14	1	**8T-4121**	2	WASHER-HARD (11X21X2.5-MM THK)	
M	15	1	**8T-4137**	2	BOLT (M10X1.5X20-MM)	
M	17	1	**8T-4200**	3	BOLT (M8X1.25X16-MM)	
	19	1	**8T-6850**	1	SEAL-O-RING	
E	20	1	**5P-1442**		HOSE (97-CM)	
E	20A	1	**5P-1442**		HOSE (77-CM)	
E	21	1	**5P-1420**		HOSE (66.8-CM)	
E	21A	1	**5P-1420**		HOSE (80-CM)	

E-ORDER BY THE CENTIMETER
M-METRIC PART

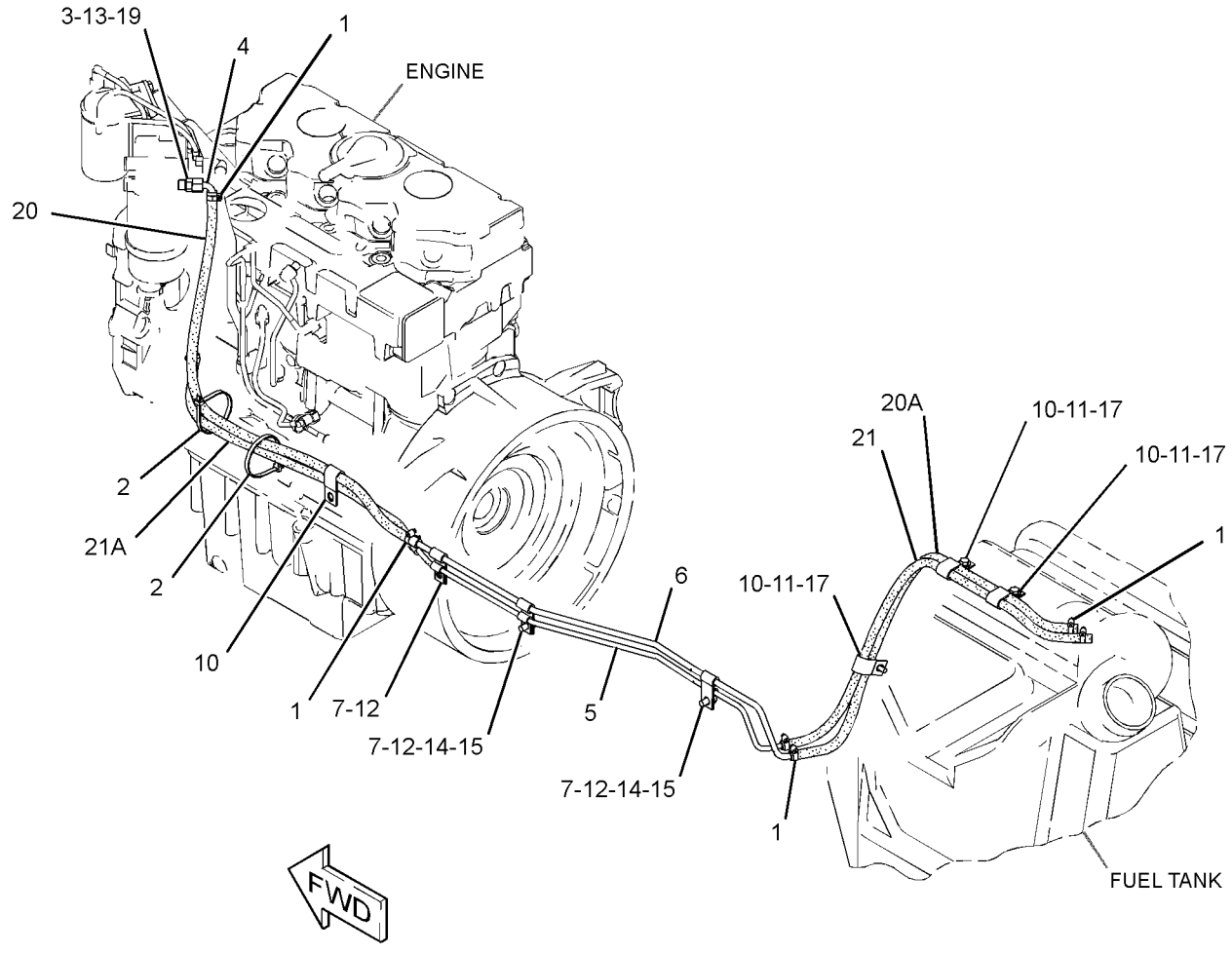

GRAPHIC #1 **<END>** g01704646

304-3659 LINES GP-FUEL

S/N: C4E1-642

PART OF 254-9233 ENGINE AR-PRIMARY

SMCS-1274 **i03304669**

NOTE	REF NO	GRAPHIC REF	PART NUMBER	QTY	PART NAME 1 2 3 4 5 6 (PRODUCT LEVEL)	SEE PAGE
M	1	2	**6I-0217**	2	BOLT (M8X1.25X20-MM)	
M	2	2	**6I-0260**	1	BOLT (M8X1.25X25-MM)	
	3	2	**6I-4709**	1	BOLT (M8X1.25X100-MM)	
M	4	1,2	**124-3815**	4	BOLT (M8X16X1.25-MM)	
	5	2	**215-9509**	1	FITTING (QUICK DISCONNECT, FEMALE)	
	7	2	**232-1115**	2	CLIP-PIPE	
	9	2	**277-6165**	1	CONNECTION-FUEL	
	11	1	**308-7571**	1	TUBE AS	
	11A	1	**295-4670**	2	BOLT-SPECIAL (BANJO)	
	11B	1	**317-8476**	4	WASHER-SEAL	
	12	1	**304-3706**	1	TUBE	
	13	1	**304-3707**	1	TUBE	
	14	2	**304-3708**	1	TUBE	
	15	2	**314-2892**	1	BRACKET	
	16	1	**324-1482**	1	BRACKET	
	17	2	**324-1481**	1	BRACKET	
F			**234-3063**	1	CLIP	
F			**278-4138**	1	PROTECTION GP-FUEL SYSTEM (LINE, LOW PRESSURE)	

F-NOT SHOWN
M-METRIC PART

304-3659 **LINES GP-FUEL** *(contd.)* **i03304669**

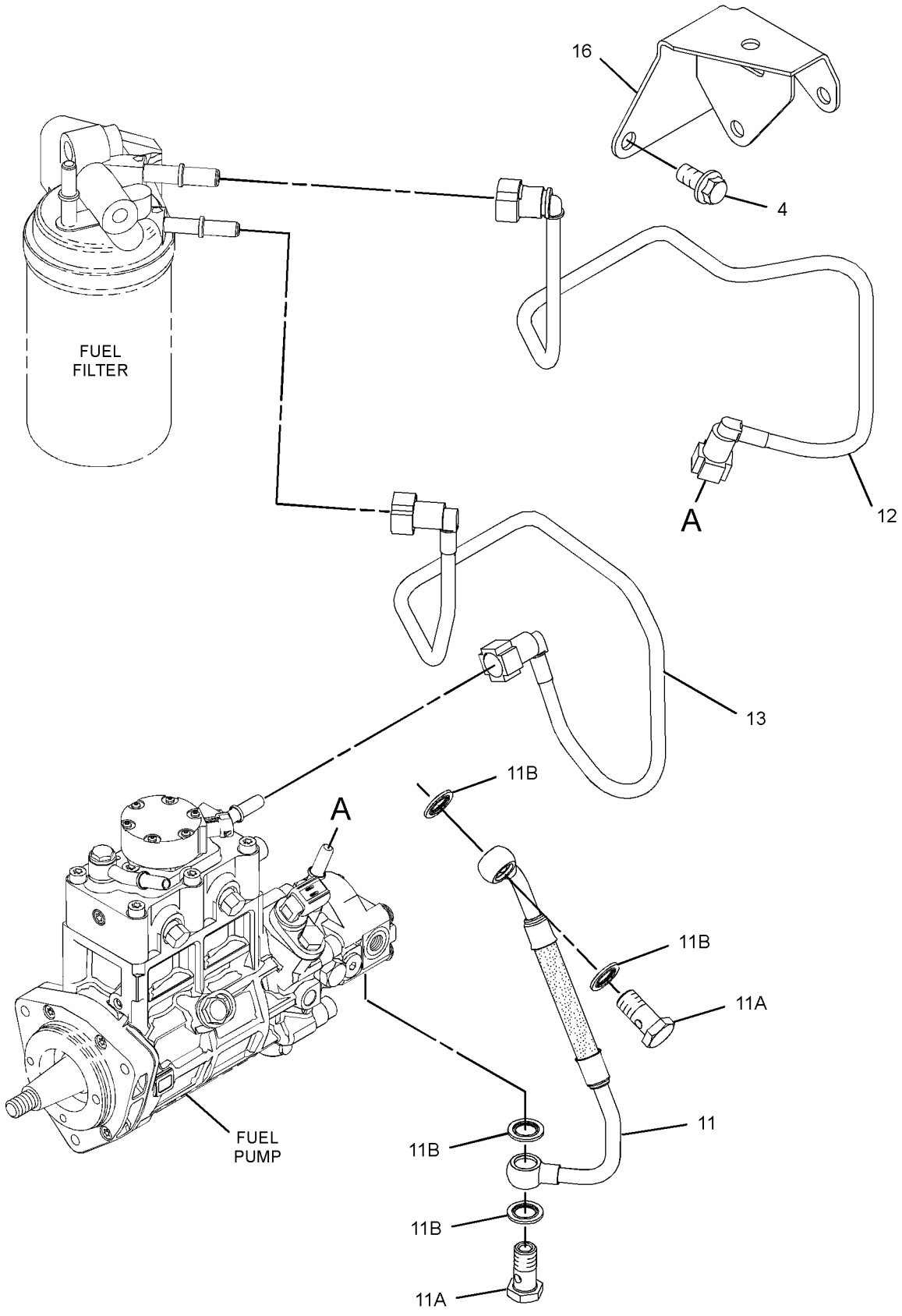

GRAPHIC #1 g01709713

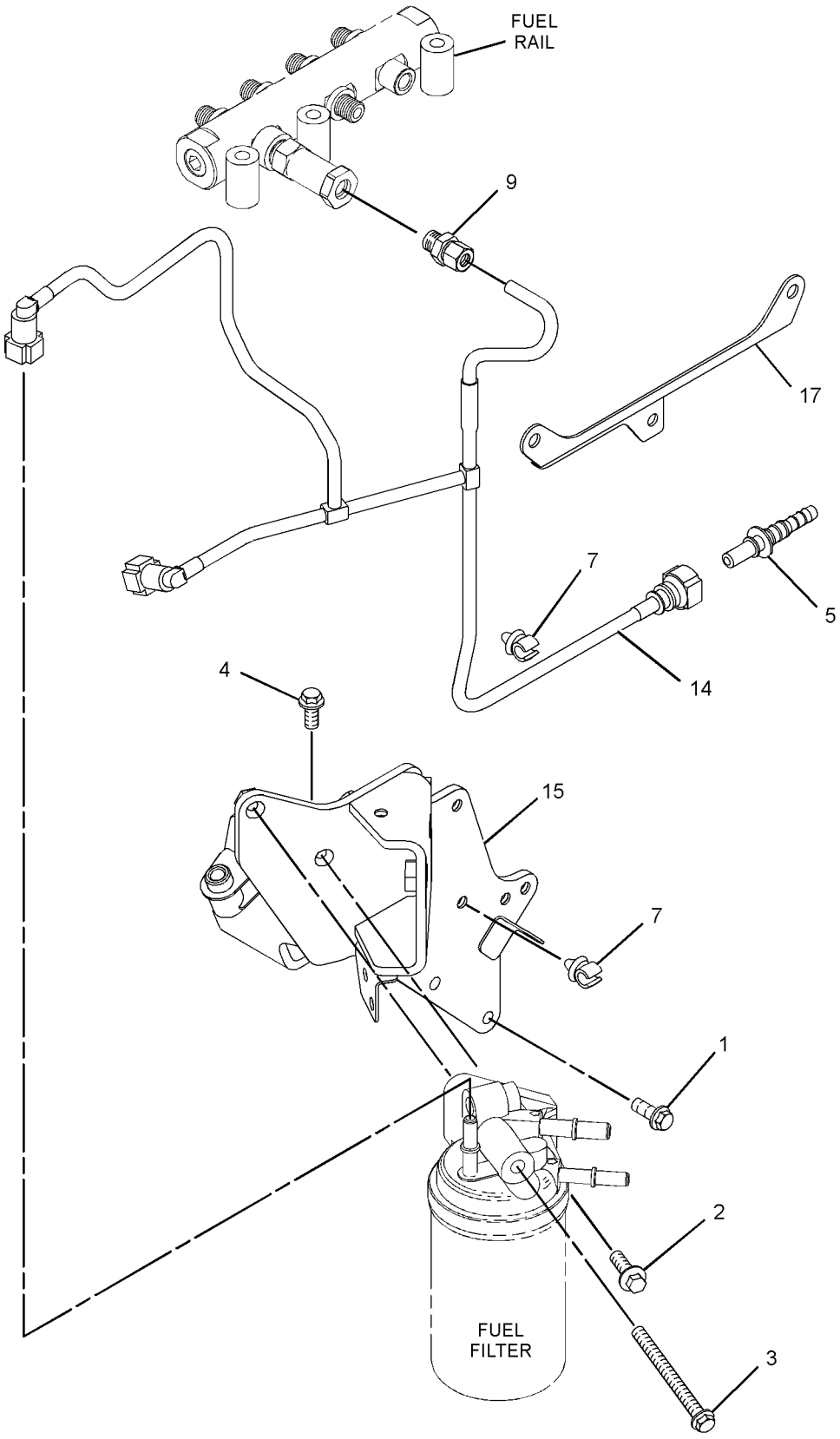

GRAPHIC #2 **<END>** g01709714

FUEL SYSTEM

304-3659 LINES GP-FUEL

S/N: C4E643-6228

PART OF 254-9233 ENGINE AR-PRIMARY

SMCS-1274 **i03348261**

NOTE	REF NO	GRAPHIC REF	PART NUMBER	QTY	PART NAME 1 2 3 4 5 6 (PRODUCT LEVEL)	SEE PAGE
M	1	1	**6I-0217**	2	BOLT (M8X1.25X20-MM)	
M	2	1	**6I-0260**	1	BOLT (M8X1.25X25-MM)	
	3	1	**6I-4709**	1	BOLT (M8X1.25X100-MM)	
M	4	1,2	**124-3815**	4	BOLT (M8X16X1.25-MM)	
	5	1	**215-9509**	1	FITTING (QUICK DISCONNECT, FEMALE)	
	7	1	**232-1115**	2	CLIP-PIPE	
	9	1	**277-6165**	1	CONNECTION-FUEL	
	11	2	**308-7571**	1	TUBE AS	
	11A	2	**295-4670**	2	BOLT-SPECIAL (BANJO)	
	11B	2	**317-8476**	4	WASHER-SEAL	
	12	2	**304-3706**	1	TUBE	
	13	2	**304-3707**	1	TUBE	
	14	1	**304-3708**	1	TUBE	
	15	1	**314-2892**	1	BRACKET	
	16	2	**324-1482**	1	BRACKET	
	17	1	**324-1481**	1	BRACKET	
BCM	18	1	**100-4830**	2	BOLT (M10X1.5X20-MM)	
BC	19	1	**335-5782**	1	BRACKET	
F			**234-3063**	1	CLIP	
F			**278-4138**	1	PROTECTION GP-FUEL SYSTEM (LINE, LOW PRESSURE)	

B-USE AS REQUIRED
C-CHANGE FROM PREVIOUS TYPE
F-NOT SHOWN
M-METRIC PART

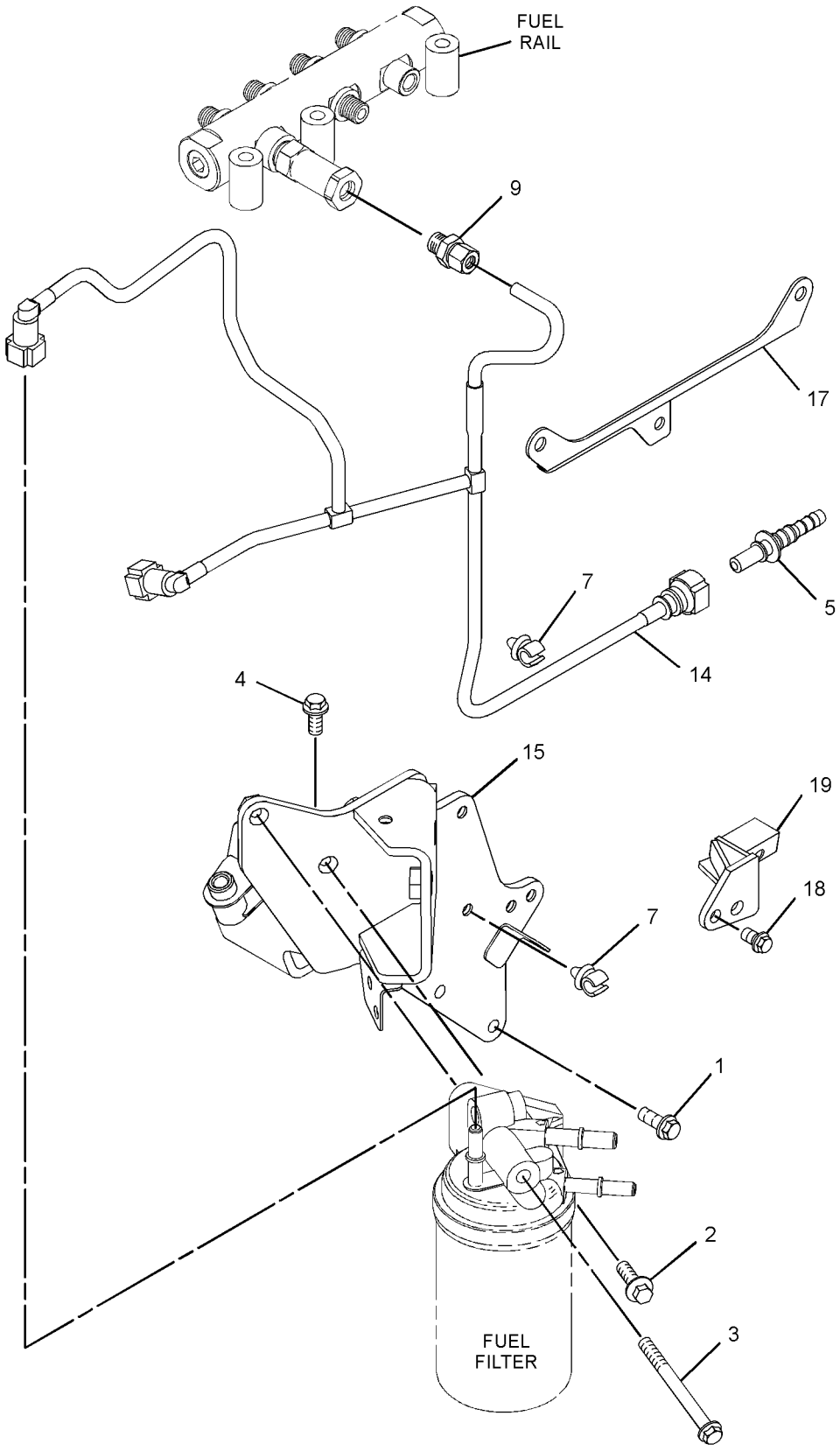

GRAPHIC #1

g01735953

304-3659 **LINES GP-FUEL** *(contd.)* **i03348261**

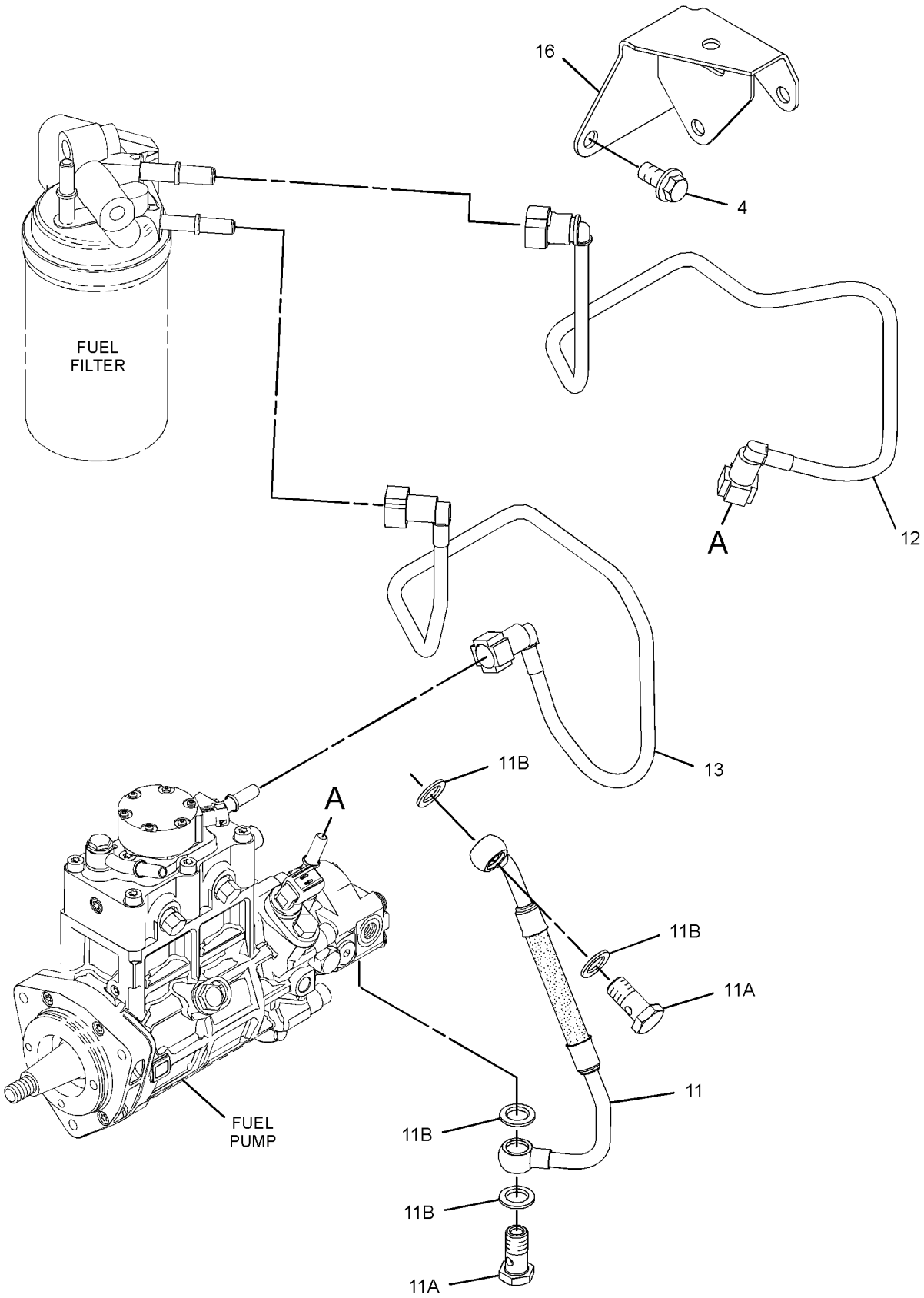

GRAPHIC #2

<END>

g01735954

FUEL SYSTEM

304-3659 LINES GP-FUEL

S/N: C4E6229-UP

PART OF 254-9233 ENGINE AR-PRIMARY

SMCS-1274 **i04001484**

NOTE	REF NO	GRAPHIC REF	PART NUMBER	QTY	PART NAME 1 2 3 4 5 6 (PRODUCT LEVEL)	SEE PAGE
CM	1	2	**6I-0217**	3	BOLT (M8X1.25X20-MM)	
M	2	2	**6I-0260**	1	BOLT (M8X1.25X25-MM)	
	3	2	**103-5705**	1	BOLT (M8X1.25X110-MM)	
CM	4	2	**124-3815**	2	BOLT (M8X1.25X16-MM)	
	5	2	**215-9509**	1	FITTING (QUICK DISCONNECT, FEMALE)	
	6	2	**277-6165**	1	CONNECTION-FUEL	
	7	1	**308-7571**	1	TUBE AS	
	7A	1	**295-4670**	2	BOLT-SPECIAL (BANJO)	
	7B	1	**317-8476**	4	WASHER-SEAL	
C	8	1	**338-8071**	1	TUBE AS	
	8A	1	**329-1197**	2	CLIP-PIPE	
C	9	1	**338-8072**	1	TUBE AS	
	9A	1	**329-1197**	2	CLIP-PIPE	
C	10	2	**338-8070**	1	TUBE AS	
	10A	2	**329-1197**	3	CLIP-PIPE	
C	11	2	**338-8075**	1	BRACKET AS	
	11A	2	**289-2478**	1	CLIP	
C	12	2	**338-8069**	1	BRACKET	
C	13	1,2	**106-8916**	4	BOLT (M6X16-MM)	
CM	14	1	**100-4841**	2	BOLT (M6X1X10-MM)	
F			**278-4138**	4	PROTECTION GP-FUEL SYSTEM (LINE, LOW PRESSURE)	

C-CHANGE FROM PREVIOUS TYPE
F-NOT SHOWN
M-METRIC PART

304-3659 **LINES GP-FUEL** *(contd.)* **i04001484**

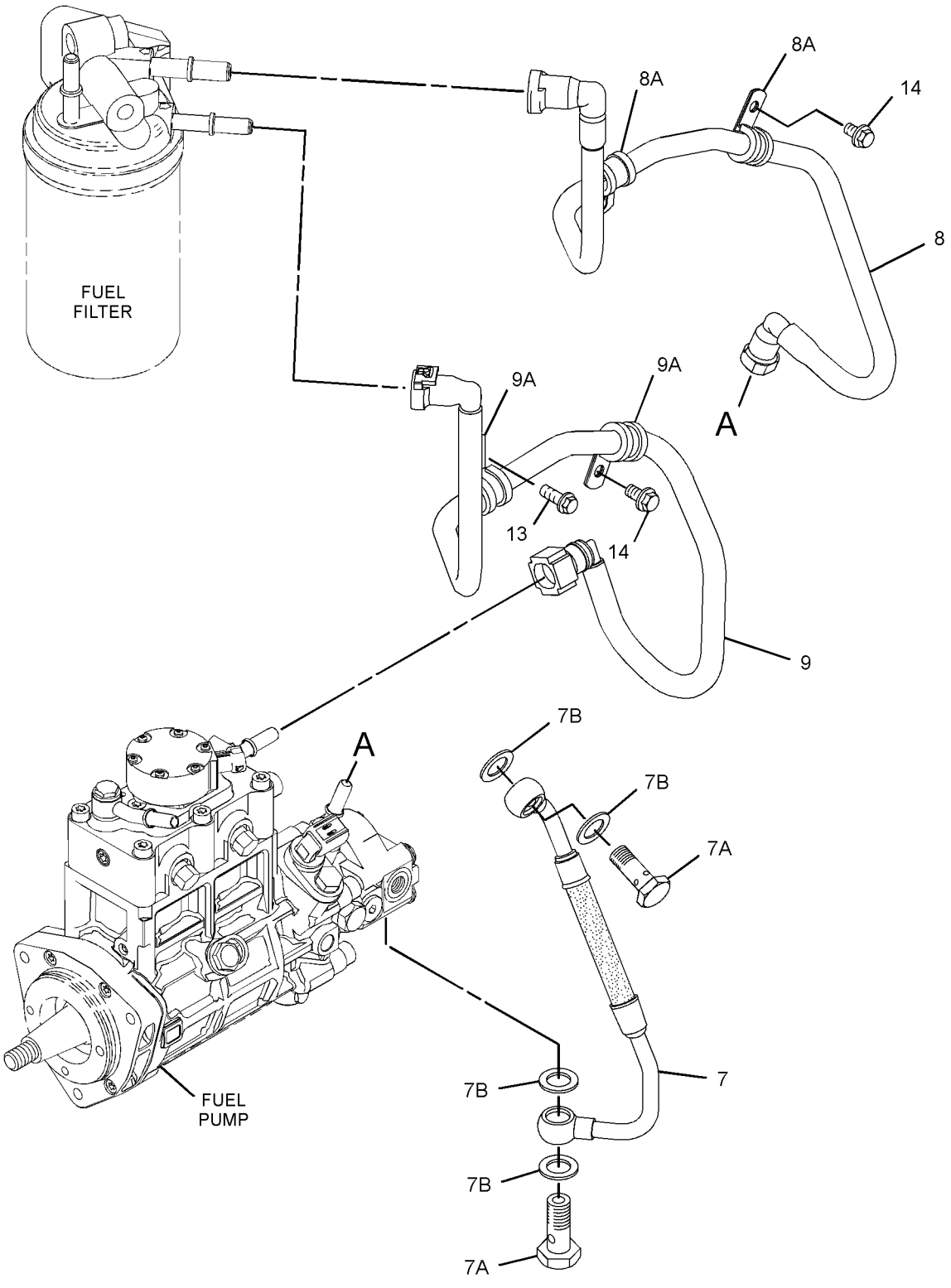

GRAPHIC #1 g02363365

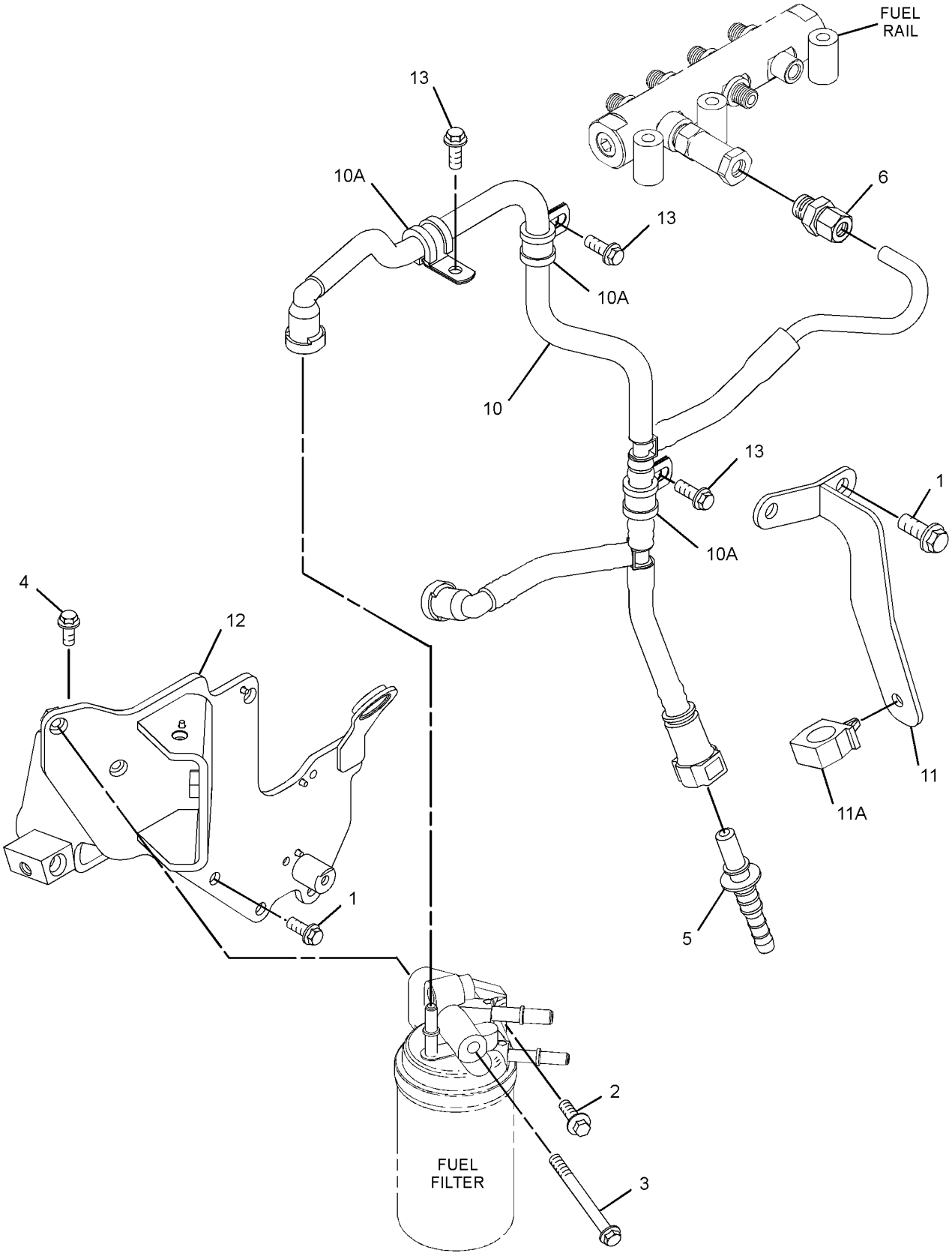

GRAPHIC #2

<END>

g02363366

FUEL SYSTEM

304-3662 LINES GP-FUEL

S/N: C4E1-5303

PART OF 254-9233 ENGINE AR-PRIMARY

SMCS-1274 **i03153881**

NOTE	REF NO	GRAPHIC REF	PART NUMBER	QTY	PART NAME 1 2 3 4 5 6 (PRODUCT LEVEL)	SEE PAGE
M	1	1	**6I-0593**	2	BOLT (M10X1.5X30-MM)	
Y	2	1	**318-8063**	1	FILTER GP-FUEL	76
	3	1	**304-3713**	1	TUBE	
BF			**278-4138**	1	PROTECTION GP-FUEL SYSTEM (LINE, LOW PRESSURE)	

B-USE AS REQUIRED
F-NOT SHOWN
M-METRIC PART
Y-SEPARATE ILLUSTRATION

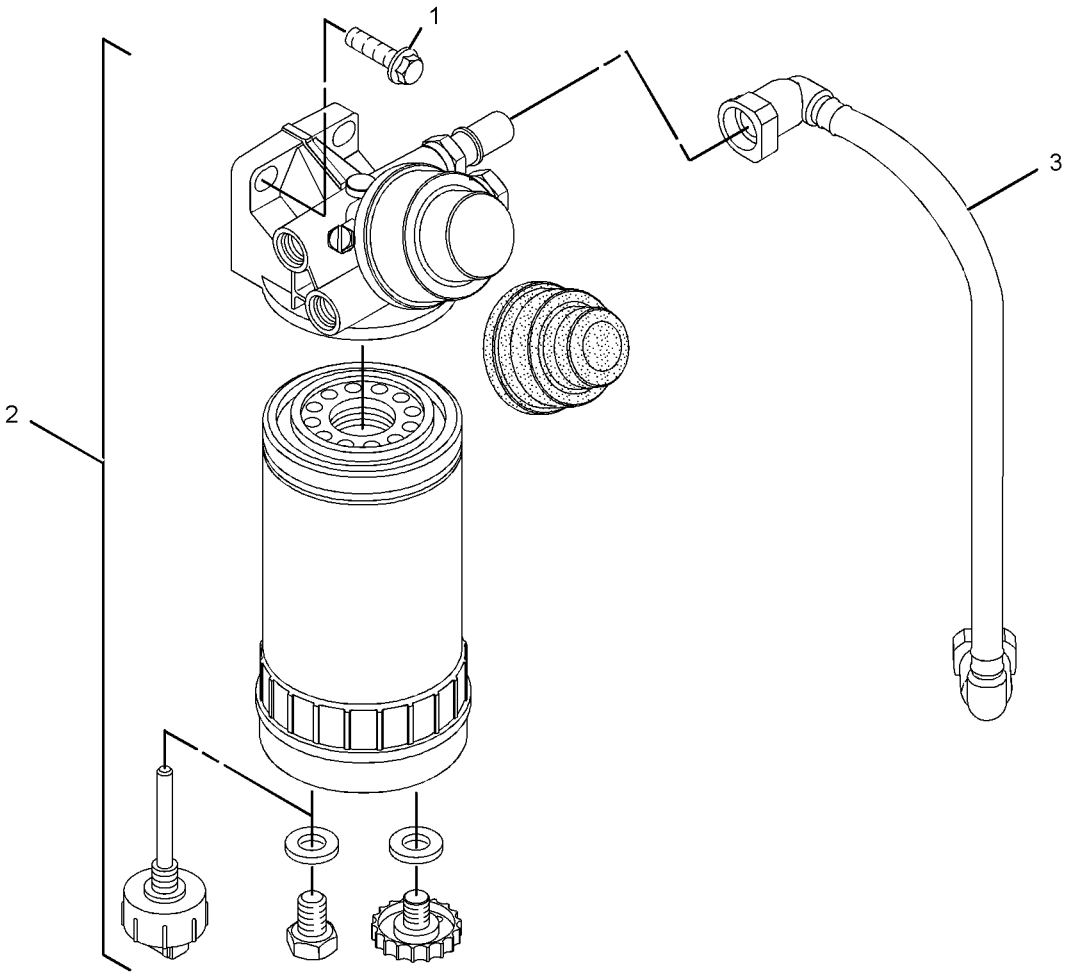

GRAPHIC #1 **<END>** g01621684

FUEL SYSTEM

304-3662 LINES GP-FUEL

S/N: C4E5304-6228

PART OF 254-9233 ENGINE AR-PRIMARY

SMCS-1274 **i03339480**

NOTE	REF NO	GRAPHIC REF	PART NUMBER	QTY	PART NAME 1 2 3 4 5 6 (PRODUCT LEVEL)	SEE PAGE
M	1	1	**6I-0593**	2	BOLT (M10X1.5X30-MM)	
CY	2	1	**334-0808**	1	FILTER GP-FUEL	78
	3	1	**304-3713**	1	TUBE	
BF			**278-4138**	1	PROTECTION GP-FUEL SYSTEM (LINE, LOW PRESSURE)	

B-USE AS REQUIRED
C-CHANGE FROM PREVIOUS TYPE
F-NOT SHOWN
M-METRIC PART
Y-SEPARATE ILLUSTRATION

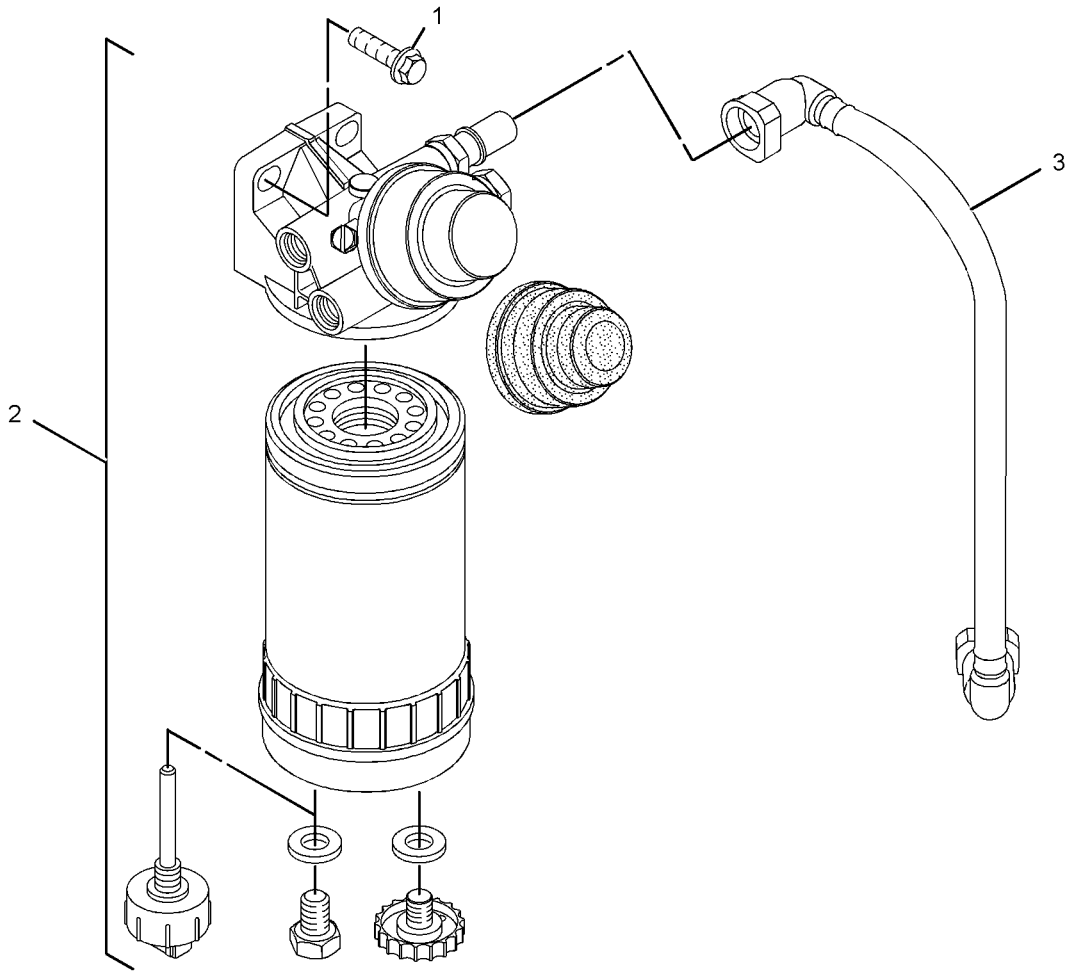

GRAPHIC #1 **<END>** g01621684

FUEL SYSTEM

304-3662 LINES GP-FUEL

S/N: C4E6229-UP

PART OF 254-9233 ENGINE AR-PRIMARY

SMCS-1274 **i03360840**

NOTE	REF NO	GRAPHIC REF	PART NUMBER	QTY	PART NAME 1 2 3 4 5 6 (PRODUCT LEVEL)	SEE PAGE
M	1	1	**6I-0593**	2	BOLT (M10X1.5X30-MM)	
CY	2	1	**334-0808**	1	FILTER GP-FUEL	78
	3	1	**338-8085**	1	TUBE AS	
BF			**278-4138**	1	PROTECTION GP-FUEL SYSTEM (LINE, LOW PRESSURE)	

B-USE AS REQUIRED
C-CHANGE FROM PREVIOUS TYPE
F-NOT SHOWN
M-METRIC PART
Y-SEPARATE ILLUSTRATION

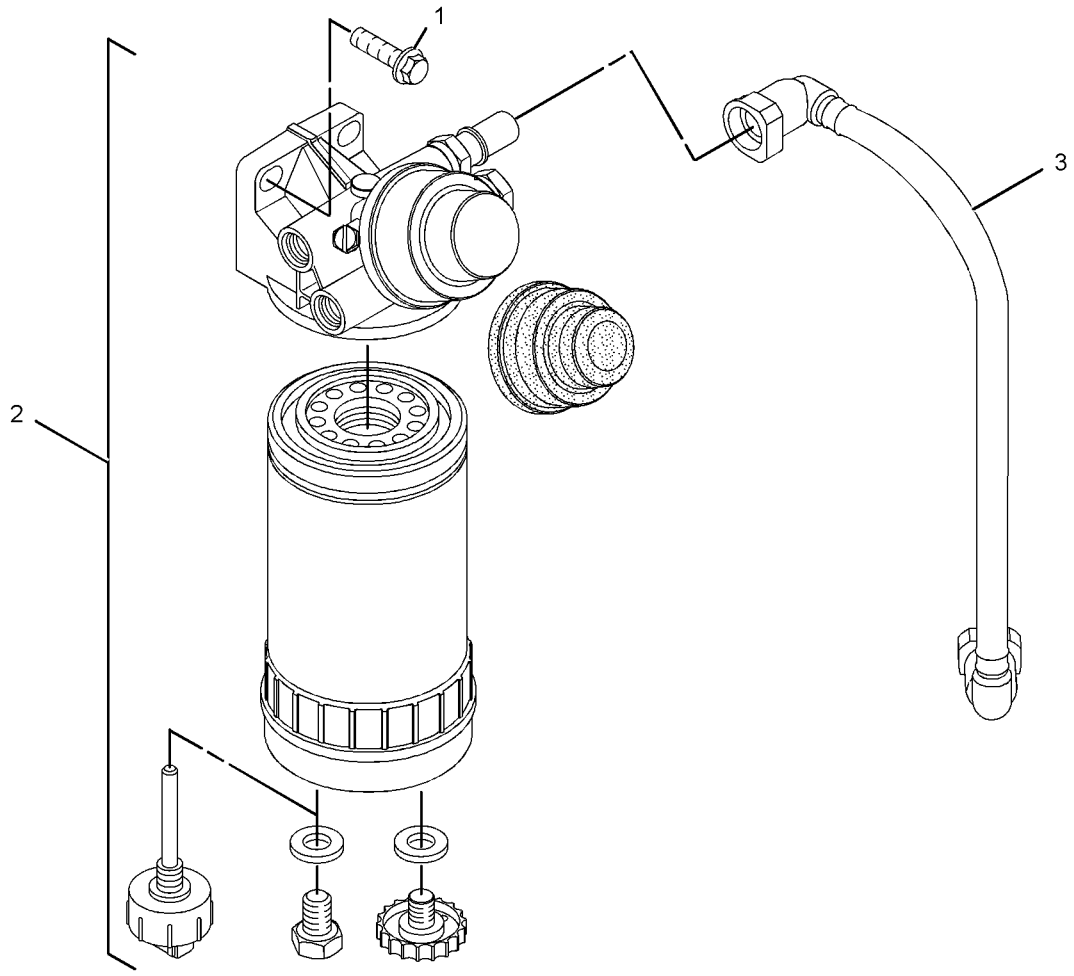

GRAPHIC #1 **<END>** g01621684

322-5900 LINES GP-FUEL—LOW PRESSURE

S/N: JTD1-UP; FFF1-UP; LLL1-UP
PART OF 325-6496, 325-6497, 325-6502 CONVERSION AR-MACHINE OPTION
AN ATTACHMENT

SMCS-1274 **i04396470**

NOTE	REF NO	GRAPHIC REF	PART NUMBER	QTY	PART NAME 1 2 3 4 5 6 (PRODUCT LEVEL)	SEE PAGE
M	1	1	**6I-0217**	2	BOLT (M8X1.25X20-MM)	
M	2	1	**6I-0260**	1	BOLT (M8X1.25X25-MM)	
M	3	1	**6I-0593**	2	BOLT (M10X1.5X30-MM)	
	4	1	**6I-4709**	1	BOLT (M8X1.25X100-MM)	
M	5	1	**100-4841**	2	BOLT (M6X1X10-MM)	
	6	1	**106-8916**	3	BOLT (M6X16-MM)	
	7	1	**286-2890**	4	WASHER	
	8	1	**294-3014**	2	WASHER (8.05X15.2X1.27-MM THK)	
	9	1	**295-4670**	2	BOLT-SPECIAL (BANJO)	
	10	1	**308-7571**	1	TUBE AS	
I	11	1	**322-5898**	1	HOSE AS	
	12	1	**322-5906**	1	MANIFOLD AS	
	13	1	**322-5910**	1	HOSE AS	
	14	1	**322-5911**	1	HOSE AS	
	15	1	**322-5912**	1	HOSE AS	
	16	1	**322-5913**	1	HOSE AS	
	17	1	**322-5914**	1	HOSE AS	
	18	1	**327-2127**	1	VALVE GP-CHECK (FUEL)	
		1	**214-7568**	1	SEAL-O-RING	
Y	19	1	**327-6347**	1	BOWL GP-WATER COLLECTION	75
	20	1	**329-1197**	1	CLIP-PIPE	
	21	1	*332-8576*	2	ELBOW AS	
					(EACH INCLUDES)	
		1	**218-1755**	1	ELBOW	
		1	**228-7089**	1	SEAL-O-RING	
		1	**228-7102**	1	SEAL-O-RING	
Y	22	1	**334-0808**	1	FILTER GP-FUEL	78
	23	1	**337-3574**	1	TUBE	
	24	1	**343-7104**	1	FILTER AS-FUEL (SECONDARY)	
		1	**299-8229**	1	FILTER ELEMENT-FUEL (ULTRA HIGH EFFICIENCY)	
	25	1	**214-7566**	3	SEAL-O-RING	
	26	1	**214-7568**	1	SEAL-O-RING	
	27	1	**228-5009**	4	CLIP	
	28	1	**228-7088**	3	SEAL-O-RING	
	29	1	**228-7089**	2	SEAL-O-RING	
	30	1	**228-7100**	1	SEAL-O-RING	
	31	1	**260-9155**	1	CONNECTOR	
	32	1	**2V-3216**	2	CLIP	
	33	1	**6V-8647**	3	CONNECTOR	
	34	1	**6V-9001**	1	ELBOW	

I-REFER TO HYDRAULIC INFORMATION SYSTEM
M-METRIC PART
Y-SEPARATE ILLUSTRATION

322-5900 **LINES GP-FUEL** *(contd.)* **i04396470**

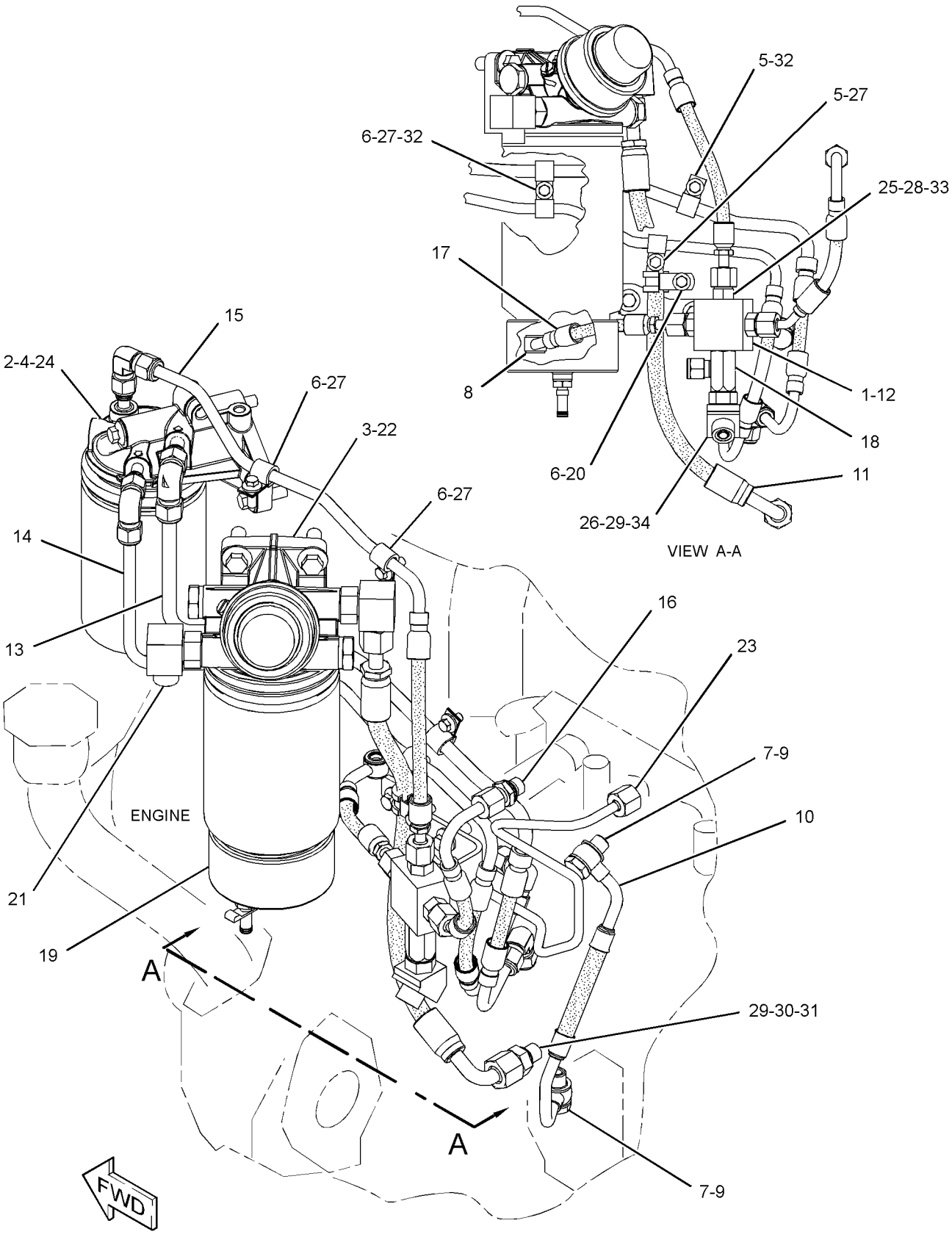

GRAPHIC #1 **<END>** g02024794

322-5904 LINES GP-FUEL–IMPLEMENT PUMP

S/N: JTD1-UP; FFF1-UP; LLL1-UP
PART OF 325-6496, 325-6497, 325-6502 CONVERSION AR-MACHINE OPTION
AN ATTACHMENT

SMCS-1274 **i03696047**

NOTE	REF NO	GRAPHIC REF	PART NUMBER	QTY	PART NAME 1 2 3 4 5 6 (PRODUCT LEVEL)	SEE PAGE
	1	1	**7K-1181**	5	STRAP-CABLE	
I	2	1	**322-5895**	1	HOSE AS	
I	3	1	**322-5896**	1	HOSE AS	
I	4	1	**322-5897**	1	HOSE AS	
Y	5	1	*322-5920*	1	SHUTOFF GP-MANUAL (FIRE PLOW)	134
	6	1	**228-7089**	2	SEAL-O-RING	
	7	1	**5P-4116**	1	WASHER-HARD (8.8X20.5X2-MM THK)	
	8	1	**8T-4121**	4	WASHER-HARD (11X21X2.5-MM THK)	
M	9	1	**8T-4137**	4	BOLT (M10X1.5X20-MM)	
M	10	1	**8T-4200**	1	BOLT (M8X1.25X16-MM)	
	11	1	**9M-4995**	5	CLIP	

I-REFER TO HYDRAULIC INFORMATION SYSTEM
M-METRIC PART
Y-SEPARATE ILLUSTRATION

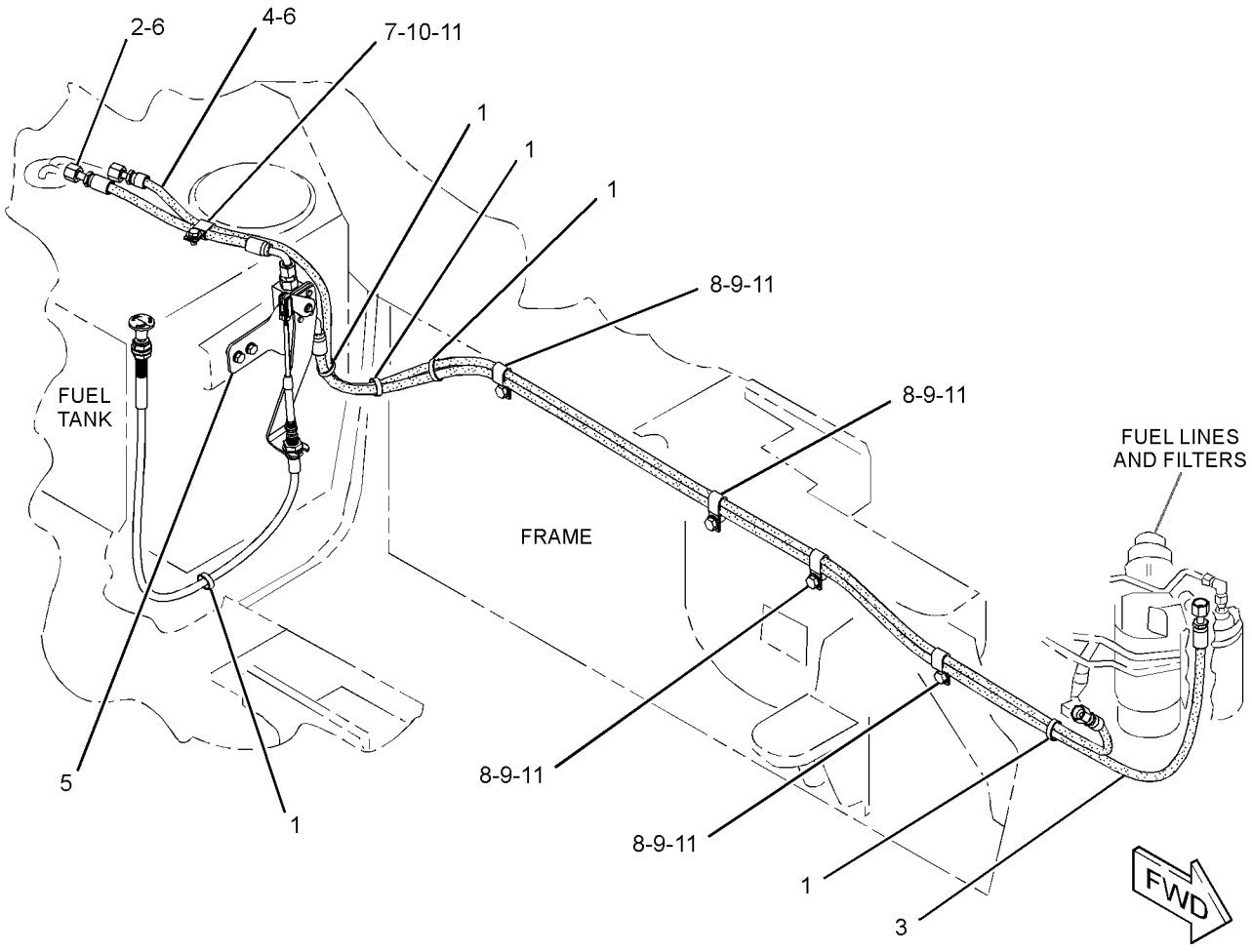

GRAPHIC #1 **<END>** g02014225

295-9125 PUMP & MTG GP-UNIT INJ HYD*R

S/N: C4E1-UP

PART OF 304-3649 PUMP GP-FUEL INJECTION

SMCS-1714 **i02906550**

NOTE	REF NO	GRAPHIC REF	PART NUMBER	QTY	PART NAME 1 2 3 4 5 6 (PRODUCT LEVEL)	SEE PAGE
M	1	1	**5A-3604**	5	BOLT-SOCKET HEAD (M8X1.25X25-MM)	
	2	1	**238-0120**	1	SENSOR GP-SPEED (FUEL PUMP)	
	3	1	**117-1385**	1	SEAL-O-RING	
	4	1	**6D-7889**	1	SEAL-O-RING	
	5	1	**295-4801**	1	NUT (M14X1.5-THD)	
	6	1	**296-3542**	1	LOCKWASHER	
	7	1	**228-7100**	1	SEAL-O-RING	
	8	1	**248-1066**	1	FITTING-FUEL	
	9	1	**293-0249**	1	PUMP GP-FUEL TRANSFER	
	10	1	**247-6020**	1	SEAL	
M	11	1	**8T-4200**	1	BOLT (M8X1.25X16-MM)	

M-METRIC PART

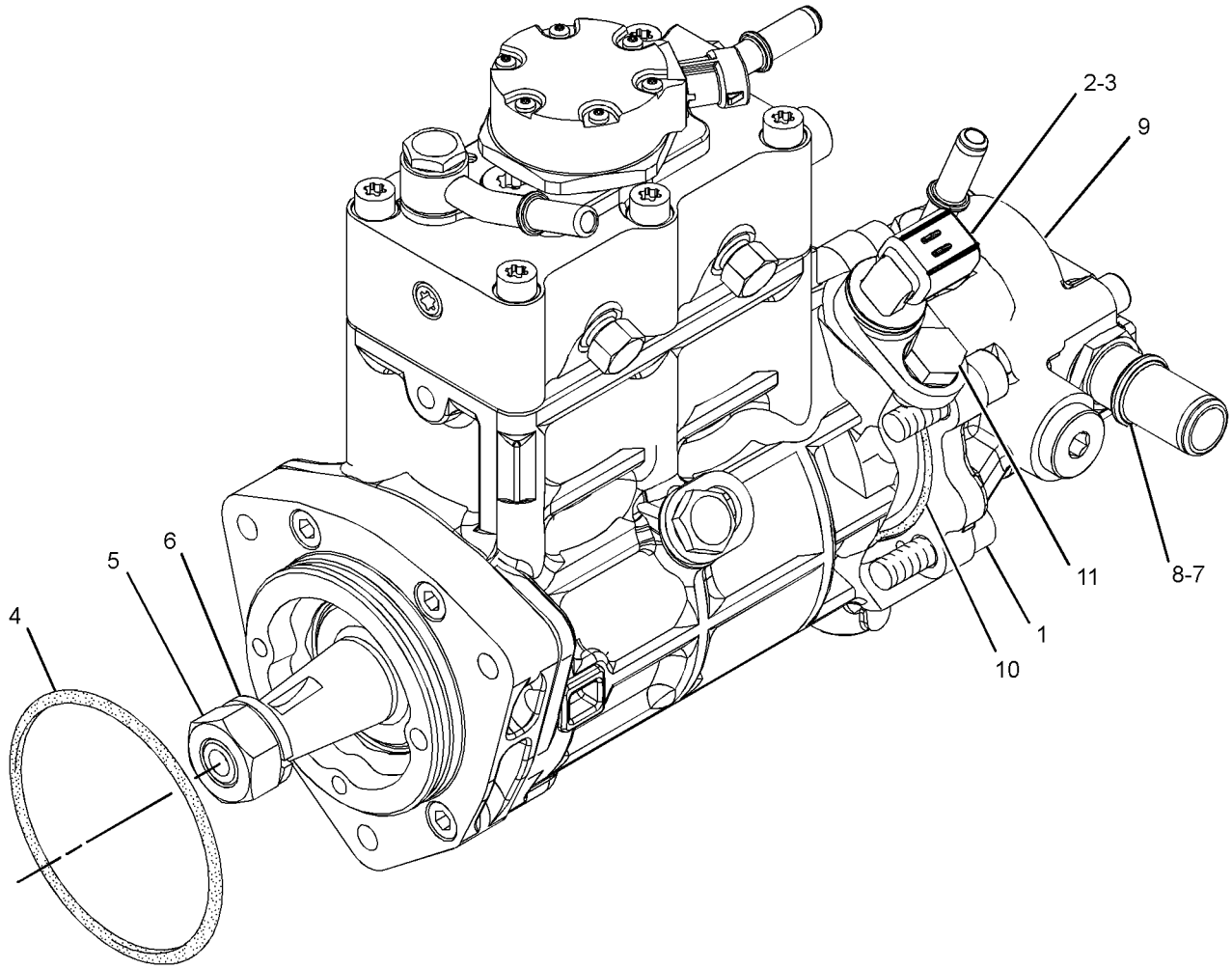

GRAPHIC #1 **<END>** g01447455

283-2271 PUMP GP-FUEL INJECTION

S/N: C4E1-UP

PART OF 304-3649 PUMP GP-FUEL INJECTION

SMCS-1251, 1290 **i03327681**

NOTE	REF NO	GRAPHIC REF	PART NUMBER	QTY	PART NAME 1 2 3 4 5 6 (PRODUCT LEVEL)	SEE PAGE
M	1	1	**5A-3604**	5	BOLT-SOCKET HEAD (M8X1.25X25-MM)	
	2	1	**238-0120**	1	SENSOR GP-SPEED (SECONDARY, TIMING)	
	3	1	**117-1385**	1	SEAL-O-RING	
	4	1	**6D-7889**	1	SEAL-O-RING	
	5	1	**277-1950**	1	NUT	
	6	1	**277-1949**	1	WASHER	
	7	1	**228-7100**	1	SEAL-O-RING	
	8	1	**248-1066**	1	FITTING-FUEL	
	9	1	**293-0249**	1	PUMP GP-FUEL TRANSFER	
	10	1	**247-6019**	1	SEAL	
M	11	1	**8T-4200**	1	BOLT (M8X1.25X16-MM)	

M-METRIC PART

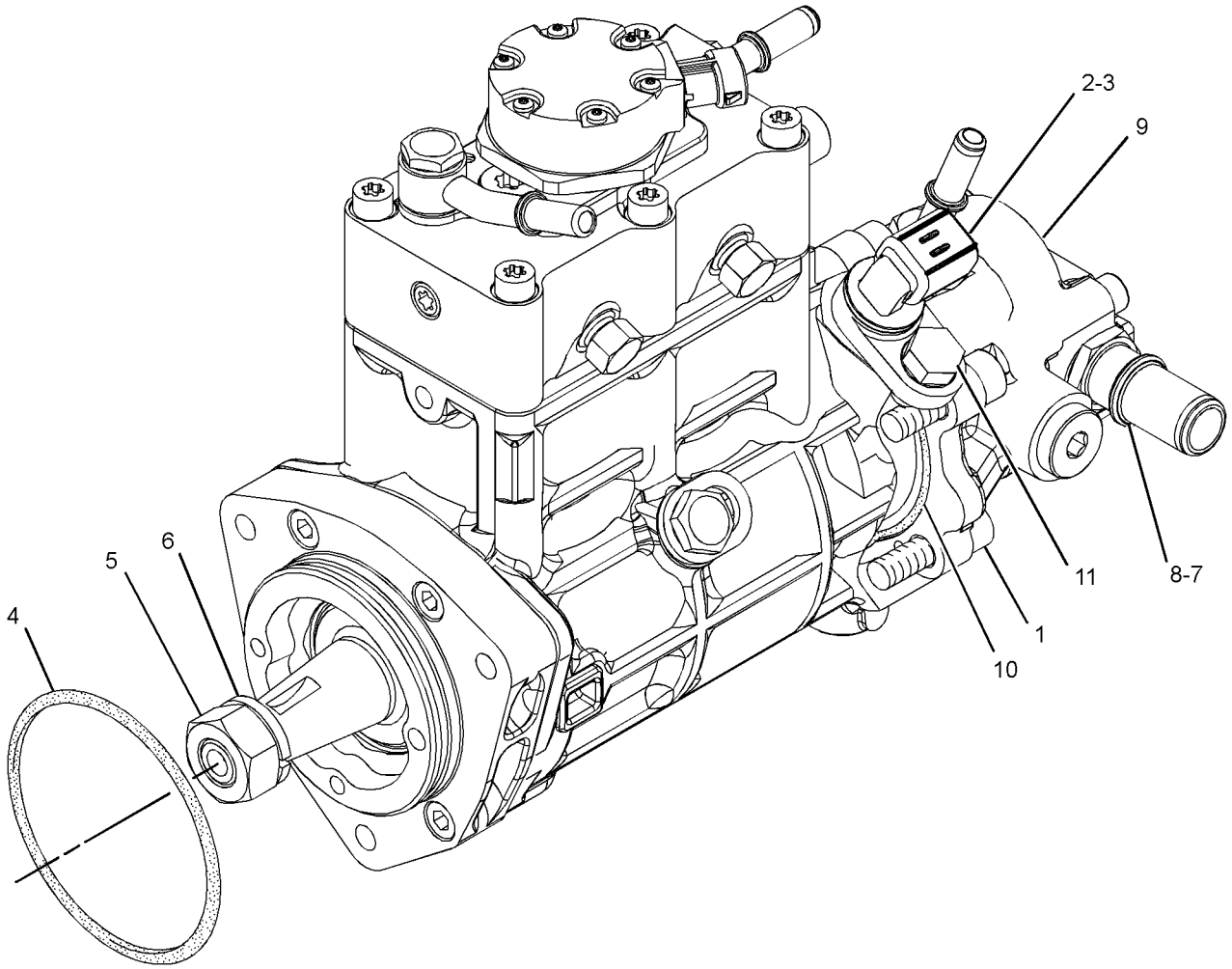

GRAPHIC #1 **<END>** g01447455

FUEL SYSTEM

304-3649 PUMP GP-FUEL INJECTION

S/N: C4E1-UP

PART OF 254-9233 ENGINE AR-PRIMARY

SMCS-1251, 1290 **i02770303**

NOTE	REF NO	GRAPHIC REF	PART NUMBER	QTY	PART NAME 1 2 3 4 5 6 (PRODUCT LEVEL)	SEE PAGE
M	1	1	**6I-0260**	3	BOLT (M8X1.25X25-MM)	
	2	1	**6I-0455**	3	BOLT (M8X1.25X55-MM)	
	3	2	**6I-0572**	4	BOLT (M8X1.25X20-MM)	
	4	2	**7W-2632**	1	WASHER (8.5X16.8X1.6-MM THK)	
	5	3	**035-8017**	2	UNION	
	6	3	**067-6264**	2	FITTING-FLARED	
	7	3	**067-6265**	2	FITTING-BRASS	
M	8	1	**100-4830**	1	BOLT (M10X1.5X20-MM)	
M	9	1	**101-3895**	4	BOLT (M8X1.25X35-MM)	
M	10	1,3	**124-3815**	4	BOLT (M8X1.25X16-MM)	
	11	2	**141-8584**	4	BOLT (M8X1.25X50-MM)	
	12	2	**155-0576**	8	MOUNT-ISOLATION	
	13	1	**160-0162**	2	WASHER	
	14	3	**199-9252**	1	SEAL-O-RING	
	15	2	**217-0099**	4	SPACER (8.2X25X2-MM THK)	
	16	2	**217-8477**	1	CLIP	
	17	1	**230-8989**	1	GEAR-FUEL PUMP (68-TEETH)	
	18	1	**232-3149**	6	WASHER (8.35X16.85X1.55-MM THK)	
	20	2	**268-6678**	1	BRACKET AS	
		1	**260-3719**	1	BRACKET	
	20A	1	**260-3939**		SCREW-HEX HEAD	
	21	2	**268-6677**	1	BRACKET AS	
		1	**260-3718**	1	BRACKET	
	21A	1	**260-3939**	1	SCREW-HEX HEAD	
	22	1	**308-8425**	1	RAIL AS-FUEL	
	23	1	**278-5168**	4	CLAMP-INJECTOR	
	24	1	**278-5170**	4	BOLT	
	25	2	**278-5203**	4	SPACER	
	27	3	**278-5225**	1	KIT-SENSOR (ENGINE OIL PRESSURE)	
	27A	3	**278-5226**	1	SEAL-O-RING	
	28	3	**278-5228**	1	KIT-SENSOR (ENGINE SPEED)	
	28A	3	**278-5227**	1	SEAL-O-RING	
	29	3	**278-5273**	1	KIT-SENSOR (AIR PRESSURE)	
	29A	3	**199-9252**	1	SEAL-O-RING	
	30	3	**278-5307**	1	KIT-SENSOR (COOLANT TEMPERATURE)	
	30A	3	**199-9267**	1	SEAL-O-RING	
	31	1	**278-5308**	1	KIT-SENSOR (FUEL RAIL PRESSURE)	
	31A	1	**278-5309**	1	WASHER	
Y	32	1	**292-3778**	4	INJECTOR GP-FUEL	81
Y	33	1	**283-2271**	1	PUMP GP-FUEL INJECTION	100
	34	1	**298-4535**	1	BRACKET-SUPPORT	
	35	1	**298-4536**	1	BRACKET-MOUNTING	
	36	1	**298-4537**	1	TUBE AS	
	37	1	**298-4538**	1	TUBE AS (CYL NO. 1)	
	38	1	**298-4539**	1	TUBE AS (CYL NO. 2)	
	39	1	**298-4540**	1	TUBE AS (CYL NO. 3)	
	40	1	**298-4541**	1	TUBE AS (CYL NO. 4)	
	41	1	**298-4542**	1	TUBE AS	
	42	1	**298-4543**	1	BOLT	
	43	2	**298-4544**	1	BRACKET MOUNTING	
	44	3	**304-3687**	1	SENSOR-AIR TEMPERATURE	
	44A	3	**278-5226**	1	SEAL-O-RING	
	45	3	**304-3688**	1	TUBE	
	46	3	**304-3689**	1	ADAPTER	
F			**278-4138**	4	PROTECTION GP-FUEL SYSTEM	

F-NOT SHOWN
M-METRIC PART
Y-SEPARATE ILLUSTRATION

304-3649 **PUMP GP-FUEL INJECTION** *(contd.)* **i02770303**

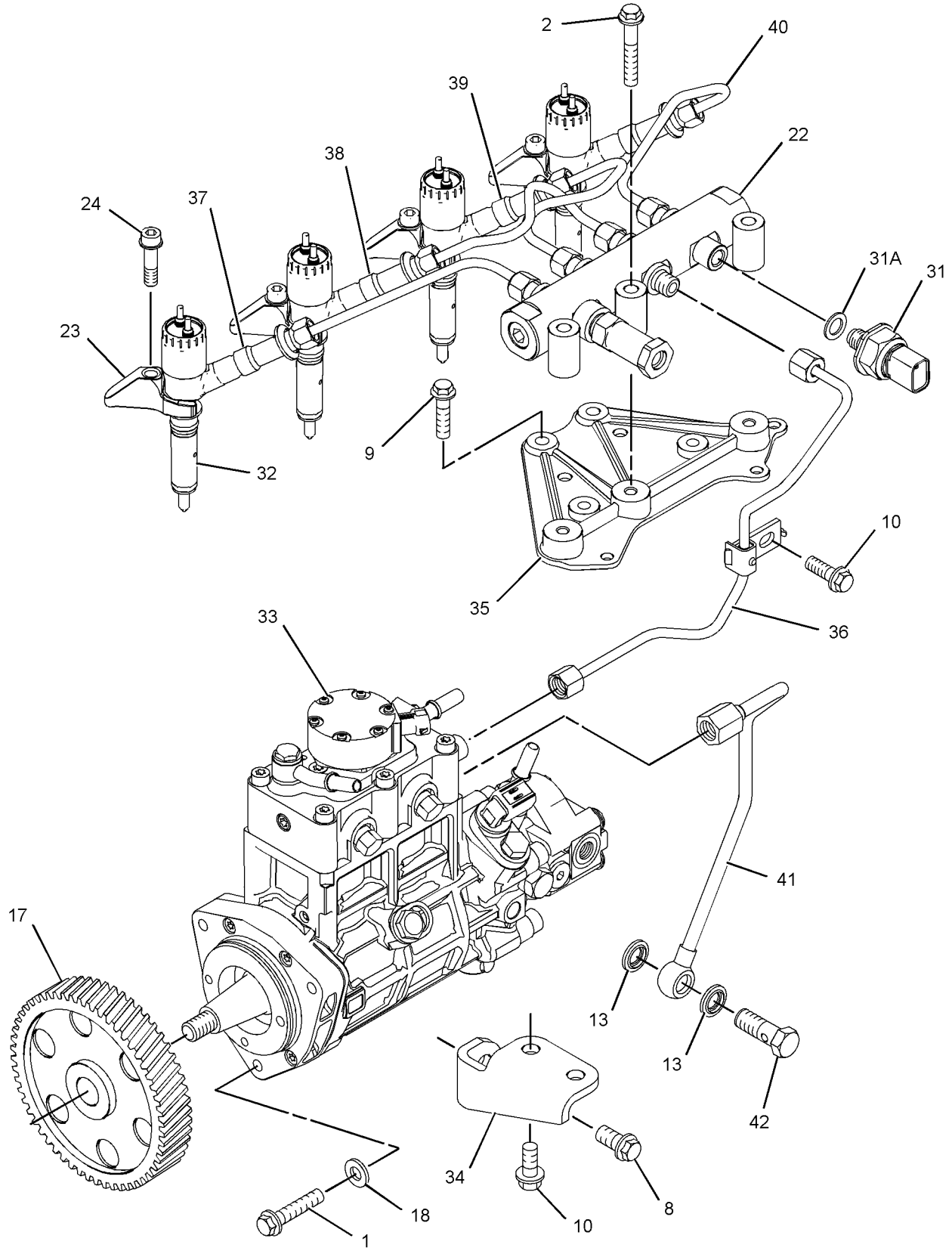

GRAPHIC #1 g01379219

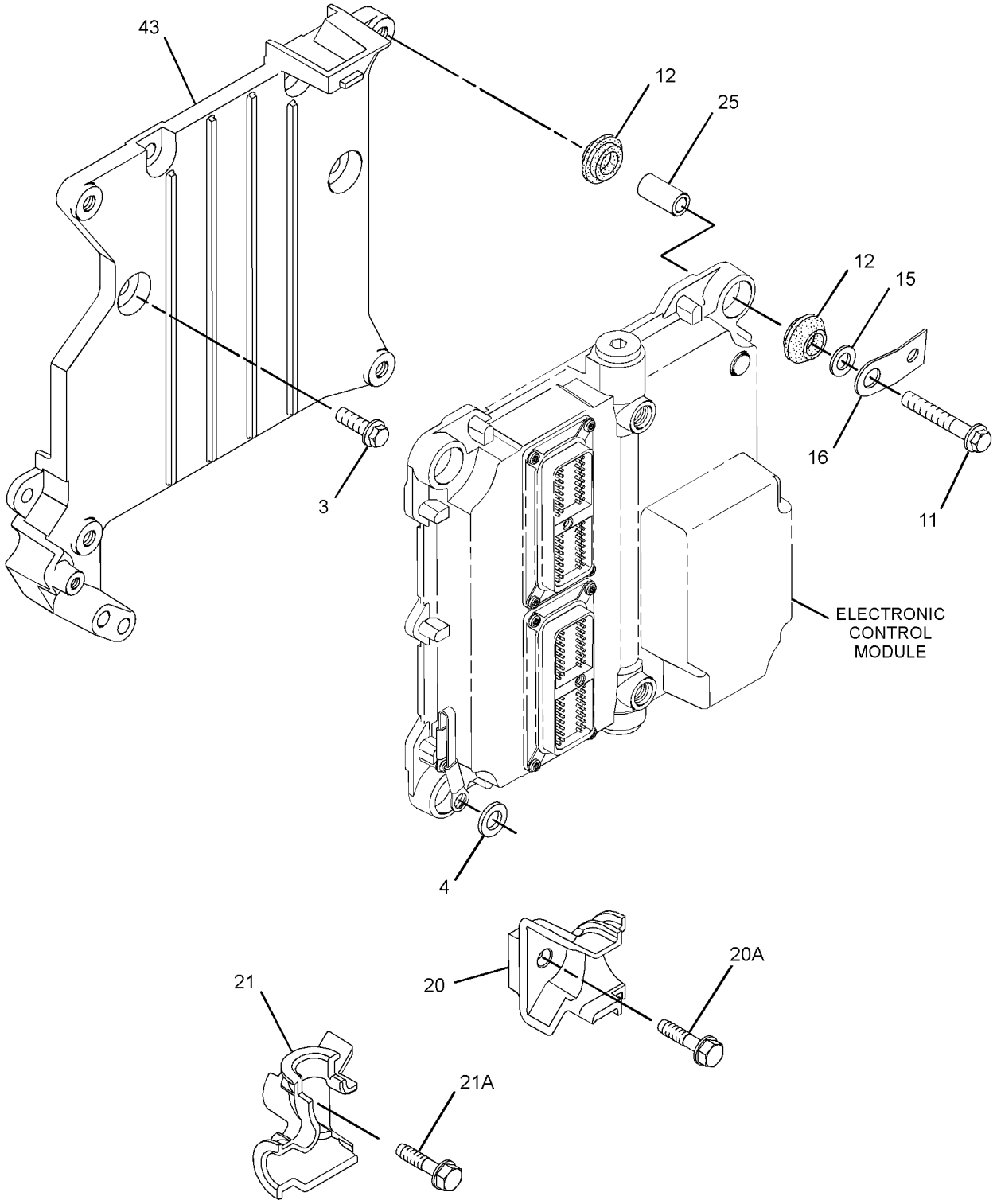

GRAPHIC #2 g01379222

304-3649 **PUMP GP-FUEL INJECTION** *(contd.)* **i02770303**

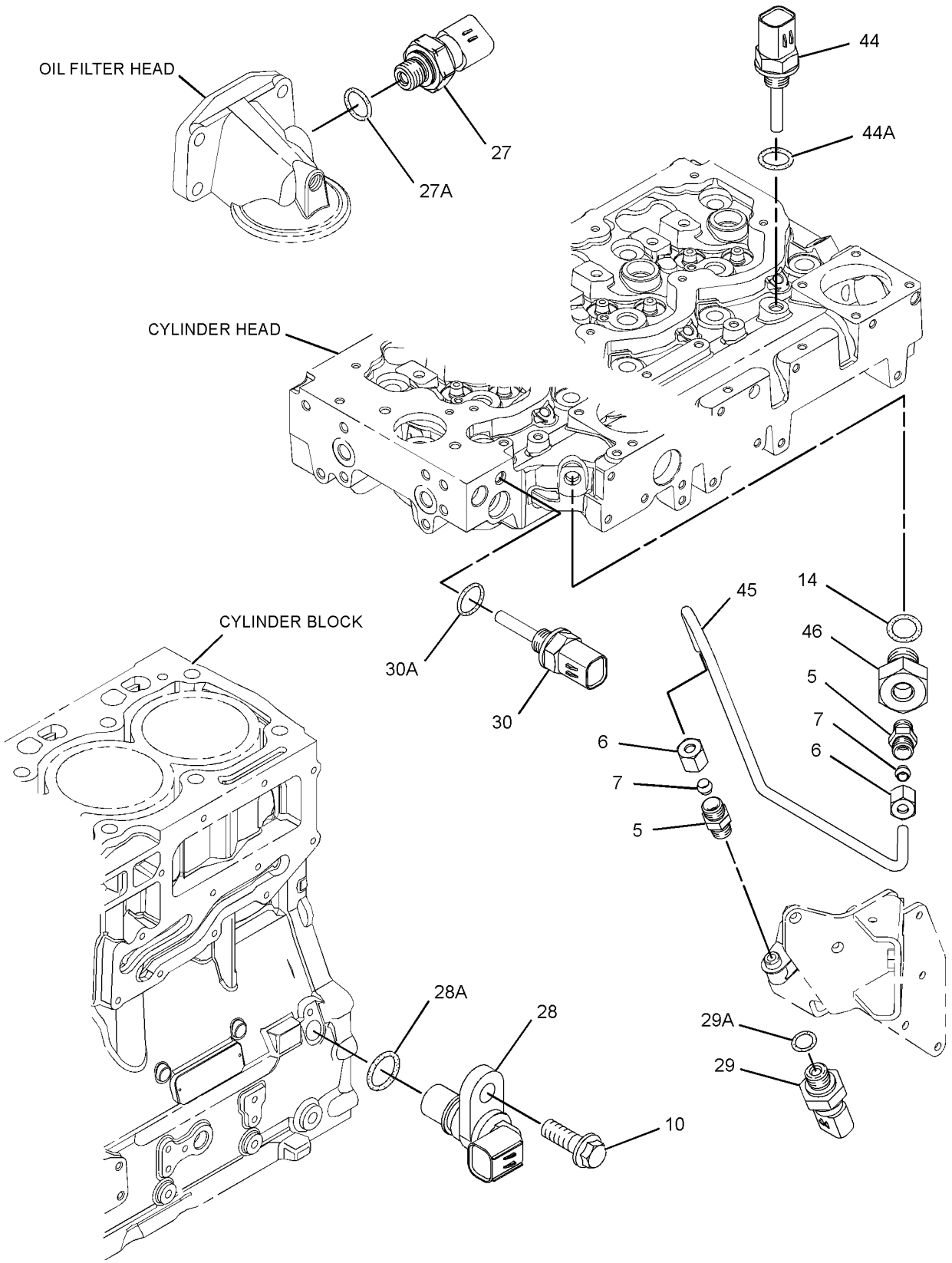

GRAPHIC #3 **<END>** g01342211

FUEL SYSTEM

304-3649 PUMP GP-FUEL INJECTION

S/N: C4E1-3159

PART OF 254-9233 ENGINE AR-PRIMARY

SMCS-1251, 1290 **i03438063**

NOTE	REF NO	GRAPHIC REF	PART NUMBER	QTY	PART NAME 1 2 3 4 5 6 (PRODUCT LEVEL)	SEE PAGE
M	1	1	**6I-0260**	3	BOLT (M8X1.25X25-MM)	
	2	1	**6I-0455**	3	BOLT (M8X1.25X55-MM)	
	3	2	**6I-0572**	4	BOLT (M8X1.25X20-MM)	
	4	2	**7W-2632**	1	WASHER (8.5X16.8X1.6-MM THK)	
	5	3	**035-8017**	2	UNION	
	6	3	**067-6264**	2	FITTING-FLARED	
	7	3	**067-6265**	2	FITTING-BRASS	
M	8	1	**100-4830**	1	BOLT (M10X1.5X20-MM)	
M	9	1	**101-3895**	4	BOLT (M8X1.25X35-MM)	
M	10	1,3	**124-3815**	4	BOLT (M8X1.25X16-MM)	
	11	2	**141-8584**	4	BOLT (M8X1.25X50-MM)	
C	12	2	**300-6714**	8	MOUNT	
	13	1	**160-0162**	2	WASHER	
	14	3	**199-9252**	1	SEAL-O-RING	
	15	2	**217-0099**	4	SPACER (8.2X25X2-MM THK)	
	16	2	**217-8477**	1	CLIP	
	17	1	**230-8989**	1	GEAR-FUEL PUMP (68-TEETH)	
	18	1	**232-3149**	3	WASHER (8.35X16.85X1.55-MM THK)	
	20	2	**268-6678**	1	BRACKET AS	
	20A	2	**260-3939**		SCREW-HEX HEAD	
	21	2	**268-6677**	1	BRACKET AS	
	21A	2	**260-3939**	1	SCREW-HEX HEAD	
	22	1	**308-8425**	1	RAIL AS-FUEL	
	23	1	**278-5168**	4	CLAMP-INJECTOR	
	24	1	**278-5170**	4	BOLT	
	25	2	**278-5203**	4	SPACER	
	27	3	**278-5225**	1	KIT-SENSOR (ENGINE OIL PRESSURE)	
	27A	3	**278-5226**	1	SEAL-O-RING	
C	28	3	**311-3858**	1	KIT-SENSOR (ENGINE SPEED)	
	28A	3	**274-1639**	1	SEAL	
	29	3	**278-5273**	1	KIT-SENSOR (AIR PRESSURE)	
	29A	3	**199-9252**	1	SEAL-O-RING	
	30	3	**278-5307**	1	KIT-SENSOR (COOLANT TEMPERATURE)	
	30A	3	**199-9267**	1	SEAL-O-RING	
C	31	1	**311-6342**	1	SENSOR-PRESSURE (FUEL RAIL PRESSURE)	
	31A	1	**309-8006**	1	WASHER	
Y	32	1	**292-3778**	4	INJECTOR GP-FUEL	81
YR	33	1	**295-9125**	1	PUMP & MTG GP-UNIT INJ HYD	99
	34	1	**298-4535**	1	BRACKET-SUPPORT	
	35	1	**298-4536**	1	BRACKET-MOUNTING	
	36	1	**298-4537**	1	TUBE AS	
	37	1	**298-4538**	1	TUBE AS (CYL NO. 1)	
	38	1	**298-4539**	1	TUBE AS (CYL NO. 2)	
	39	1	**298-4540**	1	TUBE AS (CYL NO. 3)	
	40	1	**298-4541**	1	TUBE AS (CYL NO. 4)	
	41	1	**298-4542**	1	TUBE AS	
	42	1	**298-4543**	1	BOLT	
	43	2	**317-3144**	1	BRACKET	
C	44	3	**313-2455**	1	SENSOR-TEMPERATURE (AIR)	
	44A	3	**278-5226**	1	SEAL-O-RING	
	45	3	**304-3688**	1	TUBE	
	46	3	**304-3689**	1	ADAPTER	
F			**278-4138**	4	PROTECTION GP-FUEL SYSTEM	

C-CHANGE FROM PREVIOUS TYPE
F-NOT SHOWN
M-METRIC PART
R-REMFG PART MAY BE AVAILABLE
Y-SEPARATE ILLUSTRATION

304-3649 **PUMP GP-FUEL INJECTION** *(contd.)* **i03438063**

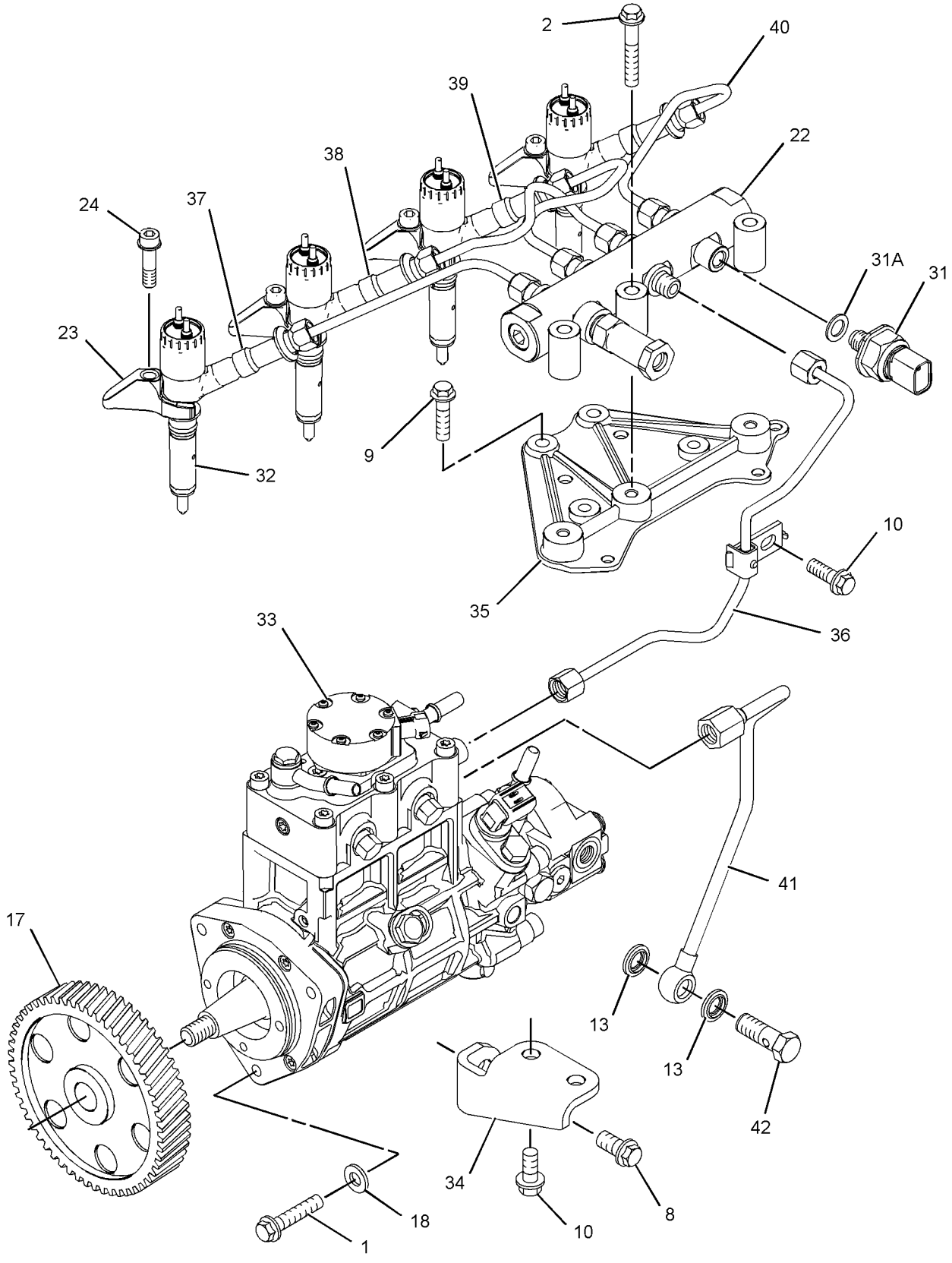

GRAPHIC #1 g01379219

304-3649 **PUMP GP-FUEL INJECTION** *(contd.)* **i03438063**

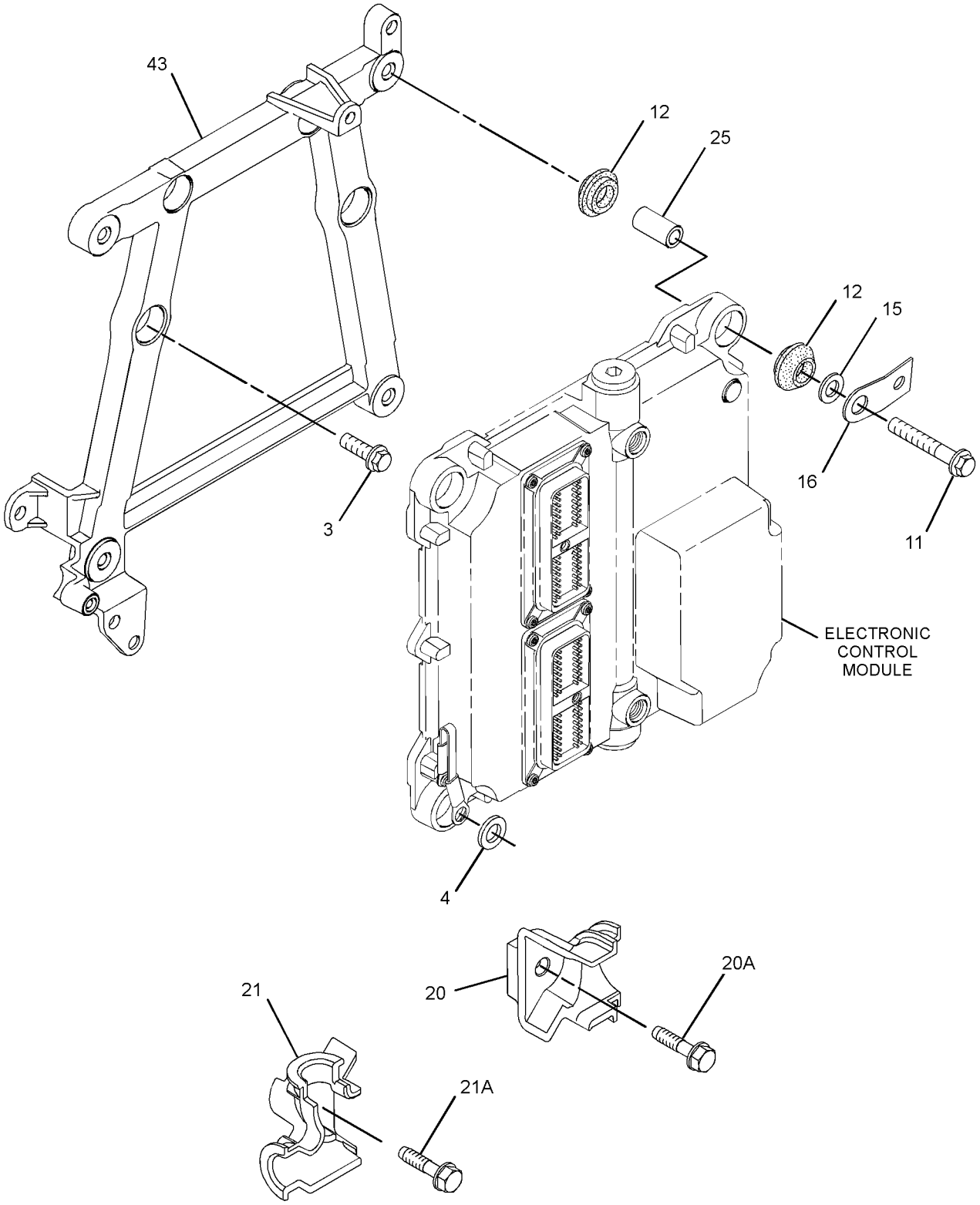

GRAPHIC #2 g01431297

304-3649 **PUMP GP-FUEL INJECTION** *(contd.)* **i03438063**

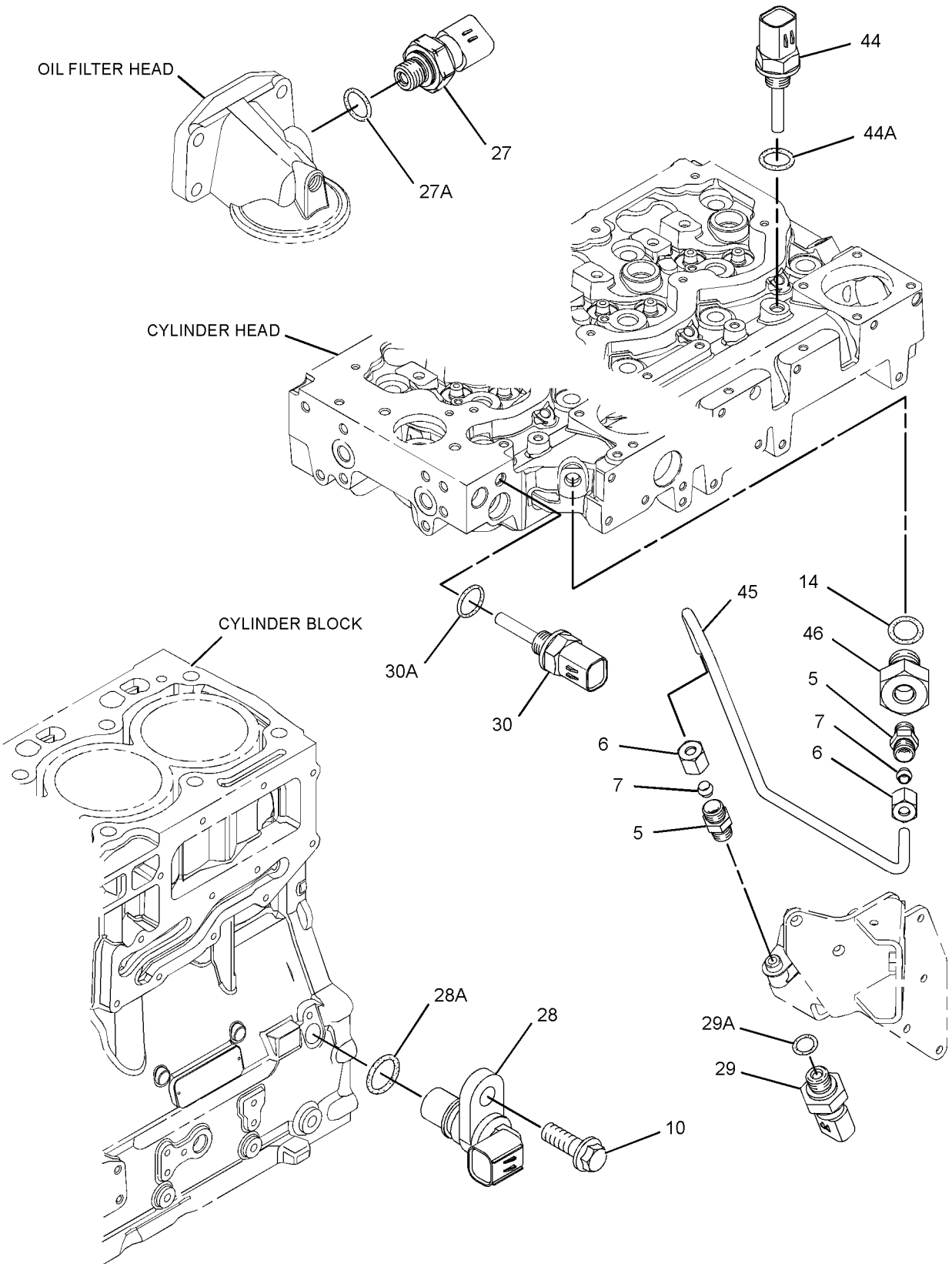

GRAPHIC #3 **<END>** g01342211

FUEL SYSTEM

304-3649 PUMP GP-FUEL INJECTION

S/N: C4E3160-5057

PART OF 254-9233 ENGINE AR-PRIMARY

SMCS-1251, 1290 **i04031923**

NOTE	REF NO	GRAPHIC REF	PART NUMBER	QTY	PART NAME 1 2 3 4 5 6 (PRODUCT LEVEL)	SEE PAGE
M	1	1	**6I-0260**	3	BOLT (M8X1.25X25-MM)	
	2	1	**6I-0455**	3	BOLT (M8X1.25X55-MM)	
	3	2	**6I-0572**	4	BOLT (M8X1.25X20-MM)	
	4	2	**7W-2632**	1	WASHER (8.5X16.8X1.6-MM THK)	
	5	3	**035-8017**	2	UNION	
	6	3	**067-6264**	2	FITTING-FLARED	
	7	3	**067-6265**	2	FITTING-BRASS	
M	8	1	**100-4830**	1	BOLT (M10X1.5X20-MM)	
M	9	1	**101-3895**	4	BOLT (M8X1.25X35-MM)	
M	10	1,3	**124-3815**	4	BOLT (M8X1.25X16-MM)	
	11	2	**141-8584**	4	BOLT (M8X1.25X50-MM)	
	12	2	**300-6714**	8	MOUNT	
	13	1	**160-0162**	2	WASHER	
	14	3	**199-9252**	1	SEAL-O-RING	
	15	2	**217-0099**	5	SPACER (8.2X25X2-MM THK)	
	16	2	**217-8477**	1	CLIP	
	17	1	**230-8989**	1	GEAR-FUEL PUMP (68-TEETH)	
	18	1	**232-3149**	3	WASHER (8.35X16.85X1.55-MM THK)	
	20	2	**268-6678**	1	BRACKET AS	
	20A	2	**260-3939**		SCREW-HEX HEAD	
	21	2	**268-6677**	1	BRACKET AS	
	21A	2	**260-3939**	1	SCREW-HEX HEAD	
C	22	1	**311-6631**	1	RAIL AS-FUEL	
		1	**305-5291**	1	VALVE AS-RELIEF	
		1	**228-7102**	1	SEAL-O-RING	
	23	1	**278-5168**	4	CLAMP-INJECTOR	
	24	1	**278-5170**	4	BOLT	
	25	2	**278-5203**	4	SPACER	
	27	3	**278-5225**	1	KIT-SENSOR (ENGINE OIL PRESSURE)	
	27A	3	**199-9267**	1	SEAL-O-RING	
	28	3	**311-3858**	1	KIT-SENSOR (ENGINE SPEED)	
	28A	3	**274-1639**	1	SEAL	
		3	**238-0120**	1	SENSOR GP-SPEED	
	29	3	**278-5273**	1	KIT-SENSOR (AIR PRESSURE)	
	29A	3	**199-9252**	1	SEAL-O-RING	
	30	3	**278-5307**	1	KIT-SENSOR (COOLANT TEMPERATURE)	
	30A	3	**199-9267**	1	SEAL-O-RING	
	31	1	**311-6342**	1	SENSOR-PRESSURE (FUEL RAIL PRESSURE)	
	31A	1	**309-8006**	1	WASHER	
CYR	32	1	**320-0677**	4	INJECTOR GP-FUEL	82
YR	33	1	**324-0532**	1	PUMP GP-FUEL INJECTION	131
	34	1	**298-4535**	1	BRACKET-SUPPORT	
	35	1	**298-4536**	1	BRACKET-MOUNTING	
	36	1	**322-3744**	1	TUBE	
	37	1	**322-3745**	1	TUBE (CYL NO. 1) (CYL NO. 1)	
	38	1	**322-3746**	1	TUBE (CYL NO. 2) (CYL NO. 2)	
	39	1	**322-3747**	1	TUBE (CYL NO. 3) (CYL NO. 3)	
	40	1	**322-3748**	1	TUBE (CYL NO. 4) (CYL NO. 4)	
	41	1	**298-4542**	1	TUBE AS	
	42	1	**298-4543**	1	BOLT	
	43	2	**317-3144**	1	BRACKET	
	44	3	**313-2455**	1	SENSOR-TEMPERATURE (AIR)	
	44A	3	**278-5226**	1	SEAL-O-RING	
	45	3	**304-3688**	1	TUBE	
	46	3	**304-3689**	1	ADAPTER	

304-3649 PUMP GP-FUEL INJECTION *(contd.)* i04031923

NOTE	REF NO	GRAPHIC REF	PART NUMBER	QTY	PART NAME 1 2 3 4 5 6 (PRODUCT LEVEL)	SEE PAGE
F			**278-4138**	4	PROTECTION GP-FUEL SYSTEM	

C-CHANGE FROM PREVIOUS TYPE
F-NOT SHOWN
M-METRIC PART
R-REMFG PART MAY BE AVAILABLE
Y-SEPARATE ILLUSTRATION

304-3649 **PUMP GP-FUEL INJECTION** *(contd.)* **i04031923**

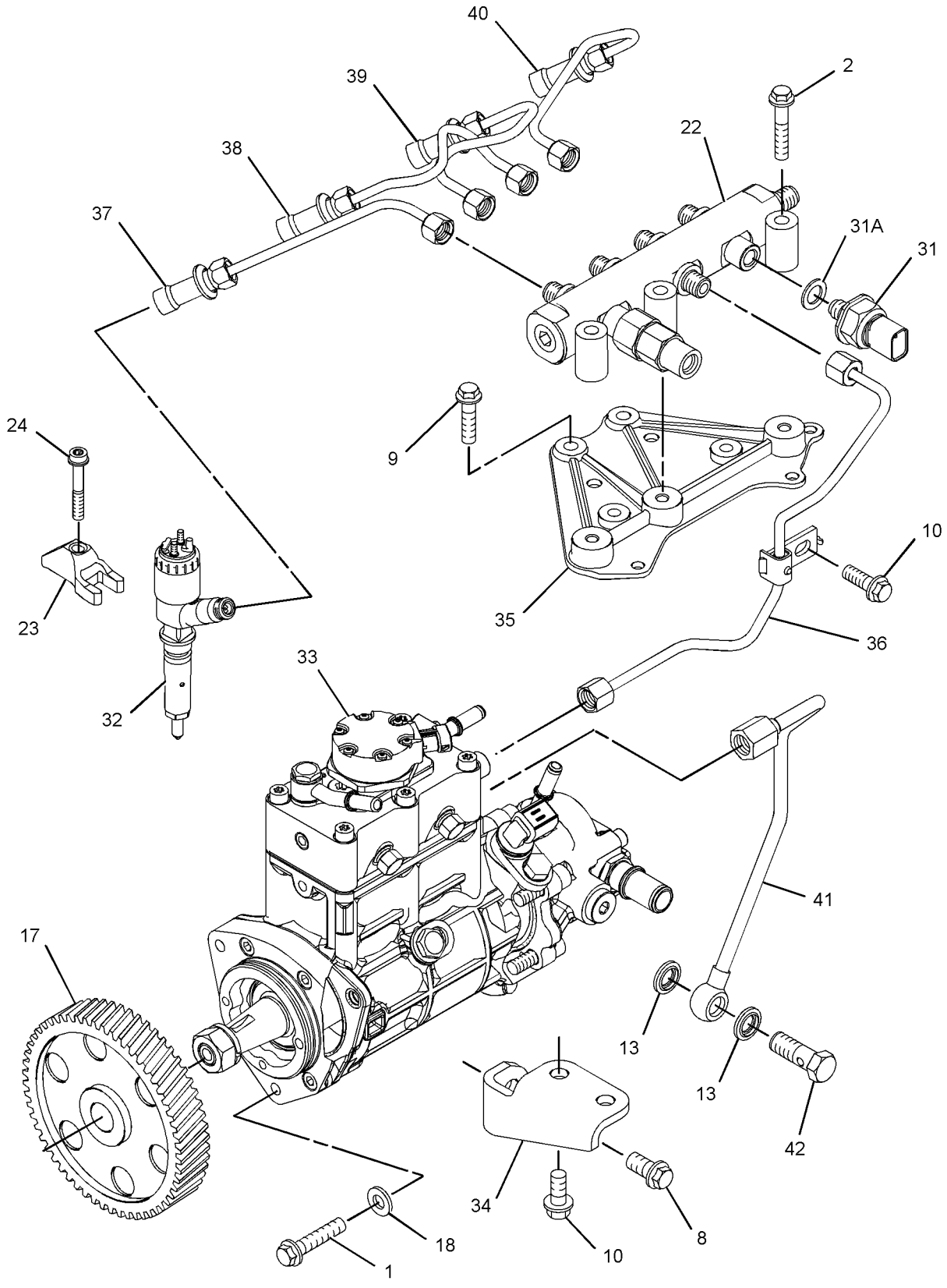

GRAPHIC #1 g01681533

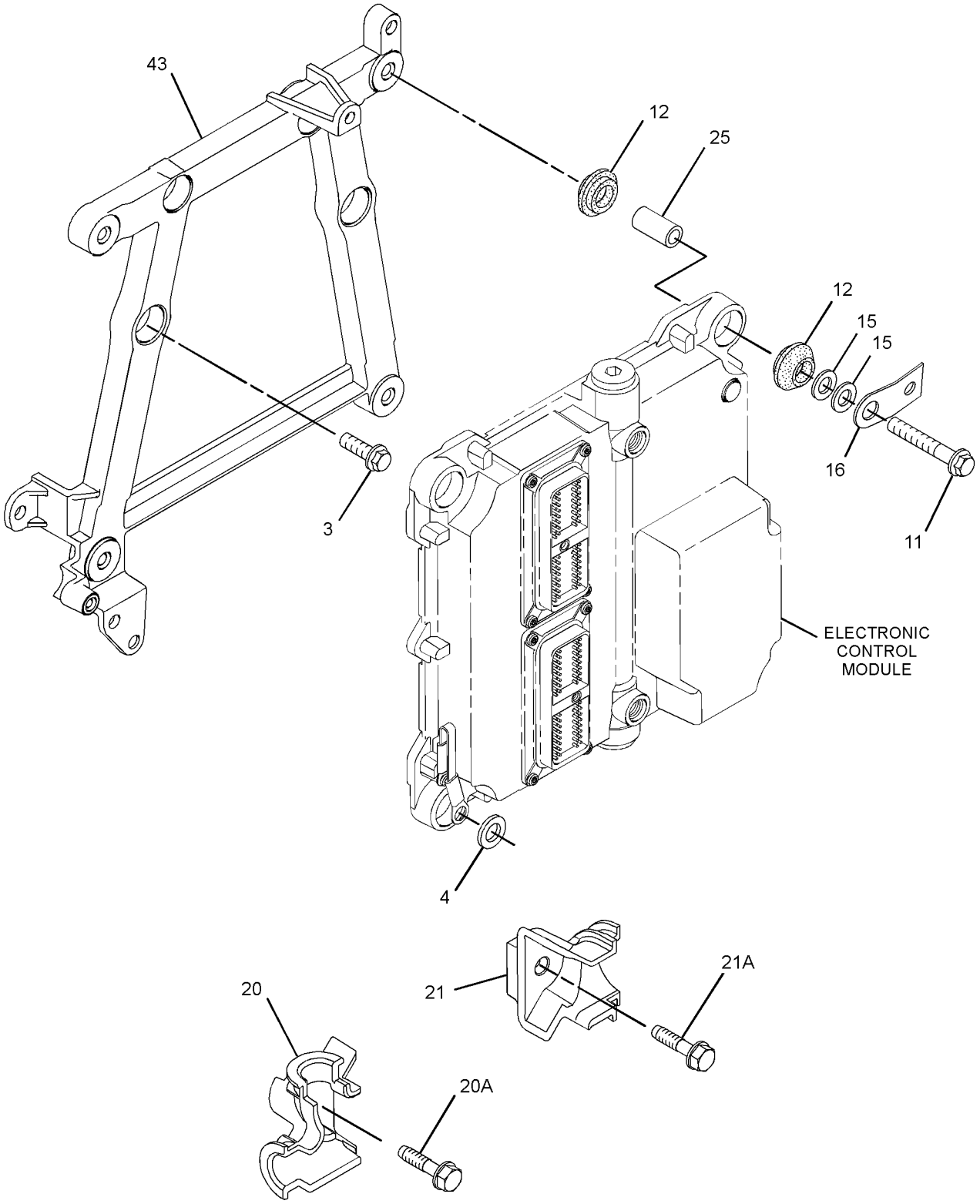

GRAPHIC #2 g01681917

304-3649 **PUMP GP-FUEL INJECTION** *(contd.)* **i04031923**

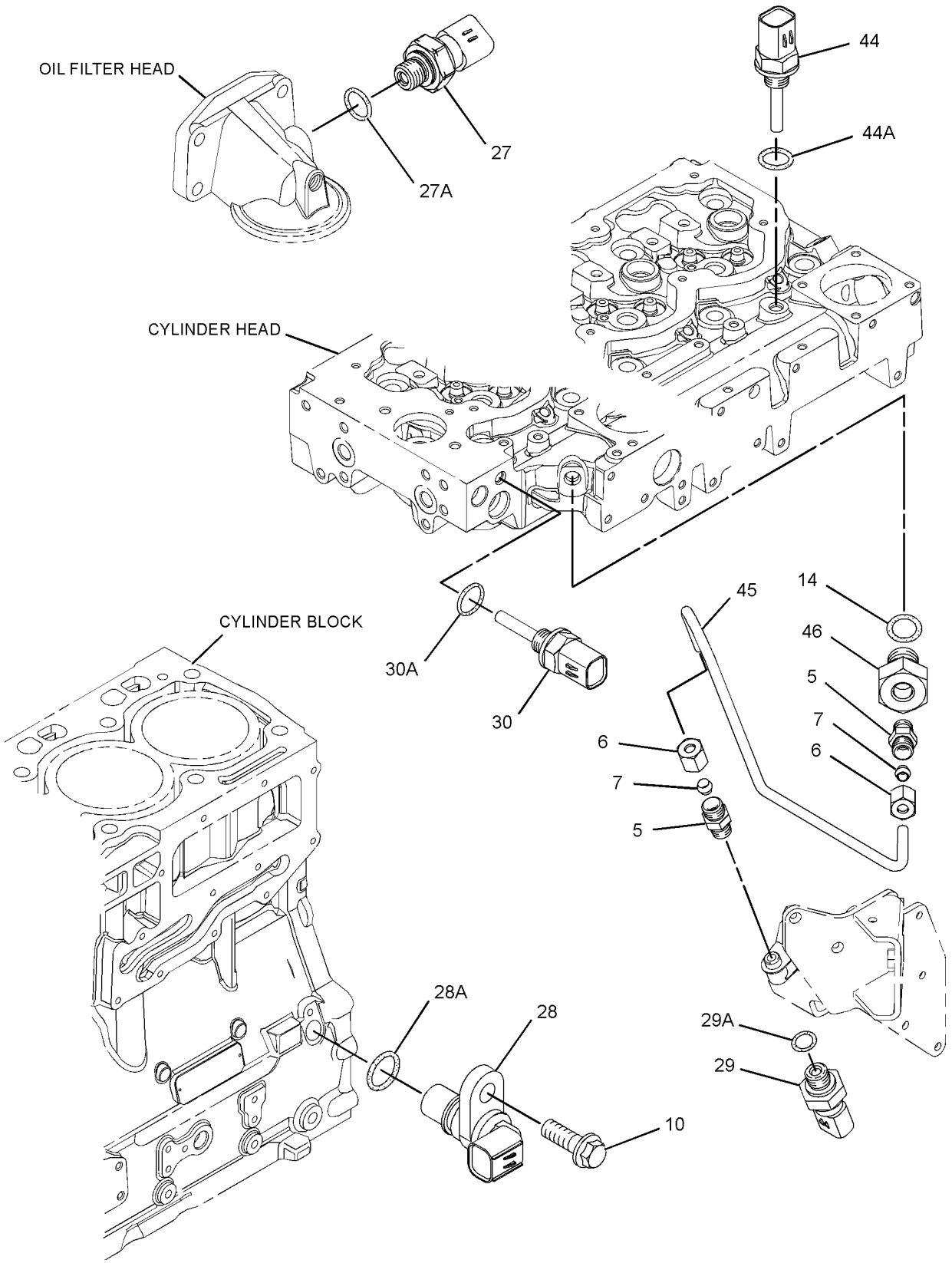

GRAPHIC #3 **<END>** g01342211

FUEL SYSTEM

304-3649 PUMP GP-FUEL INJECTION

S/N: C4E5058-6228

PART OF 254-9233 ENGINE AR-PRIMARY

SMCS-1251, 1290 **i04031922**

NOTE	REF NO	GRAPHIC REF	PART NUMBER	QTY	PART NAME 1 2 3 4 5 6 (PRODUCT LEVEL)	SEE PAGE
M	1	1	**6I-0260**	3	BOLT (M8X1.25X25-MM)	
	2	1	**6I-0455**	3	BOLT (M8X1.25X55-MM)	
	3	2	**6I-0572**	4	BOLT (M8X1.25X20-MM)	
	4	2	**7W-2632**	1	WASHER (8.5X16.8X1.6-MM THK)	
	5	3	**035-8017**	2	UNION	
	6	3	**067-6264**	2	FITTING-FLARED	
	7	3	**067-6265**	2	FITTING-BRASS	
M	8	1	**100-4830**	1	BOLT (M10X1.5X20-MM)	
M	9	1	**101-3895**	4	BOLT (M8X1.25X35-MM)	
M	10	1,3	**124-3815**	4	BOLT (M8X1.25X16-MM)	
	11	2	**141-8584**	4	BOLT (M8X1.25X50-MM)	
	12	2	**300-6714**	8	MOUNT	
	13	1	**160-0162**	2	WASHER	
	14	3	**199-9252**	1	SEAL-O-RING	
	15	2	**217-0099**	5	SPACER (8.2X25X2-MM THK)	
	16	2	**217-8477**	1	CLIP	
	17	1	**230-8989**	1	GEAR-FUEL PUMP (68-TEETH)	
	18	1	**232-3149**	3	WASHER (8.35X16.85X1.55-MM THK)	
	20	2	**268-6678**	1	BRACKET AS	
	20A	2	**260-3939**		SCREW-HEX HEAD	
	21	2	**268-6677**	1	BRACKET AS	
	21A	2	**260-3939**	1	SCREW-HEX HEAD	
	22	1	**318-2394**	1	RAIL AS-FUEL	
		1	**305-5291**		VALVE AS-RELIEF (FUEL RAIL)	
		1	**228-7102**	1	SEAL-O-RING	
	23	1	**278-5168**	4	CLAMP-INJECTOR	
	24	1	**278-5170**	4	BOLT	
	25	2	**278-5203**	4	SPACER	
	27	3	**278-5225**	1	KIT-SENSOR (ENGINE OIL PRESSURE)	
	27A	3	**199-9267**	1	SEAL-O-RING	
	28	3	**311-3858**	1	KIT-SENSOR (ENGINE SPEED)	
	28A	3	**274-1639**	1	SEAL	
		3	**238-0120**	1	SENSOR GP-SPEED	
	29	3	**278-5273**	1	KIT-SENSOR (AIR PRESSURE)	
	29A	3	**199-9252**	1	SEAL-O-RING	
	30	3	**278-5307**	1	KIT-SENSOR (COOLANT TEMPERATURE)	
	30A	3	**199-9267**	1	SEAL-O-RING	
	31	1	**311-6342**	1	SENSOR-PRESSURE (FUEL RAIL PRESSURE)	
	31A	1	**309-8006**	1	WASHER	
YR	32	1	**320-0677**	4	INJECTOR GP-FUEL	82
YR	33	1	**324-0532**	1	PUMP GP-FUEL INJECTION	131
	34	1	**298-4535**	1	BRACKET-SUPPORT	
	35	1	**298-4536**	1	BRACKET-MOUNTING	
	36	1	**322-3744**	1	TUBE	
	37	1	**322-3745**	1	TUBE (CYL NO. 1) (CYL NO. 1)	
	38	1	**322-3746**	1	TUBE (CYL NO. 2) (CYL NO. 2)	
C	39	1	**333-4732**	1	LINE-FUEL INJECTION (CYL NO. 3) (CYL NO. 3)	
C	40	1	**333-4733**	1	LINE-FUEL INJECTION (CYL NO. 4) (CYL NO. 4)	
	41	1	**298-4542**	1	TUBE AS	
	42	1	**298-4543**	1	BOLT	
	43	2	**317-3144**	1	BRACKET	
	44	3	**313-2455**	1	SENSOR-TEMPERATURE (AIR)	
	44A	3	**278-5226**	1	SEAL-O-RING	
	45	3	**304-3688**	1	TUBE	
	46	3	**304-3689**	1	ADAPTER	

304-3649 PUMP GP-FUEL INJECTION *(contd.)* i04031922

NOTE	REF NO	GRAPHIC REF	PART NUMBER	QTY	PART NAME 1 2 3 4 5 6 (PRODUCT LEVEL)	SEE PAGE
F			**278-4138**	4	PROTECTION GP-FUEL SYSTEM	

C-CHANGE FROM PREVIOUS TYPE
F-NOT SHOWN
M-METRIC PART
R-REMFG PART MAY BE AVAILABLE
Y-SEPARATE ILLUSTRATION

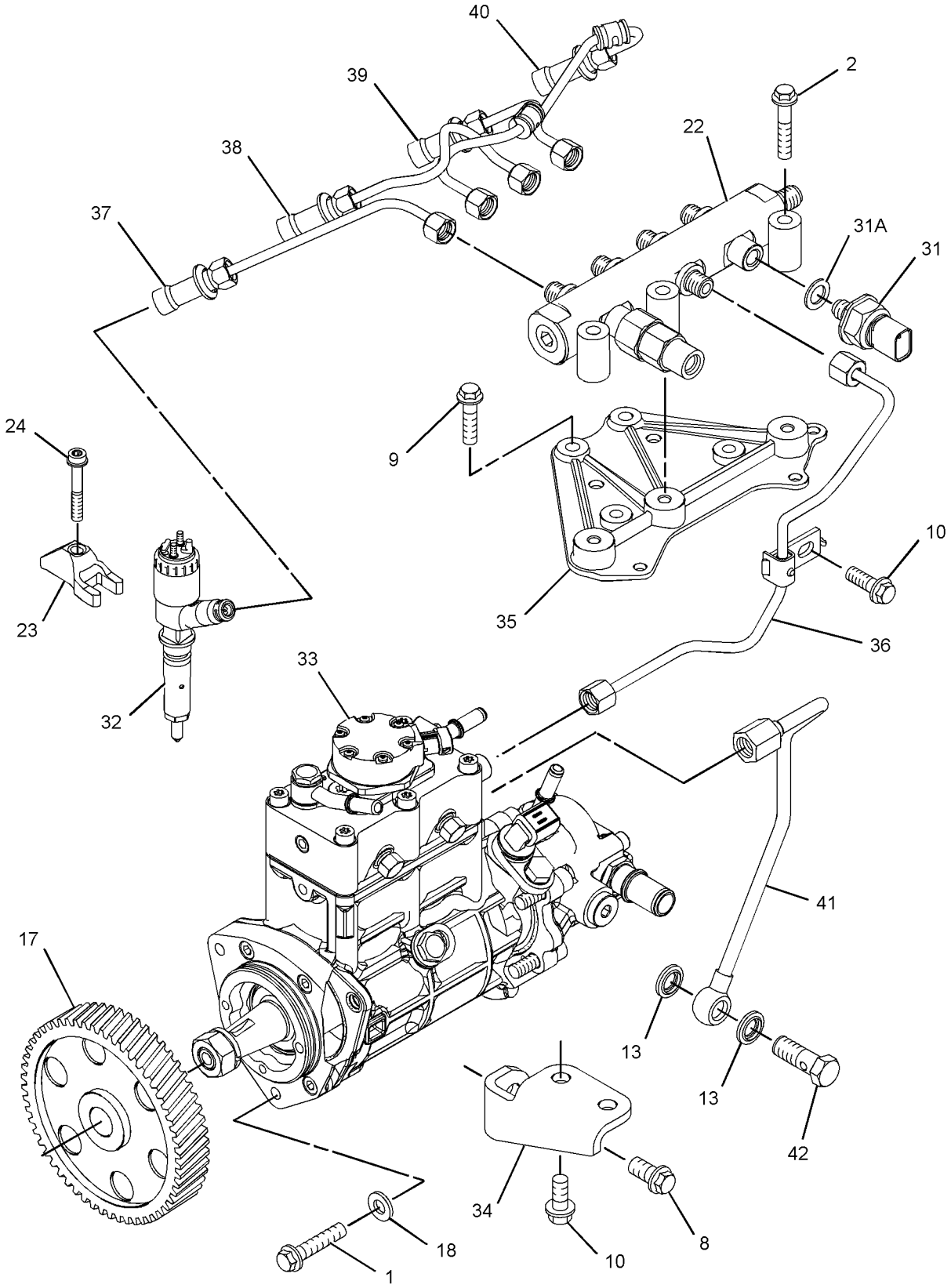

GRAPHIC #1 g01704629

304-3649 **PUMP GP-FUEL INJECTION** *(contd.)* **i04031922**

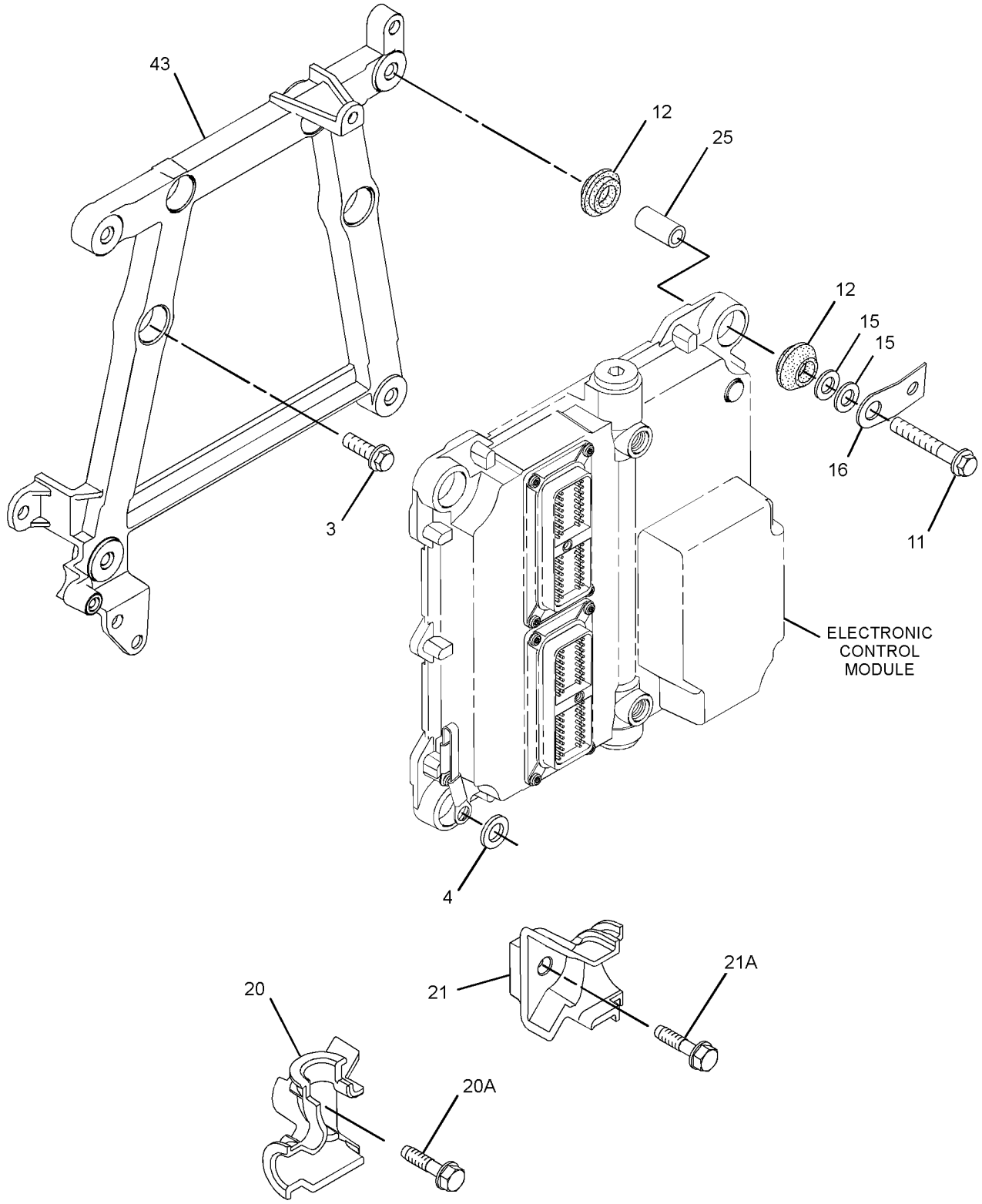

GRAPHIC #2 g01681917

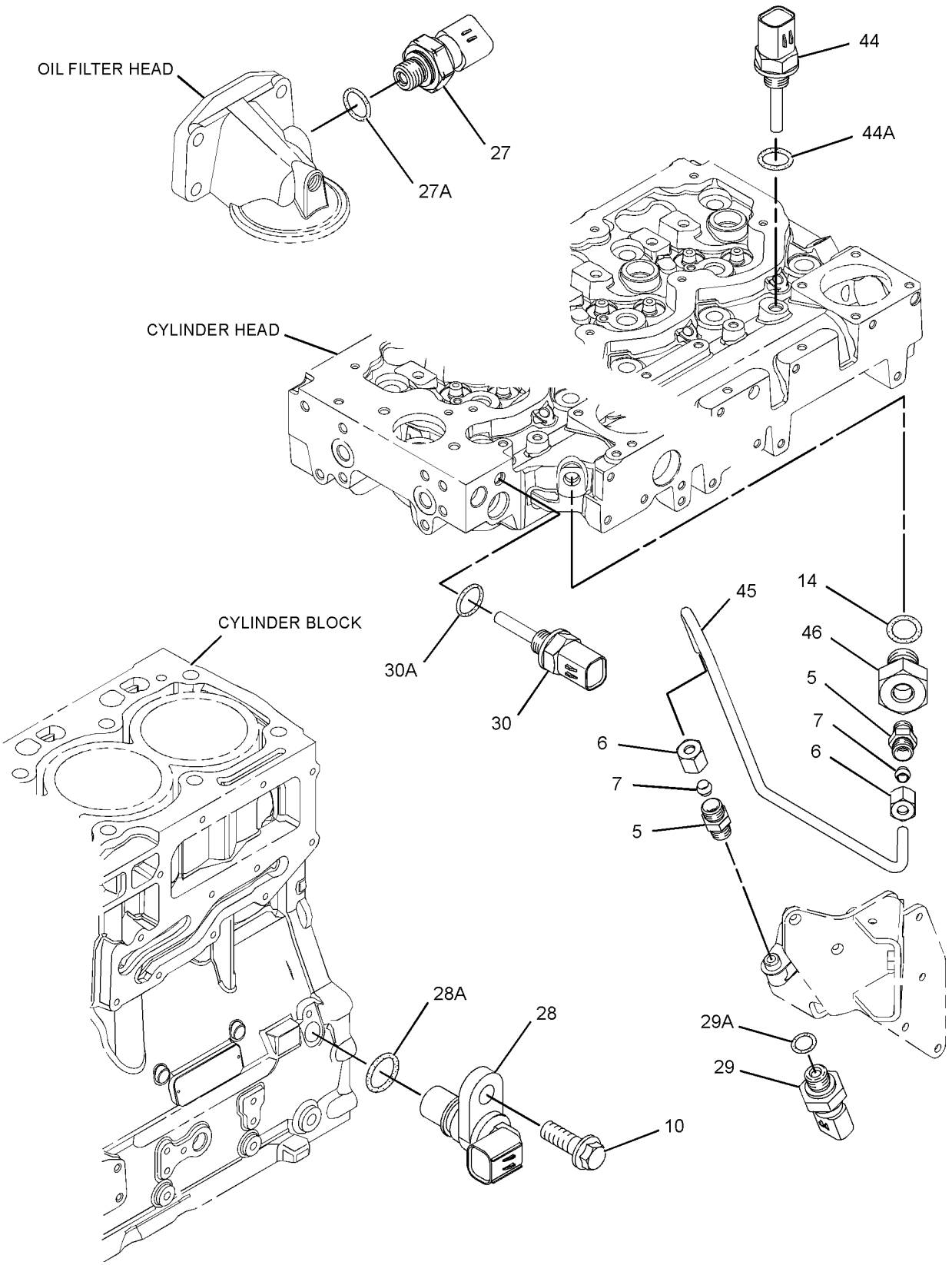

GRAPHIC #3 **<END>** g01342211

FUEL SYSTEM

304-3649 PUMP GP-FUEL INJECTION

S/N: C4E6229-UP

PART OF 254-9233 ENGINE AR-PRIMARY

TYPE 1

SMCS-1251, 1290 **i04034755**

NOTE	REF NO	GRAPHIC REF	PART NUMBER	QTY	PART NAME 1 2 3 4 5 6 (PRODUCT LEVEL)	SEE PAGE
M	1	1	**6I-0260**	3	BOLT (M8X1.25X25-MM)	
	2	1	**6I-0455**	3	BOLT (M8X1.25X55-MM)	
	3	2	**6I-0572**	4	BOLT (M8X1.25X20-MM)	
	4	2	**7W-2632**	1	WASHER (8.5X16.8X1.6-MM THK)	
	5	3	**035-8017**	2	UNION	
	6	3	**067-6264**	2	FITTING-FLARED	
	7	3	**067-6265**	2	FITTING-BRASS	
M	8	1	**100-4830**	1	BOLT (M10X1.5X20-MM)	
M	9	1	**101-3895**	4	BOLT (M8X1.25X35-MM)	
M	10	1,3	**124-3815**	4	BOLT (M8X1.25X16-MM)	
	11	2	**141-8584**	4	BOLT (M8X1.25X50-MM)	
	12	2	**300-6714**	8	MOUNT	
	13	1	**160-0162**	2	WASHER	
	14	3	**199-9252**	1	SEAL-O-RING	
	15	2	**217-0099**	5	SPACER (8.2X25X2-MM THK)	
	17	1	**230-8989**	1	GEAR-FUEL PUMP (68-TEETH)	
	18	1	**232-3149**	3	WASHER (8.35X16.85X1.55-MM THK)	
	20	2	**268-6678**	1	BRACKET AS	
	20A	2	**260-3939**	1	SCREW-HEX HEAD	
	21	2	**268-6677**	1	BRACKET AS	
	21A	2	**260-3939**	1	SCREW-HEX HEAD	
	22	1	**318-2394**	1	RAIL AS-FUEL	
	22A	1	**305-5291**	1	VALVE AS-RELIEF	
	23	1	**278-5168**	4	CLAMP-INJECTOR	
	24	1	**278-5170**	4	BOLT	
	25	2	**278-5203**	4	SPACER	
	27	3	**278-5225**	1	KIT-SENSOR (ENGINE OIL PRESSURE)	
	27A	3	**199-9267**	1	SEAL-O-RING	
	28	3	**311-3858**	1	KIT-SENSOR (ENGINE SPEED)	
	28A	3	**274-1639**	1	SEAL	
	29	3	**278-5273**	1	KIT-SENSOR (AIR PRESSURE)	
	29A	3	**199-9252**	1	SEAL-O-RING	
	30	3	**278-5307**	1	KIT-SENSOR (COOLANT TEMPERATURE)	
	30A	3	**199-9267**	1	SEAL-O-RING	
	31	1	**311-6342**	1	SENSOR-PRESSURE (FUEL RAIL PRESSURE)	
	31A	1	**309-8006**	1	WASHER	
YR	32	1	**320-0677**	4	INJECTOR GP-FUEL	82
YR	33	1	**324-0532**	1	PUMP GP-FUEL INJECTION	131
	34	1	**298-4535**	1	BRACKET-SUPPORT	
	35	1	**337-3573**	1	BRACKET	
	36	1	**337-3574**	1	TUBE	
	37	1	**322-3745**	1	TUBE (CYL NO. 1)	
	38	1	**322-3746**	1	TUBE (CYL NO. 2)	
	39	1	**333-4732**	1	LINE-FUEL INJECTION (CYL NO. 3)	
	40	1	**333-4733**	1	LINE-FUEL INJECTION (CYL NO. 4)	
	41	1	**298-4542**	1	TUBE AS	
	42	1	**298-4543**	1	BOLT	
	43	2	**317-3144**	1	BRACKET	
	44	3	**313-2455**	1	SENSOR-TEMPERATURE (AIR)	
	44A	3	**278-5226**	1	SEAL-O-RING	
C	45	3	**335-8266**	1	TUBE	
	46	3	**304-3689**	1	ADAPTER	
F			**278-4138**	4	PROTECTION GP-FUEL SYSTEM	

C-CHANGE FROM PREVIOUS TYPE
F-NOT SHOWN
M-METRIC PART
R-REMFG PART MAY BE AVAILABLE
Y-SEPARATE ILLUSTRATION

304-3649 **PUMP GP-FUEL INJECTION** *(contd.)* **i04034755**

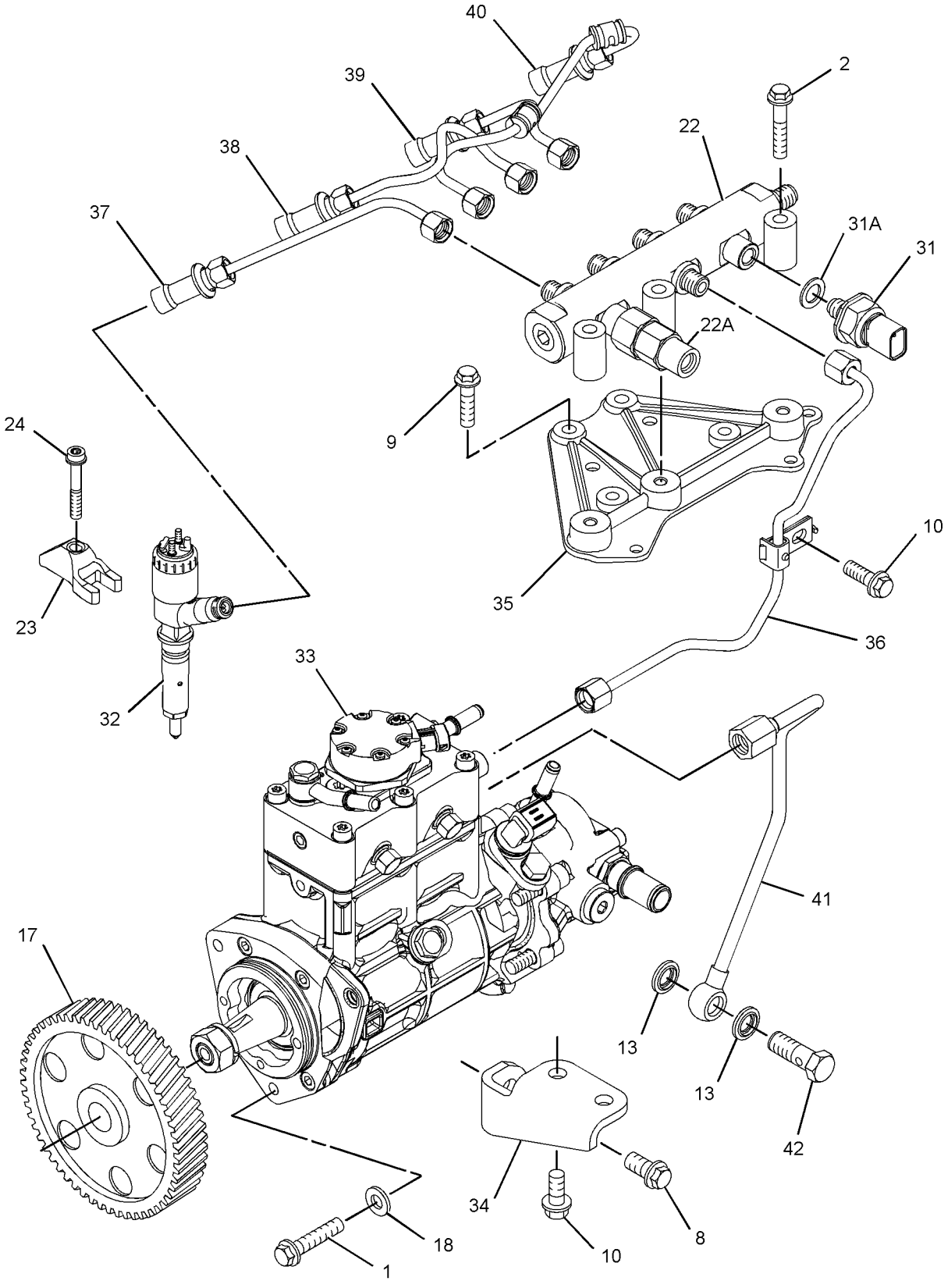

GRAPHIC #1 g01763875

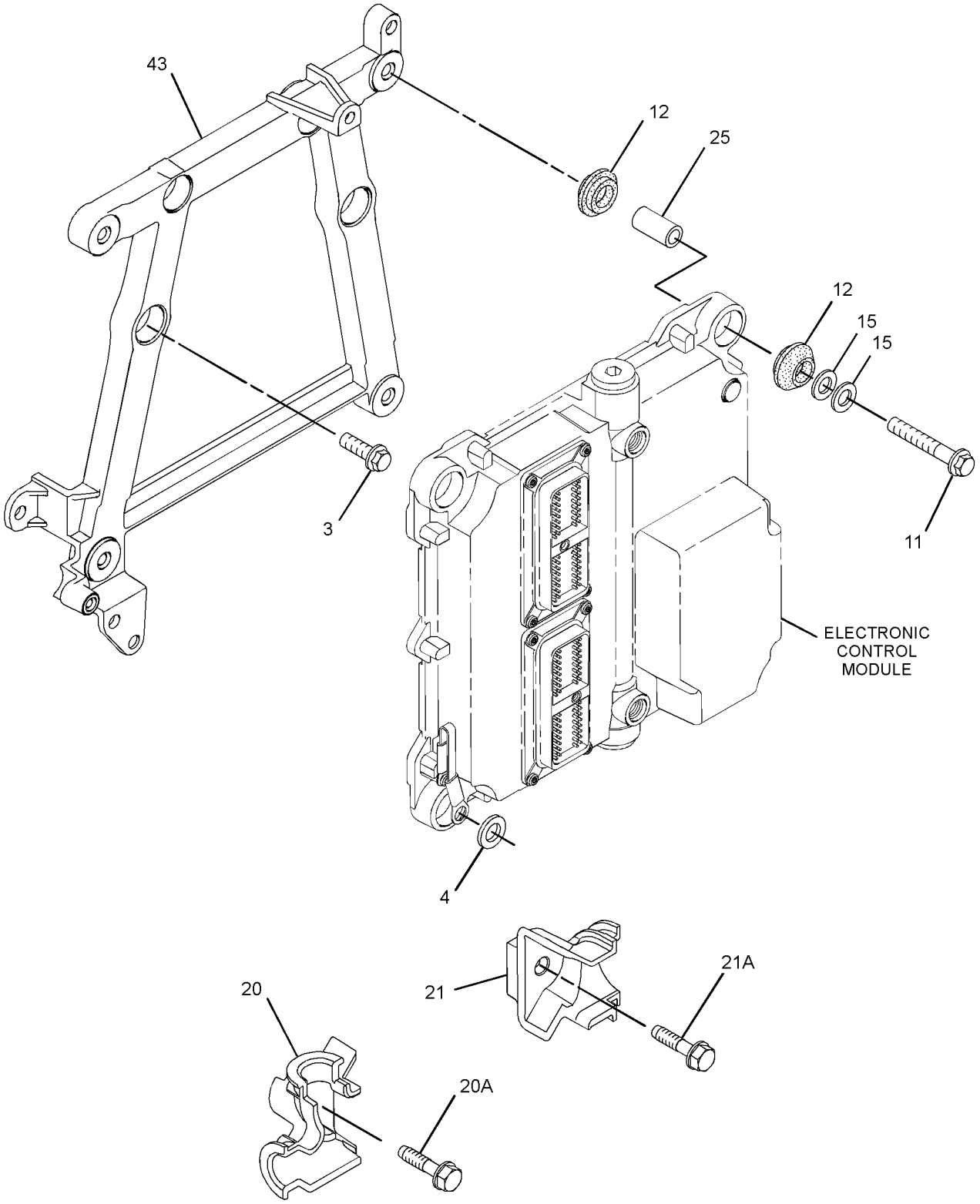

GRAPHIC #2 g01934254

304-3649 **PUMP GP-FUEL INJECTION** *(contd.)* **i04034755**

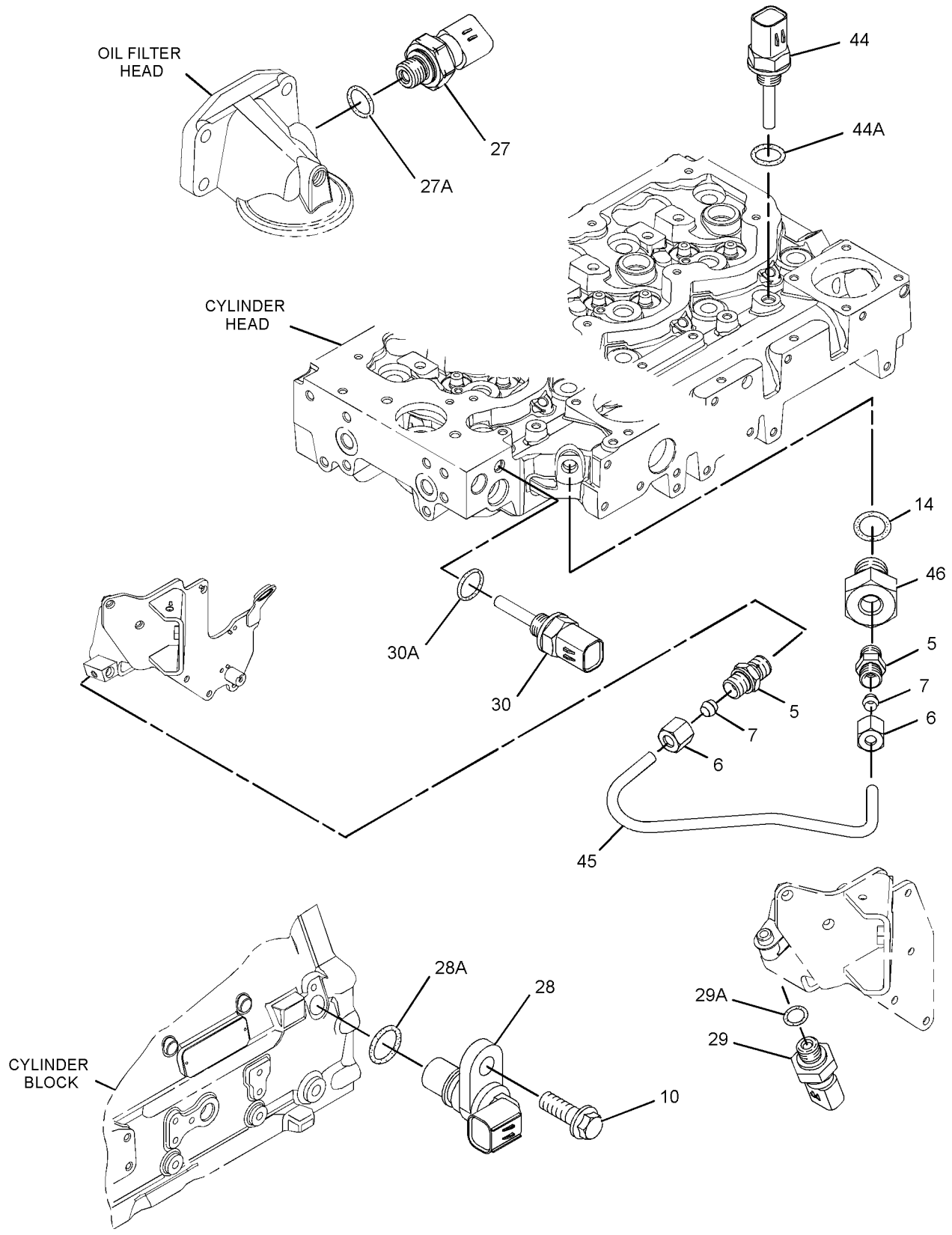

GRAPHIC #3 **<END>** g01719281

FUEL SYSTEM

304-3649 PUMP GP-FUEL INJECTION

S/N: C4E6229-UP

PART OF 254-9233 ENGINE AR-PRIMARY

TYPE 2

SMCS-1251, 1290 **i04017531**

NOTE	REF NO	GRAPHIC REF	PART NUMBER	QTY	PART NAME 1 2 3 4 5 6 (PRODUCT LEVEL)	SEE PAGE
M	1	1	**6I-0260**	3	BOLT (M8X1.25X25-MM)	
	2	1	**6I-0455**	3	BOLT (M8X1.25X55-MM)	
	3	2	**6I-0572**	4	BOLT (M8X1.25X20-MM)	
	4	2	**7W-2632**	1	WASHER (8.5X16.8X1.6-MM THK)	
	5	3	**035-8017**	2	UNION	
	6	3	**067-6264**	2	FITTING-FLARED	
	7	3	**067-6265**	2	FITTING-BRASS	
M	8	1	**100-4830**	1	BOLT (M10X1.5X20-MM)	
M	9	1	**101-3895**	4	BOLT (M8X1.25X35-MM)	
M	10	1,3	**124-3815**	4	BOLT (M8X1.25X16-MM)	
	11	2	**141-8584**	4	BOLT (M8X1.25X50-MM)	
	12	2	**300-6714**	8	MOUNT	
	13	1	**160-0162**	2	WASHER	
	14	3	**199-9252**	1	SEAL-O-RING	
	15	2	**217-0099**	5	SPACER (8.2X25X2-MM THK)	
	17	1	**230-8989**	1	GEAR-FUEL PUMP (68-TEETH)	
	18	1	**232-3149**	3	WASHER (8.35X16.85X1.55-MM THK)	
	20	2	**268-6678**	1	BRACKET AS	
	20A	2	**260-3939**	1	SCREW-HEX HEAD	
	21	2	**268-6677**	1	BRACKET AS	
	21A	2	**260-3939**	1	SCREW-HEX HEAD	
	22	1	**318-2394**	1	RAIL AS-FUEL	
	22A	1	**305-5291**	1	VALVE AS-RELIEF	
	23	1	**278-5168**	4	CLAMP-INJECTOR	
	24	1	**278-5170**	4	BOLT	
	25	2	**278-5203**	4	SPACER	
	27	3	**278-5225**	1	KIT-SENSOR (ENGINE OIL PRESSURE)	
	27A	3	**199-9267**	1	SEAL-O-RING	
	28	3	**311-3858**	1	KIT-SENSOR (ENGINE SPEED)	
	28A	3	**274-1639**	1	SEAL	
		3	**238-0120**	1	SENSOR GP-SPEED	
	29	3	**278-5273**	1	KIT-SENSOR (AIR PRESSURE)	
	29A	3	**199-9252**	1	SEAL-O-RING	
	30	3	**278-5307**	1	KIT-SENSOR (COOLANT TEMPERATURE)	
	30A	3	**199-9267**	1	SEAL-O-RING	
	31	1	**311-6342**	1	SENSOR-PRESSURE (FUEL RAIL PRESSURE)	
	31A	1	**309-8006**	1	WASHER	
YR	32	1	**320-0677**	4	INJECTOR GP-FUEL	82
CYR	33	1	**352-6584**	1	PUMP GP-FUEL INJECTION	132
	34	1	**298-4535**	1	BRACKET-SUPPORT	
	35	1	**337-3573**	1	BRACKET	
	36	1	**337-3574**	1	TUBE	
	37	1	**322-3745**	1	TUBE (CYL NO. 1)	
	38	1	**322-3746**	1	TUBE (CYL NO. 2)	
	39	1	**333-4732**	1	LINE-FUEL INJECTION (CYL NO. 3)	
	40	1	**333-4733**	1	LINE-FUEL INJECTION (CYL NO. 4)	
	41	1	**298-4542**	1	TUBE AS	
	42	1	**298-4543**	1	BOLT	
	43	2	**317-3144**	1	BRACKET	
	44	3	**313-2455**	1	SENSOR-TEMPERATURE (AIR)	
	44A	3	**278-5226**	1	SEAL-O-RING	
	45	3	**335-8266**	1	TUBE	
	46	3	**304-3689**	1	ADAPTER	
F			**278-4138**	4	PROTECTION GP-FUEL SYSTEM	

C-CHANGE FROM PREVIOUS TYPE
F-NOT SHOWN
M-METRIC PART
R-REMFG PART MAY BE AVAILABLE
Y-SEPARATE ILLUSTRATION

304-3649 **PUMP GP-FUEL INJECTION** *(contd.)* **i04017531**

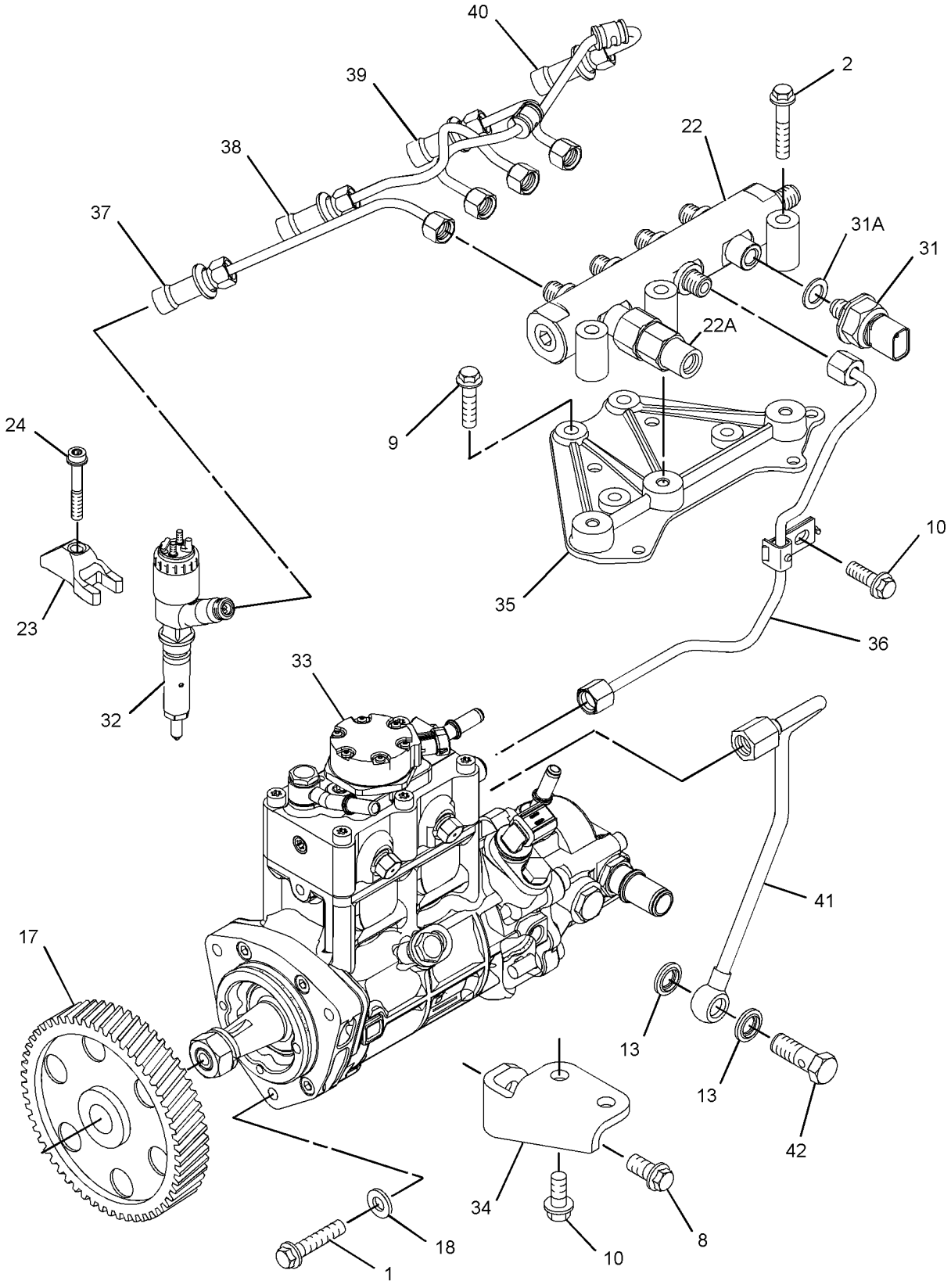

GRAPHIC #1 g02242593

304-3649 **PUMP GP-FUEL INJECTION** *(contd.)* **i04017531**

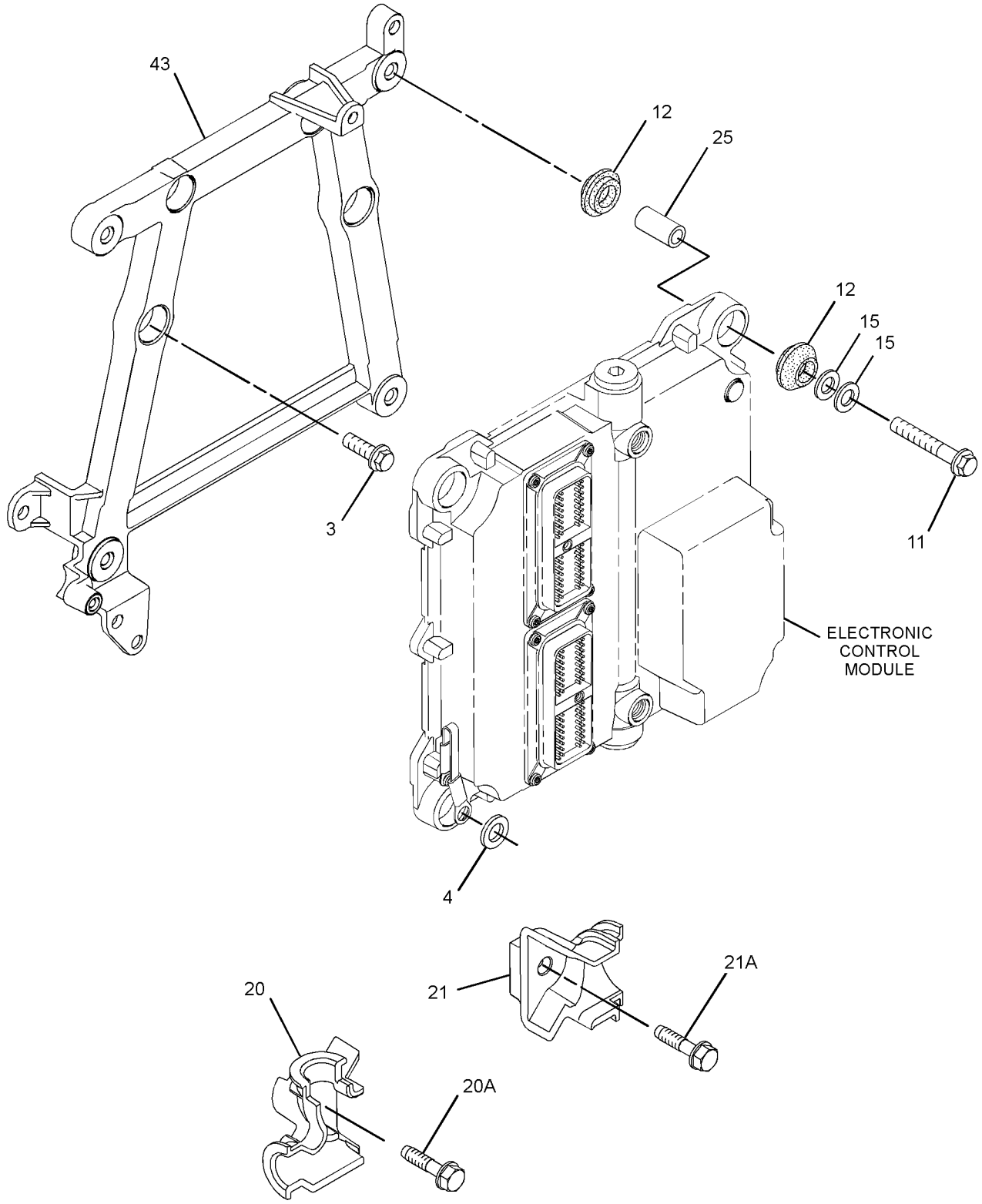

GRAPHIC #2 g01934254

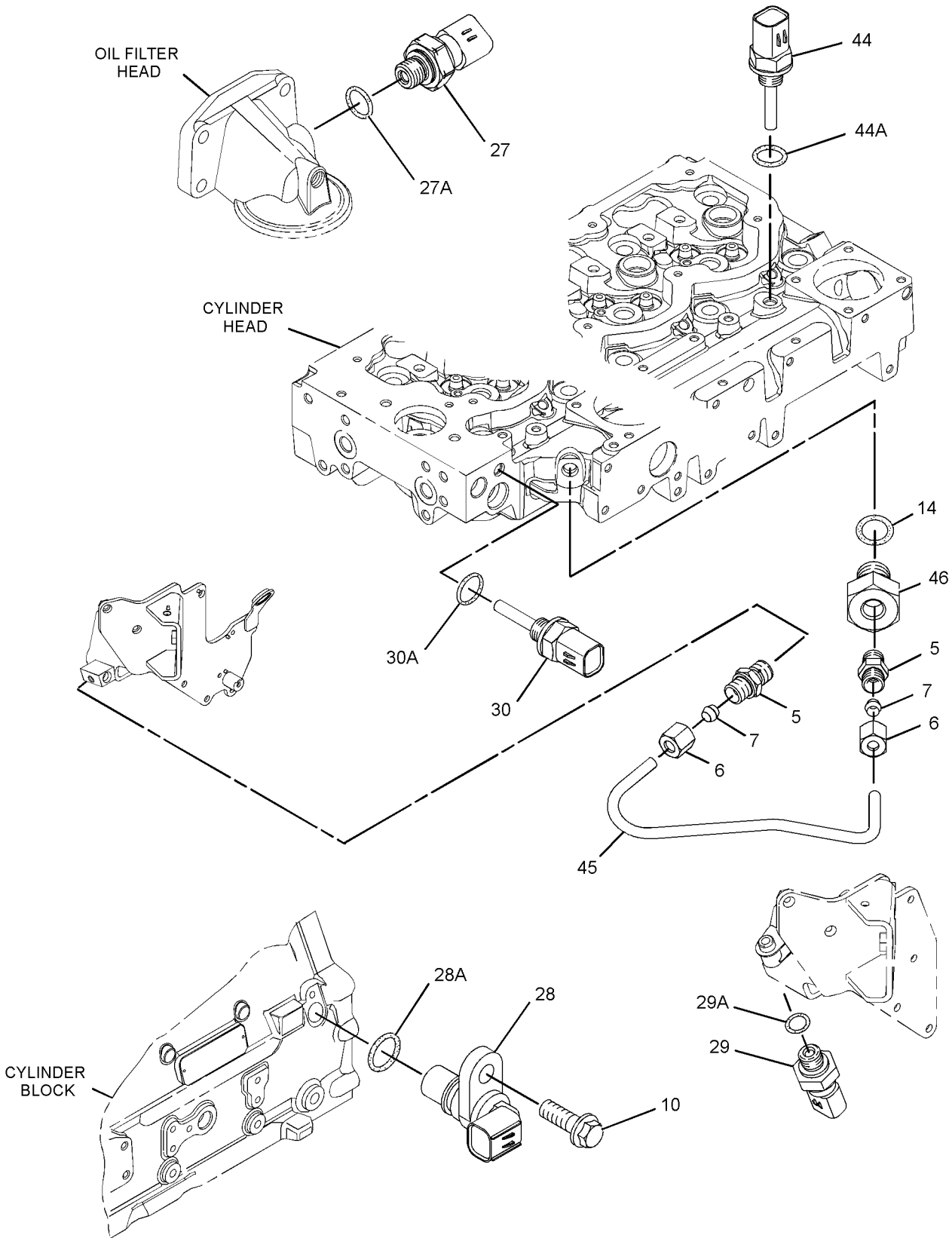

GRAPHIC #3 **<END>** g01719281

324-0532 PUMP GP-FUEL INJECTION*R

S/N: C4E1-UP

PART OF 304-3649 PUMP GP-FUEL INJECTION

SMCS-1251, 1290 **i03757534**

NOTE	REF NO	GRAPHIC REF	PART NUMBER	QTY	PART NAME 1 2 3 4 5 6 (PRODUCT LEVEL)	SEE PAGE
	1	1	**228-0172**	2	FITTING-FUEL	
	2	1	**228-7100**	3	SEAL-O-RING	
	3	1	**238-0120**	1	SENSOR GP-SPEED (SECONDARY, TIMING)	
	4	1	**247-6019**	2	SEAL	
	5	1	**248-1066**	1	FITTING-FUEL	
	6	1	**293-0249**	1	PUMP GP-FUEL TRANSFER	
	7	1	*295-0189*	1	CONNECTOR AS	
	7A	1	**8C-3076**	1	SEAL-O-RING	
	8	1	**295-4801**	1	NUT (M14X1.5-THD)	
	9	1	**296-3542**	1	LOCKWASHER	
	10	1	**117-1385**	1	SEAL-O-RING	
M	11	1	**5A-3604**	5	BOLT-SOCKET HEAD (M8X1.25X25-MM)	
	12	1	**334-2932**	1	SEAL-O-RING	
	13	1	**8L-2779**	4	SEAL-O-RING	
M	14	1	**8T-4200**	1	BOLT (M8X1.25X16-MM)	

M-METRIC PART

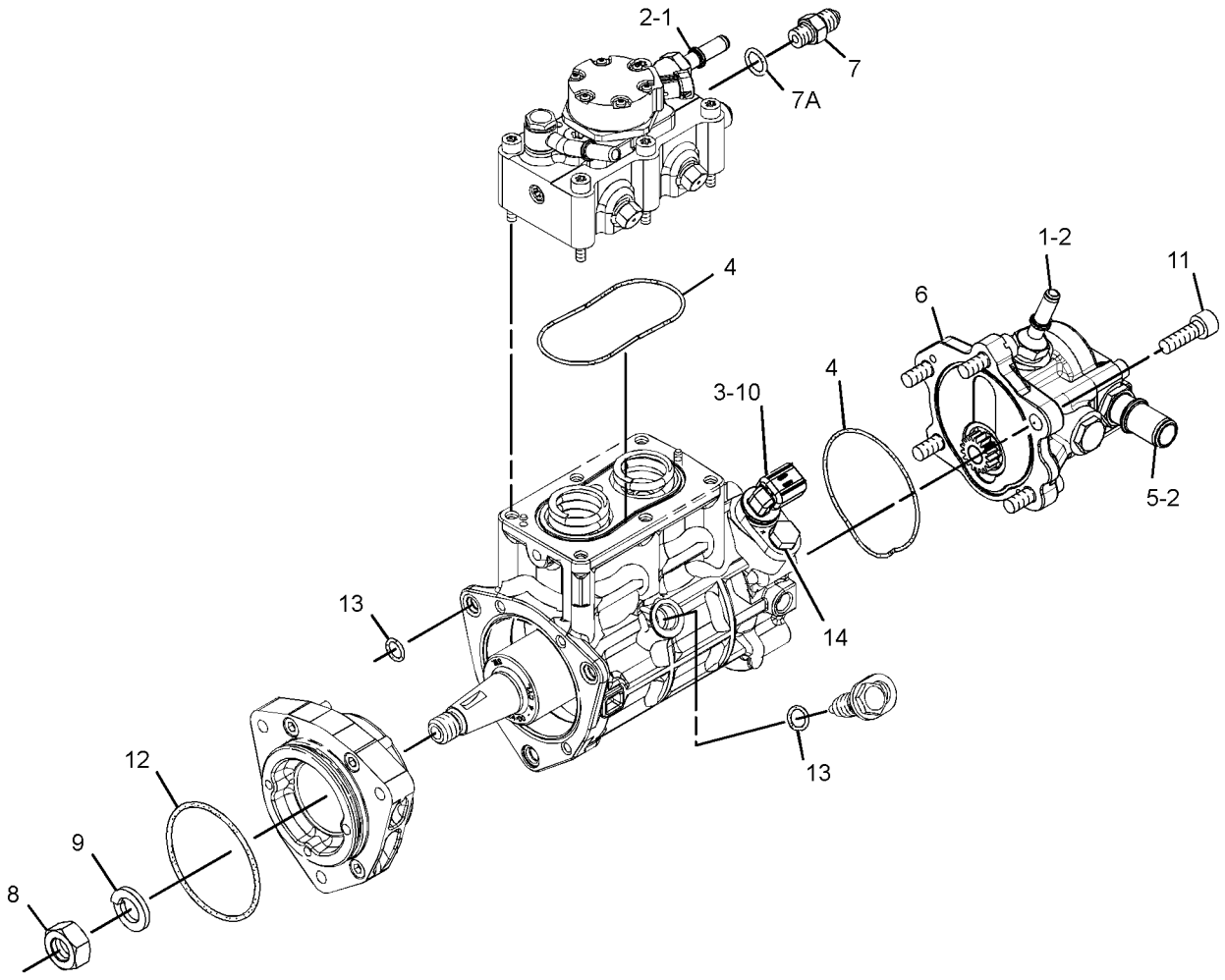

GRAPHIC #1 **<END>** g01620557

352-6584 PUMP GP-FUEL INJECTION*R

S/N: JTD1-UP; C4E1-UP; FFF1-UP; LLL1-UP
PART OF 304-3649 PUMP GP-FUEL INJECTION
ALSO AN ATTACHMENT

SMCS-1251, 1290 **i03995514**

NOTE	REF NO	GRAPHIC REF	PART NUMBER	QTY	PART NAME 1 2 3 4 5 6 (PRODUCT LEVEL)	SEE PAGE
	1	1	**228-0172**	1	FITTING-FUEL	
	2	1	**228-7100**	3	SEAL-O-RING	
	3	1	**238-0120**	1	SENSOR GP-SPEED (INJECTION PUMP)	
	4	1	**248-1066**	1	FITTING-FUEL	
	5	1	**295-4801**	1	NUT (M14X1.5-THD)	
	6	1	**296-3542**	1	LOCKWASHER	
	7	1	**117-1385**	1	SEAL-O-RING	
	8	1	**334-2932**	1	SEAL-O-RING	
M	9	1	**5A-3604**	5	BOLT-SOCKET HEAD (M8X1.25X25-MM)	
M	10	1	**8T-4200**	1	BOLT (M8X1.25X16-MM)	
	11	1	**247-6019**	1	SEAL	
	12	1	**8L-2779**	1	SEAL-O-RING	
	13	1	**351-2799**	1	FITTING	

M-METRIC PART

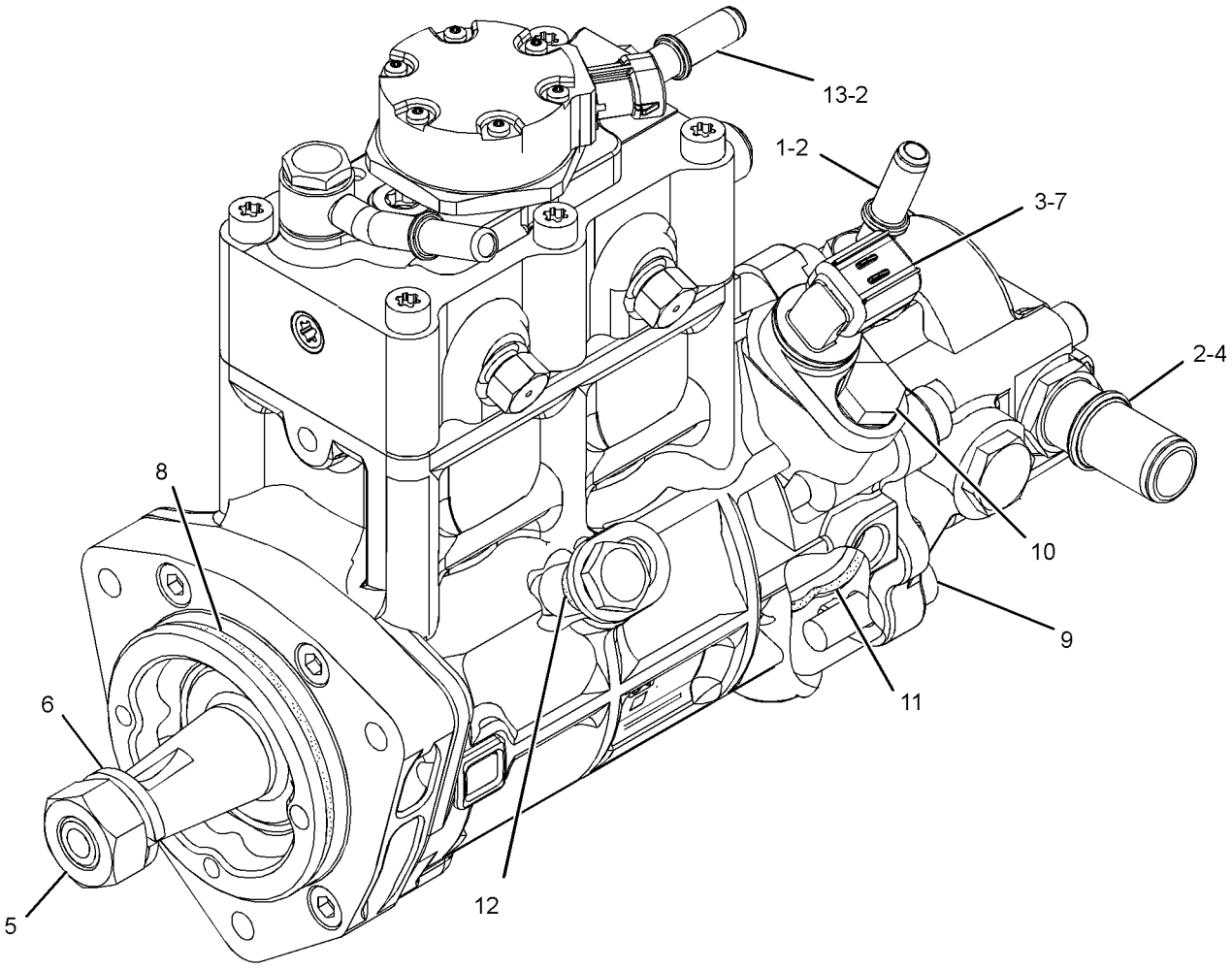

GRAPHIC #1 **<END>** g02199955

FUEL SYSTEM

358-6633 RAIL GP-FUEL

S/N: JTD1-UP; FFF1-UP; LLL1-UP
AN ATTACHMENT

SMCS-1288 **i04020469**

NOTE	REF NO	GRAPHIC REF	PART NUMBER	QTY	PART NAME 1 2 3 4 5 6 (PRODUCT LEVEL)	SEE PAGE
	1	1	**305-5291**	1	VALVE AS-RELIEF (FUEL RAIL)	

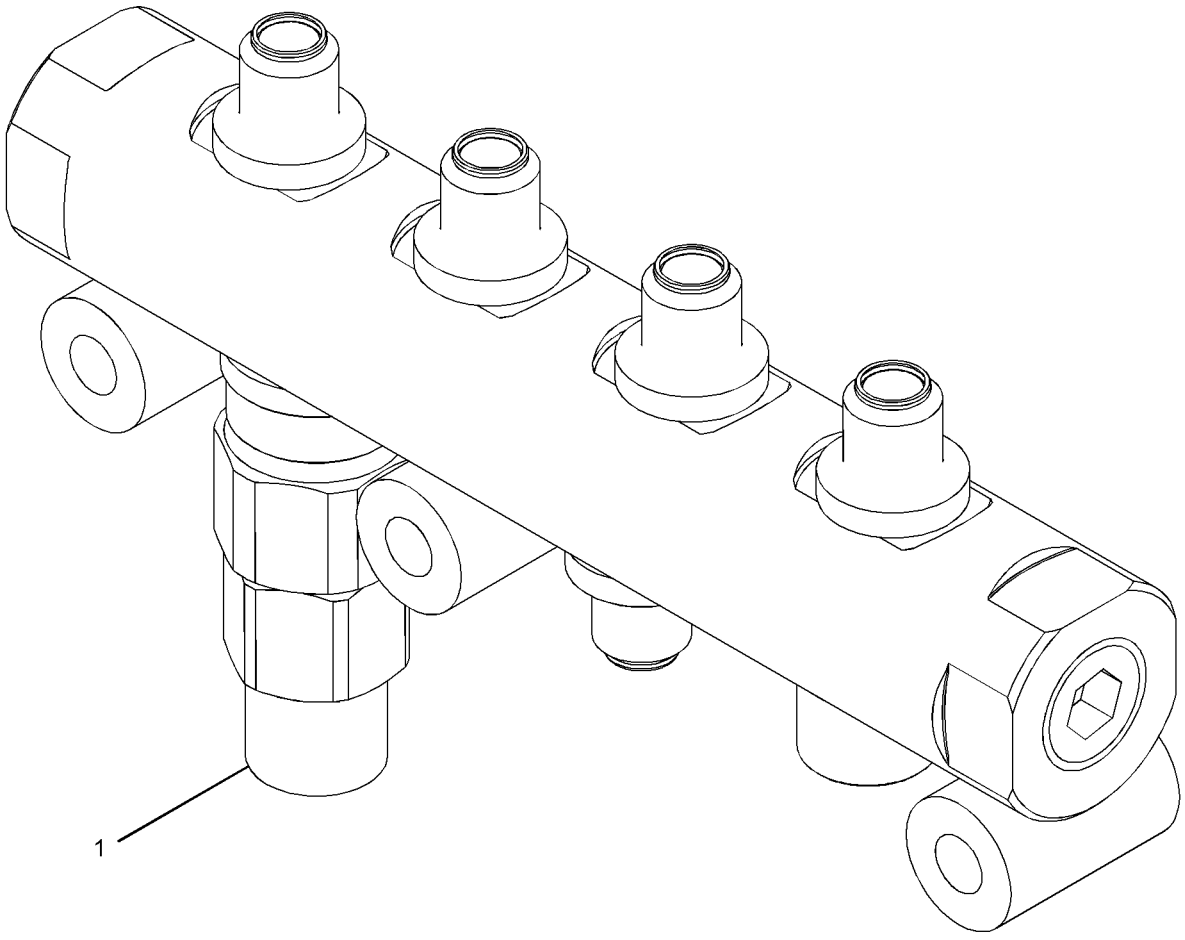

GRAPHIC #1 **<END>** g02203695

322-5920 SHUTOFF GP-MANUAL–FIRE PLOW

S/N: JTD1-UP; FFF1-UP; LLL1-UP
PART OF 322-5904 LINES GP-FUEL
AN ATTACHMENT

SMCS-1704 **i03701440**

NOTE	REF NO	GRAPHIC REF	PART NUMBER	QTY	PART NAME 1 2 3 4 5 6 (PRODUCT LEVEL)	SEE PAGE
Y	1	1	**112-1817**	1	VALVE GP-MANUAL (FIRE PLOW)	45
Y	2	1	*322-5908*	1	CABLE GP-CONTROL (FIRE PLOW)	684
	3	1	**322-5915**	1	BRACKET	
	4	1	**322-5916**	1	BRACKET	
	5	1	**322-5917**	1	BRACKET	
	6	1	**214-7568**	2	SEAL-O-RING	
	7	1	**228-7089**	2	SEAL-O-RING	
	8	1	**4B-4274**	1	WASHER (5.5X13X1.2-MM THK)	
	9	1	**6V-8636**	1	CONNECTOR	
	10	1	**6V-8724**	1	ELBOW	
M	11	1	**8T-0285**	4	SCREW-MACHINE (M4X0.7X12-MM)	
M	12	1	**8T-0287**	1	BOLT (M5X0.8X10-MM)	
M	13	1	**8T-4189**	2	BOLT (M8X1.25X20-MM)	
	14	1	**8T-4223**	1	WASHER-HARD (13.5X25.5X3-MM THK)	
	15	1	**8T-4224**	2	WASHER-HARD (8.8X16X2-MM THK)	
	16	1	**8T-7971**	1	WASHER-HARD (13.5X25.5X5-MM THK)	

M-METRIC PART
Y-SEPARATE ILLUSTRATION

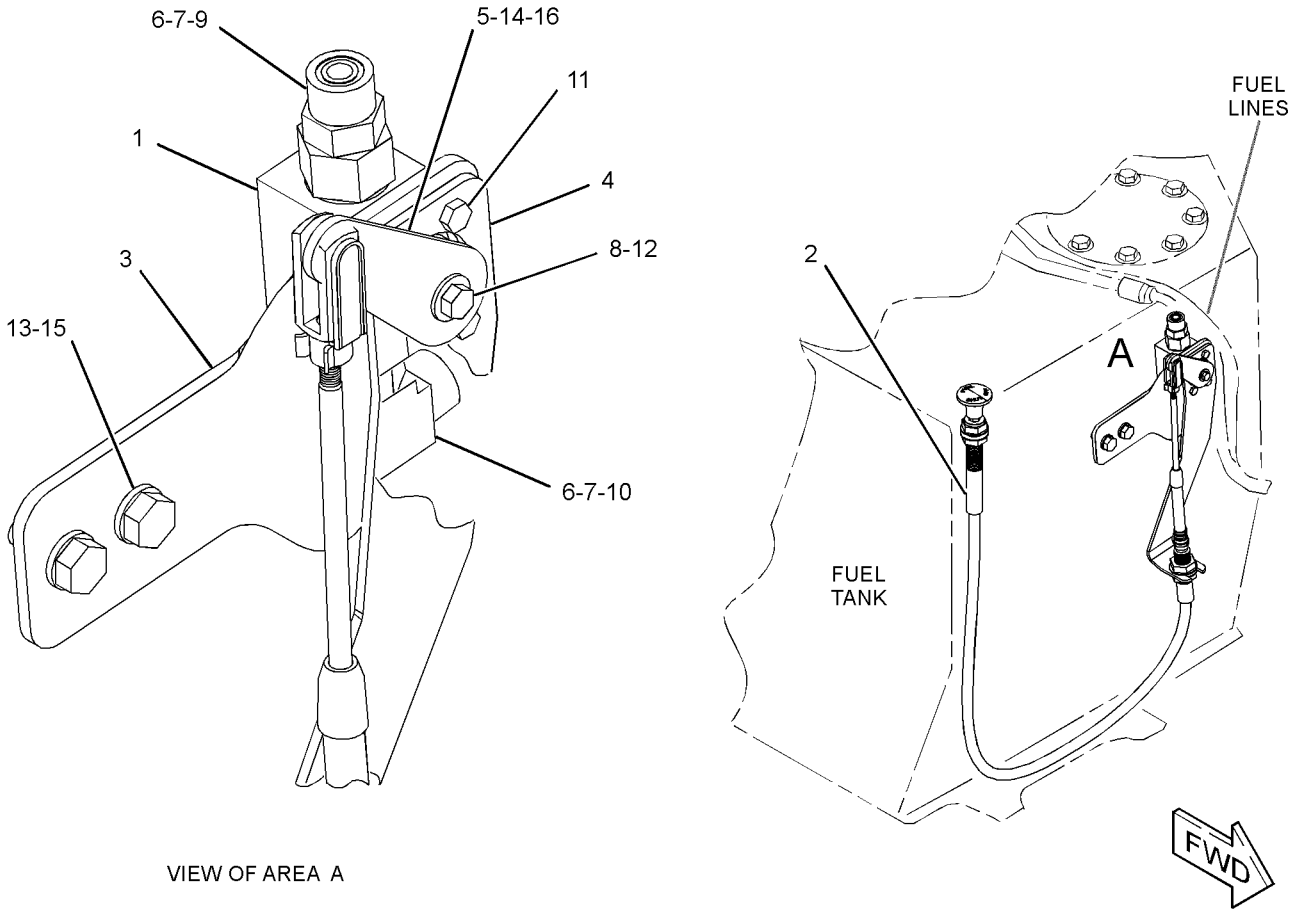

GRAPHIC #1 **<END>** g02006195

244-7408 TANK GP-FUEL

S/N: JTD1-UP; FFF1-UP; LLL1-UP
195-LITER (51.5-GAL)
PART OF 244-7376, 244-7377, 282-5327 CHASSIS AR

SMCS-1273 **i02895051**

NOTE	REF NO	GRAPHIC REF	PART NUMBER	QTY	PART NAME 1 2 3 4 5 6 (PRODUCT LEVEL)	SEE PAGE
	1	1	**9M-6738**	2	CLAMP-HOSE	
	2	1	**151-2110**	1	GASKET	
M	3	1	**160-8744**	2	BOLT (M10X1.5X65-MM)	
	4	1	**256-2268**	2	STRAP AS	
D	5	1	**6V-2495**		SEAL (0.54-M)	
D	5A	1	**6V-2495**		SEAL (0.14-M)	
D	5B	1	**6V-2495**		SEAL (0.2-M)	
D	5C	1	**6V-2495**		SEAL (0.5-M EACH)	
	6	1	**260-0083**	1	FLANGE AS-FUEL TANK	
	7	1	**285-6704**	1	HOSE	
Y	8	1	**287-1962**	1	TANK GP-FUEL	137
M	9	1	**095-0736**	5	SCREW-MACHINE (M5X0.8X10-MM)	
	10	1	**5P-1076**	2	WASHER-HARD (13.5X30X4-MM THK)	
	11	1	**8T-0328**	5	WASHER-HARD (5.5X10X1-MM THK)	
	12	1	**8T-4121**	2	WASHER-HARD (11X21X2.5-MM THK)	
M	13	1	**8T-4179**	2	BOLT (M12X1.75X20-MM)	
E	14	1	**5P-6442**		HOSE (35-CM)	
E	15	1	**136-1955**		HOSE (29-CM)	
	16	1	**140-4765**	2	CLAMP-HOSE	

D-ORDER BY THE METER
E-ORDER BY THE CENTIMETER
M-METRIC PART
Y-SEPARATE ILLUSTRATION

244-7408 **TANK GP-FUEL** *(contd.)* **i02895051**

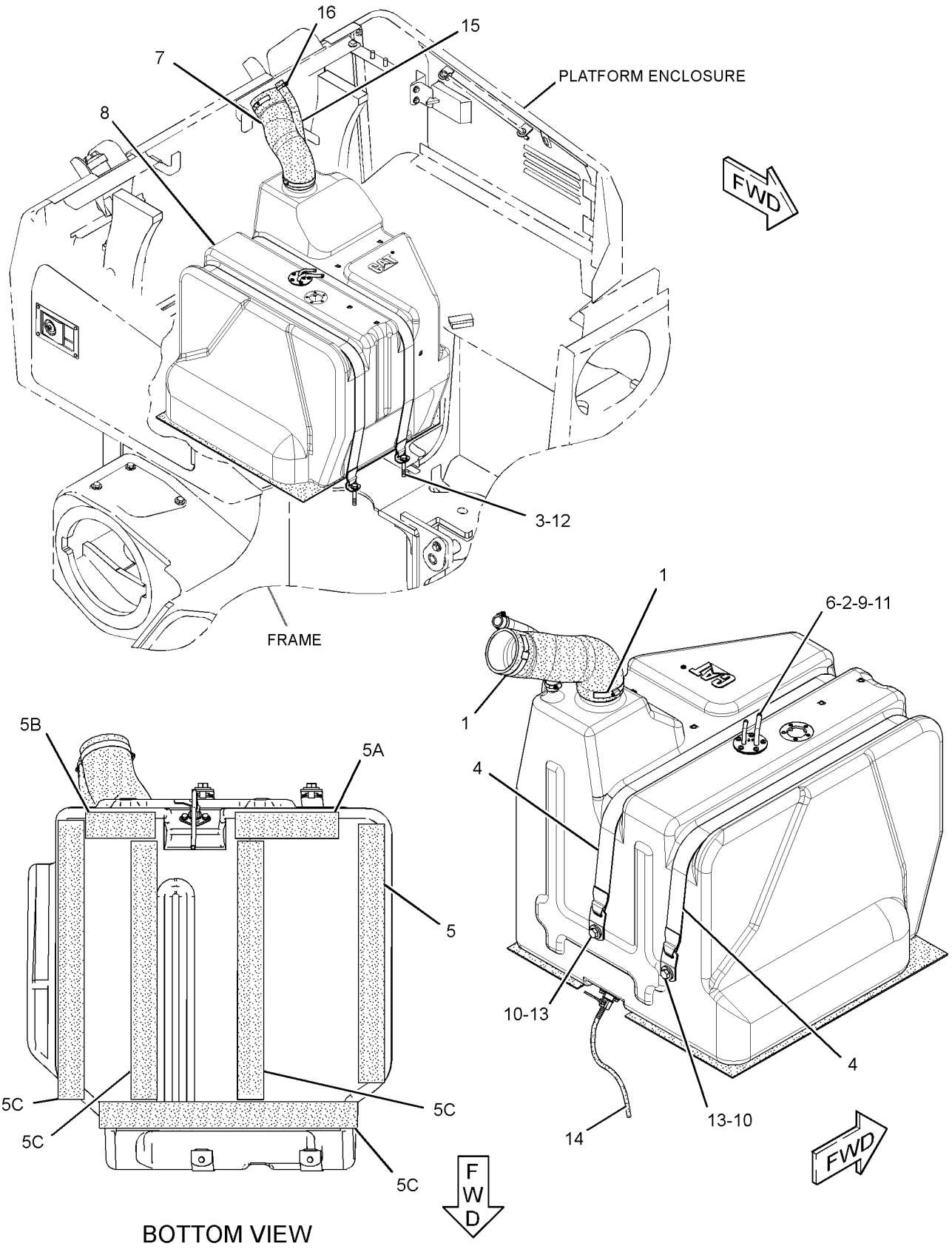

GRAPHIC #1

<END>

g01424493

287-1962 TANK GP-FUEL

S/N: JTD1-UP; FFF1-UP; LLL1-UP
PART OF 244-7408 TANK GP-FUEL

SMCS-1273 **i03601785**

NOTE	REF NO	GRAPHIC REF	PART NUMBER	QTY	PART NAME 1 2 3 4 5 6 (PRODUCT LEVEL)	SEE PAGE
	1	1	**4J-5268**	1	SEAL-O-RING	
	2	1	**175-4614**	1	VALVE AS (FUEL TANK)	
	3	1	**233-4065**	1	FLANGE AS	
	4	1	**287-1965**	1	TANK AS-FUEL	
M	5	1	**8T-4970**	2	BOLT (M6X1X14-MM)	
	6	1	**9X-8256**	2	WASHER (6.6X12X2-MM THK)	

M-METRIC PART

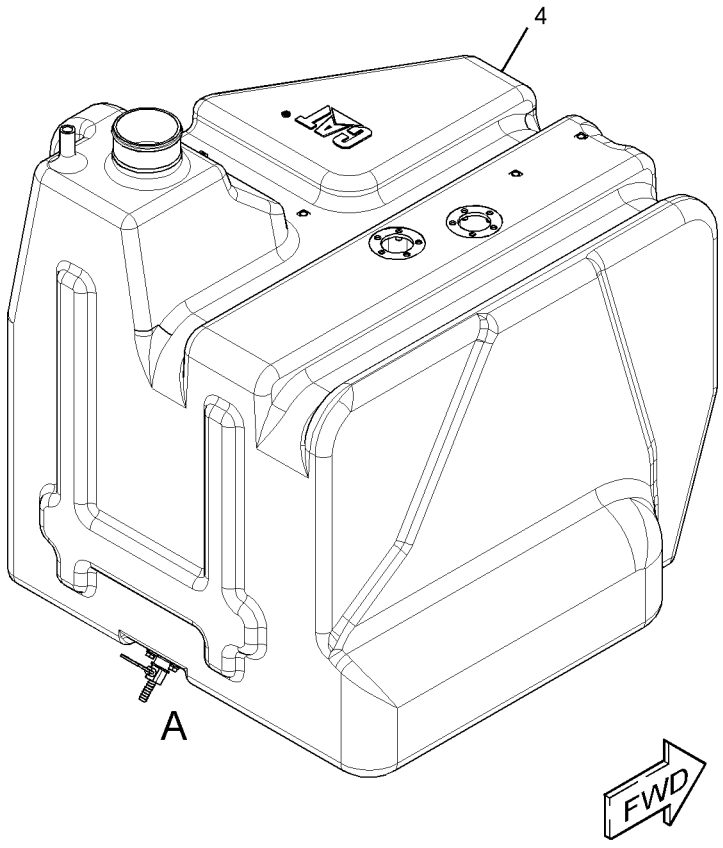

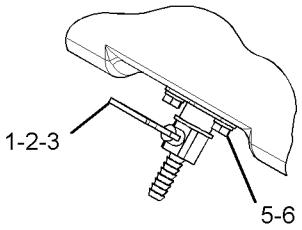

VIEW OF AREA A

GRAPHIC #1 **<END>** g01376271

319-8103 TANK GP-FUEL—FIRE PLOW

S/N: JTD1-UP; FFF1-UP; LLL1-UP
195-LITERS (51.5-US GAL)
PART OF 325-6496, 325-6497, 325-6502 CONVERSION AR-MACHINE OPTION
AN ATTACHMENT

SMCS-1273 **i03926609**

NOTE	REF NO	GRAPHIC REF	PART NUMBER	QTY	PART NAME 1 2 3 4 5 6 (PRODUCT LEVEL)	SEE PAGE
	1	1	**7K-1181**	1	STRAP-CABLE	
	2	1	**9M-6738**	2	CLAMP-HOSE	
	3	1	**110-1011**	1	COVER	
Y	4	1	**112-1817**	1	VALVE GP-MANUAL (FIRE PLOW)	45
	5	1	**140-4765**	2	CLAMP-HOSE	
	6	1	**151-2110**	1	GASKET	
	7	1	**285-6704**	1	HOSE	
	8	1	**319-8104**	1	TANK AS-FUEL	
I	9	1	**319-8105**	1	HOSE AS	
	10	1	**319-8108**	1	FLANGE AS-FUEL TANK	
	11	1	**322-5917**	1	BRACKET	
M	12	1	**095-0736**	5	SCREW-MACHINE (M5X0.8X10-MM)	
	13	1	**110-1010**	1	GASKET-SCREEN (FUEL TANK)	
	14	1	**214-7568**	3	SEAL-O-RING	
	15	1	**228-7089**	2	SEAL-O-RING	
	16	1	**4B-4274**	1	WASHER (5.5X13X1.2-MM THK)	
	17	1	**6V-8636**	2	CONNECTOR	
	18	1	**7X-7729**	13	WASHER (11X25X3-MM THK)	
M	19	1	**8C-7581**	4	SCREW-MACHINE (M4X0.7X8-MM)	
M	20	1	**8T-0287**	1	BOLT (M5X0.8X10-MM)	
	21	1	**8T-0328**	5	WASHER-HARD (5.5X10X1-MM THK)	
M	22	1	**8T-4136**	8	BOLT (M10X1.5X25-MM)	
M	23	1	**8T-4195**	5	BOLT (M10X1.5X30-MM)	
	24	1	**8T-4223**	1	WASHER-HARD (13.5X25.5X3-MM THK)	
	25	1	**8T-7971**	1	WASHER-HARD (13.5X25.5X5-MM THK)	
	26	1	**9S-8004**	1	PLUG-O-RING	
E	27	1	**136-1955**		HOSE (39.5-CM)	

E-ORDER BY THE CENTIMETER
I-REFER TO HYDRAULIC INFORMATION SYSTEM
M-METRIC PART
Y-SEPARATE ILLUSTRATION

319-8103 **TANK GP-FUEL** *(contd.)* **i03926609**

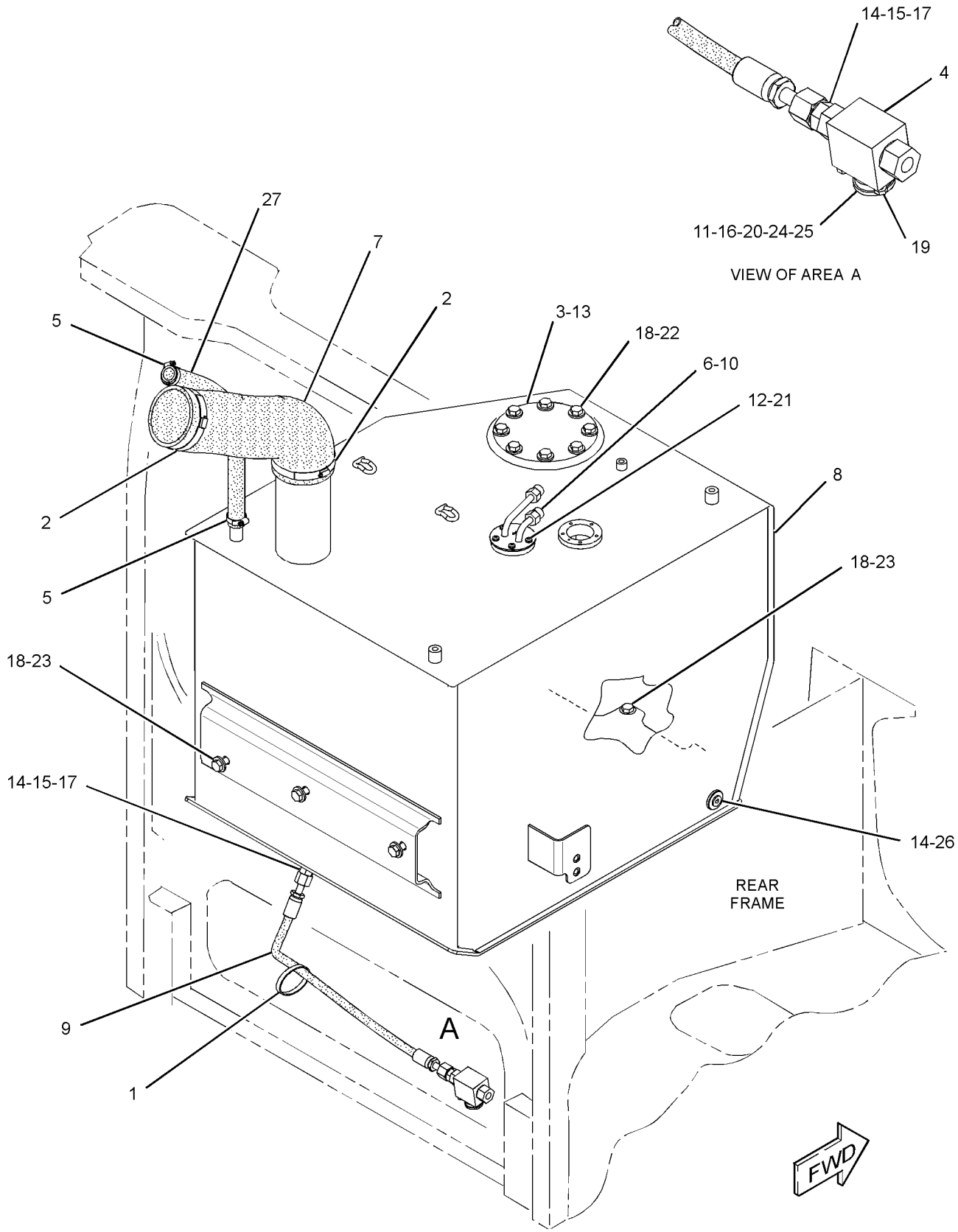

GRAPHIC #1 **<END>** g02005014

301-7890 VALVE GP-CHECK

S/N: JTD1-UP; FFF1-UP; LLL1-UP
PART OF 254-1352 MOTOR GP-PISTON

SMCS-1262, 5067 **i02663226**

NOTE	REF NO	GRAPHIC REF	PART NUMBER	QTY	PART NAME 1 2 3 4 5 6 (PRODUCT LEVEL)	SEE PAGE
	1	1	**033-6039**	1	SEAL-O-RING	
	2	1	**242-0262**	1	RING-BACKUP	
	3	1	**269-4676**	1	SEAL-O-RING	

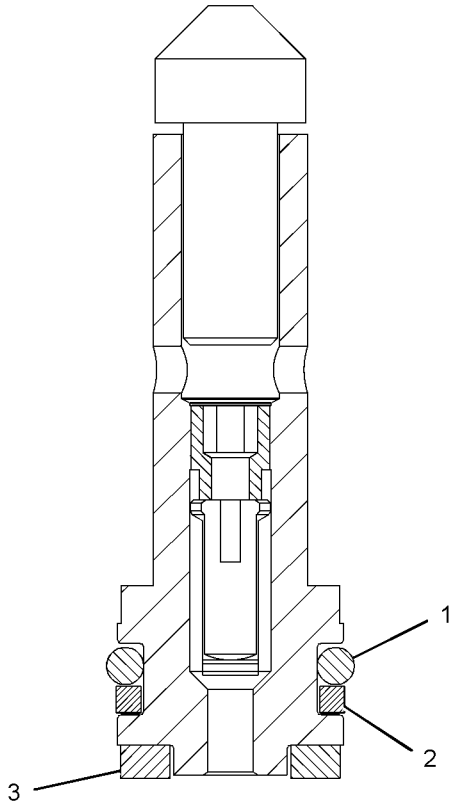

GRAPHIC #1 **<END>** g01332617

293-5450 VALVE GP-SOLENOID

S/N: JTD1-UP; FFF1-UP; LLL1-UP
PART OF 254-1379 PUMP GP-PISTON
AN ATTACHMENT

SMCS-1259 **i02833434**

NOTE	REF NO	GRAPHIC REF	PART NUMBER	QTY	PART NAME 1 2 3 4 5 6 (PRODUCT LEVEL)	SEE PAGE
	1	1	**269-4669**	1	SOLENOID AS (PILOT VALVE)	
		1	**217-3875**	1	SEAL-O-RING	
	2	1	**209-3565**	1	SEAL	
	3	1	**277-6631**	1	SPRING	
	4	1	**196-4253**	1	GASKET	
	5	1	**296-6705**	1	SOLENOID AS (WINCH PUMP)	
		1	**217-3875**	1	SEAL-O-RING	
		1	**247-7054**	1	COLLAR-LOCKING	
M	6	1	**8T-2922**	4	BOLT-SOCKET HEAD (M6X1X65-MM)	
M	7	1	**8C-6965**	1	BOLT-SOCKET HEAD (M6X1X45-MM)	
M	8	1	**099-0822**	8	BOLT-SOCKET HEAD (M5X0.8X10-MM)	
	9	1	**6J-3134**	1	SEAL-O-RING	
	10	1	**085-7539**	2	SEAL-O-RING	
	11	1	**196-4254**	2	SPRING	
	12	1	**6H-9691**	1	SEAL-O-RING	
	13	1	**215-8011**	1	BOLT-SPECIAL	
	14	1	**215-8010**	1	SHIM (3-MM THK)	
	15	1	**9S-8004**	1	PLUG-O-RING	
	16	1	**3J-1907**	1	SEAL-O-RING	
	17	1	**236-5157**	1	SCREEN-FILTER (PILOT)	
	18	1	**123-7583**	1	ORIFICE	

M-METRIC PART

293-5450 VALVE GP-SOLENOID *(contd.)* **i02833434**

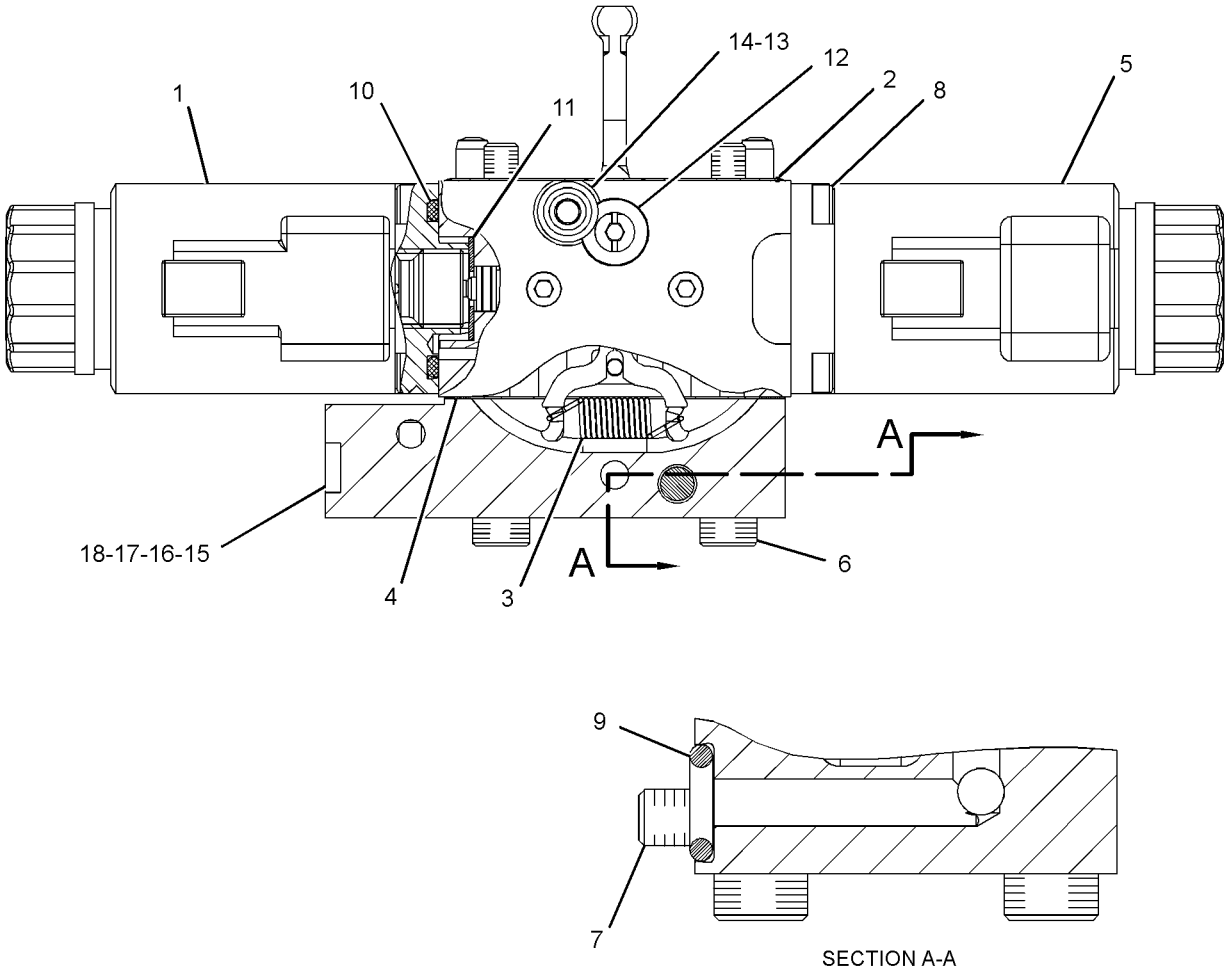

GRAPHIC #1 **<END>** g01358140

303-5774 ALTERNATOR GP-CHARGING

S/N: C4E1-UP
12 VOLT
PART OF 254-9233 ENGINE AR-PRIMARY

SMCS-1405 **i03948056**

NOTE	REF NO	GRAPHIC REF	PART NUMBER	QTY	PART NAME 1 2 3 4 5 6 (PRODUCT LEVEL)	SEE PAGE
	1	1	**346-9825**	1	ALTERNATOR GP-CHARGING	
	2	1	**305-7881**	1	BRACKET AS-ALTERNATOR	
		1	**161-9820**	2	PIN	
M	3	1	**140-8783**	2	BOLT (M10X1.5X45-MM)	
M	4	1	**6I-0650**	1	BOLT (M10X1.5X65-MM)	
	5	1	**359-9666**	1	BOLT-FLANGE HEAD	
	6	1	**113-6349**	1	NUT (M12X1.75X93-MM)	
M	7	1	**6I-0260**	1	BOLT (M8X1.25X25-MM)	
	8	1	**349-3261**	1	PLATE-TENSIONER	
M	9	1	**6I-0593**	3	BOLT (M10X1.5X30-MM)	
	10	1	**261-0406**	1	BELT TENSIONER	
	11	1	**284-3425**	1	PULLEY-ALTERNATOR	

M-METRIC PART

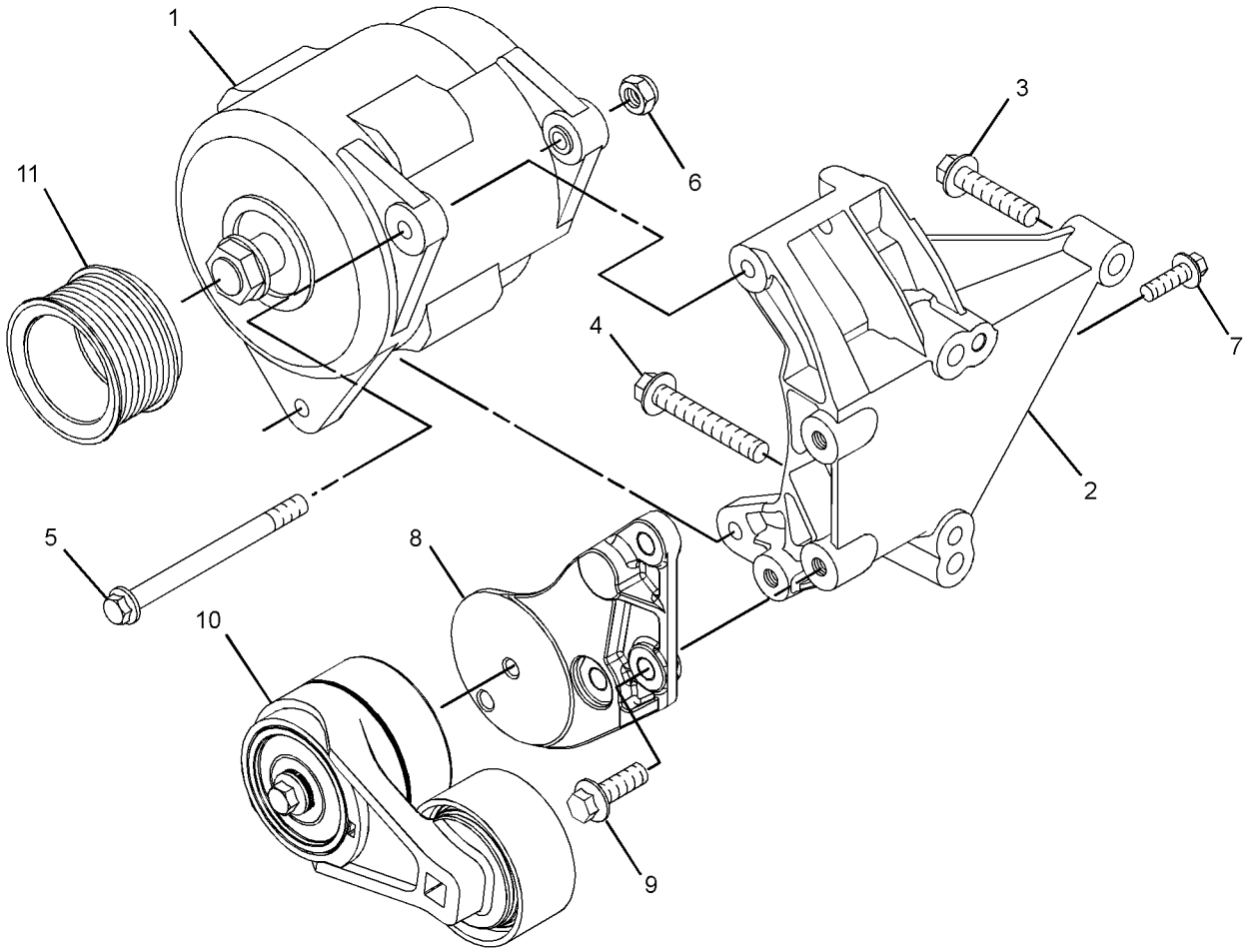

GRAPHIC #1 **<END>** g02230833

317-9776 ALTERNATOR GP-CHARGING

S/N: C4E1-UP

PART OF 254-9233 ENGINE AR-PRIMARY

SMCS-1405 **i03948363**

NOTE	REF NO	GRAPHIC REF	PART NUMBER	QTY	PART NAME 1 2 3 4 5 6 (PRODUCT LEVEL)	SEE PAGE
M	1	1	**6I-0260**	1	BOLT (M8X1.25X25-MM)	
M	2	1	**6I-0650**	1	BOLT (M10X1.5X65-MM)	
	3	1	**359-9666**	1	BOLT-FLANGE HEAD	
	4	1	**113-6349**	1	NUT (M12X1.75X93-MM)	
M	5	1	**140-8783**	2	BOLT (M10X1.5X45-MM)	
	7	1	**346-9825**	1	ALTERNATOR GP-CHARGING	
	8	1	**284-3425**	1	PULLEY-ALTERNATOR	
	9	1	**305-7881**	1	BRACKET AS-ALTERNATOR	
	9A	1	**161-9820**	2	PIN	

M-METRIC PART

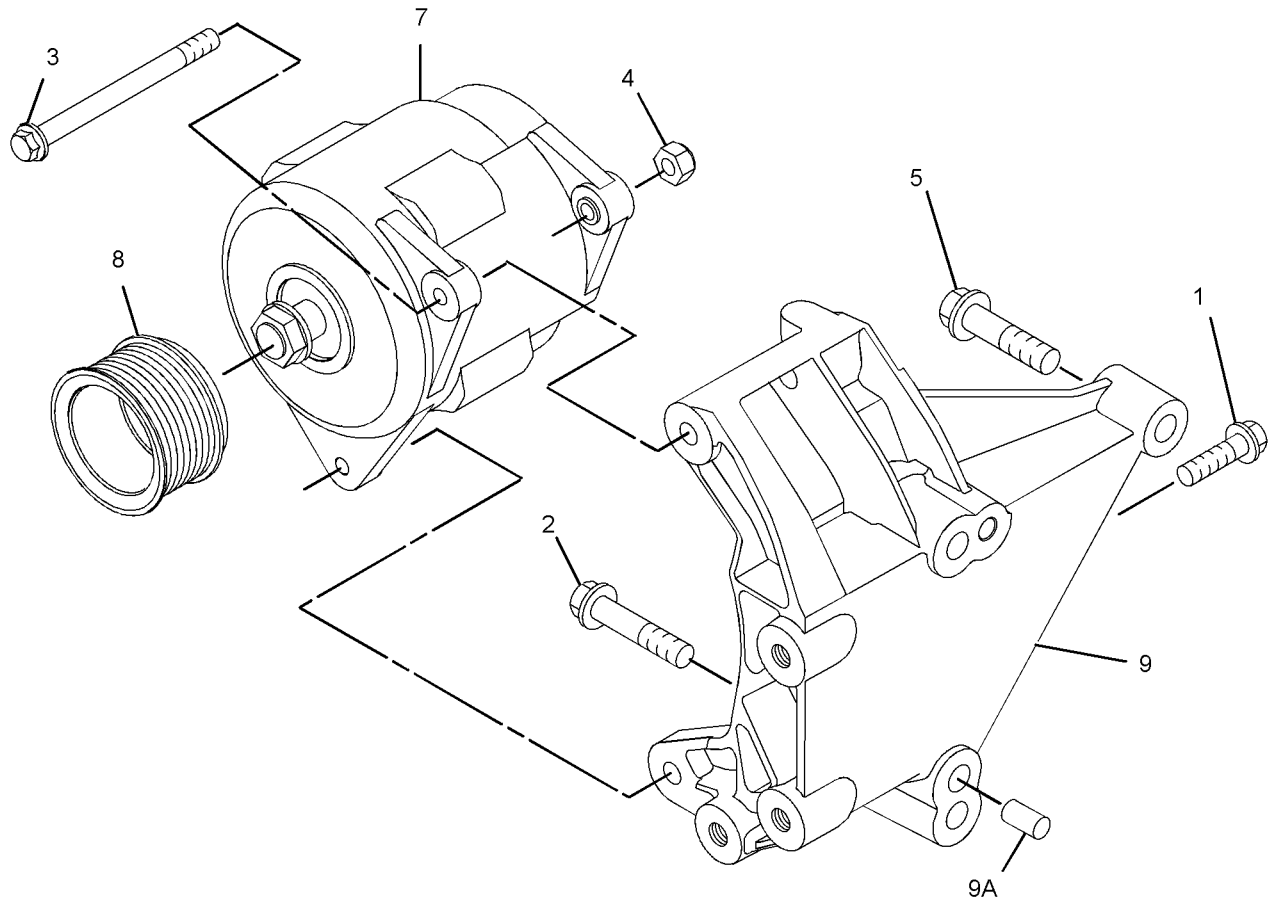

GRAPHIC #1 **<END>** g01953021

ELECTRICAL AND STARTING SYSTEM

245-6017 BATTERY & WIRING GP

S/N: JTD1-UP; FFF1-UP; LLL1-UP

PART OF 244-7376, 244-7377, 282-5327 CHASSIS AR

SMCS-1401, 1402, 1408 **i04415572**

NOTE	REF NO	GRAPHIC REF	PART NUMBER	QTY	PART NAME 1 2 3 4 5 6 (PRODUCT LEVEL)	SEE PAGE
	1	2	**3E-8320**	1	PLATE-INSTRUCTION (BATTERY) (DISCONNECT SWITCH)	
C	2	1,2	**7K-1181**	38	STRAP-CABLE	
Y	3	2	**7N-0718**	1	SWITCH GP-DISCONNECT (BATTERY)	224
	4	1,2	**8T-1887**	2	CLIP (SLOT)	
	5	1,2	**8T-1888**	2	CLIP (TAB)	
	6	1	**8X-5489**	1	SLEEVE	
	7	1	**128-5531**	2	CLAMP-HALF	
	8	1	**151-2110**	1	GASKET	
	9	2	**196-7007**	4	ROD	
	10	2	**238-0112**	1	SENSOR GP-TEMPERATURE (HYDRAULIC OIL)	
	11	1	**245-6037**	1	HARNESS AS-CHASSIS	
		1	**155-2257**	1	KIT-CONNECTING PLUG (12-PIN)	
		1	**155-2255**	1	KIT-CONNECTING PLUG (12-PIN)	
		1	**155-2270**	3	KIT-CONNECTING PLUG (2-PIN)	
		1	**155-2271**	2	KIT-CONNECTING PLUG (4-PIN)	
		1	**155-2257**	1	KIT-CONNECTING PLUG (12-PIN)	
		1	**155-2274**	1	KIT-CONNECTING PLUG (6-PIN)	
					(EACH PLUG KIT INCLUDES PLUG AS, WEDGE & INTERFACE SEAL)	
		1	**230-4011**	2	PLUG AS-CONNECTOR (2-PIN)	
					(EACH INCLUDES)	
		1	**264-7029**	1	SEAL-CONNECTOR	
		1	**237-0227**	1	PLUG AS-CONNECTOR (3-PIN)	
		1	**264-7030**	1	SEAL-CONNECTOR	
		1	**8T-8737**	8	PLUG-SEAL	
		1	**102-8805**	1	KIT-RECEPTACLE (6-PIN)	
					(INCLUDES RECEPTACLE AS & WEDGE)	
		1	**8T-8730**	25	SOCKET-CONNECTOR (16-GA TO 18-GA)	
		1	**9X-3402**	7	SOCKET-CONNECTOR (16-GA TO 18-GA)	
		1	**180-9340**	17	SOCKET-CONNECTOR (14-GA TO 18-GA)	
		1	**3S-2093**	5	STRAP-CABLE	
		1	**5P-1476**	2	TERMINAL-FORK (14-GA TO 16-GA, NO. 10 SCREW)	
E		1	**125-7874**		TUBE-HEAT SHRINK (5.72-MM DIA) (20-CM)	
E		1	**125-7875**		TUBE-HEAT SHRINK (7.44-MM DIA) (5-CM)	
	12	1	**249-9017**	1	CABLE AS	
B		1	**1P-0810**		TAPE-ELECTRICAL	
		1	**3L-6513**	1	TERMINAL-RING (1-GA TO 2-GA, 1/2-IN SCREW)	
		1	**1S-7252**	1	TERMINAL-CABLE (00-GA, 3/8-IN SCREW)	
E		1	**8C-3056**		CABLE (2-GA, RED) (50-CM)	
E		1	**159-8049**		CABLE (00-GA, RED) (120-CM)	
		1	**3S-2093**	2	STRAP-CABLE	
		1	**8N-0869**	1	COVER-TERMINAL (RED)	
		1	**8T-8827**	1	BOOT (RED)	
	13	1	**249-9018**	1	CABLE AS	
B		1	**1P-0810**		TAPE-ELECTRICAL	
		1	**249-9042**	1	TERMINAL-BATTERY	
		1	**1M-6119**	1	BOLT (5/16-18X1.375-IN)	
		1	**1M-6120**	1	NUT (5/16-18-THD)	
		1	**269-7682**	1	COVER-TERMINAL	
E		1	**159-8050**		CABLE (00-GA, BLACK) (226-CM)	
		1	**1S-7252**	1	TERMINAL-CABLE (00-GA, 3/8-IN SCREW)	
		1	**3S-2093**	1	STRAP-CABLE	
		1	**6T-0465**	1	COVER-TERMINAL (BLACK)	
	14	2	**249-9024**	1	HARNESS AS-VALVE	

245-6017 **BATTERY & WIRING GP** *(contd.)* **i04415572**

NOTE	REF NO	GRAPHIC REF	PART NUMBER	QTY	PART NAME 1 2 3 4 5 6 (PRODUCT LEVEL)	SEE PAGE
		2	**8T-8729**	10	PIN-CONNECTOR (16-GA TO 18-GA)	
		2	**155-2270**	7	KIT-CONNECTING PLUG (2-PIN)	
					(EACH INCLUDES PLUG AS, WEDGE & INTERFACE SEAL)	
		2	**8T-8737**	2	PLUG-SEAL	
		2	**102-8801**	1	KIT-RECEPTACLE (12-PIN)	
					(INCLUDES RECEPTACLE AS & WEDGE)	
		2	**8T-8730**	14	SOCKET-CONNECTOR (16-GA TO 18-GA)	
E		2	**125-7874**		TUBE-HEAT SHRINK (5.72-MM DIA) (5-CM)	
E		2	**125-7875**		TUBE-HEAT SHRINK (7.44-MM DIA) (5-CM)	
	15	2	**249-9074**	1	BRACKET AS	
	16	1	**257-8924**	1	SENDER AS-FUEL LEVEL	
		1	**8T-8729**	1	PIN-CONNECTOR (16-GA TO 18-GA)	
		1	**9X-3401**	1	PIN-CONNECTOR (16-GA TO 18-GA)	
		1	**230-4012**	1	RECEPTACLE AS-CONNECTOR (2-PIN)	
	17	1	**269-7658**	1	CABLE AS	
		1	**1S-7251**	1	TERMINAL-CABLE (OO-GA, 1/2-IN SCREW)	
E		1	**159-8049**		CABLE (OO-GA, RED) (82-CM)	
		1	**8N-0869**	1	COVER-TERMINAL (RED)	
		1	**283-3436**	1	COVER-TERMINAL (RED)	
	18	2	**269-7674**	1	BRACKET AS	
	19	2	**269-7678**	1	CLIP	
	20	1	**269-7680**	2	CLIP	
	21	1	**311-0306**	1	CLIP AS	
	22	2	**311-0307**	1	CABLE AS	
		2	**1S-7251**	1	TERMINAL-CABLE (OO-GA, 1/2-IN SCREW)	
		2	**1S-7252**	1	TERMINAL-CABLE (OO-GA, 3/8-IN SCREW)	
E		2	**159-8050**		CABLE (OO-GA, BLACK) (25-CM)	
Y	23	2	**319-6491**	1	SENSOR GP-SPEED (TRACK, RH)	219
Y	23A	2	**319-6491**	1	SENSOR GP-SPEED (TRACK, LH)	219
M	24	1	**095-0736**	5	SCREW-MACHINE (M5X0.8X10-MM)	
M	25	2	**191-8920**	4	BOLT-SOCKET HEAD (M6X1X12-MM)	
	26	2	**335-5321**	1	SENSOR GP-PRESSURE (HYDRAULIC OIL)	
	27	2	**277-1873**	1	CLIP	
	28	2	**3J-1907**	1	SEAL-O-RING	
C	29	2	**204-2281**	1	STRAP-CABLE	
	30	1	**3S-2093**	1	STRAP-CABLE	
	31	2	**4P-7581**	1	CLIP	
M	32	2	**5C-7261**	8	NUT (M8X1.25-THD)	
	33	2	**5K-8451**	1	CLIP	
	34	1,2	**5P-4116**	6	WASHER-HARD (8.8X20.5X2-MM THK)	
	35	1	**107-4749**	1	PLATE	
C	36	2	**6D-3479**	10	CLIP	
	37	2	**6V-9028**	1	SEAL-O-RING	
M	38	1	**7X-2534**	2	BOLT (M6X1X50-MM)	
M	39	1	**7X-2536**	2	BOLT (M8X1.25X14-MM)	
	40	2	**7X-7729**	1	WASHER (11X25X3-MM THK)	
	41	1	**8T-0328**	5	WASHER-HARD (5.5X10X1-MM THK)	
	42	1,2	**8T-4121**	12	WASHER-HARD (11X21X2.5-MM THK)	
M	43	1	**8T-4133**	1	NUT (M10X1.5-THD)	
M	44	2	**8T-4137**	1	BOLT (M10X1.5X20-MM)	
CM	45	2	**8T-4196**	2	BOLT (M10X1.5X35-MM)	
CM	46	2	**8T-4191**	8	BOLT (M10X1.5X16-MM)	
M	47	2	**8T-4195**	1	BOLT (M10X1.5X30-MM)	
	48	2	**8T-4224**	1	WASHER-HARD (8.8X16X2-MM THK)	
	49	2	**8W-8909**	1	SLEEVE	
	50	1	**9X-8256**	2	WASHER (6.6X12X2-MM THK)	
D	51	1,2	**8T-3425**		CHANNEL-TRIM (0.1-M EACH)	
CY	52	2	*318-8136*	1	WARNING GP-BACKUP	229
C	53	2	**154-2302**	2	SPACER (11X20X15-MM THK)	

245-6017 **BATTERY & WIRING GP** *(contd.)* **i04415572**

NOTE	REF NO	GRAPHIC REF	PART NUMBER	QTY	PART NAME 1 2 3 4 5 6 (PRODUCT LEVEL)	SEE PAGE
	54	2	**117-1385**	2	SEAL-O-RING	

B-USE AS REQUIRED
C-CHANGE FROM PREVIOUS TYPE
D-ORDER BY THE METER
E-ORDER BY THE CENTIMETER
M-METRIC PART
Y-SEPARATE ILLUSTRATION

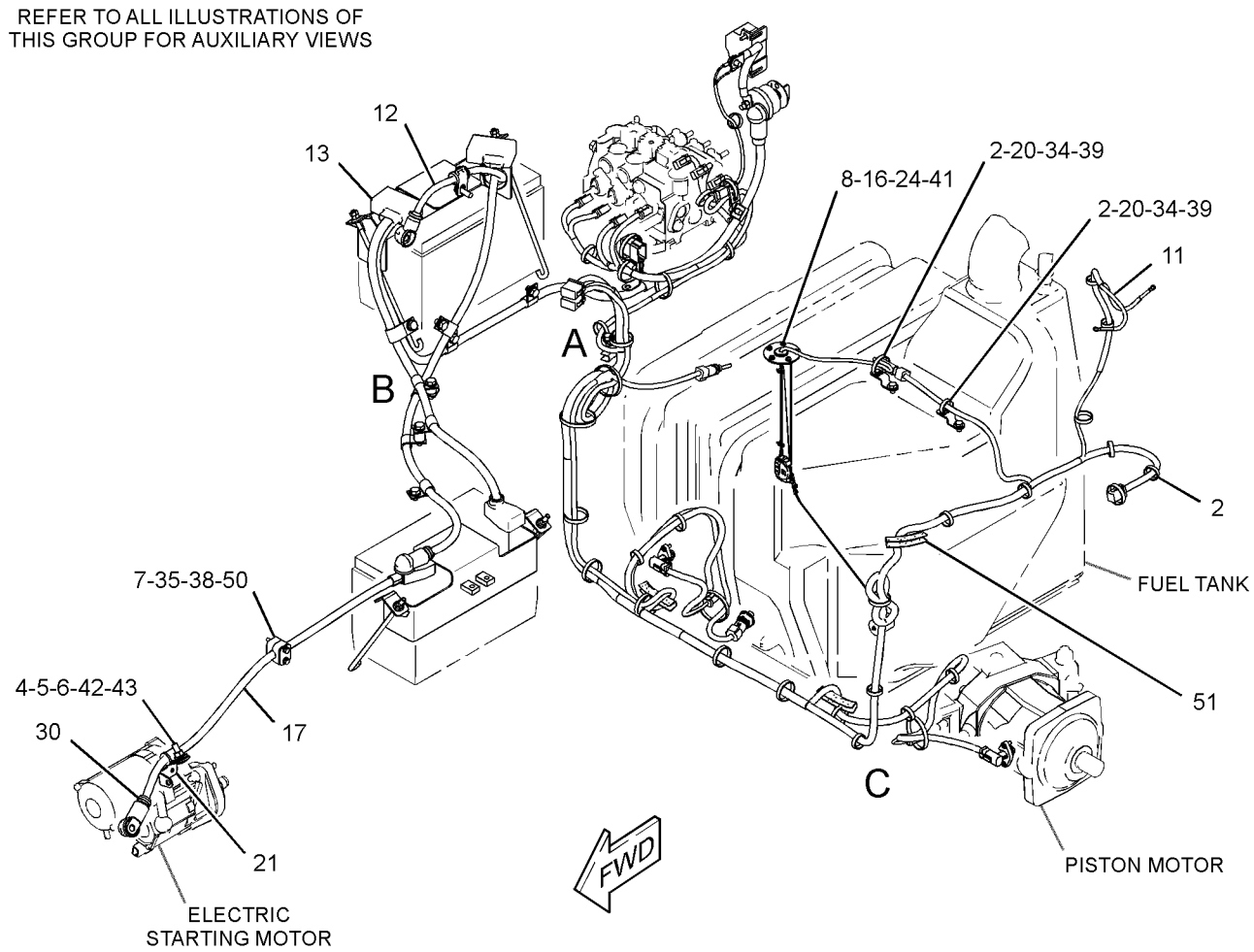

GRAPHIC #1 g02117874

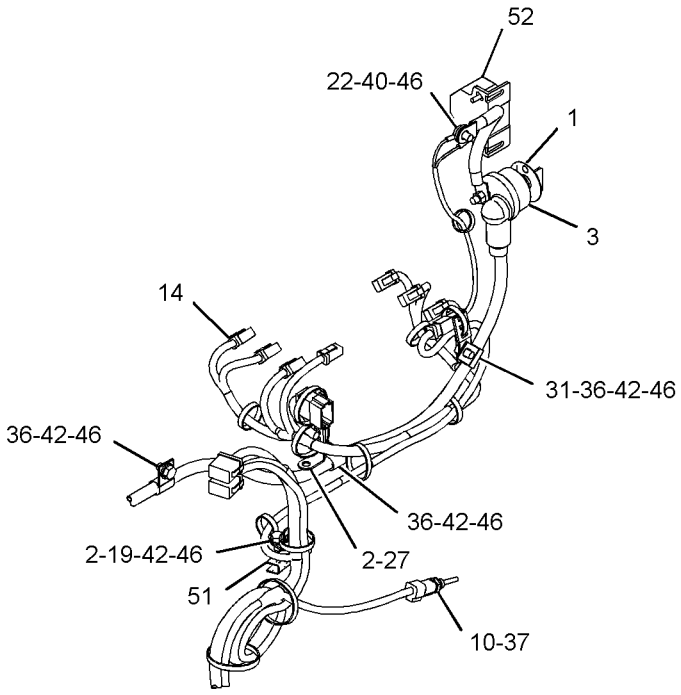

VIEW OF AREA A

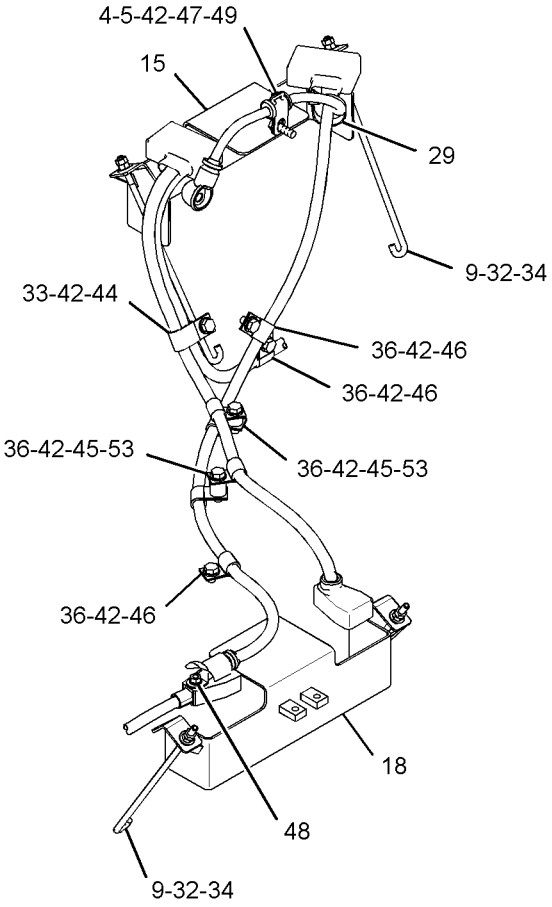

VIEW OF AREA B

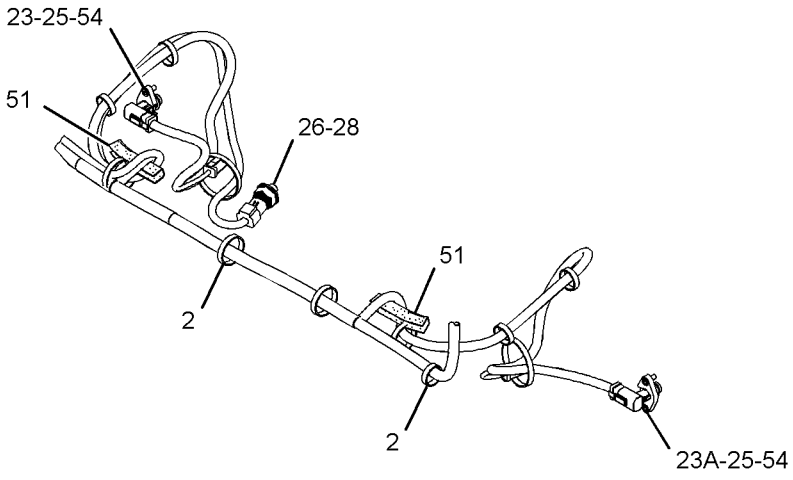

VIEW OF AREA C

GRAPHIC #2 **<END>** g02117879

ELECTRICAL AND STARTING SYSTEM

245-6017 BATTERY & WIRING GP

S/N: FFF1-UP; LLL1-UP
PART OF 244-7376, 244-7377 CHASSIS AR
TYPE 1

SMCS-1401, 1402, 1408 **i04415629**

NOTE	REF NO	GRAPHIC REF	PART NUMBER	QTY	PART NAME 1 2 3 4 5 6 (PRODUCT LEVEL)	SEE PAGE
	1	1	**3E-8320**	1	PLATE-INSTRUCTION (BATTERY)	
	2	1	**7K-1181**	32	STRAP-CABLE	
Y	3	1	**7N-0718**	1	SWITCH GP-DISCONNECT (BATTERY)	224
	4	1	**9X-3404**	2	BATTERY (12-VOLT, MAINTENANCE FREE, WET)	
D	5	1	**8T-3425**		CHANNEL-TRIM (0.1-M EACH)	
	6	1	**128-5531**	4	CLAMP-HALF	
	7	1	**151-2110**	1	GASKET	
Y	8	1	*183-4584*	1	SENSOR GP-SPEED (TRACK, RH)	218
Y	8A	1	*183-4584*	1	SENSOR GP-SPEED (TRACK, LH)	218
	9	1	**196-7007**	4	ROD	
	10	1	**220-0230**	1	ALARM AS (BACKUP)	
		1	**102-8802**	1	KIT-RECEPTACLE (2-PIN)	
					(INCLUDES RECEPTACLE AS & WEDGE)	
D		1	**5P-5623**		WIRE-ELECTRICAL (16-GA, BLACK) (0.8-M)	
		1	**186-3735**	2	PIN-CONNECTOR (16-GA TO 18-GA)	
E		1	**9X-1813**		SLEEVE (29-CM)	
	11	1	**245-6037**	1	HARNESS AS-CHASSIS	
		1	**155-2257**	1	KIT-CONNECTING PLUG (12-PIN)	
		1	**155-2255**	1	KIT-CONNECTING PLUG (12-PIN)	
		1	**155-2270**	3	KIT-CONNECTING PLUG (2-PIN)	
		1	**155-2271**	2	KIT-CONNECTING PLUG (4-PIN)	
		1	**155-2257**	1	KIT-CONNECTING PLUG (12-PIN)	
		1	**155-2274**	1	KIT-CONNECTING PLUG (6-PIN)	
					(EACH PLUG KIT INCLUDES PLUG AS, WEDGE & INTERFACE SEAL)	
		1	**230-4011**	2	PLUG AS-CONNECTOR (2-PIN)	
					(EACH INCLUDES)	
		1	**264-7029**	1	SEAL-CONNECTOR	
		1	**237-0227**	1	PLUG AS-CONNECTOR (3-PIN)	
		1	**264-7030**	1	SEAL-CONNECTOR	
		1	**8T-8737**	8	PLUG-SEAL	
		1	**102-8805**	1	KIT-RECEPTACLE (6-PIN)	
					(INCLUDES RECEPTACLE AS & WEDGE)	
		1	**8T-8730**	25	SOCKET-CONNECTOR (16-GA TO 18-GA)	
		1	**9X-3402**	7	SOCKET-CONNECTOR (16-GA TO 18-GA)	
		1	**180-9340**	17	SOCKET-CONNECTOR (14-GA TO 18-GA)	
		1	**3S-2093**	5	STRAP-CABLE	
		1	**5P-1476**	2	TERMINAL-FORK (14-GA TO 16-GA, NO. 10 SCREW)	
E		1	**125-7874**		TUBE-HEAT SHRINK (5.72-MM DIA) (20-CM)	
E		1	**125-7875**		TUBE-HEAT SHRINK (7.44-MM DIA) (5-CM)	
	12	1	**249-9017**	1	CABLE AS	
B		1	**1P-0810**		TAPE-ELECTRICAL	
		1	**3L-6513**	1	TERMINAL-RING (1-GA TO 2-GA, 1/2-IN SCREW)	
		1	**1S-7252**	1	TERMINAL-CABLE (00-GA, 3/8-IN SCREW)	
E		1	**8C-3056**		CABLE (2-GA, RED) (50-CM)	
E		1	**159-8049**		CABLE (00-GA, RED) (120-CM)	
		1	**3S-2093**	2	STRAP-CABLE	
		1	**8N-0869**	1	COVER-TERMINAL (RED)	
		1	**8T-8827**	1	BOOT (RED)	
	13	1	**249-9018**	1	CABLE AS	
B		1	**1P-0810**		TAPE-ELECTRICAL	
		1	**249-9042**	1	TERMINAL-BATTERY	
		1	**1M-6119**	1	BOLT (5/16-18X1.375-IN)	
		1	**1M-6120**	1	NUT (5/16-18-THD)	

245-6017 **BATTERY & WIRING GP** *(contd.)* **i04415629**

NOTE	REF NO	GRAPHIC REF	PART NUMBER	QTY	PART NAME 1 2 3 4 5 6 (PRODUCT LEVEL)	SEE PAGE
		1	**269-7682**	1	COVER-TERMINAL	
E		1	**159-8050**		CABLE (00-GA, BLACK) (226-CM)	
		1	**1S-7252**	1	TERMINAL-CABLE (00-GA, 3/8-IN SCREW)	
		1	**3S-2093**	1	STRAP-CABLE	
		1	**6T-0465**	1	COVER-TERMINAL (BLACK)	
	14	1	**249-9019**	1	CABLE AS	
E		1	**5P-0747**		CABLE (00-GA, BLACK) (29-CM)	
		1	**1S-7251**	1	TERMINAL-CABLE (00-GA, 1/2-IN SCREW)	
		1	**1S-7252**	1	TERMINAL-CABLE (00-GA, 3/8-IN SCREW)	
	15	1	**249-9024**	1	HARNESS AS-VALVE	
		1	**8T-8729**	10	PIN-CONNECTOR (16-GA TO 18-GA)	
		1	**155-2270**	7	KIT-CONNECTING PLUG (2-PIN)	
					(EACH INCLUDES PLUG AS, WEDGE & INTERFACE SEAL)	
		1	**8T-8737**	2	PLUG-SEAL	
		1	**102-8801**	1	KIT-RECEPTACLE (12-PIN)	
					(INCLUDES RECEPTACLE AS & WEDGE)	
		1	**8T-8730**	14	SOCKET-CONNECTOR (16-GA TO 18-GA)	
E		1	**125-7874**		TUBE-HEAT SHRINK (5.72-MM DIA) (5-CM)	
E		1	**125-7875**		TUBE-HEAT SHRINK (7.44-MM DIA) (5-CM)	
	16	1	**249-9074**	1	BRACKET AS	
	17	1	**254-8895**	1	BRACKET AS	
	18	1	**257-8924**	1	SENDER AS-FUEL LEVEL	
		1	**8T-8729**	1	PIN-CONNECTOR (16-GA TO 18-GA)	
		1	**9X-3401**	1	PIN-CONNECTOR (16-GA TO 18-GA)	
		1	**230-4012**	1	RECEPTACLE AS-CONNECTOR (2-PIN)	
	19	1	**269-7653**	1	CLIP	
	20	1	**269-7658**	1	CABLE AS	
		1	**1S-7251**	1	TERMINAL-CABLE (00-GA, 1/2-IN SCREW)	
E		1	**159-8049**		CABLE (00-GA, RED) (82-CM)	
		1	**8N-0869**	1	COVER-TERMINAL (RED)	
		1	**283-3436**	1	COVER-TERMINAL (RED)	
	21	1	**269-7674**	1	BRACKET AS	
	22	1	**269-7678**	1	CLIP	
	23	1	**269-7680**	2	CLIP	
M	24	1	**095-0736**	5	SCREW-MACHINE (M5X0.8X10-MM)	
	25	1	**124-0174**	1	CLIP	
M	26	1	**191-8920**	4	BOLT-SOCKET HEAD (M6X1X12-MM)	
	27	1	**238-0112**	1	SENSOR GP-TEMPERATURE (HYDRAULIC OIL)	
	28	1	**261-0420**	1	SENSOR GP-PRESSURE (HYDRAULIC OIL)	
	29	1	**3J-1907**	1	SEAL-O-RING	
	30	1	**3J-5696**	1	PIPE	
	31	1	**4P-7581**	1	CLIP	
	32	1	**277-1873**	1	CLIP	
M	33	1	**5C-7261**	4	NUT (M8X1.25-THD)	
	34	1	**5K-8451**	1	CLIP	
	35	1	**5P-4116**	10	WASHER-HARD (8.8X20.5X2-MM THK)	
	36	1	**107-4749**	2	PLATE	
	37	1	**6D-3479**	9	CLIP	
	38	1	**6V-9028**	1	SEAL-O-RING	
M	39	1	**7X-2534**	4	BOLT (M6X1X50-MM)	
	40	1	**7X-7729**	1	WASHER (11X25X3-MM THK)	
	41	1	**8T-0328**	5	WASHER-HARD (5.5X10X1-MM THK)	
	42	1	**8T-4121**	11	WASHER-HARD (11X21X2.5-MM THK)	
M	43	1	**8T-4137**	2	BOLT (M10X1.5X20-MM)	
M	44	1	**8T-4179**	3	BOLT (M12X1.75X20-MM)	
M	45	1	**8T-4186**	1	BOLT (M10X1.5X40-MM)	
M	46	1	**8T-4191**	9	BOLT (M10X1.5X16-MM)	
M	47	1	**8T-4200**	6	BOLT (M8X1.25X16-MM)	
	48	1	**8T-4223**	3	WASHER-HARD (13.5X25.5X3-MM THK)	

245-6017 **BATTERY & WIRING GP** *(contd.)* **i04415629**

NOTE	REF NO	GRAPHIC REF	PART NUMBER	QTY	PART NAME 1 2 3 4 5 6 (PRODUCT LEVEL)	SEE PAGE
	49	1	**8T-4224**	1	WASHER-HARD (8.8X16X2-MM THK)	
	50	1	**9X-8256**	4	WASHER (6.6X12X2-MM THK)	
	51	1	**287-2654**	1	STRAP-LIFTING	

B-USE AS REQUIRED
D-ORDER BY THE METER
E-ORDER BY THE CENTIMETER
M-METRIC PART
Y-SEPARATE ILLUSTRATION

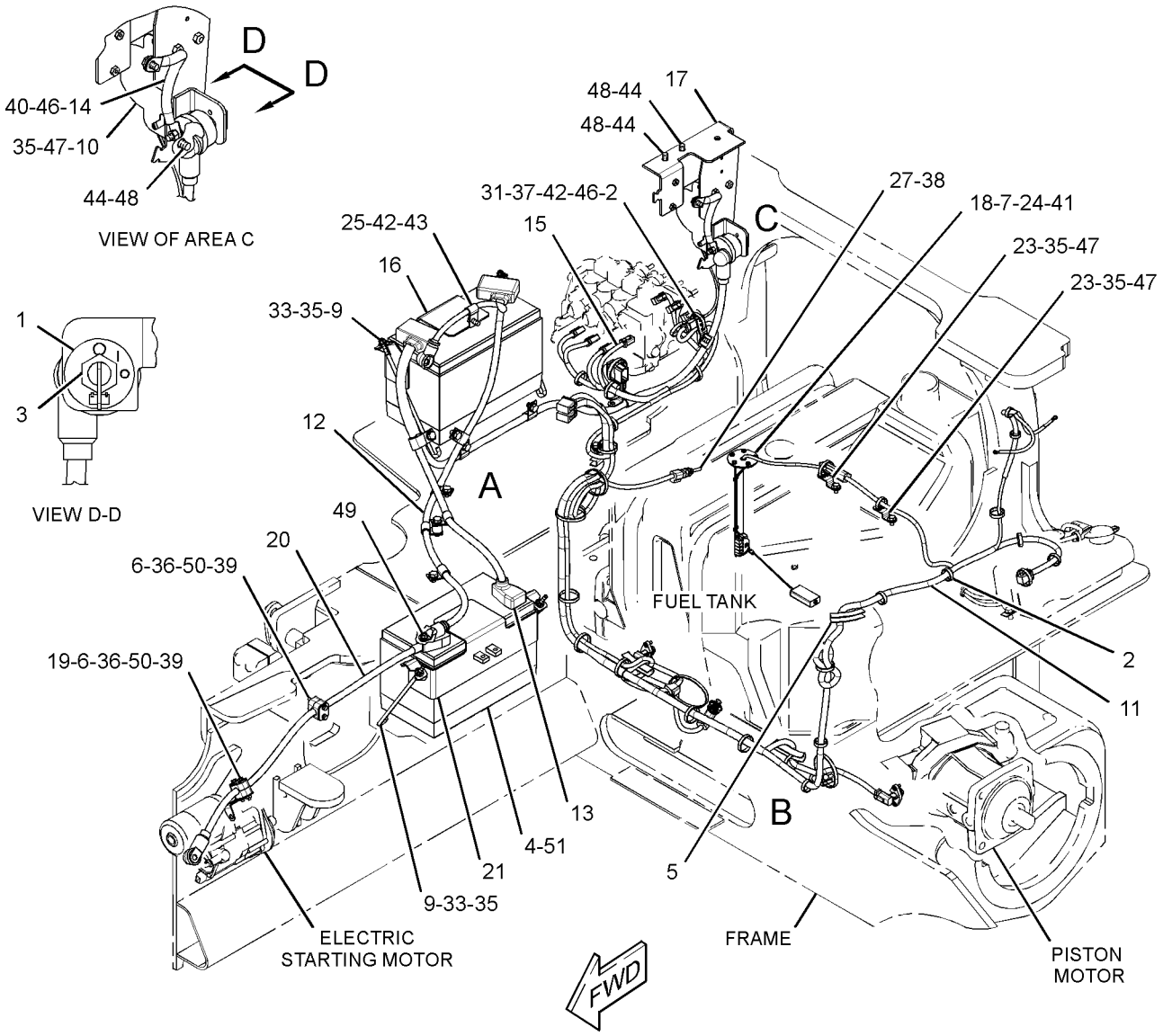

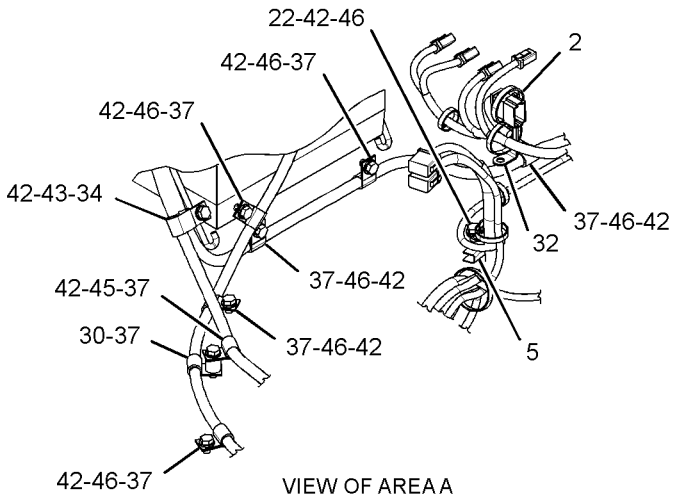

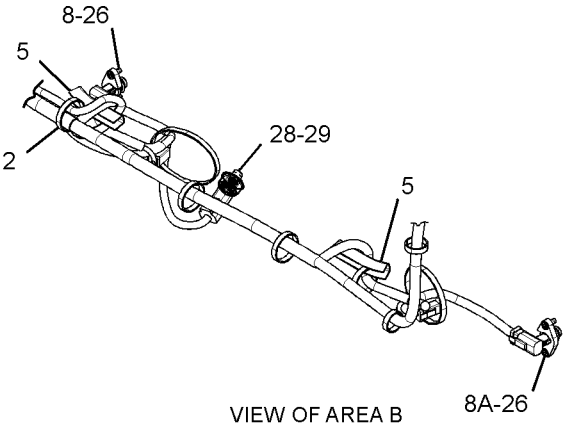

GRAPHIC #1 **<END>** g02152926

245-6017 BATTERY & WIRING GP

S/N: FFF1-UP; LLL1-UP
PART OF 244-7376, 244-7377 CHASSIS AR
TYPE 2

SMCS-1401, 1402, 1408 **i04415769**

NOTE	REF NO	GRAPHIC REF	PART NUMBER	QTY	PART NAME 1 2 3 4 5 6 (PRODUCT LEVEL)	SEE PAGE
	1	1	**3E-8320**	1	PLATE-INSTRUCTION (BATTERY)	
C	2	1	**7K-1181**	36	STRAP-CABLE	
Y	3	1	**7N-0718**	1	SWITCH GP-DISCONNECT (BATTERY)	224
C	4	1	**8T-1887**	1	CLIP (SLOT)	
C	5	1	**8T-1888**	1	CLIP (TAB)	
C	6	1	**8X-5489**	1	SLEEVE	
C	7	1	**128-5531**	2	CLAMP-HALF	
	8	1	**151-2110**	1	GASKET	
Y	9	1	*183-4584*	1	SENSOR GP-SPEED (TRACK, RH)	218
Y	9A	1	*183-4584*	1	SENSOR GP-SPEED (TRACK, LH)	218
	10	1	**196-7007**	4	ROD	
	11	1	**238-0112**	1	SENSOR GP-TEMPERATURE (HYDRAULIC OIL)	
	12	1	**245-6037**	1	HARNESS AS-CHASSIS	
		1	**155-2257**	1	KIT-CONNECTING PLUG (12-PIN)	
		1	**155-2255**	1	KIT-CONNECTING PLUG (12-PIN)	
		1	**155-2270**	3	KIT-CONNECTING PLUG (2-PIN)	
		1	**155-2271**	2	KIT-CONNECTING PLUG (4-PIN)	
		1	**155-2257**	1	KIT-CONNECTING PLUG (12-PIN)	
		1	**155-2274**	1	KIT-CONNECTING PLUG (6-PIN)	
					(EACH PLUG KIT INCLUDES PLUG AS, WEDGE & INTERFACE SEAL)	
		1	**230-4011**	2	PLUG AS-CONNECTOR (2-PIN)	
					(EACH INCLUDES)	
		1	**264-7029**	1	SEAL-CONNECTOR	
		1	**237-0227**	1	PLUG AS-CONNECTOR (3-PIN)	
		1	**264-7030**	1	SEAL-CONNECTOR	
		1	**8T-8737**	8	PLUG-SEAL	
		1	**102-8805**	1	KIT-RECEPTACLE (6-PIN)	
					(INCLUDES RECEPTACLE AS & WEDGE)	
		1	**8T-8730**	25	SOCKET-CONNECTOR (16-GA TO 18-GA)	
		1	**9X-3402**	7	SOCKET-CONNECTOR (16-GA TO 18-GA)	
		1	**180-9340**	17	SOCKET-CONNECTOR (14-GA TO 18-GA)	
		1	**3S-2093**	5	STRAP-CABLE	
		1	**5P-1476**	2	TERMINAL-FORK (14-GA TO 16-GA, NO. 10 SCREW)	
E		1	**125-7874**		TUBE-HEAT SHRINK (5.72-MM DIA) (20-CM)	
E		1	**125-7875**		TUBE-HEAT SHRINK (7.44-MM DIA) (5-CM)	
	13	1	**249-9017**	1	CABLE AS	
B		1	**1P-0810**		TAPE-ELECTRICAL	
		1	**3L-6513**	1	TERMINAL-RING (1-GA TO 2-GA, 1/2-IN SCREW)	
		1	**1S-7252**	1	TERMINAL-CABLE (00-GA, 3/8-IN SCREW)	
E		1	**8C-3056**		CABLE (2-GA, RED) (50-CM)	
E		1	**159-8049**		CABLE (00-GA, RED) (120-CM)	
		1	**3S-2093**	2	STRAP-CABLE	
		1	**8N-0869**	1	COVER-TERMINAL (RED)	
		1	**8T-8827**	1	BOOT (RED)	
	14	1	**249-9018**	1	CABLE AS	
B		1	**1P-0810**		TAPE-ELECTRICAL	
		1	**249-9042**	1	TERMINAL-BATTERY	
		1	**1M-6119**	1	BOLT (5/16-18X1.375-IN)	
		1	**1M-6120**	1	NUT (5/16-18-THD)	
		1	**269-7682**	1	COVER-TERMINAL	
E		1	**159-8050**		CABLE (00-GA, BLACK) (226-CM)	
		1	**1S-7252**	1	TERMINAL-CABLE (00-GA, 3/8-IN SCREW)	
		1	**3S-2093**	1	STRAP-CABLE	

245-6017 **BATTERY & WIRING GP** *(contd.)* **i04415769**

NOTE	REF NO	GRAPHIC REF	PART NUMBER	QTY	PART NAME 1 2 3 4 5 6 (PRODUCT LEVEL)	SEE PAGE
		1	**6T-0465**	1	COVER-TERMINAL (BLACK)	
	15	1	**249-9024**	1	HARNESS AS-VALVE	
		1	**8T-8729**	10	PIN-CONNECTOR (16-GA TO 18-GA)	
		1	**155-2270**	7	KIT-CONNECTING PLUG (2-PIN)	
					(EACH INCLUDES PLUG AS, WEDGE & INTERFACE SEAL)	
		1	**8T-8737**	2	PLUG-SEAL	
		1	**102-8801**	1	KIT-RECEPTACLE (12-PIN)	
					(INCLUDES RECEPTACLE AS & WEDGE)	
		1	**8T-8730**	14	SOCKET-CONNECTOR (16-GA TO 18-GA)	
E		1	**125-7874**		TUBE-HEAT SHRINK (5.72-MM DIA) (5-CM)	
E		1	**125-7875**		TUBE-HEAT SHRINK (7.44-MM DIA) (5-CM)	
	16	1	**249-9074**	1	BRACKET AS	
	17	1	**257-8924**	1	SENDER AS-FUEL LEVEL	
		1	**8T-8729**	1	PIN-CONNECTOR (16-GA TO 18-GA)	
		1	**9X-3401**	1	PIN-CONNECTOR (16-GA TO 18-GA)	
		1	**230-4012**	1	RECEPTACLE AS-CONNECTOR (2-PIN)	
	18	1	**269-7658**	1	CABLE AS	
		1	**1S-7251**	1	TERMINAL-CABLE (00-GA, 1/2-IN SCREW)	
E		1	**159-8049**		CABLE (00-GA, RED) (82-CM)	
		1	**8N-0869**	1	COVER-TERMINAL (RED)	
		1	**283-3436**	1	COVER-TERMINAL (RED)	
	19	1	**269-7674**	1	BRACKET AS	
	20	1	**269-7678**	1	CLIP	
	21	1	**269-7680**	2	CLIP	
C	22	1	**311-0306**	1	CLIP AS	
C	23	1	**311-0307**	1	CABLE AS	
		1	**1S-7251**	1	TERMINAL-CABLE (00-GA, 1/2-IN SCREW)	
		1	**1S-7252**	1	TERMINAL-CABLE (00-GA, 3/8-IN SCREW)	
E		1	**159-8050**		CABLE (00-GA, BLACK) (25-CM)	
M	24	1	**095-0736**	5	SCREW-MACHINE (M5X0.8X10-MM)	
	25	1	**124-0174**	1	CLIP	
M	26	1	**191-8920**	4	BOLT-SOCKET HEAD (M6X1X12-MM)	
	27	1	**261-0420**	1	SENSOR GP-PRESSURE (HYDRAULIC OIL)	
	28	1	**277-1873**	1	CLIP	
	29	1	**3J-1907**	1	SEAL-O-RING	
	30	1	**3J-5696**	1	PIPE	
C	31	1	**3S-2093**	1	STRAP-CABLE	
	32	1	**4P-7581**	1	CLIP	
M	33	1	**5C-7261**	4	NUT (M8X1.25-THD)	
	34	1	**5K-8451**	1	CLIP	
C	35	1	**5P-4116**	6	WASHER-HARD (8.8X20.5X2-MM THK)	
C	36	1	**107-4749**	1	PLATE	
	37	1	**6D-3479**	9	CLIP	
	38	1	**6V-9028**	1	SEAL-O-RING	
CM	39	1	**7X-2534**	2	BOLT (M6X1X50-MM)	
	40	1	**7X-7729**	1	WASHER (11X25X3-MM THK)	
	41	1	**8T-0328**	5	WASHER-HARD (5.5X10X1-MM THK)	
C	42	1	**8T-4121**	12	WASHER-HARD (11X21X2.5-MM THK)	
CM	43	1	**8T-4133**	1	NUT (M10X1.5-THD)	
M	44	1	**8T-4137**	2	BOLT (M10X1.5X20-MM)	
M	45	1	**8T-4186**	1	BOLT (M10X1.5X40-MM)	
M	46	1	**8T-4191**	9	BOLT (M10X1.5X16-MM)	
CM	47	1	**8T-4200**	2	BOLT (M8X1.25X16-MM)	
	48	1	**8T-4224**	1	WASHER-HARD (8.8X16X2-MM THK)	
C	49	1	**9X-8256**	2	WASHER (6.6X12X2-MM THK)	
D	50	1	**8T-3425**		CHANNEL-TRIM (0.1-M EACH)	

B-USE AS REQUIRED
C-CHANGE FROM PREVIOUS TYPE
D-ORDER BY THE METER
E-ORDER BY THE CENTIMETER
M-METRIC PART
Y-SEPARATE ILLUSTRATION

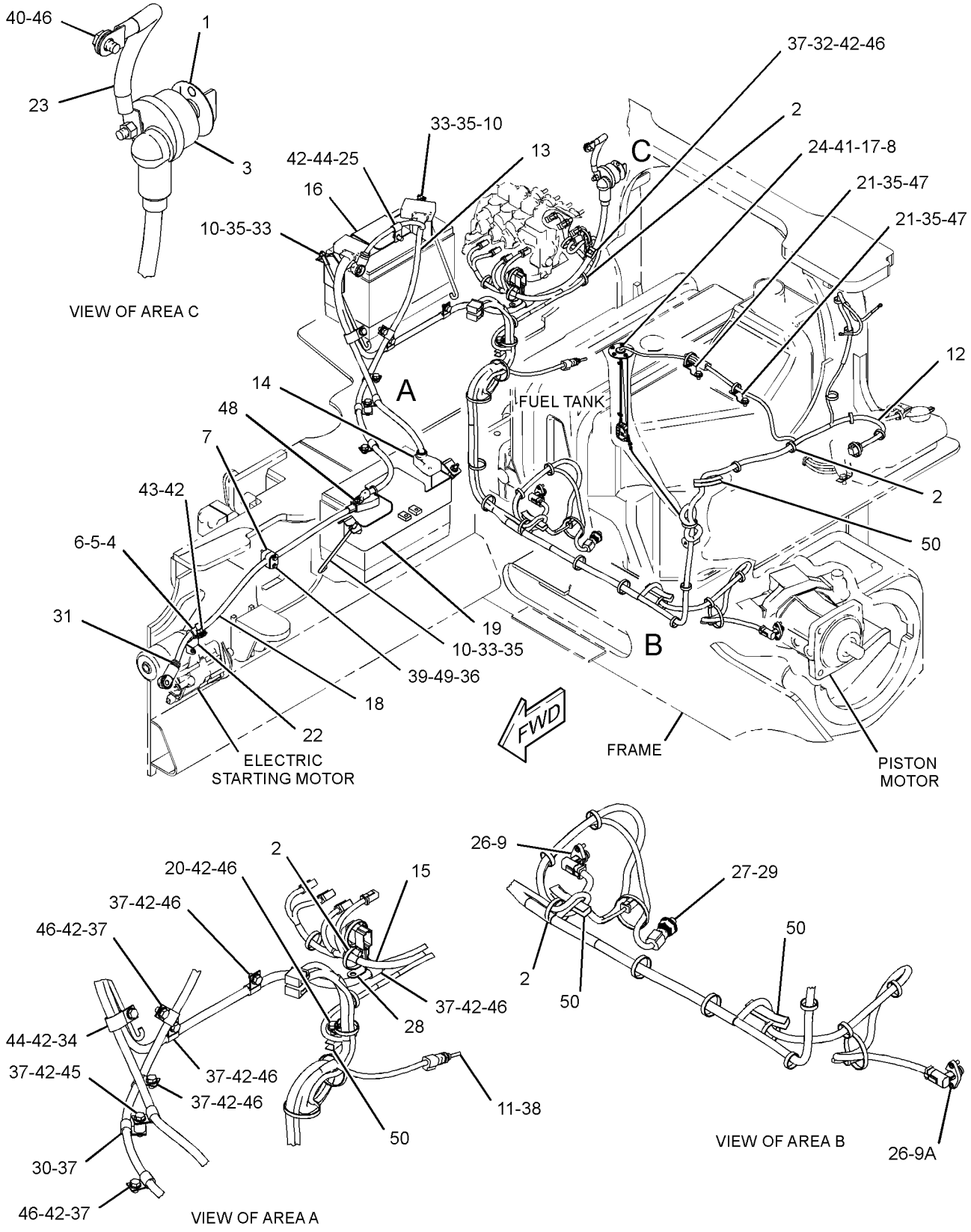

GRAPHIC #1 **<END>** g02152921

245-6017 BATTERY & WIRING GP

S/N: FFF1-UP; LLL1-UP
PART OF 244-7376, 244-7377 CHASSIS AR
TYPE 3

SMCS-1401, 1402, 1408 **i03926270**

NOTE	REF NO	GRAPHIC REF	PART NUMBER	QTY	PART NAME 1 2 3 4 5 6 (PRODUCT LEVEL)	SEE PAGE
	1	2	**3E-8320**	1	PLATE-INSTRUCTION (BATTERY)	
	2	1,2	**7K-1181**	37	STRAP-CABLE	
Y	3	2	**7N-0718**	1	SWITCH GP-DISCONNECT (BATTERY) (12-VOLT)	224
	4	1,2	**8T-1887**	2	CLIP (SLOT)	
	5	1,2	**8T-1888**	2	CLIP (TAB)	
	6	1	**8X-5489**	1	SLEEVE	
	7	1	**128-5531**	2	CLAMP-HALF	
	8	1	**151-2110**	1	GASKET	
	9	2	**196-7007**	4	ROD	
	10	2	**238-0112**	1	SENSOR GP-TEMPERATURE (HYDRAULIC OIL)	
	11	1	**245-6037**	1	HARNESS AS-CHASSIS	
		1	**155-2255**	1	KIT-CONNECTING PLUG (12-PIN)	
		1	**155-2270**	3	KIT-CONNECTING PLUG (2-PIN)	
		1	**155-2271**	2	KIT-CONNECTING PLUG (4-PIN)	
		1	**155-2257**	1	KIT-CONNECTING PLUG (12-PIN)	
		1	**155-2274**	1	KIT-CONNECTING PLUG (6-PIN)	
					(EACH PLUG KIT INCLUDES PLUG AS, WEDGE & INTERFACE SEAL)	
		1	**230-4011**	2	PLUG AS-CONNECTOR (2-PIN)	
					(EACH INCLUDES)	
		1	**264-7029**	1	SEAL-CONNECTOR	
		1	**237-0227**	1	PLUG AS-CONNECTOR (3-PIN)	
		1	**264-7030**	1	SEAL-CONNECTOR	
		1	**8T-8737**	8	PLUG-SEAL	
		1	**102-8805**	1	KIT-RECEPTACLE (6-PIN)	
					(INCLUDES RECEPTACLE AS & WEDGE)	
		1	**9X-3402**	7	SOCKET-CONNECTOR (16-GA TO 18-GA)	
		1	**180-9340**	17	SOCKET-CONNECTOR (14-GA TO 18-GA)	
		1	**186-3736**	25	SOCKET-CONNECTOR (16-GA TO 18-GA)	
		1	**3S-2093**	5	STRAP-CABLE	
		1	**5P-1476**	2	TERMINAL-FORK (14-GA TO 16-GA, NO. 10 SCREW)	
E		1	**125-7874**		TUBE-HEAT SHRINK (5.72-MM DIA) (20-CM)	
E		1	**125-7875**		TUBE-HEAT SHRINK (7.44-MM DIA) (5-CM)	
	12	1	**249-9017**	1	CABLE AS	
		1	**3L-6513**	1	TERMINAL-RING (1-GA TO 2-GA, 1/2-IN SCREW)	
		1	**1S-7252**	1	TERMINAL-CABLE (00-GA, 3/8-IN SCREW)	
E		1	**8C-3056**		CABLE (2-GA, RED) (50-CM)	
E		1	**5P-0761**		CABLE (00-GA, RED) (120-CM)	
		1	**3S-2093**	2	STRAP-CABLE	
		1	**8N-0869**	1	COVER-TERMINAL (RED)	
		1	**8T-8827**	1	BOOT (RED)	
	13	1	**249-9018**	1	CABLE AS	
		1	**249-9042**	1	TERMINAL-BATTERY	
		1	**1M-6119**	1	BOLT (5/16-18X1.375-IN)	
		1	**1M-6120**	1	NUT (5/16-18-THD)	
		1	**269-7682**	1	COVER-TERMINAL	
E		1	**5P-0747**		CABLE (00-GA, BLACK) (226-CM)	
		1	**1S-7252**	1	TERMINAL-CABLE (00-GA, 3/8-IN SCREW)	
		1	**3S-2093**	1	STRAP-CABLE	
		1	**6T-0465**	1	COVER-TERMINAL (BLACK)	
	14	2	**249-9024**	1	HARNESS AS-VALVE	
		2	**186-3735**	10	PIN-CONNECTOR (16-GA TO 18-GA)	

245-6017 **BATTERY & WIRING GP** *(contd.)* **i03926270**

NOTE	REF NO	GRAPHIC REF	PART NUMBER	QTY	PART NAME 1 2 3 4 5 6 (PRODUCT LEVEL)	SEE PAGE
		2	**155-2270**	7	KIT-CONNECTING PLUG (2-PIN)	
					(EACH INCLUDES PLUG AS, WEDGE & INTERFACE SEAL)	
		2	**8T-8737**	2	PLUG-SEAL	
		2	**102-8801**	1	KIT-RECEPTACLE (12-PIN)	
					(INCLUDES RECEPTACLE AS & WEDGE)	
		2	**186-3736**	14	SOCKET-CONNECTOR (16-GA TO 18-GA)	
E		2	**125-7874**		TUBE-HEAT SHRINK (5.72-MM DIA) (5-CM)	
E		2	**125-7875**		TUBE-HEAT SHRINK (7.44-MM DIA) (5-CM)	
	15	2	**249-9074**	1	BRACKET AS	
	16	1	**257-8924**	1	SENDER AS-FUEL LEVEL	
		1	**186-3735**	1	PIN-CONNECTOR (16-GA TO 18-GA)	
		1	**9X-3401**	1	PIN-CONNECTOR (16-GA TO 18-GA)	
		1	**230-4012**	1	RECEPTACLE AS-CONNECTOR (2-PIN)	
	17	1	**269-7658**	1	CABLE AS	
		1	**1S-7251**	1	TERMINAL-CABLE (00-GA, 1/2-IN SCREW)	
E		1	**5P-0761**		CABLE (00-GA, RED) (84-CM)	
		1	**8N-0869**	1	COVER-TERMINAL (RED)	
		1	**283-3436**	1	COVER-TERMINAL (RED)	
	18	2	**269-7674**	1	BRACKET AS	
	19	2	**269-7678**	1	CLIP	
	20	1	**269-7680**	2	CLIP	
	21	1	**311-0306**	1	CLIP AS	
	22	2	**311-0307**	1	CABLE AS	
		2	**1S-7251**	1	TERMINAL-CABLE (00-GA, 1/2-IN SCREW)	
		2	**1S-7252**	1	TERMINAL-CABLE (00-GA, 3/8-IN SCREW)	
E		2	**5P-0747**		CABLE (00-GA, BLACK) (25-CM)	
CY	23	2	**319-6491**	1	SENSOR GP-SPEED (TRACK, RH)	219
CY	23A	2	**319-6491**	1	SENSOR GP-SPEED (TRACK, LH)	219
M	24	1	**095-0736**	5	SCREW-MACHINE (M5X0.8X10-MM)	
M	25	2	**191-8920**	4	BOLT-SOCKET HEAD (M6X1X12-MM)	
	26	2	**261-0420**	1	SENSOR GP-PRESSURE (HYDROSTATIC DRIVE)	
	27	2	**277-1873**	1	CLIP	
	28	2	**3J-1907**	1	SEAL-O-RING	
	29	2	**3J-5696**	1	PIPE	
	30	1	**3S-2093**	1	STRAP-CABLE	
	31	2	**4P-7581**	1	CLIP	
CM	32	2	**5C-7261**	8	NUT (M8X1.25-THD)	
	33	2	**5K-8451**	1	CLIP	
	34	1,2	**5P-4116**	6	WASHER-HARD (8.8X20.5X2-MM THK)	
	35	1	**107-4749**	1	PLATE	
	36	2	**6D-3479**	9	CLIP	
	37	2	**6V-9028**	1	SEAL-O-RING	
M	38	1	**7X-2534**	2	BOLT (M6X1X50-MM)	
M	39	1	**7X-2536**	2	BOLT (M8X1.25X14-MM)	
	40	2	**7X-7729**	1	WASHER (11X25X3-MM THK)	
	41	1	**8T-0328**	5	WASHER-HARD (5.5X10X1-MM THK)	
	42	1,2	**8T-4121**	12	WASHER-HARD (11X21X2.5-MM THK)	
M	43	1	**8T-4133**	1	NUT (M10X1.5-THD)	
M	44	2	**8T-4137**	1	BOLT (M10X1.5X20-MM)	
M	45	2	**8T-4186**	1	BOLT (M10X1.5X40-MM)	
M	46	2	**8T-4191**	9	BOLT (M10X1.5X16-MM)	
M	47	2	**8T-4195**	1	BOLT (M10X1.5X30-MM)	
	48	2	**8T-4224**	1	WASHER-HARD (8.8X16X2-MM THK)	
	49	2	**8W-8909**	1	SLEEVE	
	50	1	**9X-8256**	2	WASHER (6.6X12X2-MM THK)	
D	51	1,2	**8T-3425**		CHANNEL-TRIM (0.1-M EACH)	

245-6017 **BATTERY & WIRING GP** *(contd.)* **i03926270**

C-CHANGE FROM PREVIOUS TYPE
D-ORDER BY THE METER
E-ORDER BY THE CENTIMETER
M-METRIC PART
Y-SEPARATE ILLUSTRATION

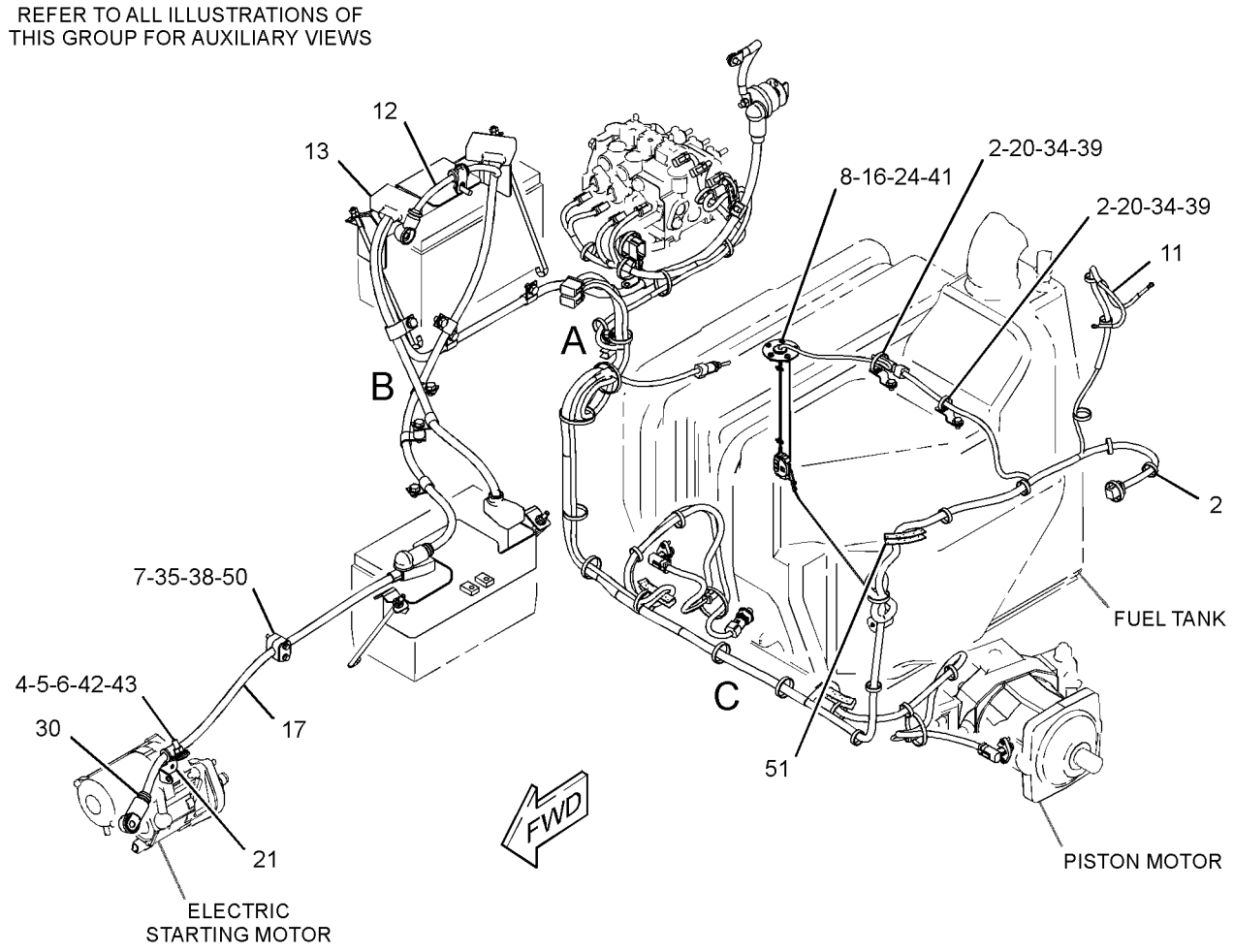

GRAPHIC #1 g01694283

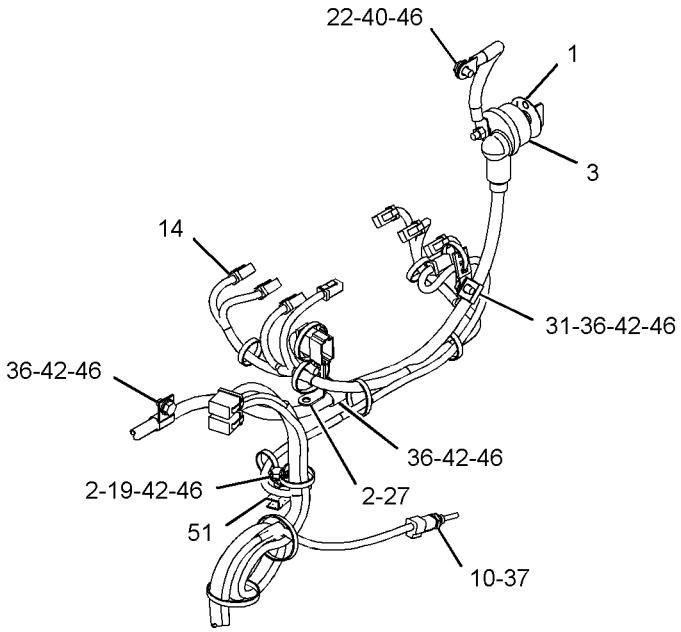

VIEW OF AREA A

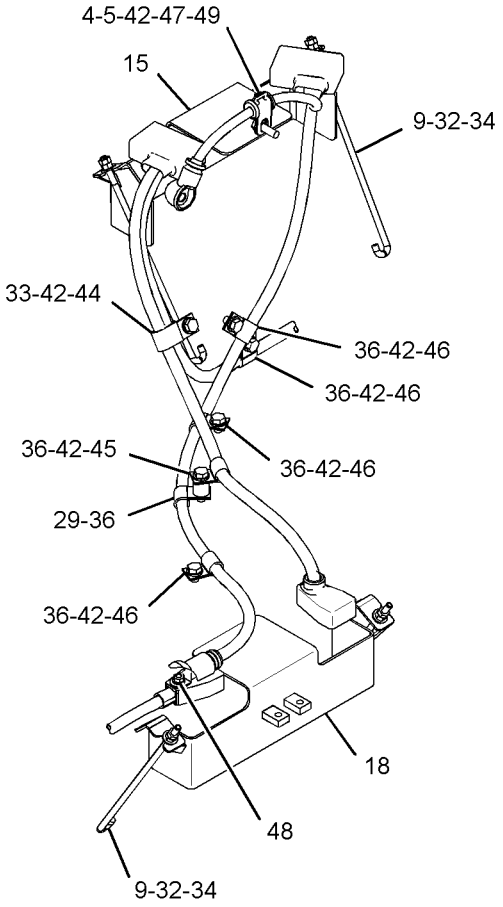

VIEW OF AREA B

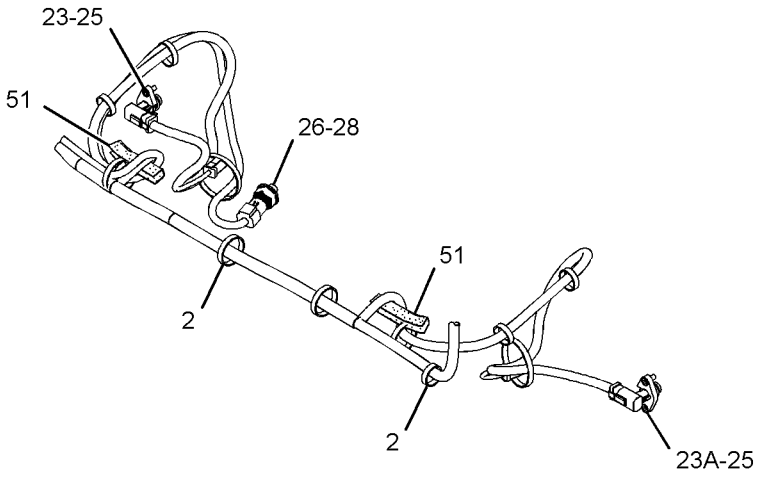

VIEW OF AREA C

GRAPHIC #2 **<END>** g02152925

292-0294 CABLE AS-COILED–LASER RECEIVER–ACCUGRADE

S/N: JTD1-UP; FFF1-UP; LLL1-UP
FIELD INSTALLATION

SMCS-1408 **i02977940**

NOTE	REF NO	GRAPHIC REF	PART NUMBER	QTY	PART NAME 1 2 3 4 5 6 (PRODUCT LEVEL)	SEE PAGE
	1	1	**311-4863**	1	CABLE AS-COILED (MAST)	

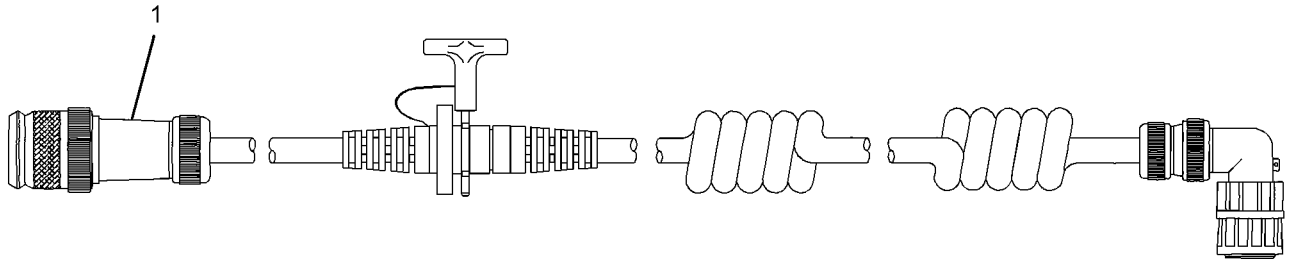

GRAPHIC #1 **<END>** g01458178

ELECTRICAL AND STARTING SYSTEM

304-3650 CONTROL GP-ENGINE ELECTRONIC

S/N: C4E1-UP

PART OF 254-9233 ENGINE AR-PRIMARY

SMCS-1901 **i03190840**

NOTE	REF NO	GRAPHIC REF	PART NUMBER	QTY	PART NAME 1 2 3 4 5 6 (PRODUCT LEVEL)	SEE PAGE
	1	1	**331-7540**	1	CONTROL GP-UNPROGRAMMED	

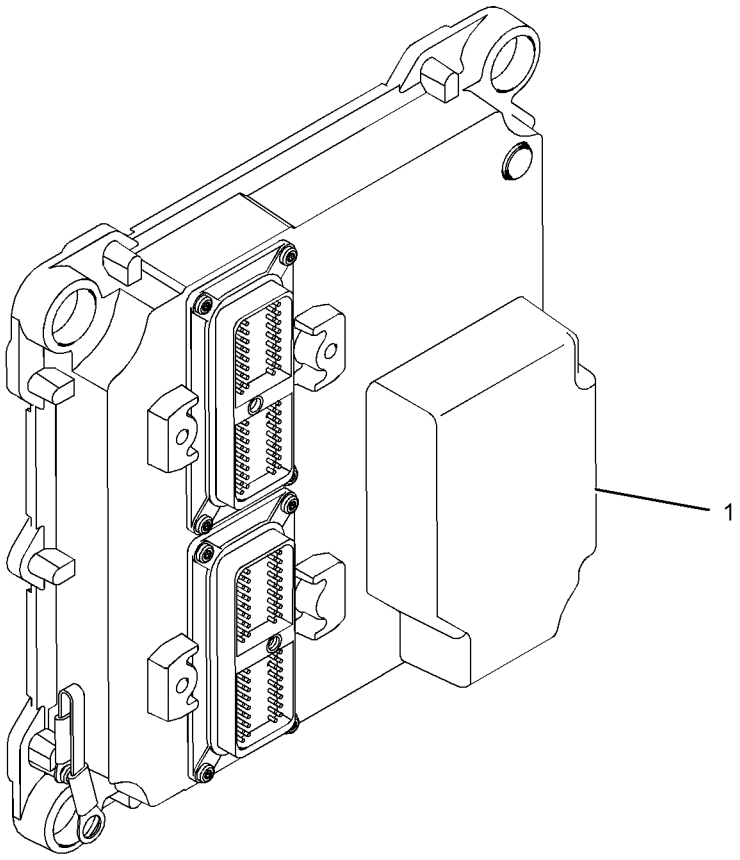

GRAPHIC #1 **<END>** g01342227

239-9954 CONTROL GP-UNPROGRAMMED–PRODUCT LINK 300

S/N: JTD1-UP; FFF1-UP; LLL1-UP
PART OF 268-4699 SERVICE GP-COMMUNICATION
AN ATTACHMENT

SMCS-7610 **i03121725**

NOTE	REF NO	GRAPHIC REF	PART NUMBER	QTY	PART NAME 1 2 3 4 5 6 (PRODUCT LEVEL)	SEE PAGE
	1	1	**285-1133**	1	CONTROL GP-UNPROGRAMMED (PRODUCT LINK 300)	
	1A	1	**7X-6315**	1	STRAP AS-GROUND	
	1B	1	**126-7574**	1	SCREW-PAN HEAD (8-32X9.52-MM)	
	1C	1	**134-4126**	1	WASHER (4.52X8.28X0.76-MM THK)	

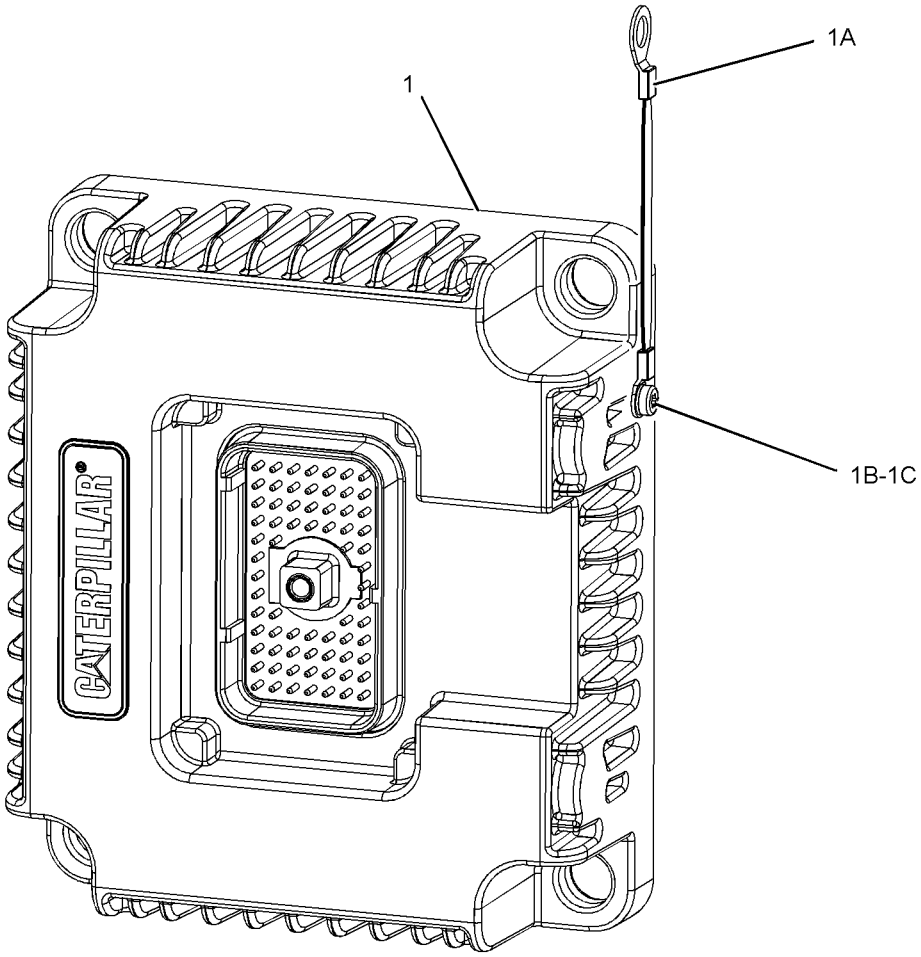

GRAPHIC #1 **<END>** g01377625

318-6107 CONVERSION GP-ELECTRICAL—FIRE PLOW

S/N: JTD1-UP; FFF1-UP; LLL1-UP

PART OF 325-6496, 325-6497, 325-6502 CONVERSION AR-MACHINE OPTION

AN ATTACHMENT

SMCS-1400, 1450 **i03696041**

NOTE	REF NO	GRAPHIC REF	PART NUMBER	QTY	PART NAME 1 2 3 4 5 6 (PRODUCT LEVEL)	SEE PAGE
E	1	2	**324-9708**		INSULATION (0.9-CM)	
E	1A	1	**324-9708**		INSULATION (12-CM)	
E	1B	2	**324-9708**		INSULATION (13.5-CM)	
E	2	1,2	**324-9707**		INSULATION (0.9-CM EACH)	
E	3	1,2	**2Q-0604**		INSULATION (12-CM EACH)	
D	5	1	**6V-1359**		SEAL (0.05-M)	
	6	2	**7K-1181**	1	STRAP-CABLE	
	7	2	**113-8490**	1	FUSE (10-AMPERE)	
	8	2	**126-2743**	1	SPACER (12X20X9-MM THK)	
	9	2	**180-0614**	1	CIRCUIT BREAKER AS (15-AMPERE) (REAR LIGHTS)	
	9A	2	**180-0614**	1	CIRCUIT BREAKER AS (15-AMPERE) (FLOODLIGHTS, FRONT)	
	9B	2	**180-0614**	1	CIRCUIT BREAKER AS (15-AMPERE) (FRONT LIGHTS)	
	10	2	**180-6615**	2	SWITCH AS (WORK LIGHTS)	
					(EACH INCLUDES)	
		2	**111-7899**	1	GASKET	
	11	2	**259-2384**	1	PLUG-ILLUMINATED	
		2	**111-7899**	1	GASKET	
	12	2	**268-6677**	1	BRACKET AS	
		2	**260-3939**	1	SCREW-HEX HEAD	
	13	2	**311-7070**	1	SWITCH AS-ROCKER (ENGINE SPEED CONTROL)	
		2	**111-7899**	1	GASKET	
	14	1	**318-6097**	1	HARNESS AS-PLATFORM	
		1	**311-0294**	1	HARNESS AS-PLATFORM	
		1	**126-1774**	2	COVER-CONNECTOR	
		1	**211-0052**	1	NUT (1-11/16-18-THD)	
		1	**213-0139**	5	PIN	
		1	**186-3735**	14	PIN-CONNECTOR (16-GA TO 18-GA)	
		1	**9W-0852**	4	PIN-CONNECTOR (14-GA TO 16-GA)	
		1	**9X-3401**	62	PIN-CONNECTOR (16-GA TO 18-GA)	
		1	**160-7690**	1	PLUG AS-CONNECTOR (70-PIN)	
		1	**147-1445**	1	PLUG AS-CONNECTOR (70-PIN)	
		1	**147-1446**	1	PLUG AS-CONNECTOR (70-PIN)	
					(EACH PLUG AS INCLUDES)	
		1	**159-9322**	1	SEAL-O-RING	
		1	**155-2255**	5	KIT-CONNECTING PLUG (12-PIN)	
		1	**155-2265**	3	KIT-CONNECTING PLUG (8-PIN)	
		1	**155-2260**	1	KIT-CONNECTING PLUG (3-PIN)	
		1	**155-2270**		KIT-CONNECTING PLUG (2-PIN)	
					(EACH PLUG KIT INCLUDES PLUG AS, WEDGE & INTERFACE SEAL)	
		1	**197-7261**	1	PLUG AS-CONNECTOR (19-PIN)	
		1	**8T-8737**	141	PLUG-SEAL	
		1	**102-8802**	2	KIT-RECEPTACLE (2-PIN)	
		1	**102-8803**	1	KIT-RECEPTACLE (3-PIN)	
		1	**102-8806**	3	KIT-RECEPTACLE (8-PIN)	
		1	**102-8801**	5	KIT-RECEPTACLE (12-PIN)	
		1	**190-7615**	1	KIT-RECEPTACLE (12-PIN)	
					(EACH RECEPTACLE KIT INCLUDES RECEPTACLE AS & WEDGE)	
		1	**167-3692**	1	RECEPTACLE AS-CONNECTOR (31-PIN)	
		1	**186-3736**	22	SOCKET-CONNECTOR (16-GA TO 18-GA)	
		1	**9W-0844**	8	SOCKET-CONNECTOR (14-GA TO 16-GA)	
		1	**9X-3402**	174	SOCKET-CONNECTOR (16-GA TO 18-GA)	
		1	**180-9340**	24	SOCKET-CONNECTOR (14-GA TO 18-GA)	

318-6107 **CONVERSION GP-ELECTRICAL** *(contd.)* **i03696041**

NOTE	REF NO	GRAPHIC REF	PART NUMBER	QTY	PART NAME 1 2 3 4 5 6 (PRODUCT LEVEL)	SEE PAGE
		1	**8L-8413**	15	STRAP-CABLE (WHITE)	
		1	**9X-6772**	4	STRAP-CABLE	
		1	**3T-4696**	1	TERMINAL-RING (10-GA TO 12-GA, 7/16-IN SCREW)	
		1	**2L-8079**	1	TERMINAL-RING (14-GA TO 16-GA, 3/8-IN SCREW)	
E		1	**119-3662**		TUBE-HEAT SHRINK (10.85-MM DIA) (13-CM)	
E		1	**125-7874**		TUBE-HEAT SHRINK (5.72-MM DIA) (125-CM)	
E		1	**125-7875**		TUBE-HEAT SHRINK (7.44-MM DIA) (15-CM)	
		1	**128-4249**	1	LOCKWASHER	
	15	1	**318-6098**	1	HARNESS AS-ENGINE	
		1	**245-6040**	1	HARNESS AS-ENGINE	
		1	**245-1045**	2	COVER	
		1	**245-1044**	2	LOCK-CONNECTOR	
		1	**176-1477**	1	PLUG AS (2-PIN)	
		1	**9X-1054**	1	PLUG AS-CONNECTOR (4-PIN)	
		1	**155-2265**	1	KIT-CONNECTING PLUG (8-PIN)	
		1	**155-2260**	1	KIT-CONNECTING PLUG (3-PIN)	
		1	**155-2270**	12	KIT-CONNECTING PLUG (2-PIN)	
					(EACH PLUG KIT INCLUDES PLUG AS, WEDGE & INTERFACE SEAL)	
		1	**230-4011**	1	PLUG AS-CONNECTOR (2-PIN)	
		1	**264-7029**	1	SEAL-CONNECTOR	
		1	**245-1042**	1	PLUG AS-CONNECTOR (64-PIN)	
		1	**267-7208**	1	RING-RETAINING	
		1	**274-4990**	1	SEAL	
M		1	**267-7207**	1	BOLT-SPECIAL	
		1	**167-3693**	1	PLUG AS-CONNECTOR (31-PIN)	
		1	**245-1048**	4	PLUG-CONNECTOR	
		1	**8T-8737**	16	PLUG-SEAL	
		1	**102-8802**	2	KIT-RECEPTACLE (2-PIN)	
		1	**102-8806**	1	KIT-RECEPTACLE (8-PIN)	
					(EACH RECEPTACLE KIT INCLUDES RECEPTACLE AS & WEDGE)	
		1	**134-2540**	1	RESISTOR AS-CONNECTION (3-PIN)	
		1	**238-9397**	1	RESISTOR AS	
		1	**8T-8729**	2	PIN-CONNECTOR (16-GA TO 18-GA)	
		1	**102-8802**	1	KIT-RECEPTACLE (2-PIN)	
					(INCLUDES RECEPTACLE AS & WEDGE)	
		1	**186-3736**	35	SOCKET-CONNECTOR (16-GA TO 18-GA)	
		1	**9W-0844**	7	SOCKET-CONNECTOR (14-GA TO 16-GA)	
		1	**9X-3402**	2	SOCKET-CONNECTOR (16-GA TO 18-GA)	
		1	**180-9340**	20	SOCKET-CONNECTOR (14-GA TO 18-GA)	
		1	**245-1047**	20	SOCKET-CONNECTOR	
		1	**189-3158**	1	SUPPRESSOR-ARC	
		1	**2L-8066**	1	TERMINAL-RING (10-GA TO 12-GA, NO. 10 SCREW)	
		1	**2L-8051**	1	TERMINAL-RING (6-GA, 5/16-IN SCREW)	
		1	*128-4178*	1	TERMINAL AS	
		1	**2L-8068**	1	TERMINAL-RING (10-GA TO 12-GA, 5/16-IN SCREW)	
D		1	**5P-6006**		TUBE-HEAT SHRINK (9.52-MM DIA) (0.1-M)	
		1	**131-1488**	2	TERMINAL AS-RING (6-GA TO 8-GA)	
					(EACH INCLUDES)	
E		1	**119-3662**		TUBE-HEAT SHRINK (10.85-MM DIA) (4-CM)	
		1	*131-1490*	1	TERMINAL AS (6-GA TO 8-GA)	
E		1	**119-3662**		TUBE-HEAT SHRINK (10.85-MM DIA) (4-CM)	
		1	**2L-8067**	1	TERMINAL-RING (10-GA TO 12-GA, 1/4-IN SCREW)	
		1	**2L-8069**	1	TERMINAL-RING (2-GA TO 10-GA, 3/8-IN SCREW)	

318-6107 **CONVERSION GP-ELECTRICAL** *(contd.)* **i03696041**

NOTE	REF NO	GRAPHIC REF	PART NUMBER	QTY	PART NAME 1 2 3 4 5 6 (PRODUCT LEVEL)	SEE PAGE
		1	**2L-8079**	1	TERMINAL-RING (14-GA TO 16-GA, 3/8-IN SCREW)	
		1	**7N-9017**	2	TERMINAL-RING (18-GA TO 22-GA, NO. 10 SCREW)	
		1	**9X-1055**	2	TERMINAL-RECEPTACLE (12-GA)	
		1	**9X-1056**	2	TERMINAL-RECEPTACLE (14-GA TO 16-GA)	
E		1	**119-3662**		TUBE-HEAT SHRINK (10.85-MM DIA) (7-CM)	
E		1	**125-7874**		TUBE-HEAT SHRINK (5.72-MM DIA) (15-CM)	
E		1	**125-7875**		TUBE-HEAT SHRINK (7.44-MM DIA) (15-CM)	
B		1	**268-4412**		TAPE-INSULATOR	
	16	1	**318-6099**	1	HARNESS AS-CHASSIS	
B		1	**268-4412**		TAPE-INSULATOR	
		1	**245-6037**	1	HARNESS AS-CHASSIS	
		1	**155-2255**	1	KIT-CONNECTING PLUG (12-PIN)	
		1	**155-2270**	3	KIT-CONNECTING PLUG (2-PIN)	
		1	**155-2271**	2	KIT-CONNECTING PLUG (4-PIN)	
		1	**155-2257**	1	KIT-CONNECTING PLUG (12-PIN)	
		1	**155-2274**	1	KIT-CONNECTING PLUG (6-PIN)	
					(EACH PLUG KIT INCLUDES PLUG AS, WEDGE & INTERFACE SEAL)	
		1	**230-4011**	2	PLUG AS-CONNECTOR (2-PIN)	
					(EACH INCLUDES)	
		1	**264-7029**	1	SEAL-CONNECTOR	
		1	**237-0227**	1	PLUG AS-CONNECTOR (3-PIN)	
		1	**264-7030**	1	SEAL-CONNECTOR	
		1	**8T-8737**	8	PLUG-SEAL	
		1	**102-8805**	1	KIT-RECEPTACLE (6-PIN)	
					(INCLUDES RECEPTACLE AS & WEDGE)	
		1	**9X-3402**	7	SOCKET-CONNECTOR (16-GA TO 18-GA)	
		1	**180-9340**	17	SOCKET-CONNECTOR (14-GA TO 18-GA)	
		1	**186-3736**	25	SOCKET-CONNECTOR (16-GA TO 18-GA)	
		1	**3S-2093**	5	STRAP-CABLE	
		1	**5P-1476**	2	TERMINAL-FORK (14-GA TO 16-GA, NO. 10 SCREW)	
E		1	**125-7874**		TUBE-HEAT SHRINK (5.72-MM DIA) (20-CM)	
E		1	**125-7875**		TUBE-HEAT SHRINK (7.44-MM DIA) (5-CM)	
	17	1	**318-6100**	1	HARNESS AS-VALVE	
BE		1	**268-4412**		TAPE-INSULATOR	
		1	**249-9024**	1	HARNESS AS-VALVE	
		1	**186-3735**	10	PIN-CONNECTOR (16-GA TO 18-GA)	
		1	**155-2270**	7	KIT-CONNECTING PLUG (2-PIN)	
					(EACH INCLUDES PLUG AS, WEDGE & INTERFACE SEAL)	
		1	**8T-8737**	2	PLUG-SEAL	
		1	**102-8801**	1	KIT-RECEPTACLE (12-PIN)	
					(EACH INCLUDES RECEPTACLE AS & WEDGE)	
		1	**186-3736**	14	SOCKET-CONNECTOR (16-GA TO 18-GA)	
E		1	**125-7874**		TUBE-HEAT SHRINK (5.72-MM DIA) (5-CM)	
E		1	**125-7875**		TUBE-HEAT SHRINK (7.44-MM DIA) (5-CM)	
	18	2	**318-6104**	1	PLATE	
	19	1	**318-6105**	1	HARNESS AS-CAB	
		1	**274-3774**	4	CAP-CONNECTOR	
		1	**228-5856**	4	CONNECTOR	
		1	**213-0139**	4	PIN	
		1	**186-3735**	5	PIN-CONNECTOR (16-GA TO 18-GA)	
		1	**9W-0852**	6	PIN-CONNECTOR (14-GA TO 16-GA)	
		1	**9X-3401**	7	PIN-CONNECTOR (16-GA TO 18-GA)	
		1	**9X-1054**	1	PLUG AS-CONNECTOR (4-PIN)	
		1	**155-2255**	1	KIT-CONNECTING PLUG (12-PIN)	
		1	**155-2265**	3	KIT-CONNECTING PLUG (8-PIN)	

318-6107 **CONVERSION GP-ELECTRICAL** ***(contd.)*** **i03696041**

NOTE	REF NO	GRAPHIC REF	PART NUMBER	QTY	PART NAME 1 2 3 4 5 6 (PRODUCT LEVEL)	SEE PAGE
		1	**155-2270**	9	KIT-CONNECTING PLUG (2-PIN)	
		1	**155-2271**	2	KIT-CONNECTING PLUG (4-PIN)	
		1	**177-9656**	1	KIT-CONNECTING PLUG (4-PIN)	
					(EACH PLUG KIT INCLUDES PLUG AS, WEDGE & INTERFACE SEAL)	
		1	**230-5008**	2	PLUG AS-CONNECTOR (4-PIN)	
					(EACH INCLUDES)	
		1	**264-7031**	1	SEAL-CONNECTOR	
		1	**8T-8737**	50	PLUG-SEAL	
		1	**102-8804**	3	KIT-RECEPTACLE (4-PIN)	
		1	**102-8806**	2	KIT-RECEPTACLE (8-PIN)	
					(EACH RECEPTACLE KIT INCLUDES RECEPTACLE AS & WEDGE)	
		1	**274-3778**	1	CAP-SEAL	
		1	**186-3736**	28	SOCKET-CONNECTOR (16-GA TO 18-GA)	
		1	**9W-0844**	9	SOCKET-CONNECTOR (14-GA TO 16-GA)	
		1	**9X-3402**	8	SOCKET-CONNECTOR (16-GA TO 18-GA)	
		1	**3S-2093**	81	STRAP-CABLE	
B		1	**268-4412**		TAPE-INSULATOR	
		1	**2L-8052**	1	TERMINAL-RING (6-GA, 3/8-IN SCREW)	
		1	**2L-8079**	2	TERMINAL-RING (14-GA TO 16-GA, 3/8-IN SCREW)	
		1	**5P-4571**	4	TERMINAL-BLADE (14-GA TO 16-GA)	
		1	**097-7234**	2	TERMINAL-BLADE (18-GA TO 22-GA)	
		1	**091-2436**	15	TERMINAL-BLADE (18-GA TO 22-GA)	
		1	**104-1995**	6	TERMINAL-BLADE (14-GA TO 18-GA)	
		1	**100-5041**	4	TERMINAL-RECEPTACLE (18-GA TO 20-GA)	
E		1	**119-3662**		TUBE-HEAT SHRINK (10.85-MM DIA) (20-CM)	
E		1	**125-7874**		TUBE-HEAT SHRINK (5.72-MM DIA) (40-CM)	
E		1	**125-7875**		TUBE-HEAT SHRINK (7.44-MM DIA) (10-CM)	
	20	1	**318-6114**	1	FILM-IDENTIFICATION (FUSE PANEL)	
	21	2	**318-6115**	1	HARNESS AS-ENGINE	
		2	**304-5165**	1	HARNESS AS-ENGINE	
B		2	**268-4412**		TAPE-INSULATOR (700-CM)	
	22	1	**318-6116**	1	CABLE AS	
E		1	**324-9706**		INSULATION (210-CM)	
		1	**249-9018**	1	CABLE AS	
		1	**249-9042**	1	TERMINAL-BATTERY	
		1	**1M-6119**	1	BOLT (5/16-18X1.375-IN)	
		1	**1M-6120**	1	NUT (5/16-18-THD)	
		1	**269-7682**	1	COVER-TERMINAL	
E		1	**5P-0747**		CABLE (00-GA, BLACK) (226-CM)	
		1	**1S-7252**	1	TERMINAL-CABLE (00-GA, 3/8-IN SCREW)	
		1	**3S-2093**	1	STRAP-CABLE	
		1	**6T-0465**	1	COVER-TERMINAL (BLACK)	
	23	1	**318-6117**	1	CABLE AS	
BE		1	**268-4412**		TAPE-INSULATOR	
BE		1	**318-6126**		TAPE	
		1	**311-0307**	1	CABLE AS	
		1	**1S-7251**	1	TERMINAL-CABLE (00-GA, 1/2-IN SCREW)	
		1	**1S-7252**	1	TERMINAL-CABLE (00-GA, 3/8-IN SCREW)	
E		1	**5P-0747**		CABLE (00-GA, BLACK) (25-CM)	
	24	1	**318-6118**	1	CABLE AS	
E		1	**324-9706**		INSULATION (155-CM)	
		1	**249-9017**	1	CABLE AS	
		1	**3L-6513**	1	TERMINAL-RING (1-GA TO 2-GA, 1/2-IN SCREW)	
		1	**1S-7252**	1	TERMINAL-CABLE (00-GA, 3/8-IN SCREW)	
E		1	**8C-3056**		CABLE (2-GA, RED) (50-CM)	
E		1	**5P-0761**		CABLE (00-GA, RED) (120-CM)	

318-6107 **CONVERSION GP-ELECTRICAL** *(contd.)* **i03696041**

NOTE	REF NO	GRAPHIC REF	PART NUMBER	QTY	PART NAME 1 2 3 4 5 6 (PRODUCT LEVEL)	SEE PAGE
		1	**3S-2093**	2	STRAP-CABLE	
		1	**8N-0869**	1	COVER-TERMINAL (RED)	
		1	**8T-8827**	1	BOOT (RED) (RED)	
	25	1	**318-6119**	1	CABLE AS	
BE		1	**268-4412**		TAPE-INSULATOR	
		1	**249-9072**	1	CABLE AS	
E		1	**8C-3056**		CABLE (2-GA, RED) (59-CM)	
		1	**242-3294**	1	TERMINAL AS	
	26	1	*318-6120*	1	CABLE AS	
E		1	**324-9706**		INSULATION (73-CM)	
		1	**269-7658**	1	CABLE AS	
		1	**1S-7251**	1	TERMINAL-CABLE (00-GA, 1/2-IN SCREW)	
E		1	**5P-0761**		CABLE (00-GA, RED) (84-CM)	
		1	**8N-0869**	1	COVER-TERMINAL (RED)	
		1	**283-3436**	1	COVER-TERMINAL (RED)	
	27	2	**115-1615**	1	RELAY AS (12-VOLT) (CAB ACCESSORIES)	
Y	28	1	**258-8373**	1	SEAT BELT GP	802
	29	2	**318-6113**	1	FILM-INSTRUCTION (PANEL)	
	30	1,2	**3S-2093**	67	STRAP-CABLE	
B	31	1,2	**3S-2093**	50	STRAP-CABLE	

B-USE AS REQUIRED
D-ORDER BY THE METER
E-ORDER BY THE CENTIMETER
M-METRIC PART
Y-SEPARATE ILLUSTRATION

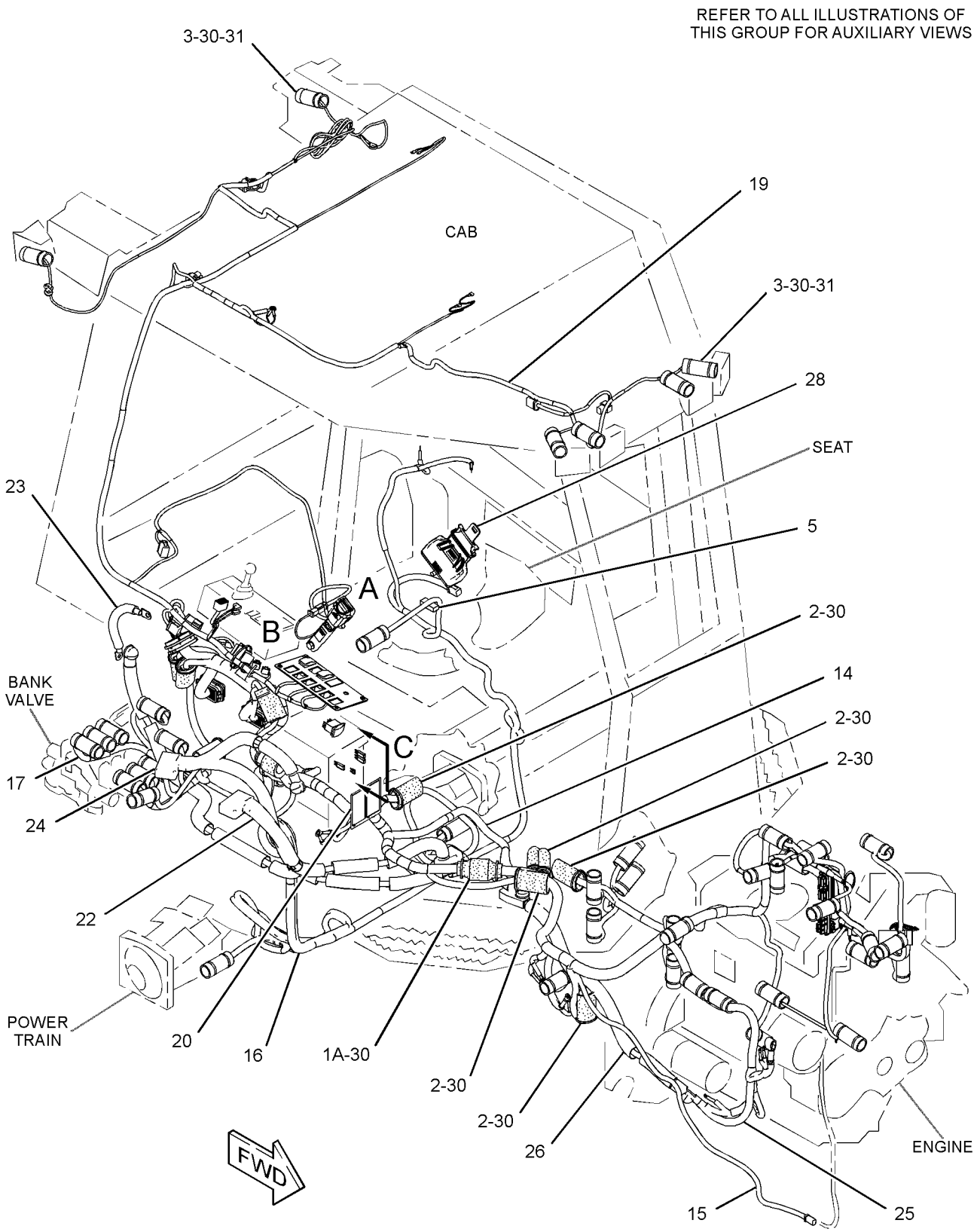

GRAPHIC #1 g02024981

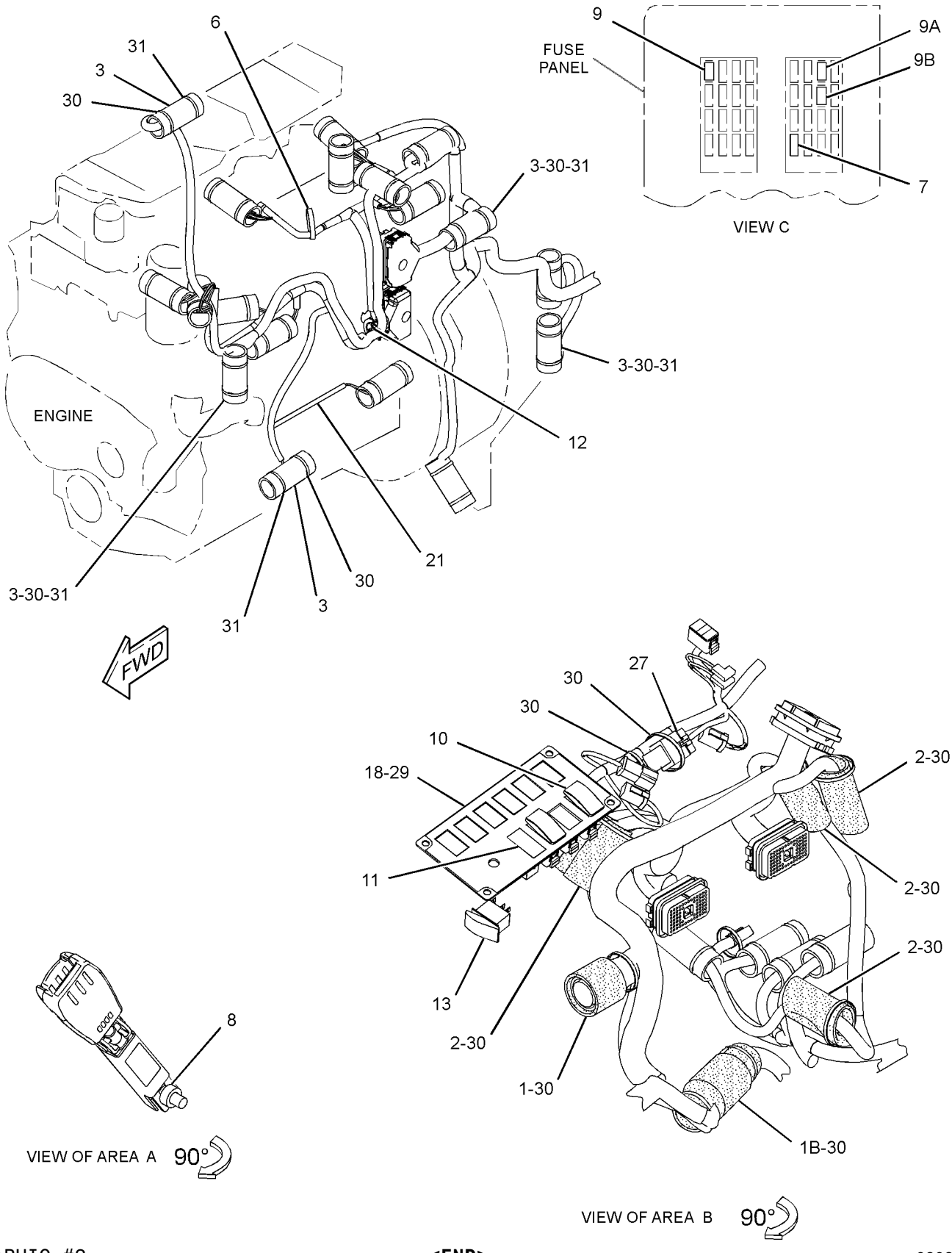

GRAPHIC #2 **<END>** g02025356

336-3545 ELECTRONICS GP-COMMUNICATION–PRODUCT LINK 121SR

S/N: JTD1-UP; FFF1-UP; LLL1-UP
PART OF 249-9068 INSTALLATION GP-COMMUNICATION
AN ATTACHMENT

SMCS-7606, 7610, 7620 **i04416549**

NOTE	PART NUMBER	QTY	PART NAME 1 2 3 4 5 6 (PRODUCT LEVEL)	SEE PAGE
	377-4844	1	SOFTWARE GP-COMMUNICATION	

<END>

303-4685 ELECTRONICS GP-IMPLEMENT–ACCUGRADE

S/N: JTD1-UP; FFF1-UP; LLL1-UP
AN ATTACHMENT

SMCS-5701, 7610, 7620 **i02694194**

NOTE	PART NUMBER	QTY	PART NAME 1 2 3 4 5 6 (PRODUCT LEVEL)	SEE PAGE
J	**303-4221**	1	CONFIGURATION-PREMIUM	
J-DLR INSTALL CONFIG:IRM:EESO3-01				

<END>

244-7387 ELECTRONICS GP-MACHINE

S/N: JTD1-UP; FFF1-UP; LLL1-UP
PART OF 244-7370, 244-7371, 282-5325 COMMON AR

SMCS-7610, 7620 **i02652035**

NOTE	PART NUMBER	QTY	PART NAME 1 2 3 4 5 6 (PRODUCT LEVEL)	SEE PAGE
Y	*284-0825*	1	ELECTRONICS GP-MACHINE (POWERTRAIN)	171
Y-SEPARATE ILLUSTRATION				

<END>

284-0825 ELECTRONICS GP-MACHINE–POWER TRAIN

S/N: JTD1-UP; FFF1-UP; LLL1-UP
PART OF 244-7387 ELECTRONICS GP-MACHINE

SMCS-7610, 7620 **i04159146**

NOTE	PART NUMBER	QTY	PART NAME 1 2 3 4 5 6 (PRODUCT LEVEL)	SEE PAGE
	317-0657	1	SOFTWARE GP-MACHINE	
			S/N: FFF1-356; LLL1-407; JTD1-159	
	338-0841	1	SOFTWARE GP-MACHINE	
			S/N: FFF357-652; LLL408-875; JTD160-175	
	362-4168	1	SOFTWARE GP-MACHINE	
			S/N: FFF653-UP; LLL876-UP; JTD176-UP	

<END>

ELECTRICAL AND STARTING SYSTEM

304-3660 GLOW PLUG GP

S/N: C4E1-UP

PART OF 254-9233 ENGINE AR-PRIMARY

SMCS-1412 **i02654914**

NOTE	REF NO	GRAPHIC REF	PART NUMBER	QTY	PART NAME 1 2 3 4 5 6 (PRODUCT LEVEL)	SEE PAGE
	1	1	**292-3462**	1	PLUG-PIPE	
	2	1	**292-9880**	4	GLOW PLUG (12-VOLT)	
	3	1	**298-5772**	1	BAR	

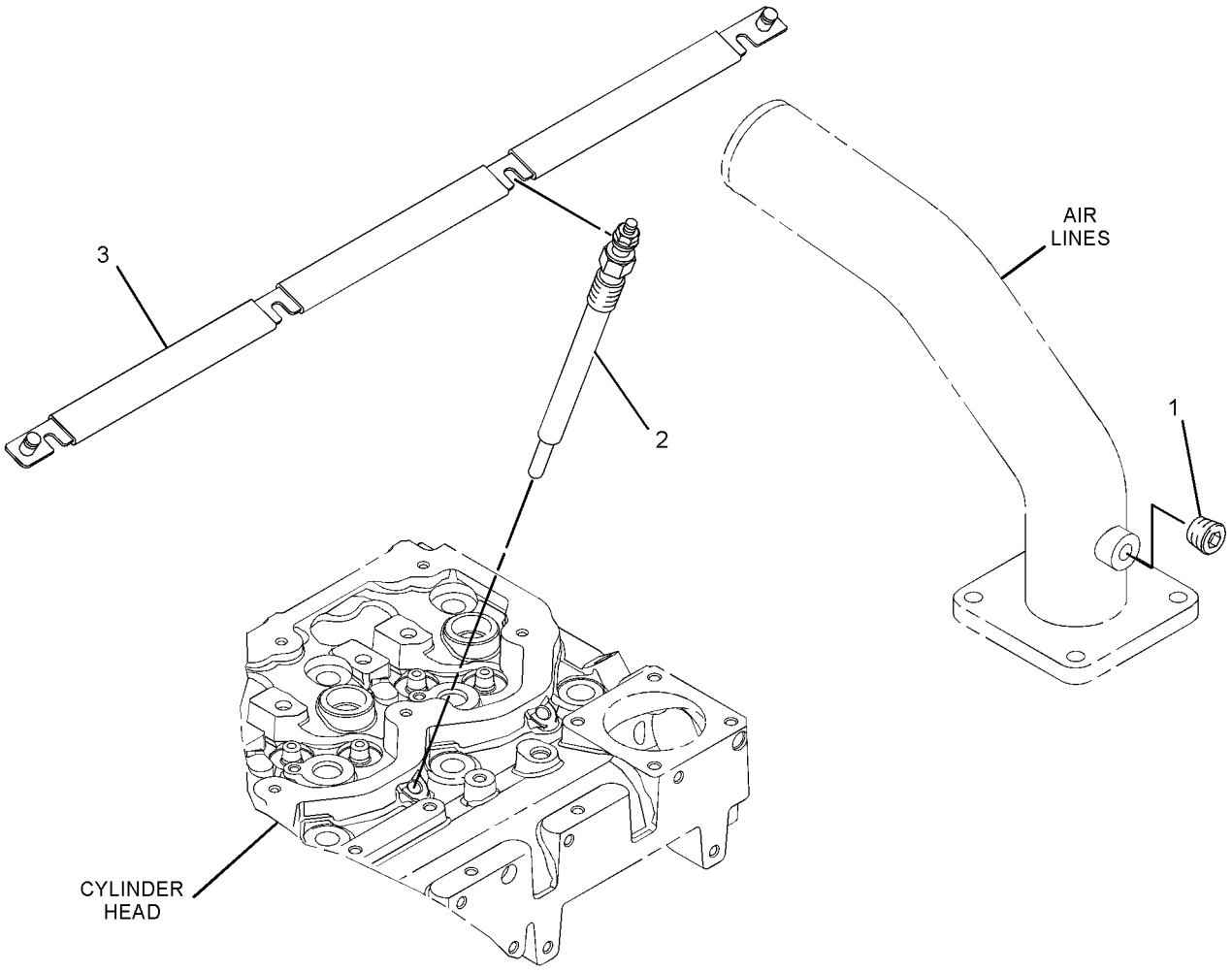

GRAPHIC #1 **<END>** g01342262

296-5751 GRADE CONTROL AR—OROPS

S/N: JTD1-UP; FFF1-UP; LLL1-UP
AN ATTACHMENT

SMCS-7220 **i03911405**

NOTE	PART NUMBER	QTY	PART NAME 1 2 3 4 5 6 (PRODUCT LEVEL)	SEE PAGE
Y	**274-4646**	1	CONTROL GP-JOYSTICK (GRADE CONTROL, RH)	706
			—OR—	
Y	**328-0895**	1	CONTROL GP-JOYSTICK (GRADE CONTROL, RH)	709
Y	*255-4230*	1	COVER GP-CAB (ROPS)	714
Y-SEPARATE ILLUSTRATION				

<END>

296-5752 GRADE CONTROL AR—EROPS

S/N: JTD1-UP; FFF1-UP; LLL1-UP
AN ATTACHMENT

SMCS-7220 **i03911406**

NOTE	PART NUMBER	QTY	PART NAME 1 2 3 4 5 6 (PRODUCT LEVEL)	SEE PAGE
Y	**274-4646**	1	CONTROL GP-JOYSTICK (GRADE CONTROL, RH)	706
			—OR—	
Y	**328-0895**	1	CONTROL GP-JOYSTICK (GRADE CONTROL, RH)	709
Y	*255-4231*	1	COVER GP-CAB (EROPS)	718
Y-SEPARATE ILLUSTRATION				

<END>

296-5753 GRADE CONTROL AR—OROPS

S/N: JTD1-UP; FFF1-UP; LLL1-UP
AN ATTACHMENT

SMCS-7220 **i03911407**

NOTE	PART NUMBER	QTY	PART NAME 1 2 3 4 5 6 (PRODUCT LEVEL)	SEE PAGE
Y	**274-4645**	1	CONTROL GP-JOYSTICK (GRADE CONTROL, RH)	705
			—OR—	
Y	**328-0894**	1	CONTROL GP-JOYSTICK (GRADE CONTROL, RH)	708
Y	*255-4230*	1	COVER GP-CAB (ROPS)	714
Y	*249-9040*	1	WIRING GP-GRADE CONTROL (BASE)	283
Y-SEPARATE ILLUSTRATION				

<END>

296-5754 GRADE CONTROL AR—EROPS

S/N: JTD1-UP; FFF1-UP; LLL1-UP
AN ATTACHMENT

SMCS-7220 **i03911408**

NOTE	PART NUMBER	QTY	PART NAME 1 2 3 4 5 6 (PRODUCT LEVEL)	SEE PAGE
Y	**274-4645**	1	CONTROL GP-JOYSTICK (GRADE CONTROL, RH)	705
			—OR—	
Y	**328-0894**	1	CONTROL GP-JOYSTICK (GRADE CONTROL, RH)	708
Y	*255-4231*	1	COVER GP-CAB (EROPS)	718
Y	*249-9040*	1	WIRING GP-GRADE CONTROL (BASE)	283
Y-SEPARATE ILLUSTRATION				

<END>

ELECTRICAL AND STARTING SYSTEM

296-5755 GRADE CONTROL AR–OROPS

S/N: JTD1-UP; FFF1-UP; LLL1-UP
FOR USE WITH BLADE AR-DOZER, GRADE CONTROL
AN ATTACHMENT

SMCS-7220 **i03911409**

NOTE	PART NUMBER	QTY	PART NAME 1 2 3 4 5 6 (PRODUCT LEVEL)	SEE PAGE
Y	**274-4645**	1	CONTROL GP-JOYSTICK (GRADE CONTROL, RH)	705
			–OR–	
Y	**328-0894**	1	CONTROL GP-JOYSTICK (GRADE CONTROL, RH)	708
Y	*285-0330*	1	COVER GP-CONSOLE (OROPS)	734
Y	*255-4260*	1	MOUNTING GP-GRADE CONTROL	196
Y	*245-6029*	1	WIRING GP-GRADE CONTROL (FULL)	263
Y-SEPARATE ILLUSTRATION				

<END>

296-5756 GRADE CONTROL AR–EROPS

S/N: JTD1-UP; FFF1-UP; LLL1-UP
FOR USE WITH BLADE AR-DOZER, GRADE CONTROL
AN ATTACHMENT

SMCS-7220 **i03911410**

NOTE	PART NUMBER	QTY	PART NAME 1 2 3 4 5 6 (PRODUCT LEVEL)	SEE PAGE
Y	**274-4645**	1	CONTROL GP-JOYSTICK (GRADE CONTROL, RH)	705
			–OR–	
Y	**328-0894**	1	CONTROL GP-JOYSTICK (GRADE CONTROL, RH)	708
Y	*285-0331*	1	COVER GP-CAB (EROPS)	724
Y	*255-4260*	1	MOUNTING GP-GRADE CONTROL	196
Y	*245-6029*	1	WIRING GP-GRADE CONTROL (FULL)	263
Y-SEPARATE ILLUSTRATION				

<END>

317-6527 GRADE CONTROL AR–
ACCUGRADE, ADVANCED TRACKING SYSTEM

S/N: JTD1-UP; FFF1-UP; LLL1-UP
FIELD INSTALLATION

SMCS-7220 **i03899418**

NOTE	PART NUMBER	QTY	PART NAME 1 2 3 4 5 6 (PRODUCT LEVEL)	SEE PAGE
Y	**286-0134**	1	DISPLAY GP-MONITOR (CD700)	738
Y	**286-9124**	3	DISPLAY GP-MONITOR (LIGHT BAR)	739
Y	**226-2333**	1	MAST GP (LASER RECEIVER)	194
Y	*292-0296*	1	MOUNTING GP-GRADE CONTROL	198
Y	*292-0302*	1	MOUNTING GP-MAST (LASER RECEIVER)	906
Y	**234-9970**	1	MOUNTING GP-RECEIVER (MAST)	199
Y	**295-9880**	1	TARGET GP-LASER	227
	276-6146	1	SENSOR AS-ANGLE (AS400TC)	
	311-4864	1	CABLE-COILED (ANGLE SENSOR)	
Y-SEPARATE ILLUSTRATION				

<END>

292-0293 GRADE CONTROL AR-LASER—ACCUGRADE, SINGLE

S/N: JTD1-UP; FFF1-UP; LLL1-UP
FOR USE WITH K SERIES, N SERIES, R SERIES, T SERIES TRACK TYPE TRACTOR
FIELD INSTALLATION

SMCS-7220 **i03754139**

NOTE	PART NUMBER	QTY	PART NAME 1 2 3 4 5 6 (PRODUCT LEVEL)	SEE PAGE
Y	**292-0309**	1	DISPLAY GP-MONITOR (CD610)	740
Y	**226-2333**	1	MAST GP (GRADE CONTROL)	194
Y	*292-0302*	1	MOUNTING GP-MAST (LASER RECEIVER)	906
Y	**234-9970**	1	MOUNTING GP-RECEIVER	199
Y	**239-9950**	1	RECEIVER GP-LASER (SINGLE) (GRADE CONTROL)	210
Y-SEPARATE ILLUSTRATION				

<END>

292-0312 GRADE CONTROL AR-LASER—ACCUGRADE, DUAL

S/N: JTD1-UP; FFF1-UP; LLL1-UP
FOR USE WITH TRACK TYPE TRACTOR
FIELD INSTALLATION

SMCS-7220 **i04418649**

NOTE	PART NUMBER	QTY	PART NAME 1 2 3 4 5 6 (PRODUCT LEVEL)	SEE PAGE
Y	*292-0309*	1	DISPLAY GP-MONITOR (CD610)	740
Y	*226-2333*	2	MAST GP (LASER RECEIVER)	194
Y	*292-0302*	2	MOUNTING GP-MAST (LASER RECEIVER)	906
Y	*234-9970*	2	MOUNTING GP-RECEIVER (MAST)	199
Y	*292-0285*	2	RECEIVER GP-LASER (ACCUGRADE, DUAL)	210
	235-4587	1	CASE-PLASTIC	
Y-SEPARATE ILLUSTRATION				

<END>

290-5570 GRADE CONTROL AR-SATELLITE—ACCUGRADE, DUAL GPS

S/N: FFF1-UP; LLL1-UP
REPLACED BY 290-5571—PAGE 176. FOR USE WITH TRACK TYPE TRACTOR
FIELD INSTALLATION

SMCS-7220 **i02852359**

NOTE	PART NUMBER	QTY	PART NAME 1 2 3 4 5 6 (PRODUCT LEVEL)	SEE PAGE
Y	*286-0134*	1	DISPLAY GP-MONITOR (CD700)	738
Y	*292-0290*	2	MAST GP (SATELLITE RECEIVER)	194
Y	**286-9124**	3	DISPLAY GP-MONITOR (LIGHT BAR)	739
Y	*292-0296*	1	MOUNTING GP-GRADE CONTROL	198
Y	*286-0137*	1	RECEIVER GP-SATELLITE (DUAL GPS, MS980)	210
	254-9136	2	CABLE-COILED (RECEIVER)	
Y-SEPARATE ILLUSTRATION				

<END>

290-5571 GRADE CONTROL AR-SATELLITE–
ACCUGRADE, DUAL GNSS
S/N: JTD1-UP; FFF1-UP; LLL1-UP
FOR USE WITH TRACK TYPE TRACTOR
FIELD INSTALLATION

SMCS-7220 **i03635371**

NOTE	PART NUMBER	QTY	PART NAME 1 2 3 4 5 6 (PRODUCT LEVEL)	SEE PAGE
Y	**286-0134**	1	DISPLAY GP-MONITOR (CD700)	738
Y	**286-9124**	3	DISPLAY GP-MONITOR (LIGHT BAR)	739
Y	*292-0296*	1	MOUNTING GP-GRADE CONTROL	198
Y	*292-0303*	2	MOUNTING GP-MAST (SATELLITE RECEIVER)	906
Y	**292-0291**	1	RECEIVER GP-SATELLITE (ACCUGRADE, DUAL GNSS, MS992)	211
	248-1500	2	MAST AS (SATELLITE RECEIVER)	
	311-4862	2	CABLE-COILED (RECEIVER)	
Y-SEPARATE ILLUSTRATION				

<END>

292-0280 GRADE CONTROL AR-SATELLITE–
ACCUGRADE, SINGLE GNSS
S/N: JTD1-UP; FFF1-UP; LLL1-UP
FOR USE WITH TRACK TYPE TRACTOR
FIELD INSTALLATION

SMCS-7220 **i03635374**

NOTE	PART NUMBER	QTY	PART NAME 1 2 3 4 5 6 (PRODUCT LEVEL)	SEE PAGE
Y	**286-0134**	1	DISPLAY GP-MONITOR (CD700)	738
Y	**286-9124**	3	DISPLAY GP-MONITOR (LIGHT BAR)	739
Y	*292-0296*	1	MOUNTING GP-GRADE CONTROL	198
Y	*292-0303*	1	MOUNTING GP-MAST (SATELLITE RECEIVER)	906
Y	**292-0292**	1	RECEIVER GP-SATELLITE (ACCUGRADE, SINGLE GNSS, MS992)	211
	248-1500	1	MAST AS (SATELLITE RECEIVER)	
	276-6146	1	SENSOR AS-ANGLE (AS400TC)	
	311-4862	1	CABLE-COILED (RECEIVER)	
	311-4864	1	CABLE-COILED (ANGLE SENSOR)	
Y-SEPARATE ILLUSTRATION				

<END>

347-0915 GRADE CONTROL AR-SATELLITE–ACCUGRADE, SINGLE

S/N: JTD1-UP; FFF1-UP; LLL1-UP

FIELD INSTALLATION

SMCS-7220 **i04108929**

NOTE	PART NUMBER	QTY	PART NAME 1 2 3 4 5 6 (PRODUCT LEVEL)	SEE PAGE
Y	**286-0134**	1	DISPLAY GP-MONITOR (CD700)	738
Y	**286-9124**	3	DISPLAY GP-MONITOR (LIGHT BAR)	739
Y	*292-0296*	1	MOUNTING GP-GRADE CONTROL	198
Y	*292-0303*	1	MOUNTING GP-MAST (SATELLITE RECEIVER)	906
Y	*347-0912*	1	RECEIVER GP-SATELLITE (SINGLE GNSS, MS990)	213
	248-1500	1	MAST AS (SATELLITE RECEIVER)	
	276-6146	1	SENSOR AS-ANGLE (AS400TC)	
	311-4862	1	CABLE-COILED (RECEIVER)	
	311-4864	1	CABLE-COILED (ANGLE SENSOR)	
Y-SEPARATE ILLUSTRATION				

<END>

347-0916 GRADE CONTROL AR-SATELLITE–ACCUGRADE, DUAL

S/N: JTD1-UP; FFF1-UP; LLL1-UP

FIELD INSTALLATION

SMCS-7220 **i04108930**

NOTE	PART NUMBER	QTY	PART NAME 1 2 3 4 5 6 (PRODUCT LEVEL)	SEE PAGE
Y	**286-0134**	1	DISPLAY GP-MONITOR (CD700)	738
Y	**286-9124**	3	DISPLAY GP-MONITOR (LIGHT BAR)	739
Y	*292-0296*	1	MOUNTING GP-GRADE CONTROL	198
Y	*292-0303*	1	MOUNTING GP-MAST (SATELLITE RECEIVER)	906
Y	*347-0913*	1	RECEIVER GP-SATELLITE (DUAL GNSS, MS990)	213
	248-1500	1	MAST AS (SATELLITE RECEIVER)	
	276-6146	1	SENSOR AS-ANGLE (AS400TC)	
	311-4862	1	CABLE-COILED (RECEIVER)	
Y-SEPARATE ILLUSTRATION				

<END>

253-5391 HEATER GP-JACKET WATER

S/N: JTD1-UP; FFF1-UP; LLL1-UP
AN ATTACHMENT

SMCS-1383 **i02644587**

NOTE	REF NO	GRAPHIC REF	PART NUMBER	QTY	PART NAME 1 2 3 4 5 6 (PRODUCT LEVEL)	SEE PAGE
	1	1	**7K-1181**	2	STRAP-CABLE	
	2	1	**130-0165**	1	RECEPTACLE AS (FLUSH MOUNT)	
	3	1	**231-3054**	1	HEATER GP-JACKET WATER	
		1	**219-3273**	1	ELEMENT AS-JACKET WATER HEATER (120-VOLT, 1000-WATT)	
		1	**133-3413**	1	KIT-SEAL (WATER JACKET)	
					(KIT INCLUDES RINGS, SPACER & SEAL)	
		1	**133-6517**	1	CAP AS-DUST	
		1	**231-3052**	1	CORD AS	
	4	1	**253-6168**	1	PLATE AS	
	5	1	**4P-7581**	2	CLIP	
	6	1	**8T-4121**	2	WASHER-HARD (11X21X2.5-MM THK)	
M	7	1	**8T-4195**	2	BOLT (M10X1.5X30-MM)	

M-METRIC PART

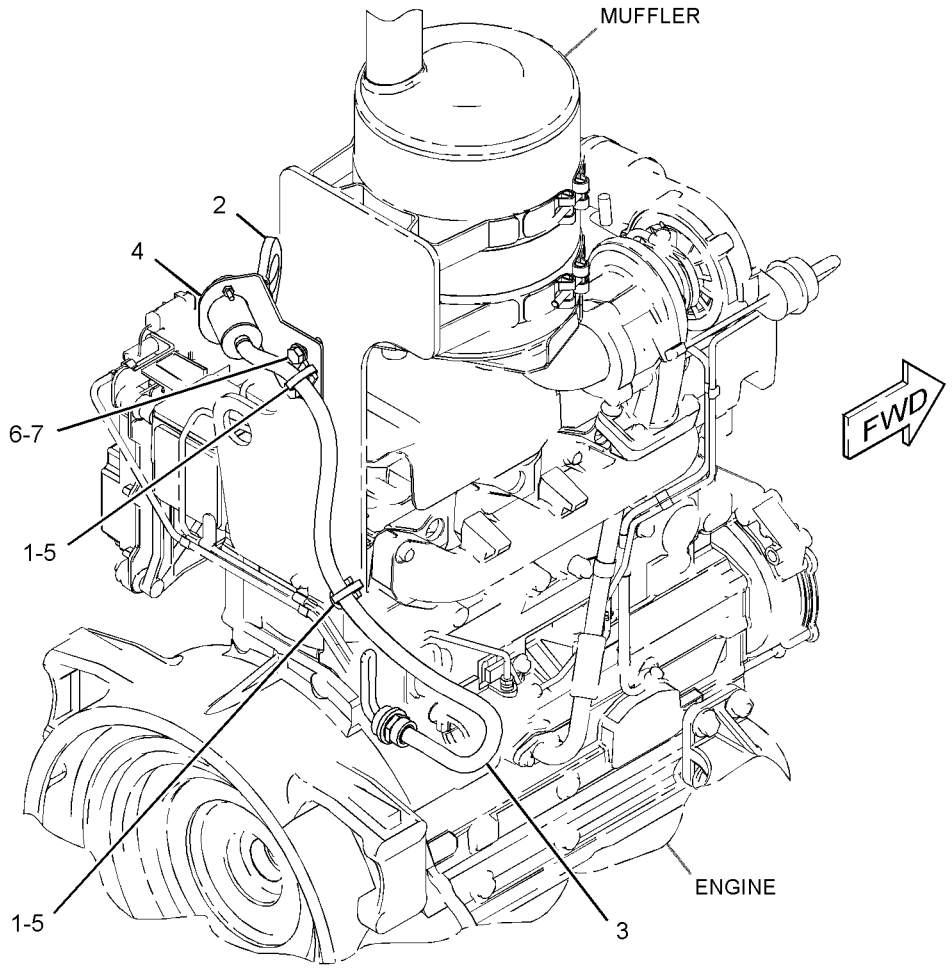

GRAPHIC #1 **<END>** g01329099

249-9029 INSTALLATION GP-COMMUNICATION–

PRODUCT LINK 321SR

S/N: JTD1-UP; FFF1-UP; LLL1-UP

AN ATTACHMENT

TYPE 1

SMCS-7606 **i03588204**

NOTE	REF NO	GRAPHIC REF	PART NUMBER	QTY	PART NAME 1 2 3 4 5 6 (PRODUCT LEVEL)	SEE PAGE
	1	1	**7K-1181**	1	STRAP-CABLE	
	2	1	**8C-5607**	8	MOUNT-ISOLATION	
	3	1	**8C-5608**	4	SPACER (6.5X9.5X25.4-MM THK)	
	4	1	**249-9035**	1	HARNESS AS-CONTROL	
		1	**9X-3401**	5	PIN-CONNECTOR (16-GA TO 18-GA)	
		1	**186-3735**	3	PIN-CONNECTOR (16-GA TO 18-GA)	
		1	**155-2255**	1	KIT-CONNECTING PLUG (12-PIN)	
		1	**155-2270**	1	KIT-CONNECTING PLUG (2-PIN)	
					(EACH PLUG KIT INCLUDES PLUG AS, WEDGE & INTERFACE SEAL)	
		1	**160-7690**	1	PLUG AS-CONNECTOR (70-PIN)	
		1	**8T-8737**	66	PLUG-SEAL	
		1	**102-8801**	1	KIT-RECEPTACLE (12-PIN)	
					(INCLUDES RECEPTACLE AS & WEDGE)	
		1	**9X-3402**	6	SOCKET-CONNECTOR (16-GA TO 18-GA)	
		1	**186-3736**	3	SOCKET-CONNECTOR (16-GA TO 18-GA)	
		1	**126-1766**	13	SOCKET-CONNECTOR (14-GA TO 18-GA)	
B		1	**141-8061**		TAPE	
E		1	**125-7874**		TUBE-HEAT SHRINK (5.72-MM DIA) (20-CM)	
Y	5	1	*249-9068*	1	INSTALLATION GP-COMMUNICATION (PRODUCT LINK 121SR)	183
Y	6	1	**268-4699**	1	SERVICE GP-COMMUNICATION (PRODUCT LINK 300)	220
	7	1	**132-5789**	1	CLIP	
	8	1	**2A-2677**	1	SPACER (10.7X17.14X19.05-MM THK)	
M	9	1	**6V-2315**	3	BOLT (M6X1X35-MM)	
M	10	1	**7X-2535**	1	BOLT (M6X1X60-MM)	
	11	1	**9X-6165**	5	WASHER (6.5X22X2.5-MM THK)	

B-USE AS REQUIRED
E-ORDER BY THE CENTIMETER
M-METRIC PART
Y-SEPARATE ILLUSTRATION

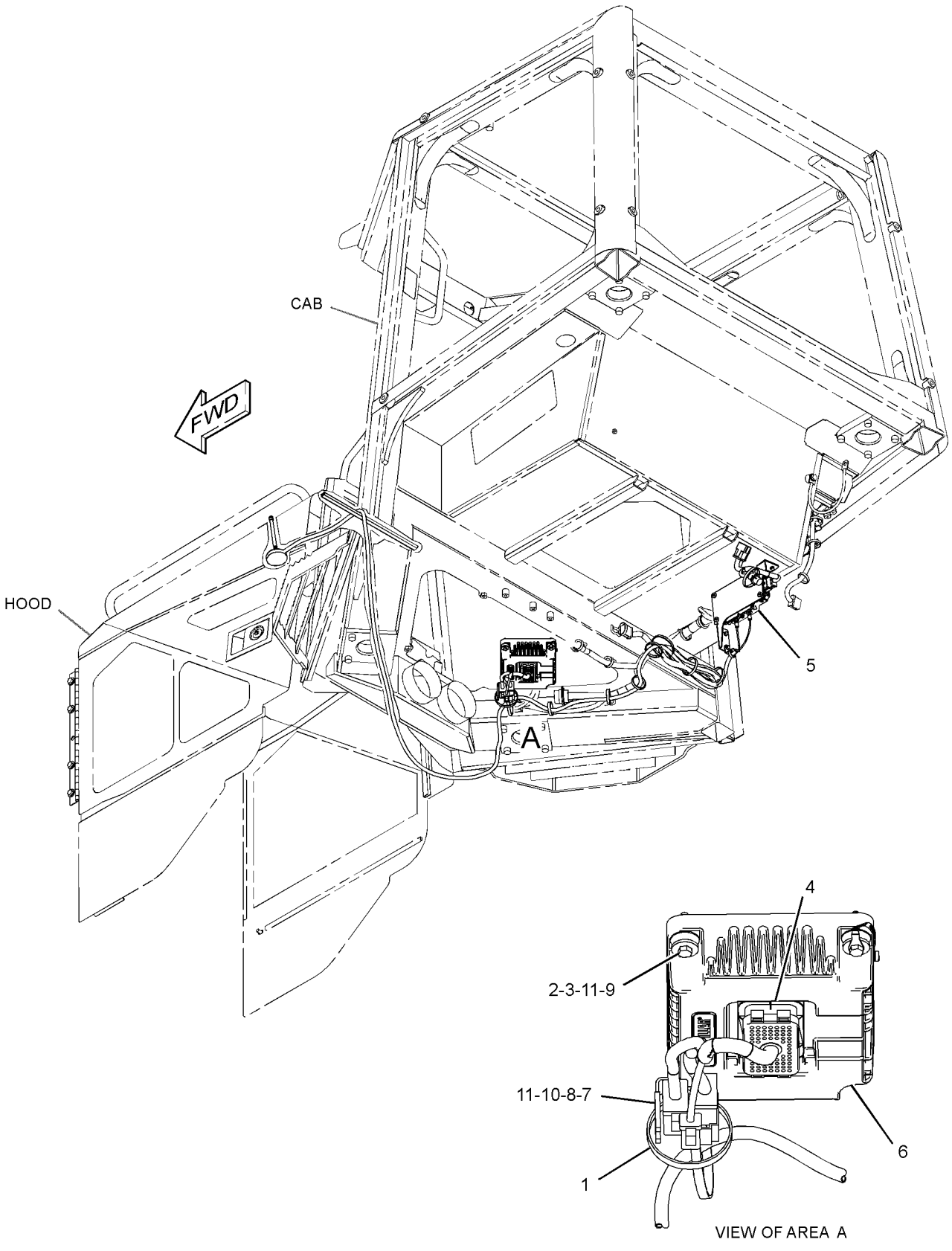

GRAPHIC #1 **<END>** g01346263

249-9029 INSTALLATION GP-COMMUNICATION–

PRODUCT LINK 321SR

S/N: JTD1-UP; FFF1-UP; LLL1-UP

AN ATTACHMENT

TYPE 2

SMCS-7606 **i03588437**

NOTE	REF NO	GRAPHIC REF	PART NUMBER	QTY	PART NAME 1 2 3 4 5 6 (PRODUCT LEVEL)	SEE PAGE
	1	1	**7K-1181**	1	STRAP-CABLE	
	2	1	**8C-5607**	8	MOUNT-ISOLATION	
	3	1	**8C-5608**	4	SPACER (6.5X9.5X25.4-MM THK)	
	4	1	**249-9035**	1	HARNESS AS-CONTROL	
		1	**9X-3401**	5	PIN-CONNECTOR (16-GA TO 18-GA)	
		1	**186-3735**	3	PIN-CONNECTOR (16-GA TO 18-GA)	
		1	**155-2255**	1	KIT-CONNECTING PLUG (12-PIN)	
		1	**155-2270**	1	KIT-CONNECTING PLUG (2-PIN)	
					(EACH PLUG KIT INCLUDES PLUG AS, WEDGE & INTERFACE SEAL)	
		1	**160-7690**	1	PLUG AS-CONNECTOR (70-PIN)	
		1	**8T-8737**	66	PLUG-SEAL	
		1	**102-8801**	1	KIT-RECEPTACLE (12-PIN)	
					(INCLUDES RECEPTACLE AS & WEDGE)	
		1	**9X-3402**	6	SOCKET-CONNECTOR (16-GA TO 18-GA)	
		1	**186-3736**	3	SOCKET-CONNECTOR (16-GA TO 18-GA)	
		1	**126-1766**	13	SOCKET-CONNECTOR (14-GA TO 18-GA)	
B		1	**141-8061**		TAPE	
E		1	**125-7874**		TUBE-HEAT SHRINK (5.72-MM DIA) (20-CM)	
Y	5	1	*249-9068*	1	INSTALLATION GP-COMMUNICATION	183
	6	1	**311-8376**	1	SERVICE GP-COMMUNICATION (PRODUCT LINK 300)	
	7	1	**132-5789**	1	CLIP	
	8	1	**2A-2677**	1	SPACER (10.7X17.14X19.05-MM THK)	
M	9	1	**6V-2315**	3	BOLT (M6X1X35-MM)	
M	10	1	**7X-2535**	1	BOLT (M6X1X60-MM)	
	11	1	**9X-6165**	5	WASHER (6.5X22X2.5-MM THK)	

B-USE AS REQUIRED
E-ORDER BY THE CENTIMETER
M-METRIC PART
Y-SEPARATE ILLUSTRATION

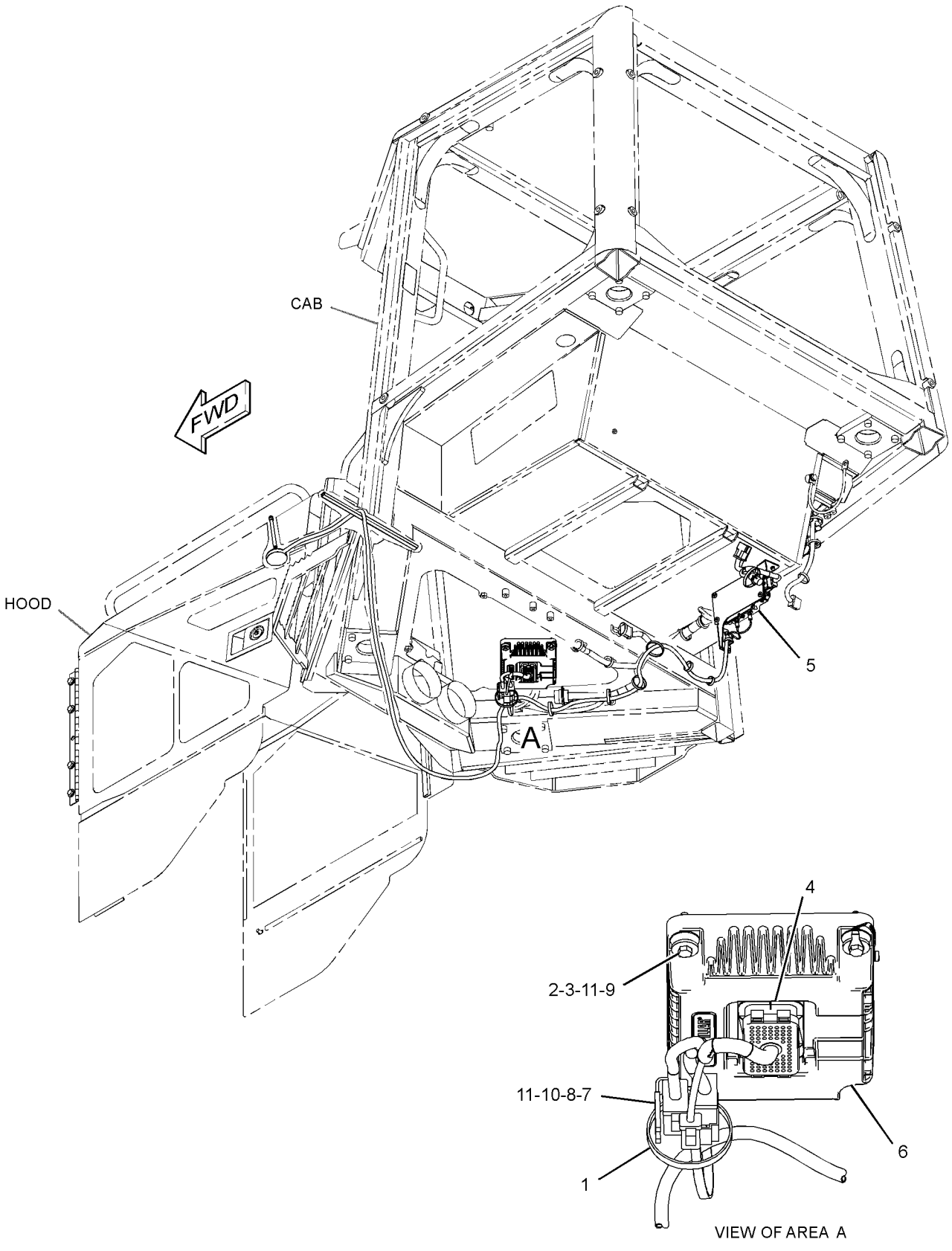

GRAPHIC #1 **<END>** g01408692

249-9068 INSTALLATION GP-COMMUNICATION–

PRODUCT LINK 121SR

S/N: JTD1-UP; FFF1-UP; LLL1-UP

PART OF 249-9029 INSTALLATION GP-COMMUNICATION

AN ATTACHMENT

SMCS-7606 **i04105310**

NOTE	REF NO	GRAPHIC REF	PART NUMBER	QTY	PART NAME 1 2 3 4 5 6 (PRODUCT LEVEL)	SEE PAGE
	1	1	**7K-1181**	9	STRAP-CABLE	
	2	1	**249-9069**	1	HARNESS AS-WIRING (PRODUCT LINK)	
		1	**100-5805**	1	CAP-RECEPTACLE	
		1	**186-3735**	12	PIN-CONNECTOR (16-GA TO 18-GA)	
		1	**155-2255**	1	KIT-CONNECTING PLUG (12-PIN)	
					(INCLUDES PLUG AS, WEDGE & INTERFACE SEAL)	
		1	**8T-8737**	8	PLUG-SEAL	
		1	**102-8802**	1	KIT-RECEPTACLE (2-PIN)	
		1	**102-8801**	1	KIT-RECEPTACLE (12-PIN)	
					(EACH RECEPTACLE KIT INCLUDES RECEPTACLE AS & WEDGE)	
		1	**9X-4813**	1	RECEPTACLE AS-CONNECTOR (3-PIN)	
		1	**186-3736**	9	SOCKET-CONNECTOR (16-GA TO 18-GA)	
E		1	**125-7874**		TUBE-HEAT SHRINK (5.72-MM DIA) (15-CM)	
B	3	1	**260-7653**	1	FILM-WARNING (PRODUCT LINK 300, INTL)	
					–OR–	
B		1	**260-7652**	1	FILM-WARNING (PRODUCT LINK 300, U.S.)	
E	4	1	**3E-6600**		SEAL (40-CM)	
Y	5	1	**336-3545**	1	ELECTRONICS GP-COMMUNICATION (PRODUCT LINK 121SR)	171
	6	1	**269-7650**	1	PLATE AS	
	7	1	**156-6175**	1	CLIP	
	8	1	**310-2392**	1	ANTENNA AS (MAGNETIC MOUNT, PRODUCT LINK)	
		1	**301-0589**	1	ANTENNA (FLEXIBLE)	
M	9	1	**8C-3210**	7	BOLT (M6X1X16-MM)	
	10	1	**9X-8256**	7	WASHER (6.6X12X2-MM THK)	
	11	1	**307-0047**	1	FILM-INFORMATION (PRODUCT LINK, READ OMM)	

B-USE AS REQUIRED
E-ORDER BY THE CENTIMETER
M-METRIC PART
Y-SEPARATE ILLUSTRATION

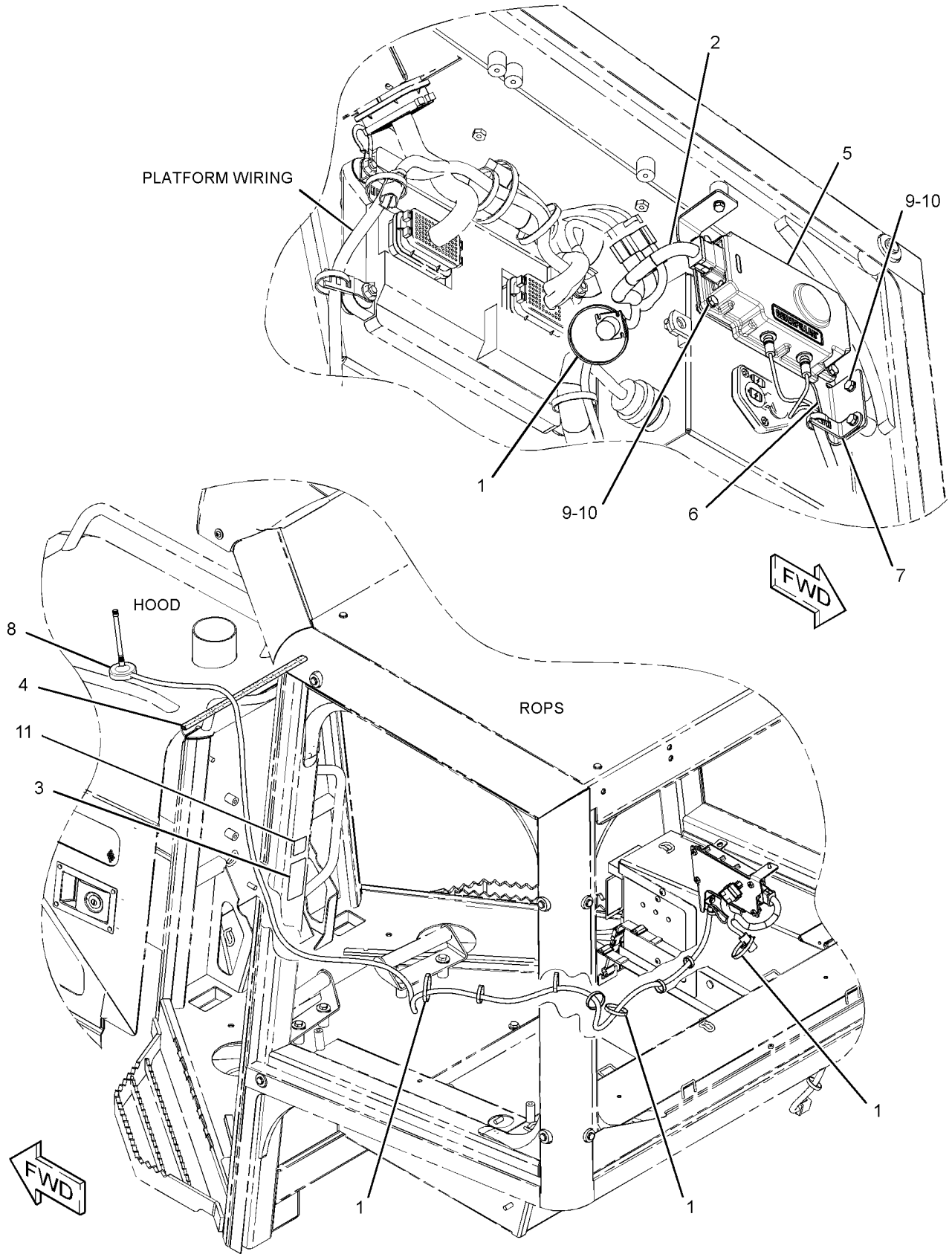

GRAPHIC #1 **<END>** g01621858

245-6028 INSTALLATION GP-SECURITY

S/N: JTD1-UP; FFF1-UP; LLL1-UP

AN ATTACHMENT

SMCS-7631 **i04415870**

NOTE	REF NO	GRAPHIC REF	PART NUMBER	QTY	PART NAME 1 2 3 4 5 6 (PRODUCT LEVEL)	SEE PAGE
	1	1	**7K-1181**	2	STRAP-CABLE	
	2	1	**8C-5607**	4	MOUNT-ISOLATION	
	3	1	**8C-5608**	2	SPACER (6.5X9.5X25.4-MM THK)	
	4	1	**206-5162**	2	KEY AS-ELECTRONIC (SECURITY)	
	5	1	*206-5203*	1	COIL AS (EXCITER)	
		1	**102-8802**	1	KIT-RECEPTACLE (2-PIN)	
					(INCLUDES RECEPTACLE AS & WEDGE)	
		1	**198-5389**	1	FILM-IDENTIFICATION (IGNITION SWITCH)	
		1	**205-8257**	1	COIL AS (EXCITER)	
		1	**207-5271**	1	WASHER (27X60.5X0.36-MM THK)	
D		1	**5P-5677**		WIRE (18-GA, BLACK) (0.4-M)	
		1	**8T-8729**	2	PIN-CONNECTOR (16-GA TO 18-GA)	
	6	1	**218-0404**	1	MODULE GP-INTERFACE (KEY)	
		1	**6V-6715**	1	SCREW-PAN HEAD (4-20X0.25-IN)	
		1	**8C-3095**	1	SEAL-O-RING	
	7	1	**219-6314**	2	KEY RING (IDENTIFICATION)	
M	8	1	**7X-2533**	2	BOLT (M6X1X35-MM)	
	9	1	**249-9028**	1	HARNESS AS-WIRING	
		1	**8T-8729**	4	PIN-CONNECTOR (16-GA TO 18-GA)	
		1	**155-2265**	1	KIT-CONNECTING PLUG (8-PIN)	
		1	**155-2270**	1	KIT-CONNECTING PLUG (2-PIN)	
					(EACH INCLUDES PLUG AS, WEDGE & INTERFACE SEAL)	
		1	**8T-8737**	6	PLUG-SEAL	
		1	**102-8806**	1	KIT-RECEPTACLE (8-PIN)	
					(INCLUDES RECEPTACLE AS & WEDGE)	
		1	**8T-8730**	8	SOCKET-CONNECTOR (16-GA TO 18-GA)	
	10	1	**9X-6165**	2	WASHER (6.5X22X2.5-MM THK)	
	11	1	**292-2558**	1	FILM-IDENTIFICATION (IGNITION SWITCH, READ OMM)	
	12	1	**205-0826**	1	FILM-INSTRUCTION (MACHINE SECURITY, CONSOLE)	

D-ORDER BY THE METER
M-METRIC PART

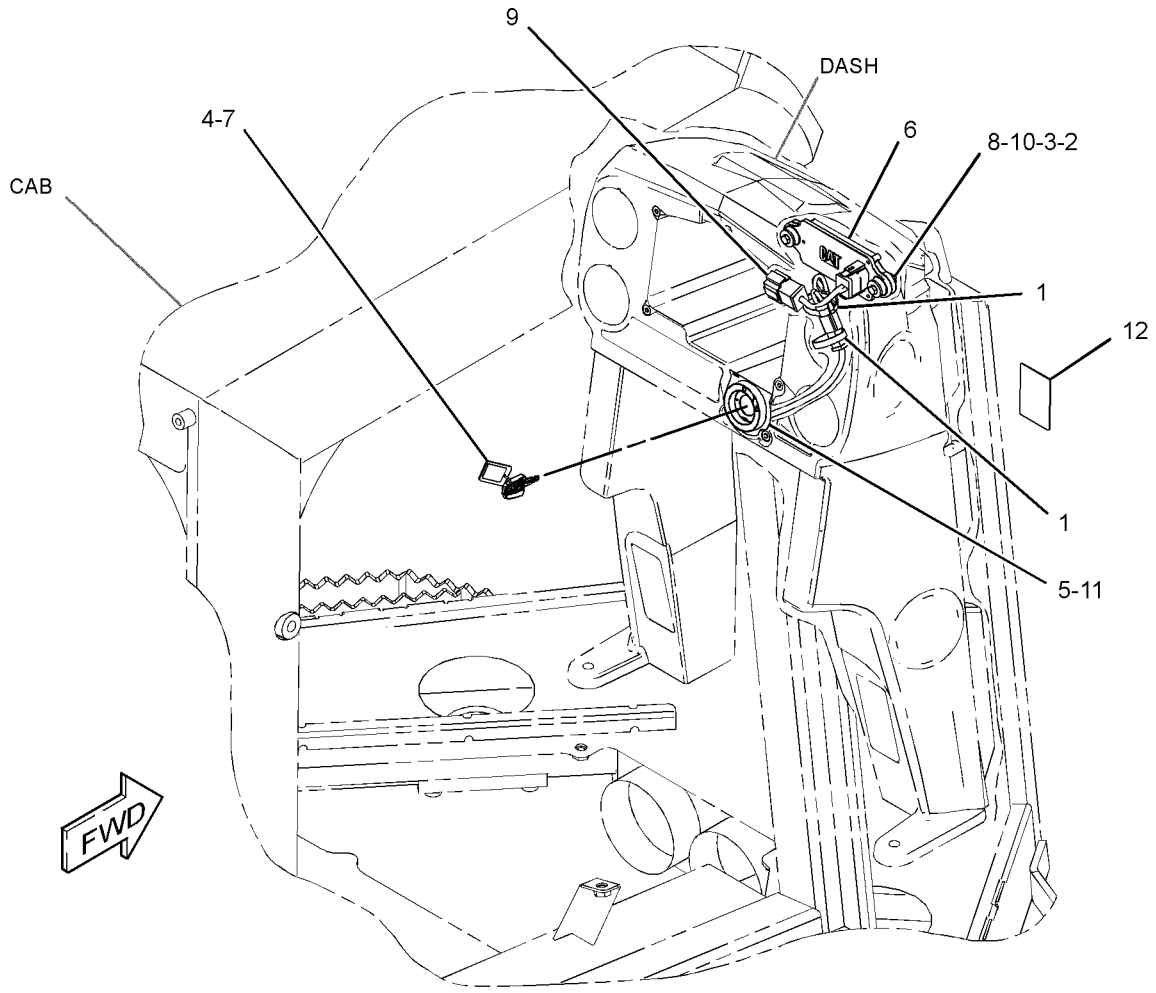

GRAPHIC #1 **<END>** g01923083

154-7986 LAMP GP-FLOOD

S/N: JTD1-UP; FFF1-UP; LLL1-UP
12-VOLT
PART OF 269-7696 LIGHTING GP-FLOOD
AN ATTACHMENT

SMCS-1434 **i03776889**

NOTE	REF NO	GRAPHIC REF	PART NUMBER	QTY	PART NAME 1 2 3 4 5 6 (PRODUCT LEVEL)	SEE PAGE
	1	1	**9W-0607**	1	LAMP (12-VOLT, 55-WATT) (FLOODLIGHT)	
	2	1	**155-5354**	1	LENS AS (FLOODLIGHT)	
	3	1	**155-5355**	1	BODY AS (FLOODLIGHT)	
M	4	1	**6V-9189**	1	LOCKNUT (M8X1.25-THD)	
M	5	1	**8T-4195**	1	BOLT (M10X1.5X30-MM)	
M	6	1	**7X-0818**	1	BOLT (M8X1.25X45-MM)	

M-METRIC PART

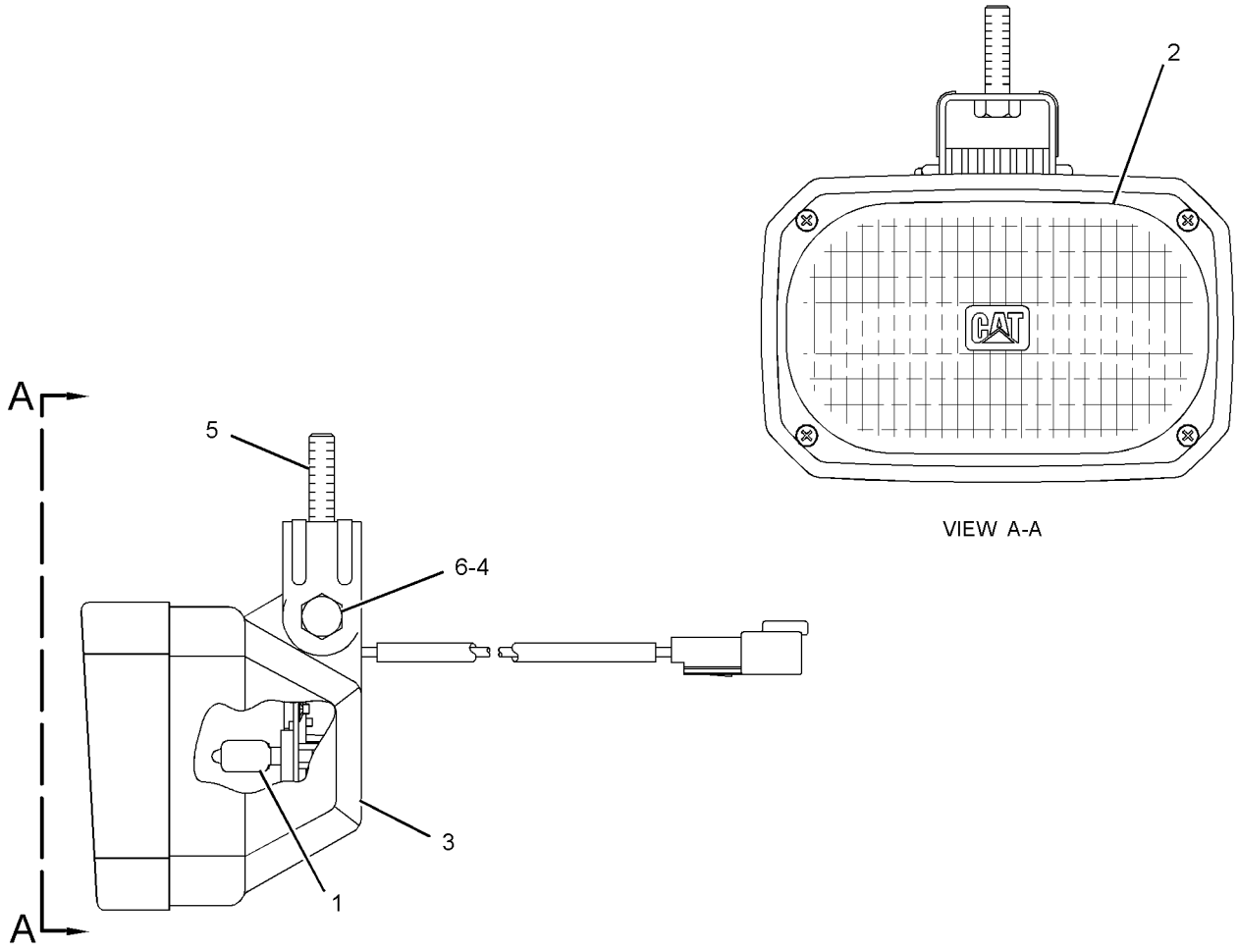

GRAPHIC #1 **<END>** g01408594

240-0101 LAMP GP-FLOOD

S/N: JTD1-UP; FFF1-UP; LLL1-UP
12-VOLT
PART OF 269-7695 LIGHTING GP-FLOOD, 245-6021, 245-6047 WIRING GP-CAB
AN ATTACHMENT

SMCS-1434 **i03776890**

NOTE	REF NO	GRAPHIC REF	PART NUMBER	QTY	PART NAME 1 2 3 4 5 6 (PRODUCT LEVEL)	SEE PAGE
	1	1	**9W-0607**	1	LAMP (12-VOLT, 55-WATT) (FLOODLIGHT)	
	2	1	**9X-4244**	2	SCREW-SPECIAL (M4X1.79X25-MM)	
	3	1	**202-6611**	1	LENS AS (FLOODLIGHT)	
	4	1	**240-0124**	1	BODY AS (FLOODLIGHT)	
	5	1	**164-7556**	1	BRACKET (LAMP RETAINING)	

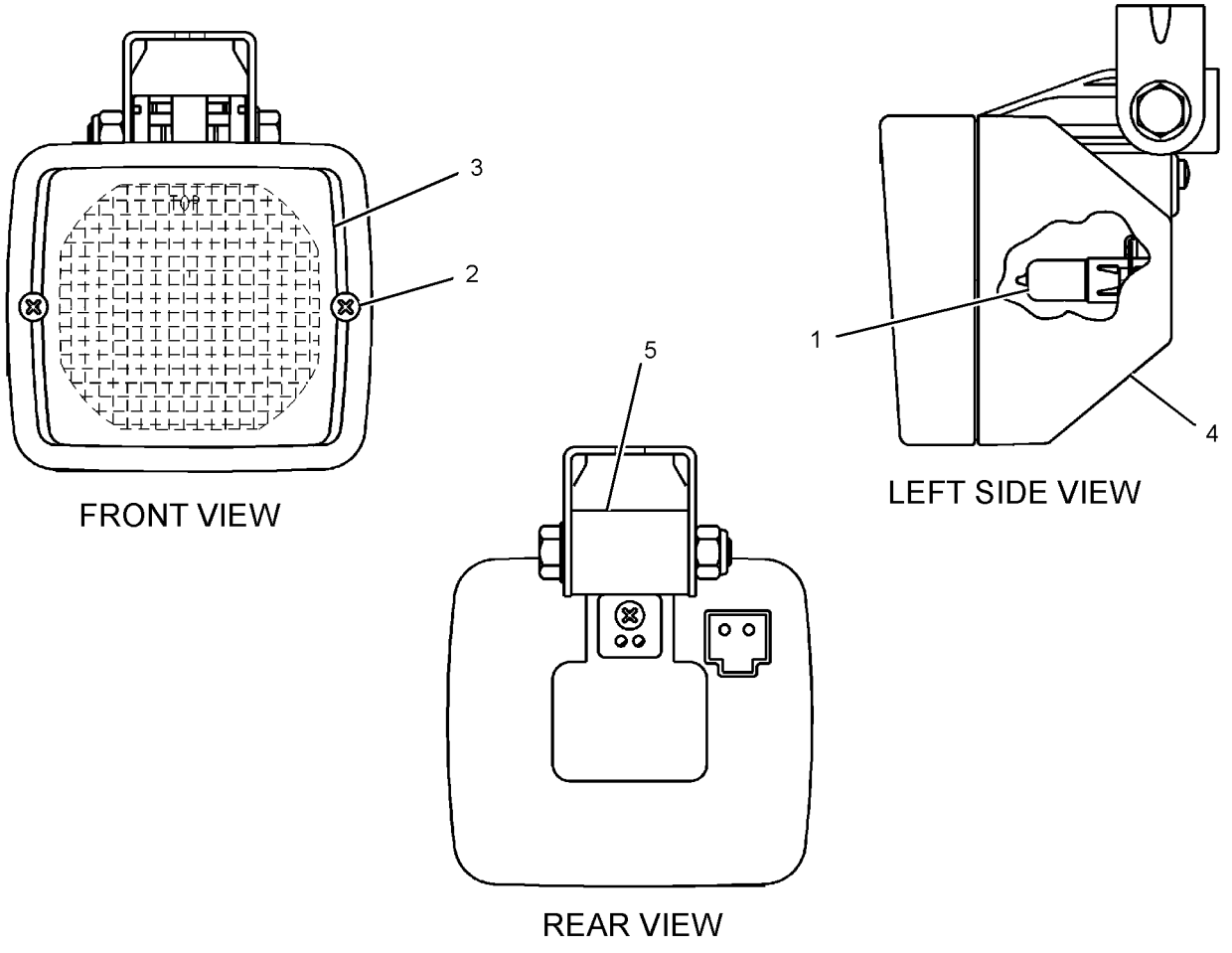

GRAPHIC #1 **<END>** g01333595

240-0102 LAMP GP-FLOOD

S/N: JTD1-UP; FFF1-UP; LLL1-UP
12-VOLT
PART OF 269-7695, 269-7696 LIGHTING GP-FLOOD, 245-6021, 245-6047 WIRING GP-CAB
AN ATTACHMENT

SMCS-1434 **i03776891**

NOTE	REF NO	GRAPHIC REF	PART NUMBER	QTY	PART NAME 1 2 3 4 5 6 (PRODUCT LEVEL)	SEE PAGE
	1	1	**9W-0607**	1	LAMP (12-VOLT, 55-WATT) (FLOODLIGHT)	
	2	1	**9X-4244**	2	SCREW-SPECIAL (M4X1.79X25-MM)	
	3	1	**202-6614**	1	LENS AS (FLOODLIGHT)	
	4	1	**240-0124**	1	BODY AS (FLOODLIGHT)	
	5	1	**164-7556**	1	BRACKET (LAMP RETAINING)	

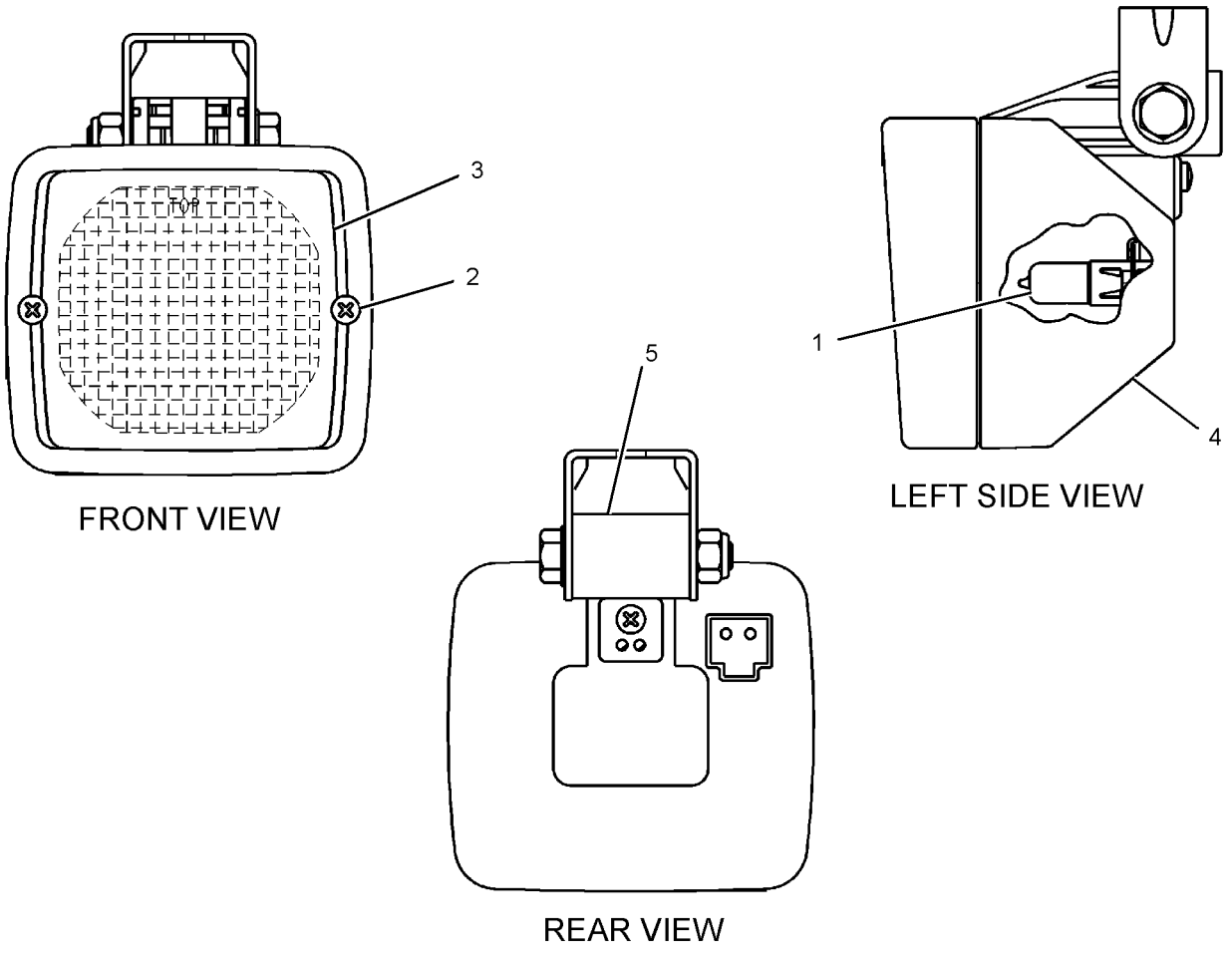

GRAPHIC #1 **<END>** g01341506

269-7695 LIGHTING GP-FLOOD

S/N: JTD1-UP; FFF1-UP; LLL1-UP
AN ATTACHMENT
TYPE 1

SMCS-1434 **i04419267**

NOTE	REF NO	GRAPHIC REF	PART NUMBER	QTY	PART NAME 1 2 3 4 5 6 (PRODUCT LEVEL)	SEE PAGE
Y	1	1	**240-0101**	2	LAMP GP-FLOOD (12-VOLT)	188
Y	2	1	**240-0102**	4	LAMP GP-FLOOD (12-VOLT)	189
M	3	1	**8T-4189**	4	BOLT (M8X1.25X20-MM)	
	4	1	**8T-4224**	6	WASHER-HARD (8.8X16X2-MM THK)	
M	5	1	**8T-7547**	2	BOLT (M8X1.25X30-MM)	

M-METRIC PART
Y-SEPARATE ILLUSTRATION

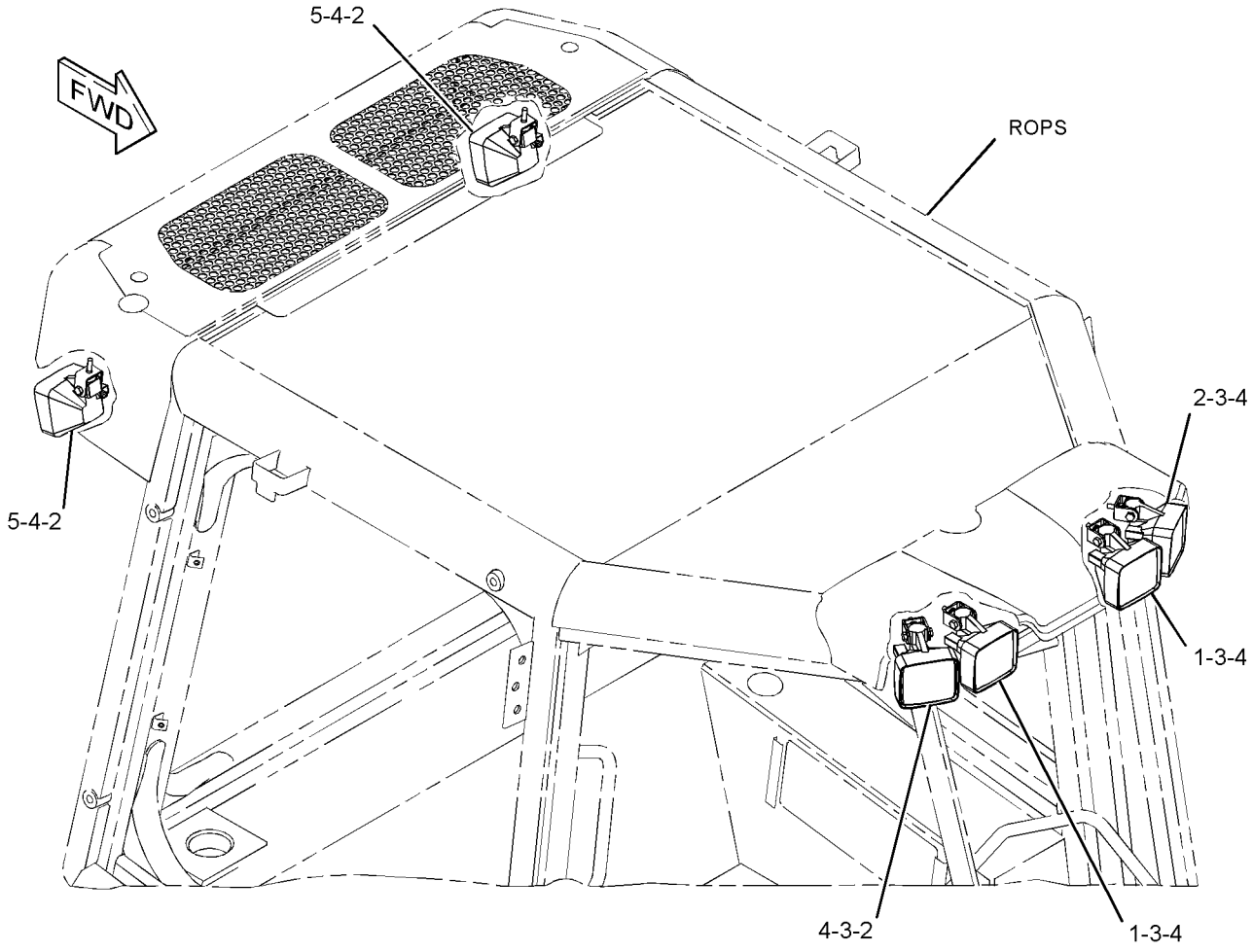

GRAPHIC #1 **<END>** g01406834

269-7695 LIGHTING GP-FLOOD

S/N: JTD1-UP; FFF1-UP; LLL1-UP
AN ATTACHMENT
TYPE 2

SMCS-1434 **i04419261**

NOTE	REF NO	GRAPHIC REF	PART NUMBER	QTY	PART NAME 1 2 3 4 5 6 (PRODUCT LEVEL)	SEE PAGE
Y	1	1	**240-0101**	2	LAMP GP-FLOOD (12-VOLT)	188
Y	2	1	**240-0102**	4	LAMP GP-FLOOD (12-VOLT)	189
CM	3	1	**8T-4189**	6	BOLT (M8X1.25X20-MM)	
	4	1	**8T-4224**	6	WASHER-HARD (8.8X16X2-MM THK)	

C-CHANGE FROM PREVIOUS TYPE
M-METRIC PART
Y-SEPARATE ILLUSTRATION

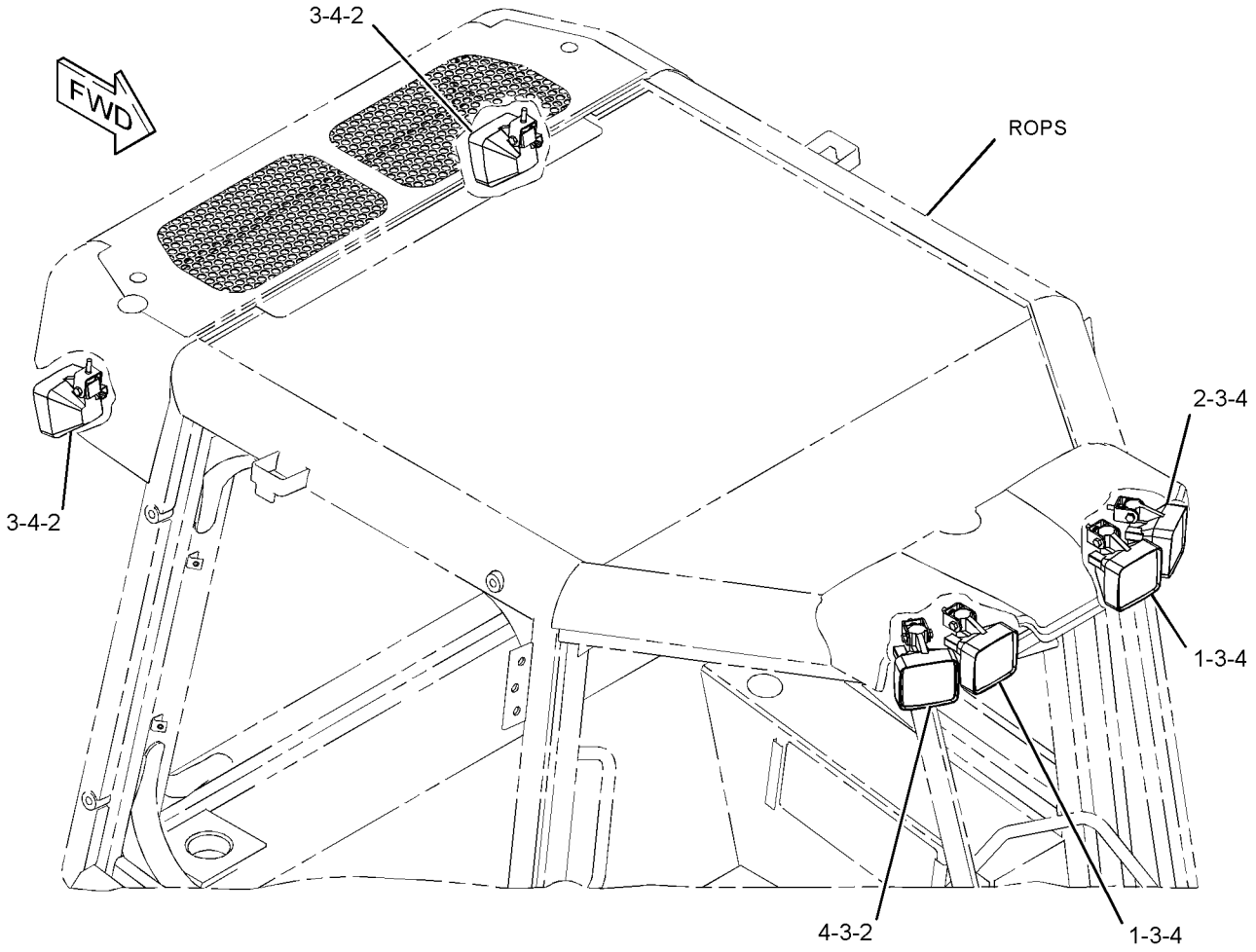

GRAPHIC #1 **<END>** g01441996

269-7696 LIGHTING GP-FLOOD

S/N: JTD1-UP; FFF1-UP; LLL1-UP
AN ATTACHMENT
TYPE 1

SMCS-1434 **i02865265**

NOTE	REF NO	GRAPHIC REF	PART NUMBER	QTY	PART NAME 1 2 3 4 5 6 (PRODUCT LEVEL)	SEE PAGE
Y	1	1	**154-7986**	2	LAMP GP-FLOOD (12-VOLT)	187
Y	2	1	**240-0102**	1	LAMP GP-FLOOD (12-VOLT)	189
M	3	1	**6V-7744**	2	LOCKNUT (M10X1.5-THD)	
	4	1	**8T-4121**	2	WASHER-HARD (11X21X2.5-MM THK)	
	5	1	**8T-4224**	1	WASHER-HARD (8.8X16X2-MM THK)	
M	6	1	**8T-4189**	1	BOLT (M8X1.25X20-MM)	

M-METRIC PART
Y-SEPARATE ILLUSTRATION

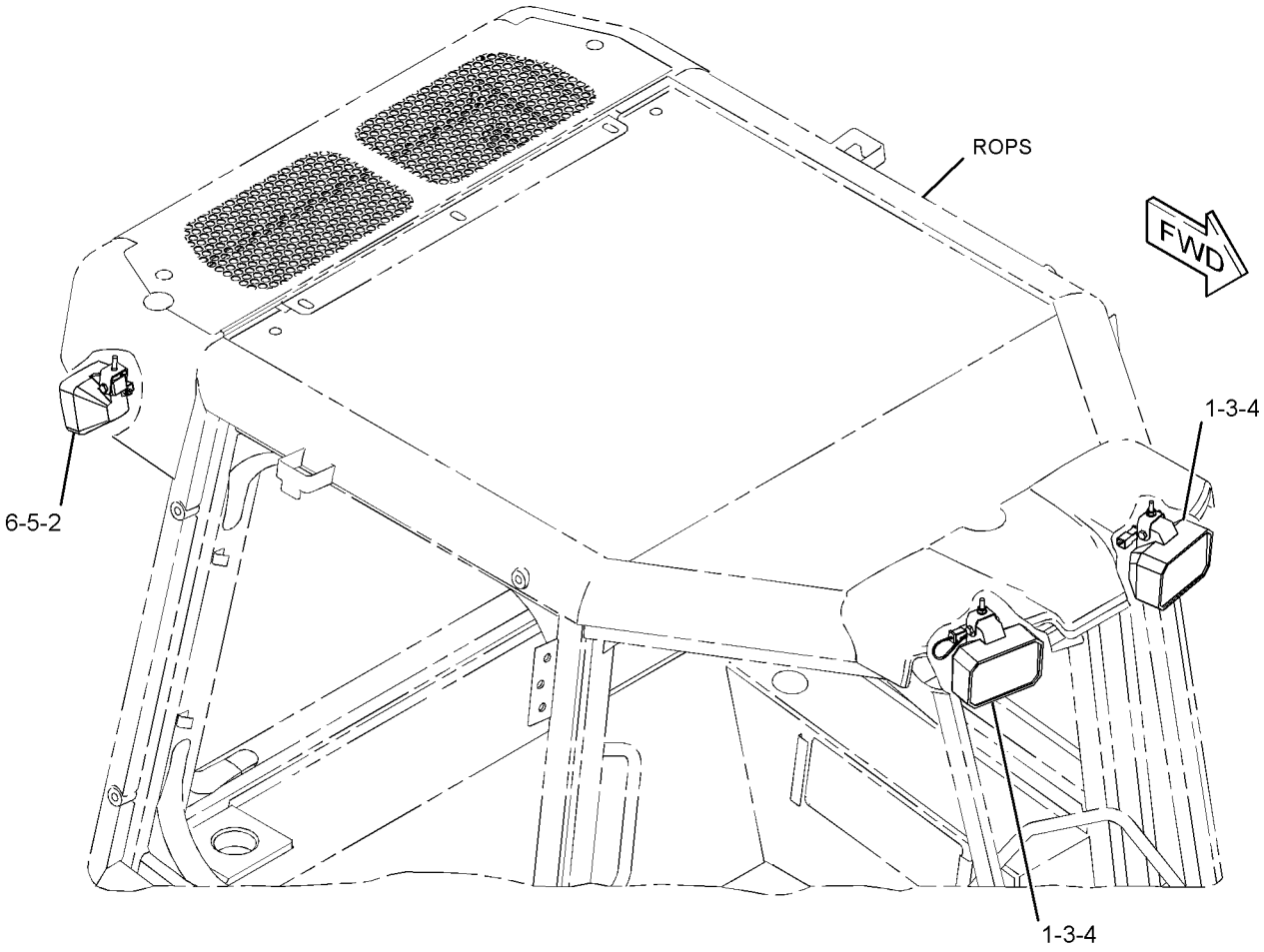

GRAPHIC #1 **<END>** g01406866

269-7696 LIGHTING GP-FLOOD

S/N: JTD1-UP; FFF1-UP; LLL1-UP
AN ATTACHMENT
TYPE 2

SMCS-1434 **i02895159**

NOTE	REF NO	GRAPHIC REF	PART NUMBER	QTY	PART NAME 1 2 3 4 5 6 (PRODUCT LEVEL)	SEE PAGE
Y	1	1	**154-7986**	2	LAMP GP-FLOOD (12-VOLT)	187
CY	2	1	**240-0102**	2	LAMP GP-FLOOD (12-VOLT)	189
M	3	1	**6V-7744**	2	LOCKNUT (M10X1.5-THD)	
	4	1	**8T-4121**	2	WASHER-HARD (11X21X2.5-MM THK)	
C	5	1	**8T-4224**	2	WASHER-HARD (8.8X16X2-MM THK)	
CM	6	1	**8T-4189**	2	BOLT (M8X1.25X20-MM)	

C-CHANGE FROM PREVIOUS TYPE
M-METRIC PART
Y-SEPARATE ILLUSTRATION

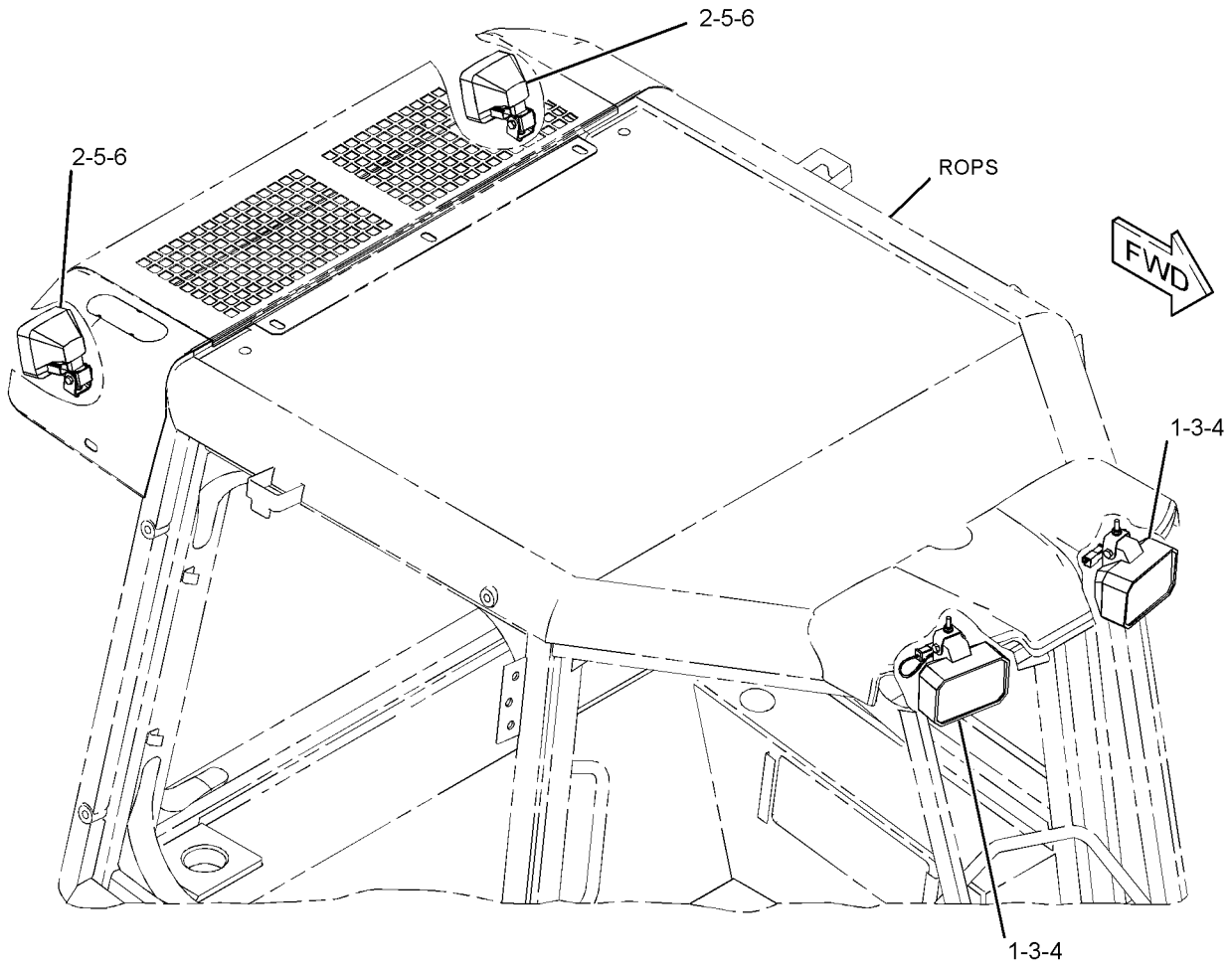

GRAPHIC #1 **<END>** g01441998

226-2333 MAST GP—LASER RECEIVER

S/N: JTD1-UP; FFF1-UP; LLL1-UP

PART OF 317-6527 GRADE CONTROL AR, 292-0293, 292-0312 GRADE CONTROL AR-LASER

SMCS-79NS **i03588632**

NOTE	PART NUMBER	QTY	PART NAME 1 2 3 4 5 6 (PRODUCT LEVEL)	SEE PAGE
	256-5732	1	HARNESS AS-WIRING (MAST)	
	256-4580	1	MOTOR AS	
	256-4579	1	SCREW AS	
	256-5720	1	SWITCH AS (UPPER LIMIT)	
	256-5721	1	SWITCH AS (LOWER LIMIT)	
	256-4581	1	BUSHING	
	256-4582	1	GEAR (141-TEETH)	
	256-5722	1	GEAR (15-TEETH)	
	260-6480	1	RING-SNAP	
	260-6478	1	SEAL-O-RING	
	256-5719	1	SEAL-WIPER	
			AVAILABLE REPAIR KIT(S):	
	295-8930	1	KIT-CIRCUIT BOARD	
			(INCLUDES BOARD AS, SCREWS, LOCKWASHERS, LOCTITE & GREASE)	
A	**245-4747**	1	KIT-ADAPTER (MAST)	
			(INCLUDES ADAPTER, BOLTS & WASHER)	
			(FOR USE WITH LR400 RECEIVER)	

A-NOT PART OF THIS GROUP

<END>

292-0290 MAST GP—SATELLITE RECEIVER

S/N: FFF1-UP; LLL1-UP

PART OF 290-5570 GRADE CONTROL AR-SATELLITE

SMCS-79NS **i02732261**

NOTE	PART NUMBER	QTY	PART NAME 1 2 3 4 5 6 (PRODUCT LEVEL)	SEE PAGE
Y	*292-0303*	1	MOUNTING GP-MAST (SATELLITE RECEIVER)	906
	248-1500	1	MAST AS	

Y-SEPARATE ILLUSTRATION

<END>

346-9800 MOUNTING GP-CONNECTOR–GRADE CONTROL

S/N: FFF1-UP; LLL1-UP

FIELD INSTALLATION

SMCS-1408 **i03997881**

NOTE	REF NO	GRAPHIC REF	PART NUMBER	QTY	PART NAME 1 2 3 4 5 6 (PRODUCT LEVEL)	SEE PAGE
	1	1	**261-0166**	1	COVER AS	
	2	1	**267-8958**	1	PLATE	
	3	1	**326-9197**	1	PLATE	
M	4	1	**8T-4138**	4	BOLT (M6X1X20-MM)	
M	5	1	**8T-4139**	4	BOLT (M12X1.75X30-MM)	
	6	1	**8T-4223**	4	WASHER-HARD (13.5X25.5X3-MM THK)	
M	7	1	**8T-6868**	4	BOLT (M12X1.75X80-MM)	
	8	1	**9X-8256**	4	WASHER (6.6X12X2-MM THK)	

M-METRIC PART

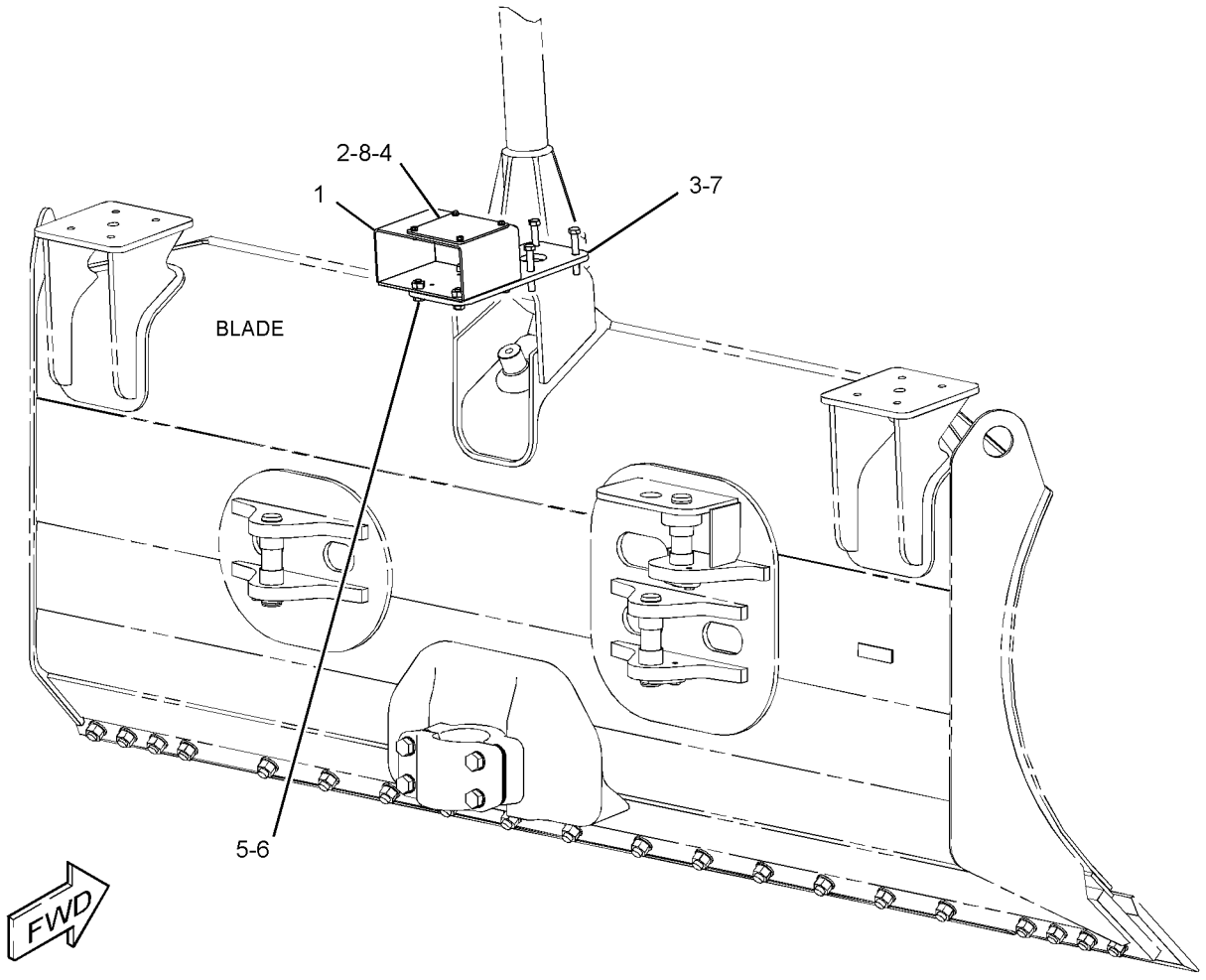

GRAPHIC #1 **<END>** g02323319

255-4260 MOUNTING GP-GRADE CONTROL

S/N: JTD1-UP; FFF1-UP; LLL1-UP
PART OF 296-5755, 296-5756 GRADE CONTROL AR
AN ATTACHMENT

SMCS-7220 **i02847072**

NOTE	REF NO	GRAPHIC REF	PART NUMBER	QTY	PART NAME 1 2 3 4 5 6 (PRODUCT LEVEL)	SEE PAGE
	1	1	**9M-5617**	1	GROMMET	
	2	1	**255-4261**	2	HINGE AS	
	3	1	**283-9900**	1	LATCH AS (COMPRESSION)	
	4	1	**283-9901**	1	CAM	
	5	1	**314-2573**	1	BASE AS	
		1	**314-2574**	2	INSERT-THREADED	
	6	1	**314-3011**	1	BRACKET AS (LH)	
	7	1	**314-3012**	1	BRACKET AS (RH)	
	8	1	**314-3013**	1	MOUNTING AS	
	9	1	**314-3014**	1	COVER	
	10	1	**314-3026**	1	PIN	
M	11	1	**174-8131**	2	SCREW-TRUSS HEAD (M4X0.7X12-MM)	
	12	1	**198-9706**	2	SCREW-TRUSS HEAD (M5X0.8X16-MM)	
M	13	1	**3E-4313**	10	SCREW-BUTTON HEAD (M4X0.7X8-MM)	
M	14	1	**5C-2890**	4	NUT (M6X1-THD)	
M	15	1	**5C-8312**	6	NUT (M4X0.7-THD)	
M	16	1	**6V-4298**	4	BOLT (M5X0.8X16-MM)	
M	17	1	**7I-2272**	4	BOLT (M5X0.8X12-MM)	
M	18	1	**7X-2619**	4	BOLT (M6X1X10-MM)	
M	19	1	**9X-2042**	3	SCREW-TRUSS HEAD (M6X1X12-MM)	
	20	1	**9X-8256**	4	WASHER (6.6X12X2-MM THK)	
E	21	1	**3E-3892**		SEAL (19-CM)	
E	22	1	**8C-7332**		TRIM-EDGE (30-CM)	

E-ORDER BY THE CENTIMETER
M-METRIC PART

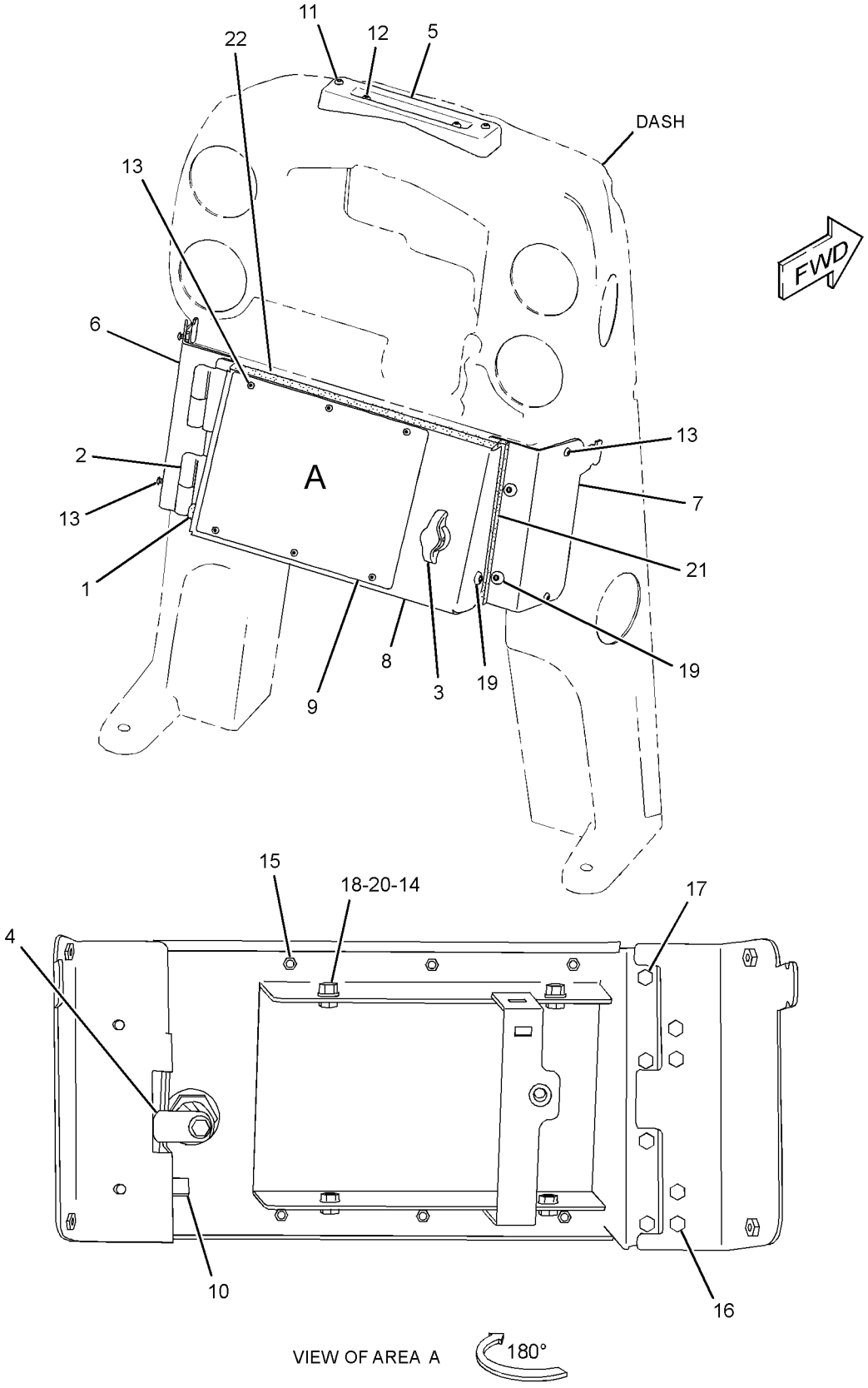

GRAPHIC #1

<END>

g01419827

292-0296 MOUNTING GP-GRADE CONTROL

S/N: JTD1-UP; FFF1-UP; LLL1-UP
PART OF 317-6527 GRADE CONTROL AR, 290-5570, 290-5571, 292-0280, 347-0915, 347-0916 GRADE CONTROL AR-SATELLITE

SMCS-7220 **i03776894**

NOTE	PART NUMBER	QTY	PART NAME 1 2 3 4 5 6 (PRODUCT LEVEL)	SEE PAGE
Y	*259-4746*	1	MOUNTING GP-RADIO (GRADE CONTROL)	792
	230-5008	3	PLUG AS-CONNECTOR (4-PIN)	
			(EACH INCLUDES)	
	264-7031	1	SEAL-CONNECTOR	
M	**143-6020**	2	BOLT-SOCKET HEAD (M6X1X75-MM)	
	2V-8259	3	GROMMET	
	2Y-5429	3	GROMMET	
M	**8T-2659**	6	LOCKNUT (M4X0.7-THD)	
M	**5C-2890**	2	NUT (M6X1-THD)	
	8T-8737	3	PLUG-SEAL	
M	**9X-1046**	8	SCREW (M4X0.7X18-MM)	
	104-2091	6	SCREW-FLAT HEAD (6-20X0.5-IN)	
	9X-3402	9	SOCKET-CONNECTOR (16-GA TO 18-GA)	
	4B-4863	12	WASHER (4.7X11X1.2-MM THK)	
	9X-8256	2	WASHER (6.6X12X2-MM THK)	

M-METRIC PART
Y-SEPARATE ILLUSTRATION

<END>

234-9970 MOUNTING GP-RECEIVER–MAST

S/N: JTD1-UP; FFF1-UP; LLL1-UP

PART OF 317-6527 GRADE CONTROL AR, 292-0293, 292-0312 GRADE CONTROL AR-LASER

SMCS-7009, 7010 **i02294016**

NOTE	REF NO	GRAPHIC REF	PART NUMBER	QTY	PART NAME 1 2 3 4 5 6 (PRODUCT LEVEL)	SEE PAGE
	1	2	**253-8967**	1	ROD-THREADED	
	2	2	**253-8969**	1	BRACKET	
	3	2	**237-4132**	4	MOUNT-FLEXIBLE	
	4	1	**237-4133**	2	GASKET	
	5	1	**237-4134**	1	CLAMP	
	6	1	**237-4135**	1	MOUNT-FLEXIBLE	
	7	2	**237-7252**	1	BOLT (3/4-16X1.25-IN)	
	8	2	**3B-4508**	4	LOCKWASHER	
	9	2	**3B-4512**	1	LOCKWASHER	
	10	2	**4M-6425**	2	BOLT (5/16-18X1-IN)	
	11	2	**5W-1437**	2	LOCKWASHER	
	12	2	**8T-9383**	2	BOLT (1/2-13X0.75-IN)	
	13	2	**9B-0453**	2	LOCKWASHER	
	14	2	**253-8981**	4	ROD-THREADED	
	15	2	**6V-8188**	6	NUT (1/2-13-THD)	

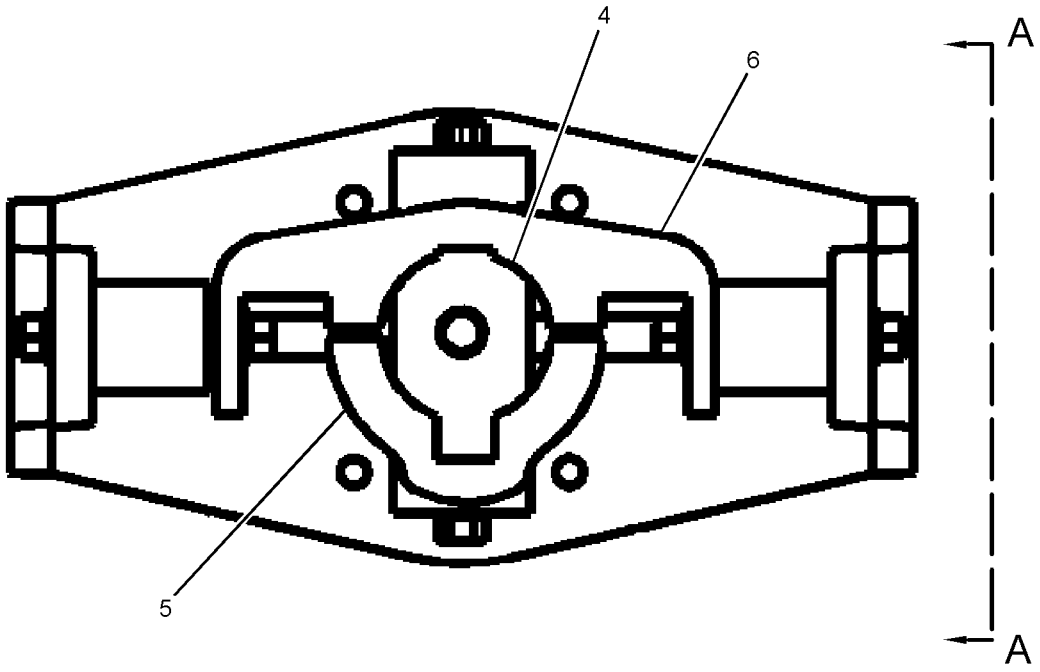

REFER TO ALL ILLUSTRATIONS OF
THIS GROUP FOR AUXILIARY VIEWS

GRAPHIC #1 g01186401

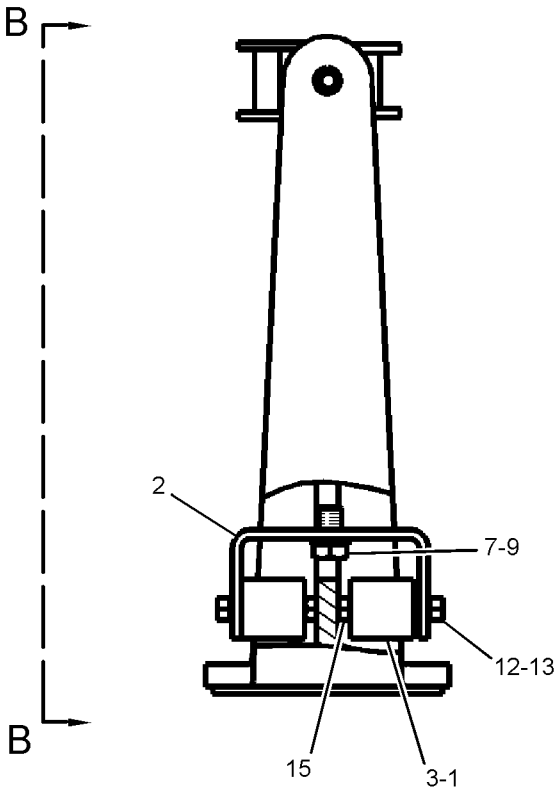

VIEW A-A

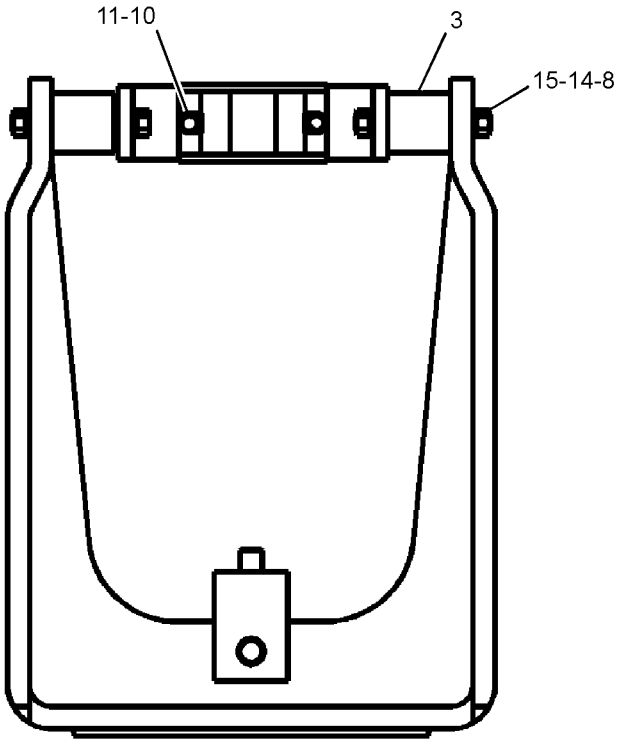

VIEW B-B

GRAPHIC #2 **<END>** g01186365

249-9023 PANEL GP-FUSE

S/N: JTD1-UP; FFF1-UP; LLL1-UP
PART OF 245-6020 WIRING GP-PLATFORM
TYPE 1

SMCS-1417 **i03588102**

NOTE	REF NO	GRAPHIC REF	PART NUMBER	QTY	PART NAME 1 2 3 4 5 6 (PRODUCT LEVEL)	SEE PAGE
	1	1	**7K-1181**	8	STRAP-CABLE	
	2	1	**116-7471**	1	PULLER-MINIFUSE	
	3	1	**171-2212**	1	CIRCUIT BREAKER AS (105-AMPERE)	
		1	**6V-8187**	2	NUT (1/4-28-THD)	
		1	**8T-4205**	2	WASHER-HARD (7.2X14.5X2-MM THK)	
		1	**253-2111**	2	LOCKWASHER	
	4	1	**172-4863**	1	JUNCTION BLOCK	
	5	1	**241-8367**	1	SWITCH AS-MAGNETIC (12-VDC) (MAIN POWER RELAY)	
		1	**155-2270**	1	KIT-CONNECTING PLUG (2-PIN)	
					(INCLUDES PLUG AS & WEDGE)	
		1	**4F-2294**	2	NUT-JAM (5/16-24-THD)	
		1	**186-3736**	2	SOCKET-CONNECTOR (16-GA TO 18-GA)	
	6	1	**245-6034**	1	BAR-BUS	
	7	1	**245-6036**	1	PLATE AS	
	8	1	**249-9020**	1	BAR-BUS	
	9	1	**249-9021**	1	BOX AS-FUSE	
	10	1	**249-9026**	1	HARNESS AS-PANEL	
		1	**124-9636**	2	BLOCK-MINIFUSE	
		1	**173-3175**	2	CIRCUIT BREAKER AS (20-AMPERE)	
		1	**264-5425**	1	CAP AS-PROTECTION	
		1	**124-3548**	2	FUSE (30-AMPERE)	
		1	**113-8490**	8	FUSE (10-AMPERE)	
		1	**113-8291**	12	PLATE-WARNING-ROPS/FOPS	
		1	**113-8292**	6	PLATE-WARNING-ROPS/FOPS	
		1	**124-9637**	2	LOCK-MINIFUSE	
		1	**211-0052**	2	NUT (1-11/16-18-THD)	
		1	**9X-3401**	8	PIN-CONNECTOR (16-GA TO 18-GA)	
		1	**186-3735**	8	PIN-CONNECTOR (16-GA TO 18-GA)	
		1	**9W-0852**	4	PIN-CONNECTOR (14-GA TO 16-GA)	
		1	**9X-1054**	3	PLUG AS-CONNECTOR (4-PIN)	
		1	**8T-8737**	9	PLUG-SEAL	
		1	**102-8802**	1	KIT-RECEPTACLE (2-PIN)	
		1	**197-7259**	1	RECEPTACLE AS-CONNECTOR (19-PIN)	
		1	**225-3861**	1	RECEPTACLE AS (31-PIN)	
		1	**9W-1951**	1	RECEPTACLE-CONNECTOR (9-PIN)	
		1	**186-3736**	10	SOCKET-CONNECTOR (16-GA TO 18-GA)	
		1	**9W-0844**	20	SOCKET-CONNECTOR (14-GA TO 16-GA)	
		1	**128-4168**	1	TERMINAL AS	
		1	**2L-8052**	2	TERMINAL-RING (6-GA, 3/8-IN SCREW)	
		1	**116-4160**	13	TERMINAL-BLADE (12-GA TO 14-GA)	
		1	**116-4161**	10	TERMINAL-BLADE (16-GA TO 18-GA)	
		1	**113-5100**	8	TERMINAL-BUS	
		1	**9X-1056**	12	TERMINAL-RECEPTACLE (14-GA TO 16-GA)	
E		1	**125-7874**		TUBE-HEAT SHRINK (5.72-MM DIA) (40-CM)	
E		1	**125-7875**		TUBE-HEAT SHRINK (7.44-MM DIA) (5-CM)	
		1	**128-4249**	2	LOCKWASHER	
	11	1	**269-7647**	1	BAR-BUS	
	12	1	**269-7654**	1	PLATE AS	
	13	1	**269-7662**	1	PLATE AS	
	14	1	**269-7690**	1	SEAL	
	15	1	**115-1615**	1	RELAY AS (12-VOLT) (REAR LIGHTS)	
	15A	1	**115-1615**	1	RELAY AS (12-VOLT) (FRONT LIGHTS)	
	15B	1	**115-1615**	1	RELAY AS (12-VOLT) (HORN)	
M	16	1	**191-8920**	3	BOLT-SOCKET HEAD (M6X1X12-MM)	

249-9023 **PANEL GP-FUSE** ***(contd.)*** **i03588102**

NOTE	REF NO	GRAPHIC REF	PART NUMBER	QTY	PART NAME 1 2 3 4 5 6 (PRODUCT LEVEL)	SEE PAGE
	17	1	**311-0312**	1	FILM-IDENTIFICATION (FUSE PANEL)	
	18	1	**269-7661**	1	FILM-IDENTIFICATION (ELECTRICAL POWER)	
M	19	1	**5C-2890**	3	NUT (M6X1-THD)	
	20	1	**6V-7978**	2	SCREW-MACHINE (10-32X0.375-IN)	
M	21	1	**7X-2548**	2	BOLT (M12X1.75X16-MM)	
	22	1	**8T-4121**	1	WASHER-HARD (11X21X2.5-MM THK)	
M	23	1	**8T-4138**	4	BOLT (M6X1X20-MM)	
M	24	1	**8T-4171**	2	BOLT (M6X1X12-MM)	
M	25	1	**8T-4191**	1	BOLT (M10X1.5X16-MM)	
	26	1	**8T-4205**	2	WASHER-HARD (7.2X14.5X2-MM THK)	
	27	1	**8T-4223**	2	WASHER-HARD (13.5X25.5X3-MM THK)	
M	28	1	**9X-2043**	2	SCREW-TRUSS HEAD (M6X1X14-MM)	
	29	1	**9X-8256**	7	WASHER (6.6X12X2-MM THK)	
E	30	1	**103-2543**		SEAL (3-CM)	

E-ORDER BY THE CENTIMETER
M-METRIC PART

249-9023 **PANEL GP-FUSE** *(contd.)* **i03588102**

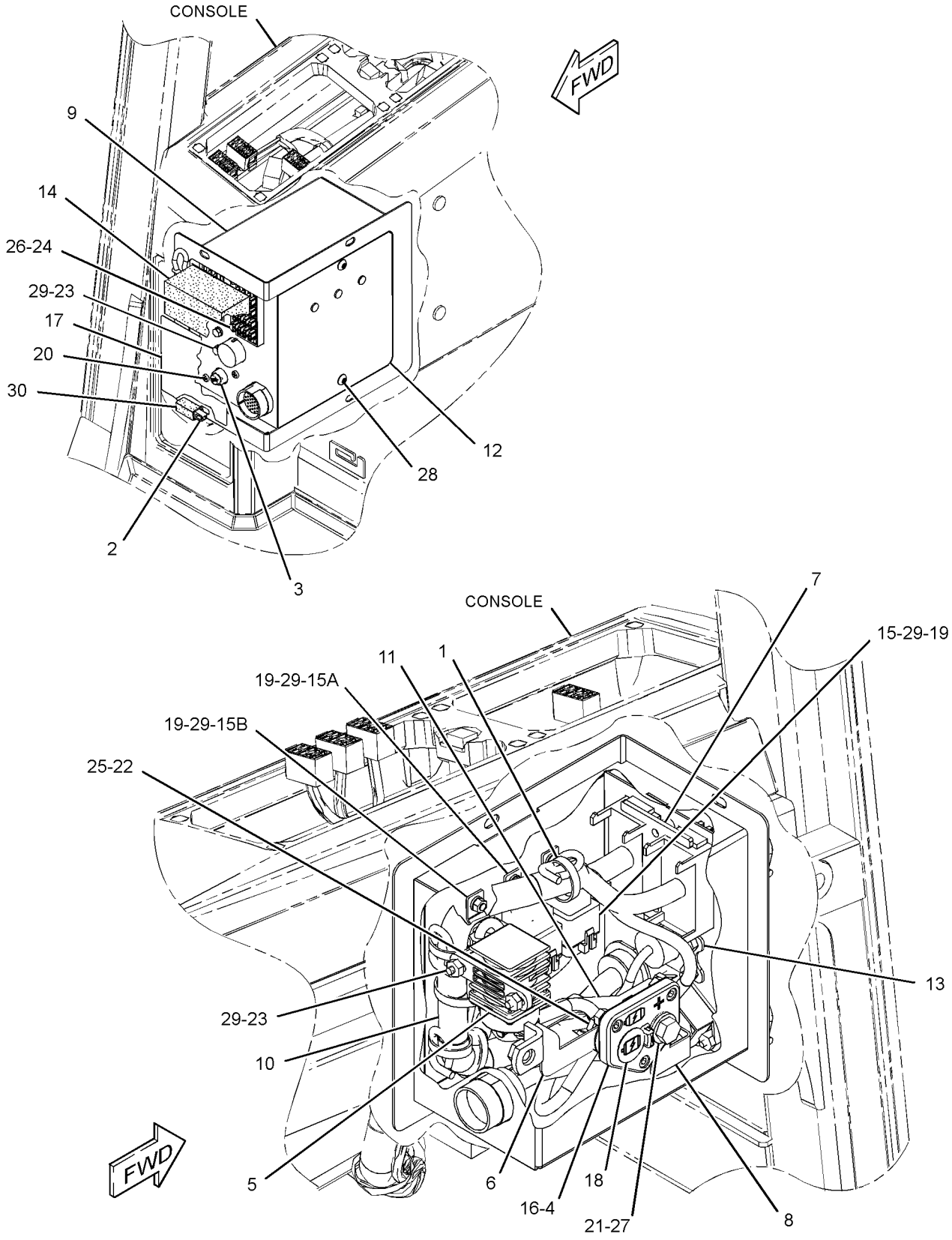

GRAPHIC #1 **<END>** g01663777

ELECTRICAL AND STARTING SYSTEM

249-9023 PANEL GP-FUSE

S/N: JTD1-UP; FFF1-UP; LLL1-UP
PART OF 245-6021 WIRING GP-CAB, 245-6020 WIRING GP-PLATFORM
ALSO AN ATTACHMENT
TYPE 2

SMCS-1417 **i03779209**

NOTE	REF NO	GRAPHIC REF	PART NUMBER	QTY	PART NAME 1 2 3 4 5 6 (PRODUCT LEVEL)	SEE PAGE
	1	1	**7K-1181**	8	STRAP-CABLE	
	2	1	**116-7471**	1	PULLER-MINIFUSE	
	3	1	**171-2212**	1	CIRCUIT BREAKER AS (105-AMPERE) (MAIN)	
		1	**6V-8187**	2	NUT (1/4-28-THD)	
		1	**8T-4205**	2	WASHER-HARD (7.2X14.5X2-MM THK)	
		1	**253-2111**	2	LOCKWASHER	
	4	1	**172-4863**	1	JUNCTION BLOCK	
	5	1	**241-8367**	1	SWITCH AS-MAGNETIC (12-VDC) (MAIN POWER RELAY)	
		1	**155-2270**	1	KIT-CONNECTING PLUG (2-PIN) (INCLUDES PLUG AS, WEDGE & INTERFACE SEAL)	
		1	**4F-2294**	2	NUT-JAM (5/16-24-THD)	
		1	**186-3736**	2	SOCKET-CONNECTOR (16-GA TO 18-GA)	
	6	1	**245-6034**	1	BAR-BUS	
	7	1	**245-6036**	1	PLATE AS	
	8	1	**327-6138**	1	WIRE AS	
	9	1	**249-9021**	1	BOX AS-FUSE	
C	10	1	**318-6095**	1	HARNESS AS-PANEL	
		1	**124-9636**	2	BLOCK-MINIFUSE	
		1	**173-3175**	2	CIRCUIT BREAKER AS (20-AMPERE)	
		1	**264-5425**	1	CAP AS-PROTECTION	
		1	**113-8490**	8	FUSE (10-AMPERE)	
		1	**113-8491**	13	FUSE (15-AMPERE)	
		1	**113-8492**	5	FUSE (20-AMPERE)	
		1	**124-9637**	2	LOCK-MINIFUSE	
		1	**211-0052**	2	NUT (1-11/16-18-THD)	
		1	**9X-3401**	8	PIN-CONNECTOR (16-GA TO 18-GA)	
		1	**186-3735**	8	PIN-CONNECTOR (16-GA TO 18-GA)	
		1	**9W-0852**	4	PIN-CONNECTOR (14-GA TO 16-GA)	
		1	**9X-1054**	3	PLUG AS-CONNECTOR (4-PIN)	
		1	**8T-8737**	6	PLUG-SEAL	
		1	**102-8802**	1	KIT-RECEPTACLE (2-PIN) (INCLUDES RECEPTACLE AS & WEDGE)	
		1	**197-7259**	1	RECEPTACLE AS-CONNECTOR (19-PIN)	
		1	**225-3861**	1	RECEPTACLE AS (31-PIN)	
		1	**9W-1951**	1	RECEPTACLE-CONNECTOR (9-PIN)	
		1	**186-3736**	10	SOCKET-CONNECTOR (16-GA TO 18-GA)	
		1	**9W-0844**	20	SOCKET-CONNECTOR (14-GA TO 16-GA)	
		1	*128-4168*	1	TERMINAL AS	
		1	**6H-3592**	1	TERMINAL-RING (6-GA TO 8-GA, 5/16-IN SCREW)	
E		1	**6V-9023**		TUBE-HEAT SHRINK (12.7-MM DIA) (4-CM)	
		1	*128-4175*	1	TERMINAL AS	
		1	**9F-3965**	1	TERMINAL (6-GA, 1/4-IN SCREW)	
E		1	**8T-5346**		TUBE-HEAT SHRINK (19.1-MM DIA) (4-CM)	
		1	**2L-8052**	2	TERMINAL-RING (6-GA, 3/8-IN SCREW)	
		1	**116-4160**	16	TERMINAL-BLADE (12-GA TO 14-GA)	
		1	**116-4161**	10	TERMINAL-BLADE (16-GA TO 18-GA)	
		1	**113-5100**	8	TERMINAL-BUS	
		1	**9X-1056**	12	TERMINAL-RECEPTACLE (14-GA TO 16-GA)	
E		1	**125-7874**		TUBE-HEAT SHRINK (5.72-MM DIA) (40-CM)	
E		1	**125-7875**		TUBE-HEAT SHRINK (7.44-MM DIA) (5-CM)	
		1	**128-4249**	2	LOCKWASHER	

249-9023 **PANEL GP-FUSE** ***(contd.)*** **i03779209**

NOTE	REF NO	GRAPHIC REF	PART NUMBER	QTY	PART NAME 1 2 3 4 5 6 (PRODUCT LEVEL)	SEE PAGE
	11	1	**327-6139**	1	WIRE AS	
	12	1	**269-7654**	1	PLATE AS	
	13	1	**269-7662**	1	PLATE AS	
	14	1	**269-7690**	1	SEAL	
	15	1	**115-1615**	1	RELAY AS (12-VOLT) (REAR LIGHTS)	
	15A	1	**115-1615**	1	RELAY AS (12-VOLT) (FRONT LIGHTS)	
	15B	1	**115-1615**	1	RELAY AS (12-VOLT) (HORN)	
M	16	1	**191-8920**	3	BOLT-SOCKET HEAD (M6X1X12-MM)	
C	17	1	**318-6096**	1	FILM-IDENTIFICATION (FUSE PANEL)	
	18	1	**269-7661**	1	FILM-IDENTIFICATION (ELECTRICAL POWER)	
M	19	1	**5C-2890**	3	NUT (M6X1-THD)	
	20	1	**6V-7978**	2	SCREW-MACHINE (10-32X0.375-IN)	
M	21	1	**7X-2548**	2	BOLT (M12X1.75X16-MM)	
	22	1	**8T-4121**	1	WASHER-HARD (11X21X2.5-MM THK)	
M	23	1	**8T-4138**	4	BOLT (M6X1X20-MM)	
M	24	1	**8T-4171**	2	BOLT (M6X1X12-MM)	
M	25	1	**8T-4191**	1	BOLT (M10X1.5X16-MM)	
	26	1	**8T-4205**	2	WASHER-HARD (7.2X14.5X2-MM THK)	
	27	1	**8T-4223**	2	WASHER-HARD (13.5X25.5X3-MM THK)	
M	28	1	**9X-2042**	2	SCREW-TRUSS HEAD (M6X1X12-MM)	
	29	1	**9X-8256**	7	WASHER (6.6X12X2-MM THK)	

C-CHANGE FROM PREVIOUS TYPE
E-ORDER BY THE CENTIMETER
M-METRIC PART

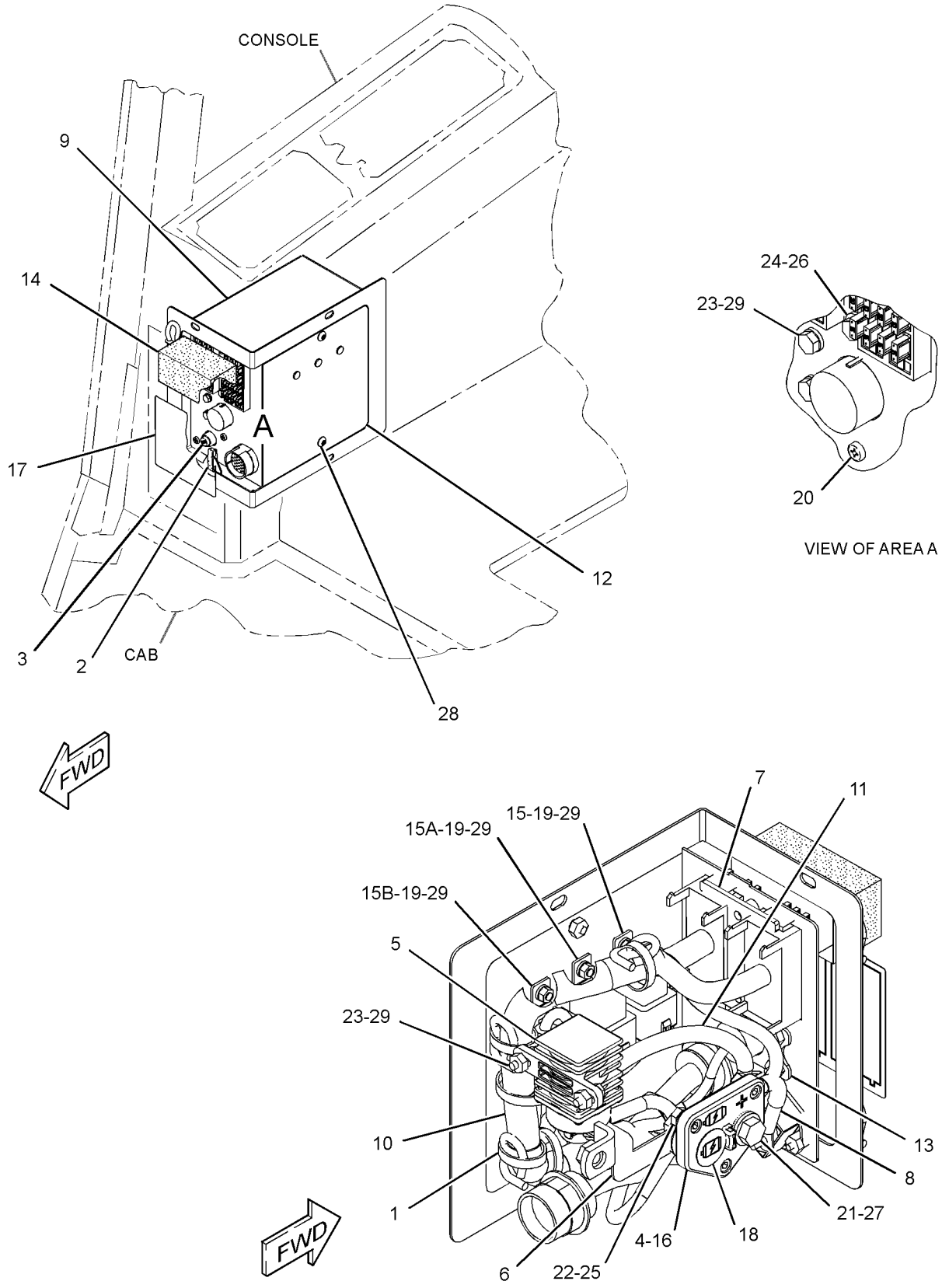

GRAPHIC #1 **<END>** g02053433

318-6121 PANEL GP-FUSE

S/N: JTD1-UP; FFF1-UP; LLL1-UP
PART OF 245-6047 WIRING GP-CAB
AN ATTACHMENT

SMCS-1417 **i04335818**

NOTE	REF NO	GRAPHIC REF	PART NUMBER	QTY	PART NAME 1 2 3 4 5 6 (PRODUCT LEVEL)	SEE PAGE
	1	1	**7K-1181**	8	STRAP-CABLE	
	2	1	**116-7471**	1	PULLER-MINIFUSE	
	3	1	**171-2212**	1	CIRCUIT BREAKER AS (105-AMPERE) (MAIN)	
		1	**6V-8187**	2	NUT (1/4-28-THD)	
		1	**8T-4205**	2	WASHER-HARD (7.2X14.5X2-MM THK)	
		1	**253-2111**	2	LOCKWASHER	
	4	1	**172-4863**	1	JUNCTION BLOCK	
	5	1	**241-8367**	1	SWITCH AS-MAGNETIC (12-VDC) (MAIN POWER RELAY)	
		1	**155-2270**	1	KIT-CONNECTING PLUG (2-PIN)	
					(INCLUDES PLUG AS, WEDGE & INTERFACE SEAL)	
		1	**4F-2294**	2	NUT-JAM (5/16-24-THD)	
		1	**8T-8730**	2	SOCKET-CONNECTOR (16-GA TO 18-GA)	
	6	1	**245-6036**	1	PLATE AS	
	7	1	**249-9021**	1	BOX AS-FUSE	
	8	1	**269-7654**	1	PLATE AS	
	9	1	**269-7662**	1	PLATE AS	
	10	1	**269-7690**	1	SEAL	
	11	1	**318-6122**	1	HARNESS AS-PANEL (FUSE)	
		1	**124-9636**	1	BLOCK-MINIFUSE	
		1	**180-0613**	1	CIRCUIT BREAKER AS (30-AMPERE)	
		1	**264-5425**	1	CAP AS-PROTECTION	
		1	**8C-6354**	1	CAP-RECEPTACLE	
E		1	**125-7875**		TUBE-HEAT SHRINK (7.44-MM DIA) (3-CM)	
		1	**2L-8076**	1	TERMINAL-RING (14-GA TO 16-GA, NO. 10 SCREW)	
		1	**113-8490**	4	FUSE (10-AMPERE)	
		1	**113-8491**	8	FUSE (15-AMPERE)	
		1	**113-8492**	3	FUSE (20-AMPERE)	
		1	**124-9637**	1	LOCK-MINIFUSE	
		1	**211-0052**	1	NUT (1-11/16-18-THD)	
		1	**8T-8729**	4	PIN-CONNECTOR (16-GA TO 18-GA)	
		1	**9W-0852**	4	PIN-CONNECTOR (14-GA TO 16-GA)	
		1	**9X-3401**	8	PIN-CONNECTOR (16-GA TO 18-GA)	
		1	**9X-1054**	3	PLUG AS-CONNECTOR (4-PIN)	
		1	**8T-8737**	27	PLUG-SEAL	
		1	**102-8802**	1	KIT-RECEPTACLE (2-PIN)	
					(INCLUDES RECEPTACLE AS & WEDGE)	
		1	**197-7259**		RECEPTACLE AS-CONNECTOR (19-PIN)	
		1	**225-3861**	1	RECEPTACLE AS (31-PIN)	
		1	**9W-1951**	1	RECEPTACLE-CONNECTOR (9-PIN)	
		1	**8T-8730**	4	SOCKET-CONNECTOR (16-GA TO 18-GA)	
		1	**9W-0844**	12	SOCKET-CONNECTOR (14-GA TO 16-GA)	
		1	*128-4168*	1	TERMINAL AS	
		1	**6H-3592**	1	TERMINAL-RING (6-GA TO 8-GA, 5/16-IN SCREW)	
E		1	**6V-9023**		TUBE-HEAT SHRINK (12.7-MM DIA) (4-CM)	
		1	*128-4175*	1	TERMINAL AS	
		1	**9F-3965**	1	TERMINAL (6-GA, 1/4-IN SCREW)	
E		1	**8T-5346**		TUBE-HEAT SHRINK (19.1-MM DIA) (4-CM)	
		1	*131-1497*	1	TERMINAL AS-RING (10-GA TO 12-GA)	
		1	**2L-8068**	1	TERMINAL-RING (10-GA TO 12-GA, 5/16-IN SCREW)	
E		1	**125-7875**		TUBE-HEAT SHRINK (7.44-MM DIA) (4-CM)	
		1	**116-4160**	11	TERMINAL-BLADE (12-GA TO 14-GA)	

318-6121 **PANEL GP-FUSE** *(contd.)* **i04335818**

NOTE	REF NO	GRAPHIC REF	PART NUMBER	QTY	PART NAME 1 2 3 4 5 6 (PRODUCT LEVEL)	SEE PAGE
		1	**116-4161**	4	TERMINAL-BLADE (16-GA TO 18-GA)	
		1	**113-5100**	4	TERMINAL-BUS	
		1	**9X-1056**	12	TERMINAL-RECEPTACLE (14-GA TO 16-GA)	
E		1	**125-7874**		TUBE-HEAT SHRINK (5.72-MM DIA) (35-CM)	
		1	**128-4249**	1	LOCKWASHER	
	12	1	**327-6138**	1	WIRE AS	
	13	1	**327-6139**	1	WIRE AS	
	14	1	**115-1615**	1	RELAY AS (12-VOLT) (REAR LIGHTS)	
	14A	1	**115-1615**	1	RELAY AS (12-VOLT) (FRONT LIGHTS)	
	14B	1	**115-1615**	1	RELAY AS (12-VOLT) (HORN)	
M	15	1	**191-8920**	3	BOLT-SOCKET HEAD (M6X1X12-MM)	
	16	1	**269-7661**	1	FILM-IDENTIFICATION (ELECTRICAL POWER)	
	17	1	**318-6128**	1	FILM-IDENTIFICATION (FUSE PANEL)	
M	18	1	**5C-2890**	3	NUT (M6X1-THD)	
	19	1	**6V-7978**	2	SCREW-MACHINE (10-32X0.375-IN)	
M	20	1	**7X-2548**	2	BOLT (M12X1.75X16-MM)	
M	21	1	**8T-4138**	4	BOLT (M6X1X20-MM)	
M	22	1	**8T-4171**	2	BOLT (M6X1X12-MM)	
	23	1	**8T-4205**	2	WASHER-HARD (7.2X14.5X2-MM THK)	
	24	1	**8T-4223**	2	WASHER-HARD (13.5X25.5X3-MM THK)	
M	25	1	**9X-2043**	2	SCREW-TRUSS HEAD (M6X1X14-MM)	
	26	1	**9X-8256**	7	WASHER (6.6X12X2-MM THK)	

E-ORDER BY THE CENTIMETER
M-METRIC PART

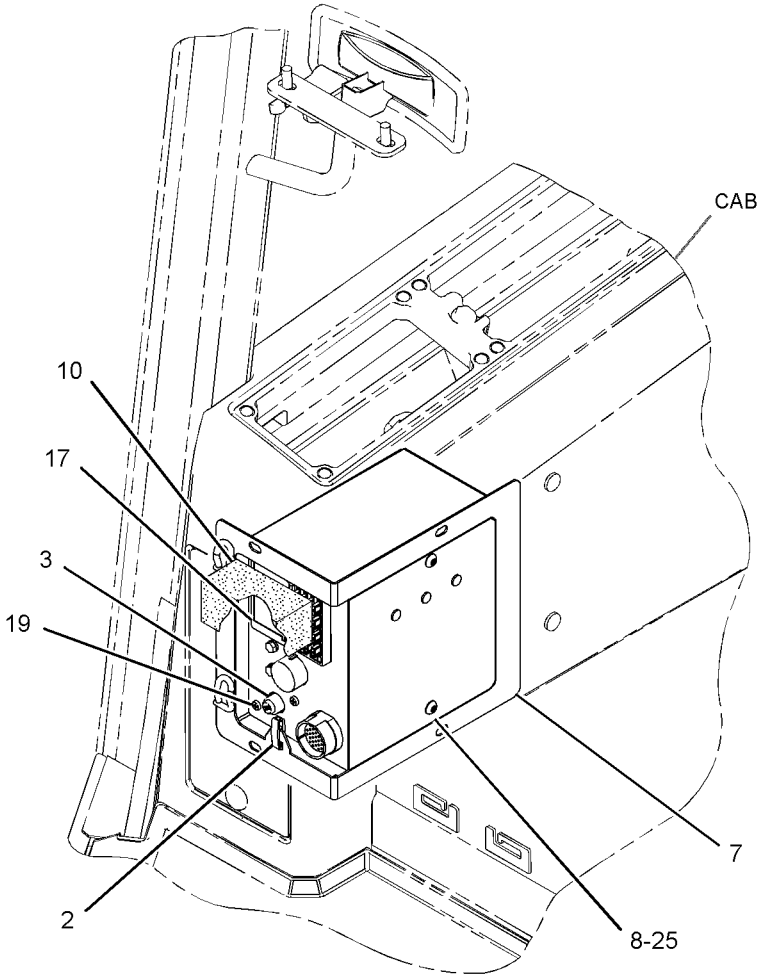

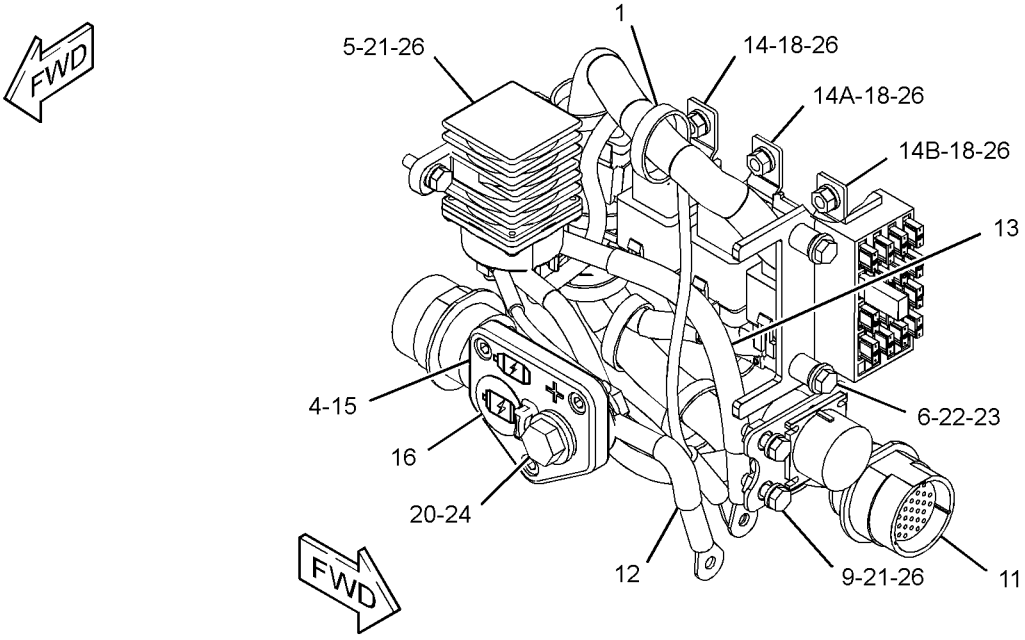

(PARTS REMOVED FOR CLARITY)

GRAPHIC #1 **<END>** g02499536

239-9950 RECEIVER GP-LASER—ACCUGRADE, SINGLE

S/N: JTD1-UP; FFF1-UP; LLL1-UP
PART OF 292-0293 GRADE CONTROL AR-LASER

SMCS-7009 **i03766955**

NOTE	PART NUMBER	QTY	PART NAME 1 2 3 4 5 6 (PRODUCT LEVEL)	SEE PAGE
	342-9559	1	RECEIVER AS-LASER	
	276-0764	1	CABLE-COILED (LASER RECEIVER)	
	257-1729	1	CASE-CARRYING	

<END>

292-0285 RECEIVER GP-LASER—ACCUGRADE, DUAL

S/N: JTD1-UP; FFF1-UP; LLL1-UP
PART OF 292-0312 GRADE CONTROL AR-LASER

SMCS-7009 **i03768195**

NOTE	PART NUMBER	QTY	PART NAME 1 2 3 4 5 6 (PRODUCT LEVEL)	SEE PAGE
	342-9559	1	RECEIVER AS-LASER	
	276-0764	1	CABLE-COILED (LASER RECEIVER)	

<END>

286-0137 RECEIVER GP-SATELLITE—DUAL GPS, MS980

S/N: FFF1-UP; LLL1-UP
PART OF 290-5570 GRADE CONTROL AR-SATELLITE

SMCS-7010 **i03615540**

NOTE	PART NUMBER	QTY	PART NAME 1 2 3 4 5 6 (PRODUCT LEVEL)	SEE PAGE
	252-9628	2	MOUNTING GP-RECEIVER (TARGET)	
			(EACH INCLUDES)	
	8R-1803	5	WASHER (10.5X18X1-MM THK)	
M	**8T-9388**	4	BOLT (M10X1.5X25-MM)	
	113-0693	5	LOCKWASHER	
	289-8449	1	HANDLE AS	
	244-1717	2	RECEIVER AS-SATELLITE (GPS, MS980)	
	255-0939	1	CASE-PLASTIC (RECEIVER)	

M-METRIC PART

<END>

292-0291 RECEIVER GP-SATELLITE–
ACCUGRADE, DUAL GNSS, MS992
S/N: JTD1-UP; FFF1-UP; LLL1-UP
PART OF 290-5571 GRADE CONTROL AR-SATELLITE

SMCS-7010 **i03939430**

NOTE	PART NUMBER	QTY	PART NAME 1 2 3 4 5 6 (PRODUCT LEVEL)	SEE PAGE
	252-9628	2	MOUNTING GP-RECEIVER (TARGET)	
			(EACH INCLUDES)	
	8R-1803	5	WASHER (10.5X18X1-MM THK)	
M	**8T-9388**	4	BOLT (M10X1.5X25-MM)	
	113-0693	5	LOCKWASHER	
	289-8449	1	HANDLE AS	
	353-2794	2	RECEIVER AS-SATELLITE (GNSS, MS992)	
	255-0939	1	CASE-PLASTIC (RECEIVER)	
	286-3017	2	HANDLE (RECEIVER)	

M-METRIC PART

<END>

292-0292 RECEIVER GP-SATELLITE–
ACCUGRADE, SINGLE GNSS, MS992
S/N: JTD1-UP; FFF1-UP; LLL1-UP
PART OF 292-0280 GRADE CONTROL AR-SATELLITE

SMCS-7010 **i03939432**

NOTE	PART NUMBER	QTY	PART NAME 1 2 3 4 5 6 (PRODUCT LEVEL)	SEE PAGE
	252-9628	1	MOUNTING GP-RECEIVER (TARGET)	
	8R-1803	5	WASHER (10.5X18X1-MM THK)	
M	**8T-9388**	4	BOLT (M10X1.5X25-MM)	
	113-0693	5	LOCKWASHER	
	289-8449	1	HANDLE AS	
	353-2794	1	RECEIVER AS-SATELLITE (GNSS, MS992)	
	255-0939	1	CASE-PLASTIC (RECEIVER)	
	286-3017	1	HANDLE (RECEIVER)	

M-METRIC PART

<END>

300-2118 RECEIVER GP-SATELLITE–
ACCUGRADE, UPGRADE FROM GPS TO GNSS
S/N: JTD1-UP; FFF1-UP; LLL1-UP
FIELD INSTALLATION

SMCS-7010 **i02741319**

NOTE	PART NUMBER	QTY	PART NAME 1 2 3 4 5 6 (PRODUCT LEVEL)	SEE PAGE
	291-1913	1	RECEIVER AS-SATELLITE (GNSS, MS990)	

<END>

347-0911 RECEIVER GP-SATELLITE–GNSS, MS990

S/N: JTD1-UP; FFF1-UP; LLL1-UP

PART OF 347-0912, 347-0913 RECEIVER GP-SATELLITE

SMCS-7010 **i04351369**

NOTE	REF NO	GRAPHIC REF	PART NUMBER	QTY	PART NAME 1 2 3 4 5 6 (PRODUCT LEVEL)	SEE PAGE
	1	1	**252-9628**	1	MOUNTING GP-RECEIVER (TARGET)	
	1A	1	**8R-1803**	5	WASHER (10.5X18X1-MM THK)	
M	1B	1	**8T-9388**	4	BOLT (M10X1.5X25-MM)	
	1C	1	**113-0693**	5	LOCKWASHER	
	1D	1	**289-8449**	1	HANDLE AS	
	2	1	**286-3017**	1	HANDLE (RECEIVER)	

M-METRIC PART

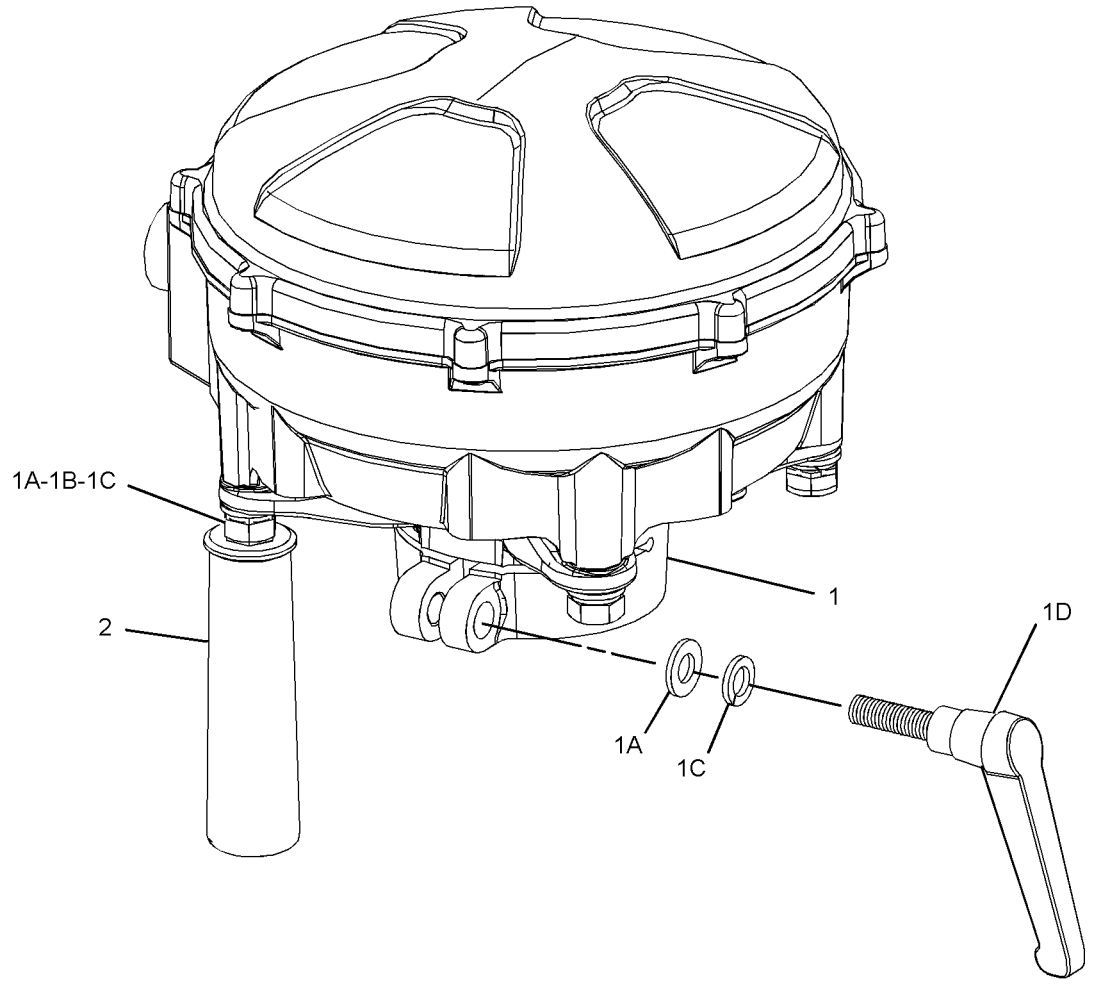

GRAPHIC #1 **<END>** g02316993

347-0912 RECEIVER GP-SATELLITE—SINGLE GNSS, MS990

S/N: JTD1-UP; FFF1-UP; LLL1-UP

PART OF 347-0915 GRADE CONTROL AR-SATELLITE

SMCS-7010 **i04109589**

NOTE	PART NUMBER	QTY	PART NAME 1 2 3 4 5 6 (PRODUCT LEVEL)	SEE PAGE
Y	*347-0911*	1	RECEIVER GP-SATELLITE (GNSS, MS990)	212
	255-0939	1	CASE-PLASTIC (RECEIVER)	

Y-SEPARATE ILLUSTRATION

<END>

347-0913 RECEIVER GP-SATELLITE—DUAL GNSS, MS990

S/N: JTD1-UP; FFF1-UP; LLL1-UP

PART OF 347-0916 GRADE CONTROL AR-SATELLITE

SMCS-7010 **i04109570**

NOTE	PART NUMBER	QTY	PART NAME 1 2 3 4 5 6 (PRODUCT LEVEL)	SEE PAGE
Y	*347-0911*	2	RECEIVER GP-SATELLITE (GNSS, MS990)	212
	255-0939	1	CASE-PLASTIC (RECEIVER)	

Y-SEPARATE ILLUSTRATION

<END>

275-0490 RELAY GP–STARTING AID HEATER

S/N: JTD1-UP; FFF1-UP; LLL1-UP
12-VOLT
PART OF 245-6019 WIRING GP-ENGINE

SMCS-4493 **i04337973**

NOTE	REF NO	GRAPHIC REF	PART NUMBER	QTY	PART NAME 1 2 3 4 5 6 (PRODUCT LEVEL)	SEE PAGE
	1	1	**1H-3244**	2	LOCKWASHER	
M	2	1	**5C-2890**	2	NUT (M6X1-THD)	
M	3	1	**5C-7261**	1	NUT (M8X1.25-THD)	
	4	1	**8T-4205**	2	WASHER-HARD (7.2X14.5X2-MM THK)	
	5	1	**8T-4224**	1	WASHER-HARD (8.8X16X2-MM THK)	
	6	1	**267-5211**	1	SEAL	
	7	1	**267-5213**	1	COVER (FUSE)	
	8	1	**274-9872**	1	FUSE (30-AMPERE)	
	9	1	**274-9877**	1	FUSE (50-AMPERE)	
	10	1	**9F-5644**	1	LOCKWASHER	

M-METRIC PART

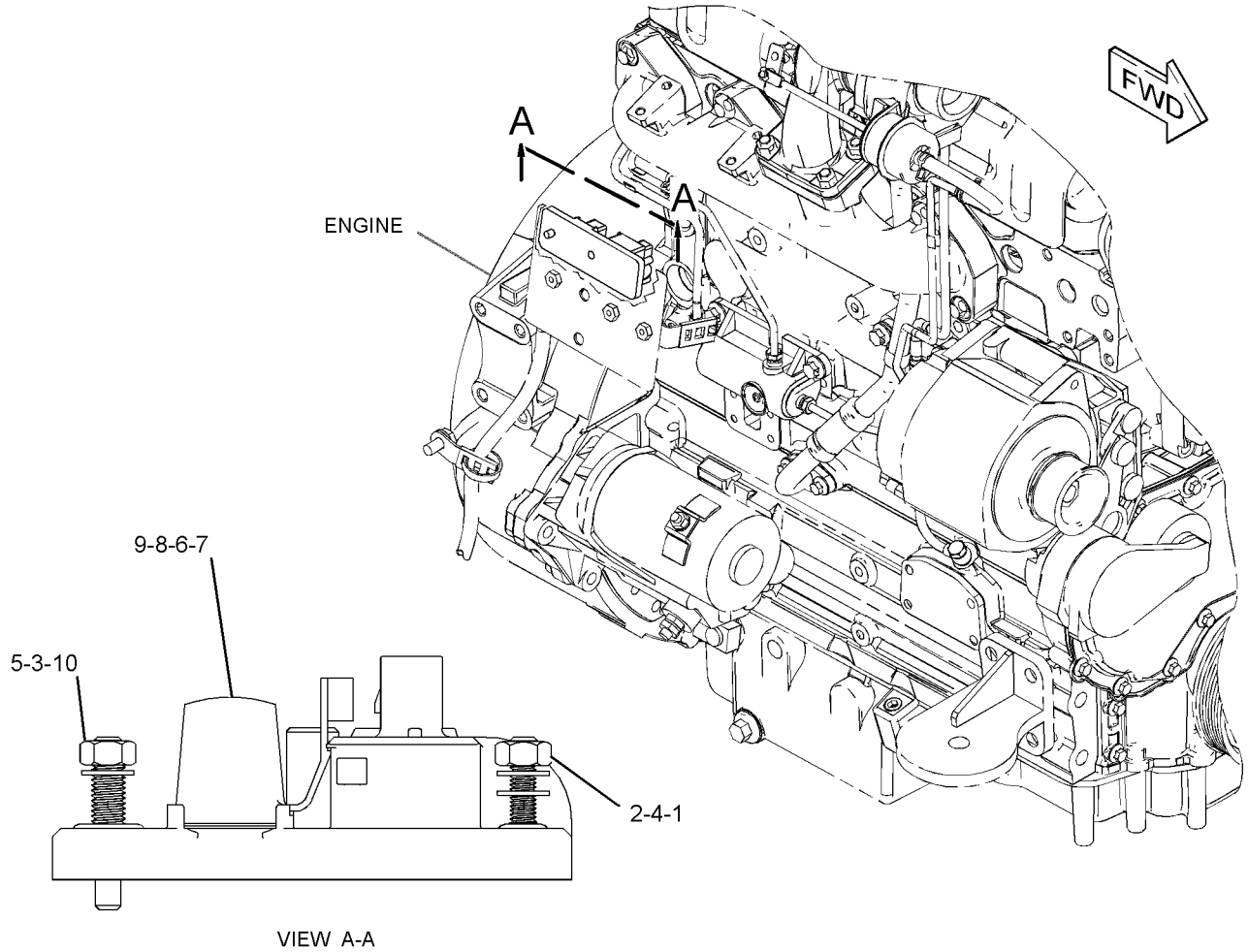

GRAPHIC #1 **<END>** g02500936

266-1470 SENSOR GP-POSITION

S/N: JTD1-UP; FFF1-UP; LLL1-UP

PART OF 324-0669 PEDAL GP-GOVERNOR & BRAKE

SMCS-1905, 1911, 430S **i03896320**

NOTE	REF NO	GRAPHIC REF	PART NUMBER	QTY	PART NAME 1 2 3 4 5 6 (PRODUCT LEVEL)	SEE PAGE
	1	1	**180-9339**	3	PIN-CONNECTOR (14-GA TO 18-GA)	
	2	1	**102-8803**	1	KIT-RECEPTACLE (3-PIN)	
					(INCLUDES RECEPTACLE AS & WEDGE)	
E	3	1	**9X-1813**		SLEEVE (13-CM)	

E-ORDER BY THE CENTIMETER

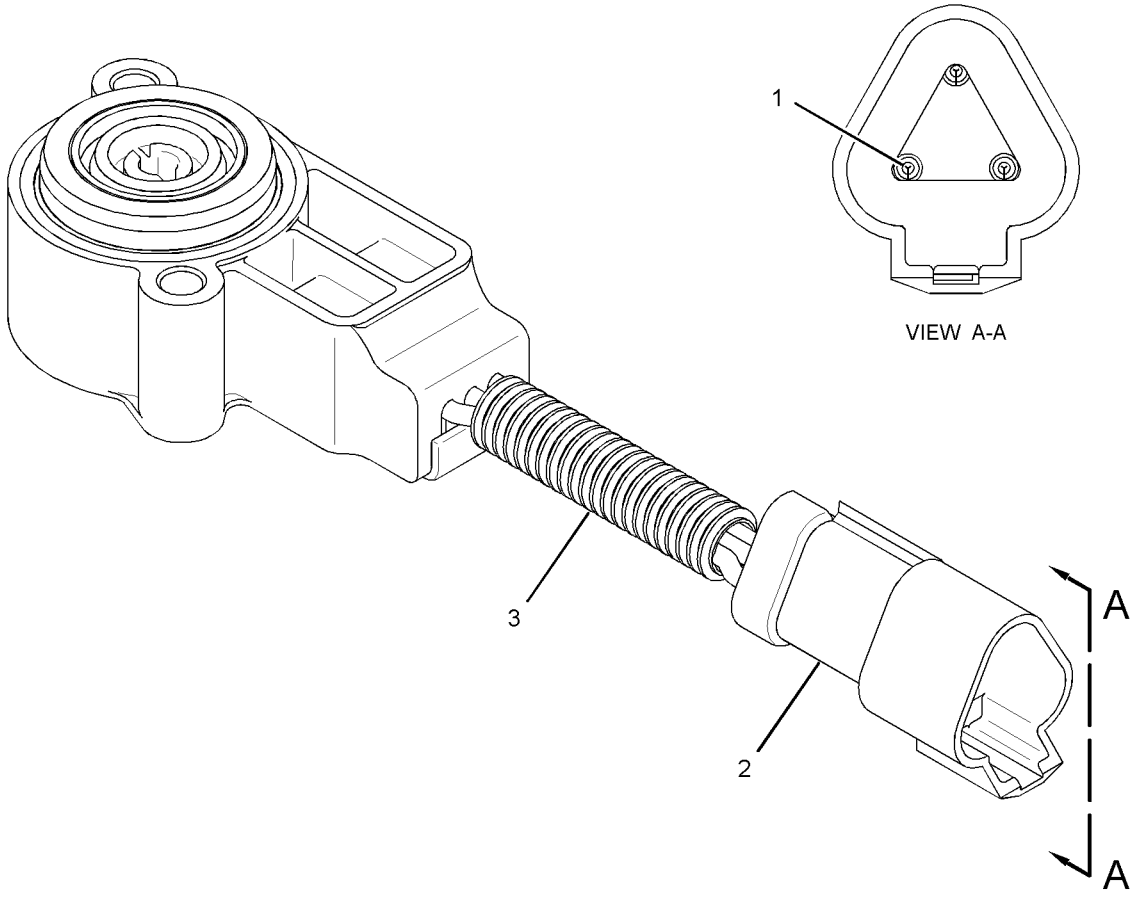

GRAPHIC #1 **<END>** g02140688

284-8207 SENSOR GP-POSITION

S/N: JTD1-UP; FFF1-UP; LLL1-UP
PART OF 290-4835 CONTROL GP-JOYSTICK

SMCS-1905, 1911, 430S **i04418621**

NOTE	REF NO	GRAPHIC REF	PART NUMBER	QTY	PART NAME 1 2 3 4 5 6 (PRODUCT LEVEL)	SEE PAGE
	1	1	**284-8208**	1	SHAFT-ADAPTER	
	2	1	**102-8805**	1	KIT-RECEPTACLE (6-PIN)	
					(INCLUDES RECEPTACLE AS & WEDGE)	
	3	1	**8T-8729**	4	PIN-CONNECTOR (16-GA TO 18-GA)	
	4	1	**8T-8737**	2	PLUG-SEAL	

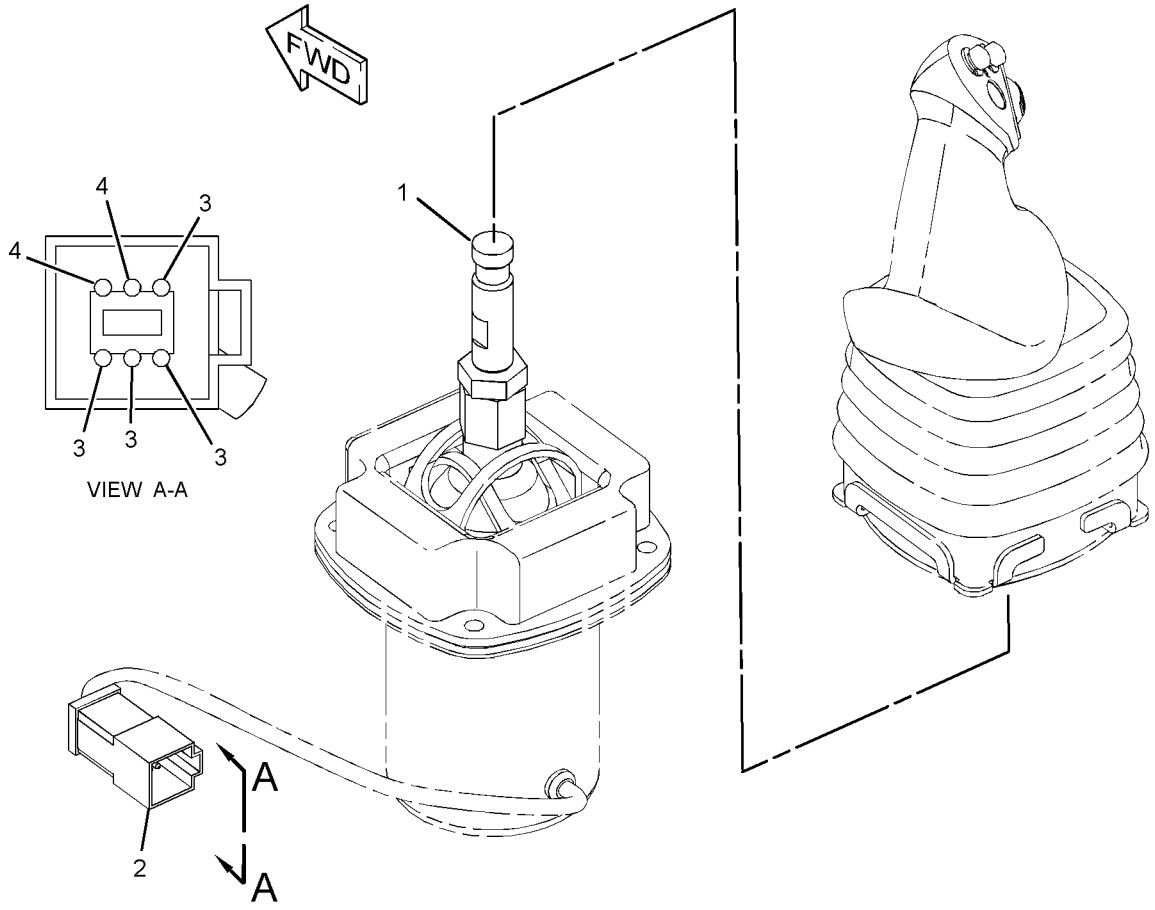

GRAPHIC #1 **<END>** g01328459

214-6863 SENSOR GP-PRESSURE

S/N: JTD1-UP; FFF1-UP; LLL1-UP
PART OF 244-7504, 318-6108 CONTROL GP-WINCH
AN ATTACHMENT

SMCS-1718, 1916, 1917, 1923, 1924, 1925 **i04418622**

NOTE	REF NO	GRAPHIC REF	PART NUMBER	QTY	PART NAME 1 2 3 4 5 6 (PRODUCT LEVEL)	SEE PAGE
	1	1	**155-2260**	1	KIT-CONNECTING PLUG (3-PIN)	
					(INCLUDES PLUG AS & WEDGE)	
	2	1	**180-9340**	3	SOCKET-CONNECTOR (14-GA TO 18-GA)	

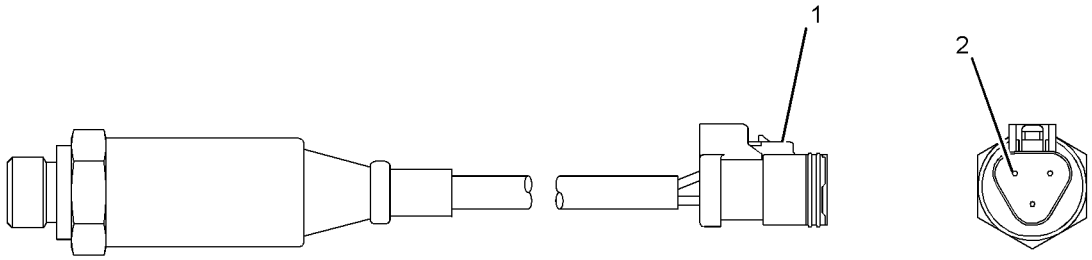

GRAPHIC #1 **<END>** g02615603

183-4584 SENSOR GP-SPEED

S/N: FFF1-UP; LLL1-UP

PART OF 245-6017 BATTERY & WIRING GP

SMCS-1907 **i01990496**

NOTE	REF NO	GRAPHIC REF	PART NUMBER	QTY	PART NAME 1 2 3 4 5 6 (PRODUCT LEVEL)	SEE PAGE
	1	1	**6J-2245**	1	SEAL-O-RING	

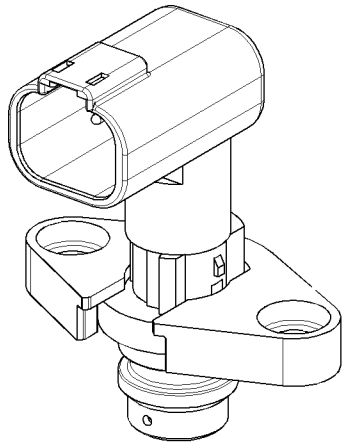

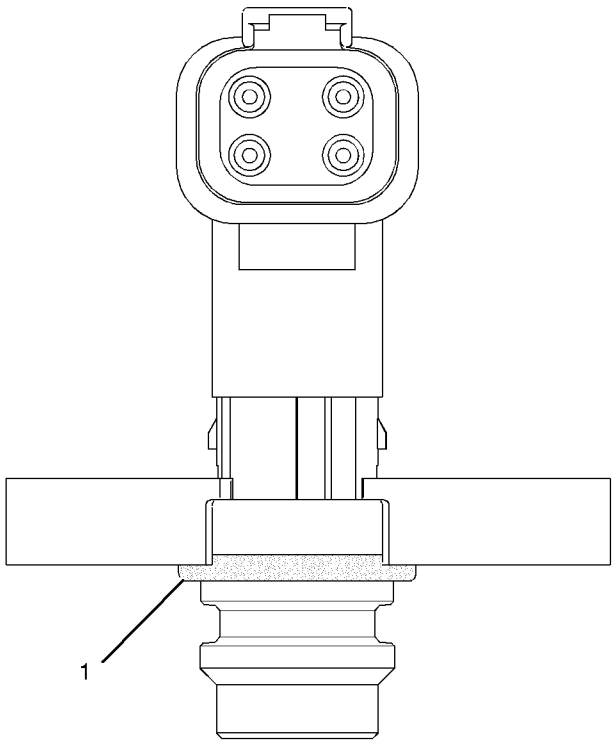

GRAPHIC #1 **<END>** g01031645

319-6491 SENSOR GP-SPEED

S/N: JTD1-UP; FFF1-UP; LLL1-UP
PART OF 245-6017 BATTERY & WIRING GP

SMCS-1907 **i03415582**

NOTE	REF NO	GRAPHIC REF	PART NUMBER	QTY	PART NAME 1 2 3 4 5 6 (PRODUCT LEVEL)	SEE PAGE
	1	1	**6J-2245**	1	SEAL-O-RING	

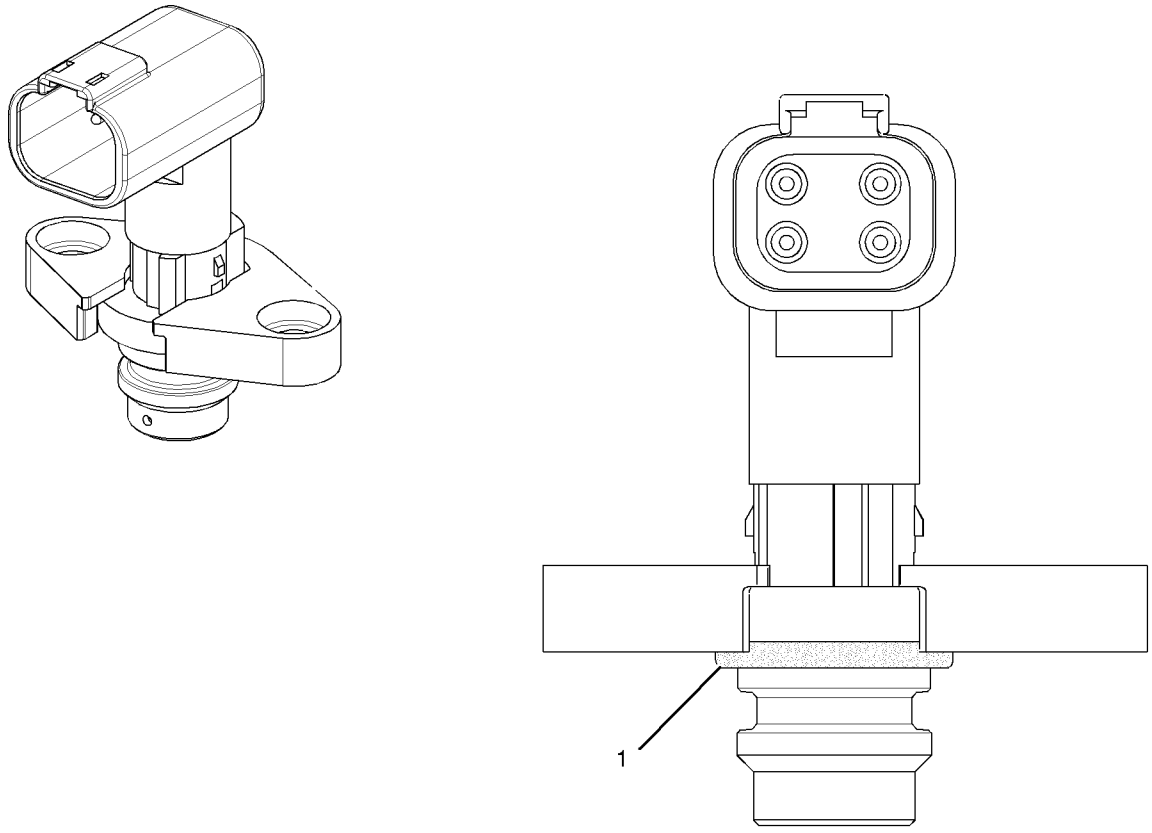

GRAPHIC #1 **<END>** g01031645

268-4699 SERVICE GP-COMMUNICATION—PRODUCT LINK 300

S/N: JTD1-UP; FFF1-UP; LLL1-UP
PART OF 249-9029 INSTALLATION GP-COMMUNICATION
AN ATTACHMENT

SMCS-7606 **i03637859**

NOTE	PART NUMBER	QTY	PART NAME 1 2 3 4 5 6 (PRODUCT LEVEL)	SEE PAGE
Y	**239-9954**	1	CONTROL GP-UNPROGRAMMED (PRODUCT LINK 300) (COMMUNICATION)	163
	268-4698	1	SOFTWARE GP-COMMUNICATION (PRODUCT LINK 300)	

Y-SEPARATE ILLUSTRATION

<END>

245-6026 STARTING AID GP-ETHER

S/N: JTD1-UP; FFF1-UP; LLL1-UP

AN ATTACHMENT

SMCS-1456 **i04268050**

NOTE	REF NO	GRAPHIC REF	PART NUMBER	QTY	PART NAME 1 2 3 4 5 6 (PRODUCT LEVEL)	SEE PAGE
	1	1	**3S-2093**	1	STRAP-CABLE	
	2	1	**241-4194**	1	FITTING AS (CONTROL)	
		1	**236-4545**	1	NUT-SLEEVE (5/16-24-THD)	
	3	1	**273-5070**	1	VALVE AS-ETHER START (12-VOLT)	
		1	**7N-9801**	1	GASKET	
		1	**102-8802**	1	KIT-RECEPTACLE (2-PIN)	
					(INCLUDES RECEPTACLE AS & WEDGE)	
		1	**8T-8729**	2	PIN-CONNECTOR (16-GA TO 18-GA)	
	4	1	*276-6597*	1	MOUNTING GP-ETHER CANISTER	
		1	**236-8013**	1	BRACKET	
		1	**276-6596**	1	CLAMP	
	5	1	**285-3329**	1	ATOMIZER AS (ETHER)	
		1	**236-4545**	1	NUT-SLEEVE (5/16-24-THD)	
M	6	1	**8T-4189**	3	BOLT (M8X1.25X20-MM)	
	7	1	**8T-4224**	3	WASHER-HARD (8.8X16X2-MM THK)	
H	8	1	**5P-5630**		TUBE (10-DM)	
E	9	1	**211-5358**		CONDUIT-FLEXIBLE (40-CM)	
A		1	**7N-0296**	1	CYLINDER AS-ETHER	
					(MUST BE PROCURED LOCALLY FROM YOUR CATERPILLAR DEALER)	

A-NOT PART OF THIS GROUP
E-ORDER BY THE CENTIMETER
H-ORDER BY THE DECIMETER
M-METRIC PART

245-6026 **STARTING AID GP-ETHER** *(contd.)* **i04268050**

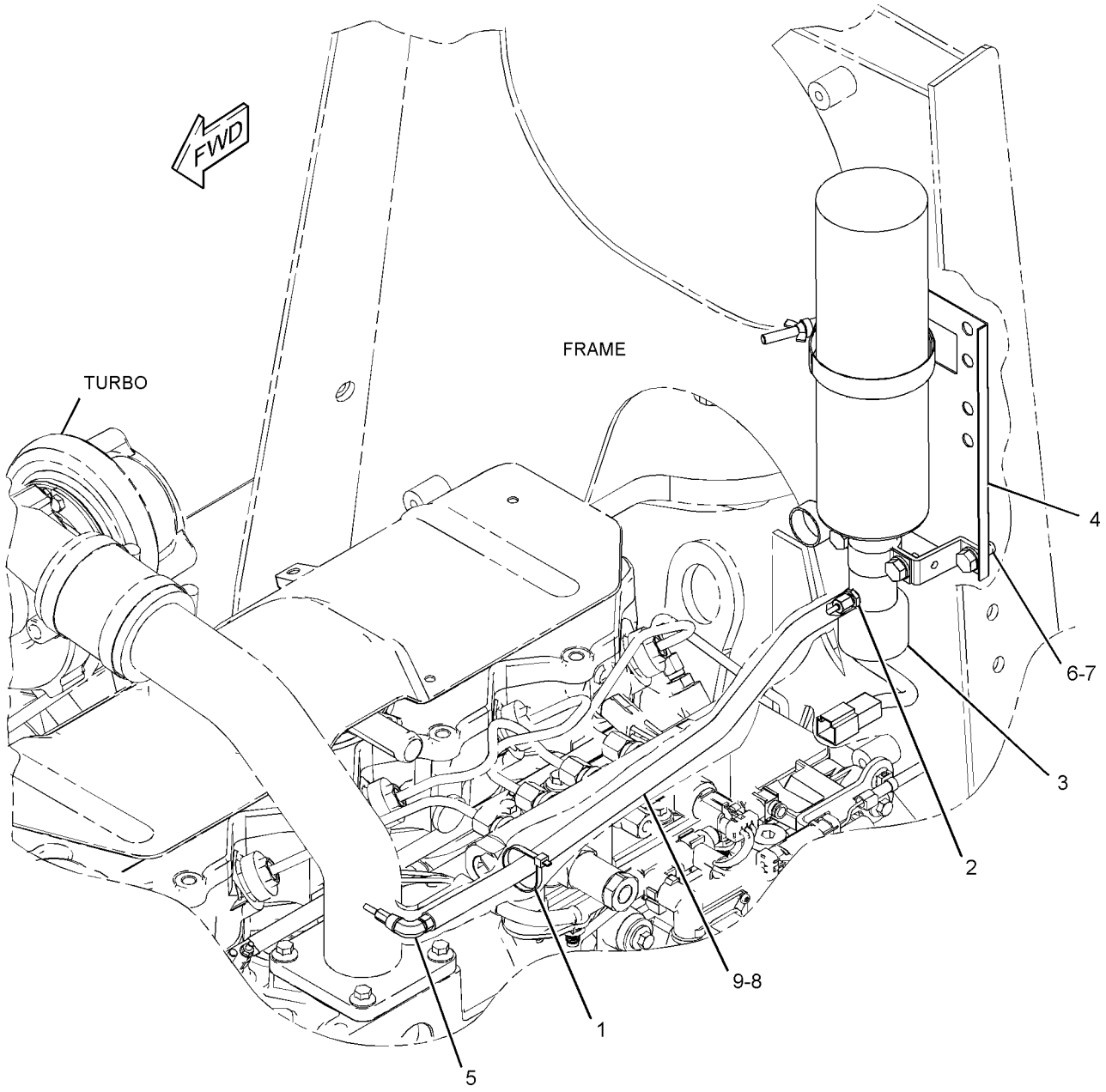

GRAPHIC #1 **<END>** g01440908

304-3655 STARTING MOTOR GP-ELECTRIC

S/N: C4E1-UP
12 VOLT, 4 KW
PART OF 254-9233 ENGINE AR-PRIMARY

SMCS-1453 **i02902110**

NOTE	REF NO	GRAPHIC REF	PART NUMBER	QTY	PART NAME 1 2 3 4 5 6 (PRODUCT LEVEL)	SEE PAGE
	1	1	**7W-4540**	1	SPACER	
	2	1	**128-1599**	3	STUD (M10X1.5X50-MM)	
	3	1	**6I-0594**	3	NUT (M10X1.5-THD)	
	4	1	**300-4415**	1	STARTING MOTOR GP-ELECTRIC	

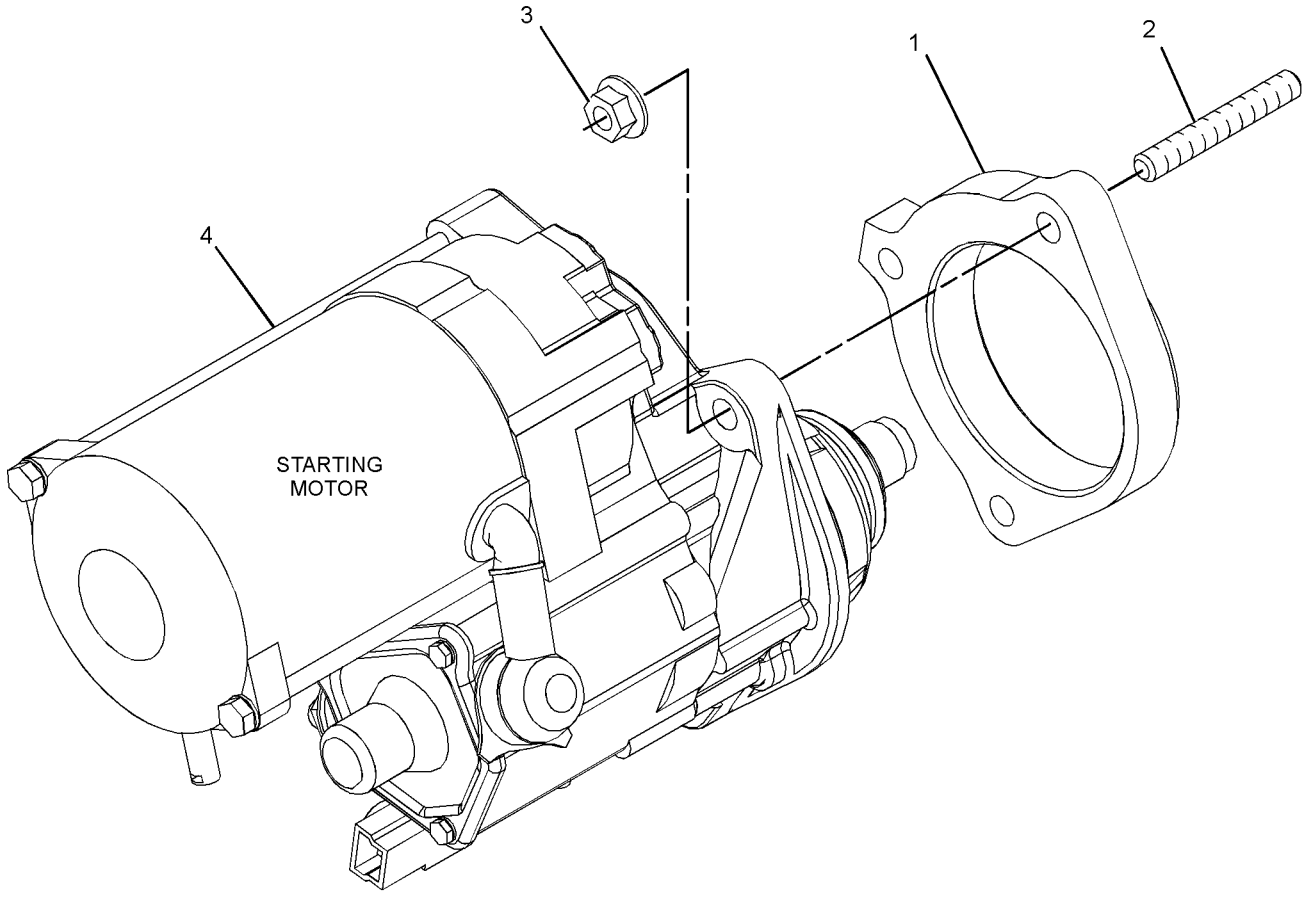

GRAPHIC #1 **<END>** g01384280

7N-0718 SWITCH GP-DISCONNECT–BATTERY

S/N: JTD1-UP; FFF1-UP; LLL1-UP

12-VOLT

PART OF 245-6017 BATTERY & WIRING GP

SMCS-1411 **i02459121**

NOTE	REF NO	GRAPHIC REF	PART NUMBER	QTY	PART NAME 1 2 3 4 5 6 (PRODUCT LEVEL)	SEE PAGE
	1	1	**8H-5306**	1	KEY (BATTERY DISCONNECT)	
	2	1	**8H-5303**	1	NUT (3/4-16-THD)	
	3	1	**2H-3922**	2	LOCKWASHER	
	4	1	**9F-5644**	2	LOCKWASHER	
	5	1	**6F-7045**	2	NUT-FULL (3/8-24-THD)	

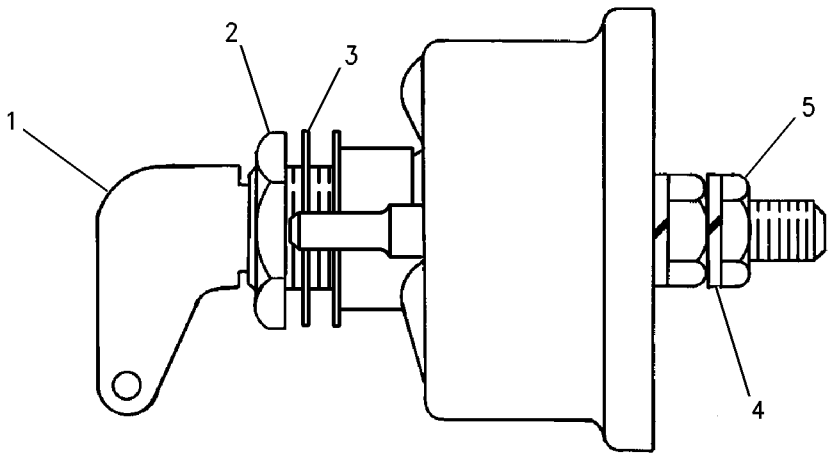

GRAPHIC #1 **<END>** g00715584

106-0107 SWITCH GP-ROTARY–THROTTLE POSITION

S/N: JTD1-UP; FFF1-UP; LLL1-UP
PART OF 245-6022, 245-6039 INSTRUMENT GP
AN ATTACHMENT

SMCS-7332 **i04415561**

NOTE	REF NO	GRAPHIC REF	PART NUMBER	QTY	PART NAME 1 2 3 4 5 6 (PRODUCT LEVEL)	SEE PAGE
	1	1	**102-8805**	1	KIT-RECEPTACLE (6-PIN)	
					(INCLUDES RECEPTACLE AS & WEDGE)	
	2	1	**106-0210**	1	SEAL	
	3	1	**8T-8737**	1	PLUG-SEAL	
	4	1	**9X-3401**	5	PIN-CONNECTOR (16-GA TO 18-GA)	
					–OR–	
		1	**126-1767**	5	PIN-CONNECTOR (14-GA TO 16-GA)	
M	5	1	**7Y-5458**	1	NUT (M12X1-THD)	
	6	1	**7Y-5464**	1	WASHER (12.2X15.4X0.5-MM THK)	

M-METRIC PART

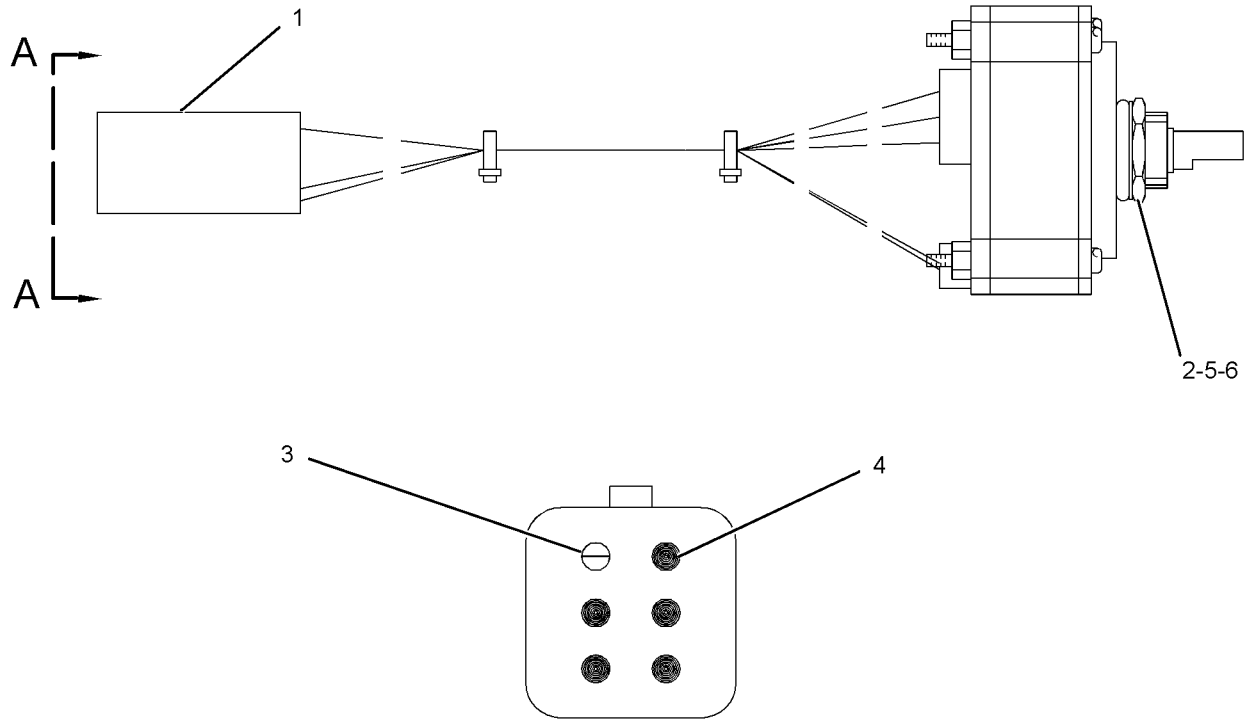

VIEW A-A

GRAPHIC #1 **<END>** g02613916

256-2907 TARGET GP-LASER

S/N: JTD1-UP; FFF1-UP; LLL1-UP
PART OF 295-9880 TARGET GP-LASER

SMCS-7009 **i03778209**

NOTE	REF NO	GRAPHIC REF	PART NUMBER	QTY	PART NAME 1 2 3 4 5 6 (PRODUCT LEVEL)	SEE PAGE
	1	1	**291-1915**	1	TARGET AS-LASER	
	2	1	**275-3378**	1	SPACER (16.7X38.1X12.7-MM THK)	
	3	1	**7X-0345**	1	BOLT (5/8-11X1.75-IN)	
	4	1	**7M-4672**	1	WASHER (0.656X1.31X0.109-IN THK)	
	5	1	**8T-9368**	4	BOLT (1/4-20X2.25-IN)	
	6	1	**9X-6165**	8	WASHER (6.5X22X2.5-MM THK)	
	7	1	**8C-5607**	8	MOUNT-ISOLATION	
	8	1	**8C-5608**	4	SPACER (6.5X9.5X25.4-MM THK)	
	9	1	**275-4012**	4	BUSHING	
	10	1	**6V-8185**	4	NUT (1/4-20-THD)	
	11	1	**5P-4115**	4	WASHER-HARD (7.2X19X2-MM THK)	
	12	1	**252-9628**	1	MOUNTING GP-RECEIVER (TARGET)	
	12A	1	**113-0693**	1	LOCKWASHER	
	12B	1	**8R-1803**	1	WASHER (10.5X18X1-MM THK)	
	12C	1	**289-8449**	1	HANDLE AS	
	13	1	**264-3171**	1	PLATE-SHOCK	

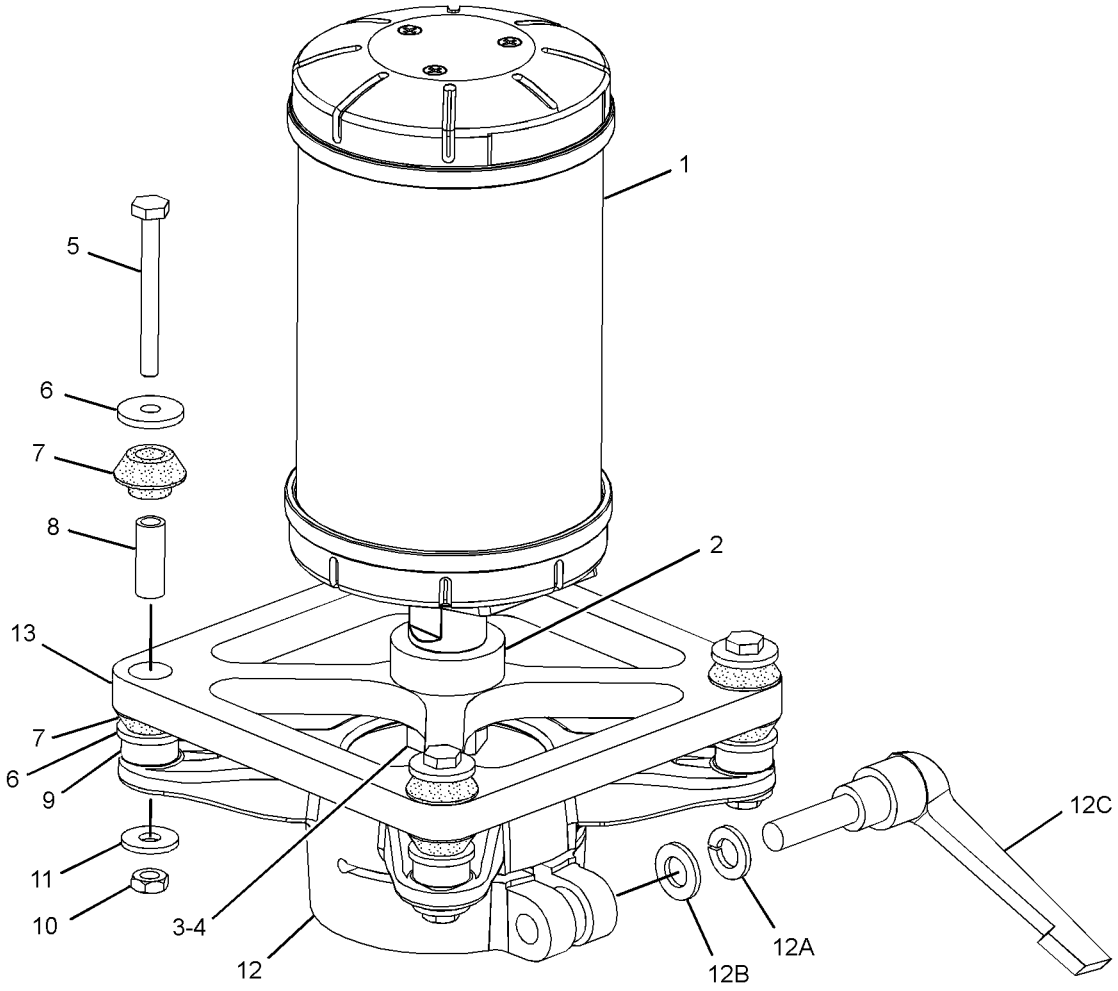

GRAPHIC #1 **<END>** g02059833

ELECTRICAL AND STARTING SYSTEM

295-9880 TARGET GP-LASER

S/N: JTD1-UP; FFF1-UP; LLL1-UP
PART OF 317-6527 GRADE CONTROL AR

SMCS-7009 **i03910854**

NOTE	PART NUMBER	QTY	PART NAME 1 2 3 4 5 6 (PRODUCT LEVEL)	SEE PAGE
Y	*256-2907*	1	TARGET GP-LASER (GRADE CONTROL)	226
	275-3376	1	BLOCK	
	276-0764	1	CABLE-COILED (LASER RECEIVER)	
	244-1719	1	CASE-CARRYING	
	252-8744	1	FILM-WARNING (BLADE, DO NOT CLIMB, READ OMM)	

Y-SEPARATE ILLUSTRATION

<END>

318-8135 WARNING GP-BACKUP

S/N: JTD1-UP; FFF1-UP; LLL1-UP
PART OF 312-1035 GUARD GP-REAR
AN ATTACHMENT

SMCS-7406 **i04418670**

NOTE	REF NO	GRAPHIC REF	PART NUMBER	QTY	PART NAME 1 2 3 4 5 6 (PRODUCT LEVEL)	SEE PAGE
	1	1	**220-0230**	1	ALARM AS (BACKUP)	
		1	**102-8802**	1	KIT-RECEPTACLE (2-PIN)	
					(INCLUDES RECEPTACLE AS & WEDGE)	
D		1	**5P-5623**		WIRE-ELECTRICAL (16-GA, BLACK) (0.8-M)	
		1	**8T-8729**	2	PIN-CONNECTOR (16-GA TO 18-GA)	
E		1	**9X-1813**		SLEEVE (29-CM)	
	2	1	**5P-4116**	4	WASHER-HARD (8.8X20.5X2-MM THK)	
M	3	1	**8T-4200**	4	BOLT (M8X1.25X16-MM)	
E	4	1	**128-8423**		SEAL (29-CM)	

D-ORDER BY THE METER
E-ORDER BY THE CENTIMETER
M-METRIC PART

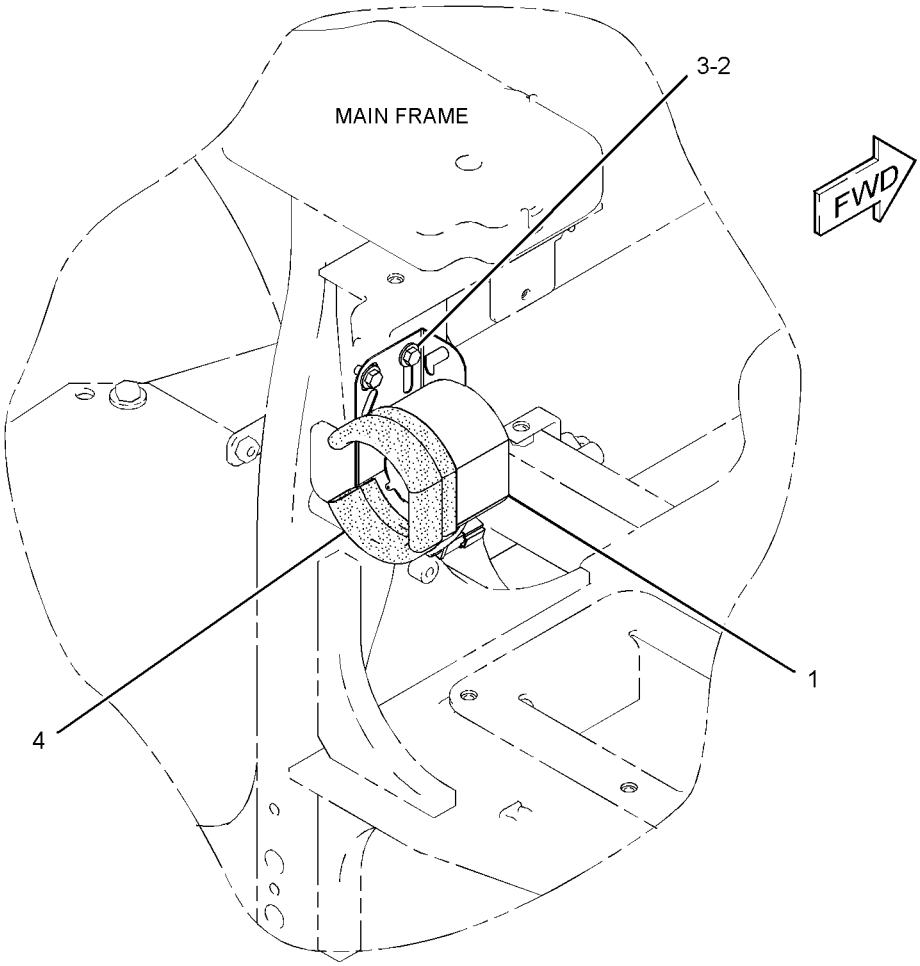

GRAPHIC #1 **<END>** g01441596

318-8136 WARNING GP-BACKUP

S/N: JTD1-UP; FFF1-UP; LLL1-UP
PART OF 245-6017 BATTERY & WIRING GP

SMCS-7406 **i04418689**

NOTE	REF NO	GRAPHIC REF	PART NUMBER	QTY	PART NAME 1 2 3 4 5 6 (PRODUCT LEVEL)	SEE PAGE
	1	1	**170-0950**	1	ALARM AS (BACKUP)	
		1	**4B-2043**	2	NUT (8-32-THD)	
	2	1	**269-7686**	1	HARNESS AS-ALARM	
		1	**8T-8729**	2	PIN-CONNECTOR (16-GA TO 18-GA)	
		1	**102-8802**	1	KIT-RECEPTACLE (2-PIN)	
					(INCLUDES RECEPTACLE AS & WEDGE)	
		1	**9G-3186**	2	TERMINAL-FORK (18-GA TO 22-GA, NO. 8 SCREW)	
B		1	**1P-0810**		TAPE-ELECTRICAL	
M	3	1	**8T-4138**	2	BOLT (M6X1X20-MM)	
	4	1	**9X-8256**	2	WASHER (6.6X12X2-MM THK)	

B-USE AS REQUIRED
M-METRIC PART

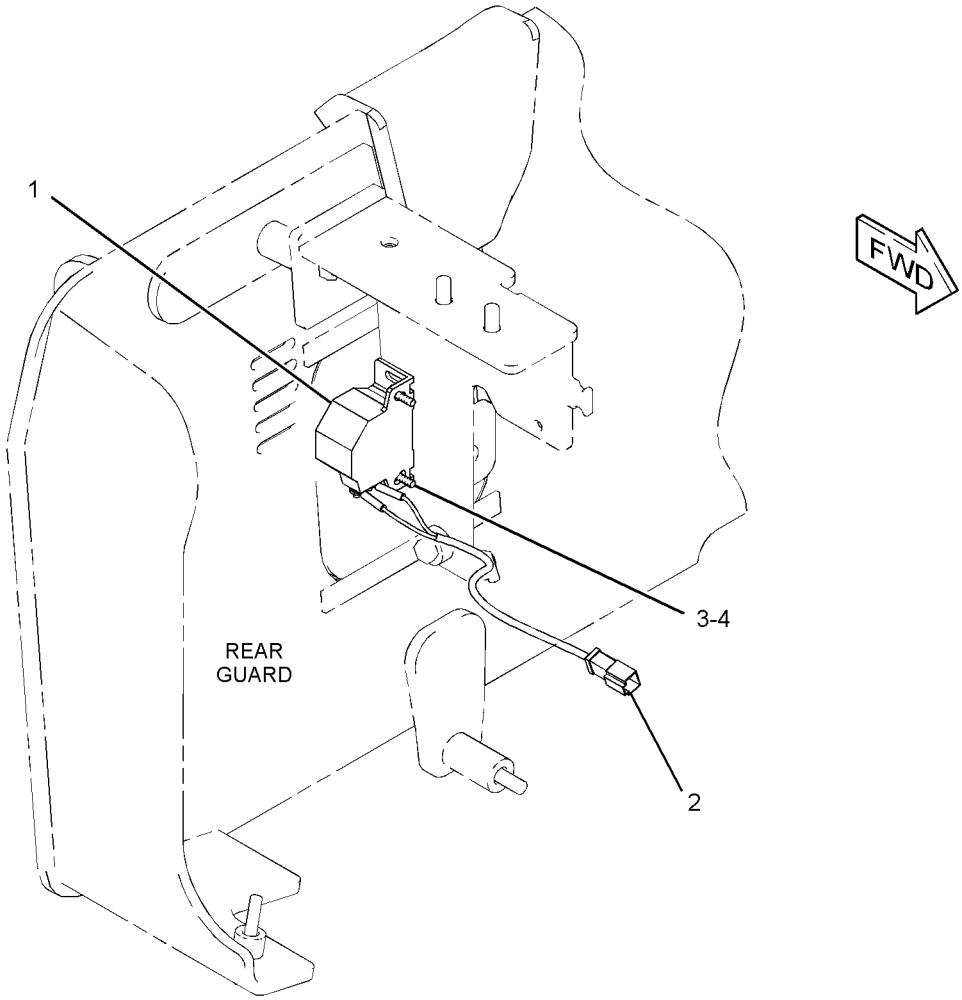

GRAPHIC #1 **<END>** g01651953

245-6024 WIRING GP-AIR CONDITIONER

S/N: JTD1-UP; FFF1-UP; LLL1-UP
PART OF 254-3210 AIR CONDITIONER & MOUNTING GP
AN ATTACHMENT

SMCS-1408, 7320 **i04418691**

NOTE	REF NO	GRAPHIC REF	PART NUMBER	QTY	PART NAME 1 2 3 4 5 6 (PRODUCT LEVEL)	SEE PAGE
	1	1	**7K-1181**	6	STRAP-CABLE	
	2	1	**236-6923**	1	SWITCH AS-PRESSURE (REFRIGERANT COMPR, HIGH SIDE)	
	3	1	**249-9048**	1	HARNESS AS-SWITCH	
		1	**9W-0852**	2	PIN-CONNECTOR (14-GA TO 16-GA)	
		1	**155-2270**	2	KIT-CONNECTING PLUG (2-PIN)	
					(EACH INCLUDES PLUG AS, WEDGE & INTERFACE SEAL)	
		1	**168-4999**	1	PLUG-CONNECTOR	
		1	**102-8802**	1	KIT-RECEPTACLE (2-PIN)	
					(INCLUDES RECEPTACLE AS & WEDGE)	
		1	**100-6674**	2	SEAL-CONNECTOR	
		1	**8T-8730**	4	SOCKET-CONNECTOR (16-GA TO 18-GA)	
		1	**305-5362**	2	TERMINAL AS (18-GA)	
		1	**189-3158**	1	SUPPRESSOR-ARC	
E		1	**125-7874**		TUBE-HEAT SHRINK (5.72-MM DIA) (5-CM)	
E		1	**125-7875**		TUBE-HEAT SHRINK (7.44-MM DIA) (5-CM)	
	4	1	**4P-8134**	1	CLIP	
	5	1	**9X-7378**	1	SEAL-O-RING	

E-ORDER BY THE CENTIMETER

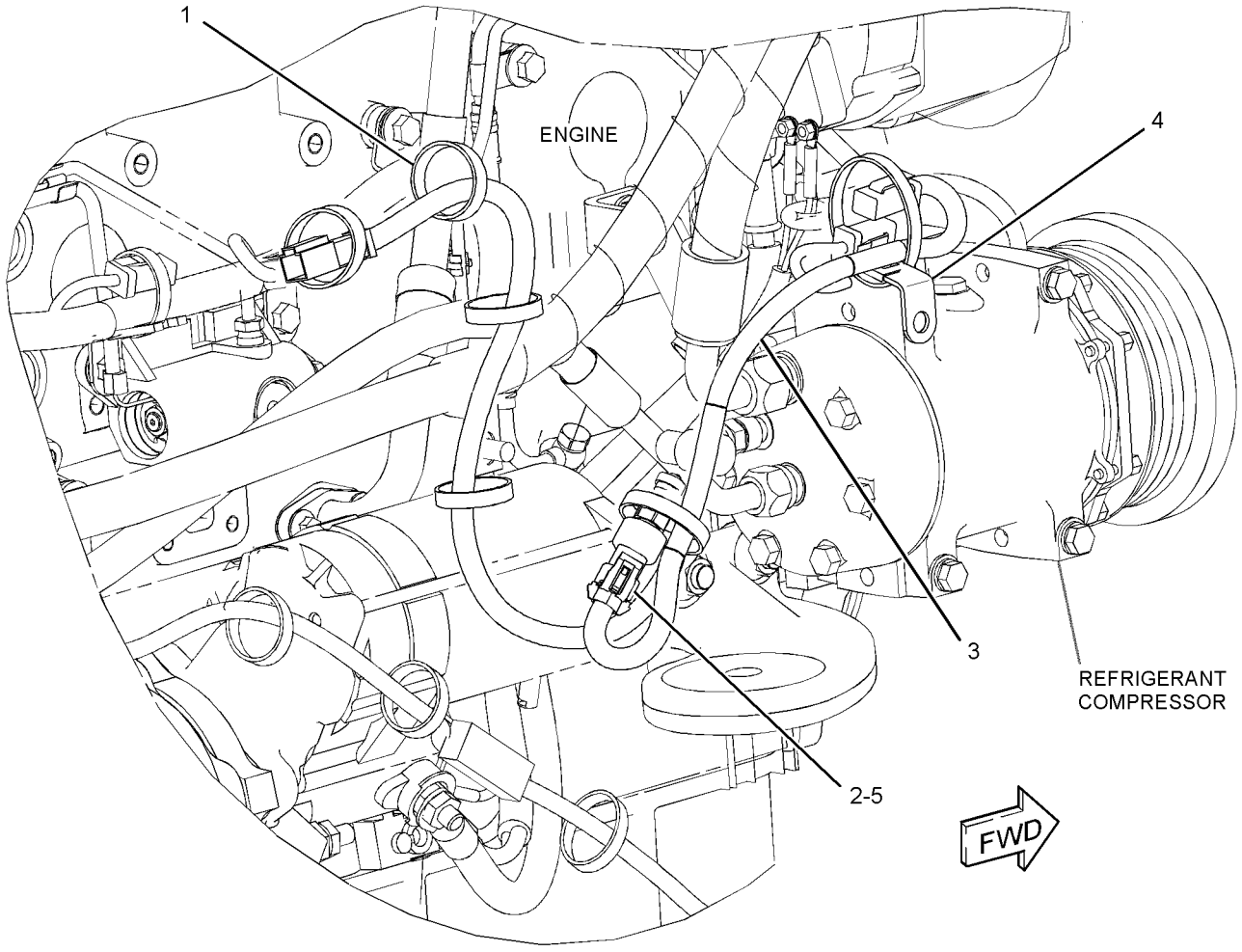

GRAPHIC #1 **<END>** g01346312

ELECTRICAL AND STARTING SYSTEM

245-6021 WIRING GP-CAB—EROPS

S/N: JTD1-UP; FFF1-UP; LLL1-UP
PART OF 244-7475, 244-7476 ROPS AR
AN ATTACHMENT
TYPE 1

SMCS-1408, 7301 **i04415790**

NOTE	REF NO	GRAPHIC REF	PART NUMBER	QTY	PART NAME 1 2 3 4 5 6 (PRODUCT LEVEL)	SEE PAGE
	1	1	**7K-1181**	72	STRAP-CABLE	
	2	1	**7T-8894**	1	GROMMET	
	3	1	**7T-8895**	1	GROMMET	
	4	1	**084-4277**	1	LAMP GP-DOME (12-VOLT) (CAB)	
		1	**210-8754**	1	LAMP (12-VOLT) (MINIATURE)	
Y	5	1	**240-0101**	2	LAMP GP-FLOOD (12-VOLT)	188
	6	1	**245-6042**	1	HARNESS AS-CONSOLE (EROPS)	
		1	**8T-8729**	16	PIN-CONNECTOR (16-GA TO 18-GA)	
		1	**9W-0852**	31	PIN-CONNECTOR (14-GA TO 16-GA)	
		1	**9X-3401**	53	PIN-CONNECTOR (16-GA TO 18-GA)	
		1	**9X-1054**	1	PLUG AS-CONNECTOR (4-PIN)	
		1	**155-2255**	4	KIT-CONNECTING PLUG (12-PIN)	
		1	**155-2256**	1	KIT-CONNECTING PLUG (12-PIN)	
					(EACH PLUG KIT INCLUDES PLUG AS, WEDGE & INTERFACE SEAL)	
		1	**8T-8737**	45	PLUG-SEAL	
		1	**102-8804**	1	KIT-RECEPTACLE (4-PIN)	
		1	**102-8806**	1	KIT-RECEPTACLE (8-PIN)	
		1	**102-8801**	1	KIT-RECEPTACLE (12-PIN)	
					(EACH RECEPTACLE KIT INCLUDES RECEPTACLE AS & WEDGE)	
		1	**8T-8730**	28	SOCKET-CONNECTOR (16-GA TO 18-GA)	
		1	**9W-0844**	28	SOCKET-CONNECTOR (14-GA TO 16-GA)	
		1	**2L-8069**	2	TERMINAL-RING (2-GA TO 10-GA, 3/8-IN SCREW)	
		1	**2L-8079**	2	TERMINAL-RING (14-GA TO 16-GA, 3/8-IN SCREW)	
		1	**5P-4571**	2	TERMINAL-BLADE (14-GA TO 16-GA)	
		1	**091-2436**	66	TERMINAL-BLADE (18-GA TO 22-GA)	
		1	**104-1995**	16	TERMINAL-BLADE (14-GA TO 18-GA)	
		1	**9X-1055**	2	TERMINAL-RECEPTACLE (12-GA)	
		1	**9X-1056**	2	TERMINAL-RECEPTACLE (14-GA TO 16-GA)	
E		1	**119-3662**		TUBE-HEAT SHRINK (10.85-MM DIA) (33-CM)	
E		1	**125-7874**		TUBE-HEAT SHRINK (5.72-MM DIA) (65-CM)	
E		1	**125-7875**		TUBE-HEAT SHRINK (7.44-MM DIA) (35-CM)	
	7	1	**245-6043**	1	HARNESS AS-CAB (ROOF)	
		1	**274-3774**	3	CAP-CONNECTOR	
		1	**213-0139**	4	PIN	
		1	**8T-8729**	2	PIN-CONNECTOR (16-GA TO 18-GA)	
		1	**9W-0852**	6	PIN-CONNECTOR (14-GA TO 16-GA)	
		1	**155-2265**	2	KIT-CONNECTING PLUG (8-PIN)	
		1	**155-2270**	7	KIT-CONNECTING PLUG (2-PIN)	
		1	**177-9656**	1	KIT-CONNECTING PLUG (4-PIN)	
					(EACH PLUG KIT INCLUDES PLUG AS, WEDGE & INTERFACE SEAL)	
		1	**230-5008**	2	PLUG AS-CONNECTOR (4-PIN)	
					(EACH INCLUDES)	
		1	**264-7031**	1	SEAL-CONNECTOR	
		1	**8T-8737**	11	PLUG-SEAL	
		1	**102-8806**	1	KIT-RECEPTACLE (8-PIN)	
					(INCLUDES RECEPTACLE AS & WEDGE)	
		1	**274-3778**	1	CAP-SEAL	
		1	**8T-8730**	19	SOCKET-CONNECTOR (16-GA TO 18-GA)	
		1	**9W-0844**	8	SOCKET-CONNECTOR (14-GA TO 16-GA)	
		1	**9X-3402**	8	SOCKET-CONNECTOR (16-GA TO 18-GA)	

245-6021 **WIRING GP-CAB** *(contd.)* **i04415790**

NOTE	REF NO	GRAPHIC REF	PART NUMBER	QTY	PART NAME 1 2 3 4 5 6 (PRODUCT LEVEL)	SEE PAGE
		1	**8L-8413**	52	STRAP-CABLE (WHITE)	
		1	**2L-8052**	1	TERMINAL-RING (6-GA, 3/8-IN SCREW)	
		1	**2L-8079**	1	TERMINAL-RING (14-GA TO 16-GA, 3/8-IN SCREW)	
		1	**5P-4571**	4	TERMINAL-BLADE (14-GA TO 16-GA)	
		1	**9R-9442**	2	TERMINAL	
E		1	**119-3662**		TUBE-HEAT SHRINK (10.85-MM DIA) (7-CM)	
E		1	**125-7874**		TUBE-HEAT SHRINK (5.72-MM DIA) (20-CM)	
E		1	**125-7875**		TUBE-HEAT SHRINK (7.44-MM DIA) (15-CM)	
	8	1	**245-6044**	1	HARNESS AS-CAB (DASH)	
		1	**8T-8729**	11	PIN-CONNECTOR (16-GA TO 18-GA)	
		1	**155-2265**	1	KIT-CONNECTING PLUG (8-PIN)	
		1	**155-2260**	2	KIT-CONNECTING PLUG (3-PIN)	
		1	**155-2271**	2	KIT-CONNECTING PLUG (4-PIN)	
					(EACH PLUG KIT INCLUDES PLUG AS, WEDGE & INTERFACE SEAL)	
		1	**230-4009**	1	PLUG AS-CONNECTOR (12-PIN)	
		1	**264-7034**	1	SEAL-CONNECTOR	
		1	**8T-8737**	21	PLUG-SEAL	
		1	**102-8806**	1	KIT-RECEPTACLE (8-PIN)	
		1	**102-8801**	1	KIT-RECEPTACLE (12-PIN)	
					(EACH RECEPTACLE KIT INCLUDES RECEPTACLE AS & WEDGE)	
		1	**134-2540**	1	RESISTOR AS-CONNECTION (3-PIN)	
		1	**8T-8730**	15	SOCKET-CONNECTOR (16-GA TO 18-GA)	
		1	**9X-3402**	7	SOCKET-CONNECTOR (16-GA TO 18-GA)	
		1	**8L-8413**	19	STRAP-CABLE (WHITE)	
		1	**5P-4571**	2	TERMINAL-BLADE (14-GA TO 16-GA)	
E		1	**125-7874**		TUBE-HEAT SHRINK (5.72-MM DIA) (35-CM)	
	9	1	**115-1615**	1	RELAY AS (12-VOLT) (BLOWER)	
	10	1	**132-5789**	1	CLIP	
Y	11	1	**240-0102**	4	LAMP GP-FLOOD (12-VOLT)	189
	12	1	**1V-6688**	1	GROMMET	
	13	1	**4P-7581**	1	CLIP	
	14	1	**4P-8134**	1	CLIP	
	15	1	**8T-4121**	2	WASHER-HARD (11X21X2.5-MM THK)	
M	16	1	**8T-4138**	5	BOLT (M6X1X20-MM)	
M	17	1	**8T-4189**	4	BOLT (M8X1.25X20-MM)	
M	18	1	**8T-4191**	2	BOLT (M10X1.5X16-MM)	
	20	1	**8T-4224**	6	WASHER-HARD (8.8X16X2-MM THK)	
M	21	1	**8T-7547**	2	BOLT (M8X1.25X30-MM)	
	22	1	**9D-3768**	2	GROMMET	
	23	1	**9X-7345**	3	GROMMET	
	24	1	**9X-8256**	5	WASHER (6.6X12X2-MM THK)	
E	25	1	**3E-6600**		SEAL (3-CM EACH)	
M	26	1	**5C-9553**	3	BOLT (M6X1X16-MM)	
	27	1	**5P-4115**	3	WASHER-HARD (7.2X19X2-MM THK)	

E-ORDER BY THE CENTIMETER
M-METRIC PART
Y-SEPARATE ILLUSTRATION

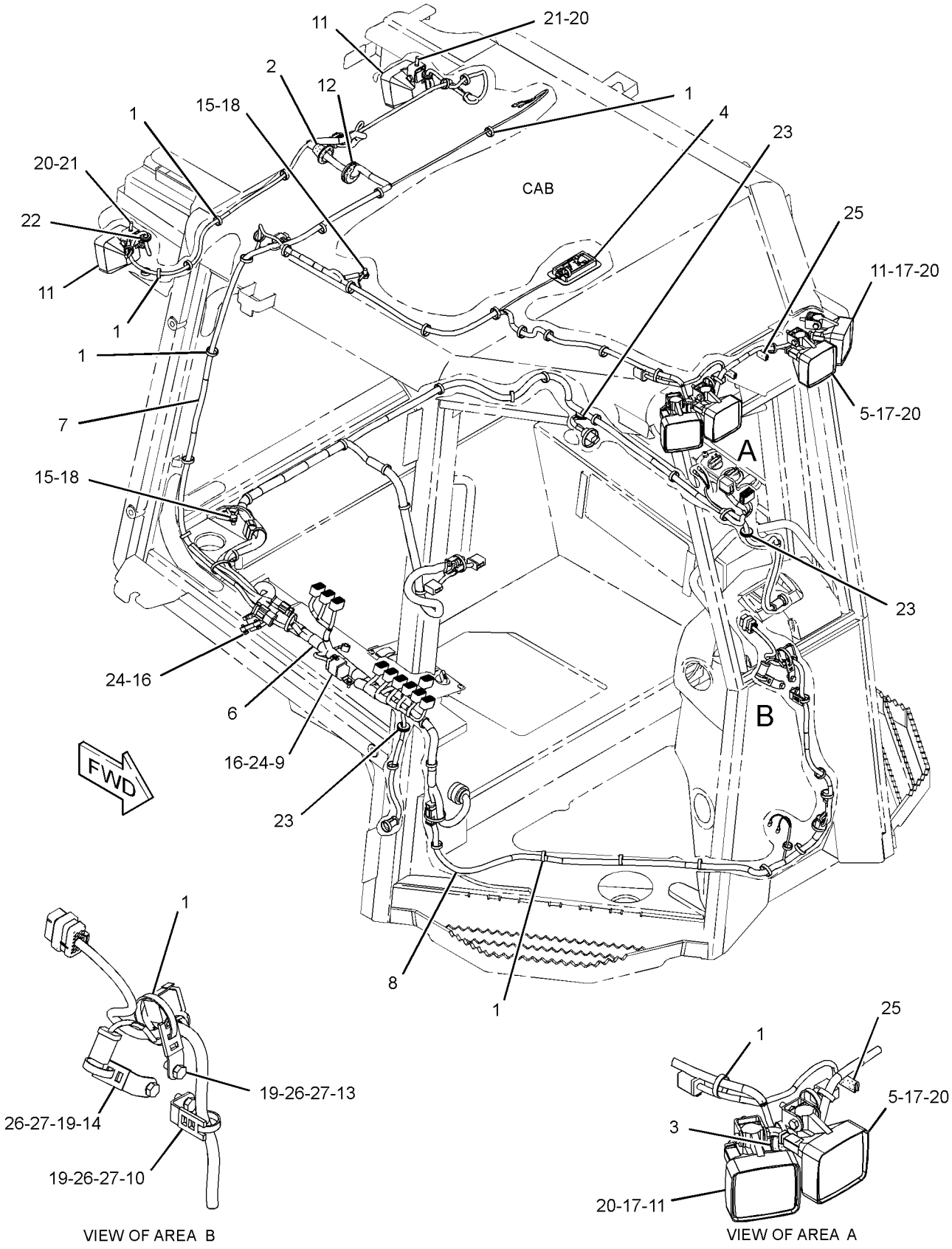

GRAPHIC #1 **<END>** g01365665

245-6021 WIRING GP-CAB–EROPS

S/N: JTD1-UP; FFF1-UP; LLL1-UP
PART OF 244-7475, 244-7476 ROPS AR
AN ATTACHMENT
TYPE 2

SMCS-1408, 7301 **i04415831**

NOTE	REF NO	GRAPHIC REF	PART NUMBER	QTY	PART NAME 1 2 3 4 5 6 (PRODUCT LEVEL)	SEE PAGE
	1	1	**7K-1181**	72	STRAP-CABLE	
	2	1	**7T-8894**	1	GROMMET	
	3	1	**7T-8895**	1	GROMMET	
	4	1	**084-4277**	1	LAMP GP-DOME (12-VOLT) (CAB)	
		1	**210-8754**	1	LAMP (12-VOLT) (MINIATURE)	
	5	1	**245-6043**	1	HARNESS AS-CAB (ROOF)	
		1	**274-3774**	3	CAP-CONNECTOR	
		1	**213-0139**	4	PIN	
		1	**8T-8729**	2	PIN-CONNECTOR (16-GA TO 18-GA)	
		1	**9W-0852**	6	PIN-CONNECTOR (14-GA TO 16-GA)	
		1	**155-2265**	2	KIT-CONNECTING PLUG (8-PIN)	
		1	**155-2270**	7	KIT-CONNECTING PLUG (2-PIN)	
		1	**177-9656**	1	KIT-CONNECTING PLUG (4-PIN)	
					(EACH PLUG KIT INCLUDES PLUG AS, WEDGE & INTERFACE SEAL)	
		1	**230-5008**	2	PLUG AS-CONNECTOR (4-PIN)	
					(EACH INCLUDES)	
		1	**264-7031**	1	SEAL-CONNECTOR	
		1	**8T-8737**	11	PLUG-SEAL	
		1	**102-8806**	1	KIT-RECEPTACLE (8-PIN)	
					(INCLUDES RECEPTACLE AS & WEDGE)	
		1	**274-3778**	1	CAP-SEAL	
		1	**8T-8730**	19	SOCKET-CONNECTOR (16-GA TO 18-GA)	
		1	**9W-0844**	8	SOCKET-CONNECTOR (14-GA TO 16-GA)	
		1	**9X-3402**	8	SOCKET-CONNECTOR (16-GA TO 18-GA)	
		1	**8L-8413**	52	STRAP-CABLE (WHITE)	
		1	**2L-8052**	1	TERMINAL-RING (6-GA, 3/8-IN SCREW)	
		1	**2L-8079**	1	TERMINAL-RING (14-GA TO 16-GA, 3/8-IN SCREW)	
		1	**5P-4571**	4	TERMINAL-BLADE (14-GA TO 16-GA)	
		1	**9R-9442**	2	TERMINAL	
E		1	**119-3662**		TUBE-HEAT SHRINK (10.85-MM DIA) (7-CM)	
E		1	**125-7874**		TUBE-HEAT SHRINK (5.72-MM DIA) (20-CM)	
E		1	**125-7875**		TUBE-HEAT SHRINK (7.44-MM DIA) (15-CM)	
	6	1	**245-6044**	1	HARNESS AS-CAB (DASH)	
		1	**8T-8729**	11	PIN-CONNECTOR (16-GA TO 18-GA)	
		1	**155-2265**	1	KIT-CONNECTING PLUG (8-PIN)	
		1	**155-2260**	2	KIT-CONNECTING PLUG (3-PIN)	
		1	**155-2271**	2	KIT-CONNECTING PLUG (4-PIN)	
					(EACH PLUG KIT INCLUDES PLUG AS, WEDGE & INTERFACE SEAL)	
		1	**230-4009**	1	PLUG AS-CONNECTOR (12-PIN)	
		1	**264-7034**	1	SEAL-CONNECTOR	
		1	**8T-8737**	21	PLUG-SEAL	
		1	**102-8806**	1	KIT-RECEPTACLE (8-PIN)	
		1	**102-8801**	1	KIT-RECEPTACLE (12-PIN)	
					(EACH RECEPTACLE KIT INCLUDES RECEPTACLE AS & WEDGE)	
		1	**134-2540**	1	RESISTOR AS-CONNECTION (3-PIN)	
		1	**8T-8730**	15	SOCKET-CONNECTOR (16-GA TO 18-GA)	
		1	**9X-3402**	7	SOCKET-CONNECTOR (16-GA TO 18-GA)	
		1	**8L-8413**	19	STRAP-CABLE (WHITE)	
		1	**5P-4571**	2	TERMINAL-BLADE (14-GA TO 16-GA)	
E		1	**125-7874**		TUBE-HEAT SHRINK (5.72-MM DIA) (35-CM)	

245-6021 **WIRING GP-CAB** ***(contd.)*** **i04415831**

NOTE	REF NO	GRAPHIC REF	PART NUMBER	QTY	PART NAME 1 2 3 4 5 6 (PRODUCT LEVEL)	SEE PAGE
C	7	1	**311-0292**	1	HARNESS AS-CONSOLE (EROPS)	
		1	**228-5856**	13	CONNECTOR	
		1	**213-0139**	4	PIN	
		1	**8T-8729**	16	PIN-CONNECTOR (16-GA TO 18-GA)	
		1	**9W-0852**	31	PIN-CONNECTOR (14-GA TO 16-GA)	
		1	**9X-3401**	59	PIN-CONNECTOR (16-GA TO 18-GA)	
		1	**9X-1054**	1	PLUG AS-CONNECTOR (4-PIN)	
		1	**155-2255**	4	KIT-CONNECTING PLUG (12-PIN)	
		1	**155-2256**	1	KIT-CONNECTING PLUG (12-PIN)	
		1	**155-2265**	1	KIT-CONNECTING PLUG (8-PIN)	
		1	**155-2260**	1	KIT-CONNECTING PLUG (3-PIN)	
		1	**155-2270**	1	KIT-CONNECTING PLUG (2-PIN)	
		1	**155-2271**	4	KIT-CONNECTING PLUG (4-PIN)	
		1	**155-2274**	1	KIT-CONNECTING PLUG (6-PIN)	
		1	**177-9656**	1	KIT-CONNECTING PLUG (4-PIN)	
					(EACH PLUG KIT INCLUDES PLUG AS, WEDGE & INTERFACE SEAL)	
		1	**225-3854**	1	PLUG AS	
		1	**8T-8737**	39	PLUG-SEAL	
		1	**102-8804**	1	KIT-RECEPTACLE (4-PIN)	
		1	**102-8806**	1	KIT-RECEPTACLE (8-PIN)	
		1	**102-8801**	1	KIT-RECEPTACLE (12-PIN)	
					(EACH RECEPTACLE KIT INCLUDES RECEPTACLE AS & WEDGE)	
		1	**214-4208**	1	RECEPTACLE AS-CONNECTOR (70-PIN)	
		1	**8T-8730**	28	SOCKET-CONNECTOR (16-GA TO 18-GA)	
		1	**9W-0844**	28	SOCKET-CONNECTOR (14-GA TO 16-GA)	
		1	**180-9340**	19	SOCKET-CONNECTOR (14-GA TO 18-GA)	
		1	**2L-8069**	2	TERMINAL-RING (2-GA TO 10-GA, 3/8-IN SCREW)	
		1	**2L-8079**	2	TERMINAL-RING (14-GA TO 16-GA, 3/8-IN SCREW)	
		1	**5P-4571**	2	TERMINAL-BLADE (14-GA TO 16-GA)	
		1	**091-2436**	80	TERMINAL-BLADE (18-GA TO 22-GA)	
		1	**104-1995**	16	TERMINAL-BLADE (14-GA TO 18-GA)	
		1	**9X-1055**	2	TERMINAL-RECEPTACLE (12-GA)	
		1	**9X-1056**	2	TERMINAL-RECEPTACLE (14-GA TO 16-GA)	
E		1	**119-3662**		TUBE-HEAT SHRINK (10.85-MM DIA) (26-CM)	
E		1	**125-7874**		TUBE-HEAT SHRINK (5.72-MM DIA) (65-CM)	
E		1	**125-7875**		TUBE-HEAT SHRINK (7.44-MM DIA) (40-CM)	
	8	1	**115-1615**	1	RELAY AS (12-VOLT) (BLOWER)	
	9	1	**132-5789**	1	CLIP	
	10	1	**1V-6688**	1	GROMMET	
	11	1	**4P-7581**	1	CLIP	
	12	1	**4P-8134**	1	CLIP	
M	13	1	**5C-9553**	3	BOLT (M6X1X16-MM)	
	14	1	**5P-4115**	3	WASHER-HARD (7.2X19X2-MM THK)	
	15	1	**8T-4121**	2	WASHER-HARD (11X21X2.5-MM THK)	
M	16	1	**8T-4138**	5	BOLT (M6X1X20-MM)	
M	17	1	**8T-4191**	2	BOLT (M10X1.5X16-MM)	
	18	1	**9X-7345**	3	GROMMET	
	19	1	**9X-8256**	5	WASHER (6.6X12X2-MM THK)	
E	20	1	**3E-6600**		SEAL (3-CM EACH)	

C-CHANGE FROM PREVIOUS TYPE
E-ORDER BY THE CENTIMETER
M-METRIC PART

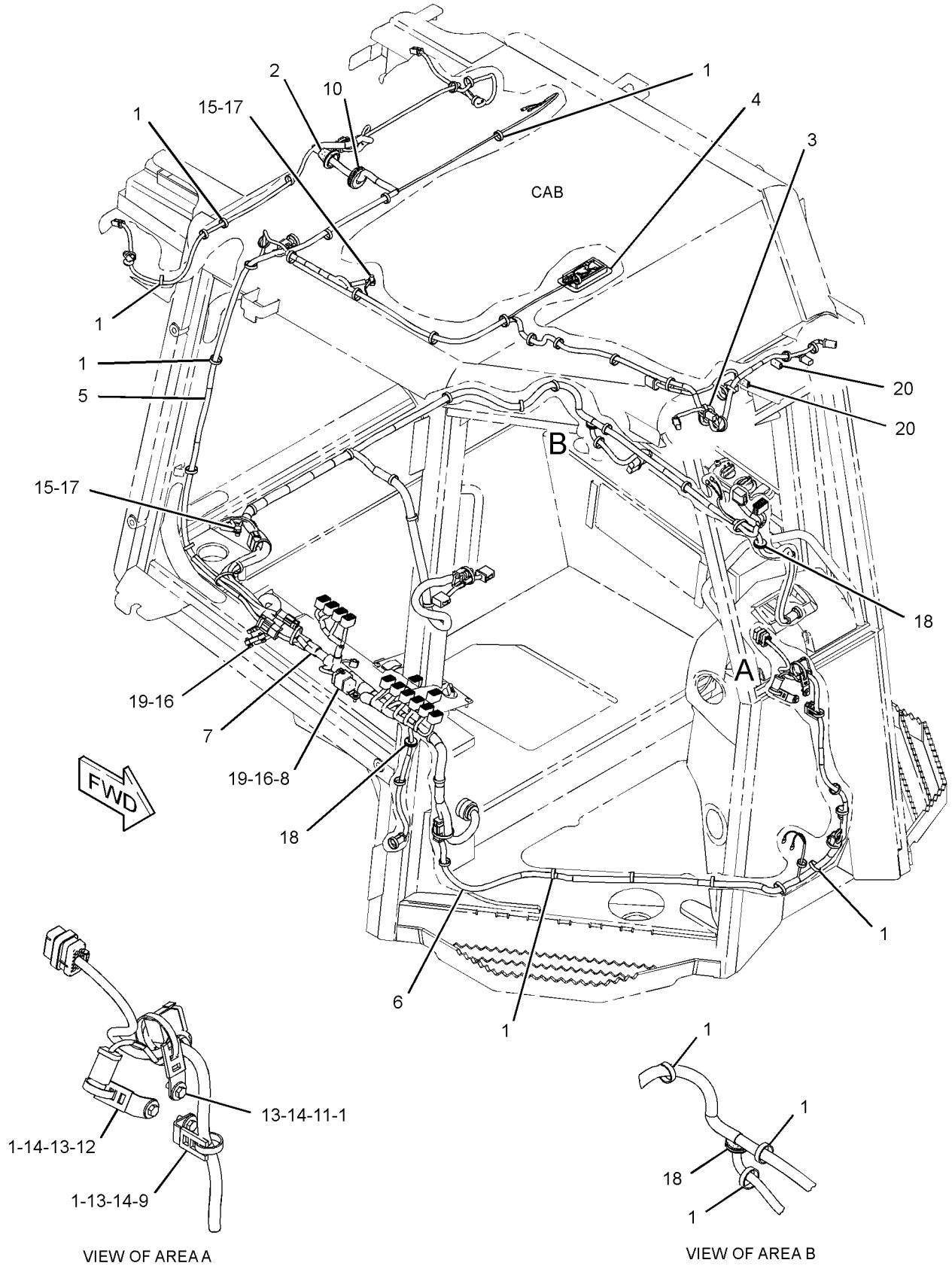

GRAPHIC #1 **<END>** g01736533

245-6021 WIRING GP-CAB–EROPS

S/N: JTD1-UP; FFF1-UP; LLL1-UP
PART OF 244-7475, 244-7476 ROPS AR
AN ATTACHMENT
TYPE 3

SMCS-1408, 7301 **i04415850**

NOTE	REF NO	GRAPHIC REF	PART NUMBER	QTY	PART NAME 1 2 3 4 5 6 (PRODUCT LEVEL)	SEE PAGE
C	1	1	**7K-1181**	77	STRAP-CABLE	
	2	1	**7T-8894**	1	GROMMET	
	3	1	**7T-8895**	1	GROMMET	
	4	1	**084-4277**	1	LAMP GP-DOME (12-VOLT) (CAB)	
		1	**210-8754**	1	LAMP (12-VOLT) (MINIATURE)	
C	5	1	**229-8377**	1	CIRCUIT BREAKER AS (35-AMPERE)	
		1	**6V-8378**	2	NUT (10-32-THD)	
		1	**8F-1434**	2	LOCKWASHER	
		1	**8T-0328**	2	WASHER-HARD (5.5X10X1-MM THK)	
	6	1	**245-6043**	1	HARNESS AS-CAB (ROOF)	
		1	**274-3774**	3	CAP-CONNECTOR	
		1	**213-0139**	4	PIN	
		1	**8T-8729**	2	PIN-CONNECTOR (16-GA TO 18-GA)	
		1	**9W-0852**	6	PIN-CONNECTOR (14-GA TO 16-GA)	
		1	**155-2265**	2	KIT-CONNECTING PLUG (8-PIN)	
		1	**155-2270**	7	KIT-CONNECTING PLUG (2-PIN)	
		1	**177-9656**	1	KIT-CONNECTING PLUG (4-PIN)	
					(EACH PLUG KIT INCLUDES PLUG AS, WEDGE & INTERFACE SEAL)	
		1	**230-5008**	2	PLUG AS-CONNECTOR (4-PIN)	
					(EACH INCLUDES)	
		1	**264-7031**	1	SEAL-CONNECTOR	
		1	**8T-8737**	11	PLUG-SEAL	
		1	**102-8806**	1	KIT-RECEPTACLE (8-PIN)	
					(INCLUDES RECEPTACLE AS & WEDGE)	
		1	**274-3778**	1	CAP-SEAL	
		1	**8T-8730**	19	SOCKET-CONNECTOR (16-GA TO 18-GA)	
		1	**9W-0844**	8	SOCKET-CONNECTOR (14-GA TO 16-GA)	
		1	**9X-3402**	8	SOCKET-CONNECTOR (16-GA TO 18-GA)	
		1	**8L-8413**	52	STRAP-CABLE (WHITE)	
		1	**2L-8052**	1	TERMINAL-RING (6-GA, 3/8-IN SCREW)	
		1	**2L-8079**	1	TERMINAL-RING (14-GA TO 16-GA, 3/8-IN SCREW)	
		1	**5P-4571**	4	TERMINAL-BLADE (14-GA TO 16-GA)	
		1	**9R-9442**	2	TERMINAL	
E		1	**119-3662**		TUBE-HEAT SHRINK (10.85-MM DIA) (7-CM)	
E		1	**125-7874**		TUBE-HEAT SHRINK (5.72-MM DIA) (20-CM)	
E		1	**125-7875**		TUBE-HEAT SHRINK (7.44-MM DIA) (15-CM)	
	7	1	**245-6044**	1	HARNESS AS-CAB (DASH)	
		1	**8T-8729**	11	PIN-CONNECTOR (16-GA TO 18-GA)	
		1	**155-2265**	1	KIT-CONNECTING PLUG (8-PIN)	
		1	**155-2260**	2	KIT-CONNECTING PLUG (3-PIN)	
		1	**155-2271**	2	KIT-CONNECTING PLUG (4-PIN)	
					(EACH PLUG KIT INCLUDES PLUG AS, WEDGE & INTERFACE SEAL)	
		1	**230-4009**	1	PLUG AS-CONNECTOR (12-PIN)	
		1	**264-7034**	1	SEAL-CONNECTOR	
		1	**8T-8737**	21	PLUG-SEAL	
		1	**102-8806**	1	KIT-RECEPTACLE (8-PIN)	
		1	**102-8801**	1	KIT-RECEPTACLE (12-PIN)	
					(EACH RECEPTACLE KIT INCLUDES RECEPTACLE AS & WEDGE)	
		1	**134-2540**	1	RESISTOR AS-CONNECTION (3-PIN)	
		1	**8T-8730**	15	SOCKET-CONNECTOR (16-GA TO 18-GA)	

245-6021 **WIRING GP-CAB** ***(contd.)*** **i04415850**

NOTE	REF NO	GRAPHIC REF	PART NUMBER	QTY	PART NAME 1 2 3 4 5 6 (PRODUCT LEVEL)	SEE PAGE
		1	**9X-3402**	7	SOCKET-CONNECTOR (16-GA TO 18-GA)	
		1	**8L-8413**	19	STRAP-CABLE (WHITE)	
		1	**5P-4571**	2	TERMINAL-BLADE (14-GA TO 16-GA)	
E		1	**125-7874**		TUBE-HEAT SHRINK (5.72-MM DIA) (35-CM)	
C	8	1	**318-6093**	1	HARNESS AS-CONSOLE (EROPS)	
		1	**228-5856**	13	CONNECTOR	
		1	**213-0139**	4	PIN	
		1	**8T-8729**	16	PIN-CONNECTOR (16-GA TO 18-GA)	
		1	**9W-0852**	31	PIN-CONNECTOR (14-GA TO 16-GA)	
		1	**9X-3401**	59	PIN-CONNECTOR (16-GA TO 18-GA)	
		1	**9X-1054**	2	PLUG AS-CONNECTOR (4-PIN)	
		1	**155-2255**	4	KIT-CONNECTING PLUG (12-PIN)	
		1	**155-2256**	1	KIT-CONNECTING PLUG (12-PIN)	
		1	**155-2265**	1	KIT-CONNECTING PLUG (8-PIN)	
		1	**155-2260**	1	KIT-CONNECTING PLUG (3-PIN)	
		1	**155-2270**	1	KIT-CONNECTING PLUG (2-PIN)	
		1	**155-2274**	1	KIT-CONNECTING PLUG (6-PIN)	
		1	**177-9656**	1	KIT-CONNECTING PLUG (4-PIN)	
		1	**155-2271**	4	KIT-CONNECTING PLUG (4-PIN)	
					(EACH PLUG KIT INCLUDES PLUG AS, WEDGE & INTERFACE SEAL)	
		1	**225-3854**	1	PLUG AS	
		1	**8T-8737**	39	PLUG-SEAL	
		1	**102-8804**	1	KIT-RECEPTACLE (4-PIN)	
		1	**102-8806**	1	KIT-RECEPTACLE (8-PIN)	
		1	**102-8801**	1	KIT-RECEPTACLE (12-PIN)	
					(EACH RECEPTACLE KIT INCLUDES RECEPTACLE AS & WEDGE)	
		1	**214-4208**	1	RECEPTACLE AS-CONNECTOR (70-PIN)	
		1	**8T-8730**	27	SOCKET-CONNECTOR (16-GA TO 18-GA)	
		1	**9W-0844**	29	SOCKET-CONNECTOR (14-GA TO 16-GA)	
		1	**180-9340**	19	SOCKET-CONNECTOR (14-GA TO 18-GA)	
B		1	**141-8061**		TAPE	
		1	**2L-8069**	2	TERMINAL-RING (2-GA TO 10-GA, 3/8-IN SCREW)	
		1	**2L-8079**	2	TERMINAL-RING (14-GA TO 16-GA, 3/8-IN SCREW)	
		1	**5P-4571**	2	TERMINAL-BLADE (14-GA TO 16-GA)	
		1	**2L-8066**	2	TERMINAL-RING (10-GA TO 12-GA, NO. 10 SCREW)	
		1	**091-2436**	79	TERMINAL-BLADE (18-GA TO 22-GA)	
		1	**104-1995**	17	TERMINAL-BLADE (14-GA TO 18-GA)	
		1	**9X-1055**	6	TERMINAL-RECEPTACLE (12-GA)	
		1	**9X-1056**	2	TERMINAL-RECEPTACLE (14-GA TO 16-GA)	
E		1	**119-3662**		TUBE-HEAT SHRINK (10.85-MM DIA) (26-CM)	
E		1	**125-7874**		TUBE-HEAT SHRINK (5.72-MM DIA) (70-CM)	
E		1	**125-7875**		TUBE-HEAT SHRINK (7.44-MM DIA) (40-CM)	
	9	1	**115-1615**	2	RELAY AS (12-VOLT) (BLOWER)	
	10	1	**132-5789**	2	CLIP	
CM	11	1	**213-7315**	2	SCREW-TRUSS HEAD (M4X0.7X25-MM)	
	12	1	**1V-6688**	1	GROMMET	
	13	1	**4P-7581**	1	CLIP	
	14	1	**4P-8134**	1	CLIP	
M	15	1	**5C-9553**	3	BOLT (M6X1X16-MM)	
	16	1	**5P-4115**	3	WASHER-HARD (7.2X19X2-MM THK)	
	17	1	**8T-4121**	2	WASHER-HARD (11X21X2.5-MM THK)	
M	18	1	**8T-4138**	5	BOLT (M6X1X20-MM)	
M	19	1	**8T-4191**	2	BOLT (M10X1.5X16-MM)	
	20	1	**9X-7345**	3	GROMMET	
	21	1	**9X-8256**	5	WASHER (6.6X12X2-MM THK)	
CD	22	1	**5P-5923**		SEAL (0.1-M)	

245-6021 **WIRING GP-CAB** *(contd.)* **i04415850**

NOTE	REF NO	GRAPHIC REF	PART NUMBER	QTY	PART NAME 1 2 3 4 5 6 (PRODUCT LEVEL)	SEE PAGE
E	23	1	**3E-6600**		SEAL (3-CM EACH)	
	24	1	**5P-4116**	1	WASHER-HARD (8.8X20.5X2-MM THK)	
M	25	1	**7Y-9099**	4	SCREW-TRUSS HEAD (M8X1.25X25-MM)	
Y	26	1	*249-9023*	1	PANEL GP-FUSE	201

B-USE AS REQUIRED
C-CHANGE FROM PREVIOUS TYPE
D-ORDER BY THE METER
E-ORDER BY THE CENTIMETER
M-METRIC PART
Y-SEPARATE ILLUSTRATION

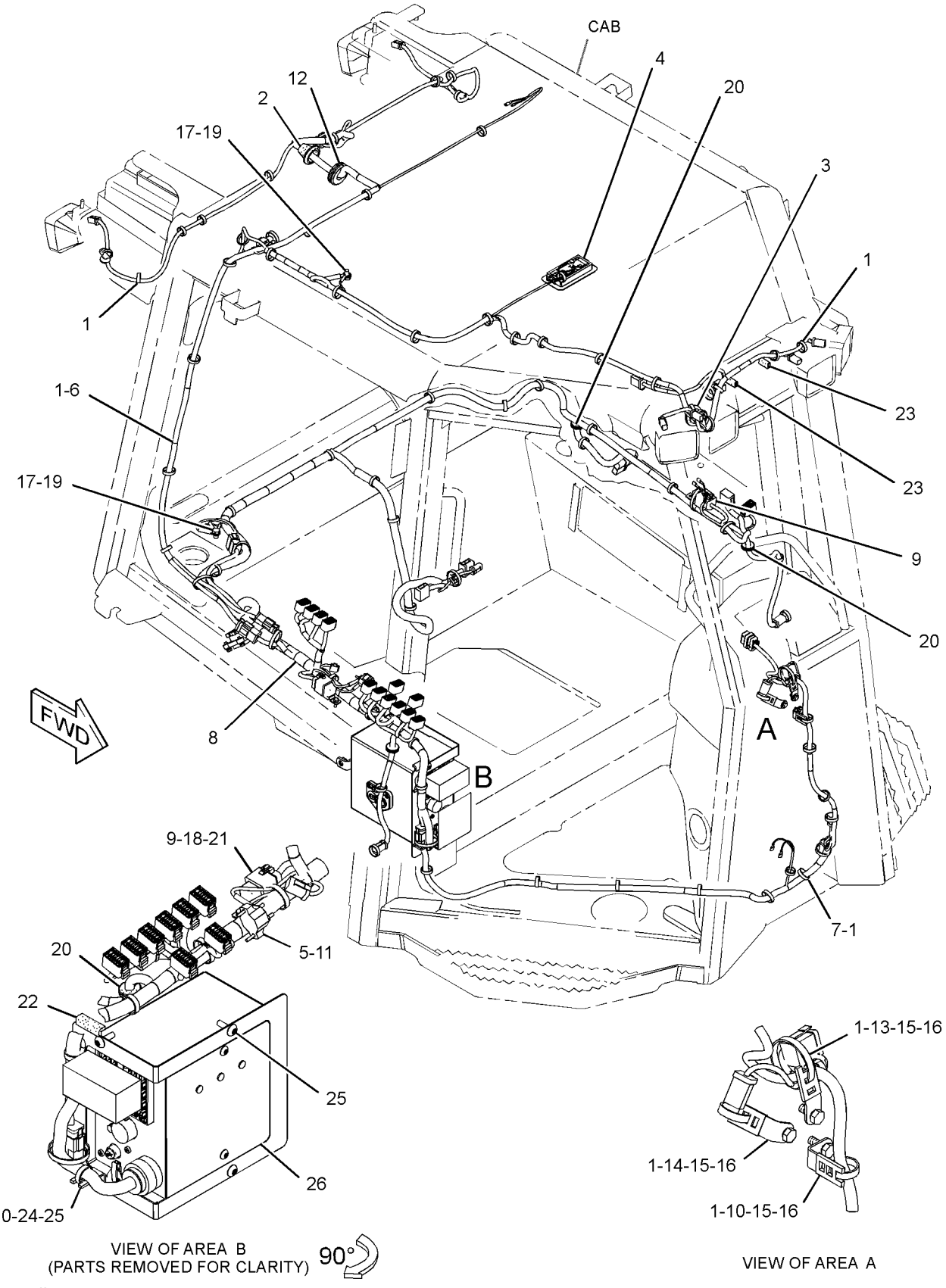

GRAPHIC #1 **<END>** g02428001

245-6047 WIRING GP-CAB–OROPS

S/N: JTD1-UP; FFF1-UP; LLL1-UP
PART OF 244-7474 ROPS AR
AN ATTACHMENT
TYPE 1

SMCS-1408, 7301 **i04415909**

NOTE	REF NO	GRAPHIC REF	PART NUMBER	QTY	PART NAME 1 2 3 4 5 6 (PRODUCT LEVEL)	SEE PAGE
	1	1	**7K-1181**	52	STRAP-CABLE	
	2	1	**7T-8895**	1	GROMMET	
Y	3	1	**240-0101**	2	LAMP GP-FLOOD (12-VOLT)	188
	4	1	**245-6023**	1	HARNESS AS-CONSOLE (OROPS)	
		1	**8T-8729**	10	PIN-CONNECTOR (16-GA TO 18-GA)	
		1	**9W-0852**	18	PIN-CONNECTOR (14-GA TO 16-GA)	
		1	**9X-3401**	51	PIN-CONNECTOR (16-GA TO 18-GA)	
		1	**9X-1054**	1	PLUG AS-CONNECTOR (4-PIN)	
		1	**155-2255**	4	KIT-CONNECTING PLUG (12-PIN)	
		1	**155-2256**	1	KIT-CONNECTING PLUG (12-PIN)	
		1	**155-2260**	1	KIT-CONNECTING PLUG (3-PIN)	
		1	**155-2270**	1	KIT-CONNECTING PLUG (2-PIN)	
		1	**155-2271**	2	KIT-CONNECTING PLUG (4-PIN)	
		1	**155-2274**	1	KIT-CONNECTING PLUG (6-PIN)	
					(EACH PLUG KIT INCLUDES PLUG AS, WEDGE & INTERFACE SEAL)	
		1	**8T-8737**	62	PLUG-SEAL	
		1	**102-8802**	1	KIT-RECEPTACLE (2-PIN)	
		1	**102-8804**	1	KIT-RECEPTACLE (4-PIN)	
		1	**102-8801**	1	KIT-RECEPTACLE (12-PIN)	
					(EACH RECEPTACLE KIT INCLUDES RECEPTACLE AS & WEDGE)	
		1	**8T-8730**	42	SOCKET-CONNECTOR (16-GA TO 18-GA)	
		1	**9W-0844**	15	SOCKET-CONNECTOR (14-GA TO 16-GA)	
		1	**2L-8069**	2	TERMINAL-RING (2-GA TO 10-GA, 3/8-IN SCREW)	
		1	**2L-8079**	2	TERMINAL-RING (14-GA TO 16-GA, 3/8-IN SCREW)	
		1	**5P-4571**	2	TERMINAL-BLADE (14-GA TO 16-GA)	
		1	**091-2436**	40	TERMINAL-BLADE (18-GA TO 22-GA)	
		1	**104-1995**	2	TERMINAL-BLADE (14-GA TO 18-GA)	
		1	**9X-1055**	2	TERMINAL-RECEPTACLE (12-GA)	
		1	**9X-1056**	2	TERMINAL-RECEPTACLE (14-GA TO 16-GA)	
E		1	**119-3662**		TUBE-HEAT SHRINK (10.85-MM DIA) (26-CM)	
E		1	**125-7874**		TUBE-HEAT SHRINK (5.72-MM DIA) (30-CM)	
E		1	**125-7875**		TUBE-HEAT SHRINK (7.44-MM DIA) (20-CM)	
	5	1	**245-6032**	1	HARNESS AS-LIGHTING (OROPS)	
		1	**274-3774**	3	CAP-CONNECTOR	
		1	**155-2270**	7	KIT-CONNECTING PLUG (2-PIN)	
					(EACH INCLUDES PLUG AS, WEDGE & INTERFACE SEAL)	
		1	**8T-8730**	12	SOCKET-CONNECTOR (16-GA TO 18-GA)	
		1	**9W-0844**	2	SOCKET-CONNECTOR (14-GA TO 16-GA)	
		1	**3T-4696**	1	TERMINAL-RING (10-GA TO 12-GA, 7/16-IN SCREW)	
E		1	**125-7874**		TUBE-HEAT SHRINK (5.72-MM DIA) (15-CM)	
E		1	**125-7875**		TUBE-HEAT SHRINK (7.44-MM DIA) (5-CM)	
	6	1	**245-6044**	1	HARNESS AS-CAB (DASH)	
		1	**8T-8729**	11	PIN-CONNECTOR (16-GA TO 18-GA)	
		1	**155-2265**	1	KIT-CONNECTING PLUG (8-PIN)	
		1	**155-2260**	2	KIT-CONNECTING PLUG (3-PIN)	
		1	**155-2271**	2	KIT-CONNECTING PLUG (4-PIN)	
					(EACH PLUG KIT INCLUDES PLUG AS, WEDGE & INTERFACE SEAL)	
		1	**230-4009**	1	PLUG AS-CONNECTOR (12-PIN)	
		1	**264-7034**	1	SEAL-CONNECTOR	

245-6047 **WIRING GP-CAB** ***(contd.)*** **i04415909**

NOTE	REF NO	GRAPHIC REF	PART NUMBER	QTY	PART NAME 1 2 3 4 5 6 (PRODUCT LEVEL)	SEE PAGE
		1	**8T-8737**	21	PLUG-SEAL	
		1	**102-8806**	1	KIT-RECEPTACLE (8-PIN)	
		1	**102-8801**	1	KIT-RECEPTACLE (12-PIN)	
					(EACH RECEPTACLE KIT INCLUDES RECEPTACLE AS & WEDGE)	
		1	**134-2540**	1	RESISTOR AS-CONNECTION (3-PIN)	
		1	**8T-8730**	15	SOCKET-CONNECTOR (16-GA TO 18-GA)	
		1	**9X-3402**	7	SOCKET-CONNECTOR (16-GA TO 18-GA)	
		1	**8L-8413**	19	STRAP-CABLE (WHITE)	
		1	**5P-4571**	2	TERMINAL-BLADE (14-GA TO 16-GA)	
E		1	**125-7874**		TUBE-HEAT SHRINK (5.72-MM DIA) (35-CM)	
	7	1	**115-1615**	1	RELAY AS (12-VOLT) (BLOWER)	
	8	1	**132-5789**	1	CLIP	
Y	9	1	**240-0102**	4	LAMP GP-FLOOD (12-VOLT)	189
	10	1	**4P-7581**	1	CLIP	
	11	1	**4P-8134**	1	CLIP	
	12	1	**8T-4121**	2	WASHER-HARD (11X21X2.5-MM THK)	
M	13	1	**8T-4138**	5	BOLT (M6X1X20-MM)	
M	14	1	**8T-4189**	6	BOLT (M8X1.25X20-MM)	
M	15	1	**8T-4191**	2	BOLT (M10X1.5X16-MM)	
	17	1	**8T-4224**	6	WASHER-HARD (8.8X16X2-MM THK)	
	18	1	**9X-7345**	1	GROMMET	
	19	1	**9X-8256**	5	WASHER (6.6X12X2-MM THK)	
M	20	1	**5C-9553**	3	BOLT (M6X1X16-MM)	
	21	1	**5P-4115**	3	WASHER-HARD (7.2X19X2-MM THK)	

E-ORDER BY THE CENTIMETER
M-METRIC PART
Y-SEPARATE ILLUSTRATION

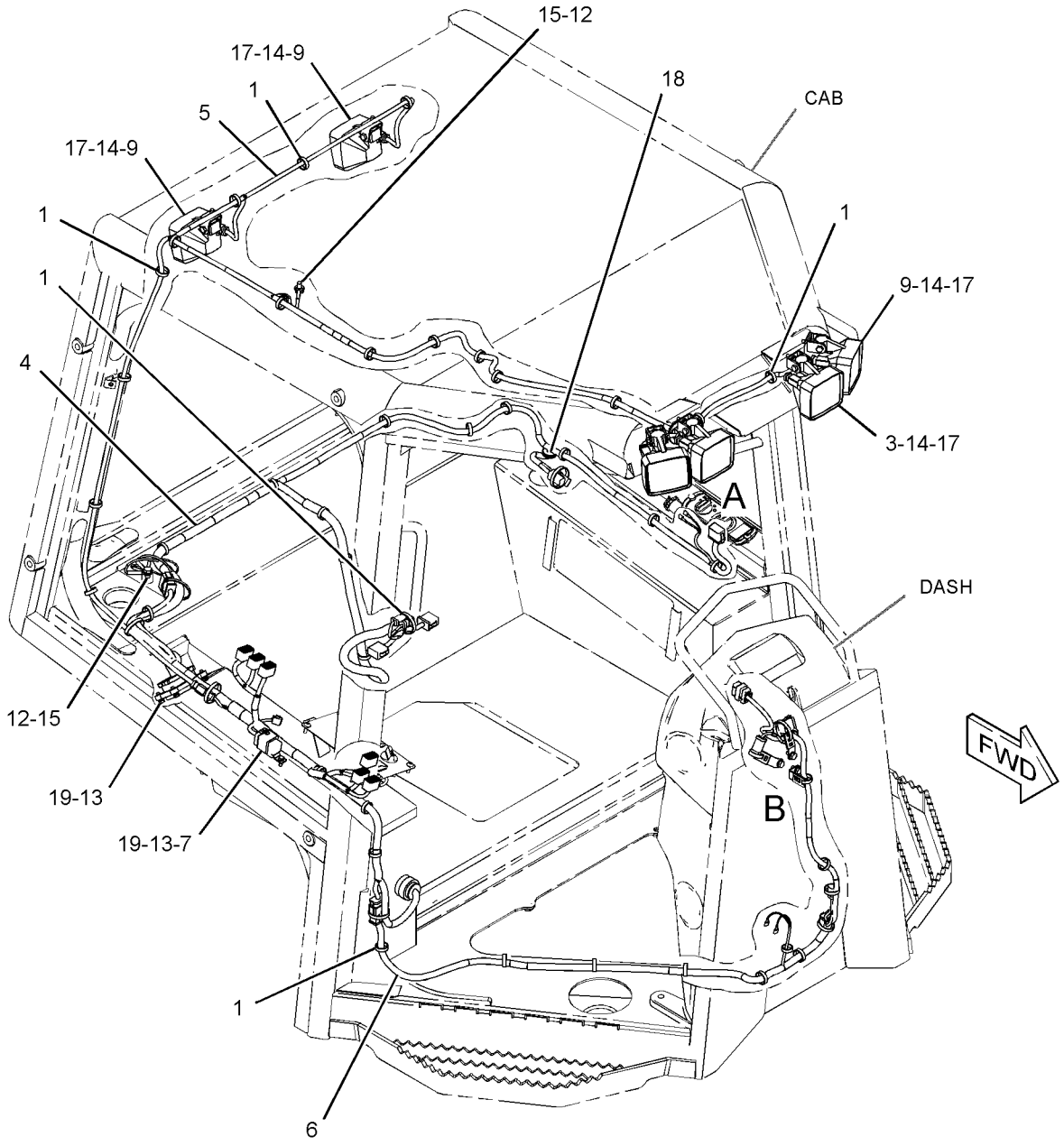

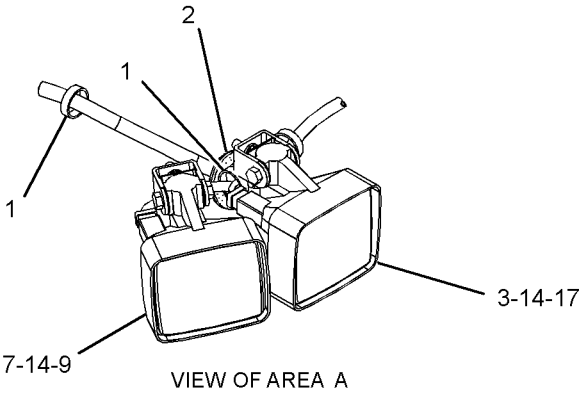

VIEW OF AREA A

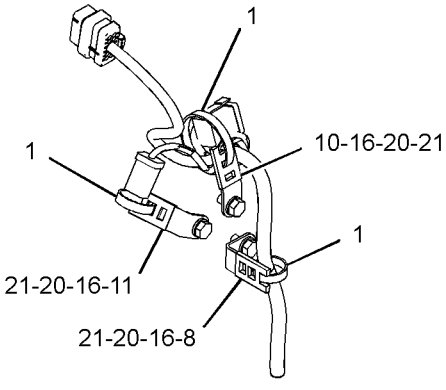

VIEW OF AREA B

GRAPHIC #1 **<END>** g01365610

245-6047 WIRING GP-CAB–OROPS

S/N: JTD1-UP; FFF1-UP; LLL1-UP
PART OF 244-7474 ROPS AR
AN ATTACHMENT
TYPE 2

SMCS-1408, 7301 **i04416249**

NOTE	REF NO	GRAPHIC REF	PART NUMBER	QTY	PART NAME 1 2 3 4 5 6 (PRODUCT LEVEL)	SEE PAGE
C	1	1	**7K-1181**	53	STRAP-CABLE	
	2	1	**7T-8895**	1	GROMMET	
	3	1	**245-6032**	1	HARNESS AS-LIGHTING (OROPS)	
		1	**274-3774**	3	CAP-CONNECTOR	
		1	**155-2270**	7	KIT-CONNECTING PLUG (2-PIN)	
					(EACH INCLUDES PLUG AS, WEDGE & INTERFACE SEAL)	
		1	**8T-8730**	12	SOCKET-CONNECTOR (16-GA TO 18-GA)	
		1	**9W-0844**	2	SOCKET-CONNECTOR (14-GA TO 16-GA)	
		1	**3T-4696**	1	TERMINAL-RING (10-GA TO 12-GA, 7/16-IN SCREW)	
E		1	**125-7874**		TUBE-HEAT SHRINK (5.72-MM DIA) (15-CM)	
E		1	**125-7875**		TUBE-HEAT SHRINK (7.44-MM DIA) (5-CM)	
	4	1	**245-6044**	1	HARNESS AS-CAB (DASH)	
		1	**8T-8729**	11	PIN-CONNECTOR (16-GA TO 18-GA)	
		1	**155-2265**	1	KIT-CONNECTING PLUG (8-PIN)	
		1	**155-2260**	2	KIT-CONNECTING PLUG (3-PIN)	
		1	**155-2271**	2	KIT-CONNECTING PLUG (4-PIN)	
					(EACH PLUG KIT INCLUDES PLUG AS, WEDGE & INTERFACE SEAL)	
		1	**230-4009**	1	PLUG AS-CONNECTOR (12-PIN)	
		1	**264-7034**	1	SEAL-CONNECTOR	
		1	**8T-8737**	21	PLUG-SEAL	
		1	**102-8806**	1	KIT-RECEPTACLE (8-PIN)	
		1	**102-8801**	1	KIT-RECEPTACLE (12-PIN)	
					(EACH RECEPTACLE KIT INCLUDES RECEPTACLE AS & WEDGE)	
		1	**134-2540**	1	RESISTOR AS-CONNECTION (3-PIN)	
		1	**8T-8730**	15	SOCKET-CONNECTOR (16-GA TO 18-GA)	
		1	**9X-3402**	7	SOCKET-CONNECTOR (16-GA TO 18-GA)	
		1	**8L-8413**	19	STRAP-CABLE (WHITE)	
		1	**5P-4571**	2	TERMINAL-BLADE (14-GA TO 16-GA)	
E		1	**125-7874**		TUBE-HEAT SHRINK (5.72-MM DIA) (35-CM)	
C	5	1	**311-0293**	1	HARNESS AS-CONSOLE (OROPS)	
		1	**228-5856**	8	CONNECTOR	
		1	**213-0139**	4	PIN	
		1	**8T-8729**	10	PIN-CONNECTOR (16-GA TO 18-GA)	
		1	**9W-0852**	18	PIN-CONNECTOR (14-GA TO 16-GA)	
		1	**9X-3401**	57	PIN-CONNECTOR (16-GA TO 18-GA)	
		1	**9X-1054**	1	PLUG AS-CONNECTOR (4-PIN)	
		1	**155-2255**	4	KIT-CONNECTING PLUG (12-PIN)	
		1	**155-2256**	1	KIT-CONNECTING PLUG (12-PIN)	
		1	**155-2260**	1	KIT-CONNECTING PLUG (3-PIN)	
		1	**155-2270**	1	KIT-CONNECTING PLUG (2-PIN)	
		1	**155-2271**	2	KIT-CONNECTING PLUG (4-PIN)	
		1	**155-2274**	1	KIT-CONNECTING PLUG (6-PIN)	
		1	**177-9656**	1	KIT-CONNECTING PLUG (4-PIN)	
					(EACH PLUG KIT INCLUDES PLUG AS, WEDGE & INTERFACE SEAL)	
		1	**225-3854**	1	PLUG AS	
		1	**8T-8737**	56	PLUG-SEAL	
		1	**102-8802**	1	KIT-RECEPTACLE (2-PIN)	
		1	**102-8804**	1	KIT-RECEPTACLE (4-PIN)	

245-6047 **WIRING GP-CAB** *(contd.)* **i04416249**

NOTE	REF NO	GRAPHIC REF	PART NUMBER	QTY	PART NAME 1 2 3 4 5 6 (PRODUCT LEVEL)	SEE PAGE
		1	**102-8801**	1	KIT-RECEPTACLE (12-PIN)	
					(EACH RECEPTACLE KIT INCLUDES RECEPTACLE AS & WEDEGE)	
		1	**214-4208**	1	RECEPTACLE AS-CONNECTOR (70-PIN)	
		1	**8T-8730**	42	SOCKET-CONNECTOR (16-GA TO 18-GA)	
		1	**9W-0844**	15	SOCKET-CONNECTOR (14-GA TO 16-GA)	
		1	**2L-8069**	2	TERMINAL-RING (2-GA TO 10-GA, 3/8-IN SCREW)	
		1	**2L-8079**	2	TERMINAL-RING (14-GA TO 16-GA, 3/8-IN SCREW)	
		1	**5P-4571**	2	TERMINAL-BLADE (14-GA TO 16-GA)	
		1	**091-2436**	54	TERMINAL-BLADE (18-GA TO 22-GA)	
		1	**104-1995**	2	TERMINAL-BLADE (14-GA TO 18-GA)	
		1	**9X-1055**	2	TERMINAL-RECEPTACLE (12-GA)	
		1	**9X-1056**	2	TERMINAL-RECEPTACLE (14-GA TO 16-GA)	
E		1	**119-3662**		TUBE-HEAT SHRINK (10.85-MM DIA) (26-CM)	
E		1	**125-7874**		TUBE-HEAT SHRINK (5.72-MM DIA) (30-CM)	
E		1	**125-7875**		TUBE-HEAT SHRINK (7.44-MM DIA) (20-CM)	
	6	1	**115-1615**	1	RELAY AS (12-VOLT) (BLOWER)	
	7	1	**132-5789**	1	CLIP	
	8	1	**4P-7581**	1	CLIP	
	9	1	**4P-8134**	1	CLIP	
M	10	1	**5C-9553**	3	BOLT (M6X1X16-MM)	
	11	1	**5P-4115**	3	WASHER-HARD (7.2X19X2-MM THK)	
	12	1	**8T-4121**	2	WASHER-HARD (11X21X2.5-MM THK)	
M	13	1	**8T-4138**	5	BOLT (M6X1X20-MM)	
M	14	1	**8T-4191**	2	BOLT (M10X1.5X16-MM)	
	15	1	**9X-7345**	1	GROMMET	
	16	1	**9X-8256**	5	WASHER (6.6X12X2-MM THK)	

C-CHANGE FROM PREVIOUS TYPE
E-ORDER BY THE CENTIMETER
M-METRIC PART

245-6047 **WIRING GP-CAB** *(contd.)* **i04416249**

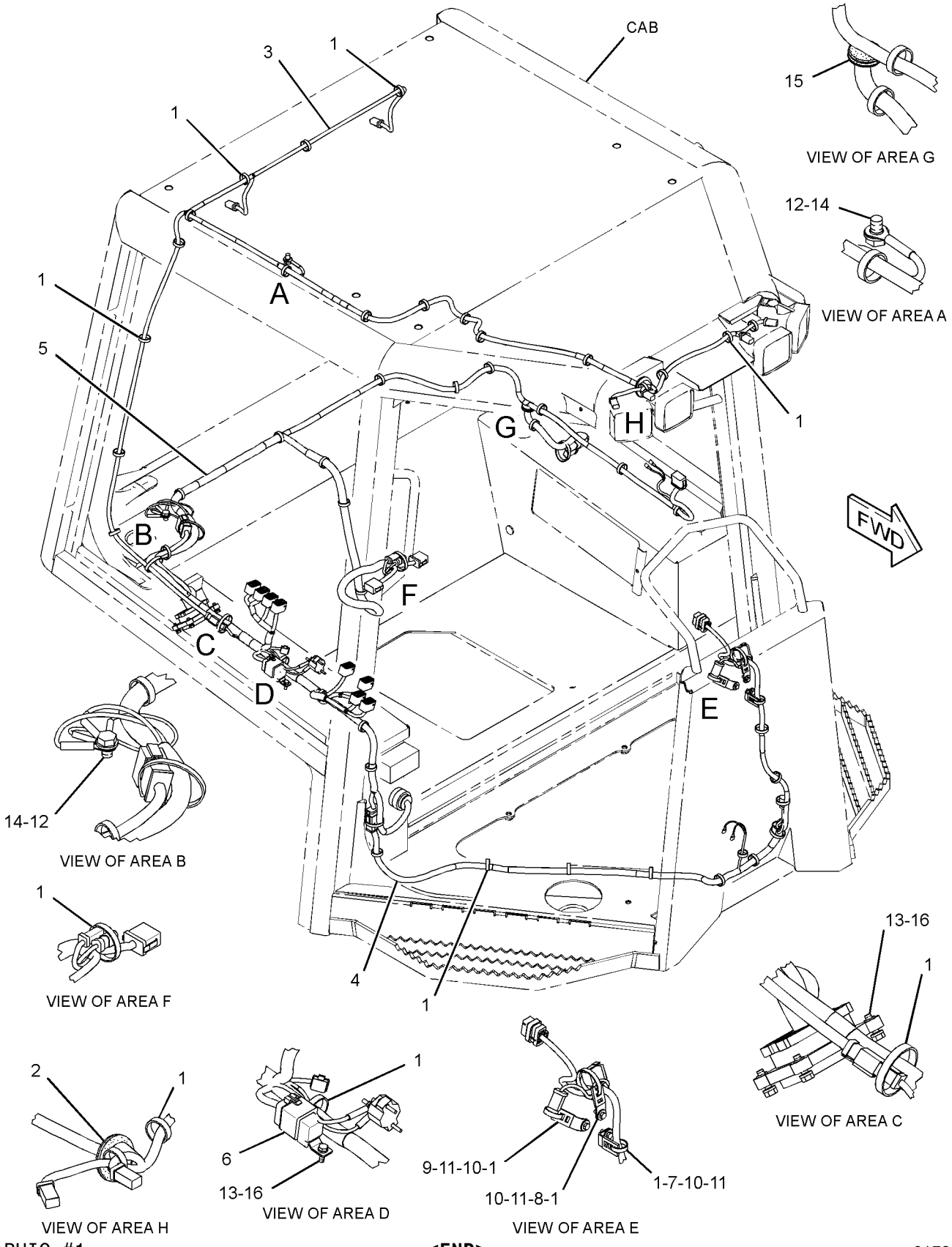

GRAPHIC #1 **<END>** g01736034

245-6047 WIRING GP-CAB–OROPS

S/N: JTD1-UP; FFF1-UP; LLL1-UP
PART OF 244-7474 ROPS AR
AN ATTACHMENT
TYPE 3

SMCS-1408, 7301 **i04416310**

NOTE	REF NO	GRAPHIC REF	PART NUMBER	QTY	PART NAME 1 2 3 4 5 6 (PRODUCT LEVEL)	SEE PAGE
C	1	1	**7K-1181**	56	STRAP-CABLE	
	2	1	**7T-8895**	1	GROMMET	
C	3	1	**229-8377**	1	CIRCUIT BREAKER AS (35-AMPERE) (BLOWER)	
		1	**6V-8378**	2	NUT (10-32-THD)	
		1	**8F-1434**	2	LOCKWASHER	
		1	**8T-0328**	2	WASHER-HARD (5.5X10X1-MM THK)	
C	4	1	**318-6094**	1	HARNESS AS-CAB (OROPS)	
		1	**228-5856**	8	CONNECTOR	
		1	**213-0139**	4	PIN	
		1	**8T-8729**	10	PIN-CONNECTOR (16-GA TO 18-GA)	
		1	**9W-0852**	18	PIN-CONNECTOR (14-GA TO 16-GA)	
		1	**9X-3401**	57	PIN-CONNECTOR (16-GA TO 18-GA)	
		1	**9X-1054**	1	PLUG AS-CONNECTOR (4-PIN)	
		1	**155-2255**	4	KIT-CONNECTING PLUG (12-PIN)	
		1	**155-2256**	1	KIT-CONNECTING PLUG (12-PIN)	
		1	**155-2260**	1	KIT-CONNECTING PLUG (3-PIN)	
		1	**155-2270**	1	KIT-CONNECTING PLUG (2-PIN)	
		1	**155-2271**	2	KIT-CONNECTING PLUG (4-PIN)	
		1	**155-2274**	1	KIT-CONNECTING PLUG (6-PIN)	
		1	**177-9656**	1	KIT-CONNECTING PLUG (4-PIN)	
					(EACH PLUG KIT INCLUDES PLUG AS, WEDGE & INTERFACE SEAL)	
		1	**225-3854**	1	PLUG AS	
		1	**8T-8737**	56	PLUG-SEAL	
		1	**102-8802**	1	KIT-RECEPTACLE (2-PIN)	
		1	**102-8804**	1	KIT-RECEPTACLE (4-PIN)	
		1	**102-8801**	1	KIT-RECEPTACLE (12-PIN)	
					(EACH RECEPTACLE KIT INCLUDES RECEPTACLE AS & WEDGE)	
		1	**214-4208**	1	RECEPTACLE AS-CONNECTOR (70-PIN)	
		1	**8T-8730**	42	SOCKET-CONNECTOR (16-GA TO 18-GA)	
		1	**9W-0844**	15	SOCKET-CONNECTOR (14-GA TO 16-GA)	
B		1	**141-8061**		TAPE	
		1	**2L-8069**	2	TERMINAL-RING (2-GA TO 10-GA, 3/8-IN SCREW)	
		1	**2L-8079**	2	TERMINAL-RING (14-GA TO 16-GA, 3/8-IN SCREW)	
		1	**5P-4571**	2	TERMINAL-BLADE (14-GA TO 16-GA)	
		1	**2L-8066**	2	TERMINAL-RING (10-GA TO 12-GA, NO. 10 SCREW)	
		1	**091-2436**	54	TERMINAL-BLADE (18-GA TO 22-GA)	
		1	**104-1995**	2	TERMINAL-BLADE (14-GA TO 18-GA)	
		1	**9X-1055**	2	TERMINAL-RECEPTACLE (12-GA)	
		1	**9X-1056**	2	TERMINAL-RECEPTACLE (14-GA TO 16-GA)	
E		1	**119-3662**		TUBE-HEAT SHRINK (10.85-MM DIA) (26-CM)	
E		1	**125-7874**		TUBE-HEAT SHRINK (5.72-MM DIA) (30-CM)	
E		1	**125-7875**		TUBE-HEAT SHRINK (7.44-MM DIA) (20-CM)	
	5	1	**245-6032**	1	HARNESS AS-LIGHTING	
		1	**274-3774**	3	CAP-CONNECTOR	
		1	**155-2270**	7	KIT-CONNECTING PLUG (2-PIN)	
					(EACH INCLUDES PLUG AS, WEDGE & INTERFACE SEAL)	
		1	**8T-8730**	12	SOCKET-CONNECTOR (16-GA TO 18-GA)	
		1	**9W-0844**	2	SOCKET-CONNECTOR (14-GA TO 16-GA)	
		1	**3T-4696**	1	TERMINAL-RING (10-GA TO 12-GA, 7/16-IN SCREW)	

245-6047 **WIRING GP-CAB** ***(contd.)*** **i04416310**

NOTE	REF NO	GRAPHIC REF	PART NUMBER	QTY	PART NAME 1 2 3 4 5 6 (PRODUCT LEVEL)	SEE PAGE
E		1	**125-7874**		TUBE-HEAT SHRINK (5.72-MM DIA) (15-CM)	
E		1	**125-7875**		TUBE-HEAT SHRINK (7.44-MM DIA) (5-CM)	
	6	1	**245-6044**	1	HARNESS AS-CAB (DASH)	
		1	**8T-8729**	11	PIN-CONNECTOR (16-GA TO 18-GA)	
		1	**155-2265**	1	KIT-CONNECTING PLUG (8-PIN)	
		1	**155-2260**	2	KIT-CONNECTING PLUG (3-PIN)	
		1	**155-2271**	2	KIT-CONNECTING PLUG (4-PIN)	
					(EACH PLUG KIT INCLUDES PLUG AS, WEDGE & INTERFACE SEAL)	
		1	**230-4009**	1	PLUG AS-CONNECTOR (12-PIN)	
		1	**264-7034**	1	SEAL-CONNECTOR	
		1	**8T-8737**	21	PLUG-SEAL	
		1	**102-8806**	1	KIT-RECEPTACLE (8-PIN)	
		1	**102-8801**	1	KIT-RECEPTACLE (12-PIN)	
					(EACH RECEPTACLE KIT INCLUDES RECEPTACLE AS & WEDGE)	
		1	**134-2540**	1	RESISTOR AS-CONNECTION (3-PIN)	
		1	**8T-8730**	15	SOCKET-CONNECTOR (16-GA TO 18-GA)	
		1	**9X-3402**	7	SOCKET-CONNECTOR (16-GA TO 18-GA)	
		1	**8L-8413**	19	STRAP-CABLE (WHITE)	
		1	**5P-4571**	2	TERMINAL-BLADE (14-GA TO 16-GA)	
E		1	**125-7874**		TUBE-HEAT SHRINK (5.72-MM DIA) (35-CM)	
	7	1	**115-1615**	1	RELAY AS (12-VOLT) (BLOWER)	
	8	1	**132-5789**	1	CLIP	
	9	1	**5P-4115**	3	WASHER-HARD (7.2X19X2-MM THK)	
	10	1	**4P-7581**	1	CLIP	
	11	1	**4P-8134**	1	CLIP	
	12	1	**8T-4121**	2	WASHER-HARD (11X21X2.5-MM THK)	
M	13	1	**8T-4138**	5	BOLT (M6X1X20-MM)	
CM	14	1	**213-7315**	2	SCREW-TRUSS HEAD (M4X0.7X25-MM)	
M	15	1	**8T-4191**	2	BOLT (M10X1.5X16-MM)	
CD	16	1	**5P-5923**		SEAL (0.1-M)	
C	17	1	**3S-2093**	2	STRAP-CABLE	
	18	1	**9X-7345**	1	GROMMET	
	19	1	**9X-8256**	5	WASHER (6.6X12X2-MM THK)	
M	20	1	**5C-9553**	3	BOLT (M6X1X16-MM)	

B-USE AS REQUIRED
C-CHANGE FROM PREVIOUS TYPE
D-ORDER BY THE METER
E-ORDER BY THE CENTIMETER
M-METRIC PART

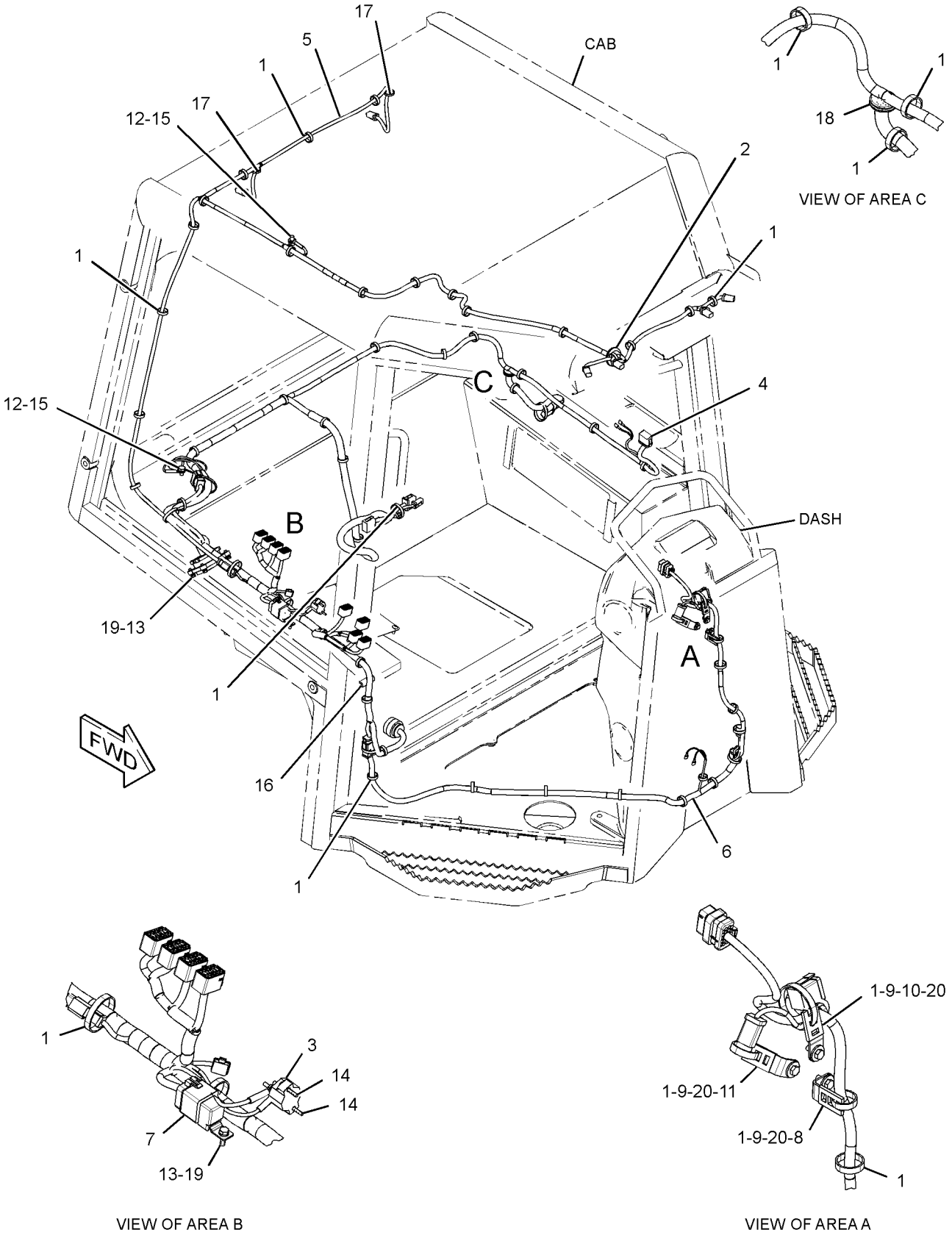

GRAPHIC #1 **<END>** g02043877

245-6047 WIRING GP-CAB–OROPS

S/N: JTD1-UP; FFF1-UP; LLL1-UP
PART OF 244-7474 ROPS AR
AN ATTACHMENT
TYPE 4

SMCS-1408, 7301 **i04418620**

NOTE	REF NO	GRAPHIC REF	PART NUMBER	QTY	PART NAME 1 2 3 4 5 6 (PRODUCT LEVEL)	SEE PAGE
	1	1	**7K-1181**	56	STRAP-CABLE	
	2	1	**7T-8895**	1	GROMMET	
	3	1	**245-6032**	1	HARNESS AS-LIGHTING (OROPS)	
		1	**274-3774**	3	CAP-CONNECTOR	
		1	**155-2270**	7	KIT-CONNECTING PLUG (2-PIN)	
					(EACH INCLUDES PLUG AS, WEDGE & INTERFACE SEAL)	
		1	**8T-8730**	12	SOCKET-CONNECTOR (16-GA TO 18-GA)	
		1	**9W-0844**	2	SOCKET-CONNECTOR (14-GA TO 16-GA)	
		1	**3T-4696**	1	TERMINAL-RING (10-GA TO 12-GA, 7/16-IN SCREW)	
E		1	**125-7874**		TUBE-HEAT SHRINK (5.72-MM DIA) (15-CM)	
E		1	**125-7875**		TUBE-HEAT SHRINK (7.44-MM DIA) (5-CM)	
	4	1	**245-6044**	1	HARNESS AS-CAB (DASH)	
		1	**8T-8729**	11	PIN-CONNECTOR (16-GA TO 18-GA)	
		1	**155-2265**	1	KIT-CONNECTING PLUG (8-PIN)	
		1	**155-2260**	2	KIT-CONNECTING PLUG (3-PIN)	
		1	**155-2271**	2	KIT-CONNECTING PLUG (4-PIN)	
					(EACH PLUG KIT INCLUDES PLUG AS, WEDGE & INTERFACE SEAL)	
		1	**230-4009**	1	PLUG AS-CONNECTOR (12-PIN)	
		1	**264-7034**	1	SEAL-CONNECTOR	
		1	**8T-8737**	21	PLUG-SEAL	
		1	**102-8806**	1	KIT-RECEPTACLE (8-PIN)	
		1	**102-8801**	1	KIT-RECEPTACLE (12-PIN)	
					(EACH RECEPTACLE KIT INCLUDES RECEPTACLE AS & WEDGE)	
		1	**134-2540**	1	RESISTOR AS-CONNECTION (3-PIN)	
		1	**8T-8730**	15	SOCKET-CONNECTOR (16-GA TO 18-GA)	
		1	**9X-3402**	7	SOCKET-CONNECTOR (16-GA TO 18-GA)	
		1	**8L-8413**	19	STRAP-CABLE (WHITE)	
		1	**5P-4571**	2	TERMINAL-BLADE (14-GA TO 16-GA)	
E		1	**125-7874**		TUBE-HEAT SHRINK (5.72-MM DIA) (35-CM)	
CY	5	1	*318-6121*	1	PANEL GP-FUSE	207
C	6	1	**327-6147**	1	HARNESS AS-CONTROL (OROPS)	
		1	**228-5856**	8	CONNECTOR	
		1	**213-0139**	4	PIN	
		1	**8T-8729**	10	PIN-CONNECTOR (16-GA TO 18-GA)	
		1	**9W-0852**	18	PIN-CONNECTOR (14-GA TO 16-GA)	
		1	**9X-3401**	57	PIN-CONNECTOR (16-GA TO 18-GA)	
		1	**9X-1054**	1	PLUG AS-CONNECTOR (4-PIN)	
		1	**155-2255**	4	KIT-CONNECTING PLUG (12-PIN)	
		1	**155-2256**	1	KIT-CONNECTING PLUG (12-PIN)	
		1	**155-2260**	1	KIT-CONNECTING PLUG (3-PIN)	
		1	**155-2270**	1	KIT-CONNECTING PLUG (2-PIN)	
		1	**155-2271**	2	KIT-CONNECTING PLUG (4-PIN)	
		1	**155-2274**	1	KIT-CONNECTING PLUG (6-PIN)	
		1	**177-9656**	1	KIT-CONNECTING PLUG (4-PIN)	
					(EACH PLUG KIT INCLUDES PLUG AS, WEDGE & INTERFACE SEAL)	
		1	**225-3854**	1	PLUG AS	
		1	**8T-8737**	56	PLUG-SEAL	
		1	**102-8802**	1	KIT-RECEPTACLE (2-PIN)	
		1	**102-8804**	1	KIT-RECEPTACLE (4-PIN)	

245-6047 **WIRING GP-CAB** ***(contd.)*** **i04418620**

NOTE	REF NO	GRAPHIC REF	PART NUMBER	QTY	PART NAME 1 2 3 4 5 6 (PRODUCT LEVEL)	SEE PAGE
		1	**102-8801**	1	KIT-RECEPTACLE (12-PIN)	
					(EACH RECEPTACLE KIT INCLUDES RECEPTACLE AS & WEDGE)	
		1	**214-4208**	1	RECEPTACLE AS-CONNECTOR (70-PIN)	
		1	**8T-8730**	42	SOCKET-CONNECTOR (16-GA TO 18-GA)	
		1	**9W-0844**	15	SOCKET-CONNECTOR (14-GA TO 16-GA)	
		1	**2L-8069**	2	TERMINAL-RING (2-GA TO 10-GA, 3/8-IN SCREW)	
		1	**2L-8079**	2	TERMINAL-RING (14-GA TO 16-GA, 3/8-IN SCREW)	
		1	**5P-4571**	2	TERMINAL-BLADE (14-GA TO 16-GA)	
		1	**091-2436**	54	TERMINAL-BLADE (18-GA TO 22-GA)	
		1	**104-1995**	2	TERMINAL-BLADE (14-GA TO 18-GA)	
		1	**9X-1055**	2	TERMINAL-RECEPTACLE (12-GA)	
		1	**9X-1056**	2	TERMINAL-RECEPTACLE (14-GA TO 16-GA)	
E		1	**119-3662**		TUBE-HEAT SHRINK (10.85-MM DIA) (26-CM)	
E		1	**125-7874**		TUBE-HEAT SHRINK (5.72-MM DIA) (30-CM)	
E		1	**125-7875**		TUBE-HEAT SHRINK (7.44-MM DIA) (20-CM)	
	7	1	**115-1615**	1	RELAY AS (12-VOLT) (BLOWER)	
C	8	1	**132-5789**	2	CLIP	
	9	1	**3S-2093**	2	STRAP-CABLE	
	10	1	**4P-7581**	1	CLIP	
	11	1	**4P-8134**	1	CLIP	
M	12	1	**5C-9553**	3	BOLT (M6X1X16-MM)	
	13	1	**5P-4115**	3	WASHER-HARD (7.2X19X2-MM THK)	
C	14	1	**5P-4116**	1	WASHER-HARD (8.8X20.5X2-MM THK)	
CM	15	1	**7Y-9099**	4	SCREW-TRUSS HEAD (M8X1.25X25-MM)	
	16	1	**8T-4121**	2	WASHER-HARD (11X21X2.5-MM THK)	
M	17	1	**8T-4138**	5	BOLT (M6X1X20-MM)	
M	18	1	**8T-4191**	2	BOLT (M10X1.5X16-MM)	
	19	1	**9X-7345**	1	GROMMET	
	20	1	**9X-8256**	5	WASHER (6.6X12X2-MM THK)	
D	21	1	**5P-5923**		SEAL (0.1-M)	

C-CHANGE FROM PREVIOUS TYPE
D-ORDER BY THE METER
E-ORDER BY THE CENTIMETER
M-METRIC PART
Y-SEPARATE ILLUSTRATION

245-6047 **WIRING GP-CAB** *(contd.)* **i04418620**

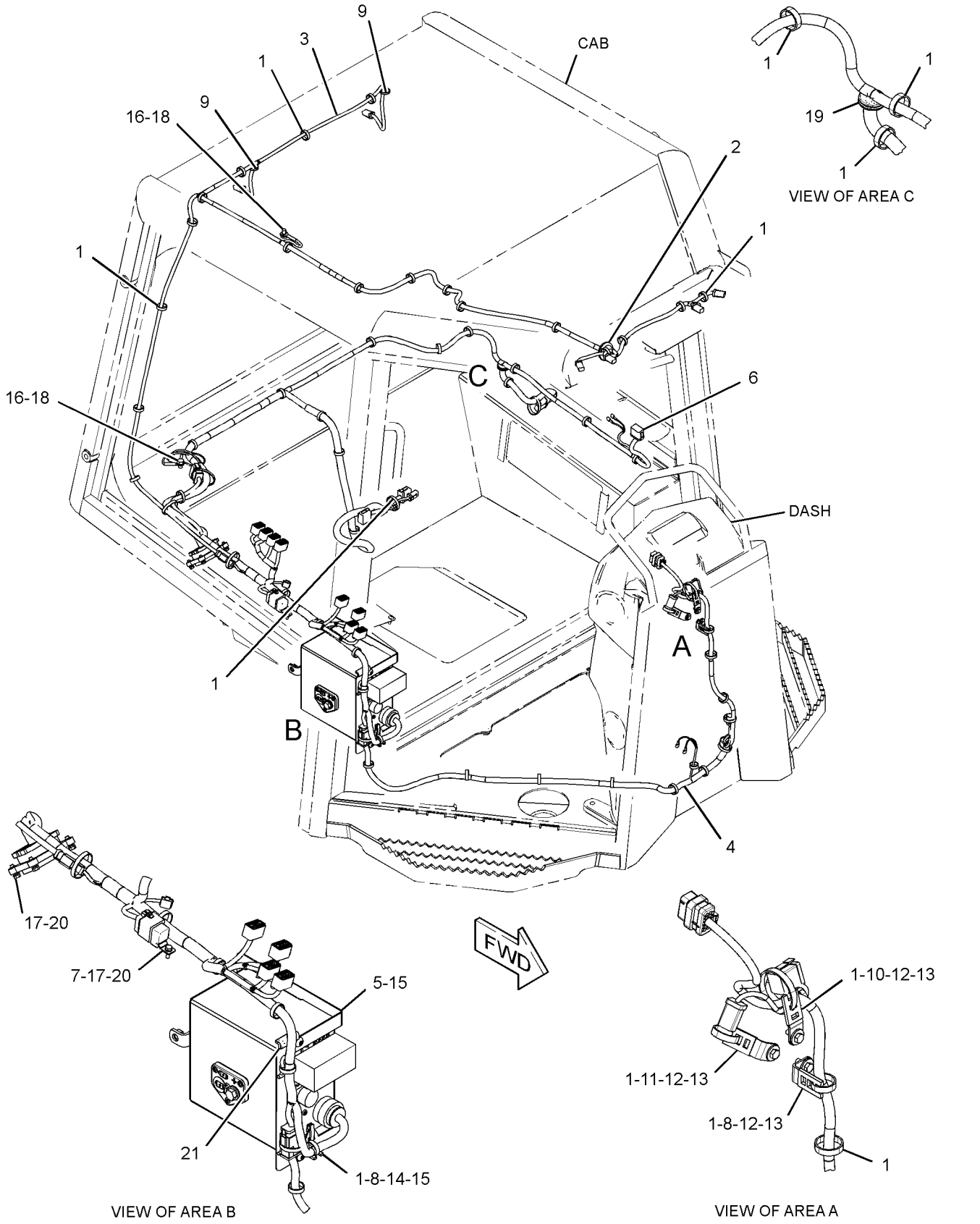

GRAPHIC #1 **<END>** g02502541

245-6027 WIRING GP-ELECTROHYDRAULIC

S/N: JTD1-UP; FFF1-UP; LLL1-UP

PART OF 244-7376, 244-7377, 282-5327 CHASSIS AR

SMCS-5734 **i03773890**

NOTE	REF NO	GRAPHIC REF	PART NUMBER	QTY	PART NAME 1 2 3 4 5 6 (PRODUCT LEVEL)	SEE PAGE
	1	1	**7K-1181**	18	STRAP-CABLE	
M	2	1	**112-6646**	4	LOCKNUT (M6X1-THD)	
	3	1	**4P-7581**	2	CLIP	
	4	1	**269-7656**	1	HARNESS AS-SENSOR (ARMREST, LH)	
		1	**9X-3401**	9	PIN-CONNECTOR (16-GA TO 18-GA)	
		1	**155-2274**	1	KIT-CONNECTING PLUG (6-PIN)	
					(INCLUDES PLUG AS, WEDGE & INTERFACE SEAL)	
		1	**230-4009**	1	PLUG AS-CONNECTOR (12-PIN)	
		1	**264-7034**	1	SEAL-CONNECTOR	
		1	**8T-8737**	10	PLUG-SEAL	
		1	**102-8801**	1	KIT-RECEPTACLE (12-PIN)	
					(INCLUDES RECEPTACLE AS & WEDGE)	
		1	**9X-3402**	7	SOCKET-CONNECTOR (16-GA TO 18-GA)	
		1	**180-9340**	4	SOCKET-CONNECTOR (14-GA TO 18-GA)	
E		1	**125-7874**		TUBE-HEAT SHRINK (5.72-MM DIA) (10-CM)	
	5	1	**269-7657**	1	HARNESS AS-SENSOR (ARMREST, RH)	
		1	**102-8801**	1	KIT-RECEPTACLE (12-PIN)	
					(INCLUDES RECEPTACLE AS & WEDGE)	
		1	**9X-3401**	10	PIN-CONNECTOR (16-GA TO 18-GA)	
		1	**230-4009**	1	PLUG AS-CONNECTOR (12-PIN)	
		1	**264-7034**	1	SEAL-CONNECTOR	
		1	**230-5010**	1	PLUG AS-CONNECTOR (6-PIN)	
		1	**264-7032**	1	SEAL-CONNECTOR	
		1	**8T-8737**	8	PLUG-SEAL	
		1	**190-7614**	1	KIT-RECEPTACLE (12-PIN)	
					(INCLUDES RECEPTACLE AS & WEDGE)	
		1	**9X-3402**	12	SOCKET-CONNECTOR (16-GA TO 18-GA)	
E		1	**125-7874**		TUBE-HEAT SHRINK (5.72-MM DIA) (10-CM)	
	6	1	**270-7882**	1	FILM-INSTRUCTION (BULLDOZER, STER, CRUISE CNTL)	
Y	7	1	*290-4835*	1	CONTROL GP-JOYSTICK (STEERING, TRANSMISSION)	707
	8	1	**132-5789**	3	CLIP	
	9	1	**4P-7428**	2	CLIP	
M	10	1	**5C-7261**	3	NUT (M8X1.25-THD)	
M	11	1	**3E-8020**	4	SCREW-TRUSS HEAD (M6X1X25-MM)	
	12	1	**8T-4224**	3	WASHER-HARD (8.8X16X2-MM THK)	
M	13	1	**8T-4908**	3	BOLT (M8X1.25X25-MM)	

E-ORDER BY THE CENTIMETER
M-METRIC PART
Y-SEPARATE ILLUSTRATION

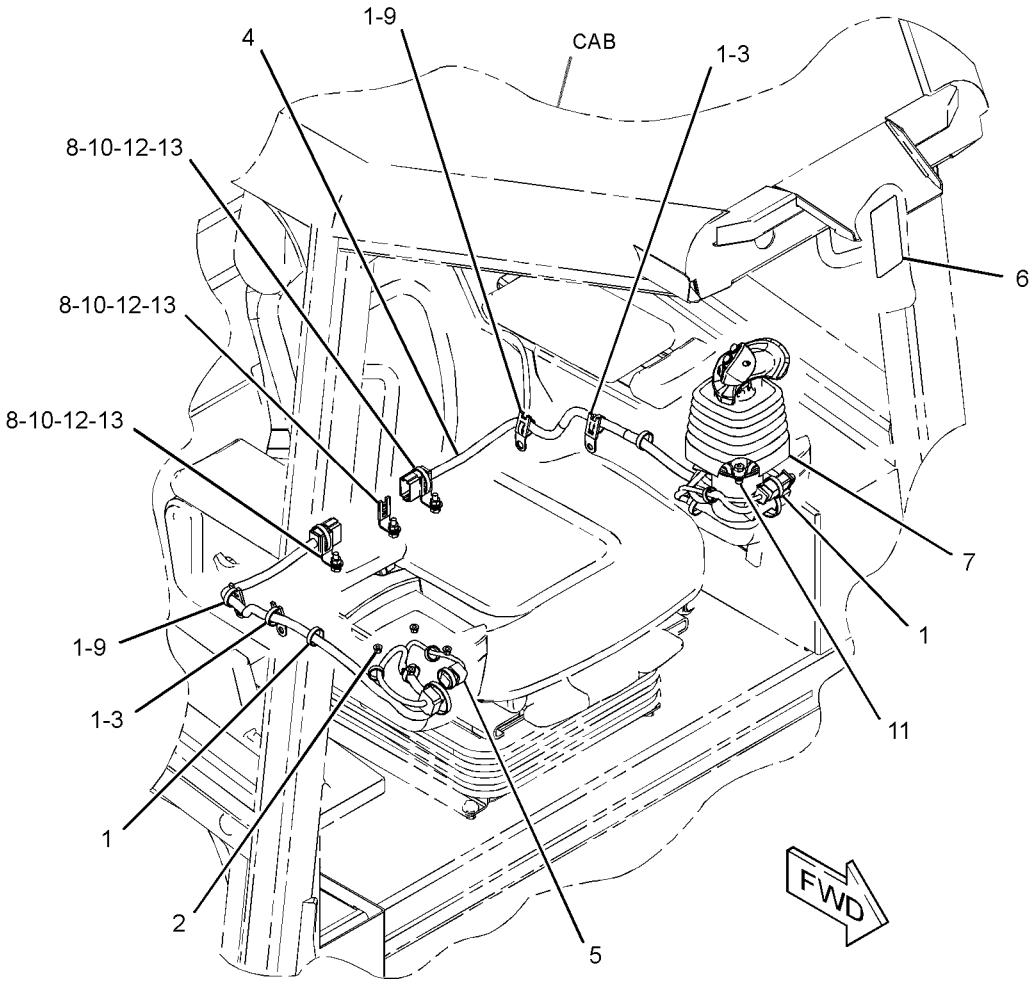

GRAPHIC #1 **<END>** g02044075

245-6019 WIRING GP-ENGINE

S/N: JTD1-UP; FFF1-UP; LLL1-UP

PART OF 244-7376, 244-7377, 282-5327 CHASSIS AR

SMCS-1000, 1408 **i04407618**

NOTE	REF NO	GRAPHIC REF	PART NUMBER	QTY	PART NAME 1 2 3 4 5 6 (PRODUCT LEVEL)	SEE PAGE
D	1	2	**6V-1359**		SEAL (0.1-M)	
	2	1	**132-1805**	1	STRAP AS-GROUND	
	3	1,2	**7K-1181**	56	STRAP-CABLE	
	4	1	**8T-8799**	3	BOOT	
D	5	1	**8T-3425**		CHANNEL-TRIM (0.1-M)	
	6	1	**116-6680**	1	SENSOR AS-SPEED (ENGINE)	
E		1	**9X-1386**		SLEEVE (14-CM)	
		1	**171-5349**	1	STRAP-MARKER	
		1	**9X-3401**	2	PIN-CONNECTOR (16-GA TO 18-GA)	
					—OR—	
		1	**126-1767**	2	PIN-CONNECTOR (14-GA TO 16-GA)	
		1	**102-8802**	1	KIT-RECEPTACLE (2-PIN)	
					(INCLUDES RECEPTACLE AS & WEDGE)	
	7	1,2	**204-2281**	2	STRAP-CABLE	
	8	2	**243-5027**	1	NUT AS (M6X1-THD)	
	9	2	**245-6040**	1	HARNESS AS-ENGINE	
		1	**245-1045**	1	COVER	
		1	**245-1044**	2	LOCK-CONNECTOR	
		1	**176-1477**	1	PLUG AS (2-PIN)	
		1	**9X-1054**	1	PLUG AS-CONNECTOR (4-PIN)	
		1	**155-2265**	1	KIT-CONNECTING PLUG (8-PIN)	
		1	**155-2260**	1	KIT-CONNECTING PLUG (3-PIN)	
		1	**155-2270**	12	KIT-CONNECTING PLUG (2-PIN)	
					(EACH PLUG KIT INCLUDES PLUG AS, WEDGE & INTERFACE SEAL)	
		1	**230-4011**	1	PLUG AS-CONNECTOR (2-PIN)	
		1	**264-7029**	1	SEAL-CONNECTOR	
		1	**245-1042**	1	PLUG AS-CONNECTOR (64-PIN)	
M		1	**267-7207**	1	BOLT-SPECIAL	
		1	**267-7208**	1	RING-RETAINING	
		1	**274-4990**	1	SEAL	
		1	**273-3143**	1	PLUG AS-CONNECTOR	
		1	**167-3693**	1	PLUG AS-CONNECTOR (31-PIN)	
		1	**245-1048**	44	PLUG-CONNECTOR	
		1	**8T-8737**	16	PLUG-SEAL	
		1	**102-8802**	2	KIT-RECEPTACLE (2-PIN)	
		1	**102-8806**	1	KIT-RECEPTACLE (8-PIN)	
					(EACH RECEPTACLE KIT INCLUDES RECEPTACLE AS & WEDGE)	
		1	**134-2540**	1	RESISTOR AS-CONNECTION (3-PIN)	
		1	**238-9397**	1	RESISTOR AS	
		1	**8T-8729**	2	PIN-CONNECTOR (16-GA TO 18-GA)	
		1	**186-3736**	35	SOCKET-CONNECTOR (16-GA TO 18-GA)	
		1	**9W-0844**	7	SOCKET-CONNECTOR (14-GA TO 16-GA)	
		1	**9X-3402**	2	SOCKET-CONNECTOR (16-GA TO 18-GA)	
		1	**180-9340**	20	SOCKET-CONNECTOR (14-GA TO 18-GA)	
		1	**267-9572**	20	SOCKET-CONNECTION (18-GA)	
		1	**189-3158**	1	SUPPRESSOR-ARC	
E		1	**1P-0810**		TAPE-ELECTRICAL (8-CM)	
		1	**176-1521**	5	TERMINAL	
		1	**2L-8066**	1	TERMINAL-RING (10-GA TO 12-GA, NO. 10 SCREW)	
		1	*128-4168*	1	TERMINAL AS	
		1	**2L-8051**	1	TERMINAL-RING (6-GA, 5/16-IN SCREW)	
		1	**5P-3455**	1	TERMINAL-RING (8-GA, 5/16-IN SCREW)	
		1	*128-4178*	1	TERMINAL AS	

245-6019 **WIRING GP-ENGINE** *(contd.)* **i04407618**

NOTE	REF NO	GRAPHIC REF	PART NUMBER	QTY	PART NAME 1 2 3 4 5 6 (PRODUCT LEVEL)	SEE PAGE
		1	**2L-8068**	1	TERMINAL-RING (10-GA TO 12-GA, 5/16-IN SCREW)	
D		1	**5P-6006**		TUBE-HEAT SHRINK (9.52-MM DIA) (1-M)	
		1	*131-1488*	2	TERMINAL AS-RING (6-GA TO 8-GA)	
					(EACH INCLUDES)	
		1	**6H-3586**	1	TERMINAL-RING (6-GA TO 8-GA, 1/4-IN SCREW)	
E		1	**119-3662**		TUBE-HEAT SHRINK (10.85-MM DIA) (4-CM)	
		1	*131-1490*	1	TERMINAL AS (6-GA TO 8-GA)	
		1	**6H-3587**	1	TERMINAL-RING (6-GA TO 8-GA, 3/8-IN SCREW)	
E		1	**119-3662**		TUBE-HEAT SHRINK (10.85-MM DIA) (4-CM)	
		1	**2L-8067**	1	TERMINAL-RING (10-GA TO 12-GA, 1/4-IN SCREW)	
		1	**2L-8069**	1	TERMINAL-RING (2-GA TO 10-GA, 3/8-IN SCREW)	
		1	**2L-8079**	1	TERMINAL-RING (14-GA TO 16-GA, 3/8-IN SCREW)	
		1	**7N-9017**	2	TERMINAL-RING (18-GA TO 22-GA, NO. 10 SCREW)	
		1	**9X-1055**	2	TERMINAL-RECEPTACLE (12-GA)	
		1	**9X-1056**	2	TERMINAL-RECEPTACLE (14-GA TO 16-GA)	
E		1	**119-3662**		TUBE-HEAT SHRINK (10.85-MM DIA) (7-CM)	
E		1	**125-7874**		TUBE-HEAT SHRINK (5.72-MM DIA) (15-CM)	
E		1	**125-7875**		TUBE-HEAT SHRINK (7.44-MM DIA) (15-CM)	
	10	2	**249-9072**	1	CABLE AS (ALTERNATOR)	
E		2	**8C-3056**		CABLE (2-GA, RED) (59-CM)	
		2	*242-3291*	1	TERMINAL AS	
E		2	**125-7876**		TUBE-HEAT SHRINK (17.78-MM DIA) (5-CM)	
	11	2	**269-7648**	1	HARNESS AS-WIRING	
		2	**9W-0852**	2	PIN-CONNECTOR (14-GA TO 16-GA)	
		2	**155-2270**	1	KIT-CONNECTING PLUG (2-PIN)	
					(INCLUDES PLUG AS, WEDGE & INTERFACE SEAL)	
		2	**102-8802**	1	KIT-RECEPTACLE (2-PIN)	
					(INCLUDES RECEPTACLE AS & WEDGE)	
		2	**9W-0844**	2	SOCKET-CONNECTOR (14-GA TO 16-GA)	
	12	1	**269-7652**	1	PLATE AS	
	13	1	**269-7669**	1	PLATE	
	14	1	**269-7677**	1	PLATE	
	15	2	**301-9819**	1	BRACKET AS	
	16	1	**115-1615**	1	RELAY AS (12-VOLT) (START)	
	17	1	**164-9425**	1	HORN AS (12-VOLT, LOW TONE)	
	18	1,2	**204-8000**	2	MOUNTING-CABLE TIE	
Y	19	1	**275-0490**	1	RELAY GP (12-VOLT) (STARTING AID HEATER)	214
	20	1	**1H-3244**	2	LOCKWASHER	
	21	1	**1L-5081**	1	SPACER (0.41X0.75X0.56-IN THK)	
	22	1	**3S-2093**	5	STRAP-CABLE	
	23	1	**4P-7428**	1	CLIP	
	24	1	**4P-7429**	1	CLIP	
	25	1,2	**4P-7581**	3	CLIP	
	26	1,2	**4P-8134**	8	CLIP	
M	27	2	**5C-2874**	2	NUT (M5X0.8-THD)	
M	28	1	**5C-2890**	3	NUT (M6X1-THD)	
M	29	1	**5C-7261**	1	NUT (M8X1.25-THD)	
	30	2	**5P-8439**	2	GROMMET	
	31	1	**7X-0579**	1	WASHER-HARD (8.8X25.5X2-MM THK)	
M	32	1	**7X-2536**	1	BOLT (M8X1.25X14-MM)	
M	33	1	**191-7503**	1	BOLT (M12X1.75X16-MM)	
	34	1	**7X-7729**	1	WASHER (11X25X3-MM THK)	
	35	2	**8F-1434**	2	LOCKWASHER	
	36	2	**8T-0328**	2	WASHER-HARD (5.5X10X1-MM THK)	

245-6019 **WIRING GP-ENGINE** ***(contd.)*** **i04407618**

NOTE	REF NO	GRAPHIC REF	PART NUMBER	QTY	PART NAME 1 2 3 4 5 6 (PRODUCT LEVEL)	SEE PAGE
	37	1,2	**8T-4121**	9	WASHER-HARD (11X21X2.5-MM THK)	
M	38	1,2	**8T-4136**	2	BOLT (M10X1.5X25-MM)	
M	39	1	**8T-4137**	1	BOLT (M10X1.5X20-MM)	
M	40	1,2	**8T-4191**	5	BOLT (M10X1.5X16-MM)	
M	41	1,2	**8T-4192**	4	BOLT (M12X1.75X25-MM)	
M	42	1	**8T-4199**	1	BOLT (M8X1.25X12-MM)	
	43	1,2	**8T-4223**	5	WASHER-HARD (13.5X25.5X3-MM THK)	
	44	1	**8T-4224**	3	WASHER-HARD (8.8X16X2-MM THK)	
M	45	1	**8T-4971**	1	BOLT (M6X1X30-MM)	
M	46	1	**9X-2480**	1	BOLT (M6X1X45-MM)	
	47	1	**9X-8256**	4	WASHER (6.6X12X2-MM THK)	
E	48	2	**7I-7439**		GUARD (48-CM)	
	49	2	**091-0081**	2	SPACER (10.5X20X10-MM THK)	
M	50	2	**8T-4186**	1	BOLT (M10X1.5X40-MM)	
M	51	2	**8T-4196**	1	BOLT (M10X1.5X35-MM)	

D-ORDER BY THE METER
E-ORDER BY THE CENTIMETER
M-METRIC PART
Y-SEPARATE ILLUSTRATION

245-6019 **WIRING GP-ENGINE** *(contd.)* **i04407618**

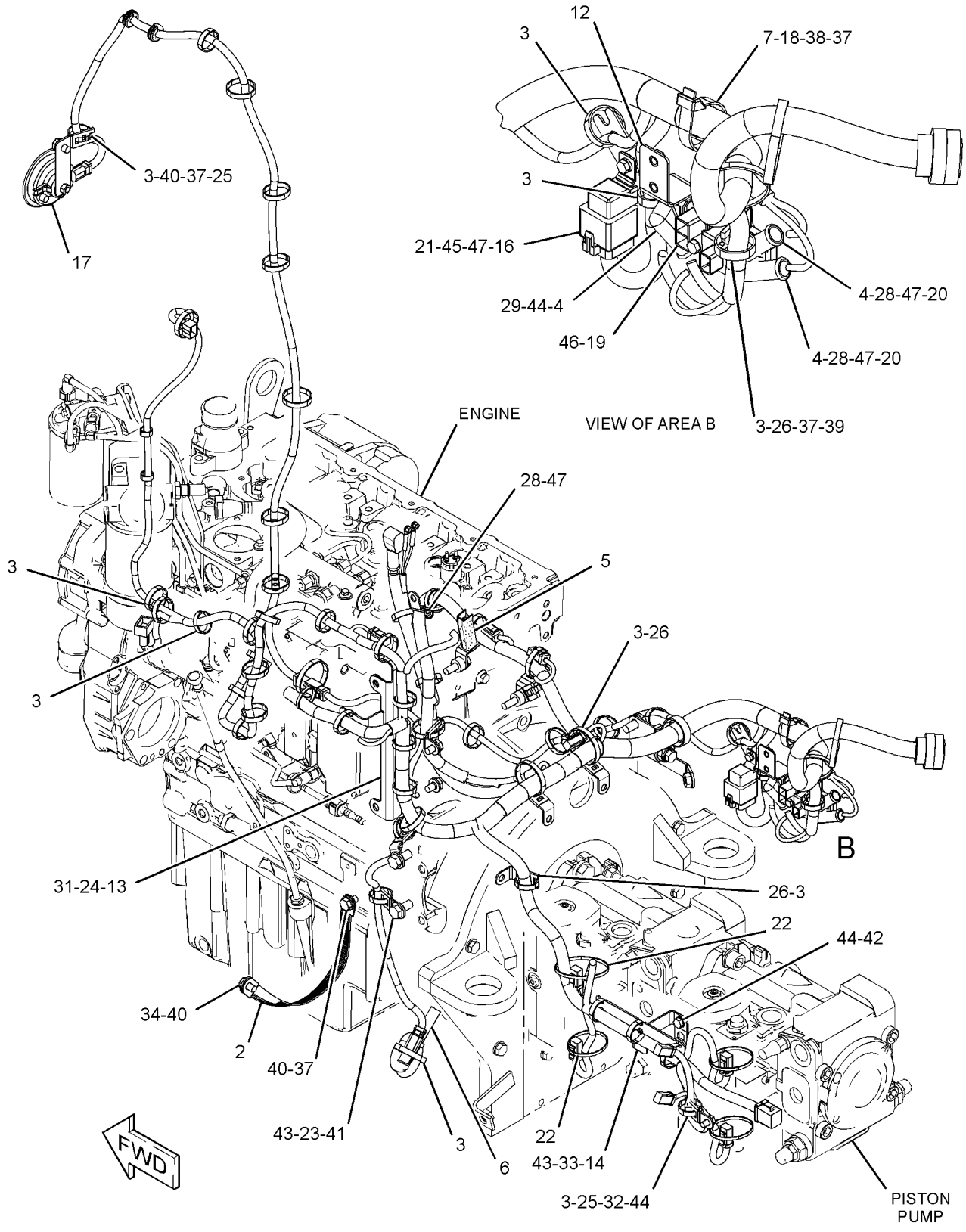

GRAPHIC #1 g02207697

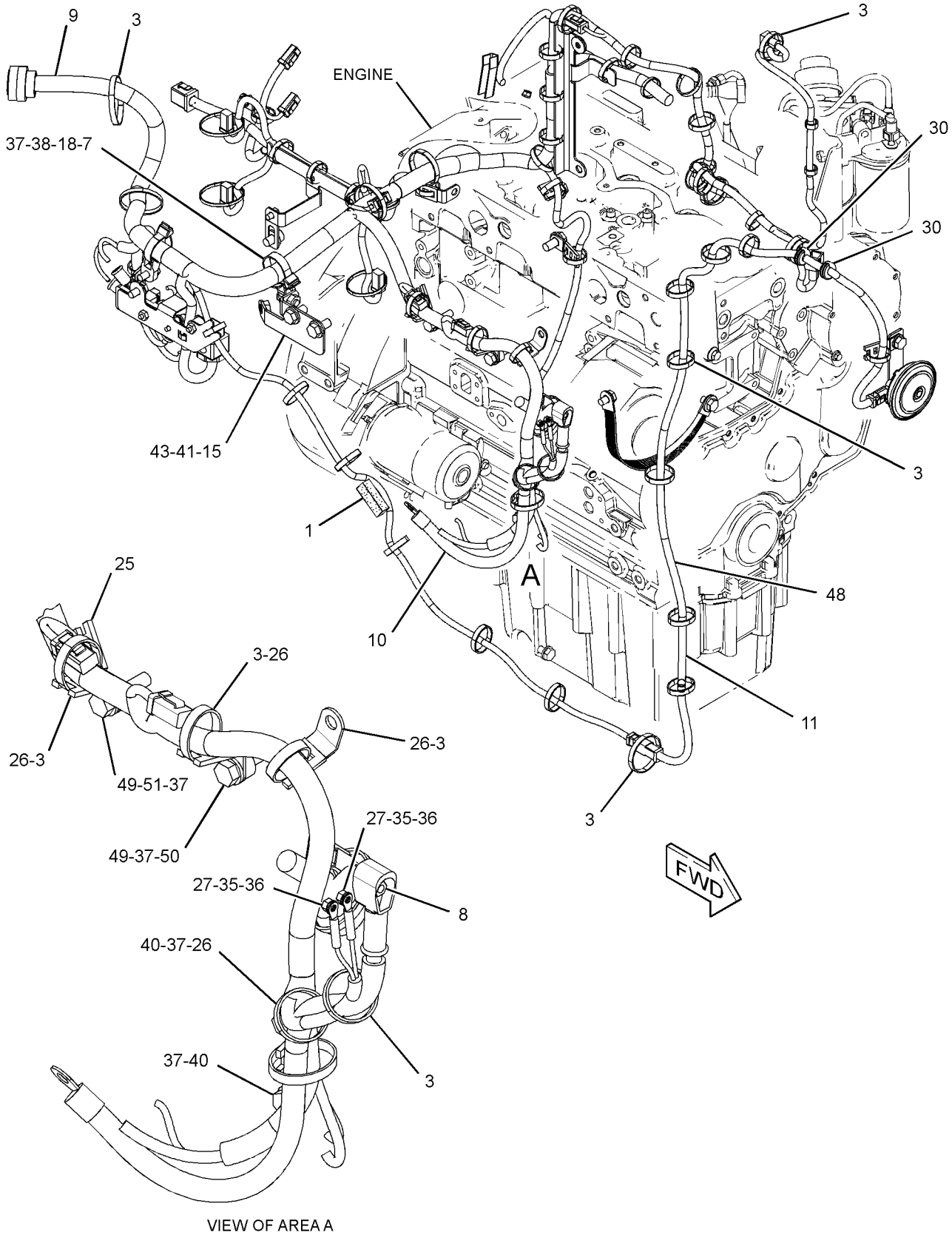

GRAPHIC #2 **<END>** g02207698

ELECTRICAL AND STARTING SYSTEM

299-5092 WIRING GP-ENGINE

S/N: C4E1-238

PART OF 254-9233 ENGINE AR-PRIMARY

SMCS-1000, 1408 **i02656765**

NOTE	REF NO	GRAPHIC REF	PART NUMBER	QTY	PART NAME 1 2 3 4 5 6 (PRODUCT LEVEL)	SEE PAGE
	1	1	**288-0526**	1	HARNESS AS-ENGINE	
	2	1	**298-4605**	1	BRACKET	
M	3	1	**124-3815**	3	BOLT (M8X16X1.25-MM)	
	4	1	**217-8477**	1	CLIP	
	5	1	**298-4606**	1	BRACKET	
	6	1	**298-4607**	1	BRACKET	
	7	1	**217-9039**	3	STRAP-CABLE	

M-METRIC PART

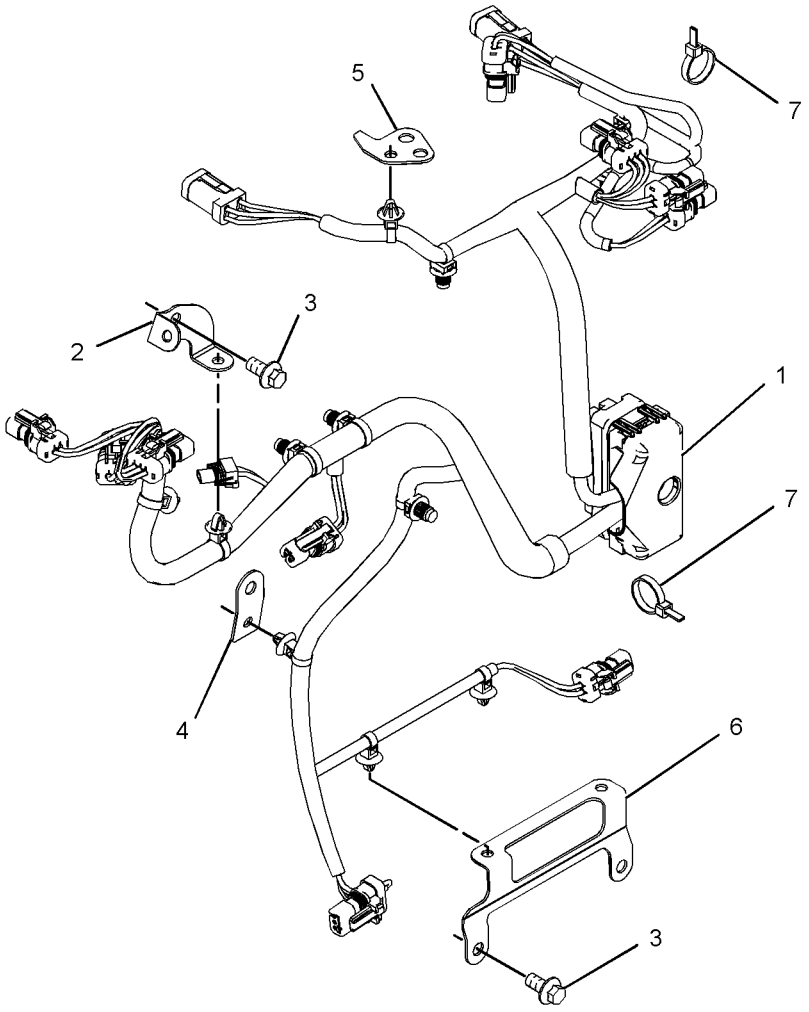

GRAPHIC #1 **<END>** g01337588

299-5092 WIRING GP-ENGINE

S/N: C4E239-UP

PART OF 254-9233 ENGINE AR-PRIMARY

SMCS-1000, 1408 **i03568854**

NOTE	REF NO	GRAPHIC REF	PART NUMBER	QTY	PART NAME 1 2 3 4 5 6 (PRODUCT LEVEL)	SEE PAGE
CM	1	1	**124-3815**	1	BOLT (M8X16X1.25-MM)	
	2	1	**217-9039**	3	STRAP-CABLE	
	3	1	**346-1449**	1	BRACKET	
C	4	1	**304-5165**	1	HARNESS AS-ENGINE	

C-CHANGE FROM PREVIOUS TYPE
M-METRIC PART

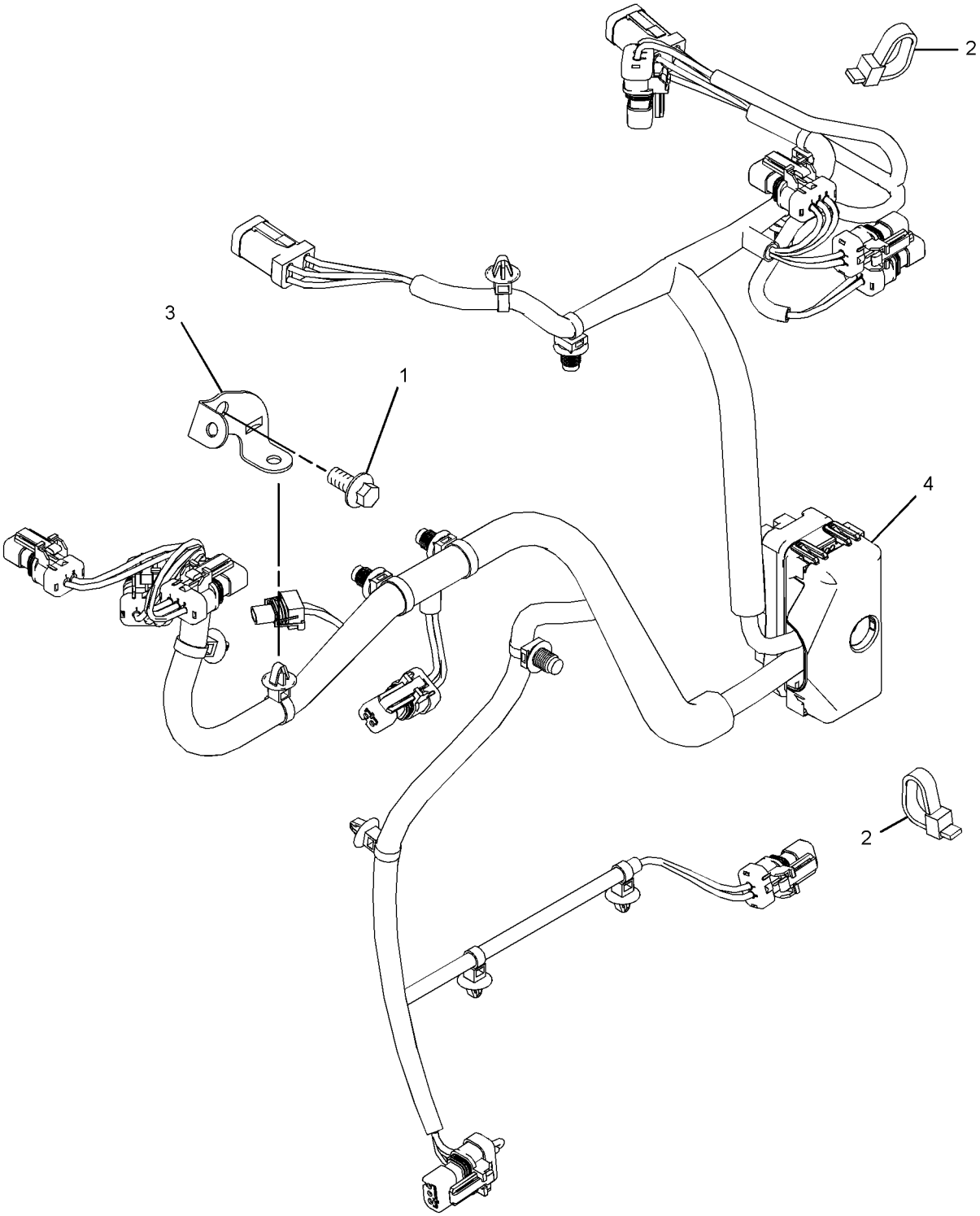

GRAPHIC #1 **<END>** g01922053

245-6029 WIRING GP-GRADE CONTROL–FULL

S/N: JTD1-UP; FFF1-108; LLL1-127
PART OF 296-5755, 296-5756 GRADE CONTROL AR
AN ATTACHMENT

SMCS-1408 **i04415714**

NOTE	REF NO	GRAPHIC REF	PART NUMBER	QTY	PART NAME 1 2 3 4 5 6 (PRODUCT LEVEL)	SEE PAGE
	1	1,2	**7K-1181**	64	STRAP-CABLE	
	2	1	**8C-5607**	6	MOUNT-ISOLATION	
	3	1	**8C-5608**	3	SPACER (6.5X9.5X25.4-MM THK)	
	4	2	**132-8487**	3	NUT-RING	
	5	2	**167-8712**	1	ALARM (ADVISOR)	
	6	2	**226-9169**	1	MODULE AS-POWER SUPPLY	
	7	2	**236-8826**	3	BOSS (1-1/8-18XO.708-IN)	
	8	1	**245-6030**	1	HARNESS AS-DASH (GRADE CONTROL)	
		1	**9X-3401**	6	PIN-CONNECTOR (16-GA TO 18-GA)	
		1	**8T-8729**	4	PIN-CONNECTOR (16-GA TO 18-GA)	
		1	**9W-0852**	2	PIN-CONNECTOR (14-GA TO 16-GA)	
		1	**230-7254**	18	PIN-CONNECTOR	
		1	**155-2255**	1	KIT-CONNECTING PLUG (12-PIN)	
		1	**155-2256**	1	KIT-CONNECTING PLUG (12-PIN)	
		1	**155-2265**	1	KIT-CONNECTING PLUG (8-PIN)	
		1	**155-2260**	2	KIT-CONNECTING PLUG (3-PIN)	
					(EACH PLUG KIT INCLUDES PLUG AS, WEDGE & INTERFACE SEAL)	
		1	**230-5008**	3	PLUG AS-CONNECTOR (4-PIN)	
					(EACH INCLUDES)	
		1	**264-7031**	1	SEAL-CONNECTOR	
		1	**8T-8737**	44	PLUG-SEAL	
		1	**102-8801**	2	KIT-RECEPTACLE (12-PIN)	
		1	**190-7614**	1	KIT-RECEPTACLE (12-PIN)	
					(EACH RECEPTACLE KIT INCLUDES RECEPTACLE AS & WEDGE)	
		1	**134-2540**	2	RESISTOR AS-CONNECTION (3-PIN)	
		1	**230-5009**	3	RECEPTACLE AS-CONNECTOR (4-PIN)	
		1	**9X-3402**	6	SOCKET-CONNECTOR (16-GA TO 18-GA)	
		1	**8T-8730**	6	SOCKET-CONNECTOR (16-GA TO 18-GA)	
		1	**9X-3402**	12	SOCKET-CONNECTOR (16-GA TO 18-GA)	
		1	**5P-2321**	2	TERMINAL-FORK (14-GA TO 16-GA, NO. 6 SCREW)	
E		1	**125-7874**		TUBE-HEAT SHRINK (5.72-MM DIA) (45-CM)	
	9	1	**249-9025**	1	HARNESS AS-RADIO (GRADE CONTROL)	
		1	**155-2255**	1	KIT-CONNECTING PLUG (12-PIN)	
					(INCLUDES PLUG AS, WEDGE & INTERFACE SEAL)	
		1	**167-8987**	1	PLUG AS-CONNECTOR (8-PIN)	
		1	**8T-8737**	6	PLUG-SEAL	
		1	**9X-3402**	4	SOCKET-CONNECTOR (16-GA TO 18-GA)	
		1	**9W-0844**	2	SOCKET-CONNECTOR (14-GA TO 16-GA)	
	10	2	**249-9030**	1	HARNESS AS-WIRING (POWER SUPPLY MODULE)	
		2	**9W-0844**	7	SOCKET-CONNECTOR (14-GA TO 16-GA)	
		2	**3R-9965**	1	PLUG AS-CONNECTOR (8-PIN)	
		2	**6D-5257**	1	PLUG AS-CONNECTOR (8-PIN)	
		2	**8T-8737**	5	PLUG-SEAL	
		2	**102-8801**	1	KIT-RECEPTACLE (12-PIN)	
					(INCLUDES RECEPTACLE AS & WEDGE)	
E		2	**125-7874**		TUBE-HEAT SHRINK (5.72-MM DIA) (5-CM)	
	11	1	**249-9031**	1	HARNESS AS-FRONT (GRADE CONTROL)	
		1	**155-2265**	2	KIT-CONNECTING PLUG (8-PIN)	
					(EACH INCLUDES PLUG AS, WEDGE & INTERFACE SEAL)	
		1	**9X-3402**	8	SOCKET-CONNECTOR (16-GA TO 18-GA)	
		1	**9W-0844**	8	SOCKET-CONNECTOR (14-GA TO 16-GA)	
	12	1	**249-9032**	1	HARNESS AS-HOOD (GRADE CONTROL)	

245-6029 **WIRING GP-GRADE CONTROL** *(contd.)* **i04415714**

NOTE	REF NO	GRAPHIC REF	PART NUMBER	QTY	PART NAME 1 2 3 4 5 6 (PRODUCT LEVEL)	SEE PAGE
		1	**9X-3401**	4	PIN-CONNECTOR (16-GA TO 18-GA)	
		1	**8T-8729**	4	PIN-CONNECTOR (16-GA TO 18-GA)	
		1	**9W-0852**	9	PIN-CONNECTOR (14-GA TO 16-GA)	
		1	**155-2265**	1	KIT-CONNECTING PLUG (8-PIN)	
		1	**155-2260**	2	KIT-CONNECTING PLUG (3-PIN)	
		1	**155-2271**	1	KIT-CONNECTING PLUG (4-PIN)	
					(EACH PLUG KIT INCLUDES PLUG AS, WEDGE & INTERFACE SEAL)	
		1	**8T-8737**	9	PLUG-SEAL	
		1	**102-8804**	1	KIT-RECEPTACLE (4-PIN)	
		1	**102-8806**	1	KIT-RECEPTACLE (8-PIN)	
		1	**102-8801**	1	KIT-RECEPTACLE (12-PIN)	
					(EACH RECEPTACLE KIT INCLUDES RECEPTACLE AS & WEDGE)	
		1	**134-2540**	2	RESISTOR AS-CONNECTION (3-PIN)	
		1	**8T-8729**	10	PIN-CONNECTOR (16-GA TO 18-GA)	
		1	**9W-0844**	6	SOCKET-CONNECTOR (14-GA TO 16-GA)	
E		1	**119-3662**		TUBE-HEAT SHRINK (10.85-MM DIA) (7-CM)	
E		1	**125-7874**		TUBE-HEAT SHRINK (5.72-MM DIA) (60-CM)	
E		1	**125-7875**		TUBE-HEAT SHRINK (7.44-MM DIA) (60-CM)	
	13	1	**249-9033**	1	HARNESS AS-CONSOLE (GRADE CONTROL)	
		1	**8C-6354**	1	CAP-RECEPTACLE	
		1	**9X-3401**	10	PIN-CONNECTOR (16-GA TO 18-GA)	
		1	**8T-8729**	10	PIN-CONNECTOR (16-GA TO 18-GA)	
		1	**9W-0852**	2	PIN-CONNECTOR (14-GA TO 16-GA)	
		1	**155-2255**	2	KIT-CONNECTING PLUG (12-PIN)	
					(EACH PLUG KIT INCLUDES PLUG AS, WEDGE & INTERFACE SEAL)	
		1	**253-2695**	1	PLUG AS-CONNECTOR	
		1	**8T-8737**	12	PLUG-SEAL	
		1	**102-8806**	1	KIT-RECEPTACLE (8-PIN)	
		1	**102-8801**	1	KIT-RECEPTACLE (12-PIN)	
					(EACH RECEPTACLE KIT INCLUDES RECEPTACLE AS & WEDGE)	
		1	**8T-8736**	1	RECEPTACLE-CONNECTOR (9-PIN)	
		1	**9X-3402**	13	SOCKET-CONNECTOR (16-GA TO 18-GA)	
		1	**9W-0844**	6	SOCKET-CONNECTOR (14-GA TO 16-GA)	
B		1	**141-8061**		TAPE	
E		1	**125-7874**		TUBE-HEAT SHRINK (5.72-MM DIA) (40-CM)	
E		1	**125-7875**		TUBE-HEAT SHRINK (7.44-MM DIA) (10-CM)	
	14	2	**249-9034**	1	HARNESS AS-SENSOR (GRADE CONTROL)	
		2	**228-3323**	1	CLIP-SPRING	
		2	**8T-8729**	2	PIN-CONNECTOR (16-GA TO 18-GA)	
		2	**9W-0852**	2	PIN-CONNECTOR (14-GA TO 16-GA)	
		2	**102-8804**	1	KIT-RECEPTACLE (4-PIN)	
					(INCLUDES RECEPTACLE AS & WEDGE)	
	15	2	**249-9049**	1	HARNESS AS-WIRING (RECEIVER, LH)	
		2	**228-3323**	1	CLIP-SPRING	
		2	**8T-8729**	4	PIN-CONNECTOR (16-GA TO 18-GA)	
		2	**9W-0852**	4	PIN-CONNECTOR (14-GA TO 16-GA)	
		2	**102-8806**	1	KIT-RECEPTACLE (8-PIN)	
					(INCLUDES RECEPTACLE AS & WEDGE)	
	16	2	**249-9050**	1	HARNESS AS-WIRING (RECEIVER, RH)	
		2	**228-3323**	1	CLIP-SPRING	
		2	**155-2255**	1	KIT-CONNECTING PLUG (12-PIN)	
					(INCLUDES PLUG AS, WEDGE & INTERFACE SEAL)	
		2	**8T-8737**	3	PLUG-SEAL	
		2	**8T-8730**	4	SOCKET-CONNECTOR (16-GA TO 18-GA)	
		2	**9W-0844**	5	SOCKET-CONNECTOR (14-GA TO 16-GA)	

245-6029 **WIRING GP-GRADE CONTROL** *(contd.)* **i04415714**

NOTE	REF NO	GRAPHIC REF	PART NUMBER	QTY	PART NAME 1 2 3 4 5 6 (PRODUCT LEVEL)	SEE PAGE
	17	2	**249-9077**	1	PLATE AS	
	18	1	**257-7501**	1	PLATE AS	
	19	1	**264-4510**	1	BRACKET AS	
	20	1	**269-7664**	1	BRACKET AS	
	21	2	**269-7676**	1	HARNESS AS-MONITOR	
		2	**8T-8729**	2	PIN-CONNECTOR (16-GA TO 18-GA)	
		2	**147-1444**	1	PLUG AS-CONNECTOR (70-PIN)	
		2	**155-2255**	1	KIT-CONNECTING PLUG (12-PIN)	
		2	**155-2256**	1	KIT-CONNECTING PLUG (12-PIN)	
					(EACH PLUG KIT INCLUDES PLUG AS, WEDGE & INTERFACE SEAL)	
		2	**8T-8737**	87	PLUG-SEAL	
		2	**102-8801**	1	KIT-RECEPTACLE (12-PIN)	
		2	**190-7614**	1	KIT-RECEPTACLE (12-PIN)	
					(EACH RECEPTACLE KIT INCLUDES RECEPTACLE AS & WEDGE)	
		2	**8T-8730**	2	SOCKET-CONNECTOR (16-GA TO 18-GA)	
		2	**9X-3402**	14	SOCKET-CONNECTOR (16-GA TO 18-GA)	
E		2	**125-7874**		TUBE-HEAT SHRINK (5.72-MM DIA) (5-CM)	
	22	2	**269-7687**	1	HARNESS AS-CONTROL	
		2	**155-2255**	1	KIT-CONNECTING PLUG (12-PIN)	
		2	**155-2256**	1	KIT-CONNECTING PLUG (12-PIN)	
					(EACH PLUG KIT INCLUDES PLUG AS, WEDGE & INTERFACE SEAL)	
		2	**180-5305**	1	PLUG AS-CONNECTOR	
		2	**8T-8737**	9	PLUG-SEAL	
		2	**8T-8730**	1	SOCKET-CONNECTOR (16-GA TO 18-GA)	
E		2	**125-7875**		TUBE-HEAT SHRINK (7.44-MM DIA) (5-CM)	
	23	2	**096-5962**	12	WASHER-HARD (3.4X7X0.8-MM THK)	
M	24	2	**117-6952**	3	SCREW (M8X1.25X30-MM)	
	25	2	**132-5789**	2	CLIP	
	26	2	**2D-0388**	1	GROMMET	
	27	2	**7R-3029**	3	CAP-DUST	
M	28	2	**7X-2553**	1	BOLT (M16X2X40-MM)	
M	29	1	**8C-8451**	3	BOLT (M6X1X40-MM)	
	30	2	**033-4818**	12	SCREW-MACHINE	
	31	2	**8T-4121**	4	WASHER-HARD (11X21X2.5-MM THK)	
	32	2	**8T-4122**	1	WASHER-HARD (17X32X3.5-MM THK)	
M	33	2	**8T-4186**	2	BOLT (M10X1.5X40-MM)	
M	34	2	**8T-4195**	2	BOLT (M10X1.5X30-MM)	
M	35	2	**8T-4200**	2	BOLT (M8X1.25X16-MM)	
	36	1	**8T-4205**	6	WASHER-HARD (7.2X14.5X2-MM THK)	
	37	2	**8T-4224**	8	WASHER-HARD (8.8X16X2-MM THK)	
M	38	2	**8T-4908**	4	BOLT (M8X1.25X25-MM)	
D	39	2	**8T-3426**		CHANNEL-TRIM (1-M)	
E	40	2	**109-2013**		GUARD (49-CM)	
D	41	1	**6V-1359**		SEAL (0.1-M)	
E	42	1	**3E-6600**		SEAL (31-CM)	
E	42A	2	**3E-6600**		SEAL (32-CM)	
E	42B	2	**3E-6600**		SEAL (3-CM)	

B-USE AS REQUIRED
D-ORDER BY THE METER
E-ORDER BY THE CENTIMETER
M-METRIC PART

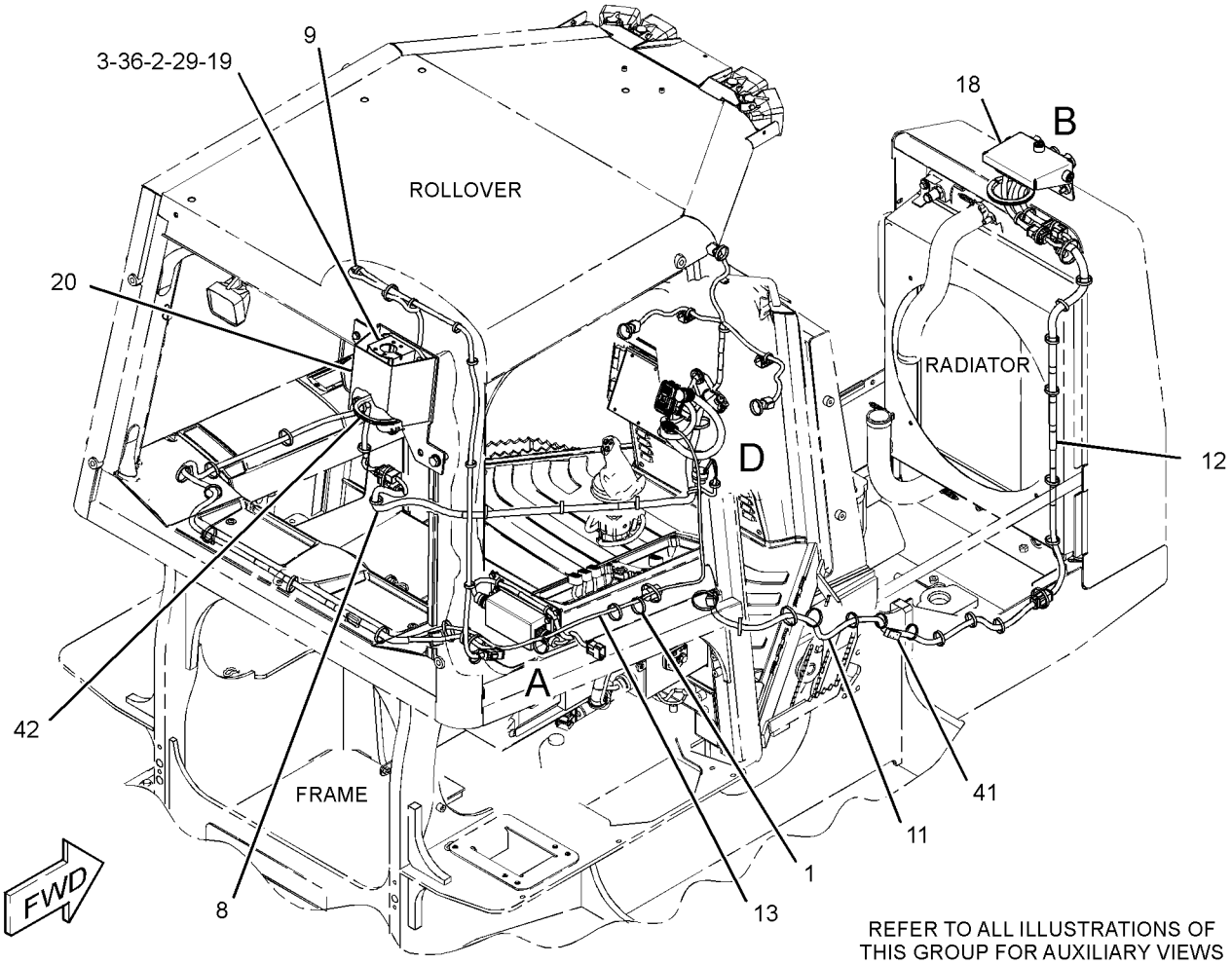

GRAPHIC #1

g01380519

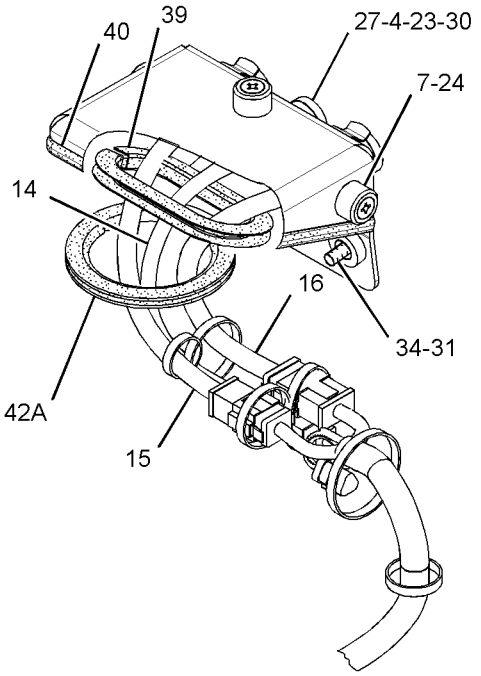

VIEW OF AREA B

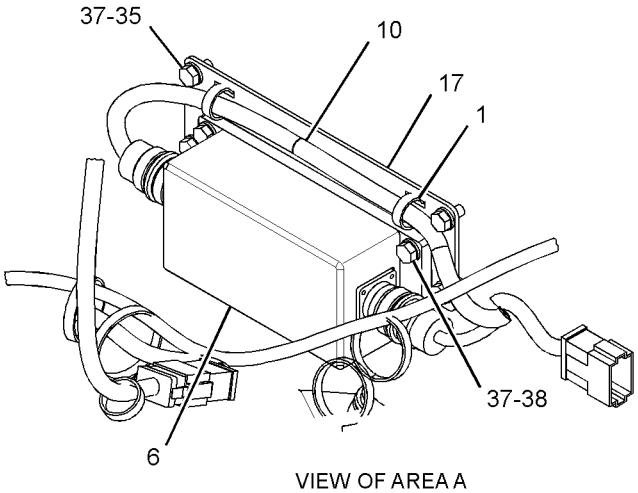

VIEW OF AREA A

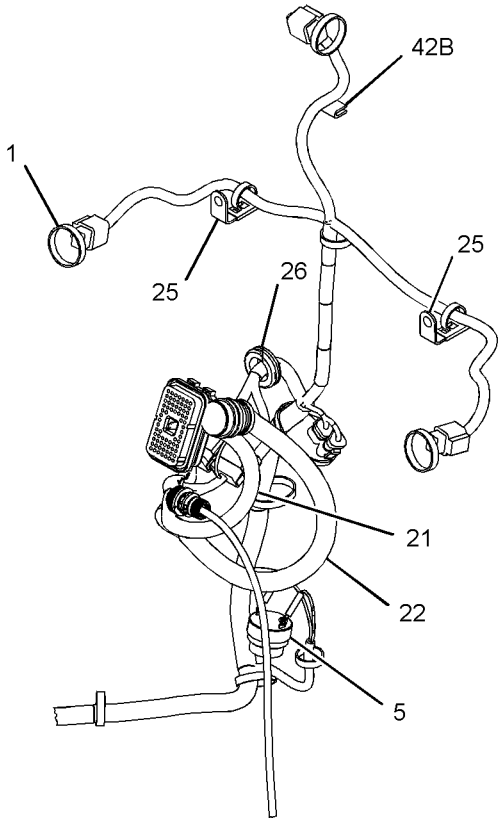

VIEW OF AREA D

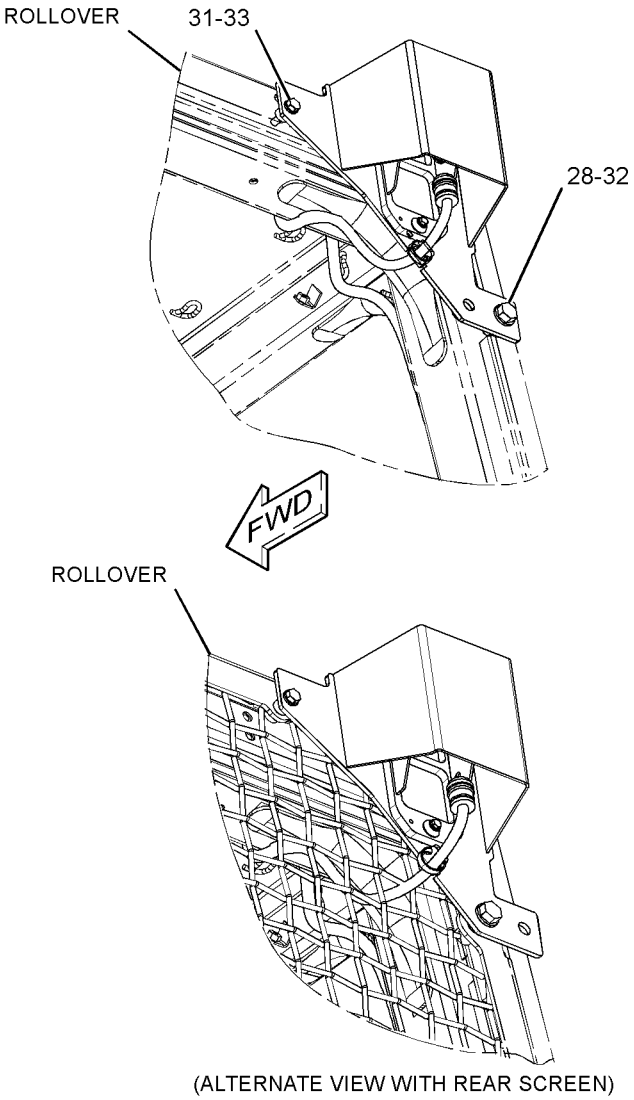

(ALTERNATE VIEW WITH REAR SCREEN)

GRAPHIC #2

<END>

g01380575

245-6029 WIRING GP-GRADE CONTROL–FULL

S/N: JTD1-UP; FFF109-UP; LLL128-UP
PART OF 296-5755, 296-5756 GRADE CONTROL AR
AN ATTACHMENT
TYPE 1

SMCS-1408 **i04416211**

NOTE	REF NO	GRAPHIC REF	PART NUMBER	QTY	PART NAME 1 2 3 4 5 6 (PRODUCT LEVEL)	SEE PAGE
C	1	1,2	**7K-1181**	65	STRAP-CABLE	
	2	2	**8C-5607**	6	MOUNT-ISOLATION	
	3	2	**8C-5608**	3	SPACER (6.5X9.5X25.4-MM THK)	
C	4	2	**8T-8737**	24	PLUG-SEAL	
C	5	2	**130-5300**	4	CLIP	
	6	2	**132-8487**	3	NUT-RING	
	7	2	**167-8712**	1	ALARM	
C	8	2	**190-7615**	1	KIT-RECEPTACLE (12-PIN)	
					(INCLUDES RECEPTACLE AS & WEDGE)	
	9	2	**226-9169**	1	MODULE AS-POWER SUPPLY	
	10	2	**236-8826**	3	BOSS (1-1/8-18X0.708-IN)	
	11	2	**249-9030**	1	HARNESS AS-WIRING (POWER SUPPLY MODULE)	
		2	**9W-0844**	7	SOCKET-CONNECTOR (14-GA TO 16-GA)	
		2	**3R-9965**	1	PLUG AS-CONNECTOR (8-PIN)	
		2	**6D-5257**	1	PLUG AS-CONNECTOR (8-PIN)	
		2	**8T-8737**	5	PLUG-SEAL	
		2	**102-8801**	1	KIT-RECEPTACLE (12-PIN)	
					(INCLUDES RECEPTACLE AS & WEDGE)	
E		2	**125-7874**		TUBE-HEAT SHRINK (5.72-MM DIA) (5-CM)	
	12	1	**249-9031**	1	HARNESS AS-FRONT (GRADE CONTROL)	
		1	**155-2265**	2	KIT-CONNECTING PLUG (8-PIN)	
					(EACH INCLUDES PLUG AS, WEDGE & INTERFACE SEAL)	
		1	**9X-3402**	8	SOCKET-CONNECTOR (16-GA TO 18-GA)	
		1	**9W-0844**	8	SOCKET-CONNECTOR (14-GA TO 16-GA)	
	13	1	**249-9032**	1	HARNESS AS-HOOD (GRADE CONTROL)	
		1	**9X-3401**	4	PIN-CONNECTOR (16-GA TO 18-GA)	
		1	**8T-8729**	4	PIN-CONNECTOR (16-GA TO 18-GA)	
		1	**9W-0852**	9	PIN-CONNECTOR (14-GA TO 16-GA)	
		1	**155-2265**	1	KIT-CONNECTING PLUG (8-PIN)	
		1	**155-2260**	2	KIT-CONNECTING PLUG (3-PIN)	
		1	**155-2271**	1	KIT-CONNECTING PLUG (4-PIN)	
					(EACH PLUG KIT INCLUDES PLUG AS, WEDGE & INTERFACE SEAL)	
		1	**8T-8737**	9	PLUG-SEAL	
		1	**102-8804**	1	KIT-RECEPTACLE (4-PIN)	
		1	**102-8806**	1	KIT-RECEPTACLE (8-PIN)	
		1	**102-8801**	1	KIT-RECEPTACLE (12-PIN)	
					(EACH RECEPTACLE KIT INCLUDES RECEPTACLE AS & WEDGE)	
		1	**134-2540**	2	RESISTOR AS-CONNECTION (3-PIN)	
		1	**8T-8730**	10	SOCKET-CONNECTOR (16-GA TO 18-GA)	
		1	**9W-0844**	6	SOCKET-CONNECTOR (14-GA TO 16-GA)	
E		1	**119-3662**		TUBE-HEAT SHRINK (10.85-MM DIA) (7-CM)	
E		1	**125-7874**		TUBE-HEAT SHRINK (5.72-MM DIA) (60-CM)	
E		1	**125-7875**		TUBE-HEAT SHRINK (7.44-MM DIA) (60-CM)	
	14	1	**249-9033**	1	HARNESS AS-CONSOLE (GRADE CONTROL)	
		1	**8C-6354**	1	CAP-RECEPTACLE	
		1	**9X-3401**	10	PIN-CONNECTOR (16-GA TO 18-GA)	
		1	**8T-8729**	10	PIN-CONNECTOR (16-GA TO 18-GA)	
		1	**9W-0852**	2	PIN-CONNECTOR (14-GA TO 16-GA)	
		1	**155-2255**	2	KIT-CONNECTING PLUG (12-PIN)	
					(INCLUDES PLUG AS, WEDGE & INTERFACE SEAL)	

245-6029 **WIRING GP-GRADE CONTROL** *(contd.)* **i04416211**

NOTE	REF NO	GRAPHIC REF	PART NUMBER	QTY	PART NAME 1 2 3 4 5 6 (PRODUCT LEVEL)	SEE PAGE
		1	**253-2695**	1	PLUG AS-CONNECTOR	
		1	**8T-8737**	12	PLUG-SEAL	
		1	**102-8806**	1	KIT-RECEPTACLE (8-PIN)	
		1	**102-8801**	1	KIT-RECEPTACLE (12-PIN)	
					(EACH RECEPTACLE KIT INCLUDES RECEPTACLE AS & WEDGE)	
		1	**8T-8736**	1	RECEPTACLE-CONNECTOR (9-PIN)	
		1	**9X-3402**	13	SOCKET-CONNECTOR (16-GA TO 18-GA)	
		1	**9W-0844**	6	SOCKET-CONNECTOR (14-GA TO 16-GA)	
B		1	**141-8061**		TAPE	
E		1	**125-7874**		TUBE-HEAT SHRINK (5.72-MM DIA) (40-CM)	
E		1	**125-7875**		TUBE-HEAT SHRINK (7.44-MM DIA) (10-CM)	
	15	2	**249-9034**	1	HARNESS AS-SENSOR (GRADE CONTROL)	
		2	**228-3323**	1	CLIP-SPRING	
		2	**186-3735**	2	PIN-CONNECTOR (16-GA TO 18-GA)	
		2	**9W-0852**	2	PIN-CONNECTOR (14-GA TO 16-GA)	
		2	**102-8804**	1	KIT-RECEPTACLE (4-PIN)	
					(INCLUDES RECEPTACLE AS & WEDGE)	
	16	2	**249-9049**	1	HARNESS AS-WIRING (RECEIVER, LH)	
		2	**228-3323**	1	CLIP-SPRING	
		2	**8T-8729**	4	PIN-CONNECTOR (16-GA TO 18-GA)	
		2	**9W-0852**	4	PIN-CONNECTOR (14-GA TO 16-GA)	
		2	**102-8806**	1	KIT-RECEPTACLE (8-PIN)	
					(INCLUDES RECEPTACLE AS & WEDGE)	
	17	2	**249-9050**	1	HARNESS AS-WIRING (RECEIVER, RH)	
		2	**228-3323**	1	CLIP-SPRING	
		2	**155-2255**	1	KIT-CONNECTING PLUG (12-PIN)	
					(INCLUDES PLUG AS, WEDGE & INTERFACE SEAL)	
		2	**8T-8737**	3	PLUG-SEAL	
		2	**8T-8730**	4	SOCKET-CONNECTOR (16-GA TO 18-GA)	
		2	**9W-0844**	5	SOCKET-CONNECTOR (14-GA TO 16-GA)	
	18	2	**249-9077**	1	PLATE AS	
	19	2	**257-7501**	1	PLATE AS	
	20	2	**264-4510**	1	BRACKET AS	
	21	2	**269-7664**	1	BRACKET AS	
C	22	1	**311-0295**	1	HARNESS AS-DASH (GRADE CONTROL)	
		1	**8T-8729**	1	PIN-CONNECTOR (16-GA TO 18-GA)	
		1	**9W-0852**	2	PIN-CONNECTOR (14-GA TO 16-GA)	
		1	**9X-3401**	6	PIN-CONNECTOR (16-GA TO 18-GA)	
					—OR—	
		1	**126-1767**	6	PIN-CONNECTOR (14-GA TO 16-GA)	
		1	**155-2255**	1	KIT-CONNECTING PLUG (12-PIN)	
		1	**155-2257**	1	KIT-CONNECTING PLUG (12-PIN)	
		1	**155-2265**	1	KIT-CONNECTING PLUG (8-PIN)	
		1	**155-2260**	2	KIT-CONNECTING PLUG (3-PIN)	
					(EACH PLUG KIT INCLUDES PLUG AS, WEDGE & INTERFACE SEAL)	
		1	**230-5008**	3	PLUG AS-CONNECTOR (4-PIN)	
		1	**8T-8737**	24	PLUG-SEAL	
		1	**102-8801**	1	KIT-RECEPTACLE (12-PIN)	
					(INCLUDES RECEPTACLE AS & WEDGE)	
		1	**134-2540**	2	RESISTOR AS-CONNECTION (3-PIN)	
		1	**230-5009**	3	RECEPTACLE AS-CONNECTOR (4-PIN)	
		1	**9X-3402**	12	SOCKET-CONNECTOR (16-GA TO 18-GA)	
		1	**180-9340**	10	SOCKET-CONNECTOR (14-GA TO 18-GA)	
		1	**5P-2321**	2	TERMINAL-FORK (14-GA TO 16-GA, NO. 6 SCREW)	
E		1	**125-7874**		TUBE-HEAT SHRINK (5.72-MM DIA) (45-CM)	
C	23	2	**311-0297**	1	HARNESS AS-MONITOR	
		2	**230-7254**	13	PIN-CONNECTOR	

245-6029 **WIRING GP-GRADE CONTROL** *(contd.)* **i04416211**

NOTE	REF NO	GRAPHIC REF	PART NUMBER	QTY	PART NAME 1 2 3 4 5 6 (PRODUCT LEVEL)	SEE PAGE
		2	**147-1444**	1	PLUG AS-CONNECTOR (70-PIN)	
		2	**159-9322**	1	SEAL-O-RING	
		2	**8T-8737**	67	PLUG-SEAL	
		2	**102-8801**	1	KIT-RECEPTACLE (12-PIN)	
		2	**190-7615**	1	KIT-RECEPTACLE (12-PIN)	
					(EACH RECEPTACLE KIT INCLUDES RECEPTACLE AS & WEDGE)	
		2	**9X-3402**	14	SOCKET-CONNECTOR (16-GA TO 18-GA)	
B		2	**141-8061**		TAPE	
E		2	**125-7874**		TUBE-HEAT SHRINK (5.72-MM DIA) (5-CM)	
C	24	2	**311-0298**	1	HARNESS AS-DASH	
		2	**230-7254**	15	PIN-CONNECTOR	
		2	**8T-8737**	9	PLUG-SEAL	
		2	**102-8801**	1	KIT-RECEPTACLE (12-PIN)	
		2	**190-7615**	1	KIT-RECEPTACLE (12-PIN)	
					(EACH RECEPTACLE KIT INCLUDES RECEPTACLE AS & WEDGE)	
B		2	**141-8061**		TAPE	
E		2	**125-7875**		TUBE-HEAT SHRINK (7.44-MM DIA) (5-CM)	
	25	2	**096-5962**	12	WASHER-HARD (3.4X7X0.8-MM THK)	
M	26	2	**117-6952**	3	SCREW (M8X1.25X30-MM)	
	27	2	**132-5789**	2	CLIP	
C	28	2	**133-6934**	1	SPACER (11X20X25-MM THK)	
C	29	1	**311-0305**	1	HARNESS AS-RADIO (GRADE CONTROL)	
		1	**155-2255**	1	KIT-CONNECTING PLUG (12-PIN)	
					(INCLUDES PLUG AS, WEDGE & INTERFACE SEAL)	
		1	**167-8987**	1	PLUG AS-CONNECTOR (8-PIN)	
		1	**8T-8737**	4	PLUG-SEAL	
		1	**9W-0844**	2	SOCKET-CONNECTOR (14-GA TO 16-GA)	
		1	**180-9340**	6	SOCKET-CONNECTOR (14-GA TO 18-GA)	
	30	2	**2D-0388**	1	GROMMET	
C	31	2	**102-8801**	1	KIT-RECEPTACLE (12-PIN)	
					(INCLUDES RECEPTACLE AS & WEDGE)	
C	32	2	**4P-8134**	1	CLIP	
CM	33	2	**5C-9553**	1	BOLT (M6X1X16-MM)	
	34	2	**7R-3029**	3	CAP-DUST	
M	35	2	**7X-2553**	1	BOLT (M16X2X40-MM)	
M	36	2	**8C-8451**	3	BOLT (M6X1X40-MM)	
	37	2	**033-4818**	12	SCREW-MACHINE	
C	38	2	**8T-4121**	6	WASHER-HARD (11X21X2.5-MM THK)	
	39	2	**8T-4122**	1	WASHER-HARD (17X32X3.5-MM THK)	
CM	40	2	**8T-4137**	1	BOLT (M10X1.5X20-MM)	
CM	41	2	**8T-4185**	1	BOLT (M10X1.5X50-MM)	
M	42	2	**8T-4186**	2	BOLT (M10X1.5X40-MM)	
M	43	2	**8T-4195**	2	BOLT (M10X1.5X30-MM)	
M	44	2	**8T-4200**	2	BOLT (M8X1.25X16-MM)	
	45	2	**8T-4205**	6	WASHER-HARD (7.2X14.5X2-MM THK)	
	46	2	**8T-4224**	8	WASHER-HARD (8.8X16X2-MM THK)	
M	47	2	**8T-4908**	4	BOLT (M8X1.25X25-MM)	
C	48	2	**9X-8256**	1	WASHER (6.6X12X2-MM THK)	
D	49	2	**8T-3426**		CHANNEL-TRIM (1-M)	
CE	50	1	**7Y-5074**		GUARD-HOSE (48-CM)	
E	51	2	**109-2013**		GUARD (49-CM)	
D	52	1	**6V-1359**		SEAL (0.1-M)	
E	53	2	**3E-6600**		SEAL (31-CM)	
E	53A	2	**3E-6600**		SEAL (32-CM)	
E	53B	2	**3E-6600**		SEAL (3-CM)	

B-USE AS REQUIRED
C-CHANGE FROM PREVIOUS TYPE
D-ORDER BY THE METER
E-ORDER BY THE CENTIMETER
M-METRIC PART

REFER TO ALL ILLUSTRATIONS OF
THIS GROUP FOR AUXILIARY VIEWS

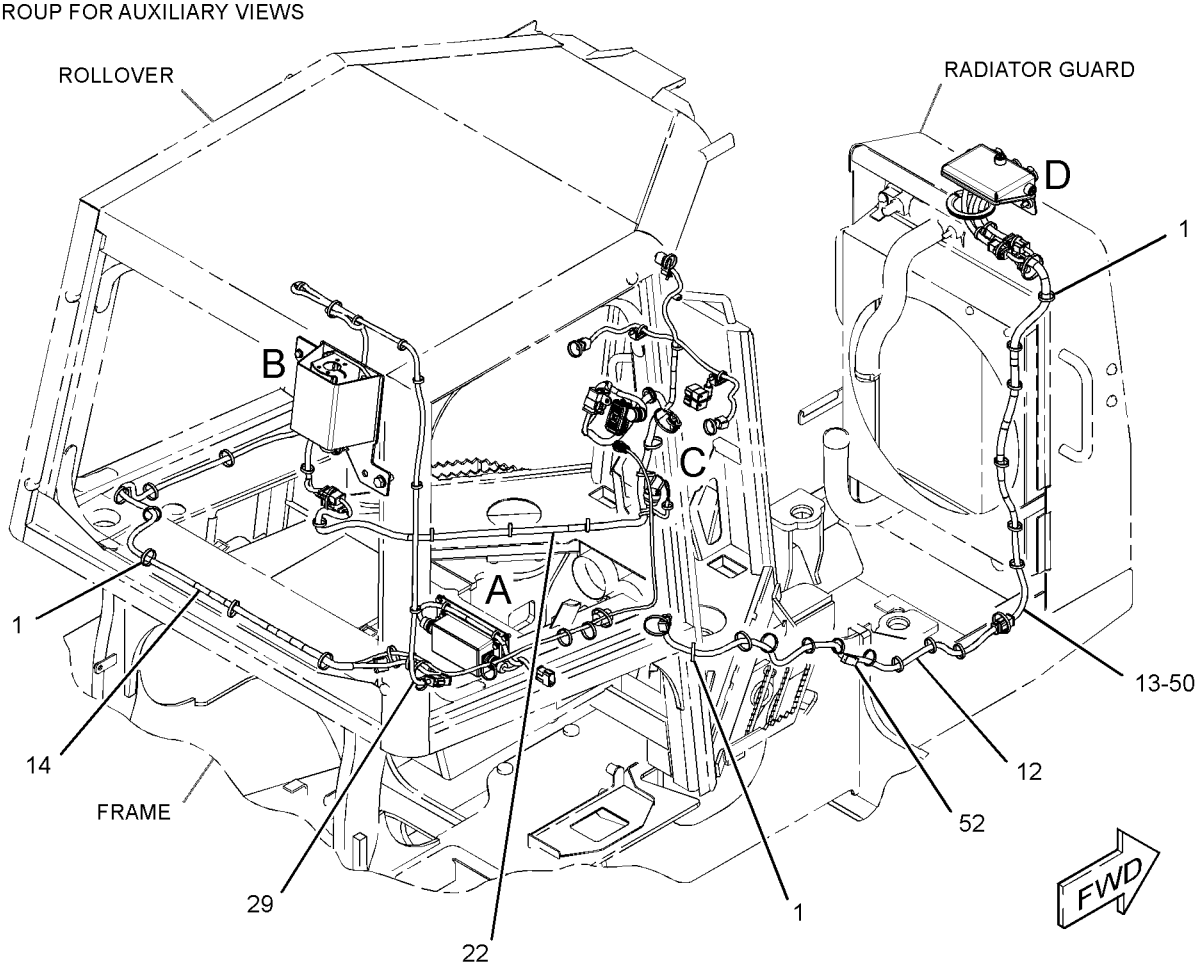

GRAPHIC #1 g01572135

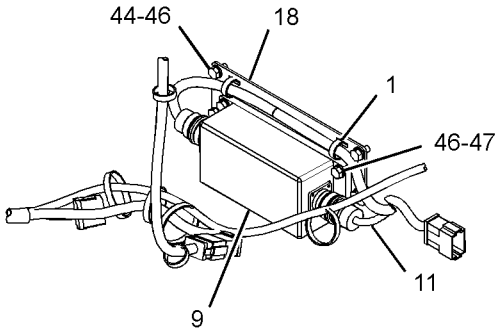

VIEW OF AREA A

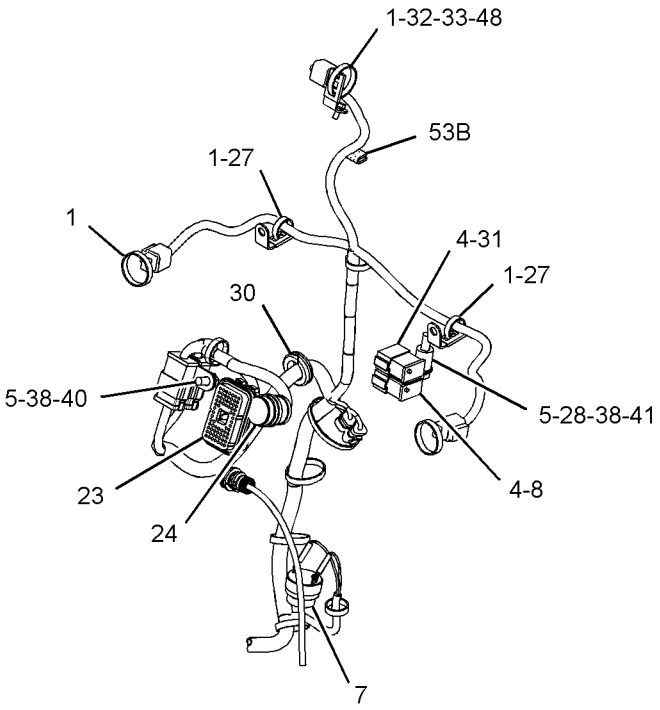

VIEW OF AREA C

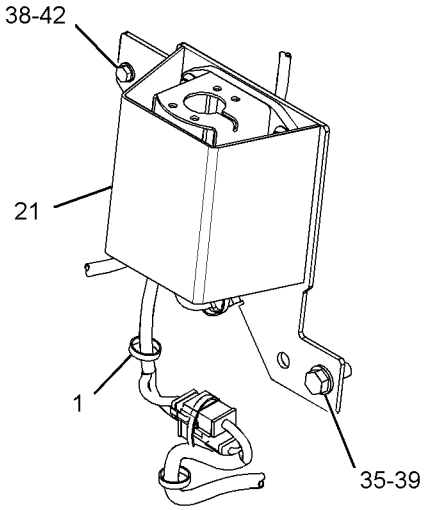

VIEW OF AREA B

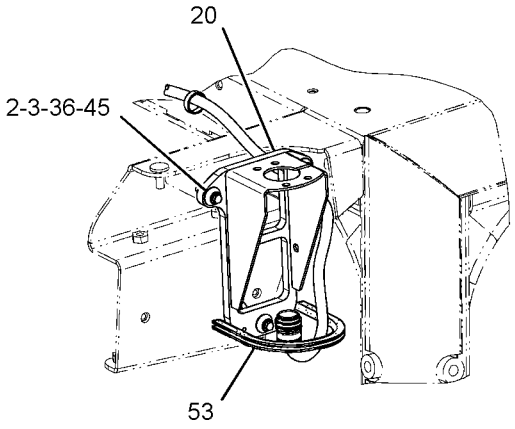

VIEW OF AREA B
(ALTERNATE VIEW ENCLOSED ROPS)

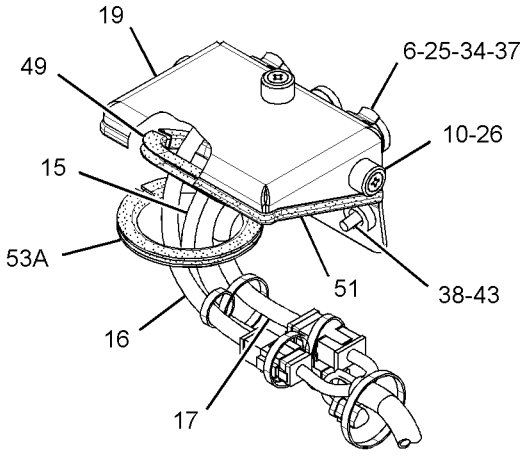

VIEW OF AREA D

GRAPHIC #2 **<END>** g01572138

245-6029 WIRING GP-GRADE CONTROL–FULL

S/N: JTD1-UP; FFF109-UP; LLL128-UP
PART OF 296-5755, 296-5756 GRADE CONTROL AR
AN ATTACHMENT
TYPE 2

SMCS-1408 **i04416210**

NOTE	REF NO	GRAPHIC REF	PART NUMBER	QTY	PART NAME 1 2 3 4 5 6 (PRODUCT LEVEL)	SEE PAGE
	1	1,2	**7K-1181**	65	STRAP-CABLE	
	4	2	**8T-8737**	24	PLUG-SEAL	
	5	2	**130-5300**	4	CLIP	
	6	2	**132-8487**	3	NUT-RING	
	7	2	**167-8712**	1	ALARM	
	8	2	**190-7615**	1	KIT-RECEPTACLE (12-PIN)	
					(INCLUDES RECEPTACLE AS & WEDGE)	
	9	2	**226-9169**	1	MODULE AS-POWER SUPPLY	
	10	2	**236-8826**	3	BOSS (1-1/8-18XO.708-IN)	
	11	2	**249-9030**	1	HARNESS AS-WIRING (POWER SUPPLY MODULE)	
		2	**9W-0844**	7	SOCKET-CONNECTOR (14-GA TO 16-GA)	
		2	**3R-9965**	1	PLUG AS-CONNECTOR (8-PIN)	
		2	**6D-5257**	1	PLUG AS-CONNECTOR (8-PIN)	
		2	**8T-8737**	5	PLUG-SEAL	
		2	**102-8801**	1	KIT-RECEPTACLE (12-PIN)	
					(INCLUDES RECEPTACLE AS & WEDGE)	
E		2	**125-7874**		TUBE-HEAT SHRINK (5.72-MM DIA) (5-CM)	
	12	1	**249-9031**	1	HARNESS AS-FRONT (GRADE CONTROL)	
		1	**155-2265**	2	KIT-CONNECTING PLUG (8-PIN)	
					(EACH INCLUDES PLUG AS, WEDGE & INTERFACE SEAL)	
		1	**9X-3402**	8	SOCKET-CONNECTOR (16-GA TO 18-GA)	
		1	**9W-0844**	8	SOCKET-CONNECTOR (14-GA TO 16-GA)	
	13	1	**249-9032**	1	HARNESS AS-HOOD (GRADE CONTROL)	
		1	**9X-3401**	4	PIN-CONNECTOR (16-GA TO 18-GA)	
		1	**8T-8729**	4	PIN-CONNECTOR (16-GA TO 18-GA)	
		1	**9W-0852**	9	PIN-CONNECTOR (14-GA TO 16-GA)	
		1	**155-2265**	1	KIT-CONNECTING PLUG (8-PIN)	
		1	**155-2260**	2	KIT-CONNECTING PLUG (3-PIN)	
		1	**155-2271**	1	KIT-CONNECTING PLUG (4-PIN)	
					(EACH PLUG KIT INCLUDES PLUG AS, WEDGE & INTERFACE SEAL)	
		1	**8T-8737**	9	PLUG-SEAL	
		1	**102-8804**	1	KIT-RECEPTACLE (4-PIN)	
		1	**102-8806**	1	KIT-RECEPTACLE (8-PIN)	
		1	**102-8801**	1	KIT-RECEPTACLE (12-PIN)	
					(EACH RECEPTACLE KIT INCLUDES RECEPTACLE AS & WEDGE)	
		1	**134-2540**	2	RESISTOR AS-CONNECTION (3-PIN)	
		1	**8T-8730**	10	SOCKET-CONNECTOR (16-GA TO 18-GA)	
		1	**9W-0844**	6	SOCKET-CONNECTOR (14-GA TO 16-GA)	
E		1	**119-3662**		TUBE-HEAT SHRINK (10.85-MM DIA) (7-CM)	
E		1	**125-7874**		TUBE-HEAT SHRINK (5.72-MM DIA) (60-CM)	
E		1	**125-7875**		TUBE-HEAT SHRINK (7.44-MM DIA) (60-CM)	
	14	1	**249-9033**	1	HARNESS AS-CONSOLE (GRADE CONTROL)	
		1	**8C-6354**	1	CAP-RECEPTACLE	
		1	**9X-3401**	10	PIN-CONNECTOR (16-GA TO 18-GA)	
		1	**8T-8729**	10	PIN-CONNECTOR (16-GA TO 18-GA)	
		1	**9W-0852**	2	PIN-CONNECTOR (14-GA TO 16-GA)	
		1	**155-2255**	2	KIT-CONNECTING PLUG (12-PIN)	
					(INCLUDES PLUG AS, WEDGE & INTERFACE SEAL)	
		1	**253-2695**	1	PLUG AS-CONNECTOR	
		1	**8T-8737**	12	PLUG-SEAL	

245-6029 **WIRING GP-GRADE CONTROL** *(contd.)* **i04416210**

NOTE	REF NO	GRAPHIC REF	PART NUMBER	QTY	PART NAME 1 2 3 4 5 6 (PRODUCT LEVEL)	SEE PAGE
		1	**102-8806**	1	KIT-RECEPTACLE (8-PIN)	
		1	**102-8801**	1	KIT-RECEPTACLE (12-PIN)	
					(EACH RECEPTACLE KIT INCLUDES RECEPTACLE AS & WEDGE)	
		1	**8T-8736**	1	RECEPTACLE-CONNECTOR (9-PIN)	
		1	**9X-3402**	13	SOCKET-CONNECTOR (16-GA TO 18-GA)	
		1	**9W-0844**	6	SOCKET-CONNECTOR (14-GA TO 16-GA)	
B		1	**141-8061**		TAPE	
E		1	**125-7874**		TUBE-HEAT SHRINK (5.72-MM DIA) (40-CM)	
E		1	**125-7875**		TUBE-HEAT SHRINK (7.44-MM DIA) (10-CM)	
	15	2	**249-9034**	1	HARNESS AS-SENSOR (GRADE CONTROL)	
		2	**228-3323**	1	CLIP-SPRING	
		2	**8T-8729**	2	PIN-CONNECTOR (16-GA TO 18-GA)	
		2	**9W-0852**	2	PIN-CONNECTOR (14-GA TO 16-GA)	
		2	**102-8804**	1	KIT-RECEPTACLE (4-PIN)	
					(INCLUDES RECEPTACLE AS & WEDGE)	
	16	2	**249-9049**	1	HARNESS AS-WIRING (RECEIVER, LH)	
		2	**228-3323**	1	CLIP-SPRING	
		2	**8T-8729**	4	PIN-CONNECTOR (16-GA TO 18-GA)	
		2	**9W-0852**	4	PIN-CONNECTOR (14-GA TO 16-GA)	
		2	**102-8806**	1	KIT-RECEPTACLE (8-PIN)	
					(INCLUDES RECEPTACLE AS & WEDGE)	
	17	2	**249-9050**	1	HARNESS AS-WIRING (RECEIVER, RH)	
		2	**228-3323**	1	CLIP-SPRING	
		2	**155-2255**	1	KIT-CONNECTING PLUG (12-PIN)	
					(INCLUDES PLUG AS, WEDGE & INTERFACE SEAL)	
		2	**8T-8737**	3	PLUG-SEAL	
		2	**8T-8730**	4	SOCKET-CONNECTOR (16-GA TO 18-GA)	
		2	**9W-0844**	5	SOCKET-CONNECTOR (14-GA TO 16-GA)	
	18	2	**249-9077**	1	PLATE AS	
	19	2	**257-7501**	1	PLATE AS	
C	21	2	**311-0311**	1	BRACKET AS	
	22	1	**311-0295**	1	HARNESS AS-DASH (GRADE CONTROL)	
		1	**8T-8729**	1	PIN-CONNECTOR (16-GA TO 18-GA)	
		1	**9W-0852**	2	PIN-CONNECTOR (14-GA TO 16-GA)	
		1	**9X-3401**	6	PIN-CONNECTOR (16-GA TO 18-GA)	
					—OR—	
		1	**126-1767**	6	PIN-CONNECTOR (14-GA TO 16-GA)	
		1	**155-2255**	1	KIT-CONNECTING PLUG (12-PIN)	
		1	**155-2257**	1	KIT-CONNECTING PLUG (12-PIN)	
		1	**155-2265**	1	KIT-CONNECTING PLUG (8-PIN)	
		1	**155-2260**	2	KIT-CONNECTING PLUG (3-PIN)	
					(EACH PLUG KIT INCLUDES PLUG AS, WEDGE & INTERFACE SEAL)	
		1	**230-5008**	3	PLUG AS-CONNECTOR (4-PIN)	
		1	**8T-8737**	24	PLUG-SEAL	
		1	**102-8801**	1	KIT-RECEPTACLE (12-PIN)	
					(INCLUDES RECEPTACLE AS & WEDGE)	
		1	**134-2540**	2	RESISTOR AS-CONNECTION (3-PIN)	
		1	**230-5009**	3	RECEPTACLE AS-CONNECTOR (4-PIN)	
		1	**9X-3402**	12	SOCKET-CONNECTOR (16-GA TO 18-GA)	
		1	**180-9340**	10	SOCKET-CONNECTOR (14-GA TO 18-GA)	
		1	**5P-2321**	2	TERMINAL-FORK (14-GA TO 16-GA, NO. 6 SCREW)	
E		1	**125-7874**		TUBE-HEAT SHRINK (5.72-MM DIA) (45-CM)	
	23	2	**311-0297**	1	HARNESS AS-MONITOR	
		2	**230-7254**	13	PIN-CONNECTOR	
		2	**147-1444**	1	PLUG AS-CONNECTOR (70-PIN)	
		2	**159-9322**	1	SEAL-O-RING	
		2	**8T-8737**	67	PLUG-SEAL	

245-6029 **WIRING GP-GRADE CONTROL** *(contd.)* **i04416210**

NOTE	REF NO	GRAPHIC REF	PART NUMBER	QTY	PART NAME 1 2 3 4 5 6 (PRODUCT LEVEL)	SEE PAGE
		2	**102-8801**	1	KIT-RECEPTACLE (12-PIN)	
		2	**190-7615**	1	KIT-RECEPTACLE (12-PIN)	
					(EACH RECEPTACLE KIT INCLUDES RECEPTACLE AS & WEDGE)	
		2	**9X-3402**	14	SOCKET-CONNECTOR (16-GA TO 18-GA)	
B		2	**141-8061**		TAPE	
E		2	**125-7874**		TUBE-HEAT SHRINK (5.72-MM DIA) (5-CM)	
	24	2	**327-6133**	1	HARNESS AS-CONTROL	
		2	**230-7254**	15	PIN-CONNECTOR	
		2	**8T-8737**	9	PLUG-SEAL	
		2	**102-8801**	1	KIT-RECEPTACLE (12-PIN)	
		2	**190-7615**	1	KIT-RECEPTACLE (12-PIN)	
					(EACH RECEPTACLE KIT INCLUDES RECEPTACLE AS & WEDGE)	
B		2	**141-8061**		TAPE	
E		2	**125-7874**		TUBE-HEAT SHRINK (5.72-MM DIA) (5-CM)	
E		2	**125-7875**		TUBE-HEAT SHRINK (7.44-MM DIA) (5-CM)	
	25	2	**096-5962**	12	WASHER-HARD (3.4X7X0.8-MM THK)	
M	26	2	**117-6952**	3	SCREW (M8X1.25X30-MM)	
	27	2	**132-5789**	2	CLIP	
	28	2	**133-6934**	1	SPACER (11X20X25-MM THK)	
	29	1	**311-0305**	1	HARNESS AS-RADIO (GRADE CONTROL)	
		1	**155-2255**	1	KIT-CONNECTING PLUG (12-PIN)	
					(INCLUDES PLUG AS, WEDGE & INTERFACE SEAL)	
		1	**167-8987**	1	PLUG AS-CONNECTOR (8-PIN)	
		1	**8T-8737**	4	PLUG-SEAL	
		1	**9W-0844**	2	SOCKET-CONNECTOR (14-GA TO 16-GA)	
		1	**180-9340**	6	SOCKET-CONNECTOR (14-GA TO 18-GA)	
	30	2	**2D-0388**	1	GROMMET	
	31	2	**102-8801**	1	KIT-RECEPTACLE (12-PIN)	
					(INCLUDES RECEPTACLE AS & WEDGE)	
	32	2	**4P-8134**	1	CLIP	
M	33	2	**5C-9553**	1	BOLT (M6X1X16-MM)	
	34	2	**7R-3029**	3	CAP-DUST	
M	35	2	**7X-2553**	1	BOLT (M16X2X40-MM)	
	37	2	**033-4818**	12	SCREW-MACHINE	
	38	2	**8T-4121**	6	WASHER-HARD (11X21X2.5-MM THK)	
	39	2	**8T-4122**	1	WASHER-HARD (17X32X3.5-MM THK)	
M	40	2	**8T-4137**	1	BOLT (M10X1.5X20-MM)	
M	41	2	**8T-4185**	1	BOLT (M10X1.5X50-MM)	
M	42	2	**8T-4186**	2	BOLT (M10X1.5X40-MM)	
M	43	2	**8T-4195**	2	BOLT (M10X1.5X30-MM)	
M	44	2	**8T-4200**	2	BOLT (M8X1.25X16-MM)	
	46	2	**8T-4224**	8	WASHER-HARD (8.8X16X2-MM THK)	
M	47	2	**8T-4908**	4	BOLT (M8X1.25X25-MM)	
	48	2	**9X-8256**	1	WASHER (6.6X12X2-MM THK)	
D	49	2	**8T-3426**		CHANNEL-TRIM (0.4-M)	
E	50	1	**7Y-5074**		GUARD-HOSE (48-CM)	
E	51	2	**109-2013**		GUARD (49-CM)	
D	52	1	**6V-1359**		SEAL (0.1-M)	
E	53	2	**3E-6600**		SEAL (31-CM)	
E	53A	2	**3E-6600**		SEAL (32-CM)	
E	53B	2	**3E-6600**		SEAL (3-CM)	

B-USE AS REQUIRED
C-CHANGE FROM PREVIOUS TYPE
D-ORDER BY THE METER
E-ORDER BY THE CENTIMETER
M-METRIC PART

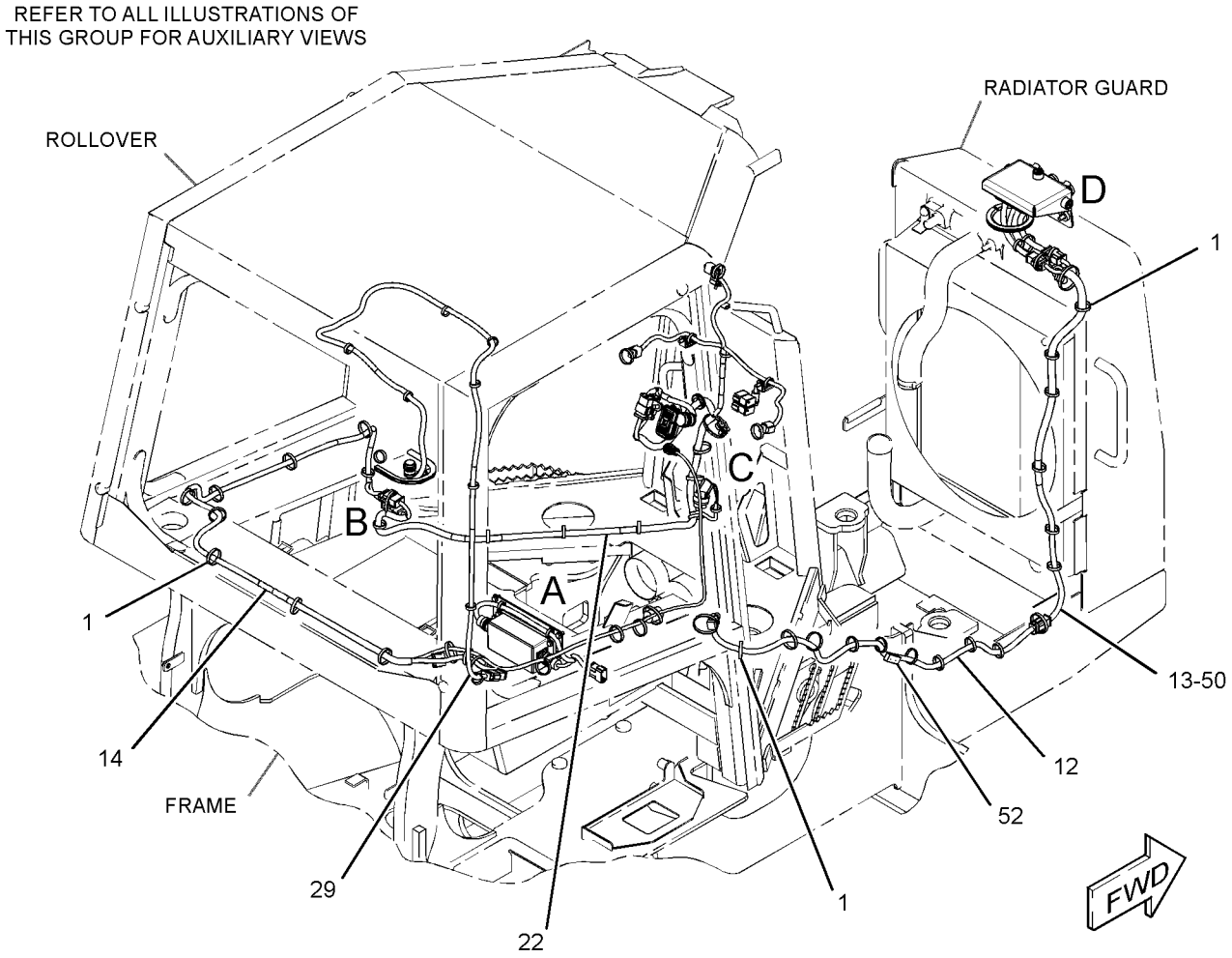

GRAPHIC #1 g01577053

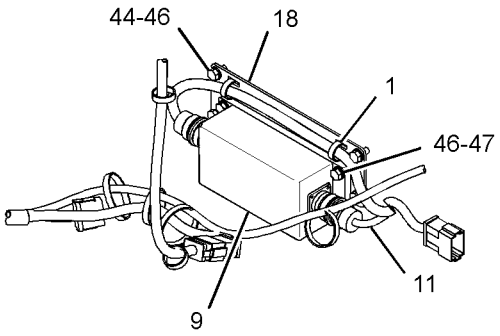

VIEW OF AREA A

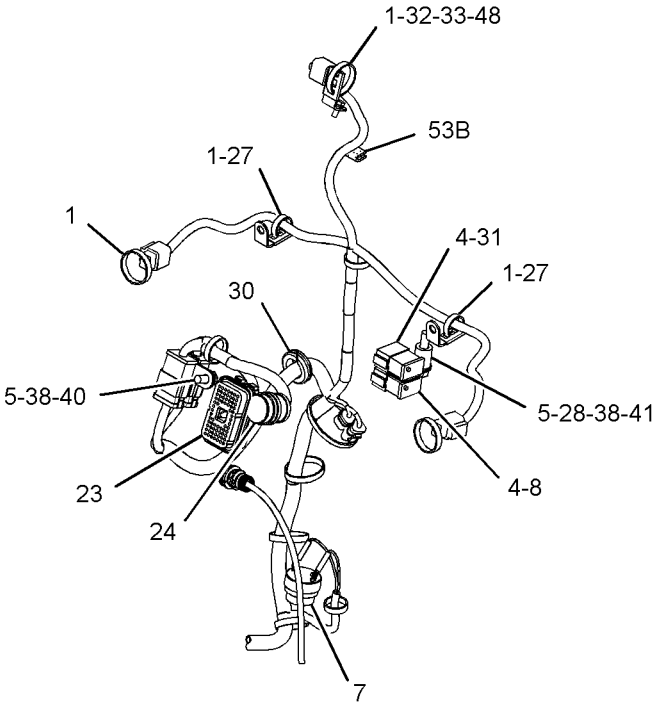

VIEW OF AREA C

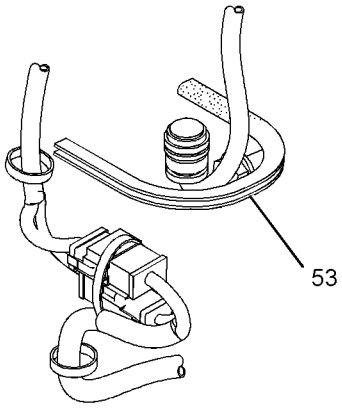

VIEW OF AREA B

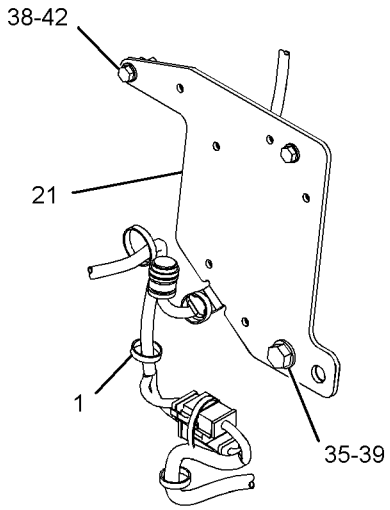

VIEW OF AREA B
(ALTERNATE ROPS CAB MOUNTING)

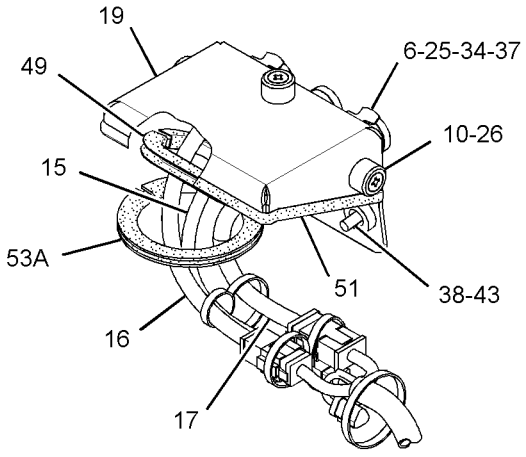

VIEW OF AREA D

GRAPHIC #2 **<END>** g01577054

245-6029 WIRING GP-GRADE CONTROL–FULL

S/N: JTD1-UP; FFF109-UP; LLL128-UP
PART OF 296-5755, 296-5756 GRADE CONTROL AR
AN ATTACHMENT
TYPE 3

SMCS-1408 **i04416212**

NOTE	REF NO	GRAPHIC REF	PART NUMBER	QTY	PART NAME 1 2 3 4 5 6 (PRODUCT LEVEL)	SEE PAGE
	1	1,2	**7K-1181**	65	STRAP-CABLE	
	4	2	**8T-8737**	24	PLUG-SEAL	
	5	2	**130-5300**	4	CLIP	
	6	2	**132-8487**	3	NUT-RING	
	7	2	**167-8712**	1	ALARM	
	8	2	**190-7615**	1	KIT-RECEPTACLE (12-PIN)	
					(INCLUDES RECEPTACLE AS & WEDGE)	
	9	2	**226-9169**	1	MODULE AS-POWER SUPPLY	
	10	2	**236-8826**	3	BOSS (1-1/8-18XO.708-IN)	
	11	2	**249-9030**	1	HARNESS AS-WIRING (POWER SUPPLY MODULE)	
		2	**9W-0852**	7	PIN-CONNECTOR (14-GA TO 16-GA)	
		2	**3R-9965**	1	PLUG AS-CONNECTOR (8-PIN)	
		2	**6D-5257**	1	PLUG AS-CONNECTOR (8-PIN)	
		2	**8T-8737**	5	PLUG-SEAL	
		2	**102-8801**	1	KIT-RECEPTACLE (12-PIN)	
					(INCLUDES RECEPTACLE AS & WEDGE)	
E		2	**125-7874**		TUBE-HEAT SHRINK (5.72-MM DIA) (5-CM)	
	12	1	**249-9031**	1	HARNESS AS-FRONT (GRADE CONTROL)	
		1	**155-2265**	2	KIT-CONNECTING PLUG (8-PIN)	
					(EACH INCLUDES PLUG AS, WEDGE & INTERFACE SEAL)	
		1	**9X-3402**	8	SOCKET-CONNECTOR (16-GA TO 18-GA)	
		1	**9W-0844**	8	SOCKET-CONNECTOR (14-GA TO 16-GA)	
	13	1	**249-9032**	1	HARNESS AS-HOOD (GRADE CONTROL)	
		1	**9X-3401**	4	PIN-CONNECTOR (16-GA TO 18-GA)	
		1	**8T-8729**	4	PIN-CONNECTOR (16-GA TO 18-GA)	
		1	**9W-0852**	9	PIN-CONNECTOR (14-GA TO 16-GA)	
		1	**155-2265**	1	KIT-CONNECTING PLUG (8-PIN)	
		1	**155-2260**	2	KIT-CONNECTING PLUG (3-PIN)	
		1	**155-2271**	1	KIT-CONNECTING PLUG (4-PIN)	
					(EACH PLUG KIT INCLUDES PLUG AS, WEDGE & INTERFACE SEAL)	
		1	**8T-8737**	9	PLUG-SEAL	
		1	**102-8804**	1	KIT-RECEPTACLE (4-PIN)	
		1	**102-8806**	1	KIT-RECEPTACLE (8-PIN)	
		1	**102-8801**	1	KIT-RECEPTACLE (12-PIN)	
					(EACH RECEPTACLE KIT INCLUDES RECEPTACLE AS & WEDGE)	
		1	**134-2540**	2	RESISTOR AS-CONNECTION (3-PIN)	
		1	**8T-8730**	10	SOCKET-CONNECTOR (16-GA TO 18-GA)	
		1	**9W-0844**	6	SOCKET-CONNECTOR (14-GA TO 16-GA)	
E		1	**119-3662**		TUBE-HEAT SHRINK (10.85-MM DIA) (7-CM)	
E		1	**125-7874**		TUBE-HEAT SHRINK (5.72-MM DIA) (60-CM)	
E		1	**125-7875**		TUBE-HEAT SHRINK (7.44-MM DIA) (5-CM)	
	14	1	**249-9033**	1	HARNESS AS-CONSOLE (GRADE CONTROL)	
		1	**8C-6354**	1	CAP-RECEPTACLE	
		1	**9X-3401**	10	PIN-CONNECTOR (16-GA TO 18-GA)	
		1	**8T-8729**	10	PIN-CONNECTOR (16-GA TO 18-GA)	
		1	**9W-0852**	2	PIN-CONNECTOR (14-GA TO 16-GA)	
		1	**155-2255**	2	KIT-CONNECTING PLUG (12-PIN)	
					(EACH INCLUDES PLUG AS, WEDGE & INTERFACE SEAL)	
		1	**253-2695**	1	PLUG AS-CONNECTOR	
		1	**8T-8737**	12	PLUG-SEAL	

245-6029 **WIRING GP-GRADE CONTROL** *(contd.)* **i04416212**

NOTE	REF NO	GRAPHIC REF	PART NUMBER	QTY	PART NAME 1 2 3 4 5 6 (PRODUCT LEVEL)	SEE PAGE
		1	**102-8806**	1	KIT-RECEPTACLE (8-PIN)	
		1	**102-8801**	1	KIT-RECEPTACLE (12-PIN)	
					(EACH RECEPTACLE KIT INCLUDES RECEPTACLE AS & WEDGE)	
		1	**8T-8736**	1	RECEPTACLE-CONNECTOR (9-PIN)	
		1	**9X-3402**	13	SOCKET-CONNECTOR (16-GA TO 18-GA)	
		1	**9W-0844**	6	SOCKET-CONNECTOR (14-GA TO 16-GA)	
B		1	**141-8061**		TAPE	
E		1	**125-7874**		TUBE-HEAT SHRINK (5.72-MM DIA) (40-CM)	
E		1	**125-7875**		TUBE-HEAT SHRINK (7.44-MM DIA) (10-CM)	
	15	2	**249-9034**	1	HARNESS AS-SENSOR (GRADE CONTROL)	
		2	**228-3323**	1	CLIP-SPRING	
		2	**8T-8729**	2	PIN-CONNECTOR (16-GA TO 18-GA)	
		2	**9W-0852**	2	PIN-CONNECTOR (14-GA TO 16-GA)	
		2	**102-8804**	1	KIT-RECEPTACLE (4-PIN)	
					(INCLUDES RECEPTACLE AS & WEDGE)	
	16	2	**249-9049**	1	HARNESS AS-WIRING (RECEIVER, LH)	
		2	**228-3323**	1	CLIP-SPRING	
		2	**8T-8729**	4	PIN-CONNECTOR (16-GA TO 18-GA)	
		2	**9W-0852**	4	PIN-CONNECTOR (14-GA TO 16-GA)	
		2	**102-8806**	1	KIT-RECEPTACLE (8-PIN)	
					(INCLUDES RECEPTACLE AS & WEDGE)	
	17	2	**249-9050**	1	HARNESS AS-WIRING (RECEIVER, RH)	
		2	**228-3323**	1	CLIP-SPRING	
		2	**155-2255**	1	KIT-CONNECTING PLUG (12-PIN)	
					(INCLUDES PLUG AS, WEDGE & INTERFACE SEAL)	
		2	**8T-8737**	3	PLUG-SEAL	
		2	**8T-8730**	4	SOCKET-CONNECTOR (16-GA TO 18-GA)	
		2	**9W-0844**	5	SOCKET-CONNECTOR (14-GA TO 16-GA)	
	18	2	**249-9077**	1	PLATE AS	
	19	2	**257-7501**	1	PLATE AS	
	21	2	**311-0311**	1	BRACKET AS	
	22	1	**311-0295**	1	HARNESS AS-DASH (GRADE CONTROL)	
		1	**8T-8729**	1	PIN-CONNECTOR (16-GA TO 18-GA)	
		1	**9W-0852**	2	PIN-CONNECTOR (14-GA TO 16-GA)	
		1	**9X-3401**	6	PIN-CONNECTOR (16-GA TO 18-GA)	
		1	**155-2255**	1	KIT-CONNECTING PLUG (12-PIN)	
		1	**155-2257**	1	KIT-CONNECTING PLUG (12-PIN)	
		1	**155-2265**	1	KIT-CONNECTING PLUG (8-PIN)	
		1	**155-2260**	2	KIT-CONNECTING PLUG (3-PIN)	
					(EACH PLUG KIT INCLUDES PLUG AS, WEDGE & INTERFACE SEAL)	
		1	**230-5008**	3	PLUG AS-CONNECTOR (4-PIN)	
					(EACH INCLUDES)	
		1	**264-7031**	1	SEAL-CONNECTOR	
		1	**8T-8737**	24	PLUG-SEAL	
		1	**102-8801**	1	KIT-RECEPTACLE (12-PIN)	
					(INCLUDES RECEPTACLE AS & WEDGE)	
		1	**134-2540**	2	RESISTOR AS-CONNECTION (3-PIN)	
		1	**230-5009**	3	RECEPTACLE AS-CONNECTOR (4-PIN)	
		1	**9X-3402**	12	SOCKET-CONNECTOR (16-GA TO 18-GA)	
		1	**180-9340**	10	SOCKET-CONNECTOR (14-GA TO 18-GA)	
		1	**5P-2321**	2	TERMINAL-FORK (14-GA TO 16-GA, NO. 6 SCREW)	
E		1	**125-7874**		TUBE-HEAT SHRINK (5.72-MM DIA) (45-CM)	
	23	2	**311-0297**	1	HARNESS AS-MONITOR	
		2	**230-7254**	13	PIN-CONNECTOR	
		2	**147-1444**	1	PLUG AS-CONNECTOR (70-PIN)	
		2	**159-9322**	1	SEAL-O-RING	
		2	**8T-8737**	67	PLUG-SEAL	

245-6029 **WIRING GP-GRADE CONTROL** *(contd.)* **i04416212**

NOTE	REF NO	GRAPHIC REF	PART NUMBER	QTY	PART NAME 1 2 3 4 5 6 (PRODUCT LEVEL)	SEE PAGE
		2	**102-8801**	1	KIT-RECEPTACLE (12-PIN)	
		2	**190-7615**	1	KIT-RECEPTACLE (12-PIN)	
					(EACH RECEPTACLE KIT INCLUDES RECEPTACLE AS & WEDGE)	
		2	**9X-3402**	14	SOCKET-CONNECTOR (16-GA TO 18-GA)	
B		2	**141-8061**		TAPE	
E		2	**125-7874**		TUBE-HEAT SHRINK (5.72-MM DIA) (5-CM)	
	24	2	**327-6133**	1	HARNESS AS-CONTROL	
		2	**230-7254**	15	PIN-CONNECTOR	
		2	**8T-8737**	9	PLUG-SEAL	
		2	**102-8801**	1	KIT-RECEPTACLE (12-PIN)	
		2	**190-7615**	1	KIT-RECEPTACLE (12-PIN)	
					(EACH RECEPTACLE KIT INCLUDES RECEPTACLE AS & WEDGE)	
B		2	**141-8061**		TAPE	
E		2	**125-7874**		TUBE-HEAT SHRINK (5.72-MM DIA) (5-CM)	
E		2	**125-7875**		TUBE-HEAT SHRINK (7.44-MM DIA) (5-CM)	
	25	2	**096-5962**	12	WASHER-HARD (3.4X7X0.8-MM THK)	
M	26	2	**117-6952**	3	SCREW (M8X1.25X30-MM)	
	27	2	**132-5789**	2	CLIP	
	28	2	**133-6934**	1	SPACER (11X20X25-MM THK)	
	29	1	**311-0305**	1	HARNESS AS-RADIO (GRADE CONTROL)	
		1	**155-2255**	1	KIT-CONNECTING PLUG (12-PIN)	
					(INCLUDES PLUG AS, WEDGE & INTERFACE SEAL)	
		1	**167-8987**	1	PLUG AS-CONNECTOR (8-PIN)	
		1	**8T-8737**	4	PLUG-SEAL	
		1	**9W-0844**	2	SOCKET-CONNECTOR (14-GA TO 16-GA)	
		1	**180-9340**	6	SOCKET-CONNECTOR (14-GA TO 18-GA)	
	30	2	**2D-0388**	1	GROMMET	
	31	2	**102-8801**	1	KIT-RECEPTACLE (12-PIN)	
					(INCLUDES RECEPTACLE AS & WEDGE)	
	32	2	**4P-8134**	1	CLIP	
M	33	2	**5C-9553**	1	BOLT (M6X1X16-MM)	
	34	2	**7R-3029**	3	CAP-DUST	
M	35	2	**7X-2553**	1	BOLT (M16X2X40-MM)	
	37	2	**033-4818**	12	SCREW-MACHINE	
C	38	2	**8T-4121**	4	WASHER-HARD (11X21X2.5-MM THK)	
	39	2	**8T-4122**	1	WASHER-HARD (17X32X3.5-MM THK)	
M	40	2	**8T-4137**	1	BOLT (M10X1.5X20-MM)	
M	41	2	**8T-4185**	1	BOLT (M10X1.5X50-MM)	
M	42	2	**8T-4186**	2	BOLT (M10X1.5X40-MM)	
M	43	2	**8T-4195**	2	BOLT (M10X1.5X30-MM)	
M	44	2	**8T-4200**	2	BOLT (M8X1.25X16-MM)	
	46	2	**8T-4224**	8	WASHER-HARD (8.8X16X2-MM THK)	
M	47	2	**8T-4908**	4	BOLT (M8X1.25X25-MM)	
	48	2	**9X-8256**	1	WASHER (6.6X12X2-MM THK)	
D	49	2	**8T-3426**		CHANNEL-TRIM (0.4-M)	
E	50	1	**7Y-5074**		GUARD-HOSE (48-CM)	
D	52	1	**6V-1359**		SEAL (0.1-M)	
E	53	2	**3E-6600**		SEAL (31-CM)	
E	53A	2	**3E-6600**		SEAL (32-CM)	
E	53B	2	**3E-6600**		SEAL (3-CM)	
C	54	2	**7X-7729**	2	WASHER (11X25X3-MM THK)	

B-USE AS REQUIRED
C-CHANGE FROM PREVIOUS TYPE
D-ORDER BY THE METER
E-ORDER BY THE CENTIMETER
M-METRIC PART

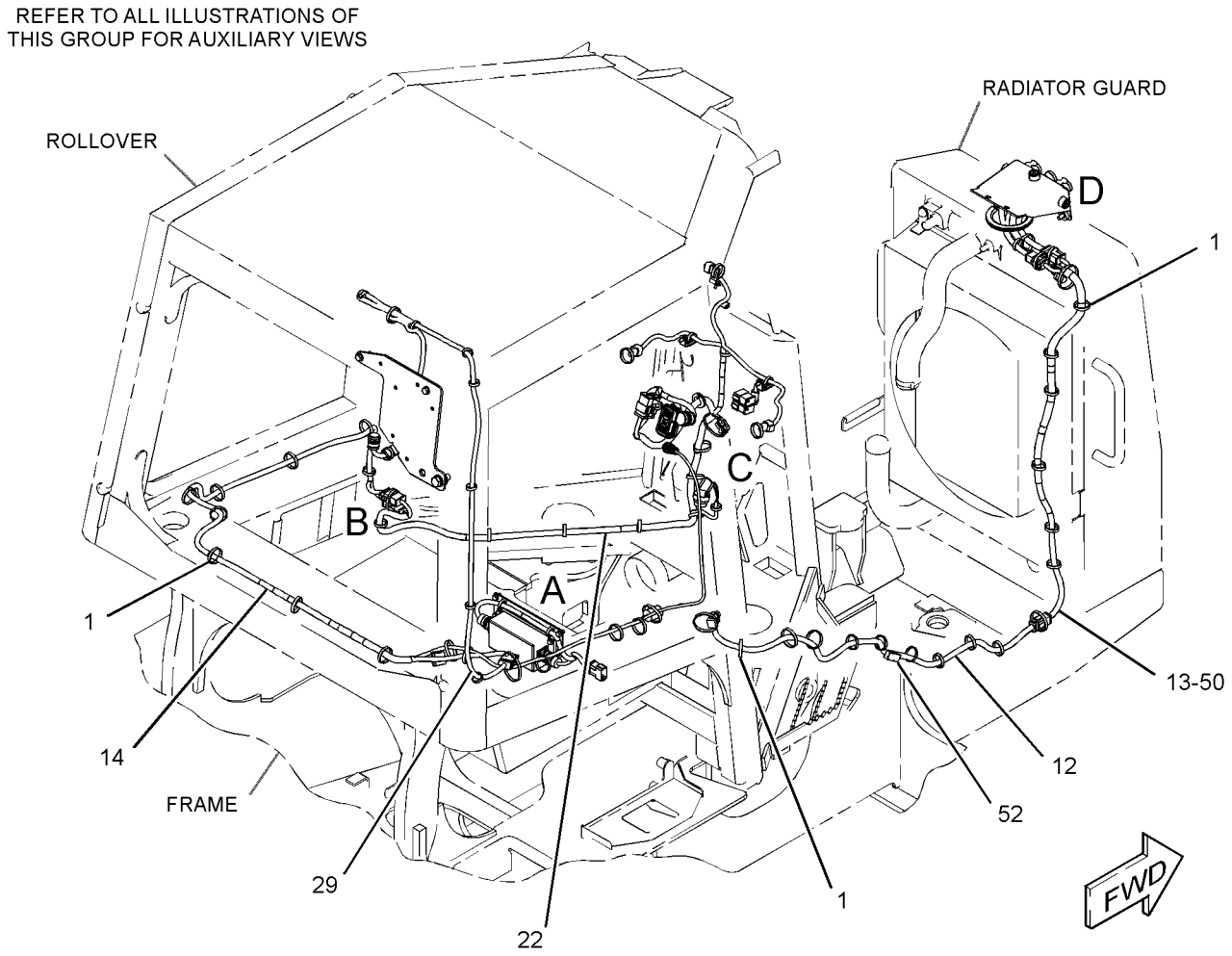

GRAPHIC #1 g02176417

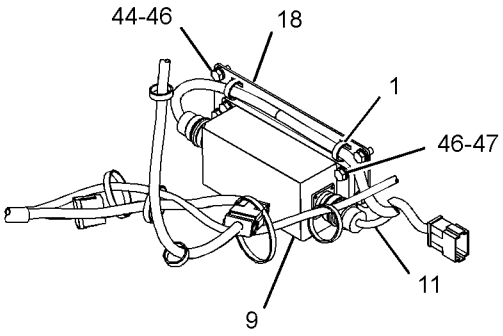

VIEW OF AREA A

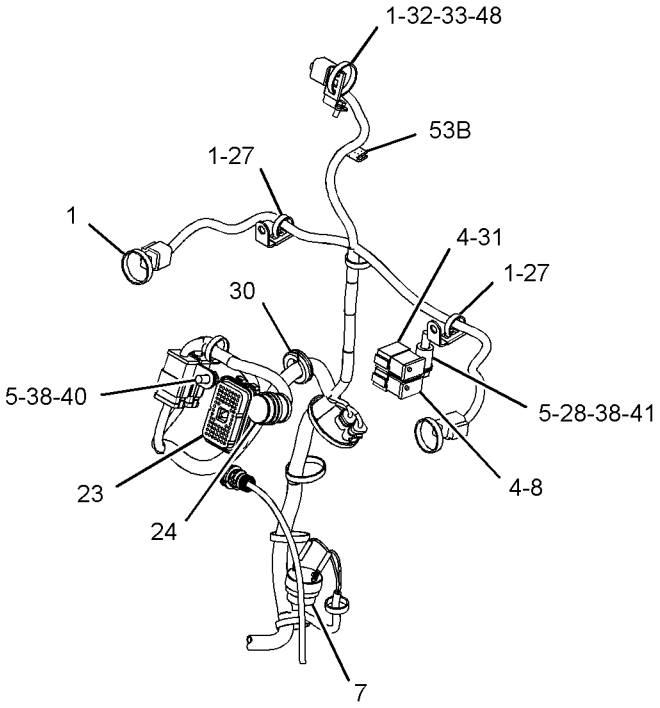

VIEW OF AREA C

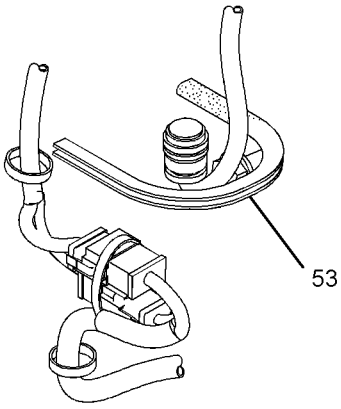

VIEW OF AREA B

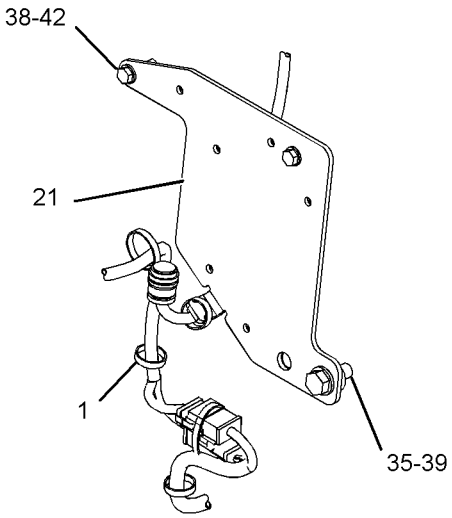

VIEW OF AREA B
(ALTERNATE ROPS CAB MOUNTING)

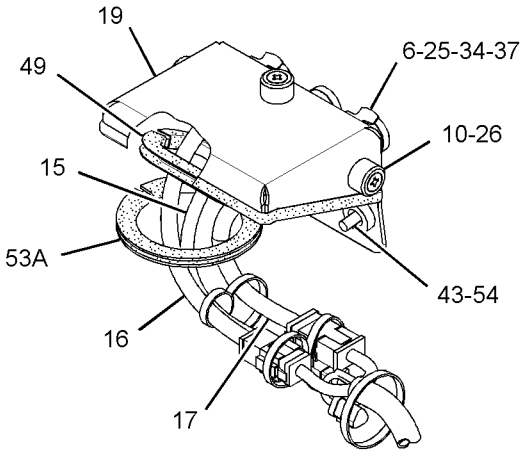

VIEW OF AREA D

GRAPHIC #2 **<END>** g02176539

ELECTRICAL AND STARTING SYSTEM

249-9040 WIRING GP-GRADE CONTROL–BASE

S/N: JTD1-UP; FFF1-UP; LLL1-UP
PART OF 296-5753, 296-5754 GRADE CONTROL AR
AN ATTACHMENT
TYPE 1

SMCS-1408 **i04415713**

NOTE	REF NO	GRAPHIC REF	PART NUMBER	QTY	PART NAME 1 2 3 4 5 6 (PRODUCT LEVEL)	SEE PAGE
	1	1	**7K-1181**	42	STRAP-CABLE	
	2	1	**167-8712**	1	ALARM (ADVISOR)	
	3	1	**226-9169**	1	MODULE AS-POWER SUPPLY	
	4	1	**245-6030**	1	HARNESS AS-DASH (GRADE CONTROL)	
		1	**9X-3401**	6	PIN-CONNECTOR (16-GA TO 18-GA)	
		1	**8T-8729**	4	PIN-CONNECTOR (16-GA TO 18-GA)	
		1	**9W-0852**	2	PIN-CONNECTOR (14-GA TO 16-GA)	
		1	**230-7254**	18	PIN-CONNECTOR	
		1	**155-2255**	1	KIT-CONNECTING PLUG (12-PIN)	
		1	**155-2256**	1	KIT-CONNECTING PLUG (12-PIN)	
		1	**155-2265**	1	KIT-CONNECTING PLUG (8-PIN)	
		1	**155-2260**	2	KIT-CONNECTING PLUG (3-PIN)	
					(EACH PLUG KIT INCLUDES PLUG AS, WEDGE & INTERFACE SEAL)	
		1	**230-5008**	3	PLUG AS-CONNECTOR (4-PIN)	
		1	**8T-8737**	44	PLUG-SEAL	
		1	**102-8801**	2	KIT-RECEPTACLE (12-PIN)	
		1	**190-7614**	1	KIT-RECEPTACLE (12-PIN)	
					(EACH RECEPTACLE KIT INCLUDES RECEPTACLE AS & WEDGE)	
		1	**134-2540**	2	RESISTOR AS-CONNECTION (3-PIN)	
		1	**230-5009**	3	RECEPTACLE AS-CONNECTOR (4-PIN)	
		1	**9X-3402**	6	SOCKET-CONNECTOR (16-GA TO 18-GA)	
		1	**8T-8730**	6	SOCKET-CONNECTOR (16-GA TO 18-GA)	
		1	**9X-3402**	12	SOCKET-CONNECTOR (16-GA TO 18-GA)	
		1	**5P-2321**	2	TERMINAL-FORK (14-GA TO 16-GA, NO. 6 SCREW)	
E		1	**125-7874**		TUBE-HEAT SHRINK (5.72-MM DIA) (45-CM)	
	5	1	**249-9025**	1	HARNESS AS-RADIO (GRADE CONTROL)	
		1	**155-2255**	1	KIT-CONNECTING PLUG (12-PIN)	
					(INCLUDES PLUG AS, WEDGE & INTERFACE SEAL)	
		1	**167-8987**	1	PLUG AS-CONNECTOR (8-PIN)	
		1	**8T-8737**	6	PLUG-SEAL	
		1	**9X-3402**	4	SOCKET-CONNECTOR (16-GA TO 18-GA)	
		1	**9W-0844**	2	SOCKET-CONNECTOR (14-GA TO 16-GA)	
		1	**155-2255**	1	KIT-CONNECTING PLUG (12-PIN)	
					(INCLUDES PLUG AS, WEDGE, & INTERFACE SEAL)	
		1	**167-8987**	1	PLUG AS-CONNECTOR (8-PIN)	
	6	1	**249-9030**	1	HARNESS AS-WIRING (POWER SUPPLY MODULE)	
		1	**9W-0852**	7	PIN-CONNECTOR (14-GA TO 16-GA)	
		1	**3R-9965**	1	PLUG AS-CONNECTOR (8-PIN)	
		1	**6D-5257**	1	PLUG AS-CONNECTOR (8-PIN)	
		1	**8T-8737**	5	PLUG-SEAL	
		1	**102-8801**	1	KIT-RECEPTACLE (12-PIN)	
					(INCLUDES RECEPTACLE AS & WEDGE)	
E		1	**125-7874**		TUBE-HEAT SHRINK (5.72-MM DIA) (5-CM)	
	7	1	**249-9033**	1	HARNESS AS-CONSOLE (GRADE CONTROL)	
		1	**8T-8729**	10	PIN-CONNECTOR (16-GA TO 18-GA)	
		1	**9W-0852**	2	PIN-CONNECTOR (14-GA TO 16-GA)	
		1	**155-2255**	2	KIT-CONNECTING PLUG (12-PIN)	
					(EACH INCLUDES PLUG AS, WEDGE & INTERFACE SEAL)	
		1	**253-2695**	1	PLUG AS-CONNECTOR	
		1	**8T-8737**	12	PLUG-SEAL	

249-9040 **WIRING GP-GRADE CONTROL** *(contd.)* **i04415713**

NOTE	REF NO	GRAPHIC REF	PART NUMBER	QTY	PART NAME 1 2 3 4 5 6 (PRODUCT LEVEL)	SEE PAGE
		1	**102-8806**	1	KIT-RECEPTACLE (8-PIN)	
		1	**102-8801**	1	KIT-RECEPTACLE (12-PIN)	
					(EACH RECEPTACLE KIT INCLUDES RECEPTACLE AS & WEDGE)	
		1	**8T-8736**	1	RECEPTACLE-CONNECTOR (9-PIN)	
		1	**9X-3402**	13	SOCKET-CONNECTOR (16-GA TO 18-GA)	
		1	**9W-0844**	6	SOCKET-CONNECTOR (14-GA TO 16-GA)	
B		1	**141-8061**		TAPE	
E		1	**125-7874**		TUBE-HEAT SHRINK (5.72-MM DIA) (40-CM)	
E		1	**125-7875**		TUBE-HEAT SHRINK (7.44-MM DIA) (10-CM)	
	8	1	**249-9077**	1	PLATE AS	
	9	1	**132-5789**	2	CLIP	
	10	1	**2D-0388**	1	GROMMET	
M	11	1	**8T-4200**	6	BOLT (M8X1.25X16-MM)	
	12	1	**8T-4224**	10	WASHER-HARD (8.8X16X2-MM THK)	
M	13	1	**8T-4908**	4	BOLT (M8X1.25X25-MM)	
E	14	1	**3E-6600**		SEAL (3-CM)	

B-USE AS REQUIRED
E-ORDER BY THE CENTIMETER
M-METRIC PART

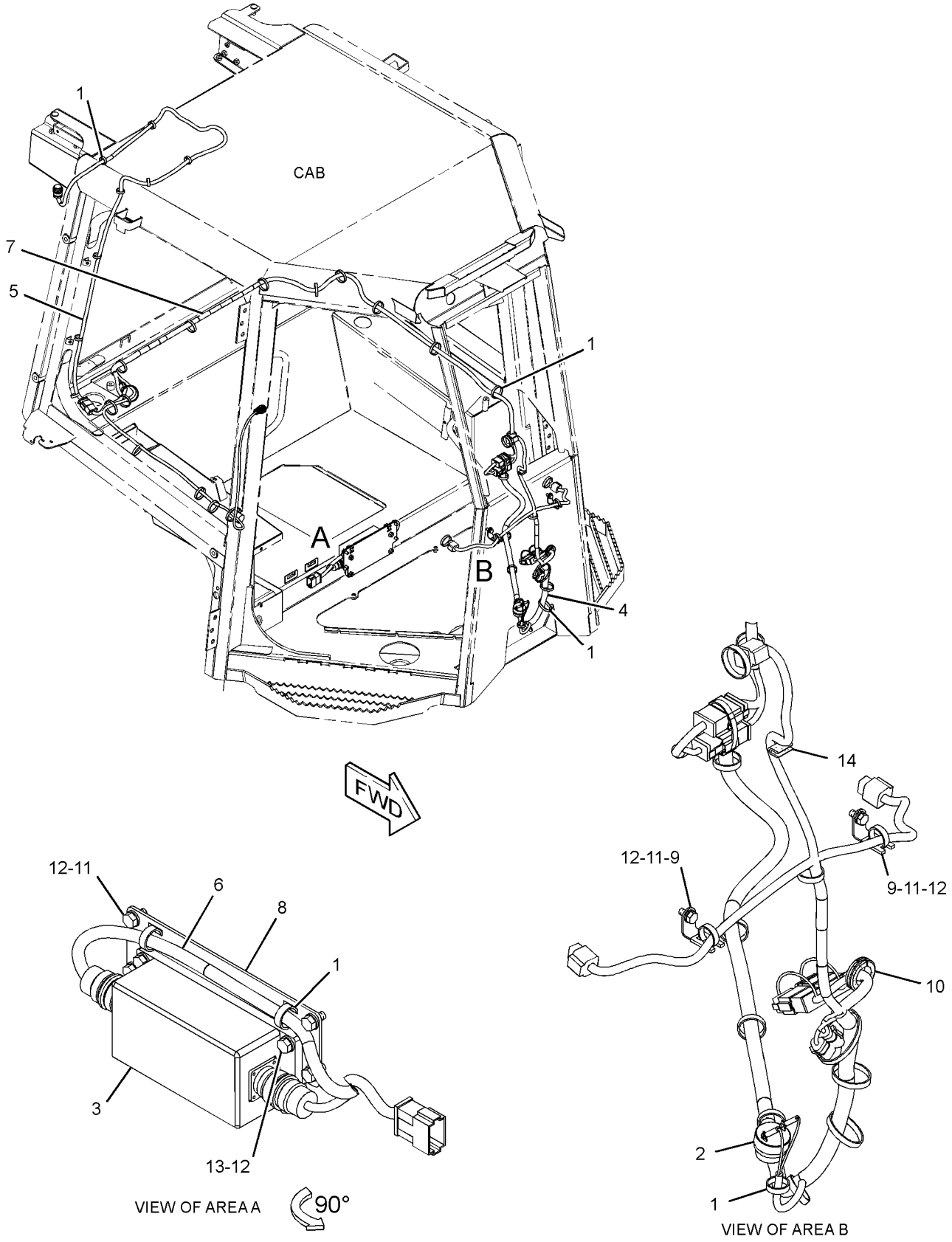

GRAPHIC #1 **<END>** g01376975

ELECTRICAL AND STARTING SYSTEM

249-9040 WIRING GP-GRADE CONTROL–BASE

S/N: JTD1-UP; FFF1-UP; LLL1-UP
PART OF 296-5753, 296-5754 GRADE CONTROL AR
AN ATTACHMENT
TYPE 2

SMCS-1408 **i04416169**

NOTE	REF NO	GRAPHIC REF	PART NUMBER	QTY	PART NAME 1 2 3 4 5 6 (PRODUCT LEVEL)	SEE PAGE
C	1	1	**7K-1181**	39	STRAP-CABLE	
C	2	1	**8T-8737**	24	PLUG-SEAL	
	3	1	**167-8712**	1	ALARM	
C	4	1	**190-7615**	1	KIT-RECEPTACLE (12-PIN)	
					(INCLUDES RECEPTACLE AS & WEDGE)	
	5	1	**226-9169**	1	MODULE AS-POWER SUPPLY	
	6	1	**249-9030**	1	HARNESS AS-WIRING (POWER SUPPLY MODULE)	
		1	**9W-0852**	7	PIN-CONNECTOR (14-GA TO 16-GA)	
		1	**3R-9965**	1	PLUG AS-CONNECTOR (8-PIN)	
		1	**6D-5257**	1	PLUG AS-CONNECTOR (8-PIN)	
		1	**8T-8737**	5	PLUG-SEAL	
		1	**102-8801**	1	KIT-RECEPTACLE (12-PIN)	
					(INCLUDES RECEPTACLE AS & WEDGE)	
E		1	**125-7874**		TUBE-HEAT SHRINK (5.72-MM DIA) (5-CM)	
	7	1	**249-9033**	1	HARNESS AS-CONSOLE (GRADE CONTROL)	
		1	**8T-8729**	10	PIN-CONNECTOR (16-GA TO 18-GA)	
		1	**9W-0852**	2	PIN-CONNECTOR (14-GA TO 16-GA)	
		1	**155-2255**	2	KIT-CONNECTING PLUG (12-PIN)	
					(EACH INCLUDES PLUG AS, WEDGE & INTERFACE SEAL)	
		1	**253-2695**	1	PLUG AS-CONNECTOR	
		1	**8T-8737**	12	PLUG-SEAL	
		1	**102-8806**	1	KIT-RECEPTACLE (8-PIN)	
		1	**102-8801**	1	KIT-RECEPTACLE (12-PIN)	
					(EACH RECEPTACLE KIT INCLUDES RECEPTACLE AS & WEDGE)	
		1	**8T-8736**	1	RECEPTACLE-CONNECTOR (9-PIN)	
		1	**9X-3402**	13	SOCKET-CONNECTOR (16-GA TO 18-GA)	
		1	**9W-0844**	6	SOCKET-CONNECTOR (14-GA TO 16-GA)	
B		1	**141-8061**		TAPE	
E		1	**125-7874**		TUBE-HEAT SHRINK (5.72-MM DIA) (40-CM)	
E		1	**125-7875**		TUBE-HEAT SHRINK (7.44-MM DIA) (10-CM)	
	8	1	**249-9077**	1	PLATE AS	
C	9	1	**311-0295**	1	HARNESS AS-DASH (GRADE CONTROL)	
		1	**8T-8729**	1	PIN-CONNECTOR (16-GA TO 18-GA)	
		1	**9W-0852**	2	PIN-CONNECTOR (14-GA TO 16-GA)	
		1	**9X-3401**	6	PIN-CONNECTOR (16-GA TO 18-GA)	
					–OR–	
		1	**126-1767**	6	PIN-CONNECTOR (14-GA TO 16-GA)	
		1	**155-2255**	1	KIT-CONNECTING PLUG (12-PIN)	
		1	**155-2257**	1	KIT-CONNECTING PLUG (12-PIN)	
		1	**155-2265**	1	KIT-CONNECTING PLUG (8-PIN)	
		1	**155-2260**	2	KIT-CONNECTING PLUG (3-PIN)	
					(EACH PLUG KIT INCLUDES PLUG AS, WEDGE & INTERFACE SEAL)	
		1	**230-5008**	3	PLUG AS-CONNECTOR (4-PIN)	
		1	**8T-8737**	24	PLUG-SEAL	
		1	**102-8801**	1	KIT-RECEPTACLE (12-PIN)	
					(INCLUDES RECEPTACLE AS & WEDGE)	
		1	**134-2540**	2	RESISTOR AS-CONNECTION (3-PIN)	
		1	**230-5009**	3	RECEPTACLE AS-CONNECTOR (4-PIN)	
		1	**9X-3402**	12	SOCKET-CONNECTOR (16-GA TO 18-GA)	
		1	**180-9340**	10	SOCKET-CONNECTOR (14-GA TO 18-GA)	
		1	**5P-2321**	2	TERMINAL-FORK (14-GA TO 16-GA, NO. 6 SCREW)	

249-9040 **WIRING GP-GRADE CONTROL** *(contd.)* **i04416169**

NOTE	REF NO	GRAPHIC REF	PART NUMBER	QTY	PART NAME 1 2 3 4 5 6 (PRODUCT LEVEL)	SEE PAGE
E		1	**125-7874**		TUBE-HEAT SHRINK (5.72-MM DIA) (45-CM)	
	10	1	**132-5789**	2	CLIP	
C	11	1	**311-0305**	1	HARNESS AS-RADIO (GRADE CONTROL)	
		1	**155-2255**	1	KIT-CONNECTING PLUG (12-PIN)	
					(INCLUDES PLUG AS, WEDGE & INTERFACE SEAL)	
		1	**167-8987**	1	PLUG AS-CONNECTOR (8-PIN)	
		1	**8T-8737**	4	PLUG-SEAL	
		1	**9W-0844**	2	SOCKET-CONNECTOR (14-GA TO 16-GA)	
		1	**180-9340**	6	SOCKET-CONNECTOR (14-GA TO 18-GA)	
C	12	1	**102-8801**	1	KIT-RECEPTACLE (12-PIN)	
					(INCLUDES RECEPTACLE AS & WEDGE)	
CM	13	1	**8T-4200**	4	BOLT (M8X1.25X16-MM)	
C	14	1	**8T-4224**	8	WASHER-HARD (8.8X16X2-MM THK)	
M	15	1	**8T-4908**	4	BOLT (M8X1.25X25-MM)	

B-USE AS REQUIRED
C-CHANGE FROM PREVIOUS TYPE
E-ORDER BY THE CENTIMETER
M-METRIC PART

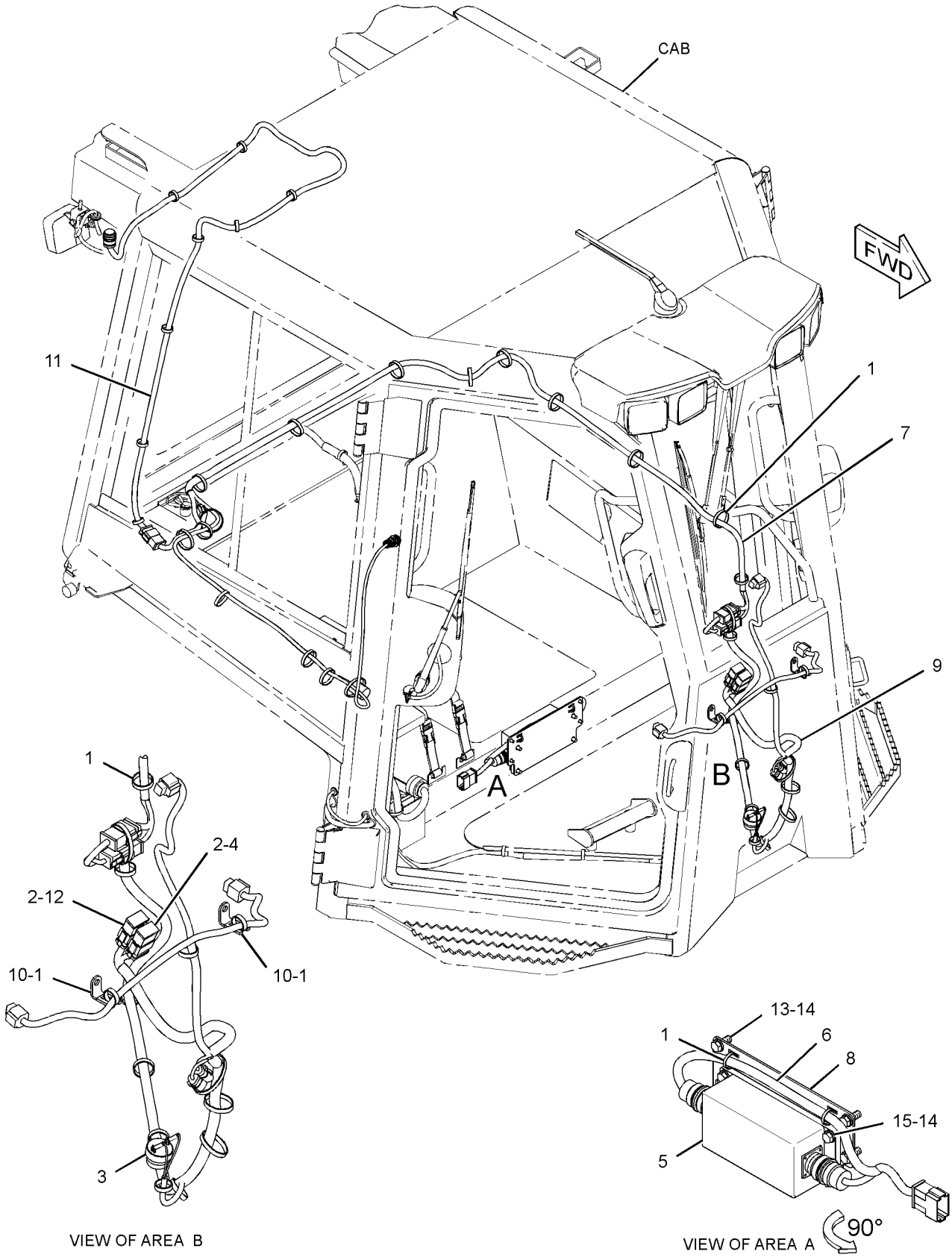

GRAPHIC #1 **<END>** g01738474

245-6020 WIRING GP-PLATFORM

S/N: JTD1-UP; FFF1-UP; LLL1-UP
PART OF 244-7376, 244-7377, 282-5327 CHASSIS AR
TYPE 1

SMCS-1408 **i04415711**

NOTE	REF NO	GRAPHIC REF	PART NUMBER	QTY	PART NAME 1 2 3 4 5 6 (PRODUCT LEVEL)	SEE PAGE
	1	1	**6I-1418**	4	SPACER (8.2X12.7X28.7-MM THK)	
	2	1	**7G-1060**	1	STRAP AS-GROUND	
	3	1	**7K-1181**	17	STRAP-CABLE	
	4	1	**8T-9655**	8	MOUNT-ISOLATION	
	5	1	**130-5300**	2	CLIP	
	6	1	**201-1024**	1	BRACKET	
	7	1	**311-0294**	1	HARNESS AS-PLATFORM	
		1	**126-1774**	2	COVER-CONNECTOR	
		1	**211-0052**	1	NUT (1-11/16-18-THD)	
		1	**213-0139**	5	PIN	
		1	**186-3735**	14	PIN-CONNECTOR (16-GA TO 18-GA)	
		1	**9W-0852**	4	PIN-CONNECTOR (14-GA TO 16-GA)	
		1	**9X-3401**	62	PIN-CONNECTOR (16-GA TO 18-GA)	
					—OR—	
		1	**126-1767**	62	PIN-CONNECTOR (14-GA TO 16-GA)	
		1	**147-1445**	1	PLUG AS-CONNECTOR (7O-PIN)	
		1	**147-1446**	1	PLUG AS-CONNECTOR (7O-PIN)	
		1	**155-2255**	5	KIT-CONNECTING PLUG (12-PIN)	
		1	**155-2265**	3	KIT-CONNECTING PLUG (8-PIN)	
		1	**155-2260**	1	KIT-CONNECTING PLUG (3-PIN)	
		1	**155-2270**	2	KIT-CONNECTING PLUG (2-PIN)	
					(EACH PLUG KIT INCLUDES PLUG AS, WEDGE & INTERFACE SEAL)	
		1	**160-7690**	1	PLUG AS-CONNECTOR (7O-PIN)	
		1	**159-9322**	1	SEAL-O-RING	
		1	**197-7261**	1	PLUG AS-CONNECTOR (19-PIN)	
		1	**8T-8737**	141	PLUG-SEAL	
		1	**102-8802**	2	KIT-RECEPTACLE (2-PIN)	
		1	**102-8803**	1	KIT-RECEPTACLE (3-PIN)	
		1	**102-8806**	3	KIT-RECEPTACLE (8-PIN)	
		1	**102-8801**	5	KIT-RECEPTACLE (12-PIN)	
		1	**190-7615**	1	KIT-RECEPTACLE (12-PIN)	
					(EACH RECEPTACLE KIT INCLUDES RECEPTACLE AS & WEDGE)	
		1	**167-3692**	1	RECEPTACLE AS-CONNECTOR (31-PIN)	
		1	**186-3736**	22	SOCKET-CONNECTOR (16-GA TO 18-GA)	
		1	**9W-0844**	8	SOCKET-CONNECTOR (14-GA TO 16-GA)	
		1	**9X-3402**	174	SOCKET-CONNECTOR (16-GA TO 18-GA)	
		1	**180-9340**	24	SOCKET-CONNECTOR (14-GA TO 18-GA)	
		1	**8L-8413**	15	STRAP-CABLE (WHITE)	
		1	**9X-6772**	4	STRAP-CABLE	
		1	**3T-4696**	1	TERMINAL-RING (1O-GA TO 12-GA, 7/16-IN SCREW)	
		1	**2L-8079**	1	TERMINAL-RING (14-GA TO 16-GA, 3/8-IN SCREW)	
E		1	**119-3662**		TUBE-HEAT SHRINK (1O.85-MM DIA) (13-CM)	
E		1	**125-7874**		TUBE-HEAT SHRINK (5.72-MM DIA) (125-CM)	
E		1	**125-7875**		TUBE-HEAT SHRINK (7.44-MM DIA) (15-CM)	
		1	**128-4249**	1	LOCKWASHER	
Y	8	1	*249-9023*	1	PANEL GP-FUSE	201
R	9	1	**262-1408**	1	CONTROL GP-UNPROGRAMMED (CHASSIS)	
	10	1	**269-7680**	1	CLIP	
M	11	1	**127-2170**	4	SCREW-TRUSS HEAD (M8X1.25X2O-MM)	
	12	1	**132-5789**	1	CLIP	
	13	1	**4P-7581**	1	CLIP	
	14	1	**4P-8134**	2	CLIP	

245-6020 **WIRING GP-PLATFORM** *(contd.)* **i04415711**

NOTE	REF NO	GRAPHIC REF	PART NUMBER	QTY	PART NAME 1 2 3 4 5 6 (PRODUCT LEVEL)	SEE PAGE
M	15	1	**5C-7261**	4	NUT (M8X1.25-THD)	
	16	1	**5P-4116**	4	WASHER-HARD (8.8X20.5X2-MM THK)	
	17	1	**8T-4121**	4	WASHER-HARD (11X21X2.5-MM THK)	
M	18	1	**8T-4133**	1	NUT (M10X1.5-THD)	
M	19	1	**8T-4191**	3	BOLT (M10X1.5X16-MM)	

E-ORDER BY THE CENTIMETER
M-METRIC PART
R-REMFG PART MAY BE AVAILABLE
Y-SEPARATE ILLUSTRATION

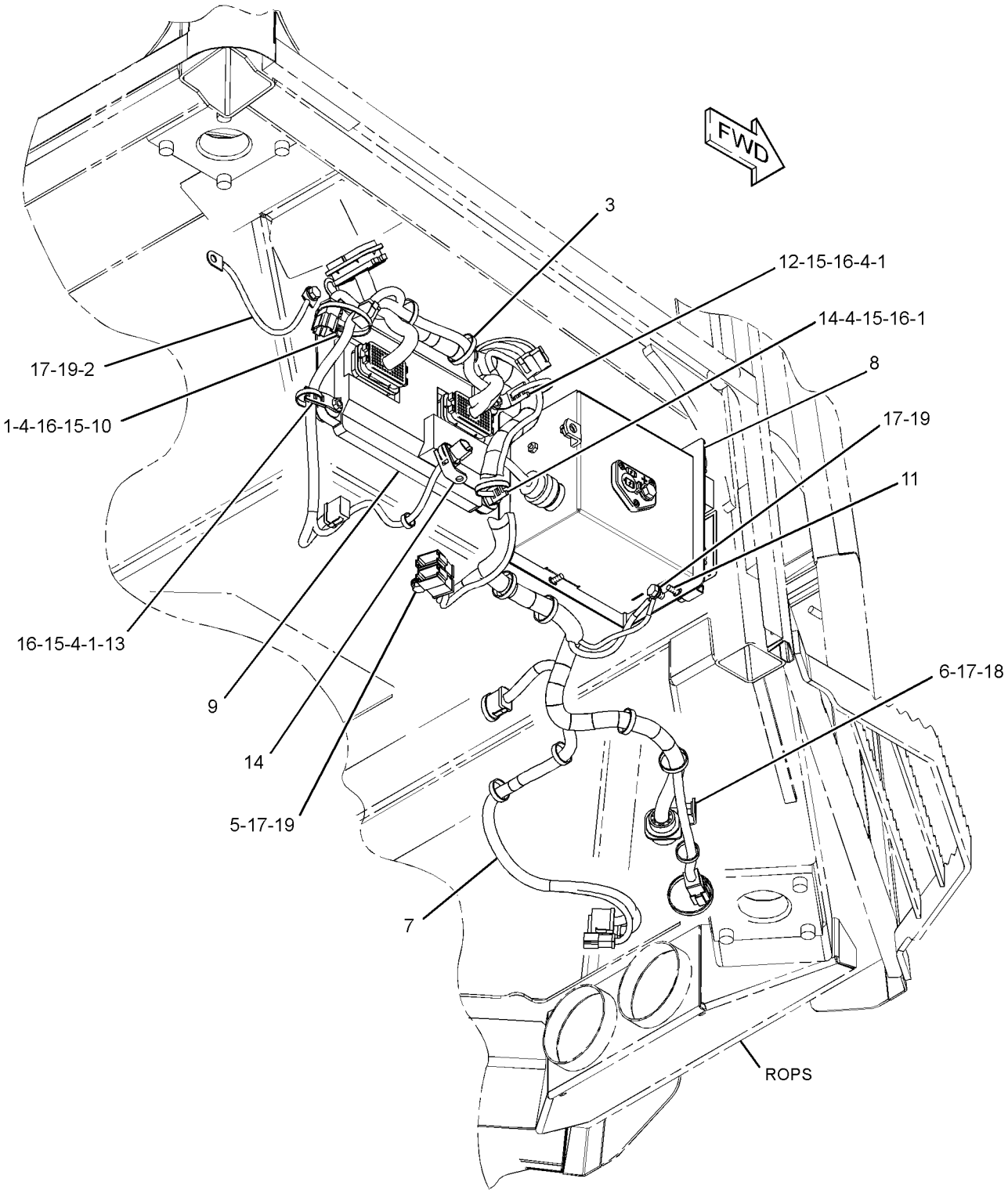

GRAPHIC #1 **<END>** g01517236

ELECTRICAL AND STARTING SYSTEM

245-6020 WIRING GP-PLATFORM

S/N: JTD1-UP; FFF1-UP; LLL1-UP
PART OF 244-7376, 244-7377, 282-5327 CHASSIS AR
TYPE 2

SMCS-1408 **i03995883**

NOTE	REF NO	GRAPHIC REF	PART NUMBER	QTY	PART NAME 1 2 3 4 5 6 (PRODUCT LEVEL)	SEE PAGE
	1	1	**6I-1418**	4	SPACER (8.2X12.7X28.7-MM THK)	
	2	1	**7G-1060**	1	STRAP AS-GROUND	
C	3	1	**7K-1181**	20	STRAP-CABLE	
	4	1	**8T-9655**	8	MOUNT-ISOLATION	
	5	1	**130-5300**	2	CLIP	
	6	1	**201-1024**	1	BRACKET	
	7	1	**311-0294**	1	HARNESS AS-PLATFORM	
		1	**126-1774**	2	COVER-CONNECTOR	
		1	**211-0052**	1	NUT (1-11/16-18-THD)	
		1	**213-0139**	5	PIN	
		1	**8T-8729**	14	PIN-CONNECTOR (16-GA TO 18-GA)	
		1	**9W-0852**	4	PIN-CONNECTOR (14-GA TO 16-GA)	
		1	**9X-3401**	62	PIN-CONNECTOR (16-GA TO 18-GA)	
		1	**160-7690**	1	PLUG AS-CONNECTOR (70-PIN)	
		1	**147-1445**	1	PLUG AS-CONNECTOR (70-PIN)	
		1	**147-1446**	1	PLUG AS-CONNECTOR (70-PIN)	
					(EACH PLUG AS INCLUDES)	
		1	**159-9322**	1	SEAL-O-RING	
		1	**155-2255**	5	KIT-CONNECTING PLUG (12-PIN)	
		1	**155-2265**	3	KIT-CONNECTING PLUG (8-PIN)	
		1	**155-2260**	1	KIT-CONNECTING PLUG (3-PIN)	
		1	**155-2270**	2	KIT-CONNECTING PLUG (2-PIN)	
					(EACH PLUG KIT INCLUDES PLUG AS, WEDGE & INTERFACE SEAL)	
		1	**197-7261**	1	PLUG AS-CONNECTOR (19-PIN)	
		1	**8T-8737**	141	PLUG-SEAL	
		1	**102-8802**	2	KIT-RECEPTACLE (2-PIN)	
		1	**102-8803**	1	KIT-RECEPTACLE (3-PIN)	
		1	**102-8806**	3	KIT-RECEPTACLE (8-PIN)	
		1	**102-8801**	5	KIT-RECEPTACLE (12-PIN)	
		1	**190-7615**	1	KIT-RECEPTACLE (12-PIN)	
					(EACH RECEPTACLE KIT INCLUDES RECEPTACLE AS & WEDGE)	
		1	**167-3692**	1	RECEPTACLE AS-CONNECTOR (31-PIN)	
		1	**8T-8730**	22	SOCKET-CONNECTOR (16-GA TO 18-GA)	
		1	**9W-0844**	8	SOCKET-CONNECTOR (14-GA TO 16-GA)	
		1	**9X-3402**	174	SOCKET-CONNECTOR (16-GA TO 18-GA)	
		1	**180-9340**	24	SOCKET-CONNECTOR (14-GA TO 18-GA)	
		1	**8L-8413**	15	STRAP-CABLE (WHITE)	
		1	**9X-6772**	4	STRAP-CABLE	
		1	**3T-4696**	1	TERMINAL-RING (10-GA TO 12-GA, 7/16-IN SCREW)	
		1	**2L-8079**	1	TERMINAL-RING (14-GA TO 16-GA, 3/8-IN SCREW)	
E		1	**119-3662**		TUBE-HEAT SHRINK (10.85-MM DIA) (13-CM)	
E		1	**125-7874**		TUBE-HEAT SHRINK (5.72-MM DIA) (125-CM)	
E		1	**125-7875**		TUBE-HEAT SHRINK (7.44-MM DIA) (15-CM)	
		1	**128-4249**	1	LOCKWASHER	
CR	9	1	**304-5687**	1	CONTROL GP-UNPROGRAMMED (CHASSIS)	
	10	1	**269-7680**	1	CLIP	
	12	1	**132-5789**	1	CLIP	
	13	1	**4P-7581**	1	CLIP	
	14	1	**4P-8134**	2	CLIP	
M	15	1	**5C-7261**	4	NUT (M8X1.25-THD)	
	16	1	**5P-4116**	4	WASHER-HARD (8.8X20.5X2-MM THK)	
	17	1	**8T-4121**	4	WASHER-HARD (11X21X2.5-MM THK)	

245-6020 **WIRING GP-PLATFORM** *(contd.)* **i03995883**

NOTE	REF NO	GRAPHIC REF	PART NUMBER	QTY	PART NAME 1 2 3 4 5 6 (PRODUCT LEVEL)	SEE PAGE
M	18	1	**8T-4133**	1	NUT (M10X1.5-THD)	
M	19	1	**8T-4191**	3	BOLT (M10X1.5X16-MM)	

C-CHANGE FROM PREVIOUS TYPE
E-ORDER BY THE CENTIMETER
M-METRIC PART
R-REMFG PART MAY BE AVAILABLE

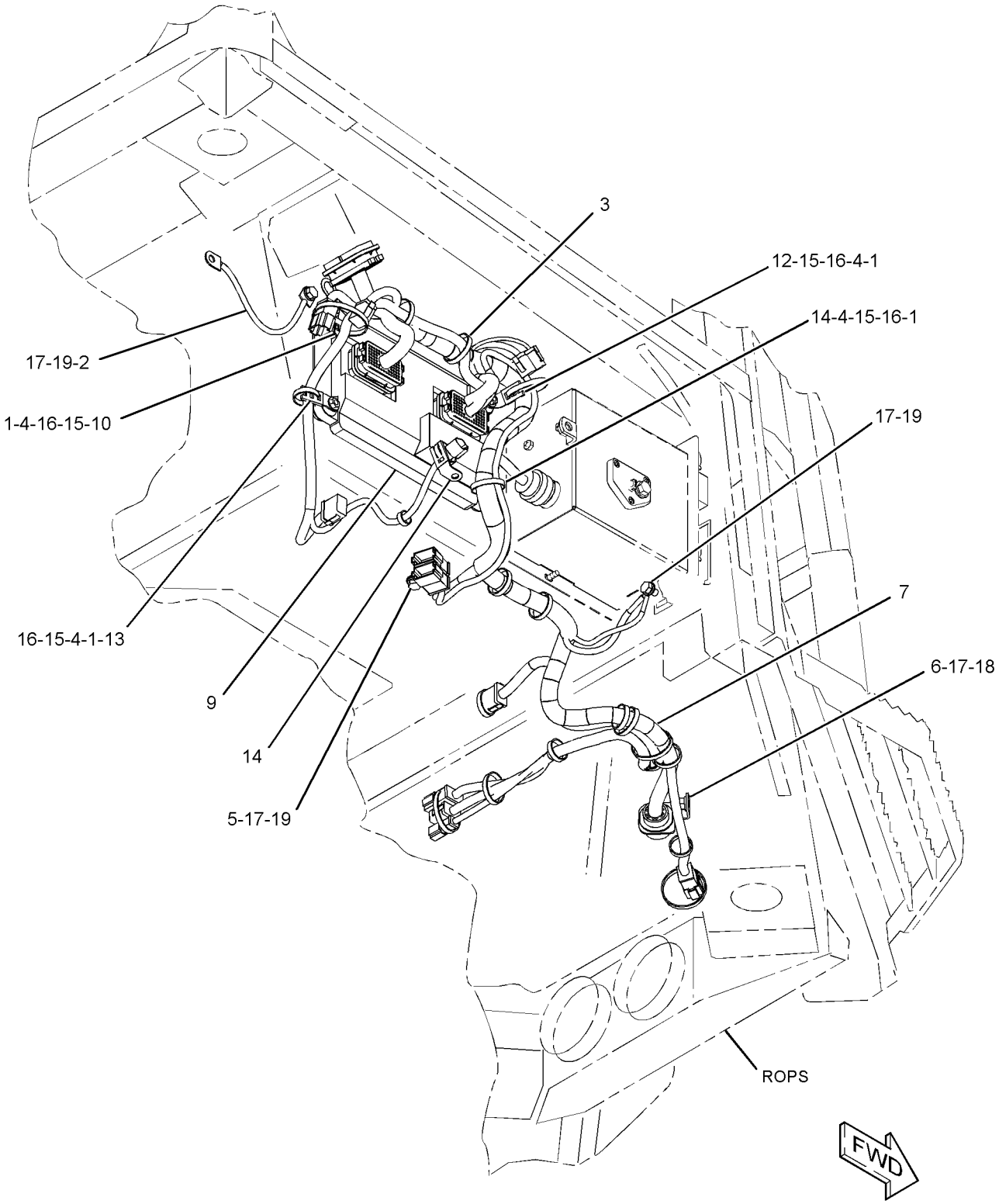

GRAPHIC #1 **<END>** g02362017

199-6225 ACTUATOR GP-PUMP–SERVO

S/N: JTD1-UP; FFF1-UP; LLL1-UP
PART OF 289-6385, 289-6386, 289-6387 PUMP GP-PISTON
AN ATTACHMENT

SMCS-5078 **i01944034**

NOTE	REF NO	GRAPHIC REF	PART NUMBER	QTY	PART NAME 1 2 3 4 5 6 (PRODUCT LEVEL)	SEE PAGE
	1	1	**117-7273**	2	SEAL-O-RING	
	2	1	**145-3812**	2	RING	
	3	1	**145-3813**	2	RING-SEAL	

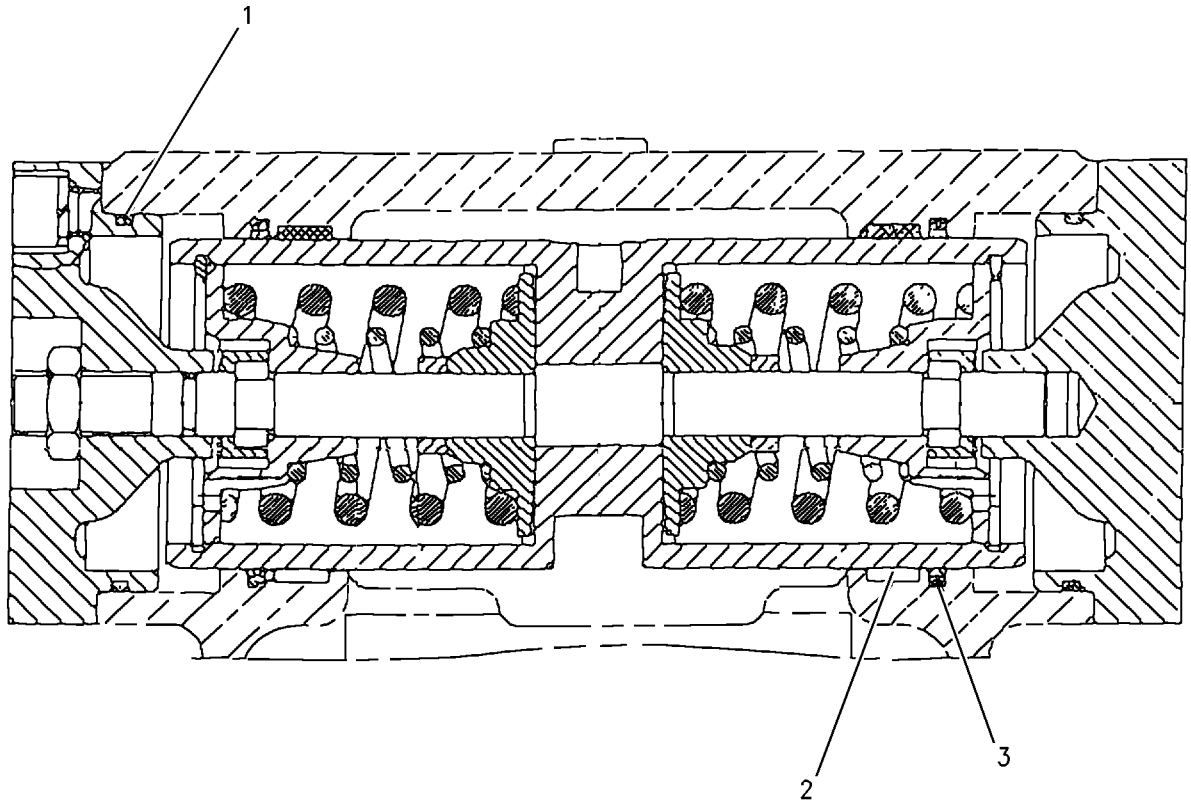

GRAPHIC #1 **<END>** g00830276

212-7032 ACTUATOR GP-PUMP–SERVO

S/N: JTD1-UP; FFF1-UP; LLL1-UP
PART OF 254-1379 PUMP GP-PISTON
AN ATTACHMENT

SMCS-5078 **i01936506**

NOTE	REF NO	GRAPHIC REF	PART NUMBER	QTY	PART NAME 1 2 3 4 5 6 (PRODUCT LEVEL)	SEE PAGE
	1	1	**8T-7000**	2	SEAL	
	2	1	**159-8246**	2	RING	
	3	1	**159-8247**	2	RING	

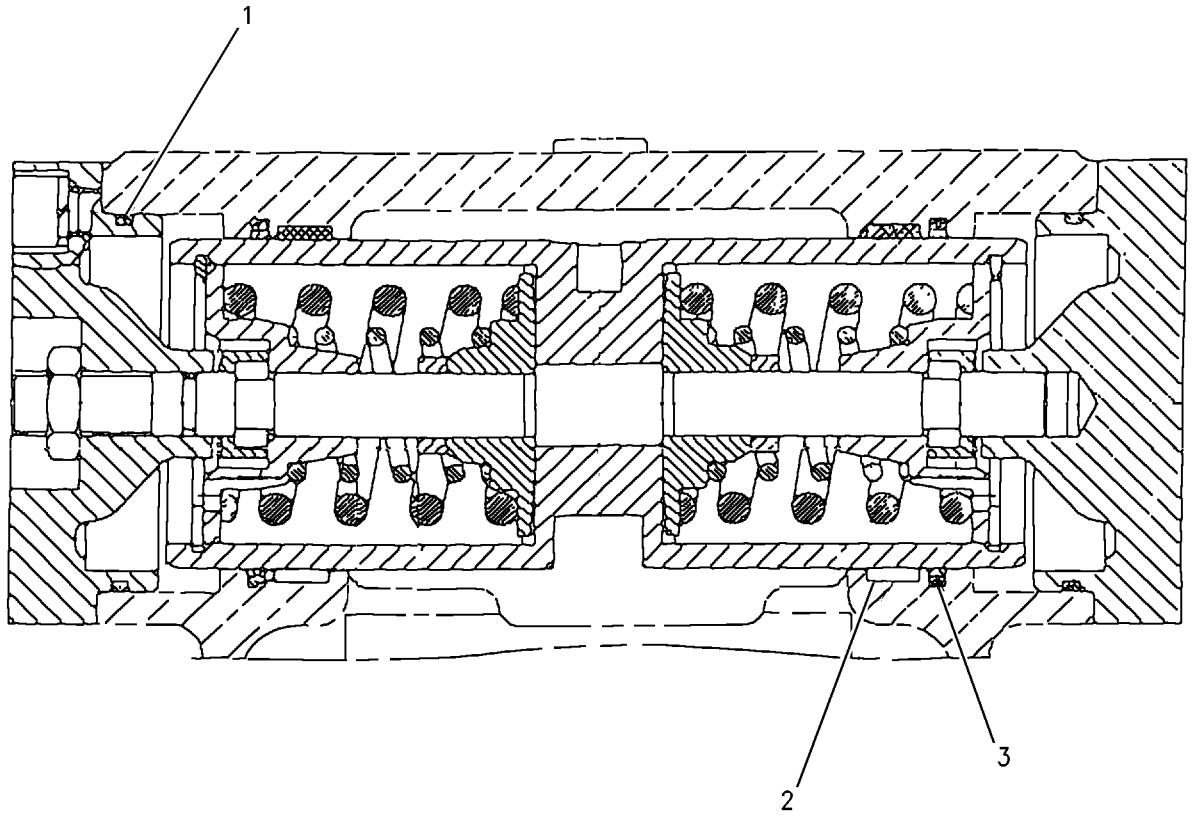

GRAPHIC #1 **<END>** g00836060

234-8821 ACTUATOR GP-PUMP

S/N: JTD1-UP
PART OF 289-6388, 289-6389 PUMP GP-PISTON
AN ATTACHMENT

SMCS-5078 **i02583844**

NOTE	REF NO	GRAPHIC REF	PART NUMBER	QTY	PART NAME 1 2 3 4 5 6 (PRODUCT LEVEL)	SEE PAGE
	1	1	**004-1964**	2	SEAL-O-RING	
	2	1	**188-7790**	2	RING-GUIDE	
	3	1	**188-7791**	2	RING	
	4	1	**188-7568**	1	COVER	
	5	1	**188-7569**	1	COVER	
M	6	1	**188-7789**	1	NUT (M12X1.5-THD)	
M	7	1	**8T-0269**	8	BOLT-SOCKET HEAD (M6X1X20-MM)	

M-METRIC PART

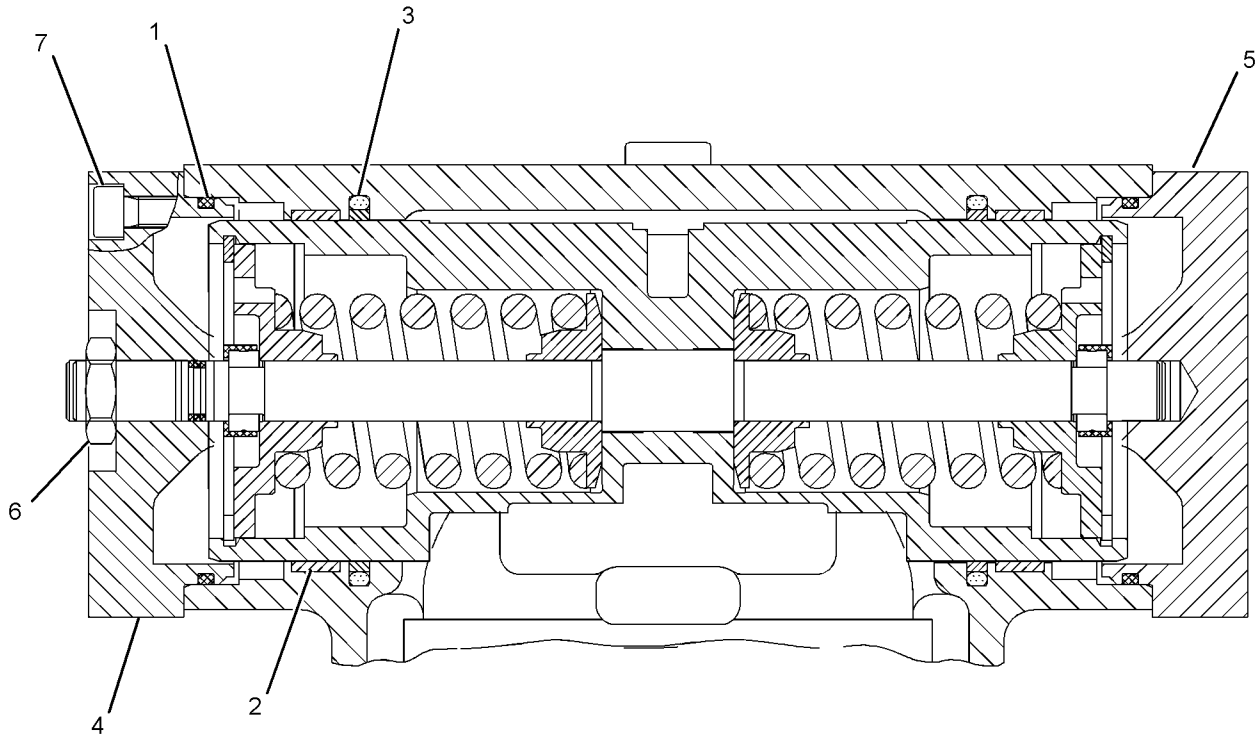

GRAPHIC #1 **<END>** g01010836

244-7615 BRAKE GP-PARKING

S/N: JTD1-UP; FFF525-UP; LLL623-UP

PART OF 244-7382, 244-7445, 286-3235 POWER TRAIN AR

SMCS-4267 **i02934561**

NOTE	REF NO	GRAPHIC REF	PART NUMBER	QTY	PART NAME 1 2 3 4 5 6 (PRODUCT LEVEL)	SEE PAGE
	1	1	**5E-8178**	14	SPRING	
	2	1	**7X-9261**	1	RETAINER	
	3	1	**249-5746**	1	PISTON	
	4	1	**303-0453**	1	KIT-DISC (BRAKE)	
					(INCLUDES PRIMARY DISC, ROTATING DISCS, STATIONARY DISCS & TORQUE PINS)	
	5	1	**303-0454**	1	KIT-SEAL	
					(INCLUDES GASKET, PACKING & SEAL-O-RING)	
C	6	1	**303-0464**	1	KIT-BEARING (BRAKE)	
					(INCLUDES BALL BEARINGS, RINGS & LIP SEALS)	
C	7	1	**303-0465**	1	SHAFT	
M	8	1	**095-0658**	2	BOLT-SOCKET HEAD (M10X1.5X70-MM)	
	9	1	**9F-2247**	2	PLUG-PIPE	

C-CHANGE FROM PREVIOUS TYPE
M-METRIC PART

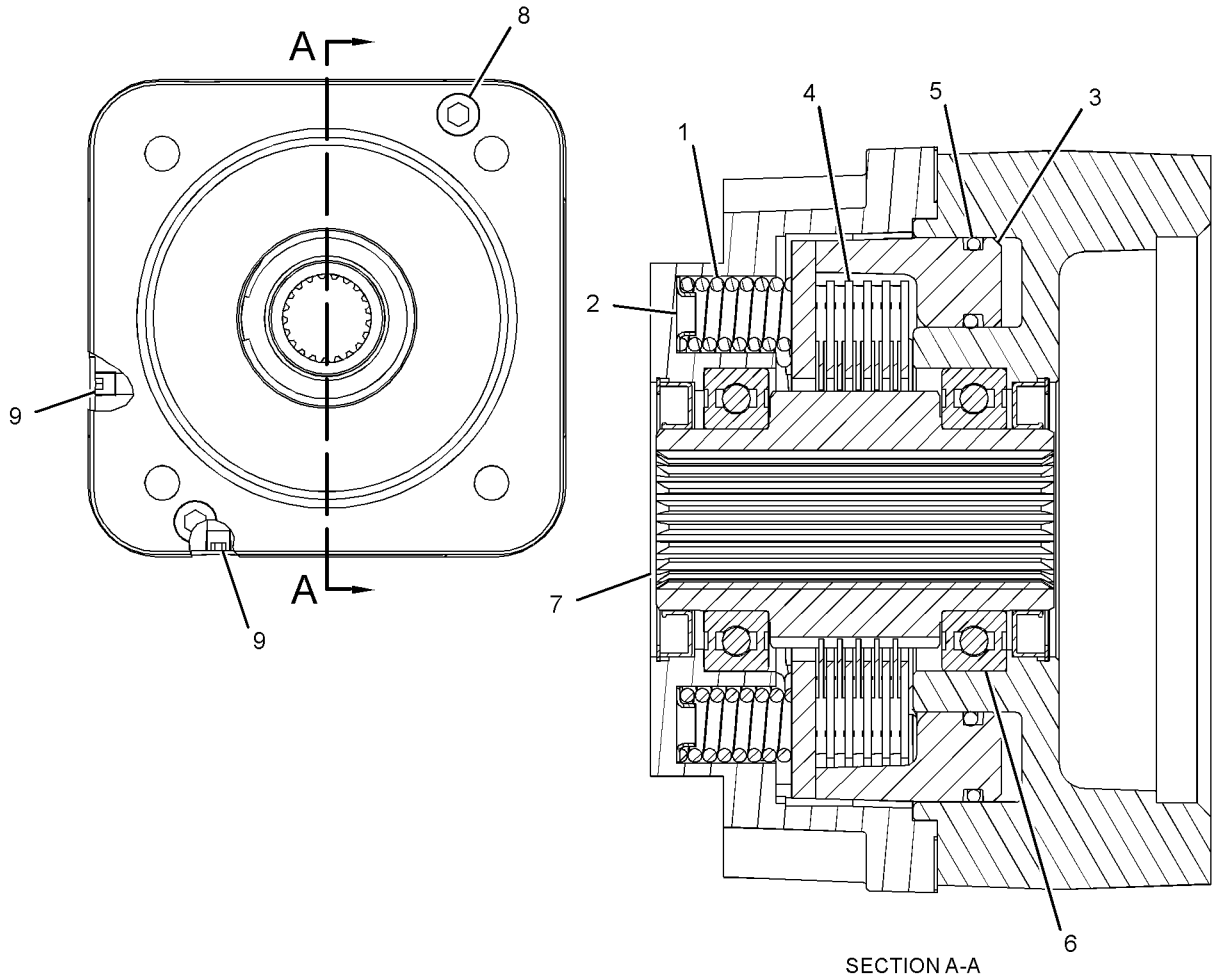

SECTION A-A

GRAPHIC #1 **<END>** g01621521

244-7615 BRAKE GP-PARKING

S/N: FFF1-524; LLL1-622

PART OF 244-7382, 244-7445 POWER TRAIN AR

SMCS-4267 **i02899701**

NOTE	REF NO	GRAPHIC REF	PART NUMBER	QTY	PART NAME 1 2 3 4 5 6 (PRODUCT LEVEL)	SEE PAGE
	1	1	**5E-8178**	14	SPRING	
	2	1	**7X-9261**	1	RETAINER	
	3	1	**249-5656**	1	SHAFT	
	4	1	**249-5665**	1	KIT-BEARING (BRAKE)	
					(INCLUDES BALL BEARINGS, RINGS & LIP SEALS)	
	5	1	**249-5745**	1	HOUSING	
	6	1	**249-5746**	1	PISTON	
	7	1	**249-5748**	1	HOUSING	
	8	1	**303-0453**	1	KIT-DISC (BRAKE)	
					(INCLUDES PRIMARY DISC, ROTATING DISCS, STATIONARY DISCS & TORQUE PINS)	
	9	1	**303-0454**	1	KIT-SEAL	
					(INCLUDES GASKET, PACKING & SEAL-O-RING)	
M	10	1	**095-0658**	2	BOLT-SOCKET HEAD (M10X1.5X70-MM)	
	12	1	**9F-2247**	2	PLUG-PIPE	

M-METRIC PART

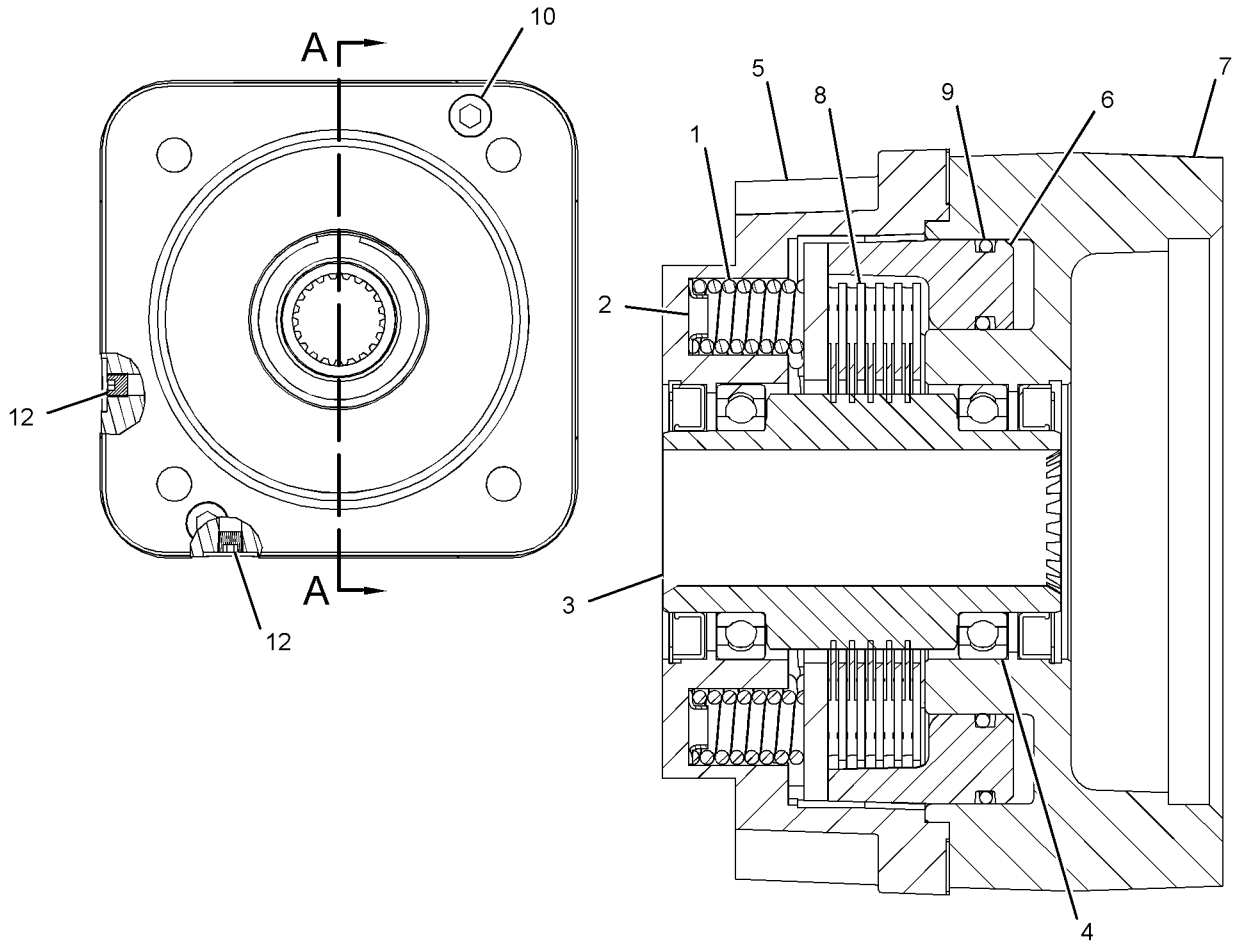

SECTION A-A

GRAPHIC #1 **<END>** g01471517

244-7450 DRIVE AR—AUXILIARY PUMP

S/N: JTD1-UP; FFF1-UP; LLL1-UP
CANNOT BE USED WITH 256-3738—PAGE 920
AN ATTACHMENT

SMCS-5158 **i02818283**

NOTE	PART NUMBER	QTY	PART NAME 1 2 3 4 5 6 (PRODUCT LEVEL)	SEE PAGE
Y	*244-7411*	1	LINES GP-HYDROSTATIC	308
Y	**254-1377**	1	PUMP GP-PISTON (HYDROSTATIC DRIVE)	359
Y	*274-7516*	1	SUPPORT GP-PUMP DRIVE	610
	311-0300	1	BATTERY GP	
	9X-3404	2	BATTERY (12-VOLT, MAINTENANCE FREE, WET)	
Y-SEPARATE ILLUSTRATION				

<END>

291-5094 DRIVE AR—STANDARD

S/N: JTD1-UP; FFF1-UP; LLL1-UP
CANNOT BE USED WITH 264-4542—PAGE 533, 244-7517—PAGE 911, 256-3738—PAGE 920
AN ATTACHMENT

SMCS-5158 **i02817878**

NOTE	PART NUMBER	QTY	PART NAME 1 2 3 4 5 6 (PRODUCT LEVEL)	SEE PAGE
Y	*289-0253*	1	LINES GP-HYDROSTATIC	313
Y	**254-1378**	1	PUMP GP-PISTON (HYDROSTATIC)	360
	311-0301	1	BATTERY GP	
	3T-5760	2	BATTERY (12-VOLT, MAINTENANCE FREE, WET)	
Y-SEPARATE ILLUSTRATION				

<END>

291-5098 DRIVE AR—STANDARD

S/N: JTD1-UP
CANNOT BE USED WITH 264-4542—PAGE 533, 244-7517—PAGE 911, 256-3738—PAGE 920
AN ATTACHMENT

SMCS-5158 **i02889107**

NOTE	PART NUMBER	QTY	PART NAME 1 2 3 4 5 6 (PRODUCT LEVEL)	SEE PAGE
Y	*286-8052*	1	LINES GP-HYDROSTATIC	310
Y	**254-1378**	1	PUMP GP-PISTON (HYDROSTATIC)	360
	311-0301	1	BATTERY GP	
	3T-5760	2	BATTERY (12-VOLT, MAINTENANCE FREE, WET)	
	123-1373	6	CAP AS-FILLER (BATTERY)	
Y-SEPARATE ILLUSTRATION				

<END>

292-0122 DRIVE AR—AUXILIARY

S/N: JTD1-UP
CANNOT BE USED WITH 256-3738—PAGE 920
AN ATTACHMENT

SMCS-5158 **i02888990**

NOTE	PART NUMBER	QTY	PART NAME 1 2 3 4 5 6 (PRODUCT LEVEL)	SEE PAGE
Y	*286-8052*	1	LINES GP-HYDROSTATIC	310
Y	**254-1377**	1	PUMP GP-PISTON (HYDROSTATIC DRIVE)	359
Y	*274-7516*	1	SUPPORT GP-PUMP DRIVE	610

Y-SEPARATE ILLUSTRATION

<END>

300-8543 DRIVE AR—AUXILIARY PUMP

S/N: JTD1-UP
CANNOT BE USED WITH 256-3738—PAGE 920, 264-4542—PAGE 533
AN ATTACHMENT

SMCS-5158 **i02884077**

NOTE	PART NUMBER	QTY	PART NAME 1 2 3 4 5 6 (PRODUCT LEVEL)	SEE PAGE
Y	*286-8052*	1	LINES GP-HYDROSTATIC	310
Y	**254-1377**	1	PUMP GP-PISTON	359
Y	*274-7516*	1	SUPPORT GP-PUMP DRIVE	610
B	**9X-3404**	2	BATTERY (12-VOLT, MAINTENANCE FREE, WET)	
			- OR -	
B	**115-2422**	1	BATTERY GP (12-VOLT, MAINTENANCE FREE, WET)	

B-USE AS REQUIRED
Y-SEPARATE ILLUSTRATION

<END>

POWER TRAIN

244-1528 DRIVE GP-FINAL

S/N: JTD1-UP; FFF1-UP; LLL1-UP

PART OF 244-7382, 244-7445, 286-3235 POWER TRAIN AR

SMCS-4050 **i03077113**

NOTE	REF NO	GRAPHIC REF	PART NUMBER	QTY	PART NAME 1 2 3 4 5 6 (PRODUCT LEVEL)	SEE PAGE
	1	1	**6V-0330**	2	CUP-BEARING (TAPERED ROLLER)	
	2	1	**6Y-0859**	1	SEAL GP-DUO-CONE	
		1	**1M-9011**	2	RING-TORIC	
	3	1	**7Y-0223**	3	SHAFT-PLANETARY	
	4	1	**7Y-0225**	3	SHAFT-PLANETARY	
	5	1	**7Y-1433**	1	CARRIER	
	6	1	**7Y-1434**	1	SPACER (40X69.5X6-MM THK)	
	7	1	**7Y-1558**	1	SPACER (90X119.6X7.5-MM THK)	
	8	1	**8T-0072**	2	CONE-BEARING	
	9	1	**094-0611**	6	WASHER (47.3X76X1-MM THK)	
	10	1	**094-0616**	3	BEARING AS-ROLLER	
M	11	1	**094-1528**	6	WASHER (53X84X1-MM THK)	
	12	1	**095-0891**	6	PIN-SPRING	
M	13	1	**113-8215**	4	STUD-TAPERLOCK	
	14	1	**113-9769**	1	RETAINER	
	15	1	**126-8921**	1	PLUG-MAGNETIC (FINAL DRIVE OIL DRAIN)	
		1	**9S-8008**	1	PLUG-O-RING	
	16	1	**322-0304**	1	GEAR-SUN (13-TEETH)	
	17	1	**244-1516**	1	GEAR-SUN (17-TEETH)	
	18	1	**244-1518**	3	GEAR-PLANETARY (30-TEETH)	
	19	1	**244-1522**	1	GEAR-COUPLING (55-TEETH)	
	20	1	**244-1523**	1	SPINDLE	
	21	1	**246-6190**	1	CARRIER	
	22	1	**247-1459**	3	GEAR-PLANETARY (44-TEETH)	
	23	1	**248-0732**	6	BEARING AS-ROLLER	
	24	1	**271-7780**	1	COVER	
	25	1	**272-2317**	1	GEAR-RING (79-TEETH)	
	26	1	**289-5883**	1	HUB	
	27	1	**303-0463**	1	PLUG	
M	28	1	**095-1277**	2	SETSCREW-SOCKET	
M	29	1	**099-0169**	18	BOLT (M16X2X55-MM)	
	30	1	**2P-1692**	1	SEAL-O-RING	
	31	1	**3D-2824**	1	SEAL-O-RING	
	32	1	**6D-0692**	1	SEAL-O-RING	
	33	1	**7J-6285**	1	SEAL-O-RING	
	34	1	**7M-8485**	2	SEAL-O-RING	
M	35	1	**7X-2568**	16	BOLT (M20X2.5X180-MM)	
	36	1	**8T-4123**	16	WASHER (22X35X3.5-MM THK)	
M	37	1	**8T-4194**	9	BOLT (M12X1.75X50-MM)	
	38	1	**8T-4223**	4	WASHER-HARD (13.5X25.5X3-MM THK)	
M	39	1	**8T-4244**	4	NUT (M12X1.75-THD)	
	40	1	**9S-9334**	1	PLUG-O-RING	
	41	1	**9X-8257**	18	WASHER (17.5X30X3.5-MM THK)	
B	42	1	**1U-8846**		SEALANT-GASKET	

B-USE AS REQUIRED
M-METRIC PART

244-1528 **DRIVE GP-FINAL** *(contd.)* **i03077113**

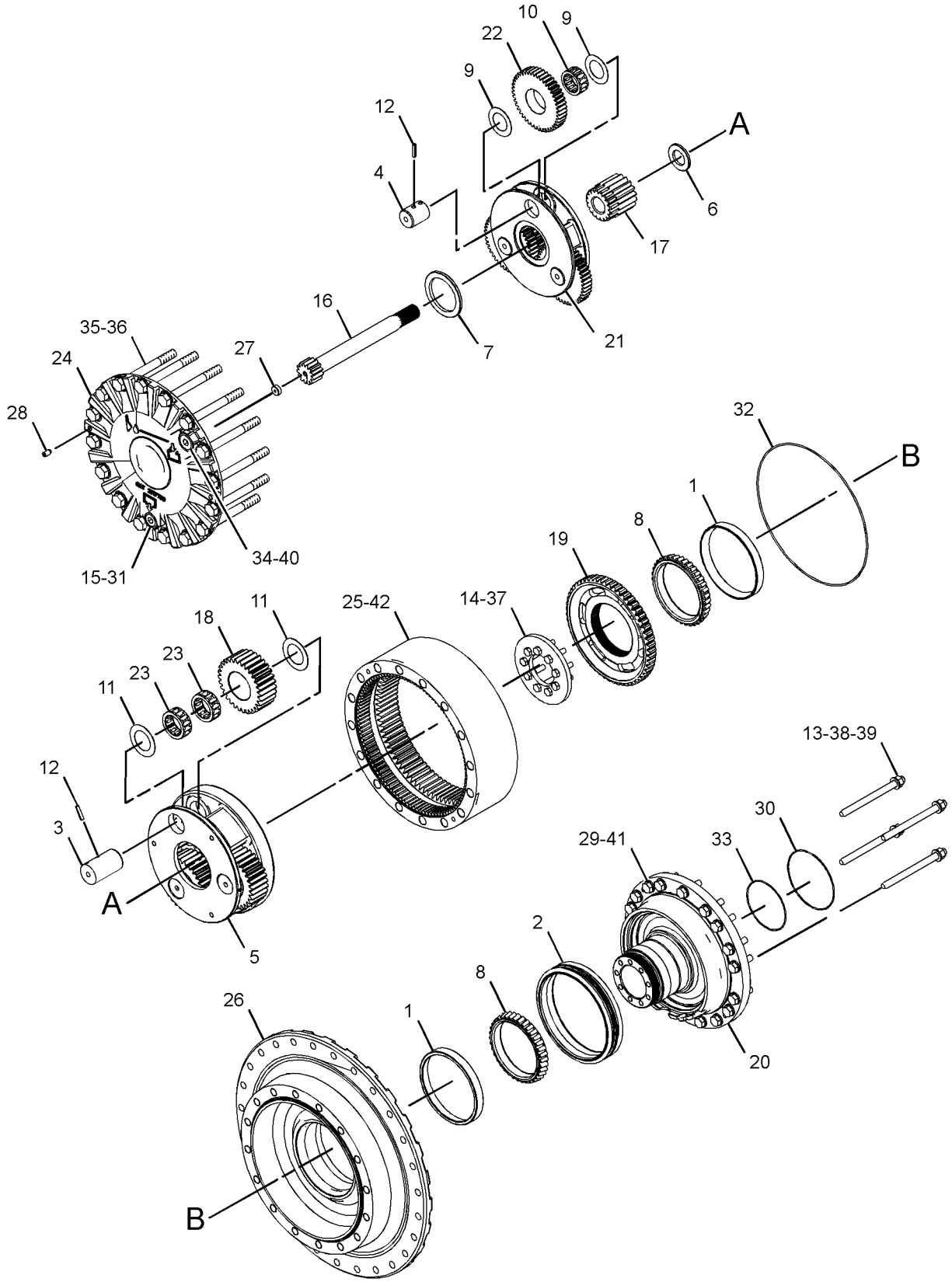

GRAPHIC #1 **<END>** g01333322

POWER TRAIN

244-7409 DRIVE GP-HYDROSTATIC

S/N: JTD1-UP; FFF1-UP; LLL1-UP

PART OF 244-7382, 244-7445, 286-3235 POWER TRAIN AR

SMCS-3159, 4350 **i02654137**

NOTE	REF NO	GRAPHIC REF	PART NUMBER	QTY	PART NAME 1 2 3 4 5 6 (PRODUCT LEVEL)	SEE PAGE
	1	1	**102-1733**	1	FLANGE-NYLON	
	2	1	**261-4747**	1	PLATE AS	
	3	1	**273-6319**	1	HUB	
M		1	**6V-8200**	1	BOLT-SOCKET HEAD (M12X1.75X35-MM)	
M	4	1	**118-4977**	2	BOLT (M16X2X65-MM)	
	5	1	**1L-9062**	8	BOLT (3/8-24X1.5-IN)	
	6	1	**3E-4356**	2	WASHER-HARD (17.5X30X6-MM THK)	
	7	1	**8T-4121**	12	WASHER-HARD (11X21X2.5-MM THK)	
M	8	1	**8T-4192**	2	BOLT (M12X1.75X25-MM)	
M	9	1	**8T-4196**	12	BOLT (M10X1.5X35-MM)	
	10	1	**8T-4223**	2	WASHER-HARD (13.5X25.5X3-MM THK)	

M-METRIC PART

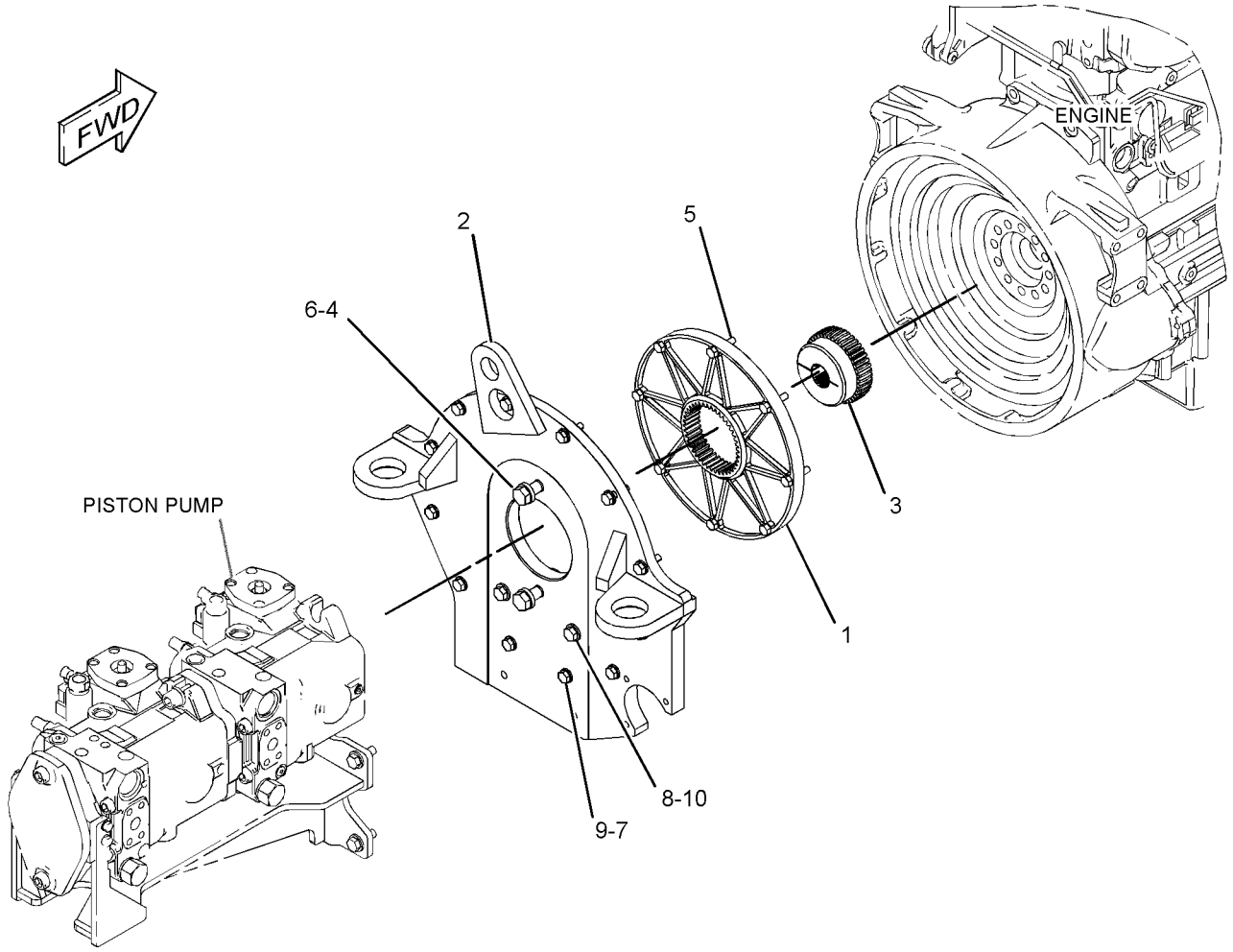

GRAPHIC #1 **<END>** g01333408

212-9363 FILTER GP-OIL–FRONT

S/N: JTD1-UP; FFF1-UP; LLL1-UP

PART OF 254-1366 LINES GP-TRANSMISSION OIL

SMCS-3004, 3067 **i01966259**

NOTE	REF NO	GRAPHIC REF	PART NUMBER	QTY	PART NAME 1 2 3 4 5 6 (PRODUCT LEVEL)	SEE PAGE
	1	1	**1G-8878**	1	FILTER-OIL (ADVANCED EFFICIENCY)	
	2	1	**8C-3446**	1	VALVE-FLUID SAMPLING (HYDRAULIC OIL FILTER)	
	3	1	**8C-3451**	1	CAP-DUST	
	4	1	**134-0404**	1	SWITCH AS-PRESSURE (PRESSURE DIFFERENTIAL)	
	5	1	**3J-1907**	1	SEAL-O-RING	
	6	1	**3J-7354**	1	SEAL-O-RING	

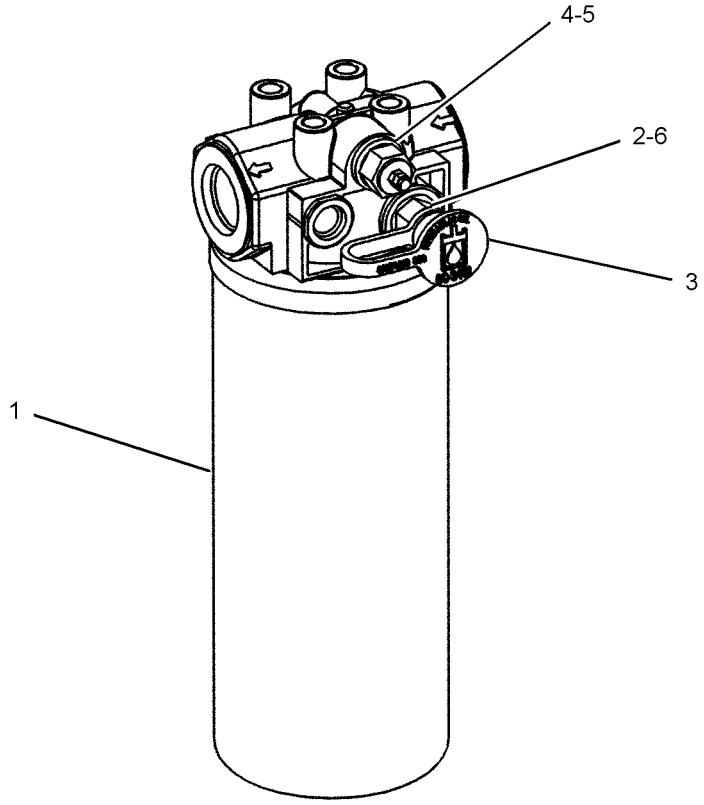

GRAPHIC #1 **<END>** g01022392

POWER TRAIN

296-6707 HEAD GP-PUMP

S/N: JTD1-UP; FFF1-UP; LLL1-UP
PART OF 289-6385, 289-6386, 289-6387 PUMP GP-PISTON
AN ATTACHMENT

SMCS-3202, 5070 **i03776970**

NOTE	REF NO	GRAPHIC REF	PART NUMBER	QTY	PART NAME 1 2 3 4 5 6 (PRODUCT LEVEL)	SEE PAGE
	1	1	**233-5621**	2	VALVE GP-RELIEF (MULTIFUNCTION)	
					(EACH INCLUDES)	
		1	**6V-5326**	1	SEAL-O-RING	
		1	**167-7713**	1	RING-BACKUP	
	2	1	**212-6679**	1	VALVE GP-RELIEF (CHARGE PRESSURE)	
		1	**6V-8352**	1	SEAL-O-RING	
	3	1	**117-7278**	1	BUSHING	
	4	1	**117-7279**	1	BUSHING (EXTERNAL)	
	5	1	**117-7280**	1	BUSHING (INTERNAL)	
	6	1	**5J-3886**	1	SEAL-O-RING	
	7	1	**9S-8002**	1	PLUG-O-RING	
	8	1	**3J-7354**	1	SEAL-O-RING	
	9	1	**120-4394**	1	PLUG-BREAK OFF	
M	10	1	**160-8493**	4	BOLT-SOCKET HEAD (M14X2X80-MM)	
	11	1	**123-7575**	1	SCREW-LOCK	
	12	1	**123-7576**	1	SEAL-O-RING	

M-METRIC PART

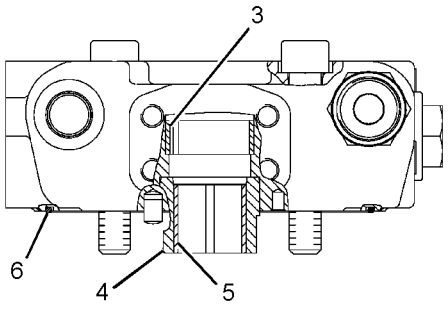

SECTION B-B

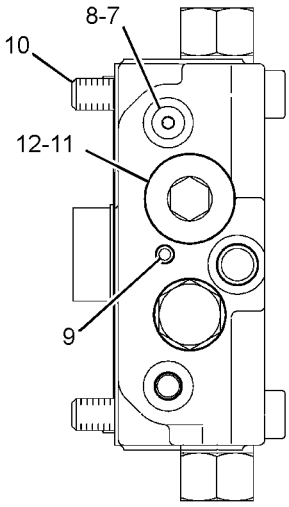

VIEW A-A

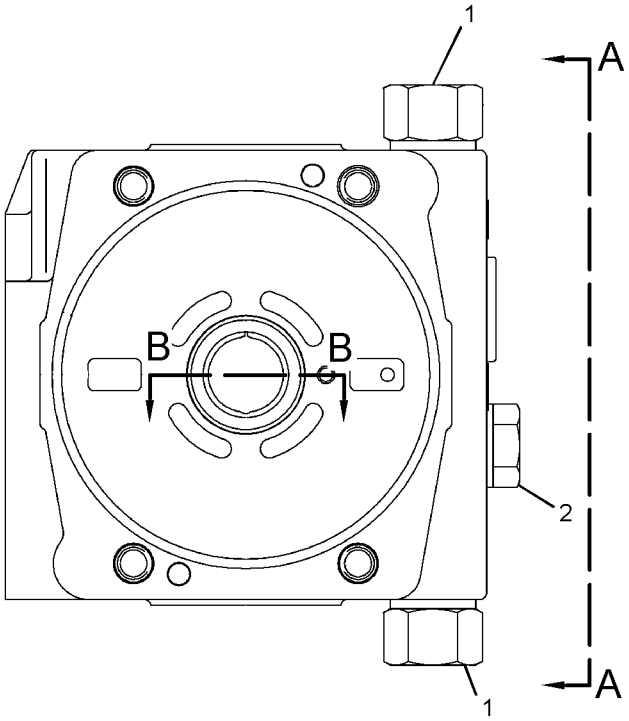

GRAPHIC #1 **<END>** g01377786

296-6708 HEAD GP-PUMP

S/N: JTD1-UP

PART OF 289-6388, 289-6389 PUMP GP-PISTON

AN ATTACHMENT

SMCS-3202, 5070 **i02730306**

NOTE	REF NO	GRAPHIC REF	PART NUMBER	QTY	PART NAME 1 2 3 4 5 6 (PRODUCT LEVEL)	SEE PAGE
M	1	1	**223-8990**	4	BOLT-SOCKET HEAD (M16X2X90-MM)	
	2	1	**1G-7407**	2	VALVE GP-RELIEF (PUMP HEAD)	
Y	3	1	**6E-4402**	1	VALVE GP-RELIEF (CHARGE PRESSURE)	648
	4	1	**9S-8002**	1	PLUG-O-RING	
	5	1	**3J-7354**	1	SEAL-O-RING	
	6	1	**126-1477**	1	BUSHING-COUPLING	
	7	1	**123-7559**	1	BUSHING	
	8	1	**123-7560**	1	BEARING-BUSHING	
	9	1	**6S-3002**	1	SEAL-O-RING	
	10	1	**123-7575**	1	SCREW-LOCK	
	11	1	**123-7576**	1	SEAL-O-RING	
	12	1	**081-3801**	1	PLUG AS	
M	13	1	**123-2017**	1	PLUG	

M-METRIC PART
Y-SEPARATE ILLUSTRATION

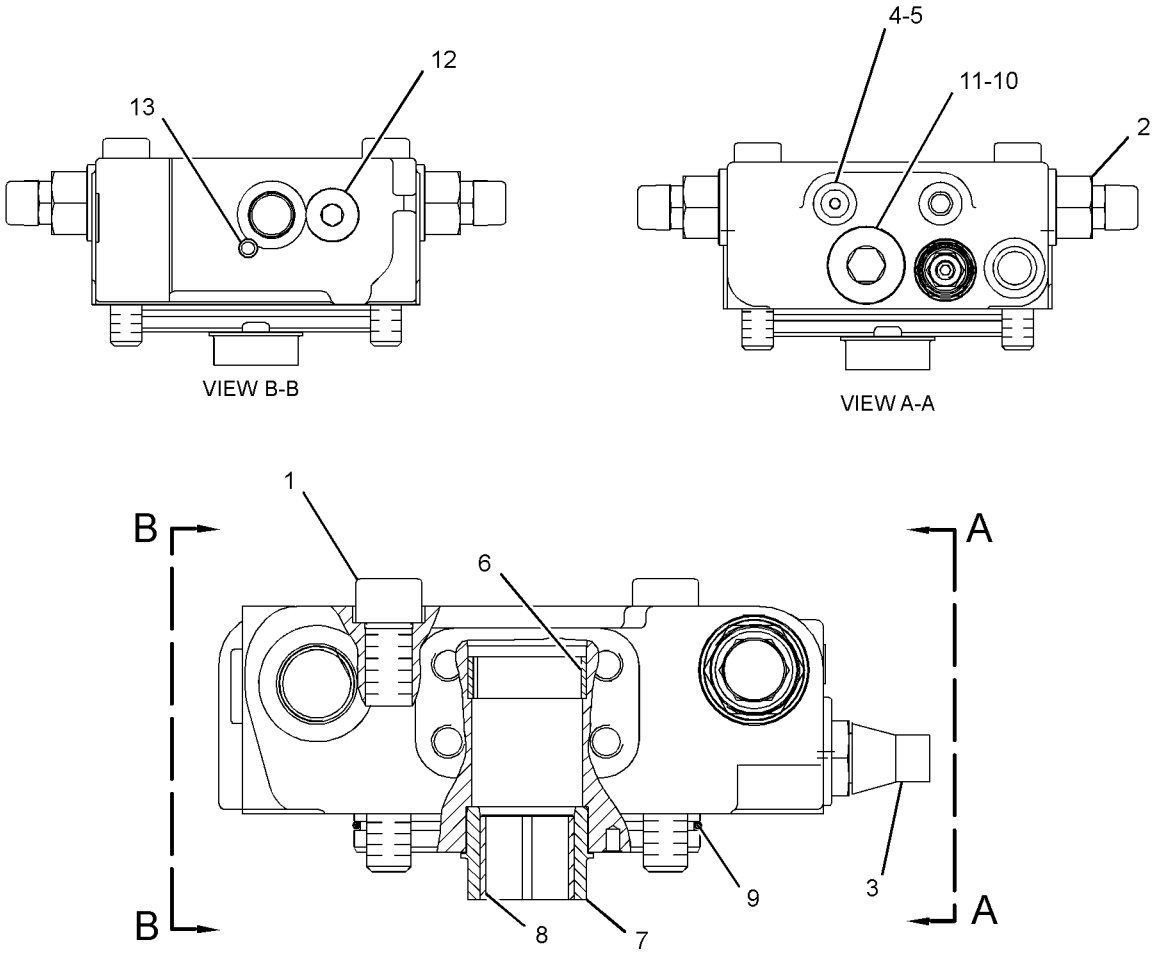

GRAPHIC #1 **<END>** g01378978

POWER TRAIN

244-7411 LINES GP-HYDROSTATIC

S/N: JTD1-UP; FFF1-UP; LLL1-UP
PART OF 244-7450 DRIVE AR, 244-7454, 325-6516 DRIVE AR-WINCH
AN ATTACHMENT

SMCS-3154 **i02843762**

NOTE	REF NO	GRAPHIC REF	PART NUMBER	QTY	PART NAME 1 2 3 4 5 6 (PRODUCT LEVEL)	SEE PAGE
I	1	1	**261-4275**	1	HOSE AS	
I	2	1	**261-4276**	1	HOSE AS	
I	3	1	**261-4277**	1	HOSE AS	
I	4	1	**261-4278**	1	HOSE AS	
	5	1	**1P-3702**	4	SEAL-RECTANGULAR	
	6	1	**1P-3703**	4	SEAL-RECTANGULAR	
	7	1	**5P-7466**	2	CLIP (SLOT)	
	8	1	**5P-7467**	2	CLIP (TAB)	
	9	1	**5P-8112**	2	GROMMET	
	10	1	**6V-0400**	8	FLANGE-HALF	
	11	1	**7G-3832**	1	GROMMET	
	12	1	**7G-3833**	1	CLIP (TAB)	
	13	1	**7G-3834**	1	CLIP (SLOT)	
	14	1	**8T-4121**	16	WASHER-HARD (11X21X2.5-MM THK)	
M	15	1	**8T-4183**	1	BOLT (M12X1.75X40-MM)	
M	16	1	**8T-4182**	16	BOLT (M10X1.5X45-MM)	
M	17	1	**8T-4184**	16	BOLT (M12X1.75X45-MM)	
	18	1	**8T-4223**	19	WASHER-HARD (13.5X25.5X3-MM THK)	
	19	1	**8T-9403**	8	FLANGE-HALF	
M	20	1	**8T-4244**	2	NUT (M12X1.75-THD)	

I-REFER TO HYDRAULIC INFORMATION SYSTEM
M-METRIC PART

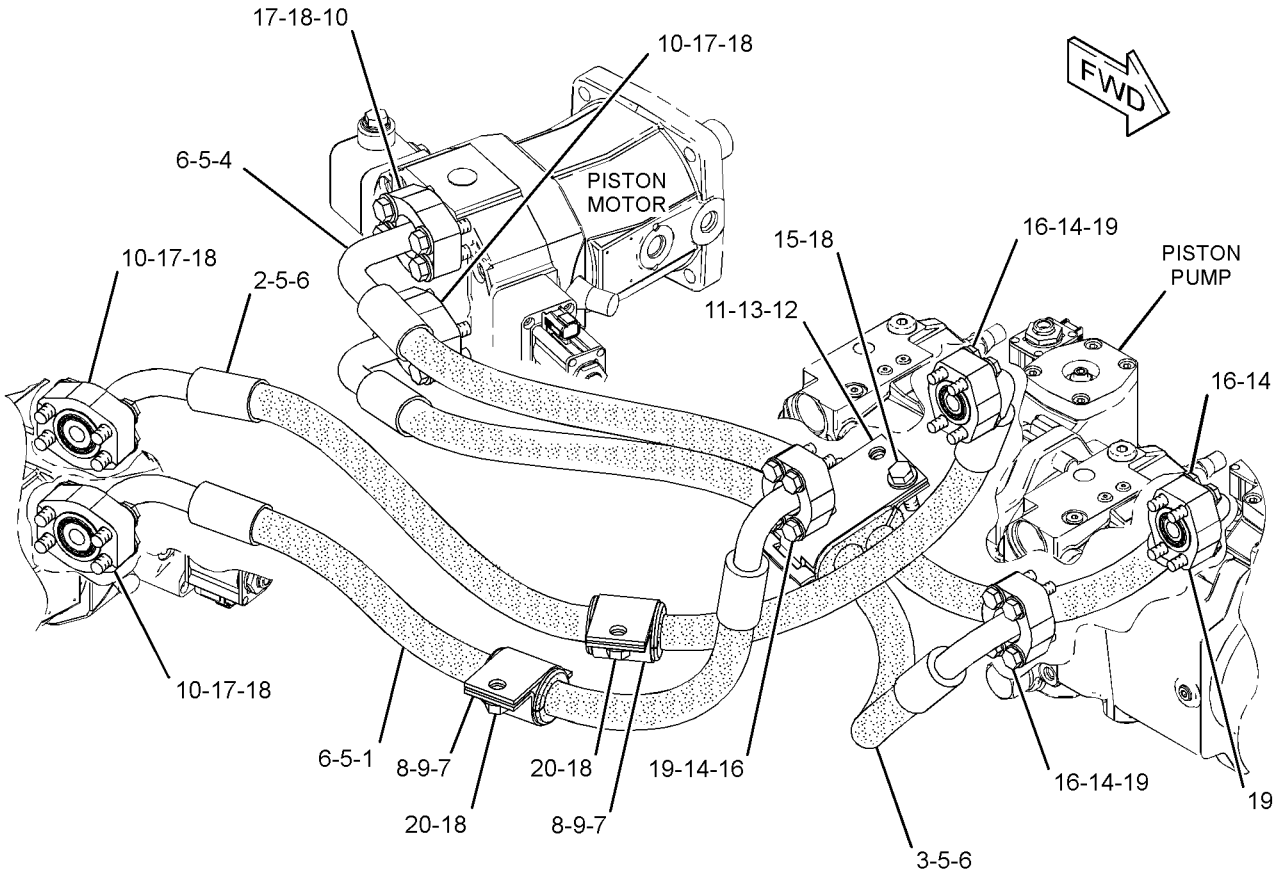

GRAPHIC #1 **<END>** g01421815

286-8052 LINES GP-HYDROSTATIC

S/N: JTD1-UP
PART OF 291-5098, 292-0122, 300-8543 DRIVE AR, 292-0124, 300-8544, 325-6519
DRIVE AR-WINCH
AN ATTACHMENT

SMCS-3154 **i02856521**

NOTE	REF NO	GRAPHIC REF	PART NUMBER	QTY	PART NAME 1 2 3 4 5 6 (PRODUCT LEVEL)	SEE PAGE
I	1	1	**314-7908**	1	HOSE AS	
I	2	1	**314-7909**	1	HOSE AS	
I	3	1	**314-7910**	1	HOSE AS	
I	4	1	**314-7911**	1	HOSE AS	
	5	1	**1P-3702**	4	SEAL-RECTANGULAR	
	6	1	**1P-3703**	4	SEAL-RECTANGULAR	
	7	1	**5P-7466**	2	CLIP (SLOT)	
	8	1	**5P-7467**	2	CLIP (TAB)	
	9	1	**5P-8112**	2	GROMMET	
	10	1	**6V-0400**	8	FLANGE-HALF	
	11	1	**7G-3832**	1	GROMMET	
	12	1	**7G-3833**	1	CLIP (TAB)	
	13	1	**7G-3834**	1	CLIP (SLOT)	
	14	1	**8T-4121**	16	WASHER-HARD (11X21X2.5-MM THK)	
M	15	1	**8T-4182**	16	BOLT (M10X1.5X45-MM)	
M	16	1	**8T-4183**	3	BOLT (M12X1.75X40-MM)	
M	17	1	**8T-4184**	16	BOLT (M12X1.75X45-MM)	
	18	1	**8T-4223**	19	WASHER-HARD (13.5X25.5X3-MM THK)	
	19	1	**8T-9403**	8	FLANGE-HALF	

I-REFER TO HYDRAULIC INFORMATION SYSTEM
M-METRIC PART

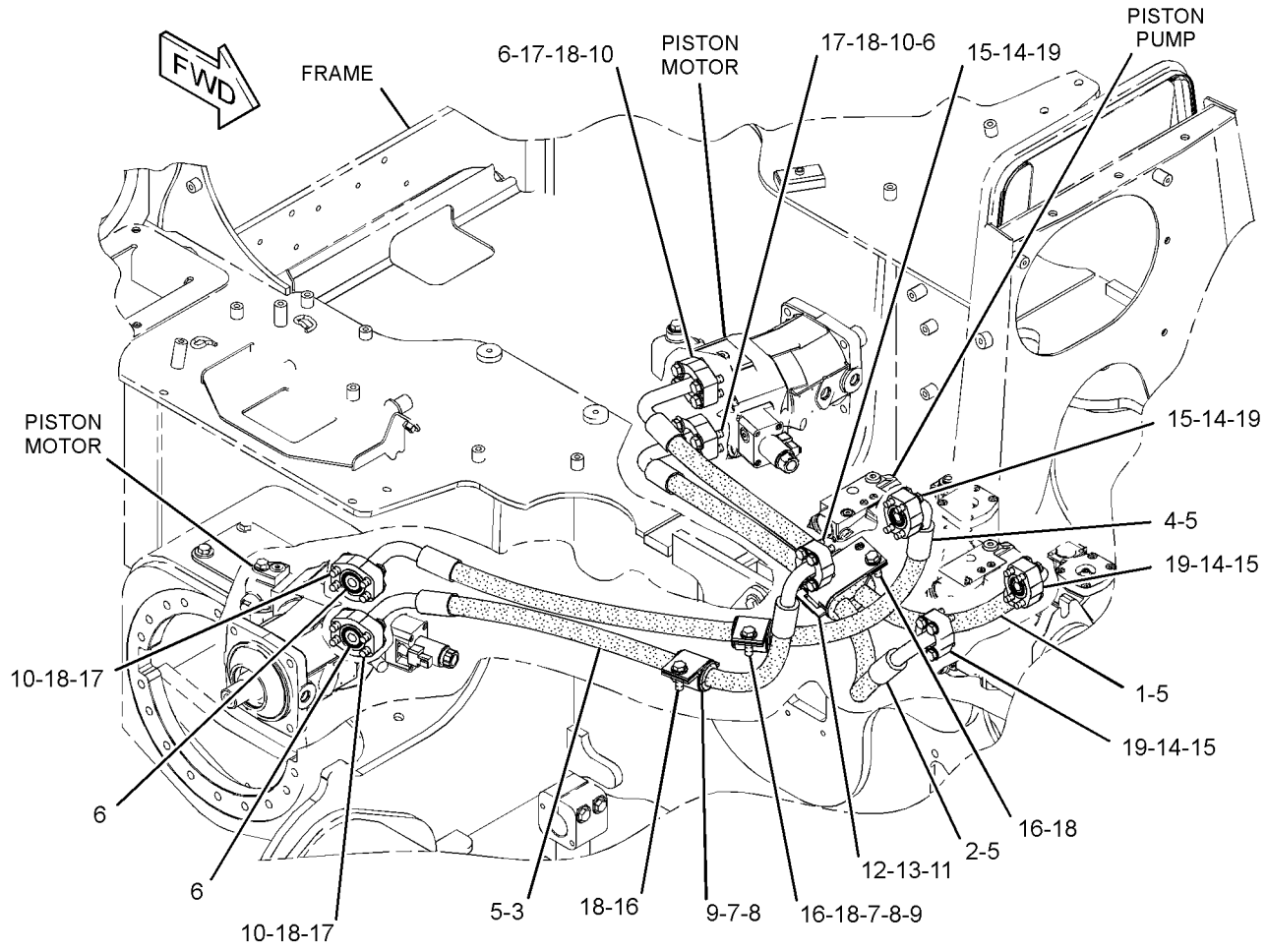

GRAPHIC #1 **<END>** g01667715

POWER TRAIN

286-8053 LINES GP-HYDROSTATIC

S/N: JTD1-UP
PART OF 325-6520 DRIVE AR-WINCH
AN ATTACHMENT

SMCS-3154 **i02700334**

NOTE	REF NO	GRAPHIC REF	PART NUMBER	QTY	PART NAME 1 2 3 4 5 6 (PRODUCT LEVEL)	SEE PAGE
I	1	1	**287-8659**	1	HOSE AS	
I	2	1	**287-8660**	1	HOSE AS	
I	3	1	**287-8661**	1	HOSE AS	
I	4	1	**287-8662**	1	HOSE AS	
	5	1	**1P-3703**	8	SEAL-RECTANGULAR	
	6	1	**6V-0400**	16	FLANGE-HALF	
	7	1	**7G-3832**	2	GROMMET	
	8	1	**7G-3833**	2	CLIP (TAB)	
	9	1	**7G-3834**	2	CLIP (SLOT)	
M	10	1	**8T-4183**	2	BOLT (M12X1.75X40-MM)	
M	11	1	**8T-4184**	32	BOLT (M12X1.75X45-MM)	
	12	1	**8T-4223**	34	WASHER-HARD (13.5X25.5X3-MM THK)	

I-REFER TO HYDRAULIC INFORMATION SYSTEM
M-METRIC PART

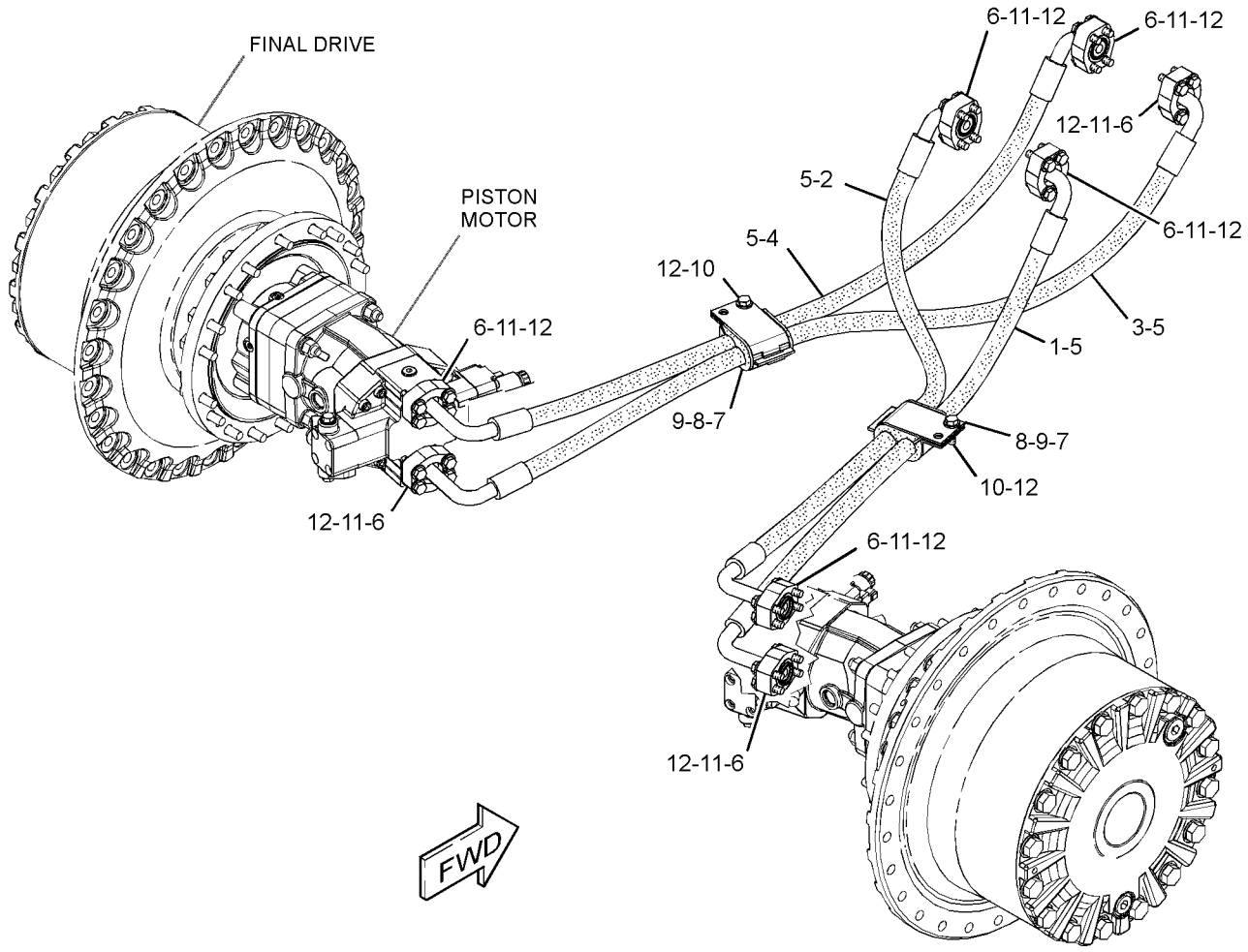

GRAPHIC #1 **<END>** g01378506

289-0253 LINES GP-HYDROSTATIC

S/N: JTD1-UP; FFF1-UP; LLL1-UP
PART OF 291-5094 DRIVE AR
AN ATTACHMENT

SMCS-3154 **i02701775**

NOTE	REF NO	GRAPHIC REF	PART NUMBER	QTY	PART NAME 1 2 3 4 5 6 (PRODUCT LEVEL)	SEE PAGE
I	1	1	**289-0242**	1	HOSE AS	
I	2	1	**289-0243**	1	HOSE AS	
I	3	1	**289-0244**	1	HOSE AS	
I	4	1	**289-0245**	1	HOSE AS	
	5	1	**1P-3702**	4	SEAL-RECTANGULAR	
	6	1	**1P-3703**	4	SEAL-RECTANGULAR	
	7	1	**5P-7466**	2	CLIP (SLOT)	
	8	1	**5P-7467**	2	CLIP (TAB)	
	9	1	**5P-8112**	2	GROMMET	
	10	1	**6V-0400**	8	FLANGE-HALF	
	11	1	**7G-3832**	1	GROMMET	
	12	1	**7G-3833**	1	CLIP (TAB)	
	13	1	**7G-3834**	1	CLIP (SLOT)	
	14	1	**8T-4121**	16	WASHER-HARD (11X21X2.5-MM THK)	
M	15	1	**8T-4182**	16	BOLT (M10X1.5X45-MM)	
M	16	1	**8T-4183**	3	BOLT (M12X1.75X40-MM)	
M	17	1	**8T-4184**	16	BOLT (M12X1.75X45-MM)	
	18	1	**8T-4223**	19	WASHER-HARD (13.5X25.5X3-MM THK)	
	19	1	**8T-9403**	8	FLANGE-HALF	

I-REFER TO HYDRAULIC INFORMATION SYSTEM
M-METRIC PART

289-0253 **LINES GP-HYDROSTATIC** *(contd.)* **i02701775**

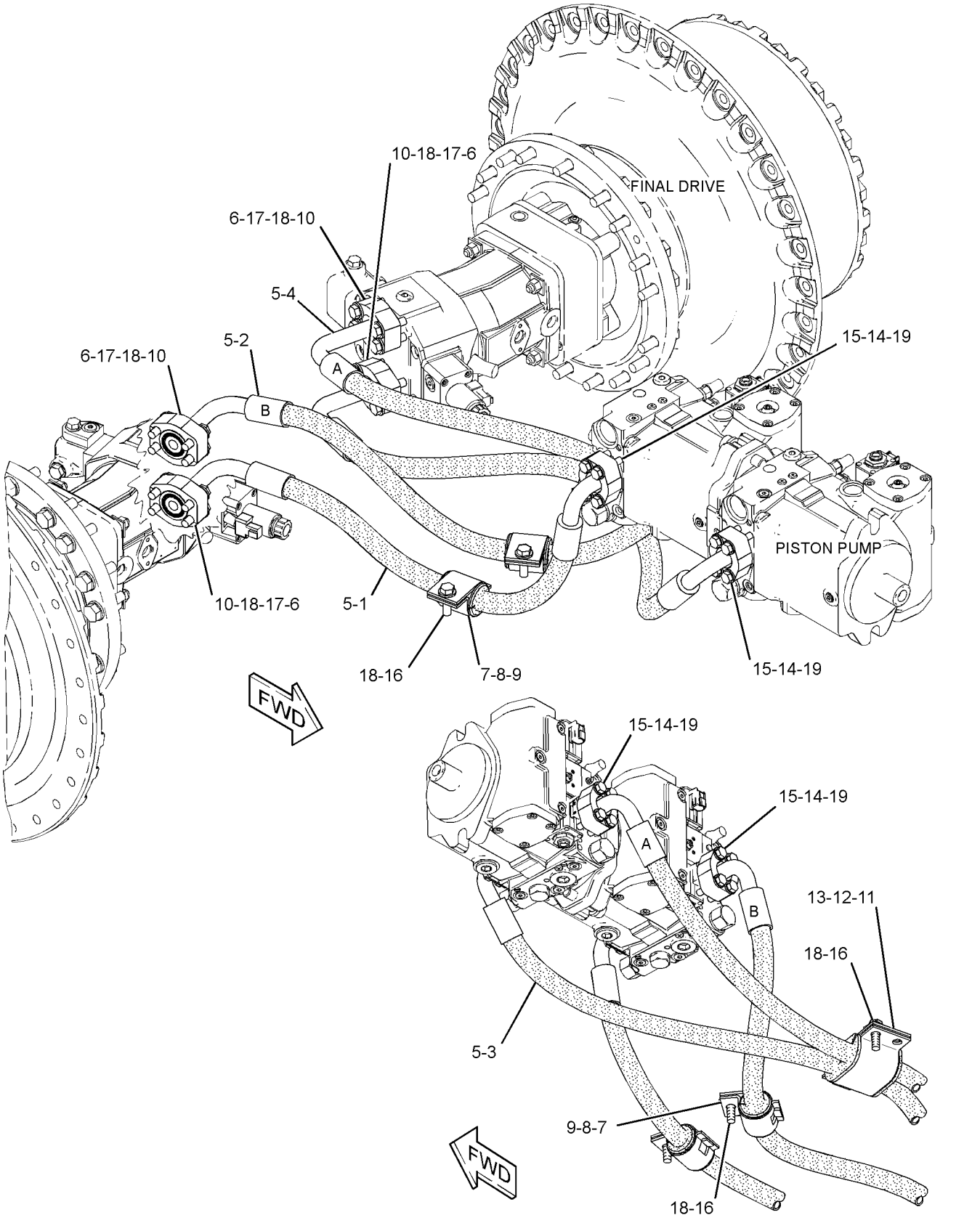

GRAPHIC #1 **<END>** g01355779

327-6772 LINES GP-HYDROSTATIC

S/N: FFF1-UP; LLL1-UP
PART OF 325-6541, 325-6542 CONVERSION AR-MACHINE OPTION
AN ATTACHMENT

SMCS-3154 **i03664462**

NOTE	REF NO	GRAPHIC REF	PART NUMBER	QTY	PART NAME 1 2 3 4 5 6 (PRODUCT LEVEL)	SEE PAGE
	1	1	*327-6773*	1	HOSE AS	
		1	**163-8812**	2	CLAMP	
I		1	**261-4275**	1	HOSE AS	
E		1	**324-9706**		INSULATION (87-CM)	
	2	1	*327-6774*	1	HOSE AS	
		1	**163-8812**	2	CLAMP	
I		1	**261-4276**	1	HOSE AS	
E		1	**324-9706**		INSULATION (91-CM)	
	3	1	*327-6775*	1	HOSE AS	
		1	**163-8812**	2	CLAMP	
I		1	**261-4277**	1	HOSE AS	
E		1	**324-9706**		INSULATION (117-CM)	
	4	1	*327-6776*	1	HOSE AS	
		1	**163-8812**	2	CLAMP	
I		1	**261-4278**	1	HOSE AS	
E		1	**324-9706**		INSULATION (105-CM)	
	5	1	**5P-7468**	2	CLIP (SLOT)	
	6	1	**5P-7469**	2	CLIP (TAB)	
	7	1	**6V-0545**	2	GROMMET	
	8	1	**7G-5984**	1	CLIP (TAB)	
	9	1	**7G-5985**	1	CLIP (SLOT)	
	10	1	**278-6469**	1	GROMMET	

E-ORDER BY THE CENTIMETER
I-REFER TO HYDRAULIC INFORMATION SYSTEM

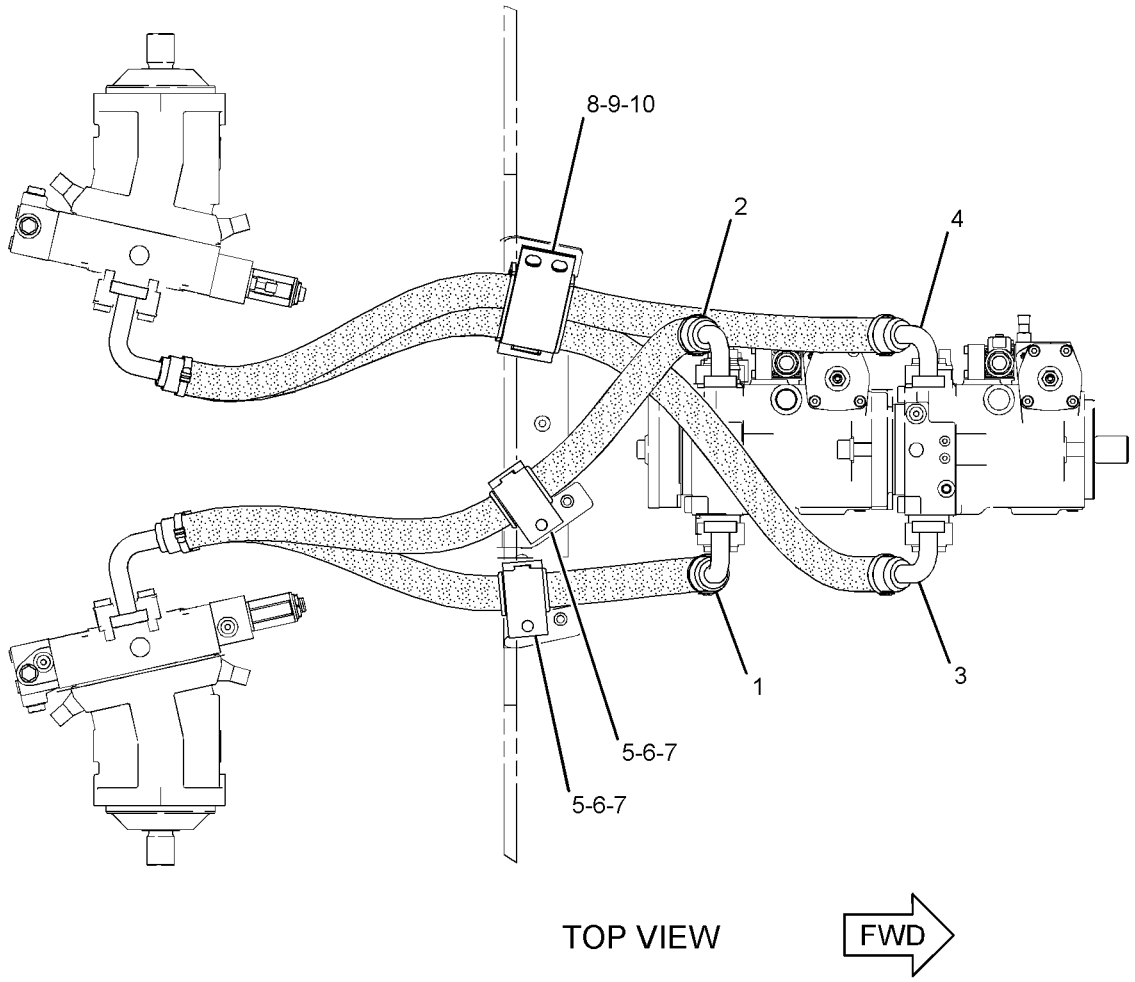

GRAPHIC #1 **<END>** g02028677

327-8901 LINES GP-HYDROSTATIC

S/N: JTD1-UP
PART OF 325-6547 CONVERSION AR-MACHINE OPTION
AN ATTACHMENT

SMCS-3154 **i03664511**

NOTE	REF NO	GRAPHIC REF	PART NUMBER	QTY	PART NAME 1 2 3 4 5 6 (PRODUCT LEVEL)	SEE PAGE
	1	1	*327-8902*	1	HOSE AS	
		1	**163-8812**	2	CLAMP	
I		1	**314-7908**	1	HOSE AS	
E		1	**324-9706**		INSULATION (104-CM)	
	2	1	*327-8903*	1	HOSE AS	
		1	**163-8812**	2	CLAMP	
I		1	**314-7909**	1	HOSE AS	
E		1	**324-9706**		INSULATION (117-CM)	
	3	1	*327-8904*	1	HOSE AS	
		1	**163-8812**	2	CLAMP	
I		1	**314-7910**	1	HOSE AS	
E		1	**324-9706**		INSULATION (87-CM)	
	4	1	*327-8905*	1	HOSE AS	
		1	**163-8812**	2	CLAMP	
I		1	**314-7911**	1	HOSE AS	
E		1	**324-9706**		INSULATION (96-CM)	
	5	1	**5P-7468**	2	CLIP (SLOT)	
	6	1	**5P-7469**	2	CLIP (TAB)	
	7	1	**6V-0545**	2	GROMMET	
	8	1	**7G-5984**	1	CLIP (TAB)	
	9	1	**7G-5985**	1	CLIP (SLOT)	
	10	1	**278-6469**	1	GROMMET	

E-ORDER BY THE CENTIMETER
I-REFER TO HYDRAULIC INFORMATION SYSTEM

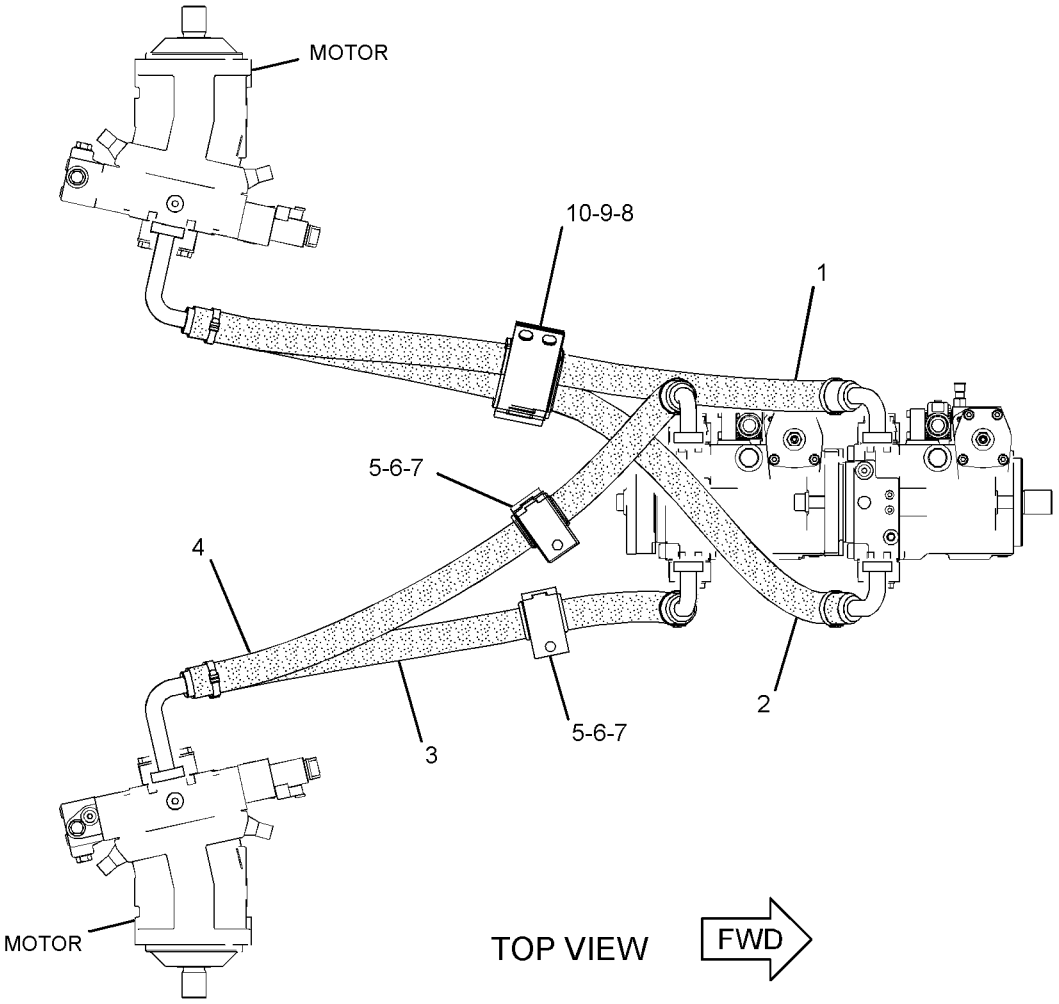

GRAPHIC #1

<END>

g02033080

244-7416 LINES GP-POWER TRAIN COOLER

S/N: LLL1-773

PART OF 244-7445 POWER TRAIN AR

SMCS-1375, 3016 **i02956627**

NOTE	REF NO	GRAPHIC REF	PART NUMBER	QTY	PART NAME 1 2 3 4 5 6 (PRODUCT LEVEL)	SEE PAGE
I	1	1	**203-1926**	2	HOSE AS	
I	2	1	**261-1108**	2	HOSE AS	
	3	1	**261-8501**	1	TUBE AS	
	4	1	**261-8502**	1	TUBE AS	
I	5	1	**263-0978**	1	HOSE AS	
	6	1	**272-3534**	1	TUBE AS	
I	7	1	**283-4938**	1	HOSE AS	
	8	1	*148-8318*	1	CONNECTOR AS	
		1	**3K-0360**	1	SEAL-O-RING	
		1	**6V-8397**	1	SEAL-O-RING	
		1	**6V-8634**	1	CONNECTOR	
	9	1	*148-8364*	1	ELBOW AS	
		1	**3K-0360**	1	SEAL-O-RING	
		1	**6V-8398**	1	SEAL-O-RING	
		1	**6V-8625**	1	ELBOW	
	10	1	*148-8428*	1	TEE AS	
		1	**3K-0360**	1	SEAL-O-RING	
		1	**6V-8398**	2	SEAL-O-RING	
		1	**6V-8782**	1	TEE	
	11	1	*153-6242*	2	CONNECTOR AS	
					(EACH INCLUDES)	
		1	**6V-9746**	1	SEAL-O-RING	
		1	**7M-8485**	1	SEAL-O-RING	
		1	**8T-0197**	1	CONNECTOR	
	12	1	**3D-2824**	2	SEAL-O-RING	
	13	1	**4H-7655**	4	CLAMP-TUBE	
	14	1	**5D-0718**	1	CLIP	
	15	1	**6V-8397**	1	SEAL-O-RING	
	16	1	**6V-9746**	6	SEAL-O-RING	
	17	1	**7X-7729**	1	WASHER (11X25X3-MM THK)	
	18	1	**5K-5338**	2	CLIP	
	19	1	**8T-4121**	4	WASHER-HARD (11X21X2.5-MM THK)	
M	20	1	**8T-4136**	3	BOLT (M10X1.5X25-MM)	
M	21	1	**8T-4137**	2	BOLT (M10X1.5X20-MM)	
	22	1	**8T-9023**	2	CONNECTOR-O-RING	

I-REFER TO HYDRAULIC INFORMATION SYSTEM
M-METRIC PART

244-7416 **LINES GP-POWER TRAIN COOLER** *(contd.)* **i02956627**

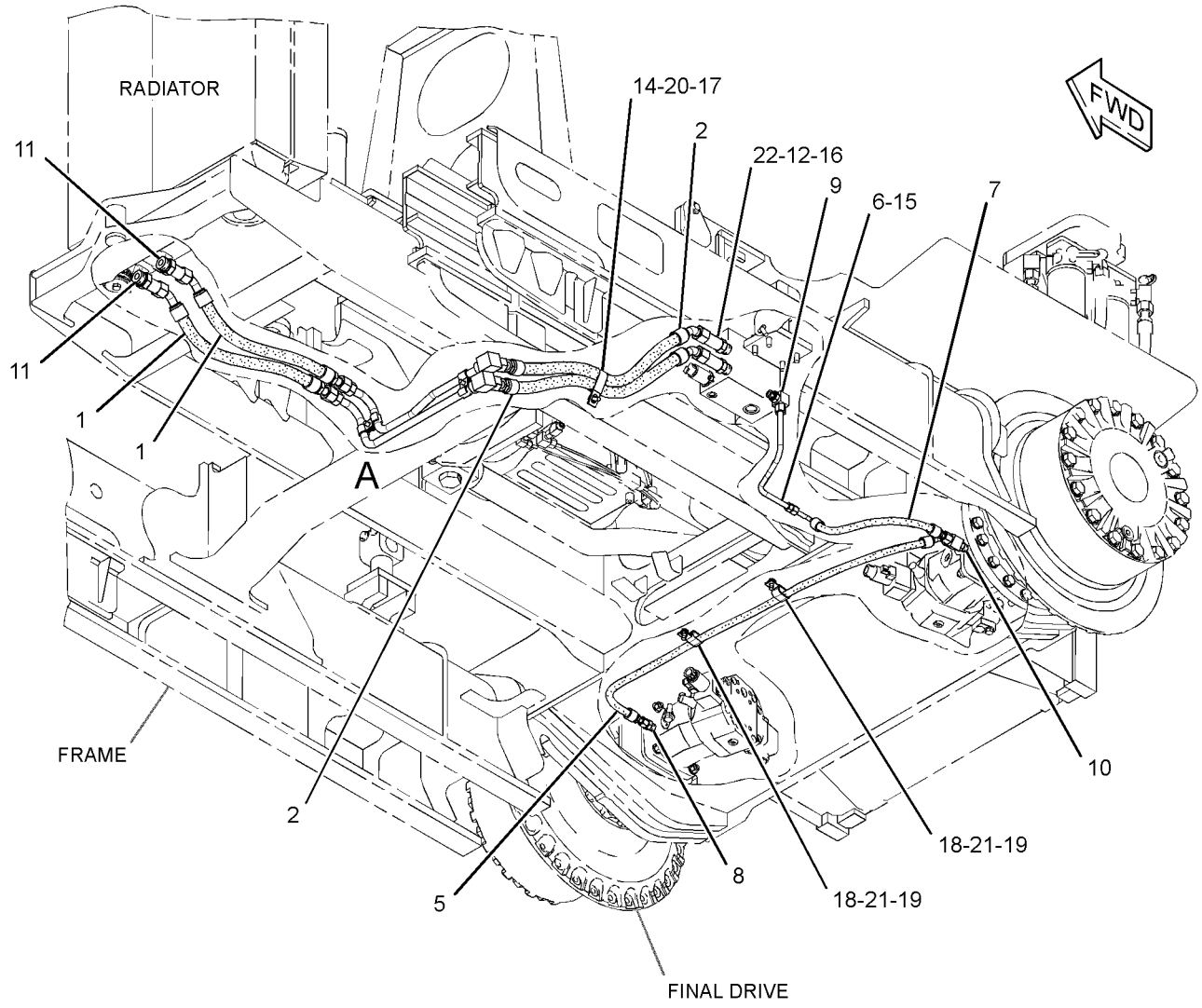

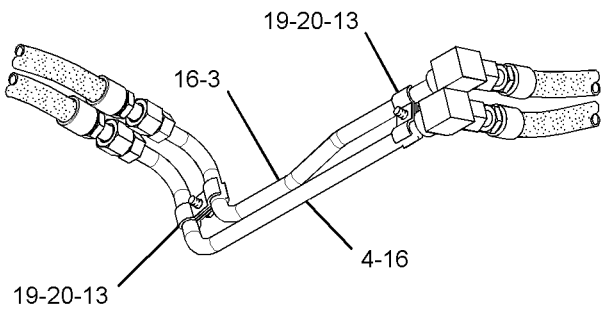

VIEW OF AREA A

GRAPHIC #1 **<END>** g01523475

244-7416 LINES GP-POWER TRAIN COOLER

S/N: LLL774-UP

PART OF 244-7445 POWER TRAIN AR

SMCS-1375, 3016 **i03996967**

NOTE	REF NO	GRAPHIC REF	PART NUMBER	QTY	PART NAME 1 2 3 4 5 6 (PRODUCT LEVEL)	SEE PAGE
I	1	1	**203-1926**	2	HOSE AS	
I	2	1	**261-1108**	2	HOSE AS	
	3	1	**261-8501**	1	TUBE AS	
	4	1	**261-8502**	1	TUBE AS	
CI	5	1	**161-6573**	1	HOSE AS	
	6	1	**272-3534**	1	TUBE AS	
I	7	1	**283-4938**	1	HOSE AS	
C	8	1	*148-8363*	1	ELBOW AS	
		1	**3K-0360**	1	SEAL-O-RING	
		1	**6V-8397**	1	SEAL-O-RING	
		1	**6V-9876**	1	ELBOW	
	9	1	*148-8364*	1	ELBOW AS	
		1	**3K-0360**	1	SEAL-O-RING	
		1	**6V-8398**	1	SEAL-O-RING	
		1	**6V-8625**	1	ELBOW	
	10	1	*148-8428*	1	TEE AS	
		1	**3K-0360**	1	SEAL-O-RING	
		1	**6V-8398**	2	SEAL-O-RING	
		1	**6V-8782**	1	TEE	
	11	1	*153-6242*	2	CONNECTOR AS	
					(EACH INCLUDES)	
		1	**6V-9746**	1	SEAL-O-RING	
		1	**7M-8485**	1	SEAL-O-RING	
		1	**8T-0197**	1	CONNECTOR	
	12	1	**3D-2824**	2	SEAL-O-RING	
	13	1	**4H-7655**	4	CLAMP-TUBE	
	14	1	**5D-0718**	1	CLIP	
	15	1	**6V-8397**	1	SEAL-O-RING	
	16	1	**6V-9746**	6	SEAL-O-RING	
	17	1	**7X-7729**	1	WASHER (11X25X3-MM THK)	
	18	1	**5K-5338**	2	CLIP	
	19	1	**8T-4121**	4	WASHER-HARD (11X21X2.5-MM THK)	
M	20	1	**8T-4136**	3	BOLT (M10X1.5X25-MM)	
M	21	1	**8T-4137**	2	BOLT (M10X1.5X20-MM)	
	22	1	**8T-9023**	2	CONNECTOR-O-RING	

C-CHANGE FROM PREVIOUS TYPE
I-REFER TO HYDRAULIC INFORMATION SYSTEM
M-METRIC PART

244-7416 **LINES GP-POWER TRAIN COOLER** *(contd.)* **i03996967**

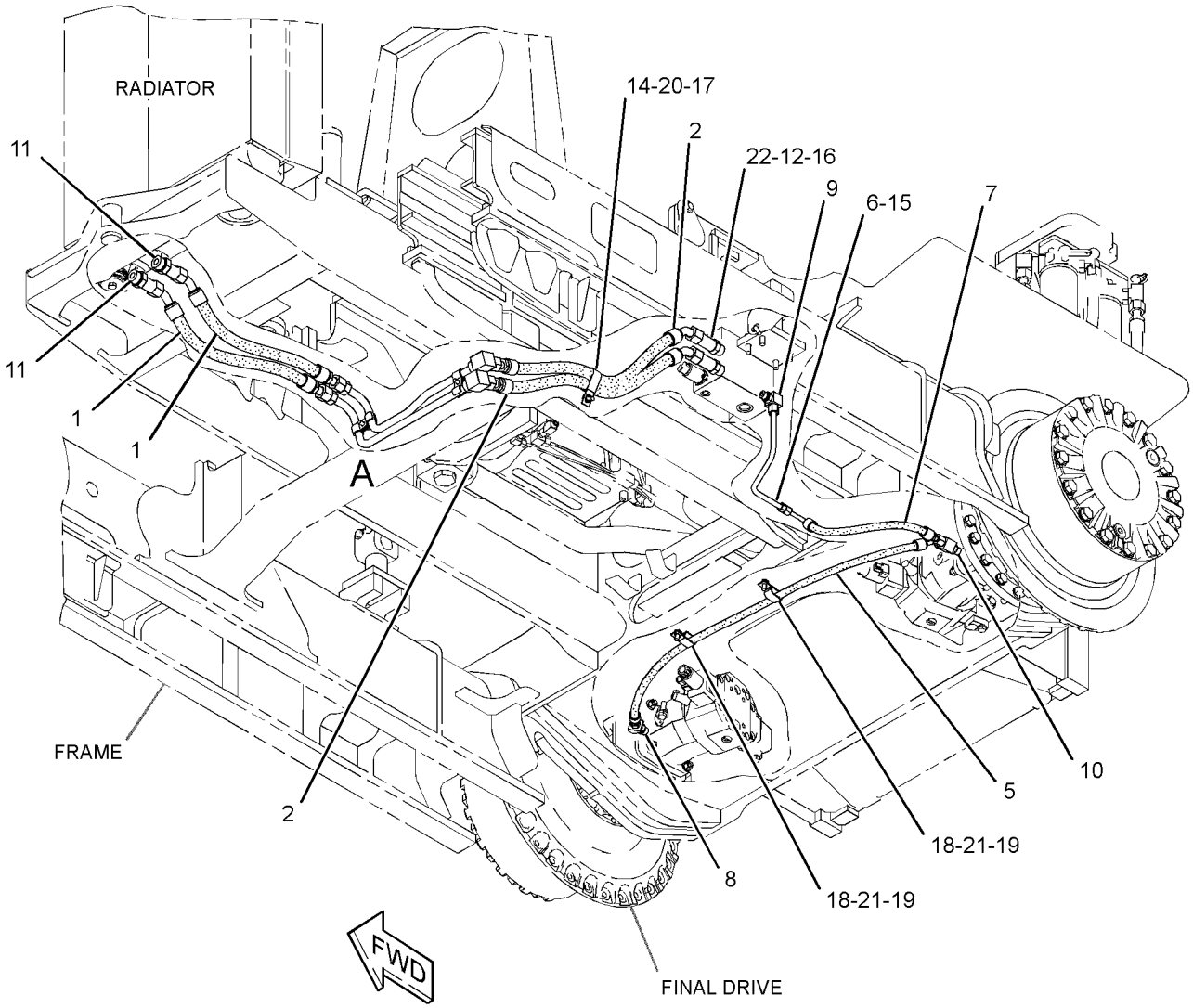

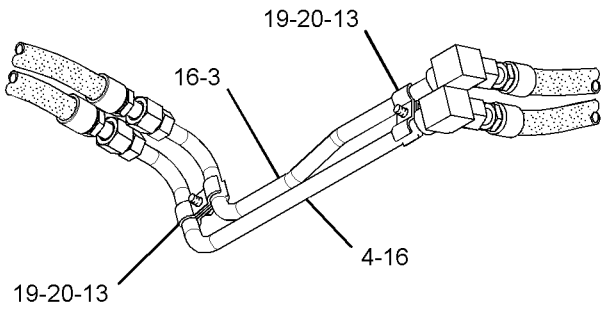

VIEW OF AREA A

GRAPHIC #1 **<END>** g02361957

286-8054 LINES GP-POWER TRAIN COOLER

S/N: JTD1-175

PART OF 286-3235 POWER TRAIN AR

SMCS-1375, 3016 **i02973783**

NOTE	REF NO	GRAPHIC REF	PART NUMBER	QTY	PART NAME 1 2 3 4 5 6 (PRODUCT LEVEL)	SEE PAGE
I	1	1	**203-1926**	2	HOSE AS	
I	2	1	**261-1108**	2	HOSE AS	
	3	1	**261-8501**	1	TUBE AS	
	4	1	**261-8502**	1	TUBE AS	
	5	1	**272-3534**	1	TUBE AS	
I	6	1	**303-6592**	1	HOSE AS	
I	7	1	**303-6599**	1	HOSE AS	
	8	1	*148-8318*	1	CONNECTOR AS	
		1	**3K-0360**	1	SEAL-O-RING	
		1	**6V-8397**	1	SEAL-O-RING	
		1	**6V-8634**	1	CONNECTOR	
	9	1	*148-8364*	1	ELBOW AS	
		1	**3K-0360**	1	SEAL-O-RING	
		1	**6V-8398**	1	SEAL-O-RING	
		1	**6V-8625**	1	ELBOW	
	10	1	*148-8428*	1	TEE AS	
		1	**3K-0360**	1	SEAL-O-RING	
		1	**6V-8398**	2	SEAL-O-RING	
		1	**6V-8782**	1	TEE	
	11	1	*153-6242*	2	CONNECTOR AS	
					(EACH INCLUDES)	
		1	**6V-9746**	1	SEAL-O-RING	
		1	**7M-8485**	1	SEAL-O-RING	
		1	**8T-0197**	1	CONNECTOR	
	12	1	**3D-2824**	2	SEAL-O-RING	
	13	1	**4H-7655**	4	CLAMP-TUBE	
	14	1	**5D-0718**	1	CLIP	
	15	1	**5K-5338**	2	CLIP	
	16	1	**6V-8397**	1	SEAL-O-RING	
	17	1	**6V-9746**	6	SEAL-O-RING	
	18	1	**7X-7729**	1	WASHER (11X25X3-MM THK)	
	19	1	**8T-4121**	4	WASHER-HARD (11X21X2.5-MM THK)	
M	20	1	**8T-4136**	3	BOLT (M10X1.5X25-MM)	
M	21	1	**8T-4137**	2	BOLT (M10X1.5X20-MM)	
	22	1	**8T-9023**	2	CONNECTOR-O-RING	

I-REFER TO HYDRAULIC INFORMATION SYSTEM
M-METRIC PART

286-8054 **LINES GP-POWER TRAIN COOLER** *(contd.)* **i02973783**

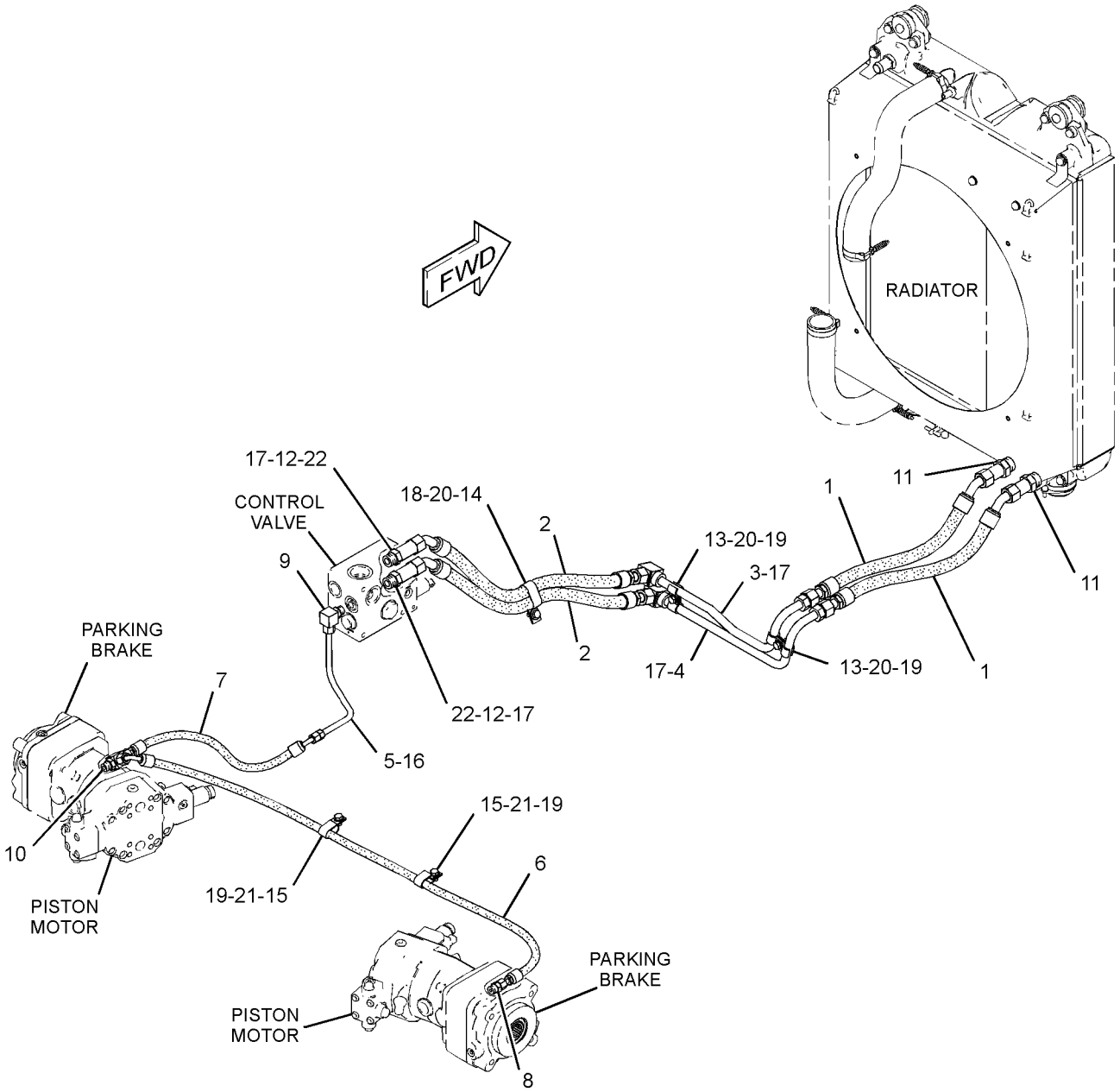

GRAPHIC #1 **<END>** g01774033

286-8054 LINES GP-POWER TRAIN COOLER

S/N: JTD176-UP

PART OF 286-3235 POWER TRAIN AR

SMCS-1375, 3016 **i04047196**

NOTE	REF NO	GRAPHIC REF	PART NUMBER	QTY	PART NAME 1 2 3 4 5 6 (PRODUCT LEVEL)	SEE PAGE
I	1	1	**203-1926**	2	HOSE AS	
I	2	1	**261-1108**	2	HOSE AS	
	3	1	**261-8501**	1	TUBE AS	
	4	1	**261-8502**	1	TUBE AS	
	5	1	**272-3534**	1	TUBE AS	
CI	6	1	**261-1124**	1	HOSE AS	
I	7	1	**303-6599**	1	HOSE AS	
C	8	1	*148-8363*	1	ELBOW AS	
		1	**3K-0360**	1	SEAL-O-RING	
		1	**6V-8397**	1	SEAL-O-RING	
		1	**6V-9876**	1	ELBOW	
	9	1	*148-8364*	1	ELBOW AS	
		1	**3K-0360**	1	SEAL-O-RING	
		1	**6V-8398**	1	SEAL-O-RING	
		1	**6V-8625**	1	ELBOW	
	10	1	*148-8428*	1	TEE AS	
		1	**3K-0360**	1	SEAL-O-RING	
		1	**6V-8398**	2	SEAL-O-RING	
		1	**6V-8782**	1	TEE	
	11	1	*153-6242*	2	CONNECTOR AS	
					(EACH INCLUDES)	
		1	**6V-9746**	1	SEAL-O-RING	
		1	**7M-8485**	1	SEAL-O-RING	
		1	**8T-0197**	1	CONNECTOR	
	12	1	**3D-2824**	2	SEAL-O-RING	
	13	1	**4H-7655**	4	CLAMP-TUBE	
	14	1	**5D-0718**	1	CLIP	
	15	1	**5K-5338**	2	CLIP	
	16	1	**6V-8397**	1	SEAL-O-RING	
	17	1	**6V-9746**	6	SEAL-O-RING	
	18	1	**7X-7729**	1	WASHER (11X25X3-MM THK)	
	19	1	**8T-4121**	4	WASHER-HARD (11X21X2.5-MM THK)	
M	20	1	**8T-4136**	3	BOLT (M10X1.5X25-MM)	
M	21	1	**8T-4137**	2	BOLT (M10X1.5X20-MM)	
	22	1	**8T-9023**	2	CONNECTOR-O-RING	

C-CHANGE FROM PREVIOUS TYPE
I-REFER TO HYDRAULIC INFORMATION SYSTEM
M-METRIC PART

286-8054 **LINES GP-POWER TRAIN COOLER** *(contd.)* **i04047196**

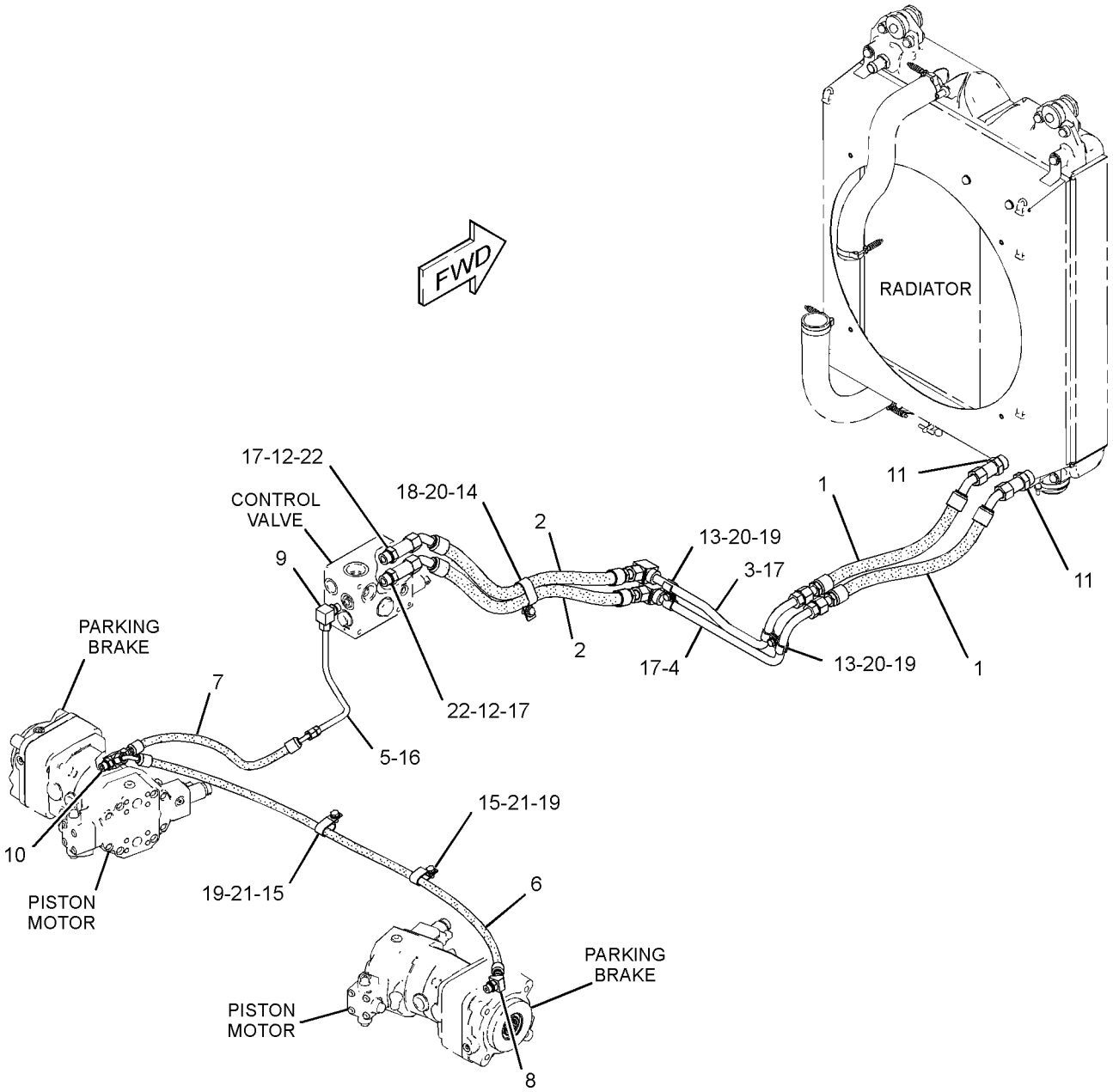

GRAPHIC #1 **<END>** g02345917

303-6589 LINES GP-POWER TRAIN COOLER

S/N: FFF1-604

PART OF 244-7382 POWER TRAIN AR

SMCS-1375, 3016 **i02963598**

NOTE	REF NO	GRAPHIC REF	PART NUMBER	QTY	PART NAME 1 2 3 4 5 6 (PRODUCT LEVEL)	SEE PAGE
I	1	1	**203-1926**	1	HOSE AS	
I	2	1	**261-1108**	2	HOSE AS	
	3	1	**261-8501**	1	TUBE AS	
	4	1	**261-8502**	1	TUBE AS	
	5	1	**272-3534**	1	TUBE AS	
I	6	1	**303-6587**	1	HOSE AS	
I	7	1	**303-6588**	1	HOSE AS	
	8	1	*148-8318*	1	CONNECTOR AS	
		1	**3K-0360**	1	SEAL-O-RING	
		1	**6V-8397**	1	SEAL-O-RING	
		1	**6V-8634**	1	CONNECTOR	
	9	1	*148-8364*	1	ELBOW AS	
		1	**3K-0360**	1	SEAL-O-RING	
		1	**6V-8398**	1	SEAL-O-RING	
		1	**6V-8625**	1	ELBOW	
	10	1	*148-8428*	1	TEE AS	
		1	**3K-0360**	1	SEAL-O-RING	
		1	**6V-8398**	2	SEAL-O-RING	
		1	**6V-8782**	1	TEE	
	11	1	*153-6242*	2	CONNECTOR AS	
					(EACH INCLUDES)	
		1	**6V-9746**	1	SEAL-O-RING	
		1	**7M-8485**	1	SEAL-O-RING	
		1	**8T-0197**	1	CONNECTOR	
	12	1	**3D-2824**	2	SEAL-O-RING	
	13	1	**4H-7655**	4	CLAMP-TUBE	
	14	1	**5D-0718**	1	CLIP	
	15	1	**5K-5338**	2	CLIP	
	16	1	**6V-8397**	1	SEAL-O-RING	
	17	1	**6V-9746**	6	SEAL-O-RING	
	18	1	**7X-7729**	1	WASHER (11X25X3-MM THK)	
	19	1	**8T-4121**	4	WASHER-HARD (11X21X2.5-MM THK)	
M	20	1	**8T-4136**	3	BOLT (M10X1.5X25-MM)	
M	21	1	**8T-4137**	2	BOLT (M10X1.5X20-MM)	
	22	1	**8T-9023**	2	CONNECTOR-O-RING	

I-REFER TO HYDRAULIC INFORMATION SYSTEM
M-METRIC PART

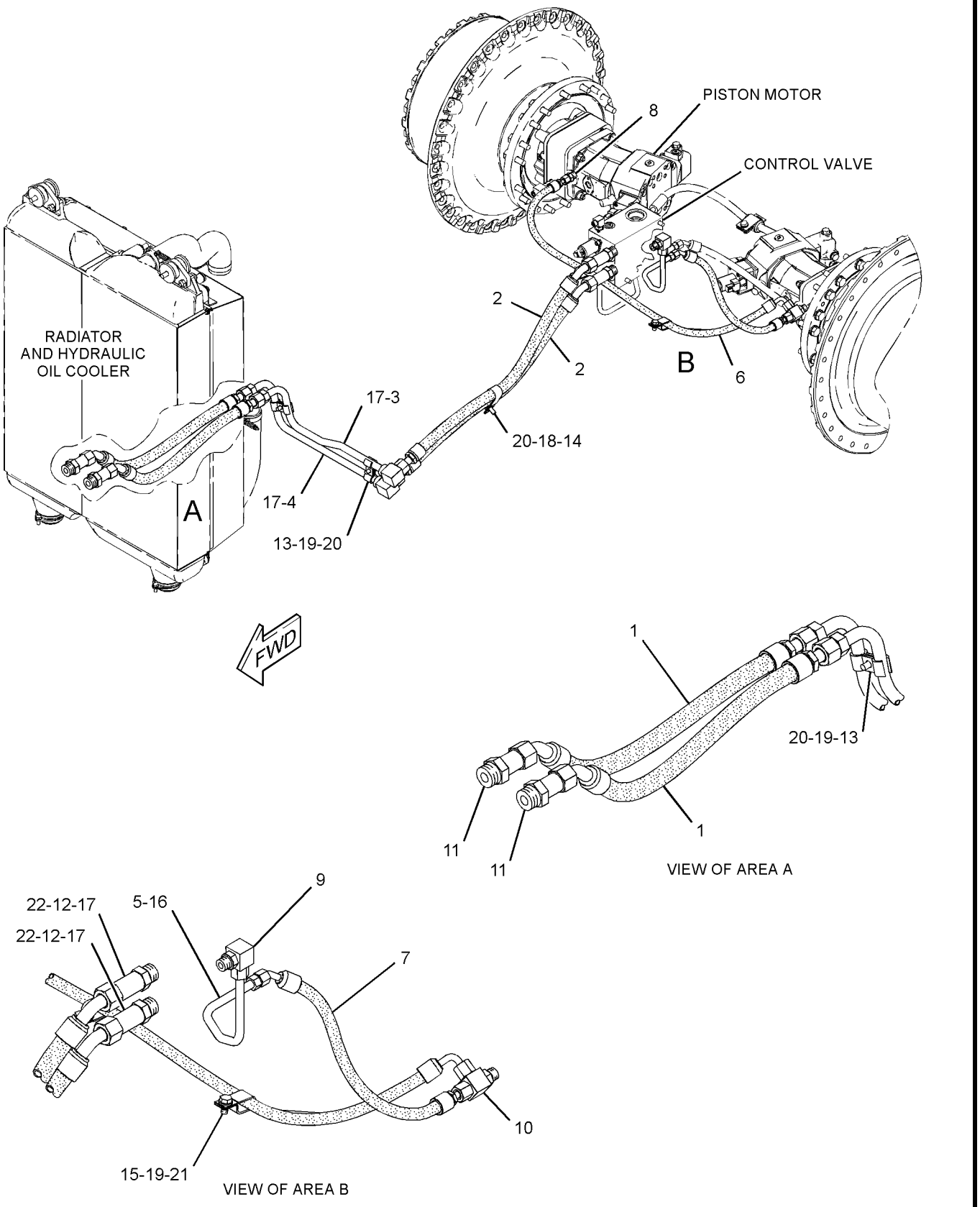

GRAPHIC #1 **<END>** g01618053

303-6589 LINES GP-POWER TRAIN COOLER

S/N: FFF605-UP

PART OF 244-7382 POWER TRAIN AR

SMCS-1375, 3016 **i03997025**

NOTE	REF NO	GRAPHIC REF	PART NUMBER	QTY	PART NAME 1 2 3 4 5 6 (PRODUCT LEVEL)	SEE PAGE
I	1	1	**203-1926**	2	HOSE AS	
I	2	1	**261-1108**	2	HOSE AS	
	3	1	**261-8501**	1	TUBE AS	
	4	1	**261-8502**	1	TUBE AS	
	5	1	**272-3534**	1	TUBE AS	
CI	6	1	**345-9622**	1	HOSE AS	
I	7	1	**303-6588**	1	HOSE AS	
C	8	1	*148-8363*	1	ELBOW AS	
		1	**3K-0360**	1	SEAL-O-RING	
		1	**6V-8397**	1	SEAL-O-RING	
		1	**6V-9876**	1	ELBOW	
	9	1	*148-8364*	1	ELBOW AS	
		1	**3K-0360**	1	SEAL-O-RING	
		1	**6V-8398**	1	SEAL-O-RING	
		1	**6V-8625**	1	ELBOW	
	10	1	*148-8428*	1	TEE AS	
		1	**3K-0360**	1	SEAL-O-RING	
		1	**6V-8398**	2	SEAL-O-RING	
		1	**6V-8782**	1	TEE	
	11	1	*153-6242*	2	CONNECTOR AS	
					(EACH INCLUDES)	
		1	**6V-9746**	1	SEAL-O-RING	
		1	**7M-8485**	1	SEAL-O-RING	
		1	**8T-0197**	1	CONNECTOR	
	12	1	**3D-2824**	2	SEAL-O-RING	
	13	1	**4H-7655**	4	CLAMP-TUBE	
	14	1	**5D-0718**	1	CLIP	
	15	1	**5K-5338**	2	CLIP	
	16	1	**6V-8397**	1	SEAL-O-RING	
	17	1	**6V-9746**	6	SEAL-O-RING	
	18	1	**7X-7729**	1	WASHER (11X25X3-MM THK)	
	19	1	**8T-4121**	4	WASHER-HARD (11X21X2.5-MM THK)	
M	20	1	**8T-4136**	3	BOLT (M10X1.5X25-MM)	
M	21	1	**8T-4137**	2	BOLT (M10X1.5X20-MM)	
	22	1	**8T-9023**	2	CONNECTOR-O-RING	

C-CHANGE FROM PREVIOUS TYPE
I-REFER TO HYDRAULIC INFORMATION SYSTEM
M-METRIC PART

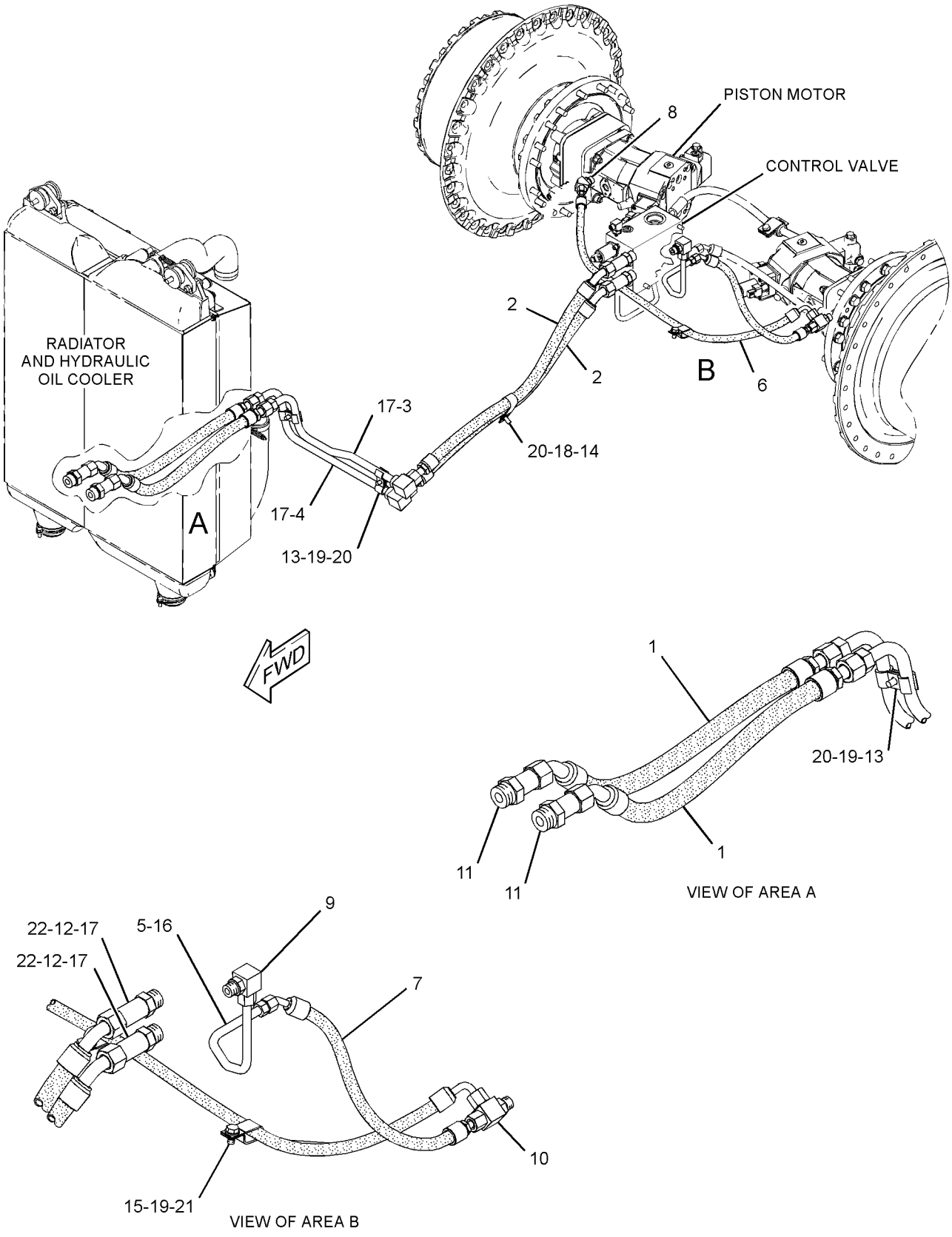

GRAPHIC #1 **<END>** g02353029

327-0931 LINES GP-POWER TRAIN COOLER

S/N: FFF1-UP
PART OF 325-6541 CONVERSION AR-MACHINE OPTION
AN ATTACHMENT

SMCS-1375, 3016 **i03664464**

NOTE	REF NO	GRAPHIC REF	PART NUMBER	QTY	PART NAME 1 2 3 4 5 6 (PRODUCT LEVEL)	SEE PAGE
I	1	1	*325-0524*	2	HOSE AS	
					(EACH INCLUDES)	
I		1	**203-1926**	1	HOSE AS	
		1	**163-8812**	2	CLAMP	
E		1	**324-9706**		INSULATION (52-CM)	
I	2	1	*325-0525*	2	HOSE AS	
					(EACH INCLUDES)	
		1	**163-8812**	2	CLAMP	
I		1	**261-1108**	1	HOSE AS	
E		1	**324-9706**		INSULATION (69-CM)	
	3	1	*327-0932*	1	HOSE AS	
E		1	**193-6911**		INSULATION (108-CM)	
		1	**163-8811**	2	CLAMP	
I		1	**303-6587**	1	HOSE AS	
	4	1	*327-0934*	1	HOSE AS	
		1	**163-8811**	2	CLAMP	
E		1	**193-6911**		INSULATION (39-CM)	
I		1	**303-6588**	1	HOSE AS	
	5	1	**2P-6470**	1	CLIP (SLOT)	
	6	1	**2P-6471**	1	CLIP (TAB)	
	7	1	**3E-4321**	2	CLIP	

E-ORDER BY THE CENTIMETER
I-REFER TO HYDRAULIC INFORMATION SYSTEM

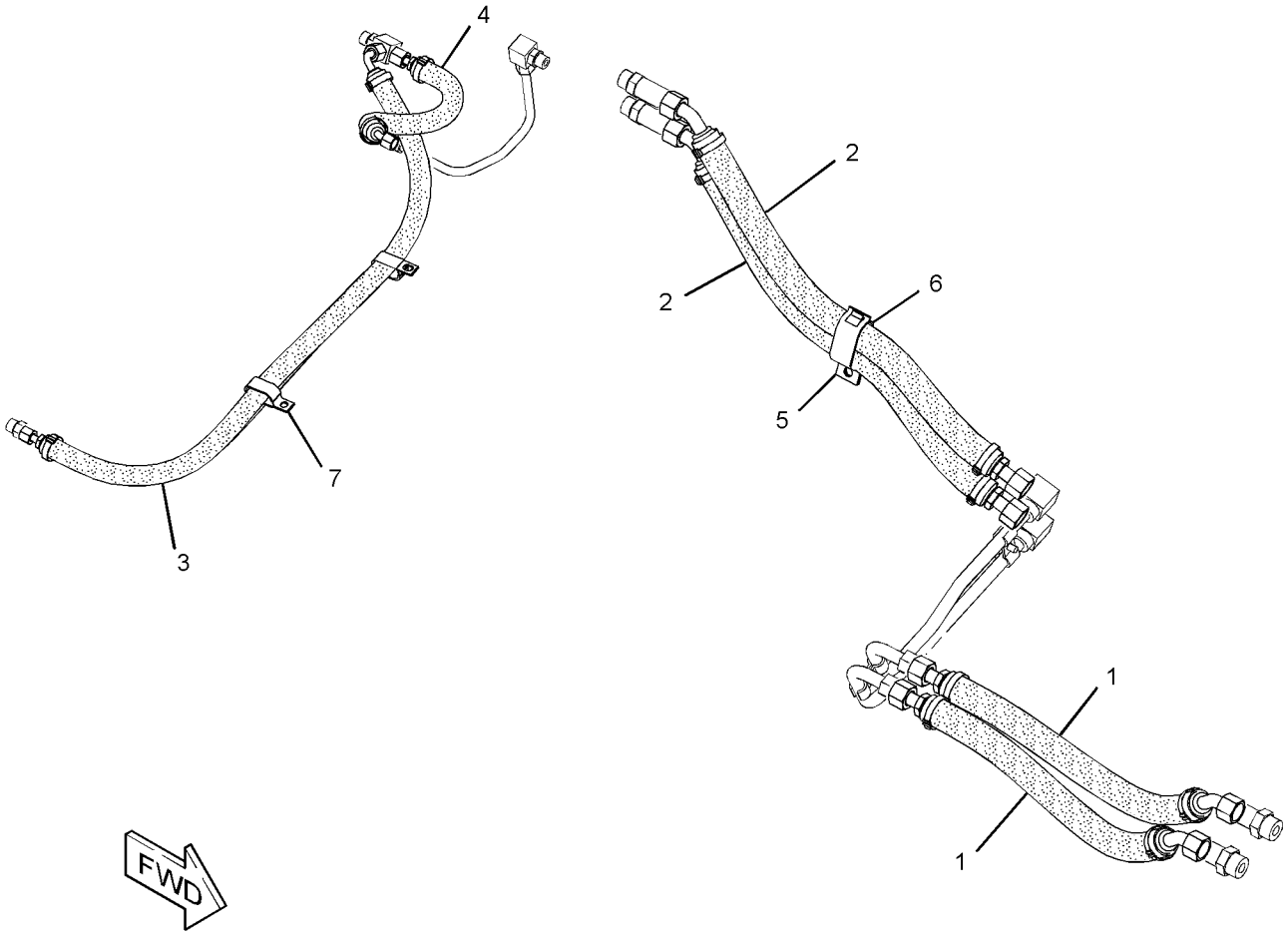

GRAPHIC #1 **<END>** g02033593

327-7665 LINES GP-POWER TRAIN COOLER

S/N: LLL1-UP
PART OF 325-6542 CONVERSION AR-MACHINE OPTION
AN ATTACHMENT

SMCS-1375, 3016 **i03664482**

NOTE	REF NO	GRAPHIC REF	PART NUMBER	QTY	PART NAME 1 2 3 4 5 6 (PRODUCT LEVEL)	SEE PAGE
I	1	1	**325-0524**	2	HOSE AS	
I	2	1	**325-0525**	2	HOSE AS	
	3	1	*327-7671*	1	HOSE AS	
E		1	**193-6911**		INSULATION (127-CM)	
		1	**163-8811**	2	CLAMP	
I		1	**263-0978**	1	HOSE AS	
	4	1	*327-7672*	1	HOSE AS	
E		1	**193-6911**		INSULATION (47-CM)	
		1	**163-8811**	2	CLAMP	
I		1	**283-4938**	1	HOSE AS	
	5	1	**2P-6470**	1	CLIP (SLOT)	
	6	1	**2P-6471**	1	CLIP (TAB)	
	7	1	**3E-4321**	2	CLIP	

E-ORDER BY THE CENTIMETER
I-REFER TO HYDRAULIC INFORMATION SYSTEM

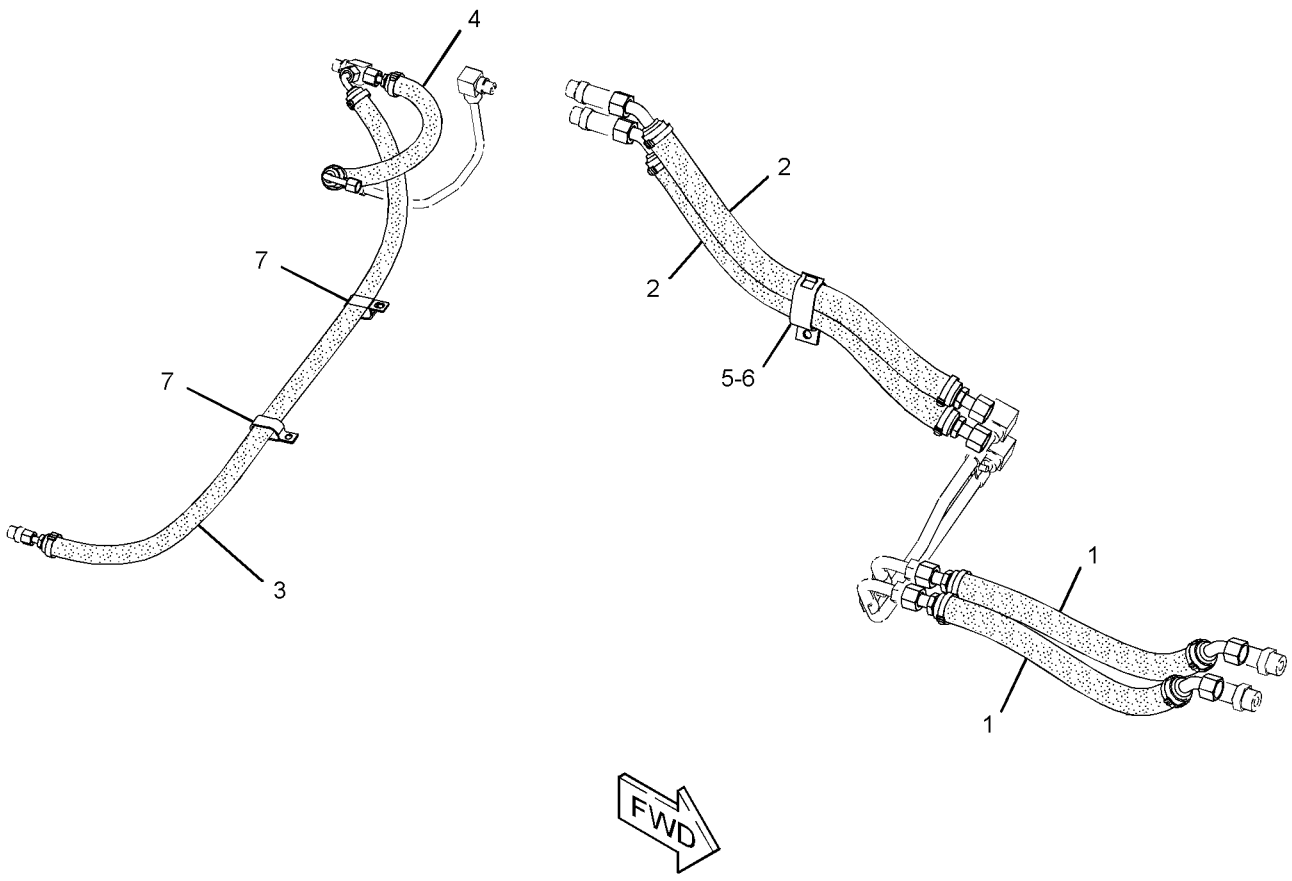

GRAPHIC #1 **<END>** g02047636

327-7670 LINES GP-POWER TRAIN COOLER

S/N: JTD1-UP
PART OF 325-6547 CONVERSION AR-MACHINE OPTION
AN ATTACHMENT

SMCS-1375, 3016 **i03664509**

NOTE	REF NO	GRAPHIC REF	PART NUMBER	QTY	PART NAME 1 2 3 4 5 6 (PRODUCT LEVEL)	SEE PAGE
I	1	1	**325-0524**	2	HOSE AS	
I	2	1	**325-0525**	2	HOSE AS	
	3	1	*327-7682*	1	HOSE AS	
E		1	**193-6911**		INSULATION (139-CM)	
		1	**163-8811**	2	CLAMP	
I		1	**303-6592**	1	HOSE AS	
	4	1	*327-7683*	1	HOSE AS	
E		1	**193-6911**		INSULATION (59-CM)	
		1	**163-8811**	2	CLAMP	
I		1	**303-6599**	1	HOSE AS	
	5	1	**2P-6470**	1	CLIP (SLOT)	
	6	1	**2P-6471**	1	CLIP (TAB)	
	7	1	**3E-4321**	2	CLIP	

E-ORDER BY THE CENTIMETER
I-REFER TO HYDRAULIC INFORMATION SYSTEM

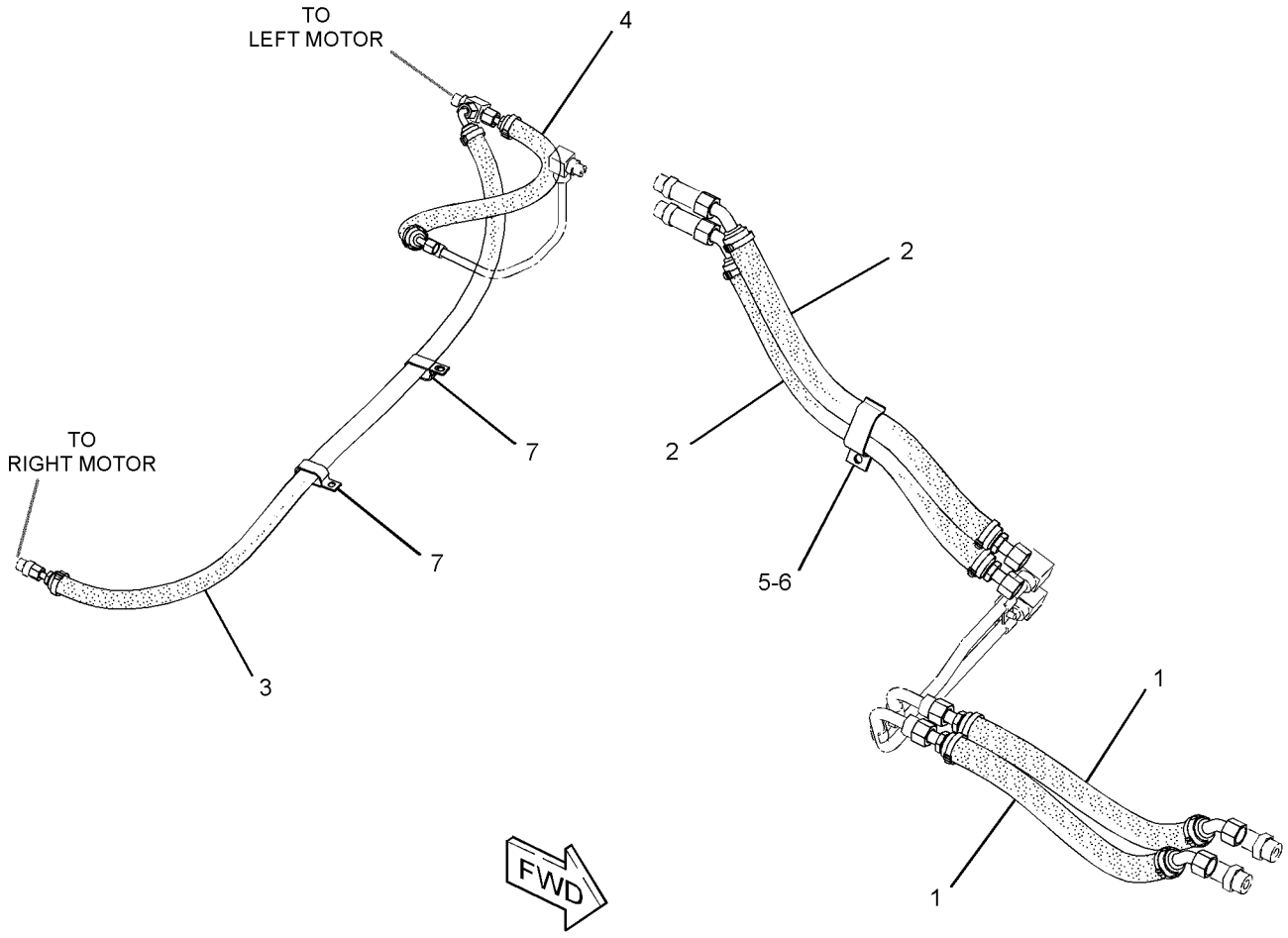

GRAPHIC #1 **<END>** g02028740

254-1366 LINES GP-TRANSMISSION OIL–CHARGE

S/N: JTD1-UP; FFF1-UP; LLL1-UP

PART OF 244-7382, 244-7445, 286-3235 POWER TRAIN AR

SMCS-3016, 3154 **i04403772**

NOTE	REF NO	GRAPHIC REF	PART NUMBER	QTY	PART NAME 1 2 3 4 5 6 (PRODUCT LEVEL)	SEE PAGE
	1	1	**3E-2345**	1	TEE-O-RING	
	2	1	**6V-0852**	2	CAP-DUST	
	3	1	**8T-4984**	2	CLAMP-HOSE	
	4	1	*9U-7000*	2	FITTING GP-HYDRAULIC	
					(EACH INCLUDES)	
		1	**2S-4078**	1	SEAL-O-RING	
		1	**5P-7506**	1	ELBOW	
	5	1	**173-3323**	2	ADAPTER	
	6	1	**196-1803**	1	FILTER GP-OIL (REAR)	
		1	**1G-8878**	1	FILTER-OIL (ADVANCED EFFICIENCY)	
		1	**3J-1907**	1	SEAL-O-RING	
		1	**134-0404**	1	SWITCH AS-PRESSURE (HYDRAULIC OIL)	
	7	1	**197-7611**	1	BLOCK AS	
	8	1	**200-3106**	1	HOSE	
	9	1	**302-8726**	1	HOSE	
Y	10	1	**212-9363**	1	FILTER GP-OIL (FRONT)	305
	11	1	**218-2148**	1	ELBOW	
	12	1	**245-5082**	1	GUARD	
I	13	1	**256-7754**	1	HOSE AS	
I	14	1	**256-7755**	1	HOSE AS	
I	15	1	**256-7756**	1	HOSE AS	
I	16	1	**256-7757**	1	HOSE AS	
	17	1	**256-7758**	1	BRACKET AS	
	18	1	**256-7761**	1	HOSE	
	19	1	*262-0481*	1	CLAMP GP-HYDRAULIC LINES	
		1	**8I-6686**	1	CLAMP	
		1	**262-0482**	1	CLAMP-DOUBLE	
	20	1	**263-0975**	1	PLATE AS	
	21	1	**119-5917**	1	CLIP	
	22	1	*148-8342*	2	CONNECTOR AS	
					(EACH INCLUDES)	
		1	**3K-0360**	1	SEAL-O-RING	
		1	**6V-8632**	1	CONNECTOR	
		1	**7J-9108**	1	SEAL-O-RING	
	23	1	*148-8347*	2	ELBOW AS	
					(EACH INCLUDES)	
		1	**3D-2824**	1	SEAL-O-RING	
		1	**6V-9007**	1	ELBOW	
		1	**6V-9746**	1	SEAL-O-RING	
	24	1	*150-3035*	1	ELBOW AS	
		1	**6V-9746**	1	SEAL-O-RING	
		1	**8T-1718**	1	ELBOW	
	25	1	*164-5567*	1	COUPLER AS-QUICK DISCONNECT (MALE)	
		1	**214-7568**	1	SEAL-O-RING	
		1	**6V-3965**	1	FITTING (QUICK DISCONNECT)	
	26	1	*164-5616*	1	PLUG AS	
		1	**2S-4078**	1	SEAL-O-RING	
		1	**9S-6130**	1	PLUG	
	27	1	*164-6863*	2	ELBOW AS	
					(EACH INCLUDES)	
		1	**3K-0360**	1	SEAL-O-RING	
		1	**6V-9746**	1	SEAL-O-RING	
		1	**8C-6920**	1	ELBOW	
	28	1	**2S-4078**	2	SEAL-O-RING	
	29	1	**3D-2824**	2	SEAL-O-RING	
	30	1	**5D-0718**	3	CLIP	

254-1366 **LINES GP-TRANSMISSION OIL** *(contd.)* **i04403772**

NOTE	REF NO	GRAPHIC REF	PART NUMBER	QTY	PART NAME 1 2 3 4 5 6 (PRODUCT LEVEL)	SEE PAGE
	31	1	**6V-9746**	2	SEAL-O-RING	
	32	1	**7M-8485**	2	SEAL-O-RING	
M	33	1	**7X-2543**	3	BOLT (M10X1.5X120-MM)	
	34	1	**7X-7729**	6	WASHER (11X25X3-MM THK)	
	35	1	**8T-3613**	1	VALVE AS-PRESSURE (TEST)	
	36	1	**8T-4121**	14	WASHER-HARD (11X21X2.5-MM THK)	
M	37	1	**8T-4136**	4	BOLT (M10X1.5X25-MM)	
M	38	1	**8T-4137**	2	BOLT (M10X1.5X20-MM)	
M	39	1	**8T-4195**	11	BOLT (M10X1.5X30-MM)	
	40	1	**8T-4983**	4	CLAMP-HOSE	

I-REFER TO HYDRAULIC INFORMATION SYSTEM
M-METRIC PART
Y-SEPARATE ILLUSTRATION

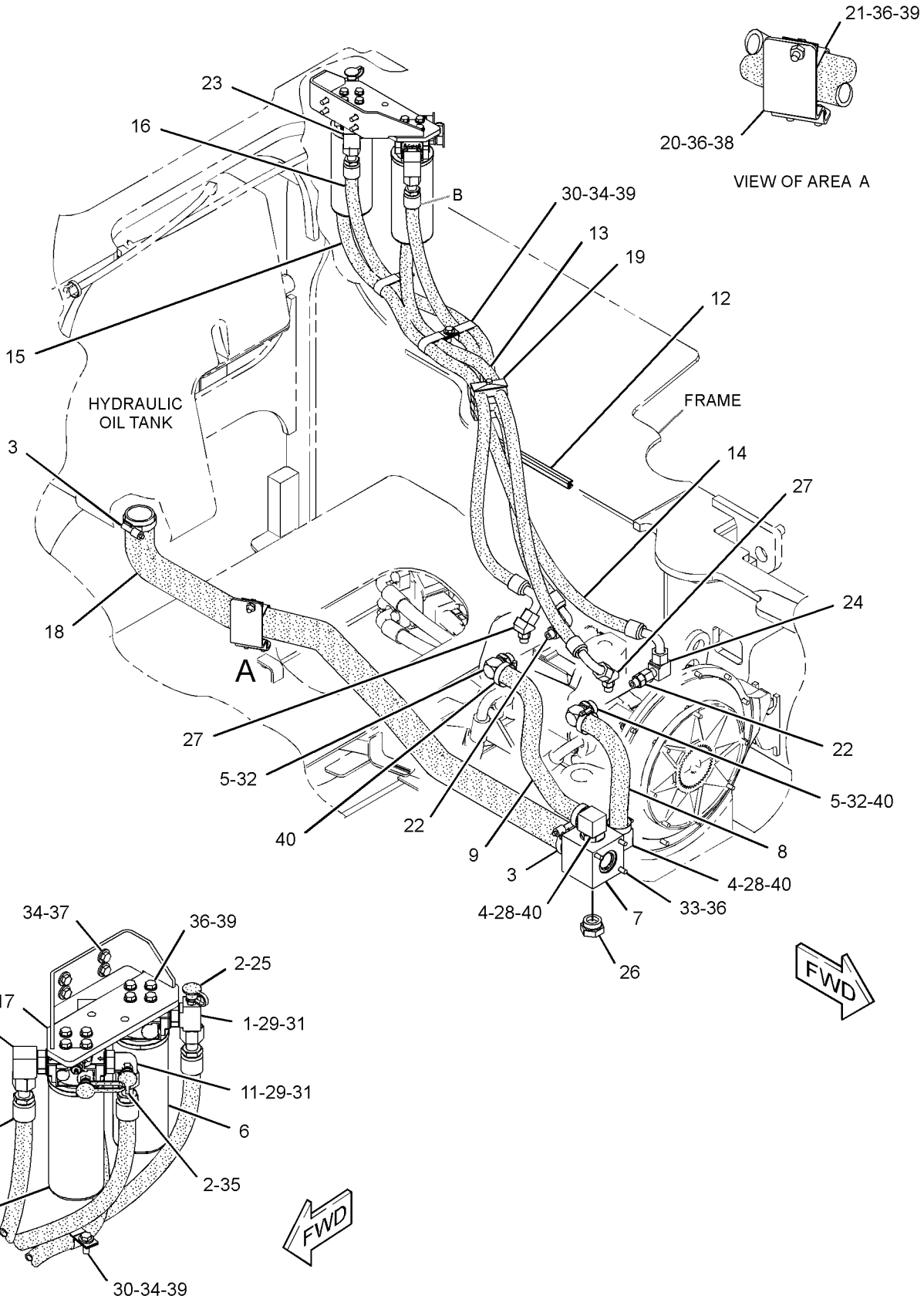

GRAPHIC #1 **<END>** g01338390

POWER TRAIN

254-1368 LINES GP-TRANSMISSION OIL—CASE DRAIN

S/N: FFF1-UP
PART OF 244-7382 POWER TRAIN AR
TYPE 1

SMCS-3016, 3154 **i04415990**

NOTE	REF NO	GRAPHIC REF	PART NUMBER	QTY	PART NAME 1 2 3 4 5 6 (PRODUCT LEVEL)	SEE PAGE
	1	1	**6V-5258**	1	ADAPTER	
	2	1	**6V-9171**	1	NUT-BULKHEAD (1-3/16-12-THD)	
	3	1	*9U-7000*	1	FITTING GP-HYDRAULIC	
		1	**5P-7506**	1	ELBOW	
		1	**2S-4078**	1	SEAL-O-RING	
	4	1	**257-1105**	1	HOSE	
I	5	1	**261-8523**	1	HOSE AS	
I	6	1	**261-8524**	1	HOSE AS	
	7	1	**263-7803**	1	TUBE AS	
	8	1	**283-4947**	1	TUBE AS	
I	9	1	**294-1061**	1	HOSE AS	
	10	1	**294-1070**	1	TUBE AS	
	11	1	**139-1398**	1	CLIP	
	12	1	*148-8317*	2	CONNECTOR AS	
					(EACH INCLUDES)	
		1	**3D-2824**	1	SEAL-O-RING	
		1	**5K-9090**	1	SEAL-O-RING	
		1	**6V-8714**	1	CONNECTOR	
	13	1	*148-8327*	2	CONNECTOR AS	
					(EACH INCLUDES)	
		1	**3D-2824**	1	SEAL-O-RING	
		1	**6V-8637**	1	CONNECTOR	
		1	**6V-9746**	1	SEAL-O-RING	
	14	1	*148-8352*	1	ELBOW AS	
		1	**5K-9090**	1	SEAL-O-RING	
		1	**6V-9854**	1	ELBOW	
	15	1	*148-8357*	1	ELBOW AS	
		1	**5K-9090**	1	SEAL-O-RING	
		1	**6V-9008**	1	ELBOW	
		1	**7M-8485**	1	SEAL-O-RING	
	16	1	*148-8450*	1	TEE AS	
		1	**3E-7443**	1	TEE-UNION	
		1	**5K-9090**	1	SEAL-O-RING	
		1	**6V-9746**	2	SEAL-O-RING	
	17	1	**158-0851**	1	CLIP	
	18	1	*164-6858*	1	TEE AS	
		1	**5K-9090**	2	SEAL-O-RING	
		1	**6V-8778**	1	TEE-FACE SEAL	
		1	**7M-8485**	1	SEAL-O-RING	
	19	1	**2S-4078**	1	SEAL-O-RING	
	20	1	**3D-2824**	1	SEAL-O-RING	
	21	1	**6V-9746**	2	SEAL-O-RING	
	22	1	**6V-9832**	1	CAP AS	
	23	1	**7X-7958**	1	CLAMP-HOSE	
	24	1	**8T-1887**	1	CLIP (SLOT)	
	25	1	**8T-1888**	1	CLIP (TAB)	
	26	1	**8T-4121**	2	WASHER-HARD (11X21X2.5-MM THK)	
M	27	1	**8T-4137**	2	BOLT (M10X1.5X20-MM)	
M	28	1	**8T-4200**	1	BOLT (M8X1.25X16-MM)	
	29	1	**8T-4224**	1	WASHER-HARD (8.8X16X2-MM THK)	
	30	1	**8T-4983**	1	CLAMP-HOSE	

I-REFER TO HYDRAULIC INFORMATION SYSTEM
M-METRIC PART

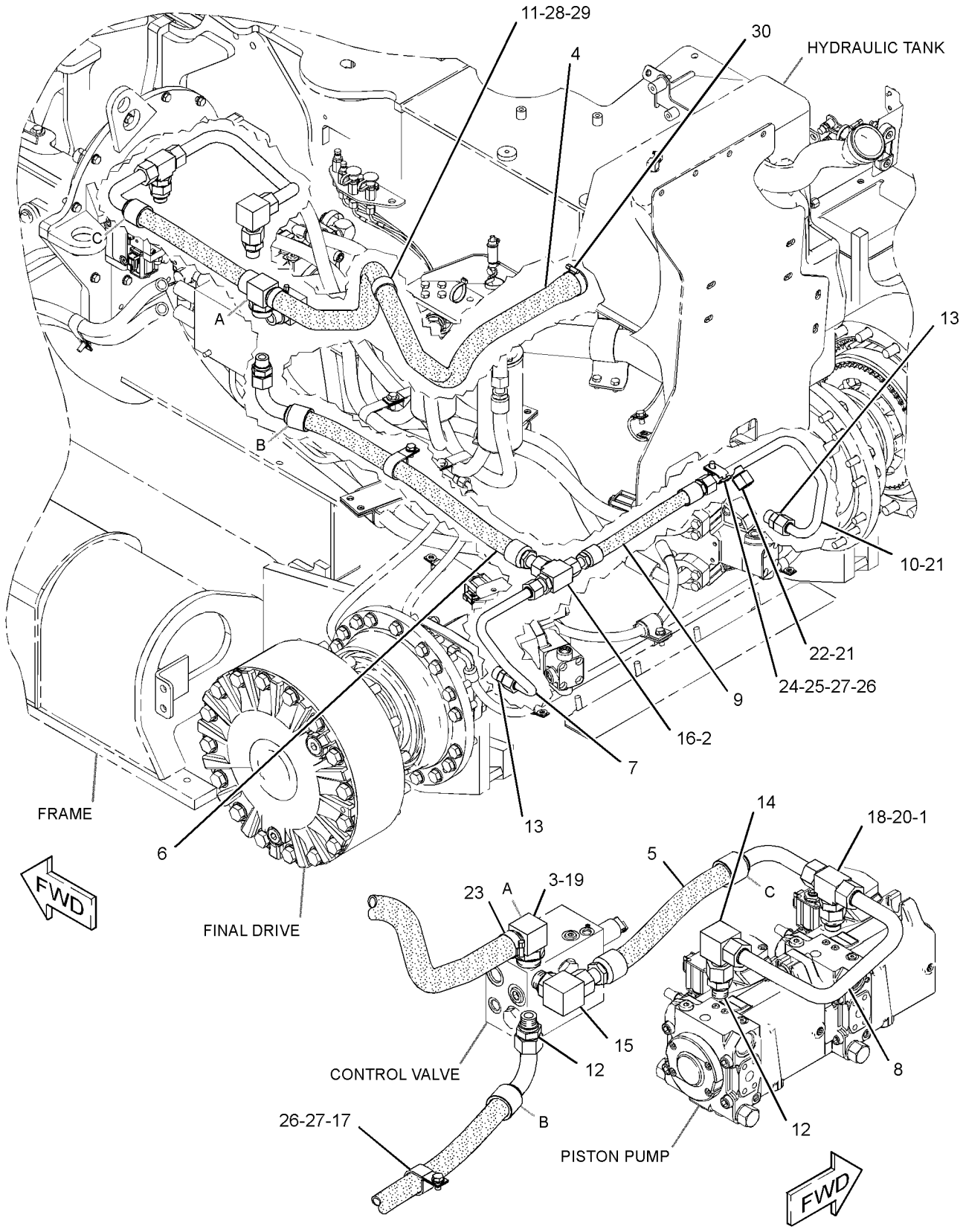

GRAPHIC #1 **<END>** g01339100

POWER TRAIN

254-1368 LINES GP-TRANSMISSION OIL—CASE DRAIN

S/N: FFF1-UP

PART OF 244-7382 POWER TRAIN AR

TYPE 2

SMCS-3016, 3154 **i04416153**

NOTE	REF NO	GRAPHIC REF	PART NUMBER	QTY	PART NAME 1 2 3 4 5 6 (PRODUCT LEVEL)	SEE PAGE
	1	1	**6V-5258**	1	ADAPTER	
	2	1	**6V-9171**	1	NUT-BULKHEAD (1-3/16-12-THD)	
	3	1	*9U-7000*	1	FITTING GP-HYDRAULIC	
		1	**5P-7506**	1	ELBOW	
		1	**2S-4078**	1	SEAL-O-RING	
	4	1	**257-1105**	1	HOSE	
I	5	1	**261-8523**	1	HOSE AS	
I	6	1	**261-8524**	1	HOSE AS	
	7	1	**263-7803**	1	TUBE AS	
	8	1	**283-4947**	1	TUBE AS	
I	9	1	**294-1061**	1	HOSE AS	
	10	1	**294-1070**	1	TUBE AS	
	11	1	**139-1398**	1	CLIP	
	12	1	*148-8317*	2	CONNECTOR AS	
					(EACH INCLUDES)	
		1	**3D-2824**	1	SEAL-O-RING	
		1	**5K-9090**	1	SEAL-O-RING	
		1	**6V-8714**	1	CONNECTOR	
	13	1	*148-8327*	2	CONNECTOR AS	
					(EACH INCLUDES)	
		1	**3D-2824**	1	SEAL-O-RING	
		1	**6V-8637**	1	CONNECTOR	
		1	**6V-9746**	1	SEAL-O-RING	
	14	1	*148-8352*	1	ELBOW AS	
		1	**5K-9090**	1	SEAL-O-RING	
		1	**6V-9854**	1	ELBOW	
	15	1	*148-8357*	1	ELBOW AS	
		1	**5K-9090**	1	SEAL-O-RING	
		1	**6V-9008**	1	ELBOW	
		1	**7M-8485**	1	SEAL-O-RING	
	16	1	*148-8450*	1	TEE AS	
		1	**3E-7443**	1	TEE-UNION	
		1	**5K-9090**	1	SEAL-O-RING	
		1	**6V-9746**	2	SEAL-O-RING	
	17	1	**158-0851**	1	CLIP	
	18	1	*164-6858*	1	TEE AS	
		1	**5K-9090**	2	SEAL-O-RING	
		1	**6V-8778**	1	TEE-FACE SEAL	
		1	**7M-8485**	1	SEAL-O-RING	
	19	1	**2S-4078**	1	SEAL-O-RING	
	20	1	**3D-2824**	1	SEAL-O-RING	
	21	1	**6V-9746**	2	SEAL-O-RING	
	22	1	**6V-9832**	1	CAP AS	
	23	1	**7X-7958**	1	CLAMP-HOSE	
	24	1	**8T-1887**	1	CLIP (SLOT)	
	25	1	**8T-1888**	1	CLIP (TAB)	
C	26	1	**8T-4121**	1	WASHER-HARD (11X21X2.5-MM THK)	
CM	27	1	**8T-4137**	1	BOLT (M10X1.5X20-MM)	
M	28	1	**8T-4200**	1	BOLT (M8X1.25X16-MM)	
C	29	1	**8T-4224**	2	WASHER-HARD (8.8X16X2-MM THK)	
	30	1	**8T-4983**	1	CLAMP-HOSE	
CM	31	1	**8T-4189**	1	BOLT (M8X1.25X20-MM)	

C-CHANGE FROM PREVIOUS TYPE
I-REFER TO HYDRAULIC INFORMATION SYSTEM
M-METRIC PART

254-1368 **LINES GP-TRANSMISSION OIL** *(contd.)* **i04416153**

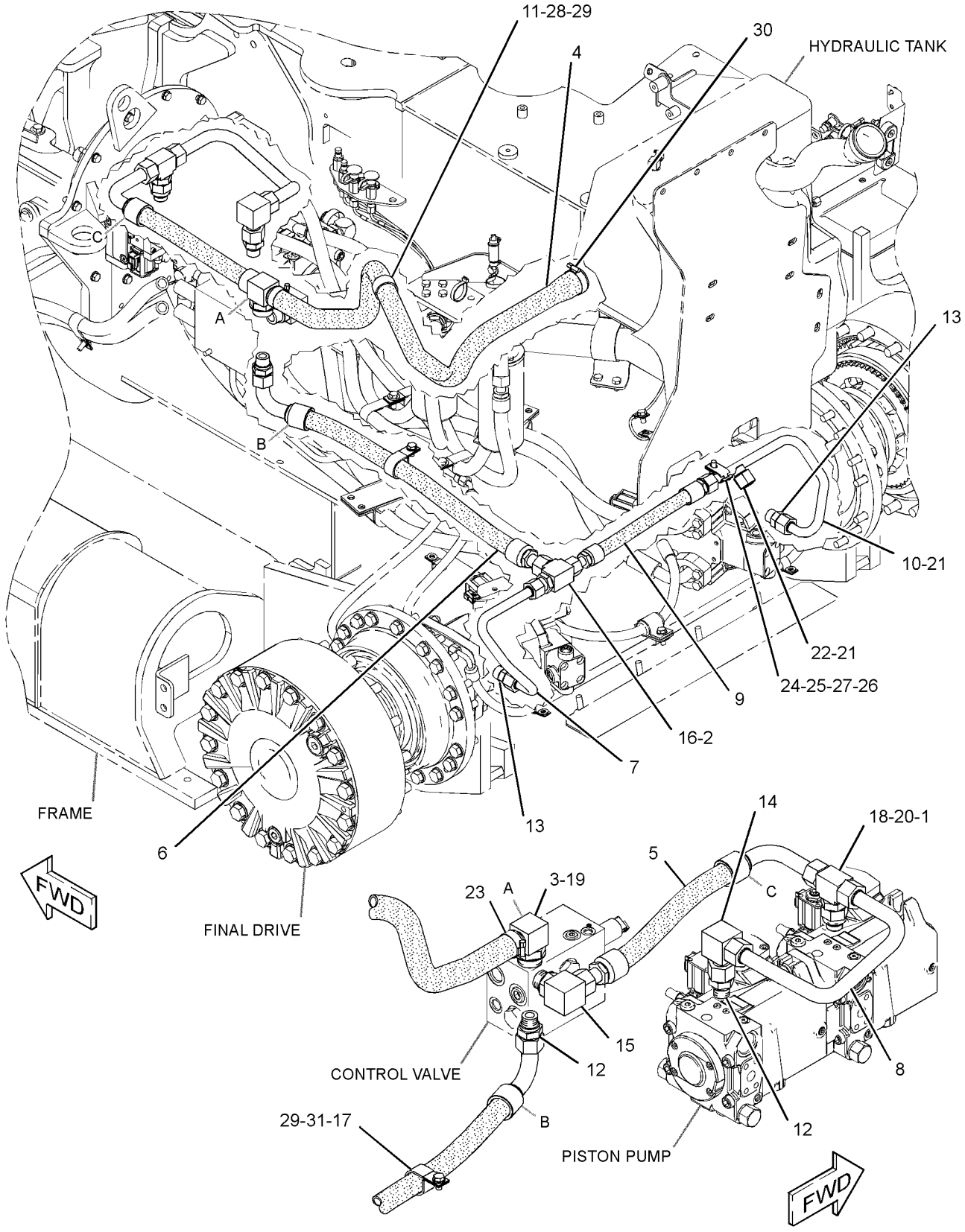

GRAPHIC #1 **<END>** g01531375

263-4136 LINES GP-TRANSMISSION OIL—CASE DRAIN

S/N: LLL1-UP

PART OF 244-7445 POWER TRAIN AR

SMCS-3016, 3154 **i02920678**

NOTE	REF NO	GRAPHIC REF	PART NUMBER	QTY	PART NAME 1 2 3 4 5 6 (PRODUCT LEVEL)	SEE PAGE
	1	1	**6V-5258**	1	ADAPTER	
	2	1	**6V-9171**	1	NUT-BULKHEAD (1-3/16-12-THD)	
	4	1	**257-1105**	1	HOSE	
I	5	1	**261-8523**	1	HOSE AS	
I	6	1	**261-8524**	1	HOSE AS	
	7	1	**263-0990**	1	TUBE AS	
	8	1	**283-4947**	1	TUBE AS	
	9	1	**289-0118**	1	TUBE AS	
I	10	1	**294-1061**	1	HOSE AS	
	11	1	**139-1398**	1	CLIP	
	12	1	*148-8317*	2	CONNECTOR AS	
					(EACH INCLUDES)	
		1	**3D-2824**	1	SEAL-O-RING	
		1	**5K-9090**	1	SEAL-O-RING	
		1	**6V-8714**	1	CONNECTOR	
	13	1	*148-8327*	2	CONNECTOR AS	
					(EACH INCLUDES)	
		1	**3D-2824**	1	SEAL-O-RING	
		1	**6V-8637**	1	CONNECTOR	
		1	**6V-9746**	1	SEAL-O-RING	
	14	1	*148-8352*	1	ELBOW AS	
		1	**5K-9090**	1	SEAL-O-RING	
		1	**6V-9854**	1	ELBOW	
	15	1	*148-8357*	1	ELBOW AS	
		1	**5K-9090**	1	SEAL-O-RING	
		1	**6V-9008**	1	ELBOW	
		1	**7M-8485**	1	SEAL-O-RING	
	16	1	*148-8450*	1	TEE AS	
		1	**3E-7443**	1	TEE-UNION	
		1	**5K-9090**	1	SEAL-O-RING	
		1	**6V-9746**	2	SEAL-O-RING	
	17	1	**158-0851**	1	CLIP	
	18	1	*164-6858*	1	TEE AS	
		1	**5K-9090**	2	SEAL-O-RING	
		1	**6V-8778**	1	TEE-FACE SEAL	
		1	**7M-8485**	1	SEAL-O-RING	
	19	1	**2S-4078**	1	SEAL-O-RING	
	20	1	**3D-2824**	1	SEAL-O-RING	
	21	1	**6V-9746**	2	SEAL-O-RING	
	22	1	**6V-9832**	1	CAP AS	
	23	1	**7X-7958**	1	CLAMP-HOSE	
	24	1	**8T-1887**	1	CLIP (SLOT)	
	25	1	**8T-1888**	1	CLIP (TAB)	
	26	1	**8T-4121**	1	WASHER-HARD (11X21X2.5-MM THK)	
M	27	1	**8T-4137**	1	BOLT (M10X1.5X20-MM)	
M	28	1	**8T-4200**	1	BOLT (M8X1.25X16-MM)	
	29	1	**8T-4224**	2	WASHER-HARD (8.8X16X2-MM THK)	
	30	1	**8T-4983**	1	CLAMP-HOSE	
M	31	1	**8T-4189**	1	BOLT (M8X1.25X20-MM)	

I-REFER TO HYDRAULIC INFORMATION SYSTEM
M-METRIC PART

263-4136 **LINES GP-TRANSMISSION OIL** *(contd.)* **i02920678**

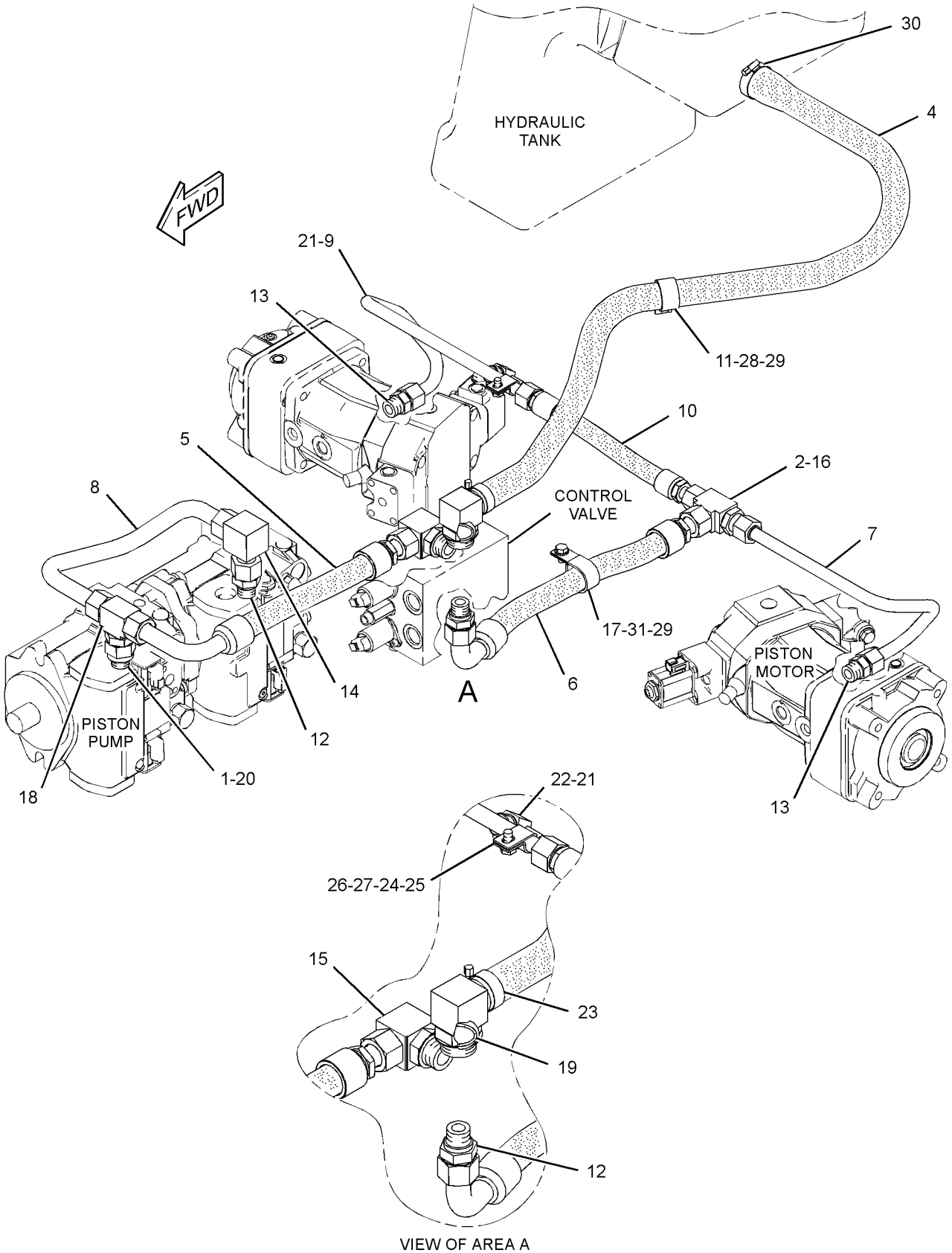

GRAPHIC #1

<END>

g01522069

286-8058 LINES GP-TRANSMISSION OIL–CASE DRAIN

S/N: JTD1-UP

PART OF 286-3235 POWER TRAIN AR

SMCS-3016, 3154 **i03133623**

NOTE	REF NO	GRAPHIC REF	PART NUMBER	QTY	PART NAME 1 2 3 4 5 6 (PRODUCT LEVEL)	SEE PAGE
	1	1	**6V-5258**	1	ADAPTER	
	2	1	**6V-9171**	1	NUT-BULKHEAD (1-3/16-12-THD)	
	3	1	**9U-7000**	1	FITTING GP-HYDRAULIC	
	4	1	**257-1105**	1	HOSE	
I	5	1	**261-8523**	1	HOSE AS	
I	6	1	**261-8524**	1	HOSE AS	
	7	1	**306-2093**	1	TUBE AS	
	8	1	**283-4947**	1	TUBE AS	
I	9	1	**294-1068**	1	HOSE AS	
	10	1	**306-2092**	1	TUBE AS	
	11	1	**139-1398**	1	CLIP	
	12	1	*148-8317*	2	CONNECTOR AS	
					(EACH INCLUDES)	
		1	**3D-2824**	1	SEAL-O-RING	
		1	**5K-9090**	1	SEAL-O-RING	
		1	**6V-8714**	1	CONNECTOR	
	13	1	*148-8327*	2	CONNECTOR AS	
					(EACH INCLUDES)	
		1	**3D-2824**	1	SEAL-O-RING	
		1	**6V-8637**	1	CONNECTOR	
		1	**6V-9746**	1	SEAL-O-RING	
	14	1	*148-8352*	1	ELBOW AS	
		1	**5K-9090**	1	SEAL-O-RING	
		1	**6V-9854**	1	ELBOW	
	15	1	*148-8357*	1	ELBOW AS	
		1	**5K-9090**	1	SEAL-O-RING	
		1	**6V-9008**	1	ELBOW	
		1	**7M-8485**	1	SEAL-O-RING	
	16	1	*148-8450*	1	TEE AS	
		1	**3E-7443**	1	TEE-UNION	
		1	**5K-9090**	1	SEAL-O-RING	
		1	**6V-9746**	2	SEAL-O-RING	
	17	1	**158-0851**	1	CLIP	
	18	1	*164-6858*	1	TEE AS	
		1	**5K-9090**	2	SEAL-O-RING	
		1	**6V-8778**	1	TEE-FACE SEAL	
		1	**7M-8485**	1	SEAL-O-RING	
	19	1	**2S-4078**	1	SEAL-O-RING	
	20	1	**3D-2824**	1	SEAL-O-RING	
	21	1	**6V-9746**	2	SEAL-O-RING	
	22	1	**6V-9832**	1	CAP AS	
	23	1	**7X-7958**	1	CLAMP-HOSE	
	24	1	**8T-1887**	1	CLIP (SLOT)	
	25	1	**8T-1888**	1	CLIP (TAB)	
	26	1	**8T-4121**	1	WASHER-HARD (11X21X2.5-MM THK)	
M	27	1	**8T-4137**	1	BOLT (M10X1.5X20-MM)	
M	28	1	**8T-4200**	1	BOLT (M8X1.25X16-MM)	
	29	1	**8T-4224**	2	WASHER-HARD (8.8X16X2-MM THK)	
	30	1	**8T-4983**	1	CLAMP-HOSE	
M	31	1	**8T-4189**	1	BOLT (M8X1.25X20-MM)	

I-REFER TO HYDRAULIC INFORMATION SYSTEM
M-METRIC PART

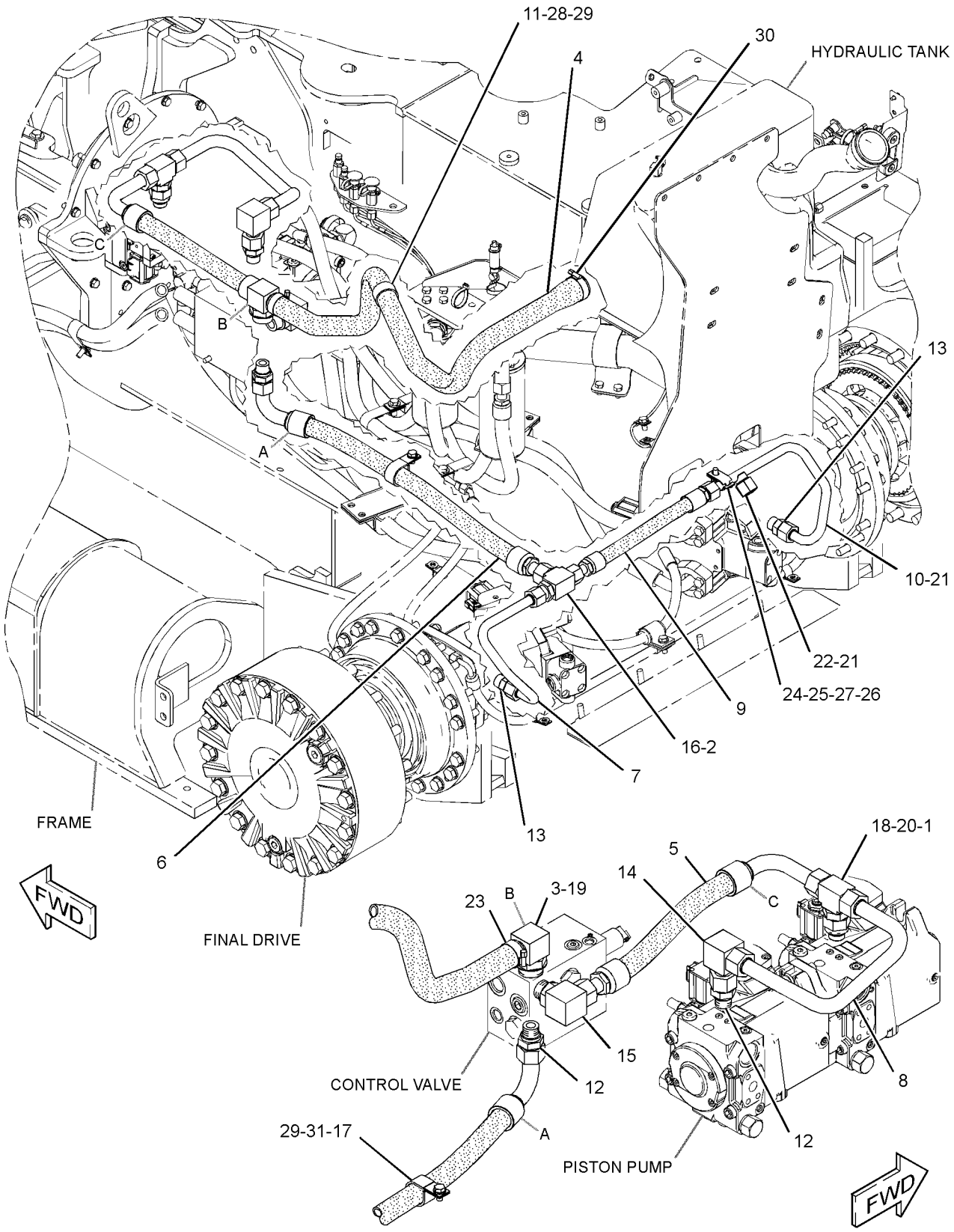

GRAPHIC #1 **<END>** g01613594

329-1319 LINES GP-TRANSMISSION OIL—CASE DRAIN

S/N: FFF1-UP; LLL1-UP

PART OF 325-6541, 325-6542 CONVERSION AR-MACHINE OPTION

AN ATTACHMENT

SMCS-3016, 3154 **i03664469**

NOTE	REF NO	GRAPHIC REF	PART NUMBER	QTY	PART NAME 1 2 3 4 5 6 (PRODUCT LEVEL)	SEE PAGE
	1	1	**329-1323**	1	HOSE AS	
		1	**257-1105**	1	HOSE	
B		1	**268-4412**		TAPE-INSULATOR	
E		1	**324-9708**		INSULATION (120-CM)	
	2	1	*329-1325*	1	HOSE AS	
		1	**163-8813**	2	CLAMP	
I		1	**261-8523**	1	HOSE AS	
E		1	**324-9707**		INSULATION (38-CM)	
	3	1	*329-1920*	1	HOSE AS	
		1	**163-8812**	2	CLAMP	
I		1	**294-1061**	1	HOSE AS	
E		1	**324-9706**		INSULATION (30-CM)	
	4	1	*329-1928*	1	HOSE AS	
		1	**163-8813**	2	CLAMP	
I		1	**261-8524**	1	HOSE AS	
E		1	**324-9707**		INSULATION (49-CM)	
	5	1	**105-1866**	1	CLIP	
	6	1	**7D-1553**	1	CLIP	

B-USE AS REQUIRED
E-ORDER BY THE CENTIMETER
I-REFER TO HYDRAULIC INFORMATION SYSTEM

329-1319 **LINES GP-TRANSMISSION OIL** *(contd.)* **i03664469**

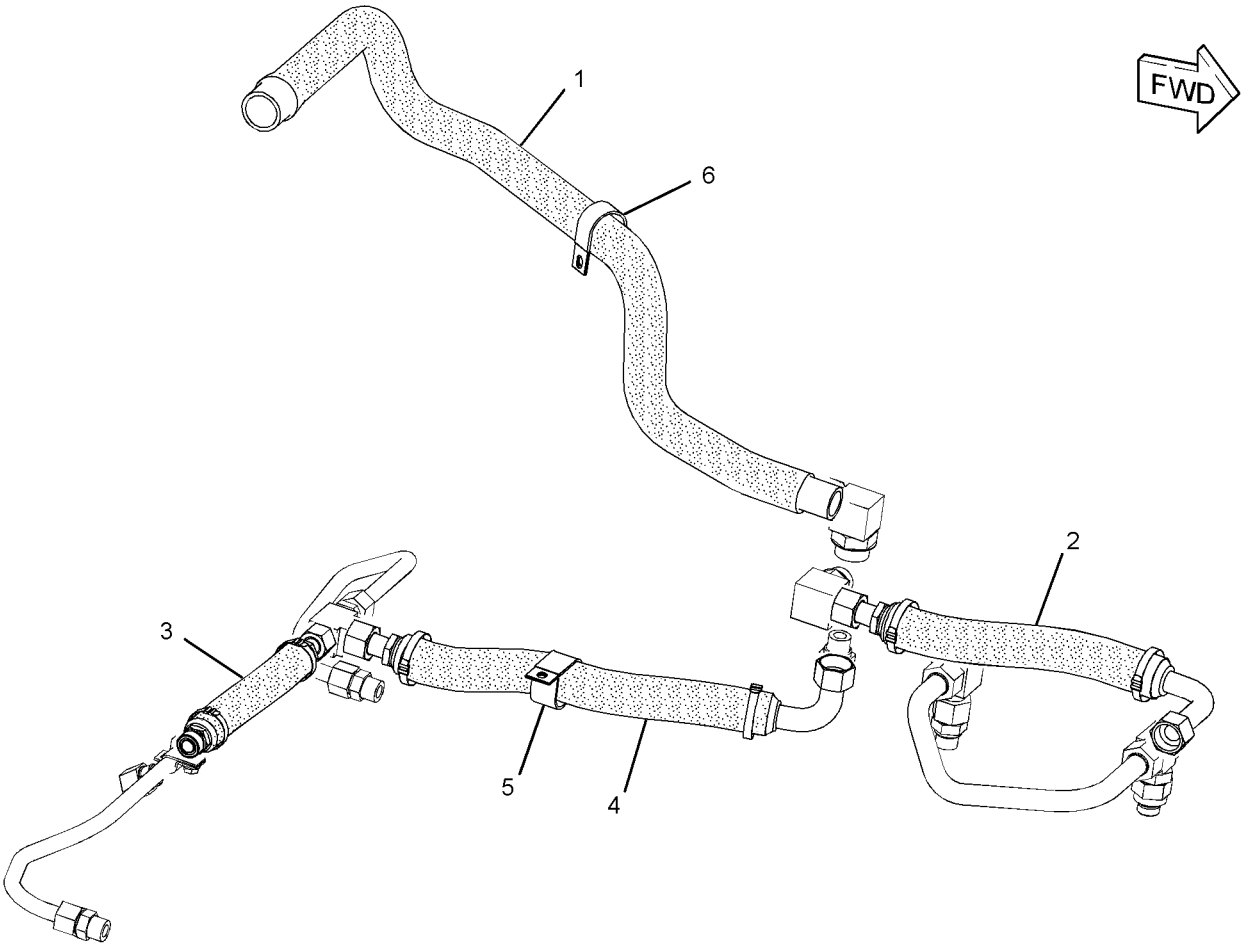

GRAPHIC #1 **<END>** g02029484

329-1937 LINES GP-TRANSMISSION OIL–CASE DRAIN

S/N: JTD1-UP
PART OF 325-6547 CONVERSION AR-MACHINE OPTION
AN ATTACHMENT

SMCS-3016, 3154 **i03664507**

NOTE	REF NO	GRAPHIC REF	PART NUMBER	QTY	PART NAME 1 2 3 4 5 6 (PRODUCT LEVEL)	SEE PAGE
	1	1	**329-1323**	1	HOSE AS	
		1	**257-1105**	1	HOSE	
B		1	**268-4412**		TAPE-INSULATOR	
E		1	**324-9708**		INSULATION (120-CM)	
	2	1	*329-1325*	1	HOSE AS	
		1	**163-8813**	2	CLAMP	
I		1	**261-8523**	1	HOSE AS	
E		1	**324-9707**		INSULATION (38-CM)	
	3	1	*329-1926*	1	HOSE AS	
		1	**163-8812**	2	CLAMP	
I		1	**294-1068**	1	HOSE AS	
E		1	**324-9706**		INSULATION (28-CM)	
	4	1	*329-1928*	1	HOSE AS	
		1	**163-8813**	2	CLAMP	
I		1	**261-8524**	1	HOSE AS	
E		1	**324-9707**		INSULATION (49-CM)	
	5	1	**105-1866**	1	CLIP	
	6	1	**7D-1553**	1	CLIP	

B-USE AS REQUIRED
E-ORDER BY THE CENTIMETER
I-REFER TO HYDRAULIC INFORMATION SYSTEM

329-1937 **LINES GP-TRANSMISSION OIL** *(contd.)* **i03664507**

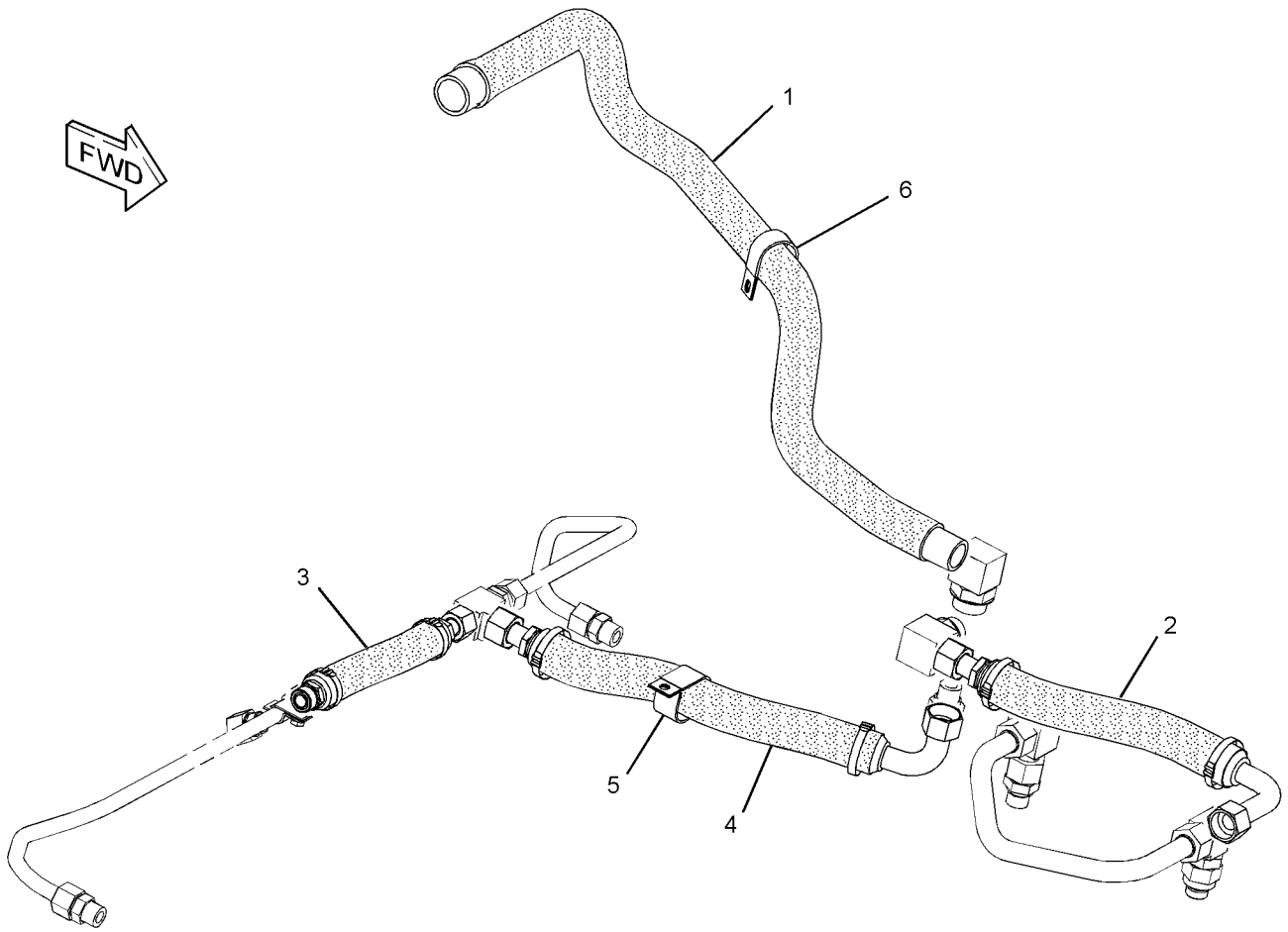

GRAPHIC #1 **<END>** g02029576

329-1938 LINES GP-TRANSMISSION OIL—CHARGE

S/N: JTD1-UP; FFF1-UP; LLL1-UP
PART OF 325-6541, 325-6542, 325-6547 CONVERSION AR-MACHINE OPTION
AN ATTACHMENT

SMCS-3016, 3154 **i03664470**

NOTE	REF NO	GRAPHIC REF	PART NUMBER	QTY	PART NAME 1 2 3 4 5 6 (PRODUCT LEVEL)	SEE PAGE
	1	1	**328-8622**	1	HOSE AS	
B		1	**268-4412**		TAPE-INSULATOR	
		1	**302-8726**	1	HOSE	
E		1	**326-3569**		INSULATION (40-CM)	
	2	1	**328-8623**	1	HOSE AS	
B		1	**268-4412**		TAPE-INSULATOR	
		1	**200-3106**	1	HOSE	
E		1	**326-3569**		INSULATION (26-CM)	
	3	1	*329-1925*	1	HOSE AS	
B		1	**268-4412**		TAPE-INSULATOR	
		1	**256-7761**	1	HOSE	
E		1	**326-3570**		INSULATION (140-CM)	
	4	1	*329-1934*	1	HOSE AS	
I		1	**256-7757**	1	HOSE AS	
		1	**163-8812**	2	CLAMP	
E		1	**324-9706**		INSULATION (152-CM)	
	5	1	*329-1939*	1	HOSE AS	
		1	**163-8812**	2	CLAMP	
I		1	**256-7754**	1	HOSE AS	
E		1	**324-9706**		INSULATION (170-CM)	
	6	1	*329-1940*	1	HOSE AS	
		1	**163-8812**	2	CLAMP	
I		1	**256-7755**	1	HOSE AS	
E		1	**324-9706**		INSULATION (151-CM)	
	7	1	*329-1941*	1	HOSE AS	
		1	**163-8812**	2	CLAMP	
I		1	**256-7756**	1	HOSE AS	
E		1	**324-9706**		INSULATION (164-CM)	
	8	1	**122-3606**	1	CLIP	
	9	1	**228-2775**	2	CLIP	

B-USE AS REQUIRED
E-ORDER BY THE CENTIMETER
I-REFER TO HYDRAULIC INFORMATION SYSTEM

329-1938 **LINES GP-TRANSMISSION OIL** *(contd.)* **i03664470**

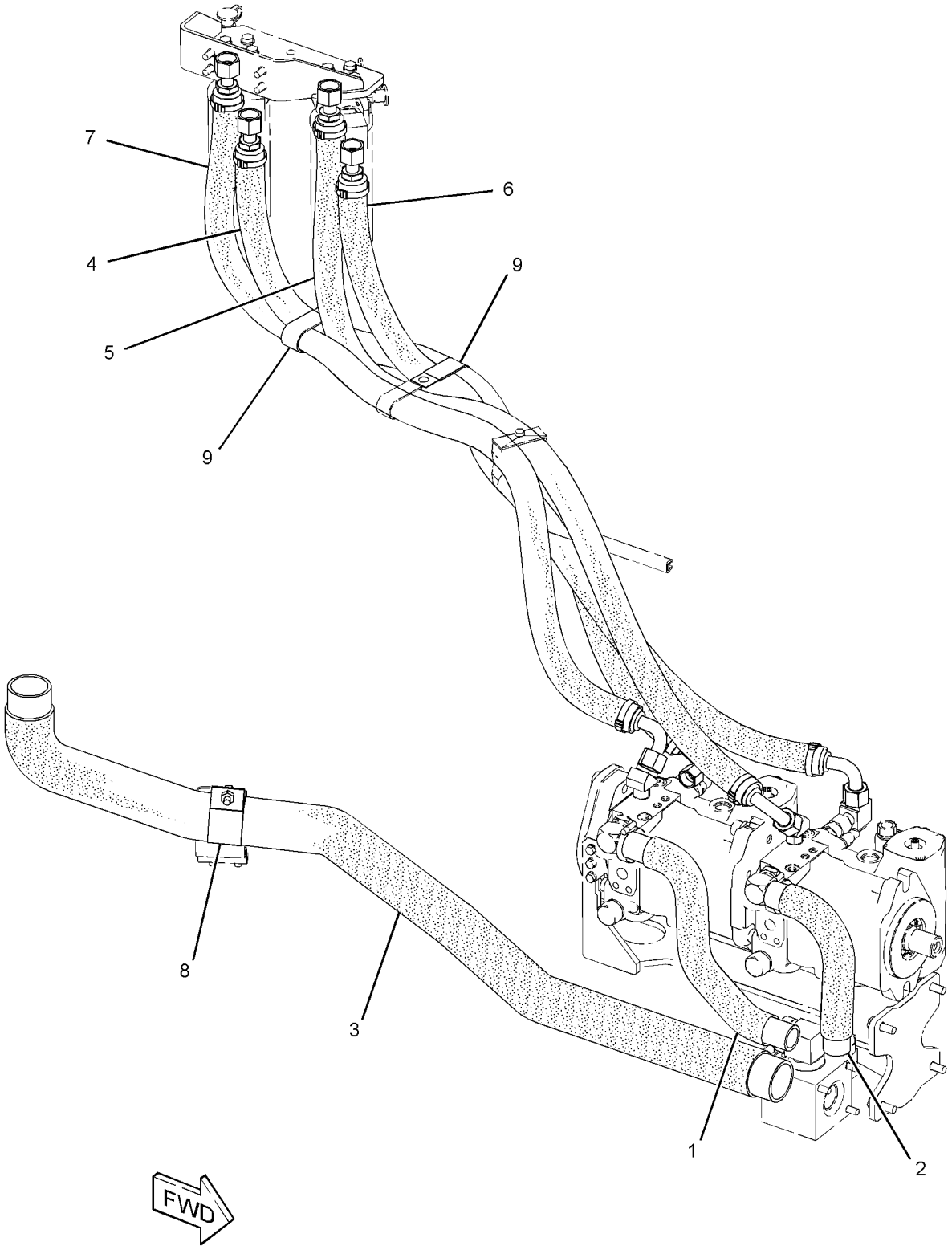

GRAPHIC #1 **<END>** g02024282

254-1352 MOTOR GP-PISTON—POWER TRAIN*R

S/N: JTD1-UP; FFF1-UP; LLL1-UP

PART OF 244-7382, 244-7445, 286-3235 POWER TRAIN AR

SMCS-4351 **i04419072**

NOTE	REF NO	GRAPHIC REF	PART NUMBER	QTY	PART NAME 1 2 3 4 5 6 (PRODUCT LEVEL)	SEE PAGE
Y	1	1	**199-1087**	1	ROTATING GP-MOTOR (HYDROSTATIC)	494
Y	2	1	**293-5447**	1	VALVE GP-PILOT (HYDROSTATIC DRIVE)	375
Y	3	1	**293-5448**	1	VALVE GP-FLUSHING (HYDROSTATIC DRIVE)	374
Y	4	1	**301-7890**	2	VALVE GP-CHECK (HYDROSTATIC DRIVE MOTOR)	140
M	5	1	**095-0674**	8	BOLT-SOCKET HEAD (M12X1.75X65-MM)	
	6	1	**123-5781**	1	PISTON	
	7	1	**123-5782**	1	PIN	
	8	1	**135-7420**	1	PISTON	
	9	1	**123-5784**	1	SETSCREW (SPECIAL)	
	10	1	**123-5787**	2	SEAT	
	11	1	**258-0129**	6	SEAL-O-RING	
	12	1	**135-7421**	3	SEAL	
	13	1	**123-5800**	2	PLUG	
	14	1	**095-0942**	1	RING-RETAINING	
	15	1	**123-5748**	1	SEAL-SHAFT	
	16	1	**9T-3743**	1	SHIM (1-MM THK)	
	17	1	**6F-4718**	1	SEAL-O-RING	
M	18	1	**9X-8483**	1	SETSCREW-SOCKET (M12X1.75X80-MM)	
M	19	1	**6E-3283**	2	LOCKNUT (M12X1.75-THD)	
M	20	1	**9X-8482**	1	SETSCREW-SOCKET (M12X1.75X70-MM)	
	21	1	**128-8981**	2	CAP (PROTECTION)	
	22	1	**120-4394**	1	PLUG-BREAK OFF	

M-METRIC PART
Y-SEPARATE ILLUSTRATION

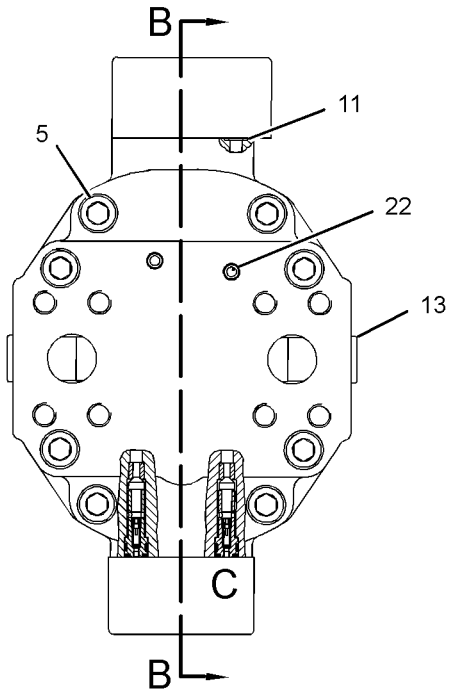

SECTION A-A

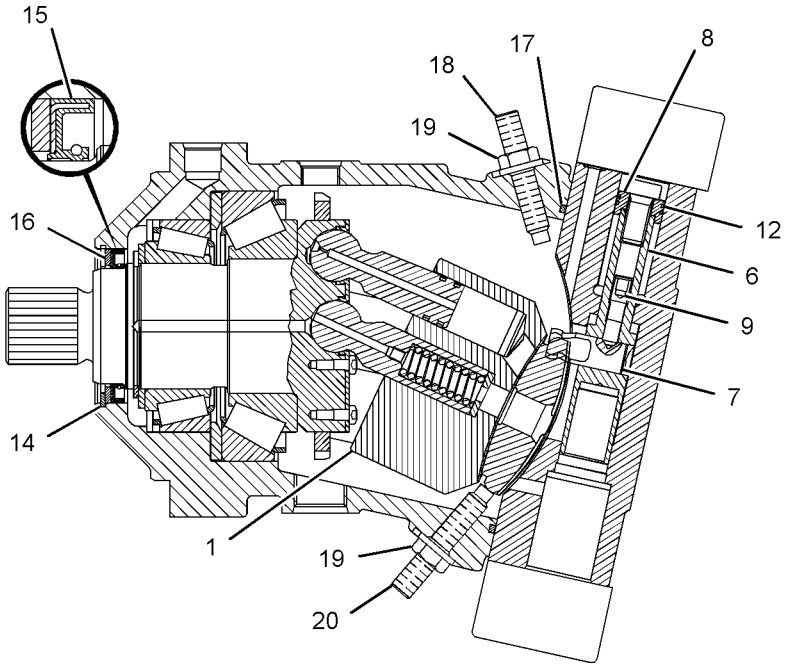

SECTION B-B

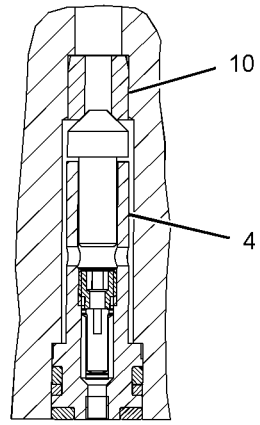

VIEW OF AREA C

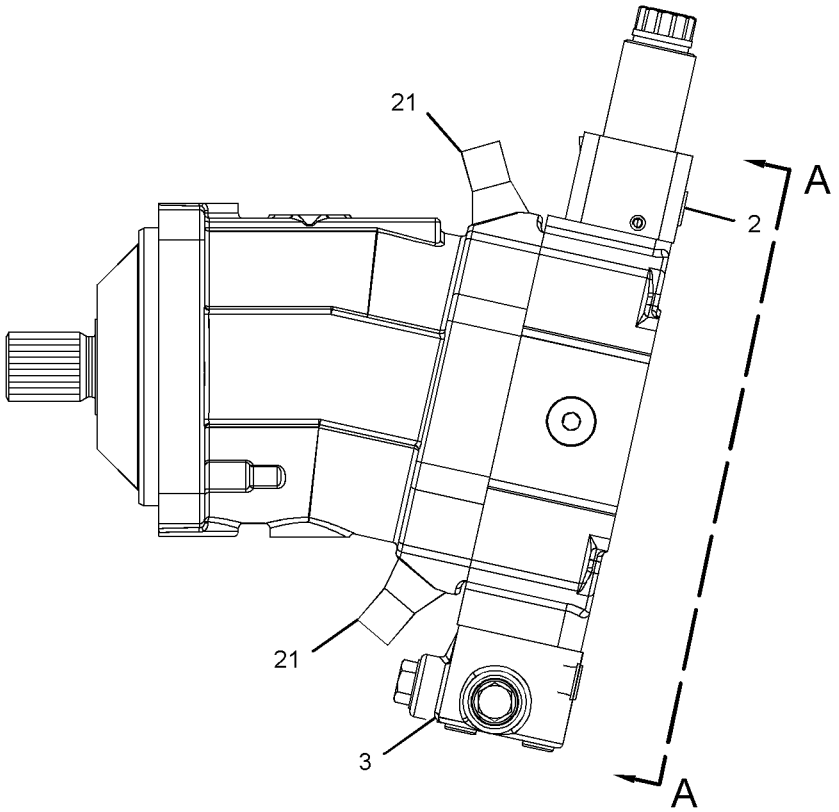

GRAPHIC #1 **<END>** g01374705

POWER TRAIN

244-7382 POWER TRAIN AR

S/N: FFF1-UP

PART OF 244-7370 COMMON AR

SMCS-3000, 4000 **i04415710**

NOTE	PART NUMBER	QTY	PART NAME 1 2 3 4 5 6 (PRODUCT LEVEL)	SEE PAGE
Y	**244-7615**	2	BRAKE GP-PARKING	298
Y	*244-1528*	2	DRIVE GP-FINAL	302
Y	*244-7409*	1	DRIVE GP-HYDROSTATIC	304
Y	*303-6589*	1	LINES GP-POWER TRAIN COOLER	327
Y	*254-1371*	1	LINES GP-PRESSURE TEST	566
Y	*254-1366*	1	LINES GP-TRANSMISSION OIL (CHARGE)	335
Y	*254-1368*	1	LINES GP-TRANSMISSION OIL (CASE DRAIN)	338
YR	**254-1352**	2	MOTOR GP-PISTON (POWER TRAIN)	352
Y	*271-9177*	1	VALVE GP-CONTROL (POWER TRAIN)	511

R-REMFG PART MAY BE AVAILABLE
Y-SEPARATE ILLUSTRATION

<END>

244-7445 POWER TRAIN AR

S/N: LLL1-UP

PART OF 244-7371 COMMON AR

SMCS-3000, 4000 **i04415751**

NOTE	PART NUMBER	QTY	PART NAME 1 2 3 4 5 6 (PRODUCT LEVEL)	SEE PAGE
Y	**244-7615**	2	BRAKE GP-PARKING	298
Y	*244-1528*	2	DRIVE GP-FINAL	302
Y	*244-7409*	1	DRIVE GP-HYDROSTATIC	304
Y	*244-7416*	1	LINES GP-POWER TRAIN COOLER	319
Y	*254-1371*	1	LINES GP-PRESSURE TEST	566
Y	*254-1366*	1	LINES GP-TRANSMISSION OIL (CHARGE)	335
Y	*263-4136*	1	LINES GP-TRANSMISSION OIL (CASE DRAIN)	342
YR	**254-1352**	2	MOTOR GP-PISTON (POWER TRAIN)	352
Y	*254-1358*	1	VALVE GP-CONTROL (POWER TRAIN)	499

R-REMFG PART MAY BE AVAILABLE
Y-SEPARATE ILLUSTRATION

<END>

286-3235 POWER TRAIN AR

S/N: JTD1-UP

PART OF 282-5325 COMMON AR

SMCS-3000, 4000 **i03656838**

NOTE	PART NUMBER	QTY	PART NAME 1 2 3 4 5 6 (PRODUCT LEVEL)	SEE PAGE
Y	**244-7615**	2	BRAKE GP-PARKING	298
Y	*244-1528*	2	DRIVE GP-FINAL	302
Y	*244-7409*	1	DRIVE GP-HYDROSTATIC	304
Y	*286-8054*	1	LINES GP-POWER TRAIN COOLER	323
Y	*254-1371*	1	LINES GP-PRESSURE TEST	566
Y	*254-1366*	1	LINES GP-TRANSMISSION OIL (CHARGE)	335
Y	*286-8058*	1	LINES GP-TRANSMISSION OIL (CASE DRAIN)	344
YR	**254-1352**	2	MOTOR GP-PISTON (POWER TRAIN)	352
Y	*286-8056*	1	VALVE GP-CONTROL (POWER TRAIN)	636

R-REMFG PART MAY BE AVAILABLE
Y-SEPARATE ILLUSTRATION

<END>

293-5438 PUMP GP-CHARGE–SLIPPER

S/N: JTD1-UP; FFF1-UP; LLL1-UP
PART OF 289-6385 PUMP GP-PISTON
AN ATTACHMENT

SMCS-3204 **i02730505**

NOTE	REF NO	GRAPHIC REF	PART NUMBER	QTY	PART NAME 1 2 3 4 5 6 (PRODUCT LEVEL)	SEE PAGE
	1	1	**123-7598**	4	SEAL-BONDED	
	2	1	**117-7278**	1	BUSHING (BEARING)	
	3	1	**179-0464**	2	SEAL-O-RING	
	4	1	**7R-8872**	1	SEAL-O-RING	
	5	1	**7J-6285**	1	SEAL-O-RING	
	6	1	**277-6624**	1	PLATE-WEAR	
	7	1	**246-5804**	2	PLUG (LOCATING)	

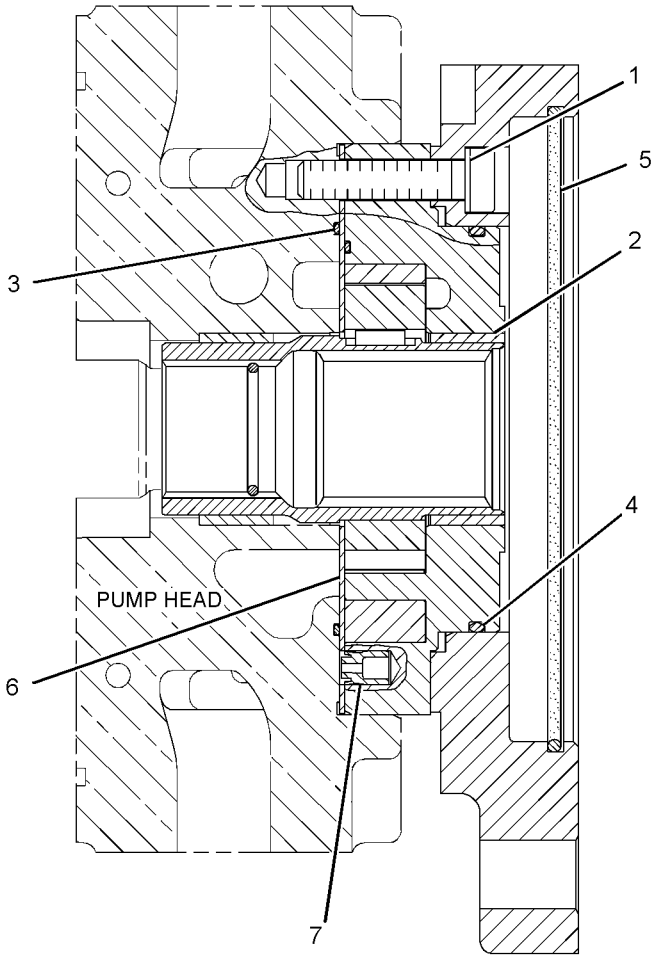

GRAPHIC #1 **<END>** g01378946

293-5439 PUMP GP-CHARGE–SLIPPER

S/N: JTD1-UP; FFF1-UP; LLL1-UP
PART OF 289-6386 PUMP GP-PISTON
AN ATTACHMENT

SMCS-3204 **i03777069**

NOTE	REF NO	GRAPHIC REF	PART NUMBER	QTY	PART NAME 1 2 3 4 5 6 (PRODUCT LEVEL)	SEE PAGE
	1	1	**123-7598**	4	SEAL-BONDED	
	2	1	**117-7278**	1	BUSHING (BEARING)	
	3	1	**179-0464**	2	SEAL-O-RING	
	4	1	**7R-8872**	1	SEAL-O-RING	
	5	1	**7J-6285**	1	SEAL-O-RING	
	6	1	**277-6624**	1	PLATE-WEAR	
	7	1	**246-5804**	2	PLUG	

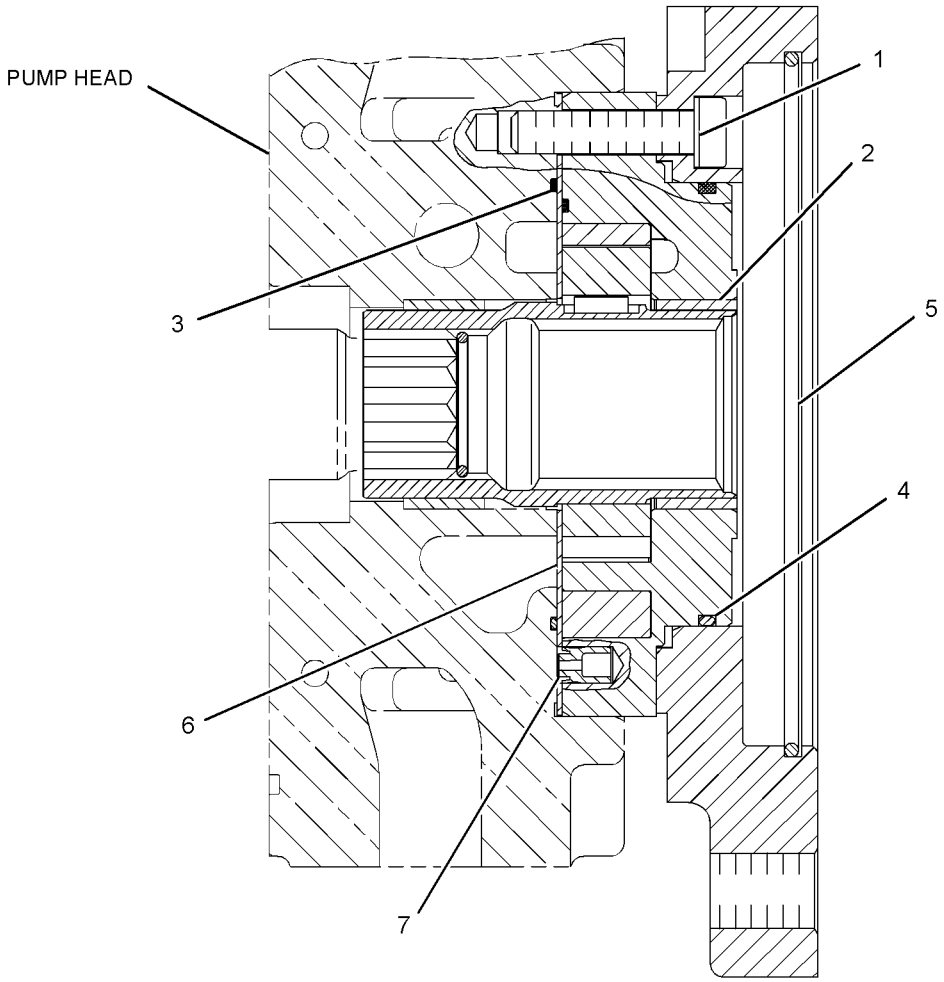

GRAPHIC #1 **<END>** g01374223

293-5440 PUMP GP-CHARGE—STEERING

S/N: JTD1-UP; FFF1-UP; LLL1-UP
PART OF 289-6387 PUMP GP-PISTON
AN ATTACHMENT

SMCS-3204 **i03415581**

NOTE	REF NO	GRAPHIC REF	PART NUMBER	QTY	PART NAME 1 2 3 4 5 6 (PRODUCT LEVEL)	SEE PAGE
M	1	1	**096-0001**	4	BOLT-SOCKET HEAD (M8X1.25X40-MM)	
	2	1	**123-7598**	4	SEAL-BONDED	
	3	1	**117-7278**	1	BUSHING (BEARING)	
	4	1	**179-0464**	2	SEAL-O-RING	
	5	1	**277-6624**	1	PLATE-WEAR	
	6	1	**246-5804**	2	PLUG	

M-METRIC PART

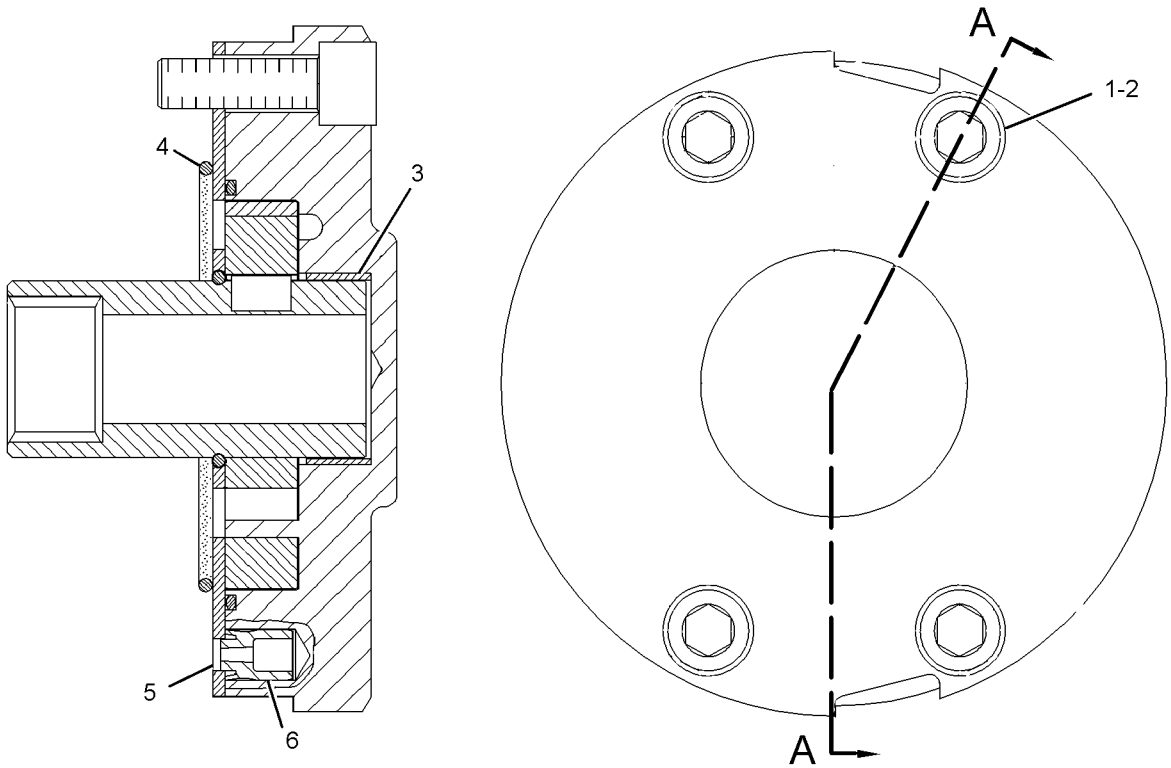

SECTION A-A

GRAPHIC #1 **<END>** g01377495

293-5441 PUMP GP-CHARGE

S/N: JTD1-UP

PART OF 289-6388, 289-6389 PUMP GP-PISTON

AN ATTACHMENT

SMCS-3204 **i03408124**

NOTE	REF NO	GRAPHIC REF	PART NUMBER	QTY	PART NAME 1 2 3 4 5 6 (PRODUCT LEVEL)	SEE PAGE
	1	1	**235-0588**	1	PLATE-WEAR	
	2	1	**126-1477**	1	BUSHING-COUPLING	
	3	1	**145-0961**	1	COUPLING	
	4	1	**117-7296**	1	KEY-SHAFT	
	5	1	**145-0909**	1	RING	
M	6	1	**8T-1159**	4	BOLT-SOCKET HEAD (M10X1.5X25-MM)	
M	7	1	**8T-2395**	8	BOLT-SOCKET HEAD (M8X1.25X16-MM)	
	8	1	**123-7598**	8	SEAL-BONDED	
	9	1	**123-7597**	2	SEAL-O-RING	
	10	1	**7J-6285**	1	SEAL-O-RING	
	11	1	**123-7602**	1	SEAL-O-RING	
	12	1	**246-5804**	2	PLUG (LOCATING)	

M-METRIC PART

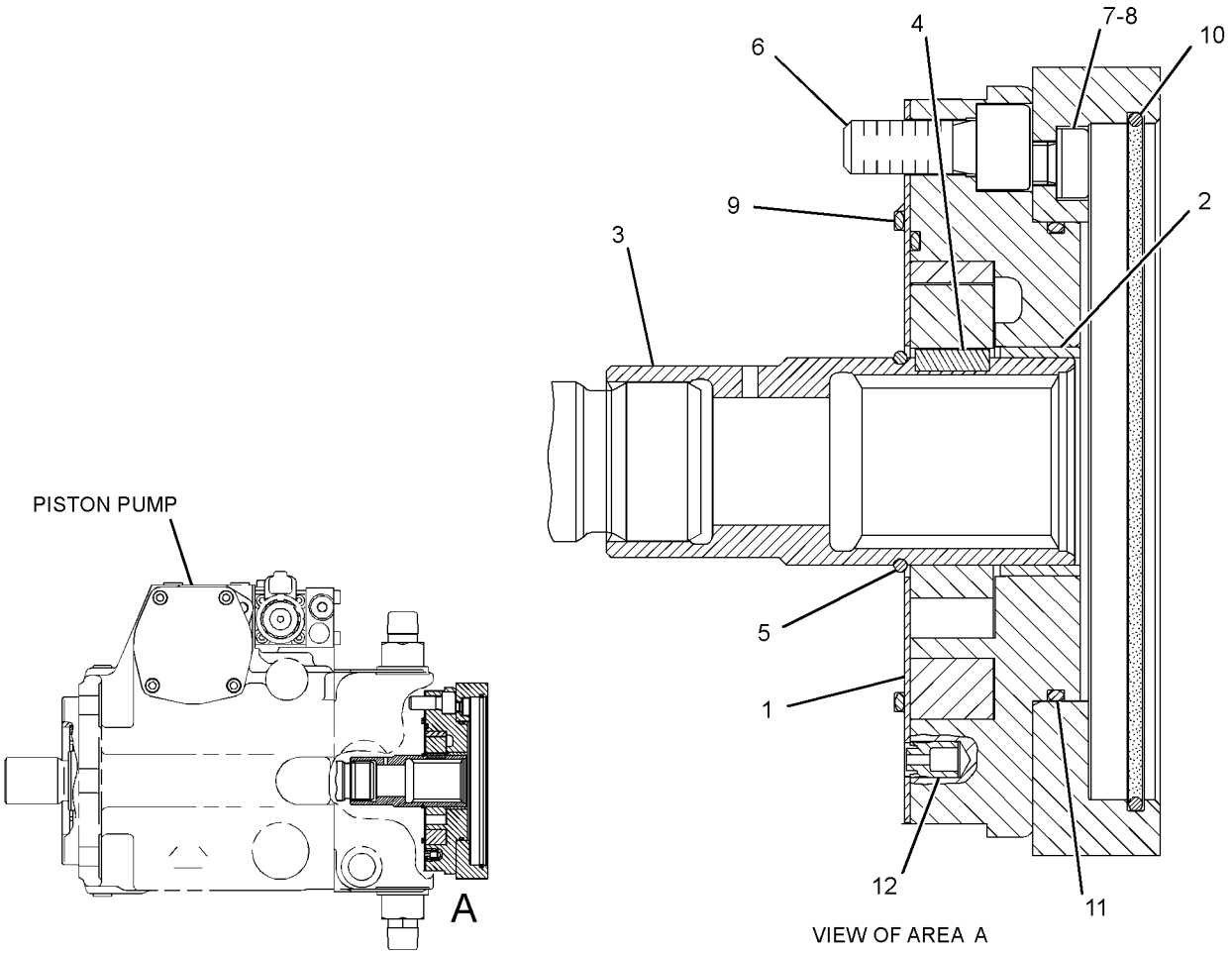

GRAPHIC #1 **<END>** g01374916

254-1377 PUMP GP-PISTON

S/N: JTD1-UP; FFF1-UP; LLL1-UP
PART OF 244-7450, 292-0122, 300-8543 DRIVE AR, 244-7454, 292-0124, 300-8544, 325-6516, 325-6519 DRIVE AR-WINCH
AN ATTACHMENT

SMCS-3203 **i02689710**

NOTE	REF NO	GRAPHIC REF	PART NUMBER	QTY	PART NAME 1 2 3 4 5 6 (PRODUCT LEVEL)	SEE PAGE
Y	1	1	**289-6385**	1	PUMP GP-PISTON (SLIPPER)	362
Y	2	1	**289-6386**	1	PUMP GP-PISTON (SLIPPER)	363
M	3	1	**6V-8201**	2	BOLT-SOCKET HEAD (M16X2X45-MM)	
	4	1	**9X-8257**	2	WASHER (17.5X30X3.5-MM THK)	

M-METRIC PART
Y-SEPARATE ILLUSTRATION

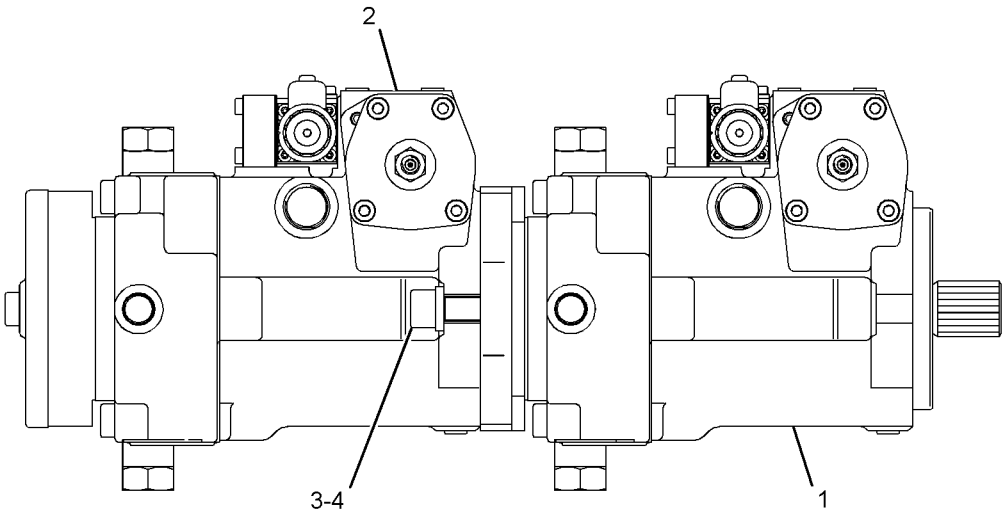

GRAPHIC #1 **<END>** g01379608

254-1378 PUMP GP-PISTON—HYDROSTATIC

S/N: JTD1-UP; FFF1-UP; LLL1-UP
PART OF 291-5094, 291-5098 DRIVE AR
CANNOT BE USED WITH 256-3738—PAGE 920, 244-7517—PAGE 911, 264-4542—PAGE 533
AN ATTACHMENT

SMCS-3203 **i02685900**

NOTE	REF NO	GRAPHIC REF	PART NUMBER	QTY	PART NAME 1 2 3 4 5 6 (PRODUCT LEVEL)	SEE PAGE
Y	1	1	**289-6385**	1	PUMP GP-PISTON (SLIPPER)	362
Y	2	1	**289-6387**	1	PUMP GP-PISTON (SLIPPER)	364
M	3	1	**6V-8201**	2	BOLT-SOCKET HEAD (M16X2X45-MM)	
	4	1	**9X-8257**	2	WASHER (17.5X30X3.5-MM THK)	

M-METRIC PART
Y-SEPARATE ILLUSTRATION

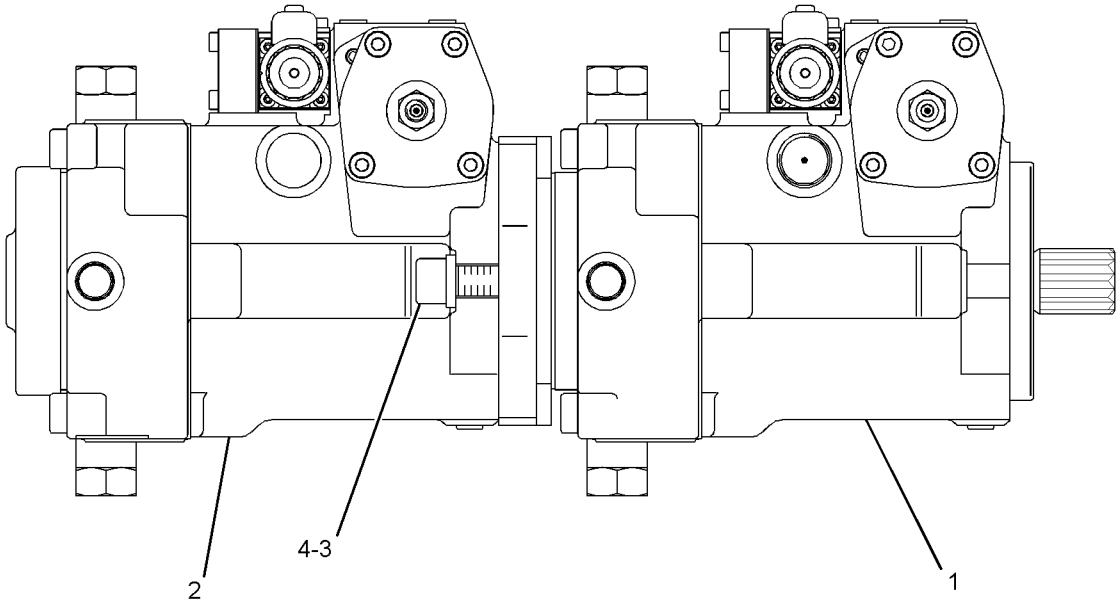

GRAPHIC #1 **<END>** g01373716

254-9099 PUMP GP-PISTON–SLIPPER

S/N: JTD1-UP
PART OF 325-6520 DRIVE AR-WINCH
AN ATTACHMENT

SMCS-3203 **i03607662**

NOTE	REF NO	GRAPHIC REF	PART NUMBER	QTY	PART NAME 1 2 3 4 5 6 (PRODUCT LEVEL)	SEE PAGE
Y	1	1	**289-6388**	1	PUMP GP-PISTON (FRONT)	365
Y	2	1	**289-6389**	1	PUMP GP-PISTON (REAR)	366
M	3	1	**8T-6594**	2	BOLT-SOCKET HEAD (M16X2X35-MM)	
	4	1	**9X-8257**	2	WASHER (17.5X30X3.5-MM THK)	

M-METRIC PART
Y-SEPARATE ILLUSTRATION

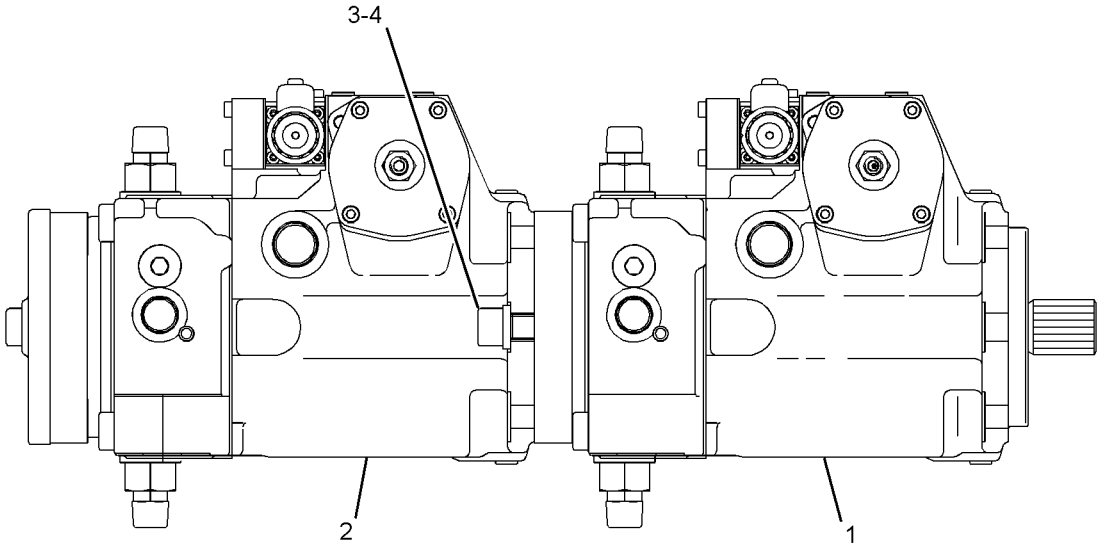

GRAPHIC #1 **<END>** g01378658

289-6385 PUMP GP-PISTON–SLIPPER

S/N: JTD1-UP; FFF1-UP; LLL1-UP
PART OF 254-1377, 254-1378 PUMP GP-PISTON
AN ATTACHMENT

SMCS-3203 **i03415620**

NOTE	REF NO	GRAPHIC REF	PART NUMBER	QTY	PART NAME 1 2 3 4 5 6 (PRODUCT LEVEL)	SEE PAGE
Y	1	1	**276-8206**	1	ROTATING GP-PUMP (PROPEL)	496
Y	2	1	**199-6225**	1	ACTUATOR GP-PUMP (SERVO)	295
Y	3	1	**293-5451**	1	VALVE GP-SOLENOID (SERVO)	380
Y	4	1	*296-6707*	1	HEAD GP-PUMP	306
	5	1	**9S-8002**	3	PLUG-O-RING (STRAIGHT THREAD O-RING)	
	6	1	**3J-7354**	3	SEAL-O-RING	
Y	7	1	**293-5438**	1	PUMP GP-CHARGE (BASIC)	355
	8	1	**167-6805**	2	PIN	
	9	1	**122-9718**	1	PIN	
	10	1	**9T-3928**	1	PLUG AS	
		1	**187-8001**	1	SEAL	
	11	1	**6E-4350**	1	PIN	

Y-SEPARATE ILLUSTRATION

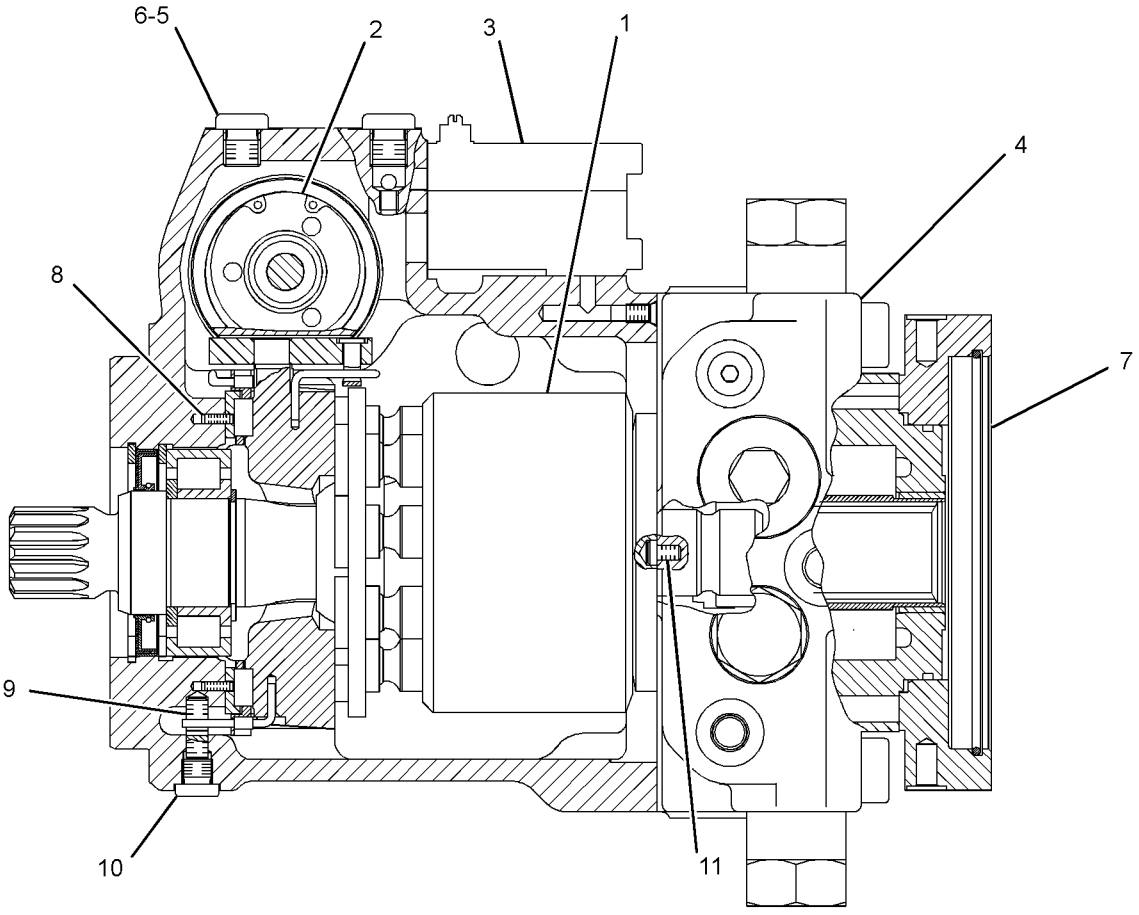

GRAPHIC #1 **<END>** g01372143

289-6386 PUMP GP-PISTON–SLIPPER

S/N: JTD1-UP; FFF1-UP; LLL1-UP
PART OF 254-1377 PUMP GP-PISTON
AN ATTACHMENT

SMCS-3203 **i02730639**

NOTE	REF NO	GRAPHIC REF	PART NUMBER	QTY	PART NAME 1 2 3 4 5 6 (PRODUCT LEVEL)	SEE PAGE
Y	1	1	**293-5444**	1	ROTATING GP-PUMP	370
Y	2	1	**199-6225**	1	ACTUATOR GP-PUMP (SERVO)	295
Y	3	1	**293-5451**	1	VALVE GP-SOLENOID (SERVO)	380
Y	4	1	*296-6707*	1	HEAD GP-PUMP	306
	5	1	**9S-8002**	3	PLUG-O-RING	
	6	1	**3J-7354**	3	SEAL-O-RING	
Y	7	1	**293-5439**	1	PUMP GP-CHARGE	356
	8	1	**167-6805**	2	PIN	
	9	1	**122-9718**	1	PIN	
	10	1	**9T-3928**	1	PLUG AS	
		1	**187-8001**	1	SEAL	
	11	1	**6E-4350**	1	PIN	

Y-SEPARATE ILLUSTRATION

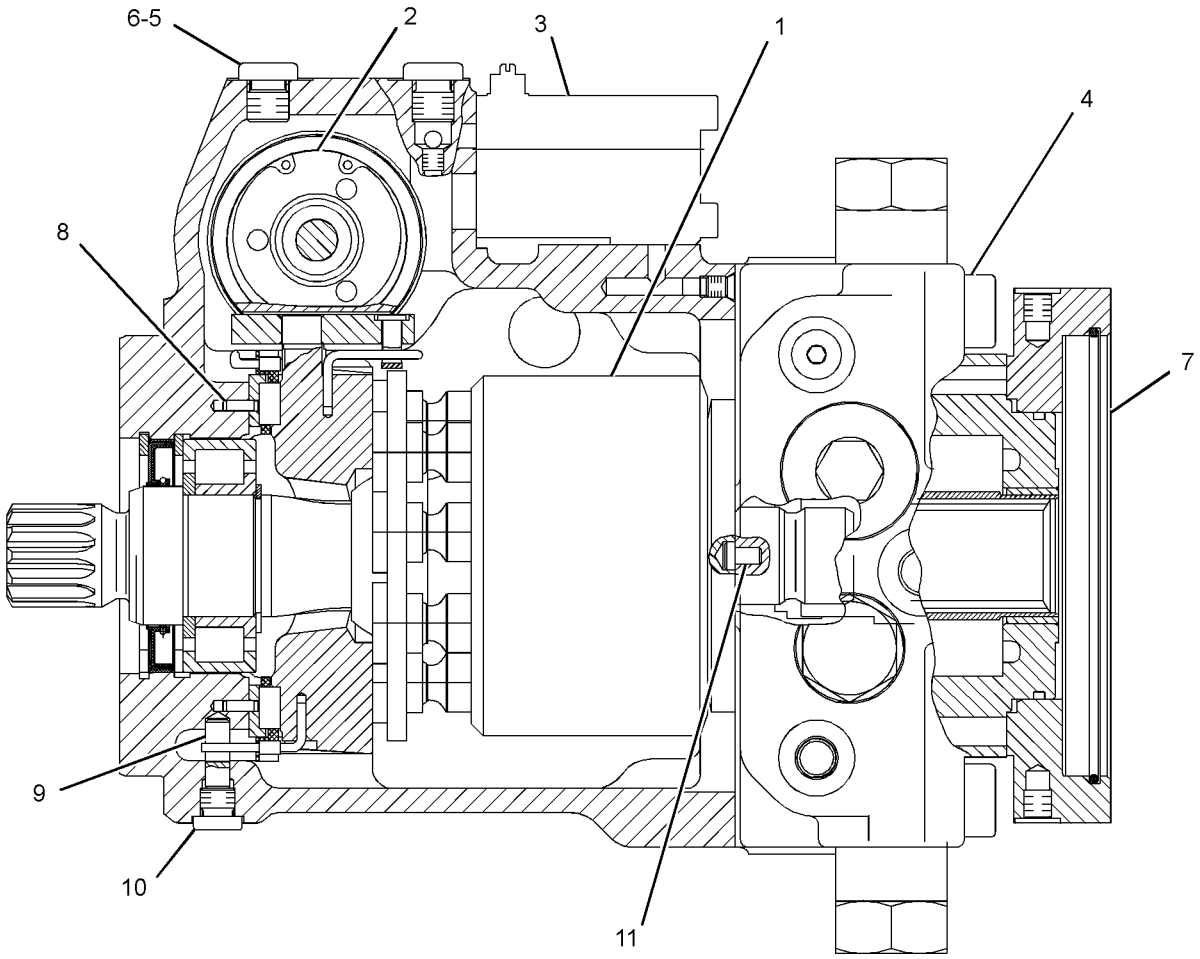

GRAPHIC #1 **<END>** g01378764

289-6387 PUMP GP-PISTON—SLIPPER

S/N: JTD1-UP; FFF1-UP; LLL1-UP
PART OF 254-1378 PUMP GP-PISTON
AN ATTACHMENT

SMCS-3203 **i02730471**

NOTE	REF NO	GRAPHIC REF	PART NUMBER	QTY	PART NAME 1 2 3 4 5 6 (PRODUCT LEVEL)	SEE PAGE
Y	1	1	**293-5444**	1	ROTATING GP-PUMP	370
Y	2	1	**199-6225**	1	ACTUATOR GP-PUMP (SERVO)	295
Y	3	1	**293-5451**	1	VALVE GP-SOLENOID (SERVO)	380
Y	4	1	*296-6707*	1	HEAD GP-PUMP	306
	5	1	**9S-8002**	3	PLUG-O-RING (STRAIGHT THREAD O-RING)	
	6	1	**3J-7354**	3	SEAL-O-RING	
Y	7	1	**293-5440**	1	PUMP GP-CHARGE	357
	8	1	**167-6805**	2	PIN	
	9	1	**122-9718**	1	PIN	
	10	1	**9T-3928**	1	PLUG AS	
		1	**187-8001**	1	SEAL	
	11	1	**6E-4350**	1	PIN	

Y-SEPARATE ILLUSTRATION

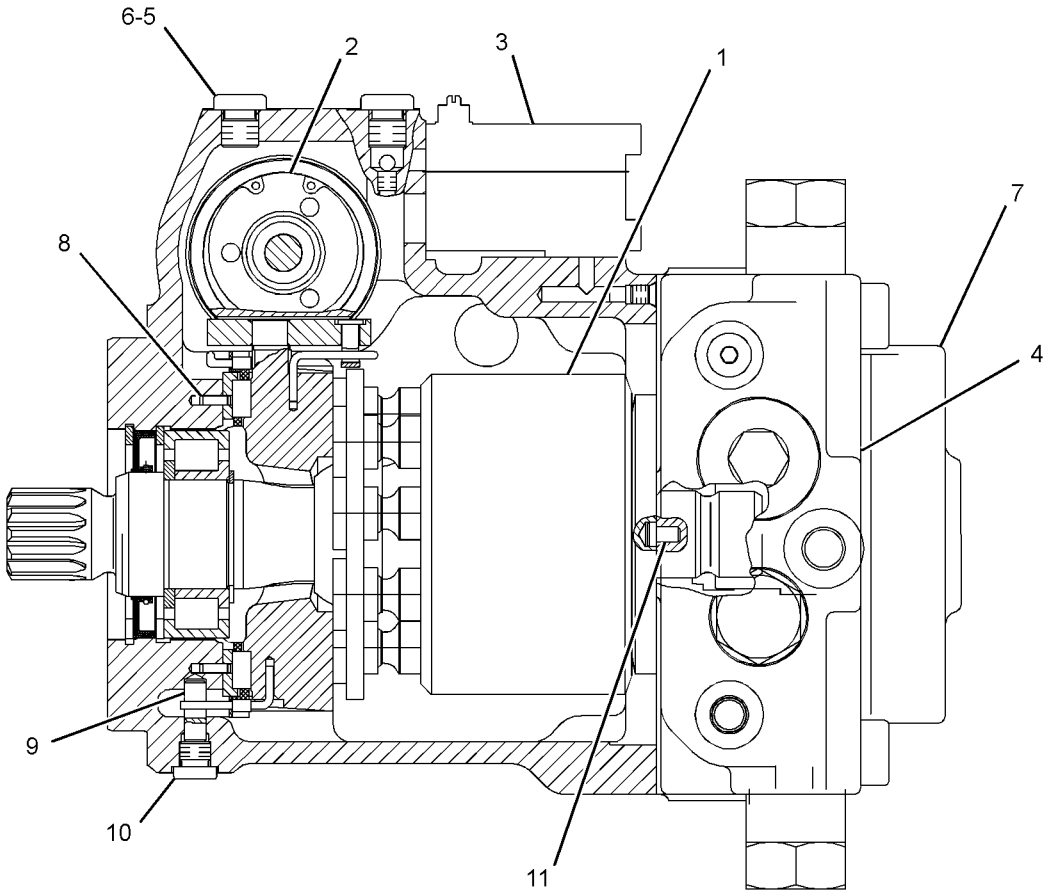

GRAPHIC #1 **<END>** g01378676

289-6388 PUMP GP-PISTON

S/N: JTD1-UP
PART OF 254-9099 PUMP GP-PISTON
AN ATTACHMENT

SMCS-3203 **i03607665**

NOTE	REF NO	GRAPHIC REF	PART NUMBER	QTY	PART NAME 1 2 3 4 5 6 (PRODUCT LEVEL)	SEE PAGE
Y	1	1	**256-8778**	1	ROTATING GP-PUMP	368
Y	2	1	**234-8821**	1	ACTUATOR GP-PUMP	297
	3	1	**9S-8002**	3	PLUG-O-RING (STRAIGHT THREAD O-RING)	
	4	1	**3J-7354**	3	SEAL-O-RING	
Y	5	1	**293-5441**	1	PUMP GP-CHARGE (HYSTAT PROPEL)	358
	6	1	**130-7806**	2	ROD	
	7	1	**142-9436**	1	BEARING AS	
	8	1	**142-9440**	1	BEARING AS (SWASHPLATE)	
	9	1	**167-6805**	2	PIN	
	10	1	**126-1638**	2	PIN-JOINT	
	11	1	**9T-3928**	2	PLUG AS	
					(EACH INCLUDES)	
		1	**187-8001**	1	SEAL	
	12	1	**6E-4350**	1	PIN	
	13	1	**120-4394**	1	PLUG-BREAK OFF	
Y	14	1	**293-5452**	1	VALVE GP-SOLENOID (SERVO)	382
Y	15	1	*296-6708*	1	HEAD GP-PUMP	307

Y-SEPARATE ILLUSTRATION

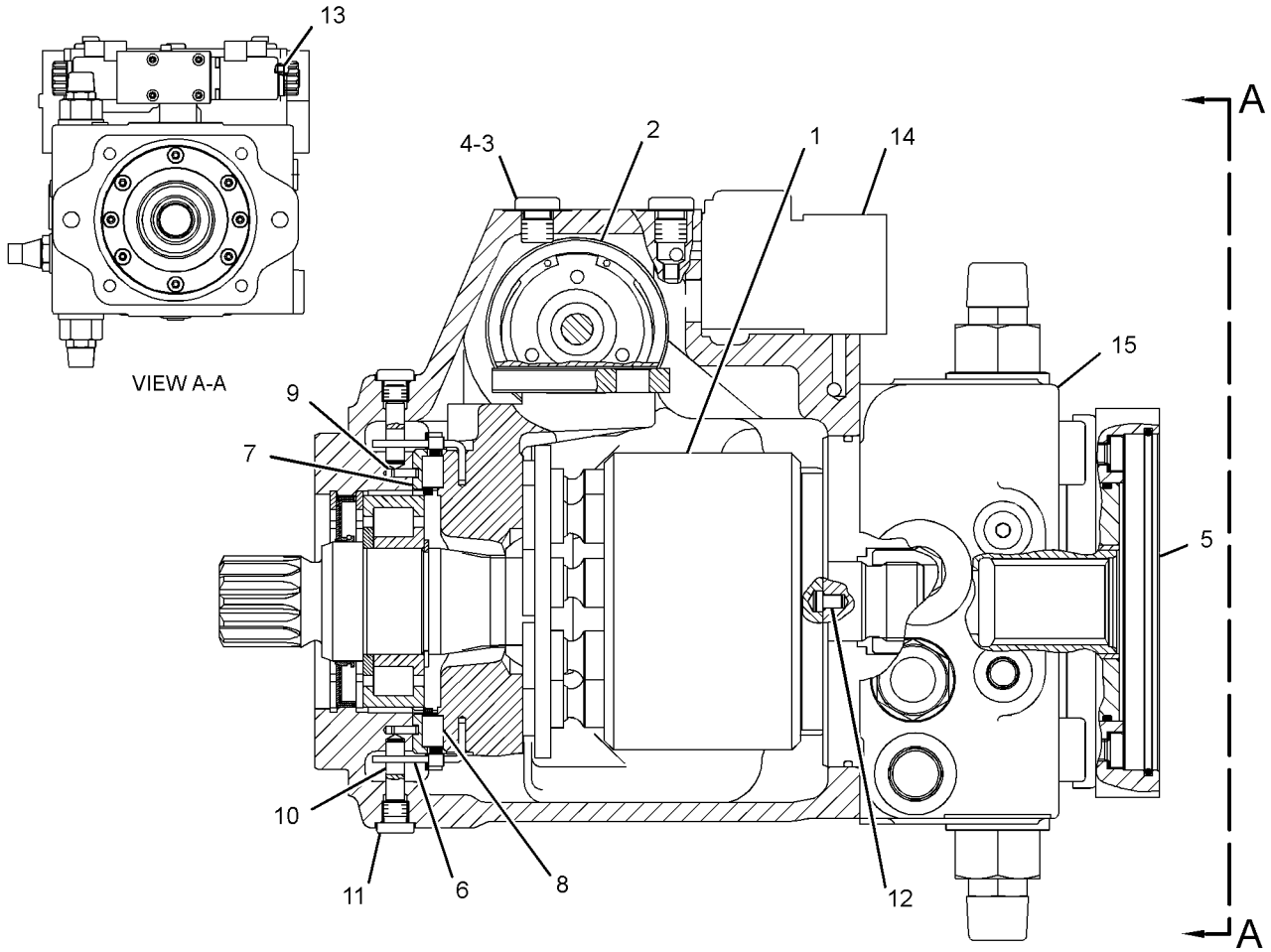

GRAPHIC #1 **<END>** g01374143

289-6389 PUMP GP-PISTON

S/N: JTD1-UP
PART OF 254-9099 PUMP GP-PISTON
AN ATTACHMENT

SMCS-3203 **i03607666**

NOTE	REF NO	GRAPHIC REF	PART NUMBER	QTY	PART NAME 1 2 3 4 5 6 (PRODUCT LEVEL)	SEE PAGE
Y	1	1	**305-1511**	1	ROTATING GP-PUMP (REAR)	371
Y	2	1	**234-8821**	1	ACTUATOR GP-PUMP	297
	3	1	**9S-8002**	3	PLUG-O-RING (STRAIGHT THREAD O-RING)	
	4	1	**3J-7354**	3	SEAL-O-RING	
Y	5	1	**293-5441**	1	PUMP GP-CHARGE (HYSTAT PROPEL)	358
Y	6	1	**296-6708**	1	HEAD GP-PUMP	307
Y	7	1	**293-5452**	1	VALVE GP-SOLENOID (SERVO)	382
	8	1	**120-4394**	1	PLUG-BREAK OFF	
	9	1	**167-6805**	2	PIN	
	10	1	**126-1638**	2	PIN-JOINT	
	11	1	**9T-3928**	2	PLUG AS	
					(EACH INCLUDES)	
		1	**187-8001**	1	SEAL	
	12	1	**6E-4350**	1	PIN	

Y-SEPARATE ILLUSTRATION

289-6389 PUMP GP-PISTON *(contd.)* **i03607666**

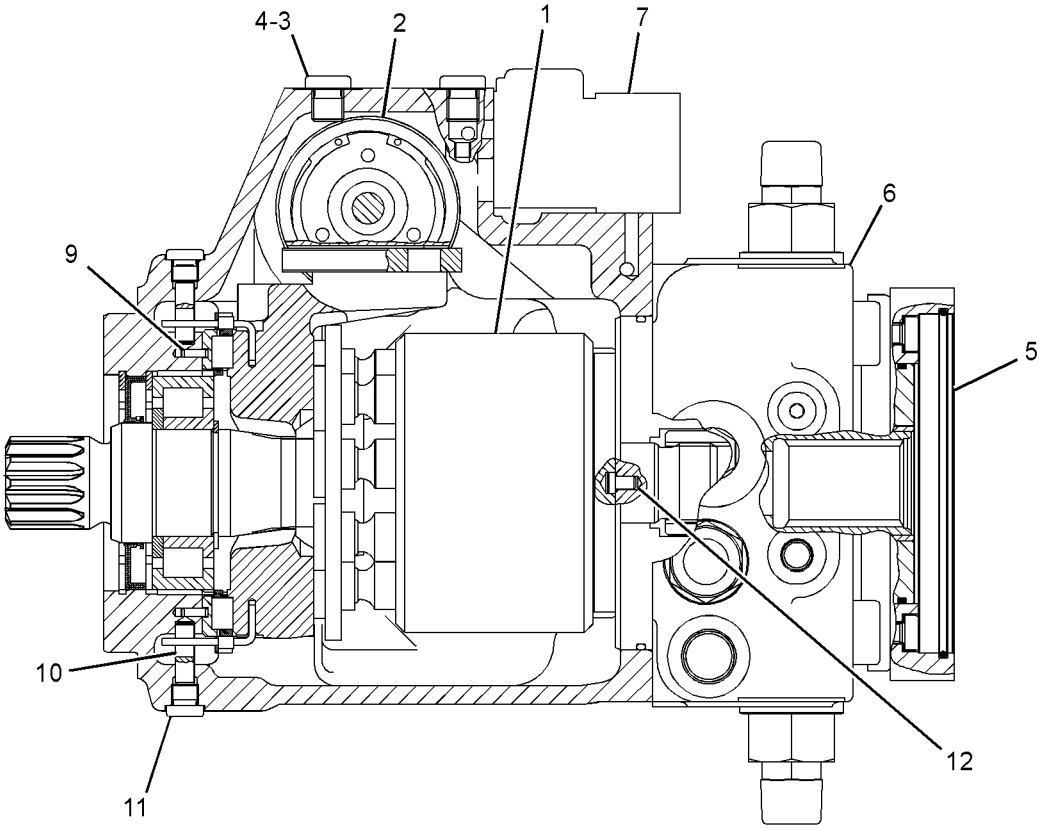

SECTION A-A

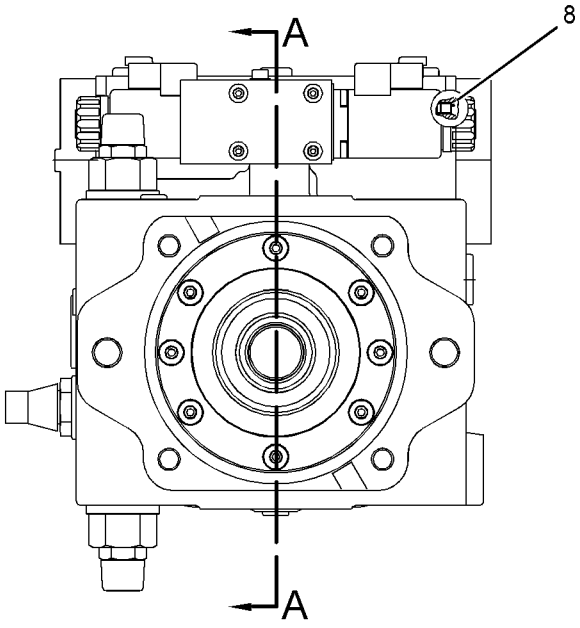

GRAPHIC #1 **<END>** g01386095

256-8778 ROTATING GP-PUMP

S/N: JTD1-UP
PART OF 289-6388 PUMP GP-PISTON
AN ATTACHMENT

SMCS-5070 **i02891603**

NOTE	REF NO	GRAPHIC REF	PART NUMBER	QTY	PART NAME 1 2 3 4 5 6 (PRODUCT LEVEL)	SEE PAGE
	1	1	**159-9854**	2	RING-RETAINING	
	2	1	**201-5382**	1	SEAL-SHAFT	
	3	1	**142-9439**	1	BEARING AS	
	4	1	**6V-5201**	1	RING-RETAINING	
	5	1	**256-9358**	1	PLATE-CONTROL	
Y	6	1	**256-9357**	1	ROTATING GP-PUMP (HYDRAULIC)	369
					PARTS SHOWN IN GRAPHIC(S) WITHOUT A REFERENCE NUMBER ARE NOT SERVICED SEPARATELY	

Y-SEPARATE ILLUSTRATION

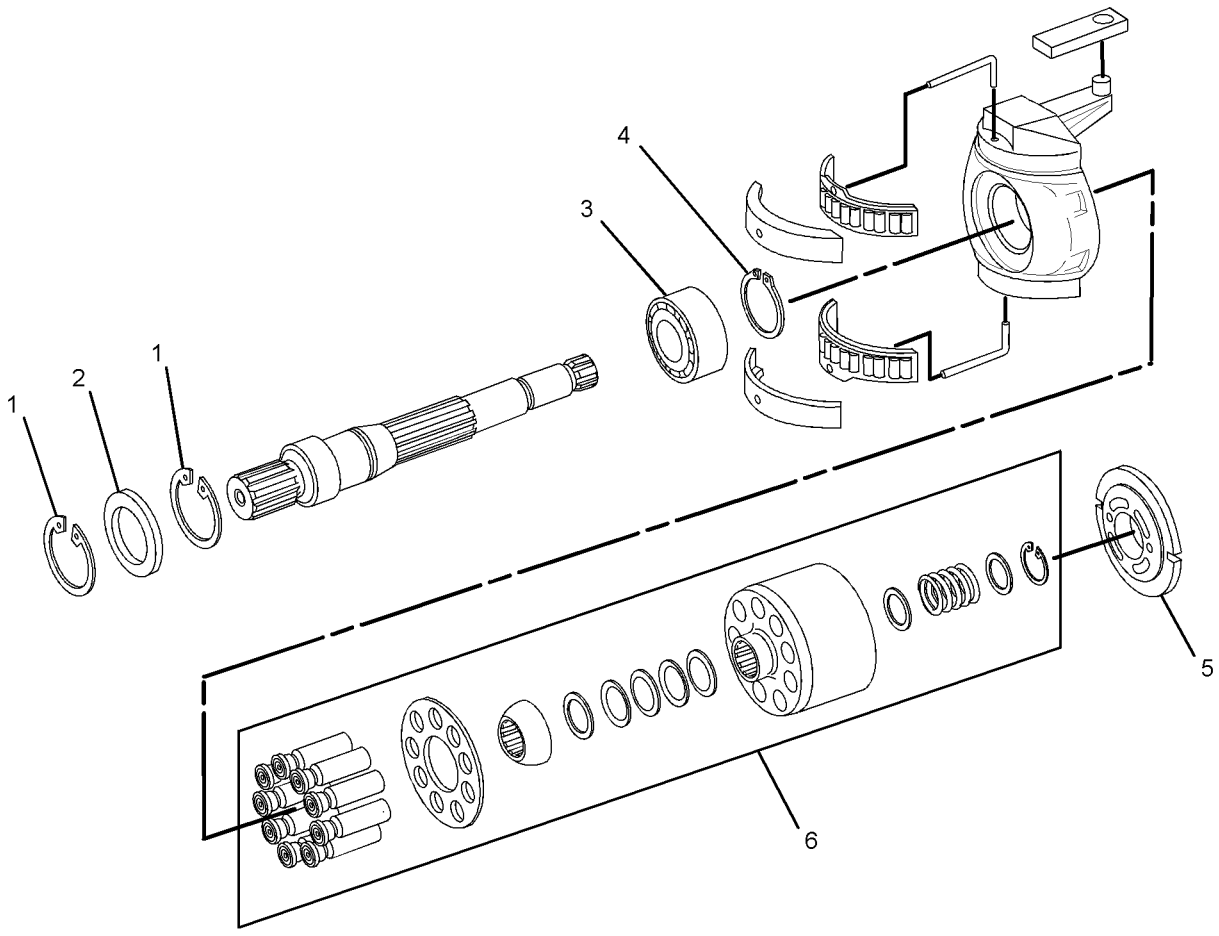

GRAPHIC #1 **<END>** g01442938

256-9357 ROTATING GP-PUMP

S/N: JTD1-UP

PART OF 256-8778, 305-1511 ROTATING GP-PUMP

AN ATTACHMENT

SMCS-5070 **i02891599**

NOTE	REF NO	GRAPHIC REF	PART NUMBER	QTY	PART NAME 1 2 3 4 5 6 (PRODUCT LEVEL)	SEE PAGE
M	1	1	**142-9437**	2	WASHER (30.7X44X3-MM THK)	
	2	1	**9X-2857**	1	RING-RETAINING	
	3	1	**142-9434**	1	PLATE-RETAINER	
	4	1	**142-9425**	9	PISTON AS	
	5	1	**287-3789**	1	BARREL AS	
	6	1	**142-9438**	1	SPRING-COIL	
	7	1	**142-9426**	1	SPRING AS	
	8	1	**142-9435**	1	BALL	
					PARTS SHOWN IN GRAPHIC(S) WITHOUT A REFERENCE NUMBER ARE NOT SERVICED SEPARATELY	

M-METRIC PART

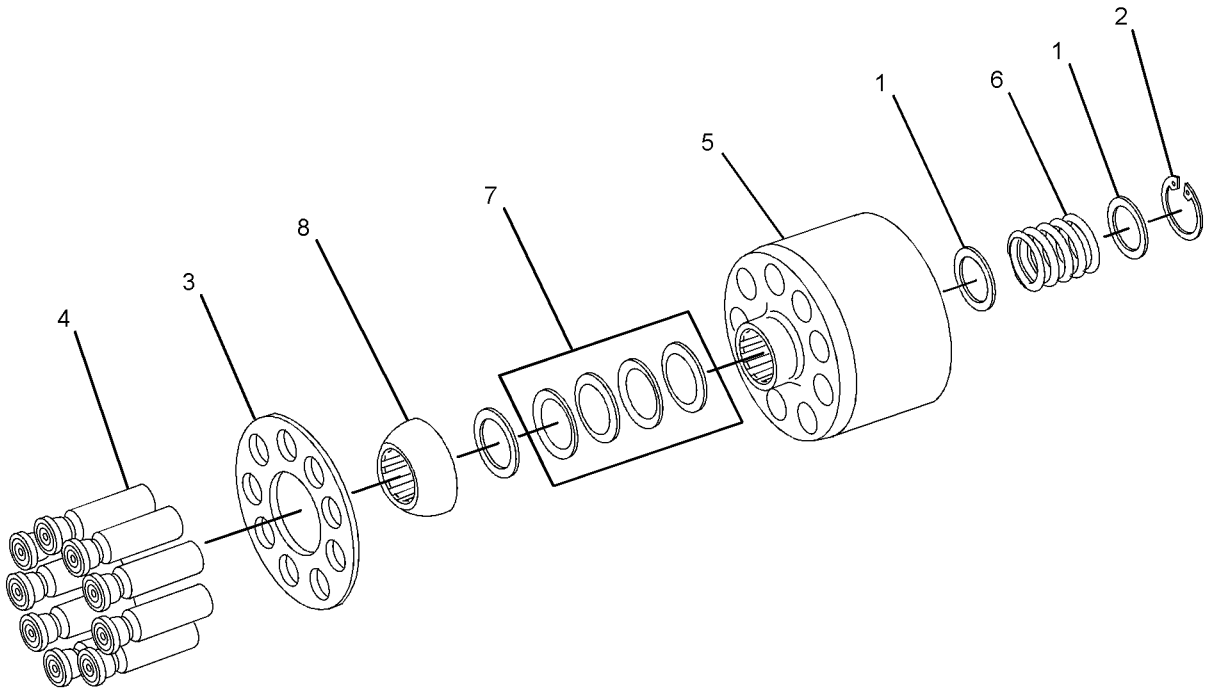

GRAPHIC #1 **<END>** g01442941

293-5444 ROTATING GP-PUMP

S/N: JTD1-UP; FFF1-UP; LLL1-UP
PART OF 289-6386, 289-6387 PUMP GP-PISTON
AN ATTACHMENT

SMCS-5070 **i03779009**

NOTE	REF NO	GRAPHIC REF	PART NUMBER	QTY	PART NAME 1 2 3 4 5 6 (PRODUCT LEVEL)	SEE PAGE
	1	1	**251-1752**	1	KIT-PUMP ROTATING GROUP	
					(INCLUDES PISTONS, PLATE RETAINING, RETAINER, SHIMS, SPRING CUP, CYLINDER, SPRING & SNAP RINGS)	
	2	1	**251-1803**	1	PLATE-CONTROL (RH)	
	3	1	**117-7242**	1	SHAFT-DRIVE	
	4	1	**1G-3410**	1	WIRE (ROD)	
	5	1	**122-9068**	1	WIRE	
	6	1	**125-9134**	1	BEARING	
	7	1	**117-7252**	1	CAGE (ROLLER-SET)	
	8	1	**117-7251**	1	BEARING (RACE-SET)	
	9	1	**108-3565**	1	CLIP (CIRCLE)	
	10	1	**212-4483**	1	RING-RETAINING	
	11	1	**194-1983**	1	SEAL-SHAFT	

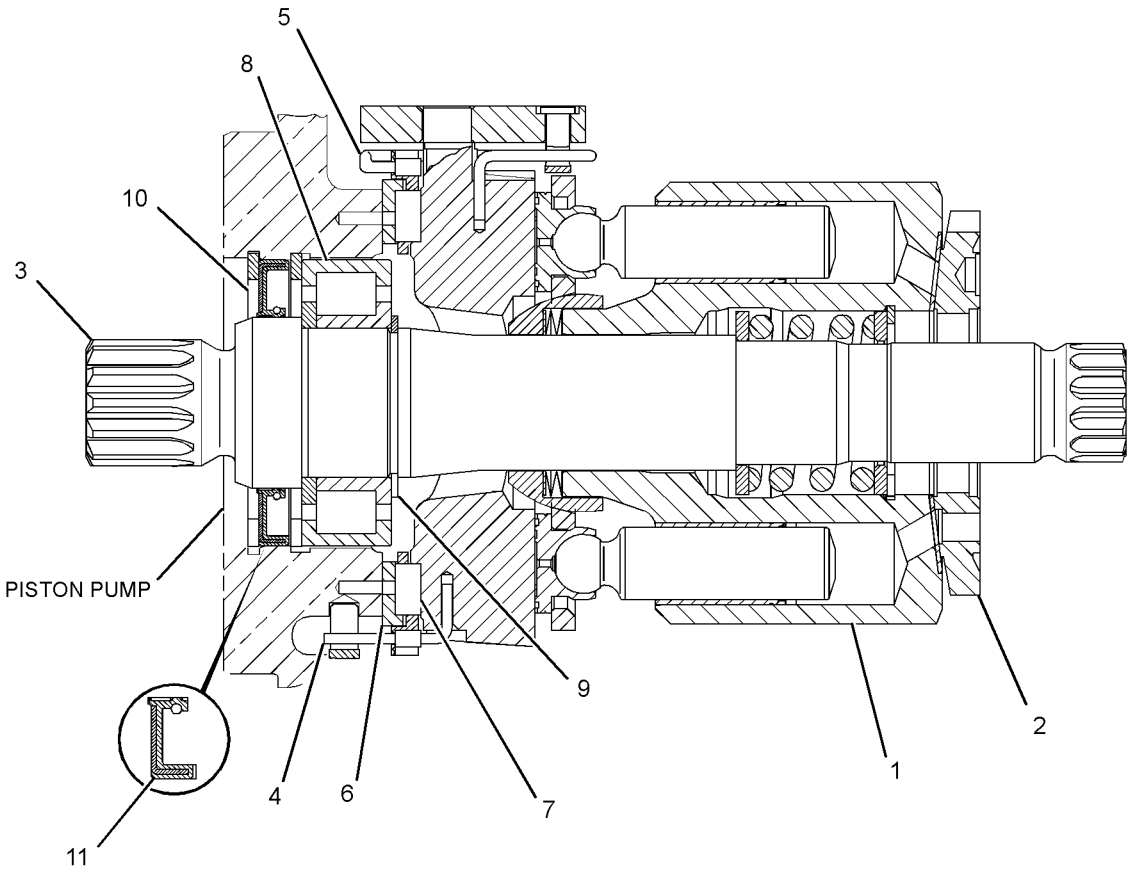

GRAPHIC #1 **<END>** g01374580

305-1511 ROTATING GP-PUMP

S/N: JTD1-UP
PART OF 289-6389 PUMP GP-PISTON
AN ATTACHMENT

SMCS-5070 **i02891604**

NOTE	REF NO	GRAPHIC REF	PART NUMBER	QTY	PART NAME 1 2 3 4 5 6 (PRODUCT LEVEL)	SEE PAGE
	1	1	**6V-5201**	1	RING-RETAINING	
	2	1	**256-9358**	1	PLATE-CONTROL	
	3	1	**142-9439**	1	BEARING AS	
	4	1	**145-1824**	1	SHAFT-PUMP	
	5	1	**159-9854**	2	RING-RETAINING	
	6	1	**142-9440**	1	BEARING AS (SWASHPLATE)	
	7	1	**142-9427**	1	SWASHPLATE	
	8	1	**126-1403**	1	PLATE-ADJUSTMENT	
	9	1	**201-5382**	1	SEAL-SHAFT	
	10	1	**142-9436**	1	BEARING AS	
B	11	1	**142-9430**	1	SHIM (1.2-MM THK)	
B	12	1	**142-9431**	1	SHIM (1-MM THK)	
B	13	1	**142-9432**	1	SHIM (0.8-MM THK)	
B	14	1	**142-9433**	1	SHIM (0.6-MM THK)	
	15	1	**130-7806**	2	ROD	
Y	16	1	**256-9357**	1	ROTATING GP-PUMP (HYDRAULIC)	369

B-USE AS REQUIRED
Y-SEPARATE ILLUSTRATION

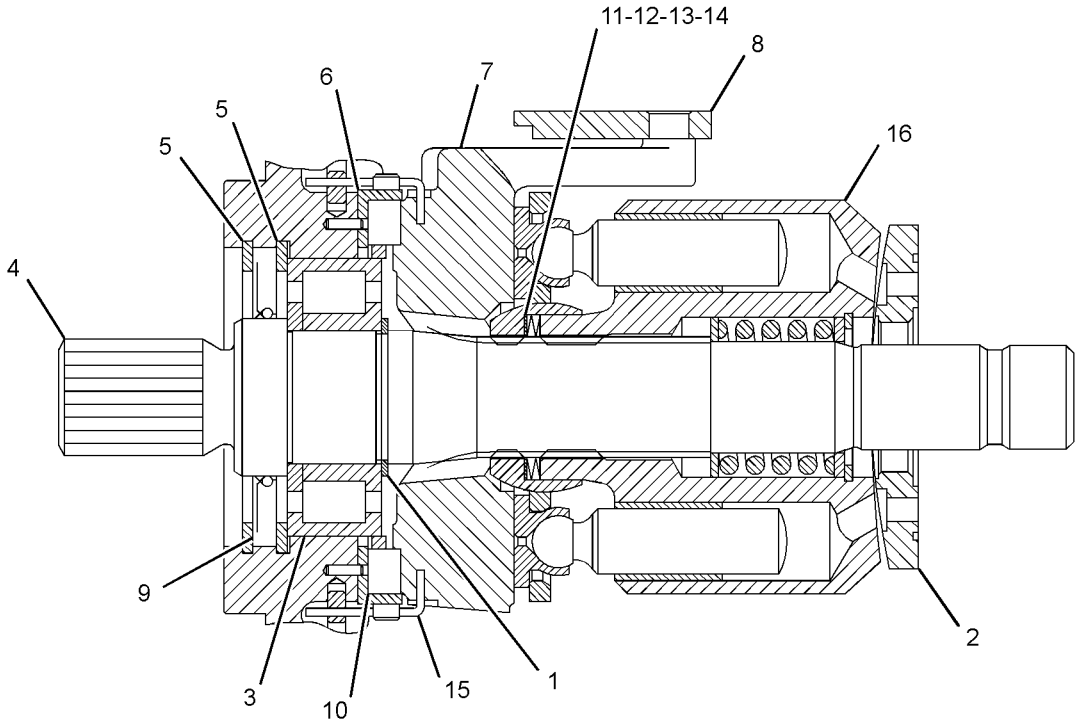

GRAPHIC #1 **<END>** g01384807

278-2357 SEGMENT GP-SPROCKET

S/N: JTD1-UP; FFF1-UP; LLL1-UP
PART OF 244-7448 UNDERCARRIAGE AR
AN ATTACHMENT

SMCS-4155 **i03682675**

NOTE	REF NO	GRAPHIC REF	PART NUMBER	QTY	PART NAME 1 2 3 4 5 6 (PRODUCT LEVEL)	SEE PAGE
	1	1	**8H-5724**	31	NUT (1/2-20-THD)	
	2	1	**278-2355**	1	SEGMENT	
	3	1	**278-2356**	5	SEGMENT	
	4	1	**5P-8246**	31	WASHER-HARD (15.5X29X3-MM THK)	
	5	1	**9W-9265**	31	BOLT (1/2-20-NF)	

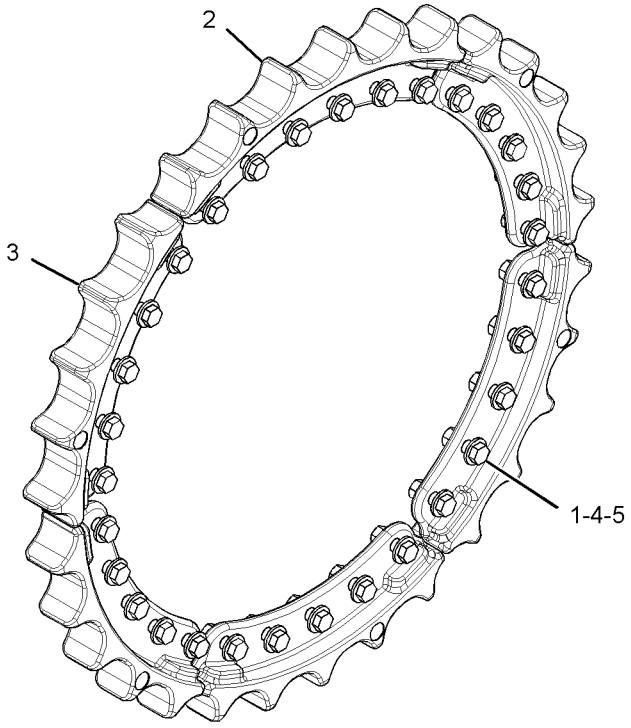

GRAPHIC #1 **<END>** g01342584

258-9789 SPROCKET GP

S/N: JTD1-UP; FFF1-UP; LLL1-UP
PART OF 244-7393 UNDERCARRIAGE AR
AN ATTACHMENT

SMCS-4164 **i03682674**

NOTE	REF NO	GRAPHIC REF	PART NUMBER	QTY	PART NAME 1 2 3 4 5 6 (PRODUCT LEVEL)	SEE PAGE
	1	1	**8H-5724**	31	NUT (1/2-20-THD)	
	2	1	**258-9787**	1	SPROCKET-TRACK	
	3	1	**5P-8246**	31	WASHER-HARD (15.5X29X3-MM THK)	
	4	1	**9W-9265**	31	BOLT (1/2-20-NF)	

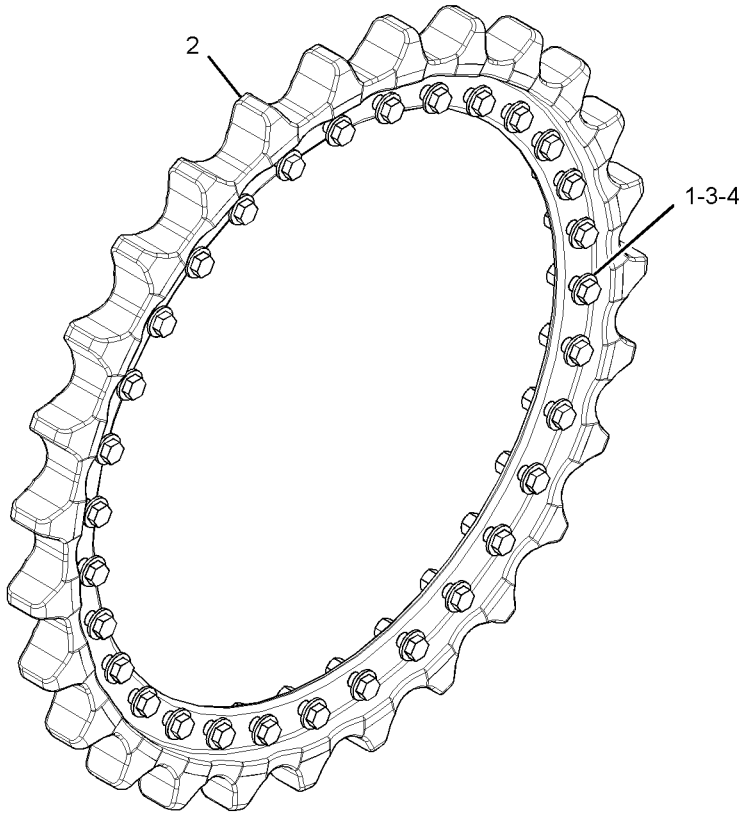

GRAPHIC #1 **<END>** g01342916

293-5448 VALVE GP-FLUSHING—HYDROSTATIC DRIVE

S/N: JTD1-UP; FFF1-UP; LLL1-UP
PART OF 254-1352 MOTOR GP-PISTON

SMCS-5066 **i03415580**

NOTE	REF NO	GRAPHIC REF	PART NUMBER	QTY	PART NAME 1 2 3 4 5 6 (PRODUCT LEVEL)	SEE PAGE
	1	1	**3J-1907**	2	SEAL-O-RING	
	2	1	**6V-8351**	1	SEAL-O-RING	
	3	1	**9S-8004**	2	PLUG-O-RING	
	4	1	**107-3117**	2	SEAL-O-RING	
B	5	1	**124-9904**	1	SHIM (1-MM THK)	
B	6	1	**124-9905**	1	SHIM (0.3-MM THK)	
B	7	1	**124-9906**	1	SHIM (0.5-MM THK)	
	8	1	**124-9908**	1	ORIFICE	
M	9	1	**129-3181**	4	BOLT-SOCKET HEAD (M10X1.5X55-MM)	
	10	1	**170-5715**	1	SEAL-O-RING	

B-USE AS REQUIRED
M-METRIC PART

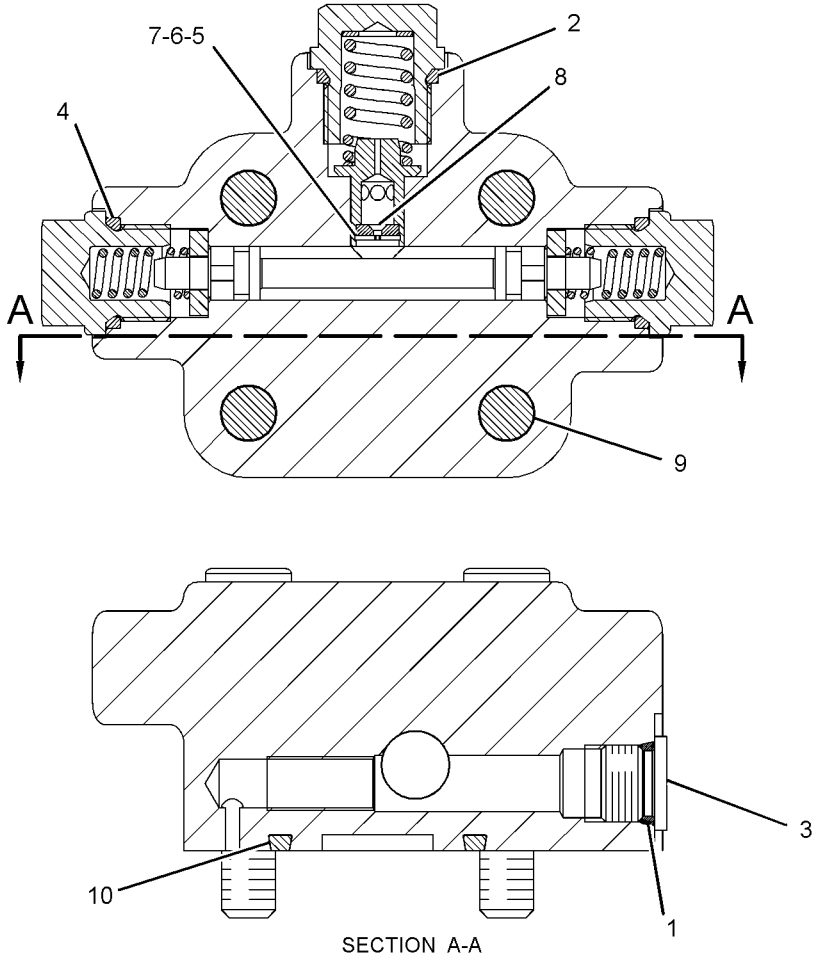

SECTION A-A

GRAPHIC #1 **<END>** g01340186

293-5447 VALVE GP-PILOT–SERVO

S/N: JTD1-UP; FFF1-UP; LLL1-UP
PART OF 254-1352 MOTOR GP-PISTON

SMCS-5059 **i02680517**

NOTE	REF NO	GRAPHIC REF	PART NUMBER	QTY	PART NAME 1 2 3 4 5 6 (PRODUCT LEVEL)	SEE PAGE
M	1	1	**8C-6965**	4	BOLT-SOCKET HEAD (M6X1X45-MM)	
	2	1	**9S-8004**	1	PLUG-O-RING	
	3	1	**3J-1907**	1	SEAL-O-RING	
	4	1	**9X-7734**	1	SEAL-O-RING	
M	5	1	**9T-3853**	1	LOCKNUT (M6X1-THD)	
	6	1	**123-9769**	2	PLUG	
	7	1	**269-4669**	1	SOLENOID AS	
		1	**217-3875**	1	SEAL-O-RING	
	8	1	**9T-4367**	1	CAP AS	
					PARTS SHOWN IN GRAPHIC(S) WITHOUT A REFERENCE NUMBER ARE NOT SERVICED SEPARATELY	

M-METRIC PART

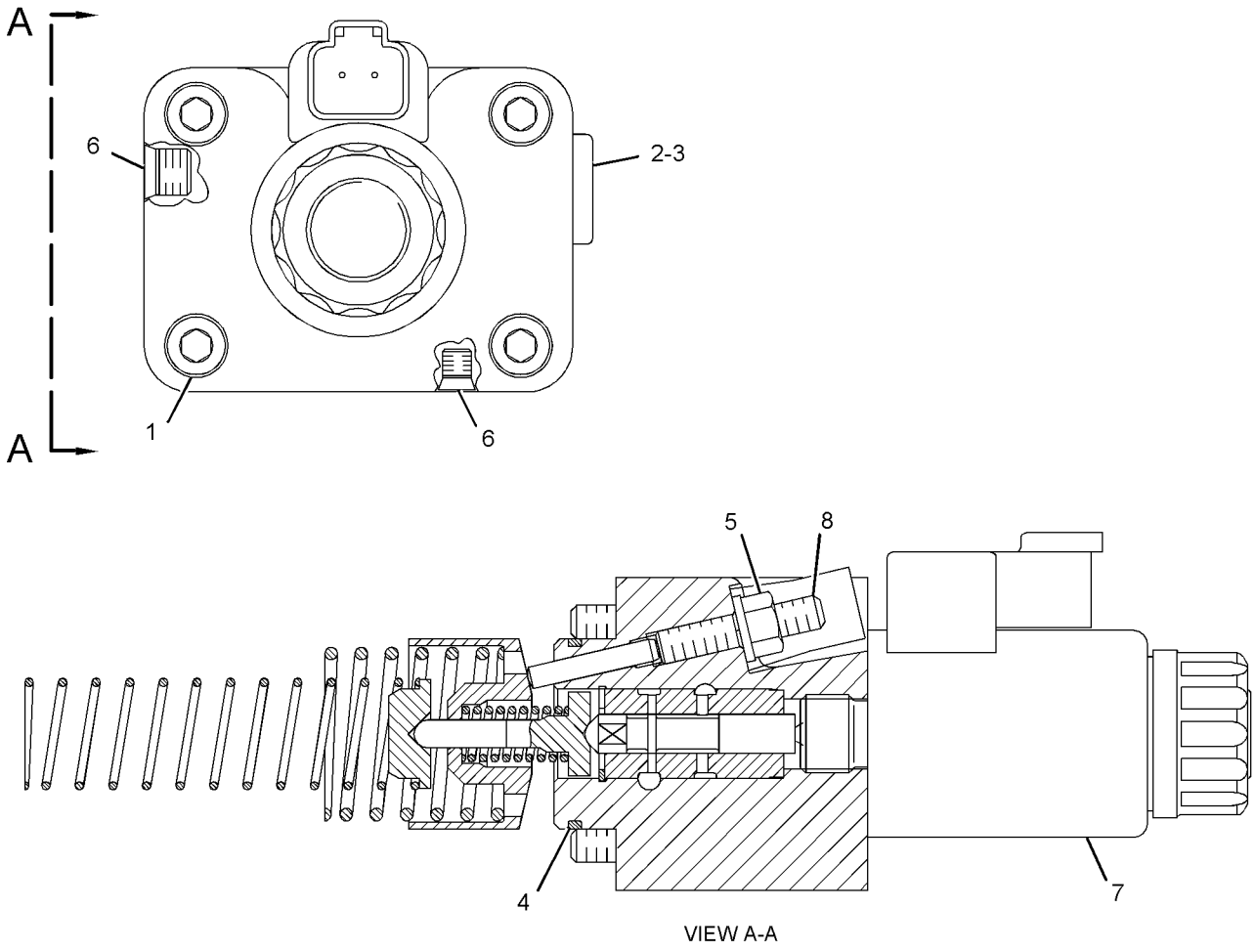

VIEW A-A

GRAPHIC #1 **<END>** g01353514

154-9445 VALVE GP-RELIEF–PRESSURE OVERRIDE–

HYDROSTATIC PUMP

S/N: JTD1-UP; FFF1-UP; LLL1-UP

PART OF 254-1379 PUMP GP-PISTON

AN ATTACHMENT

SMCS-3133, 3182 **i03408141**

NOTE	REF NO	GRAPHIC REF	PART NUMBER	QTY	PART NAME 1 2 3 4 5 6 (PRODUCT LEVEL)	SEE PAGE
J	1	1	**7Y-5219**	1	SEAL-O-RING	
J	2	1	**6V-5586**	1	SEAL-O-RING	
JM	3	1	**6E-1607**	1	LOCKNUT-SEALING	
					AVAILABLE REPAIR KIT(S):	
J			**122-9363**	1	KIT-SEAL (RELIEF VALVE)	

J-KIT MARKED J SERVICES PART(S) MARKED J
M-METRIC PART

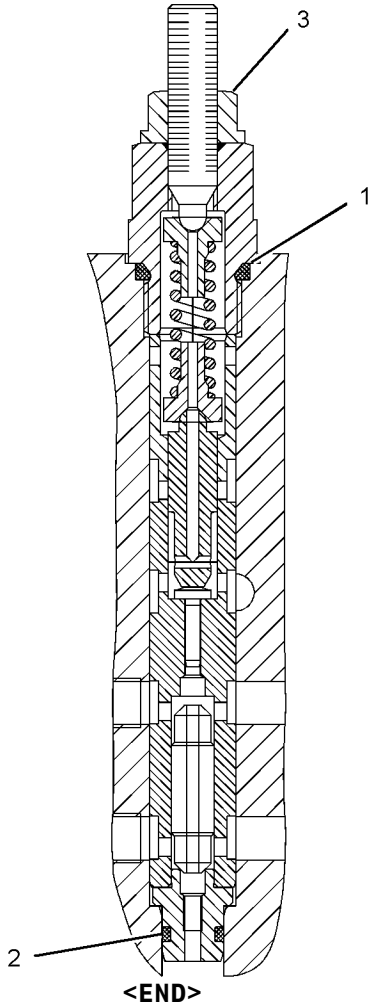

GRAPHIC #1

<END>

g01011120

177-7122 VALVE GP-RELIEF—CHARGE PRESSURE

S/N: JTD1-UP; FFF1-UP; LLL1-UP
PART OF 254-1379 PUMP GP-PISTON
AN ATTACHMENT

SMCS-3133, 3182 **i04403748**

NOTE	REF NO	GRAPHIC REF	PART NUMBER	QTY	PART NAME 1 2 3 4 5 6 (PRODUCT LEVEL)	SEE PAGE
	1	1	**6E-4404**	1	VALVE-POPPET	
	2	1	**167-7715**	1	RETAINER-SPRING	
	3	1	**112-4645**	1	SPRING	
	4	1	**6V-8352**	1	SEAL-O-RING	
	5	1	**112-4647**	1	SHIM (0.3-MM THK)	
	6	1	**177-7747**	1	RING	
					PARTS SHOWN IN GRAPHIC(S) WITHOUT A REFERENCE NUMBER ARE NOT SERVICED SEPARATELY	
					AVAILABLE REPAIR KIT(S):	
			215-7697	1	KIT-SHIM	
					(INCLUDES SHIMS)	

177-7122 **VALVE GP-RELIEF** *(contd.)* **i04403748**

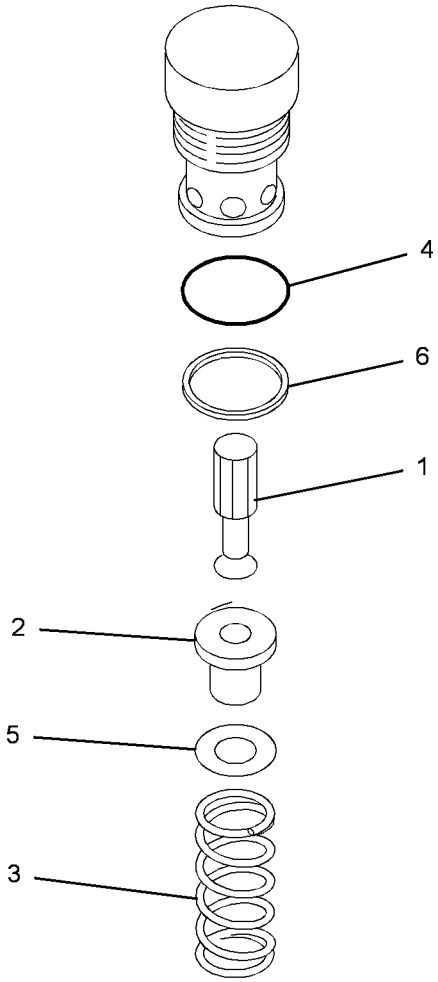

GRAPHIC #1 **<END>** g01422347

212-7035 VALVE GP-RELIEF—CROSSOVER

S/N: JTD1-UP; FFF1-UP; LLL1-UP
PART OF 254-1379 PUMP GP-PISTON
AN ATTACHMENT

SMCS-3133, 3182 **i02832199**

NOTE	REF NO	GRAPHIC REF	PART NUMBER	QTY	PART NAME 1 2 3 4 5 6 (PRODUCT LEVEL)	SEE PAGE
	1	1	**6V-5326**	1	SEAL-O-RING	
	2	1	**167-7713**	1	RING-BACKUP	

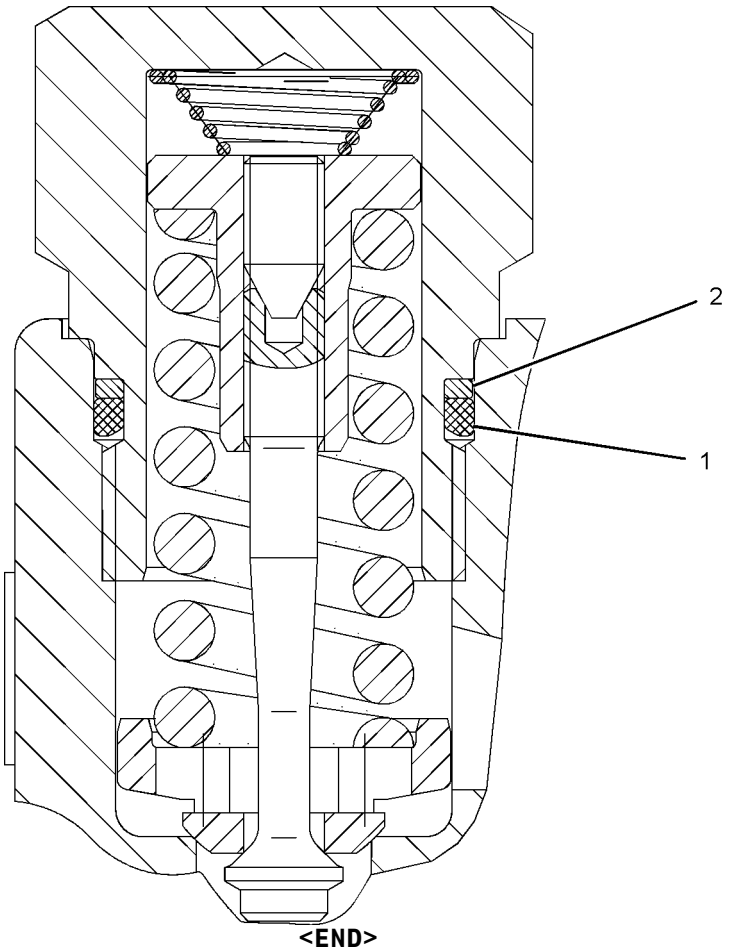

GRAPHIC #1 **<END>** g01024349

293-5451 VALVE GP-SOLENOID–SERVO

S/N: JTD1-UP; FFF1-UP; LLL1-UP
PART OF 289-6385, 289-6386, 289-6387 PUMP GP-PISTON
AN ATTACHMENT

SMCS-4282, 5479 **i03911514**

NOTE	REF NO	GRAPHIC REF	PART NUMBER	QTY	PART NAME 1 2 3 4 5 6 (PRODUCT LEVEL)	SEE PAGE
	1	1	**269-4669**	1	SOLENOID AS (PILOT VALVE)	
		1	**217-3875**	1	SEAL-O-RING	
	2	1	**209-3565**	1	SEAL	
	3	1	**277-6631**	1	SPRING	
	4	1	**196-4253**	1	GASKET	
	5	1	**296-6705**	1	SOLENOID AS (WINCH PUMP)	
		1	**217-3875**	1	SEAL-O-RING	
		1	**247-7054**	1	COLLAR-LOCKING	
M	6	1	**8T-2922**	4	BOLT-SOCKET HEAD (M6X1X65-MM)	
M	7	1	**8C-6965**	1	BOLT-SOCKET HEAD (M6X1X45-MM)	
M	8	1	**099-0822**	8	BOLT-SOCKET HEAD (M5X0.8X10-MM)	
	9	1	**6J-3134**	1	SEAL-O-RING	
	10	1	**085-7539**	2	SEAL-O-RING	
	11	1	**196-4254**	2	SPRING	
	12	1	**6H-9691**	1	SEAL-O-RING	
	13	1	**215-8011**	1	BOLT-SPECIAL	
	14	1	**215-8010**	1	SHIM (3-MM THK)	
	15	1	**9S-8004**	1	PLUG-O-RING (STRAIGHT THREAD O-RING)	
	16	1	**3J-1907**	1	SEAL-O-RING	
	17	1	**236-5157**	1	SCREEN-FILTER (PILOT)	

M-METRIC PART

293-5451 VALVE GP-SOLENOID *(contd.)* **i03911514**

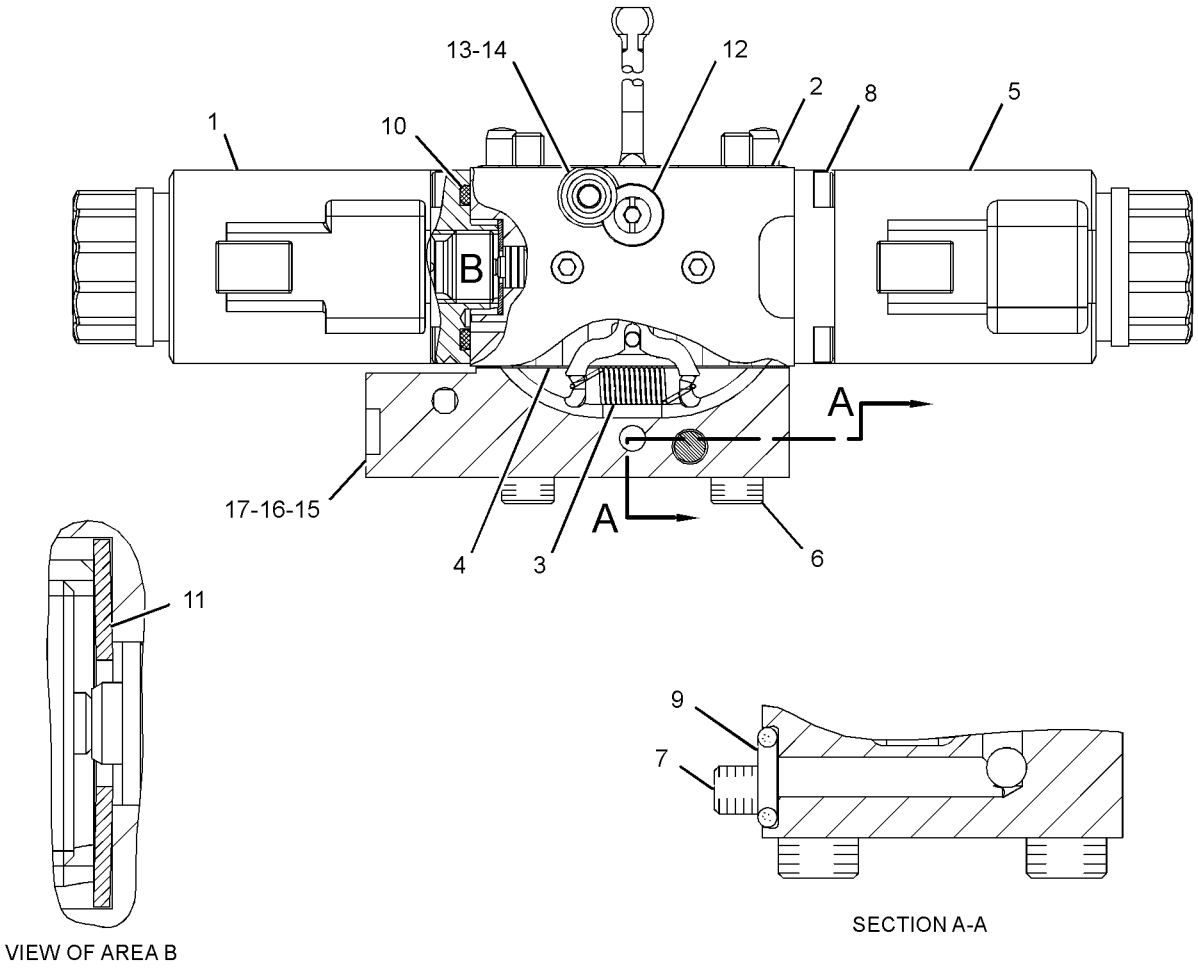

GRAPHIC #1 **<END>** g01378143

293-5452 VALVE GP-SOLENOID

S/N: JTD1-UP

PART OF 289-6388, 289-6389 PUMP GP-PISTON

AN ATTACHMENT

SMCS-4282, 5479 **i03601821**

NOTE	REF NO	GRAPHIC REF	PART NUMBER	QTY	PART NAME 1 2 3 4 5 6 (PRODUCT LEVEL)	SEE PAGE
	1	1	**269-4669**	1	SOLENOID AS (PILOT VALVE)	
		1	**217-3875**	1	SEAL-O-RING	
	2	1	**209-3565**	1	SEAL	
	3	1	**277-6631**	1	SPRING	
	4	1	**196-4253**	1	GASKET	
	5	1	**296-6705**	1	SOLENOID AS (WINCH PUMP)	
		1	**217-3875**	1	SEAL-O-RING	
		1	**247-7054**	1	COLLAR-LOCKING	
M	6	1	**8T-2922**	4	BOLT-SOCKET HEAD (M6X1X65-MM)	
M	7	1	**8C-6965**	1	BOLT-SOCKET HEAD (M6X1X45-MM)	
M	8	1	**099-0822**	8	BOLT-SOCKET HEAD (M5X0.8X10-MM)	
	9	1	**6J-3134**	1	SEAL-O-RING	
	10	1	**085-7539**	2	SEAL-O-RING	
	11	1	**196-4254**	2	SPRING	
	12	1	**6H-9691**	1	SEAL-O-RING	
	13	1	**215-8011**	1	BOLT-SPECIAL	
	14	1	**215-8010**	1	SHIM (3-MM THK)	
	15	1	**9S-8004**	1	PLUG-O-RING	
	16	1	**3J-1907**	1	SEAL-O-RING	
	17	1	**236-5157**	1	SCREEN-FILTER (PILOT)	

M-METRIC PART

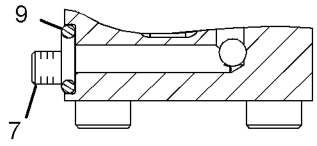

SECTION A-A

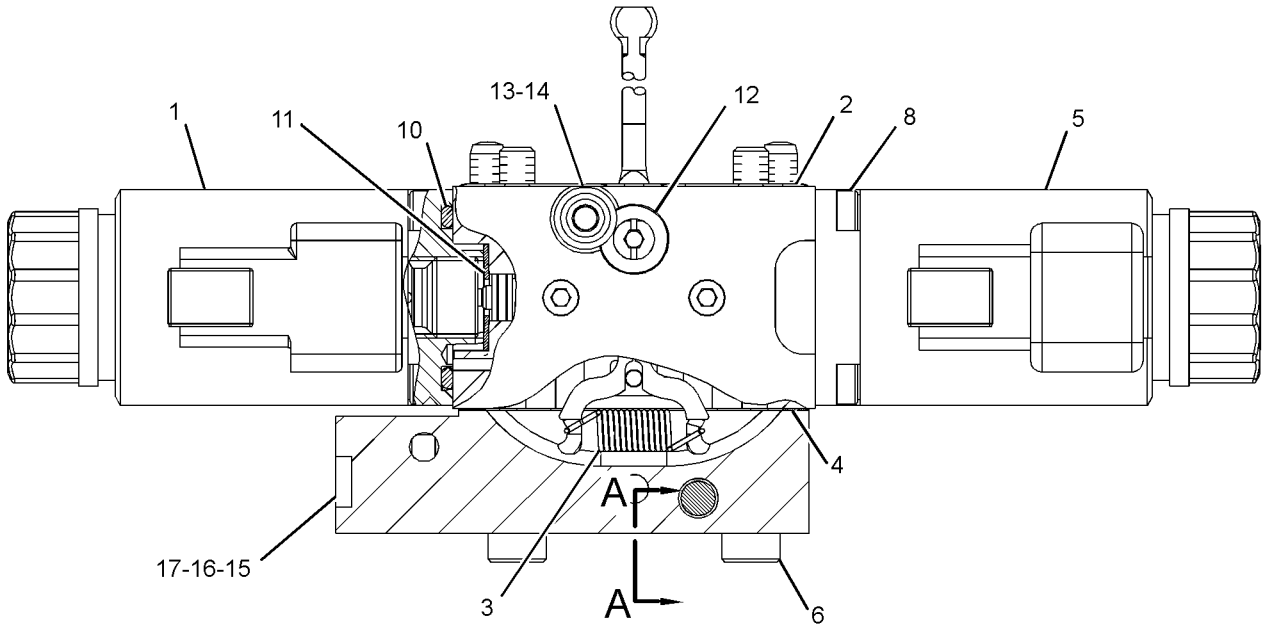

GRAPHIC #1 **<END>** g01374185

244-7516 COUNTERWEIGHT GP-FRONT

S/N: JTD1-UP; FFF1-UP; LLL1-UP
300.3-KG (662-LB)
CANNOT BE USED WITH 244-7503—PAGE 421
AN ATTACHMENT

SMCS-7056 **i02918950**

NOTE	REF NO	GRAPHIC REF	PART NUMBER	QTY	PART NAME 1 2 3 4 5 6 (PRODUCT LEVEL)	SEE PAGE
	1	1	**256-8796**	1	COUNTERWEIGHT	
	2	1	**258-2111**	2	CAP	
	3	1	**198-4767**	8	WASHER-HARD (13.5X30X12-MM THK)	
M	4	1	**8T-5041**	4	BOLT (M12X1.75X120-MM)	
M	5	1	**8T-6868**	4	BOLT (M12X1.75X80-MM)	

M-METRIC PART

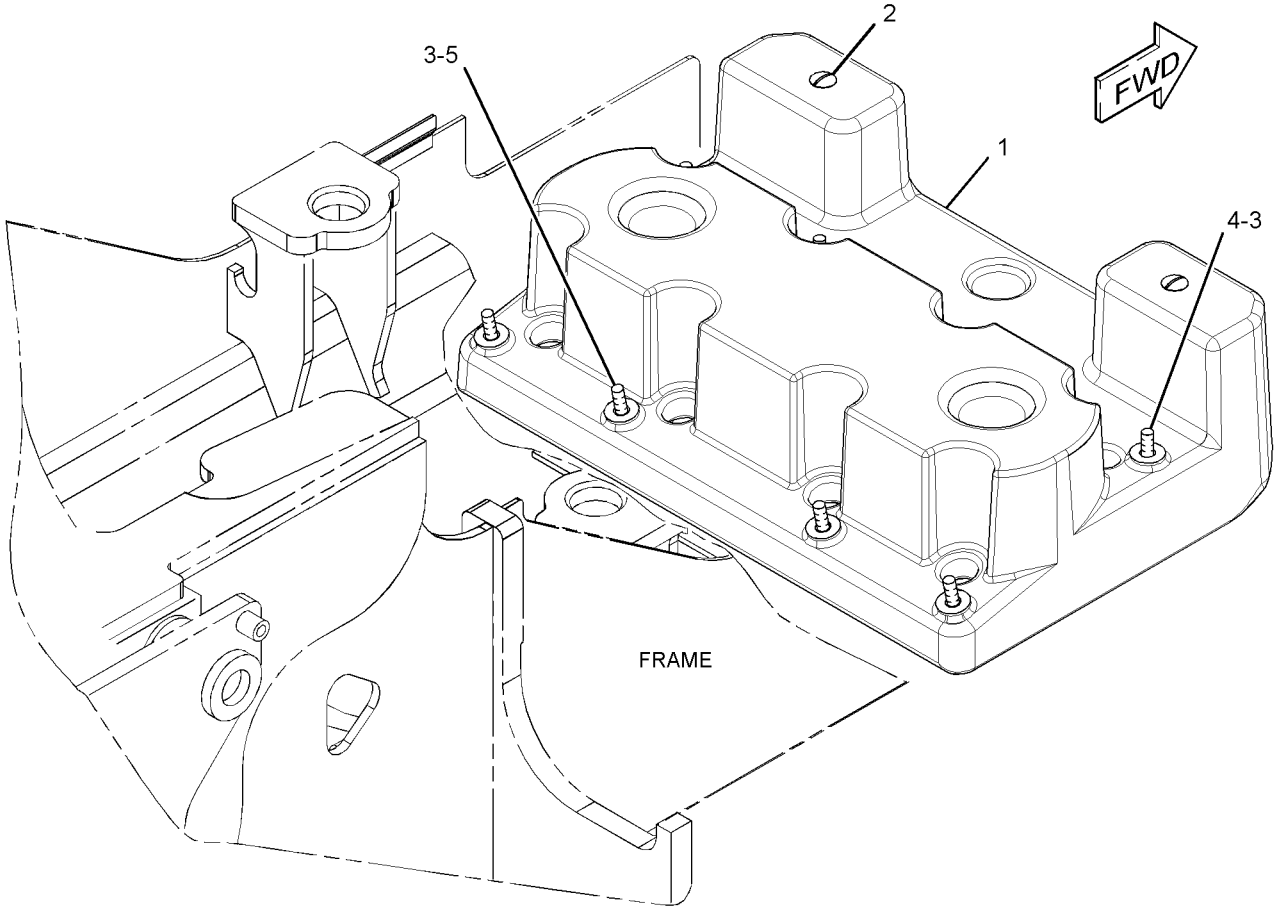

GRAPHIC #1 **<END>** g01578013

262-5868 COVER GP-ACCESS

S/N: JTD1-UP; FFF1-UP; LLL1-UP
PART OF 244-7397, 244-7402, 361-6059, 361-6060 FRAME GP, 244-7396 FRAME GP-MAIN
ALSO AN ATTACHMENT

SMCS-726A **i02819890**

NOTE	REF NO	GRAPHIC REF	PART NUMBER	QTY	PART NAME 1 2 3 4 5 6 (PRODUCT LEVEL)	SEE PAGE
	1	1	**7B-3028**	8	SCREW-DRIVE (NO 4X 3/16-IN)	
	2	1	**262-5867**	1	COVER	

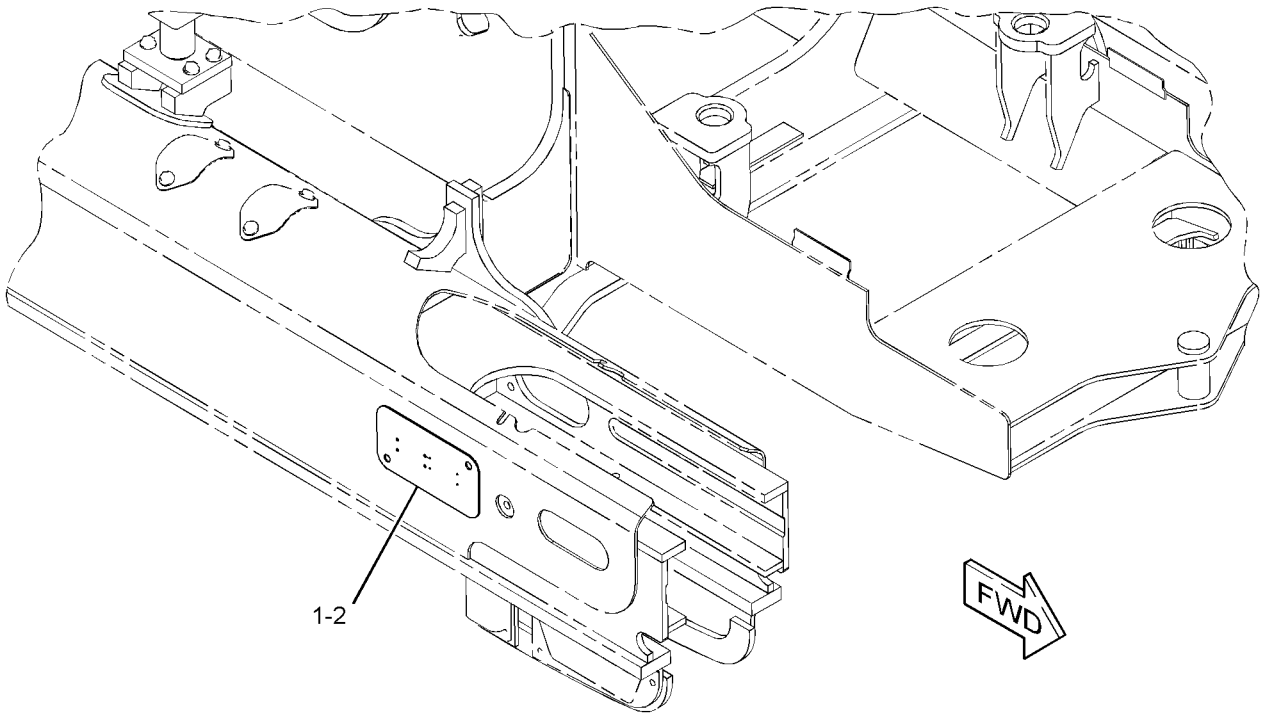

GRAPHIC #1 **<END>** g01407524

244-7434 DRAWBAR GP

S/N: JTD1-UP; FFF1-UP; LLL1-UP

CANNOT BE USED WITH 244-7433—PAGE 427, 262-4407—PAGE 913, 244-7517—PAGE 911

AN ATTACHMENT

SMCS-7105, 7119 **i02816025**

NOTE	REF NO	GRAPHIC REF	PART NUMBER	QTY	PART NAME 1 2 3 4 5 6 (PRODUCT LEVEL)	SEE PAGE
	1	1	**5G-0792**	1	PIN	
	2	1	**5P-8837**	1	LOCK PIN	
	3	1	**299-4116**	1	DRAWBAR AS	
	4	1	**299-3903**	1	PLATE AS	
	5	1	**274-7990**	1	PLATE-COVER	
	6	1	**198-4782**	4	WASHER-HARD (26X47X12-MM THK)	
	7	1	**5P-1076**	4	WASHER-HARD (13.5X30X4-MM THK)	
	8	1	**8T-4121**	4	WASHER-HARD (11X21X2.5-MM THK)	
M	9	1	**8T-4137**	7	BOLT (M10X1.5X20-MM)	
M	10	1	**8T-4139**	4	BOLT (M12X1.75X30-MM)	
M	11	1	**8T-5878**	4	BOLT (M24X3X80-MM)	
	12	1	**8T-4222**	3	WASHER-PLATED (11X32X2.5-MM THK)	

M-METRIC PART

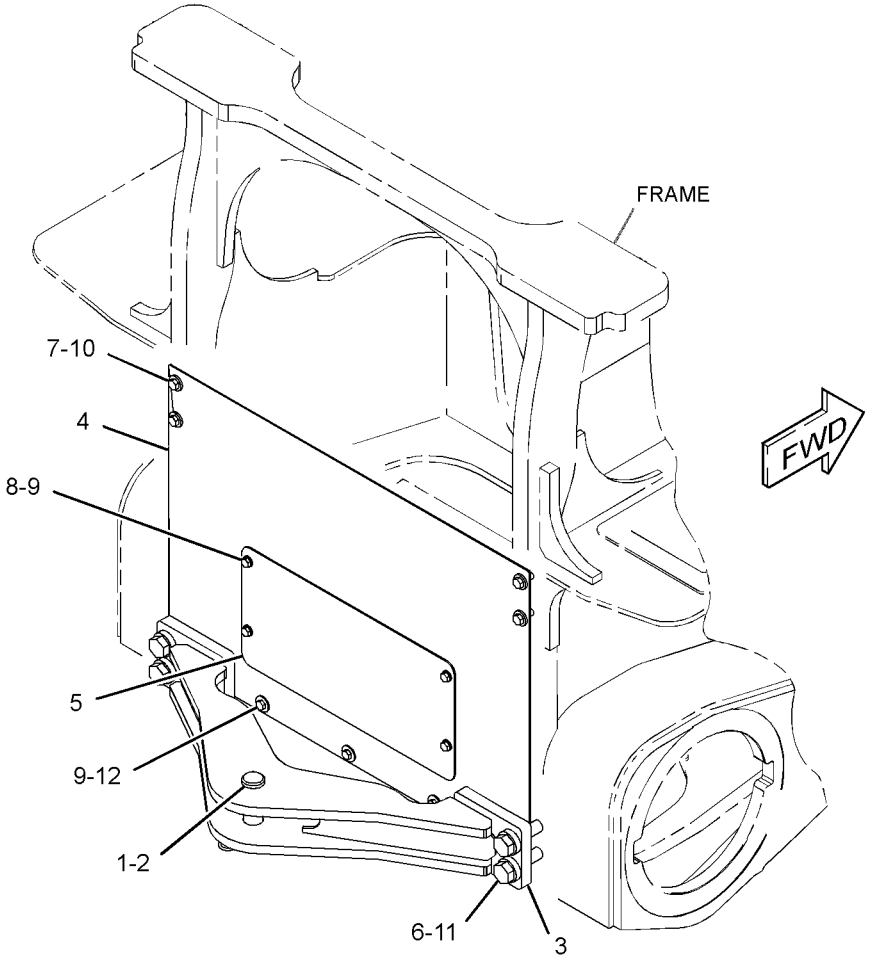

GRAPHIC #1 **<END>** g01406695

244-7512 ENCLOSURE GP-PLATFORM

S/N: JTD1-175; FFF1-598; LLL1-752

PART OF 244-7376, 244-7377, 282-5327 CHASSIS AR

SMCS-7253, 7301 **i04415989**

NOTE	REF NO	GRAPHIC REF	PART NUMBER	QTY	PART NAME 1 2 3 4 5 6 (PRODUCT LEVEL)	SEE PAGE
	1	1	**6H-5139**	1	PLATE-PRESSURE	
	2	1	**7H-1447**	1	CAP-FILLER (HYDRAULIC TANK)	
	3	1	**306-4998**	1	CAP GP-FUEL FILLER (LOCKABLE, VENTED)	
		1	**364-0856**	1	BOOT-FUEL CAP	
		1	**276-1243**	1	CAP-FUEL FILLER (LOCKABLE)	
		1	**279-9876**	1	FILTER ELEMENT-BREATHER (FUEL CAP)	
		1	**278-5684**	1	PLATE	
B	4	1	**216-0143**	4	SHIM (1-MM THK)	
	5	1	**256-2271**	1	ENCLOSURE AS	
	6	1	**256-2272**	1	ENCLOSURE AS	
	7	1	**260-0088**	2	BRACKET	
	10	1	**274-1923**	2	LOCK AS	
J	11	1	**275-0572**	1	LATCH AS	
	12	1	**275-0571**	1	CAM-LATCH	
	14	1	**301-7301**	1	ENCLOSURE AS	
	15	1	**301-7302**	1	FILLER AS	
	16	1	**301-7303**	1	FILLER AS	
	18	1	**4B-9782**	1	BALL	
M	20	1	**5C-2890**	8	NUT (M6X1-THD)	
	21	1	**5P-4116**	4	WASHER-HARD (8.8X20.5X2-MM THK)	
	22	1	**7X-7729**	20	WASHER (11X25X3-MM THK)	
M	23	1	**8T-4137**	8	BOLT (M10X1.5X20-MM)	
M	25	1	**8T-4195**	12	BOLT (M10X1.5X30-MM)	
M	27	1	**8T-7547**	4	BOLT (M8X1.25X30-MM)	
	28	1	**9H-6454**	1	GASKET	
	29	1	**9X-8256**	8	WASHER (6.6X12X2-MM THK)	
	30	1	**191-0286**	1	WASHER (23X32X1.6-MM THK)	
D	31	1	**8T-5372**		SEAL (0.2-M EACH)	

B-USE AS REQUIRED
D-ORDER BY THE METER
J-REQUIERS CORPORATE KEY
M-METRIC PART

244-7512 **ENCLOSURE GP-PLATFORM** *(contd.)* **i04415989**

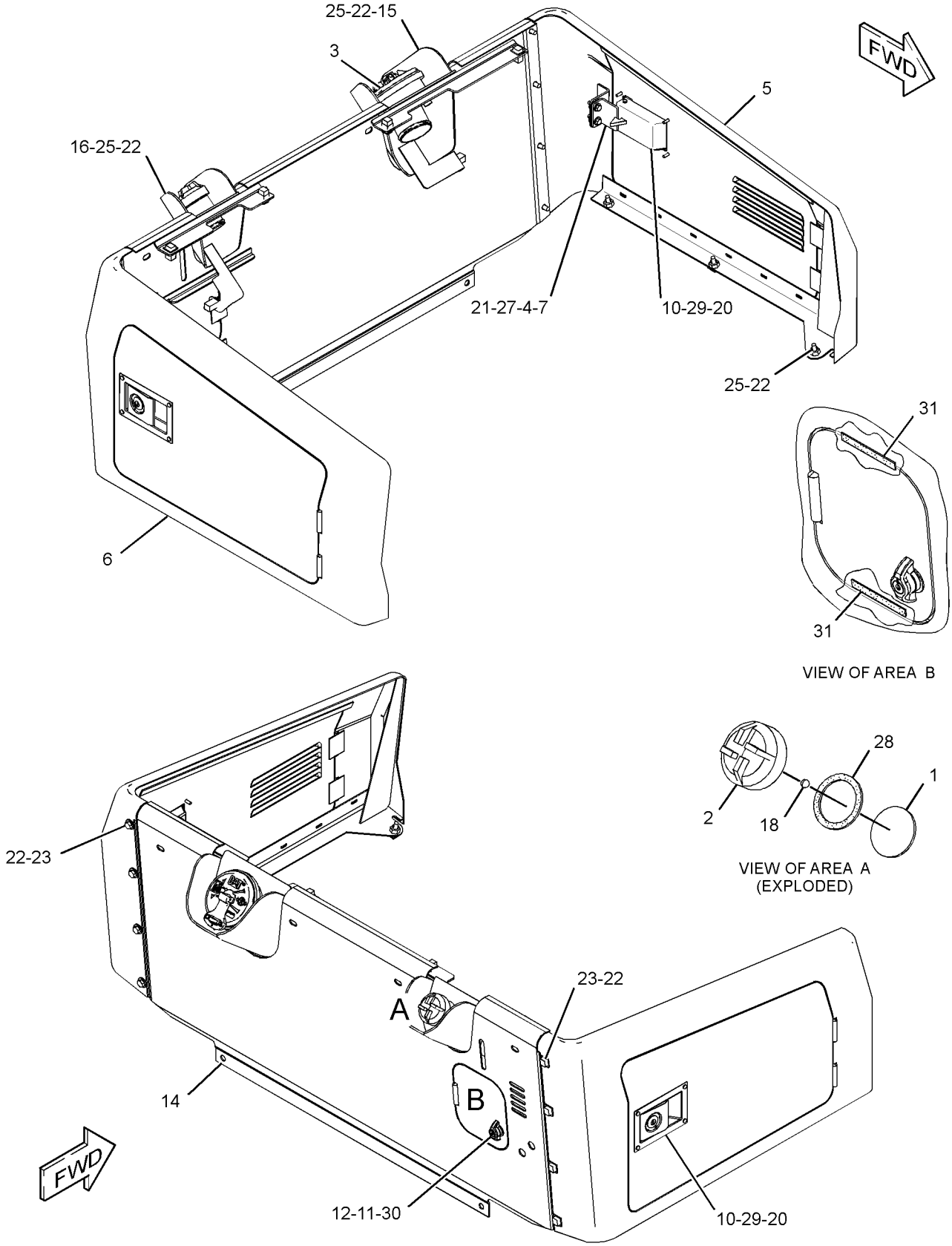

GRAPHIC #1 **<END>** g01408597

244-7512 ENCLOSURE GP-PLATFORM

S/N: JTD176-UP; FFF599-UP; LLL753-UP
PART OF 244-7376, 244-7377, 282-5327 CHASSIS AR

SMCS-7253, 7301 **i04047201**

NOTE	REF NO	GRAPHIC REF	PART NUMBER	QTY	PART NAME 1 2 3 4 5 6 (PRODUCT LEVEL)	SEE PAGE
	1	1	**6H-5139**	1	PLATE-PRESSURE	
	2	1	**7H-1447**	1	CAP-FILLER (HYDRAULIC TANK)	
	3	1	**306-4998**	1	CAP GP-FUEL FILLER (LOCKABLE, VENTED)	
		1	**276-1243**	1	CAP-FUEL FILLER (LOCKABLE)	
		1	**279-9876**	1	FILTER ELEMENT-BREATHER (FUEL CAP)	
		1	**364-0856**	1	BOOT-FUEL CAP	
B	4	1	**216-0143**	4	SHIM (1-MM THK)	
	5	1	**256-2271**	1	ENCLOSURE AS	
	6	1	**256-2272**	1	ENCLOSURE AS	
	7	1	**260-0088**	2	BRACKET	
	10	1	**274-1923**	2	LOCK AS	
J	11	1	**275-0572**	1	LATCH AS	
	12	1	**275-0571**	1	CAM-LATCH	
C	14	1	**340-4528**	1	PANEL AS-ENCLOSURE	
	15	1	**301-7302**	1	FILLER AS	
	16	1	**301-7303**	1	FILLER AS	
	18	1	**4B-9782**	1	BALL	
M	20	1	**5C-2890**	8	NUT (M6X1-THD)	
	21	1	**5P-4116**	4	WASHER-HARD (8.8X20.5X2-MM THK)	
	22	1	**7X-7729**	20	WASHER (11X25X3-MM THK)	
M	23	1	**8T-4137**	8	BOLT (M10X1.5X20-MM)	
M	25	1	**8T-4195**	12	BOLT (M10X1.5X30-MM)	
M	27	1	**8T-7547**	4	BOLT (M8X1.25X30-MM)	
	28	1	**9H-6454**	1	GASKET	
	29	1	**9X-8256**	8	WASHER (6.6X12X2-MM THK)	
	30	1	**191-0286**	1	WASHER (23X32X1.6-MM THK)	

B-USE AS REQUIRED
C-CHANGE FROM PREVIOUS TYPE
J-REQUIRES CORPORATE KEY
M-METRIC PART

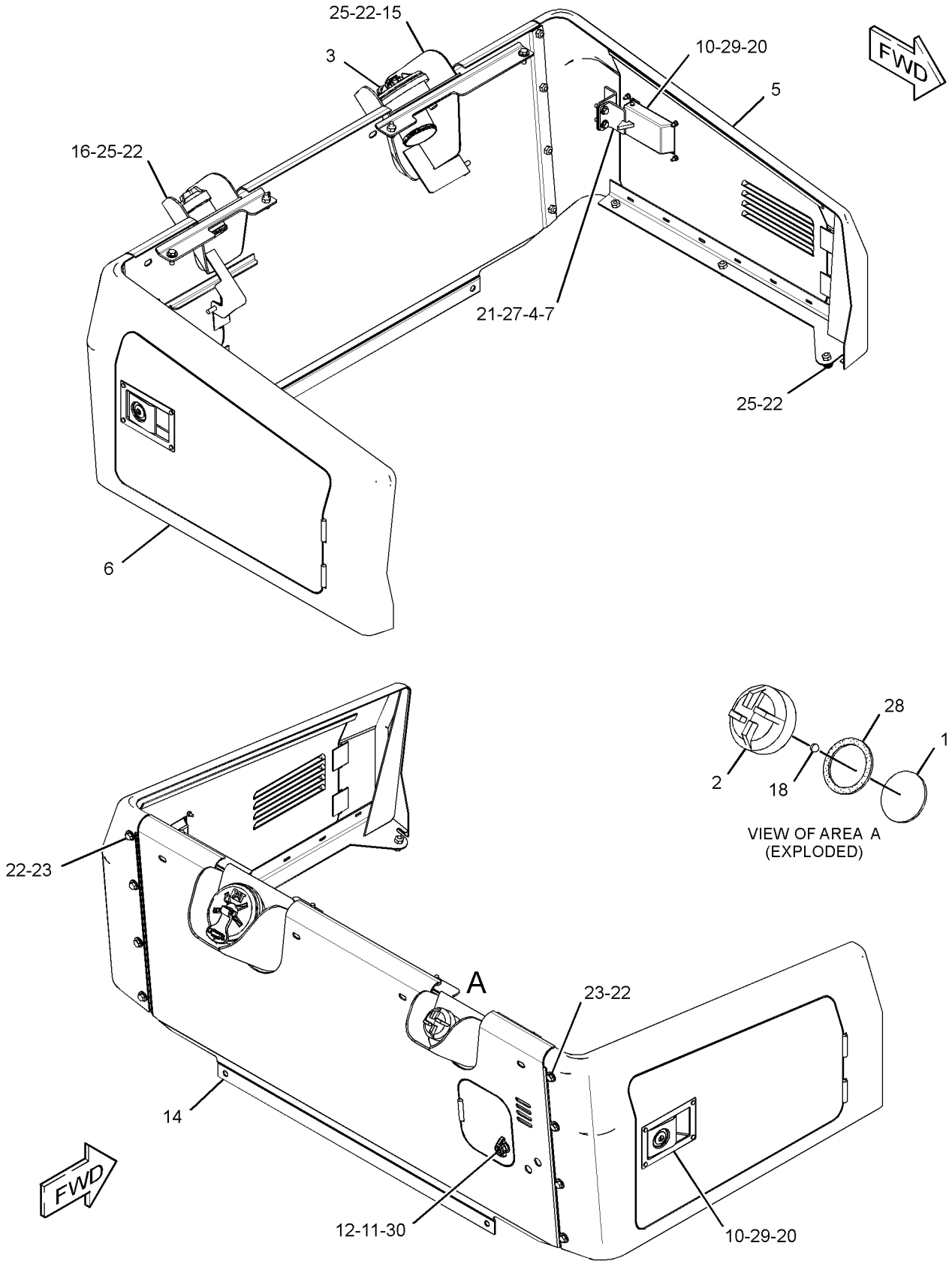

GRAPHIC #1 **<END>** g02494518

323-7320 ENCLOSURE GP-PLATFORM–FIRE PLOW

S/N: JTD1-UP; FFF1-UP; LLL1-UP

PART OF 325-6496, 325-6497, 325-6502 CONVERSION AR-MACHINE OPTION AN ATTACHMENT

SMCS-7253, 7301 **i04141169**

NOTE	REF NO	GRAPHIC REF	PART NUMBER	QTY	PART NAME 1 2 3 4 5 6 (PRODUCT LEVEL)	SEE PAGE
	1	1	**323-7319**	1	PANEL AS-ENCLOSURE (LH)	
	2	1	**317-9767**	1	PANEL AS-ENCLOSURE (RH)	

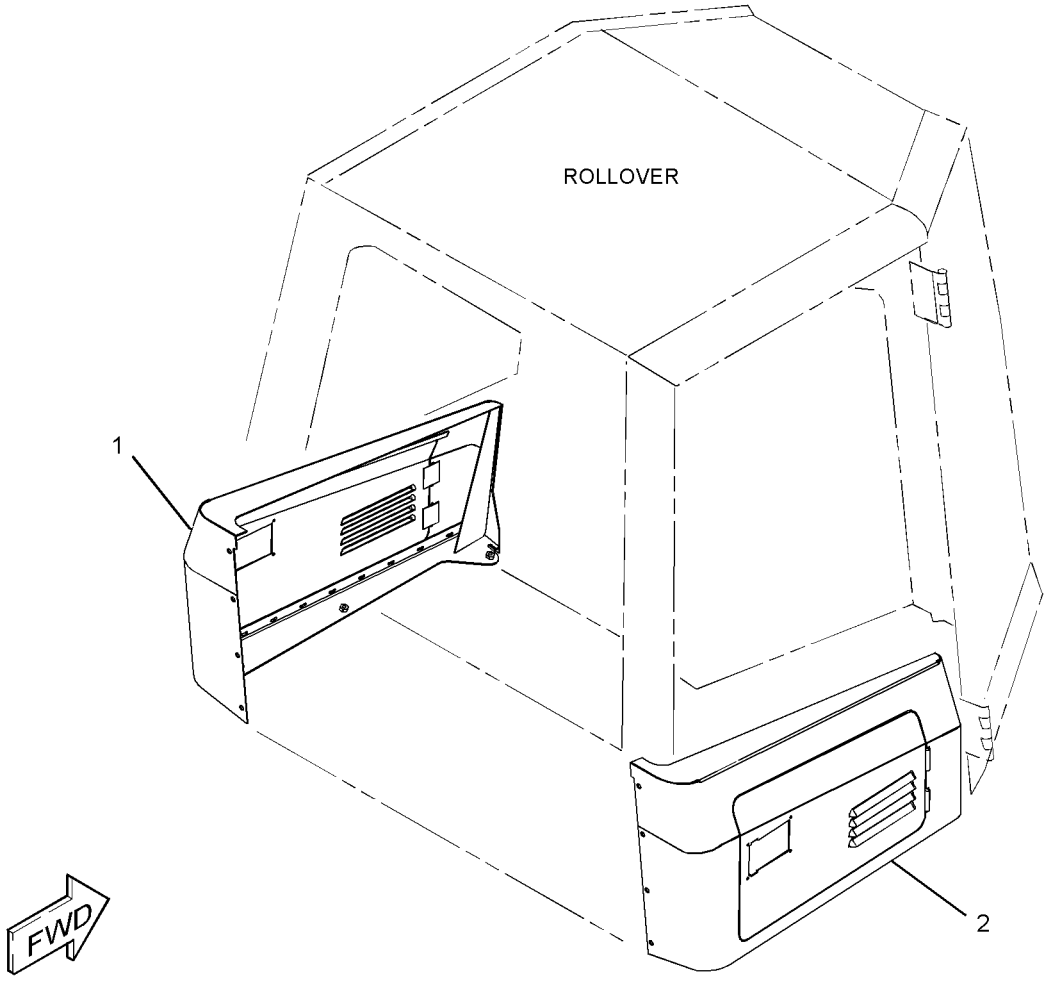

GRAPHIC #1 **<END>** g02005995

244-7397 FRAME GP

S/N: LLL1-UP
PART OF 244-7377 CHASSIS AR, 325-6505 FRAME GP
ALSO AN ATTACHMENT

SMCS-7050, 7051 **i03996608**

NOTE	REF NO	GRAPHIC REF	PART NUMBER	QTY	PART NAME 1 2 3 4 5 6 (PRODUCT LEVEL)	SEE PAGE
	1	1	**254-8751**	1	FRAME AS	
	2	1	**254-8880**	1	SUPPORT AS	
	3	1	**254-8888**	1	PLATE	
	4	1	**256-2269**	1	PLATE AS	
	5	1	**262-5866**	4	COVER	
Y	6	1	*262-5868*	2	COVER GP-ACCESS	385
	8	1	**271-2734**	2	PIN AS	
	9	1	**276-2430**	1	COVER	
	10	1	**276-2431**	1	COVER	
	11	1	**293-6144**	1	PLATE	
	12	1	**5P-1076**	22	WASHER-HARD (13.5X30X4-MM THK)	
	13	1	**7X-7729**	14	WASHER (11X25X3-MM THK)	
M	14	1	**8T-4137**	2	BOLT (M10X1.5X20-MM)	
M	15	1	**8T-4179**	2	BOLT (M12X1.75X20-MM)	
M	18	1	**8T-4196**	12	BOLT (M10X1.5X35-MM)	
M	21	1	**8T-4956**	24	BOLT (M12X1.75X35-MM)	
E	22	1	**123-3827**		SEAL (198-CM)	
	23	1	**211-5941**	8	SPACER (13.9X21.3X8-MM THK)	
	24	1	**7X-0590**	8	WASHER-HARD (13.5X44.5X6-MM THK)	
M	25	1	**8T-4139**	4	BOLT (M12X1.75X30-MM)	

E-ORDER BY THE CENTIMETER
M-METRIC PART
Y-SEPARATE ILLUSTRATION

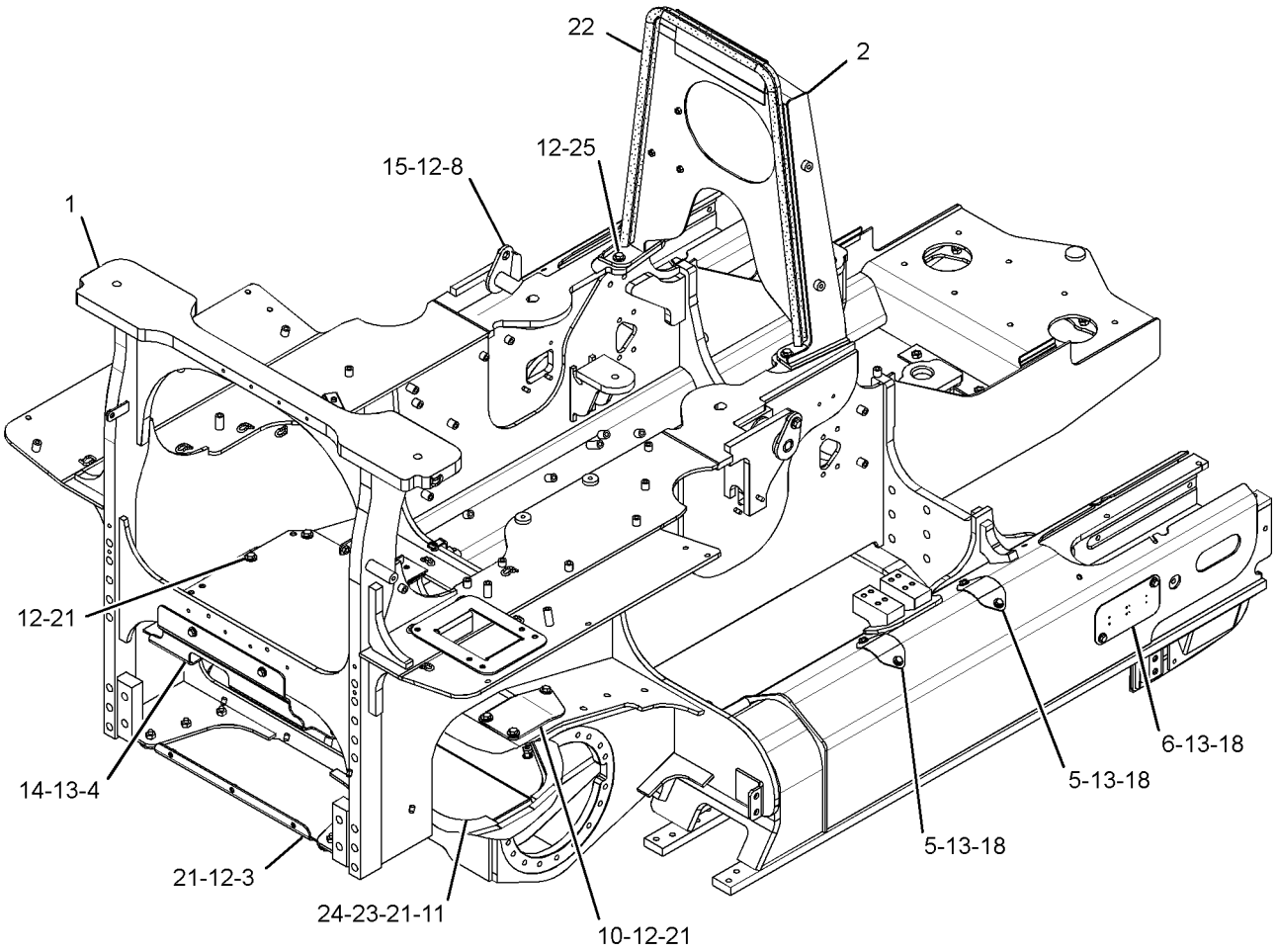

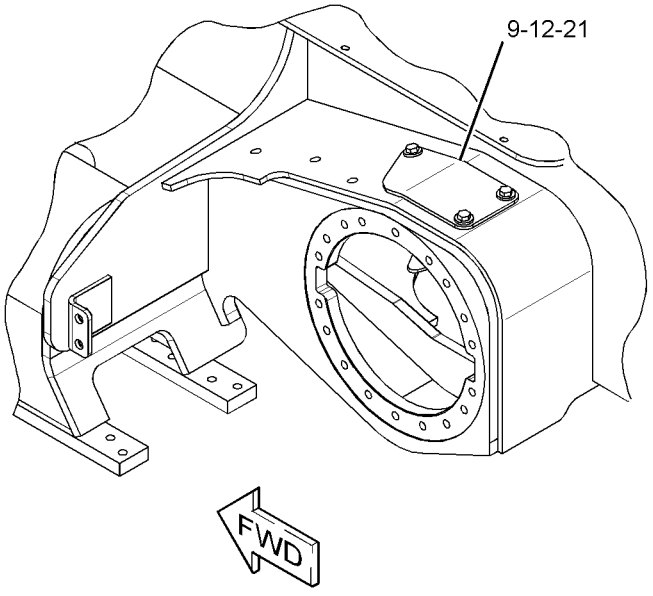

GRAPHIC #1 **<END>** g02360941

244-7402 FRAME GP

S/N: JTD1-UP
PART OF 282-5327 CHASSIS AR, 325-6510 FRAME GP
ALSO AN ATTACHMENT

SMCS-7050, 7051 **i03996614**

NOTE	REF NO	GRAPHIC REF	PART NUMBER	QTY	PART NAME 1 2 3 4 5 6 (PRODUCT LEVEL)	SEE PAGE
	1	1	**211-5941**	8	SPACER (13.9X21.3X8-MM THK)	
	2	1	**254-8880**	1	SUPPORT AS	
	3	1	**254-8888**	1	PLATE	
	4	1	**256-2269**	1	PLATE AS	
	5	1	**262-5866**	4	COVER	
Y	6	1	*262-5868*	2	COVER GP-ACCESS	385
	8	1	**271-2734**	2	PIN AS	
	9	1	**276-2430**	1	COVER	
	10	1	**276-2431**	1	COVER	
	11	1	**287-7957**	1	FRAME AS	
	12	1	**287-7969**	1	PLATE	
	13	1	**5P-1076**	22	WASHER-HARD (13.5X30X4-MM THK)	
	14	1	**7X-0590**	8	WASHER-HARD (13.5X44.5X6-MM THK)	
	15	1	**7X-7729**	14	WASHER (11X25X3-MM THK)	
M	16	1	**8T-4137**	2	BOLT (M10X1.5X20-MM)	
M	17	1	**8T-4139**	4	BOLT (M12X1.75X30-MM)	
M	18	1	**8T-4179**	2	BOLT (M12X1.75X20-MM)	
M	20	1	**8T-4196**	12	BOLT (M10X1.5X35-MM)	
M	23	1	**8T-4956**	24	BOLT (M12X1.75X35-MM)	
E	24	1	**123-3827**		SEAL (198-CM)	

E-ORDER BY THE CENTIMETER
M-METRIC PART
Y-SEPARATE ILLUSTRATION

244-7402 **FRAME GP** ***(contd.)*** **i03996614**

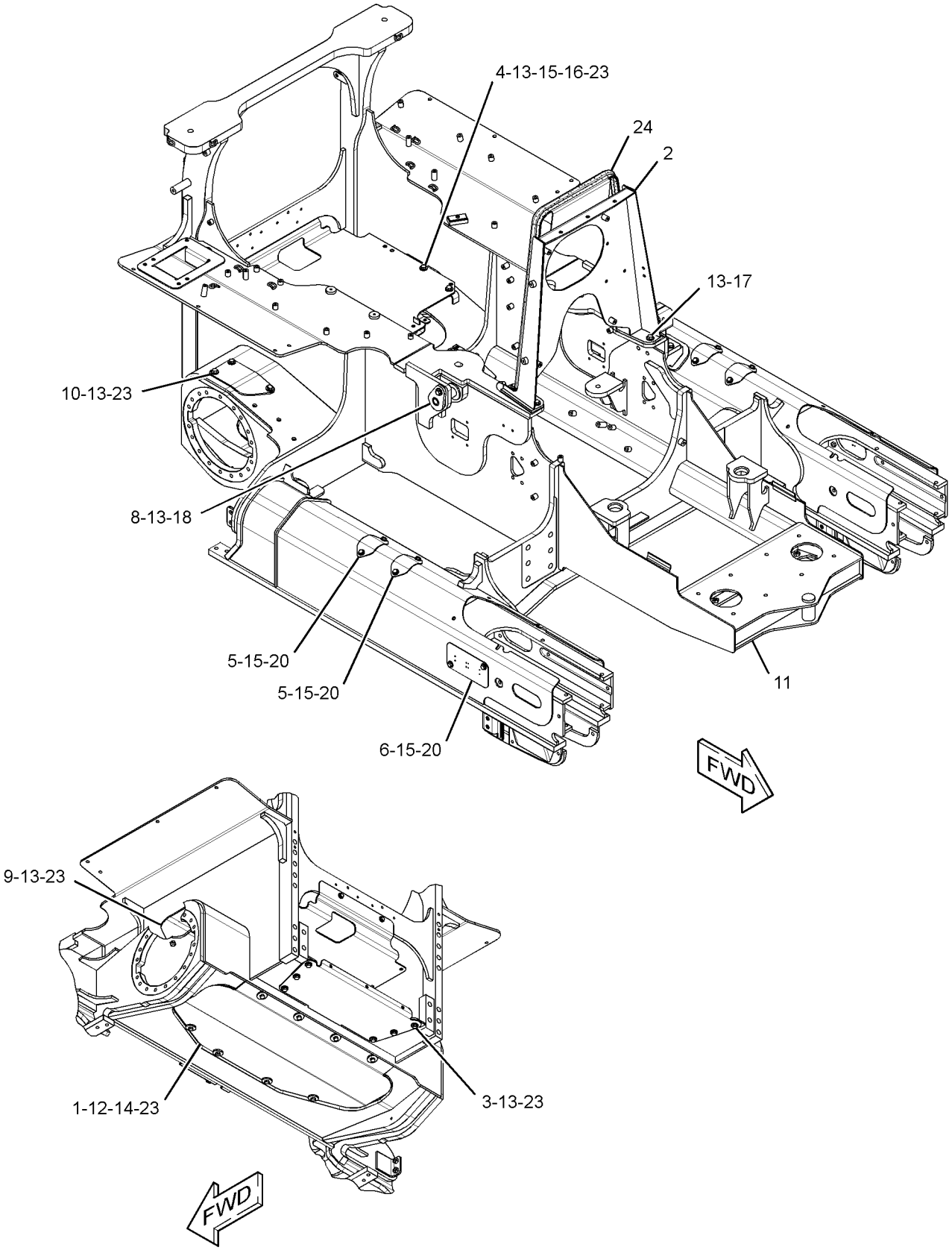

GRAPHIC #1 **<END>** g02361248

325-6505 FRAME GP—FIRE PLOW

S/N: LLL1-UP
PART OF 325-6497 CONVERSION AR-MACHINE OPTION
AN ATTACHMENT

SMCS-7050, 7051 **i03698884**

NOTE	REF NO	GRAPHIC REF	PART NUMBER	QTY	PART NAME 1 2 3 4 5 6 (PRODUCT LEVEL)	SEE PAGE
	1	1	**8T-7038**	4	FILM-WARNING (DO NOT LIFT)	
Y	2	1	*244-7397*	1	FRAME GP	392
	3	1	*327-4552*	1	BRACKET AS	
M		1	**8T-3490**	5	NUT-WELD (M10X1.5-THD)	
M	4	1	**8T-3597**	2	NUT-WELD (M12X1.75-THD)	

M-METRIC PART
Y-SEPARATE ILLUSTRATION

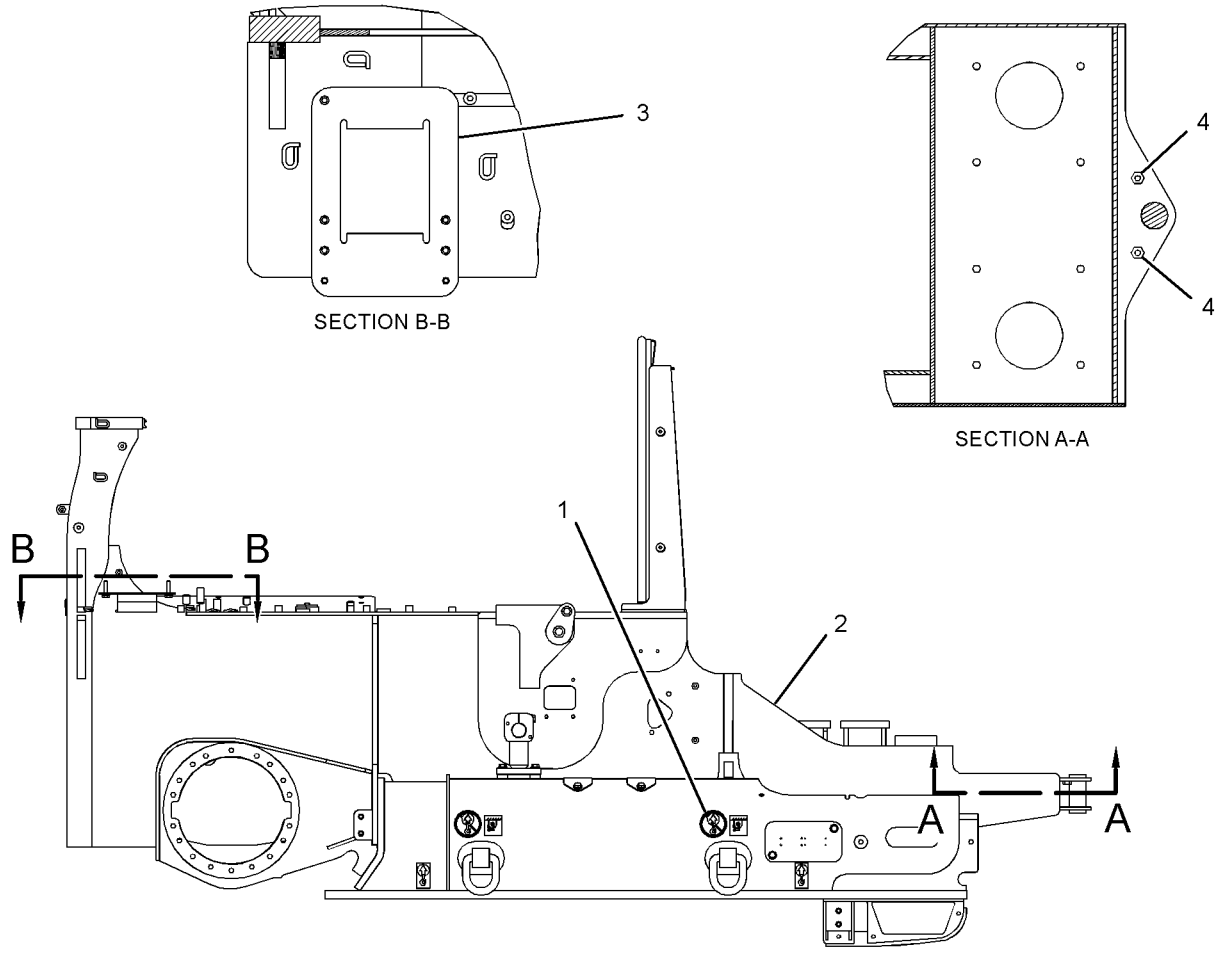

RIGHT SIDE VIEW

GRAPHIC #1 **<END>** g02050213

325-6510 FRAME GP–FIRE PLOW

S/N: JTD1-UP
PART OF 325-6502 CONVERSION AR-MACHINE OPTION
AN ATTACHMENT

SMCS-7050, 7051 **i03698891**

NOTE	REF NO	GRAPHIC REF	PART NUMBER	QTY	PART NAME 1 2 3 4 5 6 (PRODUCT LEVEL)	SEE PAGE
	1	1	**8T-7038**	4	FILM-WARNING (DO NOT LIFT)	
Y	2	1	*244-7402*	1	FRAME GP	394
	3	1	*327-4552*	1	BRACKET AS	
M		1	**8T-3490**	5	NUT-WELD (M10X1.5-THD)	
M	4	1	**8T-3597**	2	NUT-WELD (M12X1.75-THD)	

M-METRIC PART
Y-SEPARATE ILLUSTRATION

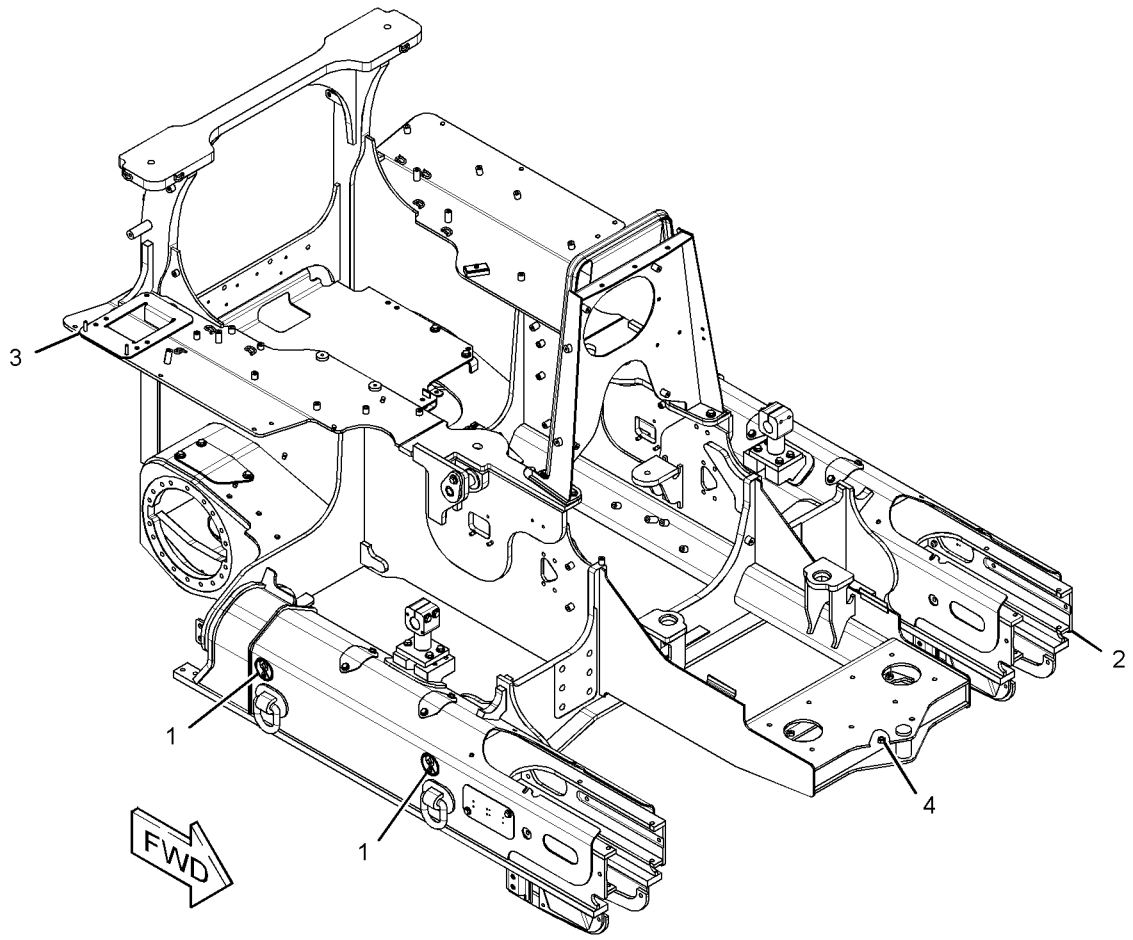

GRAPHIC #1 **<END>** g02049953

FRAME AND BODY

361-6059 FRAME GP

S/N: JTD1-UP; FFF1-UP; LLL1-UP
PART OF 244-7493 SUPPRESSION AR-SOUND
AN ATTACHMENT

SMCS-7050, 7051 **i04256450**

NOTE	REF NO	GRAPHIC REF	PART NUMBER	QTY	PART NAME 1 2 3 4 5 6 (PRODUCT LEVEL)	SEE PAGE
	1	1	**211-5941**	8	SPACER (13.9X21.3X8-MM THK)	
	2	1	**254-8880**	1	SUPPORT AS	
	3	1	**254-8888**	1	PLATE	
	4	1	**256-2269**	1	PLATE AS	
	5	1	**262-5866**	4	COVER	
Y	6	1	*262-5868*	2	COVER GP-ACCESS	385
	7	1	**271-2734**	2	PIN AS	
	8	1	**293-6143**	1	PLATE	
	9	1	**361-6069**	1	FRAME AS	
	10	1	**5P-1076**	16	WASHER-HARD (13.5X30X4-MM THK)	
	11	1	**7X-0590**	8	WASHER-HARD (13.5X44.5X6-MM THK)	
	12	1	**7X-7729**	14	WASHER (11X25X3-MM THK)	
M	13	1	**8T-4137**	2	BOLT (M10X1.5X20-MM)	
M	14	1	**8T-4139**	4	BOLT (M12X1.75X30-MM)	
M	15	1	**8T-4179**	2	BOLT (M12X1.75X20-MM)	
M	16	1	**8T-4196**	12	BOLT (M10X1.5X35-MM)	
M	17	1	**8T-4956**	18	BOLT (M12X1.75X35-MM)	
E	18	1	**123-3827**		SEAL (198-CM)	

E-ORDER BY THE CENTIMETER
M-METRIC PART
Y-SEPARATE ILLUSTRATION

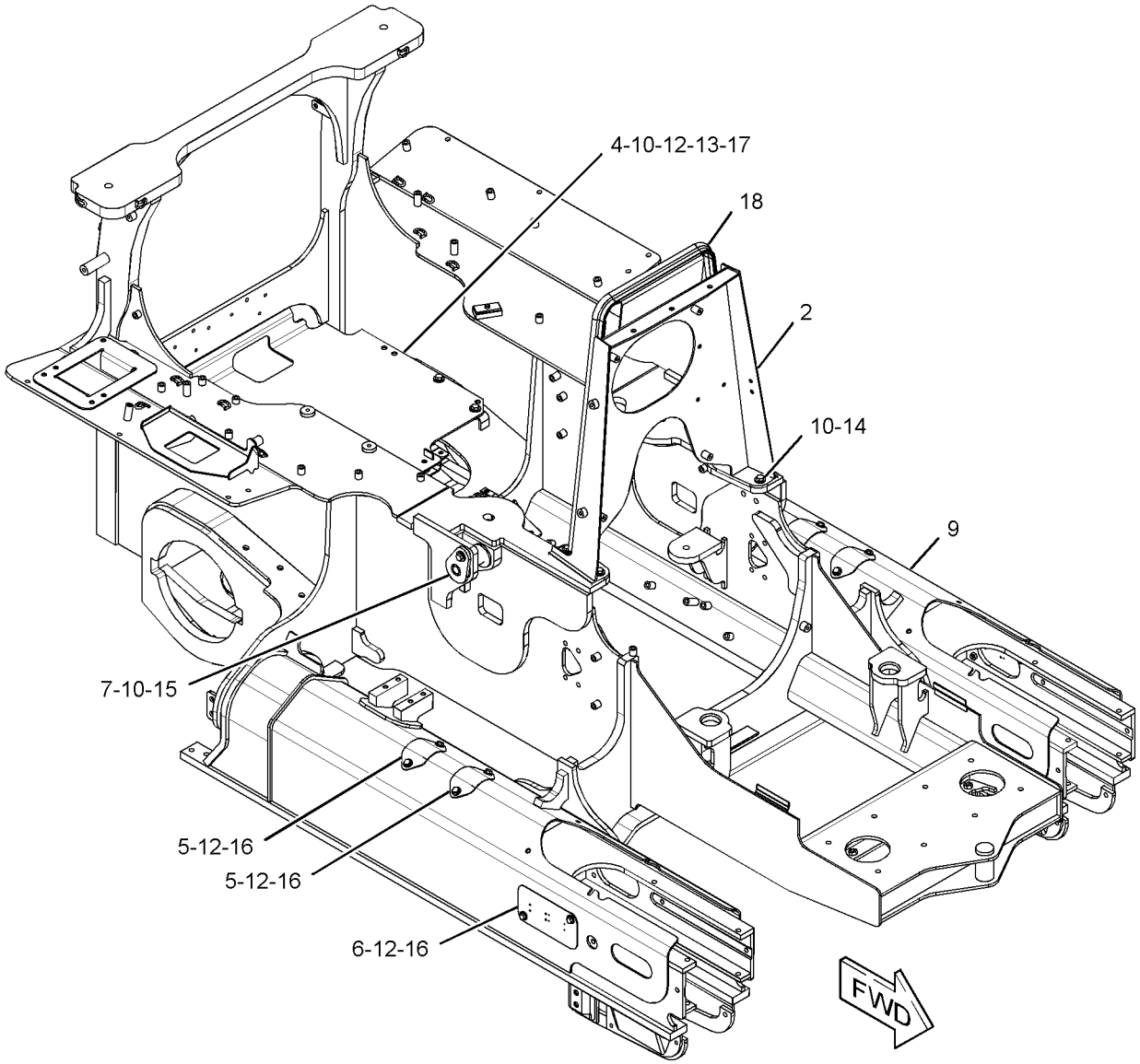

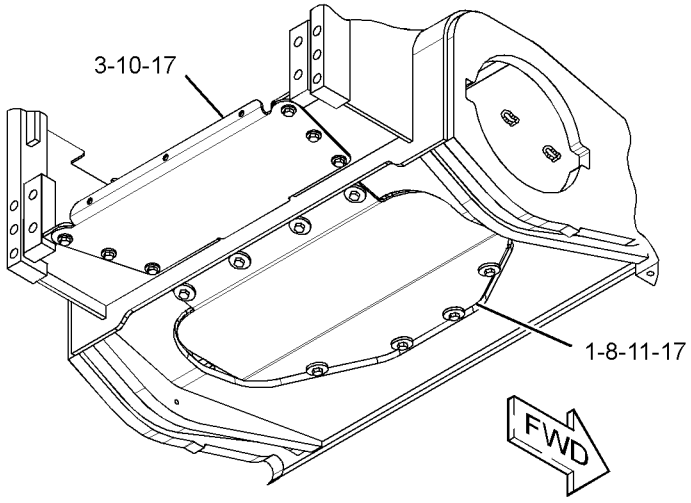

GRAPHIC #1 **<END>** g02498378

361-6060 FRAME GP

S/N: LLL1-UP
PART OF 361-6063 SUPPRESSION AR-SOUND
AN ATTACHMENT

SMCS-7050, 7051 **i04372717**

NOTE	REF NO	GRAPHIC REF	PART NUMBER	QTY	PART NAME 1 2 3 4 5 6 (PRODUCT LEVEL)	SEE PAGE
	1	1	**211-5941**	8	SPACER (13.9X21.3X8-MM THK)	
	2	1	**254-8880**	1	SUPPORT AS	
	3	1	**254-8888**	1	PLATE	
	4	1	**256-2269**	1	PLATE AS	
	5	1	**262-5866**	4	COVER	
Y	6	1	*262-5868*	2	COVER GP-ACCESS	385
	7	1	**271-2734**	2	PIN AS	
	8	1	**276-2430**	1	COVER	
	9	1	**276-2431**	1	COVER	
	10	1	**293-6144**	1	PLATE	
E	11	1	**123-3827**		SEAL (198-CM)	
	12	1	**5P-1076**	22	WASHER-HARD (13.5X30X4-MM THK)	
	13	1	**7X-0590**	8	WASHER-HARD (13.5X44.5X6-MM THK)	
	14	1	**7X-7729**	14	WASHER (11X25X3-MM THK)	
M	15	1	**8T-4137**	2	BOLT (M10X1.5X20-MM)	
M	16	1	**8T-4139**	4	BOLT (M12X1.75X30-MM)	
M	17	1	**8T-4179**	2	BOLT (M12X1.75X20-MM)	
M	18	1	**8T-4196**	12	BOLT (M10X1.5X35-MM)	
M	19	1	**8T-4956**	24	BOLT (M12X1.75X35-MM)	

E-ORDER BY THE CENTIMETER
M-METRIC PART
Y-SEPARATE ILLUSTRATION

361-6060 **FRAME GP** ***(contd.)*** **i04372717**

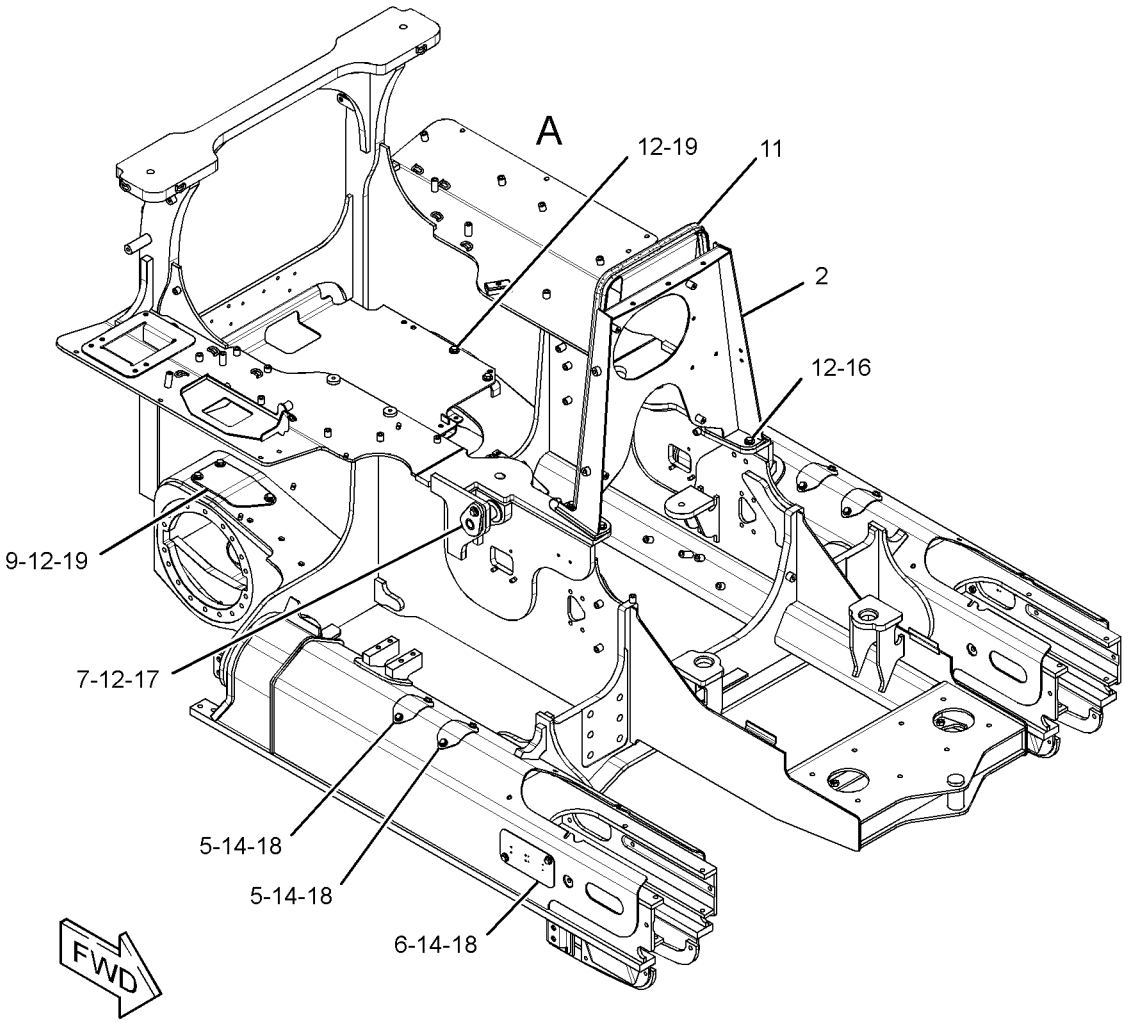

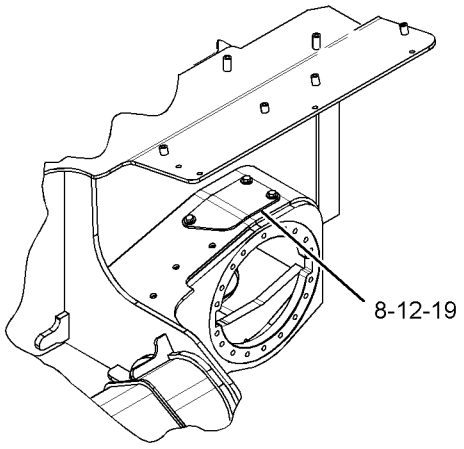

VIEW OF AREA A

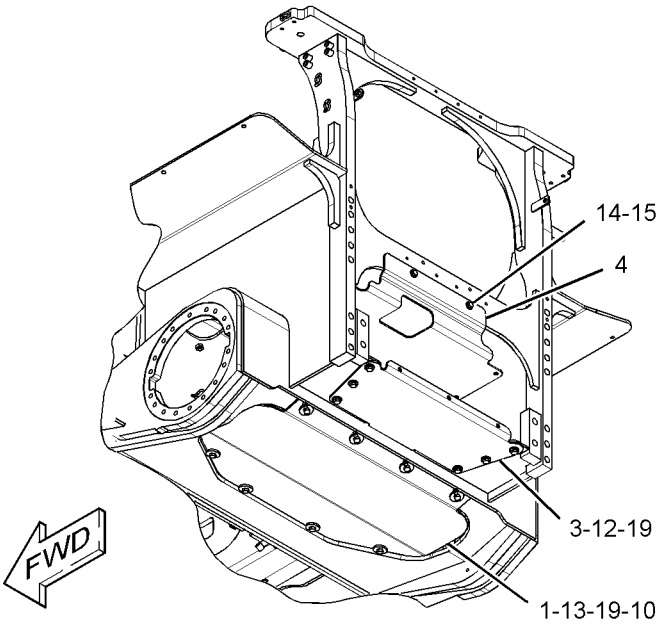

GRAPHIC #1 **<END>** g02551166

244-7396 FRAME GP-MAIN

S/N: FFF1-UP

PART OF 244-7376 CHASSIS AR, 325-6504 FRAME GP-MAIN

ALSO AN ATTACHMENT

SMCS-7051 **i03996631**

NOTE	REF NO	GRAPHIC REF	PART NUMBER	QTY	PART NAME 1 2 3 4 5 6 (PRODUCT LEVEL)	SEE PAGE
	1	1	**254-8750**	1	FRAME AS	
	2	1	**254-8880**	1	SUPPORT AS	
	3	1	**254-8888**	1	PLATE	
	4	1	**256-2269**	1	PLATE AS	
	5	1	**262-5866**	4	COVER	
Y	6	1	*262-5868*	2	COVER GP-ACCESS	385
	8	1	**271-2734**	2	PIN AS	
	9	1	**293-6143**	1	PLATE	
	10	1	**5P-1076**	16	WASHER-HARD (13.5X30X4-MM THK)	
	11	1	**7X-7729**	14	WASHER (11X25X3-MM THK)	
M	12	1	**8T-4137**	2	BOLT (M10X1.5X20-MM)	
M	13	1	**8T-4179**	2	BOLT (M12X1.75X20-MM)	
	14	1	**211-5941**	8	SPACER (13.9X21.3X8-MM THK)	
M	16	1	**8T-4196**	12	BOLT (M10X1.5X35-MM)	
M	19	1	**8T-4956**	18	BOLT (M12X1.75X35-MM)	
E	20	1	**123-3827**		SEAL (198-CM)	
	21	1	**7X-0590**	8	WASHER-HARD (13.5X44.5X6-MM THK)	
M	22	1	**8T-4139**	4	BOLT (M12X1.75X30-MM)	

E-ORDER BY THE CENTIMETER
M-METRIC PART
Y-SEPARATE ILLUSTRATION

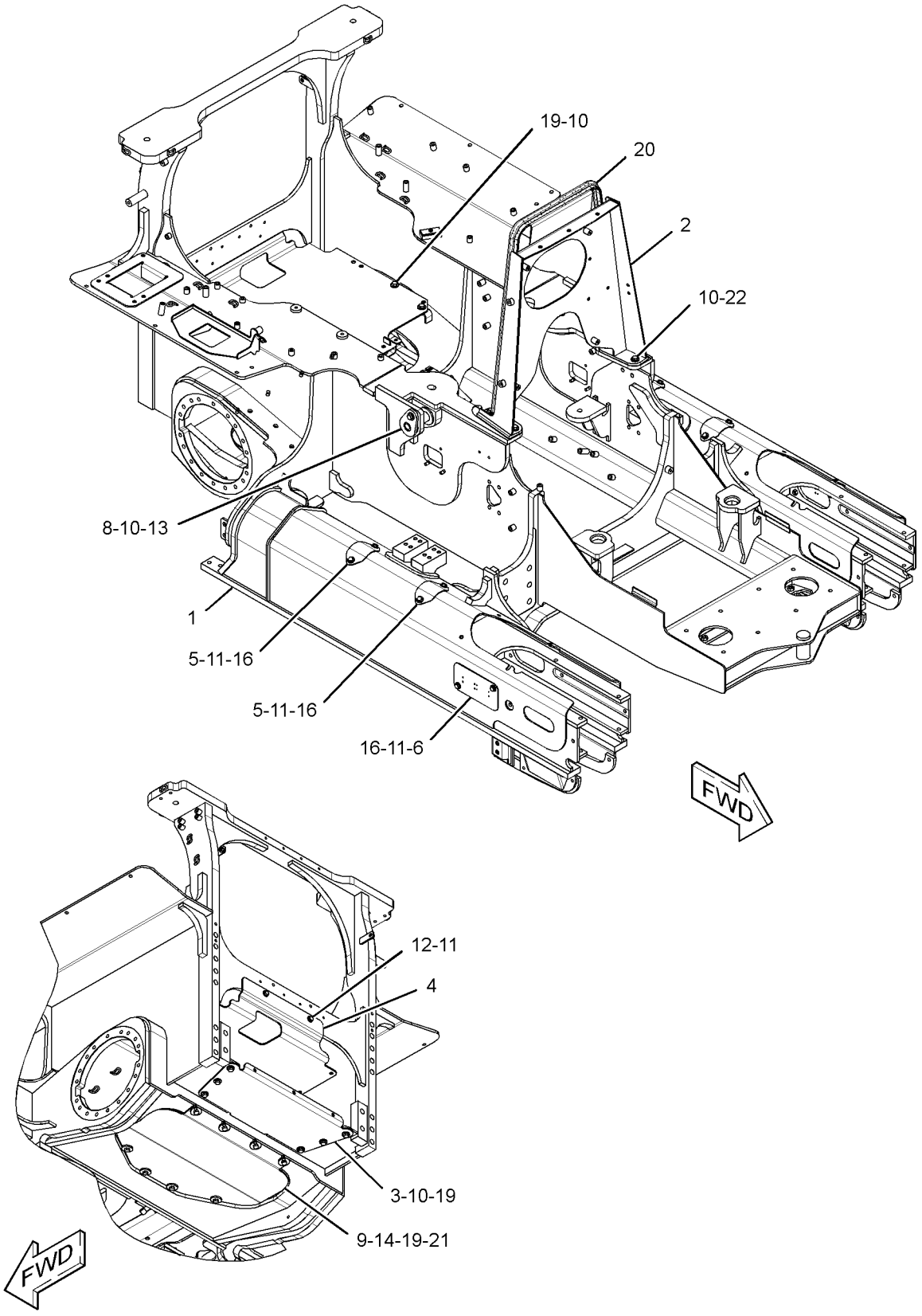

GRAPHIC #1 **<END>** g02541336

325-6504 FRAME GP-MAIN—FIRE PLOW

S/N: FFF1-UP
PART OF 325-6496 CONVERSION AR-MACHINE OPTION
AN ATTACHMENT

SMCS-7051 **i03697380**

NOTE	REF NO	GRAPHIC REF	PART NUMBER	QTY	PART NAME 1 2 3 4 5 6 (PRODUCT LEVEL)	SEE PAGE
	1	1	**8T-7038**	4	FILM-WARNING (DO NOT LIFT)	
Y	2	1	*244-7396*	1	FRAME GP-MAIN	402
	3	1	*327-4552*	1	BRACKET AS	
M		1	**8T-3490**	5	NUT-WELD (M10X1.5-THD)	
M	4	1	**8T-3597**	2	NUT-WELD (M12X1.75-THD)	

M-METRIC PART
Y-SEPARATE ILLUSTRATION

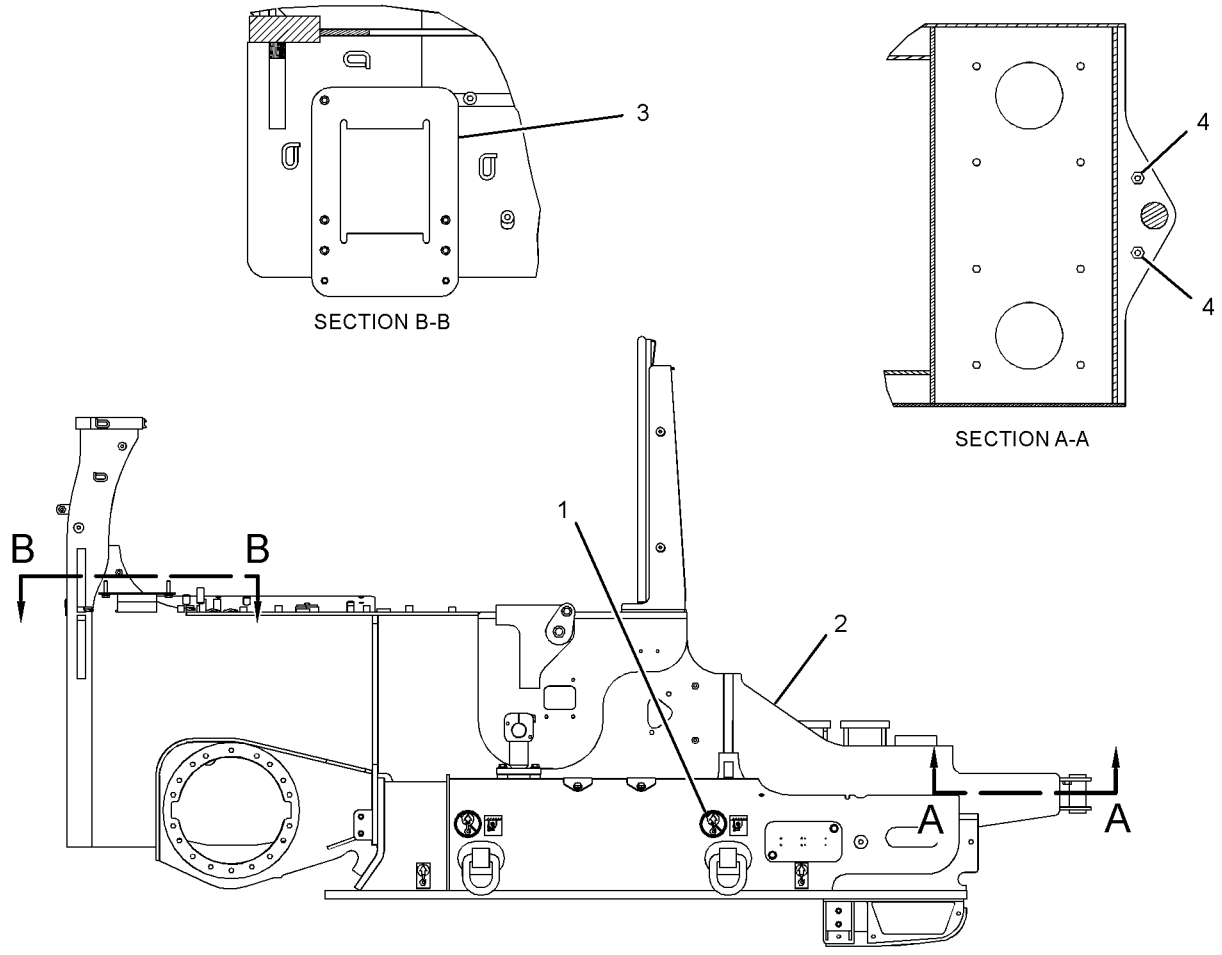

RIGHT SIDE VIEW

GRAPHIC #1 **<END>** g02050080

244-7436 GRILL AR-RADIATOR—STANDARD

S/N: JTD1-UP; FFF1-UP; LLL1-UP
CANNOT BE USED WITH 244-7437—PAGE 406
AN ATTACHMENT

SMCS-7170 **i03714728**

NOTE	REF NO	GRAPHIC REF	PART NUMBER	QTY	PART NAME 1 2 3 4 5 6 (PRODUCT LEVEL)	SEE PAGE
	1	1	**327-0939**	1	GRILL AS	
	2	1	**7X-7729**	6	WASHER (11X25X3-MM THK)	
M	3	1	**8T-4196**	6	BOLT (M10X1.5X35-MM)	

M-METRIC PART

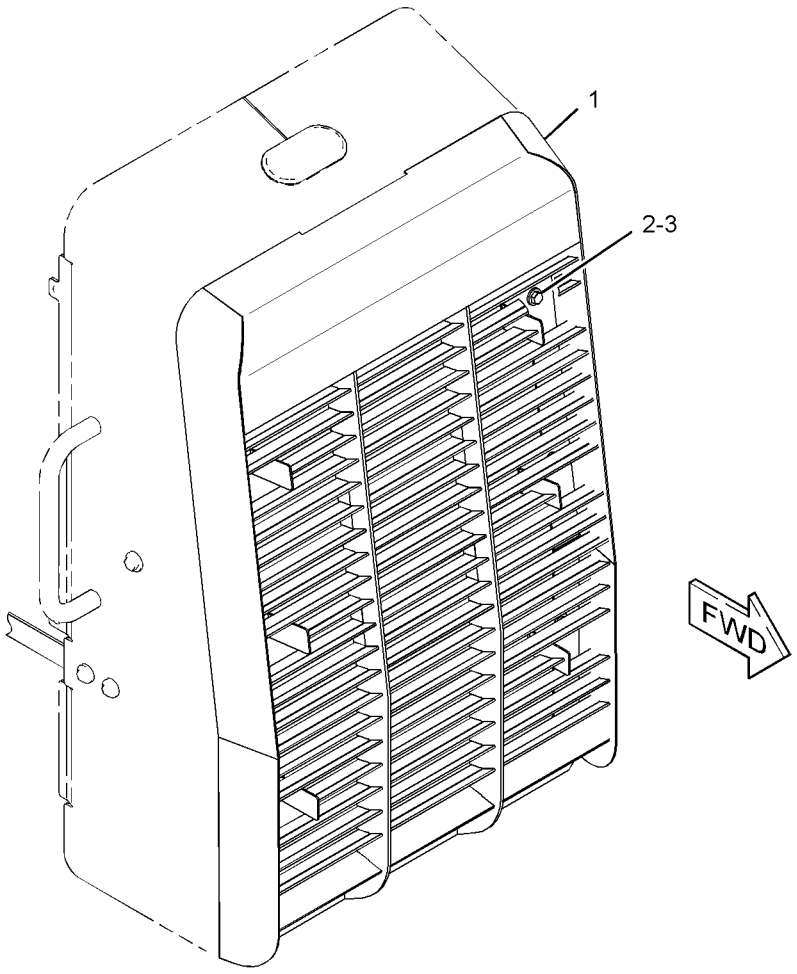

GRAPHIC #1 **<END>** g01330877

FRAME AND BODY

244-7437 GRILL AR-RADIATOR—HEAVY-DUTY

S/N: JTD1-UP; FFF1-UP; LLL1-UP
CANNOT BE USED WITH 244-7436—PAGE 405
AN ATTACHMENT

SMCS-7170 **i03331501**

NOTE	REF NO	GRAPHIC REF	PART NUMBER	QTY	PART NAME 1 2 3 4 5 6 (PRODUCT LEVEL)	SEE PAGE
	1	1	**327-0948**	1	GRILL AS	
	2	1	**7X-7729**	6	WASHER (11X25X3-MM THK)	
M	3	1	**8T-4186**	6	BOLT (M10X1.5X40-MM)	

M-METRIC PART

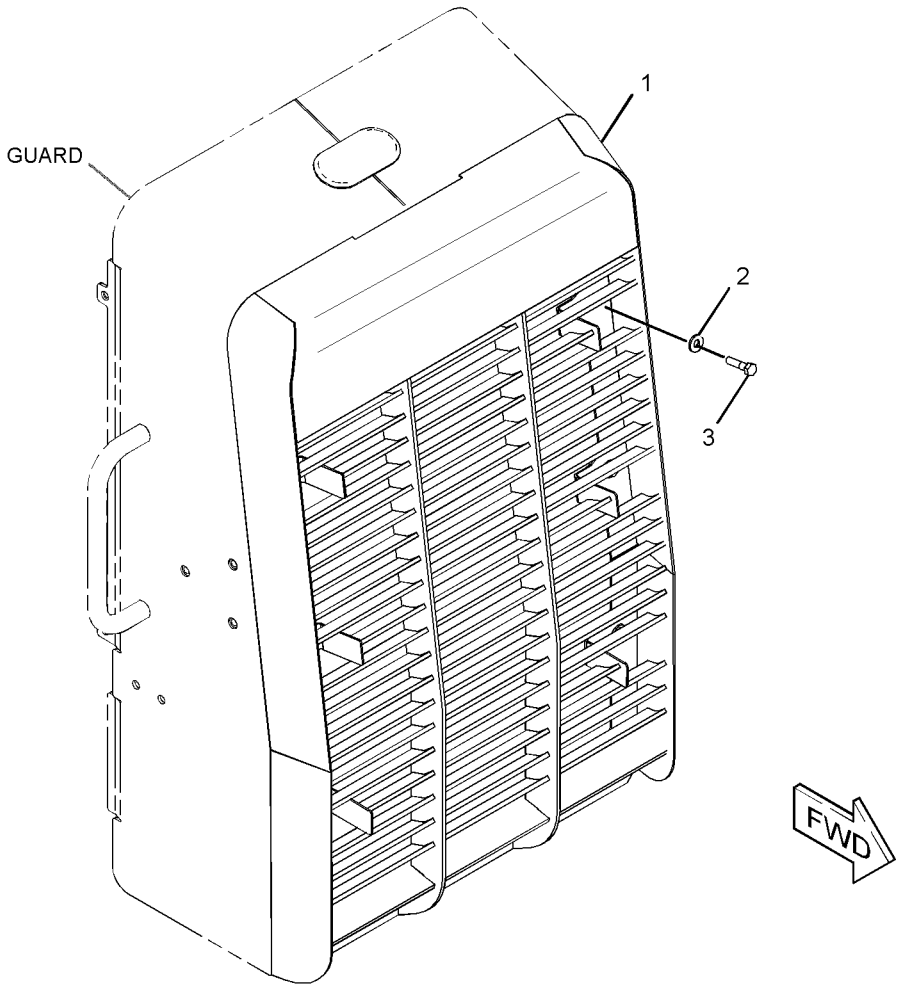

GRAPHIC #1 **<END>** g01333618

307-1593 GRILL GP-RADIATOR—FIRE PLOW

S/N: JTD1-UP; FFF1-UP; LLL1-UP

FOR USE WITH 325-6504—PAGE 404, 325-6505—PAGE 396, 325-6510—PAGE 397. CANNOT BE USED WITH 244-7436—PAGE 405, 244-7437—PAGE 406 AN ATTACHMENT

SMCS-7170 **i03879251**

NOTE	REF NO	GRAPHIC REF	PART NUMBER	QTY	PART NAME 1 2 3 4 5 6 (PRODUCT LEVEL)	SEE PAGE
	1	1	**254-8045**	1	PLUG	
	2	1	**302-6802**	1	GRILL AS	
	3	1	**307-1599**	1	PIVOT AS	
	4	1	**307-1600**	1	GUARD AS	
		1	**7T-1099**	7	LINK	
M		1	**8T-3490**	12	NUT-WELD (M10X1.5-THD)	
M		1	**8T-3597**	16	NUT-WELD (M12X1.75-THD)	
M		1	**8T-3612**	8	NUT-WELD (M8X1.25-THD)	
		1	**8Y-3465**	1	BOSS	
	5	1	**326-9262**	2	LATCH AS	
M	6	1	**110-6969**	1	BOLT (M16X2X300-MM)	
	7	1	**5P-1076**	16	WASHER-HARD (13.5X30X4-MM THK)	
	8	1	**5P-4116**	4	WASHER-HARD (8.8X20.5X2-MM THK)	
M	9	1	**8T-4139**	8	BOLT (M12X1.75X30-MM)	
M	10	1	**8T-4179**	6	BOLT (M12X1.75X20-MM)	
M	11	1	**8T-4183**	2	BOLT (M12X1.75X40-MM)	
M	12	1	**8T-4189**	4	BOLT (M8X1.25X20-MM)	
M	13	1	**8T-4778**	1	LOCKNUT (M16X2-THD)	
	14	1	**9X-8257**	2	WASHER (17.5X30X3.5-MM THK)	
D	15	1	**8T-3426**		CHANNEL-TRIM (0.13-M)	
D	16	1	**8T-5372**		SEAL (0.12-M)	
D	16A	1	**8T-5372**		SEAL (0.52-M)	
E	17	1	**3E-6600**		SEAL (12.5-CM)	
E	18	1	**3E-3805**		SEAL (10-CM EACH)	
D	19	1	**5P-5931**		SEAL (0.7-M)	
D	19A	1	**5P-5931**		SEAL (0.8-M EACH)	
D	19B	1	**5P-5931**		SEAL (0.75-M)	
	20	1	**8T-4121**	2	WASHER-HARD (11X21X2.5-MM THK)	
M	21	1	**8T-4137**	2	BOLT (M10X1.5X20-MM)	

D-ORDER BY THE METER
E-ORDER BY THE CENTIMETER
M-METRIC PART

307-1593 **GRILL GP-RADIATOR** *(contd.)* **i03879251**

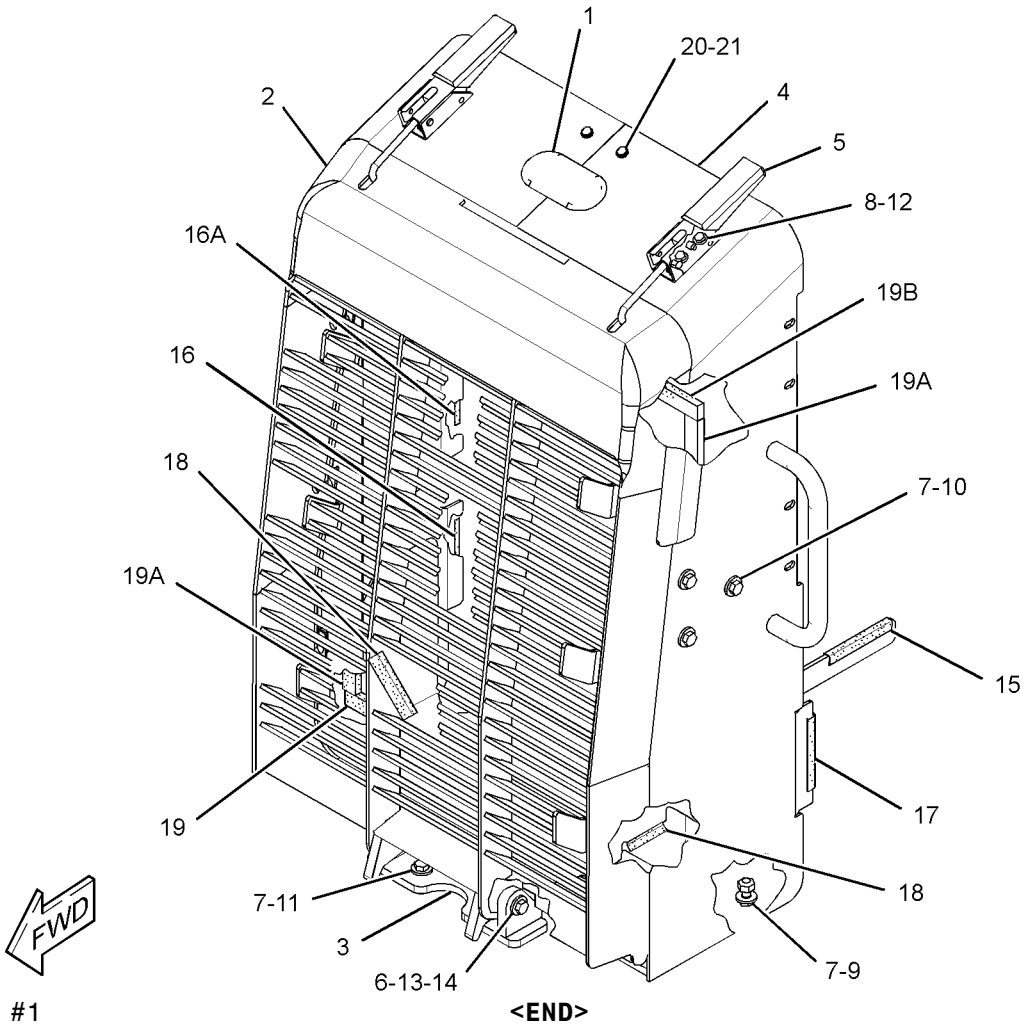

GRAPHIC #1 **<END>** g02131613

FRAME AND BODY

254-8900 GUARD GP-BOTTOM

S/N: JTD1-UP; FFF1-UP; LLL1-UP

PART OF 244-7376, 244-7377, 282-5327 CHASSIS AR

SMCS-7153 **i02646121**

NOTE	REF NO	GRAPHIC REF	PART NUMBER	QTY	PART NAME 1 2 3 4 5 6 (PRODUCT LEVEL)	SEE PAGE
	1	1	**211-5941**	6	SPACER (13.9X21.3X8-MM THK)	
	2	1	**254-8858**	2	PLATE-COVER	
	3	1	**254-8903**	1	PLATE AS (REAR)	
	4	1	**254-8906**	1	PLATE AS (FRONT)	
	5	1	**5P-1076**	12	WASHER-HARD (13.5X30X4-MM THK)	
	6	1	**7X-0590**	6	WASHER-HARD (13.5X44.5X6-MM THK)	
M	7	1	**8T-4956**	18	BOLT (M12X1.75X35-MM)	

M-METRIC PART

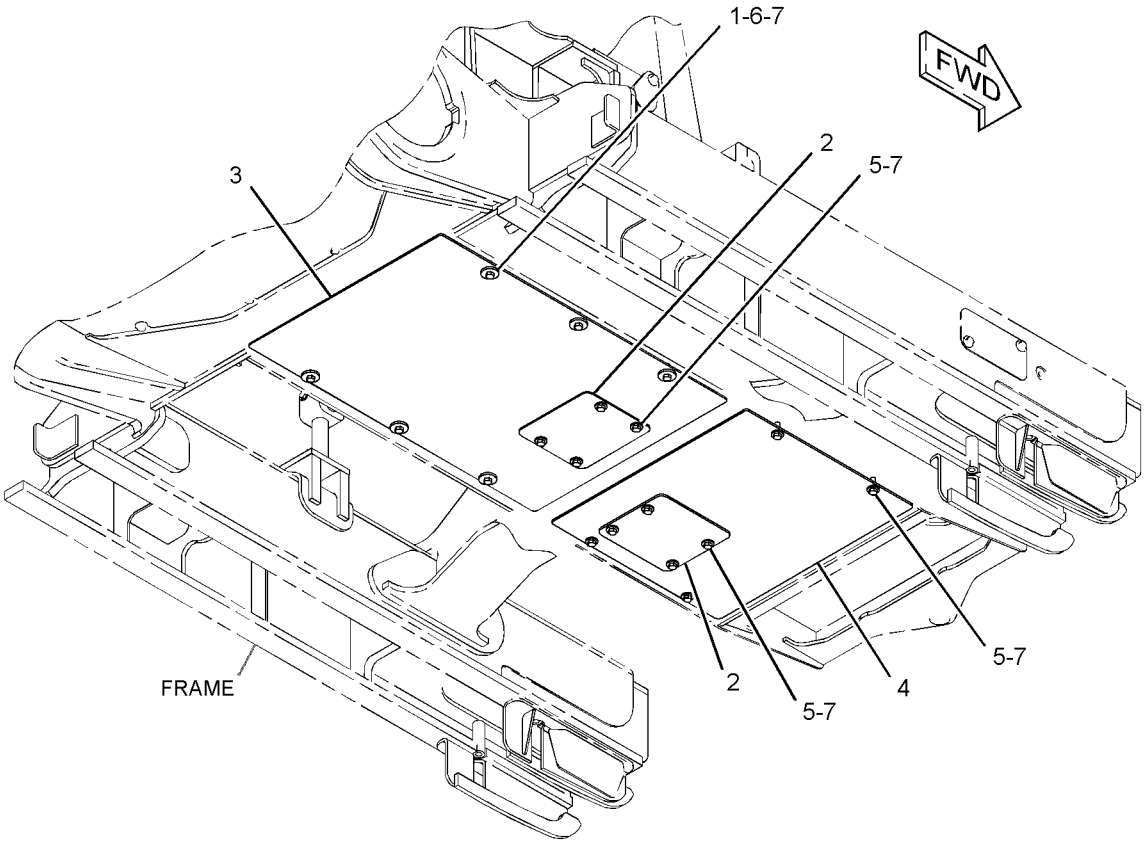

GRAPHIC #1 **<END>** g01330087

322-6479 GUARD GP-BOTTOM—EXTREME-DUTY

S/N: FFF1-UP

AN ATTACHMENT

SMCS-7153 **i03740241**

NOTE	REF NO	GRAPHIC REF	PART NUMBER	QTY	PART NAME 1 2 3 4 5 6 (PRODUCT LEVEL)	SEE PAGE
	1	1	**311-8646**	1	PLATE AS (FRONT)	
M		1	**8T-3597**	4	NUT-WELD (M12X1.75-THD)	
	2	1	**317-9763**	2	PLATE-COVER	
	3	1	**317-9764**	14	SPACER (13.9X21.3X15-MM THK)	
	4	1	**322-6487**	1	GUARD AS	
M		1	**8T-3597**	4	NUT-WELD (M12X1.75-THD)	
	5	1	**322-6488**	1	GUARD AS	
	6	1	**322-6489**	1	PLATE	
	7	1	**322-6490**	1	GUARD AS	
M		1	**8T-3490**	3	NUT-WELD (M10X1.5-THD)	
	8	1	**5P-1076**	12	WASHER-HARD (13.5X30X4-MM THK)	
	9	1	**7X-0590**	6	WASHER-HARD (13.5X44.5X6-MM THK)	
M	10	1	**8T-4183**	32	BOLT (M12X1.75X40-MM)	

M-METRIC PART

322-6479 **GUARD GP-BOTTOM** *(contd.)* **i03740241**

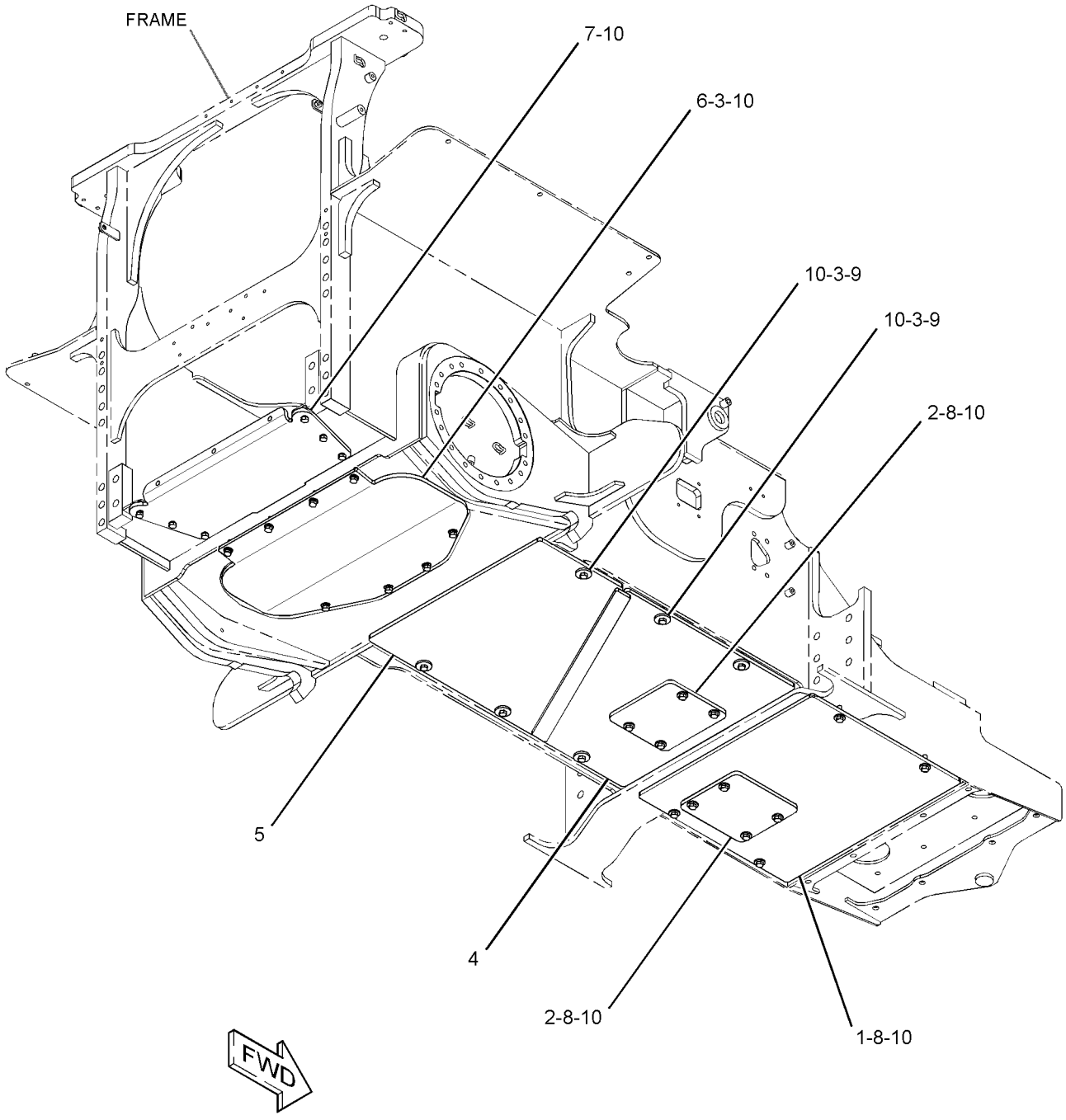

GRAPHIC #1 **<END>** g02022274

322-6480 GUARD GP-BOTTOM–EXTREME-DUTY

S/N: LLL1-UP

AN ATTACHMENT

SMCS-7153 **i03740242**

NOTE	REF NO	GRAPHIC REF	PART NUMBER	QTY	PART NAME 1 2 3 4 5 6 (PRODUCT LEVEL)	SEE PAGE
	1	1	**311-8646**	1	PLATE AS (FRONT)	
M		1	**8T-3597**	4	NUT-WELD (M12X1.75-THD)	
	2	1	**317-9763**	2	PLATE-COVER	
	3	1	**317-9764**	14	SPACER (13.9X21.3X15-MM THK)	
	4	1	**322-6487**	1	GUARD AS	
M		1	**8T-3597**	4	NUT-WELD (M12X1.75-THD)	
	5	1	**322-6488**	1	GUARD AS	
	6	1	**322-6490**	1	GUARD AS	
M		1	**8T-3490**	3	NUT-WELD (M10X1.5-THD)	
	7	1	**322-6491**	1	PLATE	
	8	1	**5P-1076**	12	WASHER-HARD (13.5X30X4-MM THK)	
	9	1	**7X-0590**	6	WASHER-HARD (13.5X44.5X6-MM THK)	
M	10	1	**8T-4183**	32	BOLT (M12X1.75X40-MM)	

M-METRIC PART

322-6480 **GUARD GP-BOTTOM** *(contd.)* **i03740242**

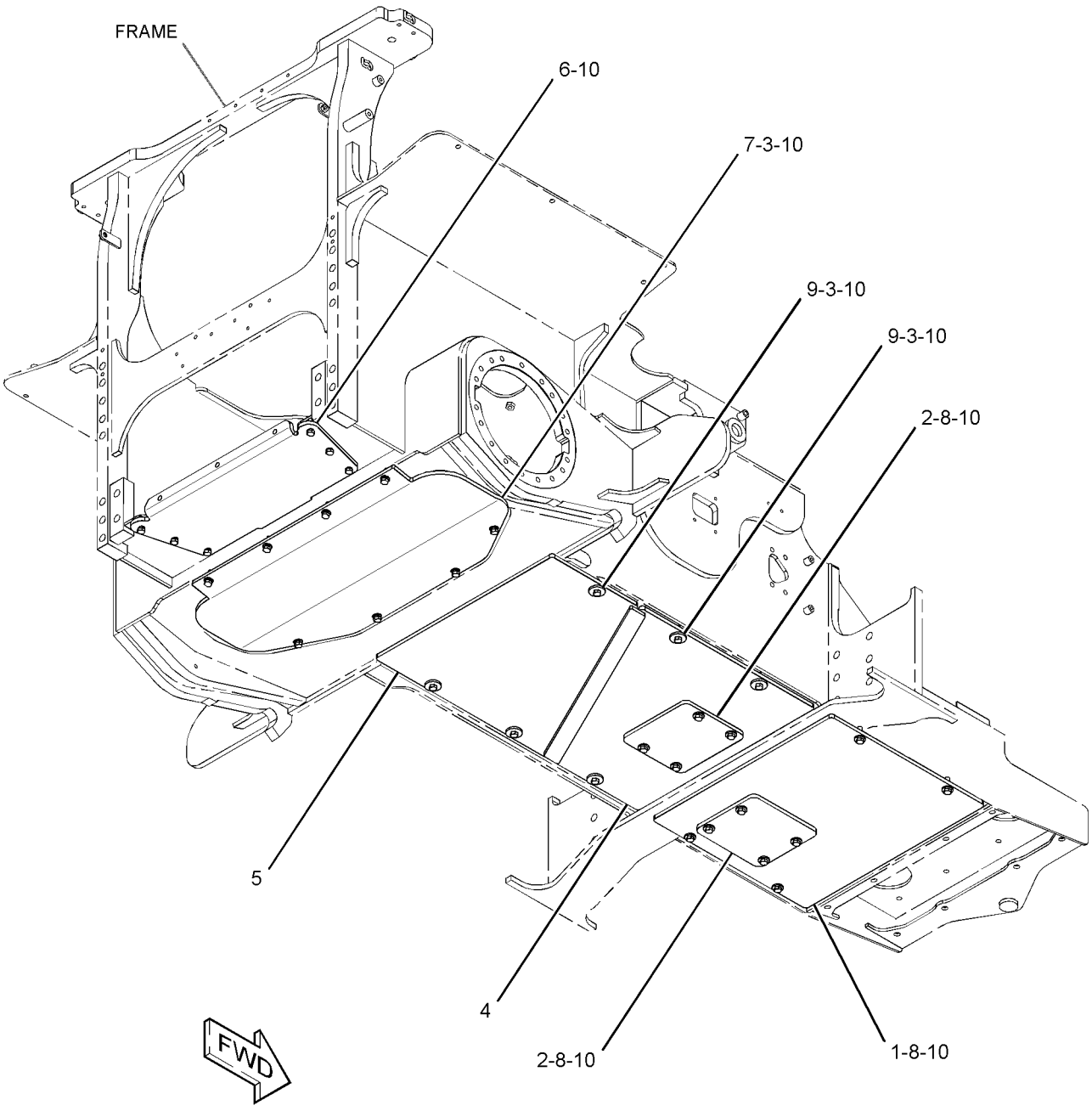

GRAPHIC #1 **<END>** g02022303

322-6481 GUARD GP-BOTTOM–EXTREME-DUTY

S/N: JTD1-UP

AN ATTACHMENT

SMCS-7153 **i03740243**

NOTE	REF NO	GRAPHIC REF	PART NUMBER	QTY	PART NAME 1 2 3 4 5 6 (PRODUCT LEVEL)	SEE PAGE
	1	1	**311-8646**	1	PLATE AS (FRONT)	
M		1	**8T-3597**	4	NUT-WELD (M12X1.75-THD)	
	2	1	**317-9763**	2	PLATE-COVER	
	3	1	**317-9764**	14	SPACER (13.9X21.3X15-MM THK)	
	4	1	**322-6487**	1	GUARD AS	
M		1	**8T-3597**	4	NUT-WELD (M12X1.75-THD)	
	5	1	**322-6488**	1	GUARD AS	
	6	1	**322-6490**	1	GUARD AS	
M		1	**8T-3490**	3	NUT-WELD (M10X1.5-THD)	
	7	1	**322-6492**	1	PLATE	
	8	1	**5P-1076**	12	WASHER-HARD (13.5X30X4-MM THK)	
	9	1	**7X-0590**	6	WASHER-HARD (13.5X44.5X6-MM THK)	
M	10	1	**8T-4183**	32	BOLT (M12X1.75X40-MM)	

M-METRIC PART

322-6481 **GUARD GP-BOTTOM** *(contd.)* **i03740243**

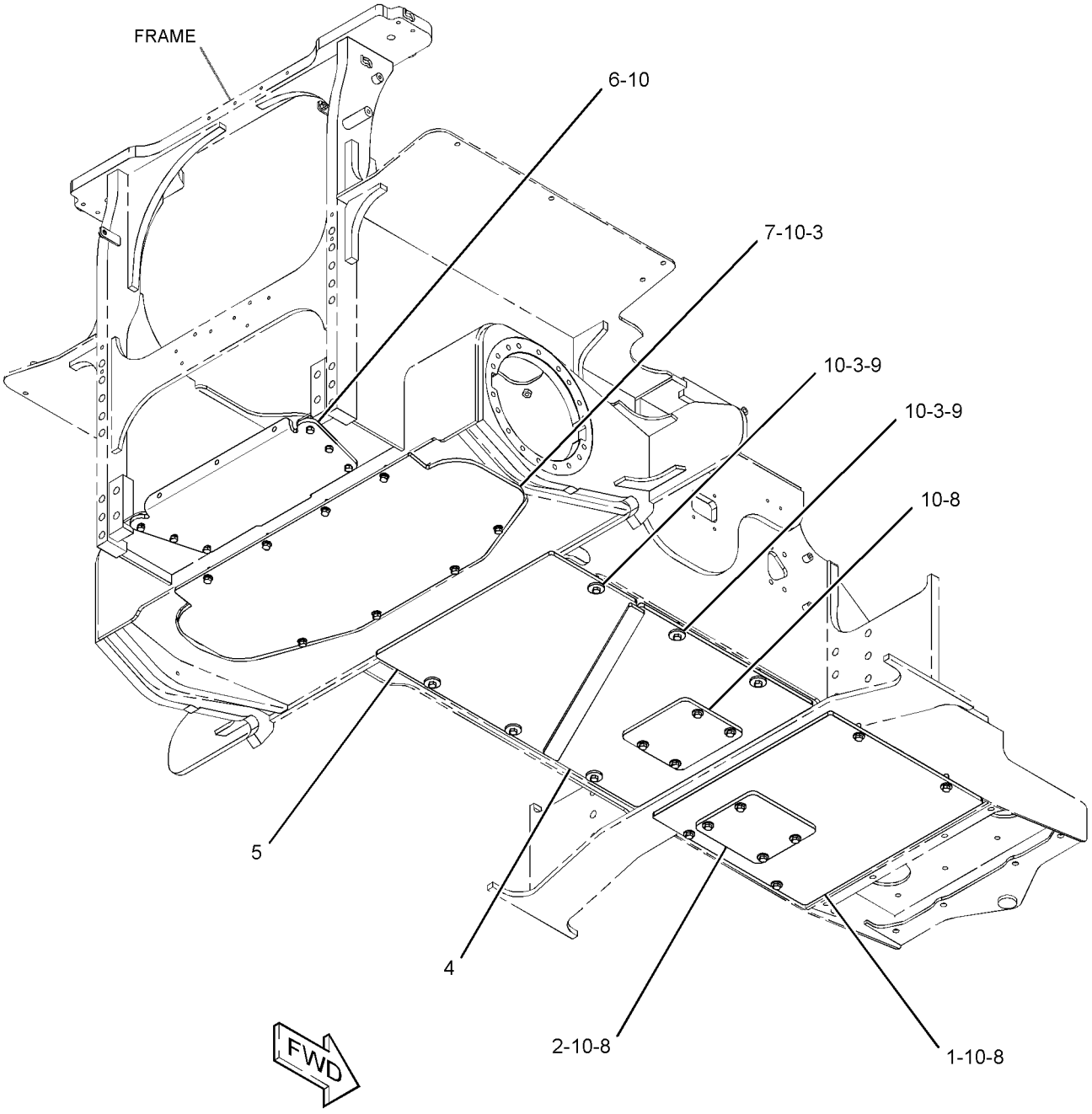

GRAPHIC #1 **<END>** g02022215

255-4276 GUARD GP-BRUSH—OPEN ROPS

S/N: JTD1-UP; FFF1-UP; LLL1-UP
DOOR, FRONT
FOR USE WITH CANOPY AR, CAB AR
AN ATTACHMENT

SMCS-7158 **i03634655**

NOTE	REF NO	GRAPHIC REF	PART NUMBER	QTY	PART NAME 1 2 3 4 5 6 (PRODUCT LEVEL)	SEE PAGE
B	1	1	**8T-0318**	6	SHIM (0.8-MM THK)	
	2	1	**114-9284**	6	BUMPER	
	3	1	**123-0380**	2	SHIELD-STRIKER	
	4	1	**187-0413**	2	STRIKER	
Y	5	1	**262-2923**	1	SCREEN GP (FRONT)	434
	6	1	**262-2925**	1	GUARD AS (RH)	
		1	**5G-8871**	2	BOSS (M6X1-THD)	
M		1	**8T-3597**	4	NUT-WELD (M12X1.75-THD)	
M		1	**8T-3612**	1	NUT-WELD (M8X1.25-THD)	
	7	1	**262-2930**	4	HINGE	
					(EACH INCLUDES)	
M		1	**8T-3612**	1	NUT-WELD (M8X1.25-THD)	
	8	1	**263-7360**	1	GUARD AS (LH)	
	9	1	**276-0062**	1	PLATE AS (LH)	
	10	1	**276-0063**	1	PLATE AS (RH)	
					(EACH PLATE AS INCLUDES)	
M		1	**8T-3612**	1	NUT-WELD (M8X1.25-THD)	
	11	1	**147-1076**	2	CYLINDER AS-GAS	
M	12	1	**5C-7261**	6	NUT (M8X1.25-THD)	
	13	1	**5P-1076**	18	WASHER-HARD (13.5X30X4-MM THK)	
	14	1	**5P-4116**	10	WASHER-HARD (8.8X20.5X2-MM THK)	
	15	1	**8T-4121**	4	WASHER-HARD (11X21X2.5-MM THK)	
M	16	1	**8T-4139**	16	BOLT (M12X1.75X30-MM)	
M	17	1	**8T-4189**	8	BOLT (M8X1.25X20-MM)	
M	18	1	**8T-4195**	4	BOLT (M10X1.5X30-MM)	
	19	1	**8T-4224**	6	WASHER-HARD (8.8X16X2-MM THK)	
M	20	1	**8T-4244**	2	NUT (M12X1.75-THD)	
	21	1	**281-3974**	4	BUMPER	
M	22	1	**5C-2890**	4	NUT (M6X1-THD)	

B-USE AS REQUIRED
M-METRIC PART
Y-SEPARATE ILLUSTRATION

255-4276 **GUARD GP-BRUSH** *(contd.)* **i03634655**

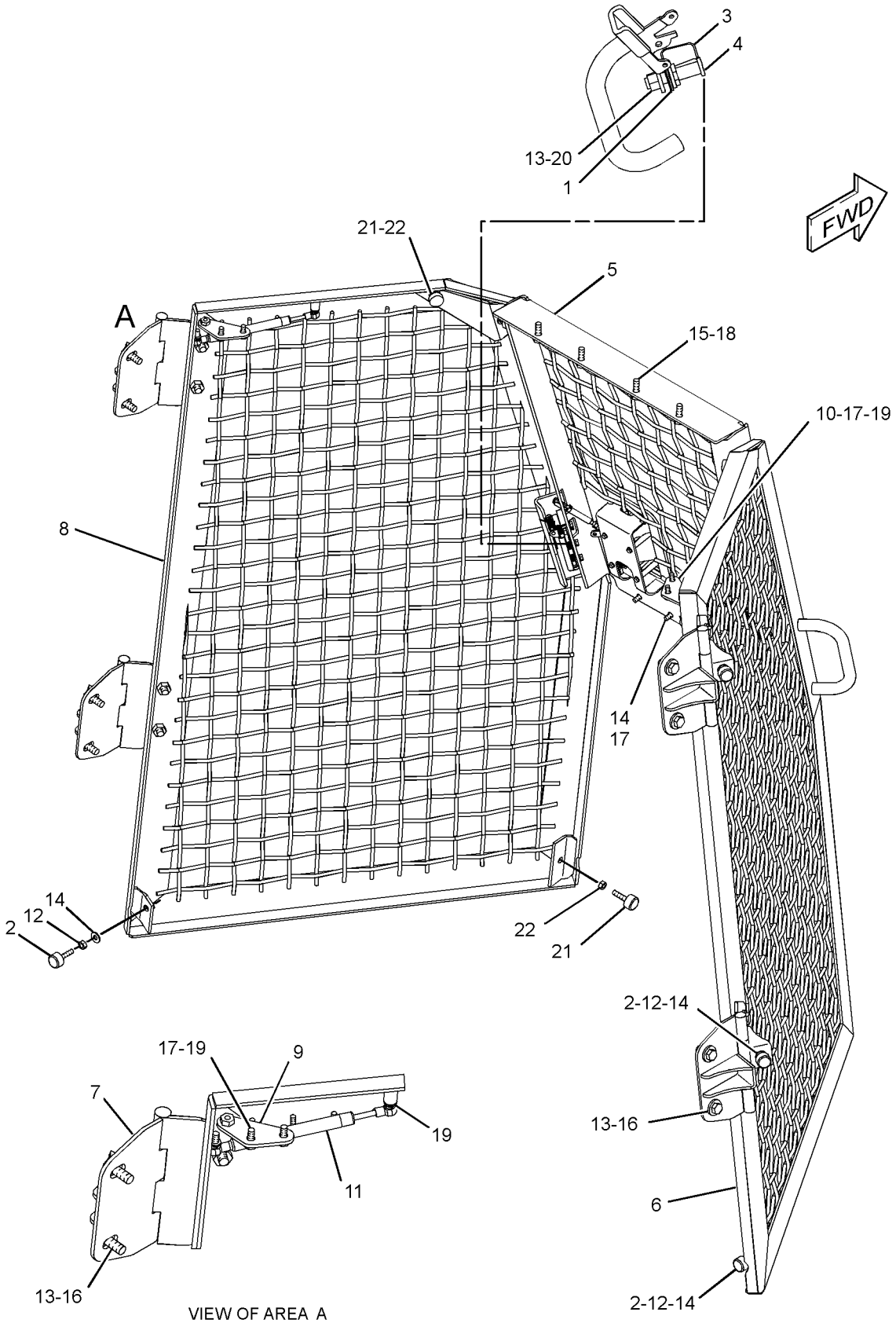

VIEW OF AREA A

GRAPHIC #1 **<END>** g01407366

336-4125 GUARD GP-BRUSH—FRONT

S/N: JTD1-UP; FFF1-UP; LLL1-UP
FOR USE WITH 325-6496—PAGE 3, 325-6497—PAGE 3, 325-6502—PAGE 4
AN ATTACHMENT

SMCS-7158 **i03726826**

NOTE	REF NO	GRAPHIC REF	PART NUMBER	QTY	PART NAME 1 2 3 4 5 6 (PRODUCT LEVEL)	SEE PAGE
	1	1	**282-2170**	4	KNOB	
	2	1	**339-0103**	1	PLATE AS	
M		1	**8T-3597**	2	NUT-WELD (M12X1.75-THD)	
M		1	**8T-3490**	4	NUT-WELD (M10X1.5-THD)	
	3	1	**339-0104**	1	BRACKET AS	
	4	1	**339-0112**	1	SCREEN AS	
	5	1	**339-0113**	1	GUARD	
	6	1	**339-0114**	2	HINGE AS	
	7	1	**339-0115**	1	HINGE AS	
	8	1	**339-0116**	1	HINGE AS	
	9	1	**339-0117**	1	DOOR AS (RH)	
	10	1	**339-0118**	1	DOOR AS (LH)	
	11	1	**340-7270**	1	STRIKER AS (RH)	
	12	1	**340-7271**	1	STRIKER AS (LH)	
M	13	1	**095-1207**	4	NUT (M12X1.75-THD)	
	14	1	**4E-1384**	4	BUMPER-CONICAL	
M	15	1	**5C-7261**	4	NUT (M8X1.25-THD)	
	16	1	**5P-1076**	8	WASHER-HARD (13.5X30X4-MM THK)	
	17	1	**8T-4121**	4	WASHER-HARD (11X21X2.5-MM THK)	
M	18	1	**8T-4136**	4	BOLT (M10X1.5X25-MM)	
M	19	1	**8T-4139**	8	BOLT (M12X1.75X30-MM)	
M	20	1	**8T-4171**	1	BOLT (M6X1X12-MM)	
M	21	1	**8T-7547**	2	BOLT (M8X1.25X30-MM)	
	22	1	**9X-6165**	1	WASHER (6.5X22X2.5-MM THK)	
E	23	1	**9X-2092**		TRIM-EDGE (15-CM EACH)	

E-ORDER BY THE CENTIMETER
M-METRIC PART

336-4125 **GUARD GP-BRUSH** *(contd.)* **i03726826**

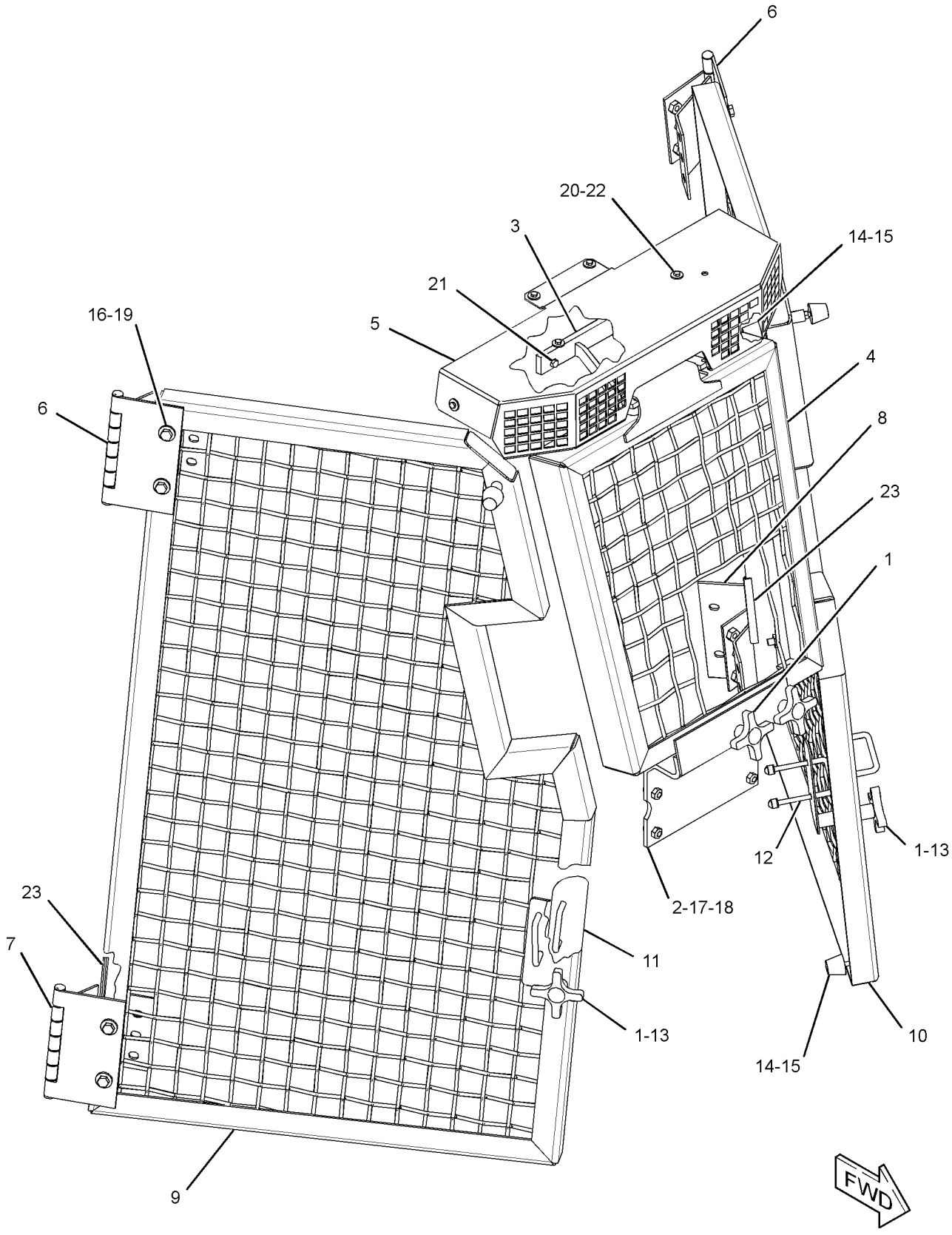

GRAPHIC #1 **<END>** g02017653

336-4126 GUARD GP-BRUSH–SIDE

S/N: JTD1-UP; FFF1-UP; LLL1-UP
FOR USE WITH 325-6496–PAGE 3, 325-6497–PAGE 3, 325-6502–PAGE 4. CANNOT BE USED WITH 250-1699–PAGE 799
AN ATTACHMENT

SMCS-7158 **i03726828**

NOTE	REF NO	GRAPHIC REF	PART NUMBER	QTY	PART NAME 1 2 3 4 5 6 (PRODUCT LEVEL)	SEE PAGE
	1	1	**5P-0372**	4	LOCK PIN	
	2	1	**180-3153**	1	LATCH AS-DOOR (ROTARY) (RH)	
	3	1	**180-3154**	1	LATCH AS-DOOR (ROTARY) (LH)	
	4	1	**336-4116**	2	PLATE AS	
	5	1	**336-4119**	1	HINGE AS	
	6	1	**336-4123**	1	SCREEN AS-CAB (RH)	
	7	1	**336-4132**	1	HINGE AS	
	8	1	**336-4134**	1	SCREEN AS-CAB (LH)	
	9	1	**178-2593**	4	BUMPER	
M	10	1	**5C-7261**	4	NUT (M8X1.25-THD)	
	11	1	**6S-9277**	4	PIN	
	12	1	**7X-0513**	12	WASHER-HARD (17X30X5-MM THK)	
M	13	1	**7X-2553**	8	BOLT (M16X2X40-MM)	
M	14	1	**8T-4138**	8	BOLT (M6X1X20-MM)	
	15	1	**9X-8256**	8	WASHER (6.6X12X2-MM THK)	

M-METRIC PART

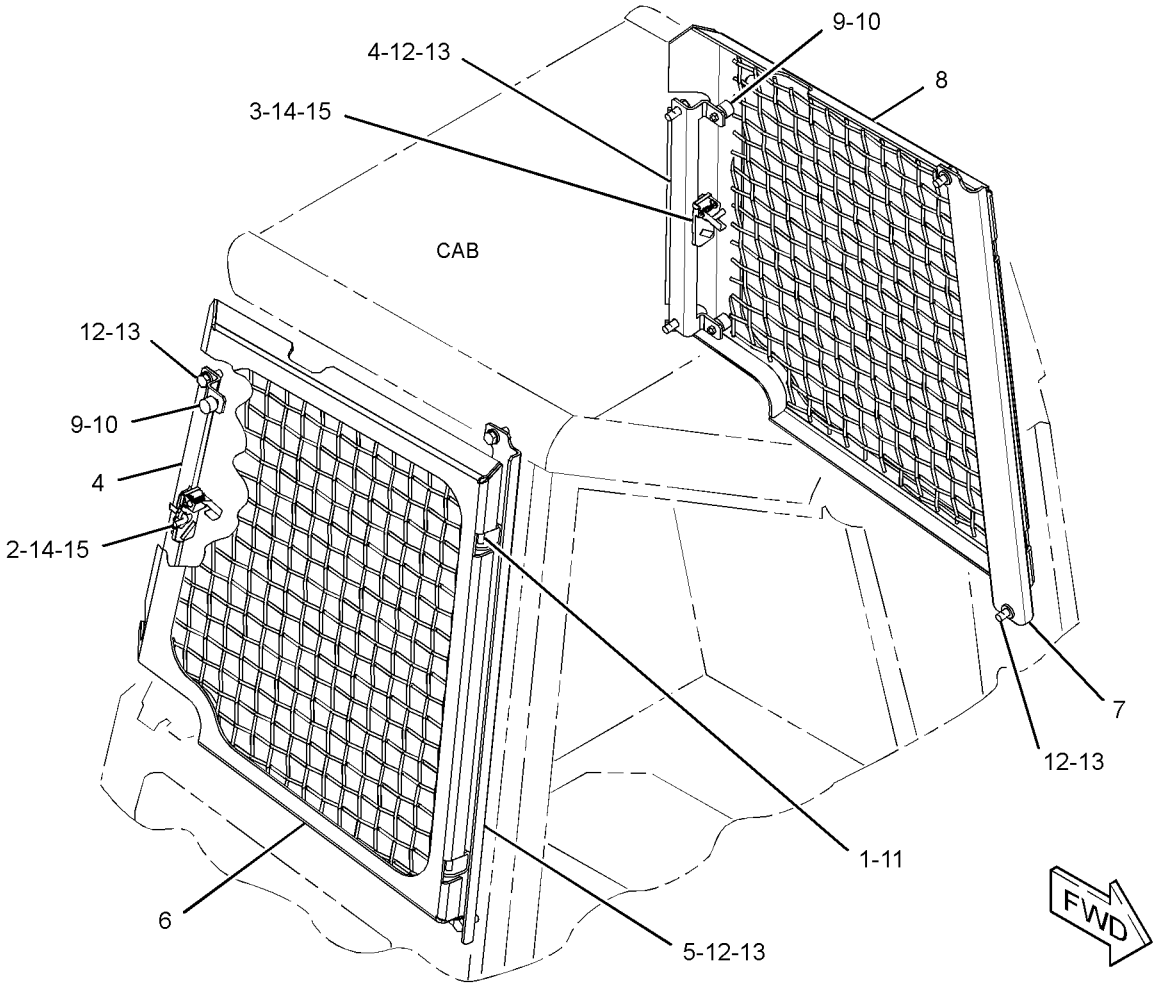

GRAPHIC #1 **<END>** g02017353

FRAME AND BODY

244-7503 GUARD GP-FRONT

S/N: JTD1-UP; FFF1-UP; LLL1-UP
CANNOT BE USED WITH 244-7516—PAGE 384
AN ATTACHMENT

SMCS-7167 **i02636797**

NOTE	REF NO	GRAPHIC REF	PART NUMBER	QTY	PART NAME 1 2 3 4 5 6 (PRODUCT LEVEL)	SEE PAGE
	1	1	**254-8919**	1	PLATE	
	2	1	**5P-1076**	8	WASHER-HARD (13.5X30X4-MM THK)	
M	3	1	**8T-4956**	8	BOLT (M12X1.75X35-MM)	

M-METRIC PART

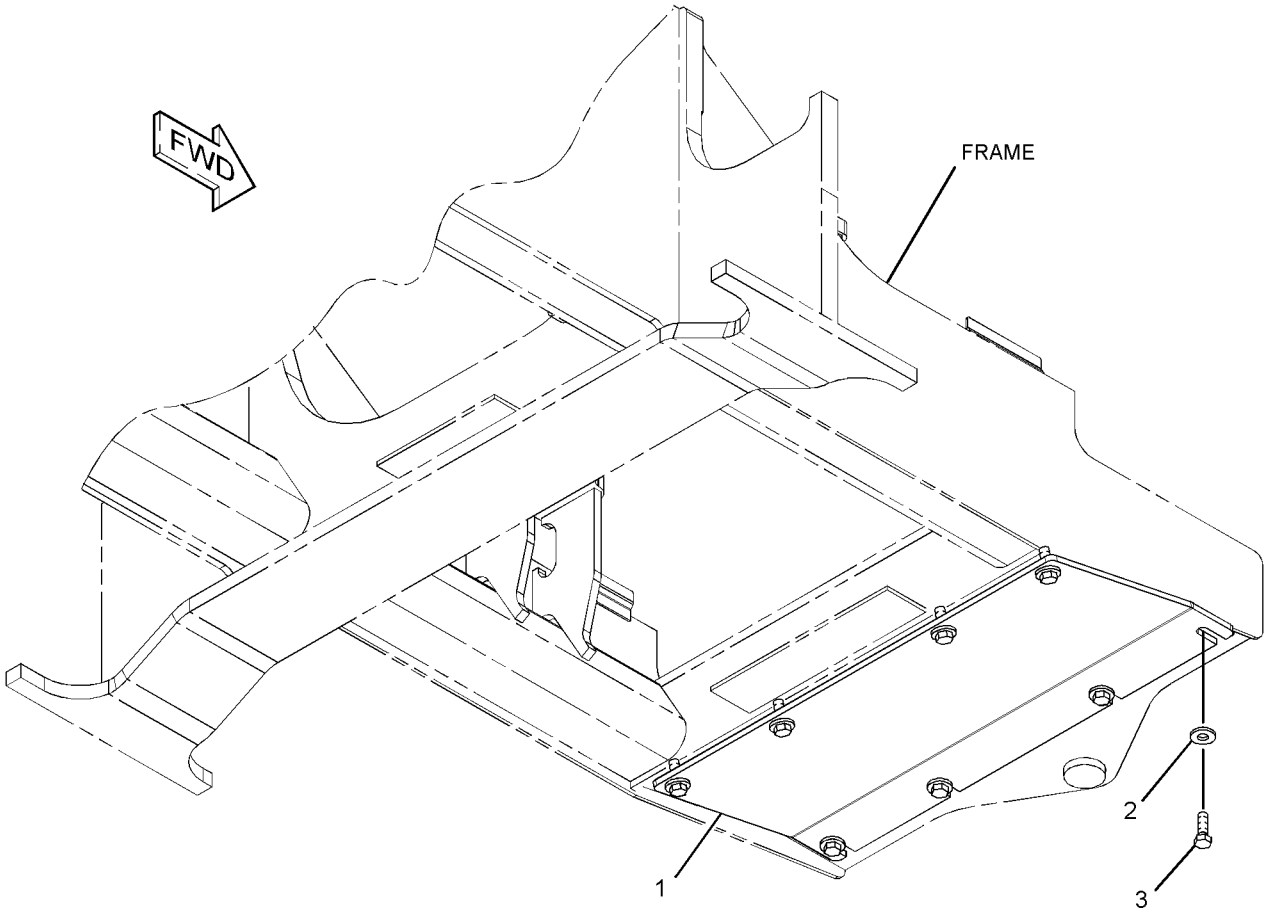

GRAPHIC #1 **<END>** g01326851

254-7757 GUARD GP-RADIATOR

S/N: JTD1-UP; FFF1-UP; LLL1-UP

PART OF 244-7376, 244-7377, 282-5327 CHASSIS AR

SMCS-7155 **i03759549**

NOTE	REF NO	GRAPHIC REF	PART NUMBER	QTY	PART NAME 1 2 3 4 5 6 (PRODUCT LEVEL)	SEE PAGE
	1	1	**254-7760**	1	GUARD AS	
	2	1	**254-8045**	1	PLUG	
	3	1	**5P-1076**	14	WASHER-HARD (13.5X30X4-MM THK)	
M	4	1	**8T-4139**	8	BOLT (M12X1.75X30-MM)	
M	5	1	**8T-4179**	6	BOLT (M12X1.75X20-MM)	
D	6	1	**8T-3426**		CHANNEL-TRIM (0.13-M)	
D	7	1	**5P-5931**		SEAL (0.8-M EACH)	
D	7A	1	**5P-5931**		SEAL (0.71-M)	
D	7B	1	**5P-5931**		SEAL (0.7-M)	
D	8	1	**8T-5372**		SEAL (0.5-M)	
D	8A	1	**8T-5372**		SEAL (0.1-M)	
E	9	1	**3E-6600**		SEAL (12.5-CM)	
E	10	1	**3E-3805**		SEAL (10-CM EACH)	
	11	1	**8T-4121**	2	WASHER-HARD (11X21X2.5-MM THK)	
M	12	1	**8T-4137**	2	BOLT (M10X1.5X20-MM)	

D-ORDER BY THE METER
E-ORDER BY THE CENTIMETER
M-METRIC PART

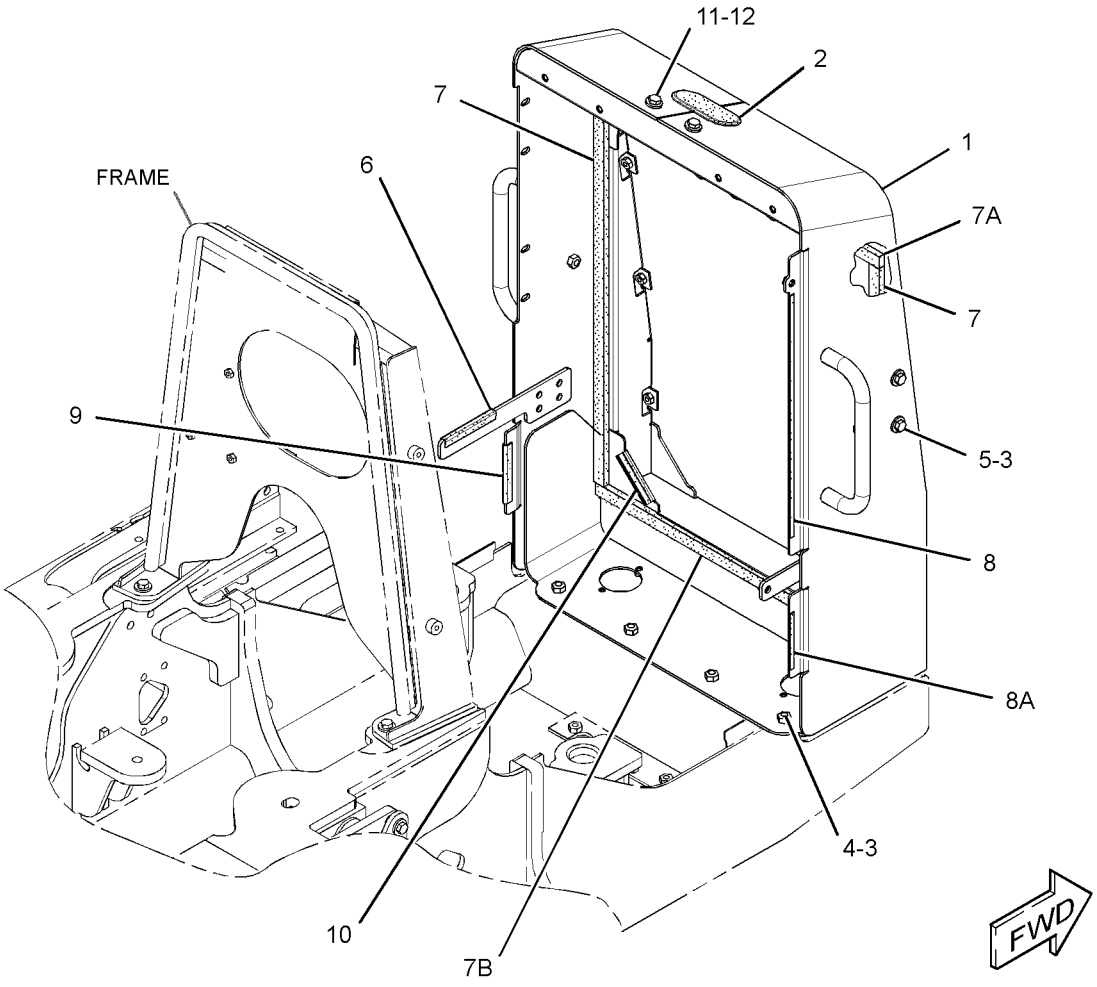

GRAPHIC #1 **<END>** g02028054

311-8644 GUARD GP-REAR

S/N: JTD1-UP; FFF1-UP; LLL1-UP
CANNOT BE USED WITH 312-1035—PAGE 425
AN ATTACHMENT

SMCS-7187 **i04415971**

NOTE	REF NO	GRAPHIC REF	PART NUMBER	QTY	PART NAME 1 2 3 4 5 6 (PRODUCT LEVEL)	SEE PAGE
	1	1	**5G-6504**	2	LUG	
	2	1	**246-2641**	1	PADLOCK GP	
		1	**5P-8500**	1	KEY	
	3	1	**299-3240**	1	FILM-IDENTIFICATION (CAT)	
	4	1	**311-8305**	1	GUARD AS	
	5	1	**311-8306**	1	PLATE AS	
	6	1	**311-8307**	1	BRACKET AS	
	7	1	**311-8643**	1	BRACKET AS	
M		1	**8T-3490**	2	NUT-WELD (M10X1.5-THD)	
	8	1	**198-4777**	8	WASHER-HARD (11X25X10-MM THK)	
	9	1	**198-4778**	7	WASHER-HARD (13.5X30X12-MM THK)	
M	11	1	**7X-2543**	4	BOLT (M10X1.5X120-MM)	
M	12	1	**7X-2549**	2	BOLT (M12X1.75X100-MM)	
M	13	1	**8T-4138**	2	BOLT (M6X1X20-MM)	
M	14	1	**8T-4183**	4	BOLT (M12X1.75X40-MM)	
M	15	1	**8T-4186**	2	BOLT (M10X1.5X40-MM)	
M	17	1	**8T-4956**	1	BOLT (M12X1.75X35-MM)	
M	18	1	**8T-5005**	2	BOLT (M10X1.5X70-MM)	
	19	1	**9X-8256**	2	WASHER (6.6X12X2-MM THK)	
	20	1	**318-6522**	1	SEAL	
	22	1	**158-7864**	1	FILM-IDENTIFICATION (HYDRAULIC OIL)	

M-METRIC PART

311-8644 **GUARD GP-REAR** *(contd.)* **i04415971**

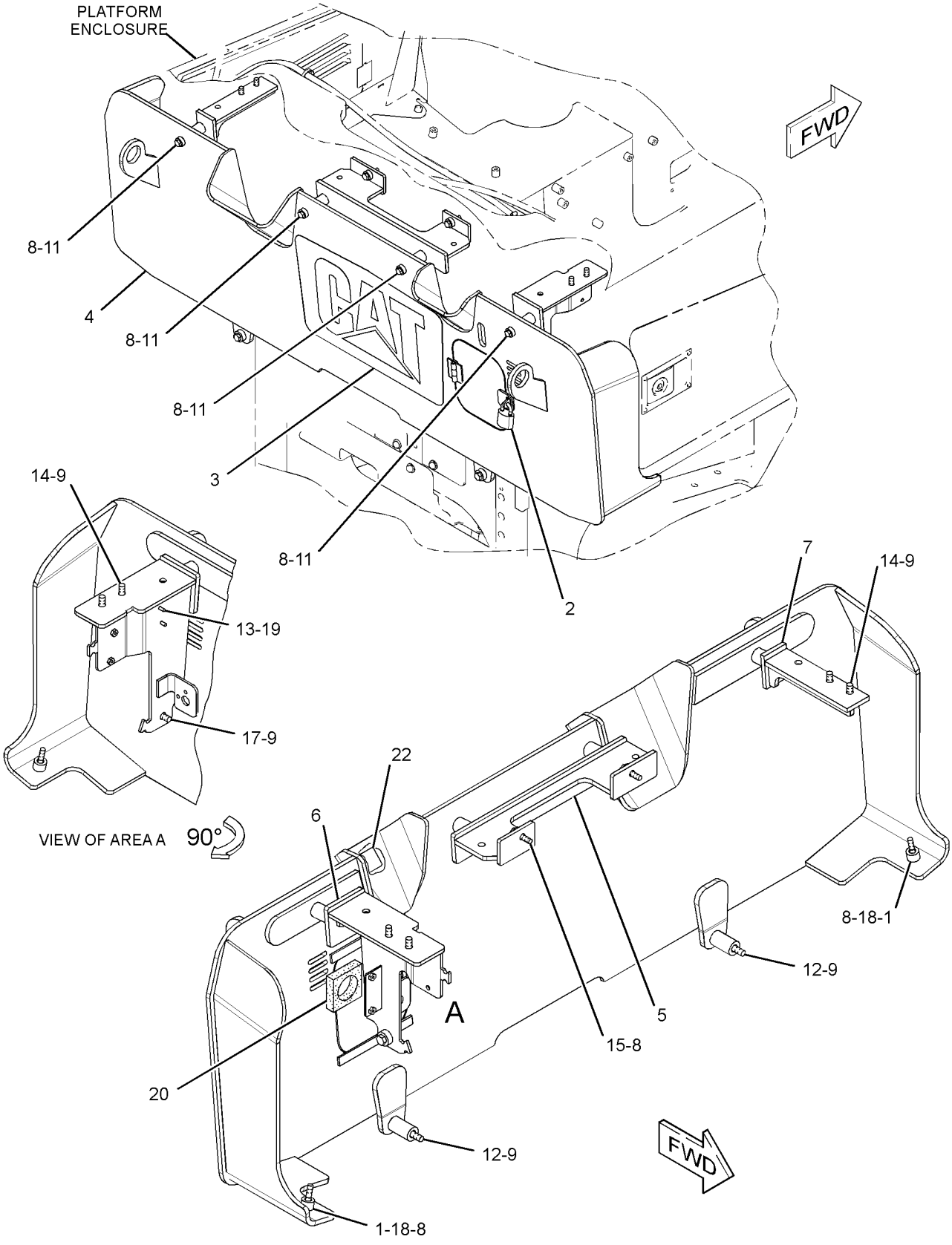

GRAPHIC #1 **<END>** g01706933

312-1035 GUARD GP-REAR

S/N: JTD1-UP; FFF1-UP; LLL1-UP
CANNOT BE USED WITH 311-8644—PAGE 423
AN ATTACHMENT
TYPE 1

SMCS-7187 **i02873281**

NOTE	REF NO	GRAPHIC REF	PART NUMBER	QTY	PART NAME 1 2 3 4 5 6 (PRODUCT LEVEL)	SEE PAGE
	1	1	**7K-1181**	1	STRAP-CABLE	
	2	1	**254-8895**	1	BRACKET AS	
	3	1	**260-0089**	1	BRACKET AS	
	4	1	**301-7299**	1	BRACKET AS	
Y	5	1	*318-8135*	1	WARNING GP-BACKUP	228
	6	1	**7X-7729**	6	WASHER (11X25X3-MM THK)	
M	7	1	**8T-4137**	4	BOLT (M10X1.5X20-MM)	
M	8	1	**8T-4139**	2	BOLT (M12X1.75X30-MM)	
M	9	1	**8T-4179**	3	BOLT (M12X1.75X20-MM)	
M	10	1	**8T-4195**	2	BOLT (M10X1.5X30-MM)	
	11	1	**8T-4223**	5	WASHER-HARD (13.5X25.5X3-MM THK)	

M-METRIC PART
Y-SEPARATE ILLUSTRATION

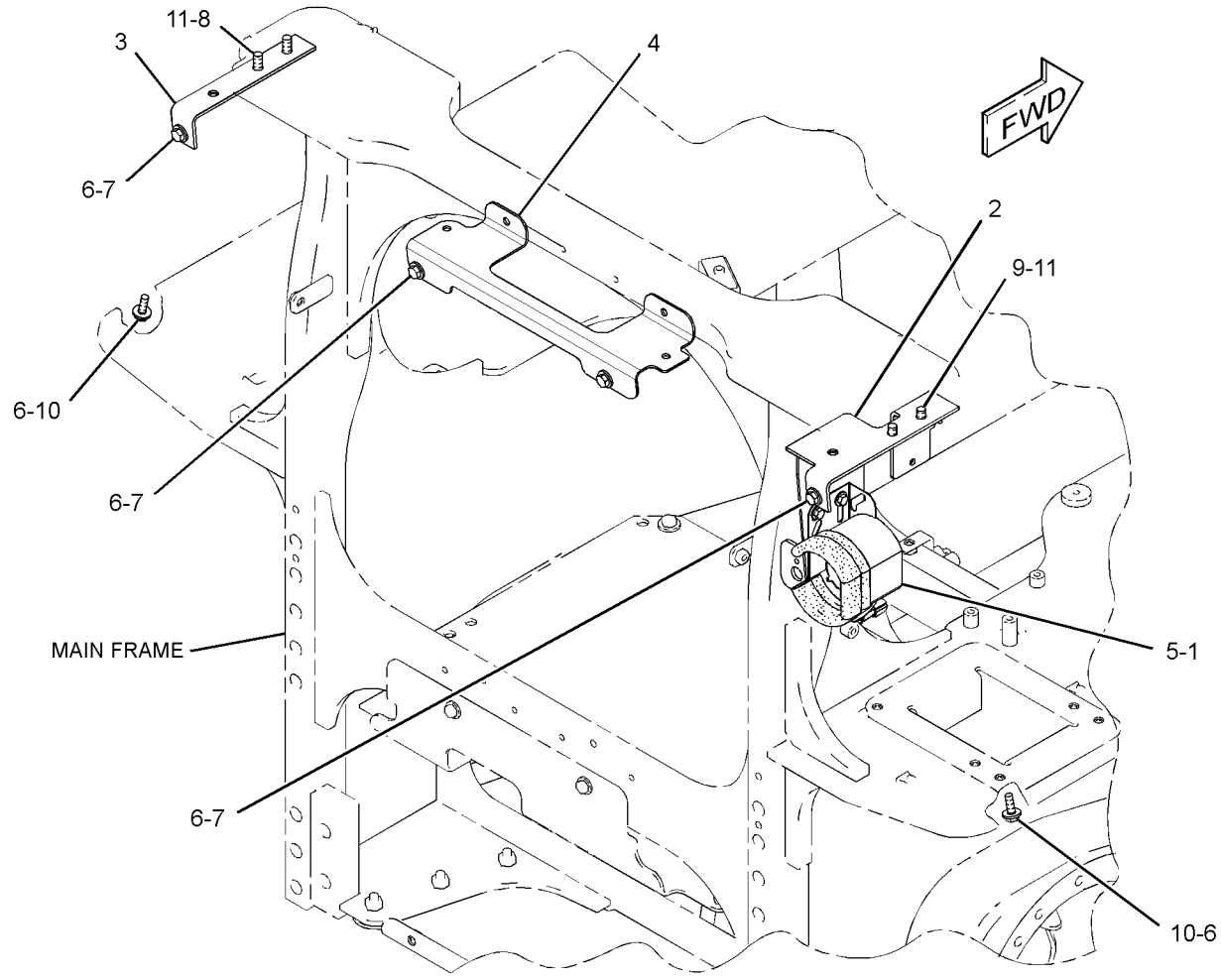

GRAPHIC #1 **<END>** g01442051

312-1035 GUARD GP-REAR

S/N: JTD1-UP; FFF1-UP; LLL1-UP
CANNOT BE USED WITH 311-8644—PAGE 423
AN ATTACHMENT
TYPE 2

SMCS-7187 **i03290916**

NOTE	REF NO	GRAPHIC REF	PART NUMBER	QTY	PART NAME 1 2 3 4 5 6 (PRODUCT LEVEL)	SEE PAGE
	1	1	**260-0089**	1	BRACKET AS	
	2	1	**301-7299**	1	BRACKET AS	
C	3	1	**318-6129**	1	BRACKET AS	
	4	1	**7X-7729**	6	WASHER (11X25X3-MM THK)	
M	5	1	**8T-4137**	4	BOLT (M10X1.5X20-MM)	
M	6	1	**8T-4139**	2	BOLT (M12X1.75X30-MM)	
M	7	1	**8T-4179**	3	BOLT (M12X1.75X20-MM)	
M	8	1	**8T-4195**	2	BOLT (M10X1.5X30-MM)	
	9	1	**8T-4223**	5	WASHER-HARD (13.5X25.5X3-MM THK)	

C-CHANGE FROM PREVIOUS TYPE
M-METRIC PART

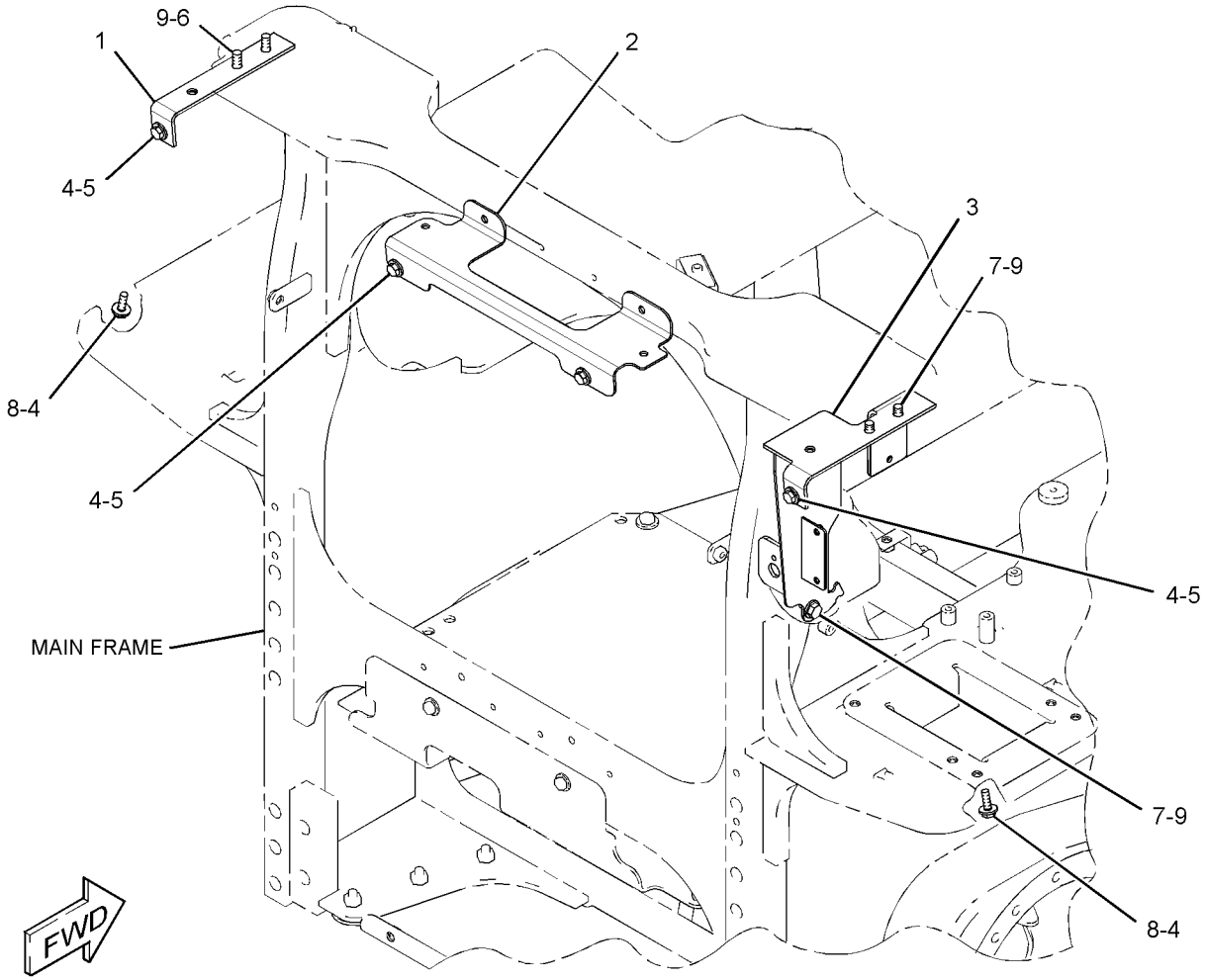

GRAPHIC #1 **<END>** g01711500

FRAME AND BODY

244-7433 HITCH GP-TOWING

S/N: JTD1-UP; FFF1-UP; LLL1-UP

CANNOT BE USED WITH 244-7517—PAGE 911, 244-7434—PAGE 386, 262-4407—PAGE 913 AN ATTACHMENT

SMCS-7100 **i02818602**

NOTE	REF NO	GRAPHIC REF	PART NUMBER	QTY	PART NAME 1 2 3 4 5 6 (PRODUCT LEVEL)	SEE PAGE
	1	1	**5G-0792**	1	PIN	
	2	1	**5P-8837**	1	LOCK PIN	
	3	1	**274-7990**	1	PLATE-COVER	
	4	1	**299-3902**	1	DRAWBAR AS	
	5	1	**299-3903**	1	PLATE AS	
	6	1	**5P-1076**	4	WASHER-HARD (13.5X30X4-MM THK)	
M	7	1	**7X-2576**	4	BOLT (M24X3X70-MM)	
	8	1	**8T-4121**	4	WASHER-HARD (11X21X2.5-MM THK)	
M	9	1	**8T-4137**	7	BOLT (M10X1.5X20-MM)	
M	10	1	**8T-4139**	4	BOLT (M12X1.75X30-MM)	
	11	1	**8T-4167**	4	WASHER-HARD (26X44X4-MM THK)	
	12	1	**8T-4222**	3	WASHER-PLATED (11X32X2.5-MM THK)	

M-METRIC PART

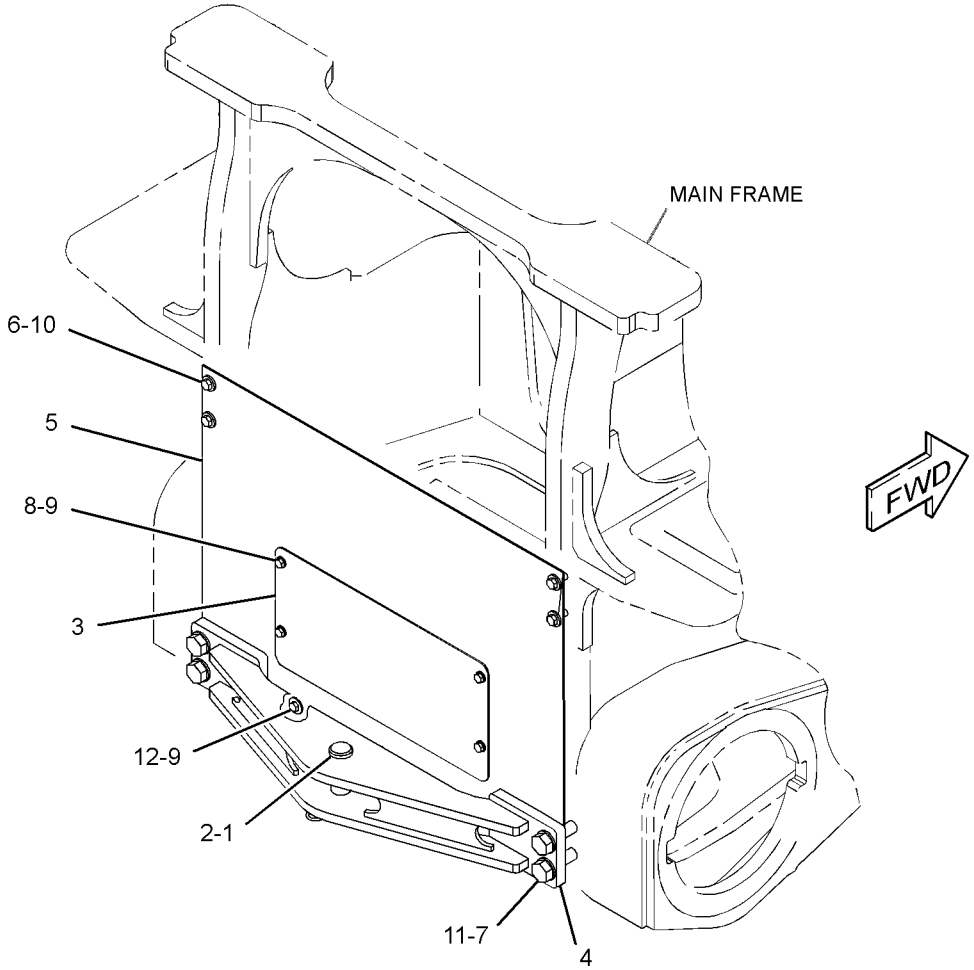

GRAPHIC #1 **<END>** g01408601

255-1431 HOOD & GUARD GP—SOUND SUPPRESSION

S/N: JTD1-UP; FFF1-UP; LLL1-UP
PART OF 244-7479 SUPPRESSION AR-SOUND
AN ATTACHMENT

SMCS-7251 **i02920658**

NOTE	REF NO	GRAPHIC REF	PART NUMBER	QTY	PART NAME 1 2 3 4 5 6 (PRODUCT LEVEL)	SEE PAGE
	1	1	**255-1433**	1	HOOD AS	
	2	2	**255-1450**	1	PANEL AS (RH)	
	3	2	**255-1455**	1	DOOR AS (LH)	
	4	2	**255-1539**	1	PANEL AS (LH)	
	5	1	**264-3010**	1	LATCH AS	
	6	1	**264-3011**	1	STRIKER AS	
	7	1	**264-3014**	1	PLATE AS	
	8	1	**264-3017**	1	ROD AS	
J	9	2	**274-1923**	1	LOCK AS	
	10	2	**198-4777**	4	WASHER-HARD (11X25X10-MM THK)	
	11	1	**4M-7470**	2	GROMMET	
M	12	2	**5C-2890**	4	NUT (M6X1-THD)	
	13	1	**5P-4116**	2	WASHER-HARD (8.8X20.5X2-MM THK)	
	14	1,2	**7X-7729**	9	WASHER (11X25X3-MM THK)	
M	15	1,2	**8T-4137**	8	BOLT (M10X1.5X20-MM)	
M	16	1	**8T-4138**	2	BOLT (M6X1X20-MM)	
M	17	2	**8T-4186**	6	BOLT (M10X1.5X40-MM)	
M	18	1	**8T-4189**	2	BOLT (M8X1.25X20-MM)	
M	19	1	**8T-4195**	3	BOLT (M10X1.5X30-MM)	
	20	1,2	**9X-8256**	6	WASHER (6.6X12X2-MM THK)	
	21	2	**254-7761**	1	PLATE AS (LH)	
D	22	1	**5P-7483**		SEAL (0.2-M EACH)	
D	22A	2	**5P-7483**		SEAL (0.43-M)	
E	23	1,2	**3E-6600**		SEAL (12.5-CM EACH)	
E	23A	1,2	**3E-6600**		SEAL (60-CM EACH)	
E	23B	1	**3E-6600**		SEAL (30-CM)	
E	23C	1	**3E-6600**		SEAL (25-CM)	
	24	1	**8T-4222**	4	WASHER-PLATED (11X32X2.5-MM THK)	

D-ORDER BY THE METER
E-ORDER BY THE CENTIMETER
J-REQUIRES CORPORATE KEY
M-METRIC PART

255-1431 **HOOD & GUARD GP** *(contd.)* **i02920658**

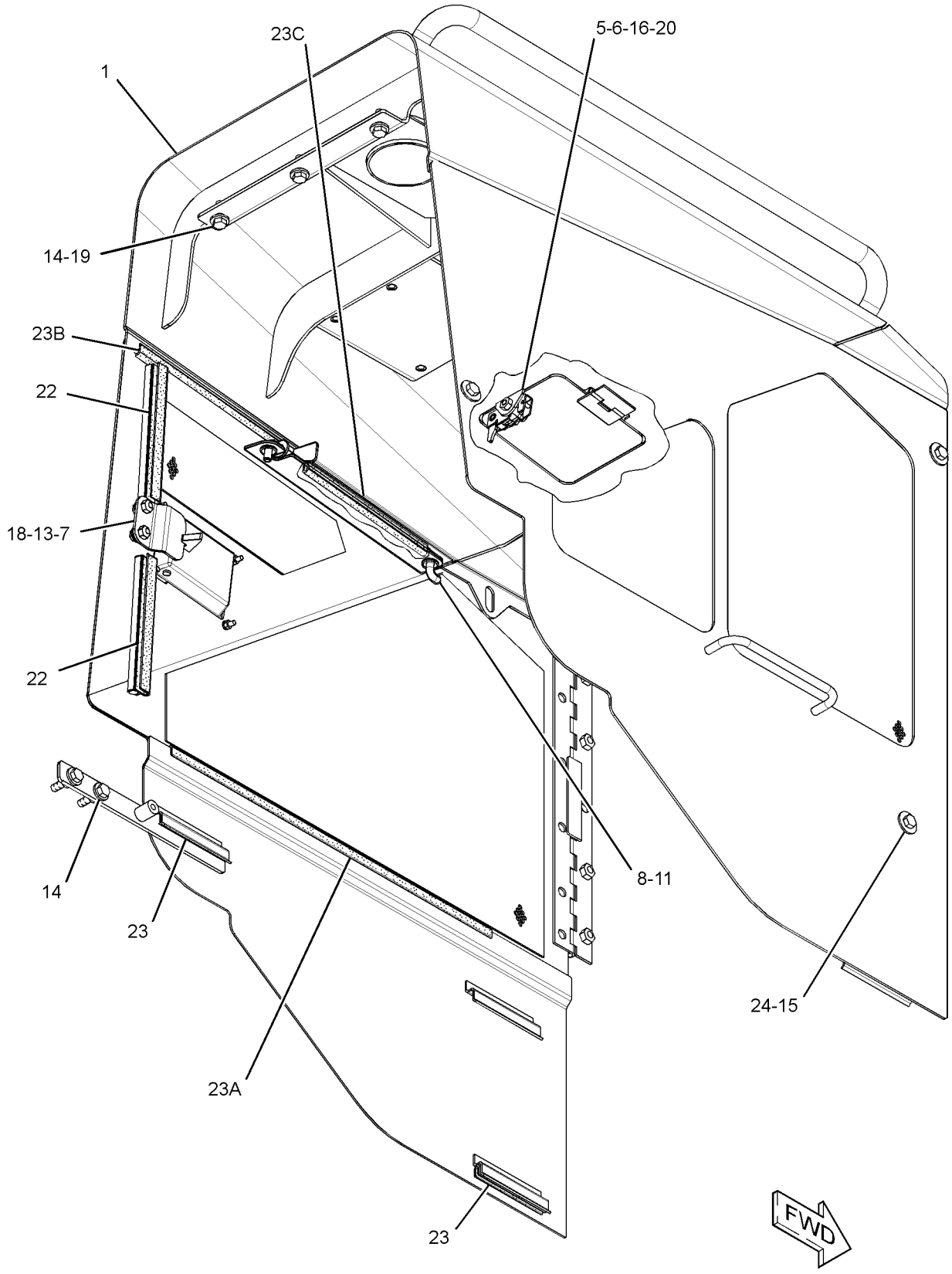

GRAPHIC #1 g01514204

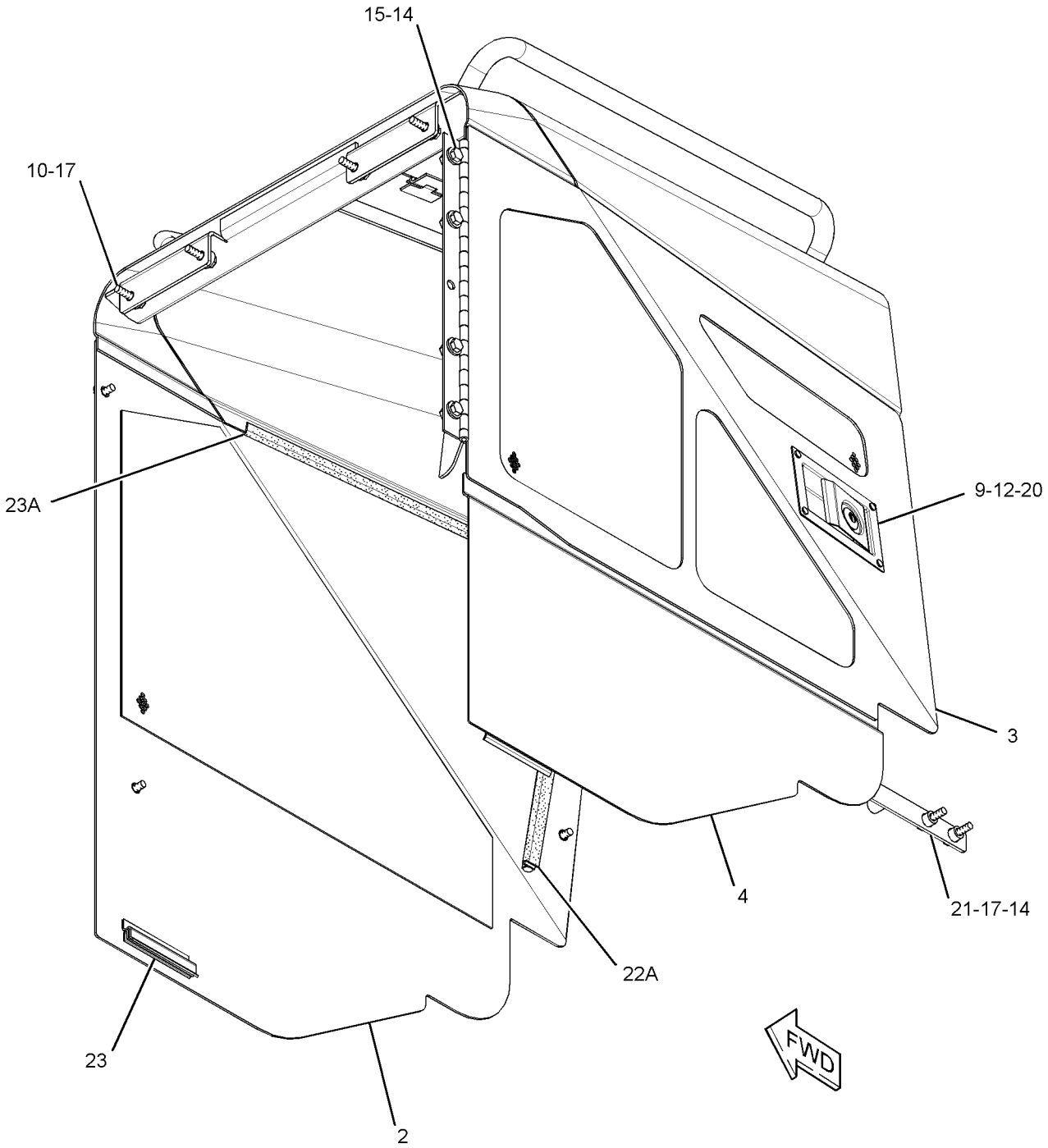

GRAPHIC #2 **<END>** g01514205

255-1452 HOOD & GUARD GP—SOUND SUPPRESSION

S/N: JTD1-UP; FFF1-UP; LLL1-UP
PART OF 244-7487, 244-7490, 244-7493, 361-6063 SUPPRESSION AR-SOUND
AN ATTACHMENT

SMCS-7251 **i02913459**

NOTE	REF NO	GRAPHIC REF	PART NUMBER	QTY	PART NAME 1 2 3 4 5 6 (PRODUCT LEVEL)	SEE PAGE
	1	1	**6P-2216**	14	CAP (PUSH ON)	
	2	1	**255-1453**	1	HOOD AS	
	3	1	**255-1539**	1	PANEL AS (LH)	
	4	1	**255-6642**	1	PANEL AS (RH)	
	5	1	**255-6644**	1	DOOR AS-ACCESS (LH)	
	6	1	**262-4324**	1	LINER (LH)	
	7	1	**262-4325**	1	LINER (LH)	
	8	1	**262-4326**	1	LINER (LH)	
	9	1	**262-4328**	1	LINER (RH)	
	10	1	**262-4329**	1	LINER (RH)	
	11	1	**263-3483**	1	LINER (RH)	
	12	1	**264-3010**	1	LATCH AS	
	13	1	**264-3011**	1	STRIKER AS	
	14	1	**264-3014**	1	PLATE AS	
	15	1	**264-3017**	1	ROD AS	
	16	1	**264-3019**	1	LINER (LH)	
	17	1	**274-1923**	1	LOCK AS	
	18	1	**198-4777**	4	WASHER-HARD (11X25X10-MM THK)	
	19	1	**4M-7470**	2	GROMMET	
M	20	1	**5C-2890**	4	NUT (M6X1-THD)	
	21	1	**5P-4116**	2	WASHER-HARD (8.8X20.5X2-MM THK)	
	22	1	**7X-7729**	9	WASHER (11X25X3-MM THK)	
M	23	1	**8T-4137**	8	BOLT (M10X1.5X20-MM)	
M	24	1	**8T-4138**	2	BOLT (M6X1X20-MM)	
M	25	1	**8T-4186**	6	BOLT (M10X1.5X40-MM)	
M	26	1	**8T-4189**	2	BOLT (M8X1.25X20-MM)	
M	27	1	**8T-4195**	3	BOLT (M10X1.5X30-MM)	
	28	1	**9X-8256**	6	WASHER (6.6X12X2-MM THK)	
D	29	1	**5P-7483**		SEAL (0.2-M EACH)	
D	29A	1	**5P-7483**		SEAL (0.43-M)	
	31	1	**254-7761**	1	PLATE AS (LH)	
E	32	1	**3E-6600**		SEAL (12.5-CM EACH)	
E	32A	1	**3E-6600**		SEAL (60-CM EACH)	
E	32B	1	**3E-6600**		SEAL (30-CM)	
E	32C	1	**3E-6600**		SEAL (25-CM)	
	33	1	**8T-4222**	4	WASHER-PLATED (11X32X2.5-MM THK)	

D-ORDER BY THE METER
E-ORDER BY THE CENTIMETER
M-METRIC PART

255-1452 **HOOD & GUARD GP** *(contd.)* **i02913459**

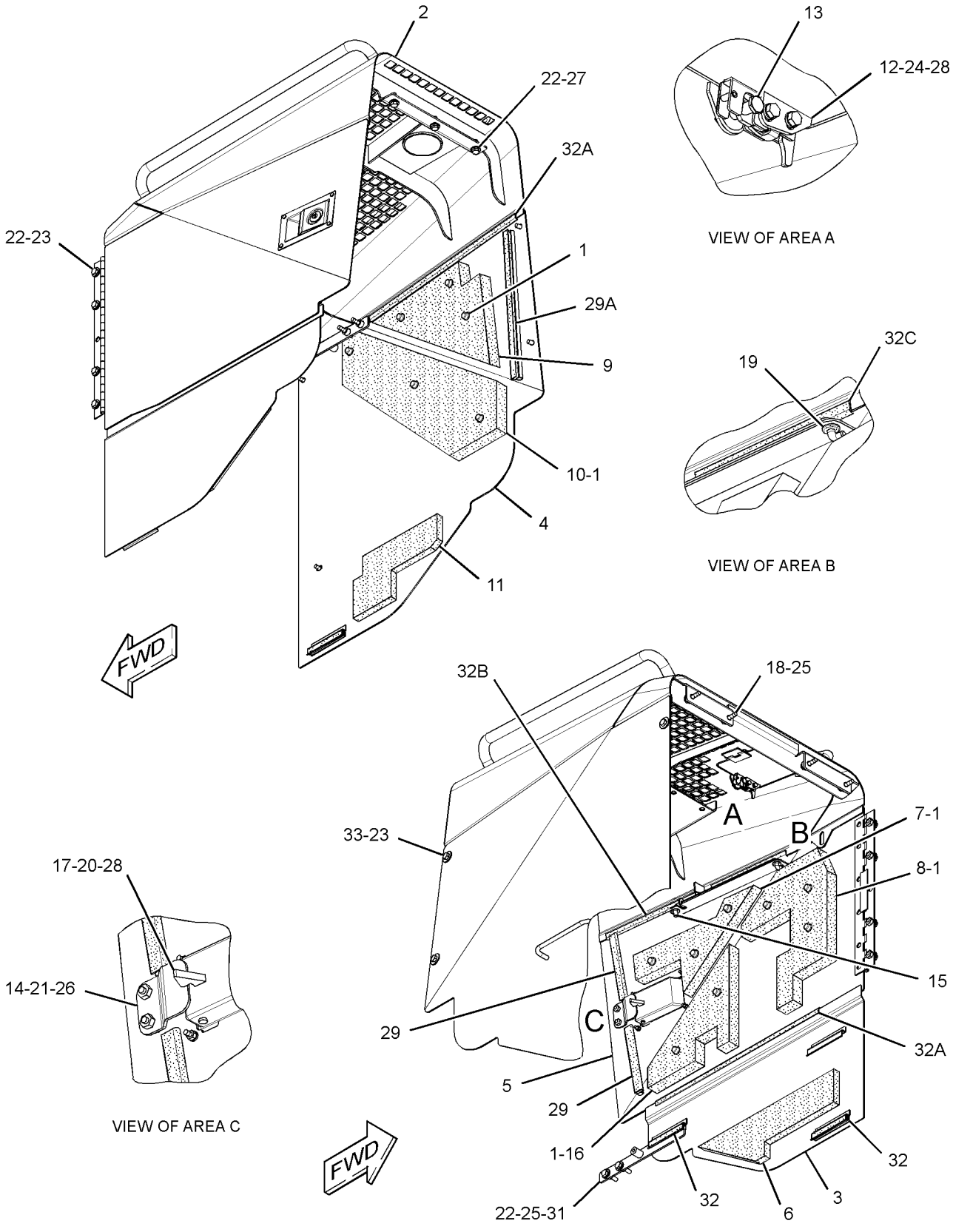

GRAPHIC #1 **<END>** g01459062

244-7497 LINER GP-SOUND SUPPRESSION–FRAME

S/N: JTD1-UP; FFF1-UP; LLL1-UP

PART OF 244-7487, 244-7490, 244-7493, 361-6063 SUPPRESSION AR-SOUND

AN ATTACHMENT

SMCS-7329 **i02883094**

NOTE	REF NO	GRAPHIC REF	PART NUMBER	QTY	PART NAME 1 2 3 4 5 6 (PRODUCT LEVEL)	SEE PAGE
	1	1	**262-9273**	1	LINER	
	2	1	**262-9277**	1	LINER	
	3	1	**262-9278**	4	LINER	
	4	1	**262-9279**	4	LINER	
	5	1	**264-5003**	10	LINER	
	6	1	**264-5004**	3	LINER	
	7	1	**264-5005**	1	LINER	
	8	1	**264-5006**	1	LINER	
	9	1	**264-5007**	7	LINER	
	10	1	**264-5009**	6	LINER	
	11	1	**264-5010**	1	LINER	
	12	1	**264-5011**	1	LINER	
	13	1	**7X-0603**	4	WASHER-HARD (9.9X35X2.5-MM THK)	
M	15	1	**8T-4189**	4	BOLT (M8X1.25X20-MM)	

M-METRIC PART

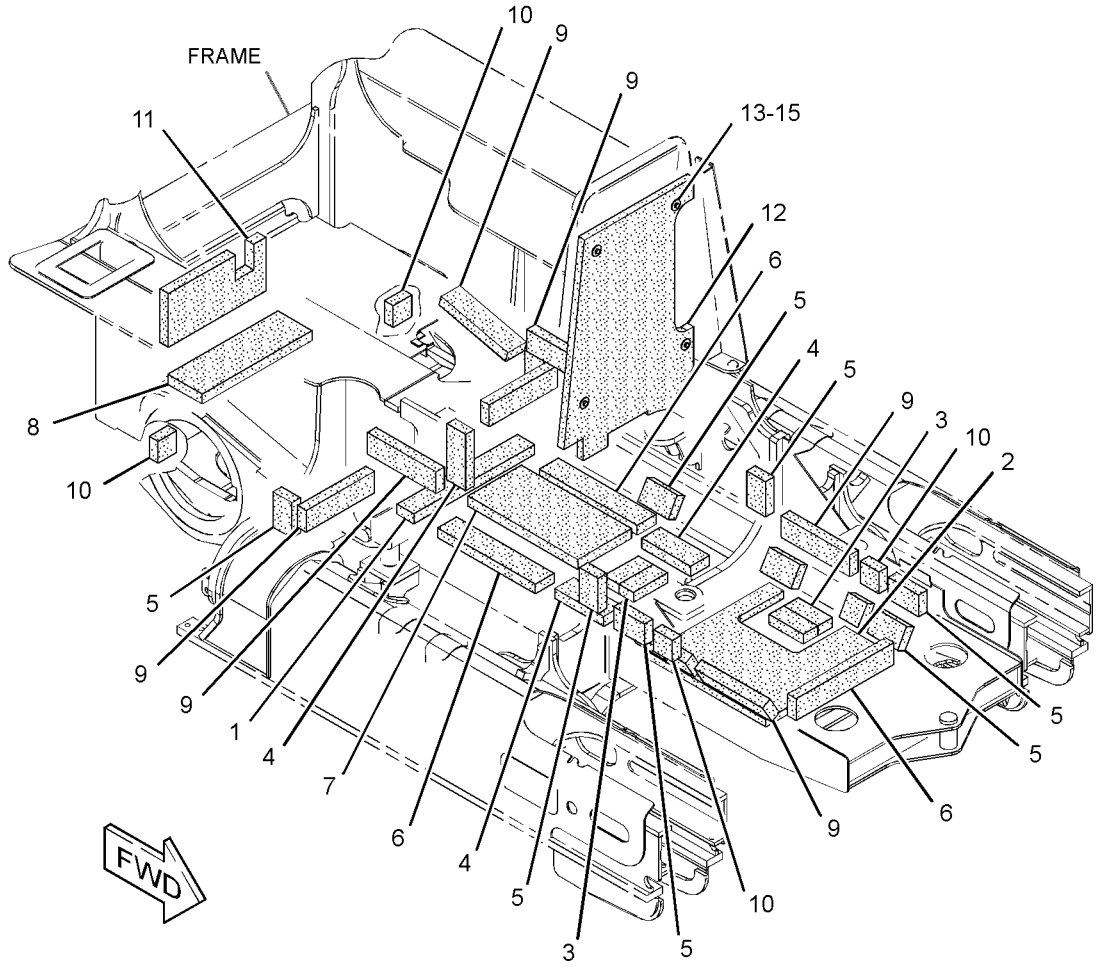

GRAPHIC #1 **<END>** g01439709

FRAME AND BODY

262-2923 SCREEN GP–FRONT

S/N: JTD1-UP; FFF1-UP; LLL1-UP
PART OF 255-4276 GUARD GP-BRUSH
AN ATTACHMENT

SMCS-7165 **i04415972**

NOTE	REF NO	GRAPHIC REF	PART NUMBER	QTY	PART NAME 1 2 3 4 5 6 (PRODUCT LEVEL)	SEE PAGE
M	1	1	**6V-7357**	8	BOLT (M6X1X25-MM)	
	2	1	**172-2384**	1	LATCH AS-ROTARY (LH)	
	3	1	**172-2385**	1	LATCH AS-ROTARY (RH)	
	4	1	**267-8655**	1	GUARD AS-FRONT	
J	5	1	**297-3275**	1	HANDLE AS (RH)	
J	6	1	**297-3274**	1	HANDLE AS (LH)	
					(EACH HANDLE AS INCLUDES)	
		1	**8Y-4501**	1	SPRING-HANDLE	
	7	1	**297-3272**	1	ROD AS (LH)	
		1	**6V-8185**	1	NUT (1/4-20-THD)	
		1	**108-5471**	1	CLEVIS	
	8	1	**6V-7636**	4	PIN AS-SPRING	
M	9	1	**8T-4180**	8	SCREW-MACHINE (M5X0.8X20-MM)	
	10	1	**9X-8256**	8	WASHER (6.6X12X2-MM THK)	
	11	1	**297-3273**	1	ROD AS (RH)	
		1	**6V-8185**	1	NUT (1/4-20-THD)	
		1	**108-5471**	1	CLEVIS	

J-REQUIRES CORPORATE KEY
M-METRIC PART

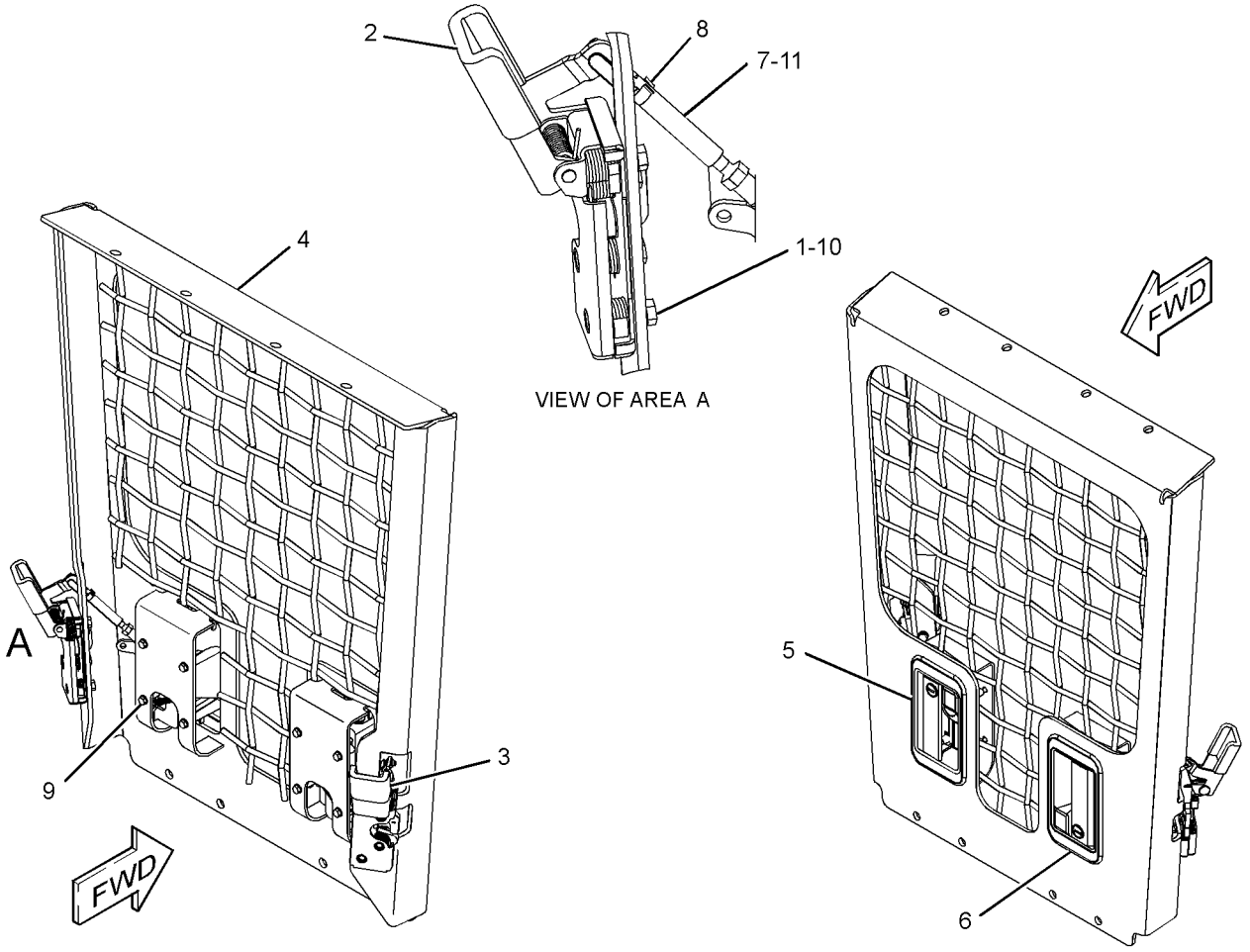

GRAPHIC #1 **<END>** g01294727

244-7467 SWEEP GP–FRONT

S/N: JTD1-UP; FFF1-UP; LLL1-UP
AN ATTACHMENT
TYPE 1

SMCS-7162 **i02708948**

NOTE	REF NO	GRAPHIC REF	PART NUMBER	QTY	PART NAME 1 2 3 4 5 6 (PRODUCT LEVEL)	SEE PAGE
	1	1	**5V-0500**	16	WASHER (16.5X75.0X6.0-MM THK)	
	2	1	**217-5807**	4	MOUNT	
	4	1	**260-9289**	1	SUPPORT (RH)	
	5	1	**260-9290**	1	SUPPORT (LH)	
	6	1	**260-9291**	2	PLATE	
	7	1	**261-8095**	1	PLATE	
	8	1	**261-8096**	1	PLATE	
M	9	1	**096-4885**	14	LOCKNUT (M16X2-THD)	
	10	1	**3V-9244**	18	WASHER (16.5X50.0X5.0-MM THK)	
M	11	1	**7X-2553**	2	BOLT (M16X2X40-MM)	
M	12	1	**7X-2555**	4	BOLT (M16X2X80-MM)	
M	13	1	**8T-4174**	4	BOLT (M16X2X120-MM)	
M	14	1	**8T-4183**	6	BOLT (M12X1.75X40-MM)	
	15	1	**306-8892**	1	SWEEP AS (RH)	
	16	1	**306-5054**	1	SWEEP AS (LH)	
	17	1	**306-5053**	1	TUBE AS	
M	18	1	**8T-4175**	2	BOLT (M16X2X90-MM)	
M	19	1	**8T-4173**	6	BOLT (M16X2X110-MM)	

M-METRIC PART

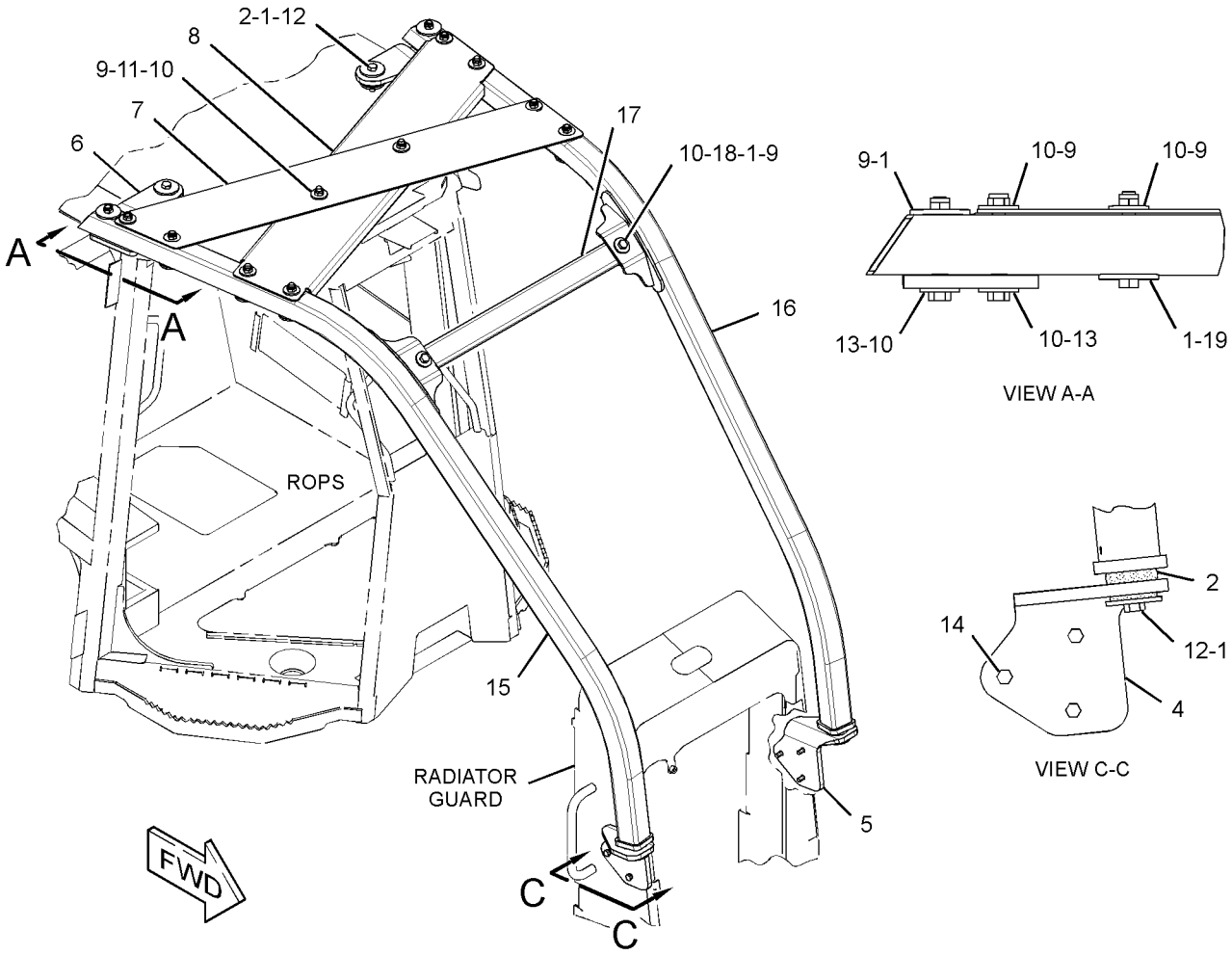

GRAPHIC #1 **<END>** g01372536

FRAME AND BODY

244-7467 SWEEP GP–FRONT

S/N: JTD1-UP; FFF1-UP; LLL1-UP
AN ATTACHMENT
TYPE 2

SMCS-7162 **i04349200**

NOTE	REF NO	GRAPHIC REF	PART NUMBER	QTY	PART NAME 1 2 3 4 5 6 (PRODUCT LEVEL)	SEE PAGE
C	1	1	**5V-0500**	14	WASHER (16.5X75X6-MM THK)	
	2	1	**217-5807**	4	MOUNT	
	4	1	**260-9289**	1	SUPPORT (RH)	
	5	1	**260-9290**	1	SUPPORT (LH)	
C	6	1	**342-9788**	2	PLATE AS	
C	7	1	**349-6992**	1	PLATE AS	
C	8	1	**349-6993**	1	PLATE AS	
C	10	1	**3V-9244**	6	WASHER (16.5X50X5-MM THK)	
CM	11	1	**7X-2552**	2	BOLT (M16X2X30-MM)	
CM	12	1	**7X-2555**	6	BOLT (M16X2X80-MM)	
M	13	1	**8T-4174**	4	BOLT (M16X2X120-MM)	
M	14	1	**8T-4183**	6	BOLT (M12X1.75X40-MM)	
	15	1	**306-8892**	1	SWEEP AS (RH)	
	16	1	**306-5054**	1	SWEEP AS (LH)	
	17	1	**306-5053**	1	TUBE AS	
M	19	1	**8T-4173**	6	BOLT (M16X2X110-MM)	

C-CHANGE FROM PREVIOUS TYPE
M-METRIC PART

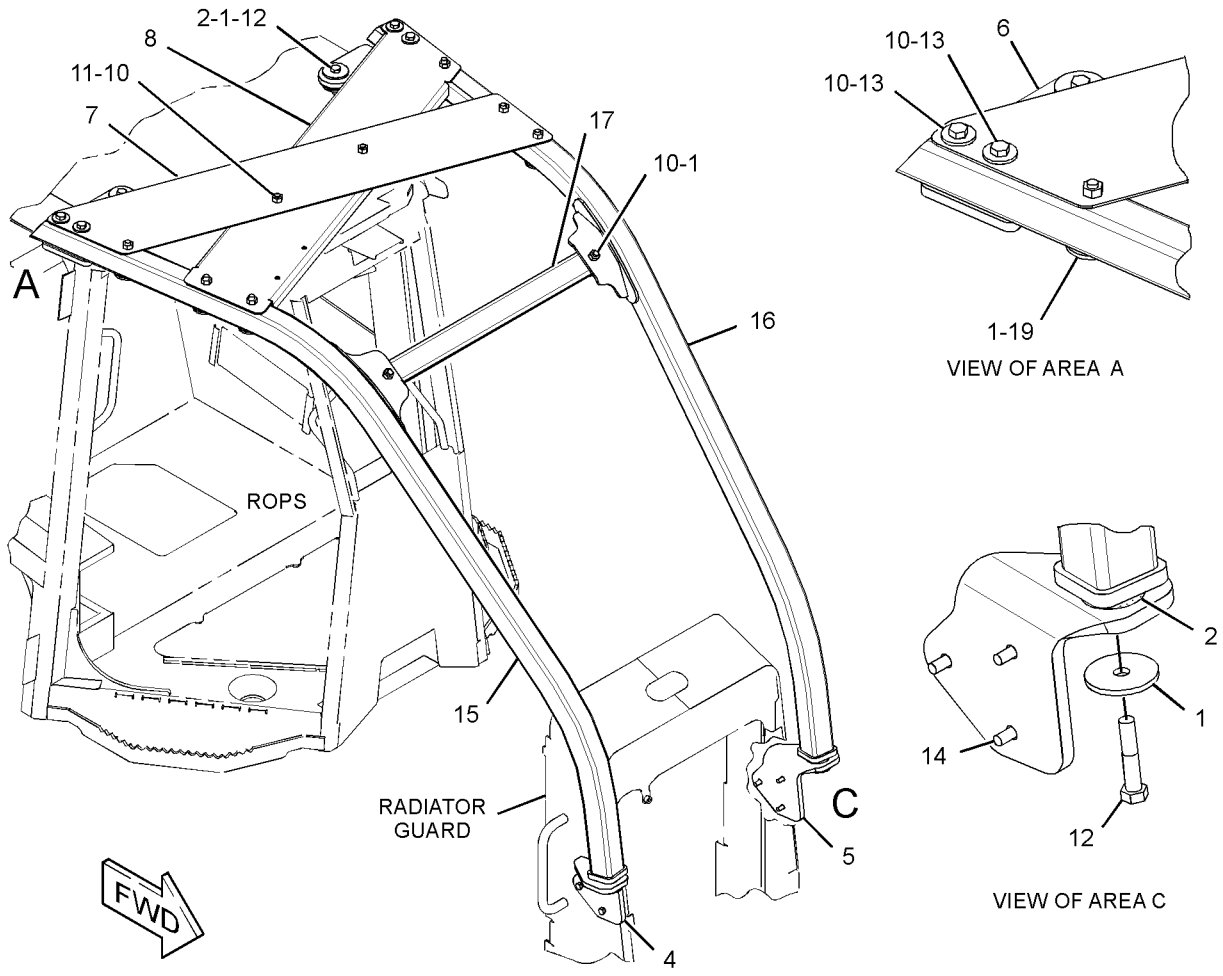

GRAPHIC #1 **<END>** g02527583

244-7468 SWEEP GP–REAR

S/N: JTD1-UP; FFF1-UP; LLL1-UP
FOR USE WITH 244-7467–PAGE 435
AN ATTACHMENT

SMCS-7162 **i03408701**

NOTE	REF NO	GRAPHIC REF	PART NUMBER	QTY	PART NAME 1 2 3 4 5 6 (PRODUCT LEVEL)	SEE PAGE
	1	1	**301-7305**	4	SPACER (16.5X75X13.5-MM THK)	
	2	1	**260-9293**	1	SWEEP AS	
	3	1	**3V-9244**	4	WASHER (16.5X50X5-MM THK)	
M	4	1	**8T-4140**	4	BOLT (M16X2X60-MM)	

M-METRIC PART

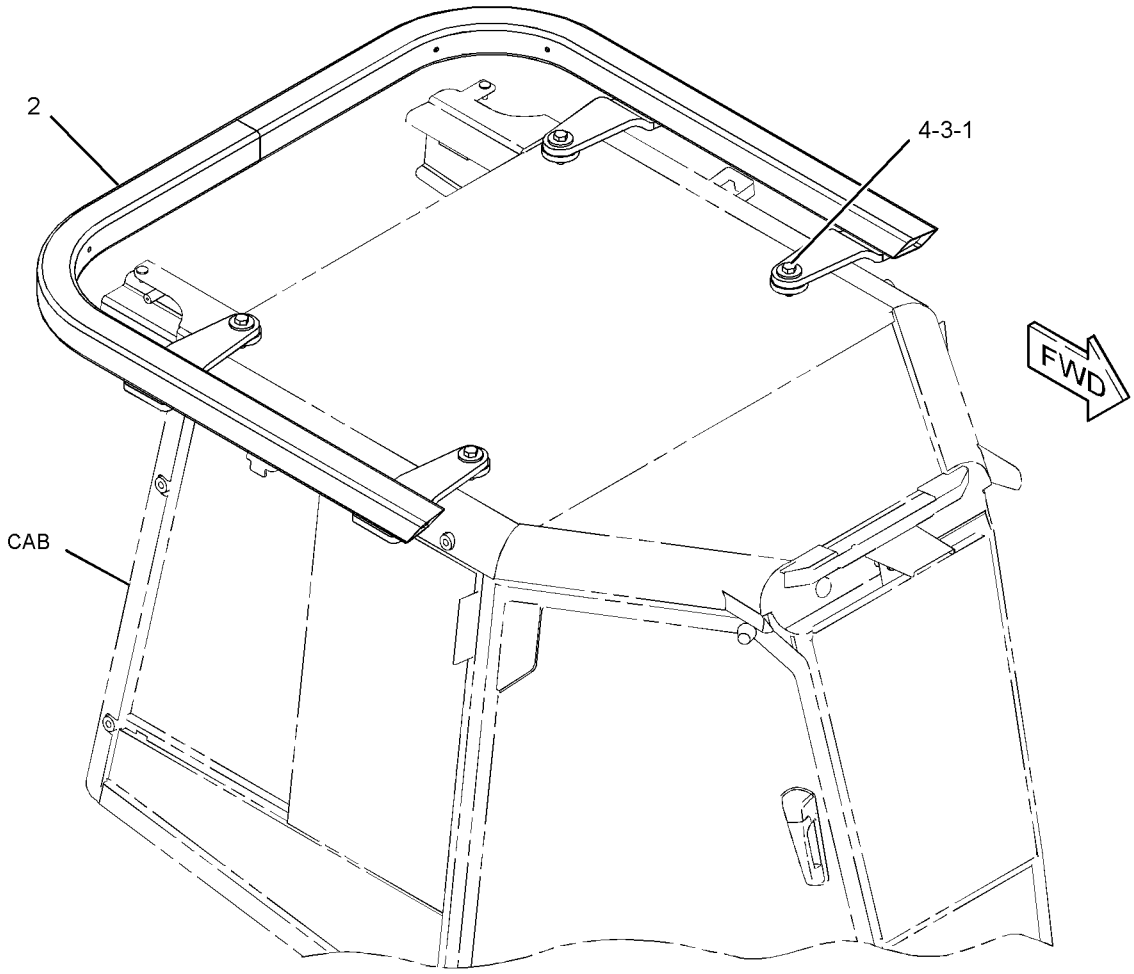

GRAPHIC #1 **<END>** g01329111

254-0664 ADJUSTMENT GP-HYDRAULIC TRACK

S/N: JTD1-UP; FFF1-268; LLL1-335
PART OF 244-7500, 254-0593 IDLER GP-FRONT
AN ATTACHMENT

SMCS-4157 **i04415712**

NOTE	REF NO	GRAPHIC REF	PART NUMBER	QTY	PART NAME 1 2 3 4 5 6 (PRODUCT LEVEL)	SEE PAGE
	1	1	**2S-5926**	1	VALVE-RELIEF (RECOIL SPRING OIL)	
	2	1	**3G-3259**	1	SEAL AS	
	3	1	**4T-5613**	1	RING-WEAR	
	4	1	**190-8609**	1	VALVE-FILL (RECOIL SPRING OIL)	
	5	1	**308-1845**	1	SEAL-WIPER	
	6	1	**231-0070**	2	WASHER-SPECIAL	
	7	1	**254-0601**	1	YOKE	
	8	1	**254-0656**	1	PLUNGER	
	9	1	**293-9150**	1	GUARD	
	10	1	**2S-4078**	1	SEAL-O-RING	
M	11	1	**5C-9553**	2	BOLT (M6X1X16-MM)	
	12	1	**9S-8010**	1	PLUG	
	13	1	**9X-8256**	2	WASHER (6.6X12X2-MM THK)	

M-METRIC PART

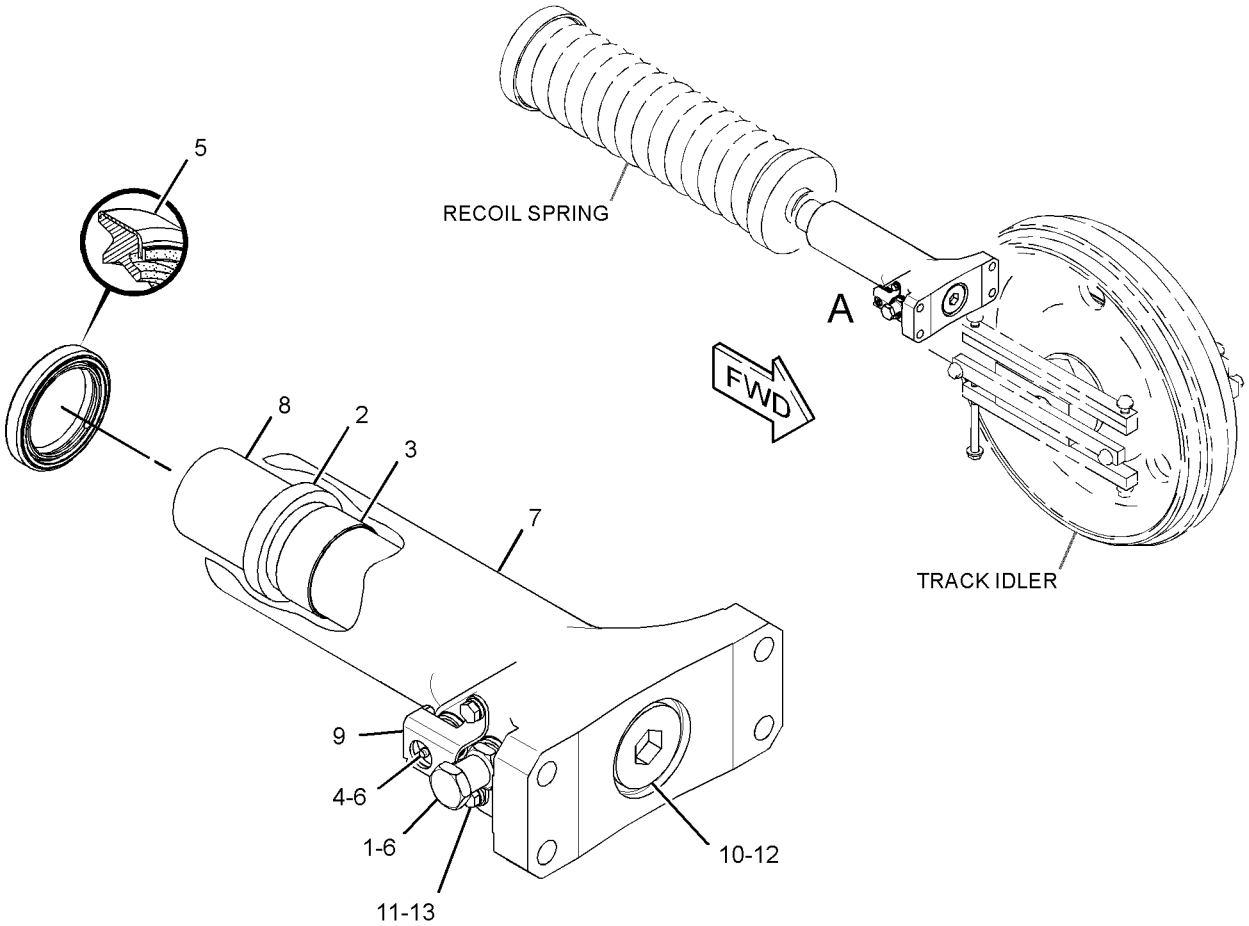

VIEW OF AREA A
(EXPLODED)

GRAPHIC #1 **<END>** g01679229

254-0664 ADJUSTMENT GP-HYDRAULIC TRACK

S/N: JTD1-UP; FFF269-UP; LLL336-UP
PART OF 244-7500, 254-0593 IDLER GP-FRONT
AN ATTACHMENT
TYPE 1

SMCS-4157 **i04416154**

NOTE	REF NO	GRAPHIC REF	PART NUMBER	QTY	PART NAME 1 2 3 4 5 6 (PRODUCT LEVEL)	SEE PAGE
	1	1	**2S-5926**	1	VALVE-RELIEF (RECOIL SPRING OIL)	
	2	1	**3G-3259**	1	SEAL AS	
	3	1	**4T-5613**	1	RING-WEAR	
	4	1	**190-8609**	1	VALVE-FILL (RECOIL SPRING OIL)	
	5	1	**308-1845**	1	SEAL-WIPER	
	6	1	**231-0070**	2	WASHER-SPECIAL	
	7	1	**254-0601**	1	YOKE	
	8	1	**254-0656**	1	PLUNGER	
	9	1	**293-9150**	1	GUARD	
C	10	1	*148-8406*	1	PLUG AS (RECOIL SPRING OIL)	
		1	**7M-8485**	1	SEAL-O-RING	
		1	**9S-9334**	1	PLUG-O-RING (STRAIGHT THREAD O-RING)	
M	11	1	**5C-9553**	2	BOLT (M6X1X16-MM)	
	12	1	**9X-8256**	2	WASHER (6.6X12X2-MM THK)	

C-CHANGE FROM PREVIOUS TYPE
M-METRIC PART

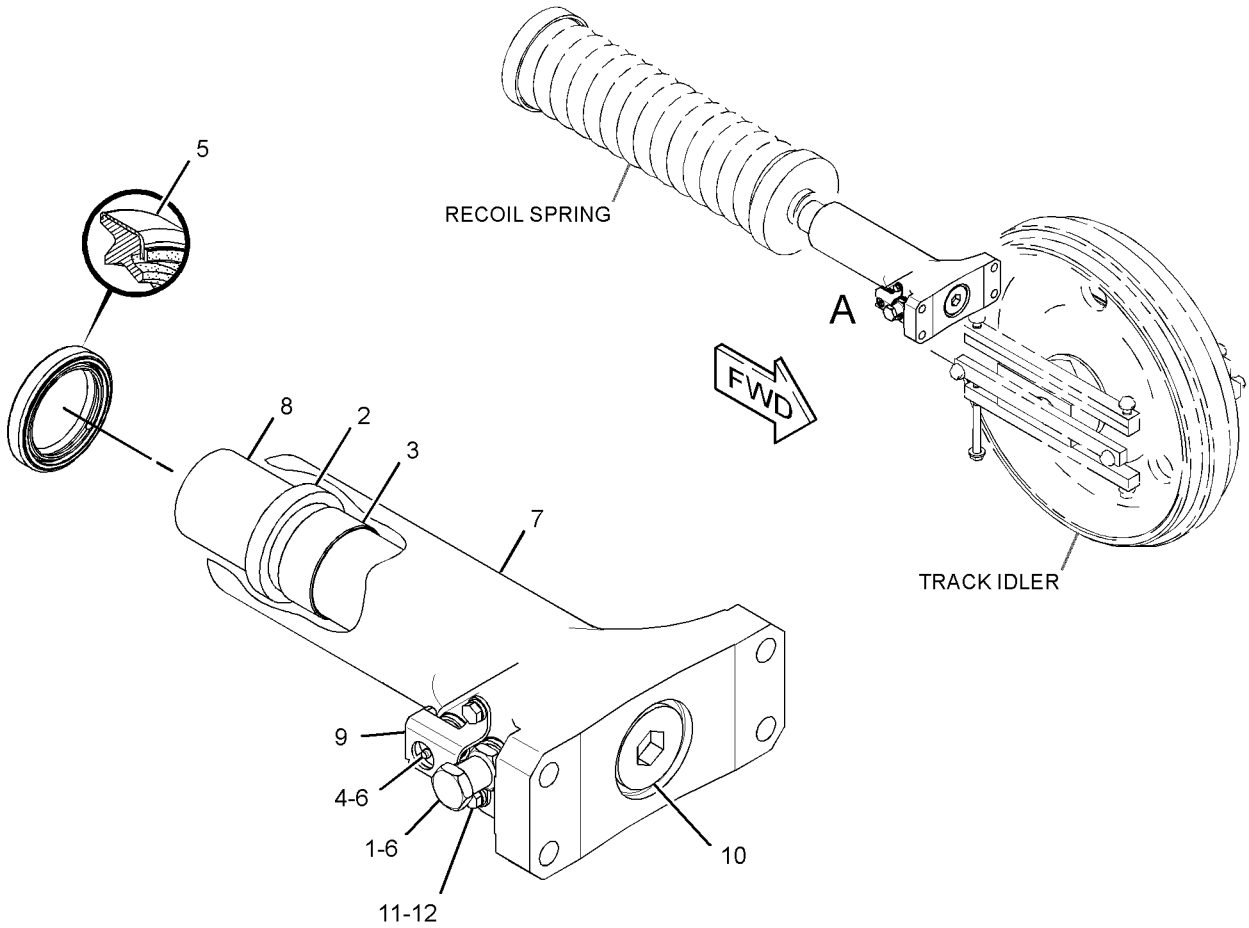

VIEW OF AREA A
(EXPLODED)

GRAPHIC #1 **<END>** g01408610

254-0664 ADJUSTMENT GP-HYDRAULIC TRACK

S/N: JTD1-UP; FFF269-UP; LLL336-UP
PART OF 244-7500, 254-0593 IDLER GP-FRONT
AN ATTACHMENT
TYPE 2

SMCS-4157 **i04338012**

NOTE	REF NO	GRAPHIC REF	PART NUMBER	QTY	PART NAME 1 2 3 4 5 6 (PRODUCT LEVEL)	SEE PAGE
C	1	1	**9S-4183**	1	PLUG-O-RING	
	2	1	**3G-3259**	1	SEAL AS	
	3	1	**4T-5613**	1	RING-WEAR	
	4	1	**190-8609**	1	VALVE-FILL (RECOIL SPRING OIL)	
	5	1	**308-1845**	1	SEAL-WIPER	
C	6	1	**231-0070**	1	WASHER-SPECIAL	
	7	1	**254-0656**	1	PLUNGER	
C	8	1	**353-5793**	1	YOKE	
C	9	1	**353-5795**	1	PLATE	
C	10	1	**353-6188**	1	GUARD	
C	11	1	**3D-2824**	1	SEAL-O-RING	
C	12	1	**4J-5268**	1	SEAL-O-RING	
C	13	1	**8T-4121**	2	WASHER-HARD (11X21X2.5-MM THK)	
CM	14	1	**8T-4195**	2	BOLT (M10X1.5X30-MM)	
CM	15	1	**8T-4200**	2	BOLT (M8X1.25X16-MM)	
C	16	1	**8T-4224**	2	WASHER-HARD (8.8X16X2-MM THK)	

C-CHANGE FROM PREVIOUS TYPE
M-METRIC PART

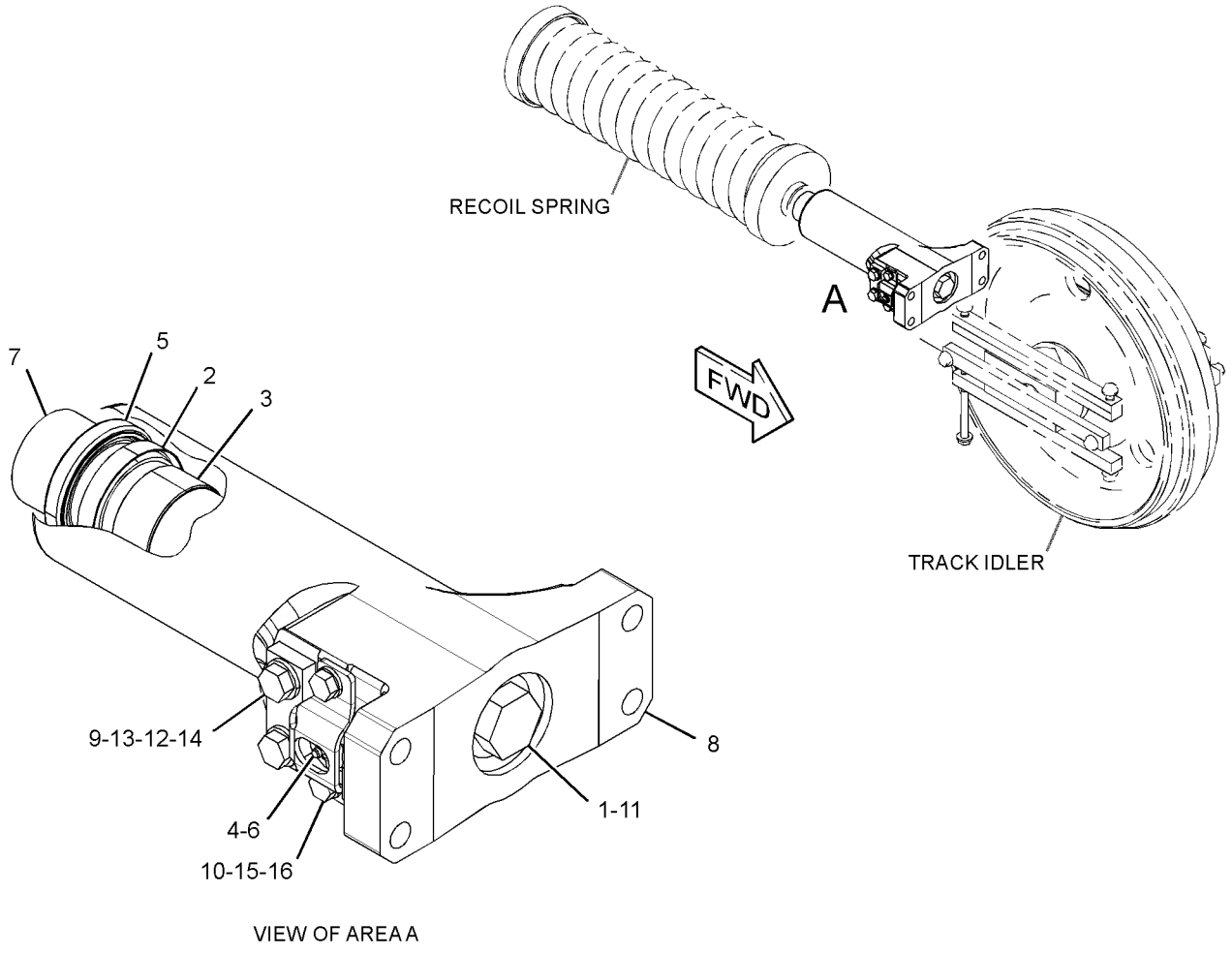

VIEW OF AREA A

GRAPHIC #1 **<END>** g02498856

244-7418 GUARD GP-IDLER

S/N: JTD1-UP; FFF1-UP; LLL1-UP
PART OF 244-7393 UNDERCARRIAGE AR
AN ATTACHMENT

SMCS-7169 **i02819972**

NOTE	REF NO	GRAPHIC REF	PART NUMBER	QTY	PART NAME 1 2 3 4 5 6 (PRODUCT LEVEL)	SEE PAGE
	1	1	**290-3391**	2	PLATE AS	
	2	1	**305-1443**	2	BRACKET AS	
					(EACH INCLUDES)	
M		1	**8T-3597**	3	NUT-WELD (M12X1.75-THD)	
	3	1	**305-1446**	2	BRACKET AS	
					(EACH INCLUDES)	
M		1	**8T-3597**	3	NUT-WELD (M12X1.75-THD)	
	4	1	**305-1451**	2	BRACKET AS	
	5	1	**305-1453**	2	BRACKET AS	
	6	1	**305-1454**	2	GUARD	
	7	1	**305-1455**	4	PLATE	
	8	1	**7X-0584**	8	WASHER-HARD (13.5X20.5X2-MM THK)	
	9	1	**7X-7729**	8	WASHER (11X25X3-MM THK)	
M	10	1	**8T-4133**	4	NUT (M10X1.5-THD)	
M	11	1	**8T-4139**	4	BOLT (M12X1.75X30-MM)	
M	12	1	**8T-4184**	8	BOLT (M12X1.75X45-MM)	
M	13	1	**8T-4192**	8	BOLT (M12X1.75X25-MM)	
M	14	1	**8T-4195**	4	BOLT (M10X1.5X30-MM)	
	15	1	**8T-4223**	20	WASHER-HARD (13.5X25.5X3-MM THK)	
M	16	1	**8T-4956**	8	BOLT (M12X1.75X35-MM)	

M-METRIC PART

244-7418 **GUARD GP-IDLER** *(contd.)* **i02819972**

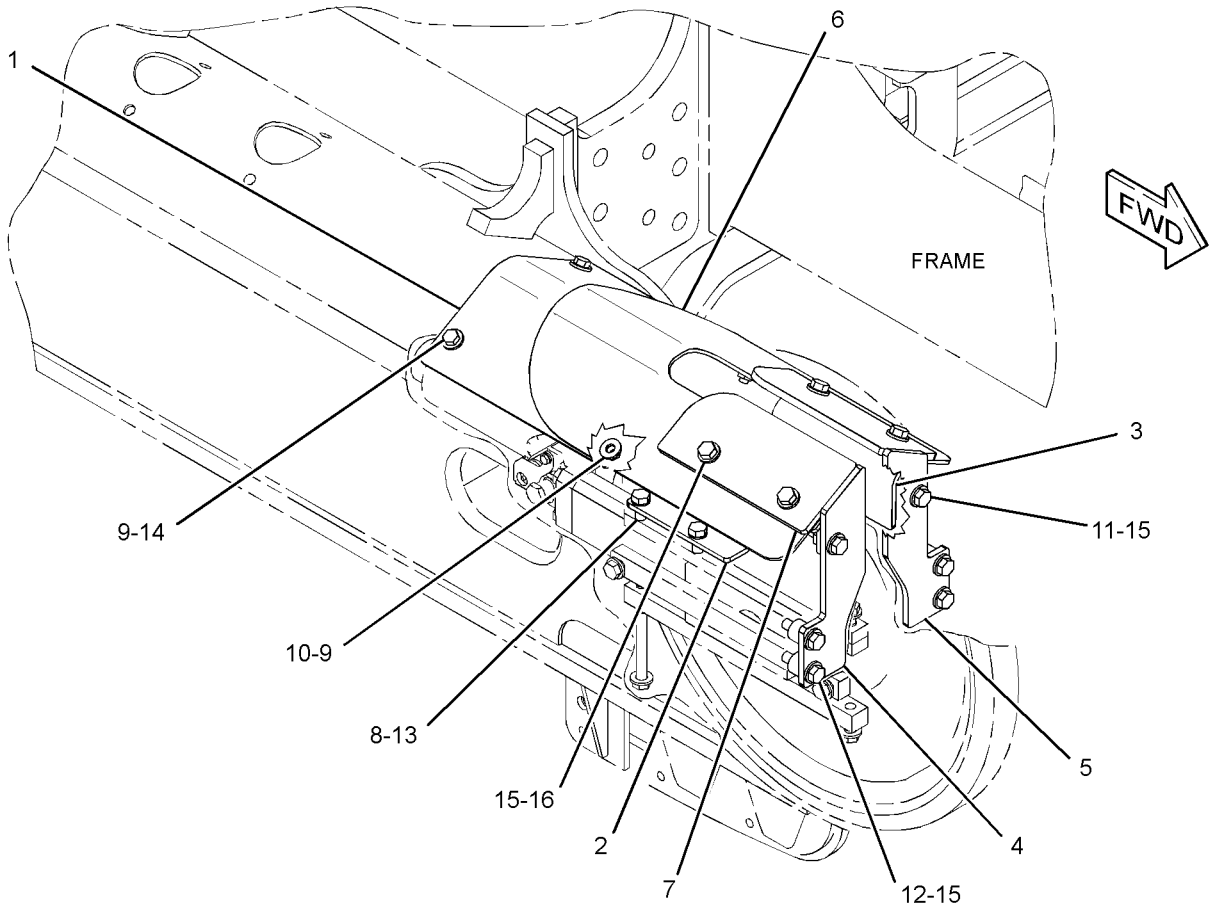

GRAPHIC #1 **<END>** g01407153

262-5874 GUARD GP-IDLER

S/N: JTD1-UP; FFF1-UP; LLL1-UP
PART OF 244-7448 UNDERCARRIAGE AR
AN ATTACHMENT

SMCS-7169 **i02819962**

NOTE	REF NO	GRAPHIC REF	PART NUMBER	QTY	PART NAME 1 2 3 4 5 6 (PRODUCT LEVEL)	SEE PAGE
	1	1	**290-3391**	2	PLATE AS	
	2	1	**305-1439**	2	BRACKET AS	
	3	1	**305-1442**	2	BRACKET AS	
	4	1	**305-1443**	2	BRACKET AS	
					(EACH INCLUDES)	
M		1	**8T-3597**	3	NUT-WELD (M12X1.75-THD)	
	5	1	**305-1446**	2	BRACKET AS	
					(EACH INCLUDES)	
M		1	**8T-3597**	3	NUT-WELD (M12X1.75-THD)	
	6	1	**305-1448**	2	GUARD	
	7	1	**305-1449**	2	PLATE	
	8	1	**305-1450**	2	PLATE	
	9	1	**7X-0584**	8	WASHER-HARD (13.5X20.5X2-MM THK)	
	10	1	**7X-7729**	8	WASHER (11X25X3-MM THK)	
M	11	1	**8T-4133**	4	NUT (M10X1.5-THD)	
M	12	1	**8T-4139**	4	BOLT (M12X1.75X30-MM)	
M	13	1	**8T-4184**	8	BOLT (M12X1.75X45-MM)	
M	14	1	**8T-4192**	8	BOLT (M12X1.75X25-MM)	
M	15	1	**8T-4195**	4	BOLT (M10X1.5X30-MM)	
	16	1	**8T-4223**	20	WASHER-HARD (13.5X25.5X3-MM THK)	
M	17	1	**8T-4956**	8	BOLT (M12X1.75X35-MM)	

M-METRIC PART

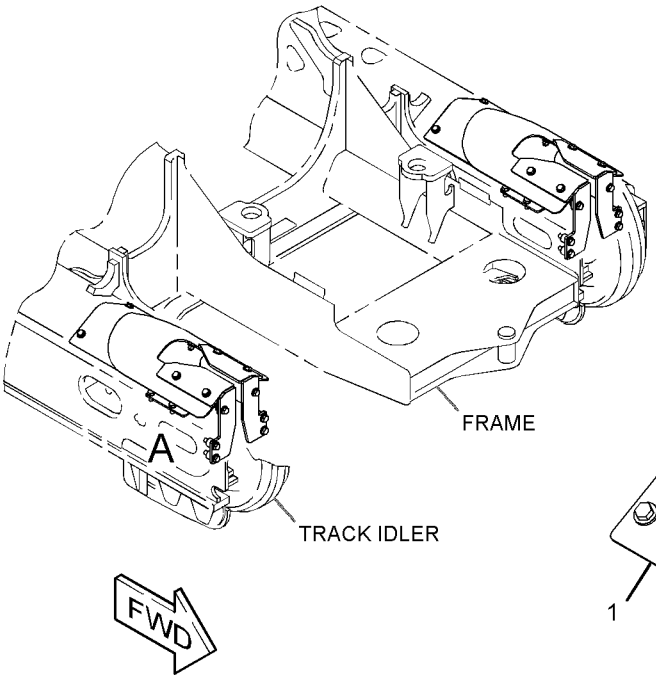

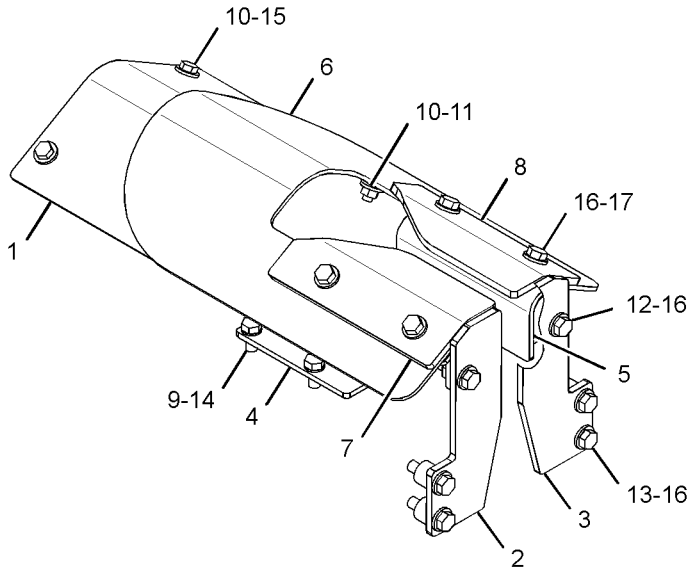

VIEW OF AREA A

GRAPHIC #1 **<END>** g01407202

244-7423 GUARD GP-TRACK GUIDE

S/N: JTD1-UP; FFF1-604; LLL1-773
PART OF 244-7448 UNDERCARRIAGE AR
AN ATTACHMENT

SMCS-4177 **i02686470**

NOTE	REF NO	GRAPHIC REF	PART NUMBER	QTY	PART NAME 1 2 3 4 5 6 (PRODUCT LEVEL)	SEE PAGE
	1	1	**263-2011**	1	GUARD AS	
M		1	**8T-3597**	1	NUT-WELD (M12X1.75-THD)	
	2	1	**263-8325**	1	GUARD AS	
M		1	**8T-3597**	2	NUT-WELD (M12X1.75-THD)	
	3	1	**263-8332**	1	GUARD AS	
M		1	**8T-3597**	1	NUT-WELD (M12X1.75-THD)	
	4	1	**263-8337**	1	GUARD AS	
M		1	**8T-3597**	2	NUT-WELD (M12X1.75-THD)	
	5	1	**263-8363**	1	GUARD AS	
	6	1	**263-8364**	1	GUARD AS	
	7	1	**286-4261**	1	GUARD AS	
M		1	**8T-3597**	1	NUT-WELD (M12X1.75-THD)	
	8	1	**286-4262**	1	GUARD AS	
M		1	**8T-3597**	1	NUT-WELD (M12X1.75-THD)	
	9	1	**5P-1076**	14	WASHER-HARD (13.5X30X4-MM THK)	
M	10	1	**7X-2556**	12	BOLT (M16X2X100-MM)	
	11	1	**8T-4122**	12	WASHER-HARD (17X32X3.5-MM THK)	
M	12	1	**8T-4139**	14	BOLT (M12X1.75X30-MM)	

M-METRIC PART

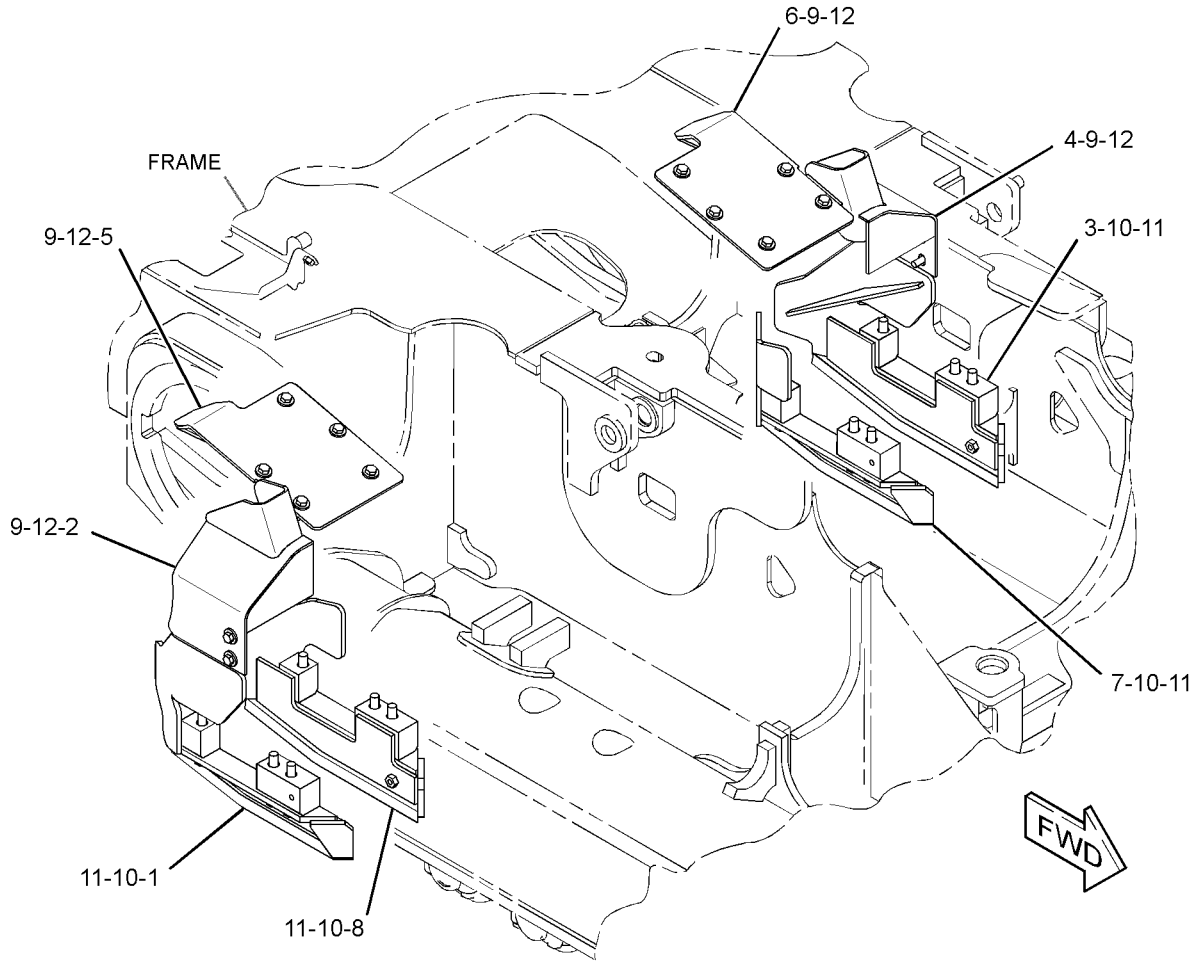

GRAPHIC #1 **<END>** g01353001

244-7423 GUARD GP-TRACK GUIDE

S/N: JTD1-UP; FFF605-UP; LLL774-UP
PART OF 244-7448 UNDERCARRIAGE AR
AN ATTACHMENT

SMCS-4177 **i04248410**

NOTE	REF NO	GRAPHIC REF	PART NUMBER	QTY	PART NAME 1 2 3 4 5 6 (PRODUCT LEVEL)	SEE PAGE
C	1	1	**345-9583**	1	GUARD AS	
C	2	1	**345-9584**	1	GUARD AS	
C	3	1	**345-9587**	1	GUARD AS	
C	4	1	**345-9588**	1	GUARD AS	
C	5	1	**345-9595**	1	GUARD AS	
C	6	1	**345-9596**	1	GUARD AS	
C	7	1	**356-5266**	1	GUARD AS-TRACK GUIDE	
C	8	1	**356-5267**	1	GUARD AS-TRACK GUIDE	
	9	1	**5P-1076**	14	WASHER-HARD (13.5X30X4-MM THK)	
CM	10	1	**7X-2556**	8	BOLT (M16X2X100-MM)	
C	11	1	**7X-0515**	8	WASHER-HARD (17X35X5-MM THK)	
M	12	1	**8T-4139**	14	BOLT (M12X1.75X30-MM)	

C-CHANGE FROM PREVIOUS TYPE
M-METRIC PART

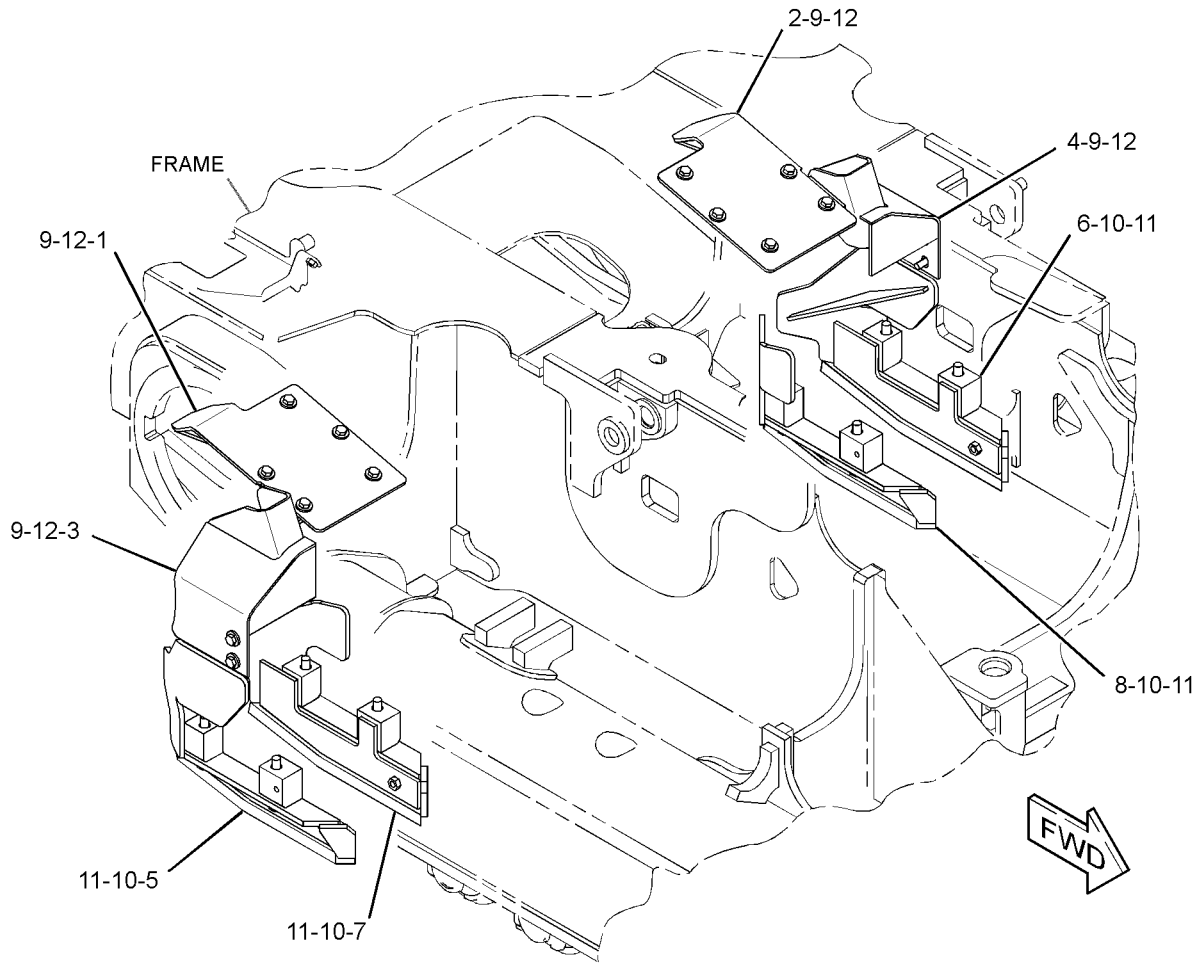

GRAPHIC #1 **<END>** g02352151

282-3663 GUARD GP-TRACK GUIDE—SYSTEMONE

S/N: FFF1-UP; LLL1-UP
CENTER
FOR USE WITH SYSTEMONE UNDERCARRIAGE. CANNOT BE USED WITH GUARD GP-TRACK ROLLER (FULL LENGTH)
AN ATTACHMENT

SMCS-4177 **i02656791**

NOTE	REF NO	GRAPHIC REF	PART NUMBER	QTY	PART NAME 1 2 3 4 5 6 (PRODUCT LEVEL)	SEE PAGE
	1	1	**276-1753**	2	GUARD AS	
	2	1	**198-4778**	8	WASHER-HARD (13.5X30X12-MM THK)	
M	3	1	**8T-4194**	8	BOLT (M12X1.75X50-MM)	

M-METRIC PART

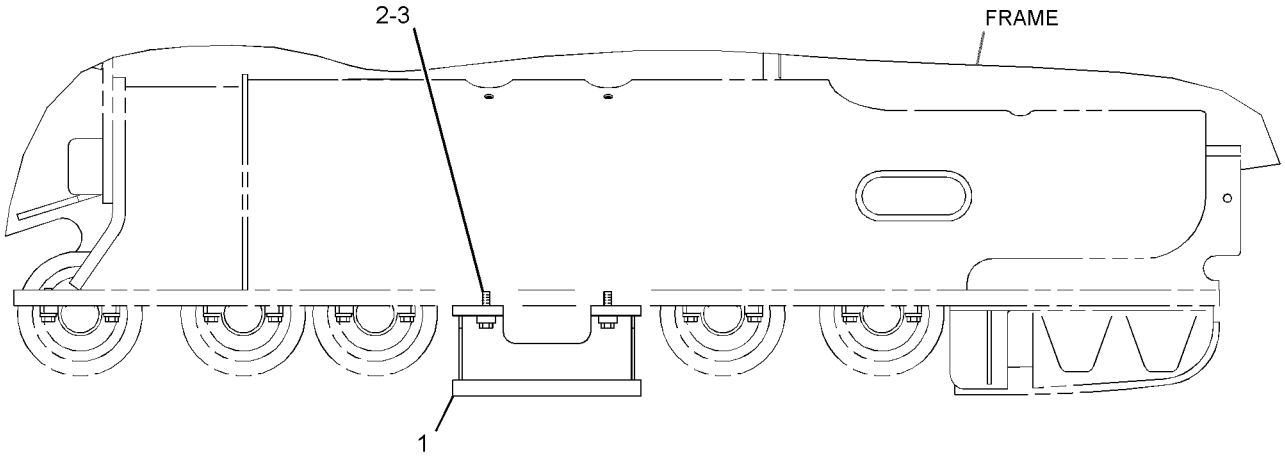

RIGHT SIDE VIEW

GRAPHIC #1 **<END>** g01335511

282-3673 GUARD GP-TRACK GUIDE–SALT

S/N: JTD1-UP; FFF1-UP; LLL1-UP
CENTER
FOR USE WITH SALT UNDERCARRIAGE. CANNOT BE USED WITH GUARD GP-TRACK ROLLER (FULL LENGTH)
AN ATTACHMENT

SMCS-4177 **i02656801**

NOTE	REF NO	GRAPHIC REF	PART NUMBER	QTY	PART NAME 1 2 3 4 5 6 (PRODUCT LEVEL)	SEE PAGE
	1	1	**282-3668**	2	GUARD AS	
	2	1	**145-5181**	8	SPACER (13.5X25X12-MM THK)	
M	3	1	**8T-4194**	8	BOLT (M12X1.75X50-MM)	

M-METRIC PART

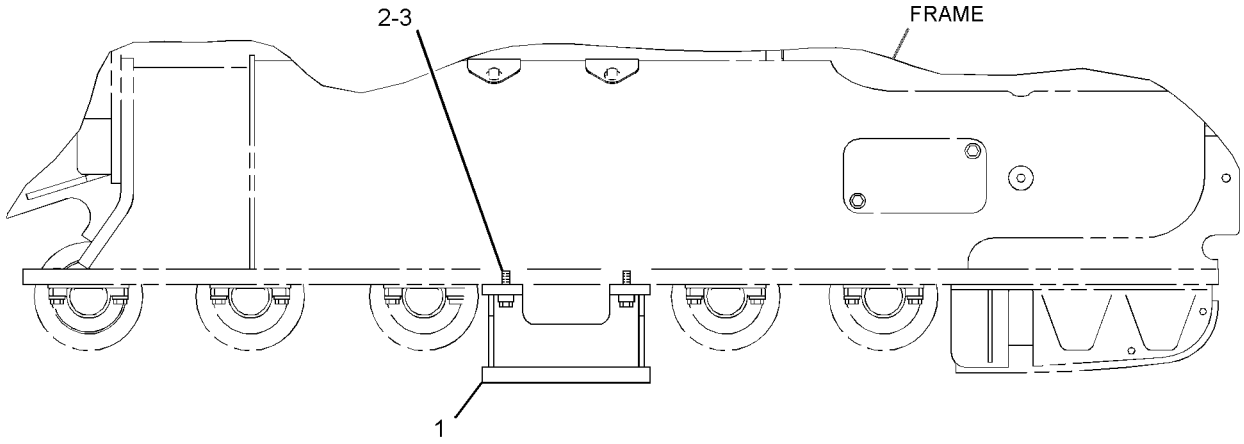

RIGHT SIDE VIEW

GRAPHIC #1 **<END>** g01335673

282-3703 GUARD GP-TRACK GUIDE–SYSTEMONE, FRONT

S/N: JTD1-UP; FFF1-UP; LLL1-UP
PART OF 244-7393 UNDERCARRIAGE AR
AN ATTACHMENT

SMCS-4177 **i02819900**

NOTE	REF NO	GRAPHIC REF	PART NUMBER	QTY	PART NAME 1 2 3 4 5 6 (PRODUCT LEVEL)	SEE PAGE
	1	1	**310-7502**	2	PLATE	
	2	1	**310-7503**	2	PLATE	
M	3	1	**8T-0722**	12	BOLT-LOCKING (M10X1.5X30-MM)	
	4	1	**8T-4121**	12	WASHER-HARD (11X21X2.5-MM THK)	

M-METRIC PART

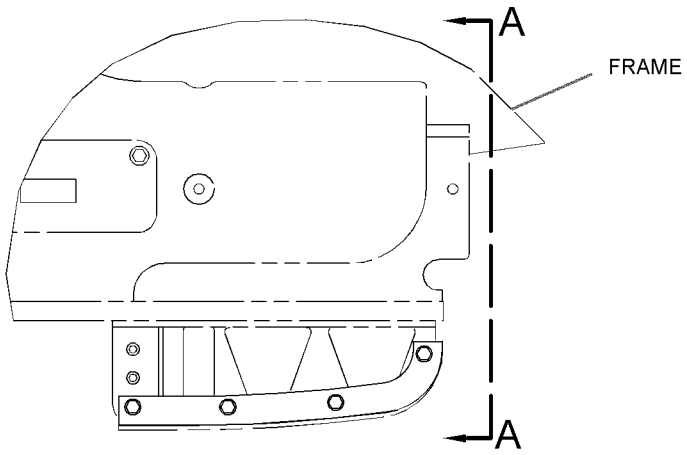

RIGHT SIDE VIEW

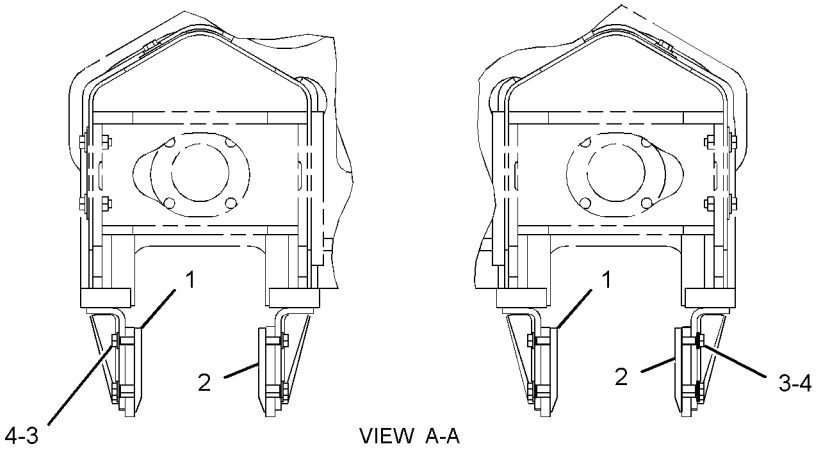

VIEW A-A

GRAPHIC #1

<END>

g01342936

282-3713 GUARD GP-TRACK GUIDE–SYSTEMONE, REAR

S/N: JTD1-UP; FFF1-604; LLL1-773
PART OF 244-7393 UNDERCARRIAGE AR
AN ATTACHMENT

SMCS-4177 **i02719325**

NOTE	REF NO	GRAPHIC REF	PART NUMBER	QTY	PART NAME 1 2 3 4 5 6 (PRODUCT LEVEL)	SEE PAGE
	1	1	**263-8325**	1	GUARD AS	
M		1	**8T-3597**	2	NUT-WELD (M12X1.75-THD)	
	2	1	**263-8337**	1	GUARD AS	
M		1	**8T-3597**	2	NUT-WELD (M12X1.75-THD)	
	3	1	**263-8363**	1	GUARD AS	
	4	1	**263-8364**	1	GUARD AS	
	5	1	**283-6423**	1	GUARD AS	
M		1	**8T-3597**	1	NUT-WELD (M12X1.75-THD)	
	6	1	**283-6424**	1	GUARD AS	
M		1	**8T-3597**	1	NUT-WELD (M12X1.75-THD)	
	7	1	**283-6425**	1	GUARD AS	
M		1	**8T-3597**	1	NUT-WELD (M12X1.75-THD)	
	8	1	**283-6426**	1	GUARD AS	
M		1	**8T-3597**	1	NUT-WELD (M12X1.75-THD)	
	9	1	**5P-1076**	14	WASHER-HARD (13.5X30X4-MM THK)	
M	10	1	**7X-2556**	12	BOLT (M16X2X100-MM)	
	11	1	**8T-4122**	12	WASHER-HARD (17X32X3.5-MM THK)	
M	12	1	**8T-4139**	14	BOLT (M12X1.75X30-MM)	

M-METRIC PART

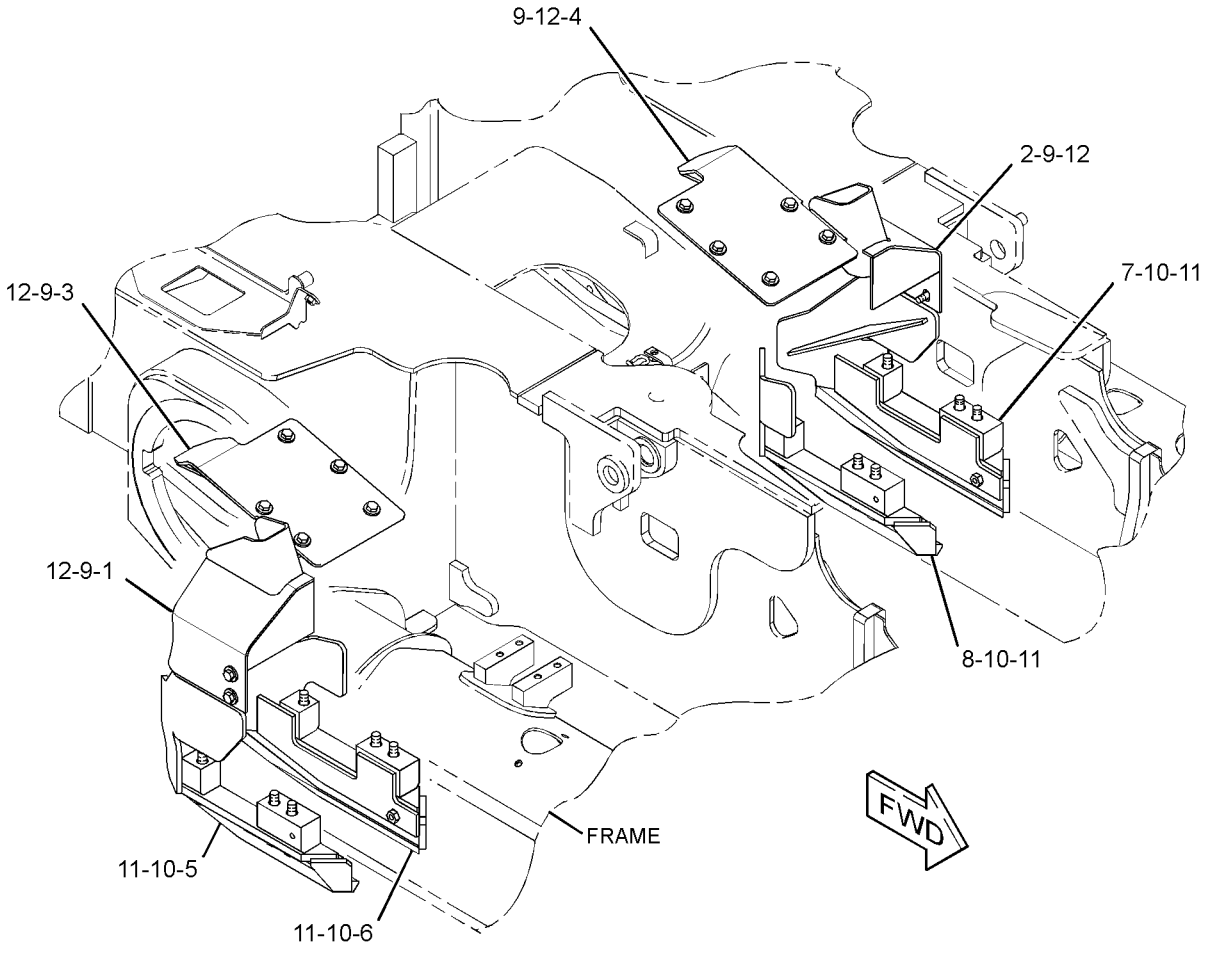

GRAPHIC #1 **<END>** g01376706

282-3713 GUARD GP-TRACK GUIDE—SYSTEMONE, REAR

S/N: JTD1-UP; FFF605-UP; LLL774-UP
PART OF 244-7393 UNDERCARRIAGE AR
AN ATTACHMENT

SMCS-4177 **i04246430**

NOTE	REF NO	GRAPHIC REF	PART NUMBER	QTY	PART NAME 1 2 3 4 5 6 (PRODUCT LEVEL)	SEE PAGE
C	1	1	**345-9583**	1	GUARD AS	
C	2	1	**345-9584**	1	GUARD AS	
C	3	1	**345-9587**	1	GUARD AS	
C	4	1	**345-9588**	1	GUARD AS	
C	5	1	**345-9591**	1	GUARD AS	
M		1	**8T-3597**	1	NUT-WELD (M12X1.75-THD)	
C	6	1	**345-9592**	1	GUARD AS	
M		1	**8T-3597**	1	NUT-WELD (M12X1.75-THD)	
C	7	1	**356-5270**	1	GUARD AS-TRACK GUIDE	
C	8	1	**356-5271**	1	GUARD AS-TRACK GUIDE	
	9	1	**5P-1076**	14	WASHER-HARD (13.5X30X4-MM THK)	
CM	10	1	**7X-2556**	8	BOLT (M16X2X100-MM)	
C	11	1	**7X-0515**	8	WASHER-HARD (17X35X5-MM THK)	
M	12	1	**8T-4139**	14	BOLT (M12X1.75X30-MM)	

C-CHANGE FROM PREVIOUS TYPE
M-METRIC PART

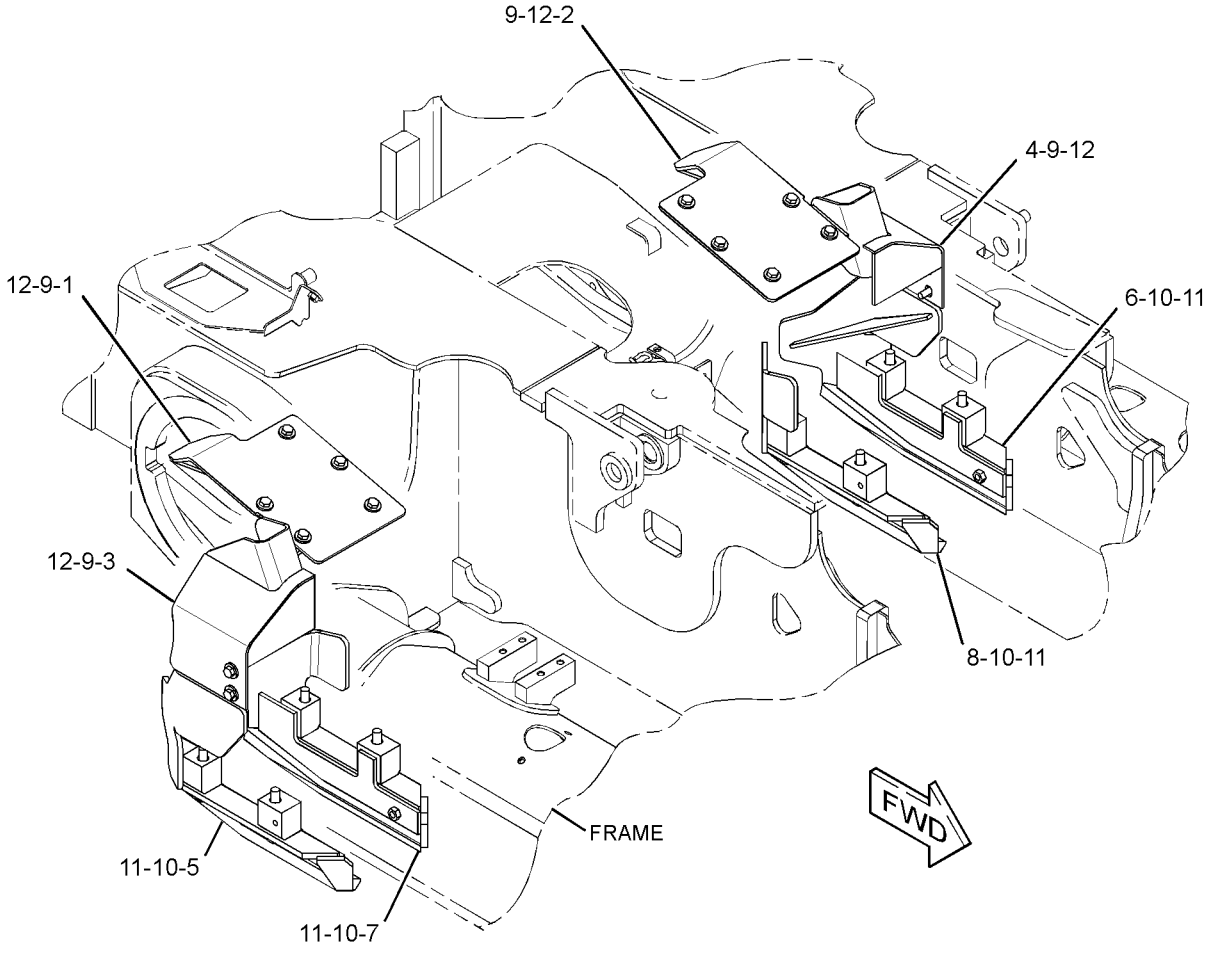

GRAPHIC #1 **<END>** g02352347

244-7523 GUARD GP-TRACK ROLLER

S/N: JTD1-UP; FFF1-UP; LLL1-UP
FOR USE WITH SALT UNDERCARRIAGE. CANNOT BE USED WITH GUARD GP-TRACK GUIDE (CENTER)
AN ATTACHMENT

SMCS-7152 **i02816026**

NOTE	REF NO	GRAPHIC REF	PART NUMBER	QTY	PART NAME 1 2 3 4 5 6 (PRODUCT LEVEL)	SEE PAGE
	1	1	**263-8342**	2	GUARD AS	
	2	1	**263-8343**	2	GUARD AS	
	3	1	**5P-1076**	8	WASHER-HARD (13.5X30X4-MM THK)	
	4	1	**145-5181**	20	SPACER (13.5X25X12-MM THK)	
	5	1	**7X-0550**	8	WASHER-HARD (13.5X32X5-MM THK)	
M	6	1	**8T-4139**	8	BOLT (M12X1.75X30-MM)	
M	7	1	**8T-4176**	4	BOLT (M12X1.75X90-MM)	
M	8	1	**8T-4183**	20	BOLT (M12X1.75X40-MM)	
M	9	1	**8T-4194**	4	BOLT (M12X1.75X50-MM)	

M-METRIC PART

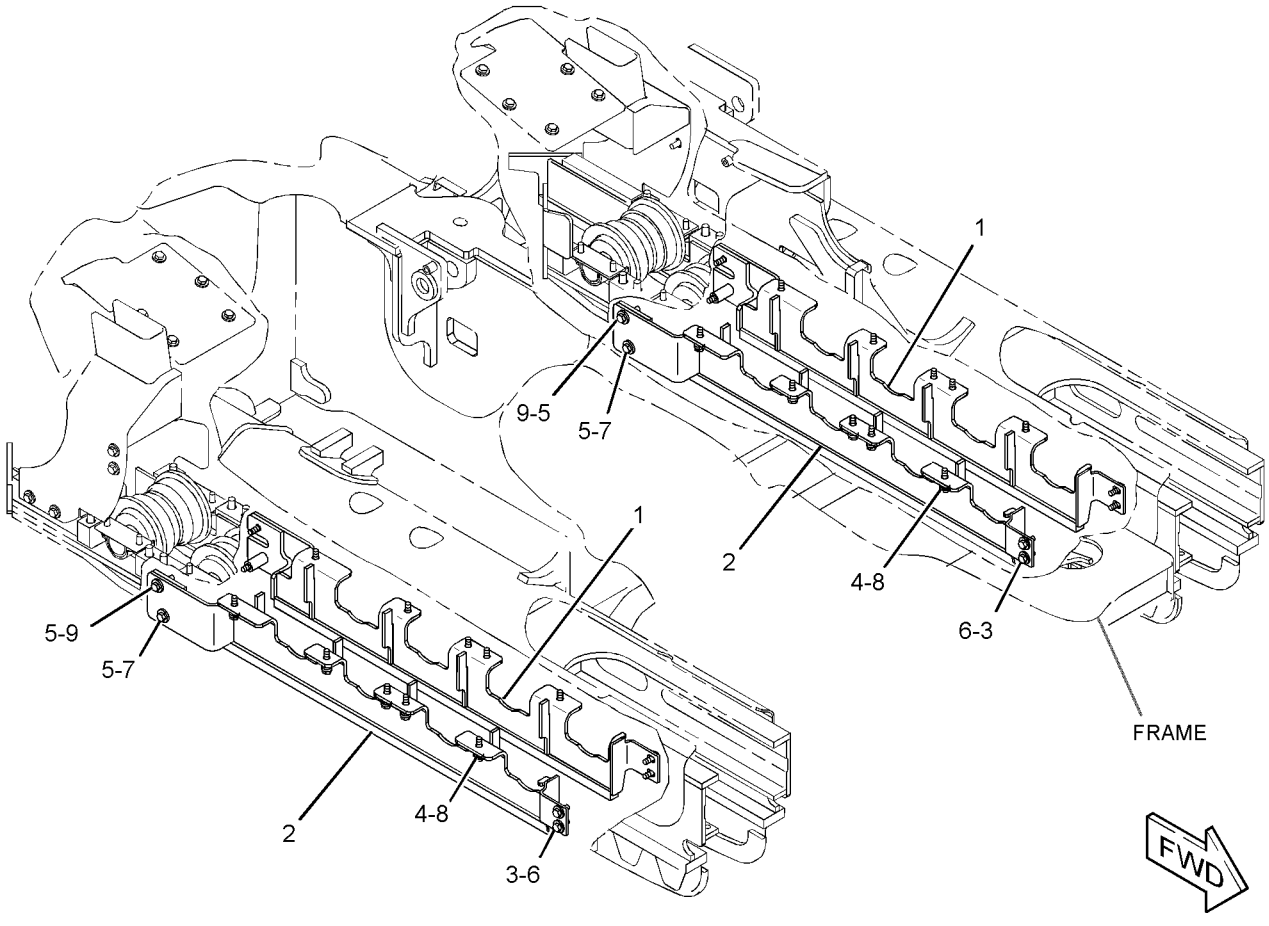

GRAPHIC #1 **<END>** g01406808

282-3683 GUARD GP-TRACK ROLLER–SYSTEMONE

S/N: JTD1-UP; FFF1-UP; LLL1-UP
FULL LENGTH
FOR USE WITH SYSTEMONE UNDERCARRIAGE ARRANGEMENT. CANNOT BE USED WITH GUARD GROUP TRACK GUIDE (CENTER), UNDERCARRIAGE ARRANGEMENT (SALT), SUPPRESSION AR (SALT)
AN ATTACHMENT

SMCS-7152 **i02819899**

NOTE	REF NO	GRAPHIC REF	PART NUMBER	QTY	PART NAME 1 2 3 4 5 6 (PRODUCT LEVEL)	SEE PAGE
	1	1	**286-1832**	2	GUARD AS	
	2	1	**286-1833**	2	GUARD AS	
	3	1	**145-5181**	20	SPACER (13.5X25X12-MM THK)	
	4	1	**5P-1076**	8	WASHER-HARD (13.5X30X4-MM THK)	
	5	1	**7X-0550**	8	WASHER-HARD (13.5X32X5-MM THK)	
M	6	1	**8T-4139**	8	BOLT (M12X1.75X30-MM)	
M	7	1	**8T-4176**	4	BOLT (M12X1.75X90-MM)	
M	8	1	**8T-4183**	20	BOLT (M12X1.75X40-MM)	
M	9	1	**8T-4194**	4	BOLT (M12X1.75X50-MM)	

M-METRIC PART

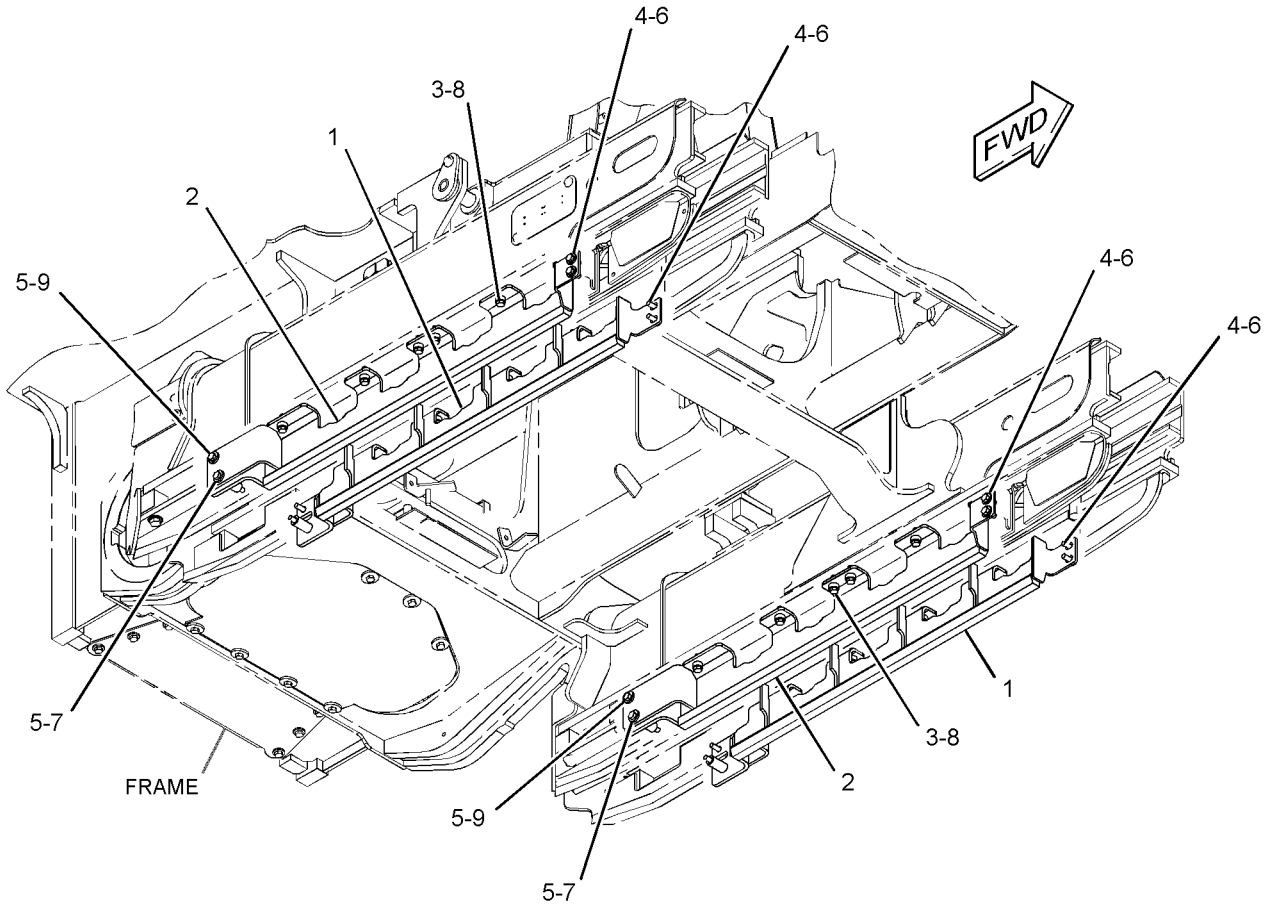

GRAPHIC #1 **<END>** g01407317

UNDERCARRIAGE

244-7500 IDLER GP-FRONT

S/N: JTD1-UP; FFF1-UP; LLL1-UP
PART OF 244-7448 UNDERCARRIAGE AR
AN ATTACHMENT

SMCS-4159 **i02666703**

NOTE	REF NO	GRAPHIC REF	PART NUMBER	QTY	PART NAME 1 2 3 4 5 6 (PRODUCT LEVEL)	SEE PAGE
	1	1	**254-0589**	12	STRIP-WEAR	
	2	1	**254-0590**	16	STRIP-WEAR	
B	3	1	**254-0591**	12	STRIP-WEAR	
Y	4	1	*254-0603*	2	SPRING GP-RECOIL	481
Y	5	1	*254-0664*	2	ADJUSTMENT GP-HYDRAULIC TRACK	438
Y	6	1	*254-0684*	2	IDLER GP-TRACK	457
	7	1	**7X-0584**	8	WASHER-HARD (13.5X20.5X2-MM THK)	
M	8	1	**8T-4184**	8	BOLT (M12X1.75X45-MM)	
M	9	1	**8T-4192**	8	BOLT (M12X1.75X25-MM)	
M	10	1	**8T-4194**	8	BOLT (M12X1.75X50-MM)	
	11	1	**8T-4223**	32	WASHER-HARD (13.5X25.5X3-MM THK)	
M	12	1	**8T-4956**	12	BOLT (M12X1.75X35-MM)	
M	13	1	**8T-5001**	4	BOLT (M12X1.75X130-MM)	

B-USE AS REQUIRED
M-METRIC PART
Y-SEPARATE ILLUSTRATION

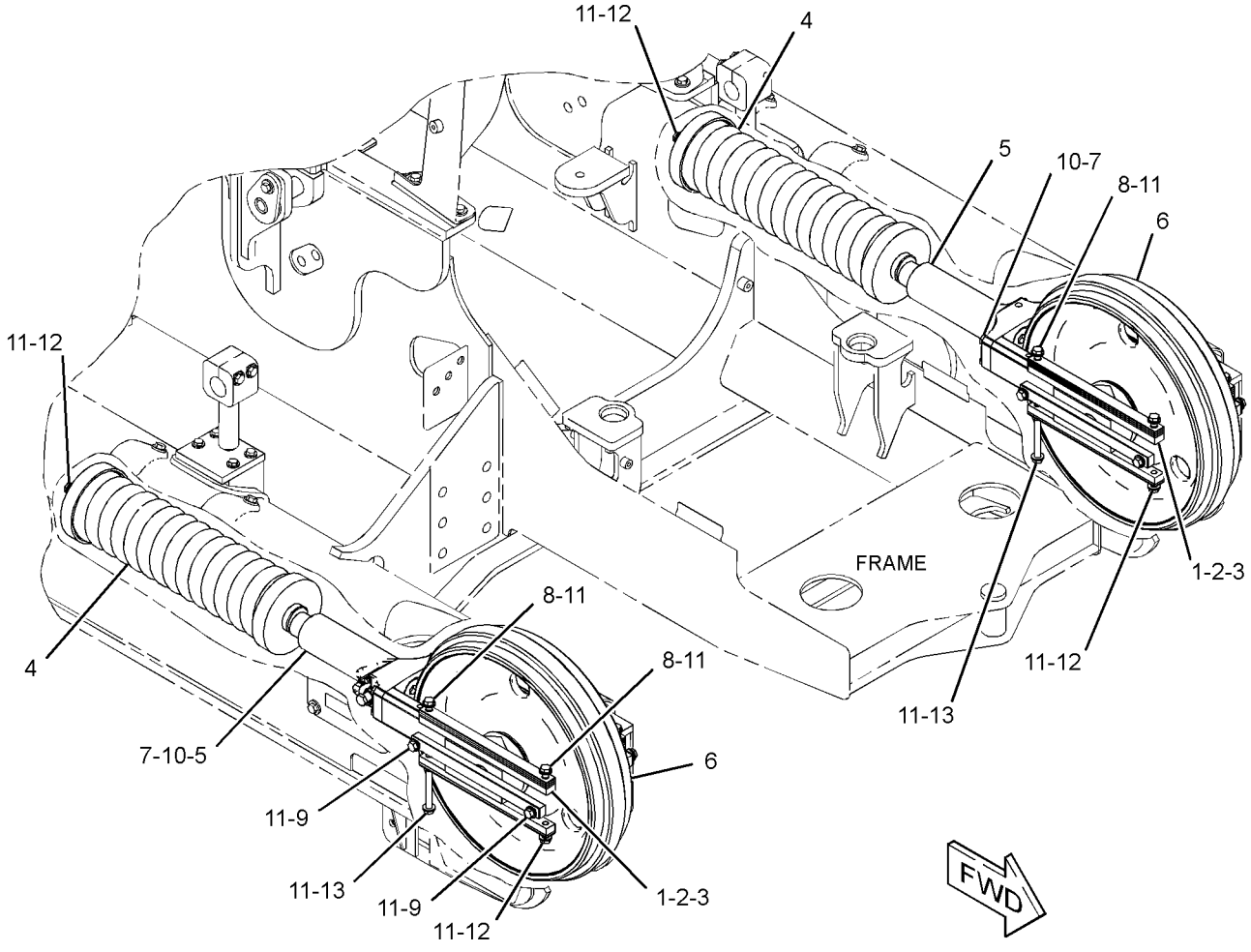

GRAPHIC #1 **<END>** g01342570

UNDERCARRIAGE

254-0593 IDLER GP-FRONT

S/N: JTD1-UP; FFF1-UP; LLL1-UP
PART OF 244-7393 UNDERCARRIAGE AR
AN ATTACHMENT

SMCS-4159 **i02666366**

NOTE	REF NO	GRAPHIC REF	PART NUMBER	QTY	PART NAME 1 2 3 4 5 6 (PRODUCT LEVEL)	SEE PAGE
	1	1	**254-0589**	12	STRIP-WEAR	
	2	1	**254-0590**	16	STRIP-WEAR	
B	3	1	**254-0591**	12	STRIP-WEAR	
Y	4	1	*254-0603*	2	SPRING GP-RECOIL	481
Y	5	1	*254-0614*	2	IDLER GP-TRACK	456
Y	6	1	*254-0664*	2	ADJUSTMENT GP-HYDRAULIC TRACK	438
	7	1	**7X-0584**	8	WASHER-HARD (13.5X20.5X2-MM THK)	
M	8	1	**8T-4184**	8	BOLT (M12X1.75X45-MM)	
M	9	1	**8T-4192**	8	BOLT (M12X1.75X25-MM)	
M	10	1	**8T-4194**	8	BOLT (M12X1.75X50-MM)	
	11	1	**8T-4223**	32	WASHER-HARD (13.5X25.5X3-MM THK)	
M	12	1	**8T-4956**	12	BOLT (M12X1.75X35-MM)	
M	13	1	**8T-5001**	4	BOLT (M12X1.75X130-MM)	

B-USE AS REQUIRED
M-METRIC PART
Y-SEPARATE ILLUSTRATION

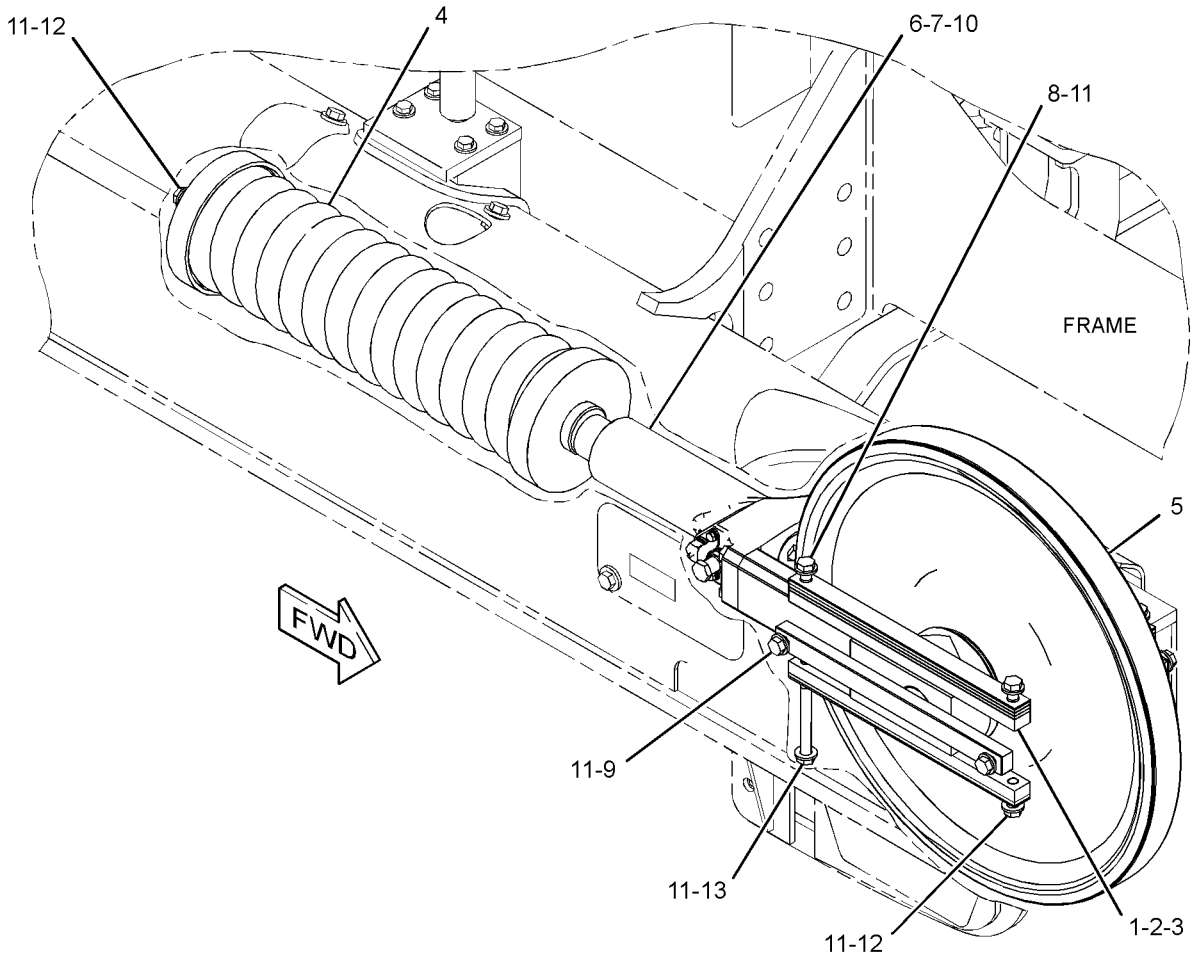

GRAPHIC #1 **<END>** g01342913

254-0614 IDLER GP-TRACK

S/N: JTD1-UP; FFF1-UP; LLL1-UP
PART OF 254-0593 IDLER GP-FRONT
AN ATTACHMENT

SMCS-4159 **i02667639**

NOTE	REF NO	GRAPHIC REF	PART NUMBER	QTY	PART NAME 1 2 3 4 5 6 (PRODUCT LEVEL)	SEE PAGE
R	1	1	**6S-3285**	2	SEAL GP-DUO-CONE	
					(EACH INCLUDES)	
		1	**6S-3284**	2	RING-TORIC	
	2	1	**6S-7715**	2	WASHER-THRUST (52X86X6.35-MM THK)	
	3	1	**027-3873**	2	PIN-SPRING	
	4	1	**254-0634**	2	BEARING-IDLER	
	5	1	**254-0644**	1	SHAFT	
	6	1	**261-4473**	1	IDLER & BEARING AS	
	7	1	**1H-9696**	2	SEAL-O-RING	
	8	1	**9F-2247**	1	PLUG-PIPE	

R-REMFG PART MAY BE AVAILABLE

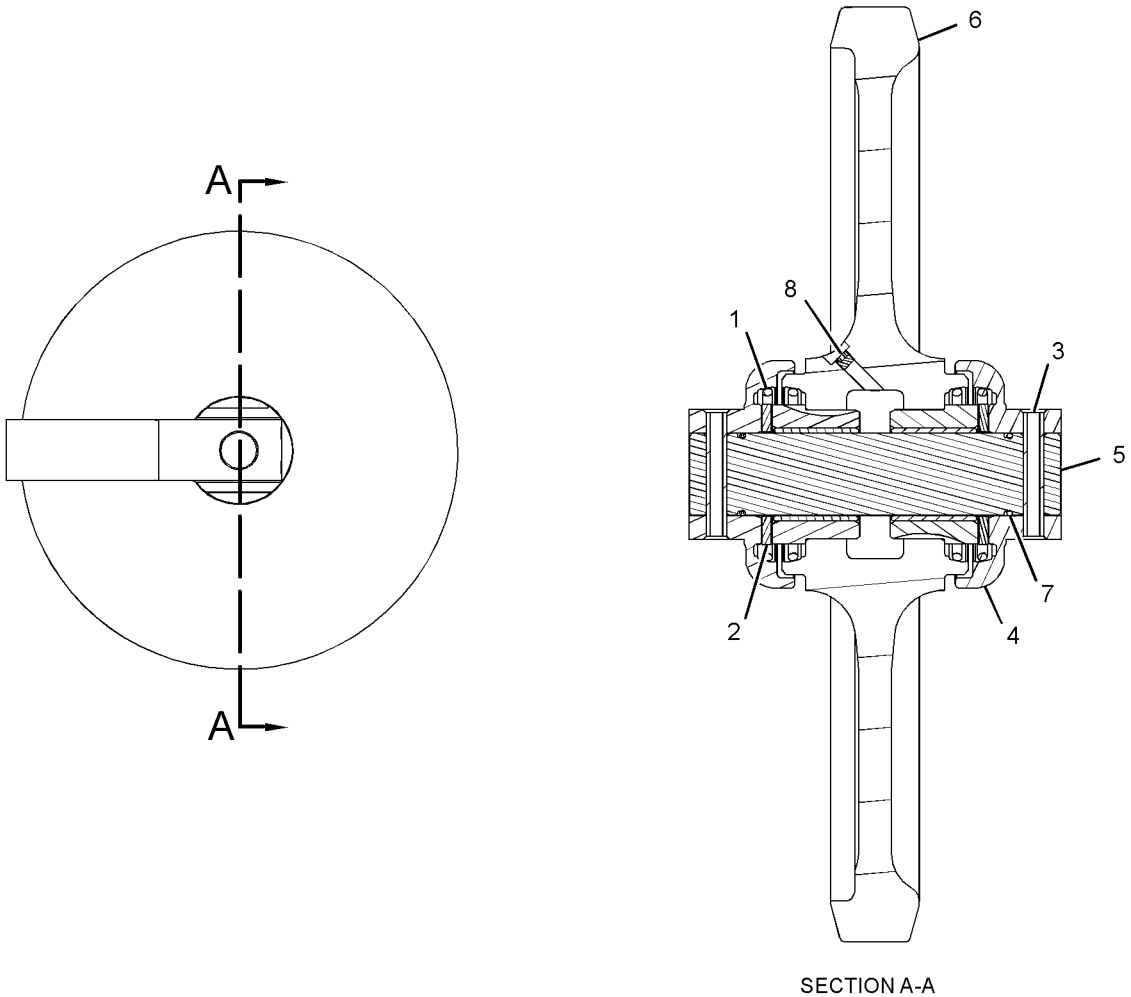

SECTION A-A

GRAPHIC #1 **<END>** g01341531

UNDERCARRIAGE

254-0684 IDLER GP-TRACK

S/N: JTD1-UP; FFF1-UP; LLL1-UP
PART OF 244-7500 IDLER GP-FRONT
AN ATTACHMENT

SMCS-4159 **i02883075**

NOTE	REF NO	GRAPHIC REF	PART NUMBER	QTY	PART NAME 1 2 3 4 5 6 (PRODUCT LEVEL)	SEE PAGE
R	1	1	**6S-3285**	2	SEAL GP-DUO-CONE	
					(EACH INCLUDES)	
		1	**6S-3284**	2	RING-TORIC	
	2	1	**6S-7715**	2	WASHER-THRUST (52X86X6.35-MM THK)	
	3	1	**027-3873**	2	PIN-SPRING	
	4	1	**106-9187**	1	IDLER & BEARING AS	
		1	**6S-3495**	2	BEARING AS	
					(EACH INCLUDES)	
		1	**6Y-4744**	1	BEARING-SLEEVE	
	5	1	**254-0634**	2	BEARING-IDLER	
	6	1	**254-0644**	1	SHAFT	
	7	1	**1H-9696**	2	SEAL-O-RING	
	8	1	**9F-2247**	1	PLUG-PIPE	

R-REMFG PART MAY BE AVAILABLE

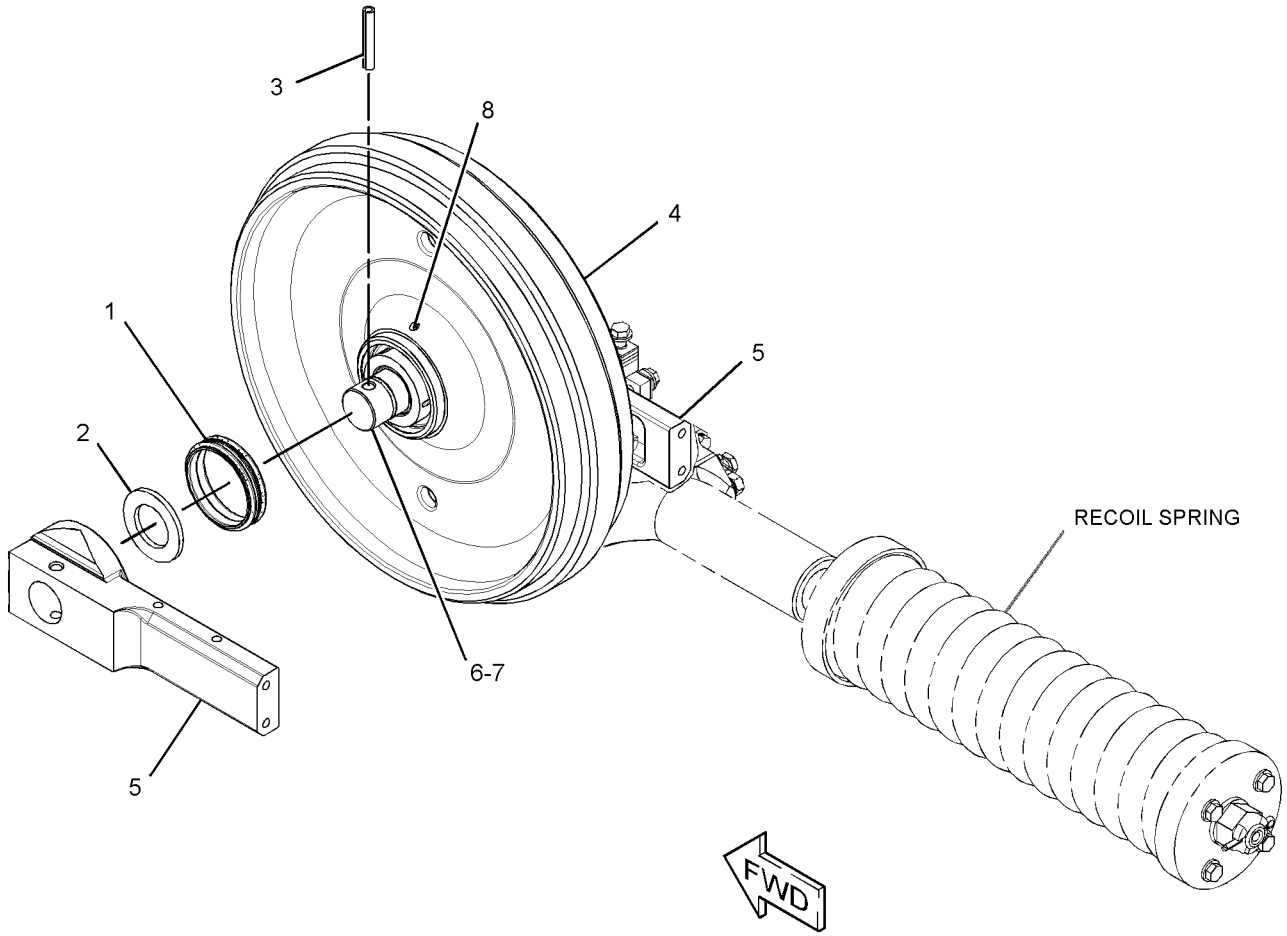

GRAPHIC #1 **<END>** g01440085

260-6747 LINK AS-TRACK—SYSTEMONE

S/N: LLL1-UP
36-JOINTS. SEALED, LUBRICATED
PART OF 289-3071 TRACK GP
FOR USE WITH SYSTEMONE ROLLERS, GUARDS, GUIDESTRIPS, SHOES
AN ATTACHMENT

SMCS-4169, 4171 **i02819083**

NOTE	REF NO	GRAPHIC REF	PART NUMBER	QTY	PART NAME 1 2 3 4 5 6 (PRODUCT LEVEL)	SEE PAGE
	1	1	**260-6740**	34	LINK-TRACK	
Y	2	1	**260-6744**	18	LINK AS-TRACK BOX (SYSTEMONE)	461

Y-SEPARATE ILLUSTRATION

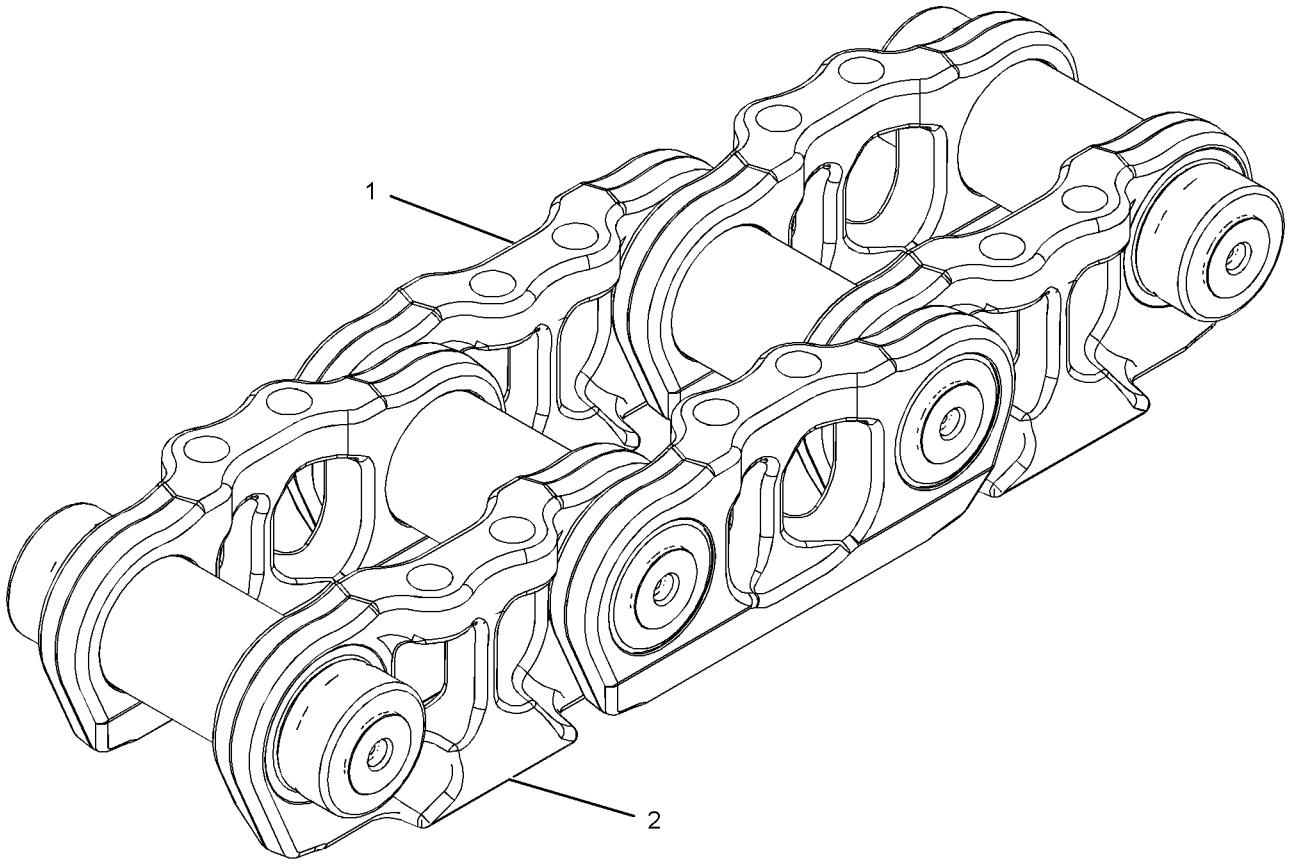

GRAPHIC #1 **<END>** g01193467

289-3061 LINK AS-TRACK–SYSTEMONE

S/N: FFF1-UP; LLL1-UP
36-JOINTS. SEALED, LUBRICATED
PART OF 289-3063, 289-3064 TRACK GP
FOR USE WITH SYSTEMONE ROLLERS, GUARDS, SPROCKETS, IDLERS, SHOES
AN ATTACHMENT

SMCS-4169, 4171 **i03747023**

NOTE	REF NO	GRAPHIC REF	PART NUMBER	QTY	PART NAME 1 2 3 4 5 6 (PRODUCT LEVEL)	SEE PAGE
Y	1	1	*289-3057*	18	LINK AS-TRACK BOX	463
	2	1	**260-6740**	34	LINK-TRACK	
BF			**254-0228**	4	BOLT-TRACK MASTER (M16X1.5X81-MM)	
BF			**260-6740**	2	LINK-TRACK	
BF			**311-6180**	2	LINK-TRACK MASTER	

B-USE AS REQUIRED
F-NOT SHOWN
Y-SEPARATE ILLUSTRATION

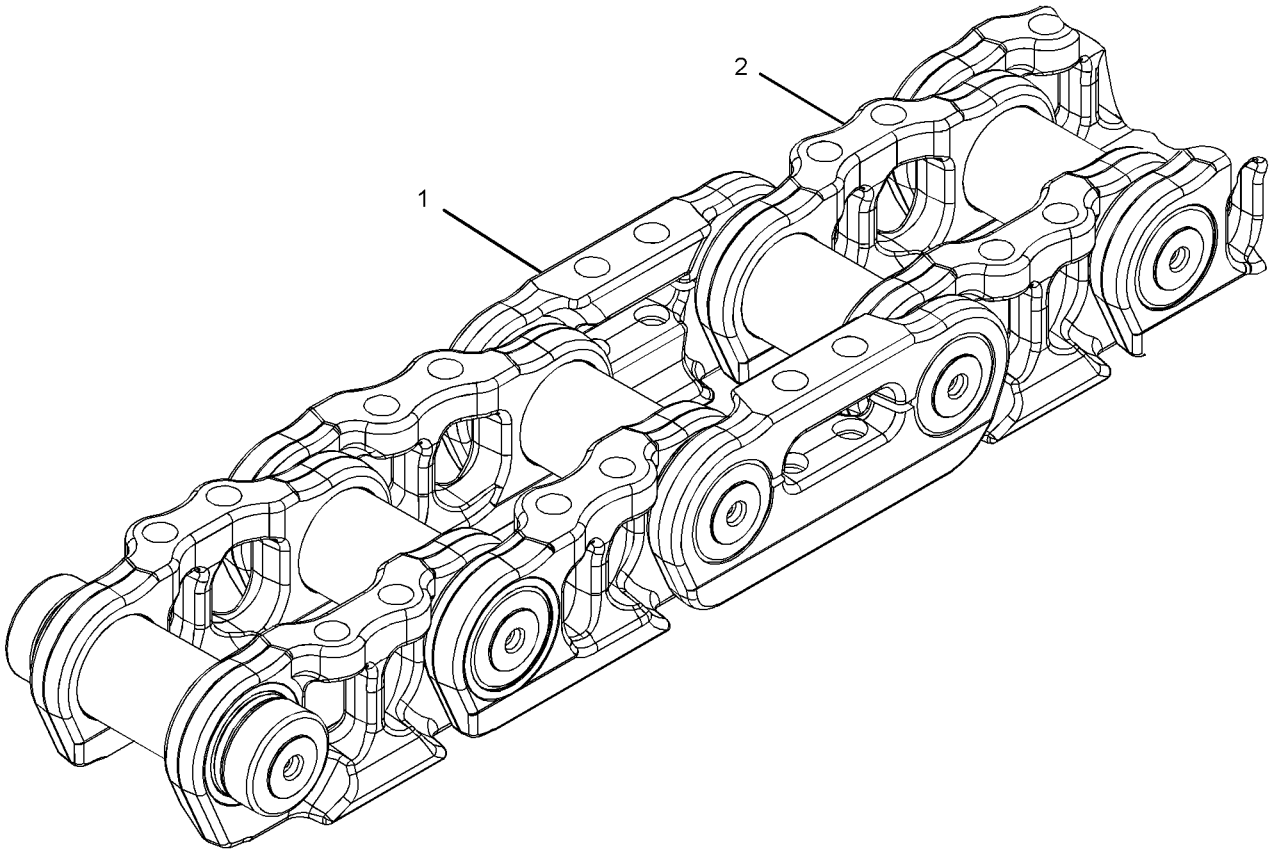

GRAPHIC #1 **<END>** g01333312

UNDERCARRIAGE

323-8756 LINK AS-TRACK

S/N: FFF1-UP; LLL1-UP
SEALED, LUBRICATED
PART OF 180-6166, 198-7392, 198-7393, 310-7249 TRACK GP
AN ATTACHMENT

SMCS-4169, 4171 **i03384961**

NOTE	PART NUMBER	QTY	PART NAME 1 2 3 4 5 6 (PRODUCT LEVEL)	SEE PAGE
	250-4002	82	SEAL AS	
	6Y-1198	41	STOP AS	
			(EACH INCLUDES)	
	5G-2247	1	STOPPER-RUBBER	
	6Y-0473	1	PLUG-CLEAR	
	5A-3187	4	BOLT-TRACK (9/16-18X3-IN)	
	188-6246	41	BUSHING-TRACK	
	6Y-0937	1	LINK-MASTER (PIN END, RH)	
	6Y-0938	1	LINK-MASTER (PIN END, LH)	
	6Y-0939	1	LINK-MASTER (BUSHING END, RH)	
	6Y-0940	1	LINK-MASTER (BUSHING END, LH)	
	6Y-0935	40	LINK-TRACK (RH)	
	6Y-0936	40	LINK-TRACK (LH)	
	303-9455	41	PIN-TRACK	
	6S-9049	82	RING-THRUST	

<END>

260-6744 LINK AS-TRACK BOX—SYSTEMONE

S/N: LLL1-UP
SEALED, LUBRICATED, ORDER FIELD REPLACEMENT OF LINK BOX WHEN 40% WORN
PART OF 260-6747 LINK AS-TRACK
OPTIONAL FIELD REPLACEMENT ORDER 264-9767—PAGE 462
AN ATTACHMENT

SMCS-4169 **i03649804**

NOTE	REF NO	GRAPHIC REF	PART NUMBER	QTY	PART NAME 1 2 3 4 5 6 (PRODUCT LEVEL)	SEE PAGE
	1	1	**260-6740**	2	LINK-TRACK	
					PARTS SHOWN IN GRAPHIC(S) WITHOUT A REFERENCE NUMBER ARE NOT SERVICED SEPARATELY	

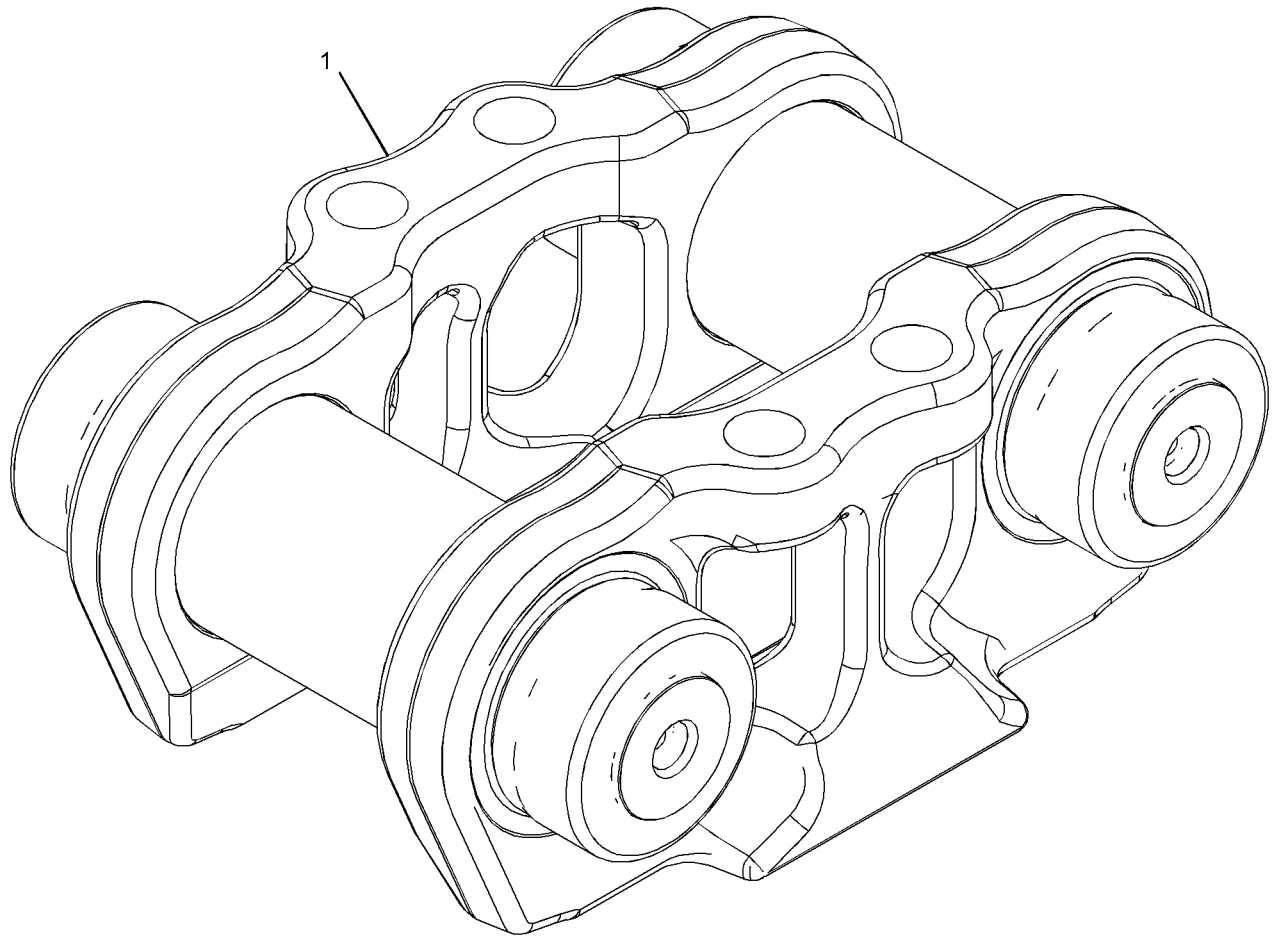

GRAPHIC #1 **<END>** g01959108

264-9767 LINK AS-TRACK BOX—LINK BOX

S/N: LLL1-UP

70%-WORN. FIELD REPLACEMENT FOR 260-6744 LINK AS THAT IS MORE THAN 40% WORN, FIELD REPLACEMENT FOR 289-3057 LINK AS THAT IS MORE THAN 40% WORN

SMCS-4169 **i04077150**

NOTE	REF NO	GRAPHIC REF	PART NUMBER	QTY	PART NAME 1 2 3 4 5 6 (PRODUCT LEVEL)	SEE PAGE
	1	1	*321-7854*	2	PIN AS	
					(EACH INCLUDES)	
		1	**6Y-0473**	2	PLUG-CLEAR	
		1	**9G-1642**	2	STOPPER-RUBBER	
					PARTS SHOWN IN GRAPHIC(S) WITHOUT A REFERENCE NUMBER ARE NOT SERVICED SEPARATELY	

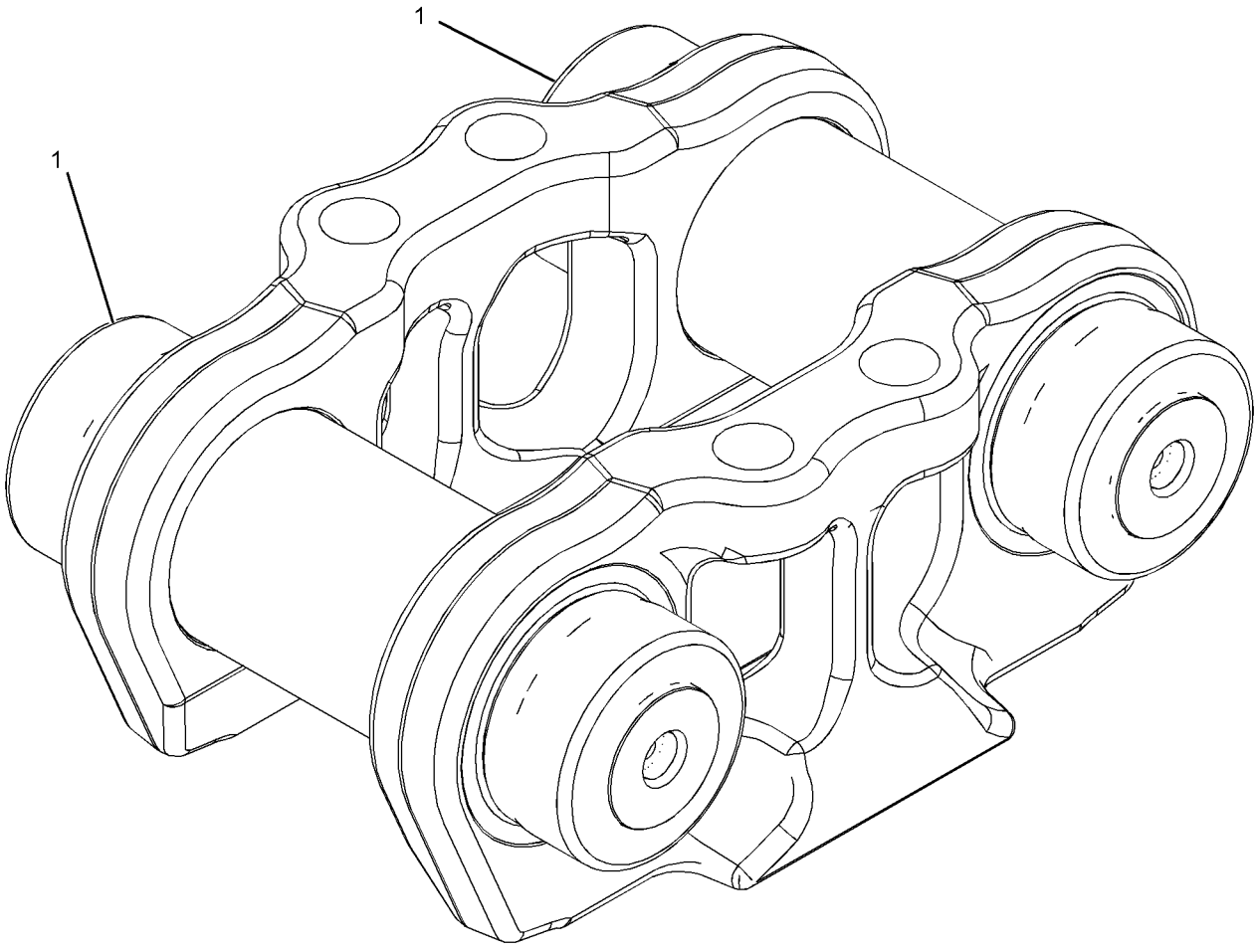

GRAPHIC #1 **<END>** g01416784

289-3057 LINK AS-TRACK BOX—LINK BOX

S/N: FFF1-UP; LLL1-UP
SEALED, LUBRICATED,
FOR FIELD REPLACEMENT OF LINK BOX THAT IS MORE THAN 40% WORN
PART OF 289-3061 LINK AS-TRACK
OPTIONAL FIELD REPLACEMENT ORDER 264-9767—PAGE 462. FIELD REPLACEMENT FOR 260-6744—PAGE 461
AN ATTACHMENT

SMCS-4169 **i04077153**

NOTE	REF NO	GRAPHIC REF	PART NUMBER	QTY	PART NAME 1 2 3 4 5 6 (PRODUCT LEVEL)	SEE PAGE
	1	1	**260-6740**	2	LINK-TRACK	
	2	1	*321-7854*	2	PIN AS	
					(EACH INCLUDES)	
		1	**6Y-0473**	2	PLUG-CLEAR	
		1	**9G-1642**	2	STOPPER-RUBBER	

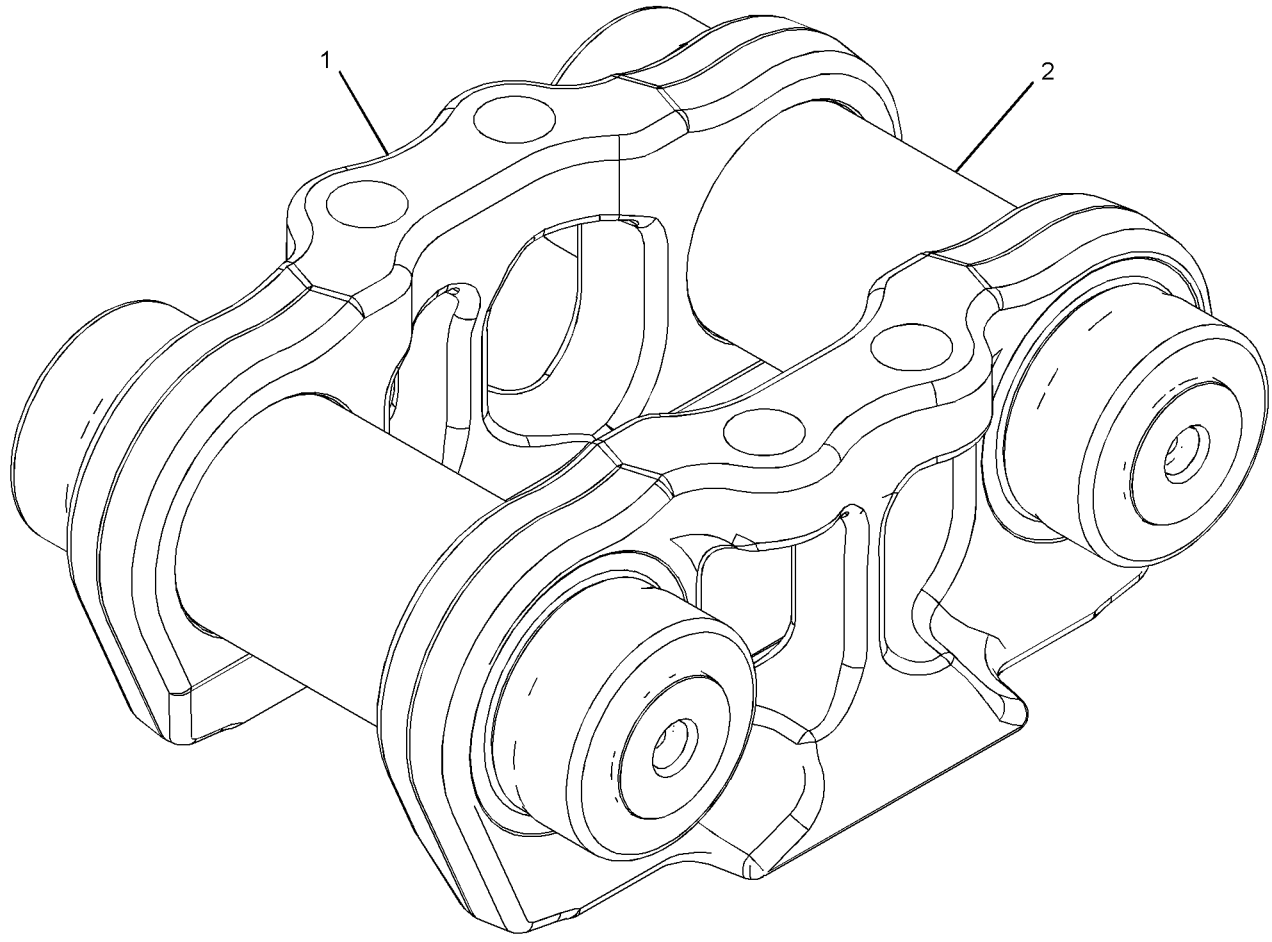

GRAPHIC #1 **<END>** g02297233

282-8803 ROLLER GP-TRACK–SYSTEMONE

S/N: FFF1-113, 115-117; LLL1-99, 101-102
PART OF 244-7393 UNDERCARRIAGE AR
AN ATTACHMENT

SMCS-4180 **i02739768**

NOTE	REF NO	GRAPHIC REF	PART NUMBER	QTY	PART NAME 1 2 3 4 5 6 (PRODUCT LEVEL)	SEE PAGE
Y	1	1	**243-3277**	12	ROLLER GP-TRACK-SINGLE FLANGE	476
	2	1	**145-5181**	48	SPACER (13.5X25X12-MM THK)	
	3	1	**215-2901**	48	BOLT (M12X1.75X50-MM)	

Y-SEPARATE ILLUSTRATION

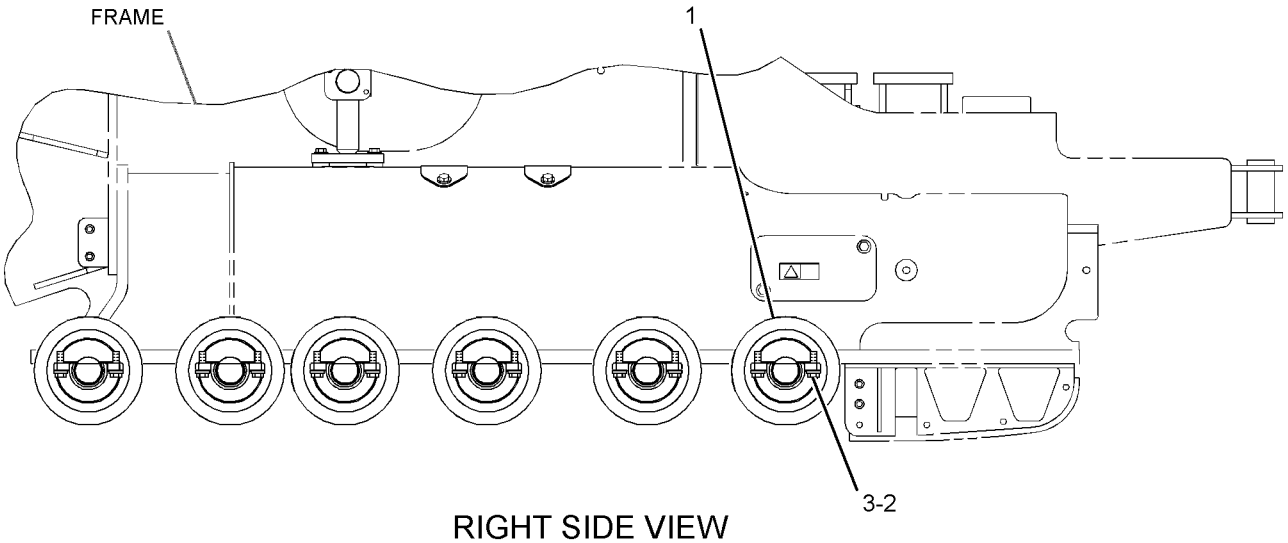

RIGHT SIDE VIEW

GRAPHIC #1 **<END>** g01344159

302-6803 ROLLER GP-TRACK

S/N: JTD1-UP; FFF114, 118-UP; LLL100, 103-UP
PART OF 244-7393 UNDERCARRIAGE AR
AN ATTACHMENT

SMCS-4180 **i02675156**

NOTE	REF NO	GRAPHIC REF	PART NUMBER	QTY	PART NAME 1 2 3 4 5 6 (PRODUCT LEVEL)	SEE PAGE
Y	1	1	*301-0654*	12	ROLLER GP-TRACK-SINGLE FLANGE	480
	2	1	**5P-8247**	48	WASHER-HARD (17X32X3.5-MM THK)	
M	3	1	**8T-0088**	48	BOLT (M16X2X65-MM)	

M-METRIC PART
Y-SEPARATE ILLUSTRATION

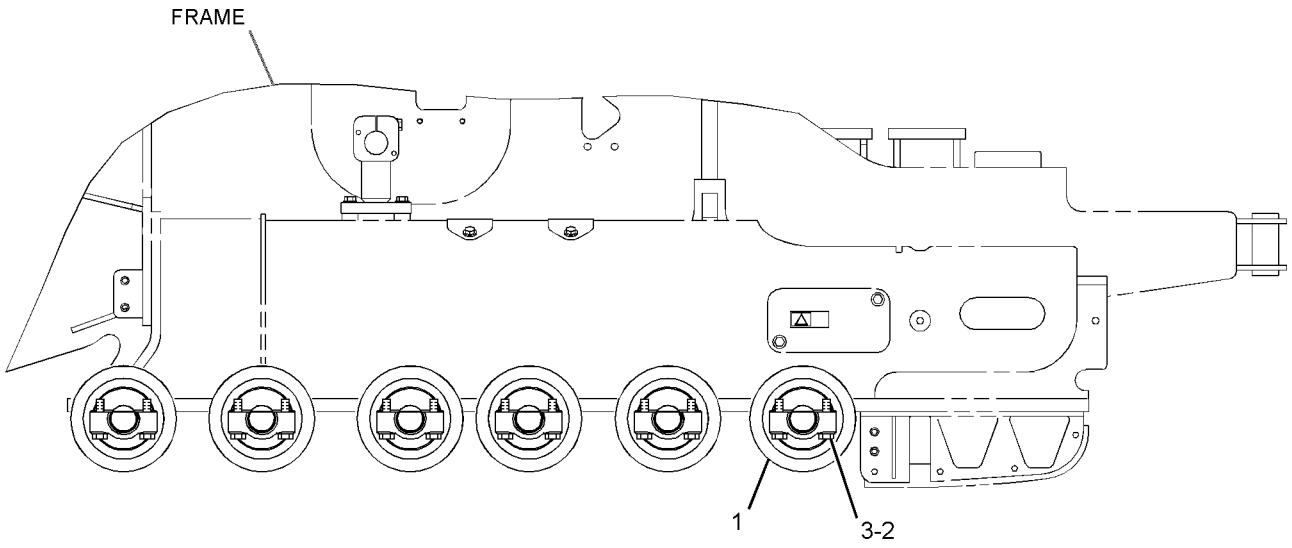

RIGHT SIDE VIEW

GRAPHIC #1 **<END>** g01344851

6S-3609 ROLLER GP-TRACK CARRIER

S/N: JTD1-UP; FFF1-UP; LLL1-UP
PART OF 356-5273 ROLLER GP-TRACK CARRIER
AN ATTACHMENT

SMCS-4154 **i04415709**

NOTE	REF NO	GRAPHIC REF	PART NUMBER	QTY	PART NAME 1 2 3 4 5 6 (PRODUCT LEVEL)	SEE PAGE
	1	1	**1M-7914**	1	RING-RETAINING	
	2	1	**1M-7918**	1	COLLAR AS-END	
	3	1	**1M-4291**	2	DOWEL	
R	4	1	**9W-7216**	1	SEAL GP-DUO-CONE	
	5	1	**3B-4506**	5	LOCKWASHER	
	6	1	**1H-9696**	1	SEAL-O-RING	
	7	1	**6K-9861**	1	SHAFT-ROLLER	
	8	1	**172-0160**	1	ROLLER AS	
	9	1	**1M-8736**	2	CUP-BEARING	
	10	1	**1M-8735**	2	CONE-BEARING	
	11	1	**6K-9860**	1	PLATE-RETAINER	
	12	1	**0L-1351**	5	BOLT (3/8-16X0.875-IN)	
C	13	1	**6V-4791**	2	BOLT (3/8-24X0.75-IN)	
	14	1	**4H-9628**	1	GASKET	
	15	1	**4H-9527**	1	COVER	

C-CHANGE FROM PREVIOUS TYPE
R-REMFG PART MAY BE AVAILABLE

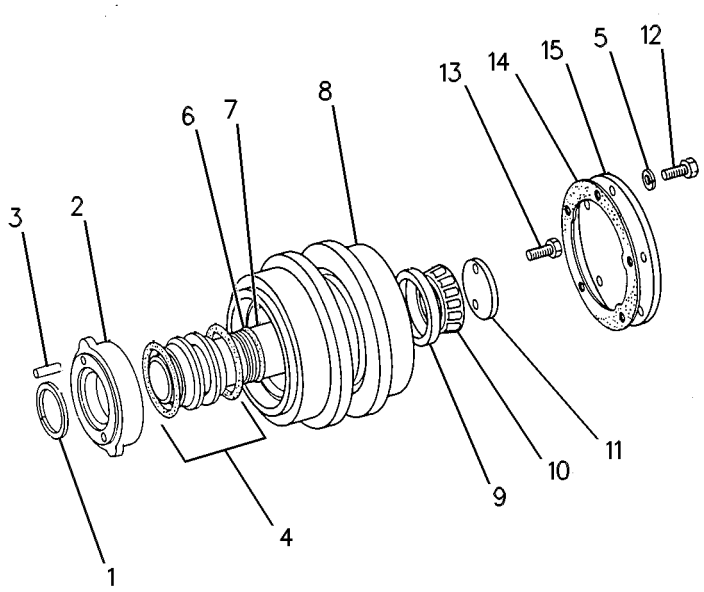

GRAPHIC #1 **<END>** g00129713

225-7650 ROLLER GP-TRACK CARRIER–SYSTEMONE

S/N: JTD1-UP; FFF1-UP; LLL1-UP
PART OF 356-5272 ROLLER GP-TRACK CARRIER
AN ATTACHMENT

SMCS-4154 **i04332522**

NOTE	REF NO	GRAPHIC REF	PART NUMBER	QTY	PART NAME 1 2 3 4 5 6 (PRODUCT LEVEL)	SEE PAGE
	1	1	**8P-6188**	1	PLATE-RETAINER	
	2	1	**7H-3171**	1	PLUG-PIPE	
	3	1	**9W-5224**	1	SEAL GP-DUO-CONE	
	4	1	**217-6359**	1	COLLAR	
	5	1	**241-8494**	2	BEARING AS-TAPERED ROLLER	
M	6	1	**192-4744**	2	BOLT (M10X1.5X20-MM)	
					PARTS SHOWN IN GRAPHIC(S) WITHOUT A REFERENCE NUMBER ARE NOT SERVICED SEPARATELY	

M-METRIC PART

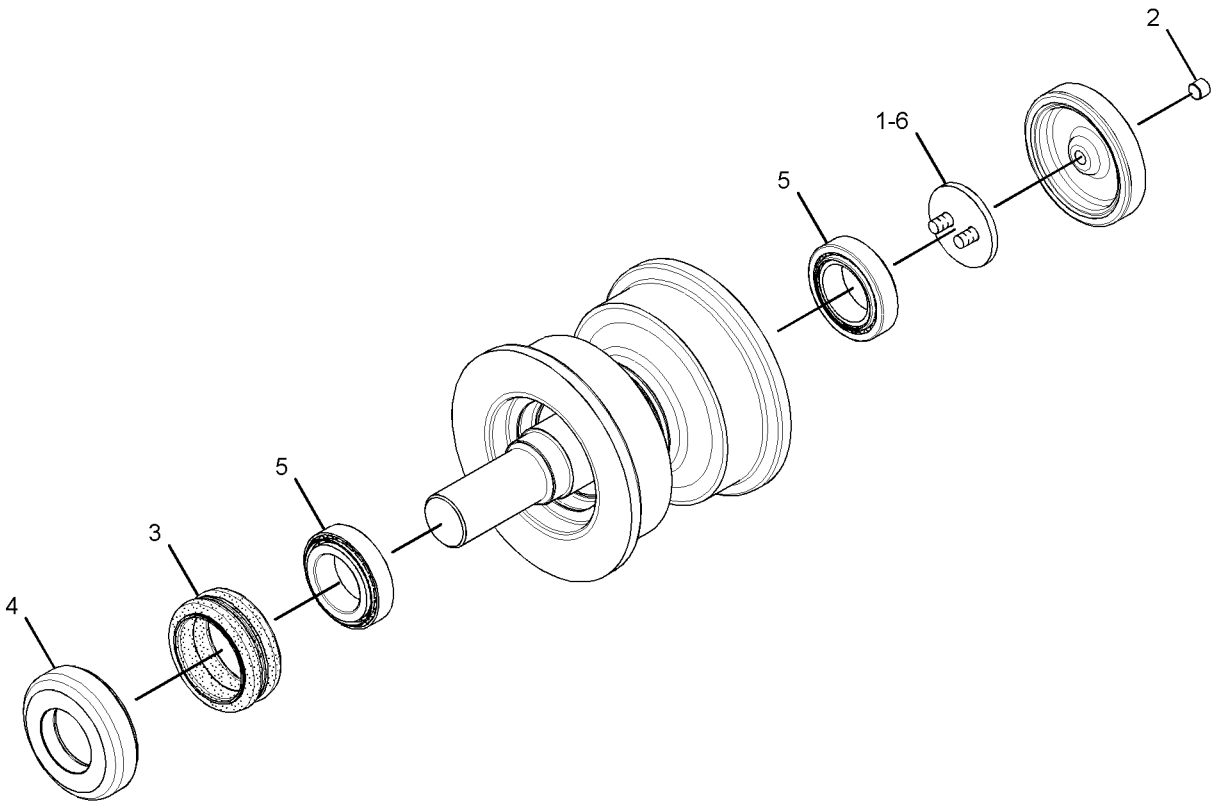

GRAPHIC #1 **<END>** g01787673

356-5272 ROLLER GP-TRACK CARRIER–SYSTEMONE

S/N: JTD1-UP; FFF1-UP; LLL1-UP
PART OF 244-7393 UNDERCARRIAGE AR
AN ATTACHMENT

SMCS-4154 **i04000943**

NOTE	REF NO	GRAPHIC REF	PART NUMBER	QTY	PART NAME 1 2 3 4 5 6 (PRODUCT LEVEL)	SEE PAGE
Y	1	1	**225-7650**	2	ROLLER GP-TRACK CARRIER (SYSTEMONE)	467
	2	1	**264-5014**	2	BRACKET AS	
M	3	1	**8T-4184**	8	BOLT (M12X1.75X45-MM)	
	4	1	**8T-4223**	12	WASHER-HARD (13.5X25.5X3-MM THK)	
M	5	1	**8T-4910**	4	BOLT (M12X1.75X60-MM)	

QUANTITIES SHOWN ARE THOSE REQUIRED FOR BOTH LH AND RH SIDES
M-METRIC PART
Y-SEPARATE ILLUSTRATION

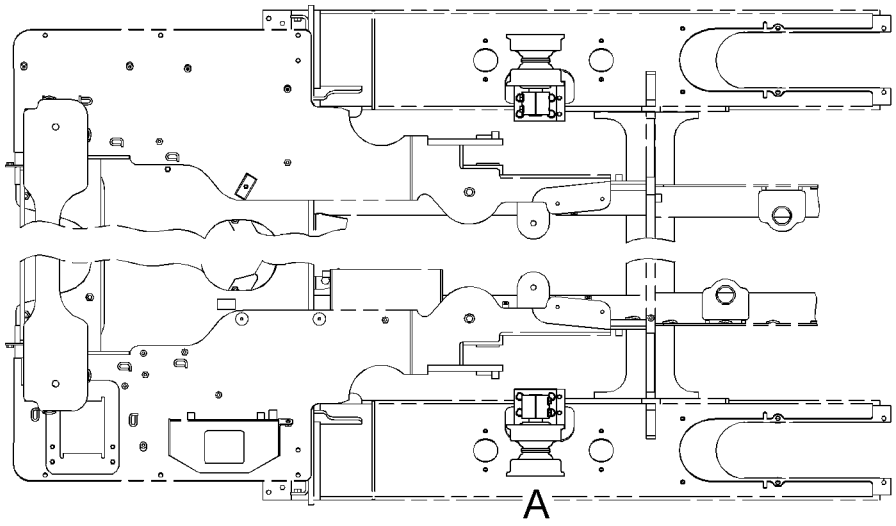

TOP VIEW FWD

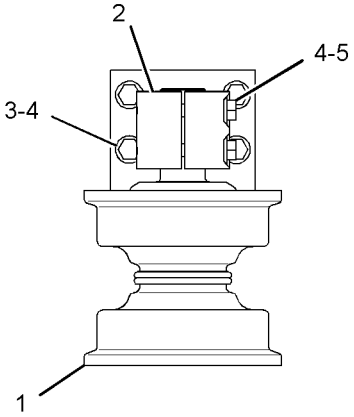

VIEW OF AREA A

GRAPHIC #1 **<END>** g02279876

356-5273 ROLLER GP-TRACK CARRIER–SYSTEMONE

S/N: JTD1-UP; FFF1-UP; LLL1-UP
PART OF 244-7448 UNDERCARRIAGE AR
AN ATTACHMENT

SMCS-4154 **i04000944**

NOTE	REF NO	GRAPHIC REF	PART NUMBER	QTY	PART NAME 1 2 3 4 5 6 (PRODUCT LEVEL)	SEE PAGE
Y	1	1	**6S-3609**	2	ROLLER GP-TRACK CARRIER	466
	2	1	**264-5014**	2	BRACKET AS	
M	3	1	**8T-4184**	8	BOLT (M12X1.75X45-MM)	
	4	1	**8T-4223**	12	WASHER-HARD (13.5X25.5X3-MM THK)	
M	5	1	**8T-4910**	4	BOLT (M12X1.75X60-MM)	

QUANTITIES SHOWN ARE THOSE REQUIRED FOR BOTH LH AND RH SIDES
M-METRIC PART
Y-SEPARATE ILLUSTRATION

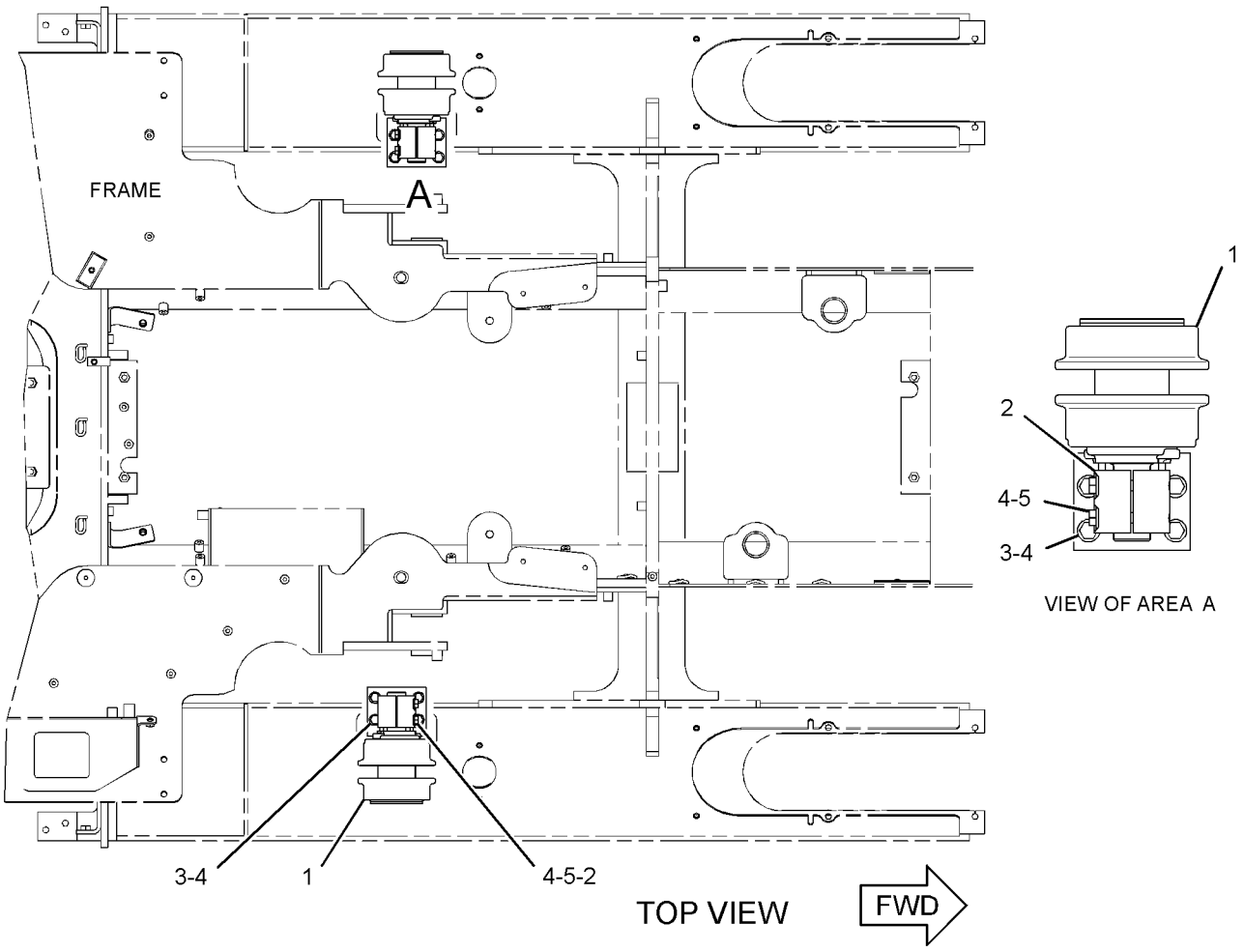

GRAPHIC #1 **<END>** g02323374

UNDERCARRIAGE

281-8338 ROLLER GP-TRACK-DOUBLE FLANGE

S/N: FFF1-113, 115-117; LLL1-99, 101-102
PART OF 282-8813 ROLLER GP-TRACK-DOUBLE FLANGE
AN ATTACHMENT

SMCS-4180 **i02510456**

NOTE	REF NO	GRAPHIC REF	PART NUMBER	QTY	PART NAME 1 2 3 4 5 6 (PRODUCT LEVEL)	SEE PAGE
	1	1	**3T-4283**	2	COLLAR	
	2	1	**6S-3171**	1	SHAFT	
	3	1	**6S-3172**	2	RING	
	4	1	*6S-3721*	1	ROLLER AS	
		1	**6S-3495**	2	BEARING AS	
					(EACH INCLUDES)	
		1	**6Y-4744**	1	BEARING-SLEEVE	
		1	**6S-7040**	1	RIM AS-ROLLER	
	5	1	**6S-7715**	2	WASHER-THRUST (52X86X6.35-MM THK)	
	6	1	**7D-9749**	2	SEAL-O-RING	
	7	1	**216-2957**	2	SEAL GP-DUO-CONE	
					(EACH INCLUDES)	
		1	**216-2956**	2	RING-TORIC	
	8	1	**9F-2247**	1	PLUG-PIPE	

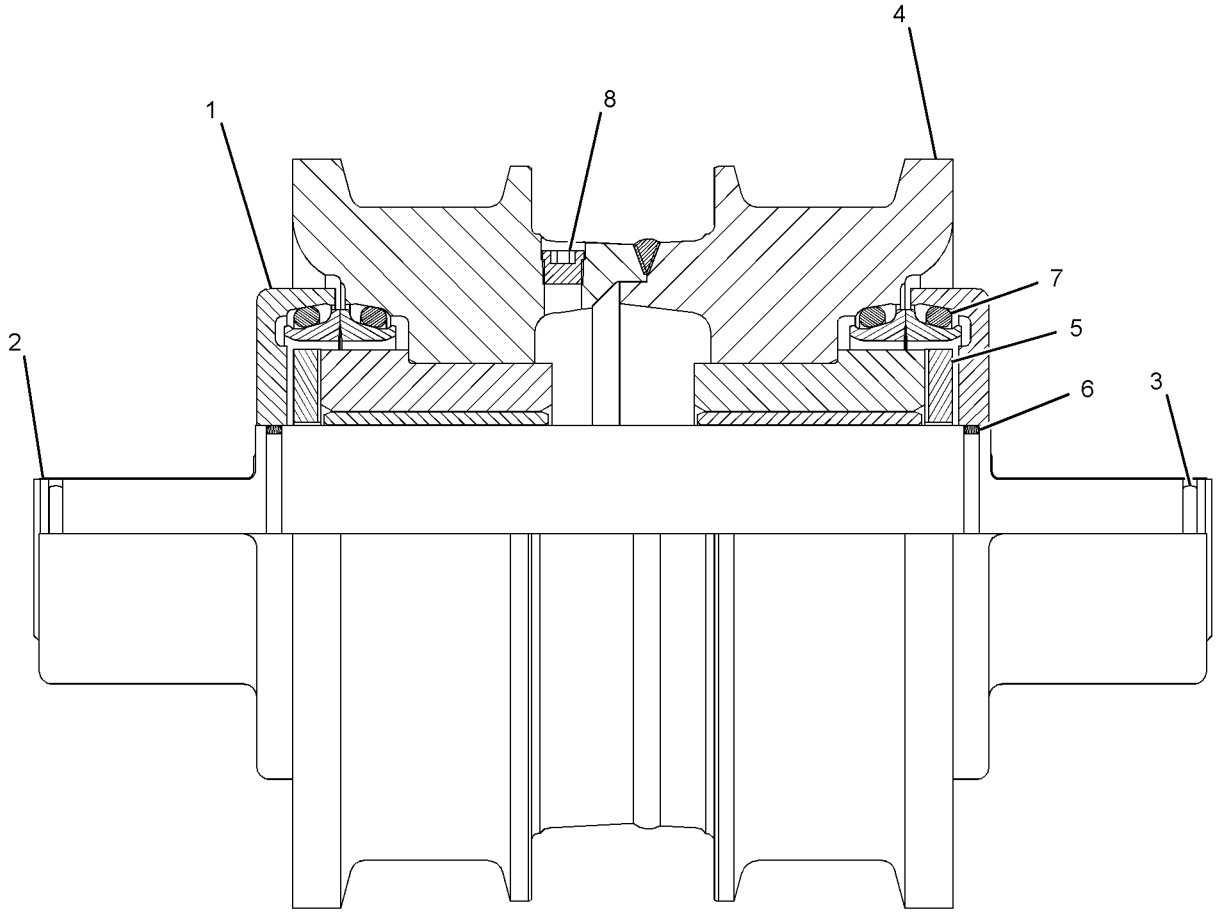

GRAPHIC #1 **<END>** g01269179

282-8813 ROLLER GP-TRACK-DOUBLE FLANGE–

SEALED, LUBRICATED

S/N: FFF1-113, 115-117; LLL1-99, 101-102

PART OF 244-7448 UNDERCARRIAGE AR

AN ATTACHMENT

SMCS-4180 **i04415715**

NOTE	REF NO	GRAPHIC REF	PART NUMBER	QTY	PART NAME 1 2 3 4 5 6 (PRODUCT LEVEL)	SEE PAGE
	1	1	**203-4604**	24	PLATE	
Y	2	1	**281-8338**	4	ROLLER GP-TRACK-DOUBLE FLANGE	470
Y	3	1	**281-8339**	8	ROLLER GP-TRACK-SINGLE FLANGE	477
	4	1	**145-5181**	48	SPACER (13.5X25X12-MM THK)	
	5	1	**215-2901**	48	BOLT (M12X1.75X50-MM)	

QUANTITIES SHOWN ARE THOSE REQUIRED FOR BOTH LH AND RH SIDES
Y-SEPARATE ILLUSTRATION

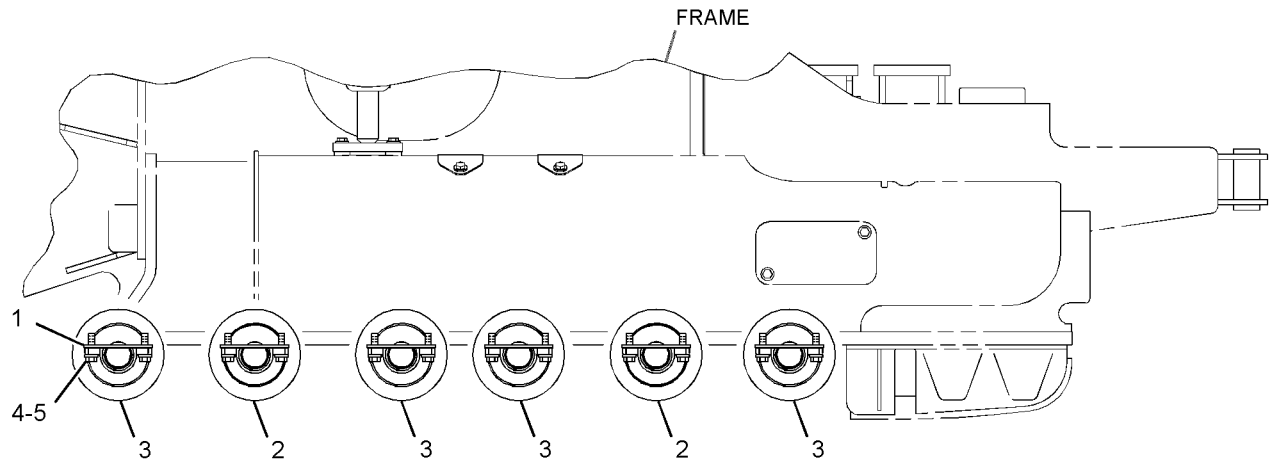

RIGHT SIDE VIEW

GRAPHIC #1 **<END>** g01344191

UNDERCARRIAGE

301-0650 ROLLER GP-TRACK-DOUBLE FLANGE

S/N: JTD1-UP; FFF114, 118-UP; LLL100, 103-UP
PART OF 302-6813 ROLLER GP-TRACK-DOUBLE FLANGE
AN ATTACHMENT

SMCS-4180 **i02674911**

NOTE	REF NO	GRAPHIC REF	PART NUMBER	QTY	PART NAME 1 2 3 4 5 6 (PRODUCT LEVEL)	SEE PAGE
	1	1	**6S-3171**	1	SHAFT	
	2	1	**6S-3172**	2	RING	
	3	1	*6S-3721*	1	ROLLER AS	
		1	**6S-3495**	2	BEARING AS	
					(EACH INCLUDES)	
		1	**6Y-4744**	1	BEARING-SLEEVE	
		1	**6S-7040**	1	RIM AS-ROLLER	
	4	1	**6S-7715**	2	WASHER-THRUST (52X86X6.35-MM THK)	
	5	1	**7D-9749**	2	SEAL-O-RING	
	6	1	**301-0096**	2	COLLAR-TRACK ROLLER	
	7	1	**216-2957**	2	SEAL GP-DUO-CONE	
					(EACH INCLUDES)	
		1	**216-2956**	2	RING-TORIC	
	8	1	**9F-2247**	1	PLUG-PIPE	

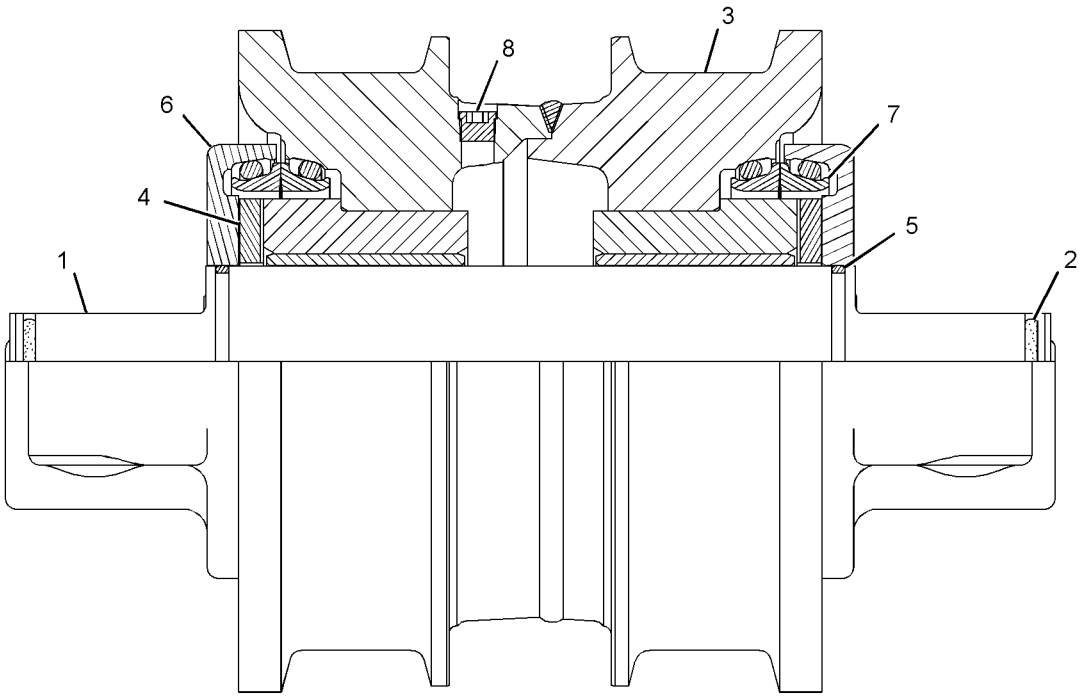

GRAPHIC #1 **<END>** g01345560

UNDERCARRIAGE

301-0650 ROLLER GP-TRACK-DOUBLE FLANGE

S/N: JTD1-UP; FFF118-UP; LLL103-UP
PART OF 302-6813 ROLLER GP-TRACK-DOUBLE FLANGE
AN ATTACHMENT

SMCS-4180 **i02895361**

NOTE	REF NO	GRAPHIC REF	PART NUMBER	QTY	PART NAME 1 2 3 4 5 6 (PRODUCT LEVEL)	SEE PAGE
	1	1	**6S-3171**	1	SHAFT	
	2	1	**6S-3172**	2	RING	
	3	1	*6S-3721*	1	ROLLER AS	
		1	**6S-3495**	2	BEARING AS	
					(EACH INCLUDES)	
		1	**6Y-4744**	1	BEARING-SLEEVE	
		1	**6S-7040**	1	RIM AS-ROLLER	
	4	1	**6S-7715**	2	WASHER-THRUST (52X86X6.35-MM THK)	
	5	1	**7D-9749**	2	SEAL-O-RING	
	6	1	**301-0096**	2	COLLAR-TRACK ROLLER	
CR	7	1	**6S-3285**	2	SEAL GP-DUO-CONE	
					(EACH INCLUDES)	
		1	**6S-3284**	2	RING-TORIC	
	8	1	**9F-2247**	1	PLUG-PIPE	

C-CHANGE FROM PREVIOUS TYPE
R-REMFG PART MAY BE AVAILABLE

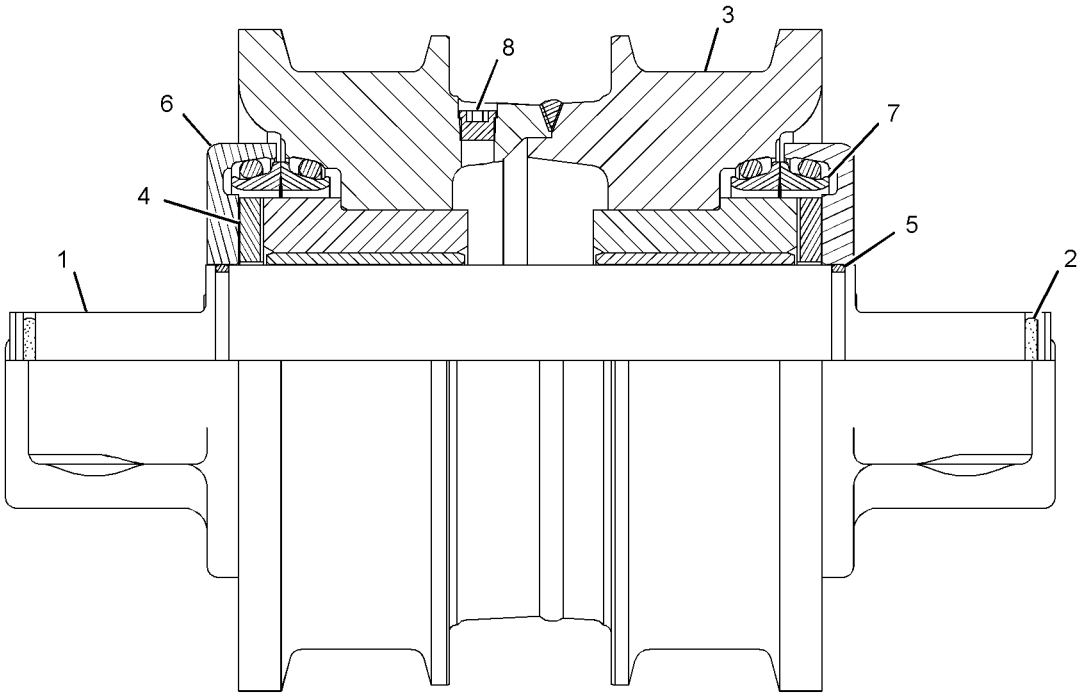

GRAPHIC #1 **<END>** g01345560

302-6813 ROLLER GP-TRACK-DOUBLE FLANGE

S/N: JTD1-UP; FFF114, 118-604; LLL100, 103-773
PART OF 244-7448 UNDERCARRIAGE AR
AN ATTACHMENT

SMCS-4180 **i04415969**

NOTE	REF NO	GRAPHIC REF	PART NUMBER	QTY	PART NAME 1 2 3 4 5 6 (PRODUCT LEVEL)	SEE PAGE
Y	1	1	**301-0650**	4	ROLLER GP-TRACK-DOUBLE FLANGE	472
Y	2	1	**301-0652**	8	ROLLER GP-TRACK-SINGLE FLANGE	478
	3	1	**302-5722**	24	PLATE	
	4	1	**5P-8247**	48	WASHER-HARD (17X32X3.5-MM THK)	
M	5	1	**8T-0357**	48	BOLT (M16X2X70-MM)	

QUANTITIES SHOWN ARE THOSE REQUIRED FOR BOTH LH AND RH SIDES
M-METRIC PART
Y-SEPARATE ILLUSTRATION

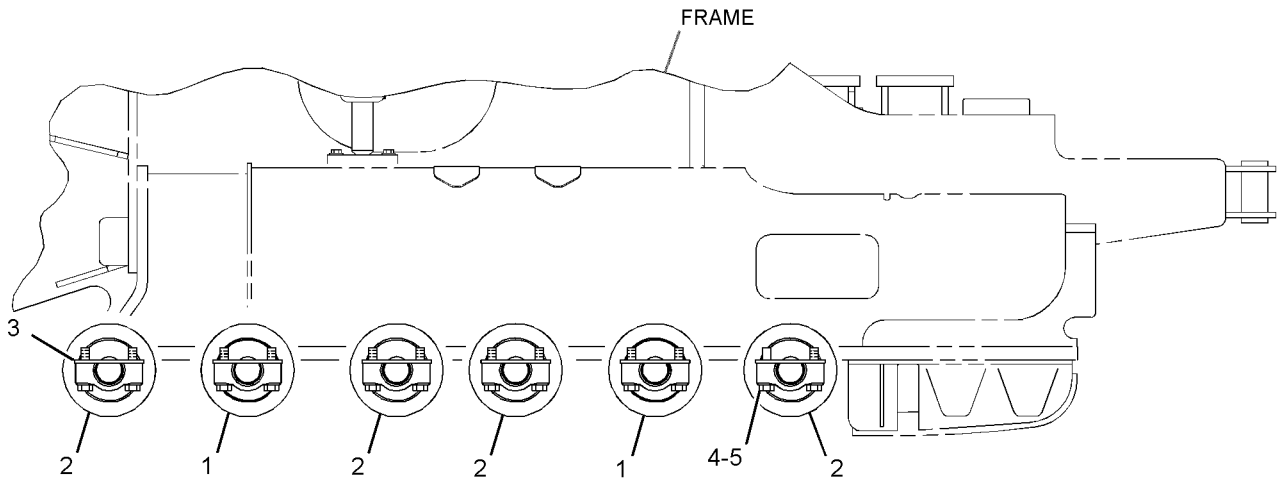

RIGHT SIDE VIEW

GRAPHIC #1 **<END>** g01346029

302-6813 ROLLER GP-TRACK-DOUBLE FLANGE

S/N: JTD1-UP; FFF605-UP; LLL774-UP
PART OF 244-7448 UNDERCARRIAGE AR
AN ATTACHMENT

SMCS-4180 **i04416270**

NOTE	REF NO	GRAPHIC REF	PART NUMBER	QTY	PART NAME 1 2 3 4 5 6 (PRODUCT LEVEL)	SEE PAGE
Y	1	1	**301-0650**	4	ROLLER GP-TRACK-DOUBLE FLANGE	472
Y	2	1	**301-0652**	8	ROLLER GP-TRACK-SINGLE FLANGE	478
C	3	1	**345-9632**	24	PLATE	
C	4	1	**357-9606**	48	BOLT (M16X2X75-MM)	
C	5	1	**4D-3704**	48	WASHER-HARD (17X30X5-MM THK)	

QUANTITIES SHOWN ARE THOSE REQUIRED FOR BOTH LH AND RH SIDES
C-CHANGE FROM PREVIOUS TYPE
Y-SEPARATE ILLUSTRATION

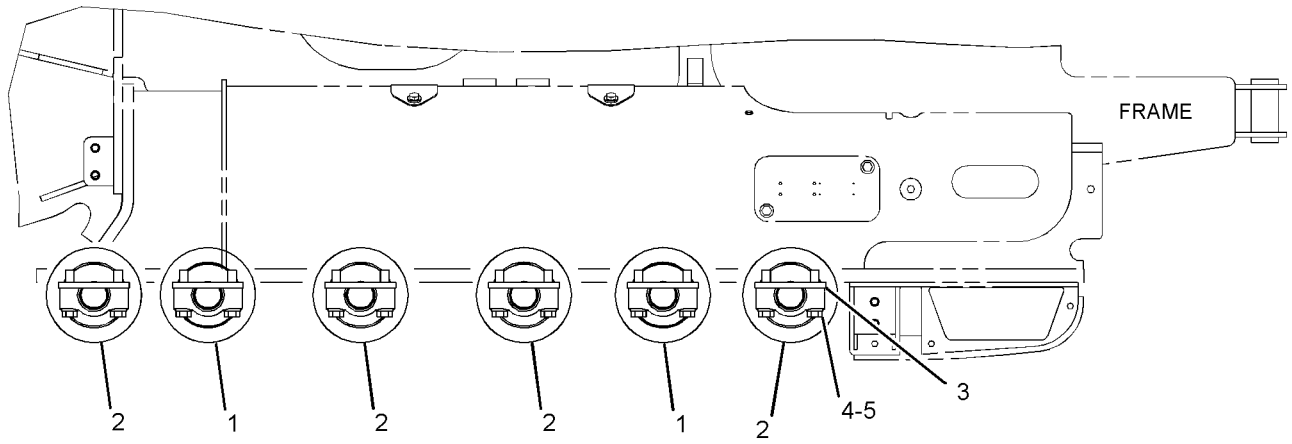

RIGHT SIDE VIEW

GRAPHIC #1 **<END>** g02354362

UNDERCARRIAGE

243-3277 ROLLER GP-TRACK-SINGLE FLANGE

S/N: FFF1-UP; LLL1-UP
PART OF 282-8803 ROLLER GP-TRACK
FOR USE WITH SYSTEMONE TRACK
AN ATTACHMENT AND FIELD INSTALLATION

SMCS-4180 **i04416271**

NOTE	REF NO	GRAPHIC REF	PART NUMBER	QTY	PART NAME 1 2 3 4 5 6 (PRODUCT LEVEL)	SEE PAGE
	1	1	**3T-4283**	2	COLLAR	
	2	1	**6S-3171**	1	SHAFT	
	3	1	**6S-3172**	2	RING	
R	4	1	**6S-3285**	2	SEAL GP-DUO-CONE	
					(EACH INCLUDES)	
		1	**6S-3284**	2	RING-TORIC	
	5	1	**6S-7715**	2	WASHER-THRUST (52X86X6.35-MM THK)	
	6	1	**7D-9749**	2	SEAL-O-RING	
	7	1	**243-3278**	1	ROLLER AS	
		1	**6S-3495**	2	BEARING AS	
					(EACH INCLUDES)	
		1	**6Y-4744**	1	BUSHING	
	8	1	**9F-2247**	1	PLUG-PIPE	

R-REMFG PART MAY BE AVAILABLE

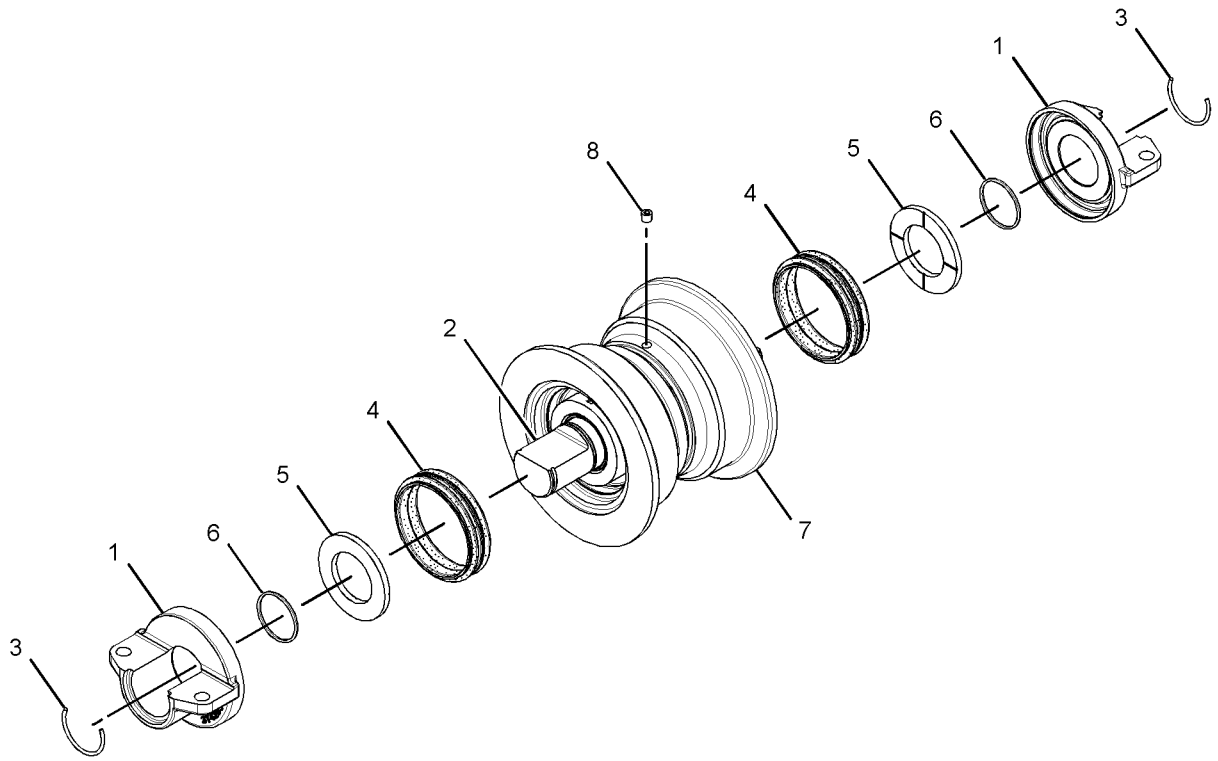

GRAPHIC #1 **<END>** g01787495

281-8339 ROLLER GP-TRACK-SINGLE FLANGE

S/N: FFF1-113, 115-117; LLL1-99, 101-102
PART OF 282-8813 ROLLER GP-TRACK-DOUBLE FLANGE
AN ATTACHMENT

SMCS-4180 **i04416269**

NOTE	REF NO	GRAPHIC REF	PART NUMBER	QTY	PART NAME 1 2 3 4 5 6 (PRODUCT LEVEL)	SEE PAGE
	1	1	**3T-4283**	2	COLLAR	
	2	1	**6S-3171**	1	SHAFT	
	3	1	**6S-3172**	2	RING	
	4	1	*6S-3722*	1	ROLLER AS	
		1	**6S-3495**	2	BEARING AS	
					(EACH INCLUDES)	
		1	**6Y-4744**	1	BUSHING	
		1	**6S-7038**	1	RIM AS	
	5	1	**6S-7715**	2	WASHER-THRUST (52X86X6.35-MM THK)	
	6	1	**7D-9749**	2	SEAL-O-RING	
	7	1	**216-2957**	2	SEAL GP-DUO-CONE	
					(EACH INCLUDES)	
		1	**216-2956**	2	RING-TORIC	
	8	1	**9F-2247**	1	PLUG-PIPE	

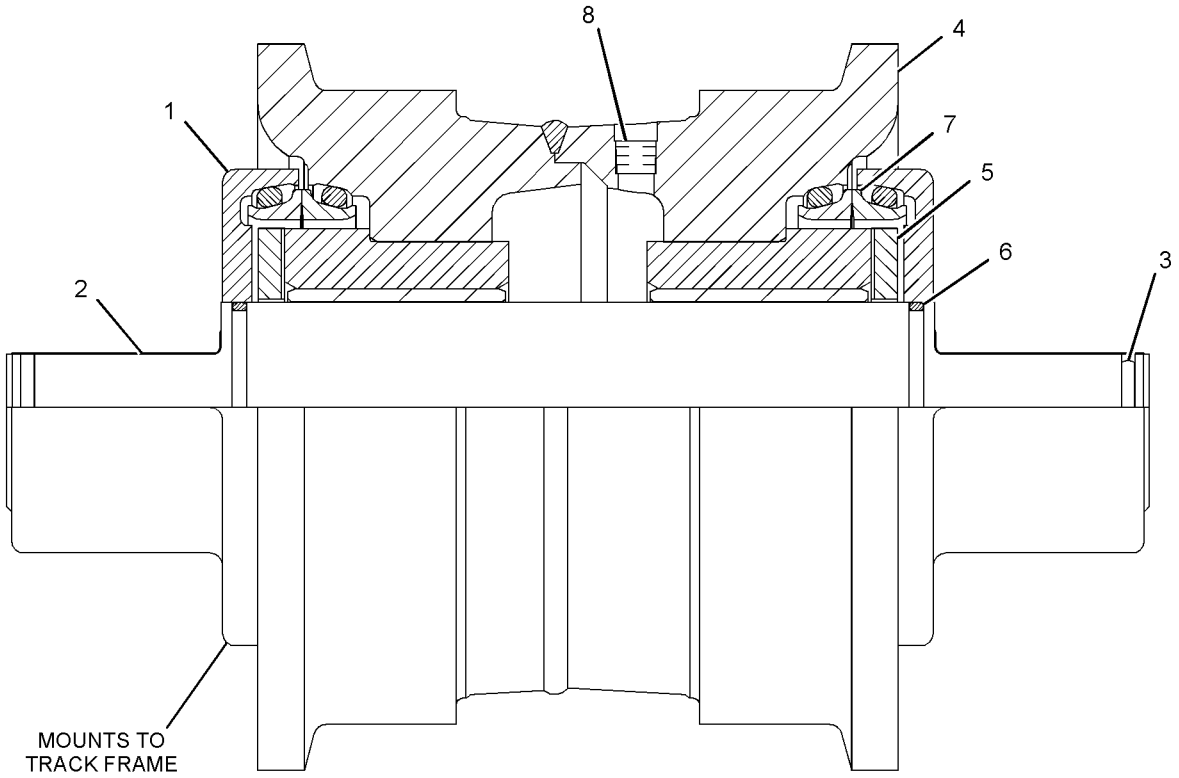

GRAPHIC #1 **<END>** g01362960

UNDERCARRIAGE

301-0652 ROLLER GP-TRACK-SINGLE FLANGE

S/N: JTD1-UP; FFF114, 118-UP; LLL100, 103-UP
PART OF 302-6813 ROLLER GP-TRACK-DOUBLE FLANGE
AN ATTACHMENT

SMCS-4180 **i02674912**

NOTE	REF NO	GRAPHIC REF	PART NUMBER	QTY	PART NAME 1 2 3 4 5 6 (PRODUCT LEVEL)	SEE PAGE
	1	1	**6S-3171**	1	SHAFT	
	2	1	**6S-3172**	2	RING	
	3	1	*6S-3722*	1	ROLLER AS	
		1	**6S-3495**	2	BEARING AS	
					(EACH INCLUDES)	
		1	**6Y-4744**	1	BEARING-SLEEVE	
		1	**6S-7038**	1	RIM AS	
	4	1	**6S-7715**	2	WASHER-THRUST (52X86X6.35-MM THK)	
	5	1	**7D-9749**	2	SEAL-O-RING	
	6	1	**301-0096**	2	COLLAR-TRACK ROLLER	
	7	1	**216-2957**	2	SEAL GP-DUO-CONE	
					(EACH INCLUDES)	
		1	**216-2956**	2	RING-TORIC	
	8	1	**9F-2247**	1	PLUG-PIPE	

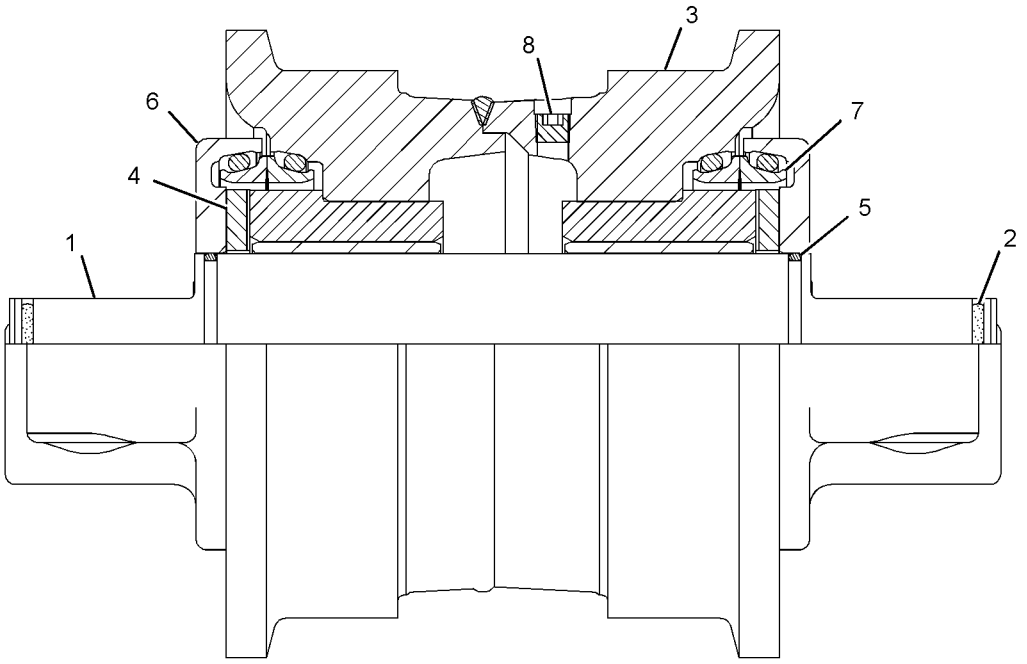

GRAPHIC #1 **<END>** g01345522

UNDERCARRIAGE

301-0652 ROLLER GP-TRACK-SINGLE FLANGE

S/N: JTD1-UP; FFF118-UP; LLL103-UP
PART OF 302-6813 ROLLER GP-TRACK-DOUBLE FLANGE
AN ATTACHMENT

SMCS-4180 **i02895371**

NOTE	REF NO	GRAPHIC REF	PART NUMBER	QTY	PART NAME 1 2 3 4 5 6 (PRODUCT LEVEL)	SEE PAGE
	1	1	**6S-3171**	1	SHAFT	
	2	1	**6S-3172**	2	RING	
	3	1	*6S-3722*	1	ROLLER AS	
		1	**6S-3495**	2	BEARING AS	
					(EACH INCLUDES)	
		1	**6Y-4744**	1	BEARING-SLEEVE	
		1	**6S-7038**	1	RIM AS	
	4	1	**6S-7715**	2	WASHER-THRUST (52X86X6.35-MM THK)	
	5	1	**7D-9749**	2	SEAL-O-RING	
	6	1	**301-0096**	2	COLLAR-TRACK ROLLER	
CR	7	1	**6S-3285**	2	SEAL GP-DUO-CONE	
					(EACH INCLUDES)	
		1	**6S-3284**	2	RING-TORIC	
	8	1	**9F-2247**	1	PLUG-PIPE	

C-CHANGE FROM PREVIOUS TYPE
R-REMFG PART MAY BE AVAILABLE

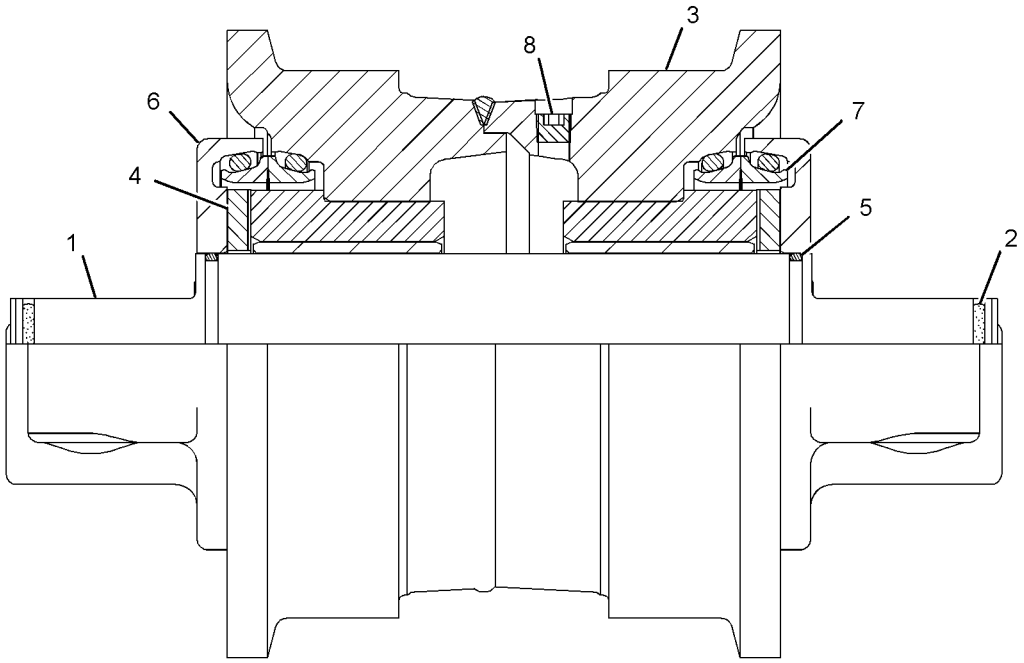

GRAPHIC #1 **<END>** g01345522

UNDERCARRIAGE

301-0654 ROLLER GP-TRACK-SINGLE FLANGE

S/N: JTD1-UP; FFF114, 118-UP; LLL100, 103-UP
PART OF 302-6803 ROLLER GP-TRACK
AN ATTACHMENT

SMCS-4180 **i03779049**

NOTE	REF NO	GRAPHIC REF	PART NUMBER	QTY	PART NAME 1 2 3 4 5 6 (PRODUCT LEVEL)	SEE PAGE
	1	1	**6S-3171**	1	SHAFT	
	2	1	**6S-3172**	2	RING	
R	3	1	**6S-3285**	2	SEAL GP-DUO-CONE	
	4	1	**6S-7715**	2	WASHER-THRUST (52X86X6.35-MM THK)	
	5	1	**7D-9749**	2	SEAL-O-RING	
	6	1	**243-3278**	1	ROLLER AS	
	6A	1	**6S-3495**	2	BEARING AS	
					(EACH INCLUDES)	
		1	**6Y-4744**	1	BEARING-SLEEVE	
	7	1	**301-0096**	2	COLLAR-TRACK ROLLER	
	8	1	**9F-2247**	1	PLUG-PIPE	

R-REMFG PART MAY BE AVAILABLE

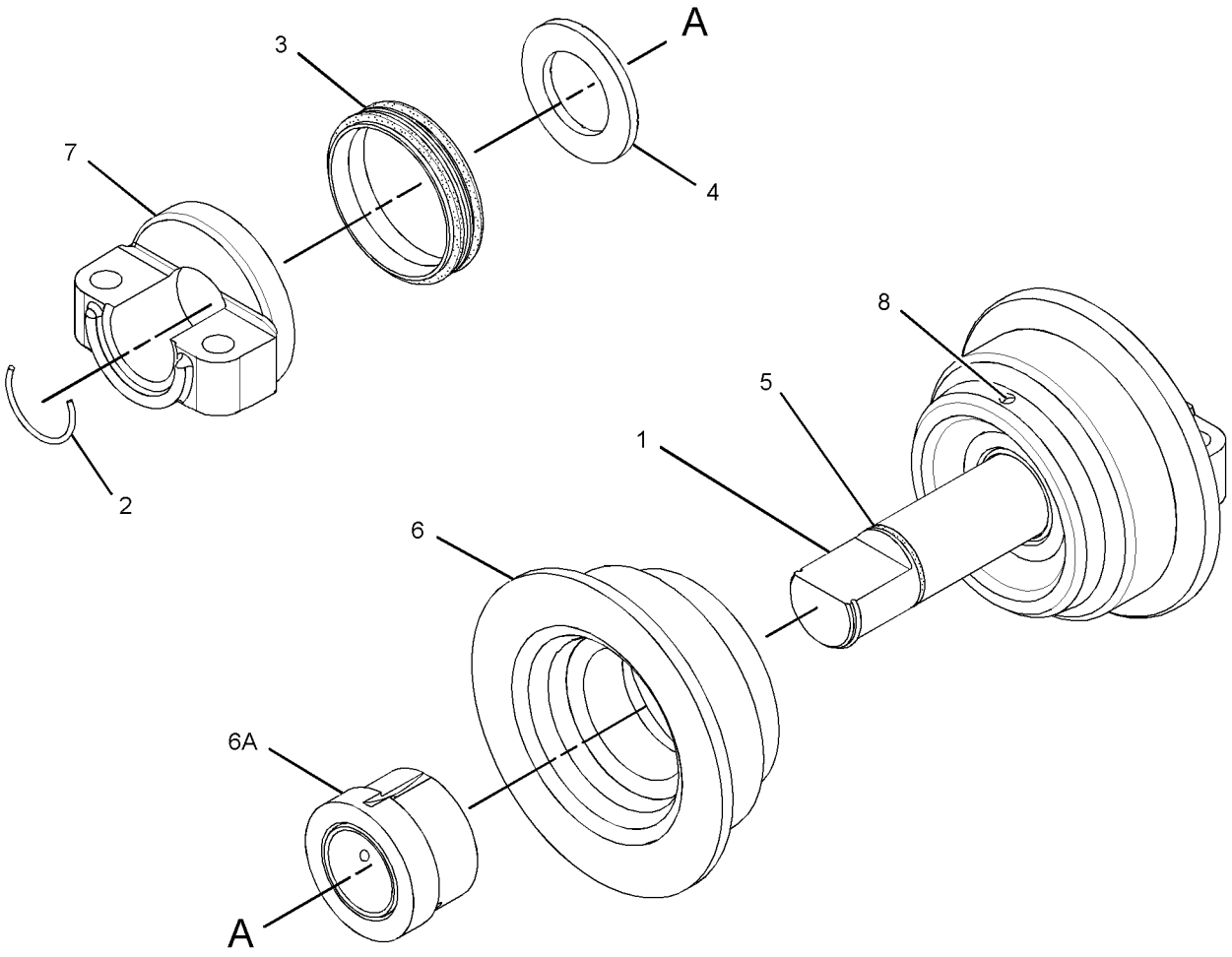

GRAPHIC #1 **<END>** g02045157

254-0603 SPRING GP-RECOIL

S/N: JTD1-UP; FFF1-UP; LLL1-UP
PART OF 244-7500, 254-0593 IDLER GP-FRONT
AN ATTACHMENT

SMCS-4158 **i02718056**

NOTE	REF NO	GRAPHIC REF	PART NUMBER	QTY	PART NAME 1 2 3 4 5 6 (PRODUCT LEVEL)	SEE PAGE
	1	1	**254-0623**	1	SPRING-RECOIL	
	2	1	**254-0662**	1	SUPPORT AS	
	3	1	**303-0461**	1	ROD	
	4	1	**289-5884**	1	NUT-CASTLE (M36X3-THD)	
	5	1	**099-5217**	1	PIN-COTTER	
	6	1	**9X-8259**	1	WASHER (39X66X6-MM THK)	
	7	1	**254-0648**	1	PLATE	

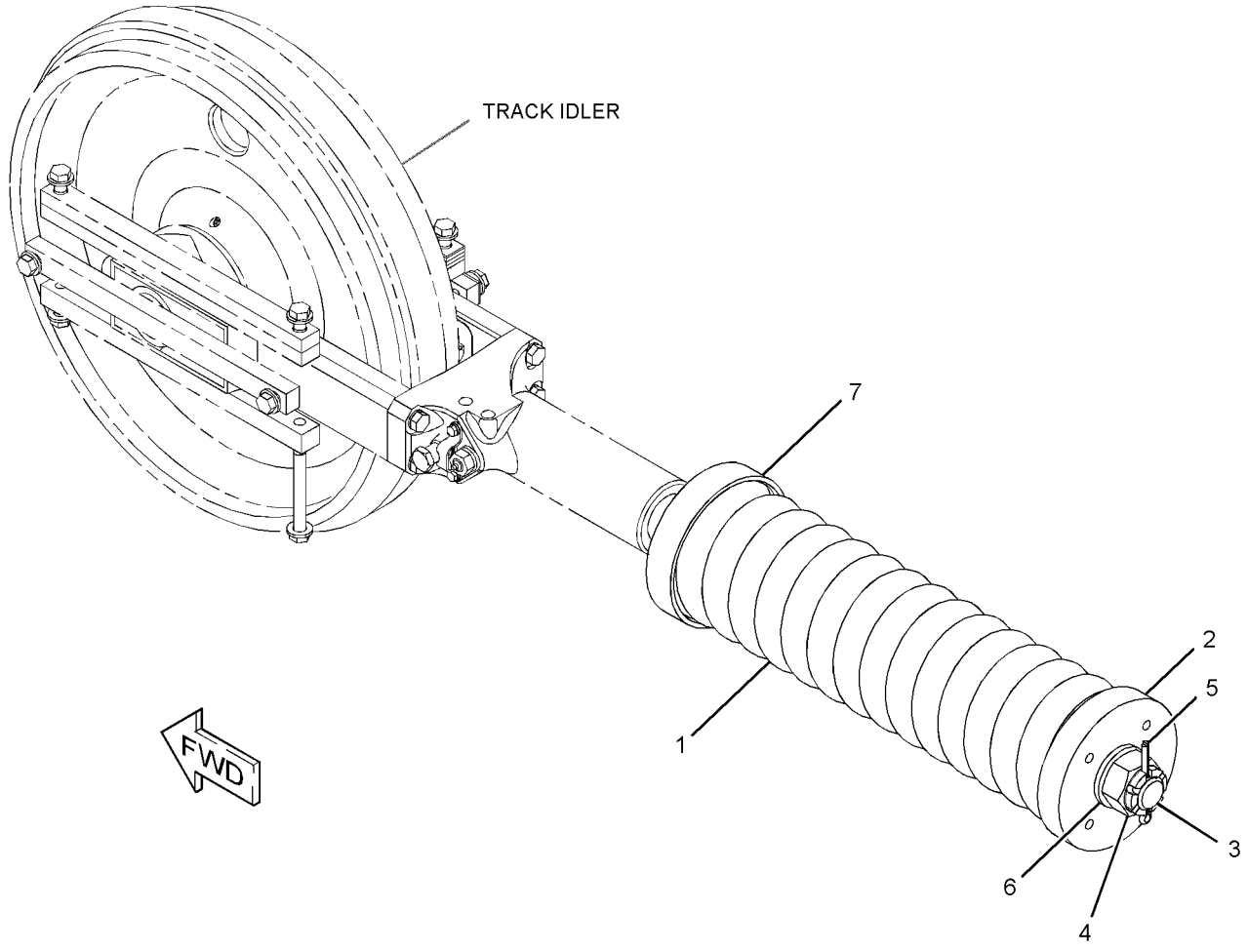

GRAPHIC #1 **<END>** g01369999

UNDERCARRIAGE

286-4301 TRACK AR

S/N: LLL1-UP
635-MM (25-IN) SELF-CLEANING SHOE. SEALED, LUBRICATED
FOR USE WITH 244-7448—PAGE 487
AN ATTACHMENT

SMCS-4170 **i02833686**

NOTE	PART NUMBER	QTY	PART NAME 1 2 3 4 5 6 (PRODUCT LEVEL)	SEE PAGE
Y	*198-7392*	2	TRACK GP (2-REQUIRED)	484
Y-SEPARATE ILLUSTRATION				

<END>

286-4303 TRACK AR

S/N: FFF1-UP; LLL1-UP
405-MM (16-IN) GROUSER SHOE. MODERATE SERVICE, SEALED, LUBRICATED
FOR USE WITH 244-7448—PAGE 487
AN ATTACHMENT

SMCS-4170 **i02833695**

NOTE	PART NUMBER	QTY	PART NAME 1 2 3 4 5 6 (PRODUCT LEVEL)	SEE PAGE
Y	*198-7393*	2	TRACK GP (2-REQUIRED)	485
Y-SEPARATE ILLUSTRATION				

<END>

286-4308 TRACK AR

S/N: LLL1-UP
635-MM (25-IN) GROUSER SHOE. MODERATE SERVICE, SEALED, LUBRICATED
FOR USE WITH 244-7448—PAGE 487
AN ATTACHMENT

SMCS-4170 **i02833696**

NOTE	PART NUMBER	QTY	PART NAME 1 2 3 4 5 6 (PRODUCT LEVEL)	SEE PAGE
Y	*180-6166*	2	TRACK GP (2-REQUIRED)	484
Y-SEPARATE ILLUSTRATION				

<END>

286-4311 TRACK AR

S/N: LLL1-UP
635-MM (25-IN) GROUSER SHOE. SELF-CLEANING GROUSER SHOE
FOR USE WITH 244-7393 UNDERCARRIAGE AR
AN ATTACHMENT

SMCS-4170 **i02833697**

NOTE	PART NUMBER	QTY	PART NAME 1 2 3 4 5 6 (PRODUCT LEVEL)	SEE PAGE
Y	*289-3071*	2	TRACK GP (SYSTEMONE) (2-REQUIRED)	486
Y-SEPARATE ILLUSTRATION				

<END>

UNDERCARRIAGE

286-4313 TRACK AR—SYSTEMONE

S/N: FFF1-UP; LLL1-UP
405-MM (15.94-IN) GROUSER SHOE. MODERATE SERVICE
FOR USE WITH 244-7393—PAGE 487
AN ATTACHMENT

SMCS-4170 **i02833701**

NOTE	PART NUMBER	QTY	PART NAME 1 2 3 4 5 6 (PRODUCT LEVEL)	SEE PAGE
Y	*289-3063*	2	TRACK GP (2-REQUIRED, SYSTEMONE)	485
Y-SEPARATE ILLUSTRATION				

<END>

286-4318 TRACK AR—SYSTEMONE

S/N: LLL1-UP
635-MM (25-IN) GROUSER SHOE. MODERATE SERVICE
FOR USE WITH 244-7393—PAGE 487
AN ATTACHMENT

SMCS-4170 **i02833704**

NOTE	PART NUMBER	QTY	PART NAME 1 2 3 4 5 6 (PRODUCT LEVEL)	SEE PAGE
Y	*289-3064*	2	TRACK GP (2-REQUIRED, SYSTEMONE)	486
Y-SEPARATE ILLUSTRATION				

<END>

310-5680 TRACK AR

S/N: FFF1-UP
355-MM (13.98-IN) TRIPLE GROUSER SHOE. SEALED, LUBRICATED
FOR USE WITH 244-7448—PAGE 487
AN ATTACHMENT

SMCS-4170 **i04416372**

NOTE	PART NUMBER	QTY	PART NAME 1 2 3 4 5 6 (PRODUCT LEVEL)	SEE PAGE
Y	*310-7249*	2	TRACK GP (2-REQUIRED)	487
Y-SEPARATE ILLUSTRATION				

<END>

UNDERCARRIAGE

180-6166 TRACK GP–2-REQUIRED

S/N: LLL1-UP
635-MM (25-IN) SINGLE GROUSER SHOE. SEALED, LUBRICATED, MODERATE SERVICE
PART OF 286-4308 TRACK AR
FOR USE WITH 244-7448–PAGE 487
AN ATTACHMENT

SMCS-4170 **i03124683**

NOTE	PART NUMBER	QTY	PART NAME 1 2 3 4 5 6 (PRODUCT LEVEL)	SEE PAGE
Y	**323-8756**	1	LINK AS-TRACK	460
	4K-7038	160	BOLT-TRACK (9/16-18X1.625-IN)	
	5A-3187	4	BOLT-TRACK (9/16-18X3-IN)	
	7K-2017	160	NUT-SQUARE (9/16-18-THD)	
	198-6991	40	SHOE-TRACK	
	198-6992	1	SHOE-TRACK MASTER	
Y-SEPARATE ILLUSTRATION				

<END>

198-7392 TRACK GP–2 REQUIRED

S/N: LLL1-UP
635-MM (25-IN) SELF CLEANING SHOE. SEALED, LUBRICATED
PART OF 286-4301 TRACK AR
FOR USE WITH 244-7448–PAGE 487
AN ATTACHMENT

SMCS-4170 **i03124863**

NOTE	PART NUMBER	QTY	PART NAME 1 2 3 4 5 6 (PRODUCT LEVEL)	SEE PAGE
Y	**323-8756**	1	LINK AS-TRACK	460
	4K-7038	80	BOLT-TRACK (9/16-18X1.625-IN)	
	5A-3187	82	BOLT-TRACK (9/16-18X3-IN)	
	5P-4683	2	BOLT-TRACK (9/16-18X4.29-IN)	
	7K-2017	160	NUT-SQUARE (9/16-18-THD)	
	6S-9115	40	SHOE-LGP TRACK	
	6S-9102	1	SHOE-MASTER LGP TRACK	
Y-SEPARATE ILLUSTRATION				

<END>

198-7393 TRACK GP–2-REQUIRED

S/N: FFF1-UP; LLL1-UP
405-MM (16-IN) GROUSER SHOE. SEALED, LUBRICATED
PART OF 286-4303 TRACK AR
FOR USE WITH 244-7448–PAGE 487
AN ATTACHMENT

SMCS-4170 **i03129036**

NOTE	PART NUMBER	QTY	PART NAME 1 2 3 4 5 6 (PRODUCT LEVEL)	SEE PAGE
Y	**323-8756**	1	LINK AS-TRACK	460
	4K-7038	160	BOLT-TRACK (9/16-18X1.625-IN)	
	5A-3187	4	BOLT-TRACK (9/16-18X3-IN)	
	7K-2017	160	NUT-SQUARE (9/16-18-THD)	
	198-6987	40	SHOE-TRACK	
	198-6988	1	SHOE-TRACK MASTER	

Y-SEPARATE ILLUSTRATION

<END>

289-3063 TRACK GP–2-REQUIRED, SYSTEMONE

S/N: FFF1-UP; LLL1-UP
405-MM (15.94-IN) GROUSER SHOE. SEALED, LUBRICATED, MODERATE SERVICE
PART OF 286-4313 TRACK AR
FOR USE WITH SYSTEMONE ROLLERS, GUARDS, GUIDESTRIPS
AN ATTACHMENT

SMCS-4170 **i04348949**

NOTE	PART NUMBER	QTY	PART NAME 1 2 3 4 5 6 (PRODUCT LEVEL)	SEE PAGE
Y	*289-3061*	1	LINK AS-TRACK (SYSTEMONE)	459
	301-4302	140	BOLT-TRACK (M16X1.5X46-MM)	
	254-0228	4	BOLT-TRACK MASTER (M16X1.5X81-MM)	
	260-6740	2	LINK-TRACK	
			–OR–	
	311-6180	2	LINK-TRACK MASTER	
M	**5I-6125**	140	NUT-TRACK (M16X1.5-THD)	
	235-2559	36	SHOE-TRACK	

M-METRIC PART
Y-SEPARATE ILLUSTRATION

<END>

289-3064 TRACK GP—2-REQUIRED, SYSTEMONE

S/N: LLL1-UP
635-MM (25-IN) GROUSER SHOE. SEALED, LUBRICATED, MODERATE SERVICE
PART OF 286-4318 TRACK AR
FOR USE WITH SYSTEMONE ROLLERS, GUARDS, GUIDESTRIPS
AN ATTACHMENT

SMCS-4170 **i04348915**

NOTE	PART NUMBER	QTY	PART NAME 1 2 3 4 5 6 (PRODUCT LEVEL)	SEE PAGE
Y	*289-3061*	1	LINK AS-TRACK (SYSTEMONE)	459
	301-4302	140	BOLT-TRACK (M16X1.5X46-MM)	
	254-0228	4	BOLT-TRACK MASTER (M16X1.5X81-MM)	
	260-6740	2	LINK-TRACK	
			—OR—	
	311-6180	2	LINK-TRACK MASTER	
M	**5I-6125**	140	NUT-TRACK (M16X1.5-THD)	
	235-2558	35	SHOE-TRACK	
	263-3798	1	SHOE-TRACK MASTER	

M-METRIC PART
Y-SEPARATE ILLUSTRATION

<END>

289-3071 TRACK GP—2-REQUIRED, SYSTEMONE

S/N: LLL1-UP
635-MM (25-IN) GROUSER SHOE. SEALED, LUBRICATED
PART OF 286-4311 TRACK AR
FOR USE WITH SYSTEMONE ROLLERS, GUARDS & GUIDESTRIPS
AN ATTACHMENT

SMCS-4170 **i02833700**

NOTE	PART NUMBER	QTY	PART NAME 1 2 3 4 5 6 (PRODUCT LEVEL)	SEE PAGE
Y	**260-6747**	1	LINK AS-TRACK (SYSTEMONE)	458
	301-4302	72	BOLT-TRACK (M16X1.5X46-MM)	
	254-0228	72	BOLT-TRACK MASTER (M16X1.5X81-MM)	
	260-6740	2	LINK-TRACK	
M	**5I-6125**	144	NUT-TRACK (M16X1.5-THD)	
	238-8371	36	SHOE-TRACK	

M-METRIC PART
Y-SEPARATE ILLUSTRATION

<END>

UNDERCARRIAGE

310-7249 TRACK GP

S/N: FFF1-UP
335-MM (13.9-IN)GROUSER SHOE. SEALED, LUBRICATED
PART OF 310-5680 TRACK AR
AN ATTACHMENT

SMCS-4170 **i03129037**

NOTE	PART NUMBER	QTY	PART NAME 1 2 3 4 5 6 (PRODUCT LEVEL)	SEE PAGE
Y	**323-8756**	1	LINK AS-TRACK	460
	4K-7038	160	BOLT-TRACK (9/16-18X1.625-IN)	
	5A-3187	4	BOLT-TRACK (9/16-18X3-IN)	
	7K-2017	160	NUT-SQUARE (9/16-18-THD)	
	6Y-1596	40	SHOE-TRACK	
	6Y-1597	1	SHOE-TRACK MASTER	
Y-SEPARATE ILLUSTRATION				

<END>

244-7393 UNDERCARRIAGE AR

S/N: JTD1-UP; FFF1-UP; LLL1-UP
FOR USE WITH SYSTEMONE TRACK GROUP
AN ATTACHMENT

SMCS-4150 **i04416370**

NOTE	PART NUMBER	QTY	PART NAME 1 2 3 4 5 6 (PRODUCT LEVEL)	SEE PAGE
Y	*244-7418*	1	GUARD GP-IDLER	441
Y	*282-3703*	1	GUARD GP-TRACK GUIDE	449
Y	*282-3713*	1	GUARD GP-TRACK GUIDE	450
Y	*254-0593*	1	IDLER GP-FRONT	455
Y	*356-5272*	1	ROLLER GP-TRACK CARRIER (SYSTEMONE)	468
Y	*282-8803*	1	ROLLER GP-TRACK	464
			S/N: FFF1-113, 115-117; LLL1-99, 101-102	
Y	*302-6803*	1	ROLLER GP-TRACK	465
			S/N: FFF114, 118-UP; LLL100, 103-UP	
Y	*258-9789*	2	SPROCKET GP	373
Y-SEPARATE ILLUSTRATION				

<END>

244-7448 UNDERCARRIAGE AR

S/N: JTD1-UP; FFF1-UP; LLL1-UP
AN ATTACHMENT

SMCS-4150 **i04001499**

NOTE	PART NUMBER	QTY	PART NAME 1 2 3 4 5 6 (PRODUCT LEVEL)	SEE PAGE
Y	*262-5874*	1	GUARD GP-IDLER	443
Y	*244-7423*	1	GUARD GP-TRACK GUIDE	445
Y	*244-7500*	1	IDLER GP-FRONT	454
Y	*356-5273*	1	ROLLER GP-TRACK CARRIER	469
Y	*282-8813*	1	ROLLER GP-TRACK-DOUBLE FLANGE	471
			S/N: FFF1-113, 115-117; LLL1-99, 101-102	
Y	*302-6813*	1	ROLLER GP-TRACK-DOUBLE FLANGE	474
			S/N: FFF114, 118-UP; LLL100, 103-UP	
Y	*278-2357*	2	SEGMENT GP-SPROCKET	372
Y-SEPARATE ILLUSTRATION				

<END>

309-5075 BRAKE GP-SERVICE & PARKING

S/N: JAG1-UP

PART OF 309-5091 BRAKE & PLANETARY GP-WINCH

AN ATTACHMENT

SMCS-4251, 4255, 4267 **i02718214**

NOTE	REF NO	GRAPHIC REF	PART NUMBER	QTY	PART NAME 1 2 3 4 5 6 (PRODUCT LEVEL)	SEE PAGE
	1	1	**129-7321**	6	DISC-FRICTION	
	2	1	**203-6618**	1	HOUSING (BRAKE)	
	3	1	**203-6620**	1	PLATE	
	4	1	**203-6621**	1	SEAL	
	5	1	**203-6623**	7	DISC-BRAKE	
	6	1	**203-6626**	1	RETAINER (BRAKE)	
	7	1	**211-8215**	8	SPRING	
	8	1	**211-8216**	1	SPACER (SPRING)	
	9	1	**211-8217**	1	PISTON	
	10	1	**3Y-9267**	1	BALL	
	11	1	**6V-4495**	1	RING-RETAINING	
	12	1	**8M-4704**	1	SEAL-O-RING	

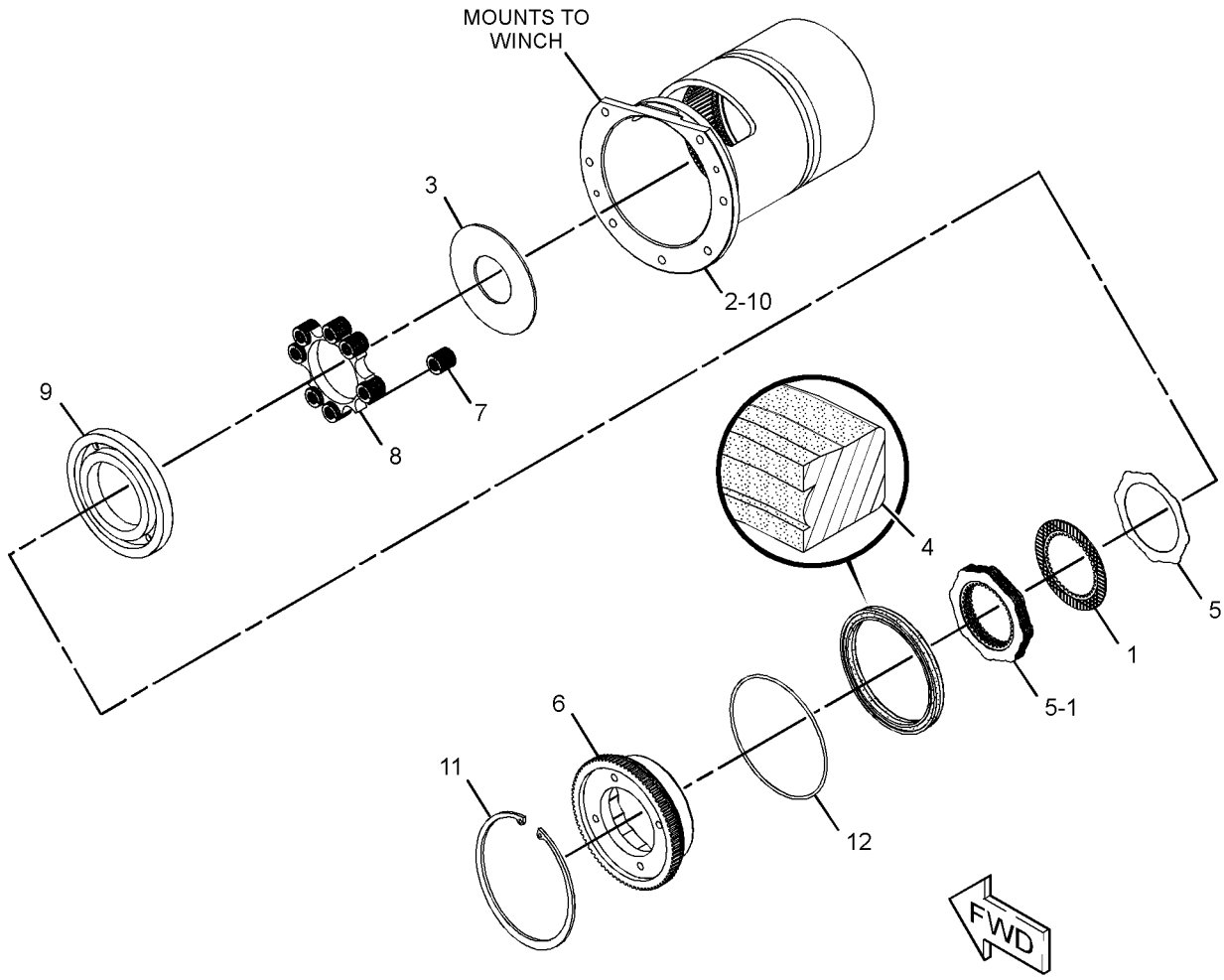

GRAPHIC #1 **<END>** g01375429

212-7037 PUMP GP-CHARGE

S/N: JTD1-UP; FFF1-UP; LLL1-UP
PART OF 254-1379 PUMP GP-PISTON
AN ATTACHMENT

SMCS-3204 **i01937023**

NOTE	REF NO	GRAPHIC REF	PART NUMBER	QTY	PART NAME 1 2 3 4 5 6 (PRODUCT LEVEL)	SEE PAGE
M	1	1	**171-2039**	4	BOLT-SOCKET HEAD (M8X1.25X30-MM)	
	2	1	**117-7278**	1	BUSHING	
	3	1	**5W-1437**	4	LOCKWASHER	
	4	1	**117-7322**	2	SEAL-RING	
	5	1	**126-5709**	1	PLATE	

M-METRIC PART

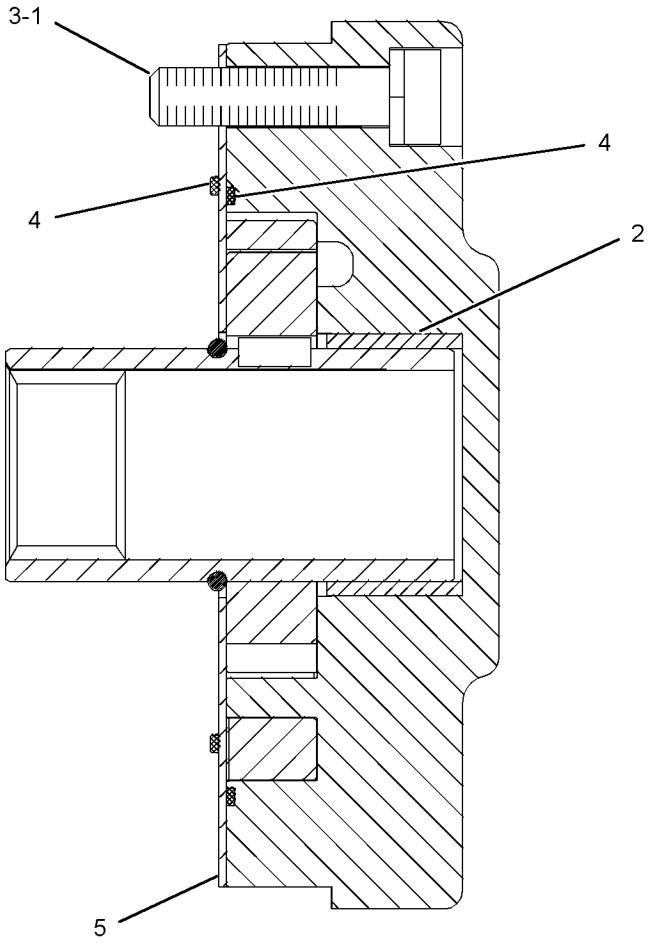

GRAPHIC #1 **<END>** g01011104

254-1379 PUMP GP-PISTON–WINCH*R

S/N: JTD1-UP; FFF1-UP; LLL1-UP
PART OF 244-7454, 292-0124, 300-8544, 325-6516, 325-6519, 325-6520 DRIVE
AR-WINCH
AN ATTACHMENT
TYPE 1

SMCS-5070 **i04415991**

NOTE	REF NO	GRAPHIC REF	PART NUMBER	QTY	PART NAME 1 2 3 4 5 6 (PRODUCT LEVEL)	SEE PAGE
Y	1	1	**293-5445**	1	ROTATING GP-PUMP (IMPLEMENT)	498
Y	2	1	**293-5450**	1	VALVE GP-SOLENOID (SERVO)	141
Y	3	1	**212-7032**	1	ACTUATOR GP-PUMP (SERVO)	296
Y	4	1	**177-7122**	1	VALVE GP-RELIEF (CHARGE PRESSURE)	377
Y	5	1	**212-7037**	1	PUMP GP-CHARGE (HYSTAT PROPEL)	489
	6	1	**9S-8002**	7	PLUG-O-RING	
	7	1	**3J-7354**	7	SEAL-O-RING	
	8	1	**9S-8004**	1	PLUG-O-RING	
	9	1	**3J-1907**	1	SEAL-O-RING	
	10	1	**2M-9780**	1	SEAL-O-RING	
	11	1	**9S-8006**	1	PLUG-O-RING	
	12	1	**167-6805**	2	PIN	
	13	1	**122-9718**	1	PIN	
	14	1	**9T-3928**	1	PLUG AS	
		1	**187-8001**	1	SEAL	
	16	1	**6E-4350**	1	PIN	
Y	17	1	**154-9445**	1	VALVE GP-RELIEF (HYDROSTATIC PUMP)	376
	18	1	**112-4629**	1	SCREW	
	19	1	**117-7236**	1	PLUG	
	20	1	**126-5676**	1	BUSHING	
	21	1	**126-5677**	1	BUSHING	
	22	1	**126-5678**	1	BUSHING	
M	23	1	**108-3819**	4	BOLT-SOCKET HEAD (M12X1.75X70-MM)	
	24	1	**112-4640**	2	PIN	
	25	1	**7J-6285**	1	SEAL-O-RING	
	26	1	**087-4772**	3	PLUG-O-RING	
	27	1	**161-6154**	2	SEAL-O-RING	
M	28	1	**1G-3176**	1	SCREW-LOCK	
	29	1	**106-0699**	1	PLUG (METRIC)	
	30	1	**6V-5326**	1	SEAL-O-RING	
	31	1	**9T-3726**	2	PLUG	
	32	1	**202-7704**	1	PLUG	
Y	33	1	**212-7035**	2	VALVE GP-RELIEF (CROSSOVER)	379

M-METRIC PART
Y-SEPARATE ILLUSTRATION

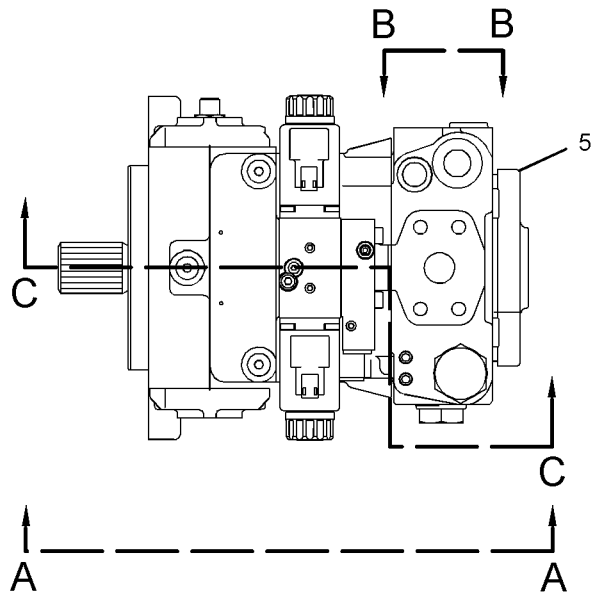

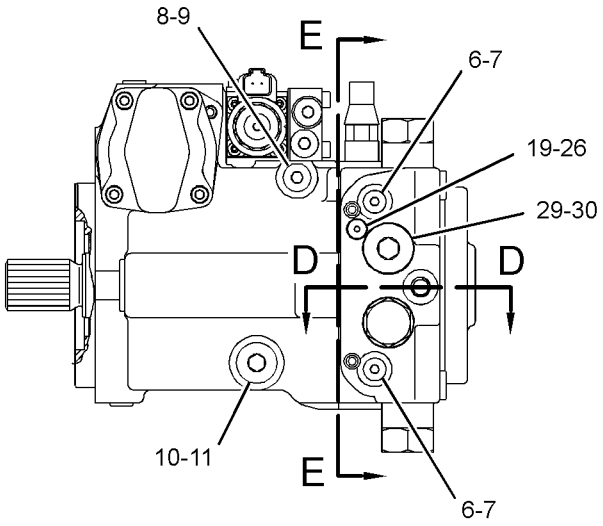

VIEW A-A

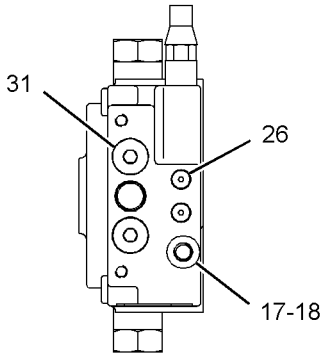

VIEW B-B

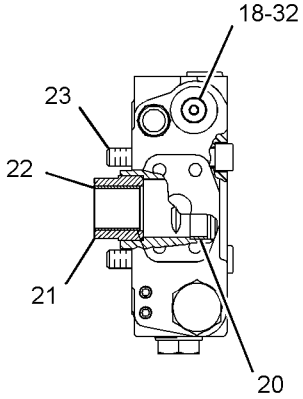

SECTION D-D

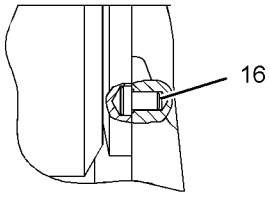

SECTION F-F

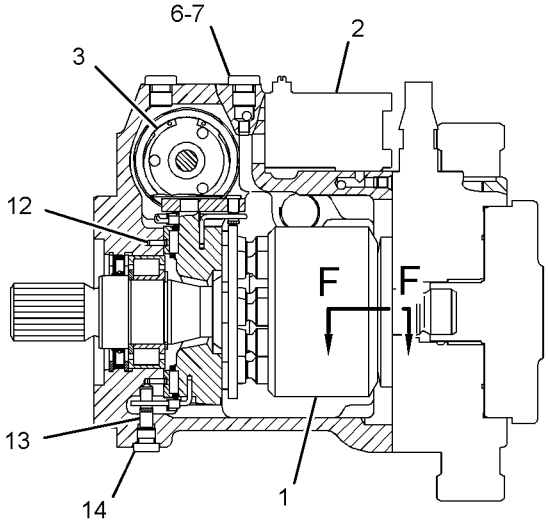

SECTION C-C

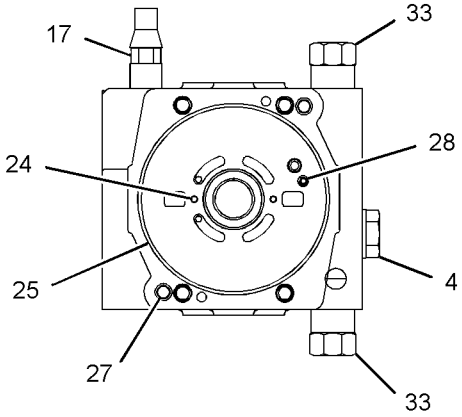

SECTION E-E

GRAPHIC #1 **<END>** g02615599

254-1379 PUMP GP-PISTON–WINCH*R

S/N: JTD1-UP; FFF1-UP; LLL1-UP
PART OF 244-7454, 292-0124, 300-8544, 325-6516, 325-6519, 325-6520 DRIVE
AR-WINCH
AN ATTACHMENT
TYPE 2

SMCS-5070 **i04335814**

NOTE	REF NO	GRAPHIC REF	PART NUMBER	QTY	PART NAME 1 2 3 4 5 6 (PRODUCT LEVEL)	SEE PAGE
Y	1	1	**293-5445**	1	ROTATING GP-PUMP (IMPLEMENT)	498
Y	2	1	**293-5450**	1	VALVE GP-SOLENOID (SERVO)	141
Y	3	1	**212-7032**	1	ACTUATOR GP-PUMP (SERVO)	296
C	4	1	**212-6679**	1	VALVE GP-RELIEF (CHARGE PRESSURE)	
		1	**6V-8352**	1	SEAL-O-RING	
Y	5	1	**212-7037**	1	PUMP GP-CHARGE (HYSTAT PROPEL)	489
	6	1	**9S-8002**	7	PLUG-O-RING	
	7	1	**3J-7354**	7	SEAL-O-RING	
	8	1	**9S-8004**	1	PLUG-O-RING	
	9	1	**3J-1907**	1	SEAL-O-RING	
	10	1	**2M-9780**	1	SEAL-O-RING	
	11	1	**9S-8006**	1	PLUG-O-RING	
	12	1	**167-6805**	2	PIN	
	13	1	**122-9718**	1	PIN	
	14	1	**9T-3928**	1	PLUG AS	
		1	**187-8001**	1	SEAL	
	16	1	**6E-4350**	1	PIN	
Y	17	1	**154-9445**	1	VALVE GP-RELIEF (HYDROSTATIC PUMP)	376
	18	1	**112-4629**	1	SCREW	
	19	1	**117-7236**	1	PLUG	
	20	1	**126-5676**	1	BUSHING	
	21	1	**126-5677**	1	BUSHING	
	22	1	**126-5678**	1	BUSHING	
M	23	1	**108-3819**	4	BOLT-SOCKET HEAD (M12X1.75X70-MM)	
	24	1	**112-4640**	2	PIN	
	25	1	**7J-6285**	1	SEAL-O-RING	
	26	1	**087-4772**	3	PLUG-O-RING	
	27	1	**161-6154**	2	SEAL-O-RING	
M	28	1	**1G-3176**	1	SCREW-LOCK	
	29	1	**106-0699**	1	PLUG	
	30	1	**6V-5326**	1	SEAL-O-RING	
	31	1	**9T-3726**	2	PLUG	
	32	1	**202-7704**	1	PLUG	
Y	33	1	**212-7035**	2	VALVE GP-RELIEF (CROSSOVER)	379

C-CHANGE FROM PREVIOUS TYPE
M-METRIC PART
Y-SEPARATE ILLUSTRATION

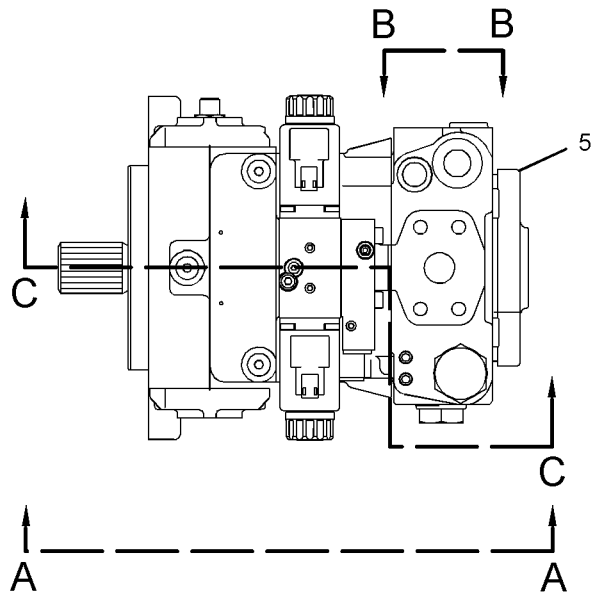

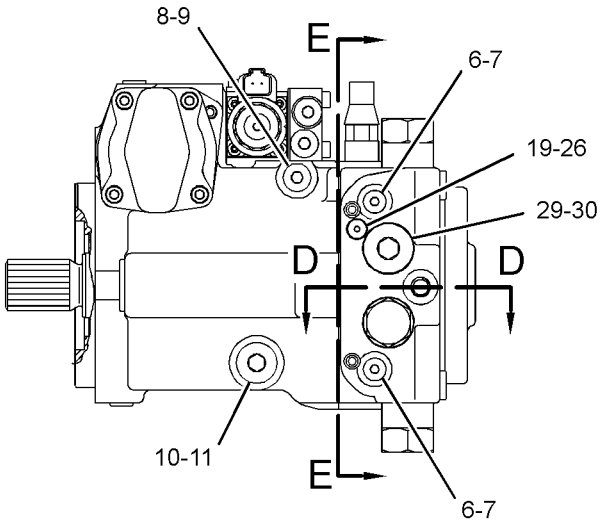

VIEW A-A

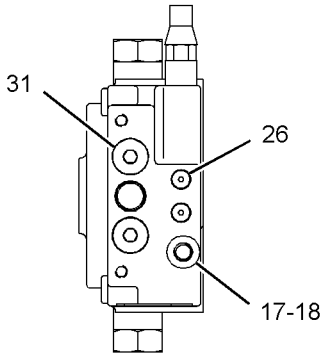

VIEW B-B

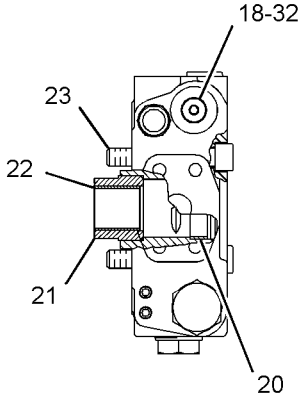

SECTION D-D

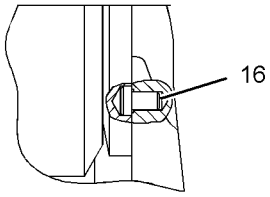

SECTION F-F

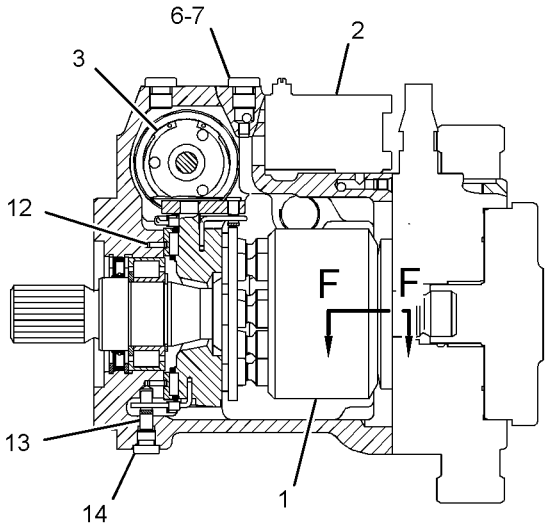

SECTION C-C

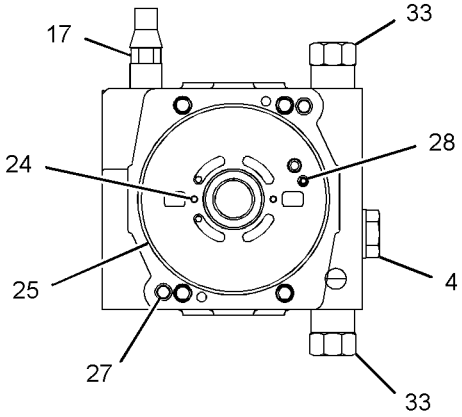

SECTION E-E

GRAPHIC #1 **<END>** g02509296

199-1087 ROTATING GP-MOTOR

S/N: JTD1-UP; FFF1-UP; LLL1-UP

PART OF 254-1352 MOTOR GP-PISTON

SMCS-5058 **i03434429**

NOTE	REF NO	GRAPHIC REF	PART NUMBER	QTY	PART NAME 1 2 3 4 5 6 (PRODUCT LEVEL)	SEE PAGE
M	1	1	**113-4419**	14	SCREW-SPECIAL (M5X0.8X8-MM)	
	2	1	**195-8636**	1	KIT-SHAFT & BEARING	
					INCLUDES SHAFT, RING-RETAINING, SHIMS, BEARING-TAPERED ROLLERS & GEAR-RING)	
B	3	1	**123-5773**	1	SHIM (3.5-MM THK)	
B	4	1	**123-5774**	1	SHIM (3.6-MM THK)	
B	5	1	**123-5775**	1	SHIM (3.7-MM THK)	
B	6	1	**123-5776**	1	SHIM (3.8-MM THK)	
B	7	1	**123-5777**	1	SHIM (3.9-MM THK)	
B	8	1	**123-5778**	1	SHIM (4-MM THK)	

B-USE AS REQUIRED
M-METRIC PART

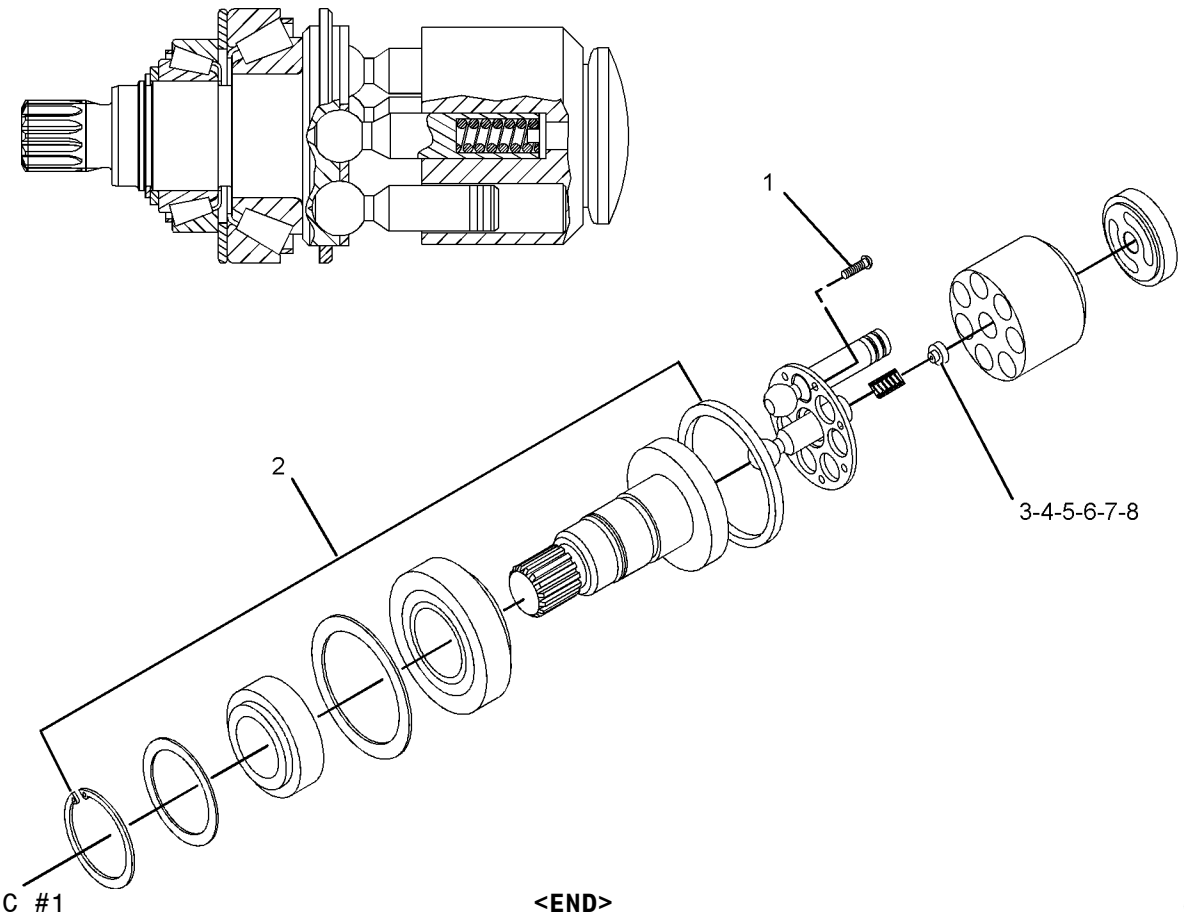

GRAPHIC #1

<END>

g01010939

280-7343 ROTATING GP-MOTOR—IMPLEMENT

S/N: JTD1-UP; FFF1-UP; LLL1-UP
PART OF 293-5445 ROTATING GP-PUMP
AN ATTACHMENT

SMCS-5058 **i02680383**

NOTE	REF NO	GRAPHIC REF	PART NUMBER	QTY	PART NAME 1 2 3 4 5 6 (PRODUCT LEVEL)	SEE PAGE
	1	1	**126-5632**	9	PISTON	
	2	1	**126-5638**	1	PLATE-RETAINER	
	3	1	**126-5639**	1	RETAINER	
	4	1	**127-4195**	1	SHIM (1.2-MM THK)	
	5	1	**127-4196**	1	SHIM (1-MM THK)	
	6	1	**127-4197**	1	SHIM (0.8-MM THK)	
	7	1	**127-4198**	1	SHIM (0.6-MM THK)	
	8	1	**126-5633**	1	SPRING-CUP	
	9	1	**126-5641**	2	SHIM (3-MM THK)	
	10	1	**126-5642**	1	SPRING	
	11	1	**8T-9597**	1	RING-RETAINING	
					PARTS SHOWN IN GRAPHIC(S) WITHOUT A REFERENCE NUMBER ARE NOT SERVICED SEPARATELY	

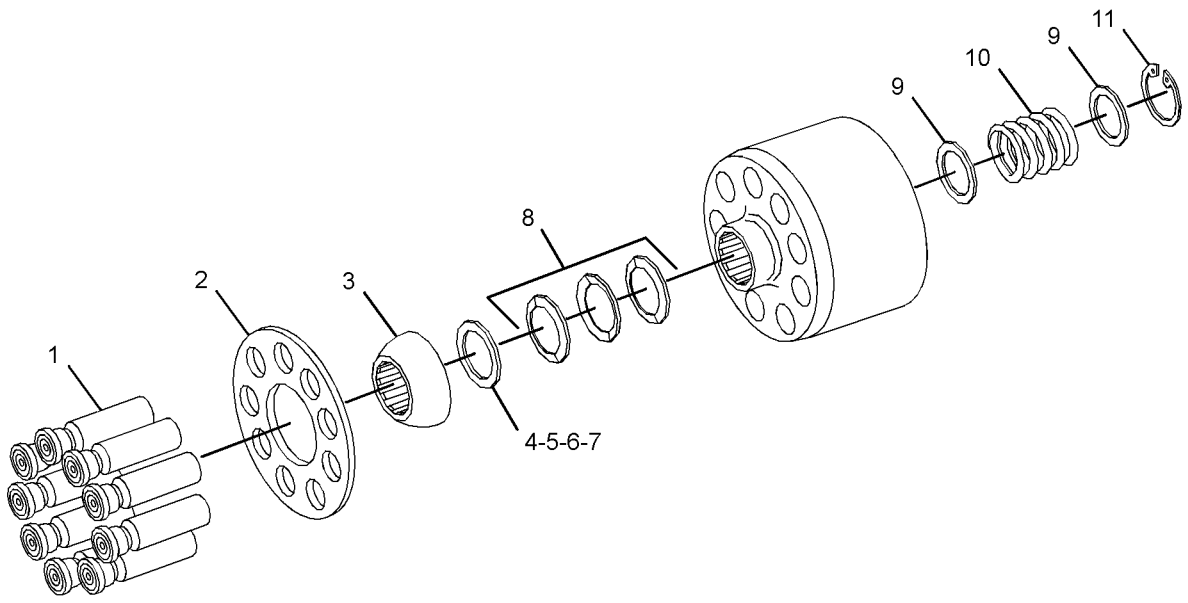

GRAPHIC #1 **<END>** g01348406

276-8206 ROTATING GP-PUMP–PROPEL

S/N: JTD1-UP; FFF1-UP; LLL1-UP
PART OF 289-6385 PUMP GP-PISTON
AN ATTACHMENT

SMCS-5070 **i04403726**

NOTE	REF NO	GRAPHIC REF	PART NUMBER	QTY	PART NAME 1 2 3 4 5 6 (PRODUCT LEVEL)	SEE PAGE
	1	1	**212-4483**	2	RING-RETAINING	
	2	1	**194-1983**	1	SEAL-SHAFT	
	3	1	**117-7251**	1	BEARING	
	4	1	**108-3565**	1	CLIP	
	5	1	**251-1803**	1	PLATE-CONTROL	
	6	1	**251-1752**	1	KIT-PUMP ROTATING GROUP	
					(INCLUDES RING-SNAP, SHIMS, SPRING, SPRING SET, RETAINER, PLATE-RETAINER, PISTON & CYLINDER)	
					PARTS SHOWN IN GRAPHIC(S) WITHOUT A REFERENCE NUMBER ARE NOT SERVICED SEPARATELY	

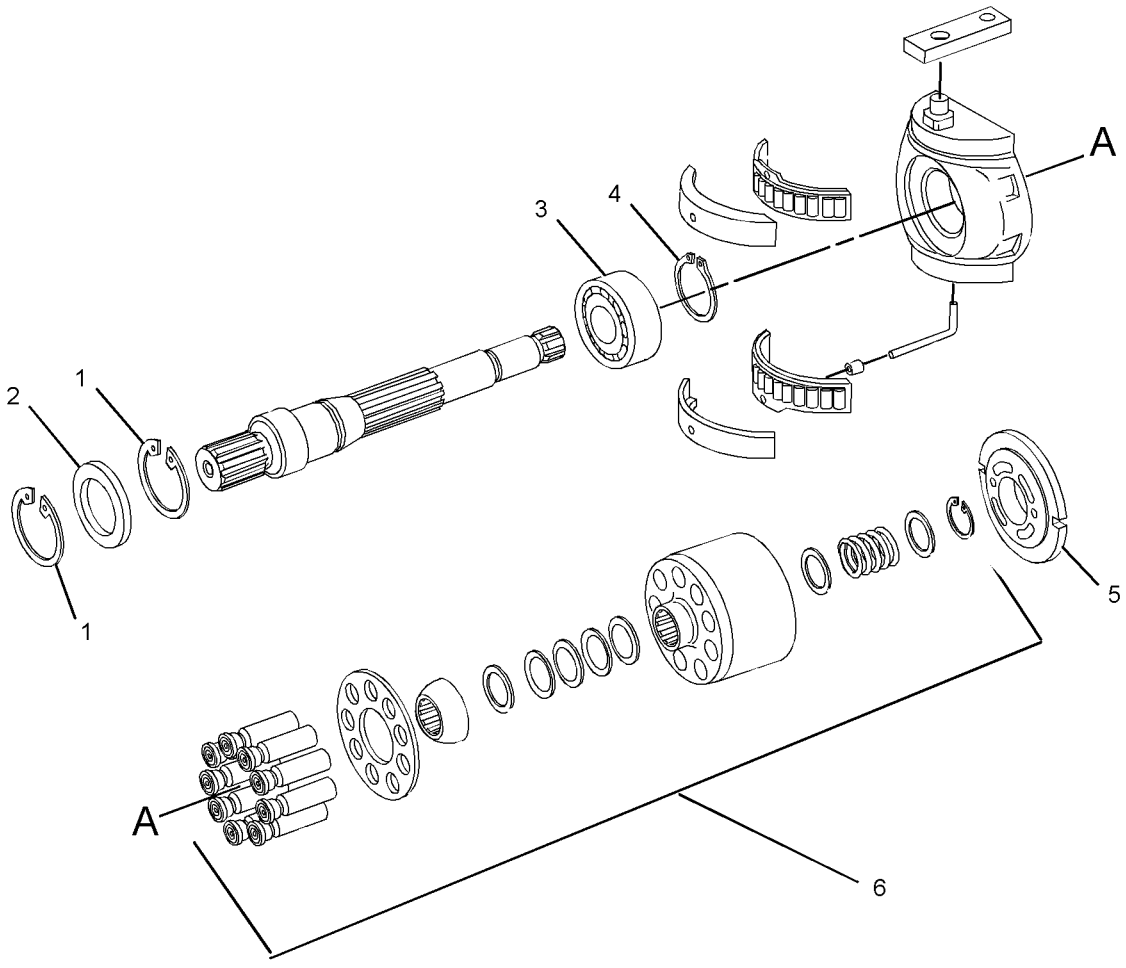

GRAPHIC #1 **<END>** g01195874

293-5445 ROTATING GP-PUMP

S/N: JTD1-UP; FFF1-UP; LLL1-UP
PART OF 254-1379 PUMP GP-PISTON
AN ATTACHMENT

SMCS-5070 **i04419318**

NOTE	REF NO	GRAPHIC REF	PART NUMBER	QTY	PART NAME 1 2 3 4 5 6 (PRODUCT LEVEL)	SEE PAGE
Y	1	1	**280-7343**	1	ROTATING GP-MOTOR (IMPLEMENT)	495
	2	1	**212-7044**	1	SHAFT-DRIVE	
	3	1	**1G-3410**	1	WIRE (ROD)	
	4	1	**126-5637**	1	WIRE (ROD)	
	5	1	**126-5640**	1	BEARING-ROLLER	
	6	1	**126-5643**	1	CAGE	
	7	1	**081-3698**	1	BEARING	
	8	1	**108-3565**	1	CLIP	
	9	1	**140-1739**	2	RING-RETAINING	
	10	1	**233-9744**	1	SEAL-LIP TYPE	

Y-SEPARATE ILLUSTRATION

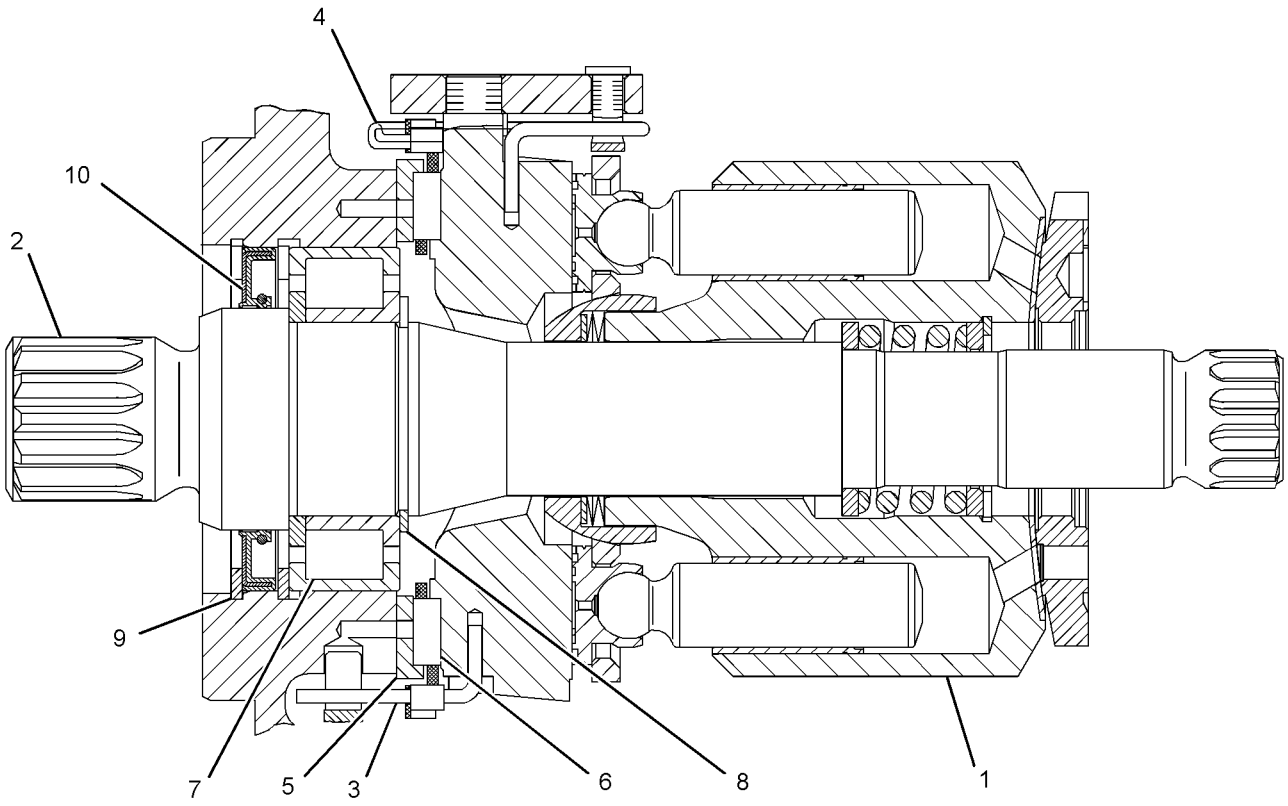

GRAPHIC #1 **<END>** g01358095

STEERING AND BRAKING SYSTEM

254-1358 VALVE GP-CONTROL

S/N: LLL1-773

PART OF 244-7445 POWER TRAIN AR

TYPE 1

SMCS-4307 **i02715672**

NOTE	REF NO	GRAPHIC REF	PART NUMBER	QTY	PART NAME 1 2 3 4 5 6 (PRODUCT LEVEL)	SEE PAGE
I	1	1	**135-7193**	1	HOSE AS	
	2	1	*164-9640*	2	CONNECTOR AS	
					(EACH INCLUDES)	
		1	**3J-1907**	1	SEAL-O-RING	
		1	**4J-5477**	1	SEAL-O-RING	
		1	**145-2237**	1	CONNECTOR	
I	3	1	**165-4632**	1	HOSE AS	
I	4	1	**185-3166**	1	HOSE AS	
I	5	1	**248-6220**	1	HOSE AS	
	6	1	**272-3533**	1	TUBE AS	
Y	7	1	**274-6747**	1	MANIFOLD GP-CONTROL	606
I	8	1	**285-3772**	1	HOSE AS	
	9	1	*295-9265*	1	TEE AS	
		1	**6V-8397**	2	SEAL-O-RING	
		1	**6V-9843**	1	TEE	
I	10	1	**305-5015**	1	HOSE AS	
	11	1	**092-3635**	1	CONNECTOR	
	12	1	*148-8336*	1	CONNECTOR AS	
		1	**3J-1907**	1	SEAL-O-RING	
		1	**6V-8397**	1	SEAL-O-RING	
		1	**6V-8636**	1	CONNECTOR	
	13	1	*148-8368*	2	ELBOW AS	
					(EACH INCLUDES)	
		1	**3J-1907**	1	SEAL-O-RING	
		1	**4J-5477**	1	SEAL-O-RING	
		1	**6V-8627**	1	ELBOW	
	14	1	*148-8378*	1	ELBOW AS	
		1	**3J-1907**	1	SEAL-O-RING	
		1	**6V-8397**	1	SEAL-O-RING	
		1	**6V-8724**	1	ELBOW	
	15	1	*148-8424*	1	TEE AS	
		1	**6V-8397**	1	SEAL-O-RING	
		1	**8T-8902**	1	TEE	
	16	1	*148-8433*	1	TEE AS	
		1	**6V-8397**	2	SEAL-O-RING	
		1	**6V-9836**	1	TEE-SWIVEL	
	17	1	*148-8443*	1	TEE AS	
		1	**3J-1907**	1	SEAL-O-RING	
		1	**6V-8397**	1	SEAL-O-RING	
		1	**7X-2459**	1	TEE-O-RING	
	18	1	*150-4043*	1	CONNECTOR AS	
		1	**3J-1907**	1	SEAL-O-RING	
		1	**6V-8398**	1	SEAL-O-RING	
		1	**6V-9873**	1	CONNECTOR	
	19	1	*155-7327*	2	CONNECTOR AS	
					(EACH INCLUDES)	
		1	**3J-1907**	1	SEAL-O-RING	
		1	**5H-8853**	1	SEAL-O-RING	
		1	**6V-8636**	1	CONNECTOR	
	20	1	**2H-0435**	2	CLAMP	
	21	1	**3K-0360**	1	SEAL-O-RING	
	22	1	**5P-7462**	1	CLIP (SLOT)	
	23	1	**5P-7463**	1	CLIP (TAB)	
	24	1	**6V-0683**	1	GROMMET	
	25	1	**6V-8397**	2	SEAL-O-RING	

254-1358 **VALVE GP-CONTROL** *(contd.)* **i02715672**

NOTE	REF NO	GRAPHIC REF	PART NUMBER	QTY	PART NAME 1 2 3 4 5 6 (PRODUCT LEVEL)	SEE PAGE
M	26	1	**7X-2543**	3	BOLT (M10X1.5X120-MM)	
	27	1	**8T-4121**	2	WASHER-HARD (11X21X2.5-MM THK)	
M	28	1	**8T-4195**	2	BOLT (M10X1.5X30-MM)	
	29	1	**8T-7934**	3	WASHER-HARD (11X21X5-MM THK)	

I-REFER TO HYDRAULIC INFORMATION SYSTEM
M-METRIC PART
Y-SEPARATE ILLUSTRATION

254-1358 **VALVE GP-CONTROL** *(contd.)* **i02715672**

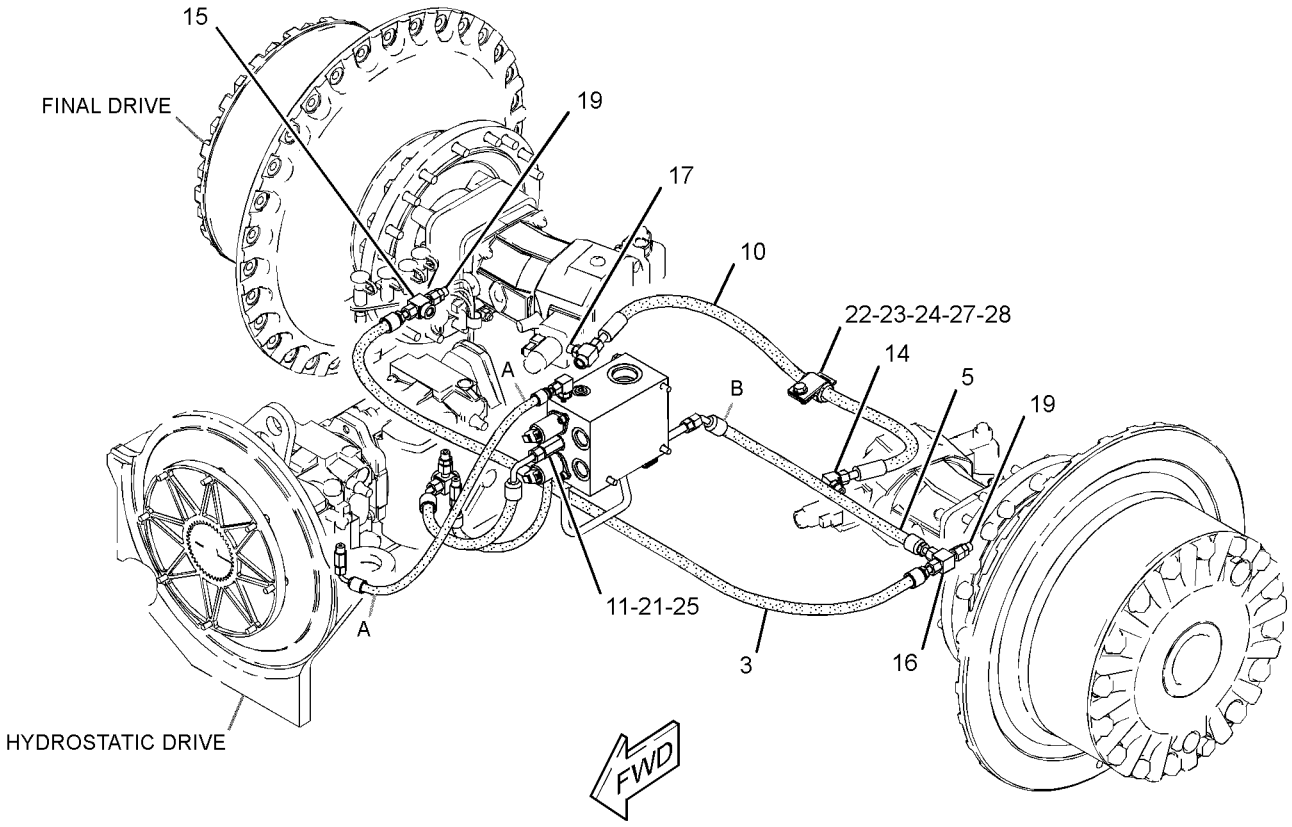

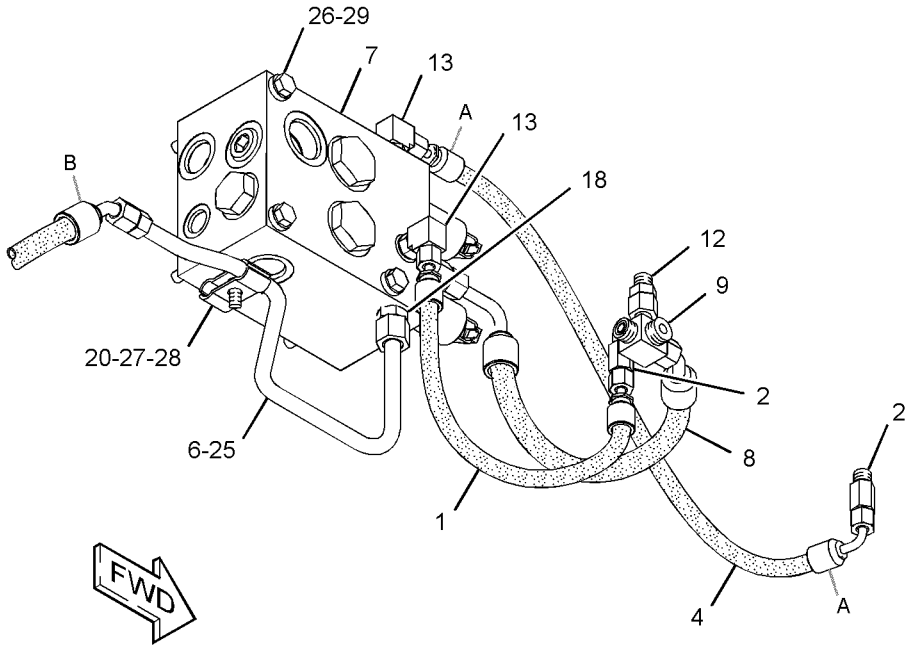

GRAPHIC #1 **<END>** g01366855

STEERING AND BRAKING SYSTEM

254-1358 VALVE GP-CONTROL

S/N: LLL1-773

PART OF 244-7445 POWER TRAIN AR

TYPE 2

SMCS-4307 **i02913160**

NOTE	REF NO	GRAPHIC REF	PART NUMBER	QTY	PART NAME 1 2 3 4 5 6 (PRODUCT LEVEL)	SEE PAGE
I	1	1	**135-7193**	1	HOSE AS	
	2	1	*164-9640*	2	CONNECTOR AS	
					(EACH INCLUDES)	
		1	**3J-1907**	1	SEAL-O-RING	
		1	**4J-5477**	1	SEAL-O-RING	
		1	**145-2237**	1	CONNECTOR	
I	3	1	**165-4632**	1	HOSE AS	
I	4	1	**185-3166**	1	HOSE AS	
I	5	1	**248-6220**	1	HOSE AS	
	6	1	**272-3533**	1	TUBE AS	
Y	7	1	**274-6747**	1	MANIFOLD GP-CONTROL	606
I	8	1	**285-3772**	1	HOSE AS	
C	9	1	**315-9855**	1	UNION AS-CROSS	
I	10	1	**305-5015**	1	HOSE AS	
	11	1	**092-3635**	1	CONNECTOR	
	12	1	*148-8336*	1	CONNECTOR AS	
		1	**3J-1907**	1	SEAL-O-RING	
		1	**6V-8397**	1	SEAL-O-RING	
		1	**6V-8636**	1	CONNECTOR	
	13	1	*148-8368*	2	ELBOW AS	
					(EACH INCLUDES)	
		1	**3J-1907**	1	SEAL-O-RING	
		1	**4J-5477**	1	SEAL-O-RING	
		1	**6V-8627**	1	ELBOW	
	14	1	*148-8378*	1	ELBOW AS	
		1	**3J-1907**	1	SEAL-O-RING	
		1	**6V-8397**	1	SEAL-O-RING	
		1	**6V-8724**	1	ELBOW	
	15	1	*148-8424*	1	TEE AS	
		1	**6V-8397**	1	SEAL-O-RING	
		1	**8T-8902**	1	TEE	
	16	1	*148-8433*	1	TEE AS	
		1	**6V-8397**	2	SEAL-O-RING	
		1	**6V-9836**	1	TEE-SWIVEL	
	17	1	*148-8443*	1	TEE AS	
		1	**3J-1907**	1	SEAL-O-RING	
		1	**6V-8397**	1	SEAL-O-RING	
		1	**7X-2459**	1	TEE-O-RING	
	18	1	*150-4043*	1	CONNECTOR AS	
		1	**3J-1907**	1	SEAL-O-RING	
		1	**6V-8398**	1	SEAL-O-RING	
		1	**6V-9873**	1	CONNECTOR	
	19	1	*155-7327*	2	CONNECTOR AS	
					(EACH INCLUDES)	
		1	**3J-1907**	1	SEAL-O-RING	
		1	**5H-8853**	1	SEAL-O-RING	
		1	**6V-8636**	1	CONNECTOR	
	20	1	**2H-0435**	2	CLAMP	
	21	1	**3K-0360**	1	SEAL-O-RING	
	22	1	**5P-7462**	1	CLIP (SLOT)	
	23	1	**5P-7463**	1	CLIP (TAB)	
	24	1	**6V-0683**	1	GROMMET	
	25	1	**6V-8397**	2	SEAL-O-RING	
M	26	1	**7X-2543**	3	BOLT (M10X1.5X120-MM)	
	27	1	**8T-4121**	2	WASHER-HARD (11X21X2.5-MM THK)	

254-1358 **VALVE GP-CONTROL** *(contd.)* **i02913160**

NOTE	REF NO	GRAPHIC REF	PART NUMBER	QTY	PART NAME 1 2 3 4 5 6 (PRODUCT LEVEL)	SEE PAGE
M	28	1	**8T-4195**	2	BOLT (M10X1.5X30-MM)	
	29	1	**8T-7934**	3	WASHER-HARD (11X21X5-MM THK)	

C-CHANGE FROM PREVIOUS TYPE
I-REFER TO HYDRAULIC INFORMATION SYSTEM
M-METRIC PART
Y-SEPARATE ILLUSTRATION

254-1358 **VALVE GP-CONTROL** *(contd.)* **i02913160**

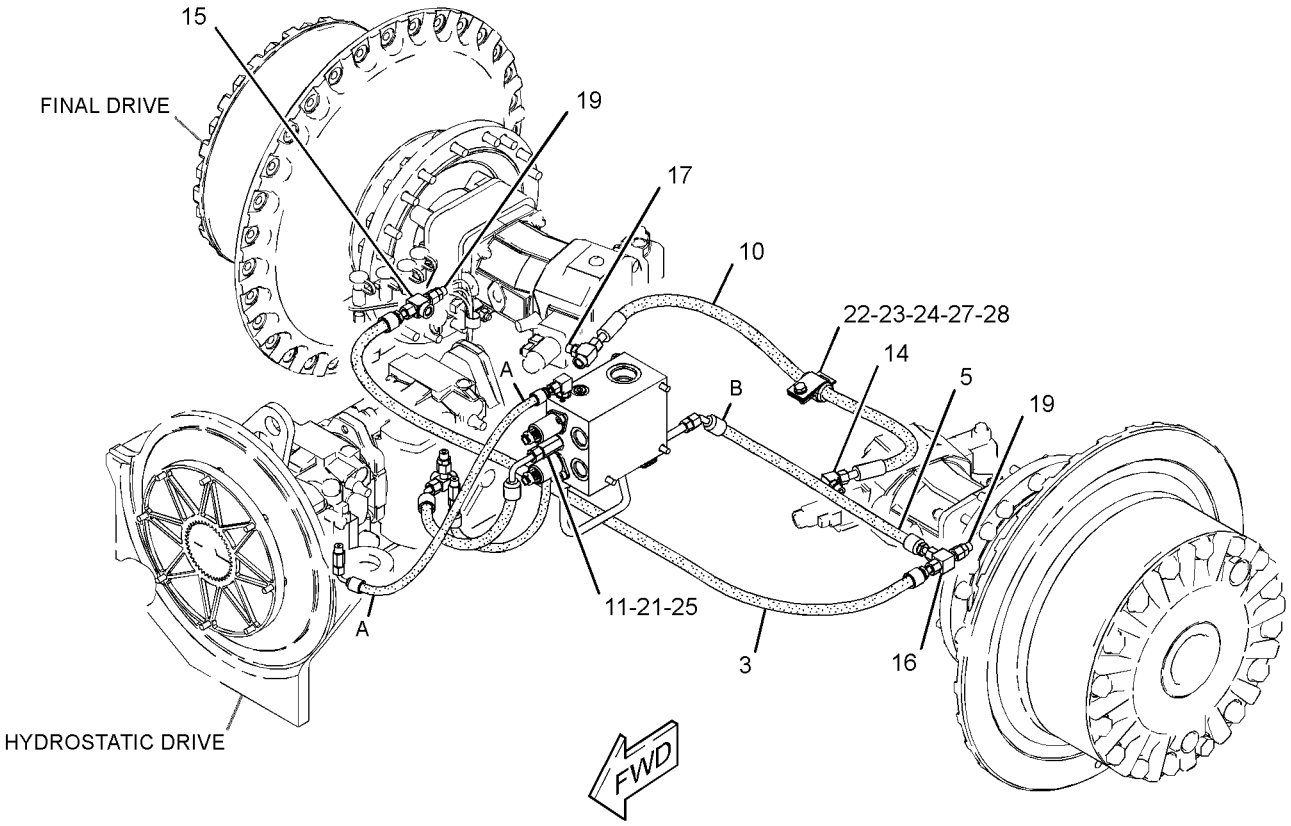

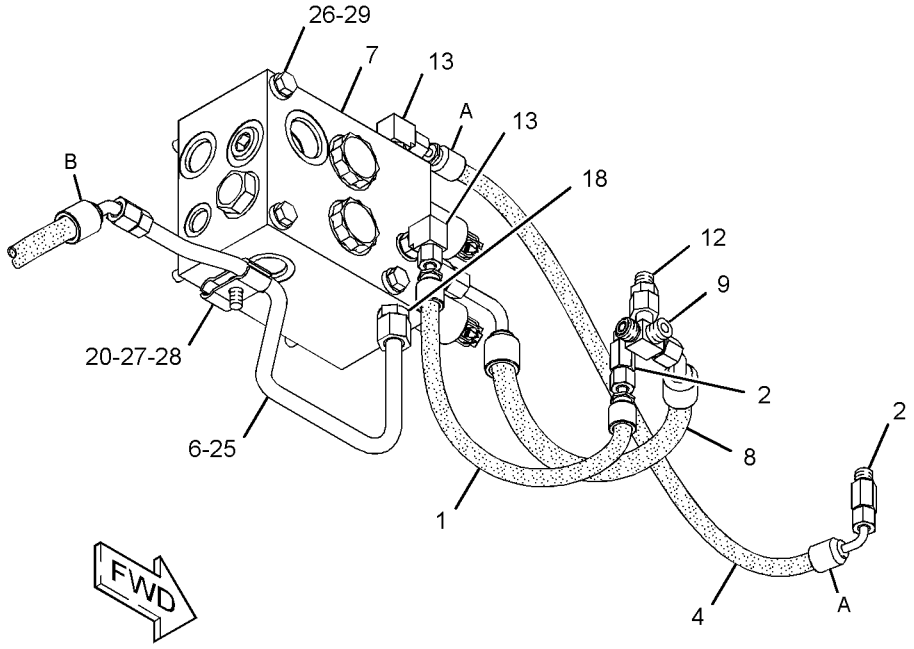

GRAPHIC #1 **<END>** g01456470

254-1358 VALVE GP-CONTROL

S/N: LLL1-773

PART OF 244-7445 POWER TRAIN AR

TYPE 3

SMCS-4307 **i03781029**

NOTE	REF NO	GRAPHIC REF	PART NUMBER	QTY	PART NAME 1 2 3 4 5 6 (PRODUCT LEVEL)	SEE PAGE
I	1	1	**135-7193**	1	HOSE AS	
	2	1	*164-9640*	2	CONNECTOR AS	
					(EACH INCLUDES)	
		1	**3J-1907**	1	SEAL-O-RING	
		1	**4J-5477**	1	SEAL-O-RING	
		1	**145-2237**	1	CONNECTOR	
CI	3	1	**306-2094**	1	HOSE AS	
I	4	1	**185-3166**	1	HOSE AS	
I	5	1	**248-6220**	1	HOSE AS	
	6	1	**272-3533**	1	TUBE AS	
Y	7	1	**274-6747**	1	MANIFOLD GP-CONTROL	606
I	8	1	**285-3772**	1	HOSE AS	
	9	1	*315-9855*	1	UNION AS-CROSS	
		1	**6V-8397**	2	SEAL-O-RING	
		1	**315-9854**	1	CROSS	
I	10	1	**305-5015**	1	HOSE AS	
	11	1	**092-3635**	1	CONNECTOR	
	12	1	*148-8336*	1	CONNECTOR AS	
		1	**3J-1907**	1	SEAL-O-RING	
		1	**6V-8397**	1	SEAL-O-RING	
		1	**6V-8636**	1	CONNECTOR	
	13	1	*148-8368*	2	ELBOW AS	
					(EACH INCLUDES)	
		1	**3J-1907**	1	SEAL-O-RING	
		1	**4J-5477**	1	SEAL-O-RING	
		1	**6V-8627**	1	ELBOW	
	14	1	*148-8378*	1	ELBOW AS	
		1	**3J-1907**	1	SEAL-O-RING	
		1	**6V-8397**	1	SEAL-O-RING	
		1	**6V-8724**	1	ELBOW	
	15	1	*148-8424*	1	TEE AS	
		1	**6V-8397**	1	SEAL-O-RING	
		1	**8T-8902**	1	TEE	
	16	1	*148-8433*	1	TEE AS	
		1	**6V-8397**	2	SEAL-O-RING	
		1	**6V-9836**	1	TEE-SWIVEL	
	18	1	*150-4043*	1	CONNECTOR AS	
		1	**3J-1907**	1	SEAL-O-RING	
		1	**6V-8398**	1	SEAL-O-RING	
		1	**6V-9873**	1	CONNECTOR	
	19	1	*155-7327*	2	CONNECTOR AS	
					(EACH INCLUDES)	
		1	**3J-1907**	1	SEAL-O-RING	
		1	**5H-8853**	1	SEAL-O-RING	
		1	**6V-8636**	1	CONNECTOR	
	20	1	**2H-0435**	2	CLAMP	
	21	1	**3K-0360**	1	SEAL-O-RING	
	22	1	**5P-7462**	1	CLIP (SLOT)	
	23	1	**5P-7463**	1	CLIP (TAB)	
	24	1	**6V-0683**	1	GROMMET	
	25	1	**6V-8397**	3	SEAL-O-RING	
M	26	1	**7X-2543**	3	BOLT (M10X1.5X120-MM)	
	27	1	**8T-4121**	2	WASHER-HARD (11X21X2.5-MM THK)	
M	28	1	**8T-4195**	2	BOLT (M10X1.5X30-MM)	
	29	1	**8T-7934**	3	WASHER-HARD (11X21X5-MM THK)	

254-1358 **VALVE GP-CONTROL** *(contd.)* **i03781029**

NOTE	REF NO	GRAPHIC REF	PART NUMBER	QTY	PART NAME 1 2 3 4 5 6 (PRODUCT LEVEL)	SEE PAGE
	30	1	**7X-2459**	1	TEE-O-RING	
	31	1	**341-0077**	1	CONNECTOR	
	32	1	**3J-1907**	2	SEAL-O-RING	

C-CHANGE FROM PREVIOUS TYPE
I-REFER TO HYDRAULIC INFORMATION SYSTEM
M-METRIC PART
Y-SEPARATE ILLUSTRATION

254-1358 **VALVE GP-CONTROL** *(contd.)* **i03781029**

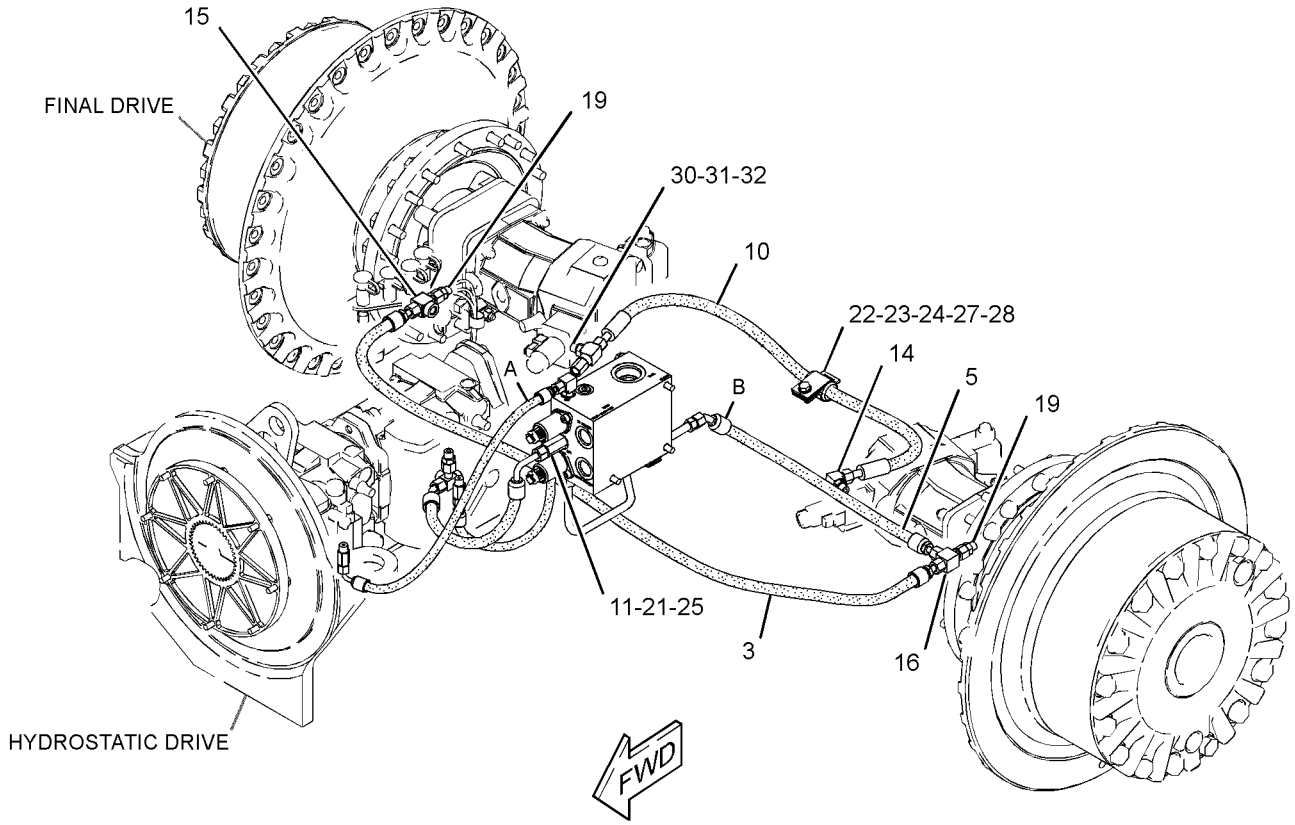

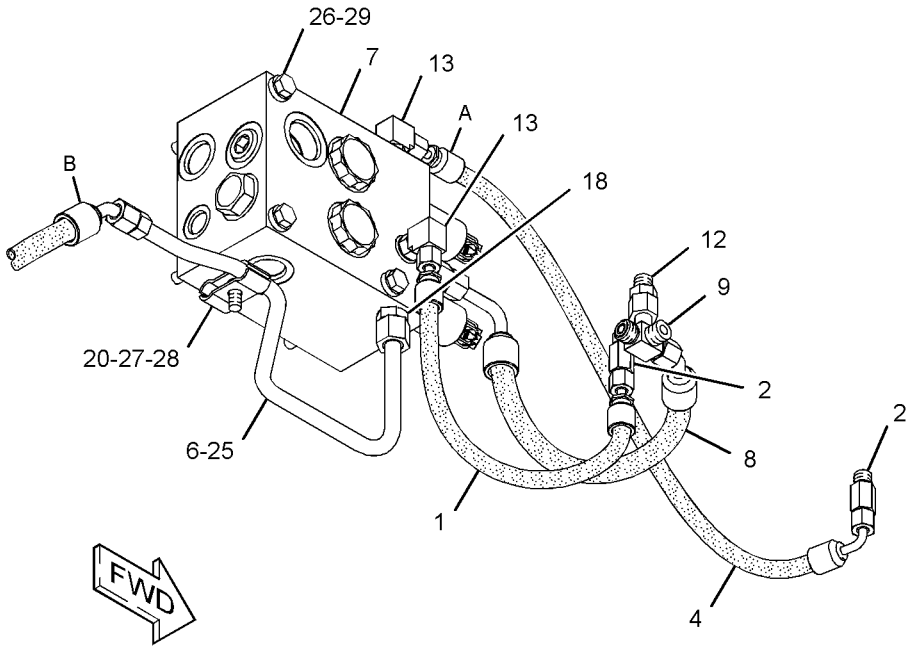

GRAPHIC #1 **<END>** g02056455

STEERING AND BRAKING SYSTEM

254-1358 VALVE GP-CONTROL

S/N: LLL774-UP

PART OF 244-7445 POWER TRAIN AR

SMCS-4307 **i03996976**

NOTE	REF NO	GRAPHIC REF	PART NUMBER	QTY	PART NAME 1 2 3 4 5 6 (PRODUCT LEVEL)	SEE PAGE
I	1	1	**135-7193**	1	HOSE AS	
	2	1	*164-9640*	2	CONNECTOR AS	
					(EACH INCLUDES)	
		1	**3J-1907**	1	SEAL-O-RING	
		1	**4J-5477**	1	SEAL-O-RING	
		1	**145-2237**	1	CONNECTOR	
CI	3	1	**345-9623**	1	HOSE AS	
I	4	1	**185-3166**	1	HOSE AS	
I	5	1	**248-6220**	1	HOSE AS	
	6	1	**272-3533**	1	TUBE AS	
Y	7	1	**274-6747**	1	MANIFOLD GP-CONTROL (SERVICE BRAKE)	606
I	8	1	**285-3772**	1	HOSE AS	
	9	1	*315-9855*	1	UNION AS-CROSS	
		1	**6V-8397**	2	SEAL-O-RING	
		1	**315-9854**	1	CROSS	
I	10	1	**305-5015**	1	HOSE AS	
	11	1	**092-3635**	1	CONNECTOR	
	12	1	*148-8336*	1	CONNECTOR AS	
		1	**3J-1907**	1	SEAL-O-RING	
		1	**6V-8397**	1	SEAL-O-RING	
		1	**6V-8636**	1	CONNECTOR	
	13	1	*148-8368*	2	ELBOW AS	
					(EACH INCLUDES)	
		1	**3J-1907**	1	SEAL-O-RING	
		1	**4J-5477**	1	SEAL-O-RING	
		1	**6V-8627**	1	ELBOW	
	14	1	*148-8378*	1	ELBOW AS	
		1	**3J-1907**	1	SEAL-O-RING	
		1	**6V-8397**	1	SEAL-O-RING	
		1	**6V-8724**	1	ELBOW	
	15	1	*148-8424*	1	TEE AS	
		1	**6V-8397**	1	SEAL-O-RING	
		1	**8T-8902**	1	TEE	
	16	1	*148-8433*	1	TEE AS	
		1	**6V-8397**	2	SEAL-O-RING	
		1	**6V-9836**	1	TEE-SWIVEL	
	18	1	*150-4043*	1	CONNECTOR AS	
		1	**3J-1907**	1	SEAL-O-RING	
		1	**6V-8398**	1	SEAL-O-RING	
		1	**6V-9873**	1	CONNECTOR	
	19	1	*155-7327*	2	CONNECTOR AS	
					(EACH INCLUDES)	
		1	**3J-1907**	1	SEAL-O-RING	
		1	**5H-8853**	1	SEAL-O-RING	
		1	**6V-8636**	1	CONNECTOR	
	20	1	**2H-0435**	2	CLAMP	
	21	1	**3K-0360**	1	SEAL-O-RING	
	22	1	**5P-7462**	1	CLIP (SLOT)	
	23	1	**5P-7463**	1	CLIP (TAB)	
	24	1	**6V-0683**	1	GROMMET	
	25	1	**6V-8397**	3	SEAL-O-RING	
M	26	1	**7X-2543**	3	BOLT (M10X1.5X120-MM)	
	27	1	**8T-4121**	2	WASHER-HARD (11X21X2.5-MM THK)	
M	28	1	**8T-4195**	2	BOLT (M10X1.5X30-MM)	
	29	1	**8T-7934**	3	WASHER-HARD (11X21X5-MM THK)	
	30	1	**7X-2459**	1	TEE-O-RING	

254-1358 **VALVE GP-CONTROL** *(contd.)* **i03996976**

NOTE	REF NO	GRAPHIC REF	PART NUMBER	QTY	PART NAME 1 2 3 4 5 6 (PRODUCT LEVEL)	SEE PAGE
	31	1	**341-0083**	1	CONNECTOR	
	32	1	**3J-1907**	2	SEAL-O-RING	

C-CHANGE FROM PREVIOUS TYPE
I-REFER TO HYDRAULIC INFORMATION SYSTEM
M-METRIC PART
Y-SEPARATE ILLUSTRATION

254-1358 **VALVE GP-CONTROL** *(contd.)* **i03996976**

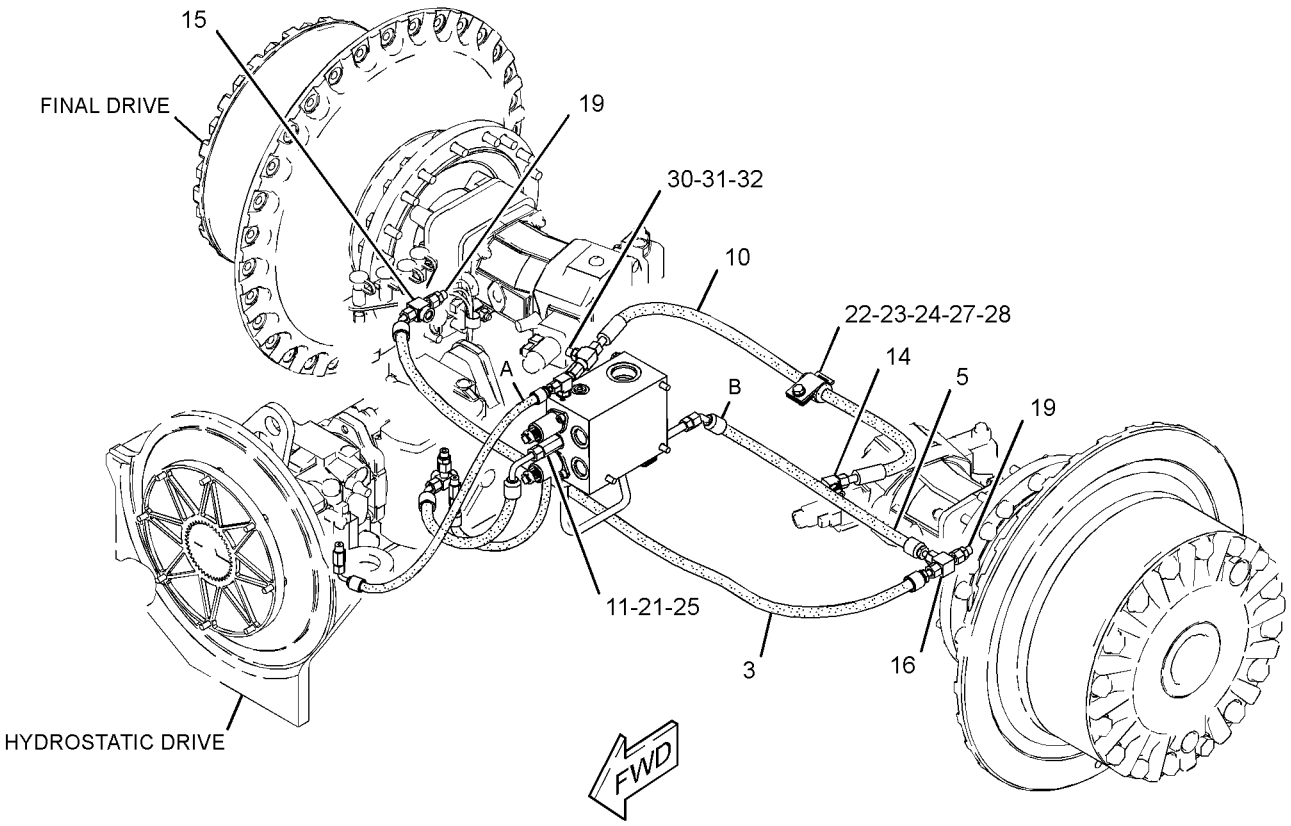

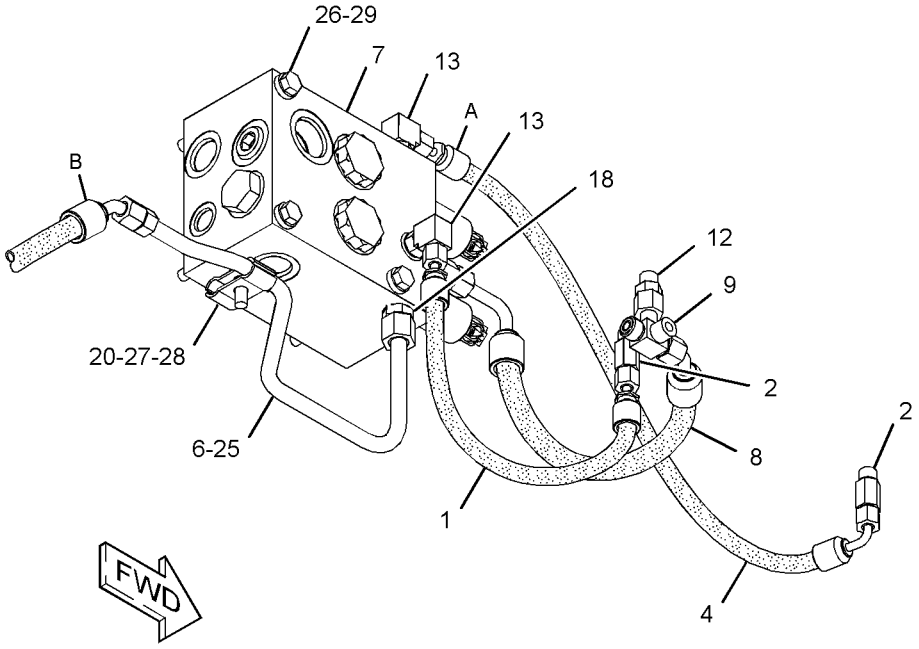

GRAPHIC #1 **<END>** g02538576

STEERING AND BRAKING SYSTEM

271-9177 VALVE GP-CONTROL

S/N: FFF1-604

PART OF 244-7382 POWER TRAIN AR

TYPE 1

SMCS-4307 **i02682053**

NOTE	REF NO	GRAPHIC REF	PART NUMBER	QTY	PART NAME 1 2 3 4 5 6 (PRODUCT LEVEL)	SEE PAGE
I	1	1	**135-7193**	1	HOSE AS	
I	2	1	**185-3166**	1	HOSE AS	
	3	1	**272-3533**	1	TUBE AS	
I	4	1	**274-1530**	1	HOSE AS	
I	5	1	**274-1534**	1	HOSE AS	
Y	6	1	**274-6747**	1	MANIFOLD GP-CONTROL	606
I	7	1	**283-4946**	1	HOSE AS	
I	8	1	**285-3772**	1	HOSE AS	
	9	1	**295-9265**	1	TEE AS	
		1	**6V-9843**	1	TEE	
		1	**6V-8397**	2	SEAL-O-RING	
	10	1	**092-3635**	1	CONNECTOR	
	11	1	*148-8325*	2	CONNECTOR AS	
					(EACH INCLUDES)	
		1	**3J-1907**	1	SEAL-O-RING	
		1	**4J-5477**	1	SEAL-O-RING	
		1	**6V-8641**	1	CONNECTOR	
	12	1	*148-8336*	1	CONNECTOR AS	
		1	**3J-1907**	1	SEAL-O-RING	
		1	**6V-8397**	1	SEAL-O-RING	
		1	**6V-8636**	1	CONNECTOR	
	13	1	*148-8368*	2	ELBOW AS	
					(EACH INCLUDES)	
		1	**3J-1907**	1	SEAL-O-RING	
		1	**4J-5477**	1	SEAL-O-RING	
		1	**6V-8627**	1	ELBOW	
	14	1	*148-8378*	1	ELBOW AS	
		1	**3J-1907**	1	SEAL-O-RING	
		1	**6V-8397**	1	SEAL-O-RING	
		1	**6V-8724**	1	ELBOW	
	15	1	*148-8439*	2	TEE AS	
					(EACH INCLUDES)	
		1	**3J-1907**	1	SEAL-O-RING	
		1	**6V-8397**	2	SEAL-O-RING	
		1	**6V-8774**	1	TEE	
	16	1	*148-8443*	1	TEE AS	
		1	**3J-1907**	1	SEAL-O-RING	
		1	**6V-8397**	1	SEAL-O-RING	
		1	**7X-2459**	1	TEE-O-RING	
	17	1	*150-4043*	1	CONNECTOR AS	
		1	**3J-1907**	1	SEAL-O-RING	
		1	**6V-8398**	1	SEAL-O-RING	
		1	**6V-9873**	1	CONNECTOR	
	18	1	**2H-0435**	2	CLAMP	
	19	1	**3K-0360**	1	SEAL-O-RING	
	20	1	**5P-7462**	1	CLIP (SLOT)	
	21	1	**5P-7463**	1	CLIP (TAB)	
	22	1	**6V-0683**	1	GROMMET	
	23	1	**6V-8397**	2	SEAL-O-RING	
M	24	1	**7X-2543**	3	BOLT (M10X1.5X120-MM)	
	25	1	**8M-2773**	3	CLIP	
	26	1	**8T-4121**	4	WASHER-HARD (11X21X2.5-MM THK)	
M	27	1	**8T-4191**	2	BOLT (M10X1.5X16-MM)	
M	28	1	**8T-4195**	2	BOLT (M10X1.5X30-MM)	
	29	1	**8T-7934**	3	WASHER-HARD (11X21X5-MM THK)	

271-9177 **VALVE GP-CONTROL** *(contd.)* **i02682053**

I-REFER TO HYDRAULIC INFORMATION SYSTEM
M-METRIC PART
Y-SEPARATE ILLUSTRATION

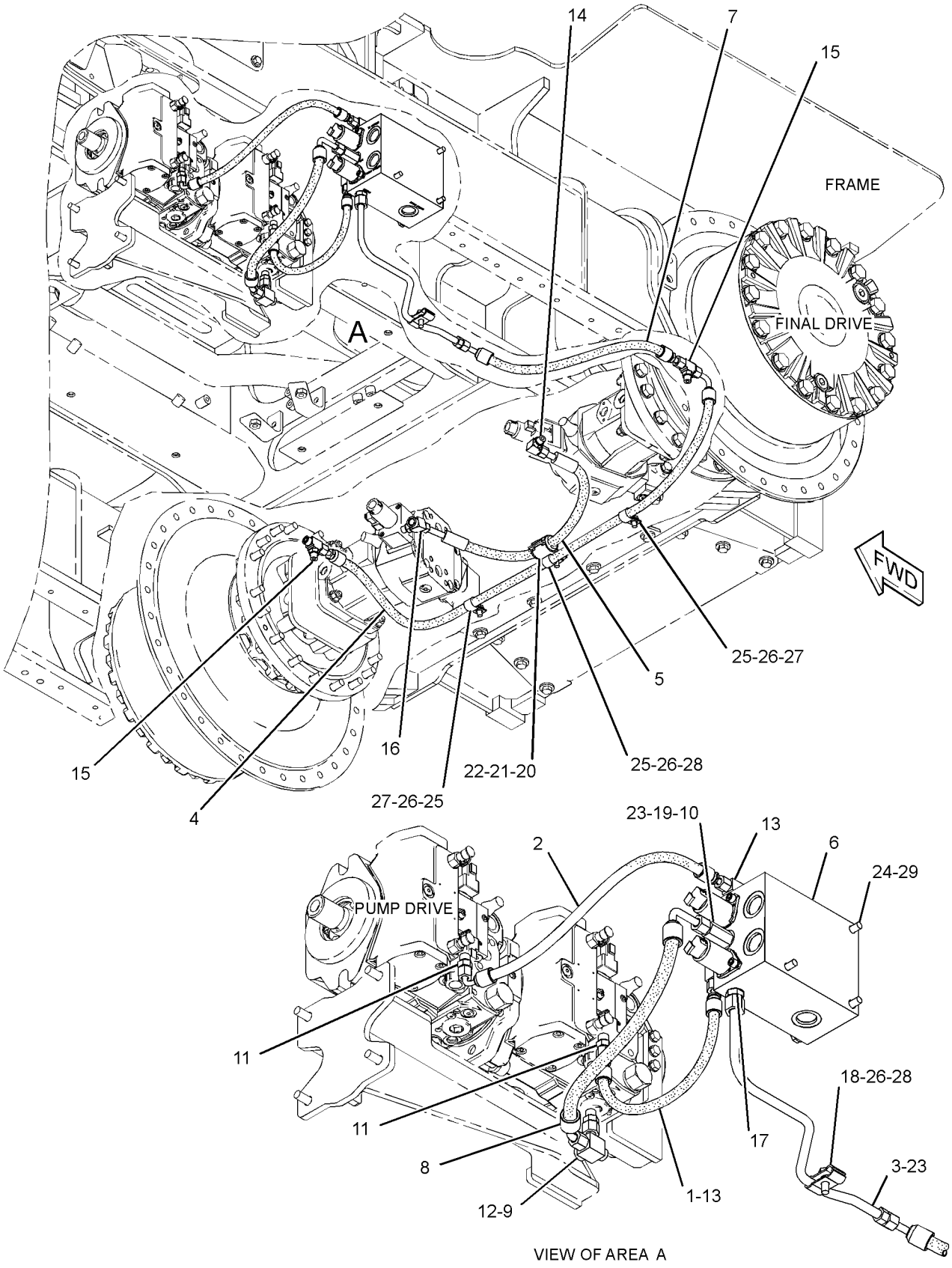

GRAPHIC #1 **<END>** g01366505

STEERING AND BRAKING SYSTEM

271-9177 VALVE GP-CONTROL

S/N: FFF1-604

PART OF 244-7382 POWER TRAIN AR

TYPE 2

SMCS-4307 **i03720153**

NOTE	REF NO	GRAPHIC REF	PART NUMBER	QTY	PART NAME 1 2 3 4 5 6 (PRODUCT LEVEL)	SEE PAGE
I	1	1	**135-7193**	1	HOSE AS	
C	2	1	*164-9640*	2	CONNECTOR AS	
					(EACH INCLUDES)	
		1	**3J-1907**	1	SEAL-O-RING	
		1	**4J-5477**	1	SEAL-O-RING	
		1	**145-2237**	1	CONNECTOR	
I	3	1	**185-3166**	1	HOSE AS	
CI	4	1	**240-2586**	1	HOSE AS	
	5	1	**272-3533**	1	TUBE AS	
Y	6	1	**274-6747**	1	MANIFOLD GP-CONTROL	606
I	7	1	**285-3772**	1	HOSE AS	
CI	8	1	**303-6600**	1	HOSE AS	
CI	9	1	**305-5014**	1	HOSE AS	
	10	1	**315-9855**	1	UNION AS-CROSS	
		1	**6V-8397**	2	SEAL-O-RING	
		1	**315-9854**	1	CROSS	
	11	1	**092-3635**	1	CONNECTOR	
	12	1	*148-8336*	1	CONNECTOR AS	
		1	**3J-1907**	1	SEAL-O-RING	
		1	**6V-8397**	1	SEAL-O-RING	
		1	**6V-8636**	1	CONNECTOR	
	13	1	*148-8368*	2	ELBOW AS	
					(EACH INCLUDES)	
		1	**3J-1907**	1	SEAL-O-RING	
		1	**4J-5477**	1	SEAL-O-RING	
		1	**6V-8627**	1	ELBOW	
	14	1	*148-8378*	1	ELBOW AS	
		1	**3J-1907**	1	SEAL-O-RING	
		1	**6V-8397**	1	SEAL-O-RING	
		1	**6V-8724**	1	ELBOW	
C	15	1	*148-8424*	1	TEE AS	
		1	**6V-8397**	1	SEAL-O-RING	
		1	**8T-8902**	1	TEE	
C	16	1	*148-8433*	1	TEE AS	
		1	**6V-8397**	2	SEAL-O-RING	
		1	**6V-9836**	1	TEE-SWIVEL	
	17	1	*148-8443*	1	TEE AS	
		1	**3J-1907**	1	SEAL-O-RING	
		1	**6V-8397**	1	SEAL-O-RING	
		1	**7X-2459**	1	TEE-O-RING	
	18	1	*150-4043*	1	CONNECTOR AS	
		1	**3J-1907**	1	SEAL-O-RING	
		1	**6V-8398**	1	SEAL-O-RING	
		1	**6V-9873**	1	CONNECTOR	
C	19	1	*155-7327*	2	CONNECTOR AS	
					(EACH INCLUDES)	
		1	**3J-1907**	1	SEAL-O-RING	
		1	**5H-8853**	1	SEAL-O-RING	
		1	**6V-8636**	1	CONNECTOR	
	20	1	**2H-0435**	2	CLAMP	
	21	1	**3K-0360**	1	SEAL-O-RING	
	22	1	**5P-7462**	1	CLIP (SLOT)	
	23	1	**5P-7463**	1	CLIP (TAB)	
	24	1	**6V-0683**	1	GROMMET	
	25	1	**6V-8397**	2	SEAL-O-RING	

271-9177 **VALVE GP-CONTROL** *(contd.)* **i03720153**

NOTE	REF NO	GRAPHIC REF	PART NUMBER	QTY	PART NAME 1 2 3 4 5 6 (PRODUCT LEVEL)	SEE PAGE
M	26	1	**7X-2543**	3	BOLT (M10X1.5X120-MM)	
C	27	1	**8T-4121**	2	WASHER-HARD (11X21X2.5-MM THK)	
M	28	1	**8T-4195**	2	BOLT (M10X1.5X30-MM)	
	29	1	**8T-7934**	3	WASHER-HARD (11X21X5-MM THK)	

C-CHANGE FROM PREVIOUS TYPE
I-REFER TO HYDRAULIC INFORMATION SYSTEM
M-METRIC PART
Y-SEPARATE ILLUSTRATION

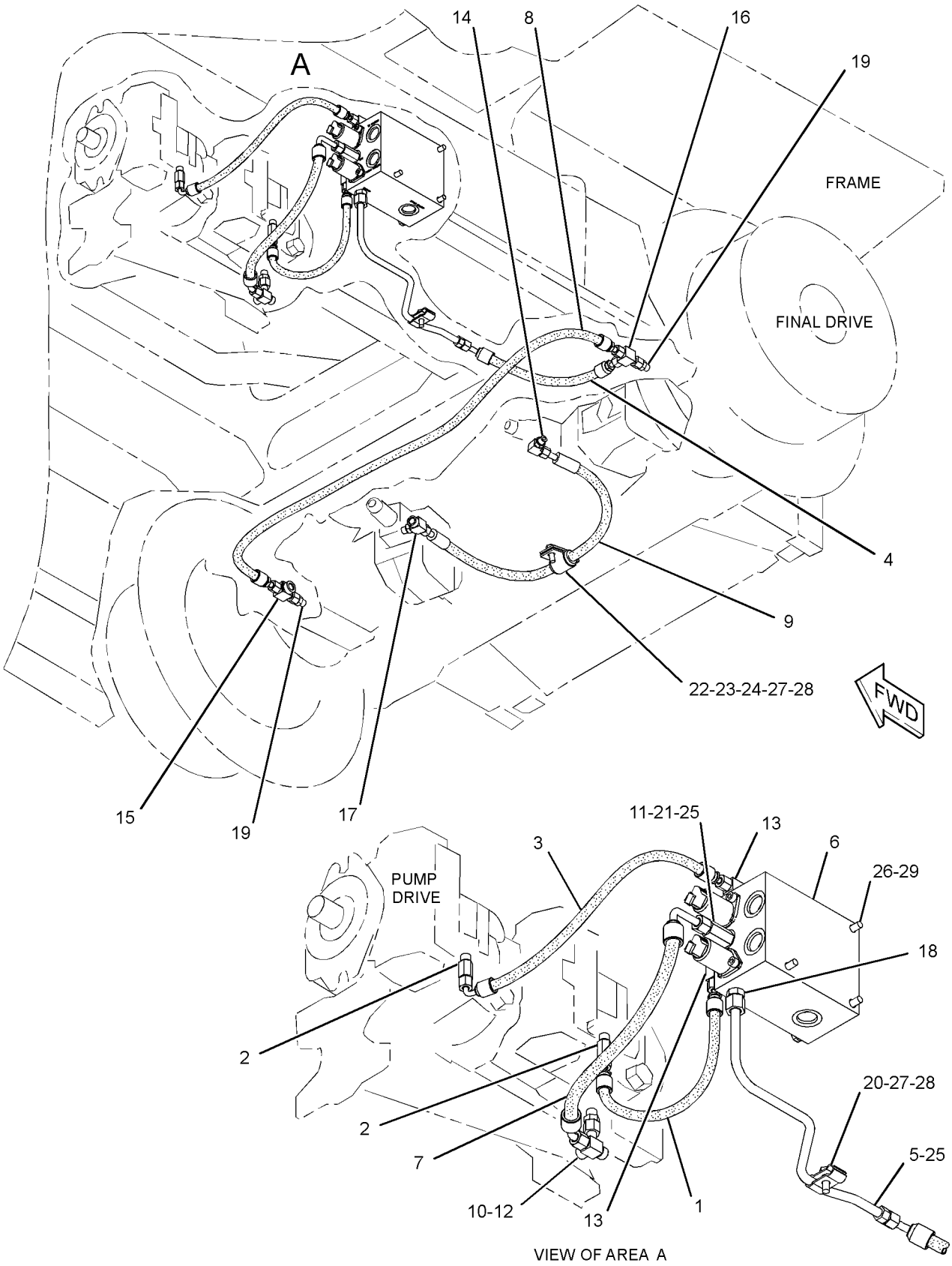

GRAPHIC #1 **<END>** g02009703

STEERING AND BRAKING SYSTEM

271-9177 VALVE GP-CONTROL

S/N: FFF1-604

PART OF 244-7382 POWER TRAIN AR

TYPE 3

SMCS-4307 **i03744090**

NOTE	REF NO	GRAPHIC REF	PART NUMBER	QTY	PART NAME 1 2 3 4 5 6 (PRODUCT LEVEL)	SEE PAGE
I	1	1	**135-7193**	1	HOSE AS	
	2	1	*164-9640*	2	CONNECTOR AS	
					(EACH INCLUDES)	
		1	**3J-1907**	1	SEAL-O-RING	
		1	**4J-5477**	1	SEAL-O-RING	
		1	**145-2237**	1	CONNECTOR	
I	3	1	**185-3166**	1	HOSE AS	
I	4	1	**240-2586**	1	HOSE AS	
	5	1	**272-3533**	1	TUBE AS	
Y	6	1	**274-6747**	1	MANIFOLD GP-CONTROL	606
I	7	1	**285-3772**	1	HOSE AS	
I	8	1	**303-6600**	1	HOSE AS	
I	9	1	**305-5014**	1	HOSE AS	
	10	1	**315-9855**	1	UNION AS-CROSS	
		1	**6V-8397**	2	SEAL-O-RING	
		1	**315-9854**	1	CROSS	
	11	1	**092-3635**	1	CONNECTOR	
	12	1	*148-8336*	1	CONNECTOR AS	
		1	**3J-1907**	1	SEAL-O-RING	
		1	**6V-8397**	1	SEAL-O-RING	
		1	**6V-8636**	1	CONNECTOR	
	13	1	*148-8368*	2	ELBOW AS	
					(EACH INCLUDES)	
		1	**3J-1907**	1	SEAL-O-RING	
		1	**4J-5477**	1	SEAL-O-RING	
		1	**6V-8627**	1	ELBOW	
	14	1	*148-8378*	1	ELBOW AS	
		1	**3J-1907**	1	SEAL-O-RING	
		1	**6V-8397**	1	SEAL-O-RING	
		1	**6V-8724**	1	ELBOW	
	15	1	*148-8424*	1	TEE AS	
		1	**6V-8397**	1	SEAL-O-RING	
		1	**8T-8902**	1	TEE	
	16	1	*148-8433*	1	TEE AS	
		1	**6V-8397**	2	SEAL-O-RING	
		1	**6V-9836**	1	TEE-SWIVEL	
C	17	1	**341-0083**	1	CONNECTOR	
	18	1	*150-4043*	1	CONNECTOR AS	
		1	**3J-1907**	1	SEAL-O-RING	
		1	**6V-8398**	1	SEAL-O-RING	
		1	**6V-9873**	1	CONNECTOR	
	19	1	*155-7327*	2	CONNECTOR AS	
					(EACH INCLUDES)	
		1	**3J-1907**	1	SEAL-O-RING	
		1	**5H-8853**	1	SEAL-O-RING	
		1	**6V-8636**	1	CONNECTOR	
	20	1	**2H-0435**	2	CLAMP	
	21	1	**3K-0360**	1	SEAL-O-RING	
	22	1	**5P-7462**	1	CLIP (SLOT)	
	23	1	**5P-7463**	1	CLIP (TAB)	
	24	1	**6V-0683**	1	GROMMET	
C	25	1	**6V-8397**	3	SEAL-O-RING	
M	26	1	**7X-2543**	3	BOLT (M10X1.5X120-MM)	
	27	1	**8T-4121**	2	WASHER-HARD (11X21X2.5-MM THK)	
M	28	1	**8T-4195**	2	BOLT (M10X1.5X30-MM)	

271-9177 **VALVE GP-CONTROL** *(contd.)* **i03744090**

NOTE	REF NO	GRAPHIC REF	PART NUMBER	QTY	PART NAME 1 2 3 4 5 6 (PRODUCT LEVEL)	SEE PAGE
	29	1	**8T-7934**	3	WASHER-HARD (11X21X5-MM THK)	
C	30	1	**7X-2459**	1	TEE-O-RING	
C	31	1	**3J-1907**	2	SEAL-O-RING	

C-CHANGE FROM PREVIOUS TYPE
I-REFER TO HYDRAULIC INFORMATION SYSTEM
M-METRIC PART
Y-SEPARATE ILLUSTRATION

271-9177 **VALVE GP-CONTROL** *(contd.)* **i03744090**

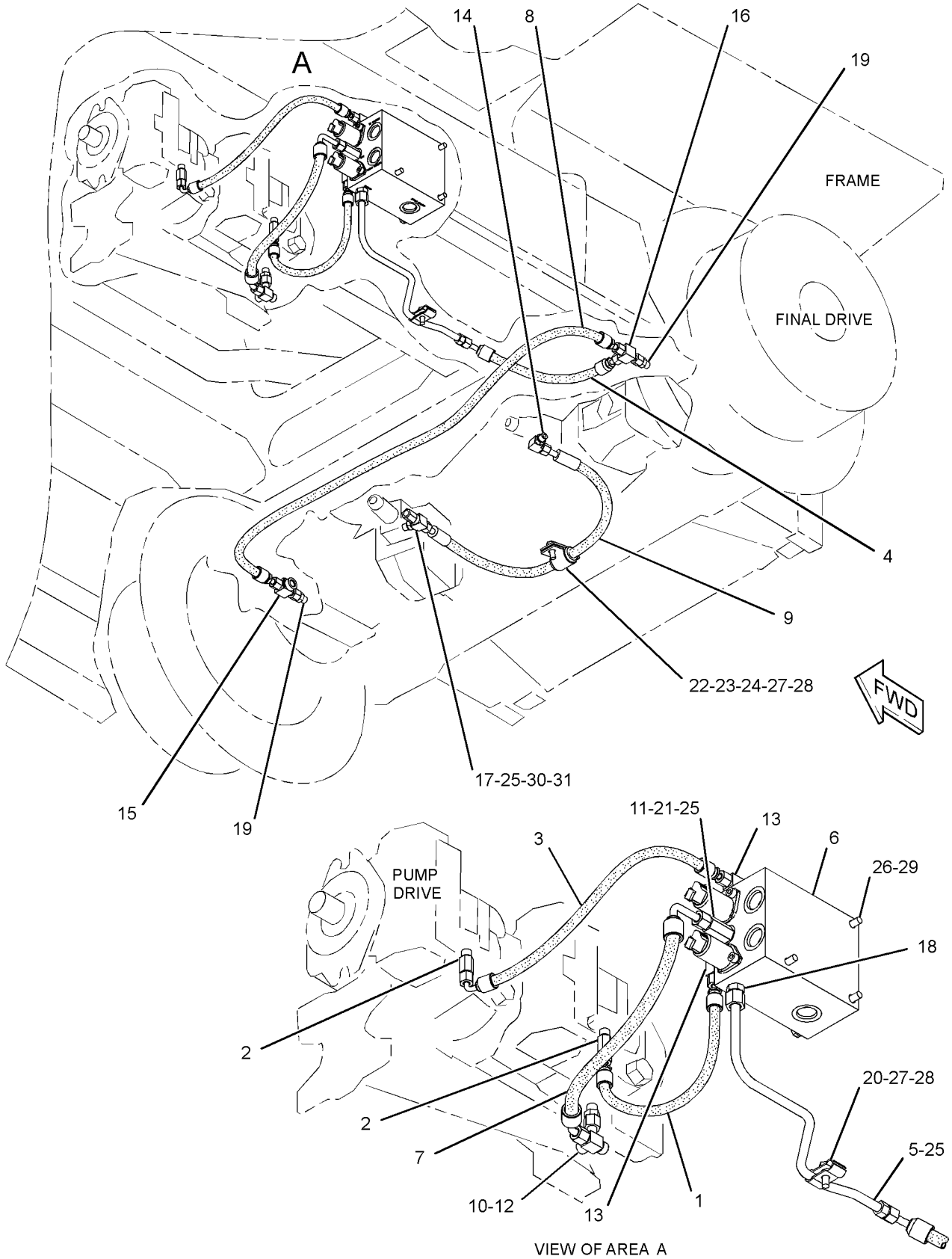

GRAPHIC #1 **<END>** g02033181

STEERING AND BRAKING SYSTEM

271-9177 VALVE GP-CONTROL

S/N: FFF605-657

PART OF 244-7382 POWER TRAIN AR

SMCS-4307 **i03996981**

NOTE	REF NO	GRAPHIC REF	PART NUMBER	QTY	PART NAME 1 2 3 4 5 6 (PRODUCT LEVEL)	SEE PAGE
I	1	1	**135-7193**	1	HOSE AS	
	2	1	*164-9640*	2	CONNECTOR AS	
					(EACH INCLUDES)	
		1	**3J-1907**	1	SEAL-O-RING	
		1	**4J-5477**	1	SEAL-O-RING	
		1	**145-2237**	1	CONNECTOR	
I	3	1	**185-3166**	1	HOSE AS	
I	4	1	**240-2586**	1	HOSE AS	
	5	1	**272-3533**	1	TUBE AS	
Y	6	1	**274-6747**	1	MANIFOLD GP-CONTROL	606
I	7	1	**285-3772**	1	HOSE AS	
CI	8	1	**184-4496**	1	HOSE AS	
I	9	1	**305-5014**	1	HOSE AS	
	10	1	**315-9855**	1	UNION AS-CROSS	
		1	**6V-8397**	2	SEAL-O-RING	
		1	**315-9854**	1	CROSS	
	11	1	**092-3635**	1	CONNECTOR	
	12	1	*148-8336*	1	CONNECTOR AS	
		1	**3J-1907**	1	SEAL-O-RING	
		1	**6V-8397**	1	SEAL-O-RING	
		1	**6V-8636**	1	CONNECTOR	
	13	1	*148-8368*	2	ELBOW AS	
					(EACH INCLUDES)	
		1	**3J-1907**	1	SEAL-O-RING	
		1	**4J-5477**	1	SEAL-O-RING	
		1	**6V-8627**	1	ELBOW	
	14	1	*148-8378*	1	ELBOW AS	
		1	**3J-1907**	1	SEAL-O-RING	
		1	**6V-8397**	1	SEAL-O-RING	
		1	**6V-8724**	1	ELBOW	
	15	1	*148-8424*	1	TEE AS	
		1	**6V-8397**	1	SEAL-O-RING	
		1	**8T-8902**	1	TEE	
	16	1	*148-8433*	1	TEE AS	
		1	**6V-8397**	2	SEAL-O-RING	
		1	**6V-9836**	1	TEE-SWIVEL	
	17	1	**341-0083**	1	CONNECTOR	
	18	1	*150-4043*	1	CONNECTOR AS	
		1	**3J-1907**	1	SEAL-O-RING	
		1	**6V-8398**	1	SEAL-O-RING	
		1	**6V-9873**	1	CONNECTOR	
	19	1	*155-7327*	2	CONNECTOR AS	
					(EACH INCLUDES)	
		1	**3J-1907**	1	SEAL-O-RING	
		1	**5H-8853**	1	SEAL-O-RING	
		1	**6V-8636**	1	CONNECTOR	
	20	1	**2H-0435**	2	CLAMP	
	21	1	**3K-0360**	1	SEAL-O-RING	
	22	1	**5P-7462**	1	CLIP (SLOT)	
	23	1	**5P-7463**	1	CLIP (TAB)	
	24	1	**6V-0683**	1	GROMMET	
	25	1	**6V-8397**	3	SEAL-O-RING	
M	26	1	**7X-2543**	3	BOLT (M10X1.5X120-MM)	
	27	1	**8T-4121**	2	WASHER-HARD (11X21X2.5-MM THK)	
M	28	1	**8T-4195**	2	BOLT (M10X1.5X30-MM)	
	29	1	**8T-7934**	3	WASHER-HARD (11X21X5-MM THK)	

271-9177 **VALVE GP-CONTROL** *(contd.)* **i03996981**

NOTE	REF NO	GRAPHIC REF	PART NUMBER	QTY	PART NAME 1 2 3 4 5 6 (PRODUCT LEVEL)	SEE PAGE
	30	1	**7X-2459**	1	TEE-O-RING	
	31	1	**3J-1907**	2	SEAL-O-RING	

C-CHANGE FROM PREVIOUS TYPE
I-REFER TO HYDRAULIC INFORMATION SYSTEM
M-METRIC PART
Y-SEPARATE ILLUSTRATION

271-9177 **VALVE GP-CONTROL** *(contd.)* **i03996981**

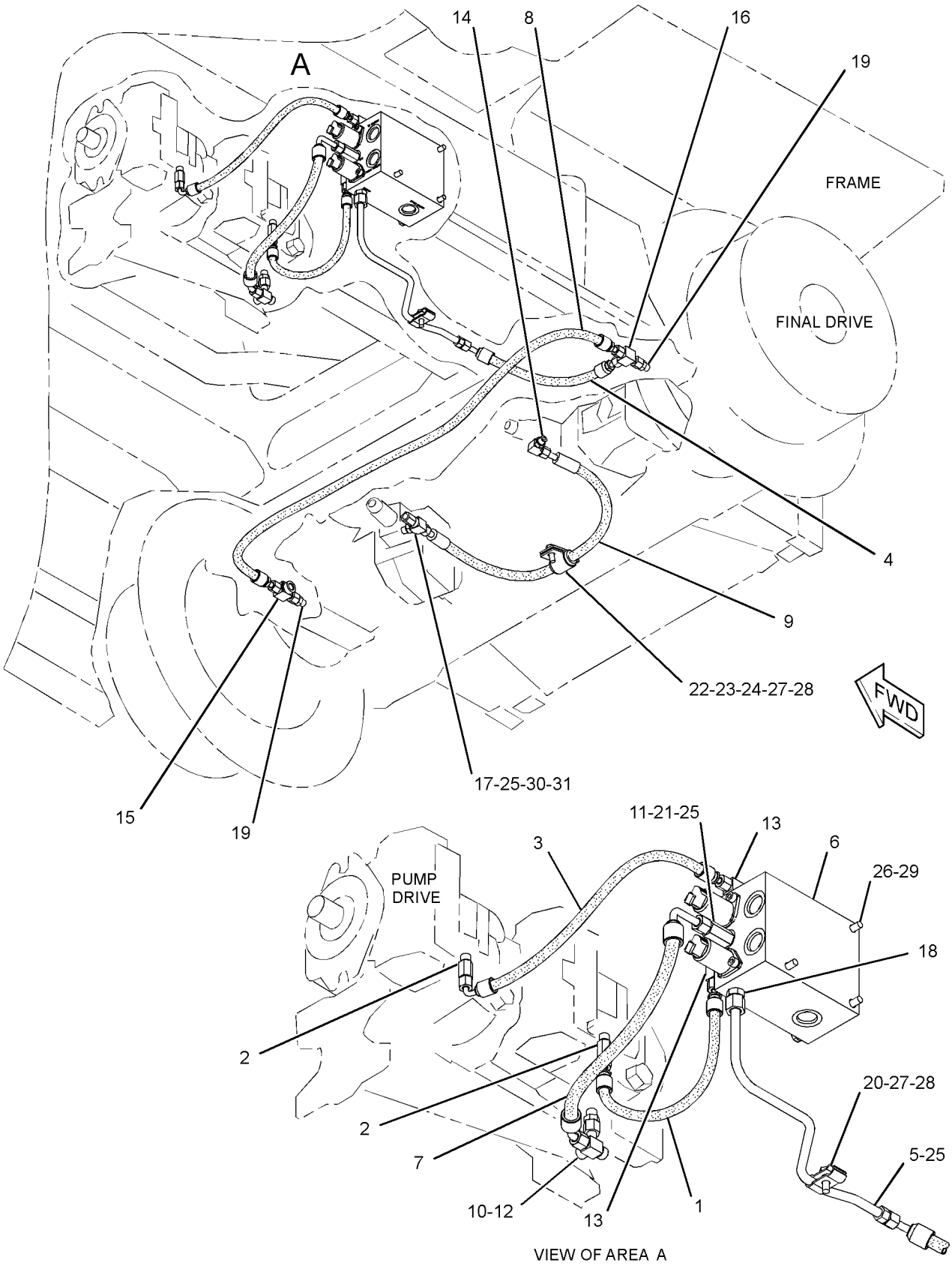

GRAPHIC #1 **<END>** g02033181

STEERING AND BRAKING SYSTEM

271-9177 VALVE GP-CONTROL

S/N: FFF658-UP

PART OF 244-7382 POWER TRAIN AR

SMCS-4307 **i04248471**

NOTE	REF NO	GRAPHIC REF	PART NUMBER	QTY	PART NAME 1 2 3 4 5 6 (PRODUCT LEVEL)	SEE PAGE
I	1	1	**135-7193**	1	HOSE AS	
	2	1	*164-9640*	2	CONNECTOR AS	
					(EACH INCLUDES)	
		1	**3J-1907**	1	SEAL-O-RING	
		1	**4J-5477**	1	SEAL-O-RING	
		1	**145-2237**	1	CONNECTOR	
CI	3	1	**195-4403**	1	HOSE AS	
I	4	1	**240-2586**	1	HOSE AS	
	5	1	**272-3533**	1	TUBE AS	
Y	6	1	**274-6747**	1	MANIFOLD GP-CONTROL (SERVICE BRAKE)	606
I	7	1	**285-3772**	1	HOSE AS	
I	8	1	**184-4496**	1	HOSE AS	
I	9	1	**305-5014**	1	HOSE AS	
	10	1	*315-9855*	1	UNION AS-CROSS	
		1	**6V-8397**	2	SEAL-O-RING	
		1	**315-9854**	1	CROSS	
	11	1	**092-3635**	1	CONNECTOR	
	12	1	*148-8336*	1	CONNECTOR AS	
		1	**3J-1907**	1	SEAL-O-RING	
		1	**6V-8397**	1	SEAL-O-RING	
		1	**6V-8636**	1	CONNECTOR	
	13	1	*148-8368*	2	ELBOW AS	
					(EACH INCLUDES)	
		1	**3J-1907**	1	SEAL-O-RING	
		1	**4J-5477**	1	SEAL-O-RING	
		1	**6V-8627**	1	ELBOW	
	14	1	*148-8378*	1	ELBOW AS	
		1	**3J-1907**	1	SEAL-O-RING	
		1	**6V-8397**	1	SEAL-O-RING	
		1	**6V-8724**	1	ELBOW	
	15	1	*148-8424*	1	TEE AS	
		1	**6V-8397**	1	SEAL-O-RING	
		1	**8T-8902**	1	TEE	
	16	1	*148-8433*	1	TEE AS	
		1	**6V-8397**	2	SEAL-O-RING	
		1	**6V-9836**	1	TEE-SWIVEL	
	17	1	**341-0083**	1	CONNECTOR	
	18	1	*150-4043*	1	CONNECTOR AS	
		1	**3J-1907**	1	SEAL-O-RING	
		1	**6V-8398**	1	SEAL-O-RING	
		1	**6V-9873**	1	CONNECTOR	
	19	1	*155-7327*	2	CONNECTOR AS	
					(EACH INCLUDES)	
		1	**3J-1907**	1	SEAL-O-RING	
		1	**5H-8853**	1	SEAL-O-RING	
		1	**6V-8636**	1	CONNECTOR	
	20	1	**2H-0435**	2	CLAMP	
	21	1	**3K-0360**	1	SEAL-O-RING	
	22	1	**5P-7462**	1	CLIP (SLOT)	
	23	1	**5P-7463**	1	CLIP (TAB)	
	24	1	**6V-0683**	1	GROMMET	
	25	1	**6V-8397**	3	SEAL-O-RING	
M	26	1	**7X-2543**	3	BOLT (M10X1.5X120-MM)	
	27	1	**8T-4121**	2	WASHER-HARD (11X21X2.5-MM THK)	
M	28	1	**8T-4195**	2	BOLT (M10X1.5X30-MM)	
	29	1	**8T-7934**	3	WASHER-HARD (11X21X5-MM THK)	

271-9177 **VALVE GP-CONTROL** *(contd.)* **i04248471**

NOTE	REF NO	GRAPHIC REF	PART NUMBER	QTY	PART NAME 1 2 3 4 5 6 (PRODUCT LEVEL)	SEE PAGE
	30	1	**7X-2459**	1	TEE-O-RING	
	31	1	**3J-1907**	2	SEAL-O-RING	

C-CHANGE FROM PREVIOUS TYPE
I-REFER TO HYDRAULIC INFORMATION SYSTEM
M-METRIC PART
Y-SEPARATE ILLUSTRATION

271-9177 **VALVE GP-CONTROL** *(contd.)* **i04248471**

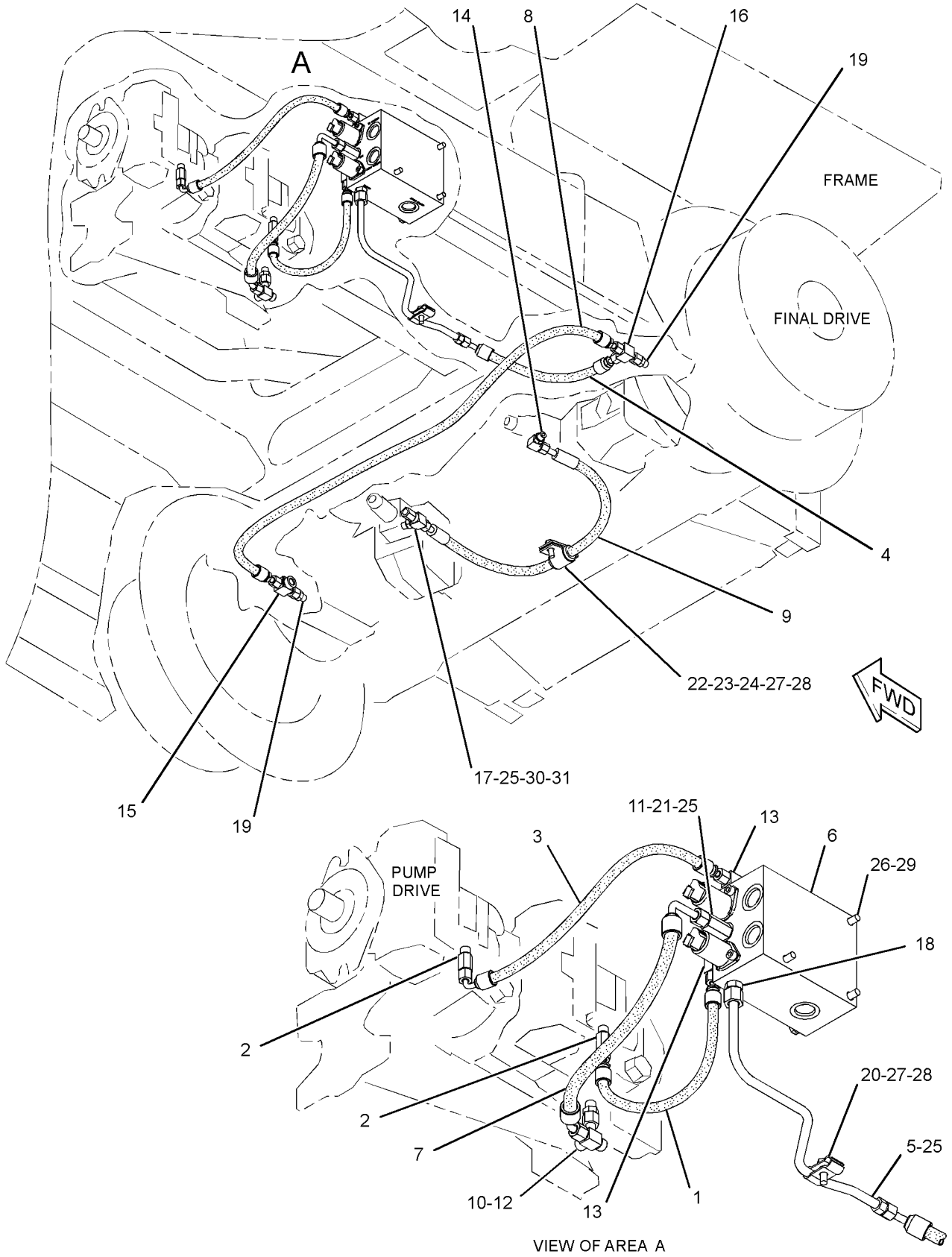

VIEW OF AREA A

GRAPHIC #1 **<END>** g02033181

HYDRAULIC SYSTEM

263-3745 CYLINDER GP-ANGLING

S/N: FFF1-UP; LLL1-UP
76.2-MM(3-IN)BORE X 399.9-MM(15.74-IN)STROKE
PART OF 244-7385 HYDRAULIC AR

SMCS-5101 **i03779189**

NOTE	REF NO	GRAPHIC REF	PART NUMBER	QTY	PART NAME 1 2 3 4 5 6 (PRODUCT LEVEL)	SEE PAGE
	1	1	**3B-8489**	2	FITTING-GREASE	
	2	1	**191-6159**	1	HEAD	
	3	1	**239-2170**	1	PISTON	
	4	1	**263-3746**	1	CYLINDER AS	
	4A	1	**4D-0298**	1	BEARING	
	5	1	**263-3748**	1	ROD AS	
	5A	1	**9J-9812**	1	BEARING	
	6	1	**167-2186**	1	SEAL AS-BUFFER	
	7	1	**167-2294**	1	SEAL-U-CUP	
	8	1	**1H-7339**	1	SEAL-O-RING	
	9	1	**226-8202**	1	SEAL-WIPER	
	10	1	**4T-6780**	1	RING-WEAR	
	11	1	**5H-8848**	1	SEAL-O-RING	
	12	1	**6J-1972**	1	SEAL AS	
	13	1	**6J-5730**	1	LOCKNUT (1-1/8-12-THD)	
	14	1	**6J-5731**	1	RING-BACKUP	
	15	1	**6J-5733**	1	RING-WEAR	

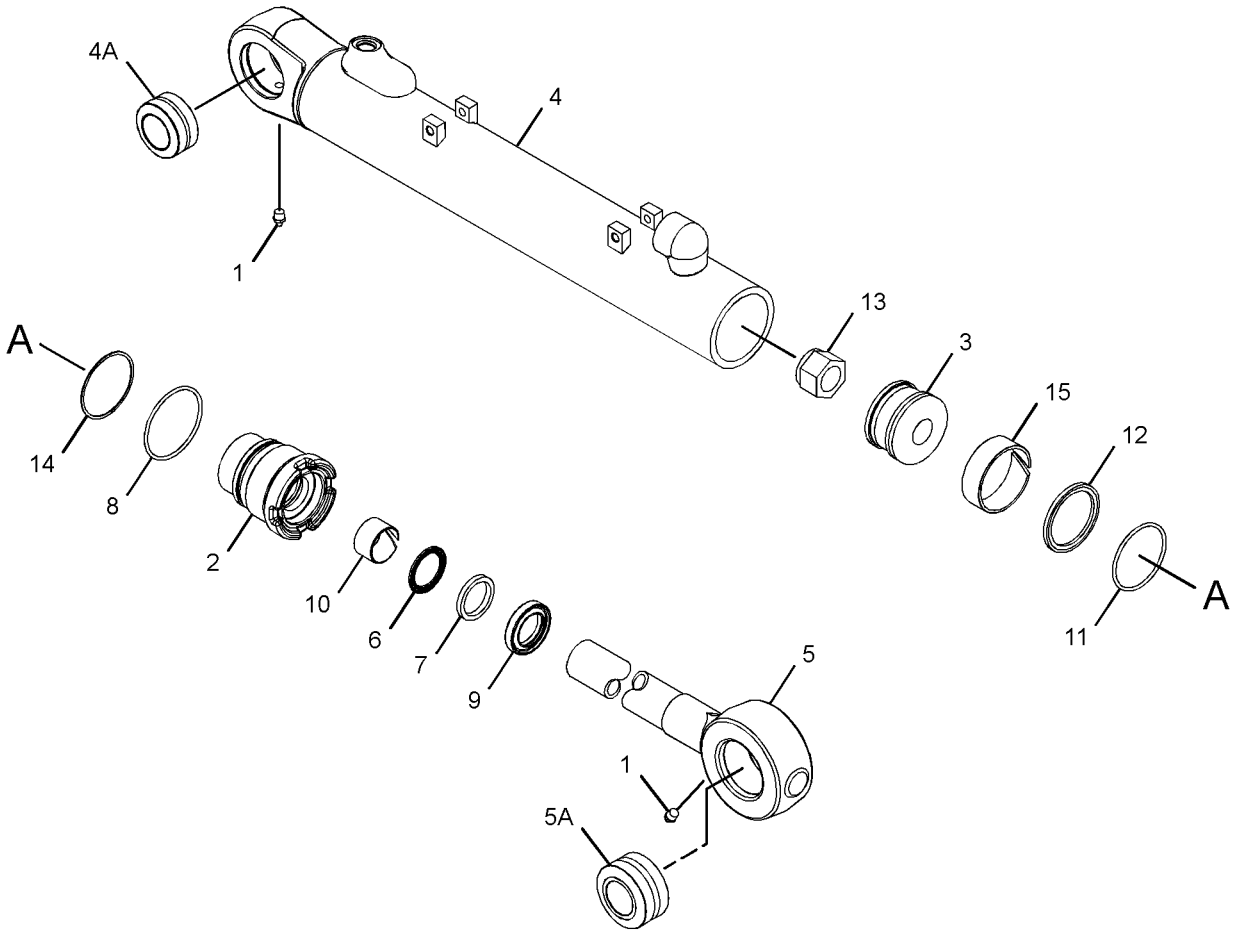

GRAPHIC #1 **<END>** g02044953

HYDRAULIC SYSTEM

263-4068 CYLINDER GP-BULLDOZER LIFT–RH

S/N: JTD1-UP; FFF1-UP; LLL1-UP
88.9-MM(3.5-IN)BORE X 353.9-MM(13.93-IN)STROKE
PART OF 244-7385, 317-2808 HYDRAULIC AR

SMCS-5102 **i03779409**

NOTE	REF NO	GRAPHIC REF	PART NUMBER	QTY	PART NAME 1 2 3 4 5 6 (PRODUCT LEVEL)	SEE PAGE
	1	1	**3B-8489**	1	FITTING-GREASE	
	2	1	**7J-9886**	1	PISTON	
	3	1	**7J-9887**	1	CROWN	
	4	1	**221-0375**	1	HEAD	
	5	1	**263-4069**	1	CYLINDER AS-HYDRAULIC (RH)	
	5A	1	**263-3181**	1	BUSHING	
	6	1	**263-4072**	1	ROD AS	
	6A	1	**263-3181**	1	BUSHING	
	7	1	**167-2186**	1	SEAL AS-BUFFER	
	8	1	**167-2294**	1	SEAL-U-CUP	
	9	1	**226-8202**	1	SEAL-WIPER	
	10	1	**2H-3931**	1	SEAL-O-RING	
	11	1	**4J-9224**	1	RING-BACKUP	
	12	1	**4T-6780**	1	RING-WEAR	
	13	1	**4T-8054**	1	SEAL AS	
	14	1	**7J-5639**	1	BOLT-LOCKING (1-14X2.5-IN)	
	15	1	**7J-9885**	1	RING-WEAR	
	16	1	**8J-7415**	1	WASHER-HARD (28X51X4.5-MM THK)	

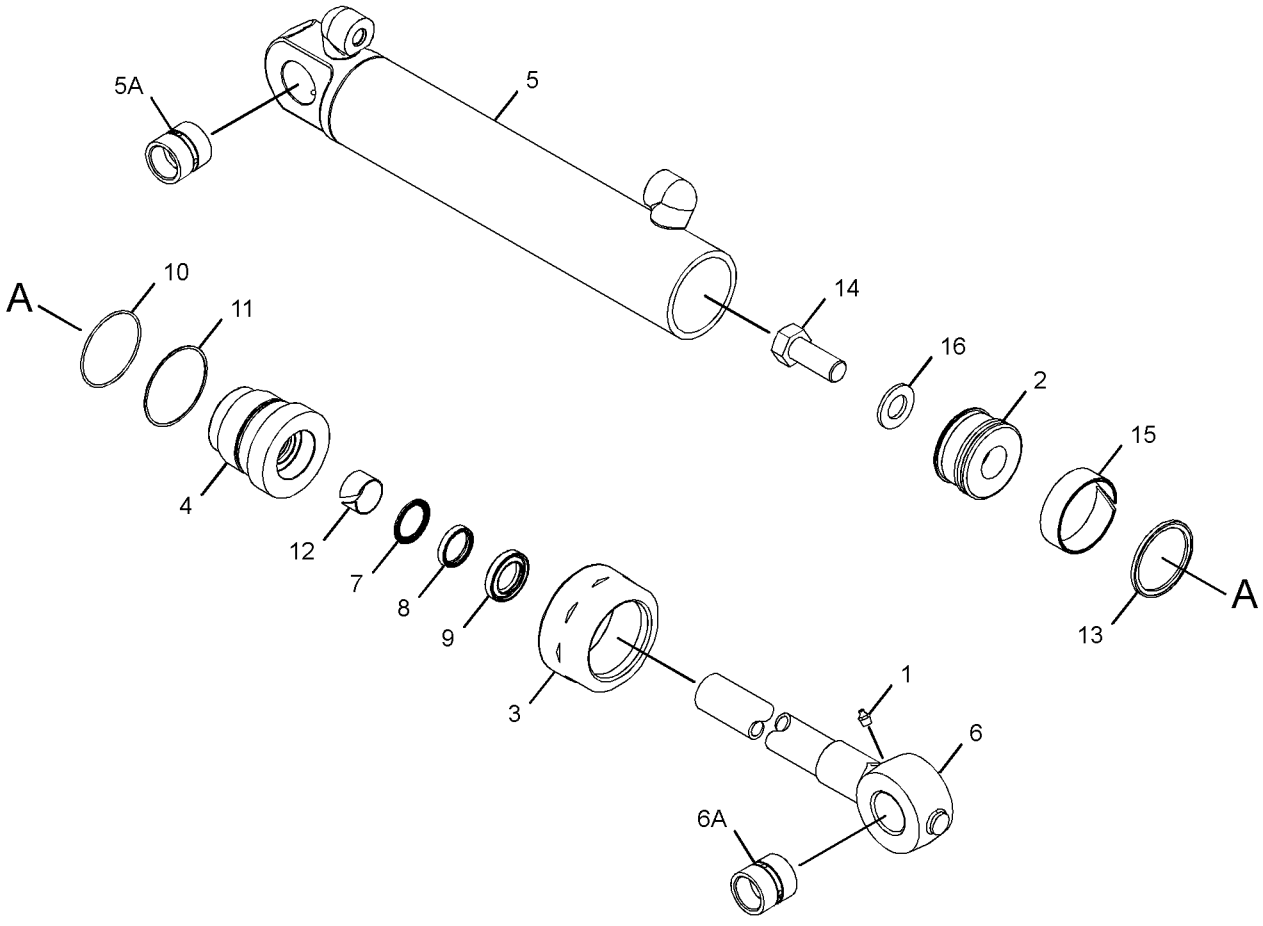

GRAPHIC #1 **<END>** g02044213

HYDRAULIC SYSTEM

276-4667 CYLINDER GP-BULLDOZER LIFT–LH

S/N: JTD1-UP; FFF1-UP; LLL1-UP
88.9-MM(3.5-IN)BORE X 353.9-MM (13.93-IN)STROKE
PART OF 244-7385, 317-2808 HYDRAULIC AR

SMCS-5102 **i03779449**

NOTE	REF NO	GRAPHIC REF	PART NUMBER	QTY	PART NAME 1 2 3 4 5 6 (PRODUCT LEVEL)	SEE PAGE
	1	1	**3B-8489**	1	FITTING-GREASE	
	2	1	**7J-9886**	1	PISTON	
	3	1	**7J-9887**	1	CROWN	
	4	1	**221-0375**	1	HEAD	
	5	1	**263-4072**	1	ROD AS	
	5A	1	**263-3181**	1	BUSHING	
	6	1	**276-4668**	1	CYLINDER AS	
	6A	1	**263-3181**	1	BUSHING	
	7	1	**167-2186**	1	SEAL AS-BUFFER	
	8	1	**167-2294**	1	SEAL-U-CUP	
	9	1	**226-8202**	1	SEAL-WIPER	
	10	1	**2H-3931**	1	SEAL-O-RING	
	11	1	**4J-9224**	1	RING-BACKUP	
	12	1	**4T-6780**	1	RING-WEAR	
	13	1	**4T-8054**	1	SEAL AS	
	14	1	**7J-5639**	1	BOLT-LOCKING (1-14X2.5-IN)	
	15	1	**7J-9885**	1	RING-WEAR	
	16	1	**8J-7415**	1	WASHER-HARD (28X51X4.5-MM THK)	

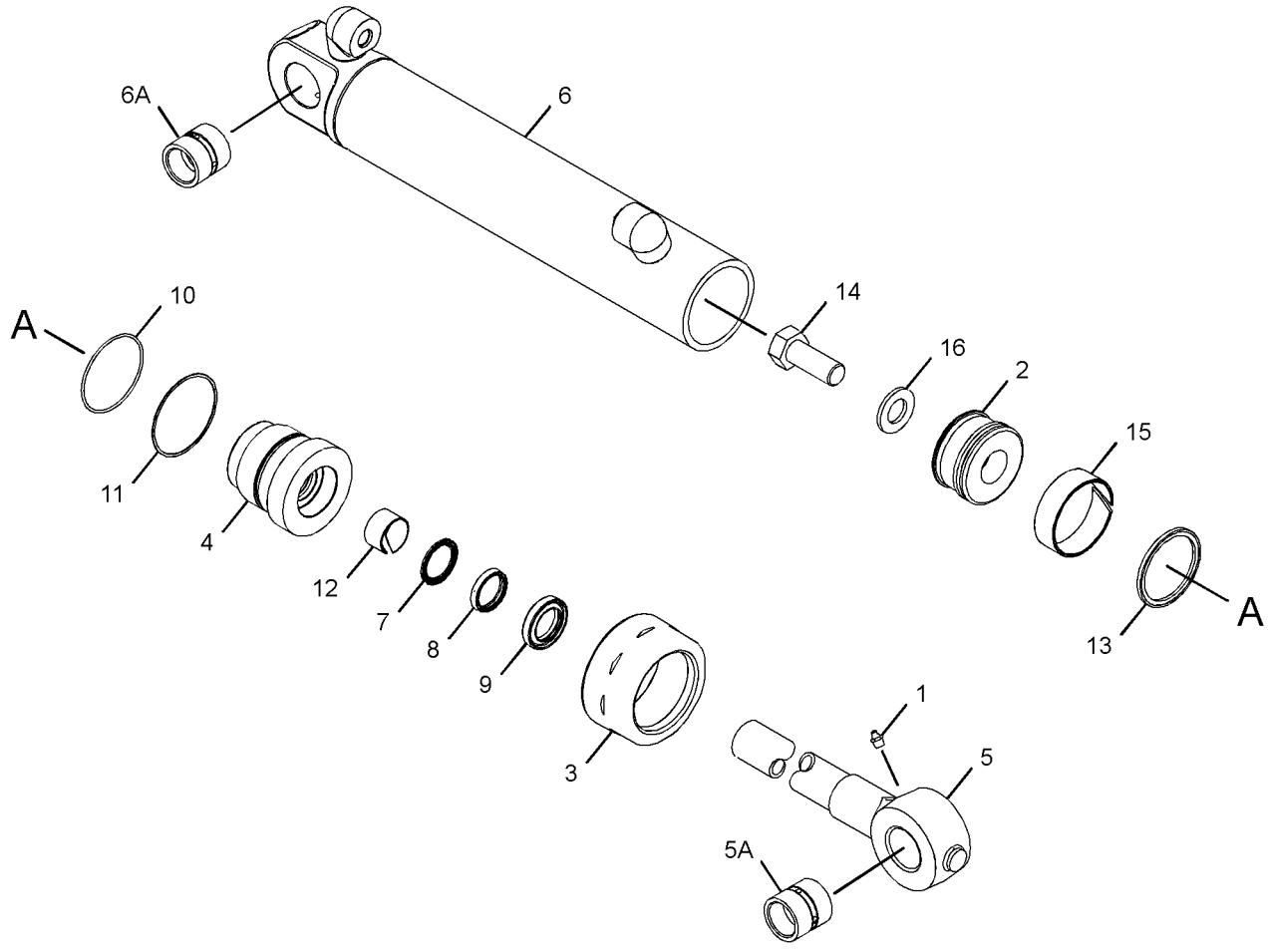

GRAPHIC #1 **<END>** g02044857

HYDRAULIC SYSTEM

262-4415 CYLINDER GP-RIPPER–RH

S/N: JMJ1-UP
76.2-MM (3-IN) BORE X 205.1-MM (8.08-IN) STROKE
PART OF 262-4407 RIPPER AR
AN ATTACHMENT

SMCS-5352, 5356 **i04415609**

NOTE	REF NO	GRAPHIC REF	PART NUMBER	QTY	PART NAME 1 2 3 4 5 6 (PRODUCT LEVEL)	SEE PAGE
	1	1	**3B-8489**	2	FITTING-GREASE	
	2	1	**8J-0553**	1	PISTON	
	3	1	**191-6159**	1	HEAD	
	4	1	**193-1546**	1	ROD AS	
	4A	1	**7K-6365**	1	BUSHING	
	5	1	**262-4416**	1	CYLINDER AS-HYDRAULIC (RH)	
	5A	1	**7K-6365**	1	BUSHING	
	6	1	**167-2186**	1	SEAL AS-BUFFER	
	7	1	**167-2294**	1	SEAL-U-CUP	
	8	1	**1H-7339**	1	SEAL-O-RING	
	9	1	**226-8202**	1	SEAL-WIPER	
	10	1	**4T-6780**	1	RING-WEAR	
	11	1	**5H-8848**	1	SEAL-O-RING	
	12	1	**5P-8250**	1	WASHER (28X49X5-MM THK)	
	13	1	**6J-1972**	1	SEAL AS	
	14	1	**6J-5731**	1	RING-BACKUP	
	15	1	**6J-5733**	1	RING-WEAR	
	16	1	**7J-5639**	1	BOLT-LOCKING (1-14X2.5-IN)	

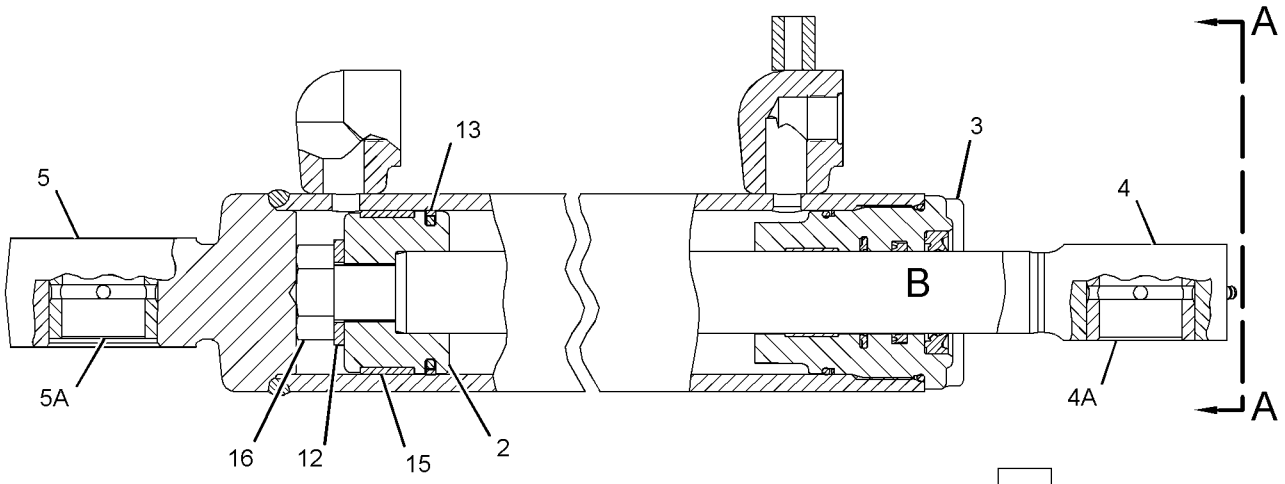

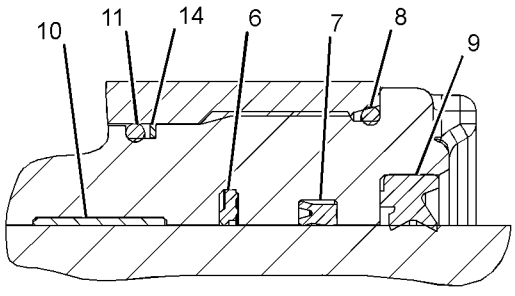

VIEW OF AREA B

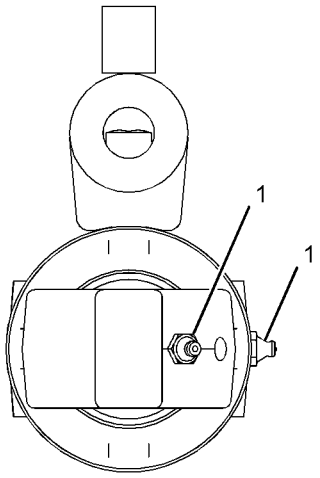

VIEW A-A

GRAPHIC #1 **<END>** g02615377

262-4418 CYLINDER GP-RIPPER–LH

S/N: JMJ1-UP
76.2-MM (3-IN) BORE X 205.1-MM (8.08-IN) STROKE
PART OF 262-4407 RIPPER AR
AN ATTACHMENT

SMCS-5352, 5356 **i03776810**

NOTE	REF NO	GRAPHIC REF	PART NUMBER	QTY	PART NAME 1 2 3 4 5 6 (PRODUCT LEVEL)	SEE PAGE
	1	1	**3B-8489**	2	FITTING-GREASE	
	2	1	**8J-0553**	1	PISTON	
	3	1	**191-6159**	1	HEAD	
	4	1	**193-1546**	1	ROD AS	
		1	**7K-6365**	1	BUSHING	
	5	1	**262-9253**	1	CYLINDER AS-HYDRAULIC (LH)	
		1	**7K-6365**	1	BUSHING	
	6	1	**167-2186**	1	SEAL AS-BUFFER	
	7	1	**167-2294**	1	SEAL-U-CUP	
	8	1	**1H-7339**	1	SEAL-O-RING	
	9	1	**226-8202**	1	SEAL-WIPER	
	10	1	**4T-6780**	1	RING-WEAR	
	11	1	**5H-8848**	1	SEAL-O-RING	
	12	1	**5P-8250**	1	WASHER (28X49X5-MM THK)	
	13	1	**6J-1972**	1	SEAL AS	
	14	1	**6J-5731**	1	RING-BACKUP	
	15	1	**6J-5733**	1	RING-WEAR	
	16	1	**7J-5639**	1	BOLT-LOCKING (1-14X2.5-IN)	

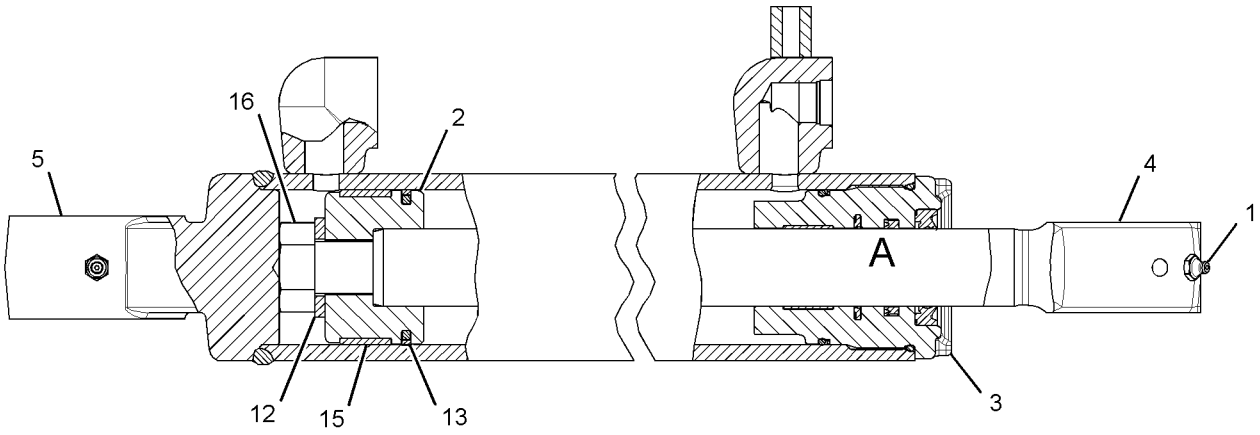

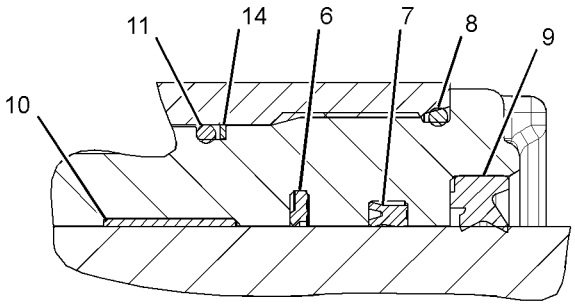

VIEW OF AREA A

GRAPHIC #1 **<END>** g01333967

HYDRAULIC SYSTEM

263-5008 CYLINDER GP-TILT

S/N: JTD1-UP; FFF1-UP; LLL1-UP
88.9-MM(3.5-IN)BORE X 144.6-MM(5.69-IN)STROKE
PART OF 244-7385, 317-2808 HYDRAULIC AR

SMCS-5104 **i03776811**

NOTE	REF NO	GRAPHIC REF	PART NUMBER	QTY	PART NAME 1 2 3 4 5 6 (PRODUCT LEVEL)	SEE PAGE
	1	1	**3B-8489**	2	FITTING-GREASE	
	2	1	**7J-9886**	1	PISTON	
	3	1	**7J-9887**	1	CROWN	
	4	1	**221-0375**	1	HEAD	
	5	1	**263-5009**	1	CYLINDER AS	
		1	**2H-5549**	1	RING-RETAINING	
		1	**9J-9812**	1	BEARING	
	6	1	**263-5013**	1	ROD AS	
		1	**1L-4775**	2	RING-RETAINING	
		1	**4D-0298**	1	BEARING	
	7	1	**167-2186**	1	SEAL AS-BUFFER	
	8	1	**167-2294**	1	SEAL-U-CUP	
	9	1	**226-8202**	1	SEAL-WIPER	
	10	1	**2H-3931**	1	SEAL-O-RING	
	11	1	**4J-9224**	1	RING-BACKUP	
	12	1	**4T-6780**	1	RING-WEAR	
	13	1	**4T-8054**	1	SEAL AS	
	14	1	**7J-5639**	1	BOLT-LOCKING (1-14X2.5-IN)	
	15	1	**7J-9885**	1	RING-WEAR	
	16	1	**8J-7415**	1	WASHER-HARD (28X51X4.5-MM THK)	

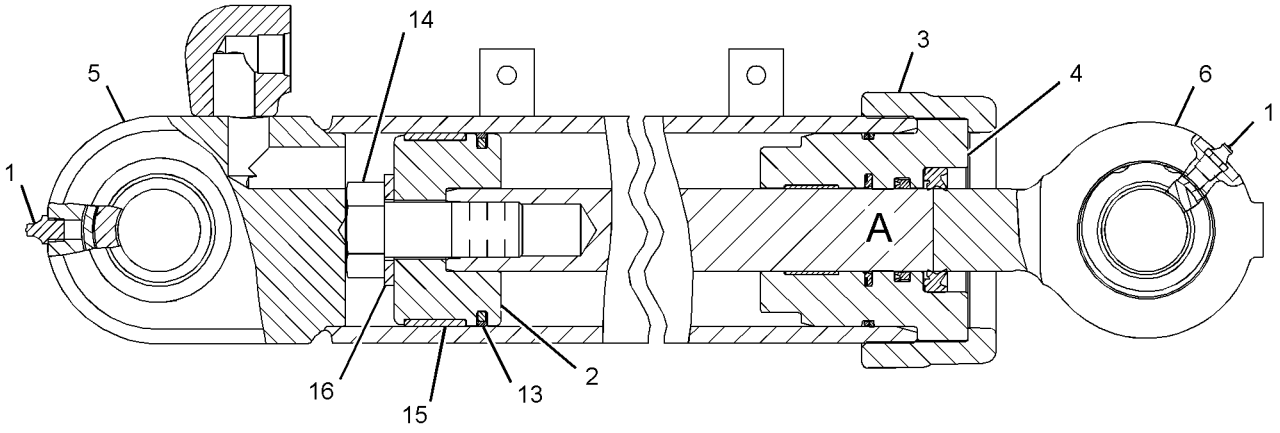

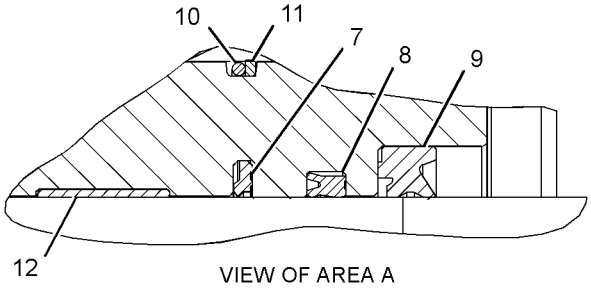

VIEW OF AREA A

GRAPHIC #1 **<END>** g01329772

HYDRAULIC SYSTEM

316-9205 CYLINDER GP-TILT

S/N: JTD1-UP
76.2-MM (3-IN) BORE X 434-MM (17.09-IN) STROKE
PART OF 317-2808 HYDRAULIC AR

SMCS-5104 **i02889158**

NOTE	REF NO	GRAPHIC REF	PART NUMBER	QTY	PART NAME 1 2 3 4 5 6 (PRODUCT LEVEL)	SEE PAGE
	1	1	**3B-8489**	2	FITTING-GREASE	
	2	1	**191-6159**	1	HEAD	
	3	1	**239-2170**	1	PISTON	
	4	1	**263-3746**	1	CYLINDER AS	
	5	1	**316-9198**	1	ROD AS	
	6	1	**167-2186**	1	SEAL AS-BUFFER	
	7	1	**167-2294**	1	SEAL-U-CUP	
	8	1	**1H-7339**	1	SEAL-O-RING	
	9	1	**226-8202**	1	SEAL-WIPER	
	10	1	**4T-6780**	1	RING-WEAR	
	11	1	**5H-8848**	1	SEAL-O-RING	
	12	1	**6J-1972**	1	SEAL AS	
	13	1	**6J-5730**	1	LOCKNUT (1-1/8-12-THD)	
	14	1	**6J-5731**	1	RING-BACKUP	
	15	1	**6J-5733**	1	RING-WEAR	

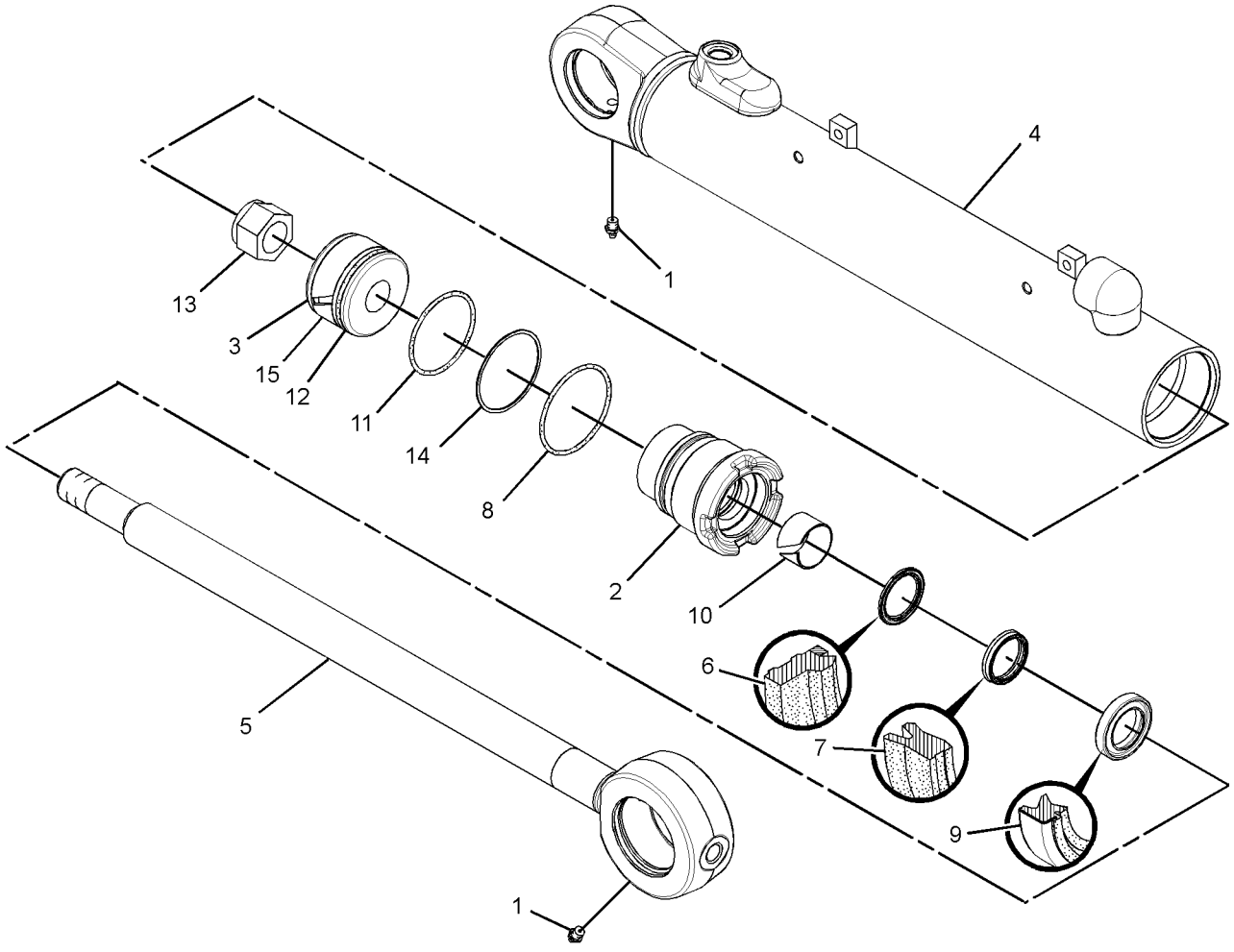

GRAPHIC #1 **<END>** g01569494

HYDRAULIC SYSTEM

244-7385 HYDRAULIC AR

S/N: FFF1-UP; LLL1-UP
PART OF 244-7370, 244-7371 COMMON AR

SMCS-5050 **i03607682**

NOTE	PART NUMBER	QTY	PART NAME 1 2 3 4 5 6 (PRODUCT LEVEL)	SEE PAGE
Y	**263-3745**	2	CYLINDER GP-ANGLING	525
Y	**276-4667**	1	CYLINDER GP-BULLDOZER LIFT (LH)	527
Y	**263-4068**	1	CYLINDER GP-BULLDOZER LIFT (RH)	526
Y	**263-5008**	1	CYLINDER GP-TILT	530
Y	*244-7452*	1	PUMP GP-GEAR (IMPLEMENT)	609
Y	*244-7426*	1	TANK GP-HYDRAULIC	613

Y-SEPARATE ILLUSTRATION

<END>

264-4540 HYDRAULIC AR—3-BANK

S/N: JTD1-UP; FFF1-UP; LLL1-UP
CANNOT BE USED WITH 262-4407—PAGE 913
AN ATTACHMENT

SMCS-5050 **i03633820**

NOTE	PART NUMBER	QTY	PART NAME 1 2 3 4 5 6 (PRODUCT LEVEL)	SEE PAGE
Y	*269-7665*	1	COVER GP-CONSOLE	733
Y	*263-4150*	1	LINES GP-ANGLE & TILT	535
Y	*263-4140*	1	LINES GP-HYDRAULIC	553
Y	*283-3512*	1	LINES GP-PUMP	576
Y	*254-1386*	1	VALVE & MTG GP-IMPLEMENT CONT	622

Y-SEPARATE ILLUSTRATION

<END>

264-4541 HYDRAULIC AR—4-BANK

S/N: JTD1-UP; FFF1-UP; LLL1-UP
CANNOT BE USED WITH 244-7454—PAGE 891, 244-7517—PAGE 911, 256-3738—PAGE 920
AN ATTACHMENT

SMCS-5050 **i02833706**

NOTE	PART NUMBER	QTY	PART NAME 1 2 3 4 5 6 (PRODUCT LEVEL)	SEE PAGE
Y	*249-9051*	1	CONTROL GP-RIPPER	710
Y	*263-4150*	1	LINES GP-ANGLE & TILT	535
Y	*263-4140*	1	LINES GP-HYDRAULIC	553
Y	*244-7422*	1	LINES GP-PUMP	570
Y	*254-1460*	1	LINES GP-REAR ATTACHMENT	585
Y	*281-3997*	1	MIRROR GP-REAR VIEW (LH)	786
Y	*254-1457*	1	VALVE & MTG GP-IMPLEMENT CONT	623

Y-SEPARATE ILLUSTRATION

<END>

HYDRAULIC SYSTEM

264-4542 HYDRAULIC AR–4-BANK

S/N: JTD1-UP; FFF1-UP; LLL1-UP
WINCH
FOR USE WITH 244-7454–PAGE 891. CANNOT BE USED WITH 244-7433–PAGE 427, 244-7434–PAGE 386, 262-4407–PAGE 913, 244-7450–PAGE 300, 254-1378–PAGE 360
AN ATTACHMENT

SMCS-5050 **i02693370**

NOTE	PART NUMBER	QTY	PART NAME 1 2 3 4 5 6 (PRODUCT LEVEL)	SEE PAGE
Y	*249-9052*	1	CONTROL GP-WINCH	883
Y	*263-4150*	1	LINES GP-ANGLE & TILT	535
Y	*263-4140*	1	LINES GP-HYDRAULIC	553
Y	*244-7422*	1	LINES GP-PUMP	570
Y	*254-1460*	1	LINES GP-REAR ATTACHMENT	585
Y	*254-1457*	1	VALVE & MTG GP-IMPLEMENT CONT	623
Y-SEPARATE ILLUSTRATION				

<END>

317-2808 HYDRAULIC AR

S/N: JTD1-UP
PART OF 282-5325 COMMON AR

SMCS-5050 **i03607683**

NOTE	PART NUMBER	QTY	PART NAME 1 2 3 4 5 6 (PRODUCT LEVEL)	SEE PAGE
Y	**263-4068**	1	CYLINDER GP-BULLDOZER LIFT (RH)	526
Y	**276-4667**	1	CYLINDER GP-BULLDOZER LIFT (LH)	527
Y	**263-5008**	1	CYLINDER GP-TILT	530
Y	**316-9205**	2	CYLINDER GP-TILT (ANGLE)	531
Y	*244-7452*	1	PUMP GP-GEAR (IMPLEMENT)	609
Y	*244-7426*	1	TANK GP-HYDRAULIC	613
Y-SEPARATE ILLUSTRATION				

<END>

325-6521 HYDRAULIC AR–5-BANK

S/N: JTD1-UP; FFF1-UP; LLL1-UP
FOR USE WITH 325-6516–PAGE 892, 325-6519–PAGE 893
AN ATTACHMENT

SMCS-5050 **i03734545**

NOTE	PART NUMBER	QTY	PART NAME 1 2 3 4 5 6 (PRODUCT LEVEL)	SEE PAGE
Y	*318-6112*	1	CONTROL GP-WINCH (4TH & 5TH VALVE, FLOAT)	889
Y	*263-4150*	1	LINES GP-ANGLE & TILT	535
Y	*263-4140*	1	LINES GP-HYDRAULIC	553
Y	*325-7274*	1	LINES GP-PUMP	581
Y	*325-7273*	1	LINES GP-REAR ATTACHMENT	589
Y	*325-7272*	1	VALVE & MTG GP-CONTROL	621
Y-SEPARATE ILLUSTRATION				

<END>

HYDRAULIC SYSTEM

325-6522 HYDRAULIC AR–4-BANK

S/N: JTD1-UP; FFF1-UP; LLL1-UP
CANNOT BE USED WITH 325-6516–PAGE 892, 325-6519–PAGE 893
AN ATTACHMENT

SMCS-5050 **i04415731**

NOTE	PART NUMBER	QTY	PART NAME 1 2 3 4 5 6 (PRODUCT LEVEL)	SEE PAGE
Y	*318-6109*	1	CONTROL GP-HYDRAULIC (4TH VALVE, FLOAT)	700
Y	*263-4150*	1	LINES GP-ANGLE & TILT	535
Y	*263-4140*	1	LINES GP-HYDRAULIC	553
Y	*244-7422*	1	LINES GP-PUMP	570
Y	*325-7273*	1	LINES GP-REAR ATTACHMENT	589
Y	*281-3997*	1	MIRROR GP-REAR VIEW	786
Y	*325-7271*	1	VALVE & MTG GP-CONTROL	620
Y-SEPARATE ILLUSTRATION				

<END>

325-6525 HYDRAULIC AR–4-BANK

S/N: JTD1-UP; FFF1-UP; LLL1-UP
FOR USE WITH 325-6519–PAGE 893, 325-6516–PAGE 892
AN ATTACHMENT

SMCS-5050 **i04415730**

NOTE	PART NUMBER	QTY	PART NAME 1 2 3 4 5 6 (PRODUCT LEVEL)	SEE PAGE
Y	*318-6110*	1	CONTROL GP-WINCH	888
Y	*263-4150*	1	LINES GP-ANGLE & TILT	535
Y	*263-4140*	1	LINES GP-HYDRAULIC	553
Y	*244-7422*	1	LINES GP-PUMP	570
Y	*325-7273*	1	LINES GP-REAR ATTACHMENT	589
Y	*325-7271*	1	VALVE & MTG GP-CONTROL	620
Y-SEPARATE ILLUSTRATION				

<END>

325-6528 HYDRAULIC AR–5-BANK

S/N: JTD1-UP; FFF1-UP; LLL1-UP
CANNOT BE USED WITH 325-6516–PAGE 892, 325-6519–PAGE 893
AN ATTACHMENT

SMCS-5050 **i04415729**

NOTE	PART NUMBER	QTY	PART NAME 1 2 3 4 5 6 (PRODUCT LEVEL)	SEE PAGE
Y	*318-6111*	1	CONTROL GP-HYDRAULIC (4TH & 5TH VALVE, FLOAT)	702
Y	*263-4150*	1	LINES GP-ANGLE & TILT	535
Y	*263-4140*	1	LINES GP-HYDRAULIC	553
Y	*325-7274*	1	LINES GP-PUMP	581
Y	*325-7273*	1	LINES GP-REAR ATTACHMENT	589
Y	*281-3997*	1	MIRROR GP-REAR VIEW	786
Y	*325-7272*	1	VALVE & MTG GP-CONTROL	621
Y-SEPARATE ILLUSTRATION				

<END>

HYDRAULIC SYSTEM

263-4150 LINES GP-ANGLE & TILT

S/N: JTD1-UP; FFF1-638; LLL1-855
PART OF 264-4540, 264-4541, 264-4542, 325-6521, 325-6522, 325-6525, 325-6528
HYDRAULIC AR
AN ATTACHMENT
TYPE 1

SMCS-5057, 5101, 5104 **i03911921**

NOTE	REF NO	GRAPHIC REF	PART NUMBER	QTY	PART NAME 1 2 3 4 5 6 (PRODUCT LEVEL)	SEE PAGE
I	1	1	**8W-5641**	1	HOSE AS	
I	2	2	**9W-3978**	1	HOSE AS	
I	3	1	**150-4644**	1	HOSE AS	
	4	2	**184-1137**	2	PLATE	
	5	2	**184-1138**	2	CLAMP	
I	6	1	**229-4995**	1	HOSE AS	
	7	2	*260-9171*	6	CONNECTOR AS	
					(EACH INCLUDES)	
		2	**8T-9041**	1	CONNECTOR	
		2	**3J-1907**	1	SEAL-O-RING	
		2	**6V-8397**	1	SEAL-O-RING	
I	8	2	**263-4154**	2	HOSE AS	
	9	1	**263-4914**	1	GUARD	
	10	1	**263-4915**	2	PLATE AS	
I	11	1	**276-4672**	1	HOSE AS	
	12	2	**289-0100**	4	TUBE AS	
	13	2	**289-0102**	2	TUBE AS	
I	14	1	**292-2208**	1	HOSE AS	
I	15	1	**292-2209**	1	HOSE AS	
I	16	1	**292-2332**	2	HOSE AS	
I	17	1	**292-2333**	2	HOSE AS	
	18	1	**293-3820**	1	COVER AS (RH)	
	19	1	**293-3821**	1	COVER AS (LH)	
	20	2	**300-2121**	2	BLOCK	
I	21	2	**301-9285**	1	HOSE AS	
I	22	2	**301-9292**	1	HOSE AS	
I	23	2	**301-9295**	2	HOSE AS	
	24	1	**301-9296**	1	TUBE AS	
	25	1	**301-9297**	1	TUBE AS	
	26	1	**301-9298**	1	TUBE AS	
	27	1	**301-9299**	1	TUBE AS	
I	28	2	**301-9300**	4	HOSE AS	
	29	2	**303-1888**	1	TUBE AS	
	30	2	**303-1889**	1	TUBE AS	
	31	1	**303-1890**	1	TUBE AS	
	32	2	**303-1892**	2	BRACKET	
	33	2	**303-1893**	2	PLATE AS	
I	34	2	**303-6580**	1	HOSE AS	
	35	2	**033-8248**	2	CLIP	
	36	1,2	**100-4336**	4	CLIP	
	37	1	*148-8318*	4	CONNECTOR AS	
					(EACH INCLUDES)	
		1	**6V-8634**	1	CONNECTOR	
		1	**3K-0360**	1	SEAL-O-RING	
		1	**6V-8397**	1	SEAL-O-RING	
	38	2	*148-8336*	2	CONNECTOR AS	
					(EACH INCLUDES)	
		2	**6V-8636**	1	CONNECTOR	
		2	**6V-8397**	1	SEAL-O-RING	
		2	**3J-1907**	1	SEAL-O-RING	
	39	2	*148-8365*	2	ELBOW AS	
					(EACH INCLUDES)	
		2	**8T-6876**	1	ELBOW	

263-4150 **LINES GP-ANGLE & TILT** *(contd.)* **i03911921**

NOTE	REF NO	GRAPHIC REF	PART NUMBER	QTY	PART NAME 1 2 3 4 5 6 (PRODUCT LEVEL)	SEE PAGE
		2	**6V-8398**	1	SEAL-O-RING	
		2	**3J-1907**	1	SEAL-O-RING	
	40	1	*148-8374*	2	ELBOW AS	
					(EACH INCLUDES)	
		1	**6V-8723**	1	ELBOW	
		1	**3K-0360**	1	SEAL-O-RING	
		1	**6V-8397**	1	SEAL-O-RING	
	41	2	*148-8393*	2	ELBOW AS	
					(EACH INCLUDES)	
		2	**6V-9852**	1	ELBOW	
		2	**7J-9108**	1	SEAL-O-RING	
	42	2	*150-4044*	1	CONNECTOR AS	
		2	**8T-1779**	1	CONNECTOR	
		2	**3J-1907**	1	SEAL-O-RING	
		2	**6V-8397**	1	SEAL-O-RING	
	43	1	**1S-0994**	6	CLIP	
	44	2	**2H-0435**	2	CLAMP	
	45	1,2	**3B-8489**	4	FITTING-GREASE	
	46	1,2	**3B-8822**	2	ELBOW	
	47	1	**5P-7462**	3	CLIP (SLOT)	
	48	1	**5P-7463**	3	CLIP (TAB)	
	49	1	**6V-0683**	3	GROMMET	
	50	1,2	**6V-8397**	20	SEAL-O-RING	
	51	1,2	**6V-8398**	3	SEAL-O-RING	
	52	2	**6V-8936**	2	REDUCER	
	53	1,2	**7J-9108**	6	SEAL-O-RING	
	54	1,2	**7X-7729**	8	WASHER (11X25X3-MM THK)	
	55	2	**8L-5008**	4	ELBOW-PIPE (45-DEG)	
	56	2	**8T-1885**	2	CLIP (SLOT)	
	57	2	**8T-1886**	2	CLIP (TAB)	
	58	1,2	**8T-4121**	50	WASHER-HARD (11X21X2.5-MM THK)	
M	59	1,2	**8T-4136**	16	BOLT (M10X1.5X25-MM)	
M	60	1,2	**8T-4137**	28	BOLT (M10X1.5X20-MM)	
M	61	2	**8T-4186**	8	BOLT (M10X1.5X40-MM)	
M	62	2	**8T-4191**	2	BOLT (M10X1.5X16-MM)	
M	63	1,2	**8T-4195**	4	BOLT (M10X1.5X30-MM)	
	64	1,2	**9M-9162**	8	CLAMP	

I-REFER TO HYDRAULIC INFORMATION SYSTEM
M-METRIC PART

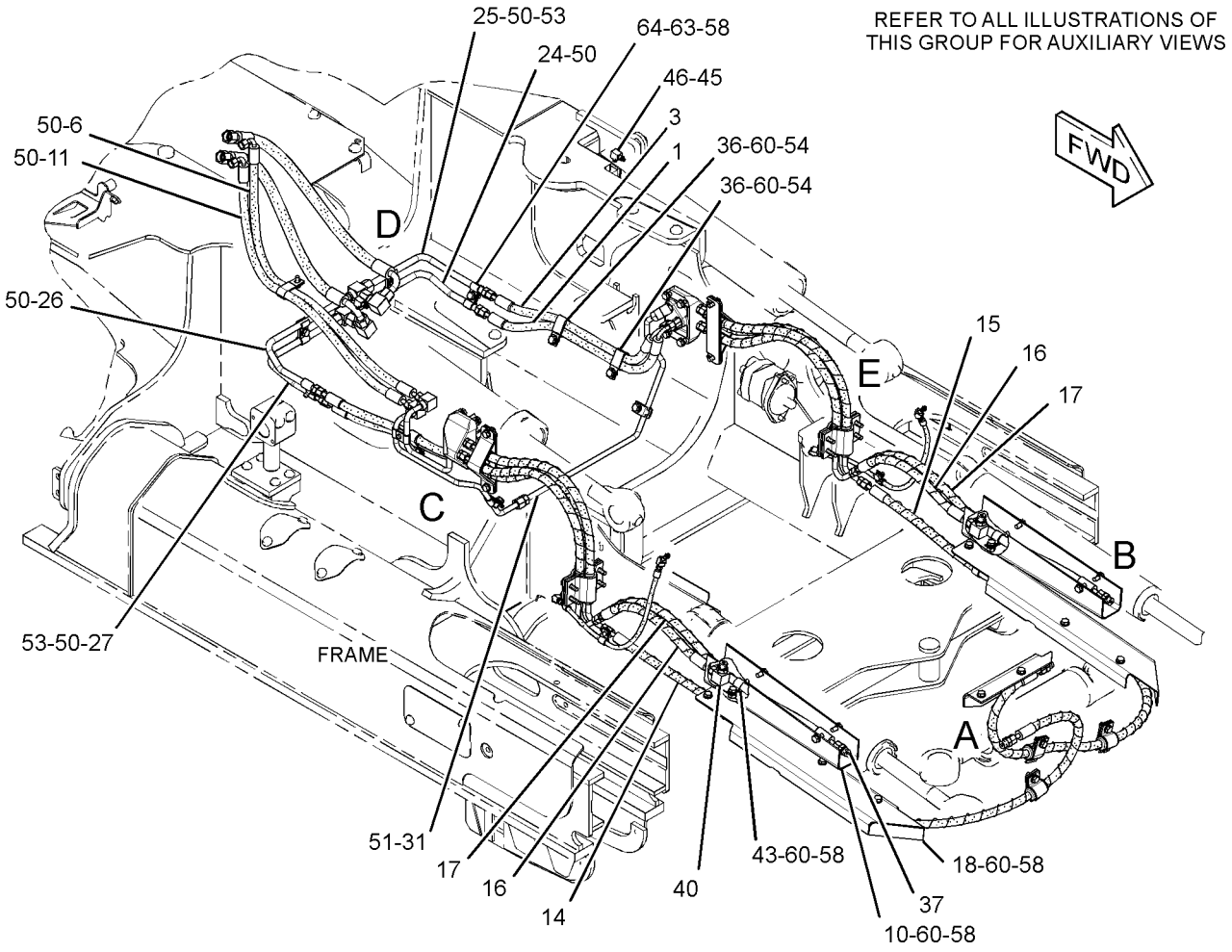

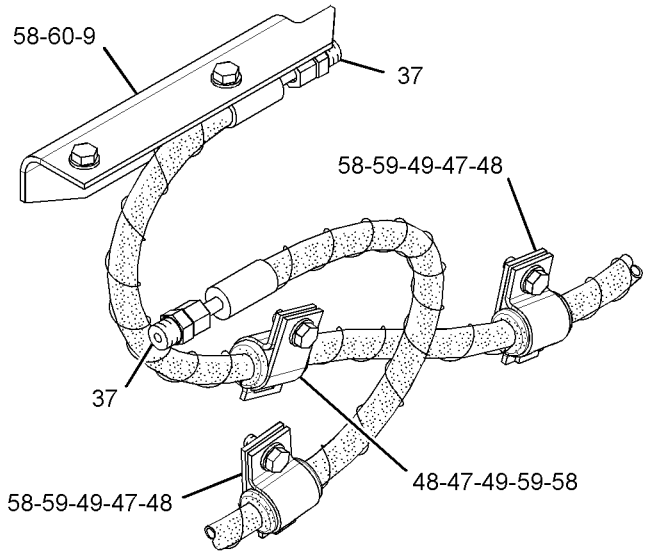

VIEW OF AREA A

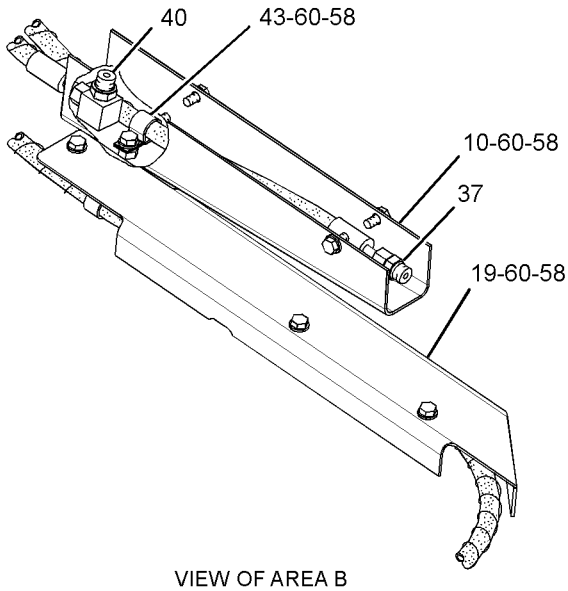

VIEW OF AREA B

GRAPHIC #1

g01375466

263-4150 **LINES GP-ANGLE & TILT** *(contd.)* **i03911921**

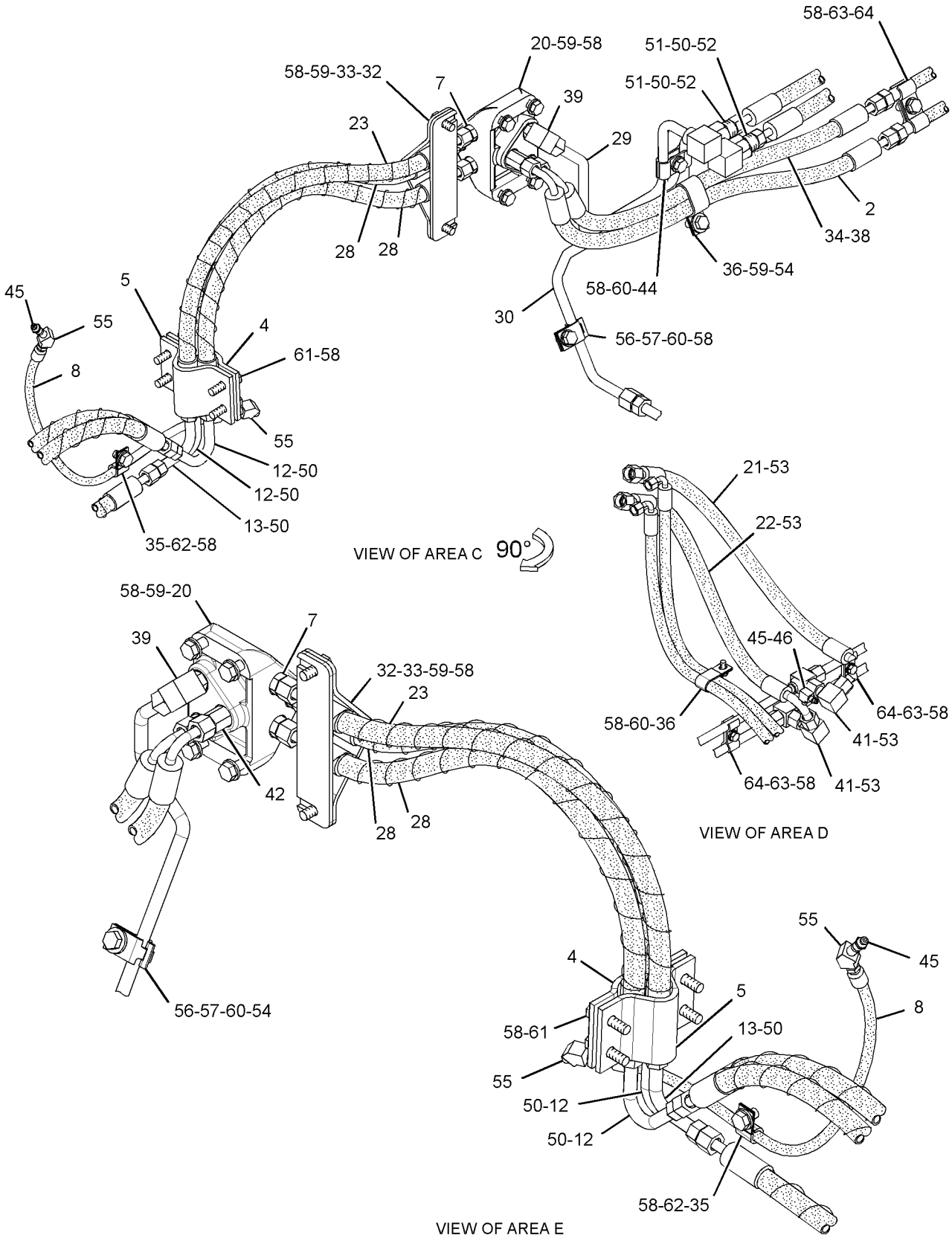

GRAPHIC #2 **<END>** g01378435

HYDRAULIC SYSTEM

263-4150 LINES GP-ANGLE & TILT

S/N: JTD1-UP; FFF1-638; LLL1-855
PART OF 264-4540, 264-4541, 264-4542, 325-6521, 325-6522, 325-6525, 325-6528
HYDRAULIC AR
AN ATTACHMENT
TYPE 2

SMCS-5057, 5101, 5104 **i03805022**

NOTE	REF NO	GRAPHIC REF	PART NUMBER	QTY	PART NAME 1 2 3 4 5 6 (PRODUCT LEVEL)	SEE PAGE
I	1	1	**8W-5641**	1	HOSE AS	
CI	2	1	**237-1957**	1	HOSE AS	
I	3	1	**150-4644**	1	HOSE AS	
	4	2	**184-1137**	2	PLATE	
	5	2	**184-1138**	2	CLAMP	
I	6	1	**229-4995**	1	HOSE AS	
	7	2	*260-9171*	6	CONNECTOR AS	
					(EACH INCLUDES)	
		2	**8T-9041**	1	CONNECTOR	
		2	**3J-1907**	1	SEAL-O-RING	
		2	**6V-8397**	1	SEAL-O-RING	
I	8	2	**263-4154**	2	HOSE AS	
	9	1	**263-4914**	1	GUARD	
	10	1	**263-4915**	2	PLATE AS	
I	11	1	**276-4672**	1	HOSE AS	
	12	2	**289-0100**	4	TUBE AS	
	13	2	**289-0102**	2	TUBE AS	
I	14	1	**292-2208**	1	HOSE AS	
I	15	1	**292-2209**	1	HOSE AS	
I	16	1	**292-2332**	2	HOSE AS	
I	17	1	**292-2333**	2	HOSE AS	
	18	1	**293-3820**	1	COVER AS (RH)	
	19	1	**293-3821**	1	COVER AS (LH)	
	20	2	**300-2121**	2	BLOCK	
I	21	2	**301-9285**	1	HOSE AS	
I	22	2	**301-9292**	1	HOSE AS	
I	23	2	**301-9295**	2	HOSE AS	
	24	2	**301-9296**	1	TUBE AS	
	25	2	**301-9297**	1	TUBE AS	
	26	2	**301-9298**	1	TUBE AS	
	27	2	**301-9299**	1	TUBE AS	
I	28	2	**301-9300**	4	HOSE AS	
C	29	2	**334-1573**	1	TUBE AS	
C	30	2	**334-1574**	1	TUBE AS	
	31	2	**303-1890**	1	TUBE AS	
	32	2	**303-1892**	2	BRACKET	
	33	2	**303-1893**	2	PLATE AS	
CI	34	1	**170-1469**	1	HOSE AS	
	35	2	**033-8248**	2	CLIP	
	36	1,2	**100-4336**	4	CLIP	
	37	1	*148-8318*	4	CONNECTOR AS	
					(EACH INCLUDES)	
		1	**6V-8634**	1	CONNECTOR	
		1	**3K-0360**	1	SEAL-O-RING	
		1	**6V-8397**	1	SEAL-O-RING	
	38	2	*148-8336*	2	CONNECTOR AS	
					(EACH INCLUDES)	
		2	**6V-8636**	1	CONNECTOR	
		2	**6V-8397**	1	SEAL-O-RING	
		2	**3J-1907**	1	SEAL-O-RING	
	39	2	*148-8365*	2	ELBOW AS	
					(EACH INCLUDES)	
		2	**8T-6876**	1	ELBOW	

263-4150 LINES GP-ANGLE & TILT *(contd.)* i03805022

NOTE	REF NO	GRAPHIC REF	PART NUMBER	QTY	PART NAME 1 2 3 4 5 6 (PRODUCT LEVEL)	SEE PAGE
		2	**6V-8398**	1	SEAL-O-RING	
		2	**3J-1907**	1	SEAL-O-RING	
	40	1	*148-8374*	2	ELBOW AS	
					(EACH INCLUDES)	
		1	**6V-8723**	1	ELBOW	
		1	**3K-0360**	1	SEAL-O-RING	
		1	**6V-8397**	1	SEAL-O-RING	
	41	2	*148-8393*	2	ELBOW AS	
					(EACH INCLUDES)	
		2	**6V-9852**	1	ELBOW	
		2	**7J-9108**	1	SEAL-O-RING	
C	42	2	*150-4044*	2	CONNECTOR AS	
					(EACH INCLUDES)	
		2	**8T-1779**	1	CONNECTOR	
		2	**3J-1907**	1	SEAL-O-RING	
		2	**6V-8397**	1	SEAL-O-RING	
	43	1	**1S-0994**	6	CLIP	
	44	2	**2H-0435**	2	CLAMP	
	45	1,2	**3B-8489**	4	FITTING-GREASE	
	46	1,2	**3B-8822**	2	ELBOW	
	47	1	**5P-7462**	3	CLIP (SLOT)	
	48	1	**5P-7463**	3	CLIP (TAB)	
	49	1	**6V-0683**	3	GROMMET	
	50	1,2	**6V-8397**	20	SEAL-O-RING	
	51	2	**6V-8398**	3	SEAL-O-RING	
	52	2	**6V-8936**	2	REDUCER	
	53	2	**7J-9108**	6	SEAL-O-RING	
	54	1,2	**7X-7729**	8	WASHER (11X25X3-MM THK)	
	55	2	**8L-5008**	4	ELBOW-PIPE	
	56	2	**8T-1885**	2	CLIP (SLOT)	
	57	2	**8T-1886**	2	CLIP (TAB)	
	58	1,2	**8T-4121**	50	WASHER-HARD (11X21X2.5-MM THK)	
CM	59	1,2	**8T-4136**	17	BOLT (M10X1.5X25-MM)	
CM	60	1,2	**8T-4137**	27	BOLT (M10X1.5X20-MM)	
M	61	2	**8T-4186**	8	BOLT (M10X1.5X40-MM)	
M	62	2	**8T-4191**	2	BOLT (M10X1.5X16-MM)	
M	63	2	**8T-4195**	4	BOLT (M10X1.5X30-MM)	
	64	2	**9M-9162**	8	CLAMP	

C-CHANGE FROM PREVIOUS TYPE
I-REFER TO HYDRAULIC INFORMATION SYSTEM
M-METRIC PART

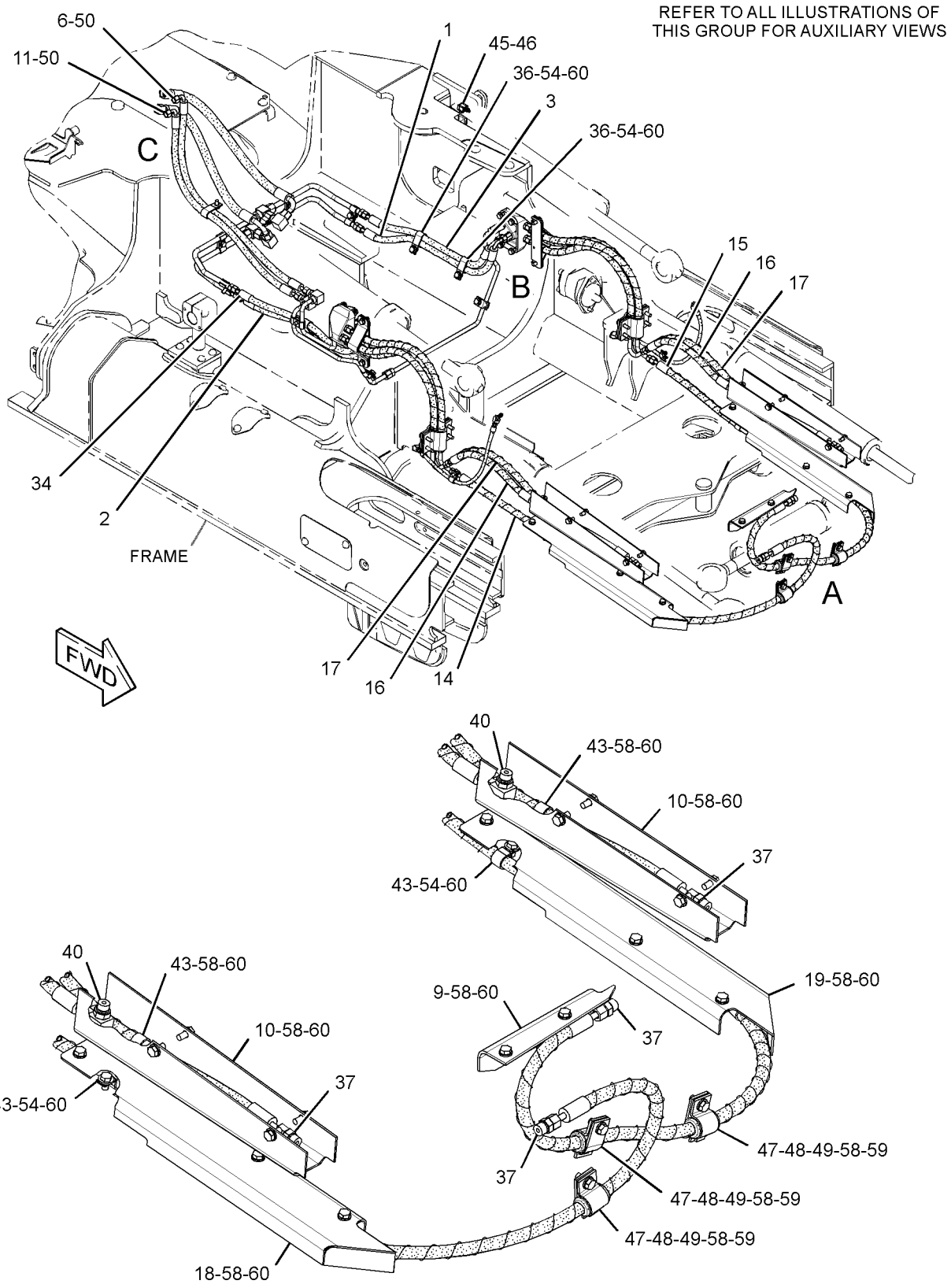

GRAPHIC #1

g02051016

263-4150 **LINES GP-ANGLE & TILT** *(contd.)* **i03805022**

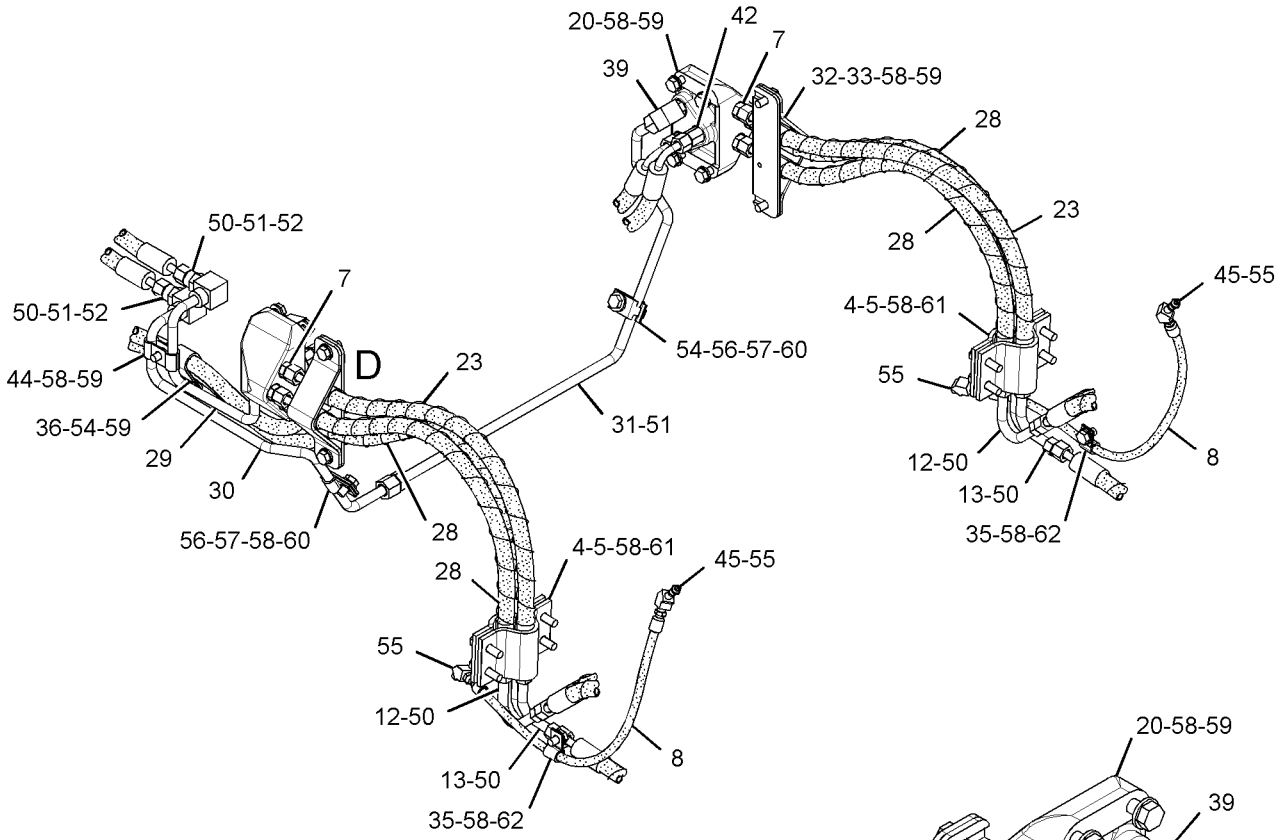

VIEW OF AREA B

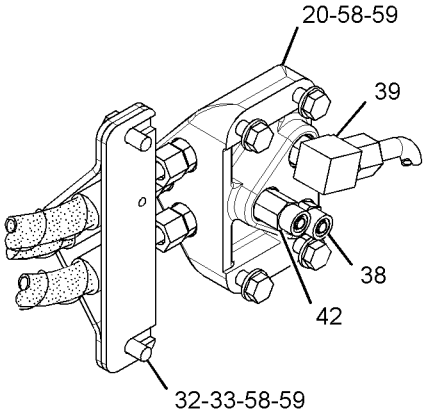

VIEW OF AREA D 90°

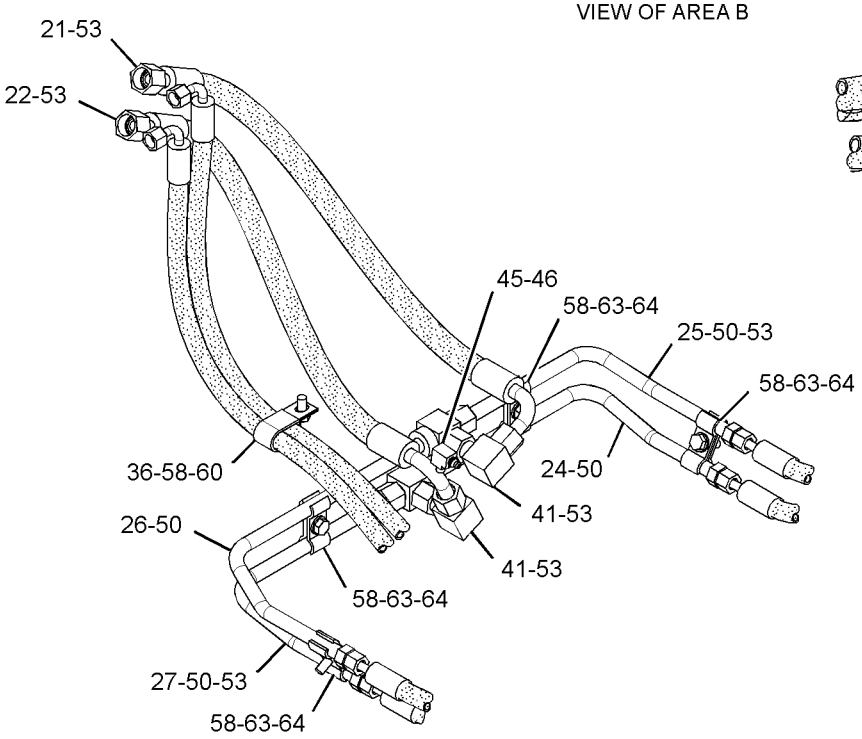

VIEW OF AREA C

GRAPHIC #2 **<END>** g02051020

HYDRAULIC SYSTEM

263-4150 LINES GP-ANGLE & TILT

S/N: JTD1-UP; FFF639-UP; LLL856-UP
PART OF 264-4540, 264-4541, 264-4542, 325-6521, 325-6522, 325-6525, 325-6528
HYDRAULIC AR
AN ATTACHMENT

SMCS-5057, 5101, 5104 **i04348889**

NOTE	REF NO	GRAPHIC REF	PART NUMBER	QTY	PART NAME 1 2 3 4 5 6 (PRODUCT LEVEL)	SEE PAGE
I	1	1	**8W-5641**	1	HOSE AS	
I	2	1	**237-1957**	1	HOSE AS	
I	3	1	**150-4644**	1	HOSE AS	
	4	2	**184-1137**	2	PLATE	
	5	2	**184-1138**	2	CLAMP	
I	6	1	**229-4995**	1	HOSE AS	
	7	2	*260-9171*	6	CONNECTOR AS	
					(EACH INCLUDES)	
		2	**8T-9041**	1	CONNECTOR	
		2	**3J-1907**	1	SEAL-O-RING	
		2	**6V-8397**	1	SEAL-O-RING	
I	8	2	**263-4154**	2	HOSE AS	
	9	1	**263-4914**	1	GUARD	
	10	1	**263-4915**	2	PLATE AS	
I	11	1	**276-4672**	1	HOSE AS	
	12	2	**289-0100**	4	TUBE AS	
	13	2	**289-0102**	2	TUBE AS	
I	14	1	**292-2208**	1	HOSE AS	
I	15	1	**292-2209**	1	HOSE AS	
I	16	1	**292-2332**	2	HOSE AS	
I	17	1	**292-2333**	2	HOSE AS	
	18	1	**293-3820**	1	COVER AS (RH)	
	19	1	**293-3821**	1	COVER AS (LH)	
	20	2	**300-2121**	2	BLOCK	
CI	21	2	**194-3751**	1	HOSE AS	
CI	22	2	**361-3547**	1	HOSE AS	
I	23	2	**301-9295**	2	HOSE AS	
C	24	2	**361-3546**	1	TUBE AS	
C	25	2	**361-3545**	1	TUBE AS	
C	26	2	**361-3544**	1	TUBE AS	
C	27	2	**361-3543**	1	TUBE AS	
I	28	2	**301-9300**	4	HOSE AS	
	29	2	**334-1573**	1	TUBE AS	
	30	2	**334-1574**	1	TUBE AS	
	31	2	**303-1890**	1	TUBE AS	
	32	2	**303-1892**	2	BRACKET	
	33	2	**303-1893**	2	PLATE AS	
I	34	1	**170-1469**	1	HOSE AS	
	35	2	**033-8248**	2	CLIP	
	36	1,2	**100-4336**	4	CLIP	
	37	1	*148-8318*	4	CONNECTOR AS	
					(EACH INCLUDES)	
		1	**6V-8634**	1	CONNECTOR	
		1	**3K-0360**	1	SEAL-O-RING	
		1	**6V-8397**	1	SEAL-O-RING	
	38	2	*148-8336*	2	CONNECTOR AS	
					(EACH INCLUDES)	
		2	**6V-8636**	1	CONNECTOR	
		2	**6V-8397**	1	SEAL-O-RING	
		2	**3J-1907**	1	SEAL-O-RING	
	39	2	*148-8365*	2	ELBOW AS	
					(EACH INCLUDES)	
		2	**8T-6876**	1	ELBOW	
		2	**6V-8398**	1	SEAL-O-RING	

263-4150 **LINES GP-ANGLE & TILT** *(contd.)* **i04348889**

NOTE	REF NO	GRAPHIC REF	PART NUMBER	QTY	PART NAME 1 2 3 4 5 6 (PRODUCT LEVEL)	SEE PAGE
		2	**3J-1907**	1	SEAL-O-RING	
	40	1	*148-8374*	2	ELBOW AS	
					(EACH INCLUDES)	
		1	**6V-8723**	1	ELBOW	
		1	**3K-0360**	1	SEAL-O-RING	
		1	**6V-8397**	1	SEAL-O-RING	
	42	2	*150-4044*	2	CONNECTOR AS	
					(EACH INCLUDES)	
		2	**8T-1779**	1	CONNECTOR	
		2	**3J-1907**	1	SEAL-O-RING	
		2	**6V-8397**	1	SEAL-O-RING	
	43	1	**1S-0994**	6	CLIP	
	44	2	**2H-0435**	2	CLAMP	
	45	1,2	**3B-8489**	4	FITTING-GREASE	
	46	1,2	**3B-8822**	2	ELBOW	
	47	1	**5P-7462**	3	CLIP (SLOT)	
	48	1	**5P-7463**	3	CLIP (TAB)	
	49	1	**6V-0683**	3	GROMMET	
	50	1,2	**6V-8397**	20	SEAL-O-RING	
	51	2	**6V-8398**	3	SEAL-O-RING	
	52	2	**6V-8936**	2	REDUCER	
	53	2	**7J-9108**	6	SEAL-O-RING	
C	54	1,2	**7X-7729**	7	WASHER (11X25X3-MM THK)	
	55	2	**8L-5008**	4	ELBOW-PIPE	
	56	2	**8T-1885**	2	CLIP (SLOT)	
	57	2	**8T-1886**	2	CLIP (TAB)	
C	58	1,2	**8T-4121**	51	WASHER-HARD (11X21X2.5-MM THK)	
M	59	1,2	**8T-4136**	17	BOLT (M10X1.5X25-MM)	
M	60	1,2	**8T-4137**	27	BOLT (M10X1.5X20-MM)	
M	61	2	**8T-4186**	8	BOLT (M10X1.5X40-MM)	
M	62	2	**8T-4191**	2	BOLT (M10X1.5X16-MM)	
M	63	2	**8T-4195**	4	BOLT (M10X1.5X30-MM)	
C	64	2	**9M-9162**	4	CLAMP	
C	65	2	**9R-1004**	2	CLIP (TAB)	
C	66	2	**9R-1005**	2	CLIP (SLOT)	

C-CHANGE FROM PREVIOUS TYPE
I-REFER TO HYDRAULIC INFORMATION SYSTEM
M-METRIC PART

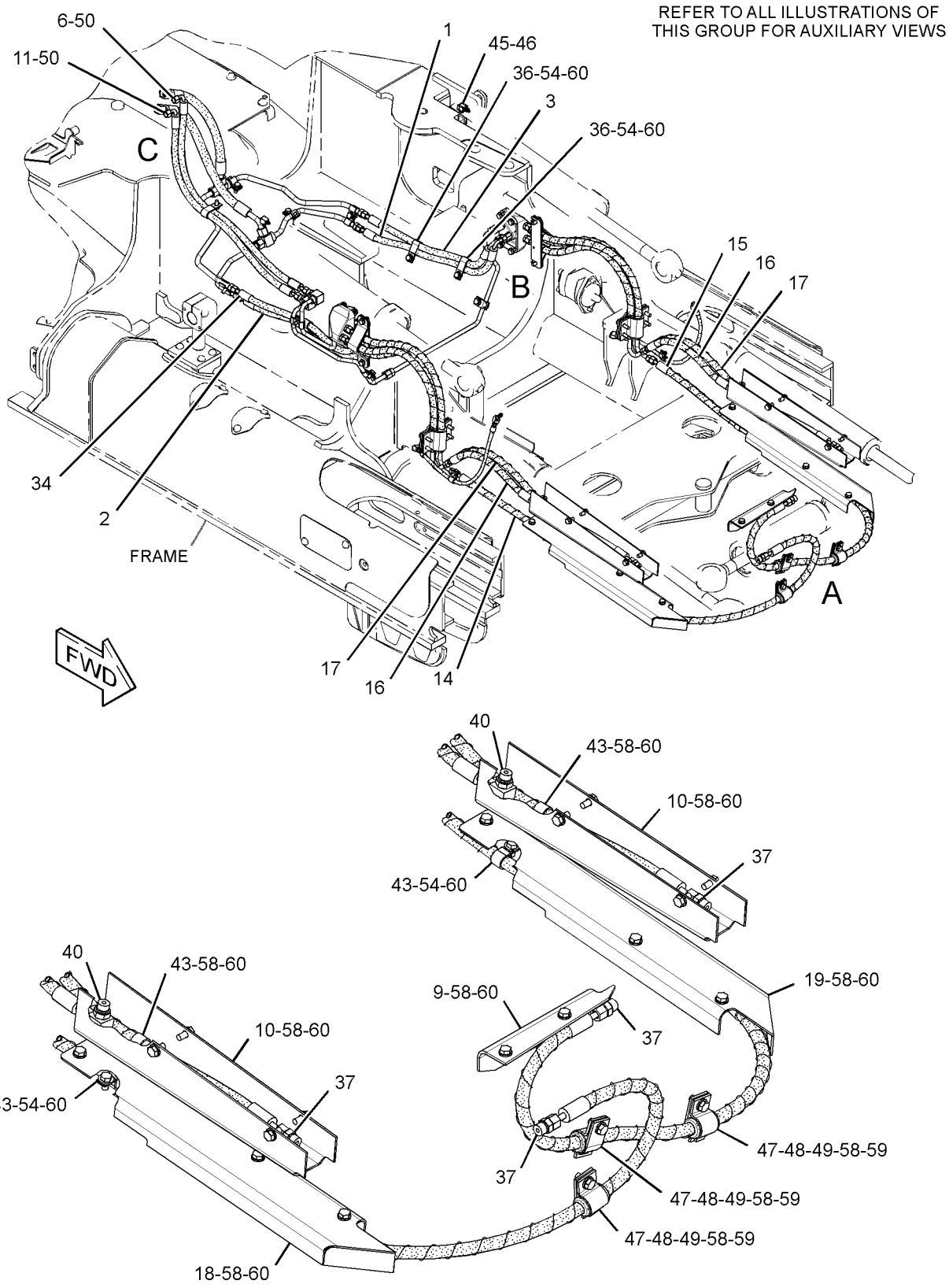

GRAPHIC #1 g02580116

263-4150 **LINES GP-ANGLE & TILT** *(contd.)* **i04348889**

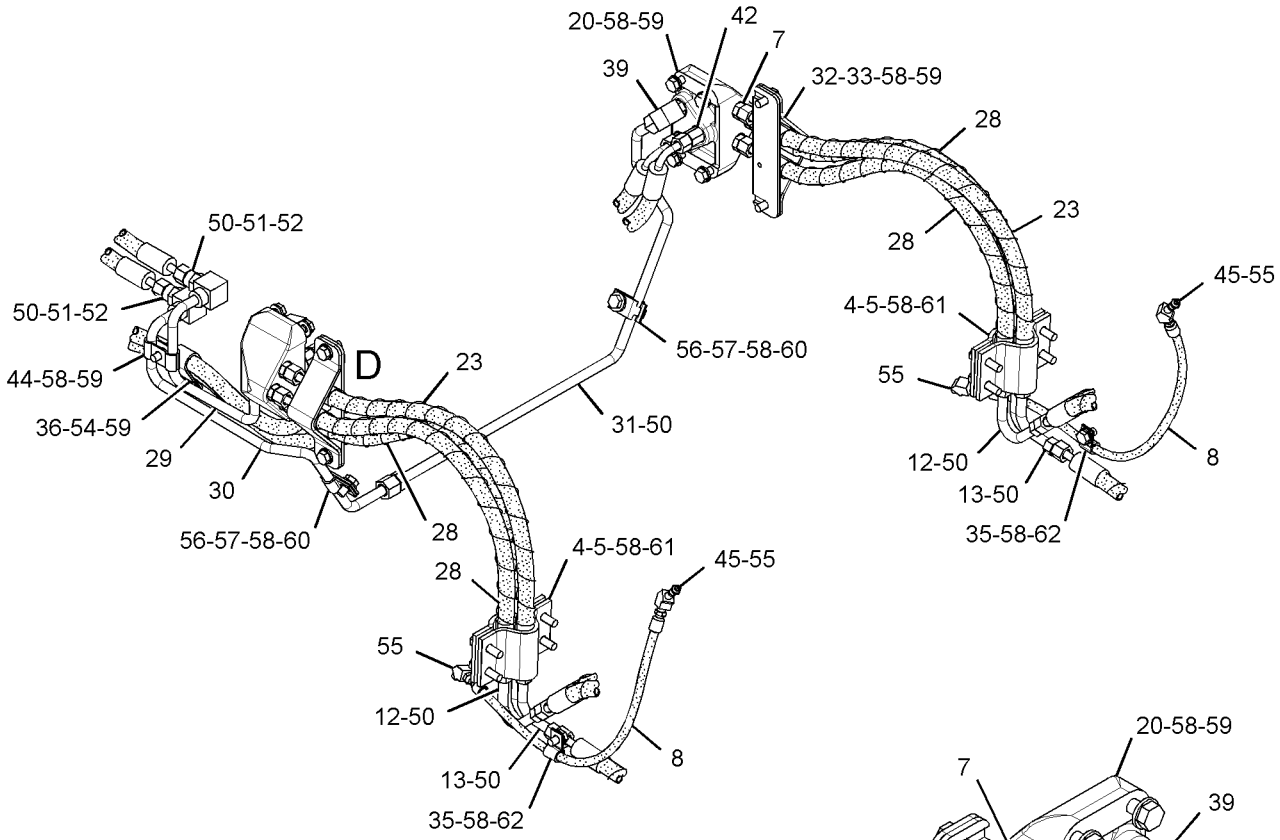

VIEW OF AREA B

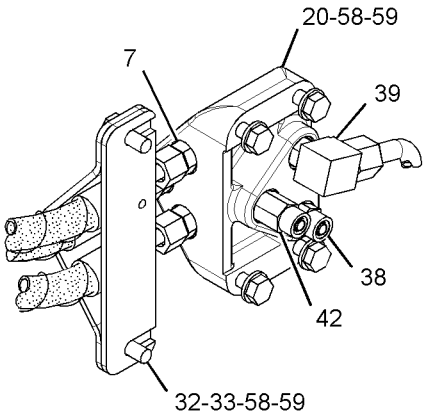

VIEW OF AREA D 90°

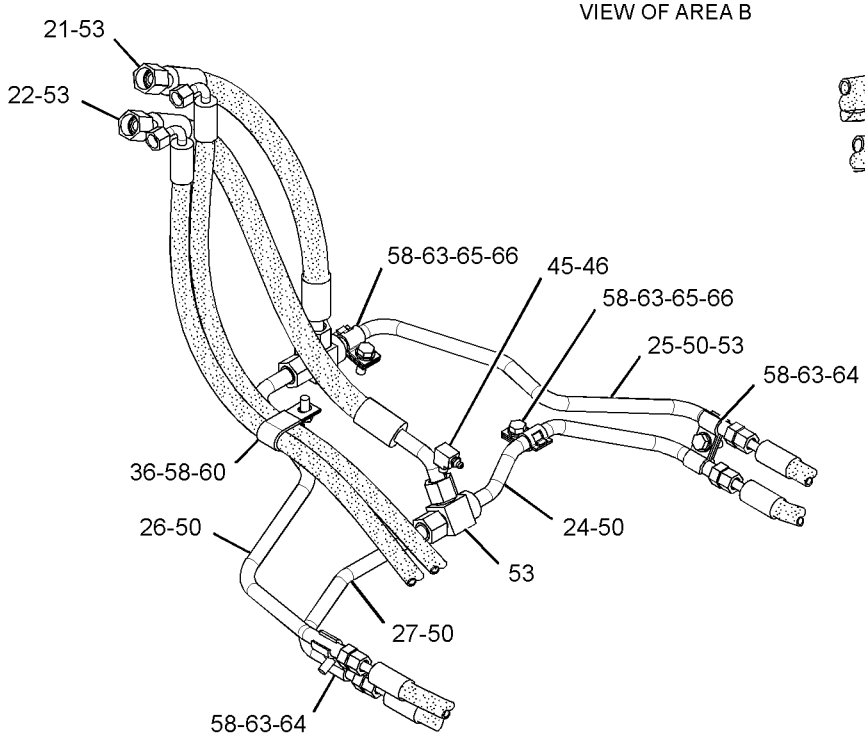

VIEW OF AREA C

GRAPHIC #2 **<END>** g02580122

HYDRAULIC SYSTEM

320-0463 LINES GP-ANGLE & TILT

S/N: FFF1-UP; LLL1-UP
FIELD INSTALLATION

SMCS-5057, 5101, 5104 **i03158544**

NOTE	REF NO	GRAPHIC REF	PART NUMBER	QTY	PART NAME 1 2 3 4 5 6 (PRODUCT LEVEL)	SEE PAGE
I	1	1	**8W-0125**	2	HOSE AS	
I	2	1	**8W-0204**	2	HOSE AS	
	3	1,2	**184-1137**	2	PLATE	
	4	1,2	**184-1138**	2	CLAMP	
	5	1	*260-9171*	2	CONNECTOR AS	
					(EACH INCLUDES)	
		1	**3J-1907**	1	SEAL-O-RING	
		1	**6V-8397**	1	SEAL-O-RING	
		1	**8T-9041**	1	CONNECTOR	
I	6	1	**261-8495**	1	HOSE AS	
I	7	1,2	**263-4154**	2	HOSE AS	
	8	2	**263-4914**	1	GUARD	
	9	2	**263-4915**	2	PLATE AS	
I	10	1	**276-4672**	1	HOSE AS	
	11	1	**283-4940**	1	TUBE AS	
	12	1	**283-4942**	1	TUBE AS	
	13	1	*289-0099*	2	BLOCK GP-HYDRAULIC	
					(EACH INCLUDES)	
		1	**272-3022**	1	BLOCK	
		1	*148-8407*	4	PLUG AS	
					(EACH INCLUDES)	
		1	**3J-1907**	1	SEAL-O-RING	
		1	**9S-4191**	1	PLUG-O-RING	
	14	1,2	**289-0100**	4	TUBE AS	
I	15	1	**289-0101**	4	HOSE AS	
	16	1,2	**289-0102**	2	TUBE AS	
I	17	1	**289-0103**	2	HOSE AS	
I	18	1	**292-2208**	1	HOSE AS	
I	19	1	**292-2209**	1	HOSE AS	
I	20	1,2	**292-2332**	2	HOSE AS	
I	21	1,2	**292-2333**	2	HOSE AS	
	22	2	**293-3820**	1	COVER AS (RH)	
	23	2	**293-3821**	1	COVER AS (LH)	
	24	2	**301-9296**	1	TUBE AS	
	25	2	**301-9297**	1	TUBE AS	
	26	2	**301-9298**	1	TUBE AS	
	27	2	**301-9299**	1	TUBE AS	
I	28	1	**320-0461**	1	HOSE AS	
I	29	1	**320-0462**	1	HOSE AS	
	30	1,2	**033-8248**	2	CLIP	
	31	1	**100-4336**	4	CLIP	
	32	2	*148-8318*	4	CONNECTOR AS	
					(EACH INCLUDES)	
		2	**3K-0360**	1	SEAL-O-RING	
		2	**6V-8397**	1	SEAL-O-RING	
		2	**6V-8634**	1	CONNECTOR	
	33	2	*148-8374*	2	ELBOW AS	
					(EACH INCLUDES)	
		2	**3K-0360**	1	SEAL-O-RING	
		2	**6V-8397**	1	SEAL-O-RING	
		2	**6V-8723**	1	ELBOW	
	34	1	*148-8378*	4	ELBOW AS	
					(EACH INCLUDES)	
		1	**3J-1907**	1	SEAL-O-RING	
		1	**6V-8397**	1	SEAL-O-RING	
		1	**6V-8724**	1	ELBOW	

320-0463 **LINES GP-ANGLE & TILT** *(contd.)* **i03158544**

NOTE	REF NO	GRAPHIC REF	PART NUMBER	QTY	PART NAME 1 2 3 4 5 6 (PRODUCT LEVEL)	SEE PAGE
	35	2	*148-8393*	2	ELBOW AS	
					(EACH INCLUDES)	
		2	**6V-9852**	1	ELBOW	
		2	**7J-9108**	1	SEAL-O-RING	
	36	1	*150-4044*	6	CONNECTOR AS	
					(EACH INCLUDES)	
		1	**3J-1907**	1	SEAL-O-RING	
		1	**6V-8397**	1	SEAL-O-RING	
		1	**8T-1779**	1	CONNECTOR	
	37	2	**1S-0994**	6	CLIP	
	38	1,2	**3B-8489**	4	FITTING-GREASE	
	39	1,2	**3B-8822**	2	ELBOW	
	40	2	**5P-7462**	3	CLIP (SLOT)	
	41	2	**5P-7463**	3	CLIP (TAB)	
	42	1	**5P-9297**	3	CLIP	
	43	2	**6V-0683**	3	GROMMET	
	44	1,2	**6V-8397**	20	SEAL-O-RING	
	45	1,2	**7J-9108**	6	SEAL-O-RING	
	46	1,2	**7X-7729**	9	WASHER (11X25X3-MM THK)	
	47	1,2	**8L-5008**	4	ELBOW-PIPE	
	48	1	**8S-0948**	1	CLIP	
	49	1,2	**8T-4121**	45	WASHER-HARD (11X21X2.5-MM THK)	
M	50	1,2	**8T-4136**	5	BOLT (M10X1.5X25-MM)	
M	51	1,2	**8T-4137**	25	BOLT (M10X1.5X20-MM)	
M	52	1,2	**8T-4186**	8	BOLT (M10X1.5X40-MM)	
M	53	1,2	**8T-4191**	3	BOLT (M10X1.5X16-MM)	
M	54	1,2	**8T-4195**	5	BOLT (M10X1.5X30-MM)	
M	55	1	**8T-4196**	8	BOLT (M10X1.5X35-MM)	
	56	2	**9M-9162**	8	CLAMP	

I-REFER TO HYDRAULIC INFORMATION SYSTEM
M-METRIC PART

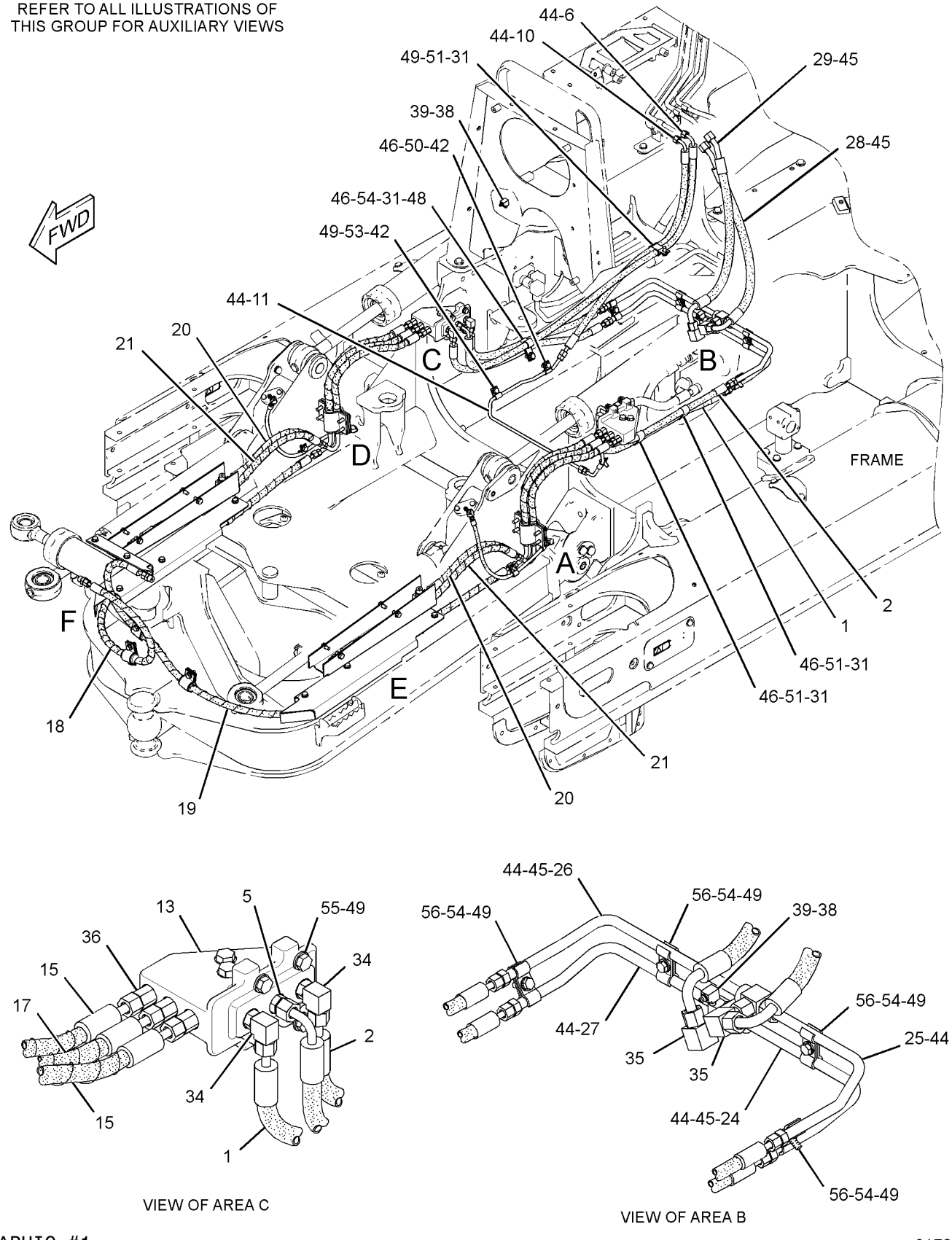

GRAPHIC #1 g01734796

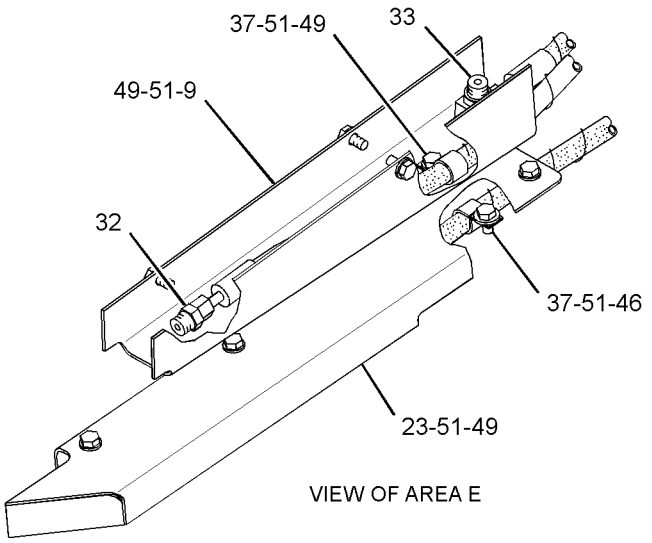

VIEW OF AREA E

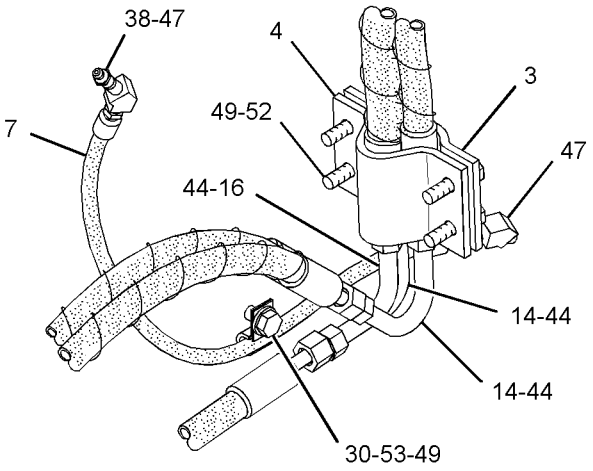

VIEW OF AREA D

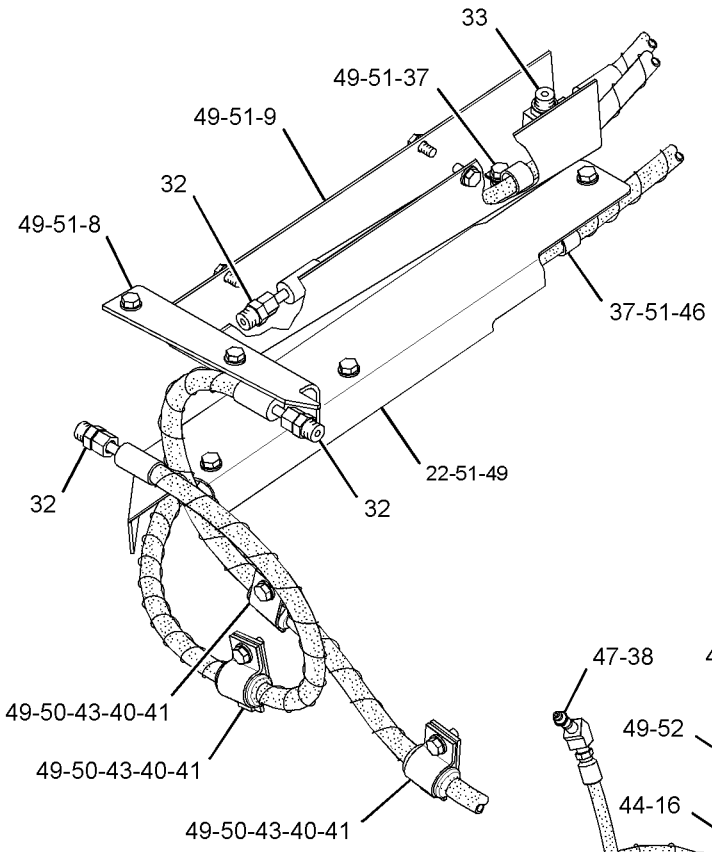

VIEW OF AREA F

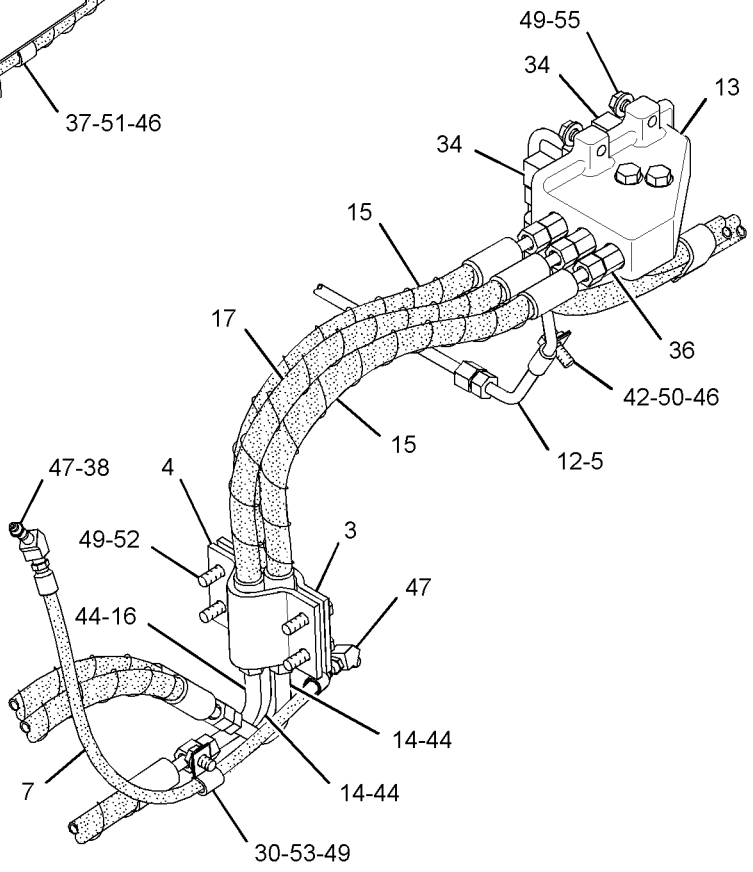

VIEW OF AREA A

GRAPHIC #2 **<END>** g01734797

HYDRAULIC SYSTEM

328-8602 LINES GP-ANGLE & TILT

S/N: JTD1-UP; FFF1-UP; LLL1-UP
PART OF 325-6541, 325-6542, 325-6547 CONVERSION AR-MACHINE OPTION
AN ATTACHMENT

SMCS-5057, 5101, 5104 **i03664442**

NOTE	REF NO	GRAPHIC REF	PART NUMBER	QTY	PART NAME 1 2 3 4 5 6 (PRODUCT LEVEL)	SEE PAGE
	1	1	**130-9984**	4	CLIP	
I	2	1	**329-3843**	1	HOSE AS	
I	3	1	**329-3844**	1	HOSE AS	
I	4	1	**329-3845**	1	HOSE AS	
I	5	1	**329-3846**	1	HOSE AS	
I	6	1	**329-3847**	2	HOSE AS	
I	7	1	**329-3848**	1	HOSE AS	
I	8	1	**329-3849**	1	HOSE AS	
I	9	1	**329-3850**	1	HOSE AS	
I	10	1	**329-3851**	2	HOSE AS	
I	11	1	**329-3852**	2	HOSE AS	
I	12	1	**329-3853**	1	HOSE AS	
I	13	1	**329-3854**	1	HOSE AS	
I	14	1	**329-3855**	2	HOSE AS	
I	15	1	**329-3856**	4	HOSE AS	
I	16	1	**329-3857**	1	HOSE AS	
	17	1	**329-8873**	2	PLATE AS	
					(EACH INCLUDES)	
M		1	**8T-3490**	1	NUT-WELD (M10X1.5-THD)	
	18	1	**341-0660**	2	PLATE AS	
	19	1	**6D-4246**	2	CLIP	
	20	1	**6V-1889**	6	CLIP	
	21	1	**7S-8920**	3	CLIP (SLOT)	
	22	1	**7S-8921**	3	CLIP (TAB)	
	23	1	**8T-2920**	3	GROMMET	
B	24	1	**8T-7934**	8	WASHER-HARD (11X21X5-MM THK)	

B-USE AS REQUIRED
I-REFER TO HYDRAULIC INFORMATION SYSTEM
M-METRIC PART

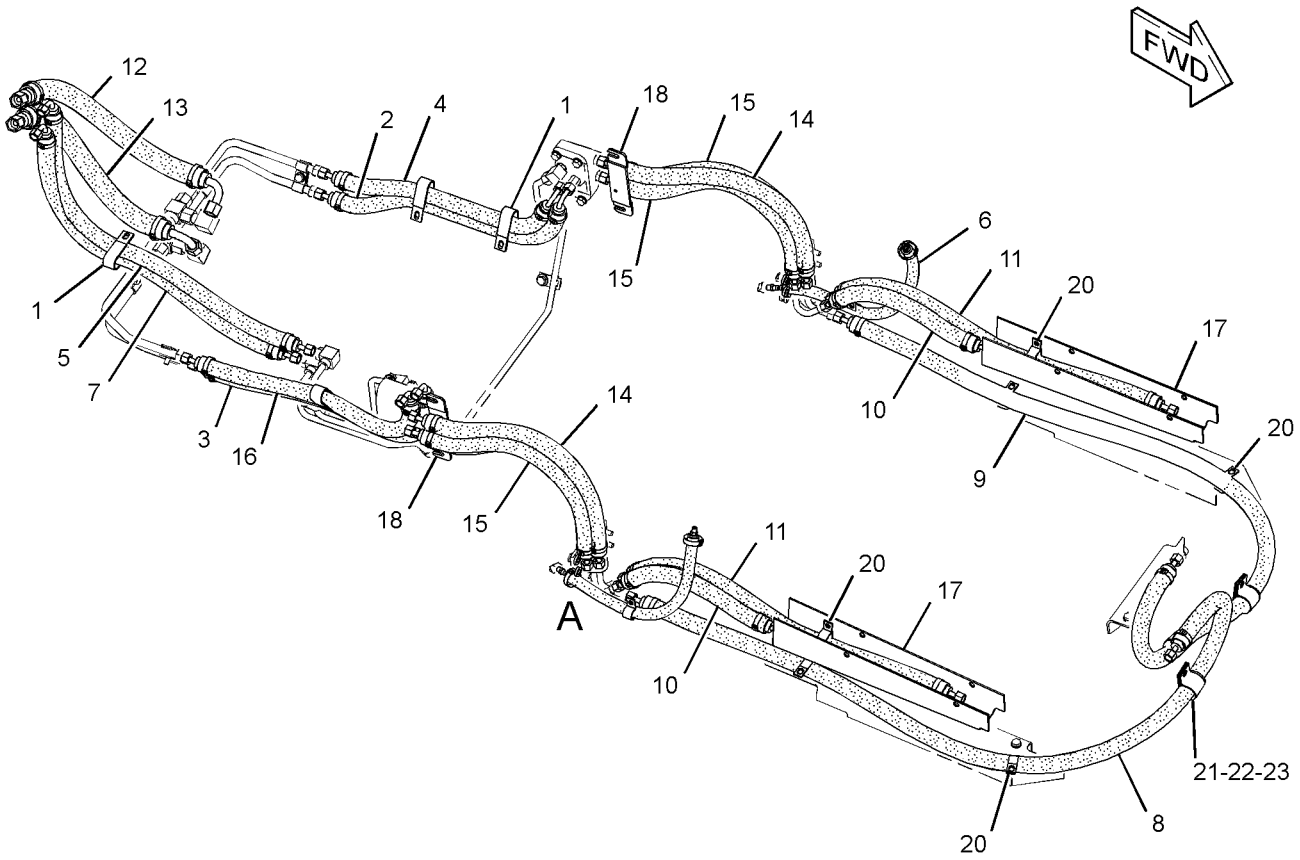

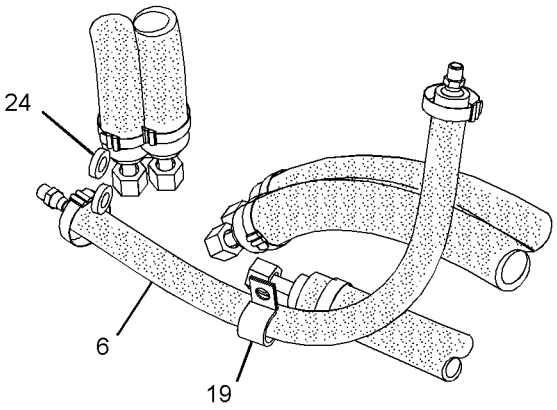

VIEW OF AREA A

GRAPHIC #1 **<END>** g02037597

HYDRAULIC SYSTEM

263-4140 LINES GP-HYDRAULIC

S/N: JTD1-UP; FFF1-657; LLL1-903
PART OF 264-4540, 264-4541, 264-4542, 325-6521, 325-6522, 325-6525, 325-6528
HYDRAULIC AR
AN ATTACHMENT

SMCS-5057 **i02832208**

NOTE	REF NO	GRAPHIC REF	PART NUMBER	QTY	PART NAME 1 2 3 4 5 6 (PRODUCT LEVEL)	SEE PAGE
	1	1	**256-7753**	1	TUBE AS	
	2	1	**257-1096**	1	TUBE AS	
	3	1	**257-1099**	1	TUBE AS	
	4	1	**272-3540**	1	BRACKET AS	
I	5	1	**276-1965**	1	HOSE AS	
	6	1	**285-4312**	2	BLOCK AS	
I	7	1	**285-4313**	2	HOSE AS	
I	8	1	**285-4314**	2	HOSE AS	
	9	1	**301-9281**	1	TUBE AS	
	10	1	**301-9282**	1	TUBE AS	
	11	1	**301-9283**	1	TUBE AS	
I	12	1	**301-9284**	1	HOSE AS	
	13	1	**301-9286**	1	TUBE AS	
	14	1	**301-9287**	1	TUBE AS	
	15	1	**301-9290**	1	TUBE AS	
	16	1	**301-9291**	1	TUBE AS	
	17	1	**301-9293**	1	TUBE AS	
	18	1	**301-9294**	1	TUBE AS	
	19	1	*148-8315*	8	CONNECTOR AS	
					(EACH INCLUDES)	
		1	**2M-9780**	1	SEAL-O-RING	
		1	**6V-8642**	1	CONNECTOR	
		1	**7J-9108**	1	SEAL-O-RING	
	20	1	*148-8340*	2	CONNECTOR AS	
					(EACH INCLUDES)	
		1	**3K-0360**	1	SEAL-O-RING	
		1	**6V-8398**	1	SEAL-O-RING	
		1	**6V-8639**	1	CONNECTOR	
	21	1	*148-8342*	2	CONNECTOR AS	
					(EACH INCLUDES)	
		1	**3K-0360**	1	SEAL-O-RING	
		1	**6V-8632**	1	CONNECTOR	
		1	**7J-9108**	1	SEAL-O-RING	
	22	1	*148-8345*	2	CONNECTOR AS	
					(EACH INCLUDES)	
		1	**2M-9780**	1	SEAL-O-RING	
		1	**6V-8398**	1	SEAL-O-RING	
		1	**6V-8638**	1	CONNECTOR	
	23	1	*148-8358*	2	ELBOW AS	
					(EACH INCLUDES)	
		1	**2M-9780**	1	SEAL-O-RING	
		1	**6V-8398**	1	SEAL-O-RING	
		1	**6V-8624**	1	ELBOW	
	24	1	*148-8390*	2	ELBOW AS	
					(EACH INCLUDES)	
		1	**2M-9780**	1	SEAL-O-RING	
		1	**6V-8626**	1	ELBOW	
		1	**7J-9108**	1	SEAL-O-RING	
	25	1	*148-8393*	2	ELBOW AS	
					(EACH INCLUDES)	
		1	**6V-9852**	1	ELBOW	
		1	**7J-9108**	1	SEAL-O-RING	
	26	1	**2H-0435**	2	CLAMP	
	27	1	**7J-9108**	8	SEAL-O-RING	

263-4140 **LINES GP-HYDRAULIC** *(contd.)* **i02832208**

NOTE	REF NO	GRAPHIC REF	PART NUMBER	QTY	PART NAME 1 2 3 4 5 6 (PRODUCT LEVEL)	SEE PAGE
	28	1	**7X-7729**	2	WASHER (11X25X3-MM THK)	
	29	1	**8T-4121**	13	WASHER-HARD (11X21X2.5-MM THK)	
M	30	1	**8T-4136**	3	BOLT (M10X1.5X25-MM)	
M	31	1	**8T-4137**	4	BOLT (M10X1.5X20-MM)	
M	32	1	**8T-4191**	2	BOLT (M10X1.5X16-MM)	
M	33	1	**8T-4196**	6	BOLT (M10X1.5X35-MM)	
	34	1	**9M-9162**	12	CLAMP	

I-REFER TO HYDRAULIC INFORMATION SYSTEM
M-METRIC PART

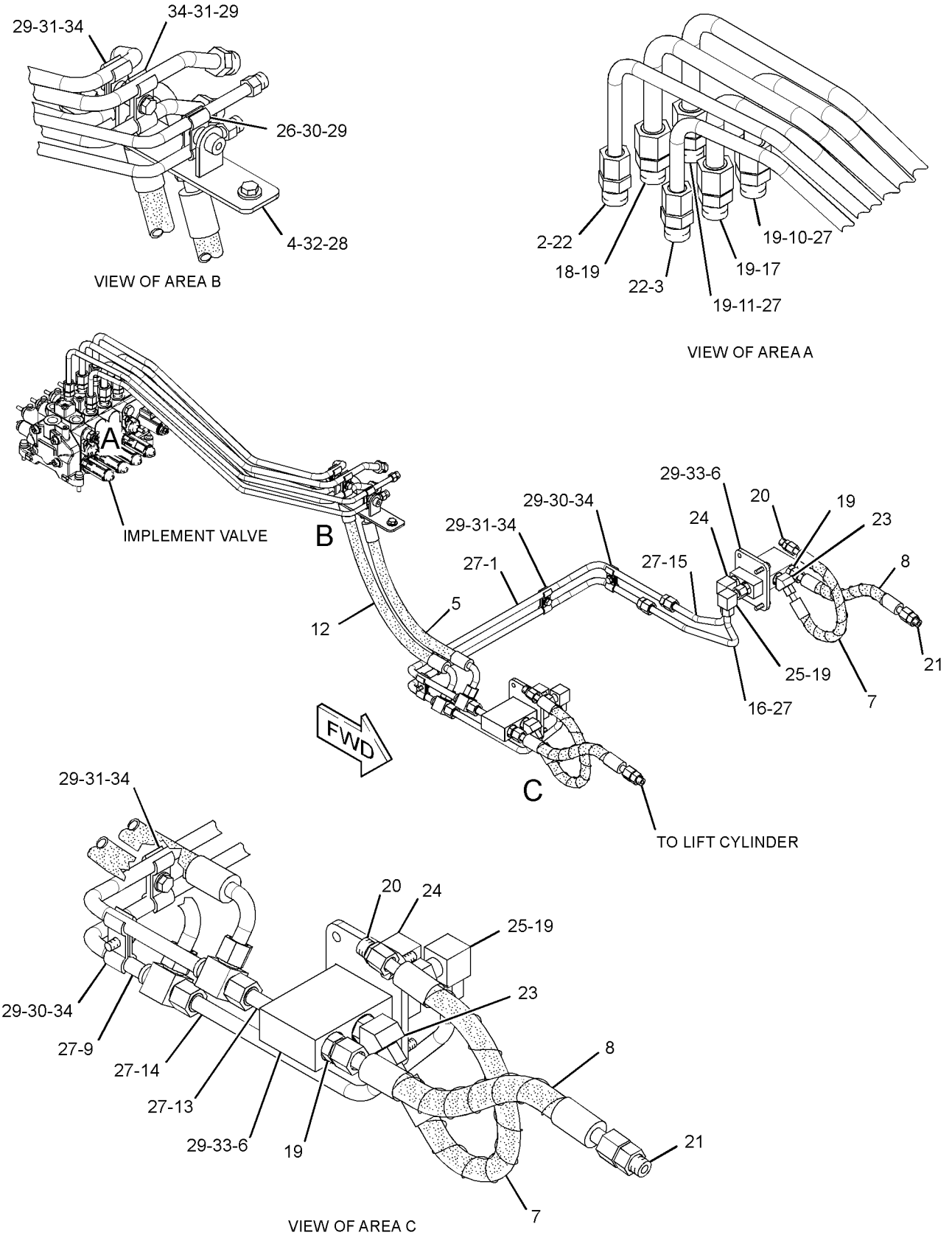

GRAPHIC #1 **<END>** g01375069

HYDRAULIC SYSTEM

263-4140 LINES GP-HYDRAULIC

S/N: JTD1-UP; FFF658-UP; LLL904-UP
PART OF 264-4540, 264-4541, 264-4542, 325-6521, 325-6522, 325-6525, 325-6528
HYDRAULIC AR
AN ATTACHMENT

SMCS-5057 **i04348830**

NOTE	REF NO	GRAPHIC REF	PART NUMBER	QTY	PART NAME 1 2 3 4 5 6 (PRODUCT LEVEL)	SEE PAGE
	1	1	**257-1096**	1	TUBE AS	
	2	1	**257-1099**	1	TUBE AS	
	3	1	**272-3540**	1	BRACKET AS	
I	4	1	**285-4313**	2	HOSE AS	
I	5	1	**285-4314**	2	HOSE AS	
	6	1	**301-9282**	1	TUBE AS	
	7	1	**301-9283**	1	TUBE AS	
	8	1	**301-9293**	1	TUBE AS	
	9	1	**301-9294**	1	TUBE AS	
CI	10	1	**360-9640**	1	HOSE AS	
CI	11	1	**360-9642**	1	HOSE AS	
CI	12	1	**360-9643**	1	HOSE AS	
CI	13	1	**360-9644**	1	HOSE AS	
CI	14	1	**360-9645**	1	HOSE AS	
CI	15	1	**360-9646**	1	HOSE AS	
C	16	1	**361-3541**	1	TUBE AS	
C	17	1	**361-3542**	1	TUBE AS	
C	18	1	**365-9563**	2	BLOCK AS	
C	19	1	*148-8315*	9	CONNECTOR AS	
					(EACH INCLUDES)	
		1	**2M-9780**	1	SEAL-O-RING	
		1	**6V-8642**	1	CONNECTOR	
		1	**7J-9108**	1	SEAL-O-RING	
	20	1	*148-8340*	2	CONNECTOR AS	
					(EACH INCLUDES)	
		1	**3K-0360**	1	SEAL-O-RING	
		1	**6V-8398**	1	SEAL-O-RING	
		1	**6V-8639**	1	CONNECTOR	
	21	1	*148-8342*	2	CONNECTOR AS	
					(EACH INCLUDES)	
		1	**3K-0360**	1	SEAL-O-RING	
		1	**6V-8632**	1	CONNECTOR	
		1	**7J-9108**	1	SEAL-O-RING	
	22	1	*148-8345*	2	CONNECTOR AS	
					(EACH INCLUDES)	
		1	**2M-9780**	1	SEAL-O-RING	
		1	**6V-8398**	1	SEAL-O-RING	
		1	**6V-8638**	1	CONNECTOR	
	23	1	*148-8358*	2	ELBOW AS	
					(EACH INCLUDES)	
		1	**2M-9780**	1	SEAL-O-RING	
		1	**6V-8398**	1	SEAL-O-RING	
		1	**6V-8624**	1	ELBOW	
	24	1	*148-8390*	1	ELBOW AS	
		1	**2M-9780**	1	SEAL-O-RING	
		1	**6V-8626**	1	ELBOW	
		1	**7J-9108**	1	SEAL-O-RING	
	25	1	**2H-0435**	2	CLAMP	
C	26	1	**3E-4321**	1	CLIP	
	27	1	**7J-9108**	8	SEAL-O-RING	
	28	1	**7X-7729**	2	WASHER (11X25X3-MM THK)	
C	29	1	**8T-4121**	14	WASHER-HARD (11X21X2.5-MM THK)	
CM	30	1	**8T-4136**	1	BOLT (M10X1.5X25-MM)	
CM	31	1	**8T-4137**	2	BOLT (M10X1.5X20-MM)	

263-4140 **LINES GP-HYDRAULIC** *(contd.)* **i04348830**

NOTE	REF NO	GRAPHIC REF	PART NUMBER	QTY	PART NAME 1 2 3 4 5 6 (PRODUCT LEVEL)	SEE PAGE
M	32	1	**8T-4191**	2	BOLT (M10X1.5X16-MM)	
CM	33	1	**8T-4195**	5	BOLT (M10X1.5X30-MM)	
M	34	1	**8T-4196**	6	BOLT (M10X1.5X35-MM)	
C	35	1	**9M-9162**	6	CLAMP	
C	36	1	**9R-1004**	2	CLIP (TAB)	
C	37	1	**9R-1005**	2	CLIP (SLOT)	
C	38	1	**9X-8250**	2	CLIP	

C-CHANGE FROM PREVIOUS TYPE
I-REFER TO HYDRAULIC INFORMATION SYSTEM
M-METRIC PART

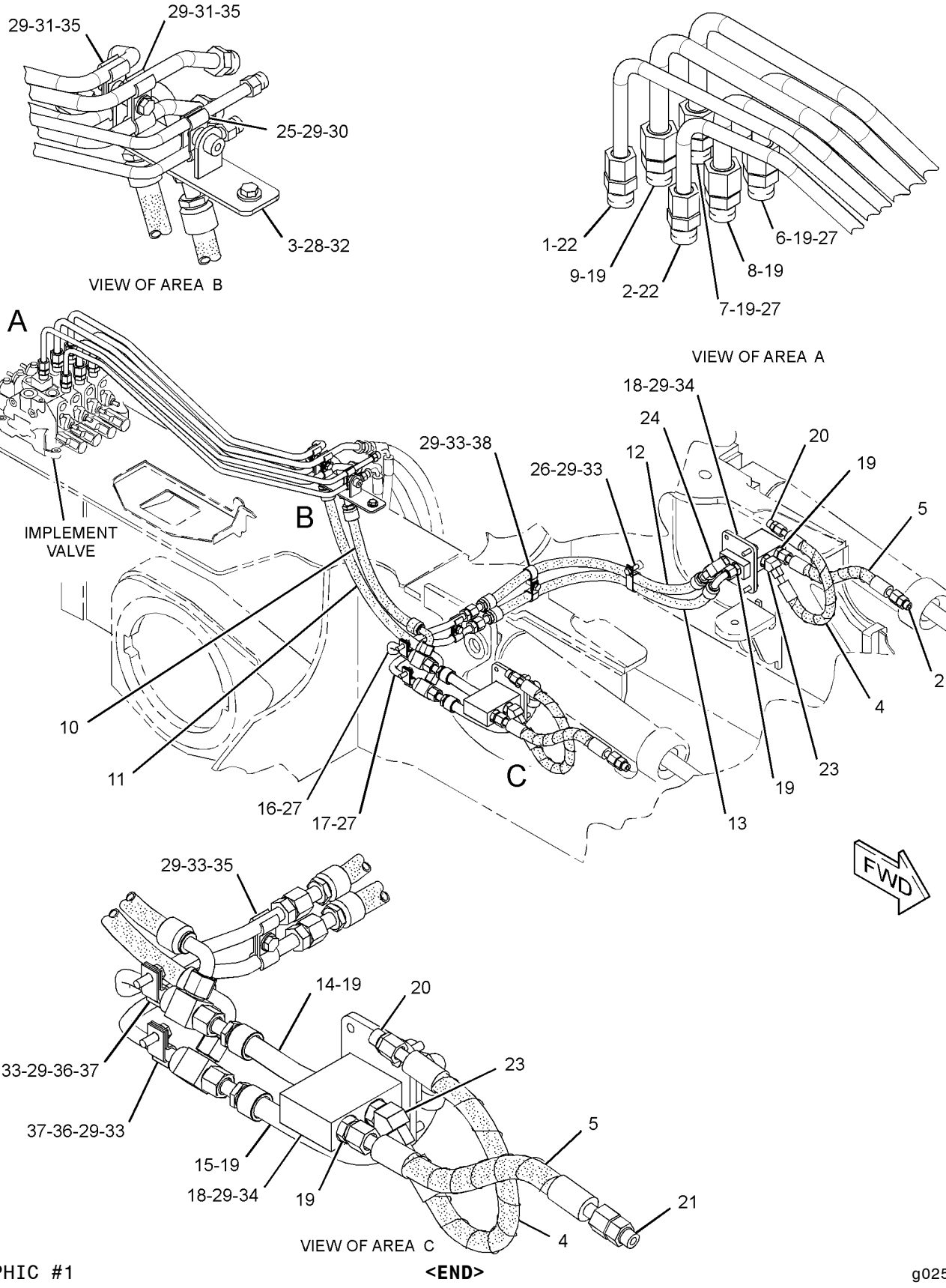

GRAPHIC #1 **<END>** g02539439

HYDRAULIC SYSTEM

325-0488 LINES GP-HYDRAULIC

S/N: FFF1-UP

PART OF 325-6541 CONVERSION AR-MACHINE OPTION

AN ATTACHMENT

SMCS-5057 **i03664472**

NOTE	REF NO	GRAPHIC REF	PART NUMBER	QTY	PART NAME 1 2 3 4 5 6 (PRODUCT LEVEL)	SEE PAGE
	1	1	*325-0494*	1	HOSE AS	
		1	**163-8811**	2	CLAMP	
I		1	**135-7193**	1	HOSE AS	
E		1	**326-3566**		INSULATION (33-CM)	
	2	1	*325-0495*	1	HOSE AS	
E		1	**193-6911**		INSULATION (73-CM)	
		1	**163-8811**	2	CLAMP	
I		1	**305-5014**	1	HOSE AS	
	3	1	*325-0496*	1	HOSE AS	
		1	**163-8811**	2	CLAMP	
E		1	**193-6911**		INSULATION (38-CM)	
I		1	**285-3772**	1	HOSE AS	
	4	1	*325-0497*	1	HOSE AS	
		1	**163-8811**	2	CLAMP	
I		1	**185-3166**	1	HOSE AS	
E		1	**326-3566**		INSULATION (53-CM)	
	5	1	*325-0498*	1	HOSE AS	
		1	**163-8811**	2	CLAMP	
E		1	**193-6911**		INSULATION (124-CM)	
I		1	**303-6600**	1	HOSE AS	
	6	1	*325-0499*	1	HOSE AS	
		1	**163-8811**	2	CLAMP	
E		1	**193-6911**		INSULATION (35-CM)	
I		1	**240-2586**	1	HOSE AS	

E-ORDER BY THE CENTIMETER
I-REFER TO HYDRAULIC INFORMATION SYSTEM

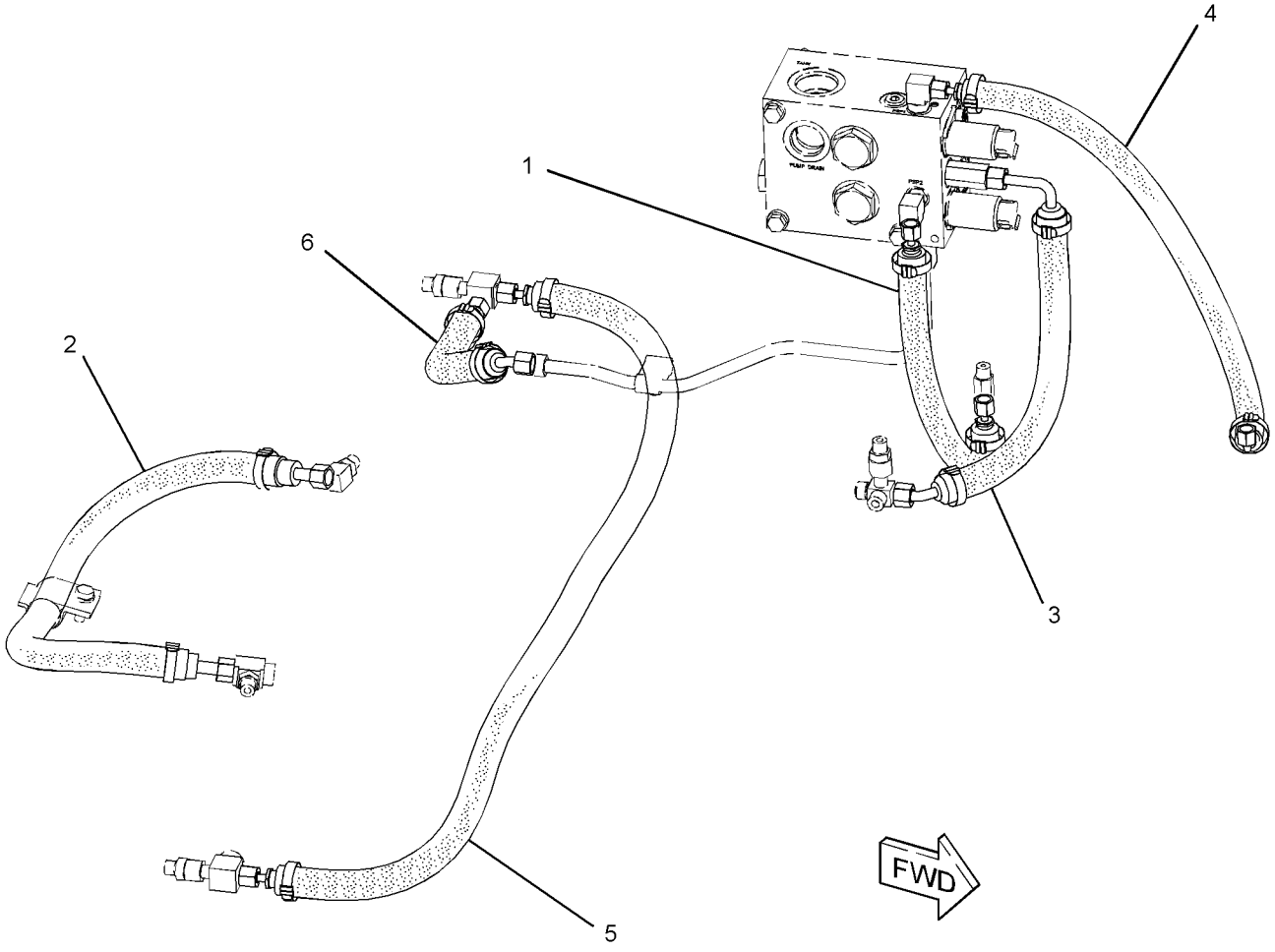

GRAPHIC #1 **<END>** g02024996

HYDRAULIC SYSTEM

325-1020 LINES GP-HYDRAULIC

S/N: LLL1-UP

PART OF 325-6542 CONVERSION AR-MACHINE OPTION

AN ATTACHMENT

SMCS-5057 **i03664483**

NOTE	REF NO	GRAPHIC REF	PART NUMBER	QTY	PART NAME 1 2 3 4 5 6 (PRODUCT LEVEL)	SEE PAGE
	1	1	*325-0494*	1	HOSE AS	
I		1	**135-7193**	1	HOSE AS	
		1	**163-8811**	2	CLAMP	
E		1	**326-3566**		INSULATION (33-CM)	
	2	1	*325-0496*	1	HOSE AS	
		1	**163-8811**	2	CLAMP	
E		1	**193-6911**		INSULATION (38-CM)	
I		1	**285-3772**	1	HOSE AS	
	3	1	*325-0497*	1	HOSE AS	
		1	**163-8811**	2	CLAMP	
I		1	**185-3166**	1	HOSE AS	
E		1	**326-3566**		INSULATION (53-CM)	
	4	1	*325-0500*	1	HOSE AS	
		1	**163-8811**	2	CLAMP	
E		1	**193-6911**		INSULATION (147-CM)	
I		1	**306-2094**	1	HOSE AS	
I	5	1	*325-0501*	1	HOSE AS	
		1	**163-8811**	2	CLAMP	
E		1	**193-6911**		INSULATION (48-CM)	
I		1	**248-6220**	1	HOSE AS	
	6	1	*325-0502*	1	HOSE AS	
		1	**163-8811**	2	CLAMP	
E		1	**193-6911**		INSULATION (93-CM)	
I		1	**305-5015**	1	HOSE AS	

E-ORDER BY THE CENTIMETER
I-REFER TO HYDRAULIC INFORMATION SYSTEM

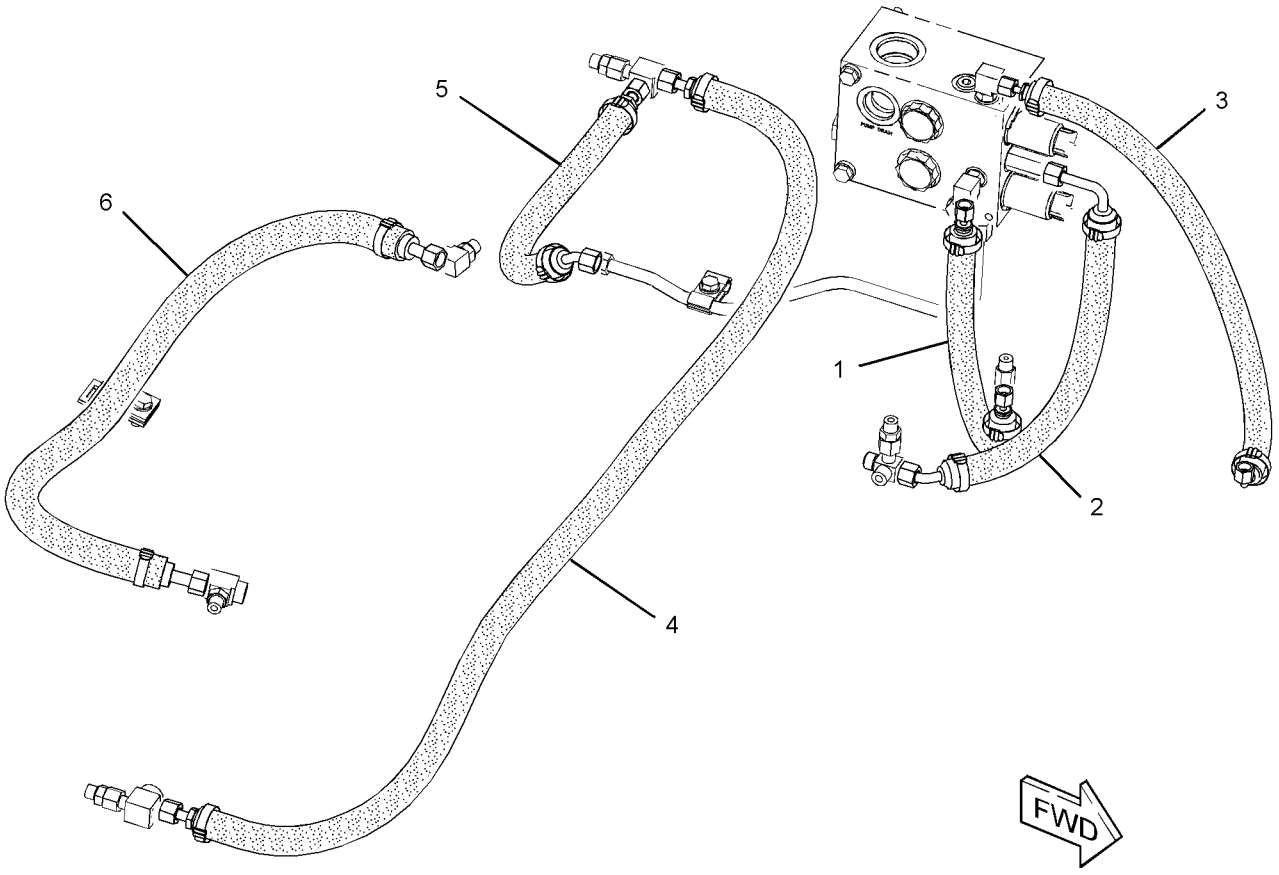

GRAPHIC #1 **<END>** g02029581

HYDRAULIC SYSTEM

325-1327 LINES GP-HYDRAULIC

S/N: JTD1-UP

PART OF 325-6547 CONVERSION AR-MACHINE OPTION

AN ATTACHMENT

SMCS-5057 **i03664506**

NOTE	REF NO	GRAPHIC REF	PART NUMBER	QTY	PART NAME 1 2 3 4 5 6 (PRODUCT LEVEL)	SEE PAGE
	1	1	*325-0494*	1	HOSE AS	
I		1	**135-7193**	1	HOSE AS	
		1	**163-8811**	2	CLAMP	
E		1	**326-3566**		INSULATION (33-CM)	
	2	1	*325-0496*	1	HOSE AS	
E		1	**193-6911**		INSULATION (38-CM)	
		1	**163-8811**	2	CLAMP	
I		1	**285-3772**	1	HOSE AS	
	3	1	*325-0497*	1	HOSE AS	
I		1	**185-3166**	1	HOSE AS	
		1	**163-8811**	2	CLAMP	
E		1	**326-3566**		INSULATION (53-CM)	
	4	1	*325-0517*	1	HOSE AS	
I		1	**131-5479**	1	HOSE AS	
E		1	**193-6911**		INSULATION (153-CM)	
		1	**163-8811**	2	CLAMP	
	5	1	*325-0518*	1	HOSE AS	
I		1	**137-4477**	1	HOSE AS	
E		1	**193-6911**		INSULATION (53-CM)	
		1	**163-8811**	2	CLAMP	
	6	1	*325-0519*	1	HOSE AS	
E		1	**193-6911**		INSULATION (105-CM)	
		1	**163-8811**	2	CLAMP	
I		1	**306-2090**	1	HOSE AS	

E-ORDER BY THE CENTIMETER
I-REFER TO HYDRAULIC INFORMATION SYSTEM

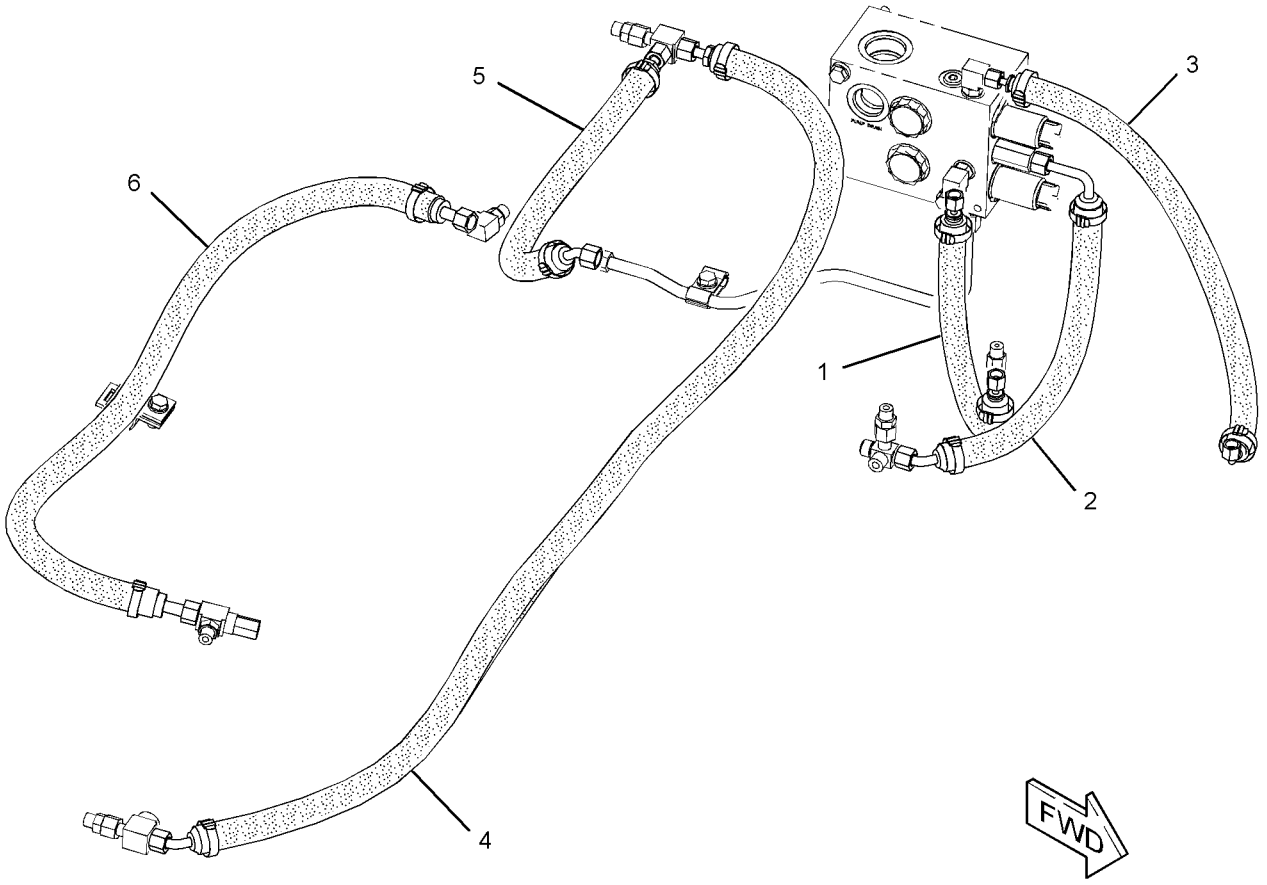

GRAPHIC #1 **<END>** g02033175

HYDRAULIC SYSTEM

327-8890 LINES GP-HYDRAULIC

S/N: JTD1-UP; FFF1-UP; LLL1-UP
PART OF 325-6541, 325-6542, 325-6547 CONVERSION AR-MACHINE OPTION
AN ATTACHMENT

SMCS-5057 **i03664447**

NOTE	REF NO	GRAPHIC REF	PART NUMBER	QTY	PART NAME 1 2 3 4 5 6 (PRODUCT LEVEL)	SEE PAGE
	1	1	*327-8891*	1	HOSE AS	
		1	**163-8812**	2	CLAMP	
I		1	**276-1965**	1	HOSE AS	
E		1	**324-9706**		INSULATION (47-CM)	
	2	1	**327-8892**	2	HOSE AS	
					(EACH INCLUDES)	
		1	**163-8812**	4	CLAMP	
I		1	**285-4313**	1	HOSE AS	
E		1	**324-9705**		INSULATION (44-CM)	
	3	1	**327-8893**	2	HOSE AS	
					(EACH INCLUDES)	
		1	**163-8812**	4	CLAMP	
I		1	**285-4314**	1	HOSE AS	
E		1	**326-3567**		INSULATION (34-CM)	
	4	1	*327-8894*	1	HOSE AS	
		1	**163-8812**	2	CLAMP	
I		1	**301-9284**	1	HOSE AS	
E		1	**324-9706**		INSULATION (52-CM)	

E-ORDER BY THE CENTIMETER
I-REFER TO HYDRAULIC INFORMATION SYSTEM

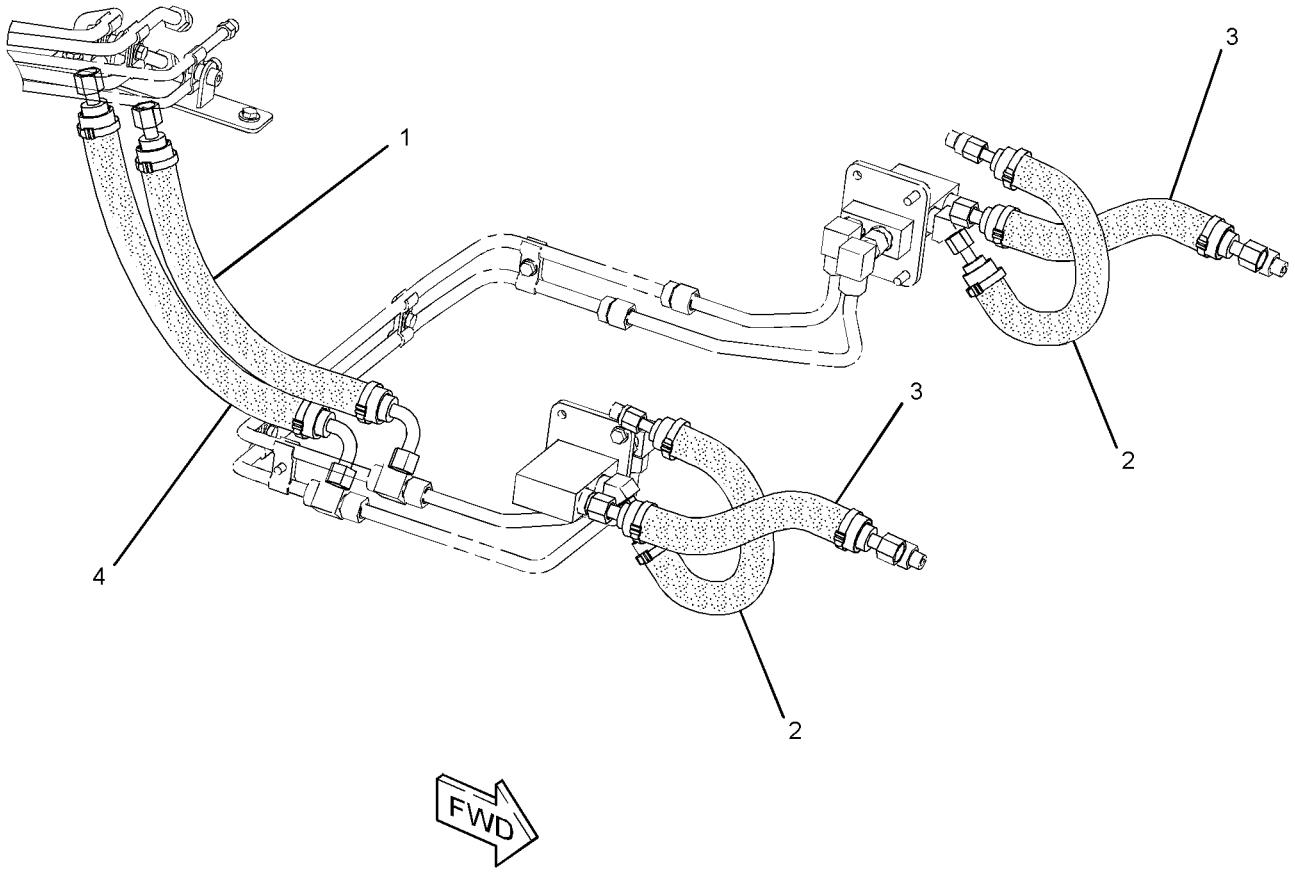

GRAPHIC #1 **<END>** g02027554

HYDRAULIC SYSTEM

254-1371 LINES GP-PRESSURE TEST

S/N: JTD1-UP; FFF1-UP; LLL1-UP

PART OF 244-7382, 244-7445, 286-3235 POWER TRAIN AR

SMCS-5057 **i03438040**

NOTE	REF NO	GRAPHIC REF	PART NUMBER	QTY	PART NAME 1 2 3 4 5 6 (PRODUCT LEVEL)	SEE PAGE
	1	1	**6V-0852**	4	CAP-DUST	
	2	1	**7X-7945**	4	ADAPTER	
	4	1	**111-4837**	1	CLIP	
	5	1	**187-3547**	1	COUPLER AS-QUICK DISCONNECT (FRONT PUMP, MA PORT)	
	5A	1	**187-3547**	1	COUPLER AS-QUICK DISCONNECT (REAR PUMP, MA PORT)	
	6	1	**187-9008**	2	CAP-DUST	
	7	1	**193-3973**	1	STRAP-CABLE	
	8	1	**261-8513**	1	HOSE AS	
	9	1	**261-8514**	1	HOSE AS	
	10	1	**261-8515**	1	HOSE AS	
	11	1	**263-0971**	1	HOSE AS	
	14	1	**283-9797**	1	PLATE	
	17	1	*148-8351*	1	ELBOW AS	
		1	**4J-5477**	1	SEAL-O-RING	
		1	**6V-9849**	1	ELBOW	
	18	1	*148-8367*	1	ELBOW AS	
		1	**6V-8397**	1	SEAL-O-RING	
		1	**6V-9850**	1	ELBOW	
	19	1	*148-8369*	1	ELBOW AS (REAR PUMP, MA PORT)	
	19A	1	*148-8369*	1	ELBOW AS (FRONT PUMP, MA PORT)	
					(EACH INCLUDES)	
		1	**3J-7354**	1	SEAL-O-RING	
		1	**4J-5477**	1	SEAL-O-RING	
		1	**6V-8628**	1	ELBOW	
	20	1	*148-8439*	1	TEE AS (FRONT PUMP, G PORT)	
		1	**3J-1907**	1	SEAL-O-RING	
		1	**6V-8397**	2	SEAL-O-RING	
		1	**6V-8774**	1	TEE	
	21	1	**2P-1279**	4	LOCKNUT (9/16-18-THD)	
	22	1	**3J-1907**	6	SEAL-O-RING	
	23	1	**4J-5477**	4	SEAL-O-RING	
	24	1	**5P-4116**	2	WASHER-HARD (8.8X20.5X2-MM THK)	
	25	1	**6K-8179**	2	CLIP	
	26	1	**6V-3965**	1	FITTING (QUICK DISCONNECT) (REAR PUMP, G PORT)	
	26A	1	**6V-3965**	1	FITTING (QUICK DISCONNECT) (FRONT PUMP, G PORT)	
	26B	1	**6V-3965**	1	FITTING (QUICK DISCONNECT) (RIGHT MOTOR, BRAKE PRESS PORT)	
	26C	1	**6V-3965**	1	FITTING (QUICK DISCONNECT) (IMPLEMENT VALVE, P PORT)	
M	27	1	**7X-2536**	1	BOLT (M8X1.25X14-MM)	
	28	1	**8T-4121**	2	WASHER-HARD (11X21X2.5-MM THK)	
M	29	1	**8T-4136**	2	BOLT (M10X1.5X25-MM)	
M	32	1	**8T-4189**	1	BOLT (M8X1.25X20-MM)	
	34	1	*241-6215*	1	ELBOW AS (IMPLEMENT VALVE, P PORT)	
		1	**3J-1907**	1	SEAL-O-RING	
		1	**6V-8076**	1	ELBOW	

M-METRIC PART

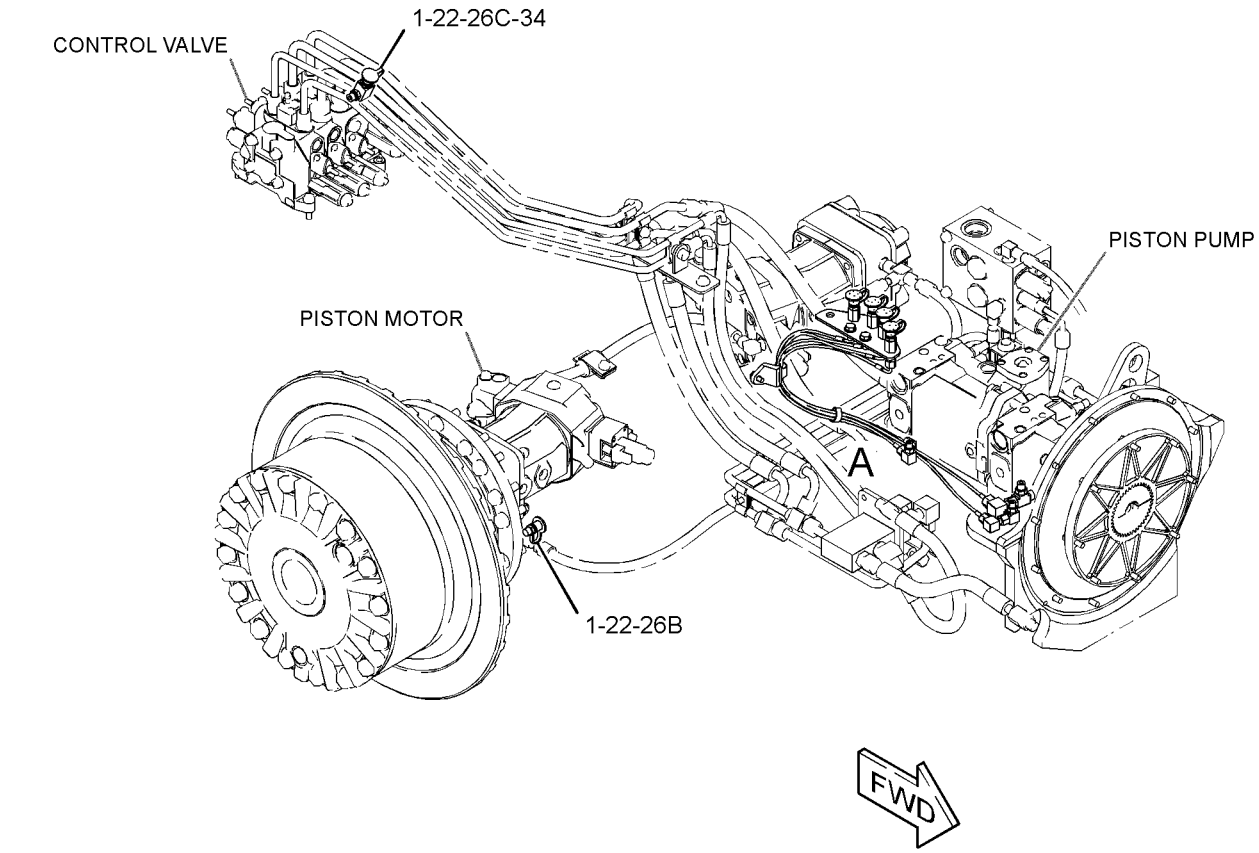

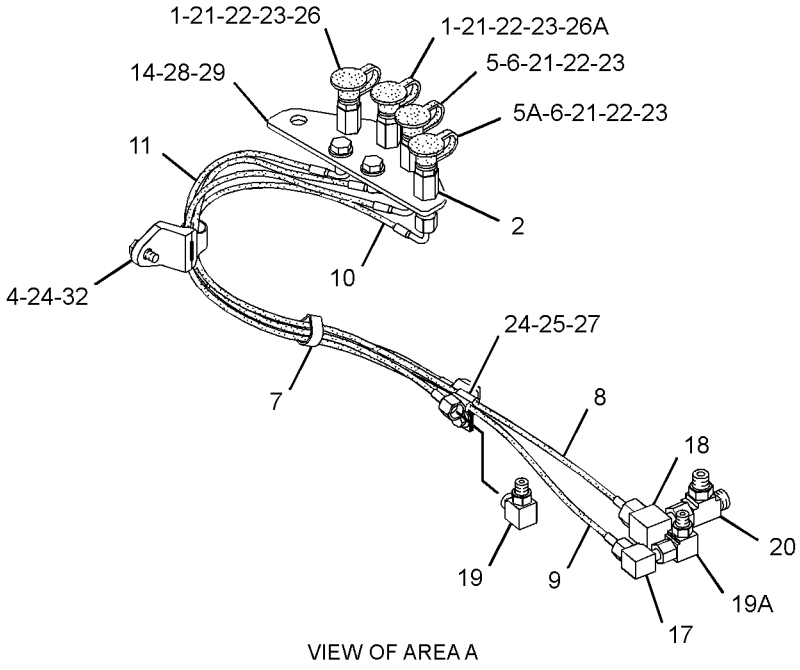

VIEW OF AREA A

GRAPHIC #1 **<END>** g01702553

HYDRAULIC SYSTEM

328-8600 LINES GP-PRESSURE TEST

S/N: JTD1-UP; FFF1-UP; LLL1-UP
PART OF 325-6541, 325-6542, 325-6547 CONVERSION AR-MACHINE OPTION
AN ATTACHMENT

SMCS-5057 **i03664467**

NOTE	REF NO	GRAPHIC REF	PART NUMBER	QTY	PART NAME 1 2 3 4 5 6 (PRODUCT LEVEL)	SEE PAGE
	1	1	**111-4838**	1	CLIP	
	2	1	**204-2281**	1	STRAP-CABLE	
	3	1	*328-8614*	1	HOSE AS	
B		1	**268-4412**		TAPE-INSULATOR	
		1	**261-8513**	1	HOSE AS	
E		1	**324-9705**		INSULATION (79-CM)	
	4	1	*328-8615*	1	HOSE AS	
B		1	**268-4412**		TAPE-INSULATOR	
		1	**261-8514**	1	HOSE AS	
E		1	**324-9705**		INSULATION (86-CM)	
	5	1	*328-8616*	1	HOSE AS	
B		1	**268-4412**		TAPE-INSULATOR	
		1	**261-8515**	1	HOSE AS	
E		1	**324-9705**		INSULATION (61-CM)	
	6	1	*328-8617*	1	HOSE AS	
B		1	**268-4412**		TAPE-INSULATOR	
		1	**263-0971**	1	HOSE AS	
E		1	**324-9705**		INSULATION (51-CM)	
	7	1	**095-0913**	2	CLIP	

B-USE AS REQUIRED
E-ORDER BY THE CENTIMETER

328-8600 **LINES GP-PRESSURE TEST** *(contd.)* **i03664467**

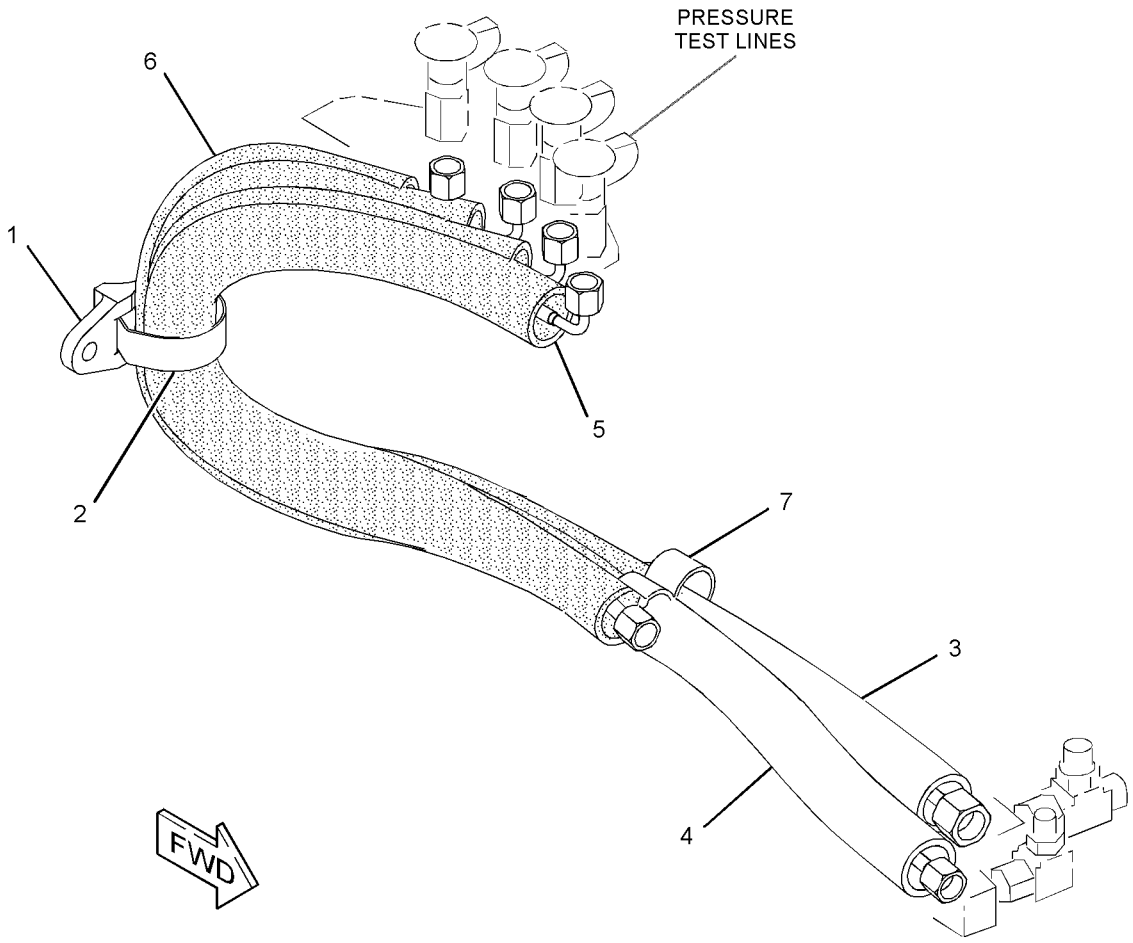

GRAPHIC #1 **<END>** g02023895

HYDRAULIC SYSTEM

244-7422 LINES GP-PUMP

S/N: JTD1-175; FFF1-562; LLL1-685
PART OF 264-4541, 264-4542, 325-6522, 325-6525 HYDRAULIC AR
AN ATTACHMENT

SMCS-5057 **i02678196**

NOTE	REF NO	GRAPHIC REF	PART NUMBER	QTY	PART NAME 1 2 3 4 5 6 (PRODUCT LEVEL)	SEE PAGE
	1	1	**1Y-3818**	1	VALVE-DRAIN	
	2	1	**119-5708**	1	CLIP	
I	3	1	**163-4520**	1	HOSE AS	
	4	1	*205-4132*	1	CONNECTOR AS	
		1	**8T-8985**	1	CONNECTOR	
		1	**2S-4078**	1	SEAL-O-RING	
		1	**8T-0315**	1	SEAL-O-RING	
I	5	1	**248-6220**	1	HOSE AS	
I	6	1	**256-7765**	1	HOSE AS	
	7	1	**257-1108**	1	TUBE AS	
	8	1	**261-8499**	1	TUBE AS	
I	9	1	**261-8500**	1	HOSE AS	
	10	1	**261-8505**	1	TUBE AS	
	11	1	**261-8506**	1	TUBE AS	
	12	1	**263-9720**	1	TUBE AS	
	13	1	*268-1507*	1	CONNECTOR AS	
		1	**268-1506**	1	CONNECTOR	
		1	**7M-8485**	1	SEAL-O-RING	
		1	**8T-0315**	1	SEAL-O-RING	
	14	1	**276-4671**	1	TUBE AS	
	15	1	**282-5064**	1	TUBE AS	
I	16	1	**303-6584**	1	HOSE AS	
	17	1	**303-6593**	1	TUBE AS	
	18	1	**308-7677**	1	CONNECTOR-FILTER	
	19	1	*148-8327*	3	CONNECTOR AS	
					(EACH INCLUDES)	
		1	**6V-8637**	1	CONNECTOR	
		1	**3D-2824**	1	SEAL-O-RING	
		1	**6V-9746**	1	SEAL-O-RING	
	20	1	*148-8336*	1	CONNECTOR AS	
		1	**6V-8636**	1	CONNECTOR	
		1	**3J-1907**	1	SEAL-O-RING	
		1	**6V-8397**	1	SEAL-O-RING	
	21	1	*148-8347*	1	ELBOW AS	
		1	**6V-9007**	1	ELBOW	
		1	**3D-2824**	1	SEAL-O-RING	
		1	**6V-9746**	1	SEAL-O-RING	
	22	1	*148-8367*	1	ELBOW AS	
		1	**6V-9850**	1	ELBOW	
		1	**6V-8397**	1	SEAL-O-RING	
	23	1	*148-8383*	1	ELBOW AS	
		1	**8T-1683**	1	ELBOW	
		1	**3K-0360**	1	SEAL-O-RING	
		1	**6V-8397**	1	SEAL-O-RING	
	24	1	**3J-1907**	1	SEAL-O-RING	
	25	1	**4H-7655**	4	CLAMP-TUBE	
	26	1	**5P-9297**	4	CLIP	
	27	1	**6V-8397**	5	SEAL-O-RING	
	28	1	**6V-9746**	4	SEAL-O-RING	
	29	1	**7X-7729**	1	WASHER (11X25X3-MM THK)	
	30	1	**8M-2773**	1	CLIP	
	31	1	**8T-1887**	2	CLIP (SLOT)	
	32	1	**8T-1888**	2	CLIP (TAB)	
	33	1	**8T-4121**	9	WASHER-HARD (11X21X2.5-MM THK)	
M	34	1	**8T-4136**	2	BOLT (M10X1.5X25-MM)	

244-7422 **LINES GP-PUMP** *(contd.)* **i02678196**

NOTE	REF NO	GRAPHIC REF	PART NUMBER	QTY	PART NAME 1 2 3 4 5 6 (PRODUCT LEVEL)	SEE PAGE
M	35	1	**8T-4137**	7	BOLT (M10X1.5X20-MM)	
M	36	1	**8T-4191**	1	BOLT (M10X1.5X16-MM)	

I-REFER TO HYDRAULIC INFORMATION SYSTEM
M-METRIC PART

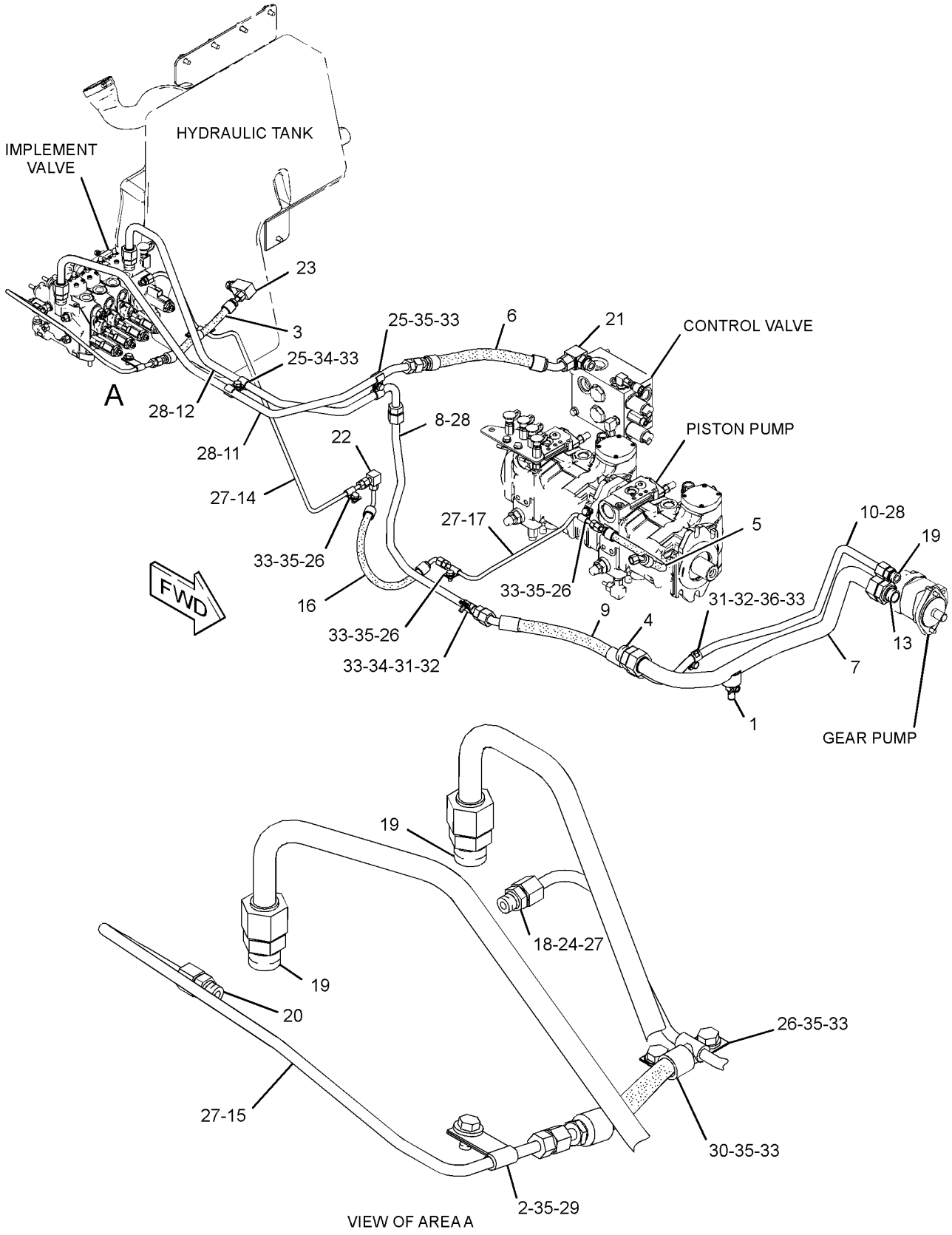

GRAPHIC #1 **<END>** g01375902

HYDRAULIC SYSTEM

244-7422 LINES GP-PUMP

S/N: JTD176-UP; FFF563-UP; LLL686-UP
PART OF 264-4541, 264-4542, 325-6522, 325-6525 HYDRAULIC AR
AN ATTACHMENT

SMCS-5057 **i03879909**

NOTE	REF NO	GRAPHIC REF	PART NUMBER	QTY	PART NAME 1 2 3 4 5 6 (PRODUCT LEVEL)	SEE PAGE
C	1	1	**6V-7238**	1	VALVE-SHUTOFF (HYDRAULIC TANK)	
	2	1	**119-5708**	1	CLIP	
I	3	1	**163-4520**	1	HOSE AS	
	4	1	*205-4132*	1	CONNECTOR AS	
		1	**8T-8985**	1	CONNECTOR	
		1	**2S-4078**	1	SEAL-O-RING	
		1	**8T-0315**	1	SEAL-O-RING	
I	5	1	**248-6220**	1	HOSE AS	
I	6	1	**256-7765**	1	HOSE AS	
C	7	1	**329-5347**	1	TUBE AS	
	8	1	**261-8499**	1	TUBE AS	
I	9	1	**261-8500**	1	HOSE AS	
	10	1	**261-8505**	1	TUBE AS	
	11	1	**261-8506**	1	TUBE AS	
	12	1	**263-9720**	1	TUBE AS	
	13	1	*268-1507*	1	CONNECTOR AS	
		1	**268-1506**	1	CONNECTOR	
		1	**7M-8485**	1	SEAL-O-RING	
		1	**8T-0315**	1	SEAL-O-RING	
	14	1	**276-4671**	1	TUBE AS	
	15	1	**282-5064**	1	TUBE AS	
I	16	1	**303-6584**	1	HOSE AS	
	17	1	**303-6593**	1	TUBE AS	
	18	1	**308-7677**	1	CONNECTOR-FILTER	
	19	1	*148-8327*	3	CONNECTOR AS	
					(EACH INCLUDES)	
		1	**6V-8637**	1	CONNECTOR	
		1	**3D-2824**	1	SEAL-O-RING	
		1	**6V-9746**	1	SEAL-O-RING	
	20	1	*148-8336*	1	CONNECTOR AS	
		1	**6V-8636**	1	CONNECTOR	
		1	**3J-1907**	1	SEAL-O-RING	
		1	**6V-8397**	1	SEAL-O-RING	
	21	1	*148-8347*	1	ELBOW AS	
		1	**6V-9007**	1	ELBOW	
		1	**3D-2824**	1	SEAL-O-RING	
		1	**6V-9746**	1	SEAL-O-RING	
	22	1	*148-8367*	1	ELBOW AS	
		1	**6V-9850**	1	ELBOW	
		1	**6V-8397**	1	SEAL-O-RING	
	23	1	*148-8383*	1	ELBOW AS	
		1	**8T-1683**	1	ELBOW	
		1	**3K-0360**	1	SEAL-O-RING	
		1	**6V-8397**	1	SEAL-O-RING	
	24	1	**3J-1907**	1	SEAL-O-RING	
	25	1	**4H-7655**	4	CLAMP-TUBE	
	26	1	**5P-9297**	4	CLIP	
	27	1	**6V-8397**	5	SEAL-O-RING	
	28	1	**6V-9746**	4	SEAL-O-RING	
	29	1	**7X-7729**	1	WASHER (11X25X3-MM THK)	
	30	1	**8M-2773**	1	CLIP	
	31	1	**8T-1887**	2	CLIP (SLOT)	
	32	1	**8T-1888**	2	CLIP (TAB)	
	33	1	**8T-4121**	9	WASHER-HARD (11X21X2.5-MM THK)	
M	34	1	**8T-4136**	2	BOLT (M10X1.5X25-MM)	

244-7422 **LINES GP-PUMP** *(contd.)* **i03879909**

NOTE	REF NO	GRAPHIC REF	PART NUMBER	QTY	PART NAME 1 2 3 4 5 6 (PRODUCT LEVEL)	SEE PAGE
M	35	1	**8T-4137**	7	BOLT (M10X1.5X20-MM)	
M	36	1	**8T-4191**	1	BOLT (M10X1.5X16-MM)	
C	37	1	**3K-0360**	1	SEAL-O-RING	

C-CHANGE FROM PREVIOUS TYPE
I-REFER TO HYDRAULIC INFORMATION SYSTEM
M-METRIC PART

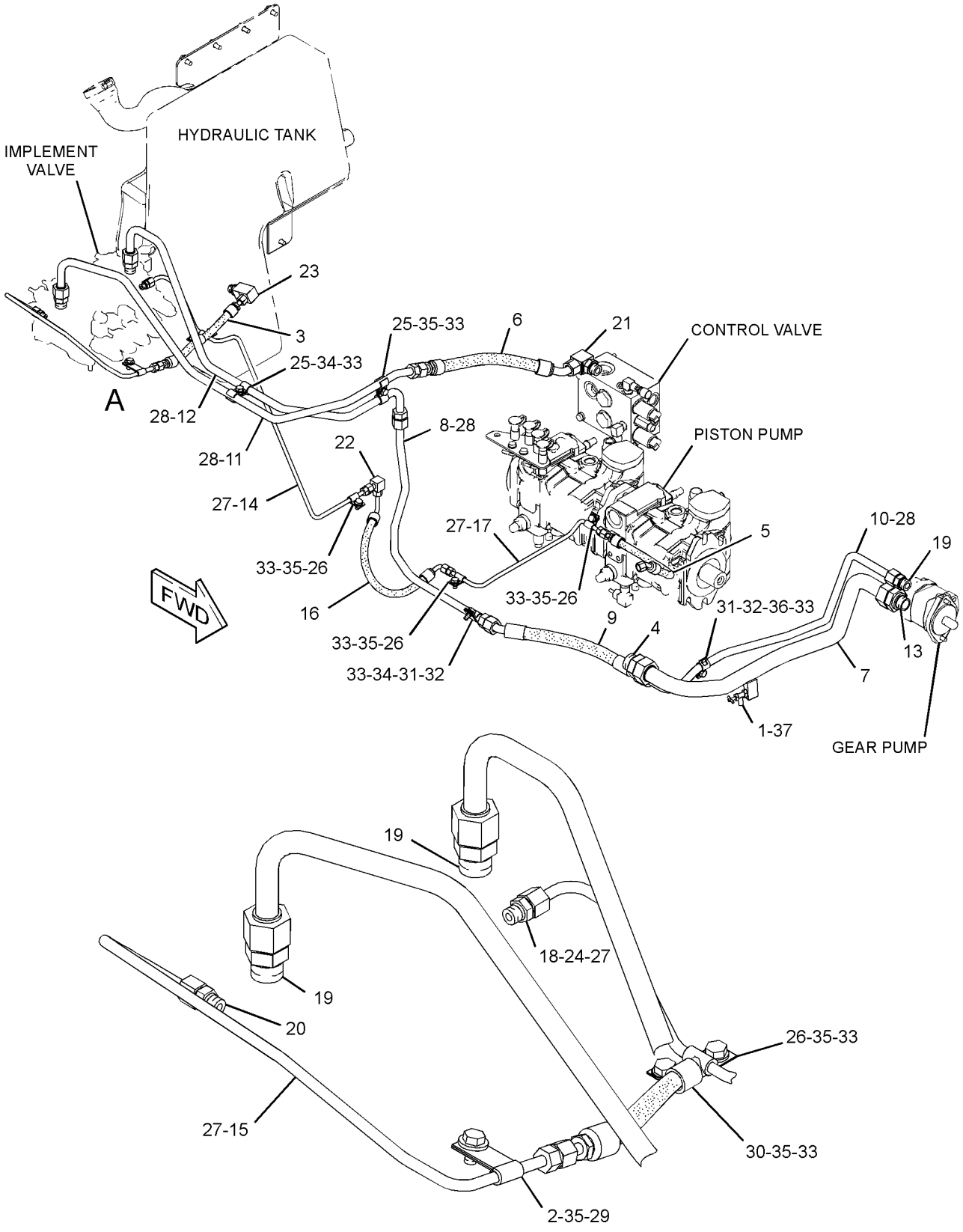

VIEW OF AREA A

GRAPHIC #1 **<END>** g02126662

HYDRAULIC SYSTEM

283-3512 LINES GP-PUMP

S/N: JTD1-175; FFF1-562; LLL1-685
PART OF 264-4540 HYDRAULIC AR
AN ATTACHMENT

SMCS-5057 **i02685905**

NOTE	REF NO	GRAPHIC REF	PART NUMBER	QTY	PART NAME 1 2 3 4 5 6 (PRODUCT LEVEL)	SEE PAGE
	1	1	**1Y-3818**	1	VALVE-DRAIN	
	2	1	*205-4132*	1	CONNECTOR AS	
		1	**2S-4078**	1	SEAL-O-RING	
		1	**8T-0315**	1	SEAL-O-RING	
		1	**8T-8985**	1	CONNECTOR	
I	3	1	**248-6220**	1	HOSE AS	
I	4	1	**256-7765**	1	HOSE AS	
	5	1	**257-1108**	1	TUBE AS	
	6	1	**261-8499**	1	TUBE AS	
I	7	1	**261-8500**	1	HOSE AS	
	8	1	**261-8505**	1	TUBE AS	
	9	1	**263-9720**	1	TUBE AS	
	10	1	*268-1507*	1	CONNECTOR AS	
		1	**7M-8485**	1	SEAL-O-RING	
		1	**8T-0315**	1	SEAL-O-RING	
		1	**268-1506**	1	CONNECTOR	
	11	1	**276-4671**	1	TUBE AS	
	12	1	**283-3515**	1	TUBE AS	
I	13	1	**283-3516**	1	HOSE AS	
I	14	1	**303-6584**	1	HOSE AS	
	15	1	**303-6593**	1	TUBE AS	
	16	1	**308-7677**	1	CONNECTOR-FILTER	
	17	1	*148-8327*	3	CONNECTOR AS	
					(EACH INCLUDES)	
		1	**3D-2824**	1	SEAL-O-RING	
		1	**6V-8637**	1	CONNECTOR	
		1	**6V-9746**	1	SEAL-O-RING	
	18	1	*148-8336*	1	CONNECTOR AS	
		1	**3J-1907**	1	SEAL-O-RING	
		1	**6V-8397**	1	SEAL-O-RING	
		1	**6V-8636**	1	CONNECTOR	
	19	1	*148-8347*	1	ELBOW AS	
		1	**3D-2824**	1	SEAL-O-RING	
		1	**6V-9007**	1	ELBOW	
		1	**6V-9746**	1	SEAL-O-RING	
	20	1	*148-8367*	2	ELBOW AS	
					(EACH INCLUDES)	
		1	**6V-8397**	1	SEAL-O-RING	
		1	**6V-9850**	1	ELBOW	
	21	1	*148-8383*	1	ELBOW AS	
		1	**3K-0360**	1	SEAL-O-RING	
		1	**6V-8397**	1	SEAL-O-RING	
		1	**8T-1683**	1	ELBOW	
	22	1	**3J-1907**	1	SEAL-O-RING	
	23	1	**4H-7655**	4	CLAMP-TUBE	
	24	1	**5P-9297**	4	CLIP	
	25	1	**6V-8397**	4	SEAL-O-RING	
	26	1	**6V-9746**	4	SEAL-O-RING	
	27	1	**8M-2773**	2	CLIP	
	28	1	**8T-1887**	2	CLIP (SLOT)	
	29	1	**8T-1888**	2	CLIP (TAB)	
	30	1	**8T-4121**	10	WASHER-HARD (11X21X2.5-MM THK)	
M	31	1	**8T-4136**	2	BOLT (M10X1.5X25-MM)	
M	32	1	**8T-4137**	7	BOLT (M10X1.5X20-MM)	
M	33	1	**8T-4191**	1	BOLT (M10X1.5X16-MM)	

283-3512 **LINES GP-PUMP** *(contd.)* **i02685905**

I-REFER TO HYDRAULIC INFORMATION SYSTEM
M-METRIC PART

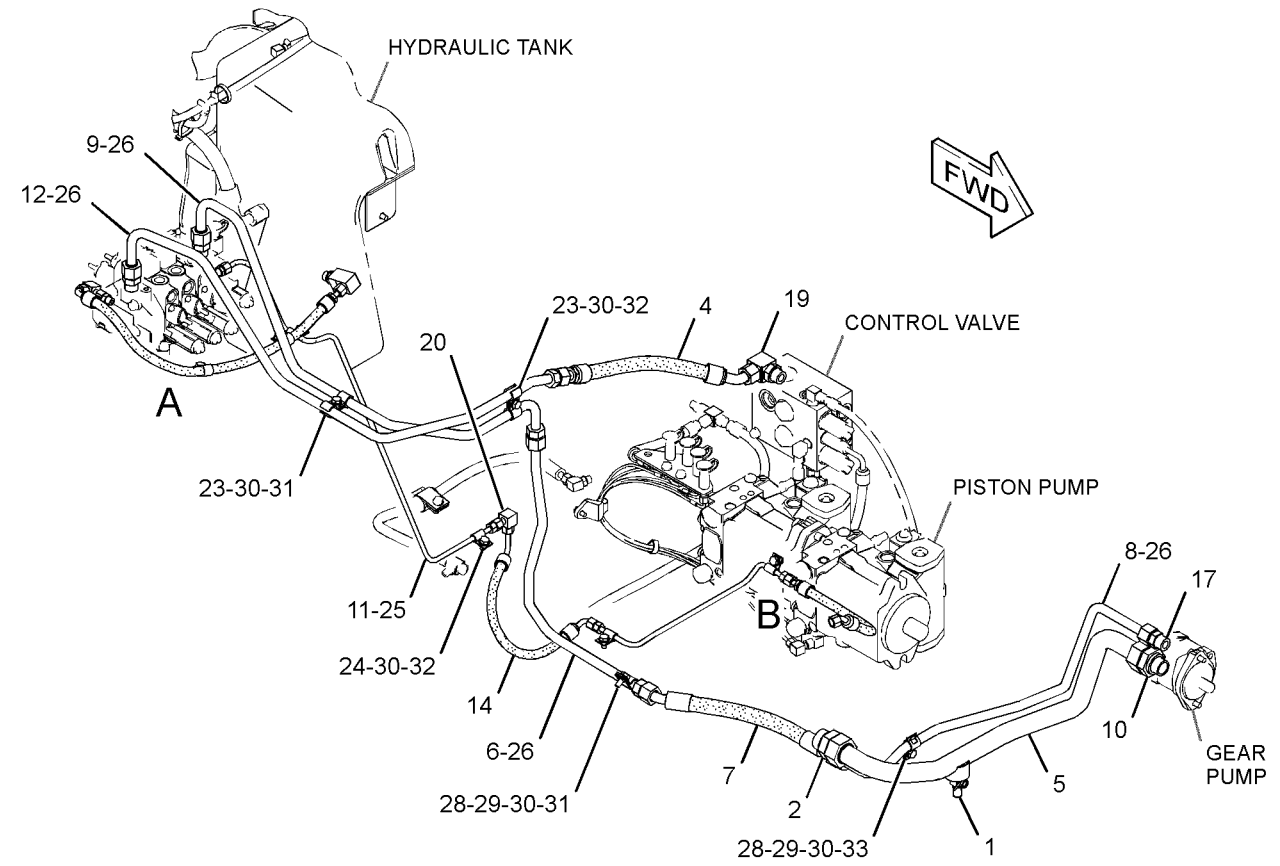

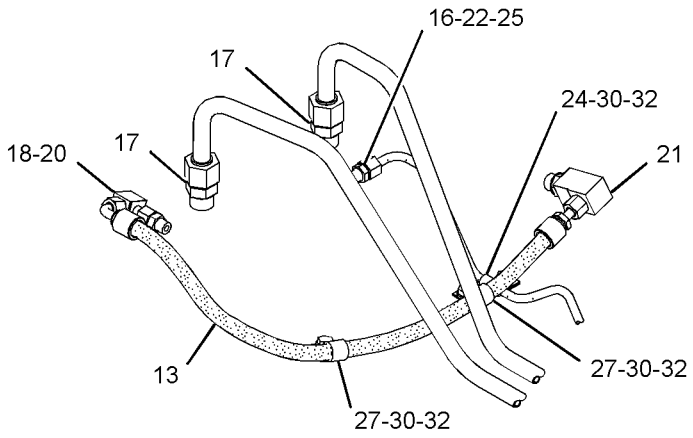

VIEW OF AREA A

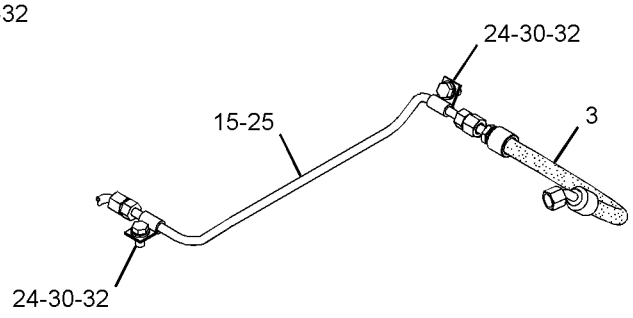

VIEW OF AREA B

GRAPHIC #1 **<END>** g01366470

HYDRAULIC SYSTEM

283-3512 LINES GP-PUMP

S/N: JTD176-UP; FFF563-UP; LLL686-UP
PART OF 264-4540 HYDRAULIC AR
AN ATTACHMENT

SMCS-5057 **i03808669**

NOTE	REF NO	GRAPHIC REF	PART NUMBER	QTY	PART NAME 1 2 3 4 5 6 (PRODUCT LEVEL)	SEE PAGE
C	1	1	**6V-7238**	1	VALVE-SHUTOFF (HYDRAULIC TANK)	
	2	1	*205-4132*	1	CONNECTOR AS	
		1	**2S-4078**	1	SEAL-O-RING	
		1	**8T-0315**	1	SEAL-O-RING	
		1	**8T-8985**	1	CONNECTOR	
I	3	1	**248-6220**	1	HOSE AS	
I	4	1	**256-7765**	1	HOSE AS	
C	5	1	**329-5347**	1	TUBE AS	
	6	1	**261-8499**	1	TUBE AS	
I	7	1	**261-8500**	1	HOSE AS	
	8	1	**261-8505**	1	TUBE AS	
	9	1	**263-9720**	1	TUBE AS	
	10	1	*268-1507*	1	CONNECTOR AS	
		1	**7M-8485**	1	SEAL-O-RING	
		1	**8T-0315**	1	SEAL-O-RING	
		1	**268-1506**	1	CONNECTOR	
	11	1	**276-4671**	1	TUBE AS	
	12	1	**283-3515**	1	TUBE AS	
I	13	1	**283-3516**	1	HOSE AS	
I	14	1	**303-6584**	1	HOSE AS	
	15	1	**303-6593**	1	TUBE AS	
	16	1	**308-7677**	1	CONNECTOR-FILTER	
	17	1	*148-8327*	3	CONNECTOR AS	
					(EACH INCLUDES)	
		1	**3D-2824**	1	SEAL-O-RING	
		1	**6V-8637**	1	CONNECTOR	
		1	**6V-9746**	1	SEAL-O-RING	
	18	1	*148-8336*	1	CONNECTOR AS	
		1	**3J-1907**	1	SEAL-O-RING	
		1	**6V-8397**	1	SEAL-O-RING	
		1	**6V-8636**	1	CONNECTOR	
	19	1	*148-8347*	1	ELBOW AS	
		1	**3D-2824**	1	SEAL-O-RING	
		1	**6V-9007**	1	ELBOW	
		1	**6V-9746**	1	SEAL-O-RING	
	20	1	*148-8367*	2	ELBOW AS	
					(EACH INCLUDES)	
		1	**6V-8397**	1	SEAL-O-RING	
		1	**6V-9850**	1	ELBOW	
	21	1	*148-8383*	1	ELBOW AS	
		1	**3K-0360**	1	SEAL-O-RING	
		1	**6V-8397**	1	SEAL-O-RING	
		1	**8T-1683**	1	ELBOW	
	22	1	**3J-1907**	1	SEAL-O-RING	
	23	1	**4H-7655**	4	CLAMP-TUBE	
	24	1	**5P-9297**	4	CLIP	
	25	1	**6V-8397**	4	SEAL-O-RING	
	26	1	**6V-9746**	4	SEAL-O-RING	
	27	1	**8M-2773**	2	CLIP	
	28	1	**8T-1887**	2	CLIP (SLOT)	
	29	1	**8T-1888**	2	CLIP (TAB)	
	30	1	**8T-4121**	10	WASHER-HARD (11X21X2.5-MM THK)	
M	31	1	**8T-4136**	2	BOLT (M10X1.5X25-MM)	
M	32	1	**8T-4137**	7	BOLT (M10X1.5X20-MM)	
M	33	1	**8T-4191**	1	BOLT (M10X1.5X16-MM)	

283-3512 **LINES GP-PUMP** *(contd.)* **i03808669**

NOTE	REF NO	GRAPHIC REF	PART NUMBER	QTY	PART NAME 1 2 3 4 5 6 (PRODUCT LEVEL)	SEE PAGE
C	34	1	**3K-0360**	1	SEAL-O-RING	

C-CHANGE FROM PREVIOUS TYPE
I-REFER TO HYDRAULIC INFORMATION SYSTEM
M-METRIC PART

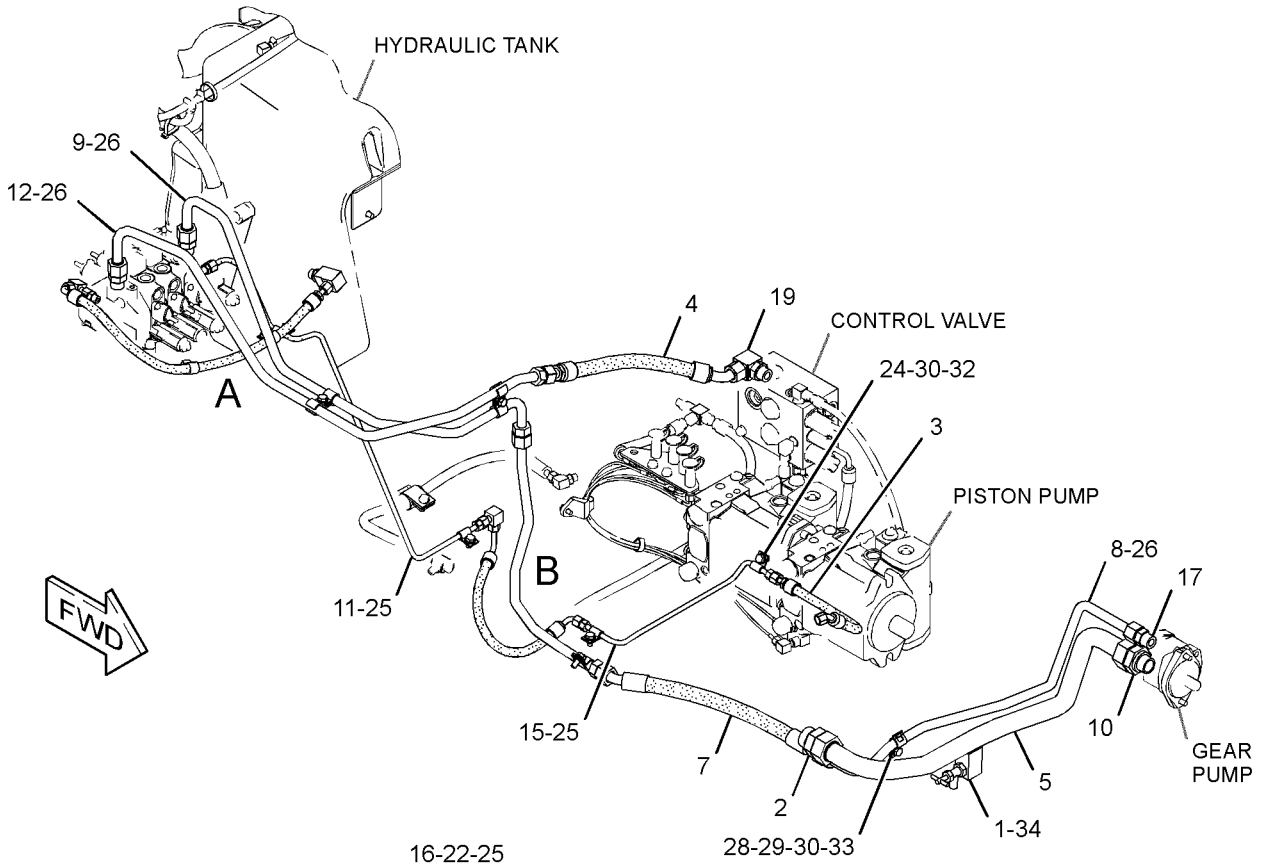

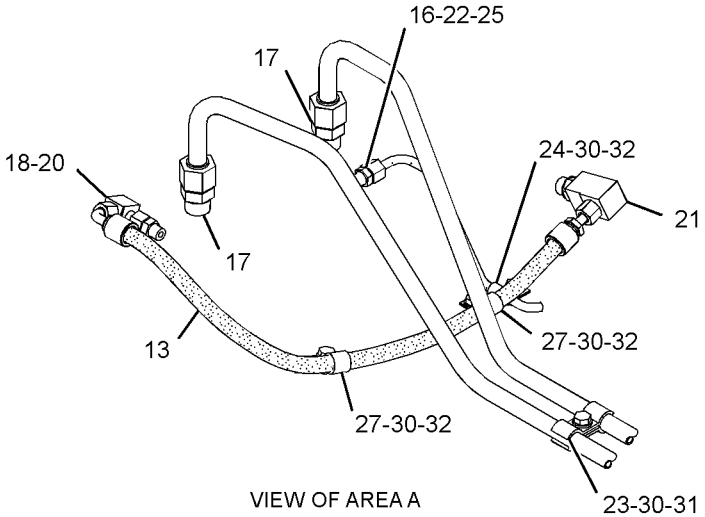

VIEW OF AREA A

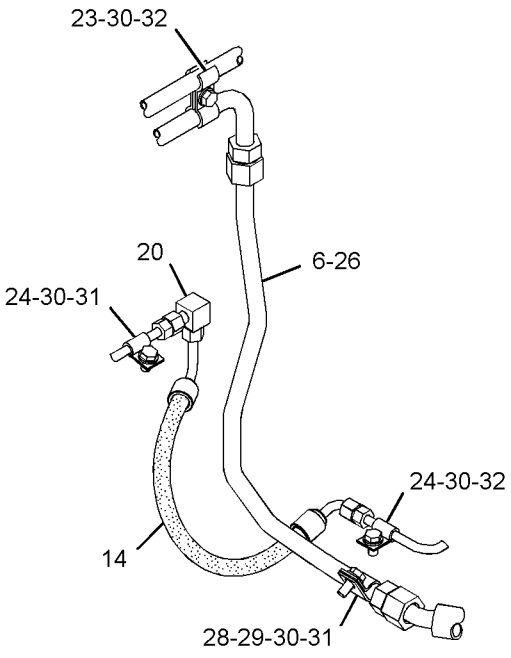

VIEW OF AREA B

GRAPHIC #1 **<END>** g02050215

HYDRAULIC SYSTEM

325-7274 LINES GP-PUMP

S/N: JTD1-UP; FFF1-UP; LLL1-UP
PART OF 325-6521, 325-6528 HYDRAULIC AR
AN ATTACHMENT

SMCS-5057 **i03738081**

NOTE	REF NO	GRAPHIC REF	PART NUMBER	QTY	PART NAME 1 2 3 4 5 6 (PRODUCT LEVEL)	SEE PAGE
	1	1	**6V-7238**	1	VALVE-SHUTOFF (IMPLEMENT PUMP)	
	2	1	**119-5708**	1	CLIP	
I	3	1	**163-4520**	1	HOSE AS	
	4	1	*205-4132*	1	CONNECTOR AS	
		1	**2S-4078**	1	SEAL-O-RING	
		1	**8T-0315**	1	SEAL-O-RING	
		1	**8T-8985**	1	CONNECTOR	
I	5	1	**248-6220**	1	HOSE AS	
I	6	1	**256-7765**	1	HOSE AS	
	7	1	**261-8499**	1	TUBE AS	
I	8	1	**261-8500**	1	HOSE AS	
	9	1	**261-8505**	1	TUBE AS	
	10	1	**263-9720**	1	TUBE AS	
	11	1	*268-1507*	1	CONNECTOR AS	
		1	**7M-8485**	1	SEAL-O-RING	
		1	**8T-0315**	1	SEAL-O-RING	
		1	**268-1506**	1	CONNECTOR	
	12	1	**276-4671**	1	TUBE AS	
I	13	1	**303-6584**	1	HOSE AS	
	14	1	**303-6593**	1	TUBE AS	
	15	1	**308-7677**	1	CONNECTOR-FILTER	
	16	1	**327-6742**	1	TUBE AS	
	17	1	**327-6743**	1	TUBE AS	
	18	1	**329-5347**	1	TUBE AS	
	19	1	*148-8327*	3	CONNECTOR AS	
					(EACH INCLUDES)	
		1	**3D-2824**	1	SEAL-O-RING	
		1	**6V-8637**	1	CONNECTOR	
		1	**6V-9746**	1	SEAL-O-RING	
	20	1	*148-8336*	1	CONNECTOR AS	
		1	**3J-1907**	1	SEAL-O-RING	
		1	**6V-8397**	1	SEAL-O-RING	
		1	**6V-8636**	1	CONNECTOR	
	21	1	*148-8347*	1	ELBOW AS	
		1	**3D-2824**	1	SEAL-O-RING	
		1	**6V-9007**	1	ELBOW	
		1	**6V-9746**	1	SEAL-O-RING	
	22	1	*148-8367*	1	ELBOW AS	
		1	**6V-8397**	1	SEAL-O-RING	
		1	**6V-9850**	1	ELBOW	
	23	1	*148-8383*	1	ELBOW AS	
		1	**3K-0360**	1	SEAL-O-RING	
		1	**6V-8397**	1	SEAL-O-RING	
		1	**8T-1683**	1	ELBOW	
	24	1	**3J-1907**	1	SEAL-O-RING	
	25	1	**3K-0360**	1	SEAL-O-RING	
	26	1	**4H-7655**	4	CLAMP-TUBE	
	27	1	**5P-9297**	4	CLIP	
	28	1	**6V-8397**	5	SEAL-O-RING	
	29	1	**6V-9746**	4	SEAL-O-RING	
	30	1	**7X-7729**	1	WASHER (11X25X3-MM THK)	
	31	1	**8M-2773**	1	CLIP	
	32	1	**8T-1887**	2	CLIP (SLOT)	
	33	1	**8T-1888**	2	CLIP (TAB)	
	34	1	**8T-4121**	9	WASHER-HARD (11X21X2.5-MM THK)	

325-7274 **LINES GP-PUMP** *(contd.)* **i03738081**

NOTE	REF NO	GRAPHIC REF	PART NUMBER	QTY	PART NAME 1 2 3 4 5 6 (PRODUCT LEVEL)	SEE PAGE
M	35	1	**8T-4136**	2	BOLT (M10X1.5X25-MM)	
M	36	1	**8T-4137**	7	BOLT (M10X1.5X20-MM)	
M	37	1	**8T-4191**	1	BOLT (M10X1.5X16-MM)	

I-REFER TO HYDRAULIC INFORMATION SYSTEM
M-METRIC PART

325-7274 **LINES GP-PUMP** *(contd.)* **i03738081**

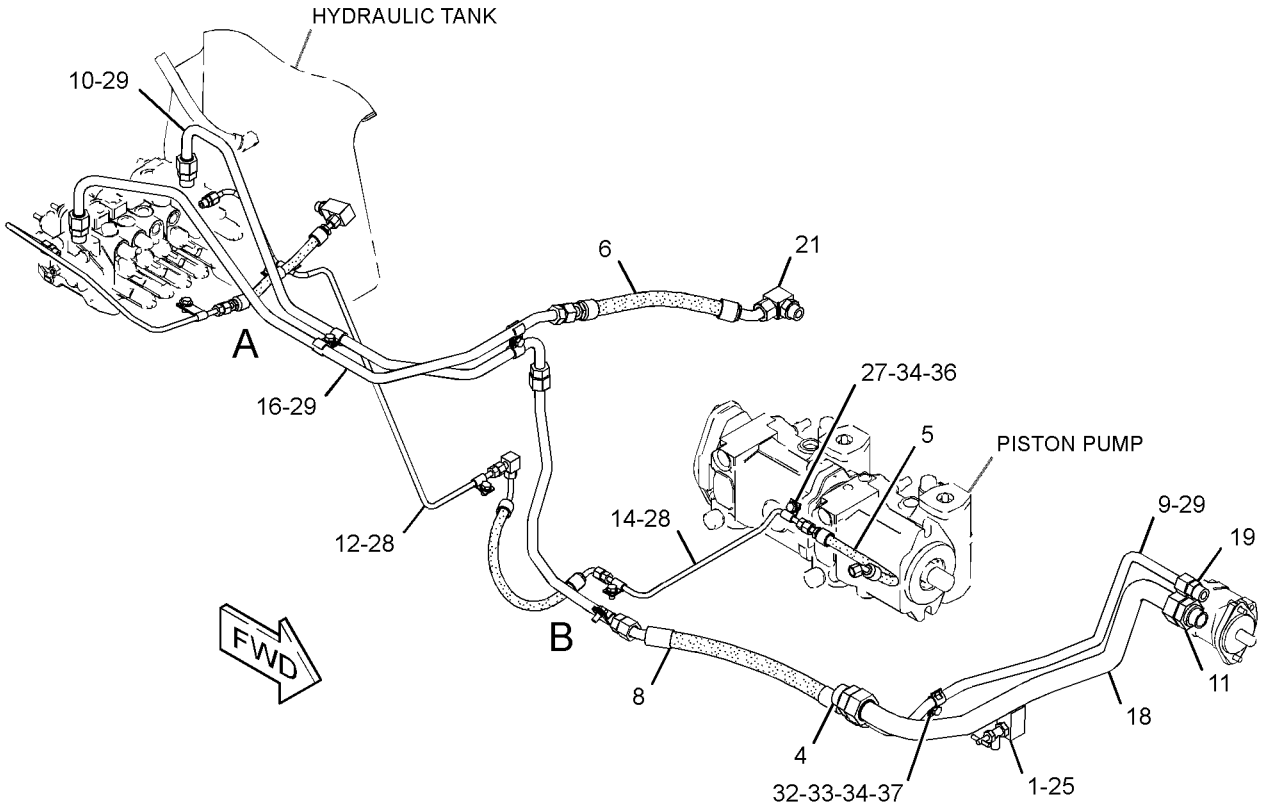

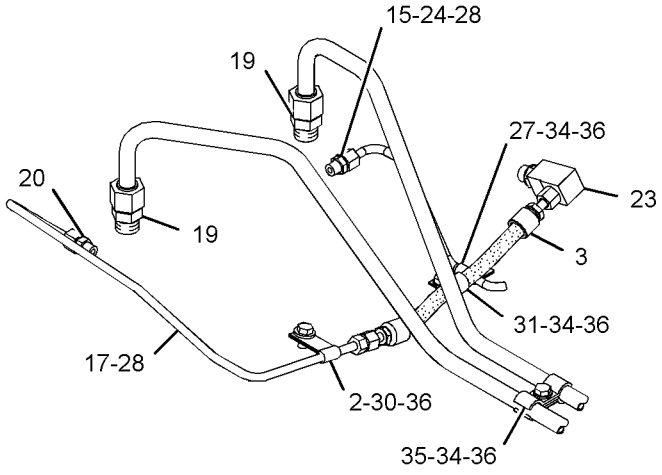

VIEW OF AREA A

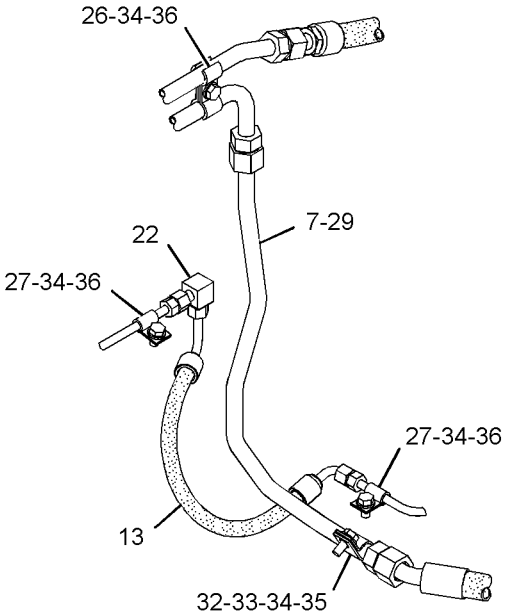

VIEW OF AREA B

GRAPHIC #1 **<END>** g02049515

HYDRAULIC SYSTEM

327-3392 LINES GP-PUMP

S/N: JTD1-UP; FFF1-UP; LLL1-UP
PART OF 325-6541, 325-6542, 325-6547 CONVERSION AR-MACHINE OPTION
AN ATTACHMENT

SMCS-5057 **i03664468**

NOTE	REF NO	GRAPHIC REF	PART NUMBER	QTY	PART NAME 1 2 3 4 5 6 (PRODUCT LEVEL)	SEE PAGE
I	1	1	**325-0501**	1	HOSE AS	
I	2	1	**327-3395**	1	HOSE AS	
I	3	1	**327-8912**	1	HOSE AS	
I	4	1	**327-8914**	1	HOSE AS	
I	5	1	**328-8627**	1	HOSE AS	
	6	1	**6V-1889**	1	CLIP	

I-REFER TO HYDRAULIC INFORMATION SYSTEM

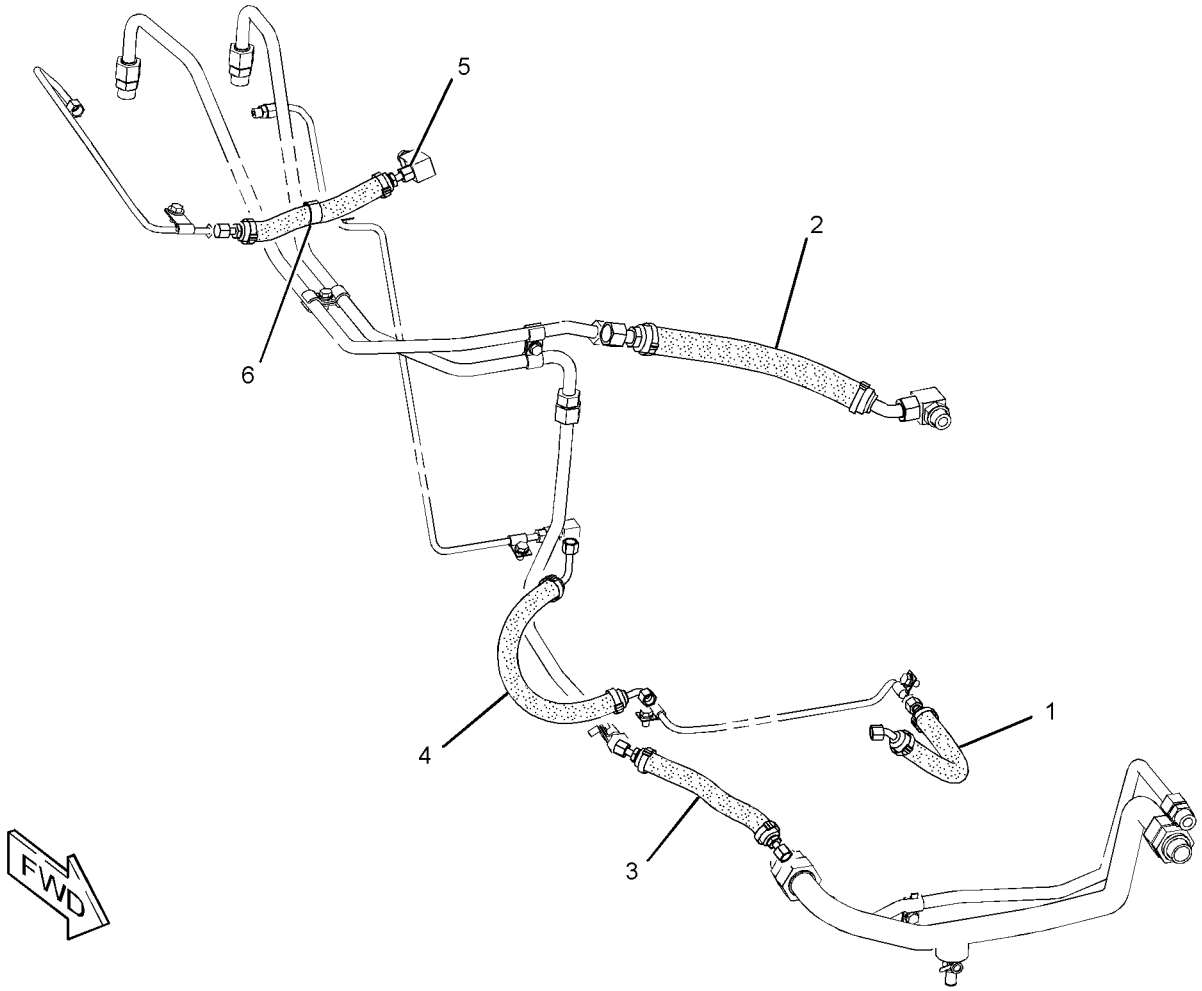

GRAPHIC #1 **<END>** g02029975

254-1460 LINES GP-REAR ATTACHMENT

S/N: JTD1-UP; FFF1-UP; LLL1-UP
PART OF 264-4541, 264-4542 HYDRAULIC AR
AN ATTACHMENT
TYPE 1

SMCS-5057 **i02679288**

NOTE	REF NO	GRAPHIC REF	PART NUMBER	QTY	PART NAME 1 2 3 4 5 6 (PRODUCT LEVEL)	SEE PAGE
I	1	1	**237-2598**	1	HOSE AS	
I	2	1	**259-0122**	1	HOSE AS	
I	3	1	**272-0343**	1	HOSE AS	
	4	1	**292-3480**	1	VALVE GP-LOAD CONTROL	
		1	**295-4695**	1	VALVE GP-RELIEF (LOAD CONTROL)	
		1	**148-9364**	1	VALVE GP-CHECK (LOAD CONTROL)	
	5	1	*148-8345*	3	CONNECTOR AS	
					(EACH INCLUDES)	
		1	**2M-9780**	1	SEAL-O-RING	
		1	**6V-8398**	1	SEAL-O-RING	
		1	**6V-8638**	1	CONNECTOR	
	6	1	*148-8375*	2	ELBOW AS	
					(EACH INCLUDES)	
		1	**6V-8398**	2	SEAL-O-RING	
		1	**6V-8981**	1	ELBOW	
	7	1	**2M-9780**	1	SEAL-O-RING	
	8	1	**6V-8398**	1	SEAL-O-RING	
	9	1	**6V-8721**	1	ELBOW	
	10	1	**6V-9169**	2	NUT (13/16-16-THD)	
	11	1	**6V-9830**	2	CAP AS (AUX HYD FUNCTION)	
M	12	1	**7X-2535**	2	BOLT (M6X1X60-MM)	
	13	1	**9X-8256**	2	WASHER (6.6X12X2-MM THK)	

I-REFER TO HYDRAULIC INFORMATION SYSTEM
M-METRIC PART

254-1460 **LINES GP-REAR ATTACHMENT** *(contd.)* **i02679288**

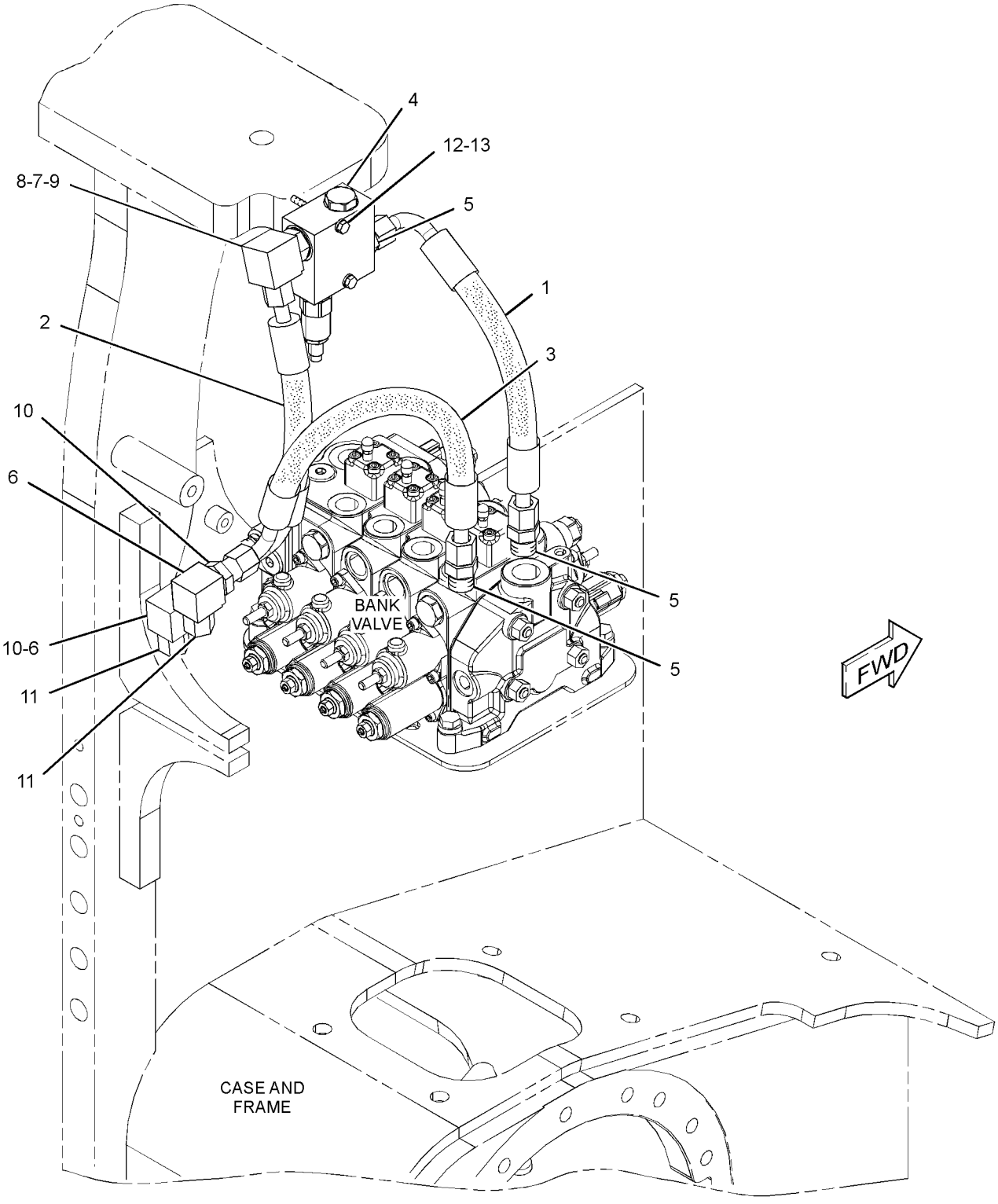

GRAPHIC #1 **<END>** g01362499

254-1460 LINES GP-REAR ATTACHMENT

S/N: JTD1-UP; FFF1-UP; LLL1-UP
PART OF 264-4541, 264-4542 HYDRAULIC AR
AN ATTACHMENT
TYPE 2

SMCS-5057 **i03149707**

NOTE	REF NO	GRAPHIC REF	PART NUMBER	QTY	PART NAME 1 2 3 4 5 6 (PRODUCT LEVEL)	SEE PAGE
I	1	1	**237-2598**	1	HOSE AS	
I	2	1	**259-0122**	1	HOSE AS	
I	3	1	**272-0343**	1	HOSE AS	
C	4	1	**319-6909**	1	VALVE GP-LOAD CONTROL	
		1	**319-1824**	1	VALVE GP-RELIEF (LOAD CONTROL)	
		1	**148-9364**	1	VALVE GP-CHECK (LOAD CONTROL)	
	5	1	*148-8345*	3	CONNECTOR AS	
					(EACH INCLUDES)	
		1	**2M-9780**	1	SEAL-O-RING	
		1	**6V-8398**	1	SEAL-O-RING	
		1	**6V-8638**	1	CONNECTOR	
	6	1	*148-8375*	2	ELBOW AS	
					(EACH INCLUDES)	
		1	**6V-8398**	2	SEAL-O-RING	
		1	**6V-8981**	1	ELBOW	
	7	1	**2M-9780**	1	SEAL-O-RING	
	8	1	**6V-8398**	1	SEAL-O-RING	
	9	1	**6V-8721**	1	ELBOW	
	10	1	**6V-9169**	2	NUT (13/16-16-THD)	
	11	1	**6V-9830**	2	CAP AS (AUX HYD FUNCTION)	
M	12	1	**7X-2535**	2	BOLT (M6X1X60-MM)	
	13	1	**9X-8256**	2	WASHER (6.6X12X2-MM THK)	

C-CHANGE FROM PREVIOUS TYPE
I-REFER TO HYDRAULIC INFORMATION SYSTEM
M-METRIC PART

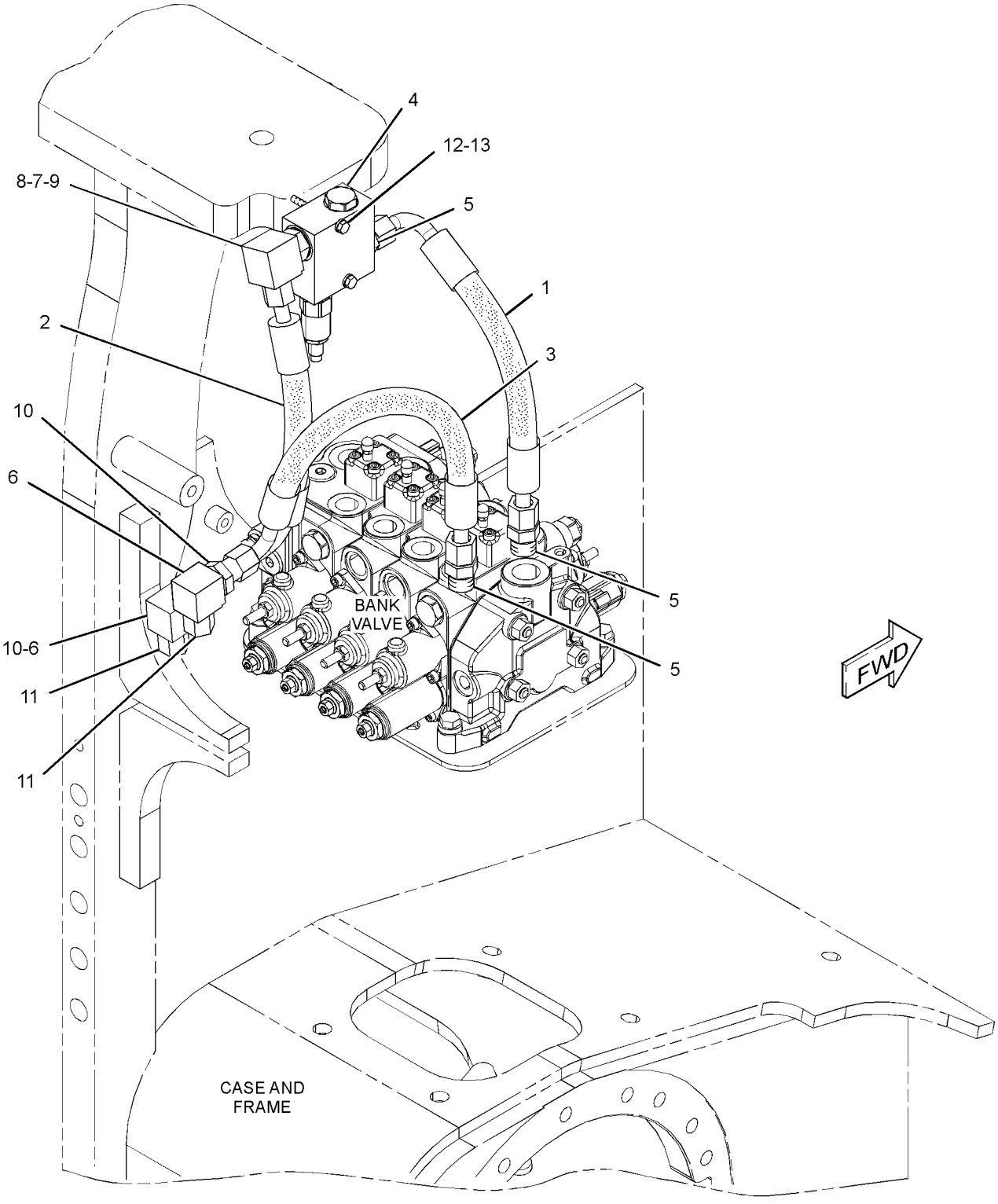

GRAPHIC #1 **<END>** g01362499

HYDRAULIC SYSTEM

325-7273 LINES GP-REAR ATTACHMENT

S/N: JTD1-UP; FFF1-UP; LLL1-UP
PART OF 325-6521, 325-6522, 325-6525, 325-6528 HYDRAULIC AR
AN ATTACHMENT

SMCS-5057 **i04403742**

NOTE	REF NO	GRAPHIC REF	PART NUMBER	QTY	PART NAME 1 2 3 4 5 6 (PRODUCT LEVEL)	SEE PAGE
	1	1	**319-6909**	1	VALVE GP-LOAD CONTROL (HYDRAULIC)	
		1	**148-9364**	1	VALVE GP-CHECK (LOAD CONTROL)	
		1	**319-1824**	1	VALVE GP-RELIEF (LOAD CONTROL)	
	2	1	*330-3518*	1	HOSE AS	
I		1	**237-2598**	1	HOSE AS	
E		1	**326-3567**		INSULATION (24-CM)	
		1	**163-8811**	2	CLAMP	
	3	1	*330-3519*	1	HOSE AS	
I		1	**259-0122**	1	HOSE AS	
E		1	**326-3567**		INSULATION (20-CM)	
		1	**163-8811**	2	CLAMP	
	4	1	**330-3520**	1	HOSE AS	
I		1	**272-0343**	1	HOSE AS	
E		1	**326-3567**		INSULATION (36-CM)	
		1	**163-8811**	2	CLAMP	
	5	1	*148-8345*	3	CONNECTOR AS	
					(EACH INCLUDES)	
		1	**2M-9780**	1	SEAL-O-RING	
		1	**6V-8398**	1	SEAL-O-RING	
		1	**6V-8638**	1	CONNECTOR	
	6	1	*148-8375*	2	ELBOW AS	
					(EACH INCLUDES)	
		1	**6V-8398**	2	SEAL-O-RING	
		1	**6V-8981**	1	ELBOW	
	7	1	**2M-9780**	1	SEAL-O-RING	
	8	1	**6V-8398**	1	SEAL-O-RING	
	9	1	**6V-8721**	1	ELBOW	
	10	1	**6V-9169**	2	NUT (13/16-16-THD)	
	11	1	**6V-9830**	2	CAP AS	
M	12	1	**7X-2535**	2	BOLT (M6X1X60-MM)	
	13	1	**9X-8256**	2	WASHER (6.6X12X2-MM THK)	

E-ORDER BY THE CENTIMETER
I-REFER TO HYDRAULIC INFORMATION SYSTEM
M-METRIC PART

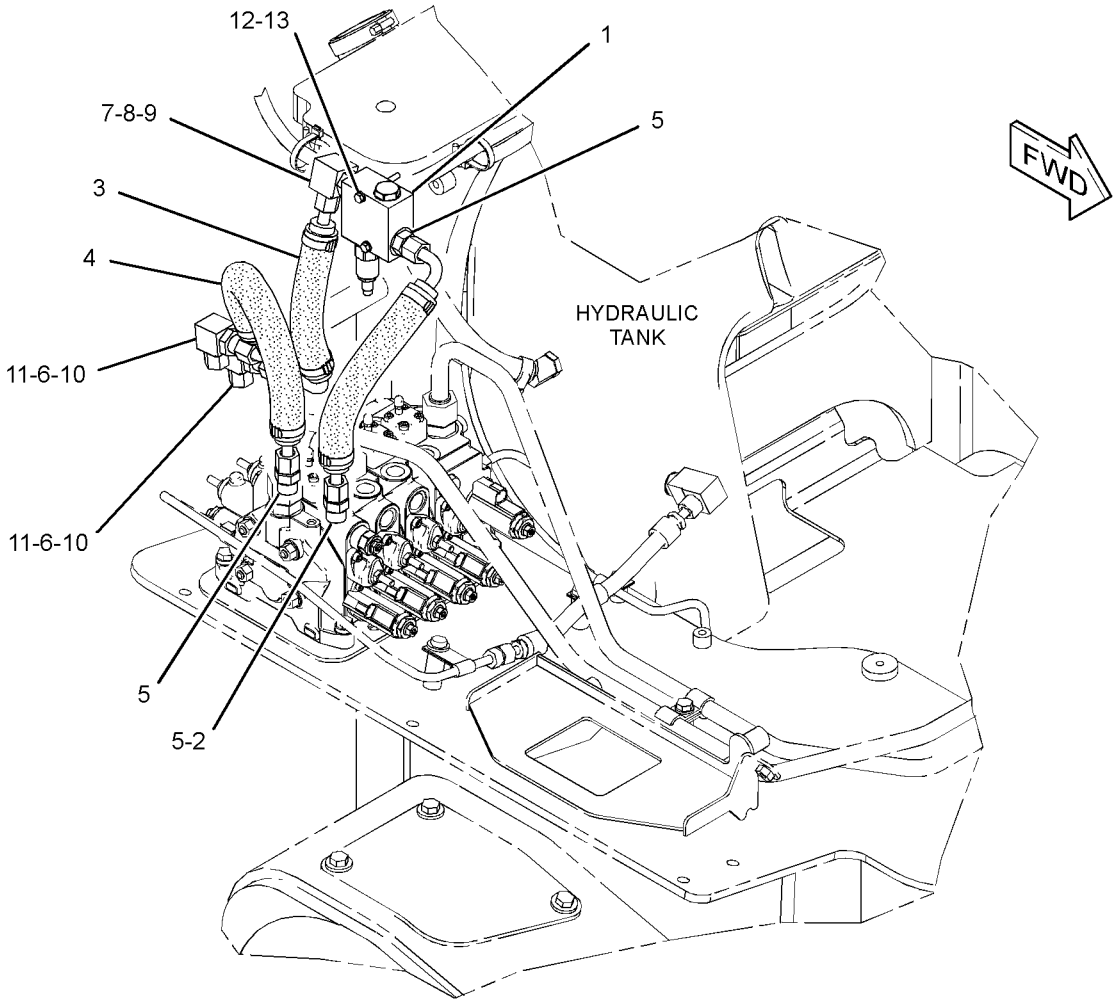

GRAPHIC #1

<END>

g02024490

HYDRAULIC SYSTEM

263-3323 LINES GP-RIPPER

S/N: JMJ1-UP
PART OF 262-4407 RIPPER AR
AN ATTACHMENT
TYPE 1

SMCS-5057, 5352, 5356 **i02882979**

NOTE	REF NO	GRAPHIC REF	PART NUMBER	QTY	PART NAME 1 2 3 4 5 6 (PRODUCT LEVEL)	SEE PAGE
I	1	1	**194-0627**	2	HOSE AS	
I	2	1	**194-0628**	2	HOSE AS	
	3	1	**264-3888**	1	TUBE AS	
	4	1	**264-3889**	1	TUBE AS	
	5	1	**264-3890**	1	PLATE AS	
	6	1	**264-3891**	1	PLATE	
	7	1	**264-6941**	1	BRACKET AS	
	8	1	**283-6370**	2	TUBE AS	
	9	1	*148-8315*	2	CONNECTOR AS	
					(EACH INCLUDES)	
		1	**2M-9780**	1	SEAL-O-RING	
		1	**6V-8642**	1	CONNECTOR	
		1	**7J-9108**	1	SEAL-O-RING	
	10	1	*148-8345*	2	CONNECTOR AS	
					(EACH INCLUDES)	
		1	**2M-9780**	1	SEAL-O-RING	
		1	**6V-8398**	1	SEAL-O-RING	
		1	**6V-8638**	1	CONNECTOR	
	11	1	*148-8375*	2	ELBOW AS	
					(EACH INCLUDES)	
		1	**6V-8398**	2	SEAL-O-RING	
		1	**6V-8981**	1	ELBOW	
	12	1	*150-4037*	2	TEE AS	
					(EACH INCLUDES)	
		1	**6V-8398**	2	SEAL-O-RING	
		1	**6V-9844**	1	TEE-SWIVEL	
M	13	1	**5C-7261**	1	NUT (M8X1.25-THD)	
	14	1	**6V-8398**	2	SEAL-O-RING	
	15	1	**6V-9169**	2	NUT (13/16-16-THD)	
	16	1	**7X-7729**	5	WASHER (11X25X3-MM THK)	
	17	1	**8B-9424**	2	CLAMP	
	18	1	**8T-1895**	4	CLIP (SLOT)	
	19	1	**8T-1896**	4	CLIP (TAB)	
	20	1	**8T-4121**	6	WASHER-HARD (11X21X2.5-MM THK)	
M	21	1	**8T-4136**	11	BOLT (M10X1.5X25-MM)	
	23	1	**8T-4224**	2	WASHER-HARD (8.8X16X2-MM THK)	
M	24	1	**8T-4908**	1	BOLT (M8X1.25X25-MM)	
	25	1	**9R-1004**	2	CLIP (TAB)	
	26	1	**9R-1005**	2	CLIP (SLOT)	

I-REFER TO HYDRAULIC INFORMATION SYSTEM
M-METRIC PART

263-3323 **LINES GP-RIPPER** *(contd.)* **i02882979**

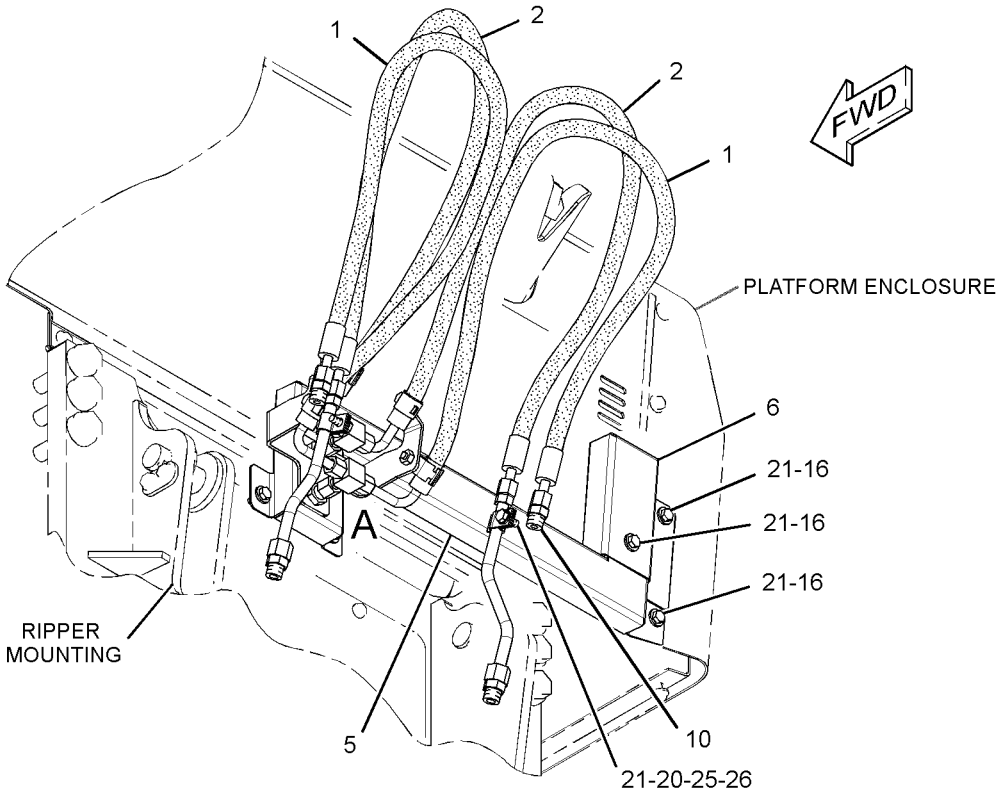

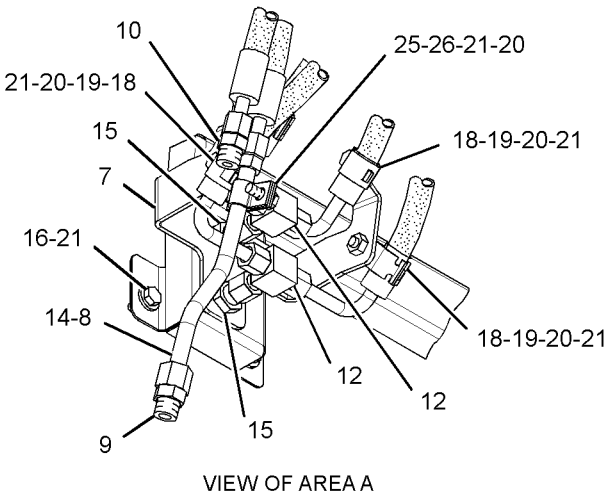

VIEW OF AREA A

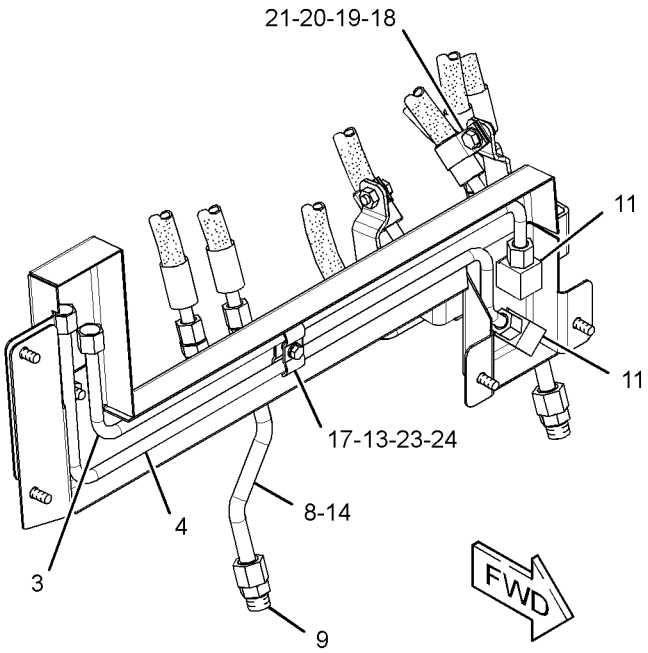

GRAPHIC #1 **<END>** g01520727

HYDRAULIC SYSTEM

263-3323 LINES GP-RIPPER

S/N: JMJ1-UP
PART OF 262-4407 RIPPER AR
AN ATTACHMENT
TYPE 2

SMCS-5057, 5352, 5356 **i04338010**

NOTE	REF NO	GRAPHIC REF	PART NUMBER	QTY	PART NAME 1 2 3 4 5 6 (PRODUCT LEVEL)	SEE PAGE
	1	1	**264-3888**	1	TUBE AS	
	2	1	**264-3889**	1	TUBE AS	
	3	1	**264-3890**	1	PLATE AS	
	4	1	**264-3891**	1	PLATE	
	5	1	**264-6941**	1	BRACKET AS	
CI	6	1	**369-4706**	2	HOSE AS	
CI	7	1	**369-4707**	2	HOSE AS	
C	8	1	*148-8345*	4	CONNECTOR AS	
					(EACH INCLUDES)	
		1	**2M-9780**	1	SEAL-O-RING	
		1	**6V-8398**	1	SEAL-O-RING	
		1	**6V-8638**	1	CONNECTOR	
	9	1	*148-8375*	2	ELBOW AS	
					(EACH INCLUDES)	
		1	**6V-8398**	2	SEAL-O-RING	
		1	**6V-8981**	1	ELBOW	
	10	1	*150-4037*	2	TEE AS	
					(EACH INCLUDES)	
		1	**6V-8398**	2	SEAL-O-RING	
		1	**6V-9844**	1	TEE-SWIVEL	
M	11	1	**5C-7261**	1	NUT (M8X1.25-THD)	
C	12	1	**5P-7462**	4	CLIP (SLOT)	
C	13	1	**5P-7463**	4	CLIP (TAB)	
C	14	1	**5P-7464**	2	CLIP (SLOT)	
C	15	1	**5P-7465**	2	CLIP (TAB)	
C	16	1	**6V-1249**	2	GROMMET	
	17	1	**6V-9169**	2	NUT (13/16-16-THD)	
	18	1	**7X-7729**	5	WASHER (11X25X3-MM THK)	
	19	1	**8B-9424**	2	CLAMP	
	20	1	**8T-4121**	6	WASHER-HARD (11X21X2.5-MM THK)	
CM	21	1	**8T-4136**	5	BOLT (M10X1.5X25-MM)	
CM	22	1	**8T-4195**	6	BOLT (M10X1.5X30-MM)	
	23	1	**8T-4224**	2	WASHER-HARD (8.8X16X2-MM THK)	
M	24	1	**8T-4908**	1	BOLT (M8X1.25X25-MM)	

C-CHANGE FROM PREVIOUS TYPE
I-REFER TO HYDRAULIC INFORMATION SYSTEM
M-METRIC PART

263-3323 **LINES GP-RIPPER** *(contd.)* **i04338010**

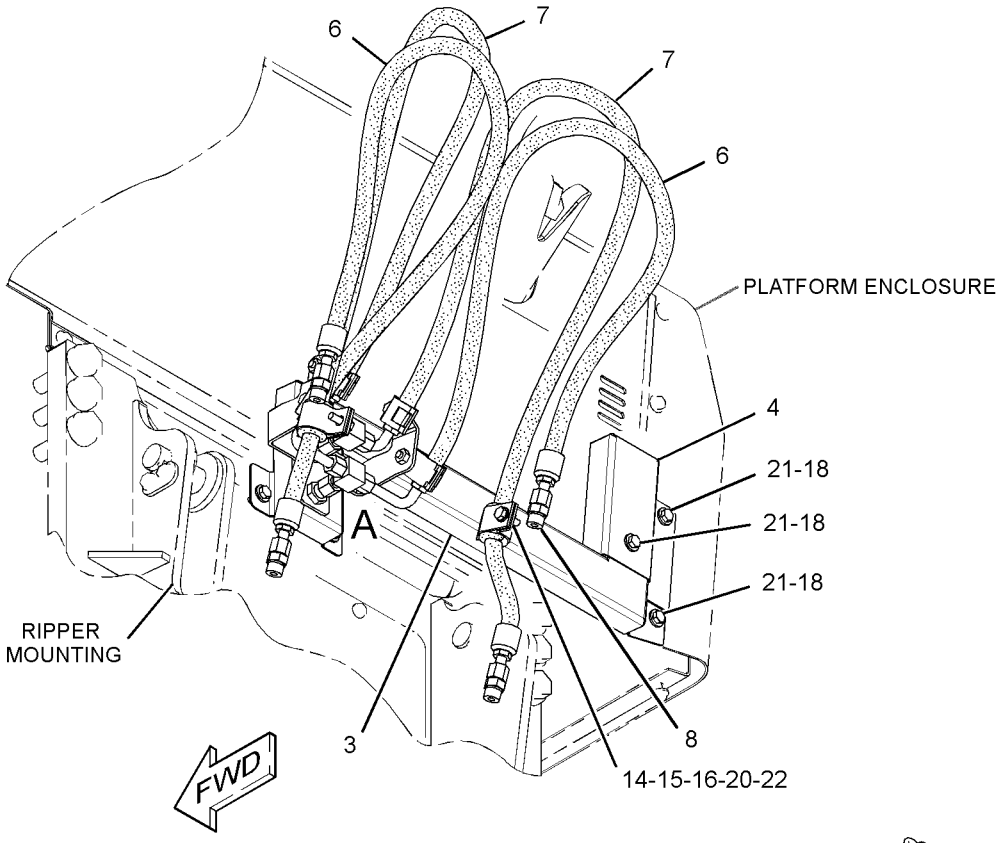

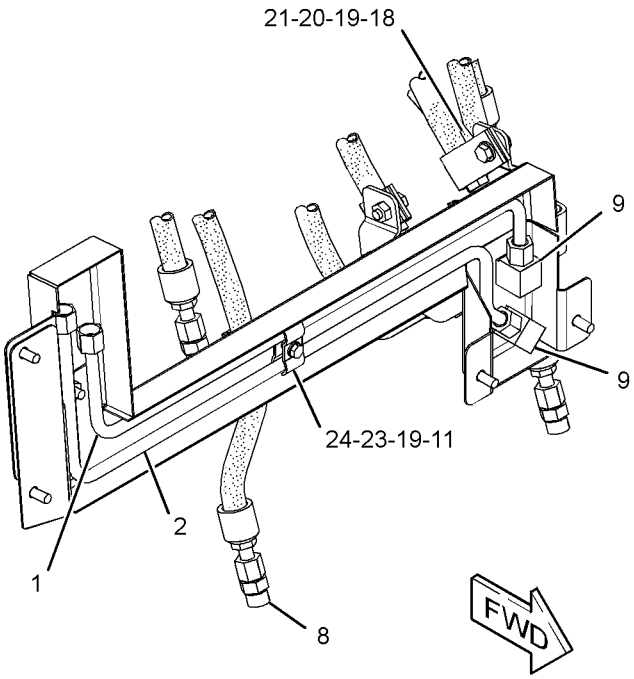

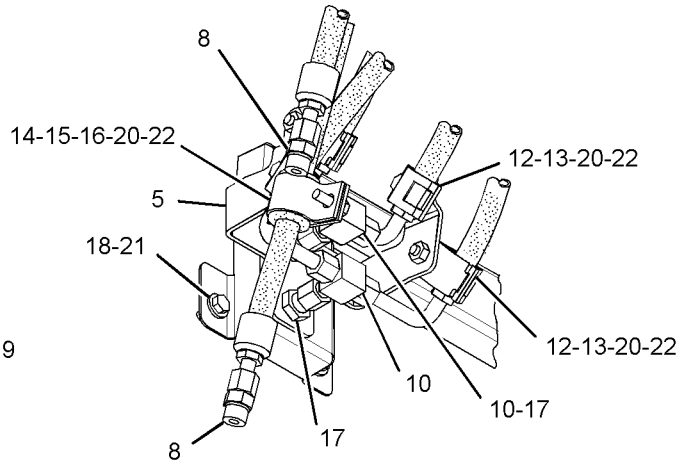

VIEW OF AREA A

GRAPHIC #1 **<END>** g02533059

HYDRAULIC SYSTEM

255-1150 LINES GP-WINCH

S/N: JTD1-UP; FFF1-UP; LLL1-UP
PART OF 244-7454, 292-0124, 300-8544 DRIVE AR-WINCH
AN ATTACHMENT

SMCS-5179 **i03331440**

NOTE	REF NO	GRAPHIC REF	PART NUMBER	QTY	PART NAME 1 2 3 4 5 6 (PRODUCT LEVEL)	SEE PAGE
	1	1	**6V-0852**	1	CAP-DUST	
	2	1	**7K-1181**	5	STRAP-CABLE	
	3	1	**7X-7945**	1	ADAPTER	
	4	1	**9V-6589**	2	CLAMP-DOUBLE	
	5	1	**091-9035**	1	SPACER (11X25X20-MM THK)	
	6	1	**102-8705**	1	PLATE	
I	7	1	**115-3799**	1	HOSE AS	
	8	1	**122-1951**	2	COVER	
	9	1	**154-4891**	1	BOLT-STACKING (M8X1.25X49-MM)	
	10	1	*164-9640*	1	CONNECTOR AS	
		1	**145-2237**	1	CONNECTOR	
		1	**3J-1907**	1	SEAL-O-RING	
		1	**4J-5477**	1	SEAL-O-RING	
	11	1	**198-9047**	1	SPACER (11X17X21.5-MM THK)	
	12	1	**200-6345**	2	MOUNT (DUAL SWIVEL)	
Y	13	1	**201-2744**	1	FILTER GP-OIL (HYDRAULIC)	900
	14	1	**206-0452**	1	PLATE	
I	15	1	**261-8504**	1	HOSE AS	
	16	1	**265-2166**	1	BRACKET AS	
I	17	1	**271-5385**	1	HOSE AS	
	18	1	**272-3544**	1	BRACKET	
	19	1	**272-3545**	1	TUBE AS	
	20	1	**276-4679**	1	TUBE AS	
	21	1	**276-8181**	1	HOSE AS	
I	22	1	**294-1062**	1	HOSE AS	
I	23	1	**305-7952**	1	HOSE AS	
I	24	1	**305-7956**	1	HOSE AS	
I	25	1	**313-7224**	1	HOSE AS	
I	26	1	**316-0625**	1	HOSE AS	
	27	1	**132-7551**	3	SPACER (11X19X6-MM THK)	
	28	1	*148-8315*	1	CONNECTOR AS	
		1	**6V-8642**	1	CONNECTOR	
		1	**2M-9780**	1	SEAL-O-RING	
		1	**7J-9108**	1	SEAL-O-RING	
	29	1	*148-8336*	1	CONNECTOR AS	
		1	**6V-8636**	1	CONNECTOR	
		1	**3J-1907**	1	SEAL-O-RING	
		1	**6V-8397**	1	SEAL-O-RING	
	30	1	*148-8341*	1	CONNECTOR AS	
		1	**6V-8713**	1	CONNECTOR	
		1	**3D-2824**	1	SEAL-O-RING	
		1	**7J-9108**	1	SEAL-O-RING	
	31	1	*148-8342*	1	CONNECTOR AS	
		1	**6V-8632**	1	CONNECTOR	
		1	**3K-0360**	1	SEAL-O-RING	
		1	**7J-9108**	1	SEAL-O-RING	
	32	1	*148-8356*	1	ELBOW AS	
		1	**6V-9009**	1	ELBOW	
		1	**2S-4078**	1	SEAL-O-RING	
		1	**6V-8400**	1	SEAL-O-RING	
	33	1	*148-8369*	1	ELBOW AS	
		1	**6V-8628**	1	ELBOW	
		1	**4J-5477**	1	SEAL-O-RING	
		1	**3J-7354**	1	SEAL-O-RING	
	34	1	*148-8373*	1	ELBOW AS	

255-1150 **LINES GP-WINCH** *(contd.)* **i03331440**

NOTE	REF NO	GRAPHIC REF	PART NUMBER	QTY	PART NAME 1 2 3 4 5 6 (PRODUCT LEVEL)	SEE PAGE
		1	**8C-3364**	1	ELBOW	
		1	**6V-8400**	1	SEAL-O-RING	
		1	**7M-8485**	1	SEAL-O-RING	
	35	1	*148-8382*	2	ELBOW AS	
					(EACH INCLUDES)	
		1	**8T-0404**	1	ELBOW	
		1	**3D-2824**	1	SEAL-O-RING	
		1	**7J-9108**	1	SEAL-O-RING	
	36	1	*148-8433*	1	TEE AS	
		1	**6V-9836**	1	TEE-SWIVEL	
		1	**6V-8397**	2	SEAL-O-RING	
	37	1	*164-5581*	1	PLUG AS	
		1	**6V-9511**	1	PLUG (1-3/16-12-THD)	
		1	**6V-9746**	1	SEAL-O-RING	
	38	1	*165-4934*	1	PLUG AS	
		1	**6V-9508**	1	PLUG (11/16-16-THD)	
		1	**6V-8397**	1	SEAL-O-RING	
	39	1	*241-6228*	1	CONNECTOR AS	
		1	**156-9791**	1	CONNECTOR-SPECIAL	
		1	**3K-0360**	1	SEAL-O-RING	
		1	**7J-9108**	1	SEAL-O-RING	
	40	1	**1P-3702**	4	SEAL-RECTANGULAR	
	41	1	**2P-1279**	1	LOCKNUT (9/16-18-THD)	
	42	1	**3J-1907**	1	SEAL-O-RING	
	43	1	**4J-5477**	1	SEAL-O-RING	
	44	1	**4P-7581**	1	CLIP	
	45	1	**5P-7466**	2	CLIP (SLOT)	
	46	1	**5P-7467**	2	CLIP (TAB)	
	47	1	**5P-8112**	2	GROMMET	
	48	1	**5P-9297**	1	CLIP	
	49	1	**6D-1641**	1	CLIP	
	50	1	**6D-3479**	2	CLIP	
	51	1	**6V-3965**	1	FITTING (QUICK DISCONNECT)	
	52	1	**6V-8397**	1	SEAL-O-RING	
	53	1	**7X-7729**	4	WASHER (11X25X3-MM THK)	
	54	1	**8T-4121**	25	WASHER-HARD (11X21X2.5-MM THK)	
M	55	1	**8T-4133**	13	NUT (M10X1.5-THD)	
M	56	1	**8T-4136**	4	BOLT (M10X1.5X25-MM)	
M	57	1	**8T-4137**	3	BOLT (M10X1.5X20-MM)	
M	58	1	**8T-4182**	12	BOLT (M10X1.5X45-MM)	
M	59	1	**8T-4183**	2	BOLT (M12X1.75X40-MM)	
M	60	1	**8T-4185**	1	BOLT (M10X1.5X50-MM)	
M	61	1	**8T-4186**	1	BOLT (M10X1.5X40-MM)	
M	62	1	**8T-4195**	2	BOLT (M10X1.5X30-MM)	
	63	1	**8T-4223**	4	WASHER-HARD (13.5X25.5X3-MM THK)	
M	64	1	**8T-4244**	2	NUT (M12X1.75-THD)	
M	65	1	**8T-6466**	4	BOLT (M10X1.5X60-MM)	
M	66	1	**8T-7329**	1	BOLT (M8X1.25X55-MM)	
	67	1	**8T-9403**	8	FLANGE-HALF	

I-REFER TO HYDRAULIC INFORMATION SYSTEM
M-METRIC PART
Y-SEPARATE ILLUSTRATION

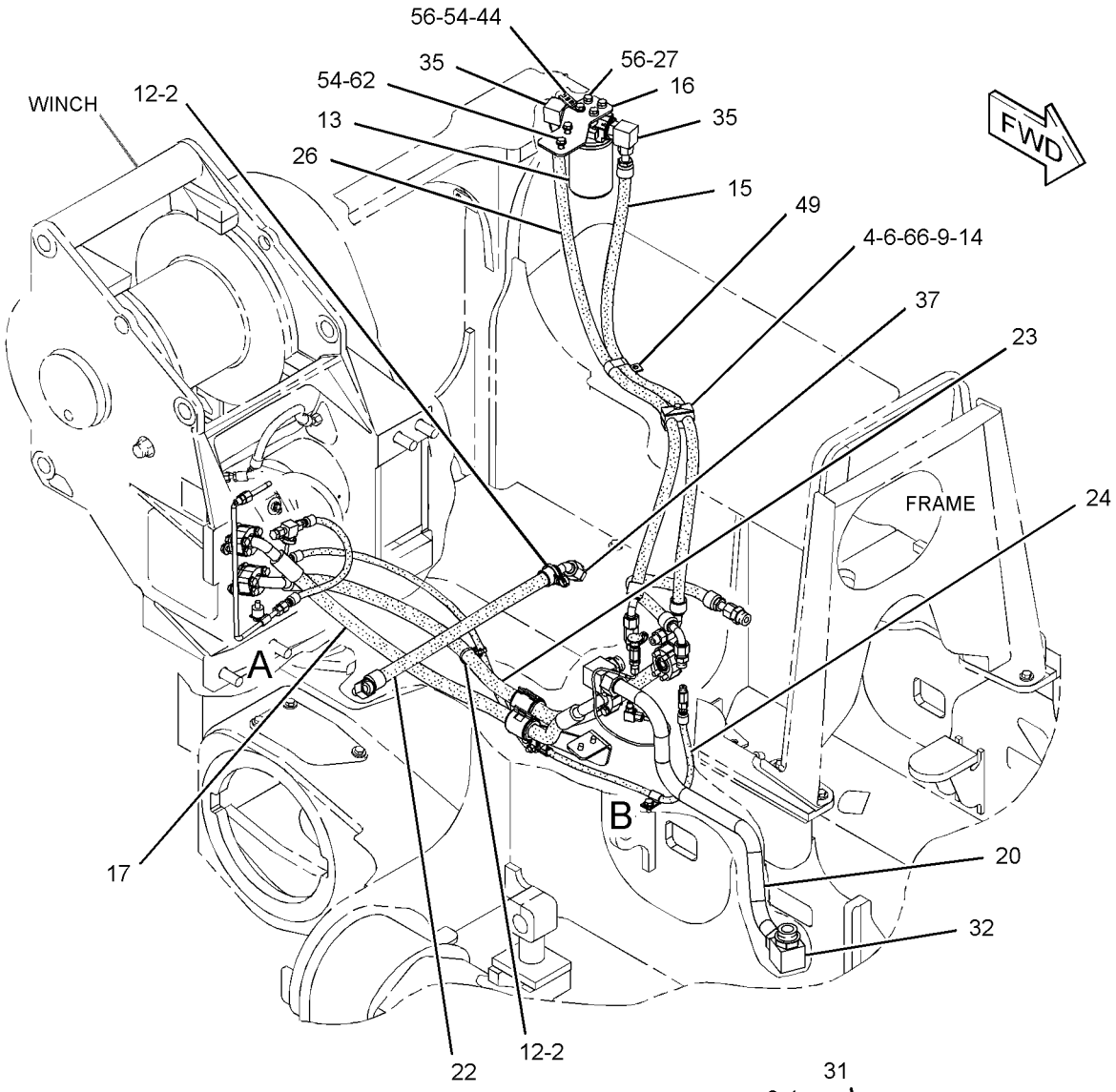

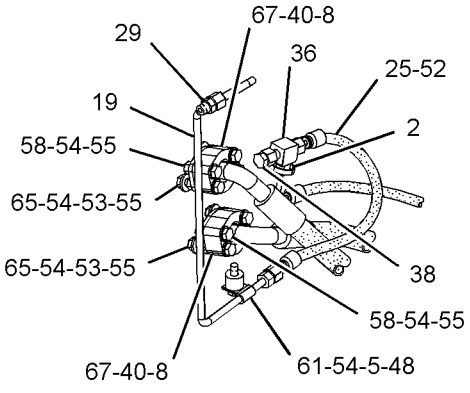

VIEW OF AREA A

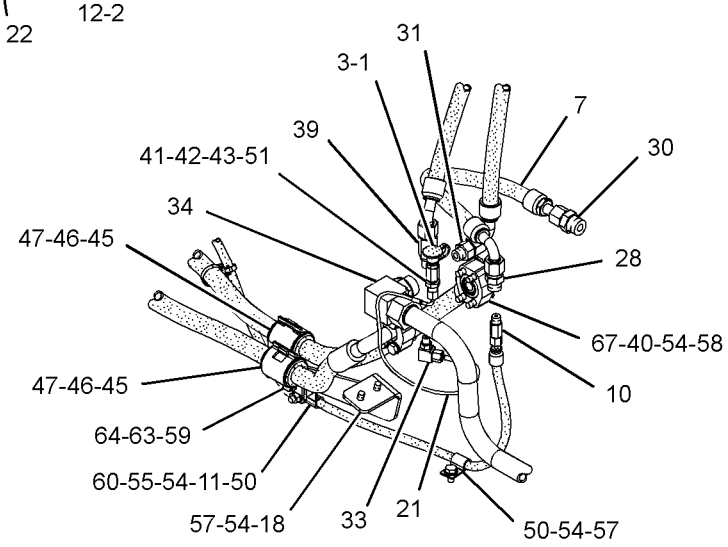

VIEW OF AREA B

GRAPHIC #1 **<END>** g01718335

HYDRAULIC SYSTEM

325-7268 LINES GP-WINCH

S/N: JTD1-UP; FFF1-UP; LLL1-UP
PART OF 325-6516, 325-6519 DRIVE AR-WINCH
AN ATTACHMENT

SMCS-5179 **i03734520**

NOTE	REF NO	GRAPHIC REF	PART NUMBER	QTY	PART NAME 1 2 3 4 5 6 (PRODUCT LEVEL)	SEE PAGE
	1	1	**6V-0852**	1	CAP-DUST	
	2	1	**7K-1181**	5	STRAP-CABLE	
	3	1	**7X-7945**	1	ADAPTER	
	4	1	**9V-6589**	2	CLAMP-DOUBLE	
	5	1	**091-9035**	1	SPACER (11X25X20-MM THK)	
	6	1	**102-8705**	1	PLATE	
	7	1	**122-1951**	2	COVER	
	8	1	**154-4891**	1	BOLT-STACKING (M8X1.25X49-MM)	
	9	1	*164-9640*	1	CONNECTOR AS	
		1	**3J-1907**	1	SEAL-O-RING	
		1	**4J-5477**	1	SEAL-O-RING	
		1	**145-2237**	1	CONNECTOR	
	10	1	**198-9047**	1	SPACER (11X17X21.5-MM THK)	
	11	1	**200-6345**	2	MOUNT (DUAL SWIVEL)	
Y	12	1	**201-2744**	1	FILTER GP-OIL (HYDRAULIC)	900
	13	1	**206-0452**	1	PLATE	
	14	1	**265-2166**	1	BRACKET AS	
	15	1	**272-3544**	1	BRACKET	
	16	1	**272-3545**	1	TUBE AS	
	17	1	**276-4679**	1	TUBE AS	
	18	1	*330-7301*	1	HOSE AS	
B		1	**268-4412**		TAPE-INSULATOR	
		1	**276-8181**	1	HOSE AS	
E		1	**324-9705**		INSULATION (53-CM)	
	19	1	**332-1074**	1	HOSE AS	
		1	**163-8812**	2	CLAMP	
I		1	**261-8504**	1	HOSE AS	
E		1	**324-9706**		INSULATION (132-CM)	
	20	1	**332-1075**	1	HOSE AS	
		1	**163-8812**	2	CLAMP	
I		1	**316-0625**	1	HOSE AS	
E		1	**324-9706**		INSULATION (139-CM)	
	21	1	**332-1076**	1	HOSE AS	
I		1	**115-3799**	1	HOSE AS	
		1	**163-8812**	2	CLAMP	
E		1	**324-9706**		INSULATION (45-CM)	
	22	1	**332-1077**	1	HOSE AS	
		1	**163-8812**	2	CLAMP	
I		1	**271-5385**	1	HOSE AS	
E		1	**324-9706**		INSULATION (118-CM)	
	23	1	**332-1078**	1	HOSE AS	
		1	**163-8812**	2	CLAMP	
I		1	**305-7952**	1	HOSE AS	
E		1	**324-9706**		INSULATION (127-CM)	
	24	1	**332-1079**	1	HOSE AS	
		1	**163-8812**	2	CLAMP	
I		1	**294-1062**	1	HOSE AS	
E		1	**326-3568**		INSULATION (55-CM)	
	25	1	**332-1080**	1	HOSE AS	
E		1	**193-6911**		INSULATION (144-CM)	
		1	**163-8811**	2	CLAMP	
I		1	**305-7956**	1	HOSE AS	
	26	1	**332-1081**	1	HOSE AS	
E		1	**193-6911**		INSULATION (30-CM)	
		1	**163-8811**	2	CLAMP	

325-7268 **LINES GP-WINCH** *(contd.)* **i03734520**

NOTE	REF NO	GRAPHIC REF	PART NUMBER	QTY	PART NAME 1 2 3 4 5 6 (PRODUCT LEVEL)	SEE PAGE
I		1	**313-7224**	1	HOSE AS	
	27	1	**067-3045**	2	CLIP	
	28	1	**132-7551**	3	SPACER (11X19X6-MM THK)	
	29	1	*148-8315*	1	CONNECTOR AS	
		1	**2M-9780**	1	SEAL-O-RING	
		1	**6V-8642**	1	CONNECTOR	
		1	**7J-9108**	1	SEAL-O-RING	
	30	1	*148-8336*	1	CONNECTOR AS	
		1	**3J-1907**	1	SEAL-O-RING	
		1	**6V-8397**	1	SEAL-O-RING	
		1	**6V-8636**	1	CONNECTOR	
	31	1	*148-8341*	1	CONNECTOR AS	
		1	**3D-2824**	1	SEAL-O-RING	
		1	**6V-8713**	1	CONNECTOR	
		1	**7J-9108**	1	SEAL-O-RING	
	32	1	*148-8342*	1	CONNECTOR AS	
		1	**3K-0360**	1	SEAL-O-RING	
		1	**6V-8632**	1	CONNECTOR	
		1	**7J-9108**	1	SEAL-O-RING	
	33	1	*148-8356*	1	ELBOW AS	
		1	**2S-4078**	1	SEAL-O-RING	
		1	**6V-8400**	1	SEAL-O-RING	
		1	**6V-9009**	1	ELBOW	
	34	1	*148-8369*	1	ELBOW AS	
		1	**3J-7354**	1	SEAL-O-RING	
		1	**4J-5477**	1	SEAL-O-RING	
		1	**6V-8628**	1	ELBOW	
	35	1	*148-8373*	1	ELBOW AS	
		1	**6V-8400**	1	SEAL-O-RING	
		1	**7M-8485**	1	SEAL-O-RING	
		1	**8C-3364**	1	ELBOW	
	36	1	*148-8382*	2	ELBOW AS	
					(EACH INCLUDES)	
		1	**3D-2824**	1	SEAL-O-RING	
		1	**7J-9108**	1	SEAL-O-RING	
		1	**8T-0404**	1	ELBOW	
	37	1	*148-8433*	1	TEE AS	
		1	**6V-8397**	2	SEAL-O-RING	
		1	**6V-9836**	1	TEE-SWIVEL	
	38	1	*164-5581*	1	PLUG AS	
		1	**6V-9511**	1	PLUG (1-3/16-12-THD)	
		1	**6V-9746**	1	SEAL-O-RING	
	39	1	*165-4934*	1	PLUG AS	
		1	**6V-8397**	1	SEAL-O-RING	
		1	**6V-9508**	1	PLUG (11/16-16-THD)	
	40	1	**1P-3702**	4	SEAL-RECTANGULAR	
	41	1	*241-6228*	1	CONNECTOR AS	
		1	**3K-0360**	1	SEAL-O-RING	
		1	**7J-9108**	1	SEAL-O-RING	
		1	**156-9791**	1	CONNECTOR-SPECIAL	
	42	1	**2P-1279**	1	LOCKNUT (9/16-18-THD)	
	43	1	**3J-1907**	1	SEAL-O-RING	
	44	1	**4J-5477**	1	SEAL-O-RING	
	45	1	**4P-7581**	1	CLIP	
	46	1	**5P-7468**	2	CLIP (SLOT)	
	47	1	**5P-7469**	2	CLIP (TAB)	
	48	1	**5P-8444**	2	GROMMET	
	49	1	**5P-9297**	1	CLIP	
	50	1	**6D-1641**	1	CLIP	

325-7268 **LINES GP-WINCH** *(contd.)* **i03734520**

NOTE	REF NO	GRAPHIC REF	PART NUMBER	QTY	PART NAME 1 2 3 4 5 6 (PRODUCT LEVEL)	SEE PAGE
	51	1	**6V-3965**	1	FITTING (QUICK DISCONNECT)	
	52	1	**6V-8397**	1	SEAL-O-RING	
	53	1	**7X-7729**	4	WASHER (11X25X3-MM THK)	
	54	1	**8T-4121**	25	WASHER-HARD (11X21X2.5-MM THK)	
M	55	1	**8T-4133**	13	NUT (M10X1.5-THD)	
M	56	1	**8T-4136**	4	BOLT (M10X1.5X25-MM)	
M	57	1	**8T-4137**	3	BOLT (M10X1.5X20-MM)	
M	58	1	**8T-4182**	12	BOLT (M10X1.5X45-MM)	
M	59	1	**8T-4183**	2	BOLT (M12X1.75X40-MM)	
M	60	1	**8T-4185**	1	BOLT (M10X1.5X50-MM)	
M	61	1	**8T-4186**	1	BOLT (M10X1.5X40-MM)	
M	62	1	**8T-4195**	2	BOLT (M10X1.5X30-MM)	
	63	1	**8T-4223**	4	WASHER-HARD (13.5X25.5X3-MM THK)	
M	64	1	**8T-4244**	2	NUT (M12X1.75-THD)	
M	65	1	**8T-6466**	4	BOLT (M10X1.5X60-MM)	
M	66	1	**8T-7329**	1	BOLT (M8X1.25X55-MM)	
	67	1	**8T-9403**	8	FLANGE-HALF	

B-USE AS REQUIRED
E-ORDER BY THE CENTIMETER
I-REFER TO HYDRAULIC INFORMATION SYSTEM
M-METRIC PART
Y-SEPARATE ILLUSTRATION

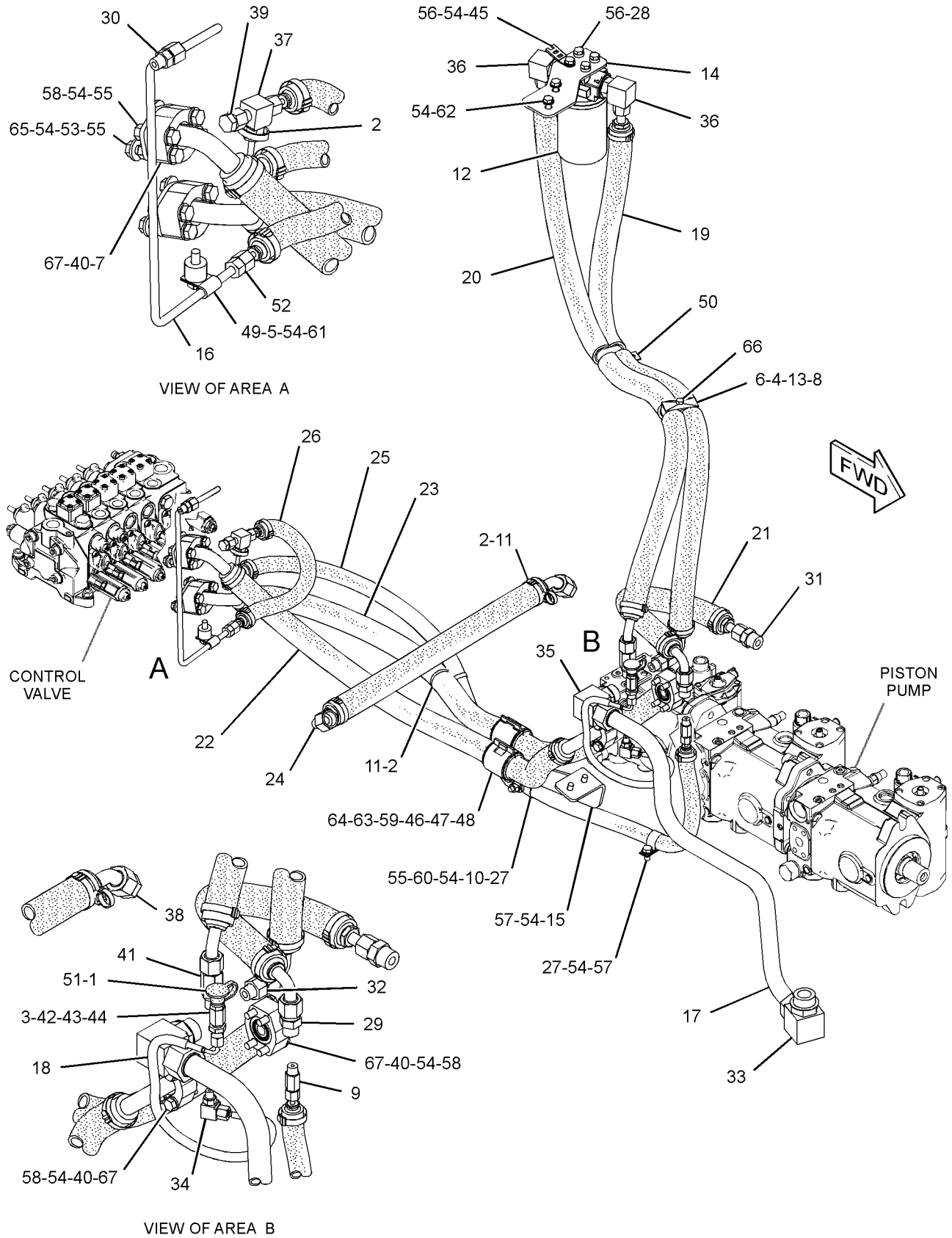

GRAPHIC #1 **<END>** g02029003

HYDRAULIC SYSTEM

325-7270 LINES GP-WINCH

S/N: JTD1-UP
PART OF 325-6520 DRIVE AR-WINCH
AN ATTACHMENT

SMCS-5179 **i03735040**

NOTE	REF NO	GRAPHIC REF	PART NUMBER	QTY	PART NAME 1 2 3 4 5 6 (PRODUCT LEVEL)	SEE PAGE
	1	1	**6V-0852**	1	CAP-DUST	
	2	1	**7K-1181**	5	STRAP-CABLE	
	3	1	**7X-7945**	1	ADAPTER	
	4	1	**8T-4983**	2	CLAMP-HOSE	
	5	1	**9U-7000**	1	FITTING GP-HYDRAULIC	
		1	**2S-4078**	1	SEAL-O-RING	
		1	**5P-7506**	1	ELBOW	
	6	1	**9V-6589**	2	CLAMP-DOUBLE	
	7	1	**102-8705**	1	PLATE	
	8	1	**122-1951**	2	COVER	
	9	1	**154-4891**	1	BOLT-STACKING (M8X1.25X49-MM)	
	10	1	*164-9640*	1	CONNECTOR AS	
		1	**3J-1907**	1	SEAL-O-RING	
		1	**4J-5477**	1	SEAL-O-RING	
		1	**145-2237**	1	CONNECTOR	
	11	1	**173-3323**	1	ADAPTER	
	12	1	**200-6345**	2	MOUNT (DUAL SWIVEL)	
Y	13	1	**201-2744**	1	FILTER GP-OIL (HYDRAULIC)	900
	14	1	**206-0452**	1	PLATE	
	15	1	**265-2166**	1	BRACKET AS	
	16	1	**282-5062**	1	BRACKET AS	
	17	1	**282-5069**	1	TUBE AS	
	18	1	*330-7301*	1	HOSE AS	
B		1	**268-4412**		TAPE-INSULATOR	
		1	**276-8181**	1	HOSE AS	
E		1	**324-9705**		INSULATION (53-CM)	
	19	1	*330-7315*	1	HOSE AS	
		1	**221-3329**	1	HOSE	
B		1	**268-4412**		TAPE-INSULATOR	
E		1	**324-9707**		INSULATION (85-CM)	
	20	1	*330-7316*	1	HOSE AS	
E		1	**324-9706**		INSULATION (131-CM)	
		1	**163-8812**	2	CLAMP	
I		1	**263-2214**	1	HOSE AS	
	21	1	**330-7317**	1	HOSE AS	
		1	**163-8812**	2	CLAMP	
I		1	**316-0629**	1	HOSE AS	
E		1	**324-9706**		INSULATION (144-CM)	
	22	1	*330-7318*	1	HOSE AS	
		1	**163-8812**	2	CLAMP	
I		1	**264-9742**	1	HOSE AS	
E		1	**324-9706**		INSULATION (39-CM)	
	23	1	*330-7319*	1	HOSE AS	
E		1	**193-6911**		INSULATION (133-CM)	
		1	**163-8811**	2	CLAMP	
I		1	**313-7228**	1	HOSE AS	
	24	1	*330-7320*	1	HOSE AS	
		1	**163-8812**	2	CLAMP	
I		1	**277-7092**	1	HOSE AS	
E		1	**324-9706**		INSULATION (118-CM)	
	25	1	*330-7321*	1	HOSE AS	
		1	**163-8812**	2	CLAMP	
I		1	**277-7093**	1	HOSE AS	
E		1	**324-9706**		INSULATION (124-CM)	
	26	1	*330-7322*	1	HOSE AS	

325-7270 **LINES GP-WINCH** *(contd.)* **i03735040**

NOTE	REF NO	GRAPHIC REF	PART NUMBER	QTY	PART NAME 1 2 3 4 5 6 (PRODUCT LEVEL)	SEE PAGE
		1	**163-8812**	2	CLAMP	
I		1	**294-1063**	1	HOSE AS	
E		1	**326-3568**		INSULATION (42-CM)	
	27	1	*330-7323*	1	HOSE AS	
E		1	**193-6911**		INSULATION (77-CM)	
		1	**163-8811**	2	CLAMP	
I		1	**313-7227**	1	HOSE AS	
	28	1	**067-3045**	3	CLIP	
	29	1	**105-1866**	1	CLIP	
	30	1	**132-7551**	3	SPACER (11X19X6-MM THK)	
	31	1	*148-8315*	1	CONNECTOR AS	
		1	**2M-9780**	1	SEAL-O-RING	
		1	**6V-8642**	1	CONNECTOR	
		1	**7J-9108**	1	SEAL-O-RING	
	32	1	*148-8336*	1	CONNECTOR AS	
		1	**3J-1907**	1	SEAL-O-RING	
		1	**6V-8397**	1	SEAL-O-RING	
		1	**6V-8636**	1	CONNECTOR	
	33	1	*148-8341*	1	CONNECTOR AS	
		1	**3D-2824**	1	SEAL-O-RING	
		1	**6V-8713**	1	CONNECTOR	
		1	**7J-9108**	1	SEAL-O-RING	
	34	1	*148-8342*	2	CONNECTOR AS	
					(EACH INCLUDES)	
		1	**3K-0360**	1	SEAL-O-RING	
		1	**6V-8632**	1	CONNECTOR	
		1	**7J-9108**	1	SEAL-O-RING	
	35	1	*148-8369*	1	ELBOW AS	
		1	**3J-7354**	1	SEAL-O-RING	
		1	**4J-5477**	1	SEAL-O-RING	
		1	**6V-8628**	1	ELBOW	
	36	1	*148-8382*	2	ELBOW AS	
					(EACH INCLUDES)	
		1	**3D-2824**	1	SEAL-O-RING	
		1	**7J-9108**	1	SEAL-O-RING	
		1	**8T-0404**	1	ELBOW	
	37	1	*148-8433*	1	TEE AS	
		1	**6V-8397**	2	SEAL-O-RING	
		1	**6V-9836**	1	TEE-SWIVEL	
	38	1	*164-5581*	1	PLUG AS	
		1	**6V-9511**	1	PLUG (1-3/16-12-THD)	
		1	**6V-9746**	1	SEAL-O-RING	
	39	1	*165-4934*	1	PLUG AS	
		1	**6V-8397**	1	SEAL-O-RING	
		1	**6V-9508**	1	PLUG (11/16-16-THD)	
	40	1	**1P-3702**	4	SEAL-RECTANGULAR	
	41	1	**2P-1279**	1	LOCKNUT (9/16-18-THD)	
	42	1	**2S-4078**	1	SEAL-O-RING	
	43	1	**3J-1907**	1	SEAL-O-RING	
	44	1	**4J-5477**	1	SEAL-O-RING	
	45	1	**4P-7581**	1	CLIP	
	46	1	**5P-7468**	2	CLIP (SLOT)	
	47	1	**5P-7469**	2	CLIP (TAB)	
	48	1	**5P-8444**	2	GROMMET	
	49	1	**5P-9297**	1	CLIP	
	50	1	**6D-1641**	1	CLIP	
	51	1	**6V-3965**	1	FITTING (QUICK DISCONNECT)	
	52	1	**6V-8397**	1	SEAL-O-RING	
	53	1	**7M-8485**	1	SEAL-O-RING	

325-7270 **LINES GP-WINCH** *(contd.)* **i03735040**

NOTE	REF NO	GRAPHIC REF	PART NUMBER	QTY	PART NAME 1 2 3 4 5 6 (PRODUCT LEVEL)	SEE PAGE
	54	1	**7N-0900**	1	SPACER (0.423X0.675X2.38-IN)	
	55	1	**7X-7729**	4	WASHER (11X25X3-MM THK)	
	56	1	**8T-4121**	24	WASHER-HARD (11X21X2.5-MM THK)	
M	57	1	**8T-4133**	12	NUT (M10X1.5-THD)	
M	58	1	**8T-4136**	4	BOLT (M10X1.5X25-MM)	
M	59	1	**8T-4137**	4	BOLT (M10X1.5X20-MM)	
M	60	1	**8T-4172**	1	BOLT (M10X1.5X80-MM)	
M	61	1	**8T-4182**	12	BOLT (M10X1.5X45-MM)	
M	62	1	**8T-4183**	2	BOLT (M12X1.75X40-MM)	
M	63	1	**8T-4195**	2	BOLT (M10X1.5X30-MM)	
M	64	1	**8T-4200**	1	BOLT (M8X1.25X16-MM)	
	65	1	**8T-4223**	4	WASHER-HARD (13.5X25.5X3-MM THK)	
M	66	1	**8T-4244**	2	NUT (M12X1.75-THD)	
M	67	1	**8T-6466**	4	BOLT (M10X1.5X60-MM)	
M	68	1	**8T-7329**	1	BOLT (M8X1.25X55-MM)	
	69	1	**8T-9403**	8	FLANGE-HALF	

B-USE AS REQUIRED
E-ORDER BY THE CENTIMETER
I-REFER TO HYDRAULIC INFORMATION SYSTEM
M-METRIC PART
Y-SEPARATE ILLUSTRATION

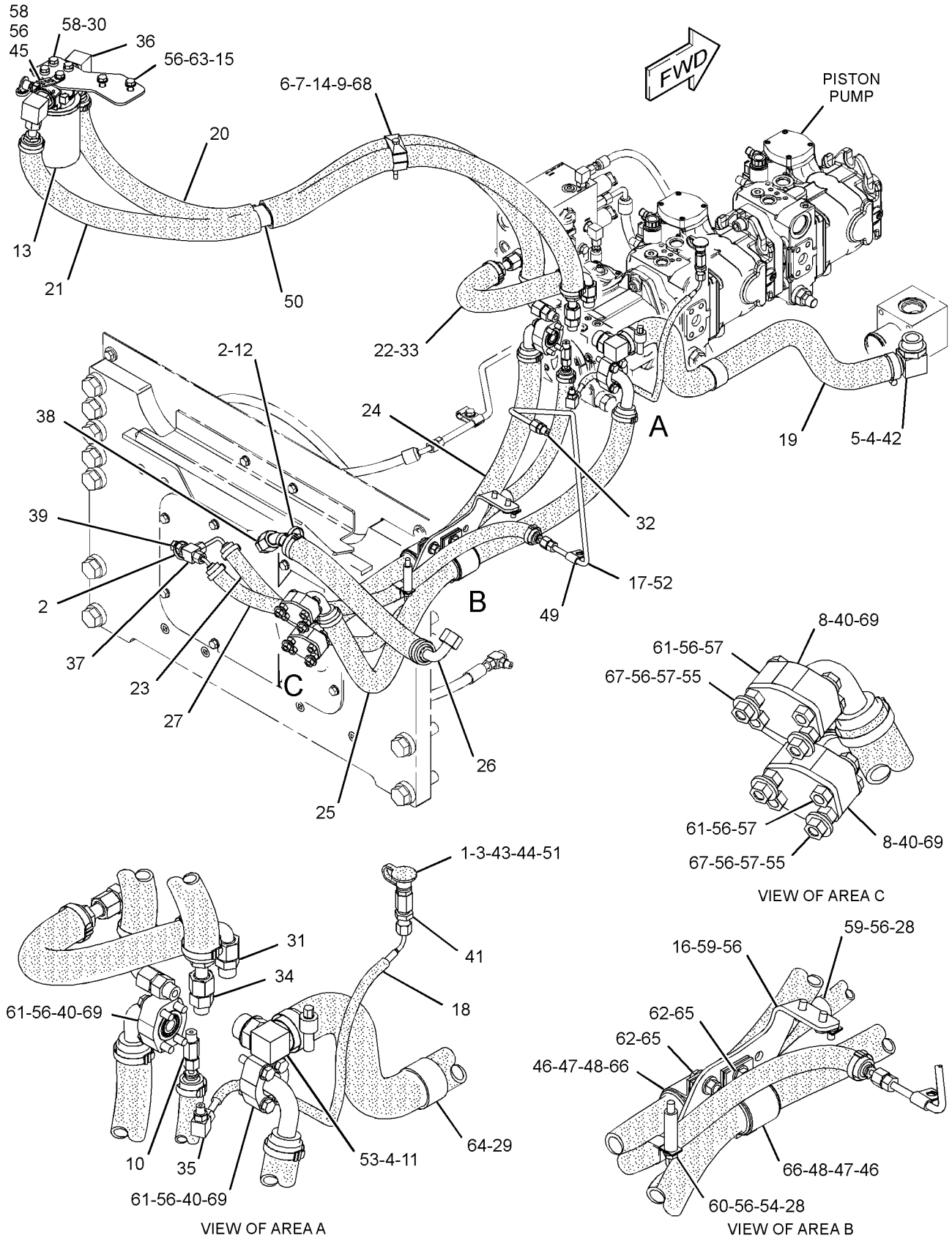

GRAPHIC #1 **<END>** g02033933

HYDRAULIC SYSTEM

274-6747 MANIFOLD GP-CONTROL

S/N: JTD1-UP; FFF1-UP; LLL1-UP

PART OF 254-1358, 271-9177, 286-8056, 322-6504, 322-6505 VALVE GP-CONTROL

SMCS-5264 **i04419316**

NOTE	REF NO	GRAPHIC REF	PART NUMBER	QTY	PART NAME 1 2 3 4 5 6 (PRODUCT LEVEL)	SEE PAGE
M	1	1	**8T-1158**	2	BOLT-SOCKET HEAD (M8X1.25X20-MM)	
	2	1	**105-4593**	2	POPPET	
	3	1	**212-6603**	2	PLUG AS	
					(EACH INCLUDES)	
		1	**6V-8978**	1	SEAL-O-RING	
	4	1	**245-1181**	2	FLANGE	
J	5	1	**252-4734**	2	VALVE GP-SOLENOID (12-VOLT) (MOTOR, 2-SPEED)	
					(EACH INCLUDES)	
		1	**245-1181**	1	FLANGE	
	6	1	**263-9560**	1	SPRING	
	7	1	**263-9561**	1	SPRING	
					AVAILABLE REPAIR KIT(S):	
J			**245-1912**	1	KIT-SEAL (SOLENOID VALVE)	
					(INCLUDES O-RING SEALS)	

J-KIT MARKED J SERVICES PARTS MARKED J
M-METRIC PART

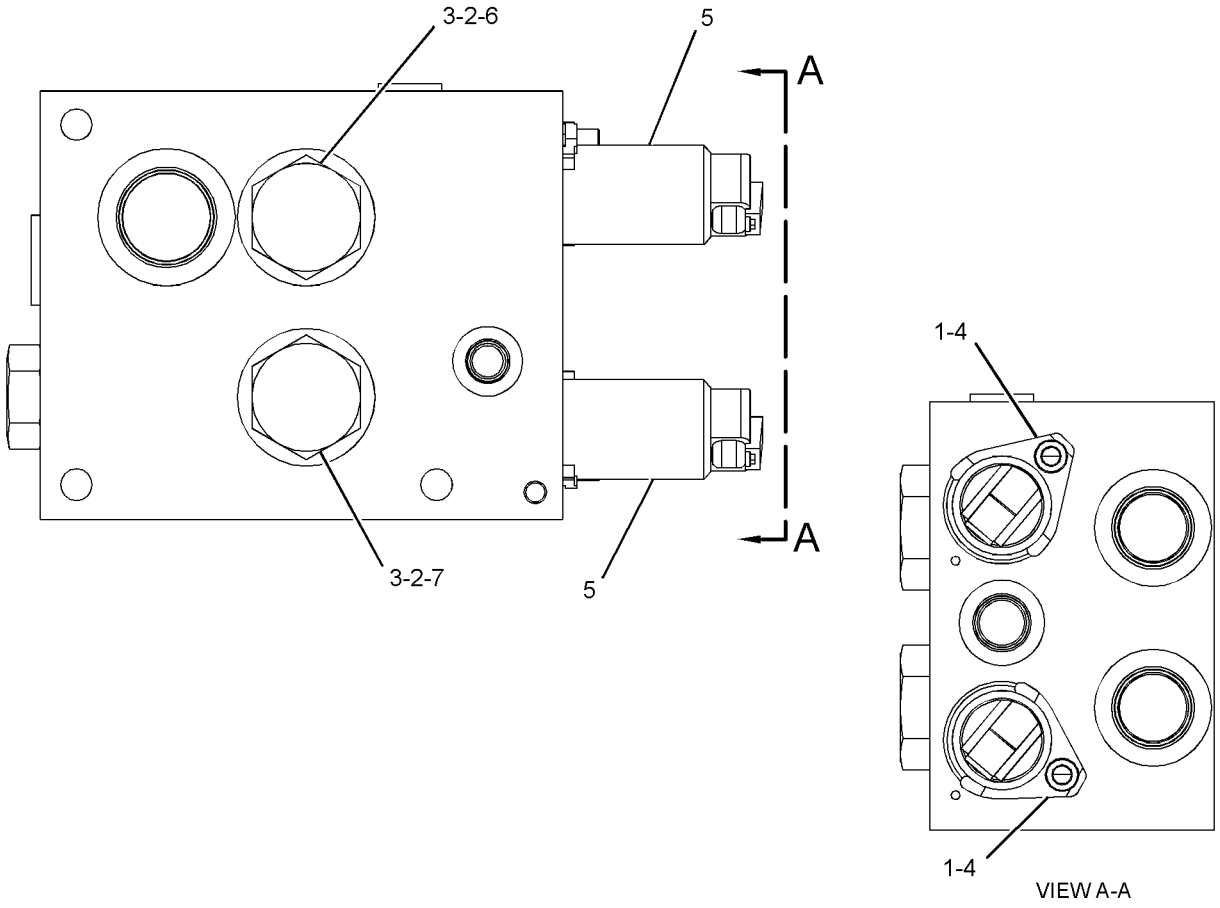

GRAPHIC #1 **<END>** g01358074

269-1087 MANIFOLD GP-VALVE–OUTLET

S/N: JTD1-UP; FFF1-UP; LLL1-UP
PART OF 254-1450 VALVE GP-BANK 3, 323-8150 VALVE GP-BANK 4, 323-8151 VALVE GP-BANK 5
AN ATTACHMENT

SMCS-5264 **i03634806**

NOTE	REF NO	GRAPHIC REF	PART NUMBER	QTY	PART NAME 1 2 3 4 5 6 (PRODUCT LEVEL)	SEE PAGE
					(NO SERVICED PARTS)	

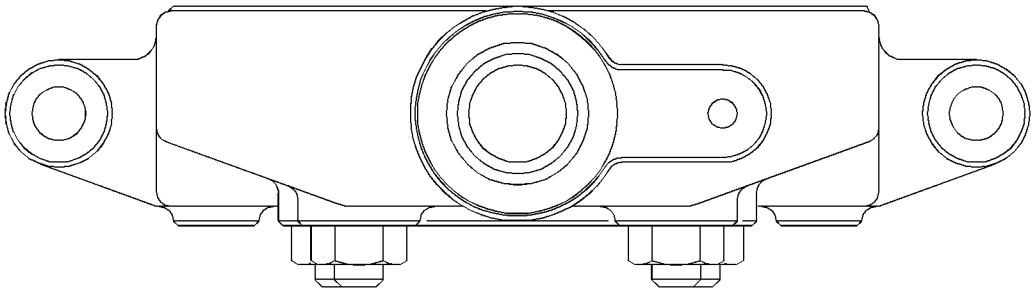

GRAPHIC #1 **<END>** g01776457

HYDRAULIC SYSTEM

200-1729 MOTOR GP-PISTON

S/N: JAG1-UP
PART OF 208-5549 MOTOR & MTG GP-WINCH
AN ATTACHMENT

SMCS-5058 **i04419067**

NOTE	REF NO	GRAPHIC REF	PART NUMBER	QTY	PART NAME 1 2 3 4 5 6 (PRODUCT LEVEL)	SEE PAGE
	1	1	**2H-9247**	1	SEAL-O-RING	
	2	1	**191-3539**	2	NUT-SEAL	
	3	1	**9S-8006**	1	PLUG-O-RING	
	4	1	**6V-4589**	1	SEAL-O-RING	
	5	1	**8T-9598**	1	RING-RETAINING	
	6	1	**6E-5063**	2	CAP AS	
	7	1	**7X-1553**	1	SEAL-LIP TYPE	
	8	1	**9S-8008**	1	PLUG-O-RING	
	9	1	**6V-5050**	1	SEAL-O-RING	
	10	1	**9S-8004**	3	PLUG-O-RING	
	11	1	**6V-5049**	3	SEAL-O-RING	
	12	1	**141-0305**	1	SETSCREW	
M	13	1	**096-4900**	1	SETSCREW-SOCKET	

M-METRIC PART

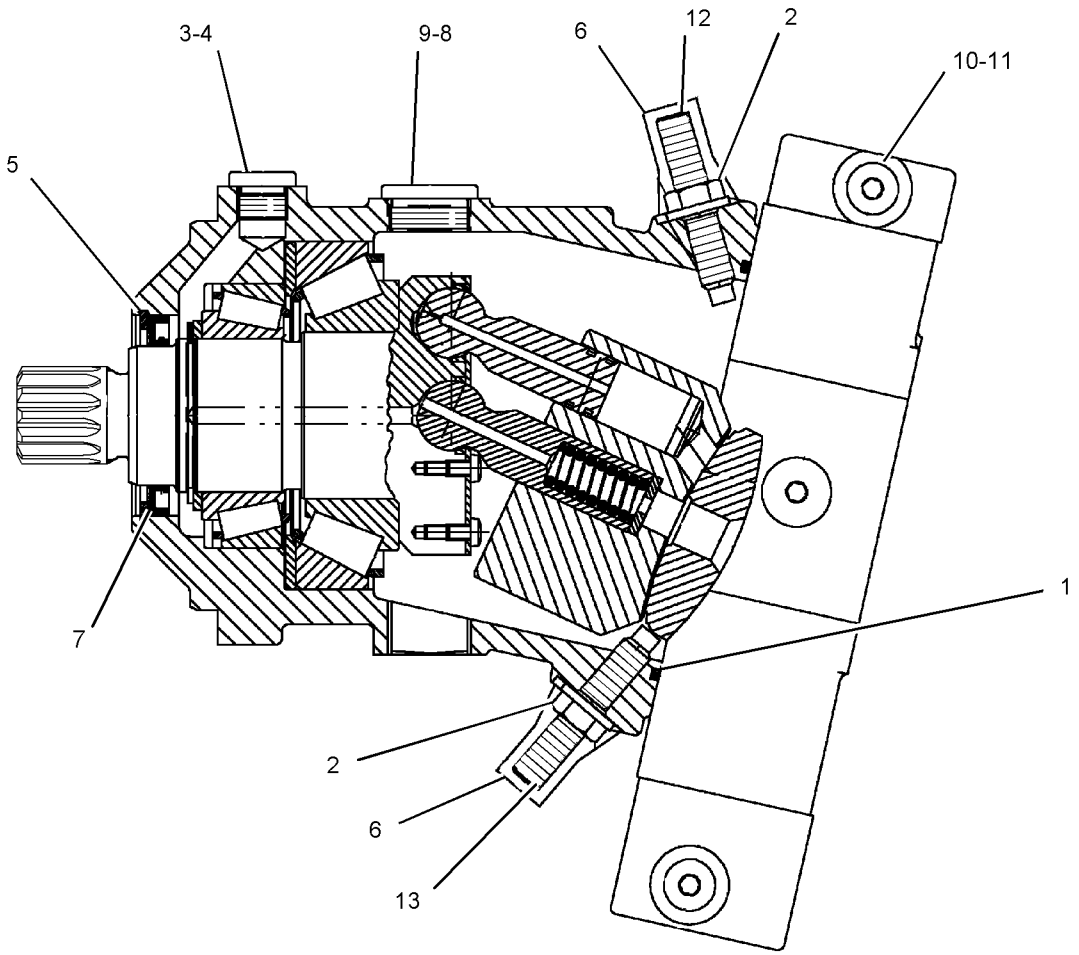

GRAPHIC #1 **<END>** g01009333

244-7452 PUMP GP-GEAR–IMPLEMENT

S/N: JTD1-UP; FFF1-UP; LLL1-UP
PART OF 244-7385, 317-2808 HYDRAULIC AR

SMCS-5073 **i04419070**

NOTE	REF NO	GRAPHIC REF	PART NUMBER	QTY	PART NAME 1 2 3 4 5 6 (PRODUCT LEVEL)	SEE PAGE
	1	1	**6D-1004**	1	GASKET	
J	2	1	**269-0004**	1	PUMP GP-GEAR (IMPLEMENT)	
	3	1	**8T-4121**	2	WASHER-HARD (11X21X2.5-MM THK)	
M	4	1	**9X-6032**	2	BOLT-SOCKET HEAD (M10X1.5X30-MM)	
					AVAILABLE REPAIR KIT(S):	
J			**138-8381**	1	KIT-SEAL (GEAR PUMP)	
					(INCLUDES SHAFT SEAL, COVER SEALS, SEALS & RETAINING RING)	

J-KIT MARKED J SERVICES PART MARKED J
M-METRIC PART

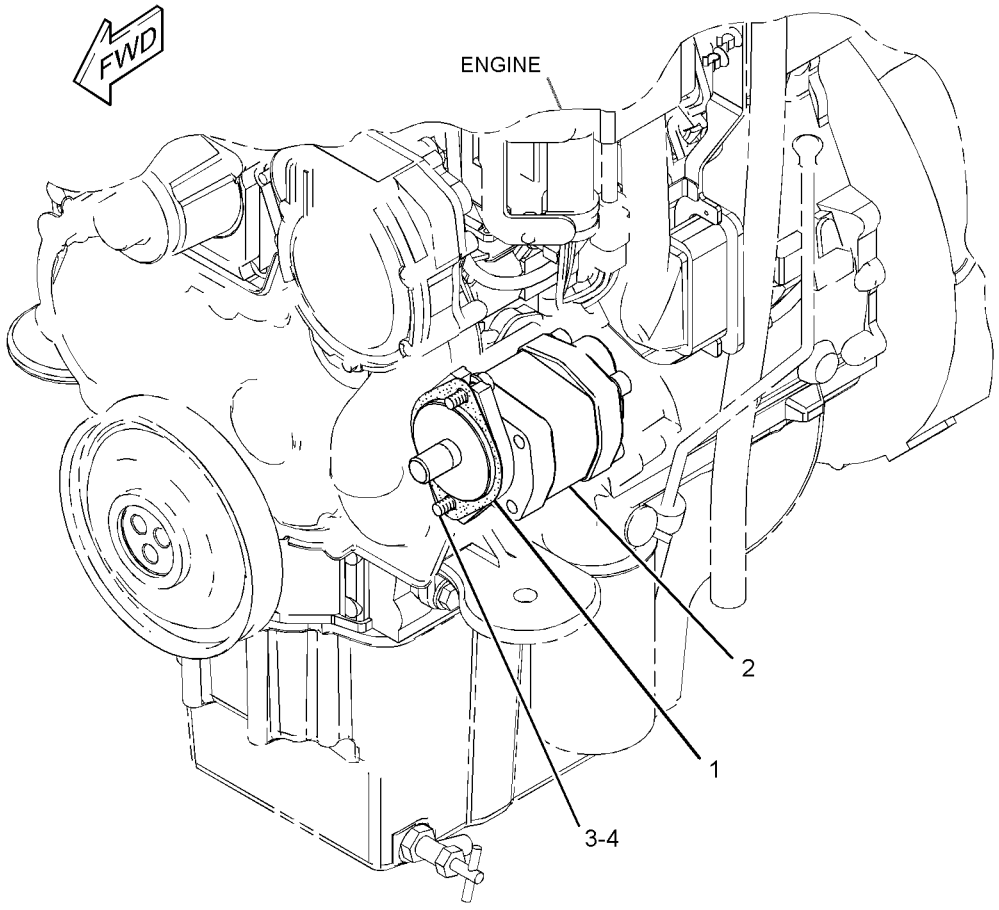

GRAPHIC #1 **<END>** g01331076

274-7516 SUPPORT GP-PUMP DRIVE

S/N: JTD1-UP; FFF1-UP; LLL1-UP
PART OF 244-7450, 292-0122, 300-8543 DRIVE AR, 244-7454, 292-0124, 300-8544, 325-6516, 325-6519 DRIVE AR-WINCH
AN ATTACHMENT

SMCS-3203 **i02645584**

NOTE	REF NO	GRAPHIC REF	PART NUMBER	QTY	PART NAME 1 2 3 4 5 6 (PRODUCT LEVEL)	SEE PAGE
	1	1	**274-7518**	1	BRACKET AS	
	2	1	**5P-4116**	1	WASHER-HARD (8.8X20.5X2-MM THK)	
M	3	1	**8T-4189**	6	BOLT (M8X1.25X20-MM)	
	4	1	**8T-4223**	4	WASHER-HARD (13.5X25.5X3-MM THK)	
	5	1	**8T-4224**	5	WASHER-HARD (8.8X16X2-MM THK)	
M	6	1	**8T-4956**	4	BOLT (M12X1.75X35-MM)	

M-METRIC PART

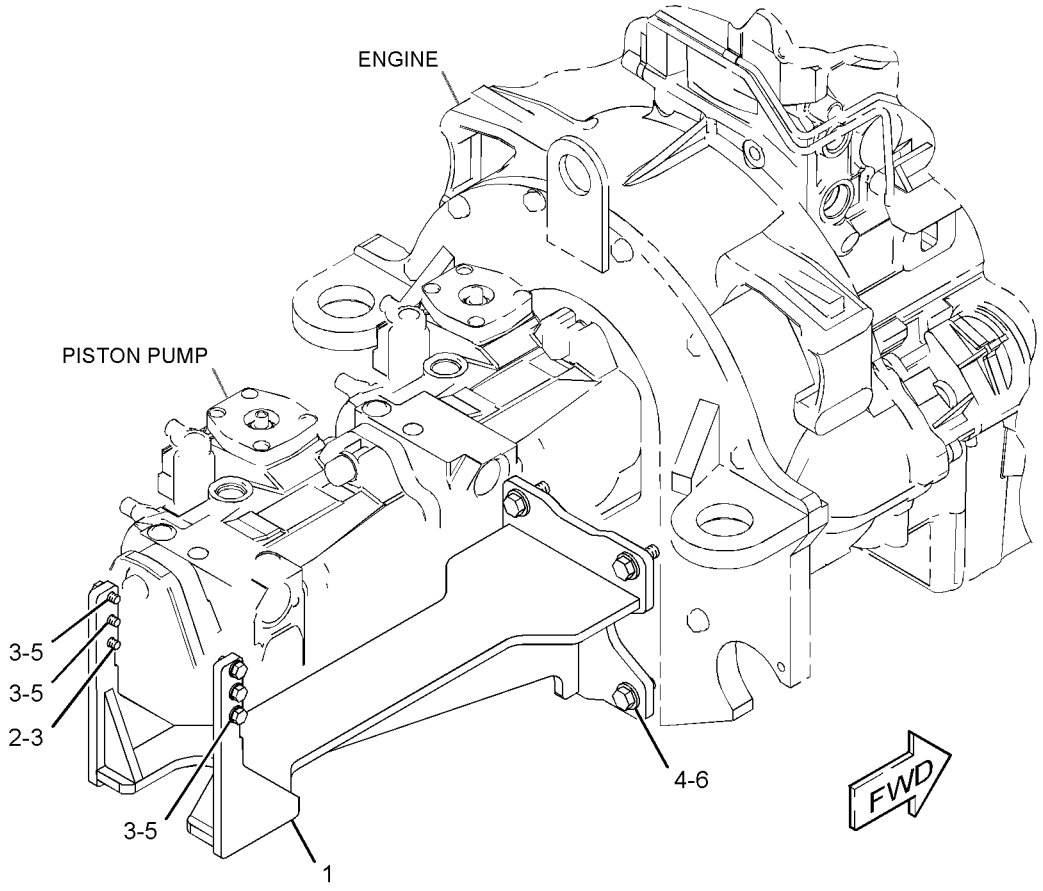

GRAPHIC #1 **<END>** g01333221

319-8113 TANK & MTG GP-HYDRAULIC—FIRE PLOW

S/N: JTD1-UP; FFF1-UP; LLL1-UP
PART OF 325-6496, 325-6497, 325-6502 CONVERSION AR-MACHINE OPTION
AN ATTACHMENT

SMCS-5056 **i03696045**

NOTE	REF NO	GRAPHIC REF	PART NUMBER	QTY	PART NAME 1 2 3 4 5 6 (PRODUCT LEVEL)	SEE PAGE
	1	1	**1P-4278**	6	CLAMP-HOSE	
	2	1	**7K-1181**	9	STRAP-CABLE	
	3	1	**9R-9925**	2	FILTER ELEMENT-BREATHER (HYDRAULIC TANK)	
	4	1	**255-1152**	1	BRACKET AS	
	5	1	**284-2885**	1	HOSE	
Y	6	1	*319-8114*	1	TANK GP-HYDRAULIC (FIRE PLOW)	618
	7	1	**5P-9297**	1	CLIP	
	8	1	**7X-7729**	14	WASHER (11X25X3-MM THK)	
	9	1	**8T-4121**	1	WASHER-HARD (11X21X2.5-MM THK)	
M	10	1	**8T-4136**	10	BOLT (M10X1.5X25-MM)	
M	11	1	**8T-4137**	5	BOLT (M10X1.5X20-MM)	
	12	1	**8T-4984**	1	CLAMP-HOSE	
	13	1	**8T-6703**	1	CLAMP-HOSE	
E	14	1	**188-4653**		HOSE-HYDRAULIC (89-CM EACH)	
E	15	1	**5P-1442**		HOSE (138.6-CM)	
E	15A	1	**5P-1442**		HOSE (162.2-CM)	
D	16	1	**6V-2495**		SEAL (0.2-M EACH)	

D-ORDER BY THE METER
E-ORDER BY THE CENTIMETER
M-METRIC PART
Y-SEPARATE ILLUSTRATION

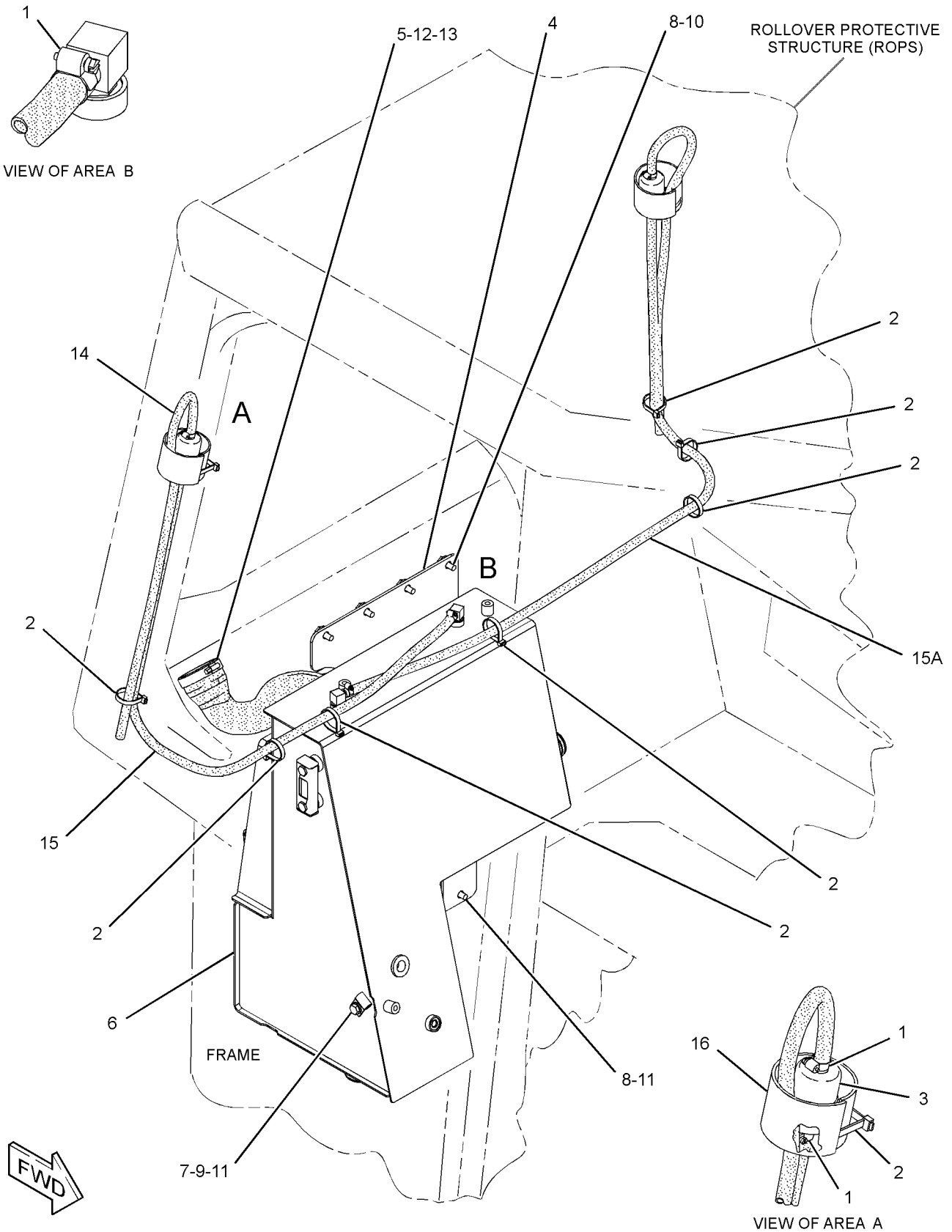

GRAPHIC #1

<END>

g02006313

244-7426 TANK GP-HYDRAULIC

S/N: JTD1-175; FFF1-598; LLL1-752
PART OF 244-7385, 317-2808 HYDRAULIC AR

SMCS-5056 **i03602316**

NOTE	REF NO	GRAPHIC REF	PART NUMBER	QTY	PART NAME 1 2 3 4 5 6 (PRODUCT LEVEL)	SEE PAGE
	1	1	**1P-4278**	10	CLAMP-HOSE	
	2	1	**7K-1181**	11	STRAP-CABLE	
	3	1	**8T-2173**	1	CONNECTOR-HOSE	
	5	1	**187-5086**	1	TEE	
	6	1	**9R-9925**	2	FILTER ELEMENT-BREATHER (HYDRAULIC TANK)	
Y	7	1	*244-7440*	1	TANK GP-HYDRAULIC	617
	8	1	**255-1152**	1	BRACKET AS	
	9	1	**284-2885**	1	HOSE	
	10	1	**291-9247**	1	BRACKET AS	
E	11	1	**5P-1442**		HOSE (139.2-CM)	
E	11A	1	**5P-1442**		HOSE (59-CM)	
E	11B	1	**5P-1442**		HOSE (104-CM)	
E	11C	1	**5P-1442**		HOSE (106-CM)	
D	12	1	**6V-2495**		SEAL (0.2-M EACH)	
M	13	1	**5C-9553**	2	BOLT (M6X1X16-MM)	
	14	1	**7X-7729**	14	WASHER (11X25X3-MM THK)	
M	15	1	**8T-4136**	4	BOLT (M10X1.5X25-MM)	
M	16	1	**8T-4137**	4	BOLT (M10X1.5X20-MM)	
M	17	1	**8T-4191**	6	BOLT (M10X1.5X16-MM)	
	18	1	**8T-4984**	1	CLAMP-HOSE	
	19	1	**8T-6703**	1	CLAMP-HOSE	
	20	1	**9X-8256**	2	WASHER (6.6X12X2-MM THK)	
	21	1	**314-9768**	1	GAUGE-SIGHT	
	22	1	**8T-9402**	2	CLAMP-HOSE	
E	23	1	**5P-0743**		HOSE (32-CM)	

D-ORDER BY THE METER
E-ORDER BY THE CENTIMETER
M-METRIC PART
Y-SEPARATE ILLUSTRATION

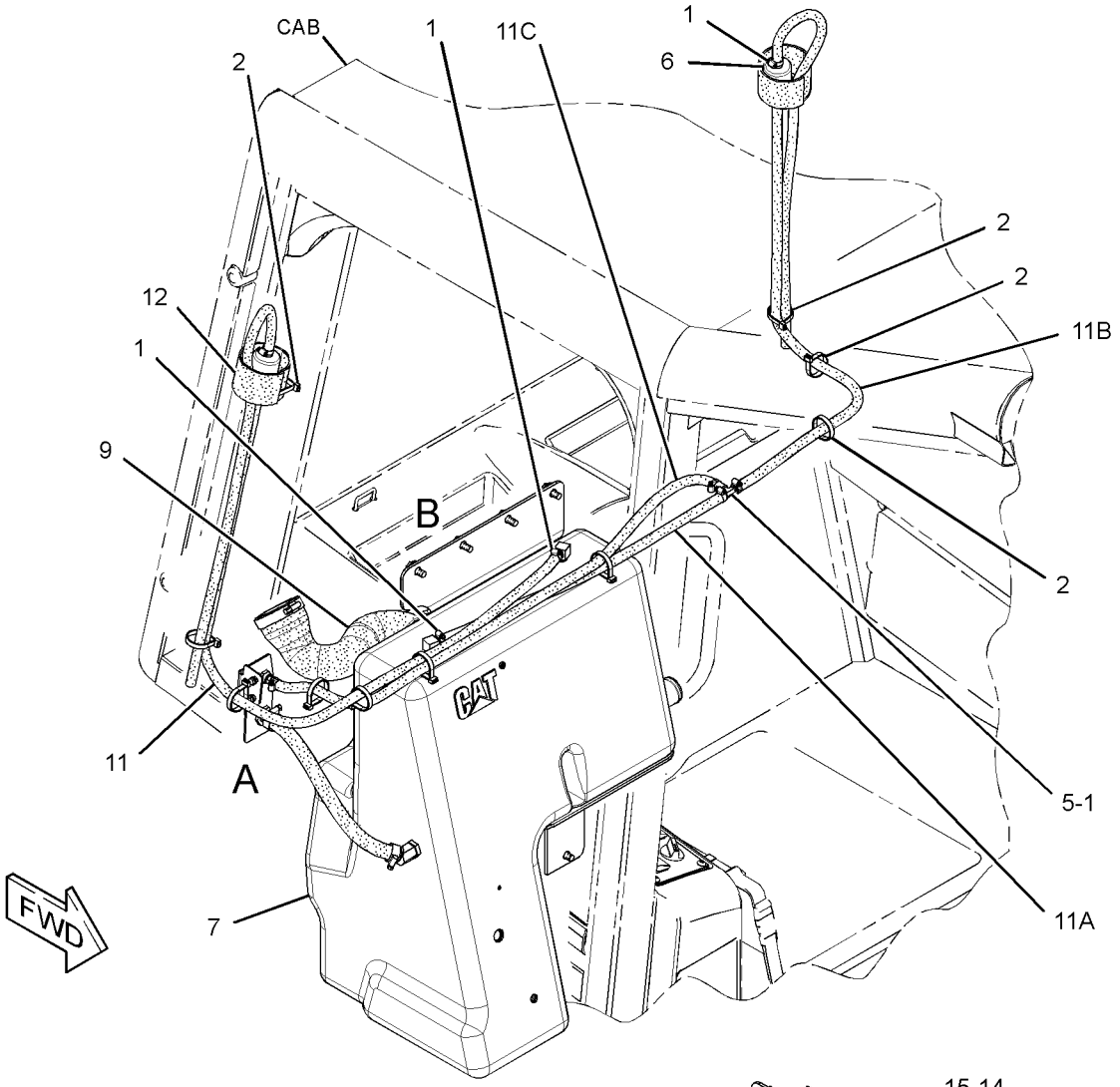

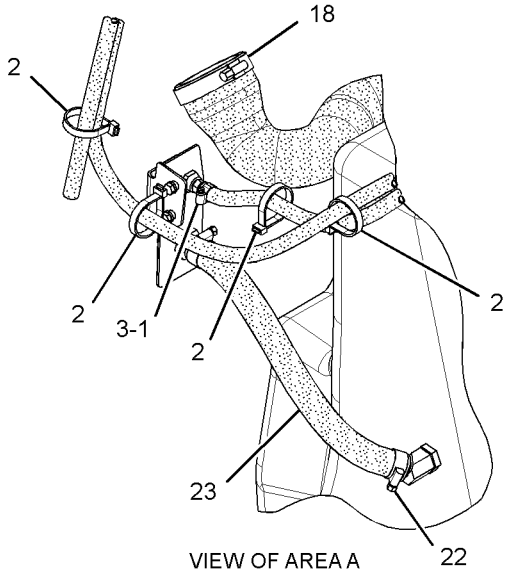

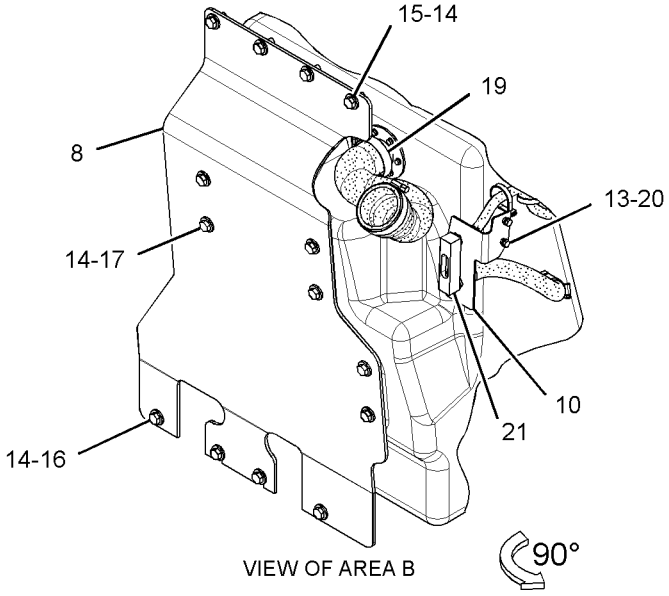

GRAPHIC #1 **<END>** g01733673

HYDRAULIC SYSTEM

244-7426 TANK GP-HYDRAULIC

S/N: JTD176-UP; FFF599-UP; LLL753-UP
PART OF 244-7385, 317-2808 HYDRAULIC AR

SMCS-5056 **i04046699**

NOTE	REF NO	GRAPHIC REF	PART NUMBER	QTY	PART NAME 1 2 3 4 5 6 (PRODUCT LEVEL)	SEE PAGE
C	1	1	**1P-4278**	6	CLAMP-HOSE	
C	2	1	**7K-1181**	8	STRAP-CABLE	
	3	1	**9R-9925**	2	FILTER ELEMENT-BREATHER (HYDRAULIC TANK)	
	4	1	**255-1152**	1	BRACKET AS	
	5	1	**284-2885**	1	HOSE	
CY	6	1	*319-8820*	1	TANK GP-HYDRAULIC	619
	7	1	**7X-7729**	14	WASHER (11X25X3-MM THK)	
M	8	1	**8T-4136**	4	BOLT (M10X1.5X25-MM)	
M	9	1	**8T-4137**	4	BOLT (M10X1.5X20-MM)	
M	10	1	**8T-4191**	6	BOLT (M10X1.5X16-MM)	
	11	1	**8T-4984**	1	CLAMP-HOSE	
	12	1	**8T-6703**	1	CLAMP-HOSE	
E	13	1	**188-4653**		HOSE-HYDRAULIC (89-CM EACH)	
CE	14	1	**5P-1442**		HOSE (170-CM)	
CE	14A	1	**5P-1442**		HOSE (140-CM)	
CD	15	1	**6V-2495**		SEAL (0.2-M EACH)	

C-CHANGE FROM PREVIOUS TYPE
D-ORDER BY THE METER
E-ORDER BY THE CENTIMETER
M-METRIC PART
Y-SEPARATE ILLUSTRATION

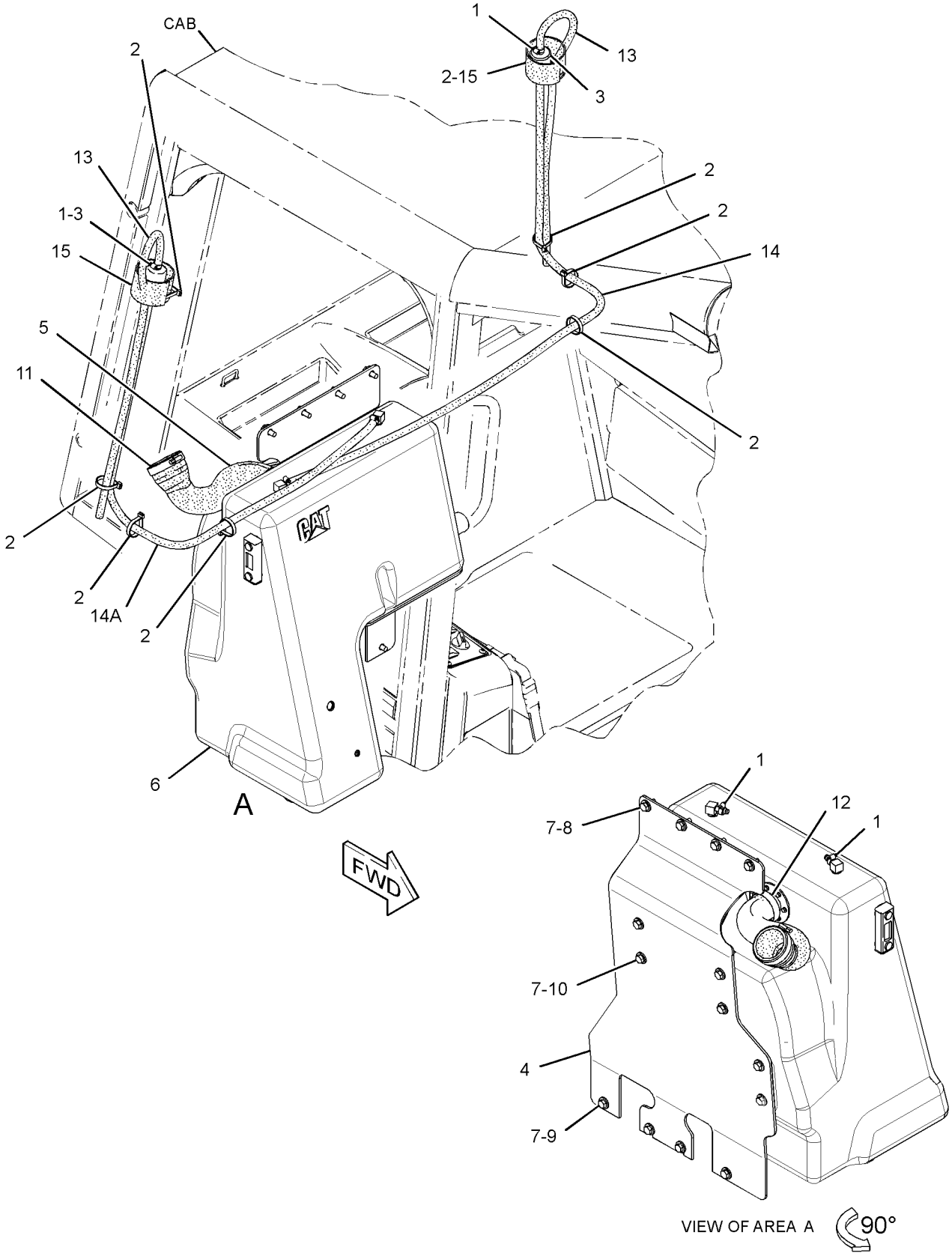

GRAPHIC #1 **<END>** g02506396

244-7440 TANK GP-HYDRAULIC

S/N: JTD1-175; FFF1-598; LLL1-752
59.5- LITER (15.8-GAL)
PART OF 244-7426 TANK GP-HYDRAULIC

SMCS-5056 **i02918747**

NOTE	REF NO	GRAPHIC REF	PART NUMBER	QTY	PART NAME 1 2 3 4 5 6 (PRODUCT LEVEL)	SEE PAGE
	1	1	**3E-4091**	2	ELBOW	
	2	1	**7F-8267**	1	SEAL-O-RING	
	3	1	**132-3056**	1	SEAL-O-RING	
	4	1	**194-4864**	1	ELBOW	
	5	1	**322-9703**	1	SCREEN-SUCTION (HYDRAULIC TANK)	
	6	1	**255-1155**	1	TANK AS-HYDRAULIC	
	7	1	**256-7752**	1	COVER AS	
	8	1	**284-3705**	1	TUBE AS	
	9	1	**3J-7354**	2	SEAL-O-RING	
	10	1	**6V-4589**	1	SEAL-O-RING	
M	11	1	**8T-0288**	6	BOLT (M5X0.8X12-MM)	
	12	1	**8T-0328**	6	WASHER-HARD (5.5X10X1-MM THK)	
M	13	1	**8T-4200**	6	BOLT (M8X1.25X16-MM)	
	14	1	**8T-4224**	6	WASHER-HARD (8.8X16X2-MM THK)	

M-METRIC PART

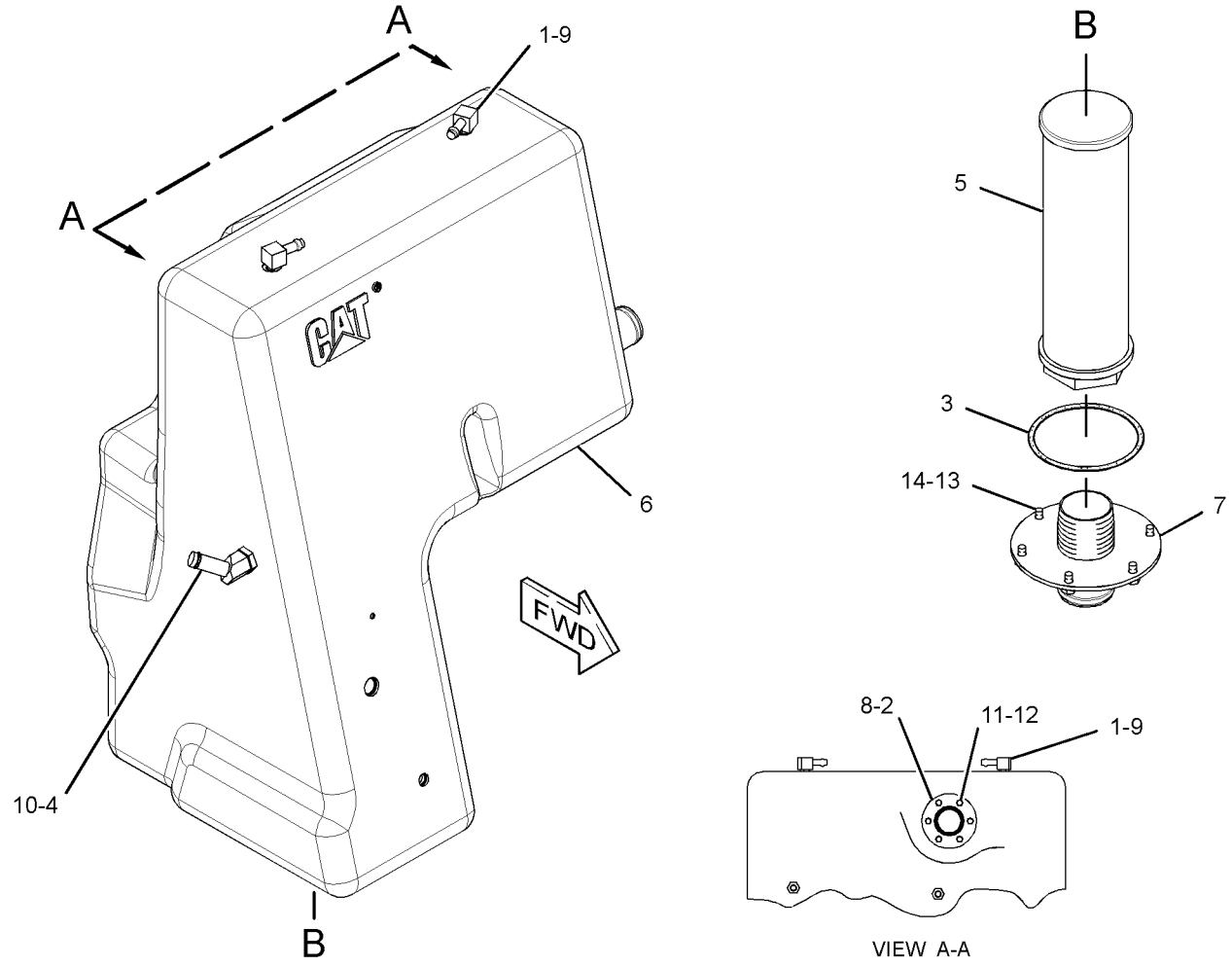

GRAPHIC #1 **<END>** g01407076

HYDRAULIC SYSTEM

319-8114 TANK GP-HYDRAULIC—FIRE PLOW

S/N: JTD1-UP; FFF1-UP; LLL1-UP
PART OF 319-8113 TANK & MTG GP-HYDRAULIC
AN ATTACHMENT

SMCS-5056 **i03698960**

NOTE	REF NO	GRAPHIC REF	PART NUMBER	QTY	PART NAME 1 2 3 4 5 6 (PRODUCT LEVEL)	SEE PAGE
	1	1	**3E-4091**	2	ELBOW	
	2	1	**197-7610**	1	COVER AS	
	3	1	**265-5644**	1	GAUGE GP-SIGHT (HYDRAULIC TANK OIL)	
	4	1	**319-8115**	1	TANK AS-HYDRAULIC	
	5	1	**322-9703**	1	SCREEN-SUCTION (HYDRAULIC TANK)	
	6	1	**110-1010**	1	GASKET-SCREEN (HYDRAULIC TANK)	
	7	1	**3J-7354**	2	SEAL-O-RING	
	8	1	**7X-7729**	8	WASHER (11X25X3-MM THK)	
M	9	1	**8T-4136**	8	BOLT (M10X1.5X25-MM)	

M-METRIC PART

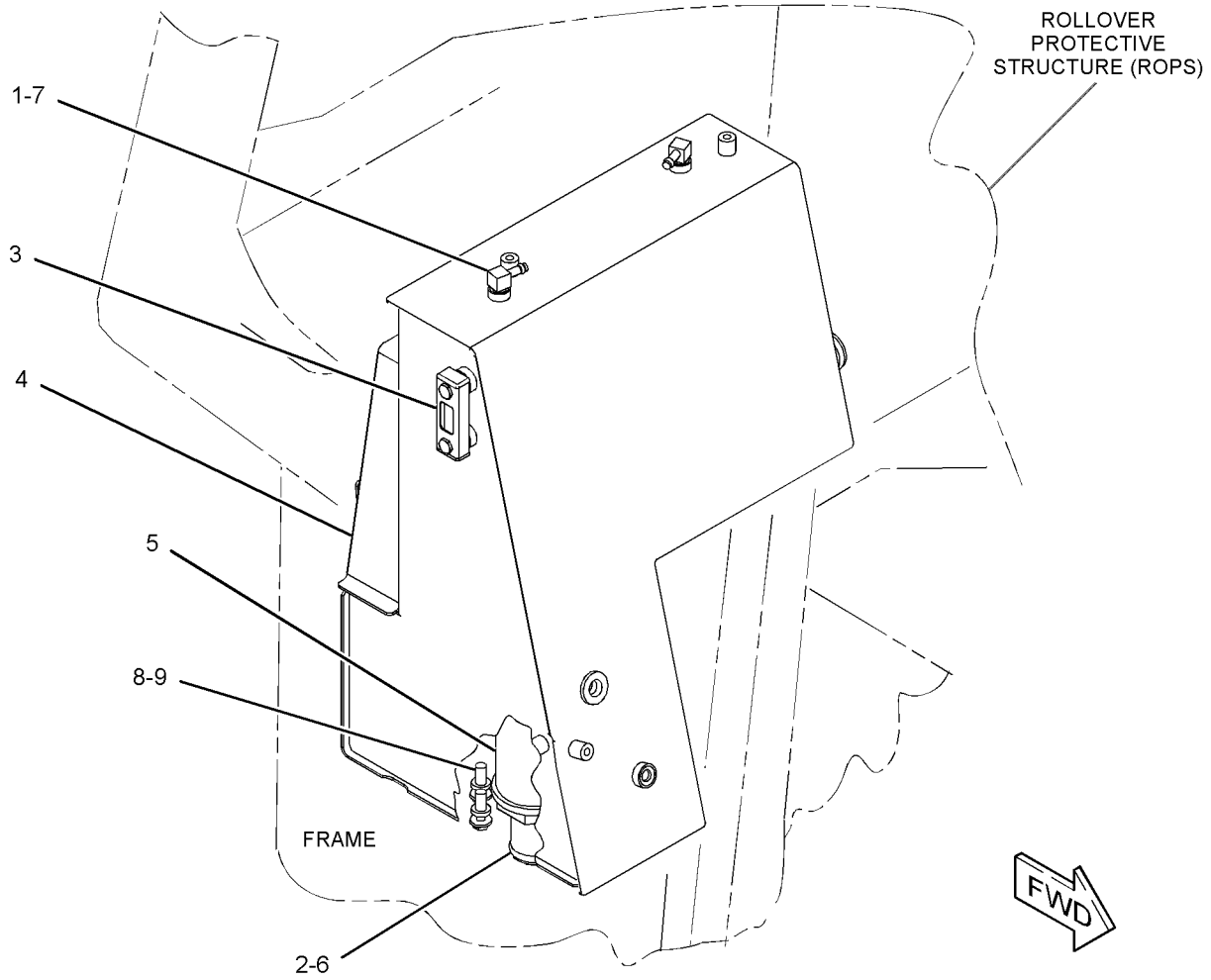

GRAPHIC #1 **<END>** g02006734

319-8820 TANK GP-HYDRAULIC

S/N: JTD176-UP; FFF599-UP; LLL753-UP
59-LITER (15.6-US GAL)
PART OF 244-7426 TANK GP-HYDRAULIC

SMCS-5056 **i04051794**

NOTE	REF NO	GRAPHIC REF	PART NUMBER	QTY	PART NAME 1 2 3 4 5 6 (PRODUCT LEVEL)	SEE PAGE
	1	1	**3E-4091**	2	ELBOW	
	2	1	**7F-8267**	1	SEAL-O-RING	
	3	1	**256-7752**	1	COVER AS	
	4	1	**284-3705**	1	TUBE AS	
	5	1	**319-8110**	1	TANK GP-HYDRAULIC	
		1	**265-5644**	1	GAUGE GP-SIGHT (HYDRAULIC TANK OIL)	
		1	**319-8832**	1	TANK AS-HYDRAULIC	
	6	1	**322-9703**	1	SCREEN-SUCTION (HYDRAULIC TANK)	
	7	1	**132-3056**	1	SEAL-O-RING	
	8	1	**3J-7354**	2	SEAL-O-RING	
M	9	1	**8T-0288**	6	BOLT (M5X0.8X12-MM)	
	10	1	**8T-0328**	6	WASHER-HARD (5.5X10X1-MM THK)	
M	11	1	**8T-4200**	6	BOLT (M8X1.25X16-MM)	
	12	1	**8T-4224**	6	WASHER-HARD (8.8X16X2-MM THK)	

M-METRIC PART

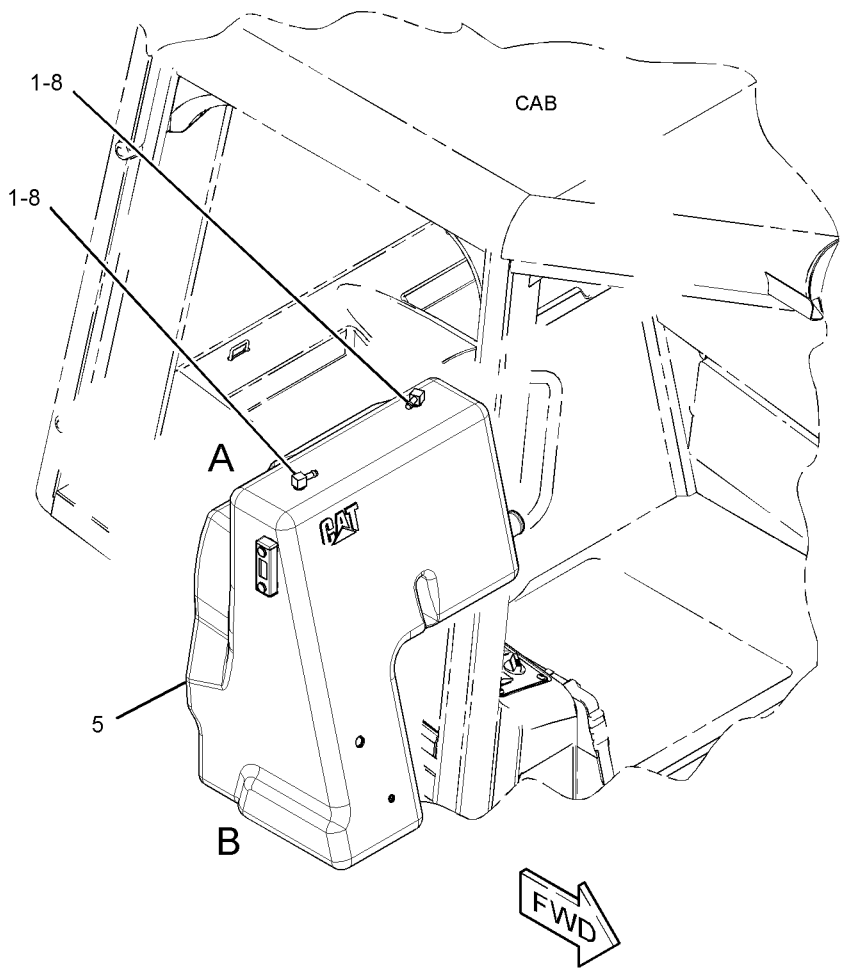

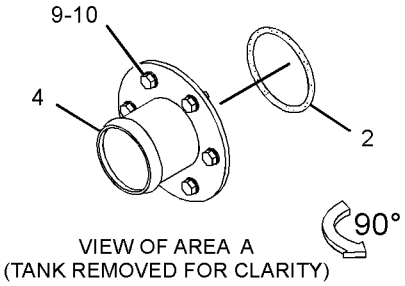

VIEW OF AREA A
(TANK REMOVED FOR CLARITY)

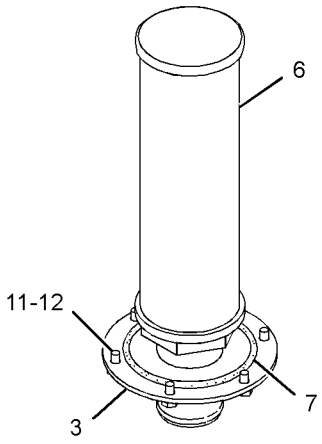

VIEW OF AREA B
(TANK REMOVED FOR CLARITY)

GRAPHIC #1 **<END>** g02492757

HYDRAULIC SYSTEM

325-7271 VALVE & MTG GP-CONTROL

S/N: JTD1-UP; FFF1-UP; LLL1-UP
PART OF 325-6522, 325-6525 HYDRAULIC AR
AN ATTACHMENT

SMCS-5051 **i03726322**

NOTE	REF NO	GRAPHIC REF	PART NUMBER	QTY	PART NAME 1 2 3 4 5 6 (PRODUCT LEVEL)	SEE PAGE
Y	1	1	**323-8150**	1	VALVE GP-BANK 4	628
M	2	1	**8T-4182**	3	BOLT (M10X1.5X45-MM)	
	3	1	**8T-7934**	3	WASHER-HARD (11X21X5-MM THK)	

M-METRIC PART
Y-SEPARATE ILLUSTRATION

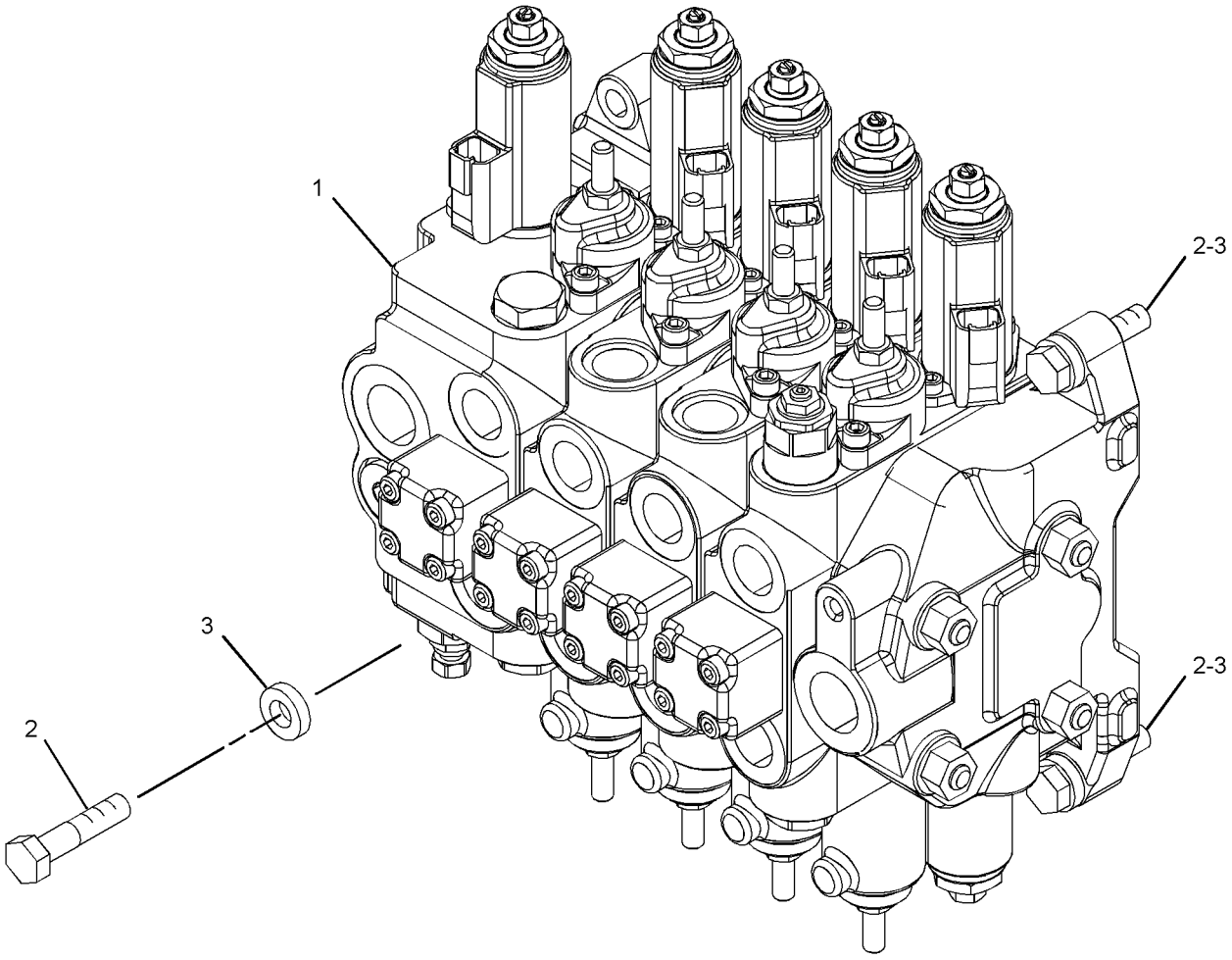

GRAPHIC #1 **<END>** g02010993

HYDRAULIC SYSTEM

325-7272 VALVE & MTG GP-CONTROL

S/N: JTD1-UP; FFF1-UP; LLL1-UP
PART OF 325-6521, 325-6528 HYDRAULIC AR
AN ATTACHMENT

SMCS-5051 **i03726468**

NOTE	REF NO	GRAPHIC REF	PART NUMBER	QTY	PART NAME 1 2 3 4 5 6 (PRODUCT LEVEL)	SEE PAGE
Y	1	1	**323-8151**	1	VALVE GP-BANK 5	630
	2	1	**2M-9780**	2	SEAL-O-RING	
	3	1	**8T-4121**	2	WASHER-HARD (11X21X2.5-MM THK)	
M	4	1	**8T-4133**	2	NUT (M10X1.5-THD)	
M	5	1	**8T-4182**	1	BOLT (M10X1.5X45-MM)	
	6	1	**8T-7934**	1	WASHER-HARD (11X21X5-MM THK)	
	7	1	**9S-4190**	2	PLUG-O-RING	

M-METRIC PART
Y-SEPARATE ILLUSTRATION

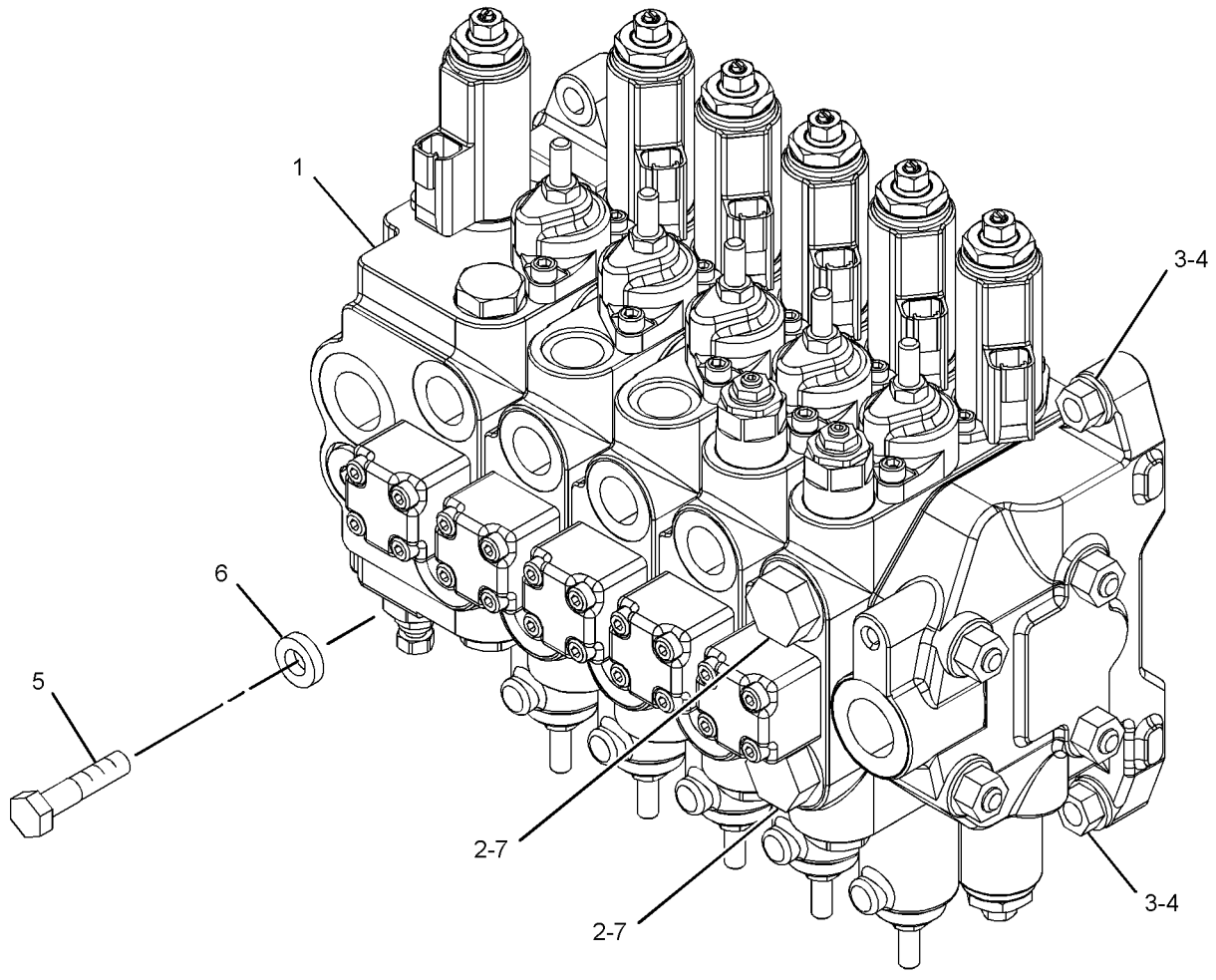

GRAPHIC #1 **<END>** g02013960

254-1386 VALVE & MTG GP-IMPLEMENT CONT–STANDARD

S/N: JTD1-UP; FFF1-UP; LLL1-UP
PART OF 264-4540 HYDRAULIC AR
AN ATTACHMENT

SMCS-5051 **i02819289**

NOTE	REF NO	GRAPHIC REF	PART NUMBER	QTY	PART NAME 1 2 3 4 5 6 (PRODUCT LEVEL)	SEE PAGE
Y	1	1	**254-1450**	1	VALVE GP-BANK 3	624
M	2	1	**8T-4182**	3	BOLT (M10X1.5X45-MM)	
	3	1	**8T-7934**	3	WASHER-HARD (11X21X5-MM THK)	

M-METRIC PART
Y-SEPARATE ILLUSTRATION

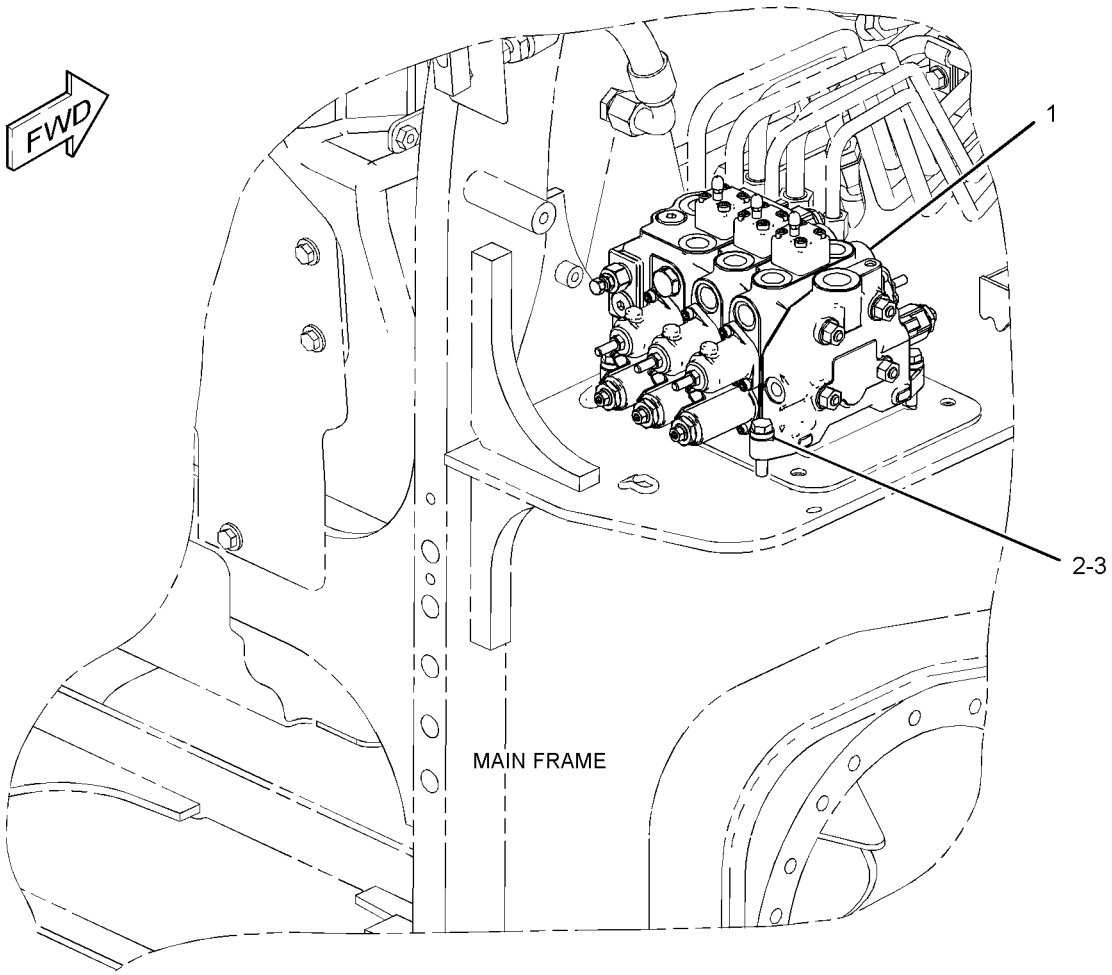

GRAPHIC #1 **<END>** g01373994

254-1457 VALVE & MTG GP-IMPLEMENT CONT

S/N: JTD1-UP; FFF1-UP; LLL1-UP
PART OF 264-4541, 264-4542 HYDRAULIC AR
AN ATTACHMENT

SMCS-5051 **i02679428**

NOTE	REF NO	GRAPHIC REF	PART NUMBER	QTY	PART NAME 1 2 3 4 5 6 (PRODUCT LEVEL)	SEE PAGE
Y	1	1	**254-1451**	1	VALVE GP-BANK 4 (IMPLEMENT)	626
M	2	1	**8T-4182**	3	BOLT (M10X1.5X45-MM)	
	3	1	**8T-7934**	3	WASHER-HARD (11X21X5-MM THK)	

M-METRIC PART
Y-SEPARATE ILLUSTRATION

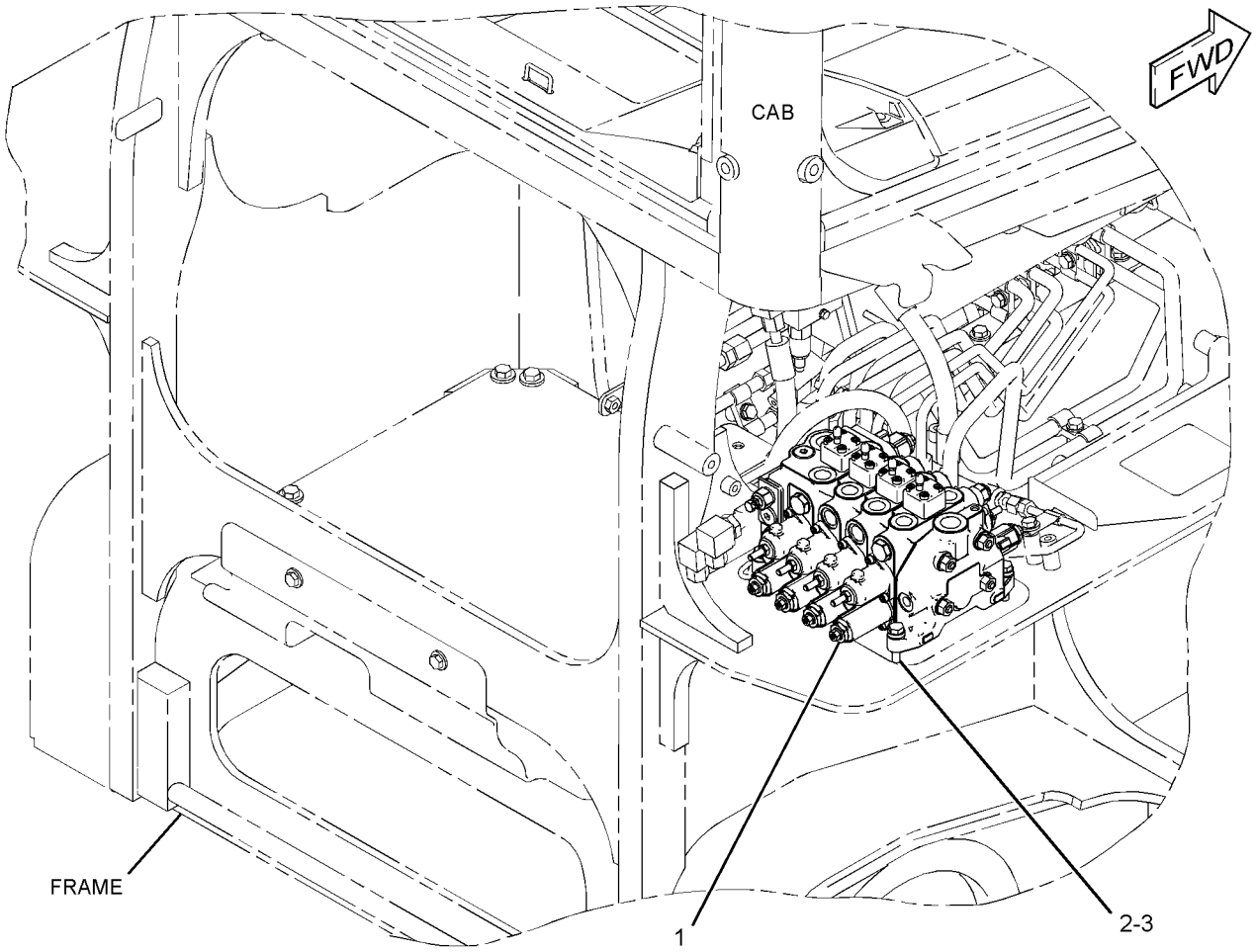

GRAPHIC #1 **<END>** g01379603

HYDRAULIC SYSTEM

254-1450 VALVE GP-BANK 3—IMPLEMENT

S/N: JTD1-UP; FFF1-UP; LLL1-UP
PART OF 254-1386 VALVE & MTG GP-IMPLEMENT CONT
AN ATTACHMENT

SMCS-5051 **i03871955**

NOTE	REF NO	GRAPHIC REF	PART NUMBER	QTY	PART NAME 1 2 3 4 5 6 (PRODUCT LEVEL)	SEE PAGE
Y	1	1	**269-1084**	1	VALVE GP-CONTROL (BLADE LIFT)	632
Y	2	1	**269-1085**	1	VALVE GP-CONTROL (ANGLE)	634
Y	3	1	**304-1139**	1	VALVE GP-CONTROL (TILT)	642
Y	4	1	**269-1087**	1	MANIFOLD GP-VALVE (OUTLET)	607
	5	1	**123-4363**	4	ROD	
M	6	1	**8T-4133**	4	NUT (M10X1.5-THD)	
	7	1	**095-1574**	24	SEAL-O-RING	
	8	1	**095-1590**	9	SEAL-O-RING	
	9	1	**095-1586**	3	SEAL-O-RING	
	10	1	**304-1154**	3	VALVE GP-CHECK (IMPLEMENT)	

M-METRIC PART
Y-SEPARATE ILLUSTRATION

254-1450 VALVE GP-BANK 3 *(contd.)* **i03871955**

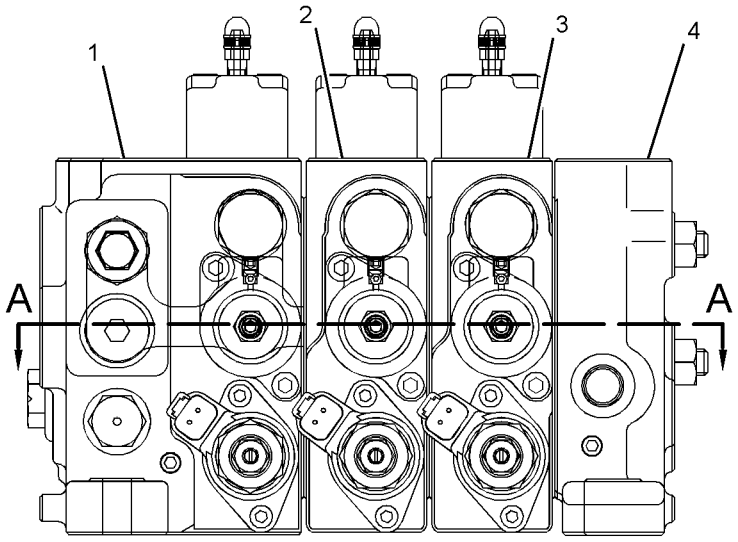

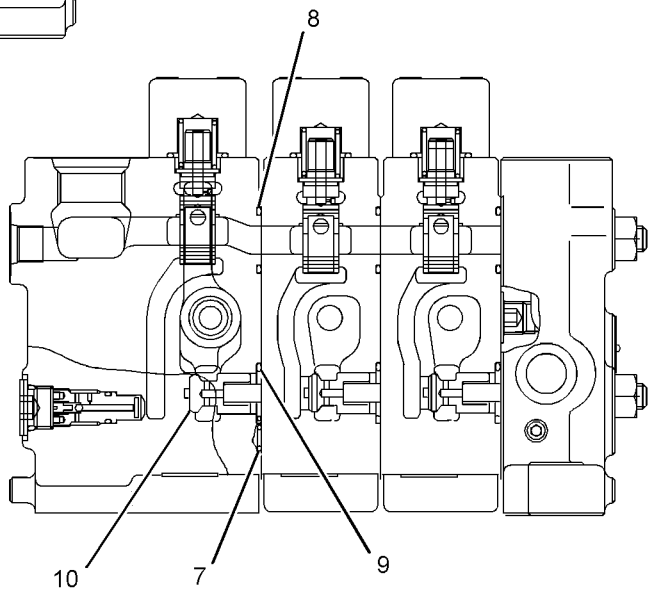

SECTION B-B

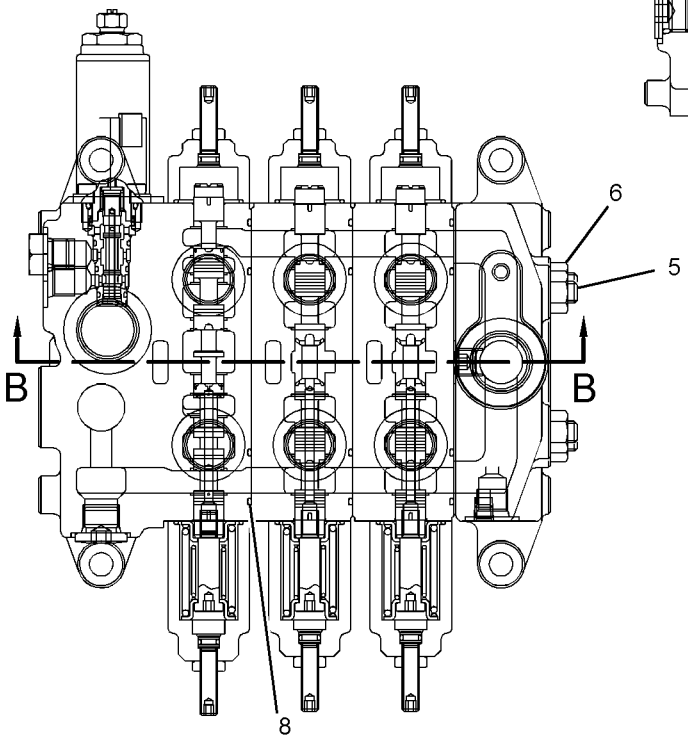

SECTION A-A

GRAPHIC #1 **<END>** g02004822

HYDRAULIC SYSTEM

254-1451 VALVE GP-BANK 4—IMPLEMENT

S/N: JTD1-UP; FFF1-UP; LLL1-UP
PART OF 254-1457 VALVE & MTG GP-IMPLEMENT CONT
AN ATTACHMENT

SMCS-5051 **i04415562**

NOTE	REF NO	GRAPHIC REF	PART NUMBER	QTY	PART NAME 1 2 3 4 5 6 (PRODUCT LEVEL)	SEE PAGE
Y	1	1	**269-1084**	1	VALVE GP-CONTROL (BLADE LIFT)	632
Y	2	1	**269-1085**	1	VALVE GP-CONTROL (ANGLE)	634
Y	3	1	**304-1139**	1	VALVE GP-CONTROL (TILT)	642
Y	4	1	**269-1086**	1	VALVE GP-CONTROL (AUXILIARY)	635
	5	1	**269-1087**	1	MANIFOLD GP-VALVE (OUTLET)	
	6	1	**9R-0699**	4	ROD	
M	7	1	**8T-4133**	4	NUT (M10X1.5-THD)	
	8	1	**095-1574**	32	SEAL-O-RING	
	9	1	**095-1590**	12	SEAL-O-RING	
	10	1	**095-1586**	4	SEAL-O-RING	
	11	1	**304-1154**	4	VALVE GP-CHECK (IMPLEMENT)	

M-METRIC PART
Y-SEPARATE ILLUSTRATION

254-1451 VALVE GP-BANK 4 ***(contd.)*** **i04415562**

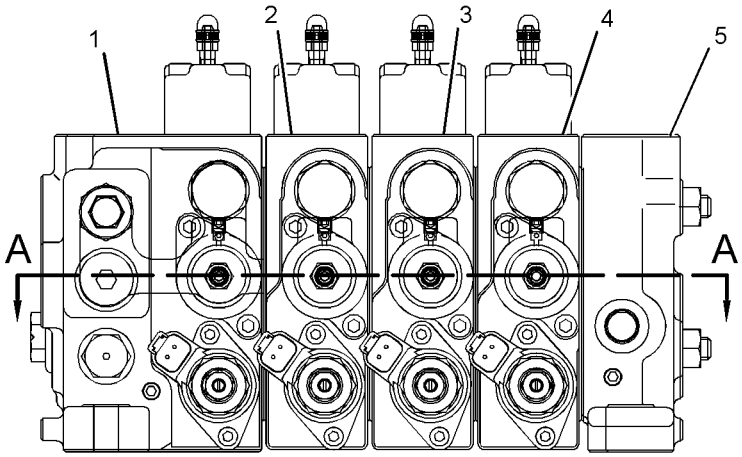

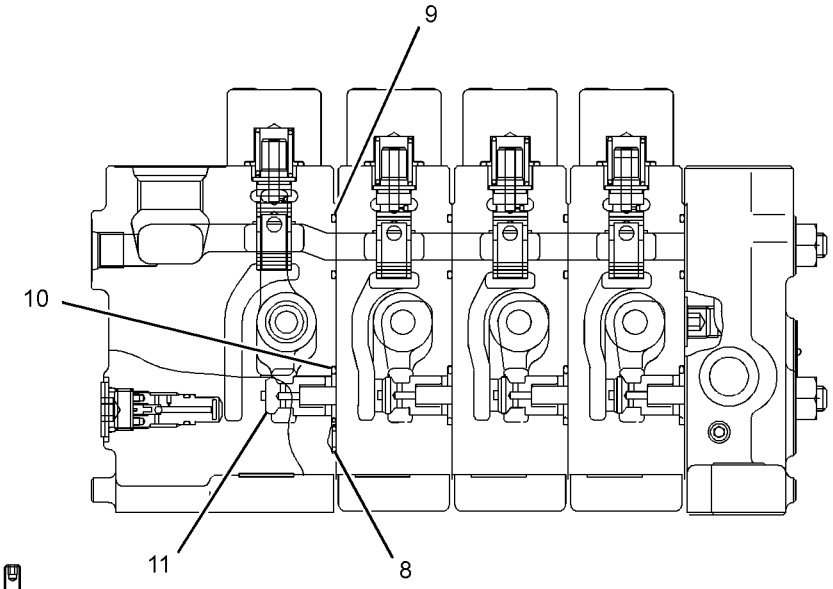

SECTION B-B

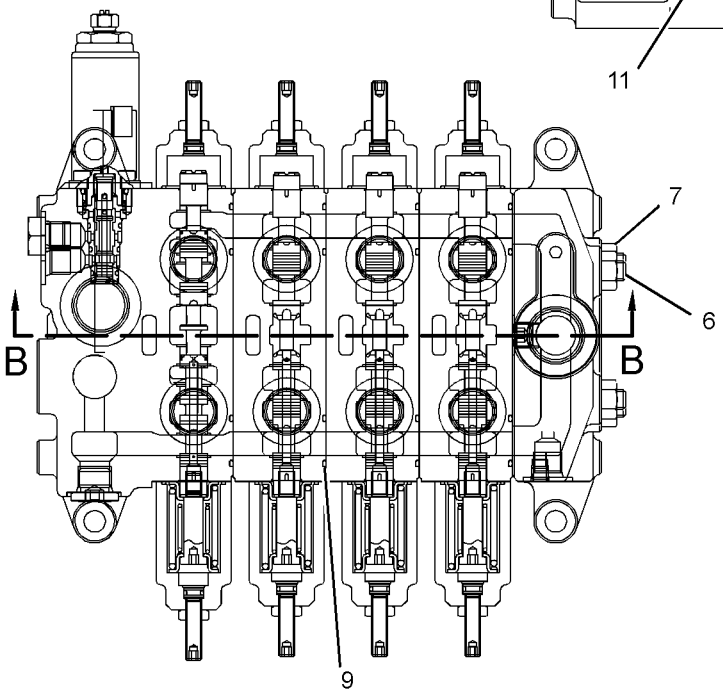

SECTION A-A

GRAPHIC #1 **<END>** g02004814

HYDRAULIC SYSTEM

323-8150 VALVE GP-BANK 4—IMPLEMENT

S/N: JTD1-UP; FFF1-UP; LLL1-UP
PART OF 325-7271 VALVE & MTG GP-CONTROL
AN ATTACHMENT

SMCS-5051 **i04402165**

NOTE	REF NO	GRAPHIC REF	PART NUMBER	QTY	PART NAME 1 2 3 4 5 6 (PRODUCT LEVEL)	SEE PAGE
Y	1	1	**269-1084**	1	VALVE GP-CONTROL (BLADE LIFT)	632
Y	2	1	**269-1085**	1	VALVE GP-CONTROL (ANGLE)	634
Y	3	1	**304-1139**	1	VALVE GP-CONTROL (TILT)	642
Y	4	1	**326-8749**	1	VALVE GP-CONTROL (AUXILIARY)	647
Y	5	1	**269-1087**	1	MANIFOLD GP-VALVE (OUTLET)	607
	6	1	**9R-0699**	4	ROD	
M	7	1	**8T-4133**	4	NUT (M10X1.5-THD)	
	8	1	**095-1574**	32	SEAL-O-RING	
	9	1	**095-1590**	12	SEAL-O-RING	
	10	1	**095-1586**	4	SEAL-O-RING	
	11	1	**304-1154**	4	VALVE GP-CHECK (IMPLEMENT)	

M-METRIC PART
Y-SEPARATE ILLUSTRATION

323-8150 VALVE GP-BANK 4 ***(contd.)*** **i04402165**

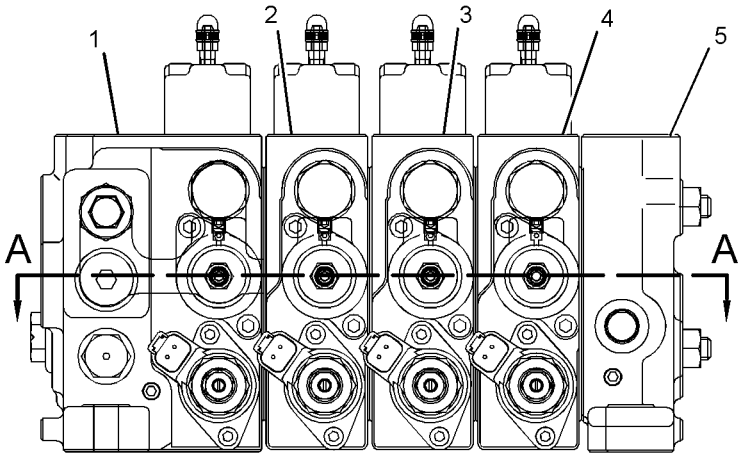

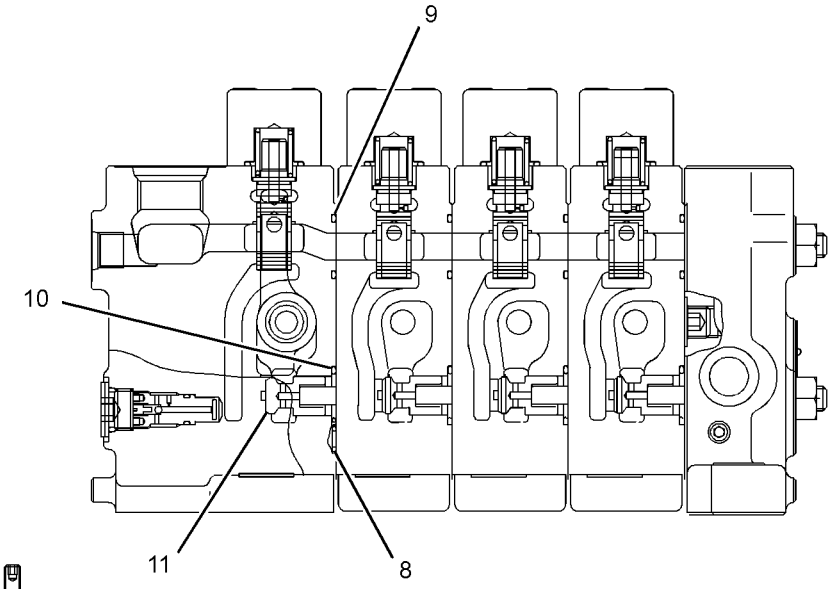

SECTION B-B

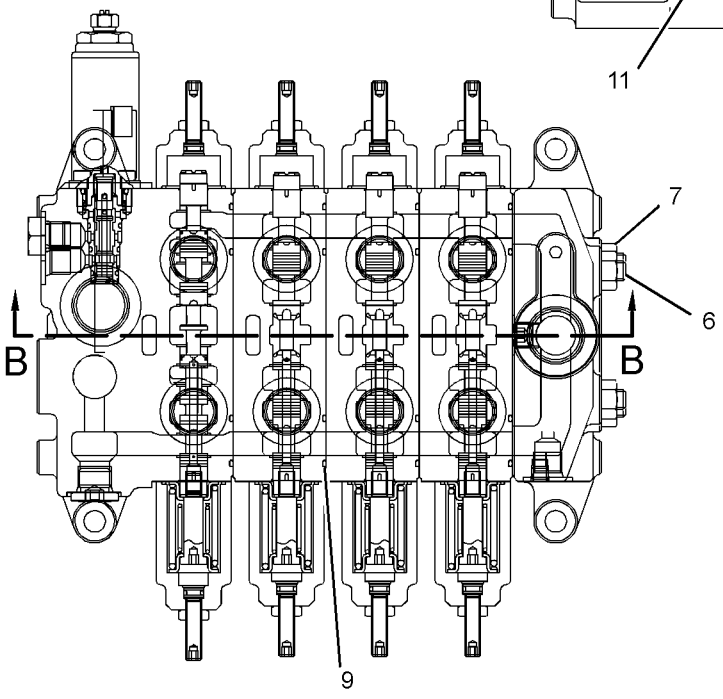

SECTION A-A

GRAPHIC #1 **<END>** g02014057

323-8151 VALVE GP-BANK 5—IMPLEMENT

S/N: JTD1-UP; FFF1-UP; LLL1-UP
PART OF 325-7272 VALVE & MTG GP-CONTROL
AN ATTACHMENT

SMCS-5051 **i04403732**

NOTE	REF NO	GRAPHIC REF	PART NUMBER	QTY	PART NAME 1 2 3 4 5 6 (PRODUCT LEVEL)	SEE PAGE
Y	1	1	**269-1084**	1	VALVE GP-CONTROL (BLADE LIFT)	632
Y	2	1	**269-1085**	1	VALVE GP-CONTROL (ANGLE)	634
Y	3	1	**304-1139**	1	VALVE GP-CONTROL (TILT)	642
Y	4	1	**326-8749**	2	VALVE GP-CONTROL (AUXILIARY)	647
Y	5	1	**269-1087**	1	MANIFOLD GP-VALVE (OUTLET)	607
	6	1	**108-2949**	4	ROD	
M	7	1	**8T-4133**	4	NUT (M10X1.5-THD)	
	8	1	**095-1574**	40	SEAL-O-RING	
	9	1	**095-1590**	15	SEAL-O-RING	
	10	1	**095-1586**	5	SEAL-O-RING	
	11	1	**304-1154**	5	VALVE GP-CHECK (IMPLEMENT)	

M-METRIC PART
Y-SEPARATE ILLUSTRATION

323-8151 VALVE GP-BANK 5 *(contd.)* **i04403732**

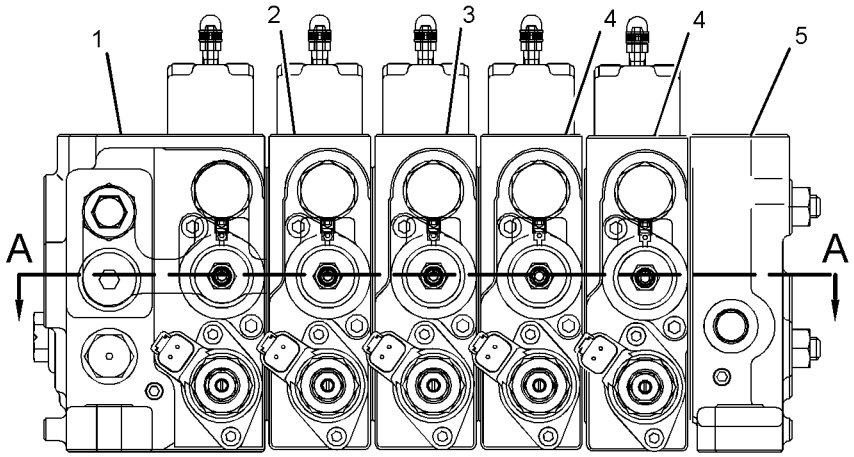

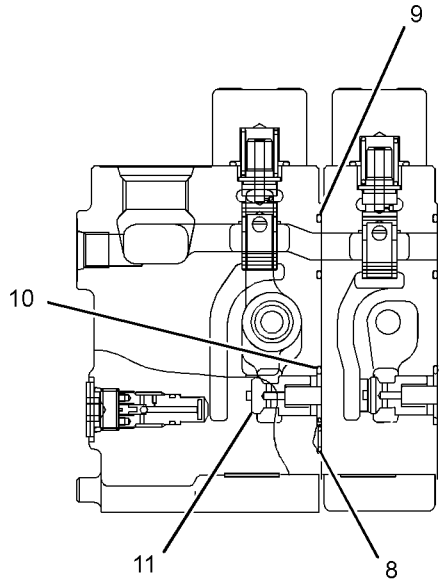

SECTION B-B

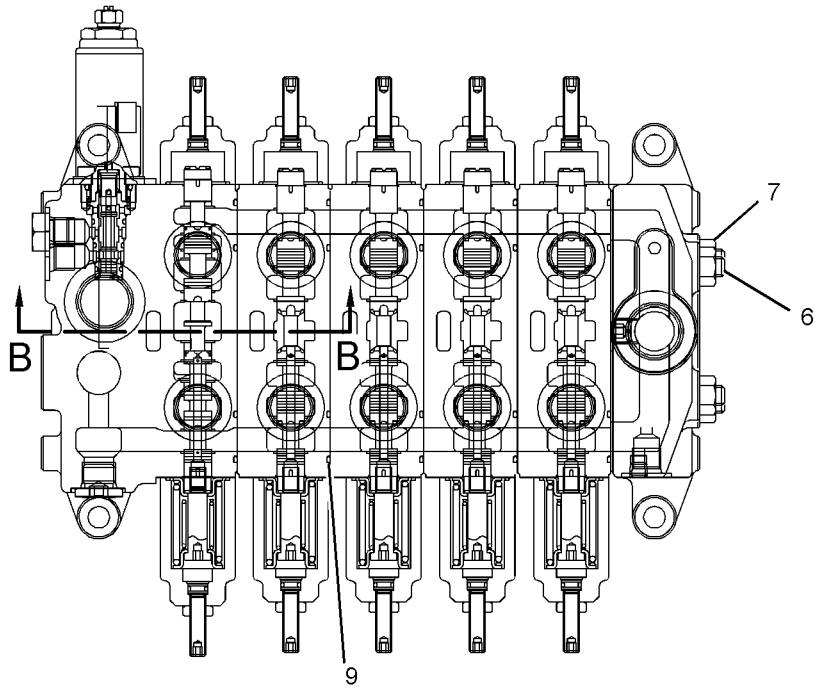

SECTION A-A

GRAPHIC #1 **<END>** g02015693

269-1084 VALVE GP-CONTROL—BLADE LIFT

S/N: JTD1-UP; FFF1-UP; LLL1-UP
PART OF 254-1450 VALVE GP-BANK 3, 254-1451, 323-8150 VALVE GP-BANK 4, 323-8151 VALVE GP-BANK 5
AN ATTACHMENT

SMCS-5051 **i04415689**

NOTE	REF NO	GRAPHIC REF	PART NUMBER	QTY	PART NAME 1 2 3 4 5 6 (PRODUCT LEVEL)	SEE PAGE
	1	1	**304-1140**	1	VALVE GP-RELIEF (12-VOLT) (BLADE LIFT)	
	2	1	**304-1141**	1	VALVE GP-SOLENOID (12-VOLT) (IMPLEMENT OVERRIDE)	
	3	1	**304-1142**	2	VALVE GP-SOLENOID (12-VOLT) (BLADE LIFT)	
	4	1	**304-1144**	1	KIT-COVER	
					(INCLUDES COVER, VALVE, CAP, O-RING SEAL & BOLTS)	
	5	1	**304-1147**	2	VALVE GP-MAKEUP (BLADE LIFT)	
	6	1	**304-1149**	1	KIT-COVER	
	7	1	**304-1150**	1	KIT-COVER	
					(EACH COVER KIT INCLUDES COVER, O-RING SEALS, SCREWS, BALL & NUT)	
M	8	1	**8T-0269**	4	BOLT-SOCKET HEAD (M6X1X20-MM)	
M	9	1	**099-2374**	6	BOLT-SOCKET HEAD (M5X0.8X12-MM)	
	10	1	**304-1156**	1	SEAT AS-SHUTTLE	
		1	**095-1582**	1	SEAL-O-RING	
		1	**095-1750**	1	SEAL-O-RING	
		1	**161-6154**	1	SEAL-O-RING	
	11	1	**304-1153**	1	VALVE GP-CHECK (SLOW RETURN)	
		1	**095-1582**	1	SEAL-O-RING	
		1	**161-6154**	1	SEAL-O-RING	
	12	1	**304-1155**	1	KIT-SPRING	
					(INCLUDES SPRINGS)	
	13	1	**9S-4191**	2	PLUG-O-RING	
	14	1	**197-0145**	3	PLUG	
	15	1	**3J-1907**	2	SEAL-O-RING	
	16	1	**095-1590**	3	SEAL-O-RING	

M-METRIC PART

269-1084 VALVE GP-CONTROL *(contd.)* **i04415689**

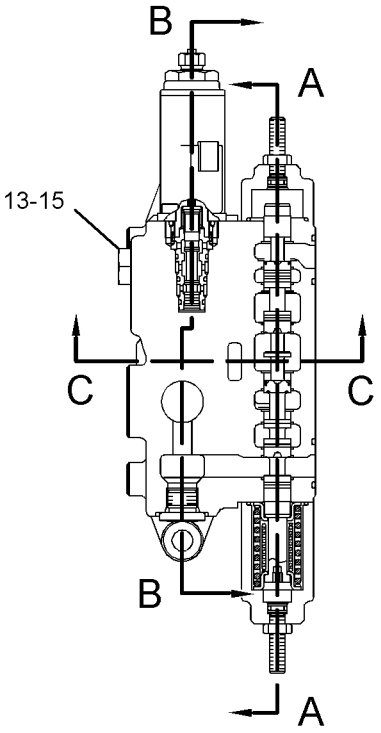

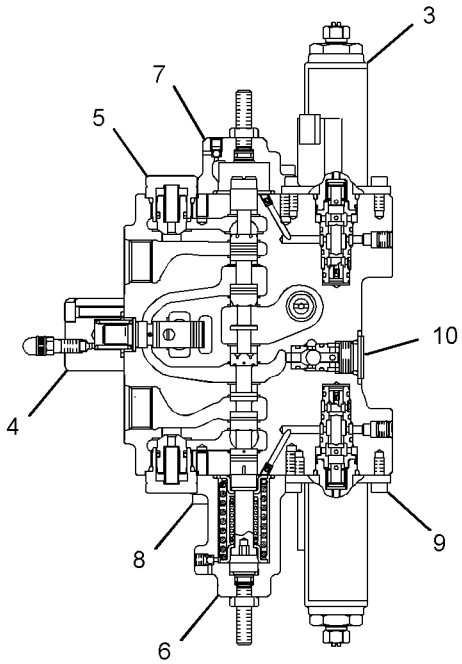

SECTION A-A

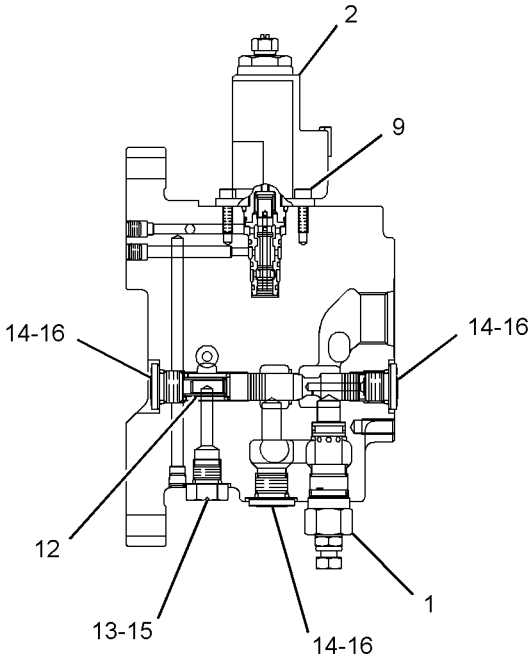

SECTION B-B

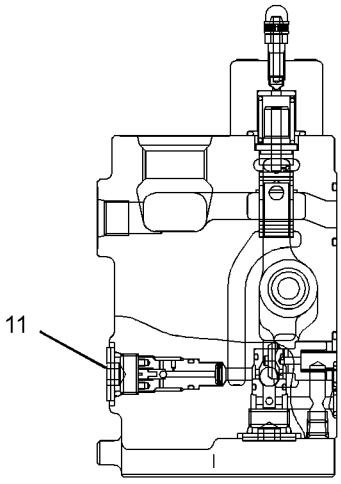

SECTION C-C

GRAPHIC #1 **<END>** g02020833

HYDRAULIC SYSTEM

269-1085 VALVE GP-CONTROL–ANGLE

S/N: JTD1-UP; FFF1-UP; LLL1-UP
PART OF 254-1450 VALVE GP-BANK 3, 254-1451, 323-8150 VALVE GP-BANK 4, 323-8151 VALVE GP-BANK 5
AN ATTACHMENT

SMCS-5051 **i04403723**

NOTE	REF NO	GRAPHIC REF	PART NUMBER	QTY	PART NAME 1 2 3 4 5 6 (PRODUCT LEVEL)	SEE PAGE
	1	1	**304-1142**	2	VALVE GP-SOLENOID (ANGLE)	
	2	1	**304-1145**	1	KIT-COVER (COMPENSATOR)	
					(INCLUDES COVER, VALVE, CAP, SEAL & BOLTS)	
	3	1	**304-1147**	2	VALVE GP-MAKEUP (ANGLE)	
	4	1	**304-1150**	1	KIT-COVER	
					(INCLUDES COVER, SEALS, SCREWS, BALL & NUT)	
	5	1	**304-1151**	1	KIT-COVER	
					(INCLUDES COVER, SEALS, SCREWS, BALL & NUT)	
M	6	1	**8T-0269**	4	BOLT-SOCKET HEAD (M6X1X20-MM)	
M	7	1	**099-2374**	4	BOLT-SOCKET HEAD (M5X0.8X12-MM)	
	8	1	**304-1156**	1	SEAT AS-SHUTTLE	
		1	**095-1582**	1	SEAL-O-RING	
		1	**095-1750**	1	SEAL-O-RING	
		1	**161-6154**	1	SEAL-O-RING	

M-METRIC PART

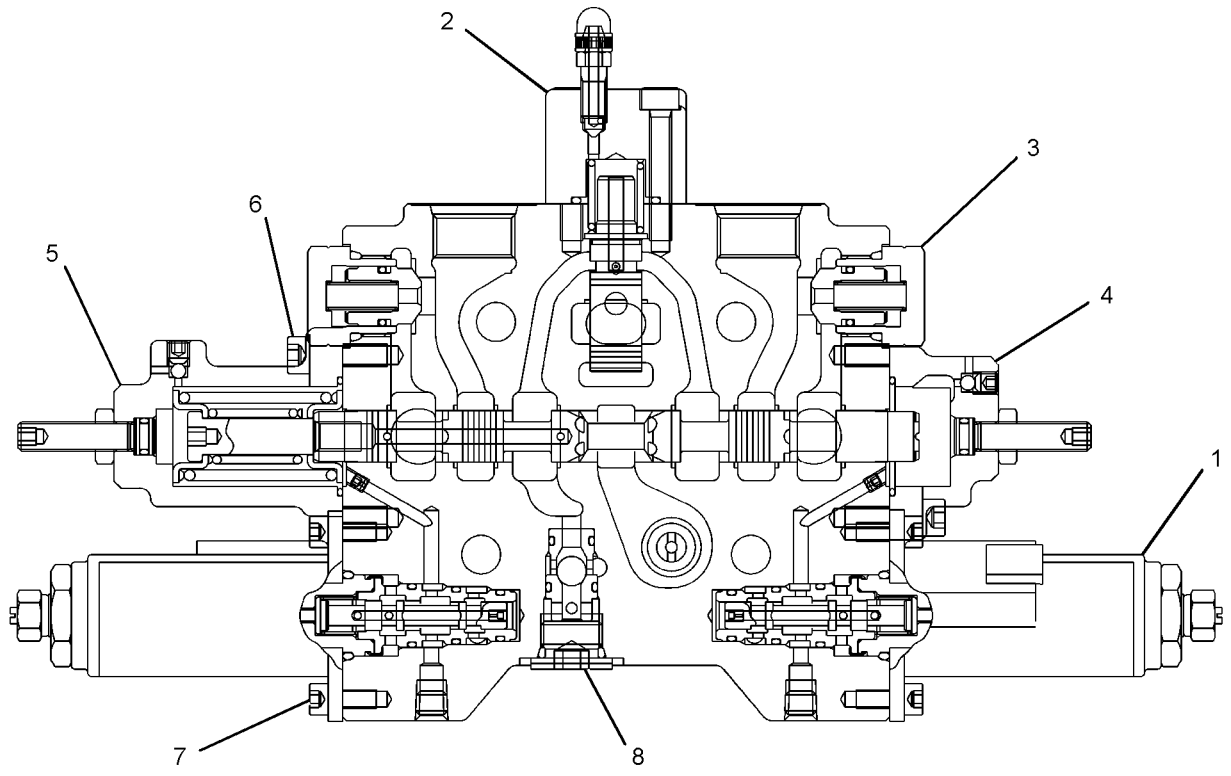

GRAPHIC #1 **<END>** g01407053

HYDRAULIC SYSTEM

269-1086 VALVE GP-CONTROL–AUXILIARY

S/N: JTD1-UP; FFF1-UP; LLL1-UP
PART OF 254-1451 VALVE GP-BANK 4
AN ATTACHMENT

SMCS-5051 **i04403724**

NOTE	REF NO	GRAPHIC REF	PART NUMBER	QTY	PART NAME 1 2 3 4 5 6 (PRODUCT LEVEL)	SEE PAGE
	1	1	**304-1142**	2	VALVE GP-SOLENOID (AUXILIARY)	
	2	1	**304-1145**	1	KIT-COVER (COMPENSATOR)	
					(INCLUDES COVER, VALVE, CAP, SEAL, & BOLTS)	
	3	1	**304-1147**	1	VALVE GP-MAKEUP (AUXILIARY)	
	4	1	**304-1150**	1	KIT-COVER	
					(INCLUDES COVER, SEALS, SCREWS, BALL, & NUT)	
	5	1	**304-1151**	1	KIT-COVER	
					(INCLUDES COVER, SEALS, SCREWS, BALL, & NUT)	
	6	1	**304-1152**	1	VALVE GP-RELIEF (AUXILIARY)	
M	7	1	**8T-0269**	4	BOLT-SOCKET HEAD (M6X1X20-MM)	
M	8	1	**099-2374**	4	BOLT-SOCKET HEAD (M5X0.8X12-MM)	
	9	1	**304-1156**	1	SEAT AS-SHUTTLE	
		1	**095-1582**	1	SEAL-O-RING	
		1	**095-1750**	1	SEAL-O-RING	
		1	**161-6154**	1	SEAL-O-RING	

M-METRIC PART

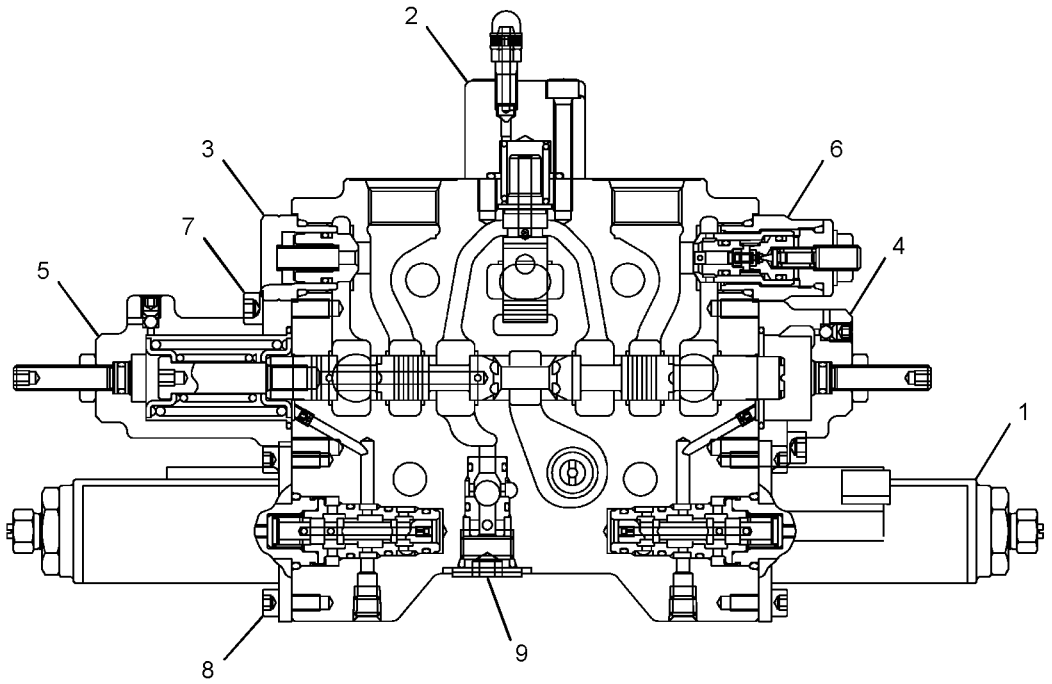

GRAPHIC #1 **<END>** g01408684

HYDRAULIC SYSTEM

286-8056 VALVE GP-CONTROL

S/N: JTD1-175

PART OF 286-3235 POWER TRAIN AR

SMCS-5051 **i03635678**

NOTE	REF NO	GRAPHIC REF	PART NUMBER	QTY	PART NAME 1 2 3 4 5 6 (PRODUCT LEVEL)	SEE PAGE
I	1	1	**131-5479**	1	HOSE AS	
I	2	1	**135-7193**	1	HOSE AS	
I	3	1	**137-4477**	1	HOSE AS	
	4	1	*164-9640*	2	CONNECTOR AS	
					(EACH INCLUDES)	
		1	**3J-1907**	1	SEAL-O-RING	
		1	**4J-5477**	1	SEAL-O-RING	
		1	**145-2237**	1	CONNECTOR	
I	5	1	**185-3166**	1	HOSE AS	
	6	1	**272-3533**	1	TUBE AS	
Y	7	1	**274-6747**	1	MANIFOLD GP-CONTROL	606
I	8	1	**285-3772**	1	HOSE AS	
I	9	1	**306-2090**	1	HOSE AS	
	10	1	*315-9855*	1	UNION AS-CROSS	
		1	**6V-8397**	2	SEAL-O-RING	
		1	**315-9854**	1	CROSS	
	11	1	**092-3635**	1	CONNECTOR	
	12	1	*148-8336*	1	CONNECTOR AS	
		1	**3J-1907**	1	SEAL-O-RING	
		1	**6V-8397**	1	SEAL-O-RING	
		1	**6V-8636**	1	CONNECTOR	
	13	1	*148-8368*	2	ELBOW AS	
					(EACH INCLUDES)	
		1	**3J-1907**	1	SEAL-O-RING	
		1	**4J-5477**	1	SEAL-O-RING	
		1	**6V-8627**	1	ELBOW	
	14	1	*148-8378*	1	ELBOW AS	
		1	**3J-1907**	1	SEAL-O-RING	
		1	**6V-8397**	1	SEAL-O-RING	
		1	**6V-8724**	1	ELBOW	
	15	1	*148-8424*	1	TEE AS	
		1	**6V-8397**	1	SEAL-O-RING	
		1	**8T-8902**	1	TEE	
	16	1	*148-8433*	1	TEE AS	
		1	**6V-9836**	1	TEE-SWIVEL	
		1	**6V-8397**	2	SEAL-O-RING	
	18	1	*150-4043*	1	CONNECTOR AS	
		1	**3J-1907**	1	SEAL-O-RING	
		1	**6V-8398**	1	SEAL-O-RING	
		1	**6V-9873**	1	CONNECTOR	
	19	1	*155-7327*	2	CONNECTOR AS	
					(EACH INCLUDES)	
		1	**3J-1907**	1	SEAL-O-RING	
		1	**5H-8853**	1	SEAL-O-RING	
		1	**6V-8636**	1	CONNECTOR	
	20	1	**2H-0435**	2	CLAMP	
	21	1	**3K-0360**	1	SEAL-O-RING	
	22	1	**5P-7462**	1	CLIP (SLOT)	
	23	1	**5P-7463**	1	CLIP (TAB)	
	24	1	**6V-0683**	1	GROMMET	
	25	1	**6V-8397**	3	SEAL-O-RING	
M	26	1	**7X-2543**	3	BOLT (M10X1.5X120-MM)	
	27	1	**8T-4121**	2	WASHER-HARD (11X21X2.5-MM THK)	
M	28	1	**8T-4195**	2	BOLT (M10X1.5X30-MM)	
	29	1	**8T-7934**	3	WASHER-HARD (11X21X5-MM THK)	
	30	1	**341-0083**	1	CONNECTOR	

286-8056 **VALVE GP-CONTROL** *(contd.)* **i03635678**

NOTE	REF NO	GRAPHIC REF	PART NUMBER	QTY	PART NAME 1 2 3 4 5 6 (PRODUCT LEVEL)	SEE PAGE
	31	1	**7X-2459**	1	TEE-O-RING	
	32	1	**3J-1907**	2	SEAL-O-RING	

I-REFER TO HYDRAULIC INFORMATION SYSTEM
M-METRIC PART
Y-SEPARATE ILLUSTRATION

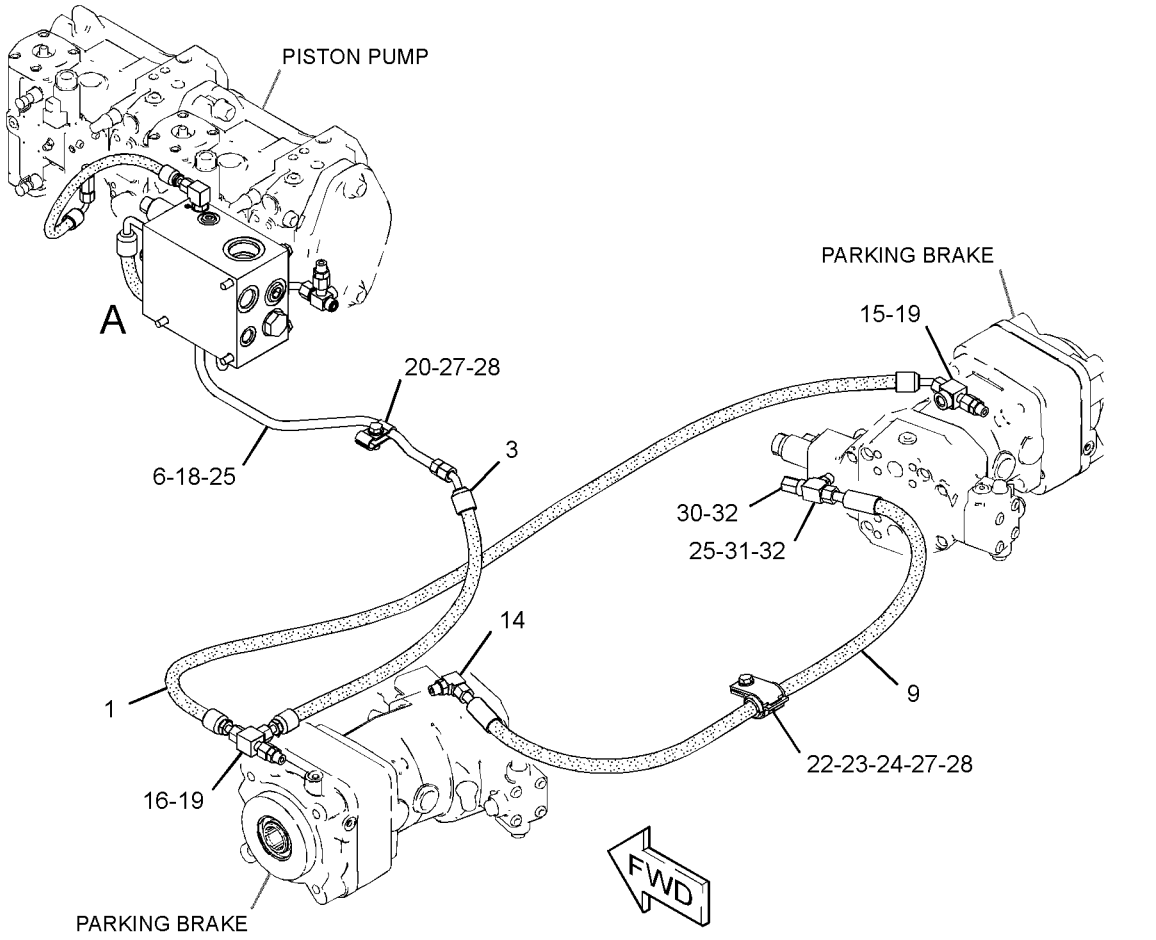

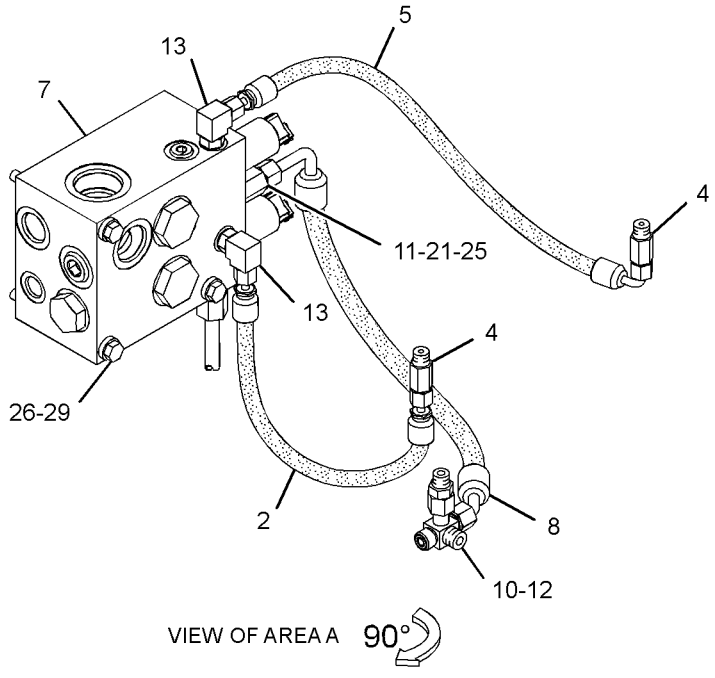

GRAPHIC #1 **<END>** g01952417

HYDRAULIC SYSTEM

286-8056 VALVE GP-CONTROL

S/N: JTD176-UP

PART OF 286-3235 POWER TRAIN AR

SMCS-5051 **i04248530**

NOTE	REF NO	GRAPHIC REF	PART NUMBER	QTY	PART NAME 1 2 3 4 5 6 (PRODUCT LEVEL)	SEE PAGE
I	1	1	**131-5479**	1	HOSE AS	
I	2	1	**135-7193**	1	HOSE AS	
I	3	1	**137-4477**	1	HOSE AS	
	4	1	*164-9640*	2	CONNECTOR AS	
					(EACH INCLUDES)	
		1	**3J-1907**	1	SEAL-O-RING	
		1	**4J-5477**	1	SEAL-O-RING	
		1	**145-2237**	1	CONNECTOR	
CI	5	1	**195-4403**	1	HOSE AS	
	6	1	**272-3533**	1	TUBE AS	
Y	7	1	**274-6747**	1	MANIFOLD GP-CONTROL (SERVICE BRAKE)	606
I	8	1	**285-3772**	1	HOSE AS	
I	9	1	**306-2090**	1	HOSE AS	
	10	1	*315-9855*	1	UNION AS-CROSS	
		1	**6V-8397**	2	SEAL-O-RING	
		1	**315-9854**	1	CROSS	
	11	1	**092-3635**	1	CONNECTOR	
	12	1	*148-8336*	1	CONNECTOR AS	
		1	**3J-1907**	1	SEAL-O-RING	
		1	**6V-8397**	1	SEAL-O-RING	
		1	**6V-8636**	1	CONNECTOR	
	13	1	*148-8368*	2	ELBOW AS	
					(EACH INCLUDES)	
		1	**3J-1907**	1	SEAL-O-RING	
		1	**4J-5477**	1	SEAL-O-RING	
		1	**6V-8627**	1	ELBOW	
	14	1	*148-8378*	1	ELBOW AS	
		1	**3J-1907**	1	SEAL-O-RING	
		1	**6V-8397**	1	SEAL-O-RING	
		1	**6V-8724**	1	ELBOW	
	15	1	*148-8424*	1	TEE AS	
		1	**6V-8397**	1	SEAL-O-RING	
		1	**8T-8902**	1	TEE	
	16	1	*148-8433*	1	TEE AS	
		1	**6V-9836**	1	TEE-SWIVEL	
		1	**6V-8397**	2	SEAL-O-RING	
	18	1	*150-4043*	1	CONNECTOR AS	
		1	**3J-1907**	1	SEAL-O-RING	
		1	**6V-8398**	1	SEAL-O-RING	
		1	**6V-9873**	1	CONNECTOR	
	19	1	*155-7327*	2	CONNECTOR AS	
					(EACH INCLUDES)	
		1	**3J-1907**	1	SEAL-O-RING	
		1	**5H-8853**	1	SEAL-O-RING	
		1	**6V-8636**	1	CONNECTOR	
	20	1	**2H-0435**	2	CLAMP	
	21	1	**3K-0360**	1	SEAL-O-RING	
	22	1	**5P-7462**	1	CLIP (SLOT)	
	23	1	**5P-7463**	1	CLIP (TAB)	
	24	1	**6V-0683**	1	GROMMET	
	25	1	**6V-8397**	3	SEAL-O-RING	
M	26	1	**7X-2543**	3	BOLT (M10X1.5X120-MM)	
	27	1	**8T-4121**	2	WASHER-HARD (11X21X2.5-MM THK)	
M	28	1	**8T-4195**	2	BOLT (M10X1.5X30-MM)	
	29	1	**8T-7934**	3	WASHER-HARD (11X21X5-MM THK)	
	30	1	**341-0083**	1	CONNECTOR	

286-8056 **VALVE GP-CONTROL** *(contd.)* **i04248530**

NOTE	REF NO	GRAPHIC REF	PART NUMBER	QTY	PART NAME 1 2 3 4 5 6 (PRODUCT LEVEL)	SEE PAGE
	31	1	**7X-2459**	1	TEE-O-RING	
	32	1	**3J-1907**	2	SEAL-O-RING	

C-CHANGE FROM PREVIOUS TYPE
I-REFER TO HYDRAULIC INFORMATION SYSTEM
M-METRIC PART
Y-SEPARATE ILLUSTRATION

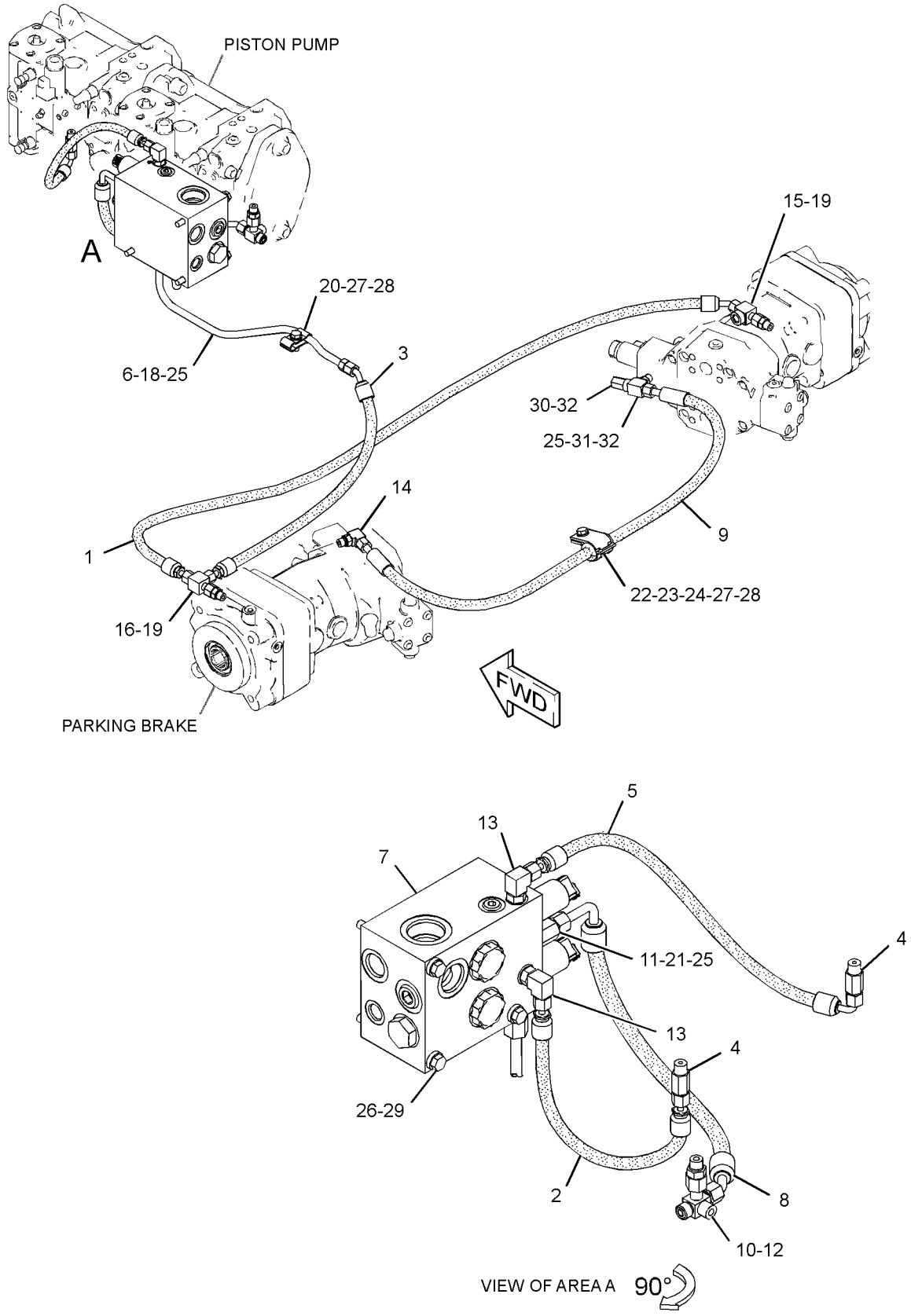

GRAPHIC #1 **<END>** g02538903

HYDRAULIC SYSTEM

304-1139 VALVE GP-CONTROL–TILT

S/N: JTD1-UP; FFF1-UP; LLL1-UP
PART OF 254-1450 VALVE GP-BANK 3, 254-1451, 323-8150 VALVE GP-BANK 4, 323-8151 VALVE GP-BANK 5
AN ATTACHMENT

SMCS-5051 **i04415690**

NOTE	REF NO	GRAPHIC REF	PART NUMBER	QTY	PART NAME 1 2 3 4 5 6 (PRODUCT LEVEL)	SEE PAGE
	1	1	**304-1143**	2	VALVE GP-SOLENOID (12-VOLT) (TILT)	
	2	1	**304-1145**	1	KIT-COVER	
					(INCLUDES COVER, VALVE, CAP, SEAL, & BOLTS)	
	3	1	**304-1147**	2	VALVE GP-MAKEUP (TILT)	
	4	1	**304-1150**	1	KIT-COVER	
	5	1	**304-1151**	1	KIT-COVER	
					(EACH KIT INCLUDES COVER, SEALS, SCREWS, BALL, & NUT)	
M	6	1	**8T-0269**	4	BOLT-SOCKET HEAD (M6X1X20-MM)	
M	7	1	**099-2374**	4	BOLT-SOCKET HEAD (M5X0.8X12-MM)	
	8	1	**304-1156**	1	SEAT AS-SHUTTLE	
		1	**095-1582**	1	SEAL-O-RING	
		1	**095-1750**	1	SEAL-O-RING	
		1	**161-6154**	1	SEAL-O-RING	

M-METRIC PART

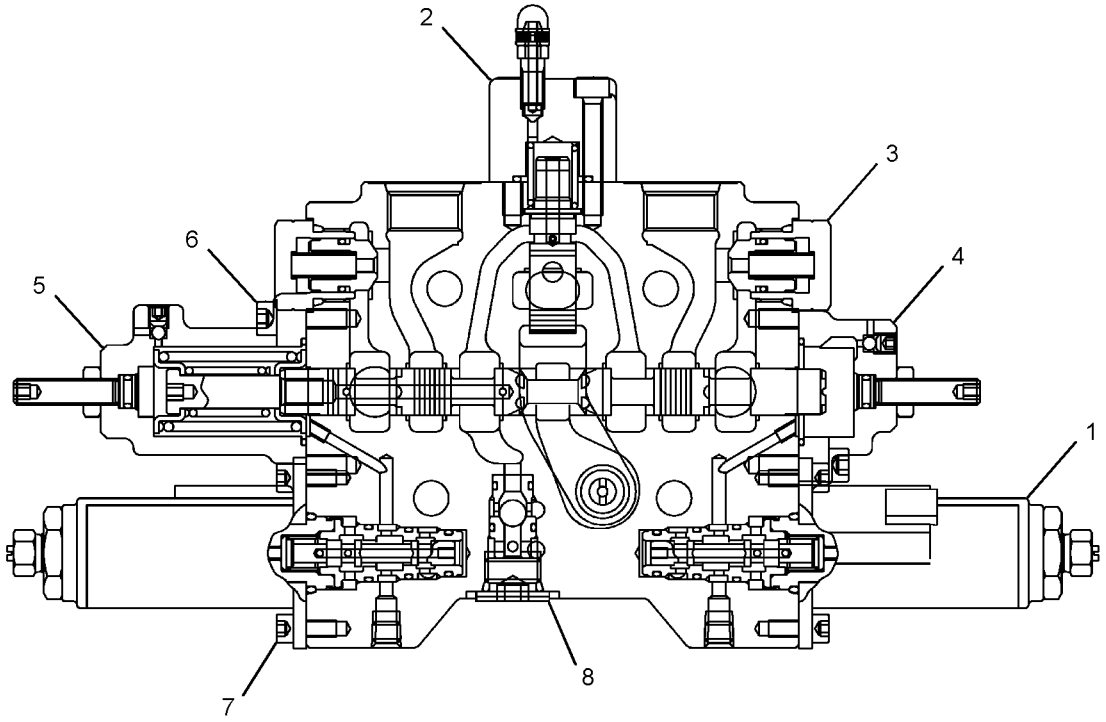

GRAPHIC #1 **<END>** g01408658

HYDRAULIC SYSTEM

322-6504 VALVE GP-CONTROL

S/N: FFF1-UP

FIELD INSTALLATION

SMCS-5051 **i04419453**

NOTE	REF NO	GRAPHIC REF	PART NUMBER	QTY	PART NAME 1 2 3 4 5 6 (PRODUCT LEVEL)	SEE PAGE
I	1	1	**135-7193**	1	HOSE AS	
I	2	1	**185-3166**	1	HOSE AS	
	3	1	**272-3533**	1	TUBE AS	
I	4	1	**274-1530**	1	HOSE AS	
I	5	1	**274-1534**	1	HOSE AS	
Y	6	1	**274-6747**	1	MANIFOLD GP-CONTROL (SERVICE BRAKE)	606
I	7	1	**283-4946**	1	HOSE AS	
I	8	1	**285-3772**	1	HOSE AS	
	9	1	*315-9855*	1	UNION AS-CROSS	
		1	**6V-8397**	2	SEAL-O-RING	
		1	**315-9854**	1	CROSS	
	10	1	**092-3635**	1	CONNECTOR	
	11	1	*148-8325*	2	CONNECTOR AS	
					(EACH INCLUDES)	
		1	**3J-1907**	1	SEAL-O-RING	
		1	**4J-5477**	1	SEAL-O-RING	
		1	**6V-8641**	1	CONNECTOR	
	12	1	*148-8336*	1	CONNECTOR AS	
		1	**3J-1907**	1	SEAL-O-RING	
		1	**6V-8397**	1	SEAL-O-RING	
		1	**6V-8636**	1	CONNECTOR	
	13	1	*148-8368*	2	ELBOW AS	
					(EACH INCLUDES)	
		1	**3J-1907**	1	SEAL-O-RING	
		1	**4J-5477**	1	SEAL-O-RING	
		1	**6V-8627**	1	ELBOW	
	14	1	*148-8378*	1	ELBOW AS	
		1	**3J-1907**	1	SEAL-O-RING	
		1	**6V-8397**	1	SEAL-O-RING	
		1	**6V-8724**	1	ELBOW	
	15	1	*148-8439*	1	TEE AS	
		1	**3J-1907**	1	SEAL-O-RING	
		1	**6V-8397**	2	SEAL-O-RING	
		1	**6V-8774**	1	TEE	
	16	1	*148-8443*	2	TEE AS	
					(EACH INCLUDES)	
		1	**3J-1907**	1	SEAL-O-RING	
		1	**6V-8397**	1	SEAL-O-RING	
		1	**7X-2459**	1	TEE-O-RING	
	17	1	*150-4043*	1	CONNECTOR AS	
		1	**3J-1907**	1	SEAL-O-RING	
		1	**6V-8398**	1	SEAL-O-RING	
		1	**6V-9873**	1	CONNECTOR	
	18	1	**2H-0435**	2	CLAMP	
	19	1	**3K-0360**	1	SEAL-O-RING	
	20	1	**5P-7462**	1	CLIP (SLOT)	
	21	1	**5P-7463**	1	CLIP (TAB)	
	22	1	**6V-0683**	1	GROMMET	
	23	1	**6V-8397**	2	SEAL-O-RING	
M	24	1	**7X-2543**	3	BOLT (M10X1.5X120-MM)	
	25	1	**8M-2773**	3	CLIP	
	26	1	**8T-4121**	4	WASHER-HARD (11X21X2.5-MM THK)	
M	27	1	**8T-4191**	2	BOLT (M10X1.5X16-MM)	
M	28	1	**8T-4195**	2	BOLT (M10X1.5X30-MM)	
	29	1	**8T-7934**	3	WASHER-HARD (11X21X5-MM THK)	

322-6504 **VALVE GP-CONTROL** *(contd.)* **i04419453**

I-REFER TO HYDRAULIC INFORMATION SYSTEM
M-METRIC PART
Y-SEPARATE ILLUSTRATION

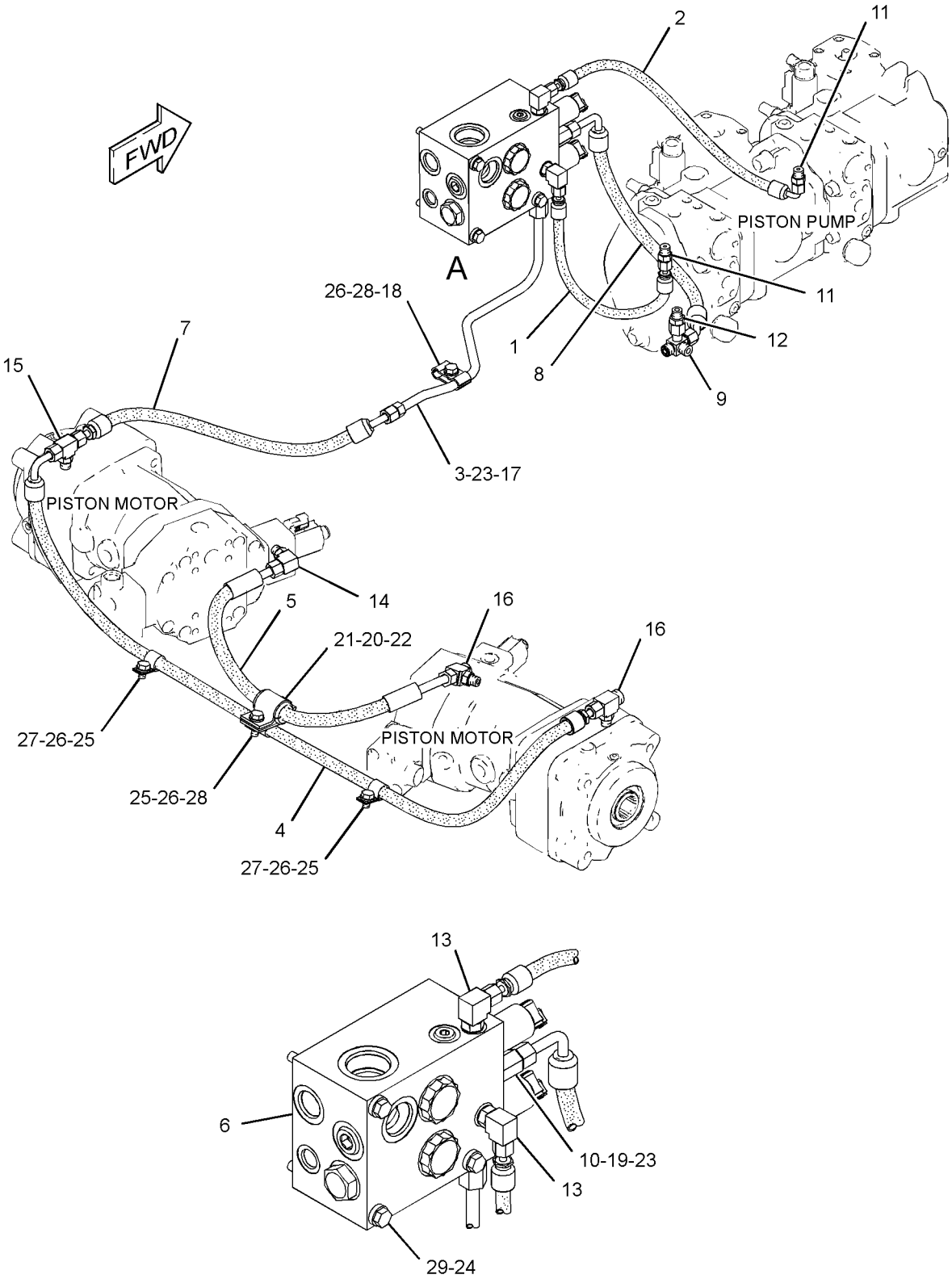

VIEW OF AREA A

GRAPHIC #1 **<END>** g01572477

HYDRAULIC SYSTEM

322-6505 VALVE GP-CONTROL

S/N: LLL1-UP

FIELD INSTALLATION

SMCS-5051 **i04419454**

NOTE	REF NO	GRAPHIC REF	PART NUMBER	QTY	PART NAME 1 2 3 4 5 6 (PRODUCT LEVEL)	SEE PAGE
I	1	1	**135-7193**	1	HOSE AS	
I	2	1	**148-9282**	1	HOSE AS	
I	3	1	**185-3166**	1	HOSE AS	
I	4	1	**261-8507**	1	HOSE AS	
I	5	1	**263-0983**	1	HOSE AS	
	6	1	**272-3533**	1	TUBE AS	
Y	7	1	**274-6747**	1	MANIFOLD GP-CONTROL (SERVICE BRAKE)	606
I	8	1	**285-3772**	1	HOSE AS	
	9	1	*315-9855*	1	UNION AS-CROSS	
		1	**6V-8397**	2	SEAL-O-RING	
		1	**315-9854**	1	CROSS	
	10	1	**092-3635**	1	CONNECTOR	
	11	1	*148-8325*	2	CONNECTOR AS	
					(EACH INCLUDES)	
		1	**3J-1907**	1	SEAL-O-RING	
		1	**4J-5477**	1	SEAL-O-RING	
		1	**6V-8641**	1	CONNECTOR	
	12	1	*148-8336*	1	CONNECTOR AS	
		1	**3J-1907**	1	SEAL-O-RING	
		1	**6V-8397**	1	SEAL-O-RING	
		1	**6V-8636**	1	CONNECTOR	
	13	1	*148-8368*	2	ELBOW AS	
					(EACH INCLUDES)	
		1	**3J-1907**	1	SEAL-O-RING	
		1	**4J-5477**	1	SEAL-O-RING	
		1	**6V-8627**	1	ELBOW	
	14	1	*148-8378*	1	ELBOW AS	
		1	**3J-1907**	1	SEAL-O-RING	
		1	**6V-8397**	1	SEAL-O-RING	
		1	**6V-8724**	1	ELBOW	
	15	1	*148-8439*	1	TEE AS	
		1	**3J-1907**	1	SEAL-O-RING	
		1	**6V-8397**	2	SEAL-O-RING	
		1	**6V-8774**	1	TEE	
	16	1	*148-8443*	2	TEE AS	
					(EACH INCLUDES)	
		1	**3J-1907**	1	SEAL-O-RING	
		1	**6V-8397**	1	SEAL-O-RING	
		1	**7X-2459**	1	TEE-O-RING	
	17	1	*150-4043*	1	CONNECTOR AS	
		1	**3J-1907**	1	SEAL-O-RING	
		1	**6V-8398**	1	SEAL-O-RING	
		1	**6V-9873**	1	CONNECTOR	
	18	1	**2H-0435**	2	CLAMP	
	19	1	**3K-0360**	1	SEAL-O-RING	
	20	1	**5P-7462**	1	CLIP (SLOT)	
	21	1	**5P-7463**	1	CLIP (TAB)	
	22	1	**6V-0683**	1	GROMMET	
	23	1	**6V-8397**	2	SEAL-O-RING	
M	24	1	**7X-2543**	3	BOLT (M10X1.5X120-MM)	
	25	1	**8M-2773**	3	CLIP	
	26	1	**8T-4121**	4	WASHER-HARD (11X21X2.5-MM THK)	
M	27	1	**8T-4191**	2	BOLT (M10X1.5X16-MM)	
M	28	1	**8T-4195**	2	BOLT (M10X1.5X30-MM)	
	29	1	**8T-7934**	3	WASHER-HARD (11X21X5-MM THK)	

322-6505 **VALVE GP-CONTROL** *(contd.)* **i04419454**

I-REFER TO HYDRAULIC INFORMATION SYSTEM
M-METRIC PART
Y-SEPARATE ILLUSTRATION

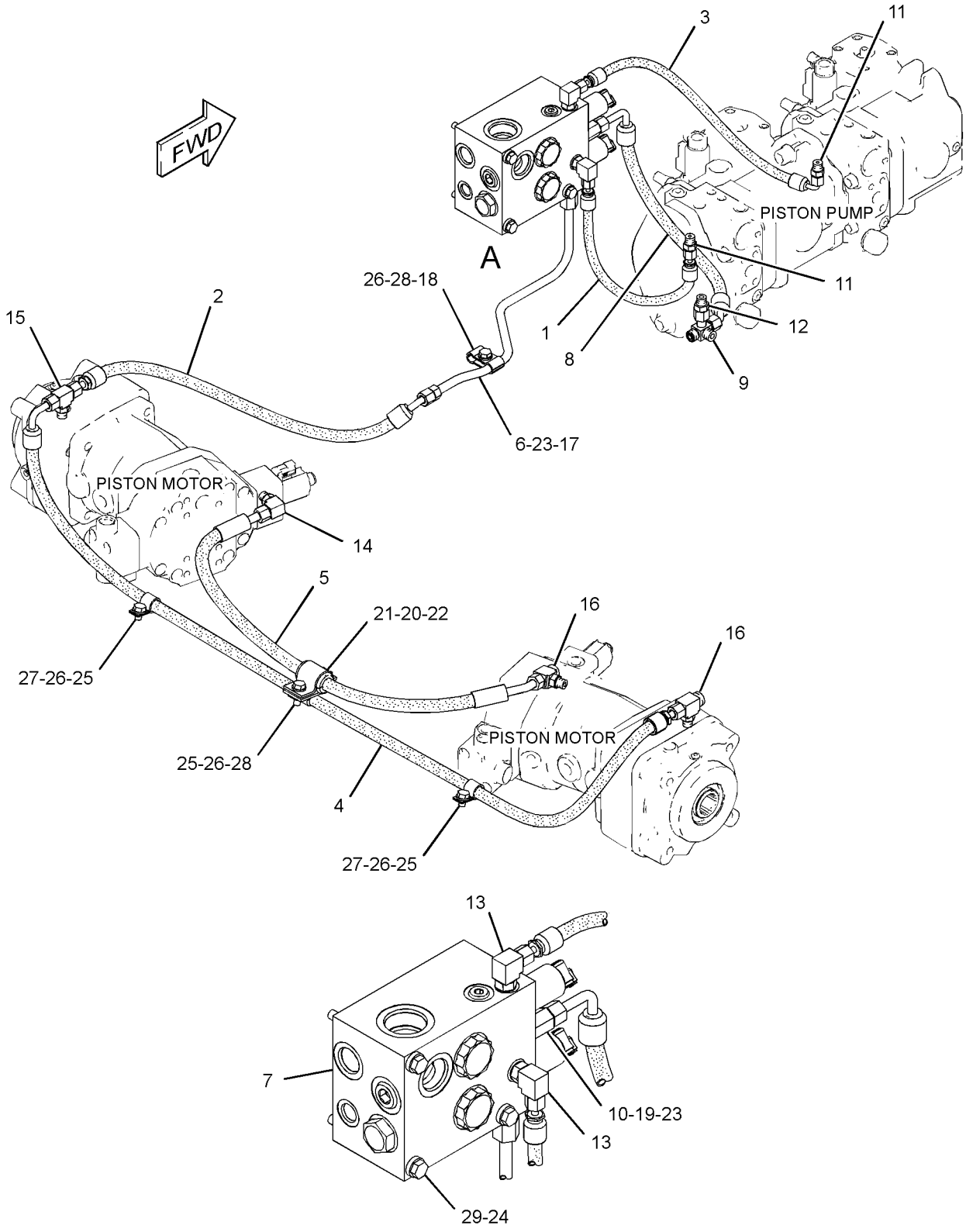

VIEW OF AREA A

GRAPHIC #1 **<END>** g01572478

326-8749 VALVE GP-CONTROL–AUXILIARY

S/N: JTD1-UP; FFF1-UP; LLL1-UP
PART OF 323-8150 VALVE GP-BANK 4, 323-8151 VALVE GP-BANK 5
AN ATTACHMENT

SMCS-5051 **i04415691**

NOTE	REF NO	GRAPHIC REF	PART NUMBER	QTY	PART NAME 1 2 3 4 5 6 (PRODUCT LEVEL)	SEE PAGE
	1	1	**304-1142**	2	VALVE GP-SOLENOID (12-VOLT) (AUXILIARY)	
	2	1	**304-1145**	1	KIT-COVER	
					(INCLUDES COVER, CAP, O-RING SEAL, BOLTS & AIR VENT VALVE)	
	3	1	**304-1147**	1	VALVE GP-MAKEUP (AUXILIARY)	
	4	1	**304-1150**	1	KIT-COVER	
	5	1	**304-1151**	1	KIT-COVER	
					(EACH COVER KIT INCLUDES COVER, O-RING SEALS, SCREWS, BALL & NUT)	
	6	1	**304-1152**	1	VALVE GP-RELIEF (AUXILIARY)	
M	7	1	**8T-0269**	4	BOLT-SOCKET HEAD (M6X1X20-MM)	
M	8	1	**099-2374**	4	BOLT-SOCKET HEAD (M5X0.8X12-MM)	
	9	1	**304-1156**	1	SEAT AS-SHUTTLE	
		1	**095-1582**	1	SEAL-O-RING	
		1	**095-1750**	1	SEAL-O-RING	
		1	**161-6154**	1	SEAL-O-RING	

M-METRIC PART

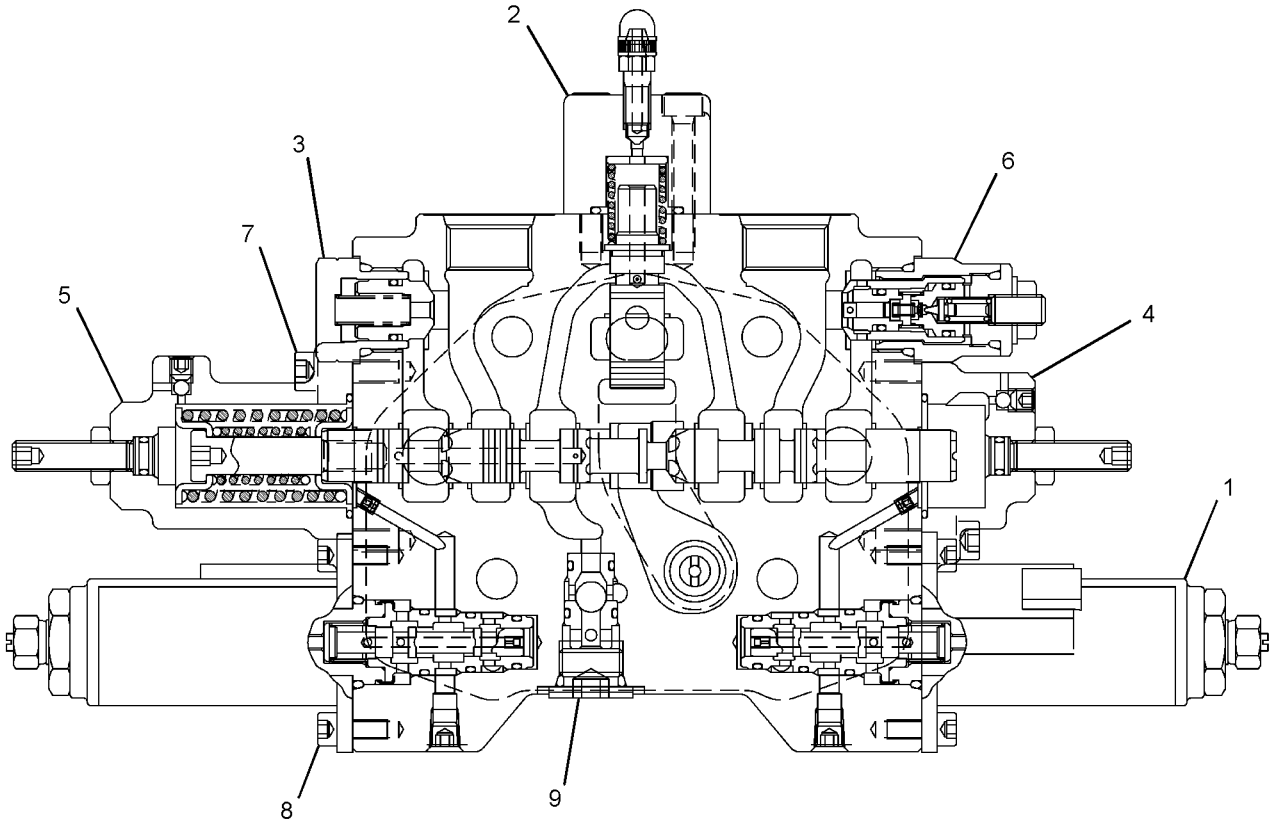

GRAPHIC #1 **<END>** g02024456

HYDRAULIC SYSTEM

6E-4402 VALVE GP-RELIEF–CHARGE PRESSURE

S/N: JTD1-UP
PART OF 296-6708 HEAD GP-PUMP
AN ATTACHMENT

SMCS-5069, 5117 **i02591010**

NOTE	REF NO	GRAPHIC REF	PART NUMBER	QTY	PART NAME 1 2 3 4 5 6 (PRODUCT LEVEL)	SEE PAGE
	1	1	**202-2342**	1	SPRING	
	2	1	**6E-4404**	1	VALVE-POPPET	
	3	1	**183-8410**	1	SCREW	
	4	1	**6E-4403**	1	PLUG	
M	5	1	**6E-4240**	1	NUT-SEALING (M10X1-THD)	
	6	1	**6V-8352**	1	SEAL-O-RING	
	7	1	**167-7715**	1	RETAINER-SPRING	

M-METRIC PART

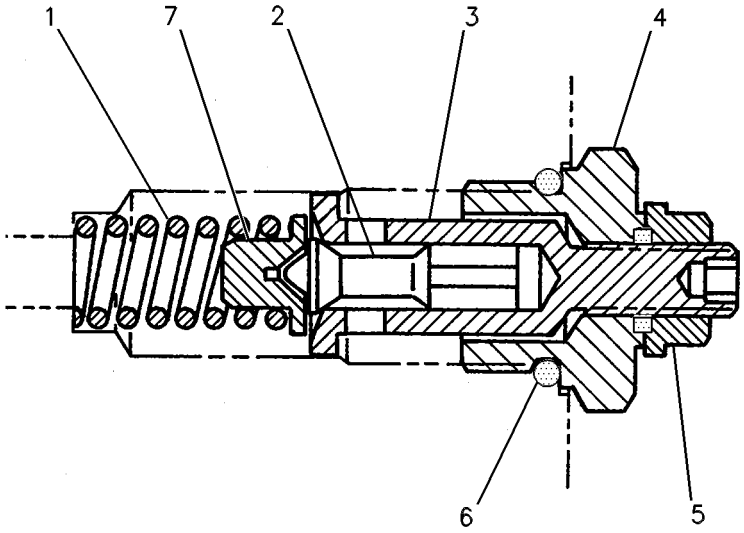

GRAPHIC #1 **<END>** g00252131

259-8194 VALVE GP-SOLENOID—PARKING BRAKE

S/N: JAG1-UP
12-VOLT
PART OF 264-3709 VALVE GP-SOLENOID
AN ATTACHMENT

SMCS-5479 **i02485890**

NOTE	REF NO	GRAPHIC REF	PART NUMBER	QTY	PART NAME 1 2 3 4 5 6 (PRODUCT LEVEL)	SEE PAGE
	1	1	**238-4626**	1	COIL AS (AUXILIARY FLOW CONTROL)	

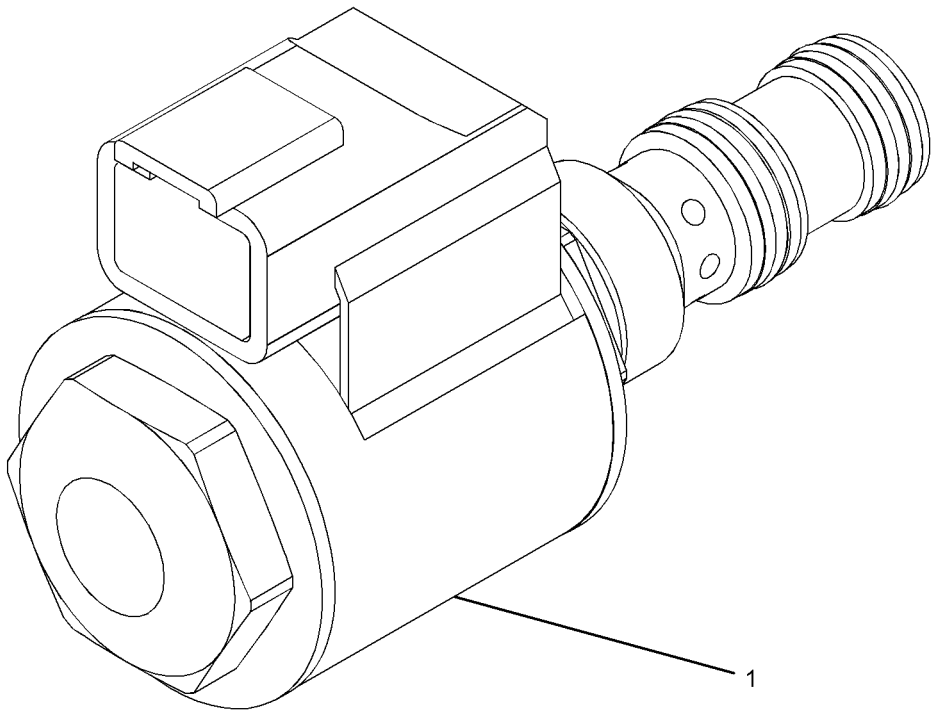

GRAPHIC #1 **<END>** g01121017

HYDRAULIC SYSTEM

264-3709 VALVE GP-SOLENOID

S/N: JAG1-UP
PART OF 256-3739 VALVE & LINES GP-WINCH
AN ATTACHMENT

SMCS-5479 **i04415574**

NOTE	PART NUMBER	QTY	PART NAME 1 2 3 4 5 6 (PRODUCT LEVEL)	SEE PAGE
Y	**259-8194**	1	VALVE GP-SOLENOID (PARKING BRAKE)	649
Y	**279-6529**	2	VALVE GP-SOLENOID (WINCH)	651

Y-SEPARATE ILLUSTRATION

<END>

279-6529 VALVE GP-SOLENOID–WINCH

S/N: JAG1-UP
PART OF 264-3709 VALVE GP-SOLENOID
FIELD REPLACEMENT ORDER 341-9215–PAGE 652
AN ATTACHMENT

SMCS-5479 **i03918710**

NOTE	REF NO	GRAPHIC REF	PART NUMBER	QTY	PART NAME 1 2 3 4 5 6 (PRODUCT LEVEL)	SEE PAGE
	1	1	**3K-0360**	1	SEAL-O-RING	
	2	1	**4K-2039**	1	SEAL-O-RING	
	3	1	**6M-5062**	1	SEAL-O-RING	
	4	1	**146-3728**	1	WASHER-SPRING	
	5	1	**326-5208**	1	COIL AS (12-VDC)	

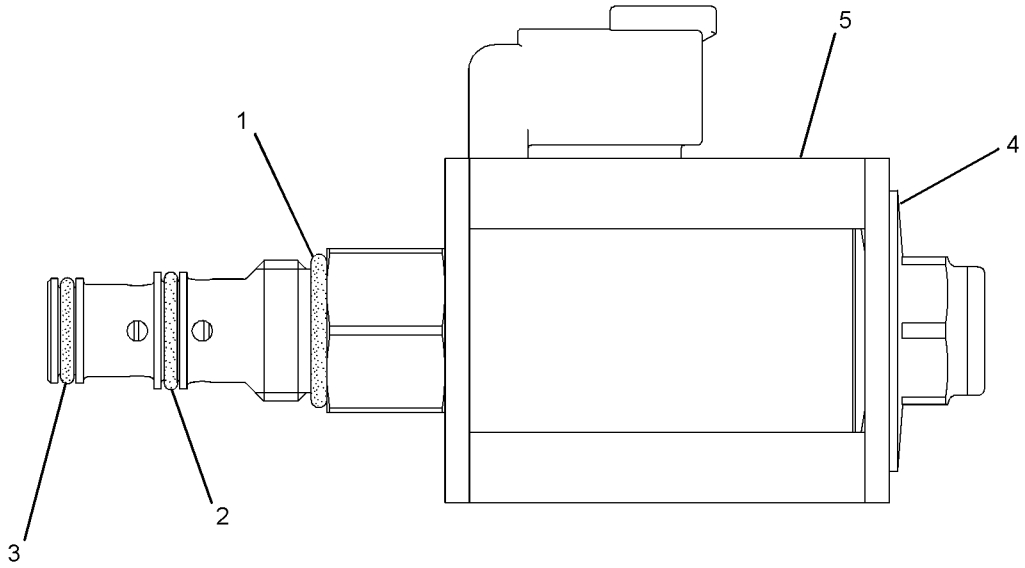

GRAPHIC #1 **<END>** g02176888

341-9215 VALVE GP-SOLENOID—WINCH

S/N: JAG1-UP

FIELD REPLACEMENT FOR 279-6529—PAGE 651

SMCS-5479 **i04047726**

NOTE	REF NO	GRAPHIC REF	PART NUMBER	QTY	PART NAME 1 2 3 4 5 6 (PRODUCT LEVEL)	SEE PAGE
	1	1	**191-9247**	1	WASHER (19.15X31.65X2.36-MM THK)	
	2	1	**198-2914**	1	NUT (3/4-32-THD)	
	3	1	**214-7568**	2	SEAL-O-RING	
	4	1	**326-5208**	1	COIL AS (12-VDC)	
	5	1	**3K-0360**	1	SEAL-O-RING	
	6	1	**4K-2039**	1	SEAL-O-RING	
	7	1	**6M-5062**	1	SEAL-O-RING	

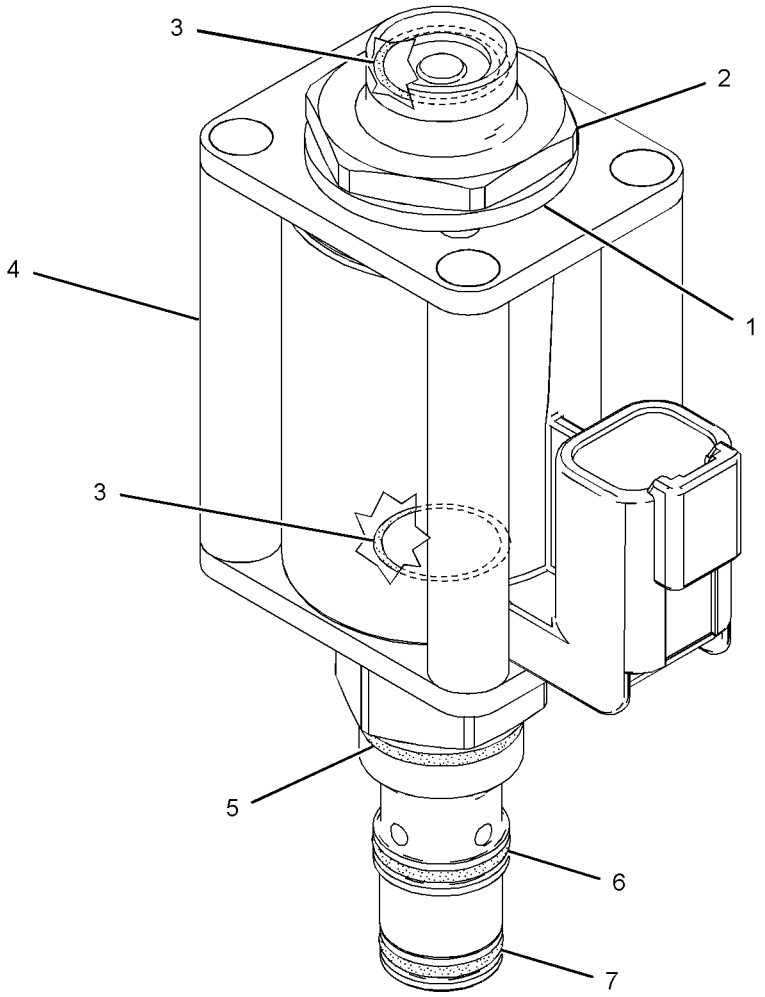

GRAPHIC #1 **<END>** g02453280

255-2098 C-FRAME GP-POWER ANGLING–TILT

S/N: JTD1-UP; FFF1-UP; LLL1-UP

PART OF 244-7376, 244-7377, 282-5327 CHASSIS AR

SMCS-6063 **i04415564**

NOTE	REF NO	GRAPHIC REF	PART NUMBER	QTY	PART NAME 1 2 3 4 5 6 (PRODUCT LEVEL)	SEE PAGE
	1	1	**8J-0729**	1	RETAINER	
	2	1	**8J-0928**	1	PIN	
	3	1	**150-0353**	6	SPACER (38.3X44.45X14-MM THK)	
	4	1	**299-7704**	2	PIN	
	5	1	**183-1176**	2	BEARING	
	6	1	**183-1178**	4	WASHER-THRUST	
	7	1	**9X-8257**	4	WASHER (17.5X30X3.5-MM THK)	
	8	1	**255-2100**	4	PIN AS	
	9	1	**255-2102**	1	FRAME AS	
	9A	1	**255-2130**	2	BEARING	
	10	1	**255-2114**	1	BEARING (LH)	
	11	1	**255-2122**	1	BEARING (RH)	
	12	1	**262-3104**	2	BAR	
	13	1	**262-7686**	12	BOLT (M20X2.5X65-MM)	
	14	1	**283-7697**	2	BOSS	
	15	1	**198-4781**	12	WASHER-HARD (22X40X10-MM THK)	
	16	1	**7K-9206**	4	SEAL-LIP TYPE	
M	17	1	**7X-2537**	4	BOLT (M8X1.25X35-MM)	
M	18	1	**7X-2553**	4	BOLT (M16X2X40-MM)	
M	19	1	**8T-4192**	4	BOLT (M12X1.75X25-MM)	
M	20	1	**8T-4195**	1	BOLT (M10X1.5X30-MM)	
	21	1	**8T-4223**	4	WASHER-HARD (13.5X25.5X3-MM THK)	
	22	1	**8T-4224**	4	WASHER-HARD (8.8X16X2-MM THK)	

M-METRIC PART

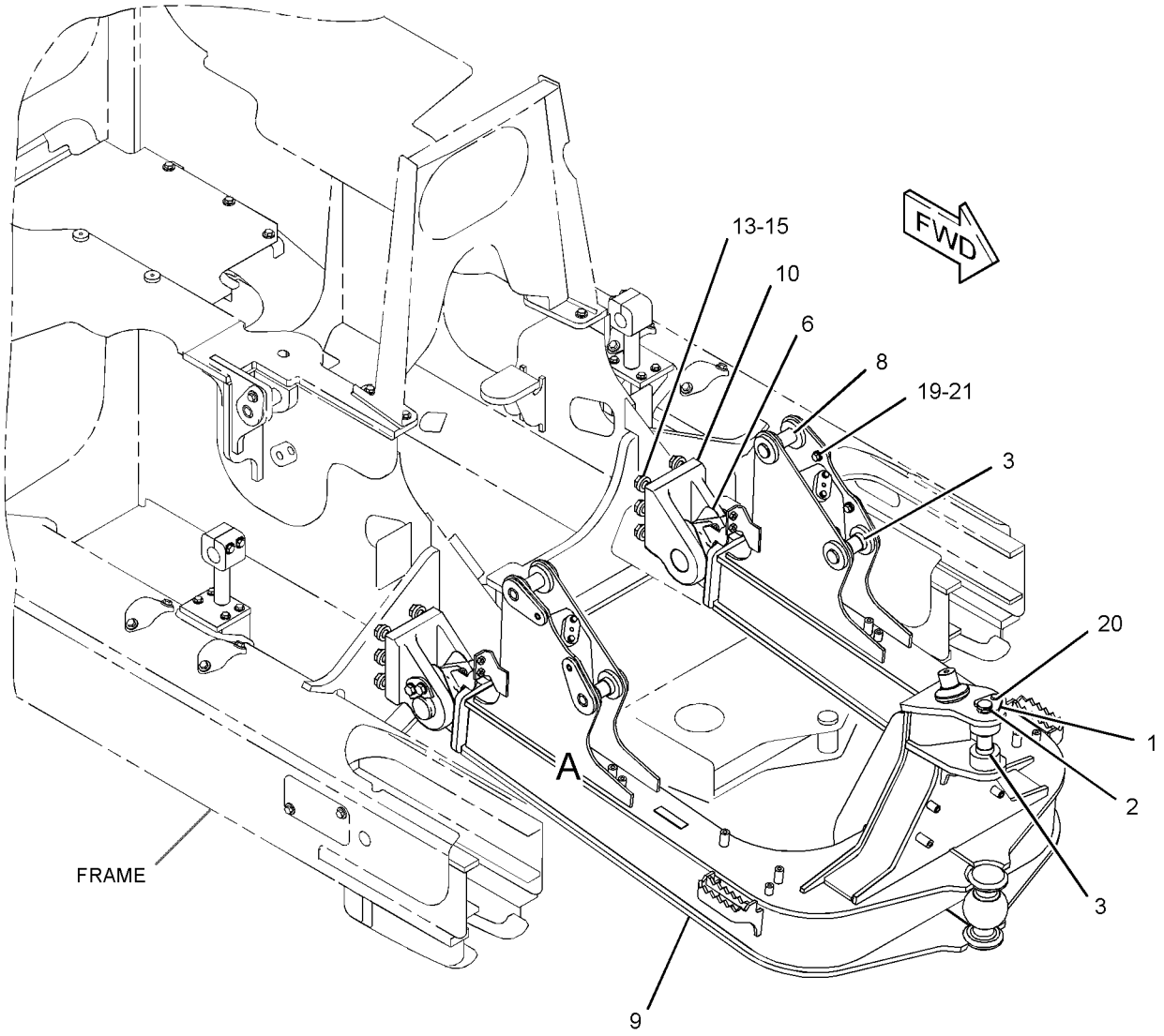

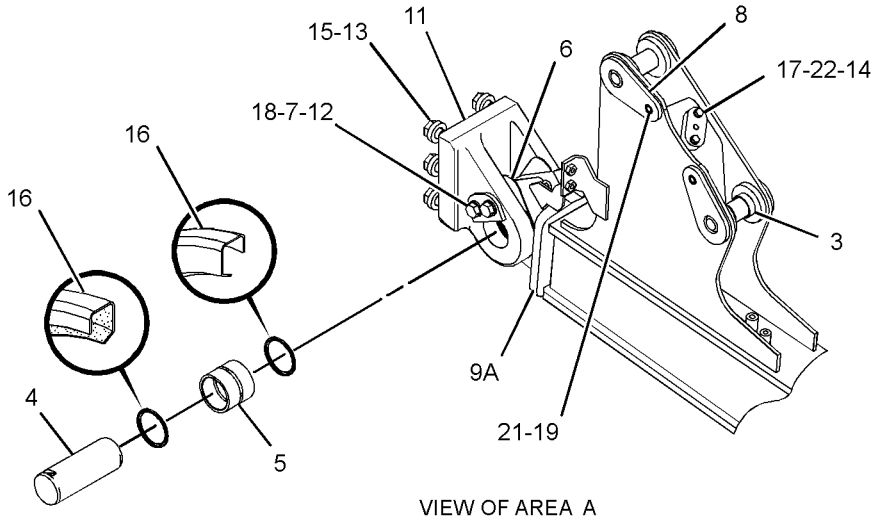

VIEW OF AREA A
(EXPLODED)

GRAPHIC #1 **<END>** g02614422

255-1357 LINK GP-PITCH

S/N: JTD1-UP; FFF1-UP; LLL1-UP

PART OF 255-1355, 255-1394, 255-1413, 255-1425, 255-1470, 255-1486, 255-1502, 255-2368, 255-2372, 255-2375, 255-2378, 255-2381, 255-2385, 255-2390, 255-2393, 277-7715, 286-2935, 312-8350, 312-8360 BLADE AR-PWR ANGLE & TILT AN ATTACHMENT

SMCS-6079, 6081 **i02638046**

NOTE	REF NO	GRAPHIC REF	PART NUMBER	QTY	PART NAME 1 2 3 4 5 6 (PRODUCT LEVEL)	SEE PAGE
	1	1	**4D-4431**	2	BEARING-ALIGNING	
	2	1	**9V-4460**	2	SPACER (13X50X18-MM THK)	
	3	1	**150-5123**	1	BOSS AS (1-1/2-6X3.64-IN, LH)	
	4	1	**150-6215**	1	BOSS AS (1-1/2-6X3.95-IN, RH)	
	5	1	**179-8232**	1	LOCKPIN	
	6	1	**216-4251**	1	PIN	
	7	1	**255-1359**	1	BAR AS	
	8	1	**255-1361**	1	COVER AS	
	9	1	**2H-5549**	2	RING-RETAINING	
	10	1	**3B-8489**	4	FITTING-GREASE	
	11	1	**5M-6214**	1	PLUG-PIPE	
	12	1	**7D-1649**	2	WASHER-HARD (13.5X32X5-MM THK)	
M	13	1	**8T-4194**	2	BOLT (M12X1.75X50-MM)	

M-METRIC PART

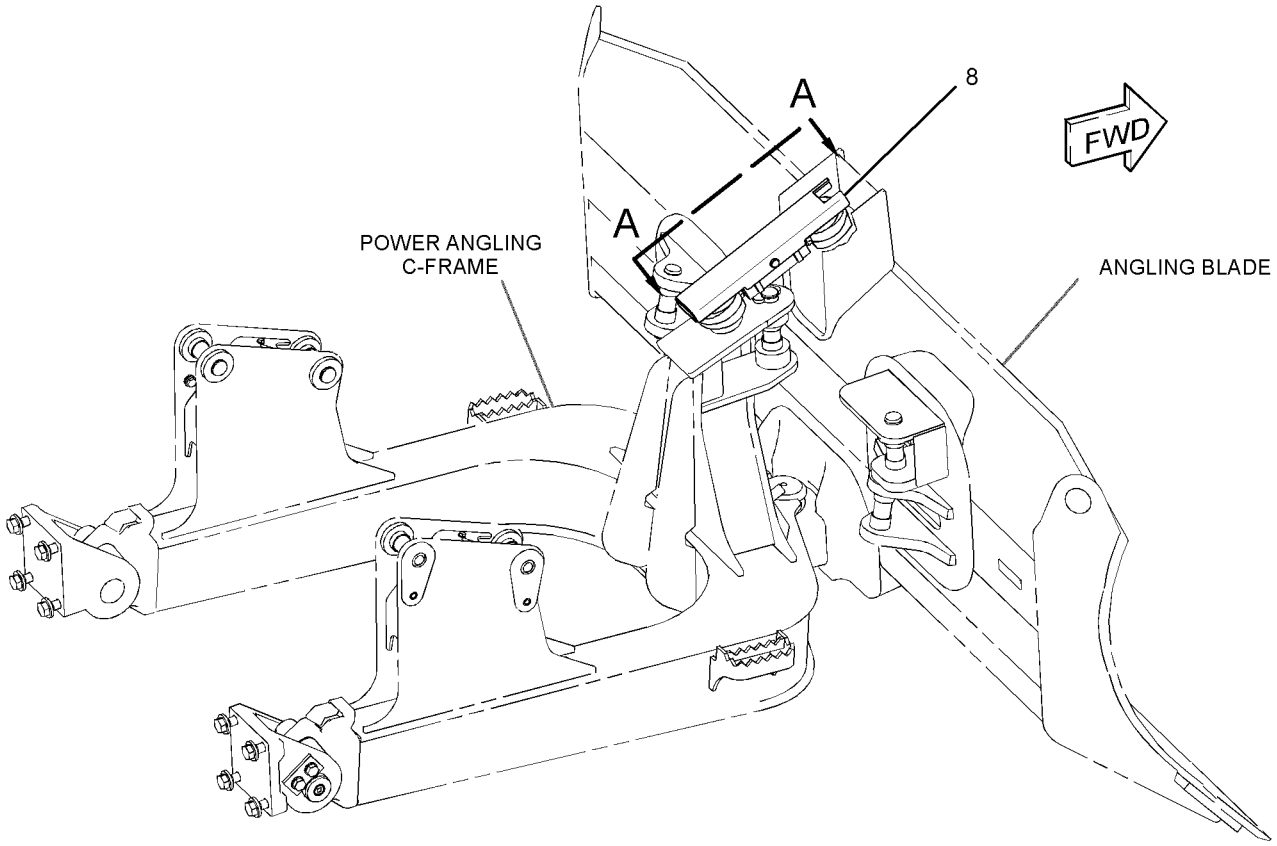

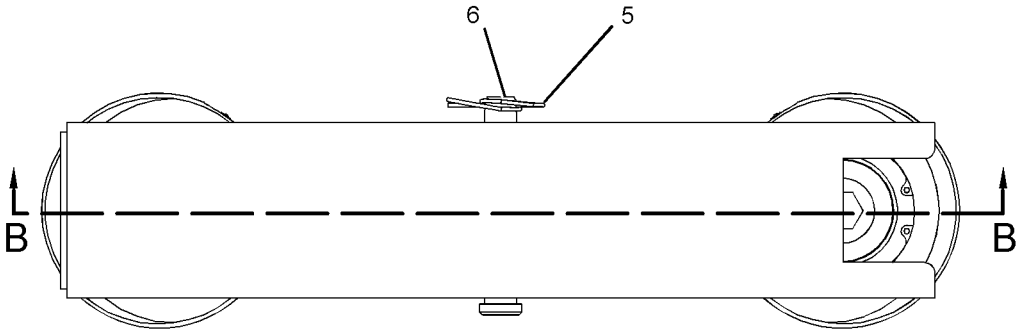

VIEW A-A

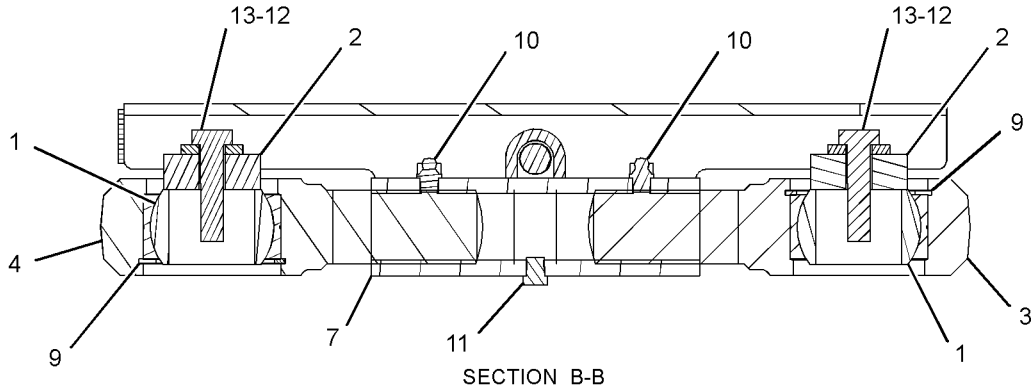

SECTION B-B

GRAPHIC #1 **<END>** g01330487

OPERATOR STATION

255-4239 ACCESSORY GP-CAB—EROPS

S/N: JTD1-UP; FFF1-UP; LLL1-UP
PART OF 244-7475, 244-7476 ROPS AR
AN ATTACHMENT
TYPE 1

SMCS-1408, 1421, 7301 **i04403706**

NOTE	REF NO	GRAPHIC REF	PART NUMBER	QTY	PART NAME 1 2 3 4 5 6 (PRODUCT LEVEL)	SEE PAGE
	1	1	**180-3153**	1	LATCH AS-DOOR (ROTARY) (RH)	
	2	1	**180-3154**	1	LATCH AS-DOOR (ROTARY) (LH)	
	3	1	**263-3013**	19	CAP	
	4	1	**254-3183**	2	HINGE AS	
	5	1	**254-3204**	4	COVER (LH)	
	6	1	**255-4235**	1	HINGE AS (RH)	
	7	1	**255-4236**	1	HINGE AS (LH)	
					(EACH HINGE AS INCLUDES)	
M		1	**8T-3597**	3	NUT-WELD (M12X1.75-THD)	
	8	1	**255-4258**	1	PLATE AS	
	9	1	**259-1060**	1	COVER AS (LIGHT)	
	10	1	**271-2773**	1	SUPPORT AS (LH)	
	11	1	**271-2774**	1	SUPPORT AS (RH)	
	12	1	**281-3986**	1	PLATE AS	
	13	1	**281-7631**	2	STRIKER	
	14	1	**9X-6165**	5	WASHER (6.5X22X2.5-MM THK)	
	15	1	**178-2593**	2	BUMPER	
M	16	1	**5C-7261**	4	NUT (M8X1.25-THD)	
	17	1	**5P-1076**	12	WASHER-HARD (13.5X30X4-MM THK)	
	18	1	**7G-4824**	2	STRAP	
	19	1	**7X-7729**	4	WASHER (11X25X3-MM THK)	
	20	1	**8E-7791**	2	STRAP	
M	21	1	**8T-4137**	8	BOLT (M10X1.5X20-MM)	
M	22	1	**8T-4138**	8	BOLT (M6X1X20-MM)	
M	23	1	**8T-4139**	12	BOLT (M12X1.75X30-MM)	
	24	1	**8T-4222**	4	WASHER-PLATED (11X32X2.5-MM THK)	
M	25	1	**8T-4171**	5	BOLT (M6X1X12-MM)	
M	26	1	**9X-2045**	8	SCREW-TRUSS HEAD (M6X1X20-MM)	
	27	1	**9X-8256**	8	WASHER (6.6X12X2-MM THK)	

M-METRIC PART

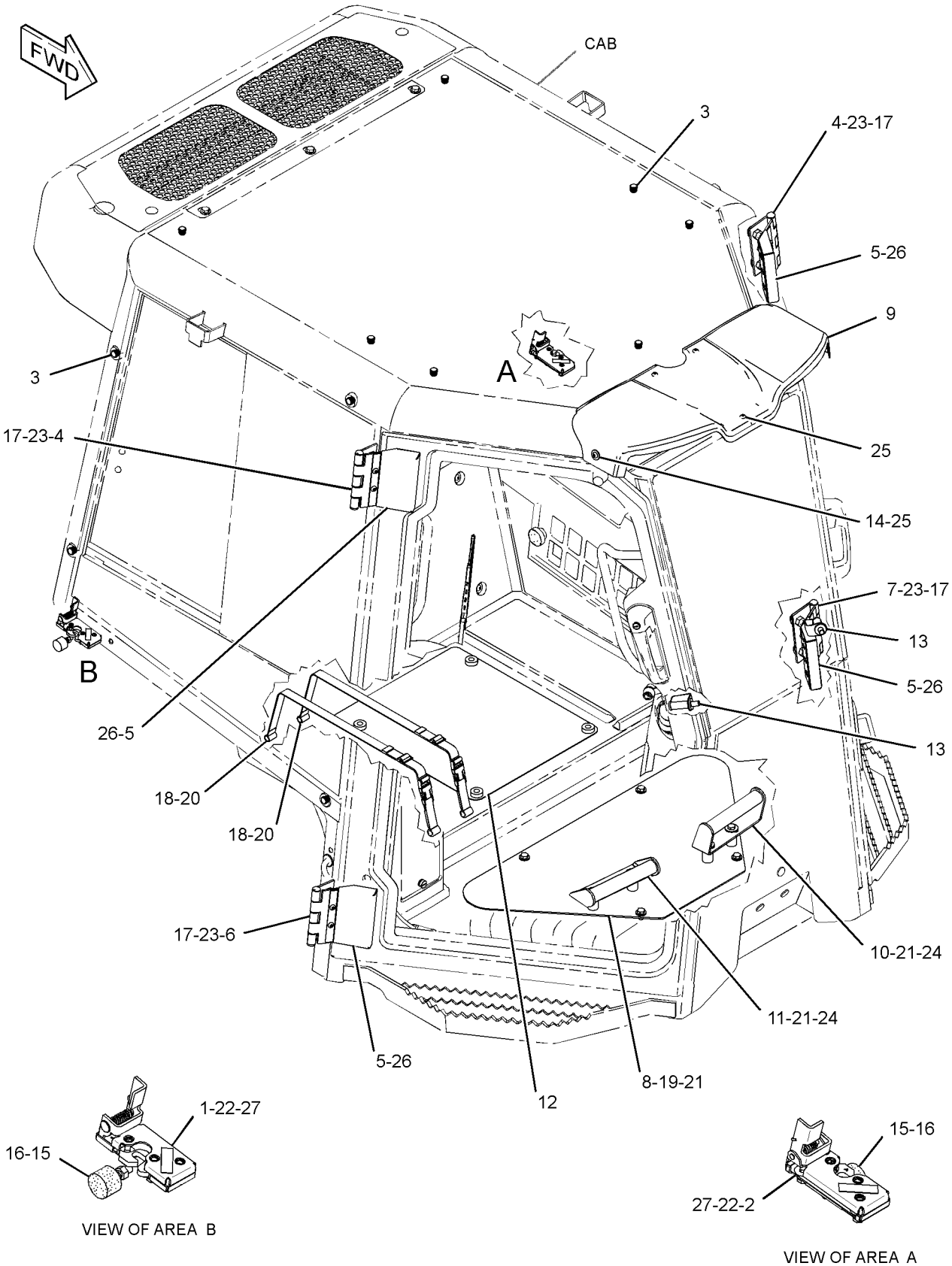

GRAPHIC #1 **<END>** g01349337

OPERATOR STATION

255-4239 ACCESSORY GP-CAB—EROPS

S/N: JTD1-UP; FFF1-UP; LLL1-UP
PART OF 244-7475, 244-7476 ROPS AR
AN ATTACHMENT
TYPE 2

SMCS-1408, 1421, 7301 **i03918458**

NOTE	REF NO	GRAPHIC REF	PART NUMBER	QTY	PART NAME 1 2 3 4 5 6 (PRODUCT LEVEL)	SEE PAGE
	1	1	**180-3153**	1	LATCH AS-DOOR (ROTARY) (RH)	
	2	1	**180-3154**	1	LATCH AS-DOOR (ROTARY) (LH)	
	3	1	**263-3013**	19	CAP	
	4	1	**254-3183**	2	HINGE AS	
	6	1	**255-4235**	1	HINGE AS (RH)	
	7	1	**255-4236**	1	HINGE AS (LH)	
					(EACH HINGE AS INCLUDES)	
M		1	**8T-3597**	3	NUT-WELD (M12X1.75-THD)	
	8	1	**255-4258**	1	PLATE AS	
	9	1	**343-3549**	1	COVER-LIGHT	
	10	1	**271-2773**	1	SUPPORT AS (LH)	
	11	1	**271-2774**	1	SUPPORT AS (RH)	
	12	1	**281-3986**	1	PLATE AS	
	13	1	**281-7631**	2	STRIKER	
	14	1	**9X-6165**	5	WASHER (6.5X22X2.5-MM THK)	
	15	1	**178-2593**	2	BUMPER	
M	16	1	**5C-7261**	4	NUT (M8X1.25-THD)	
	17	1	**5P-1076**	12	WASHER-HARD (13.5X30X4-MM THK)	
	18	1	**7G-4824**	2	STRAP	
	19	1	**7X-7729**	4	WASHER (11X25X3-MM THK)	
	20	1	**8E-7791**	2	STRAP	
M	21	1	**8T-4137**	8	BOLT (M10X1.5X20-MM)	
M	22	1	**8T-4138**	8	BOLT (M6X1X20-MM)	
M	23	1	**8T-4139**	12	BOLT (M12X1.75X30-MM)	
	24	1	**8T-4222**	4	WASHER-PLATED (11X32X2.5-MM THK)	
M	25	1	**8T-4171**	5	BOLT (M6X1X12-MM)	
	27	1	**9X-8256**	8	WASHER (6.6X12X2-MM THK)	

M-METRIC PART

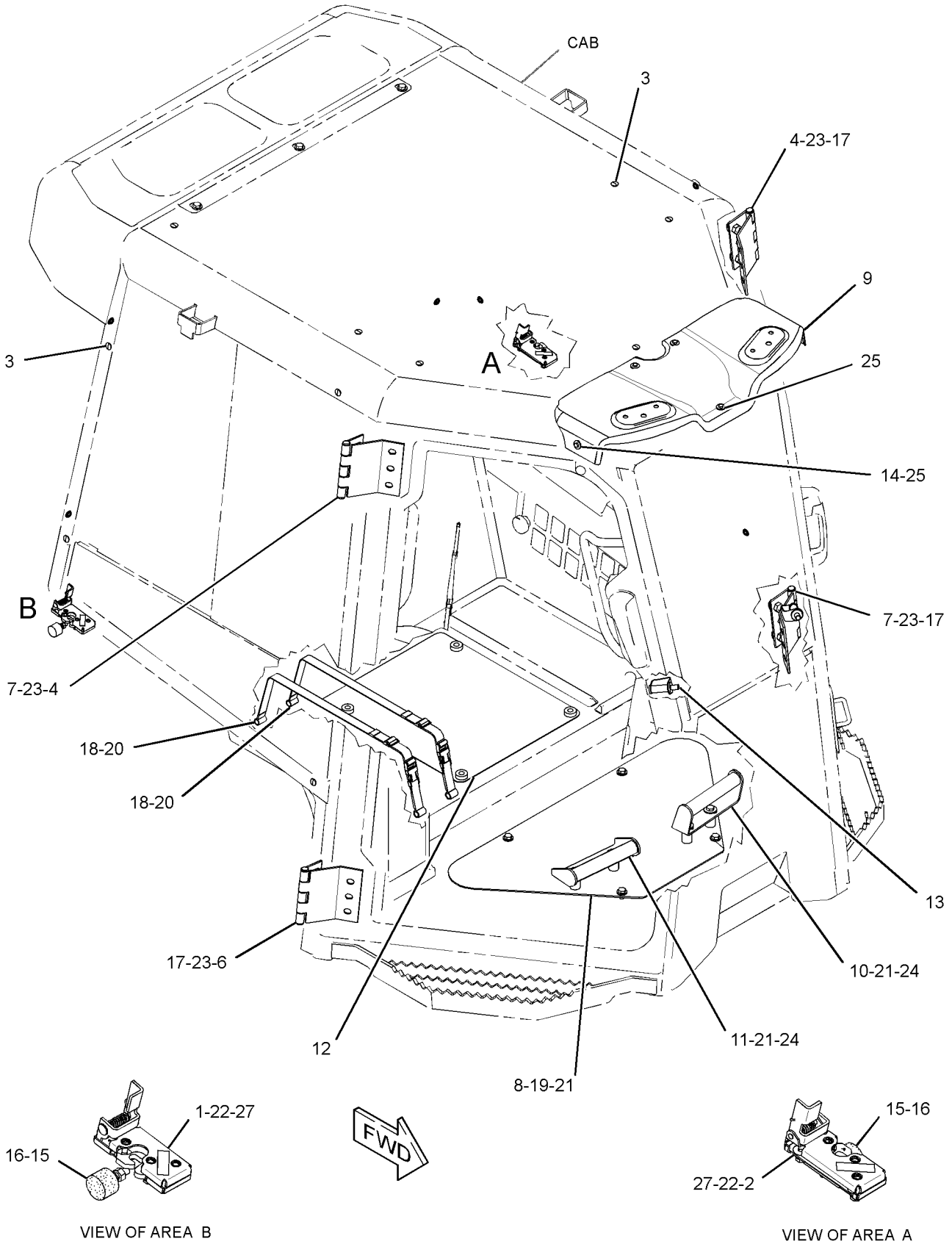

GRAPHIC #1

<END>

g02201673

OPERATOR STATION

255-4240 ACCESSORY GP-CAB–OROPS

S/N: JTD1-UP; FFF1-UP; LLL1-UP
PART OF 244-7474 ROPS AR
AN ATTACHMENT

SMCS-1408, 1421, 7301 **i03918463**

NOTE	REF NO	GRAPHIC REF	PART NUMBER	QTY	PART NAME 1 2 3 4 5 6 (PRODUCT LEVEL)	SEE PAGE
	1	1	**263-3013**	19	CAP	
	2	1	**255-4258**	1	PLATE AS	
	3	1	**343-3549**	1	COVER-LIGHT	
	4	1	**271-2773**	1	SUPPORT AS (LH)	
	5	1	**271-2774**	1	SUPPORT AS (RH)	
	6	1	**281-3986**	1	PLATE AS	
	7	1	**7G-4824**	2	STRAP	
	8	1	**7X-7729**	4	WASHER (11X25X3-MM THK)	
	9	1	**8E-7791**	2	STRAP	
M	10	1	**8T-4137**	8	BOLT (M10X1.5X20-MM)	
	11	1	**8T-4222**	4	WASHER-PLATED (11X32X2.5-MM THK)	
M	12	1	**8T-4171**	5	BOLT (M6X1X12-MM)	
	13	1	**9X-6165**	5	WASHER (6.5X22X2.5-MM THK)	

M-METRIC PART

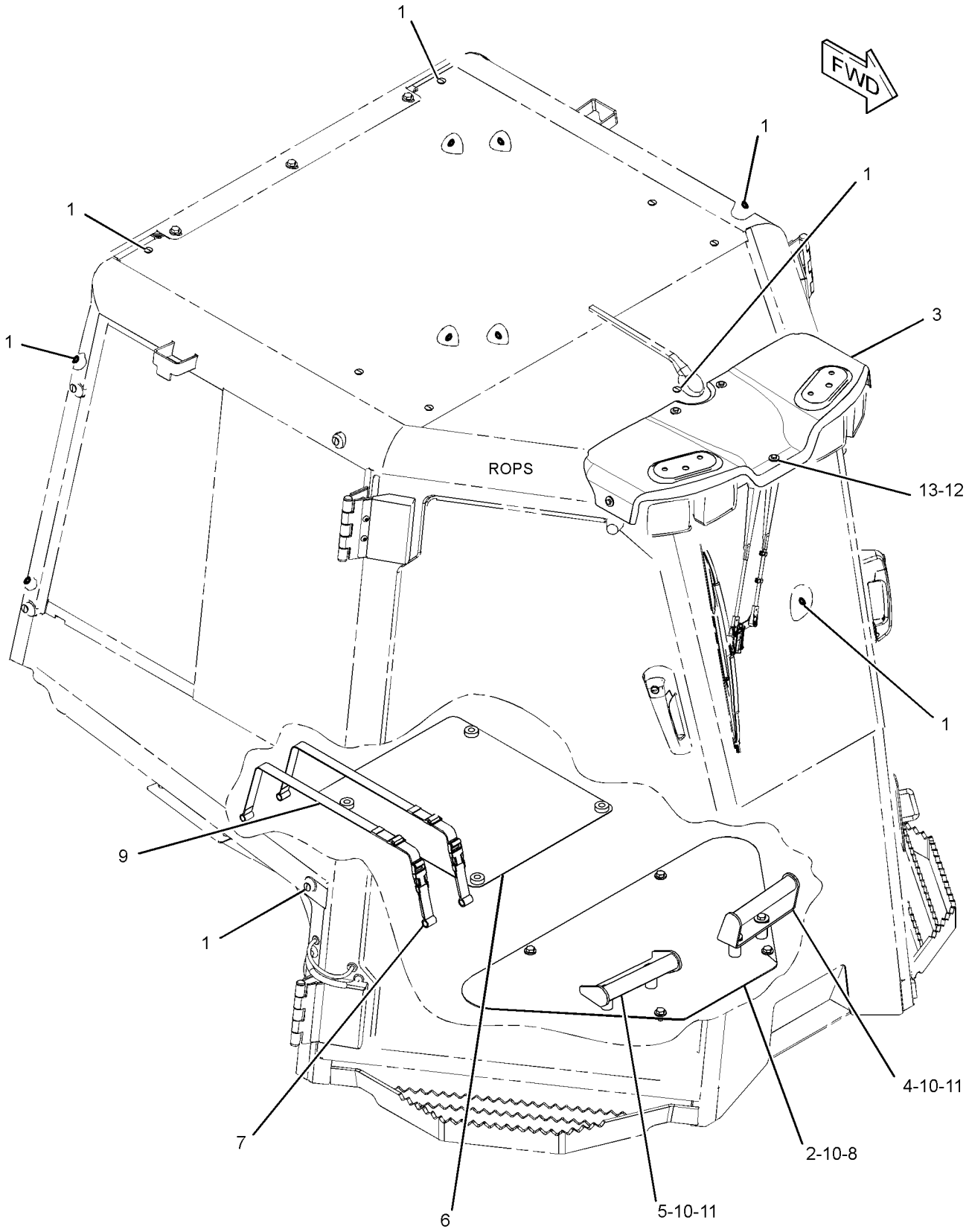

GRAPHIC #1 **<END>** g02200253

OPERATOR STATION

325-7265 ACCESSORY GP-CAB—FIRE PLOW

S/N: JTD1-UP; FFF1-UP; LLL1-UP

PART OF 325-6496, 325-6497, 325-6502 CONVERSION AR-MACHINE OPTION

AN ATTACHMENT

SMCS-1408, 1421, 7301 **i03696040**

NOTE	REF NO	GRAPHIC REF	PART NUMBER	QTY	PART NAME 1 2 3 4 5 6 (PRODUCT LEVEL)	SEE PAGE
M	1	1	**225-3322**	6	SCREW-TRUSS HEAD (M6X1X10-MM)	
	2	1	**252-6596**	2	HANDLE AS	
	3	1	**259-8704**	2	PLATE-STOP	
	4	1	**322-6486**	1	PLATE	
	5	1	**322-8499**	1	PLATE	
	6	1	**254-3180**	1	ROLLOVER AS	
	7	1	**326-8172**	1	PLATE AS-FLOOR	
	8	1	**284-3754**	1	FLOOR MAT-FRONT	
	9	1	**348-6651**	2	PLATE	
	10	1	**349-4589**	6	LUG	
	11	1	**096-6166**	6	WASHER-HARD (4.5X9X1-MM THK)	
M	12	1	**111-4627**	2	SCREW-MACHINE (M6X1X30-MM)	
M	13	1	**5C-2890**	8	NUT (M6X1-THD)	
M	14	1	**5C-8312**	6	NUT (M4X0.7-THD)	
M	15	1	**8T-4138**	8	BOLT (M6X1X20-MM)	
M	16	1	**8T-7852**	6	BOLT (M4X0.7X10-MM)	
	17	1	**9X-8256**	16	WASHER (6.6X12X2-MM THK)	
E	18	1	**123-3827**		SEAL (51-CM EACH)	

E-ORDER BY THE CENTIMETER
M-METRIC PART

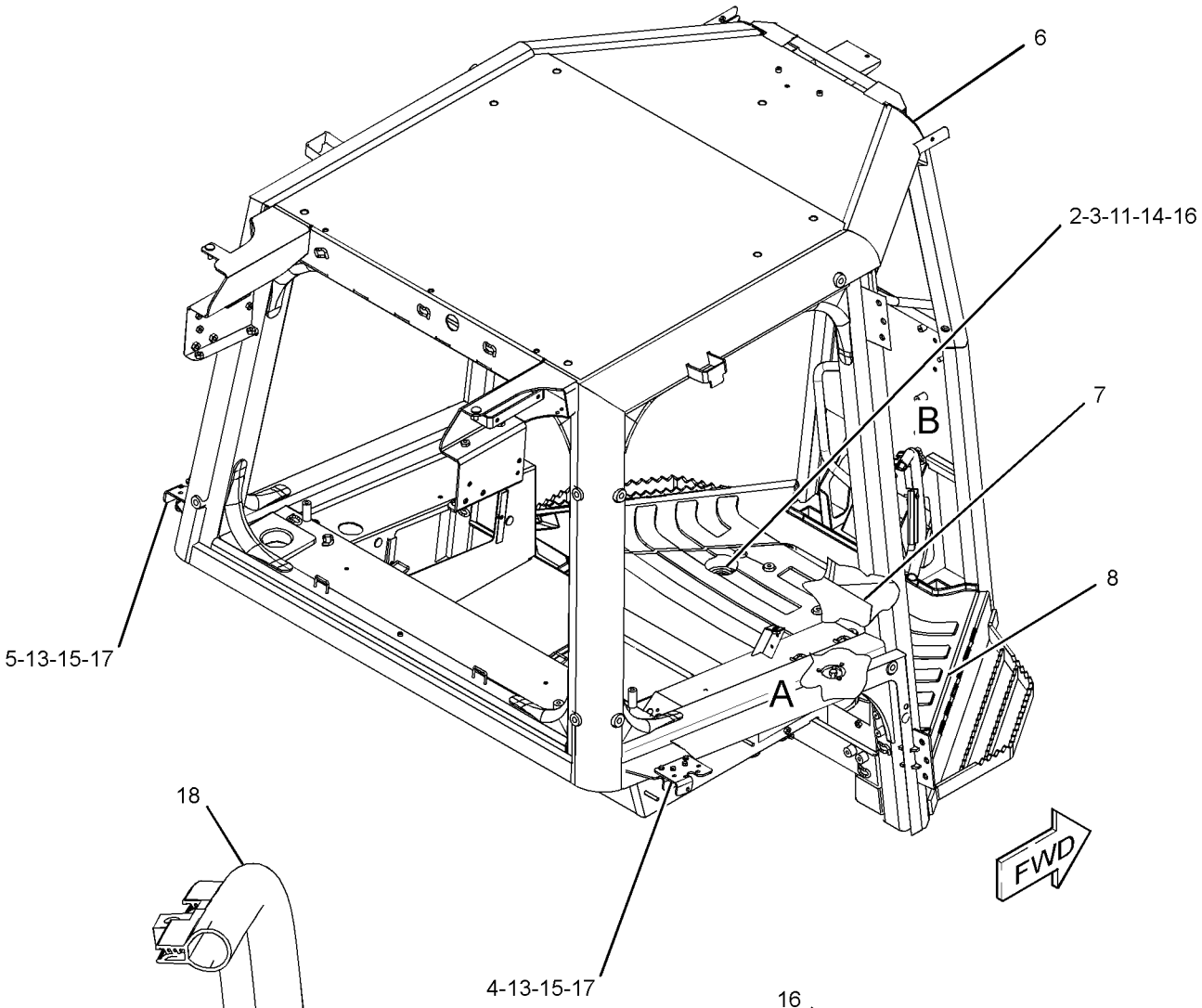

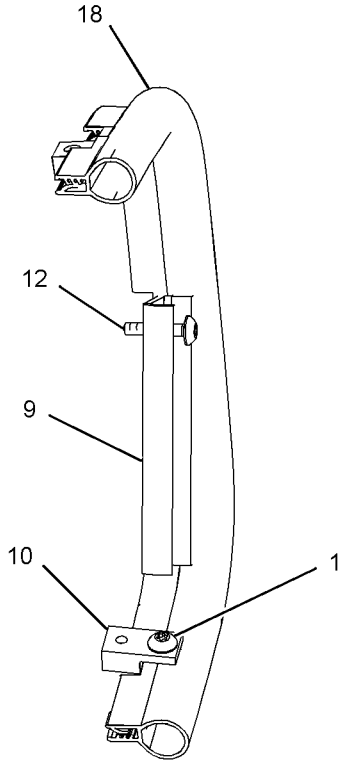

VIEW OF AREA B

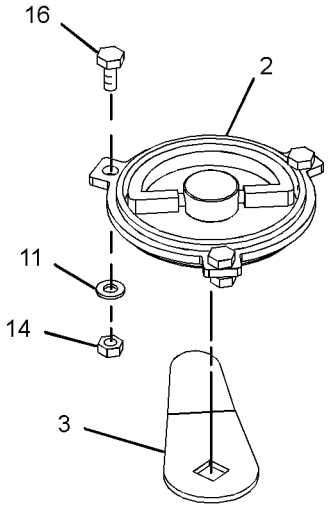

VIEW OF AREA A
(EXPLODED)

GRAPHIC #1 **<END>** g02007033

OPERATOR STATION

176-3900 ACCUMULATOR GP-REFRIGERANT–UNCHARGED

S/N: JTD1-UP; LLL1-UP

FIELD REPLACEMENT FOR 186-6190–PAGE 666

SMCS-7320 **i02195254**

NOTE	REF NO	GRAPHIC REF	PART NUMBER	QTY	PART NAME 1 2 3 4 5 6 (PRODUCT LEVEL)	SEE PAGE
					(NO SERVICED PARTS)	

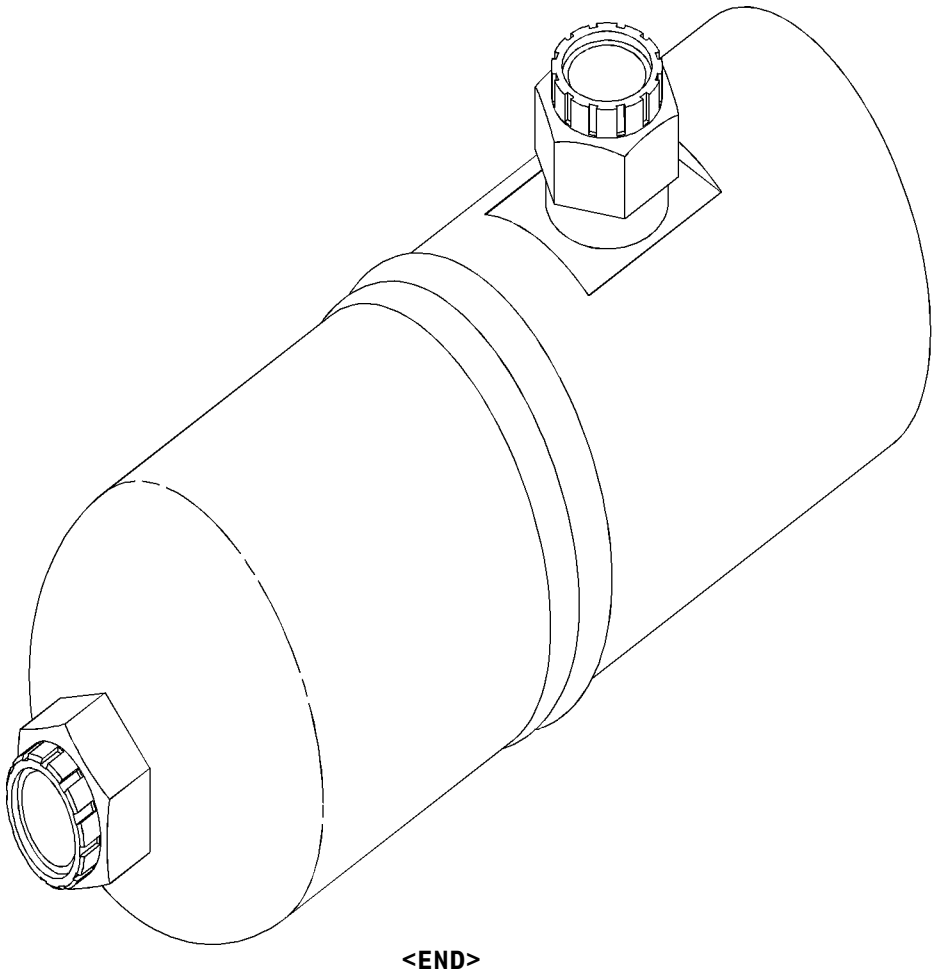

GRAPHIC #1 **<END>** g01035076

186-6190 ACCUMULATOR GP-REFRIGERANT—CHARGED

S/N: JTD1-UP; FFF1-UP; LLL1-UP
PART OF 257-9819 LINES GP-AIR CONDITIONER
FIELD REPLACEMENT ORDER 176-3900—PAGE 665
AN ATTACHMENT

SMCS-7320 **i02306357**

NOTE	REF NO	GRAPHIC REF	PART NUMBER	QTY	PART NAME 1 2 3 4 5 6 (PRODUCT LEVEL)	SEE PAGE
					(NO SERVICED PARTS)	

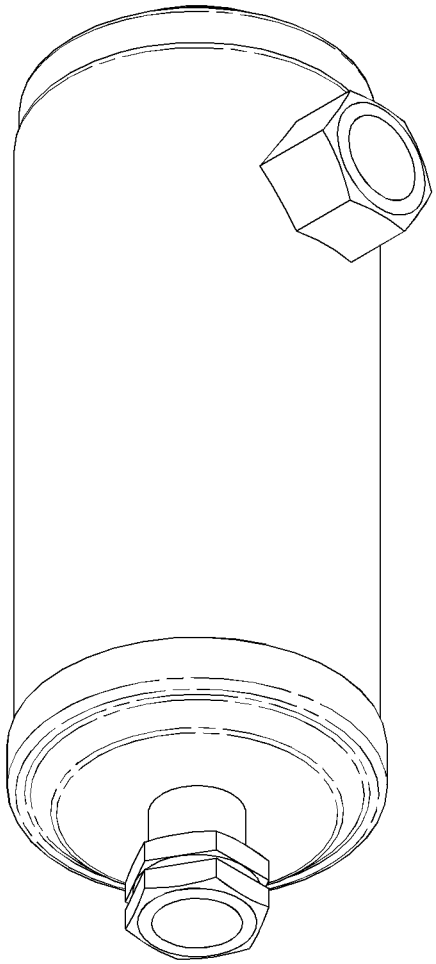

GRAPHIC #1 **<END>** g01155244

OPERATOR STATION

254-3210 AIR CONDITIONER & MOUNTING GP

S/N: JTD1-UP; FFF1-UP; LLL1-UP
PART OF 244-7475, 244-7476 ROPS AR
AN ATTACHMENT

SMCS-7320 **i02883074**

NOTE	REF NO	GRAPHIC REF	PART NUMBER	QTY	PART NAME 1 2 3 4 5 6 (PRODUCT LEVEL)	SEE PAGE
	1	2	**3S-2093**	1	STRAP-CABLE	
Y	2	2	**180-5927**	1	CONDENSER GP-REFRIGERANT	687
Y	3	2	*245-6024*	1	WIRING GP-AIR CONDITIONER	230
	4	2	**247-6648**	1	GRID	
	5	2	**315-6737**	1	COVER AS (LH)	
	6	2	**315-6735**	1	COVER AS (RH)	
Y	7	1	*252-4502*	1	AIR CONDITIONER GP	670
	8	1	**315-6738**	1	COVER AS	
	9	1	**254-3196**	1	HOSE	
	10	1	**254-3199**	1	HOSE	
	11	1	**254-3200**	1	GASKET	
	12	1	**254-3201**	1	DUCT-AIR	
		1	**6C-3680**	4	RIVET-POP	
Y	13	2	*255-3696*	1	COMPRESSOR & MTG GP-REFRIG	685
	14	1	**255-5153**	1	COVER-FILTER	
Y	15	1	*257-9819*	1	LINES GP-AIR CONDITIONER	777
	16	1	**266-7765**	1	FILTER GP-CAB AIR (STANDARD EFFICIENCY) (LOW RESTRICTION MEDIA)	
	17	2	**281-4005**	1	PLATE	
	18	1	**288-3657**	2	THUMBSCREW (M6X1X10-MM)	
	19	1	**300-3665**	4	GROMMET	
	20	1	**5P-0597**	2	CLAMP-HOSE	
	21	1	**5P-0599**	4	CLAMP-BAND	
M	22	1	**6V-7744**	3	LOCKNUT (M10X1.5-THD)	
	23	1,2	**7X-7729**	21	WASHER (11X25X3-MM THK)	
M	24	1,2	**8T-4137**	14	BOLT (M10X1.5X20-MM)	
M	25	2	**8T-4189**	4	BOLT (M8X1.25X20-MM)	
M	26	2	**8T-4195**	4	BOLT (M10X1.5X30-MM)	
	27	2	**8T-4224**	4	WASHER-HARD (8.8X16X2-MM THK)	
H	28	1	**242-4885**		HOSE (2-DM)	

H-ORDER BY THE DECIMETER
M-METRIC PART
Y-SEPARATE ILLUSTRATION

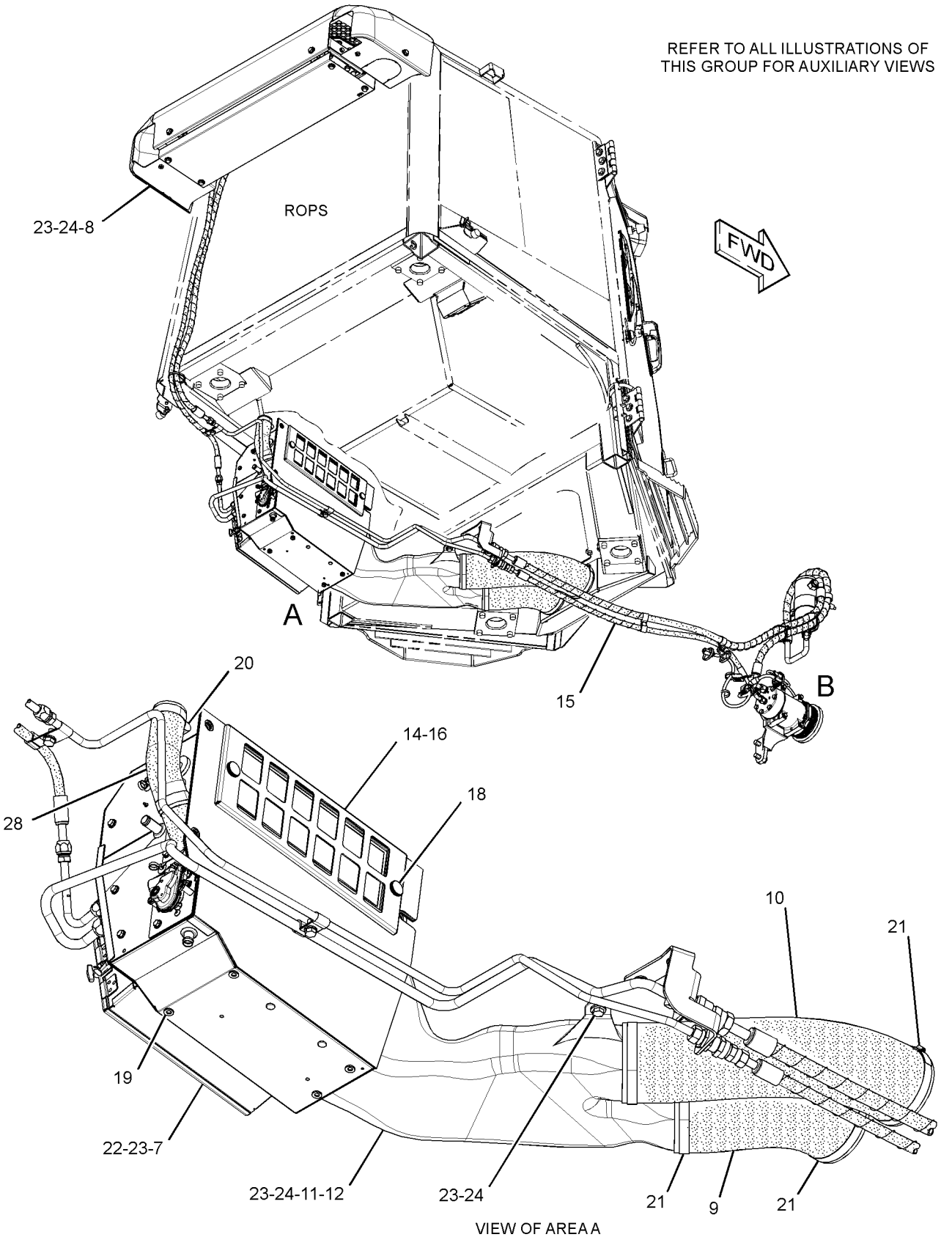

VIEW OF AREA A

GRAPHIC #1

g01527799

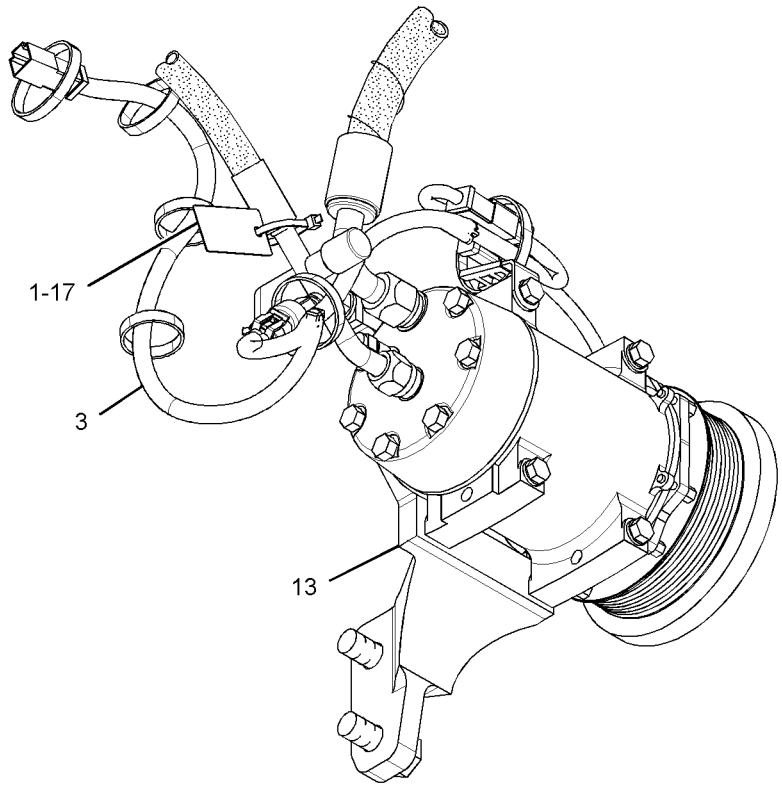

VIEW OF AREA B

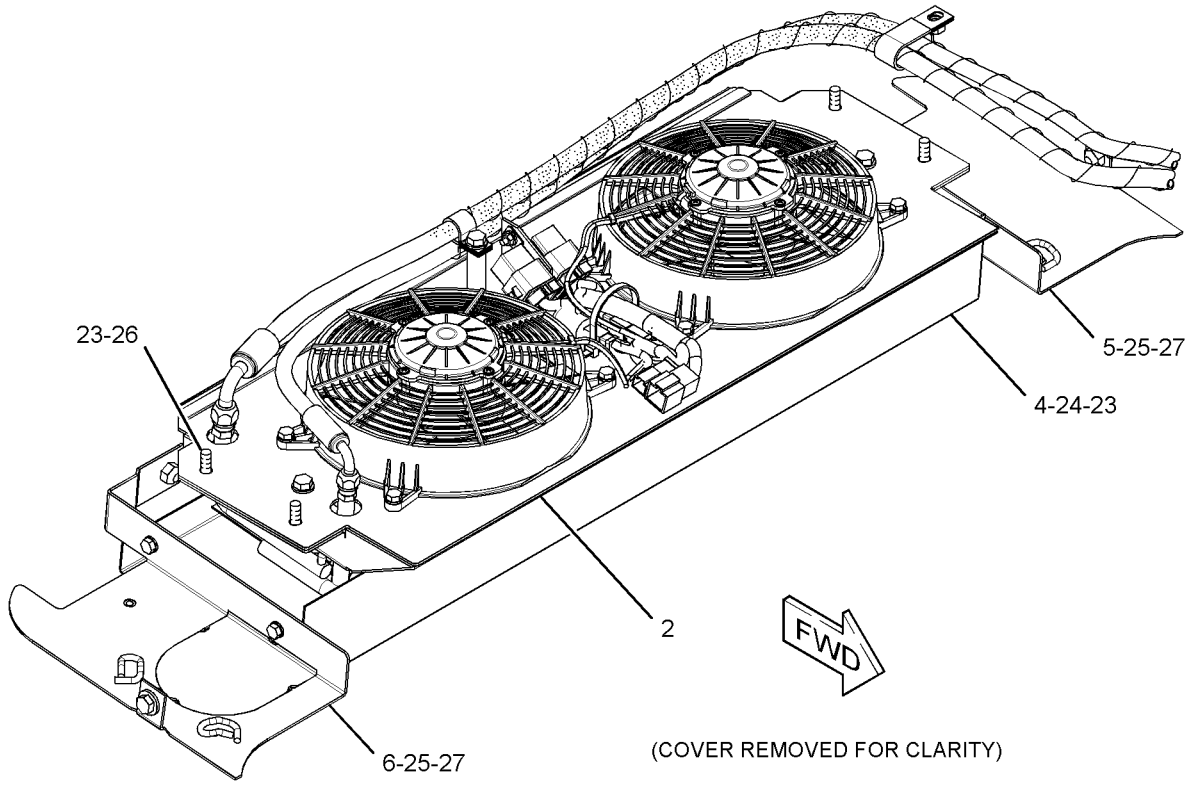

(COVER REMOVED FOR CLARITY)

GRAPHIC #2 **<END>** g01527800

OPERATOR STATION

252-4502 AIR CONDITIONER GP

S/N: JTD1-UP; FFF1-UP; LLL1-UP
PART OF 254-3210 AIR CONDITIONER & MOUNTING GP
AN ATTACHMENT
TYPE 1

SMCS-7320 **i04415565**

NOTE	REF NO	GRAPHIC REF	PART NUMBER	QTY	PART NAME 1 2 3 4 5 6 (PRODUCT LEVEL)	SEE PAGE
	1	1	**3E-5464**	1	THERMOSTAT (HVAC)	
	2	1	**3S-2093**	3	STRAP-CABLE	
	3	1	**8C-3756**	1	FILM-IDENTIFICATION (GROUP NO., SEQUENCE NO.)	
	4	1	**111-4015**	1	GROMMET	
	5	1	**131-3093**	1	BUSHING	
	6	1	**133-8714**	1	GROMMET	
	7	1	**134-3518**	2	TIE-PUSH MOUNT	
	8	1	**151-5650**	2	PLUG	
	9	1	**153-6932**	1	GASKET	
	10	1	**209-8217**	1	FILTER ELEMENT-CAB AIR (STANDARD EFFICIENCY)	
					—OR—	
		1	**268-6705**	1	FILTER ELEMENT AS-AIR (ADVANCED EFFICIENCY)	
					—OR—	
		1	**307-4442**	1	FILTER (ACTIVATED CHARCOAL)	
					—OR—	
		1	**318-7190**	1	FILTER ELEMENT-CAB AIR (ADVANCED EFFICIENCY)	
	11	1	**248-6772**	2	SCREW-MACHINE (8-16X7.75-IN)	
	12	1	**255-6210**	1	COIL AS-EVAPORATOR	
	13	1	**256-0761**	1	CASE AS-AIR CONDITIONER	
	14	1	**256-0762**	1	PLATE AS	
M		1	**6V-9632**	1	NUT-WELD (M6X1-THD)	
	15	1	**256-0768**	1	PLATE AS	
M		1	**6V-9632**	6	NUT-WELD (M6X1-THD)	
M		1	**9X-2032**	2	NUT-WELD (M4X0.7-THD)	
	16	1	**256-0770**	1	PLATE AS	
	17	1	**262-2814**	1	PLATE AS	
	18	1	**265-9620**	1	ACTUATOR (ELECTRONIC)	
	19	1	**266-7145**	1	DUCT AS	
	20	1	**275-6707**	2	GROMMET	
	21	1	**276-4299**	1	HARNESS AS-MOTOR (BLOWER)	
		1	**6T-6505**	7	HOUSING-RECEPTACLE (BLADE, POSITIVE LOCK)	
		1	**7T-0093**	4	PIN-CONNECTOR (12-GA TO 14-GA)	
		1	**8T-8729**	3	PIN-CONNECTOR (16-GA TO 18-GA)	
		1	**9W-0852**	1	PIN-CONNECTOR (14-GA TO 16-GA)	
		1	**155-2271**	1	KIT-CONNECTING PLUG (4-PIN)	
		1	**177-9648**	1	KIT-CONNECTING PLUG (2-PIN)	
					(EACH PLUG KIT INCLUDES PLUG AS, WEDGE & INTERFACE SEAL)	
		1	**8T-8737**	1	PLUG-SEAL	
		1	**177-9651**	1	LOCK	
		1	**7T-0094**	2	SOCKET-CONNECTOR (12-GA TO 14-GA)	
		1	**126-1766**	2	SOCKET-CONNECTOR (14-GA TO 18-GA)	
		1	**126-1766**		SOCKET-CONNECTOR (14-GA TO 18-GA)	
		1	**9X-3402**	3	SOCKET-CONNECTOR (16-GA TO 18-GA)	
		1	**8T-9850**	3	TERMINAL-BLADE	
		1	**6T-6506**	4	TERMINAL-BLADE (14-GA TO 18-GA)	
E		1	**125-7875**		TUBE-HEAT SHRINK (7.44-MM DIA) (5-CM)	
		1	**102-8804**	1	KIT-RECEPTACLE (4-PIN)	
		1	**177-9653**	1	KIT-RECEPTACLE (4-PIN)	
					(EACH RECEPTACLE KIT INCLUDES RECEPTACLE AS & WEDGE)	
		1	**6T-6506**	1	TERMINAL-BLADE (14-GA TO 18-GA)	
E		1	**119-3662**		TUBE-HEAT SHRINK (10.85-MM DIA) (7-CM)	
	22	1	**277-7113**	1	PLATE AS	

252-4502 AIR CONDITIONER GP *(contd.)* i04415565

NOTE	REF NO	GRAPHIC REF	PART NUMBER	QTY	PART NAME 1 2 3 4 5 6 (PRODUCT LEVEL)	SEE PAGE
	23	1	**277-7114**	2	PLUG	
	24	1	**277-7115**	1	BLOWER AS	
	25	1	**277-9966**	1	PLATE AS	
Y	26	1	**277-9969**	1	HEATER GP-CAB	769
	27	1	**318-0815**	1	PLATE AS	
	28	1	**278-3354**	1	FILM-INSTRUCTION (HVAC WATER, DRAINING, FILLING)	
	29	1	*282-3475*	1	RESISTOR GP	
		1	**280-9453**	3	SCREW-SELF-TAPPING (6X0.375-IN)	
		1	**282-3481**	1	PLATE AS	
		1	**284-8773**	1	RESISTOR AS	
	30	1	**282-3653**	1	BRACKET	
M	31	1	**283-8651**	7	BOLT (M4X0.7X10-MM)	
	32	1	**096-6166**	4	WASHER-HARD (4.5X9X1-MM THK)	
	33	1	**3B-4501**	2	LOCKWASHER	
	34	1	**4P-7581**	1	CLIP	
M	35	1	**5C-9553**	21	BOLT (M6X1X16-MM)	
	36	1	**8C-8514**	2	SCREW-MACHINE (8-32X0.375-IN)	
	37	1	**8T-4121**	1	WASHER-HARD (11X21X2.5-MM THK)	
M	38	1	**8T-4137**	1	BOLT (M10X1.5X20-MM)	
	39	1	**8T-4205**	21	WASHER-HARD (7.2X14.5X2-MM THK)	
D	40	1	**6V-2496**		SEAL (0.1-M EACH)	
D	40A	1	**6V-2496**		SEAL (0.2-M EACH)	
D	40B	1	**6V-2496**		SEAL (0.3-M EACH)	
					AVAILABLE REPAIR KIT(S):	
			285-8553	1	KIT-GASKET (AIR CONDITIONER)	
					(INCLUDES GASKETS)	

D-ORDER BY THE METER
E-ORDER BY THE CENTIMETER
M-METRIC PART
Y-SEPARATE ILLUSTRATION

252-4502 AIR CONDITIONER GP *(contd.)* i04415565

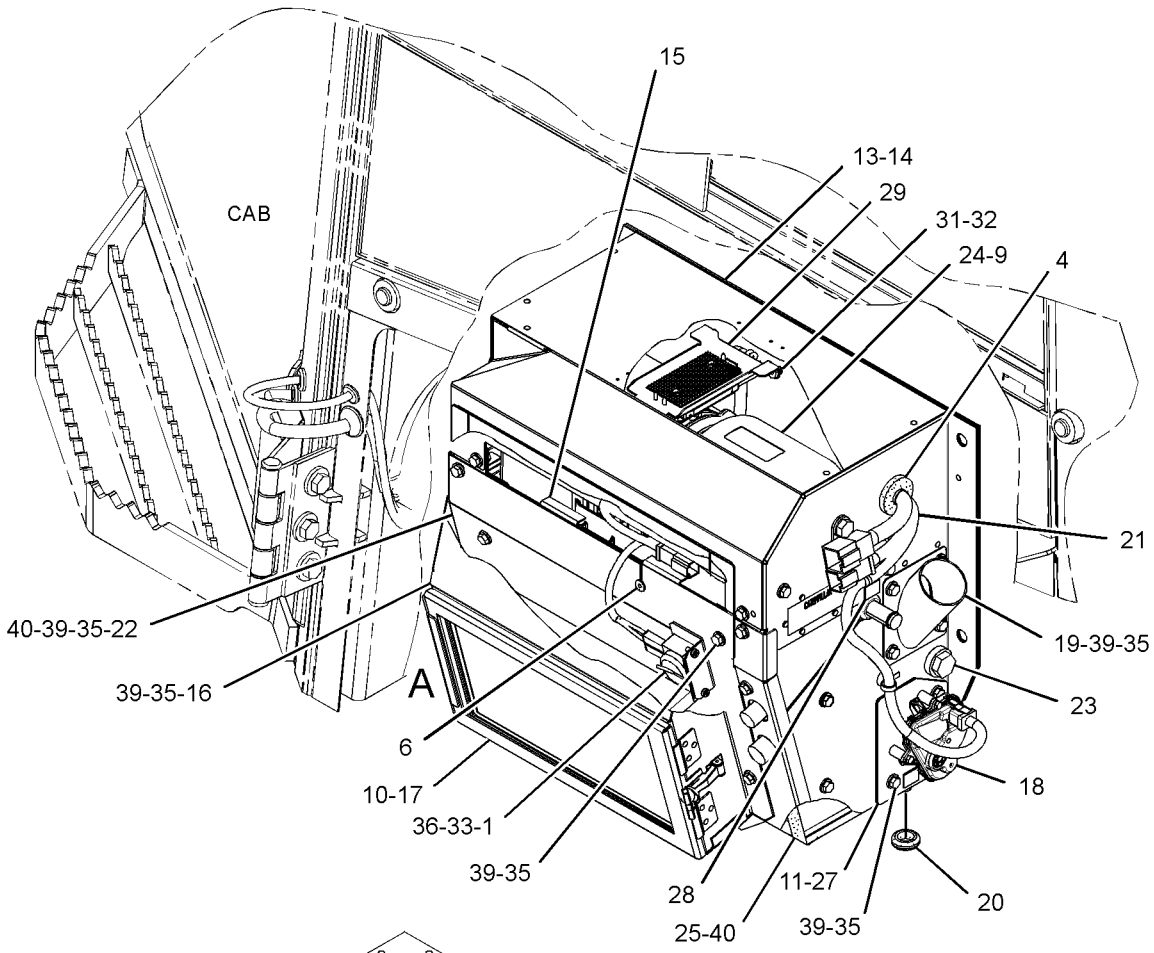

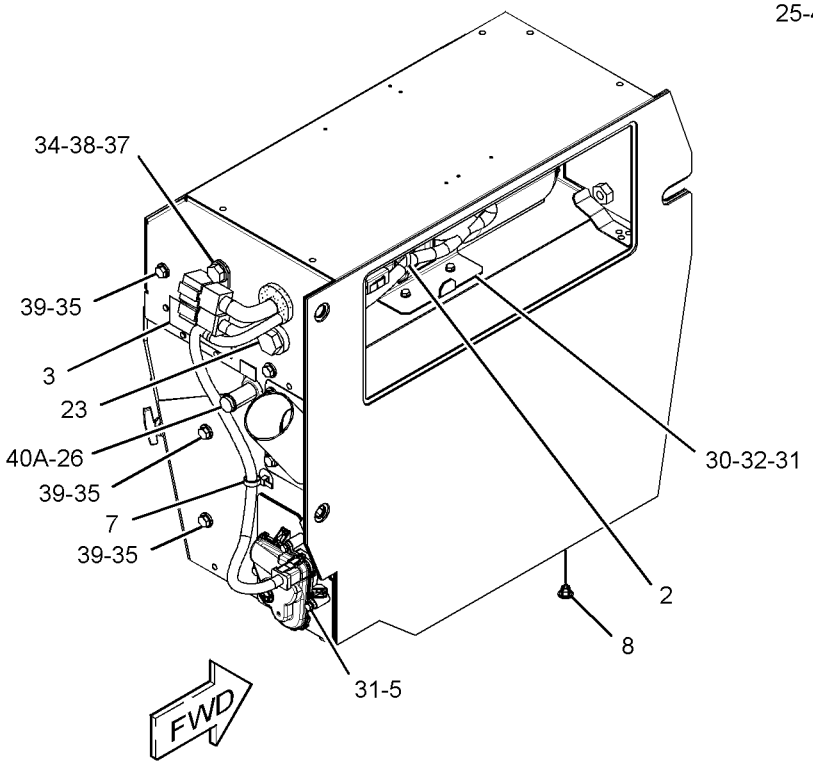



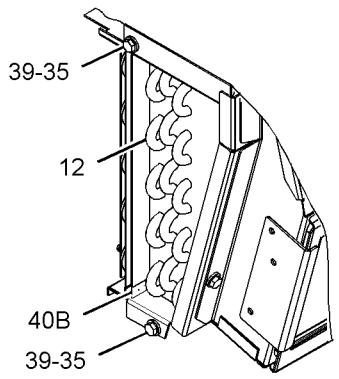

VIEW OF AREA A
(PLATE REMOVED FOR CLARITY)

90°

GRAPHIC #1 **<END>** g02615598

OPERATOR STATION

252-4502 AIR CONDITIONER GP

S/N: JTD1-UP; FFF1-UP; LLL1-UP
PART OF 254-3210 AIR CONDITIONER & MOUNTING GP
AN ATTACHMENT
TYPE 2

SMCS-7320 **i04335789**

NOTE	REF NO	GRAPHIC REF	PART NUMBER	QTY	PART NAME 1 2 3 4 5 6 (PRODUCT LEVEL)	SEE PAGE
	1	1	**3E-5464**	1	THERMOSTAT (HVAC)	
	2	1	**3S-2093**	3	STRAP-CABLE	
	3	1	**8C-3756**	1	FILM-IDENTIFICATION (GROUP NO., SEQUENCE NO.)	
	4	1	**111-4015**	1	GROMMET	
	5	1	**131-3093**	1	BUSHING	
	6	1	**133-8714**	1	GROMMET	
C	7	1	**134-3518**	3	TIE-PUSH MOUNT	
	8	1	**151-5650**	2	PLUG	
	9	1	**153-6932**	1	GASKET	
	10	1	**209-8217**	1	FILTER ELEMENT-CAB AIR (STANDARD EFFICIENCY)	
					—OR—	
		1	**268-6705**	1	FILTER ELEMENT AS-AIR (ADVANCED EFFICIENCY)	
					—OR—	
		1	**307-4442**	1	FILTER (ACTIVATED CHARCOAL)	
					—OR—	
		1	**318-7190**	1	FILTER ELEMENT-CAB AIR (ADVANCED EFFICIENCY)	
	11	1	**248-6772**	2	SCREW-MACHINE (8-16X7.75-IN)	
	12	1	**255-6210**	1	COIL AS-EVAPORATOR	
	13	1	**256-0761**	1	CASE AS-AIR CONDITIONER	
	14	1	**256-0762**	1	PLATE AS	
	15	1	**256-0768**	1	PLATE AS	
M		1	**6V-9632**	6	NUT-WELD (M6X1-THD)	
M		1	**9X-2032**	2	NUT-WELD (M4X0.7-THD)	
	16	1	**256-0770**	1	PLATE AS	
	17	1	**262-2814**	1	PLATE AS	
	18	1	**265-9620**	1	ACTUATOR (ELECTRONIC)	
	19	1	**266-7145**	1	DUCT AS	
	20	1	**275-6707**	2	GROMMET	
C	21	1	**364-6136**	1	HARNESS AS-MOTOR (BLOWER)	
		1	**6T-6505**	3	HOUSING-RECEPTACLE (BLADE, POSITIVE LOCK)	
		1	**7T-0093**	4	PIN-CONNECTOR (12-GA TO 14-GA)	
		1	**8T-8729**	3	PIN-CONNECTOR (16-GA TO 18-GA)	
		1	**9W-0852**	1	PIN-CONNECTOR (14-GA TO 16-GA)	
		1	**155-2271**	1	KIT-CONNECTING PLUG (4-PIN)	
		1	**177-9648**	1	KIT-CONNECTING PLUG (2-PIN)	
					(EACH PLUG KIT INCLUDES PLUG AS, WEDGE & INTERFACE SEAL)	
		1	**8T-8737**	1	PLUG-SEAL	
		1	**102-8804**	1	KIT-RECEPTACLE (4-PIN)	
		1	**177-9653**		KIT-RECEPTACLE (4-PIN)	
					(EACH RECEPTACLE KIT INCLUDES RECEPTACLE AS & WEDGE)	
		1	**7T-0094**	2	SOCKET-CONNECTOR (12-GA TO 14-GA)	
		1	**192-2112**	3	SOCKET-TERMINAL	
		1	**9X-3402**	3	SOCKET-CONNECTOR (16-GA TO 18-GA)	
		1	**5P-5618**	2	TERMINAL-BLADE (10-GA TO 12-GA)	
		1	**6T-6506**	3	TERMINAL-BLADE (14-GA TO 18-GA)	
E		1	**125-7875**		TUBE-HEAT SHRINK (7.44-MM DIA) (10-CM)	
	22	1	**277-7113**	1	PLATE AS	
	23	1	**277-7114**	2	PLUG	
	24	1	**277-7115**	1	BLOWER AS	
	25	1	**277-9966**	1	PLATE AS	
Y	26	1	**277-9969**	1	HEATER GP-CAB	769
	27	1	**318-0815**	1	PLATE AS	

252-4502 AIR CONDITIONER GP *(contd.)* i04335789

NOTE	REF NO	GRAPHIC REF	PART NUMBER	QTY	PART NAME 1 2 3 4 5 6 (PRODUCT LEVEL)	SEE PAGE
	28	1	**278-3354**	1	FILM-INSTRUCTION (HVAC WATER, DRAINING, FILLING)	
C	29	1	*363-5992*	1	RESISTOR GP	
		1	**9X-2185**	3	SCREW (8-15X0.44-IN)	
		1	**133-9012**	1	FUSE (15-AMPERE)	
		1	**354-1384**	1	RESISTOR GP	
		1	**363-5991**	1	BRACKET AS	
	30	1	**282-3653**	1	BRACKET	
M	31	1	**283-8651**	7	BOLT (M4X0.7X10-MM)	
	32	1	**096-6166**	4	WASHER-HARD (4.5X9X1-MM THK)	
	33	1	**3B-4501**	2	LOCKWASHER	
	34	1	**4P-7581**	1	CLIP	
M	35	1	**5C-9553**	21	BOLT (M6X1X16-MM)	
	36	1	**8C-8514**	2	SCREW-MACHINE (8-32X0.375-IN)	
	37	1	**8T-4121**	1	WASHER-HARD (11X21X2.5-MM THK)	
M	38	1	**8T-4137**	1	BOLT (M10X1.5X20-MM)	
	39	1	**8T-4205**	21	WASHER-HARD (7.2X14.5X2-MM THK)	
D	40	1	**6V-2496**		SEAL (0.1-M EACH)	
D	40A	1	**6V-2496**		SEAL (0.2-M EACH)	
D	40B	1	**6V-2496**		SEAL (0.3-M EACH)	

C-CHANGE FROM PREVIOUS TYPE
D-ORDER BY THE METER
E-ORDER BY THE CENTIMETER
M-METRIC PART
Y-SEPARATE ILLUSTRATION

252-4502 AIR CONDITIONER GP *(contd.)* i04335789

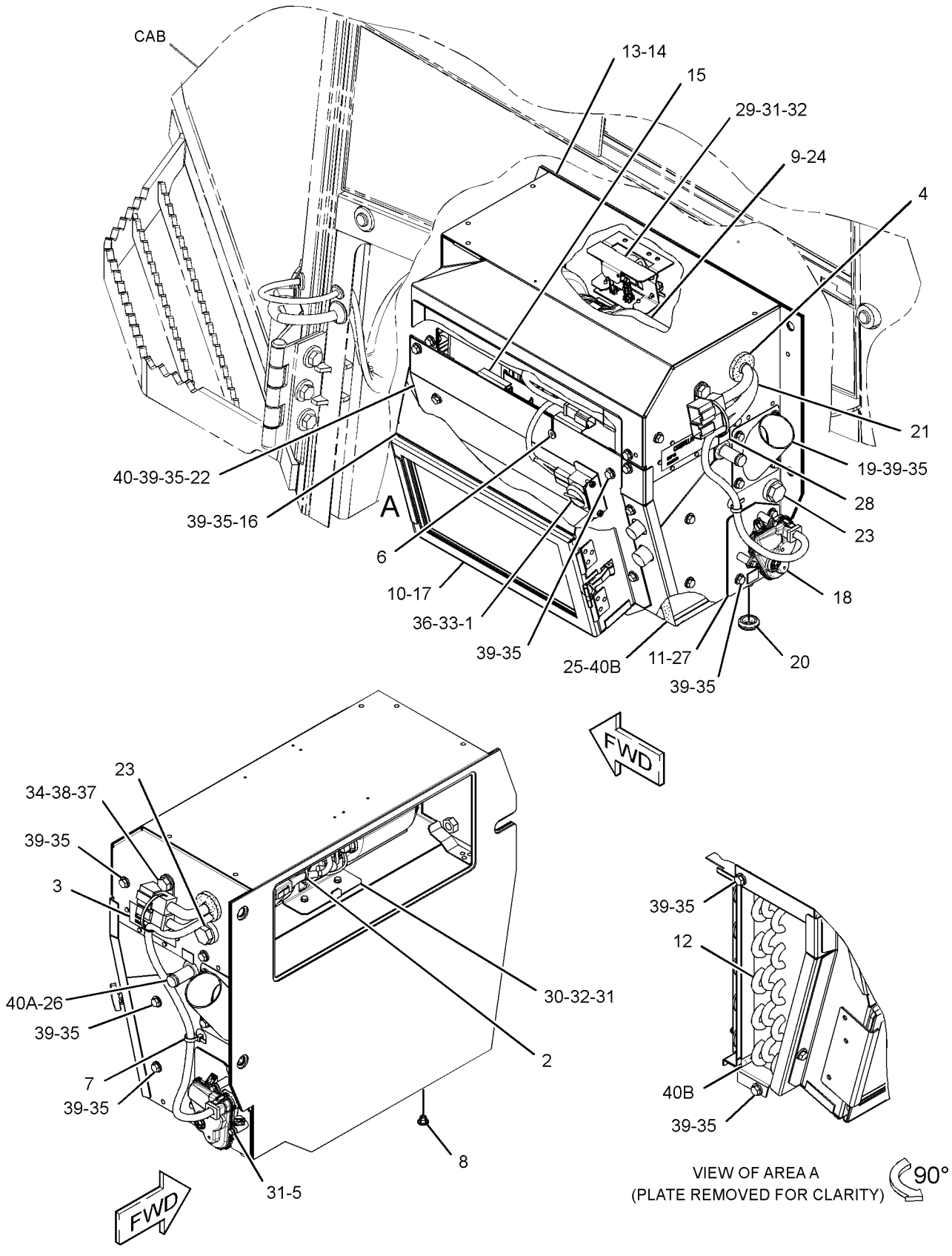

GRAPHIC #1 **<END>** g02524616

OPERATOR STATION

326-8180 AIR CONDITIONER GP

S/N: JTD1-UP; FFF1-UP; LLL1-UP

FOR USE WITH 325-6496—PAGE 3, 325-6497—PAGE 3, 325-6502—PAGE 4

AN ATTACHMENT

SMCS-7320 **i03713940**

NOTE	REF NO	GRAPHIC REF	PART NUMBER	QTY	PART NAME 1 2 3 4 5 6 (PRODUCT LEVEL)	SEE PAGE
E	1	1	**3E-3892**		SEAL (15.5-CM EACH)	
E	1A	1	**3E-3892**		SEAL (32-CM EACH)	
	2	1	**326-8178**	1	PLATE AS	
	3	1	**326-8179**	1	FILTER-AIR (AIR CONDITIONER)	
					PARTS SHOWN IN GRAPHIC(S) WITHOUT A REFERENCE NUMBER ARE NOT SERVICED SEPARATELY	

E-ORDER BY THE CENTIMETER

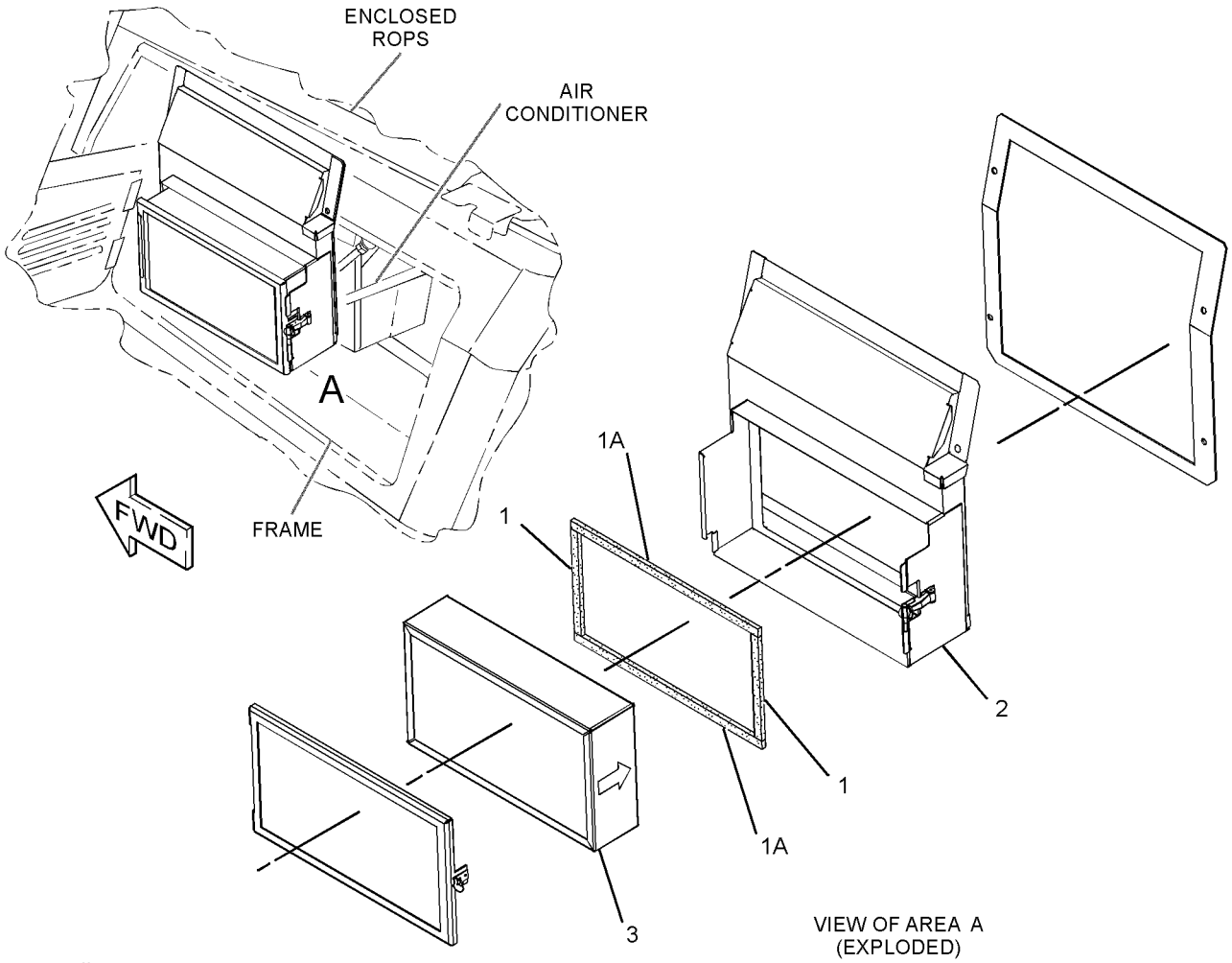

GRAPHIC #1 **<END>** g02005037

291-7980 ARM GP-SEAT SUSPENSION–CENTER

S/N: JTD1-UP; FFF1-UP; LLL1-UP
PART OF 316-8368 SUSPENSION GP-SEAT
AN ATTACHMENT

SMCS-7324 **i02891542**

NOTE	REF NO	GRAPHIC REF	PART NUMBER	QTY	PART NAME 1 2 3 4 5 6 (PRODUCT LEVEL)	SEE PAGE
	1	1	**291-7981**	1	ARM AS (INNER, RH)	
	2	1	**291-7984**	1	ARM AS (INNER, LH)	
	3	1	**291-7986**	1	PLATE AS	
	4	1	**291-7989**	2	PLATE	
	5	1	**291-7990**	2	BEARING	
	6	1	**291-7992**	1	SHAFT	
	7	1	**291-8030**	1	SPACER (19.3X25.4X225-MM THK)	
	8	1	**291-9310**	2	BELT-TETHER	
	9	1	**2B-2695**	4	BOLT (5/16-18X0.875-IN)	
	10	1	**6V-8189**	4	NUT (5/16-18-THD)	
	11	1	**6V-8801**	4	NUT (3/8-16-THD)	
	12	1	**7X-0289**	4	BOLT (3/8-16X1.875-IN)	
	13	1	**8T-4896**	8	WASHER-HARD (10.2X18.5X2.5-MM THK)	
	14	1	**9S-5282**	4	WASHER-HARD (8.8X14.5X2-MM THK)	
	15	1	**313-2794**	1	CLIP	

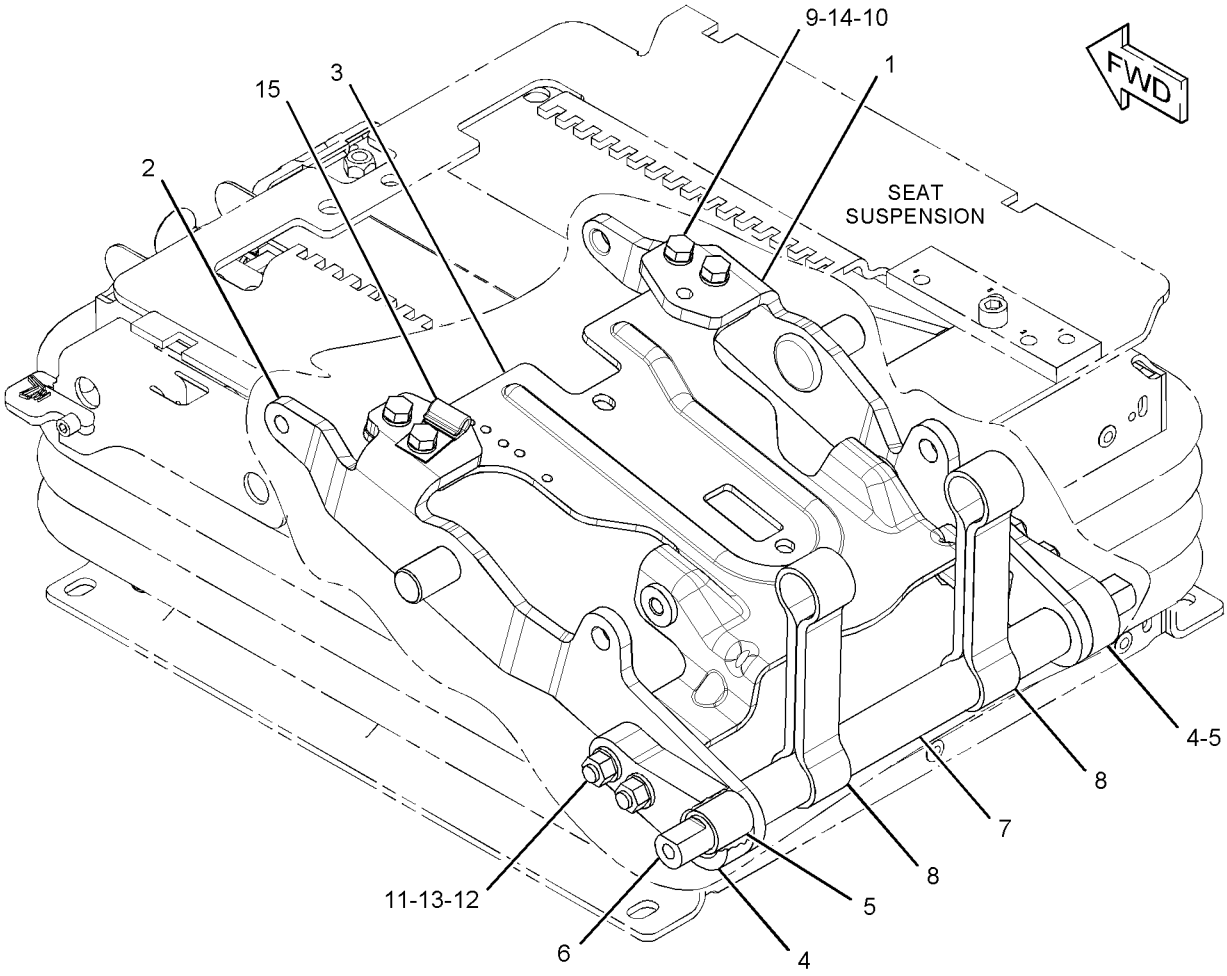

GRAPHIC #1 **<END>** g01445899

OPERATOR STATION

291-8004 ARM GP-SEAT SUSPENSION—OUTER, RH

S/N: JTD1-UP; FFF1-UP; LLL1-UP
PART OF 316-8368 SUSPENSION GP-SEAT
AN ATTACHMENT

SMCS-7324 **i03098048**

NOTE	REF NO	GRAPHIC REF	PART NUMBER	QTY	PART NAME 1 2 3 4 5 6 (PRODUCT LEVEL)	SEE PAGE
	1	1	**291-7990**	1	BEARING	
	2	1	**291-8005**	1	ARM AS (OUTER, RH)	
	3	1	**291-8008**	1	SPACER	
M	4	1	**5C-7261**	2	NUT (M8X1.25-THD)	
M	5	1	**8T-4197**	2	BOLT (M8X1.25X40-MM)	
	6	1	**8T-4224**	4	WASHER-HARD (8.8X16X2-MM THK)	

M-METRIC PART

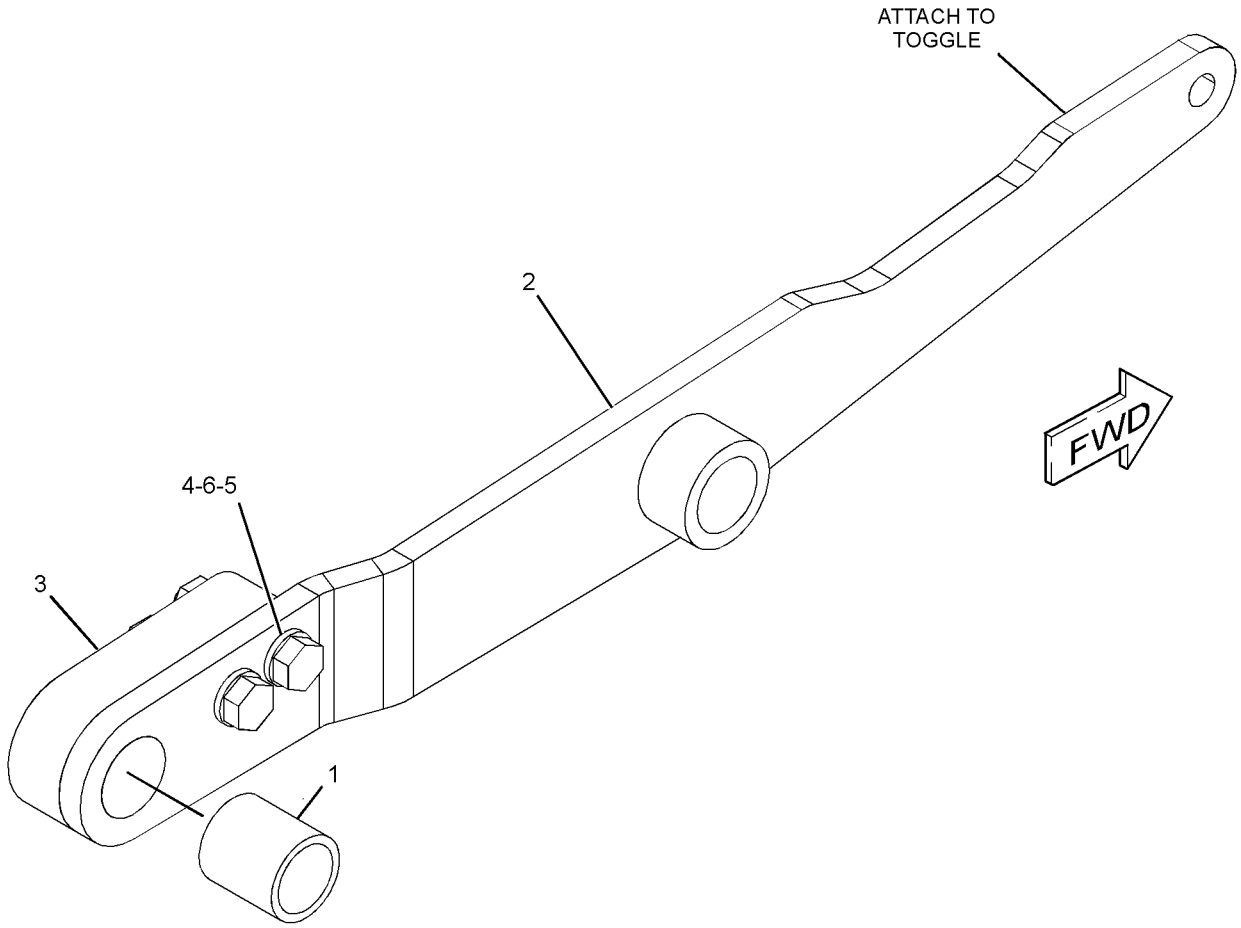

GRAPHIC #1 **<END>** g01578696

291-8011 ARM GP-SEAT SUSPENSION–OUTER, LH

S/N: JTD1-UP; FFF1-UP; LLL1-UP
PART OF 316-8368 SUSPENSION GP-SEAT
AN ATTACHMENT

SMCS-7324 **i03098049**

NOTE	REF NO	GRAPHIC REF	PART NUMBER	QTY	PART NAME 1 2 3 4 5 6 (PRODUCT LEVEL)	SEE PAGE
	1	1	**291-7990**	1	BEARING	
	2	1	**291-8008**	1	SPACER	
	3	1	**291-8012**	1	ARM (OUTER, LH)	
M	4	1	**5C-7261**	2	NUT (M8X1.25-THD)	
M	5	1	**8T-4197**	2	BOLT (M8X1.25X40-MM)	
	6	1	**8T-4224**	4	WASHER-HARD (8.8X16X2-MM THK)	

M-METRIC PART

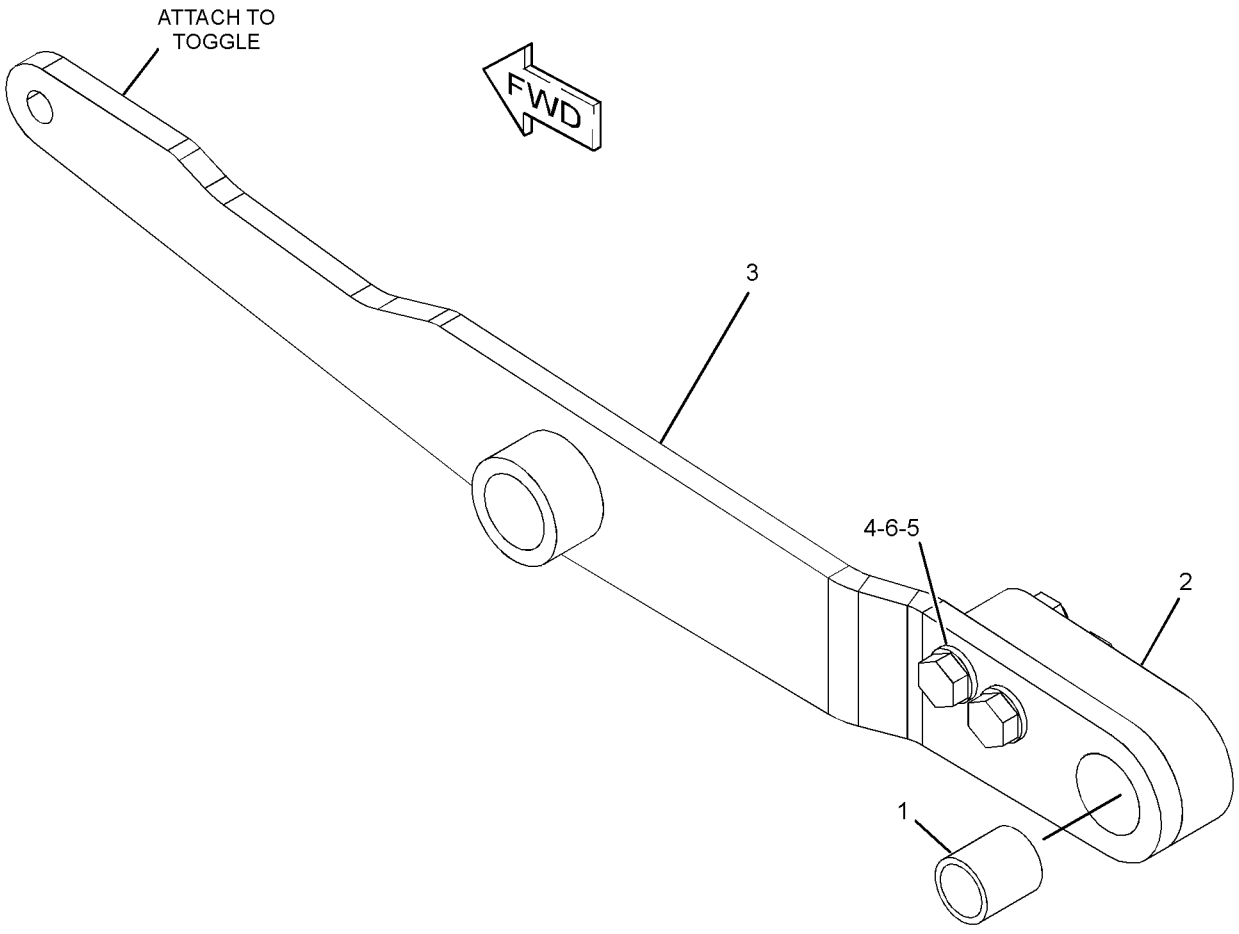

GRAPHIC #1 **<END>** g01578695

OPERATOR STATION

280-9679 ARMREST GP–LH

S/N: JTD1-UP; FFF1-UP; LLL1-UP
PART OF 255-4242 SEAT & SUPPORT GP, 255-4250, 255-4251, 255-4252 SEAT
GP-SUSPENSION
AN ATTACHMENT

SMCS-7307, 7312 **i04415578**

NOTE	REF NO	GRAPHIC REF	PART NUMBER	QTY	PART NAME 1 2 3 4 5 6 (PRODUCT LEVEL)	SEE PAGE
	1	1	**253-8798**	2	KNOB	
	2	1	**268-9378**	1	BRACKET	
	3	1	**282-2035**	1	CUSHION AS (LH)	
	4	1	**282-2036**	1	CUSHION AS	
	5	1	**282-6690**	1	COVER	
	6	1	**282-6692**	1	COVER (LH)	
	7	1	**282-6702**	1	BRACKET AS (LH)	
	8	1	**282-6708**	1	BRACKET AS	
	9	1	**282-6710**	1	BRACKET AS	
Y	10	1	*284-7059*	1	SUPPORT GP-STEERING CONTROL (LH)	827
	11	1	**284-7649**	1	BRACKET	
M	12	1	**127-2170**	9	SCREW-TRUSS HEAD (M8X1.25X20-MM)	
	13	1	**7X-0578**	2	WASHER-HARD (10.2X32X2.5-MM THK)	
M	14	1	**7X-2546**	1	BOLT (M10X1.5X180-MM)	
	15	1	**8T-4121**	4	WASHER-HARD (11X21X2.5-MM THK)	
M	16	1	**8T-4178**	2	BOLT (M10X1.5X90-MM)	
M	17	1	**8T-6685**	1	BOLT (M10X1.5X110-MM)	
M	18	1	**9X-2041**	1	SCREW-TRUSS HEAD (M10X1.5X20-MM)	
M	19	1	**9X-2042**	4	SCREW-TRUSS HEAD (M6X1X12-MM)	
M	20	1	**9X-2043**	2	SCREW-TRUSS HEAD (M6X1X14-MM)	
M	21	1	**9X-2044**	4	SCREW-TRUSS HEAD (M6X1X16-MM)	
M	22	1	**9X-2045**	2	SCREW-TRUSS HEAD (M6X1X20-MM)	

M-METRIC PART
Y-SEPARATE ILLUSTRATION

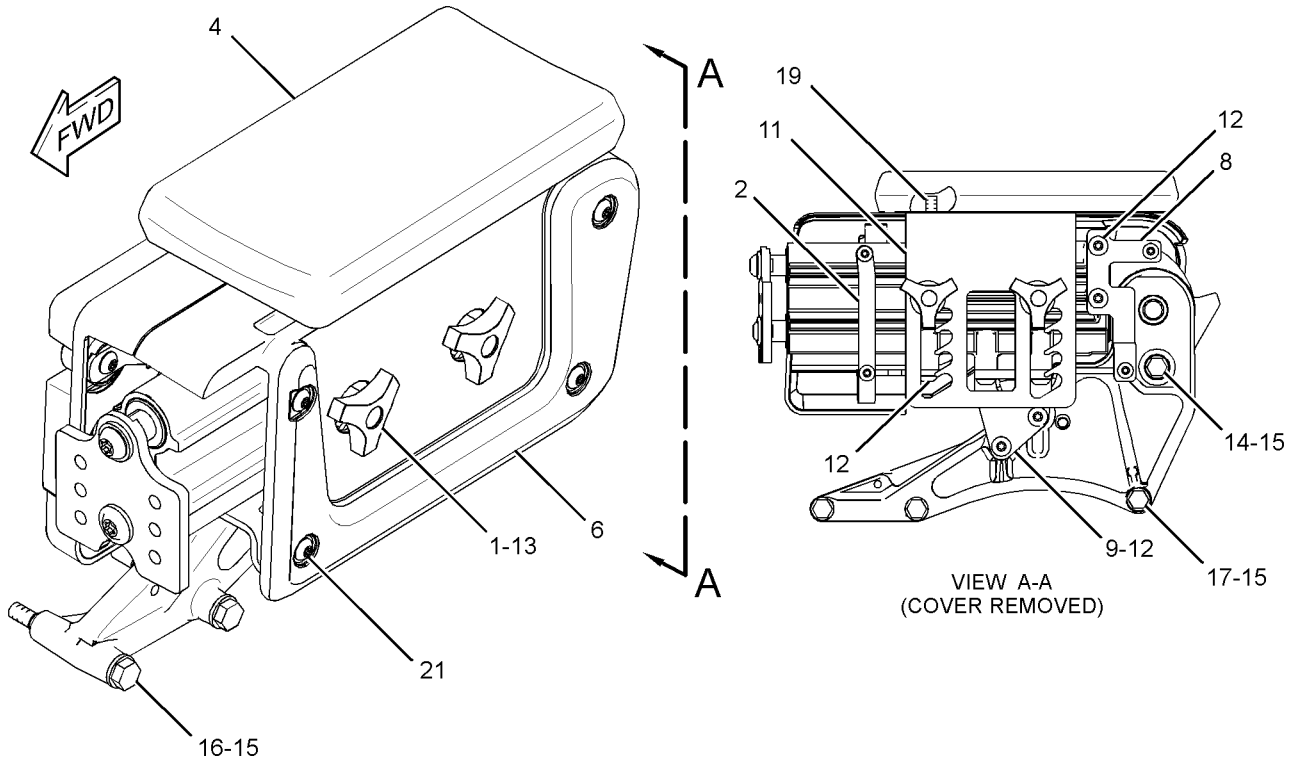

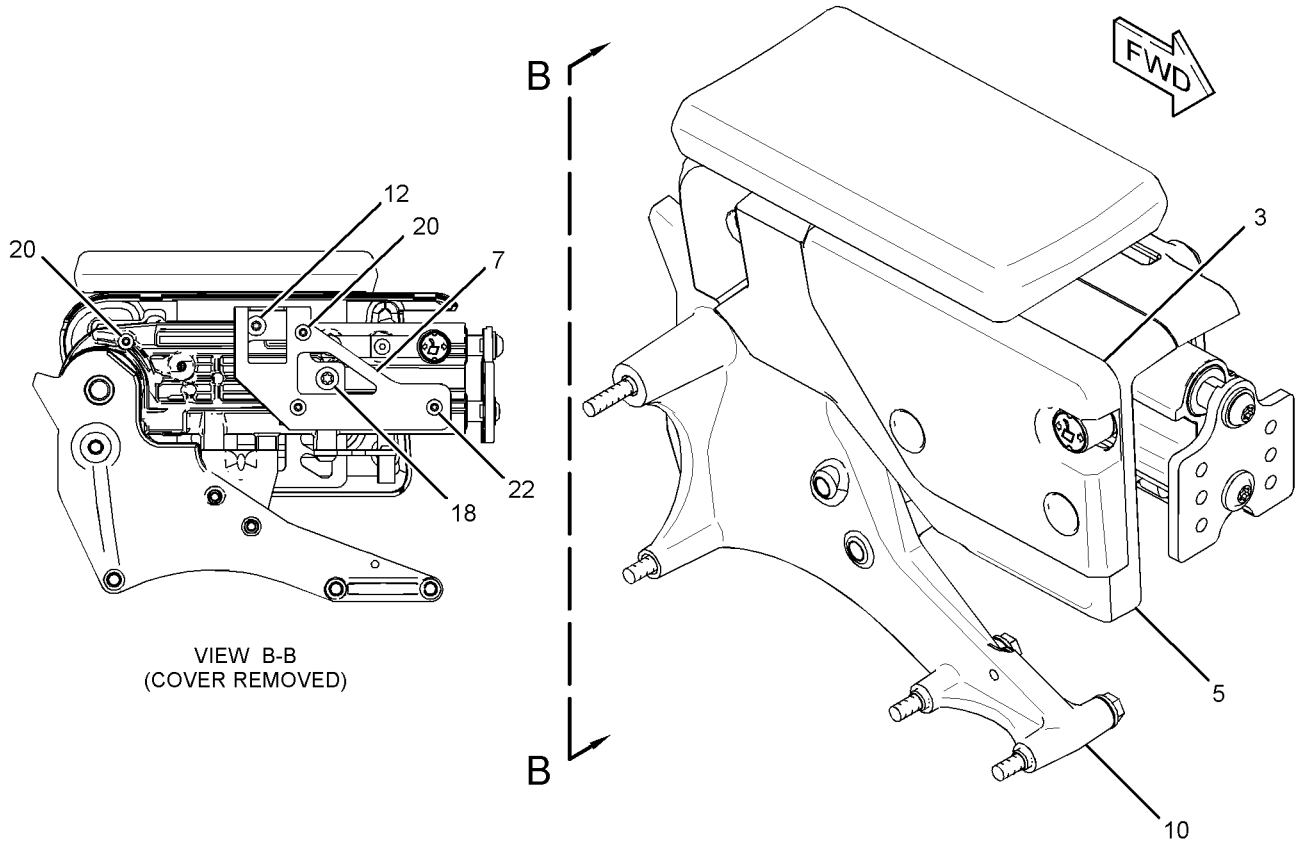

GRAPHIC #1 **<END>** g01304612

OPERATOR STATION

284-7054 ARMREST GP–RH

S/N: JTD1-UP; FFF1-UP; LLL1-UP
PART OF 255-4242 SEAT & SUPPORT GP, 255-4250, 255-4251, 255-4252 SEAT GP-SUSPENSION
AN ATTACHMENT

SMCS-7307, 7312 **i02833325**

NOTE	REF NO	GRAPHIC REF	PART NUMBER	QTY	PART NAME 1 2 3 4 5 6 (PRODUCT LEVEL)	SEE PAGE
	1	1	**253-8798**	2	KNOB	
	2	1	**268-9382**	1	BRACKET	
	3	1	**282-2034**	1	CUSHION AS (RH)	
	4	1	**282-2036**	1	CUSHION AS	
	5	1	**282-6689**	1	COVER	
	6	1	**282-6691**	1	COVER (RH)	
	7	1	**282-6701**	1	BRACKET AS (RH)	
	8	1	**282-6707**	1	BRACKET AS	
	9	1	**282-6709**	1	BRACKET AS	
Y	10	1	**284-7055**	1	SUPPORT GP-HYDRAULIC CONTROL (RH)	825
	11	1	**284-7648**	1	BRACKET	
M	12	1	**127-2170**	9	SCREW-TRUSS HEAD (M8X1.25X20-MM)	
	13	1	**7X-0578**	2	WASHER-HARD (10.2X32X2.5-MM THK)	
M	14	1	**7X-2546**	1	BOLT (M10X1.5X180-MM)	
	15	1	**8T-4121**	4	WASHER-HARD (11X21X2.5-MM THK)	
M	16	1	**8T-4178**	2	BOLT (M10X1.5X90-MM)	
M	17	1	**8T-6685**	1	BOLT (M10X1.5X110-MM)	
M	18	1	**9X-2041**	1	SCREW-TRUSS HEAD (M10X1.5X20-MM)	
M	19	1	**9X-2042**	4	SCREW-TRUSS HEAD (M6X1X12-MM)	
M	20	1	**9X-2043**	2	SCREW-TRUSS HEAD (M6X1X14-MM)	
M	21	1	**9X-2044**	4	SCREW-TRUSS HEAD (M6X1X16-MM)	
M	22	1	**9X-2045**	2	SCREW-TRUSS HEAD (M6X1X20-MM)	
	23	1	**314-3472**	1	SPACER (10.67X17.46X12-MM THK)	

M-METRIC PART
Y-SEPARATE ILLUSTRATION

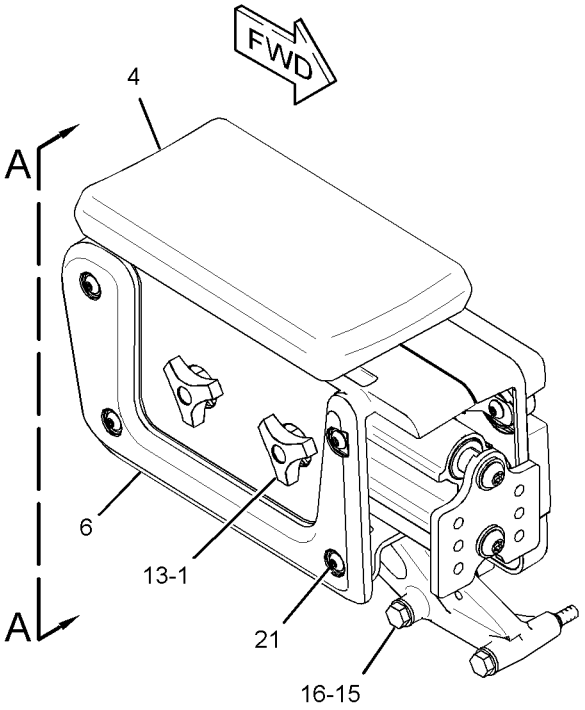

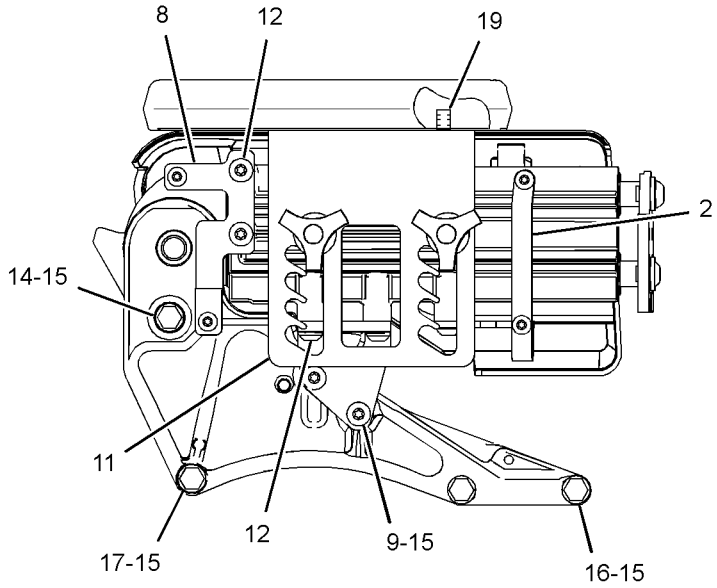

VIEW A-A
(COVER REMOVED)

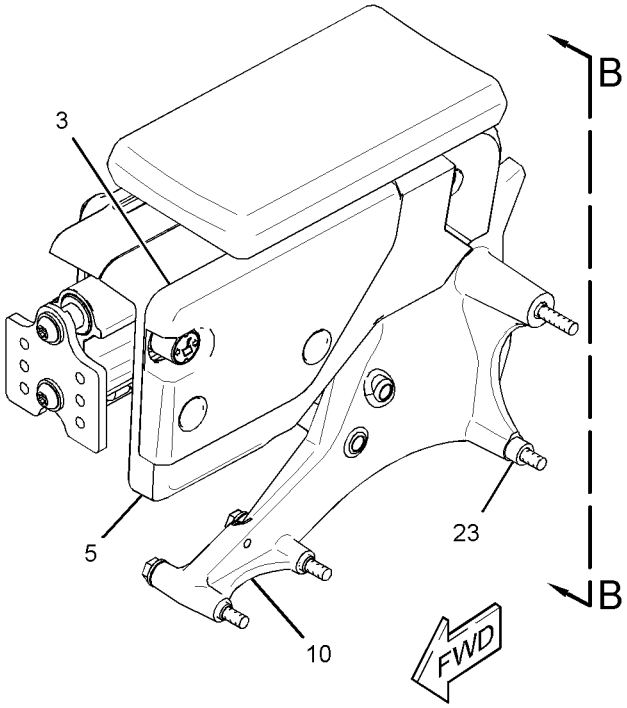

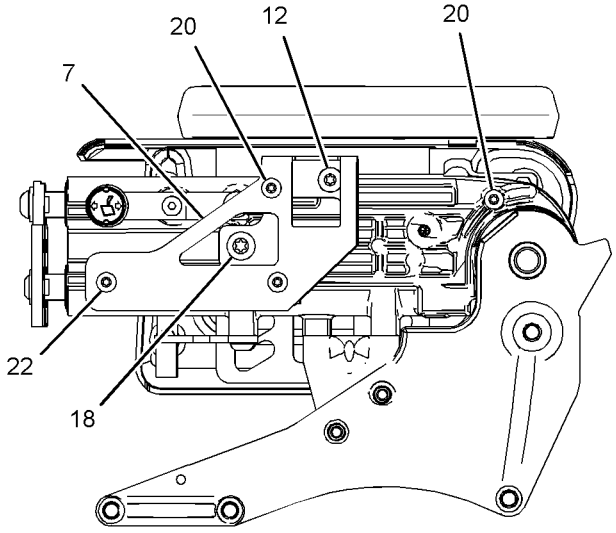

VIEW B-B
(COVER REMOVED)

GRAPHIC #1 **<END>** g01414585

OPERATOR STATION

322-5908 CABLE GP-CONTROL—FIRE PLOW

S/N: JTD1-UP; FFF1-UP; LLL1-UP
PART OF 322-5920 SHUTOFF GP-MANUAL
AN ATTACHMENT

SMCS-5154 **i03701442**

NOTE	REF NO	GRAPHIC REF	PART NUMBER	QTY	PART NAME 1 2 3 4 5 6 (PRODUCT LEVEL)	SEE PAGE
	1	1	**322-5909**	1	CABLE AS	
		1	**8T-4742**	1	END-YOKE ROD	
		1	**8T-4744**	1	PIN AS-SPRING	
	2	1	**326-9195**	1	KNOB GP (PUSH-PULL)	
		1	**292-2437**	1	NUT	
		1	**292-2438**	1	SEAL	

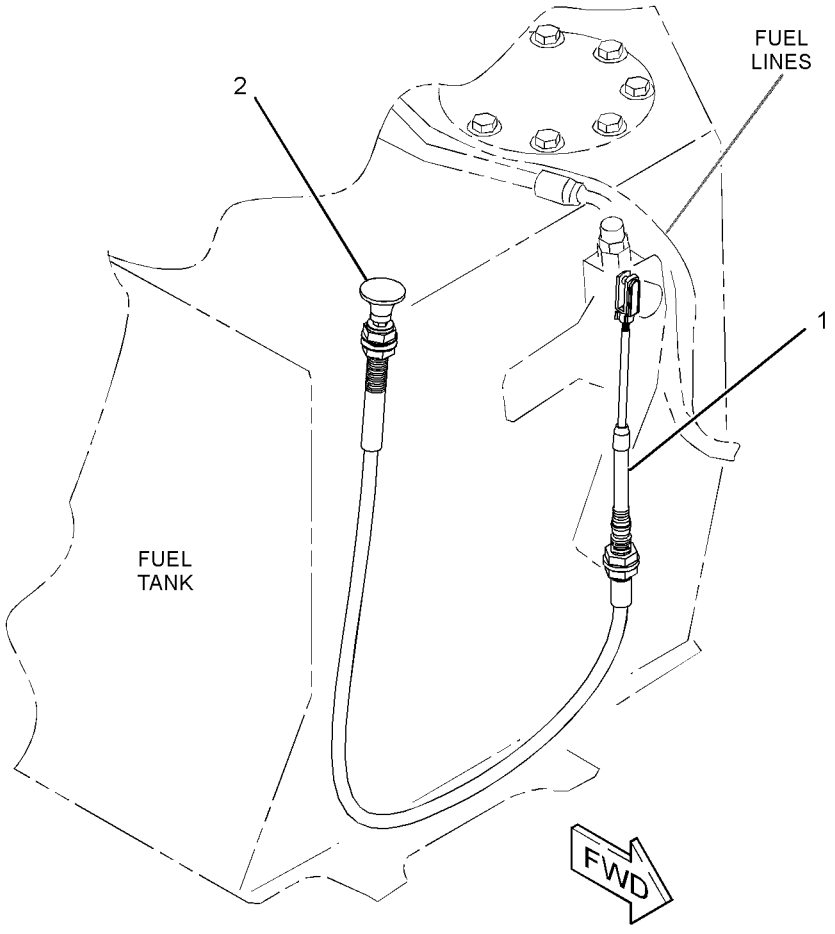

GRAPHIC #1 **<END>** g02024576

255-3696 COMPRESSOR & MTG GP-REFRIG

S/N: JTD1-UP; FFF1-UP; LLL1-UP
PART OF 254-3210 AIR CONDITIONER & MOUNTING GP
AN ATTACHMENT

SMCS-1802 **i02678237**

NOTE	REF NO	GRAPHIC REF	PART NUMBER	QTY	PART NAME 1 2 3 4 5 6 (PRODUCT LEVEL)	SEE PAGE
Y	1	1	**178-9570**	1	COMPRESSOR GP-REFRIGERANT	686
	2	1	**261-0372**	1	BRACKET	
	3	1	**261-0373**	1	BRACKET	
M	4	1	**7X-2538**	4	BOLT (M8X1.25X100-MM)	
M	5	1	**7X-2553**	2	BOLT (M16X2X40-MM)	
	6	1	**8T-4121**	2	WASHER-HARD (11X21X2.5-MM THK)	
M	7	1	**8T-4136**	1	BOLT (M10X1.5X25-MM)	
M	8	1	**8T-4195**	1	BOLT (M10X1.5X30-MM)	
	9	1	**8T-4224**	4	WASHER-HARD (8.8X16X2-MM THK)	
	10	1	**9X-8257**	2	WASHER (17.5X30X3.5-MM THK)	

M-METRIC PART
Y-SEPARATE ILLUSTRATION

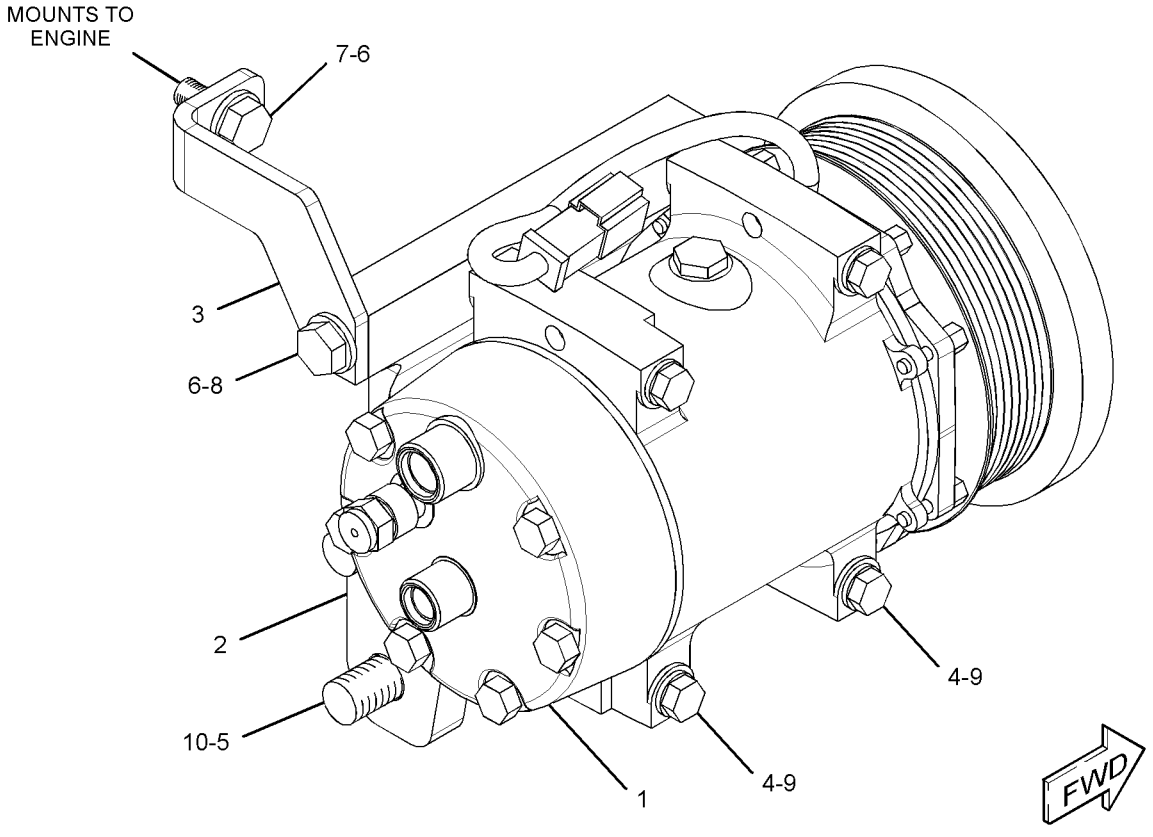

GRAPHIC #1 **<END>** g01348437

OPERATOR STATION

178-9570 COMPRESSOR GP-REFRIGERANT

S/N: JTD1-UP; FFF1-UP; LLL1-UP
PART OF 255-3696 COMPRESSOR & MTG GP-REFRIG
AN ATTACHMENT

SMCS-1802 **i03997180**

NOTE	REF NO	GRAPHIC REF	PART NUMBER	QTY	PART NAME 1 2 3 4 5 6 (PRODUCT LEVEL)	SEE PAGE
	1	1	**102-8802**	1	KIT-RECEPTACLE (2-PIN)	
					(INCLUDES RECEPTACLE AS AND WEDGE)	
		1	**126-1767**	2	PIN-CONNECTOR (14-GA TO 16-GA)	
	2	1	**7T-4532**	1	PLUG AS	
	3	1	**314-4018**	1	VALVE AS-PRESSURE RELIEF (REFRIGERANT COMPRESSOR)	
	3A	1	**9X-7378**	1	SEAL-O-RING	

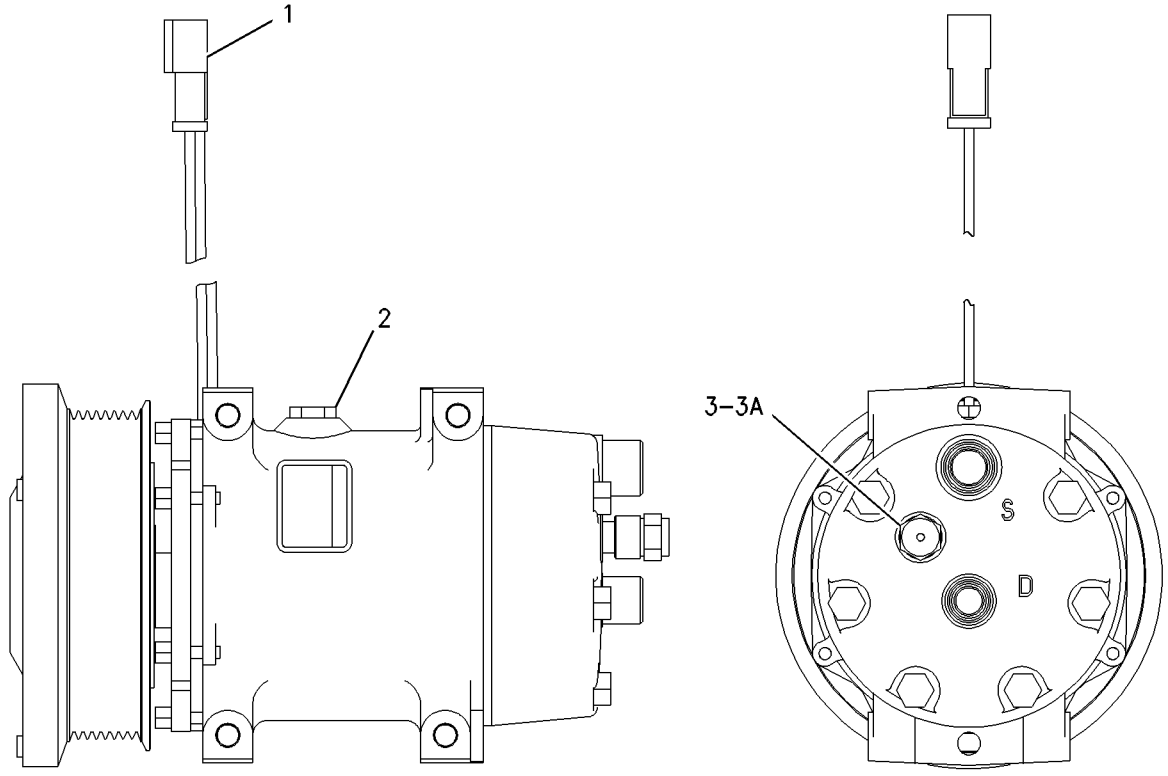

GRAPHIC #1 **<END>** g01005404

OPERATOR STATION

180-5927 CONDENSER GP-REFRIGERANT

S/N: JTD1-UP; FFF1-UP; LLL1-UP
PART OF 254-3210 AIR CONDITIONER & MOUNTING GP
AN ATTACHMENT

SMCS-1805 **i03574881**

NOTE	REF NO	GRAPHIC REF	PART NUMBER	QTY	PART NAME 1 2 3 4 5 6 (PRODUCT LEVEL)	SEE PAGE
	1	1	**7K-1181**	1	STRAP-CABLE	
	2	1	**8C-3756**	1	FILM-IDENTIFICATION (GROUP NO., SEQUENCE NO.) (REFRIGERANT CONDENSER)	
	3	1	**115-1615**	2	RELAY AS (12-VOLT) (REFRIGERANT CONDENSER)	
	4	1	**175-2539**	1	CASE AS	
	6	1	**304-3716**	2	FAN AS (5-BLADE)	
					(EACH INCLUDES)	
		1	**177-9645**	1	KIT-RECEPTACLE (2-PIN)	
					(INCLUDES RECEPTACLE AS & WEDGE)	
	7	1	**185-4303**	1	HARNESS AS-MOTOR (CONDENSER FAN)	
		1	**7T-0093**	4	PIN-CONNECTOR (12-GA TO 14-GA)	
		1	**144-1636**	1	PIN-CONNECTOR (14-GA TO 18-GA)	
		1	**9X-1054**	2	PLUG AS-CONNECTOR (4-PIN)	
		1	**155-2270**	1	KIT-CONNECTING PLUG (2-PIN)	
					(INCLUDES PLUG AS, WEDGE & INTERFACE SEAL)	
		1	**177-9648**	2	KIT-CONNECTING PLUG (2-PIN)	
					(EACH INCLUDES PLUG AS, WEDGE & INTERFACE SEAL)	
		1	**8T-8737**	1	PLUG-SEAL	
		1	**102-8802**	1	KIT-RECEPTACLE (2-PIN)	
					(INCLUDES RECEPTACLE AS & WEDGE)	
		1	**177-9653**	1	KIT-RECEPTACLE (4-PIN)	
					(INCLUDES RECEPTACLE AS & WEDGE)	
		1	**7T-0094**	4	SOCKET-CONNECTOR (12-GA TO 14-GA)	
		1	**126-1766**	2	SOCKET-CONNECTOR (14-GA TO 18-GA)	
		1	**189-3158**	1	SUPPRESSOR-ARC	
	8	1	**199-7698**	1	COIL AS (CONDENSER)	
M	9	1	**5C-2890**	1	NUT (M6X1-THD)	
M	10	1	**8T-4138**	1	BOLT (M6X1X20-MM)	
	11	1	**8T-4224**	8	WASHER-HARD (8.8X16X2-MM THK)	
	12	1	**8T-4121**	6	WASHER-HARD (11X21X2.5-MM THK)	
M	13	1	**8T-4137**	6	BOLT (M10X1.5X20-MM)	
	14	1	**8T-4205**	2	WASHER-HARD (7.2X14.5X2-MM THK)	
M	15	1	**8T-4908**	8	BOLT (M8X1.25X25-MM)	
D	16	1	**5P-5673**		SEAL (0.78-M EACH)	
D	16A	1	**5P-5673**		SEAL (0.16-M)	
D	16B	1	**5P-5673**		SEAL (0.2-M)	
E	17	1	**126-8472**		SEAL (79-CM)	

D-ORDER BY THE METER
E-ORDER BY THE CENTIMETER
M-METRIC PART

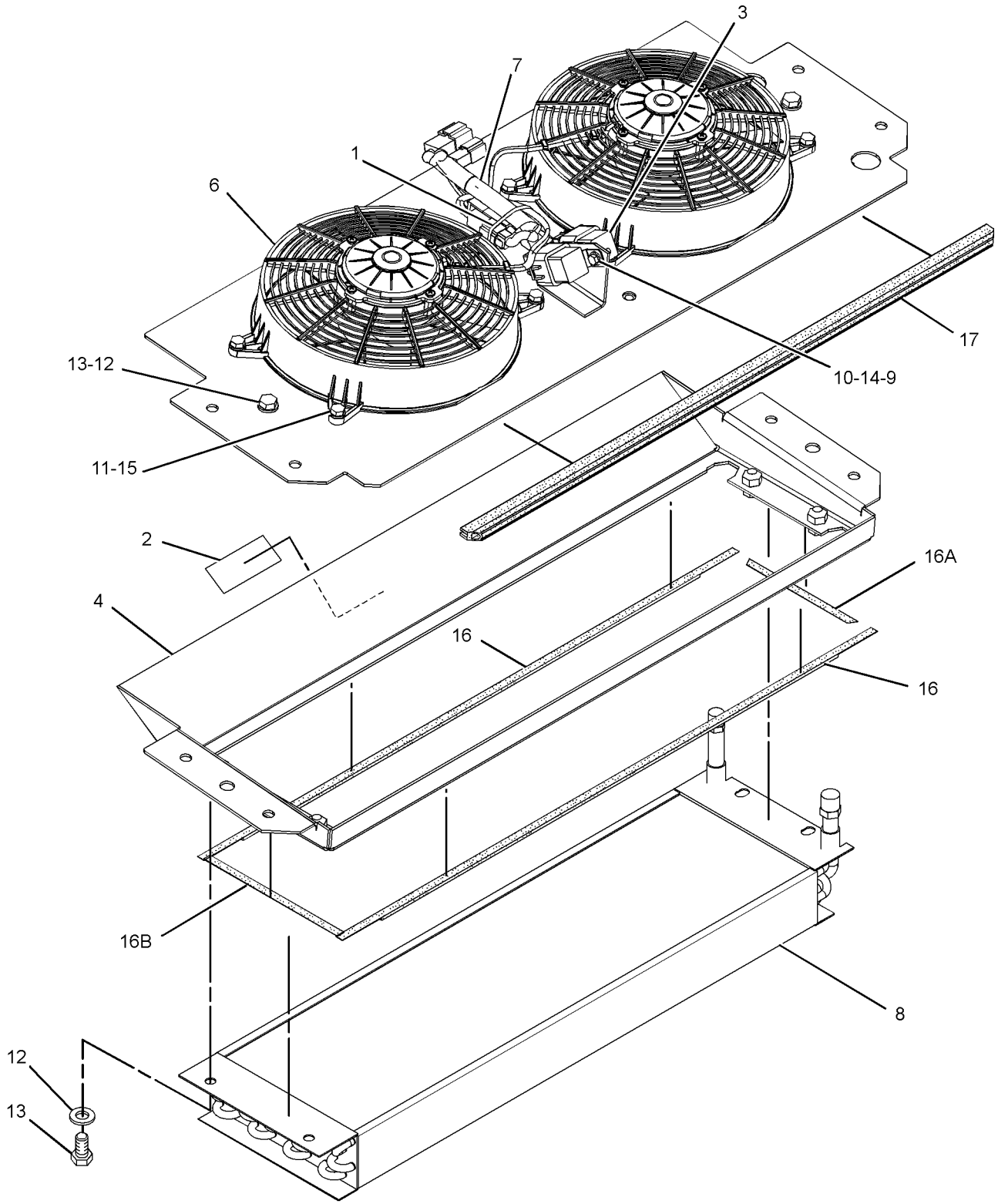

GRAPHIC #1 **<END>** g01185778

OPERATOR STATION

314-3003 CONSOLE GP–LH

S/N: JTD1-UP; FFF1-UP; LLL1-UP
PART OF 255-4231, 285-0331 COVER GP-CAB
AN ATTACHMENT

SMCS-5258 **i04402167**

NOTE	REF NO	GRAPHIC REF	PART NUMBER	QTY	PART NAME 1 2 3 4 5 6 (PRODUCT LEVEL)	SEE PAGE
	1	1	**188-8846**	1	LATCH AS (COMPRESSION)	
	2	1	**258-6387**	1	HINGE AS	
	3	1	**297-1464**	11	INSERT-THREADED (M4X0.7-THD)	
M	4	1	**297-1466**	3	INSERT-THREADED (M6X1-THD)	
	5	1	**314-3005**	1	CONSOLE (LH)	
	6	1	**314-3007**	1	DOOR	
M	7	1	**138-8454**	11	SCREW-TRUSS HEAD (M4X0.7X10-MM)	

M-METRIC PART

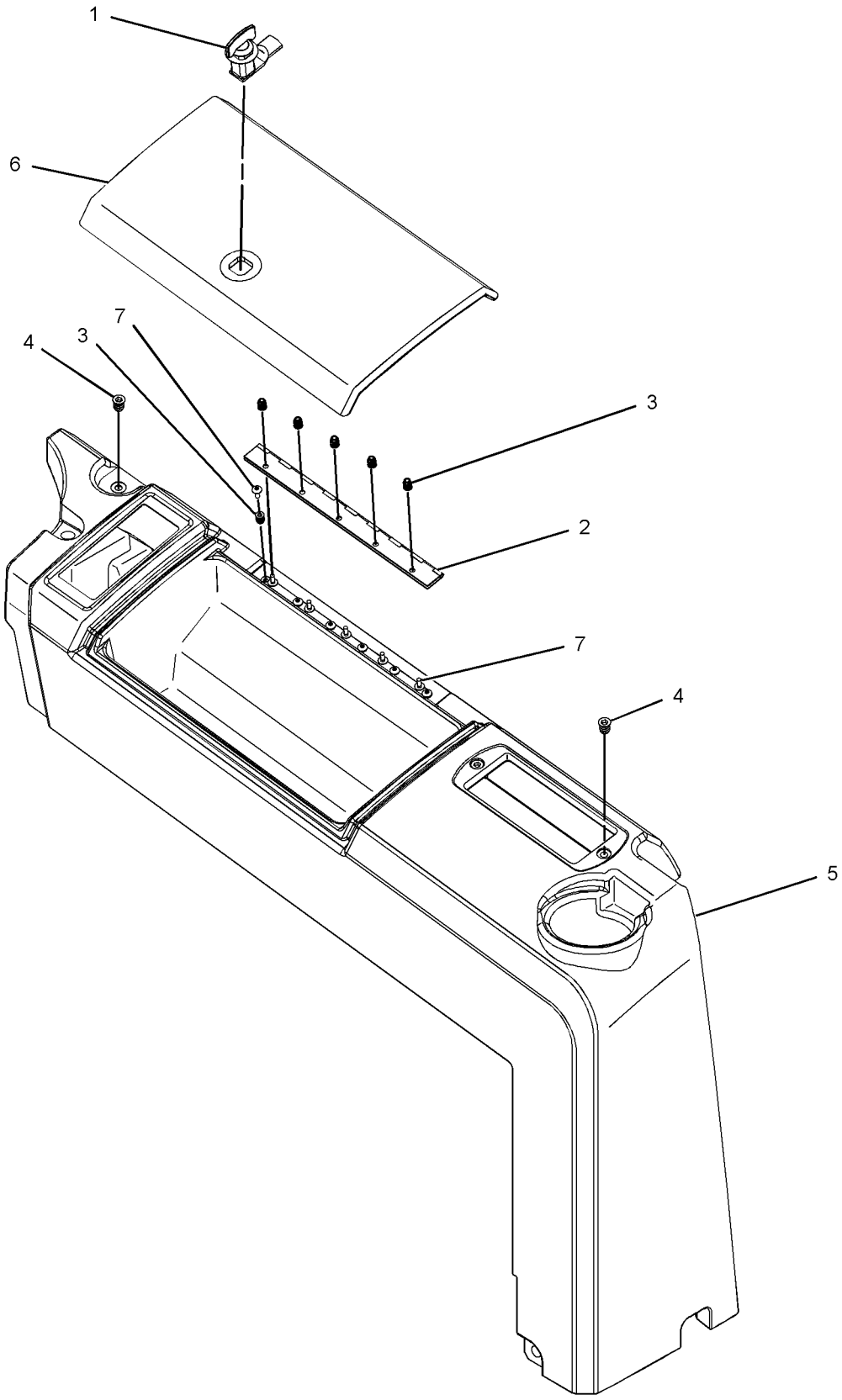

GRAPHIC #1 **<END>** g01423643

OPERATOR STATION

314-3004 CONSOLE GP–LH

S/N: JTD1-UP; FFF1-UP; LLL1-UP
PART OF 255-4230 COVER GP-CAB, 285-0330 COVER GP-CONSOLE
AN ATTACHMENT

SMCS-5258 **i02890496**

NOTE	REF NO	GRAPHIC REF	PART NUMBER	QTY	PART NAME 1 2 3 4 5 6 (PRODUCT LEVEL)	SEE PAGE
	1	1	**188-8846**	1	LATCH AS	
	2	1	**258-6387**	1	HINGE AS	
	3	1	**297-1464**	11	INSERT-THREADED (M4X0.7-THD)	
M	4	1	**297-1466**	3	INSERT-THREADED (M6X1-THD)	
	6	1	**314-3007**	1	DOOR	
M	7	1	**138-8454**	11	SCREW-TRUSS HEAD (M4X0.7X10-MM)	

M-METRIC PART

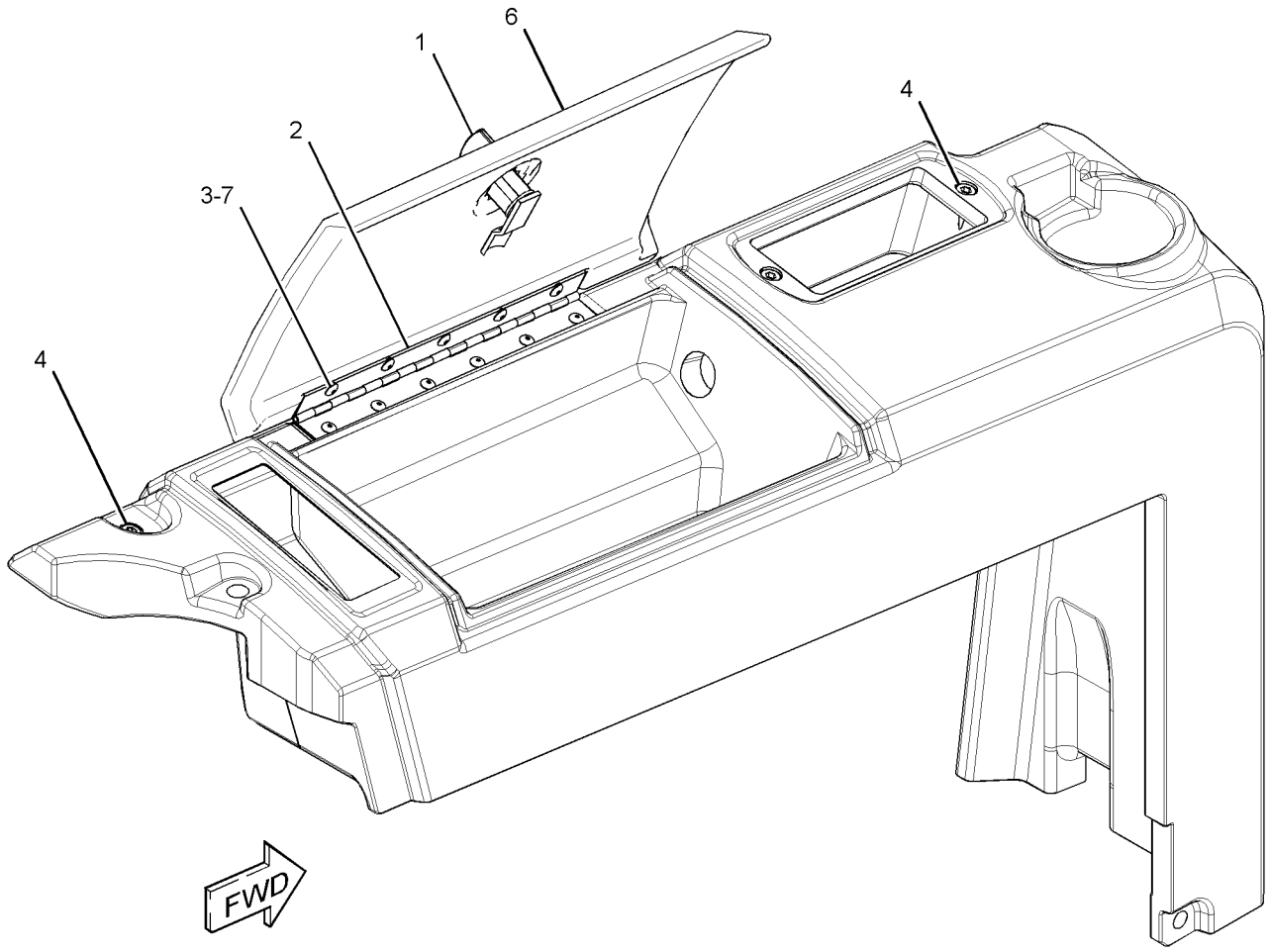

GRAPHIC #1 **<END>** g01447659

OPERATOR STATION

268-9351 CONSOLE GP-OPERATOR—RH

S/N: JTD1-UP; FFF1-UP; LLL1-UP
PART OF 255-4242 SEAT & SUPPORT GP, 255-4250, 255-4251, 255-4252 SEAT GP-SUSPENSION
AN ATTACHMENT

SMCS-5258, 7451 **i02685626**

NOTE	REF NO	GRAPHIC REF	PART NUMBER	QTY	PART NAME 1 2 3 4 5 6 (PRODUCT LEVEL)	SEE PAGE
	1	1	**280-9440**	1	CUSHION AS	
	2	1	**280-9680**	1	BRACKET AS	
	3	1	**280-9896**	1	COVER AS	
M	4	1	**6V-3940**	4	BOLT (M8X1.25X25-MM)	
	5	1	**7X-0578**	1	WASHER-HARD (10.2X32X2.5-MM THK)	
	6	1	**9M-1974**	4	WASHER-HARD (8.8X16X2-MM THK)	
M	7	1	**9X-2043**	10	SCREW-TRUSS HEAD (M6X1X14-MM)	
D	8	1	**6V-3987**		SEAL (0.1-M EACH)	
	9	1	**280-9441**	1	BRACKET	
	10	1	**280-9442**	1	BRACKET AS	
	11	1	**280-9444**	1	KNOB	
	12	1	**280-9897**	1	COVER	

D-ORDER BY THE METER
M-METRIC PART

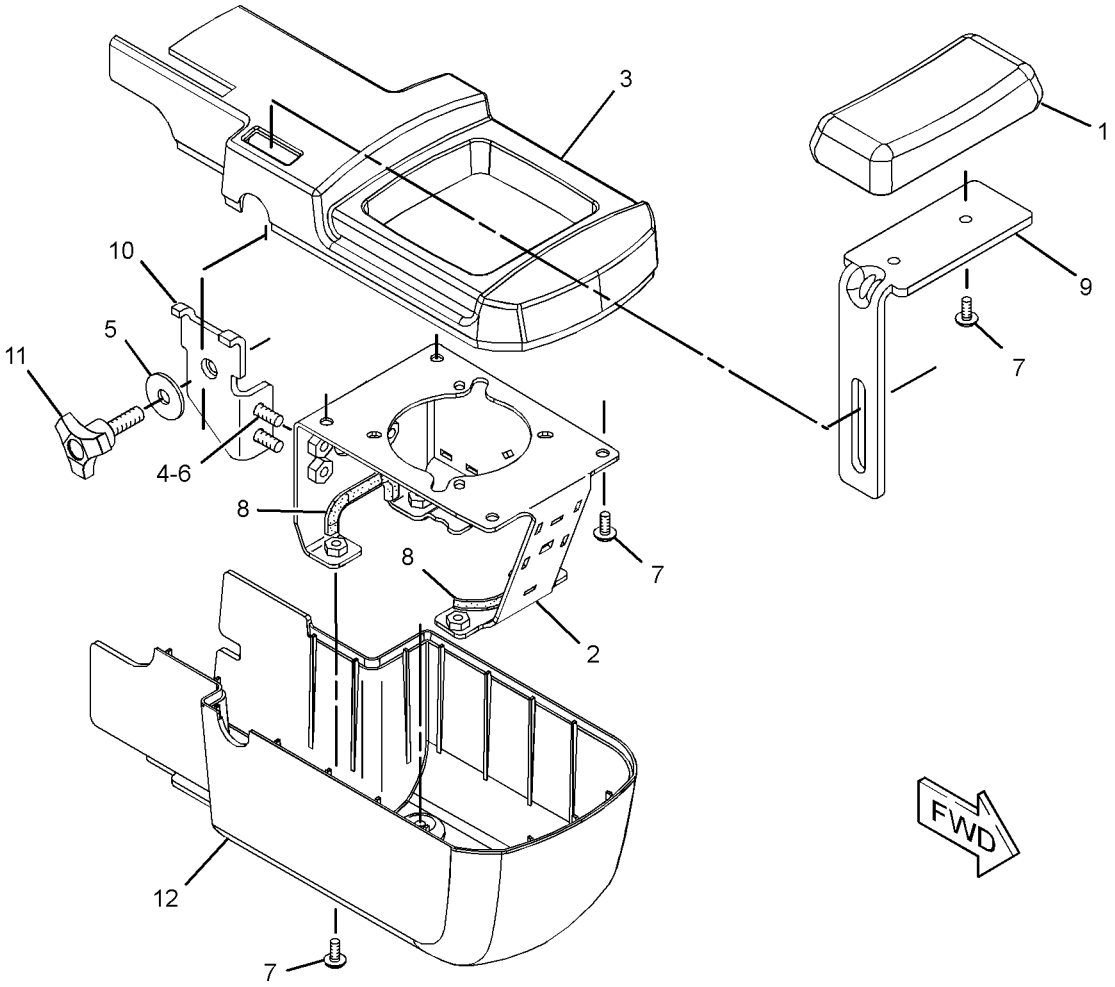

GRAPHIC #1 **<END>** g01314510

OPERATOR STATION

268-9352 CONSOLE GP-OPERATOR–LH

S/N: JTD1-UP; FFF1-UP; LLL1-UP
PART OF 255-4242 SEAT & SUPPORT GP, 255-4250, 255-4251, 255-4252 SEAT GP-SUSPENSION
AN ATTACHMENT

SMCS-5258, 7451 **i04415576**

NOTE	REF NO	GRAPHIC REF	PART NUMBER	QTY	PART NAME 1 2 3 4 5 6 (PRODUCT LEVEL)	SEE PAGE
	1	1	**280-9440**	1	CUSHION AS	
	2	1	**280-9441**	1	BRACKET	
	3	1	**280-9443**	1	BRACKET AS	
M		1	**8T-3490**	1	NUT-WELD (M10X1.5-THD)	
	4	1	**280-9444**	1	KNOB	
	5	1	**280-9898**	1	BRACKET AS	
	6	1	**280-9899**	1	COVER AS	
	7	1	**280-9900**	1	COVER	
M	8	1	**6V-3940**	4	BOLT (M8X1.25X25-MM)	
	9	1	**7X-0578**	1	WASHER-HARD (10.2X32X2.5-MM THK)	
	10	1	**9M-1974**	4	WASHER-HARD (8.8X16X2-MM THK)	
M	11	1	**9X-2043**	10	SCREW-TRUSS HEAD (M6X1X14-MM)	
D	12	1	**6V-3987**		SEAL (0.7-M EACH)	

D-ORDER BY THE METER
M-METRIC PART

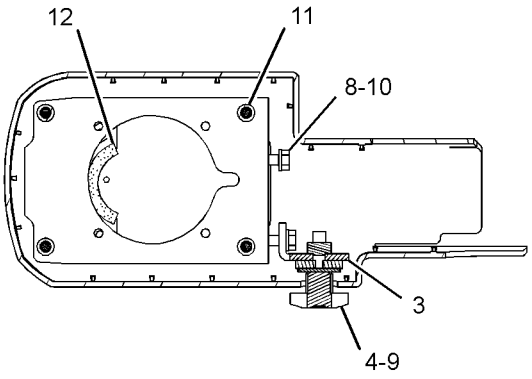

SECTION A-A

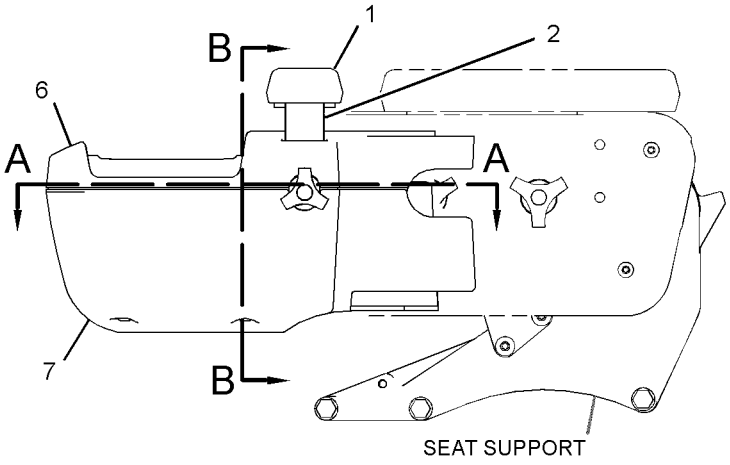

SEAT SUPPORT

LEFT SIDE VIEW

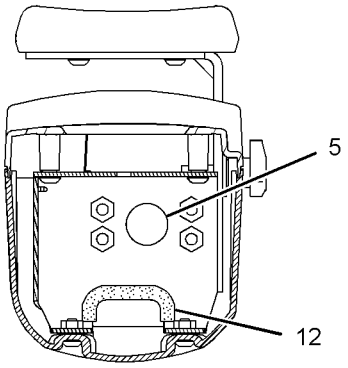

SECTION B-B

GRAPHIC #1 **<END>** g02615595

OPERATOR STATION

324-0670 CONTROL & MTG GP-PEDAL–GOVERNOR, BRAKE

S/N: JTD1-UP; FFF1-UP; LLL1-UP

PART OF 244-7376, 244-7377, 282-5327 CHASSIS AR

SMCS-5462 **i02970961**

NOTE	REF NO	GRAPHIC REF	PART NUMBER	QTY	PART NAME 1 2 3 4 5 6 (PRODUCT LEVEL)	SEE PAGE
Y	1	1	*324-0669*	1	PEDAL GP-GOVERNOR & BRAKE	794
	2	1	**7X-7729**	3	WASHER (11X25X3-MM THK)	
M	3	1	**8T-4133**	3	NUT (M10X1.5-THD)	

M-METRIC PART
Y-SEPARATE ILLUSTRATION

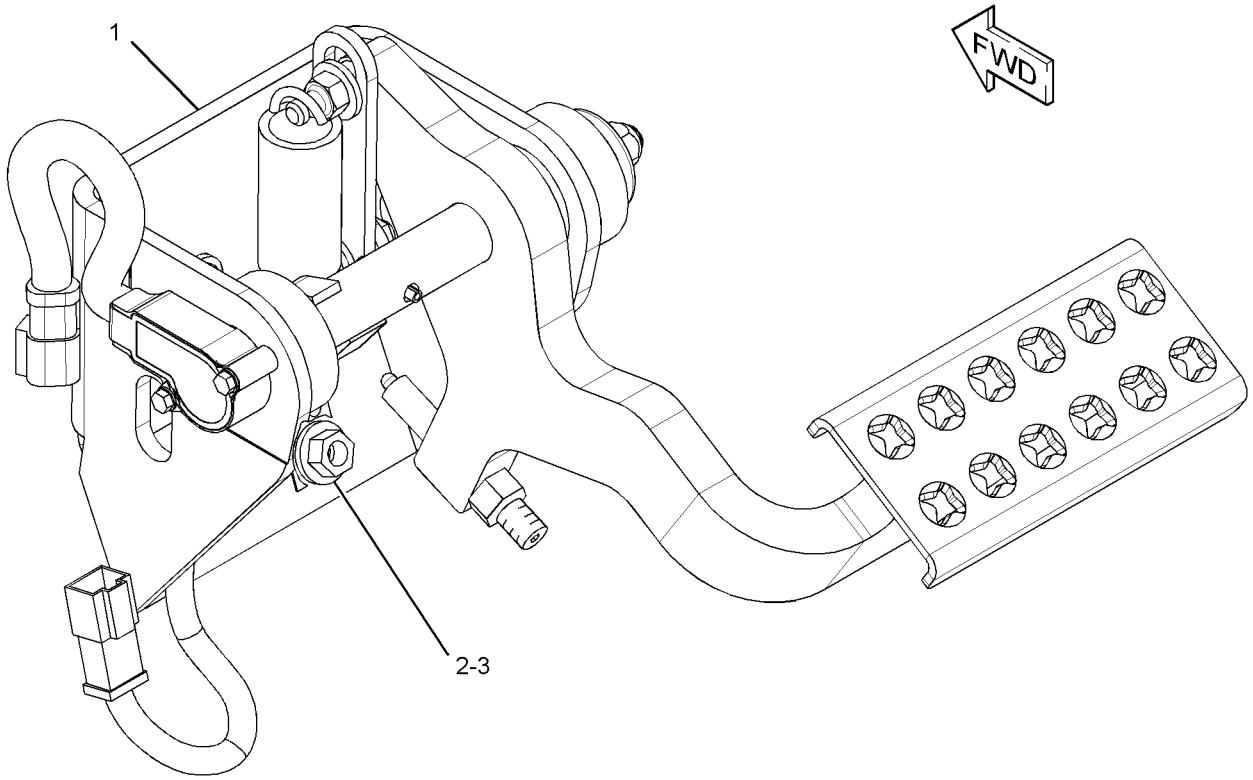

GRAPHIC #1 **<END>** g01618459

OPERATOR STATION

252-4559 CONTROL GP-HANDLE–WINCH–RIPPER

S/N: JTD1-UP; FFF1-108; LLL1-UP
PART OF 244-7504 CONTROL GP-WINCH
FIELD REPLACEMENT FOR 307-4673 CONTROL GP-HANDLE
AN ATTACHMENT

SMCS-5063, 5705 **i03408142**

NOTE	REF NO	GRAPHIC REF	PART NUMBER	QTY	PART NAME 1 2 3 4 5 6 (PRODUCT LEVEL)	SEE PAGE
	1	1	**151-9274**	1	KIT-RECEPTACLE (4-PIN)	
					(INCLUDES RECEPTACLE AS & WEDGE)	
	2	1	**278-8974**	1	KNOB	
	3	1	**278-8965**	1	BOOT	
	4	1	**278-8967**	1	RETAINER-BOOT	
M	5	1	**278-8970**	4	SCREW (M3X0.5X6-MM)	

M-METRIC PART

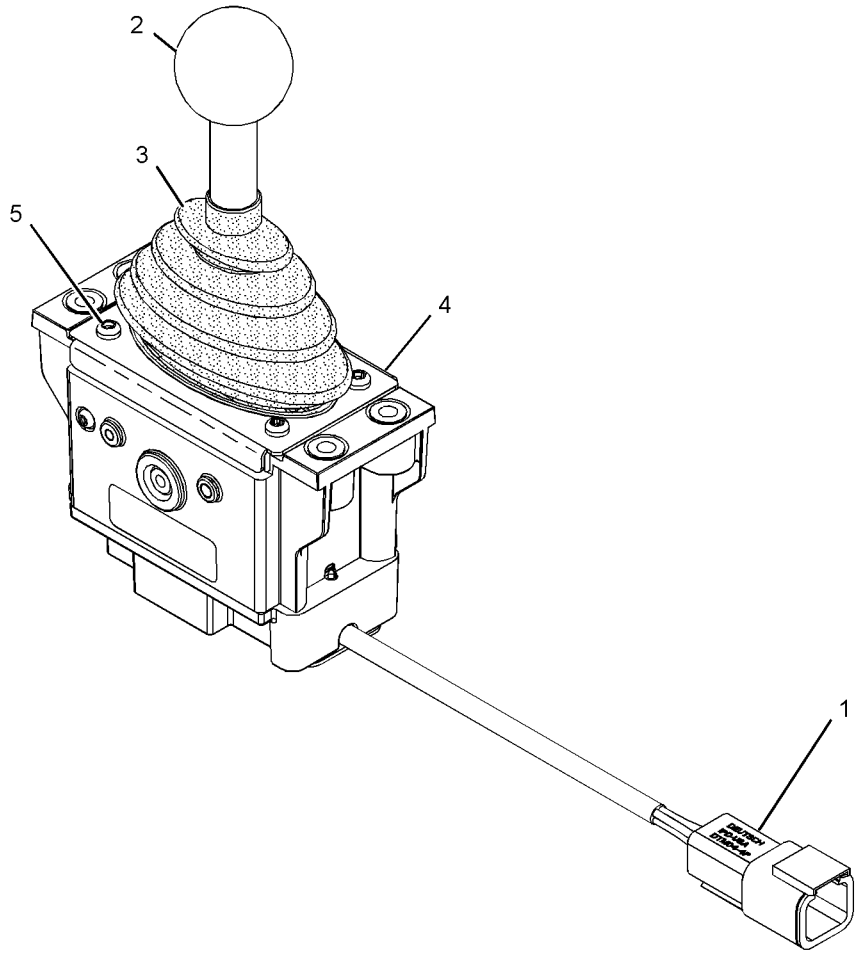

GRAPHIC #1 **<END>** g01195083

OPERATOR STATION

266-7631 CONTROL GP-HANDLE—GRADE CONTROL, RH

S/N: JTD1-UP; FFF1-UP; LLL1-UP
PART OF 274-4646, 328-0895 CONTROL GP-JOYSTICK
AN ATTACHMENT

SMCS-5063, 5705 **i04415573**

NOTE	REF NO	GRAPHIC REF	PART NUMBER	QTY	PART NAME 1 2 3 4 5 6 (PRODUCT LEVEL)	SEE PAGE
M	1	1	**299-2214**	2	SETSCREW (M6X1X12-MM)	
	2	1	**260-6728**	1	RECEPTACLE AS-CONNECTOR (12-PIN)	
	3	1	**8T-8729**	7	PIN-CONNECTOR (16-GA TO 18-GA)	
	4	1	**8T-8737**	5	PLUG-SEAL	
	5	1	**144-0331**	1	CAP-PUSH BUTTON (YELLOW)	

M-METRIC PART

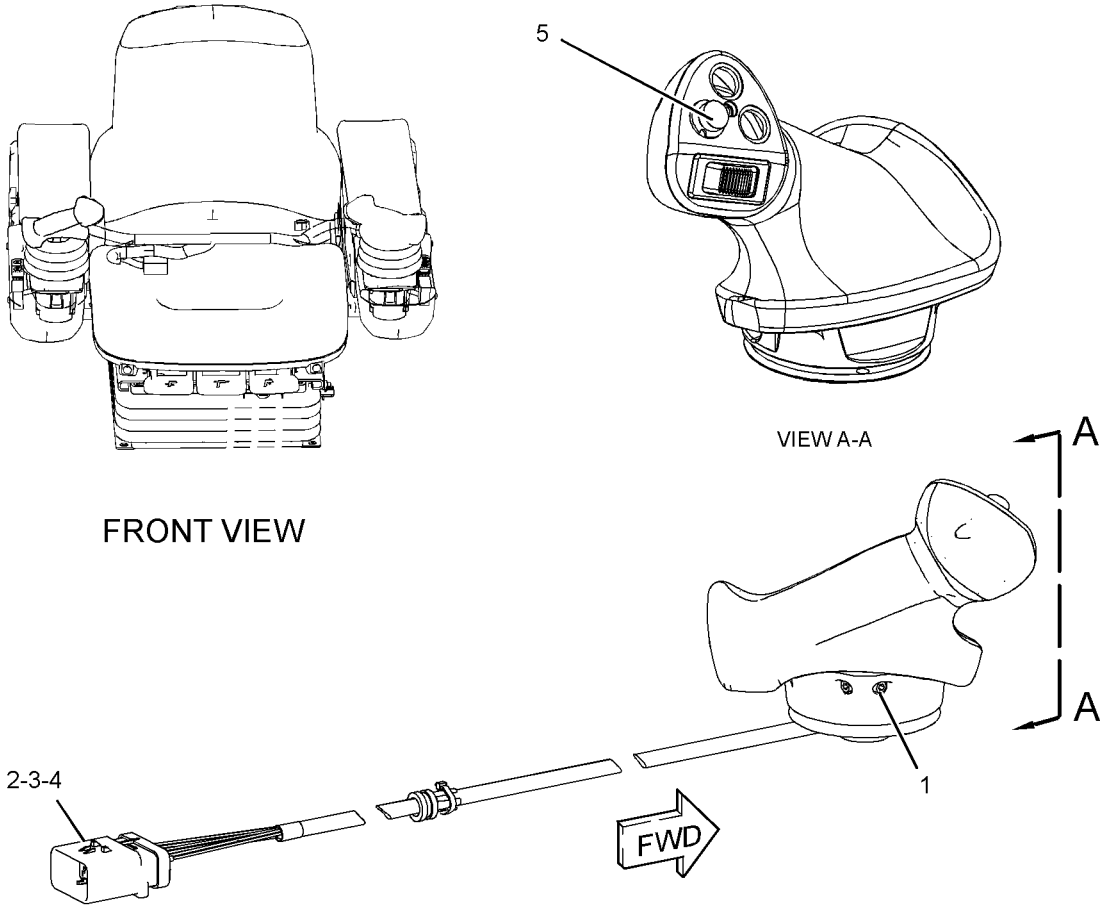

GRAPHIC #1 **<END>** g01863293

266-7632 CONTROL GP-HANDLE–GRADE CONTROL, RH

S/N: JTD1-UP; FFF1-UP; LLL1-UP
PART OF 274-4645, 328-0894 CONTROL GP-JOYSTICK
AN ATTACHMENT

SMCS-5063, 5705 **i03528323**

NOTE	REF NO	GRAPHIC REF	PART NUMBER	QTY	PART NAME 1 2 3 4 5 6 (PRODUCT LEVEL)	SEE PAGE
M	1	1	**299-2214**	2	SETSCREW (M6X1X12-MM)	
	2	1	**260-6728**	1	RECEPTACLE AS-CONNECTOR (12-PIN)	
	3	1	**186-3735**	11	PIN-CONNECTOR (16-GA TO 18-GA)	
	4	1	**8T-8737**	1	PLUG-SEAL	
	5	1	**144-0331**	1	CAP-PUSH BUTTON (YELLOW)	
	6	1	**220-8355**	2	CAP-PUSH BUTTON (BLACK)	

M-METRIC PART

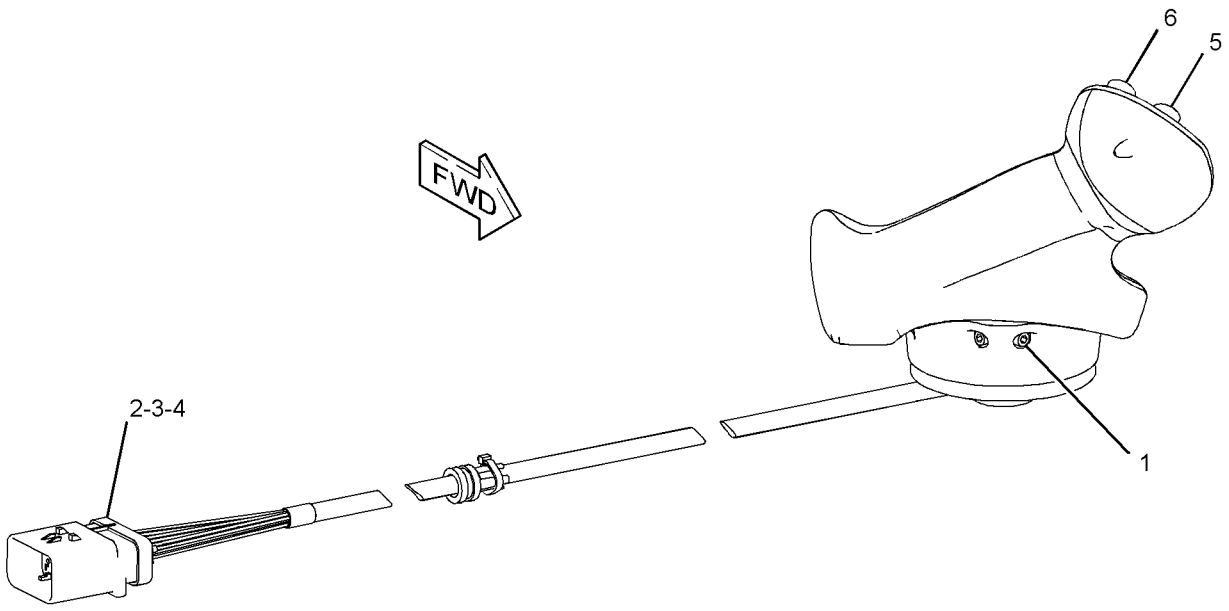

GRAPHIC #1 **<END>** g01893133

OPERATOR STATION

266-7634 CONTROL GP-HANDLE—GRADE CONTROL, RH

S/N: JTD1-UP; FFF1-UP; LLL1-UP

PART OF 290-4835 CONTROL GP-JOYSTICK

SMCS-5063, 5705 **i04281732**

NOTE	REF NO	GRAPHIC REF	PART NUMBER	QTY	PART NAME 1 2 3 4 5 6 (PRODUCT LEVEL)	SEE PAGE
	1	1	**260-6728**	1	RECEPTACLE AS-CONNECTOR (12-PIN)	
	2	1	**8T-8729**	8	PIN-CONNECTOR (16-GA TO 18-GA)	
	3	1	**8T-8737**	4	PLUG-SEAL	
M	4	1	**299-2214**	2	SETSCREW (M6X1X12-MM)	
	5	1	**144-0331**	1	CAP-PUSH BUTTON (YELLOW)	
	6	1	**220-8355**	1	CAP-PUSH BUTTON (BLACK)	

M-METRIC PART

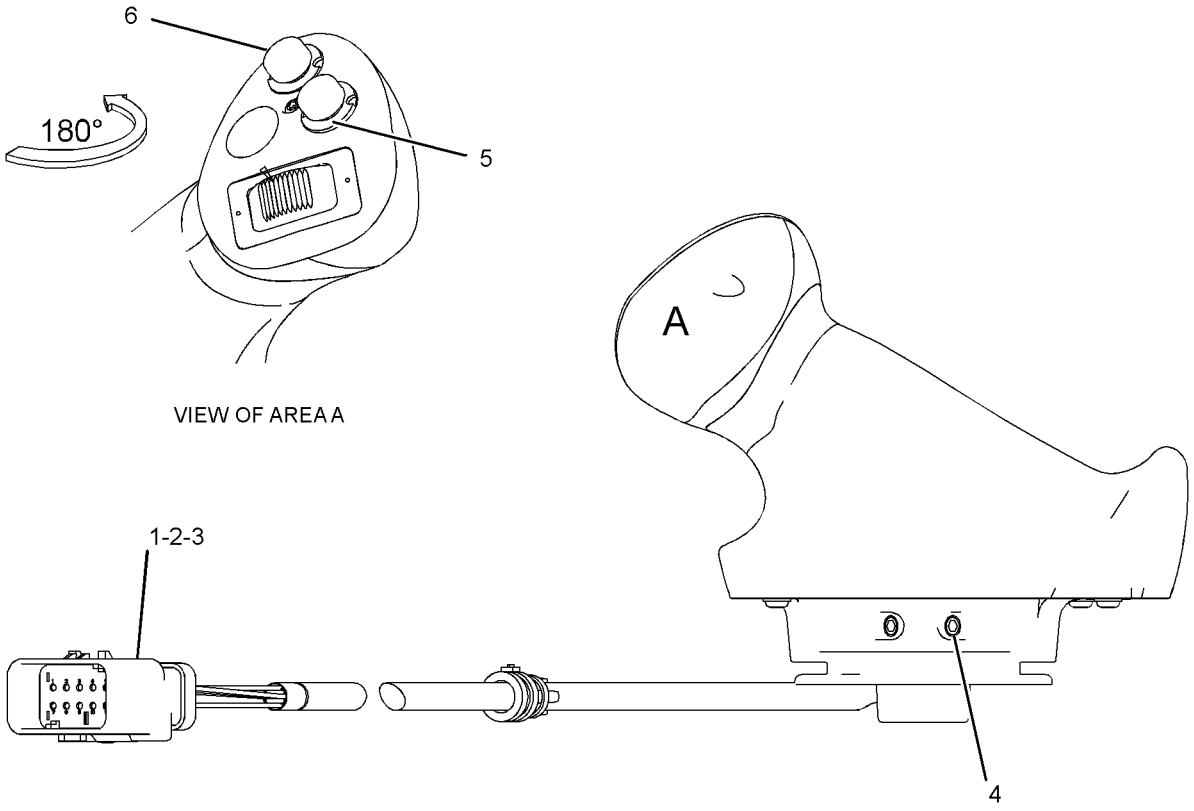

FRONT VIEW

GRAPHIC #1 **<END>** g01869054

OPERATOR STATION

307-4673 CONTROL GP-HANDLE–WINCH–RIPPER

S/N: JTD1-UP; FFF1-UP; LLL1-UP

PART OF 318-6109, 318-6111 CONTROL GP-HYDRAULIC, 249-9051 CONTROL GP-RIPPER, 244-7504, 318-6108, 318-6112 CONTROL GP-WINCH

AN ATTACHMENT

SMCS-5063, 5705 **i02707095**

NOTE	REF NO	GRAPHIC REF	PART NUMBER	QTY	PART NAME 1 2 3 4 5 6 (PRODUCT LEVEL)	SEE PAGE
	1	1	**151-9274**	1	KIT-RECEPTACLE (4-PIN)	
					(INCLUDES RECEPTACLE AS & WEDGE)	
	2	1	**278-8974**	1	KNOB	
	3	1	**278-8965**	1	BOOT	
	4	1	**278-8967**	1	RETAINER-BOOT	
M	5	1	**278-8970**	4	SCREW (M3X10X6-MM)	

M-METRIC PART

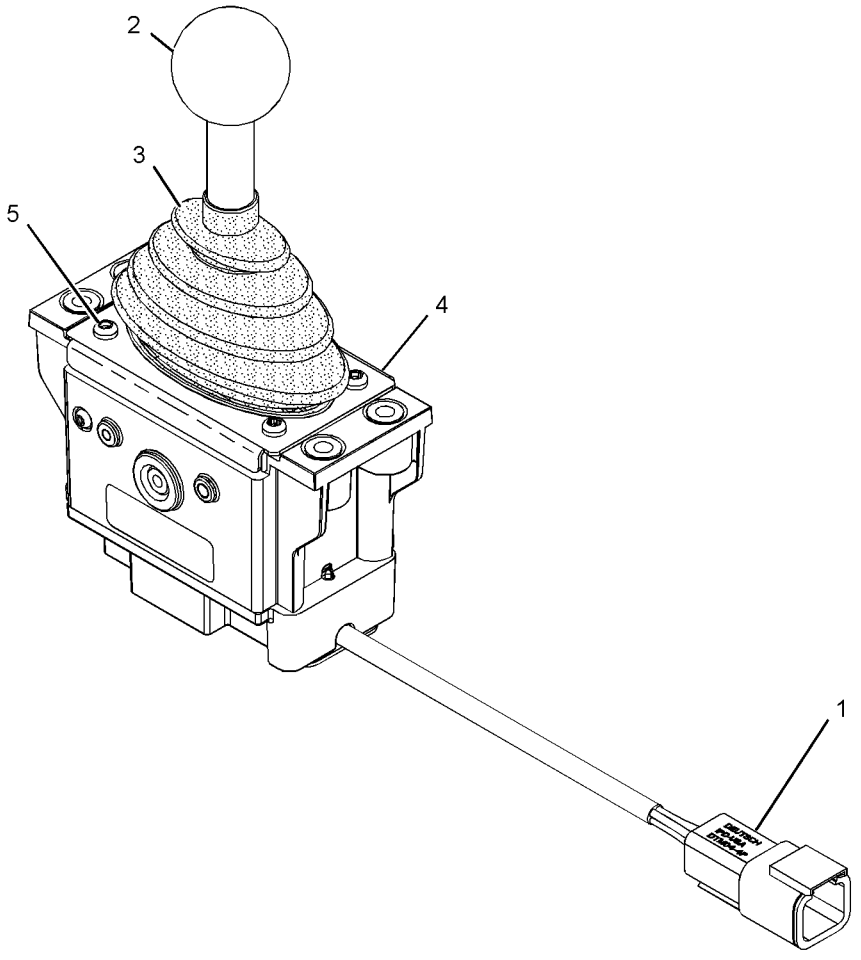

GRAPHIC #1 **<END>** g01195083

OPERATOR STATION

318-6109 CONTROL GP-HYDRAULIC

S/N: JTD1-UP; FFF1-UP; LLL1-UP
PART OF 325-6522 HYDRAULIC AR
AN ATTACHMENT

SMCS-5063 **i04419451**

NOTE	REF NO	GRAPHIC REF	PART NUMBER	QTY	PART NAME 1 2 3 4 5 6 (PRODUCT LEVEL)	SEE PAGE
	1	1	**6I-1418**	4	SPACER (8.2X12.7X28.7-MM THK)	
	2	1	**7K-1181**	9	STRAP-CABLE	
	3	1	**9N-0869**	4	WASHER-HARD (8.8X25.5X2-MM THK)	
	4	1	**155-0576**	8	MOUNT-ISOLATION	
	5	1	**165-0311**	3	PLUG	
	6	1	**178-7539**	1	RECEPTACLE AS (POWER SUPPLY)	
	7	1	**269-7666**	1	PLATE AS	
Y	8	1	**307-4673**	1	CONTROL GP-HANDLE (IMPLEMENT)	699
	9	1	**329-2576**	1	CONTROL GP-UNPROGRAMMED (MACHINE)	
	10	1	**311-0296**	1	BRACKET	
	11	1	**311-7069**	1	SWITCH AS-ROCKER (4TH VALVE, FLOAT)	
		1	**111-7899**	1	GASKET	
	12	1	**318-6123**	1	FILM-INSTRUCTION (AUXILIARY CONTROL VALVE)	
	13	1	**327-6134**	1	HARNESS AS-CONTROL (WINCH)	
B		1	**268-4412**		TAPE-INSULATOR	
		1	**311-0302**	1	HARNESS AS-CONTROL (WINCH)	
		1	**126-1774**	1	COVER-CONNECTOR	
		1	**8T-8729**	3	PIN-CONNECTOR (16-GA TO 18-GA)	
		1	**9W-0852**	1	PIN-CONNECTOR (14-GA TO 16-GA)	
		1	**155-2265**	1	KIT-CONNECTING PLUG (8-PIN)	
		1	**155-2270**	2	KIT-CONNECTING PLUG (2-PIN)	
		1	**155-2274**	1	KIT-CONNECTING PLUG (6-PIN)	
					(EACH PLUG KIT INCLUDES PLUG AS, WEDGE & INTERFACE SEAL)	
		1	**160-7689**	1	PLUG AS-CONNECTOR (70-PIN)	
		1	**159-9322**	1	SEAL-O-RING	
		1	**8T-8737**	61	PLUG-SEAL	
		1	**102-8802**	2	KIT-RECEPTACLE (2-PIN)	
		1	**102-8805**	1	KIT-RECEPTACLE (6-PIN)	
		1	**102-8806**	1	KIT-RECEPTACLE (8-PIN)	
					(EACH RECEPTACLE KIT INCLUDES RECEPTACLE AS & WEDGE)	
		1	**8T-8730**	1	SOCKET-CONNECTOR (16-GA TO 18-GA)	
		1	**9W-0844**	1	SOCKET-CONNECTOR (14-GA TO 16-GA)	
		1	**9X-3402**	24	SOCKET-CONNECTOR (16-GA TO 18-GA)	
		1	**180-9340**	15	SOCKET-CONNECTOR (14-GA TO 18-GA)	
		1	**8L-8413**	2	STRAP-CABLE (WHITE)	
E		1	**119-3662**		TUBE-HEAT SHRINK (10.85-MM DIA) (7-CM)	
E		1	**125-7874**		TUBE-HEAT SHRINK (5.72-MM DIA) (5-CM)	
	14	1	**3S-2093**	5	STRAP-CABLE	
M	15	1	**5C-7261**	4	NUT (M8X1.25-THD)	
M	16	1	**8T-4138**	2	BOLT (M6X1X20-MM)	
M	17	1	**9X-2045**	8	SCREW-TRUSS HEAD (M6X1X20-MM)	
	18	1	**9X-8256**	2	WASHER (6.6X12X2-MM THK)	
E	19	1	**2Q-0604**		INSULATION (9-CM)	
E	20	1	**324-9707**		INSULATION (12-CM EACH)	

B-USE AS REQUIRED
E-ORDER BY THE CENTIMETER
M-METRIC PART
Y-SEPARATE ILLUSTRATION

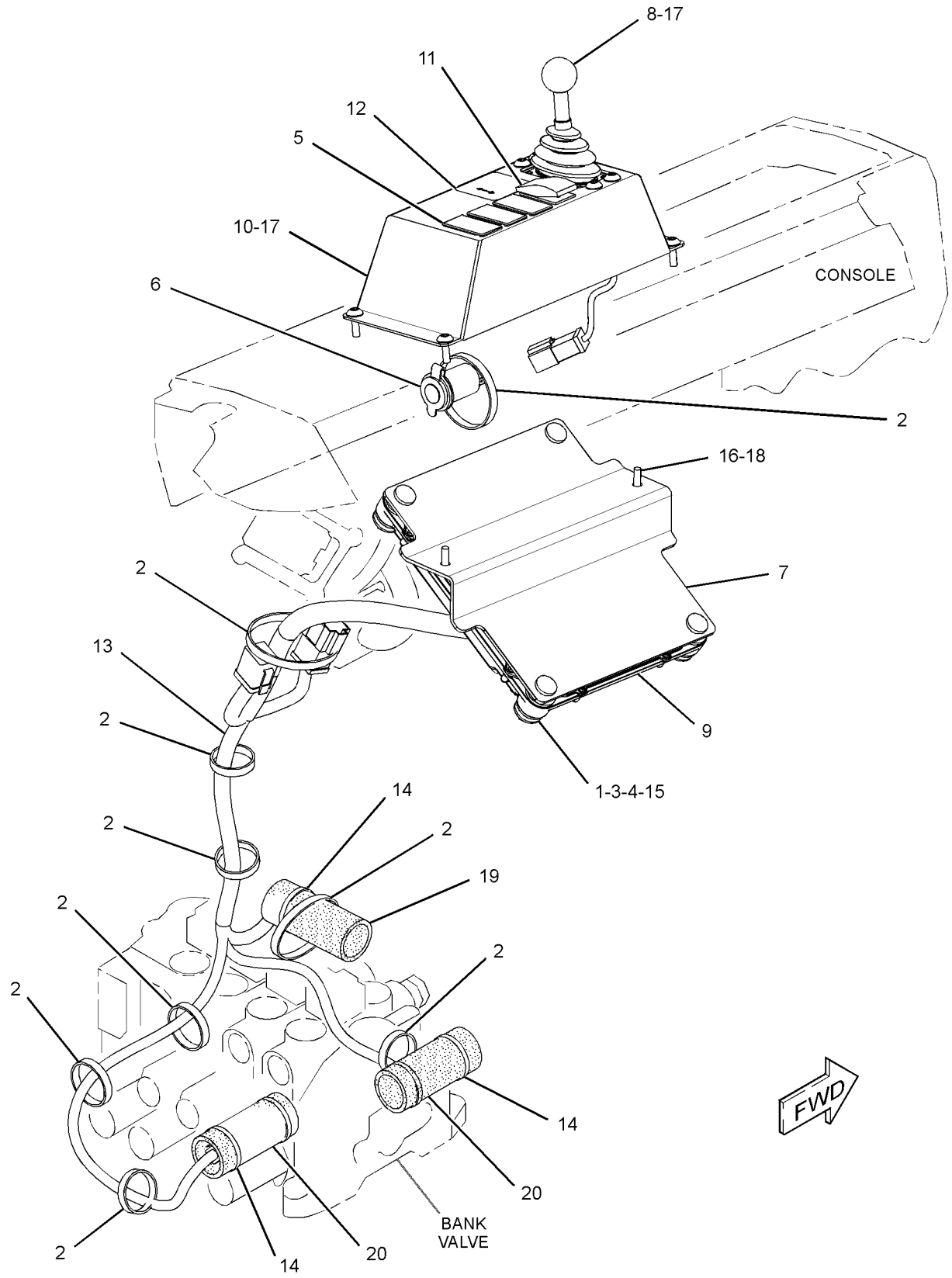

GRAPHIC #1 **<END>** g02293773

OPERATOR STATION

318-6111 CONTROL GP-HYDRAULIC—FIRE PLOW

S/N: JTD1-UP; FFF1-UP; LLL1-UP
PART OF 325-6528 HYDRAULIC AR
AN ATTACHMENT

SMCS-5063 **i04419452**

NOTE	REF NO	GRAPHIC REF	PART NUMBER	QTY	PART NAME 1 2 3 4 5 6 (PRODUCT LEVEL)	SEE PAGE
	1	1	**6I-1418**	4	SPACER (8.2X12.7X28.7-MM THK)	
	2	1	**7K-1181**	8	STRAP-CABLE	
	3	1	**9N-0869**	4	WASHER-HARD (8.8X25.5X2-MM THK)	
	4	1	**155-0576**	8	MOUNT-ISOLATION	
	5	1	**165-0311**	3	PLUG	
	6	1	**178-7539**	1	RECEPTACLE AS (POWER SUPPLY)	
	7	1	**269-7666**	1	PLATE AS	
Y	8	1	**307-4673**	2	CONTROL GP-HANDLE (IMPLEMENT)	699
	9	1	**329-2576**	1	CONTROL GP-UNPROGRAMMED (MACHINE)	
	10	1	**311-7069**	1	SWITCH AS-ROCKER (4TH VALVE, FLOAT)	
	10A	1	**311-7069**	1	SWITCH AS-ROCKER (5TH VALVE, FLOAT)	
					(EACH SWITCH AS INCLUDES)	
		1	**111-7899**	1	GASKET	
	11	1	**318-6101**	1	BRACKET	
	12	1	**318-6106**	1	HARNESS AS-VALVE	
B		1	**268-4412**		TAPE-INSULATOR	
		1	**155-2270**	2	KIT-CONNECTING PLUG (2-PIN)	
					(EACH PLUG KIT INCLUDES PLUG AS, WEDGE & INTERFACE SEAL)	
		1	**9X-3402**	4	SOCKET-CONNECTOR (16-GA TO 18-GA)	
		1	**180-9340**	4	SOCKET-CONNECTOR (14-GA TO 18-GA)	
	13	1	**318-6123**	2	FILM-INSTRUCTION (AUXILIARY CONTROL VALVE)	
	14	1	**327-6134**	1	HARNESS AS-CONTROL (WINCH)	
B		1	**268-4412**		TAPE-INSULATOR	
		1	**311-0302**	1	HARNESS AS-CONTROL (WINCH)	
		1	**126-1774**	1	COVER-CONNECTOR	
		1	**8T-8729**	3	PIN-CONNECTOR (16-GA TO 18-GA)	
		1	**9W-0852**	1	PIN-CONNECTOR (14-GA TO 16-GA)	
		1	**155-2265**	1	KIT-CONNECTING PLUG (8-PIN)	
		1	**155-2270**	2	KIT-CONNECTING PLUG (2-PIN)	
		1	**155-2274**	1	KIT-CONNECTING PLUG (6-PIN)	
					(EACH PLUG KIT INCLUDES PLUG AS, WEDGE & INTERFACE SEAL)	
		1	**160-7689**	1	PLUG AS-CONNECTOR (70-PIN)	
		1	**159-9322**	1	SEAL-O-RING	
		1	**8T-8730**	1	SOCKET-CONNECTOR (16-GA TO 18-GA)	
		1	**102-8802**	2	KIT-RECEPTACLE (2-PIN)	
		1	**102-8805**	1	KIT-RECEPTACLE (6-PIN)	
		1	**102-8806**	1	KIT-RECEPTACLE (8-PIN)	
					(EACH RECEPTACLE KIT INCLUDES RECEPTACLE AS & WEDGE)	
		1	**186-3736**	1	SOCKET-CONNECTOR (16-GA TO 18-GA)	
		1	**9W-0844**	1	SOCKET-CONNECTOR (14-GA TO 16-GA)	
		1	**9X-3402**	24	SOCKET-CONNECTOR (16-GA TO 18-GA)	
		1	**180-9340**	15	SOCKET-CONNECTOR (14-GA TO 18-GA)	
		1	**8L-8413**	2	STRAP-CABLE (WHITE)	
E		1	**119-3662**		TUBE-HEAT SHRINK (10.85-MM DIA) (7-CM)	
E		1	**125-7874**		TUBE-HEAT SHRINK (5.72-MM DIA) (5-CM)	
	15	1	**3S-2093**	9	STRAP-CABLE	
M	16	1	**5C-7261**	4	NUT (M8X1.25-THD)	
M	17	1	**8T-4138**	2	BOLT (M6X1X20-MM)	
M	18	1	**9X-2045**	12	SCREW-TRUSS HEAD (M6X1X20-MM)	
	19	1	**9X-8256**	2	WASHER (6.6X12X2-MM THK)	
E	20	1	**2Q-0604**		INSULATION (9-CM)	
E	21	1	**324-9707**		INSULATION (12-CM EACH)	

B-USE AS REQUIRED
E-ORDER BY THE CENTIMETER
M-METRIC PART
Y-SEPARATE ILLUSTRATION

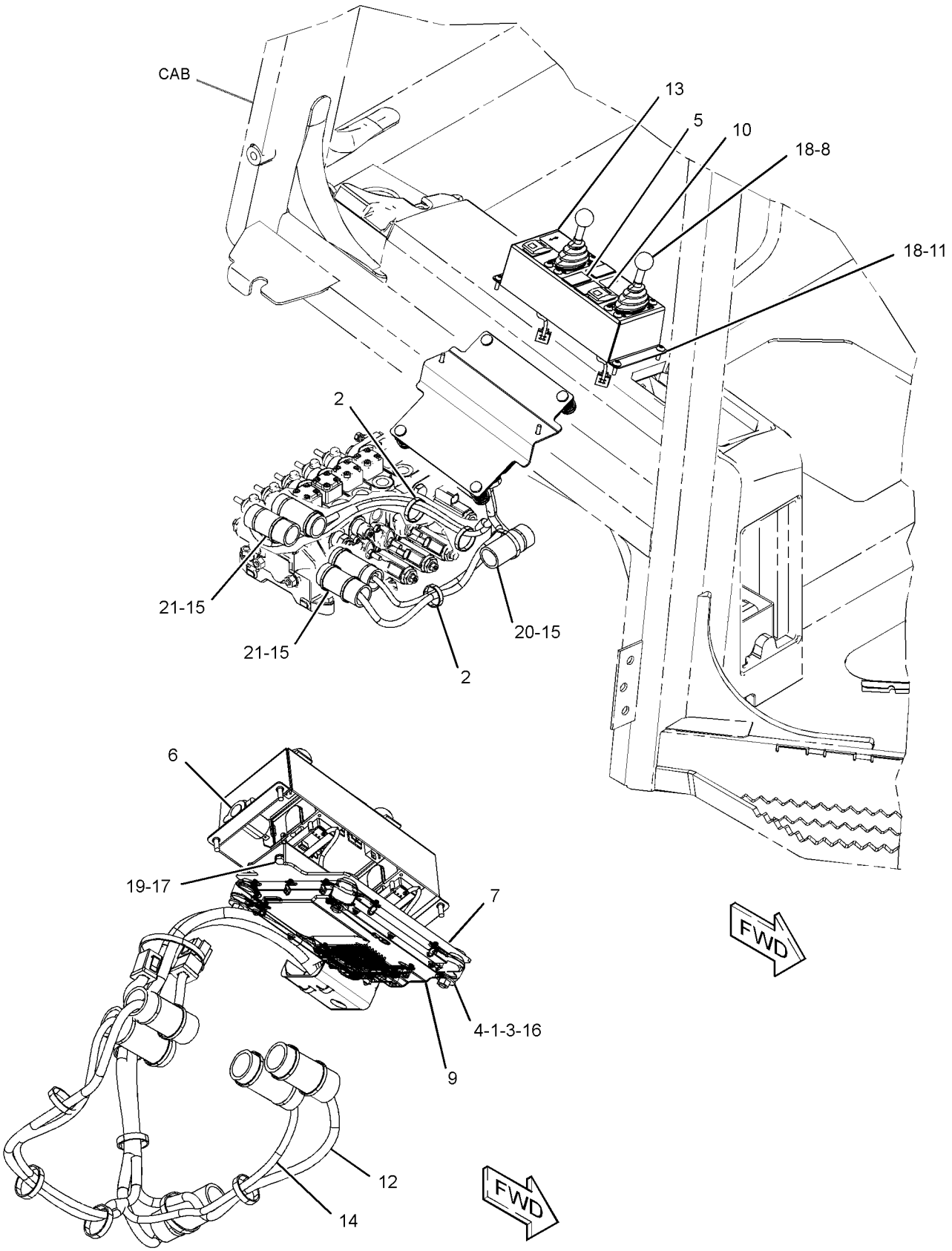

GRAPHIC #1 **<END>** g02293753

274-4645 CONTROL GP-JOYSTICK—GRADE CONTROL, RH

S/N: JTD1-UP; FFF1-UP; LLL1-UP
PART OF 296-5753, 296-5754, 296-5755, 296-5756 GRADE CONTROL AR
FIELD REPLACEMENT ORDER 328-0894—PAGE 708
AN ATTACHMENT

SMCS-5705 **i04415579**

NOTE	REF NO	GRAPHIC REF	PART NUMBER	QTY	PART NAME 1 2 3 4 5 6 (PRODUCT LEVEL)	SEE PAGE
	1	1	**328-0893**	1	SENSOR AS-POSITION (BULLDOZER CONTROL)	
	1A	1	**230-5011**	1	RECEPTACLE AS-CONNECTOR (6-PIN)	
	1B	1	**8T-8729**	6	PIN-CONNECTOR (16-GA TO 18-GA)	
Y	2	1	**266-7632**	1	CONTROL GP-HANDLE (GRADE CONTROL, RH)	697
	3	1	**285-0151**	1	BOOT	
	5	1	**8T-8729**	11	PIN-CONNECTOR (16-GA TO 18-GA)	
	6	1	**260-6728**	1	RECEPTACLE AS-CONNECTOR (12-PIN)	
	7	1	**8T-8737**	1	PLUG-SEAL	
M	8	1	**299-2214**	2	SETSCREW (M6X1X12-MM)	
	9	1	**8L-8413**	3	STRAP-CABLE (WHITE)	

M-METRIC PART
Y-SEPARATE ILLUSTRATION

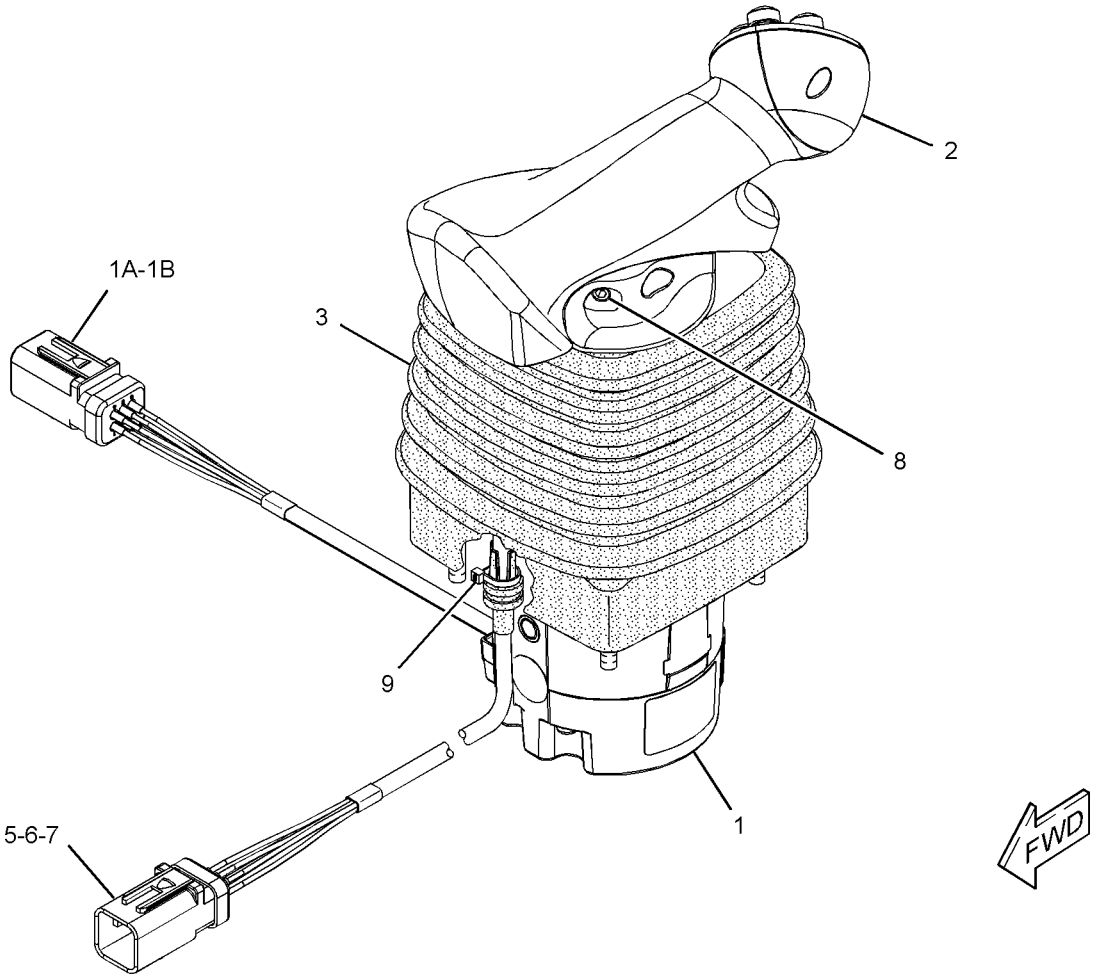

GRAPHIC #1 **<END>** g01414464

OPERATOR STATION

274-4646 CONTROL GP-JOYSTICK

S/N: JTD1-UP; FFF1-UP; LLL1-UP
PART OF 296-5751, 296-5752 GRADE CONTROL AR
AN ATTACHMENT

SMCS-5705 **i04419314**

NOTE	REF NO	GRAPHIC REF	PART NUMBER	QTY	PART NAME 1 2 3 4 5 6 (PRODUCT LEVEL)	SEE PAGE
	1	1	**328-0893**	1	SENSOR AS-POSITION (BULLDOZER CONTROL)	
	1A	1	**8T-8729**	6	PIN-CONNECTOR (16-GA TO 18-GA)	
	1B	1	**230-5011**	1	RECEPTACLE AS-CONNECTOR (6-PIN)	
Y	2	1	**266-7631**	1	CONTROL GP-HANDLE (GRADE CONTROL, RH)	696
	3	1	**285-0151**	1	BOOT	
	5	1	**8T-8729**	7	PIN-CONNECTOR (16-GA TO 18-GA)	
	6	1	**260-6728**	1	RECEPTACLE AS-CONNECTOR (12-PIN)	
	7	1	**8T-8737**	5	PLUG-SEAL	
M	8	1	**299-2214**	2	SETSCREW (M6X1X12-MM)	
	9	1	**8L-8413**	3	STRAP-CABLE (WHITE)	

M-METRIC PART
Y-SEPARATE ILLUSTRATION

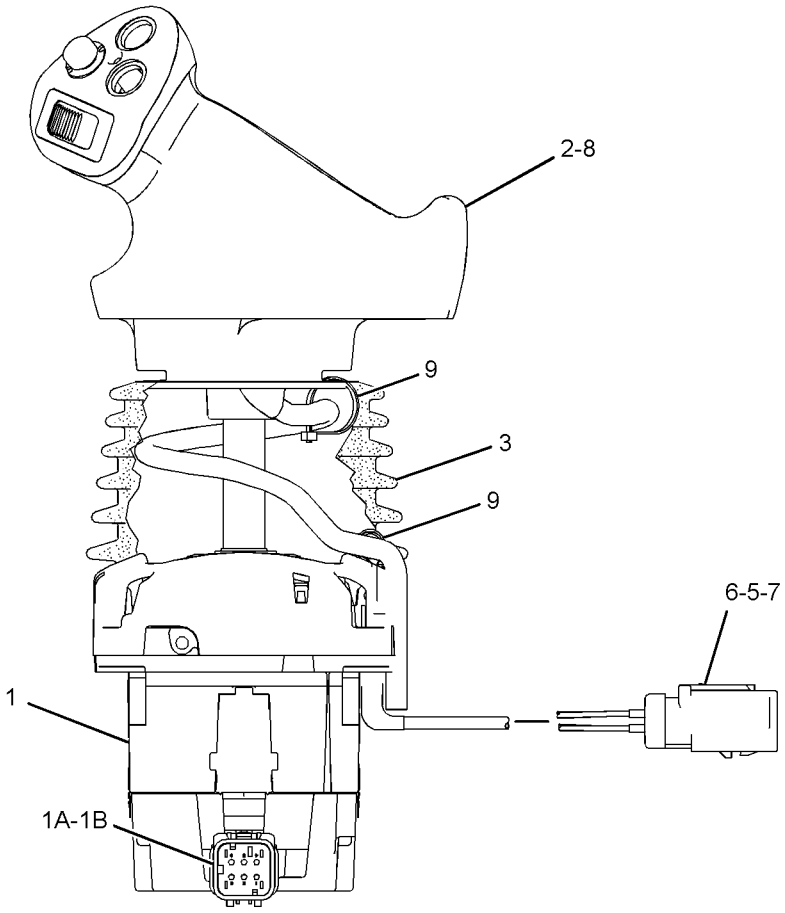

REAR VIEW

GRAPHIC #1 **<END>** g01422964

OPERATOR STATION

290-4835 CONTROL GP-JOYSTICK

S/N: JTD1-UP; FFF1-UP; LLL1-UP

PART OF 245-6027 WIRING GP-ELECTROHYDRAULIC

SMCS-5705 **i04074390**

NOTE	REF NO	GRAPHIC REF	PART NUMBER	QTY	PART NAME 1 2 3 4 5 6 (PRODUCT LEVEL)	SEE PAGE
Y	1	1	**266-7634**	1	CONTROL GP-HANDLE (STEERING, TRANSMISSION)	698
Y	2	1	**284-8207**	1	SENSOR GP-POSITION (STEERING, TRANSMISSION)	216
	3	1	**285-0151**	1	BOOT	
	4	1	**286-2968**	1	BRACKET AS	
M		1	**6V-9632**	4	NUT-WELD (M6X1-THD)	
M	5	1	**299-2214**	2	SETSCREW (M6X1X12-MM)	
	6	1	**260-6728**	1	RECEPTACLE AS-CONNECTOR (12-PIN)	
	7	1	**102-8805**	1	KIT-RECEPTACLE (6-PIN)	
					(INCLUDES RECEPTACLE AS & WEDGE)	
	8	1	**8T-8729**	14	PIN-CONNECTOR (16-GA TO 18-GA)	
	9	1	**8T-8737**	4	PLUG-SEAL	
	10	1	**284-8208**	1	SHAFT-ADAPTER	
	11	1	**8L-8413**	1	STRAP-CABLE	
	12	1	**144-0331**	1	CAP-PUSH BUTTON (YELLOW)	
	13	1	**220-8355**	1	CAP-PUSH BUTTON (BLACK)	

M-METRIC PART
Y-SEPARATE ILLUSTRATION

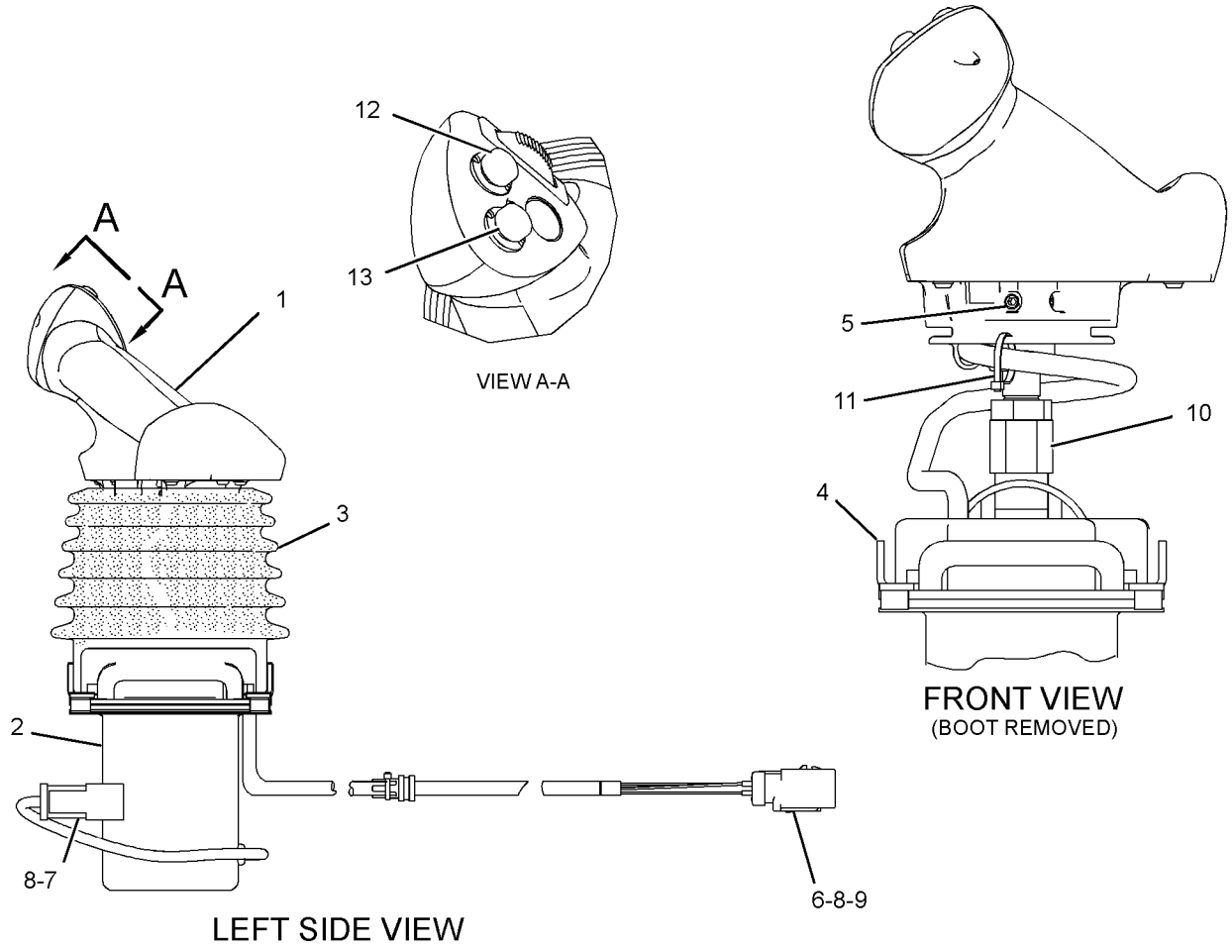

GRAPHIC #1 **<END>** g01900800

OPERATOR STATION

328-0894 CONTROL GP-JOYSTICK—GRADE CONTROL, RH

S/N: JTD1-UP; FFF1-UP; LLL1-UP
PART OF 296-5753, 296-5754, 296-5755, 296-5756 GRADE CONTROL AR
FIELD REPLACEMENT FOR 274-4645—PAGE 705
AN ATTACHMENT

SMCS-5705 **i03776823**

NOTE	REF NO	GRAPHIC REF	PART NUMBER	QTY	PART NAME 1 2 3 4 5 6 (PRODUCT LEVEL)	SEE PAGE
	1	1	**328-0893**	1	SENSOR AS-POSITION (BULLDOZER CONTROL)	
		1	**186-3735**	6	PIN-CONNECTOR (16-GA TO 18-GA)	
		1	**230-5011**	1	RECEPTACLE AS-CONNECTOR (6-PIN)	
Y	2	1	**266-7632**	1	CONTROL GP-HANDLE (RH)	697
	3	1	**285-0151**	1	BOOT	
	4	1	**230-5011**	1	RECEPTACLE AS-CONNECTOR (6-PIN)	
	5	1	**186-3735**	17	PIN-CONNECTOR (16-GA TO 18-GA)	
	6	1	**260-6728**	1	RECEPTACLE AS-CONNECTOR (12-PIN)	
	7	1	**8T-8737**	1	PLUG-SEAL	
M	8	1	**299-2214**	2	SETSCREW (M6X1X12-MM)	
	9	1	**8L-8413**	3	STRAP-CABLE	
	10	1	**144-0331**	1	CAP-PUSH BUTTON (YELLOW)	
	11	1	**220-8355**	2	CAP-PUSH BUTTON (BLACK)	

M-METRIC PART
Y-SEPARATE ILLUSTRATION

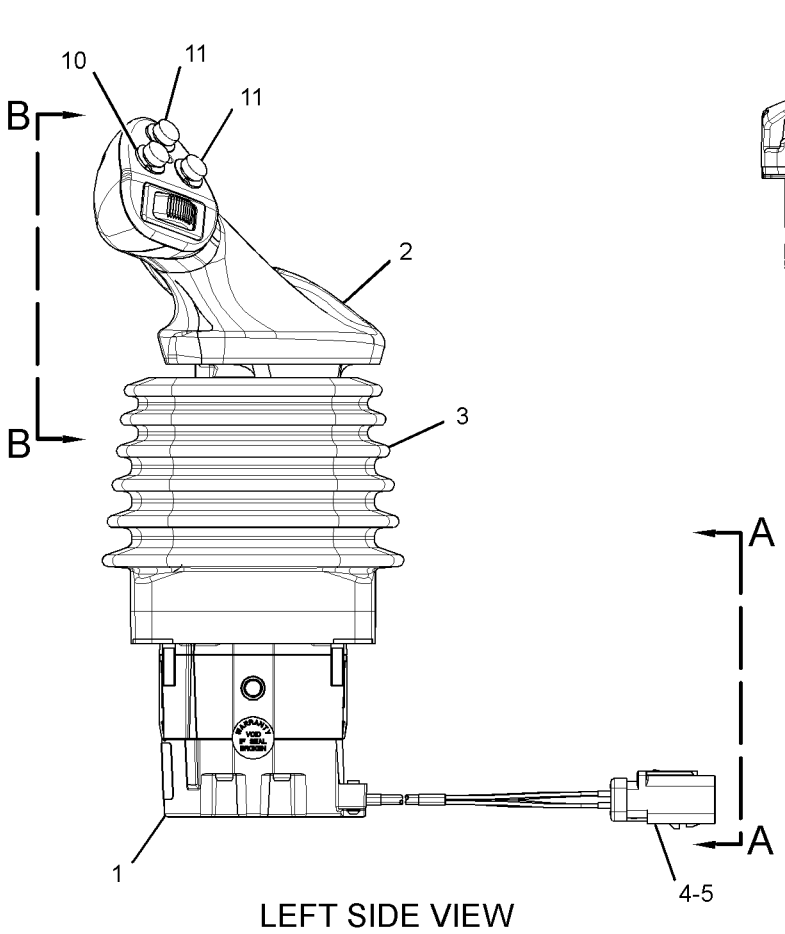

LEFT SIDE VIEW

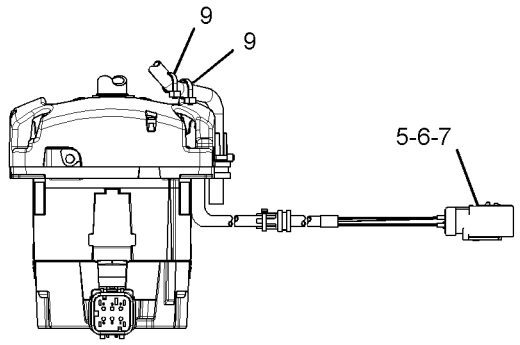

VIEW A-A
(BOOT REMOVED FOR CLARITY)

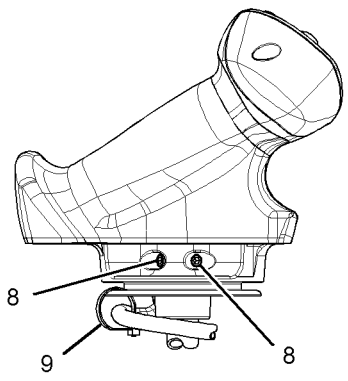

VIEW B-B
(BOOT REMOVED FOR CLARITY)

GRAPHIC #1 **<END>** g01622556

328-0895 CONTROL GP-JOYSTICK

S/N: JTD1-UP; FFF1-UP; LLL1-UP
PART OF 296-5751, 296-5752 GRADE CONTROL AR
AN ATTACHMENT

SMCS-5705 **i04419455**

NOTE	REF NO	GRAPHIC REF	PART NUMBER	QTY	PART NAME 1 2 3 4 5 6 (PRODUCT LEVEL)	SEE PAGE
	1	1	**328-0893**	1	SENSOR AS-POSITION (BULLDOZER CONTROL)	
		1	**8T-8729**	6	PIN-CONNECTOR (16-GA TO 18-GA)	
		1	**230-5011**	1	RECEPTACLE AS-CONNECTOR (6-PIN)	
Y	2	1	**266-7631**	1	CONTROL GP-HANDLE (GRADE CONTROL, RH)	696
	3	1	**285-0151**	1	BOOT	
	4	1	**230-5011**	1	RECEPTACLE AS-CONNECTOR (6-PIN)	
	5	1	**8T-8729**	13	PIN-CONNECTOR (16-GA TO 18-GA)	
	6	1	**260-6728**	1	RECEPTACLE AS-CONNECTOR (12-PIN)	
	7	1	**8T-8737**	5	PLUG-SEAL	
M	8	1	**299-2214**	2	SETSCREW (M6X1X12-MM)	
	9	1	**8L-8413**	3	STRAP-CABLE (WHITE)	
	10	1	**144-0331**	1	CAP-PUSH BUTTON (YELLOW)	

M-METRIC PART
Y-SEPARATE ILLUSTRATION

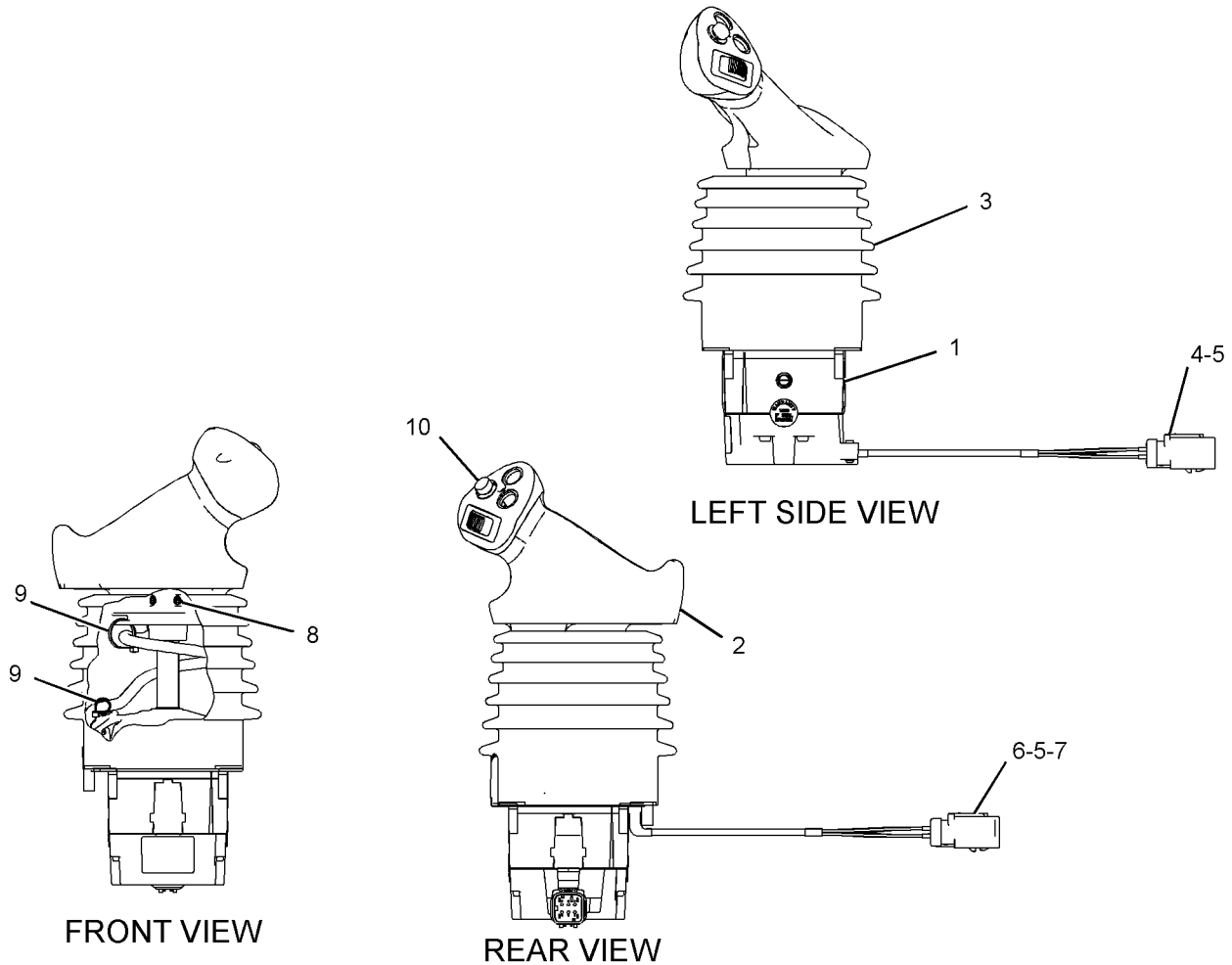

GRAPHIC #1

<END>

g01622537

OPERATOR STATION

249-9051 CONTROL GP-RIPPER

S/N: JTD1-175; FFF1-630; LLL1-840
PART OF 264-4541 HYDRAULIC AR
AN ATTACHMENT

SMCS-5357 **i04415563**

NOTE	REF NO	GRAPHIC REF	PART NUMBER	QTY	PART NAME 1 2 3 4 5 6 (PRODUCT LEVEL)	SEE PAGE
	1	1	**7K-1181**	10	STRAP-CABLE	
	2	1	**165-0311**	4	PLUG	
	3	1	**249-9079**	1	PLATE AS	
	4	1	**266-9005**	1	FILM-INSTRUCTION (RIPPER CONTROL)	
	5	1	**269-7697**	1	HARNESS AS-WORK TOOL (RIPPER)	
		1	**274-3777**	1	CAP-CONNECTOR	
		1	**9X-3401**	7	PIN-CONNECTOR (16-GA TO 18-GA)	
					—OR—	
		1	**126-1767**	7	PIN-CONNECTOR (14-GA TO 16-GA)	
		1	**155-2265**	1	KIT-CONNECTING PLUG (8-PIN)	
		1	**155-2270**	2	KIT-CONNECTING PLUG (2-PIN)	
		1	**155-2274**	1	KIT-CONNECTING PLUG (6-PIN)	
					(EACH PLUG KIT INCLUDES PLUG AS, WEDGE & INTERFACE SEAL)	
		1	**230-4009**	2	PLUG AS-CONNECTOR (12-PIN)	
					(EACH INCLUDES)	
		1	**264-7034**	1	SEAL-CONNECTOR	
		1	**231-2296**	2	PLUG AS-CONNECTOR (8-PIN)	
					(EACH INCLUDES)	
		1	**264-7033**	1	SEAL-CONNECTOR	
		1	**8T-8737**	51	PLUG-SEAL	
		1	**102-8802**	2	KIT-RECEPTACLE (2-PIN)	
		1	**102-8806**	1	KIT-RECEPTACLE (8-PIN)	
					(EACH RECEPTACLE KIT INCLUDES RECEPTACLE AS & WEDGE)	
		1	**230-4010**	2	RECEPTACLE AS-CONNECTOR (12-PIN)	
		1	**231-2301**	1	RECEPTACLE AS-CONNECTOR (8-PIN)	
		1	**186-3736**	1	SOCKET-CONNECTOR (16-GA TO 18-GA)	
		1	**9W-0844**	2	SOCKET-CONNECTOR (14-GA TO 16-GA)	
		1	**9X-3402**	26	SOCKET-CONNECTOR (16-GA TO 18-GA)	
		1	**180-9340**	15	SOCKET-CONNECTOR (14-GA TO 18-GA)	
E		1	**125-7874**		TUBE-HEAT SHRINK (5.72-MM DIA) (25-CM)	
Y	6	1	**307-4673**	1	CONTROL GP-HANDLE (RIPPER, WINCH)	699
	7	1	**311-0296**	1	BRACKET	
	8	1	**156-6175**	2	CLIP	
R	9	1	**300-3631**	1	CONTROL GP-UNPROGRAMMED (RIPPER)	
M	10	1	**7X-2534**	2	BOLT (M6X1X50-MM)	
M	11	1	**8T-4138**	2	BOLT (M6X1X20-MM)	
M	12	1	**9X-2045**	8	SCREW-TRUSS HEAD (M6X1X20-MM)	
	13	1	**9X-8256**	4	WASHER (6.6X12X2-MM THK)	

E-ORDER BY THE CENTIMETER
M-METRIC PART
R-REMFG PART MAY BE AVAILABLE
Y-SEPARATE ILLUSTRATION

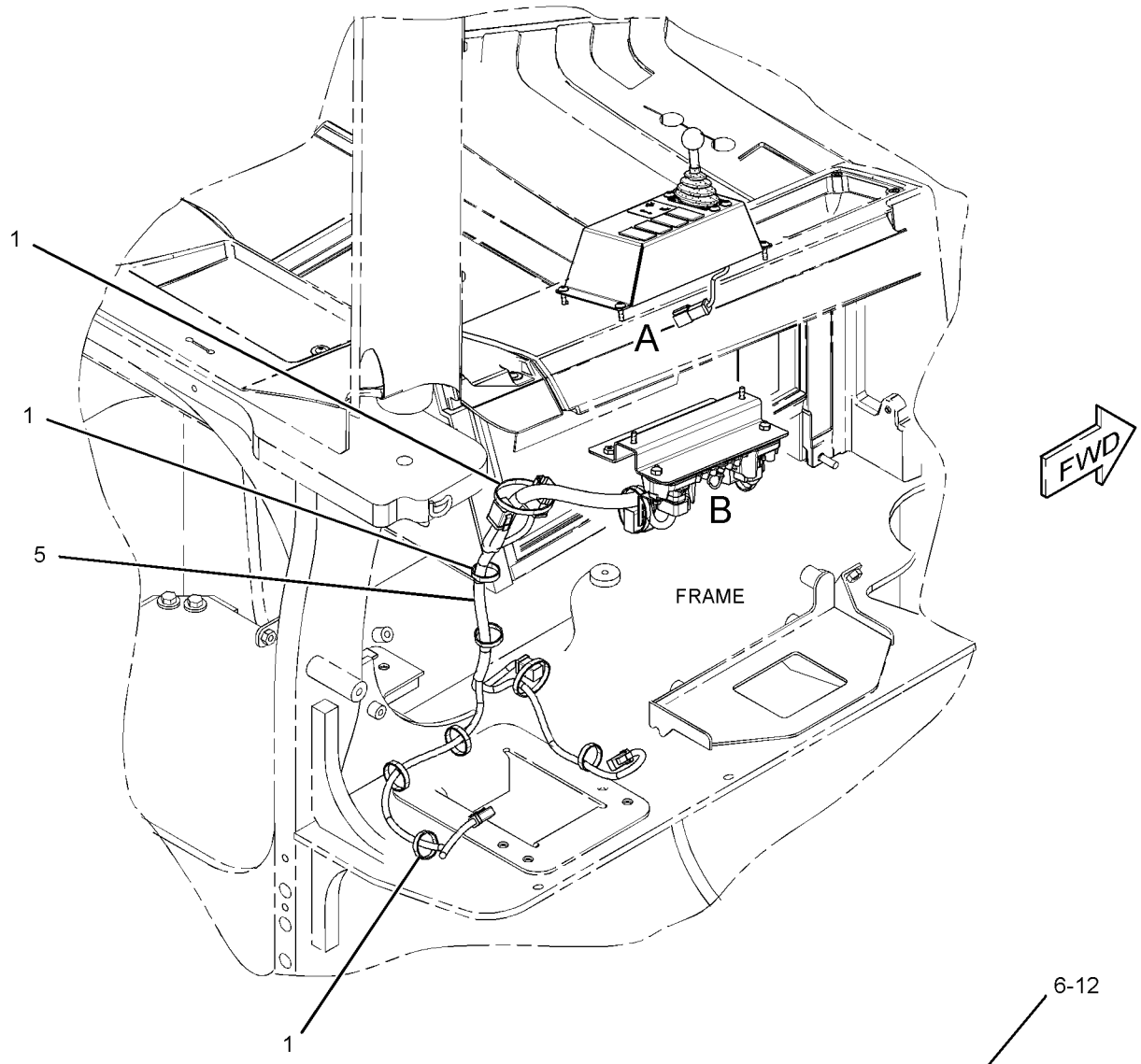

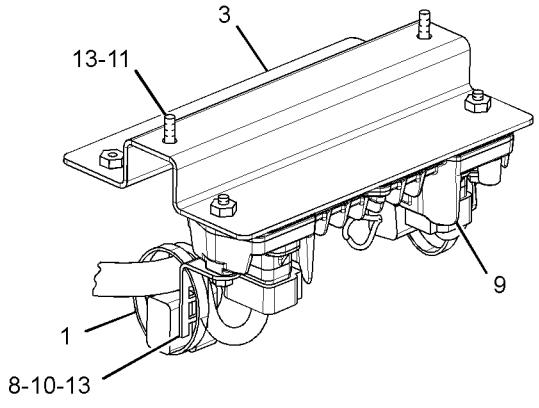

VIEW OF AREA B

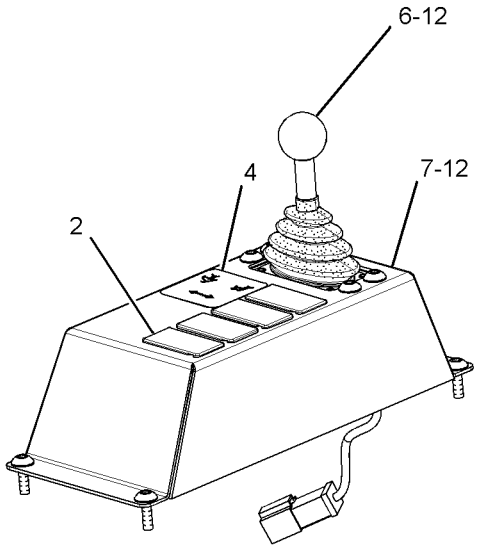

VIEW OF AREA A

GRAPHIC #1 **<END>** g01441539

OPERATOR STATION

249-9051 CONTROL GP-RIPPER

S/N: JTD176-UP; FFF631-UP; LLL841-UP
PART OF 264-4541 HYDRAULIC AR
AN ATTACHMENT

SMCS-5357 **i04110209**

NOTE	REF NO	GRAPHIC REF	PART NUMBER	QTY	PART NAME 1 2 3 4 5 6 (PRODUCT LEVEL)	SEE PAGE
C	1	1	**6I-1418**	4	SPACER (8.2X12.7X28.7-MM THK)	
C	2	1	**7K-1181**	8	STRAP-CABLE	
C	3	1	**9N-0869**	4	WASHER-HARD (8.8X25.5X2-MM THK)	
C	4	1	**155-0576**	8	MOUNT-ISOLATION	
	5	1	**165-0311**	4	PLUG	
	6	1	**266-9005**	1	FILM-INSTRUCTION (RIPPER CONTROL)	
C	7	1	**269-7666**	1	PLATE AS	
Y	8	1	**307-4673**	1	CONTROL GP-HANDLE (RIPPER, WINCH)	699
C	9	1	**329-2576**	1	CONTROL GP-UNPROGRAMMED (RIPPER)	
	10	1	**311-0296**	1	BRACKET	
C	11	1	**311-0302**	1	HARNESS AS-CONTROL	
		1	**126-1774**	1	COVER-CONNECTOR	
		1	**8T-8729**	3	PIN-CONNECTOR (16-GA TO 18-GA)	
		1	**9W-0852**	1	PIN-CONNECTOR (14-GA TO 16-GA)	
		1	**155-2265**	1	KIT-CONNECTING PLUG (8-PIN)	
		1	**155-2270**	2	KIT-CONNECTING PLUG (2-PIN)	
		1	**155-2274**	1	KIT-CONNECTING PLUG (6-PIN)	
					(EACH PLUG KIT INCLUDES PLUG AS, WEDGE & INTERFACE SEAL)	
		1	**160-7689**	1	PLUG AS-CONNECTOR (70-PIN)	
		1	**159-9322**	1	SEAL-O-RING	
		1	**8T-8737**	61	PLUG-SEAL	
		1	**102-8802**	2	KIT-RECEPTACLE (2-PIN)	
		1	**102-8805**	1	KIT-RECEPTACLE (6-PIN)	
		1	**102-8806**	1	KIT-RECEPTACLE (8-PIN)	
					(EACH RECEPTACLE KIT INCLUDES RECEPTACLE AS & WEDGE)	
		1	**8T-8730**	1	SOCKET-CONNECTOR (16-GA TO 18-GA)	
		1	**9W-0844**	1	SOCKET-CONNECTOR (14-GA TO 16-GA)	
		1	**9X-3402**	24	SOCKET-CONNECTOR (16-GA TO 18-GA)	
		1	**180-9340**	15	SOCKET-CONNECTOR (14-GA TO 18-GA)	
		1	**8L-8413**	2	STRAP-CABLE (WHITE)	
E		1	**119-3662**		TUBE-HEAT SHRINK (10.85-MM DIA) (7-CM)	
E		1	**125-7874**		TUBE-HEAT SHRINK (5.72-MM DIA) (5-CM)	
CM	12	1	**5C-7261**	4	NUT (M8X1.25-THD)	
M	13	1	**8T-4138**	2	BOLT (M6X1X20-MM)	
M	14	1	**9X-2045**	8	SCREW-TRUSS HEAD (M6X1X20-MM)	
C	15	1	**9X-8256**	2	WASHER (6.6X12X2-MM THK)	

C-CHANGE FROM PREVIOUS TYPE
E-ORDER BY THE CENTIMETER
M-METRIC PART
Y-SEPARATE ILLUSTRATION

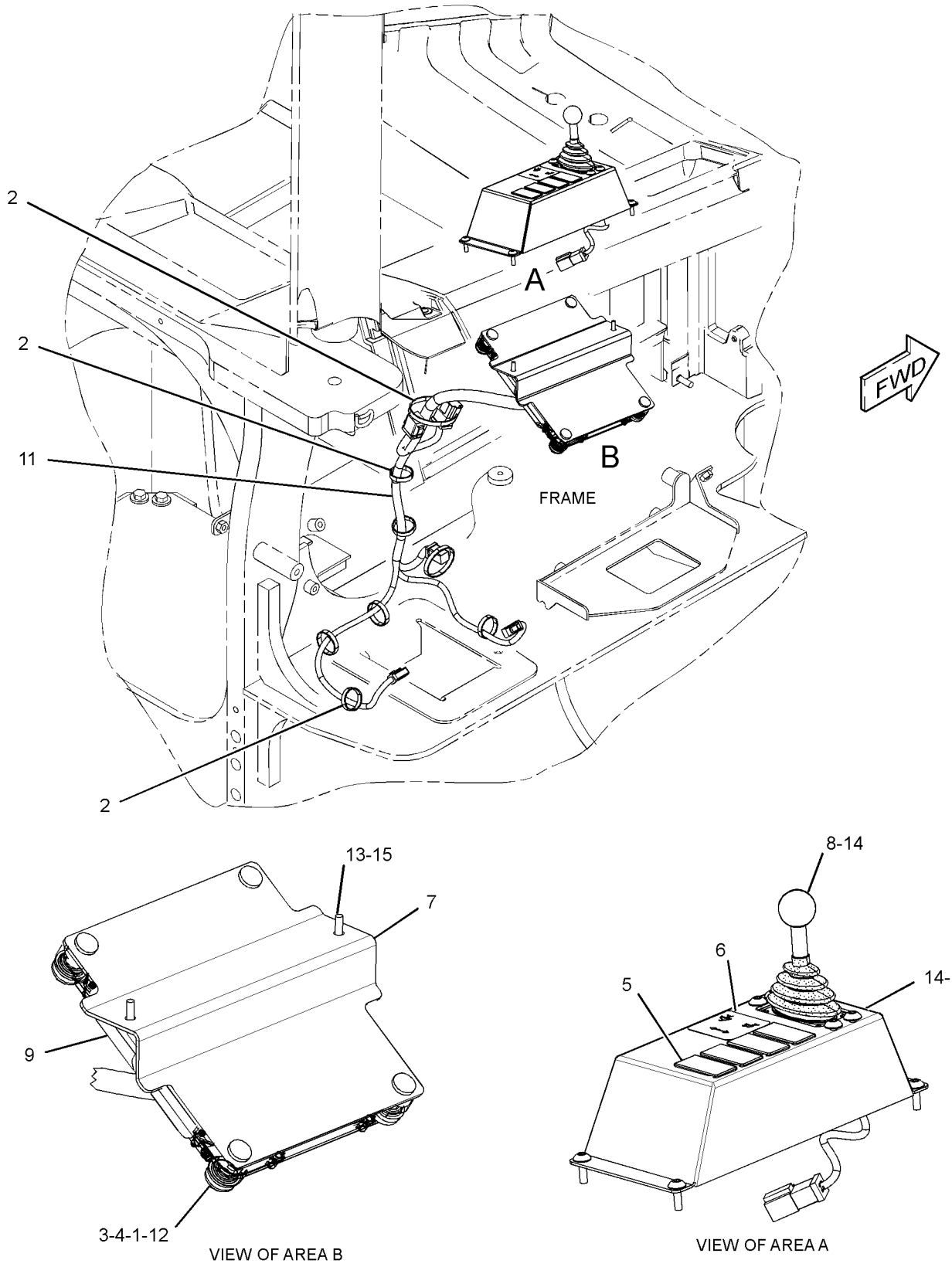

GRAPHIC #1 **<END>** g02284454

OPERATOR STATION

255-4230 COVER GP-CAB—OROPS

S/N: JTD1-UP; FFF1-UP; LLL1-UP
PART OF 296-5751, 296-5753 GRADE CONTROL AR
AN ATTACHMENT
TYPE 1

SMCS-7301 **i03292470**

NOTE	REF NO	GRAPHIC REF	PART NUMBER	QTY	PART NAME 1 2 3 4 5 6 (PRODUCT LEVEL)	SEE PAGE
	1	1	**164-0850**	1	LEVER	
	2	1	**164-8474**	4	LOUVER AS-VENT	
M	3	1	**225-3322**	1	SCREW-TRUSS HEAD (M6X1X10-MM)	
	4	1	**226-0331**	1	CAM-LOCK	
	5	1	**270-7881**	1	FILM-INSTRUCTION (BULLDOZER CONTROL)	
	6	1	**281-3964**	1	TREAD-RUBBER	
	7	1	**281-3965**	1	TREAD-RUBBER	
	8	1	**281-4004**	1	HEADLINER	
	9	1	**281-4007**	1	BRACKET AS	
	10	1	**283-9902**	1	HANDLE AS	
	11	1	**283-9909**	1	MIRROR AS	
	12	1	**284-3754**	1	FLOOR MAT-FRONT	
	13	1	**288-0884**	1	COVER-POST	
	14	1	**311-5950**	1	FLOOR MAT-REAR	
	15	1	**314-3001**	1	DASH AS	
M		1	**297-1465**	9	INSERT-THREADED (M5X0.8-THD)	
M		1	**297-1466**	14	INSERT-THREADED (M6X1-THD)	
	16	1	**314-3002**	1	CONSOLE AS (RH)	
M		1	**297-1466**	11	INSERT-THREADED (M6X1-THD)	
Y	17	1	**314-3004**	1	CONSOLE GP (LH)	691
	18	1	**314-3009**	1	PLATE	
	19	1	**314-3016**	1	PLATE	
	20	1	**314-3017**	1	PLATE	
	21	1	**314-3019**	1	GUARD GP-VANDALISM	
	22	1	**314-3020**	1	PLATE	
	23	1	**314-3021**	1	PLATE	
	24	1	**314-3025**	2	THUMBSCREW	
M	25	1	**128-2136**	4	SCREW-TRUSS HEAD (M6X1X16-MM)	
	26	1	**198-9706**	4	SCREW-TRUSS HEAD (M5X0.8X16-MM)	
	27	1	**275-6710**	2	RETAINER (PUSH ON)	
M	28	1	**5C-9553**	4	BOLT (M6X1X16-MM)	
	29	1	**5P-4115**	4	WASHER-HARD (7.2X19X2-MM THK)	
J	30	1	**5P-9000**	1	LOCK AS-CYLINDER	
	31	1	**7X-7729**	13	WASHER (11X25X3-MM THK)	
	32	1	**8T-4121**	1	WASHER-HARD (11X21X2.5-MM THK)	
M	33	1	**8T-4133**	2	NUT (M10X1.5-THD)	
M	34	1	**8T-4186**	7	BOLT (M10X1.5X40-MM)	
	35	1	**8T-4205**	1	WASHER-HARD (7.2X14.5X2-MM THK)	
	36	1	**8T-4223**	1	WASHER-HARD (13.5X25.5X3-MM THK)	
M	37	1	**9X-2040**	7	SCREW-TRUSS HEAD (M10X1.5X25-MM)	
M	38	1	**9X-2042**	7	SCREW-TRUSS HEAD (M6X1X12-MM)	
M	39	1	**9X-2045**	6	SCREW-TRUSS HEAD (M6X1X20-MM)	
	40	1	**9X-6165**	2	WASHER (6.5X22X2.5-MM THK)	
E	41	1	**3E-3892**		SEAL (28-CM)	
E	42	1	**8C-7332**		TRIM-EDGE (29-CM)	
	43	1	**325-0701**	1	BRACKET	

E-ORDER BY THE CENTIMETER
J-REQUIRES CORPORATE KEY
M-METRIC PART
Y-SEPARATE ILLUSTRATION

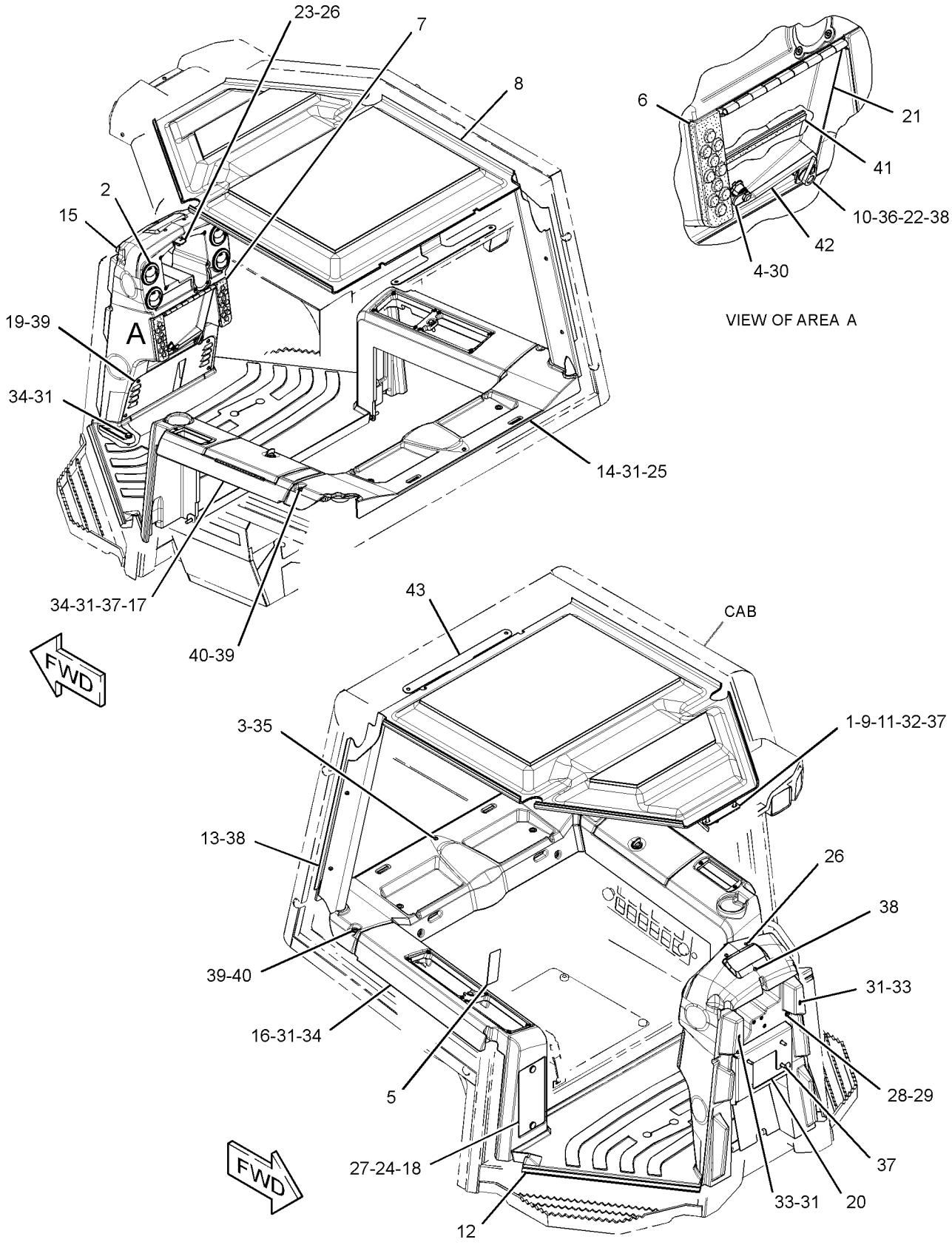

GRAPHIC #1

<END>

g01733073

OPERATOR STATION

255-4230 COVER GP-CAB—OROPS

S/N: JTD1-UP; FFF1-UP; LLL1-UP
PART OF 296-5751, 296-5753 GRADE CONTROL AR
AN ATTACHMENT
TYPE 2

SMCS-7301 **i04396504**

NOTE	REF NO	GRAPHIC REF	PART NUMBER	QTY	PART NAME 1 2 3 4 5 6 (PRODUCT LEVEL)	SEE PAGE
	1	1	**164-0850**	1	LEVER	
	2	1	**164-8474**	4	LOUVER AS-VENT	
M	3	1	**225-3322**	1	SCREW-TRUSS HEAD (M6X1X10-MM)	
	4	1	**226-0331**	1	CAM-LOCK	
	5	1	**270-7881**	1	FILM-INSTRUCTION (BULLDOZER CONTROL)	
	6	1	**281-3964**	1	TREAD-RUBBER	
	7	1	**281-3965**	1	TREAD-RUBBER	
	8	1	**281-4004**	1	HEADLINER	
	9	1	**281-4007**	1	BRACKET AS	
	10	1	**283-9902**	1	HANDLE AS	
	11	1	**283-9909**	1	MIRROR AS	
	12	1	**284-3754**	1	FLOOR MAT-FRONT	
	13	1	**288-0884**	1	COVER-POST	
	14	1	**311-5950**	1	FLOOR MAT-REAR	
	15	1	**314-3001**	1	DASH AS	
M		1	**297-1465**	9	INSERT-THREADED (M5X0.8-THD)	
M		1	**297-1466**	14	INSERT-THREADED (M6X1-THD)	
C	16	1	**343-3566**	1	CONSOLE AS (RH)	
M		1	**297-1466**	11	INSERT-THREADED (M6X1-THD)	
Y	17	1	**314-3004**	1	CONSOLE GP (LH)	691
C	18	1	**343-3567**	1	PLATE	
	19	1	**314-3016**	1	PLATE	
	20	1	**314-3017**	1	PLATE	
	21	1	**314-3019**	1	GUARD GP-VANDALISM	
	22	1	**314-3020**	1	PLATE	
	23	1	**314-3021**	1	PLATE	
	24	1	**314-3025**	2	SCREW-THUMB (M6X1X16-MM)	
M	25	1	**128-2136**	4	SCREW-TRUSS HEAD (M6X1X16-MM)	
C	26	1	**198-9706**	2	SCREW-TRUSS HEAD (M5X0.8X16-MM)	
	27	1	**275-6710**	2	RETAINER (PUSH ON)	
M	28	1	**5C-9553**	4	BOLT (M6X1X16-MM)	
	29	1	**5P-4115**	4	WASHER-HARD (7.2X19X2-MM THK)	
J	30	1	**5P-9000**	1	LOCK AS-CYLINDER	
	31	1	**7X-7729**	13	WASHER (11X25X3-MM THK)	
	32	1	**8T-4121**	1	WASHER-HARD (11X21X2.5-MM THK)	
M	33	1	**8T-4133**	2	NUT (M10X1.5-THD)	
M	34	1	**8T-4186**	7	BOLT (M10X1.5X40-MM)	
	35	1	**8T-4205**	1	WASHER-HARD (7.2X14.5X2-MM THK)	
	36	1	**8T-4223**	1	WASHER-HARD (13.5X25.5X3-MM THK)	
M	37	1	**9X-2040**	7	SCREW-TRUSS HEAD (M10X1.5X25-MM)	
M	38	1	**9X-2042**	7	SCREW-TRUSS HEAD (M6X1X12-MM)	
M	39	1	**9X-2045**	6	SCREW-TRUSS HEAD (M6X1X20-MM)	
	40	1	**9X-6165**	2	WASHER (6.5X22X2.5-MM THK)	
E	41	1	**3E-3892**		SEAL (28-CM)	
E	42	1	**8C-7332**		TRIM-EDGE (29-CM)	
	43	1	**325-0701**	1	BRACKET	
CM	44	1	**271-9408**	2	SCREW-TRUSS HEAD (M5X0.8X10-MM)	

C-CHANGE FROM PREVIOUS TYPE
E-ORDER BY THE CENTIMETER
J-REQUIRES CORPORATE KEY
M-METRIC PART
Y-SEPARATE ILLUSTRATION

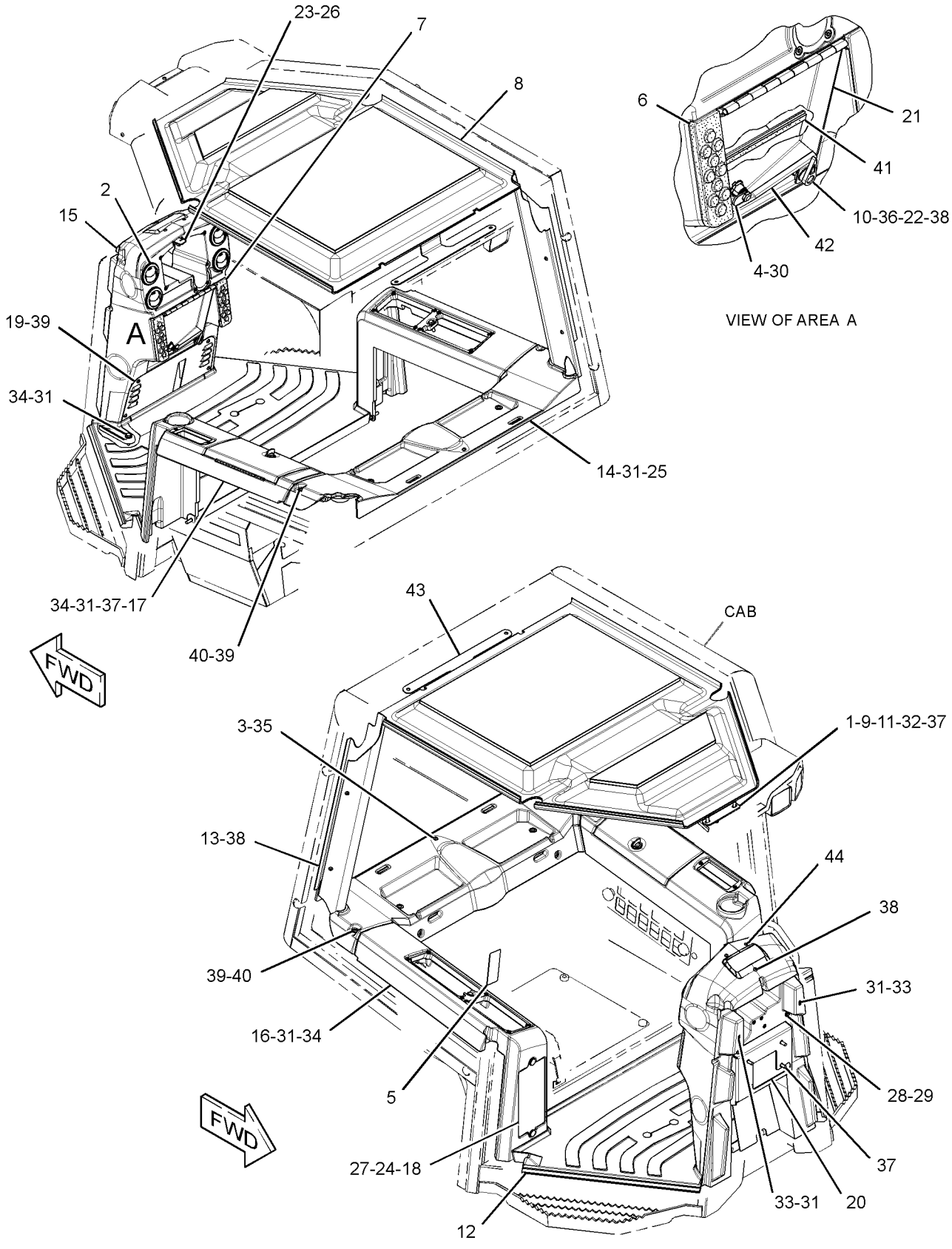

GRAPHIC #1

<END>

g02550438

OPERATOR STATION

255-4231 COVER GP-CAB—EROPS

S/N: JTD1-175; FFF1-623; LLL1-815
PART OF 296-5752, 296-5754 GRADE CONTROL AR
AN ATTACHMENT

SMCS-7301 **i04403716**

NOTE	REF NO	GRAPHIC REF	PART NUMBER	QTY	PART NAME 1 2 3 4 5 6 (PRODUCT LEVEL)	SEE PAGE
	1	1	**110-0885**	1	BUMPER	
	2	1	**154-7951**	12	SPACER	
	3	1	**164-0850**	1	LEVER	
	4	1	**164-8474**	8	LOUVER AS-VENT	
	5	1	**188-8846**	1	LATCH AS (COMPRESSION)	
M	6	1	**225-3322**	1	SCREW-TRUSS HEAD (M6X1X10-MM)	
	9	1	**254-3206**	1	FLOOR MAT-REAR	
	10	1	**255-4233**	1	HEADLINER	
	11	1	**255-8384**	1	COVER-RADIO	
	12	1	**255-8386**	1	COVER	
	13	1	**270-7881**	1	FILM-INSTRUCTION (BULLDOZER CONTROL)	
	14	1	**281-3964**	1	TREAD-RUBBER	
	15	1	**281-3965**	1	TREAD-RUBBER	
	16	1	**281-4007**	1	BRACKET AS	
	17	1	**283-9909**	1	MIRROR AS (REAR VIEW)	
	18	1	**284-3753**	1	MAT-REAR	
	19	1	**284-3754**	1	FLOOR MAT-FRONT	
	20	1	**288-0884**	1	COVER-POST	
	21	1	**314-3000**	1	DASH AS	
M		1	**297-1465**	7	INSERT-THREADED (M5X0.8-THD)	
M		1	**297-1466**	14	INSERT-THREADED (M6X1-THD)	
	22	1	**314-3002**	1	CONSOLE AS (RH)	
M		1	**297-1466**	11	INSERT-THREADED (M6X1-THD)	
Y	23	1	**314-3003**	1	CONSOLE GP (LH)	689
	24	1	**314-3009**	1	PLATE	
	25	1	**314-3016**	1	PLATE	
	26	1	**314-3017**	1	PLATE	
	27	1	**314-3018**	1	BOX AS	
	28	1	**314-3022**	1	BOX AS-STORAGE	
	29	1	**314-3023**	1	PLATE AS	
M		1	**8T-3612**	1	NUT-WELD (M8X1.25-THD)	
	30	1	**314-3025**	2	SCREW-THUMB (M6X1X16-MM)	
M	31	1	**127-2170**	15	SCREW-TRUSS HEAD (M8X1.25X20-MM)	
M	32	1	**128-2136**	6	SCREW-TRUSS HEAD (M6X1X16-MM)	
	33	1	**275-6710**	2	RETAINER (PUSH ON)	
M	34	1	**5C-9553**	4	BOLT (M6X1X16-MM)	
	35	1	**5P-4115**	4	WASHER-HARD (7.2X19X2-MM THK)	
	36	1	**7X-7729**	15	WASHER (11X25X3-MM THK)	
	37	1	**8T-4121**	1	WASHER-HARD (11X21X2.5-MM THK)	
M	38	1	**8T-4133**	2	NUT (M10X1.5-THD)	
M	39	1	**8T-4186**	7	BOLT (M10X1.5X40-MM)	
	40	1	**8T-4205**	1	WASHER-HARD (7.2X14.5X2-MM THK)	
	41	1	**104-2091**	4	SCREW-FLAT HEAD (6-20X0.5-IN)	
M	42	1	**9X-2040**	7	SCREW-TRUSS HEAD (M10X1.5X25-MM)	
M	43	1	**9X-2042**	10	SCREW-TRUSS HEAD (M6X1X12-MM)	
M	44	1	**9X-2045**	11	SCREW-TRUSS HEAD (M6X1X20-MM)	
	45	1	**9X-6165**	2	WASHER (6.5X22X2.5-MM THK)	
D	46	1	**5P-5639**		SEAL (0.1-M)	
D	47	1	**5P-5969**		SEAL (0.3-M)	
	48	1	**198-9706**	2	SCREW-TRUSS HEAD (M5X0.8X16-MM)	
	49	1	**8Y-6388**	2	LOUVER AS-VENT	

D-ORDER BY THE METER
M-METRIC PART
Y-SEPARATE ILLUSTRATION

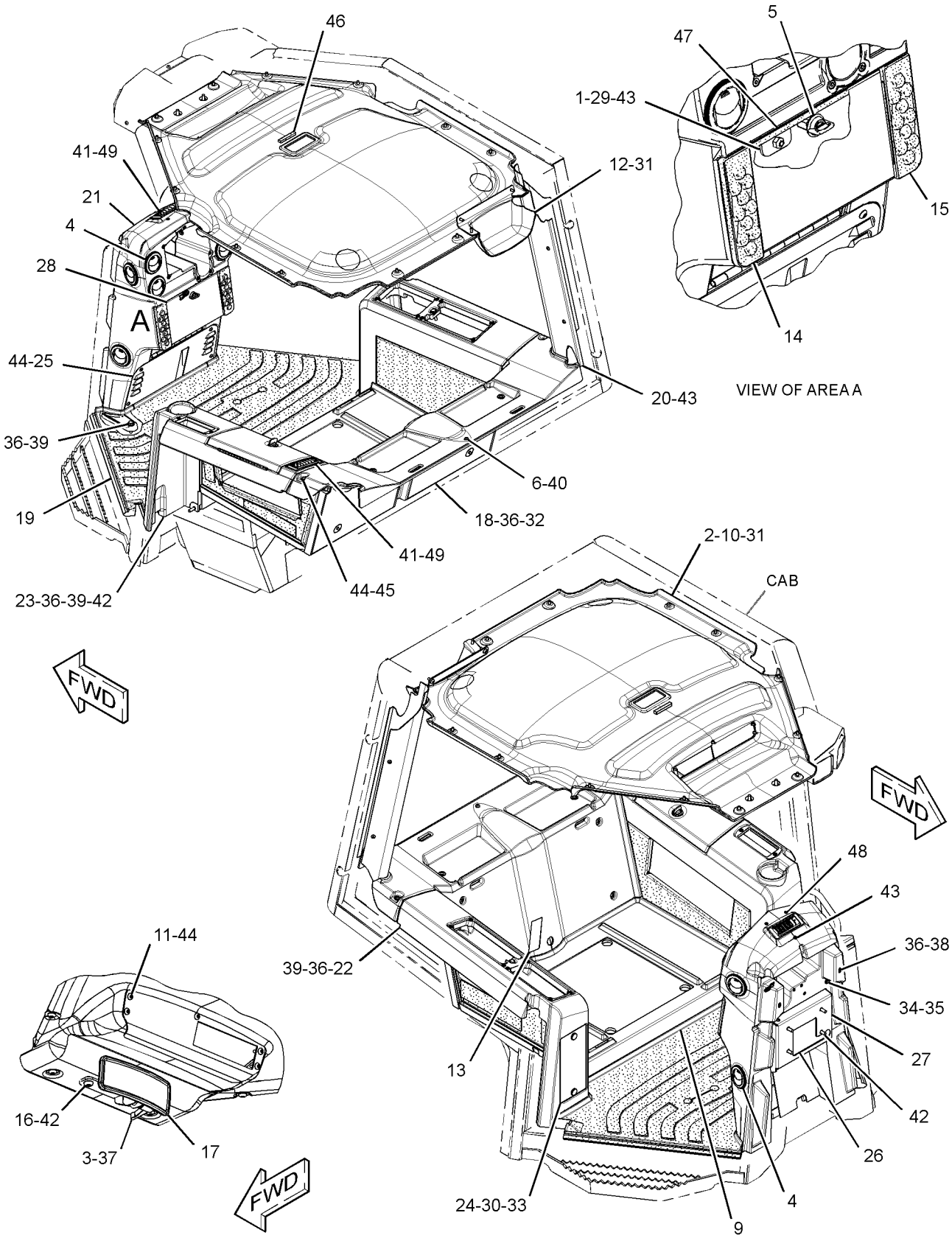

GRAPHIC #1 **<END>** g01864003

OPERATOR STATION

255-4231 COVER GP-CAB—EROPS

S/N: JTD176-UP; FFF624-UP; LLL816-UP
PART OF 296-5752, 296-5754 GRADE CONTROL AR
AN ATTACHMENT
TYPE 1

SMCS-7301 **i03893490**

NOTE	REF NO	GRAPHIC REF	PART NUMBER	QTY	PART NAME 1 2 3 4 5 6 (PRODUCT LEVEL)	SEE PAGE
	1	1	**110-0885**	1	BUMPER	
	2	1	**154-7951**	12	SPACER	
	3	1	**164-0850**	1	LEVER	
	4	1	**164-8474**	8	LOUVER AS-VENT	
	5	1	**188-8846**	1	LATCH AS	
M	6	1	**225-3322**	1	SCREW-TRUSS HEAD (M6X1X10-MM)	
	10	1	**255-4233**	1	HEADLINER	
	11	1	**255-8384**	1	COVER-RADIO	
	12	1	**255-8386**	1	COVER	
	13	1	**270-7881**	1	FILM-INSTRUCTION (BULLDOZER CONTROL)	
	14	1	**281-3964**	1	TREAD-RUBBER	
	15	1	**281-3965**	1	TREAD-RUBBER	
	16	1	**281-4007**	1	BRACKET AS	
	17	1	**283-9909**	1	MIRROR AS	
	18	1	**284-3754**	1	FLOOR MAT-FRONT	
C	19	1	**311-5950**	1	FLOOR MAT-REAR	
	20	1	**288-0884**	1	COVER-POST	
	21	1	**314-3000**	1	DASH AS	
M		1	**297-1465**	7	INSERT-THREADED (M5X0.8-THD)	
M		1	**297-1466**	14	INSERT-THREADED (M6X1-THD)	
	22	1	**314-3002**	1	CONSOLE AS (RH)	
M		1	**297-1466**	11	INSERT-THREADED (M6X1-THD)	
Y	23	1	**314-3003**	1	CONSOLE GP (LH)	689
	24	1	**314-3009**	1	PLATE	
	25	1	**314-3016**	1	PLATE	
	26	1	**314-3017**	1	PLATE	
	27	1	**314-3018**	1	BOX AS	
	28	1	**314-3022**	1	BOX AS-STORAGE	
	29	1	**314-3023**	1	PLATE AS	
	30	1	**314-3025**	2	SCREW-THUMB (M6X1X16-MM)	
M	31	1	**127-2170**	15	SCREW-TRUSS HEAD (M8X1.25X20-MM)	
CM	32	1	**128-2136**	4	SCREW-TRUSS HEAD (M6X1X16-MM)	
	33	1	**275-6710**	2	RETAINER	
M	34	1	**5C-9553**	4	BOLT (M6X1X16-MM)	
	35	1	**5P-4115**	4	WASHER-HARD (7.2X19X2-MM THK)	
C	36	1	**7X-7729**	13	WASHER (11X25X3-MM THK)	
	37	1	**8T-4121**	1	WASHER-HARD (11X21X2.5-MM THK)	
M	38	1	**8T-4133**	2	NUT (M10X1.5-THD)	
M	39	1	**8T-4186**	7	BOLT (M10X1.5X40-MM)	
	40	1	**8T-4205**	1	WASHER-HARD (7.2X14.5X2-MM THK)	
	41	1	**104-2091**	4	SCREW-FLAT HEAD (6-20X0.5-IN)	
M	42	1	**9X-2040**	7	SCREW-TRUSS HEAD (M10X1.5X25-MM)	
M	43	1	**9X-2042**	10	SCREW-TRUSS HEAD (M6X1X12-MM)	
M	44	1	**9X-2045**	11	SCREW-TRUSS HEAD (M6X1X20-MM)	
	45	1	**9X-6165**	2	WASHER (6.5X22X2.5-MM THK)	
D	46	1	**5P-5639**		SEAL (0.1-M)	
D	47	1	**5P-5969**		SEAL (0.3-M)	
	48	1	**198-9706**	2	SCREW-TRUSS HEAD (M5X0.8X16-MM)	
	49	1	**8Y-6388**	2	LOUVER AS-VENT	

C-CHANGE FROM PREVIOUS TYPE
D-ORDER BY THE METER
M-METRIC PART
Y-SEPARATE ILLUSTRATION

255-4231 **COVER GP-CAB** *(contd.)* **i03893490**

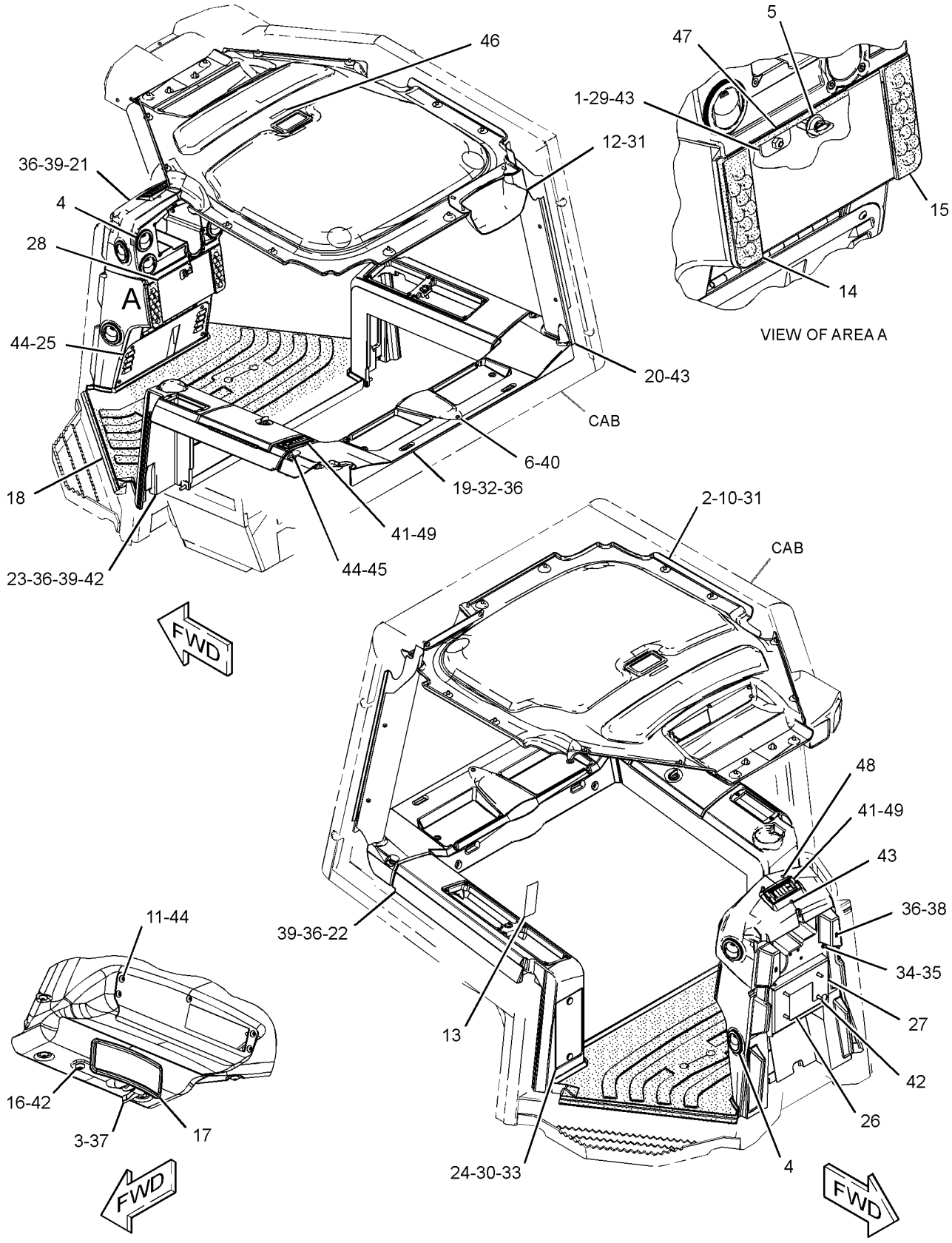

GRAPHIC #1 **<END>** g02283654

OPERATOR STATION

255-4231 COVER GP-CAB—EROPS

S/N: JTD176-UP; FFF624-UP; LLL816-UP
PART OF 296-5752, 296-5754 GRADE CONTROL AR
AN ATTACHMENT
TYPE 2

SMCS-7301 **i04396498**

NOTE	REF NO	GRAPHIC REF	PART NUMBER	QTY	PART NAME 1 2 3 4 5 6 (PRODUCT LEVEL)	SEE PAGE
	1	1	**110-0885**	1	BUMPER	
	2	1	**154-7951**	12	SPACER	
	3	1	**164-0850**	1	LEVER	
	4	1	**164-8474**	8	LOUVER AS-VENT	
	5	1	**188-8846**	1	LATCH AS	
M	6	1	**225-3322**	1	SCREW-TRUSS HEAD (M6X1X10-MM)	
	10	1	**255-4233**	1	HEADLINER	
	11	1	**255-8384**	1	COVER-RADIO	
	12	1	**255-8386**	1	COVER	
	13	1	**270-7881**	1	FILM-INSTRUCTION (BULLDOZER CONTROL)	
	14	1	**281-3964**	1	TREAD-RUBBER	
	15	1	**281-3965**	1	TREAD-RUBBER	
	16	1	**281-4007**	1	BRACKET AS	
	17	1	**283-9909**	1	MIRROR AS	
	18	1	**284-3754**	1	FLOOR MAT-FRONT	
	19	1	**311-5950**	1	FLOOR MAT-REAR	
	20	1	**288-0884**	1	COVER-POST	
	21	1	**314-3000**	1	DASH AS	
M		1	**297-1465**	7	INSERT-THREADED (M5X0.8-THD)	
M		1	**297-1466**	14	INSERT-THREADED (M6X1-THD)	
C	22	1	**343-3566**	1	CONSOLE AS (RH)	
M		1	**297-1466**	11	INSERT-THREADED (M6X1-THD)	
Y	23	1	**314-3003**	1	CONSOLE GP (LH)	689
C	24	1	**343-3567**	1	PLATE	
	25	1	**314-3016**	1	PLATE	
	26	1	**314-3017**	1	PLATE	
	27	1	**314-3018**	1	BOX AS	
	28	1	**314-3022**	1	BOX AS-STORAGE	
	29	1	**314-3023**	1	PLATE AS	
	30	1	**314-3025**	2	SCREW-THUMB (M6X1X16-MM)	
M	31	1	**127-2170**	15	SCREW-TRUSS HEAD (M8X1.25X20-MM)	
M	32	1	**128-2136**	4	SCREW-TRUSS HEAD (M6X1X16-MM)	
	33	1	**275-6710**	2	RETAINER	
M	34	1	**5C-9553**	4	BOLT (M6X1X16-MM)	
	35	1	**5P-4115**	4	WASHER-HARD (7.2X19X2-MM THK)	
	36	1	**7X-7729**	13	WASHER (11X25X3-MM THK)	
	37	1	**8T-4121**	1	WASHER-HARD (11X21X2.5-MM THK)	
M	38	1	**8T-4133**	2	NUT (M10X1.5-THD)	
M	39	1	**8T-4186**	7	BOLT (M10X1.5X40-MM)	
	40	1	**8T-4205**	1	WASHER-HARD (7.2X14.5X2-MM THK)	
	41	1	**104-2091**	4	SCREW-FLAT HEAD (6-20X0.5-IN)	
M	42	1	**9X-2040**	7	SCREW-TRUSS HEAD (M10X1.5X25-MM)	
M	43	1	**9X-2042**	10	SCREW-TRUSS HEAD (M6X1X12-MM)	
M	44	1	**9X-2045**	11	SCREW-TRUSS HEAD (M6X1X20-MM)	
	45	1	**9X-6165**	2	WASHER (6.5X22X2.5-MM THK)	
D	46	1	**5P-5639**		SEAL (0.1-M)	
D	47	1	**5P-5969**		SEAL (0.3-M)	
CM	48	1	**271-9408**	2	SCREW-TRUSS HEAD (M5X0.8X10-MM)	
	49	1	**8Y-6388**	2	LOUVER AS-VENT	

C-CHANGE FROM PREVIOUS TYPE
D-ORDER BY THE METER
M-METRIC PART
Y-SEPARATE ILLUSTRATION

255-4231 **COVER GP-CAB** *(contd.)* **i04396498**

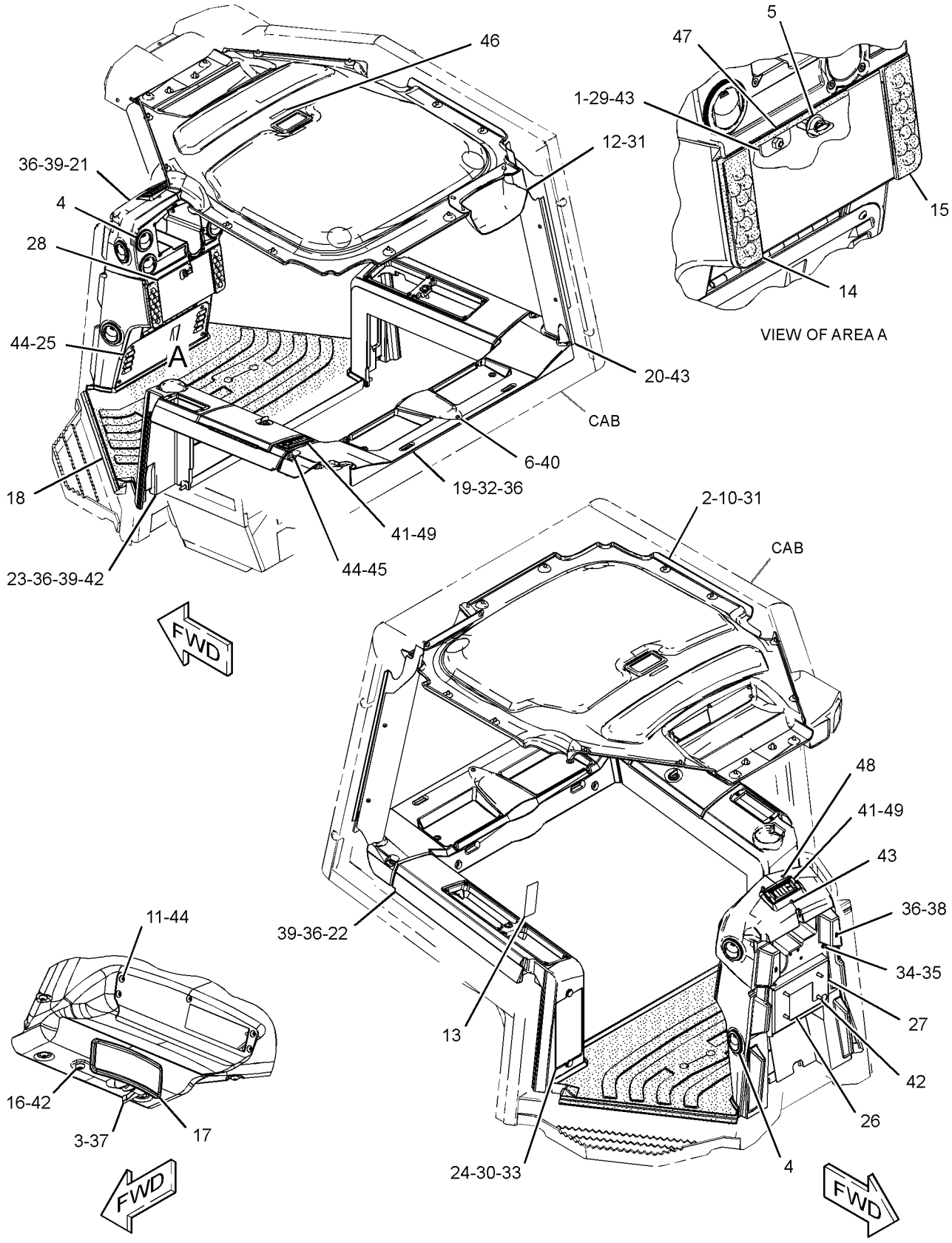

GRAPHIC #1 **<END>** g02582797

OPERATOR STATION

285-0331 COVER GP-CAB—EROPS

S/N: JTD1-UP; FFF1-UP; LLL1-UP
PART OF 296-5756 GRADE CONTROL AR
AN ATTACHMENT
TYPE 1

SMCS-7301 **i04402171**

NOTE	REF NO	GRAPHIC REF	PART NUMBER	QTY	PART NAME 1 2 3 4 5 6 (PRODUCT LEVEL)	SEE PAGE
	1	1	**154-7951**	12	SPACER	
	2	2	**164-8474**	8	LOUVER AS-VENT	
M	3	1	**225-3322**	1	SCREW-TRUSS HEAD (M6X1X10-MM)	
	4	1	**314-3009**	1	PLATE	
	5	2	**198-9706**	2	SCREW-TRUSS HEAD (M5X0.8X16-MM)	
	6	1,2	**104-2091**	4	SCREW-FLAT HEAD (6-20X0.5-IN)	
	7	1	**254-3206**	1	FLOOR MAT-REAR	
	8	1	**255-4233**	1	HEADLINER	
	9	2	**255-8384**	1	COVER-RADIO	
	10	1	**255-8386**	1	COVER (WIPER)	
	11	1	**272-5584**	1	FILM-INSTRUCTION (BULLDOZER CONTROL)	
	12	2	**314-3016**	1	PLATE	
	13	1	**314-3017**	1	PLATE	
	14	2	**314-3018**	1	BOX AS	
	15	2	**314-3024**	1	PLATE	
	16	1	**314-3002**	1	CONSOLE AS (RH)	
M		1	**297-1466**	11	INSERT-THREADED (M6X1-THD)	
Y	17	1	**314-3003**	1	CONSOLE GP (LH)	689
	18	1	**284-3753**	1	MAT-REAR	
	19	1	**284-3754**	1	FLOOR MAT-FRONT	
	20	1	**288-0884**	1	COVER-POST	
	21	2	**281-4007**	1	BRACKET AS	
	22	1	**314-3025**	2	SCREW-THUMB (M6X1X16-MM)	
	23	2	**314-3000**	1	DASH AS	
M		2	**297-1465**	7	INSERT-THREADED (M5X0.8-THD)	
M		2	**297-1466**	14	INSERT-THREADED (M6X1-THD)	
M	24	1	**127-2170**	15	SCREW-TRUSS HEAD (M8X1.25X20-MM)	
M	25	1	**128-2136**	6	SCREW-TRUSS HEAD (M6X1X16-MM)	
	26	1	**275-6710**	2	RETAINER	
	27	1	**9X-6165**	2	WASHER (6.5X22X2.5-MM THK)	
	28	1,2	**7X-7729**	15	WASHER (11X25X3-MM THK)	
	29	2	**283-9909**	1	MIRROR AS (REAR VIEW)	
M	30	1	**8T-4133**	2	NUT (M10X1.5-THD)	
M	31	1,2	**8T-4186**	7	BOLT (M10X1.5X40-MM)	
M	32	1	**5C-9553**	4	BOLT (M6X1X16-MM)	
	33	1	**5P-4115**	4	WASHER-HARD (7.2X19X2-MM THK)	
	34	1,2	**8Y-6388**	2	LOUVER AS-VENT	
M	35	1,2	**9X-2040**	7	SCREW-TRUSS HEAD (M10X1.5X25-MM)	
M	36	1,2	**9X-2042**	7	SCREW-TRUSS HEAD (M6X1X12-MM)	
M	37	1,2	**9X-2045**	11	SCREW-TRUSS HEAD (M6X1X20-MM)	
D	38	1	**5P-5639**		SEAL (0.1-M)	
E	39	2	**8C-7332**		TRIM-EDGE (28-CM EACH)	
	40	2	**164-0850**	1	LEVER	
	41	2	**8T-4121**	1	WASHER-HARD (11X21X2.5-MM THK)	
	42	1	**8T-4205**	1	WASHER-HARD (7.2X14.5X2-MM THK)	

D-ORDER BY THE METER
E-ORDER BY THE CENTIMETER
M-METRIC PART
Y-SEPARATE ILLUSTRATION

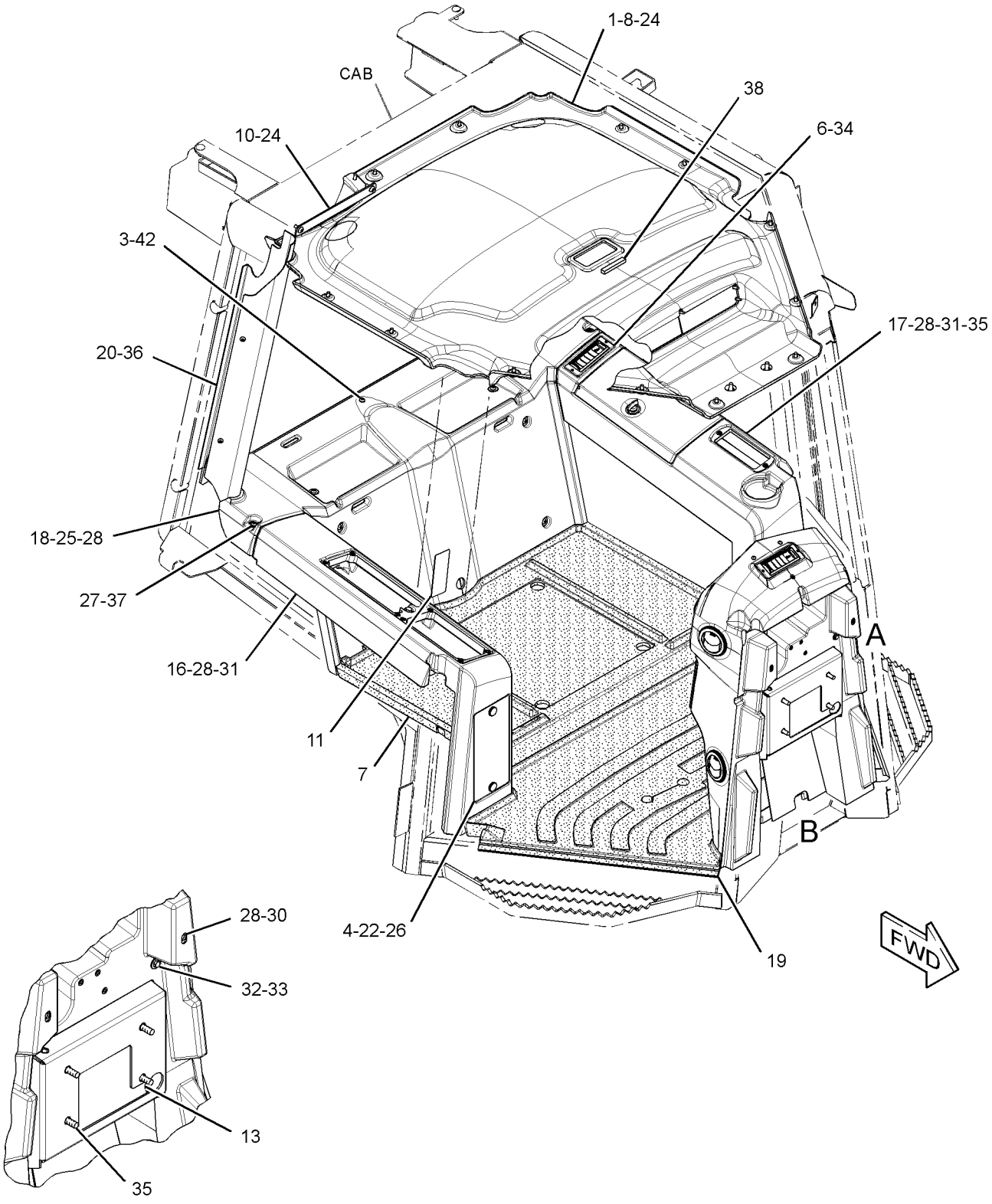

VIEW OF AREA A

REFER TO ALL ILLUSTRATIONS OF THIS GROUP FOR AUXILIARY VIEWS

GRAPHIC #1

g01743053

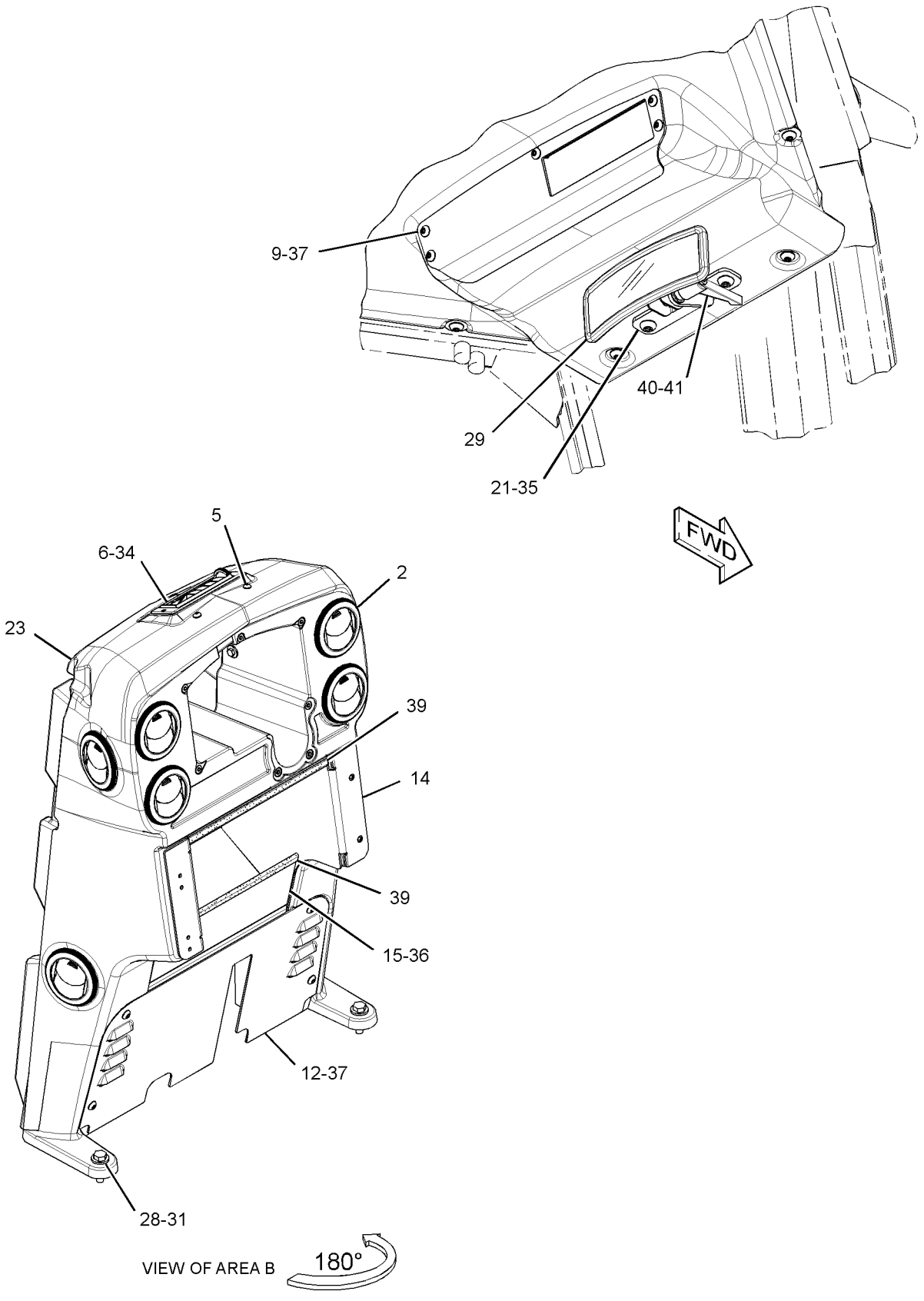

GRAPHIC #2 **<END>** g01743075

OPERATOR STATION

285-0331 COVER GP-CAB—EROPS

S/N: JTD1-UP; FFF1-UP; LLL1-UP
PART OF 296-5756 GRADE CONTROL AR
AN ATTACHMENT
TYPE 2

SMCS-7301 **i03742281**

NOTE	REF NO	GRAPHIC REF	PART NUMBER	QTY	PART NAME 1 2 3 4 5 6 (PRODUCT LEVEL)	SEE PAGE
	1	1	**154-7951**	12	SPACER	
	2	2	**164-8474**	8	LOUVER AS-VENT	
M	3	1	**225-3322**	1	SCREW-TRUSS HEAD (M6X1X10-MM)	
	4	1	**314-3009**	1	PLATE	
	5	2	**198-9706**	2	SCREW-TRUSS HEAD (M5X0.8X16-MM)	
	6	1,2	**104-2091**	4	SCREW-FLAT HEAD (6-20X0.5-IN)	
	8	1	**255-4233**	1	HEADLINER	
	9	2	**255-8384**	1	COVER-RADIO	
	10	1	**255-8386**	1	COVER (WIPER)	
	11	1	**272-5584**	1	FILM-INSTRUCTION (BULLDOZER CONTROL)	
	12	2	**314-3016**	1	PLATE	
	13	1	**314-3017**	1	PLATE	
	14	2	**314-3018**	1	BOX AS	
	15	2	**314-3024**	1	PLATE	
	16	1	**314-3002**	1	CONSOLE AS (RH)	
M		1	**297-1466**	11	INSERT-THREADED (M6X1-THD)	
Y	17	1	**314-3003**	1	CONSOLE GP (LH)	689
C	18	1	**311-5950**	1	FLOOR MAT-REAR	
	19	1	**284-3754**	1	FLOOR MAT-FRONT	
	20	1	**288-0884**	1	COVER-POST	
	21	2	**281-4007**	1	BRACKET AS	
	22	1	**314-3025**	2	SCREW-THUMB (M6X1X16-MM)	
	23	2	**314-3000**	1	DASH AS	
M		2	**297-1465**	7	INSERT-THREADED (M5X0.8-THD)	
M		2	**297-1466**	14	INSERT-THREADED (M6X1-THD)	
M	24	1	**127-2170**	15	SCREW-TRUSS HEAD (M8X1.25X20-MM)	
CM	25	1	**128-2136**	4	SCREW-TRUSS HEAD (M6X1X16-MM)	
	26	1	**275-6710**	2	RETAINER	
	27	1	**9X-6165**	2	WASHER (6.5X22X2.5-MM THK)	
C	28	1,2	**7X-7729**	13	WASHER (11X25X3-MM THK)	
	29	2	**283-9909**	1	MIRROR AS	
M	30	1	**8T-4133**	2	NUT (M10X1.5-THD)	
M	31	1,2	**8T-4186**	7	BOLT (M10X1.5X40-MM)	
M	32	1	**5C-9553**	4	BOLT (M6X1X16-MM)	
	33	1	**5P-4115**	4	WASHER-HARD (7.2X19X2-MM THK)	
	34	1,2	**8Y-6388**	2	LOUVER AS-VENT	
M	35	1,2	**9X-2040**	7	SCREW-TRUSS HEAD (M10X1.5X25-MM)	
M	36	1,2	**9X-2042**	7	SCREW-TRUSS HEAD (M6X1X12-MM)	
M	37	1,2	**9X-2045**	11	SCREW-TRUSS HEAD (M6X1X20-MM)	
D	38	1	**5P-5639**		SEAL (0.1-M)	
E	39	2	**8C-7332**		TRIM-EDGE (28-CM EACH)	
	40	2	**164-0850**	1	LEVER	
	41	2	**8T-4121**	1	WASHER-HARD (11X21X2.5-MM THK)	
	42	1	**8T-4205**	1	WASHER-HARD (7.2X14.5X2-MM THK)	

C-CHANGE FROM PREVIOUS TYPE
D-ORDER BY THE METER
E-ORDER BY THE CENTIMETER
M-METRIC PART
Y-SEPARATE ILLUSTRATION

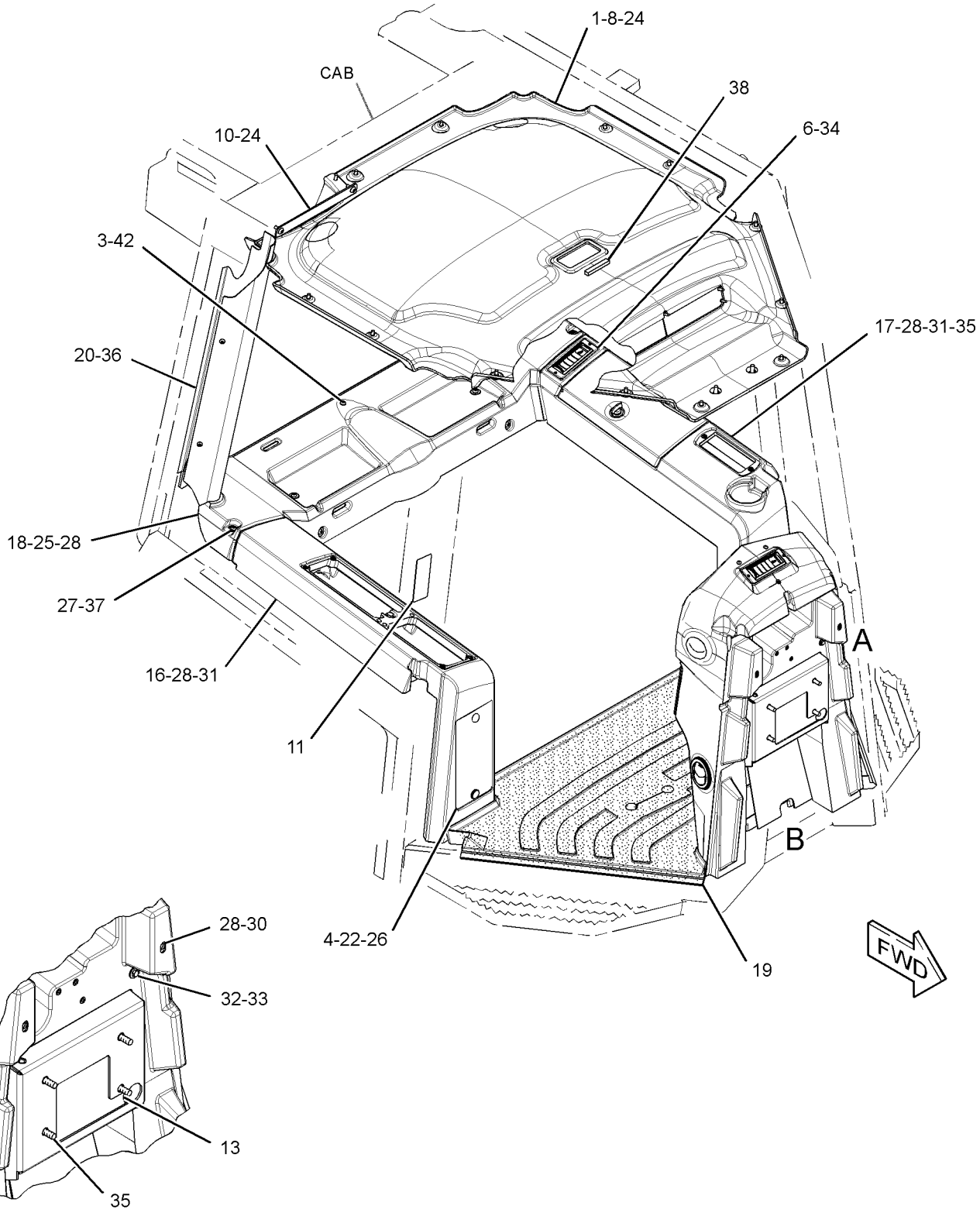

VIEW OF AREA A

REFER TO ALL ILLUSTRATIONS OF THIS GROUP FOR AUXILIARY VIEWS

GRAPHIC #1

g02014294

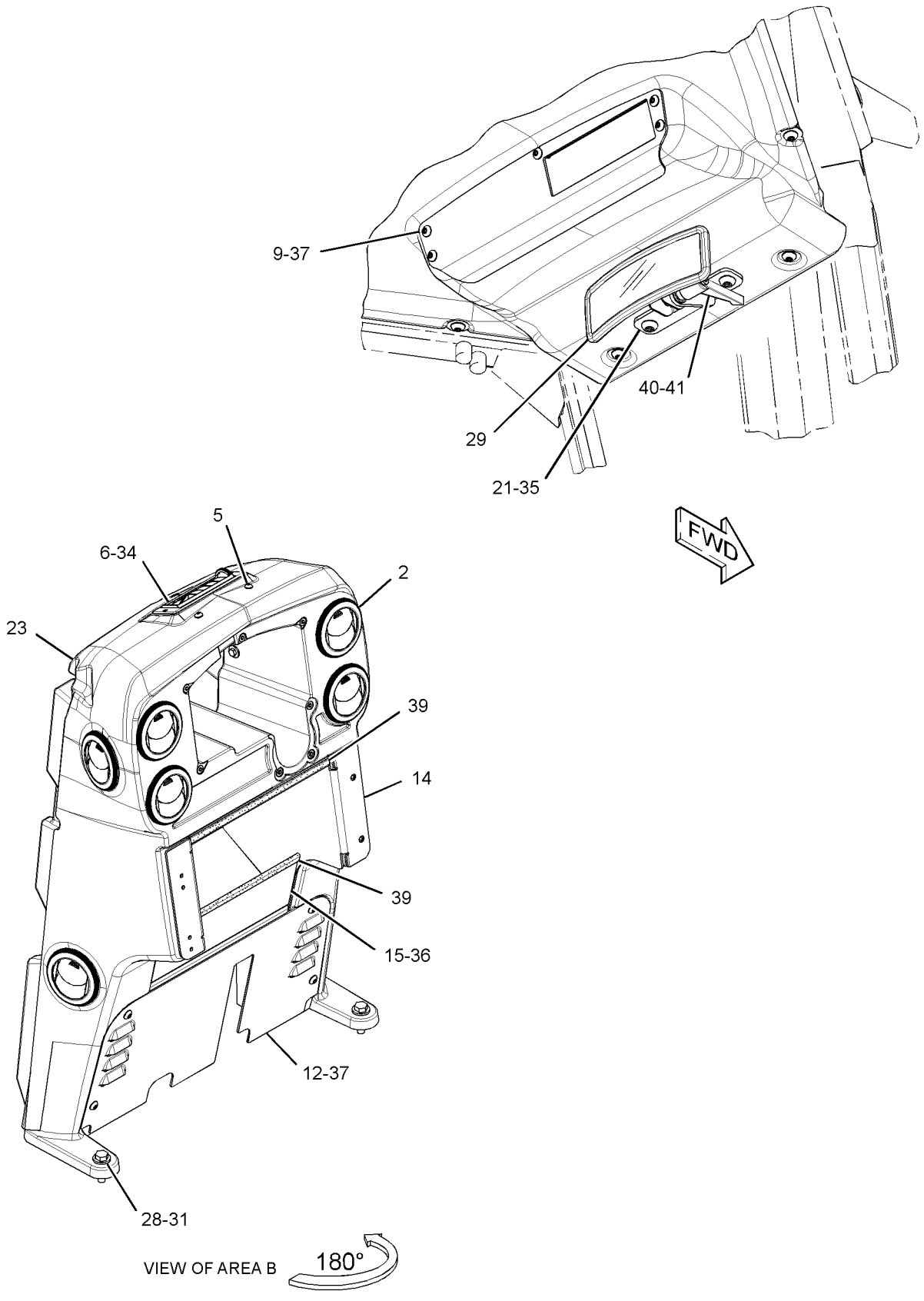

GRAPHIC #2 **<END>** g01743075

OPERATOR STATION

285-0331 COVER GP-CAB–EROPS

S/N: JTD1-UP; FFF1-UP; LLL1-UP
PART OF 296-5756 GRADE CONTROL AR
AN ATTACHMENT
TYPE 3

SMCS-7301 **i04395772**

NOTE	REF NO	GRAPHIC REF	PART NUMBER	QTY	PART NAME 1 2 3 4 5 6 (PRODUCT LEVEL)	SEE PAGE
	1	1	**154-7951**	12	SPACER	
	2	2	**164-8474**	8	LOUVER AS-VENT	
M	3	1	**225-3322**	1	SCREW-TRUSS HEAD (M6X1X10-MM)	
C	4	1	**343-3567**	1	PLATE	
	6	1,2	**104-2091**	4	SCREW-FLAT HEAD (6-20X0.5-IN)	
	8	1	**255-4233**	1	HEADLINER	
	9	2	**255-8384**	1	COVER-RADIO	
	10	1	**255-8386**	1	COVER (WIPER)	
	11	1	**272-5584**	1	FILM-INSTRUCTION (BULLDOZER CONTROL)	
	12	2	**314-3016**	1	PLATE	
	13	1	**314-3017**	1	PLATE	
	14	2	**314-3018**	1	BOX AS	
	15	2	**314-3024**	1	PLATE	
C	16	1	**343-3566**	1	CONSOLE AS (RH)	
M		1	**297-1466**	11	INSERT-THREADED (M6X1-THD)	
Y	17	1	**314-3003**	1	CONSOLE GP (LH)	689
	18	1	**311-5950**	1	FLOOR MAT-REAR	
	19	1	**284-3754**	1	FLOOR MAT-FRONT	
	20	1	**288-0884**	1	COVER-POST	
	21	2	**281-4007**	1	BRACKET AS	
	22	1	**314-3025**	2	SCREW-THUMB (M6X1X16-MM)	
	23	2	**314-3000**	1	DASH AS	
M		2	**297-1465**	7	INSERT-THREADED (M5X0.8-THD)	
M		2	**297-1466**	14	INSERT-THREADED (M6X1-THD)	
M	24	1	**127-2170**	15	SCREW-TRUSS HEAD (M8X1.25X20-MM)	
M	25	1	**128-2136**	4	SCREW-TRUSS HEAD (M6X1X16-MM)	
	26	1	**275-6710**	2	RETAINER	
	27	1	**9X-6165**	2	WASHER (6.5X22X2.5-MM THK)	
	28	1,2	**7X-7729**	13	WASHER (11X25X3-MM THK)	
	29	2	**283-9909**	1	MIRROR AS	
M	30	1	**8T-4133**	2	NUT (M10X1.5-THD)	
M	31	1,2	**8T-4186**	7	BOLT (M10X1.5X40-MM)	
M	32	1	**5C-9553**	4	BOLT (M6X1X16-MM)	
	33	1	**5P-4115**	4	WASHER-HARD (7.2X19X2-MM THK)	
	34	1,2	**8Y-6388**	2	LOUVER AS-VENT	
M	35	1,2	**9X-2040**	7	SCREW-TRUSS HEAD (M10X1.5X25-MM)	
M	36	1,2	**9X-2042**	7	SCREW-TRUSS HEAD (M6X1X12-MM)	
M	37	1,2	**9X-2045**	11	SCREW-TRUSS HEAD (M6X1X20-MM)	
D	38	1	**5P-5639**		SEAL (0.1-M)	
E	39	2	**8C-7332**		TRIM-EDGE (28-CM EACH)	
	40	2	**164-0850**	1	LEVER	
	41	2	**8T-4121**	1	WASHER-HARD (11X21X2.5-MM THK)	
	42	1	**8T-4205**	1	WASHER-HARD (7.2X14.5X2-MM THK)	

C-CHANGE FROM PREVIOUS TYPE
D-ORDER BY THE METER
E-ORDER BY THE CENTIMETER
M-METRIC PART
Y-SEPARATE ILLUSTRATION

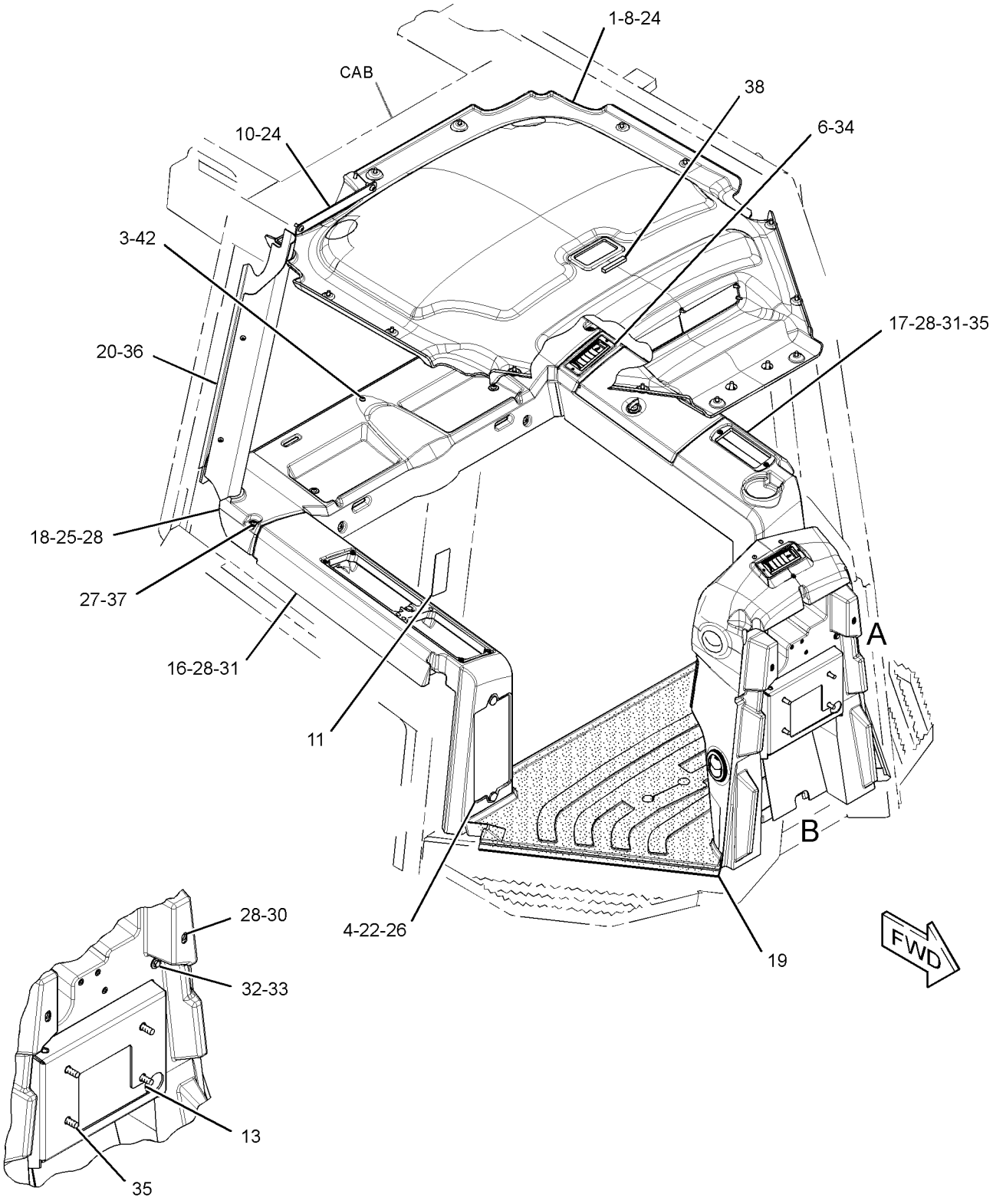

VIEW OF AREA A

REFER TO ALL ILLUSTRATIONS OF THIS GROUP FOR AUXILIARY VIEWS

GRAPHIC #1

g02545876

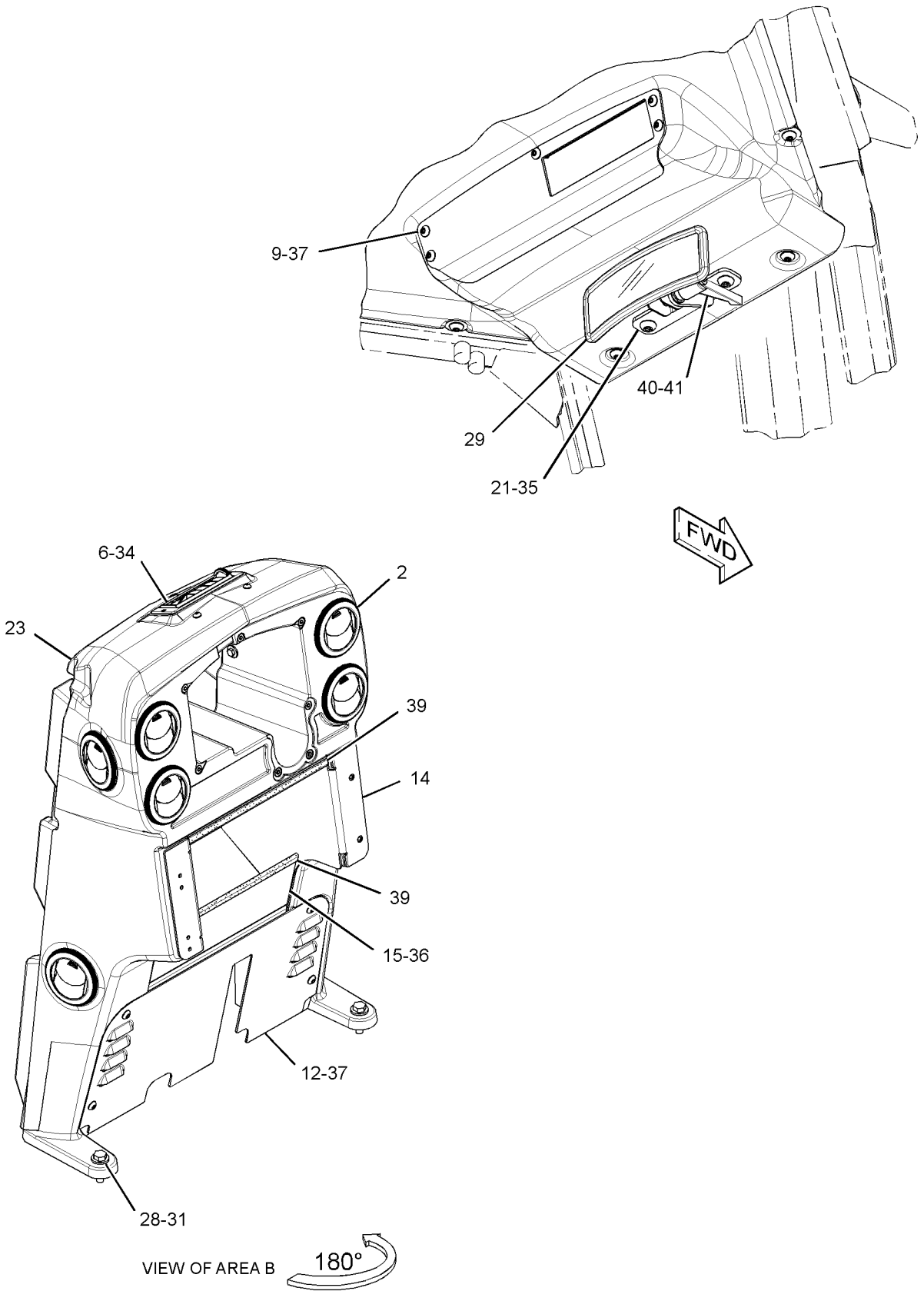

GRAPHIC #2 **<END>** g02545877

OPERATOR STATION

269-7665 COVER GP-CONSOLE–STANDARD

S/N: JTD1-UP; FFF1-UP; LLL1-UP
PART OF 264-4540 HYDRAULIC AR
AN ATTACHMENT

SMCS-5258 **i03630961**

NOTE	REF NO	GRAPHIC REF	PART NUMBER	QTY	PART NAME 1 2 3 4 5 6 (PRODUCT LEVEL)	SEE PAGE
	1	1	**251-4056**	1	PLATE	
M	2	1	**9X-2045**	4	SCREW-TRUSS HEAD (M6X1X20-MM)	

M-METRIC PART

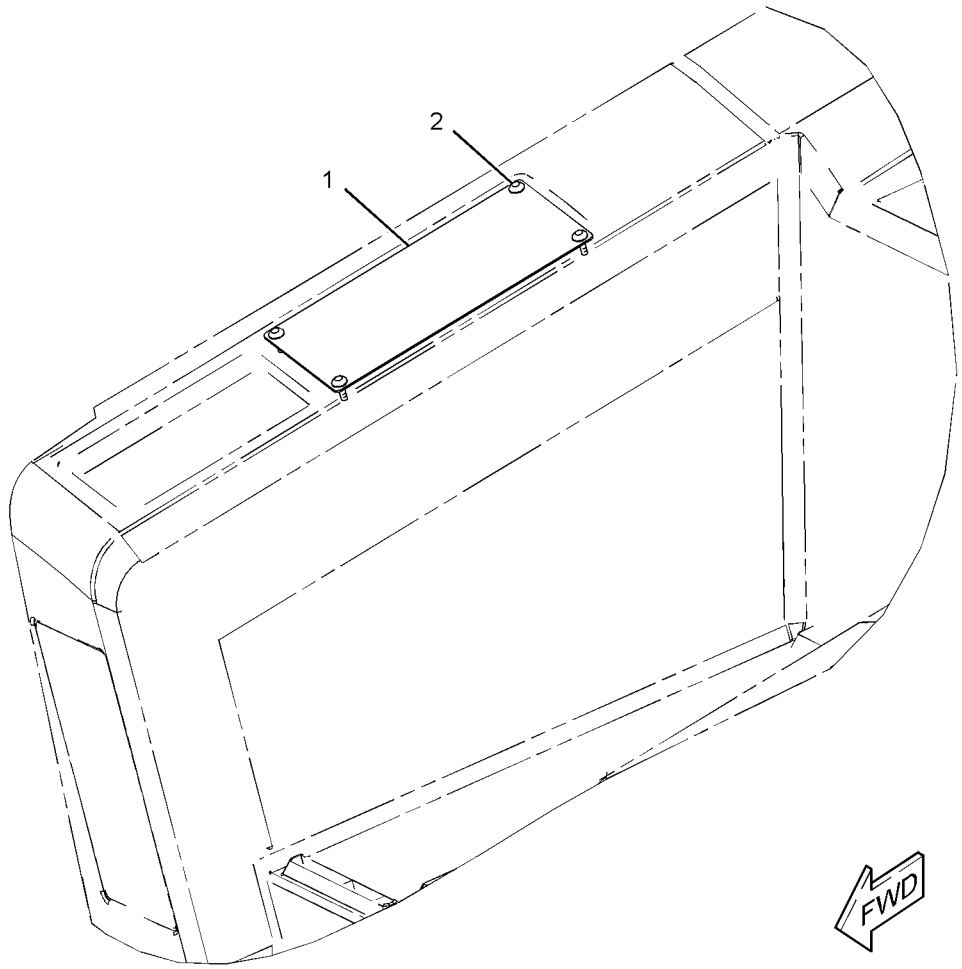

GRAPHIC #1 **<END>** g01948602

OPERATOR STATION

285-0330 COVER GP-CONSOLE—OROPS

S/N: JTD1-UP; FFF1-UP; LLL1-UP
PART OF 296-5755 GRADE CONTROL AR
AN ATTACHMENT
TYPE 1

SMCS-5258 **i03603120**

NOTE	REF NO	GRAPHIC REF	PART NUMBER	QTY	PART NAME 1 2 3 4 5 6 (PRODUCT LEVEL)	SEE PAGE
	1	1	**164-0850**	1	LEVER	
	2	1	**164-8474**	4	LOUVER AS-VENT	
M	3	1	**225-3322**	1	SCREW-TRUSS HEAD (M6X1X10-MM)	
	4	1	**226-0331**	1	CAM-LOCK	
	5	1	**314-3009**	1	PLATE	
	7	1	**314-3015**	1	PLATE	
	8	1	**272-5584**	1	FILM-INSTRUCTION (BULLDOZER CONTROL)	
	9	1	**314-3016**	1	PLATE	
	10	1	**314-3017**	1	PLATE	
	11	1	**314-3019**	1	GUARD GP-VANDALISM	
	12	1	**314-3021**	1	PLATE	
	13	1	**281-4004**	1	HEADLINER	
	14	1	**281-4007**	1	BRACKET AS	
	15	1	**283-9902**	1	HANDLE AS	
	16	1	**283-9909**	1	MIRROR AS	
	17	1	**314-3002**	1	CONSOLE AS (RH)	
M		1	**297-1466**	11	INSERT-THREADED (M6X1-THD)	
	18	1	**311-5950**	1	FLOOR MAT-REAR	
	19	1	**284-3754**	1	FLOOR MAT-FRONT	
	20	1	**288-0884**	1	COVER-POST	
	21	1	**314-3025**	2	THUMBSCREW (M6X1X16-MM)	
Y	22	1	**314-3004**	1	CONSOLE GP (LH)	691
	23	1	**314-3001**	1	DASH AS	
M		1	**297-1465**	11	INSERT-THREADED (M5X0.8-THD)	
M		1	**297-1466**	13	INSERT-THREADED (M6X1-THD)	
M	24	1	**128-2136**	4	SCREW-TRUSS HEAD (M6X1X16-MM)	
	25	1	**198-9706**	4	SCREW-TRUSS HEAD (M5X0.8X16-MM)	
	26	1	**275-6710**	2	RETAINER	
M	28	1	**5C-9553**	4	BOLT (M6X1X16-MM)	
	29	1	**5P-4115**	4	WASHER-HARD (7.2X19X2-MM THK)	
J	30	1	**5P-9000**	1	LOCK AS-CYLINDER	
	31	1	**7X-7729**	13	WASHER (11X25X3-MM THK)	
	32	1	**8T-4121**	1	WASHER-HARD (11X21X2.5-MM THK)	
M	33	1	**8T-4133**	2	NUT (M10X1.5-THD)	
M	34	1	**8T-4186**	7	BOLT (M10X1.5X40-MM)	
	35	1	**8T-4223**	1	WASHER-HARD (13.5X25.5X3-MM THK)	
M	36	1	**9X-2040**	7	SCREW-TRUSS HEAD (M10X1.5X25-MM)	
M	37	1	**9X-2042**	7	SCREW-TRUSS HEAD (M6X1X12-MM)	
M	38	1	**9X-2045**	6	SCREW-TRUSS HEAD (M6X1X20-MM)	
E	39	1	**8C-7332**		TRIM-EDGE (29-CM)	
	40	1	**9X-6165**	2	WASHER (6.5X22X2.5-MM THK)	
	41	1	**8T-4205**	1	WASHER-HARD (7.2X14.5X2-MM THK)	
	42	1	**325-0701**	1	BRACKET	

E-ORDER BY THE CENTIMETER
J-REQUIRES CORPORATE KEY
M-METRIC PART
Y-SEPARATE ILLUSTRATION

285-0330 **COVER GP-CONSOLE** *(contd.)* **i03603120**

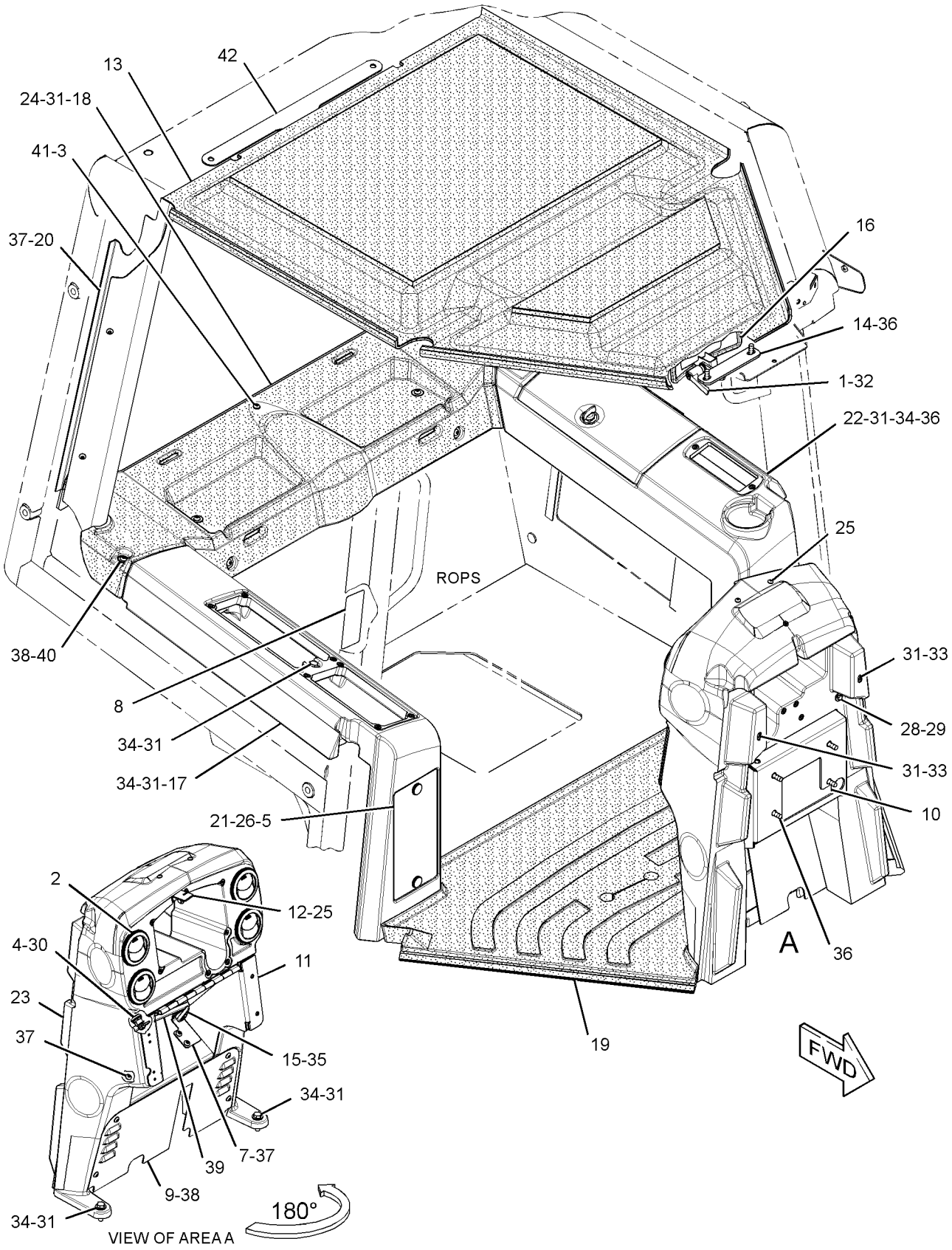

GRAPHIC #1 **<END>** g01734914

OPERATOR STATION

285-0330 COVER GP-CONSOLE–OROPS

S/N: JTD1-UP; FFF1-UP; LLL1-UP
PART OF 296-5755 GRADE CONTROL AR
AN ATTACHMENT
TYPE 2

SMCS-5258 **i04395790**

NOTE	REF NO	GRAPHIC REF	PART NUMBER	QTY	PART NAME 1 2 3 4 5 6 (PRODUCT LEVEL)	SEE PAGE
	1	1	**164-0850**	1	LEVER	
	2	1	**164-8474**	4	LOUVER AS-VENT	
M	3	1	**225-3322**	1	SCREW-TRUSS HEAD (M6X1X10-MM)	
	4	1	**226-0331**	1	CAM-LOCK	
C	5	1	**343-3567**	1	PLATE	
	7	1	**314-3015**	1	PLATE	
	8	1	**272-5584**	1	FILM-INSTRUCTION (BULLDOZER CONTROL)	
	9	1	**314-3016**	1	PLATE	
	10	1	**314-3017**	1	PLATE	
	11	1	**314-3019**	1	GUARD GP-VANDALISM	
	12	1	**314-3021**	1	PLATE	
	13	1	**281-4004**	1	HEADLINER	
	14	1	**281-4007**	1	BRACKET AS	
	15	1	**283-9902**	1	HANDLE AS	
	16	1	**283-9909**	1	MIRROR AS	
C	17	1	**343-3566**	1	CONSOLE AS (RH)	
M		1	**297-1466**	11	INSERT-THREADED (M6X1-THD)	
	18	1	**311-5950**	1	FLOOR MAT-REAR	
	19	1	**284-3754**	1	FLOOR MAT-FRONT	
	20	1	**288-0884**	1	COVER-POST	
	21	1	**314-3025**	2	SCREW-THUMB (M6X1X16-MM)	
Y	22	1	**314-3004**	1	CONSOLE GP (LH)	691
	23	1	**314-3001**	1	DASH AS	
M		1	**297-1465**	9	INSERT-THREADED (M5X0.8-THD)	
M		1	**297-1466**	14	INSERT-THREADED (M6X1-THD)	
M	24	1	**128-2136**	4	SCREW-TRUSS HEAD (M6X1X16-MM)	
C	25	1	**198-9706**	2	SCREW-TRUSS HEAD (M5X0.8X16-MM)	
	26	1	**275-6710**	2	RETAINER	
M	28	1	**5C-9553**	4	BOLT (M6X1X16-MM)	
	29	1	**5P-4115**	4	WASHER-HARD (7.2X19X2-MM THK)	
J	30	1	**5P-9000**	1	LOCK AS-CYLINDER	
	31	1	**7X-7729**	13	WASHER (11X25X3-MM THK)	
	32	1	**8T-4121**	1	WASHER-HARD (11X21X2.5-MM THK)	
M	33	1	**8T-4133**	2	NUT (M10X1.5-THD)	
M	34	1	**8T-4186**	7	BOLT (M10X1.5X40-MM)	
	35	1	**8T-4223**	1	WASHER-HARD (13.5X25.5X3-MM THK)	
M	36	1	**9X-2040**	7	SCREW-TRUSS HEAD (M10X1.5X25-MM)	
M	37	1	**9X-2042**	7	SCREW-TRUSS HEAD (M6X1X12-MM)	
M	38	1	**9X-2045**	6	SCREW-TRUSS HEAD (M6X1X20-MM)	
E	39	1	**8C-7332**		TRIM-EDGE (29-CM)	
	40	1	**9X-6165**	2	WASHER (6.5X22X2.5-MM THK)	
	41	1	**8T-4205**	1	WASHER-HARD (7.2X14.5X2-MM THK)	
	42	1	**325-0701**	1	BRACKET	

C-CHANGE FROM PREVIOUS TYPE
E-ORDER BY THE CENTIMETER
J-REQUIRES CORPORATE KEY
M-METRIC PART
Y-SEPARATE ILLUSTRATION

285-0330 **COVER GP-CONSOLE** *(contd.)* **i04395790**

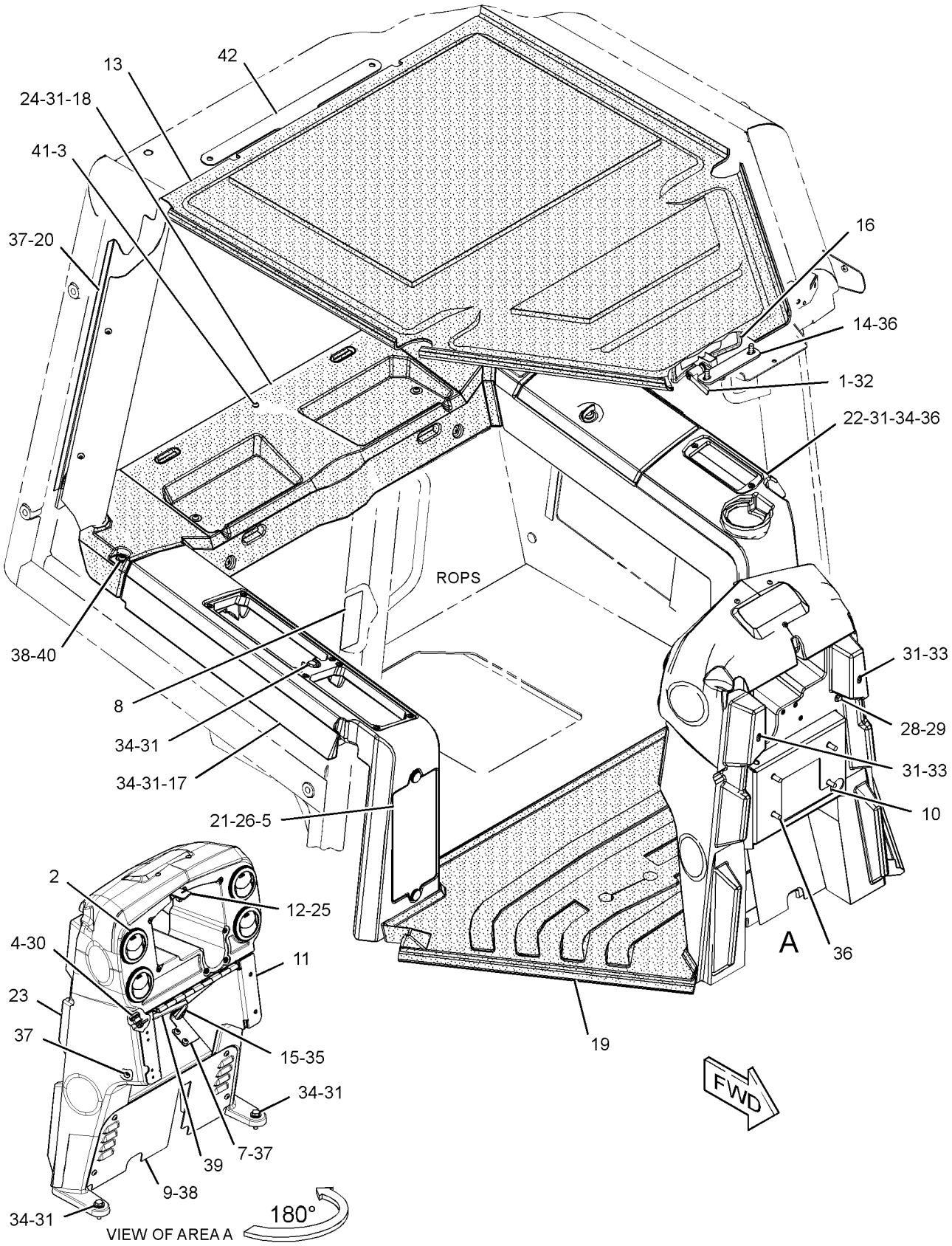

GRAPHIC #1 **<END>** g02545560

OPERATOR STATION

286-0134 DISPLAY GP-MONITOR—CD700C

S/N: JTD1-UP; FFF1-UP; LLL1-UP
PART OF 317-6527 GRADE CONTROL AR, 290-5570, 290-5571, 292-0280, 347-0915, 347-0916 GRADE CONTROL AR-SATELLITE

SMCS-7490 **i04036776**

NOTE	PART NUMBER	QTY	PART NAME 1 2 3 4 5 6 (PRODUCT LEVEL)	SEE PAGE
R	**244-1716**	1	DISPLAY GP-MONITOR (CD700C)	
	283-4426	1	CARD AS-MEMORY (FLASH)	
	194-8031	1	ADAPTER (COMPACT)	
M	**8T-4171**	6	BOLT (M6X1X12-MM)	
	292-0311	1	CASE-CARRYING	
M	**8T-0285**	6	SCREW-MACHINE (M4X0.7X12-MM)	
	9X-8256	6	WASHER (6.6X12X2-MM THK)	
	096-6166	6	WASHER-HARD (4.5X9X1-MM THK)	

M-METRIC PART
R-REMFG PART MAY BE AVAILABLE

<END>

OPERATOR STATION

286-9124 DISPLAY GP-MONITOR—LIGHT BAR

S/N: JTD1-UP; FFF1-UP; LLL1-UP
PART OF 317-6527 GRADE CONTROL AR, 290-5570, 290-5571, 292-0280, 347-0915, 347-0916 GRADE CONTROL AR-SATELLITE

SMCS-7490 **i02618892**

NOTE	REF NO	GRAPHIC REF	PART NUMBER	QTY	PART NAME 1 2 3 4 5 6 (PRODUCT LEVEL)	SEE PAGE
	1	1	**230-5009**	1	RECEPTACLE AS-CONNECTOR (4-PIN)	
	2	1	**9X-3402**	3	SOCKET-CONNECTOR (16-GA TO 18-GA)	
	3	1	**8T-8737**	1	PLUG-SEAL	

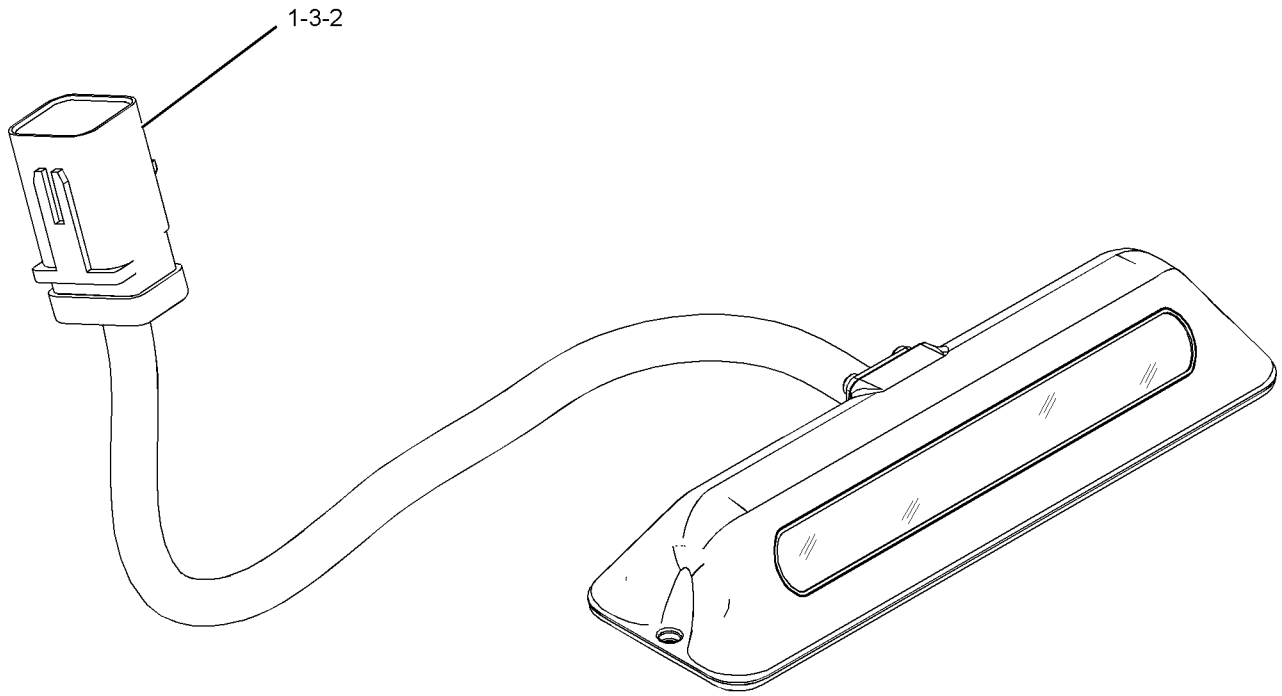

GRAPHIC #1 **<END>** g01313338

OPERATOR STATION

292-0309 DISPLAY GP-MONITOR—CD610

S/N: JTD1-UP; FFF1-UP; LLL1-UP

PART OF 292-0293, 292-0312 GRADE CONTROL AR-LASER

SMCS-7490 **i04025329**

NOTE	PART NUMBER	QTY	PART NAME 1 2 3 4 5 6 (PRODUCT LEVEL)	SEE PAGE
	283-9530	1	DISPLAY GP-MONITOR (CD610)	
	346-4372	1	SOFTWARE	
M	**7X-2619**	6	BOLT (M6X1X10-MM)	
	292-0311	1	CASE-CARRYING	
	8T-4205	6	WASHER-HARD (7.2X14.5X2-MM THK)	

M-METRIC PART

<END>

OPERATOR STATION

255-4271 DOOR GP-CAB—RH

S/N: JTD1-UP; FFF1-684; LLL1-949
PART OF 244-7475 ROPS AR
AN ATTACHMENT

SMCS-7308 **i04403717**

NOTE	REF NO	GRAPHIC REF	PART NUMBER	QTY	PART NAME 1 2 3 4 5 6 (PRODUCT LEVEL)	SEE PAGE
	1	1	**320-8448**	2	CAP-NUT	
	2	1	**249-9061**	1	HARNESS AS-SWITCH (DOOR, RH)	
		1	**9W-0852**	4	PIN-CONNECTOR (14-GA TO 16-GA)	
		1	**230-5008**	1	PLUG AS-CONNECTOR (4-PIN)	
		1	**264-7031**	1	SEAL-CONNECTOR	
		1	**9X-3402**	4	SOCKET-CONNECTOR (16-GA TO 18-GA)	
J	3	1	**252-1862**	1	HANDLE AS (PULL)	
	4	1	**252-1863**	1	GASKET	
	5	1	**255-4256**	1	STRIKER AS (RH)	
Y	6	1	**261-7993**	1	MOTOR GP-WINDOW WIPER	788
	7	1	**262-1997**	1	ARM GP-WINDOW WIPER (DOOR, RH)	
		1	**305-9192**	1	NOZZLE AS-WASHER	
	8	1	**266-9299**	1	FRAME AS-DOOR (RH)	
M		1	**6V-9632**	6	NUT-WELD (M6X1-THD)	
M		1	**8T-3597**	6	NUT-WELD (M12X1.75-THD)	
	9	1	**266-9303**	1	COVER	
	10	1	**269-2887**	1	LATCH AS-DOOR (ROTARY)	
	11	1	**269-2890**	1	CLEVIS	
	12	1	**269-2892**	2	PIN	
	13	1	**272-1622**	1	ROD AS	
		1	**108-5471**	1	CLEVIS	
	14	1	**272-1623**	1	BELLCRANK AS	
E	15	1	**133-3234**		SEAL (420-CM)	
	16	1	**281-4002**	1	PLUG	
	17	1	**281-4136**	1	COVER-LATCH (RH)	
	18	1	**281-4140**	1	WINDOW (DOOR, RH)	
	19	1	**287-0548**	1	STICKER-DOOR SEAL (RH)	
	20	1	**125-8175**	1	BLADE AS-WIPER (450-MM) (DOOR, RH)	
M	21	1	**131-3540**	2	LOCKNUT (M8X1.25-THD)	
	22	1	**102-8804**	1	KIT-RECEPTACLE (4-PIN)	
					(INCLUDES RECEPTACLE AS & WEDGE)	
	24	1	**4D-0012**	1	GROMMET	
	25	1	**4E-1384**	1	BUMPER-CONICAL (STUD)	
M	26	1	**5C-7261**	1	NUT (M8X1.25-THD)	
	27	1	**5P-1076**	6	WASHER-HARD (13.5X30X4-MM THK)	
	28	1	**5P-8441**	1	GROMMET	
	29	1	**6V-7636**	1	PIN AS-SPRING	
M	30	1	**8C-6802**	4	SCREW-FLAT HEAD (6X1X26.3-MM)	
M	31	1	**8T-4183**	6	BOLT (M12X1.75X40-MM)	
	32	1	**8T-4224**	2	WASHER-HARD (8.8X16X2-MM THK)	
M	33	1	**8T-4971**	3	BOLT (M6X1X30-MM)	
	34	1	**8T-5400**	1	CONNECTOR AS	
	35	1	**8T-6902**	2	CLIP	
M	36	1	**9X-2042**	3	SCREW-TRUSS HEAD (M6X1X12-MM)	
M	37	1	**9X-2045**	5	SCREW-TRUSS HEAD (M6X1X20-MM)	
	38	1	**9X-8267**	3	WASHER (6.6X12X2-MM THK)	
E	39	1	**144-0195**		HOSE (26-CM)	
	40	1	**7K-1181**	1	STRAP-CABLE	

E-ORDER BY THE CENTIMETER
J-REQUIRES CORPORATE KEY
M-METRIC PART
Y-SEPARATE ILLUSTRATION

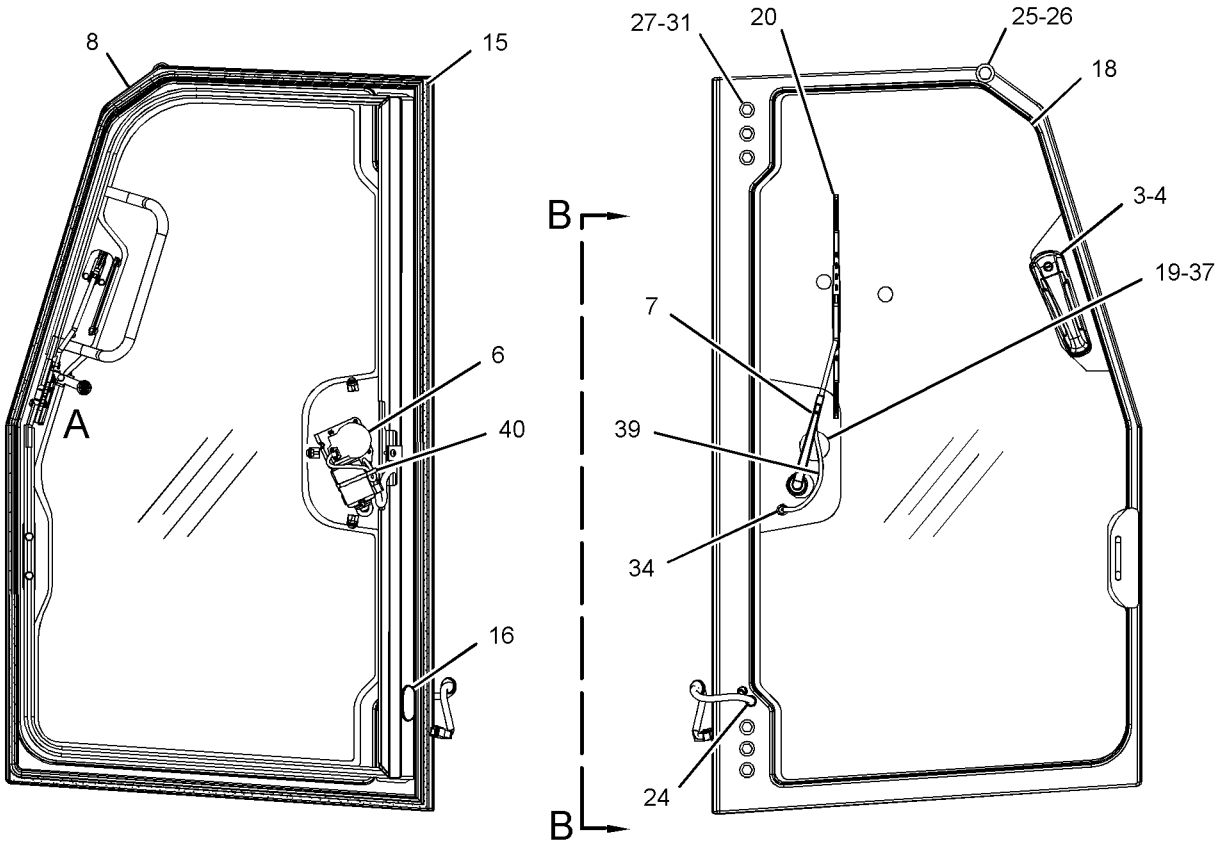

LEFT SIDE VIEW
(COVERS REMOVED FOR CLARITY)

RIGHT SIDE VIEW

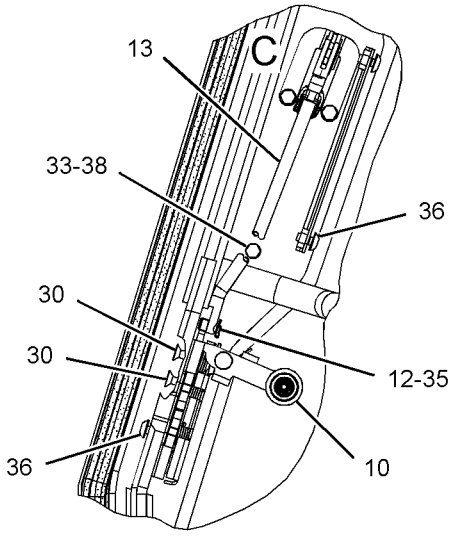

VIEW OF AREA A

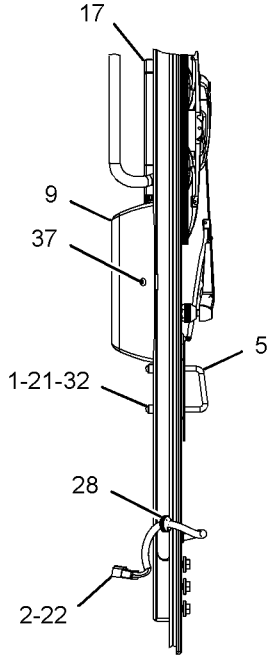

VIEW B-B

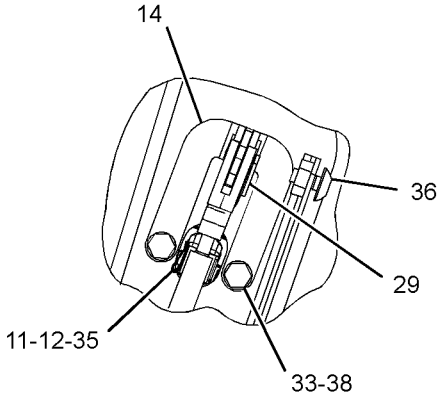

VIEW OF AREA C

GRAPHIC #1

<END>

g01657556

OPERATOR STATION

255-4271 DOOR GP-CAB—RH

S/N: JTD1-UP; FFF685-UP; LLL950-UP
PART OF 244-7475 ROPS AR
AN ATTACHMENT

SMCS-7308 **i04349113**

NOTE	REF NO	GRAPHIC REF	PART NUMBER	QTY	PART NAME 1 2 3 4 5 6 (PRODUCT LEVEL)	SEE PAGE
	1	1	**320-8448**	2	CAP-NUT	
	2	1	**249-9061**	1	HARNESS AS-SWITCH (DOOR, RH)	
		1	**9W-0852**	4	PIN-CONNECTOR (14-GA TO 16-GA)	
		1	**230-5008**	1	PLUG AS-CONNECTOR (4-PIN)	
		1	**264-7031**	1	SEAL-CONNECTOR	
		1	**9X-3402**	4	SOCKET-CONNECTOR (16-GA TO 18-GA)	
J	3	1	**252-1862**	1	HANDLE AS (PULL)	
	4	1	**252-1863**	1	GASKET	
	5	1	**255-4256**	1	STRIKER AS (RH)	
Y	6	1	**261-7993**	1	MOTOR GP-WINDOW WIPER	788
	7	1	**262-1997**	1	ARM GP-WINDOW WIPER (DOOR, RH)	
		1	**305-9192**	1	NOZZLE AS-WASHER	
	8	1	**266-9299**	1	FRAME AS-DOOR (RH)	
M		1	**6V-9632**	6	NUT-WELD (M6X1-THD)	
M		1	**8T-3597**	6	NUT-WELD (M12X1.75-THD)	
	9	1	**266-9303**	1	COVER	
	10	1	**269-2887**	1	LATCH AS-DOOR (ROTARY)	
C	11	1	**355-7354**	1	CLEVIS	
C	12	1	**269-2892**	1	PIN	
C	14	1	**323-6147**	1	LINKAGE AS (RH)	
E	15	1	**133-3234**		SEAL (430-CM)	
	16	1	**281-4002**	1	PLUG	
	17	1	**281-4136**	1	COVER-LATCH (RH)	
	18	1	**281-4140**	1	WINDOW (DOOR, RH)	
	19	1	**287-0548**	1	STICKER-DOOR SEAL	
	20	1	**125-8175**	1	BLADE AS-WIPER (450-MM) (DOOR, RH)	
M	21	1	**131-3540**	2	LOCKNUT (M8X1.25-THD)	
	22	1	**102-8804**	1	KIT-RECEPTACLE (4-PIN)	
					(INCLUDES RECEPTACLE AS & WEDGE)	
	24	1	**4D-0012**	1	GROMMET	
	25	1	**4E-1384**	1	BUMPER-CONICAL (STUD)	
M	26	1	**5C-7261**	1	NUT (M8X1.25-THD)	
	27	1	**5P-1076**	6	WASHER-HARD (13.5X30X4-MM THK)	
	28	1	**5P-8441**	1	GROMMET	
M	30	1	**8C-6802**	4	SCREW-FLAT HEAD (6X1X26.3-MM)	
M	31	1	**8T-4183**	6	BOLT (M12X1.75X40-MM)	
	32	1	**8T-4224**	2	WASHER-HARD (8.8X16X2-MM THK)	
CM	33	1	**8T-4971**	2	BOLT (M6X1X30-MM)	
	34	1	**8T-5400**	1	CONNECTOR AS	
C	35	1	**8T-6902**	1	CLIP	
M	36	1	**9X-2042**	3	SCREW-TRUSS HEAD (M6X1X12-MM)	
M	37	1	**9X-2045**	5	SCREW-TRUSS HEAD (M6X1X20-MM)	
C	38	1	**9X-8267**	2	WASHER (6.6X12X2-MM THK)	
E	39	1	**144-0195**		HOSE (26-CM)	
	40	1	**7K-1181**	1	STRAP-CABLE	
CM	41	1	**136-1613**	1	BOLT-SOCKET HEAD (M6X1X30-MM)	

C-CHANGE FROM PREVIOUS TYPE
E-ORDER BY THE CENTIMETER
J-REQUIRES CORPORATE KEY
M-METRIC PART
Y-SEPARATE ILLUSTRATION

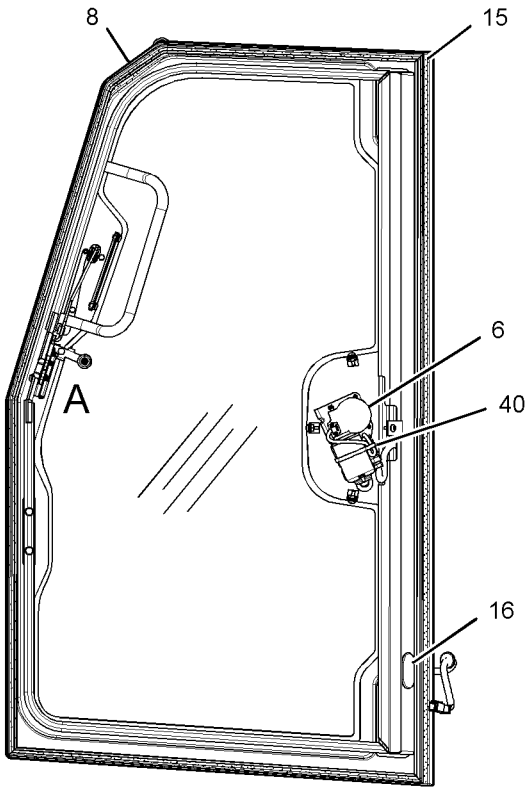

LEFT SIDE VIEW
(COVERS REMOVED FOR CLARITY)

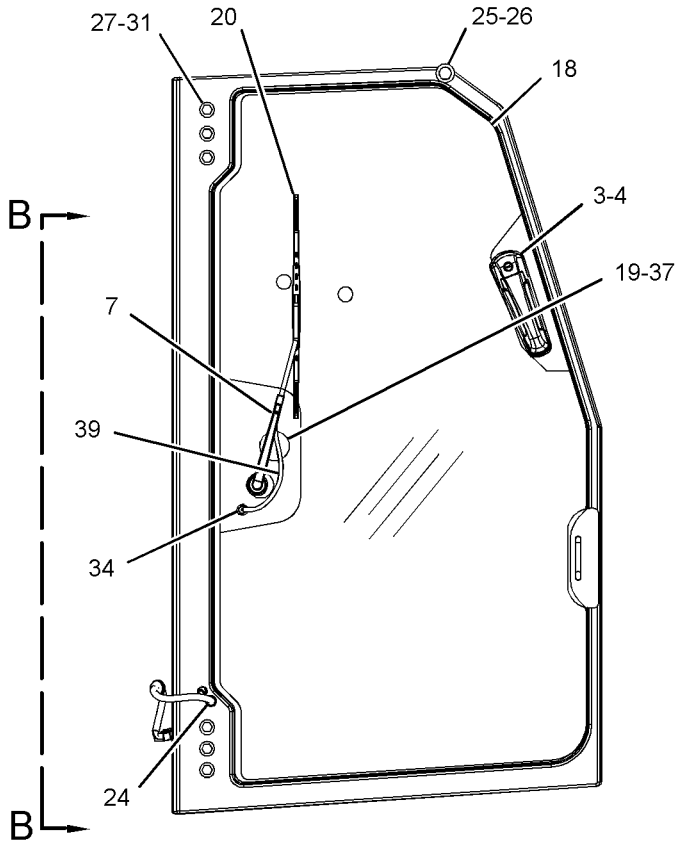

RIGHT SIDE VIEW

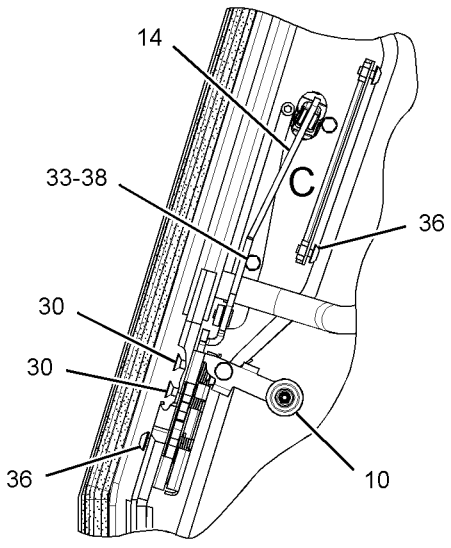

VIEW OF AREA A

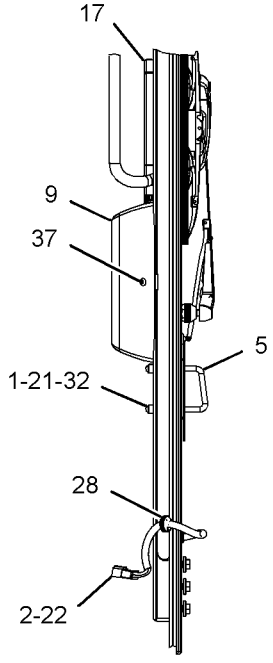

VIEW B-B

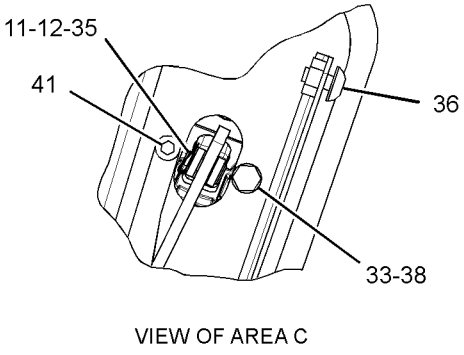

VIEW OF AREA C

GRAPHIC #1

<END>

g02509778

OPERATOR STATION

255-4272 DOOR GP-CAB—LH

S/N: JTD1-UP; FFF1-UP; LLL1-UP
PART OF 244-7475 ROPS AR
AN ATTACHMENT
TYPE 1

SMCS-7308 **i03635054**

NOTE	REF NO	GRAPHIC REF	PART NUMBER	QTY	PART NAME 1 2 3 4 5 6 (PRODUCT LEVEL)	SEE PAGE
	1	1	**320-8448**	2	CAP-NUT	
	2	2	**247-6613**	1	FRAME AS-DOOR (LH)	
M		1	**6V-9632**	6	NUT-WELD (M6X1-THD)	
M		1	**8T-3597**	6	NUT-WELD (M12X1.75-THD)	
	3	2	**249-9060**	1	HARNESS AS-SWITCH (DOOR, LH)	
		2	**9W-0852**	4	PIN-CONNECTOR (14-GA TO 16-GA)	
		2	**230-5008**	1	PLUG AS-CONNECTOR (4-PIN)	
		2	**264-7031**	1	SEAL-CONNECTOR	
		2	**9X-3402**	4	SOCKET-CONNECTOR (16-GA TO 18-GA)	
J	4	1	**252-1862**	1	HANDLE AS (PULL)	
	5	1	**252-1863**	1	GASKET	
	6	1	**255-4255**	1	STRIKER AS (LH)	
Y	7	2	**261-7992**	1	MOTOR GP-WINDOW WIPER	787
	8	1	**262-1998**	1	ARM GP-WINDOW WIPER (DOOR, LH)	
		1	**305-9192**	1	NOZZLE AS-WASHER	
	9	2	**266-9303**	1	COVER	
	10	2	**269-2888**	1	LINK GP-ADJUSTABLE	
		2	**108-5471**	1	CLEVIS	
	11	2	**269-2890**	1	CLEVIS	
	12	2	**269-2892**	2	PIN	
	13	2	**272-1623**	1	BELLCRANK AS	
	14	2	**133-3234**	1	SEAL	
	15	2	**281-4002**	1	PLUG	
	16	2	**281-4137**	1	COVER-LATCH	
	17	1	**281-4141**	1	WINDOW	
	18	1	**287-0548**	1	STICKER-DOOR SEAL	
	19	1	**125-8175**	1	BLADE AS-WIPER (450-MM) (DOOR, LH)	
M	20	1	**131-3540**	2	LOCKNUT (M8X1.25-THD)	
	21	2	**269-2886**	1	LATCH AS-DOOR (ROTARY)	
	22	2	**102-8804**	1	KIT-RECEPTACLE (4-PIN)	
					(INCLUDES RECEPTACLE AS & WEDGE)	
	24	1	**4D-0012**	1	GROMMET	
	25	2	**4E-1384**	1	BUMPER-CONICAL	
M	26	2	**5C-7261**	1	NUT (M8X1.25-THD)	
	27	1	**5P-1076**	6	WASHER-HARD (13.5X30X4-MM THK)	
	28	2	**5P-8441**	1	GROMMET	
	29	2	**6V-7636**	1	PIN AS-SPRING	
M	30	2	**8C-6802**	4	SCREW-FLAT HEAD (6X1X26.3-MM)	
M	31	1	**8T-4183**	6	BOLT (M12X1.75X40-MM)	
	32	1	**8T-4224**	2	WASHER-HARD (8.8X16X2-MM THK)	
M	33	2	**8T-4971**	3	BOLT (M6X1X30-MM)	
	34	1	**8T-5400**	1	CONNECTOR AS	
	35	2	**8T-6902**	2	CLIP	
M	36	2	**9X-2042**	3	SCREW-TRUSS HEAD (M6X1X12-MM)	
M	37	1,2	**9X-2045**	5	SCREW-TRUSS HEAD (M6X1X20-MM)	
	38	2	**9X-8267**	3	WASHER (6.6X12X2-MM THK)	
E	39	1	**144-0195**		HOSE (26-CM)	
	40	2	**7K-1181**	1	STRAP-CABLE	

E-ORDER BY THE CENTIMETER
J-REQUIRES CORPORATE KEY
M-METRIC PART
Y-SEPARATE ILLUSTRATION

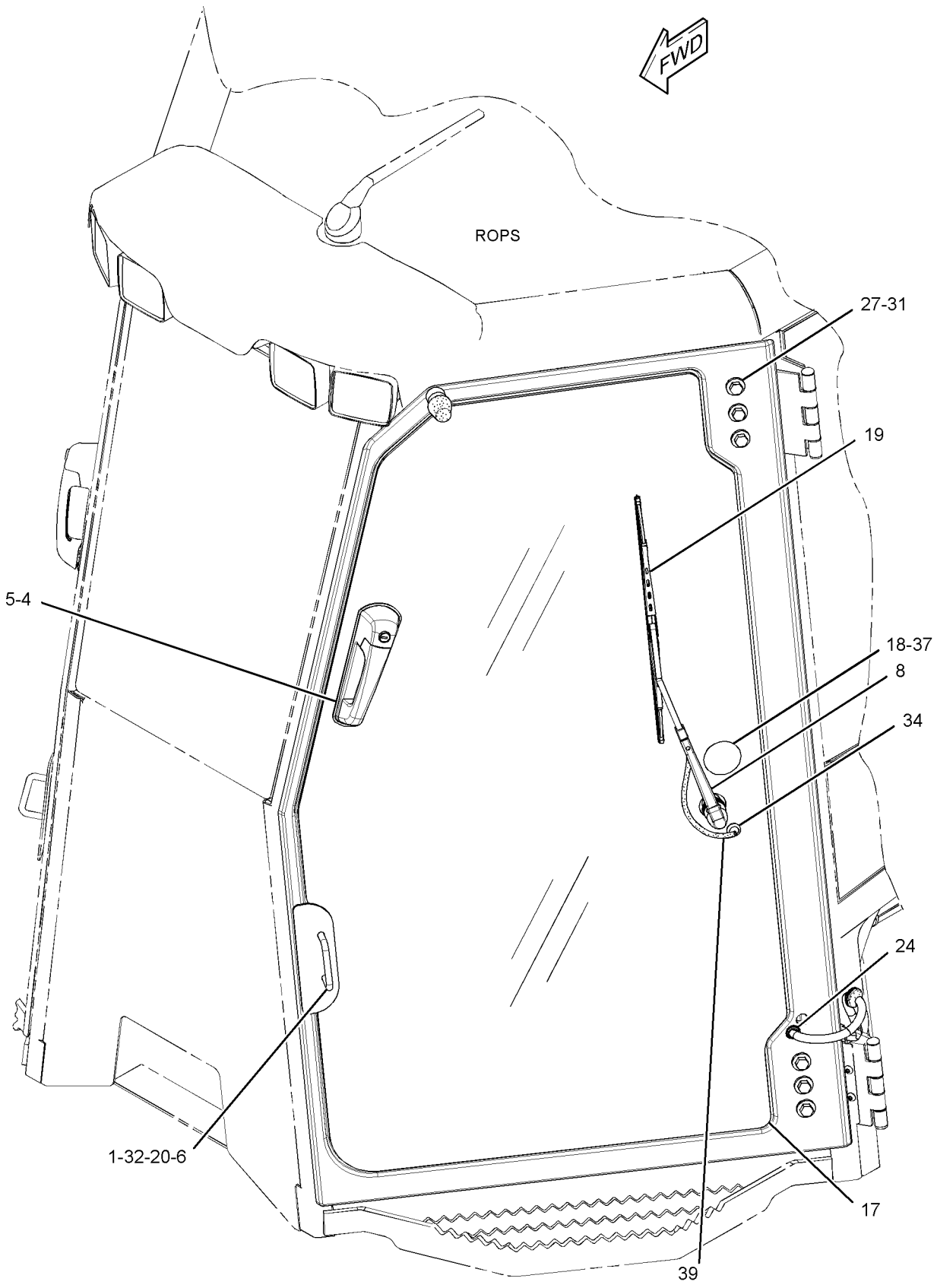

GRAPHIC #1 g01369456

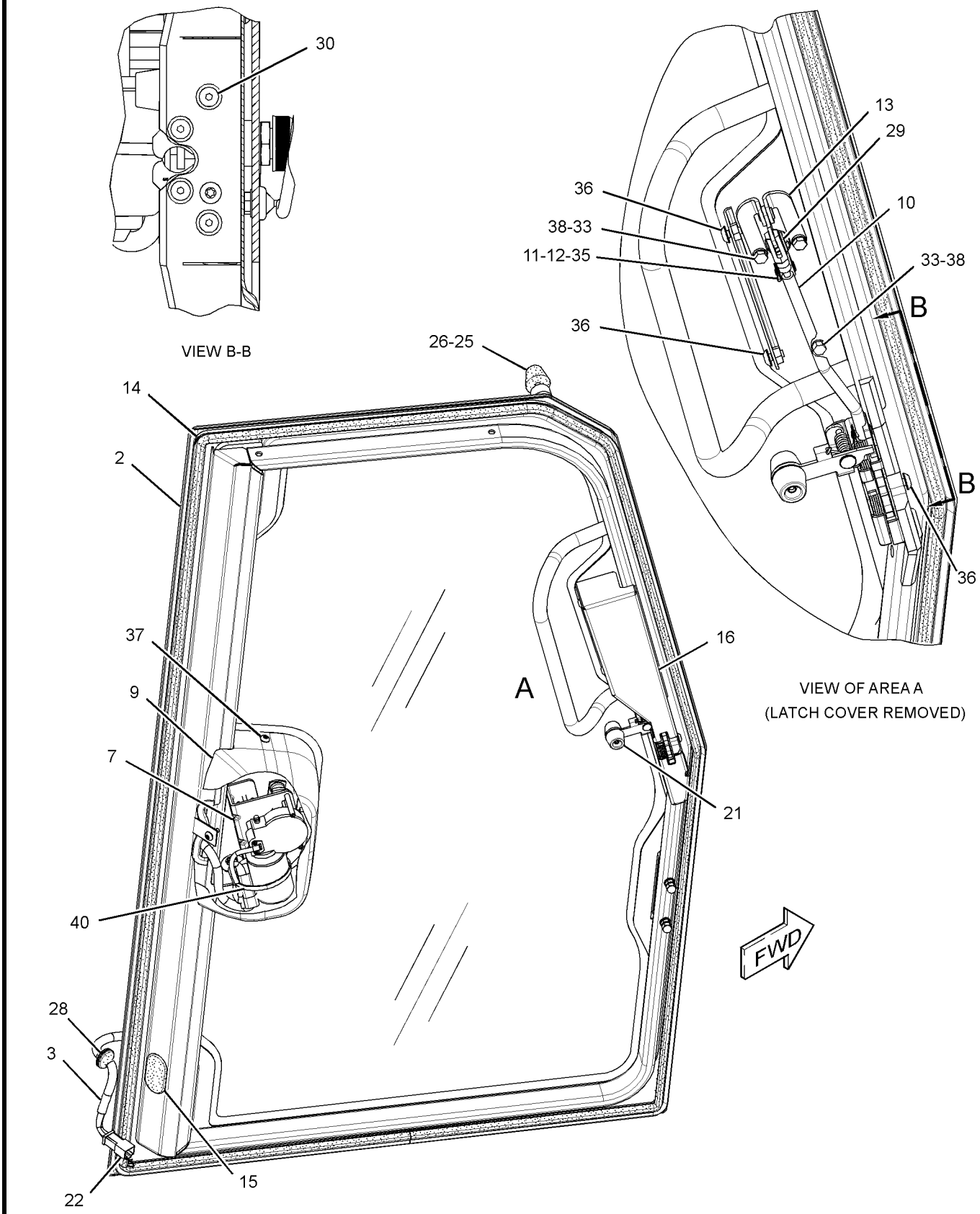

GRAPHIC #2 **<END>** g01376422

OPERATOR STATION

255-4272 DOOR GP-CAB—LH

S/N: JTD1-UP; FFF1-UP; LLL1-UP
PART OF 244-7475 ROPS AR
AN ATTACHMENT
TYPE 2

SMCS-7308 **i04349074**

NOTE	REF NO	GRAPHIC REF	PART NUMBER	QTY	PART NAME 1 2 3 4 5 6 (PRODUCT LEVEL)	SEE PAGE
	1	1	**320-8448**	2	CAP-NUT	
	2	2	**247-6613**	1	FRAME AS-DOOR (LH)	
M		2	**6V-9632**	6	NUT-WELD (M6X1-THD)	
M		2	**8T-3597**	6	NUT-WELD (M12X1.75-THD)	
	3	2	**249-9060**	1	HARNESS AS-SWITCH (DOOR, LH)	
		2	**9W-0852**	4	PIN-CONNECTOR (14-GA TO 16-GA)	
		2	**230-5008**	1	PLUG AS-CONNECTOR (4-PIN)	
		2	**264-7031**	1	SEAL-CONNECTOR	
		2	**9X-3402**	4	SOCKET-CONNECTOR (16-GA TO 18-GA)	
J	4	1	**252-1862**	1	HANDLE AS (PULL)	
	5	1	**252-1863**	1	GASKET	
	6	1	**255-4255**	1	STRIKER AS (LH)	
Y	7	2	**261-7992**	1	MOTOR GP-WINDOW WIPER	787
	8	1	**262-1998**	1	ARM GP-WINDOW WIPER (DOOR, LH)	
		1	**305-9192**	1	NOZZLE AS-WASHER	
	9	2	**266-9303**	1	COVER	
C	11	2	**355-7354**	1	CLEVIS	
C	12	2	**269-2892**	1	PIN	
C	13	2	**323-6148**	1	LINKAGE AS (LH)	
E	14	2	**133-3234**		SEAL (425-CM)	
	15	2	**281-4002**	1	PLUG	
	16	2	**281-4137**	1	COVER-LATCH	
	17	1	**281-4141**	1	WINDOW	
	18	1	**287-0548**	1	STICKER-DOOR SEAL (LH)	
	19	1	**125-8175**	1	BLADE AS-WIPER (450-MM) (DOOR, LH)	
M	20	1	**131-3540**	2	LOCKNUT (M8X1.25-THD)	
	21	2	**269-2886**	1	LATCH AS-DOOR (ROTARY)	
	22	2	**102-8804**	1	KIT-RECEPTACLE (4-PIN)	
					(INCLUDES RECEPTACLE AS & WEDGE)	
	24	1	**4D-0012**	1	GROMMET	
	25	2	**4E-1384**	1	BUMPER-CONICAL	
M	26	2	**5C-7261**	1	NUT (M8X1.25-THD)	
	27	1	**5P-1076**	6	WASHER-HARD (13.5X30X4-MM THK)	
	28	2	**5P-8441**	1	GROMMET	
M	30	2	**8C-6802**	4	SCREW-FLAT HEAD (6X1X26.3-MM)	
M	31	1	**8T-4183**	6	BOLT (M12X1.75X40-MM)	
	32	1	**8T-4224**	2	WASHER-HARD (8.8X16X2-MM THK)	
CM	33	2	**8T-4971**	2	BOLT (M6X1X30-MM)	
	34	1	**8T-5400**	1	CONNECTOR AS	
C	35	2	**8T-6902**	1	CLIP	
M	36	2	**9X-2042**	3	SCREW-TRUSS HEAD (M6X1X12-MM)	
M	37	1,2	**9X-2045**	5	SCREW-TRUSS HEAD (M6X1X20-MM)	
C	38	2	**9X-8267**	2	WASHER (6.6X12X2-MM THK)	
E	39	1	**144-0195**		HOSE (26-CM)	
	40	2	**7K-1181**	1	STRAP-CABLE	
CM	41	2	**136-1613**	1	BOLT-SOCKET HEAD (M6X1X30-MM)	

C-CHANGE FROM PREVIOUS TYPE
E-ORDER BY THE CENTIMETER
J-REQUIRES CORPORATE KEY
M-METRIC PART
Y-SEPARATE ILLUSTRATION

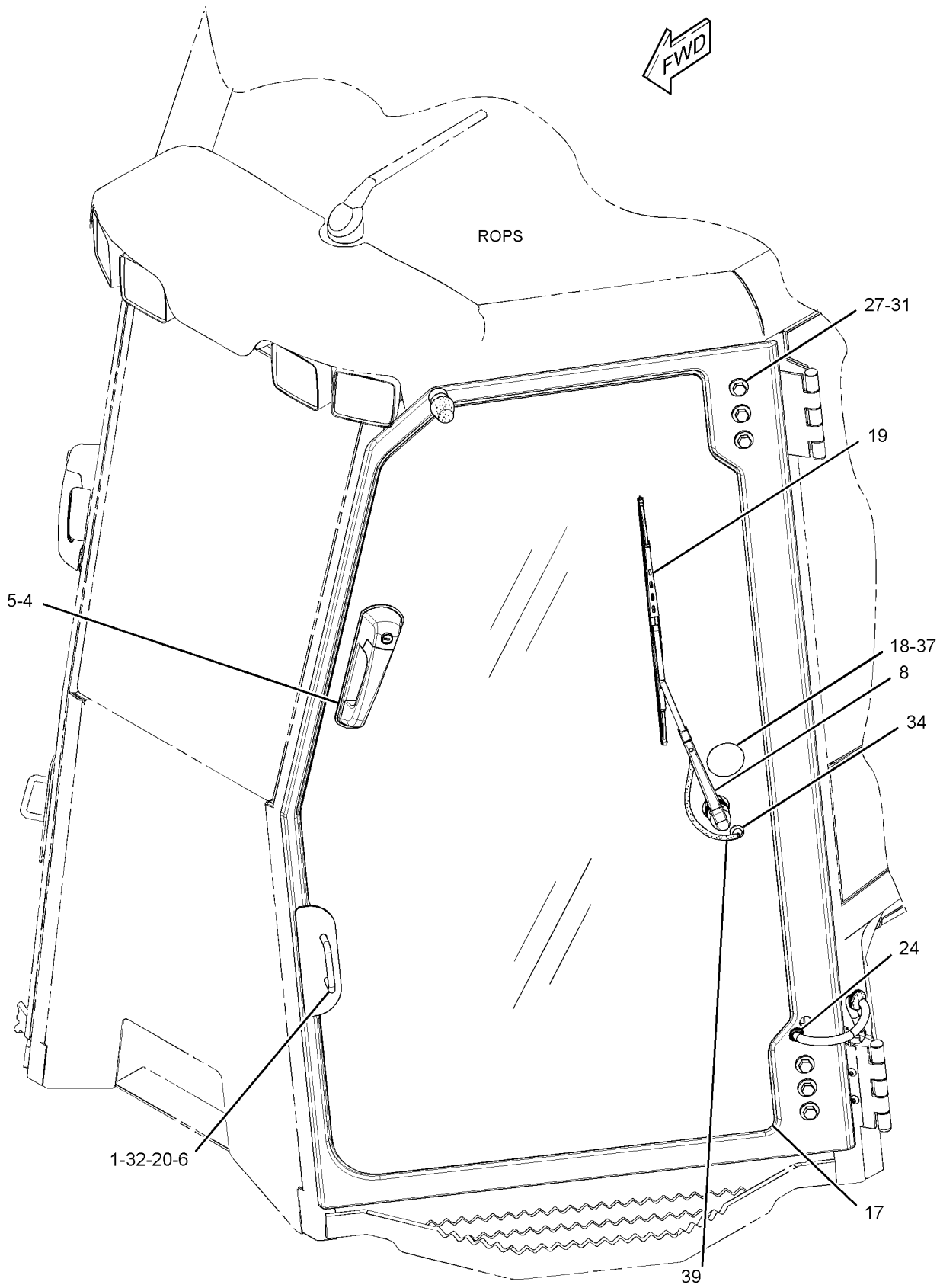

GRAPHIC #1 g02512865

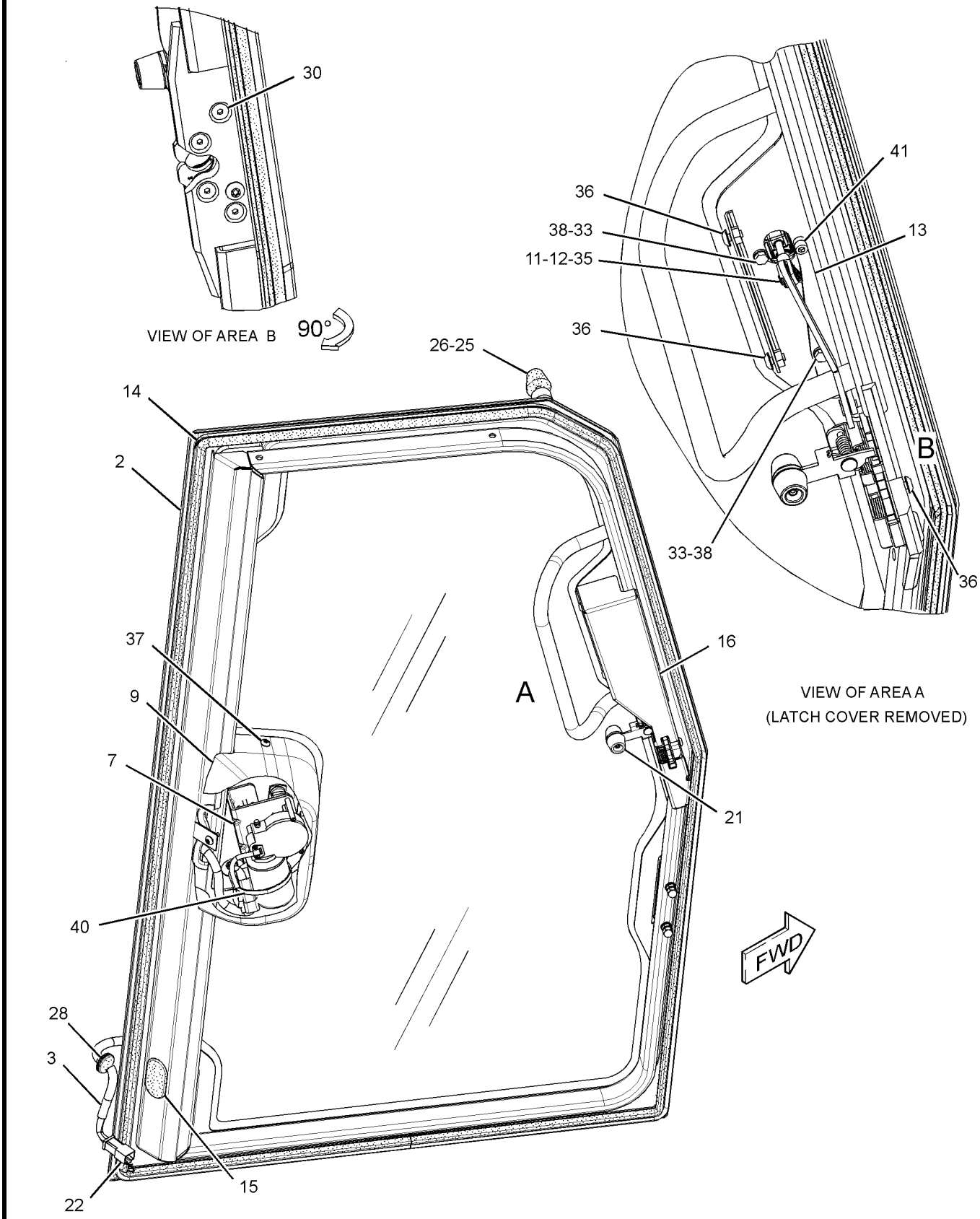

GRAPHIC #2 **<END>** g02512864

OPERATOR STATION

255-4273 DOOR GP-CAB–RH

S/N: JTD1-UP; FFF1-UP; LLL1-UP
PART OF 244-7476 ROPS AR
AN ATTACHMENT
TYPE 1

SMCS-7308 **i04102871**

NOTE	REF NO	GRAPHIC REF	PART NUMBER	QTY	PART NAME 1 2 3 4 5 6 (PRODUCT LEVEL)	SEE PAGE
	1	1	**223-9818**	1	FILM-INSTRUCTION (WINDOW CLEANING, READ OMM)	
	2	1	**249-9061**	1	HARNESS AS-SWITCH (DOOR, RH)	
		1	**9W-0852**	4	PIN-CONNECTOR (14-GA TO 16-GA)	
		1	**230-5008**	1	PLUG AS-CONNECTOR (4-PIN)	
		1	**264-7031**	1	SEAL-CONNECTOR	
		1	**9X-3402**	4	SOCKET-CONNECTOR (16-GA TO 18-GA)	
J	3	1	**252-1862**	1	HANDLE AS (PULL)	
	4	1	**252-1863**	1	GASKET	
	5	1	**255-4256**	1	STRIKER AS (RH)	
Y	6	1	**261-7993**	1	MOTOR GP-WINDOW WIPER	788
	7	1	**262-1997**	1	ARM GP-WINDOW WIPER (RH)	
		1	**305-9192**	1	NOZZLE AS-WASHER	
	8	1	**266-9299**	1	FRAME AS-DOOR (RH)	
M		1	**6V-9632**	6	NUT-WELD (M6X1-THD)	
M		1	**8T-3597**	6	NUT-WELD (M12X1.75-THD)	
	9	1	**266-9303**	1	COVER	
	10	1	**269-2887**	1	LATCH AS-DOOR (ROTARY)	
	11	1	**269-2890**	1	CLEVIS	
	12	1	**269-2892**	2	PIN	
E	13	1	**133-3234**	1	SEAL (425-CM)	
	14	1	**281-4002**	1	PLUG	
	15	1	**281-4136**	1	COVER-LATCH (RH)	
	16	1	**343-3798**	1	WINDOW-RH	
	17	1	**287-0548**	1	STICKER-DOOR SEAL (RH)	
	18	1	**290-6180**	3	SPACER (7X11X5-MM THK)	
	19	1	**125-8175**	1	BLADE AS-WIPER (450-MM) (DOOR, RH)	
M	20	1	**131-3540**	2	LOCKNUT (M8X1.25-THD)	
	21	1	**272-1622**	1	ROD AS	
		1	**108-5471**	1	CLEVIS	
	22	1	**272-1623**	1	BELLCRANK AS	
	23	1	**102-8804**	1	KIT-RECEPTACLE (4-PIN) (INCLUDES RECEPTACLE AS & WEDGE)	
	24	1	**9X-8267**	3	WASHER (6.6X12X2-MM THK)	
	25	1	**4D-0012**	1	GROMMET	
	26	1	**4E-1384**	1	BUMPER-CONICAL	
	27	1	**4I-4872**	2	SPACER (8.6X18X5-MM THK)	
M	28	1	**5C-7261**	1	NUT (M8X1.25-THD)	
	29	1	**5P-1076**	6	WASHER-HARD (13.5X30X4-MM THK)	
	30	1	**5P-8441**	1	GROMMET	
	31	1	**6V-7636**	1	PIN AS-SPRING	
M	32	1	**7X-2533**	3	BOLT (M6X1X35-MM)	
M	33	1	**8C-6802**	4	SCREW-FLAT HEAD (6X1X26.3-MM)	
M	34	1	**8T-4183**	6	BOLT (M12X1.75X40-MM)	
	35	1	**8T-4224**	2	WASHER-HARD (8.8X16X2-MM THK)	
	36	1	**8T-6902**	2	CLIP	
M	37	1	**9X-2042**	3	SCREW-TRUSS HEAD (M6X1X12-MM)	
M	38	1	**9X-2045**	5	SCREW-TRUSS HEAD (M6X1X20-MM)	
E	39	1	**144-0195**		HOSE (26-CM)	
	40	1	**8T-5400**	1	CONNECTOR AS	
	41	1	**7K-1181**	1	STRAP-CABLE	
	42	1	**320-8448**	2	CAP-NUT	

E-ORDER BY THE CENTIMETER
J-REQUIRES CORPORATE KEY
M-METRIC PART
Y-SEPARATE ILLUSTRATION

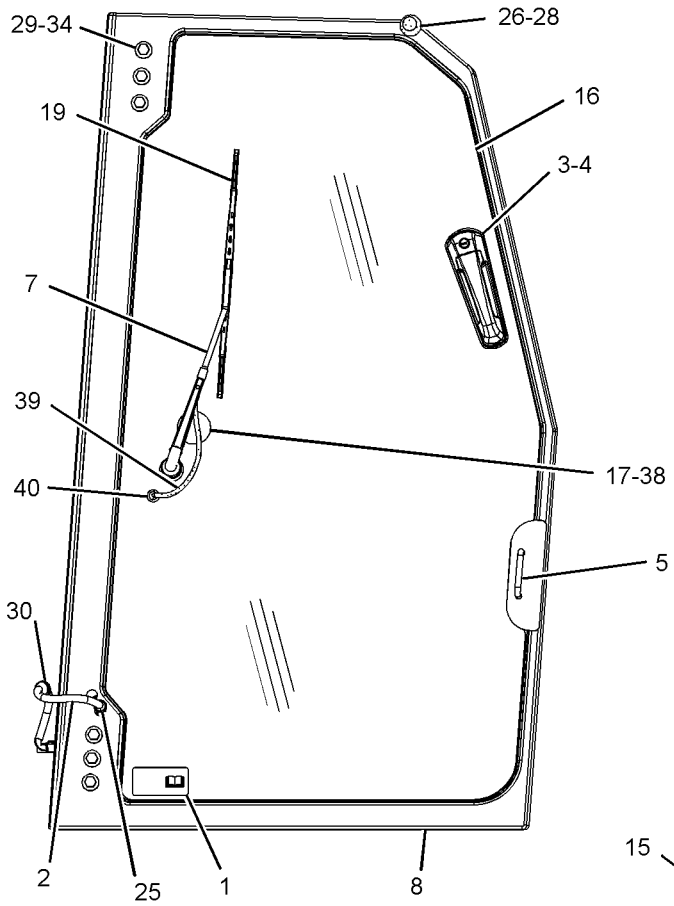

RIGHT SIDE VIEW

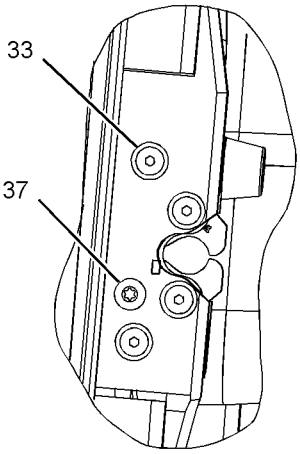

SECTION B-B

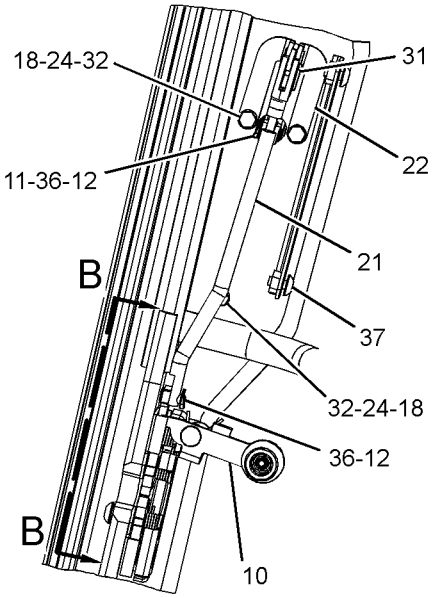

VIEW OF AREA A
(LATCH COVER REMOVED
FOR CLARITY)

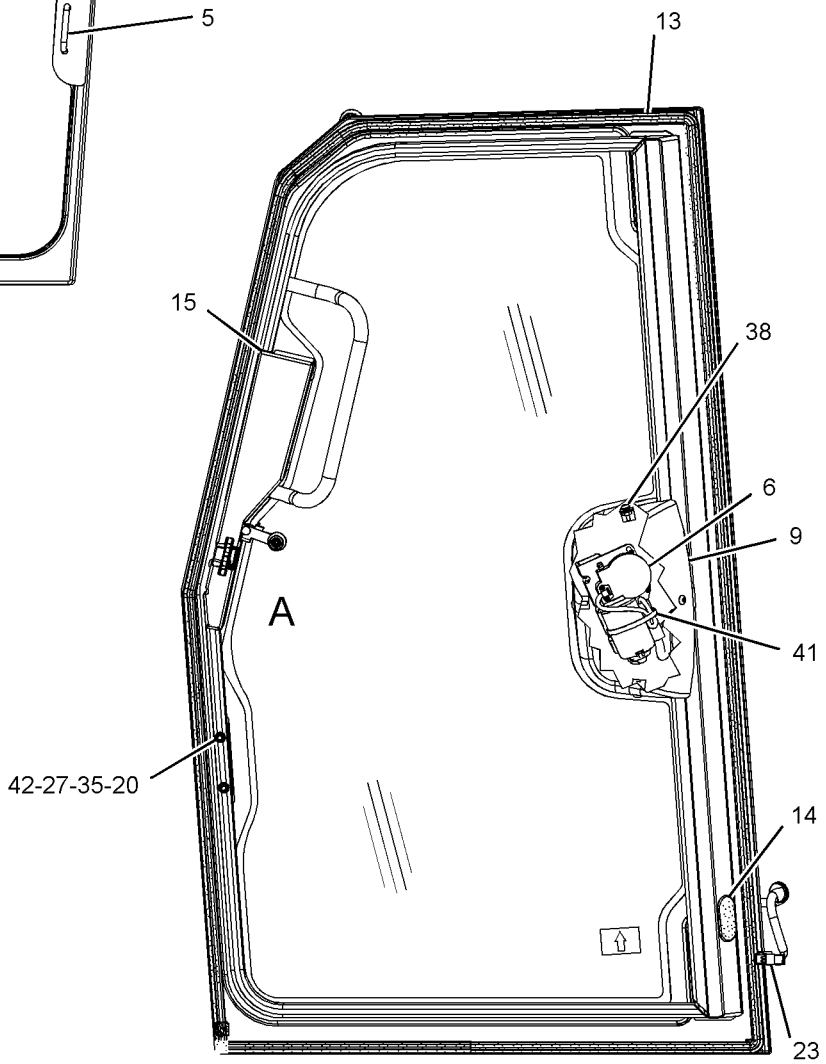

LEFT SIDE VIEW
(INSIDE DOOR)

GRAPHIC #1 **<END>** g01700893

OPERATOR STATION

255-4273 DOOR GP-CAB—RH

S/N: JTD1-UP; FFF1-UP; LLL1-UP
PART OF 244-7476 ROPS AR
AN ATTACHMENT
TYPE 2

SMCS-7308 **i04349029**

NOTE	REF NO	GRAPHIC REF	PART NUMBER	QTY	PART NAME 1 2 3 4 5 6 (PRODUCT LEVEL)	SEE PAGE
	1	1	**223-9818**	1	FILM-INSTRUCTION (WINDOW CLEANING, READ OMM)	
	2	1	**249-9061**	1	HARNESS AS-SWITCH (DOOR, RH)	
		1	**9W-0852**	4	PIN-CONNECTOR (14-GA TO 16-GA)	
		1	**230-5008**	1	PLUG AS-CONNECTOR (4-PIN)	
		1	**264-7031**	1	SEAL-CONNECTOR	
		1	**9X-3402**	4	SOCKET-CONNECTOR (16-GA TO 18-GA)	
J	3	1	**252-1862**	1	HANDLE AS (PULL)	
	4	1	**252-1863**	1	GASKET	
	5	1	**255-4256**	1	STRIKER AS (RH)	
Y	6	2	**261-7993**	1	MOTOR GP-WINDOW WIPER	788
	7	1	**262-1997**	1	ARM GP-WINDOW WIPER (RH)	
		1	**305-9192**	1	NOZZLE AS-WASHER	
	8	1	**266-9299**	1	FRAME AS-DOOR (RH)	
M		1	**6V-9632**	6	NUT-WELD (M6X1-THD)	
M		1	**8T-3597**	6	NUT-WELD (M12X1.75-THD)	
	9	2	**266-9303**	1	COVER	
	10	2	**269-2887**	1	LATCH AS-DOOR (ROTARY)	
C	11	2	**355-7354**	1	CLEVIS	
C	12	2	**269-2892**	1	PIN	
E	13	2	**133-3234**		SEAL (425-CM)	
	14	2	**281-4002**	1	PLUG	
	15	2	**281-4136**	1	COVER-LATCH (RH)	
	16	1	**343-3798**	1	WINDOW-RH	
	17	1	**287-0548**	1	STICKER-DOOR SEAL (RH)	
	18	2	**290-6180**	3	SPACER (7X11X5-MM THK)	
	19	1	**125-8175**	1	BLADE AS-WIPER (450-MM) (DOOR, RH)	
M	20	2	**131-3540**	2	LOCKNUT (M8X1.25-THD)	
C	22	2	**323-6147**	1	LINKAGE AS (RH)	
	23	2	**102-8804**	1	KIT-RECEPTACLE (4-PIN)	
					(INCLUDES RECEPTACLE AS & WEDGE)	
C	24	2	**9X-8267**	2	WASHER (6.6X12X2-MM THK)	
	25	1	**4D-0012**	1	GROMMET	
	26	2	**4E-1384**	1	BUMPER-CONICAL	
	27	2	**4I-4872**	2	SPACER (8.6X18X5-MM THK)	
M	28	2	**5C-7261**	1	NUT (M8X1.25-THD)	
	29	1	**5P-1076**	6	WASHER-HARD (13.5X30X4-MM THK)	
	30	1	**5P-8441**	1	GROMMET	
CM	32	2	**7X-2533**	2	BOLT (M6X1X35-MM)	
M	33	2	**8C-6802**	4	SCREW-FLAT HEAD (6X1X26.3-MM)	
M	34	1	**8T-4183**	6	BOLT (M12X1.75X40-MM)	
	35	2	**8T-4224**	2	WASHER-HARD (8.8X16X2-MM THK)	
C	36	2	**8T-6902**	1	CLIP	
M	37	2	**9X-2042**	3	SCREW-TRUSS HEAD (M6X1X12-MM)	
M	38	1,2	**9X-2045**	5	SCREW-TRUSS HEAD (M6X1X20-MM)	
E	39	1	**144-0195**		HOSE (26-CM)	
	40	1	**8T-5400**	1	CONNECTOR AS	
	41	2	**7K-1181**	1	STRAP-CABLE	
	42	2	**320-8448**	2	CAP-NUT	
CM	43	2	**136-4192**	1	BOLT (M6X1X35-MM)	

C-CHANGE FROM PREVIOUS TYPE
E-ORDER BY THE CENTIMETER
J-REQUIRES CORPORATE KEY
M-METRIC PART
Y-SEPARATE ILLUSTRATION

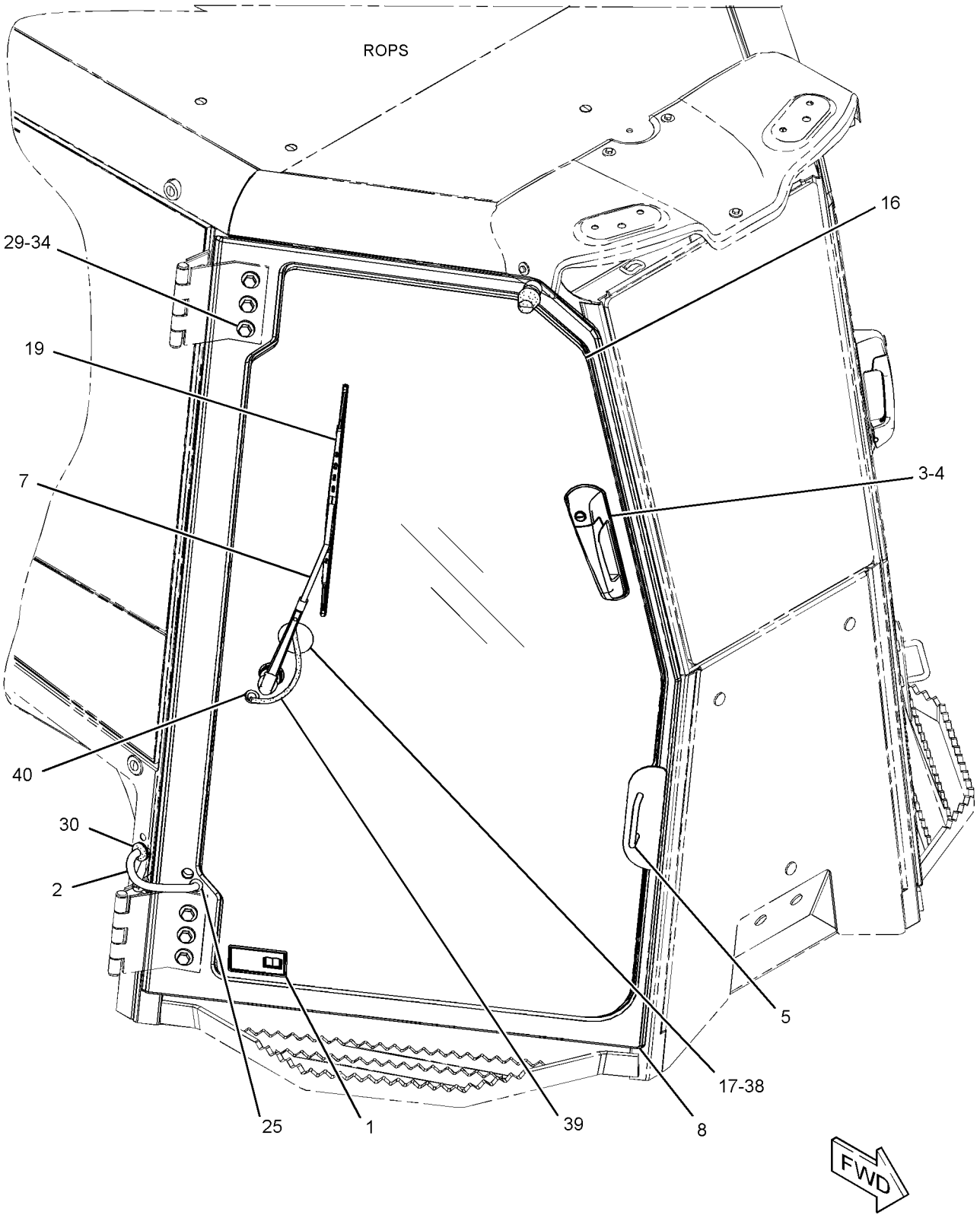

GRAPHIC #1 g02514196

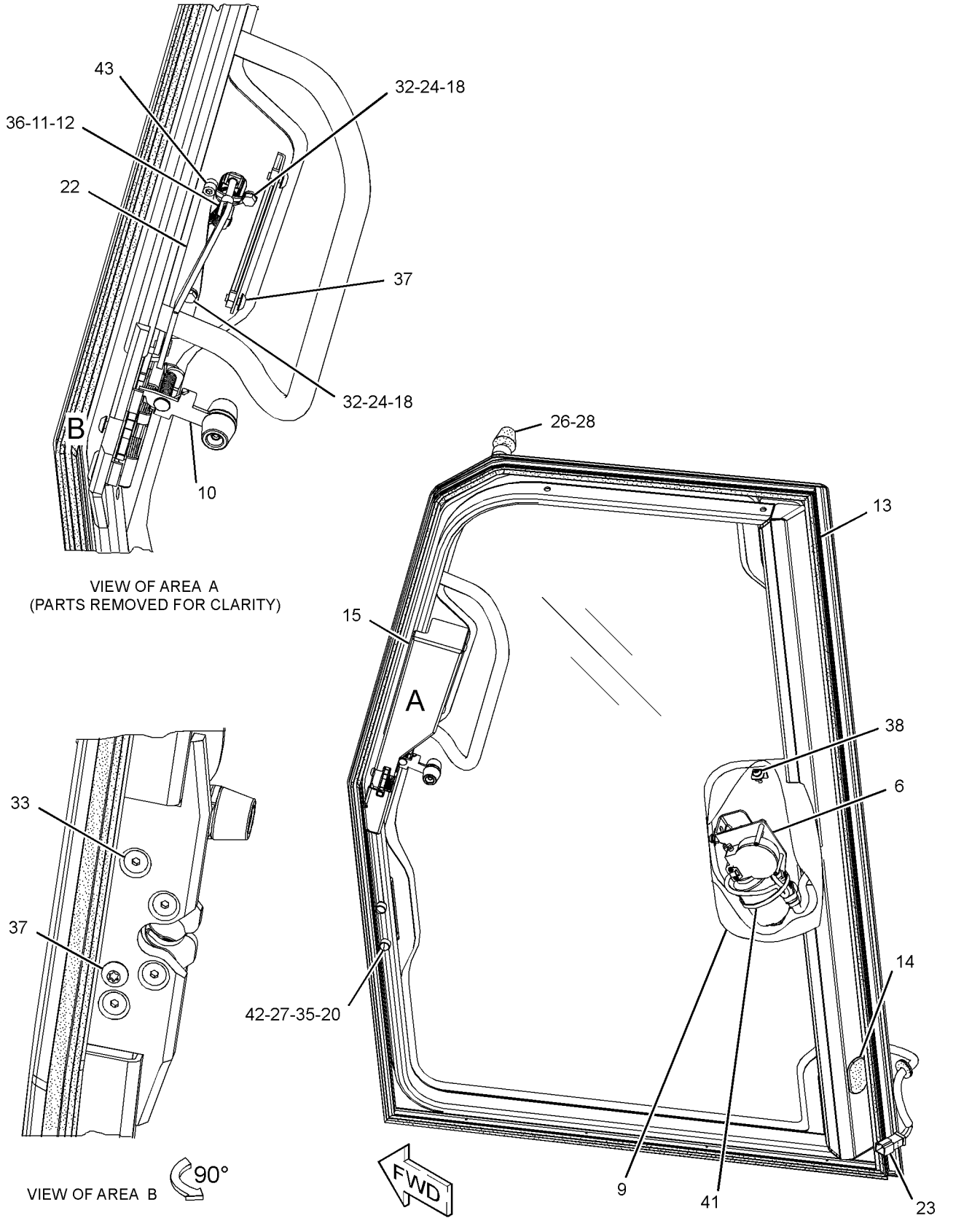

GRAPHIC #2

<END>

g02514896

OPERATOR STATION

255-4274 DOOR GP-CAB—LH

S/N: JTD1-UP; FFF1-UP; LLL1-UP
PART OF 244-7476 ROPS AR
AN ATTACHMENT
TYPE 1

SMCS-7308 **i04403718**

NOTE	REF NO	GRAPHIC REF	PART NUMBER	QTY	PART NAME 1 2 3 4 5 6 (PRODUCT LEVEL)	SEE PAGE
	1	1	**223-9818**	1	FILM-INSTRUCTION (WINDOW CLEANING, READ OMM)	
	2	1	**247-6613**	1	FRAME AS-DOOR (LH)	
M		1	**6V-9632**	6	NUT-WELD (M6X1-THD)	
M		1	**8T-3597**	6	NUT-WELD (M12X1.75-THD)	
	3	1	**249-9060**	1	HARNESS AS-SWITCH (DOOR, LH)	
		1	**9W-0852**	4	PIN-CONNECTOR (14-GA TO 16-GA)	
		1	**230-5008**	1	PLUG AS-CONNECTOR (4-PIN)	
		1	**264-7031**	1	SEAL-CONNECTOR	
		1	**9X-3402**	4	SOCKET-CONNECTOR (16-GA TO 18-GA)	
		1	**230-5008**	1	PLUG AS-CONNECTOR (4-PIN)	
J	4	1	**252-1862**	1	HANDLE AS (PULL)	
	5	1	**252-1863**	1	GASKET	
	6	1	**255-4255**	1	STRIKER AS (LH)	
Y	7	1	**261-7992**	1	MOTOR GP-WINDOW WIPER	787
	8	1	**262-1998**	1	ARM GP-WINDOW WIPER (DOOR, LH)	
		1	**305-9192**	1	NOZZLE AS-WASHER	
	9	1	**266-9303**	1	COVER	
	10	1	**269-2890**	1	CLEVIS	
	11	1	**269-2892**	2	PIN	
E	12	1	**133-3234**		SEAL (425-CM)	
	13	1	**281-4002**	1	PLUG	
	14	1	**281-4137**	1	COVER-LATCH (LH)	
	15	1	**343-3799**	1	WINDOW-LH	
	16	1	**287-0548**	1	STICKER-DOOR SEAL (LH)	
	17	1	**290-6180**	3	SPACER (7X11X5-MM THK)	
	18	1	**125-8175**	1	BLADE AS-WIPER (450-MM) (DOOR, LH)	
M	19	1	**131-3540**	2	LOCKNUT (M8X1.25-THD)	
	20	1	**269-2886**	1	LATCH AS-DOOR (ROTARY)	
	21	1	**269-2888**	1	LINK GP-ADJUSTABLE	
		1	**108-5471**	1	CLEVIS	
	22	1	**272-1623**	1	BELLCRANK AS	
	23	1	**102-8804**	1	KIT-RECEPTACLE (4-PIN) (INCLUDES RECEPTACLE AS & WEDGE)	
	24	1	**9X-8267**	3	WASHER (6.6X12X2-MM THK)	
	25	1	**4D-0012**	1	GROMMET	
	26	1	**4E-1384**	1	BUMPER-CONICAL	
	27	1	**4I-4872**	2	SPACER (8.6X18X5-MM THK)	
M	28	1	**5C-7261**	1	NUT (M8X1.25-THD)	
	29	1	**5P-1076**	6	WASHER-HARD (13.5X30X4-MM THK)	
	30	1	**5P-8441**	1	GROMMET	
	31	1	**6V-7636**	1	PIN AS-SPRING	
M	32	1	**7X-2533**	3	BOLT (M6X1X35-MM)	
M	33	1	**8C-6802**	4	SCREW-FLAT HEAD (6X1X26.3-MM)	
M	34	1	**8T-4183**	6	BOLT (M12X1.75X40-MM)	
	35	1	**8T-4224**	2	WASHER-HARD (8.8X16X2-MM THK)	
	36	1	**8T-6902**	2	CLIP	
M	37	1	**9X-2042**	3	SCREW-TRUSS HEAD (M6X1X12-MM)	
M	38	1	**9X-2045**	5	SCREW-TRUSS HEAD (M6X1X20-MM)	
	39	1	**7K-1181**	1	STRAP-CABLE	
	40	1	**8T-5400**	1	CONNECTOR AS	
E	41	1	**144-0195**		HOSE (26-CM)	
	42	1	**320-8448**	2	CAP-NUT	

E-ORDER BY THE CENTIMETER
J-REQUIRES CORPORATE KEY
M-METRIC PART
Y-SEPARATE ILLUSTRATION

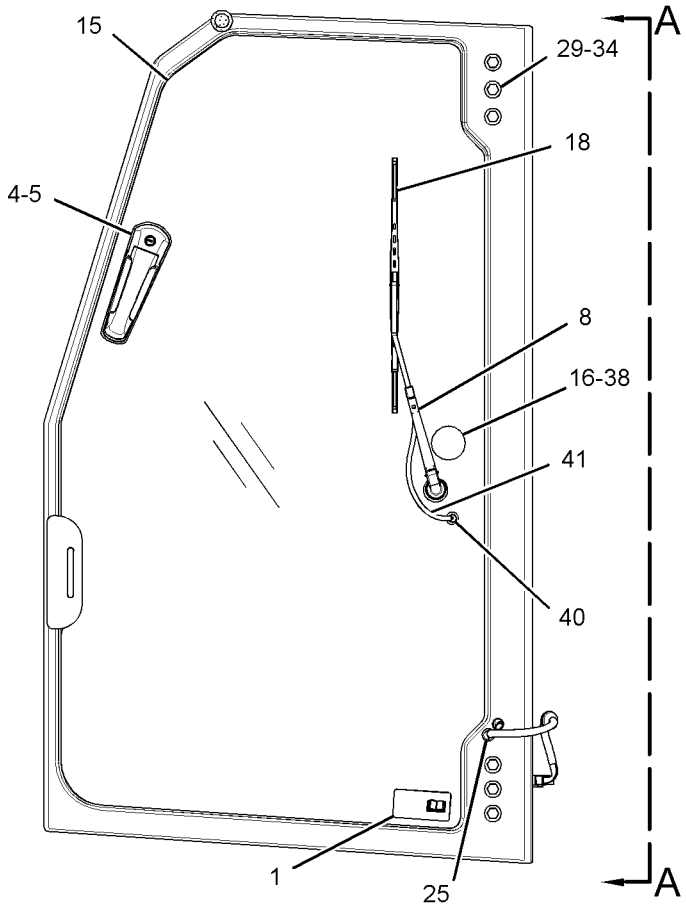

LEFT SIDE VIEW

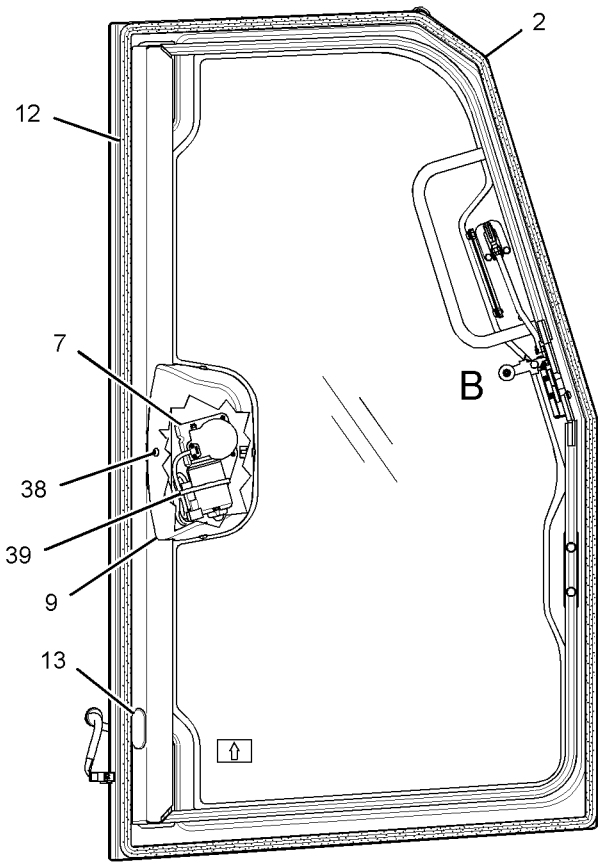

RIGHT SIDE VIEW
(LATCH COVER REMOVED FOR CLARITY)

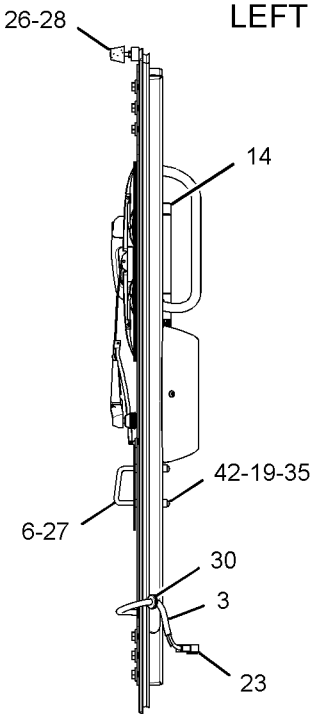

VIEW A-A

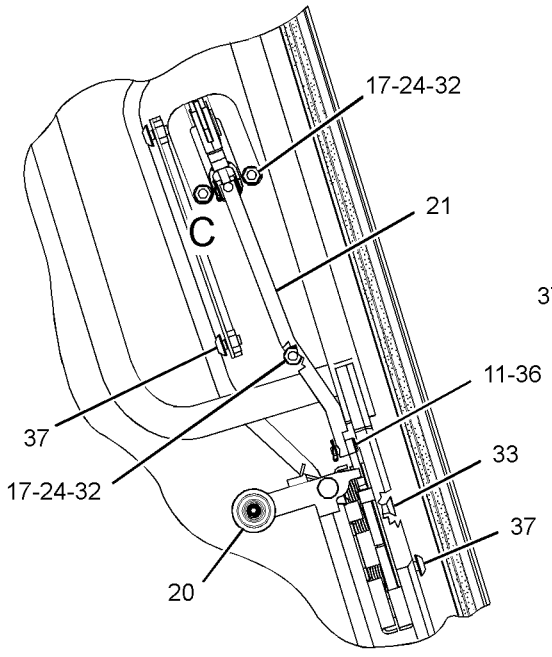

VIEW OF AREA B

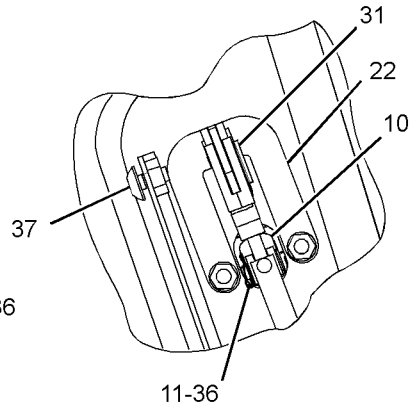

VIEW OF AREA C

GRAPHIC #1

<END>

g01736477

OPERATOR STATION

255-4274 DOOR GP-CAB—LH

S/N: JTD1-UP; FFF1-UP; LLL1-UP
PART OF 244-7476 ROPS AR
AN ATTACHMENT
TYPE 2

SMCS-7308 **i04348953**

NOTE	REF NO	GRAPHIC REF	PART NUMBER	QTY	PART NAME 1 2 3 4 5 6 (PRODUCT LEVEL)	SEE PAGE
	1	1	**223-9818**	1	FILM-INSTRUCTION (WINDOW CLEANING, READ OMM)	
	2	1	**247-6613**	1	FRAME AS-DOOR (LH)	
M		1	**6V-9632**	6	NUT-WELD (M6X1-THD)	
M		1	**8T-3597**	6	NUT-WELD (M12X1.75-THD)	
	3	1	**249-9060**	1	HARNESS AS-SWITCH (DOOR, LH)	
		1	**9W-0852**	4	PIN-CONNECTOR (14-GA TO 16-GA)	
		1	**230-5008**	1	PLUG AS-CONNECTOR (4-PIN)	
		1	**264-7031**	1	SEAL-CONNECTOR	
		1	**9X-3402**	4	SOCKET-CONNECTOR (16-GA TO 18-GA)	
J	4	1	**252-1862**	1	HANDLE AS (PULL)	
	5	1	**252-1863**	1	GASKET	
	6	1	**255-4255**	1	STRIKER AS (LH)	
Y	7	1	**261-7992**	1	MOTOR GP-WINDOW WIPER	787
	8	1	**262-1998**	1	ARM GP-WINDOW WIPER (DOOR, LH)	
		1	**305-9192**	1	NOZZLE AS-WASHER	
	9	1	**266-9303**	1	COVER	
C	10	1	**355-7354**	1	CLEVIS	
C	11	1	**269-2892**	1	PIN	
E	12	1	**133-3234**		SEAL (425-CM)	
	13	1	**281-4002**	1	PLUG	
	14	1	**281-4137**	1	COVER-LATCH	
	15	1	**343-3799**	1	WINDOW-LH	
	16	1	**287-0548**	1	STICKER-DOOR SEAL (LH)	
	17	1	**290-6180**	3	SPACER (7X11X5-MM THK)	
	18	1	**125-8175**	1	BLADE AS-WIPER (450-MM) (DOOR, LH)	
M	19	1	**131-3540**	2	LOCKNUT (M8X1.25-THD)	
	20	1	**269-2886**	1	LATCH AS-DOOR (ROTARY)	
C	22	1	**323-6148**	1	LINKAGE AS (LH)	
	23	1	**102-8804**	1	KIT-RECEPTACLE (4-PIN)	
					(INCLUDES RECEPTACLE AS & WEDGE)	
C	24	1	**9X-8267**	2	WASHER (6.6X12X2-MM THK)	
	25	1	**4D-0012**	1	GROMMET	
	26	1	**4E-1384**	1	BUMPER-CONICAL	
	27	1	**4I-4872**	2	SPACER (8.6X18X5-MM THK)	
M	28	1	**5C-7261**	1	NUT (M8X1.25-THD)	
	29	1	**5P-1076**	6	WASHER-HARD (13.5X30X4-MM THK)	
	30	1	**5P-8441**	1	GROMMET	
CM	32	1	**7X-2533**	2	BOLT (M6X1X35-MM)	
M	33	1	**8C-6802**	4	SCREW-FLAT HEAD (6X1X26.3-MM)	
M	34	1	**8T-4183**	6	BOLT (M12X1.75X40-MM)	
	35	1	**8T-4224**	2	WASHER-HARD (8.8X16X2-MM THK)	
C	36	1	**8T-6902**	1	CLIP	
M	37	1	**9X-2042**	3	SCREW-TRUSS HEAD (M6X1X12-MM)	
M	38	1	**9X-2045**	5	SCREW-TRUSS HEAD (M6X1X20-MM)	
	39	1	**7K-1181**	1	STRAP-CABLE	
	40	1	**8T-5400**	1	CONNECTOR AS	
E	41	1	**144-0195**		HOSE (26-CM)	
	42	1	**320-8448**	2	CAP-NUT	
CM	43	1	**136-4192**	1	BOLT (M6X1X35-MM)	

C-CHANGE FROM PREVIOUS TYPE
E-ORDER BY THE CENTIMETER
J-REQUIRES CORPORATE KEY
M-METRIC PART
Y-SEPARATE ILLUSTRATION

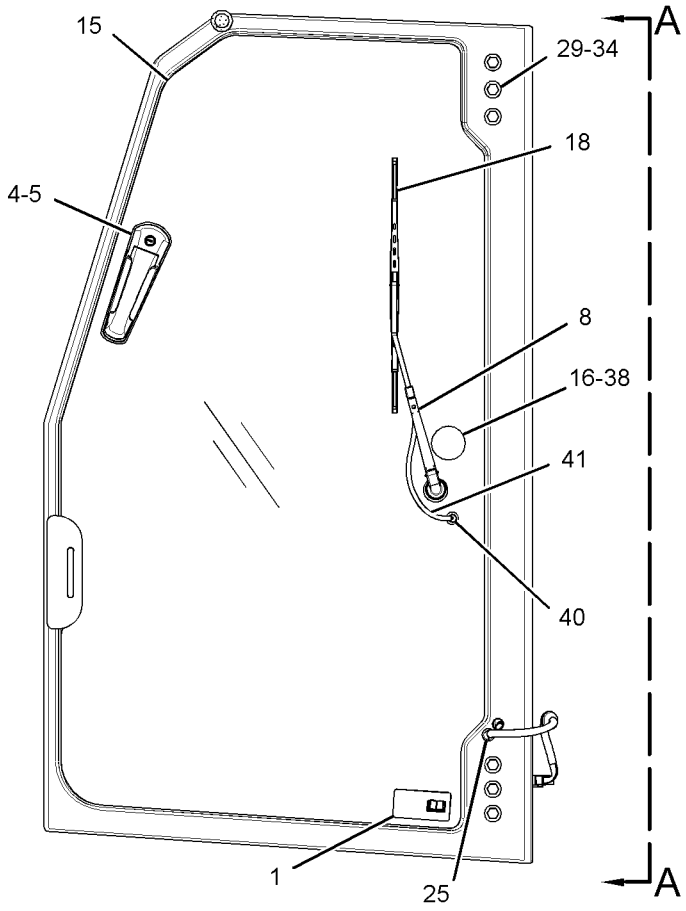

LEFT SIDE VIEW

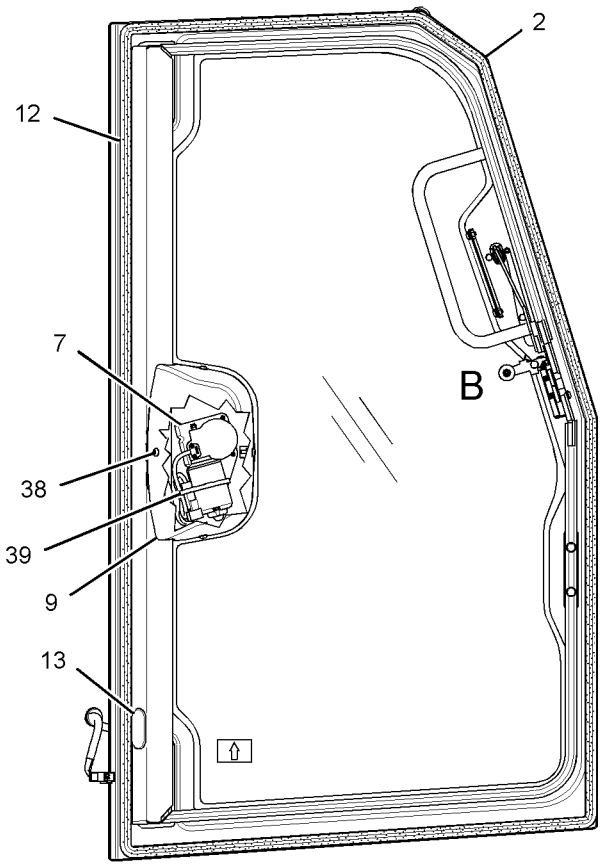

RIGHT SIDE VIEW
(LATCH COVER REMOVED FOR CLARITY)

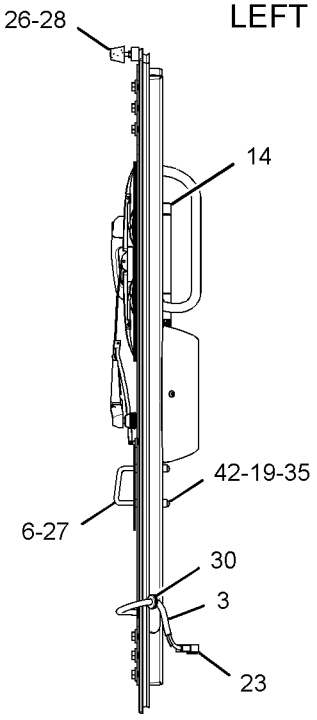

VIEW A-A

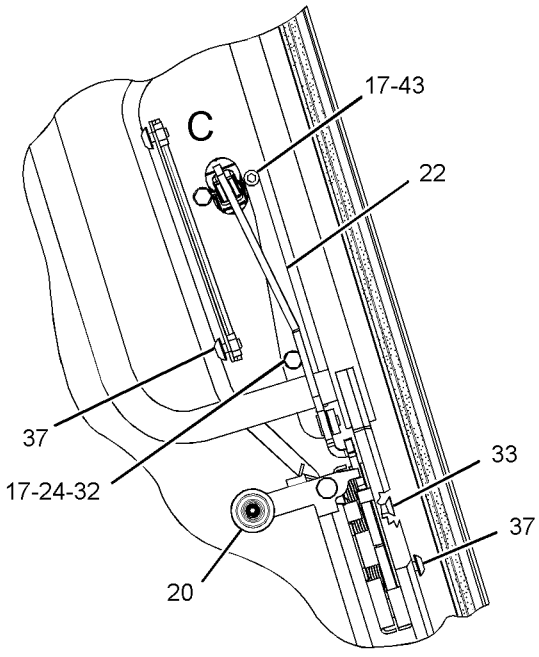

VIEW OF AREA B

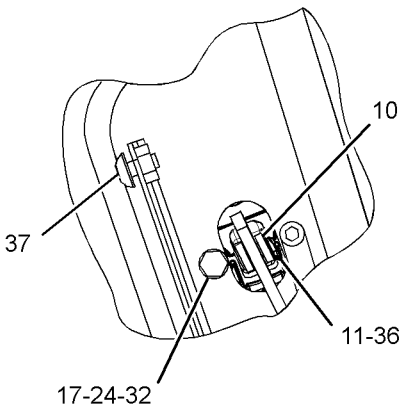

VIEW OF AREA C

GRAPHIC #1

<END>

g02519106

OPERATOR STATION

252-4504 HEATER GP-CAB

S/N: JTD1-UP; FFF1-UP; LLL1-UP
PART OF 254-3190 HEATER GP-CAB
AN ATTACHMENT
TYPE 1

SMCS-7304 **i03776850**

NOTE	REF NO	GRAPHIC REF	PART NUMBER	QTY	PART NAME 1 2 3 4 5 6 (PRODUCT LEVEL)	SEE PAGE
	1	2	**289-2134**	1	PLATE AS	
	2	2	**3S-2093**	3	STRAP-CABLE	
	3	2	**8C-3756**	1	FILM-IDENTIFICATION (GROUP NO., SEQUENCE NO.) (HEATER)	
	4	2	**111-4015**	1	GROMMET	
	5	2	**4P-7581**	1	CLIP	
	6	2	**131-3093**	1	BUSHING	
	7	2	**134-3518**	2	TIE-PUSH MOUNT	
	8	1	**151-5650**	2	PLUG	
	9	2	**248-6772**	2	SCREW-MACHINE (8-16X7.75-IN)	
	10	2	**256-0761**	1	CASE AS-AIR CONDITIONER	
	11	2	**256-0768**	1	PLATE AS	
M		2	**6V-9632**	6	NUT-WELD (M6X1-THD)	
M		2	**9X-2032**	2	NUT-WELD (M4X0.7-THD)	
J	12	2	**262-2815**	1	GASKET	
	13	2	**265-9620**	1	ACTUATOR (ELECTRONIC)	
	14	1,2	**275-6707**	2	GROMMET	
	15	2	**276-4299**	1	HARNESS AS-MOTOR (BLOWER)	
		2	**6T-6505**	7	HOUSING-RECEPTACLE (BLADE, POSITIVE LOCK)	
		2	**7T-0093**	4	PIN-CONNECTOR (12-GA TO 14-GA)	
		2	**8T-8729**	3	PIN-CONNECTOR (16-GA TO 18-GA)	
		2	**9W-0852**	1	PIN-CONNECTOR (14-GA TO 16-GA)	
		2	**155-2271**	1	KIT-CONNECTING PLUG (4-PIN)	
					(INCLUDES PLUG AS, WEDGE & INTERFACE SEAL)	
		2	**177-9648**	1	KIT-CONNECTING PLUG (2-PIN)	
					(INCLUDES PLUG AS & WEDGE)	
		2	**8T-8737**	1	PLUG-SEAL	
		2	**102-8804**	1	KIT-RECEPTACLE (4-PIN)	
		2	**177-9653**	1	KIT-RECEPTACLE (4-PIN)	
					(EACH RECEPTACLE KIT INCLUDES RECEPTACLE AS & WEDGE)	
		2	**9X-3402**	3	SOCKET-CONNECTOR (16-GA TO 18-GA)	
		2	**7T-0094**	2	SOCKET-CONNECTOR (12-GA TO 14-GA)	
		2	**8T-9850**	3	TERMINAL-BLADE	
		2	**6T-6506**	4	TERMINAL-BLADE (14-GA TO 18-GA)	
E		2	**125-7875**		TUBE-HEAT SHRINK (7.44-MM DIA) (5-CM)	
	16	2	**277-7112**	1	PLATE	
	17	2	**277-7114**	2	PLUG	
	18	2	**277-7115**	1	BLOWER AS	
J	19	2	**277-9958**	1	GASKET	
J	20	2	**277-9959**	1	GASKET	
J	21	2	**277-9960**	1	GASKET	
J	22	2	**277-9962**	1	GASKET	
J	23	2	**277-9964**	1	GASKET	
	24	2	**318-0815**	1	PLATE AS	
	25	2	**278-3354**	1	FILM-INSTRUCTION (HVAC WATER, DRAINING, FILLING)	
	26	2	*282-3475*	1	RESISTOR GP	
		2	**280-9453**	3	SCREW-SELF-TAPPING (6X0.375-IN)	
		2	**282-3481**	1	PLATE AS	
		2	**284-8773**	1	RESISTOR AS	
	27	2	**282-3653**	1	BRACKET	
M	28	2	**283-8651**	7	BOLT (M4X0.7X10-MM)	

252-4504 HEATER GP-CAB *(contd.)* i03776850

NOTE	REF NO	GRAPHIC REF	PART NUMBER	QTY	PART NAME 1 2 3 4 5 6 (PRODUCT LEVEL)	SEE PAGE
	29	1	**285-7974**	1	PLATE AS	
	30	1	**289-4795**	1	PLATE AS	
	31	2	**096-6166**	4	WASHER-HARD (4.5X9X1-MM THK)	
J	32	1	**285-8548**	1	GASKET	
Y	33	1	*289-2123*	1	HEATER GP-CAB	770
	34	1	**300-4098**	4	CAP	
M	35	1,2	**5C-9553**	16	BOLT (M6X1X16-MM)	
	36	2	**8T-4121**	1	WASHER-HARD (11X21X2.5-MM THK)	
M	37	2	**8T-4137**	1	BOLT (M10X1.5X20-MM)	
	38	1,2	**8T-4205**	16	WASHER-HARD (7.2X14.5X2-MM THK)	
D	39	1	**6V-2496**		SEAL (0.27-M EACH)	
D	39A	1	**6V-2496**		SEAL (0.04-M)	
D	39B	1	**6V-2496**		SEAL (0.26-M)	
D	39C	2	**6V-2496**		SEAL (0.15-M EACH)	
J	40	2	**153-6932**	1	GASKET	
					AVAILABLE REPAIR KIT(S):	
J			**285-8554**	1	KIT-SEAL (HEATER)	

D-ORDER BY THE METER
E-ORDER BY THE CENTIMETER
J-KIT MARKED J SERVICES PARTS MARKED J
M-METRIC PART
Y-SEPARATE ILLUSTRATION

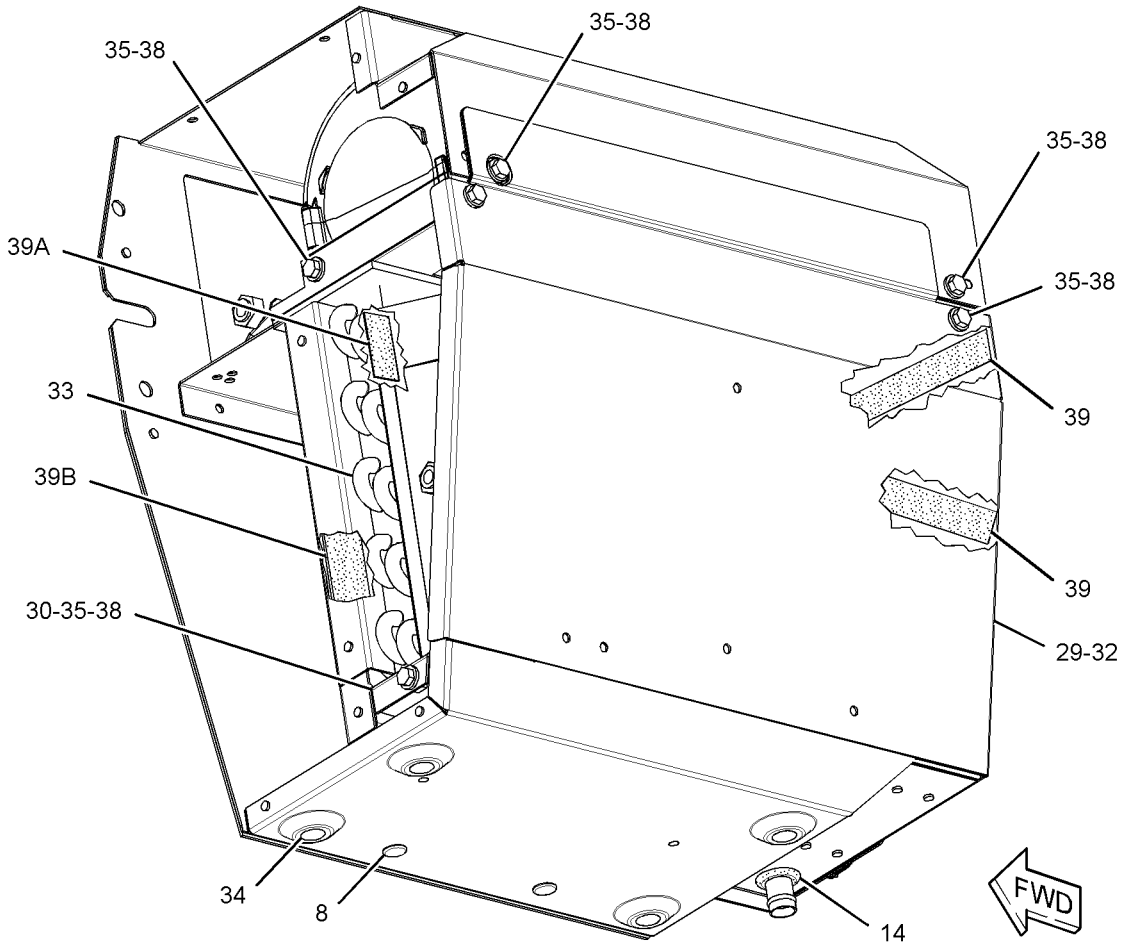

(COVER REMOVED FOR CLARITY)

GRAPHIC #1 g01733294

252-4504 HEATER GP-CAB *(contd.)* i03776850

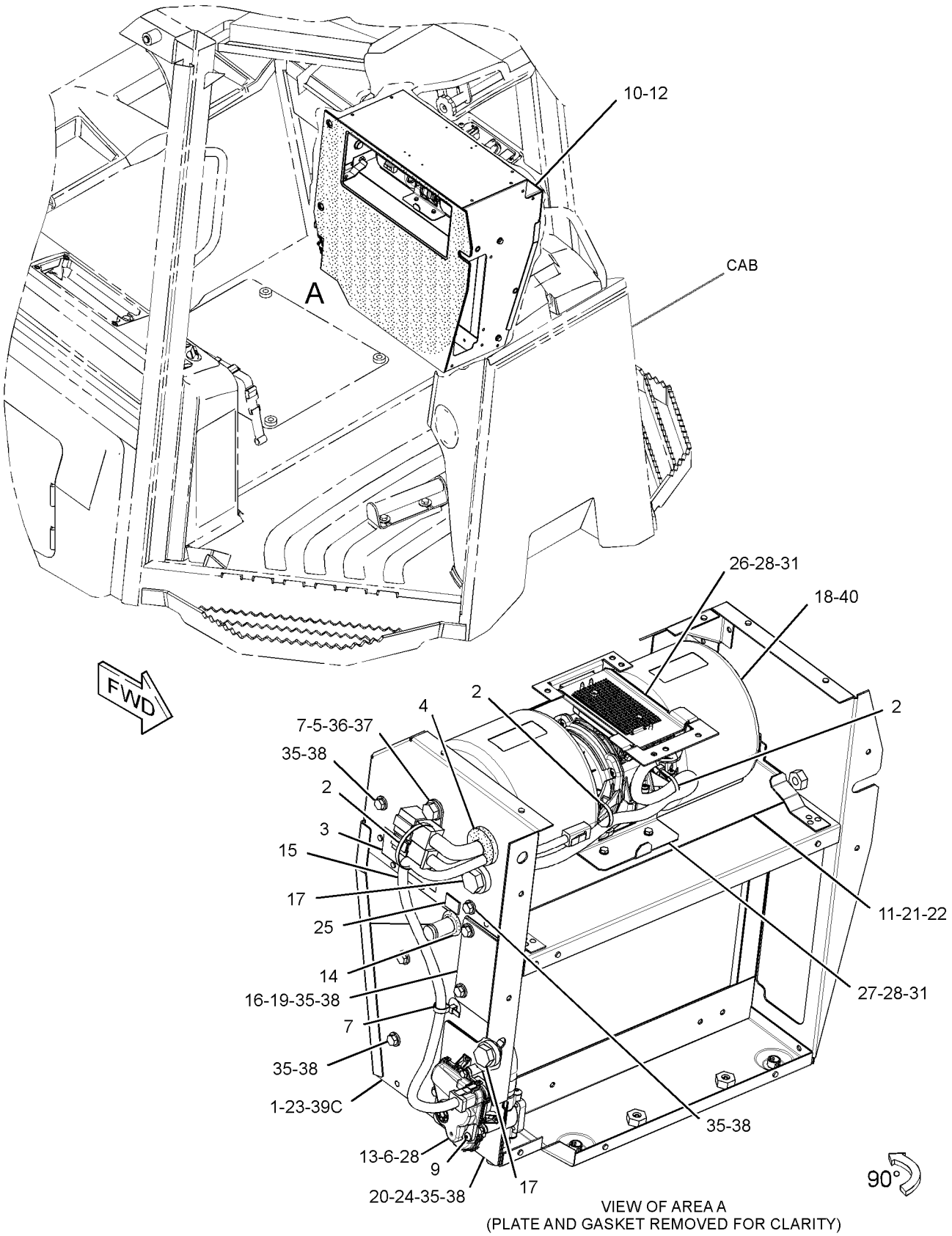

VIEW OF AREA A
(PLATE AND GASKET REMOVED FOR CLARITY)

GRAPHIC #2 **<END>** g01733295

OPERATOR STATION

252-4504 HEATER GP-CAB

S/N: JTD1-UP; FFF1-UP; LLL1-UP
PART OF 254-3190 HEATER GP-CAB
AN ATTACHMENT
TYPE 2

SMCS-7304 **i04335791**

NOTE	REF NO	GRAPHIC REF	PART NUMBER	QTY	PART NAME 1 2 3 4 5 6 (PRODUCT LEVEL)	SEE PAGE
	1	2	**289-2134**	1	PLATE AS	
	2	2	*3S-2093*	3	STRAP-CABLE	
	3	2	**8C-3756**	1	FILM-IDENTIFICATION (GROUP NO., SEQUENCE NO.)	
	4	2	**111-4015**	1	GROMMET	
	5	2	**4P-7581**	1	CLIP	
	6	2	**131-3093**	1	BUSHING	
C	7	2	**134-3518**	3	TIE-PUSH MOUNT	
	8	2	**151-5650**	2	PLUG	
	9	2	**248-6772**	2	SCREW-MACHINE (8-16X7.75-IN)	
	10	1	**256-0761**	1	CASE AS-AIR CONDITIONER	
	11	2	**256-0768**	1	PLATE AS	
M		2	**6V-9632**	6	NUT-WELD (M6X1-THD)	
M		2	**9X-2032**	2	NUT-WELD (M4X0.7-THD)	
J	12	2	**262-2815**	1	GASKET	
	13	2	**265-9620**	1	ACTUATOR (ELECTRONIC)	
	14	2	**275-6707**	2	GROMMET	
C	15	2	**364-6136**	1	HARNESS AS-MOTOR (BLOWER)	
		2	**6T-6505**	3	HOUSING-RECEPTACLE (BLADE, POSITIVE LOCK)	
		2	**7T-0093**	4	PIN-CONNECTOR (12-GA TO 14-GA)	
		2	**8T-8729**	3	PIN-CONNECTOR (16-GA TO 18-GA)	
		2	**9W-0852**	1	PIN-CONNECTOR (14-GA TO 16-GA)	
		2	**155-2271**	1	KIT-CONNECTING PLUG (4-PIN)	
					(INCLUDES PLUG AS, WEDGE & INTERFACE SEAL)	
		2	**177-9648**	1	KIT-CONNECTING PLUG (2-PIN)	
					(INCLUDES PLUG AS & WEDGE)	
		2	**8T-8737**	1	PLUG-SEAL	
		2	**102-8804**	1	KIT-RECEPTACLE (4-PIN)	
		2	**177-9653**	1	KIT-RECEPTACLE (4-PIN)	
					(EACH RECEPTACLE KIT INCLUDES RECEPTACLE AS & WEDGE)	
		2	**9X-3402**	3	SOCKET-CONNECTOR (16-GA TO 18-GA)	
		2	**7T-0094**	2	SOCKET-CONNECTOR (12-GA TO 14-GA)	
		2	**5P-5618**	3	TERMINAL-BLADE (10-GA TO 12-GA)	
		2	**6T-6506**	3	TERMINAL-BLADE (14-GA TO 18-GA)	
E		2	**125-7875**		TUBE-HEAT SHRINK (7.44-MM DIA) (5-CM)	
	16	2	**277-7112**	1	PLATE	
	17	2	**277-7114**	2	PLUG	
	18	2	**277-7115**	1	BLOWER AS	
J	19	2	**277-9958**	1	GASKET	
J	20	2	**277-9959**	1	GASKET	
J	21	2	**277-9960**	1	GASKET	
J	22	2	**277-9962**	1	GASKET	
J	23	2	**277-9964**	1	GASKET	
	24	2	**318-0815**	1	PLATE AS	
	25	2	**278-3354**	1	FILM-INSTRUCTION (HVAC WATER, DRAINING, FILLING)	
C	26	2	*363-5992*	1	RESISTOR GP	
		2	**363-5991**	1	BRACKET AS	
		2	**133-9012**	1	FUSE (15-AMPERE)	
		2	**354-1384**	1	RESISTOR GP	
		2	**9X-2185**	3	SCREW (8-15X0.44-IN)	
	27	2	**282-3653**	1	BRACKET	
M	28	2	**283-8651**	7	BOLT (M4X0.7X10-MM)	

252-4504 HEATER GP-CAB *(contd.)* i04335791

NOTE	REF NO	GRAPHIC REF	PART NUMBER	QTY	PART NAME 1 2 3 4 5 6 (PRODUCT LEVEL)	SEE PAGE
	29	2	**285-7974**	1	PLATE AS	
	30	2	**289-4795**	1	PLATE AS	
	31	2	**096-6166**	4	WASHER-HARD (4.5X9X1-MM THK)	
J	32	2	**285-8548**	1	GASKET	
Y	33	2	*289-2123*	1	HEATER GP-CAB	770
	34	2	**300-4098**	4	CAP	
M	35	2	**5C-9553**	16	BOLT (M6X1X16-MM)	
	36	2	**8T-4121**	1	WASHER-HARD (11X21X2.5-MM THK)	
M	37	2	**8T-4137**	1	BOLT (M10X1.5X20-MM)	
	38	2	**8T-4205**	16	WASHER-HARD (7.2X14.5X2-MM THK)	
D	39	2	**6V-2496**		SEAL (0.3-M EACH)	
D	39A	2	**6V-2496**		SEAL (0.1-M)	
D	39B	2	**6V-2496**		SEAL (0.2-M EACH)	
J	40	2	**153-6932**	1	GASKET	
					AVAILABLE REPAIR KIT(S):	
J			**285-8554**	1	KIT-SEAL (HEATER)	

C-CHANGE FROM PREVIOUS TYPE
D-ORDER BY THE METER
E-ORDER BY THE CENTIMETER
J-KIT MARKED J SERVICES PARTS MARKED J
M-METRIC PART
Y-SEPARATE ILLUSTRATION

REFER TO ALL ILLUSTRATIONS OF
THIS GROUP FOR AUXILIARY VIEWS

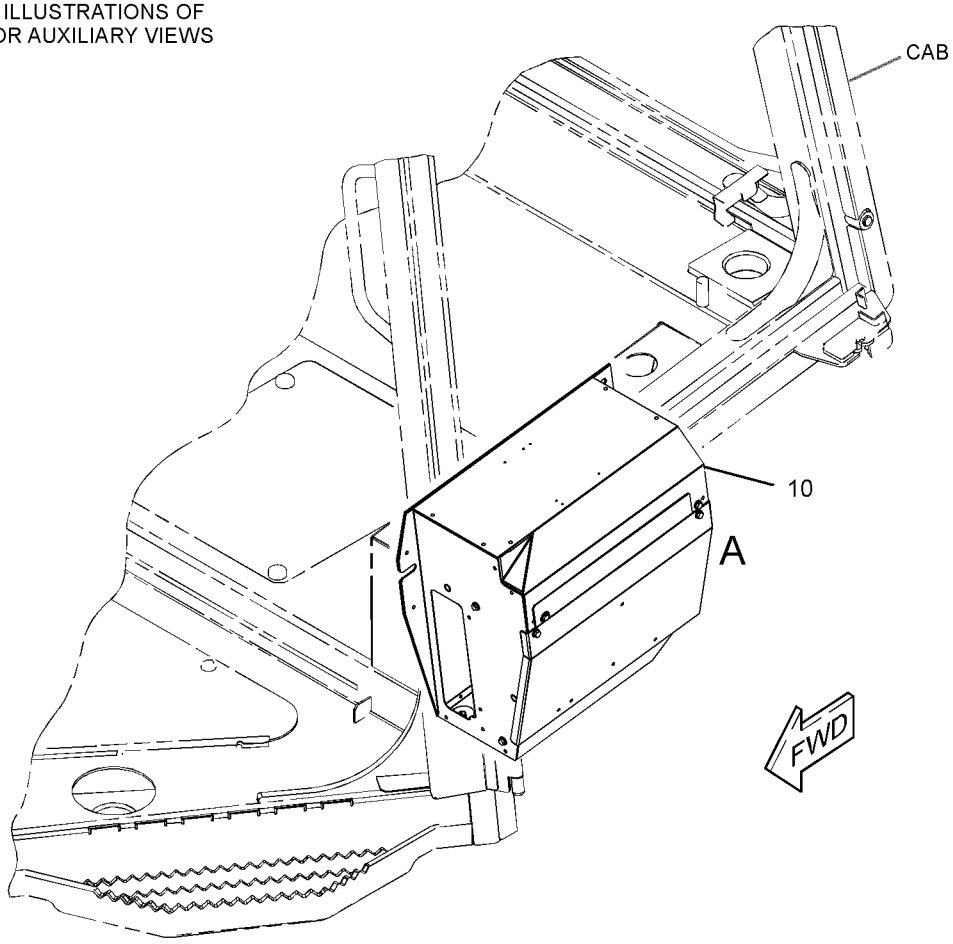

GRAPHIC #1 g02503716

252-4504 HEATER GP-CAB *(contd.)* **i04335791**

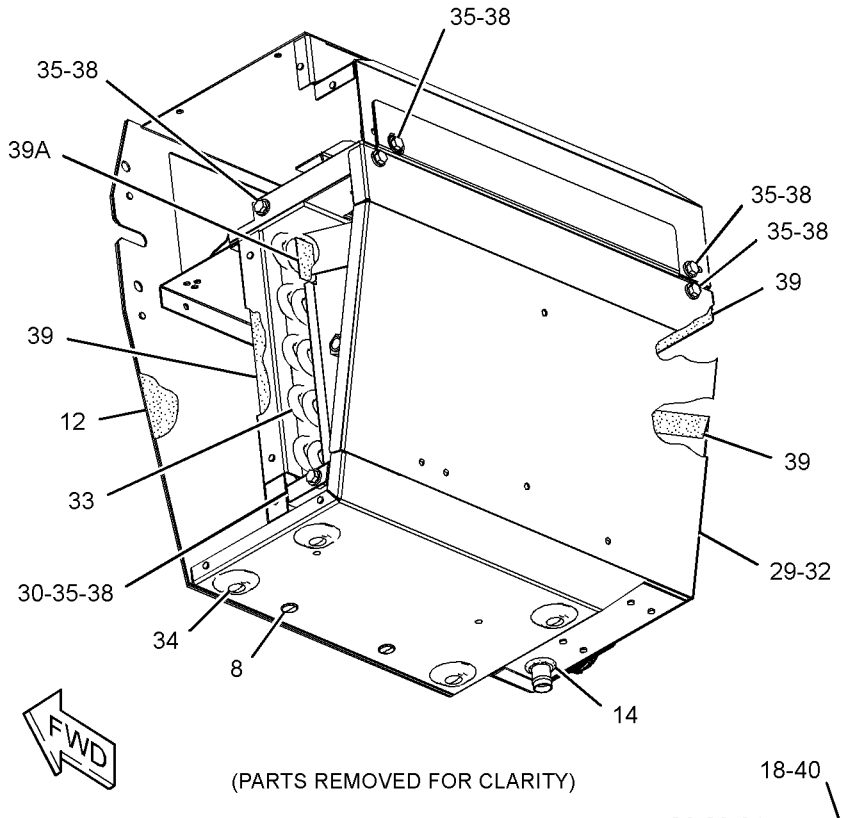

(PARTS REMOVED FOR CLARITY)

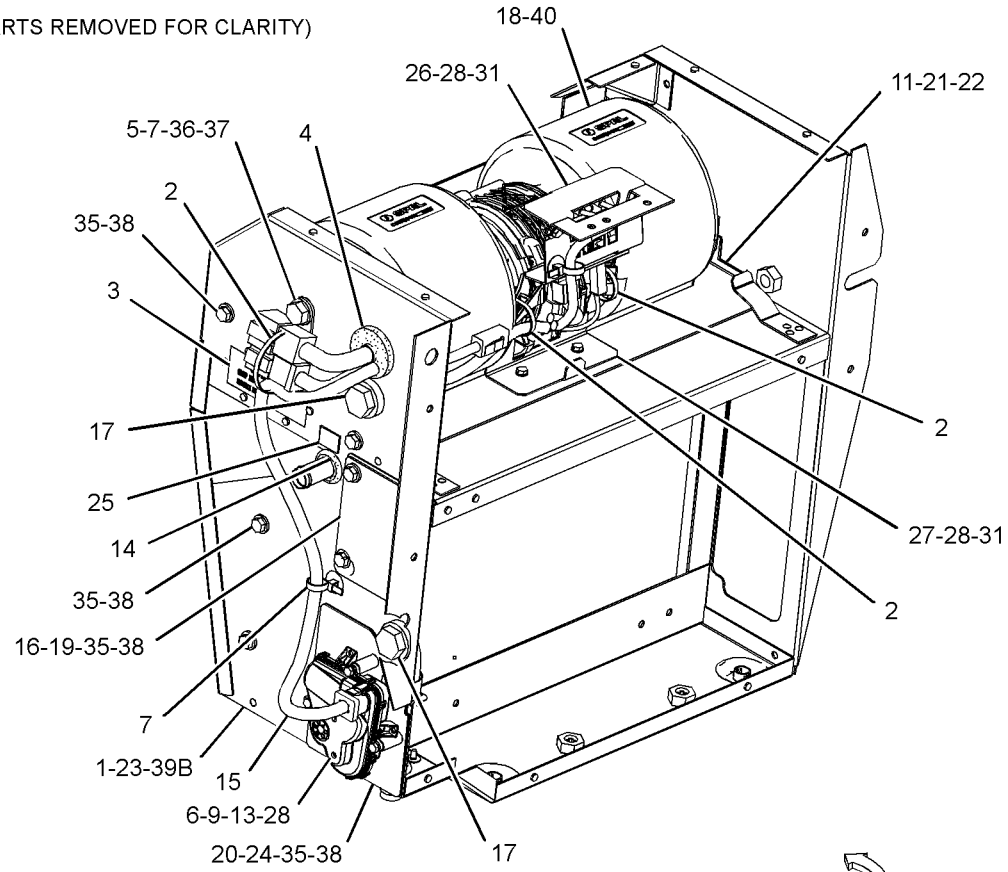

VIEW OF AREA A
(PARTS REMOVED FOR CLARITY)

GRAPHIC #2 **<END>** g02507101

OPERATOR STATION

254-3190 HEATER GP-CAB–OROPS

S/N: JTD1-UP; FFF1-UP; LLL1-UP
PART OF 244-7474 ROPS AR
AN ATTACHMENT

SMCS-7304 **i03413680**

NOTE	REF NO	GRAPHIC REF	PART NUMBER	QTY	PART NAME 1 2 3 4 5 6 (PRODUCT LEVEL)	SEE PAGE
	1	1	**121-2761**	1	GRILL-AIR FILTER (CAB)	
Y	2	1	*252-4504*	1	HEATER GP-CAB	762
	3	1	**254-3196**	1	HOSE	
	4	1	**254-3199**	1	HOSE	
	5	1	**254-3200**	1	GASKET	
	6	1	**254-3201**	1	DUCT-AIR	
		1	**6C-3680**	4	RIVET-POP	
	7	1	**287-8437**	1	PLATE AS	
M		1	**6V-9632**	4	NUT-WELD (M6X1-THD)	
M	8	1	**288-3663**	4	SCREW-THUMB (M6X1X25-MM)	
	9	1	**5P-0599**	4	CLAMP-BAND	
M	10	1	**6V-7744**	3	LOCKNUT (M10X1.5-THD)	
	11	1	**7X-7729**	6	WASHER (11X25X3-MM THK)	
M	12	1	**8T-4137**	3	BOLT (M10X1.5X20-MM)	
M	13	1	**9X-2042**	2	SCREW-TRUSS HEAD (M6X1X12-MM)	
D	14	1	**5P-5639**		SEAL (1.4-M)	

D-ORDER BY THE METER
M-METRIC PART
Y-SEPARATE ILLUSTRATION

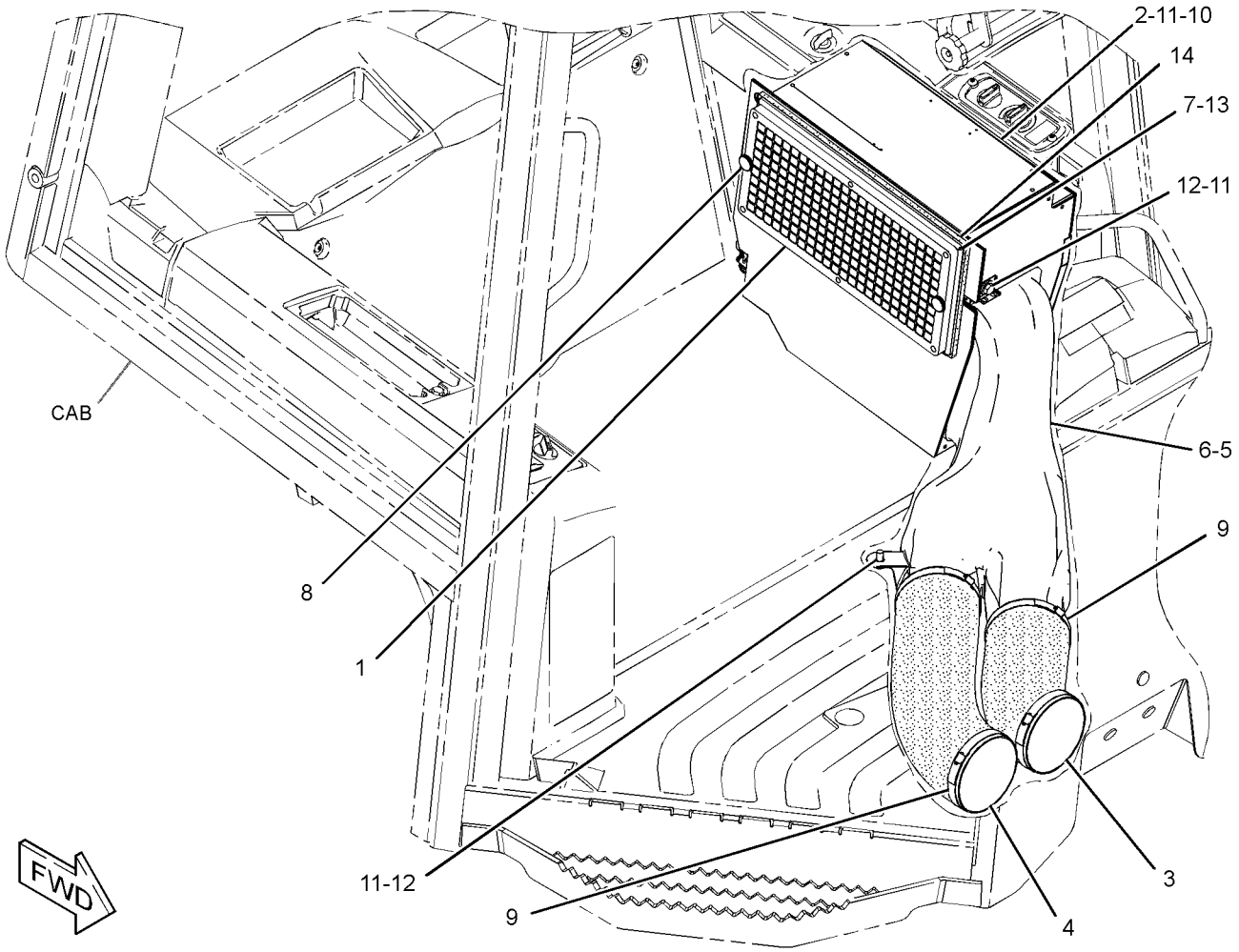

GRAPHIC #1 **<END>** g01341608

OPERATOR STATION

277-9969 HEATER GP-CAB

S/N: JTD1-UP; FFF1-UP; LLL1-UP
PART OF 252-4502 AIR CONDITIONER GP
AN ATTACHMENT

SMCS-7304 **i04403727**

NOTE	REF NO	GRAPHIC REF	PART NUMBER	QTY	PART NAME 1 2 3 4 5 6 (PRODUCT LEVEL)	SEE PAGE
	1	1	**8T-0154**	2	CLAMP-HOSE	
	2	1	**277-9968**	1	VALVE GP-CAB HEATER (WATER)	
	3	1	**287-6657**	1	COIL AS-HEATER	
	4	1	**291-3803**	1	HOSE	

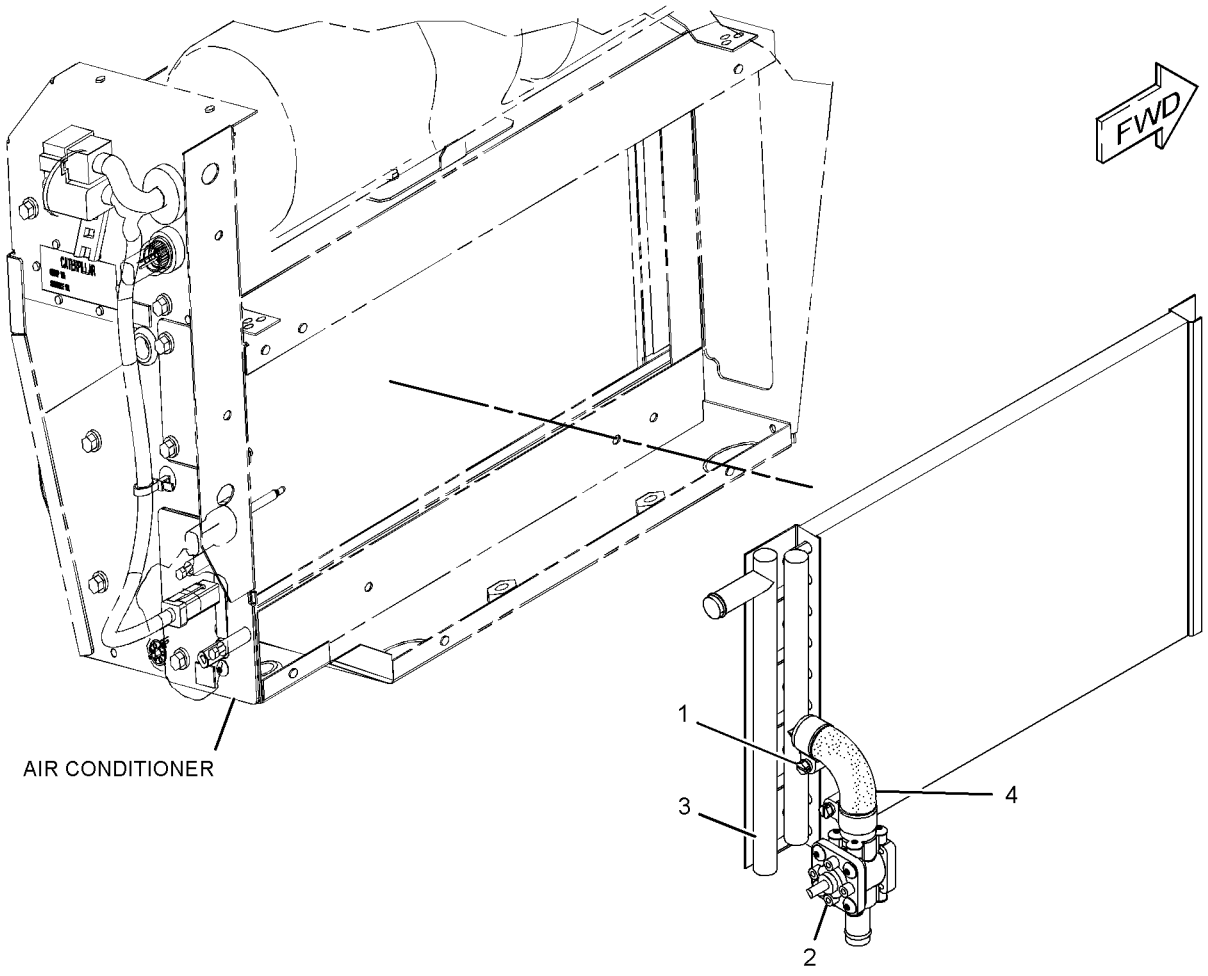

GRAPHIC #1 **<END>** g01417376

OPERATOR STATION

289-2123 HEATER GP-CAB

S/N: JTD1-UP; FFF1-UP; LLL1-UP
PART OF 252-4504 HEATER GP-CAB
AN ATTACHMENT

SMCS-7304 **i03900515**

NOTE	REF NO	GRAPHIC REF	PART NUMBER	QTY	PART NAME 1 2 3 4 5 6 (PRODUCT LEVEL)	SEE PAGE
	1	1	**8T-0154**	2	CLAMP-HOSE	
	2	1	**277-9968**	1	VALVE GP-CAB HEATER	
	3	1	**289-2122**	1	COIL AS-HEATER	
	4	1	**291-3803**	1	HOSE	

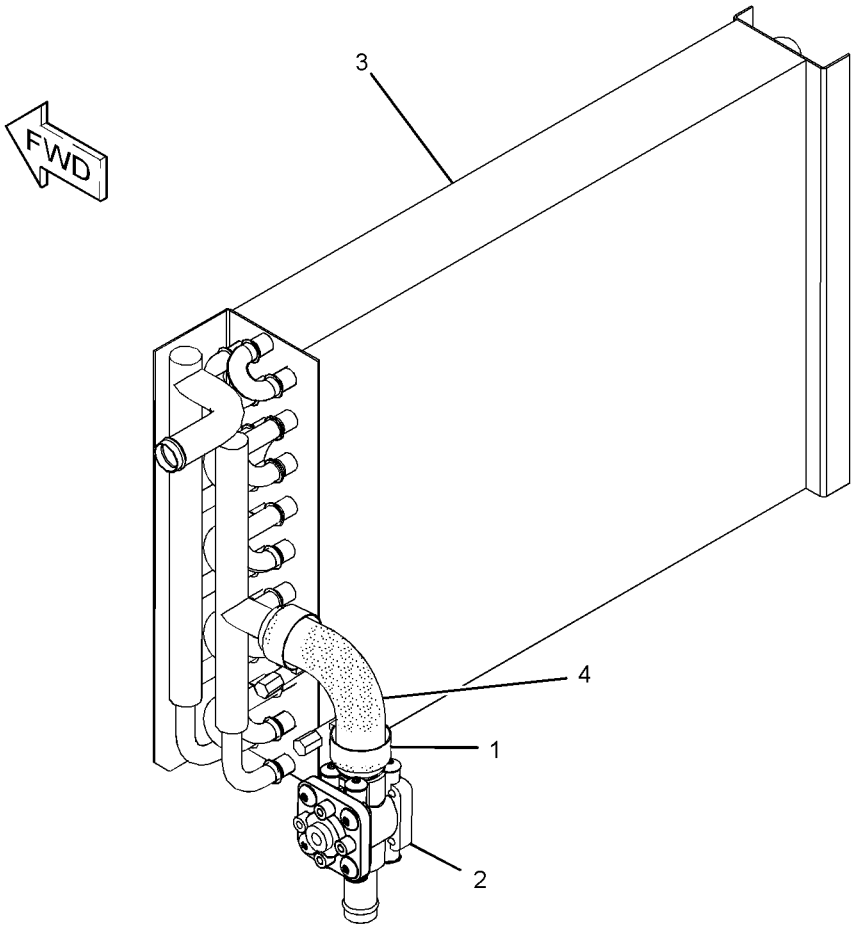

GRAPHIC #1 **<END>** g02144251

247-6505 INSTALLATION GP-RADIO

S/N: JTD1-UP; FFF1-UP; LLL1-UP
PART OF 244-7475, 244-7476 ROPS AR
AN ATTACHMENT

SMCS-7338 **i03841951**

NOTE	REF NO	GRAPHIC REF	PART NUMBER	QTY	PART NAME 1 2 3 4 5 6 (PRODUCT LEVEL)	SEE PAGE
	1	1	**6C-3431**	1	ANTENNA	
	2	1	**6T-7695**	2	SPEAKER AS-RADIO	
	3	1	**7K-1181**	3	STRAP-CABLE	
	4	1	**9U-8263**	1	COVER	
	5	1	**226-0150**	1	WASHER-RUBBER	
	6	1	**226-0151**	1	SPACER	
	7	1	**6C-9081**	2	LOCKWASHER	
M	8	1	**138-8454**	8	SCREW-TRUSS HEAD (M4X0.7X10-MM)	
M	9	1	**160-8754**	1	BOLT (M5X0.8X40-MM)	
M	10	1	**5C-2874**	1	NUT (M5X0.8-THD)	
	11	1	**8K-1433**	1	GROMMET	
	12	1	**140-4722**	1	NUT (M5X0.8-THD)	

M-METRIC PART

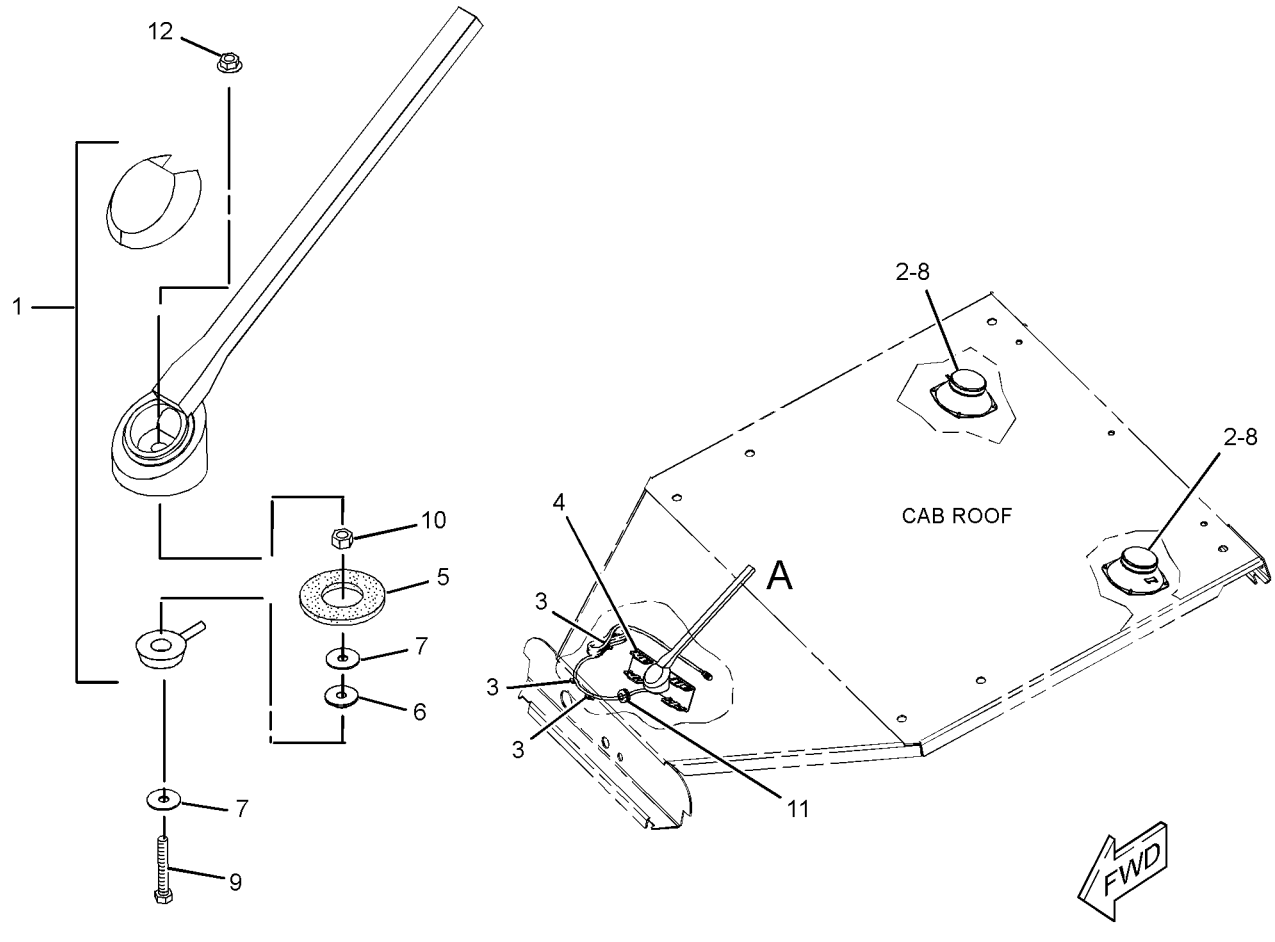

GRAPHIC #1 **<END>** g02102235

OPERATOR STATION

245-6022 INSTRUMENT GP—OROPS

S/N: JTD1-UP; FFF1-UP; LLL1-UP
PART OF 244-7474 ROPS AR
AN ATTACHMENT

SMCS-7450, 7451 **i03872997**

NOTE	REF NO	GRAPHIC REF	PART NUMBER	QTY	PART NAME 1 2 3 4 5 6 (PRODUCT LEVEL)	SEE PAGE
Y	1	1	**106-0107**	1	SWITCH GP-ROTARY (THROTTLE POSITION)	225
	2	1	**110-6109**	1	KNOB-CONTROL (THROTTLE SWITCH)	
	3	1	**110-7887**	1	SWITCH AS-START (KEY)	
		1	**7T-6799**	1	NUT-MOUNTING (1-32-THD)	
		1	**102-8804**	1	KIT-RECEPTACLE (4-PIN)	
					(INCLUDES RECEPTACLE AS & WEDGE)	
		1	**186-3735**	4	PIN-CONNECTOR (16-GA TO 18-GA)	
	4	1	**165-0311**	2	PLUG	
	5	1	**178-7539**	1	RECEPTACLE AS (POWER SUPPLY)	
	6	1	**180-6615**	1	SWITCH AS (WORK LIGHTS)	
		1	**111-7899**	1	GASKET	
	7	1	**341-7478**	1	SWITCH AS-ROCKER (PARKING BRAKE)	
		1	**111-7899**	1	GASKET	
B	8	1	**218-0651**	1	FILM-INSTRUCTION (KEY START SWITCH)	
	9	1	**232-1792**	1	HORN (ALARM)	
	10	1	**245-6033**	1	SWITCH AS-ROCKER (IMPLEMENT LOCKOUT)	
		1	**111-7899**	1	GASKET	
	11	1	**254-4091**	1	MONITOR GP-OPERATOR (INSTRUMENT CLUSTER)	
	12	1	**311-0299**	1	PLATE-SWITCH	
	13	1	**311-0303**	1	FILM-PANEL (OROPS)	
	14	1	**269-7675**	1	BRACKET	
	15	1	**314-3010**	1	PLATE	
M	16	1	**263-5928**	5	SCREW-TRUSS HEAD (M5X0.8X25-MM)	
	17	1	**267-5239**	1	PANEL-CONTROL (TEMPERATURE)	
		1	**271-7312**	1	KNOB (TEMPERATURE CONTROL)	
		1	**285-7415**	1	KNOB (BLOWER FAN SPEED)	
	18	1	**8T-4121**	1	WASHER-HARD (11X21X2.5-MM THK)	
M	19	1	**8T-4136**	1	BOLT (M10X1.5X25-MM)	
M	20	1	**9X-2045**	8	SCREW-TRUSS HEAD (M6X1X20-MM)	

B-USE AS REQUIRED
M-METRIC PART
Y-SEPARATE ILLUSTRATION

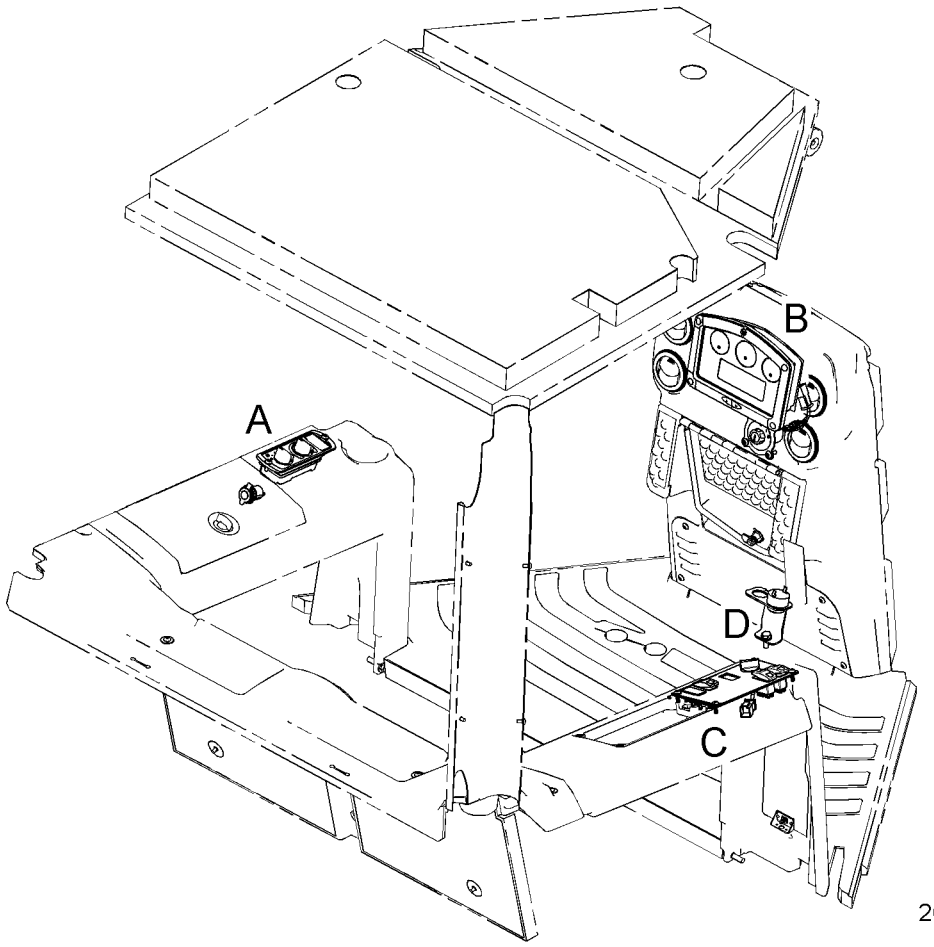

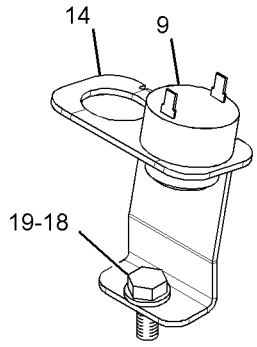

VIEW OF AREA D

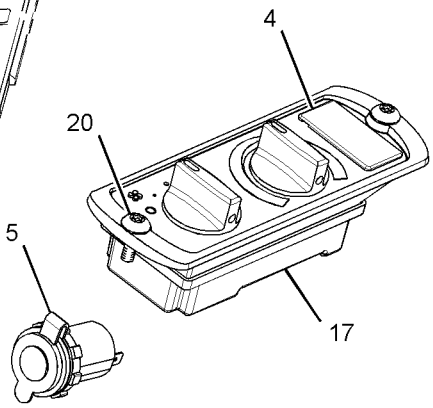

VIEW OF AREA A

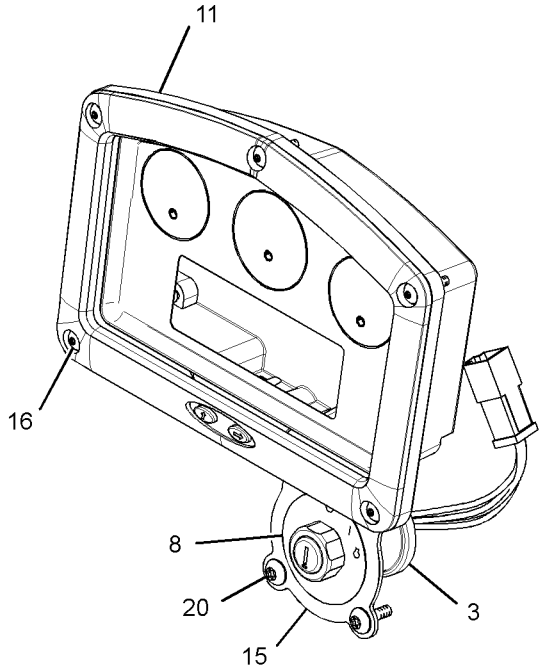

VIEW OF AREA B

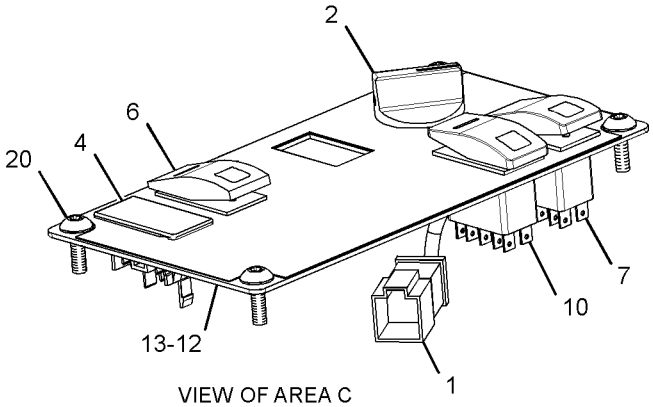

VIEW OF AREA C

GRAPHIC #1 **<END>** g01422587

OPERATOR STATION

245-6039 INSTRUMENT GP—EROPS

S/N: JTD1-UP; FFF1-UP; LLL1-UP
PART OF 244-7475, 244-7476 ROPS AR
AN ATTACHMENT

SMCS-7450, 7451 **i03721421**

NOTE	REF NO	GRAPHIC REF	PART NUMBER	QTY	PART NAME 1 2 3 4 5 6 (PRODUCT LEVEL)	SEE PAGE
Y	1	1	**106-0107**	1	SWITCH GP-ROTARY (THROTTLE POSITION)	225
	2	1	**110-6109**	1	KNOB-CONTROL (THROTTLE SWITCH)	
	3	1	**110-7887**	1	SWITCH AS-START (KEY)	
		1	**7T-6799**	1	NUT-MOUNTING (1-32-THD)	
		1	**102-8804**	1	KIT-RECEPTACLE (4-PIN)	
					(INCLUDES RECEPTACLE AS & WEDGE)	
		1	**186-3735**	4	PIN-CONNECTOR (16-GA TO 18-GA)	
	4	1	**178-7539**	1	RECEPTACLE AS (POWER SUPPLY)	
	5	1	**180-6615**	1	SWITCH AS (WORK LIGHTS)	
	6	1	**341-7478**	1	SWITCH AS-ROCKER (PARKING BRAKE)	
	7	1	**202-2284**	1	SWITCH AS-ROCKER (AIR CONDITIONER)	
					(EACH SWITCH AS INCLUDES)	
		1	**111-7899**	1	GASKET	
	8	1	**232-1792**	1	HORN	
B	9	1	**218-0651**	1	FILM-INSTRUCTION (KEY START SWITCH)	
	10	1	**237-9154**	1	SWITCH AS-ROCKER (FRONT WIPER)	
	11	1	**237-9157**	1	SWITCH AS-ROCKER (REAR WIPER)	
					(EACH SWITCH AS-ROCKER INCLUDES)	
		1	**111-7899**	1	GASKET	
M	12	1	**9X-2045**	8	SCREW-TRUSS HEAD (M6X1X20-MM)	
	13	1	**245-6033**	1	SWITCH AS-ROCKER (IMPLEMENT LOCKOUT)	
		1	**111-7899**	1	GASKET	
	14	1	**254-4091**	1	MONITOR GP-OPERATOR (INSTRUMENT CLUSTER)	
	15	1	**311-0299**	1	PLATE-SWITCH	
	16	1	**311-0304**	1	FILM-PANEL (EROPS)	
	17	1	**269-7675**	1	BRACKET	
	18	1	**314-3010**	1	PLATE	
M	19	1	**263-5928**	5	SCREW-TRUSS HEAD (M5X0.8X25-MM)	
	20	1	**267-5239**	1	PANEL-CONTROL	
		1	**271-7312**	1	KNOB (TEMPERATURE CONTROL)	
		1	**285-7415**	1	KNOB (BLOWER FAN SPEED)	
	21	1	**8T-4121**	1	WASHER-HARD (11X21X2.5-MM THK)	
M	22	1	**8T-4136**	1	BOLT (M10X1.5X25-MM)	
	23	1	**237-9158**	1	SWITCH AS-ROCKER (SIDE WIPER, LEFT)	
	23A	1	**237-9158**	1	SWITCH AS-ROCKER (SIDE WIPER, RIGHT)	
					(EACH SWITCH AS-ROCKER INCLUDES)	
		1	**111-7899**	1	GASKET	
	25	1	**165-0311**	1	PLUG	

B-USE AS REQUIRED
M-METRIC PART
Y-SEPARATE ILLUSTRATION

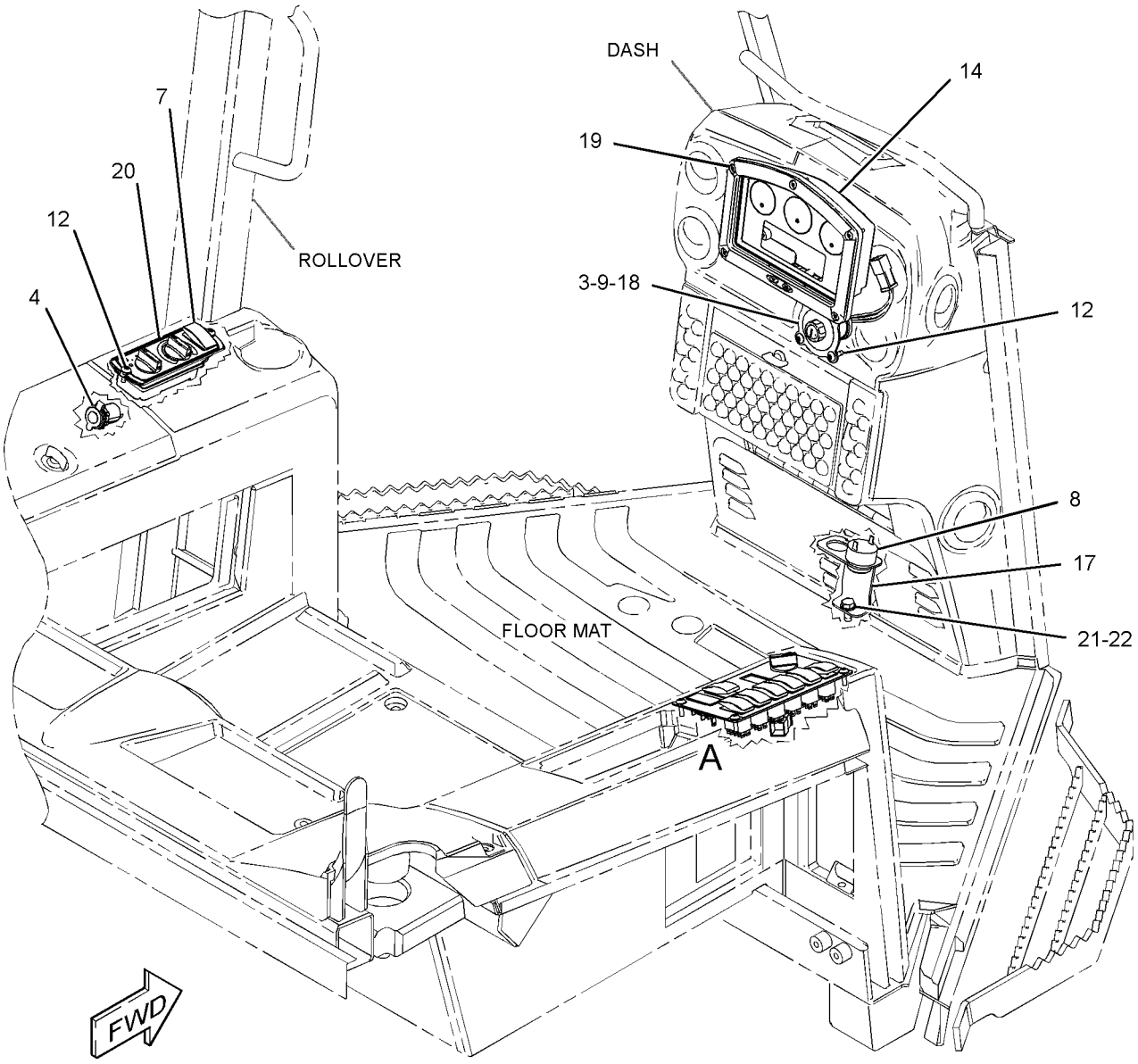

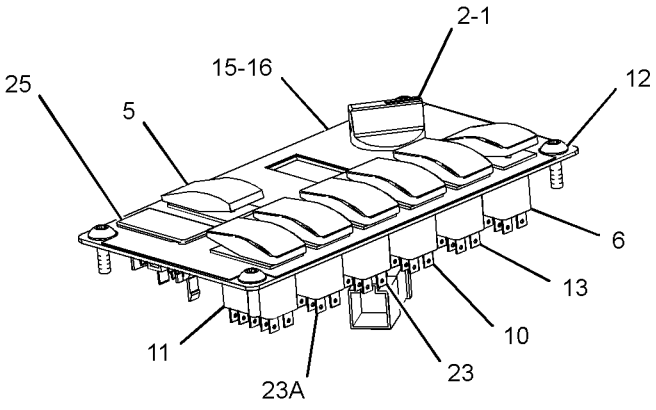

VIEW OF AREA A

GRAPHIC #1 **<END>** g01471693

OPERATOR STATION

325-7266 LATCH GP–FIRE PLOW

S/N: JTD1-UP; FFF1-UP; LLL1-UP
PART OF 325-6496, 325-6497, 325-6502 CONVERSION AR-MACHINE OPTION
AN ATTACHMENT

SMCS-7308 **i03696050**

NOTE	REF NO	GRAPHIC REF	PART NUMBER	QTY	PART NAME 1 2 3 4 5 6 (PRODUCT LEVEL)	SEE PAGE
	1	1	**5D-8159**	4	PIN AS	
	2	1	**303-0467**	4	PIN	
	3	1	**8T-4121**	4	WASHER-HARD (11X21X2.5-MM THK)	
M	4	1	**8T-4133**	4	NUT (M10X1.5-THD)	

M-METRIC PART

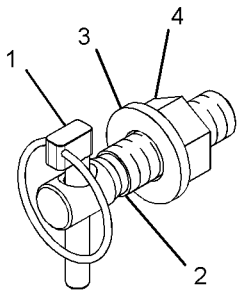

VIEW OF AREA A

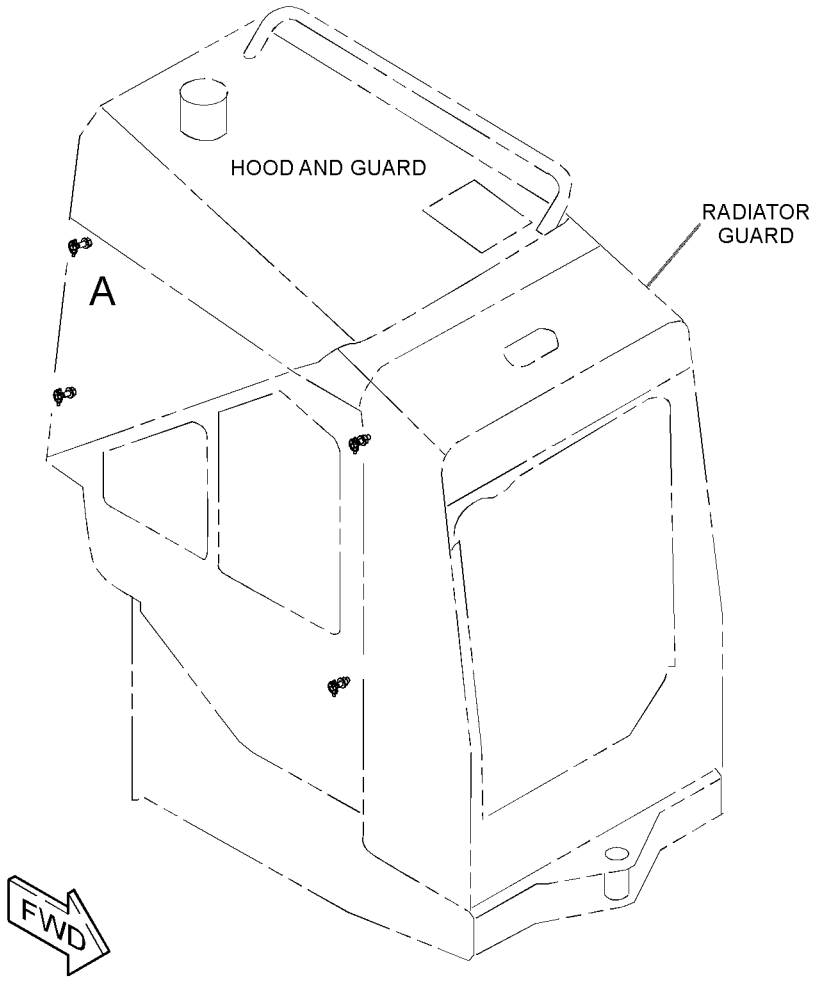

GRAPHIC #1 **<END>** g02006078

OPERATOR STATION

257-9819 LINES GP-AIR CONDITIONER

S/N: JTD1-UP; FFF1-575; LLL1-716
PART OF 254-3210 AIR CONDITIONER & MOUNTING GP
AN ATTACHMENT

SMCS-1808 **i04415558**

NOTE	REF NO	GRAPHIC REF	PART NUMBER	QTY	PART NAME 1 2 3 4 5 6 (PRODUCT LEVEL)	SEE PAGE
	1	1	**3E-6909**	1	CLIP	
	2	1	**5P-3928**	1	COUPLING AS-REFRIGERANT (SELF SEALING)	
		1	**107-4395**	1	VALVE AS	
		1	**107-4396**	1	GASKET	
	3	1	**5P-3929**	1	COUPLING AS-REFRIGERANT (SELF SEALING)	
		1	**8F-9206**	1	SEAL-O-RING	
		1	**107-4397**	1	VALVE AS (LOW SIDE)	
	4	1	**5P-3948**	1	COUPLING AS-REFRIGERANT (SELF SEALING)	
		1	**7F-8607**	1	SEAL-O-RING	
		1	**107-4399**	1	VALVE AS (HIGH SIDE)	
	5	1	**5P-4106**	1	NUT (1-7/16-16-THD)	
	6	1	**6P-5239**	1	SPACER (0.5X0.688X1.92-IN THK)	
	7	1	**7K-1181**	3	STRAP-CABLE	
	8	1	**7K-3176**	1	COUPLING AS-REFRIGERANT (SELF SEALING)	
		1	**107-4393**	1	VALVE AS (AIR CONDITIONER REFRIGERANT)	
		1	**107-4394**	1	GASKET	
	9	1	**7K-3304**	1	NUT-JAM (1-20-THD)	
	10	1	**101-8296**	2	CLIP	
Y	11	1	*186-6190*	1	ACCUMULATOR GP-REFRIGERANT (CHARGED)	666
	12	1	**102-7886**	2	SLEEVE	
I	13	1	**260-9505**	1	HOSE AS	
I	14	1	**260-9506**	1	HOSE AS	
	15	1	**261-8090**	1	TUBE AS-ORIFICE	
		1	**189-1707**	1	ORIFICE AS-AIR CONDITIONER	
	16	1	**301-6061**	1	BRACKET	
	17	1	**301-6062**	1	HOSE AS	
I	18	1	**301-6063**	1	HOSE AS	
I	19	1	**301-6064**	1	HOSE AS	
	20	1	**301-6065**	1	TUBE AS	
	21	1	**301-6066**	1	TUBE AS	
	22	1	**174-5907**	1	CLIP	
	24	1	**5P-4107**	1	WASHER (38.48X63.5X1.4-MM THK)	
	25	1	**6D-1641**	1	CLIP	
	26	1	**6D-4246**	2	CLIP	
	27	1	**6K-8178**	1	CLIP	
	28	1	**7B-1598**	1	CLIP	
	29	1	**8T-4121**	11	WASHER-HARD (11X21X2.5-MM THK)	
M	30	1	**8T-4133**	1	NUT (M10X1.5-THD)	
M	31	1	**8T-4137**	4	BOLT (M10X1.5X20-MM)	
M	32	1	**8T-4198**	2	BOLT (M10X1.5X100-MM)	
M	33	1	**8T-5005**	1	BOLT (M10X1.5X70-MM)	
	34	1	**9M-8406**	1	CLIP	
	35	1	**9X-7380**	1	SEAL-O-RING	
	36	1	**9X-7381**	5	SEAL-O-RING	
	37	1	**9X-7382**	2	SEAL-O-RING	
	38	1	**9X-7383**	4	SEAL-O-RING	
	39	1	**9X-7384**	2	SEAL-O-RING	
	40	1	**9X-8250**	3	CLIP	
D	41	1	**6V-5817**		CONDUIT-FLEXIBLE (26.1-MM ID, SPLIT) (0.6-M)	
D	41A	1	**6V-5817**		CONDUIT-FLEXIBLE (26.1-MM ID, SPLIT) (0.7-M)	
D	41B	1	**6V-5817**		CONDUIT-FLEXIBLE (26.1-MM ID, SPLIT) (0.8-M)	
D	42	1	**6V-5818**		CONDUIT-FLEXIBLE (18.62-MM ID, SPLIT) (0.6-M)	
D	42A	1	**6V-5818**		CONDUIT-FLEXIBLE (18.62-MM ID, SPLIT) (2.2-M)	
D	42B	1	**6V-5818**		CONDUIT-FLEXIBLE (18.62-MM ID, SPLIT) (2.1-M)	
D	43	1	**6V-2495**		SEAL (0.3-M)	

257-9819 **LINES GP-AIR CONDITIONER** *(contd.)* **i04415558**

NOTE	REF NO	GRAPHIC REF	PART NUMBER	QTY	PART NAME 1 2 3 4 5 6 (PRODUCT LEVEL)	SEE PAGE
	44	1	**307-1592**	1	PLATE AS	
M	45	1	**8T-4136**	3	BOLT (M10X1.5X25-MM)	

D-ORDER BY THE METER
I-REFER TO HYDRAULIC INFORMATION SYSTEM
M-METRIC PART
Y-SEPARATE ILLUSTRATION

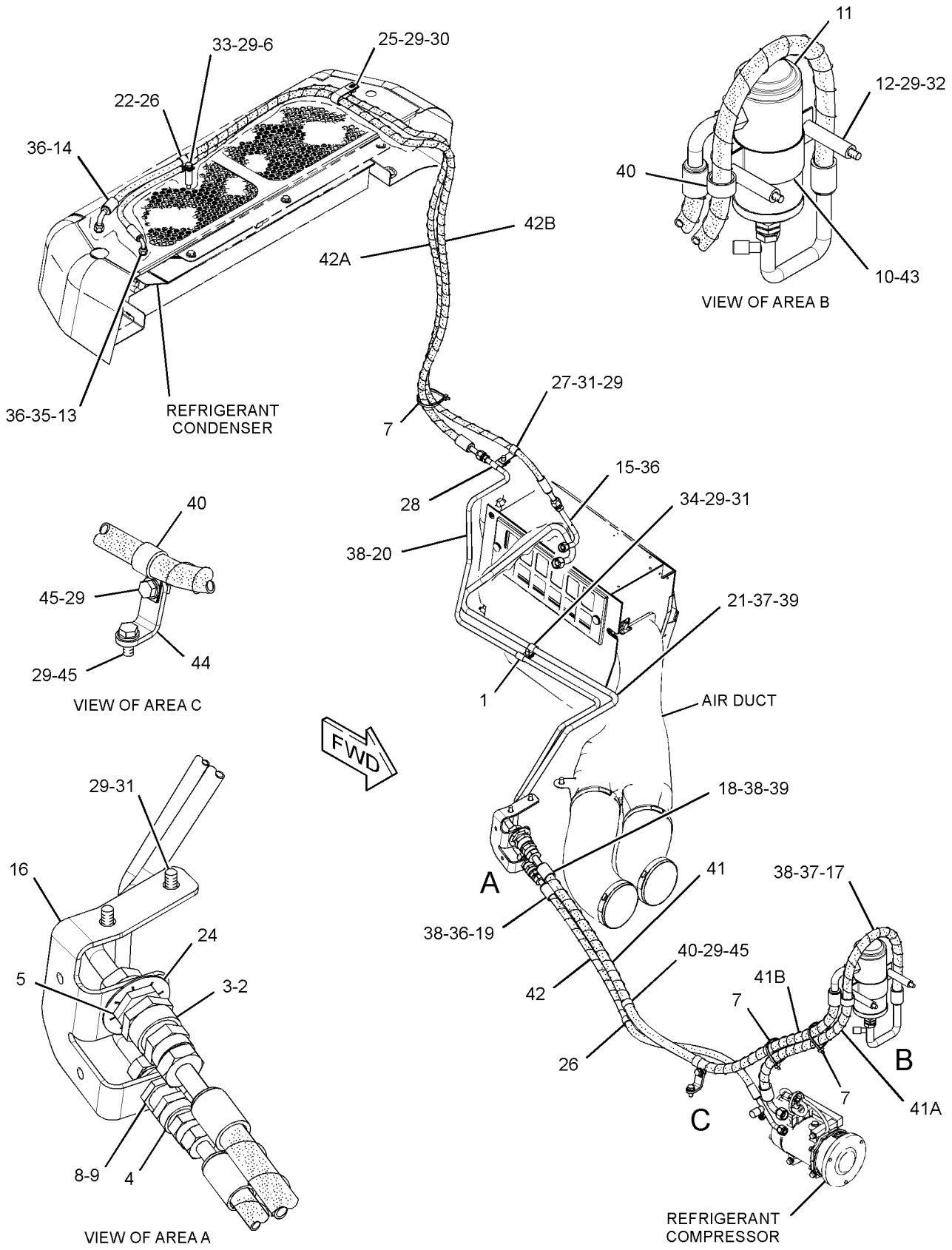

GRAPHIC #1 **<END>** g01637376

OPERATOR STATION

257-9819 LINES GP-AIR CONDITIONER

S/N: JTD1-UP; FFF576-UP; LLL717-UP
PART OF 254-3210 AIR CONDITIONER & MOUNTING GP
AN ATTACHMENT

SMCS-1808 **i04000239**

NOTE	REF NO	GRAPHIC REF	PART NUMBER	QTY	PART NAME 1 2 3 4 5 6 (PRODUCT LEVEL)	SEE PAGE
C	1	1	**3E-6909**	2	CLIP	
	2	1	**6P-5239**	1	SPACER (0.5X0.688X1.92-IN THK)	
	3	1	**7K-1181**	3	STRAP-CABLE	
	4	1	**101-8296**	2	CLIP	
	5	1	**102-7886**	2	SLEEVE	
Y	6	1	*186-6190*	1	ACCUMULATOR GP-REFRIGERANT (CHARGED)	666
I	7	1	**260-9505**	1	HOSE AS	
I	8	1	**260-9506**	1	HOSE AS	
	9	1	**261-8090**	1	TUBE AS-ORIFICE	
		1	**189-1707**	1	ORIFICE AS-AIR CONDITIONER	
	10	1	**301-6062**	1	HOSE AS	
	11	1	**307-1592**	1	PLATE AS	
C	12	1	**347-2282**	1	BRACKET AS	
CI	13	1	**347-2283**	1	HOSE AS	
CI	14	1	**347-2284**	1	HOSE AS	
C	15	1	**347-2285**	1	TUBE AS	
C	16	1	**347-2286**	1	TUBE AS	
	17	1	**174-5907**	1	CLIP	
	18	1	**6D-1641**	1	CLIP	
	19	1	**6D-4246**	2	CLIP	
	20	1	**6K-8178**	1	CLIP	
	21	1	**7B-1598**	1	CLIP	
C	22	1	**8T-4121**	12	WASHER-HARD (11X21X2.5-MM THK)	
M	23	1	**8T-4133**	1	NUT (M10X1.5-THD)	
M	24	1	**8T-4136**	3	BOLT (M10X1.5X25-MM)	
CM	25	1	**8T-4137**	5	BOLT (M10X1.5X20-MM)	
M	26	1	**8T-4198**	2	BOLT (M10X1.5X100-MM)	
M	27	1	**8T-5005**	1	BOLT (M10X1.5X70-MM)	
C	28	1	**9M-8406**	2	CLIP	
	29	1	**9X-7380**	1	SEAL-O-RING	
C	30	1	**9X-7381**	6	SEAL-O-RING	
C	31	1	**9X-7382**	3	SEAL-O-RING	
C	32	1	**9X-7383**	2	SEAL-O-RING	
	33	1	**9X-8250**	3	CLIP	
D	34	1	**6V-5817**		CONDUIT-FLEXIBLE (26.1-MM ID, SPLIT) (0.6-M)	
D	34A	1	**6V-5817**		CONDUIT-FLEXIBLE (26.1-MM ID, SPLIT) (0.7-M)	
D	34B	1	**6V-5817**		CONDUIT-FLEXIBLE (26.1-MM ID, SPLIT) (0.8-M)	
D	35	1	**6V-5818**		CONDUIT-FLEXIBLE (18.62-MM ID, SPLIT) (0.6-M)	
D	35A	1	**6V-5818**		CONDUIT-FLEXIBLE (18.62-MM ID, SPLIT) (2.2-M)	
D	35B	1	**6V-5818**		CONDUIT-FLEXIBLE (18.62-MM ID, SPLIT) (2.1-M)	
D	36	1	**6V-2495**		SEAL (0.3-M)	

C-CHANGE FROM PREVIOUS TYPE
D-ORDER BY THE METER
I-REFER TO HYDRAULIC INFORMATION SYSTEM
M-METRIC PART
Y-SEPARATE ILLUSTRATION

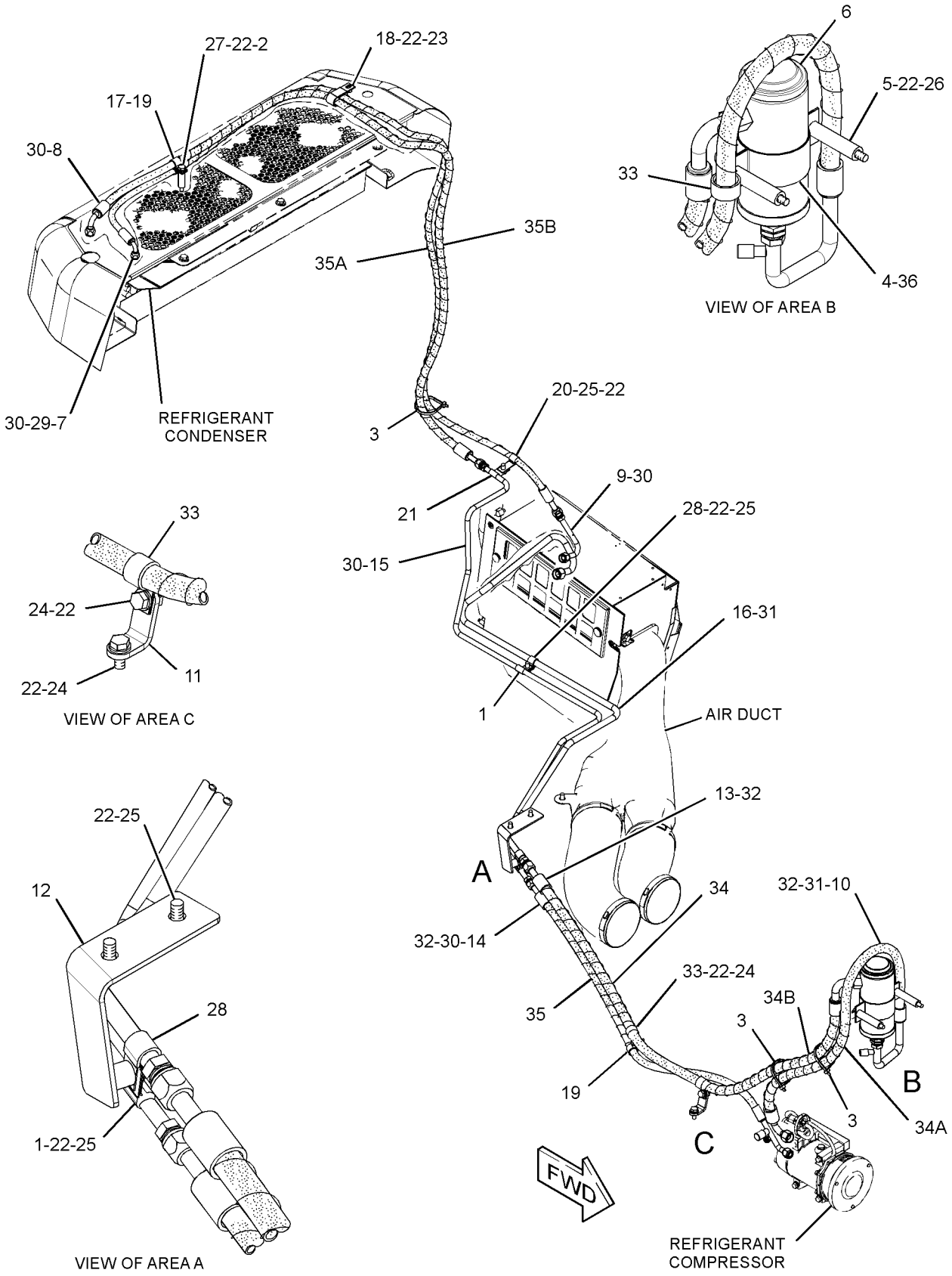

GRAPHIC #1 **<END>** g02351642

OPERATOR STATION

255-4241 LINES GP-HEATER

S/N: JTD1-UP; FFF1-UP; LLL1-UP

PART OF 244-7376, 244-7377, 282-5327 CHASSIS AR

SMCS-7304 **i02895418**

NOTE	REF NO	GRAPHIC REF	PART NUMBER	QTY	PART NAME 1 2 3 4 5 6 (PRODUCT LEVEL)	SEE PAGE
	1	1	**5D-1026**	6	CLAMP-BAND	
	2	1	**260-9285**	1	TUBE	
	3	1	**260-9286**	1	TUBE	
	4	1	**307-1590**	1	HOSE	
	5	1	**307-1591**	1	PLATE AS	
	6	1	**2B-0941**	1	SPACER (10.5X19X19-MM THK)	
	7	1	**3E-4321**	4	CLIP	
	8	1	**7M-8798**	1	CLIP	
	9	1	**7X-7729**	1	WASHER (11X25X3-MM THK)	
	10	1	**8T-4121**	7	WASHER-HARD (11X21X2.5-MM THK)	
M	11	1	**8T-4136**	4	BOLT (M10X1.5X25-MM)	
M	12	1	**8T-4137**	3	BOLT (M10X1.5X20-MM)	
M	13	1	**8T-4186**	1	BOLT (M10X1.5X40-MM)	
M	14	1	**8T-4189**	1	BOLT (M8X1.25X20-MM)	
	15	1	**8T-4224**	1	WASHER-HARD (8.8X16X2-MM THK)	
	16	1	**9M-8406**	7	CLIP	
	17	1	**9X-2488**	2	CLAMP-HOSE	
D	18	1	**6V-5817**		CONDUIT-FLEXIBLE (26.1-MM ID, SPLIT) (0.2-M)	
D	18A	1	**6V-5817**		CONDUIT-FLEXIBLE (26.1-MM ID, SPLIT) (0.1-M)	
E	19	1	**5P-0767**		HOSE (149-CM)	
E	19A	1	**5P-0767**		HOSE (127.3-CM)	
E	19B	1	**5P-0767**		HOSE (42.4-CM)	

D-ORDER BY THE METER
E-ORDER BY THE CENTIMETER
M-METRIC PART

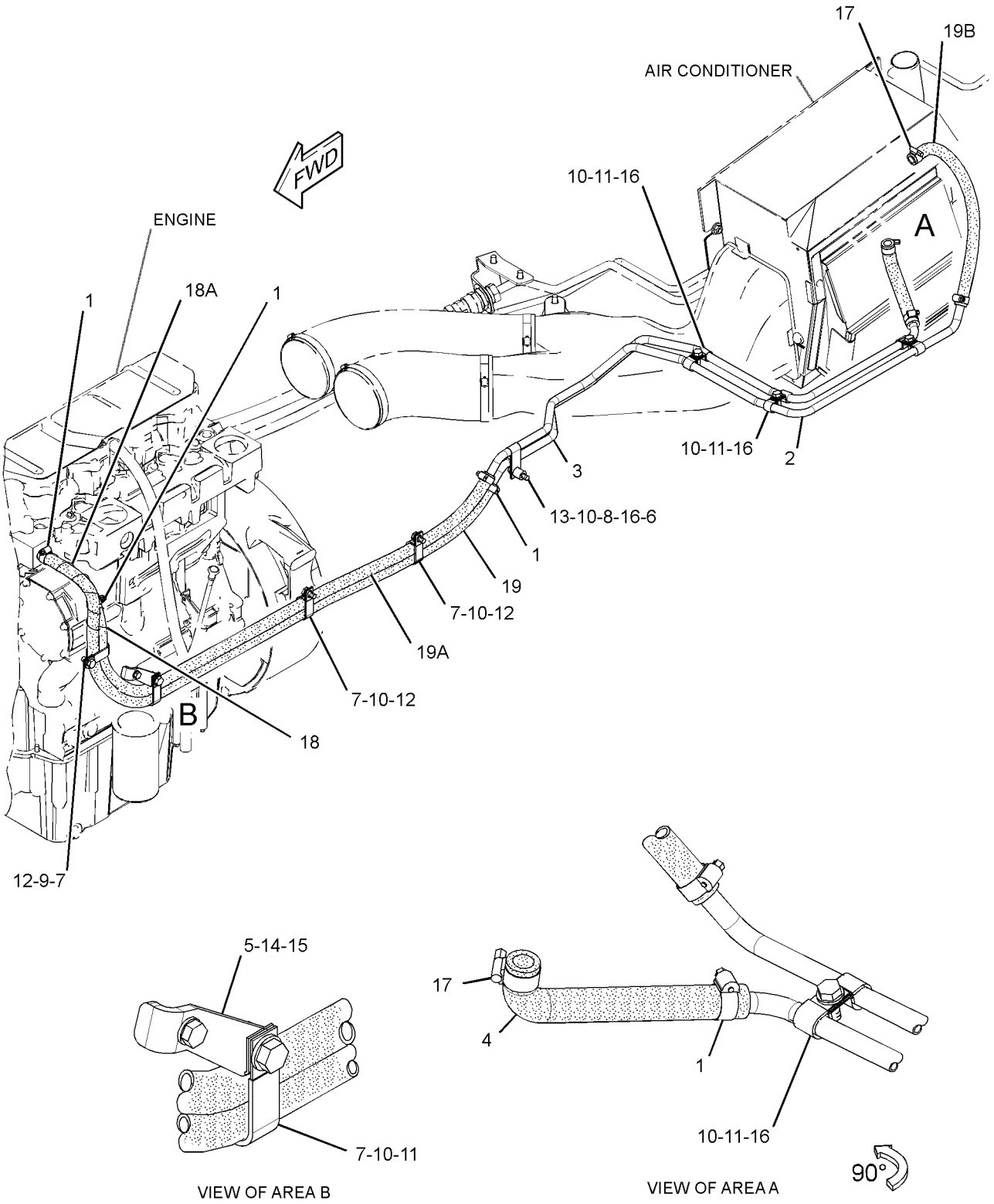

GRAPHIC #1 **<END>** g01525215

OPERATOR STATION

327-7684 LINES GP-HEATER

S/N: JTD1-UP; FFF1-UP; LLL1-UP
PART OF 325-6541, 325-6542, 325-6547 CONVERSION AR-MACHINE OPTION
AN ATTACHMENT

SMCS-7304 **i03657545**

NOTE	REF NO	GRAPHIC REF	PART NUMBER	QTY	PART NAME 1 2 3 4 5 6 (PRODUCT LEVEL)	SEE PAGE
	1	1	**130-9984**	4	CLIP	
	2	1	**328-8624**	1	HOSE AS	
	3	1	**7X-7958**	2	CLAMP-HOSE	
	4	1	**8T-1117**	6	CLAMP-HOSE	
E	5	1	**324-9705**		INSULATION (122-CM)	
E	5A	1	**324-9705**		INSULATION (144-CM)	
E	5B	1	**324-9705**		INSULATION (38-CM)	
E	6	1	**268-4412**		TAPE-INSULATOR (50-CM EACH)	
E	7	1	**5P-0767**		HOSE (127-CM)	
E	7A	1	**5P-0767**		HOSE (153-CM)	
E	7B	1	**5P-0767**		HOSE (42-CM)	

E-ORDER BY THE CENTIMETER

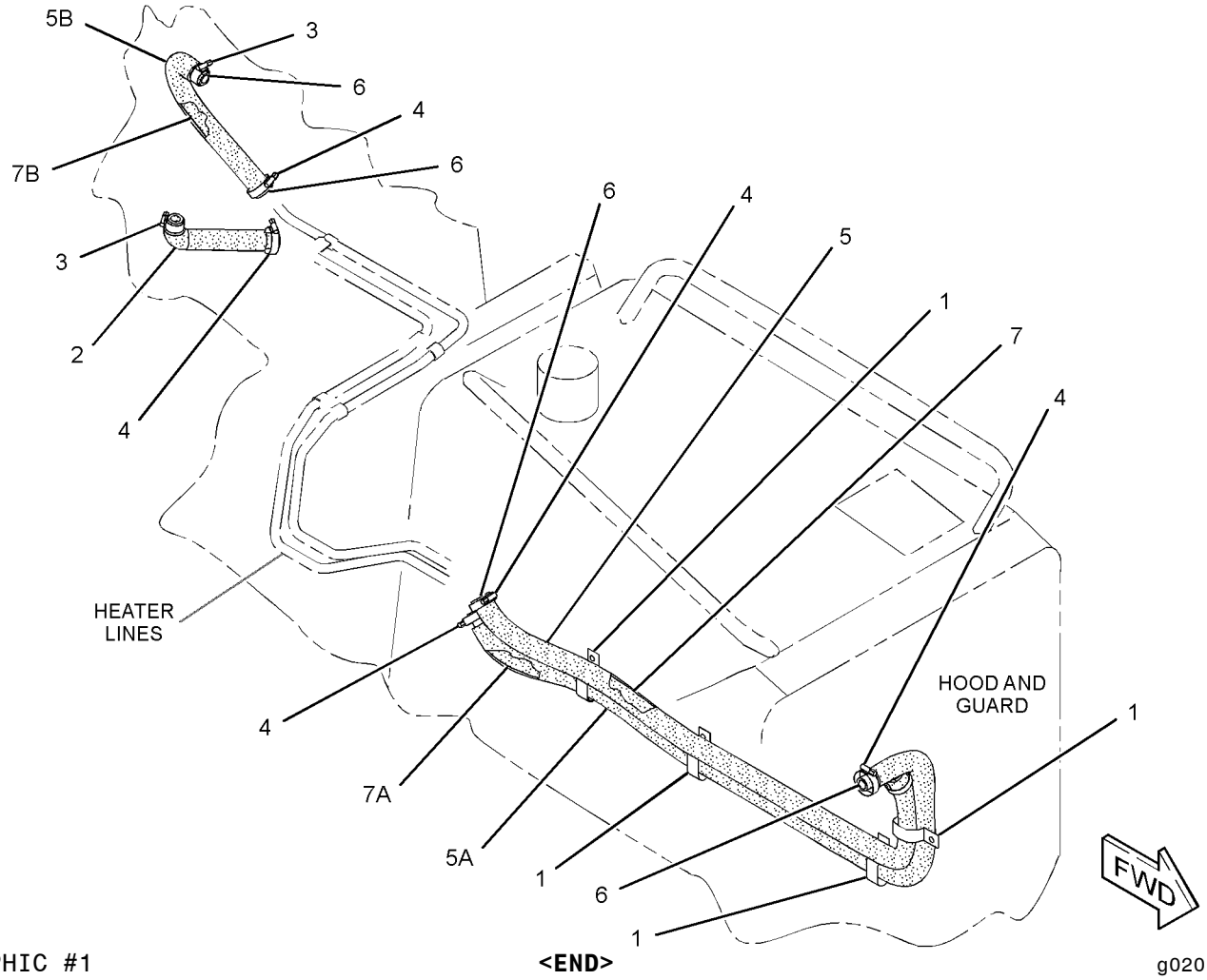

GRAPHIC #1 **<END>** g02010637

OPERATOR STATION

6V-1971 LITERATURE GP—MACHINE

S/N: FFF1-UP; LLL1-UP

PART OF 244-7506, 244-7507, 286-5015, 286-5016, 288-3624 PLATE & FILM GP

AN ATTACHMENT

SMCS-7300, 7400 **i02485092**

NOTE	PART NUMBER	QTY	PART NAME 1 2 3 4 5 6 (PRODUCT LEVEL)	SEE PAGE
	246-2641	1	PADLOCK GP (LITERATURE COMPARTMENT)	
	5P-8500	2	KEY	

<END>

OPERATOR STATION

281-3997 MIRROR GP-REAR VIEW—LH

S/N: JTD1-UP; FFF1-UP; LLL1-UP
PART OF 244-7454, 300-8544, 325-6516, 325-6519, 325-6520 DRIVE AR-WINCH, 264-4541, 325-6522, 325-6528 HYDRAULIC AR
AN ATTACHMENT

SMCS-7319 **i02819620**

NOTE	REF NO	GRAPHIC REF	PART NUMBER	QTY	PART NAME 1 2 3 4 5 6 (PRODUCT LEVEL)	SEE PAGE
	1	1	**281-3998**	1	MIRROR AS	
M	2	1	**3E-8020**	1	SCREW-TRUSS HEAD (M6X1X25-MM)	

M-METRIC PART

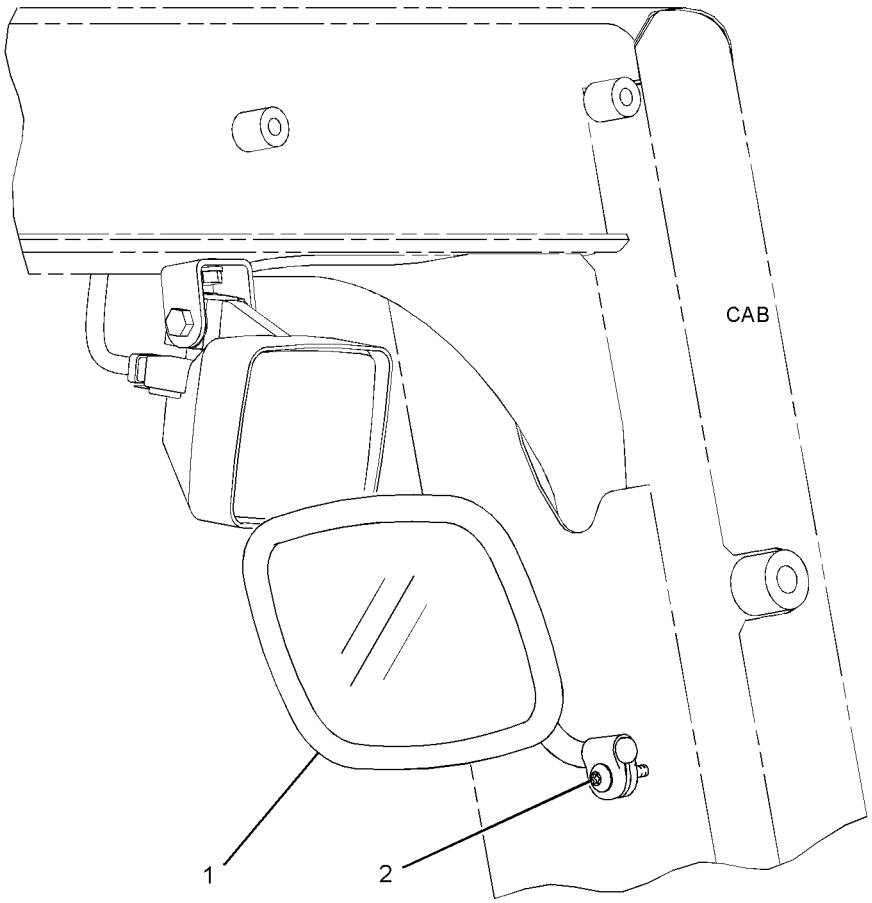

REAR VIEW
(LOWER LEFT)

GRAPHIC #1 **<END>** g01373435

261-7992 MOTOR GP-WINDOW WIPER–DOOR, LH

S/N: JTD1-UP; FFF1-UP; LLL1-UP
12-VOLT
PART OF 255-4272, 255-4274 DOOR GP-CAB
AN ATTACHMENT

SMCS-7305 **i04419074**

NOTE	REF NO	GRAPHIC REF	PART NUMBER	QTY	PART NAME 1 2 3 4 5 6 (PRODUCT LEVEL)	SEE PAGE
	1	1	**206-5823**	1	CAP	
	2	1	**270-1907**	1	MOTOR GP-WINDOW WIPER (DOOR, LH)	
		1	**8T-8729**	4	PIN-CONNECTOR (16-GA TO 18-GA)	
		1	**230-5009**	1	RECEPTACLE AS-CONNECTOR (4-PIN)	
	3	1	**3F-9556**	1	LOCKWASHER	
M	4	1	**5C-7261**	1	NUT (M8X1.25-THD)	

M-METRIC PART

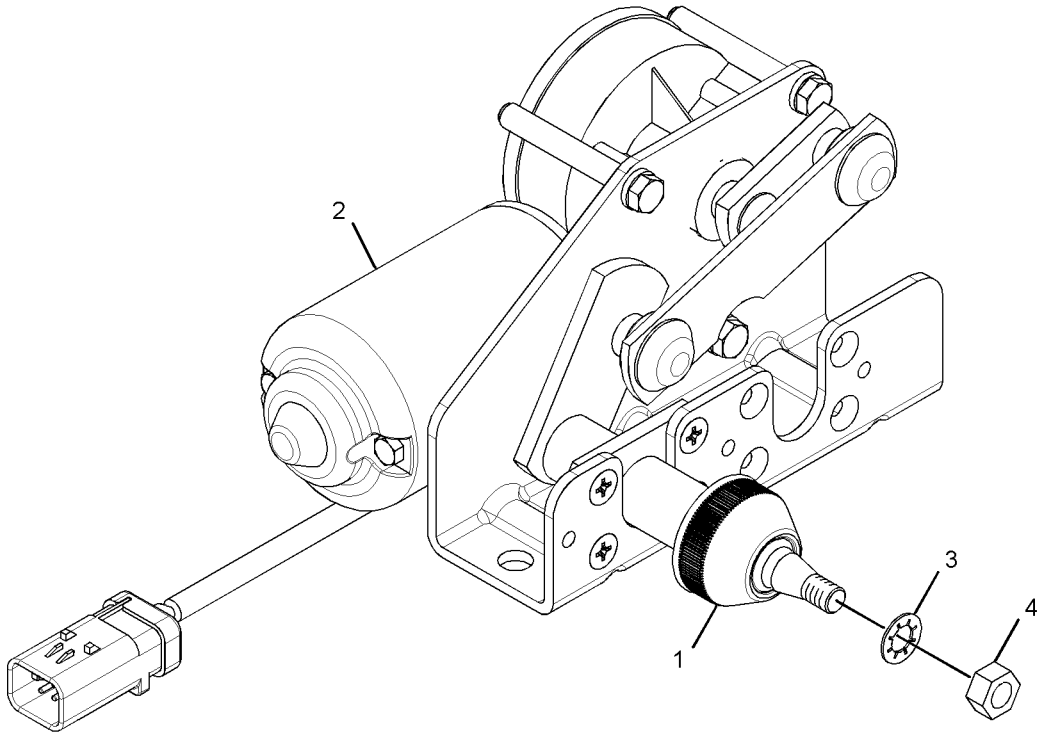

GRAPHIC #1 **<END>** g01354070

OPERATOR STATION

261-7993 MOTOR GP-WINDOW WIPER

S/N: JTD1-UP; FFF1-UP; LLL1-UP
12-VOLT
PART OF 255-4271, 255-4273 DOOR GP-CAB
AN ATTACHMENT

SMCS-7305 **i04419079**

NOTE	REF NO	GRAPHIC REF	PART NUMBER	QTY	PART NAME 1 2 3 4 5 6 (PRODUCT LEVEL)	SEE PAGE
	1	1	**206-5823**	1	CAP	
	2	1	**270-1907**	1	MOTOR GP-WINDOW WIPER (DOOR, LH)	
		1	**8T-8729**	4	PIN-CONNECTOR (16-GA TO 18-GA)	
		1	**230-5009**	1	RECEPTACLE AS-CONNECTOR (4-PIN)	
	3	1	**3F-9556**	1	LOCKWASHER	
M	4	1	**5C-7261**	1	NUT (M8X1.25-THD)	

M-METRIC PART

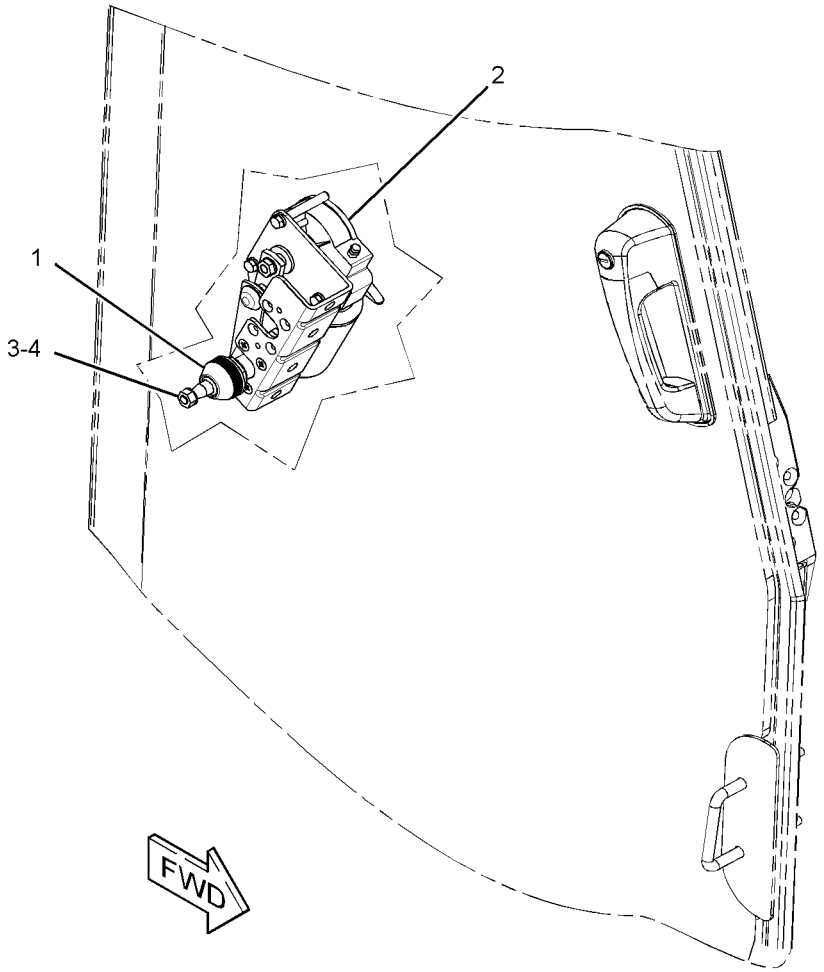

GRAPHIC #1 **<END>** g01375962

330-5019 MOTOR GP-WINDOW WIPER–REAR

S/N: JTD1-UP; FFF1-UP; LLL1-UP
12-VOLT
PART OF 255-4228 WIPER GP-WINDOW
AN ATTACHMENT

SMCS-7305 **i04049371**

NOTE	REF NO	GRAPHIC REF	PART NUMBER	QTY	PART NAME 1 2 3 4 5 6 (PRODUCT LEVEL)	SEE PAGE
	1	1	**8T-8729**	4	PIN-CONNECTOR (16-GA TO 18-GA)	
	2	1	**230-5009**	1	RECEPTACLE AS-CONNECTOR (4-PIN)	
	3	1	**263-3823**	1	CAP-WIPER	
	4	1	**3F-9556**	1	LOCKWASHER	
M	5	1	**5C-7261**	1	NUT (M8X1.25-THD)	

M-METRIC PART

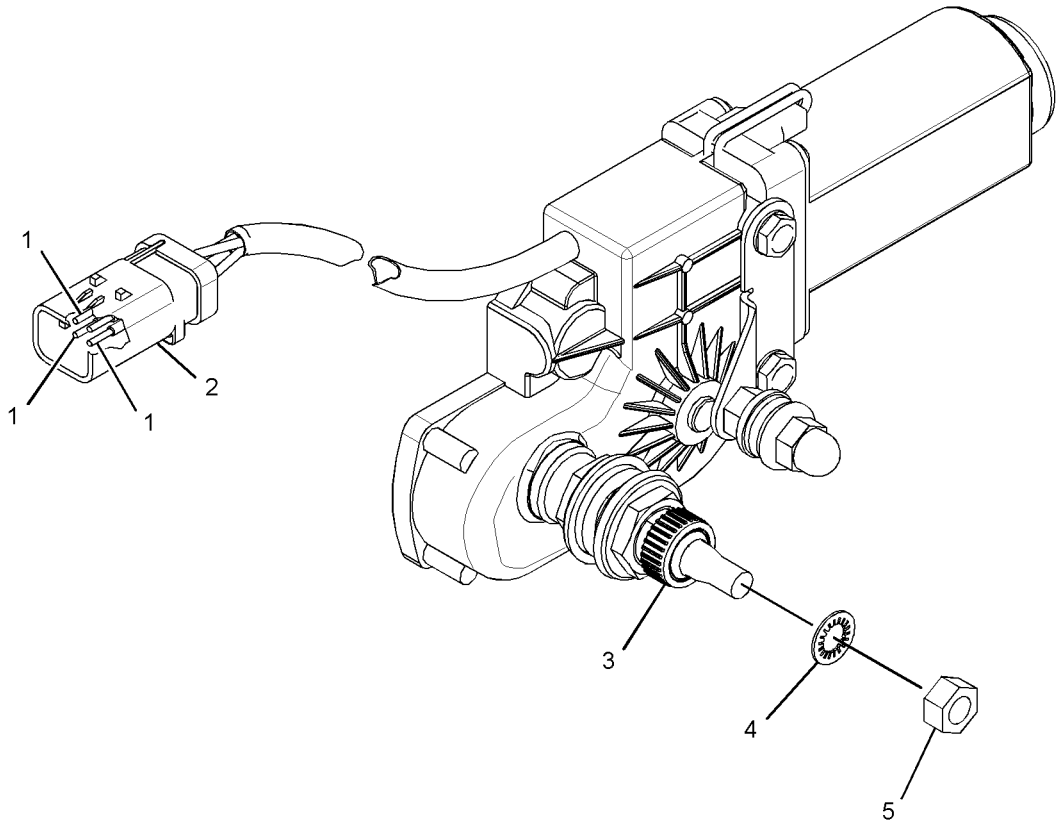

GRAPHIC #1 **<END>** g02493201

OPERATOR STATION

330-5020 MOTOR GP-WINDOW WIPER—FRONT

S/N: JTD1-UP; FFF1-UP; LLL1-UP
12-VOLT
PART OF 255-4228 WIPER GP-WINDOW
AN ATTACHMENT

SMCS-7305 **i04049389**

NOTE	REF NO	GRAPHIC REF	PART NUMBER	QTY	PART NAME 1 2 3 4 5 6 (PRODUCT LEVEL)	SEE PAGE
	1	1	**8T-8729**	4	PIN-CONNECTOR (16-GA TO 18-GA)	
	2	1	**230-5009**	1	RECEPTACLE AS-CONNECTOR (4-PIN)	
	3	1	**263-3823**	1	CAP-WIPER	
	4	1	**3F-9556**	1	LOCKWASHER	
M	5	1	**5C-7261**	1	NUT (M8X1.25-THD)	

M-METRIC PART

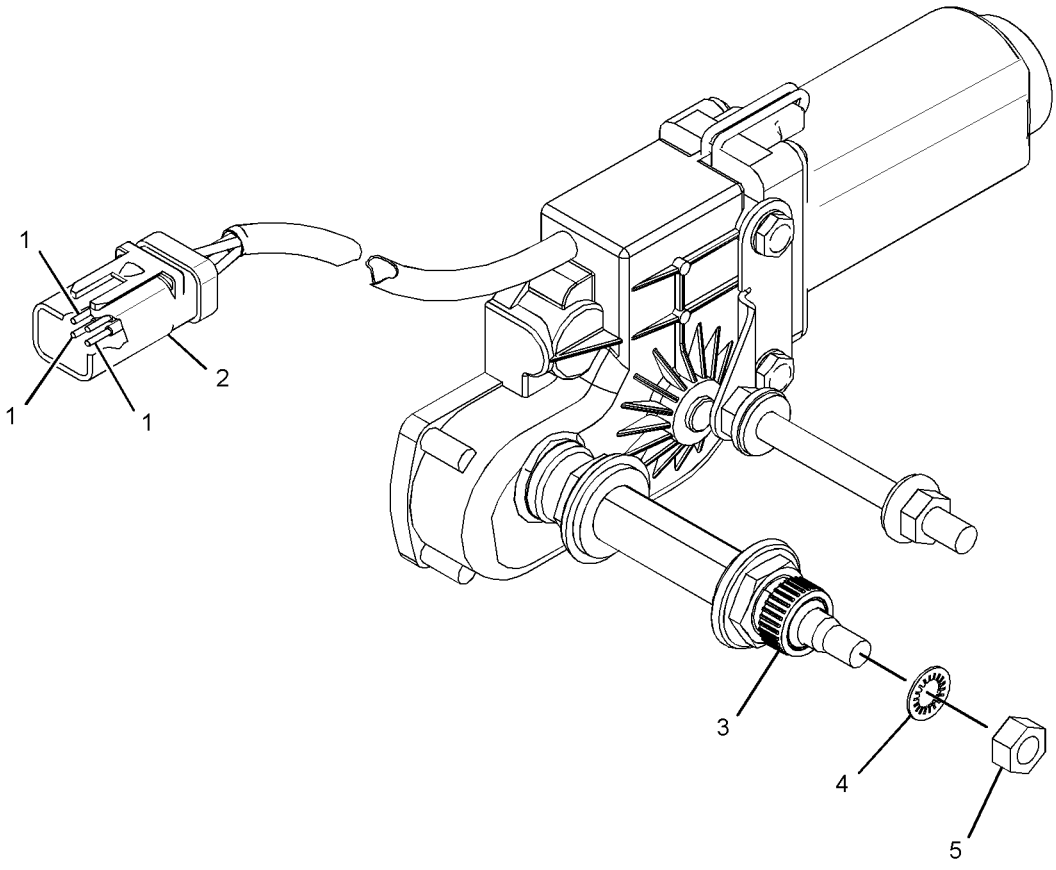

GRAPHIC #1 **<END>** g02493036

OPERATOR STATION

254-3169 MOUNTING GP-CAB

S/N: JTD1-UP; FFF1-UP; LLL1-UP

PART OF 244-7376, 244-7377, 282-5327 CHASSIS AR

SMCS-7266, 7301 **i02819622**

NOTE	REF NO	GRAPHIC REF	PART NUMBER	QTY	PART NAME 1 2 3 4 5 6 (PRODUCT LEVEL)	SEE PAGE
	1	1	**117-8131**	8	MOUNT AS (CAB)	
	2	1	**255-4280**	4	WASHER (25X134X12-MM THK)	
	3	1	**3E-4898**	4	SLEEVE	
M	4	1	**7X-2465**	2	BOLT (M24X3X180-MM)	
M	5	1	**8C-3290**	2	BOLT (M24X3X150-MM)	
	6	1	**126-8928**	4	WASHER-HARD (26X40X8-MM THK)	

M-METRIC PART

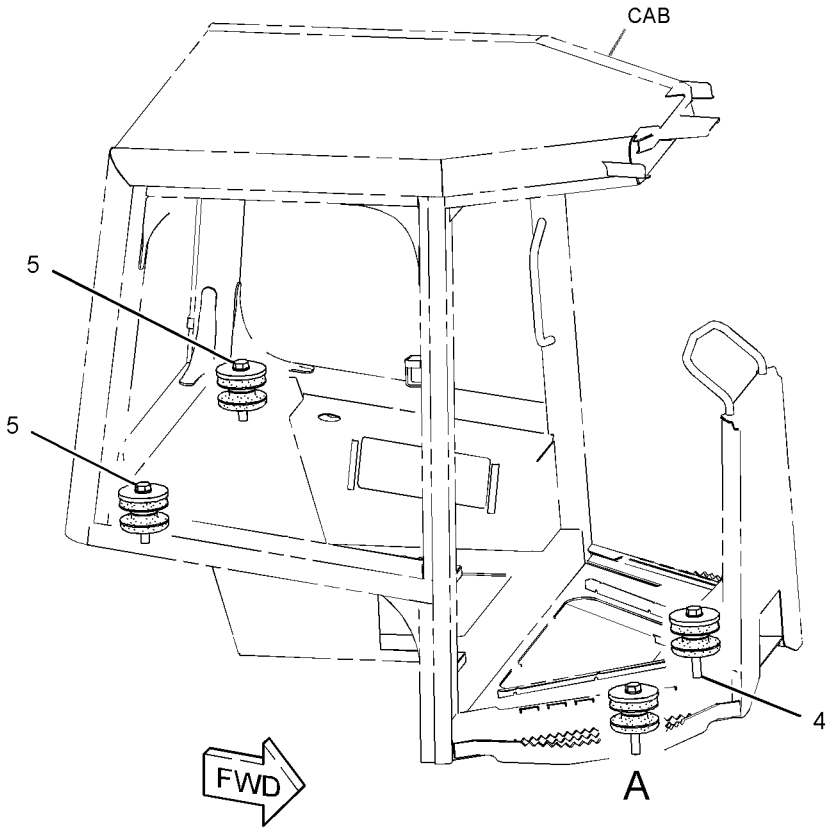

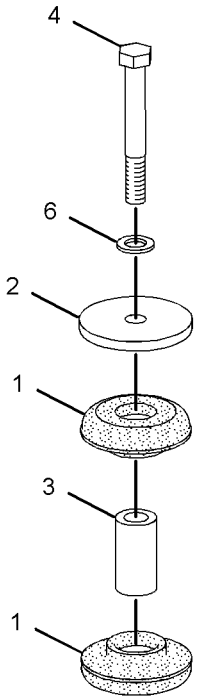

VIEW OF AREA A
(EXPLODED)

GRAPHIC #1 **<END>** g01330632

OPERATOR STATION

259-4746 MOUNTING GP-RADIO–GRADE CONTROL

S/N: JTD1-UP; FFF1-UP; LLL1-UP

PART OF 292-0296 MOUNTING GP-GRADE CONTROL

SMCS-7338 **i02514096**

NOTE	REF NO	GRAPHIC REF	PART NUMBER	QTY	PART NAME 1 2 3 4 5 6 (PRODUCT LEVEL)	SEE PAGE
	1	1	**8C-5607**	6	MOUNT-ISOLATION	
	2	1	**8C-5608**	3	SPACER (6.5X9.5X25.4-MM THK)	
	3	1	**140-7480**	1	BRACKET-MOUNTING	
	4	1	**167-8610**	1	BRACKET AS	
	5	1	**5S-7349**	2	BOLT (1/4-20X0.5-IN)	
	6	1	**8T-4205**	2	WASHER-HARD (7.2X14.5X2-MM THK)	
M	7	1	**9X-2480**	3	BOLT (M6X1X45-MM)	
	8	1	**9X-6165**	3	WASHER (6.5X22X2.5-MM THK)	
BJM	9	1	**7X-2533**	3	BOLT (M6X1X35-MM)	

B-USE AS REQUIRED
J-TO BE USED ON HYDRAULIC EXCAVATOR
M-METRIC PART

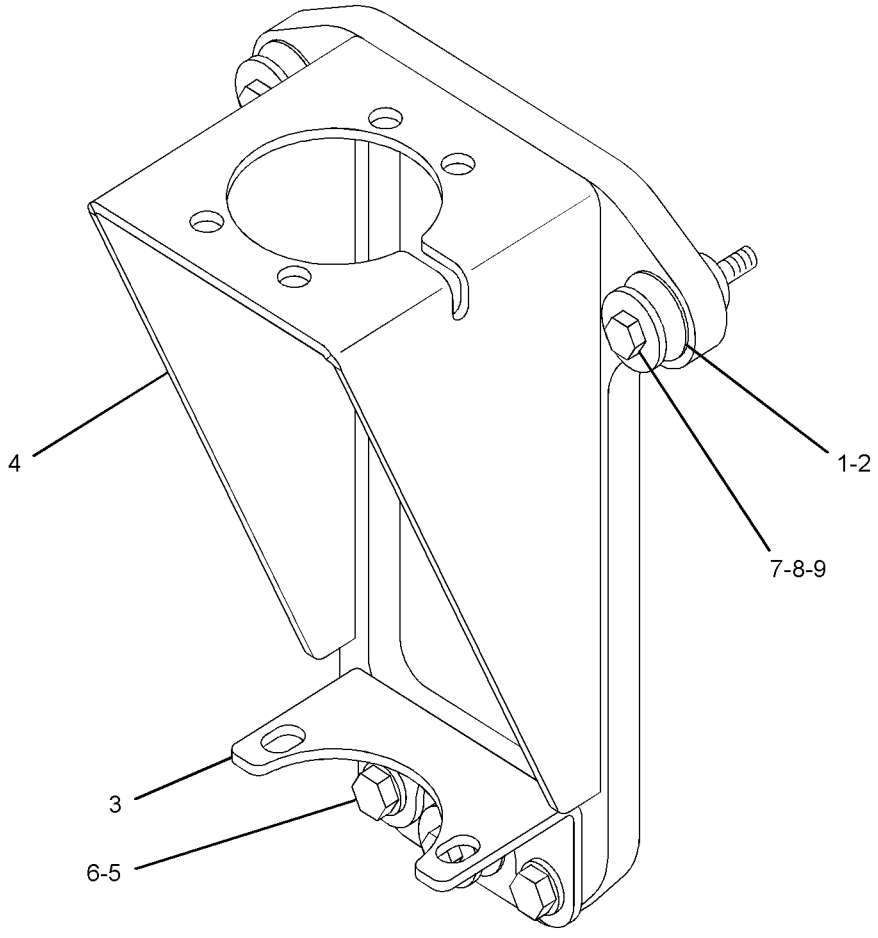

GRAPHIC #1 **<END>** g01259563

292-6402 PAN GP-BACKREST—LUMBAR

S/N: JTD1-UP; FFF1-UP; LLL1-UP
PART OF 295-4433, 295-4434, 295-4436, 301-0147 SEAT GP
AN ATTACHMENT

SMCS-7312 **i03095783**

NOTE	REF NO	GRAPHIC REF	PART NUMBER	QTY	PART NAME 1 2 3 4 5 6 (PRODUCT LEVEL)	SEE PAGE
	1	1	**5P-7957**	1	LANYARD	
	2	1	**136-1543**	1	PLATE AS-LUMBAR	
	3	1	**173-2052**	1	RETAINER	
	4	1	**178-7907**	1	HOLDER	
	5	1	**261-5694**	1	PAN AS-BACKREST	
	6	1	**322-3161**	1	SPRING	
	7	1	**4K-9429**	8	RIVET-POP	

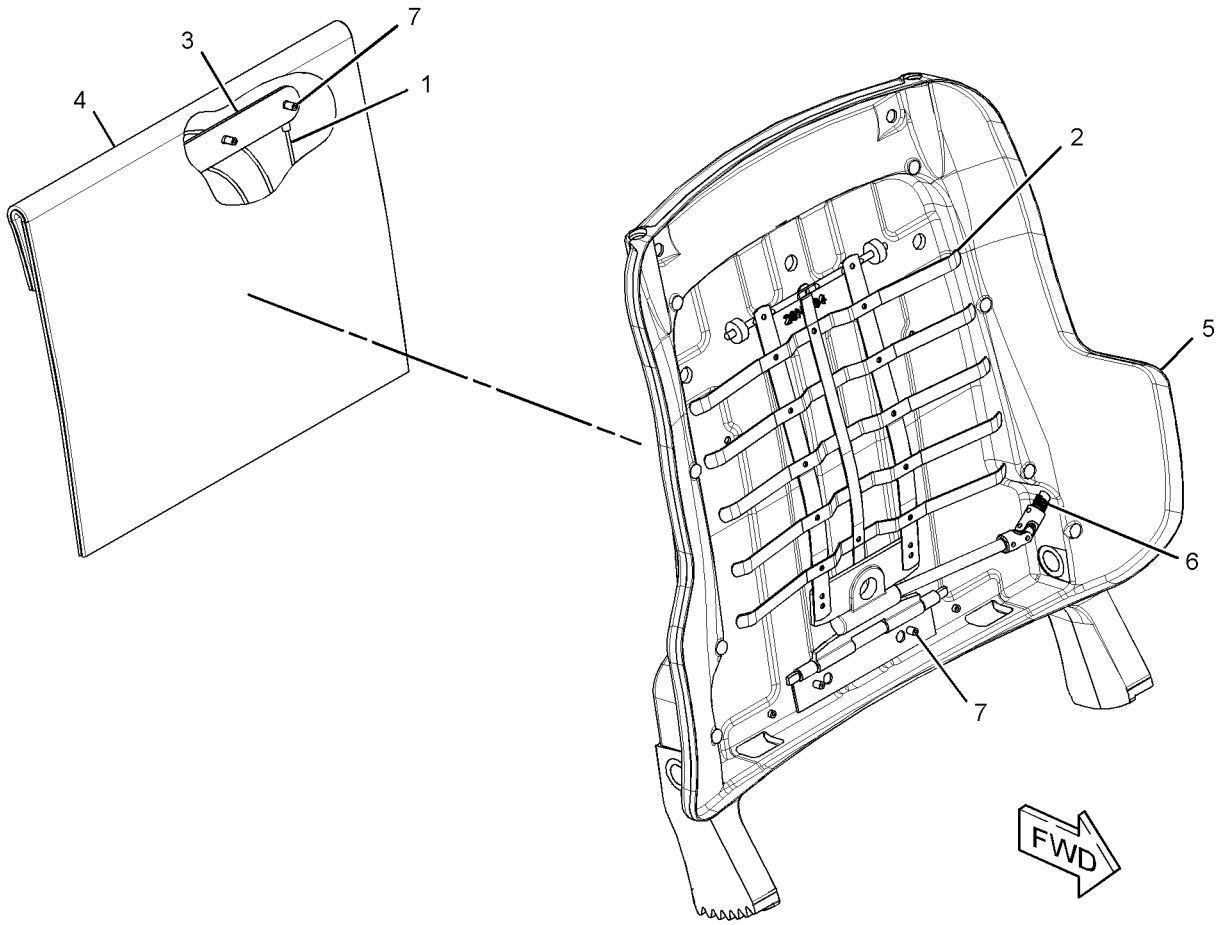

GRAPHIC #1 **<END>** g01577333

OPERATOR STATION

324-0669 PEDAL GP-GOVERNOR & BRAKE

S/N: JTD1-UP; FFF1-UP; LLL1-UP

PART OF 324-0670 CONTROL & MTG GP-PEDAL

SMCS-4122 **i03896325**

NOTE	REF NO	GRAPHIC REF	PART NUMBER	QTY	PART NAME 1 2 3 4 5 6 (PRODUCT LEVEL)	SEE PAGE
	1	1	**5P-9209**	2	BEARING AS-NEEDLE	
	2	1	**111-3780**	1	SPRING	
	3	1	**111-3781**	2	BOLT-ANCHOR (M10X1.5X23-MM)	
	4	1	**145-3405**	2	SPACER (10.3X16.7X8-MM THK)	
	5	1	**191-3587**	1	SWITCH AS-LIMIT (GOVERNOR, BRAKE PEDAL)	
		1	**9G-3695**	1	PLUG-SEAL	
		1	**102-8804**	1	KIT-RECEPTACLE (4-PIN)	
					(INCLUDES RECEPTACLE AS & WEDGE)	
		1	**186-3735**	3	PIN-CONNECTOR (16-GA TO 18-GA)	
	6	1	**252-8930**	1	SUPPORT AS-PEDAL	
	7	1	**252-8933**	1	SHAFT	
	8	1	**267-5639**	1	LINK	
	9	1	**287-2169**	1	PAD	
	10	1	**296-9891**	1	PEDAL AS	
		1	**4S-8264**	2	RIVET-POP	
		1	**148-2714**	1	SPRING	
	11	1	**096-6166**	4	WASHER-HARD (4.5X9X1-MM THK)	
	12	1	**138-1645**	1	PIN-SPRING	
Y	13	1	**266-1470**	1	SENSOR GP-POSITION (STEERING)	215
M	14	1	**3C-6969**	2	NUT (M3X0.5-THD)	
	15	1	**3W-3321**	1	PLUNGER AS	
	16	1	**5D-0998**	6	SPRING-DISC	
	17	1	**6S-3859**	1	WASHER (0.562X1.75X0.063-IN THK)	
	18	1	**6V-0894**	1	SEAL-O-RING	
M	19	1	**6V-2314**	2	BOLT (M5X0.8X35-MM)	
M	20	1	**6V-7687**	1	LOCKNUT (M12X1.75-THD)	
	21	1	**6V-8188**	1	NUT (1/2-13-THD)	
M	22	1	**6V-9325**	2	SCREW-MACHINE (M3X0.5X30-MM)	
	23	1	**7X-7729**	3	WASHER (11X25X3-MM THK)	
	24	1	**8T-0328**	2	WASHER-HARD (5.5X10X1-MM THK)	
M	25	1	**8T-4133**	1	NUT (M10X1.5-THD)	
	26	1	**8T-7971**	1	WASHER-HARD (13.5X25.5X5-MM THK)	
	27	1	**6S-3900**	1	SEAT	

M-METRIC PART
Y-SEPARATE ILLUSTRATION

324-0669 **PEDAL GP-GOVERNOR & BRAKE** *(contd.)* **i03896325**

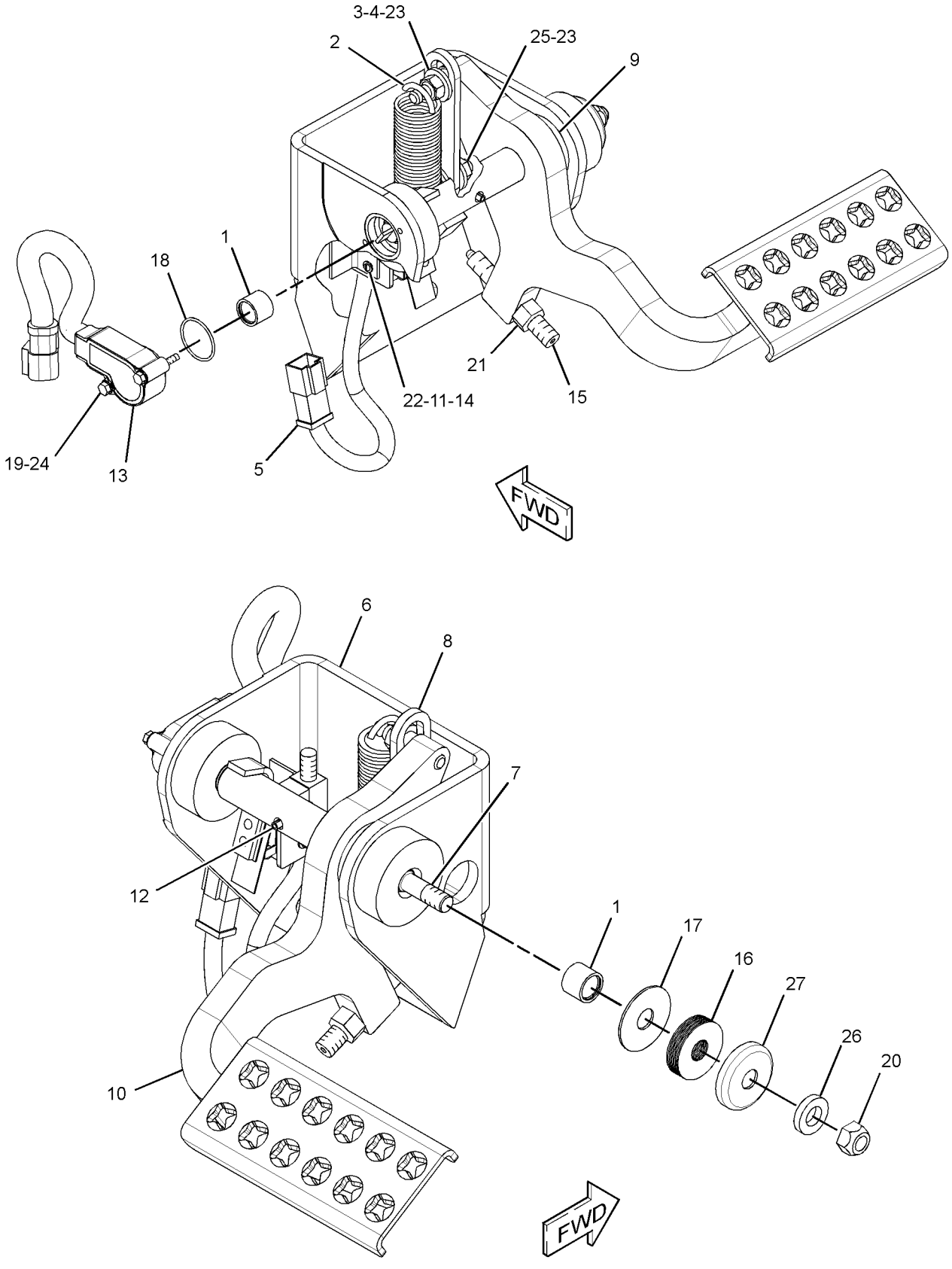

GRAPHIC #1 **<END>** g01711437

OPERATOR STATION

244-7474 ROPS AR—OROPS

S/N: JTD1-UP; FFF1-UP; LLL1-UP
AN ATTACHMENT

SMCS-7177 **i04415557**

NOTE	PART NUMBER	QTY	PART NAME 1 2 3 4 5 6 (PRODUCT LEVEL)	SEE PAGE
Y	*255-4240*	1	ACCESSORY GP-CAB	661
Y	*260-9501*	1	BELT TENSIONER GP	10
Y	*254-3190*	1	HEATER GP-CAB	768
Y	*245-6022*	1	INSTRUMENT GP	772
Y	*245-6047*	1	WIRING GP-CAB (OROPS)	241
	254-3170	1	ROLLOVER AS	
Y-SEPARATE ILLUSTRATION				

<END>

244-7475 ROPS AR—EROPS

S/N: JTD1-UP; FFF1-UP; LLL1-UP
AN ATTACHMENT

SMCS-7177 **i03920897**

NOTE	PART NUMBER	QTY	PART NAME 1 2 3 4 5 6 (PRODUCT LEVEL)	SEE PAGE
Y	*255-4239*	1	ACCESSORY GP-CAB	657
Y	*254-3210*	1	AIR CONDITIONER & MOUNTING GP	667
Y	*260-9294*	1	BELT TENSIONER GP (FAN)	9
Y	*255-4271*	1	DOOR GP-CAB (RH)	741
Y	*255-4272*	1	DOOR GP-CAB (LH)	745
Y	**247-6505**	1	INSTALLATION GP-RADIO	771
Y	*245-6039*	1	INSTRUMENT GP	774
Y	*255-4229*	1	WASHER GP-WINDOW	833
Y	*247-6503*	1	WINDOW GP-CAB	835
Y	*255-4228*	1	WIPER GP-WINDOW	844
Y	*245-6021*	1	WIRING GP-CAB	231
	254-3180	1	ROLLOVER AS	
Y-SEPARATE ILLUSTRATION				

<END>

OPERATOR STATION

244-7476 ROPS AR—EROPS

S/N: JTD1-UP; FFF1-UP; LLL1-UP
360 DEGREE GUARDING
AN ATTACHMENT

SMCS-7177 **i03920909**

NOTE	PART NUMBER	QTY	PART NAME 1 2 3 4 5 6 (PRODUCT LEVEL)	SEE PAGE
Y	*255-4239*	1	ACCESSORY GP-CAB	657
Y	*254-3210*	1	AIR CONDITIONER & MOUNTING GP	667
Y	*260-9294*	1	BELT TENSIONER GP (FAN)	9
Y	*255-4273*	1	DOOR GP-CAB (RH)	751
Y	*255-4274*	1	DOOR GP-CAB (LH)	757
Y	**247-6505**	1	INSTALLATION GP-RADIO	771
Y	*245-6039*	1	INSTRUMENT GP	774
Y	*250-1699*	1	SCREEN GP-PROTECTION (SIDES)	799
Y	*272-9780*	1	SCREEN GP-PROTECTION (REAR)	800
Y	*255-4229*	1	WASHER GP-WINDOW	833
Y	*255-4275*	1	WINDOW GP-CAB	837
Y	*255-4228*	1	WIPER GP-WINDOW	844
Y	*245-6021*	1	WIRING GP-CAB	231
	254-3180	1	ROLLOVER AS	

Y-SEPARATE ILLUSTRATION

<END>

OPERATOR STATION

272-9770 SCREEN GP-CAB–OROPS

S/N: JTD1-UP; FFF1-UP; LLL1-UP
REAR
FOR USE WITH CANOPY, ROPS
AN ATTACHMENT

SMCS-7165, 7301 **i04415649**

NOTE	REF NO	GRAPHIC REF	PART NUMBER	QTY	PART NAME 1 2 3 4 5 6 (PRODUCT LEVEL)	SEE PAGE
	1	1	**302-5320**	1	SCREEN AS-CAB	
M	2	1	**7X-2552**	4	BOLT (M16X2X30-MM)	
	3	1	**8T-4122**	4	WASHER-HARD (17X32X3.5-MM THK)	

M-METRIC PART

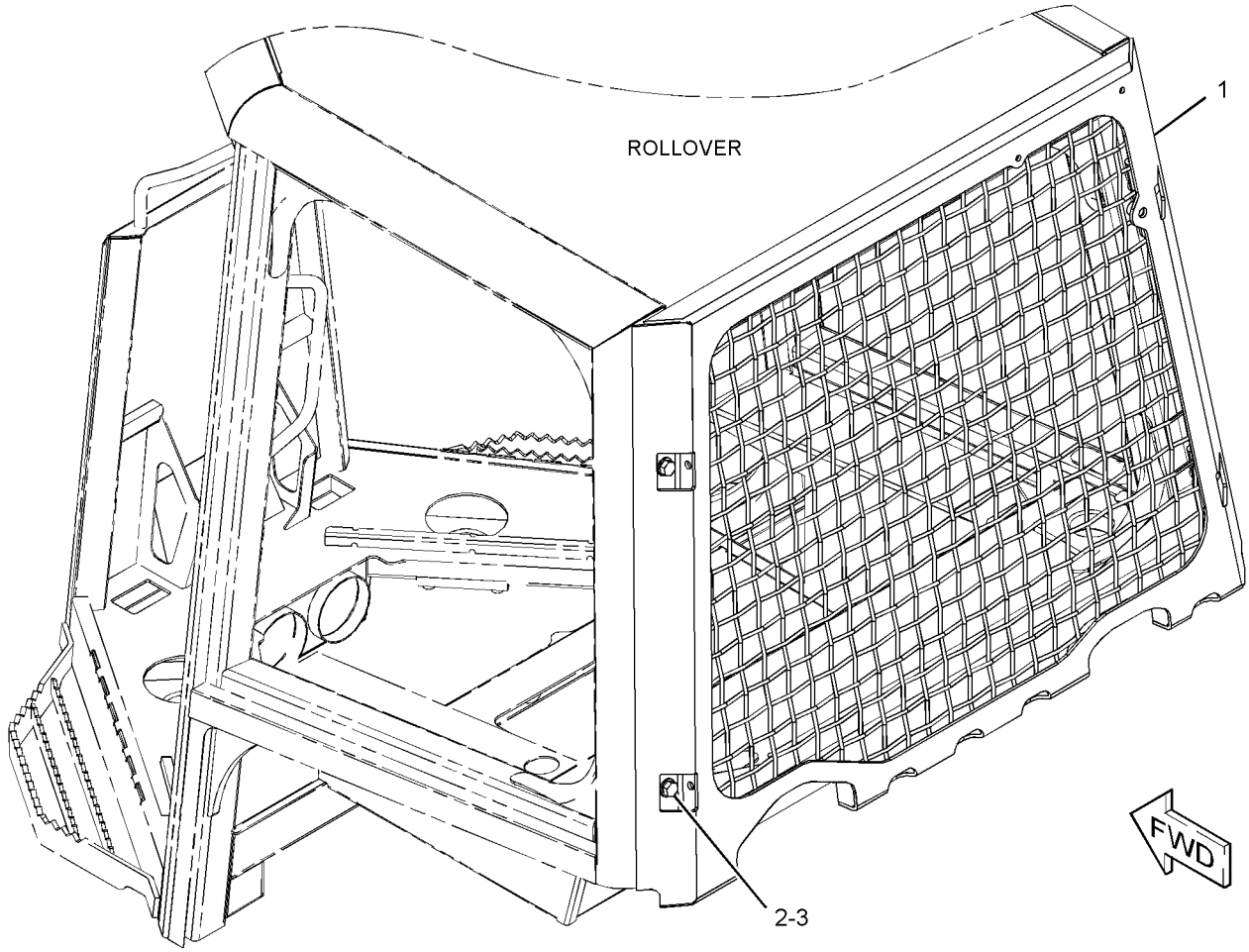

GRAPHIC #1 **<END>** g01333901

OPERATOR STATION

250-1699 SCREEN GP-PROTECTION–SIDES

S/N: JTD1-UP; FFF1-UP; LLL1-UP
PART OF 244-7476 ROPS AR
AN ATTACHMENT

SMCS-7165 **i03635050**

NOTE	REF NO	GRAPHIC REF	PART NUMBER	QTY	PART NAME 1 2 3 4 5 6 (PRODUCT LEVEL)	SEE PAGE
	1	1	**252-0552**	1	SCREEN AS (RH)	
	2	1	**252-0553**	1	SCREEN AS (LH)	
					(EACH SCREEN AS INCLUDES)	
M		1	**8T-3597**	4	NUT-WELD (M12X1.75-THD)	
M	3	1	**7X-2553**	6	BOLT (M16X2X40-MM)	
M	4	1	**7X-2554**	2	BOLT (M16X2X70-MM)	
	5	1	**9X-8257**	8	WASHER (17.5X30X3.5-MM THK)	

M-METRIC PART

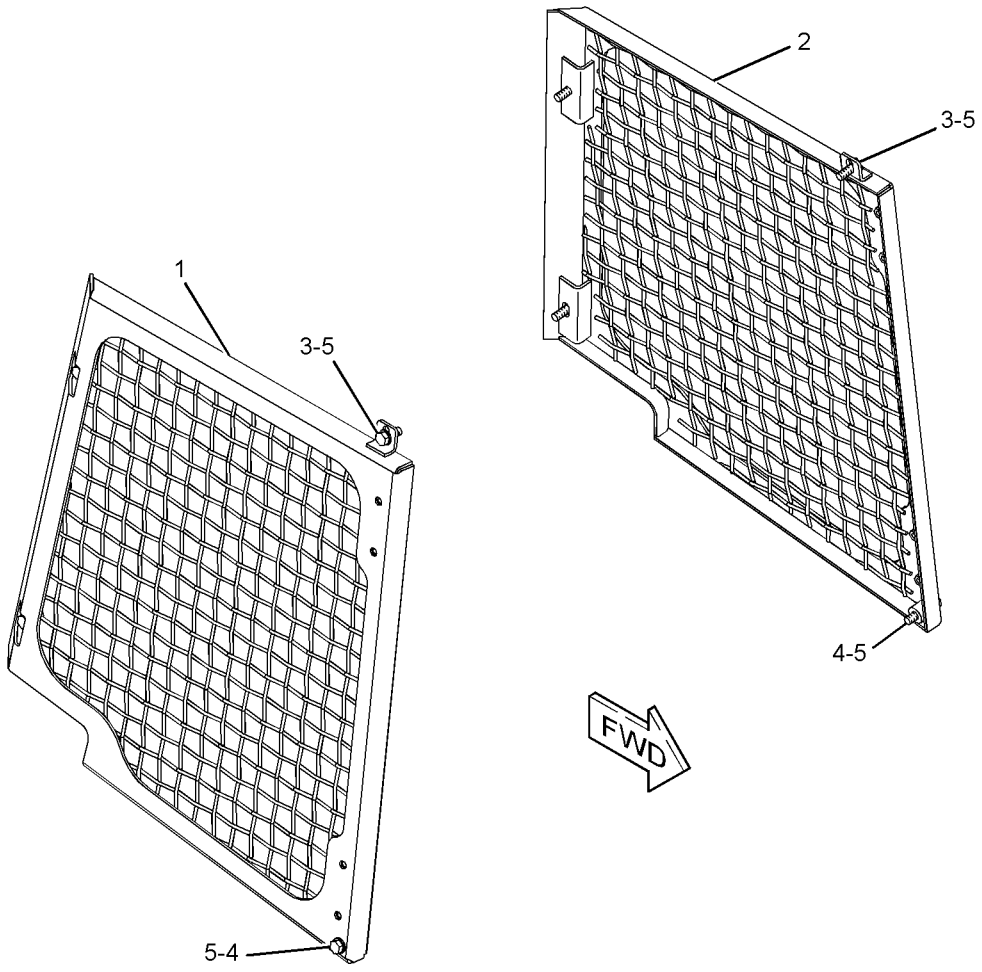

GRAPHIC #1 **<END>** g01202762

OPERATOR STATION

272-9780 SCREEN GP-PROTECTION–REAR

S/N: JTD1-UP; FFF1-UP; LLL1-UP
PART OF 244-7476 ROPS AR
FOR USE WITH CABS, ROPS
AN ATTACHMENT

SMCS-7165 **i04246429**

NOTE	REF NO	GRAPHIC REF	PART NUMBER	QTY	PART NAME 1 2 3 4 5 6 (PRODUCT LEVEL)	SEE PAGE
	1	1	**5P-0372**	3	LOCK PIN	
	2	1	**8E-7840**	1	CLIP	
	3	1	**9M-5732**	1	RIVET-POP	
	4	1	**252-5459**	1	ROD AS	
		1	**7X-0599**	1	WASHER-HARD (13X20X2-MM THK)	
	5	1	**252-6803**	2	HINGE	
	6	1	**302-5323**	1	SCREEN AS-CAB	
	7	1	**6S-9277**	2	PIN	
M	8	1	**7X-2552**	4	BOLT (M16X2X30-MM)	
	9	1	**8T-4122**	4	WASHER-HARD (17X32X3.5-MM THK)	
	10	1	**171-3396**	1	GROMMET	

M-METRIC PART

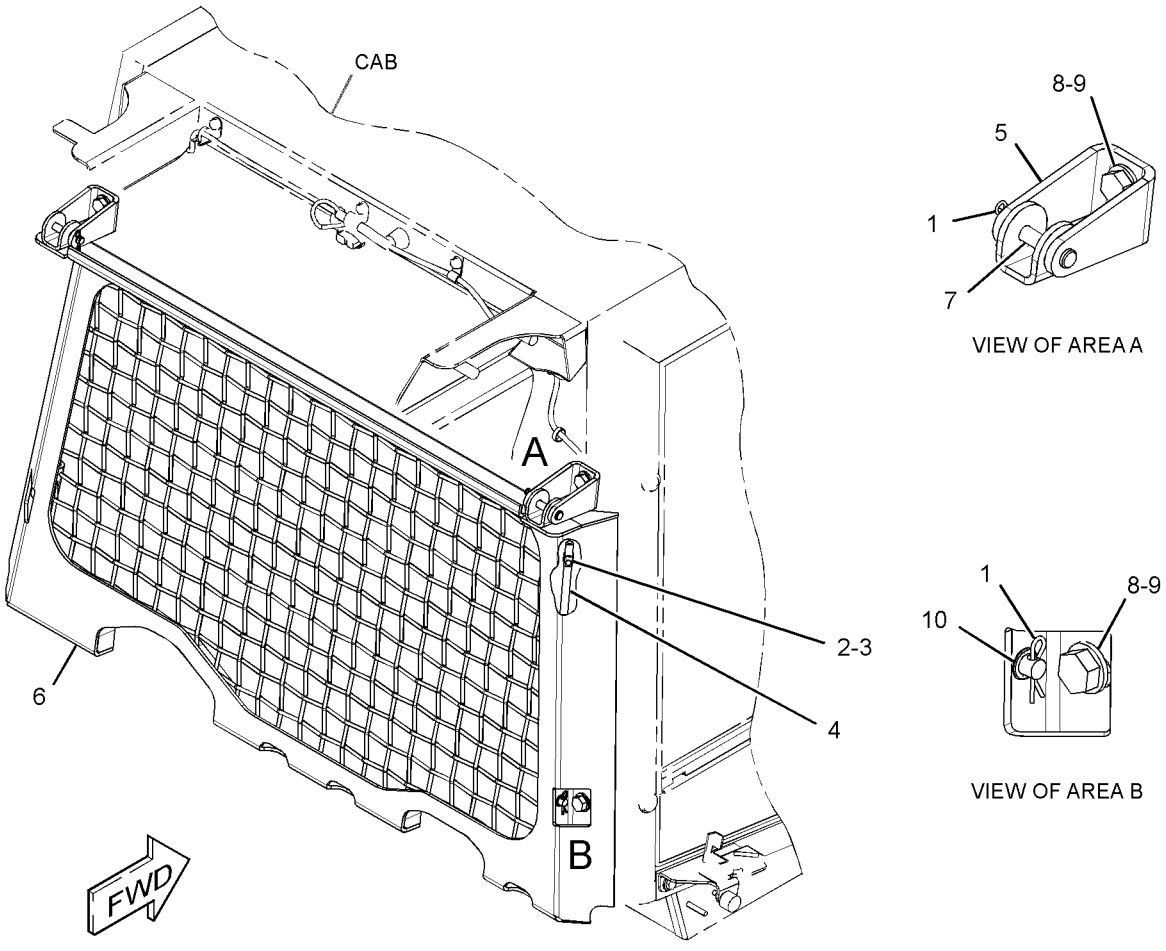

VIEW OF AREA A

VIEW OF AREA B

GRAPHIC #1 **<END>** g02492660

OPERATOR STATION

255-4242 SEAT & SUPPORT GP—VINYL, HEATED

S/N: JTD1-UP; FFF1-UP; LLL1-UP

CANNOT BE USED WITH 255-4250—PAGE 818, 255-4251—PAGE 819, 255-4252—PAGE 820

AN ATTACHMENT

SMCS-7312 **i02834136**

NOTE	REF NO	GRAPHIC REF	PART NUMBER	QTY	PART NAME 1 2 3 4 5 6 (PRODUCT LEVEL)	SEE PAGE
Y	1	1	*268-9351*	1	CONSOLE GP-OPERATOR (RH)	692
Y	2	1	*268-9352*	1	CONSOLE GP-OPERATOR (LH)	693
Y	3	1	*280-9679*	1	ARMREST GP (LH)	680
Y	4	1	*284-7054*	1	ARMREST GP (RH)	682
Y	5	1	*301-0148*	1	SEAT GP-SUSPENSION (VINYL, HEATED)	824
	6	1	**7X-7729**	4	WASHER (11X25X3-MM THK)	
M	7	1	**8T-4186**	4	BOLT (M10X1.5X40-MM)	

M-METRIC PART
Y-SEPARATE ILLUSTRATION

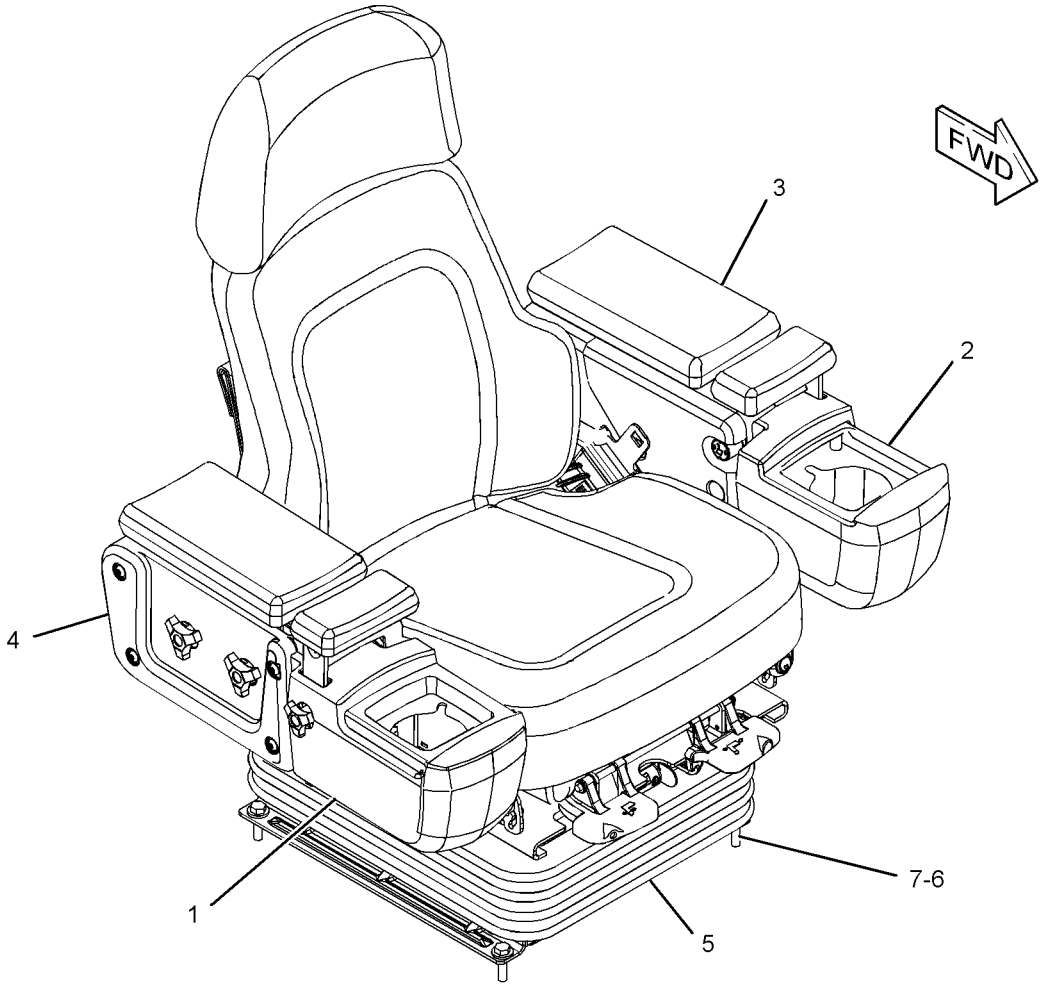

GRAPHIC #1 **<END>** g01354437

OPERATOR STATION

258-8373 SEAT BELT GP–RETRACTABLE

S/N: JTD1-UP; FFF1-UP; LLL1-UP
PART OF 318-6107 CONVERSION GP-ELECTRICAL
AN ATTACHMENT

SMCS-7327 **i03434903**

NOTE	REF NO	GRAPHIC REF	PART NUMBER	QTY	PART NAME 1 2 3 4 5 6 (PRODUCT LEVEL)	SEE PAGE
					(NO SERVICED PARTS)	

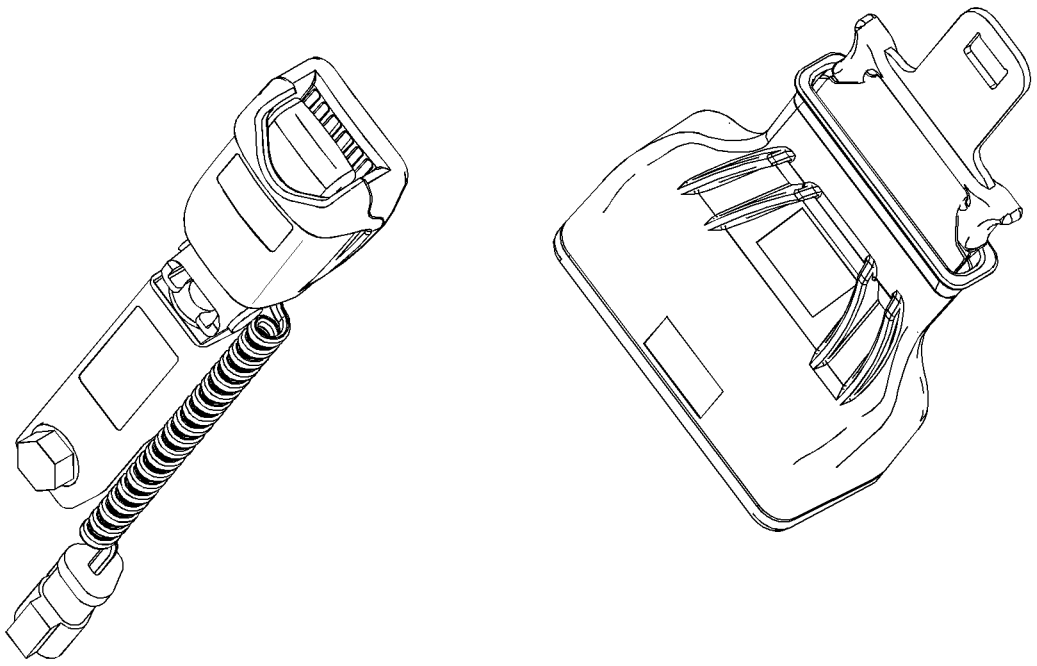

GRAPHIC #1 **<END>** g01756993

OPERATOR STATION

272-2272 SEAT BELT GP–RETRACTABLE

S/N: JTD1-UP; FFF1-UP; LLL1-UP
PART OF 255-8846, 257-4959, 272-8111, 301-0148 SEAT GP-SUSPENSION
AN ATTACHMENT

SMCS-7327 **i02760027**

NOTE	REF NO	GRAPHIC REF	PART NUMBER	QTY	PART NAME 1 2 3 4 5 6 (PRODUCT LEVEL)	SEE PAGE
	1	1	**275-7803**	1	SPACER (11.7X19.8X25.4-MM THK)	
	2	1	**0T-0489**	2	BOLT (7/16-20X2-IN)	
	3	1	**8T-5360**	2	WASHER (12X22.5X2.5-MM THK)	

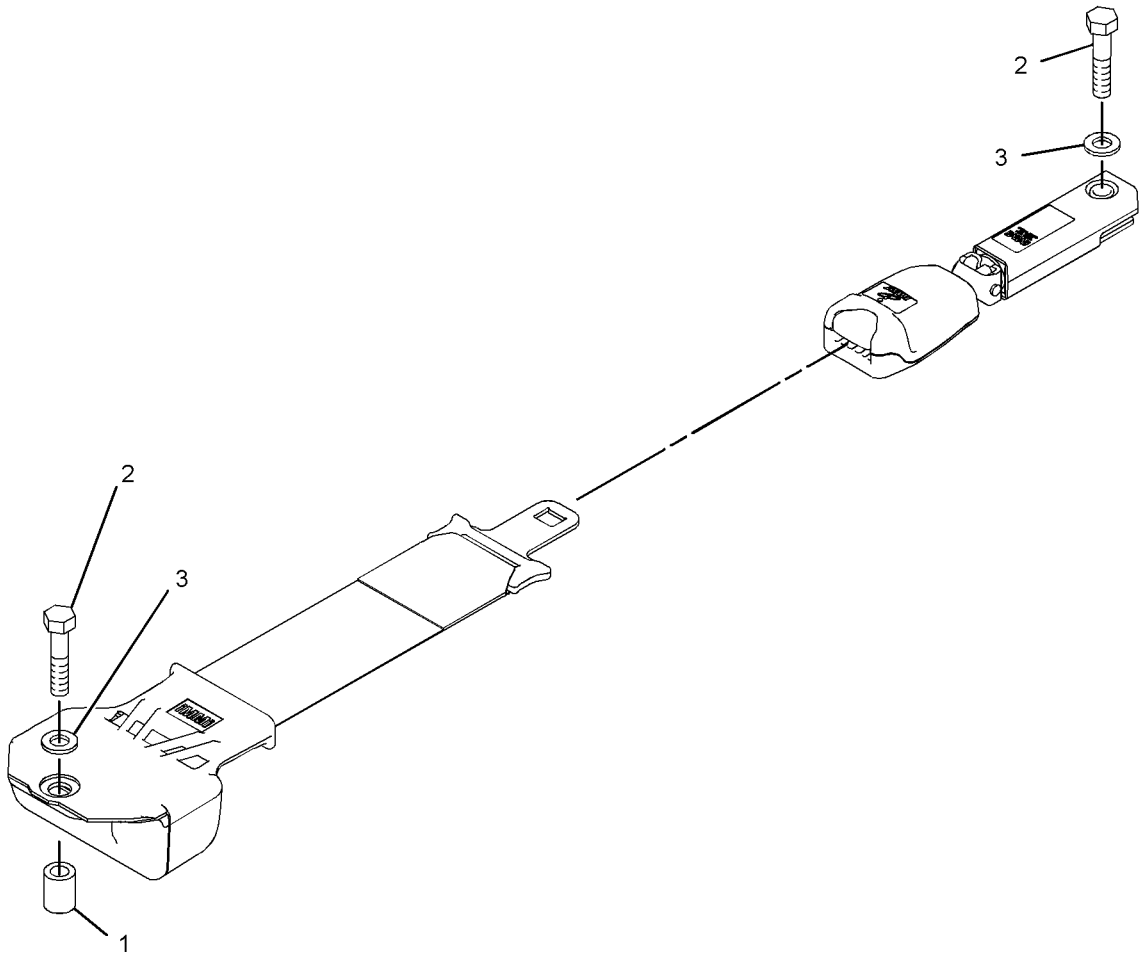

GRAPHIC #1 **<END>** g01382730

OPERATOR STATION

295-4433 SEAT GP–CLOTH, HEATED

S/N: JTD1-UP; FFF1-UP; LLL1-UP
PART OF 272-8111 SEAT GP-SUSPENSION
AN ATTACHMENT

SMCS-7312 **i03776969**

NOTE	REF NO	GRAPHIC REF	PART NUMBER	QTY	PART NAME 1 2 3 4 5 6 (PRODUCT LEVEL)	SEE PAGE
	1	1	**4V-8256**	2	SPRING	
	2	2	**132-0338**	4	WASHER-PLASTIC (13X31.7X0.8-MM THK)	
	3	1	**143-1288**	6	LOCKNUT-FLANGE (3/8-16-THD)	
	4	1	**164-4883**	1	KNOB-LUMBAR	
	5	1	**171-1230**	6	SCREW-BUTTON HEAD (3/8-16X1-IN)	
	6	2	**216-0814**	1	SWITCH AS-LIMIT (SEAT ADJUSTMENT)	
	7	1	**218-2529**	3	PLUG	
	8	1	**229-1494**	1	EXTENSION GP-BACKREST (CLOTH)	
		1	**117-4491**	1	ROD	
	9	2	**249-2844**	2	WASHER (12.7X31.7X1-MM THK)	
	10	1	**262-0767**	1	BRACKET AS (LH)	
	11	1	**262-0769**	1	BRACKET AS (RH)	
	12	2	**262-0772**	1	SHAFT AS	
		2	**2K-9111**	2	PIN-SPRING	
		2	**3E-4333**	1	KEY-WOODRUFF	
		2	**8T-0277**	1	PIN-SPRING	
		2	**256-4959**	1	SLIDER AS	
		2	**262-0789**	1	CABLE AS	
	13	1	**262-0779**	1	LATCH (LH)	
	14	1	**262-0780**	1	LATCH (RH)	
	15	1	**262-0781**	1	ROD	
	16	2	**262-0785**	1	LEVER (RH)	
	17	2	**262-0786**	2	BOLT-SPECIAL	
	18	2	**262-0787**	1	ROD	
	19	2	**267-5147**	2	BRACKET	
	20	2	**267-5159**	1	SPRING	
	21	2	**267-5160**	1	PLATE	
	22	1	**267-9319**	1	STOP	
	23	2	**276-3642**	1	SHAFT	
	24	2	**276-3644**	1	NUT-SPECIAL	
	25	1	**282-0554**	1	SWITCH (12-VOLT) (SEAT HEATER ON, OFF)	
	26	1	**282-0558**	1	CUSHION AS-SEAT (CLOTH, HEATED)	
	27	1	**282-0561**	1	CUSHION AS-BACK (CLOTH, HEATED)	
	28	1	**285-2372**	1	HARNESS AS-SWITCH (HEATED SEAT)	
		1	**102-8803**	1	KIT-RECEPTACLE (3-PIN) (INCLUDES RECEPTACLE AS & WEDGE)	
		1	**9X-3401**	3	PIN-CONNECTOR (16-GA TO 18-GA)	
		1	**113-9807**	1	TERMINAL-RECEPTACLE	
		1	**122-4395**	3	TERMINAL	
Y	29	1	*292-6402*	1	PAN GP-BACKREST (LUMBAR)	793
	30	2	**293-2915**	1	LEVER (LH)	
	31	2	**293-9379**	1	ROD	
	32	1	**293-9380**	1	ROD	
	33	1	**293-9381**	1	PLATE AS	
	34	2	**293-9665**	2	SPRING	
	35	2	**294-7139**	1	PAN GP-SEAT	
M		2	**5C-7261**	6	NUT (M8X1.25-THD)	
		2	**8T-4224**	6	WASHER-HARD (8.8X16X2-MM THK)	
M		2	**127-2170**	6	SCREW-TRUSS HEAD (M8X1.25X20-MM)	
	36	2	**295-6472**	4	WASHER (7X19X2-MM THK)	
	40	1	**031-0214**	1	BOLT-LOCKING (1/4-20X0.5-IN)	
	41	1	**101-2867**	1	WASHER-HARD (7.2X25X2-MM THK)	
M	42	1	**238-0251**	8	SCREW-BUTTON HEAD (M10X1.5X25-MM)	
	43	2	**5T-7486**	2	RETAINER-SPRING	
	44	2	**5V-1496**	2	RETAINER	

295-4433 **SEAT GP** *(contd.)* **i03776969**

NOTE	REF NO	GRAPHIC REF	PART NUMBER	QTY	PART NAME 1 2 3 4 5 6 (PRODUCT LEVEL)	SEE PAGE
	45	1	**6V-8969**	2	SCREW-BUTTON HEAD (1/4-20X0.5-IN)	
	46	2	**7Y-0468**	2	PIN-SPRING	
M	47	2	**7Y-7388**	6	SCREW-BUTTON HEAD (M5X0.8X12-MM)	
M	48	2	**8T-4133**	1	NUT (M10X1.5-THD)	
	49	1	**8T-4205**	2	WASHER-HARD (7.2X14.5X2-MM THK)	
	50	1	**8T-7566**	1	PIN-SPRING	
	51	2	**9F-5975**	1	BOLT (5/16-18X0.75-IN)	
	52	2	**9T-5241**	4	WASHER (9.53X18X1-MM THK)	

M-METRIC PART
Y-SEPARATE ILLUSTRATION

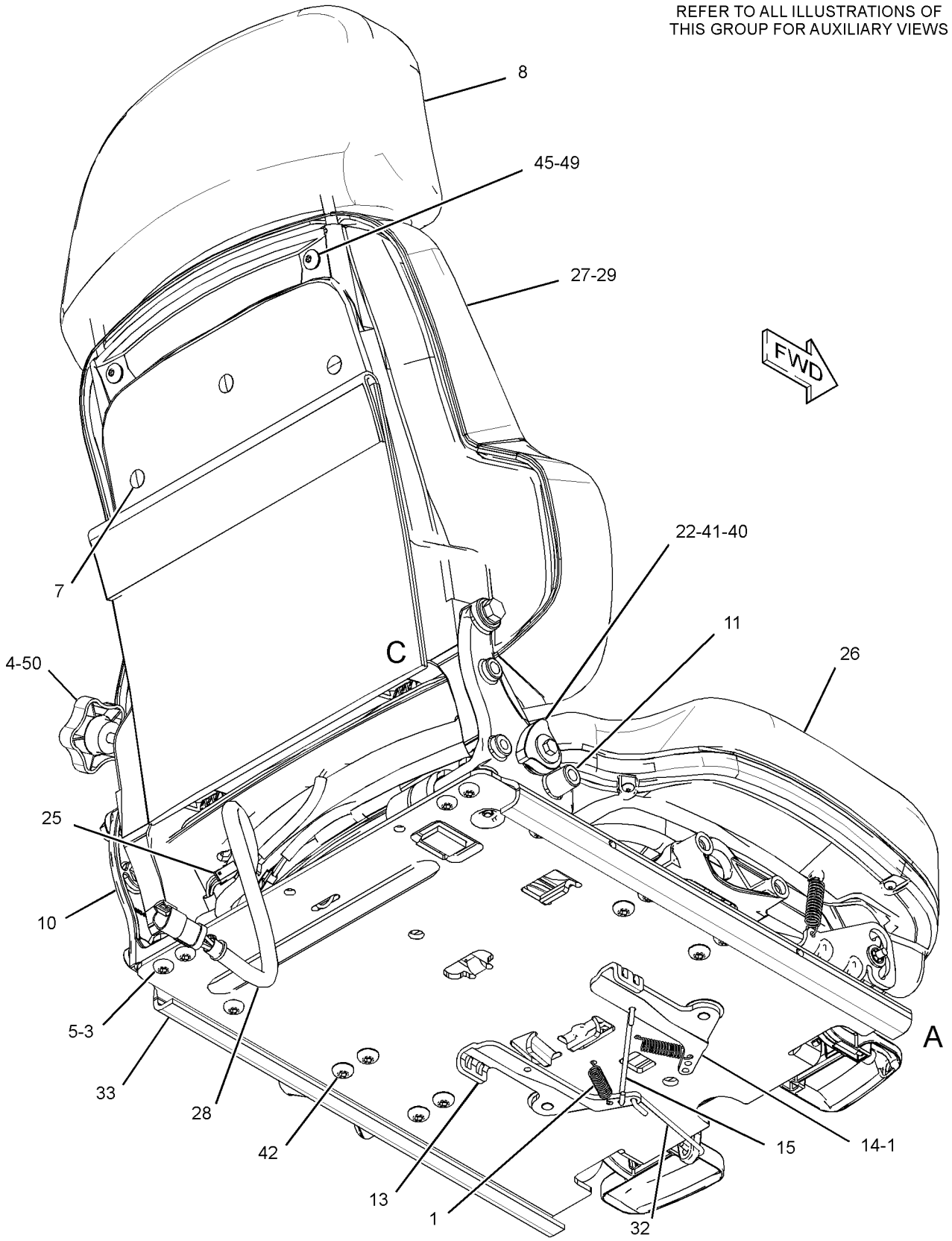

GRAPHIC #1

g01954058

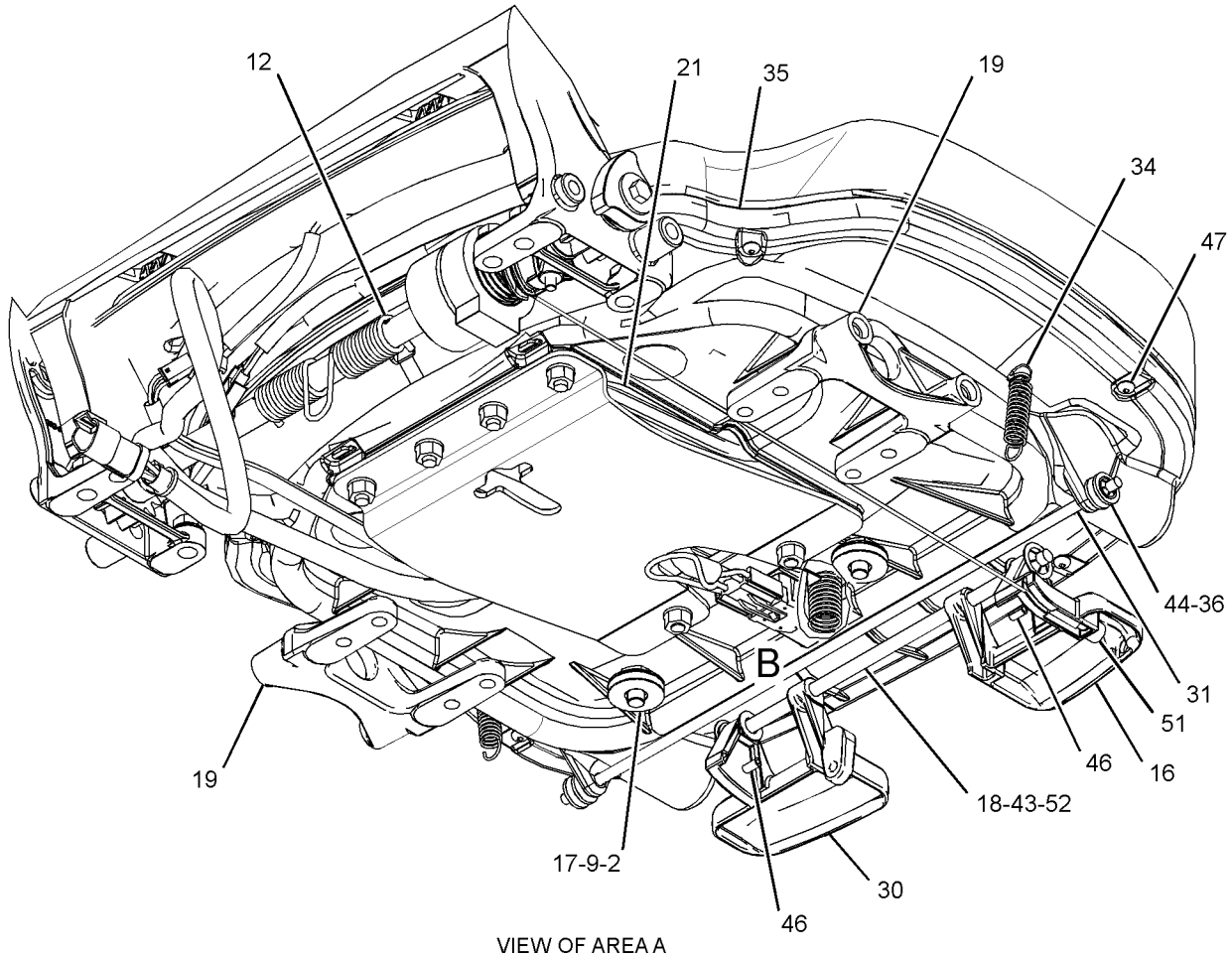

VIEW OF AREA A
(PLATE REMOVED FOR CLARITY)

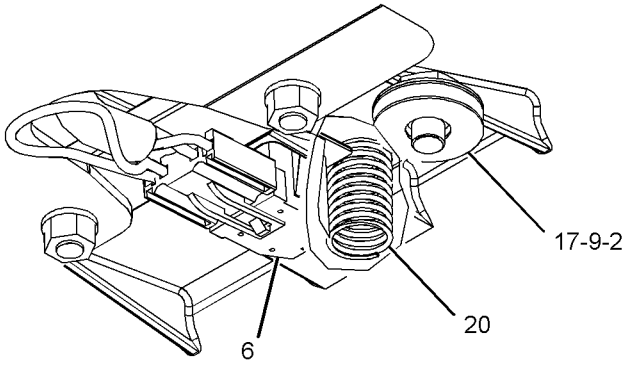

VIEW OF AREA B

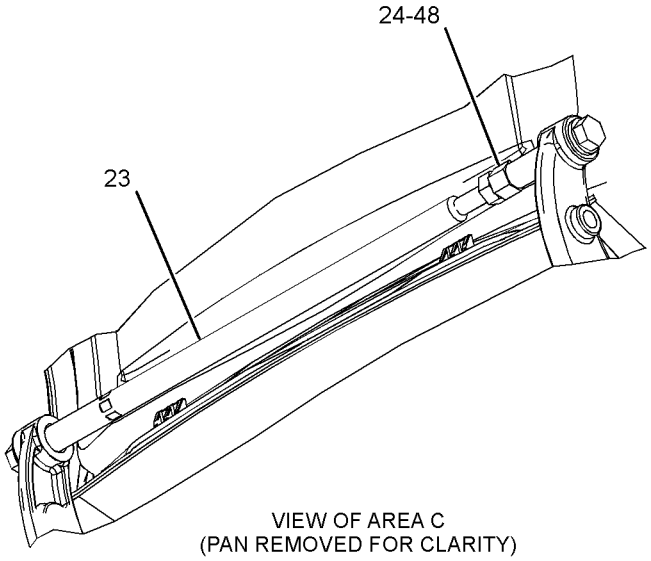

VIEW OF AREA C
(PAN REMOVED FOR CLARITY)

GRAPHIC #2 **<END>** g01954059

OPERATOR STATION

295-4434 SEAT GP–CLOTH

S/N: JTD1-UP; FFF1-UP; LLL1-UP
PART OF 255-8846 SEAT GP-SUSPENSION
AN ATTACHMENT

SMCS-7312 **i03920950**

NOTE	REF NO	GRAPHIC REF	PART NUMBER	QTY	PART NAME 1 2 3 4 5 6 (PRODUCT LEVEL)	SEE PAGE
	1	1	**4V-8256**	2	SPRING	
	2	1	**132-0338**	4	WASHER-PLASTIC (13X31.7X0.8-MM THK)	
	3	1	**143-1288**	6	LOCKNUT-FLANGE (3/8-16-THD)	
	4	1	**164-4883**	1	KNOB-LUMBAR	
	5	1	**171-1230**	6	SCREW-BUTTON HEAD (3/8-16X1-IN)	
	6	1	**216-0814**	1	SWITCH AS-LIMIT (SEAT ADJUSTMENT)	
	7	1	**218-2529**	3	PLUG	
	8	1	**229-1494**	1	EXTENSION GP-BACKREST (CLOTH)	
		1	**117-4491**	1	ROD	
	9	1	**249-2844**	2	WASHER (12.7X31.7X1-MM THK)	
	10	1	**262-0767**	1	BRACKET AS (LH)	
	11	1	**262-0769**	1	BRACKET AS (RH)	
	12	1	**262-0772**	1	SHAFT AS (RECLINER)	
		1	**2K-9111**	2	PIN-SPRING	
		1	**3E-4333**	1	KEY-WOODRUFF	
		1	**8T-0277**	1	PIN-SPRING	
		1	**256-4959**	1	SLIDER AS	
		1	**262-0789**	1	CABLE AS	
	13	1	**262-0779**	1	LATCH (LH)	
	14	1	**262-0780**	1	LATCH (RH)	
	15	1	**262-0781**	1	ROD	
	16	1	**262-0785**	1	LEVER (RH)	
	17	1	**262-0786**	2	BOLT-SPECIAL	
	18	1	**262-0787**	1	ROD	
	19	1	**267-5147**	2	BRACKET	
	20	1	**267-5159**	1	SPRING	
	21	1	**267-5160**	1	PLATE	
	22	1	**267-9319**	1	STOP	
	23	1	**276-3642**	1	SHAFT	
	24	1	**276-3644**	1	NUT-SPECIAL	
	25	1	**277-8103**	1	PLUG	
	26	1	**277-8589**	1	CUSHION AS-SEAT (CLOTH)	
	27	1	**278-7528**	1	CUSHION AS-BACK (CLOTH)	
	28	1	**285-2372**	1	HARNESS AS-SWITCH (HEATED SEAT)	
		1	**9X-3401**	3	PIN-CONNECTOR (16-GA TO 18-GA)	
		1	**102-8803**	1	KIT-RECEPTACLE (3-PIN) (INCLUDES RECEPTACLE AS & WEDGE)	
		1	**122-4395**	3	TERMINAL	
		1	**113-9807**	1	TERMINAL-RECEPTACLE	
Y	29	1	*292-6402*	1	PAN GP-BACKREST (LUMBAR)	793
	30	1	**293-2915**	1	LEVER (LH)	
	31	1	**293-9379**	1	ROD	
	32	1	**293-9380**	1	ROD	
	33	1	**293-9381**	1	PLATE AS	
	34	1	**293-9665**	2	SPRING	
	35	1	**294-7139**	1	PAN GP-SEAT	
	36	1	**295-6472**	4	WASHER (7X19X2-MM THK)	
	40	1	**031-0214**	1	BOLT-LOCKING (1/4-20X0.5-IN)	
	41	1	**101-2867**	1	WASHER-HARD (7.2X25X2-MM THK)	
M	42	1	**238-0251**	8	SCREW-BUTTON HEAD (M10X1.5X25-MM)	
M	43	1	**8T-4133**	1	NUT (M10X1.5-THD)	
	44	1	**8T-4205**	2	WASHER-HARD (7.2X14.5X2-MM THK)	
	45	1	**5T-7486**	2	RETAINER-SPRING	
	46	1	**5V-1496**	2	RETAINER	
	47	1	**6V-8969**	2	SCREW-BUTTON HEAD (1/4-20X0.5-IN)	

295-4434 SEAT GP *(contd.)* i03920950

NOTE	REF NO	GRAPHIC REF	PART NUMBER	QTY	PART NAME 1 2 3 4 5 6 (PRODUCT LEVEL)	SEE PAGE
	48	1	**7Y-0468**	2	PIN-SPRING	
M	49	1	**7Y-7388**	6	SCREW-BUTTON HEAD (M5X0.8X12-MM)	
	50	1	**8T-7566**	1	PIN-SPRING	
	51	1	**9F-5975**	1	BOLT (5/16-18X0.75-IN)	
	52	1	**9T-5241**	4	WASHER (9.53X18X1-MM THK)	

M-METRIC PART
Y-SEPARATE ILLUSTRATION

295-4434 SEAT GP *(contd.)* **i03920950**

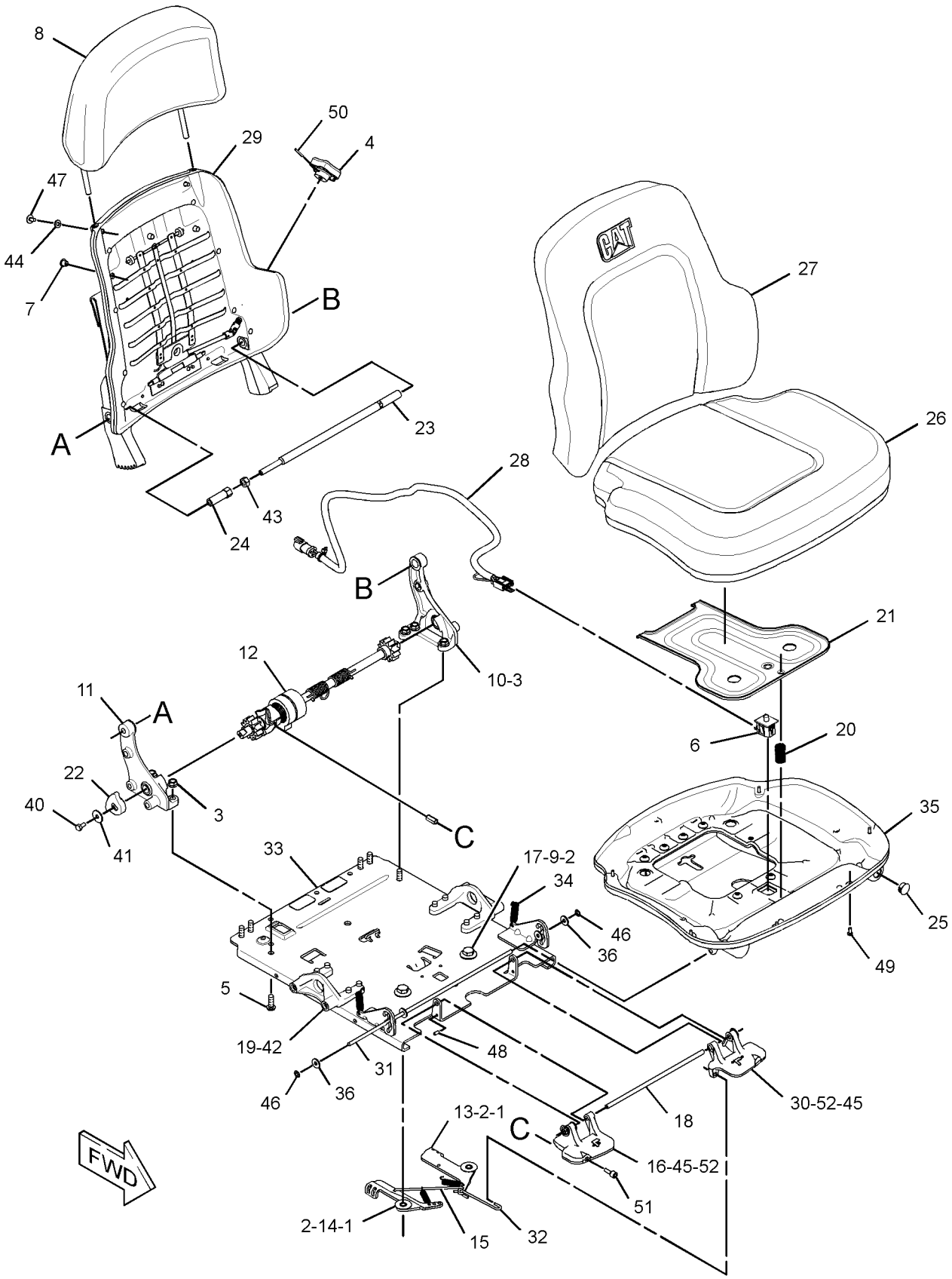

GRAPHIC #1 **<END>** g01812203

OPERATOR STATION

295-4436 SEAT GP—VINYL

S/N: JTD1-UP; FFF1-UP; LLL1-UP
MANUAL TILT
PART OF 257-4959 SEAT GP-SUSPENSION
AN ATTACHMENT

SMCS-7312 **i03897499**

NOTE	REF NO	GRAPHIC REF	PART NUMBER	QTY	PART NAME 1 2 3 4 5 6 (PRODUCT LEVEL)	SEE PAGE
	1	1	**4V-8256**	2	SPRING	
	2	1	**132-0338**	4	WASHER-PLASTIC (13X31.7X0.8-MM THK)	
	3	1	**143-1288**	6	LOCKNUT-FLANGE (3/8-16-THD)	
	4	1	**164-4883**	1	KNOB-LUMBAR	
	5	1	**171-1230**	6	SCREW-BUTTON HEAD (3/8-16X1-IN)	
	6	1	**173-3083**	1	EXTENSION GP-BACKREST (VINYL)	
	7	1	**216-0814**	1	SWITCH AS-LIMIT (OPERATOR PRESENT)	
	8	1	**218-2529**	3	PLUG	
	9	1	**249-2844**	2	WASHER (12.7X31.7X1-MM THK)	
	10	1	**262-0767**	1	BRACKET AS (LH)	
	11	1	**262-0769**	1	BRACKET AS (RH)	
	12	1	**262-0772**	1	SHAFT AS	
		1	**2K-9111**	2	PIN-SPRING	
		1	**3E-4333**	1	KEY-WOODRUFF	
		1	**8T-0277**	1	PIN-SPRING	
		1	**256-4959**	1	SLIDER AS	
		1	**262-0789**	1	CABLE AS	
	13	1	**262-0779**	1	LATCH (LH)	
	14	1	**262-0780**	1	LATCH (RH)	
	15	1	**262-0781**	1	ROD	
	16	1	**262-0785**	1	LEVER (RH)	
	17	1	**262-0786**	2	BOLT-SPECIAL	
	18	1	**262-0787**	1	ROD	
	19	1	**267-5147**	2	BRACKET	
	20	1	**267-5159**	1	SPRING	
	21	1	**267-5160**	1	PLATE	
	22	1	**267-9319**	1	STOP	
	23	1	**276-3642**	1	SHAFT	
	24	1	**276-3644**	1	NUT-SPECIAL	
	25	1	**277-8103**	1	PLUG	
	26	1	**278-6935**	1	CUSHION AS-BACKREST (VINYL)	
	27	1	**278-6936**	1	CUSHION AS-SEAT (VINYL)	
	28	1	**285-2372**	1	HARNESS AS-SWITCH (HEATED SEAT)	
		1	**9X-3401**	3	PIN-CONNECTOR (16-GA TO 18-GA)	
		1	**102-8803**	1	KIT-RECEPTACLE (3-PIN)	
					(INCLUDES RECEPTACLE AS & WEDGE)	
		1	**122-4395**	3	TERMINAL	
		1	**113-9807**	1	TERMINAL-RECEPTACLE	
Y	29	1	*292-6402*	1	PAN GP-BACKREST (LUMBAR)	793
	30	1	**293-2915**	1	LEVER (LH)	
	31	1	**293-9379**	1	ROD	
	32	1	**293-9380**	1	ROD	
	33	1	**293-9381**	1	PLATE AS	
	34	1	**293-9665**	2	SPRING	
	35	1	**294-7139**	1	PAN GP-SEAT	
M		1	**5C-7261**	6	NUT (M8X1.25-THD)	
		1	**8T-4224**	6	WASHER-HARD (8.8X16X2-MM THK)	
M		1	**127-2170**	6	SCREW-TRUSS HEAD (M8X1.25X20-MM)	
	36	1	**295-6472**	4	WASHER (7X19X2-MM THK)	
	40	1	**031-0214**	1	BOLT-LOCKING (1/4-20X0.5-IN)	
	41	1	**101-2867**	1	WASHER-HARD (7.2X25X2-MM THK)	
M	42	1	**238-0251**	8	SCREW-BUTTON HEAD (M10X1.5X25-MM)	
	43	1	**5T-7486**	2	RETAINER-SPRING	
	44	1	**5V-1496**	2	RETAINER	

295-4436 **SEAT GP** *(contd.)* **i03897499**

NOTE	REF NO	GRAPHIC REF	PART NUMBER	QTY	PART NAME 1 2 3 4 5 6 (PRODUCT LEVEL)	SEE PAGE
	45	1	**6V-8969**	2	SCREW-BUTTON HEAD (1/4-20X0.5-IN)	
	46	1	**7Y-0468**	2	PIN-SPRING	
M	47	1	**7Y-7388**	6	SCREW-BUTTON HEAD (M5X0.8X12-MM)	
M	48	1	**8T-4133**	1	NUT (M10X1.5-THD)	
	49	1	**8T-4205**	2	WASHER-HARD (7.2X14.5X2-MM THK)	
	50	1	**8T-7566**	1	PIN-SPRING	
	51	1	**9F-5975**	1	BOLT (5/16-18X0.75-IN)	
	52	1	**9T-5241**	4	WASHER (9.53X18X1-MM THK)	

M-METRIC PART
Y-SEPARATE ILLUSTRATION

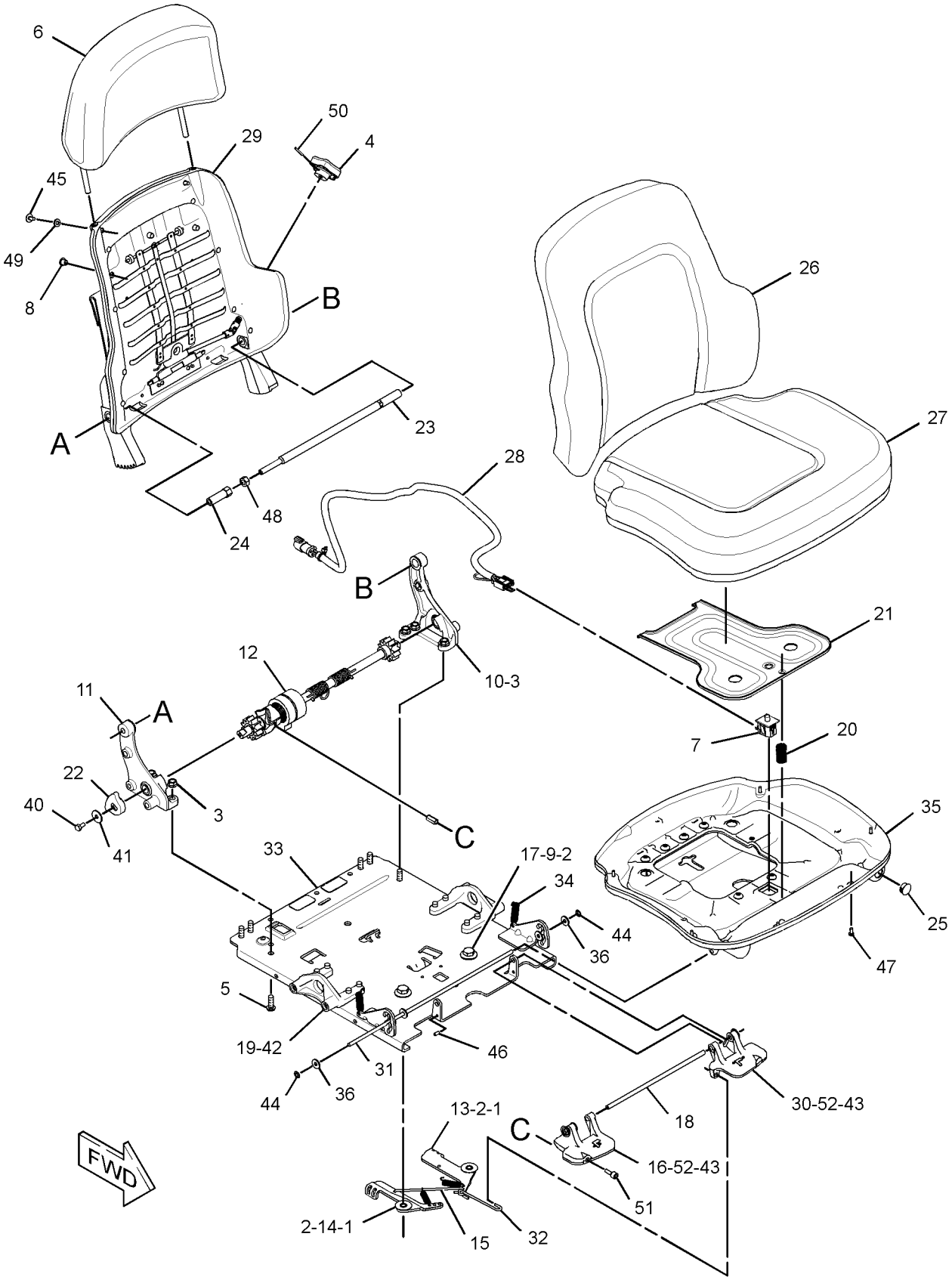

GRAPHIC #1 **<END>** g01812005

OPERATOR STATION

301-0147 SEAT GP—HEATED SEAT

S/N: JTD1-UP; FFF1-UP; LLL1-UP
PART OF 301-0148 SEAT GP-SUSPENSION
AN ATTACHMENT

SMCS-7312 **i03610006**

NOTE	REF NO	GRAPHIC REF	PART NUMBER	QTY	PART NAME 1 2 3 4 5 6 (PRODUCT LEVEL)	SEE PAGE
	1	1	**4V-8256**	2	SPRING	
	2	2	**132-0338**	4	WASHER-PLASTIC (13X31.7X0.8-MM THK)	
	3	1	**143-1288**	6	LOCKNUT-FLANGE (3/8-16-THD)	
	4	1	**164-4883**	1	KNOB-LUMBAR	
	5	1	**171-1230**	6	SCREW-BUTTON HEAD (3/8-16X1-IN)	
	6	1	**173-3083**	1	EXTENSION GP-BACKREST (VINYL)	
		1	**117-4491**	1	ROD	
	7	2	**216-0814**	1	SWITCH AS-LIMIT (SEAT ADJUSTMENT)	
	8	1	**218-2529**	3	PLUG	
	9	2	**249-2844**	2	WASHER (12.7X31.7X1-MM THK)	
	10	1	**262-0767**	1	BRACKET AS (LH)	
	11	1	**262-0769**	1	BRACKET AS (RH)	
	12	2	**262-0772**	1	SHAFT AS (RECLINER)	
		2	**2K-9111**	2	PIN-SPRING	
		2	**3E-4333**	1	KEY-WOODRUFF	
		2	**8T-0277**	1	PIN-SPRING	
		2	**256-4959**	1	SLIDER AS	
		2	**262-0789**	1	CABLE AS	
	13	1	**262-0779**	1	LATCH (LH)	
	14	1	**262-0780**	1	LATCH (RH)	
	15	1	**262-0781**	1	ROD	
	16	2	**262-0785**	1	LEVER (RH)	
	17	2	**262-0786**	2	BOLT-SPECIAL	
	18	2	**262-0787**	1	ROD	
	19	2	**267-5147**	2	BRACKET	
	20	2	**267-5159**	1	SPRING	
	21	2	**267-5160**	1	PLATE	
	22	1	**267-9319**	1	STOP	
	23	2	**276-3642**	1	SHAFT	
	24	2	**276-3644**	1	NUT-SPECIAL	
	25	1	**285-2372**	1	HARNESS AS-SWITCH (HEATED SEAT)	
		1	**102-8803**	1	KIT-RECEPTACLE (3-PIN) (INCLUDES RECEPTACLE AS & WEDGE)	
		1	**9X-3401**	3	PIN-CONNECTOR (16-GA TO 18-GA)	
		1	**113-9807**	1	TERMINAL-RECEPTACLE	
		1	**122-4395**	3	TERMINAL	
Y	26	1	*292-6402*	1	PAN GP-BACKREST (LUMBAR)	793
	27	2	**293-2915**	1	LEVER (LH)	
	28	2	**293-9379**	1	ROD	
	29	1	**293-9380**	1	ROD	
	30	1	**293-9381**	1	PLATE AS	
	31	2	**293-9665**	2	SPRING	
	32	2	**294-7139**	1	PAN GP-SEAT	
	33	2	**295-6472**	4	WASHER (7X19X2-MM THK)	
	34	1	**301-0145**	1	CUSHION AS-BACK	
	35	1	**301-0146**	1	CUSHION AS-SEAT	
	36	1	**320-5176**	1	SWITCH (12-VOLT, 24-VOLT)	
	40	1	**031-0214**	1	BOLT-LOCKING (1/4-20X0.5-IN)	
	41	1	**101-2867**	1	WASHER-HARD (7.2X25X2-MM THK)	
M	42	1	**238-0251**	8	SCREW-BUTTON HEAD (M10X1.5X25-MM)	
	43	2	**5T-7486**	2	RETAINER-SPRING	
	44	2	**5V-1496**	2	RETAINER	
	45	1	**6V-8969**	2	SCREW-BUTTON HEAD (1/4-20X0.5-IN)	
	46	2	**7Y-0468**	2	PIN-SPRING	
M	47	2	**7Y-7388**	6	SCREW-BUTTON HEAD (M5X0.8X12-MM)	

301-0147 SEAT GP *(contd.)* i03610006

NOTE	REF NO	GRAPHIC REF	PART NUMBER	QTY	PART NAME 1 2 3 4 5 6 (PRODUCT LEVEL)	SEE PAGE
M	48	2	**8T-4133**	1	NUT (M10X1.5-THD)	
	49	1	**8T-4205**	2	WASHER-HARD (7.2X14.5X2-MM THK)	
	50	1	**8T-7566**	1	PIN-SPRING	
	51	2	**9F-5975**	1	BOLT (5/16-18X0.75-IN)	
	52	2	**9T-5241**	4	WASHER (9.53X18X1-MM THK)	

M-METRIC PART
Y-SEPARATE ILLUSTRATION

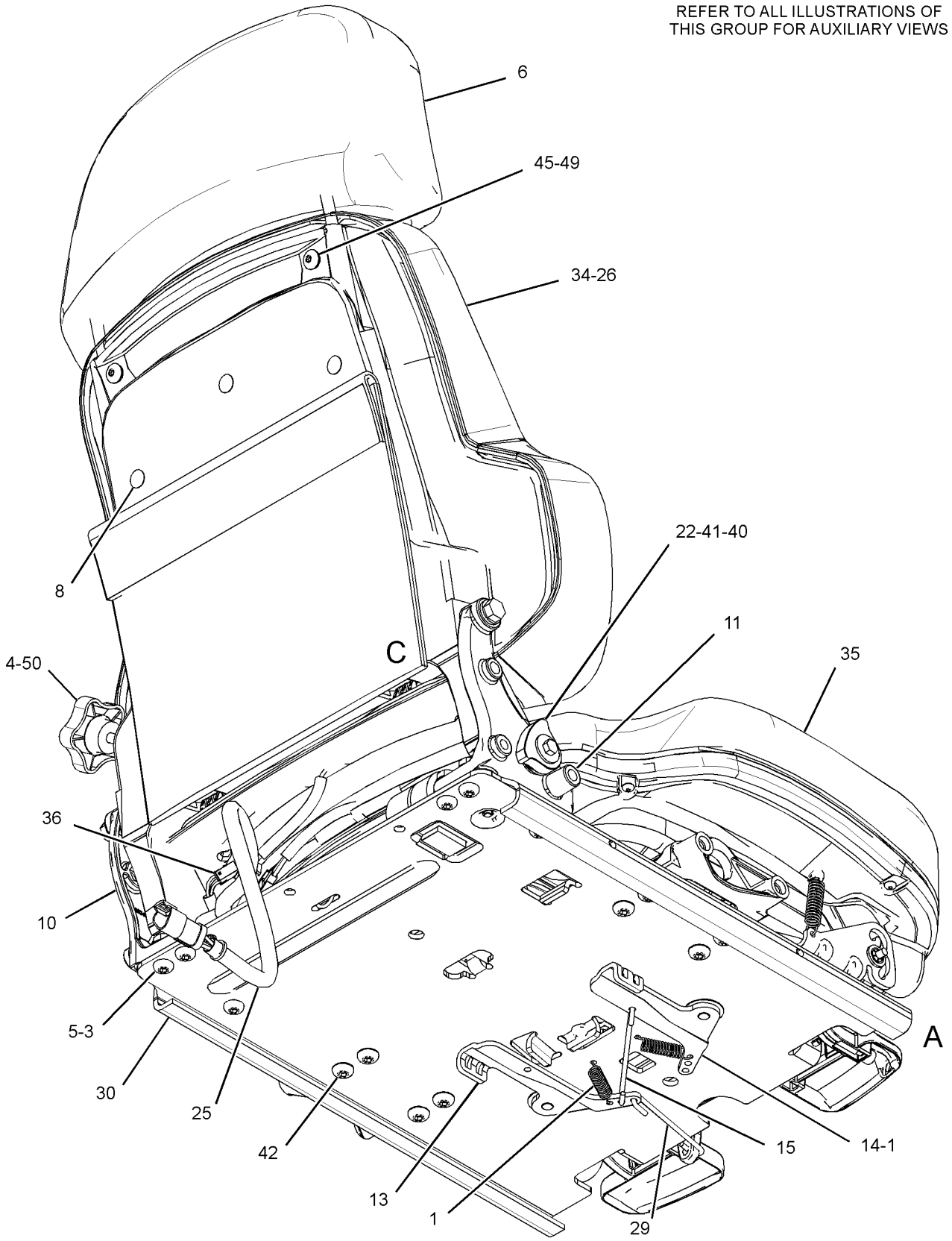

GRAPHIC #1

g01954034

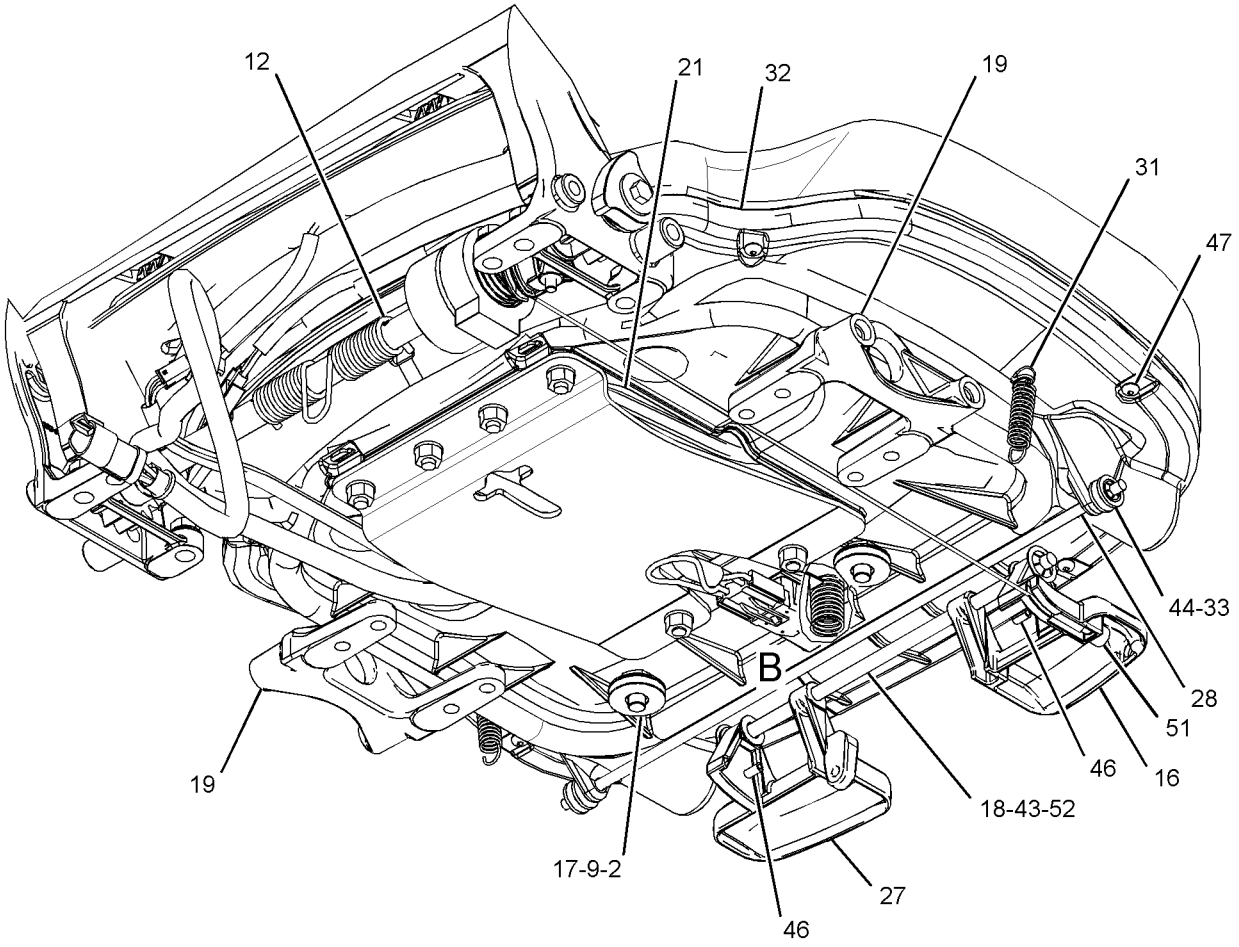

VIEW OF AREA A
(PLATE REMOVED FOR CLARITY)

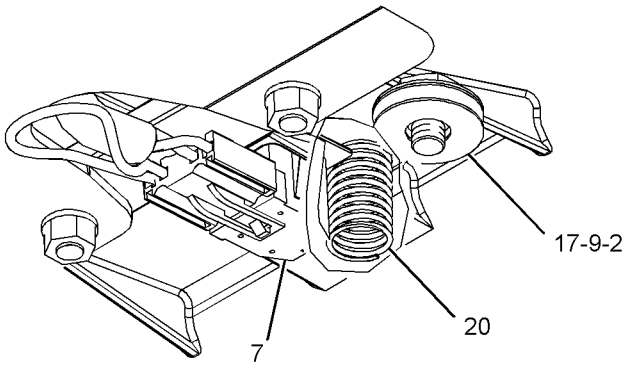

VIEW OF AREA B

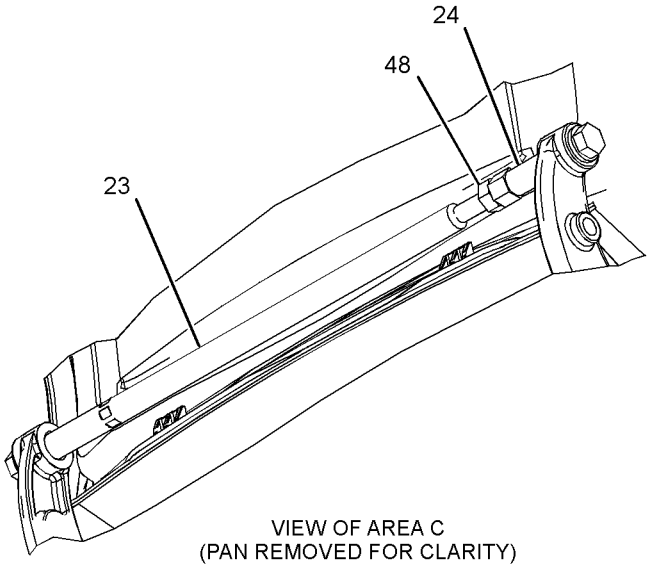

VIEW OF AREA C
(PAN REMOVED FOR CLARITY)

GRAPHIC #2 **<END>** g01954035

OPERATOR STATION

255-4250 SEAT GP-SUSPENSION—VINYL

S/N: JTD1-UP; FFF1-UP; LLL1-UP
FOR USE WITH 244-7474—PAGE 796
AN ATTACHMENT

SMCS-7321, 7324, 7336 **i03408221**

NOTE	REF NO	GRAPHIC REF	PART NUMBER	QTY	PART NAME 1 2 3 4 5 6 (PRODUCT LEVEL)	SEE PAGE
Y	1	1	*257-4959*	1	SEAT GP-SUSPENSION (VINYL)	822
Y	2	1	*268-9351*	1	CONSOLE GP-OPERATOR (RH)	692
Y	3	1	*268-9352*	1	CONSOLE GP-OPERATOR (LH)	693
Y	4	1	*280-9679*	1	ARMREST GP (LH)	680
Y	5	1	*284-7054*	1	ARMREST GP (RH)	682
	6	1	**7X-7729**	4	WASHER (11X25X3-MM THK)	
M	7	1	**8T-4186**	4	BOLT (M10X1.5X40-MM)	

M-METRIC PART
Y-SEPARATE ILLUSTRATION

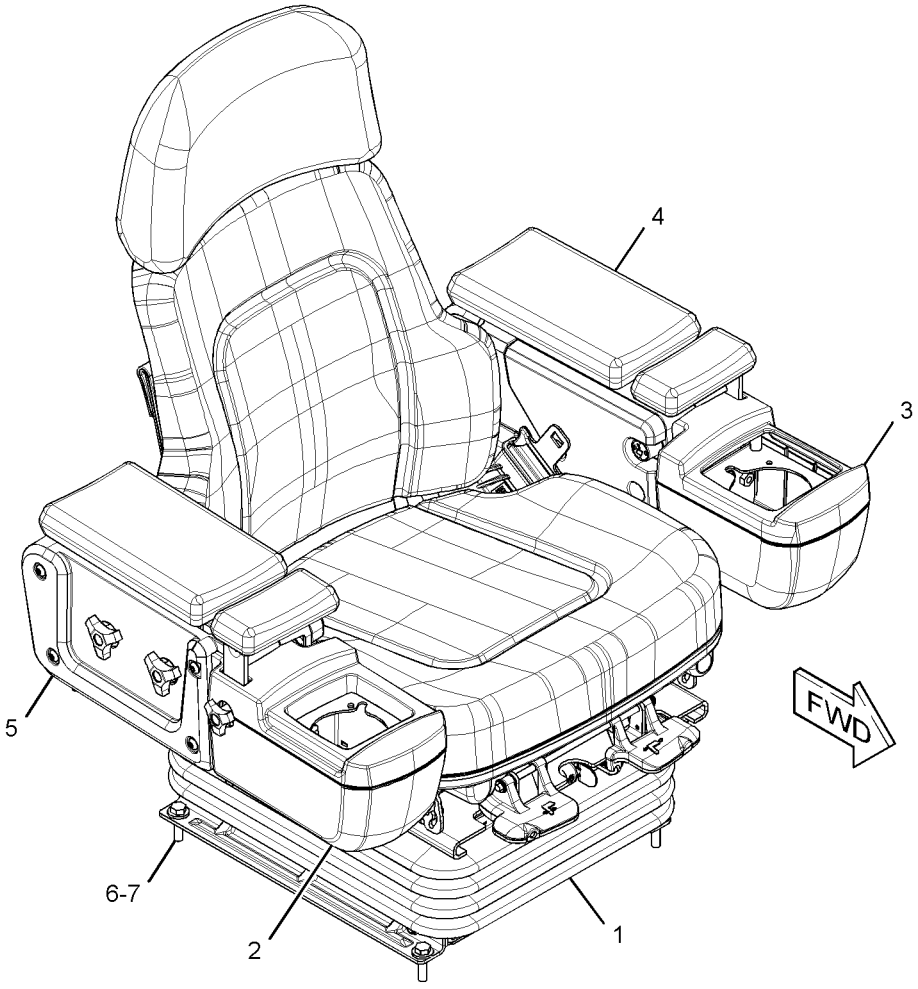

GRAPHIC #1 **<END>** g01365748

255-4251 SEAT GP-SUSPENSION—CLOTH

S/N: JTD1-UP; FFF1-UP; LLL1-UP
FOR USE WITH 244-7475—PAGE 796, 244-7476—PAGE 797, ENCLOSED ROPS. CANNOT BE USED WITH ANY OTHER SEAT GROUP
AN ATTACHMENT

SMCS-7321, 7324, 7336 **i03408224**

NOTE	REF NO	GRAPHIC REF	PART NUMBER	QTY	PART NAME 1 2 3 4 5 6 (PRODUCT LEVEL)	SEE PAGE
Y	1	1	*255-8846*	1	SEAT GP-SUSPENSION (CLOTH)	821
Y	2	1	*268-9351*	1	CONSOLE GP-OPERATOR (RH)	692
Y	3	1	*268-9352*	1	CONSOLE GP-OPERATOR (LH)	693
Y	4	1	*280-9679*	1	ARMREST GP (LH)	680
Y	5	1	*284-7054*	1	ARMREST GP (RH)	682
	6	1	**7X-7729**	4	WASHER (11X25X3-MM THK)	
M	7	1	**8T-4195**	4	BOLT (M10X1.5X30-MM)	

M-METRIC PART
Y-SEPARATE ILLUSTRATION

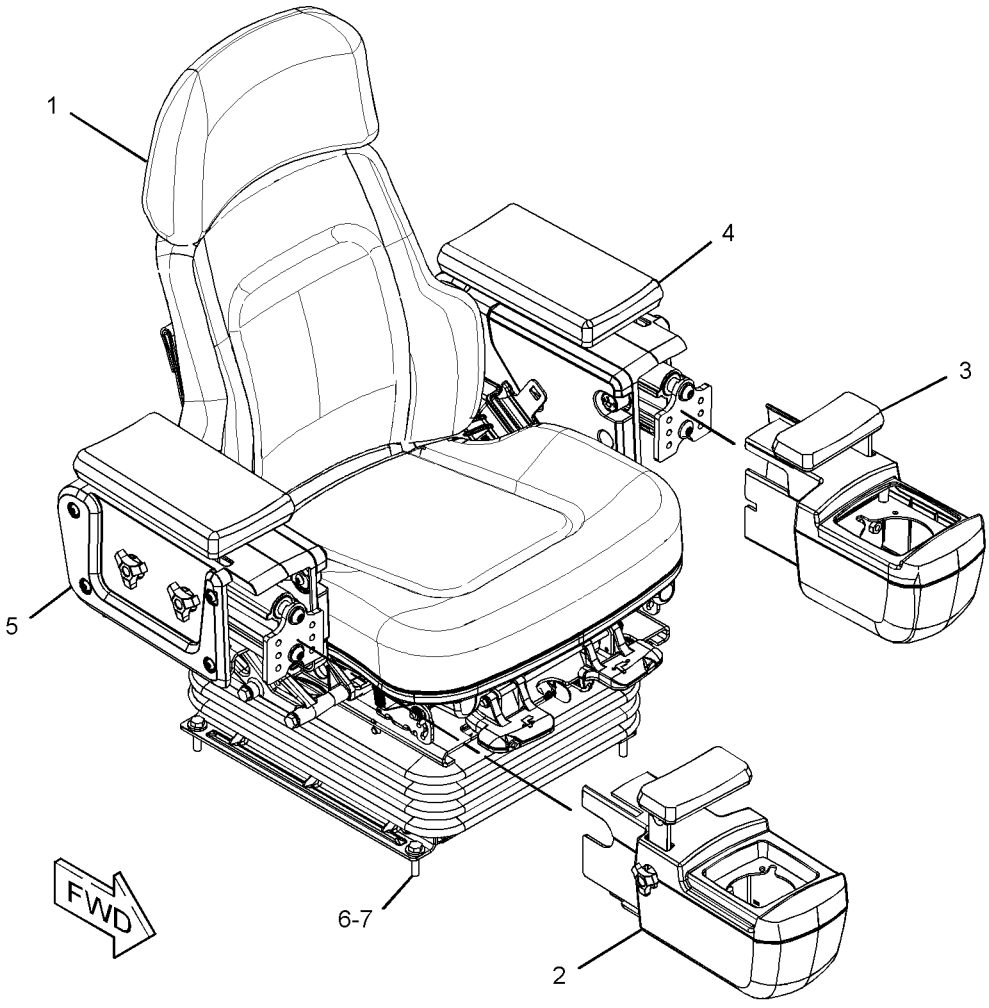

GRAPHIC #1 **<END>** g01352919

OPERATOR STATION

255-4252 SEAT GP-SUSPENSION—CLOTH, HEATED

S/N: JTD1-UP; FFF1-UP; LLL1-UP

FOR USE WITH 244-7475—PAGE 796, 244-7476—PAGE 797, ENCLOSED ROPS. CANNOT BE USED WITH ANY OTHER SEAT GROUP AN ATTACHMENT

SMCS-7321, 7324, 7336 **i03408228**

NOTE	REF NO	GRAPHIC REF	PART NUMBER	QTY	PART NAME 1 2 3 4 5 6 (PRODUCT LEVEL)	SEE PAGE
Y	1	1	*268-9351*	1	CONSOLE GP-OPERATOR (RH)	692
Y	2	1	*268-9352*	1	CONSOLE GP-OPERATOR (LH)	693
Y	3	1	*272-8111*	1	SEAT GP-SUSPENSION (CLOTH, HEATED)	823
Y	4	1	*280-9679*	1	ARMREST GP (LH)	680
Y	5	1	*284-7054*	1	ARMREST GP (RH)	682
	6	1	**7X-7729**	4	WASHER (11X25X3-MM THK)	
M	7	1	**8T-4186**	4	BOLT (M10X1.5X40-MM)	

M-METRIC PART
Y-SEPARATE ILLUSTRATION

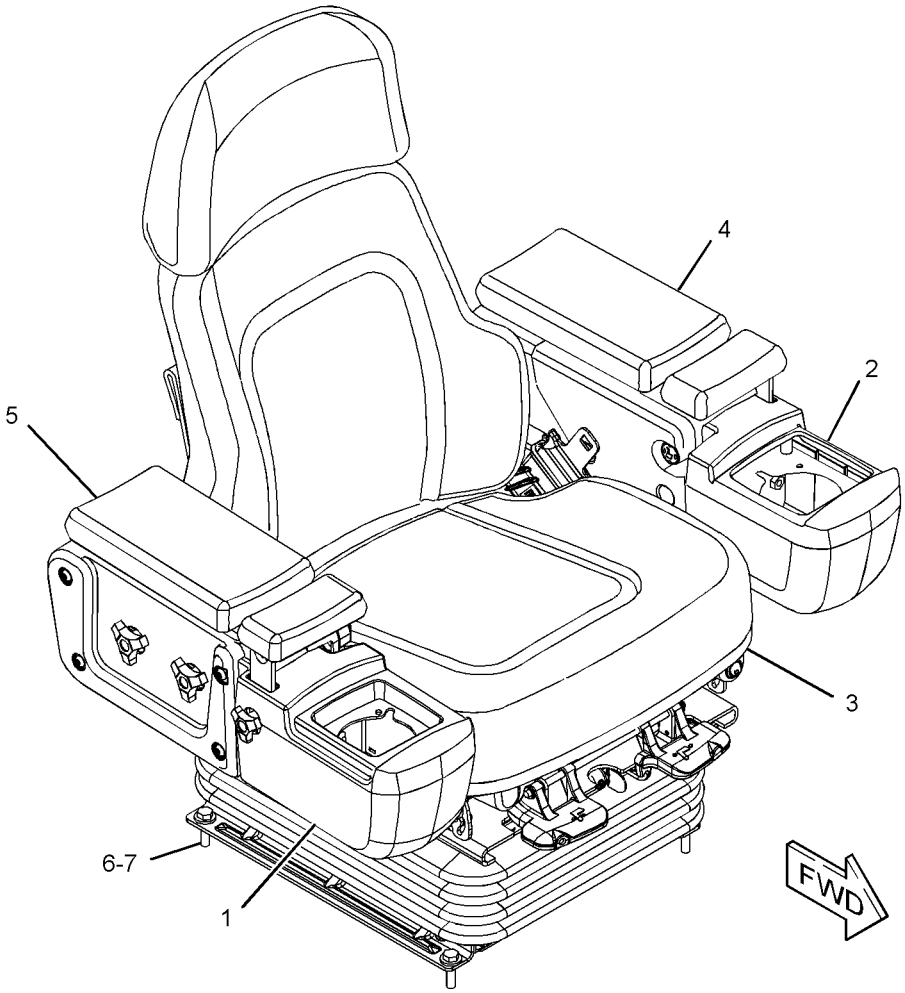

GRAPHIC #1 **<END>** g01366871

OPERATOR STATION

255-8846 SEAT GP-SUSPENSION—CLOTH

S/N: JTD1-UP; FFF1-UP; LLL1-UP
PART OF 255-4251 SEAT GP-SUSPENSION
AN ATTACHMENT

SMCS-7321, 7324, 7336 **i03301089**

NOTE	REF NO	GRAPHIC REF	PART NUMBER	QTY	PART NAME 1 2 3 4 5 6 (PRODUCT LEVEL)	SEE PAGE
J	1	1	**161-9289**	4	BLOCK-SLIDER	
J	2	1	**173-5787**	4	SETSCREW (1/4-20-THD)	
J	3	1	**203-7703**	2	WASHER-HARD (10.2X22.22X2.38-MM THK)	
	4	1	**8L-8413**	1	STRAP-CABLE (PLASTIC)	
Y	5	1	**272-2272**	1	SEAT BELT GP (RETRACTABLE)	803
Y	6	1	**295-4434**	1	SEAT GP (CLOTH)	808
Y	7	1	*316-8368*	1	SUSPENSION GP-SEAT	829
J	8	1	**4F-4879**	1	BOLT (3/8-16X0.5-IN)	
					AVAILABLE REPAIR KIT(S):	
J			**173-7035**	1	KIT-SLIDER BLOCK (SUSPENSION SEAT)	

J-KIT MARKED J SERVICES PARTS MARKED J
Y-SEPARATE ILLUSTRATION

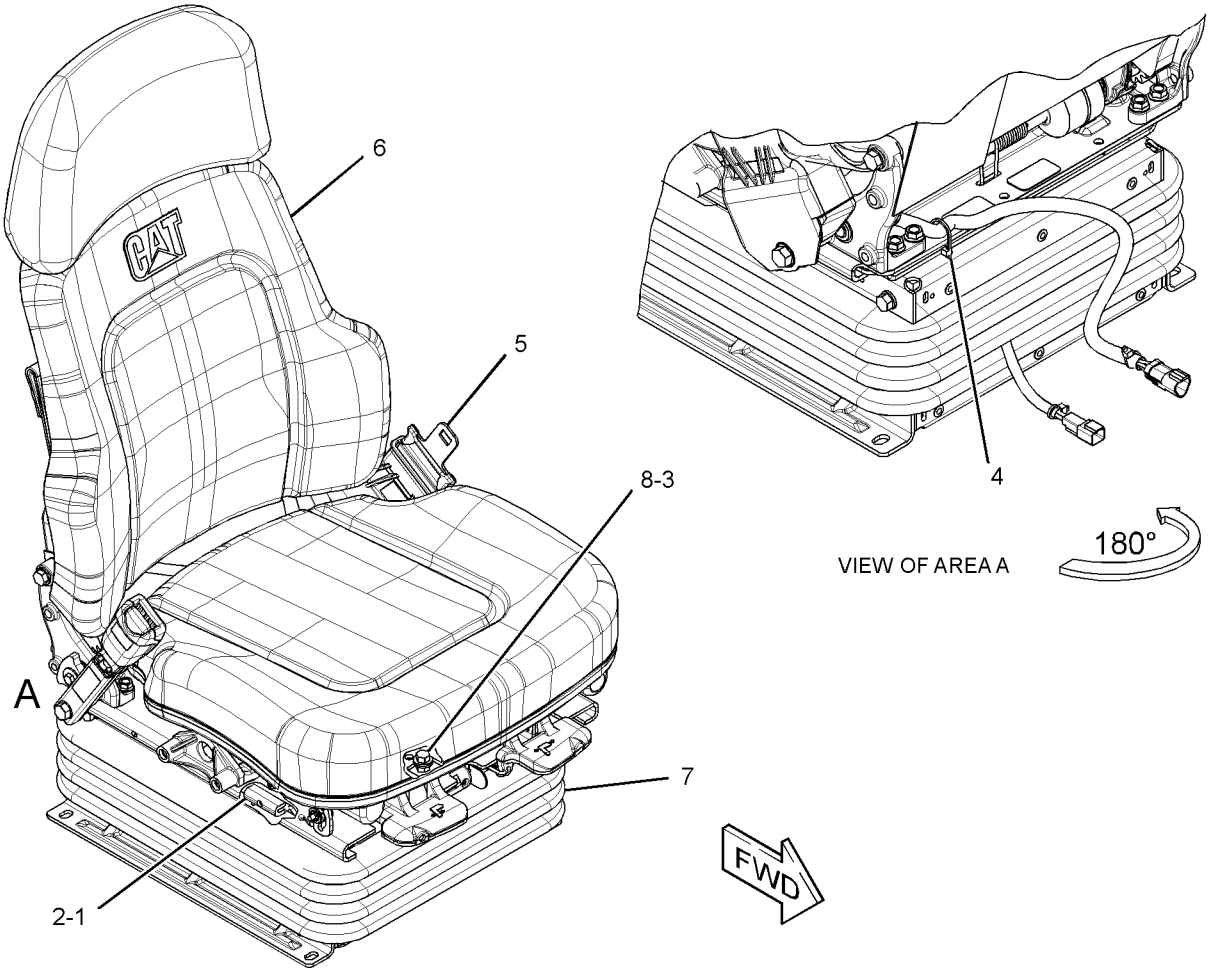

GRAPHIC #1 **<END>** g01716635

OPERATOR STATION

257-4959 SEAT GP-SUSPENSION—VINYL

S/N: JTD1-UP; FFF1-UP; LLL1-UP
PART OF 255-4250 SEAT GP-SUSPENSION
AN ATTACHMENT

SMCS-7321, 7324, 7336 **i03160843**

NOTE	REF NO	GRAPHIC REF	PART NUMBER	QTY	PART NAME 1 2 3 4 5 6 (PRODUCT LEVEL)	SEE PAGE
	1	1	**8L-8413**	1	STRAP-CABLE	
J	2	1	**173-5787**	4	SETSCREW (1/4-20-THD)	
J	3	1	**203-7703**	2	WASHER-HARD (10.2X22.22X2.38-MM THK)	
Y	4	1	**272-2272**	1	SEAT BELT GP (RETRACTABLE)	803
Y	5	1	*295-4436*	1	SEAT GP (VINYL)	811
Y	6	1	*316-8368*	1	SUSPENSION GP-SEAT	829
J	7	1	**4F-4879**	1	BOLT (3/8-16X0.5-IN)	
					AVAILABLE REPAIR KIT(S):	
J			**173-7035**	1	KIT-SLIDER BLOCK (SUSPENSION SEAT)	
					(INCLUDES BLOCK)	

J-KIT MARKED J SERVICES PARTS MARKED J
Y-SEPARATE ILLUSTRATION

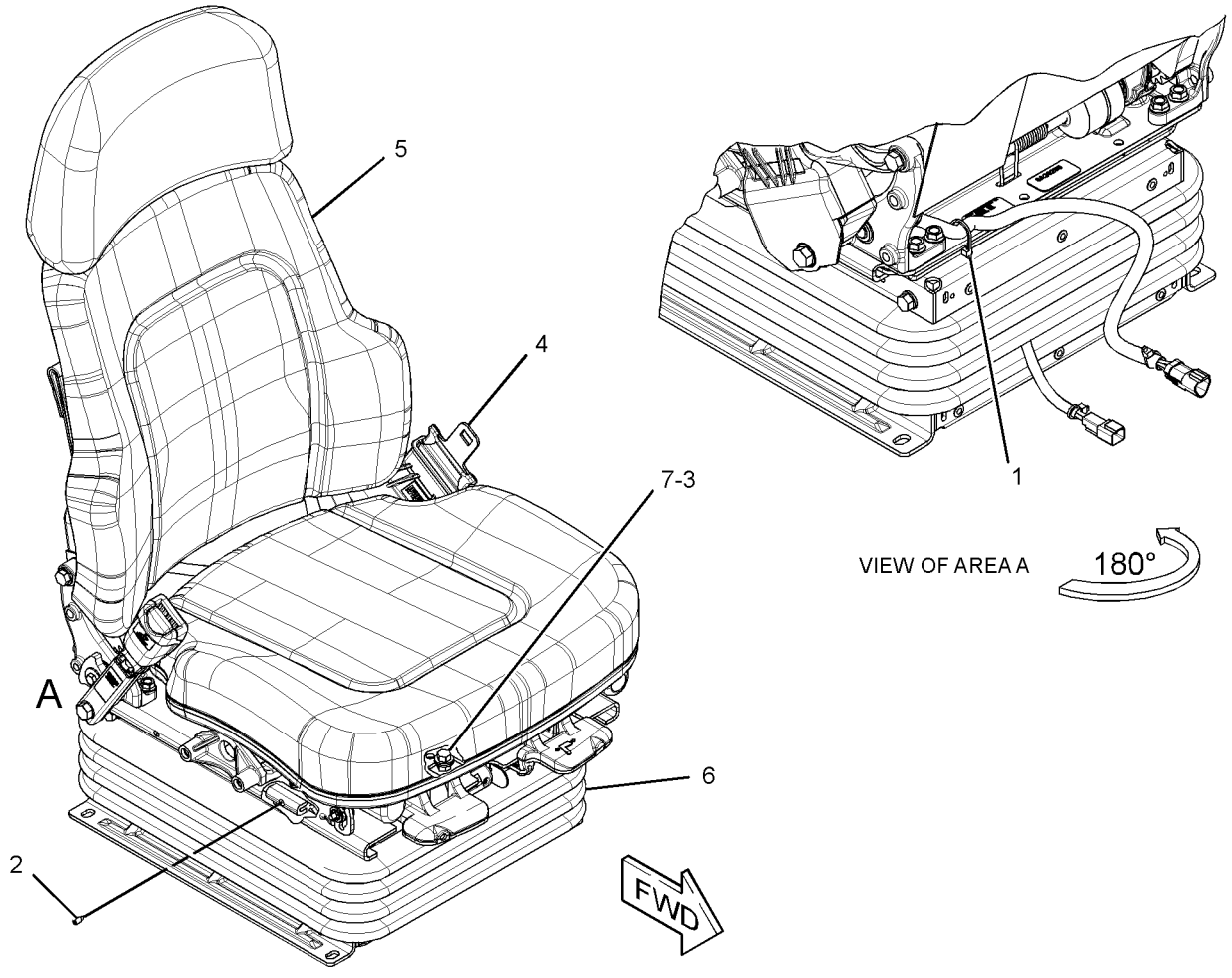

GRAPHIC #1 **<END>** g01707266

OPERATOR STATION

272-8111 SEAT GP-SUSPENSION—CLOTH, HEATED

S/N: JTD1-UP; FFF1-UP; LLL1-UP
PART OF 255-4252 SEAT GP-SUSPENSION
AN ATTACHMENT

SMCS-7321, 7324, 7336 **i03587865**

NOTE	REF NO	GRAPHIC REF	PART NUMBER	QTY	PART NAME 1 2 3 4 5 6 (PRODUCT LEVEL)	SEE PAGE
	1	1	**241-5786**	1	HARNESS AS-HEATER (SEAT)	
J	2	1	**173-5787**	4	SETSCREW (1/4-20-THD)	
J	3	1	**203-7703**	2	WASHER-HARD (10.2X22.22X2.38-MM THK)	
	4	1	**8L-8413**	1	STRAP-CABLE	
Y	5	1	**272-2272**	1	SEAT BELT GP (RETRACTABLE)	803
Y	6	1	*295-4433*	1	SEAT GP (CLOTH, HEATED)	804
Y	7	1	*316-8368*	1	SUSPENSION GP-SEAT	829
J	8	1	**4F-4879**	1	BOLT (3/8-16X0.5-IN)	
					AVAILABLE REPAIR KIT(S):	
J			**173-7035**	1	KIT-SLIDER BLOCK (SUSPENSION SEAT)	
					(ALSO INCLUDES SLIDER BLOCKS)	

J-KIT MARKED J SERVICES PARTS MARKED J
Y-SEPARATE ILLUSTRATION

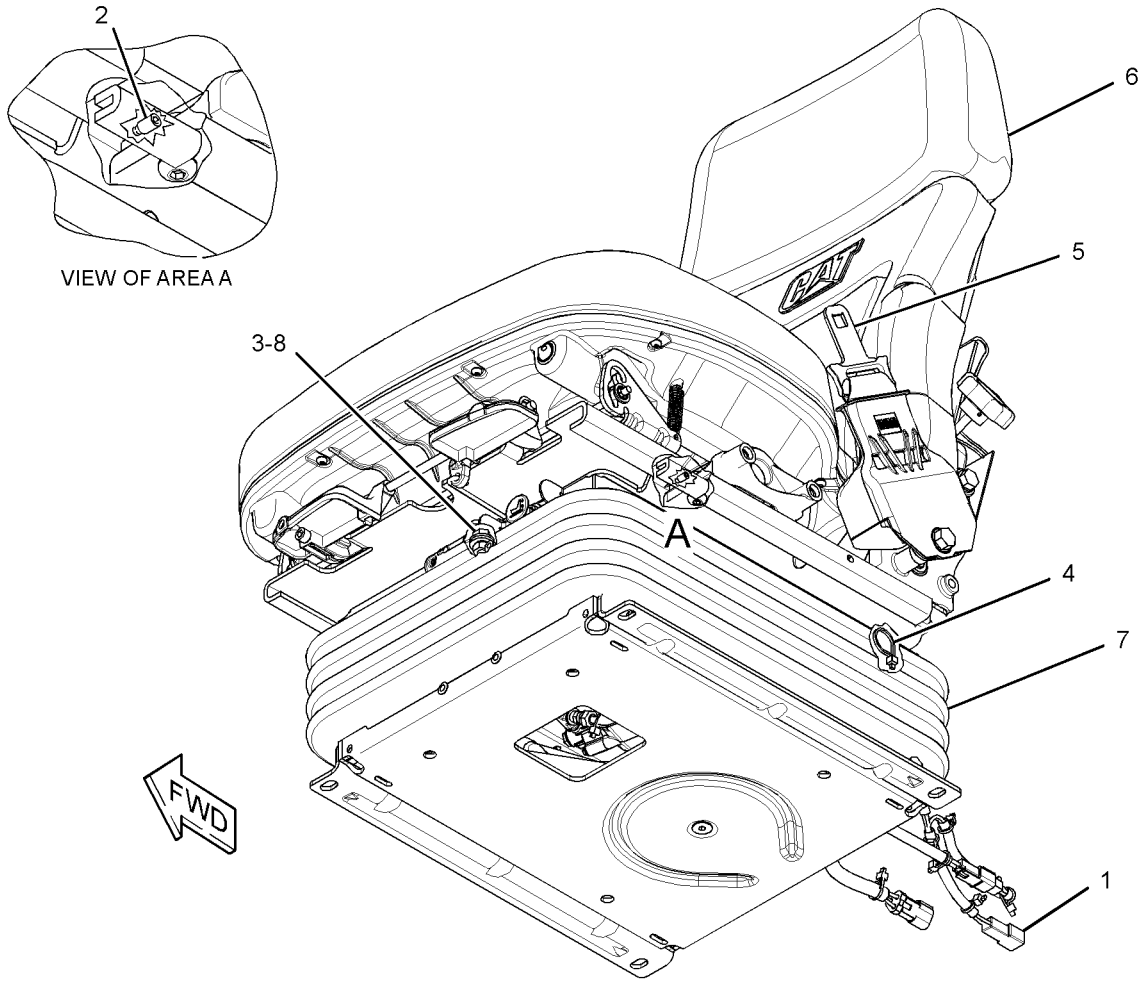

GRAPHIC #1 **<END>** g01919173

OPERATOR STATION

301-0148 SEAT GP-SUSPENSION—VINYL, HEATED

S/N: JTD1-UP; FFF1-UP; LLL1-UP
PART OF 255-4242 SEAT & SUPPORT GP
AN ATTACHMENT

SMCS-7321, 7324, 7336 **i04402169**

NOTE	REF NO	GRAPHIC REF	PART NUMBER	QTY	PART NAME 1 2 3 4 5 6 (PRODUCT LEVEL)	SEE PAGE
	1	1	**8L-8413**	1	STRAP-CABLE (WHITE)	
	2	1	**241-5786**	1	HARNESS AS-HEATER (SEAT)	
J	3	1	**173-5787**	4	SETSCREW (1/4-20-THD)	
J	4	1	**203-7703**	2	WASHER-HARD (10.2X22.22X2.38-MM THK)	
Y	5	1	**272-2272**	1	SEAT BELT GP (RETRACTABLE)	803
Y	6	1	*316-8368*	1	SUSPENSION GP-SEAT	829
Y	7	1	**301-0147**	1	SEAT GP (HEATED SEAT)	814
J	8	1	**4F-4879**	1	BOLT (3/8-16X0.5-IN)	
					AVAILABLE REPAIR KIT(S):	
J			**173-7035**	1	KIT-SLIDER BLOCK (SUSPENSION SEAT)	
					(ALSO INCLUDES SLIDER BLOCKS)	

J-KIT MARKED J SERVICES PARTS MARKED J
Y-SEPARATE ILLUSTRATION

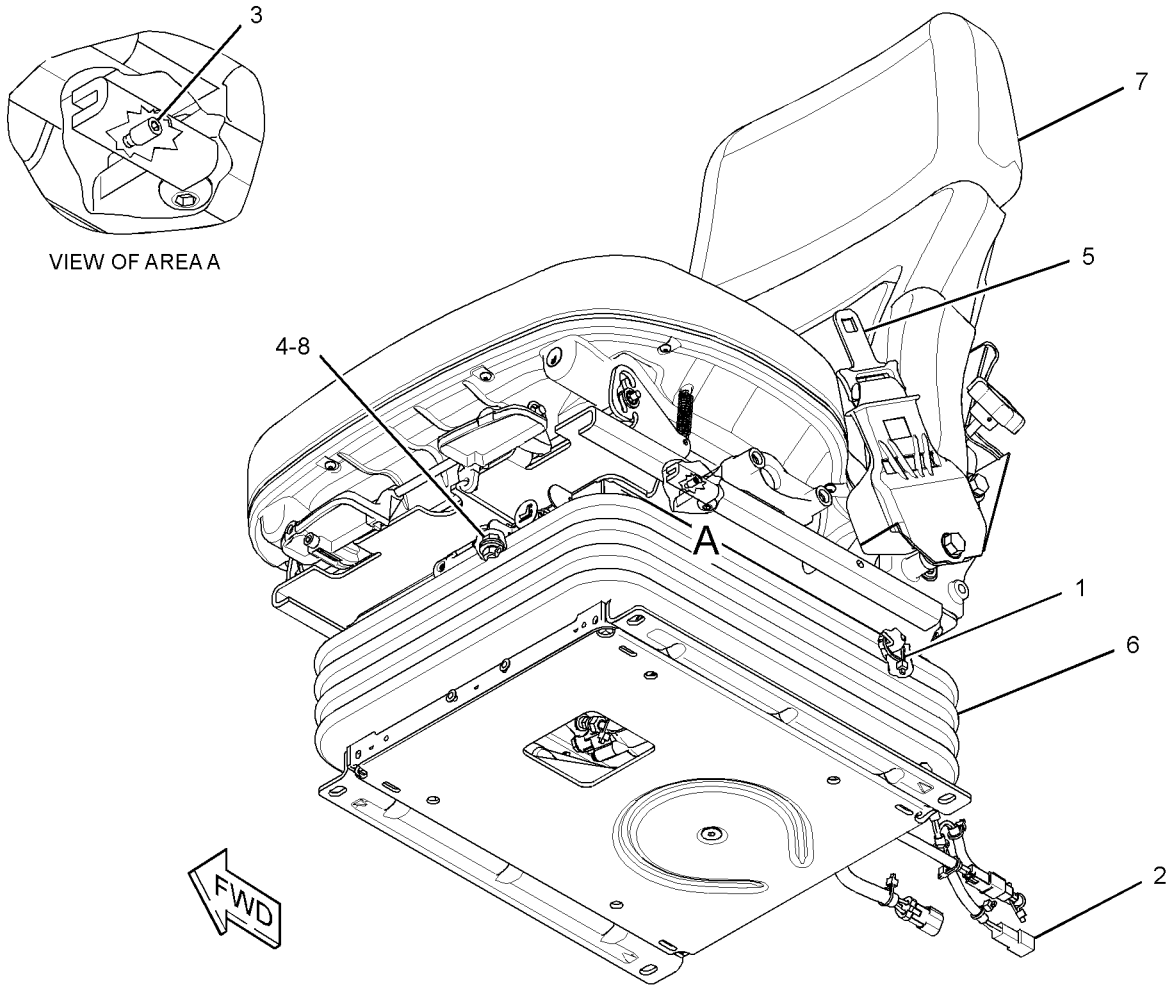

GRAPHIC #1 **<END>** g01919397

OPERATOR STATION

284-7055 SUPPORT GP-HYDRAULIC CONTROL—RH

S/N: JTD1-UP; FFF1-UP; LLL1-UP
PART OF 284-7054 ARMREST GP
AN ATTACHMENT

SMCS-5258 **i03253002**

NOTE	REF NO	GRAPHIC REF	PART NUMBER	QTY	PART NAME 1 2 3 4 5 6 (PRODUCT LEVEL)	SEE PAGE
	1	1	**1W-7117**	2	DOWEL-HOLLOW	
	2	1	**161-2398**	2	SEAL-LIP TYPE	
	3	1	**244-2095**	1	ROD	
	4	1	**244-2109**	1	ROD-ADJUSTMENT	
	5	1	**244-2115**	1	PIN	
	6	1	**266-3214**	1	PIN (ADJUSTMENT)	
	7	1	**267-9552**	2	SPACER (19X76X.8-MM THK)	
	8	1	**267-9553**	1	SPACER (7X12.5X6.5-MM THK)	
	9	1	**267-9554**	2	BEARING	
	10	1	**267-9555**	2	BEARING	
	11	1	**267-9556**	2	BEARING	
	12	1	**267-9834**	1	PLATE	
	13	1	**280-3512**	1	HOUSING (ADJUSTER)	
	14	1	**280-3514**	1	SUPPORT-ARM	
	15	1	**6F-9974**	2	PLUG-CORE	
	16	1	**282-2033**	1	BUTTON-PUSH	
	17	1	**282-6695**	1	BRACKET	
	18	1	**289-2073**	1	FILM-INFORMATION (ARMREST ADJUSTMENT)	
	19	1	**3E-4353**	2	WASHER-HARD (11X25X3-MM THK)	
	20	1	**7D-7453**	1	SETSCREW (1/4-20-THD)	
	21	1	**7D-9708**	1	BOLT-SHOULDER (5/16-18XO.88-IN)	
M	22	1	**9X-2040**	2	SCREW-TRUSS HEAD (M10X1.5X25-MM)	
M	23	1	**9X-2043**	1	SCREW-TRUSS HEAD (M6X1X14-MM)	

M-METRIC PART

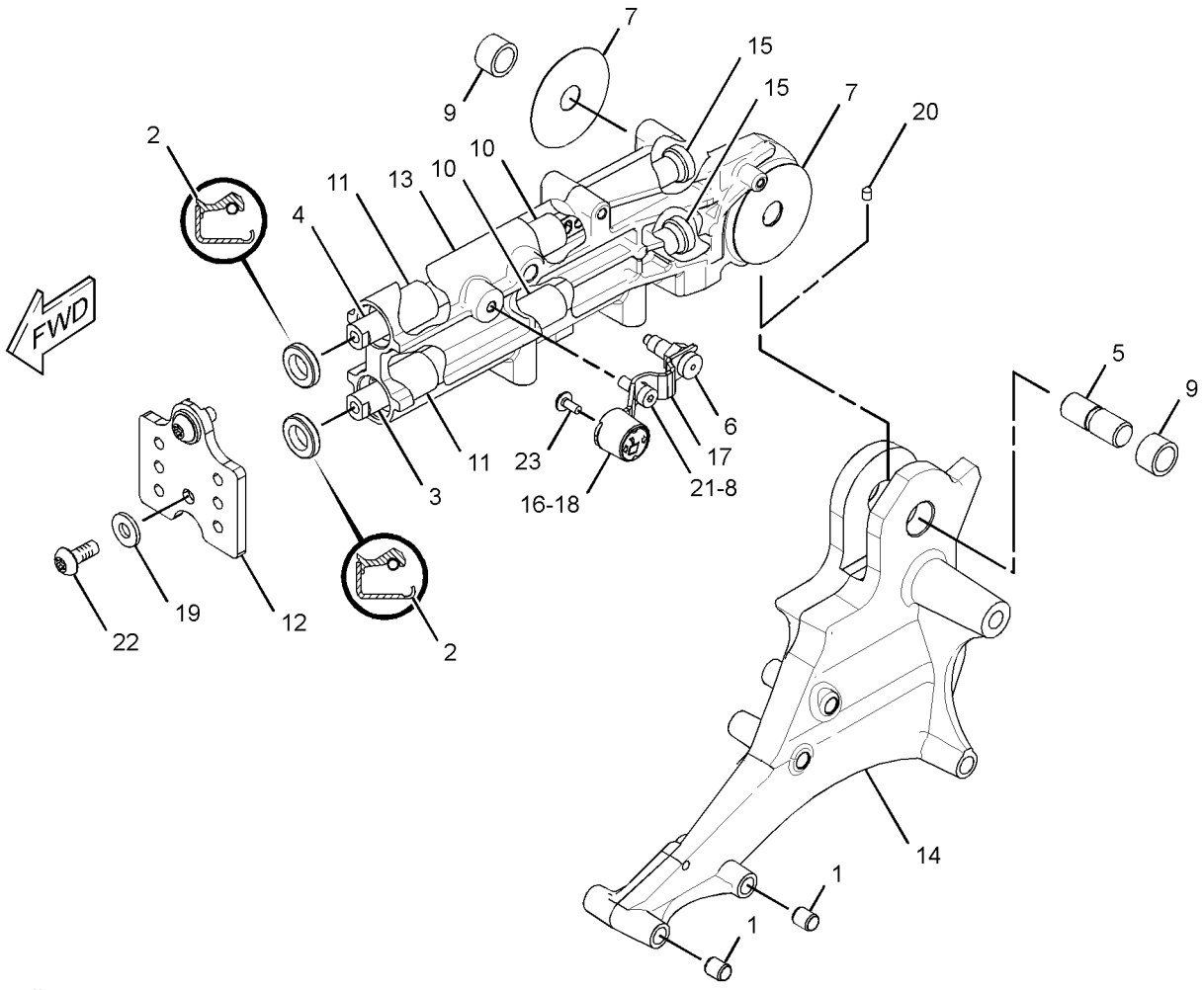

GRAPHIC #1 **<END>** g01662613

OPERATOR STATION

284-7059 SUPPORT GP-STEERING CONTROL—LH

S/N: JTD1-UP; FFF1-UP; LLL1-UP
PART OF 280-9679 ARMREST GP
AN ATTACHMENT

SMCS-5258 **i03301501**

NOTE	REF NO	GRAPHIC REF	PART NUMBER	QTY	PART NAME 1 2 3 4 5 6 (PRODUCT LEVEL)	SEE PAGE
	1	1	**1W-7117**	2	DOWEL-HOLLOW	
	2	1	**161-2398**	2	SEAL-LIP TYPE	
	3	1	**244-2095**	1	ROD	
	4	1	**244-2109**	1	ROD-ADJUSTMENT	
	5	1	**244-2115**	1	PIN	
	6	1	**266-3214**	1	PIN	
	7	1	**267-9552**	2	SPACER (19X76X.8-MM THK)	
	8	1	**267-9553**	1	SPACER (7X12.5X6.5-MM THK)	
	9	1	**267-9554**	2	BEARING	
	10	1	**267-9555**	2	BEARING	
	11	1	**267-9556**	2	BEARING	
	12	1	**267-9834**	1	PLATE	
	13	1	**280-3513**	1	HOUSING	
	14	1	**280-3515**	1	SUPPORT-ARM (LH)	
	15	1	**6F-9974**	2	PLUG-CORE	
	16	1	**282-2033**	1	BUTTON-PUSH	
	17	1	**282-6695**	1	BRACKET	
	18	1	**289-2073**	1	FILM-INFORMATION (ARMREST ADJUSTMENT)	
	19	1	**3E-4353**	2	WASHER-HARD (11X25X3-MM THK)	
	20	1	**7D-7453**	1	SETSCREW (1/4-20-THD)	
	21	1	**7D-9708**	1	BOLT-SHOULDER (5/16-18XO.88-IN)	
M	22	1	**9X-2040**	2	SCREW-TRUSS HEAD (M10X1.5X25-MM)	
M	23	1	**9X-2043**	1	SCREW-TRUSS HEAD (M6X1X14-MM)	

M-METRIC PART

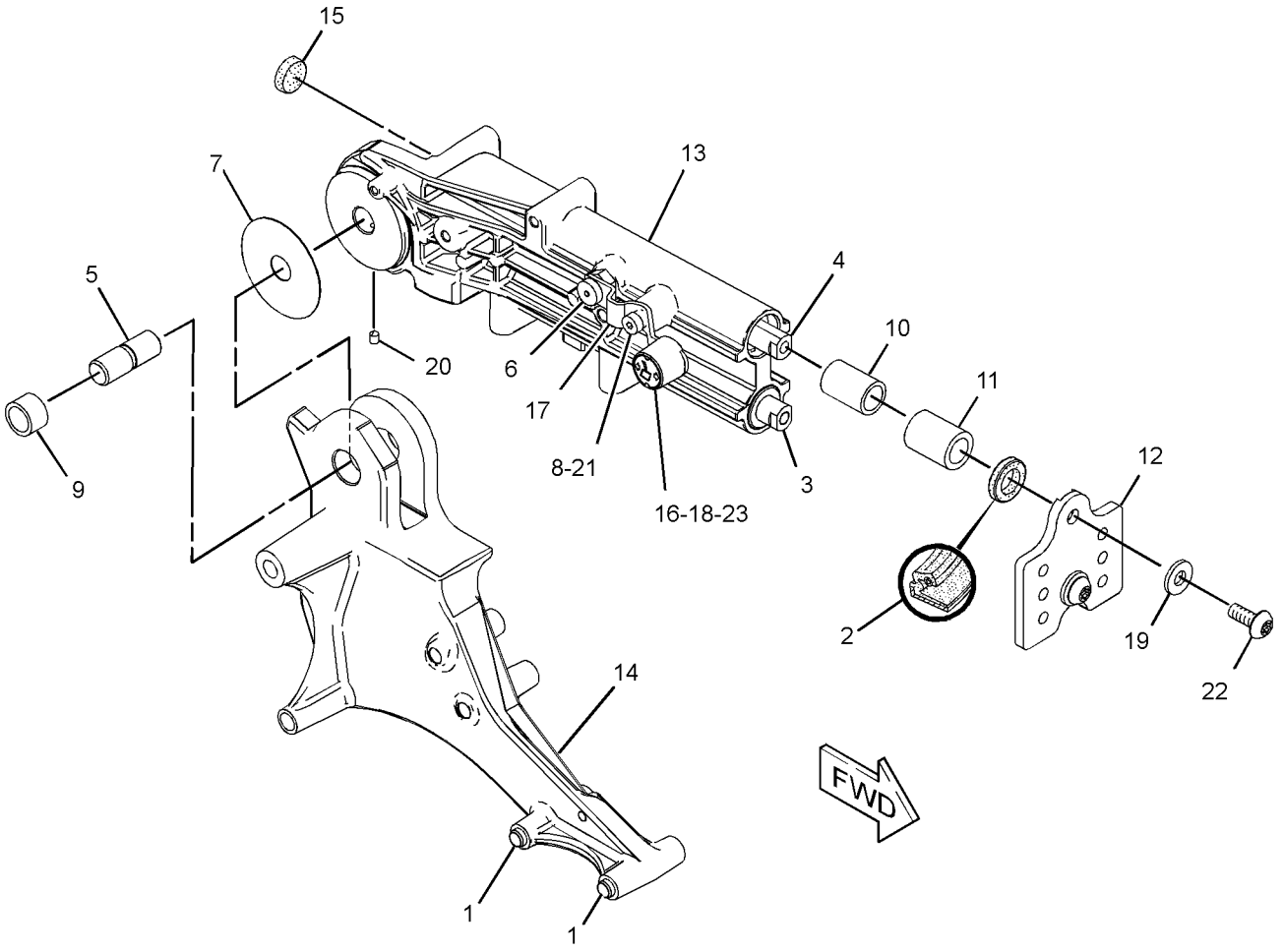

GRAPHIC #1 **<END>** g01303992

OPERATOR STATION

316-8368 SUSPENSION GP-SEAT

S/N: JTD1-UP; FFF1-UP; LLL1-UP
PART OF 255-8846, 257-4959, 272-8111, 301-0148 SEAT GP-SUSPENSION
AN ATTACHMENT

SMCS-7324 **i04402166**

NOTE	REF NO	GRAPHIC REF	PART NUMBER	QTY	PART NAME 1 2 3 4 5 6 (PRODUCT LEVEL)	SEE PAGE
	1	2	**3P-9900**	1	WASHER (10.5X30X3-MM THK)	
	2	2	**4V-8577**	8	BEARING	
	3	1	**7L-0688**	2	BOLT-SOCKET HEAD (10-24X1.2-IN)	
	4	1	**8L-8413**	9	STRAP-CABLE (WHITE)	
	5	1	**031-0249**	2	LOCKNUT (10-24-THD)	
	6	1	**101-0003**	22	FASTENER	
	7	1	**145-0326**	1	FILM-INSTRUCTION (SEAT ADJUSTMENT)	
	8	1	**164-1234**	1	PLATE	
	9	1	**169-7380**	1	BOLT-SOCKET HEAD (3/8-16X0.375-IN)	
	10	1	**186-5107**	2	SCREW-DRIVE (NO 8-16X1.25-IN)	
	11	1	**192-7795**	1	BOOT	
	13	1	**192-7805**	1	HARNESS AS-VALVE (SEAT AIR COMPRESSOR)	
E		1	**211-5358**		CONDUIT-FLEXIBLE (64-CM)	
		1	**8T-8729**	2	PIN-CONNECTOR (16-GA TO 18-GA)	
		1	**102-8802**	1	KIT-RECEPTACLE (2-PIN)	
					(INCLUDES RECEPTACLE AS & WEDGE)	
		1	**5P-4571**	2	TERMINAL-BLADE (14-GA TO 16-GA)	
	14	1	**192-7810**	1	SPRING AS-AIR	
		1	**5P-4423**	1	ELBOW	
		1	**163-1135**	1	SPRING	
	15	2	**192-7820**	1	BUMPER	
	17	2	**213-5167**	1	ROD	
	18	1	**213-5168**	1	ARM-INDICATOR	
	19	1	**213-5169**	1	HOUSING	
	20	2	**218-7252**	1	RETAINER	
	21	1	**237-3943**	1	BRACKET	
	22	2	**251-2360**	1	TOGGLE AS (LOWER)	
	23	2	**251-2362**	1	TOGGLE AS (UPPER)	
	24	1	**261-7487**	1	AIR COMPRESSOR GP-SEAT (SUSPENSION)	
	25	1	**291-7972**	1	HOUSING AS	
Y	26	2	*291-7980*	1	ARM GP-SEAT SUSPENSION (CENTER)	677
	27	1	**291-7993**	3	WASHER (20X40X2-MM THK)	
Y	28	1	*291-8004*	1	ARM GP-SEAT SUSPENSION (OUTER, RH)	678
	29	1	**291-8010**	2	BEARING	
Y	30	1	*291-8011*	1	ARM GP-SEAT SUSPENSION (OUTER, LH)	679
	31	1	**291-8014**	1	HOUSING AS	
	32	2	**291-8019**	2	SHAFT	
	33	1	**291-8026**	1	SHAFT	
	34	1	**291-8027**	4	BLOCK	
	35	2	**291-8028**	4	BLOCK	
	36	1	**291-8031**	1	SPACER (19.3X25.4X212.4-MM THK)	
	37	2	**291-8032**	1	BUMPER	
	38	2	**308-3554**	1	SPACER (9.9X28.4X3.2-MM THK)	
	39	2	**308-3555**	1	SPACER (7.1X25.4X1.4-MM THK)	
	40	1	**308-8642**	1	FILM-IDENTIFICATION (SERIAL NUMBER)	
	41	2	**314-5274**	1	SHAFT (INNER)	
	42	2	**314-5275**	1	SHAFT (OUTER)	
	43	1	**108-4311**	1	SCREW-MACHINE (3/8-16X0.75-IN)	
J	44	1,2	**2K-4973**	8	LOCKNUT (3/8-16-THD)	
	45	2	**3E-9865**	2	LOCKNUT (1/4-20-THD)	
	46	1	**4D-7794**	1	CLIP	
	47	1	**4L-6454**	4	BOLT (3/8-16X1-IN)	
M	48	2	**5C-2890**	2	NUT (M6X1-THD)	
	49	1,2	**8T-4224**	16	WASHER-HARD (8.8X16X2-MM THK)	
	50	1,2	**8T-4896**	12	WASHER-HARD (10.2X18.5X2.5-MM THK)	

316-8368 SUSPENSION GP-SEAT *(contd.)* i04402166

NOTE	REF NO	GRAPHIC REF	PART NUMBER	QTY	PART NAME 1 2 3 4 5 6 (PRODUCT LEVEL)	SEE PAGE
M	51	1,2	**8T-7547**	16	BOLT (M8X1.25X30-MM)	
	52	1	**8T-9371**	1	BOLT (3/8-16X0.5-IN)	
BE	53	1	**211-5358**		CONDUIT-FLEXIBLE (64-CM)	
BD	54	1	**5P-6010**		TUBE (1-M)	
					AVAILABLE REPAIR KIT(S):	
			192-7799	1	KIT-AIR VALVE (SEAT)	
					(INCLUDES FITTING, LOCKWASHER, NUT, VALVE & KNOB AS)	
J			**192-7848**	2	KIT-SHOCK ABSORBER (SUSPENSION SEAT)	
					(EACH KIT INCLUDES PARTS MARKED J IN GRAPHICS)	
			351-1881	1	KIT-WASHER	
					(INCLUDES WASHERS & SHIMS)	

B-USE AS REQUIRED
D-ORDER BY THE METER
E-ORDER BY THE CENTIMETER
J-KIT MARKED J SERVICES PARTS MARKED J
M-METRIC PART
Y-SEPARATE ILLUSTRATION

316-8368 SUSPENSION GP-SEAT *(contd.)* i04402166

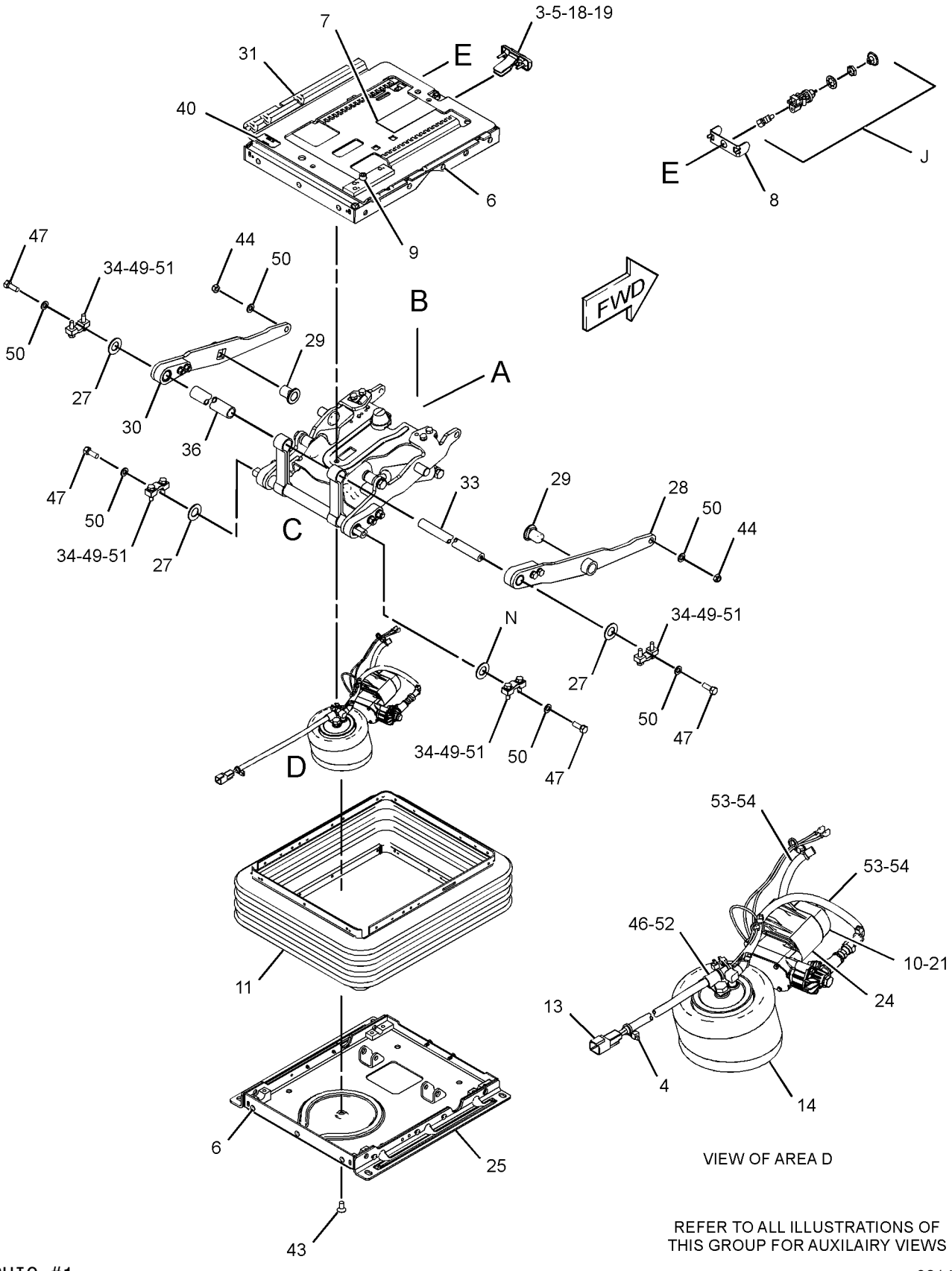

VIEW OF AREA D

REFER TO ALL ILLUSTRATIONS OF THIS GROUP FOR AUXILAIRY VIEWS

GRAPHIC #1

g02140698

316-8368 SUSPENSION GP-SEAT *(contd.)* i04402166

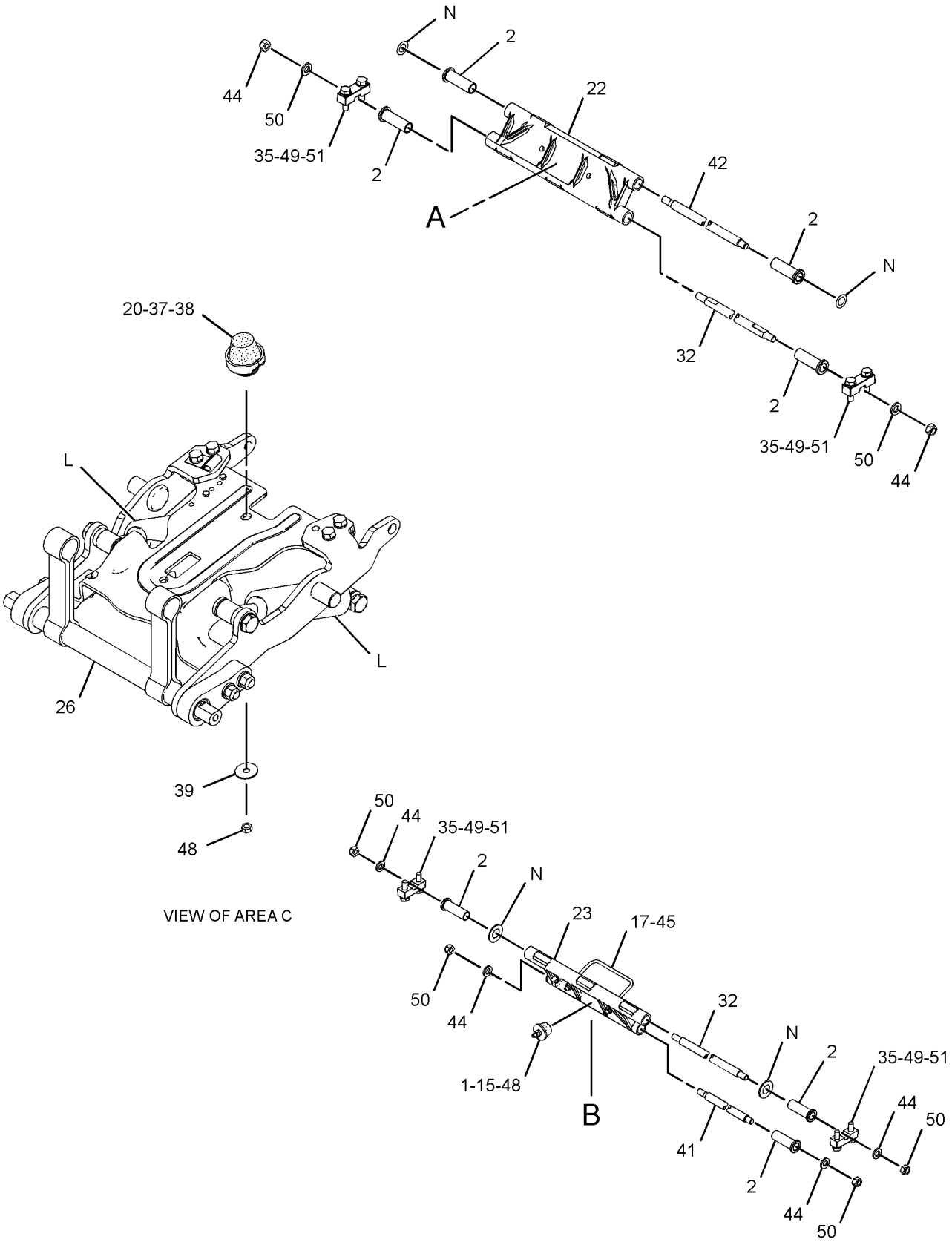

GRAPHIC #2 **<END>** g02140699

OPERATOR STATION

255-4229 WASHER GP-WINDOW

S/N: JTD1-UP; FFF1-UP; LLL1-UP
PART OF 244-7475, 244-7476 ROPS AR
AN ATTACHMENT

SMCS-7306 **i03595841**

NOTE	REF NO	GRAPHIC REF	PART NUMBER	QTY	PART NAME 1 2 3 4 5 6 (PRODUCT LEVEL)	SEE PAGE
	1	1	**7K-1181**	3	STRAP-CABLE	
B	2	1	**7X-7927**		TAPE-IDENTIFICATION (LETTER A)	
B	3	1	**7X-7928**		TAPE-IDENTIFICATION (LETTER B)	
B	4	1	**7X-7929**		TAPE-IDENTIFICATION (LETTER C)	
B	5	1	**7X-7930**		TAPE-IDENTIFICATION (LETTER D)	
	6	1	**249-9062**	1	HARNESS AS-PUMP (WINDOW WASHER)	
		1	**123-7615**	4	CONNECTOR	
		1	**186-3735**	5	PIN-CONNECTOR (16-GA TO 18-GA)	
		1	**8T-8737**	1	PLUG-SEAL	
		1	**102-8805**	1	KIT-RECEPTACLE (6-PIN)	
					(INCLUDES RECEPTACLE AS & WEDGE)	
		1	**6V-0491**	8	TERMINAL-BLADE (14-GA TO 18-GA)	
E		1	**125-7875**		TUBE-HEAT SHRINK (7.44-MM DIA) (5-CM)	
	7	1	**251-5977**	1	BRACKET	
	8	1	**280-9162**	1	TANK GP-WINDOW WASHER	
	8A	1	**209-4481**	4	PUMP AS	
	8B	1	**209-4482**	1	CAP-VENTED (WINDOW WASHER TANK)	
	9	1	**3S-2093**	2	STRAP-CABLE	
	10	1	**8T-4121**	2	WASHER-HARD (11X21X2.5-MM THK)	
M	11	1	**8T-4137**	2	BOLT (M10X1.5X20-MM)	
E	12	1	**144-0195**		HOSE (30-CM)	
E	12A	1	**144-0195**		HOSE (25-CM)	
E	12B	1	**144-0195**		HOSE (20-CM)	
E	12C	1	**144-0195**		HOSE (16-CM)	
D	13	1	**6V-2496**		SEAL (0.4-M)	
D	13A	1	**6V-2496**		SEAL (0.25-M EACH)	

B-USE AS REQUIRED
D-ORDER BY THE METER
E-ORDER BY THE CENTIMETER
M-METRIC PART

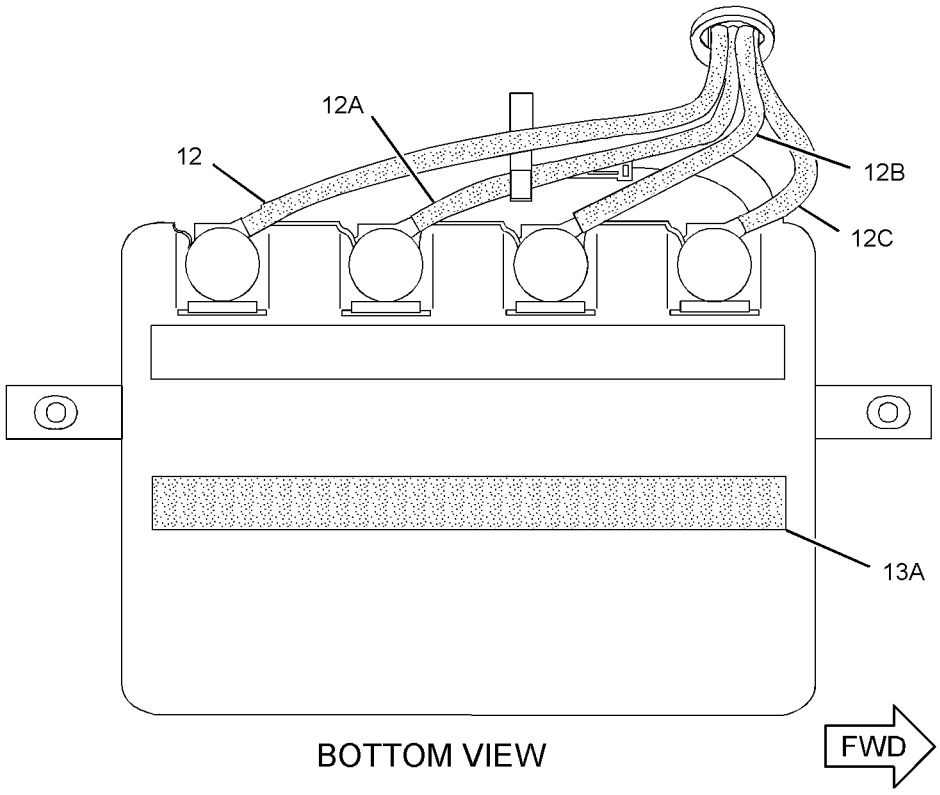

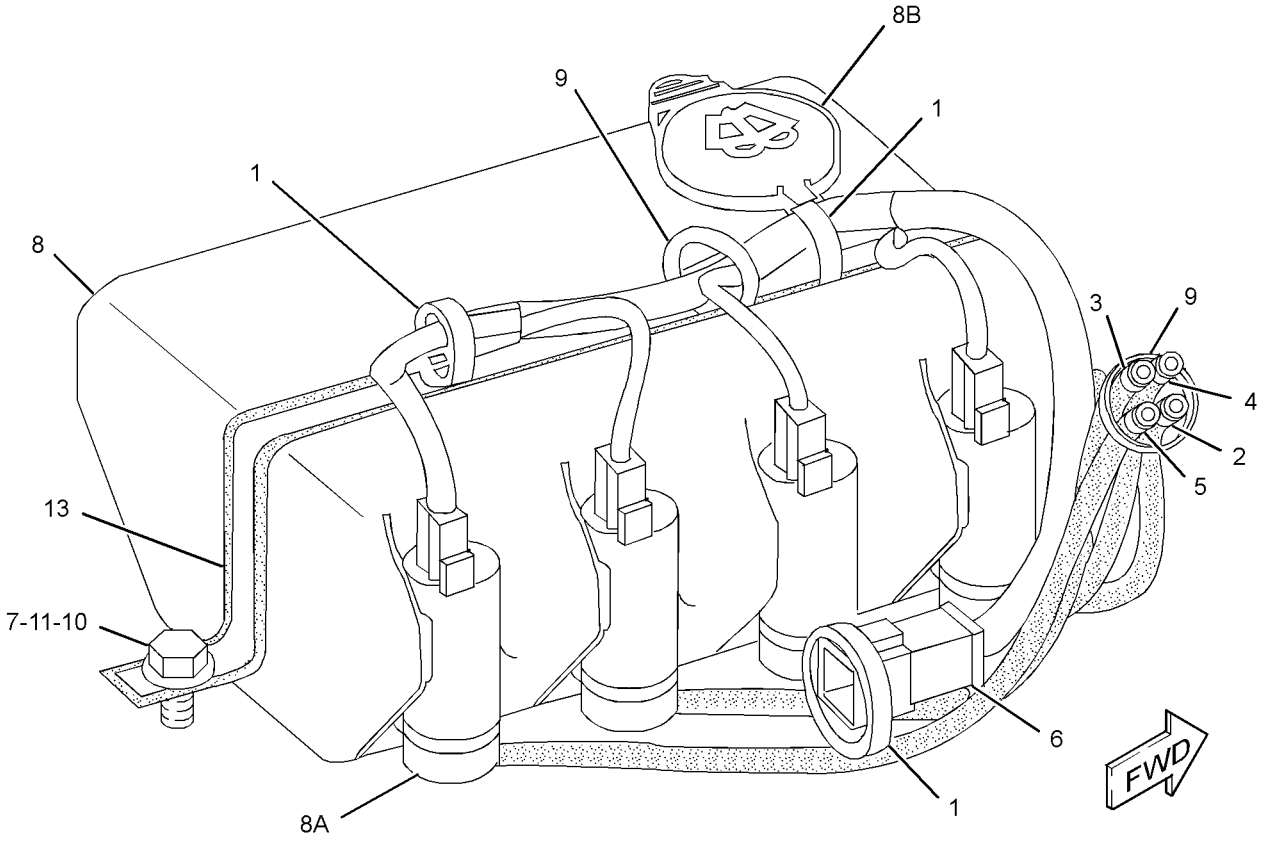

GRAPHIC #1 **<END>** g01730974

OPERATOR STATION

247-6503 WINDOW GP-CAB

S/N: JTD1-UP; FFF1-UP; LLL1-UP
PART OF 244-7475 ROPS AR
AN ATTACHMENT
TYPE 1

SMCS-7310 **i03776834**

NOTE	REF NO	GRAPHIC REF	PART NUMBER	QTY	PART NAME 1 2 3 4 5 6 (PRODUCT LEVEL)	SEE PAGE
	1	1	**247-6582**	1	GLASS-FRONT	
	2	1	**247-6583**	1	GLASS-REAR	
Y	3	1	*259-4405*	1	WINDOW GP-CAB (LH)	839
Y	4	1	*259-4403*	1	WINDOW GP-CAB (RH)	838

Y-SEPARATE ILLUSTRATION

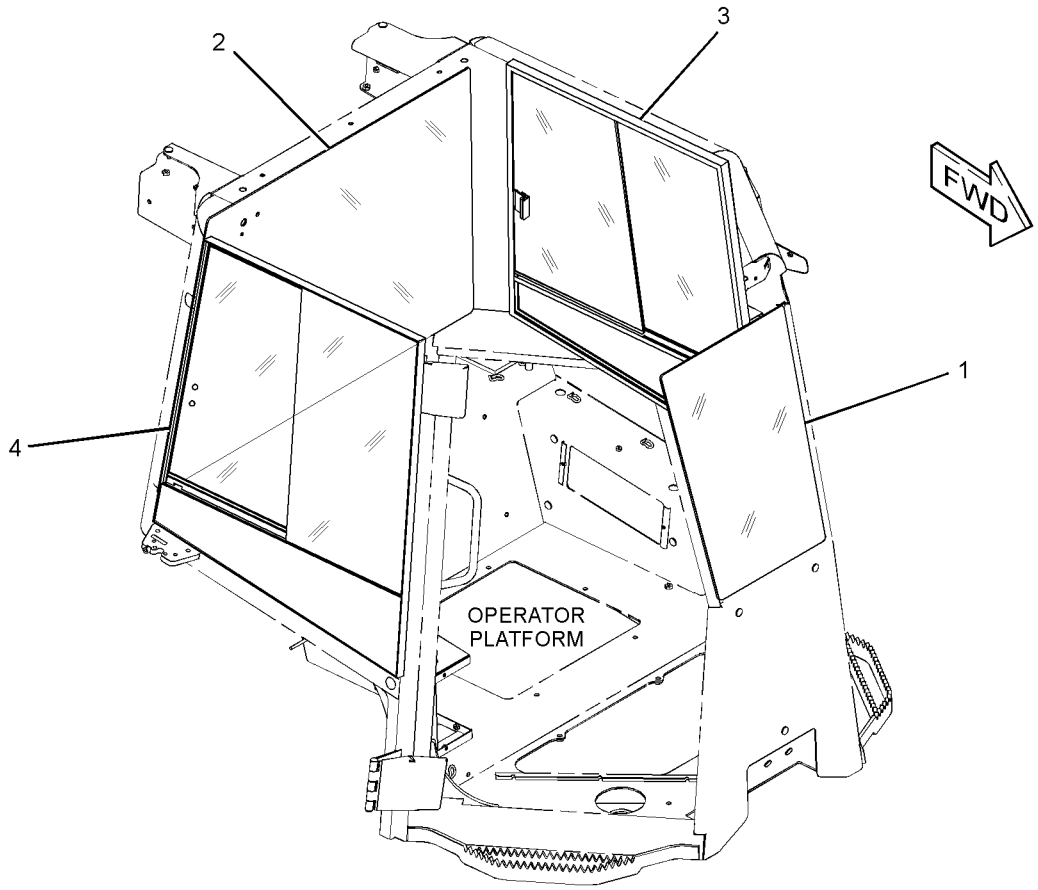

GRAPHIC #1 **<END>** g01301019

OPERATOR STATION

247-6503 WINDOW GP-CAB

S/N: JTD1-UP; FFF1-UP; LLL1-UP
PART OF 244-7475 ROPS AR
AN ATTACHMENT
TYPE 2

SMCS-7310 **i04102853**

NOTE	REF NO	GRAPHIC REF	PART NUMBER	QTY	PART NAME 1 2 3 4 5 6 (PRODUCT LEVEL)	SEE PAGE
	1	1	**364-6583**	1	GLASS-FRONT	
	2	1	**247-6583**	1	GLASS-REAR	
CY	3	1	**333-2732**	1	WINDOW GP-SLIDING (RH)	840
CY	4	1	**333-2733**	1	WINDOW GP-SLIDING (LH)	842

C-CHANGE FROM PREVIOUS TYPE
Y-SEPARATE ILLUSTRATION

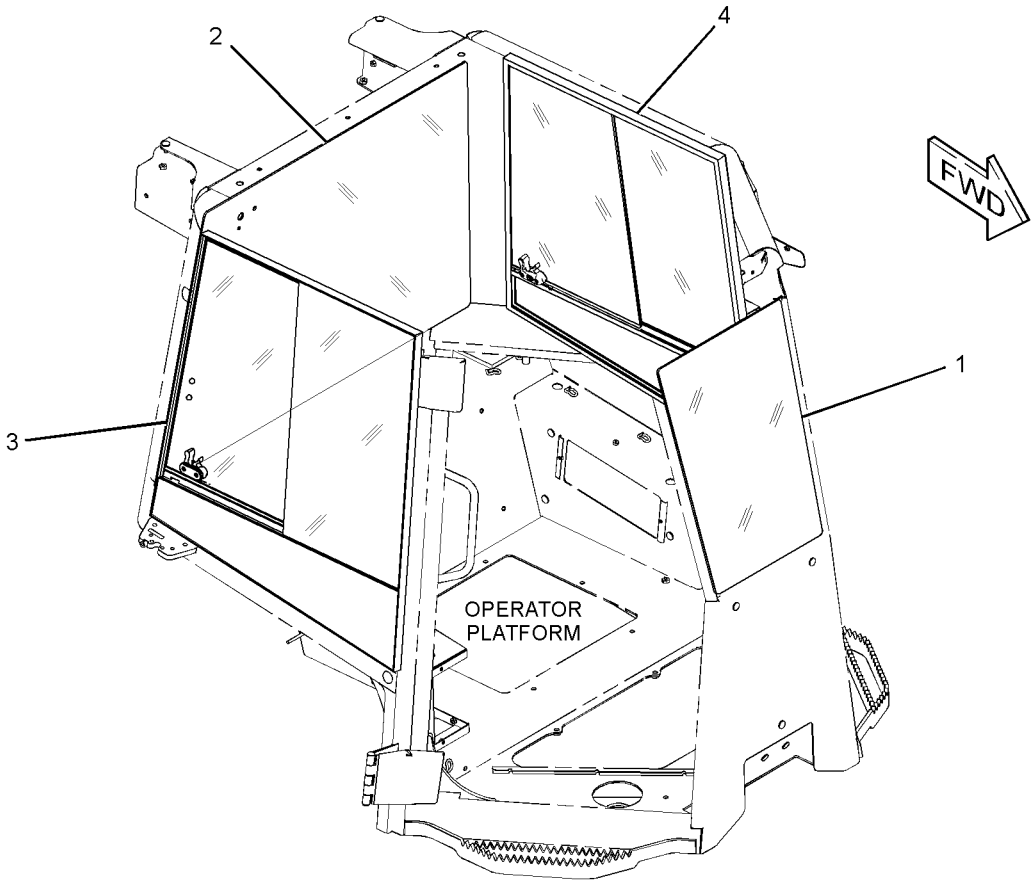

GRAPHIC #1 **<END>** g02125810

255-4275 WINDOW GP-CAB

S/N: JTD1-UP; FFF1-UP; LLL1-UP
PART OF 244-7476 ROPS AR
AN ATTACHMENT

SMCS-7310 **i03781050**

NOTE	REF NO	GRAPHIC REF	PART NUMBER	QTY	PART NAME 1 2 3 4 5 6 (PRODUCT LEVEL)	SEE PAGE
	1	1	**247-6583**	1	GLASS-REAR	
	2	1	**343-3797**	1	WINDOW-FRONT (POLYCARBONATE)	
Y	3	1	**259-4403**	1	WINDOW GP-CAB (RH)	838
Y	4	1	**259-4405**	1	WINDOW GP-CAB (LH)	839

Y-SEPARATE ILLUSTRATION

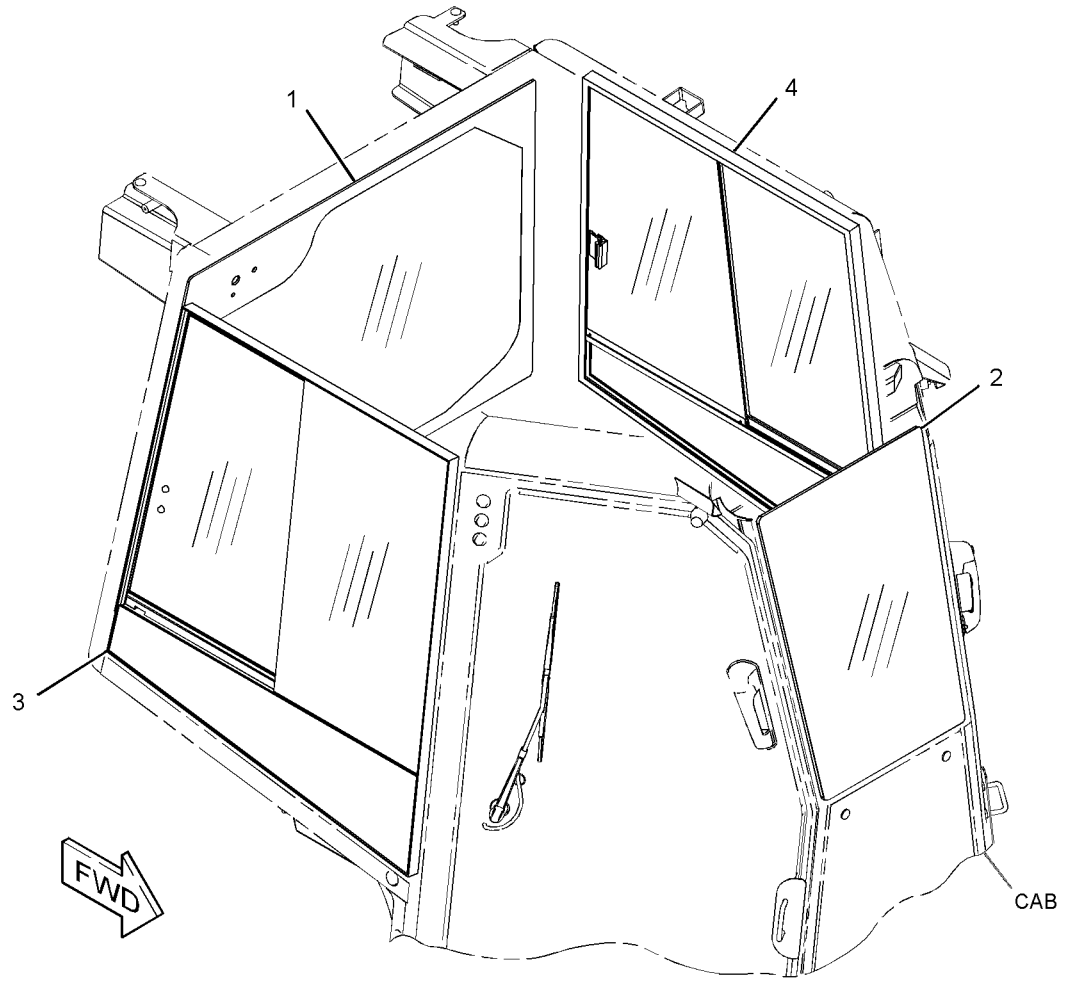

GRAPHIC #1 **<END>** g01380929

OPERATOR STATION

259-4403 WINDOW GP-CAB–RH

S/N: JTD1-UP; FFF1-UP; LLL1-UP
PART OF 247-6503, 255-4275 WINDOW GP-CAB
FIELD REPLACEMENT ORDER 333-2732–PAGE 840
AN ATTACHMENT

SMCS-7310 **i02994803**

NOTE	REF NO	GRAPHIC REF	PART NUMBER	QTY	PART NAME 1 2 3 4 5 6 (PRODUCT LEVEL)	SEE PAGE
	1	1	**6C-4016**	1	CAP	
	2	1	**212-4219**	1	KNOB	
	3	1	**302-2136**	1	CATCH AS	
E	4	1	**137-2170**		SEAL (77-CM)	
E	4A	1	**137-2170**		SEAL (78-CM)	
E	5	1	**191-3040**		SEAL (8-CM)	
	6	1	**301-5701**	1	GLASS	
	7	1	**264-8899**	1	GLASS	
	8	1	**264-8900**	1	GLASS	
	9	1	**295-4039**	2	BLOCK-SLIDER	
E	10	1	**264-8901**		SEAL (47-CM)	
E	11	1	**286-4407**		WEATHERSTRIP (75-CM EACH)	
	12	1	**145-9087**	1	CUSHION	
M	13	1	**5C-2874**	2	NUT (M5XO.8-THD)	
	14	1	**8R-0275**	2	CAP	
	15	1	**9R-4024**	2	BUSHING-TERMINAL	

E-ORDER BY THE CENTIMETER
M-METRIC PART

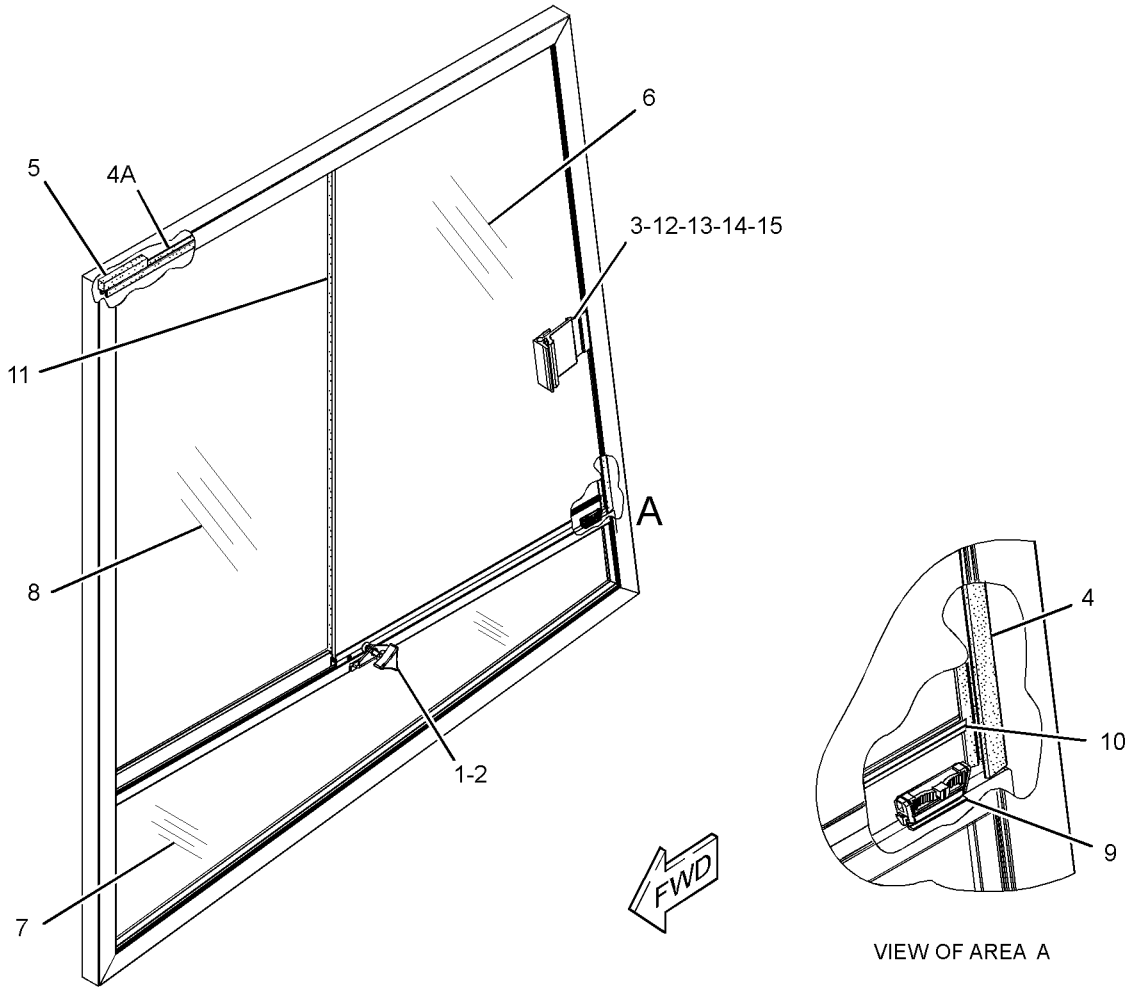

GRAPHIC #1 **<END>** g01520280

OPERATOR STATION

259-4405 WINDOW GP-CAB—LH

S/N: JTD1-UP; FFF1-UP; LLL1-UP
PART OF 247-6503, 255-4275 WINDOW GP-CAB
FIELD REPLACEMENT ORDER 333-2733—PAGE 842
AN ATTACHMENT

SMCS-7310 **i02994503**

NOTE	REF NO	GRAPHIC REF	PART NUMBER	QTY	PART NAME 1 2 3 4 5 6 (PRODUCT LEVEL)	SEE PAGE
	1	1	**6C-4016**	1	CAP	
	2	1	**212-4219**	1	KNOB	
	3	1	**302-2136**	1	CATCH AS	
E	4	1	**137-2170**		SEAL (77-CM)	
E	4A	1	**137-2170**		SEAL (78-CM)	
E	5	1	**191-3040**		SEAL (8-CM)	
	6	1	**301-5700**	1	GLASS	
	7	1	**295-4037**	1	GLASS (LH)	
	8	1	**264-8900**	1	GLASS	
	9	1	**295-4039**	2	BLOCK-SLIDER	
E	10	1	**264-8901**		SEAL (47-CM)	
E	11	1	**286-4407**		WEATHERSTRIP (75-CM EACH)	
	12	1	**145-9087**	1	CUSHION	
M	13	1	**5C-2874**	2	NUT (M5X0.8-THD)	
	14	1	**8R-0275**	2	CAP	
	15	1	**9R-4024**	2	BUSHING-TERMINAL	

E-ORDER BY THE CENTIMETER
M-METRIC PART

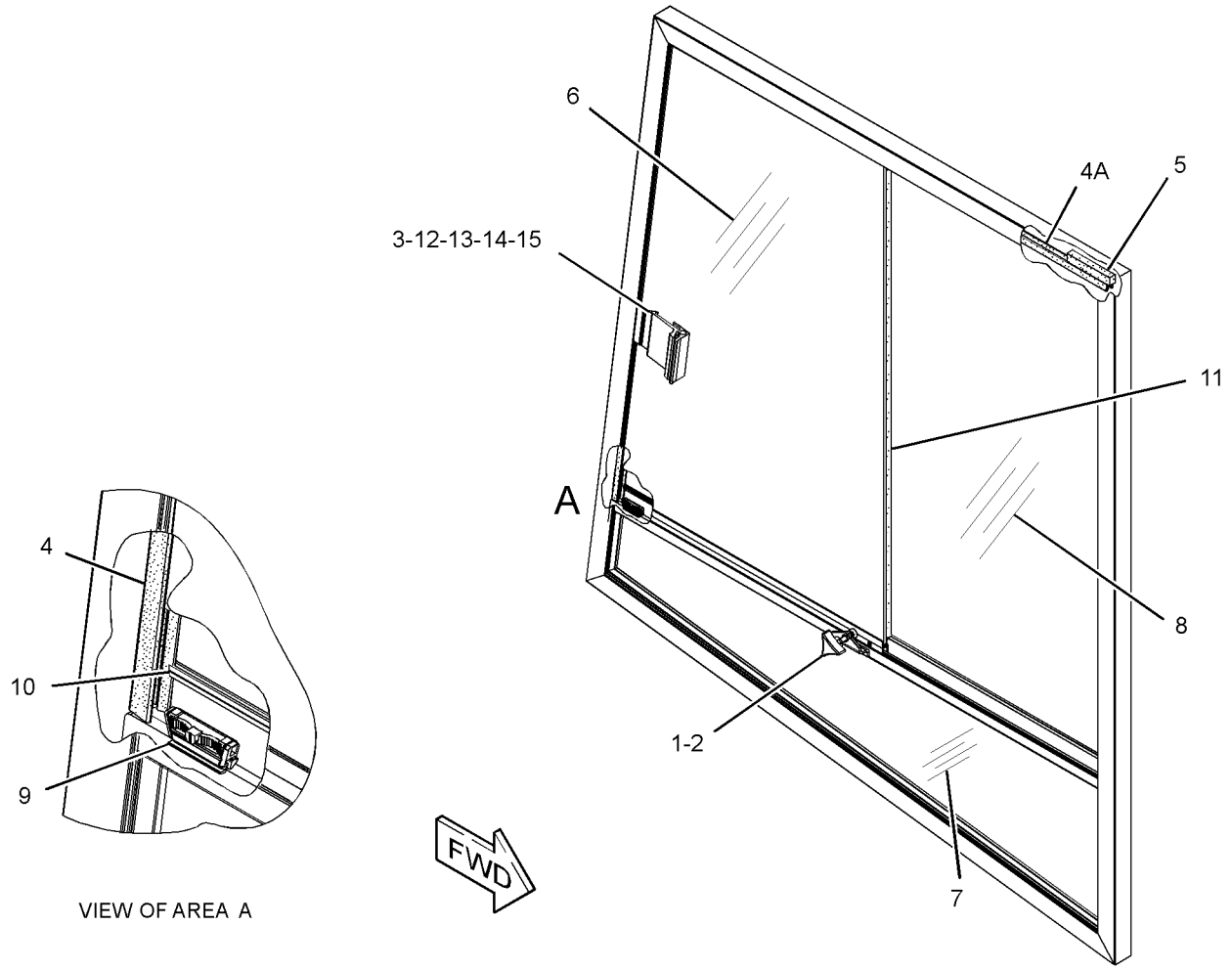

GRAPHIC #1 **<END>** g01519939

OPERATOR STATION

333-2732 WINDOW GP-SLIDING—RH

S/N: JTD1-UP; FFF1-UP; LLL1-UP
PART OF 247-6503 WINDOW GP-CAB
FIELD REPLACEMENT FOR 259-4403—PAGE 838
AN ATTACHMENT

SMCS-7310 **i03879143**

NOTE	REF NO	GRAPHIC REF	PART NUMBER	QTY	PART NAME 1 2 3 4 5 6 (PRODUCT LEVEL)	SEE PAGE
	1	1	**264-8899**	1	GLASS (RH)	
	2	1	**264-8900**	1	GLASS	
	3	1	**286-8868**	1	STOP	
	4	1	**286-8871**	1	LATCH	
	5	1	**348-7782**	1	SEAL-WINDOW	
	6	1	**348-7783**	1	KIT-SEAL	
	7	1	**348-7784**	1	KIT-GLASS (SLIDING)	
E	8	1	**226-4872**		SEAL (76-CM EACH)	

E-ORDER BY THE CENTIMETER

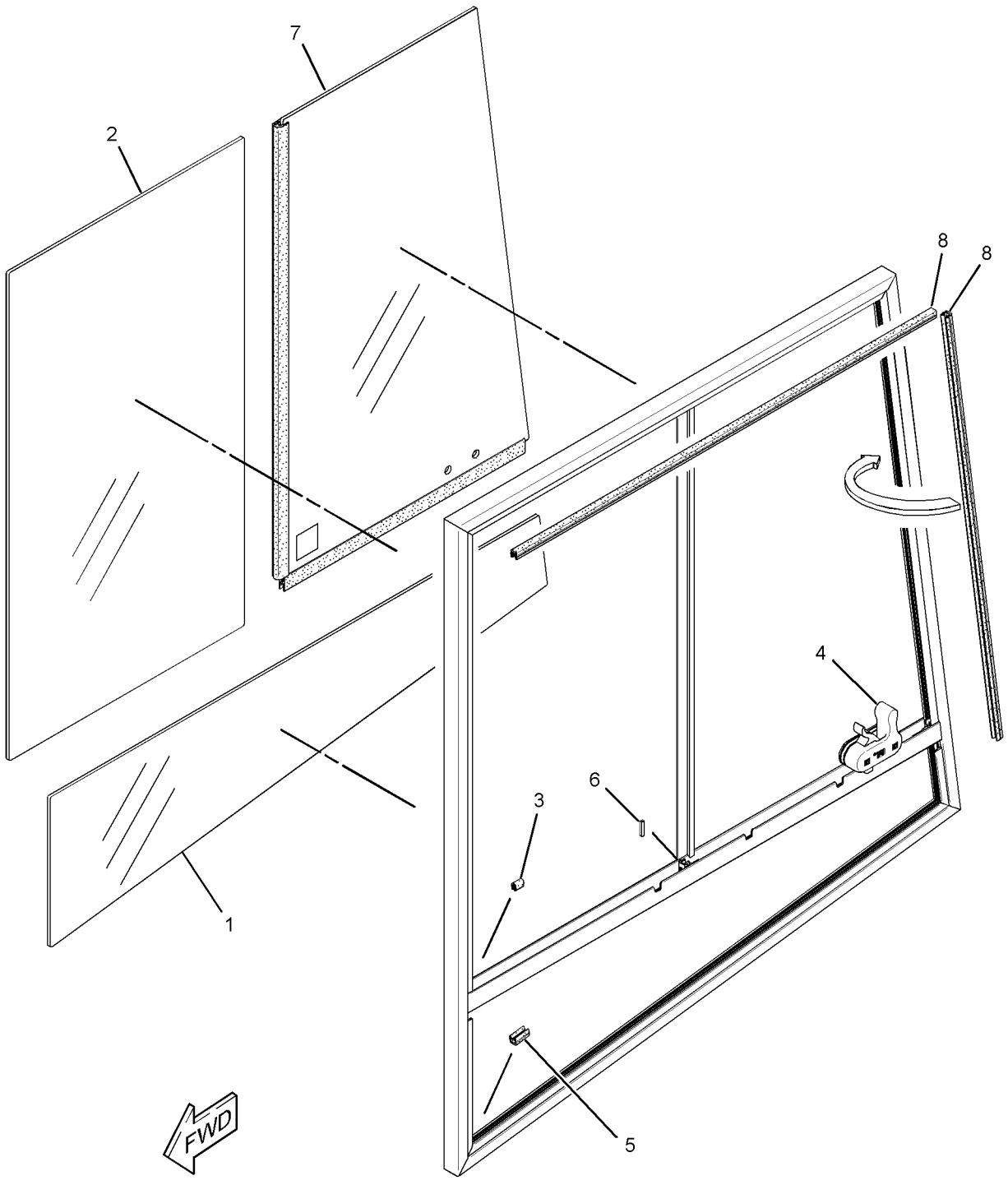

GRAPHIC #1 **<END>** g02126511

OPERATOR STATION

333-2733 WINDOW GP-SLIDING—LH

S/N: JTD1-UP; FFF1-UP; LLL1-UP
PART OF 247-6503 WINDOW GP-CAB
FIELD REPLACEMENT FOR 259-4405—PAGE 839
AN ATTACHMENT

SMCS-7310 **i04403744**

NOTE	REF NO	GRAPHIC REF	PART NUMBER	QTY	PART NAME 1 2 3 4 5 6 (PRODUCT LEVEL)	SEE PAGE
	1	1	**295-4037**	1	GLASS (LH)	
	2	1	**264-8900**	1	GLASS	
	3	1	**286-8868**	1	STOP	
	4	1	**348-7781**	1	LATCH AS (LH)	
	5	1	**348-7782**	1	SEAL-WINDOW	
	6	1	**348-7783**	1	KIT-SEAL	
	7	1	**348-7785**	1	KIT-GLASS (SLIDING)	
E	8	1	**226-4872**		SEAL (76-CM EACH)	

E-ORDER BY THE CENTIMETER

333-2733 WINDOW GP-SLIDING *(contd.)* **i04403744**

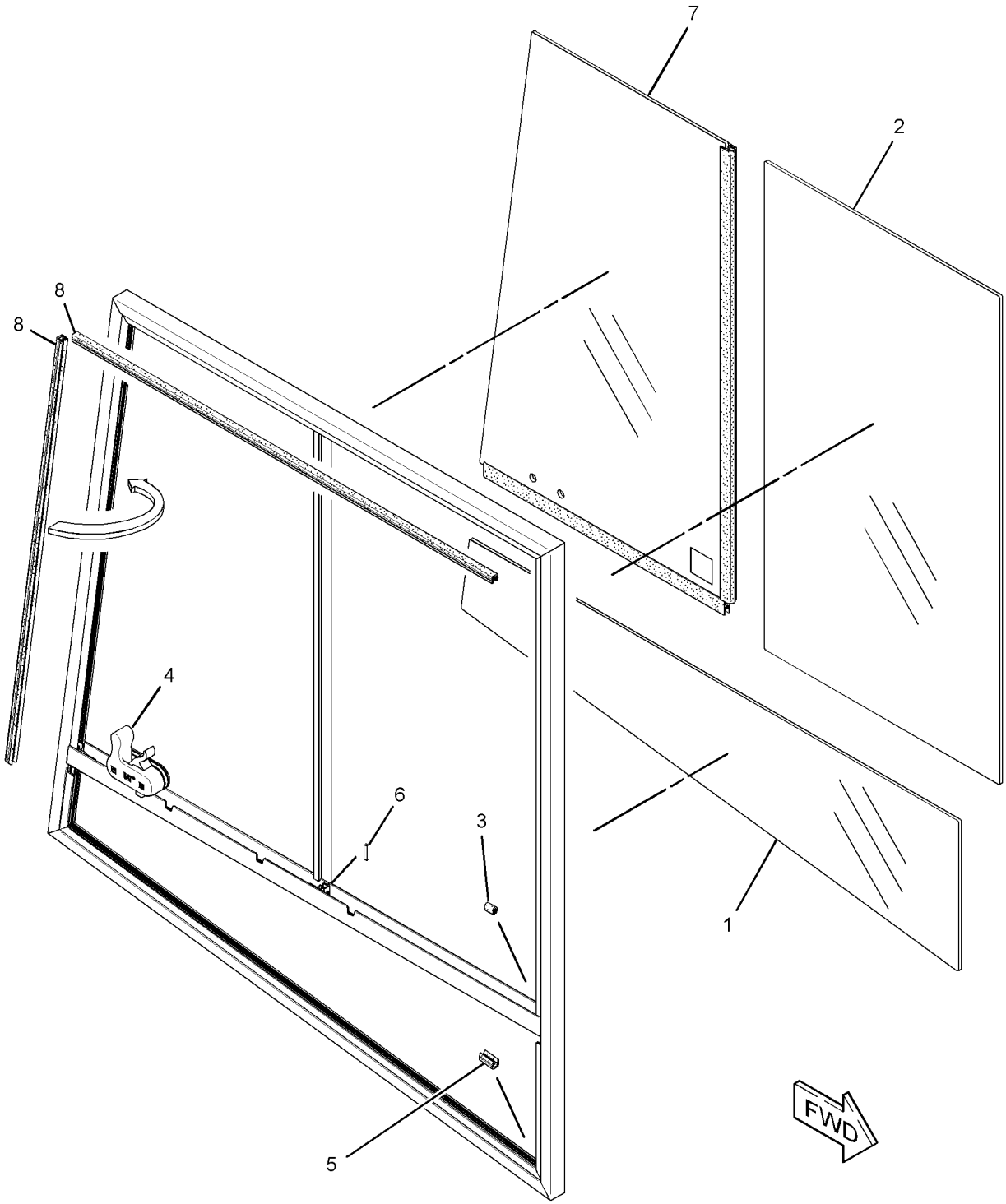

GRAPHIC #1 **<END>** g02126159

OPERATOR STATION

255-4228 WIPER GP-WINDOW

S/N: JTD1-UP; FFF1-UP; LLL1-UP
PART OF 244-7475, 244-7476 ROPS AR
AN ATTACHMENT

SMCS-7305 **i04348629**

NOTE	REF NO	GRAPHIC REF	PART NUMBER	QTY	PART NAME 1 2 3 4 5 6 (PRODUCT LEVEL)	SEE PAGE
Y	1	1	**330-5019**	1	MOTOR GP-WINDOW WIPER (REAR)	789
Y	2	1	**330-5020**	1	MOTOR GP-WINDOW WIPER (FRONT)	790
	3	1	**263-2135**	1	ARM GP-WINDOW WIPER (FRONT)	
		1	**240-8666**	2	CLIP	
		1	**136-3191**	1	NOZZLE AS-WASHER	
E		1	**194-5171**		HOSE (60-CM)	
	4	1	**266-3701**	1	ARM GP-WINDOW WIPER (REAR)	
		1	**305-9192**	1	NOZZLE AS-WASHER	
E		1	**194-5171**		HOSE (50-CM)	
	5	1	**3S-2093**	20	STRAP-CABLE	
	6	1	**317-5316**	2	GROMMET	
	7	1	**5C-8811**	1	BLADE AS-WIPER (500-MM) (FRONT)	
	8	1	**7Y-3474**	4	VALVE AS-CHECK (WINDOW WASHER)	
	9	1	**8T-5400**	2	CONNECTOR AS	
	10	1	**9D-8508**	4	GROMMET	
B	11	1	**7X-7927**		TAPE-IDENTIFICATION (LETTER A)	
B	12	1	**7X-7928**		TAPE-IDENTIFICATION (LETTER B)	
B	13	1	**7X-7929**		TAPE-IDENTIFICATION (LETTER C)	
B	14	1	**7X-7930**		TAPE-IDENTIFICATION (LETTER D)	
E	15	1	**144-0195**		HOSE (212-CM)	
E	15A	1	**144-0195**		HOSE (302-CM)	
E	15B	1	**144-0195**		HOSE (400-CM)	
E	15C	1	**144-0195**		HOSE (550-CM)	
	16	1	**146-6433**	1	BLADE AS-WIPER (500-MM) (REAR)	

B-USE AS REQUIRED
E-ORDER BY THE CENTIMETER
Y-SEPARATE ILLUSTRATION

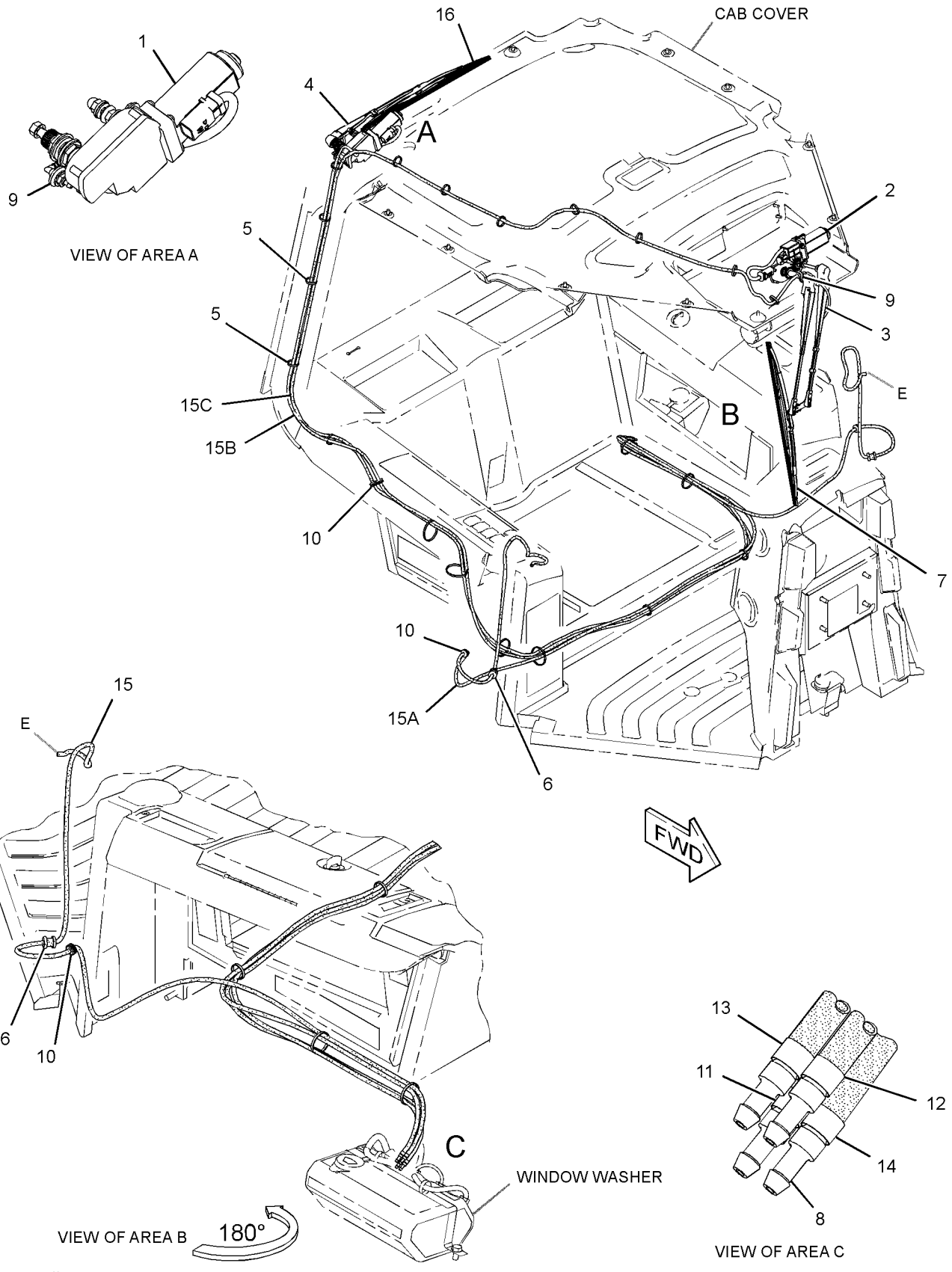

GRAPHIC #1

<END>

g02495239

255-1355 BLADE AR-PWR ANGLE & TILT–LGP

S/N: JTD1-UP; FFF1-UP; LLL1-UP
3149-MM (124-IN)
AN ATTACHMENT

SMCS-6050 **i02833724**

NOTE	PART NUMBER	QTY	PART NAME 1 2 3 4 5 6 (PRODUCT LEVEL)	SEE PAGE
Y	*255-1362*	1	BLADE GP-ANGLING (LOW GROUND PRESSURE)	851
Y	*255-1357*	1	LINK GP-PITCH	655

Y-SEPARATE ILLUSTRATION

<END>

255-1394 BLADE AR-PWR ANGLE & TILT–XL

S/N: JTD1-UP; FFF1-UP; LLL1-UP
2646-MM (104.2-IN)
AN ATTACHMENT

SMCS-6050 **i02833726**

NOTE	PART NUMBER	QTY	PART NAME 1 2 3 4 5 6 (PRODUCT LEVEL)	SEE PAGE
Y	*255-1395*	1	BLADE GP-ANGLING (XL GRADE CONTROL)	852
Y	*255-1357*	1	LINK GP-PITCH	655

Y-SEPARATE ILLUSTRATION

<END>

255-1413 BLADE AR-PWR ANGLE & TILT–LGP

S/N: JTD1-UP; FFF1-UP; LLL1-UP
3149-MM (124-IN)
AN ATTACHMENT

SMCS-6050 **i02833728**

NOTE	PART NUMBER	QTY	PART NAME 1 2 3 4 5 6 (PRODUCT LEVEL)	SEE PAGE
Y	*255-1414*	1	BLADE GP-ANGLING (LOW GROUND PRESSURE)	853
Y	*255-1357*	1	LINK GP-PITCH	655

Y-SEPARATE ILLUSTRATION

<END>

255-1425 BLADE AR-PWR ANGLE & TILT–XL

S/N: JTD1-UP; FFF1-UP; LLL1-UP
2782-MM (109.5-IN)
AN ATTACHMENT

SMCS-6050 **i02833730**

NOTE	PART NUMBER	QTY	PART NAME 1 2 3 4 5 6 (PRODUCT LEVEL)	SEE PAGE
Y	*255-1427*	1	BLADE GP-ANGLING (XL GRADE CONTROL)	854
Y	*255-1357*	1	LINK GP-PITCH	655

Y-SEPARATE ILLUSTRATION

<END>

255-1470 BLADE AR-PWR ANGLE & TILT–LGP

S/N: JTD1-UP; FFF1-UP; LLL1-UP
3220-MM (126.8-IN)
AN ATTACHMENT

SMCS-6050 **i02833731**

NOTE	PART NUMBER	QTY	PART NAME 1 2 3 4 5 6 (PRODUCT LEVEL)	SEE PAGE
Y	*255-1471*	1	BLADE GP-ANGLING (LOW GROUND PRESSURE)	855
Y	*255-1357*	1	LINK GP-PITCH	655

Y-SEPARATE ILLUSTRATION

<END>

255-1486 BLADE AR-PWR ANGLE & TILT

S/N: JTD1-UP; FFF1-UP; LLL1-UP
2921-MM (115-IN)
AN ATTACHMENT

SMCS-6050 **i02833733**

NOTE	PART NUMBER	QTY	PART NAME 1 2 3 4 5 6 (PRODUCT LEVEL)	SEE PAGE
Y	*255-1487*	1	BLADE GP-ANGLING (XL GRADE CONTROL)	856
Y	*255-1357*	1	LINK GP-PITCH	655

Y-SEPARATE ILLUSTRATION

<END>

255-1502 BLADE AR-PWR ANGLE & TILT–XL

S/N: JTD1-UP; FFF1-UP; LLL1-UP
2886-MM (113.6-IN)
AN ATTACHMENT

SMCS-6050 **i02833734**

NOTE	PART NUMBER	QTY	PART NAME 1 2 3 4 5 6 (PRODUCT LEVEL)	SEE PAGE
Y	*255-1503*	1	BLADE GP-ANGLING (XL GRADE CONTROL)	857
Y	*255-1357*	1	LINK GP-PITCH	655

Y-SEPARATE ILLUSTRATION

<END>

255-2368 BLADE AR-PWR ANGLE & TILT–LGP

S/N: JTD1-UP; FFF1-UP; LLL1-UP
3145.6-MM (123.8-IN)
AN ATTACHMENT

SMCS-6050 **i02833735**

NOTE	PART NUMBER	QTY	PART NAME 1 2 3 4 5 6 (PRODUCT LEVEL)	SEE PAGE
Y	*255-2370*	1	BLADE GP-ANGLING (LOW GROUND PRESSURE)	858
Y	*255-1357*	1	LINK GP-PITCH	655

Y-SEPARATE ILLUSTRATION

<END>

255-2372 BLADE AR-PWR ANGLE & TILT–XL

S/N: JTD1-UP; FFF1-UP; LLL1-UP
2646-MM (104.2-IN)
AN ATTACHMENT

SMCS-6050 **i02833736**

NOTE	PART NUMBER	QTY	PART NAME 1 2 3 4 5 6 (PRODUCT LEVEL)	SEE PAGE
Y	*255-2373*	1	BLADE GP-ANGLING (XL GRADE CONTROL)	859
Y	*255-1357*	1	LINK GP-PITCH	655

Y-SEPARATE ILLUSTRATION

<END>

255-2375 BLADE AR-PWR ANGLE & TILT–LGP

S/N: JTD1-UP; FFF1-UP; LLL1-UP
3149-MM(124-IN)
AN ATTACHMENT

SMCS-6050 **i02833737**

NOTE	PART NUMBER	QTY	PART NAME 1 2 3 4 5 6 (PRODUCT LEVEL)	SEE PAGE
Y	*255-2376*	1	BLADE GP-ANGLING (LOW GROUND PRESSURE)	860
Y	*255-1357*	1	LINK GP-PITCH	655

Y-SEPARATE ILLUSTRATION

<END>

255-2378 BLADE AR-PWR ANGLE & TILT–XL

S/N: JTD1-UP; FFF1-UP; LLL1-UP
2782-MM (109.5-IN)
AN ATTACHMENT

SMCS-6050 **i02833738**

NOTE	PART NUMBER	QTY	PART NAME 1 2 3 4 5 6 (PRODUCT LEVEL)	SEE PAGE
Y	*255-2379*	1	BLADE GP-ANGLING (XL GRADE CONTROL)	861
Y	*255-1357*	1	LINK GP-PITCH	655

Y-SEPARATE ILLUSTRATION

<END>

255-2381 BLADE AR-PWR ANGLE & TILT–LGP

S/N: JTD1-UP; FFF1-UP; LLL1-UP
3220-MM (126.8-IN)
AN ATTACHMENT

SMCS-6050 **i02833739**

NOTE	PART NUMBER	QTY	PART NAME 1 2 3 4 5 6 (PRODUCT LEVEL)	SEE PAGE
Y	*255-2383*	1	BLADE GP-ANGLING (LOW GROUND PRESSURE)	862
Y	*255-1357*	1	LINK GP-PITCH	655

Y-SEPARATE ILLUSTRATION

<END>

255-2385 BLADE AR-PWR ANGLE & TILT

S/N: JTD1-UP; FFF1-UP; LLL1-UP
2921-MM (115-IN)
AN ATTACHMENT

SMCS-6050 **i02833745**

NOTE	PART NUMBER	QTY	PART NAME 1 2 3 4 5 6 (PRODUCT LEVEL)	SEE PAGE
Y	*255-2386*	1	BLADE GP-ANGLING (XL GRADE CONTROL)	863
Y	*255-1357*	1	LINK GP-PITCH	655

Y-SEPARATE ILLUSTRATION

<END>

255-2390 BLADE AR-PWR ANGLE & TILT–XL

S/N: JTD1-UP; FFF1-UP; LLL1-UP
2886-MM (113.6-IN)
AN ATTACHMENT

SMCS-6050 **i02833746**

NOTE	PART NUMBER	QTY	PART NAME 1 2 3 4 5 6 (PRODUCT LEVEL)	SEE PAGE
Y	*255-2391*	1	BLADE GP-ANGLING (XL GRADE CONTROL)	864
Y	*255-1357*	1	LINK GP-PITCH	655

Y-SEPARATE ILLUSTRATION

<END>

255-2393 BLADE AR-PWR ANGLE & TILT–FORESTRY

S/N: JTD1-UP; FFF1-UP; LLL1-UP
2886-MM (113.6-IN)
AN ATTACHMENT

SMCS-6050 **i02833747**

NOTE	PART NUMBER	QTY	PART NAME 1 2 3 4 5 6 (PRODUCT LEVEL)	SEE PAGE
Y	*255-2394*	1	BLADE GP-ANGLING (FORESTRY)	865
Y	*255-1357*	1	LINK GP-PITCH	655

Y-SEPARATE ILLUSTRATION

<END>

277-7715 BLADE AR-PWR ANGLE & TILT–LGP

S/N: JTD1-UP; FFF1-UP; LLL1-UP
3103-MM (122.2-IN)
AN ATTACHMENT

SMCS-6050 **i02833748**

NOTE	PART NUMBER	QTY	PART NAME 1 2 3 4 5 6 (PRODUCT LEVEL)	SEE PAGE
Y	*277-5647*	1	BLADE GP-ANGLING (LARGE CAPACITY)	866
Y	*255-1357*	1	LINK GP-PITCH	655

Y-SEPARATE ILLUSTRATION

<END>

WORK TOOLS

286-2935 BLADE AR-PWR ANGLE & TILT

S/N: JTD1-UP; FFF1-UP; LLL1-UP
3103-MM (122.2-IN)
AN ATTACHMENT

SMCS-6050 **i02642341**

NOTE	PART NUMBER	QTY	PART NAME 1 2 3 4 5 6 (PRODUCT LEVEL)	SEE PAGE
Y	*286-2936*	1	BLADE GP-ANGLING (LOW GROUND PRESSURE)	867
Y	*255-1357*	1	LINK GP-PITCH	655

Y-SEPARATE ILLUSTRATION

<END>

312-8350 BLADE AR-PWR ANGLE & TILT

S/N: JTD1-UP; FFF1-UP; LLL1-UP
2921-MM(115-IN)
AN ATTACHMENT

SMCS-6050 **i02864411**

NOTE	PART NUMBER	QTY	PART NAME 1 2 3 4 5 6 (PRODUCT LEVEL)	SEE PAGE
Y	*312-8351*	1	BLADE GP-ANGLING	868
Y	*255-1357*	1	LINK GP-PITCH	655

Y-SEPARATE ILLUSTRATION

<END>

312-8360 BLADE AR-PWR ANGLE & TILT

S/N: JTD1-UP; FFF1-UP; LLL1-UP
2921-MM(115-IN)
AN ATTACHMENT

SMCS-6050 **i03776836**

NOTE	PART NUMBER	QTY	PART NAME 1 2 3 4 5 6 (PRODUCT LEVEL)	SEE PAGE
Y	*312-8361*	1	BLADE GP-ANGLING (GRADE CONTROL)	869
Y	*255-1357*	1	LINK GP-PITCH	655

Y-SEPARATE ILLUSTRATION

<END>

255-1362 BLADE GP-ANGLING—LOW GROUND PRESSURE

S/N: JTD1-UP; FFF1-UP; LLL1-UP
PART OF 255-1355 BLADE AR-PWR ANGLE & TILT
AN ATTACHMENT

SMCS-6052, 6060, 6701 **i02637757**

NOTE	REF NO	GRAPHIC REF	PART NUMBER	QTY	PART NAME 1 2 3 4 5 6 (PRODUCT LEVEL)	SEE PAGE
	1	1	**6Y-1421**	3	PIN	
Y	2	1	*6Y-5838*	1	EDGE GP-BIT & CUTTING	895
	3	1	**8J-0729**	3	RETAINER	
	4	1	**150-0351**	2	SPACER (38.3X44.45X20.8-MM THK)	
	5	1	**150-0352**	4	SPACER (38.30X44.45X27.3-MM THK)	
	6	1	**179-5755**	1	CAP-BEARING	
B	7	1	**183-5297**	26	SHIM (0.8-MM THK)	
	8	1	**255-1365**	1	BLADE AS-ANGLING	
	9	1	**225-0098**	4	BOLT (M20X2.5X140-MM)	
	10	1	**8T-3282**	4	WASHER-HARD (22X35X3.5-MM THK)	
M	11	1	**8T-4195**	3	BOLT (M10X1.5X30-MM)	

B-USE AS REQUIRED
M-METRIC PART
Y-SEPARATE ILLUSTRATION

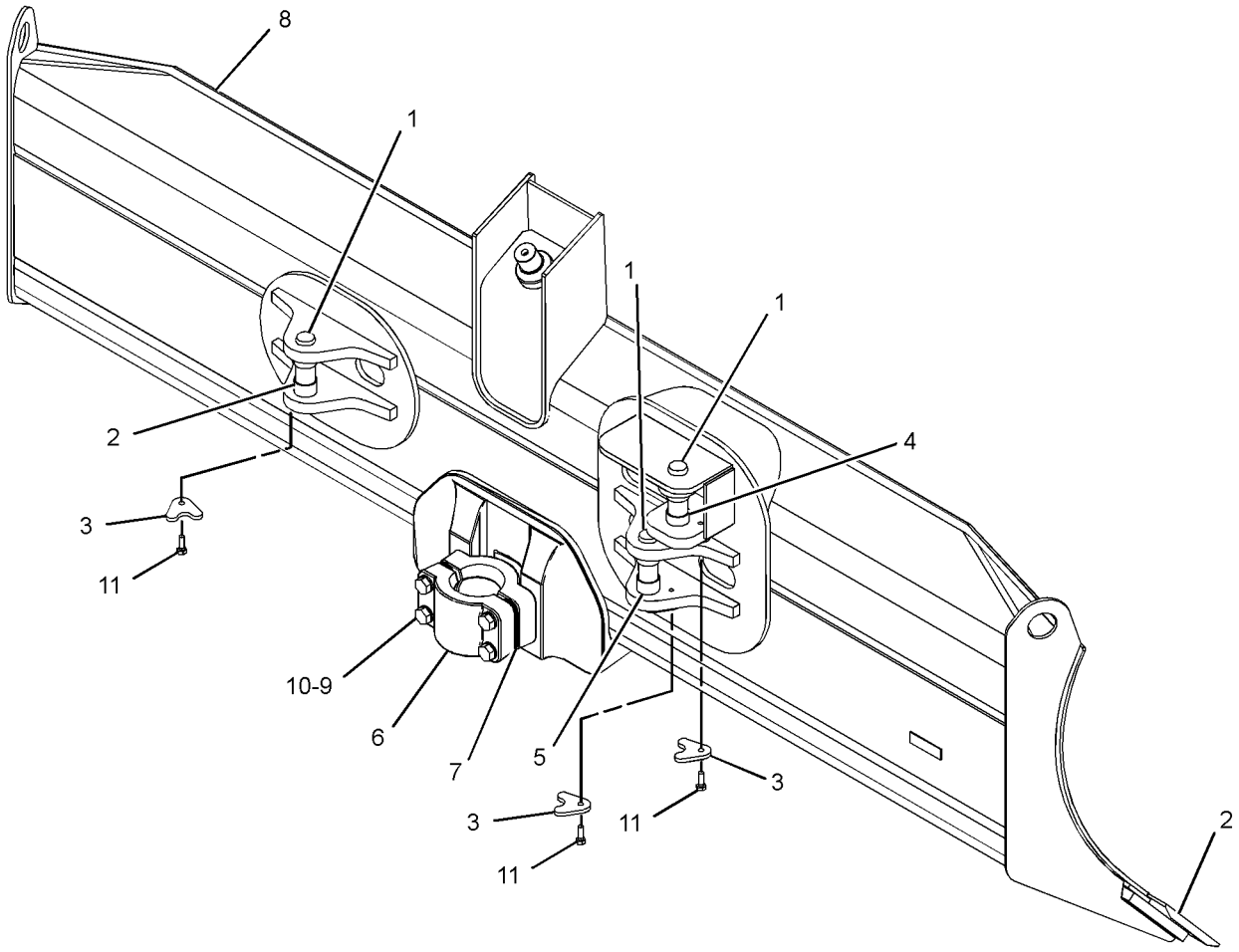

GRAPHIC #1 **<END>** g01330203

255-1395 BLADE GP-ANGLING–XL GRADE CONTROL

S/N: JTD1-UP; FFF1-UP; LLL1-UP
PART OF 255-1394 BLADE AR-PWR ANGLE & TILT
AN ATTACHMENT

SMCS-6052, 6060, 6701 **i02638061**

NOTE	REF NO	GRAPHIC REF	PART NUMBER	QTY	PART NAME 1 2 3 4 5 6 (PRODUCT LEVEL)	SEE PAGE
	1	1	**6Y-1421**	3	PIN	
	2	1	**8J-0729**	3	RETAINER	
	3	1	**150-0351**	2	SPACER (38.3X44.45X20.8-MM THK)	
	4	1	**150-0352**	4	SPACER (38.30X44.45X27.3-MM THK)	
	5	1	**179-5755**	1	CAP-BEARING	
B	6	1	**183-5297**	26	SHIM (0.8-MM THK)	
	7	1	**255-1397**	1	BLADE AS-ANGLING	
Y	8	1	*255-1426*	1	EDGE GP-BIT & CUTTING (LEVEL CUT)	897
	9	1	**225-0098**	4	BOLT (M20X2.5X140-MM)	
	10	1	**8T-3282**	4	WASHER-HARD (22X35X3.5-MM THK)	
M	11	1	**8T-4195**	3	BOLT (M10X1.5X30-MM)	

B-USE AS REQUIRED
M-METRIC PART
Y-SEPARATE ILLUSTRATION

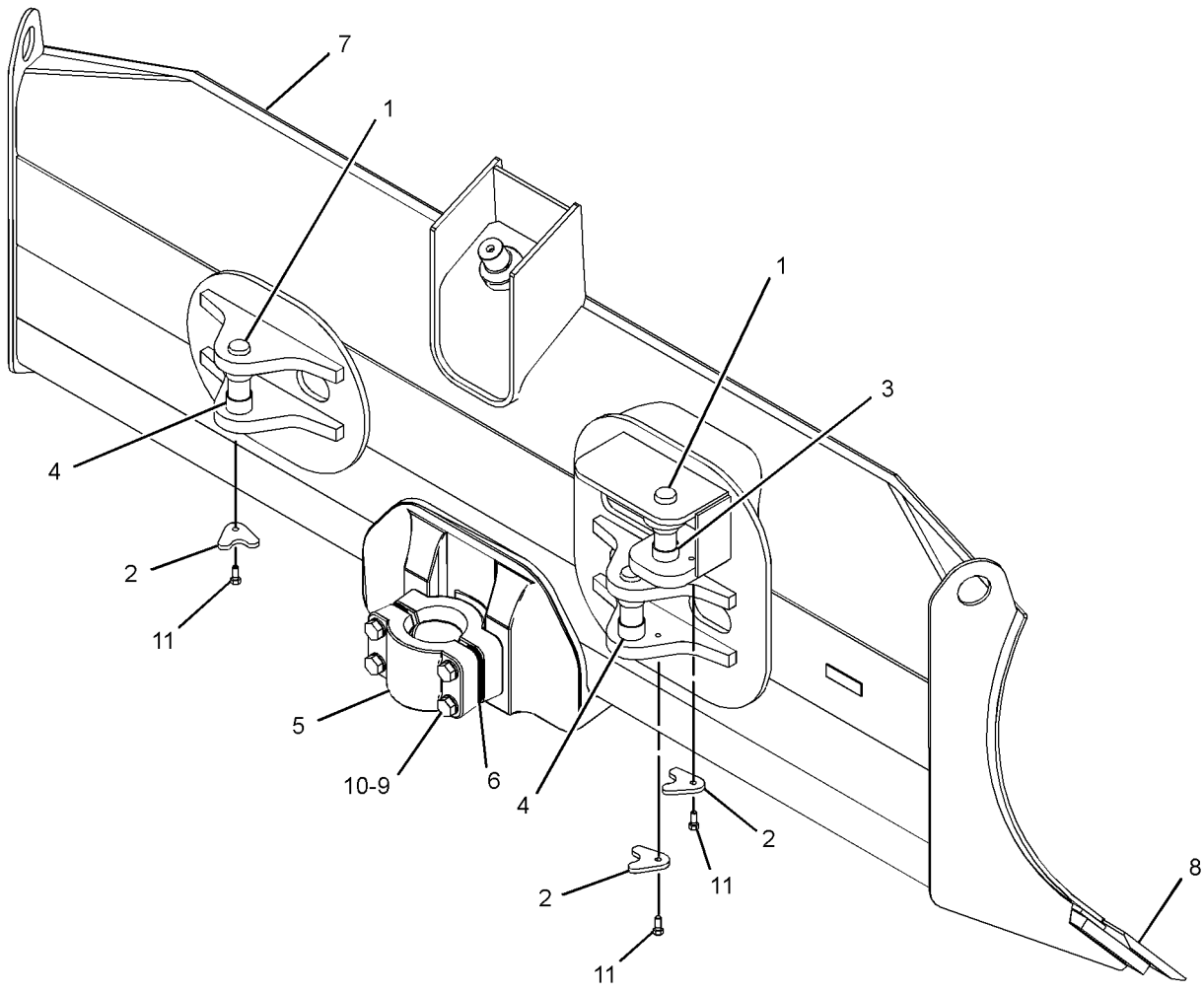

GRAPHIC #1 **<END>** g01330216

255-1414 BLADE GP-ANGLING—LOW GROUND PRESSURE

S/N: JTD1-UP; FFF1-UP; LLL1-UP
PART OF 255-1413 BLADE AR-PWR ANGLE & TILT
AN ATTACHMENT

SMCS-6052, 6060, 6701 **i02638047**

NOTE	REF NO	GRAPHIC REF	PART NUMBER	QTY	PART NAME 1 2 3 4 5 6 (PRODUCT LEVEL)	SEE PAGE
	1	1	**6Y-1421**	3	PIN	
Y	2	1	*6Y-5838*	1	EDGE GP-BIT & CUTTING	895
	3	1	**8J-0729**	3	RETAINER	
	4	1	**150-0351**	2	SPACER (38.3X44.45X20.8-MM THK)	
	5	1	**150-0352**	4	SPACER (38.30X44.45X27.3-MM THK)	
	6	1	**179-5755**	1	CAP-BEARING	
B	7	1	**183-5297**	26	SHIM (0.8-MM THK)	
	8	1	**255-1415**	1	BLADE AS-ANGLING	
	9	1	**225-0098**	4	BOLT (M20X2.5X140-MM)	
	10	1	**8T-3282**	4	WASHER-HARD (22X35X3.5-MM THK)	
M	11	1	**8T-4195**	3	BOLT (M10X1.5X30-MM)	

B-USE AS REQUIRED
M-METRIC PART
Y-SEPARATE ILLUSTRATION

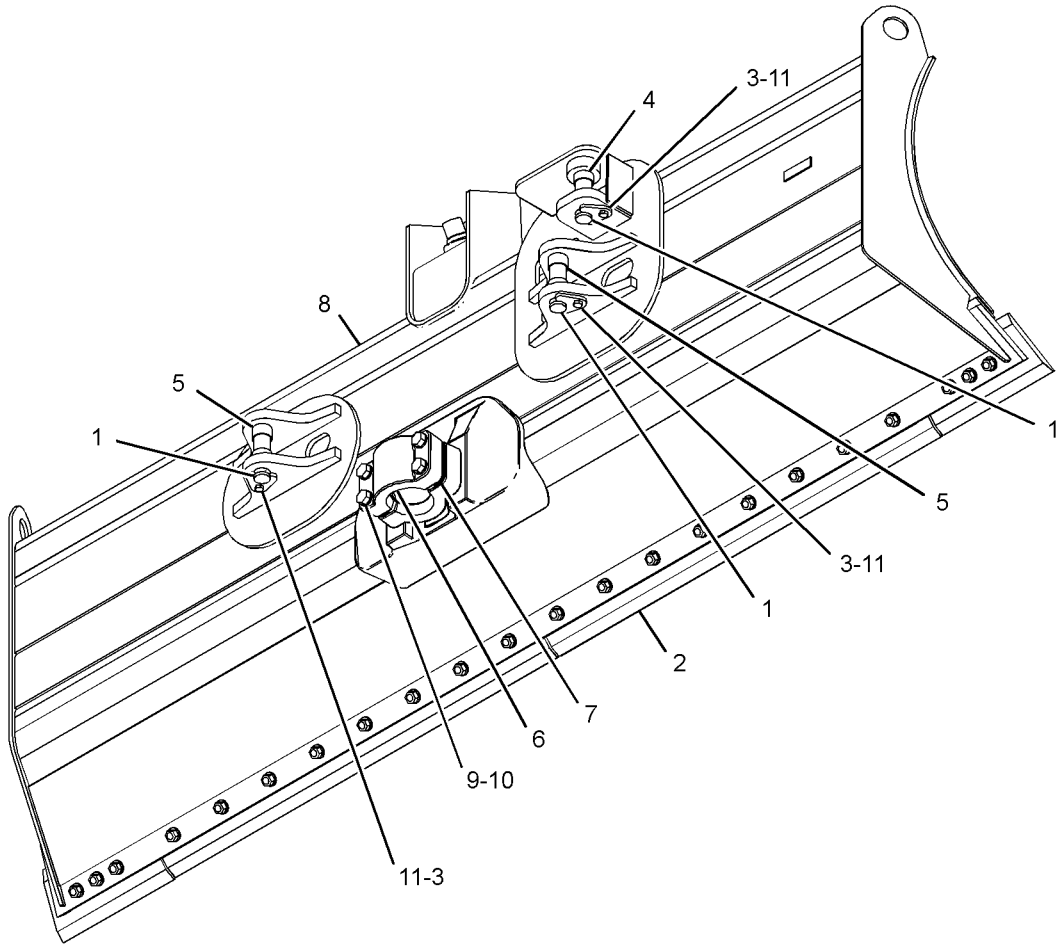

GRAPHIC #1 **<END>** g01330361

255-1427 BLADE GP-ANGLING–XL GRADE CONTROL

S/N: JTD1-UP; FFF1-UP; LLL1-UP
PART OF 255-1425 BLADE AR-PWR ANGLE & TILT
AN ATTACHMENT

SMCS-6052, 6060, 6701 **i02833741**

NOTE	REF NO	GRAPHIC REF	PART NUMBER	QTY	PART NAME 1 2 3 4 5 6 (PRODUCT LEVEL)	SEE PAGE
	1	1	**6Y-1421**	3	PIN	
	2	1	**8J-0729**	3	RETAINER	
	3	1	**150-0351**	2	SPACER (38.3X44.45X20.8-MM THK)	
	4	1	**150-0352**	4	SPACER (38.30X44.45X27.3-MM THK)	
	5	1	**179-5755**	1	CAP-BEARING	
B	6	1	**183-5297**	26	SHIM (0.8-MM THK)	
Y	7	1	*255-1428*	1	EDGE GP-BIT & CUTTING (LEVEL CUT)	897
	8	1	**255-1430**	1	BLADE AS-ANGLING	
	9	1	**225-0098**	4	BOLT (M20X2.5X140-MM)	
	10	1	**8T-3282**	4	WASHER-HARD (22X35X3.5-MM THK)	
M	11	1	**8T-4195**	3	BOLT (M10X1.5X30-MM)	

B-USE AS REQUIRED
M-METRIC PART
Y-SEPARATE ILLUSTRATION

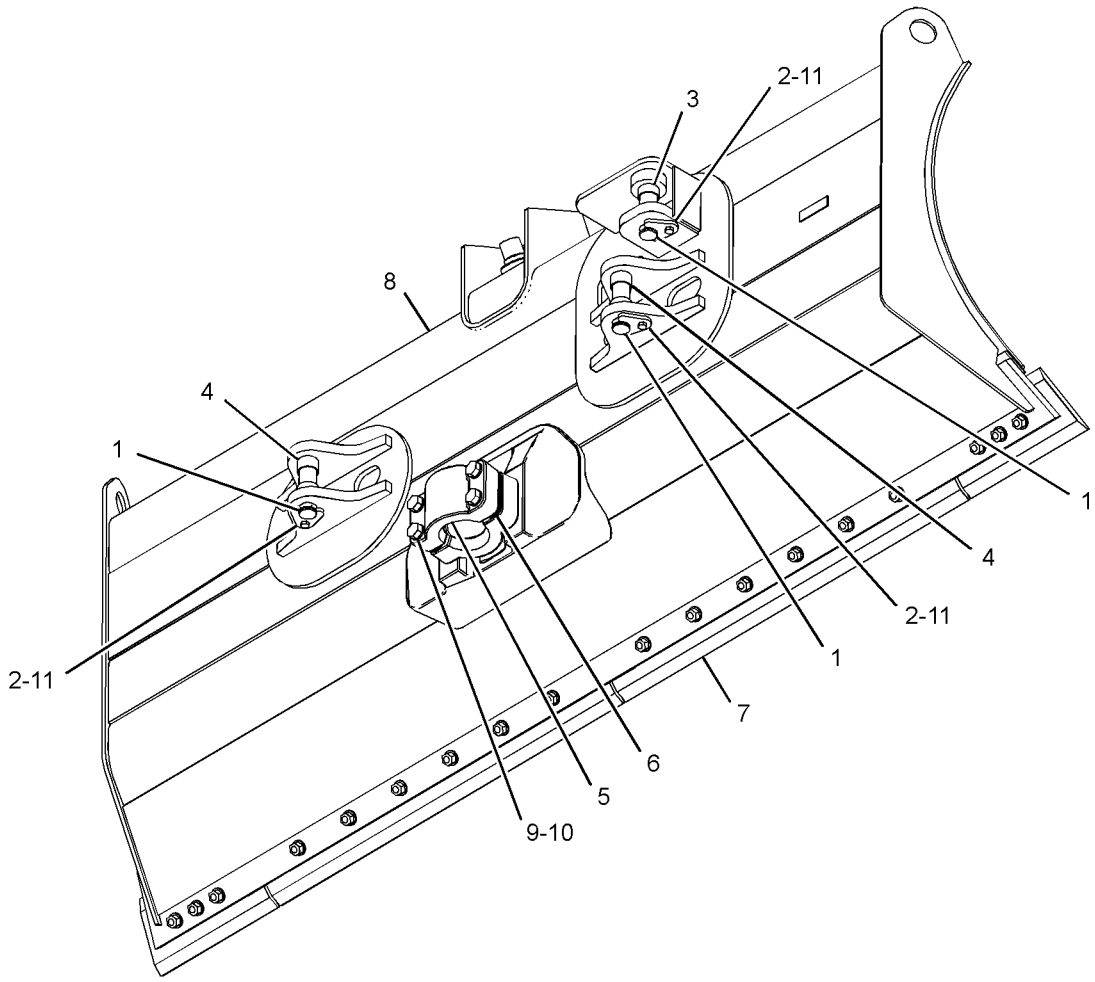

GRAPHIC #1 **<END>** g01330341

255-1471 BLADE GP-ANGLING—LOW GROUND PRESSURE

S/N: JTD1-UP; FFF1-UP; LLL1-UP
PART OF 255-1470 BLADE AR-PWR ANGLE & TILT
AN ATTACHMENT

SMCS-6052, 6060, 6701 **i02833743**

NOTE	REF NO	GRAPHIC REF	PART NUMBER	QTY	PART NAME 1 2 3 4 5 6 (PRODUCT LEVEL)	SEE PAGE
	1	1	**6Y-1421**	3	PIN	
	2	1	**8J-0729**	3	RETAINER	
	3	1	**150-0351**	2	SPACER (38.3X44.45X20.8-MM THK)	
	4	1	**150-0352**	4	SPACER (38.30X44.45X27.3-MM THK)	
	5	1	**179-5755**	1	CAP-BEARING	
B	6	1	**183-5297**	26	SHIM (0.8-MM THK)	
Y	7	1	*255-1472*	1	EDGE GP-BIT & CUTTING (LEVEL CUT)	897
	8	1	**255-1475**	1	BLADE AS-ANGLING	
	9	1	**225-0098**	4	BOLT (M20X2.5X140-MM)	
	10	1	**8T-3282**	4	WASHER-HARD (22X35X3.5-MM THK)	
M	11	1	**8T-4195**	3	BOLT (M10X1.5X30-MM)	

B-USE AS REQUIRED
M-METRIC PART
Y-SEPARATE ILLUSTRATION

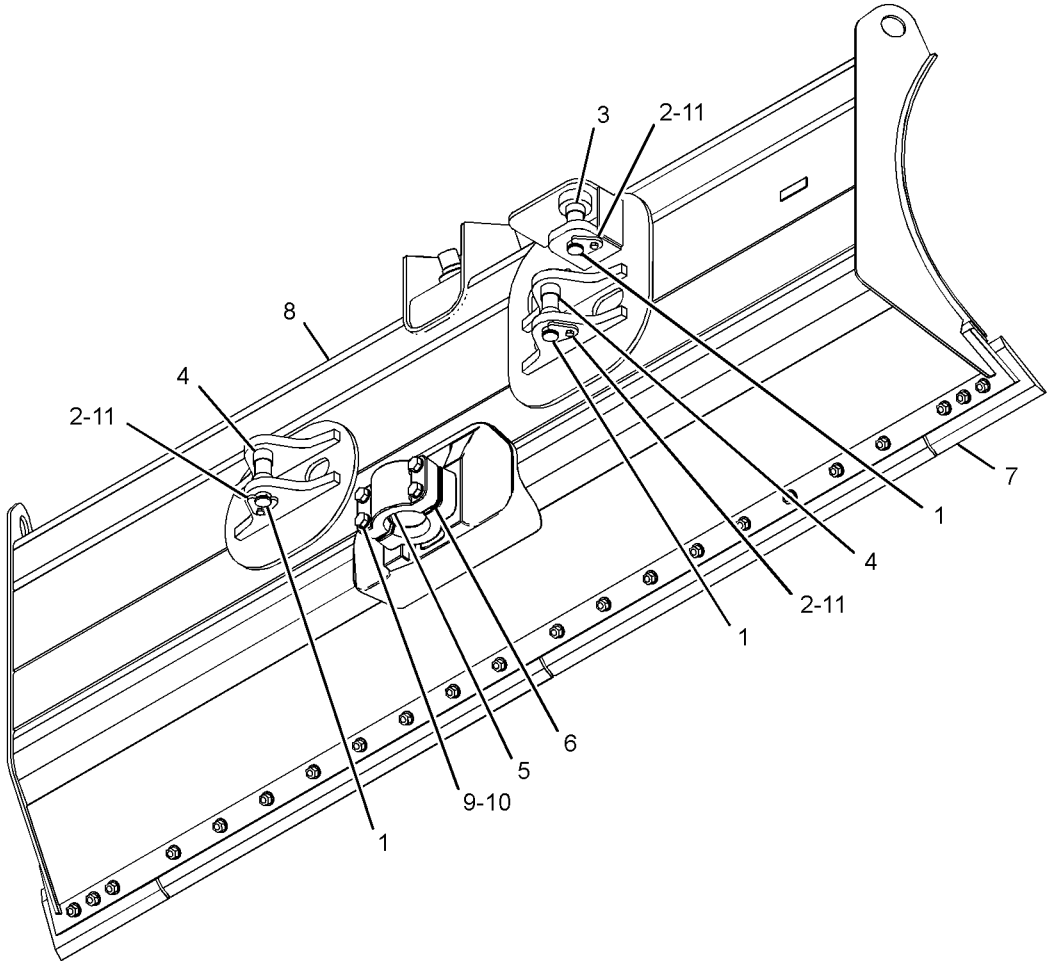

GRAPHIC #1 **<END>** g01330866

255-1487 BLADE GP-ANGLING–XL GRADE CONTROL

S/N: JTD1-UP; FFF1-UP; LLL1-UP
PART OF 255-1486 BLADE AR-PWR ANGLE & TILT
AN ATTACHMENT

SMCS-6052, 6060, 6701 **i02642309**

NOTE	REF NO	GRAPHIC REF	PART NUMBER	QTY	PART NAME 1 2 3 4 5 6 (PRODUCT LEVEL)	SEE PAGE
	1	1	**6Y-1421**	3	PIN	
	2	1	**8J-0729**	3	RETAINER	
	3	1	**150-0351**	2	SPACER (38.3X44.45X20.8-MM THK)	
	4	1	**150-0352**	4	SPACER (38.30X44.45X27.3-MM THK)	
Y	5	1	*179-2897*	1	EDGE GP-BIT & CUTTING	896
	6	1	**179-5755**	1	CAP-BEARING	
B	7	1	**183-5297**	26	SHIM (0.8-MM THK)	
	8	1	**255-1490**	1	BLADE AS-ANGLING	
	9	1	**225-0098**	4	BOLT (M20X2.5X140-MM)	
	10	1	**8T-3282**	4	WASHER-HARD (22X35X3.5-MM THK)	
M	11	1	**8T-4195**	3	BOLT (M10X1.5X30-MM)	

B-USE AS REQUIRED
M-METRIC PART
Y-SEPARATE ILLUSTRATION

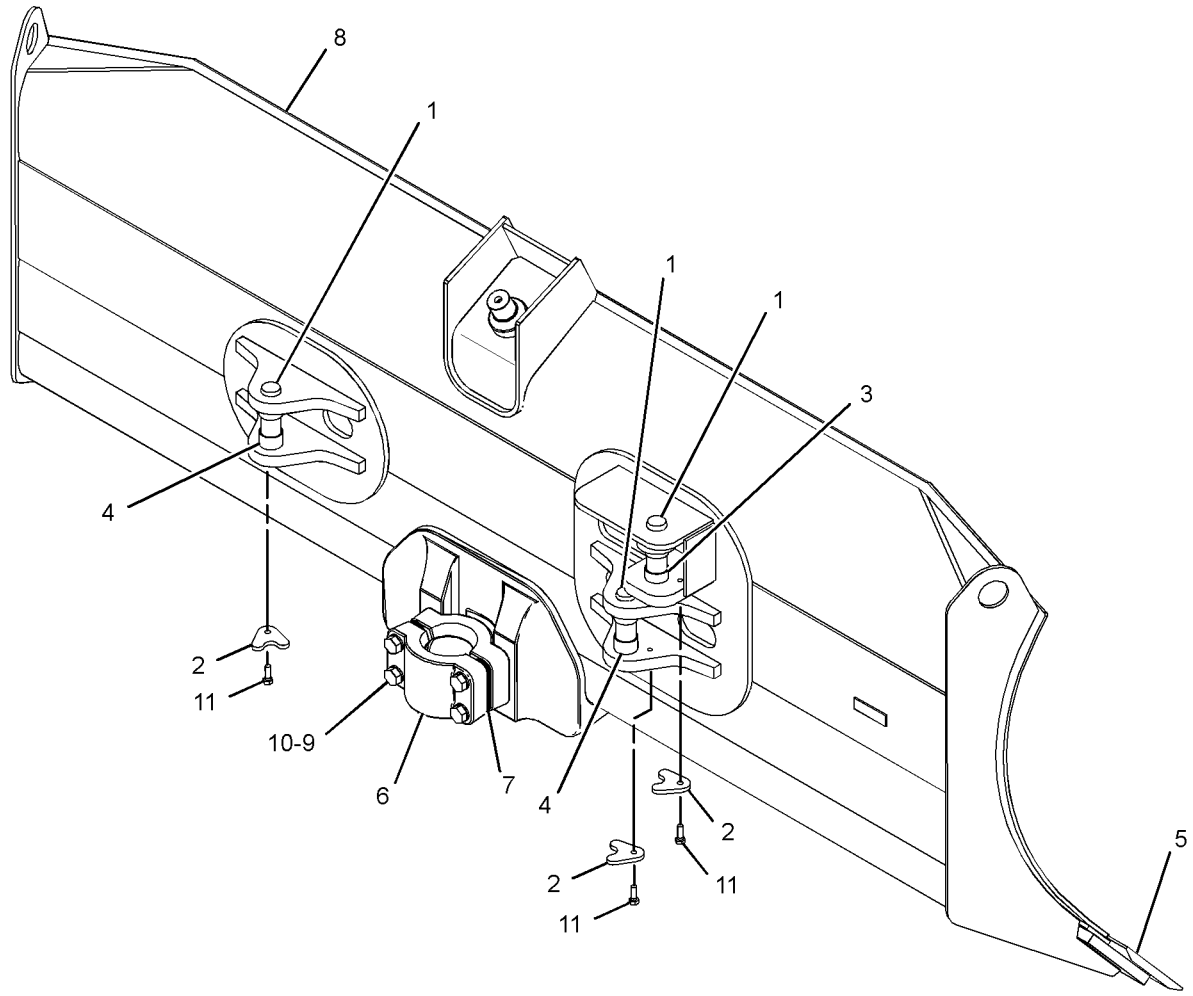

GRAPHIC #1 **<END>** g01330259

255-1503 BLADE GP-ANGLING–XL GRADE CONTROL

S/N: JTD1-UP; FFF1-UP; LLL1-UP
PART OF 255-1502 BLADE AR-PWR ANGLE & TILT
AN ATTACHMENT

SMCS-6052, 6060, 6701 **i03586665**

NOTE	REF NO	GRAPHIC REF	PART NUMBER	QTY	PART NAME 1 2 3 4 5 6 (PRODUCT LEVEL)	SEE PAGE
	1	1	**6Y-1421**	3	PIN	
	2	1	**8J-0729**	3	RETAINER	
	3	1	**150-0351**	2	SPACER (38.3X44.45X20.8-MM THK)	
	4	1	**150-0352**	4	SPACER (38.30X44.45X27.3-MM THK)	
	5	1	**179-5755**	1	CAP-BEARING	
B	6	1	**183-5297**	26	SHIM (0.8-MM THK)	
Y	7	1	*255-1501*	1	EDGE GP-BIT & CUTTING	898
	8	1	**331-0163**	1	BLADE AS-ANGLING	
	9	1	**225-0098**	4	BOLT (M20X2.5X140-MM)	
	10	1	**8T-3282**	4	WASHER-HARD (22X35X3.5-MM THK)	
M	11	1	**8T-4195**	3	BOLT (M10X1.5X30-MM)	

B-USE AS REQUIRED
M-METRIC PART
Y-SEPARATE ILLUSTRATION

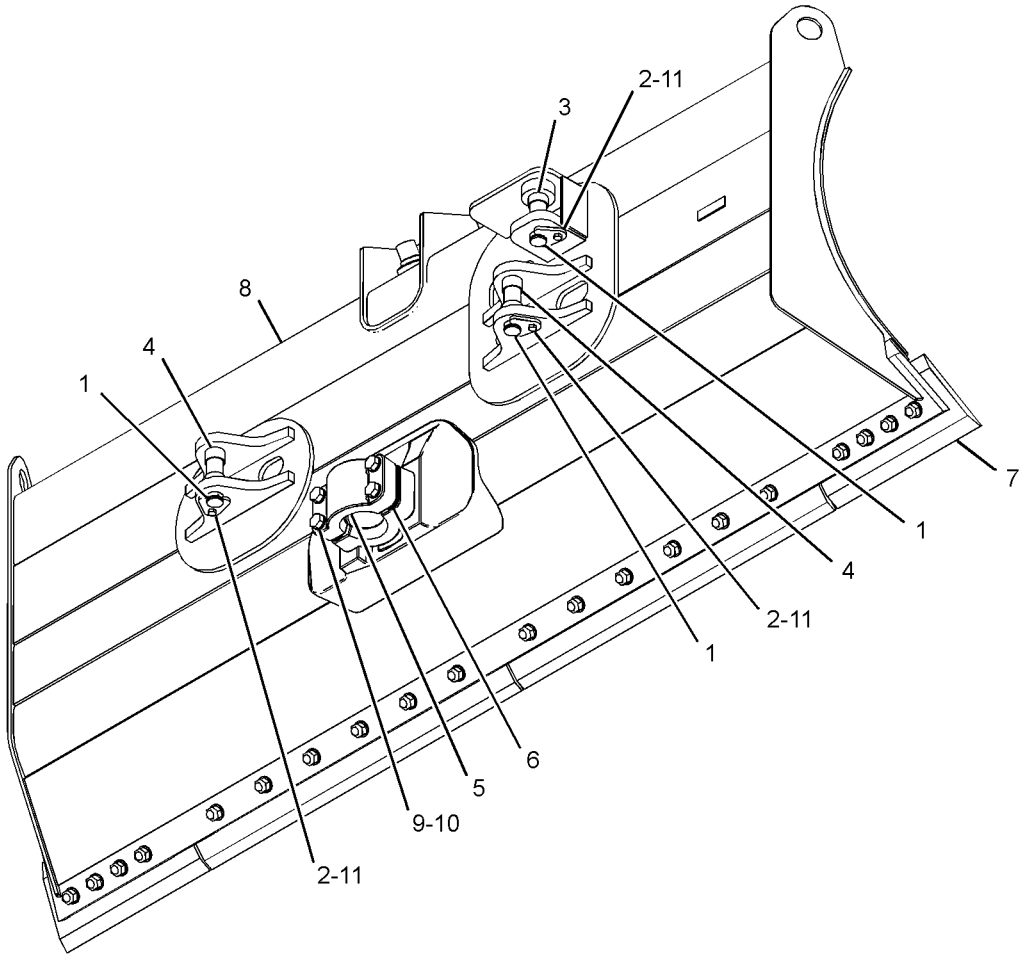

GRAPHIC #1 **<END>** g01331081

255-2370 BLADE GP-ANGLING—LOW GROUND PRESSURE

S/N: JTD1-UP; FFF1-UP; LLL1-UP
PART OF 255-2368 BLADE AR-PWR ANGLE & TILT
AN ATTACHMENT

SMCS-6052, 6060, 6701 **i02883043**

NOTE	REF NO	GRAPHIC REF	PART NUMBER	QTY	PART NAME 1 2 3 4 5 6 (PRODUCT LEVEL)	SEE PAGE
	1	1	**6Y-1421**	3	PIN	
Y	2	1	*6Y-5838*	1	EDGE GP-BIT & CUTTING	895
	3	1	**8J-0729**	3	RETAINER	
	4	1	**150-0351**	2	SPACER (38.3X44.45X20.8-MM THK)	
	5	1	**150-0352**	4	SPACER (38.30X44.45X27.3-MM THK)	
	6	1	**179-5755**	1	CAP-BEARING	
B	7	1	**183-5297**	26	SHIM (0.8-MM THK)	
	8	1	**255-2371**	1	BLADE AS-ANGLING	
	9	1	**225-0098**	4	BOLT (M20X2.5X140-MM)	
	10	1	**8T-3282**	4	WASHER-HARD (22X35X3.5-MM THK)	
M	11	1	**8T-4195**	3	BOLT (M10X1.5X30-MM)	
M	12	1	**5C-9553**	4	BOLT (M6X1X16-MM)	
	13	1	**9X-8256**	4	WASHER (6.6X12X2-MM THK)	

B-USE AS REQUIRED
M-METRIC PART
Y-SEPARATE ILLUSTRATION

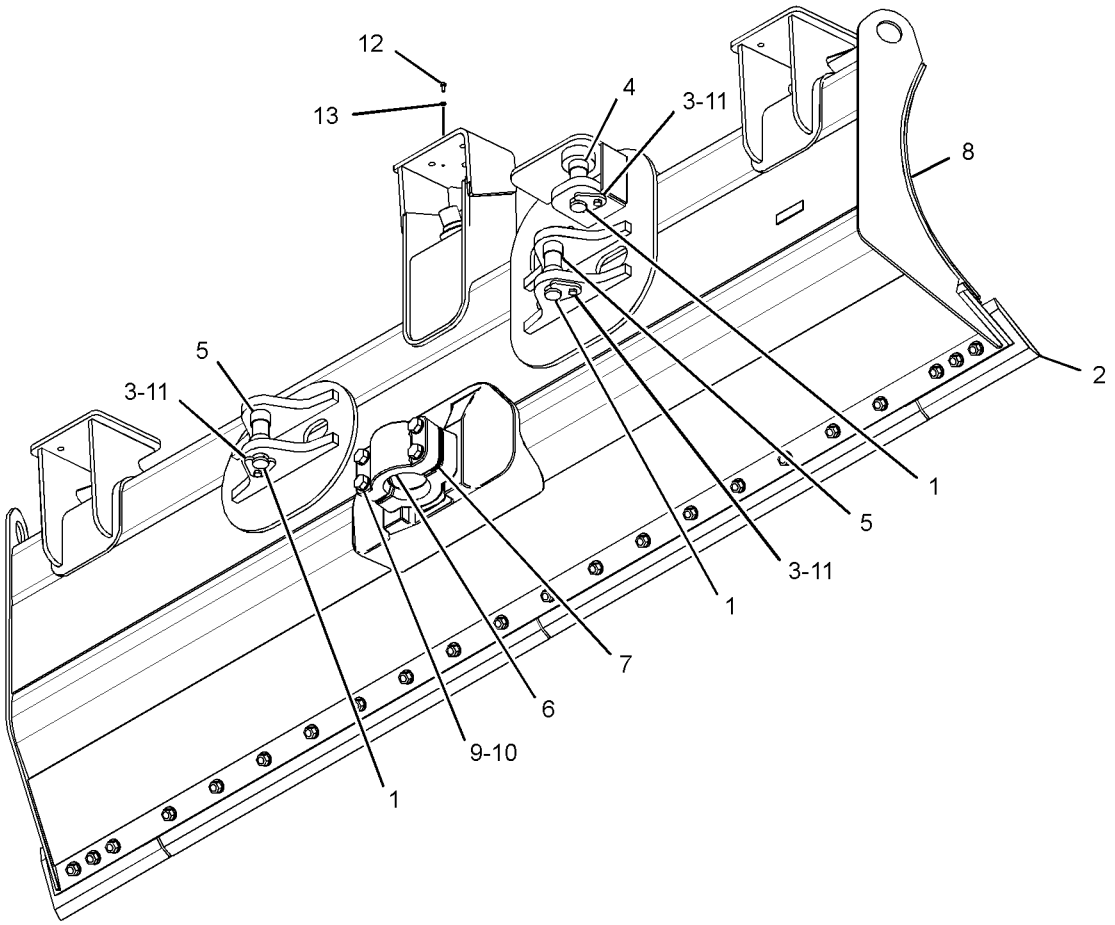

GRAPHIC #1 **<END>** g01441524

255-2373 BLADE GP-ANGLING–XL GRADE CONTROL

S/N: JTD1-UP; FFF1-UP; LLL1-UP
PART OF 255-2372 BLADE AR-PWR ANGLE & TILT
AN ATTACHMENT

SMCS-6052, 6060, 6701 **i02883044**

NOTE	REF NO	GRAPHIC REF	PART NUMBER	QTY	PART NAME 1 2 3 4 5 6 (PRODUCT LEVEL)	SEE PAGE
	1	1	**6Y-1421**	3	PIN	
	2	1	**8J-0729**	3	RETAINER	
	3	1	**150-0351**	2	SPACER (38.3X44.45X20.8-MM THK)	
	4	1	**150-0352**	4	SPACER (38.30X44.45X27.3-MM THK)	
	5	1	**179-5755**	1	CAP-BEARING	
B	6	1	**183-5297**	26	SHIM (0.8-MM THK)	
Y	7	1	*255-1426*	1	EDGE GP-BIT & CUTTING (LEVEL CUT)	897
	8	1	**255-2374**	1	BLADE AS-ANGLING	
	9	1	**225-0098**	4	BOLT (M20X2.5X140-MM)	
	10	1	**8T-3282**	4	WASHER-HARD (22X35X3.5-MM THK)	
M	11	1	**8T-4195**	3	BOLT (M10X1.5X30-MM)	
M	12	1	**5C-9553**	4	BOLT (M6X1X16-MM)	
	13	1	**9X-8256**	4	WASHER (6.6X12X2-MM THK)	

B-USE AS REQUIRED
M-METRIC PART
Y-SEPARATE ILLUSTRATION

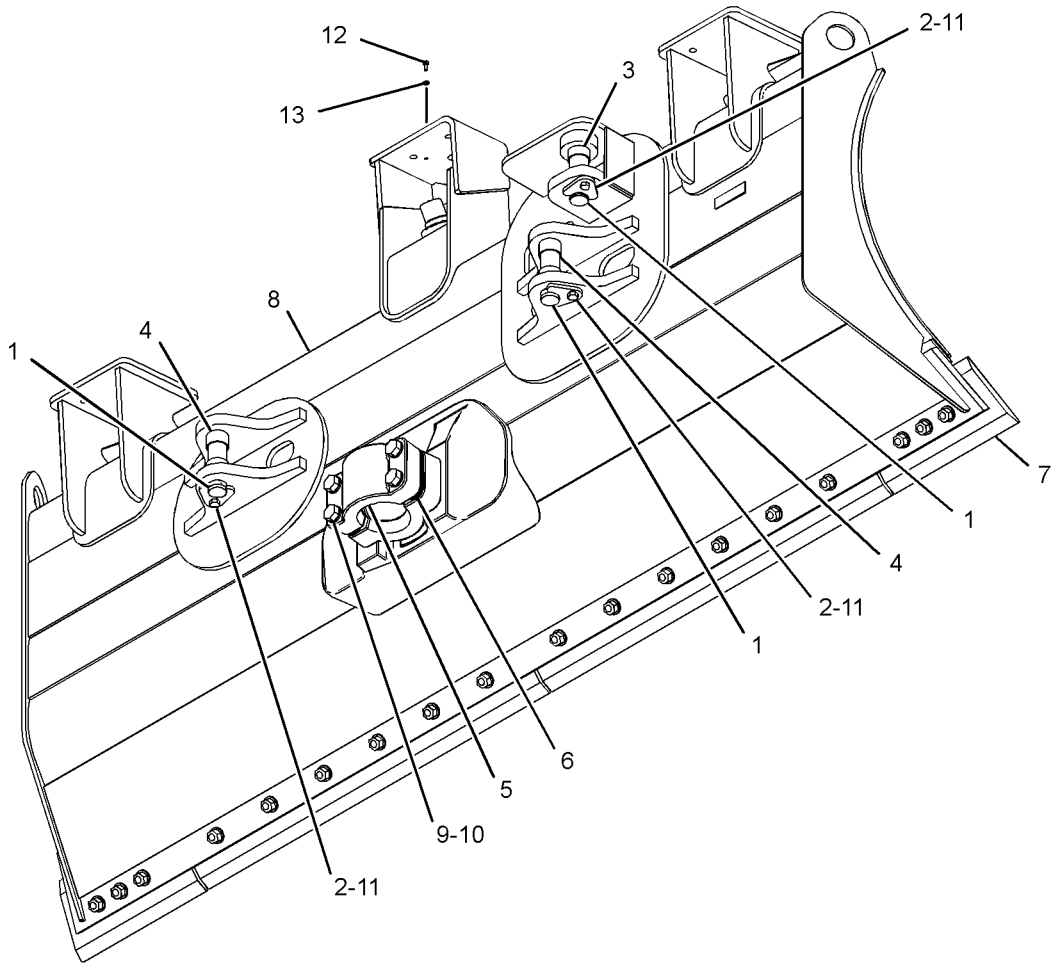

GRAPHIC #1 **<END>** g01441561

255-2376 BLADE GP-ANGLING—LOW GROUND PRESSURE

S/N: JTD1-UP; FFF1-UP; LLL1-UP
PART OF 255-2375 BLADE AR-PWR ANGLE & TILT
AN ATTACHMENT

SMCS-6052, 6060, 6701 **i02883055**

NOTE	REF NO	GRAPHIC REF	PART NUMBER	QTY	PART NAME 1 2 3 4 5 6 (PRODUCT LEVEL)	SEE PAGE
	1	1	**6Y-1421**	3	PIN	
Y	2	1	*6Y-5838*	1	EDGE GP-BIT & CUTTING	895
	3	1	**8J-0729**	3	RETAINER	
	4	1	**150-0351**	2	SPACER (38.3X44.45X20.8-MM THK)	
	5	1	**150-0352**	4	SPACER (38.30X44.45X27.3-MM THK)	
	6	1	**179-5755**	1	CAP-BEARING	
B	7	1	**183-5297**	26	SHIM (0.8-MM THK)	
	8	1	**255-2377**	1	BLADE AS-ANGLING	
	9	1	**225-0098**	4	BOLT (M20X2.5X140-MM)	
	10	1	**8T-3282**	4	WASHER-HARD (22X35X3.5-MM THK)	
M	11	1	**8T-4195**	3	BOLT (M10X1.5X30-MM)	
M	12	1	**5C-9553**	4	BOLT (M6X1X16-MM)	
	13	1	**9X-8256**	4	WASHER (6.6X12X2-MM THK)	

B-USE AS REQUIRED
M-METRIC PART
Y-SEPARATE ILLUSTRATION

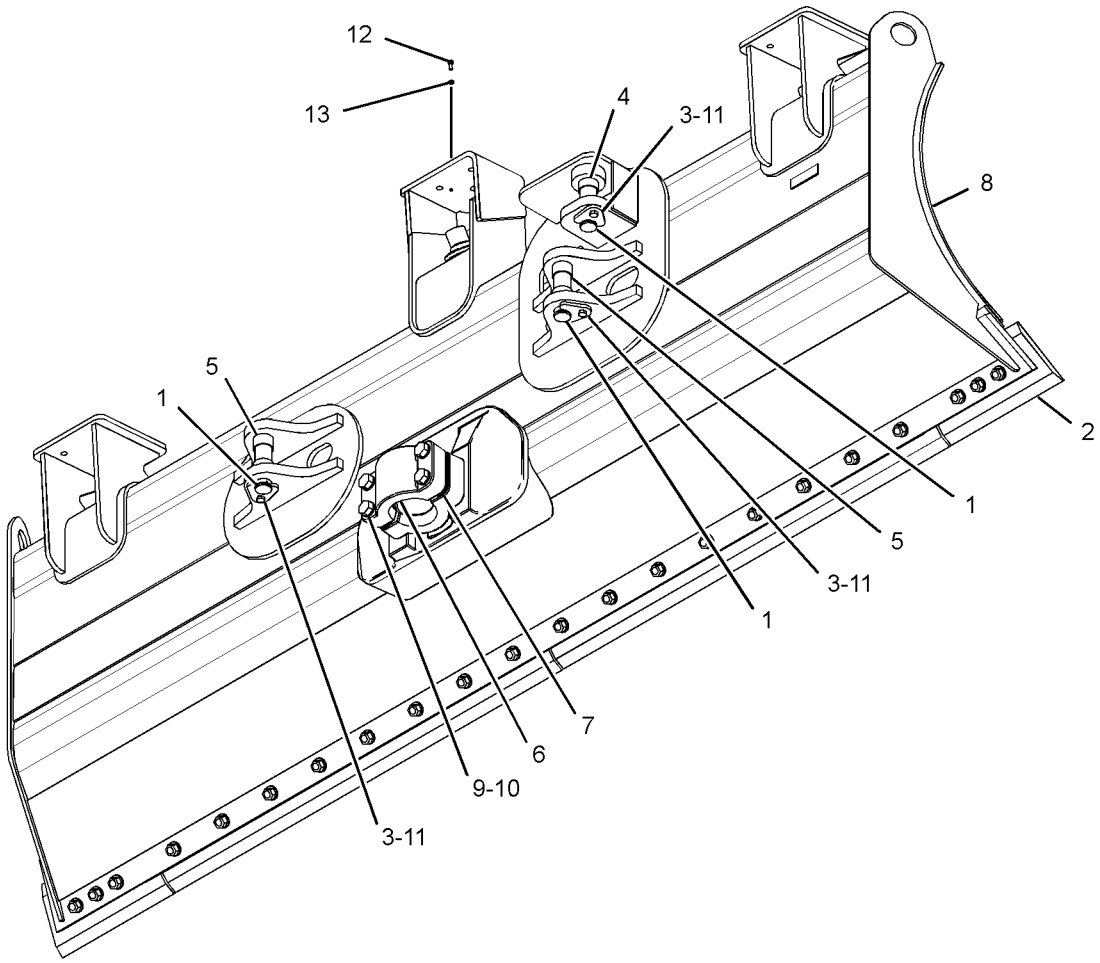

GRAPHIC #1 **<END>** g01441546

255-2379 BLADE GP-ANGLING–XL GRADE CONTROL

S/N: JTD1-UP; FFF1-UP; LLL1-UP

PART OF 255-2378 BLADE AR-PWR ANGLE & TILT

AN ATTACHMENT

SMCS-6052, 6060, 6701 **i02883054**

NOTE	REF NO	GRAPHIC REF	PART NUMBER	QTY	PART NAME 1 2 3 4 5 6 (PRODUCT LEVEL)	SEE PAGE
	1	1	**6Y-1421**	3	PIN	
	2	1	**8J-0729**	3	RETAINER	
	3	1	**150-0351**	2	SPACER (38.3X44.45X20.8-MM THK)	
	4	1	**150-0352**	4	SPACER (38.30X44.45X27.3-MM THK)	
	5	1	**179-5755**	1	CAP-BEARING	
B	6	1	**183-5297**	26	SHIM (0.8-MM THK)	
Y	7	1	*255-1428*	1	EDGE GP-BIT & CUTTING (LEVEL CUT)	897
	8	1	**255-2380**	1	BLADE AS-ANGLING	
	9	1	**225-0098**	4	BOLT (M20X2.5X140-MM)	
	10	1	**8T-3282**	4	WASHER-HARD (22X35X3.5-MM THK)	
M	11	1	**8T-4195**	3	BOLT (M10X1.5X30-MM)	
M	12	1	**5C-9553**	4	BOLT (M6X1X16-MM)	
	13	1	**9X-8256**	4	WASHER (6.6X12X2-MM THK)	

B-USE AS REQUIRED
M-METRIC PART
Y-SEPARATE ILLUSTRATION

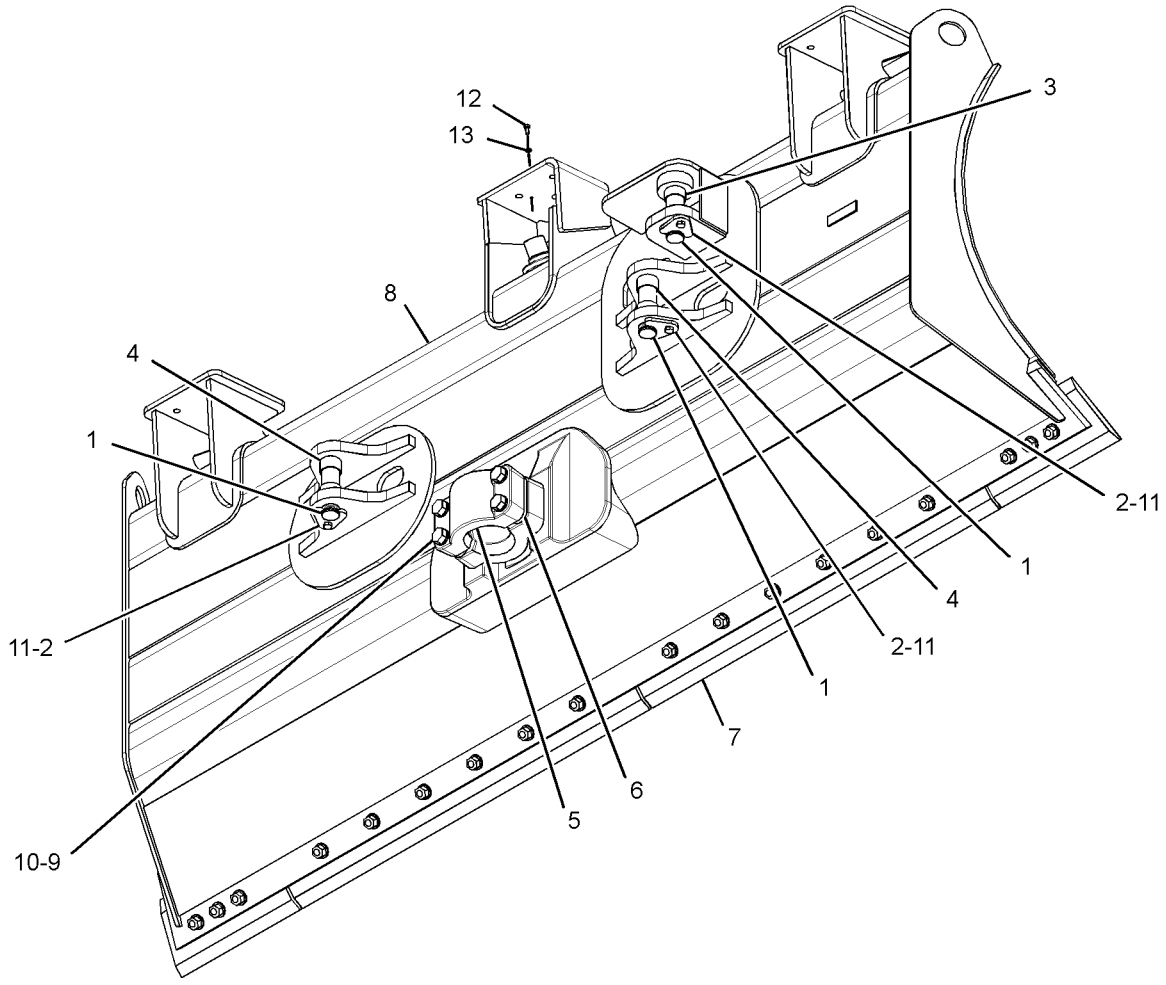

GRAPHIC #1 **<END>** g01439315

255-2383 BLADE GP-ANGLING—LOW GROUND PRESSURE

S/N: JTD1-UP; FFF1-UP; LLL1-UP
PART OF 255-2381 BLADE AR-PWR ANGLE & TILT
AN ATTACHMENT

SMCS-6052, 6060, 6701 **i02883053**

NOTE	REF NO	GRAPHIC REF	PART NUMBER	QTY	PART NAME 1 2 3 4 5 6 (PRODUCT LEVEL)	SEE PAGE
	1	1	**6Y-1421**	3	PIN	
	2	1	**8J-0729**	3	RETAINER	
	3	1	**150-0351**	2	SPACER (38.3X44.45X20.8-MM THK)	
	4	1	**150-0352**	4	SPACER (38.30X44.45X27.3-MM THK)	
	5	1	**179-5755**	1	CAP-BEARING	
B	6	1	**183-5297**	26	SHIM (0.8-MM THK)	
Y	7	1	*255-1472*	1	EDGE GP-BIT & CUTTING (LEVEL CUT)	897
	8	1	**255-2384**	1	BLADE AS-ANGLING	
	9	1	**225-0098**	4	BOLT (M20X2.5X140-MM)	
	10	1	**8T-3282**	4	WASHER-HARD (22X35X3.5-MM THK)	
M	11	1	**8T-4195**	3	BOLT (M10X1.5X30-MM)	
M	12	1	**5C-9553**	4	BOLT (M6X1X16-MM)	
	13	1	**9X-8256**	4	WASHER (6.6X12X2-MM THK)	

B-USE AS REQUIRED
M-METRIC PART
Y-SEPARATE ILLUSTRATION

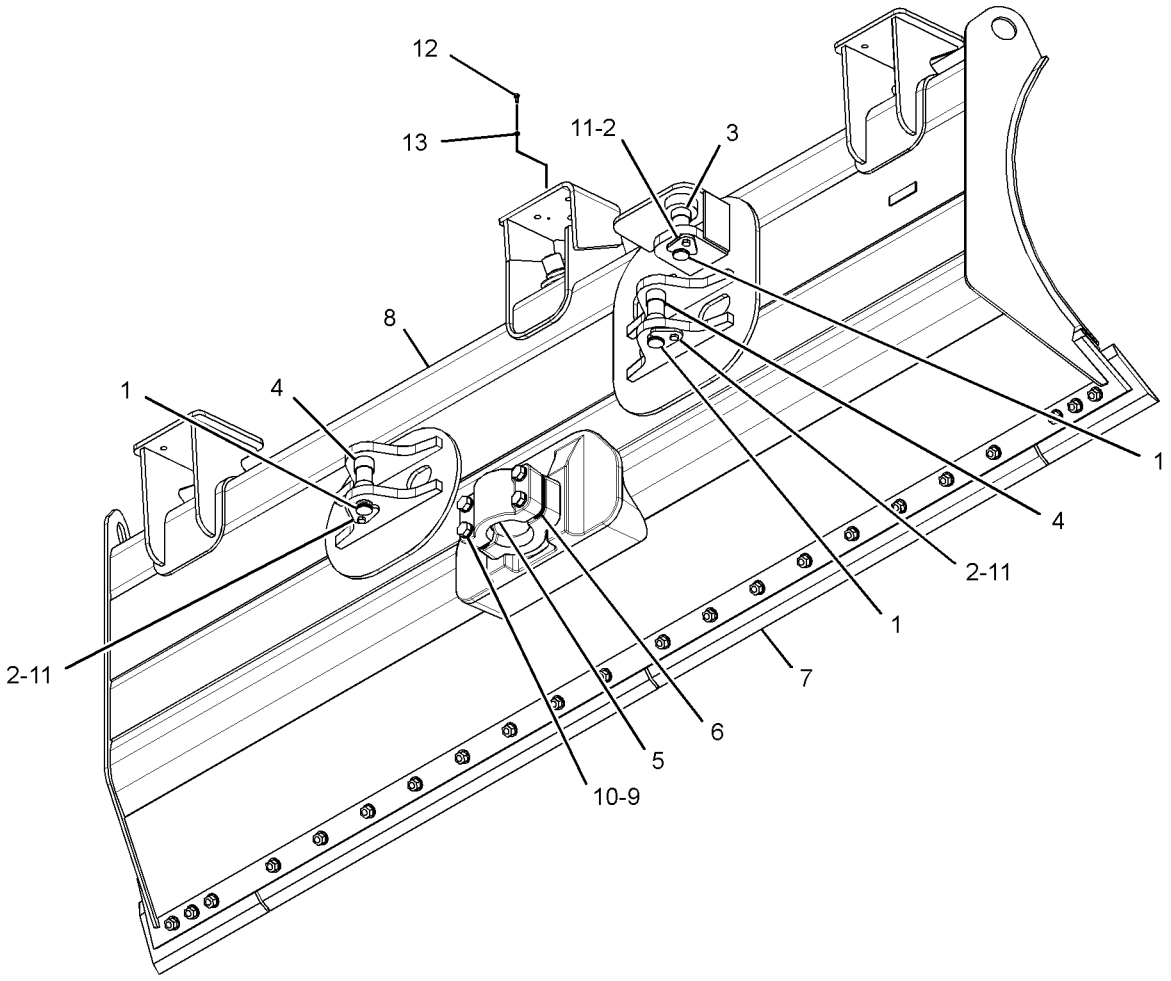

GRAPHIC #1 **<END>** g01439631

255-2386 BLADE GP-ANGLING–XL GRADE CONTROL

S/N: JTD1-UP; FFF1-UP; LLL1-UP
PART OF 255-2385 BLADE AR-PWR ANGLE & TILT
AN ATTACHMENT

SMCS-6052, 6060, 6701 **i02883052**

NOTE	REF NO	GRAPHIC REF	PART NUMBER	QTY	PART NAME 1 2 3 4 5 6 (PRODUCT LEVEL)	SEE PAGE
	1	1	**6Y-1421**	3	PIN	
	2	1	**8J-0729**	3	RETAINER	
	3	1	**150-0351**	2	SPACER (38.3X44.45X20.8-MM THK)	
	4	1	**150-0352**	4	SPACER (38.30X44.45X27.3-MM THK)	
Y	5	1	*179-2897*	1	EDGE GP-BIT & CUTTING	896
	6	1	**179-5755**	1	CAP-BEARING	
B	7	1	**183-5297**	26	SHIM (0.8-MM THK)	
	8	1	**255-2387**	1	BLADE AS-ANGLING	
	9	1	**225-0098**	4	BOLT (M20X2.5X140-MM)	
	10	1	**8T-3282**	4	WASHER-HARD (22X35X3.5-MM THK)	
M	11	1	**8T-4195**	3	BOLT (M10X1.5X30-MM)	
M	12	1	**5C-9553**	4	BOLT (M6X1X16-MM)	
	13	1	**9X-8256**	4	WASHER (6.6X12X2-MM THK)	

B-USE AS REQUIRED
M-METRIC PART
Y-SEPARATE ILLUSTRATION

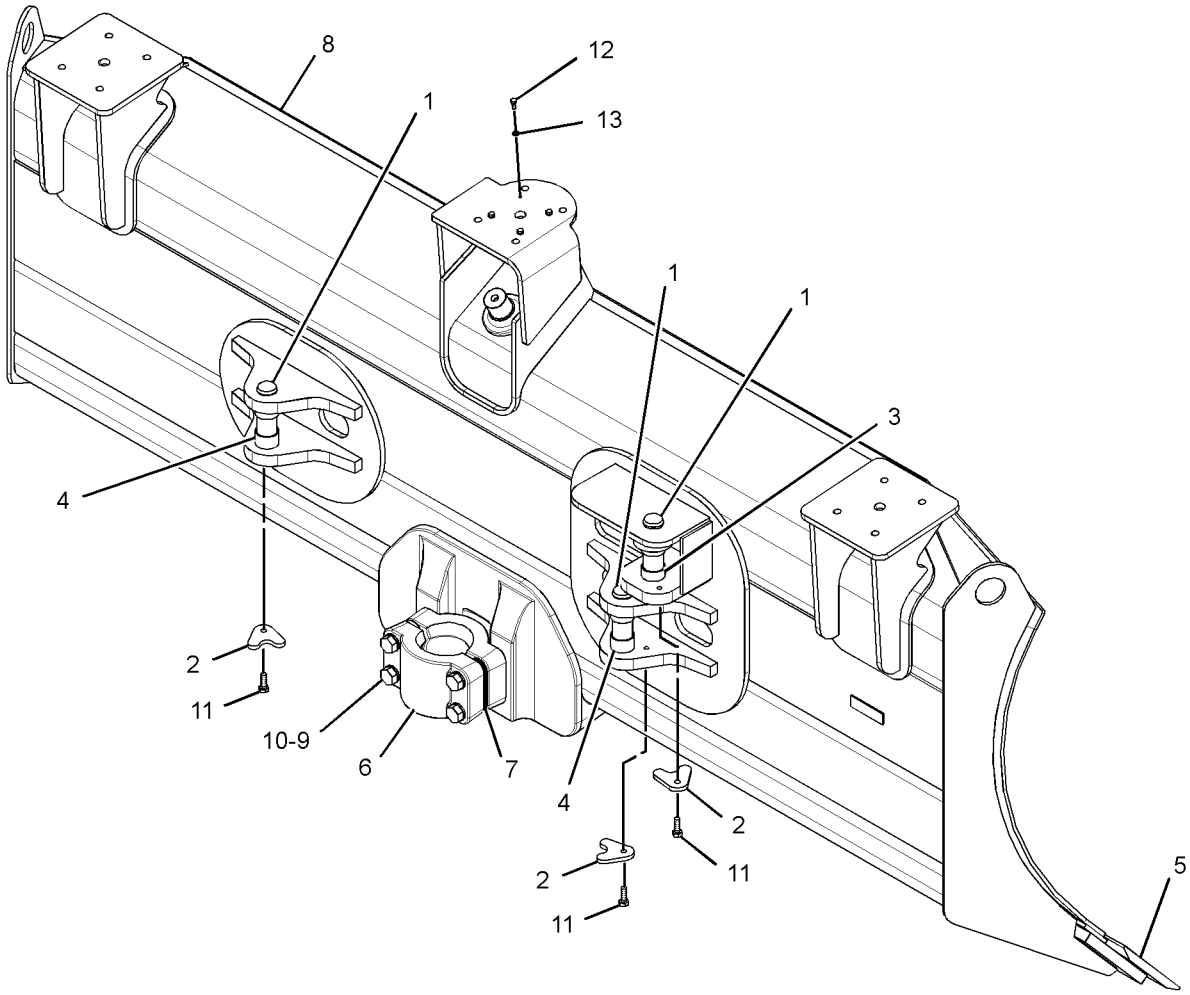

GRAPHIC #1 **<END>** g01439665

WORK TOOLS

255-2391 BLADE GP-ANGLING—XL GRADE CONTROL

S/N: JTD1-UP; FFF1-UP; LLL1-UP
PART OF 255-2390 BLADE AR-PWR ANGLE & TILT
AN ATTACHMENT

SMCS-6052, 6060, 6701 **i03586666**

NOTE	REF NO	GRAPHIC REF	PART NUMBER	QTY	PART NAME 1 2 3 4 5 6 (PRODUCT LEVEL)	SEE PAGE
	1	1	**6Y-1421**	3	PIN	
	2	1	**8J-0729**	3	RETAINER	
	3	1	**150-0351**	2	SPACER (38.3X44.45X20.8-MM THK)	
	4	1	**150-0352**	4	SPACER (38.30X44.45X27.3-MM THK)	
	5	1	**179-5755**	1	CAP-BEARING	
B	6	1	**183-5297**	26	SHIM (0.8-MM THK)	
Y	7	1	*255-1501*	1	EDGE GP-BIT & CUTTING (ANGLE BLADE)	898
	8	1	**331-0177**	1	BLADE AS-ANGLING (GRADE CONTROL)	
		1	**8P-9770**	1	PLATE	
		1	**331-0163**	1	BLADE AS-ANGLING	
	9	1	**225-0098**	4	BOLT (M20X2.5X140-MM)	
	10	1	**8T-3282**	4	WASHER-HARD (22X35X3.5-MM THK)	
M	11	1	**8T-4195**	3	BOLT (M10X1.5X30-MM)	
M	12	1	**5C-9553**	4	BOLT (M6X1X16-MM)	
	13	1	**9X-8256**	4	WASHER (6.6X12X2-MM THK)	

B-USE AS REQUIRED
M-METRIC PART
Y-SEPARATE ILLUSTRATION

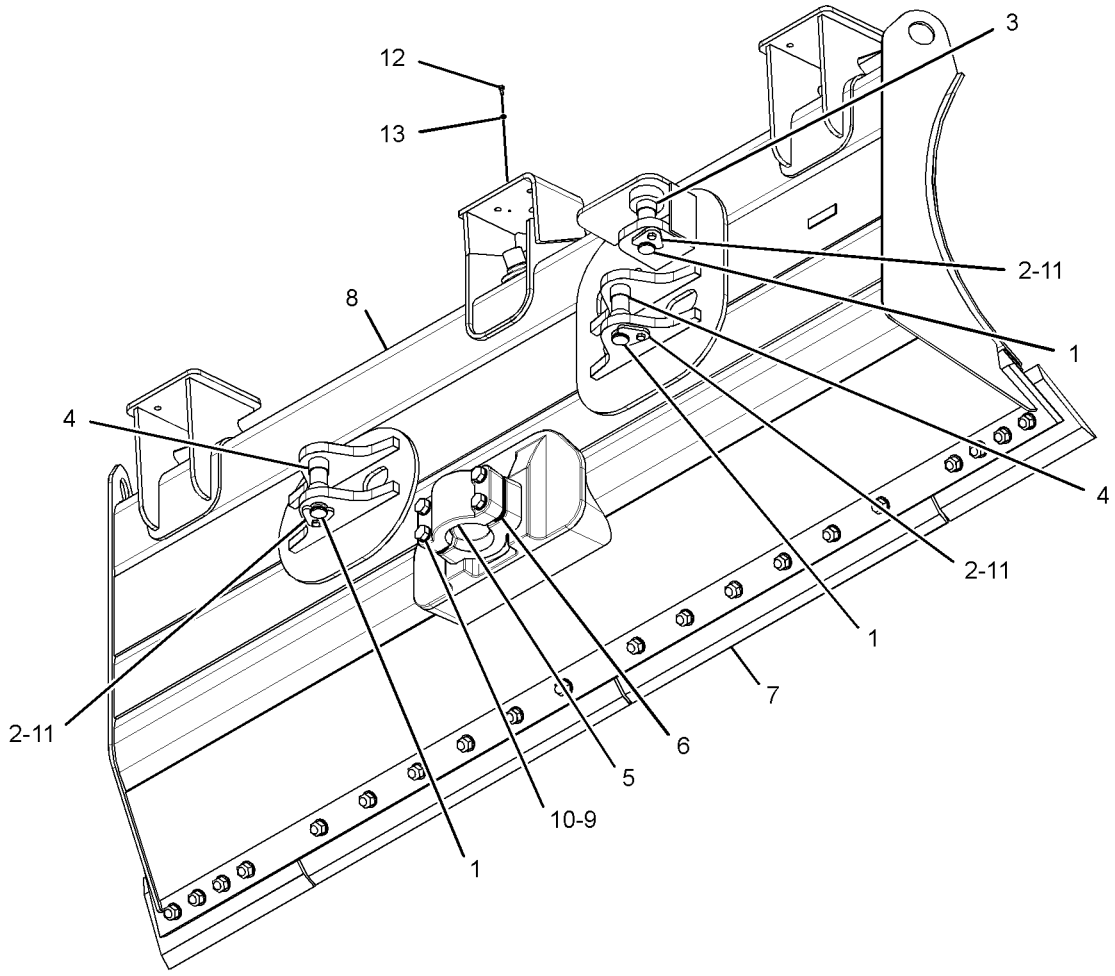

GRAPHIC #1 **<END>** g01439680

255-2394 BLADE GP-ANGLING–FORESTRY

S/N: JTD1-UP; FFF1-UP; LLL1-UP
PART OF 255-2393 BLADE AR-PWR ANGLE & TILT
AN ATTACHMENT

SMCS-6052, 6060, 6701 **i03586667**

NOTE	REF NO	GRAPHIC REF	PART NUMBER	QTY	PART NAME 1 2 3 4 5 6 (PRODUCT LEVEL)	SEE PAGE
	1	1	**6Y-1421**	3	PIN	
	2	1	**8J-0729**	3	RETAINER	
	3	1	**150-0351**	2	SPACER (38.3X44.45X20.8-MM THK)	
	4	1	**150-0352**	4	SPACER (38.30X44.45X27.3-MM THK)	
	5	1	**179-5755**	1	CAP-BEARING	
B	6	1	**183-5297**	26	SHIM (0.8-MM THK)	
Y	7	1	*255-1501*	1	EDGE GP-BIT & CUTTING (ANGLE BLADE)	898
	8	1	**331-0180**	1	BLADE AS-ANGLING	
	9	1	**225-0098**	4	BOLT (M20X2.5X140-MM)	
	10	1	**8T-3282**	4	WASHER-HARD (22X35X3.5-MM THK)	
M	11	1	**8T-4195**	3	BOLT (M10X1.5X30-MM)	

B-USE AS REQUIRED
M-METRIC PART
Y-SEPARATE ILLUSTRATION

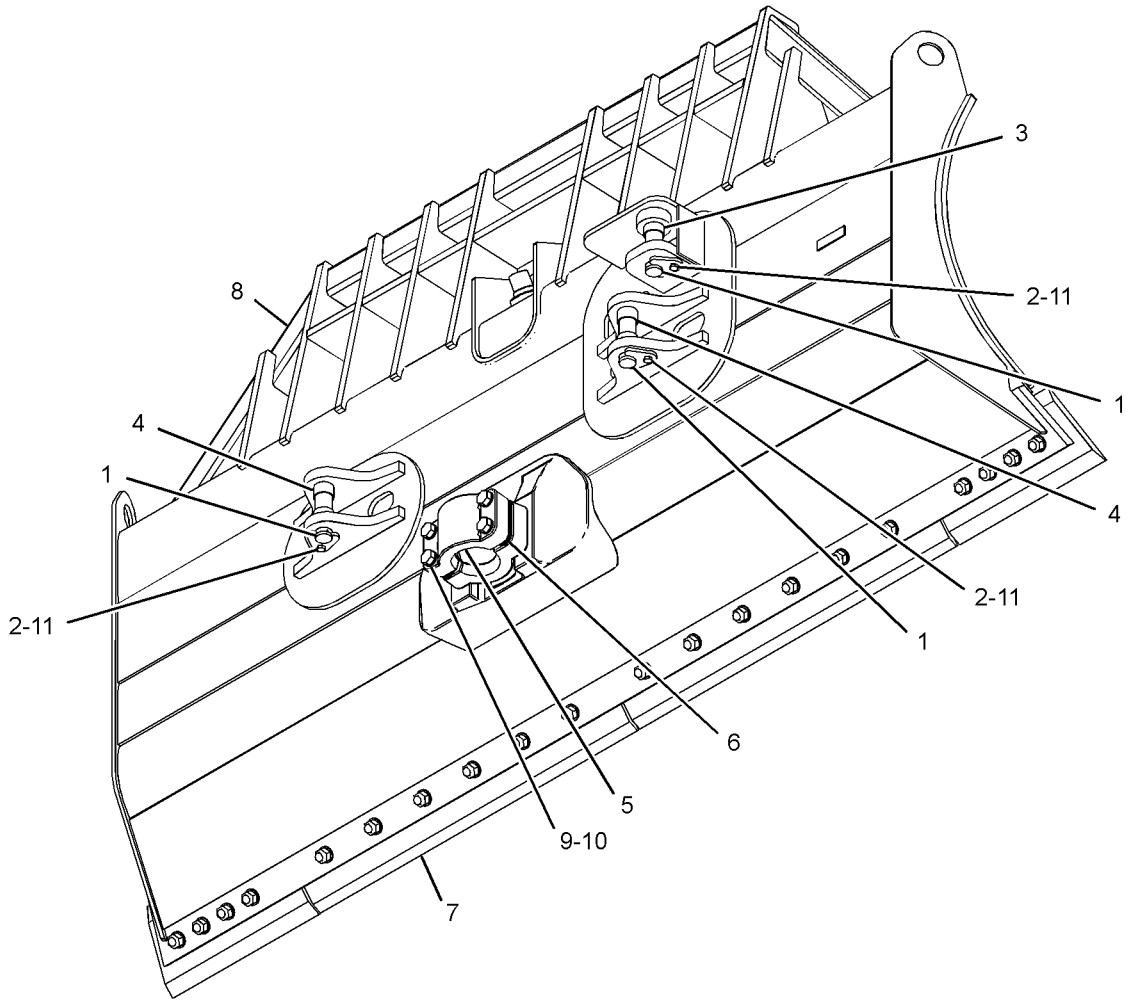

GRAPHIC #1 **<END>** g01329058

277-5647 BLADE GP-ANGLING—LARGE CAPACITY

S/N: JTD1-UP; FFF1-UP; LLL1-UP
PART OF 277-7715 BLADE AR-PWR ANGLE & TILT
AN ATTACHMENT

SMCS-6052, 6060, 6701 **i02719506**

NOTE	REF NO	GRAPHIC REF	PART NUMBER	QTY	PART NAME 1 2 3 4 5 6 (PRODUCT LEVEL)	SEE PAGE
Y	1	1	*3G-3353*	1	EDGE GP-BIT & CUTTING	894
	2	1	**6Y-1421**	3	PIN	
	3	1	**8J-0729**	3	RETAINER	
	4	1	**150-0351**	2	SPACER (38.3X44.45X20.8-MM THK)	
	5	1	**150-0352**	4	SPACER (38.30X44.45X27.3-MM THK)	
	6	1	**179-5755**	1	CAP-BEARING	
B	7	1	**183-5297**	26	SHIM (0.8-MM THK)	
	8	1	**300-1647**	1	BLADE AS-ANGLING	
		1	**8P-9770**	1	PLATE (BLADE)	
	9	1	**225-0098**	4	BOLT (M20X2.5X140-MM)	
	10	1	**8T-3282**	4	WASHER-HARD (22X35X3.5-MM THK)	
M	11	1	**8T-4195**	3	BOLT (M10X1.5X30-MM)	

B-USE AS REQUIRED
M-METRIC PART
Y-SEPARATE ILLUSTRATION

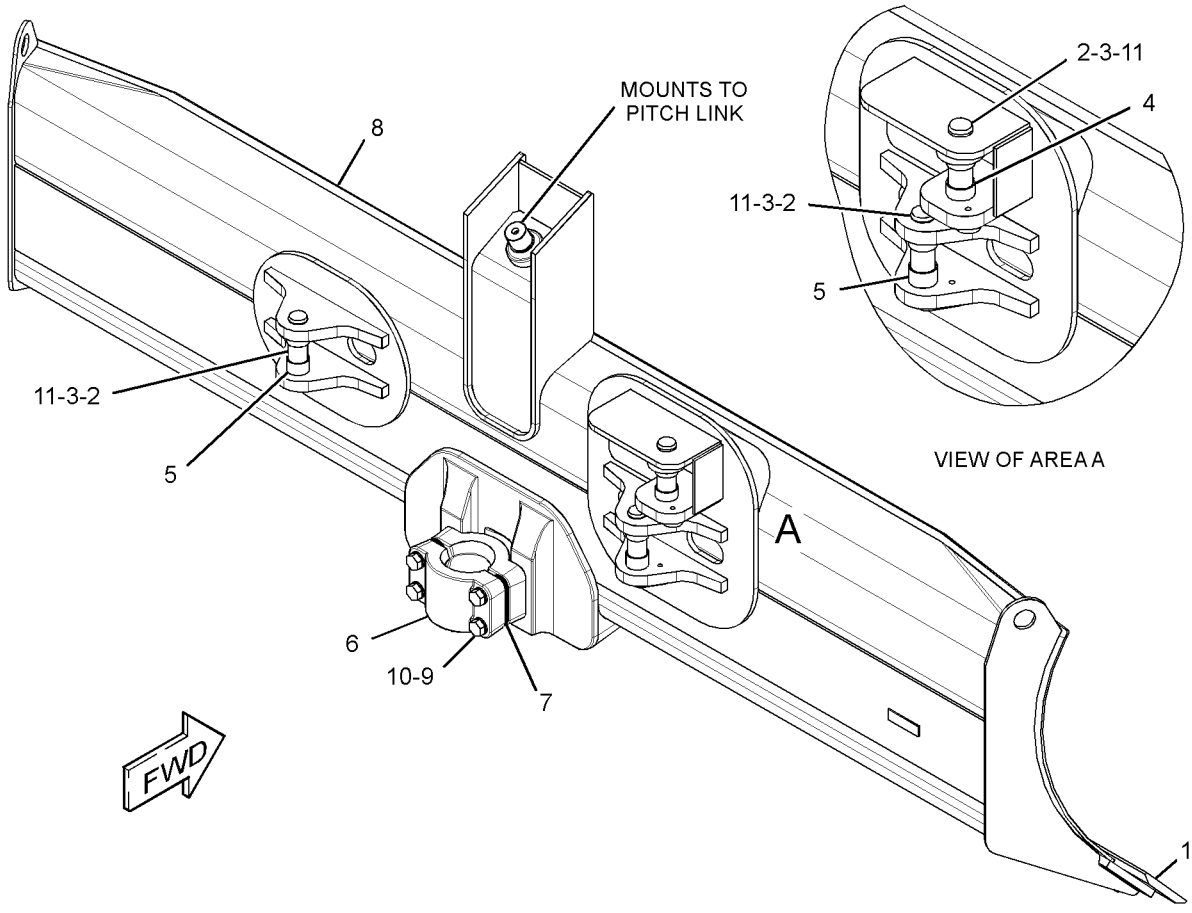

GRAPHIC #1 **<END>** g01372132

286-2936 BLADE GP-ANGLING—LOW GROUND PRESSURE

S/N: JTD1-UP; FFF1-UP; LLL1-UP
PART OF 286-2935 BLADE AR-PWR ANGLE & TILT
AN ATTACHMENT

SMCS-6052, 6060, 6701 **i02882859**

NOTE	REF NO	GRAPHIC REF	PART NUMBER	QTY	PART NAME 1 2 3 4 5 6 (PRODUCT LEVEL)	SEE PAGE
Y	1	1	*3G-3353*	1	EDGE GP-BIT & CUTTING	894
	2	1	**6Y-1421**	3	PIN	
	3	1	**8J-0729**	3	RETAINER	
	4	1	**150-0351**	2	SPACER (38.3X44.45X20.8-MM THK)	
	5	1	**150-0352**	4	SPACER (38.30X44.45X27.3-MM THK)	
	6	1	**179-5755**	1	CAP-BEARING	
B	7	1	**183-5297**	26	SHIM (0.8-MM THK)	
	8	1	**300-1661**	1	BLADE AS-ANGLING	
	9	1	**225-0098**	4	BOLT (M20X2.5X140-MM)	
	10	1	**8T-3282**	4	WASHER-HARD (22X35X3.5-MM THK)	
M	11	1	**8T-4195**	3	BOLT (M10X1.5X30-MM)	
M	12	1	**5C-9553**	4	BOLT (M6X1X16-MM)	
	13	1	**9X-8256**	4	WASHER (6.6X12X2-MM THK)	

B-USE AS REQUIRED
M-METRIC PART
Y-SEPARATE ILLUSTRATION

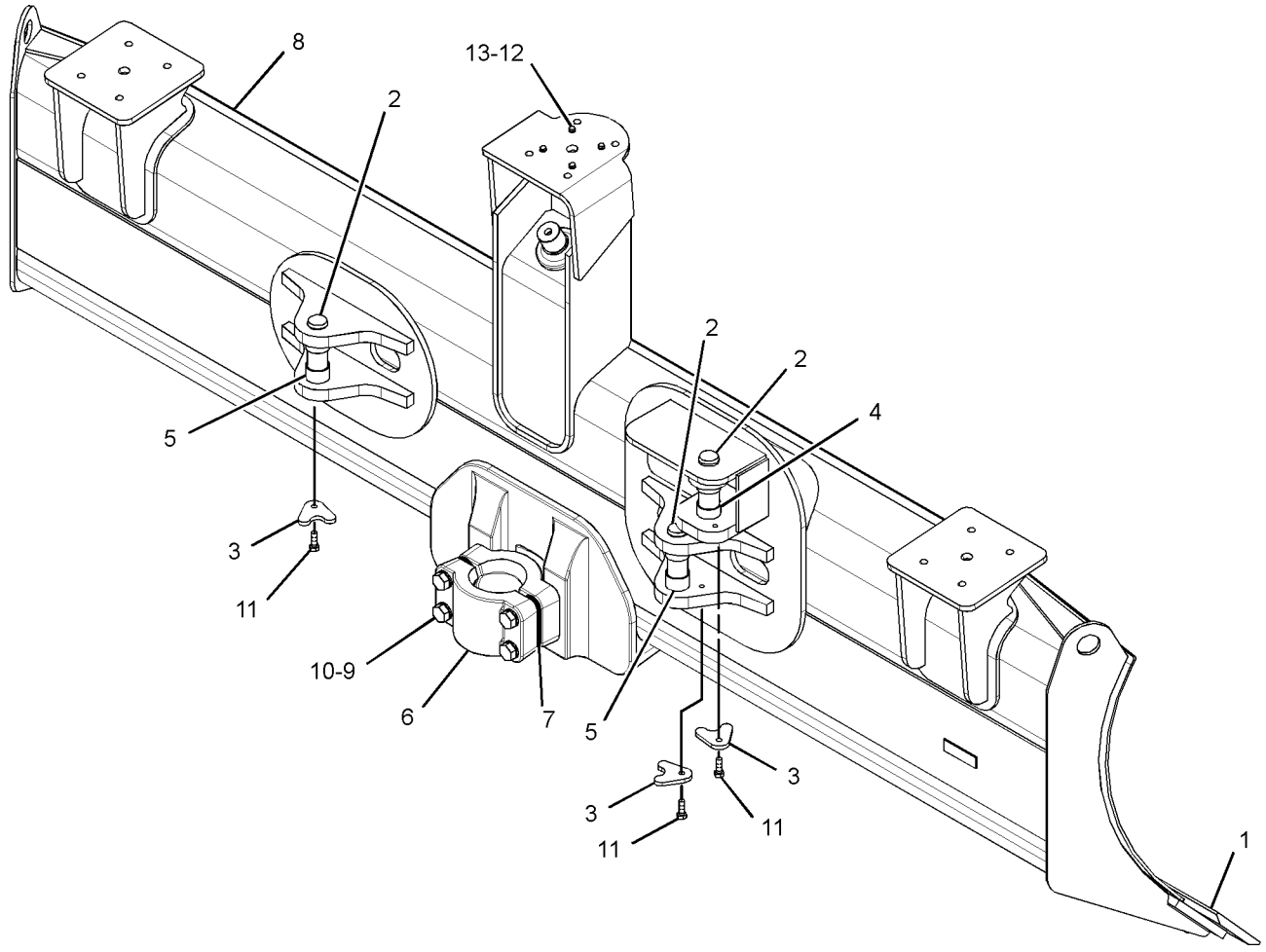

GRAPHIC #1 **<END>** g01439621

WORK TOOLS

312-8351 BLADE GP-ANGLING

S/N: JTD1-UP; FFF1-UP; LLL1-UP
PART OF 312-8350 BLADE AR-PWR ANGLE & TILT
AN ATTACHMENT

SMCS-6052, 6060, 6701 **i02864422**

NOTE	REF NO	GRAPHIC REF	PART NUMBER	QTY	PART NAME 1 2 3 4 5 6 (PRODUCT LEVEL)	SEE PAGE
	1	1	**6Y-1421**	3	PIN	
	2	1	**8J-0729**	3	RETAINER	
	3	1	**150-0351**	2	SPACER (38.3X44.45X20.8-MM THK)	
	4	1	**150-0352**	4	SPACER (38.30X44.45X27.3-MM THK)	
Y	5	1	*179-2897*	1	EDGE GP-BIT & CUTTING	896
B	7	1	**183-5297**	26	SHIM (0.8-MM THK)	
	8	1	**312-8352**	1	BLADE AS-ANGLING	
	8A	1	**179-5755**	1	CAP-BEARING	
	8B	1	**8P-9770**	1	PLATE	
	9	1	**225-0098**	4	BOLT (M20X2.5X140-MM)	
	10	1	**8T-3282**	4	WASHER-HARD (22X35X3.5-MM THK)	
M	11	1	**8T-4195**	3	BOLT (M10X1.5X30-MM)	

B-USE AS REQUIRED
M-METRIC PART
Y-SEPARATE ILLUSTRATION

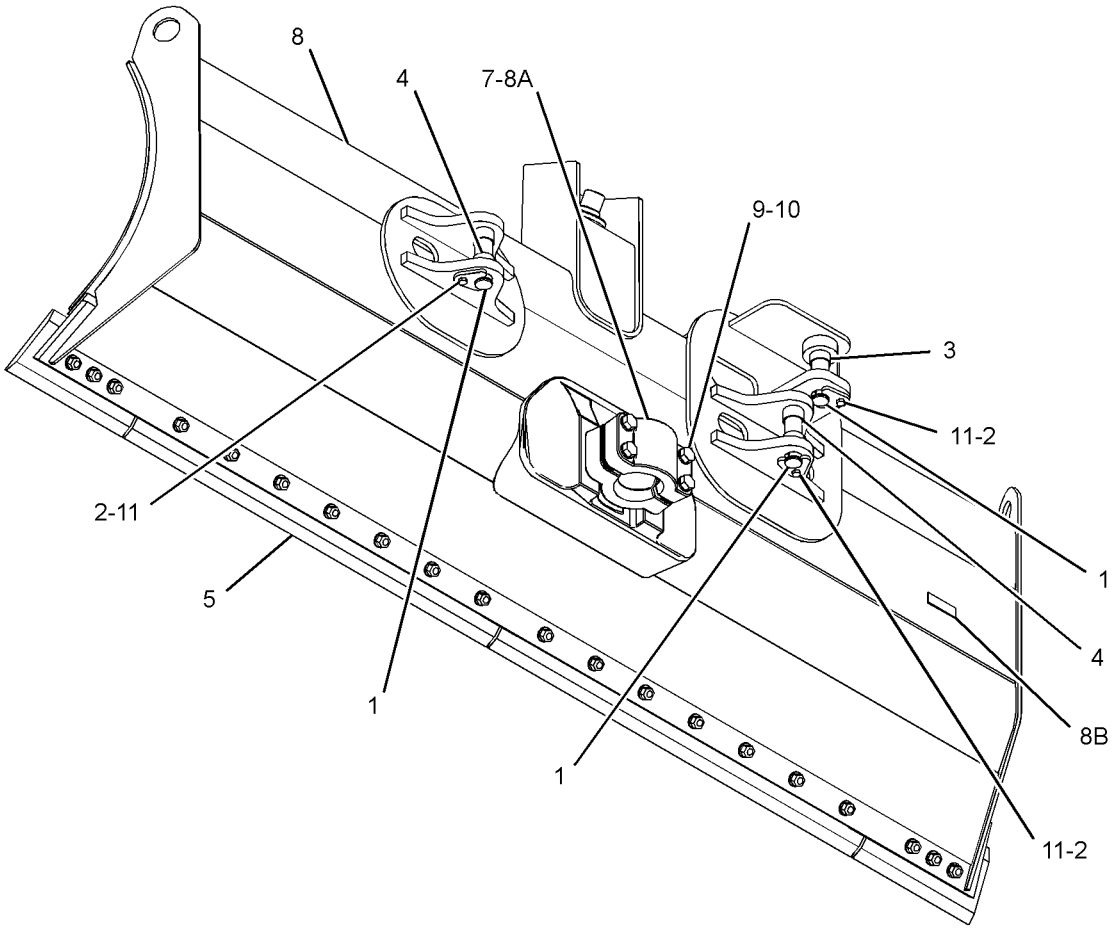

GRAPHIC #1 **<END>** g01435215

312-8361 BLADE GP-ANGLING–GRADE CONTROL

S/N: JTD1-UP; FFF1-UP; LLL1-UP
PART OF 312-8360 BLADE AR-PWR ANGLE & TILT
AN ATTACHMENT

SMCS-6052, 6060, 6701 **i02873098**

NOTE	REF NO	GRAPHIC REF	PART NUMBER	QTY	PART NAME 1 2 3 4 5 6 (PRODUCT LEVEL)	SEE PAGE
	1	1	**6Y-1421**	3	PIN	
	2	1	**8J-0729**	3	RETAINER	
	3	1	**150-0351**	2	SPACER (38.3X44.45X20.8-MM THK)	
	4	1	**150-0352**	4	SPACER (38.30X44.45X27.3-MM THK)	
Y	5	1	*179-2897*	1	EDGE GP-BIT & CUTTING	896
	6	1	**179-5755**	1	CAP-BEARING	
B	7	1	**183-5297**	26	SHIM (0.8-MM THK)	
	8	1	**312-8362**	1	BLADE AS-ANGLING	
	9	1	**225-0098**	4	BOLT (M20X2.5X140-MM)	
M	10	1	**5C-9553**	4	BOLT (M6X1X16-MM)	
	11	1	**8T-3282**	4	WASHER-HARD (22X35X3.5-MM THK)	
M	12	1	**8T-4195**	3	BOLT (M10X1.5X30-MM)	
	13	1	**9X-8256**	4	WASHER (6.6X12X2-MM THK)	

B-USE AS REQUIRED
M-METRIC PART
Y-SEPARATE ILLUSTRATION

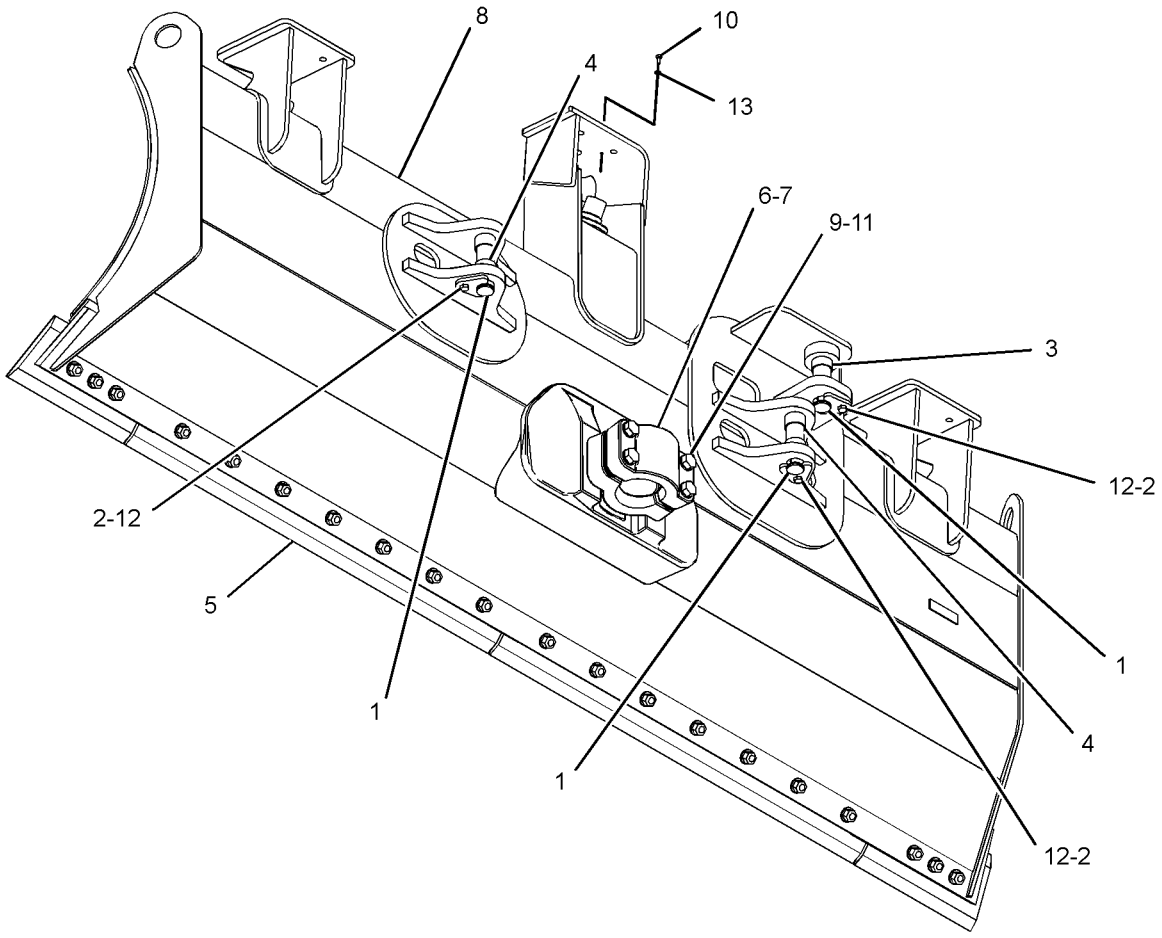

GRAPHIC #1 **<END>** g01435667

WORK TOOLS

309-5090 BRAKE & PLANETARY GP-WINCH

S/N: JAG1-UP
PART OF 256-3738 WINCH AR
AN ATTACHMENT

SMCS-5165 **i02718222**

NOTE	REF NO	GRAPHIC REF	PART NUMBER	QTY	PART NAME 1 2 3 4 5 6 (PRODUCT LEVEL)	SEE PAGE
	1	1	**149-5461**	2	SEAL-O-RING	
Y	2	1	*309-5091*	1	BRAKE & PLANETARY GP-WINCH	871
	3	1	**3K-0360**	1	SEAL-O-RING	
	4	1	**7X-0288**	7	BOLT (3/8-16X1.625-IN)	
	5	1	**8T-4896**	7	WASHER-HARD (10.2X18.5X2.5-MM THK)	
	6	1	**9S-8005**	1	PLUG-O-RING	

Y-SEPARATE ILLUSTRATION

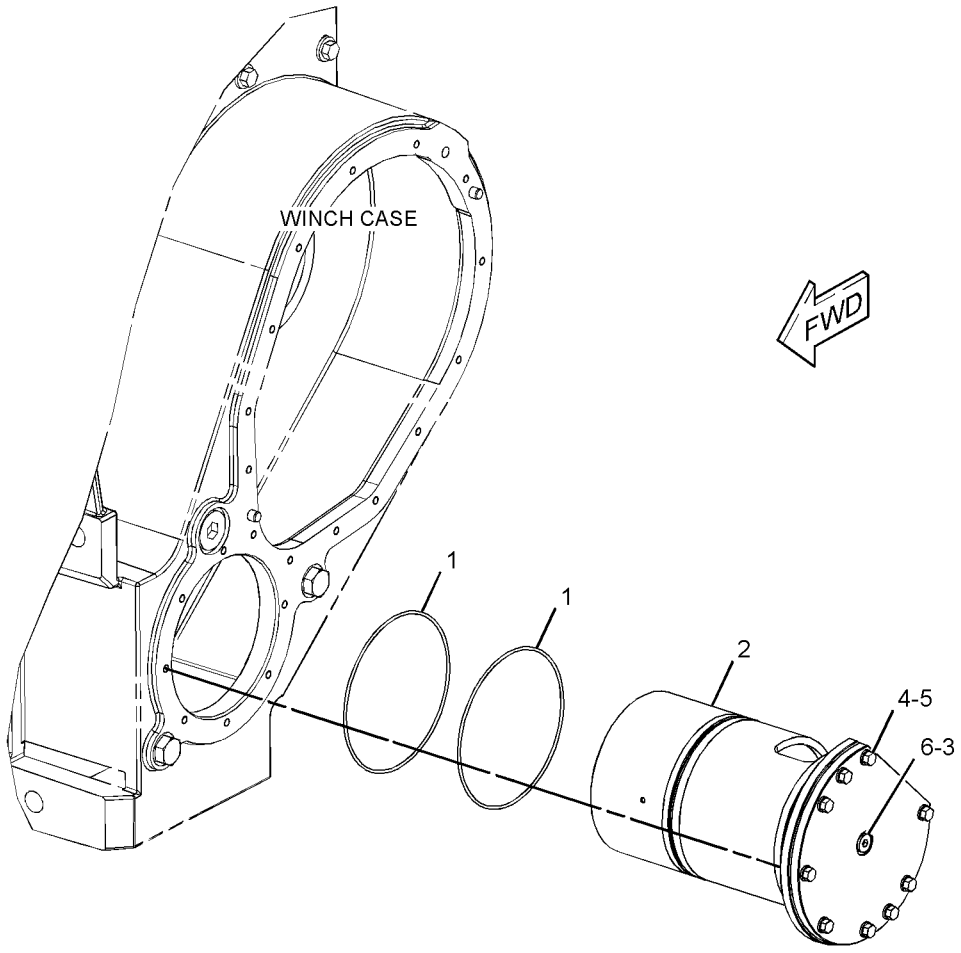

GRAPHIC #1 **<END>** g01378942

309-5091 BRAKE & PLANETARY GP-WINCH

S/N: JAG1-UP

PART OF 309-5090 BRAKE & PLANETARY GP-WINCH

AN ATTACHMENT

SMCS-5165 **i02718215**

NOTE	REF NO	GRAPHIC REF	PART NUMBER	QTY	PART NAME 1 2 3 4 5 6 (PRODUCT LEVEL)	SEE PAGE
	1	1	**8C-3312**	1	RING-RETAINING	
	2	1	**203-6631**	1	SHAFT	
Y	3	1	*211-8169*	1	PLANETARY GP-WINCH	912
Y	4	1	*211-8171*	1	GEAR GP-WINCH TRANSFER	903
	5	1	**211-8753**	1	COUPLING-MOTOR	
	6	1	**211-8754**	1	RING-THRUST	
Y	7	1	*309-5075*	1	BRAKE GP-SERVICE & PARKING	488
	8	1	**4L-6454**	2	BOLT (3/8-16X1-IN)	
	9	1	**8T-4896**	2	WASHER-HARD (10.2X18.5X2.5-MM THK)	

Y-SEPARATE ILLUSTRATION

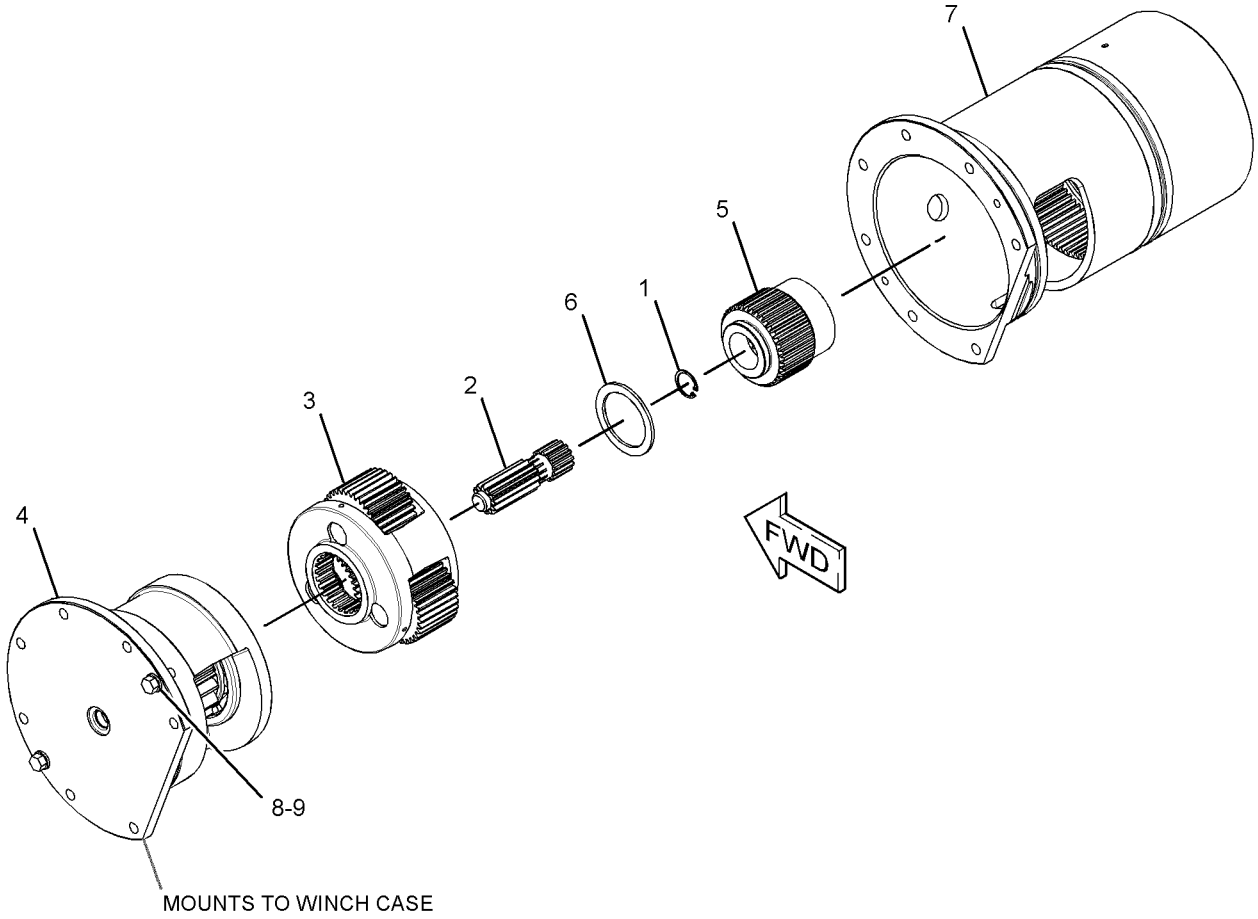

GRAPHIC #1 **<END>** g01374600

WORK TOOLS

208-5546 CASE GP-WINCH

S/N: JAG1-UP
PART OF 256-3738 WINCH AR
AN ATTACHMENT

SMCS-5163 **i02719597**

NOTE	REF NO	GRAPHIC REF	PART NUMBER	QTY	PART NAME 1 2 3 4 5 6 (PRODUCT LEVEL)	SEE PAGE
C	1	1	**5P-9436**	2	PLUG	
	2	1	**8C-6868**	1	CONNECTOR	
	3	1	**203-6608**	1	BLOCK	
	4	1	**203-6609**	1	BLOCK	
C	5	1	**293-0777**	1	TUBE AS	
C	6	1	**293-0778**	1	CASE AS	
	7	1	**053-1578**	2	DOWEL	
C	8	1	**3D-2824**	2	SEAL-O-RING	
	9	1	**5P-1076**	4	WASHER-HARD (13.5X30X4-MM THK)	
	10	1	**6V-8397**	4	SEAL-O-RING	
	11	1	**6V-8994**	1	UNION (BULKHEAD)	
	12	1	**6V-9850**	1	ELBOW (SWIVEL)	
	13	1	**7J-9108**	1	SEAL-O-RING	
	14	1	**8T-8919**	4	BOLT (1/2-13X1.75-IN)	
C	15	1	**9S-8010**	1	PLUG	
C	16	1	**2S-4078**	1	SEAL-O-RING	

C-CHANGE FROM PREVIOUS TYPE

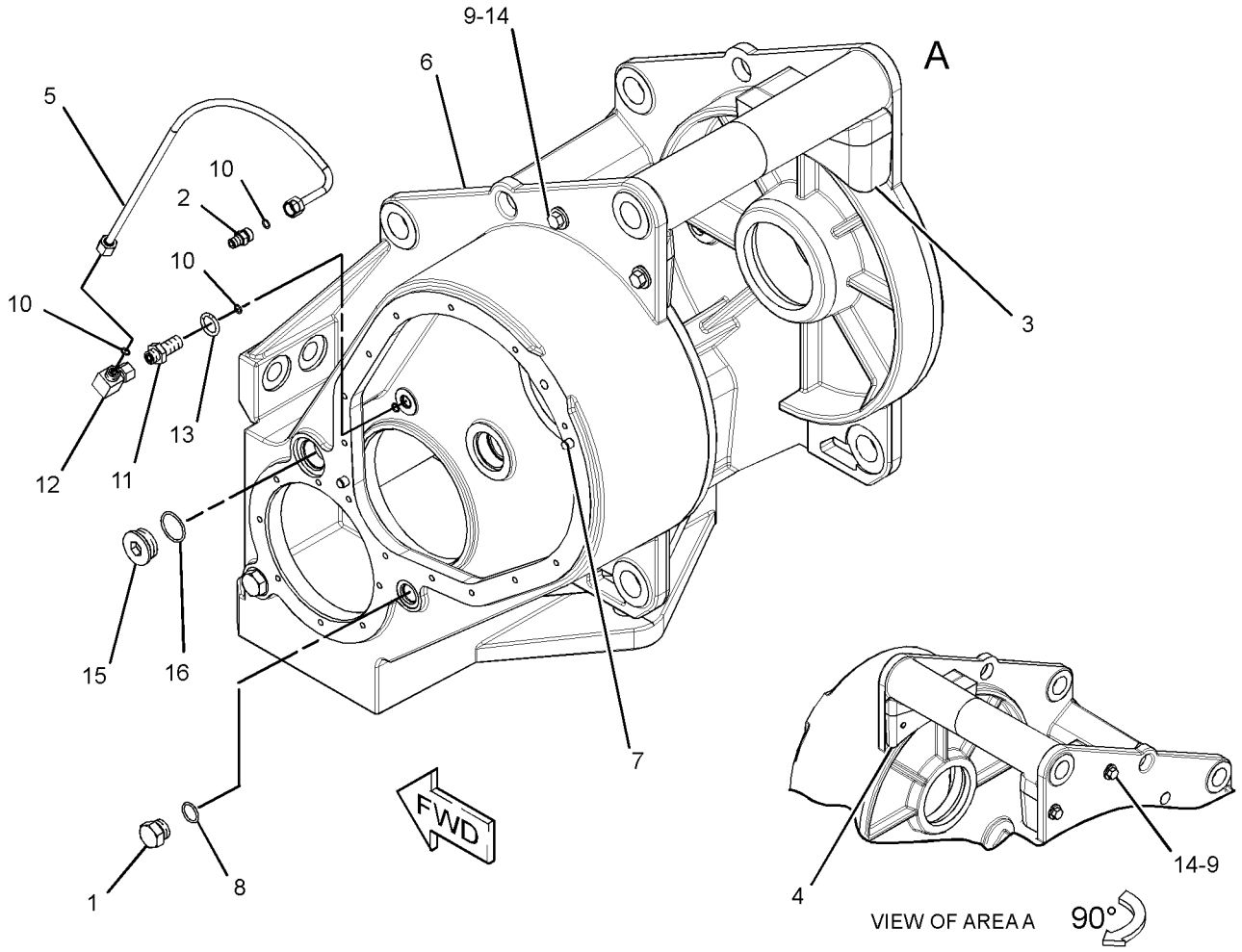

GRAPHIC #1 **<END>** g01378935

208-5552 CLUTCH & GEAR GP-WINCH

S/N: JAG1-UP
PART OF 256-3738 WINCH AR
AN ATTACHMENT

SMCS-5167 **i03380332**

NOTE	REF NO	GRAPHIC REF	PART NUMBER	QTY	PART NAME 1 2 3 4 5 6 (PRODUCT LEVEL)	SEE PAGE
	1	1	**6U-1989**	1	VALVE-RELIEF (WINCH)	
	2	1	**161-6422**	1	CLUTCH-FREESPOOL (34-TEETH)	
	3	1	**162-0175**	1	SPRING	
	4	1	**162-0180**	1	RING	
	5	1	**162-2766**	1	RING-BACKUP	
	6	1	**172-0307**	1	PISTON AS	
	7	1	**203-6640**	1	GASKET	
	8	1	**211-1856**	1	COVER-GEAR	
	9	1	**3B-8489**	1	FITTING-GREASE	
	10	1	**3H-3385**	1	SEAL-O-RING	
	11	1	**3J-7354**	1	SEAL-O-RING	
	12	1	**8M-4986**	1	SEAL-O-RING	
	13	1	**8T-4896**	14	WASHER-HARD (10.2X18.5X2.5-MM THK)	
	14	1	**9B-7237**	14	BOLT (3/8-16X1.25-IN)	
	15	1	**9S-8002**	1	PLUG-O-RING	

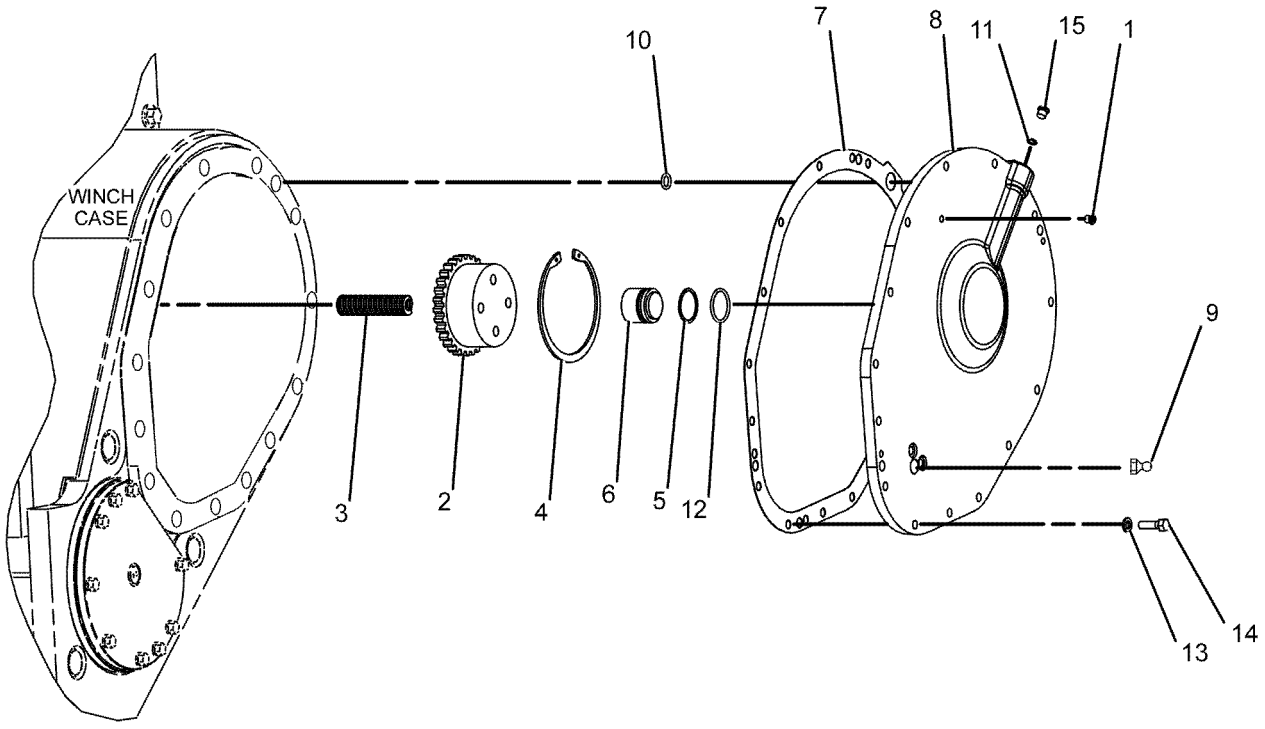

GRAPHIC #1 **<END>** g01009246

WORK TOOLS

244-7504 CONTROL GP-WINCH

S/N: JTD1-UP; FFF1-108; LLL1-UP
PART OF 244-7454, 292-0124, 300-8544 DRIVE AR-WINCH
AN ATTACHMENT

SMCS-5161, 5170 **i03590460**

NOTE	REF NO	GRAPHIC REF	PART NUMBER	QTY	PART NAME 1 2 3 4 5 6 (PRODUCT LEVEL)	SEE PAGE
	1	1	**7K-1181**	29	STRAP-CABLE	
	2	1	**165-0311**	1	PLUG	
	3	1	**249-9065**	1	HARNESS AS-WORK TOOL (WINCH)	
		1	**9X-3401**	6	PIN-CONNECTOR (16-GA TO 18-GA)	
		1	**155-2270**	3	KIT-CONNECTING PLUG (2-PIN)	
					(EACH INCLUDES PLUG AS, WEDGE & INTERFACE SEAL)	
		1	**8T-8737**	6	PLUG-SEAL	
		1	**102-8802**	3	KIT-RECEPTACLE (2-PIN)	
		1	**102-8805**	1	KIT-RECEPTACLE (6-PIN)	
					(EACH RECEPTACLE KIT INCLUDES RECEPTACLE AS & WEDGE)	
		1	**9X-3402**	6	SOCKET-CONNECTOR (16-GA TO 18-GA)	
	4	1	**249-9067**	1	WIRE AS	
	5	1	**266-9006**	1	FILM-INSTRUCTION (WINCH CONTROL)	
	6	1	**269-7667**	1	HARNESS AS-PUMP (WINCH)	
		1	**9X-3401**	10	PIN-CONNECTOR (16-GA TO 18-GA)	
		1	**155-2270**	2	KIT-CONNECTING PLUG (2-PIN)	
					(EACH INCLUDES PLUG AS, WEDGE & INTERFACE SEAL)	
		1	**8T-8737**	1	PLUG-SEAL	
		1	**102-8803**	1	KIT-RECEPTACLE (3-PIN)	
		1	**102-8806**	1	KIT-RECEPTACLE (8-PIN)	
					(EACH RECEPTACLE KIT INCLUDES RECEPTACLE AS & WEDGE)	
		1	**9X-3402**	4	SOCKET-CONNECTOR (16-GA TO 18-GA)	
	7	1	**269-7668**	1	BRACKET	
	8	1	**269-7677**	1	PLATE	
	9	1	**156-6175**	2	CLIP	
Y	10	1	**214-6863**	1	SENSOR GP-PRESSURE (WINCH OIL)	217
	11	1	**249-9037**	1	SWITCH AS-ROCKER (12-VOLT) (WINCH FREE SPOOL)	
	12	1	**249-9047**	1	SWITCH AS-ROCKER (12-VOLT) (WINCH BRAKE OFF)	
					(EACH SWITCH AS-ROCKER INCLUDES)	
		1	**111-7899**	1	GASKET	
Y	13	1	*252-4559*	1	CONTROL GP-HANDLE (WINCH)	695
	14	1	**269-7683**	1	HARNESS AS-WORK TOOL (PLATFORM)	
		1	**155-2270**	2	KIT-CONNECTING PLUG (2-PIN)	
		1	**155-2265**	1	KIT-CONNECTING PLUG (8-PIN)	
		1	**155-2274**	1	KIT-CONNECTING PLUG (6-PIN)	
					(EACH PLUG KIT INCLUDES PLUG AS, WEDGE & INTERFACE SEAL)	
		1	**230-4009**	2	PLUG AS-CONNECTOR (12-PIN)	
					(EACH INCLUDES)	
		1	**264-7034**	1	SEAL-CONNECTOR	
		1	**231-2296**	2	PLUG AS-CONNECTOR (8-PIN)	
					(EACH INCLUDES)	
		1	**264-7033**	1	SEAL-CONNECTOR	
		1	**102-8805**	2	KIT-RECEPTACLE (6-PIN)	
					(EACH INCLUDES RECEPTACLE AS & WEDGE)	
		1	**230-4010**	2	RECEPTACLE AS-CONNECTOR (12-PIN)	
		1	**231-2301**	1	RECEPTACLE AS-CONNECTOR (8-PIN)	
		1	**9X-3401**	7	PIN-CONNECTOR (16-GA TO 18-GA)	
					-OR-	
		1	**126-1767**	7	PIN-CONNECTOR (14-GA TO 16-GA)	
		1	**8T-8737**	51	PLUG-SEAL	
		1	**9X-3402**	26	SOCKET-CONNECTOR (16-GA TO 18-GA)	

244-7504 **CONTROL GP-WINCH** *(contd.)* **i03590460**

NOTE	REF NO	GRAPHIC REF	PART NUMBER	QTY	PART NAME 1 2 3 4 5 6 (PRODUCT LEVEL)	SEE PAGE
		1	**180-9340**	15	SOCKET-CONNECTOR (14-GA TO 18-GA)	
		1	**186-3736**	1	SOCKET-CONNECTOR (16-GA TO 18-GA)	
		1	**9W-0844**	2	SOCKET-CONNECTOR (14-GA TO 16-GA)	
E		1	**125-7874**		TUBE-HEAT SHRINK (5.72-MM DIA) (25-CM)	
R	15	1	**300-3631**	1	CONTROL GP-UNPROGRAMMED	
	16	1	**3J-1907**	1	SEAL-O-RING	
	17	1	**3J-7354**	1	SEAL-O-RING	
	18	1	**3S-2093**	2	STRAP-CABLE	
M	19	1	**7X-2534**	2	BOLT (M6X1X50-MM)	
M	20	1	**7X-2548**	1	BOLT (M12X1.75X16-MM)	
	21	1	**8T-2353**	1	ADAPTER (STRAIGHT THREAD O-RING)	
	22	1	**8T-4223**	1	WASHER-HARD (13.5X25.5X3-MM THK)	
M	23	1	**9X-2045**	8	SCREW-TRUSS HEAD (M6X1X20-MM)	
	24	1	**9X-8256**	2	WASHER (6.6X12X2-MM THK)	

E-ORDER BY THE CENTIMETER
M-METRIC PART
R-REMFG PART MAY BE AVAILABLE
Y-SEPARATE ILLUSTRATION

244-7504 **CONTROL GP-WINCH** *(contd.)* **i03590460**

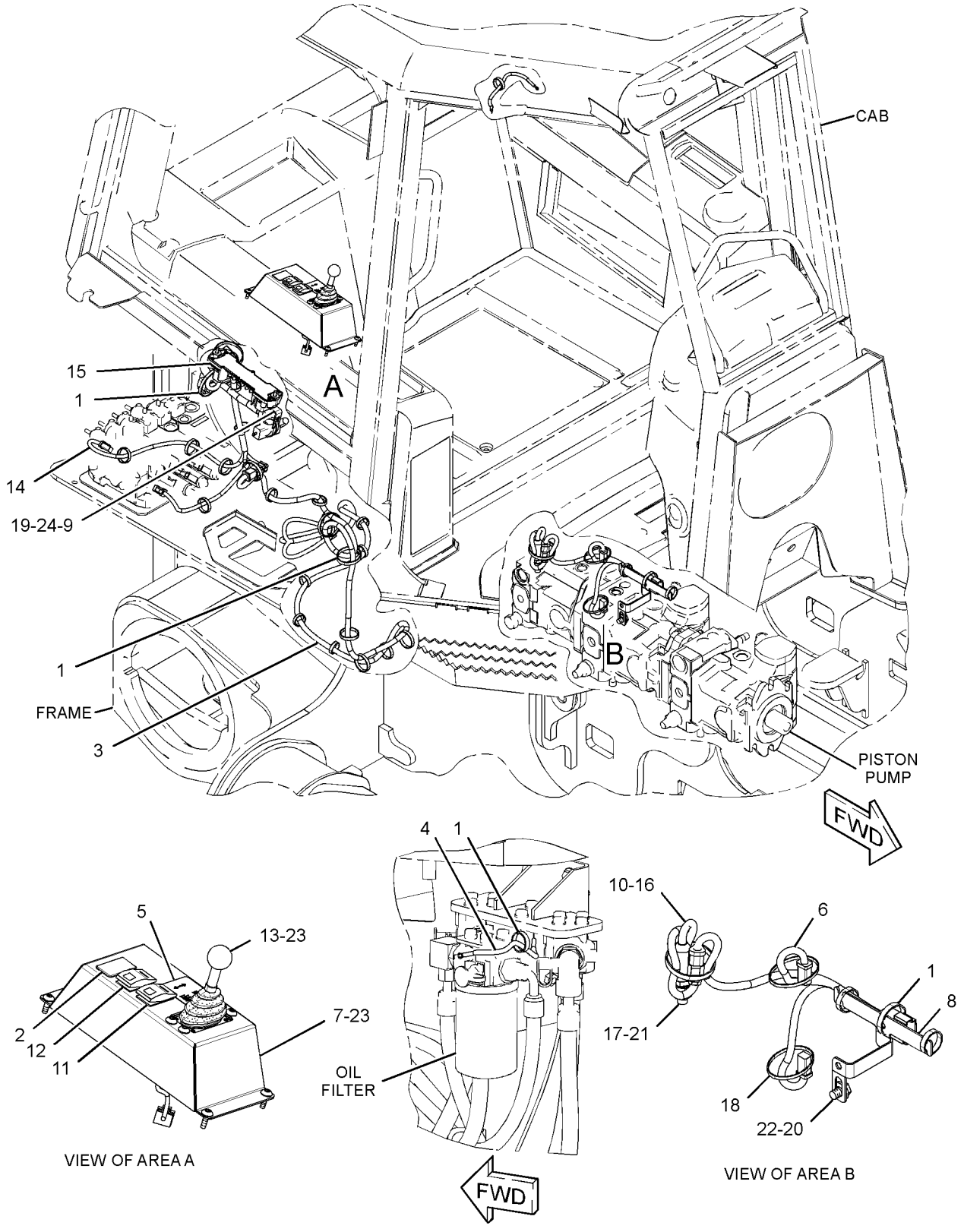

GRAPHIC #1 **<END>** g01378559

WORK TOOLS

244-7504 CONTROL GP-WINCH

S/N: JTD1-UP; FFF109-UP; LLL1-UP
PART OF 244-7454, 292-0124, 300-8544 DRIVE AR-WINCH
AN ATTACHMENT

SMCS-5161, 5170 **i03590500**

NOTE	REF NO	GRAPHIC REF	PART NUMBER	QTY	PART NAME 1 2 3 4 5 6 (PRODUCT LEVEL)	SEE PAGE
	1	1	**7K-1181**	29	STRAP-CABLE	
C	2	1	**165-0311**	2	PLUG	
	3	1	**249-9065**	1	HARNESS AS-WORK TOOL (WINCH)	
		1	**9X-3401**	6	PIN-CONNECTOR (16-GA TO 18-GA)	
		1	**155-2270**	3	KIT-CONNECTING PLUG (2-PIN)	
					(EACH INCLUDES PLUG AS, WEDGE & INTERFACE SEAL)	
		1	**8T-8737**	6	PLUG-SEAL	
		1	**102-8802**	3	KIT-RECEPTACLE (2-PIN)	
		1	**102-8805**	1	KIT-RECEPTACLE (6-PIN)	
					(EACH RECEPTACLE KIT INCLUDES RECEPTACLE AS & WEDGE)	
		1	**9X-3402**	6	SOCKET-CONNECTOR (16-GA TO 18-GA)	
	4	1	**249-9067**	1	WIRE AS	
	5	1	**266-9006**	1	FILM-INSTRUCTION (WINCH CONTROL)	
	6	1	**269-7667**	1	HARNESS AS-PUMP (WINCH)	
		1	**9X-3401**	10	PIN-CONNECTOR (16-GA TO 18-GA)	
		1	**155-2270**	2	KIT-CONNECTING PLUG (2-PIN)	
					(EACH INCLUDES PLUG AS, WEDGE & INTERFACE SEAL)	
		1	**8T-8737**	1	PLUG-SEAL	
		1	**102-8803**	1	KIT-RECEPTACLE (3-PIN)	
		1	**102-8806**	1	KIT-RECEPTACLE (8-PIN)	
					(EACH RECEPTACLE KIT INCLUDES RECEPTACLE AS & WEDGE)	
		1	**9X-3402**	4	SOCKET-CONNECTOR (16-GA TO 18-GA)	
C	7	1	**311-0296**	1	BRACKET	
	8	1	**269-7677**	1	PLATE	
	9	1	**156-6175**	2	CLIP	
Y	10	1	**214-6863**	1	SENSOR GP-PRESSURE (WINCH OIL)	217
	11	1	**249-9037**	1	SWITCH AS-ROCKER (12-VOLT) (WINCH FREE SPOOL)	
	12	1	**249-9047**	1	SWITCH AS-ROCKER (12-VOLT) (WINCH BRAKE OFF)	
					(EACH SWITCH AS-ROCKER INCLUDES)	
		1	**111-7899**	1	GASKET	
CY	13	1	**307-4673**	1	CONTROL GP-HANDLE (WINCH)	699
C	14	1	**269-7697**	1	HARNESS AS-WORK TOOL (PLATFORM)	
		1	**274-3777**	1	CAP-CONNECTOR	
		1	**155-2270**	2	KIT-CONNECTING PLUG (2-PIN)	
		1	**155-2265**	1	KIT-CONNECTING PLUG (8-PIN)	
		1	**155-2274**	1	KIT-CONNECTING PLUG (6-PIN)	
					(EACH PLUG KIT INCLUDES PLUG AS, WEDGE & INTERFACE SEAL)	
		1	**230-4009**	2	PLUG AS-CONNECTOR (12-PIN)	
					(EACH INCLUDES)	
		1	**264-7034**	1	SEAL-CONNECTOR	
		1	**231-2296**	2	PLUG AS-CONNECTOR (8-PIN)	
					(EACH INCLUDES)	
		1	**264-7033**	1	SEAL-CONNECTOR	
		1	**102-8802**	2	KIT-RECEPTACLE (2-PIN)	
		1	**102-8806**	2	KIT-RECEPTACLE (8-PIN)	
					(EACH RECEPTACLE KIT INCLUDES RECEPTACLE AS & WEDGE)	
		1	**230-4010**	2	RECEPTACLE AS-CONNECTOR (12-PIN)	
		1	**231-2301**	1	RECEPTACLE AS-CONNECTOR (8-PIN)	
		1	**9X-3401**	7	PIN-CONNECTOR (16-GA TO 18-GA)	
					-OR-	

244-7504 **CONTROL GP-WINCH** *(contd.)* **i03590500**

NOTE	REF NO	GRAPHIC REF	PART NUMBER	QTY	PART NAME 1 2 3 4 5 6 (PRODUCT LEVEL)	SEE PAGE
		1	**126-1767**	7	PIN-CONNECTOR (14-GA TO 16-GA)	
		1	**8T-8737**	51	PLUG-SEAL	
		1	**9X-3402**	26	SOCKET-CONNECTOR (16-GA TO 18-GA)	
		1	**180-9340**	15	SOCKET-CONNECTOR (14-GA TO 18-GA)	
		1	**186-3736**	1	SOCKET-CONNECTOR (16-GA TO 18-GA)	
		1	**9W-0844**	2	SOCKET-CONNECTOR (14-GA TO 16-GA)	
E		1	**125-7874**		TUBE-HEAT SHRINK (5.72-MM DIA) (25-CM)	
R	15	1	**300-3631**	1	CONTROL GP-UNPROGRAMMED	
	16	1	**3J-1907**	1	SEAL-O-RING	
	17	1	**3J-7354**	1	SEAL-O-RING	
	18	1	**3S-2093**	2	STRAP-CABLE	
M	19	1	**7X-2534**	2	BOLT (M6X1X50-MM)	
M	20	1	**7X-2548**	1	BOLT (M12X1.75X16-MM)	
	21	1	**8T-2353**	1	ADAPTER	
	22	1	**8T-4223**	1	WASHER-HARD (13.5X25.5X3-MM THK)	
M	23	1	**9X-2045**	8	SCREW-TRUSS HEAD (M6X1X20-MM)	
	24	1	**9X-8256**	4	WASHER (6.6X12X2-MM THK)	
	25	1	**249-9079**	1	PLATE AS	
M	26	1	**8T-4138**	2	BOLT (M6X1X20-MM)	

C-CHANGE FROM PREVIOUS TYPE
E-ORDER BY THE CENTIMETER
M-METRIC PART
R-REMFG PART MAY BE AVAILABLE
Y-SEPARATE ILLUSTRATION

244-7504 **CONTROL GP-WINCH** *(contd.)* **i03590500**

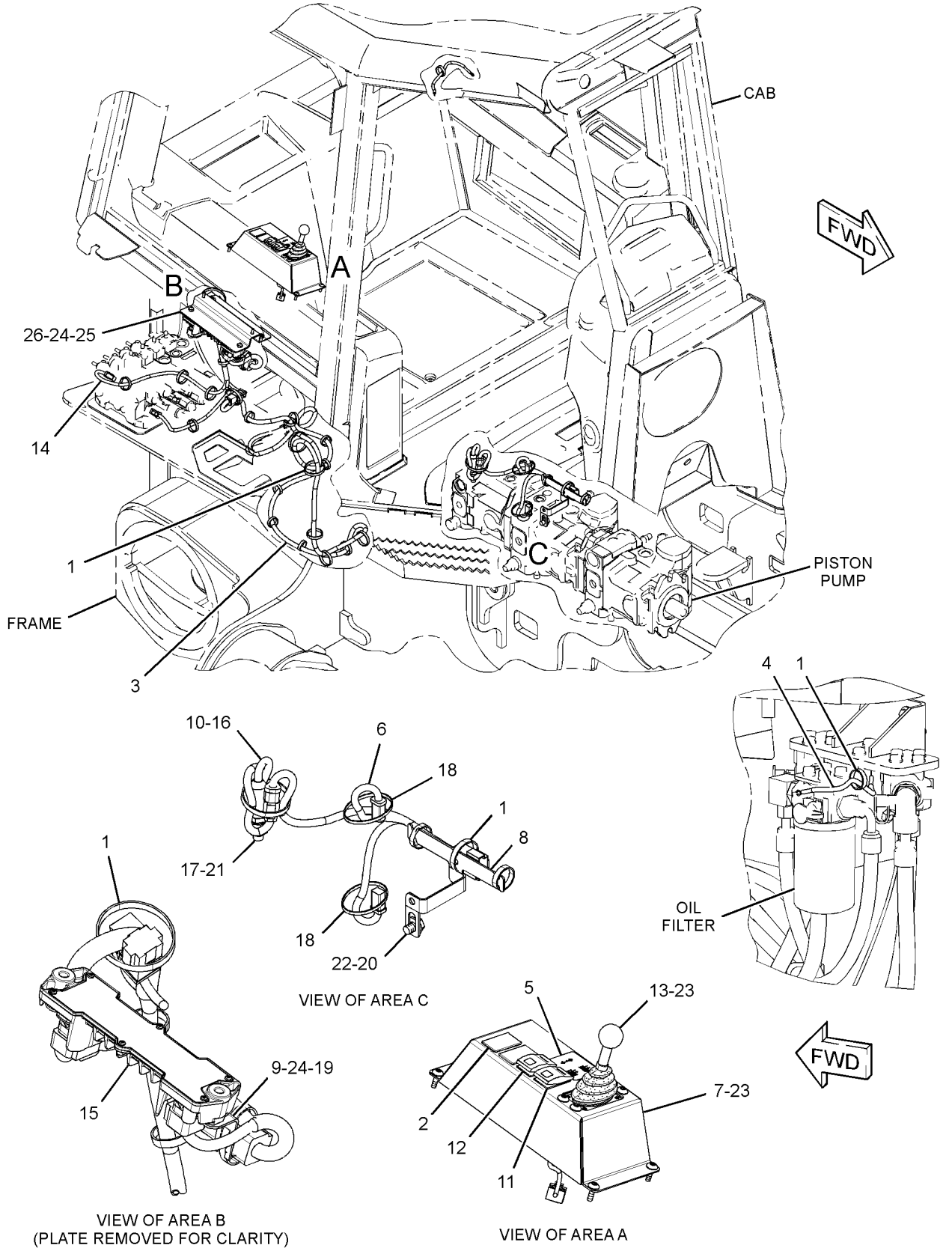

GRAPHIC #1 **<END>** g01502582

WORK TOOLS

244-7504 CONTROL GP-WINCH

S/N: JTD1-175; FFF109-630; LLL1-840
PART OF 244-7454, 292-0124, 300-8544 DRIVE AR-WINCH
AN ATTACHMENT

SMCS-5161, 5170 **i04137969**

NOTE	REF NO	GRAPHIC REF	PART NUMBER	QTY	PART NAME 1 2 3 4 5 6 (PRODUCT LEVEL)	SEE PAGE
C	1	1	**7K-1181**	27	STRAP-CABLE	
	2	1	**165-0311**	2	PLUG	
	3	1	**249-9065**	1	HARNESS AS-WORK TOOL (WINCH)	
		1	**9X-3401**	6	PIN-CONNECTOR (16-GA TO 18-GA)	
		1	**155-2270**	3	KIT-CONNECTING PLUG (2-PIN)	
					(EACH PLUG KIT INCLUDES PLUG AS, WEDGE & INTERFACE SEAL)	
		1	**8T-8737**	6	PLUG-SEAL	
		1	**102-8802**	3	KIT-RECEPTACLE (2-PIN)	
		1	**102-8805**	1	KIT-RECEPTACLE (6-PIN)	
					(EACH RECEPTACLE KIT INCLUDES RECEPTACLE AS & WEDGE)	
		1	**9X-3402**	6	SOCKET-CONNECTOR (16-GA TO 18-GA)	
	4	1	**249-9067**	1	WIRE AS	
	5	1	**266-9006**	1	FILM-INSTRUCTION (WINCH CONTROL)	
	6	1	**269-7667**	1	HARNESS AS-PUMP (WINCH)	
		1	**9X-3401**	10	PIN-CONNECTOR (16-GA TO 18-GA)	
		1	**155-2270**	2	KIT-CONNECTING PLUG (2-PIN)	
					(EACH PLUG KIT INCLUDES PLUG AS, WEDGE & INTERFACE SEAL)	
		1	**8T-8737**	1	PLUG-SEAL	
		1	**102-8803**	1	KIT-RECEPTACLE (3-PIN)	
		1	**102-8806**	1	KIT-RECEPTACLE (8-PIN)	
					(EACH RECEPTACLE KIT INCLUDES RECEPTACLE AS & WEDGE)	
		1	**9X-3402**	4	SOCKET-CONNECTOR (16-GA TO 18-GA)	
	7	1	**311-0296**	1	BRACKET	
	8	1	**269-7677**	1	PLATE	
C	9	1	**155-0576**	8	MOUNT-ISOLATION	
Y	10	1	**214-6863**	1	SENSOR GP-PRESSURE (WINCH OIL)	217
	11	1	**249-9037**	1	SWITCH AS-ROCKER (12-VOLT) (WINCH FREESPOOL)	
	12	1	**249-9047**	1	SWITCH AS-ROCKER (12-VOLT) (DRIVE AWAY)	
					(EACH SWITCH AS INCLUDES)	
		1	**111-7899**	1	GASKET	
Y	13	1	**307-4673**	1	CONTROL GP-HANDLE (WINCH)	699
C	14	1	**311-0302**	1	HARNESS AS-CONTROL (PLATFORM)	
		1	**126-1774**	1	COVER-CONNECTOR	
		1	**8T-8729**	3	PIN-CONNECTOR (16-GA TO 18-GA)	
		1	**9W-0852**	1	PIN-CONNECTOR (14-GA TO 16-GA)	
		1	**8L-8413**	2	STRAP-CABLE (WHITE)	
E		1	**119-3662**		TUBE-HEAT SHRINK (10.85-MM DIA) (11-CM)	
		1	**155-2270**	2	KIT-CONNECTING PLUG (2-PIN)	
		1	**155-2265**	1	KIT-CONNECTING PLUG (8-PIN)	
		1	**155-2274**	1	KIT-CONNECTING PLUG (6-PIN)	
					(EACH PLUG KIT INCLUDES PLUG AS, WEDGE & INTERFACE SEAL)	
		1	**160-7689**	1	PLUG AS-CONNECTOR (70-PIN)	
					(EACH INCLUDES)	
		1	**159-9322**	1	SEAL-O-RING	
		1	**102-8802**	2	KIT-RECEPTACLE (2-PIN)	
		1	**102-8806**	1	KIT-RECEPTACLE (8-PIN)	
		1	**102-8805**	1	KIT-RECEPTACLE (6-PIN)	
					(EACH RECEPTACLE KIT INCLUDES RECEPTACLE AS & WEDGE)	
		1	**8T-8737**	61	PLUG-SEAL	
		1	**9X-3402**	24	SOCKET-CONNECTOR (16-GA TO 18-GA)	

244-7504 **CONTROL GP-WINCH** *(contd.)* **i04137969**

NOTE	REF NO	GRAPHIC REF	PART NUMBER	QTY	PART NAME 1 2 3 4 5 6 (PRODUCT LEVEL)	SEE PAGE
		1	**180-9340**	15	SOCKET-CONNECTOR (14-GA TO 18-GA)	
		1	**8T-8730**	1	SOCKET-CONNECTOR (16-GA TO 18-GA)	
		1	**9W-0844**	2	SOCKET-CONNECTOR (14-GA TO 16-GA)	
E		1	**125-7874**		TUBE-HEAT SHRINK (5.72-MM DIA) (5-CM)	
C	15	1	**329-2576**	1	CONTROL GP-UNPROGRAMMED (WINCH)	
	16	1	**3J-1907**	1	SEAL-O-RING	
	17	1	**3J-7354**	1	SEAL-O-RING	
	18	1	**3S-2093**	2	STRAP-CABLE	
CM	19	1	**5C-7261**	4	NUT (M8X1.25-THD)	
M	20	1	**191-7503**	1	BOLT (M12X1.75X16-MM)	
	21	1	**8T-2353**	1	ADAPTER	
	22	1	**8T-4223**	1	WASHER-HARD (13.5X25.5X3-MM THK)	
M	23	1	**9X-2045**	8	SCREW-TRUSS HEAD (M6X1X20-MM)	
C	24	1	**9X-8256**	2	WASHER (6.6X12X2-MM THK)	
C	25	1	**269-7666**	1	PLATE AS	
M	26	1	**8T-4138**	2	BOLT (M6X1X20-MM)	
C	27	1	**9N-0869**	4	WASHER-HARD (8.8X25.5X2-MM THK)	
C	28	1	**6I-1418**	4	SPACER (8.2X12.7X28.7-MM THK)	

C-CHANGE FROM PREVIOUS TYPE
E-ORDER BY THE CENTIMETER
M-METRIC PART
Y-SEPARATE ILLUSTRATION

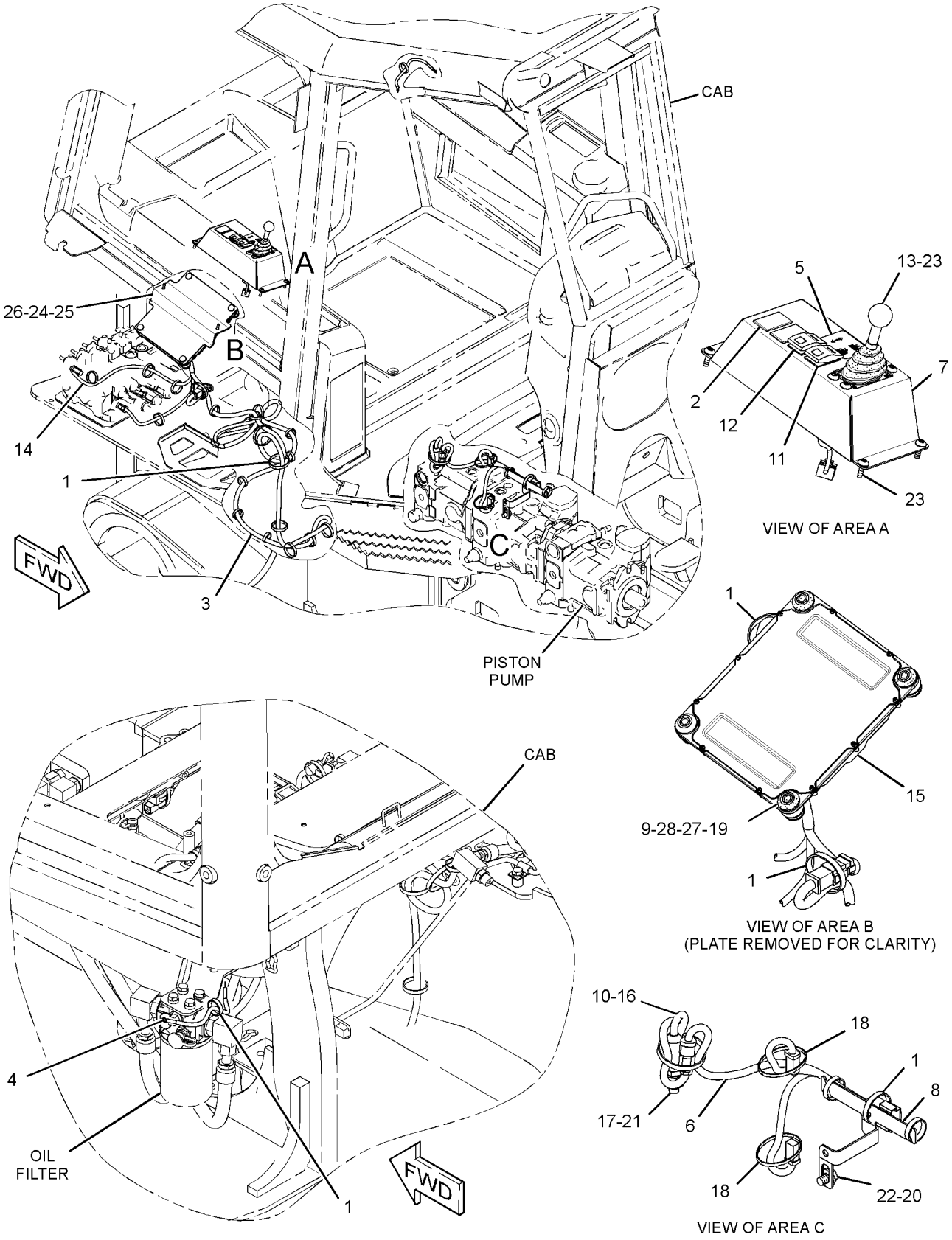

GRAPHIC #1 **<END>** g01739715

249-9052 CONTROL GP-WINCH

S/N: JTD1-UP; FFF1-UP; LLL1-UP
PART OF 264-4542 HYDRAULIC AR
AN ATTACHMENT
TYPE 1

SMCS-5161, 5170 **i03603530**

NOTE	REF NO	GRAPHIC REF	PART NUMBER	QTY	PART NAME 1 2 3 4 5 6 (PRODUCT LEVEL)	SEE PAGE
	1	1	**249-9079**	1	PLATE AS	
	2	1	**156-6175**	2	CLIP	
	3	1	**249-9022**	1	SWITCH AS-ROCKER (4TH VALVE)	
		1	**111-7899**	1	GASKET	
R	4	1	**300-3631**	1	CONTROL GP-UNPROGRAMMED (WINCH)	
M	5	1	**7X-2534**	2	BOLT (M6X1X50-MM)	
M	6	1	**8T-4138**	2	BOLT (M6X1X20-MM)	
	7	1	**9X-8256**	4	WASHER (6.6X12X2-MM THK)	
	8	1	**165-0311**	1	PLUG	

M-METRIC PART
R-REMFG PART MAY BE AVAILABLE

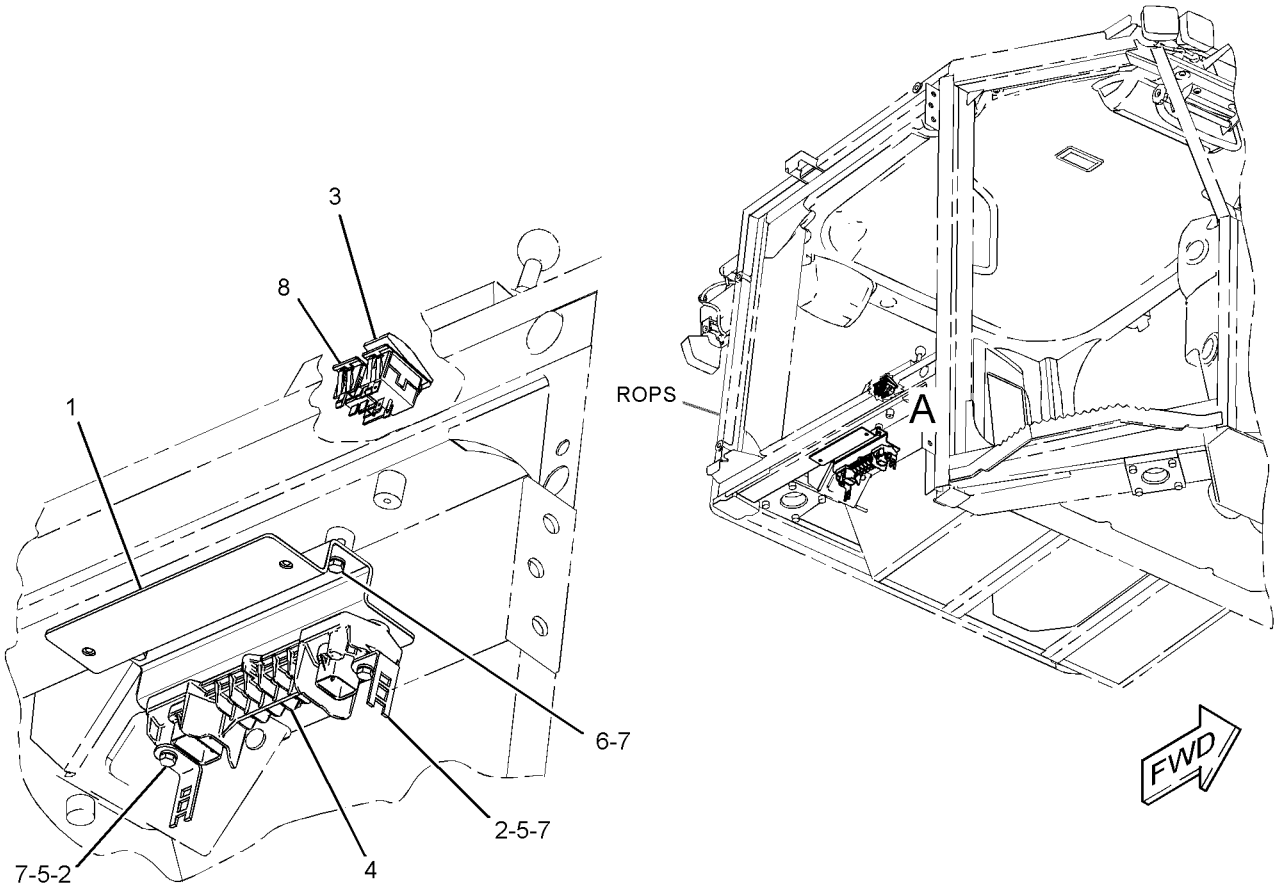

VIEW OF AREA A

GRAPHIC #1 **<END>** g01406890

WORK TOOLS

249-9052 CONTROL GP-WINCH

S/N: JTD1-UP; FFF1-UP; LLL1-UP
PART OF 264-4542 HYDRAULIC AR
AN ATTACHMENT
TYPE 2

SMCS-5161, 5170 **i03603562**

NOTE	REF NO	GRAPHIC REF	PART NUMBER	QTY	PART NAME 1 2 3 4 5 6 (PRODUCT LEVEL)	SEE PAGE
	1	1	**249-9022**	1	SWITCH AS-ROCKER (4TH VALVE)	
		1	**111-7899**	1	GASKET	

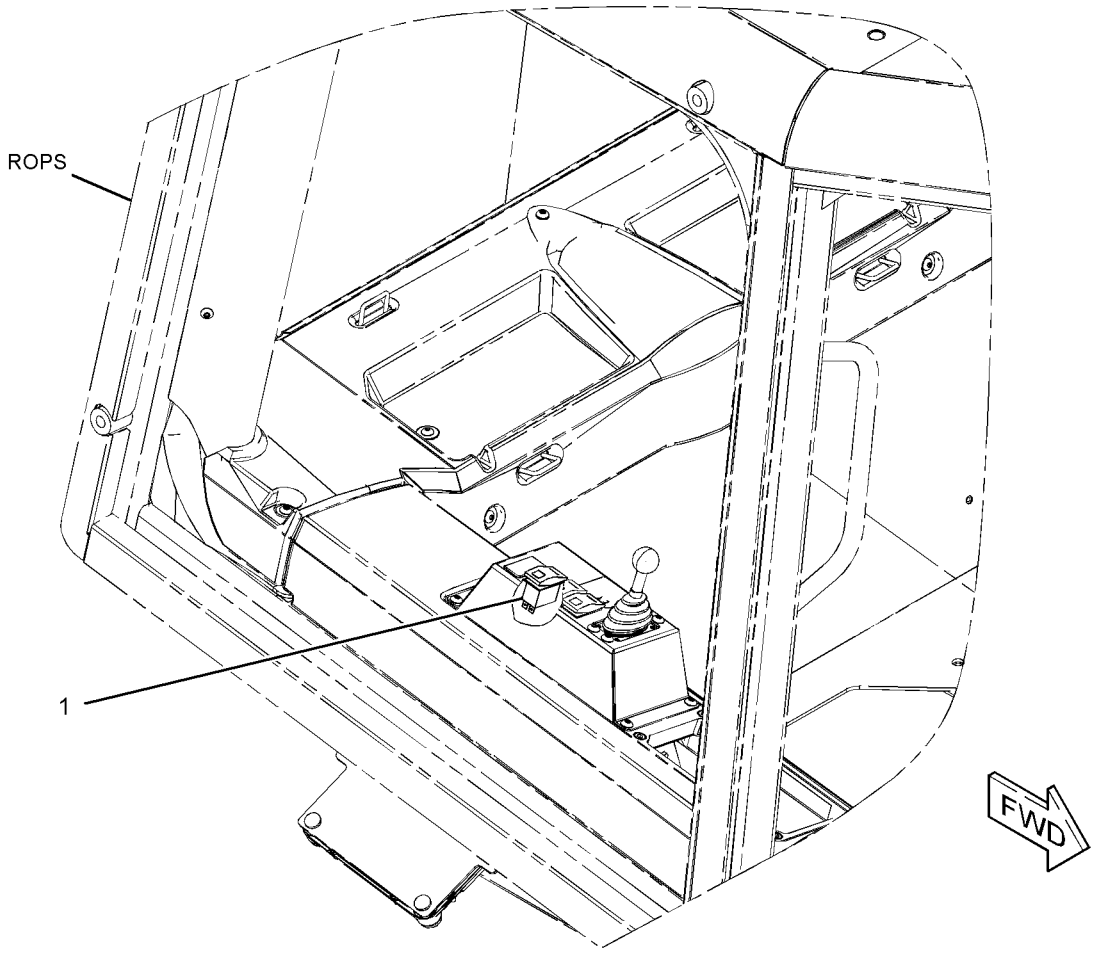

GRAPHIC #1 **<END>** g01617893

WORK TOOLS

318-6108 CONTROL GP-WINCH

S/N: JTD1-UP; FFF1-UP; LLL1-UP
PART OF 325-6516, 325-6519, 325-6520 DRIVE AR-WINCH
AN ATTACHMENT

SMCS-5161, 5170 **i04415555**

NOTE	REF NO	GRAPHIC REF	PART NUMBER	QTY	PART NAME 1 2 3 4 5 6 (PRODUCT LEVEL)	SEE PAGE
	1	1	**6I-1418**	4	SPACER (8.2X12.7X28.7-MM THK)	
	2	1	**7K-1181**	28	STRAP-CABLE	
	3	1	**9N-0869**	4	WASHER-HARD (8.8X25.5X2-MM THK)	
	4	1	**155-0576**	8	MOUNT-ISOLATION	
	5	1	**165-0311**	2	PLUG	
	6	1	**178-7539**	1	RECEPTACLE AS (POWER SUPPLY)	
M	7	1	**191-7503**	1	BOLT (M12X1.75X16-MM)	
	8	1	**266-9006**	1	FILM-INSTRUCTION (WINCH CONTROL)	
	9	1	**269-7666**	1	PLATE AS	
	10	1	**269-7677**	1	PLATE	
Y	11	1	**307-4673**	1	CONTROL GP-HANDLE (WINCH)	699
	12	1	**329-2576**	1	CONTROL GP-UNPROGRAMMED (WINCH)	
	13	1	**311-0296**	1	BRACKET	
	14	1	**318-6124**	1	HARNESS AS-PUMP (WINCH)	
B		1	**268-4412**		TAPE-INSULATOR	
		1	**269-7667**	1	HARNESS AS-PUMP (WINCH)	
		1	**9X-3401**	10	PIN-CONNECTOR (16-GA TO 18-GA)	
		1	**155-2270**	2	KIT-CONNECTING PLUG (2-PIN)	
					(EACH INCLUDES PLUG AS, WEDGE & INTERFACE SEAL)	
		1	**8T-8737**	1	PLUG-SEAL	
		1	**102-8803**	1	KIT-RECEPTACLE (3-PIN)	
		1	**102-8806**	1	KIT-RECEPTACLE (8-PIN)	
					(EACH RECEPTACLE KIT INCLUDES RECEPTACLE AS & WEDGE)	
		1	**9X-3402**	4	SOCKET-CONNECTOR (16-GA TO 18-GA)	
	15	1	**318-6125**	1	HARNESS AS-WORK TOOL (WINCH)	
B		1	**268-4412**		TAPE-INSULATOR	
		1	**249-9065**	1	HARNESS AS-WORK TOOL (WINCH)	
		1	**9X-3401**	6	PIN-CONNECTOR (16-GA TO 18-GA)	
		1	**155-2270**	3	KIT-CONNECTING PLUG (2-PIN)	
					(EACH INCLUDES PLUG AS, WEDGE & INTERFACE SEAL)	
		1	**8T-8737**	6	PLUG-SEAL	
		1	**102-8802**	3	KIT-RECEPTACLE (2-PIN)	
		1	**102-8805**	1	KIT-RECEPTACLE (6-PIN)	
					(EACH RECEPTACLE KIT INCLUDES RECEPTACLE AS & WEDGE)	
		1	**9X-3402**	6	SOCKET-CONNECTOR (16-GA TO 18-GA)	
	16	1	**318-6127**	1	WIRE AS	
	17	1	**327-6134**	1	HARNESS AS-CONTROL (WINCH)	
B		1	**268-4412**		TAPE-INSULATOR	
		1	**311-0302**	1	HARNESS AS-CONTROL (WINCH)	
		1	**126-1766**	24	SOCKET-CONNECTOR (14-GA TO 18-GA)	
		1	**126-1774**	1	COVER-CONNECTOR	
		1	**186-3735**	3	PIN-CONNECTOR (16-GA TO 18-GA)	
		1	**9W-0852**	1	PIN-CONNECTOR (14-GA TO 16-GA)	
		1	**155-2265**	1	KIT-CONNECTING PLUG (8-PIN)	
		1	**155-2270**	2	KIT-CONNECTING PLUG (2-PIN)	
		1	**155-2274**	1	KIT-CONNECTING PLUG (6-PIN)	
					(EACH PLUG KIT INCLUDES PLUG AS, WEDGE & INTERFACE SEAL)	
		1	**160-7689**	1	PLUG AS-CONNECTOR (70-PIN)	
		1	**159-9322**	1	SEAL-O-RING	
		1	**8T-8737**	61	PLUG-SEAL	
		1	**102-8802**	2	KIT-RECEPTACLE (2-PIN)	

318-6108 **CONTROL GP-WINCH** *(contd.)* **i04415555**

NOTE	REF NO	GRAPHIC REF	PART NUMBER	QTY	PART NAME 1 2 3 4 5 6 (PRODUCT LEVEL)	SEE PAGE
		1	**102-8805**	1	KIT-RECEPTACLE (6-PIN)	
		1	**102-8806**	1	KIT-RECEPTACLE (8-PIN)	
					(EACH RECEPTACLE KIT INCLUDES RECEPTACLE AS & WEDGE)	
		1	**186-3736**	1	SOCKET-CONNECTOR (16-GA TO 18-GA)	
		1	**9W-0844**	1	SOCKET-CONNECTOR (14-GA TO 16-GA)	
		1	**180-9340**	15	SOCKET-CONNECTOR (14-GA TO 18-GA)	
		1	**8L-8413**	2	STRAP-CABLE (WHITE)	
E		1	**119-3662**		TUBE-HEAT SHRINK (10.85-MM DIA) (7-CM)	
E		1	**125-7874**		TUBE-HEAT SHRINK (5.72-MM DIA) (5-CM)	
Y	18	1	**214-6863**	1	SENSOR GP-PRESSURE (WINCH)	217
	19	1	**249-9037**	1	SWITCH AS-ROCKER (12-VOLT) (WINCH FREESPOOL)	
	20	1	**249-9047**	1	SWITCH AS-ROCKER (12-VOLT) (WINCH BRAKE)	
					(EACH SWITCH AS INCLUDES)	
		1	**111-7899**	1	GASKET	
	21	1	**3J-1907**	1	SEAL-O-RING	
	22	1	**3J-7354**	1	SEAL-O-RING	
	23	1	**3S-2093**	14	STRAP-CABLE	
M	24	1	**5C-7261**	4	NUT (M8X1.25-THD)	
	25	1	**8T-2353**	1	ADAPTER	
M	26	1	**8T-4138**	2	BOLT (M6X1X20-MM)	
	27	1	**8T-4223**	1	WASHER-HARD (13.5X25.5X3-MM THK)	
M	28	1	**9X-2045**	8	SCREW-TRUSS HEAD (M6X1X20-MM)	
	29	1	**9X-8256**	2	WASHER (6.6X12X2-MM THK)	
E	30	1	**324-9707**		INSULATION (5-CM)	
E	30A	1	**324-9707**		INSULATION (9-CM)	
E	30B	1	**324-9707**		INSULATION (12-CM EACH)	
E	31	1	**2Q-0604**		INSULATION (9-CM EACH)	

B-USE AS REQUIRED
E-ORDER BY THE CENTIMETER
M-METRIC PART
Y-SEPARATE ILLUSTRATION

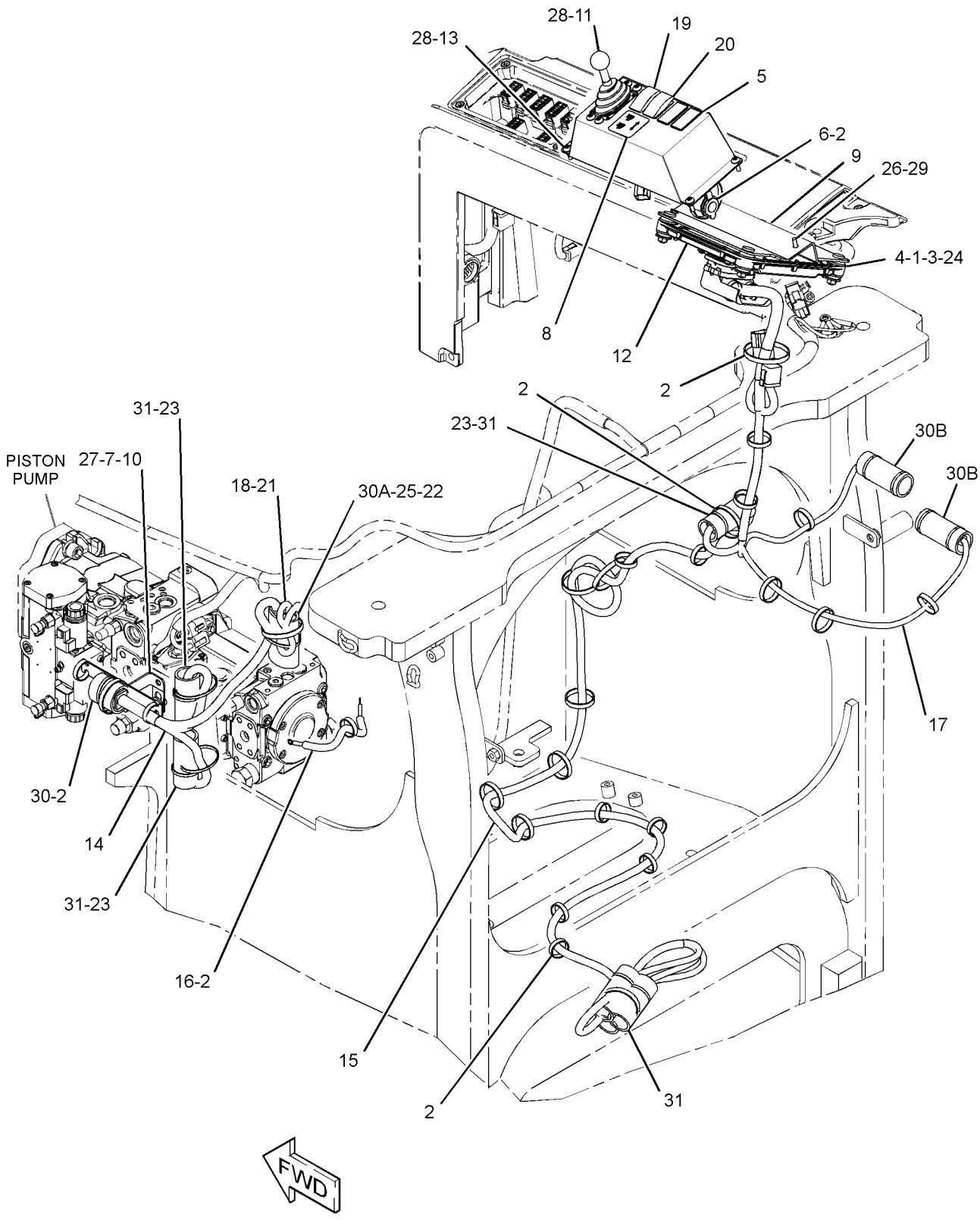

GRAPHIC #1 **<END>** g02306895

WORK TOOLS

318-6110 CONTROL GP-WINCH—4TH VALVE, FLOAT

S/N: JTD1-UP; FFF1-UP; LLL1-UP
PART OF 325-6525 HYDRAULIC AR
AN ATTACHMENT

SMCS-5161, 5170 **i03726465**

NOTE	REF NO	GRAPHIC REF	PART NUMBER	QTY	PART NAME 1 2 3 4 5 6 (PRODUCT LEVEL)	SEE PAGE
	1	1	**311-7069**	1	SWITCH AS-ROCKER (4TH VALVE, FLOAT)	
	2	1	**249-9022**	1	SWITCH AS-ROCKER (4TH VALVE)	
					(EACH SWITCH AS-ROCKER INCLUDES)	
		1	**111-7899**	1	GASKET	

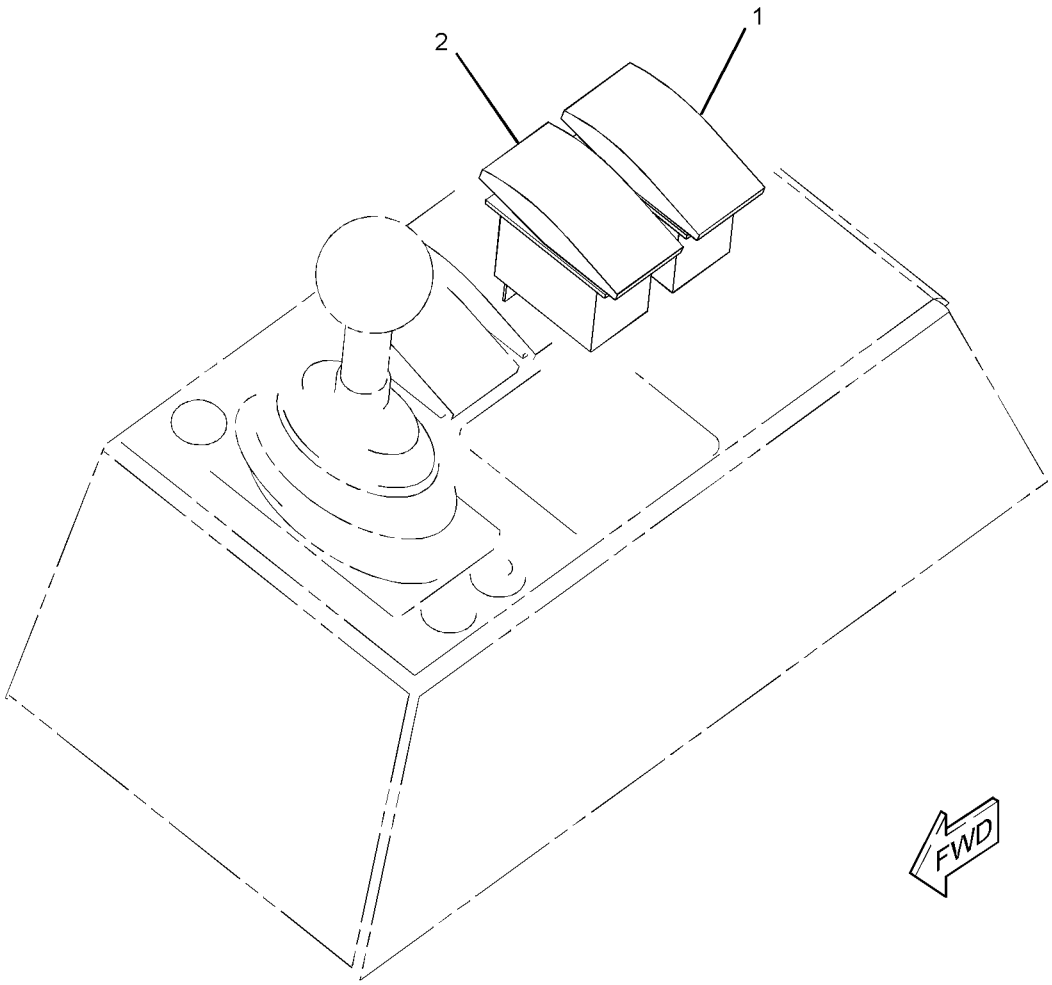

GRAPHIC #1 **<END>** g02017197

318-6112 CONTROL GP-WINCH—4TH & 5TH VALVE, FLOAT

S/N: JTD1-UP; FFF1-UP; LLL1-UP
PART OF 325-6521 HYDRAULIC AR
AN ATTACHMENT

SMCS-5161, 5170 **i04039324**

NOTE	REF NO	GRAPHIC REF	PART NUMBER	QTY	PART NAME 1 2 3 4 5 6 (PRODUCT LEVEL)	SEE PAGE
Y	1	1	**307-4673**	1	CONTROL GP-HANDLE (WINCH)	699
	2	1	**311-7069**	1	SWITCH AS-ROCKER (4TH VALVE, FLOAT)	
	2A	1	**311-7069**	1	SWITCH AS-ROCKER (5TH VALVE, FLOAT)	
					(EACH SWITCH AS-ROCKER INCLUDES)	
		1	**111-7899**	1	GASKET	
	3	1	**318-6101**	1	BRACKET	
	4	1	**318-6106**	1	HARNESS AS-VALVE	
		1	**155-2270**	2	KIT-CONNECTING PLUG (2-PIN)	
					(EACH INCLUDES PLUG AS, WEDGE & INTERFACE SEAL)	
		1	**9X-3402**	4	SOCKET-CONNECTOR (16-GA TO 18-GA)	
		1	**180-9340**	4	SOCKET-CONNECTOR (14-GA TO 18-GA)	
B		1	**268-4412**		TAPE-INSULATOR	
	5	1	**318-6123**	1	FILM-INSTRUCTION (AUXILIARY CONTROL VALVE)	
	6	1	**249-9022**	1	SWITCH AS-ROCKER (4TH VALVE, FLOAT)	
		1	**111-7899**	1	GASKET	
	7	1	**3S-2093**	4	STRAP-CABLE	
M	8	1	**9X-2045**	4	SCREW-TRUSS HEAD (M6X1X20-MM)	
E	9	1	**324-9707**		INSULATION (12-CM EACH)	

B-USE AS REQUIRED
E-ORDER BY THE CENTIMETER
M-METRIC PART
Y-SEPARATE ILLUSTRATION

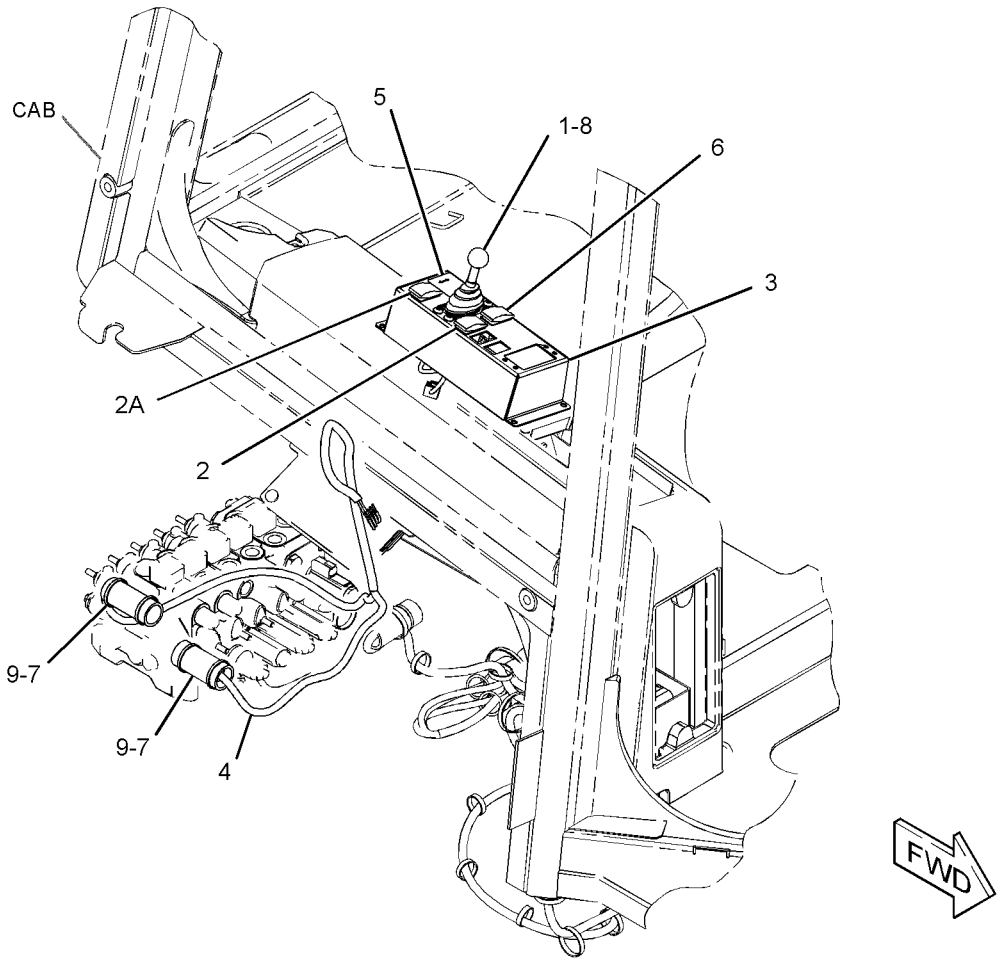

GRAPHIC #1 **<END>** g02492736

244-7454 DRIVE AR-WINCH—OROPS

S/N: JTD1-UP; FFF1-UP; LLL1-UP
HYDRAULIC WINCH
FOR USE WITH 244-7517—PAGE 911, REQUIRES ONE OF THE FOLLOWING SELECTIONS, 244-7476—PAGE 797, 272-9770—PAGE 798, 272-9780—PAGE 800. CANNOT BE USED WITH 264-4541—PAGE 532, 244-7433—PAGE 427, 244-7434—PAGE 386, 262-4407—PAGE 913 AN ATTACHMENT

SMCS-5165 **i02817262**

NOTE	PART NUMBER	QTY	PART NAME 1 2 3 4 5 6 (PRODUCT LEVEL)	SEE PAGE
Y	*244-7504*	1	CONTROL GP-WINCH	874
Y	*244-7411*	1	LINES GP-HYDROSTATIC	308
Y	*255-1150*	1	LINES GP-WINCH	595
Y	*281-3997*	1	MIRROR GP-REAR VIEW	786
Y	*217-2004*	1	MOUNTING GP-PUMP	907
Y	**254-1377**	1	PUMP GP-PISTON (HYDROSTATIC DRIVE)	359
Y	**254-1379**	1	PUMP GP-PISTON (WINCH)	490
Y	*274-7516*	1	SUPPORT GP-PUMP DRIVE	610
	311-0300	1	BATTERY GP	
	9X-3404	2	BATTERY (12-VOLT, MAINTENANCE FREE, WET)	

Y-SEPARATE ILLUSTRATION

<END>

292-0124 DRIVE AR-WINCH

S/N: JTD1-UP
CANNOT BE USED WITH 264-4541—PAGE 532, 244-7433—PAGE 427, 244-7434—PAGE 386, 262-4407—PAGE 913 AN ATTACHMENT

SMCS-5165 **i02856517**

NOTE	PART NUMBER	QTY	PART NAME 1 2 3 4 5 6 (PRODUCT LEVEL)	SEE PAGE
Y	*244-7504*	1	CONTROL GP-WINCH	874
Y	*286-8052*	1	LINES GP-HYDROSTATIC	310
Y	*255-1150*	1	LINES GP-WINCH	595
Y	*217-2004*	1	MOUNTING GP-PUMP	907
Y	**254-1377**	1	PUMP GP-PISTON (HYDROSTATIC DRIVE)	359
Y	**254-1379**	1	PUMP GP-PISTON (WINCH)	490
Y	*274-7516*	1	SUPPORT GP-PUMP DRIVE	610

Y-SEPARATE ILLUSTRATION

<END>

WORK TOOLS

300-8544 DRIVE AR-WINCH—HYDRAULIC

S/N: JTD1-UP

FOR USE WITH 244-7517—PAGE 911, 244-7476—PAGE 797, 272-9770—PAGE 798, 272-9780—PAGE 800. CANNOT BE USED WITH 264-4541—PAGE 532, 244-7433—PAGE 427, 244-7434—PAGE 386, 262-4407—PAGE 913

AN ATTACHMENT

SMCS-5165 **i02889020**

NOTE	PART NUMBER	QTY	PART NAME 1 2 3 4 5 6 (PRODUCT LEVEL)	SEE PAGE
Y	*244-7504*	1	CONTROL GP-WINCH	874
Y	*286-8052*	1	LINES GP-HYDROSTATIC	310
Y	*255-1150*	1	LINES GP-WINCH	595
Y	*281-3997*	1	MIRROR GP-REAR VIEW (LH)	786
Y	*217-2004*	1	MOUNTING GP-PUMP	907
Y	**254-1377**	1	PUMP GP-PISTON (HYDROSTATIC DRIVE)	359
Y	**254-1379**	1	PUMP GP-PISTON (WINCH)	490
Y	*274-7516*	1	SUPPORT GP-PUMP DRIVE	610
	311-0300	1	BATTERY GP	
	9X-3404	2	BATTERY (12-VOLT, MAINTENANCE FREE, WET)	

Y-SEPARATE ILLUSTRATION

<END>

325-6516 DRIVE AR-WINCH—FIRE PLOW

S/N: FFF1-UP; LLL1-UP

FOR USE WITH 244-7517—PAGE 911

AN ATTACHMENT

SMCS-5165 **i03734440**

NOTE	PART NUMBER	QTY	PART NAME 1 2 3 4 5 6 (PRODUCT LEVEL)	SEE PAGE
Y	*318-6108*	1	CONTROL GP-WINCH	885
Y	*244-7411*	1	LINES GP-HYDROSTATIC	308
Y	*325-7268*	1	LINES GP-WINCH	598
Y	*281-3997*	1	MIRROR GP-REAR VIEW	786
Y	*217-2004*	1	MOUNTING GP-PUMP	907
Y	**254-1377**	1	PUMP GP-PISTON (HYDROSTATIC DRIVE)	359
Y	**254-1379**	1	PUMP GP-PISTON (WINCH)	490
Y	*274-7516*	1	SUPPORT GP-PUMP DRIVE	610
	311-0300	1	BATTERY GP	
	9X-3404	2	BATTERY (12-VOLT, MAINTENANCE FREE, WET)	

Y-SEPARATE ILLUSTRATION

<END>

325-6519 DRIVE AR-WINCH—FIRE PLOW

S/N: JTD1-UP
FOR USE WITH 244-7517—PAGE 911
AN ATTACHMENT

SMCS-5165 **i03734540**

NOTE	PART NUMBER	QTY	PART NAME 1 2 3 4 5 6 (PRODUCT LEVEL)	SEE PAGE
Y	*318-6108*	1	CONTROL GP-WINCH	885
Y	*286-8052*	1	LINES GP-HYDROSTATIC	310
Y	*325-7268*	1	LINES GP-WINCH	598
Y	*281-3997*	1	MIRROR GP-REAR VIEW	786
Y	*217-2004*	1	MOUNTING GP-PUMP	907
Y	**254-1377**	1	PUMP GP-PISTON (HYDROSTATIC DRIVE)	359
Y	**254-1379**	1	PUMP GP-PISTON (WINCH)	490
Y	*274-7516*	1	SUPPORT GP-PUMP DRIVE	610
	311-0300	1	BATTERY GP	
	9X-3404	2	BATTERY (12-VOLT, MAINTENANCE FREE, WET)	

Y-SEPARATE ILLUSTRATION

<END>

325-6520 DRIVE AR-WINCH—FIRE PLOW

S/N: JTD1-UP
FOR USE WITH 244-7517—PAGE 911
AN ATTACHMENT

SMCS-5165 **i03734544**

NOTE	PART NUMBER	QTY	PART NAME 1 2 3 4 5 6 (PRODUCT LEVEL)	SEE PAGE
Y	*318-6108*	1	CONTROL GP-WINCH	885
Y	*286-8053*	1	LINES GP-HYDROSTATIC	312
Y	*325-7270*	1	LINES GP-WINCH	602
Y	*281-3997*	1	MIRROR GP-REAR VIEW	786
Y	*217-2004*	1	MOUNTING GP-PUMP	907
Y	**254-1379**	1	PUMP GP-PISTON (WINCH)	490
Y	**254-9099**	1	PUMP GP-PISTON (HYDROSTATIC DRIVE)	361
	311-0300	1	BATTERY GP	
	9X-3404	2	BATTERY (12-VOLT, MAINTENANCE FREE, WET)	

Y-SEPARATE ILLUSTRATION

<END>

WORK TOOLS

3G-3353 EDGE GP-BIT & CUTTING

S/N: JTD1-UP; FFF1-UP; LLL1-UP
PART OF 277-5647, 286-2936 BLADE GP-ANGLING
AN ATTACHMENT

SMCS-6801, 6804 **i04415559**

NOTE	REF NO	GRAPHIC REF	PART NUMBER	QTY	PART NAME 1 2 3 4 5 6 (PRODUCT LEVEL)	SEE PAGE
	1	1	**4T-6229**	2	BIT-END	
	2	1	**4T-6232**	2	EDGE-CUTTING	
	3	1	**3F-5108**	22	BOLT-PLOW (5/8-11X2.25-IN)	
	4	1	**4K-0367**	22	NUT-FULL (5/8-11-THD)	
	5	1	**5P-8247**	22	WASHER-HARD (17X32X3.5-MM THK)	

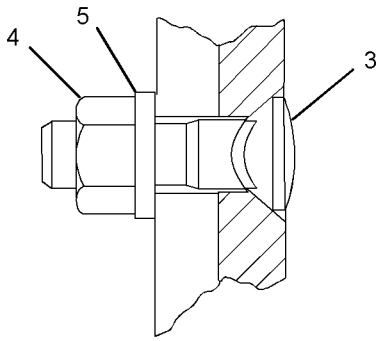

VIEW A-A

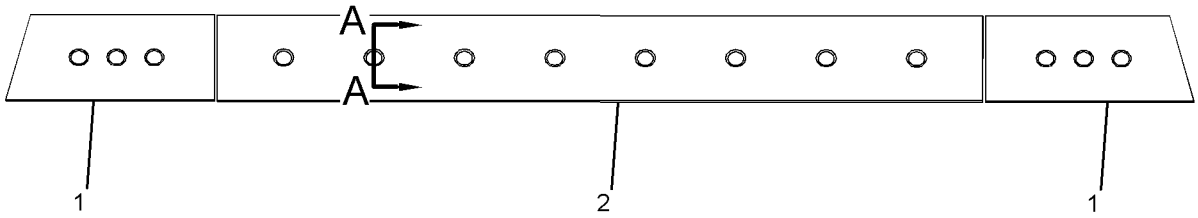

GRAPHIC #1 **<END>** g02623180

6Y-5838 EDGE GP-BIT & CUTTING

S/N: JTD1-UP; FFF1-UP; LLL1-UP
PART OF 255-1362, 255-1414, 255-2370, 255-2376 BLADE GP-ANGLING
AN ATTACHMENT

SMCS-6801, 6804 **i02826960**

NOTE	REF NO	GRAPHIC REF	PART NUMBER	QTY	PART NAME 1 2 3 4 5 6 (PRODUCT LEVEL)	SEE PAGE
	1	1	**6Y-5839**	1	BIT-END (RH) (RH)	
	2	1	**4T-6232**	2	EDGE-CUTTING	
	3	1	**3F-5108**	22	BOLT-PLOW (5/8-11X2.25-IN)	
	4	1	**5P-8247**	22	WASHER-HARD (17X32X3.5-MM THK)	
	5	1	**4K-0367**	22	NUT-FULL (5/8-11-THD)	
	6	1	**6Y-5840**	1	BIT-END (LH) (LH)	

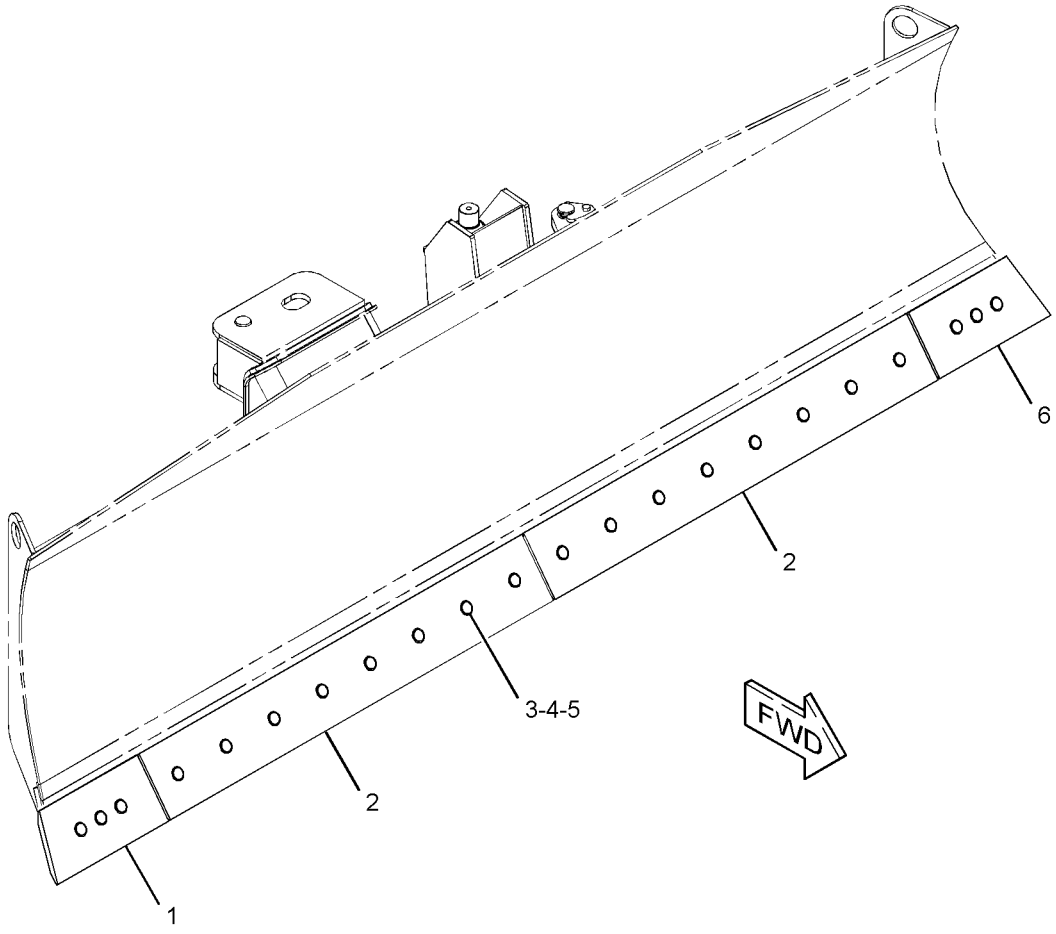

GRAPHIC #1 **<END>** g01410733

179-2897 EDGE GP-BIT & CUTTING

S/N: JTD1-UP; FFF1-UP; LLL1-UP
PART OF 255-1487, 255-2386, 312-8351, 312-8361 BLADE GP-ANGLING
AN ATTACHMENT

SMCS-6801, 6804 **i02826961**

NOTE	REF NO	GRAPHIC REF	PART NUMBER	QTY	PART NAME 1 2 3 4 5 6 (PRODUCT LEVEL)	SEE PAGE
	1	1	**6Y-5839**	1	BIT-END (RH) (RH)	
	2	1	**6Y-5840**	1	BIT-END (LH) (LH)	
	3	1	**3F-5108**	20	BOLT-PLOW (5/8-11X2.25-IN)	
	4	1	**157-7338**	2	EDGE-CUTTING	
	5	1	**4K-0367**	20	NUT-FULL (5/8-11-THD)	
	6	1	**5P-8247**	20	WASHER-HARD (17X32X3.5-MM THK)	

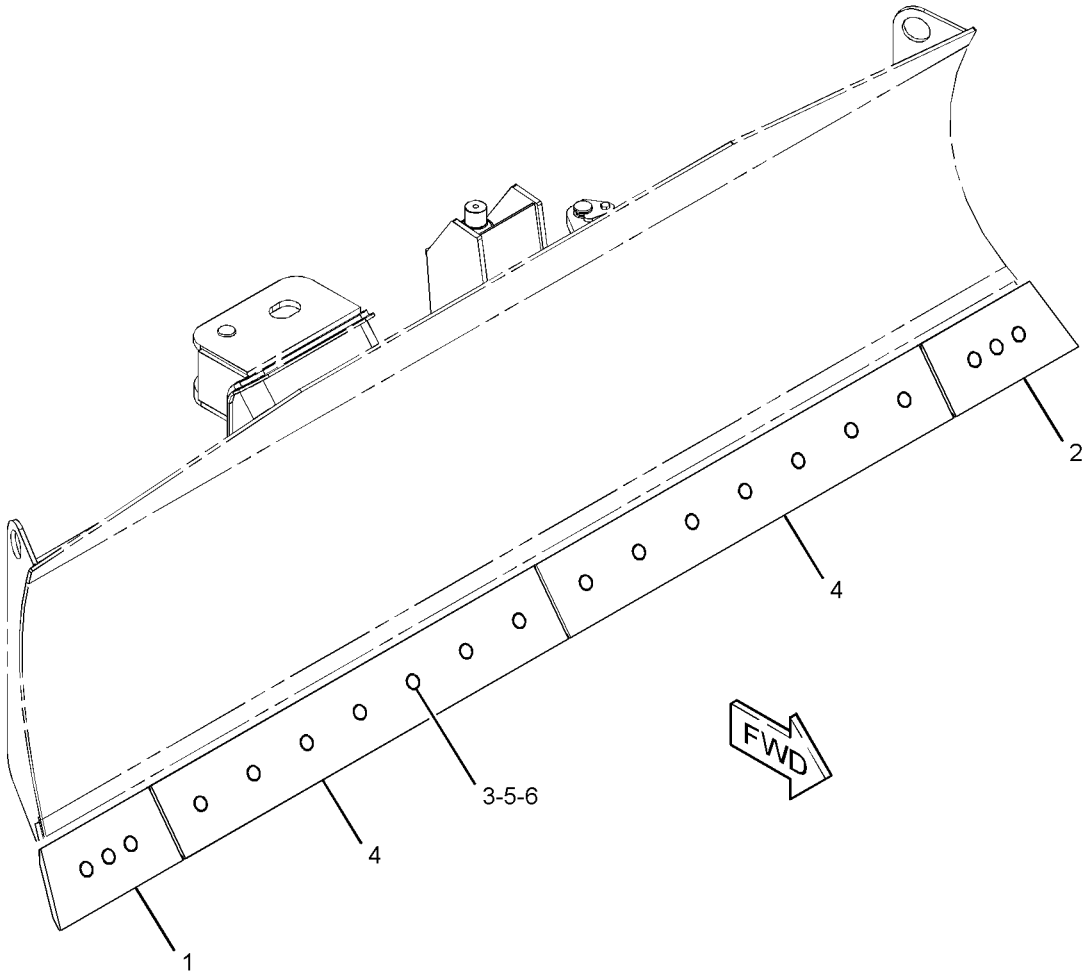

GRAPHIC #1 **<END>** g01410711

255-1426 EDGE GP-BIT & CUTTING—LEVEL CUT

S/N: JTD1-UP; FFF1-UP; LLL1-UP
PART OF 255-1395, 255-2373 BLADE GP-ANGLING
AN ATTACHMENT

SMCS-6801, 6804 **i02636077**

NOTE	PART NUMBER	QTY	PART NAME 1 2 3 4 5 6 (PRODUCT LEVEL)	SEE PAGE
	6Y-5839	1	BIT-END (RH) (RH)	
	6Y-5840	1	BIT-END (LH) (LH)	
	3F-5108	18	BOLT-PLOW (5/8-11X2.25-IN)	
	140-6836	2	EDGE-CUTTING	
	4K-0367	18	NUT-FULL (5/8-11-THD)	
	5P-8247	18	WASHER-HARD (17X32X3.5-MM THK)	

<END>

255-1428 EDGE GP-BIT & CUTTING—LEVEL CUT

S/N: JTD1-UP; FFF1-UP; LLL1-UP
PART OF 255-1427, 255-2379 BLADE GP-ANGLING
AN ATTACHMENT

SMCS-6801, 6804 **i02638119**

NOTE	PART NUMBER	QTY	PART NAME 1 2 3 4 5 6 (PRODUCT LEVEL)	SEE PAGE
	6Y-5839	1	BIT-END (RH) (RH)	
	6Y-5840	1	BIT-END (LH) (LH)	
	3F-5108	18	BOLT-PLOW (5/8-11X2.25-IN)	
	255-1429	2	EDGE-CUTTING	
	4K-0367	18	NUT-FULL (5/8-11-THD)	
	5P-8247	18	WASHER-HARD (17X32X3.5-MM THK)	

<END>

255-1472 EDGE GP-BIT & CUTTING—LEVEL CUT

S/N: JTD1-UP; FFF1-UP; LLL1-UP
PART OF 255-1471, 255-2383 BLADE GP-ANGLING
AN ATTACHMENT

SMCS-6801, 6804 **i02638912**

NOTE	PART NUMBER	QTY	PART NAME 1 2 3 4 5 6 (PRODUCT LEVEL)	SEE PAGE
	6Y-5839	1	BIT-END (RH) (RH)	
	6Y-5840	1	BIT-END (LH) (LH)	
	3F-5108	22	BOLT-PLOW (5/8-11X2.25-IN)	
	255-1474	2	EDGE-CUTTING	
	4K-0367	22	NUT-FULL (5/8-11-THD)	
	5P-8247	22	WASHER-HARD (17X32X3.5-MM THK)	

<END>

WORK TOOLS

255-1501 EDGE GP-BIT & CUTTING

S/N: JTD1-UP; FFF1-UP; LLL1-UP
PART OF 255-1503, 255-2391, 255-2394 BLADE GP-ANGLING
AN ATTACHMENT

SMCS-6801, 6804 **i03918442**

NOTE	REF NO	GRAPHIC REF	PART NUMBER	QTY	PART NAME 1 2 3 4 5 6 (PRODUCT LEVEL)	SEE PAGE
	1	1	**8E-7078**	1	BIT-END (LH)	
	2	1	**8E-7079**	1	BIT-END (RH)	
	3	1	**331-0162**	2	EDGE-CUTTING	
	4	1	**2J-3506**	20	NUT-FULL (3/4-10-THD)	
	5	1	**5J-4771**	20	BOLT-PLOW (3/4-10X2.75-IN)	
	6	1	**5P-8248**	20	WASHER-HARD (20X36.5X3.5-MM THK)	

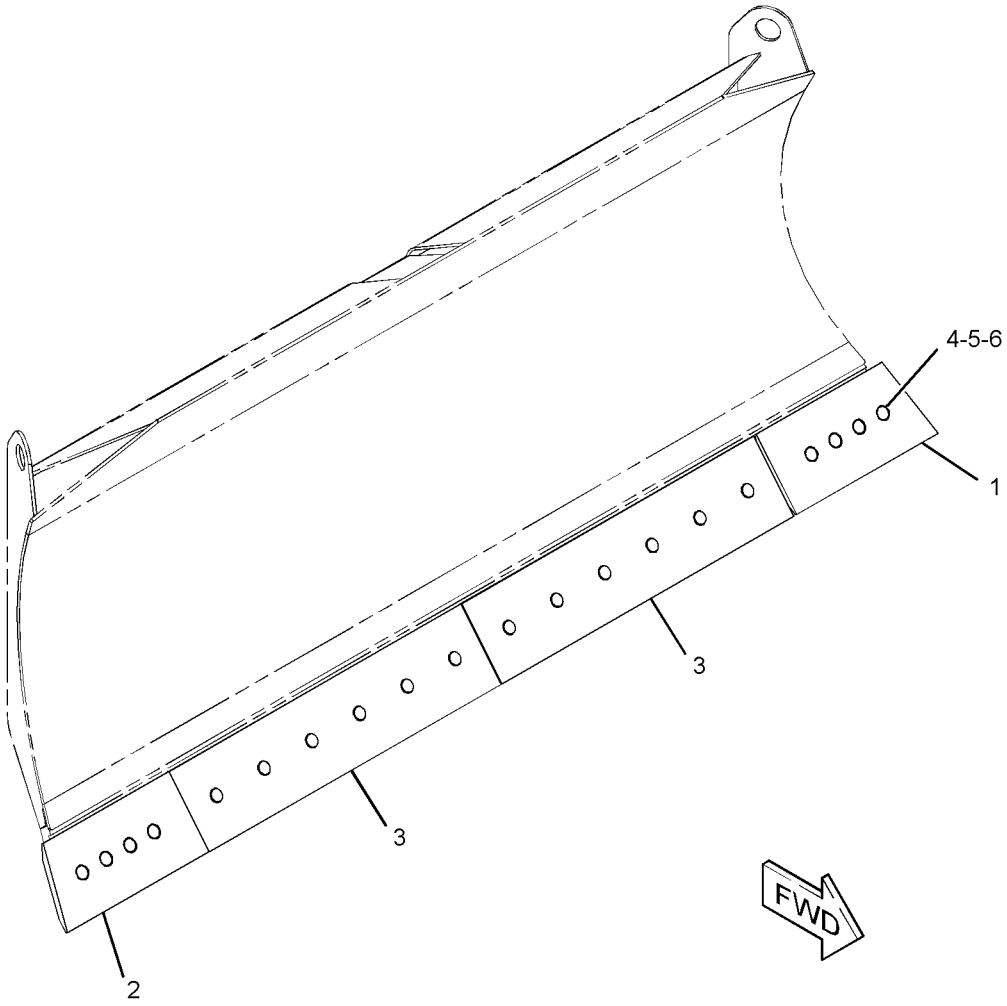

GRAPHIC #1 **<END>** g02360921

WORK TOOLS

255-1505 EDGE-CUTTING

S/N: JTD1-UP; FFF1-UP; LLL1-UP

AN ATTACHMENT

SMCS-6801 **i02688955**

NOTE	PART NUMBER	QTY	PART NAME 1 2 3 4 5 6 (PRODUCT LEVEL)	SEE PAGE
			(NO SERVICED PARTS)	

<END>

201-2744 FILTER GP-OIL—HYDRAULIC

S/N: JTD1-UP; FFF1-UP; LLL1-UP
PART OF 255-1150, 325-7268, 325-7270 LINES GP-WINCH
AN ATTACHMENT

SMCS-5068, 5177 **i03577307**

NOTE	REF NO	GRAPHIC REF	PART NUMBER	QTY	PART NAME 1 2 3 4 5 6 (PRODUCT LEVEL)	SEE PAGE
	1	1	**6V-0852**	1	CAP-DUST	
	2	1	**6V-3965**	1	FITTING (QUICK DISCONNECT)	
	3	1	**134-0404**	1	SWITCH AS-PRESSURE (HYDRAULIC OIL FILTER)	
	4	1	**144-6691**	1	FILTER-OIL (ADVANCED EFFICIENCY)	
	5	1	**3J-1907**	2	SEAL-O-RING	

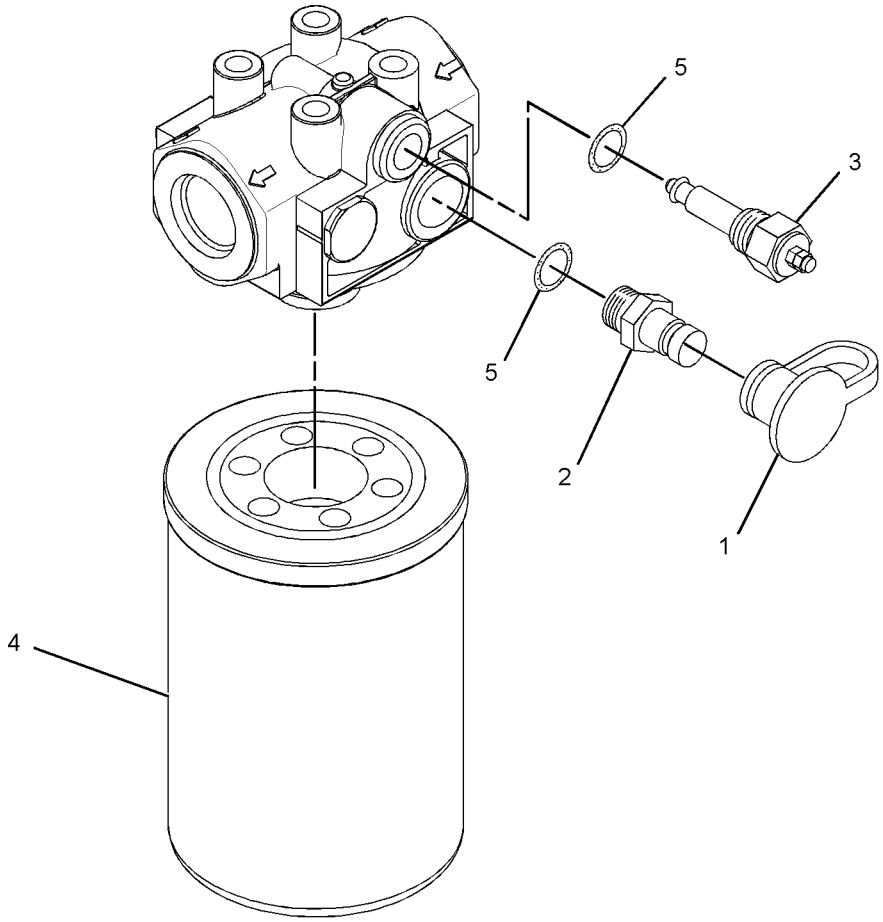

GRAPHIC #1 **<END>** g01910473

WORK TOOLS

208-5551 GEAR GP-WINCH

S/N: JAG1-UP
PART OF 256-3738 WINCH AR
AN ATTACHMENT

SMCS-5165 **i03577309**

NOTE	REF NO	GRAPHIC REF	PART NUMBER	QTY	PART NAME 1 2 3 4 5 6 (PRODUCT LEVEL)	SEE PAGE
	1	1	**5S-6174**	3	BEARING	
	2	1	**119-1616**	1	RING	
	3	1	**119-2195**	1	RING	
	4	1	**123-4410**	2	SPACER (2X2.75X0.125-IN THK) (3.18MM THK)	
	5	1	**129-7301**	1	SEAL-O-RING	
	6	1	**161-6424**	1	GEAR	
	7	1	**161-6425**	1	GEAR	
	8	1	**161-6427**	1	GEAR	
	9	1	**161-8041**	1	WASHER (100.5X125X3.5-MM THK)	
	10	1	**162-0178**	2	BALL BEARING	
	11	1	**162-0179**	1	RING	
	12	1	**162-2772**	1	RING	
	13	1	**172-2437**	1	BEARING AS-NEEDLE	
	14	1	**203-6639**	1	SHAFT-GEAR	
	15	1	**1M-7914**	1	RING-RETAINING	
	16	1	**4L-9337**	2	BOLT (3/8-16X1.5-IN)	
	17	1	**8T-4896**	2	WASHER-HARD (10.2X18.5X2.5-MM THK)	

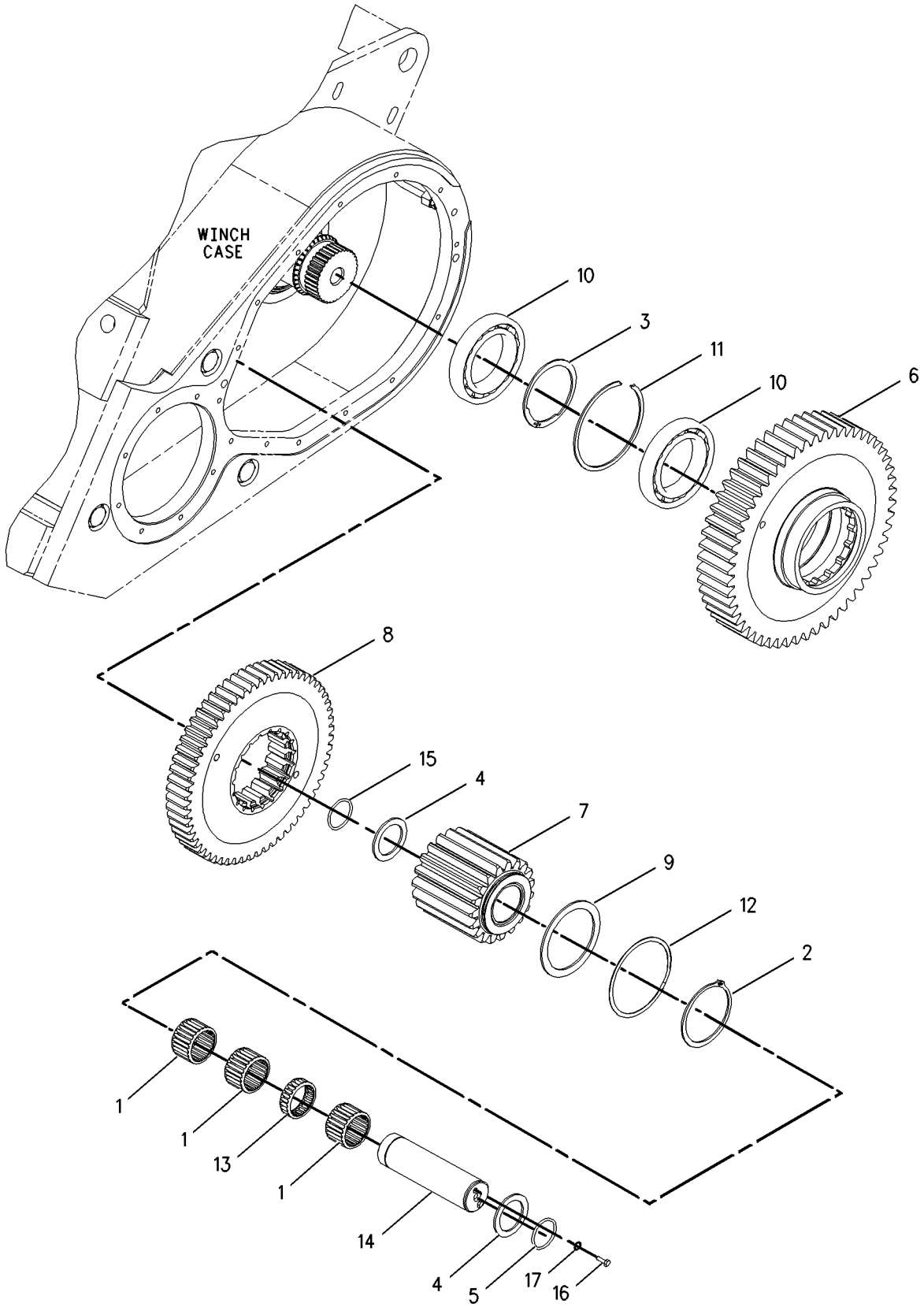

GRAPHIC #1 **<END>** g00826409

211-8171 GEAR GP-WINCH TRANSFER

S/N: JAG1-UP

PART OF 309-5091 BRAKE & PLANETARY GP-WINCH

AN ATTACHMENT

SMCS-5165 **i01921731**

NOTE	REF NO	GRAPHIC REF	PART NUMBER	QTY	PART NAME 1 2 3 4 5 6 (PRODUCT LEVEL)	SEE PAGE
	1	1	**1F-2771**	1	BALL BEARING	
	2	1	**1S-3743**	1	BALL BEARING	
	3	1	**203-6632**	1	CARRIER-BEARING	
	4	1	**203-6633**	1	GEAR-PINION (16-TEETH)	
	5	1	**9F-1399**	1	SEAL-O-RING	

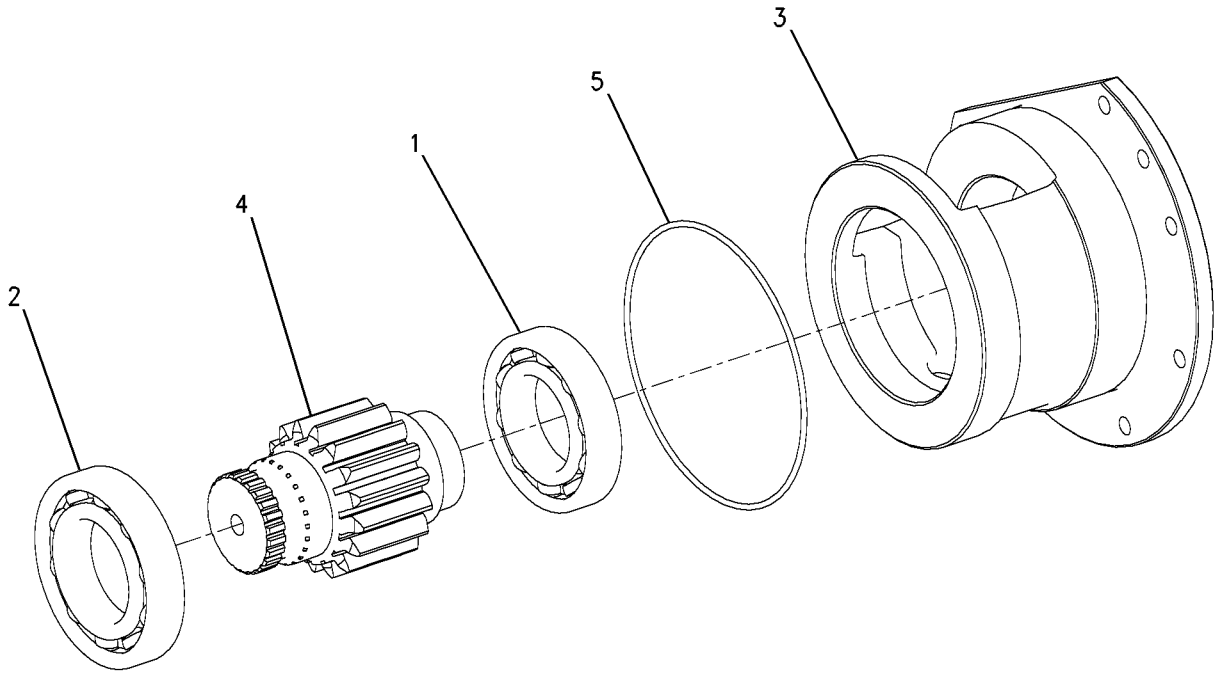

GRAPHIC #1 **<END>** g00833216

WORK TOOLS

208-5549 MOTOR & MTG GP-WINCH

S/N: JAG1-UP
PART OF 256-3738 WINCH AR
AN ATTACHMENT

SMCS-5058, 5163 **i03603601**

NOTE	REF NO	GRAPHIC REF	PART NUMBER	QTY	PART NAME 1 2 3 4 5 6 (PRODUCT LEVEL)	SEE PAGE
Y	1	1	**200-1729**	1	MOTOR GP-PISTON (WINCH)	608
	2	1	**3D-2824**	1	SEAL-O-RING	
	3	1	**3H-8430**	1	SETSCREW (3/8-16X0.75-IN)	
	4	1	**4S-5898**	1	SEAL-O-RING	
	5	1	**6V-8637**	1	CONNECTOR	
	6	1	**6V-9746**	1	SEAL-O-RING	
	7	1	**8T-4223**	4	WASHER-HARD (13.5X25.5X3-MM THK)	
	8	1	**8T-8919**	4	BOLT (1/2-13X1.75-IN)	

Y-SEPARATE ILLUSTRATION

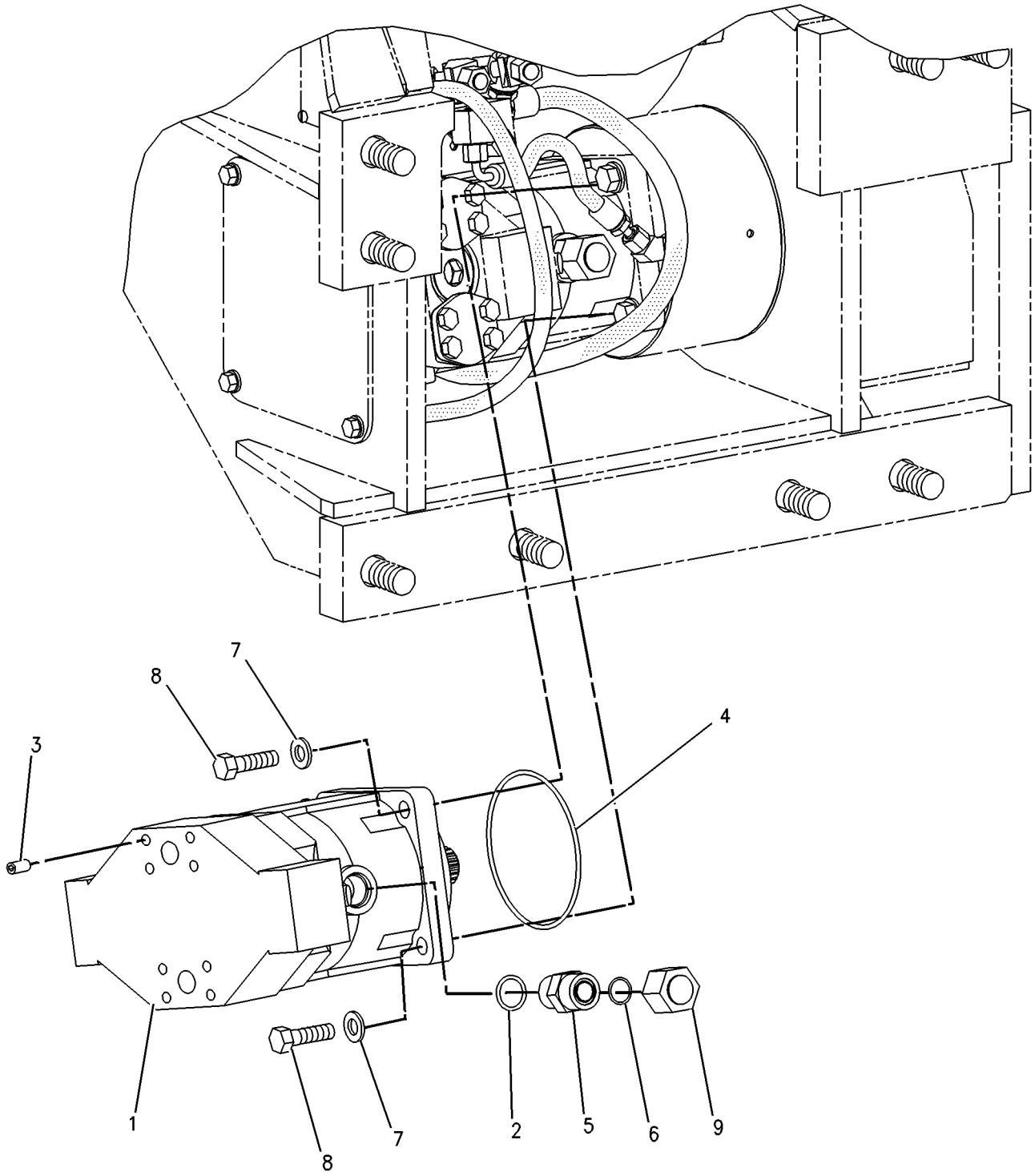

GRAPHIC #1 **<END>** g00833026

292-0302 MOUNTING GP-MAST—LASER RECEIVER

S/N: JTD1-UP; FFF1-UP; LLL1-UP

PART OF 317-6527 GRADE CONTROL AR, 292-0293, 292-0312 GRADE CONTROL AR-LASER

SMCS-79NS **i02622638**

NOTE	PART NUMBER	QTY	PART NAME 1 2 3 4 5 6 (PRODUCT LEVEL)	SEE PAGE
M	**8T-4648**	4	BOLT (M12X1.75X70-MM)	
	237-7552	3	FILM-WARNING (LASER TRANSMITTER)	
	252-8744	1	FILM-WARNING (BLADE, DO NOT CLIMB, READ OMM)	
M	**8T-4244**	4	NUT (M12X1.75-THD)	
	8T-4223	8	WASHER-HARD (13.5X25.5X3-MM THK)	

M-METRIC PART

<END>

292-0303 MOUNTING GP-MAST—SATELLITE RECEIVER

S/N: JTD1-UP; FFF1-UP; LLL1-UP

PART OF 290-5571, 292-0280, 347-0915, 347-0916 GRADE CONTROL AR-SATELLITE, 292-0290 MAST GP

SMCS-79NS **i03128391**

NOTE	PART NUMBER	QTY	PART NAME 1 2 3 4 5 6 (PRODUCT LEVEL)	SEE PAGE
M	**8T-4648**	4	BOLT (M12X1.75X70-MM)	
	252-8744	1	FILM-WARNING (BLADE, DO NOT CLIMB, READ OMM)	
M	**8T-4244**	4	NUT (M12X1.75-THD)	
	8T-4223	8	WASHER-HARD (13.5X25.5X3-MM THK)	

M-METRIC PART

<END>

217-2004 MOUNTING GP-PUMP

S/N: JTD1-UP; FFF1-UP; LLL1-UP

PART OF 244-7454, 292-0124, 300-8544, 325-6516, 325-6519, 325-6520 DRIVE AR-WINCH AN ATTACHMENT

SMCS-5084 **i01937074**

NOTE	REF NO	GRAPHIC REF	PART NUMBER	QTY	PART NAME 1 2 3 4 5 6 (PRODUCT LEVEL)	SEE PAGE
	1	1	**3E-4356**	2	WASHER-HARD (17.5X30X6-MM THK)	
	2	1	**7J-6285**	1	SEAL-O-RING	
M	3	1	**8T-7338**	2	BOLT (M16X2X45-MM)	

M-METRIC PART

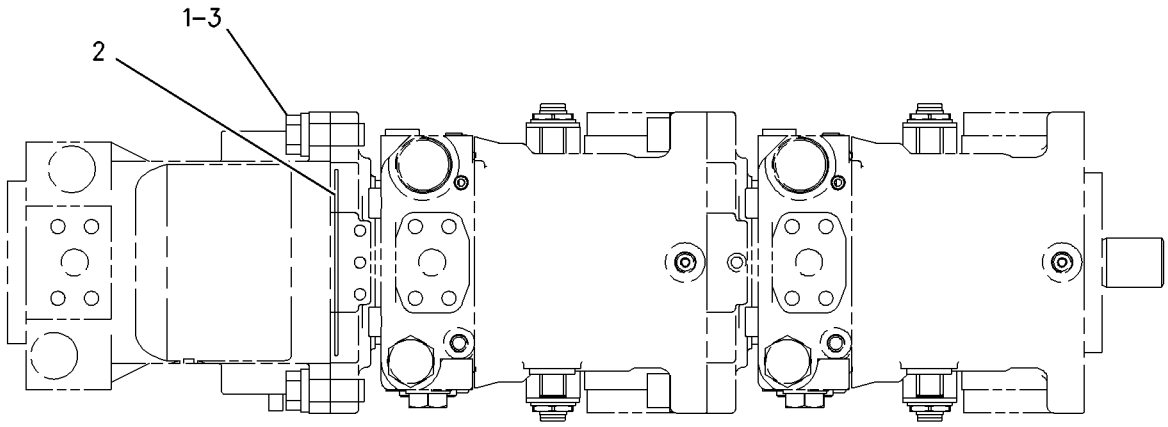

GRAPHIC #1 **<END>** g00876400

WORK TOOLS

258-4961 MOUNTING GP-RIPPER

S/N: JMJ1-UP
PART OF 262-4407 RIPPER AR
AN ATTACHMENT

SMCS-6165, 6310, 6324 **i02818569**

NOTE	REF NO	GRAPHIC REF	PART NUMBER	QTY	PART NAME 1 2 3 4 5 6 (PRODUCT LEVEL)	SEE PAGE
	1	1	**7P-2358**	2	PIN	
	2	1	**170-6631**	4	BAR	
	3	1	**188-3538**	4	PIN	
	4	1	**254-8859**	1	PLATE AS	
	5	1	**258-4962**	1	PLATE AS	
	6	1	**258-4971**	1	PLATE	
	7	1	**198-4782**	14	WASHER-HARD (26X47X12-MM THK)	
	8	1	**5P-1076**	2	WASHER-HARD (13.5X30X4-MM THK)	
M	9	1	**6V-7687**	2	LOCKNUT (M12X1.75-THD)	
M	10	1	**7X-2550**	2	BOLT (M12X1.75X110-MM)	
M	11	1	**7X-2577**	14	BOLT (M24X3X90-MM)	
	12	1	**8T-4121**	4	WASHER-HARD (11X21X2.5-MM THK)	
M	13	1	**8T-4136**	4	BOLT (M10X1.5X25-MM)	
M	14	1	**8T-4139**	2	BOLT (M12X1.75X30-MM)	
M	15	1	**8T-4192**	8	BOLT (M12X1.75X25-MM)	
	16	1	**8T-4223**	8	WASHER-HARD (13.5X25.5X3-MM THK)	
	17	1	**5P-8837**	1	LOCK PIN	
	18	1	**161-9570**	1	PIN	

M-METRIC PART

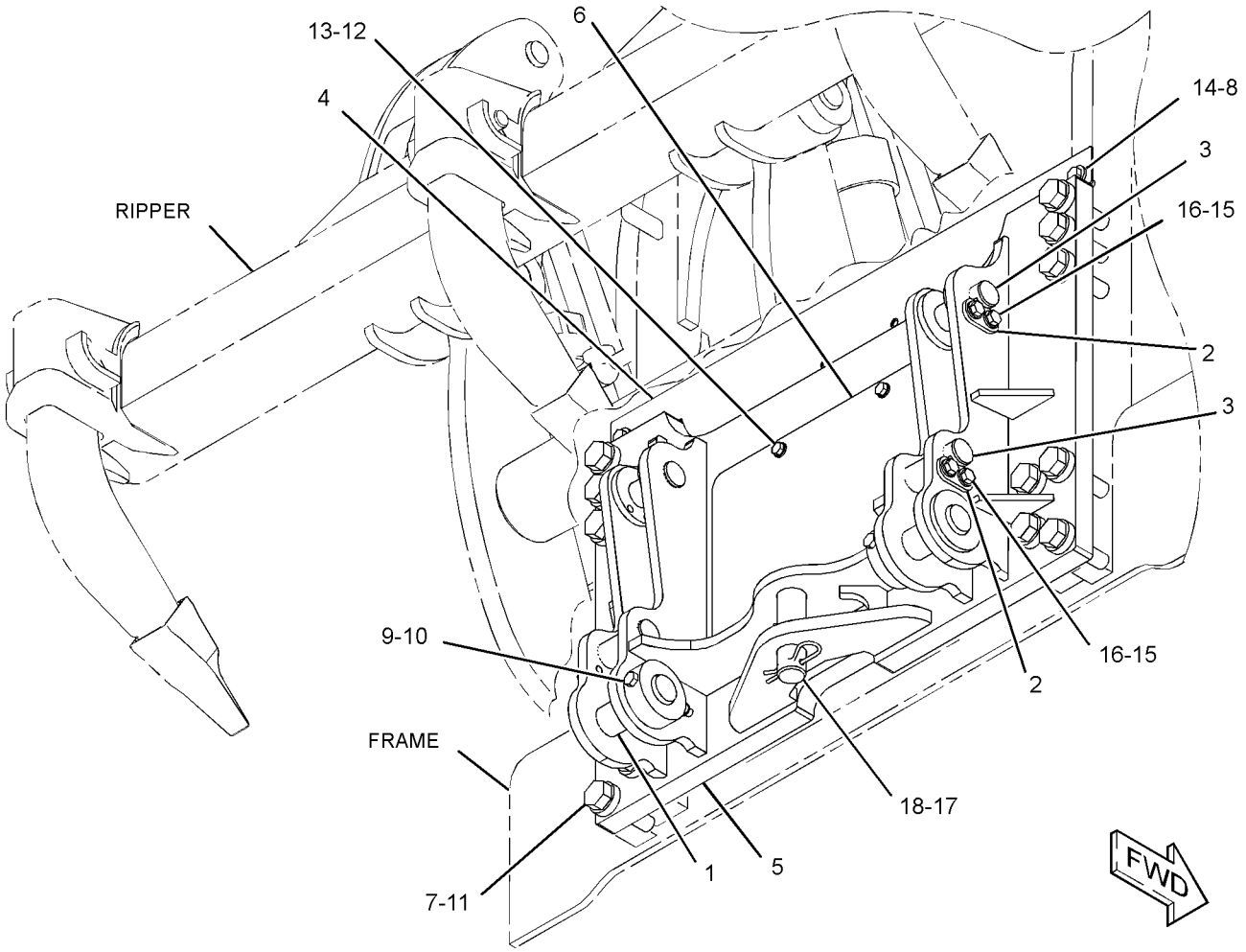

GRAPHIC #1 **<END>** g01408632

208-5553 MOUNTING GP-WINCH

S/N: JAG1-UP
PART OF 256-3738 WINCH AR
AN ATTACHMENT

SMCS-5163 **i01923450**

NOTE	REF NO	GRAPHIC REF	PART NUMBER	QTY	PART NAME 1 2 3 4 5 6 (PRODUCT LEVEL)	SEE PAGE
	1	1	**3B-4641**	2	PIN-COTTER	
	2	1	**138-2456**	1	PLATE	
	3	1	**212-4757**	1	PIN-DRAWBAR	
	4	1	**7H-4543**	4	SCREW-TAPPING (10-16X0.375-IN)	
	5	1	**8T-4167**	8	WASHER-HARD (26X44X4-MM THK)	
M	6	1	**8T-5878**	8	BOLT (M24X3X80-MM)	

M-METRIC PART

208-5553 **MOUNTING GP-WINCH** *(contd.)* **i01923450**

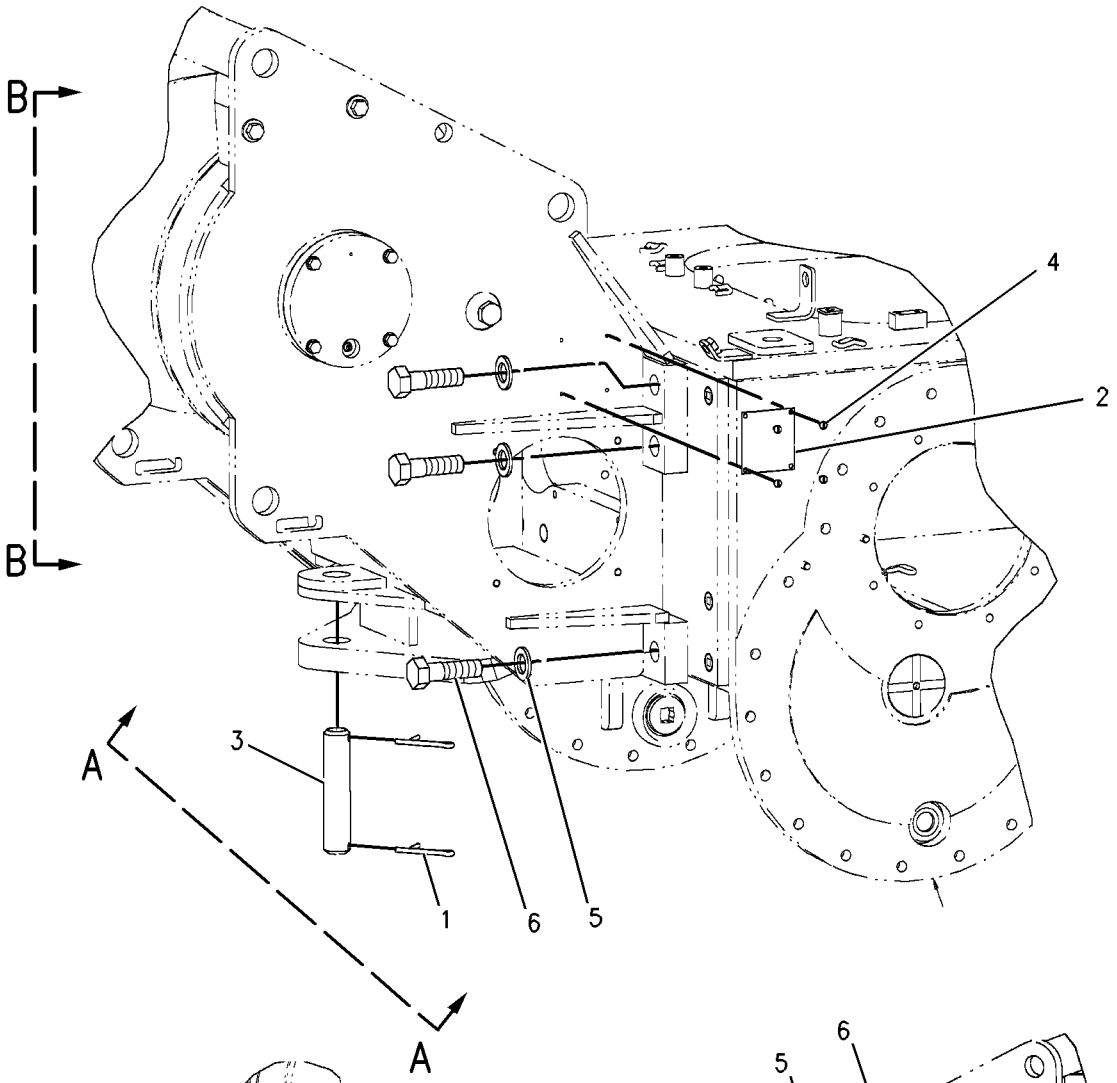

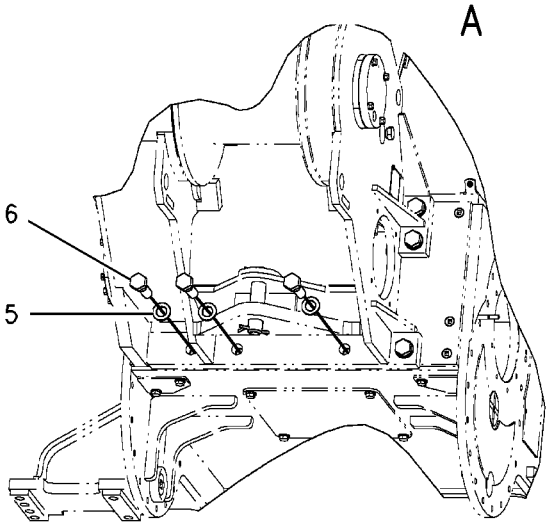

VIEW A-A

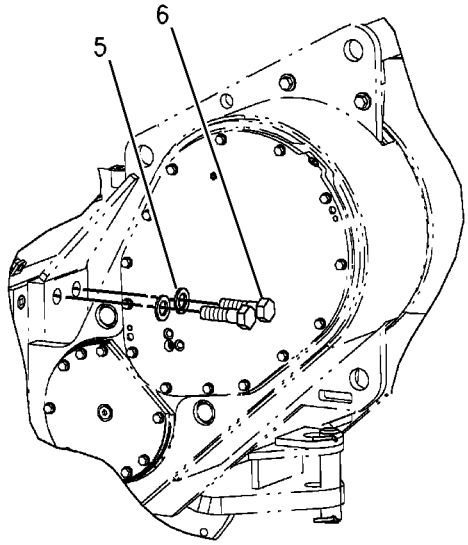

VIEW B-B

GRAPHIC #1 **<END>** g00833294

244-7517 MOUNTING GP-WINCH

S/N: JTD1-UP; FFF1-UP; LLL1-UP

CANNOT BE USED WITH 244-7433—PAGE 427, 244-7434—PAGE 386, 262-4407—PAGE 913 AN ATTACHMENT

SMCS-5163 **i02710524**

NOTE	REF NO	GRAPHIC REF	PART NUMBER	QTY	PART NAME 1 2 3 4 5 6 (PRODUCT LEVEL)	SEE PAGE
	1	1	**198-0918**	8	PLUG	
	2	1	**244-7518**	1	PLATE AS	
	4	1	**254-8859**	1	PLATE AS	
	5	1	**198-4782**	14	WASHER-HARD (26X47X12-MM THK)	
	6	1	**5P-1076**	2	WASHER-HARD (13.5X30X4-MM THK)	
M	7	1	**7X-2577**	14	BOLT (M24X3X90-MM)	
	8	1	**8T-4121**	8	WASHER-HARD (11X21X2.5-MM THK)	
M	9	1	**8T-4137**	8	BOLT (M10X1.5X20-MM)	
M	10	1	**8T-4139**	2	BOLT (M12X1.75X30-MM)	
	11	1	**303-6582**	1	PLATE	
	12	1	**299-8874**	1	PLATE AS	

M-METRIC PART

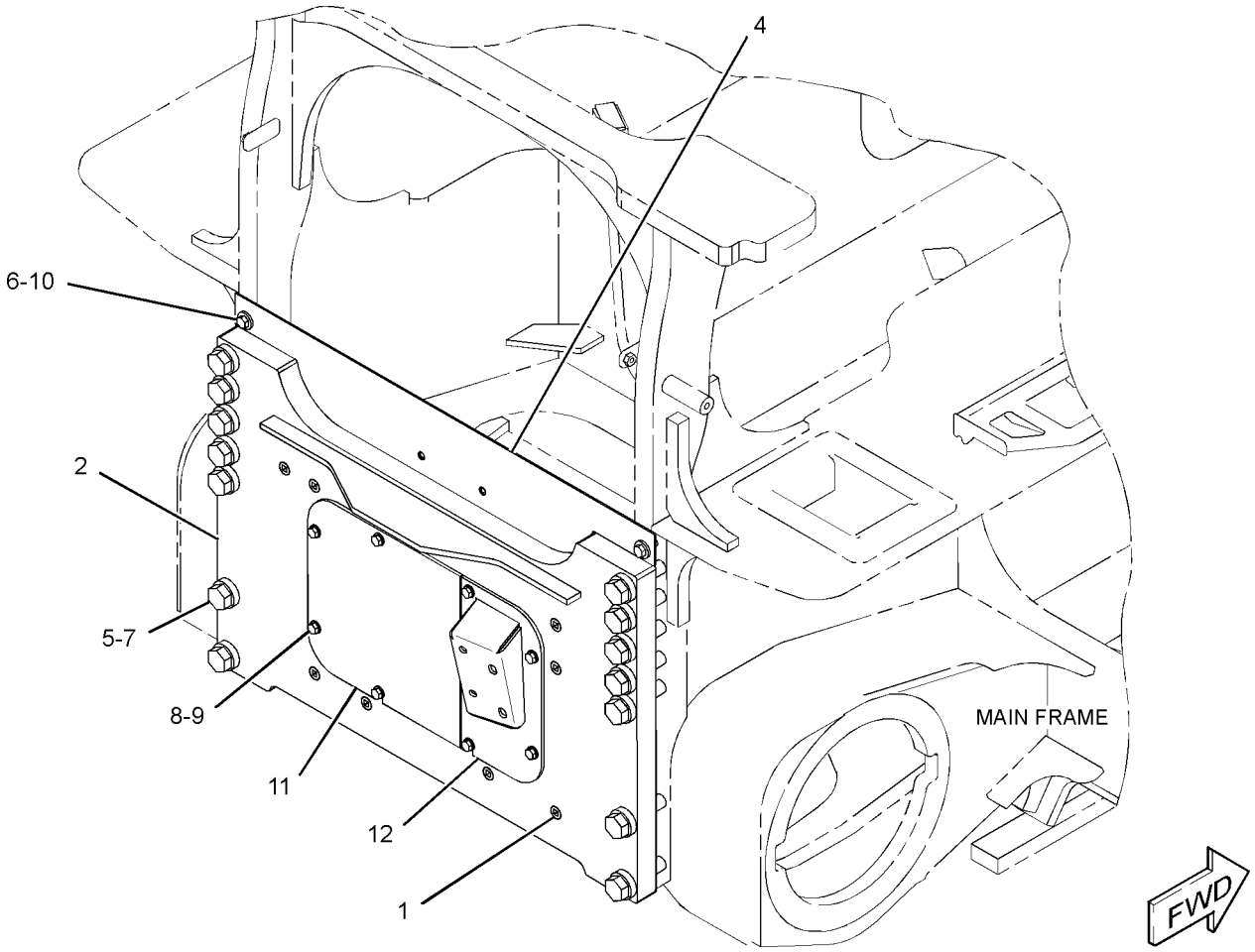

GRAPHIC #1 **<END>** g01364263

WORK TOOLS

211-8169 PLANETARY GP-WINCH

S/N: JAG1-UP

PART OF 309-5091 BRAKE & PLANETARY GP-WINCH

AN ATTACHMENT

SMCS-5165 **i02833721**

NOTE	REF NO	GRAPHIC REF	PART NUMBER	QTY	PART NAME 1 2 3 4 5 6 (PRODUCT LEVEL)	SEE PAGE
	1	1	**129-7286**	6	BEARING	
	2	1	**129-7307**	6	RACE	
	3	1	**203-6629**	1	CARRIER-PLANETARY	
	4	1	**203-6630**	3	GEAR-PLANETARY (34-TEETH)	
	5	1	**211-9023**	3	SPACER-BEARING	
	6	1	**211-9024**	3	SHAFT	
	7	1	**4H-8380**	3	PIN-SPRING	

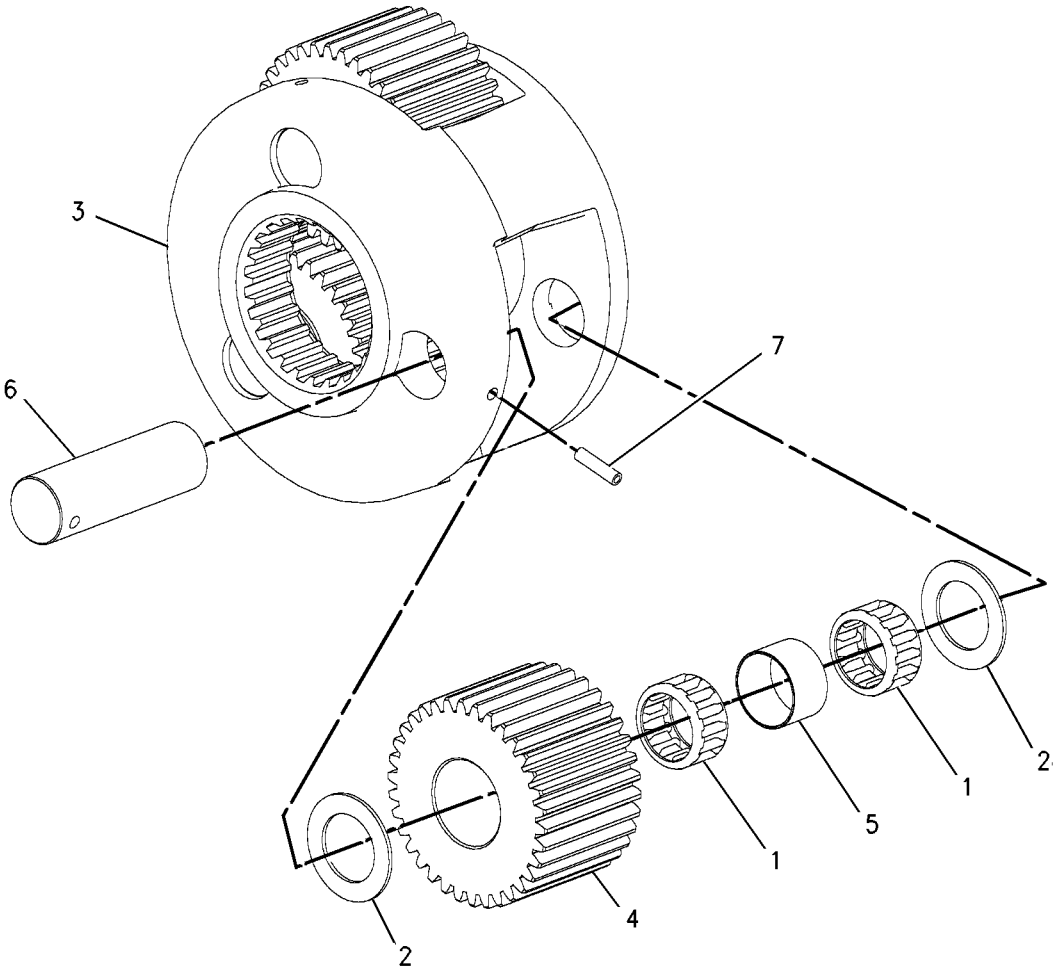

GRAPHIC #1 **<END>** g00833226

WORK TOOLS

262-4407 RIPPER AR

S/N: JMJ1-UP

CANNOT BE USED WITH 244-7433—PAGE 427, 244-7434—PAGE 386, 244-7517—PAGE 911 AN ATTACHMENT

SMCS-6310 **i04415556**

NOTE	PART NUMBER	QTY	PART NAME 1 2 3 4 5 6 (PRODUCT LEVEL)	SEE PAGE
Y	**262-4415**	1	CYLINDER GP-RIPPER (RH)	528
Y	**262-4418**	1	CYLINDER GP-RIPPER (LH)	529
Y	*263-3323*	1	LINES GP-RIPPER	591
Y	*258-4961*	1	MOUNTING GP-RIPPER	908
Y	*262-4408*	1	RIPPER GP	914
	4B-4158	2	SCREW-DRIVE (NO 4XO.25-IN)	
	8T-7516	1	PLATE-SERIAL NUMBER	

Y-SEPARATE ILLUSTRATION

<END>

WORK TOOLS

262-4408 RIPPER GP

S/N: JMJ1-UP
PART OF 262-4407 RIPPER AR
AN ATTACHMENT

SMCS-6310, 6325 **i02650132**

NOTE	REF NO	GRAPHIC REF	PART NUMBER	QTY	PART NAME 1 2 3 4 5 6 (PRODUCT LEVEL)	SEE PAGE
	1	1	**5G-5069**	4	PIN	
	2	1	**8J-7008**	2	PIN	
Y	3	1	*9J-1137*	3	TOOTH GP-RIPPER	917
	4	1	**170-6631**	4	BAR	
	5	1	**186-6529**	2	LINK	
	6	1	**262-4409**	1	LINK AS	
	7	1	**262-4411**	1	CARRIAGE AS	
	8	1	**3B-8489**	8	FITTING-GREASE	
M	9	1	**6V-7744**	2	LOCKNUT (M10X1.5-THD)	
M	10	1	**8T-4192**	8	BOLT (M12X1.75X25-MM)	
	11	1	**8T-4223**	8	WASHER-HARD (13.5X25.5X3-MM THK)	
M	12	1	**8T-6685**	2	BOLT (M10X1.5X110-MM)	

M-METRIC PART
Y-SEPARATE ILLUSTRATION

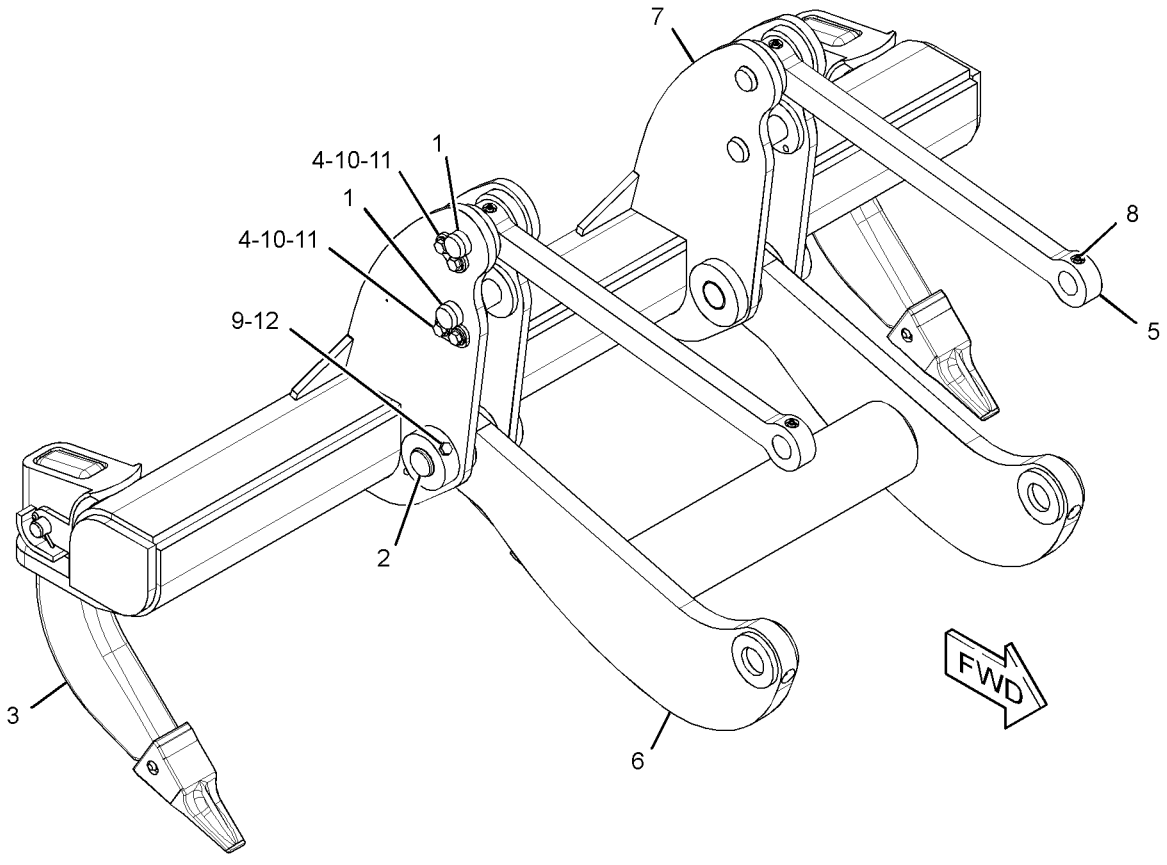

GRAPHIC #1 **<END>** g01333623

WORK TOOLS

208-5547 SHAFT GP-WINCH DRUM

S/N: JAG1-UP
PART OF 256-3738 WINCH AR
AN ATTACHMENT

SMCS-5165 **i01921229**

NOTE	REF NO	GRAPHIC REF	PART NUMBER	QTY	PART NAME 1 2 3 4 5 6 (PRODUCT LEVEL)	SEE PAGE
	1	1	**1J-4034**	2	SEAL-LIP TYPE	
	2	1	**1P-3934**	2	CUP-BEARING	
	3	1	**1P-3935**	2	CONE-BEARING	
	4	1	**2H-3786**	1	NUT-JAM (1-14-THD)	
	5	1	**161-6417**	1	DISC-BRAKE	
	6	1	**203-6610**	1	DRUM-CABLE	
	7	1	**203-6612**	1	BUSHING	
	8	1	**203-6614**	1	SHAFT-DRUM	
	9	1	**203-6615**	1	GASKET	
	10	1	**203-6637**	1	HOUSING-SPRING	
	11	1	**203-6641**	1	SPRING	
	12	1	**211-0388**	1	COVER-BEARING	
	13	1	**211-0394**	1	BOLT (5/16-18X0.4-IN)	
	14	1	**211-0395**	1	LOCKNUT-BEARING	
	15	1	**211-0396**	2	WASHER	
	16	1	**211-0397**	1	KEY	
	17	1	**3B-8489**	1	FITTING-GREASE	
	18	1	**4L-9337**	4	BOLT (3/8-16X1.5-IN)	
	19	1	**7F-2122**	1	SEAL-O-RING	
	20	1	**8T-4896**	4	WASHER-HARD (10.2X18.5X2.5-MM THK)	
	21	1	**219-7935**	1	PLATE	
	22	1	**5M-3062**	1	BOLT (3/8-16X0.75-IN)	

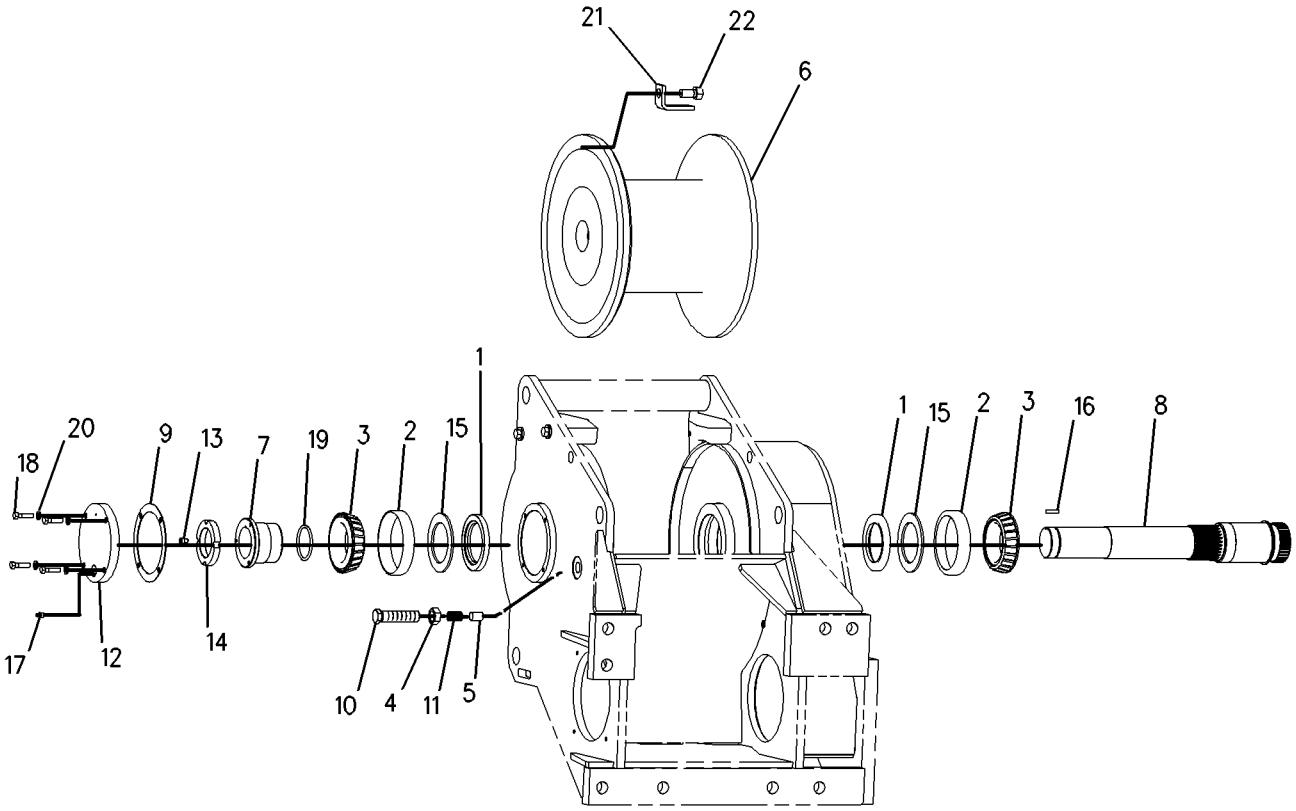

GRAPHIC #1 **<END>** g01005331

WORK TOOLS

9J-1137 TOOTH GP-RIPPER

S/N: JMJ1-UP
PART OF 262-4408 RIPPER GP
AN ATTACHMENT

SMCS-6808, 6810 **i01925355**

NOTE	REF NO	GRAPHIC REF	PART NUMBER	QTY	PART NAME 1 2 3 4 5 6 (PRODUCT LEVEL)	SEE PAGE
	1	1	**3B-4630**	2	PIN-COTTER	
	2	1	**3G-6049**	1	PIN	
	3	1	**1U-1257**	1	SHANK-RIPPER	
	4	1	**149-5733**	1	RETAINER AS (G.E.T.)	
	5	1	**9J-4259**	1	TIP-PENETRATION	
	6	1	**132-4763**	1	PIN	

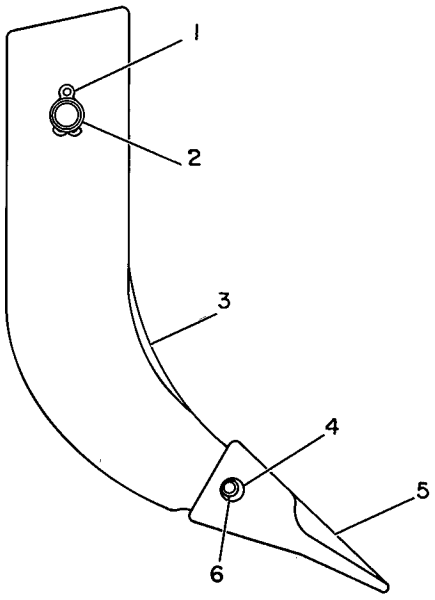

GRAPHIC #1 **<END>** g00145703

WORK TOOLS

256-3739 VALVE & LINES GP-WINCH

S/N: JAG1-UP
PART OF 256-3738 WINCH AR
AN ATTACHMENT

SMCS-5163 **i04002672**

NOTE	REF NO	GRAPHIC REF	PART NUMBER	QTY	PART NAME 1 2 3 4 5 6 (PRODUCT LEVEL)	SEE PAGE
	1	1	**8T-4896**	4	WASHER-HARD (10.2X18.5X2.5-MM THK)	
	2	1	**122-1951**	2	COVER	
I	3	1	**152-8368**	1	HOSE AS	
I	4	1	**152-8369**	1	HOSE AS	
	5	1	**152-9105**	1	HOSE AS	
	6	1	**200-1311**	1	VALVE GP-FLOW CONTROL (WINCH)	
	7	1	**212-6023**	1	COVER	
I	8	1	**212-6989**	1	HOSE AS	
Y	9	1	**264-3709**	1	VALVE GP-SOLENOID (WINCH)	650
	10	1	*148-8316*	1	CONNECTOR AS	
		1	**3J-7354**	1	SEAL-O-RING	
		1	**4J-5477**	1	SEAL-O-RING	
		1	**6V-8647**	1	CONNECTOR	
	11	1	*148-8336*	1	CONNECTOR AS	
		1	**3J-1907**	1	SEAL-O-RING	
		1	**6V-8397**	1	SEAL-O-RING	
		1	**6V-8636**	1	CONNECTOR	
	12	1	*148-8368*	2	ELBOW AS	
					(EACH INCLUDES)	
		1	**3J-1907**	1	SEAL-O-RING	
		1	**4J-5477**	1	SEAL-O-RING	
		1	**6V-8627**	1	ELBOW	
	13	1	*148-8369*	1	ELBOW AS	
		1	**3J-7354**	1	SEAL-O-RING	
		1	**4J-5477**	1	SEAL-O-RING	
		1	**6V-8628**	1	ELBOW	
	14	1	*148-8378*	2	ELBOW AS	
					(EACH INCLUDES)	
		1	**3J-1907**	1	SEAL-O-RING	
		1	**6V-8397**	1	SEAL-O-RING	
		1	**6V-8724**	1	ELBOW	
	15	1	*148-8385*	1	ELBOW AS	
		1	**3J-7354**	1	SEAL-O-RING	
		1	**4J-5477**	1	SEAL-O-RING	
		1	**6V-9000**	1	ELBOW	
	16	1	*205-3692*	1	ELBOW AS	
		1	**2M-9780**	1	SEAL-O-RING	
		1	**6V-8397**	1	SEAL-O-RING	
		1	**9X-2134**	1	ELBOW	
	17	1	**1Y-7574**	3	BOLT-HEAD (3/8-16X2.5-IN)	
	18	1	**4J-5267**	1	SEAL-O-RING	
	19	1	**4L-6454**	4	BOLT (3/8-16X1-IN)	
	20	1	**4S-9002**	6	BOLT-12 POINT HEAD (3/8-16X3-IN)	
	21	1	**5F-1678**	2	SEAL-O-RING	
	22	1	**6V-9829**	1	CAP	
M	23	1	**8T-4137**	8	BOLT (M10X1.5X20-MM)	

I-REFER TO HYDRAULIC INFORMATION SYSTEM
M-METRIC PART
Y-SEPARATE ILLUSTRATION

256-3739 **VALVE & LINES GP-WINCH** *(contd.)* **i04002672**

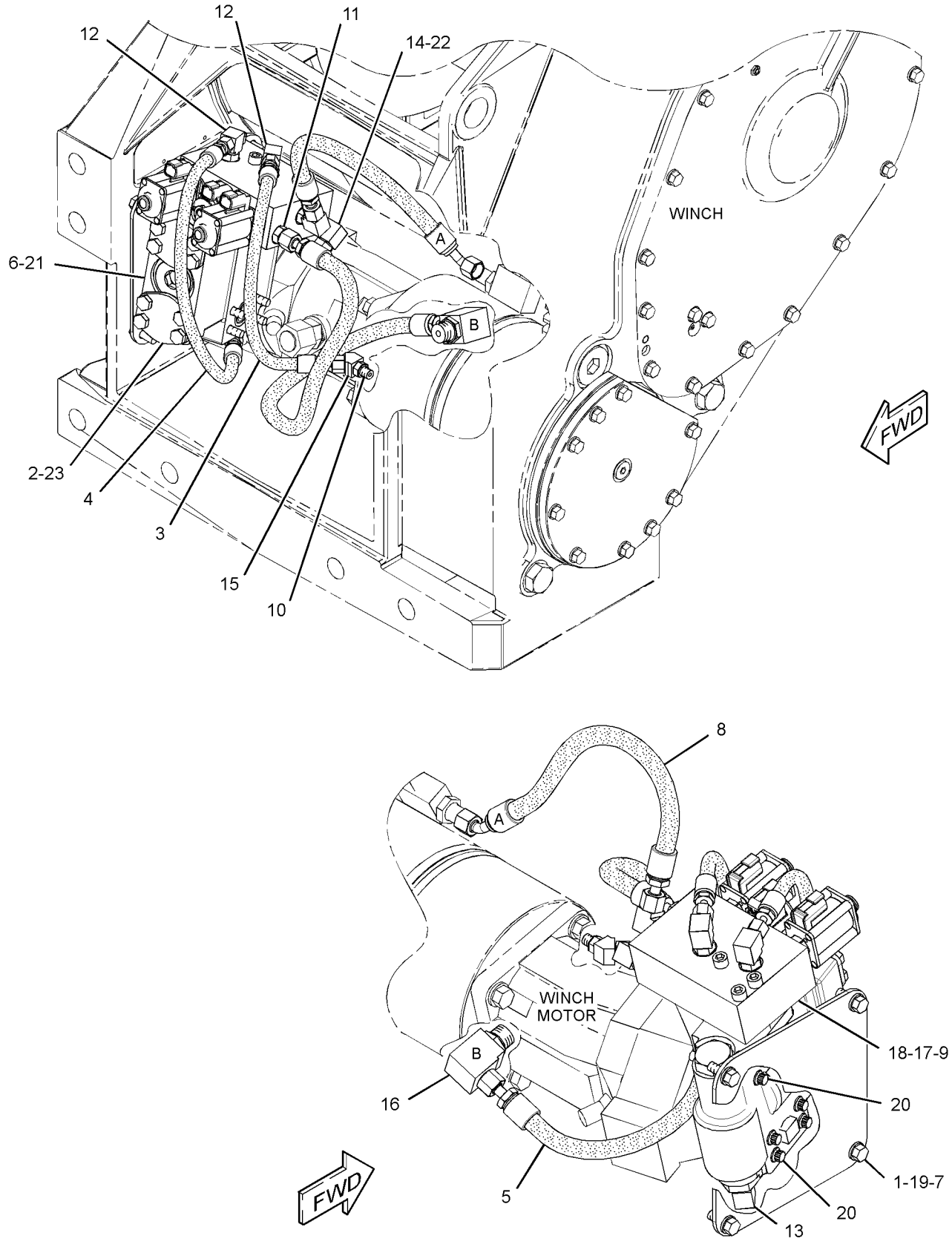

GRAPHIC #1 **<END>** g01330403

WORK TOOLS

256-3738 WINCH AR

S/N: JAG1-UP

FOR USE WITH 244-7517—PAGE 911, 244-7454—PAGE 891

AN ATTACHMENT

SMCS-5163 **i02718216**

NOTE	PART NUMBER	QTY	PART NAME 1 2 3 4 5 6 (PRODUCT LEVEL)	SEE PAGE
Y	*309-5090*	1	BRAKE & PLANETARY GP-WINCH	870
Y	*208-5546*	1	CASE GP-WINCH	872
Y	*208-5552*	1	CLUTCH & GEAR GP-WINCH	873
Y	*208-5551*	1	GEAR GP-WINCH	901
Y	*208-5549*	1	MOTOR & MTG GP-WINCH	904
Y	*208-5553*	1	MOUNTING GP-WINCH	909
Y	*208-5547*	1	SHAFT GP-WINCH DRUM	915
Y	*256-3739*	1	VALVE & LINES GP-WINCH	918

Y-SEPARATE ILLUSTRATION

<END>

SERVICE EQUIPMENT AND SUPPLIES

244-7389 FILM GP

S/N: FFF1-UP

PART OF 244-7376 CHASSIS AR

SMCS-7000 **i02676310**

NOTE	REF NO	GRAPHIC REF	PART NUMBER	QTY	PART NAME 1 2 3 4 5 6 (PRODUCT LEVEL)	SEE PAGE
	1	1	**299-3238**	1	FILM-IDENTIFICATION (CAT, RH)	
	2	1	**299-3237**	1	FILM-IDENTIFICATION (CAT, LH)	
	3	1	**299-3245**	1	FILM-IDENTIFICATION (D3K XL, RH)	
	4	1	**299-3244**	1	FILM-IDENTIFICATION (D3K XL, LH)	
	5	1	**277-8365**	1	FILM-IDENTIFICATION (CATERPILLAR)	
	6	1	**299-3240**	1	FILM-IDENTIFICATION (CAT)	
	7	1	**253-0861**	2	FILM-INFORMATION (CAT POWER, ACERT TECHNOLOGY)	

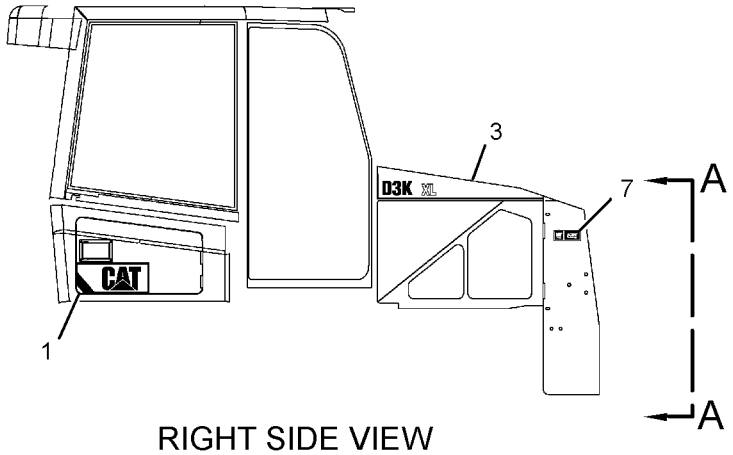

RIGHT SIDE VIEW

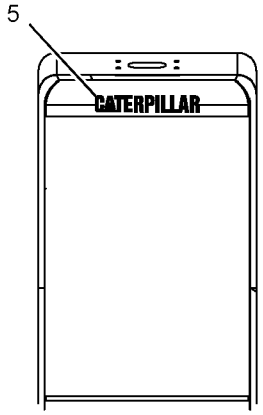

VIEW A-A

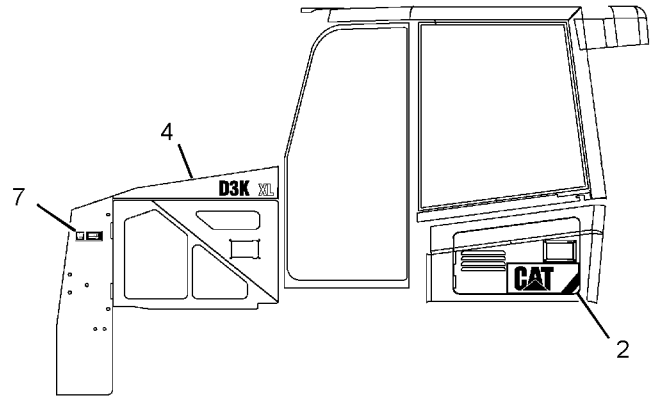

LEFT SIDE VIEW

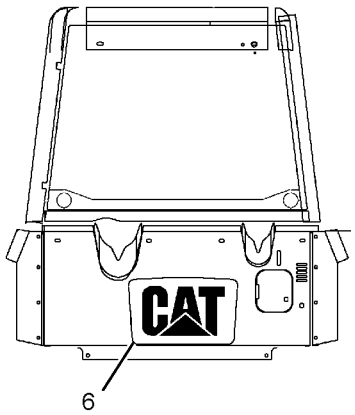

REAR VIEW

GRAPHIC #1 **<END>** g01345207

244-7484 FILM GP–LGP

S/N: JTD1-UP; LLL1-UP

PART OF 244-7377, 282-5327 CHASSIS AR

SMCS-7000 **i02676353**

NOTE	REF NO	GRAPHIC REF	PART NUMBER	QTY	PART NAME 1 2 3 4 5 6 (PRODUCT LEVEL)	SEE PAGE
	1	1	**299-3238**	1	FILM-IDENTIFICATION (CAT, RH)	
	2	1	**299-3237**	1	FILM-IDENTIFICATION (CAT, LH)	
	3	1	**299-3236**	1	FILM-IDENTIFICATION (D3K LGP, RH)	
	4	1	**299-3235**	1	FILM-IDENTIFICATION (D3K LGP, LH)	
	5	1	**277-8365**	1	FILM-IDENTIFICATION (CATERPILLAR)	
	6	1	**299-3240**	1	FILM-IDENTIFICATION (CAT)	
	7	1	**253-0861**	2	FILM-INFORMATION (CAT POWER, ACERT TECHNOLOGY)	

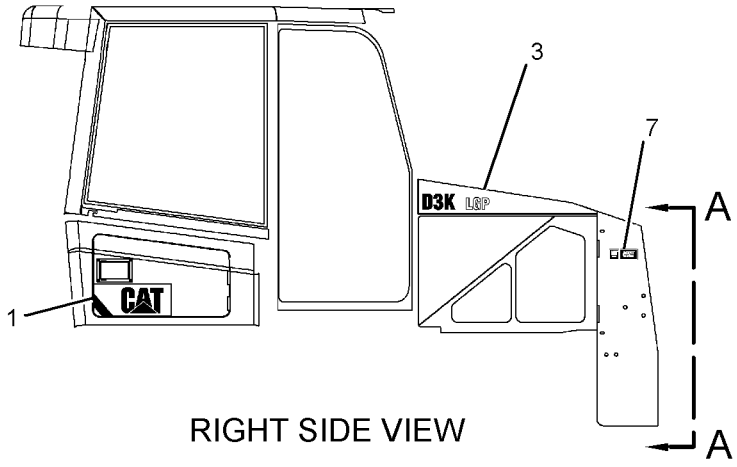

RIGHT SIDE VIEW

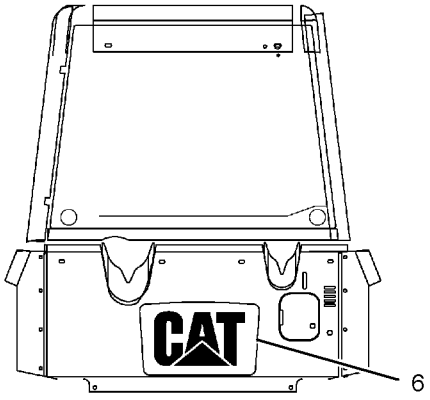

REAR VIEW

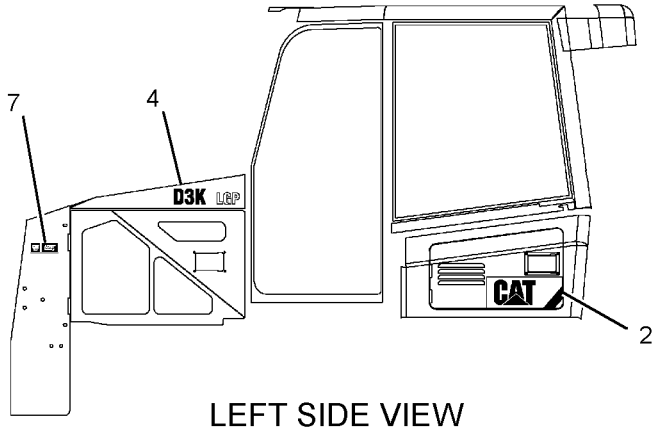

LEFT SIDE VIEW

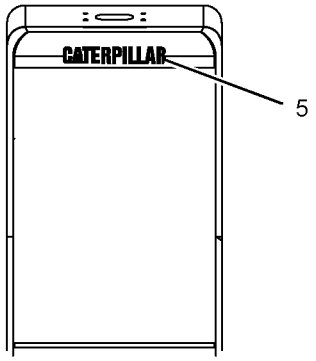

VIEW A-A

GRAPHIC #1 **<END>** g01345177

260-9502 LOCK GP-VANDALISM

S/N: FFF1-UP; LLL1-UP
PART OF 244-7506, 244-7507, 286-5015, 286-5016 PLATE & FILM GP
AN ATTACHMENT

SMCS-7315 **i02647770**

NOTE	REF NO	GRAPHIC REF	PART NUMBER	QTY	PART NAME 1 2 3 4 5 6 (PRODUCT LEVEL)	SEE PAGE
	1	1	**5D-1911**	1	COVER-HYDRAULIC CAP	
	2	1	**246-2641**	2	PADLOCK GP	
					(EACH INCLUDES)	
		1	**5P-8500**	1	KEY	
	3	1	**9M-7394**	1	LEVER	
	4	1	**1L-5072**	1	DOWEL	
	5	1	**2J-7761**	1	RING-RETAINING	

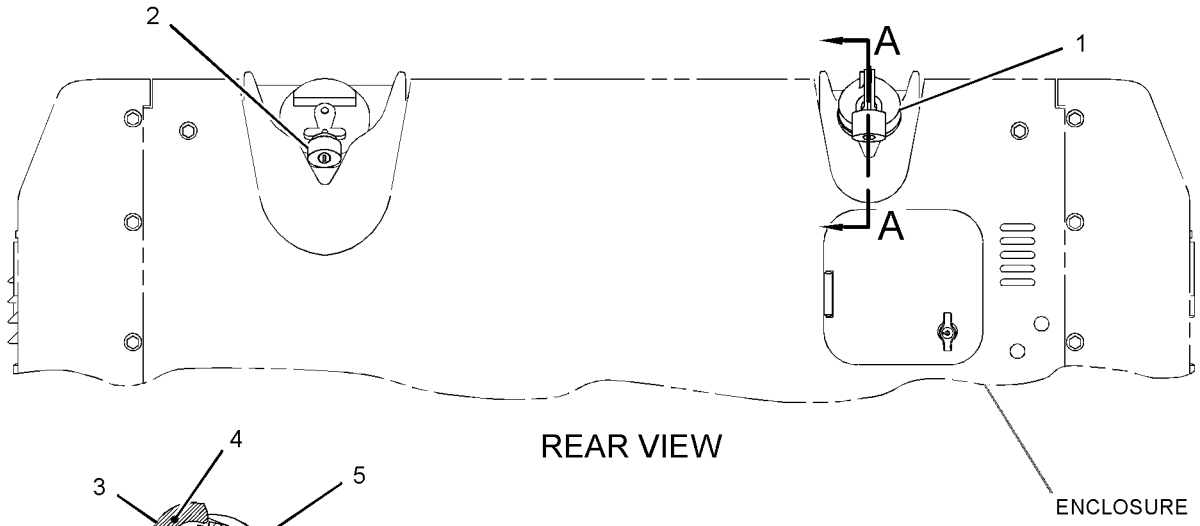

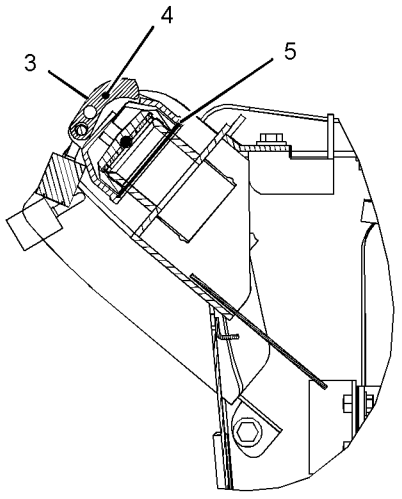

SECTION A-A

GRAPHIC #1 **<END>** g01330314

SERVICE EQUIPMENT AND SUPPLIES

244-7506 PLATE & FILM GP–U.S.

S/N: FFF1-UP; LLL1-UP

AN ATTACHMENT

SMCS-7557, 7563 **i03590601**

NOTE	PART NUMBER	QTY	PART NAME 1 2 3 4 5 6 (PRODUCT LEVEL)	SEE PAGE
Y	*6V-1971*	1	LITERATURE GP	785
			(IN POCKET ON BACK OF SEAT)	
Y	*260-9502*	1	LOCK GP-VANDALISM	923
	239-6987	1	PLATE-SERIAL NUMBER (MACHINE) (CASE, FRAME)	
			(ON OUTSIDE OF LH PLATE OF FRAME NEAR REAR OF MACHINE)	
	239-6989	1	PLATE-SERIAL NUMBER (MACHINE) (PRODUCT IDENTIFICATION)	
			(ON OUTSIDE OF LH PLATE OF FRAME NEAR REAR OF MACHINE)	
	291-4256	4	PLATE-WARNING (HIGH PRESS CYLINDER, READ OMM)	
			(ON TRACK ADJUST COVER PLATES; FASTEN TO COVER PLATE WITH RIVETS IN COVER GROUP; MOUNTED AFTER PAINTING)	
	334-4603	1	FILM-INFORMATION (HYDO ADVANCED 10)	
			(ON REAR ENCLOSURE BELOW HYDRAULIC TANK FILLER NECK)	
	169-2876	1	FILM-IDENTIFICATION (POWER RECEPTACLE, 12-VOLT)	
			(ON INSIDE OF REAR RH SIDE ENCLOSURE DOOR NEAR DOOR HINGE)	
	286-8141	1	FILM-IDENTIFICATION (COMPACT INSTRUMENT CLUSTER)	
			(ON INSIDE OF GLOVEBOX DOOR)	
	287-2016	1	FILM-IDENTIFICATION (TEST PORT, READ OMM)	
			(ON THE TEST PORT PLATE NEAR THE HYSTAT PUMPS)	
	1P-2807	4	FILM-INFORMATION (LIFT EYE LOCATION)	
			(2 - EACH SIDE ON TRACK ROLLER FRAME, BETWEEN FRONT IDLER & FRONT ROLLER & BETWEEN REAR SPROCKET & LAST ROLLER)	
	7X-7644	5	FILM-INFORMATION (TIE-DOWN)	
			(2 - EACH SIDE ON TRACK ROLLER FRAME, BETWEEN FRONT IDLER & FRONT ROLLER & BETWEEN REAR SPROCKET & LAST ROLLER)	
			(1 - ABOVE RETRIEVAL HITCH)	
	134-7258	1	FILM-INFORMATION (EXTENDED LIFE COOLANT)	
			(ON UNDERSIDE OF RADIATOR FILL DOOR)	
	291-4261	1	FILM-INSTRUCTION (DUAL BATTERY, READ OMM)	
			(ON INSIDE OF REAR RH SIDE ENCLOSURE DOOR NEAR DOOR HINGE)	
	167-7270	2	FILM-INSTRUCTION (NO STEP)	
			(ON TOP OF BOTH ANGLE CYLINDERS)	
	291-1094	1	FILM-INSTRUCTION (SERVICE POINTS)	
			(ON INSIDE OF REAR LH SIDE ENCLOSURE DOOR)	
	190-5386	2	FILM-STRIPE (ROUND RED REFLECTIVE)	
			(ON GUSSETS NEXT TO REAR ROPS POSTS ON OROPS OR ON LOWER CORNERS OF REAR WINDOW ON EROPS	
			OR ON LOWER CORNERS OF REAR SCREEN IF INSTALLED)	
	219-0305	1	FILM-WARNING (NO WELD, NO DRILL, READ OMM)	
			(ON LH SIDE REAR ROPS "C" POST)	
	224-8945	1	FILM-WARNING (DO NOT USE ETHER, U.S)	
			(ON AIR CLEANER BODY NEAR AIR INLET)	
	225-0313	1	FILM-WARNING (JUMP START, READ OMM, U.S.)	

244-7506 **PLATE & FILM GP** ***(contd.)*** **i03590601**

NOTE	PART NUMBER	QTY	PART NAME 1 2 3 4 5 6 (PRODUCT LEVEL)	SEE PAGE
			(ON INSIDE OF REAR RH SIDE ENCLOSURE DOOR NEAR DOOR HINGE)	
	227-7391	1	FILM-WARNING (SEAT BELT, INTERNATIONAL)	
			(ON THE REAR SURFACE OF THE LH SIDE ROPS "B" POST ABOVE THE JOYSTICK CONTROL FILM)	
	228-2615	1	FILM-WARNING (UNIVERSAL, U.S.)	
			(ON REAR SURFACE OF RH SIDE ROPS "B" POST ABOVE JOYSTICK CONTROL FILM)	
	259-4401	1	FILM-WARNING (HOT FLUID UND PRESS, READ OMM)	
			(ON SHUNT BOTTLE CAP)	
	262-7082	1	FILM-WARNING (ROPS, FOPS, READ OMM)	
			(ON LH SIDE REAR ROPS "C" POST)	
Y-SEPARATE ILLUSTRATION				

<END>

244-7507 PLATE & FILM GP—U.S.

S/N: LLL1-UP

AN ATTACHMENT

SMCS-7557, 7563 **i02678210**

NOTE	PART NUMBER	QTY	PART NAME 1 2 3 4 5 6 (PRODUCT LEVEL)	SEE PAGE
Y	*6V-1971*	1	LITERATURE GP	785
			(PLACE IN POCKET ON BACK OF SEAT)	
Y	*260-9502*	1	LOCK GP-VANDALISM	923
	239-6989	1	PLATE-SERIAL NUMBER (MACHINE)	
			(ON OUTSIDE OF LH PLATE OF FRAME NEAR REAR OF MACHINE)	
	169-2876	1	FILM-IDENTIFICATION (POWER RECEPTACLE, 12-VOLT)	
			(ON INSIDE OF REAR RH SIDE ENCLOSURE DOOR NEAR DOOR HINGE)	
	190-5386	2	FILM-STRIPE (ROUND RED REFLECTIVE)	
			(ON GUSSETS NEXT TO REAR ROPS POSTS ON OROPS OR ON LOWER CORNERS OF REAR WINDOW ON EROPS OR ON LOWER CORNERS OF REAR	
			SCREEN IF INSTALLED)	
	287-2016	1	FILM-IDENTIFICATION (TEST PORT, READ OMM)	
			(ON TEST PORT PLATE NEAR HYSTAT PUMPS)	
	287-2017	1	FILM-IDENTIFICATION (TEST PORT, READ OMM)	
			(ON TEST PORT PLATE IN REAR RH SIDE ENCLOSURE)	
	286-8141	1	FILM-IDENTIFICATION (COMPACT INSTRUMENT CLUSTER)	
			(ON INSIDE OF GLVOEBOX DOOR)	
	1P-2807	4	FILM-INFORMATION (LIFT EYE LOCATION)	
			(2-BETWEEN FRONT IDLER & FRONT ROLLER ON TRACK ROLLER FRAME)	
			(2-BETWEEN REAR SPROCKET & LAST ROLLER ON TRACK ROLLER FRAME)	
	7X-7644	5	FILM-INFORMATION (TIE-DOWN)	
			(2-BETWEEN FRONT IDLER & FRONT ROLLER ON TRACK ROLLER FRAME)	
			(2-BETWEEN REAR SPROCKET & LAST ROLLER)	
			(1-ABOVE RETRIEVAL HITCH)	
	134-7258	1	FILM-INFORMATION (EXTENDED LIFE COOLANT)	
			(ON UNDERSIDE OF RADIATOR FILL DOOR)	
	291-4261	1	FILM-INSTRUCTION (DUAL BATTERY, READ OMM)	

244-7507 **PLATE & FILM GP** *(contd.)* **i02678210**

NOTE	PART NUMBER	QTY	PART NAME 1 2 3 4 5 6 (PRODUCT LEVEL)	SEE PAGE
			(ON INSIDE OF REAR RH SIDE ENCLOSURE DOOR NEAR DOOR HINGE)	
	158-7864	1	FILM-IDENTIFICATION (HYDRAULIC OIL)	
			(ON REAR ENCLOSURE BELOW HYDRAULIC TANK FILLER NECK)	
	167-7270	2	FILM-INSTRUCTION (NO STEP)	
			(CENTER ON TOP OF BOTH ANGLE CYLINDERS)	
	291-1094	1	FILM-INSTRUCTION (SERVICE POINTS)	
			(ON INSIDE OF REAR LH SIDE ENCLOSURE DOOR)	
	219-0305	1	FILM-WARNING (NO WELD, NO DRILL, READ OMM)	
			(ON LH SIDE REAR ROPS "C" POST)	
	224-8945	1	FILM-WARNING (DO NOT USE ETHER, U.S)	
			(ON AIR CLEANER BODY NEAR AIR INLET)	
	225-0313	1	FILM-WARNING (JUMP START, READ OMM, U.S.)	
			(ON INSIDE OF REAR RH SIDE ENCLOSURE DOOR NEAR DOOR HINGE)	
	227-7391	1	FILM-WARNING (SEAT BELT, INTERNATIONAL)	
			(ON REAR SURFACE OF LH SIDE ROPS "B" POST ABOVE JOYSTICK CONTROL FILM)	
	228-2615	1	FILM-WARNING (UNIVERSAL, U.S.)	
			(ON REAR SURFACE OF RH SIDE ROPS "B" POST ABOVE JOYSTICK CONTROL FILM)	
	259-4401	1	FILM-WARNING (HOT FLUID UND PRESS, READ OMM)	
			(ON SHUNT BOTTLE CAP)	
	262-7082	1	FILM-WARNING (ROPS, FOPS, READ OMM)	
			(ON LH SIDE REAR ROPS "C" POST)	
	291-4256	4	PLATE-WARNING (HIGH PRESS CYLINDER, READ OMM)	
			(ON TRACK ADJUST COVER PLATES;FASTEN TO COVER PLATE WITH RIVETS IN COVER GP;MOUNTED AFTER PAINTING)	
Y-SEPARATE ILLUSTRATION				

<END>

286-5015 PLATE & FILM GP—INTERNATIONAL

S/N: FFF1-UP

AN ATTACHMENT

SMCS-7557, 7563 **i02682059**

NOTE	PART NUMBER	QTY	PART NAME 1 2 3 4 5 6 (PRODUCT LEVEL)	SEE PAGE
Y	*6V-1971*	1	LITERATURE GP	785
Y	*260-9502*	1	LOCK GP-VANDALISM	923
	239-6989	1	PLATE-SERIAL NUMBER (MACHINE)	
			(ON OUTSIDE OF LH PLATE FRAME NEAR REAR OF MACHINE)	
	291-4256	4	PLATE-WARNING (HIGH PRESS CYLINDER, READ OMM)	
			(ON TRACK ADJUST COVER PLATES: FASTEN TO COVER PLATE WITH RIVETS IN COVER GP; MOUNTED AFTER PAINTING)	
	169-2876	1	FILM-IDENTIFICATION (POWER RECEPTACLE, 12-VOLT)	
			(ON INSIDE OF REAR RH SIDE ENCLOSURE DOOR NEAR DOOR HINGE)	
	190-5386	2	FILM-STRIPE (ROUND RED REFLECTIVE)	
			(ON GUSSETS NEXT TO REAR ROPS POSTS ON OROPS OR ON LOWER CORNERS OF REAR WINDOW ON EROPS OR ON	
			LOWER CORNERS OF REAR SCREEN IF INSTALLED)	

286-5015 **PLATE & FILM GP** ***(contd.)*** **i02682059**

NOTE	PART NUMBER	QTY	PART NAME 1 2 3 4 5 6 (PRODUCT LEVEL)	SEE PAGE
	287-2016	1	FILM-IDENTIFICATION (TEST PORT, READ OMM)	
			(ON THE TEST PORT PLATE NEAR THE HYSTAT PUMPS)	
	287-2017	1	FILM-IDENTIFICATION (TEST PORT, READ OMM)	
			(ON TEST PORT PLATE IN REAR RH SIDE ENCLOSURE)	
	286-8141	1	FILM-IDENTIFICATION (COMPACT INSTRUMENT CLUSTER)	
			(ON INSIDE OF GLOVEBOX DOOR)	
	1P-2807	4	FILM-INFORMATION (LIFT EYE LOCATION)	
			(4-ON TRACK ROLLER FRAME, BETWEEN FRONT IDLER & FRONT ROLLER & BETWEEN REAR SPROCKET & LAST ROLLER (2 ON EACH SIDE)	
	7X-7644	5	FILM-INFORMATION (TIE-DOWN)	
			(4-ON TRACK ROLLER FRAME, BETWEEN FRONT IDLER & FRONT ROLLER & BETWEEN REAR SPROCKET	
			& LAST ROLLER (2 EACH SIDE) & 1-ABOVE RETRIEVAL HITCH)	
	134-7258	1	FILM-INFORMATION (EXTENDED LIFE COOLANT)	
			(ON UNDERSIDE OF RADIATOR FILL DOOR)	
	158-7864	1	FILM-IDENTIFICATION (HYDRAULIC OIL)	
			(ON REAR ENCLOSURE BELOW HYDRAULIC TANK FILLER NECK)	
	167-7270	2	FILM-INSTRUCTION (NO STEP)	
			(CENTER ON TOP OF BOTH ANGLE CYLINDERS)	
	291-4261	1	FILM-INSTRUCTION (DUAL BATTERY, READ OMM)	
			(ON INSIDE OF REAR RH SIDE ENCLOSURE DOOR NEAR DOOR HINGE)	
	291-1094	1	FILM-INSTRUCTION (SERVICE POINTS)	
			(ON INSIDE OF REAR LH SIDE ENCLOSURE DOOR)	
	219-0305	1	FILM-WARNING (NO WELD, NO DRILL, READ OMM)	
			(ON LH SIDE REAR ROPS "C" POST)	
	224-8946	1	FILM-WARNING (NO ETHER SPRAY/AIR INTK, INTL)	
			(ON AIR CLEANER BODY NEAR AIR INLET)	
	225-0312	1	FILM-WARNING (JUMP START, READ OMM, INTL)	
			(ON INSIDE OF REAR RH SIDE ENCLOSURE DOOR NEAR DOOR HINGE)	
	227-7391	1	FILM-WARNING (SEAT BELT, INTERNATIONAL)	
			(ON THE REAR SURFACE OF THE LH SIDE ROPS "B" POST ABOVE THE JOYSTICK CONTROL FILM)	
	228-2616	1	FILM-WARNING (UNIVERSAL, READ OMM, INTL)	
			(ON REAR SURFACE OF RH SIDE ROPS "B" POST ABOVE JOYSTICK CONTROL FILM)	
	259-4402	1	FILM-WARNING (HOT FLUID UNDER PRESSURE)	
			(ON SHUNT BOTTLE CAP)	
	262-7082	1	FILM-WARNING (ROPS, FOPS, READ OMM)	
			(ON LH SIDE REAR ROPS "C" POST)	

Y-SEPARATE ILLUSTRATION

<END>

286-5016 PLATE & FILM GP—INTERNATIONAL

S/N: FFF1-UP; LLL1-UP

AN ATTACHMENT

SMCS-7557, 7563 **i03590606**

NOTE	PART NUMBER	QTY	PART NAME 1 2 3 4 5 6 (PRODUCT LEVEL)	SEE PAGE
Y	*6V-1971*	1	LITERATURE GP	785
			(IN POCKET ON BACK OF SEAT)	
Y	*260-9502*	1	LOCK GP-VANDALISM	923

286-5016 **PLATE & FILM GP** *(contd.)* **i03590606**

NOTE	PART NUMBER	QTY	PART NAME 1 2 3 4 5 6 (PRODUCT LEVEL)	SEE PAGE
	239-6989	1	PLATE-SERIAL NUMBER (MACHINE)	
			(ON OUTSIDE OF LH PLATE OF FRAME NEAR REAR OF MACHINE)	
	239-6987	1	PLATE-SERIAL NUMBER (MACHINE)	
			(ON OUTSIDE OF LH PLATE OF FRAME NEAR REAR OF MACHINE)	
	291-4256	4	PLATE-WARNING (HIGH PRESS CYLINDER, READ OMM)	
			(ON TRACK ADJUST COVER PLATES)	
	169-2876	1	FILM-IDENTIFICATION (POWER RECEPTACLE, 12-VOLT)	
			(ON INSIDE OF REAR RH SIDE ENCLOSURE DOOR NEAR DOOR HINGE)	
	287-2016	1	FILM-IDENTIFICATION (TEST PORT, READ OMM)	
			(ON THE TEST PORT PLATE NEAR THE HYSTAT PUMPS)	
	286-8141	1	FILM-IDENTIFICATION (COMPACT INSTRUMENT CLUSTER)	
			(ON INSIDE OF GLOVEBOX DOOR)	
	1P-2807	4	FILM-INFORMATION (LIFT EYE LOCATION)	
			(2-ON TRACK ROLLER FRAME, BETWEEN FRONT IDLER & FRONT ROLLER	
			2-ON TRACK ROLLER FRAME, BETWEEN REAR SPROCKET & LAST ROLLER)	
	7X-7644	5	FILM-INFORMATION (TIE-DOWN)	
			(2-ON TRACK ROLLER FRAME, BETWEEN FRONT IDLER & FRONT ROLLER	
			2-ON TRACK ROLLER FRAME, BETWEEN REAR SPROCKET & LAST ROLLER	
			1-ABOVE RETRIEVAL HITCH)	
	134-7258	1	FILM-INFORMATION (EXTENDED LIFE COOLANT)	
			(ON UNDERSIDE OF RADIATOR FILL DOOR)	
	291-4261	1	FILM-INSTRUCTION (DUAL BATTERY, READ OMM)	
			(ON INSIDE OF REAR RH SIDE ENCLOSURE DOOR NEAR DOOR HINGE)	
	334-4603	1	FILM-INFORMATION (HYDO ADVANCED 10)	
			(ON REAR ENCLOSURE BELOW HYDRAULIC TANK FILLER NECK)	
	167-7270	2	FILM-INSTRUCTION (NO STEP)	
			(CENTER ON TOP OF BOTH ANGLE CYLINDERS)	
	291-1094	1	FILM-INSTRUCTION (SERVICE POINTS)	
			(ON INSIDE OF REAR LH SIDE ENCLOSURE DOOR)	
	190-5386	2	FILM-STRIPE (ROUND RED REFLECTIVE)	
			(ON GUSSETS NEXT TO REAR ROPS POSTS ON OROPS OR ON LOWER CORNERS OF REAR WINDOW ON EROPS OR ON LOWER CORNERS OF REAR	
			SCREEN IF INSTALLED)	
	219-0305	1	FILM-WARNING (NO WELD, NO DRILL, READ OMM)	
			(ON LH SIDE REAR ROPS "C" POST)	
	224-8946	1	FILM-WARNING (NO ETHER SPRAY/AIR INTK, INTL)	
			(ON AIR CLEANER BODY NEAR AIR INLET)	
	225-0312	1	FILM-WARNING (JUMP START, READ OMM, INTL)	
			(ON INSIDE OF REAR RH SIDE ENCLOSURE DOOR NEAR DOOR HINGE)	
	227-7391	1	FILM-WARNING (SEAT BELT, INTERNATIONAL)	
			(ON REAR SURFACE OF LH SIDE ROPS "B" POST ABOVE JOYSTICK CONTROL FILM)	
	228-2616	1	FILM-WARNING (UNIVERSAL, READ OMM, INTL)	
			(ON REAR SURFACE OF RH SIDE ROPS "B" POST ABOVE JOYSTICK CONTROL FILM)	
	259-4402	1	FILM-WARNING (HOT FLUID UNDER PRESSURE)	

286-5016 **PLATE & FILM GP** ***(contd.)*** **i03590606**

NOTE	PART NUMBER	QTY	PART NAME 1 2 3 4 5 6 (PRODUCT LEVEL)	SEE PAGE
			(ON SHUNT BOTTLE CAP)	
	262-7082	1	FILM-WARNING (ROPS, FOPS, READ OMM)	
			(ON LH SIDE REAR ROPS "C" POST)	
Y-SEPARATE ILLUSTRATION				

<END>

288-3624 PLATE & FILM GP—JAPANESE

S/N: FFF1-UP; LLL1-UP
AN ATTACHMENT

SMCS-7557, 7563 **i03590605**

NOTE	PART NUMBER	QTY	PART NAME 1 2 3 4 5 6 (PRODUCT LEVEL)	SEE PAGE
Y	*6V-1971*	1	LITERATURE GP	785
			(IN POCKET ON BACK OF SEAT)	
	239-6989	1	PLATE-SERIAL NUMBER (MACHINE) (PRODUCT IDENTIFICATION)	
			(ON OUSIDE OF LH PLATE OF FRAME NEAR REAR OF MACHINE)	
	239-6987	1	PLATE-SERIAL NUMBER (MACHINE) (CASE, FRAME)	
			(ON OUSIDE OF LH PLATE OF FRAME NEAR REAR OF MACHINE)	
	173-5701	4	PLATE-WARNING (READ OMM)	
			(ON TRACK ADJUST COVER PLATES)	
	169-2876	1	FILM-IDENTIFICATION (POWER RECEPTACLE, 12-VOLT)	
			(ON INSIDE OF REAR RH SIDE ENCLOSURE DOOR NEAR DOOR HINGE)	
	286-8141	1	FILM-IDENTIFICATION (COMPACT INSTRUMENT CLUSTER)	
			(ON INSIDE OF GLOVEBOX DOOR)	
	287-2016	1	FILM-IDENTIFICATION (TEST PORT, READ OMM)	
			(ON THE TEST PORT PLATE NEAR THE HYSTAT PUMPS)	
	334-4603	1	FILM-INFORMATION (HYDO ADVANCED 10)	
			(ON REAR ENCLOSURE BELOW HYDRAULIC TANK FILLER NECK)	
	1P-2807	4	FILM-INFORMATION (LIFT EYE LOCATION)	
			(ON TRACK ROLLER FRAME, BETWEEN FRONT IDLER & FRONT ROLLER & BETWEEN REAR SPROCKET & LAST ROLLER (2 EACH SIDE))	
	7X-7644	5	FILM-INFORMATION (TIE-DOWN)	
			(4-ON TRACK ROLLER FRAME, BETWEEN FRONT IDLER & FRONT ROLLER & BETWEEN REAR SPROCKET & LAST ROLLER(2 EACH SIDE))	
			(1-ABOVE RETRIEVAL HITCH)	
	134-7258	1	FILM-INFORMATION (EXTENDED LIFE COOLANT)	
			(ON UNDERSIDE OF RADIATOR FILL DOOR)	
	291-4261	1	FILM-INSTRUCTION (DUAL BATTERY, READ OMM)	
			(ON INSIDE OF REAR RH SIDE ENCLOSURE DOOR NEAR DOOR HINGE)	
	291-9334	1	FILM-INSTRUCTION (DIESEL FUEL)	
			(ON REAR ENCLOSURE BELOW FUEL TANK FILLER NECK)	
	291-1094	1	FILM-INSTRUCTION (SERVICE POINTS)	
			(ON INSIDE OF REAR LH SIDE ENCLOSURE DOOR)	
	219-3133	1	FILM-NOTICE (REFRIGERANT)	
			(ON LH SIDE REAR ROPS "C" POST)	

288-3624 **PLATE & FILM GP** *(contd.)* **i03590605**

NOTE	PART NUMBER	QTY	PART NAME 1 2 3 4 5 6 (PRODUCT LEVEL)	SEE PAGE
	160-6817	1	FILM-WARNING (READ OMM)	
			(ON REAR SURFACE OF RH SIDE ROPS "B" POST ABOVE JOYSTICK CONTROL FILM)	
	160-6841	1	FILM-WARNING (BELT, STOP ROTATION)	
			(ON LH SIDE OF FAN SHROUD)	
	160-6833	1	FILM-WARNING (SHOCK HAZARD, READ OMM)	
			(ON INSIDE OF REAR RH SIDE ENCLOSURE DOOR NEAR DOOR HINGE)	
	160-6836	1	FILM-WARNING (NO STEP)	
			(ON TOP OF RADIATOR GUARD)	
	160-6842	2	FILM-WARNING (NO STEP)	
			(ON TOP OF BOTH ANGLE CYLINDERS)	
	160-6869	1	FILM-WARNING (NO REPAIR)	
			(ON A/C ACCUMULATOR)	
	173-5700	1	FILM-WARNING (CRUSH HAZARD, READ OMM)	
			(ON REAR OF VEHICLE)	
	312-7461	1	FILM-WARNING (CRUSH HAZARD, STAY BACK)	
			(ON REAR SURFACE OF RH SIDE ROPS "B" POST ABOVE JOYSTICK CONTROL FILM)	
	219-0305	1	FILM-WARNING (NO WELD, NO DRILL, READ OMM)	
			(ON LH SIDE REAR ROPS "C" POST)	
	224-8946	1	FILM-WARNING (NO ETHER SPRAY/AIR INTK, INTL)	
			(ON AIR CLEANER BODY NEAR AIR INLET)	
	225-0312	1	FILM-WARNING (JUMP START, READ OMM, INTL)	
			(ON INSIDE OF REAR RH SIDE ENCLOSURE DOOR NEAR DOOR HINGE)	
	227-7391	1	FILM-WARNING (SEAT BELT, INTERNATIONAL)	
			(ON REAR SURFACE OF LH SIDE ROPS "B" POST ABOVE THE JOYSTICK CONTROL FILM)	
	259-4402	1	FILM-WARNING (HOT FLUID UNDER PRESSURE)	
			(ON SHUNT BOTTLE CAP)	
	262-7082	1	FILM-WARNING (ROPS, FOPS, READ OMM)	
			(ON LH SIDE REAR ROPS "C" POST)	
	298-5074	1	FILM-WARNING (FIRE HAZARD, READ OMM)	
			(ON REAR SURFACE OF RH SIDE ROPS "B" POST ABOVE JOYSTICK CONTROL FILM)	
	160-6824	1	FILM-WARNING (SCALD, DO NOT OPEN)	
			(ON UNDERSIDE OF RADIATOR FILL DOOR)	

Y-SEPARATE ILLUSTRATION

<END>

288-3625 PLATE & FILM GP—JAPANESE

S/N: LLL1-UP

AN ATTACHMENT

SMCS-7557, 7563 **i02708180**

NOTE	PART NUMBER	QTY	PART NAME 1 2 3 4 5 6 (PRODUCT LEVEL)	SEE PAGE
	239-6989	1	PLATE-SERIAL NUMBER (MACHINE)	
			(ON OUTSIDE OF LH PLATE OF FRAME)	
	173-5701	4	PLATE-WARNING (READ OMM)	
			(ON TRACK ADJUST COVER PLATES)	
	286-8141	1	FILM-IDENTIFICATION (COMPACT INSTRUMENT CLUSTER)	
			(ON INSIDE OF GLOVEBOX DOOR)	
	287-2016	1	FILM-IDENTIFICATION (TEST PORT, READ OMM)	
			(ON THE TEST PORT PLATE NEAR THE HYSTAT PUMPS)	

288-3625 **PLATE & FILM GP** *(contd.)* **i02708180**

NOTE	PART NUMBER	QTY	PART NAME 1 2 3 4 5 6 (PRODUCT LEVEL)	SEE PAGE
	287-2017	1	FILM-IDENTIFICATION (TEST PORT, READ OMM)	
			(ON TEST PORT PLATE IN REAR RHS ENCLOSURE)	
	169-2876	1	FILM-IDENTIFICATION (POWER RECEPTACLE, 12-VOLT)	
			(ON INSIDE OF REAR RHS ENCLOSURE DOOR)	
	1P-2807	4	FILM-INFORMATION (LIFT EYE LOCATION)	
			(ON TRACK ROLLER FRAME)	
	7X-7644	5	FILM-INFORMATION (TIE-DOWN)	
			(ON TRACK ROLLER FRAME, ABOVE RETRIEVAL HITCH)	
	134-7258	1	FILM-INFORMATION (EXTENDED LIFE COOLANT)	
			(ON UNDERSIDE OF RADIATOR FILL DOOR)	
	158-7864	1	FILM-IDENTIFICATION (HYDRAULIC OIL)	
			(ON REAR ENCLOSURE BELOW HYDRAULIC TANK FILLER NECK)	
	291-9334	1	FILM-INSTRUCTION (DIESEL FUEL)	
			(ON REAR ENCLOSURE BELOW FUEL TANK FILLER NECK)	
	291-4261	1	FILM-INSTRUCTION (DUAL BATTERY, READ OMM)	
			(ON INSIDE OF REAR RHS ENCLOSURE DOOR NEAR DOOR HINGE)	
	291-1094	1	FILM-INSTRUCTION (SERVICE POINTS)	
			(ON INSIDE OF REAR LHS ENCLOSURE DOOR)	
	219-3133	1	FILM-NOTICE (REFRIGERANT)	
			(ON LHS REAR ROPS "C" POST)	
	160-6817	1	FILM-WARNING (READ OMM)	
			(ON REAR SURFACE OF RHS ROPS "B" POST ABOVE JOYSTICK CONTROL FILM)	
	160-6842	2	FILM-WARNING (NO STEP)	
			(ON TOP OF BOTH ANGLE CYLINDERS)	
	219-0305	1	FILM-WARNING (NO WELD, NO DRILL, READ OMM)	
			(ON LHS REAS ROPS "C" POST)	
	224-8946	1	FILM-WARNING (NO ETHER SPRAY/AIR INTK, INTL)	
			(ON AIR CLEANER BODY NEAR AIR INLET)	
	227-7391	1	FILM-WARNING (SEAT BELT, INTERNATIONAL)	
			(ON THE REAR SURFACE OF THE LHS ROPS "B" POST ABOVE THE JOYSTICK CONTROL FILM)	
	298-5074	1	FILM-WARNING (FIRE HAZARD, READ OMM)	
			(ON THE REAR SURFACE OF THE RHS ROPS "B" POST ABOVE THE JOYSTICK CONTROL FILM)	
	262-7082	1	FILM-WARNING (ROPS, FOPS, READ OMM)	
			(ON LHS REAR ROPS "C" POST)	
	225-0312	1	FILM-WARNING (JUMP START, READ OMM, INTL)	
			(ON THE INSIDE REAR RHS ENCLOSURE DOOR NEAR DOOR HINGE)	
	160-6833	1	FILM-WARNING (SHOCK HAZARD, READ OMM)	
			(ON INSIDE OF REAR RHS ENCLOSURE DOOR NEAR DOOR HINGE)	
	160-6841	2	FILM-WARNING (BELT, STOP ROTATION)	
			(ON BOTH SIDES OF FAN SHROUD)	
	160-6869	1	FILM-WARNING (NO REPAIR)	
			(ON A/C ACUMULATOR)	
	173-5699	1	FILM-WARNING (READ OMM)	
			(ON TOP OF DASH)	
	173-5700	1	FILM-WARNING (CRUSH HAZARD, READ OMM)	
			(ON REAR OF VEHICLE)	
	160-6836	1	FILM-WARNING (NO STEP)	
			(ON TOP OF RADIATOR GUARD)	
	259-4402	1	FILM-WARNING (HOT FLUID UNDER PRESSURE)	

288-3625 **PLATE & FILM GP** ***(contd.)*** **i02708180**

NOTE	PART NUMBER	QTY	PART NAME 1 2 3 4 5 6 (PRODUCT LEVEL)	SEE PAGE
			(ON SHUNT BOTTLE CAP)	

<END>

370-3244 PLATE & FILM GP–CHINESE

S/N: JTD1-UP; FFF1-UP; LLL1-UP

AN ATTACHMENT

SMCS-7557, 7563 **i04415554**

NOTE	REF NO	GRAPHIC REF	PART NUMBER	QTY	PART NAME 1 2 3 4 5 6 (PRODUCT LEVEL)	SEE PAGE
	1	1	**371-8900**	1	FILM-WARNING (ROPS, FOPS, READ OMM)	
	2	1	**367-5286**	1	PLATE-IDENTIFICATION (MACHINE)	

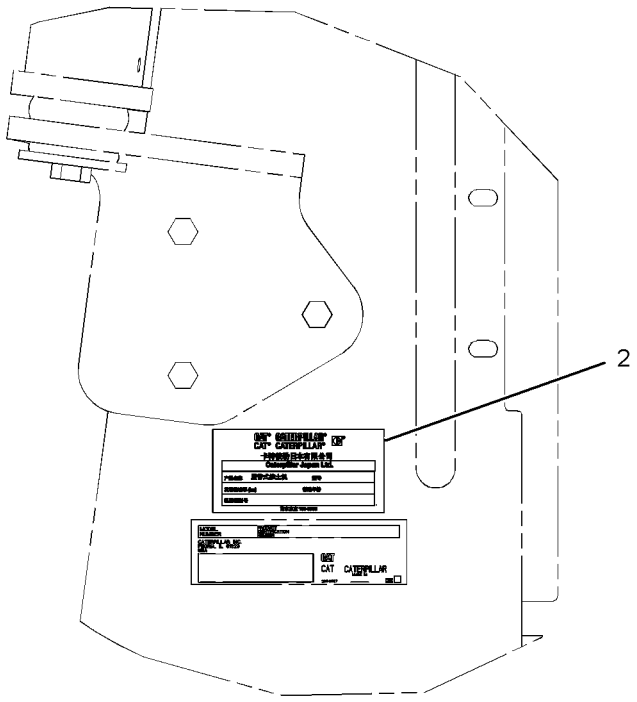

(LEFT SIDE OF RADIATOR GUARD)

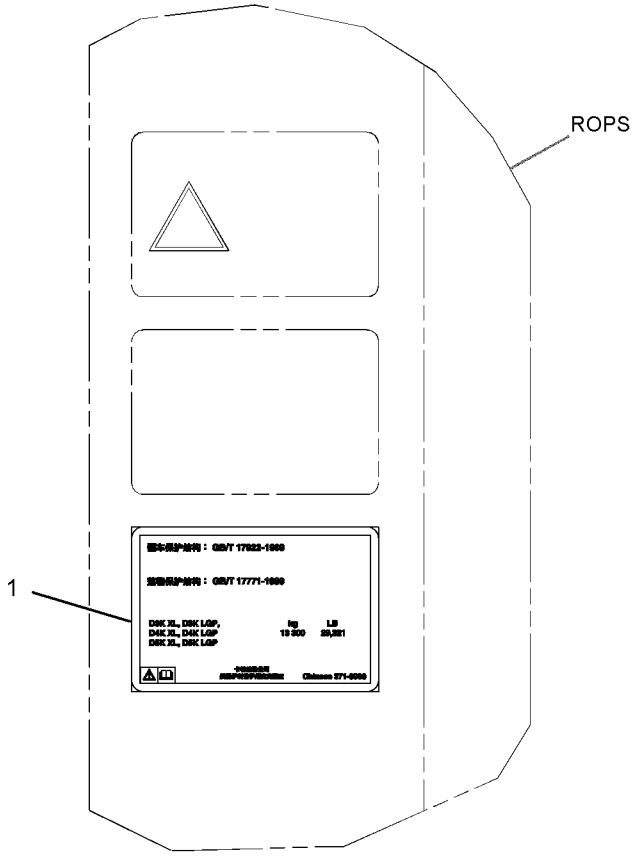

(LOCATED ON THE LEFT SIDE REAR ROPS POST)

GRAPHIC #1 **<END>** g02615056

MEMORANDA

PART NUMBER INDEX

Part	Page
0	
0L-1351	466
0S-1603	29
0T-0489	803
1	
1B-8736	11
	16
	17
	20
1F-2771	903
1G-3176	490
	492
1G-3410	370
	498
1G-7407	307
1G-8878	305
	335
1H-3244	214
	256
1H-7339	525
	528
	529
	531
1H-9696	456
	457
	466
1J-4034	915
1L-4775	530
1L-5072	923
1L-5081	256
1L-9062	304
1M-4291	466
1M-6119	145
	149
	153
	157
	167
1M-6120	145
	149
	153
	157
	167
1M-7914	466
	901
1M-7918	466
1M-8735	466
1M-8736	466
1M-9011	302
1P-0810	145
	149
	153
	229
	255
1P-2807	924
	925
	927
	928
	929
	931
1P-3702	308
	310
1P-3703	308
	310
	312
	313
1P-3934	915
1P-3935	915
1P-4278	83
	611
	613
	615
1S-0994	536
	540
	544
	548
1S-3743	903
1S-7251	146
	150
	154
	158
	167
	168
1S-7252	145
	146
	149
	150
	153
	154
	157
	158
	167
1U-1257	917
1U-8846	302
1V-6688	232
	235
	238
1W-7117	825
	827
1Y-3818	570
	576
1Y-7574	918
2	
2A-2677	179
	181
2B-0858	24
	40
2B-0941	782
2B-2695	677
2D-0388	265
	270
	275
	280
	284
2H-0435	499
	502
	505
	508
	511
	513
	516
	519
	522
	536
	540
	544
	553
	556
	636
	639
	643
	645
2H-3786	915
2H-3922	224
2H-3931	526
	527
	530
2H-5549	530
	655
2H-9247	608
2J-3506	898
2J-7761	923
2K-4973	829
2K-9111	804
	808
	811
	814
2L-8051	165
	255
2L-8052	167
	201
	204
	232
	234
	237
2L-8066	165
	238
	247
	255
2L-8067	165
	256
2L-8068	165
	207
	256
2L-8069	165
	231
	235
	238
	241
	245
	247
	251
	256
2L-8076	207
2L-8079	165
	166
	167
	231
	232
	234
	235
	237
	238
	241
	245
2M-9780	490
	492
	553
	556
	585
	587
	589
	591
	593
	595
	599
	603
	621
	918
2P-1279	566
	596
	599
	603
2P-1692	302
2P-6470	331
	333
	334
2P-6471	331
	333
	334
2Q-0604	164
	700
	702
	886
2S-3440	67
2S-4078	335
	338
	340
	342
	344
	438
	570
	573
	576
	578
	581
	595
	599
	602
	603
	872
2S-5926	438
	439
2V-3216	96
2V-8259	198
2Y-5429	198
3	
3B-4501	671
	674
3B-4506	466
3B-4508	199
3B-4512	199

► **PRIMARY REFERENCE**

PART NUMBER INDEX

Part	Page	Part	Page	Part	Page	Part	Page
3B-4630	917	3E-4333	804		382		599
3B-4641	909		808		490		603
3B-7942	69		811		492		617
3B-8489	525		814		499		618
	526	3E-4353	825		502		619
	527		827		505		873
	528	3E-4356	304		506		875
	529		907		508		878
	530	3E-4898	791		509		881
	531	3E-5464	670		511		886
	536		673		513		918
	540	3E-6600	183		516	3K-0360	49
	544		232		517		65
	548		235		519		319
	655		239		520		321
	873		265		522		323
	914		270		523		325
	915		275		535		327
3B-8822	536		280		536		329
	540		284		539		335
	544		407		540		499
	548		422		543		502
3C-6969	794		428		544		505
3D-2824	65		431		547		508
	302	3E-6909	777		548		511
	319		780		566		513
	321	3E-7443	338		570		516
	323		340		573		519
	325		342		576		522
	327		344		578		535
	329	3E-8020	253		581		536
	335		786		595		539
	338	3E-8320	145		596		540
	340		149		598		543
	342		153		599		544
	344		157		602		547
	440	3E-9865	829		603		553
	570	3F-5108	894		632		556
	573		895		636		570
	576		896		637		573
	578		897		639		574
	581	3F-9556	787		640		576
	595		788		643		578
	596		789		645		579
	599		790		875		581
	603	3G-3259	438		878		595
	872		439		881		596
	904		440		886		599
3E-2345	335	3G-3353	866		900		603
3E-3377	13		867		918		636
3E-3805	407		▶894	3J-5696	150		639
	422	3G-6049	917		154		643
3E-3892	196	3H-3385	873		158		645
	676	3H-8430	904	3J-7354	305		651
	714	3J-1907	75		306		652
	716		141		307		870
3E-4091	617		146		362	3L-6513	145
	618		150		363		149
	619		154		364		153
3E-4313	196		158		365		157
3E-4321	331		305		366		167
	333		335		490	3P-9900	829
	334		374		492	3R-9965	263
	556		375		566		268
	782		380		595		273

▶ **PRIMARY REFERENCE**

PART NUMBER INDEX

Part	Page
	278
	283
	286
3S-2093	67
	145
	146
	149
	150
	153
	154
	157
	158
	166
	167
	168
	221
	248
	251
	256
	667
	670
	673
	700
	702
	762
	765
	833
	844
	875
	878
	881
	886
	889
3T-4283	470
	476
	477
3T-4696	165
	241
	244
	247
	250
	289
	292
3T-5760	300
3V-9244	69
	435
	436
	437
3W-3321	794
3Y-9267	488

4

Part	Page
4B-2043	229
4B-4158	913
4B-4274	134
	138
4B-4863	198
4B-8774	72
4B-9782	387
	389
4D-0012	741
	743
	745
	748
	751
	754
	757
	760
4D-0298	525
	530
4D-3704	475
4D-4431	655
4D-7794	829
4E-1384	418
	741
	743
	745
	748
	751
	754
	757
	760
4F-2294	201
	204
	207
4F-4879	821
	822
	823
	824
4H-7655	319
	321
	323
	325
	327
	329
	570
	573
	576
	578
	581
4H-8380	912
4H-9527	466
4H-9628	466
4I-4872	751
	754
	757
	760
4J-5267	918
4J-5268	137
	440
4J-5477	499
	502
	505
	508
	511
	513
	516
	519
	522
	566
	595
	596
	598
	599
	602
	603
	636
	639
4J-9224	526
	527
	530
4K-0367	894
	895
	896
	897
4K-2039	651
	652
4K-7038	484
	485
	487
4K-9429	793
4L-6454	829
	871
	918
4L-9337	901
	915
4M-6425	199
4M-7470	428
	431
4P-7428	253
	256
4P-7429	256
4P-7581	146
	150
	154
	158
	178
	232
	235
	238
	242
	245
	248
	251
	253
	256
	289
	292
	596
	599
	603
	671
	674
	762
	765
4P-8134	230
	232
	235
	238
	242
	245
	248
	251
	256
	270
	275
	280
	289
	292
4S-5898	904
4S-8264	794
4S-9002	918
4T-5613	438
	439
	440
4T-6229	894
4T-6232	894
	895
4T-6780	525
	526
	527
	528
	529
	530
	531
4T-8054	526
	527
	530
4V-8256	804
	808
	811
	814
4V-8577	829

5

Part	Page
5A-3187	460
	484
	485
	487
5A-3604	99
	100
	131
	132
5C-2874	256
	771
	838
	839
5C-2890	69
	196
	198
	202
	205
	208
	214
	256
	387
	389
	416
	428
	431
	663
	687
	829
5C-7261	146
	150
	154
	158
	214
	253
	256
	290
	292
	416

► **PRIMARY REFERENCE**

PART NUMBER INDEX

Part	Page	Part	Page	Part	Page	Part	Page
	418		869	5P-0743	613	5P-3929	777
	420	5D-0718	319	5P-0747	150	5P-3948	777
	591		321		157	5P-4106	777
	593		323		158	5P-4107	777
	657		325		167	5P-4115	226
	659		327	5P-0761	157		232
	678		329		158		235
	679		335		167		238
	700	5D-0998	794		168		242
	702	5D-1026	13	5P-0767	782		245
	712		67		784		248
	741		782	5P-1076	135		251
	743	5D-1911	923		386		714
	745	5D-8159	776		392		716
	748	5E-8178	298		394		718
	751		299		398		720
	754	5E-9091	69		400		722
	757	5F-1678	918		402		724
	760	5G-0792	386		407		727
	787		427		409		730
	788	5G-2247	460		410		734
	789	5G-5069	914		412		736
	790	5G-6504	423		414	5P-4116	59
	804	5G-8871	416		416		67
	811	5H-8848	525		418		68
	881		528		421		83
	886		529		422		98
5C-8312	196		531		427		146
	663	5H-8853	499		445		150
5C-8811	844		502		446		154
5C-9553	232		505		450		158
	235		508		451		228
	238		513		452		239
	242		516		453		251
	245		519		657		290
	248		522		659		292
	251		636		741		387
	270		639		743		389
	275	5I-6125	485		745		407
	280		486		748		416
	438	5J-3886	306		751		428
	439	5J-4771	898		754		431
	613	5K-5338	319		757		566
	671		321		760		610
	674		323		872	5P-4423	829
	714		325		908	5P-4571	167
	716		327		911		231
	718		329	5P-1420	83		232
	720	5K-8451	83	5P-1442	83		234
	722		146		611		235
	724		150		613		237
	727		154		615		238
	730		158	5P-1476	145		241
	734	5K-9090	338		149		242
	736		340		153		244
	763		342		157		245
	766		344		166		247
	858	5M-3062	915	5P-2321	263		248
	859	5M-6214	655		269		250
	860	5P-0372	420		274		251
	861		800		279		829
	862	5P-0597	667		283	5P-4683	484
	863	5P-0598	68		286	5P-5618	673
	864	5P-0599	667	5P-3455	255		765
	867		768	5P-3928	777	5P-5623	149

PART NUMBER INDEX

Part	Page
	228
5P-5630	221
5P-5639	718
	720
	722
	724
	727
	730
	768
5P-5673	687
5P-5677	185
5P-5923	238
	248
	251
5P-5931	407
	422
5P-5969	718
	720
	722
5P-6006	165
	256
5P-6010	830
5P-6442	135
5P-6718	49
5P-7462	499
	502
	505
	508
	511
	513
	516
	519
	522
	536
	540
	544
	548
	593
	636
	639
	643
	645
5P-7463	499
	502
	505
	508
	511
	513
	516
	519
	522
	536
	540
	544
	548
	593
	636
	639
	643
	645
5P-7464	593
5P-7465	593
5P-7466	308
	310
	313
	596
5P-7467	308
	310
	313
	596
5P-7468	315
	317
	599
	603
5P-7469	315
	317
	599
	603
5P-7483	428
	431
5P-7506	335
	338
	340
	602
5P-7957	793
5P-8112	308
	310
	313
	596
5P-8245	29
5P-8246	372
	373
5P-8247	465
	474
	894
	895
	896
	897
5P-8248	898
5P-8250	528
	529
5P-8309	65
5P-8439	256
5P-8441	741
	743
	745
	748
	751
	754
	757
	760
5P-8444	599
	603
5P-8500	423
	785
	923
5P-8837	386
	427
	908
5P-9000	714
	716
	734
	736
5P-9085	83
5P-9209	794
5P-9297	548
	570
	573
	576
	578
5P-9436	872
5S-6174	901
5S-7349	792
5T-7486	804
	808
	811
	814
5V-0500	435
	436
5V-1496	804
	808
	811
	814
5W-1437	199
	489
	581
	596
	599
	603
	611
	872
	901
	792
	804
	808
	811
	814
	435
	436
	804
	808
	811
	814
	199
	489
6C-3431	771
6C-3680	667
	768
6C-4016	838
	839
6C-9081	771
6D-0692	302
6D-1004	609
6D-1641	596
	599
	603
	777
	780
6D-3479	146
	150
	154
	158
	596
6D-4246	551
	777
	780
6D-5257	263
	268
	273
	278
	283
	286
6D-7889	99
	100
6E-1607	376
6E-3283	352
6E-4240	648
6E-4350	362
	363
	364
	365
	366
	490
	492
6E-4402	307
	▶648
6E-4403	648
6E-4404	377
	648
6E-5063	608
6F-4718	352
6F-7045	224
6F-9974	825
	827
6H-3586	256
6H-3587	256
6H-3592	204
	207
6H-3616	34
6H-3957	8
6H-5139	387
	389
6H-9691	141
	380
	382
6I-0217	30
	48
	55
	58
	61
	63
	72
	84
	87
	90
	96
6I-0254	48
	61
	63
6I-0260	35
	55
	58
	72
	84
	87
	90
	96
	101
	106
	111
	116
	121
	126
	143
	144
6I-0292	35
6I-0363	35
6I-0364	71
6I-0423	32
6I-0455	101
	106
	111
	116
	121
	126
6I-0501	27
6I-0563	71
	72
6I-0572	55
	57
	101

6

► **PRIMARY REFERENCE**

PART NUMBER INDEX

Part	Page	Part	Page	Part	Page	Part	Page
	106		780		472		275
	111	6K-8179	566		473		280
	116	6K-9860	466		476	6V-1889	551
	121	6K-9861	466		477		584
	126	6M-5062	651		478	6V-1971	▶785
6I-0593	9		652		479		924
	10	6P-2216	431		480		925
	72	6P-5239	777	6S-9049	460		926
	93		780	6S-9102	484		927
	94	6S-3002	307	6S-9115	484		929
	95	6S-3171	470	6S-9277	420	6V-2314	794
	96		472		800	6V-2315	179
	143		473	6T-0465	145		181
6I-0594	223		476		150	6V-2495	135
6I-0645	22		477		154		611
	30		478		157		613
	55		479		167		615
	57		480	6T-6505	670		777
6I-0646	8	6S-3172	470		673		780
	22		472		762	6V-2496	671
6I-0650	30		473		765		674
	143		476	6T-6506	670		763
	144		477		673		766
6I-0654	33		478		762		833
	72		479		765	6V-3940	692
6I-0817	72		480	6T-7695	771		693
6I-0839	63	6S-3284	456	6U-1989	873	6V-3965	335
6I-0846	13		457	6V-0330	302		566
	35		473	6V-0400	308		596
6I-0847	32		476		310		600
6I-1090	55		479		312		603
	58	6S-3285	456		313		900
6I-1418	289		457	6V-0491	833	6V-3987	692
	292		473	6V-0545	315		693
	700		476		317	6V-4298	196
	702		479	6V-0681	75	6V-4495	488
	712		480	6V-0683	499	6V-4589	608
	881	6S-3495	457		502		617
	885		470		505	6V-4791	466
6I-1497	35		472		508	6V-5049	608
6I-4200	72		473		511	6V-5050	608
6I-4374	48		476		513	6V-5201	368
6I-4709	84		477		516		371
	87		478		519	6V-5258	338
	96		479		522		340
6J-1972	525		480		536		342
	528	6S-3609	▶466		540		344
	529		469		544	6V-5326	306
	531	6S-3721	470		548		379
6J-2245	218		472		636		490
	219		473		639		492
6J-3134	141	6S-3722	477		643	6V-5586	376
	380		478		645	6V-5817	777
	382		479	6V-0852	335		780
6J-5730	525	6S-3859	794		566		782
	531	6S-3900	794		595	6V-5818	777
6J-5731	525	6S-7038	477		598		780
	528		478		602	6V-6715	185
	529		479		900	6V-7238	49
	531	6S-7040	470	6V-0894	794		65
6J-5733	525		472	6V-1249	593		573
	528		473	6V-1359	164		578
	529	6S-7715	456		255		581
	531		457		265	6V-7357	434
6K-8178	777		470		270	6V-7636	434

▶ **PRIMARY REFERENCE**

PART NUMBER INDEX

Part	Page	Part	Page	Part	Page	Part	Page
	741		596		645		556
	745		599		918	6V-8641	511
	751		600	6V-8628	566		643
	757		603		595		645
6V-7687	794		636		599	6V-8642	553
	908		639		603		556
6V-7743	69		643		918		591
6V-7744	192		645	6V-8632	335		595
	193		872		553		599
	667		918		556		603
	768	6V-8398	319		595	6V-8647	96
	914		321		599		918
6V-7978	202		323		603	6V-8713	595
	205		325	6V-8634	319		599
	208		327		323		603
6V-8076	566		329		327	6V-8714	338
6V-8185	226		499		535		340
	434		502		539		342
6V-8187	201		505		543		344
	204		508		547	6V-8721	585
	207		511	6V-8636	134		587
6V-8188	199		513		138		589
	794		516		499	6V-8723	536
6V-8189	677		519		502		540
6V-8200	304		522		505		544
6V-8201	359		536		508		547
	360		540		511	6V-8724	134
6V-8351	374		543		513		499
6V-8352	306		544		516		502
	377		553		519		505
	492		556		522		508
	648		585		535		511
6V-8378	237		587		539		513
	247		589		543		516
6V-8397	83		591		570		519
	319		593		573		522
	321		636		576		547
	323		639		578		636
	325		643		581		639
	327		645		595		643
	329	6V-8400	595		599		645
	499		596		603		918
	502		599		636	6V-8774	511
	505	6V-8624	553		639		566
	508		556		643		643
	511	6V-8625	319		645		645
	513		321		918	6V-8778	338
	516		323	6V-8637	338		340
	519		325		340		342
	522		327		342		344
	535		329		344	6V-8782	319
	536	6V-8626	553		570		321
	539		556		573		323
	540	6V-8627	499		576		325
	543		502		578		327
	544		505		581		329
	547		508		904	6V-8801	677
	548		511	6V-8638	553	6V-8936	536
	566		513		556		540
	570		516		585		544
	573		519		587	6V-8969	805
	576		522		589		808
	578		636		591		812
	581		639		593		814
	595		643	6V-8639	553	6V-8978	606

► **PRIMARY REFERENCE**

PART NUMBER INDEX

Part	Page
6V-8981	585
	587
	589
	591
	593
6V-8994	872
6V-9000	918
6V-9001	96
6V-9007	335
	570
	573
	576
	578
	581
6V-9008	338
	340
	342
	344
6V-9009	595
	599
6V-9023	204
	207
6V-9028	146
	150
	154
	158
6V-9169	585
	587
	589
	591
	593
6V-9171	338
	340
	342
	344
6V-9189	187
6V-9325	794
6V-9508	596
	599
	603
6V-9511	596
	599
	603
6V-9632	670
	673
	707
	741
	743
	745
	748
	751
	754
	757
	760
	762
	765
	768
6V-9746	319
	321
	323
	325
	327
	329
	335
	336
	338
	340
	342
	344
6V-9829	918
6V-9830	585
	587
	589
6V-9832	338
	340
	342
	344
6V-9836	499
	502
	505
	508
	513
	516
	519
	522
	596
	599
	603
	636
	639
6V-9843	499
	511
6V-9844	591
	593
6V-9849	566
6V-9850	566
	570
	573
	576
	578
	581
	872
6V-9852	536
	540
	548
	553
6V-9854	338
	340
	342
	344
6V-9873	499
	502
	505
	508
	511
	513
	516
	519
	522
	636
	639
	643
	645
6V-9876	321
	325
	329
6Y-0473	460
	462
	463
6Y-0859	302
6Y-0935	460
6Y-0936	460
6Y-0937	460
6Y-0938	460
6Y-0939	460
6Y-0940	460
6Y-1198	460
6Y-1421	851
	852
	853
	854
	855
	856
	857
	858
	859
	860
	861
	862
	863
	864
	865
	866
	867
	868
	869
6Y-1596	487
6Y-1597	487
6Y-4744	457
	470
	472
	473
	476
	477
	478
	479
	480
6Y-5838	851
	853
	858
	860
	▶895
6Y-5839	895
	896
	897
6Y-5840	895
	896
	897
7B-1598	777
	780
7B-3028	385
7C-0351	35
7C-1224	35
7C-1281	13
7C-4616	30
7D-1553	346
	348
7D-1649	655
7D-7453	825
	827
7D-9708	825
	827
7D-9749	470
	472
	473
	476
	477
	478
	479
	480
7E-3870	71
7F-2122	915
7F-8267	617
	619
7F-8607	777
7G-1060	289
	292
7G-3832	308
	310
	312
	313
7G-3833	308
	310
	312
	313
7G-3834	308
	310
	312
	313
7G-4824	657
	659
	661
7G-5984	315
	317
7G-5985	315
	317
7G-8839	65
7H-1447	387
	389
7H-3171	467
7H-4543	909
7I-2272	196
7I-7439	257
7J-5639	526
	527
	528
	529
	530
7J-6285	302
	355
	356
	358
	490
	492
	907
7J-9108	335
	536

7

▶ PRIMARY REFERENCE

PART NUMBER INDEX

Part	Page	Part	Page	Part	Page	Part	Page
	540		712	7R-8872	355		410
	544		741		356		412
	548		743	7S-4992	69		414
	553		745	7S-8920	551	7X-0599	800
	556		748	7S-8921	551	7X-0603	433
	591		751	7T-0093	670	7X-0818	187
	595		754		673	7X-1553	608
	596		757		687	7X-2459	499
	599		760		762		502
	603		771		765		506
	872		777	7T-0094	670		508
7J-9885	526		780		673		511
	527		833		687		513
	530		874		762		517
7J-9886	526		877		765		520
	527		880	7T-1099	407		523
	530		885	7T-4532	686		637
7J-9887	526	7K-2017	484	7T-6799	772		640
	527		485		774		643
	530		487	7T-8894	231		645
7K-1181	83	7K-3176	777		234	7X-2465	791
	98	7K-3304	777		237	7X-2533	69
	138	7K-6365	528	7T-8895	231		185
	145		529		234		751
	149	7K-9206	653		237		754
	153	7L-0688	829		241		757
	157	7M-4672	226		244		760
	164	7M-8485	302		247		792
	178		319		250	7X-2534	146
	179		321	7W-1176	32		150
	181		323	7W-2326	49		154
	183		325		50		158
	185		327	7W-2632	101		710
	201		329		106		875
	204		336		111		878
	207		338		116		883
	230		340		121	7X-2535	179
	231		342		126		181
	234		344	7W-4540	223		585
	237		439	7W-4634	27		587
	241		570	7W-4642	32		589
	244		573	7W-4669	40	7X-2536	146
	247		576	7X-0288	870		158
	250		578	7X-0289	677		256
	253		581	7X-0345	226		566
	255		596	7X-0513	420	7X-2537	653
	263		599	7X-0515	446	7X-2538	685
	268		603		451	7X-2539	59
	273	7M-8798	782	7X-0550	452	7X-2543	336
	278	7N-0296	221		453		423
	283	7N-0718	145	7X-0578	680		500
	286		149		682		502
	289		153		692		505
	292		157		693		508
	425		▶224	7X-0579	256		511
	595	7N-0808	69	7X-0584	441		514
	598	7N-0900	604		443		516
	602	7N-9017	166		454		519
	611		256		455		522
	613	7N-9801	221	7X-0590	392		636
	615	7P-2358	908		394		639
	687	7R-3029	265		398		643
	700		270		400		645
	702		275		402	7X-2546	680
	710		280		409		682

▶ **PRIMARY REFERENCE**

PART NUMBER INDEX

Part	Page
7X-2548	202
	205
	208
	875
	878
7X-2549	423
7X-2550	908
7X-2552	436
	798
	800
7X-2553	265
	270
	275
	280
	420
	435
	653
	685
	799
7X-2554	799
7X-2555	435
	436
7X-2556	445
	446
	450
	451
7X-2568	302
7X-2576	427
7X-2577	908
	911
7X-2619	196
	740
7X-6315	163
7X-7644	924
	925
	927
	928
	929
	931
7X-7729	65
	71
	138
	146
	150
	154
	158
	256
	280
	319
	321
	323
	325
	327
	329
	336
	387
	389
	392
	394
	398
	400
	402
	405
	406
	425
	426
	428
	431
	441
	443
	536
	540
	544
	548
	554
	556
	570
	573
	581
	591
	593
	596
	600
	604
	611
	613
	615
	618
	657
	659
	661
	667
	694
	714
	716
	718
	720
	722
	724
	727
	730
	734
	736
	768
	782
	794
	801
	818
	819
	820
7X-7927	833
	844
7X-7928	833
	844
7X-7929	833
	844
7X-7930	833
	844
7X-7945	566
	595
	598
	602
7X-7958	338
	340
	342
	344
	784
7X-9261	298
	299
7Y-0223	302
7Y-0225	302
7Y-0468	805
	809
	812
	814
7Y-1433	302
7Y-1434	302
7Y-1558	302
7Y-3474	844
7Y-5074	270
	275
	280
7Y-5219	376
7Y-5458	225
7Y-5464	225
7Y-7388	805
	809
	812
	814
7Y-9099	239
	251
8	
8B-9424	591
	593
8C-3056	145
	149
	153
	157
	167
	168
	256
8C-3076	131
8C-3095	185
8C-3210	183
8C-3290	791
8C-3312	871
8C-3364	596
	599
8C-3445	52
8C-3446	305
8C-3451	305
8C-3681	67
8C-3756	670
	673
	687
	762
	765
8C-5607	179
	181
	185
	226
	263
	268
	792
8C-5608	179
	181
	185
	226
	263
	268
	792
8C-6354	207
	264
	268
	273
	278
8C-6802	741
	743
	745
	748
	751
	754
	757
	760
8C-6868	872
8C-6920	335
8C-6965	141
	375
	380
	382
8C-7332	196
	714
	716
	724
	727
	730
	734
	736
8C-7581	138
8C-8451	265
	270
8C-8514	671
	674
8E-7078	898
8E-7079	898
8E-7791	657
	659
	661
8E-7840	800
8F-1434	237
	247
	256
8F-9206	777
8H-5303	224
8H-5306	224
8H-5724	372
	373
8I-6686	335
8J-0553	528
	529
8J-0729	653
	851
	852
	853
	854
	855
	856
	857
	858
	859
	860
	861
	862
	863
	864
	865
	866

PART NUMBER INDEX

Part	Page	Part	Page	Part	Page	Part	Page
	867		839	8T-1718	335		868
	868	8R-1803	210	8T-1779	536		869
	869		211		540	8T-3425	146
8J-0928	653		212		544		149
8J-7008	914		226		548		154
8J-7415	526	8S-0948	548	8T-1885	536		158
	527	8S-9378	65		540		255
	530	8T-0072	302		544	8T-3426	265
8K-1433	771	8T-0088	465	8T-1886	536		270
8L-2779	131	8T-0154	769		540		275
	132		770		544		280
8L-5008	536	8T-0197	319	8T-1887	145		407
	540		321		153		422
	544		323		157	8T-3490	396
	548		325		338		397
8L-8413	165		327		340		404
	232		329		342		407
	234	8T-0269	297		344		410
	237		632		570		412
	238		634		573		414
	242		635		576		418
	244		642		578		423
	248		647		581		551
	250	8T-0277	804	8T-1888	145		693
	289		808		153	8T-3597	396
	292		811		157		397
	700		814		338		404
	702	8T-0285	134		340		407
	705		738		342		410
	706	8T-0287	134		344		412
	707		138		570		414
	708	8T-0288	617		573		416
	709		619		576		418
	712	8T-0315	570		578		441
	821		573		581		443
	822		576	8T-1895	591		445
	823		578	8T-1896	591		450
	824		581	8T-2173	613		451
	829	8T-0318	416	8T-2353	875		657
	880	8T-0328	135		878		659
	886		138		881		741
8M-2773	511		146		886		743
	570		150	8T-2395	358		745
	573		154	8T-2659	198		748
	576		158	8T-2920	551		751
	578		237	8T-2922	141		754
	581		247		380		757
	643		256		382		760
	645		617	8T-3282	851		799
8M-4704	488		619		852	8T-3612	407
8M-4986	873		794		853		416
8N-0869	145	8T-0357	474		854		718
	146	8T-0404	596		855	8T-3613	336
	149		599		856	8T-4121	65
	150		603		857		67
	153	8T-0643	69		858		68
	154	8T-0722	449		859		69
	157	8T-1117	784		860		71
	158	8T-1158	606		861		83
	168	8T-1159	358		862		98
8P-6188	467	8T-1683	570		863		135
8P-9770	864		573		864		146
	866		576		865		150
	868		578		866		154
8R-0275	838		581		867		158

► **PRIMARY REFERENCE**

PART NUMBER INDEX

Part	Page	Part	Page	Part	Page	Part	Page
	178		596		716		257
	192		600		718		270
	193		604		720		275
	202		609		722		280
	205		611		724		319
	232		621		727		321
	235		636		730		323
	238		639		734		325
	242		643		736		327
	245		645		776		329
	248		671		777		336
	251		674		780		338
	257		680		794		340
	265		682		805		342
	270		685		808		344
	275		687		812		386
	280		714		815		387
	290		716	8T-4136	67		389
	292		718		69		392
	304		720		138		394
	308		722		257		398
	310		724		319		400
	313		727		321		402
	319		730		323		407
	321		734		325		422
	323		736		327		425
	325		763		329		426
	327		766		336		427
	329		772		418		428
	336		774		536		431
	338		776		540		536
	340		777		544		540
	342		780		548		544
	344		782		554		548
	386		833		556		554
	407		908		566		556
	416		911		570		571
	418	8T-4122	265		573		574
	422		270		576		576
	427		275		578		578
	440		280		582		582
	449		445		591		596
	500		450		593		600
	502		798		596		604
	505		800		600		611
	508	8T-4123	302		604		613
	511	8T-4133	69		611		615
	514		71		613		657
	516		146		615		659
	519		154		618		661
	522		158		685		667
	536		290		772		671
	540		293		774		674
	544		441		778		687
	548		443		780		763
	554		596		782		766
	556		600		908		768
	566		604	8T-4137	65		777
	570		621		68		780
	573		624		83		782
	576		626		98		833
	578		628		146		911
	581		630		150		918
	591		694		154	8T-4138	195
	593		714		158		202

PART NUMBER INDEX

Part	Page
	205
	208
	229
	232
	235
	238
	242
	245
	248
	251
	420
	423
	428
	431
	657
	659
	663
	687
	700
	702
	710
	712
	878
	881
	883
	886
8T-4139	195
	386
	392
	394
	398
	400
	402
	407
	416
	418
	422
	425
	426
	427
	441
	443
	445
	446
	450
	451
	452
	453
	657
	659
	908
	911
8T-4140	437
8T-4167	427
	909
8T-4171	202
	205
	208
	418
	657
	659
	661
	738
8T-4172	604
8T-4173	435
	436
8T-4174	43
	69
	435
	436
8T-4175	435
8T-4176	452
	453
8T-4178	680
	682
8T-4179	135
	150
	392
	394
	398
	400
	402
	407
	422
	425
	426
8T-4180	434
8T-4182	308
	310
	313
	596
	600
	604
	620
	621
	622
	623
8T-4183	308
	310
	312
	313
	407
	410
	412
	414
	423
	435
	436
	452
	453
	596
	600
	604
	741
	743
	745
	748
	751
	754
	757
	760
8T-4184	308
	310
	312
	313
	441
	443
	454
	455
	468
	469
8T-4185	65
	270
	275
	280
	596
	600
8T-4186	69
	150
	154
	158
	257
	265
	270
	275
	280
	406
	423
	428
	431
	536
	540
	544
	548
	596
	600
	714
	716
	718
	720
	722
	724
	727
	730
	734
	736
	782
	801
	818
	820
8T-4189	65
	68
	134
	190
	191
	192
	193
	221
	232
	242
	340
	342
	344
	407
	416
	428
	431
	433
	566
	610
	667
	782
8T-4191	146
	150
	154
	158
	202
	205
	232
	235
	238
	242
	245
	248
	251
	257
	290
	293
	511
	536
	540
	544
	548
	554
	557
	571
	574
	576
	578
	582
	613
	615
	643
	645
8T-4192	257
	304
	441
	443
	454
	455
	653
	908
	914
8T-4194	302
	447
	448
	452
	453
	454
	455
	655
8T-4195	69
	71
	138
	146
	158
	178
	187
	265
	270
	275
	280
	336
	387
	389
	416
	425
	426
	428
	431

► **PRIMARY REFERENCE**

PART NUMBER INDEX

Part	Page	Part	Page	Part	Page	Part	Page
	440	8T-4200	59		195		593
	441		67		202		610
	443		83		205		617
	500		98		208		619
	503		99		257		653
	505		100		302		667
	508		131		304		678
	511		132		308		679
	514		150		310		685
	516		154		312		687
	519		228		313		741
	522		265		425		743
	536		270		426		745
	540		275		441		748
	544		280		443		751
	548		284		454		754
	557		287		455		757
	593		338		468		760
	596		340		469		782
	600		342		596		804
	604		344		600		811
	636		440		604		829
	639		604		610	8T-4244	302
	643		617		653		308
	645		619		714		416
	653	8T-4205	201		716		596
	667		202		734		600
	685		204		736		604
	819		205		875		906
	851		207		878	8T-4648	906
	852		208		881	8T-4742	684
	853		214		886	8T-4744	684
	854		265		904	8T-4778	407
	855		270		906	8T-4896	677
	856		671		908		829
	857		674		914		870
	858		687	8T-4224	65		871
	859		714		134		873
	860		716		146		901
	861		718		151		915
	862		720		154		918
	863		722		158	8T-4908	253
	864		724		190		265
	865		727		191		270
	866		730		192		275
	867		734		193		280
	868		736		214		284
	869		740		221		287
8T-4196	146		763		232		591
	257		766		242		593
	304		792		253		687
	392		805		257	8T-4910	65
	394		808		265		468
	398		812		270		469
	400		815		275	8T-4956	392
	402	8T-4222	386		280		394
	405		427		284		398
	548		428		287		400
	554		431		338		402
	557		657		340		409
8T-4197	678		659		342		421
	679		661		344		423
8T-4198	777	8T-4223	134		416		441
	780		138		440		443
8T-4199	257		150		591		454

► PRIMARY REFERENCE

PART NUMBER INDEX

Part	Page	Part	Page	Part	Page	Part	Page
	455		757		263		700
	610		760		264		702
8T-4970	137	8T-7000	296		265		712
8T-4971	257	8T-7038	396		268		881
	741		397		269	8T-8736	264
	743		404		273		269
	745	8T-7329	596		274		274
	748		600		278		279
8T-4983	336		604		279		284
	338	8T-7338	907		283		286
	340	8T-7516	913		286	8T-8737	145
	342	8T-7547	190		292		146
	344		232		670		149
	602		387		673		150
8T-4984	335		389		696		153
	611		418		698		154
	613		830		700		157
	615	8T-7566	805		702		158
8T-5001	454		809		705		164
	455		812		706		165
8T-5005	423		815		707		166
	777	8T-7852	663		709		167
	780	8T-7934	500		712		179
8T-5041	384		503		762		181
8T-5346	204		505		765		183
	207		508		787		185
8T-5360	803		511		788		198
8T-5372	387		514		789		201
	407		517		790		204
	422		519		829		207
8T-5400	741		522		880		216
	743		551	8T-8730	145		225
	745		620		146		231
	748		621		149		232
	751		622		150		234
	754		623		153		235
	757		636		154		237
	760		639		185		238
	844		643		207		241
8T-5878	386		645		230		242
	909	8T-7971	134		231		244
8T-6466	596		138		232		247
	600		794		234		248
	604	8T-8729	146		235		250
8T-6594	361		150		237		253
8T-6685	680		154		238		255
	682		165		241		263
	914		185		242		264
8T-6703	611		207		244		265
	613		216		245		268
	615		221		247		269
8T-6725	83		228		248		270
8T-6850	83		229		250		273
8T-6868	65		231		251		274
	195		232		263		275
	384		234		264		278
8T-6876	535		235		265		279
	539		237		268		280
	543		238		269		283
8T-6902	741		241		273		286
	743		244		274		287
	745		247		278		289
	748		248		279		292
	751		250		283		670
	754		255		292		673

► **PRIMARY REFERENCE**

PART NUMBER INDEX

Part	Page
	687
	696
	697
	698
	700
	705
	706
	707
	708
	709
	710
	712
	739
	762
	765
	833
	874
	877
	878
	880
	885
8T-8799	255
8T-8827	145
	149
	153
	157
	168
8T-8902	499
	502
	505
	508
	513
	516
	519
	522
	636
	639
8T-8919	872
	904
8T-8985	570
	573
	576
	578
	581
8T-9023	319
	321
	323
	325
	327
	329
8T-9041	535
	539
	543
	547
8T-9368	226
8T-9371	830
8T-9383	199
8T-9388	210
	211
	212
8T-9402	613
8T-9403	308
	310
	313
	596
	600
	604
8T-9597	495
8T-9598	608
8T-9655	289
	292
8T-9850	670
	762
8W-0125	547
8W-0204	547
8W-5641	535
	539
	543
8W-8909	146
	158
8X-5489	145
	153
	157
8Y-3465	407
8Y-4501	434
8Y-6388	718
	720
	722
	724
	727
	730
9	
9B-0453	199
9B-7237	873
9D-3768	232
9D-8508	844
9F-1399	903
9F-2247	298
	299
	456
	457
	470
	472
	473
	476
	477
	478
	479
	480
9F-3965	204
	207
9F-5644	214
	224
9F-5975	805
	809
	812
	815
9G-1642	462
	463
9G-3186	229
9G-3695	794
9H-6454	387
	389
9J-1137	914
	►917
9J-4259	917
9J-9812	525
	530
9M-1974	692
	693
9M-4995	98
9M-5617	196
9M-5732	800
9M-6738	135
	138
9M-7394	923
9M-8406	777
	780
	782
9M-9162	536
	540
	544
	548
	554
	557
9N-0869	700
	702
	712
	881
	885
9R-0699	626
	628
9R-1004	544
	557
	591
9R-1005	544
	557
	591
9R-4024	838
	839
9R-9442	232
	234
	237
9R-9925	611
	613
	615
9S-4183	440
9S-4190	621
9S-4191	75
	547
	632
9S-5282	677
9S-6130	335
9S-8002	306
	307
	362
	363
	364
	365
	366
	490
	492
	873
9S-8004	138
	141
	374
	375
	380
	382
	490
	492
	608
9S-8005	870
9S-8006	490
	492
	608
9S-8008	302
	608
9S-8010	438
	872
9S-9334	302
	439
9T-3726	490
	492
9T-3743	352
9T-3853	375
9T-3928	362
	363
	364
	365
	366
	490
	492
9T-4367	375
9T-5241	805
	809
	812
	815
9U-7000	335
	338
	340
	344
	602
9U-8263	771
9V-4460	655
9V-6589	595
	598
	602
9W-0607	187
	188
	189
9W-0844	164
	165
	167
	201
	204
	207
	231
	234
	235
	237
	238
	241
	244
	245
	247
	250
	251
	255
	256
	263
	264
	268
	269
	270
	273
	274

► **PRIMARY REFERENCE**

PART NUMBER INDEX

Part	Page	Part	Page	Part	Page	Part	Page
	275		207	9X-2041	680		881
	278	9W-3978	535		682		886
	279	9W-5224	467	9X-2042	196		889
	280	9W-7216	466		205	9X-2092	418
	283	9W-9265	372		680	9X-2133	67
	284		373		682	9X-2134	918
	286	9W-9915	43		714	9X-2185	674
	287	9W-9952	43		716		765
	289	9W-9953	43		718	9X-2480	257
	292	9X-1046	198		720		792
	700	9X-1054	165		722	9X-2488	782
	702		166		724	9X-2857	369
	710		201		727	9X-3401	146
	712		204		730		150
	875		207		734		154
	878		231		736		158
	881		235		741		164
	886		238		743		166
9W-0852	164		241		745		179
	166		244		748		181
	201		247		751		201
	204		250		754		204
	207		255		757		207
	230		687		760		225
	231	9X-1055	166		768		231
	234		231	9X-2043	202		235
	235		235		208		238
	237		238		680		241
	238		241		682		244
	241		245		692		247
	244		247		693		250
	247		251		825		253
	250		256		827		255
	256	9X-1056	166	9X-2044	680		263
	263		201		682		264
	264		204	9X-2045	657		268
	268		208		680		269
	269		231		682		273
	273		235		700		274
	274		238		702		278
	278		241		710		279
	279		245		712		283
	283		247		714		286
	286		251		716		289
	289		256		718		292
	292	9X-1386	255		720		710
	670	9X-1813	149		722		804
	673		215		724		808
	700		228		727		811
	702	9X-2032	670		730		814
	712		673		733		874
	741		762		734		877
	743		765		736		880
	745	9X-2040	714		741		885
	748		716		743	9X-3402	145
	751		718		745		149
	754		720		748		153
	757		722		751		157
	760		724		754		164
	762		727		757		165
	765		730		760		166
	880		734		772		167
	885		736		774		179
9W-1951	201		825		875		181
	204		827		878		198

► **PRIMARY REFERENCE**

PART NUMBER INDEX

Part	Page	Part	Page	Part	Page	Part	Page
	231		418		280		808
	232		657		387		811
	234		659		389		814
	237		661		420	031-0249	829
	238		714		423	032-8047	72
	242		716		428	032-8191	72
	244		718		431	032-9090	17
	248		720		434		19
	250		722		438		20
	253		724		439	032-9091	17
	255		727		585		19
	263		730		587		20
	264		734		589	033-4818	265
	265		736		613		270
	268		792		657		275
	269	9X-6269	43		659		280
	270	9X-6772	165		663	033-6039	140
	273		289		700	033-7687	29
	274		292		702	033-8248	535
	275	9X-7345	232		710		539
	278		235		712		543
	279		238		738		547
	280		242		858	035-8014	72
	283		245		859	035-8017	101
	284		248		860		106
	286		251		861		111
	289	9X-7378	230		862		116
	292		686		863		121
	670	9X-7380	777		864		126
	673		780		867	035-8063	22
	700	9X-7381	777		869		52
	702		780		875	035-8068	22
	710	9X-7382	777		878	053-1578	872
	712		780		881	067-3045	599
	739	9X-7383	777		883		603
	741		780		886	067-6002	22
	743	9X-7384	777	9X-8257	43	067-6006	22
	745	9X-7734	375		302	067-6043	22
	748	9X-8250	557		359	067-6179	30
	751		777		360	067-6213	35
	754		780		361	067-6264	101
	757	9X-8256	69		407		106
	760		137		653		111
	762		146		685		116
	765		151		799		121
	874		154	9X-8259	481		126
	877		158	9X-8267	741	067-6265	101
	878		183		743		106
	880		195		745		111
	885		196		748		116
	889		198		751		121
9X-3404	149		202		754		126
	300		205		757	067-6873	17
	301		208		760		19
	891		229	9X-8482	352		20
	892		232	9X-8483	352	067-6874	17
	893		235	9Y-9381	72		19
9X-4244	188		238				20
	189		242			069-4269	65
9X-4813	183		245	**0**		081-3698	498
9X-6032	609		248			081-3801	307
9X-6165	179		251	004-1964	297	084-4277	231
	181		257	027-3873	456		234
	185		270		457		237
	226		275	031-0214	804	085-7539	141

PART NUMBER INDEX

Part	Page
	380
	382
087-4772	490
	492
087-8799	69
091-0081	257
091-2436	167
	231
	235
	238
	241
	245
	247
	251
091-9035	595
	598
092-3635	499
	502
	505
	508
	511
	513
	516
	519
	522
	636
	639
	643
	645
094-0611	302
094-0616	302
094-1528	302
095-0658	298
	299
095-0674	352
095-0736	135
	138
	146
	150
	154
	158
095-0891	302
095-0913	568
095-0942	352
095-1207	418
095-1277	302
095-1574	624
	626
	628
	630
095-1582	632
	634
	635
	642
	647
095-1586	624
	626
	628
	630
095-1590	624
	626
	628
	630
	632
095-1750	632
	634
	635
	642
	647
096-0001	357
096-4885	69
	435
096-4900	608
096-5962	265
	270
	275
	280
096-6166	663
	671
	674
	738
	763
	766
	794
097-7234	167
099-0169	302
099-0822	141
	380
	382
099-2374	632
	634
	635
	642
	647
099-5217	481
100-3751	30
	58
100-4336	535
	539
	543
	547
100-4461	51
100-4830	30
	72
	87
	101
	106
	111
	116
	121
	126
100-4841	22
	90
	96
100-5041	167
100-5805	183
100-6674	230
101-0003	829
101-2867	804
	808
	811
	814
101-2987	34
101-3617	32
101-3771	55
101-3895	30
	101
	106
	111
	116
	121
	126
101-8296	777
	780
102-1733	304
102-2073	8
102-2075	8
102-2076	8
102-2078	8
102-7886	777
	780
102-8705	595
	598
	602
102-8801	146
	150
	154
	158
	164
	166
	179
	181
	183
	231
	232
	234
	235
	237
	238
	241
	242
	244
	245
	247
	248
	250
	251
	253
	263
	264
	265
	268
	269
	270
	273
	274
	275
	278
	279
	280
	283
	284
	286
	287
	289
	292
102-8802	149
	164
	165
	183
	185
	201
	204
	207
	221
	228
	229
	230
	241
	244
	247
	250
	255
	256
	289
	292
	686
	687
	700
	702
	710
	712
	829
	874
	877
	880
	885
102-8803	164
	215
	289
	292
	804
	808
	811
	814
	874
	877
	880
	885
102-8804	167
	231
	235
	238
	241
	244
	247
	250
	264
	268
	269
	273
	274
	278
	279
	670
	673
	741
	743
	745
	748
	751
	754
	757
	760
	762
	765

1

► **PRIMARY REFERENCE**

PART NUMBER INDEX

Part	Page	Part	Page	Part	Page	Part	Page
	772		241	111-3781	794	114-4363	32
	774		245	111-4015	670	114-9284	416
	794		247		673	115-1615	168
102-8805	145		251		762		201
	149	104-2091	198		765		205
	153		718	111-4627	663		208
	157		720	111-4837	566		232
	166		722	111-4838	568		235
	216		724	111-7899	44		238
	225		727		164		242
	700		730		700		245
	702	105-1866	346		702		248
	707		348		772		251
	712		603		774		256
	833	105-4593	606		874		687
	874	106-0107	▶225		877	115-2422	301
	877		772		880	115-3799	595
	880		774		883		598
	885	106-0210	225		884	116-4160	201
	886	106-0699	490		886		204
102-8806	164		492		888		207
	165	106-8916	72		889	116-4161	201
	167		90	111-8222	12		204
	185		96	112-1817	▶45		208
	231	106-9187	457		134	116-6680	255
	232	107-2348	72		138	116-7471	201
	234	107-3117	374	112-4629	490		204
	235	107-4393	777		492		207
	237	107-4394	777	112-4640	490	117-1385	99
	238	107-4395	777		492		100
	242	107-4396	777	112-4645	377		131
	244	107-4397	777	112-4647	377		132
	248	107-4399	777	112-6646	253		147
	250	107-4749	146	112-9861	45	117-4491	804
	255		150	113-0693	210		808
	264		154		211		814
	268		158		212	117-6952	265
	269	108-2949	630		226		270
	273	108-3565	370	113-1504	48		275
	274		496	113-4419	494		280
	278		498	113-4630	13	117-7236	490
	279	108-3819	490	113-5100	201		492
	284		492		204	117-7242	370
	286	108-4311	829		208	117-7251	370
	289	108-5471	434	113-6349	143		496
	292		741		144	117-7252	370
	700		745	113-8129	61	117-7273	295
	702		751		63	117-7278	306
	710		757	113-8215	302		355
	712	109-2013	265	113-8291	201		356
	874		270	113-8292	201		357
	877		275	113-8490	164		489
	880	110-0885	718		201	117-7279	306
	885		720		204	117-7280	306
	886		722		207	117-7296	358
102-9941	27	110-1010	138	113-8491	204	117-7322	489
	41		618		207	117-8131	791
103-2135	72	110-1011	138	113-8492	204	118-4977	304
103-2543	202	110-6109	772		207	119-1616	901
103-5705	90		774	113-9769	302	119-2195	901
103-6131	29	110-6969	407	113-9807	804	119-3662	165
104-1995	167	110-7887	772		808		166
	231		774		811		167
	235	111-0859	28		814		231
	238	111-3780	794	114-2579	12		232

▶ **PRIMARY REFERENCE**

PART NUMBER INDEX

Part	Page	Part	Page	Part	Page	Part	Page
	234	123-5775	494		181		234
	235	123-5776	494		183		235
	237	123-5777	494		201		237
	238	123-5778	494		204		238
	241	123-5781	352		208		241
	245	123-5782	352		230		244
	247	123-5784	352		231		245
	251	123-5787	352		232		247
	256	123-5800	352		234		248
	264	123-7559	307		235		250
	268	123-7560	307		237		251
	273	123-7575	306		238		256
	278		307		241		264
	289	123-7576	306		242		265
	292		307		244		268
	670	123-7583	141		245		269
	700	123-7597	358		247		270
	702	123-7598	355		248		273
	712		356		250		274
	880		357		251		275
	886		358		253		278
119-5708	83	123-7602	358		256		279
	570	123-7615	833		263		280
	573	123-9769	375		264		284
	581	124-0174	150		265		286
119-5917	335		154		268		289
120-4394	306	124-3536	37		269		292
	352		38		270		670
	365	124-3548	201		273		673
	366	124-3815	12		274		762
121-0883	32		30		275		765
121-2761	768		35		278		833
122-1951	595		84		279	125-7876	256
	598		87		280	125-8175	741
	602		90		283		743
	918		101		284		745
122-3606	350		106		286		748
122-4395	804		111		287		751
	808		116		289		754
	811		121		292		757
	814		126		700		760
122-9068	370		260		702	125-9134	370
122-9363	376		261		710	126-1403	371
122-9718	362	124-9636	201		712	126-1477	307
	363		204		875		358
	364		207		878	126-1638	365
	490	124-9637	201		881		366
	492		204		886	126-1766	179
123-0380	416		207	125-7875	145		181
123-1373	300	124-9904	374		146		670
123-2017	307	124-9905	374		149		687
123-2899	53	124-9906	374		150		885
	54	124-9908	374		153	126-1767	225
123-3827	392	125-7874	145		154		255
	394		146		157		269
	398		149		158		274
	400		150		165		286
	402		153		166		289
	663		154		167		686
123-4038	72		157		201		710
123-4363	624		158		204		874
123-4410	901		165		207		878
123-5748	352		166		230	126-1774	164
123-5773	494		167		231		289
123-5774	494		179		232		292

► **PRIMARY REFERENCE**

PART NUMBER INDEX

Part	Page	Part	Page	Part	Page	Part	Page
	700		204		270		929
	702		208		275		931
	712		289		280	135-7193	499
	880		292		284		502
	885	128-5531	145		287		505
126-2743	164		149		289		508
126-3212	8		153		292		511
126-5632	495		157	132-7551	595		513
126-5633	495	128-8423	228		599		516
126-5637	498	128-8981	352		603		519
126-5638	495	129-3181	374	132-8487	263		522
126-5639	495	129-7286	912		268		559
126-5640	498	129-7301	901		273		561
126-5641	495	129-7307	912		278		563
126-5642	495	129-7321	488	133-1011	30		636
126-5643	498	130-0165	178	133-3234	741		639
126-5676	490	130-5300	268		743		643
	492		273		745		645
126-5677	490		278		748	135-7420	352
	492		289		751	135-7421	352
126-5678	490		292		754	136-1543	793
	492	130-7806	365		757	136-1613	743
126-5709	489		371		760		748
126-7574	163	130-9888	48	133-3413	178	136-1955	135
126-8472	687	130-9984	551	133-6517	178		138
126-8921	302		784	133-6934	270	136-3191	844
126-8928	791	131-1488	165		275	136-4192	754
127-2170	289		256		280		760
	680	131-1490	165	133-8714	670	137-2170	838
	682		256		673		839
	718	131-1497	207	133-9012	674	137-4477	563
	720	131-3093	670		765		636
	722		673	133-9469	72		639
	724		762	134-0404	305	138-1645	794
	727		765		335	138-2456	909
	730	131-3540	741		900	138-8381	609
	804		743	134-2540	165	138-8454	689
	811		745		232		691
127-4195	495		748		234		771
127-4196	495		751		237	139-1398	338
127-4197	495		754		242		340
127-4198	495		757		244		342
127-4471	68		760		248		344
127-8165	72	131-5479	563		250	140-1739	498
128-1599	223		636		255	140-4722	771
128-2136	714		639		263	140-4765	135
	716	132-0338	804		264		138
	718		808		268	140-4829	65
	720		811		269	140-6836	897
	722		814		273	140-7480	792
	724	132-1805	255		274	140-8783	143
	727	132-3056	617		278		144
	730		619		279	141-0305	608
	734	132-4763	917		283	141-8061	179
	736	132-5789	179		286		181
128-4168	201		181	134-3518	670		238
	204		232		673		247
	207		235		762		264
	255		238		765		269
128-4175	204		242	134-3856	40		270
	207		245	134-4126	163		274
128-4178	165		248	134-7258	924		275
	255		251		925		279
128-4249	165		253		927		280
	201		265		928		284

PART NUMBER INDEX

Part	Page	Part	Page	Part	Page	Part	Page
	286	145-3812	295		543		573
141-8584	101	145-3813	295		570		576
	106	145-5181	448		573		578
	111		452		576		581
	116		453		578	148-8368	499
	121		464		581		502
	126		471		595		505
142-9425	369	145-9087	838		599		508
142-9426	369		839		603		511
142-9427	371	146-3728	651		636		513
142-9430	371	146-6433	844		639		516
142-9431	371	147-1076	416		643		519
142-9432	371	147-1444	265		645		522
142-9433	371		270		918		636
142-9434	369		274	148-8340	553		639
142-9435	369		279		556		643
142-9436	365	147-1445	164	148-8341	595		645
	371		289		599		918
142-9437	369		292		603	148-8369	566
142-9438	369	147-1446	164	148-8342	335		595
142-9439	368		289		553		599
	371		292		556		603
142-9440	365	147-5553	72		595		918
	371	148-2714	794		599	148-8373	595
143-1288	804	148-8315	553		603		599
	808		556	148-8345	553	148-8374	536
	811		591		556		540
	814		595		585		544
143-6020	198		599		587		547
144-0195	741		603		589	148-8375	585
	743	148-8316	918		591		587
	745	148-8317	338		593		589
	748		340	148-8347	335		591
	751		342		570		593
	754		344		573	148-8378	499
	757	148-8318	319		576		502
	760		323		578		505
	833		327		581		508
	844		535	148-8351	566		511
144-0331	696		539	148-8352	338		513
	697		543		340		516
	698		547		342		519
	707	148-8325	511		344		522
	708		643	148-8356	595		547
	709		645		599		636
144-1636	687	148-8327	338	148-8357	338		639
144-6691	900		340		340		643
145-0326	829		342		342		645
145-0909	358		344		344		918
145-0961	358		570	148-8358	553	148-8382	596
145-1824	371		573		556		599
145-2237	499		576	148-8363	321		603
	502		578		325	148-8383	570
	505		581		329		573
	508	148-8336	499	148-8364	319		576
	513		502		321		578
	516		505		323		581
	519		508		325	148-8385	918
	522		511		327	148-8390	553
	595		513		329		556
	598		516	148-8365	535	148-8393	536
	602		519		539		540
	636		522		543		548
	639		535	148-8367	566		553
145-3405	794		539		570	148-8406	439

► **PRIMARY REFERENCE**

PART NUMBER INDEX

Part	Page
148-8407	547
148-8424	499
	502
	505
	508
	513
	516
	519
	522
	636
	639
148-8428	319
	321
	323
	325
	327
	329
148-8433	499
	502
	505
	508
	513
	516
	519
	522
	596
	599
	603
	636
	639
148-8439	511
	566
	643
	645
148-8443	499
	502
	511
	513
	643
	645
148-8450	338
	340
	342
	344
148-9282	645
148-9364	585
	587
	589
149-5461	870
149-5733	917
150-0351	851
	852
	853
	854
	855
	856
	857
	858
	859
	860
	861
	862
	863
	864
	865
	866
	867
	868
	869
150-0352	851
	852
	853
	854
	855
	856
	857
	858
	859
	860
	861
	862
	863
	864
	865
	866
	867
	868
	869
150-0353	653
150-3035	335
150-4037	591
	593
150-4043	499
	502
	505
	508
	511
	513
	516
	519
	522
	636
	639
	643
	645
150-4044	536
	540
	544
	548
150-4644	535
	539
	543
150-5123	655
150-6215	655
151-2110	135
	138
	145
	149
	153
	157
151-5650	670
	673
	762
	765
151-9274	695
	699
152-6730	35
152-8368	918
152-8369	918
152-9105	918
153-6242	319
	321
	323
	325
	327
	329
153-6932	670
	673
	763
	766
154-2302	146
154-4891	595
	598
	602
154-7951	718
	720
	722
	724
	727
	730
154-7986	▶187
	192
	193
154-9445	▶376
	490
	492
155-0576	101
	700
	702
	712
	880
	885
155-2255	145
	149
	153
	157
	164
	166
	179
	181
	183
	231
	235
	238
	241
	244
	247
	250
	263
	265
	283
155-2256	231
	235
	238
	241
	244
	247
	250
	263
	265
	283
155-2257	145
	149
	153
	157
	166
	269
	274
	279
	286
155-2260	164
	165
	217
	232
	234
	235
	237
	238
	241
	244
	247
	248
	250
	255
	263
	264
	268
	269
	273
	274
	278
	279
	283
	286
	289
	292
155-2265	164
	165
	166
	185
	231
	232
	234
	235
	237
	238
	241
	244
	248
	250
	255
	263
	264
	268
	269
	273

▶ PRIMARY REFERENCE

PART NUMBER INDEX

Part	Page	Part	Page	Part	Page	Part	Page
	274		235	159-5255	49		635
	278		237	159-8049	145		642
	279		238		146		647
	283		241		149	161-6417	915
	286		244		150	161-6422	873
	289		247		153	161-6424	901
	292		248		154	161-6425	901
	700		250	159-8050	145	161-6427	901
	702		264		146	161-6573	321
	710		268		150	161-8041	901
	712		273		153	161-9289	821
	874		278		154	161-9570	908
	877		670	159-8246	296	161-9820	143
	880		673	159-8247	296		144
	885		762	159-9322	164	162-0175	873
155-2270	145		765		270	162-0178	901
	146	155-2274	145		274	162-0179	901
	149		149		279	162-0180	873
	150		153		289	162-1565	13
	153		157		292	162-2766	873
	154		166		700	162-2772	901
	157		235		702	163-1135	829
	158		238		712	163-4520	570
	164		241		880		573
	165		244		885		581
	166		247	159-9854	368	163-8811	331
	167		250		371		333
	179		253	160-0162	101		334
	181		700		106		559
	185		702		111		561
	201		710		116		563
	204		712		121		589
	207		874		126		598
	230		877	160-6817	930		602
	231		880		931		603
	234		885	160-6824	930	163-8812	315
	235	155-5354	187	160-6833	930		317
	237	155-5355	187		931		331
	238	155-7327	499	160-6836	930		346
	241		502		931		348
	244		505	160-6841	930		350
	247		508		931		565
	250		513	160-6842	930		598
	255		516		931		602
	256		519	160-6869	930		603
	289		522		931	163-8813	346
	292		636	160-7689	700		348
	687		639		702	164-0850	714
	700	156-6175	183		712		716
	702		710		880		718
	710		874		885		720
	712		877	160-7690	164		722
	874		883		179		724
	877	156-9791	596		181		727
	880		599		289		730
	885	157-7338	896		292		734
	889	158-0851	338	160-8493	306		736
155-2271	145		340	160-8744	135	164-1234	829
	149		342	160-8754	771	164-4883	804
	153		344	161-2398	825		808
	157	158-7864	423		827		811
	166		926	161-6154	490		814
	167		927		492	164-5567	335
	232		931		632	164-5581	596
	234	159-0186	68		634		599

► **PRIMARY REFERENCE**

PART NUMBER INDEX

Part	Page	Part	Page	Part	Page	Part	Page
	603		289	173-2052	793		356
164-5616	335		292	173-3083	811		357
164-6858	338	167-3693	165		814	179-2897	856
	340		255	173-3175	201		863
	342	167-6805	362		204		868
	344		363	173-3323	335		869
164-6863	335		364		602		▶896
164-7556	188		365	173-5699	931	179-5755	851
	189		366	173-5700	930		852
164-8474	714		490		931		853
	716		492	173-5701	929		854
	718	167-7270	924		930		855
	720		926	173-5787	821		856
	722		927		822		857
	724		928		823		858
	727	167-7713	306		824		859
	730		379	173-7035	821		860
	734	167-7715	377		822		861
	736		648		823		862
164-9425	256	167-8610	792		824		863
164-9640	499	167-8712	263	174-5907	777		864
	502		268		780		865
	505		273	174-8131	196		866
	508		278	175-2539	687		867
	513		283	175-4614	137		868
	516		286	176-1477	165		869
	519	167-8987	263		255	179-8232	655
	522		270	176-1521	255	180-0613	207
	595		275	176-3900	▶665	180-0614	164
	598		280	177-7122	▶377	180-3153	420
	602		283		490		657
	636		287	177-7747	377		659
	639	168-4999	230	177-9645	687	180-3154	420
165-0311	45	169-2876	924	177-9648	670		657
	700		925		673		659
	702		926		687	180-5305	265
	710		928		762	180-5927	667
	712		929		765		▶687
	772		931	177-9651	670	180-6166	482
	774	169-7380	829	177-9653	670		▶484
	874	170-0950	229		673	180-6615	164
	877	170-1469	539		687		772
	880		543		762		774
	883	170-5715	374		765	180-9339	13
	885	170-6631	908	177-9656	167		215
165-4632	499		914		231	180-9340	145
	502	171-1230	804		234		149
165-4934	596		808		235		153
	599		811		237		157
	603		814		238		164
167-2186	525	171-2039	489		244		165
	526	171-2212	201		247		166
	527		204		250		217
	528		207	178-2593	420		235
	529	171-3396	800		657		238
	530	171-5349	255		659		253
	531	172-0160	466	178-7539	700		255
167-2294	525	172-0307	873		702		269
	526	172-2384	434		772		270
	527	172-2385	434		774		274
	528	172-2437	901		885		275
	529	172-4325	72	178-7907	793		279
	530	172-4863	201	178-9570	685		280
	531		204		▶686		286
167-3692	164		207	179-0464	355		287

▶ **PRIMARY REFERENCE**

PART NUMBER INDEX

Part	Page
	289
	292
	700
	702
	710
	712
	875
	878
	881
	886
	889
183-1176	653
183-1178	653
183-4584	149
	153
	▶218
183-5297	851
	852
	853
	854
	855
	856
	857
	858
	859
	860
	861
	862
	863
	864
	865
	866
	867
	868
	869
183-8410	648
184-1137	535
	539
	543
	547
184-1138	535
	539
	543
	547
184-4496	519
	522
185-0884	22
185-3166	499
	502
	505
	508
	511
	513
	516
	519
	559
	561
	563
	636
	643
	645
185-4303	687
185-6627	12
185-7149	35
186-3735	149
186-3736	157
	158
	164
	165
	166
	167
	179
	181
	183
	201
	204
	255
	289
	702
	710
	875
	878
	886
186-5107	829
186-6190	▶666
	777
	780
186-6529	914
187-0413	416
187-0555	35
187-3547	566
187-5086	613
187-8001	362
	363
	364
	365
	366
	490
	492
187-9008	566
188-3538	908
188-4653	611
	615
188-6246	460
188-7568	297
188-7569	297
188-7789	297
188-7790	297
188-7791	297
188-8846	689
	691
	718
	720
	722
189-1707	777
	780
189-3158	165
	230
	255
	687
190-5386	44
	924
	925
	926
	928
190-7614	253
	263
	265
	283
190-7615	164
	268
	270
	273
	275
	278
	280
	286
	289
	292
190-8609	438
	439
	440
191-0286	387
	389
191-3040	838
	839
191-3539	608
191-3587	794
191-6159	525
	528
	529
	531
191-7503	256
	881
	885
191-8920	146
	150
	154
	158
	201
	205
	208
191-9247	652
192-2112	673
192-4744	467
192-7795	829
192-7799	830
192-7805	829
192-7810	829
192-7820	829
192-7848	830
193-1546	528
	529
193-3973	566
193-6911	60
	331
	333
	334
	559
	561
	563
	598
	602
	603
194-0627	591
194-0628	591
194-1983	370
	496
194-3751	543
194-4864	617
194-5171	844
194-5390	72
194-8031	738
195-2136	34
195-2221	34
195-4403	522
	639
195-8636	494
196-1803	335
196-4253	141
	380
	382
196-4254	141
	380
	382
196-7007	145
	149
	153
	157
197-0145	632
197-7259	201
	204
	207
197-7261	164
	289
	292
197-7610	618
197-7611	335
198-0918	911
198-2914	652
198-4767	384
198-4777	65
	423
	428
	431
198-4778	423
	447
198-4781	653
198-4782	386
	908
	911
198-5389	185
198-6987	485
198-6988	485
198-6991	484
198-6992	484
198-7392	482
	▶484
198-7393	482
	▶485
198-9047	595
	598

▶ **PRIMARY REFERENCE**

PART NUMBER INDEX

Part	Page
198-9706	196
	714
	716
	718
	720
	724
	727
	734
	736
199-1087	352
	▶494
199-6225	▶295
	362
	363
	364
199-6928	43
199-7698	687
199-9252	101
	106
	111
	116
	121
	126
199-9267	101
	106
	111
	116
	121
	126
199-9751	24
	39
2	
200-1311	918
200-1729	▶608
	904
200-3106	335
	350
200-6345	595
	598
	602
201-1024	289
	292
201-2744	595
	598
	602
	▶900
201-5382	368
	371
202-2284	774
202-2342	648
202-6611	188
202-6614	189
202-7704	490
	492
203-1926	319
	321
	323
	325
	327
	329
	331
203-4604	471
203-6608	872
203-6609	872
203-6610	915
203-6612	915
203-6614	915
203-6615	915
203-6618	488
203-6620	488
203-6621	488
203-6623	488
203-6626	488
203-6629	912
203-6630	912
203-6631	871
203-6632	903
203-6633	903
203-6637	915
203-6639	901
203-6640	873
203-6641	915
203-7703	821
	822
	823
	824
204-2281	146
	255
	568
204-8000	256
205-0826	185
205-3692	918
205-4132	570
	573
	576
	578
	581
205-8257	185
206-0452	595
	598
	602
206-5162	185
206-5203	185
206-5823	787
	788
207-2554	59
207-5271	185
208-5546	▶872
	920
208-5547	▶915
	920
208-5549	▶904
	920
208-5551	▶901
	920
208-5552	▶873
	920
208-5553	▶909
	920
209-3565	141
	380
	382
209-4481	833
209-4482	833
209-8217	670
	673
209-9219	21
210-6964	75
210-8754	231
	234
	237
211-0052	164
	201
	204
	207
	289
	292
211-0388	915
211-0394	915
211-0395	915
211-0396	915
211-0397	915
211-1856	873
211-5358	221
	829
	830
211-5941	392
	394
	398
	400
	402
	409
211-8169	871
	▶912
211-8171	871
	▶903
211-8215	488
211-8216	488
211-8217	488
211-8753	871
211-8754	871
211-9023	912
211-9024	912
212-4219	838
	839
212-4483	370
	496
212-4757	909
212-6023	918
212-6603	606
212-6679	306
	492
212-6989	918
212-7032	▶296
	490
	492
212-7035	▶379
	490
	492
212-7037	▶489
	490
	492
212-7044	498
212-9363	▶305
	335
213-0139	164
	166
	231
	234
	235
	237
	238
	244
	247
	250
	289
	292
213-5167	829
213-5168	829
213-5169	829
213-7315	238
	248
214-3203	8
	22
214-4208	235
	238
	245
	247
	251
214-6863	▶217
	874
	877
	880
	886
214-7457	65
214-7566	96
214-7568	96
	134
	138
	335
	652
215-2901	464
	471
215-7697	377
215-8010	141
	380
	382
215-8011	141
	380
	382
215-9509	84
	87
	90
216-0143	387
	389
216-0814	804
	808
	811
	814
216-2956	470
	472
	477
	478
216-2957	470
	472
	477
	478
216-4251	655
216-8314	16
	17
216-8634	30
216-9633	52
217-0099	101
	106
	111
	116
	121

▶ **PRIMARY REFERENCE**

PART NUMBER INDEX

Part	Page
	126
217-2004	891
	892
	893
	▶907
217-3875	141
	375
	380
	382
217-5807	435
	436
217-6359	467
217-8477	101
	106
	111
	116
	260
217-9039	260
	261
218-0404	185
218-0651	772
	774
218-1755	96
218-2148	335
218-2529	804
	808
	811
	814
218-7252	829
219-0305	924
	926
	927
	928
	930
	931
219-3133	929
	931
219-3273	178
219-6314	185
219-7935	915
220-0230	149
	228
220-7163	72
220-8355	697
	698
	707
	708
220-8631	32
220-8678	76
221-0375	526
	527
	530
221-3329	602
223-0189	65
223-8990	307
223-9818	751
	754
	757
	760
224-8945	924
	926
224-8946	927
	928
	930
	931
224-9476	68
225-0098	851
	852
	853
	854
	855
	856
	857
	858
	859
	860
	861
	862
	863
	864
	865
	866
	867
	868
	869
225-0312	927
	928
	930
	931
225-0313	924
	926
225-3322	663
	714
	716
	718
	720
	722
	724
	727
	730
	734
	736
225-3854	235
	238
	244
	247
	250
225-3861	201
	204
	207
225-5438	37
	38
225-5439	37
225-5441	37
225-5451	37
225-5453	37
225-5454	37
225-5458	37
225-5459	37
225-5501	26
225-6005	35
225-7650	▶467
	468
225-7738	61
	63
225-7772	17
225-7944	55
	57
225-8019	61
	63
225-8329	51
225-8524	72
225-8526	72
225-8533	72
225-8534	72
225-8858	22
226-0150	771
226-0151	771
226-0331	714
	716
	734
	736
226-2333	174
	175
	▶194
226-4872	840
	842
226-8202	525
	526
	527
	528
	529
	530
	531
226-8766	30
226-8767	30
226-9169	263
	268
	273
	278
	283
	286
227-7391	925
	926
	927
	928
	930
	931
227-7446	68
227-7449	68
228-0172	131
	132
228-2615	925
	926
228-2616	927
	928
228-2775	350
228-3323	264
	269
	274
	279
228-5009	96
228-5856	166
	235
	238
	244
	247
	250
228-7088	96
228-7089	96
	98
	134
	138
228-7100	96
	99
	100
	131
	132
228-7102	96
	111
	116
229-1494	804
	808
229-4995	535
	539
	543
229-8377	237
	247
230-4009	232
	234
	237
	241
	244
	248
	250
	253
	710
	874
	877
230-4010	710
	874
	877
230-4011	145
	149
	153
	157
	165
	166
	255
230-4012	146
	150
	154
	158
230-5008	167
	198
	231
	234
	237
	263
	269
	274
	279
	283
	286
	741
	743
	745
	748
	751
	754
	757
	760
230-5009	263
	269
	274
	279
	283
	286
	739
	787

▶ **PRIMARY REFERENCE**

PART NUMBER INDEX

Part	Page	Part	Page	Part	Page	Part	Page
	788		87	239-2170	525	244-2109	825
	789	234-8821	▶297		531		827
	790		365	239-6987	924	244-2115	825
230-5010	253		366		928		827
230-5011	705	234-9970	174		929	244-7370	▶2
	706		175	239-6989	924	244-7371	▶2
	708		▶199		925	244-7376	▶1
	709	235-0588	358		926		2
230-7254	263	235-1061	8		928	244-7377	▶1
	269	235-1063	8		929		2
	270	235-2558	486		930	244-7382	2
	274	235-2559	485	239-9950	175		▶354
	275	235-4587	175		▶210	244-7385	2
	279	236-2507	71	239-9954	▶163		▶532
	280	236-4545	221		220	244-7386	2
	283	236-5157	141	240-0101	▶188		3
230-8094	35		380		190		▶7
230-8989	101		382		191	244-7387	2
	106	236-6923	230		231		3
	111	236-8013	221		241		▶171
	116	236-8826	263	240-0102	▶189	244-7389	1
	121		268		190		▶921
	126		273		191	244-7393	▶487
231-0070	438		278		192	244-7396	1
	439	237-0227	145		193		▶402
	440		149		232		404
231-2296	710		153		242	244-7397	1
	874		157	240-0124	188		▶392
	877		166		189		396
231-2301	710	237-1957	539	240-2586	513	244-7402	2
	874		543		516		▶394
	877	237-2598	585		519		397
231-3052	178		587		522	244-7408	1
231-3054	178		589		559		2
232-1115	84	237-3943	829	240-8666	844		▶135
	87	237-4132	199	241-4194	221	244-7409	▶304
232-1322	24	237-4133	199	241-5786	823		354
	39	237-4134	199		824	244-7411	300
232-1792	772	237-4135	199	241-6215	566		▶308
	774	237-7252	199	241-6228	596		891
232-3149	101	237-7552	906		599		892
	106	237-9154	774	241-8367	201	244-7416	▶319
	111	237-9157	774		204		▶321
	116	237-9158	774		207		354
	121	238-0112	145	241-8494	467	244-7418	▶441
	126		150	242-0262	140		487
232-3666	30		153	242-3291	256	244-7422	532
232-3751	55		157	242-3294	168		533
	57	238-0120	99	242-4885	667		534
232-7440	22		100	243-3277	464		▶570
232-7449	21		111		▶476		▶573
232-7596	22		116	243-3278	476	244-7423	▶445
232-7597	22		126		480		▶446
232-7599	22		131	243-5027	255		487
233-3784	17		132	244-1516	302	244-7426	532
233-3785	17	238-0251	804	244-1518	302		533
233-3786	17		808	244-1522	302		▶613
	19		811	244-1523	302		▶615
	20		814	244-1528	▶302	244-7427	7
233-4065	137	238-1844	83		354		▶68
233-5621	306	238-4626	649	244-1716	738	244-7428	7
233-9408	22	238-8292	72	244-1717	210		▶59
233-9744	498	238-8371	486	244-1719	227	244-7430	7
234-3030	72	238-9397	165	244-2095	825		▶65
234-3063	84		255		827	244-7431	7

▶ **PRIMARY REFERENCE**

PART NUMBER INDEX

Part	Page	Part	Page	Part	Page	Part	Page
	▶43	245-1912	606		237		762
244-7433	▶427	245-4747	194		241		765
244-7434	▶386	245-5082	335		244	249-0974	55
244-7436	▶405	245-6017	1		248		57
244-7437	▶406		2		250	249-2844	804
244-7440	613		▶145	245-6047	▶241		808
	▶617		▶149		▶244		811
244-7445	2		▶153		▶247		814
	▶354		▶157		▶250	249-5656	299
244-7448	▶487	245-6019	1		796	249-5665	299
244-7450	▶300		2	246-2641	423	249-5745	299
244-7452	532		▶255		785	249-5746	298
	533	245-6020	1		923		299
	▶609		2	246-4960	71	249-5748	299
244-7454	▶891		▶289	246-5804	355	249-9017	145
244-7467	▶435		▶292		356		149
	▶436	245-6021	▶231		357		153
244-7468	▶437		▶234		358		157
244-7474	▶796		▶237	246-6190	302		167
244-7475	▶796		796	247-1385	67	249-9018	145
244-7476	▶797		797	247-1459	302		149
244-7479	▶44	245-6022	▶772	247-6019	100		153
244-7482	1		796		131		157
	2	245-6023	241		132		167
	▶83	245-6024	▶230	247-6020	99	249-9019	150
244-7484	1		667	247-6503	796	249-9020	201
	2	245-6026	▶221		▶835	249-9021	201
	▶922	245-6027	1		▶836		204
244-7487	▶44		2	247-6505	▶771		207
244-7490	▶44		▶253		796	249-9022	883
244-7493	▶45	245-6028	▶185		797		884
244-7497	44	245-6029	174	247-6582	835		888
	45		▶263	247-6583	835		889
	▶433		▶268		836	249-9023	▶201
244-7500	▶454		▶273		837		▶204
	487		▶278	247-6613	745		239
244-7503	▶421	245-6030	263		748		289
244-7504	▶874		283		757	249-9024	145
	▶877	245-6032	241		760		150
	▶880		244	247-6648	667		154
	891		247	247-7054	141		157
	892		250		380		166
244-7506	▶924	245-6033	772		382	249-9025	263
244-7507	▶925		774	247-7954	65		283
244-7512	1	245-6034	201	247-9730	68	249-9026	201
	2		204	248-0732	302	249-9028	185
	▶387	245-6036	201	248-1066	99	249-9029	▶179
	▶389		204		100		▶181
244-7516	▶384		207		131	249-9030	263
244-7517	▶911	245-6037	145		132		268
244-7518	911		149	248-1500	176		273
244-7523	▶452		153		177		278
244-7615	▶298		157		194		283
	▶299		166	248-6220	499		286
	354	245-6039	▶774		502	249-9031	263
245-1042	165		796		505		268
	255		797		508		273
245-1044	165	245-6040	165		561		278
	255		255		570	249-9032	263
245-1045	165	245-6042	231		573		268
	255	245-6043	231		576		273
245-1047	165		234		578		278
245-1048	165		237		581	249-9033	264
	255	245-6044	232	248-6772	670		268
245-1181	606		234		673		273

▶ **PRIMARY REFERENCE**

PART NUMBER INDEX

Part	Page
	278
	283
	286
249-9034	264
	269
	274
	279
249-9035	179
	181
249-9037	874
	877
	880
	886
249-9040	173
	▶283
	▶286
249-9042	145
	149
	153
	157
	167
249-9047	874
	877
	880
	886
249-9048	230
249-9049	264
	269
	274
	279
249-9050	264
	269
	274
	279
249-9051	532
	▶710
	▶712
249-9052	533
	▶883
	▶884
249-9060	745
	748
	757
	760
249-9061	741
	743
	751
	754
249-9062	833
249-9065	874
	877
	880
	885
249-9067	874
	877
	880
249-9068	179
	181
	▶183
249-9069	183
249-9072	168
	256
249-9074	146
	150
	154
	158
249-9077	265
	269
	274
	279
	284
	286
249-9079	710
	878
	883
250-1699	797
	▶799
250-4002	460
251-1752	370
	496
251-1803	370
	496
251-2360	829
251-2362	829
251-2437	28
251-3227	67
251-4056	733
251-4336	30
251-5977	833
252-0552	799
252-0553	799
252-1862	741
	743
	745
	748
	751
	754
	757
	760
252-1863	741
	743
	745
	748
	751
	754
	757
	760
252-4502	667
	▶670
	▶673
252-4504	▶762
	▶765
	768
252-4559	▶695
	874
252-4734	606
252-5459	800
252-6318	22
252-6596	663
252-6803	800
252-8744	227
	906
252-8930	794
252-8933	794
252-9628	210
	211
	212
	226
253-0861	921
	922
253-1218	65
253-2111	201
	204
	207
253-2695	264
	269
	273
	278
	283
	286
253-5391	▶178
253-6168	178
253-8798	680
	682
253-8967	199
253-8969	199
253-8981	199
254-0228	459
	485
	486
254-0589	454
	455
254-0590	454
	455
254-0591	454
	455
254-0593	▶455
	487
254-0601	438
	439
254-0603	454
	455
	▶481
254-0614	455
	▶456
254-0623	481
254-0634	456
	457
254-0644	456
	457
254-0648	481
254-0656	438
	439
	440
254-0662	481
254-0664	▶438
	▶439
	▶440
	454
	455
254-0684	454
	▶457
254-1087	68
254-1090	68
254-1352	▶352
	354
254-1358	354
	▶499
	▶502
	▶505
	▶508
254-1366	▶335
	354
254-1368	▶338
	▶340
	354
254-1371	354
	▶566
254-1377	300
	301
	▶359
	891
	892
	893
254-1378	300
	▶360
254-1379	▶490
	▶492
	891
	892
	893
254-1386	532
	▶622
254-1450	622
	▶624
254-1451	623
	▶626
254-1457	532
	533
	▶623
254-1460	532
	533
	▶585
	▶587
254-3169	1
	2
	▶791
254-3170	796
254-3180	663
	796
	797
254-3183	657
	659
254-3190	▶768
	796
254-3196	667
	768
254-3199	667
	768
254-3200	667
	768
254-3201	667
	768
254-3204	657
254-3206	718
	724
254-3210	▶667
	796
	797
254-3256	7
	▶67
254-3257	68
254-4091	772
	774
254-7757	1
	2
	▶422
254-7760	422
254-7761	428
	431

▶ **PRIMARY REFERENCE**

PART NUMBER INDEX

Part	Page
254-8045	407
	422
254-8750	402
254-8751	392
254-8858	409
254-8859	908
	911
254-8880	392
	394
	398
	400
	402
254-8888	392
	394
	398
	400
	402
254-8895	150
	425
254-8900	1
	2
	▶409
254-8903	409
254-8906	409
254-8919	421
254-8954	7
	▶71
254-9099	▶361
	893
254-9136	175
254-9233	2
	3
	▶6
255-0939	210
	211
	213
255-1150	▶595
	891
	892
255-1152	611
	613
	615
255-1155	617
255-1204	71
255-1343	60
	65
255-1344	60
	65
255-1355	▶846
255-1357	▶655
	846
	847
	848
	849
	850
255-1359	655
255-1361	655
255-1362	846
	▶851
255-1365	851
255-1394	▶846
255-1395	846
	▶852
255-1397	852
255-1413	▶846
255-1414	846
	▶853
255-1415	853
255-1425	▶846
255-1426	852
	859
	▶897
255-1427	846
	▶854
255-1428	854
	861
	▶897
255-1429	897
255-1430	854
255-1431	44
	▶428
255-1433	428
255-1450	428
255-1452	44
	45
	▶431
255-1453	431
255-1455	428
255-1470	▶847
255-1471	847
	▶855
255-1472	855
	862
	▶897
255-1474	897
255-1475	855
255-1486	▶847
255-1487	847
	▶856
255-1490	856
255-1501	857
	864
	865
	▶898
255-1502	▶847
255-1503	847
	▶857
255-1505	▶899
255-1539	428
	431
255-2098	1
	2
	▶653
255-2100	653
255-2102	653
255-2114	653
255-2122	653
255-2130	653
255-2368	▶847
255-2370	847
	▶858
255-2371	858
255-2372	▶848
255-2373	848
	▶859
255-2374	859
255-2375	▶848
255-2376	848
	▶860
255-2377	860
255-2378	▶848
255-2379	848
	▶861
255-2380	861
255-2381	▶848
255-2383	848
	▶862
255-2384	862
255-2385	▶849
255-2386	849
	▶863
255-2387	863
255-2390	▶849
255-2391	849
	▶864
255-2393	▶849
255-2394	849
	▶865
255-3696	667
	▶685
255-4228	796
	797
	▶844
255-4229	796
	797
	▶833
255-4230	173
	▶714
	▶716
255-4231	173
	▶718
	▶720
	▶722
255-4233	718
	720
	722
	724
	727
	730
255-4235	657
	659
255-4236	657
	659
255-4239	▶657
	▶659
	796
	797
255-4240	▶661
	796
255-4241	1
	2
	▶782
255-4242	▶801
255-4250	▶818
255-4251	▶819
255-4252	▶820
255-4255	745
	748
	757
	760
255-4256	741
	743
	751
	754
255-4258	657
	659
	661
255-4260	174
	▶196
255-4261	196
255-4271	▶741
	▶743
	796
255-4272	▶745
	▶748
	796
255-4273	▶751
	▶754
	797
255-4274	▶757
	▶760
	797
255-4275	797
	▶837
255-4276	▶416
255-4280	791
255-5153	667
255-6210	670
	673
255-6642	431
255-6644	431
255-8384	718
	720
	722
	724
	727
	730
255-8386	718
	720
	722
	724
	727
	730
255-8846	819
	▶821
256-0761	670
	673
	762
	765
256-0762	670
	673
256-0768	670
	673
	762
	765
256-0770	670
	673
256-2268	135
256-2269	392
	394
	398
	400
	402
256-2271	387
	389
256-2272	387
	389
256-2907	▶226
	227
256-3738	▶920

▶ **PRIMARY REFERENCE**

PART NUMBER INDEX

Part	Page
256-3739	▶918
	920
256-4579	194
256-4580	194
256-4581	194
256-4582	194
256-4959	804
	808
	811
	814
256-5719	194
256-5720	194
256-5721	194
256-5722	194
256-5732	194
256-7752	617
	619
256-7753	553
256-7754	335
	350
256-7755	335
	350
256-7756	335
	350
256-7757	335
	350
256-7758	335
256-7761	335
	350
256-7765	570
	573
	576
	578
	581
256-8778	365
	▶368
256-8796	384
256-9357	368
	▶369
	371
256-9358	368
	371
257-1096	553
	556
257-1099	553
	556
257-1105	338
	340
	342
	344
	346
	348
257-1108	570
	576
257-1729	210
257-4959	818
	▶822
257-7501	265
	269
	274
	279
257-8924	146
	150
	154
	158
257-9819	667
	▶777
	▶780
258-0129	352
258-2111	384
258-4961	▶908
	913
258-4962	908
258-4971	908
258-6387	689
	691
258-8373	168
	▶802
258-9787	373
258-9789	▶373
	487
258-9982	65
259-0122	585
	587
	589
259-1060	657
259-2384	164
259-4401	925
	926
259-4402	927
	928
	930
	931
259-4403	835
	837
	▶838
259-4405	835
	837
	▶839
259-4746	198
	▶792
259-8194	▶649
	650
259-8704	663
260-0083	135
260-0088	387
	389
260-0089	425
	426
260-0631	68
260-0633	67
260-0634	68
260-3718	101
260-3719	101
260-3939	101
	106
	111
	116
	121
	126
	164
260-6478	194
260-6480	194
260-6728	696
	697
	698
	705
	706
	707
	708
	709
260-6740	458
	459
	461
	463
	485
	486
260-6744	458
	▶461
260-6747	▶458
	486
260-7652	183
260-7653	183
260-9155	96
260-9171	535
	539
	543
	547
260-9285	782
260-9286	782
260-9289	435
	436
260-9290	435
	436
260-9291	435
260-9293	437
260-9294	▶9
	796
	797
260-9501	▶10
	796
260-9502	▶923
	924
	925
	926
	927
260-9505	777
	780
260-9506	777
	780
261-0166	195
261-0372	685
261-0373	685
261-0376	9
261-0406	10
	143
261-0420	150
	154
	158
261-0428	9
261-1108	319
	321
	323
	325
	327
	329
261-1124	325
261-4275	308
	315
261-4276	308
	315
261-4277	308
	315
261-4278	308
	315
261-4473	456
261-4747	304
261-5694	793
261-7487	829
261-7992	745
	748
	757
	760
	▶787
261-7993	741
	743
	751
	754
	▶788
261-8090	777
	780
261-8095	435
261-8096	435
261-8495	547
261-8499	570
	573
	576
	578
	581
261-8500	570
	573
	576
	578
	581
261-8501	319
	321
	323
	325
	327
	329
261-8502	319
	321
	323
	325
261-8504	595
	598
261-8505	570
	573
	576
	578
	581
261-8506	570
	573
261-8507	645
261-8513	566
	568
261-8514	566
	568
261-8515	566
	568
261-8523	338
	340
	342
	344
	346
	348
261-8524	338

▶ **PRIMARY REFERENCE**

PART NUMBER INDEX

Part	Page	Part	Page	Part	Page	Part	Page
	340	262-4324	431	263-3746	525		581
	342	262-4325	431		531	264-3010	428
	344	262-4326	431	263-3748	525		431
	346	262-4328	431	263-3798	486	264-3011	428
	348	262-4329	431	263-3823	789		431
262-0481	335	262-4407	▶913		790	264-3014	428
262-0482	335	262-4408	913	263-4068	▶526		431
262-0767	804		▶914		532	264-3017	428
	808	262-4409	914		533		431
	811	262-4411	914	263-4069	526	264-3019	431
	814	262-4415	▶528	263-4072	526	264-3171	226
262-0769	804		913		527	264-3709	▶650
	808	262-4416	528	263-4136	▶342		918
	811	262-4418	▶529		354	264-3888	591
	814		913	263-4140	532		593
262-0772	804	262-5866	392		533	264-3889	591
	808		394		534		593
	811		398		▶553	264-3890	591
	814		400		▶556		593
262-0779	804		402	263-4150	532	264-3891	591
	808	262-5867	385		533		593
	811	262-5868	▶385		534	264-4510	265
	814		392		▶535		269
262-0780	804		394		▶539	264-4540	▶532
	808		398		▶543	264-4541	▶532
	811		400	263-4154	535	264-4542	▶533
	814		402		539	264-5003	433
262-0781	804	262-5874	▶443		543	264-5004	433
	808		487		547	264-5005	433
	811	262-7082	925	263-4914	535	264-5006	433
	814		926		539	264-5007	433
262-0785	804		927		543	264-5009	433
	808		929		547	264-5010	433
	811		930	263-4915	535	264-5011	433
	814		931		539	264-5014	468
262-0786	804	262-7686	653		543		469
	808	262-9253	529		547	264-5425	201
	811	262-9273	433	263-5008	▶530		204
	814	262-9277	433		532		207
262-0787	804	262-9278	433		533	264-6941	591
	808	262-9279	433	263-5009	530		593
	811	262-9786	68	263-5013	530	264-7029	145
	814	263-0971	566	263-5376	72		149
262-0789	804		568	263-5928	772		153
	808	263-0975	335		774		157
	811	263-0978	319	263-7360	416		165
	814		333	263-7803	338		166
262-1408	289	263-0983	645		340		255
262-1997	741	263-0990	342	263-8325	445	264-7030	145
	743	263-1431	83		450		149
	751	263-1432	83	263-8332	445		153
	754	263-2011	445	263-8337	445		157
262-1998	745	263-2135	844		450		166
	748	263-2214	602	263-8342	452	264-7031	167
	757	263-3013	657	263-8343	452		198
	760		659	263-8363	445		231
262-2814	670		661		450		234
	673	263-3181	526	263-8364	445		237
262-2815	762		527		450		263
	765	263-3323	▶591	263-9560	606		279
262-2923	416		▶593	263-9561	606		741
	▶434		913	263-9720	570		743
262-2925	416	263-3483	431		573		745
262-2930	416	263-3745	▶525		576		748
262-3104	653		532		578		751

▶ **PRIMARY REFERENCE**

PART NUMBER INDEX

Part	Page
	754
	757
	760
264-7032	253
264-7033	710
	874
	877
264-7034	232
	234
	237
	241
	244
	248
	250
	253
	710
	874
	877
264-8899	838
	840
264-8900	838
	839
	840
	842
264-8901	838
	839
264-9742	602
264-9767	▶462
265-2166	595
	598
	602
265-5644	618
	619
265-9620	670
	673
	762
	765
266-1470	▶215
	794
266-3214	825
	827
266-3701	844
266-7092	72
266-7145	670
	673
266-7631	▶696
	706
	709
266-7632	▶697
	705
	708
266-7634	▶698
	707
266-7765	667
266-9005	710
	712
266-9006	874
	877
	880
	885
266-9299	741
	743
	751
	754
266-9303	741
	743
	745
	748
	751
	754
	757
	760
267-5147	804
	808
	811
	814
267-5159	804
	808
	811
	814
267-5160	804
	808
	811
	814
267-5211	214
267-5213	214
267-5239	772
	774
267-5639	794
267-7207	165
	255
267-7208	165
	255
267-8655	434
267-8958	195
267-9319	804
	808
	811
	814
267-9552	825
	827
267-9553	825
	827
267-9554	825
	827
267-9555	825
	827
267-9556	825
	827
267-9572	255
267-9834	825
	827
268-1506	570
	573
	576
	578
	581
268-1507	570
	573
	576
	578
	581
268-4412	166
	167
	168
	346
	348
	350
	568
	598
	602
	700
	702
	784
	885
	889
268-4698	220
268-4699	179
	▶220
268-6677	101
	106
	111
	116
	121
	126
	164
268-6678	101
	106
	111
	116
	121
	126
268-6705	670
	673
268-9351	▶692
	801
	818
	819
	820
268-9352	▶693
	801
	818
	819
	820
268-9378	680
268-9382	682
269-0004	609
269-1084	624
	626
	628
	630
	▶632
269-1085	624
	626
	628
	630
	▶634
269-1086	626
	▶635
269-1087	▶607
	624
	626
	628
	630
269-2886	745
	748
	757
	760
269-2887	741
	743
	751
	754
269-2888	745
	757
269-2890	741
	745
	751
	754
	757
269-2892	741
	743
	745
	748
	751
	754
	757
	760
269-4669	141
	375
	380
	382
269-4676	140
269-7647	201
269-7648	256
269-7650	183
269-7652	256
269-7653	150
269-7654	201
	205
	207
269-7656	253
269-7657	253
269-7658	146
	150
	154
	158
	168
269-7661	202
	205
	208
269-7662	201
	205
	207
269-7664	265
	269
269-7665	532
	▶733
269-7666	700
	702
	712
	881
	885
269-7667	874
	877
	880
	885
269-7668	874
269-7669	256
269-7674	146
	150
	154
	158
269-7675	772
	774
269-7676	265
269-7677	256
	874
	877
	880
	885
269-7678	146

▶ **PRIMARY REFERENCE**

PART NUMBER INDEX

Part	Page	Part	Page	Part	Page	Part	Page
	150		751		237		736
	154		757		241	275-7803	803
	158	272-2272	▶803		244	275-9883	35
269-7680	146		821		247	276-0062	416
	150		822		250	276-0063	416
	154		823	274-3777	710	276-0764	210
	158		824		877		227
	289	272-2317	302	274-3778	167	276-1243	387
	292	272-3022	547		231		389
269-7682	145	272-3533	499		234	276-1753	447
	150		502		237	276-1965	553
	153		505	274-4645	173		565
	157		508		174	276-2430	392
	167		511		▶705		394
269-7683	874		513	274-4646	173		400
269-7686	229		516		▶706	276-2431	392
269-7687	265		519	274-4990	165		394
269-7690	201		522		255		400
	205		636	274-6747	499	276-3642	804
	207		639		502		808
269-7695	▶190		643		505		811
	▶191		645		508		814
269-7696	▶192	272-3534	319		511	276-3644	804
	▶193		321		513		808
269-7697	710		323		516		811
	877		325		519		814
270-1907	787		327		522	276-4299	670
	788		329		▶606		762
270-7881	714	272-3540	553		636	276-4667	▶527
	716		556		639		532
	718	272-3544	595		643		533
	720		598		645	276-4668	527
	722	272-3545	595	274-7516	300	276-4671	570
270-7882	253		598		301		573
271-2734	392	272-5584	724		▶610		576
	394		727		891		578
	398		730		892		581
	400		734		893	276-4672	535
	402		736	274-7518	610		539
271-2773	657	272-8111	820	274-7990	386		543
	659		▶823		427		547
	661	272-9770	▶798	274-9872	214	276-4679	595
271-2774	657	272-9780	797	274-9877	214		598
	659		▶800	275-0490	▶214	276-4836	68
	661	273-3143	255		256	276-5605	22
271-5385	595	273-5070	221	275-0571	387	276-6146	174
	598	273-6319	304		389		176
271-7312	772	274-1530	511	275-0572	387		177
	774		643		389	276-6596	221
271-7780	302	274-1534	511	275-3376	227	276-6597	221
271-9177	354		643	275-3378	226	276-7394	15
	▶511	274-1639	81	275-4012	226		16
	▶513		82	275-6707	670	276-7476	37
	▶516		106		673		38
	▶519		111		762	276-8116	24
	▶522		116		765	276-8117	24
271-9408	716		121	275-6710	714	276-8123	24
	722		126		716	276-8133	24
272-0343	585	274-1923	387		718	276-8181	595
	587		389		720		598
	589		428		722		602
272-1622	741		431		724	276-8206	362
	751	274-3774	166		727		▶496
272-1623	741		231		730	276-9200	42
	745		234		734	276-9201	42

▶ **PRIMARY REFERENCE**

PART NUMBER INDEX

Part	Page
276-9206	42
276-9207	42
276-9230	42
277-1873	146
	150
	154
	158
277-1949	100
277-1950	100
277-2923	61
	63
277-2925	61
	63
277-2974	53
277-3012	30
277-5031	13
277-5064	13
277-5065	13
277-5067	13
277-5647	849
	▶866
277-6165	84
	87
	90
277-6624	355
	356
	357
277-6631	141
	380
	382
277-7092	602
277-7093	602
277-7112	762
	765
277-7113	670
	673
277-7114	671
	673
	762
	765
277-7115	671
	673
	762
	765
277-7715	▶849
277-8103	808
	811
277-8365	921
	922
277-8589	808
277-9958	762
	765
277-9959	762
	765
277-9960	762
	765
277-9962	762
	765
277-9964	762
	765
277-9966	671
	673
277-9968	769
	770
277-9969	671
	673
	▶769
278-0316	72
278-0361	72
278-2355	372
278-2356	372
278-2357	▶372
	487
278-3242	61
278-3354	671
	674
	762
	765
278-4138	77
	79
	80
	84
	87
	90
	93
	94
	95
	101
	106
	112
	117
	121
	126
278-5111	42
278-5112	42
278-5113	42
278-5126	11
278-5168	101
	106
	111
	116
	121
	126
278-5170	101
	106
	111
	116
	121
	126
278-5203	101
	106
	111
	116
	121
	126
278-5225	101
	106
	111
	116
	121
	126
278-5226	101
	106
	111
	116
	121
	126
278-5227	101
278-5228	101
278-5273	101
	106
	111
	116
	121
	126
278-5307	101
	106
	111
	116
	121
	126
278-5308	101
278-5309	101
278-5684	387
278-6469	315
	317
278-6935	811
278-6936	811
278-7528	808
278-8965	695
	699
278-8967	695
	699
278-8970	695
	699
278-8974	695
	699
279-6529	650
	▶651
279-9651	33
279-9876	387
	389
280-1430	48
280-1912	42
280-1913	42
280-1914	42
280-3512	825
280-3513	827
280-3514	825
280-3515	827
280-7343	▶495
	498
280-9162	833
280-9440	692
	693
280-9441	692
	693
280-9442	692
280-9443	693
280-9444	692
	693
280-9453	671
	762
280-9679	▶680
	801
	818
	819
	820
280-9680	692
280-9896	692
280-9897	692
280-9898	693
280-9899	693
280-9900	693
281-3964	714
	716
	718
	720
	722
281-3965	714
	716
	718
	720
	722
281-3974	416
281-3986	657
	659
	661
281-3997	532
	534
	▶786
	891
	892
	893
281-3998	786
281-4002	741
	743
	745
	748
	751
	754
	757
	760
281-4004	714
	716
	734
	736
281-4005	667
281-4007	714
	716
	718
	720
	722
	724
	727
	730
	734
	736
281-4136	741
	743
	751
	754
281-4137	745
	748
	757
	760
281-4140	741
	743
281-4141	745
	748
281-7631	657
	659
281-8338	▶470
	471
281-8339	471
	▶477
281-8744	53
	54
282-0554	804
282-0558	804

▶ **PRIMARY REFERENCE**

PART NUMBER INDEX

Part	Page
282-0561	804
282-2033	825
	827
282-2034	682
282-2035	680
282-2036	680
	682
282-2170	418
282-3475	671
	762
282-3481	671
	762
282-3653	671
	674
	762
	765
282-3663	▶447
282-3668	448
282-3673	▶448
282-3683	▶453
282-3703	▶449
	487
282-3713	▶450
	▶451
	487
282-5062	602
282-5064	570
	573
282-5069	602
282-5325	▶3
282-5327	▶2
	3
282-6689	682
282-6690	680
282-6691	682
282-6692	680
282-6695	825
	827
282-6701	682
282-6702	680
282-6707	682
282-6708	680
282-6709	682
282-6710	680
282-8803	▶464
	487
282-8813	▶471
	487
283-2271	▶100
	101
283-3426	7
	▶49
283-3436	146
	150
	154
	158
	168
283-3512	532
	▶576
	▶578
283-3515	576
	578
283-3516	576
	578
283-4148	9
	10
283-4426	738
283-4938	319
	321
	333
283-4940	547
283-4942	547
283-4946	511
	643
283-4947	338
	340
	342
	344
283-6370	591
283-6423	450
283-6424	450
283-6425	450
283-6426	450
283-7697	653
283-8651	671
	674
	762
	765
283-9530	740
283-9797	566
283-9900	196
283-9901	196
283-9902	714
	716
	734
	736
283-9909	714
	716
	718
	720
	722
	724
	727
	730
	734
	736
284-0825	▶171
284-2885	611
	613
	615
284-3425	143
	144
284-3705	617
	619
284-3753	718
	724
284-3754	663
	714
	716
	718
	720
	722
	724
	727
284-7054	▶682
	801
	818
	819
	820
284-7055	682
	▶825
284-7059	680
	▶827
284-7648	682
284-7649	680
284-8207	▶216
	707
284-8208	216
	707
284-8773	671
	762
285-0151	705
	706
	707
	708
	709
285-0330	174
	▶734
	▶736
285-0331	174
	▶724
	▶727
	▶730
285-1133	163
285-1973	13
285-2372	804
	808
	811
	814
285-3329	221
285-3772	499
	502
	505
	508
	511
	513
	516
	519
	522
	559
	561
	563
	636
	639
	643
	645
285-4312	553
285-4313	553
	556
	565
285-4314	553
	556
	565
285-6627	65
285-6704	135
	138
285-7415	772
	774
285-7974	763
	766
285-8548	763
	766
285-8553	671
285-8554	763
	766
286-0134	174
	175
	176
	177
	▶738
286-0137	175
	▶210
286-1832	453
286-1833	453
286-2890	96
286-2935	▶850
286-2936	850
	▶867
286-2968	707
286-3017	211
	212
286-3235	3
	▶354
286-4261	445
286-4262	445
286-4301	▶482
286-4303	▶482
286-4308	▶482
286-4311	▶482
286-4313	▶483
286-4318	▶483
286-4407	838
	839
286-5015	▶926
286-5016	▶927
286-7848	27
	41
286-8052	300
	301
	▶310
	891
	892
	893
286-8053	▶312
	893
286-8054	▶323
	▶325
	354
286-8056	354
	▶636
	▶639
286-8058	▶344
	354
286-8141	924
	925
	927
	928
	929
	930
286-8868	840
	842
286-8871	840
286-9124	174
	175
	176
	177
	▶739

▶ **PRIMARY REFERENCE**

PART NUMBER INDEX

Part	Page
287-0548	741
	743
	745
	748
	751
	754
	757
	760
287-1962	135
	▶137
287-1965	137
287-2016	924
	925
	927
	928
	929
	930
287-2017	925
	927
	931
287-2169	794
287-2654	151
287-3789	369
287-6657	769
287-7430	61
287-7637	81
	82
287-7957	394
287-7969	394
287-8437	768
287-8597	32
287-8659	312
287-8660	312
287-8661	312
287-8662	312
288-0422	30
288-0526	260
288-0884	714
	716
	718
	720
	722
	724
	727
	730
	734
	736
288-3624	▶929
288-3625	▶930
288-3657	667
288-3663	768
289-0099	547
289-0100	535
	539
	543
	547
289-0101	547
289-0102	535
	539
	543
	547
289-0103	547
289-0118	342
289-0242	313
289-0243	313
289-0244	313
289-0245	313
289-0253	300
	▶313
289-0600	79
289-2073	825
	827
289-2122	770
289-2123	763
	766
	▶770
289-2134	762
	765
289-2478	90
289-3057	459
	▶463
289-3061	▶459
	485
	486
289-3063	483
	▶485
289-3064	483
	▶486
289-3071	482
	▶486
289-4795	763
	766
289-5883	302
289-5884	481
289-6385	359
	360
	▶362
289-6386	359
	▶363
289-6387	360
	▶364
289-6388	361
	▶365
289-6389	361
	▶366
289-8449	210
	211
	212
	226
290-3391	441
	443
290-4835	253
	▶707
290-5570	▶175
290-5571	▶176
290-6180	751
	754
	757
	760
291-1094	924
	926
	927
	928
	929
	931
291-1913	211
291-1915	226
291-3803	769
	770
291-4256	924
	926
	928
291-4261	924
	925
	927
	928
	929
	931
291-5094	▶300
291-5098	▶300
291-5505	71
291-7972	829
291-7980	▶677
	829
291-7981	677
291-7984	677
291-7986	677
291-7989	677
291-7990	677
	678
	679
291-7992	677
291-7993	829
291-8004	▶678
	829
291-8005	678
291-8008	678
	679
291-8010	829
291-8011	▶679
	829
291-8012	679
291-8014	829
291-8019	829
291-8026	829
291-8027	829
291-8028	829
291-8030	677
291-8031	829
291-8032	829
291-9247	613
291-9310	677
291-9334	929
	931
292-0122	▶301
292-0124	▶891
292-0280	▶176
292-0285	175
	▶210
292-0290	175
	▶194
292-0291	176
	▶211
292-0292	176
	▶211
292-0293	▶175
292-0294	▶161
292-0296	174
	175
	176
	177
	▶198
292-0302	174
	175
	▶906
292-0303	176
	177
	194
	▶906
292-0309	175
	▶740
292-0311	738
	740
292-0312	▶175
292-2208	535
	539
	543
	547
292-2209	535
	539
	543
	547
292-2332	535
	539
	543
	547
292-2333	535
	539
	543
	547
292-2437	684
292-2438	684
292-2558	185
292-3462	172
292-3480	585
292-3778	▶81
	101
	106
292-6402	▶793
	804
	808
	811
	814
292-9880	172
293-0249	99
	100
	131
293-0777	872
293-0778	872
293-2915	804
	808
	811
	814
293-3820	535
	539
	543
	547
293-3821	535
	539
	543
	547
293-4053	68
293-4381	60
	67
293-5438	▶355
	362
293-5439	▶356
	363
293-5440	▶357
	364

▶ **PRIMARY REFERENCE**

PART NUMBER INDEX

Part	Page
293-5441	▶358
	365
	366
293-5444	363
	364
	▶370
293-5445	490
	492
	▶498
293-5447	352
	▶375
293-5448	352
	▶374
293-5450	▶141
	490
	492
293-5451	362
	363
	364
	▶380
293-5452	365
	366
	▶382
293-6143	398
	402
293-6144	392
	400
293-9150	438
	439
293-9379	804
	808
	811
	814
293-9380	804
	808
	811
	814
293-9381	804
	808
	811
	814
293-9665	804
	808
	811
	814
294-1061	338
	340
	342
	346
294-1062	595
	598
294-1063	603
294-1068	344
	348
294-1070	338
	340
294-3014	96
294-7139	804
	808
	811
	814
294-7375	72
295-0189	131
295-1042	13
295-1711	30
295-4037	839
	842
295-4039	838
	839
295-4433	▶804
	823
295-4434	▶808
	821
295-4436	▶811
	822
295-4670	84
	87
	90
	96
295-4695	585
295-4801	99
	131
	132
295-6472	804
	808
	811
	814
295-6661	24
295-8930	194
295-9125	▶99
	106
295-9265	499
	511
295-9880	174
	▶227
296-3542	99
	131
	132
296-5751	▶173
296-5752	▶173
296-5753	▶173
296-5754	▶173
296-5755	▶174
296-5756	▶174
296-6705	141
	380
	382
296-6707	▶306
	362
	363
	364
296-6708	▶307
	365
	366
296-9891	794
297-1464	689
	691
297-1465	714
	716
	718
	720
	722
	724
	727
	730
	734
	736
297-1466	689
	691
	714
	716
	718
	720
	722
	724
	727
	730
	734
	736
297-3272	434
297-3273	434
297-3274	434
297-3275	434
298-4524	17
298-4526	▶24
	26
298-4527	24
298-4528	24
298-4530	24
298-4533	▶42
	46
298-4535	101
	106
	111
	116
	121
	126
298-4536	101
	106
	111
	116
298-4537	101
	106
298-4538	101
	106
298-4539	101
	106
298-4540	101
	106
298-4541	101
	106
298-4542	101
	106
	111
	116
	121
	126
298-4543	101
	106
	111
	116
	121
	126
298-4544	101
298-4546	13
298-4547	13
298-4548	13
298-4549	13
298-4550	13
298-4551	13
298-4552	13
298-4553	55
298-4558	55
	58
298-4559	55
298-4560	55
	58
298-4570	72
298-4576	72
298-4603	79
298-4604	33
298-4605	260
298-4606	260
298-4607	260
298-5074	930
	931
298-5099	6
	▶55
	▶57
298-5100	6
	▶50
298-5105	6
	▶61
	▶63
298-5110	6
	▶30
298-5112	6
	▶51
298-5123	6
	▶79
	▶80
298-5127	6
	▶33
298-5129	6
	▶39
298-5772	172
298-5874	9
299-2214	696
	697
	698
	705
	706
	707
	708
	709
299-3235	922
299-3236	922
299-3237	921
	922
299-3238	921
	922
299-3240	423
	921
	922
299-3244	921
299-3245	921
299-3902	427
299-3903	386
	427
299-4116	386
299-5092	6
	▶260
	▶261
299-5511	24
299-7704	653
299-8229	77
	80
	96
299-8874	911

▶ **PRIMARY REFERENCE**

PART NUMBER INDEX

Part	Page
3	
300-1647	866
300-1661	867
300-2118	▶211
300-2121	535
	539
	543
300-3631	710
	875
	878
	883
300-3665	667
300-4098	763
	766
300-4415	223
300-6520	72
300-6714	106
	111
	116
	121
	126
300-8543	▶301
300-8544	▶892
301-0096	472
	473
	478
	479
	480
301-0145	814
301-0146	814
301-0147	▶814
	824
301-0148	801
	▶824
301-0589	183
301-0650	▶472
	▶473
	474
	475
301-0652	474
	475
	▶478
	▶479
301-0654	465
	▶480
301-4302	485
	486
301-5700	839
301-5701	838
301-6061	777
301-6062	777
	780
301-6063	777
301-6064	777
301-6065	777
301-6066	777
301-7299	425
	426
301-7301	387
301-7302	387
	389
301-7303	387
	389
301-7305	437
301-7890	▶140
	352
301-8243	6
	▶53
301-9281	553
301-9282	553
	556
301-9283	553
	556
301-9284	553
	565
301-9285	535
	539
301-9286	553
301-9287	553
301-9290	553
301-9291	553
301-9292	535
	539
301-9293	553
	556
301-9294	553
	556
301-9295	535
	539
	543
301-9296	535
	539
	547
301-9297	535
	539
	547
301-9298	535
	539
	547
301-9299	535
	539
	547
301-9300	535
	539
	543
301-9819	256
302-2136	838
	839
302-5320	798
302-5323	800
302-5722	474
302-6802	407
302-6803	▶465
	487
302-6813	▶474
	▶475
	487
302-8726	335
	350
303-0453	298
	299
303-0454	298
	299
303-0461	481
303-0463	302
303-0464	298
303-0465	298
303-0467	776
303-1888	535
303-1889	535
303-1890	535
	539
	543
303-1892	535
	539
	543
303-1893	535
	539
	543
303-2116	72
303-4221	171
303-4685	▶171
303-5767	6
	▶32
303-5770	6
	▶28
303-5774	6
	▶143
303-5775	6
	▶8
303-5781	13
303-5786	72
303-5787	72
303-5788	72
303-5793	72
303-6580	535
303-6582	911
303-6584	570
	573
	576
	578
	581
303-6587	327
	331
303-6588	327
	329
	331
303-6589	▶327
	▶329
	354
303-6592	323
	334
303-6593	570
	573
	576
	578
	581
303-6599	323
	325
	334
303-6600	513
	516
	559
303-9455	460
304-1139	624
	626
	628
	630
	▶642
304-1140	632
304-1141	632
304-1142	632
	634
	635
	647
304-1143	642
304-1144	632
304-1145	634
	635
	642
	647
304-1147	632
	634
	635
	642
	647
304-1149	632
304-1150	632
	634
	635
	642
	647
304-1151	634
	635
	642
	647
304-1152	635
	647
304-1153	632
304-1154	624
	626
	628
	630
304-1155	632
304-1156	632
	634
	635
	642
	647
304-3641	6
	▶21
304-3642	6
	▶15
	▶16
304-3643	6
	▶37
	▶38
304-3645	6
	▶26
304-3647	6
	▶46
304-3648	6
	▶11
304-3649	6
	▶101
	▶106
	▶111
	▶116
	▶121
	▶126
304-3650	6
	▶162
304-3654	6
	▶29
304-3655	6
	▶223
304-3656	6
	▶35
304-3657	6

▶ **PRIMARY REFERENCE**

PART NUMBER INDEX

Part	Page
	▶72
304-3658	6
	▶12
304-3659	6
	▶84
	▶87
	▶90
304-3660	6
	▶172
304-3661	6
	▶34
304-3662	6
	▶93
	▶94
	▶95
304-3663	6
	▶40
304-3687	101
304-3688	101
	106
	111
	116
304-3689	101
	106
	111
	116
	121
	126
304-3692	35
304-3693	35
304-3695	35
304-3698	35
304-3702	72
304-3704	72
304-3706	84
	87
304-3707	84
	87
304-3708	84
	87
304-3711	34
304-3713	93
	94
304-3716	687
304-5165	167
	261
304-5617	6
	▶52
304-5687	292
305-1439	443
305-1442	443
305-1443	441
	443
305-1446	441
	443
305-1448	443
305-1449	443
305-1450	443
305-1451	441
305-1453	441
305-1454	441
305-1455	441
305-1511	366
	▶371
305-5014	513
	516
	519
	522
	559
305-5015	499
	502
	505
	508
	561
305-5291	111
	116
	121
	126
	133
305-5362	230
305-7398	48
305-7881	143
	144
305-7952	595
	598
305-7956	595
	598
305-8452	6
305-9192	741
	743
	745
	748
	751
	754
	757
	760
	844
306-2090	563
	636
	639
306-2092	344
306-2093	344
306-2094	505
	561
306-2330	11
306-2337	48
306-4998	387
	389
306-5053	435
	436
306-5054	435
	436
306-5911	35
306-8855	▶27
306-8857	27
306-8892	435
	436
307-0047	183
307-1590	782
307-1591	782
307-1592	778
	780
307-1593	▶407
307-1599	407
307-1600	407
307-2242	9
307-4442	670
	673
307-4673	▶699
	700
	702
	710
	712
	877
	880
	885
	889
307-9843	61
308-1845	438
	439
	440
308-3554	829
308-3555	829
308-7298	76
	78
308-7571	84
	87
	90
	96
308-7576	78
308-7677	570
	573
	576
	578
	581
308-8425	101
	106
308-8642	829
309-5075	▶488
	871
309-5090	▶870
	920
309-5091	870
	▶871
309-6666	10
309-6678	24
309-8006	106
	111
	116
	121
	126
310-2392	183
310-5680	▶483
310-5912	76
	78
310-7249	483
	▶487
310-7502	449
310-7503	449
310-8520	26
310-9269	37
	38
311-0292	235
311-0293	244
311-0294	164
	289
	292
311-0295	269
	274
	279
	286
311-0296	700
	710
	712
	877
	880
	885
311-0297	269
	274
	279
311-0298	270
311-0299	772
	774
311-0300	300
	891
	892
	893
311-0301	300
311-0302	700
	702
	712
	880
	885
311-0303	772
311-0304	774
311-0305	270
	275
	280
	287
311-0306	146
	154
	158
311-0307	146
	154
	158
	167
311-0311	274
	279
311-0312	202
311-2376	80
311-3858	106
	111
	116
	121
	126
311-4862	176
	177
311-4863	161
311-4864	174
	176
	177
311-5950	714
	716
	720
	722
	727
	730
	734
	736
311-6180	459
	485
	486
311-6342	106
	111
	116
	121
	126
311-6631	111
311-7069	700
	702

▶ **PRIMARY REFERENCE**

PART NUMBER INDEX

Part	Page
	888
	889
311-7070	44
	164
311-8305	423
311-8306	423
311-8307	423
311-8376	181
311-8643	423
311-8644	▶423
311-8646	410
	412
	414
312-1035	▶425
	▶426
312-7461	930
312-8350	▶850
312-8351	850
	▶868
312-8352	868
312-8360	▶850
312-8361	850
	▶869
312-8362	869
313-1663	76
	78
313-2455	106
	111
	116
	121
	126
313-2794	677
313-7224	595
	599
313-7227	603
313-7228	602
314-2573	196
314-2574	196
314-2892	84
	87
314-3000	718
	720
	722
	724
	727
	730
314-3001	714
	716
	734
	736
314-3002	714
	718
	720
	724
	727
	734
314-3003	▶689
	718
	720
	722
	724
	727
	730
314-3004	▶691
	714
	716
	734
	736
314-3005	689
314-3007	689
	691
314-3009	714
	718
	720
	724
	727
	734
314-3010	772
	774
314-3011	196
314-3012	196
314-3013	196
314-3014	196
314-3015	734
	736
314-3016	714
	716
	718
	720
	722
	724
	727
	730
314-3017	714
	716
	718
	720
	722
	724
	727
	730
314-3018	718
	720
	722
	724
	727
	730
314-3019	714
	716
	734
	736
314-3020	714
	716
314-3021	714
	716
	734
	736
314-3022	718
	720
	722
314-3023	718
	720
	722
	724
	727
	730
314-3024	724
	727
	730
314-3025	714
	716
	718
	720
	722
	724
	727
	730
	734
	736
314-3026	196
314-3472	682
314-3956	48
314-3957	48
314-3960	6
	▶48
314-4018	686
314-5274	829
314-5275	829
314-7908	310
	317
314-7909	310
	317
314-7910	310
	317
314-7911	310
	317
314-9768	613
315-3384	11
315-6735	667
315-6737	667
315-6738	667
315-9854	505
	508
	513
	516
	519
	522
	636
	639
	643
	645
315-9855	502
	505
	508
	513
	516
	519
	522
	636
	639
	643
	645
316-0468	72
316-0625	595
	598
316-0629	602
316-1441	59
316-8368	821
	822
	823
	824
	▶829
316-9198	531
316-9205	▶531
	533
316-9351	13
317-0657	171
317-2808	3
	▶533
317-3144	106
	111
	116
	121
	126
317-3775	48
317-5316	844
317-6527	▶174
317-8476	84
	87
	90
317-9299	48
317-9763	410
	412
	414
317-9764	410
	412
	414
317-9767	391
317-9776	6
	▶144
318-0815	671
	673
	762
	765
318-2394	116
	121
	126
318-6093	238
318-6094	247
318-6095	204
318-6096	205
318-6097	164
318-6098	165
318-6099	166
318-6100	166
318-6101	702
	889
318-6104	166
318-6105	166
318-6106	702
	889
318-6107	3
	4
	▶164
318-6108	▶885
	892
	893
318-6109	534
	▶700
318-6110	534
	▶888
318-6111	534
	▶702
318-6112	533
	▶889
318-6113	168
318-6114	167
318-6115	167
318-6116	167

▶ **PRIMARY REFERENCE**

PART NUMBER INDEX

Part	Page	Part	Page	Part	Page	Part	Page
318-6117	167		743	322-6504	▶643	325-0488	4
318-6118	167		745	322-6505	▶645		▶559
318-6119	168		748	322-8499	663	325-0494	559
318-6120	168		751	322-9703	617		561
318-6121	▶207		754		618		563
	250		757		619	325-0495	559
318-6122	207		760	323-3515	30	325-0496	559
318-6123	700	320-9921	13	323-6147	743		561
	702	321-7854	462		754		563
	889		463	323-6148	748	325-0497	559
318-6124	885	322-0304	302		760		561
318-6125	885	322-3161	793	323-7319	391		563
318-6126	167	322-3744	111	323-7320	3	325-0498	559
318-6127	885		116		4	325-0499	559
318-6128	208	322-3745	111		▶391	325-0500	561
318-6129	426		116	323-8150	620	325-0501	561
318-6522	423		121		▶628		584
318-7190	670		126	323-8151	621	325-0502	561
	673	322-3746	111		▶630	325-0517	563
318-8063	▶76		116	323-8756	▶460	325-0518	563
	93		121		484	325-0519	563
318-8135	▶228		126		485	325-0524	331
	425	322-3747	111		487		333
318-8136	146	322-3748	111	323-9312	38		334
	▶229	322-5895	98	324-0444	30	325-0525	331
319-1824	587	322-5896	98	324-0532	111		333
	589	322-5897	98		116		334
319-6491	146	322-5898	96		121	325-0701	714
	158	322-5900	3		▶131		716
	▶219		4	324-0669	694		734
319-6909	587		▶96		▶794		736
	589	322-5904	3	324-0670	1	325-1020	5
319-8103	3		4		2		▶561
	4		▶98		▶694	325-1327	5
	▶138	322-5906	96	324-1481	84		▶563
319-8104	138	322-5908	134		87	325-6496	▶3
319-8105	138		▶684	324-1482	84	325-6497	▶3
319-8108	138	322-5909	684		87	325-6502	▶4
319-8110	619	322-5910	96	324-9705	565	325-6504	3
319-8113	3	322-5911	96		568		▶404
	4	322-5912	96		598	325-6505	3
	▶611	322-5913	96		602		▶396
319-8114	611	322-5914	96		784	325-6510	4
	▶618	322-5915	134	324-9706	167		▶397
319-8115	618	322-5916	134		168	325-6516	▶892
319-8820	615	322-5917	134		315	325-6519	▶893
	▶619		138		317	325-6520	▶893
319-8832	619	322-5920	98		331	325-6521	▶533
320-0461	547		▶134		346	325-6522	▶534
320-0462	547	322-6479	▶410		348	325-6525	▶534
320-0463	▶547	322-6480	▶412		350	325-6528	▶534
320-0677	▶82	322-6481	▶414		565	325-6541	▶4
	111	322-6486	663		598	325-6542	▶5
	116	322-6487	410		602	325-6547	▶5
	121		412	324-9707	164	325-7265	3
	126		414		346		4
320-1332	6	322-6488	410		348		▶663
	▶77		412		602	325-7266	3
320-2360	13		414		700		4
320-2361	13	322-6489	410		702		▶776
320-2362	13	322-6490	410		886	325-7267	3
320-2369	6		412		889		4
	▶13		414	324-9708	164		▶69
320-5176	814	322-6491	412		346	325-7268	▶598
320-8448	741	322-6492	414		348		892

▶ **PRIMARY REFERENCE**

PART NUMBER INDEX

Part	Page
	893
325-7270	▶602
	893
325-7271	534
	▶620
325-7272	533
	534
	▶621
325-7273	533
	534
	▶589
325-7274	533
	534
	▶581
326-1880	28
326-3563	60
326-3566	559
	561
	563
326-3567	565
	589
326-3568	60
	598
	603
326-3569	350
326-3570	60
	350
326-5208	651
	652
326-8172	663
326-8178	676
326-8179	676
326-8180	▶676
326-8749	628
	630
	▶647
326-9195	684
326-9197	195
326-9262	407
327-0931	4
	▶331
327-0932	331
327-0934	331
327-0939	405
327-0948	406
327-2127	96
327-3392	4
	5
	▶584
327-3395	584
327-4444	43
327-4552	396
	397
	404
327-6133	275
	280
327-6134	700
	702
	885
327-6138	204
	208
327-6139	205
	208
327-6147	250
327-6347	▶75
	96
327-6742	581
327-6743	581
327-6772	4
	5
	▶315
327-6773	315
327-6774	315
327-6775	315
327-6776	315
327-7665	5
	▶333
327-7670	5
	▶334
327-7671	333
327-7672	333
327-7682	334
327-7683	334
327-7684	4
	5
	▶784
327-8890	4
	5
	▶565
327-8891	565
327-8892	565
327-8893	565
327-8894	565
327-8901	5
	▶317
327-8902	317
327-8903	317
327-8904	317
327-8905	317
327-8912	584
327-8914	584
328-0893	705
	706
	708
	709
328-0894	173
	174
	▶708
328-0895	173
	▶709
328-8600	4
	5
	▶568
328-8602	4
	5
	▶551
328-8614	568
328-8615	568
328-8616	568
328-8617	568
328-8622	350
328-8623	350
328-8624	784
328-8627	584
329-1197	90
	96
329-1319	4
	5
	▶346
329-1323	346
	348
329-1325	346
	348
329-1920	346
329-1925	350
329-1926	348
329-1928	346
	348
329-1934	350
329-1937	5
	▶348
329-1938	4
	5
	▶350
329-1939	350
329-1940	350
329-1941	350
329-2576	700
	702
	712
	881
	885
329-3843	551
329-3844	551
329-3845	551
329-3846	551
329-3847	551
329-3848	551
329-3849	551
329-3850	551
329-3851	551
329-3852	551
329-3853	551
329-3854	551
329-3855	551
329-3856	551
329-3857	551
329-4986	69
329-4996	69
329-5347	573
	578
	581
329-5632	4
	5
	▶60
329-8873	551
330-1736	15
	▶17
330-3518	589
330-3519	589
330-3520	589
330-4789	21
	▶22
330-5019	▶789
	844
330-5020	▶790
	844
330-5410	60
330-5411	60
330-5412	60
330-7301	598
	602
330-7315	602
330-7316	602
330-7317	602
330-7318	602
330-7319	602
330-7320	602
330-7321	602
330-7322	602
330-7323	603
331-0162	898
331-0163	857
	864
331-0177	864
331-0180	865
331-0887	75
331-7540	162
332-1074	598
332-1075	598
332-1076	598
332-1077	598
332-1078	598
332-1079	598
332-1080	598
332-1081	598
332-8576	96
333-2732	836
	▶840
333-2733	836
	▶842
333-4732	116
	121
	126
333-4733	116
	121
	126
333-5435	76
	78
333-9693	76
	78
333-9694	76
	78
334-0808	▶78
	94
	95
	96
334-1401	54
334-1573	539
	543
334-1574	539
	543
334-2314	6
	▶54
334-2932	131
	132
334-4603	924
	928
	929
334-9334	41
335-5321	146
335-5782	87
335-8266	121
	126
336-3545	▶171
	183
336-4116	420
336-4119	420
336-4123	420
336-4125	▶418

▶ **PRIMARY REFERENCE**

PART NUMBER INDEX

Part	Page
336-4126	▶420
336-4132	420
336-4134	420
337-3573	121
	126
337-3574	96
	121
	126
337-5633	59
338-0841	171
338-8069	90
338-8070	90
338-8071	90
338-8072	90
338-8075	90
338-8085	95
339-0103	418
339-0104	418
339-0112	418
339-0113	418
339-0114	418
339-0115	418
339-0116	418
339-0117	418
339-0118	418
339-3397	46
339-8780	16
	17
339-9637	24
340-4528	389
340-7270	418
340-7271	418
341-0077	506
341-0083	509
	516
	519
	522
	636
	639
341-0660	551
341-4028	15
	16
341-7478	772
	774
341-9215	▶652
342-9559	210
342-9788	436
343-3549	659
	661
343-3566	716
	722
	730
	736
343-3567	716
	722
	730
	736
343-3797	837
343-3798	751
	754
343-3799	757
	760
343-7104	77
	96
343-8096	13
345-9583	446
	451
345-9584	446
	451
345-9587	446
	451
345-9588	446
	451
345-9591	451
345-9592	451
345-9595	446
345-9596	446
345-9622	329
345-9623	508
345-9632	475
346-1449	261
346-4372	740
346-9800	▶195
346-9825	143
	144
347-0911	▶212
	213
347-0912	177
	▶213
347-0913	177
	▶213
347-0915	▶177
347-0916	▶177
347-2282	780
347-2283	780
347-2284	780
347-2285	780
347-2286	780
348-6651	663
348-7781	842
348-7782	840
	842
348-7783	840
	842
348-7784	840
348-7785	842
348-8149	9
349-3261	10
	143
349-4589	663
349-6992	436
349-6993	436
351-1881	830
351-2799	132
352-6584	126
	▶132
353-2205	20
353-2206	20
353-2207	20
353-2208	20
353-2794	211
353-5793	440
353-5795	440
353-6188	440
353-7423	19
	20
353-7424	19
	20
353-7425	19
	20
353-7715	58
353-7717	57
	▶58
353-9667	19
354-1384	674
	765
354-4754	63
355-7354	743
	748
	754
	760
356-5266	446
356-5267	446
356-5270	451
356-5271	451
356-5272	▶468
	487
356-5273	▶469
	487
357-9606	475
358-6633	▶133
359-0716	16
	▶19
359-0719	38
359-0720	38
359-0721	38
359-0722	38
359-0723	38
359-0724	38
359-0737	6
359-0750	41
359-9666	143
	144
360-7345	6
	▶41
360-9640	556
360-9642	556
360-9643	556
360-9644	556
360-9645	556
360-9646	556
361-3541	556
361-3542	556
361-3543	543
361-3544	543
361-3545	543
361-3546	543
361-3547	543
361-6059	45
	▶398
361-6060	45
	▶400
361-6063	▶45
361-6069	398
362-4168	171
363-5991	674
	765
363-5992	674
	765
364-0856	387
	389
364-2829	▶20
364-6136	673
	765
364-6583	836
365-9563	556
367-5286	933
369-4706	593
369-4707	593
370-3244	▶933
371-8900	933
377-4844	171

▶ **PRIMARY REFERENCE**

MEMORANDA



© 2011 CATERPILLAR
ALL RIGHTS
RESERVED

CAT, CATERPILLAR, THEIR RESPECTIVE LOGOS, “CATERPILLAR YELLOW” AND THE POWER EDGE TRADE DRESS, AS WELL AS CORPORATE AND PRODUCT IDENTITY USED HEREIN, ARE TRADEMARKS OF CATERPILLAR AND MAY NOT BE USED WITHOUT PERMISSION.

Printed in
Japan