M0116465-02 (en-us)
May 2020

RUTHZIL TRATOR COMERCIAL DE PEÇAS LTDA 11 97083-6812 ROLANDO

Parts Manual

D4 TRACK TYPE TRACTOR

K3G1-UP (Machine)
H3C1-UP (Machine)
4501-UP (Engine)
E7A1-UP (Engine)
4501-UP (Engine)
E7A1-UP (Engine)
JJJ1-UP (Ripper)
JJJ1-UP (Ripper)
FD51-UP (Angle Blade)
BB91-UP (Angle Blade)
FD61-UP (Angle Blade)
BG91-UP (Blade)

Powered By C7.1 ENGINE

Product and Dealer Information

Note: For product identification plate locations, see the section “Product Identification Information” in the Operation and Maintenance Manual.

Delivery Date: _____

Product Information

Model: _____

Product Identification Number: _____

Engine Serial Number: _____

Transmission Serial Number: _____

Generator Serial Number: _____

Attachment Serial Numbers: _____

Attachment Information: _____

Customer Equipment Number: _____

Dealer Equipment Number: _____

Dealer Information

Name: _____ Branch: _____

Address: _____

_____

_____

	Dealer Contact	Phone Number	Hours
Sales:	_____	_____	_____
Parts:	_____	_____	_____
Service:	_____	_____	_____

MEMORANDA

TABLE OF CONTENTS

NAME	PAGE
GENERAL INFORMATION	A5
REPAIR ALTERNATIVES	A8
SUPPLEMENTAL COOLANT ADDITIVES	A9
MAINTENANCE PARTS	A10
INDEX	A12
MACHINE ARRANGEMENT	1
CHASSIS AR	1
COMMON AR	1
OPTION AR-WORK TOOL	2
ENGINE ARRANGEMENT	3
ENGINE AR	3
ENGINE AR-COMPLETE	3
ENGINE AR-PRIMARY	4
INSTALLATION AR-ENGINE	5
BASIC ENGINE	6
BELT TENSIONER GP	6
BRACKET GP-MOUNTING	7
CAMSHAFT GP	8
CONNECTING ROD GP	9
COVER GP-VALVE MECHANISM	10
CRANKSHAFT GP	11
CYLINDER BLOCK AS	13
CYLINDER BLOCK GP	14
CYLINDER BLOCK GP-SHORT	15
CYLINDER HEAD AS	17
CYLINDER HEAD GP	18
DRAIN GP-ENGINE OIL	22
DRIVE GP-FAN	23
FASTENER GP-DAMPER & PULLEY	24
FLYWHEEL GP	25
HOUSING GP-FLYWHEEL	26
HOUSING GP-FRONT	27
JET GP-PISTON COOLING	29
LIFTING GP-ENGINE	30
MOUNTING GP-ALTERNATOR	31
MOUNTING GP-ENGINE	32
MOUNTING GP-ENGINE & XMSN	33
PAN GP-OIL	34
PISTON & ROD GP	36
PISTON GP	40
PLUG GP-CYLINDER BLOCK	42
PULLEY GP-CRANKSHAFT	43
ROCKER ARM GP	44
LUBRICATION SYSTEM	48
FILLER GP-ENGINE OIL	48
FILTER GP-ENGINE OIL	49
GAUGE GP-OIL LEVEL (DIPSTICK)	50
LINES GP-FUMES DISPOSAL	52
PUMP GP-ENGINE OIL	54
VALVE GP-FLUID SAMPLING	55
COOLING SYSTEM	56
BASE GP-OIL COOLER & FILTER	56
CONNECTION GP-HEATER	57
CONNECTION GP-WATER	58
COOLER GP-ENGINE OIL	59
COOLING AR	60
COOLING GP	61
FAN & MOTOR GP	62
LINES GP-COOLANT	63
PUMP GP-WATER	67
AIR INLET AND EXHAUST SYSTEM	68
AIR CLEANER GP	68
DUST EJECTOR GP	70
LINES GP-AIR	71
LINES GP-TURBOCHARGER AIR	73
MANIFOLD GP-EXHAUST	74
MANIFOLD GP-INLET	75
MUFFLER GP	76
PIPE GP-EXHAUST	77
PRECLEANER GP	78
SUPPORT GP-PUMP	80
TURBOCHARGER GP	81
FUEL SYSTEM	83
FILTER GP-FUEL	83
FILTER GP-PRIMARY FUEL	86
FILTER GP-WATER SEP & FUEL	88
INJECTOR GP-FUEL	89
LINES GP-FUEL	91
LINES GP-FUEL FILTER	96
LINES GP-FUEL INJECTION	98
PUMP GP-FUEL INJECTION	100
RAIL GP-FUEL	102
TANK & MTG GP-FUEL	103
TANK GP-FUEL	105
ELECTRICAL AND STARTING SYSTEM	106
ALARM GP	106
ALTERNATOR GP-CHARGING	107
BATTERY & WIRING GP	110
CAMERA AR	116
CAMERA GP	117
CONTROL & MTG GP-ELECTRONIC	118
CONTROL GP-COMMUNICATION	120
CONTROL GP-ELECTRONIC	121
CONTROL GP-ENGINE ELECTRONIC	122
CONTROL GP-IMPLEMENT	123
CONTROL GP-UNPROGRAMMED	126

TABLE OF CONTENTS

NAME PAGE

ELECTRONICS AR-MACHINE 128
ELECTRONICS GP-MACHINE 129
ELECTRONICS GP-MONITOR 130
HARNESS AS-CAB 131
HARNESS AS-CHASSIS 132
HARNESS AS-CONTROL 133
HARNESS AS-DASH 137
HARNESS AS-ENGINE 138
HARNESS AS-HEATER & AIR COND 140
HARNESS AS-LIGHTING 141
HARNESS AS-MONITOR 141
HARNESS AS-PLATFORM 142
HARNESS AS-REAR LIGHTING 144
HARNESS AS-SENSOR 144
HARNESS AS-SOLENOID 148
HARNESS AS-VALVE 148
HARNESS AS-WINDOW WIPER 149
HARNESS AS-WIRING 149
HEATER GP-JACKET WATER 151
INSTALLATION GP-COMMUNICATION 152
LAMP GP-FLOOD 158
LIGHTING GP-FLOOD 160
LIGHTING GP-WARNING BEACON 162
MOUNTING GP-ELECTRONIC CONTROL 163
PANEL GP-CIRCUIT BREAKER 164
RADIO GP-COMMUNICATION 166
SENSOR GP-ENGINE 167
SENSOR GP-POSITION 168
SENSOR GP-SPEED 169
STARTING AID GP 170
STARTING MOTOR GP-ELECTRIC 171
SWITCH GP-DISCONNECT 174
WIRING GP-CAB 175
WIRING GP-CAMERA 179
WIRING GP-CONTROL 180
WIRING GP-ENGINE 182
WIRING GP-GRADE CONTROL 188
WIRING GP-PLATFORM 190
WIRING GP-SEAT 194
WIRING GP-SENSOR 196
WIRING GP-VALVE 200

POWER TRAIN 201
ACTUATOR GP-PUMP 201
BASE GP-OIL FILTER 202
COUPLING GP-PUMP 203
DRIVE AR-FINAL 204
FILTER GP-OIL 206
FINAL DRIVE & BRAKE GP 208
FLANGE GP 220
HEAD GP-MOTOR 222
HOUSING GP-PUMP 224
LINES GP-CHARGE PRESSURE 226

NAME PAGE

LINES GP-DRAIN 228
LINES GP-HYDROSTATIC 230
MOTOR & MOUNTING GP 232
MOTOR GP-PISTON 233
MOUNTING GP-FINAL DRIVE 237
POWER TRAIN AR 238
PUMP & MTG GP-POWER TRAIN 239
PUMP GP-PISTON 240
ROTATING GP-MOTOR 242
ROTATING GP-PUMP 245
SEGMENT GP-SPROCKET 249
VALVE GP-CHECK 251
VALVE GP-FLUSHING 252
VALVE GP-MOTOR CONTROL 253
VALVE GP-PUMP CONTROL 254
VALVE GP-RELIEF 256

FRAME AND BODY 257
BAFFLE GP-RADIATOR 257
BOX GP-STORAGE 259
BRACKET GP-SUPPORT 261
COVER GP-ACCESS 262
DRAWBAR GP 266
ENCLOSURE GP 267
ENCLOSURE GP-ENGINE 268
GRILL GP-RADIATOR 271
GUARD AR-BOTTOM 274
GUARD GP-BOTTOM 275
GUARD GP-FUEL TANK 277
GUARD GP-LIGHTING 279
GUARD GP-RADIATOR 280
GUARD GP-REAR 282
HOOD GP 283
INSULATION GP-SOUND SUPPR 284
LINES GP-GREASE 285
PANEL GP-SIDE 286
SCREEN GP-PROTECTION 288
SWEEP AR 289
SWEEP AS 290
SWEEP GP 291

UNDERCARRIAGE 294
BAR GP-EQUALIZER 294
BRACKET GP-MOUNTING 298
FRAME GP-TRACK ROLLER 299
GUARD GP-SPROCKET 309
GUARD GP-TRACK ROLLER 310
IDLER GP-FRONT 317
IDLER GP-TRACK 319
LINK AS-TRACK 321
PIVOT BAR GP 325
ROLLER GP-TRACK CARRIER 327
ROLLER GP-TRACK-DOUBLE FLANGE 329
ROLLER GP-TRACK-SINGLE FLANGE 330

TABLE OF CONTENTS

NAME	PAGE
SPRING GP-RECOIL	333
TRACK ADJUSTER & RECOIL GP	334
TRACK AR	336
TRACK GP	345
UNDERCARRIAGE AR	354
STEERING AND BRAKING SYSTEM	355
LINES GP-BRAKE	355
HYDRAULIC SYSTEM	357
ACCUMULATOR GP-HYDRAULIC	357
ACTUATOR GP-PUMP	359
CONTROL AR-HYDRAULIC	360
CYLINDER GP-ANGLING	361
CYLINDER GP-BULLDOZER LIFT	363
CYLINDER GP-RIPPER	365
CYLINDER GP-TILT	367
FILTER GP-OIL	369
HEAD GP-PUMP	370
HYDRAULIC AR	372
LINES GP-ANGLE & TILT	374
LINES GP-BULLDOZER	379
LINES GP-HYDRAULIC FAN	381
LINES GP-LIFT CYLINDER	390
LINES GP-PILOT	391
LINES GP-RIPPER	393
LINES GP-WINCH	395
MOTOR GP-GEAR	398
MOUNTING GP-HYDRAULIC TANK	400
MOUNTING GP-VALVE	401
PIN GP-CYLINDER	402
PLUG GP-CONTROL VALVE	403
PUMP & LINES AR	404
PUMP & LINES GP	405
PUMP GP-CHARGE	407
PUMP GP-GEAR	408
PUMP GP-PISTON	409
PUMP GP-PISTON & GEAR	411
ROTATING GP-PUMP	413
TANK GP-HYDRAULIC	417
VALVE & LINES GP-HYD CONTROL	421
VALVE GP-BANK 4	422
VALVE GP-PUMP CONTROL	423
VALVE GP-RELIEF	426
VALVE GP-SOLENOID	430
IMPLEMENTS	431
C-FRAME GP-POWER ANGLING	431
INSTALLATION AR-BULLDOZER	434
LINK GP-PITCH	435
OPERATOR STATION	436
AIR CONDITIONER GP	436
ARM GP-SEAT SUSPENSION	442
ARMREST GP	445
CAB AR	446
CAB GP	448
COMPRESSOR & MTG GP-REFRIG	450
COMPRESSOR GP-REFRIGERANT	451
CONDENSER GP-REFRIGERANT	452
CONSOLE GP	454
CONSOLE GP-OPERATOR	455
CONTROL & MTG GP-PEDAL	457
CONTROL GP-HANDLE	458
CONTROL GP-JOYSTICK	463
CONTROL GP-RIPPER	470
COVER GP-ACCESS	471
COVER GP-CAB	472
COVER GP-CONSOLE	474
DOOR GP-CAB	478
DOOR GP-STORAGE	488
ENCLOSURE GP-CAB	490
INSTALLATION GP-CAB	491
INSTALLATION GP-RADIO	494
KIT-HANDLE	495
LINES GP-AIR CONDITIONER	496
LINES GP-HEATER	498
LINES GP-WINDOW WASHER	500
MONITOR GP-OPERATOR	501
MOTOR GP-WINDOW WIPER	503
MOUNTING GP-DISPLAY	507
PEDAL GP-GOVERNOR & BRAKE	509
RADIO GP	511
SCREEN GP-CAB	513
SEAT & MOUNTING GP	514
SEAT BELT GP	516
SEAT GP	517
SEAT GP-SUSPENSION	521
SUSPENSION GP-SEAT	523
TANK GP-WINDOW WASHER	526
WINDOW GP-CAB	529
WINDOW GP-SLIDING	531
WIPER GP-WINDOW	533
WORK TOOLS	535
BLADE & EDGE GP-ANGLING	535
BLADE GP-ANGLING	538
EDGE GP-BIT & CUTTING	545
EDGE GP-CUTTING	548
MOUNTING GP-RIPPER	549
PUMP & LINES GP-WINCH	551
RIPPER AR	553
RIPPER GP	554
TOOTH GP-RIPPER	556
SERVICE EQUIPMENT AND SUPPLIES	560
BOX GP-TOOL	560
FILM GP	562
PLATE & FILM GP	568

TABLE OF CONTENTS

NAME	PAGE	NAME	PAGE
PART NUMBER INDEX	B1		

1. MACHINE IDENTIFICATION

Cat machines are identified by Product Identification Numbers (PIN). Some components included in a machine may be identified by Serial Numbers (S/N). Typical components that will be serialized include engines, transmissions, bulldozers, and rippers. The machine and engine are further identified by arrangement numbers and in some cases modification numbers. These numbers are shown on the product identification plate(s) and on the master plate in the operator's compartment.

Cat dealers need all of these numbers to determine accurate parts identification.

Effective First Quarter 2001 the Cat Product Identification Number (PIN) changed from 8 to 17 characters. In an effort to provide uniform equipment identification, Caterpillar and other construction equipment manufacturers are moving to comply with the latest version of the product identification numbering standard. Non-road machine PINs are defined by ISO 10261. The new PIN format will apply to all Cat machines and generator sets. The PIN plates and frame marking will display the 17 character PIN. The new format will look like the following:

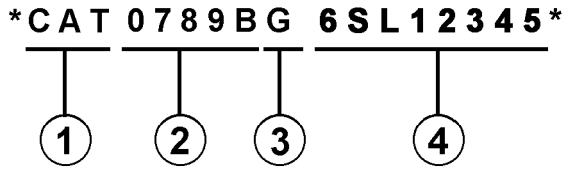

Where:

1. Caterpillar's World Manufacturing Code (characters 1-3)

2. Machine Descriptor (characters 4-8)

3. Check Character (character 9)

4. Machine Indicator Section (MIS) or Product Sequence Number (characters 10-17). These were previously referred to as the Serial Number.

Machines and generator sets produced before First Quarter 2001 will maintain their 8 character PIN format.

Components such as engines, transmissions, axles, etc. and work tools will continue to use an 8 character Serial Number (S/N).

2. ORDERING PARTS

⚠ WARNING

When replacement parts are required for this product Caterpillar recommends using Caterpillar replacement parts or parts with equivalent specifications including, but not limited to, physical dimensions, type, strength and material.

Failure to heed this warning can lead to premature failures, product damage, personal injury or death.

Quality Cat replacement parts are available from Cat dealers throughout the world. Their parts inventories are up to date and include all parts normally required to protect your investment in Cat machines. Dealers may offer repair kits or remanufactured parts to allow selection of the most effective repair alternative for a particular situation. When ordering parts, your order should specify the quantity, part number, part name, and the serial number/product identification number of the machine for which the parts are needed.

3. PARTS MANUAL ORGANIZATION

Product information in this manual is presented as "information elements" that represent all of the components for the specific model. Engine Arrangement and Seat Group are examples of information elements. The information elements are organized alphabetically by part name and secondarily by part number within each major section of the manual.

4. TABLE OF CONTENTS

A table of contents (TOC) is found at the beginning of the manual. The TOC lists each section of the manual with a complete list of all information elements organized as they appear in the manual. Page numbers are provided for quick reference to detailed parts identification illustrations and serviceable consist lists.

5. MAINTENANCE PARTS INDEX

The Maintenance Parts Index, located near the beginning of the manual, references most frequently used maintenance part numbers, providing description, quantity, usage and page number. This information is organized alphabetically by part description.

6. INDEX

The index located near the front of the manual is an alphabetical listing of all information elements included in the manual. Page numbers are provided for quick reference to detailed parts identification illustrations and serviceable consist lists.

7. PART NUMBER INDEX

A numerical index listing all part numbers and the corresponding page number(s) appears at the back of the manual.

8. CAPTIONS

Captions located at the beginning of each information element identify the part number and part name along with additional descriptive information. PIN and S/N information found in each caption should be used to select correct information for a specific machine. Field replacement options, identification of optional attachment components, and where used ("part of") information is also provided.

The first line of a caption is shown in larger type font to indicate the beginning of an information element. Captions for additional pages that may be required to illustrate an information element will be shown in standard type font and will include the term (contd.).

9. NON-SERVICED PARTS

In some instances it is necessary to display non-serviced parts that are a link to a lower level serviceable consist lists. These non-serviced part numbers are shown in italic type indicating that they are not available.

10. PARTS LIST REFERENCE NUMBERS

Numbers shown in the Ref No column correspond to numbers used in the associated graphic(s). An alphabetic suffix may be added to a reference number to identify lower level consist items. Numbers shown in the Graphic Ref column refer to the graphic number identifier displayed in the lower left corner of each illustration. The Graphic Ref number may be used in combination with the item Ref No to determine the correct part number. There may be intentional omission of a Ref No in a consist list as information is updated to reflect the latest serviceable part numbers.

11. INDENTED PART NAMES

When a part name is indented in a parts list, it is part of (included in) the group or assembly under which it is indented.

12. ILLUSTRATION REFERENCE LETTERS

When necessary, illustrations contain reference letters (A, B, C etc.) that are intended to track lines and harnesses from one point to another. They are also used to show where to reconnect illustrations that have been separated.

13. ABBREVIATIONS AND SYMBOLS

O.D. – Outside Diameter
I.D. – Inside Diameter
A – Not Part Of This Group
B – Use As Required
C – Change From Previous Type
D – Order By The Meter
E – Order By The Centimeter
F – Not Shown
G – Order By The Inch
I – Refer To Hydraulic Information System
M – Metric Part
R – Remfg Part May Be Available
Y – Separate Illustration
Z – Not Serviced Separately

14. DESCRIPTION OF TYPE CHANGES

Type - A type is defined as any configuration change that requires an additional Information Element for an Arrangement, Group, or Assembly. If serial number breaks for types are not available, a type # (Type 1, Type 2, etc.) will be displayed in the caption. These "type" changes are identified with a "C" note (change from previous type) in the Parts List. Only the "types" that apply to this Parts Manual will be included. Additional types may exist causing "C" notes to appear on an Information Element when no other types are shown.

15.<END>

This symbol indicates the end of an information element.

NOTE:

Continuing improvement and advancement of product design may cause changes to your machine which may not be included in this publication. Whenever a question arises regarding your Cat product or this publication, please consult your Cat dealer for the latest available information.

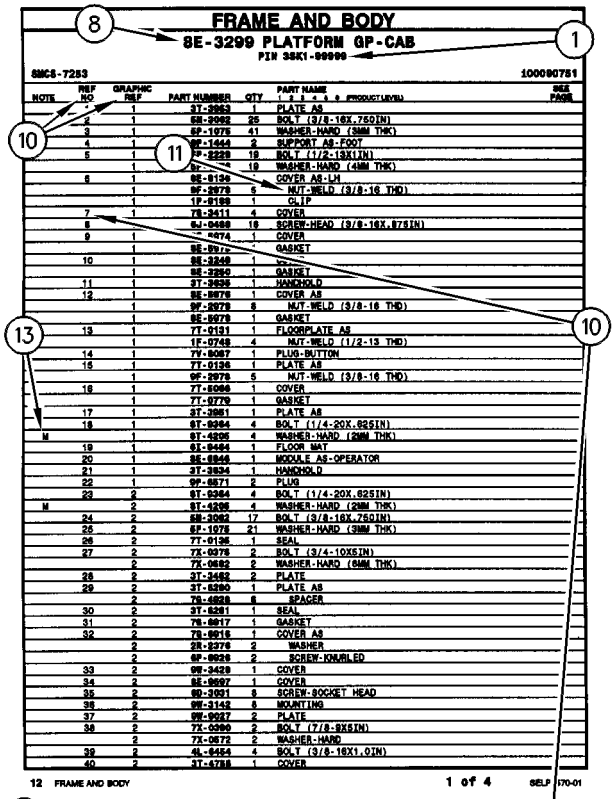

NOTE	REF NO	GRAPHIC REF	PART NUMBER	QTY	PART NAME (1 2 3 4 5 6 PRODUCT LEVEL)	SEE PAGE
	1	1	3T-3963	1	PLATE AS	
	2	1	5H-2062	25	BOLT (3/8-16X.750IN)	
	3	1	6P-1075	41	WASHER-HARD (3MM THK)	
	4	1	9P-1444	2	SUPPORT AS-FOOT	
	5	1	5P-2229	19	BOLT (1/2-13X1IN)	
		1	9x-[illegible]	19	WASHER-HARD (4MM THK)	
	6	1	9E-8134	1	COVER AS-LH	
		1	8F-2979	6	NUT-WELD (3/8-16 THD)	
		1	1F-8188	1	CLIP	
	7	1	7S-2411	4	COVER	
	8	1	5J-0468	19	SCREW-HEAD (3/8-16X.87SIN)	
	9	1	[illegible]074	1	COVER	
		1	9E-8[illegible]	1	GASKET	
	10	1	9E-3248	1	[illegible]	
		1	9E-3250	1	GASKET	
	11	1	3T-3930	1	HANDHOLD	
	12	1	9E-8078	1	COVER AS	
		1	9F-2979	6	NUT-WELD (3/8-16 THD)	
		1	9E-8079	1	GASKET	
	13	1	7T-0131	1	FLOORPLATE AS	
		1	1F-0748	4	NUT-WELD (1/2-13 THD)	
	14	1	7V-8067	1	PLUG-BUTTON	
	15	1	7T-0136	1	PLATE AS	
		1	9F-2979	5	NUT-WELD (3/8-16 THD)	
	16	1	7T-8066	1	COVER	
		1	7T-0779	1	GASKET	
	17	1	3T-3951	1	PLATE AS	
	18	1	9T-9364	4	BOLT (1/4-20X.62SIN)	
M		1	9T-4286	4	WASHER-HARD (2MM THK)	
	19	1	6I-8464	1	FLOOR MAT	
	20	1	9E-8946	1	MODULE AS-OPERATOR	
	21	1	3T-3934	1	HANDHOLD	
	22	1	9P-8571	2	PLUG	
	23	2	9T-9364	4	BOLT (1/4-20X.62SIN)	
M		2	9T-4286	4	WASHER-HARD (2MM THK)	
	24	2	5H-2062	17	BOLT (3/8-16X.750IN)	
	25	2	6P-1075	21	WASHER-HARD (3MM THK)	
	26	2	7T-0136	1	SEAL	
	27	2	7X-0375	2	BOLT (3/4-10X5IN)	
		2	7X-0682	2	WASHER-HARD (6MM THK)	
	28	2	3T-3482	2	PLATE	
	29	2	3T-8290	1	PLATE AS	
		2	7S-4828	6	SPACER	
	30	2	3T-8281	1	SEAL	
	31	2	7S-8017	1	GASKET	
	32	2	7S-8016	1	COVER AS	
		2	2R-2376	2	WASHER	
		2	6P-8626	2	SCREW-KNURLED	
	33	2	9W-3429	1	COVER	
	34	2	8E-9697	1	COVER	
	35	2	9D-3091	8	SCREW-SOCKET HEAD	
	36	2	9W-3142	8	MOUNTING	
	37	2	9W-9527	2	PLATE	
	38	2	7X-0390	2	BOLT (7/8-9X6IN)	
		2	7X-0672	2	WASHER-HARD	
	39	2	4L-8454	4	BOLT (3/8-16X1.0IN)	
	40	2	3T-4788	1	COVER	

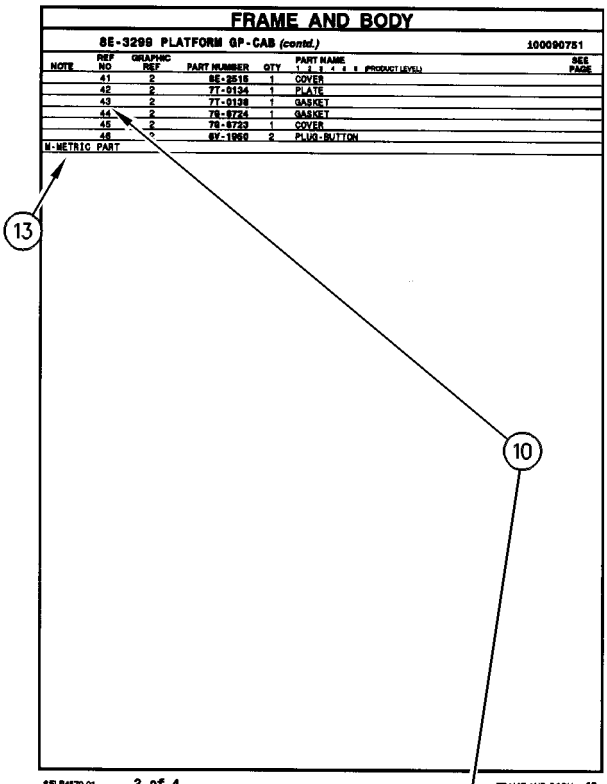

NOTE	REF NO	GRAPHIC REF	PART NUMBER	QTY	PART NAME (1 2 3 4 5 6 PRODUCT LEVEL)	SEE PAGE
	41	2	6E-2515	1	COVER	
	42	2	7T-0134	1	PLATE	
	43	2	7T-0128	1	GASKET	
	44	2	7S-8724	1	GASKET	
	45	2	7S-8723	1	COVER	
	46	2	6V-1960	2	PLUG-BUTTON	

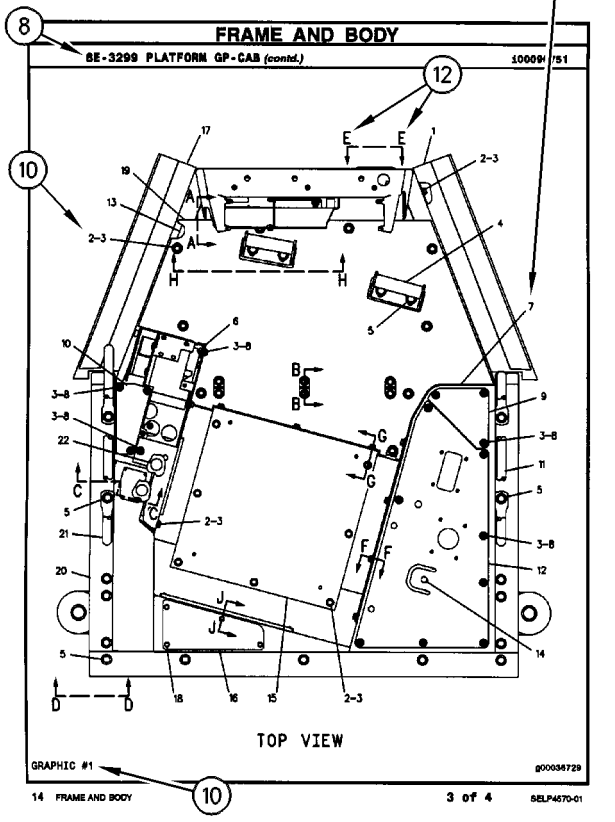

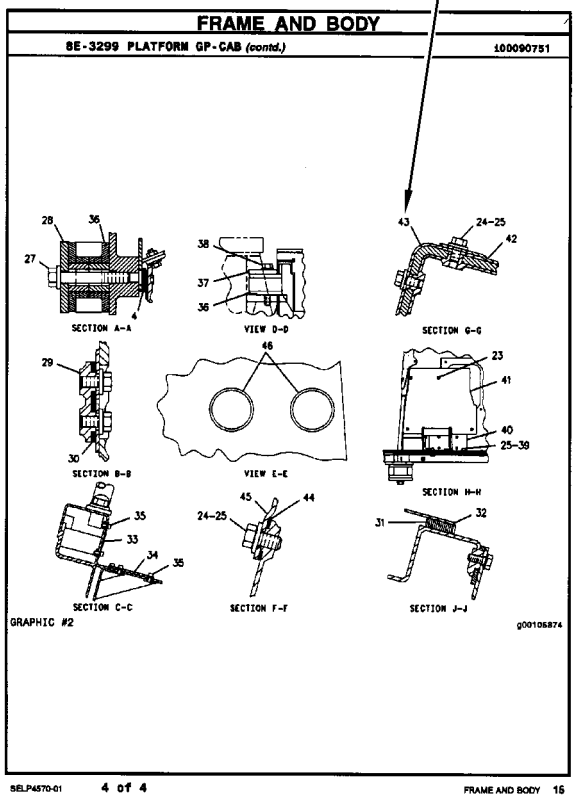

REMANUFACTURED COMPONENTS

As an option when making repairs consider Cat Remanufactured Components. Components that are available through the Cat Remanufactured Program are identified three ways in the parts book:

- with the letter R in the note field of the parts list
- with an R* at the beginning of the first line of the caption
- with an *R at the end of the first line of the caption

Typical components included in the Remanufacturing Program include:

ALTERNATORS
CONNECTING RODS
CRANKSHAFTS - UNDERSIZE
CRANKSHAFTS - UPGRADE TO NEW
CYLINDER HEADS
ELECTRONIC CONTROL MODULES (ECM)
ELECTRONIC SENSORS
FUEL INJECTORS
FUEL NOZZLES
FUEL PUMPS
GOVERNORS
OIL PUMPS
PISTONS
SHORT BLOCKS
STARTERS
TURBOCHARGERS - COMPLETE
TURBOCHARGER CARTRIDGES
WATER PUMPS

Cat Remanufactured engines for many engine arrangements are also available.

SUPPLEMENTAL COOLANT ADDITIVES

CUSTOMER BENEFITS:

Protects against cavitation, foam, erosion, corrosion, and scale buildup in cooling systems.

- Provides measured coolant conditioner.

DESCRIPTION:

Additives deplete from the coolant with normal operation. For this reason, Supplemental Coolant Additives (SCA) must be added to all heavy duty coolants at regular intervals. In addition, when not using a fully formulated, pre-charged antifreeze, like Cat DEAC, an initial charge of SCA must be added to the cooling system. The amount of SCA added to the system is dependent on the capacity of the system.

The SCA for initial fill is provided as a liquid. SCA's for maintenance intervals are available in liquid form and as a spin-on element. (No Spin-on available for 3600 Family of Engines)

NOTE:

The amount of SCA added at initial fill is not the same as the amount added at maintenance intervals.

The coolant additive elements can be used with any ethylene or propylene glycol type antifreeze which meets ASTM D4985 or ASTM D5345 Specifications.

NOTE:

For use with standard heavy duty coolant only, not for use with Extended Life Coolant.

PARTS NEEDED:

Cooling System Capacity		Liquid SCA at Initial Fill	Liquid SCA at Maintenance*	Spin-on SCA Maintenance Element*
Liters	Gallons			
22-30	(6-8)	3P-2044 (1)	6V-3542 (1)	111-2370 (1)
30-38	(8-10)	3P-2044 (1) 6V-3542 (1)	111-2372 (1)	111-2369 (1)
38-49	(10-13)	3P-2044 (1) 8T-1589 (1)	111-2372 (1)	111-2369 (1)
49-64	(13-17)	3P-2044 (2)	8T-1589 (1)	9N-3368 (1)
64-83	(17-22)	3P-2044 (2) 8T-1589 (1)	111-2372 (1) 6V-3542 (1)	111-2371 (1)
83-114	(22-30)	3P-2044 (3) 8T-1589 (1)	3P-2044 (1)	9N-3718 (1)
114-163	(30-43)	3P-2044 (5)	3P-2044 (1) 6V-3542 (1)	111-2371 (2)
163-242	(43-64)	3P-2044 (8)	3P-2044 (2)	9N-3718 (2)

* Normal maintenance period is 250 hrs. See your Operation and Maintenance Manual for complete coolant maintenance instructions.

( ) Indicates quantity required.

MAINTENANCE PARTS

DESCRIPTION	PART NUMBER	QTY	WHERE USED	PAGE
AIR INLET AND EXHAUST SYSTEM				
FILTER ELEMENT AS-AIR (SECONDARY)	529-0132	1	AIR CLEANER GP	68
FILTER ELEMENT-AIR (PRIMARY)	528-7222	1	AIR CLEANER GP	68
COOLING SYSTEM				
CAP AS-COOLANT TANK (RADIATOR)	251-3227	1	LINES GP-COOLANT	65
GASKET-FILTER (ENGINE OIL)	277-2526	1	BASE GP-OIL COOLER & FILTER	56
GASKET-WATER REGULATOR (TEMPERATURE)	281-8744	1	CONNECTION GP-WATER	58
REGULATOR AS-WATER TEMPERATURE (INCLUDES CONNECTOR)	417-7782	1	CONNECTION GP-WATER	58
ELECTRICAL AND STARTING SYSTEM				
BELT-SERPENTINE	350-8742	1	ALTERNATOR GP-CHARGING	107
CAP AS-FILLER	461-5232	6	BATTERY & WIRING GP	110
CIRCUIT BREAKER AS (120-AMPERE)	481-2484	1	PANEL GP-CIRCUIT BREAKER	164
CIRCUIT BREAKER AS (15-AMPERE, MANUAL RESET)	280-2709	3	PANEL GP-CIRCUIT BREAKER	164
FUSE (10-AMPERE)	113-8490	14	PANEL GP-CIRCUIT BREAKER	164
FUSE (15-AMPERE)	113-8491	14	PANEL GP-CIRCUIT BREAKER	164
FUSE (20-AMPERE)	113-8492	3	PANEL GP-CIRCUIT BREAKER	164
	9W-1446	1	HARNESS AS-CHASSIS	133
FUSE (40-AMPERE)	232-6313	2	PANEL GP-CIRCUIT BREAKER	164
GLOW PLUG (24-VOLT)	462-2235	6	STARTING AID GP	170
KEY (BATTERY DISCONNECT)	8H-5306	1	SWITCH GP-DISCONNECT	174
LAMP GP-FLOOD (9 TO 32-VOLT)	486-8216	2	LIGHTING GP-FLOOD	161
LAMP-HALOGEN (24-VOLT, 70-WATT)	351-9918	1	LAMP GP-FLOOD	158
FRAME AND BODY				
SCREEN AS (LH)	252-0553	1	SCREEN GP-PROTECTION	288
SCREEN AS (RH)	252-0552	1	SCREEN GP-PROTECTION	288
FUEL SYSTEM				
CAP AS-FUEL (LOCKABLE, VENTED)	349-7059	1	TANK GP-FUEL	105
FILTER AS-WATER SEP & FUEL	439-5037	1	FILTER GP-WATER SEP & FUEL	88
FILTER ELEMENT-FUEL	360-8960	1	FILTER GP-FUEL	83
STRAINER-FUEL	9P-7121	1	TANK GP-FUEL	105
HYDRAULIC SYSTEM				
BREATHER AS (HYDRAULIC TANK)	466-1627	1	TANK GP-HYDRAULIC	417
CAP AS-FILLER (LOCKABLE)	142-8937	1	MOUNTING GP-HYDRAULIC TANK	400
FILTER ELEMENT AS-OIL	389-1076	1	FILTER GP-OIL	369
SCREEN-SUCTION (HYDRAULIC TANK)	142-8929	1	TANK GP-HYDRAULIC	419
	322-9703	1	TANK GP-HYDRAULIC	417

MAINTENANCE PARTS

DESCRIPTION	PART NUMBER	QTY	WHERE USED	PAGE
LUBRICATION SYSTEM				
CAP AS-OIL FILLER	369-3867	1	FILLER GP-ENGINE OIL	48
FILTER-ENGINE OIL	462-1171	1	FILTER GP-ENGINE OIL	49
MACHINE ARRANGEMENT				
KEY	5P-8500	1	CHASSIS AR	1
OPERATOR STATION				
BLADE AS-WIPER (450-MM) (DOOR, LH)	125-8175	1	DOOR GP-CAB	481
BLADE AS-WIPER (450-MM) (DOOR, RH)	125-8175	1	DOOR GP-CAB	478
BLADE AS-WIPER (500-MM) (FRONT)	5C-8811	1	WIPER GP-WINDOW	533
BLADE AS-WIPER (500-MM) (REAR)	146-6433	1	WIPER GP-WINDOW	533
CAP-VENTED (WINDOW WASHER RESERVOIR)	209-4482	1	TANK GP-WINDOW WASHER	528
DRYER-REFRIGERANT	450-6492	1	AIR CONDITIONER GP	436
FILTER ELEMENT-AIR (STANDARD EFFICIENCY) (CAB HEATER, AIR CONDITIONER)	266-7765	1	AIR CONDITIONER GP	436
FILTER ELEMENT-CAB AIR	443-4037	1	AIR CONDITIONER GP	440
LAMP (24-VOLT, 10-WATT)	259-1286	1	COVER GP-CONSOLE	474
LAMP AS-DOME (24-VOLT) (CAB)	107-6032	1	COVER GP-CONSOLE	474
SCREEN AS-CAB (REAR)	441-5462	1	SCREEN GP-CAB	513
SEAL-INTEGRAL (1/2-IN) (REFRIGERANT, HIGH SIDE)	327-0282	1	LINES GP-AIR CONDITIONER	496
SEAL-INTEGRAL (3/4-IN) (REFRIGERANT, LOW SIDE)	327-0283	1	LINES GP-AIR CONDITIONER	496
POWER TRAIN				
FILTER (SCREEN) (SWING PUMP)	382-9259	7	HOUSING GP-PUMP	224
FILTER ELEMENT AS-OIL	389-1079	1	FILTER GP-OIL	207
FILTER ELEMENT AS-OIL (HYDRAULIC, TRANSMISSION)	389-1079	1	FILTER GP-OIL	206
PLUG-MAGNETIC	3S-9182	1	FINAL DRIVE & BRAKE GP	214
	6V-0439	1	FINAL DRIVE & BRAKE GP	215
PLUG-MAGNETIC (DRAIN)	3S-9182	1	FINAL DRIVE & BRAKE GP	208
PLUG-MAGNETIC (FINAL DRIVE, OIL CHECK, FILL)	6V-0439	1	FINAL DRIVE & BRAKE GP	208

INDEX

NAME PAGE

A

ACCUMULATOR GP-HYDRAULIC–CHARGED. . . 357
ACCUMULATOR GP-HYDRAULIC–UNCHARGED 358
ACTUATOR GP-PUMP 201 359
ADJUSTER GP-CONTROL 455
AIR CLEANER GP 68 69
AIR CONDITIONER GP 436 440
ALARM GP 106
ALARM GP (24-VOLT) 501
ALTERNATOR GP-CHARGING 107 108
ARM GP-SEAT SUSPENSION–CENTER. 442
ARM GP-SEAT SUSPENSION–OUTER, LH. 444
ARM GP-SEAT SUSPENSION–OUTER, RH 443
ARM GP-WINDOW WIPER (DOOR, LH) 481 485
ARM GP-WINDOW WIPER (DOOR, RH) 478 483
ARM GP-WINDOW WIPER (FRONT). 533
ARM GP-WINDOW WIPER (REAR) 533
ARMREST GP 445

B

BAFFLE GP-RADIATOR. 257
BAR GP-EQUALIZER 294 295 296 297
BASE GP-OIL COOLER & FILTER 56
BASE GP-OIL FILTER–HYDRAULIC, TRANSMISSION 202
BATTERY & WIRING GP 110
BATTERY GP (12-VOLT, MAINTENANCE FREE, WET) 110
BELT TENSIONER GP. 6
BELT-SERPENTINE. 107
BLADE & EDGE GP-ANGLING 535
BLADE AS-WIPER (450-MM) (DOOR, LH). 481 485
BLADE AS-WIPER (450-MM) (DOOR, RH) 478 483
BLADE AS-WIPER (500-MM) (FRONT) 533
BLADE AS-WIPER (500-MM) (REAR) 533
BLADE GP-ANGLING 538 540
BLADE GP-ANGLING–FOLDABLE. 542
BOX GP-STORAGE–SHOVEL 259 260
BOX GP-TOOL 560 561
BRACKET GP-MOUNTING 7 298
BRACKET GP-SUPPORT 261

NAME PAGE

BREATHER AS (HYDRAULIC TANK) 417 419
BRIDGE GP-VALVE 46

C

C-FRAME GP-POWER ANGLING 431 432
CAB AR 446 447 448
CAB GP 448 449
CAMERA AR. 116
CAMERA GP. 117
CAMERA GP (12-VOLT, 24-VOLT). 117
CAMSHAFT GP 8
CAP AS-COOLANT TANK (RADIATOR) 65
CAP AS-FILLER. 110
CAP AS-FILLER (LOCKABLE) 400
CAP AS-FUEL (LOCKABLE, VENTED) 105
CAP AS-OIL FILLER. 48
CAP-VENTED (WINDOW WASHER RESERVOIR). 528
CHASSIS AR. 1
CIRCUIT BREAKER AS (120-AMPERE) 164
CIRCUIT BREAKER AS (15-AMPERE, MANUAL RESET). 164
CLAMP GP-HYDRAULIC LINES 374
COMMON AR 1
COMPRESSOR & MTG GP-REFRIG. 450
COMPRESSOR GP-REFRIGERANT 451
CONDENSER GP-REFRIGERANT 452
CONNECTING ROD GP 9
CONNECTING ROD GP (GRADE G) 36 38
CONNECTION GP-AIR. 75
CONNECTION GP-FUEL 86
CONNECTION GP-HEATER 57
CONNECTION GP-WATER 58
CONSOLE GP 454
CONSOLE GP-OPERATOR–LH 456
CONSOLE GP-OPERATOR–RH. 455
CONTROL & MTG GP-ELECTRONIC 118 119
CONTROL & MTG GP-PEDAL 457
CONTROL AR-HYDRAULIC 360
CONTROL GP-COMMUNICATION 152 154 156
CONTROL GP-COMMUNICATION–ELECTRONIC 120
CONTROL GP-ELECTRONIC (GRADE CONTROL). 180
CONTROL GP-ELECTRONIC–PL641E CELLULAR. 121
CONTROL GP-ENGINE ELECTRONIC 122
CONTROL GP-HANDLE. 462
CONTROL GP-HANDLE (RIPPER, WINCH). 124
CONTROL GP-HANDLE (RIPPER) 125

INDEX

NAME PAGE

CONTROL GP-HANDLE–HEATED, LH 459
CONTROL GP-HANDLE–HEATED, RH 461
CONTROL GP-HANDLE–LH 458
CONTROL GP-HANDLE–RIPPER 460
CONTROL GP-IMPLEMENT 123
CONTROL GP-IMPLEMENT–RIPPER. 125
CONTROL GP-IMPLEMENT–RIPPER, WINCH . . 124
CONTROL GP-JOYSTICK 463
465
467
468
469
CONTROL GP-JOYSTICK–HEATED, RH 466
CONTROL GP-RIPPER 470
CONTROL GP-UNPROGRAMMED 122
126
127
CONTROL GP-UNPROGRAMMED (ELECTRONIC) 190
COOLER GP-ENGINE OIL 59
COOLING AR 60
COOLING GP 61
CORE AS-AFTERCOOLER 61
COUPLING GP-PUMP 203
COVER GP-ACCESS 471
COVER GP-ACCESS–LH. 264
COVER GP-ACCESS–RH 262
COVER GP-CAB 472
COVER GP-CONSOLE. 474
477
COVER GP-VALVE MECHANISM. 10
CRANKSHAFT GP. 11
CYLINDER BLOCK AS. 13
CYLINDER BLOCK GP 14
CYLINDER BLOCK GP-SHORT. 15
16
CYLINDER GP-ANGLING 361
CYLINDER GP-BULLDOZER LIFT 363
CYLINDER GP-RIPPER–LIFT. 365
CYLINDER GP-TILT 367
CYLINDER HEAD AS. 17
CYLINDER HEAD GP. 18
19
20
21

D

DOOR GP-CAB–LH. 481
485
DOOR GP-CAB–RH. 478
483
DOOR GP-STORAGE. 488
DOOR GP-STORAGE–ENCLOSED ROPS 489
DRAIN GP-ENGINE OIL 22
DRAWBAR GP 266
DRIVE AR-FINAL 204
205
DRIVE GP-FAN 23
DRYER-REFRIGERANT 436
DUST EJECTOR GP 70

E

EDGE GP-BIT & CUTTING. 545
546
547
EDGE GP-CUTTING 548
ELECTRONICS AR-MACHINE 128
129
ELECTRONICS GP-MACHINE 129
ELECTRONICS GP-MACHINE–RIPPER, WINCH 129
ELECTRONICS GP-MONITOR. 130
152
154
156
ENCLOSURE GP-CAB 490
ENCLOSURE GP-ENGINE–FRONT. 268
269
ENCLOSURE GP–REAR 267
ENGINE AR. 3
ENGINE AR-COMPLETE 3
ENGINE AR-PRIMARY 4
5
EXTENSION GP-BACKREST 519
EXTENSION GP-BACKREST (CLOTH) 517

F

FAN & MOTOR GP 62
FASTENER GP-DAMPER & PULLEY 24
FILLER GP-ENGINE OIL 48
FILM GP. 562
563
564
566
569
570
FILM-IDENTIFICATION (CAT). 501
564
566
568
569
570
FILM-IDENTIFICATION (D4) 564
566
FILM-IDENTIFICATION (DIAGNOSTIC) (DIAGNOSTIC) 400
FILM-IDENTIFICATION (FUSE/RELAY PANEL) 191
FILM-IDENTIFICATION (GRADE CONTROL). . . . 180
FILM-IDENTIFICATION (HYDRAULIC & XMSN OIL FILTER). 226
396
FILM-IDENTIFICATION (HYDRAULIC OIL) 569
570
FILM-IDENTIFICATION (LGP). 566

INDEX

NAME PAGE

FILM-IDENTIFICATION (LIFT EYE, TIE-DOWN LOCATION) 569 570
FILM-IDENTIFICATION (LUBE POINT) 285
FILM-IDENTIFICATION (LUBRICATION, MAINTENANCE) 569 570
FILM-IDENTIFICATION (POWER RECEPTACLE, 12-VOLT) 190
FILM-IDENTIFICATION (SERIAL NUMBER) 524
FILM-IDENTIFICATION (SHOVEL MOUNTING, READ OMM) 260
FILM-IDENTIFICATION (SIGHT GAUGE) 569 570
FILM-IDENTIFICATION (TIE-DOWN). 266 553 569 570
FILM-INFORMATION (24-VOLT HEATER) 440
FILM-INFORMATION (DRAWBAR, READ OMM). 266
FILM-INFORMATION (EXTENDED LIFE COOLANT) 569 570
FILM-INFORMATION (INDONESIAN) 121
FILM-INFORMATION (PRODUCT LINK, READ OMM). 152 154
FILM-INSTRUCTION (AIR FILTER SERVICE, READ OMM). 569 570
FILM-INSTRUCTION (BATTERY DISCONNECT) 111
FILM-INSTRUCTION (BULLDOZER CONTROL). 128 434
FILM-INSTRUCTION (BULLDOZER, STEERING, CRUISE CONTROL) 563
FILM-INSTRUCTION (ENGINE OIL) 569 570
FILM-INSTRUCTION (GRADE, SLOPE). 180
FILM-INSTRUCTION (KEY START SWITCH) . . . 501
FILM-INSTRUCTION (RIPPER CONTROL). 125
FILM-INSTRUCTION (RIPPER, WINCH) 124
FILM-INSTRUCTION (SEAT ADJUSTMENT) 523
FILM-INSTRUCTION (WINDOW CLEANING, READ OMM). 483 485 530
FILM-NOTICE (SHIPPING) 569 570
FILM-ROPS 563
FILM-WARNING (DO NOT SPRAY, READ OMM). 568
FILM-WARNING (DO NOT USE ETHER, READ OMM). 562
FILM-WARNING (EXPLOSION HAZARD, PRODUCT LINK) 562
FILM-WARNING (FAN, READ OMM) 562
FILM-WARNING (HIGH PRESSURE CYLINDER) 358
FILM-WARNING (HIGH PRESSURE, READ OMM). 562
FILM-WARNING (HOT FLUID UND PRESS, READ OMM). 562
FILM-WARNING (JUMP START, READ OMM, INTL) 562
FILM-WARNING (NO STEP). 562
FILM-WARNING (NO WELD, NO DRILL, READ OMM). 563
FILM-WARNING (SEAT BELT, INTERNATIONAL) 562
FILM-WARNING (UNIVERSAL WARNING) 568
FILM-WARNING (UNIVERSAL, READ OMM). . . . 562
FILTER (SCREEN) (SWING PUMP). 224
FILTER AS-WATER SEP & FUEL 88
FILTER ELEMENT AS-AIR (SECONDARY) 68
FILTER ELEMENT AS-OIL 207 369
FILTER ELEMENT AS-OIL (HYDRAULIC, TRANSMISSION) 206
FILTER ELEMENT-AIR (PRIMARY) 68
FILTER ELEMENT-AIR (STANDARD EFFICIENCY) (CAB HEATER, AIR CONDITIONER). 436
FILTER ELEMENT-CAB AIR. 440
FILTER ELEMENT-FUEL 83
FILTER GP-ENGINE OIL. 49
FILTER GP-FUEL. 83 84 85
FILTER GP-OIL 206 207 369
FILTER GP-PRIMARY FUEL 86
FILTER GP-WATER SEP & FUEL 88
FILTER-ENGINE OIL. 49
FINAL DRIVE & BRAKE GP 208 211
FINAL DRIVE & BRAKE GP–LH. 214
FINAL DRIVE & BRAKE GP–RH 217
FLANGE GP 220 221
FLOOR MAT 472
FLYWHEEL GP 25
FRAME GP-TRACK ROLLER–HEAVY-DUTY, LH. 305
FRAME GP-TRACK ROLLER–HEAVY-DUTY, RH 303
FRAME GP-TRACK ROLLER–LH 308
FRAME GP-TRACK ROLLER–RH. 307
FRAME GP-TRACK ROLLER–SYSTEMONE, LH. 301
FRAME GP-TRACK ROLLER–SYSTEMONE, RH 299
FUSE (10-AMPERE) 164
FUSE (15-AMPERE) 164
FUSE (20-AMPERE) 133 164
FUSE (40-AMPERE) 164

NAME PAGE

G

GASKET-FILTER (ENGINE OIL) 56
GASKET-WATER REGULATOR (TEMPERATURE) 58
GAUGE AS-OIL LEVEL (DIPSTICK) 51
GAUGE GP-OIL LEVEL (DIPSTICK) 50
51
GAUGE GP-SIGHT (HYDRAULIC TANK OIL) . . . 417
419
GLOW PLUG (24-VOLT) 170
GRILL GP-RADIATOR 271
272
273
GUARD AR-BOTTOM 274
GUARD AR-BOTTOM–HEAVY-DUTY 274
GUARD GP-BOTTOM 275
GUARD GP-BOTTOM–HEAVY-DUTY 276
GUARD GP-FUEL TANK 277
278
GUARD GP-LIGHTING 279
GUARD GP-RADIATOR 280
281
GUARD GP-REAR–WINCH 282
GUARD GP-SPROCKET 309
GUARD GP-TRACK ROLLER 310
GUARD GP-TRACK ROLLER–HEAVY-DUTY 311
313
315
GUARD GP-TRACK ROLLER–SYSTEMONE 312
314
316

H

HARNESS AS-CAB 131
HARNESS AS-CHASSIS 132
133
HARNESS AS-CONTROL 134
135
136
HARNESS AS-CONTROL–RADIO 133
HARNESS AS-DASH 137
HARNESS AS-ENGINE 138
139
HARNESS AS-HEATER & AIR COND 140
452
HARNESS AS-LIGHTING 141
HARNESS AS-MONITOR–DISPLAY 141
HARNESS AS-PLATFORM 142
HARNESS AS-RADIO (BLUETOOTH) 166
HARNESS AS-REAR LIGHTING 144
HARNESS AS-SENSOR 146
147
HARNESS AS-SENSOR–FUEL SENDER 144
HARNESS AS-SENSOR–SEAT 145
HARNESS AS-SOLENOID–REVERSING FAN . . . 148
HARNESS AS-STARTING AID 170
HARNESS AS-VALVE 148

NAME PAGE

HARNESS AS-VALVE (SEAT AIR COMPRESSOR) 523
HARNESS AS-WINDOW WIPER 526
HARNESS AS-WINDOW WIPER–LH 149
HARNESS AS-WINDOW WIPER–RH 149
HARNESS AS-WIRING 150
HARNESS AS-WIRING (CRANK WITHOUT INJECT) 139
HARNESS AS-WIRING (DISPLAY) 179
HARNESS AS-WIRING–ENGINE 149
HEAD GP-MOTOR–HYDROSTATIC DRIVE, LH 222
HEAD GP-MOTOR–HYDROSTATIC DRIVE, RH 223
HEAD GP-PUMP 370
HEATER GP-JACKET WATER 151
HOOD GP 283
HOUSING GP-FLYWHEEL 26
HOUSING GP-FRONT 27
HOUSING GP-PUMP 224
HYDRAULIC AR 372
373

I

IDLER GP-FRONT–HEAVY-DUTY 317
IDLER GP-FRONT–SYSTEMONE 318
IDLER GP-TRACK–HEAVY-DUTY 320
IDLER GP-TRACK–SYSTEMONE 319
INDICATOR-AIR FILTER CHANGE 111
INJECTOR GP-FUEL 89
90
INSTALLATION AR-BULLDOZER 434
INSTALLATION AR-ENGINE 5
INSTALLATION GP-CAB 491
493
INSTALLATION GP-COMMUNICATION 152
154
156
INSTALLATION GP-RADIO 494
INSULATION GP-SOUND SUPPR 284

J

JET GP-PISTON COOLING 29

K

KEY 1
KEY (BATTERY DISCONNECT) 174
KIT-HANDLE 495

L

LAMP (24-VOLT, 10-WATT) 474
LAMP AS-DOME (24-VOLT) (CAB) 474

INDEX

NAME PAGE

LAMP GP-FLOOD 158
159
LAMP GP-FLOOD (9 TO 32-VOLT) 161
LAMP-HALOGEN (24-VOLT, 70-WATT) 158
159
LIFTING GP-ENGINE 30
LIGHTING GP-FLOOD 160
161
LIGHTING GP-WARNING BEACON 162
LINES GP-AIR 71
LINES GP-AIR CONDITIONER 496
LINES GP-ANGLE & TILT 374
376
377
LINES GP-BRAKE 355
LINES GP-BULLDOZER 379
LINES GP-CHARGE PRESSURE 226
LINES GP-COOLANT 63
65
LINES GP-DRAIN 228
LINES GP-FUEL 91
93
94
95
96
LINES GP-FUEL FILTER 96
LINES GP-FUEL INJECTION 98
99
LINES GP-FUMES DISPOSAL 52
53
LINES GP-GREASE 285
LINES GP-HEATER 498
LINES GP-HYDRAULIC FAN 381
386
LINES GP-HYDRAULIC FAN–REVERSING 384
388
LINES GP-HYDROSTATIC 230
LINES GP-LIFT CYLINDER 390
LINES GP-PILOT 391
LINES GP-RIPPER 393
394
LINES GP-TURBOCHARGER AIR 73
LINES GP-WINCH 395
LINES GP-WINDOW WASHER 500
LINK AS-TRACK 321
LINK AS-TRACK–HEAVY-DUTY 323
LINK AS-TRACK–SYSTEMONE 324
LINK GP-PITCH 435
LITERATURE GP 1

M

MANIFOLD GP-EXHAUST 74
MANIFOLD GP-INLET 75
MODULE GP-DISPLAY 177
MONITOR GP-OPERATOR 501
MOTOR & MOUNTING GP 232
MOTOR GP-GEAR 398
MOTOR GP-GEAR–REVERSING 399
MOTOR GP-PISTON–HYDROSTATIC DRIVE, LH 233
MOTOR GP-PISTON–HYDROSTATIC DRIVE, RH 235
MOTOR GP-WINDOW WIPER 503
504
506
MOTOR GP-WINDOW WIPER–REAR 505
MOUNTING GP-ALTERNATOR 31
MOUNTING GP-DISPLAY 507
508
MOUNTING GP-ELECTRONIC CONTROL 163
MOUNTING GP-ENGINE 32
MOUNTING GP-ENGINE & XMSN 33
MOUNTING GP-FINAL DRIVE 237
MOUNTING GP-HYDRAULIC TANK 400
MOUNTING GP-RIPPER 549
MOUNTING GP-VALVE 401
MUFFLER GP 76

O

OPTION AR-WORK TOOL–RIPPER 2

P

PADLOCK GP 1
PAN GP-OIL 15
34
35
PANEL GP-CIRCUIT BREAKER 164
PANEL GP-SIDE–LH 286
PEDAL GP-GOVERNOR & BRAKE 509
PIN GP-CYLINDER 402
PIPE GP-EXHAUST 77
PISTON & ROD GP 36
38
PISTON GP 36
40
PIVOT BAR GP 325
326
PLATE & FILM GP 535
538
540
542
553
568
569
570
PLATE-SERIAL NUMBER (RIPPER) 553
PLATE-WARNING (CRUSH HAZARD, READ OMM) 333
PLATE-WARNING (HIGH PRESSURE CYLINDER) 299
301
303
305
PLUG GP-CONNECTOR (64-PIN) 138
PLUG GP-CONTROL VALVE 403

NAME PAGE

PLUG GP-CYLINDER BLOCK 42
PLUG-MAGNETIC 214
215
PLUG-MAGNETIC (DRAIN) 208
211
217
PLUG-MAGNETIC (FINAL DRIVE, OIL CHECK, FILL) 208
211
218
POWER TRAIN AR 238
PRECLEANER GP 79
PRECLEANER GP–TURBINE 78
PULLEY GP-CRANKSHAFT 43
PUMP & LINES AR 404
PUMP & LINES GP 405
PUMP & LINES GP-WINCH 551
PUMP & MTG GP-POWER TRAIN 239
PUMP GP-CHARGE 407
PUMP GP-ENGINE OIL 54
PUMP GP-FUEL INJECTION 100
101
PUMP GP-GEAR–HYDRAULIC FAN 408
PUMP GP-PISTON 240
409
PUMP GP-PISTON & GEAR–FRONT 411
PUMP GP-WATER 67

R

RADIO GP (AM/FM/USB/BLUETOOTH) 511
RADIO GP-COMMUNICATION 166
RADIO GP–AM/FM/USB/BLUETOOTH 511
512
RAIL GP-FUEL 102
RECEIVER GP-SATELLITE (GPS) 177
REGULATOR AS-VOLTAGE (24-VOLT) 108
REGULATOR AS-WATER TEMPERATURE (INCLUDES CONNECTOR) 58
RELAY AS (12-VOLT) (HEATED CONTROLS) 469
RELAY AS (24-VOLT, 55-AMPERE) (GLOW PLUG) 164
RELAY AS (24-VOLT, 55-AMPERE) (MAIN) 164
RELAY AS (24-VOLT, 55-AMPERE) (SPARE) . . 164
RELAY AS (24-VOLT) (AIR CONDITIONER) 164
RELAY AS (24-VOLT) (CONDENSER FAN) 452
RELAY AS (24-VOLT) (DIVERTER VALVE) 164
RELAY AS (24-VOLT) (FLOODLIGHTS) 164
RELAY AS (24-VOLT) (FUEL PUMP) 164
RELAY AS (24-VOLT) (GRADE CONTROL) 164
RELAY AS (24-VOLT) (HEATED CONTROLS) 164
RELAY AS (24-VOLT) (HORN) 164
RELAY AS (24-VOLT) (SPARE) 164
RELAY AS (24-VOLT) (WIPER-LH) 164
RELAY AS (24-VOLT) (WIPER-RH) 164
RIPPER AR 553
RIPPER GP 554
ROCKER ARM GP 44
46
47
ROLLER GP-TRACK CARRIER–HEAVY-DUTY 327
ROLLER GP-TRACK CARRIER–SYSTEMONE 328
ROLLER GP-TRACK-DOUBLE FLANGE 329
ROLLER GP-TRACK-DOUBLE FLANGE–HEAVY-DUTY 329
ROLLER GP-TRACK-SINGLE FLANGE 331
ROLLER GP-TRACK-SINGLE FLANGE–HEAVY-DUTY 331
ROLLER GP-TRACK-SINGLE FLANGE–SYSTEMONE 330
332
ROTATING GP-MOTOR 242
ROTATING GP-MOTOR–HYDROSTATIC DRIVE 244
ROTATING GP-PUMP 245
247
413
414
416

S

SCREEN AS (LH) 288
SCREEN AS (RH) 288
SCREEN AS-CAB (REAR) 513
SCREEN GP-CAB 513
SCREEN GP-PROTECTION–SIDES 288
SCREEN-SUCTION (HYDRAULIC TANK) 417
419
SEAL GP-DUO-CONE 208
211
214
217
319
320
327
328
329
331
SEAL-INTEGRAL (1/2-IN) (REFRIGERANT, HIGH SIDE) 496
SEAL-INTEGRAL (3/4-IN) (REFRIGERANT, LOW SIDE) 496
SEAT & MOUNTING GP–CLOTH, AIR 514
SEAT & MOUNTING GP–CLOTH, HEATED, AIR 515
SEAT BELT GP 516
SEAT GP-SUSPENSION–CLOTH 521
SEAT GP-SUSPENSION–CLOTH, AIR 522
SEAT GP–CLOTH 517
SEAT GP–DELUXE, CLOTH 519
SEGMENT GP-SPROCKET–HEAVY-DUTY 250
SEGMENT GP-SPROCKET–SYSTEMONE 249
SENDER AS-FUEL LEVEL 103
SENSOR (FUEL RAIL PRESSURE) 102

INDEX

NAME PAGE

SENSOR (TEMPERATURE) 440
SENSOR AS-INERTIAL (STABLE BLADE) 196
SENSOR GP-ENGINE 4
167
SENSOR GP-GRADE (BLADE SLOPE) 180
SENSOR GP-POSITION (ROTARY) (GOVERNOR, BRAKE PEDAL) 509
SENSOR GP-POSITION–ROTARY 168
SENSOR GP-PRESSURE (ENGINE OIL) 167
SENSOR GP-PRESSURE (INLET MANIFOLD AIR) 167
SENSOR GP-SPEED 169
SENSOR GP-SPEED (ENGINE) 167
SENSOR GP-SPEED (TRACK, RH, LH) 111
SENSOR-LEVEL 88
SENSOR-PRESSURE 200
SENSOR-PRESSURE (HYDROSTATIC, FWD, LH) 183
SENSOR-PRESSURE (HYDROSTATIC, FWD, RH) 183
SENSOR-PRESSURE (HYDROSTATIC, REV, LH) 183
SENSOR-PRESSURE (HYDROSTATIC, REV, RH) 183
SENSOR-PRESSURE (WINCH OIL) 396
SENSOR-TEMPERATURE (2-PIN) (AIR INLET MANIFOLD) 167
SENSOR-TEMPERATURE (2-PIN) (AMBIENT AIR) 111
SENSOR-TEMPERATURE (2-PIN) (COOLANT) 167
SENSOR-TEMPERATURE (2-PIN) (HYDRAULIC OIL) 417
419
SOFTWARE GP-MACHINE 129
SOFTWARE GP-MACHINE (IMPLEMENT) 129
SOFTWARE GP-MONITOR 121
130
177
180
196
SOFTWARE GP-MONITOR (APPLICATION) 130
SOFTWARE GP-MONITOR (LICENSE) 130
SOFTWARE GP-MONITOR (MACHINE DEFAULTS) 130
SOFTWARE GP-MONITOR (MACHINE) 130
SOFTWARE GP-MONITOR (NETWORK MANAGER) 130
SOFTWARE GP-MONITOR (SATELLITE RADIO) 127
SOLENOID 75
SOLENOID AS 424
SOLENOID AS (PUMP CONTROL VALVE) 253
254
SPRING GP-RECOIL 333
STARTING AID GP 170
STARTING MOTOR GP-ELECTRIC 171
172
STRAINER-FUEL 105
SUPPORT GP-HOOD 283
SUPPORT GP-LINES 96

NAME PAGE

SUPPORT GP-PUMP 80
SUSPENSION GP-SEAT–AIR 523
SWEEP AR 289
SWEEP AS–FRONT 290
SWEEP GP 292
293
SWEEP GP–FRONT 291
SWITCH AS (THROTTLE) 175
SWITCH AS-LIMIT (SERVICE BRAKE) 509
SWITCH AS-PRESSURE (A/C COMPRESSOR CLUTCH) (REFRIGERANT, LOW SIDE) 496
SWITCH AS-PRESSURE (HIGH, LOW) (REFRIGERANT, HIGH SIDE) 496
SWITCH AS-PRESSURE (OIL) 207
369
SWITCH AS-ROCKER (24-VOLT) (AIR CONDITIONER ON, OFF) 436
SWITCH AS-ROCKER (24-VOLT) (FLOODLIGHT) 175
SWITCH AS-ROCKER (24-VOLT) (FRONT WIPER) 175
SWITCH AS-ROCKER (24-VOLT) (IMPLEMENT LOCKOUT) 175
SWITCH AS-ROCKER (24-VOLT) (PARKING BRAKE) 175
SWITCH AS-ROCKER (24-VOLT) (REAR WIPER) 175
SWITCH AS-ROCKER (24-VOLT) (REVERSING FAN) 384
388
SWITCH AS-ROCKER (24-VOLT) (RIGHT SIDE WIPER) 175
SWITCH AS-ROCKER (24-VOLT) (WINCH BRAKE) 124
SWITCH AS-ROCKER (24-VOLT) (WINCH FREESPOOL) 124
SWITCH AS-ROCKER (HEATED CONTROLS) 469
SWITCH AS-ROCKER (RIPPER CYLINDER) . . . 124
SWITCH AS-ROCKER (TRACTION CONTROL) 196
SWITCH AS-START (KEY) 501
SWITCH AS-THERMOSTAT 440
SWITCH GP-DISCONNECT 174

T

TANK & MTG GP-FUEL 103
TANK GP-COOLANT 65
TANK GP-FUEL 105
TANK GP-HYDRAULIC 417
419
TANK GP-WINDOW WASHER 526
528
TOOTH GP-RIPPER 558
TOOTH GP-RIPPER–CURVED 556
TOOTH GP-RIPPER–STRAIGHT 557
559
TRACK ADJUSTER & RECOIL GP–LH 335
TRACK ADJUSTER & RECOIL GP–RH 334

INDEX

NAME PAGE

TRACK AR. 340
342
TRACK AR–HEAVY-DUTY. 336
337
338
TRACK AR–SYSTEMONE 339
341
343
344
TRACK GP–2 REQUIRED, HEAVY-DUTY 345
TRACK GP–2-REQUIRED, HEAVY-DUTY. 346
347
TRACK GP–2-REQUIRED, SYSTEMONE 348
349
350
351
352
353
TURBOCHARGER GP 81

U

UNDERCARRIAGE AR–HEAVY-DUTY 354
UNDERCARRIAGE AR–SYSTEMONE 354

V

VALVE & LINES GP-HYD CONTROL 421
VALVE AS-PRESSURE RELIEF (REFRIGERANT COMPRESSOR) 451
VALVE AS-RELIEF 240
VALVE GP-BANK 4. 422
VALVE GP-CHECK 251
VALVE GP-CHECK (PUMP) 228
VALVE GP-FLUID SAMPLING 55
VALVE GP-FLUSHING–HYDROSTATIC DRIVE 252
VALVE GP-MOTOR CONTROL. 253
VALVE GP-PUMP CONTROL. 254
424
VALVE GP-PUMP CONTROL–PRESSURE, FLOW COMPENSATOR 423
VALVE GP-RELIEF 240
256
370
422
427
428
429
VALVE GP-RELIEF–PRESSURE OVERRIDE. . . . 426
VALVE GP-SEQUENCE. 240
VALVE GP-SOLENOID (12-VDC) (REVERSING FAN) 385
389
VALVE GP-SOLENOID (24-VDC) 422
VALVE GP-SOLENOID (HYDRAULIC FAN) 381
386
VALVE GP-SOLENOID (REVERSING FAN). 384
388

NAME PAGE

VALVE GP-SOLENOID–24-VDC. 430
VALVE-PRESSURE REDUCING (INLET AIR) . . . 399
VALVE-SOLENOID (12-VDC) 422

W

WINDOW GP-CAB. 529
530
WINDOW GP-SLIDING–LH 532
WINDOW GP-SLIDING–RH. 531
WIPER GP-WINDOW 533
WIRING GP-CAB 175
177
WIRING GP-CAMERA. 179
WIRING GP-CONTROL 180
WIRING GP-ENGINE 182
183
WIRING GP-GRADE CONTROL 188
WIRING GP-PLATFORM 190
WIRING GP-SEAT 194
WIRING GP-SENSOR. 196
198
WIRING GP-VALVE. 200

Y

YOKE AS 317
318

MEMORANDA

MACHINE ARRANGEMENT

459-6582 CHASSIS AR

S/N: H3C1-UP; K3G1-UP

PART OF 590-7198, 590-7199 COMMON AR

SMCS-7000 **i07783053**

NOTE	PART NUMBER	QTY	PART NAME 1 2 3 4 5 6 (PRODUCT LEVEL)	SEE PAGE
Y	*483-9172*	1	ENCLOSURE GP-CAB	490
Y	*483-9182*	1	ENCLOSURE GP-ENGINE (FRONT)	269
Y	*425-5434*	1	GUARD GP-RADIATOR	280
Y	*433-1767*	1	GUARD GP-REAR	282
Y	*461-8771*	1	HOOD GP	283
	418-0800	1	CASE & FRAME AS	
	7P-7858	2	BUSHING	
	6V-1971	1	LITERATURE GP	
	246-2641	1	PADLOCK GP	
	5P-8500	1	KEY	

Y - SEPARATE ILLUSTRATION

<END>

590-7198 COMMON AR

S/N: K3G1-UP

SMCS-7000 **i08063030**

NOTE	PART NUMBER	QTY	PART NAME 1 2 3 4 5 6 (PRODUCT LEVEL)	SEE PAGE
Y	*459-6582*	1	CHASSIS AR	1
Y	*457-1194*	1	COOLING AR	60
Y	*458-3872*	1	ENGINE AR	3
Y	*523-7054*	1	FILM GP	562
Y	*457-1192*	1	INSTALLATION AR-ENGINE	5
Y	*591-7134*	1	POWER TRAIN AR	238

Y - SEPARATE ILLUSTRATION

<END>

590-7199 COMMON AR

S/N: H3C1-UP

SMCS-7000 **i08063042**

NOTE	PART NUMBER	QTY	PART NAME 1 2 3 4 5 6 (PRODUCT LEVEL)	SEE PAGE
Y	*459-6582*	1	CHASSIS AR	1
Y	*457-1194*	1	COOLING AR	60
Y	*458-3872*	1	ENGINE AR	3
Y	*523-7054*	1	FILM GP	562
Y	*457-1192*	1	INSTALLATION AR-ENGINE	5
Y	*591-7135*	1	POWER TRAIN AR	238

Y - SEPARATE ILLUSTRATION

<END>

487-6095 OPTION AR-WORK TOOL—RIPPER

S/N: H3C1-UP; K3G1-UP
CURVED
FOR USE WITH 549-6773—PAGE: 372
CANNOT BE USED WITH 549-6775—PAGE: 372, 550-2352—PAGE: 373
AN ATTACHMENT

SMCS-6700, 7000 **i08062758**

NOTE	PART NUMBER	QTY	PART NAME 1 2 3 4 5 6 (PRODUCT LEVEL)	SEE PAGE
Y	*436-1245*	1	RIPPER AR	553
Y	*276-4480*	1	TOOTH GP-RIPPER	556

Y - SEPARATE ILLUSTRATION

<END>

487-6096 OPTION AR-WORK TOOL—RIPPER

S/N: H3C1-UP; K3G1-UP
STRAIGHT
FOR USE WITH 549-6773—PAGE: 372
CANNOT BE USED WITH 549-6775—PAGE: 372, 550-2352—PAGE: 373
AN ATTACHMENT

SMCS-6700, 7000 **i08062764**

NOTE	PART NUMBER	QTY	PART NAME 1 2 3 4 5 6 (PRODUCT LEVEL)	SEE PAGE
Y	*436-1245*	1	RIPPER AR	553
Y	*276-4483*	1	TOOTH GP-RIPPER	557

Y - SEPARATE ILLUSTRATION

<END>

ENGINE ARRANGEMENT

458-3872 ENGINE AR

S/N: H3C1-UP; K3G1-UP

PART OF 590-7198, 590-7199 COMMON AR

SMCS-1000 **i07476094**

NOTE	PART NUMBER	QTY	PART NAME 1 2 3 4 5 6 (PRODUCT LEVEL)	SEE PAGE
Y	*549-5649*	1	ALTERNATOR GP-CHARGING	107
Y	**553-5212**	1	ENGINE AR-PRIMARY	5
Y	*525-5775*	1	LINES GP-FUMES DISPOSAL	53
Y	*458-3861*	1	MOUNTING GP-ENGINE & XMSN	33

Y - SEPARATE ILLUSTRATION

<END>

556-3819 ENGINE AR-COMPLETE

S/N: H3C1-UP; K3G1-UP

PART OF 553-5212 ENGINE AR-PRIMARY

SMCS-1000 **i07478324**

NOTE	PART NUMBER	QTY	PART NAME 1 2 3 4 5 6 (PRODUCT LEVEL)	SEE PAGE
Y	*451-8385*	1	CYLINDER BLOCK GP-SHORT	16
Y	*452-6582*	1	CYLINDER HEAD GP (SHORT)	19
Y	**553-3684**	1	ENGINE AR-PRIMARY	4

Y - SEPARATE ILLUSTRATION

<END>

553-3684 ENGINE AR-PRIMARY

S/N: 4501-UP

BRAKE KW 116 (BHP 155) AT 2200 RPM

OPTIONAL FIELD REPLACEMENT ORDER 451-1222—PAGE: 15, 452-6584—PAGE: 20

PART OF 556-3819 ENGINE AR-COMPLETE

SMCS-1000 **i07572939**

NOTE	PART NUMBER	QTY	PART NAME 1 2 3 4 5 6 (PRODUCT LEVEL)	SEE PAGE
Y	*346-0099*	1	BASE GP-OIL COOLER & FILTER	56
Y	*376-1108*	1	BELT TENSIONER GP	6
Y	*433-6938*	1	BRACKET GP-MOUNTING (BREATHER)	7
Y	*396-2615*	1	CAMSHAFT GP	8
Y	*374-7094*	1	COMPRESSOR & MTG GP-REFRIG	450
Y	*346-2911*	1	CONNECTION GP-HEATER	57
Y	*373-3607*	1	CONNECTION GP-WATER	58
Y	*371-2537*	1	CONTROL GP-ENGINE ELECTRONIC	122
Y	*389-3346*	1	COVER GP-VALVE MECHANISM	10
Y	*374-6300*	1	CRANKSHAFT GP	11
Y	*390-0854*	1	CYLINDER BLOCK GP	14
Y	*385-2572*	1	CYLINDER HEAD GP	18
Y	*378-8166*	1	DRAIN GP-ENGINE OIL	22
Y	*375-3937*	1	DRIVE GP-FAN	23
Y	*375-0098*	1	FASTENER GP-DAMPER & PULLEY	24
Y	*419-6603*	1	FILLER GP-ENGINE OIL	48
Y	*346-0220*	1	FILTER GP-ENGINE OIL	49
Y	*453-7163*	1	FILTER GP-FUEL	85
Y	*390-0055*	1	FLYWHEEL GP	25
Y	*378-0625*	1	GAUGE GP-OIL LEVEL (DIPSTICK)	50
Y	*393-3369*	1	HOUSING GP-FLYWHEEL	26
Y	*371-2716*	1	HOUSING GP-FRONT	27
Y	*371-2483*	1	INJECTOR GP-FUEL	89
Y	*371-2478*	1	JET GP-PISTON COOLING	29
Y	*371-2740*	1	LIFTING GP-ENGINE	30
Y	*432-6484*	1	LINES GP-FUEL FILTER	96
Y	*416-7808*	1	MANIFOLD GP-EXHAUST	74
Y	*391-5523*	1	MANIFOLD GP-INLET	75
Y	*371-2558*	1	MOUNTING GP-ALTERNATOR	31
Y	*395-0112*	1	MOUNTING GP-ELECTRONIC CONTROL	163
Y	*346-1510*	1	MOUNTING GP-ENGINE	32
Y	*371-2544*	1	PAN GP-OIL	34
Y	*486-3208*	1	PISTON & ROD GP	38
Y	*468-7356*	1	PLATE & FILM GP	568
Y	*374-9295*	1	PLUG GP-CYLINDER BLOCK	42
Y	*371-2554*	1	PULLEY GP-CRANKSHAFT	43
Y	*462-6685*	1	PUMP GP-ENGINE OIL	54
Y	*391-4811*	1	PUMP GP-FUEL INJECTION	101
Y	*372-2297*	1	PUMP GP-WATER	67
Y	*394-9639*	1	RAIL GP-FUEL	102
Y	*371-2480*	1	ROCKER ARM GP	46
Y	*395-0110*	1	SENSOR GP-ENGINE	167
Y	*395-0114*	1	STARTING AID GP	170
Y	*385-8000*	1	STARTING MOTOR GP-ELECTRIC	172
Y	*489-9971*	1	TURBOCHARGER GP	81
Y	*371-2745*	1	VALVE GP-FLUID SAMPLING	55

553-3684 **ENGINE AR-PRIMARY (**contd.**)** **i07572939**

NOTE	PART NUMBER	QTY	PART NAME 1 2 3 4 5 6 (PRODUCT LEVEL)	SEE PAGE
Y	*395-0113*	1	WIRING GP-ENGINE	182
	504-5294	1	ELECTRONICS GP-ENGINE	
	478-6398	1	PLATE GP-SERIAL NUMBER	

Y - SEPARATE ILLUSTRATION

<END>

553-5212 ENGINE AR-PRIMARY

S/N: H3C1-UP; K3G1-UP

PART OF 458-3872 ENGINE AR

SMCS-1000 **i07478352**

NOTE	PART NUMBER	QTY	PART NAME 1 2 3 4 5 6 (PRODUCT LEVEL)	SEE PAGE
Y	**556-3819**	1	ENGINE AR-COMPLETE	3

Y - SEPARATE ILLUSTRATION

<END>

457-1192 INSTALLATION AR-ENGINE

S/N: H3C1-UP; K3G1-UP

PART OF 590-7198, 590-7199 COMMON AR

SMCS-1000 **i07654606**

NOTE	PART NUMBER	QTY	PART NAME 1 2 3 4 5 6 (PRODUCT LEVEL)	SEE PAGE
Y	*206-7255*	1	COUPLING GP-PUMP	203
Y	*458-6950*	1	FILTER GP-PRIMARY FUEL	86
Y	*495-4688*	1	LINES GP-AIR	71
Y	*504-1202*	1	LINES GP-AIR CONDITIONER	496
Y	*495-4687*	1	LINES GP-COOLANT	65
Y	*459-2093*	1	LINES GP-HEATER	498
Y	*457-3577*	1	MUFFLER GP	76
Y	*491-2830*	1	PIPE GP-EXHAUST	77
Y	*492-8970*	1	SUPPORT GP-PUMP	80

Y - SEPARATE ILLUSTRATION

<END>

376-1108 BELT TENSIONER GP

S/N: 4501-UP

PART OF 553-3684 ENGINE AR-PRIMARY

SMCS-1358 **i05330735**

NOTE	REF NO	GRAPHIC REF	PART NUMBER	QTY	PART NAME 1 2 3 4 5 6 (PRODUCT LEVEL)	SEE PAGE
	1	1	**369-1255**	1	TENSIONER	

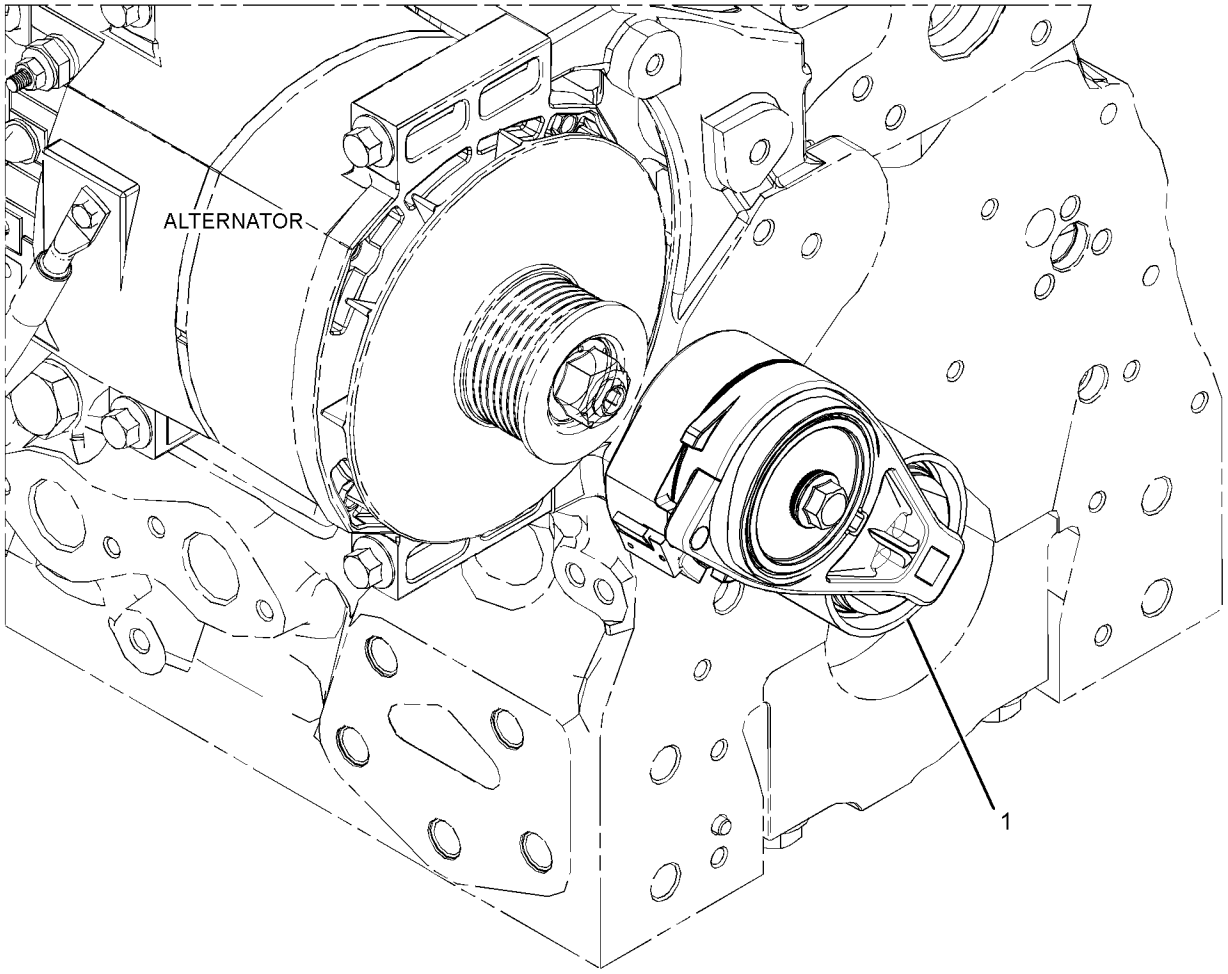

GRAPHIC #1 <END> g02514017

433-6938 BRACKET GP-MOUNTING

S/N: 4501-UP

PART OF 553-3684 ENGINE AR-PRIMARY

SMCS-0635 **i05892195**

NOTE	REF NO	GRAPHIC REF	PART NUMBER	QTY	PART NAME 1 2 3 4 5 6 (PRODUCT LEVEL)	SEE PAGE
M	1	1	**105-2740**	3	BOLT (M8X1.25X40-MM)	
M	2	1	**124-3815**	3	BOLT (M8X1.25X16-MM)	
	3	1	**428-7042**	1	BRACKET	

M - METRIC PART

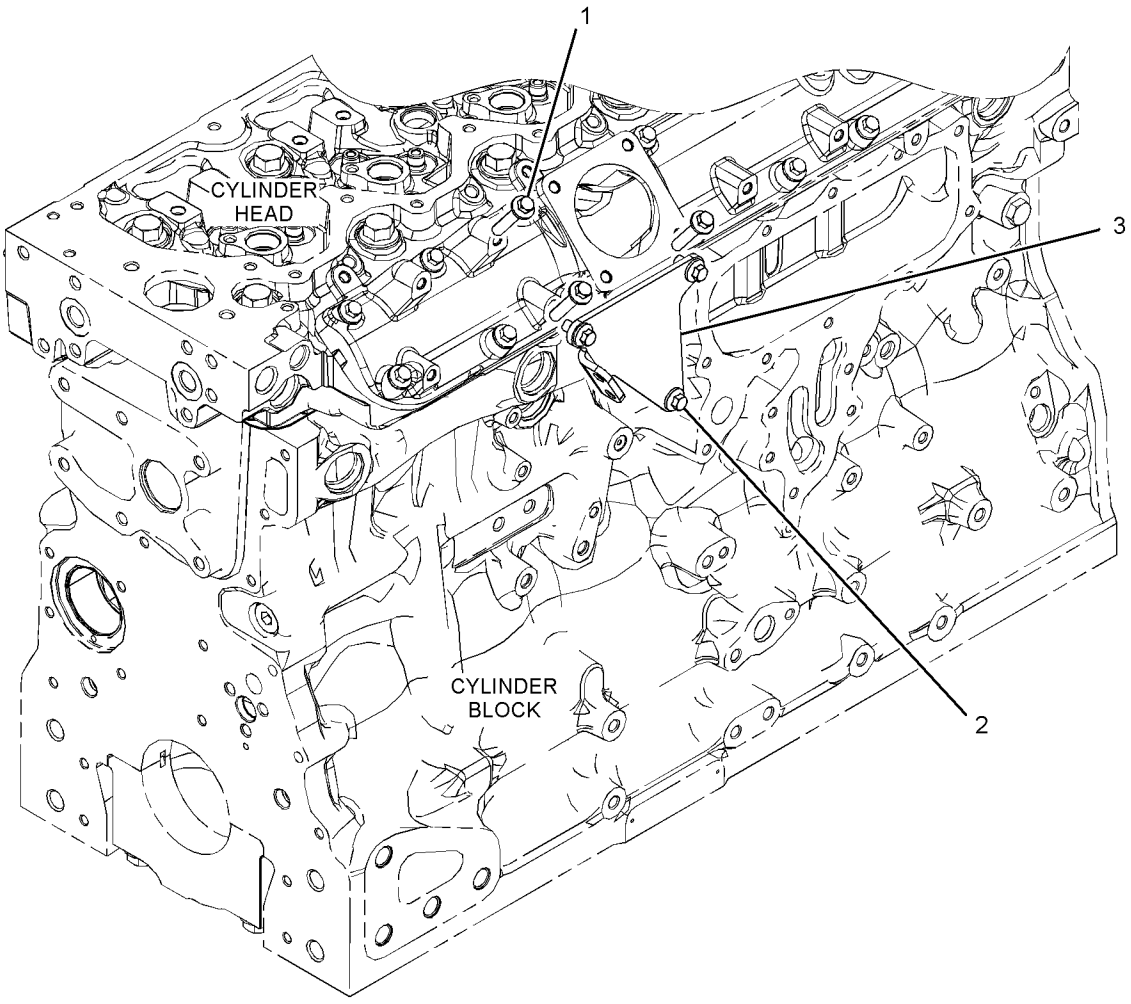

GRAPHIC #1 <END> g03578440

396-2615 CAMSHAFT GP

S/N: 4501-UP

PART OF 553-3684 ENGINE AR-PRIMARY

SMCS-1210 **i05330842**

NOTE	REF NO	GRAPHIC REF	PART NUMBER	QTY	PART NAME 1 2 3 4 5 6 (PRODUCT LEVEL)	SEE PAGE
	1	1	**278-5125**	12	TAPPET	
	2	1	**396-8795**	1	CAMSHAFT GP	
	2A	1	**067-6135**	1	KEY-WOODRUFF	
	3	1	**319-8426**	12	PUSHROD	

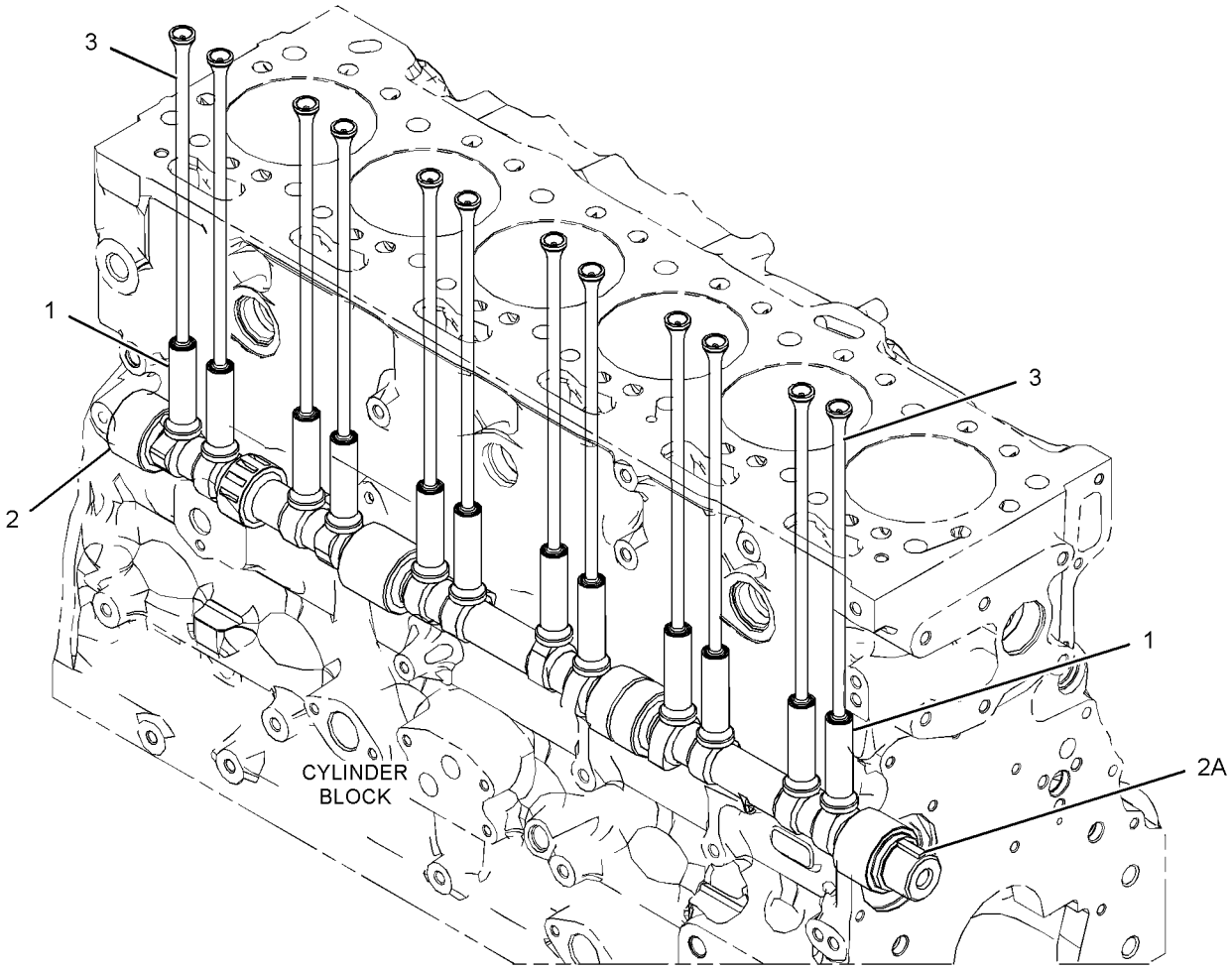

GRAPHIC #1 <END> g03380150

331-0290 CONNECTING ROD GP

S/N: H3C1-UP; K3G1-UP

PART OF 369-7304 PISTON & ROD GP

SMCS-1218 **i06951990**

NOTE	REF NO	GRAPHIC REF	PART NUMBER	QTY	PART NAME 1 2 3 4 5 6 (PRODUCT LEVEL)	SEE PAGE
	1	1	**276-7478**	1	BUSHING	
M	2	1	**323-9312**	2	BOLT (M10X1X50-MM)	

M - METRIC PART

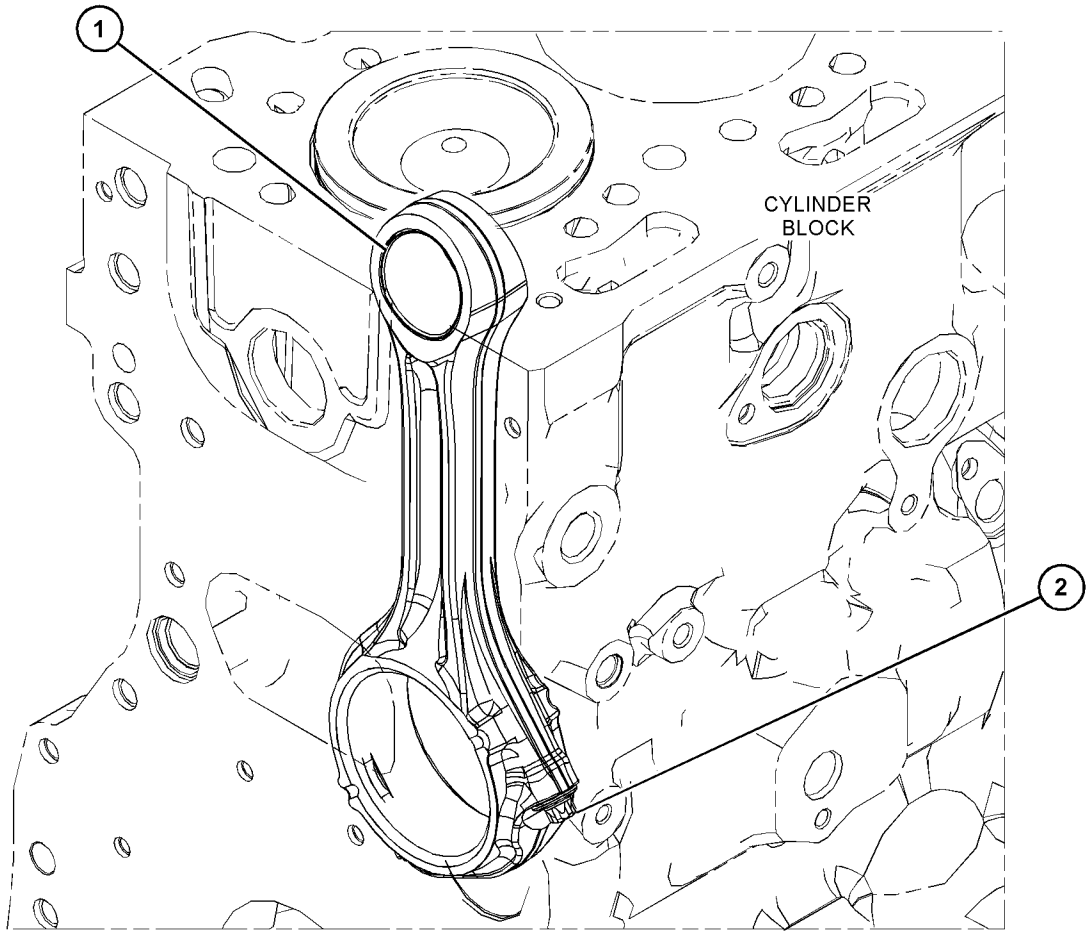

GRAPHIC #1 <END> g03551985

389-3346 COVER GP-VALVE MECHANISM

S/N: 4501-UP

PART OF 553-3684 ENGINE AR-PRIMARY

SMCS-1107 **i07636240**

NOTE	REF NO	GRAPHIC REF	PART NUMBER	QTY	PART NAME 1 2 3 4 5 6 (PRODUCT LEVEL)	SEE PAGE
M	1	1	**101-3895**	9	BOLT (M8X1.25X35-MM)	
M	2	1	**103-5705**	6	BOLT (M8X1.25X110-MM)	
C	3	1	**527-1637**	1	COVER GP-VALVE MECHANISM	
M	3A	1	**195-9245**	3	SCREW (M4X0.7X10-MM)	
	3B	1	**527-1641**	1	SEAL	
	3C	1	**380-9615**	1	BREATHER	
		1	**326-7289**	1	SEAL-O-RING	
	4	1	**566-7931**	1	GASKET	
	5	1	**383-1388**	1	COVER-BASE	
M	6	1	**6I-0217**	14	BOLT (M8X1.25X20-MM)	

C - CHANGE FROM PREVIOUS TYPE
M - METRIC PART

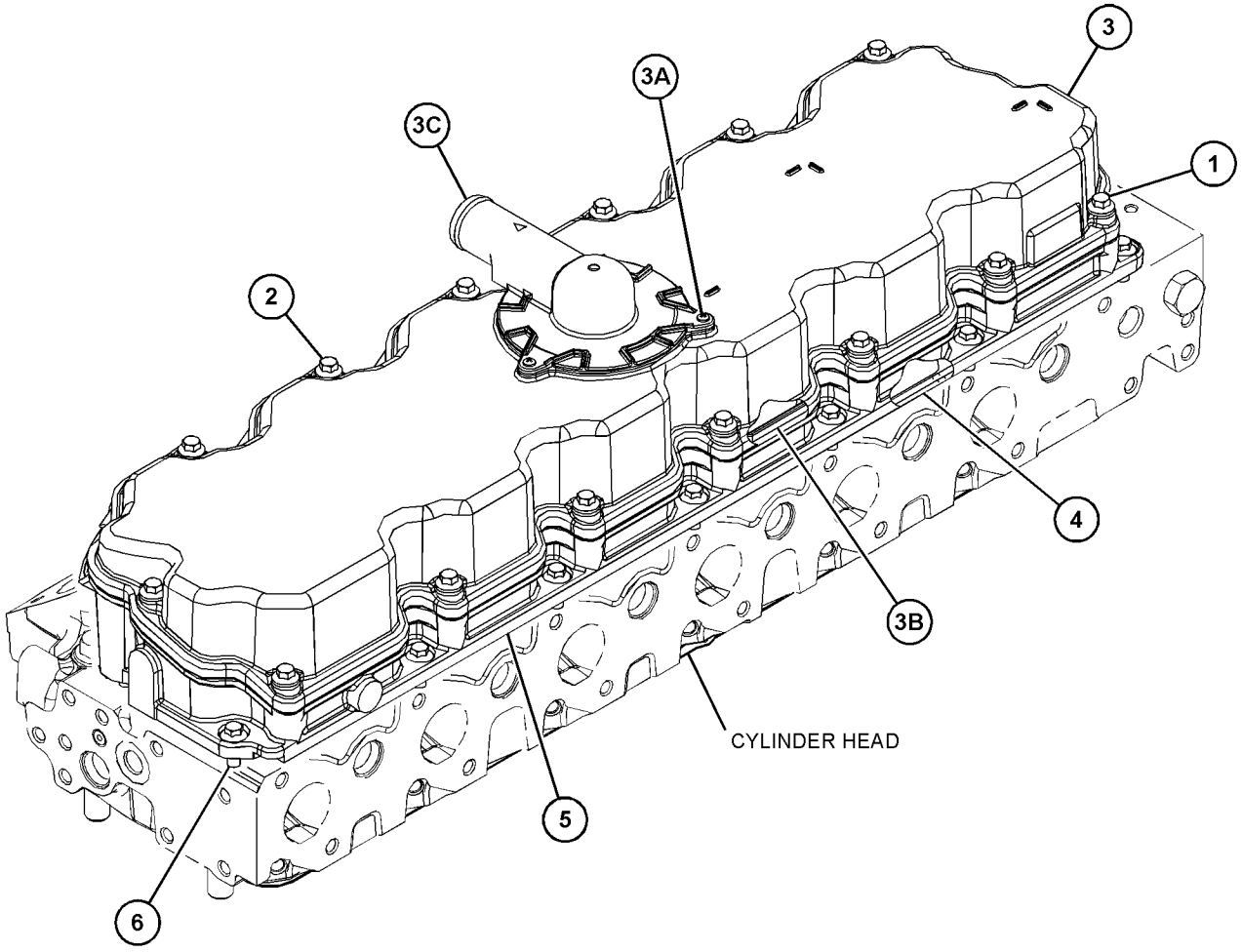

GRAPHIC #1 <END> g06145214

374-6300 CRANKSHAFT GP

S/N: 4501-UP; H3C1-UP; K3G1-UP

PART OF 451-1222 CYLINDER BLOCK GP-SHORT, 553-3684 ENGINE AR-PRIMARY

SMCS-1202 **i06990996**

NOTE	REF NO	GRAPHIC REF	PART NUMBER	QTY	PART NAME 1 2 3 4 5 6 (PRODUCT LEVEL)	SEE PAGE
	1	1	**067-6135**	1	KEY-WOODRUFF	
	2	1	**276-7391**	1	GEAR (34-TEETH)	
M	3	1	**276-7394**	3	SCREW (M6X1XX12-MM)	
	4	1	**339-8780**	1	DOWEL	
J	5	1	*363-0559*	2	WASHER-THRUST	
	6	1	**376-4074**	1	CRANKSHAFT	
	7	1	**376-4078**	1	DISC-TIMING	
CP	8	1	*470-8101*	7	BEARING-CRANKSHAFT (STANDARD-UPPER)	
CP	9	1	*470-8171*	7	BEARING-CRANKSHAFT (STANDARD-LOWER)	
					AVAILABLE REPAIR KIT(S):	
P			**448-4217**	1	KIT-BEARING (STANDARD)	
					(INCLUDES BEARINGS)	
AB			**448-4218**		KIT-BEARING (0.254-MM US)	
					(INCLUDES BEARINGS)	
AB			**448-4220**		KIT-BEARING (0.508-MM US)	
					(INCLUDES BEARINGS)	
AB			**448-4222**		KIT-BEARING (0.762-MM US)	
					(INCLUDES BEARINGS)	
J			**364-5145**	1	KIT-WASHER (STANDARD)	
					(INCLUDES WASHERS)	
AB			**448-4227**		KIT-WASHER (0.20-MM US)	
					(INCLUDES WASHERS)	

A - NOT PART OF THIS GROUP
B - USE AS REQUIRED
C - CHANGE FROM PREVIOUS TYPE
J - KIT MARKED J SERVICES PART(S) MARKED J
M - METRIC PART
P - KIT MARKED P SERVICES PART(S) MARKED P

374-6300 **CRANKSHAFT GP (**contd.**)** **i06990996**

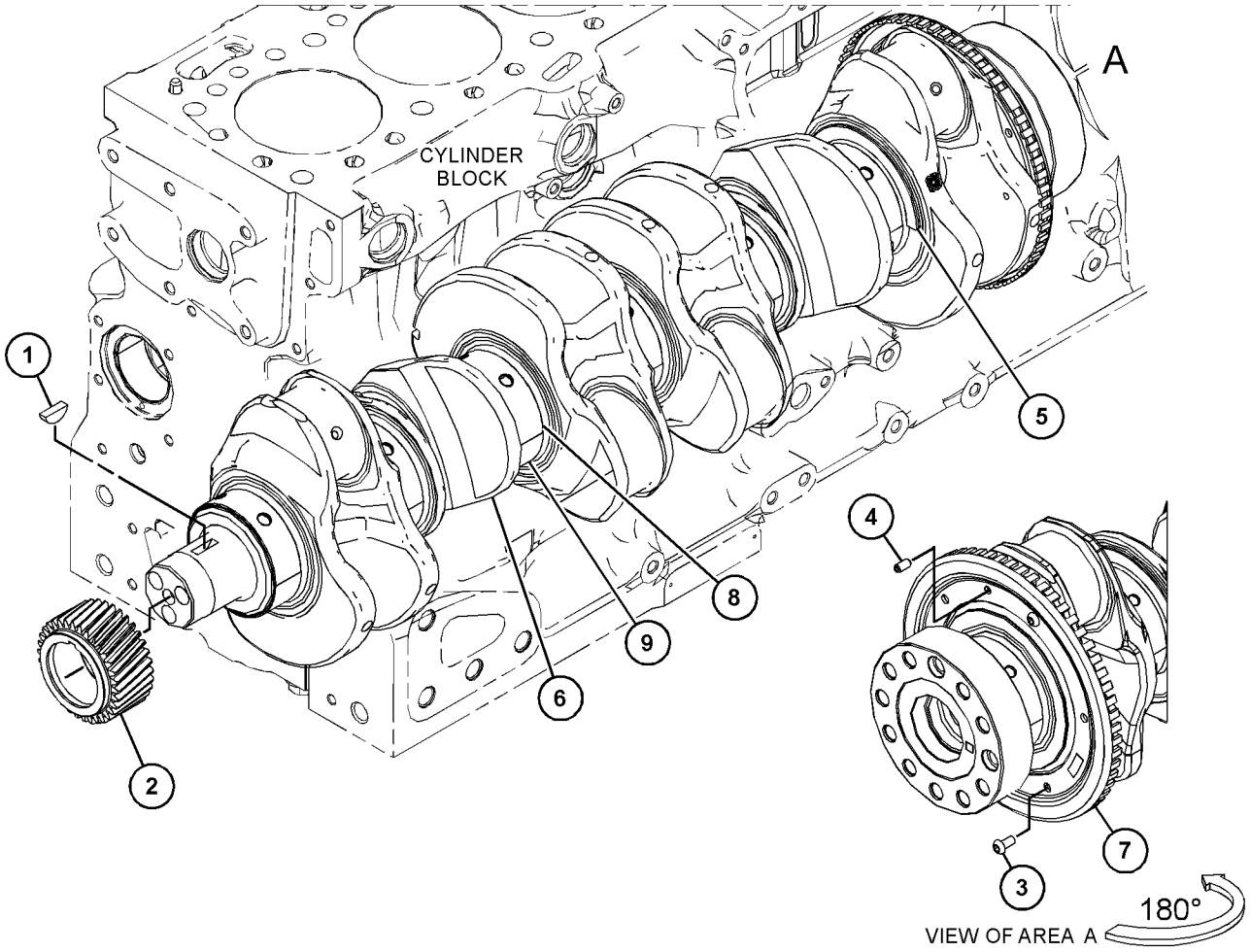

GRAPHIC #1 <END> g06188935

383-3581 CYLINDER BLOCK AS

S/N: 4501-UP; H3C1-UP; K3G1-UP

PART OF 390-0854 CYLINDER BLOCK GP

SMCS-1201 **i07383704**

NOTE	REF NO	GRAPHIC REF	PART NUMBER	QTY	PART NAME 1 2 3 4 5 6 (PRODUCT LEVEL)	SEE PAGE
	1	1	**232-7597**	2	PLUG	
	2	1	**276-5602**	2	PLUG-CORE	
	3	1	**232-7596**	1	PLUG	
	4	1	**067-6043**	7	PLUG-SIDE	
	5	1	**067-6823**	1	PLUG	
	6	1	**185-0884**	2	DOWEL	
	7	1	**225-8858**	2	PLUG	
	8	1	**232-7599**	2	PLUG	
	9	1	**276-5600**	14	BOLT-SPECIAL	
	10	1	**331-6835**	2	PLUG-SEAL	
F			**370-6545**	1	BUSHING-CAMSHAFT	

F - NOT SHOWN

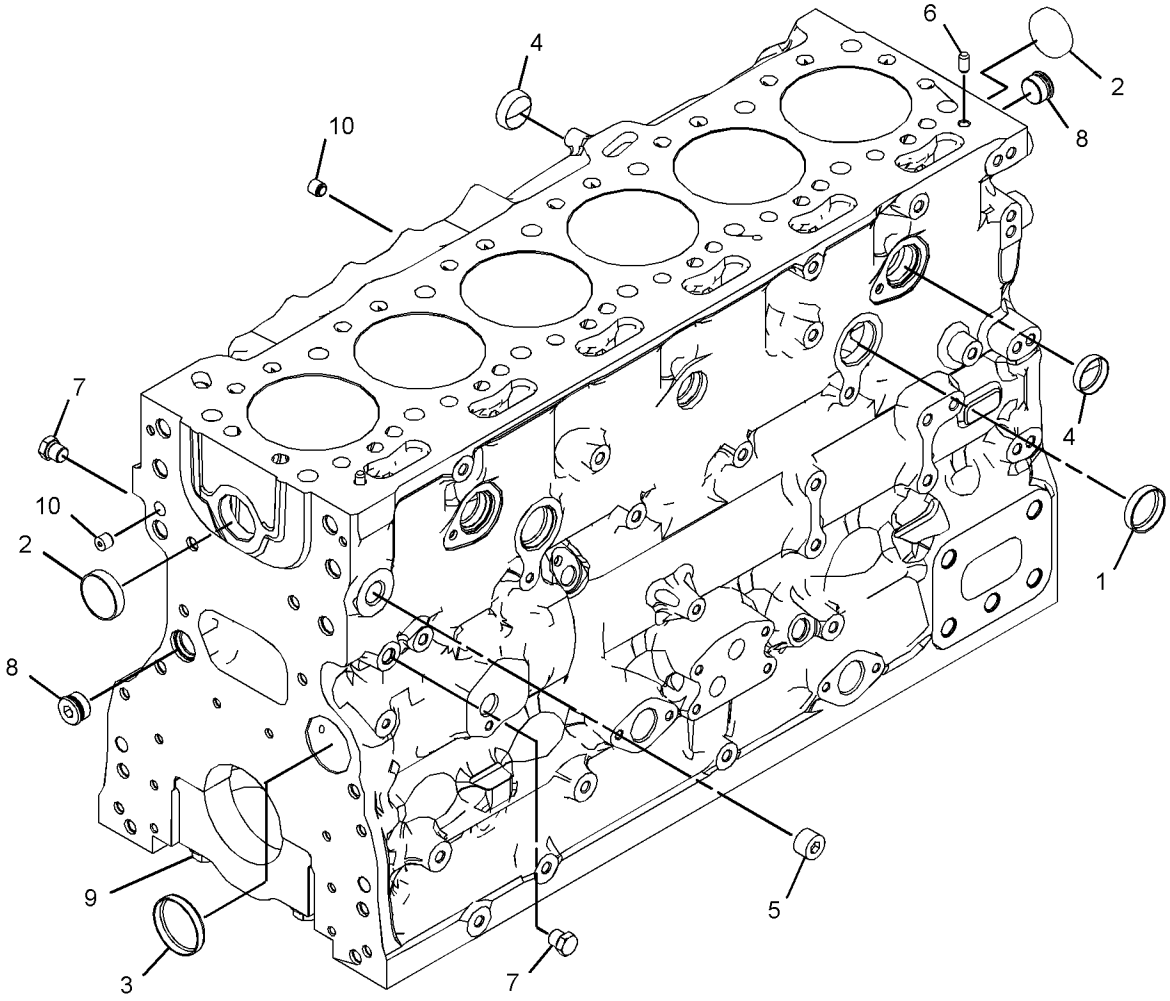

GRAPHIC #1 <END> g03351937

390-0854 CYLINDER BLOCK GP

S/N: 4501-UP; H3C1-UP; K3G1-UP

PART OF 451-1222 CYLINDER BLOCK GP-SHORT, 553-3684 ENGINE AR-PRIMARY

SMCS-1201 **i06547930**

NOTE	REF NO	GRAPHIC REF	PART NUMBER	QTY	PART NAME 1 2 3 4 5 6 (PRODUCT LEVEL)	SEE PAGE
	1	1	**276-5603**	1	SEAL-O-RING	
Y	2	1	*383-3581*	1	CYLINDER BLOCK AS	13
M	3	1	**209-9219**	10	BOLT (M8X1.25X16-MM)	
	4	1	**232-7449**	1	HOUSING AS	
	5	1	**232-1322**	1	PLUG	

M - METRIC PART
Y - SEPARATE ILLUSTRATION

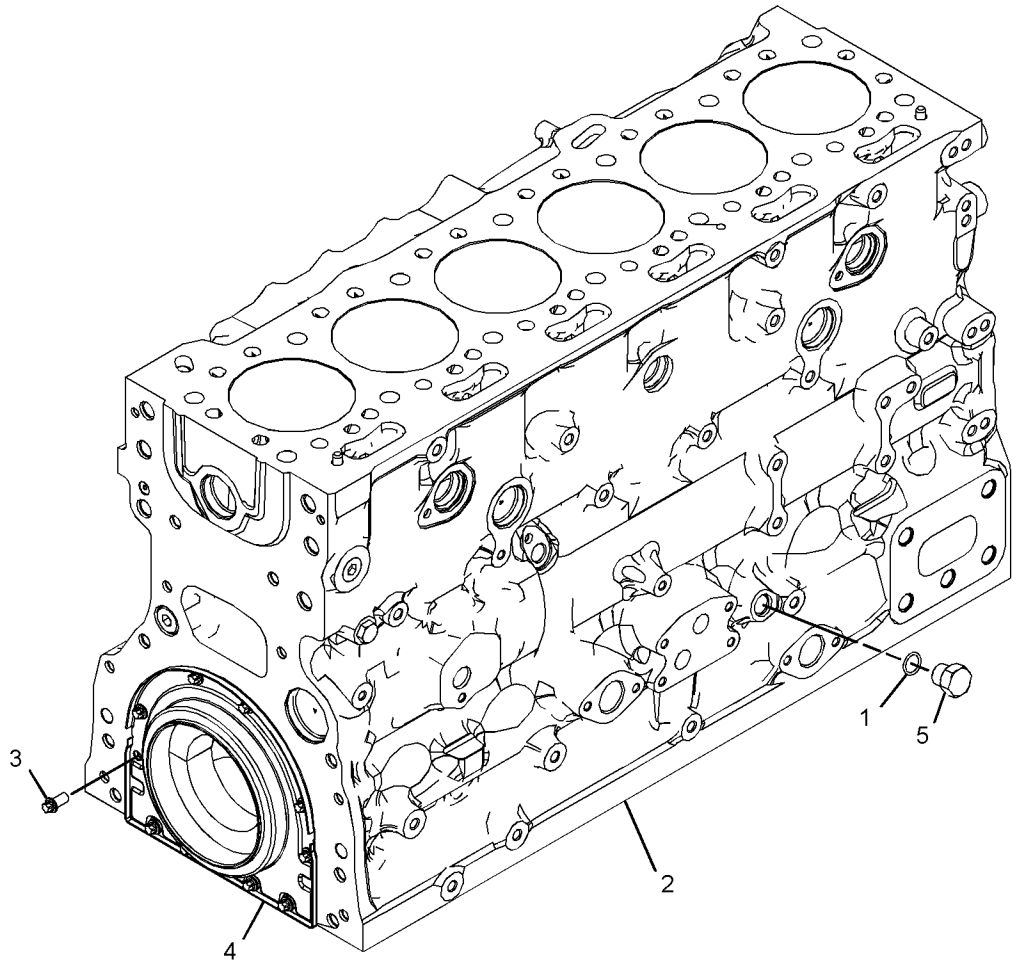

GRAPHIC #1 <END> g03384924

451-1222 CYLINDER BLOCK GP-SHORT

S/N: H3C1-UP; K3G1-UP
FIELD REPLACEMENT FOR 553-3684—PAGE: 4
PART OF 451-8385 CYLINDER BLOCK GP-SHORT

SMCS-1200 **i07270810**

NOTE	REF NO	GRAPHIC REF	PART NUMBER	QTY	PART NAME 1 2 3 4 5 6 (PRODUCT LEVEL)	SEE PAGE
Y	1	1	*369-7304*	1	PISTON & ROD GP	36
Y	2	1	*371-2478*	1	JET GP-PISTON COOLING	29
Y	3	1	*374-6300*	1	CRANKSHAFT GP	11
	4	1	*451-8317*	1	PAN GP-OIL	
M	4A	1	**8T-0269**	2	BOLT-SOCKET HEAD (M6X1X20-MM)	
	4B	1	**230-8094**	1	BRIDGE	
Y	5	1	*390-0854*	1	CYLINDER BLOCK GP	14

M - METRIC PART
Y - SEPARATE ILLUSTRATION

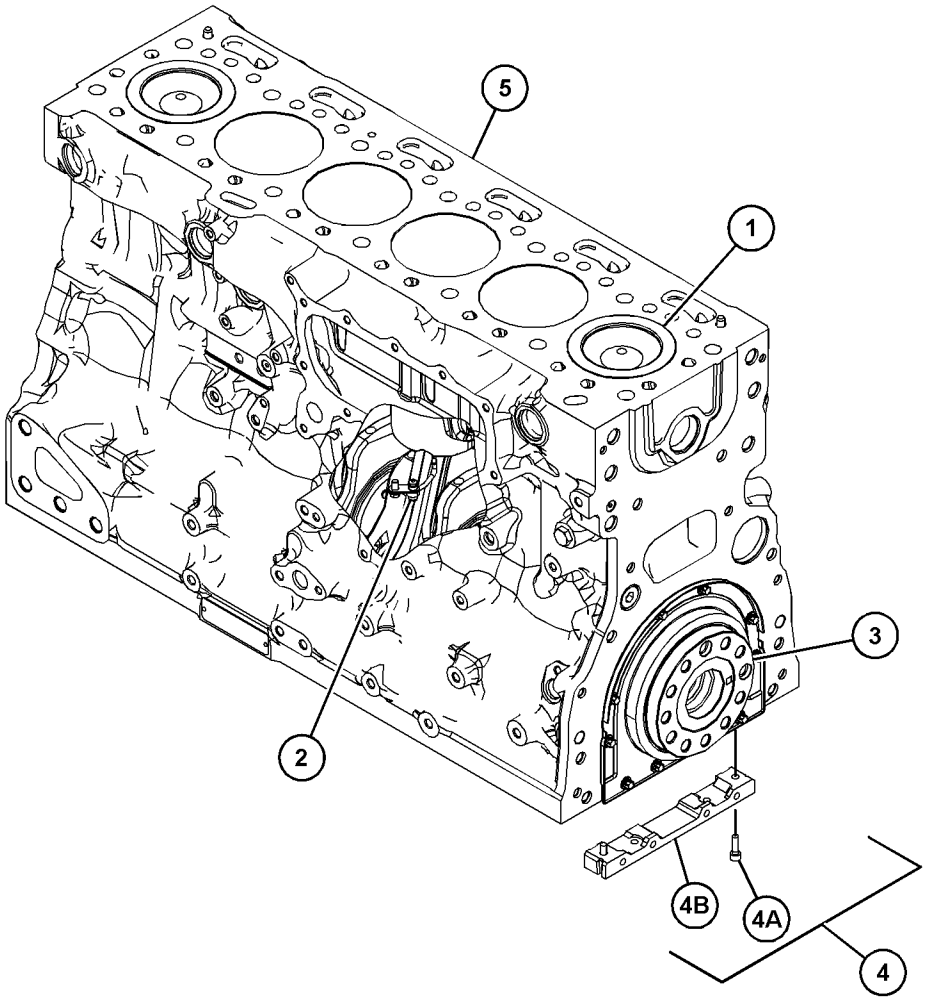

GRAPHIC #1 <END> g03733390

451-8385 CYLINDER BLOCK GP-SHORT

S/N: H3C1-UP; K3G1-UP

PART OF 556-3819 ENGINE AR-COMPLETE

SMCS-1200 **i05906121**

NOTE	REF NO	GRAPHIC REF	PART NUMBER	QTY	PART NAME 1 2 3 4 5 6 (PRODUCT LEVEL)	SEE PAGE
Y	1	1	**451-1222**	1	CYLINDER BLOCK GP-SHORT	15

Y - SEPARATE ILLUSTRATION

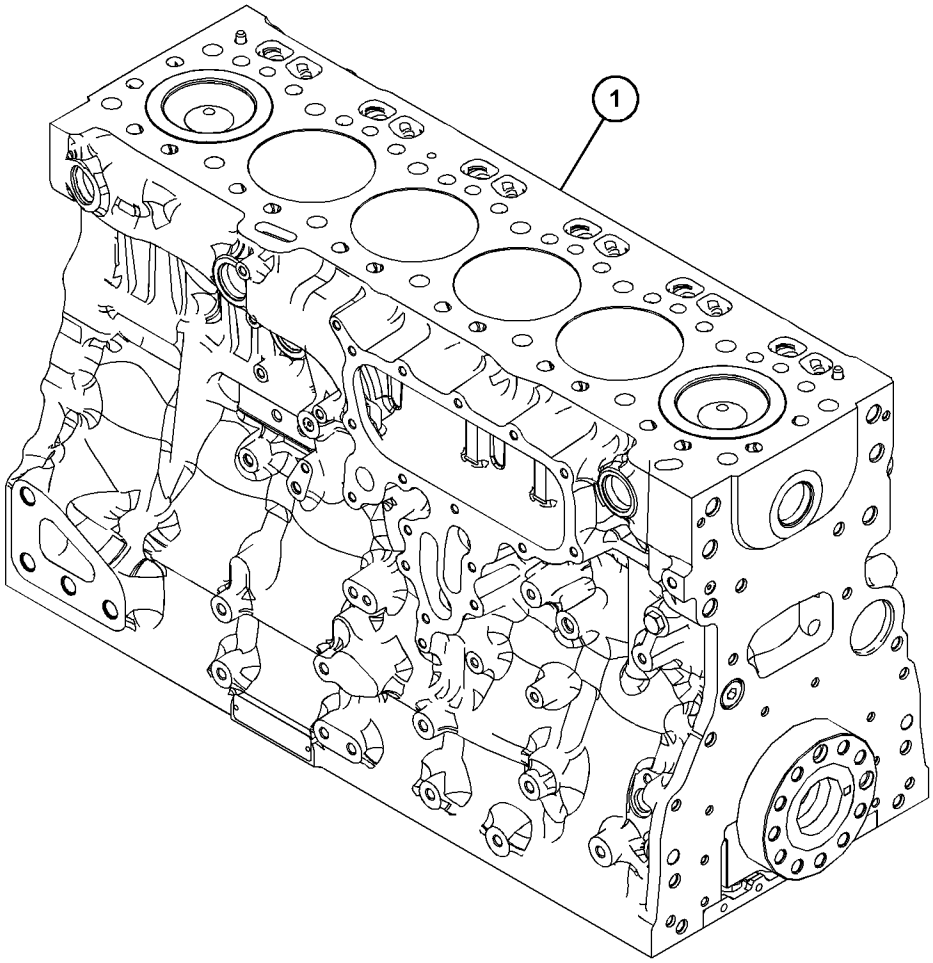

GRAPHIC #1 <END> g03697536

384-5313 CYLINDER HEAD AS

S/N: 4501-UP; H3C1-UP; K3G1-UP

PART OF 385-2572, 452-6586 CYLINDER HEAD GP

SMCS-1100, 1101

i05330860

NOTE	REF NO	GRAPHIC REF	PART NUMBER	QTY	PART NAME 1 2 3 4 5 6 (PRODUCT LEVEL)	SEE PAGE
	1	1	**276-8116**	6	PLUG-CORE	
	2	1	**377-0400**	12	INSERT-VALVE SEAT (EXHAUST)	
	3	1	**377-0399**	12	INSERT-VALVE SEAT (INTAKE)	
	4	1	**276-8117**	13	PLUG-CORE	

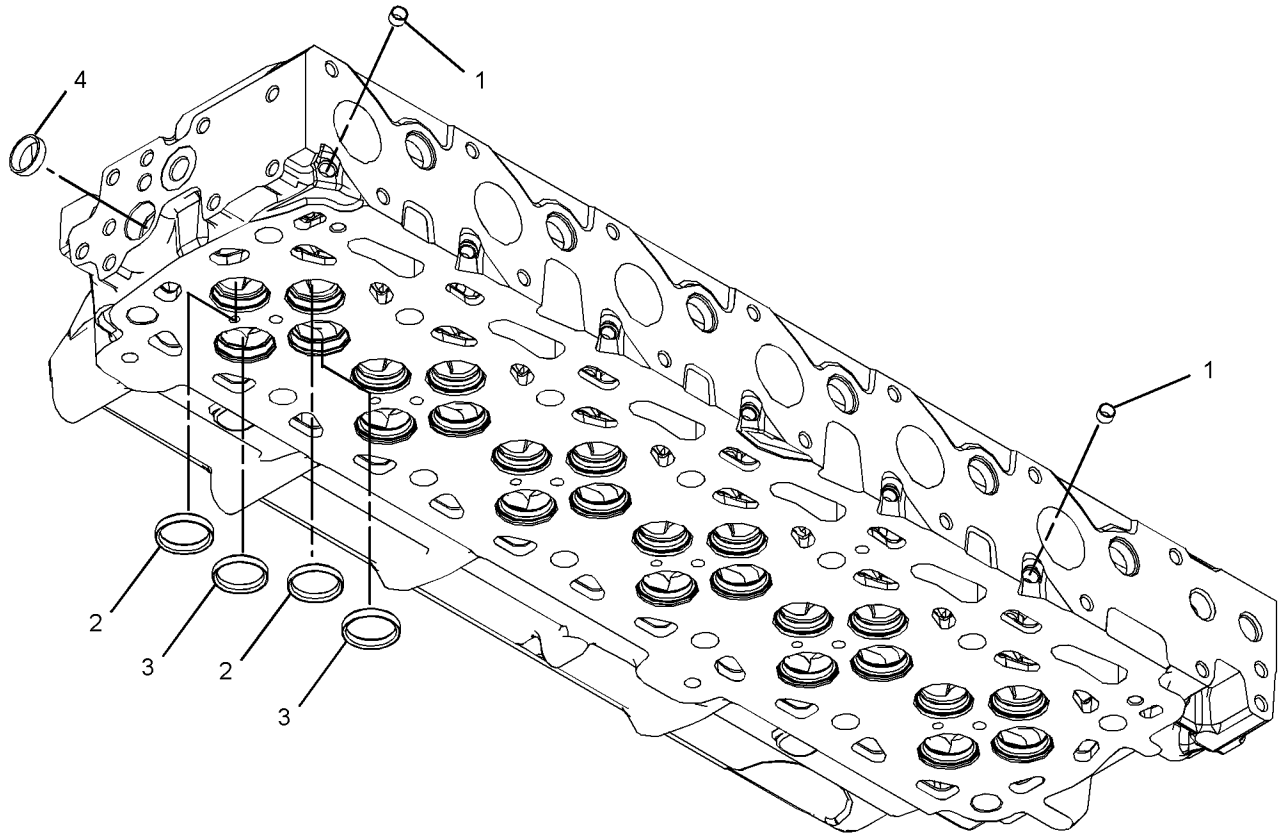

GRAPHIC #1 <END> g03379426

385-2572 CYLINDER HEAD GP

S/N: 4501-UP

PART OF 553-3684 ENGINE AR-PRIMARY

SMCS-1100 **i05330848**

NOTE	REF NO	GRAPHIC REF	PART NUMBER	QTY	PART NAME 1 2 3 4 5 6 (PRODUCT LEVEL)	SEE PAGE
	1	1	**199-9751**	1	SEAL-O-RING	
Y	2	1	**384-5313**	1	CYLINDER HEAD AS	17
	3	1	**388-4707**	1	GASKET-CYLINDER HEAD	
	4	1	**232-1322**	1	PLUG	
	5	1	**276-8134**	14	BOLT-SPECIAL (CYLINDER HEAD)	
	6	1	**277-4302**	2	DOWEL	
	7	1	**295-6661**	1	PLUG	

Y - SEPARATE ILLUSTRATION

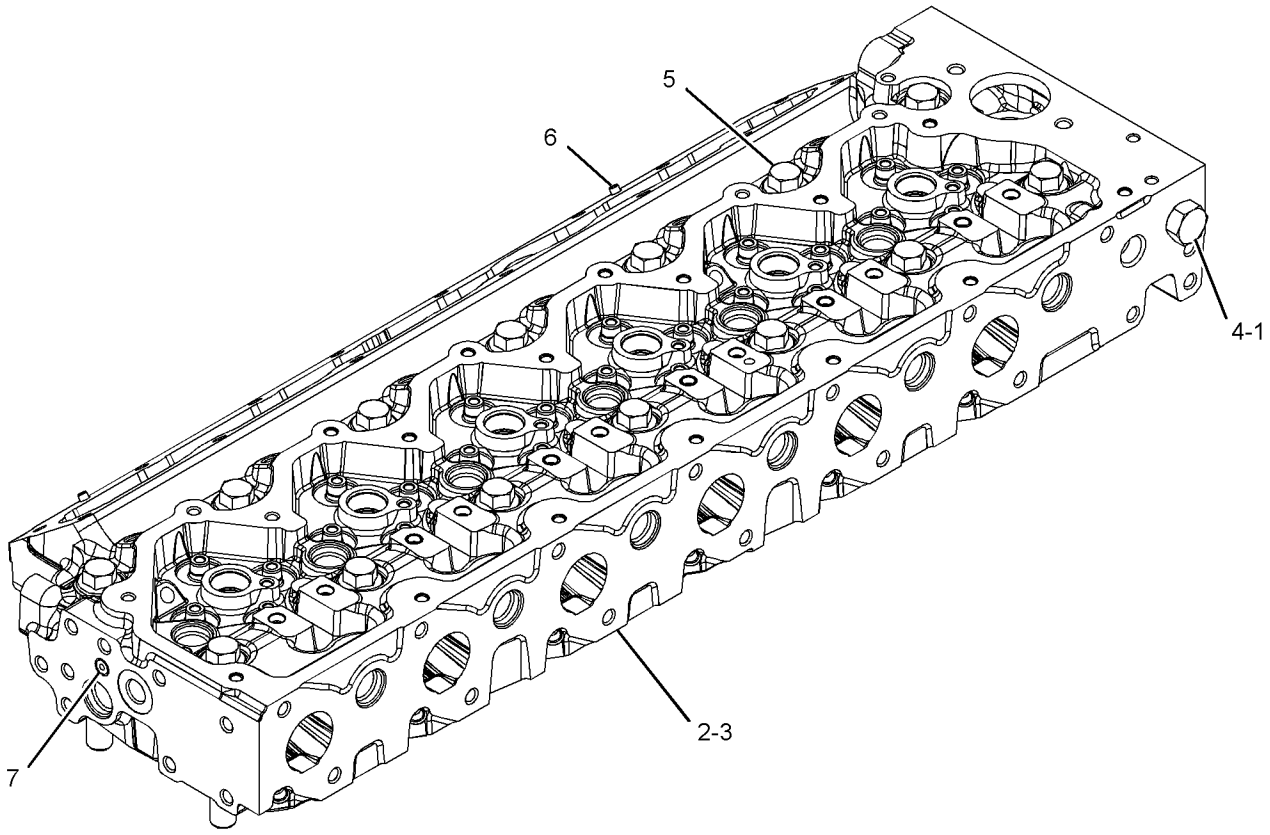

GRAPHIC #1 <END> g03379427

452-6582 CYLINDER HEAD GP

S/N: H3C1-UP; K3G1-UP

PART OF 556-3819 ENGINE AR-COMPLETE

SMCS-1100 **i05906125**

NOTE	REF NO	GRAPHIC REF	PART NUMBER	QTY	PART NAME 1 2 3 4 5 6 (PRODUCT LEVEL)	SEE PAGE
Y	1	1	**452-6584**	1	CYLINDER HEAD GP (SHORT)	20

Y - SEPARATE ILLUSTRATION

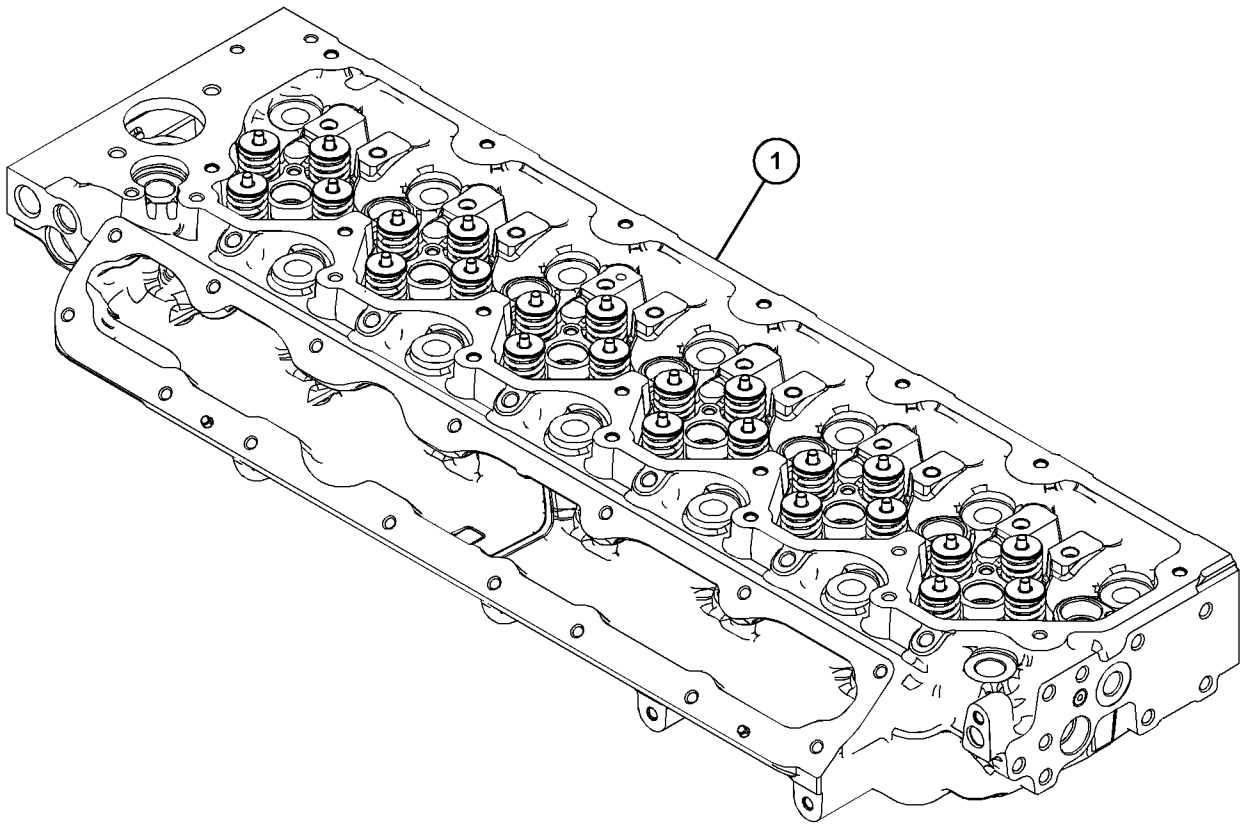

GRAPHIC #1 <END> g03697902

452-6584 CYLINDER HEAD GP

S/N: H3C1-UP; K3G1-UP
FIELD REPLACEMENT FOR 553-3684—PAGE: 4
PART OF 452-6582 CYLINDER HEAD GP

SMCS-1100 **i07270811**

NOTE	REF NO	GRAPHIC REF	PART NUMBER	QTY	PART NAME 1 2 3 4 5 6 (PRODUCT LEVEL)	SEE PAGE
Y	1	1	*452-6585*	1	ROCKER ARM GP	47
Y	2	1	*452-6586*	1	CYLINDER HEAD GP	21

Y - SEPARATE ILLUSTRATION

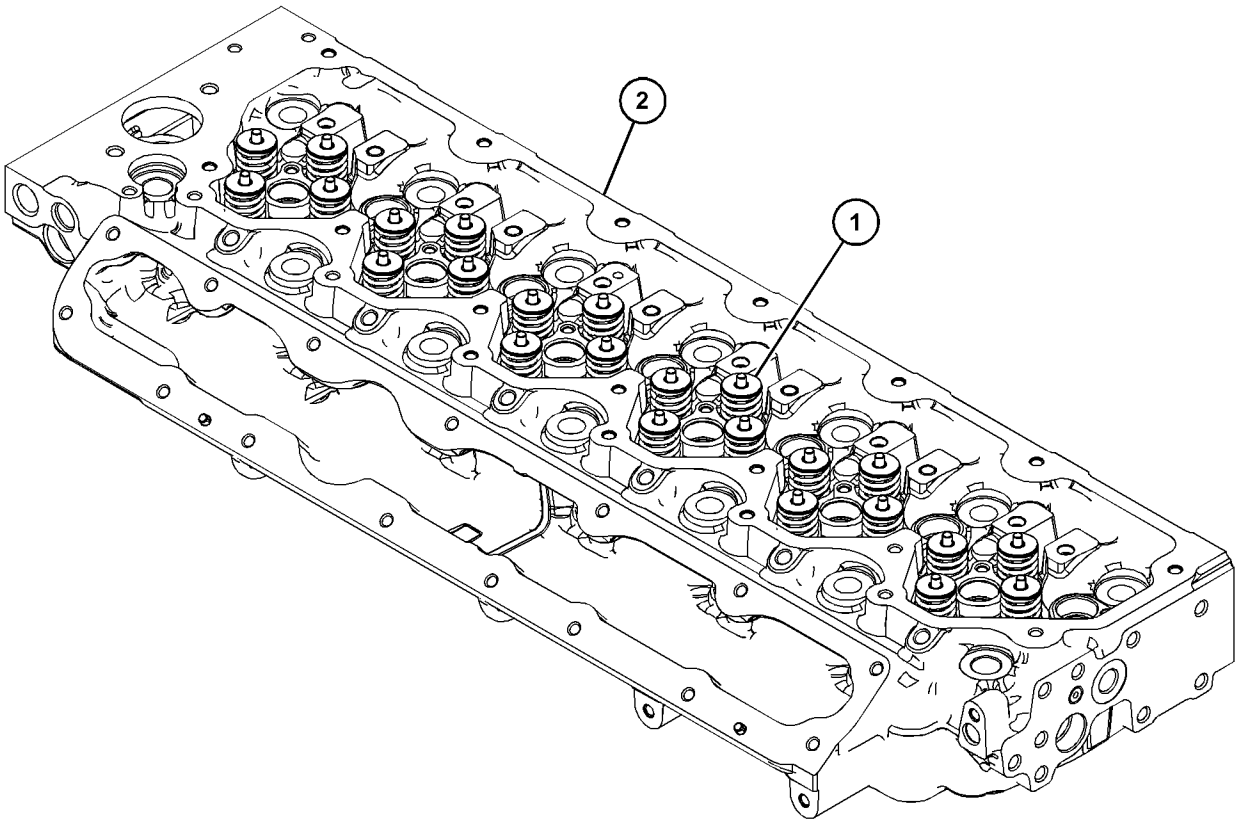

GRAPHIC #1 <END> g03674499

452-6586 CYLINDER HEAD GP

S/N: H3C1-UP; K3G1-UP

PART OF 452-6584 CYLINDER HEAD GP

SMCS-1100 **i05883716**

NOTE	REF NO	GRAPHIC REF	PART NUMBER	QTY	PART NAME 1 2 3 4 5 6 (PRODUCT LEVEL)	SEE PAGE
	1	1	**199-9751**	1	SEAL-O-RING	
	2	1	**277-4302**	2	DOWEL	
	3	1	**295-6661**	1	PLUG	
	4	1	**232-1322**	1	PLUG	
Y	5	1	*384-5313*	1	CYLINDER HEAD AS	17

Y - SEPARATE ILLUSTRATION

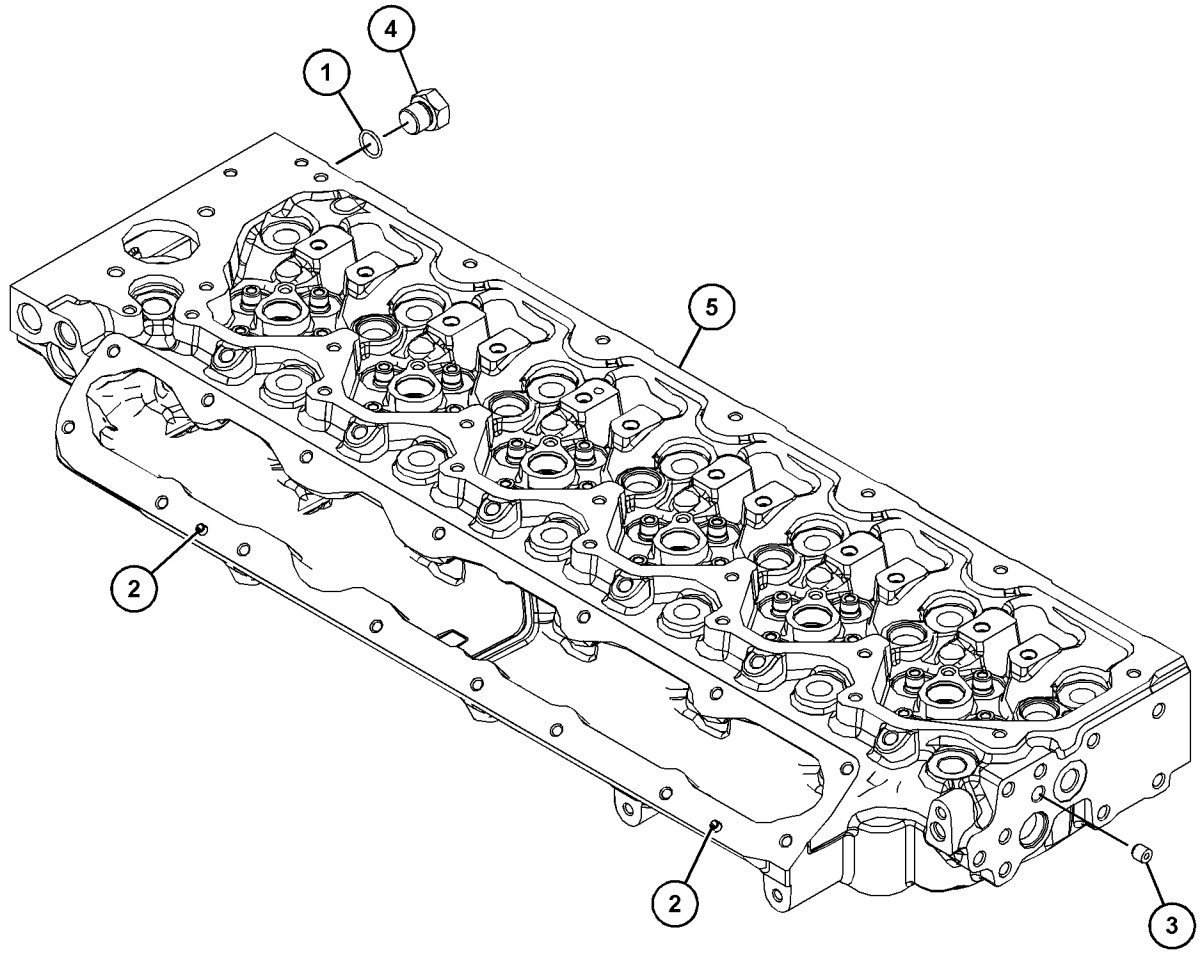

GRAPHIC #1 <END> g03714865

378-8166 DRAIN GP-ENGINE OIL

S/N: 4501-UP

PART OF 553-3684 ENGINE AR-PRIMARY

SMCS-1302 **i05892196**

NOTE	REF NO	GRAPHIC REF	PART NUMBER	QTY	PART NAME 1 2 3 4 5 6 (PRODUCT LEVEL)	SEE PAGE
	1	1	**6V-7238**	1	VALVE-SHUTOFF	
	2	1	**3K-0360**	1	SEAL-O-RING	

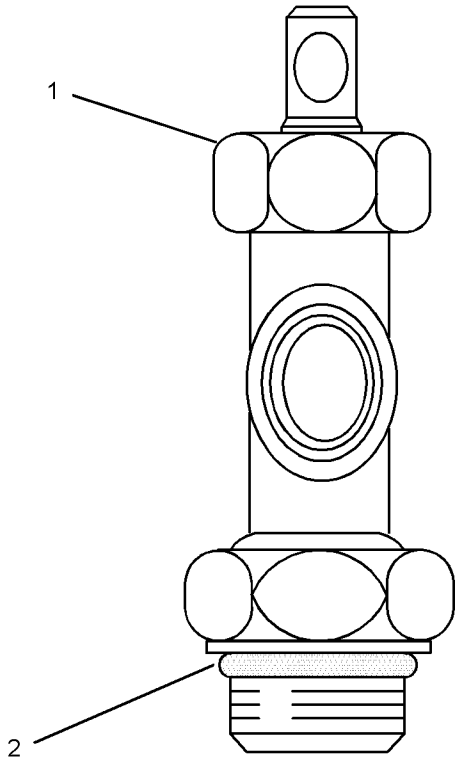

GRAPHIC #1 <END> g03457400

375-3937 DRIVE GP-FAN

S/N: 4501-UP

PART OF 553-3684 ENGINE AR-PRIMARY

SMCS-1359 **i07382388**

NOTE	REF NO	GRAPHIC REF	PART NUMBER	QTY	PART NAME 1 2 3 4 5 6 (PRODUCT LEVEL)	SEE PAGE
	1	1	**371-8298**	1	BRACKET	
	2	1	**377-9255**	1	PULLEY AS (8-GROOVE)	
M		1	**423-7576**	1	BOLT (M10X1.5X50-MM)	
M	3	1	**111-0859**	2	BOLT (M10X1.5X35-MM)	

M - METRIC PART

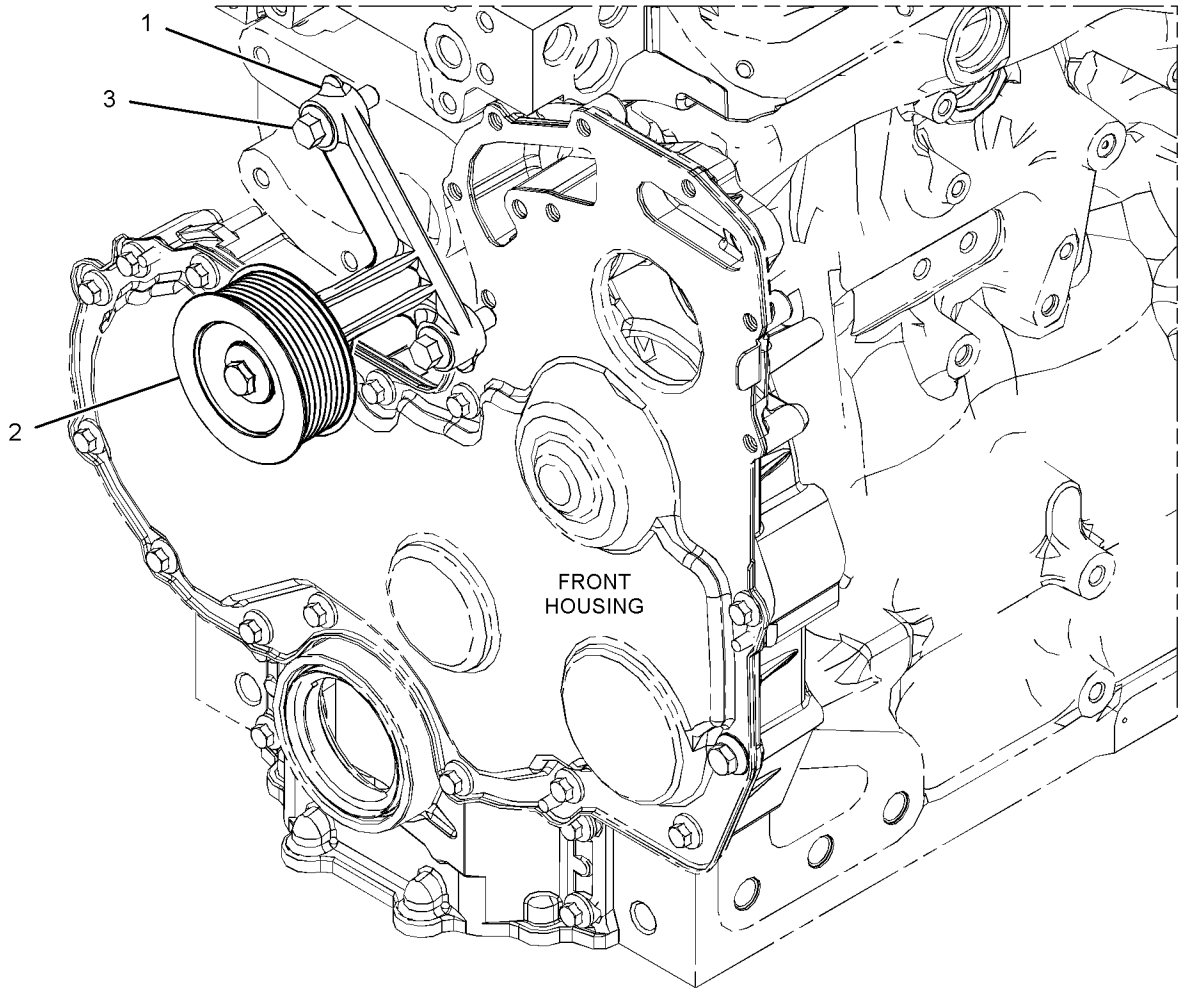

GRAPHIC #1 <END> g03108922

375-0098 FASTENER GP-DAMPER & PULLEY

S/N: 4501-UP

PART OF 553-3684 ENGINE AR-PRIMARY

SMCS-1205 **i05332368**

NOTE	REF NO	GRAPHIC REF	PART NUMBER	QTY	PART NAME 1 2 3 4 5 6 (PRODUCT LEVEL)	SEE PAGE
M	1	1	**274-1935**	6	BOLT (M12X1.75X30-MM)	

M - METRIC PART

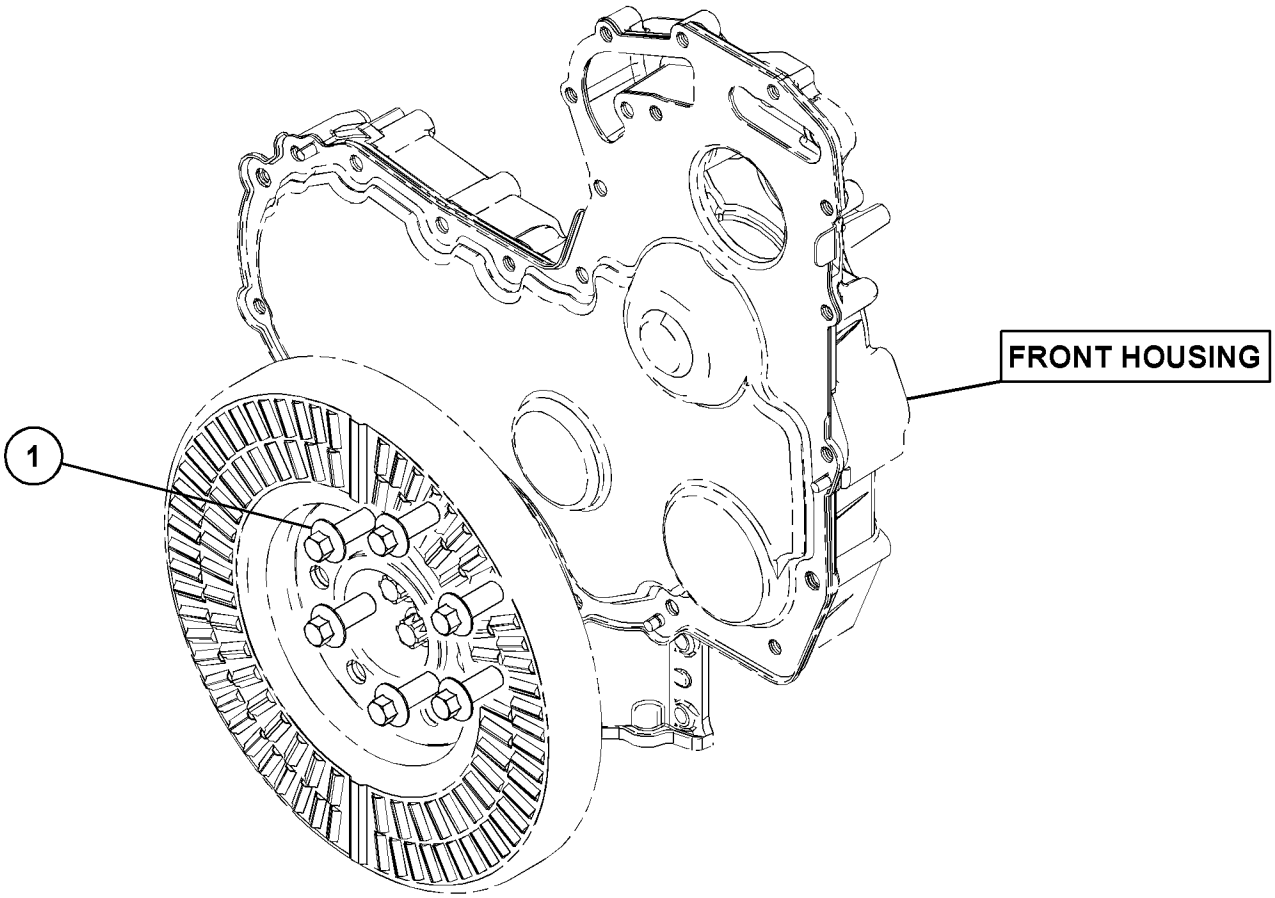

GRAPHIC #1 <END> g03172177

390-0055 FLYWHEEL GP

S/N: 4501-UP

PART OF 553-3684 ENGINE AR-PRIMARY

SMCS-1156 **i05892203**

NOTE	REF NO	GRAPHIC REF	PART NUMBER	QTY	PART NAME 1 2 3 4 5 6 (PRODUCT LEVEL)	SEE PAGE
	1	1	**320-3669**	1	FLYWHEEL AS	
	1A	1	**277-0588**	1	GEAR-STARTING MOTOR RING (134-TEETH)	
	2	1	**145-4911**	12	WASHER	
	3	1	**279-9254**	12	BOLT (1/2-20X2-IN)	

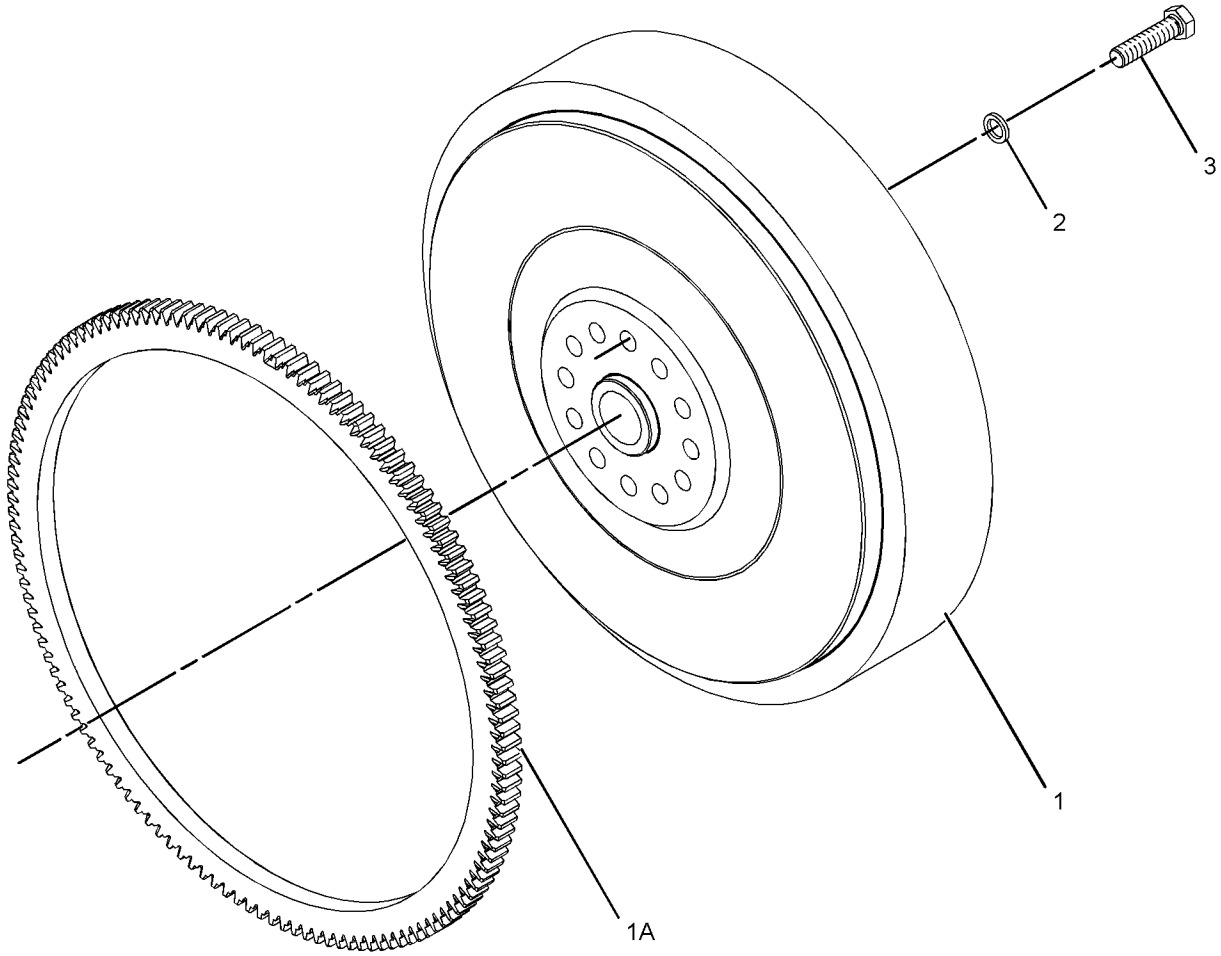

GRAPHIC #1 <END> g01194047

393-3369 HOUSING GP-FLYWHEEL

S/N: 4501-UP

PART OF 553-3684 ENGINE AR-PRIMARY

SMCS-1157 **i06894341**

NOTE	REF NO	GRAPHIC REF	PART NUMBER	QTY	PART NAME 1 2 3 4 5 6 (PRODUCT LEVEL)	SEE PAGE
	1	1	**354-8322**	3	PLUG	
M	2	1	**283-4662**	2	BOLT-FLANGE HEAD (M12X1.75X55-MM)	
	3	1	**287-8597**	2	DOWEL	
M	4	1	**288-6974**	4	BOLT (M10X1.5X50-MM)	
M	5	1	**288-6975**	2	BOLT (M16X2X40-MM)	
	6	1	**393-4006**	1	GASKET	
C	7	1	**489-5888**	1	HOUSING-FLYWHEEL	

C - CHANGE FROM PREVIOUS TYPE
M - METRIC PART

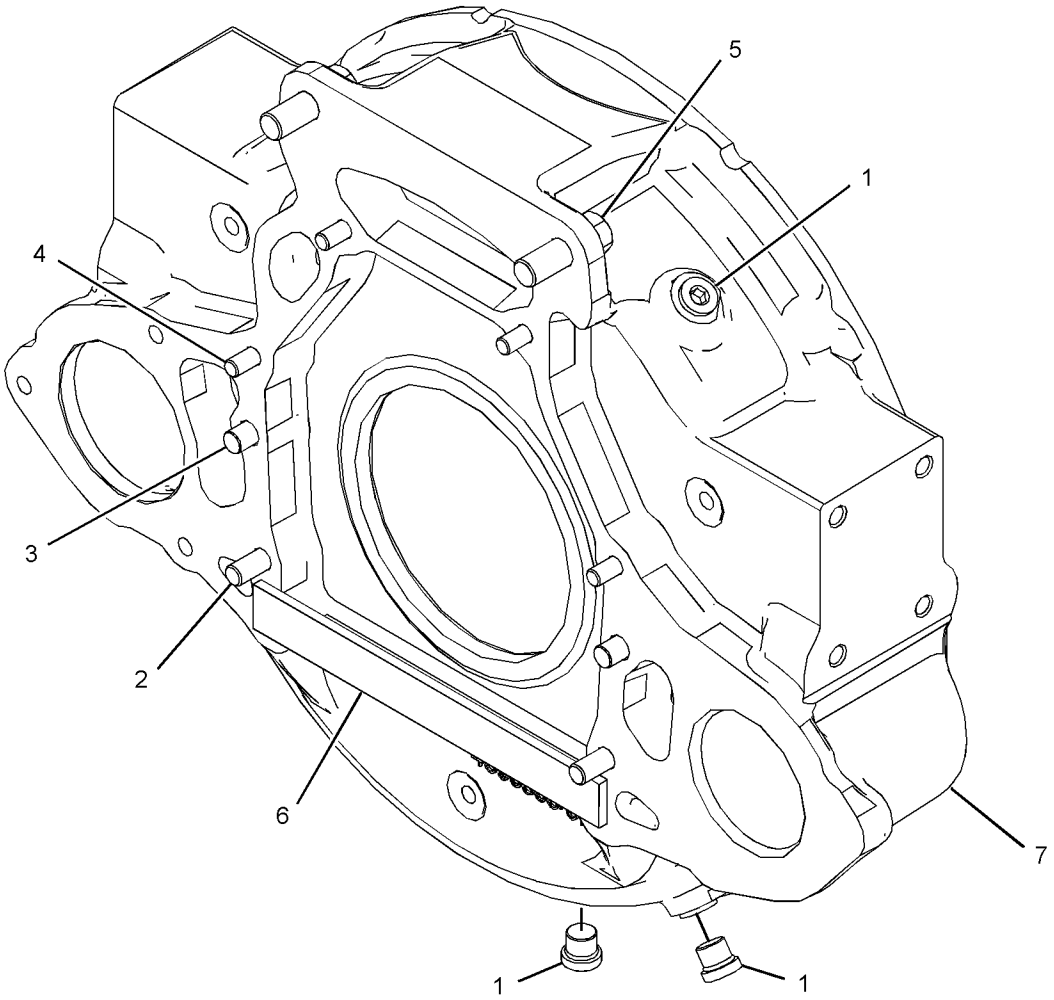

GRAPHIC #1 <END> g06177911

371-2716 HOUSING GP-FRONT

S/N: 4501-UP

PART OF 553-3684 ENGINE AR-PRIMARY

SMCS-1151, 1162, 1206

i06909393

NOTE	REF NO	GRAPHIC REF	PART NUMBER	QTY	PART NAME 1 2 3 4 5 6 (PRODUCT LEVEL)	SEE PAGE
M	1	1	**6I-0217**	6	BOLT (M8X1.25X20-MM)	
M	2	1	**6I-0645**	4	BOLT (M8X1.25X25-MM)	
M	3	1	**6I-0650**	3	BOLT (M10X1.5X65-MM)	
M	4	1	**7C-4616**	1	BOLT (M12X1.75X45-MM)	
	5	1	**067-6179**	1	DOWEL	
M	6	1	**100-3751**	5	BOLT (M8X1.25X65-MM)	
M	7	1	**101-3895**	2	BOLT (M8X1.25X35-MM)	
M	8	1	**124-3815**	10	BOLT (M8X1.25X16-MM)	
	9	1	**133-1011**	1	WASHER	
	10	1	**425-7103**	1	GEAR (68-TEETH)	
	11	1	**232-3657**	1	COVER AS-FRONT	
	11A	1	**225-8287**	1	GASKET	
	12	1	**232-3666**	1	WASHER-THRUST	
	13	1	**277-3012**	1	GASKET-COVER	
	14	1	**277-3013**	1	SEAL	
	15	1	**324-0444**	1	HUB-IDLER GEAR	
	16	1	**346-0407**	1	GEAR-IDLER	
	17	1	**346-0408**	1	PLATE	
	18	1	**386-2112**	1	CASE-GEAR	

M - METRIC PART

371-2716 **HOUSING GP-FRONT (**contd.**)** **i06909393**

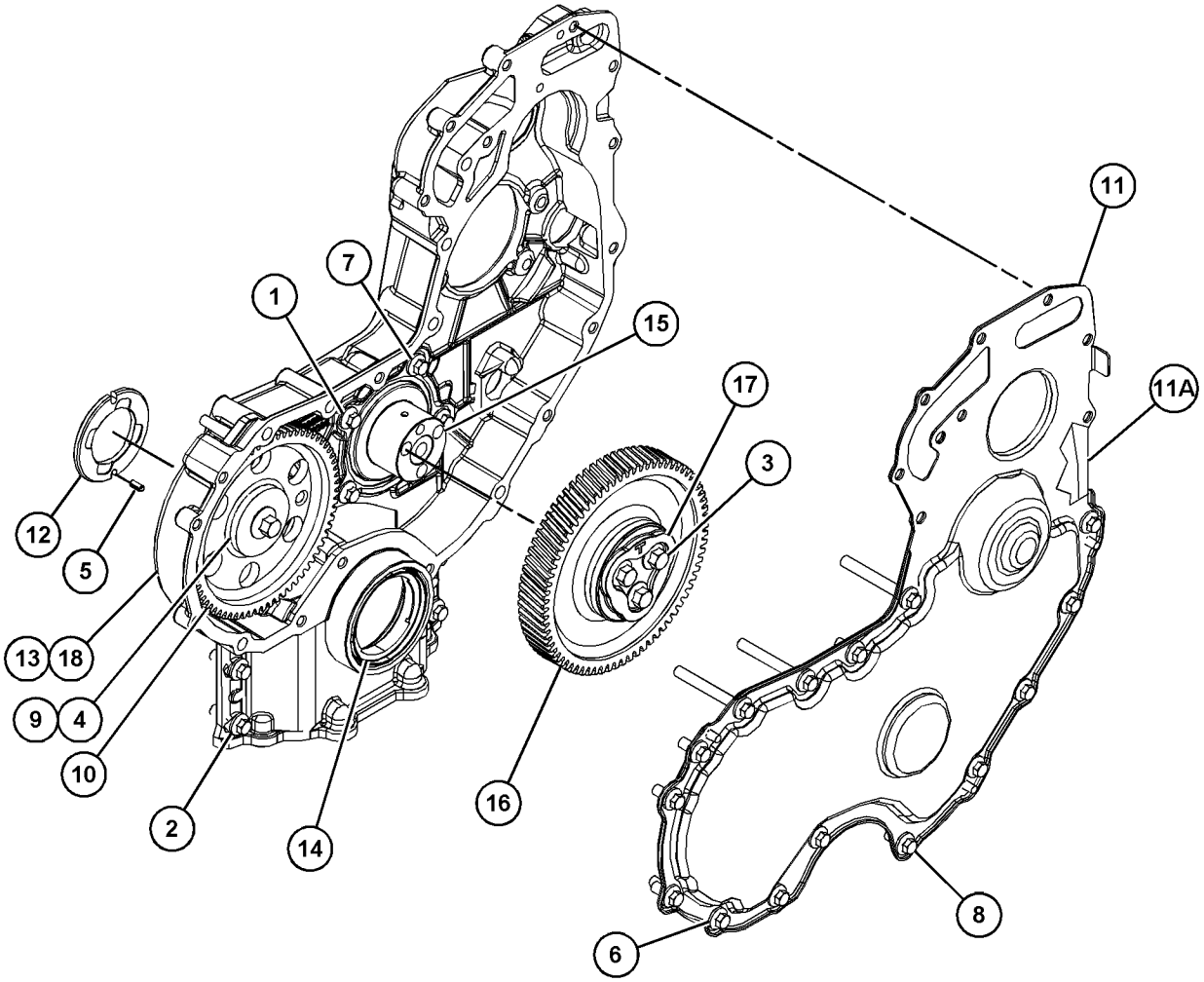

GRAPHIC #1 <END> g03483004

371-2478 JET GP-PISTON COOLING

S/N: 4501-UP; H3C1-UP; K3G1-UP

PART OF 451-1222 CYLINDER BLOCK GP-SHORT, 553-3684 ENGINE AR-PRIMARY

SMCS-1331 **i05331889**

NOTE	REF NO	GRAPHIC REF	PART NUMBER	QTY	PART NAME 1 2 3 4 5 6 (PRODUCT LEVEL)	SEE PAGE
M	1	1	**100-4841**	6	BOLT (M6X1X10-MM)	
	2	1	**329-3796**	6	TUBE AS-OIL JET	

M - METRIC PART

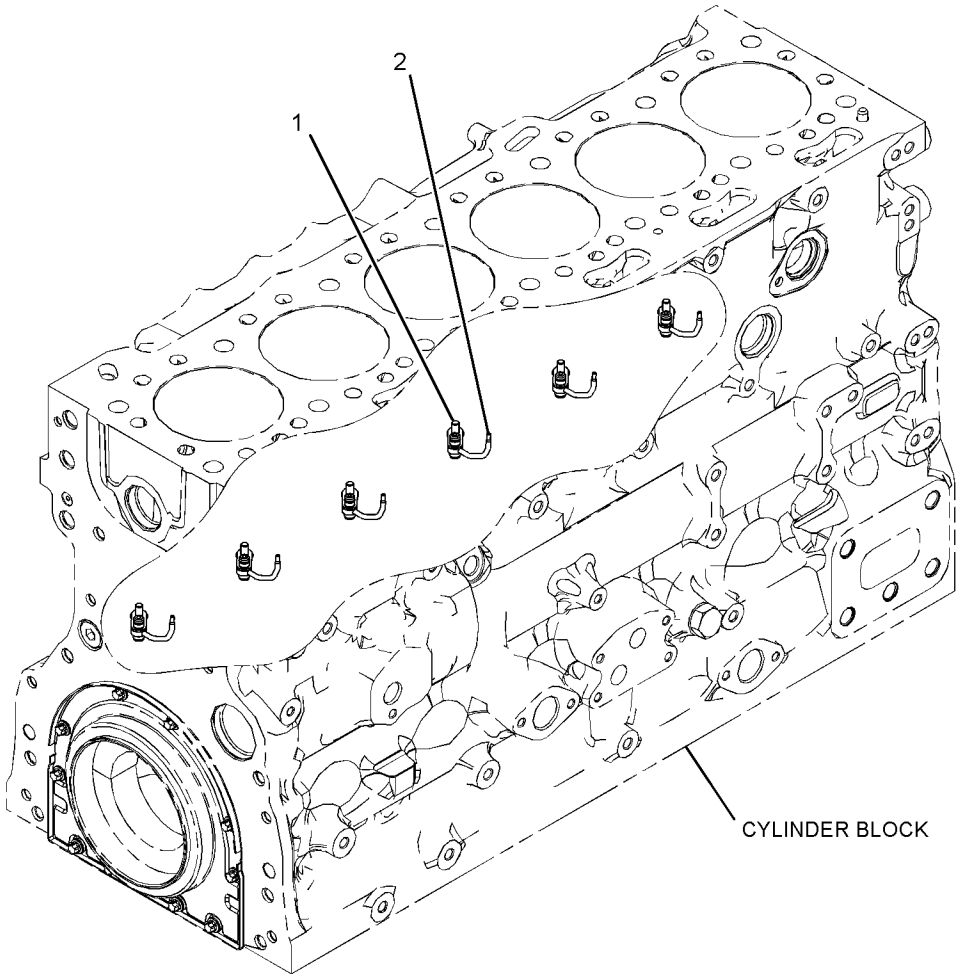

GRAPHIC #1 <END> g03378569

371-2740 LIFTING GP-ENGINE

S/N: 4501-UP

PART OF 553-3684 ENGINE AR-PRIMARY

SMCS-1122 **i05496035**

NOTE	REF NO	GRAPHIC REF	PART NUMBER	QTY	PART NAME 1 2 3 4 5 6 (PRODUCT LEVEL)	SEE PAGE
	1	1	**279-9651**	1	PLATE-LIFTING	
	2	1	**304-5062**	1	BRACKET	
M	3	1	**6I-0654**	2	BOLT (M10X1.5X25-MM)	
M	4	1	**123-2899**	4	BOLT (M10X1.5X40-MM)	
	5	1	**415-1604**	1	BRACKET-LIFTING	

M - METRIC PART

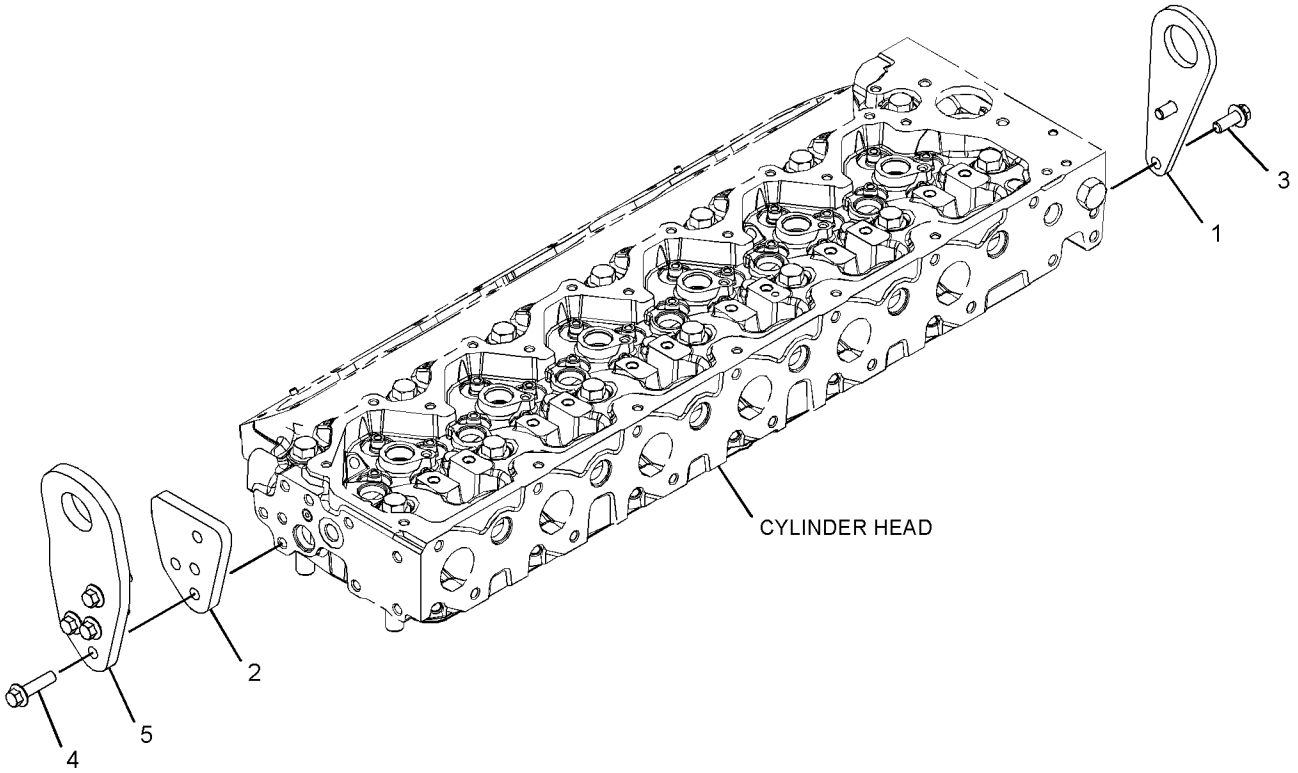

GRAPHIC #1 <END> g03456846

371-2558 MOUNTING GP-ALTERNATOR

S/N: 4501-UP

PART OF 553-3684 ENGINE AR-PRIMARY

SMCS-1405 **i05331892**

NOTE	REF NO	GRAPHIC REF	PART NUMBER	QTY	PART NAME 1 2 3 4 5 6 (PRODUCT LEVEL)	SEE PAGE
M	1	1	**111-0859**	4	BOLT (M10X1.5X35-MM)	
	2	1	**394-4451**	1	BRACKET AS	
		1	**161-9820**	2	PIN	

M - METRIC PART

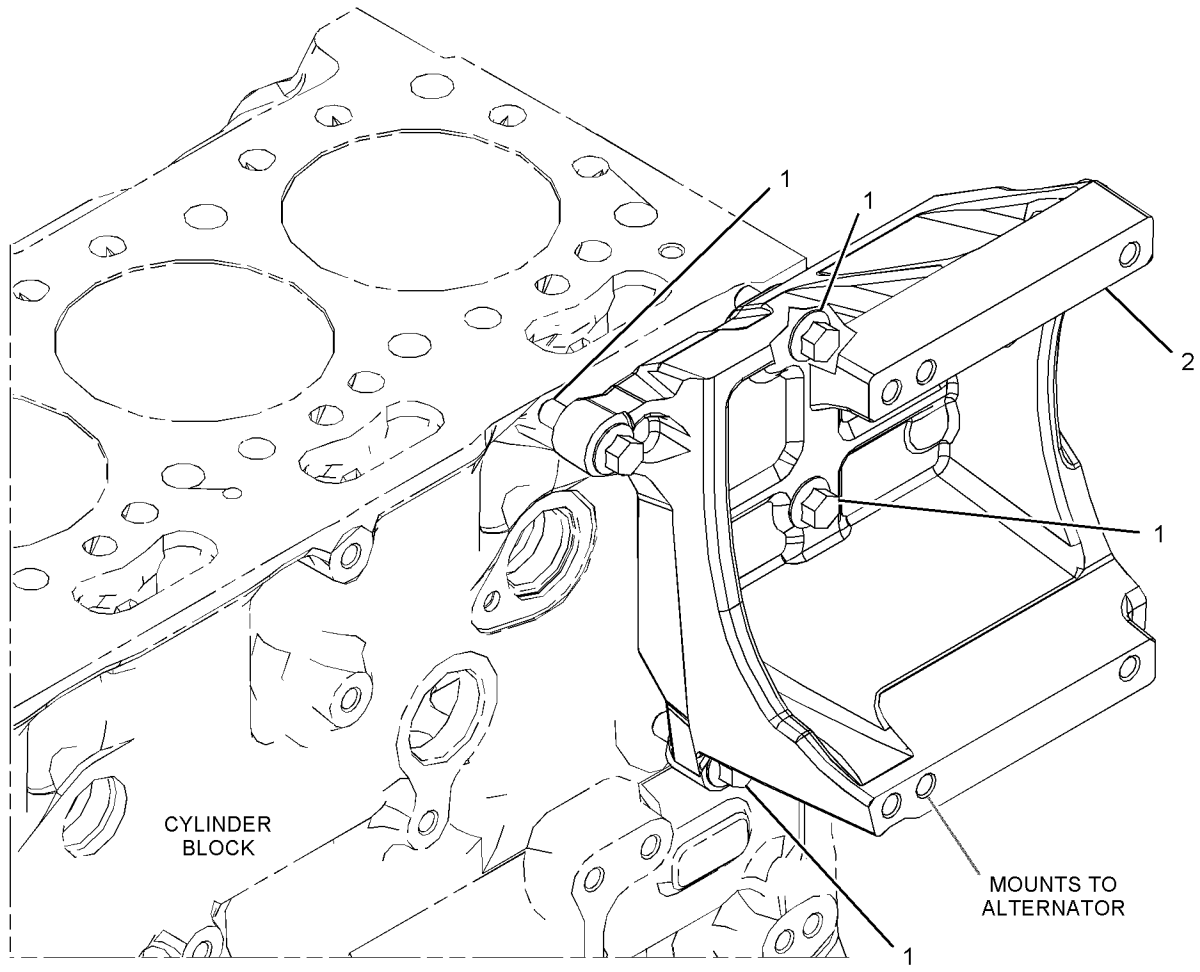

GRAPHIC #1 <END> g03378855

346-1510 MOUNTING GP-ENGINE

S/N: 4501-UP

PART OF 553-3684 ENGINE AR-PRIMARY

SMCS-1152, 1153, 1154 **i05892206**

NOTE	REF NO	GRAPHIC REF	PART NUMBER	QTY	PART NAME 1 2 3 4 5 6 (PRODUCT LEVEL)	SEE PAGE
M	1	1	**283-8301**	2	BOLT (M16X2X60-MM)	
M	2	1	**283-8302**	6	BOLT (M16X2X80-MM)	
	3	1	**277-4490**	2	BRACKET-MOUNTING	

M - METRIC PART

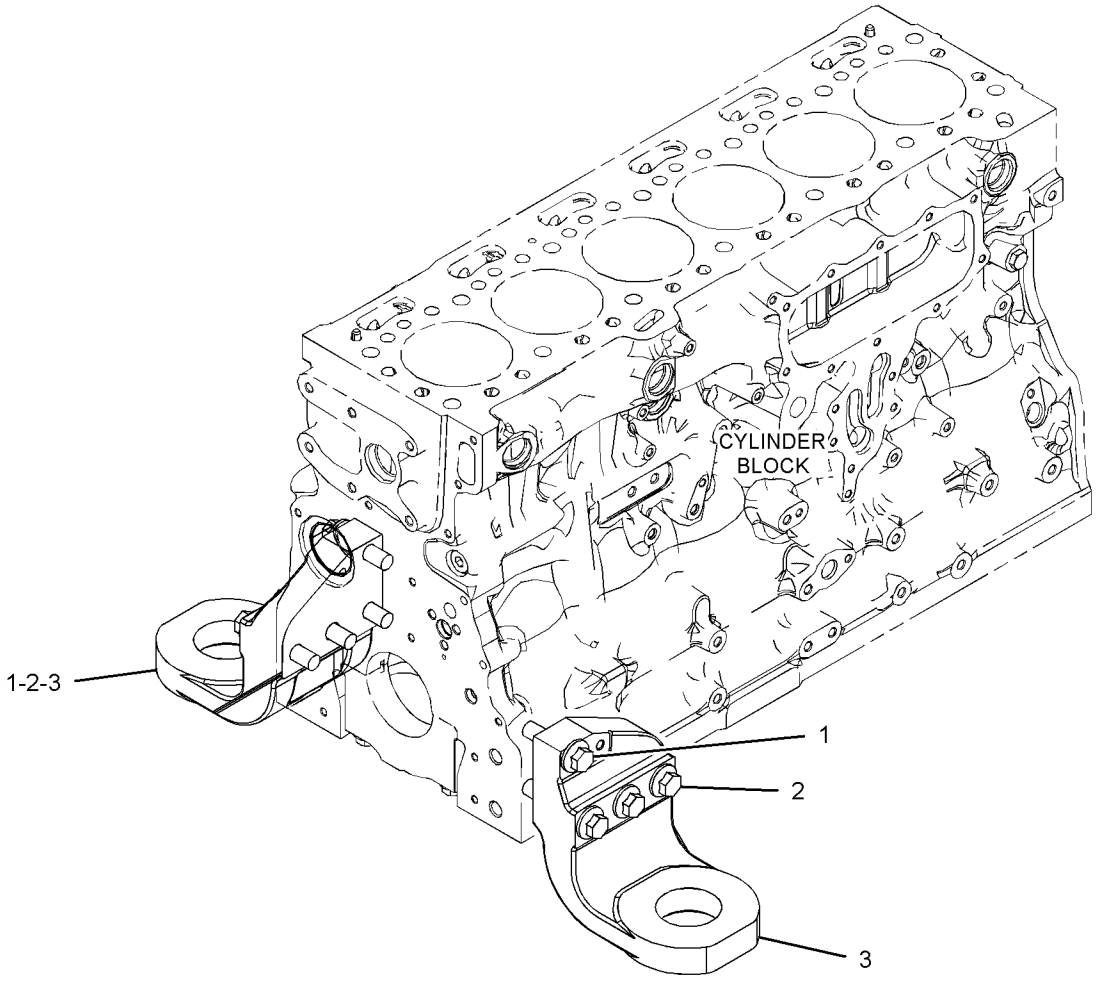

GRAPHIC #1 <END> g03507641

458-3861 MOUNTING GP-ENGINE & XMSN

S/N: H3C1-UP; K3G1-UP

PART OF 458-3872 ENGINE AR

SMCS-1152, 1154, 3082

i07030749

NOTE	REF NO	GRAPHIC REF	PART NUMBER	QTY	PART NAME 1 2 3 4 5 6 (PRODUCT LEVEL)	SEE PAGE
	1	1	**9W-9930**	4	MOUNT AS	
	2	1	**243-2147**	2	SUPPORT-ENGINE	
	3	1	**6Y-6681**	2	PLATE	
M	4	1	**7X-2554**	4	BOLT (M16X2X70-MM)	
M	5	1	**7X-2555**	4	BOLT (M16X2X80-MM)	
M	6	1	**8C-8478**	2	BOLT (M20X2.5X140-MM)	
	7	1	**8T-4123**	4	WASHER (22X35X3.5-MM THK)	
M	8	1	**8T-6381**	2	BOLT (M20X2.5X120-MM)	
	9	1	**9W-6582**	4	SLEEVE	
	10	1	**9W-6584**	4	WASHER (20.5X114X10-MM THK)	
	11	1	**9X-8257**	8	WASHER (17.5X30X3.5-MM THK)	

M - METRIC PART

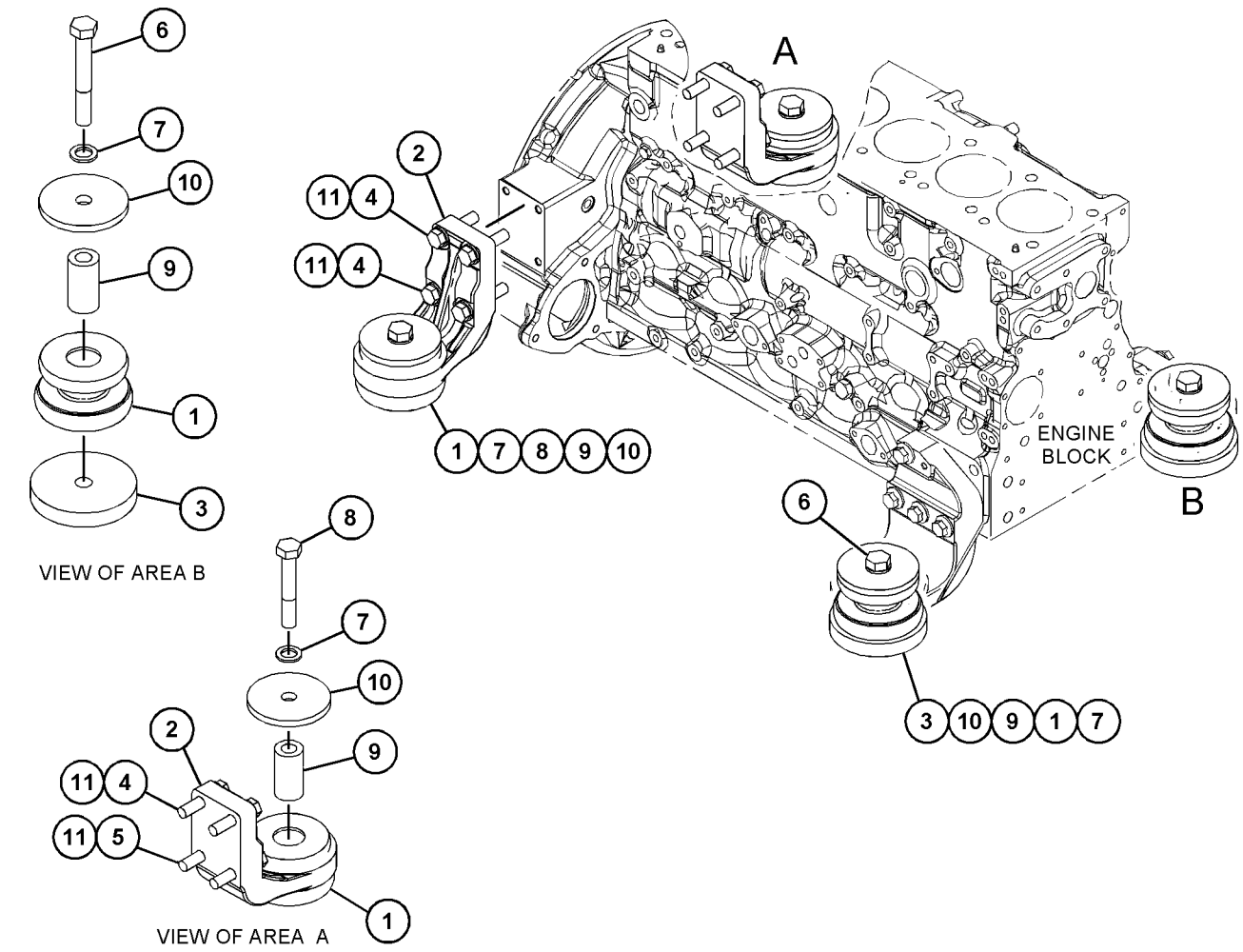

GRAPHIC #1

<END>

g06200993

371-2544 PAN GP-OIL

S/N: 4501-UP

PART OF 553-3684 ENGINE AR-PRIMARY

SMCS-1302 **i05331983**

NOTE	REF NO	GRAPHIC REF	PART NUMBER	QTY	PART NAME 1 2 3 4 5 6 (PRODUCT LEVEL)	SEE PAGE
	1	1	**230-8094**	1	BRIDGE	
M	2	1	**6I-0217**	29	BOLT (M8X1.25X20-MM)	
M	3	1	**6I-0260**	2	BOLT (M8X1.25X25-MM)	
M	4	1	**6I-0363**	2	BOLT (M6X1X20-MM)	
M	5	1	**6I-0572**	2	BOLT (M8X1.25X20-MM)	
	6	1	**351-4749**	1	GASKET-OIL PAN	
Y	7	1	**377-4718**	1	PAN GP-OIL	35
M	8	1	**6I-0654**	1	BOLT (M10X1.5X25-MM)	
	9	1	**275-9897**	1	BRACKET	
	10	1	**280-1384**	1	TUBE AS-OIL SUCTION	
	10A	1	**236-5511**	1	CLIP-PIPE	
	11	1	**6I-4681**	1	GASKET	

M - METRIC PART
Y - SEPARATE ILLUSTRATION

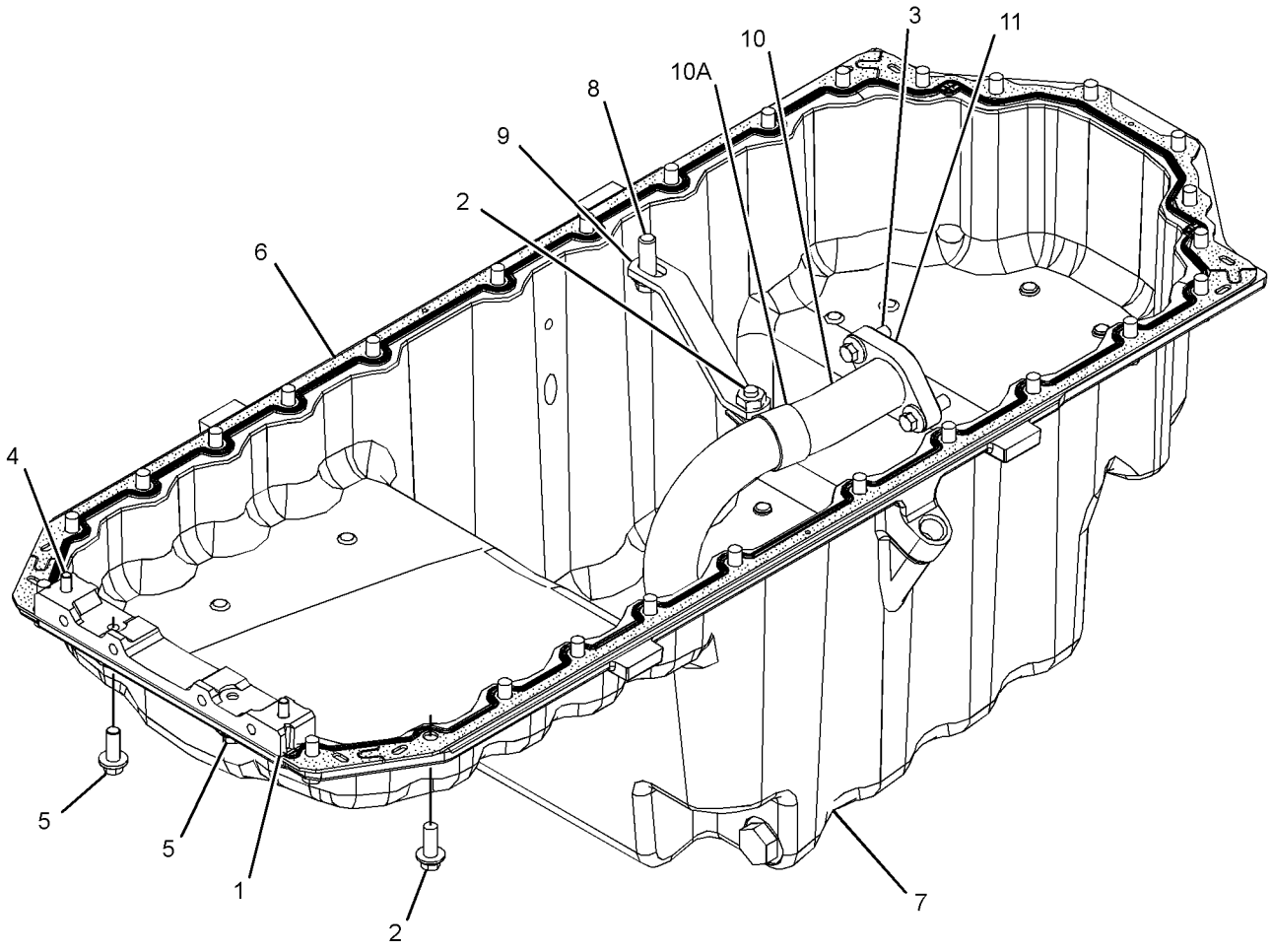

GRAPHIC #1 <END> g03110796

377-4718 PAN GP-OIL

S/N: 4501-UP

PART OF 371-2544 PAN GP-OIL

SMCS-1302 **i05596643**

NOTE	REF NO	GRAPHIC REF	PART NUMBER	QTY	PART NAME 1 2 3 4 5 6 (PRODUCT LEVEL)	SEE PAGE
	1	1	**8L-2786**	2	SEAL-O-RING	
	2	1	**9S-4185**	2	PLUG (3/4-16-THD)	

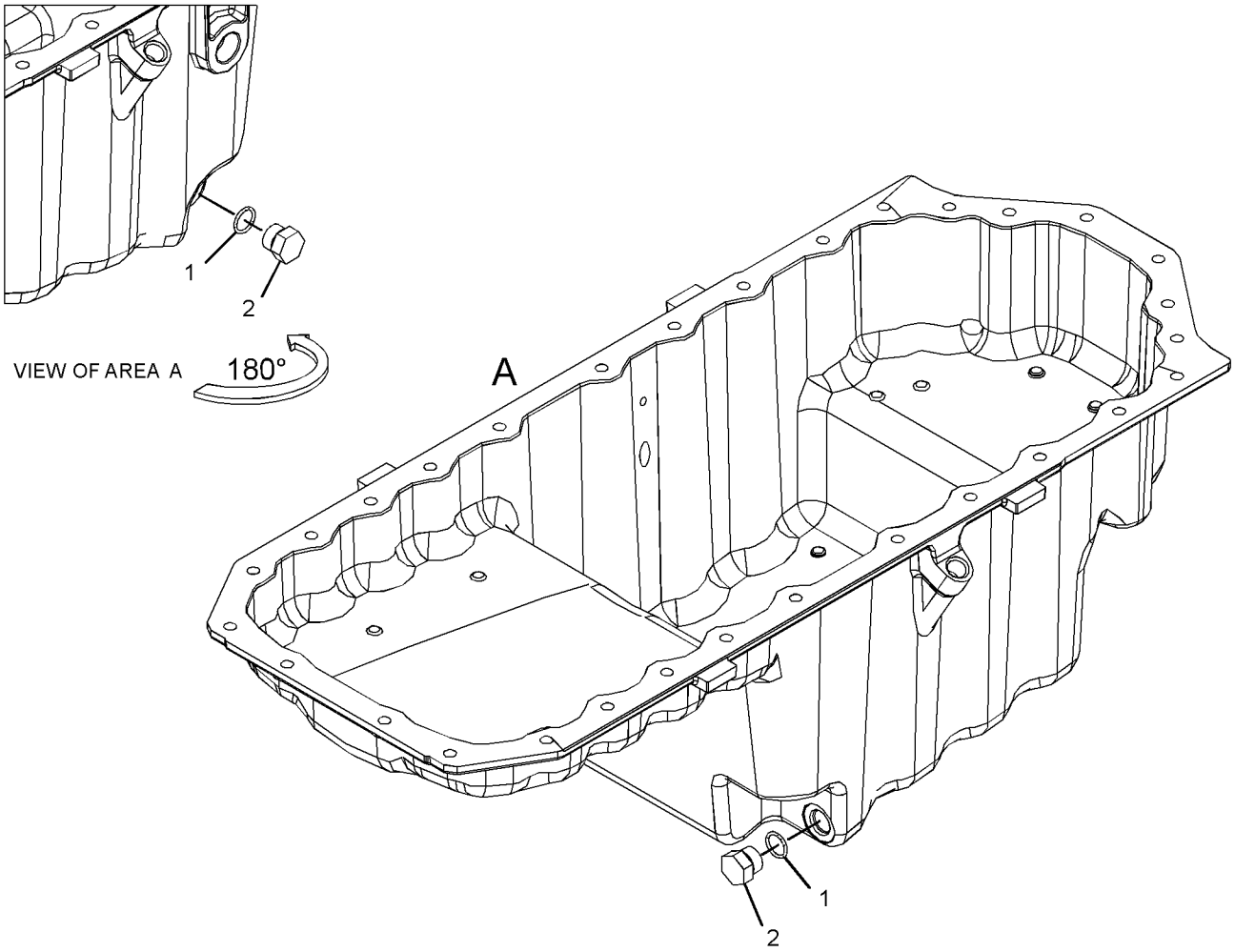

GRAPHIC #1 <END> g03371776

369-7304 PISTON & ROD GP

S/N: H3C1-UP; K3G1-UP

PART OF 451-1222 CYLINDER BLOCK GP-SHORT

SMCS-1225 **i08018679**

NOTE	REF NO	GRAPHIC REF	PART NUMBER	QTY	PART NAME 1 2 3 4 5 6 (PRODUCT LEVEL)	SEE PAGE
Y	1	1	**331-0290**	6	CONNECTING ROD GP (GRADE G)	9
CHNY	2	1	*504-2903*	6	PISTON GP	40
J	3	1	*317-5482*	6	BEARING	
J	4	1	*470-8038*	6	BEARING	
N	5	1	**124-3536**	12	RING-RETAINING	
					AVAILABLE REPAIR KIT(S):	
BJ			**436-7781**	1	KIT-BEARING (STANDARD)	
					(INCLUDES BEARINGS)	
AB			**480-4489**		KIT-BEARING (0.254-MM US)	
					(INCLUDES BEARINGS)	
AB			**480-4490**		KIT-BEARING (0.51-MM US)	
					(INCLUDES BEARINGS)	
AB			**480-4491**		KIT-BEARING (0.762-MM US)	
					(INCLUDES BEARINGS)	
BH			**276-7476**	1	KIT-PISTON RING (STANDARD)	
					(INCLUDES RINGS)	
AB			**380-2065**		KIT-PISTON RING (0.5-MM OS)	
					(INCLUDES RINGS)	
AB			**466-4849**		KIT-PISTON RING (1-MM OS)	
					(INCLUDES RINGS)	
BHN			**443-9475**	1	KIT-PISTON (STANDARD)	
					(INCLUDES PISTON, PIN & RINGS)	
AB			**443-9898**		KIT-PISTON (0.5-MM OS)	
					(INCLUDES PISTON, PIN & RINGS)	
AB			**443-9919**		KIT-PISTON (1-MM OS)	
					(INCLUDES PISTON, PIN & RINGS)	

A - NOT PART OF THIS GROUP
B - USE AS REQUIRED
C - CHANGE FROM PREVIOUS TYPE
H - KIT MARKED H SERVICES PART(S) MARKED H
J - KIT MARKED J SERVICES PART(S) MARKED J
N - KIT MARKED N SERVICES PART(S) MARKED N
Y - SEPARATE ILLUSTRATION

369-7304 **PISTON & ROD GP (**contd.**)** **i08018679**

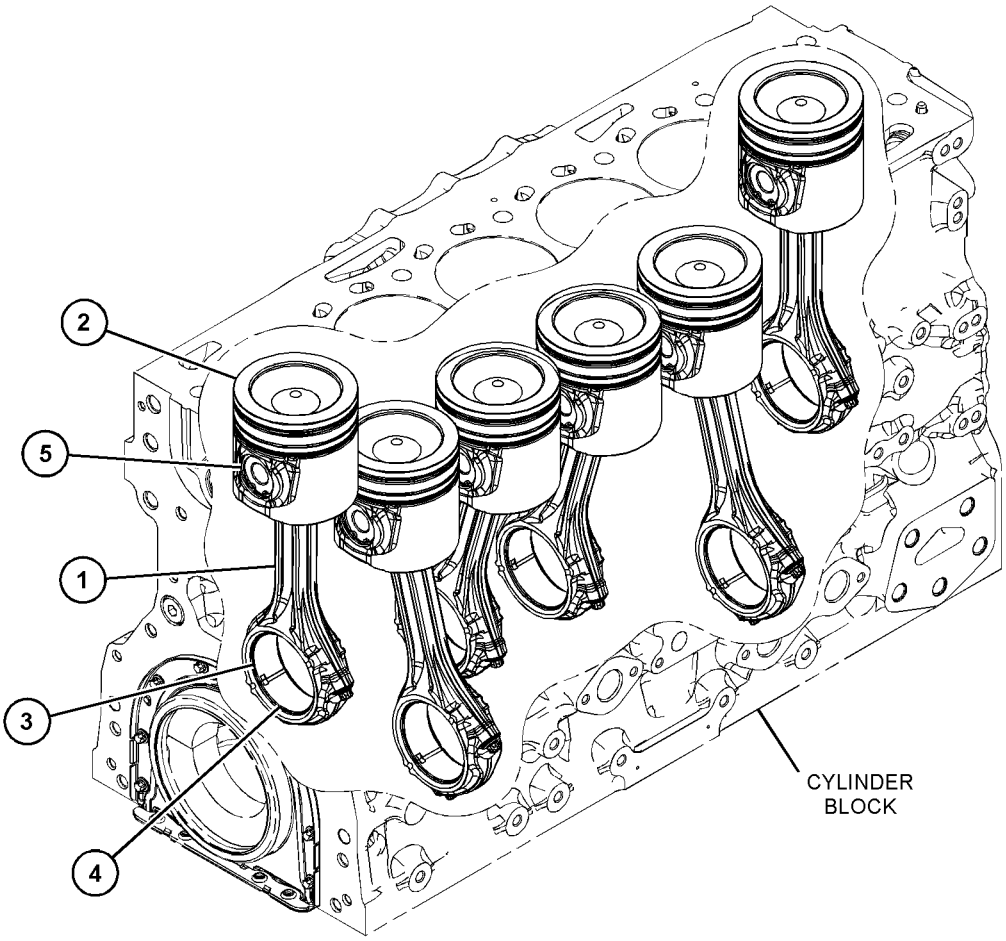

GRAPHIC #1 <END> g06540334

486-3208 PISTON & ROD GP

S/N: 4501-UP

PART OF 553-3684 ENGINE AR-PRIMARY

SMCS-1225 **i06945068**

NOTE	REF NO	GRAPHIC REF	PART NUMBER	QTY	PART NAME 1 2 3 4 5 6 (PRODUCT LEVEL)	SEE PAGE
L	1	1	**124-3536**	12	RING-RETAINING	
J	2	1	*317-5482*	6	BEARING	
	3	1	**331-0290**	6	CONNECTING ROD GP (GRADE G)	
					(EACH INCLUDES)	
	3A	1	**276-7478**	1	BUSHING	
M	3B	1	**323-9312**	2	BOLT (M10X1X50-MM)	
L	4	1	*473-1373*	6	PISTON GP	
AB		1	**391-3732**		PISTON GP (0.5-MM OS)	
AB		1	**391-3735**		PISTON GP (1-MM OS)	
CT	5	1	*470-8038*	6	BEARING	
					PARTS SHOWN IN GRAPHIC(S) WITHOUT A REFERENCE NUMBER ARE NOT SERVICED SEPARATELY	
					AVAILABLE REPAIR KIT(S):	
J			**360-1564**	1	KIT-BEARING (STANDARD)	
					(INCLUDES BEARINGS)	
AB			**458-7918**		KIT-BEARING (0.25-MM US)	
					(INCLUDES BEARINGS)	
AB			**458-7939**		KIT-BEARING (0.50-MM US)	
					(INCLUDES BEARINGS)	
AB			**458-7940**		KIT-BEARING (0.75-MM US)	
					(INCLUDES BEARINGS)	
T			**436-7781**	1	KIT-BEARING (STANDARD)	
					(INCLUDES BEARINGS)	
AB			**480-4489**		KIT-BEARING (0.254-MM US)	
					(INCLUDES BEARINGS)	
AB			**480-4490**		KIT-BEARING (0.51-MM US)	
					(INCLUDES BEARINGS)	
AB			**480-4491**		KIT-BEARING (0.762-MM US)	
					(INCLUDES BEARINGS)	
L			**443-9543**	1	KIT-RING (STANDARD)	
					(INCLUDES PISTON RINGS)	
AB			**380-2065**		KIT-PISTON RING (0.5-MM OS)	
					(INCLUDES PISTON RINGS)	
AB			**466-4849**		KIT-PISTON RING (1-MM OS)	
					(INCLUDES PISTON RINGS)	
L			**444-2190**	1	KIT-PISTON	
					(INCLUDES PISTON RINGS, RETAINING RINGS, PISTON & PIN)	

A - NOT PART OF THIS GROUP
B - USE AS REQUIRED
C - CHANGE FROM PREVIOUS TYPE
J - KIT MARKED J SERVICES PART(S) MARKED J
L - KIT MARKED L SERVICES PART(S) MARKED L
M - METRIC PART
T - KIT MARKED T SERVICES PART(S) MARKED T

486-3208 **PISTON & ROD GP (**contd.**)** **i06945068**

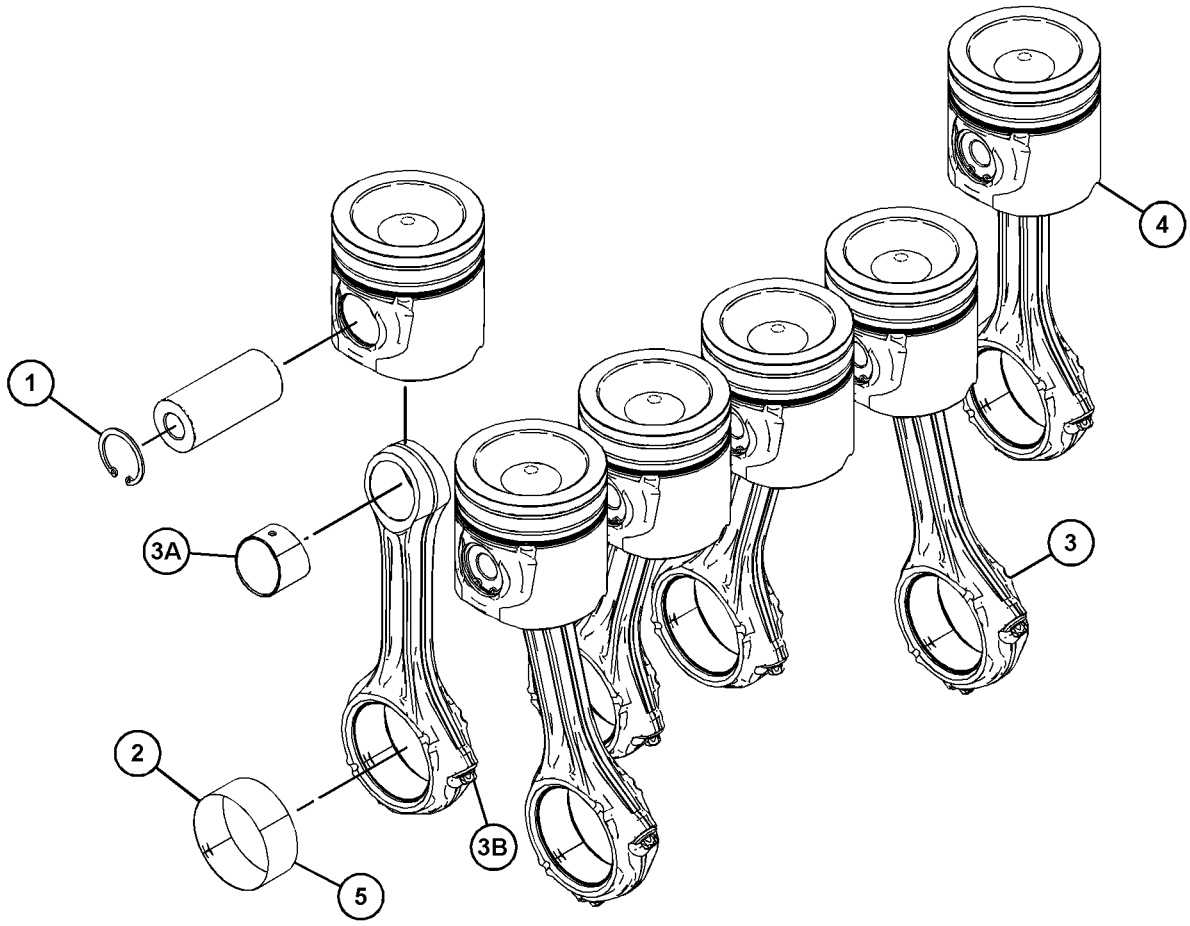

GRAPHIC #1 <END> g06160700

504-2903 PISTON GP

S/N: H3C1-UP; K3G1-UP

PART OF 369-7304 PISTON & ROD GP

SMCS-1214 **i07157641**

NOTE	REF NO	GRAPHIC REF	PART NUMBER	QTY	PART NAME 1 2 3 4 5 6 (PRODUCT LEVEL)	SEE PAGE
PQT	1	1	**317-6214**	1	PIN	
P	2	1	*369-3188*	1	PISTON	
JP	3	1	*454-9560*	1	RING-PISTON	
JP	4	1	*454-9569*	1	RING-PISTON	
JP	5	1	*454-9573*	1	RING-OIL	
					AVAILABLE REPAIR KIT(S):	
J			**276-7476**	1	KIT-PISTON RING (STANDARD)	
					(INCLUDES RINGS)	
AB			**380-2065**		KIT-PISTON RING (0.5-MM OS)	
					(INCLUDES RINGS)	
AB			**466-4849**		KIT-PISTON RING (1-MM OS)	
					(INCLUDES RINGS)	
P			**443-9475**	1	KIT-PISTON (STANDARD)	
					(INCLUDES PIN, PISTON RINGS, RETAINING RINGS & PISTON)	
ABQ			**443-9898**		KIT-PISTON (0.5-MM OS)	
					(INCLUDES PIN, PISTON RINGS, RETAINING RINGS & PISTON)	
ABT			**443-9919**		KIT-PISTON (1-MM OS)	
					(INCLUDES PIN, PISTON RINGS, RETAINING RINGS & PISTON)	

A - NOT PART OF THIS GROUP
B - USE AS REQUIRED
J - KIT MARKED J SERVICES PART(S) MARKED J
P - KIT MARKED P SERVICES PART(S) MARKED P
Q - KIT MARKED Q SERVICES PART(S) MARKED Q
T - KIT MARKED T SERVICES PART(S) MARKED T

504-2903 **PISTON GP (**contd.**)** **i07157641**

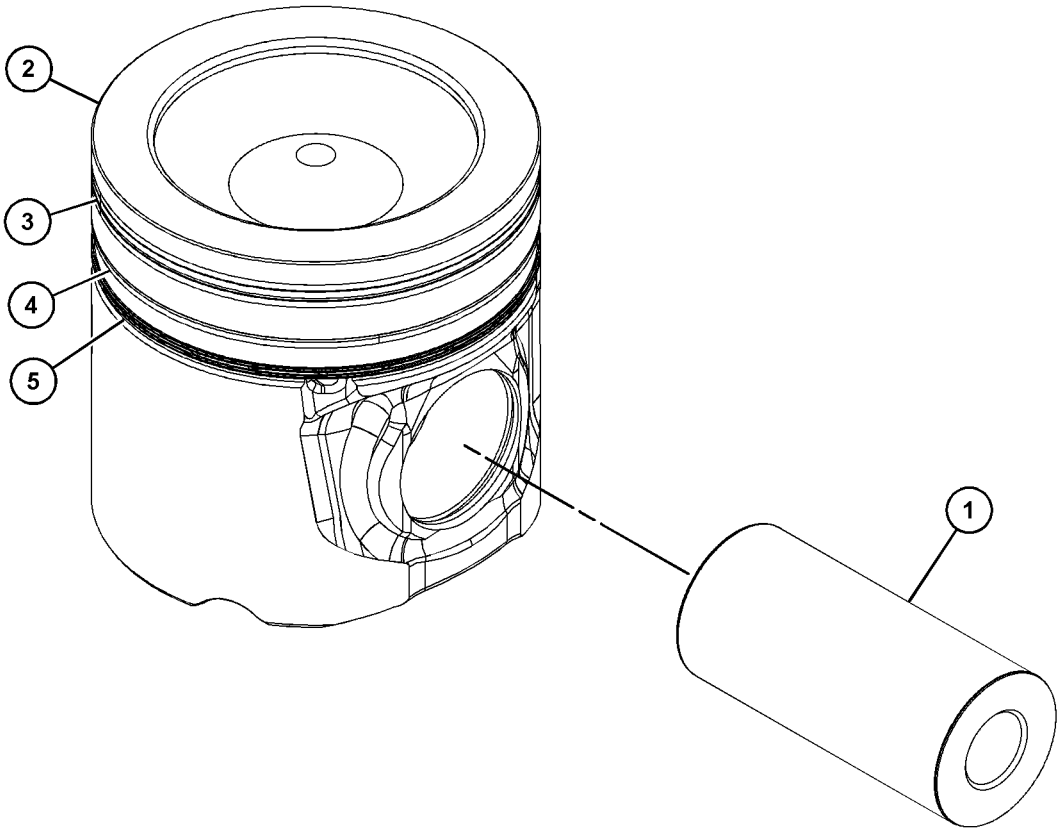

GRAPHIC #1 <END> g06238431

374-9295 PLUG GP-CYLINDER BLOCK

S/N: 4501-UP

PART OF 553-3684 ENGINE AR-PRIMARY

SMCS-1201 **i05498259**

NOTE	REF NO	GRAPHIC REF	PART NUMBER	QTY	PART NAME 1 2 3 4 5 6 (PRODUCT LEVEL)	SEE PAGE
	1	1	**277-4223**	1	PLUG	

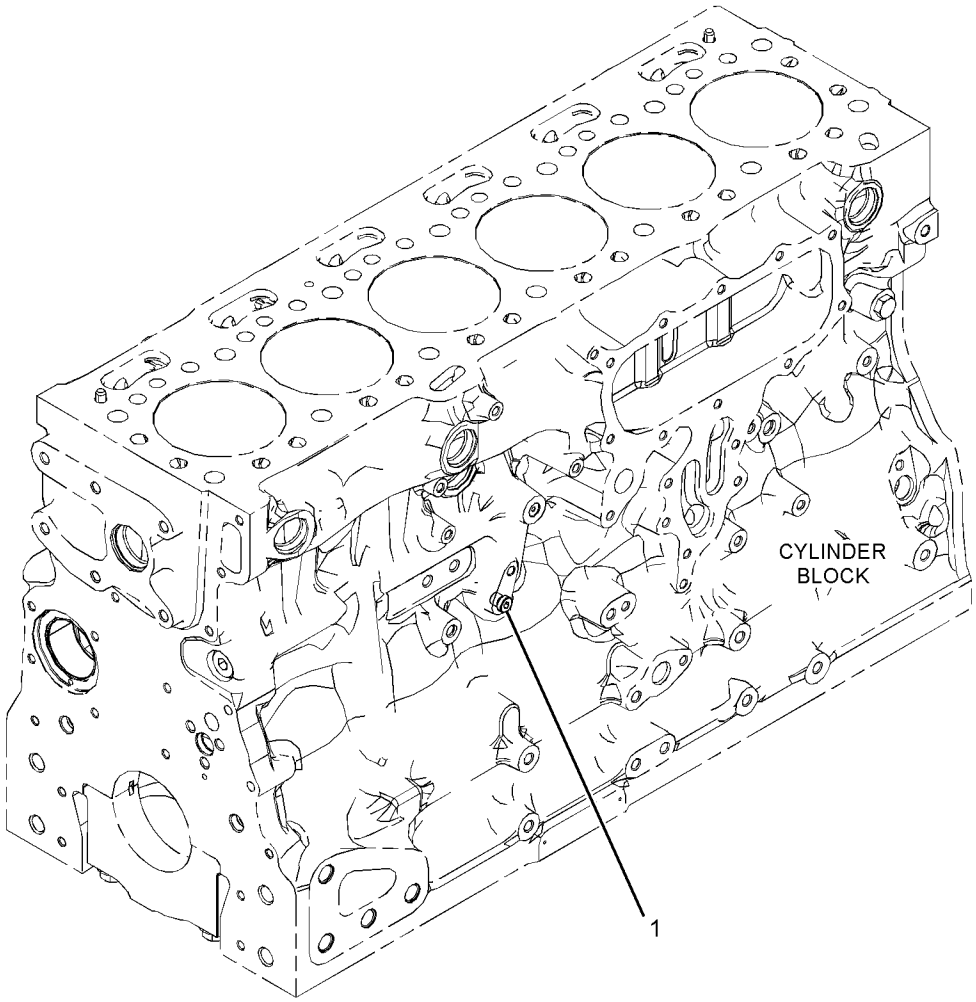

GRAPHIC #1 <END> g03483538

371-2554 PULLEY GP-CRANKSHAFT

S/N: 4501-UP

PART OF 553-3684 ENGINE AR-PRIMARY

SMCS-1205 **i05332376**

NOTE	REF NO	GRAPHIC REF	PART NUMBER	QTY	PART NAME 1 2 3 4 5 6 (PRODUCT LEVEL)	SEE PAGE
	1	1	**274-1931**	1	PULLEY (8-GROOVE)	
	2	1	**342-6502**	1	ADAPTER	
M	3	1	**342-6510**	3	BOLT-TORX (M14X1.5X70-MM)	
	4	1	**351-1724**	1	DAMPER	

M - METRIC PART

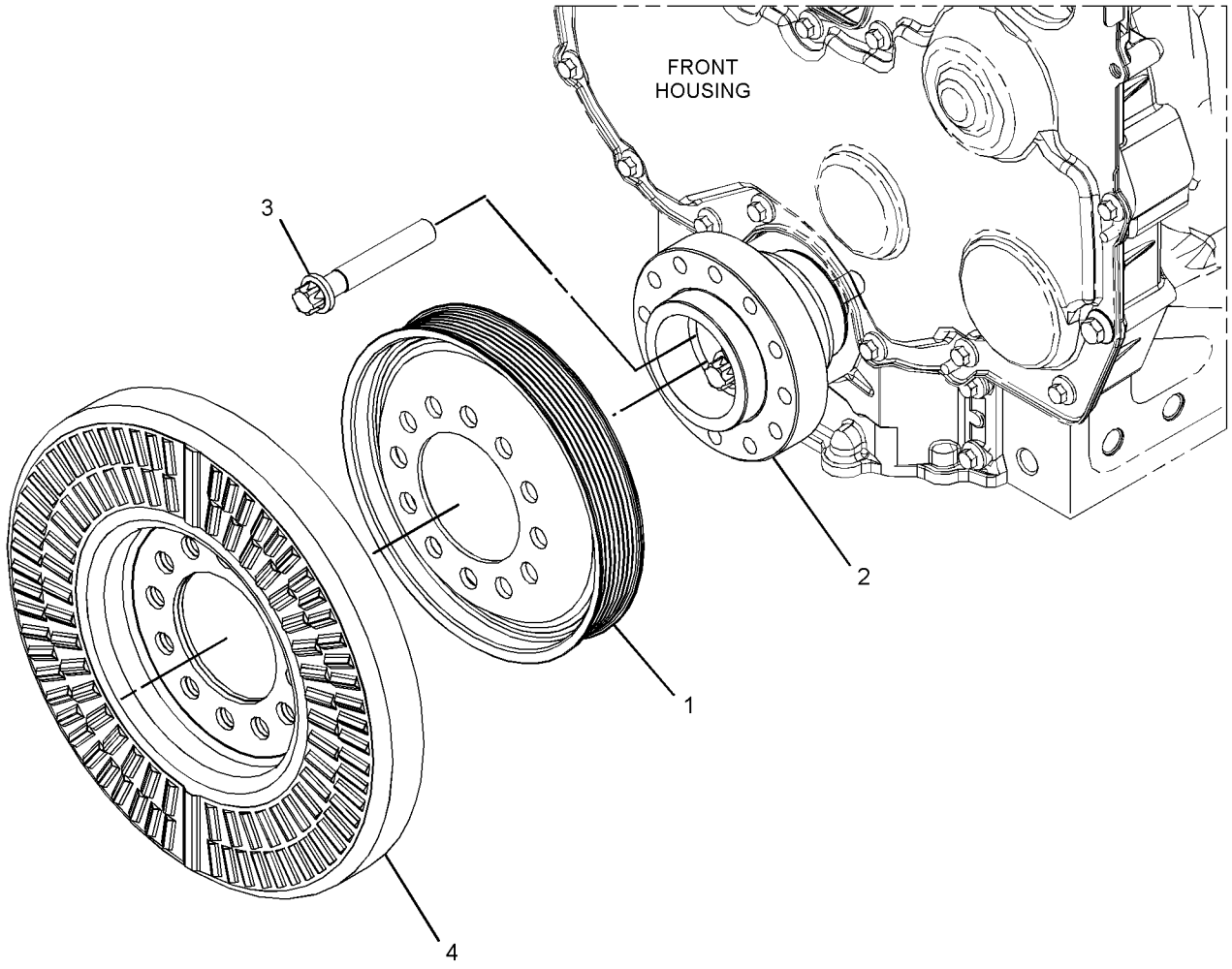

GRAPHIC #1 <END> g03110077

280-1911 ROCKER ARM GP

S/N: 4501-UP

PART OF 371-2480 ROCKER ARM GP

SMCS-1123 **i02752423**

NOTE	REF NO	GRAPHIC REF	PART NUMBER	QTY	PART NAME 1 2 3 4 5 6 (PRODUCT LEVEL)	SEE PAGE
	1	1	**276-9201**	1	CLIP	
	2	1	**276-9206**	5	SPRING-SHAFT	
	3	1	**276-9207**	1	SPRING-SHAFT	
	4	1	**277-5307**	1	SHAFT AS-ROCKER ARM	
	4A	1	**276-9200**	1	PLUG-SHAFT END	
	5	1	**278-5111**	6	ROCKER ARM AS	
					(EACH INCLUDES)	
	5A	1	**276-9230**	1	NUT	
	5B	1	**278-5113**	1	SCREW-ADJUSTING (TORX)	
	6	1	**278-5112**	6	ROCKER ARM AS	
					(EACH INCLUDES)	
	6A	1	**276-9230**	1	NUT	
	6B	1	**278-5113**	1	SCREW-ADJUSTING (TORX)	
	7	1	**280-1912**	6	BRACKET	
	8	1	**280-1913**	6	RETAINER	
	9	1	**280-1914**	12	BOLT (M8X1.25X55-MM)	

280-1911 **ROCKER ARM GP (**contd.**)** **i02752423**

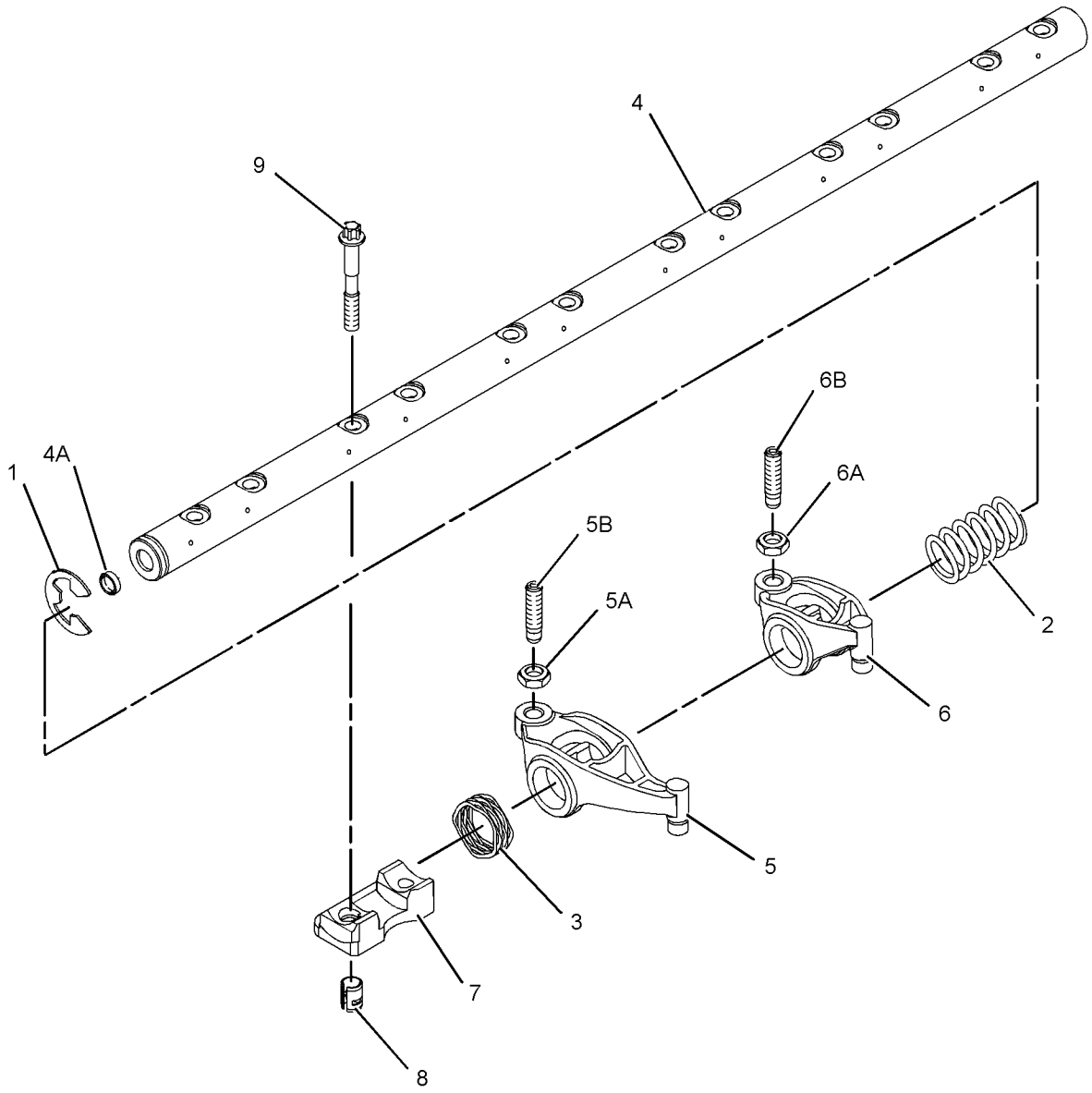

GRAPHIC #1 <END> g01235750

371-2480 ROCKER ARM GP

S/N: 4501-UP

PART OF 553-3684 ENGINE AR-PRIMARY

SMCS-1123 **i05773127**

NOTE	REF NO	GRAPHIC REF	PART NUMBER	QTY	PART NAME 1 2 3 4 5 6 (PRODUCT LEVEL)	SEE PAGE
	1	1	**436-0521**	24	SPRING-VALVE	
	2	1	**346-4709**	12	BRIDGE GP-VALVE	
	3	1	**276-8123**	48	COTTER-CAP	
	4	1	**276-8133**	24	CAP-VALVE	
Y	5	1	**280-1911**	1	ROCKER ARM GP	44
	6	1	**299-5511**	24	SEAL-VALVE STEM	
	7	1	**309-6678**	12	VALVE-INLET	
	8	1	**339-9637**	12	VALVE-EXHAUST	

Y - SEPARATE ILLUSTRATION

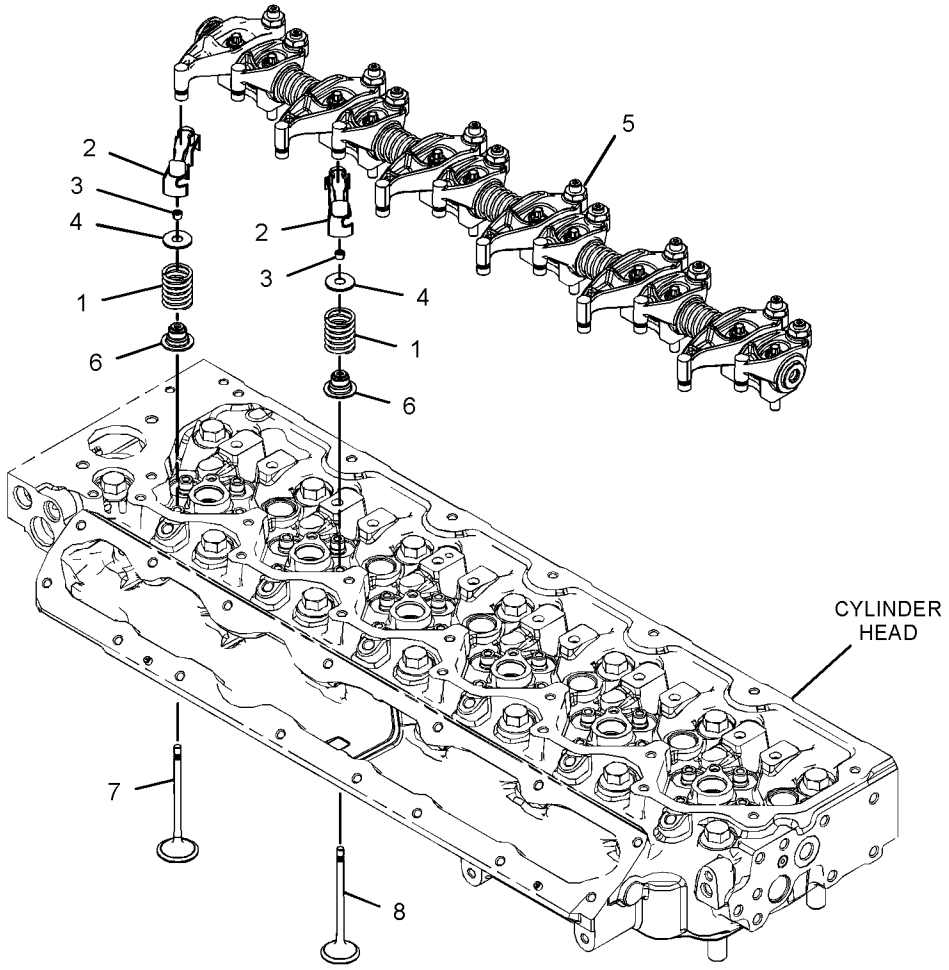

GRAPHIC #1 <END> g03103178

452-6585 ROCKER ARM GP

S/N: H3C1-UP; K3G1-UP

PART OF 452-6584 CYLINDER HEAD GP

SMCS-1123 **i06041076**

NOTE	REF NO	GRAPHIC REF	PART NUMBER	QTY	PART NAME 1 2 3 4 5 6 (PRODUCT LEVEL)	SEE PAGE
	1	1	**436-0521**	24	SPRING-VALVE	
	2	1	**276-8133**	24	CAP-VALVE	
	3	1	**276-8123**	48	COTTER-CAP	
	4	1	**299-5511**	24	SEAL-VALVE STEM	
	5	1	**309-6678**	12	VALVE-INLET	
	6	1	**339-9637**	12	VALVE-EXHAUST	

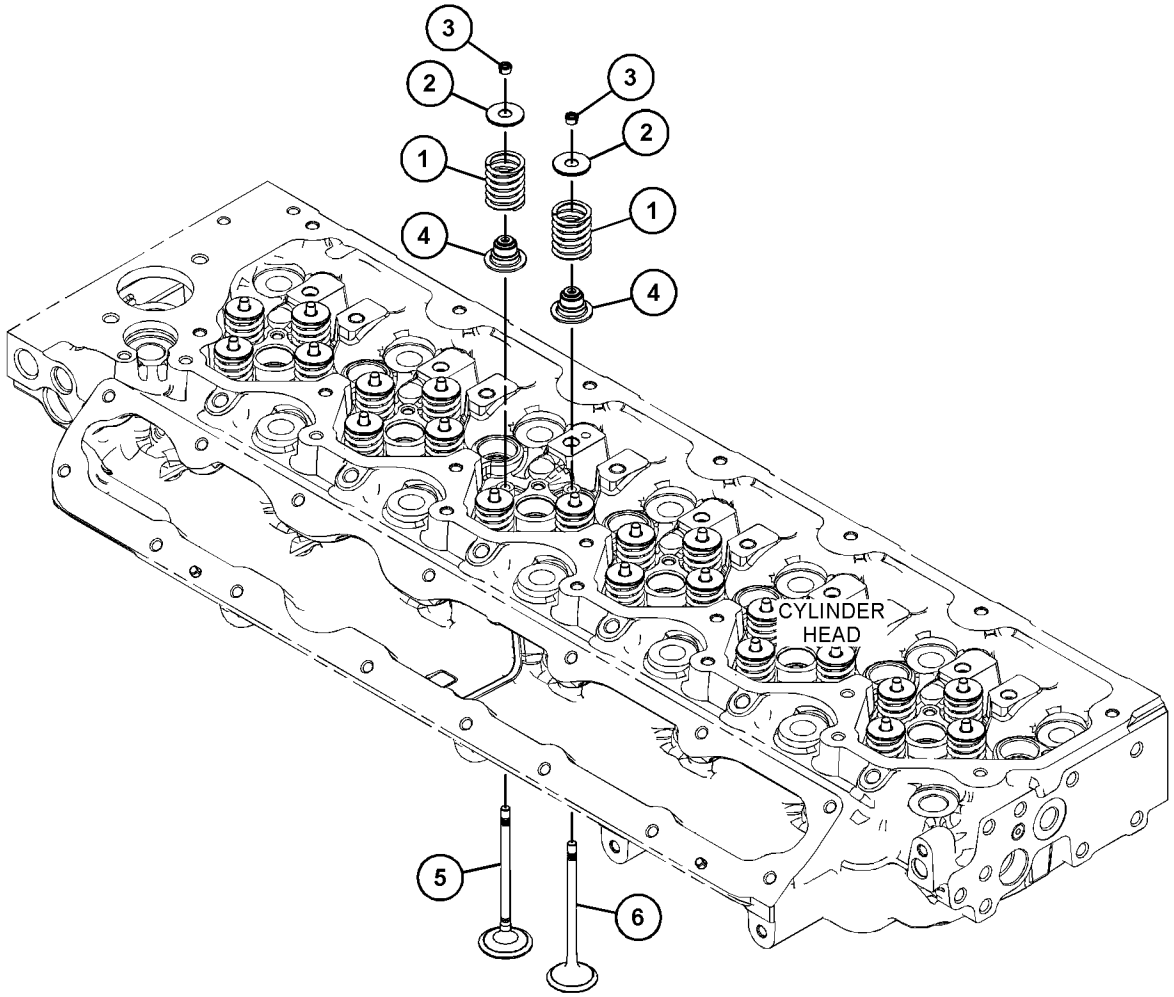

GRAPHIC #1 <END> g03674542

419-6603 FILLER GP-ENGINE OIL

S/N: 4501-UP

PART OF 553-3684 ENGINE AR-PRIMARY

SMCS-1316 **i05892200**

NOTE	REF NO	GRAPHIC REF	PART NUMBER	QTY	PART NAME 1 2 3 4 5 6 (PRODUCT LEVEL)	SEE PAGE
M	1	1	**6I-4374**	1	BOLT (M8X1.25X60-MM)	
M	2	1	**124-3815**	1	BOLT (M8X1.25X16-MM)	
	3	1	**225-6524**	1	PLUG-CUP	
	4	1	**416-9520**	1	BRACKET AS	
	5	1	*419-0384*	1	FILLER GP-ENGINE OIL	
	5A	1	**306-2337**	1	SEAL-O-RING	
	5B	1	**369-3867**	1	CAP AS-OIL FILLER	
M	6	1	**6I-0217**	2	BOLT (M8X1.25X20-MM)	
M	7	1	**6I-1090**	1	BOLT (M8X1.25X40-MM)	
	8	1	**277-1974**	1	PLATE AS	
	8A	1	**277-1975**	1	SEAL-O-RING	

M - METRIC PART

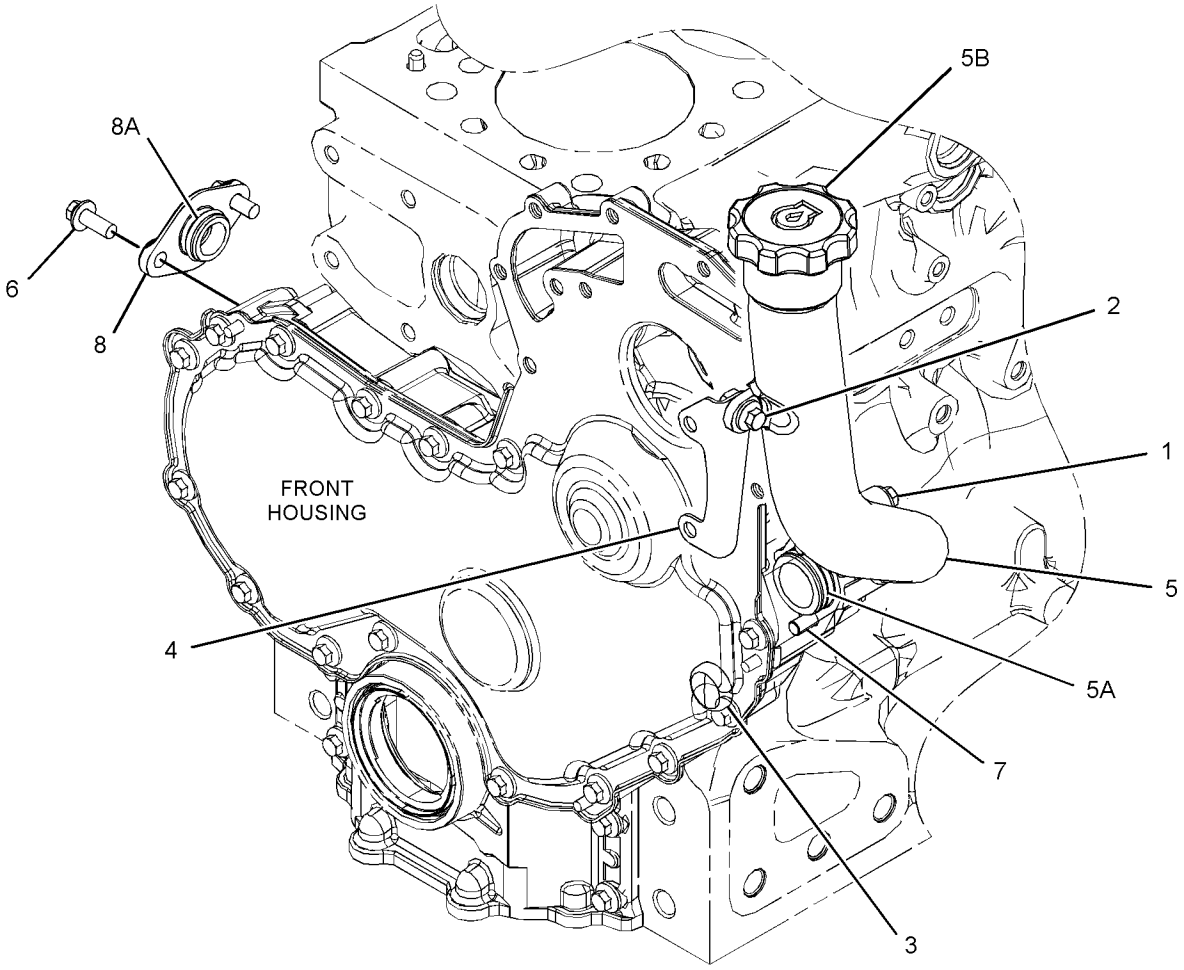

GRAPHIC #1 <END> g03556805

346-0220 FILTER GP-ENGINE OIL

S/N: 4501-UP

PART OF 553-3684 ENGINE AR-PRIMARY

SMCS-1306, 1308

i05882505

NOTE	REF NO	GRAPHIC REF	PART NUMBER	QTY	PART NAME 1 2 3 4 5 6 (PRODUCT LEVEL)	SEE PAGE
	1	1	**462-1171**	1	FILTER-ENGINE OIL	

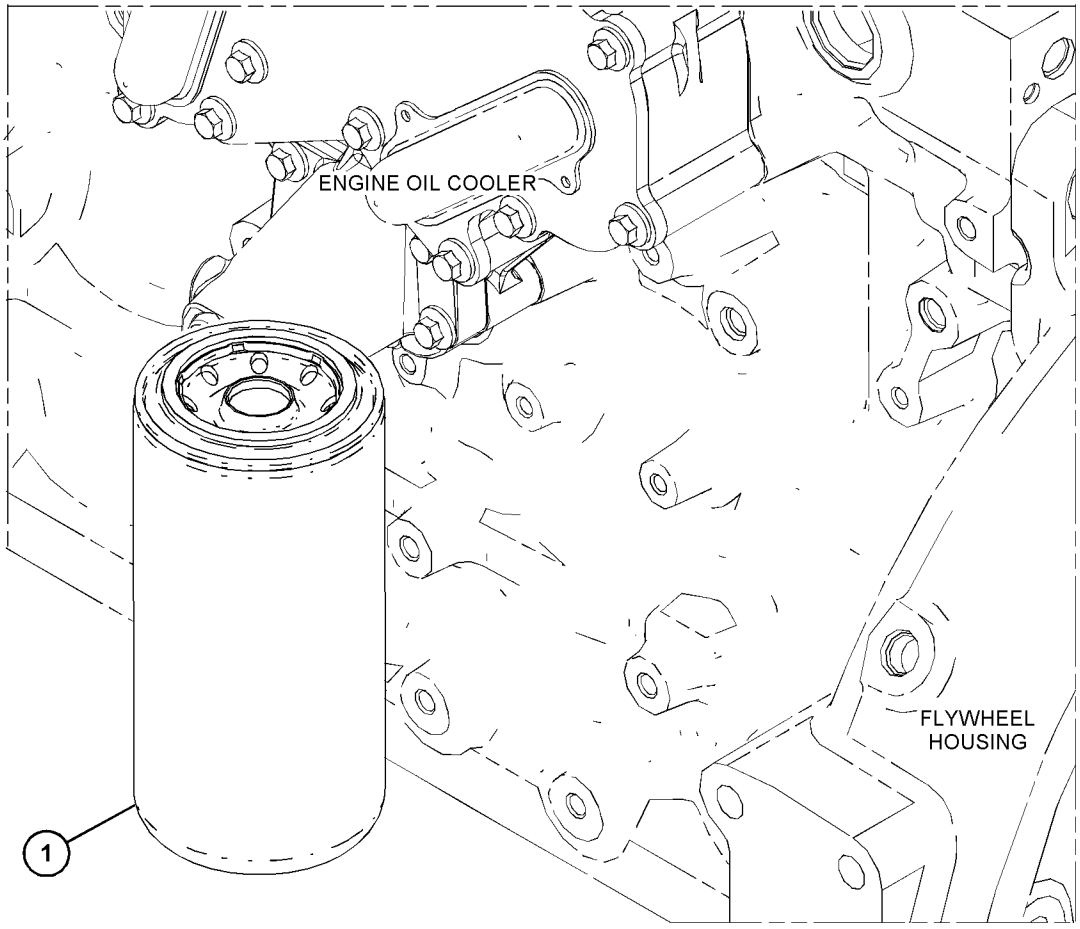

GRAPHIC #1 <END> g03710180

378-0625 GAUGE GP-OIL LEVEL (DIPSTICK)

S/N: 4501-UP

PART OF 553-3684 ENGINE AR-PRIMARY

SMCS-1326 **i07724424**

NOTE	REF NO	GRAPHIC REF	PART NUMBER	QTY	PART NAME 1 2 3 4 5 6 (PRODUCT LEVEL)	SEE PAGE
	1	1	**6I-1497**	1	SEAL	
	2	1	**6I-0289**	1	PLUG	
Y	3	1	**420-4129**	1	GAUGE GP-OIL LEVEL (DIPSTICK)	51
	4	1	**420-4143**	1	SPACER	
M	5	1	**6I-0293**	1	BOLT (M8X1.25X80-MM)	

M - METRIC PART
Y - SEPARATE ILLUSTRATION

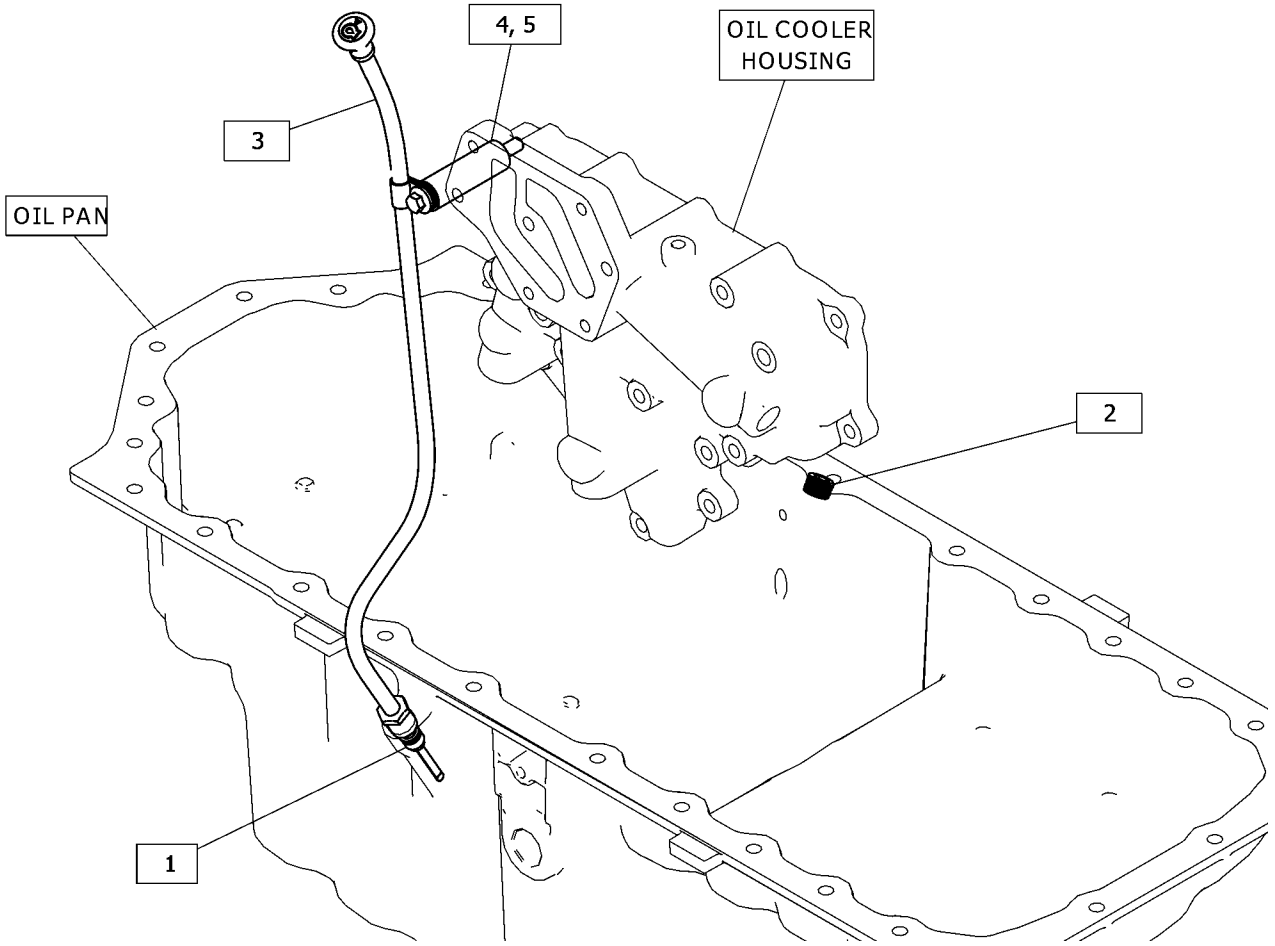

GRAPHIC #1 <END> g06404314

420-4129 GAUGE GP-OIL LEVEL (DIPSTICK)

S/N: 4501-UP

PART OF 378-0625 GAUGE GP-OIL LEVEL (DIPSTICK)

SMCS-1326 **i07724413**

NOTE	REF NO	GRAPHIC REF	PART NUMBER	QTY	PART NAME 1 2 3 4 5 6 (PRODUCT LEVEL)	SEE PAGE
	1	1	*420-4133*	1	TUBE AS-OIL GAUGE	
	1A	1	**123-2933**	1	CLIP	
	1B	1	**228-7089**	1	SEAL-O-RING	
	2	1	*420-4136*	1	GAUGE AS-OIL LEVEL (DIPSTICK)	
	2A	1	**275-9891**	2	SEAL-O-RING	

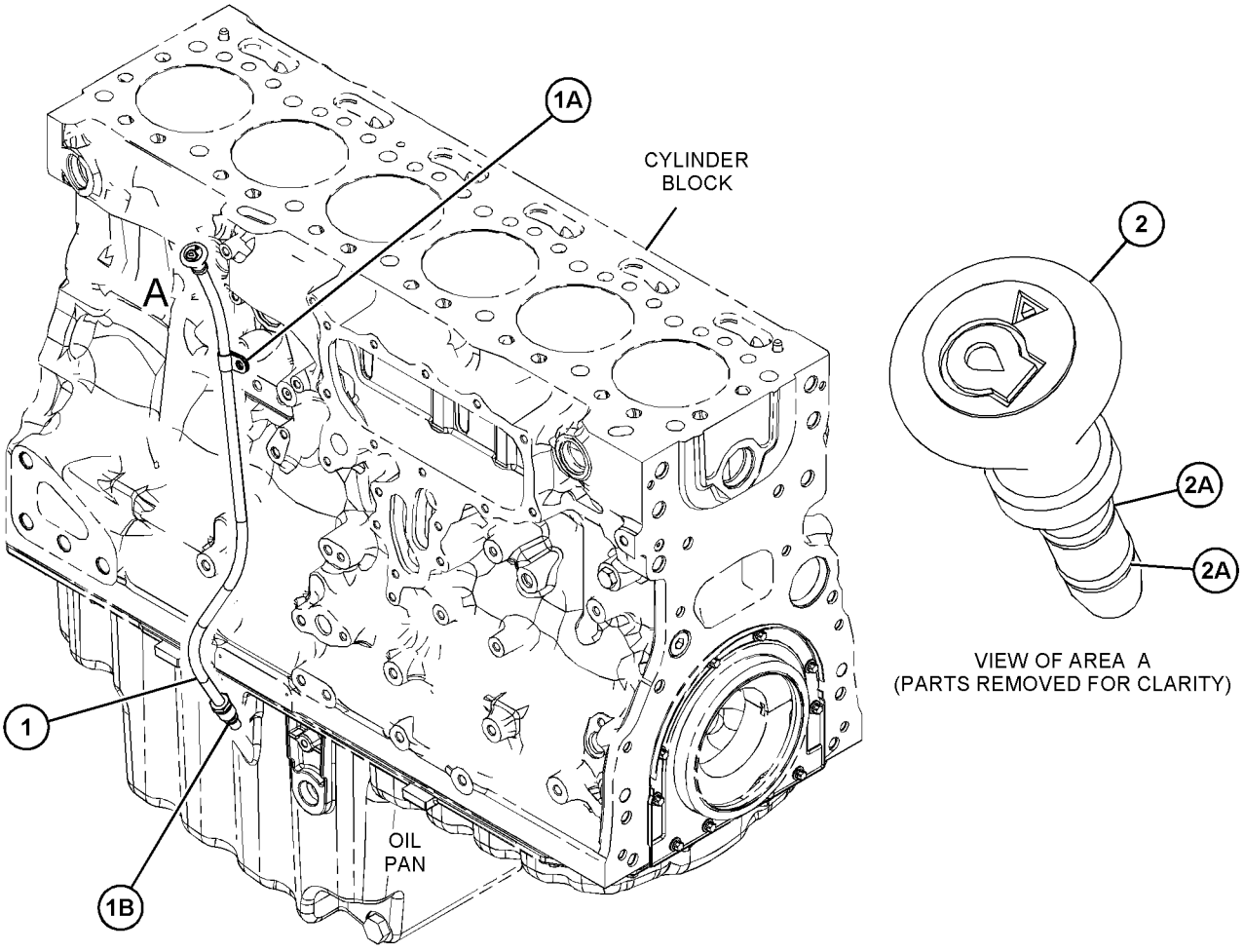

GRAPHIC #1 <END> g06465542

504-1231 LINES GP-FUMES DISPOSAL

S/N: H3C1-UP; K3G1-UP

AN ATTACHMENT

SMCS-1317, 7554 **i07638665**

NOTE	REF NO	GRAPHIC REF	PART NUMBER	QTY	PART NAME 1 2 3 4 5 6 (PRODUCT LEVEL)	SEE PAGE
E	1	1	**524-6301**		INSULATION-BULK (124-CM)	

E - ORDER BY THE CENTIMETER

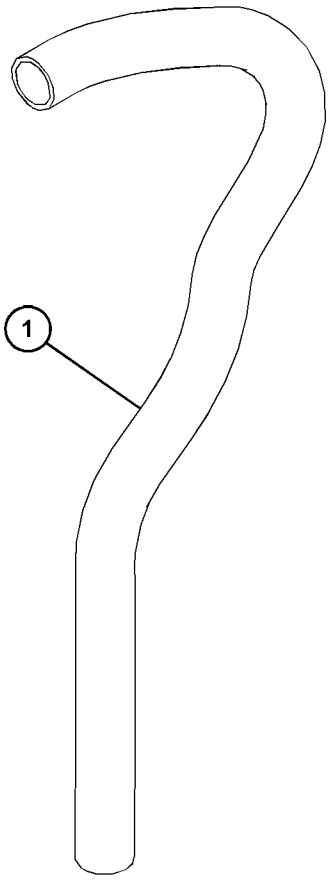

GRAPHIC #1 <END> g06211104

525-5775 LINES GP-FUMES DISPOSAL

S/N: H3C1-UP; K3G1-UP

PART OF 458-3872 ENGINE AR

SMCS-1317, 7554 **i07026190**

NOTE	REF NO	GRAPHIC REF	PART NUMBER	QTY	PART NAME 1 2 3 4 5 6 (PRODUCT LEVEL)	SEE PAGE
M	1	1	**8T-4196**	1	BOLT (M10X1.5X35-MM)	
M	2	1	**8T-4908**	1	BOLT (M8X1.25X25-MM)	
	3	1	**8T-4121**	2	WASHER-HARD (11X21X2.5-MM THK)	
	4	1	**8T-4224**	1	WASHER-HARD (8.8X16X2-MM THK)	
	5	1	**9M-7958**	1	CLAMP-HOSE	
	6	1	**091-0081**	1	SPACER (10.5X20X10-MM THK)	
	7	1	**200-6345**	1	SADDLE-MOUNTING (DUAL SWIVEL)	
	8	1	**203-3847**	1	BRACKET AS	
	9	1	**204-2281**	4	STRAP-CABLE	
	10	1	**204-8000**	2	MOUNTING-CABLE TIE	
M	11	1	**344-5675**	1	NUT (M10X1.5-THD)	
E	12	1	**397-3972**		HOSE (124-CM)	

E - ORDER BY THE CENTIMETER
M - METRIC PART

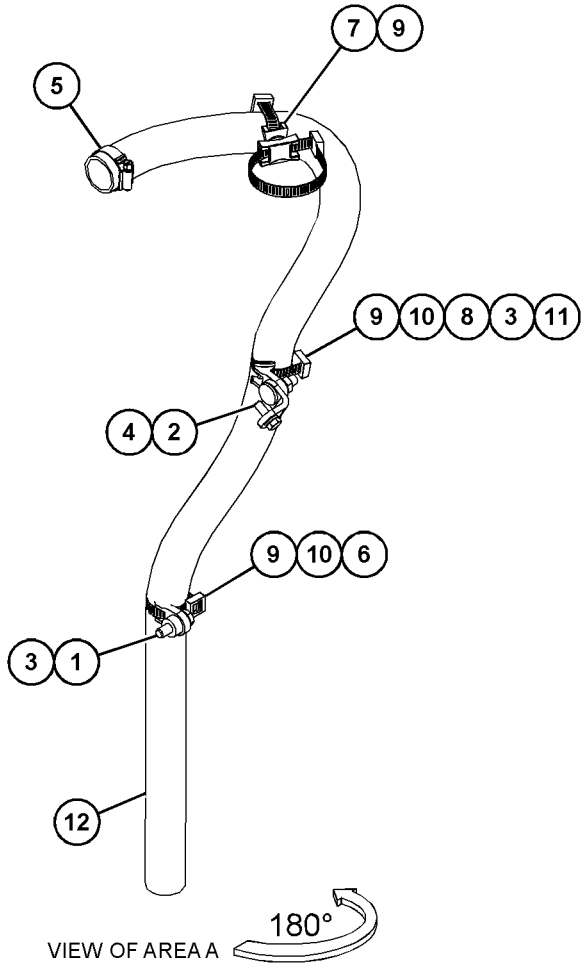

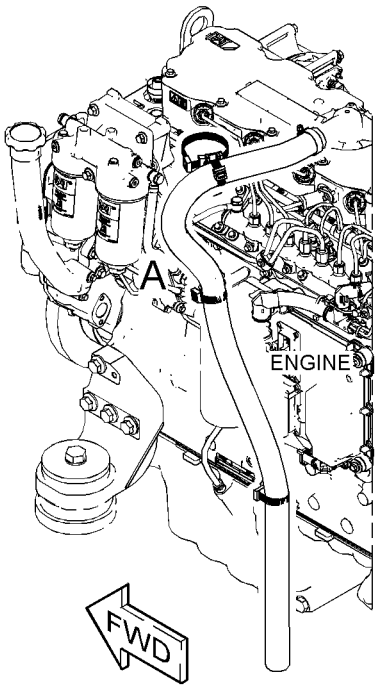

GRAPHIC #1 <END> g06188061

462-6685 PUMP GP-ENGINE OIL

S/N: 4501-UP

PART OF 553-3684 ENGINE AR-PRIMARY

SMCS-1304, 1315 **i07025307**

NOTE	REF NO	GRAPHIC REF	PART NUMBER	QTY	PART NAME 1 2 3 4 5 6 (PRODUCT LEVEL)	SEE PAGE
	1	1	**420-0454**	1	PUMP AS-OIL	
M	2	1	**6I-1090**	4	BOLT (M8X1.25X40-MM)	

M - METRIC PART

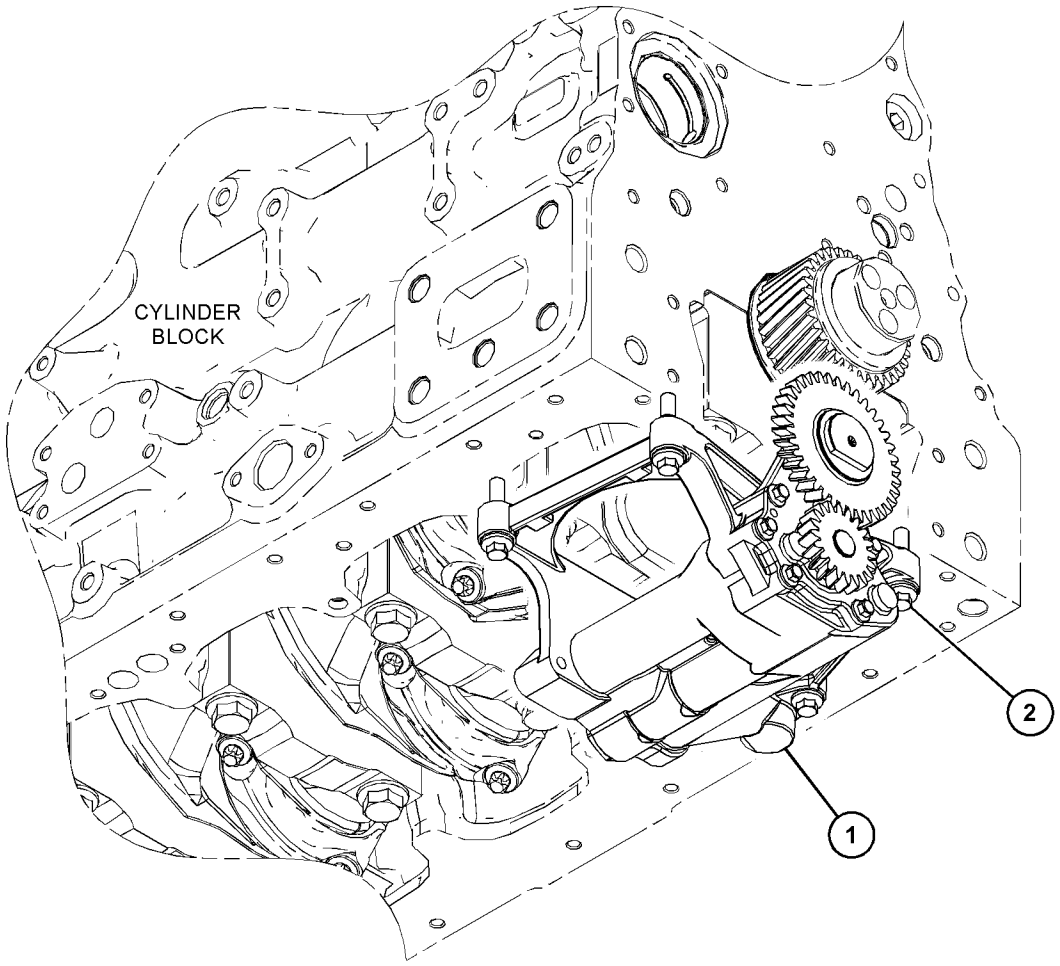

GRAPHIC #1 <END> g03797853

371-2745 VALVE GP-FLUID SAMPLING

S/N: 4501-UP

PART OF 553-3684 ENGINE AR-PRIMARY

SMCS-7542 **i05331565**

NOTE	REF NO	GRAPHIC REF	PART NUMBER	QTY	PART NAME 1 2 3 4 5 6 (PRODUCT LEVEL)	SEE PAGE
	1	1	**216-9633**	1	VALVE AS-FLUID SAMPLING	
	2	1	**8C-3445**	1	CAP-DUST	

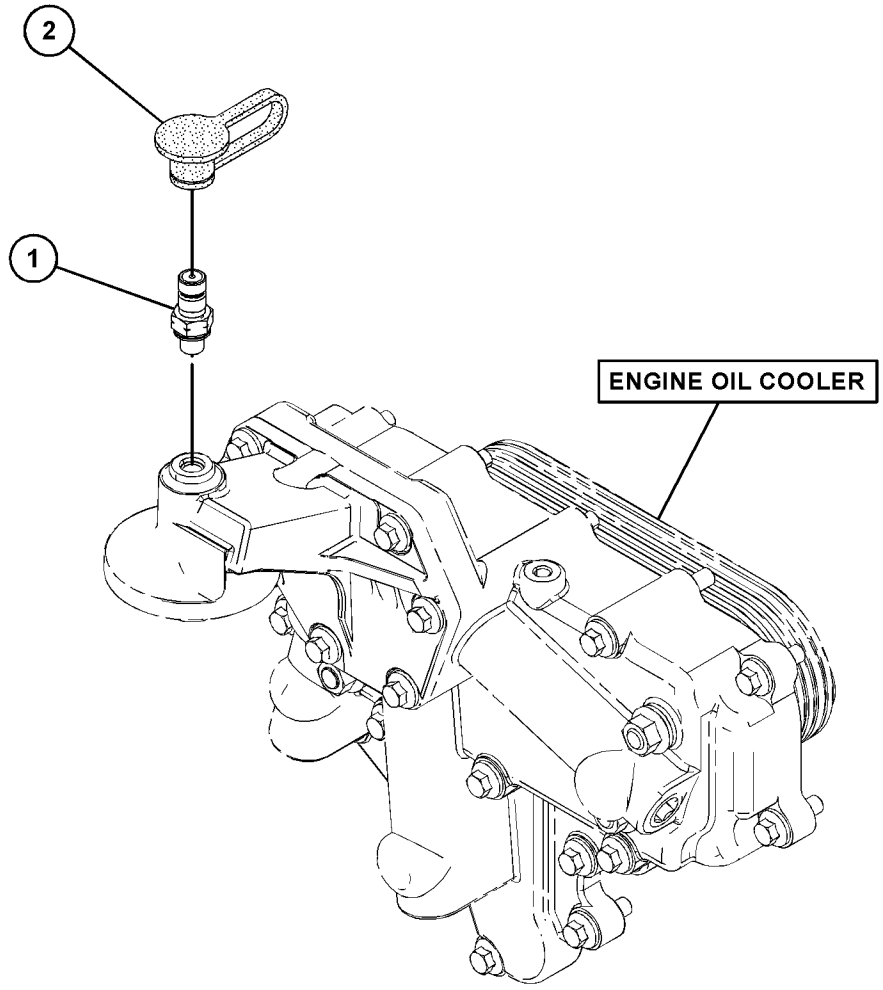

GRAPHIC #1 <END> g03178016

346-0099 BASE GP-OIL COOLER & FILTER

S/N: 4501-UP

PART OF 553-3684 ENGINE AR-PRIMARY

SMCS-1306, 1378 **i06910465**

NOTE	REF NO	GRAPHIC REF	PART NUMBER	QTY	PART NAME 1 2 3 4 5 6 (PRODUCT LEVEL)	SEE PAGE
M	1	1	**100-3751**	5	BOLT (M8X1.25X65-MM)	
	2	1	**225-7944**	1	GASKET	
	3	1	**232-3751**	1	PLATE	
	4	1	**277-2525**	1	HEAD AS-OIL FILTER	
	5	1	**277-2526**	1	GASKET-FILTER (ENGINE OIL)	
	6	1	**277-2537**	1	PLATE	
Y	8	1	**295-8610**	1	COOLER GP-ENGINE OIL	59
M	9	1	**6I-0217**	6	BOLT (M8X1.25X20-MM)	
M	10	1	**6I-0260**	8	BOLT (M8X1.25X25-MM)	
M	11	1	**6I-4709**	3	BOLT (M8X1.25X100-MM)	

M - METRIC PART
Y - SEPARATE ILLUSTRATION

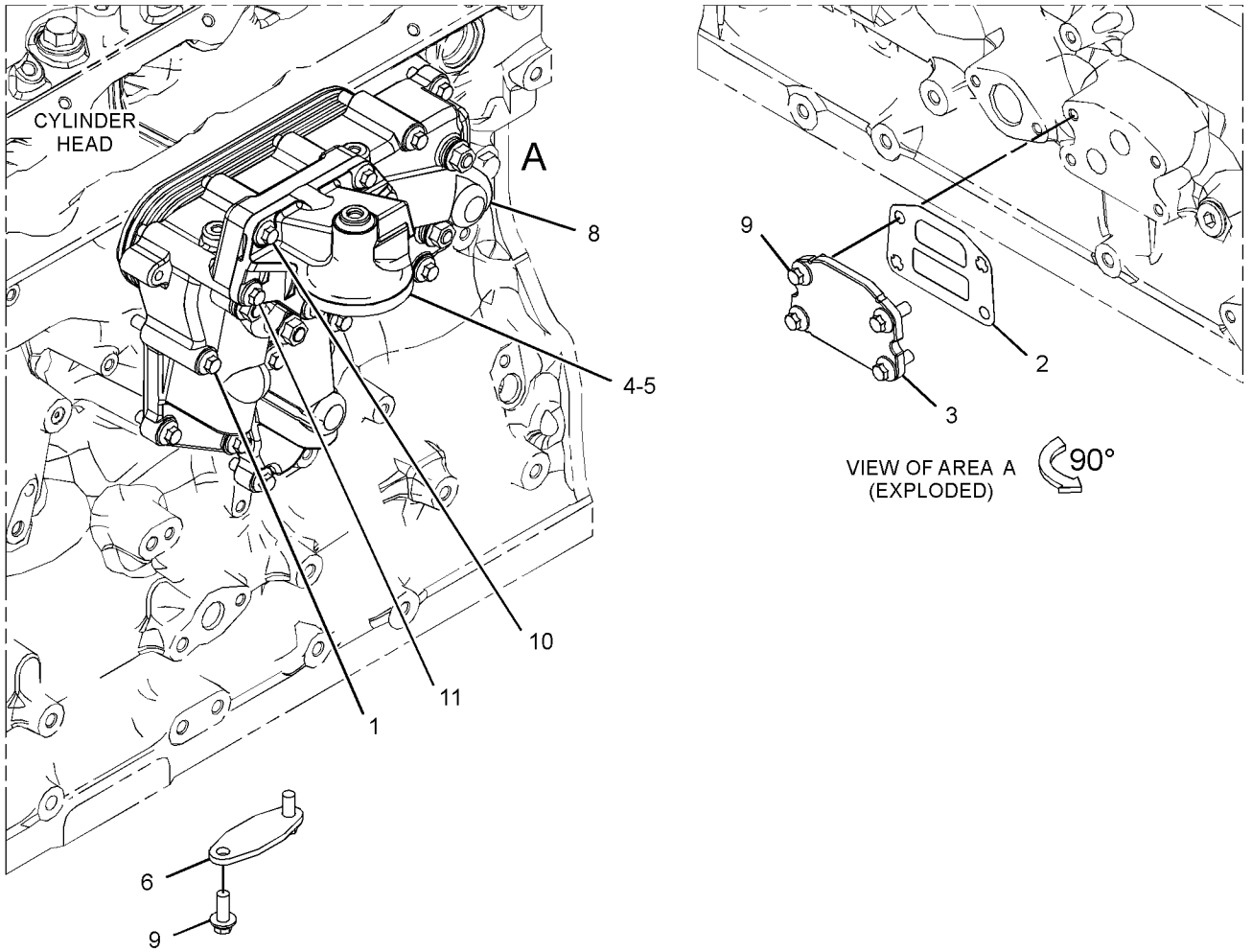

GRAPHIC #1 <END> g06161854

346-2911 CONNECTION GP-HEATER

S/N: 4501-UP

FOR USE WITH OPTIONAL CUSTOMER CONNECTION FOR CAB HEATER

PART OF 553-3684 ENGINE AR-PRIMARY

SMCS-1380, 1383

i05303153

NOTE	REF NO	GRAPHIC REF	PART NUMBER	QTY	PART NAME 1 2 3 4 5 6 (PRODUCT LEVEL)	SEE PAGE
	1	1	**067-6823**	1	PLUG	
	2	1	**9X-3959**	1	ELBOW	
	3	1	**7W-4669**	1	ADAPTER	

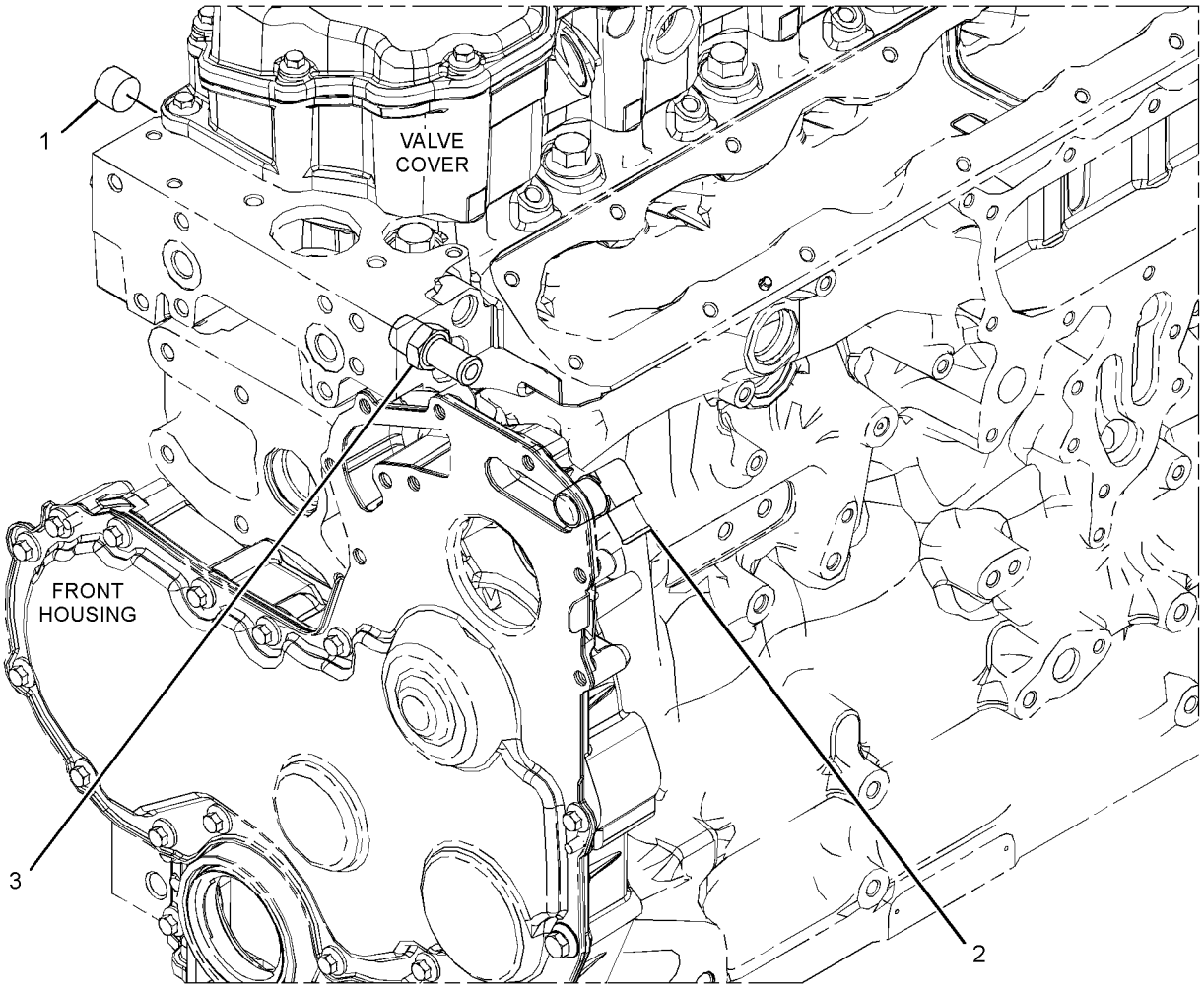

GRAPHIC #1 <END> g03105759

373-3607 CONNECTION GP-WATER

S/N: 4501-UP

PART OF 553-3684 ENGINE AR-PRIMARY

SMCS-1380 **i05331563**

NOTE	REF NO	GRAPHIC REF	PART NUMBER	QTY	PART NAME 1 2 3 4 5 6 (PRODUCT LEVEL)	SEE PAGE
M	1	1	**123-2899**	2	BOLT (M10X1.5X40-MM)	
	2	1	**417-7782**	1	REGULATOR AS-WATER TEMPERATURE (INCLUDES CONNECTOR)	
	3	1	**281-8744**	1	GASKET-WATER REGULATOR (TEMPERATURE)	

M - METRIC PART

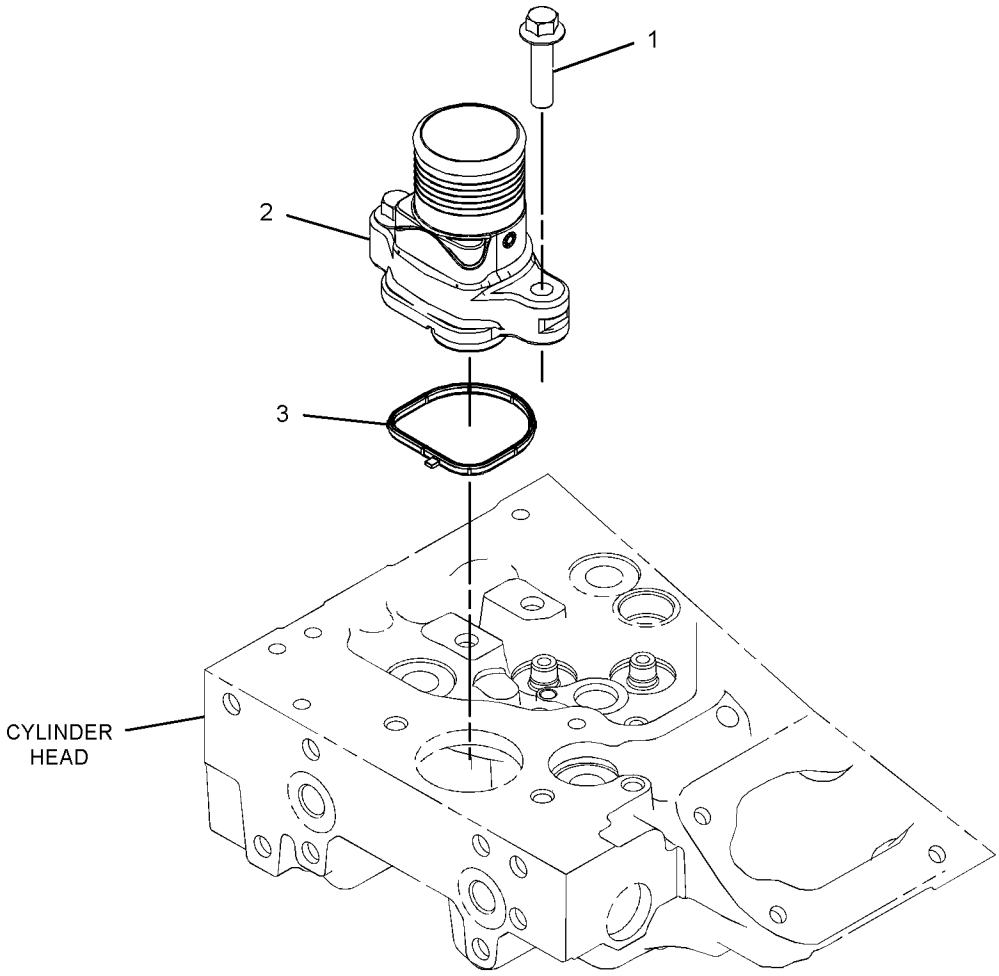

GRAPHIC #1 <END> g03341487

295-8610 COOLER GP-ENGINE OIL

S/N: 4501-UP

PART OF 346-0099 BASE GP-OIL COOLER & FILTER

SMCS-1378 **i06300691**

NOTE	REF NO	GRAPHIC REF	PART NUMBER	QTY	PART NAME 1 2 3 4 5 6 (PRODUCT LEVEL)	SEE PAGE
M	1	1	**6I-0260**	3	BOLT (M8X1.25X25-MM)	
M	2	1	**6I-0594**	4	NUT (M10X1.5-THD)	
	3	1	**101-3917**	4	WASHER (10.5X21X2-MM THK)	
	4	1	**101-7547**	4	LOCKWASHER	
	5	1	**231-1455**	2	STUD	
	6	1	**277-2500**	1	GASKET	
	7	1	**277-2502**	2	STUD	
	8	1	**277-2503**	3	PLUG	
	9	1	**295-8613**	1	COOLER-OIL (ENGINE)	
	10	1	**295-8615**	2	GASKET	
					PARTS SHOWN IN GRAPHIC(S) WITHOUT A REFERENCE NUMBER ARE NOT SERVICED SEPARATELY	

M - METRIC PART

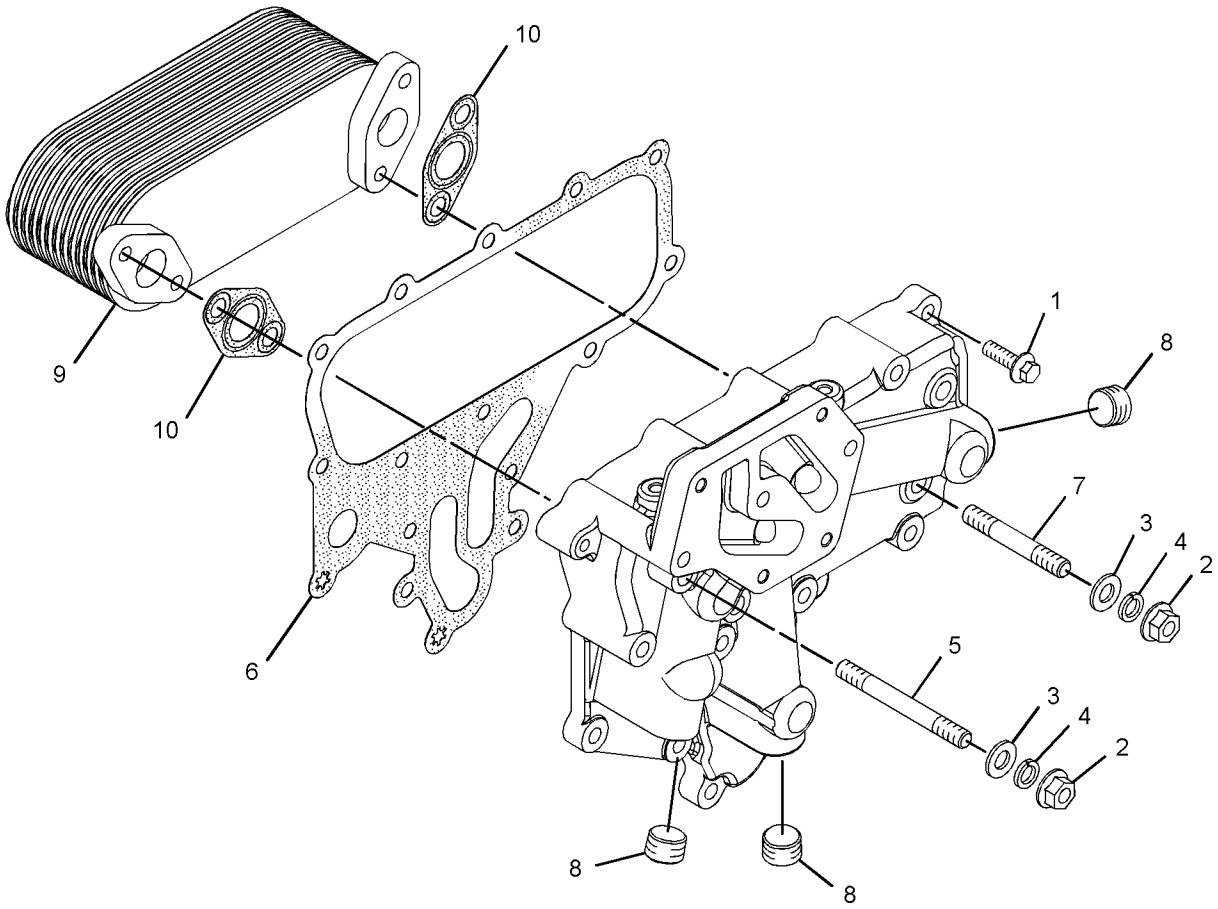

GRAPHIC #1 <END> g03105899

457-1194 COOLING AR

S/N: H3C1-UP; K3G1-UP

PART OF 590-7198, 590-7199 COMMON AR

SMCS-1350 **i06978356**

NOTE	PART NUMBER	QTY	PART NAME 1 2 3 4 5 6 (PRODUCT LEVEL)	SEE PAGE
Y	*425-3337*	1	BAFFLE GP-RADIATOR	257
Y	**495-4371**	1	COOLING GP	61
Y	*425-3336*	1	FAN & MOTOR GP	62

Y - SEPARATE ILLUSTRATION

<END>

495-4371 COOLING GP

S/N: H3C1-UP; K3G1-UP
PART OF 457-1194 COOLING AR

SMCS-1350, 1353 **i06987916**

NOTE	REF NO	GRAPHIC REF	PART NUMBER	QTY	PART NAME 1 2 3 4 5 6 (PRODUCT LEVEL)	SEE PAGE
	1	1	**453-5912**	1	CORE AS-AFTERCOOLER	
	2	1	**453-6241**	1	SUPPORT AS-RADIATOR	
	3	1	**453-6242**	1	SUPPORT AS-RADIATOR	
	4	1	**495-4369**	1	CORE AS-RADIATOR	
	5	1	**495-4370**	1	CORE AS-OIL COOLER	
	6	1	**7X-7729**	18	WASHER (11X25X3-MM THK)	
M	7	1	**8T-4195**	18	BOLT (M10X1.5X30-MM)	
E	8	1	**392-0610**		SEAL (108-CM EACH)	
E	9	1	**335-7022**		SEAL (94-CM EACH)	

E - ORDER BY THE CENTIMETER
M - METRIC PART

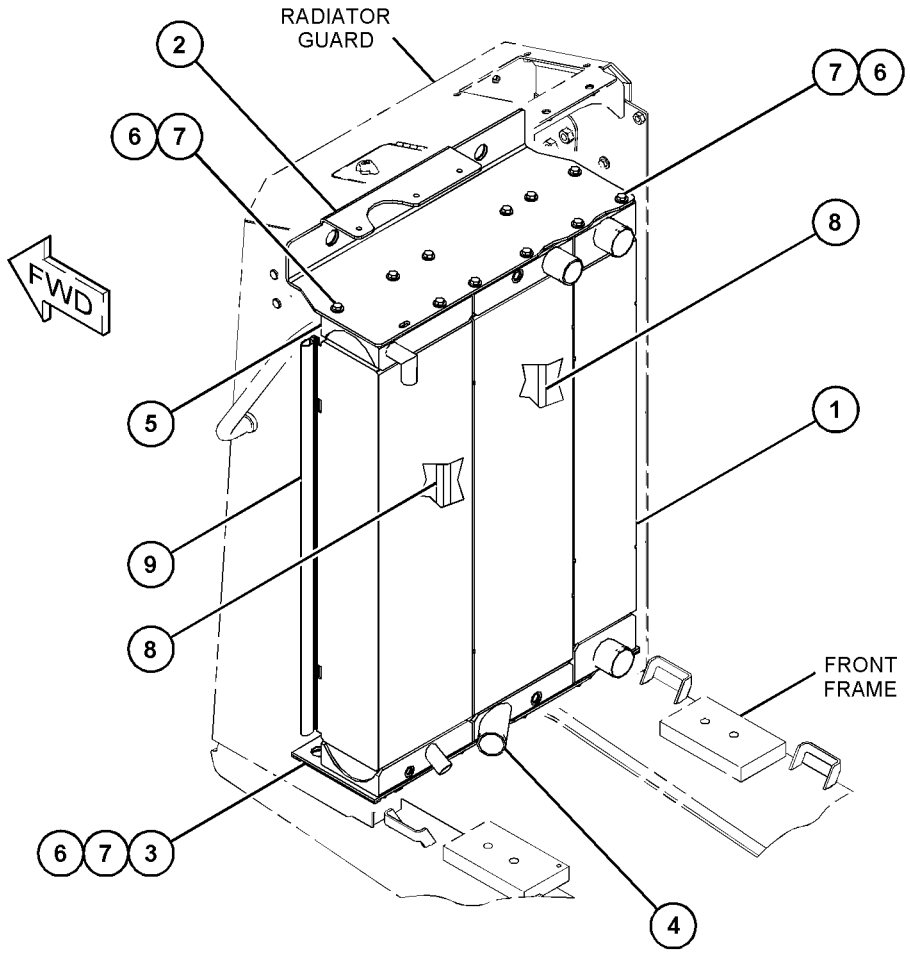

GRAPHIC #1 <END> g06187464

425-3336 FAN & MOTOR GP

S/N: H3C1-UP; K3G1-UP
PART OF 457-1194 COOLING AR

SMCS-1356, 1386 **i07434842**

NOTE	REF NO	GRAPHIC REF	PART NUMBER	QTY	PART NAME 1 2 3 4 5 6 (PRODUCT LEVEL)	SEE PAGE
	1	1	**116-8688**	2	HINGE	
	2	1	**261-7504**	1	SPIDER AS-FAN (7-BLADE)	
	3	1	**425-6622**	1	DOOR AS	
	4	1	**430-4709**	1	ADAPTER	
	5	1	**432-8272**	2	SPACER	
	6	1	**296-2063**	1	SET-LOCKWASHER	
	7	1	**5P-1076**	2	WASHER-HARD (13.5X30X4-MM THK)	
M	8	1	**5W-9419**	1	NUT (M12X1.5-THD)	
	9	1	**8R-8847**	2	RETAINER-SPRING	
	10	1	**8T-4121**	18	WASHER-HARD (11X21X2.5-MM THK)	
M	11	1	**344-5675**	4	NUT (M10X1.5-THD)	
M	12	1	**8T-4136**	10	BOLT (M10X1.5X25-MM)	
M	13	1	**8T-4183**	2	BOLT (M12X1.75X40-MM)	
B	14	1	**398-2972**		TAPE-REFLECTIVE	
M	15	1	**8T-4195**	4	BOLT (M10X1.5X30-MM)	

B - USE AS REQUIRED
M - METRIC PART

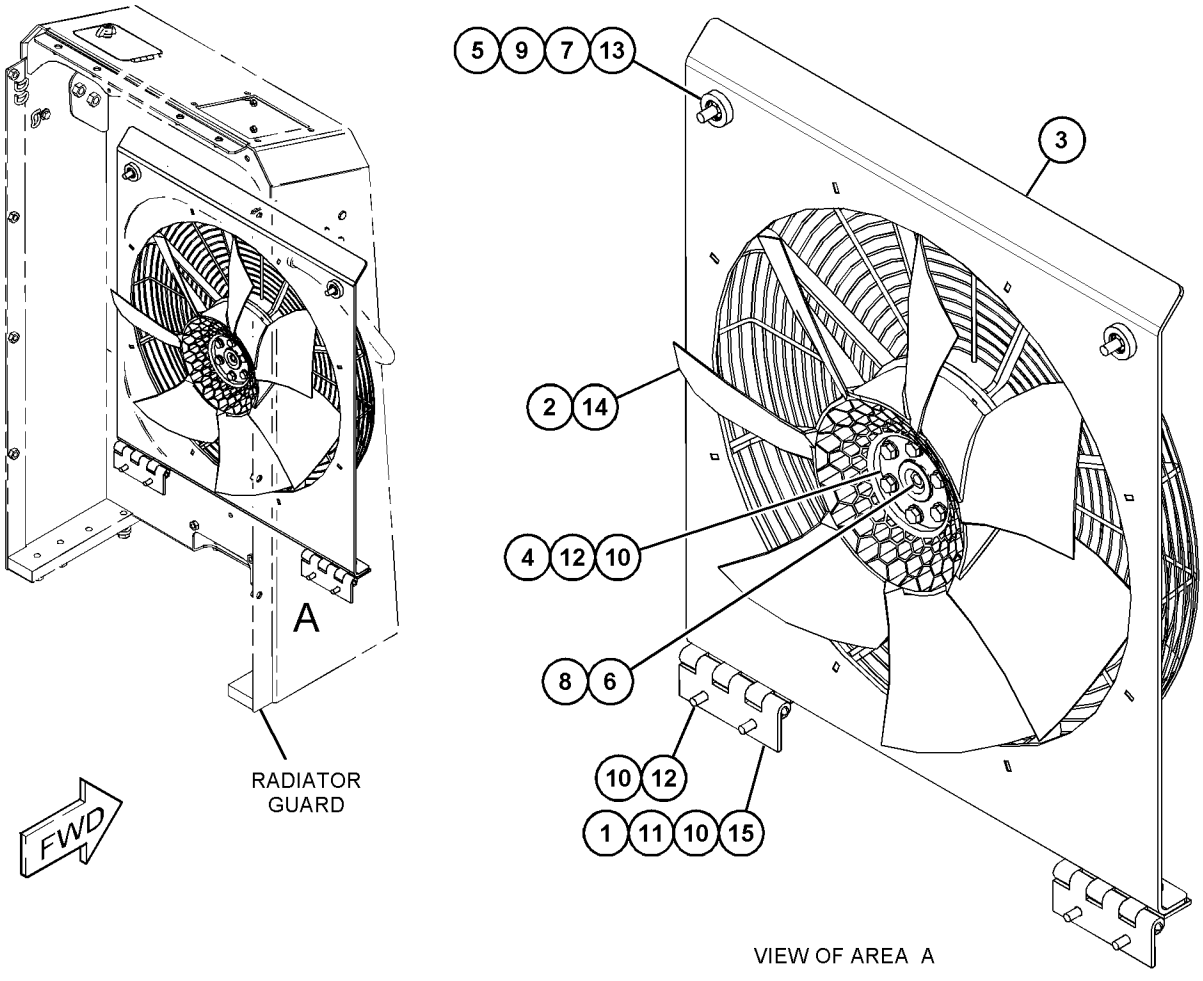

GRAPHIC #1 <END> g06072056

457-5414 LINES GP-COOLANT

S/N: H3C1-UP; K3G1-UP

PART OF 591-7134, 591-7135 POWER TRAIN AR

SMCS-1380 **i08027086**

NOTE	REF NO	GRAPHIC REF	PART NUMBER	QTY	PART NAME 1 2 3 4 5 6 (PRODUCT LEVEL)	SEE PAGE
CM	1	1	**8T-4172**	2	BOLT (M10X1.5X80-MM)	
CM	2	1	**8T-4176**	1	BOLT (M12X1.75X90-MM)	
M	3	1	**8T-5436**	1	BOLT (M10X1.5X130-MM)	
	4	1	**7N-0900**	1	SPACER (0.423X0.675X2.38-IN)	
	5	1	**7X-7729**	2	WASHER (11X25X3-MM THK)	
C	6	1	**8T-4121**	4	WASHER-HARD (11X21X2.5-MM THK)	
M	7	1	**8T-4136**	2	BOLT (M10X1.5X25-MM)	
CM	8	1	**8T-4139**	1	BOLT (M12X1.75X30-MM)	
	9	1	**8T-4223**	2	WASHER-HARD (13.5X25.5X3-MM THK)	
	10	1	**8T-4983**	4	CLAMP-HOSE	
	11	1	**203-3847**	1	BRACKET AS	
	12	1	**218-0054**	1	SPACER (11X25X100-MM THK)	
	13	1	**243-5821**	2	BRACKET AS	
					(EACH INCLUDES)	
M		1	**8T-3490**	1	NUT-WELD (M10X1.5-THD)	
C	14	1	**294-5374**	4	PLATE	
C	15	1	**307-5172**	1	SPACER (13.5X25X60-MM THK)	
C	16	1	**311-8802**	1	SPACER (10.5X19X57-MM THK)	
	17	1	*386-6219*	1	ELBOW AS	
		1	**7M-8485**	1	SEAL-O-RING	
		1	**198-7655**	1	CONNECTOR	
	18	1	*451-0490*	1	ADAPTER AS	
		1	**7M-8485**	1	SEAL-O-RING	
		1	**451-0489**	1	ADAPTER	
C	19	1	**468-0177**	1	CLAMP	
	20	1	**482-5134**	1	PLATE	
M	21	1	**344-5675**	1	NUT (M10X1.5-THD)	
	22	1	**493-8130**	1	HOSE	
	23	1	**493-8131**	1	HOSE	
C	24	1	**5P-2369**	6	CLIP (LOOP)	

C - CHANGE FROM PREVIOUS TYPE
M - METRIC PART

457-5414 **LINES GP-COOLANT (**contd.**)** **i08027086**

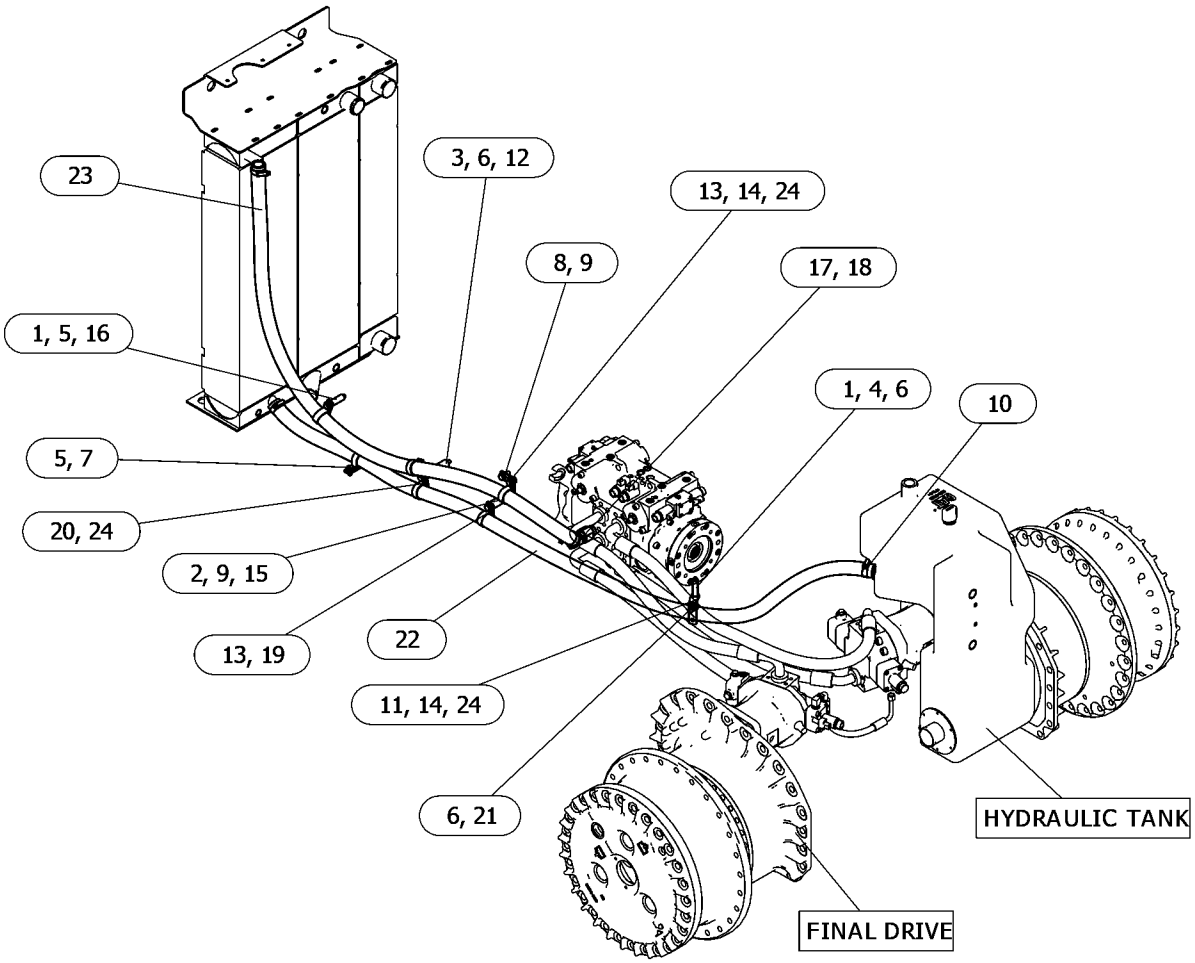

GRAPHIC #1 <END> g06544061

495-4687 LINES GP-COOLANT

S/N: H3C1-UP; K3G1-UP

PART OF 457-1192 INSTALLATION AR-ENGINE

SMCS-1380 **i08019691**

NOTE	REF NO	GRAPHIC REF	PART NUMBER	QTY	PART NAME 1 2 3 4 5 6 (PRODUCT LEVEL)	SEE PAGE
	1	1	**7K-1181**	2	STRAP-CABLE	
M	2	1	**8T-4185**	1	BOLT (M10X1.5X50-MM)	
M	3	1	**8T-4200**	2	BOLT (M8X1.25X16-MM)	
	4	1	**4D-7388**	1	CLIP	
	5	1	**5P-4116**	2	WASHER-HARD (8.8X20.5X2-MM THK)	
	6	1	**8T-4121**	1	WASHER-HARD (11X21X2.5-MM THK)	
	7	1	**091-9035**	1	SPACER (11X25X20-MM THK)	
	8	1	*165-2273*	1	VALVE AS-SHUTOFF	
		1	**3K-0360**	1	SEAL-O-RING	
		1	**6V-7238**	1	VALVE-SHUTOFF	
	9	1	**204-2281**	6	STRAP-CABLE	
	10	1	**247-1385**	1	TANK GP-COOLANT	
		1	**251-3227**	1	CAP AS-COOLANT TANK (RADIATOR)	
	11	1	**280-3090**	1	HOSE	
	12	1	**287-0427**	1	TUBE AS	
	13	1	**8T-4984**	6	CLAMP-HOSE	
	14	1	*369-6840*	1	ELBOW AS	
		1	**6V-6609**	1	SEAL-O-RING	
		1	**363-4156**	1	ADAPTER-ELBOW	
	15	1	**495-6269**	1	HOSE	
	16	1	**495-6271**	1	HOSE	
	17	1	**498-2272**	1	HOSE	
	18	1	**109-1145**	2	CLAMP-HOSE	
	19	1	**200-6345**	3	SADDLE-MOUNTING (DUAL SWIVEL)	
	20	1	**7X-7958**	2	CLAMP-HOSE	
E	21	1	**9X-2133**		HOSE (44-CM)	
E	22	1	**8C-3681**		HOSE (132-CM)	

E - ORDER BY THE CENTIMETER
M - METRIC PART

495-4687 **LINES GP-COOLANT (**contd.**)** **i08019691**

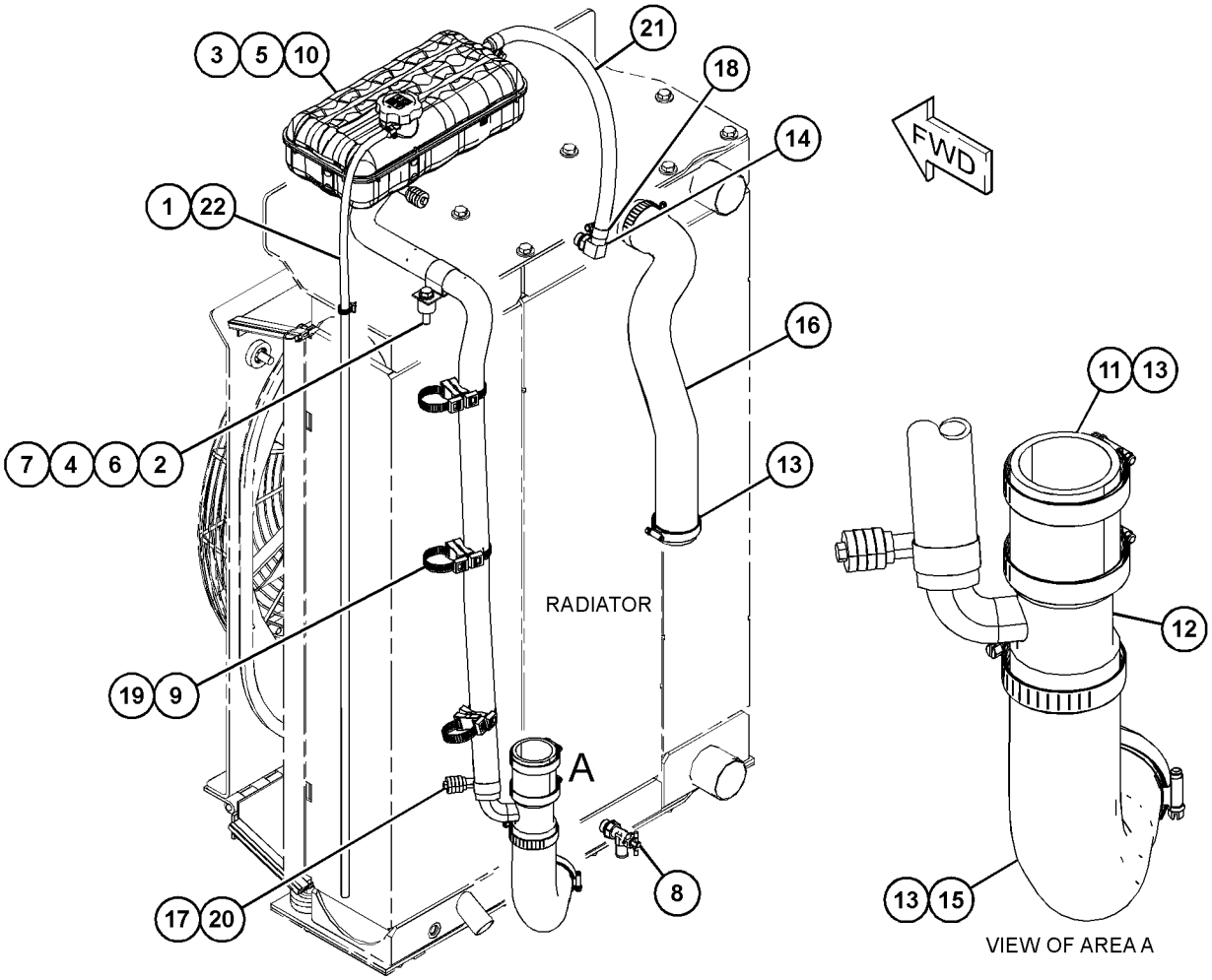

GRAPHIC #1 <END> g06186182

372-2297 PUMP GP-WATER

S/N: 4501-UP

PART OF 553-3684 ENGINE AR-PRIMARY

SMCS-1361 **i06928393**

NOTE	REF NO	GRAPHIC REF	PART NUMBER	QTY	PART NAME 1 2 3 4 5 6 (PRODUCT LEVEL)	SEE PAGE
M	1	1	**6I-0217**	2	BOLT (M8X1.25X20-MM)	
J	2	1	*485-4894*	1	PUMP GP-WATER	
M	2A	1	**278-3242**	3	BOLT-FLANGE HEAD (M8X1.25X18-MM)	
	2B	1	**374-4419**	1	GASKET	
M	3	1	**113-8129**	2	BOLT (M8X1.25X75-MM)	
	4	1	**225-8019**	1	GASKET	
	5	1	**277-2925**	1	CONNECTION AS	
	5A	1	**225-7738**	1	SEAL-O-RING	
	5B	1	**277-2923**	1	GASKET	
M	6	1	**6I-0254**	2	BOLT (M8X1.25X30-MM)	
M	7	1	**6I-0839**	5	BOLT (M8X1.25X70-MM)	
FJ			**485-4895**	1	PUMP GP-WATER	

F - NOT SHOWN
J - PART MARKED J SERVICES 485-4894
M - METRIC PART

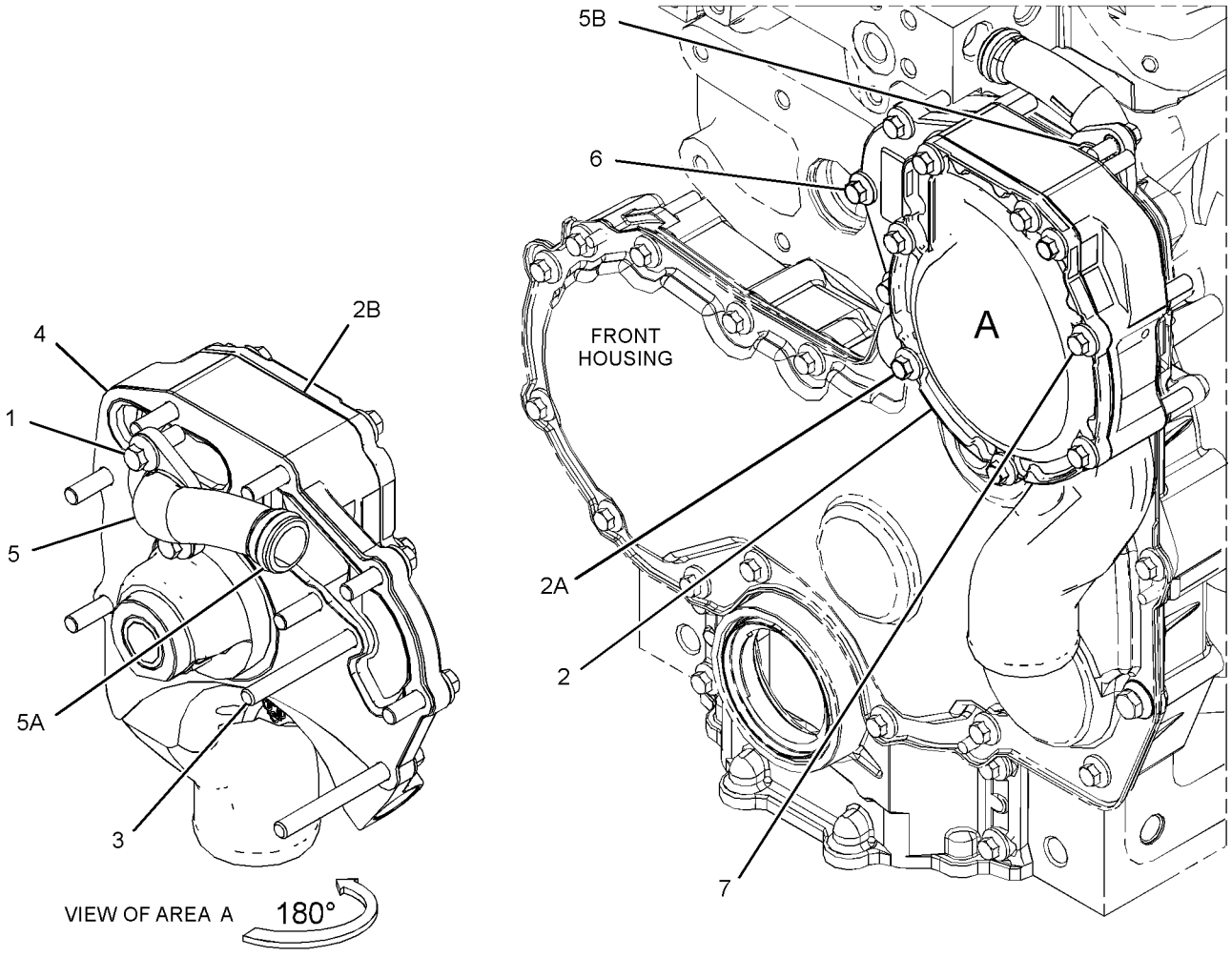

GRAPHIC #1

<END>

g06129592

450-4373 AIR CLEANER GP

S/N: H3C1-UP; K3G1-UP
PART OF 501-7414 AIR CLEANER GP, 501-7416 PRECLEANER GP
AN ATTACHMENT

SMCS-1051, 1054

i07285140

NOTE	REF NO	GRAPHIC REF	PART NUMBER	QTY	PART NAME 1 2 3 4 5 6 (PRODUCT LEVEL)	SEE PAGE
	1	1	**353-4847**	1	VALVE-DUST	
	2	1	**529-0132**	1	FILTER ELEMENT AS-AIR (SECONDARY)	
	3	1	**528-7222**	1	FILTER ELEMENT-AIR (PRIMARY)	
	4	1	**463-1738**	1	COVER AS-AIR CLEANER	

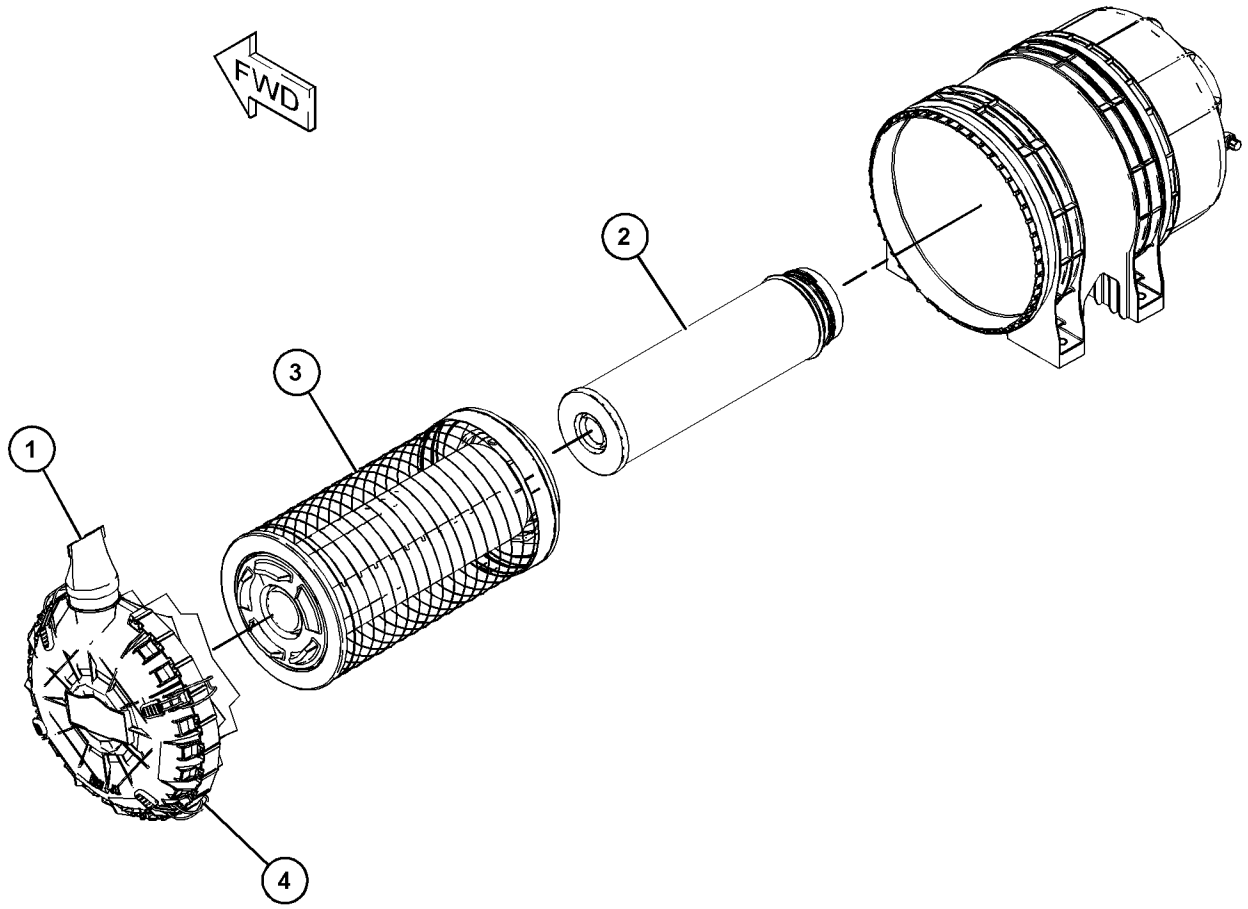

GRAPHIC #1 <END> g03869502

501-7414 AIR CLEANER GP

S/N: H3C1-UP; K3G1-UP
CANNOT BE USED WITH 501-7416—PAGE: 79
AN ATTACHMENT

SMCS-1051, 1054 **i06988632**

NOTE	REF NO	GRAPHIC REF	PART NUMBER	QTY	PART NAME 1 2 3 4 5 6 (PRODUCT LEVEL)	SEE PAGE
M	1	1	**8T-4136**	7	BOLT (M10X1.5X25-MM)	
M	2	1	**8T-4182**	4	BOLT (M10X1.5X45-MM)	
	3	1	**7X-7729**	4	WASHER (11X25X3-MM THK)	
	4	1	**8T-4121**	11	WASHER-HARD (11X21X2.5-MM THK)	
	5	1	**256-7926**	1	CAP AS-AIR CLEANER	
M	6	1	**344-5675**	4	NUT (M10X1.5-THD)	
Y	7	1	**450-4373**	1	AIR CLEANER GP	68
	8	1	**490-2792**	1	DUCT	
	9	1	**493-2817**	1	ADAPTER AS	
M		1	**8T-3490**	3	NUT-WELD (M10X1.5-THD)	
	10	1	**504-8150**	1	SUPPORT	
	11	1	**512-8035**	1	RING	
	12	1	**147-1685**	1	CLAMP	
	13	1	**216-2211**	1	CLAMP	

M - METRIC PART
Y - SEPARATE ILLUSTRATION

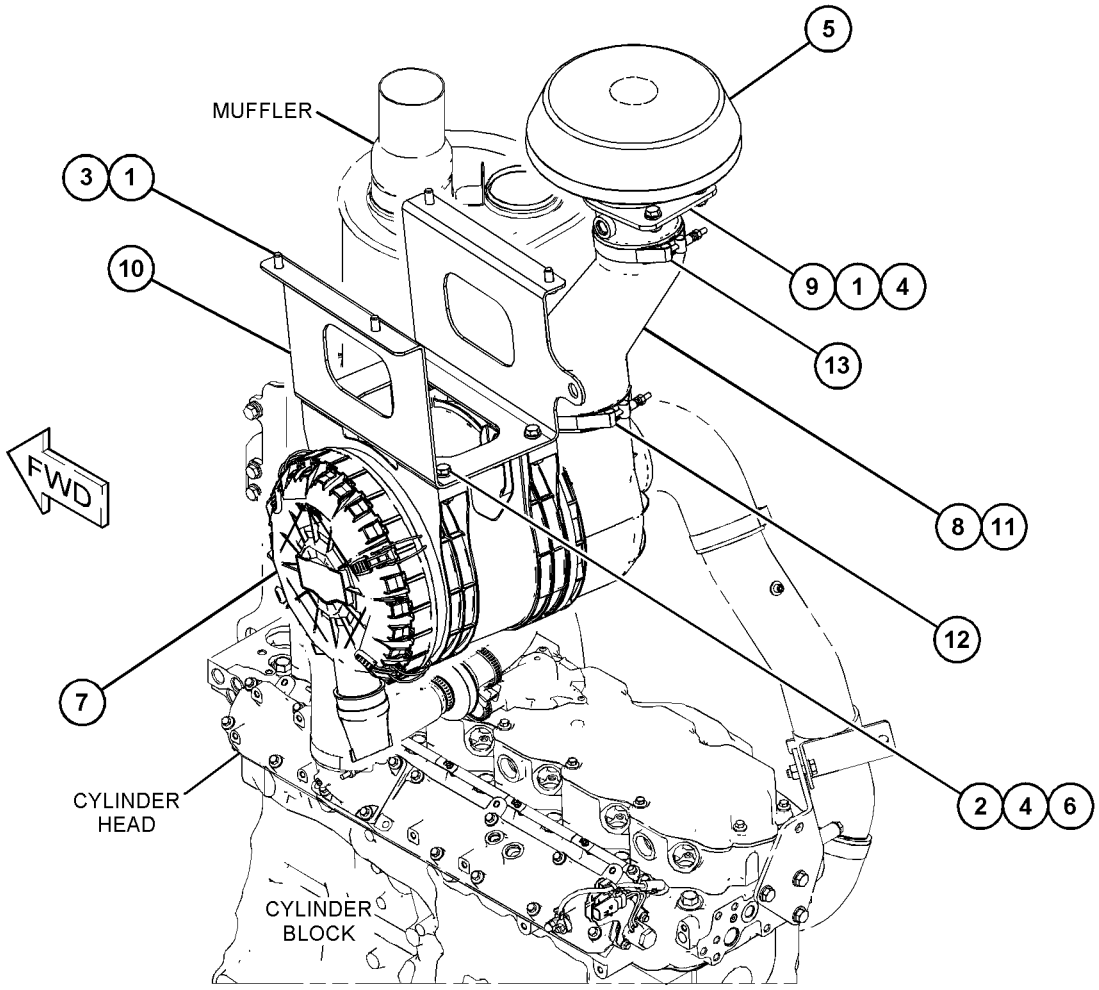

GRAPHIC #1 <END> g06188501

483-0513 DUST EJECTOR GP

S/N: H3C1-UP; K3G1-UP

PART OF 457-3577 MUFFLER GP

SMCS-1068 **i07032201**

NOTE	REF NO	GRAPHIC REF	PART NUMBER	QTY	PART NAME 1 2 3 4 5 6 (PRODUCT LEVEL)	SEE PAGE
	1	1	**247-9730**	1	VALVE AS-CHECK	
	2	1	**290-5626**	1	HOSE	
	3	1	**200-6345**	1	SADDLE-MOUNTING (DUAL SWIVEL)	
	4	1	**204-2281**	2	STRAP-CABLE	
	5	1	**260-0634**	1	TUBE	
	6	1	**2J-6540**	1	CLAMP-HOSE	
	7	1	**2S-3440**	2	CLAMP-HOSE	
	8	1	**5P-2230**	1	CLAMP-HOSE	
E	9	1	**6V-5632**		HOSE (46-CM)	
	10	1	**9M-7959**	1	CLAMP-HOSE	

E - ORDER BY THE CENTIMETER

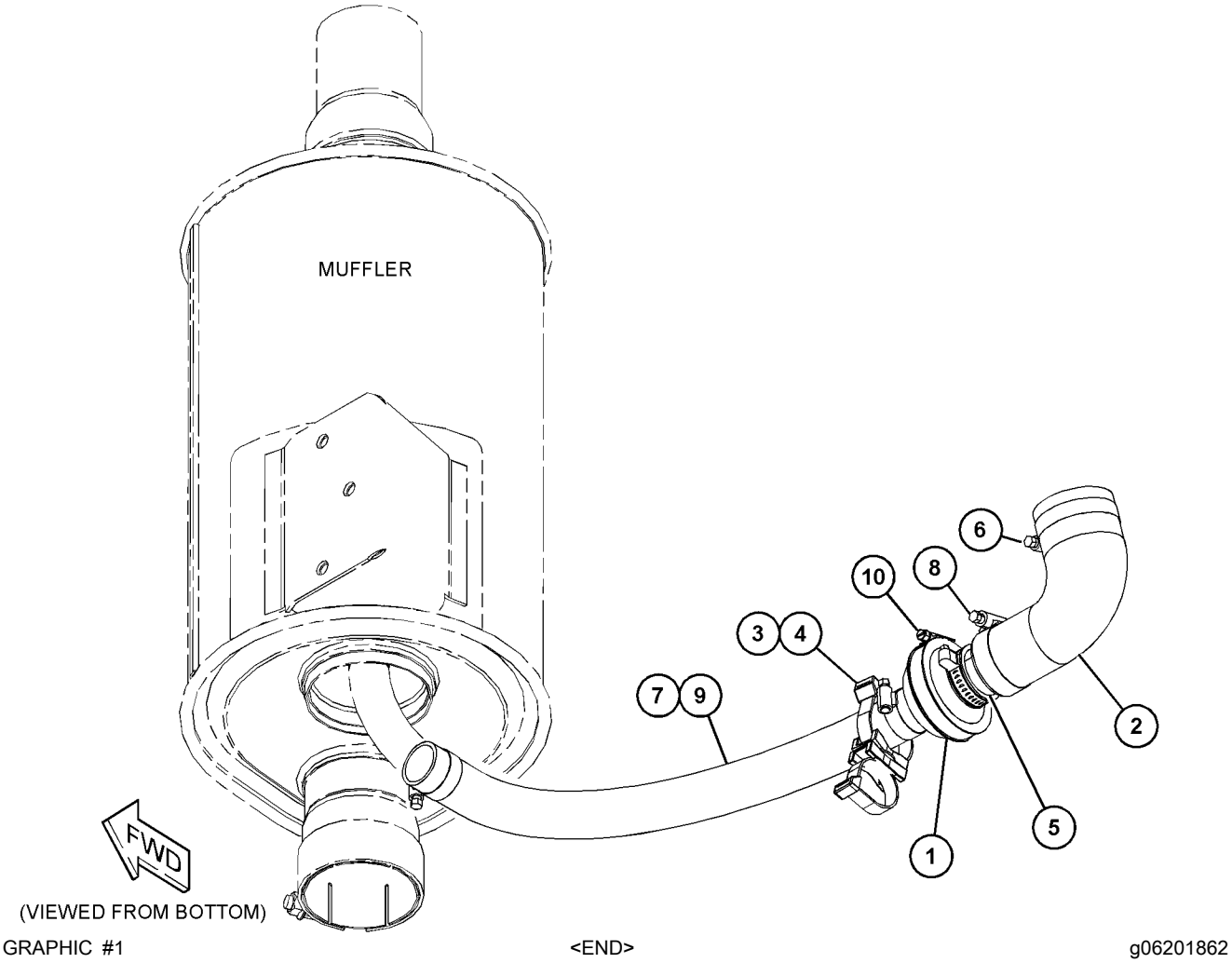

GRAPHIC #1 <END> g06201862

495-4688 LINES GP-AIR

S/N: H3C1-UP; K3G1-UP

PART OF 457-1192 INSTALLATION AR-ENGINE

SMCS-1071 **i07437437**

NOTE	REF NO	GRAPHIC REF	PART NUMBER	QTY	PART NAME 1 2 3 4 5 6 (PRODUCT LEVEL)	SEE PAGE
M	1	1	**8T-4136**	5	BOLT (M10X1.5X25-MM)	
M	2	1	**8T-4195**	2	BOLT (M10X1.5X30-MM)	
M	3	1	**8T-4779**	2	BOLT (M16X2X35-MM)	
	4	1	**6V-1581**	2	CLIP (SLOT)	
	5	1	**6V-1582**	2	CLIP (TAB)	
	6	1	**6V-1867**	1	CLIP (SLOT)	
	7	1	**6V-1868**	1	CLIP (TAB)	
	8	1	**8T-4121**	8	WASHER-HARD (11X21X2.5-MM THK)	
	9	1	**198-4780**	2	WASHER-HARD (17.5X32X8-MM THK)	
	10	1	**309-0572**	1	ELBOW	
M	11	1	**344-5675**	1	NUT (M10X1.5-THD)	
	12	1	**348-5118**	1	HOSE	
	13	1	**355-4327**	1	HOSE-ELBOW	
	14	1	**433-6913**	1	BRACKET AS	
	15	1	**454-2372**	1	HOSE-ELBOW	
	16	1	**490-1953**	1	DUCT	
	17	1	**498-4902**	1	TUBE	
	18	1	**498-4903**	1	TUBE AS	
	19	1	**498-6212**	1	BRACKET AS	
	20	1	**498-7851**	1	TUBE	
	21	1	**498-7852**	1	BRACKET AS	
	22	1	**500-0390**	1	HOSE	
	23	1	**209-4573**	4	CLAMP-T BOLT	
	24	1	**209-4582**	3	CLAMP-T BOLT	
	25	1	**209-4589**	1	CLAMP-T BOLT	
	26	1	**212-6934**	1	CLAMP-T BOLT	
	27	1	**216-4983**	2	CLAMP-T BOLT	
	28	1	**8T-4986**	1	CLAMP-HOSE	

M - METRIC PART

495-4688 **LINES GP-AIR (**contd.**)** **i07437437**

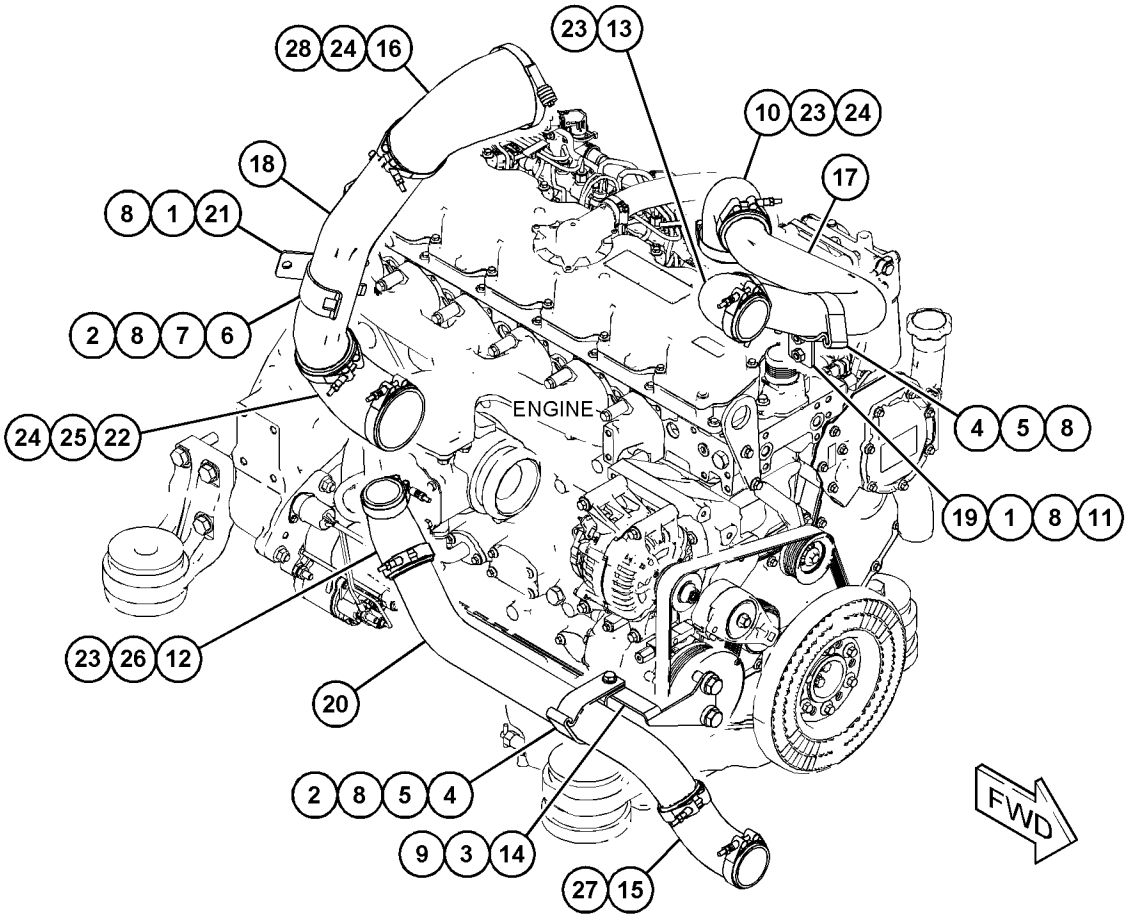

GRAPHIC #1 <END> g06180206

396-9532 LINES GP-TURBOCHARGER AIR

S/N: 4501-UP

PART OF 489-9971 TURBOCHARGER GP

SMCS-1052, 1071 **i05892232**

NOTE	REF NO	GRAPHIC REF	PART NUMBER	QTY	PART NAME 1 2 3 4 5 6 (PRODUCT LEVEL)	SEE PAGE
	1	1	**225-8526**	2	WASHER (10.4X13.75X1.37-MM THK)	
	2	1	**133-9469**	1	CLIP	
	3	1	**225-8524**	1	BOLT-SPECIAL (M10X1.5X23-MM)	
	4	1	**335-8611**	1	CLIP	
	5	1	**396-9529**	1	TUBE AS-TURBOCHARGER	
	6	1	**107-2348**	2	CLIP	

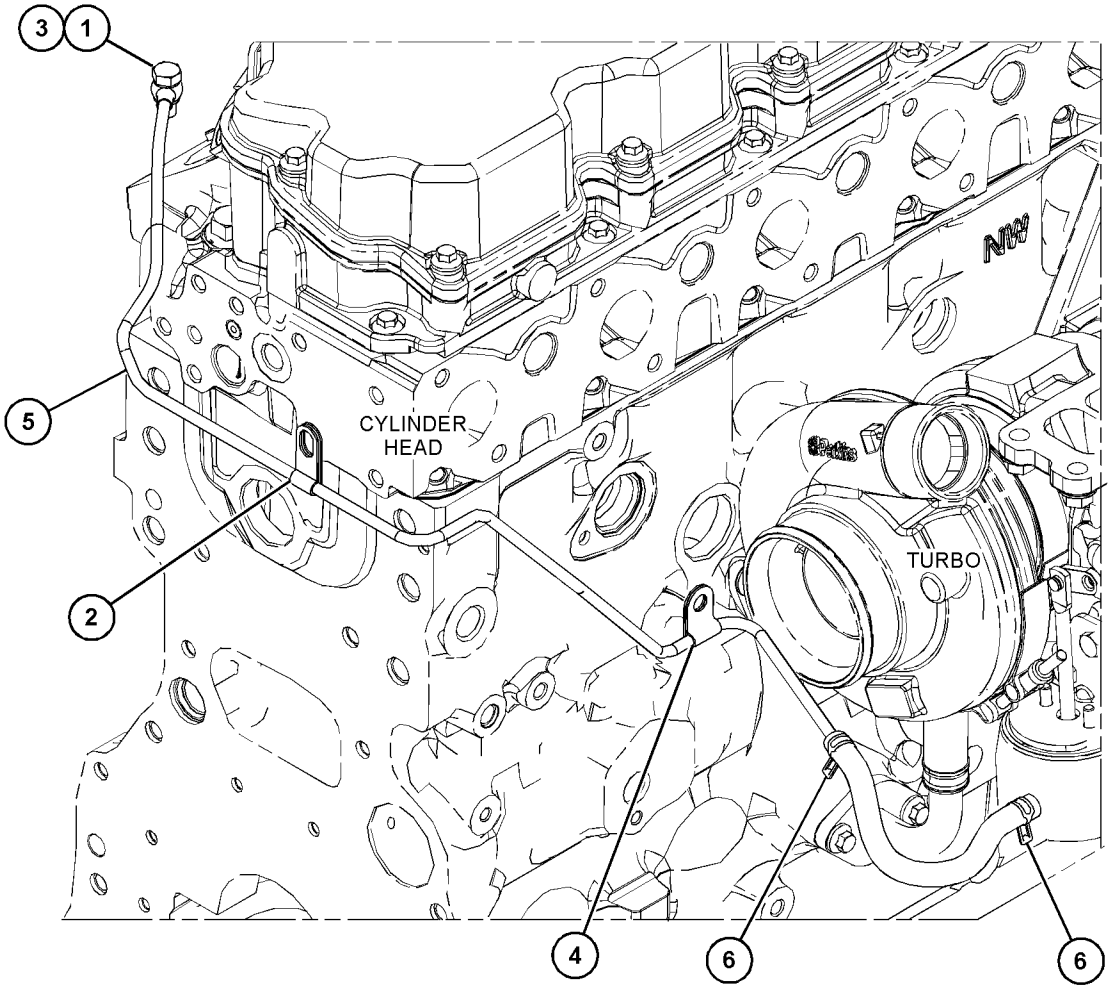

GRAPHIC #1 <END> g03557599

416-7808 MANIFOLD GP-EXHAUST

S/N: 4501-UP

PART OF 553-3684 ENGINE AR-PRIMARY

SMCS-1059 **i06060828**

NOTE	REF NO	GRAPHIC REF	PART NUMBER	QTY	PART NAME 1 2 3 4 5 6 (PRODUCT LEVEL)	SEE PAGE
	1	1	**238-8292**	12	BOLT-FLANGE HEAD	
	2	1	**286-7851**	12	SPACER	
	3	1	**396-8052**	1	MANIFOLD-EXHAUST	
	4	1	**367-3340**	4	STUD	
	5	1	**416-7727**	2	GASKET	

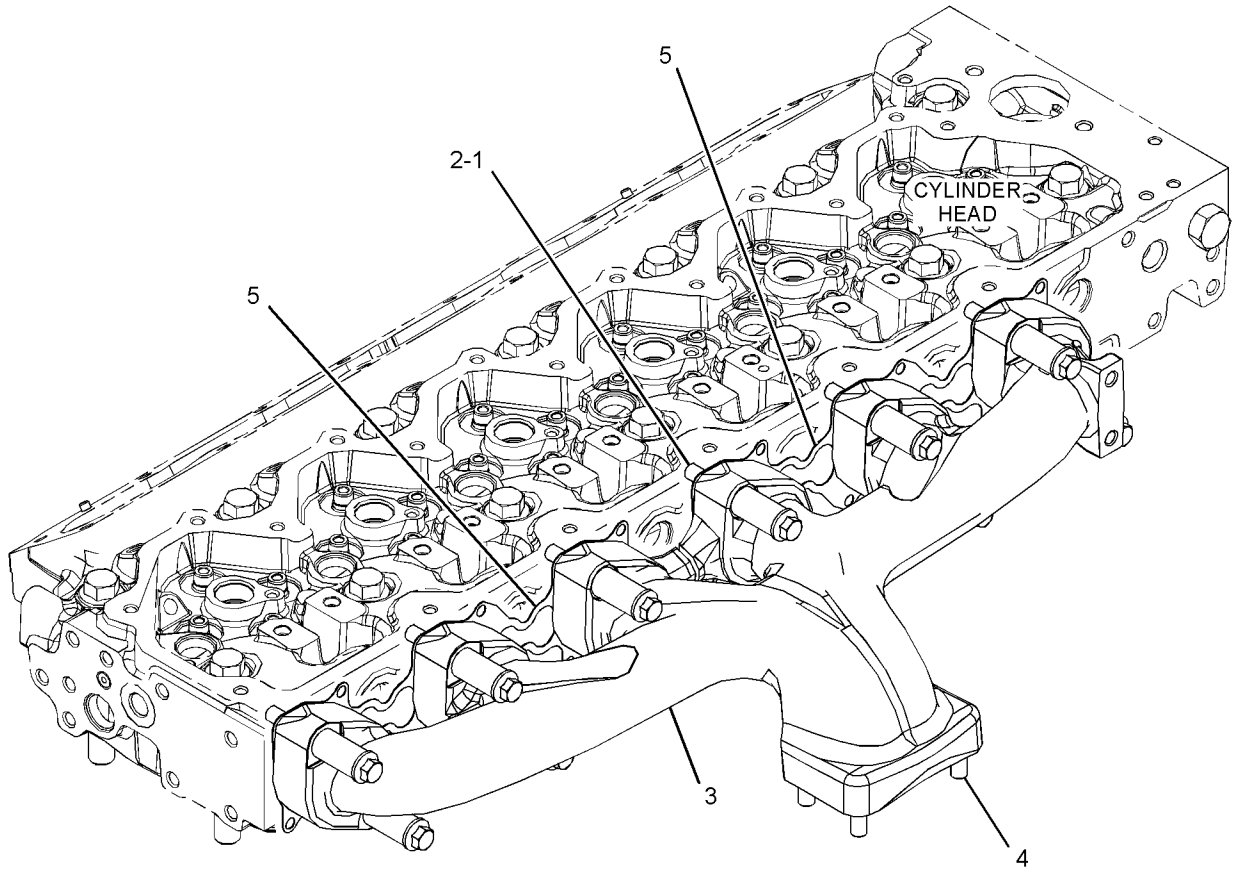

GRAPHIC #1 <END> g03535858

391-5523 MANIFOLD GP-INLET

S/N: 4501-UP

PART OF 553-3684 ENGINE AR-PRIMARY

SMCS-1058, 1090

i05832948

NOTE	REF NO	GRAPHIC REF	PART NUMBER	QTY	PART NAME 1 2 3 4 5 6 (PRODUCT LEVEL)	SEE PAGE
M	1	1	**6I-0917**	2	BOLT (M6X1X25-MM)	
M	2	1	**105-2740**	12	BOLT (M8X1.25X40-MM)	
	3	1	**369-1658**	1	SOLENOID	
	4	1	**452-9704**	1	COVER (CYLINDER HEAD)	
M	5	1	**6I-0260**	4	BOLT (M8X1.25X25-MM)	
	6	1	**390-7626**	1	CONNECTION GP-AIR	
		1	**238-8288**	1	GASKET-INLET	
		1	**292-3462**	1	PLUG-PIPE	

M - METRIC PART

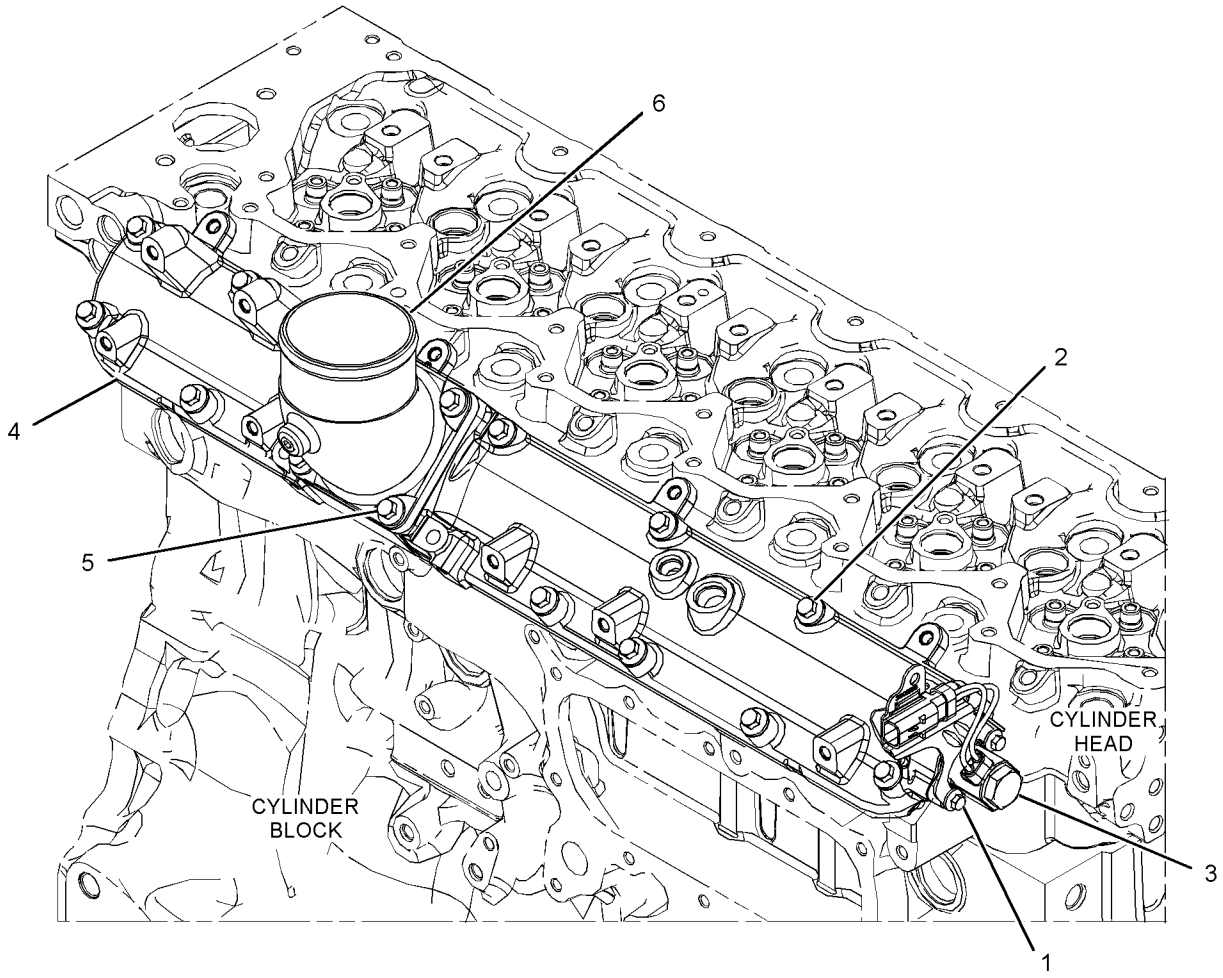

GRAPHIC #1 <END> g03476304

457-3577 MUFFLER GP

S/N: H3C1-UP; K3G1-UP

PART OF 457-1192 INSTALLATION AR-ENGINE

SMCS-1062 **i06912496**

NOTE	REF NO	GRAPHIC REF	PART NUMBER	QTY	PART NAME 1 2 3 4 5 6 (PRODUCT LEVEL)	SEE PAGE
	1	1	**280-2424**	1	ADAPTER	
	2	1	**290-5638**	1	MUFFLER AS	
		1	**388-7010**	1	CLAMP-BENT BOLT	
	3	1	**482-5110**	1	ELBOW	
	4	1	**482-7048**	1	BRACKET AS	
Y	5	1	*483-0513*	1	DUST EJECTOR GP	70
	6	1	**156-4130**	1	CLIP-TUBE	
	7	1	**198-4777**	5	WASHER-HARD (11X25X10-MM THK)	
M	8	1	**344-5675**	1	NUT (M10X1.5-THD)	
	9	1	**8T-4121**	10	WASHER-HARD (11X21X2.5-MM THK)	
M	10	1	**8T-4196**	13	BOLT (M10X1.5X35-MM)	

M - METRIC PART
Y - SEPARATE ILLUSTRATION

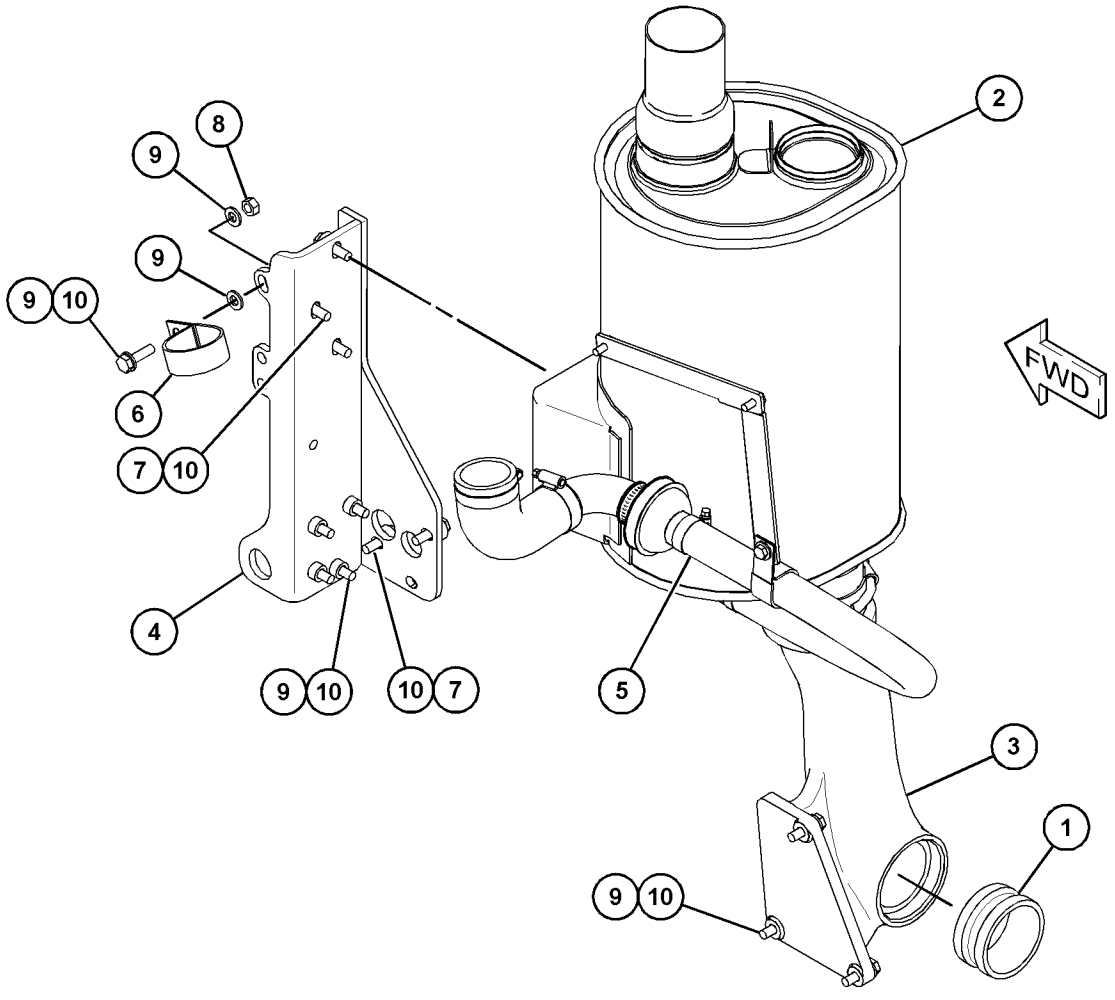

GRAPHIC #1 <END> g06120125

491-2830 PIPE GP-EXHAUST

S/N: H3C1-UP; K3G1-UP

PART OF 457-1192 INSTALLATION AR-ENGINE

SMCS-1061 **i07434242**

NOTE	REF NO	GRAPHIC REF	PART NUMBER	QTY	PART NAME 1 2 3 4 5 6 (PRODUCT LEVEL)	SEE PAGE
	1	1	**243-2158**	1	PIPE-EXHAUST	
	2	1	**525-8758**	1	ADAPTER AS	
	3	1	**388-9525**	1	CLAMP-BENT BOLT	
	4	1	**8T-4121**	4	WASHER-HARD (11X21X2.5-MM THK)	
M	5	1	**8T-4136**	4	BOLT (M10X1.5X25-MM)	

M - METRIC PART

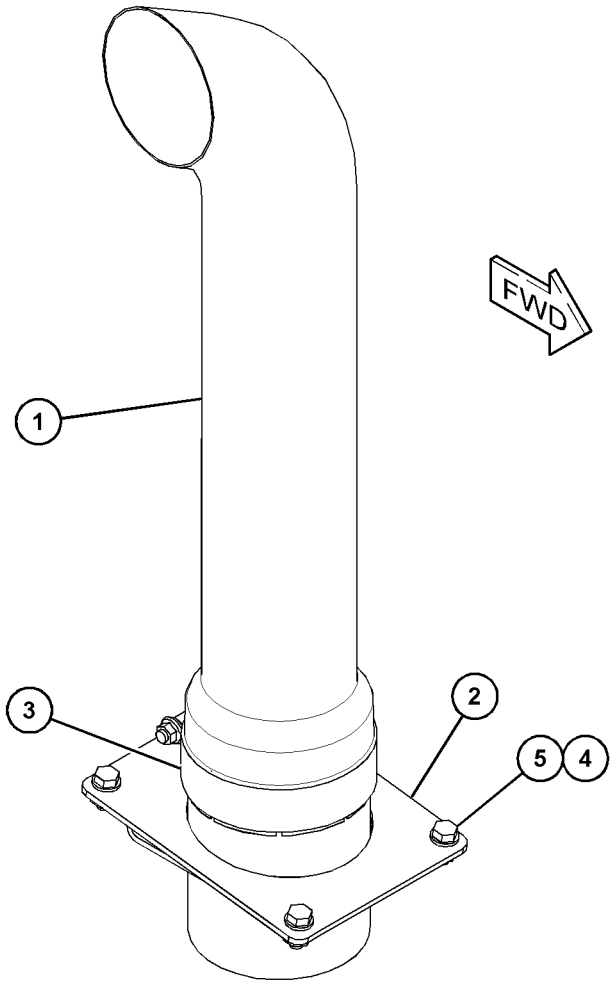

GRAPHIC #1 <END> g06120074

256-3455 PRECLEANER GP–TURBINE

S/N: H3C1-UP; K3G1-UP
PART OF 501-7416 PRECLEANER GP
AN ATTACHMENT

SMCS-1055 **i06702885**

NOTE	PART NUMBER	QTY	PART NAME 1 2 3 4 5 6 (PRODUCT LEVEL)	SEE PAGE
	070-0195	1	PRECLEANER AS	
	174-5414	1	CLAMP	
	153-1276	1	KIT-SCREEN (TURBINE PRECLEANER)	
			(INCLUDES SCREEN, CLAMP, SCREWS & TUBE)	
			<END>	

501-7416 PRECLEANER GP

S/N: H3C1-UP; K3G1-UP
CANNOT BE USED WITH 501-7414—PAGE: 69
AN ATTACHMENT

SMCS-1055 **i07437426**

NOTE	REF NO	GRAPHIC REF	PART NUMBER	QTY	PART NAME 1 2 3 4 5 6 (PRODUCT LEVEL)	SEE PAGE
M	1	1	**8T-4136**	7	BOLT (M10X1.5X25-MM)	
M	2	1	**8T-4182**	4	BOLT (M10X1.5X45-MM)	
	3	1	**7X-7729**	4	WASHER (11X25X3-MM THK)	
	4	1	**8T-4121**	11	WASHER-HARD (11X21X2.5-MM THK)	
Y	5	1	*256-3455*	1	PRECLEANER GP (TURBINE)	78
M	6	1	**344-5675**	4	NUT (M10X1.5-THD)	
Y	7	1	**450-4373**	1	AIR CLEANER GP	68
	8	1	**490-2792**	1	DUCT	
	9	1	**493-2818**	1	ADAPTER AS	
	10	1	**504-8150**	1	SUPPORT	
	11	1	**512-8035**	1	RING	
	12	1	**147-1685**	1	CLAMP	
	13	1	**216-2211**	1	CLAMP	

M - METRIC PART
Y - SEPARATE ILLUSTRATION

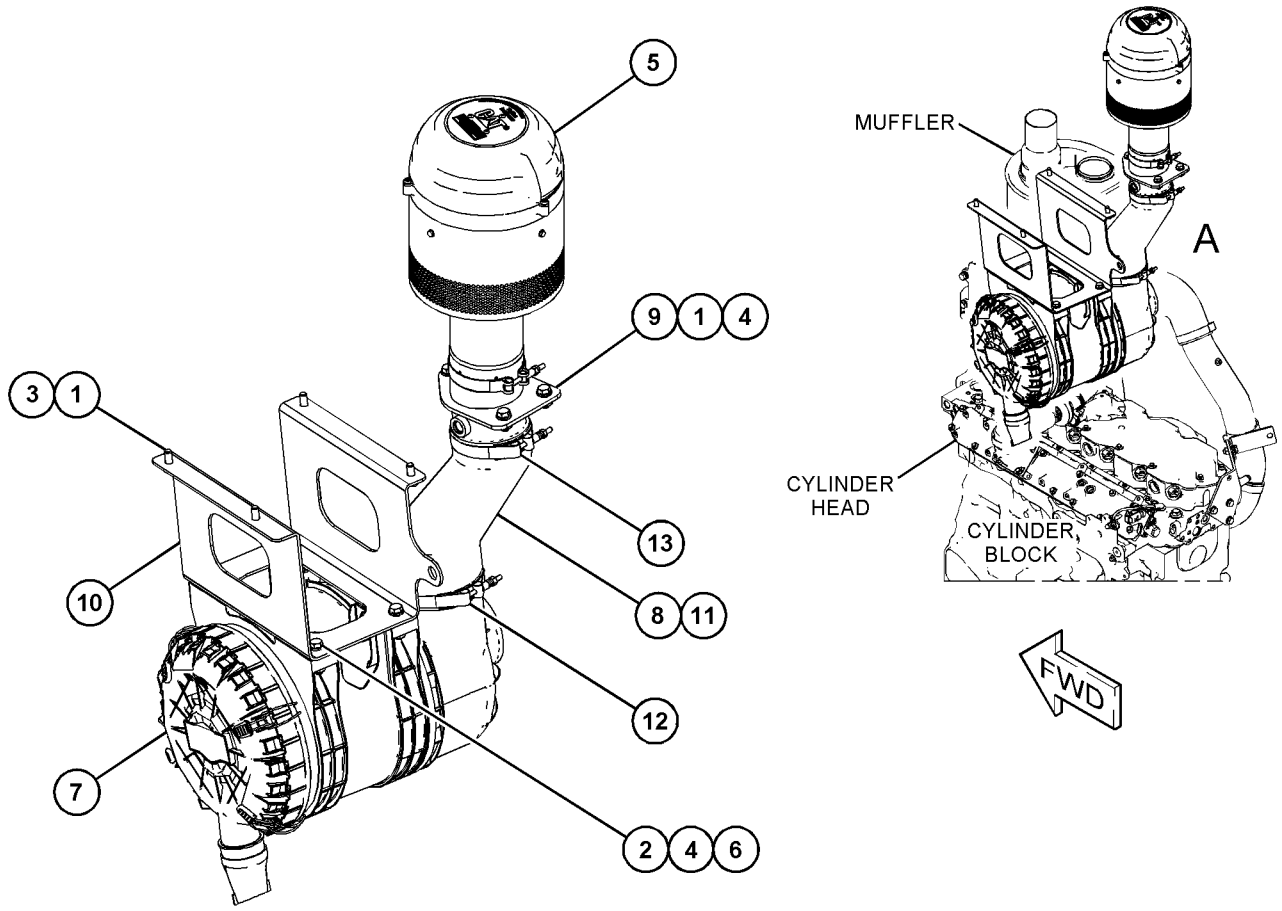

VIEW OF AREA A

GRAPHIC #1 <END> g06190149

492-8970 SUPPORT GP-PUMP

S/N: H3C1-UP; K3G1-UP

PART OF 457-1192 INSTALLATION AR-ENGINE

SMCS-0635, 108J

i07437434

NOTE	REF NO	GRAPHIC REF	PART NUMBER	QTY	PART NAME 1 2 3 4 5 6 (PRODUCT LEVEL)	SEE PAGE
M	1	1	**7X-2543**	2	BOLT (M10X1.5X120-MM)	
M	2	1	**8T-4178**	8	BOLT (M10X1.5X90-MM)	
	3	1	**8T-7934**	10	WASHER-HARD (11X21X5-MM THK)	
	4	1	**493-6673**	1	SUPPORT	

M - METRIC PART

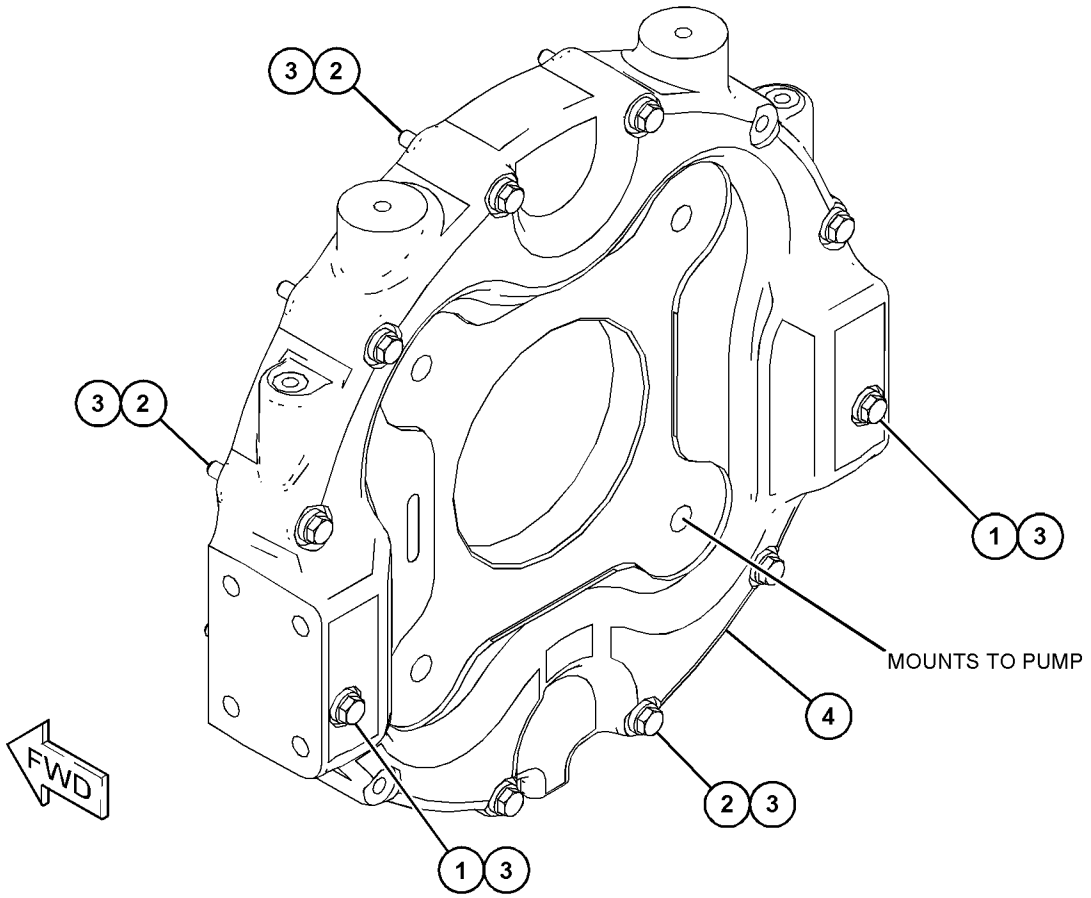

GRAPHIC #1 <END> g06180198

489-9971 TURBOCHARGER GP

S/N: 4501-UP

PART OF 553-3684 ENGINE AR-PRIMARY

SMCS-1052, 1053 **i08066518**

NOTE	REF NO	GRAPHIC REF	PART NUMBER	QTY	PART NAME 1 2 3 4 5 6 (PRODUCT LEVEL)	SEE PAGE
M	1	1	**100-4830**	1	BOLT (M10X1.5X20-MM)	
M	2	1	**124-3815**	1	BOLT (M8X1.25X16-MM)	
	3	2	**278-0017**	1	GASKET	
	4	2	**368-8557**	1	TUBE AS-TURBOCHARGER	
	4A	2	**277-9938**	1	BOLT-SPECIAL (BANJO)	
	4B	2	**277-9940**	1	SEAL-O-RING	
	4C	2	**365-5823**	2	WASHER	
Y	5	1	**396-9532**	1	LINES GP-TURBOCHARGER AIR	73
	6	2	**420-2372**	1	LINE AS	
	7	2	**437-4170**	1	GASKET	
M	8	2	**6I-0217**	5	BOLT (M8X1.25X20-MM)	
M	9	1	**6I-0563**	4	NUT (M10X1.5-THD)	
CR	10	1	**569-6097**	1	TURBOCHARGER AS	

C - CHANGE FROM PREVIOUS TYPE
M - METRIC PART
R - REMANUFACTURED PART MAY BE AVAILABLE
Y - SEPARATE ILLUSTRATION

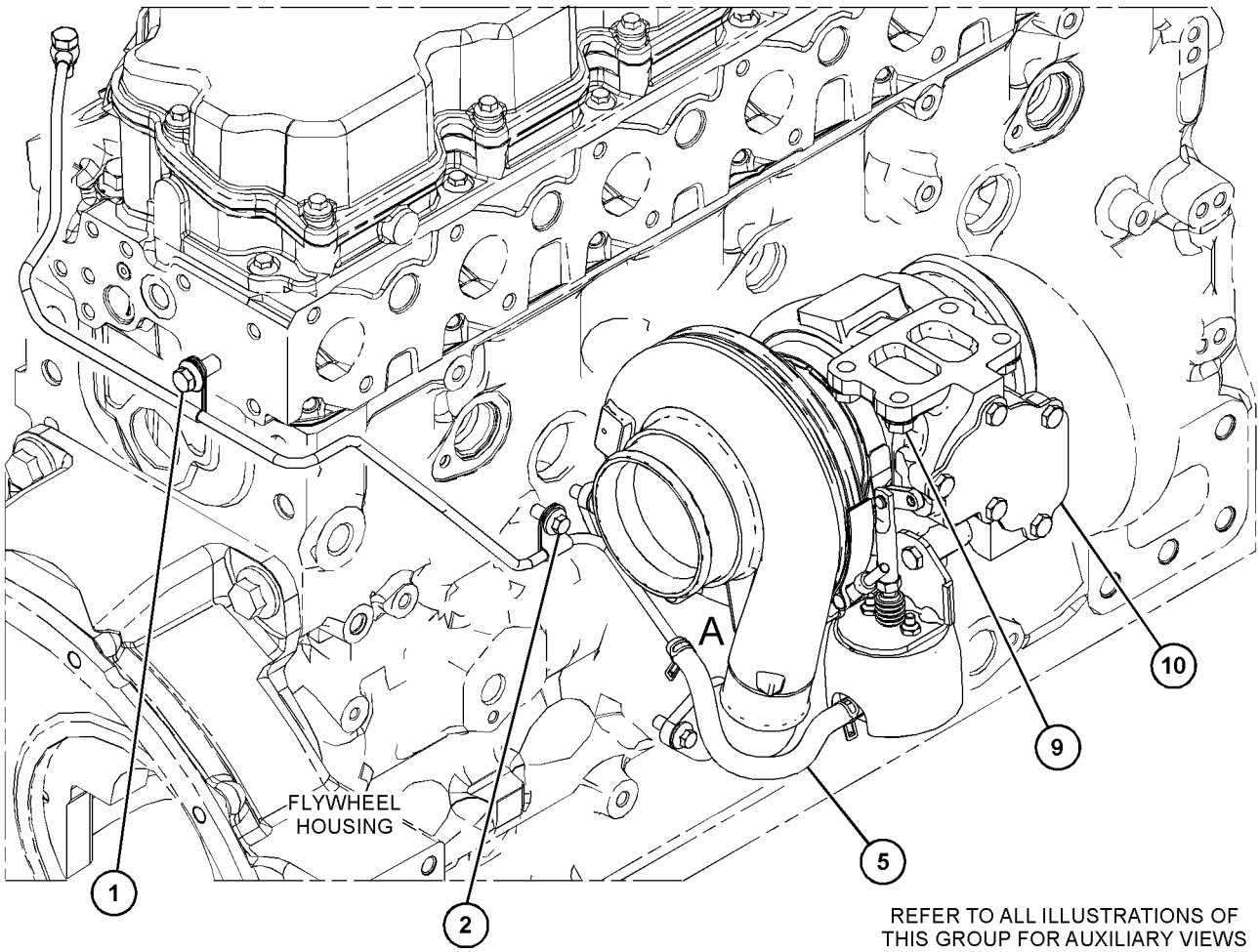

REFER TO ALL ILLUSTRATIONS OF THIS GROUP FOR AUXILIARY VIEWS

GRAPHIC #1 g06543188

489-9971 **TURBOCHARGER GP (**contd.**)** **i08066518**

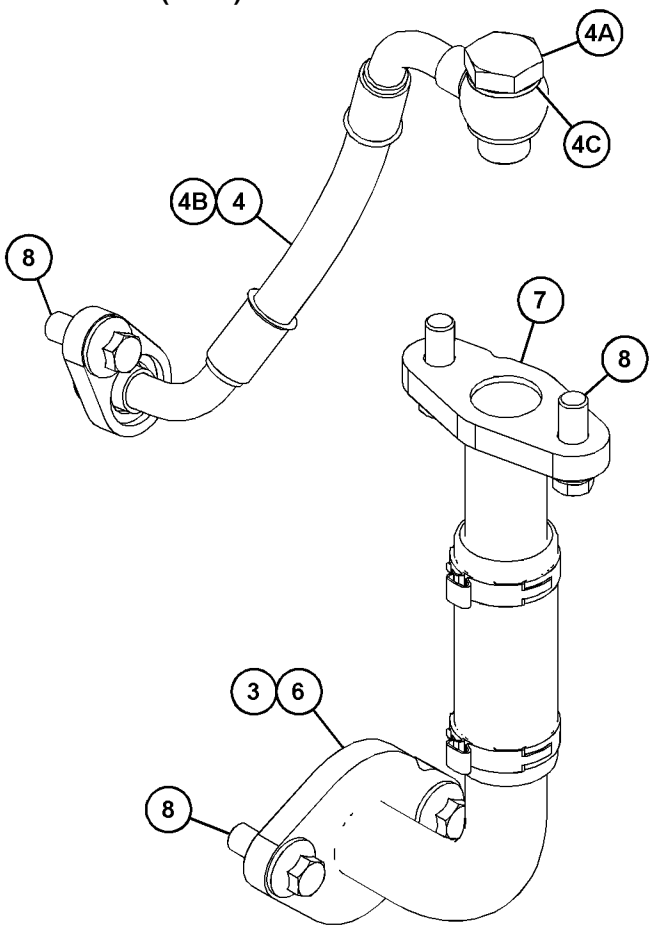

VIEW OF AREA A
(PARTS REMOVED FOR CLARITY)

GRAPHIC #2 <END> g06543239

360-8958 FILTER GP-FUEL

S/N: 4501-UP

PART OF 452-8547 FILTER GP-FUEL

SMCS-1261 **i06791520**

NOTE	REF NO	GRAPHIC REF	PART NUMBER	QTY	PART NAME 1 2 3 4 5 6 (PRODUCT LEVEL)	SEE PAGE
	1	1	**360-8960**	1	FILTER ELEMENT-FUEL	
					AVAILABLE REPAIR KIT(S):	
			362-5412	1	KIT-DRAIN (FUEL FILTER)	
					(INCLUDES DRAIN, KNOB, & SEALS)	
			370-8376	1	KIT-FUEL SYSTEM PARTS	

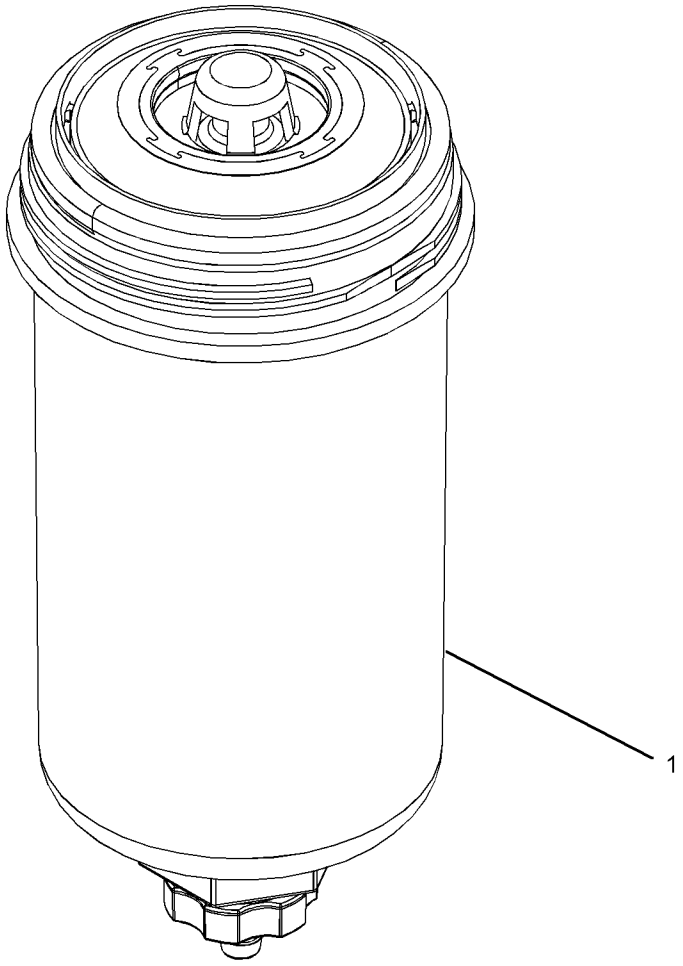

GRAPHIC #1 <END> g03173178

452-8547 FILTER GP-FUEL

S/N: 4501-UP

PART OF 453-7163 FILTER GP-FUEL

SMCS-1261 **i05856598**

NOTE	REF NO	GRAPHIC REF	PART NUMBER	QTY	PART NAME 1 2 3 4 5 6 (PRODUCT LEVEL)	SEE PAGE
Y	1	1	**360-8958**	2	FILTER GP-FUEL	83
	2	1	**362-9689**	2	SCREW-SPECIAL	
					AVAILABLE REPAIR KIT(S):	
			362-5412	2	KIT-DRAIN	
					(EACH KIT INCLUDES DRAIN, KNOB & SEAL)	

Y - SEPARATE ILLUSTRATION

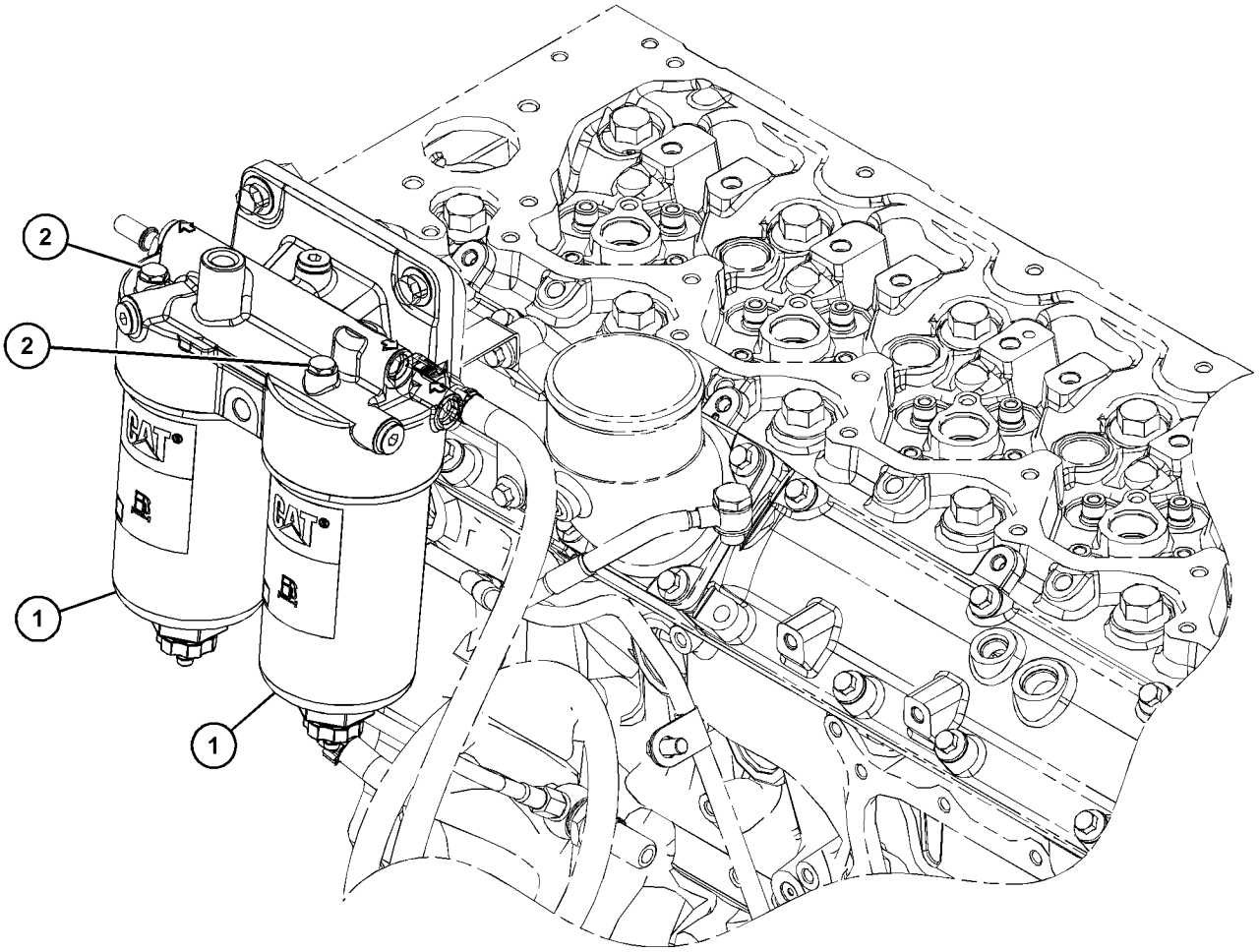

GRAPHIC #1 <END> g03701881

453-7163 FILTER GP-FUEL

S/N: 4501-UP

PART OF 553-3684 ENGINE AR-PRIMARY

SMCS-1261 **i05856596**

NOTE	REF NO	GRAPHIC REF	PART NUMBER	QTY	PART NAME 1 2 3 4 5 6 (PRODUCT LEVEL)	SEE PAGE
Y	1	1	**452-8547**	1	FILTER GP-FUEL	84

Y - SEPARATE ILLUSTRATION

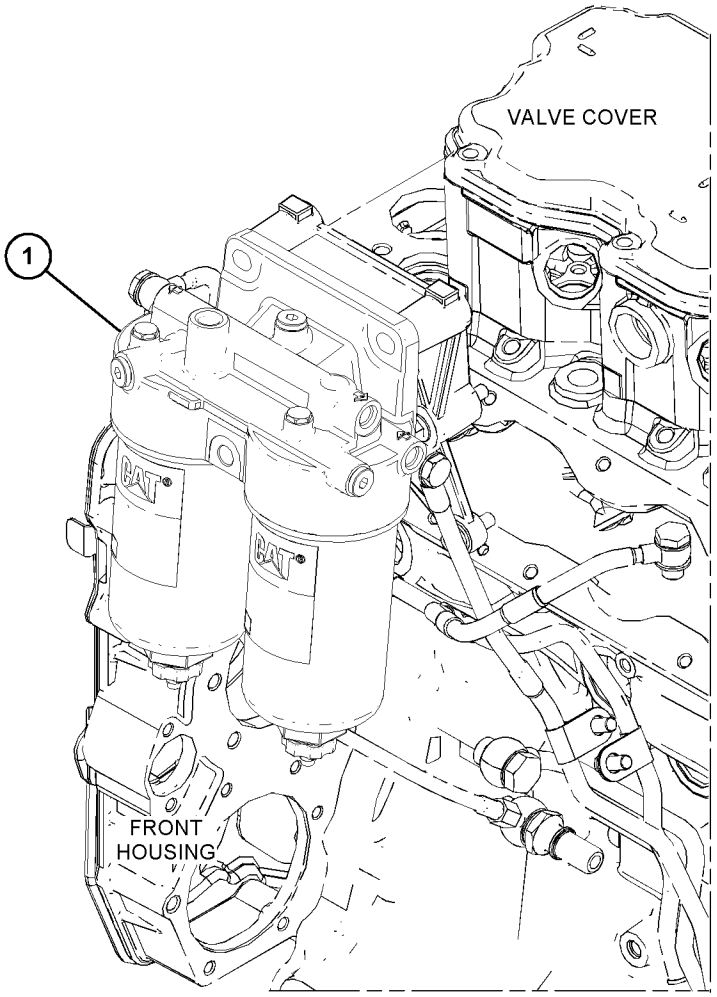

GRAPHIC #1 <END> g03695817

458-6950 FILTER GP-PRIMARY FUEL

S/N: H3C1-UP; K3G1-UP

PART OF 457-1192 INSTALLATION AR-ENGINE

SMCS-1260, 1261 **i07618989**

NOTE	REF NO	GRAPHIC REF	PART NUMBER	QTY	PART NAME 1 2 3 4 5 6 (PRODUCT LEVEL)	SEE PAGE
	1	1	**7K-1181**	2	STRAP-CABLE	
M	2	1	**8T-4136**	3	BOLT (M10X1.5X25-MM)	
M	3	1	**8T-4182**	2	BOLT (M10X1.5X45-MM)	
M	4	1	**8T-4184**	2	BOLT (M12X1.75X45-MM)	
M	5	1	**8T-4195**	6	BOLT (M10X1.5X30-MM)	
M	6	1	**8T-5005**	1	BOLT (M10X1.5X70-MM)	
	7	1	**1P-4278**	3	CLAMP-HOSE	
	8	1	**4P-8134**	1	CLIP (LADDER)	
	9	1	**5D-1026**	6	CLAMP-BAND	
	10	1	**5P-1076**	2	WASHER-HARD (13.5X30X4-MM THK)	
	11	1	**5P-4961**	2	CLAMP-HOSE	
	12	1	**8T-4121**	20	WASHER-HARD (11X21X2.5-MM THK)	
	13	1	**9X-8256**	2	WASHER (6.6X12X2-MM THK)	
	14	1	**141-3983**	1	SPACER (11X19X48-MM THK)	
M	15	1	**176-9237**	2	BOLT-SPECIAL (M10X1.5-THD)	
	16	1	**198-4777**	2	WASHER-HARD (11X25X10-MM THK)	
	17	1	*264-3517*	2	CONNECTION GP-FUEL	
					(EACH INCLUDES)	
		1	**264-3518**	1	CONNECTOR-RECEPTACLE	
		1	**264-3519**	1	CAP	
		1	**264-3520**	1	PLUG	
M	18	1	**270-9433**	2	BOLT-SOCKET HEAD (M6X1X45-MM)	
	19	1	**275-4910**	2	STRAP	
	20	1	*529-7524*	1	FITTING AS	
		1	**126-9093**	1	SEAL	
		1	**529-7523**	1	FITTING	
	21	1	**294-5076**	2	PLATE AS	
	22	1	**301-2722**	2	CONNECTOR-HOSE	
M	24	1	**344-5675**	4	NUT (M10X1.5-THD)	
	25	1	*348-5055*	1	CONNECTOR AS	
		1	**238-5080**	1	SEAL-O-RING	
		1	**267-6417**	1	CONNECTOR	
	26	1	**397-9301**	1	WASHER-HARD (11.5X20X15-MM THK)	
C	27	1	**425-2633**	4	CONNECTOR-SPECIAL	
	28	1	**434-1217**	1	PLATE	
	29	1	*442-1579*	1	FITTING AS	
		1	**126-9093**	1	SEAL	
		1	**439-1840**	1	FITTING	
Y	30	1	**444-5022**	1	FILTER GP-WATER SEP & FUEL	88
	31	1	**462-8830**	1	BRACKET AS	
	32	1	**465-0295**	1	VALVE AS-BALL	
	33	1	**491-0636**	1	BRACKET AS	
	34	1	**515-2111**	1	SUPPORT AS	
	35	1	**6D-4246**	4	CLIP (LOOP)	
	36	1	**9M-8406**	3	CLIP (LOOP)	
	37	1	**9X-8250**	7	CLIP (LOOP)	
D	38	1	**5P-5991**		HOSE (0.3-M EACH)	

458-6950 **FILTER GP-PRIMARY FUEL** (contd.) **i07618989**

NOTE	REF NO	GRAPHIC REF	PART NUMBER	QTY	PART NAME 1 2 3 4 5 6 (PRODUCT LEVEL)	SEE PAGE
E	39	1	**347-8645**		HOSE (166-CM)	
CE	40	1	**347-8646**		HOSE (25-CM)	
E	40A	1	**347-8646**		HOSE (165-CM)	
E	41	1	**347-8647**		HOSE (277-CM)	
C	42	1	*524-3798*	1	CONNECTOR AS	
		1	**238-5080**	1	SEAL-O-RING	
		1	**524-3797**	1	CONNECTOR	

C - CHANGE FROM PREVIOUS TYPE
D - ORDER BY THE METER
E - ORDER BY THE CENTIMETER
M - METRIC PART
Y - SEPARATE ILLUSTRATION

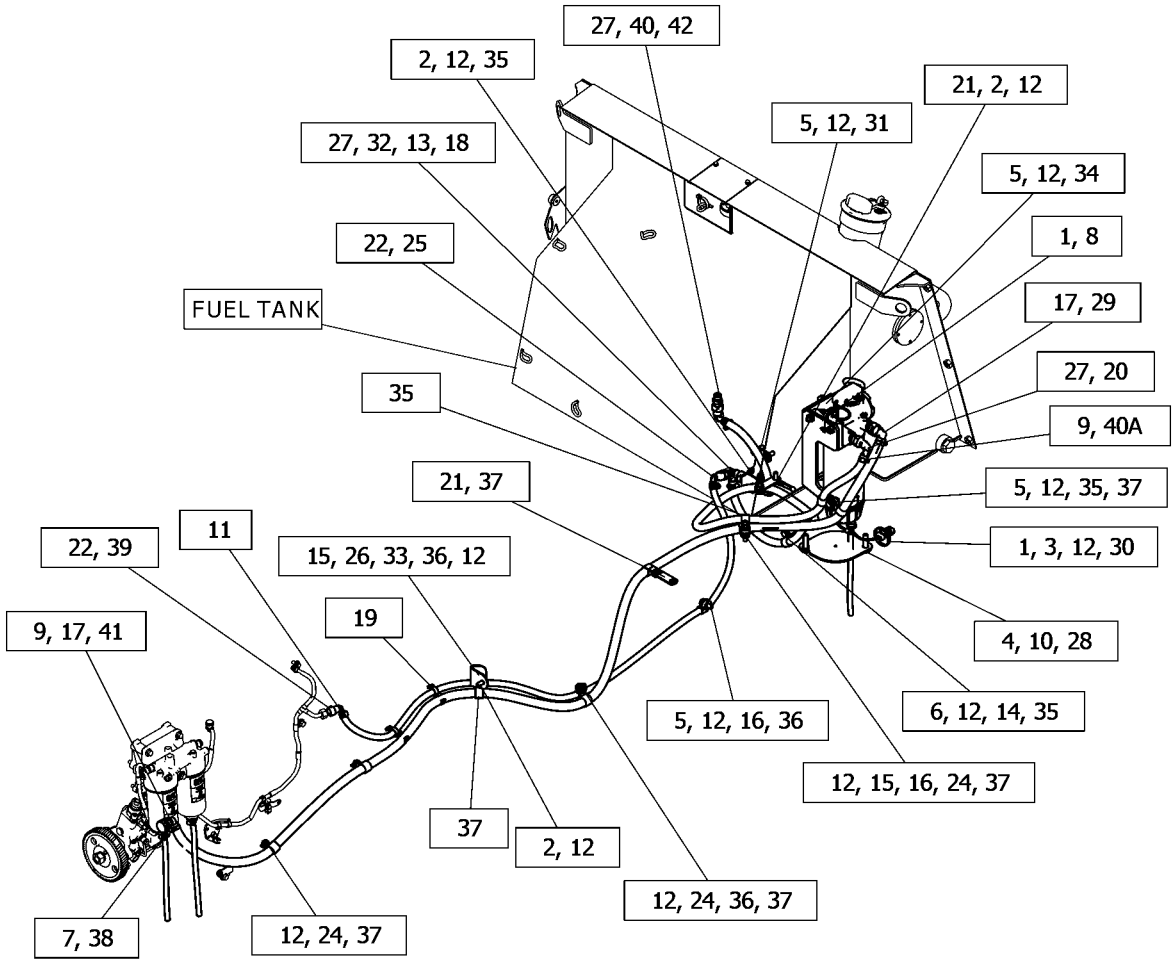

GRAPHIC #1 <END> g06420737

444-5022 FILTER GP-WATER SEP & FUEL

S/N: H3C1-UP; K3G1-UP

PART OF 458-6950 FILTER GP-PRIMARY FUEL

SMCS-1261, 1263 **i07377449**

NOTE	REF NO	GRAPHIC REF	PART NUMBER	QTY	PART NAME 1 2 3 4 5 6 (PRODUCT LEVEL)	SEE PAGE
	1	1	**192-9207**	2	PLUG AS	
					(EACH INCLUDES)	
	1A	1	**126-9093**	1	SEAL	
	2	1	**439-5037**	1	FILTER AS-WATER SEP & FUEL	
	3	1	**439-5039**	1	SENSOR-LEVEL	
	4	1	**439-5040**	1	BOWL AS	
	5	1	**446-0105**	1	MODULE AS	
	6	1	**445-5511**	1	VALVE AS	

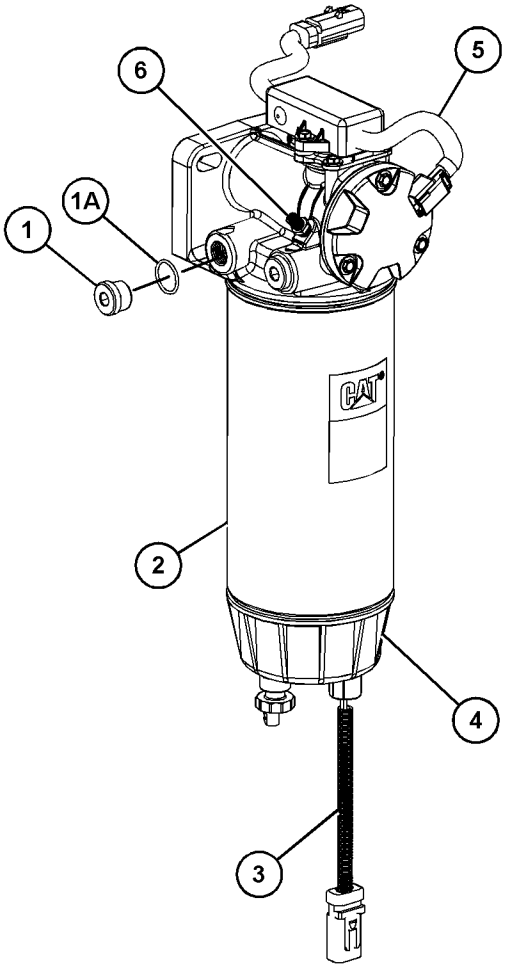

GRAPHIC #1 <END> g03651397

371-2483 INJECTOR GP-FUEL

S/N: 4501-UP

PART OF 553-3684 ENGINE AR-PRIMARY

SMCS-1251, 1254, 1290

i06928408

NOTE	REF NO	GRAPHIC REF	PART NUMBER	QTY	PART NAME 1 2 3 4 5 6 (PRODUCT LEVEL)	SEE PAGE
	1	1	**278-5170**	6	BOLT	
	2	1	**369-7799**	6	CLAMP-INJECTOR	
YR	3	1	**371-3974**	6	INJECTOR GP-FUEL	90
	4	1	**517-8243**	6	SLEEVE-INJECTOR	

R - REMANUFACTURED PART MAY BE AVAILABLE
Y - SEPARATE ILLUSTRATION

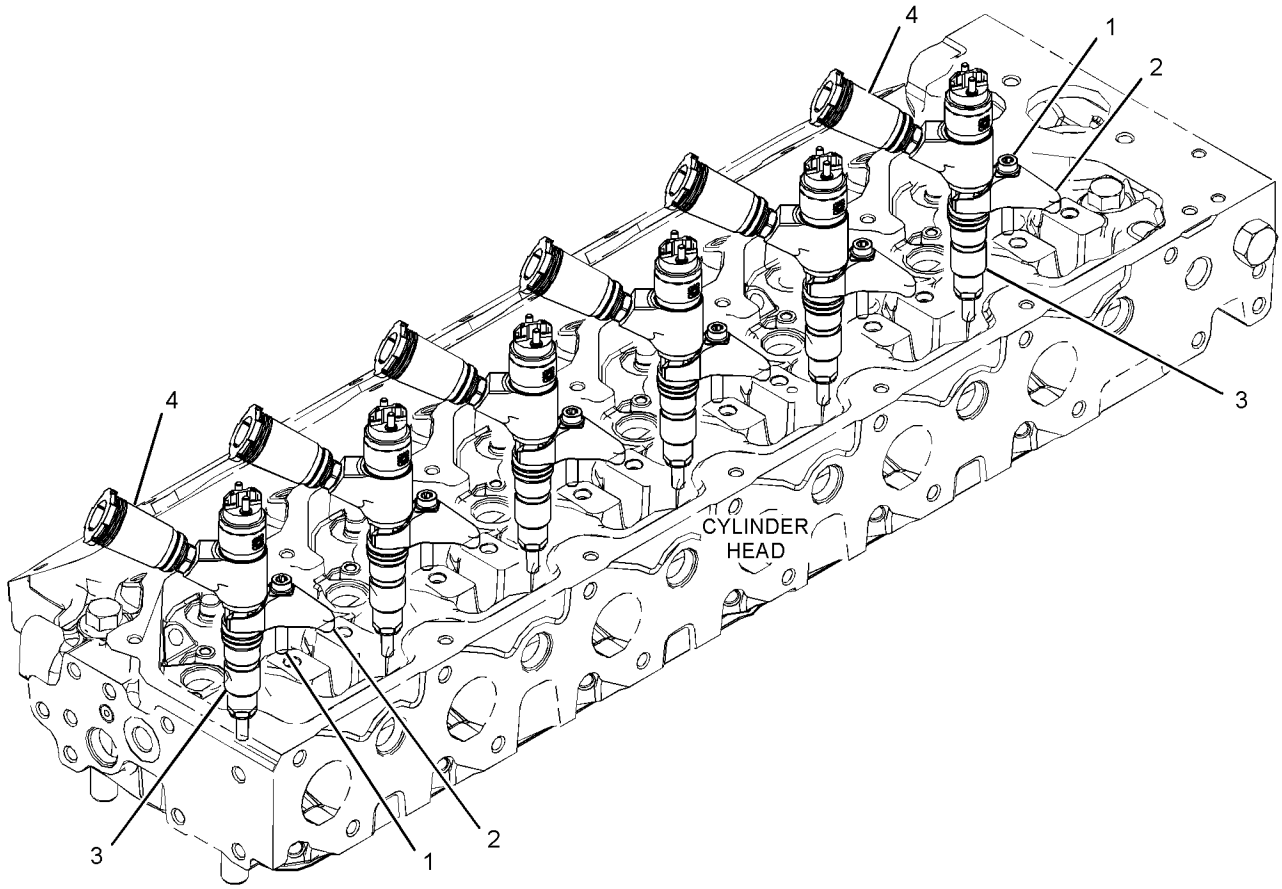

GRAPHIC #1 <END> g03378802

371-3974 INJECTOR GP-FUEL*R

S/N: 4501-UP

PART OF 371-2483 INJECTOR GP-FUEL

SMCS-1251, 1254, 1290

i07426454

NOTE	REF NO	GRAPHIC REF	PART NUMBER	QTY	PART NAME 1 2 3 4 5 6 (PRODUCT LEVEL)	SEE PAGE
	1	1	**376-6403**	1	WASHER-SEALING	
	2	1	**376-6405**	1	SEAL-O-RING	

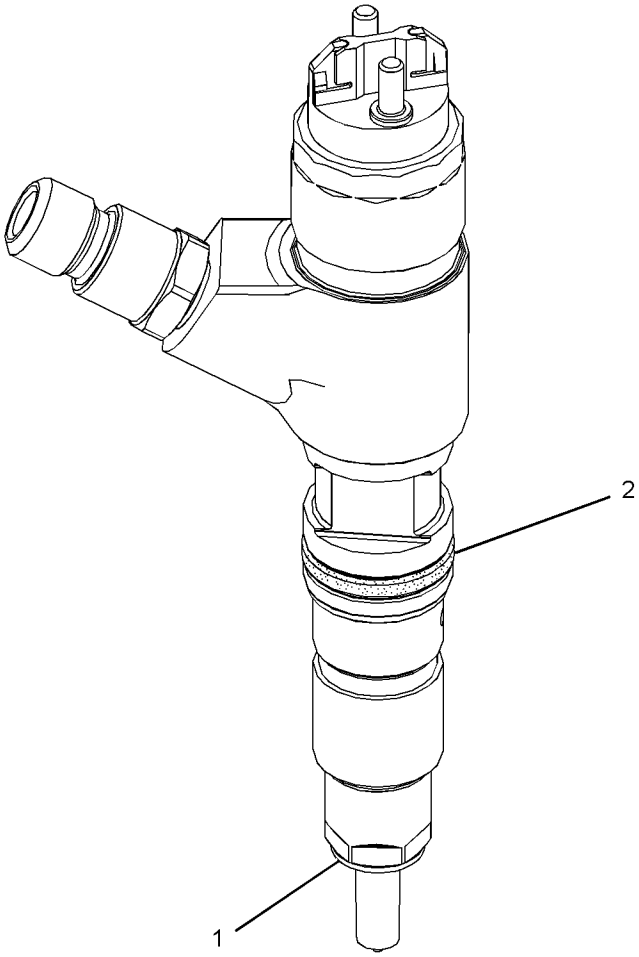

GRAPHIC #1

<END>

g03110876

416-1069 LINES GP-FUEL

S/N: 4501-UP

PART OF 432-6484 LINES GP-FUEL FILTER

SMCS-1274 **i07952932**

NOTE	REF NO	GRAPHIC REF	PART NUMBER	QTY	PART NAME 1 2 3 4 5 6 (PRODUCT LEVEL)	SEE PAGE
	1	1	**286-2890**	2	WASHER	
	2	1	**377-5988**	1	BOLT	
	3	1	**277-4993**	1	SEAL-O-RING	

416-1069 **LINES GP-FUEL (**contd.**)** **i07952932**

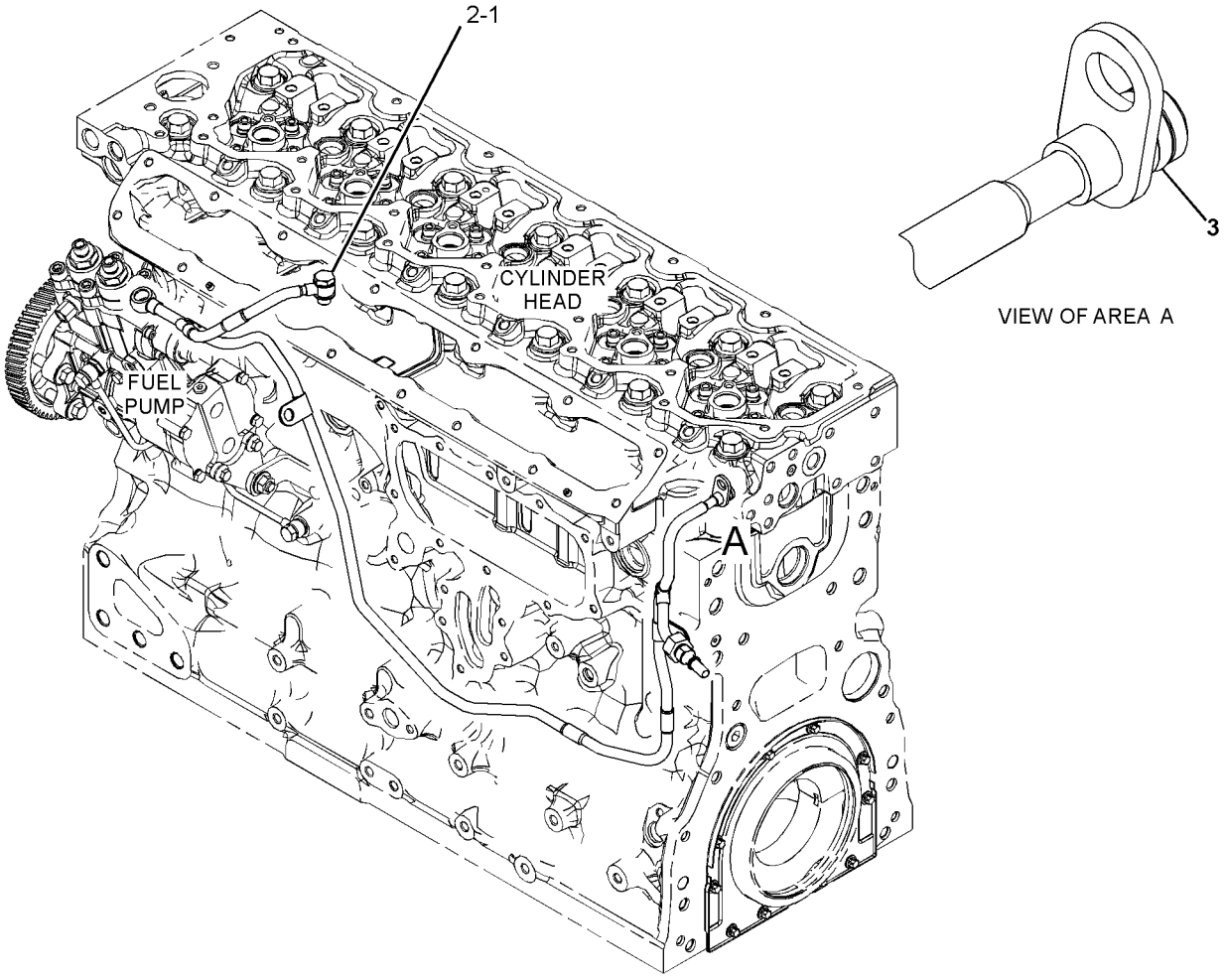

GRAPHIC #1 <END> g06493452

433-1316 LINES GP-FUEL

S/N: 4501-UP

PART OF 432-6484 LINES GP-FUEL FILTER

SMCS-1274 **i07953019**

NOTE	REF NO	GRAPHIC REF	PART NUMBER	QTY	PART NAME 1 2 3 4 5 6 (PRODUCT LEVEL)	SEE PAGE
	1	1	**246-4361**	2	WASHER (10.5X14X1.5-MM THK)	
	2	1	**385-1398**	1	CONNECTION-FUEL	
	3	1	**386-1864**	1	BOLT-BANJO	
	4	1	**247-4928**	2	WASHER (16.5X20.5X1.6-MM THK)	
					PARTS SHOWN IN GRAPHIC(S) WITHOUT A REFERENCE NUMBER ARE NOT SERVICED SEPARATELY	

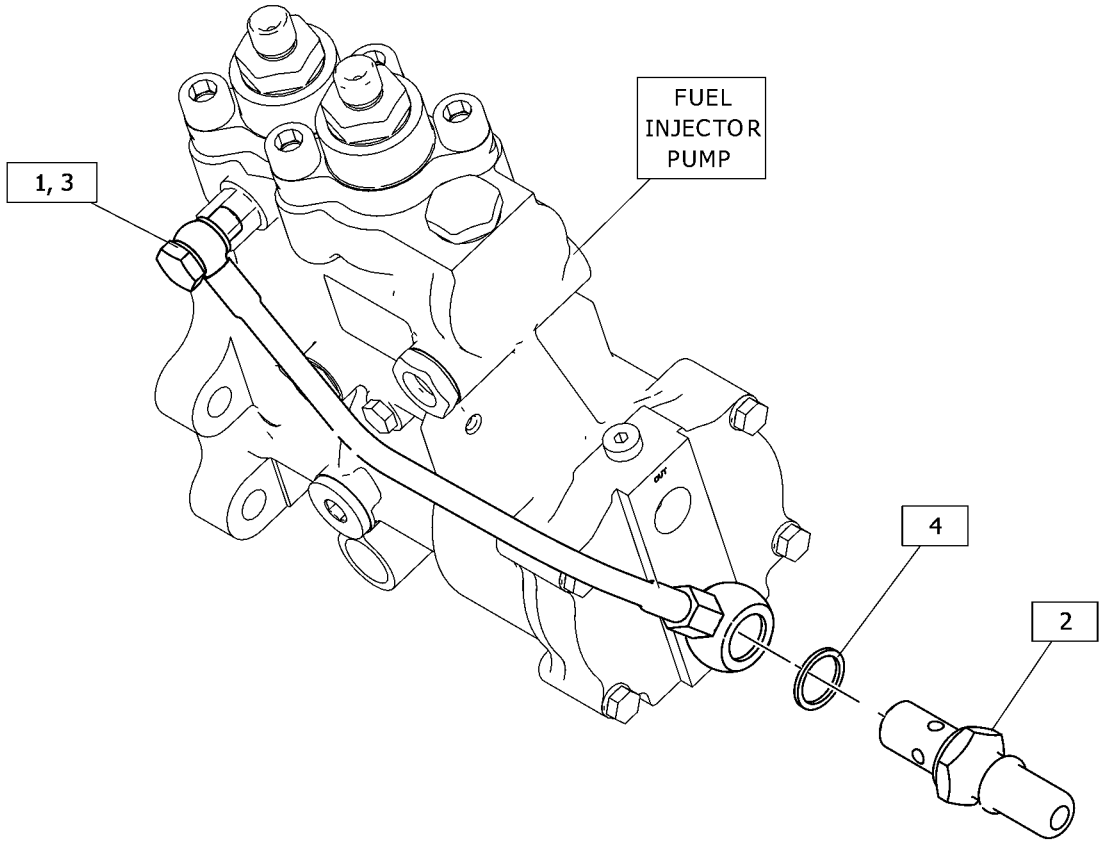

GRAPHIC #1 <END> g06494442

442-8465 LINES GP-FUEL

S/N: 4501-UP

PART OF 432-6484 LINES GP-FUEL FILTER

SMCS-1274 **i07107150**

NOTE	REF NO	GRAPHIC REF	PART NUMBER	QTY	PART NAME 1 2 3 4 5 6 (PRODUCT LEVEL)	SEE PAGE
	1	1	**277-9938**	1	BOLT-SPECIAL (BANJO)	
	2	1	**286-2890**	2	WASHER	
	3	1	**295-4670**	1	BOLT-SPECIAL (BANJO)	
	4	1	**348-0495**	2	WASHER	

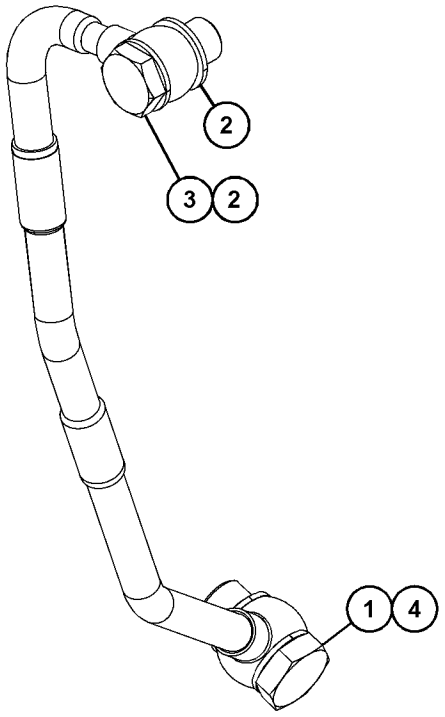

VIEW OF AREA A

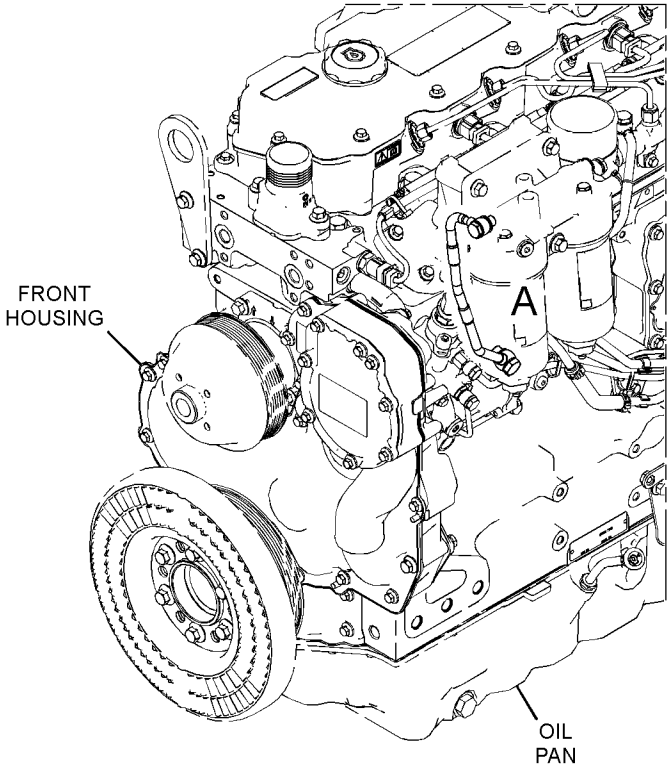

GRAPHIC #1 <END> g06240240

484-7200 LINES GP-FUEL

S/N: 4501-UP

PART OF 432-6484 LINES GP-FUEL FILTER

SMCS-1274 **i07952990**

NOTE	REF NO	GRAPHIC REF	PART NUMBER	QTY	PART NAME 1 2 3 4 5 6 (PRODUCT LEVEL)	SEE PAGE
	1	1	**247-4928**	2	WASHER (16.5X20.5X1.6-MM THK)	
	2	1	**286-2890**	2	WASHER	
	3	1	**295-4670**	1	BOLT-SPECIAL (BANJO)	
M	4	1	**386-2737**	1	BOLT-BANJO (M16X1.5X27-MM)	
					PARTS SHOWN IN GRAPHIC(S) WITHOUT A REFERENCE NUMBER ARE NOT SERVICED SEPARATELY	

M - METRIC PART

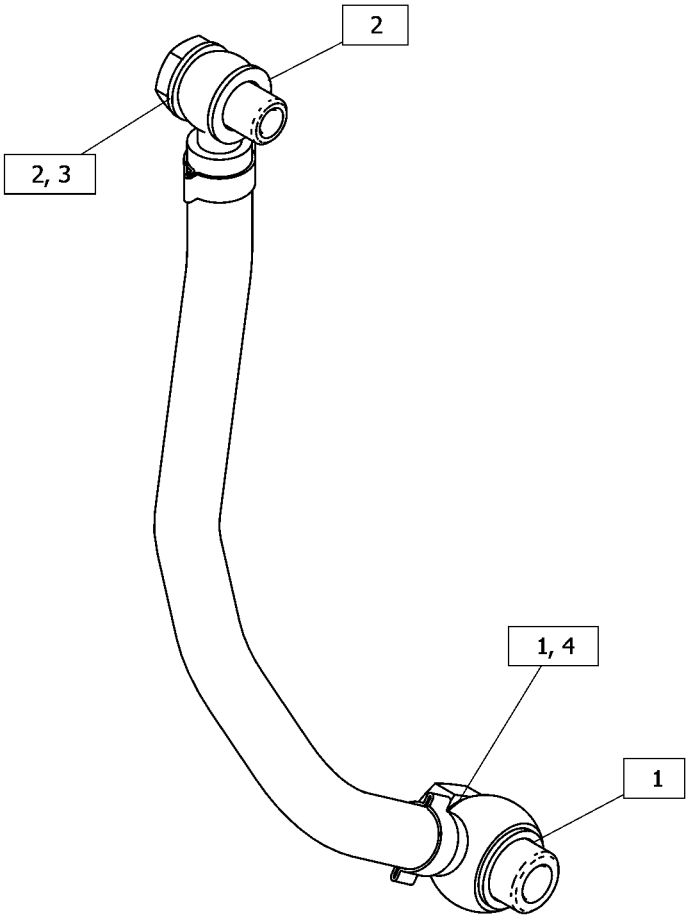

GRAPHIC #1 <END> g06494372

432-6484 LINES GP-FUEL FILTER

S/N: 4501-UP

PART OF 553-3684 ENGINE AR-PRIMARY

SMCS-1261, 1274 **i07171676**

NOTE	REF NO	GRAPHIC REF	PART NUMBER	QTY	PART NAME 1 2 3 4 5 6 (PRODUCT LEVEL)	SEE PAGE
M	1	1	**6I-0593**	2	BOLT (M10X1.5X30-MM)	
M	2	1	**6I-4200**	2	BOLT (M10X1.5X16-MM)	
M	3	1	**100-4458**	1	BOLT (M8X1.25X14-MM)	
M	4	1	**124-3815**	1	BOLT (M8X1.25X16-MM)	
M	5	1	**164-7468**	1	BOLT (M10X1.5X95-MM)	
	6	1	**387-3577**	1	SUPPORT GP-LINES	
		1	**366-9373**	4	CLIP	
	7	1	**389-5775**	1	BRACKET	
	8	1	**389-5784**	1	BRACKET-FILTER	
	9	1	**391-1817**	1	SUPPORT GP-LINES	
		1	**366-9373**	2	CLIP	
Y	10	1	**416-1069**	1	LINES GP-FUEL	91
	11	1	**432-8723**	1	BRACKET AS	
Y	12	1	**433-1316**	1	LINES GP-FUEL	93
Y	13	1	**442-8465**	1	LINES GP-FUEL	94
Y	14	1	**484-7200**	1	LINES GP-FUEL	95
	15	1	**442-8569**	1	CLIP-PIPE	
M	16	1	**6I-0217**	1	BOLT (M8X1.25X20-MM)	
M	17	1	**6I-0260**	3	BOLT (M8X1.25X25-MM)	
M	18	1	**208-9287**	2	BOLT-FLANGE HEAD (M8X1.25X50-MM)	
	19	1	*330-9723*	2	PLUG AS	
					(EACH INCLUDES)	
		1	**228-7100**	1	SEAL-O-RING	
		1	**241-6157**	1	PLUG	

M - METRIC PART
Y - SEPARATE ILLUSTRATION

432-6484 **LINES GP-FUEL FILTER (**contd.**)** **i07171676**

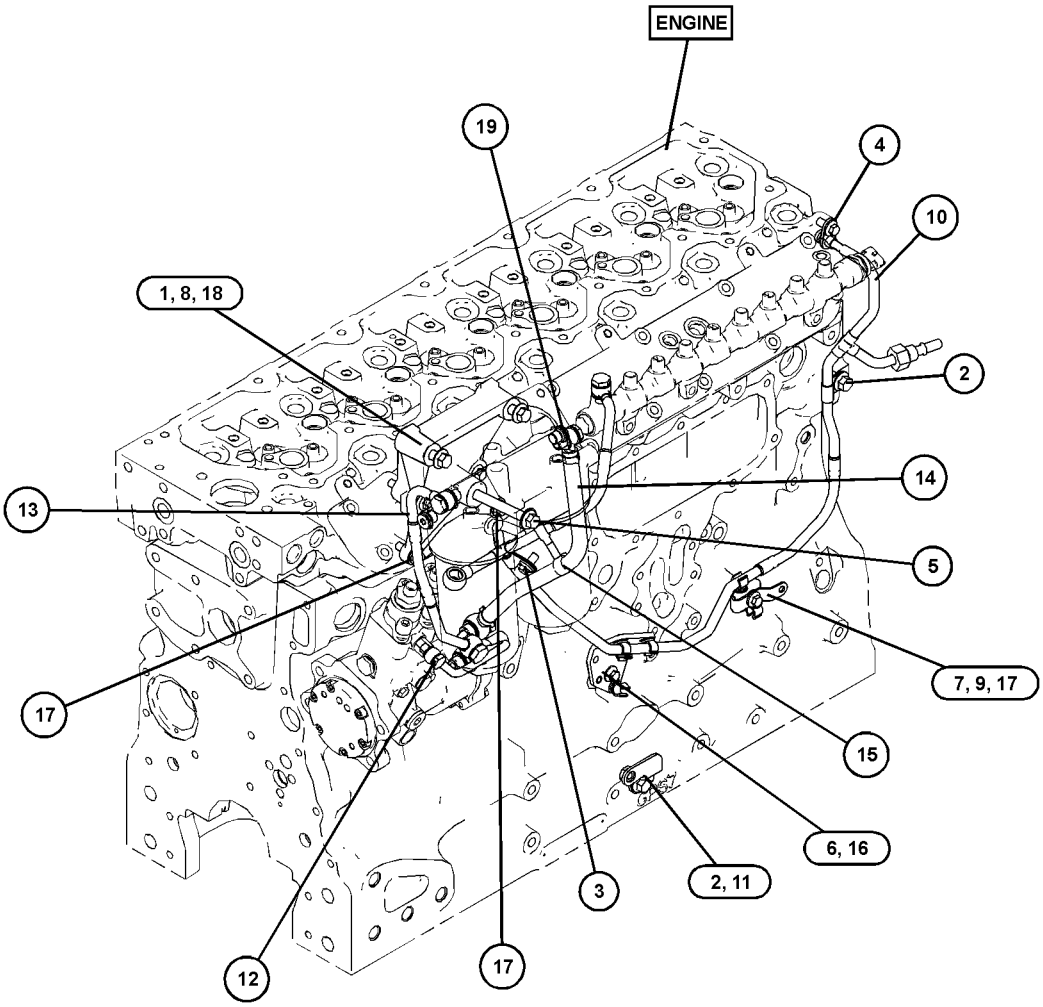

GRAPHIC #1 <END> g06241564

370-5520 LINES GP-FUEL INJECTION

S/N: 4501-UP

PART OF 394-9639 RAIL GP-FUEL

SMCS-1252, 1254 **i07175141**

NOTE	REF NO	GRAPHIC REF	PART NUMBER	QTY	PART NAME 1 2 3 4 5 6 (PRODUCT LEVEL)	SEE PAGE
	1	1	**395-1633**	1	BRACKET AS	
M		1	**6I-0631**	1	BOLT (M6X1X12-MM)	
	2	1	**370-5516**	1	LINE AS-FUEL INJECTION	
	3	1	**370-5517**	1	LINE AS-FUEL INJECTION	
	4	1	**370-5518**	1	LINE AS-FUEL INJECTION	

M - METRIC PART

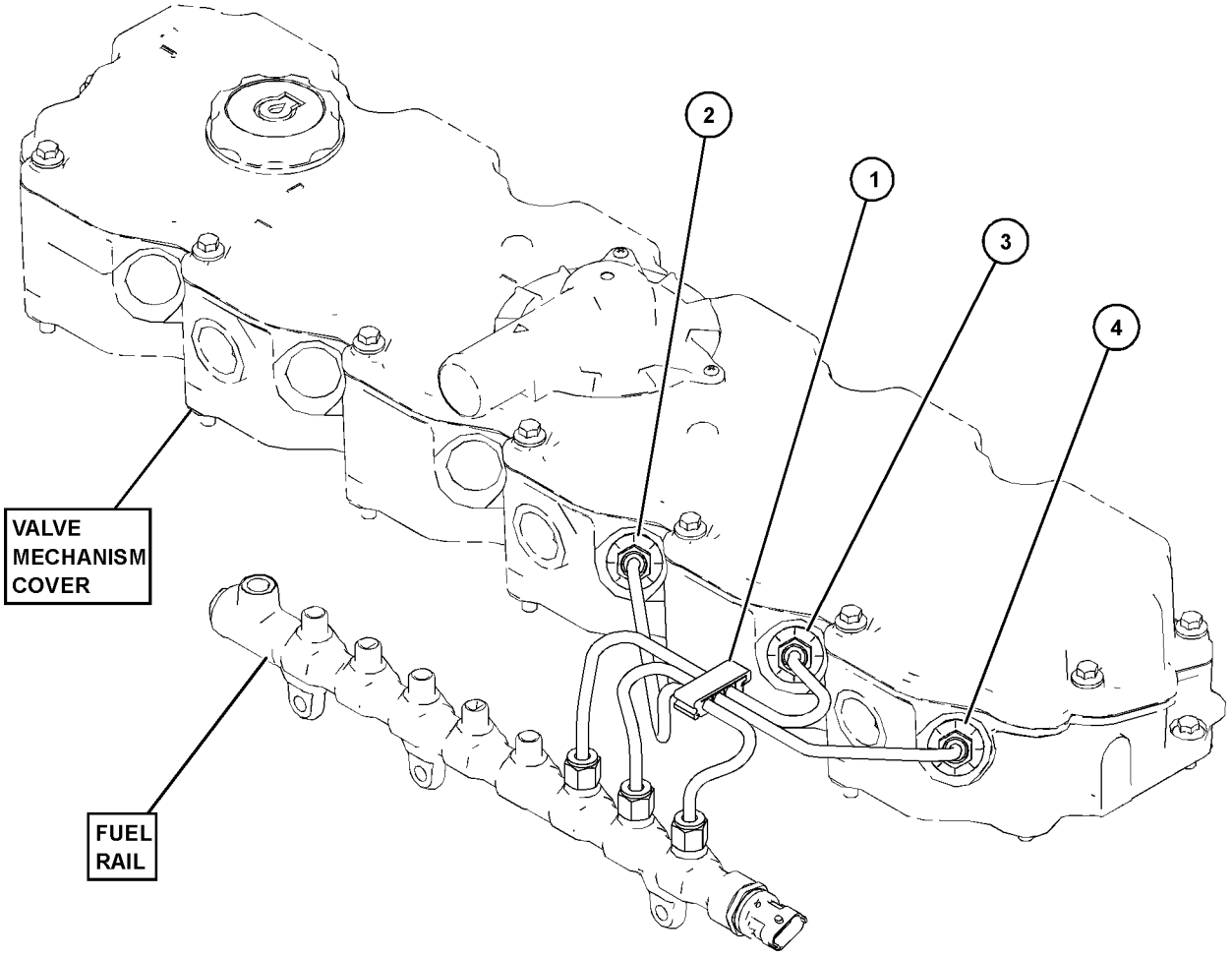

GRAPHIC #1 <END> g06238838

394-0525 LINES GP-FUEL INJECTION

S/N: 4501-UP

PART OF 394-9639 RAIL GP-FUEL

SMCS-1252, 1254

i07107179

NOTE	REF NO	GRAPHIC REF	PART NUMBER	QTY	PART NAME 1 2 3 4 5 6 (PRODUCT LEVEL)	SEE PAGE
	1	1	**395-1633**	1	BRACKET AS	
M	1A	1	**6I-0631**	1	BOLT (M6X1X12-MM)	
	2	1	**370-5513**	1	LINE AS-FUEL	
	3	1	**393-5467**	1	LINE AS-FUEL	
	4	1	**393-5468**	1	LINE AS-FUEL	

M - METRIC PART

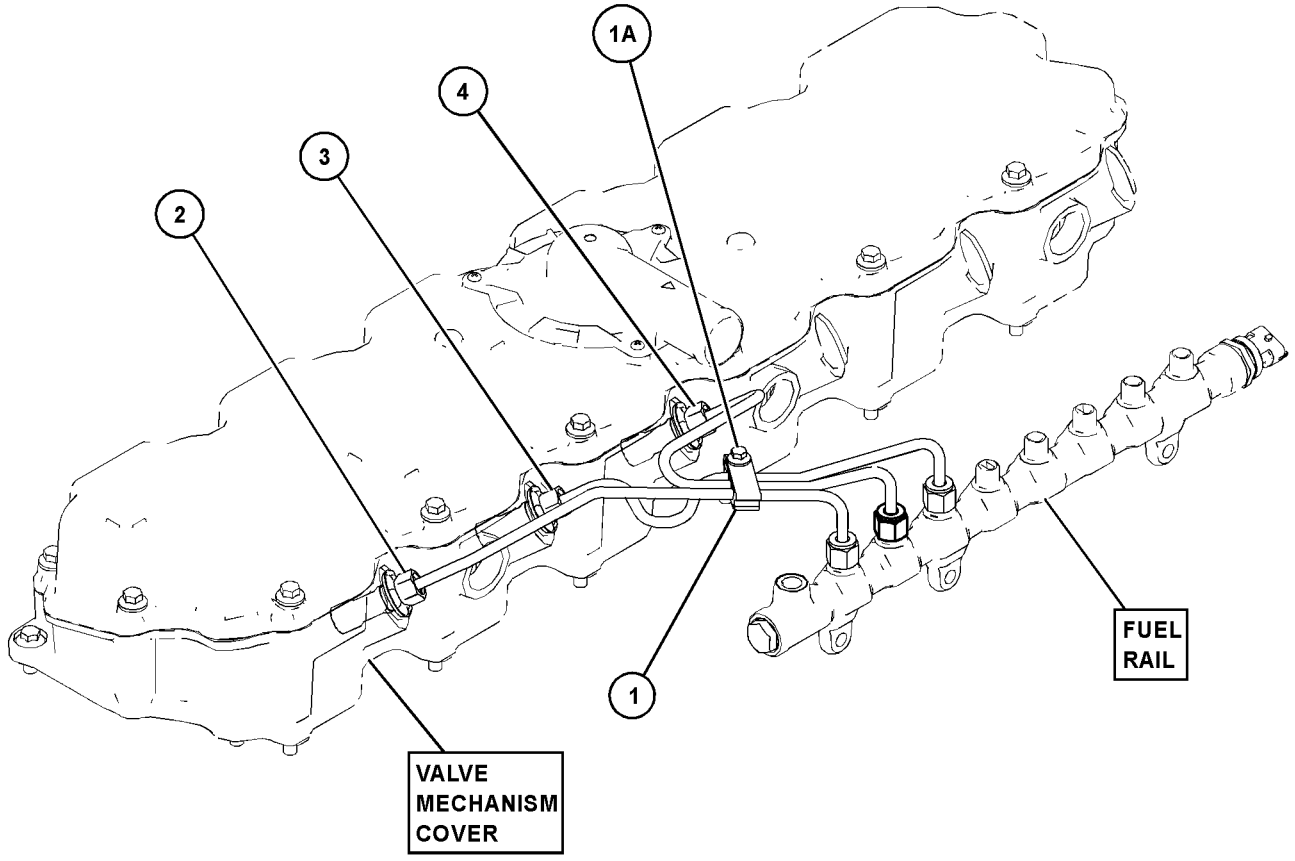

GRAPHIC #1 <END> g06241117

375-2647 PUMP GP-FUEL INJECTION*R

S/N: 4501-UP

PART OF 391-4811 PUMP GP-FUEL INJECTION

SMCS-1251, 1290

i07351531

NOTE	REF NO	GRAPHIC REF	PART NUMBER	QTY	PART NAME 1 2 3 4 5 6 (PRODUCT LEVEL)	SEE PAGE
	1	1	**386-3819**	1	KEY-SHAFT	
	2	1	**375-8254**	1	VALVE	
	3	1	**376-6409**	1	SEAL	
	4	1	**376-6410**	1	RETAINER-WASHER	
	5	1	**376-6411**	1	NUT-SHAFT	
	6	1	**386-2971**	2	WASHER	
	7	1	**386-2976**	2	WASHER	
	8	1	**453-0790**	3	BOLT	
	9	1	**454-5109**	1	BOLT-BANJO	

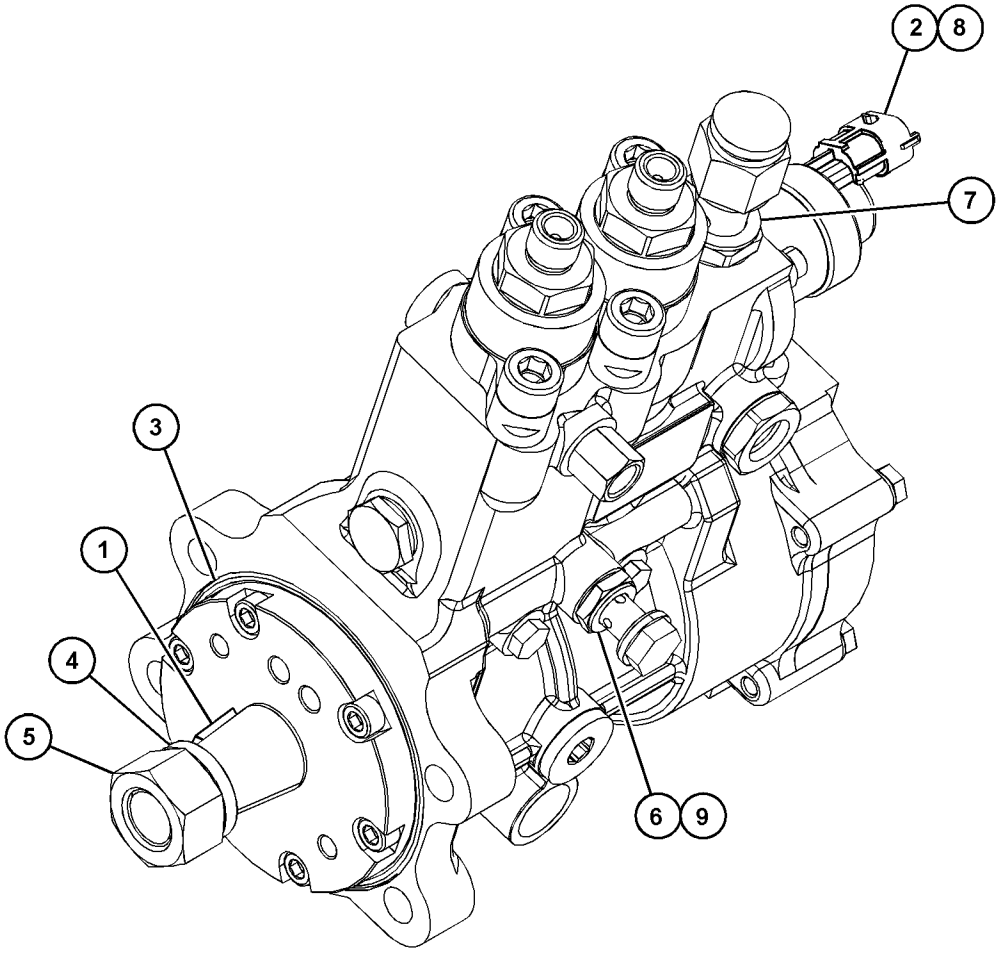

GRAPHIC #1 <END> g06182840

391-4811 PUMP GP-FUEL INJECTION

S/N: 4501-UP

PART OF 553-3684 ENGINE AR-PRIMARY

SMCS-1251, 1290 **i08083019**

NOTE	REF NO	GRAPHIC REF	PART NUMBER	QTY	PART NAME 1 2 3 4 5 6 (PRODUCT LEVEL)	SEE PAGE
M	1	1	**111-0859**	4	BOLT (M10X1.5X35-MM)	
M	2	1	**6I-0654**	3	BOLT (M10X1.5X25-MM)	
	3	1	**371-2684**	1	BRACKET	
	4	1	**371-2691**	1	BRACKET	
	5	1	**371-7263**	1	LINE AS-FUEL	
YR	6	1	**375-2647**	1	PUMP GP-FUEL INJECTION	100
	7	1	**476-2947**	1	GEAR-FUEL PUMP (68-TEETH)	
M	8	1	**6I-0217**	2	BOLT (M8X1.25X20-MM)	
	9	1	**346-0006**	1	BOLT-SPECIAL	
	10	1	**346-0007**	2	WASHER	
M	11	1	**175-7141**	1	NUT-HEX FLANGE (M10X1.5-THD)	
	12	1	**348-0495**	2	WASHER	

M - METRIC PART
R - REMANUFACTURED PART MAY BE AVAILABLE
Y - SEPARATE ILLUSTRATION

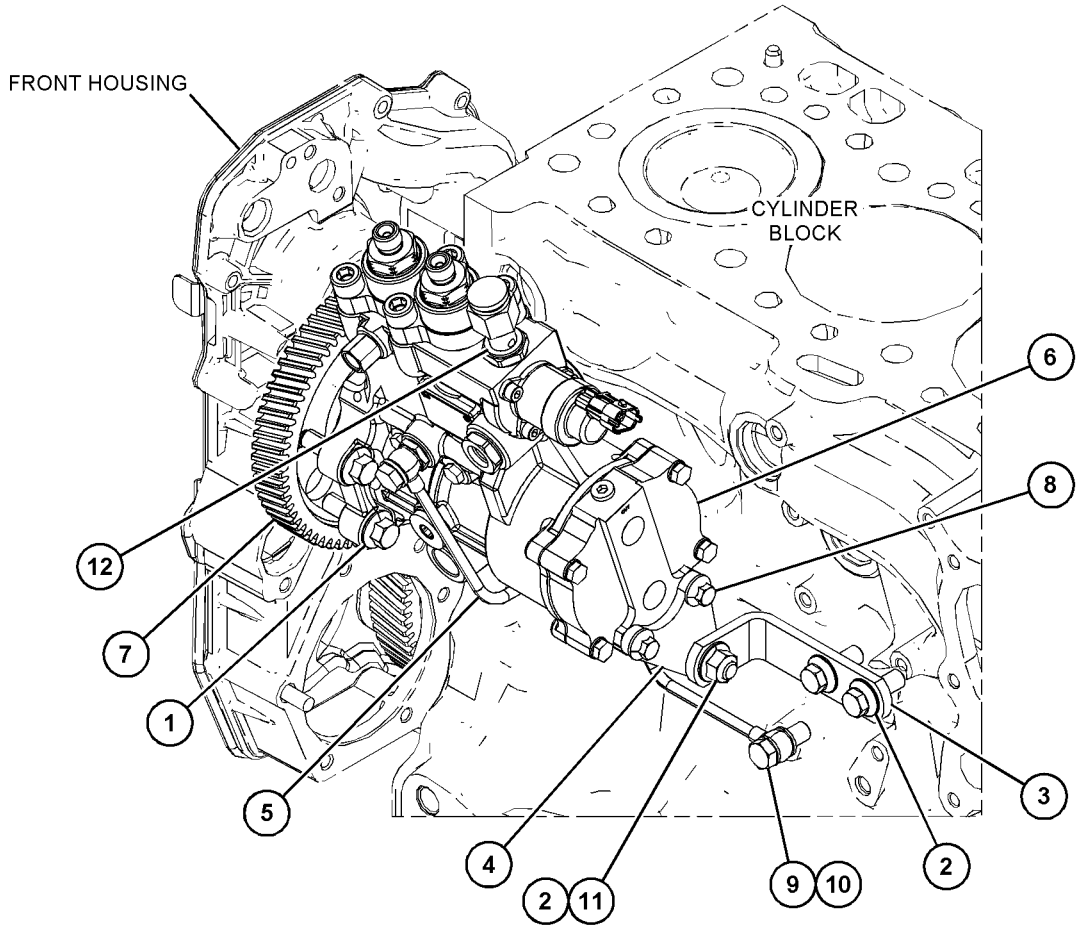

GRAPHIC #1 <END> g06537698

394-9639 RAIL GP-FUEL

S/N: 4501-UP

PART OF 553-3684 ENGINE AR-PRIMARY

SMCS-1288 **i05489964**

NOTE	REF NO	GRAPHIC REF	PART NUMBER	QTY	PART NAME 1 2 3 4 5 6 (PRODUCT LEVEL)	SEE PAGE
M	1	1	**6I-0260**	3	BOLT (M8X1.25X25-MM)	
M	2	1	**099-6418**	1	NUT (M6X1-THD)	
	3	1	**206-1826**	2	BOLT	
Y	4	1	*370-5520*	1	LINES GP-FUEL INJECTION	98
	5	1	**375-0482**	4	CLAMP-PIPE	
	6	1	**375-0483**	2	INSERT-CLAMP	
	7	1	**375-2649**	1	RAIL GP-FUEL	
		1	**375-6988**	1	SENSOR (FUEL RAIL PRESSURE)	
		1	**398-6226**	1	VALVE (FUEL RAIL PRESSURE)	
	8	1	**393-2034**	1	LINE AS-FUEL	
	9	1	**393-2035**	1	LINE AS-FUEL	
Y	10	1	**394-0525**	1	LINES GP-FUEL INJECTION	99

M - METRIC PART
Y - SEPARATE ILLUSTRATION

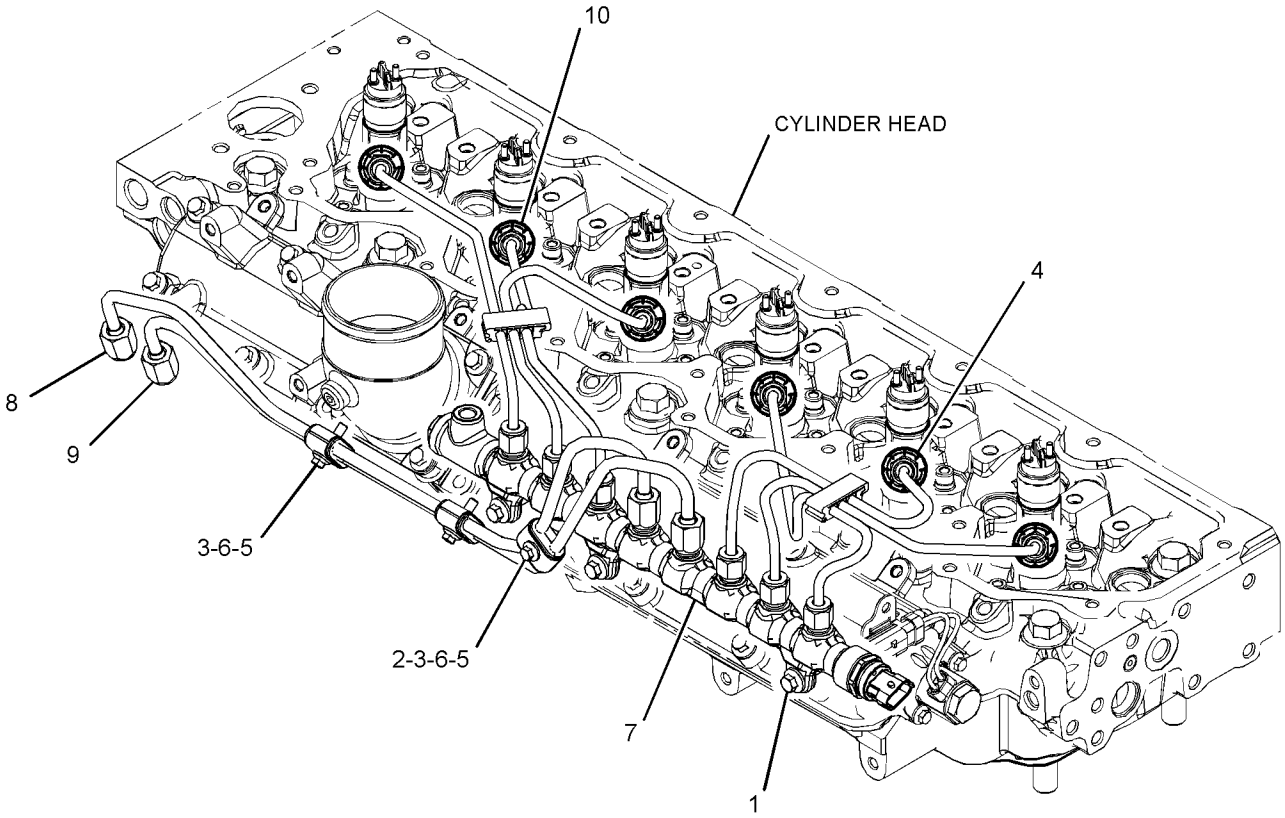

GRAPHIC #1 <END> g03380177

425-7127 TANK & MTG GP-FUEL

S/N: H3C1-UP; K3G1-UP
250-L (66.04 U.S. GAL)
AN ATTACHMENT

SMCS-1273 **i08056707**

NOTE	REF NO	GRAPHIC REF	PART NUMBER	QTY	PART NAME 1 2 3 4 5 6 (PRODUCT LEVEL)	SEE PAGE
	1	1	**7P-9131**	1	HANDRAIL	
	2	1	**101-4639**	1	VALVE-DRAIN (HYDRAULIC TANK) (FUEL TANK)	
	3	1	**125-7037**	3	INSERT	
	4	1	**159-3727**	1	TUBE AS-DRAIN	
	5	1	**160-9192**	2	CLIP	
	6	1	**363-4123**	1	GASKET	
	7	1	**434-1217**	1	PLATE	
	8	1	**459-7322**	1	PLATE	
	9	1	**461-1233**	2	PLUG	
Y	10	1	**476-0301**	1	TANK GP-FUEL	105
	11	1	**485-5354**	1	SENDER AS-FUEL LEVEL	
		1	**9X-3401**	2	PIN-CONNECTOR (16-GA TO 18-GA)	
		1	**102-8802**	1	KIT-RECEPTACLE (2-PIN)	
					(INCLUDES RECEPTACLE AS & WEDGE)	
	12	1	**2M-9780**	1	SEAL-O-RING	
	13	1	**5P-1076**	4	WASHER-HARD (13.5X30X4-MM THK)	
	14	1	**8G-5258**	4	SPACER (17X35X20-MM THK)	
M	15	1	**8T-0325**	5	BOLT (M5X0.8X14-MM)	
	16	1	**8T-0328**	5	WASHER-HARD (5.5X10X1-MM THK)	
M	17	1	**8T-4139**	2	BOLT (M12X1.75X30-MM)	
M	18	1	**8T-4140**	4	BOLT (M16X2X60-MM)	
M	19	1	**8T-4194**	2	BOLT (M12X1.75X50-MM)	
	20	1	**7K-1181**	1	STRAP-CABLE	

M - METRIC PART
Y - SEPARATE ILLUSTRATION

425-7127 **TANK & MTG GP-FUEL (**contd.**)** **i08056707**

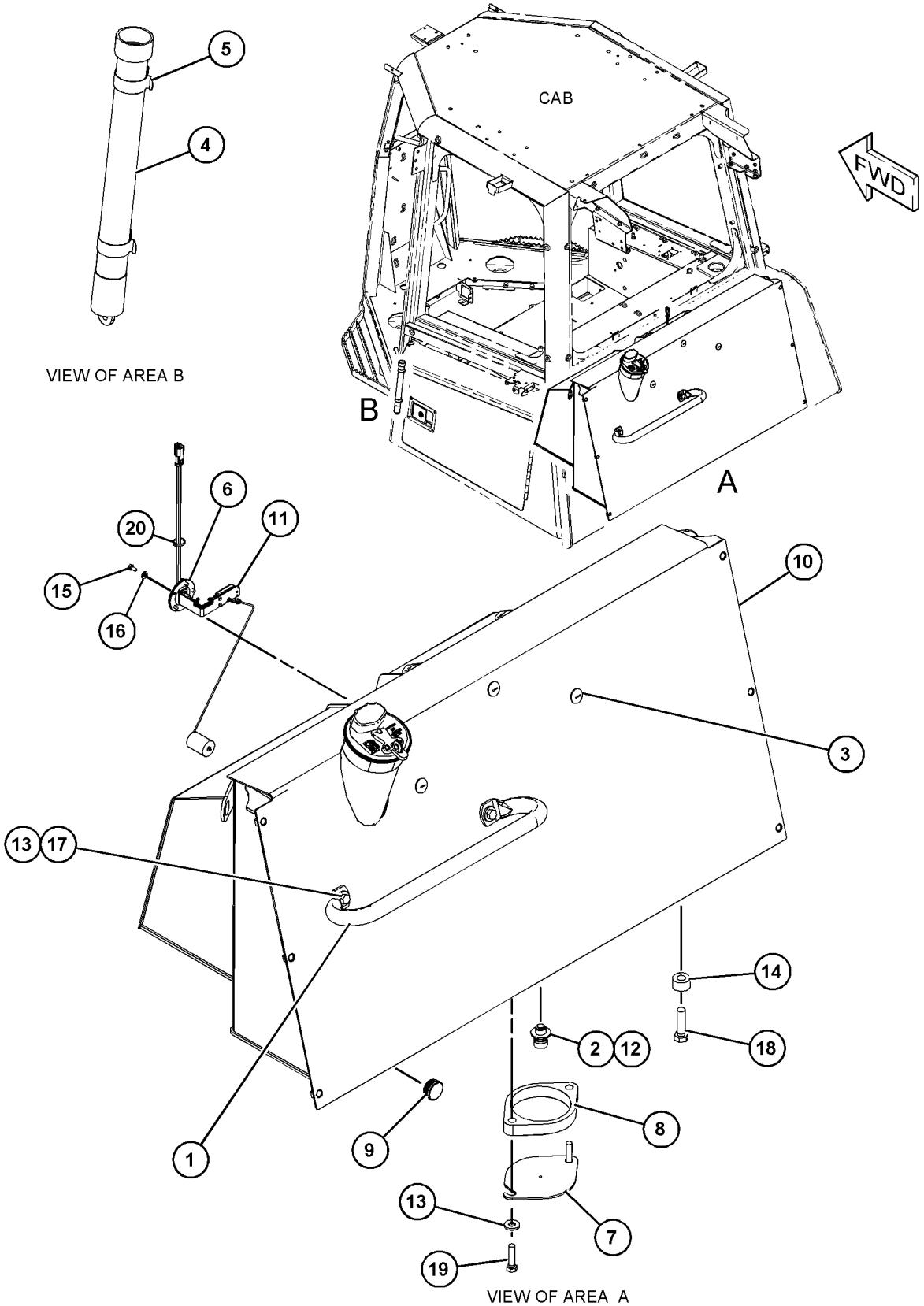

GRAPHIC #1 <END> g06147352

476-0301 TANK GP-FUEL

S/N: H3C1-UP; K3G1-UP
250-L (66.1-US GAL)
PART OF 425-7127 TANK & MTG GP-FUEL
AN ATTACHMENT

SMCS-1273 **i06693992**

NOTE	REF NO	GRAPHIC REF	PART NUMBER	QTY	PART NAME 1 2 3 4 5 6 (PRODUCT LEVEL)	SEE PAGE
	1	1	**9P-7121**	1	STRAINER-FUEL	
	2	1	**349-7059**	1	CAP AS-FUEL (LOCKABLE, VENTED)	
		1	**7D-7111**	1	SEAL-O-RING	
		1	**350-7735**	1	KIT-CAP FILTER (FUEL TANK)	
					(INCLUDES BODY BREATHER, GASKET, SCREWS & WASHERS)	
	3	1	**9X-8256**	10	WASHER (6.6X12X2-MM THK)	
	4	1	**459-0553**	1	COVER	
	5	1	**494-1760**	2	COVER	
	6	1	**033-6031**	2	SEAL-O-RING	
M	7	1	**5C-9553**	2	BOLT (M6X1X16-MM)	
	8	1	**6V-5063**	1	SEAL-O-RING	
M	9	1	**8T-4138**	8	BOLT (M6X1X20-MM)	
	10	1	**9S-4183**	1	PLUG (1-1/16-12-THD)	

M - METRIC PART

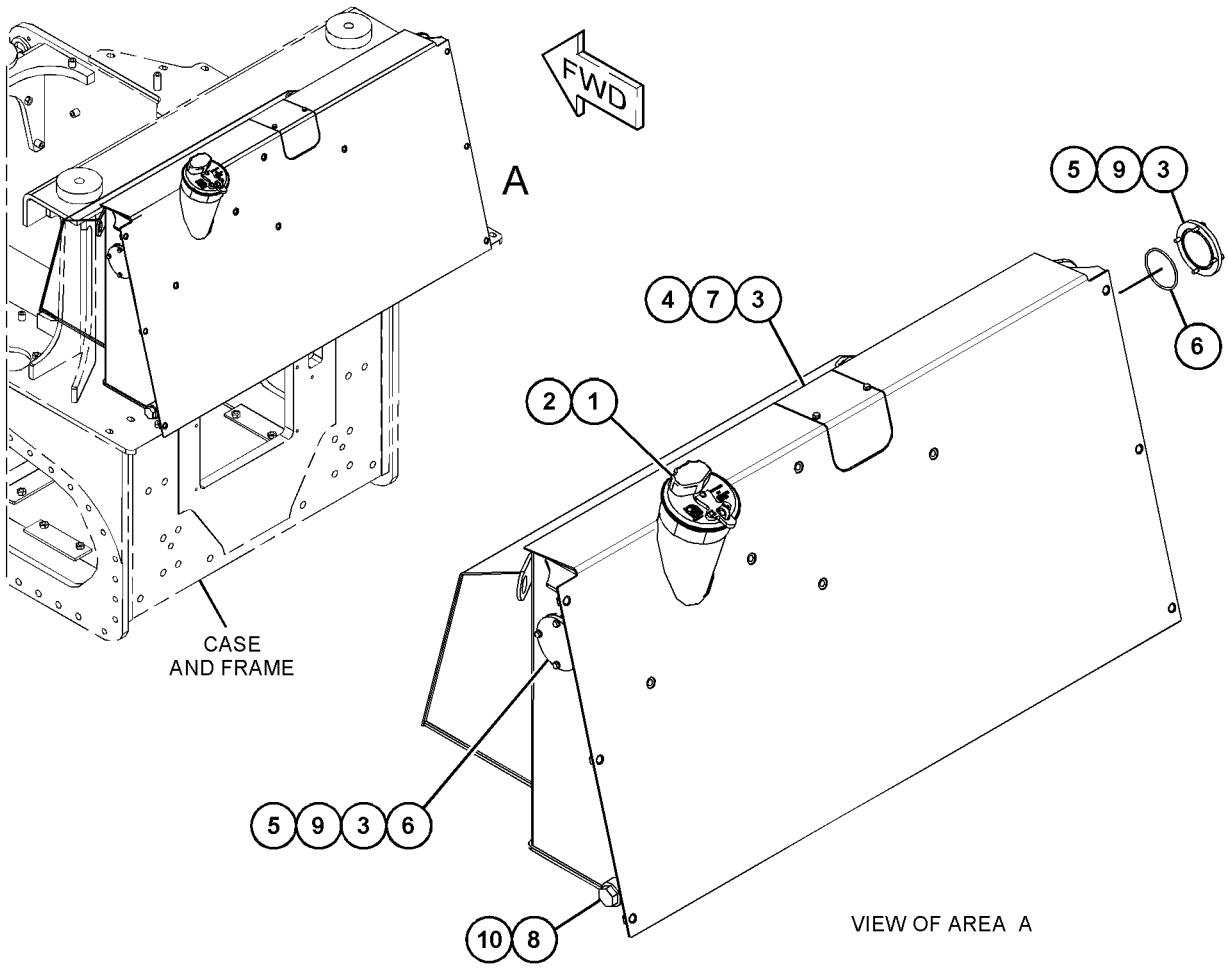

GRAPHIC #1 <END> g06010737

3E-6328 ALARM GP

S/N: H3C1-UP; K3G1-UP
24-VOLT
PART OF 539-0441 MONITOR GP-OPERATOR
AN ATTACHMENT

SMCS-7400, 7402, 7407 **i07284368**

NOTE	REF NO	GRAPHIC REF	PART NUMBER	QTY	PART NAME 1 2 3 4 5 6 (PRODUCT LEVEL)	SEE PAGE
	1	1	**102-8802**	1	KIT-RECEPTACLE (2-PIN)	
					(INCLUDES RECEPTACLE AS & WEDGE)	
	2	1	**8T-8729**	2	PIN-CONNECTOR (16-GA TO 20-GA)	

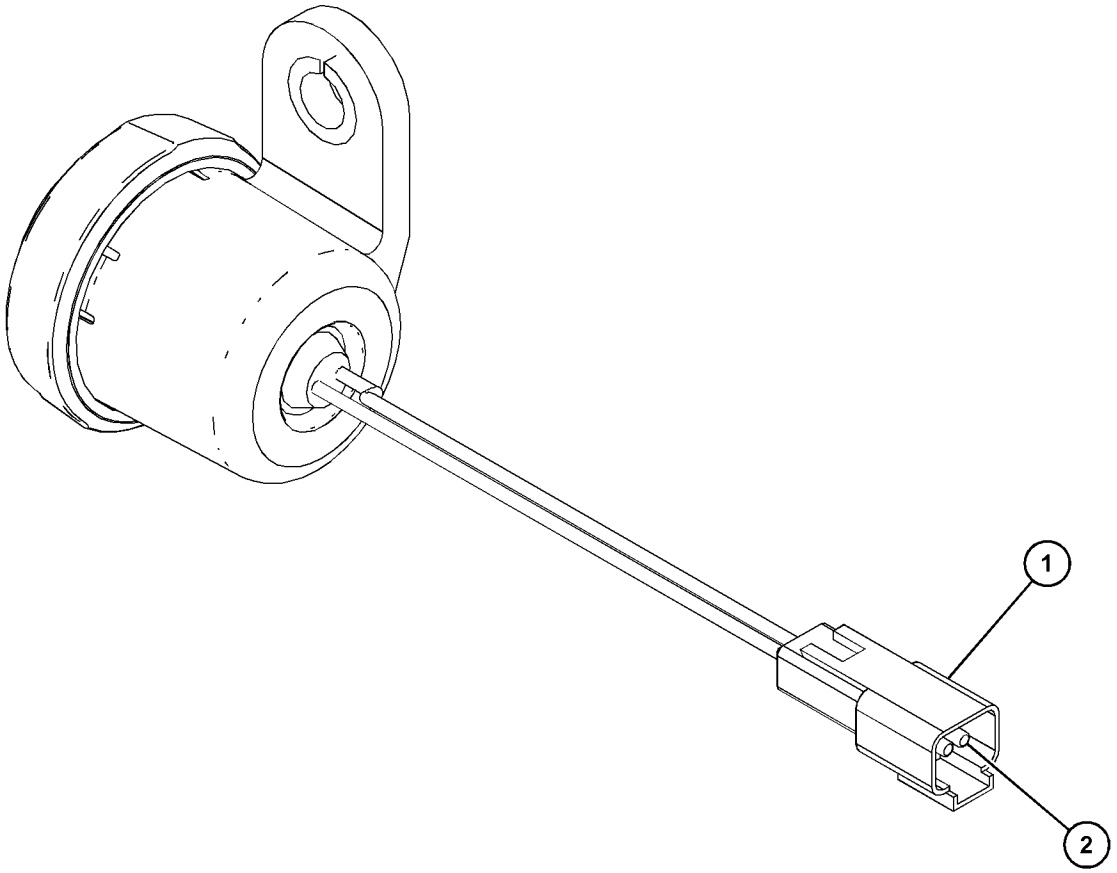

GRAPHIC #1 <END> g03798741

549-5649 ALTERNATOR GP-CHARGING

S/N: H3C1-UP; K3G1-UP
24-VOLT, 95-AMPERE
PART OF 458-3872 ENGINE AR

SMCS-1405 **i08027814**

NOTE	REF NO	GRAPHIC REF	PART NUMBER	QTY	PART NAME 1 2 3 4 5 6 (PRODUCT LEVEL)	SEE PAGE
	1	1	**337-6324**	1	PULLEY (8-GROOVE)	
M	2	1	**164-7468**	4	BOLT (M10X1.5X95-MM)	
CYR	3	1	**561-3001**	1	ALTERNATOR GP-CHARGING (24-VOLT, 95-AMPERE)	108
	4	1	**350-8742**	1	BELT-SERPENTINE	

C - CHANGE FROM PREVIOUS TYPE
M - METRIC PART
R - REMANUFACTURED PART MAY BE AVAILABLE
Y - SEPARATE ILLUSTRATION

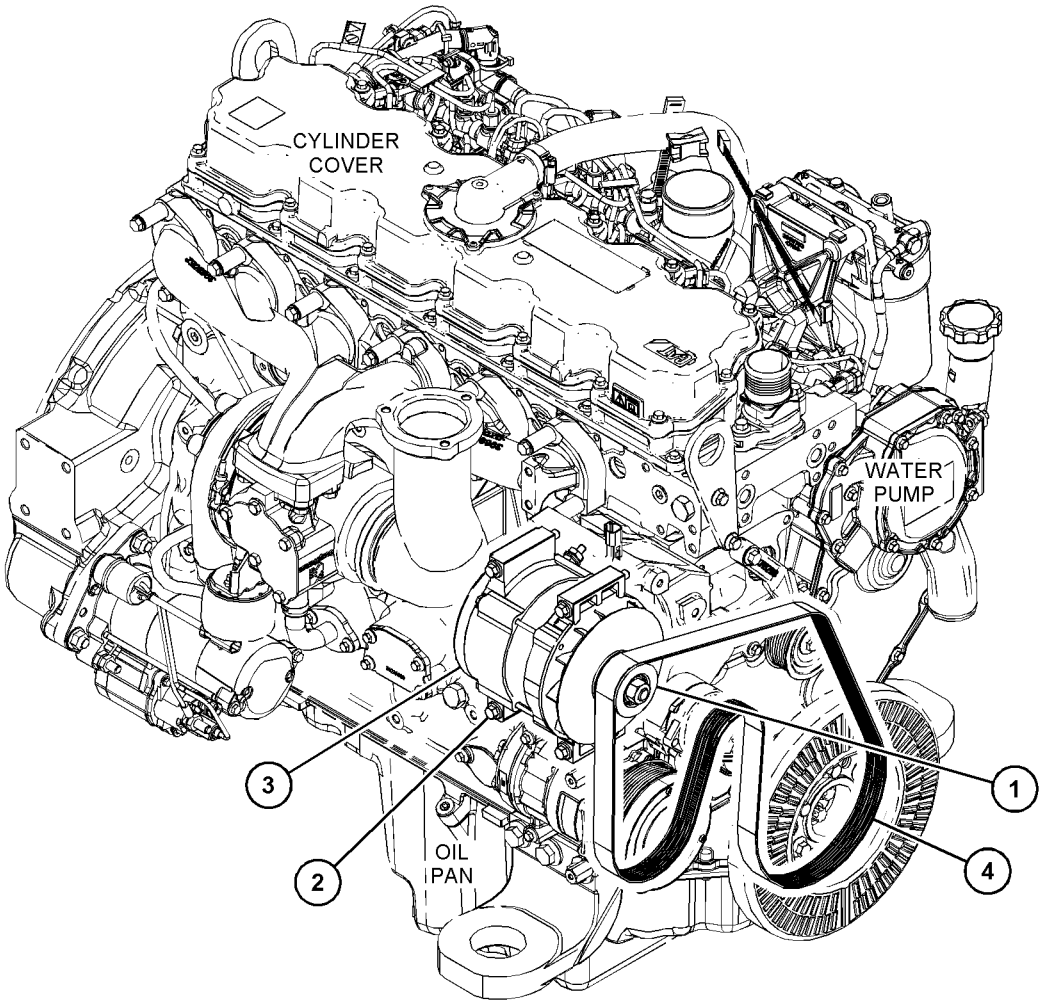

GRAPHIC #1 <END> g06333362

561-3001 ALTERNATOR GP-CHARGING*R

S/N: H3C1-UP; K3G1-UP

PART OF 549-5649 ALTERNATOR GP-CHARGING

SMCS-1405 **i07831625**

NOTE	REF NO	GRAPHIC REF	PART NUMBER	QTY	PART NAME 1 2 3 4 5 6 (PRODUCT LEVEL)	SEE PAGE
	1	1	**228-9656**	1	FRAME AS-DRIVE END	
	2	1	**5S-7349**	1	BOLT (1/4-20X0.5-IN)	
	3	1	**185-2639**	1	FAN AS (ALTERNATOR AIR)	
	4	1	**1H-3244**	1	LOCKWASHER	
	5	1	**228-9655**	1	FRAME AS-ALTERNATOR	
	6	1	**2K-4821**	1	LOCKNUT (5/8-18-THD)	
	7	1	**5P-8247**	1	WASHER-HARD (17X32X3.5-MM THK)	
	8	1	**228-9657**	1	COVER AS	
	9	1	**8T-4205**	1	WASHER-HARD (7.2X14.5X2-MM THK)	
	10	1	**185-2647**	1	GROMMET	
	11	1	**9L-6770**	1	CAP-DUST	
	12	1	**205-0626**	1	STATOR AS-ALTERNATOR	
	13	1	**185-2638**	2	COLLAR	
	14	1	**185-2654**	1	PLATE	
	15	1	**185-2650**	1	ROTOR AS	
	16	1	**185-2644**	1	COIL AS	
	17	1	**561-3457**	1	REGULATOR AS-VOLTAGE (24-VOLT)	
	18	1	**6V-8189**	1	NUT (5/16-18-THD)	
	19	1	**8T-4224**	1	WASHER-HARD (8.8X16X2-MM THK)	
	20	1	**3F-9556**	1	LOCKWASHER	
	21	1	**185-2655**	1	KIT-BEARING (ALTERNATOR)	
					(INCLUDES BEARINGS)	
	22	1	**199-8436**	1	KIT-TERMINAL (ALTERNATOR AIR)	
					(INCLUDES HOLDER AS, PLATE, INSULATOR, PIN, BOLT KIT, GROMMET, & NUT)	
	23	1	**199-7891**	1	KIT-TERMINAL (ALTERNATOR AIR)	
					(INCLUDES INSULATORS, WASHERS, & NUTS)	
	24	1	**185-2658**	1	KIT-HARDWARE (ALTERNATOR AIR)	
					(INCLUDES BOLTS & BOLT KITS)	

561-3001 **ALTERNATOR GP-CHARGING (**contd.**)** **i07831625**

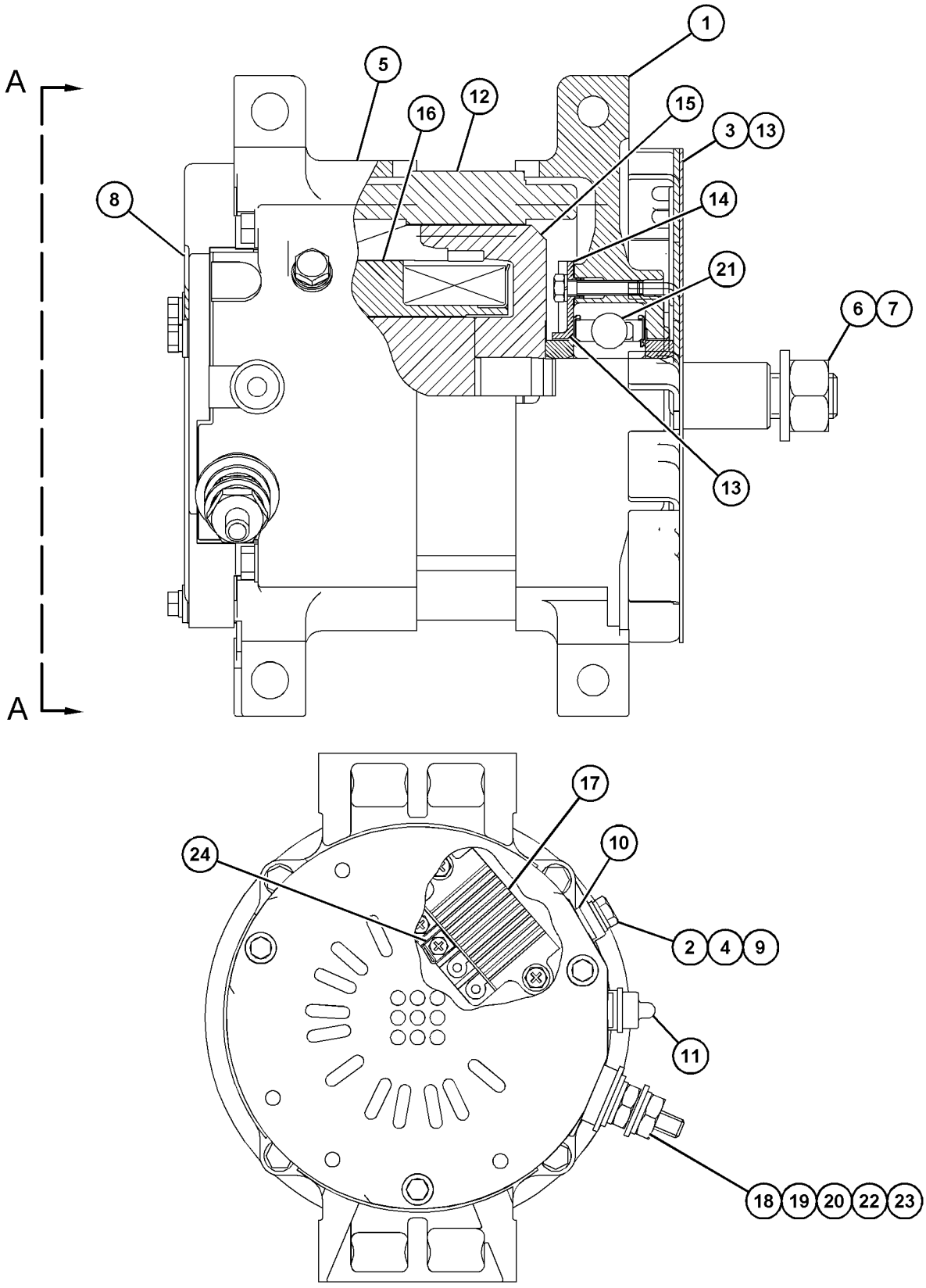

VIEW A-A

GRAPHIC #1 <END> g06399301

550-0157 BATTERY & WIRING GP

S/N: H3C1-UP; K3G1-UP
PART OF 549-8281 ELECTRONICS AR-MACHINE
AN ATTACHMENT

SMCS-1401, 1402, 1408 **i07716446**

NOTE	REF NO	GRAPHIC REF	PART NUMBER	QTY	PART NAME 1 2 3 4 5 6 (PRODUCT LEVEL)	SEE PAGE
M	1	3	**8T-4186**	1	BOLT (M10X1.5X40-MM)	
M	2	1	**8T-4191**	1	BOLT (M10X1.5X16-MM)	
M	3	2,3	**8T-4195**	2	BOLT (M10X1.5X30-MM)	
M	4	3	**8T-4196**	2	BOLT (M10X1.5X35-MM)	
M	5	3	**8T-4910**	1	BOLT (M12X1.75X60-MM)	
M	6	3	**7X-0818**	1	BOLT (M8X1.25X45-MM)	
	7	3	**2B-0941**	1	SPACER (10.5X19X19-MM THK)	
	8	1,2,3	**3S-2093**	20	STRAP-CABLE	
	9	3	**4P-7429**	2	CLIP (LADDER)	
	10	1,2,3	**4P-7581**	7	CLIP (LADDER)	
	11	1	**4P-8134**	2	CLIP (LADDER)	
	12	1	**5P-7464**	1	CLIP (SLOT)	
	13	1	**5P-7465**	1	CLIP (TAB)	
	14	2	**5P-9297**	2	CLIP (LOOP)	
	15	3	**6D-4244**	2	CLIP (LOOP)	
	16	3	**6I-1418**	1	SPACER (8.2X12.7X28.7-MM THK)	
	17	1	**6V-7359**	1	GROMMET (25-MM ID, 37-MM OD)	
	18	1,2,3	**7K-1181**	56	STRAP-CABLE	
M	19	3	**8T-0267**	4	BOLT-SOCKET HEAD (M6X1X12-MM)	
M	20	3	**8T-0389**	1	LOCKNUT (M10X1.5-THD)	
	21	3	**8T-1887**	8	CLIP (SLOT)	
	22	3	**8T-1888**	8	CLIP (TAB)	
	23	3	**8T-1889**	1	CLIP (SLOT)	
	24	3	**8T-1890**	1	CLIP (TAB)	
	25	1,2,3	**8T-4121**	30	WASHER-HARD (11X21X2.5-MM THK)	
M	26	3	**8T-4133**	1	NUT (M10X1.5-THD)	
M	27	1,2,3	**8T-4136**	6	BOLT (M10X1.5X25-MM)	
M	28	1,2,3	**8T-4137**	8	BOLT (M10X1.5X20-MM)	
M	29	3	**8T-4138**	1	BOLT (M6X1X20-MM)	
M	30	3	**8T-4139**	1	BOLT (M12X1.75X30-MM)	
	31	3	**8T-4223**	2	WASHER-HARD (13.5X25.5X3-MM THK)	
	32	2,3	**8T-4224**	2	WASHER-HARD (8.8X16X2-MM THK)	
	33	3	**8T-7934**	3	WASHER-HARD (11X21X5-MM THK)	
	34	3	**8X-5489**	8	SLEEVE	
	35	3	**9X-3404**	2	BATTERY GP (12-VOLT, MAINTENANCE FREE, WET)	
					(EACH INCLUDES)	
		3	**461-5232**	6	CAP AS-FILLER	
	36	3	**9X-8256**	2	WASHER (6.6X12X2-MM THK)	
	37	3	**105-7781**	1	SPACER (13.5X25X40-MM THK)	
	38	1	**119-6105**	1	GROMMET	
	39	2	**124-1479**	1	CLIP (LOOP)	
	40	3	**132-5789**	1	CLIP (LADDER)	
M	41	3	**133-7810**	1	STUD-TAPERLOCK (M10X1.5X45-MM)	
	42	3	**160-8124**	1	PLUG AS-CONNECTOR (2-PIN)	
		3	**102-8802**	1	KIT-RECEPTACLE (2-PIN)	
					(INCLUDES RECEPTACLE AS & WEDGE)	
		3	**8T-8737**	2	PLUG-SEAL	

550-0157 **BATTERY & WIRING GP (**contd.**)** **i07716446**

NOTE	REF NO	GRAPHIC REF	PART NUMBER	QTY	PART NAME 1 2 3 4 5 6 (PRODUCT LEVEL)	SEE PAGE
	43	1,2,3	**177-2215**	7	STRAP-DUAL CLAMP	
	44	2	**198-4777**	1	WASHER-HARD (11X25X10-MM THK)	
	45	3	**203-3847**	1	BRACKET AS	
	46	1,2,3	**206-2423**	6	SADDLE-MOUNTING	
	47	3	**211-0686**	1	FILM-INSTRUCTION (BATTERY DISCONNECT)	
	48	3	**214-3509**	1	BRACKET AS	
	49	2	**215-3717**	1	GROMMET	
	50	1	**220-0229**	1	ALARM AS (BACKUP)	
		1	**102-8802**	1	KIT-RECEPTACLE (2-PIN)	
					(INCLUDES RECEPTACLE AS & WEDGE)	
H		1	**6A-3361**		WIRE-ELECTRICAL (16-GA, BLACK) (4-DM)	
		1	**8T-8729**	2	PIN-CONNECTOR (16-GA TO 20-GA)	
E		1	**9X-1813**		SLEEVE (29-CM)	
	51	3	**221-3525**	1	GROMMET	
M	52	1	**234-9525**	1	STUD (M10X1.5-THD)	
	53	3	**246-9371**	1	COVER-RELAY	
	54	2	**256-1028**	1	BRACKET AS	
M		2	**8T-3490**	1	NUT-WELD (M10X1.5-THD)	
		2	**124-6998**	1	PLATE	
	55	2	**256-6454**	1	SENSOR-TEMPERATURE (2-PIN) (AMBIENT AIR)	
	56	2	**267-6197**	1	INDICATOR-AIR FILTER CHANGE	
	57	3	**277-5995**	1	ROD	
Y	58	3	**306-0166**	1	SWITCH GP-DISCONNECT (BATTERY DISCONNECT)	174
	59	3	**328-0181**	1	STRAP AS-GROUND	
M	60	3	**344-5673**	1	NUT (M6X1-THD)	
M	61	3	**344-5674**	1	NUT (M8X1.25-THD)	
M	62	3	**344-5675**	8	NUT (M10X1.5-THD)	
	63	3	**351-1904**	2	SEAL-O-RING	
	64	2	**351-3525**	1	CLIP	
	65	1	**352-3964**	1	CLIP (LADDER)	
	66	3	**352-3968**	1	CLIP (LADDER)	
Y	67	3	**358-2398**	2	SENSOR GP-SPEED (TRACK, RH, LH)	169
	68	3	**373-9151**	1	HOLD-DOWN AS	
	69	3	**397-9301**	1	WASHER-HARD (11.5X20X15-MM THK)	
	70	3	**433-1683**	1	CABLE AS	
E		3	**159-8049**		CABLE (00-GA, RED) (37-CM)	
		3	**8C-5918**	1	TERMINAL AS-BATTERY (NEGATIVE)	
		3	**8T-9756**	1	TERMINAL AS-BATTERY (POSITIVE)	
					(EACH TERMINAL AS INCLUDES)	
		3	**1M-6119**	1	BOLT (5/16-18X1.375-IN)	
		3	**1M-6120**	1	NUT (5/16-18-THD)	
		3	**9G-0002**	1	COVER AS-TERMINAL (RED)	
		3	**9G-0005**	1	COVER AS-TERMINAL (BLACK)	
					(EACH COVER AS INCLUDES)	
		3	**8L-8413**	1	STRAP-CABLE (WHITE)	
	71	3	**433-1847**	1	CABLE AS	
E		3	**159-8050**		CABLE (00-GA, BLACK) (30-CM)	
		3	**8T-9757**	1	TERMINAL AS-BATTERY (NEGATIVE)	
		3	**1M-6119**	1	BOLT (5/16-18X1.375-IN)	
		3	**1M-6120**	1	NUT (5/16-18-THD)	
		3	**9G-0003**	1	COVER AS-TERMINAL (BLACK)	

550-0157 **BATTERY & WIRING GP** (contd.) **i07716446**

NOTE	REF NO	GRAPHIC REF	PART NUMBER	QTY	PART NAME 1 2 3 4 5 6 (PRODUCT LEVEL)	SEE PAGE
		3	**8L-8413**	1	STRAP-CABLE (WHITE)	
		3	**299-9092**	1	COVER-TERMINAL (BLACK)	
		3	**315-0180**	1	TERMINAL-RING (00-GA, 3/8-IN SCREW)	
	72	3	**435-8422**	1	ANGLE	
	73	3	**437-1171**	1	BRACKET	
	74	3	**438-3534**	1	CABLE AS	
		3	**1S-7252**	1	TERMINAL-CABLE (00-GA, 3/8-IN SCREW)	
E		3	**159-8050**		CABLE (00-GA, BLACK) (29-CM)	
		3	**315-0180**	1	TERMINAL-RING (00-GA, 3/8-IN SCREW)	
Y	75	2	**438-8573**	1	HARNESS AS-SOLENOID (REVERSING FAN)	148
Y	76	3	**478-7013**	1	HARNESS AS-SENSOR (FUEL SENDER)	144
Y	77	1	**499-3460**	1	HARNESS AS-CHASSIS (MAIN)	132
	78	3	**499-3943**	1	CABLE AS	
		3	**1M-6120**	1	NUT (5/16-18-THD)	
		3	**1S-7251**	1	TERMINAL-CABLE (00-GA, 1/2-IN SCREW)	
		3	**3S-6049**	1	TERMINAL AS-BATTERY (POSITIVE)	
		3	**1M-6119**	1	BOLT (5/16-18X1.375-IN)	
		3	**1M-6120**	1	NUT (5/16-18-THD)	
		3	**3T-3349**	1	STUD (5/16-18X0.5-IN, 5/16-18X1.5-IN)	
E		3	**159-8049**		CABLE (00-GA, RED) (233-CM)	
		3	**7T-9987**	1	COVER AS-TERMINAL (RED)	
		3	**8L-8413**	1	STRAP-CABLE (WHITE)	
		3	**294-2318**	1	COVER-TERMINAL (RED)	
Y	79	3	**504-4756**	1	HARNESS AS-CHASSIS (HYDROSTATIC DRIVE)	133
Y	80	2	**525-6398**	1	HARNESS AS-SENSOR (HORN)	146
	81	2	**535-8873**	1	HORN AS (24-VOLT, LOW TONE)	
	82	1	**541-1459**	1	COVER AS	
Y	83	2	**550-2139**	1	HARNESS AS-SENSOR (HOOD)	147
E	84	1	**221-8310**		SEAL (18-CM)	
E	84A	1	**221-8310**		SEAL (11-CM EACH)	

E - ORDER BY THE CENTIMETER
H - ORDER BY THE DECIMETER
M - METRIC PART
Y - SEPARATE ILLUSTRATION

550-0157 **BATTERY & WIRING GP (**contd.**)** **i07716446**

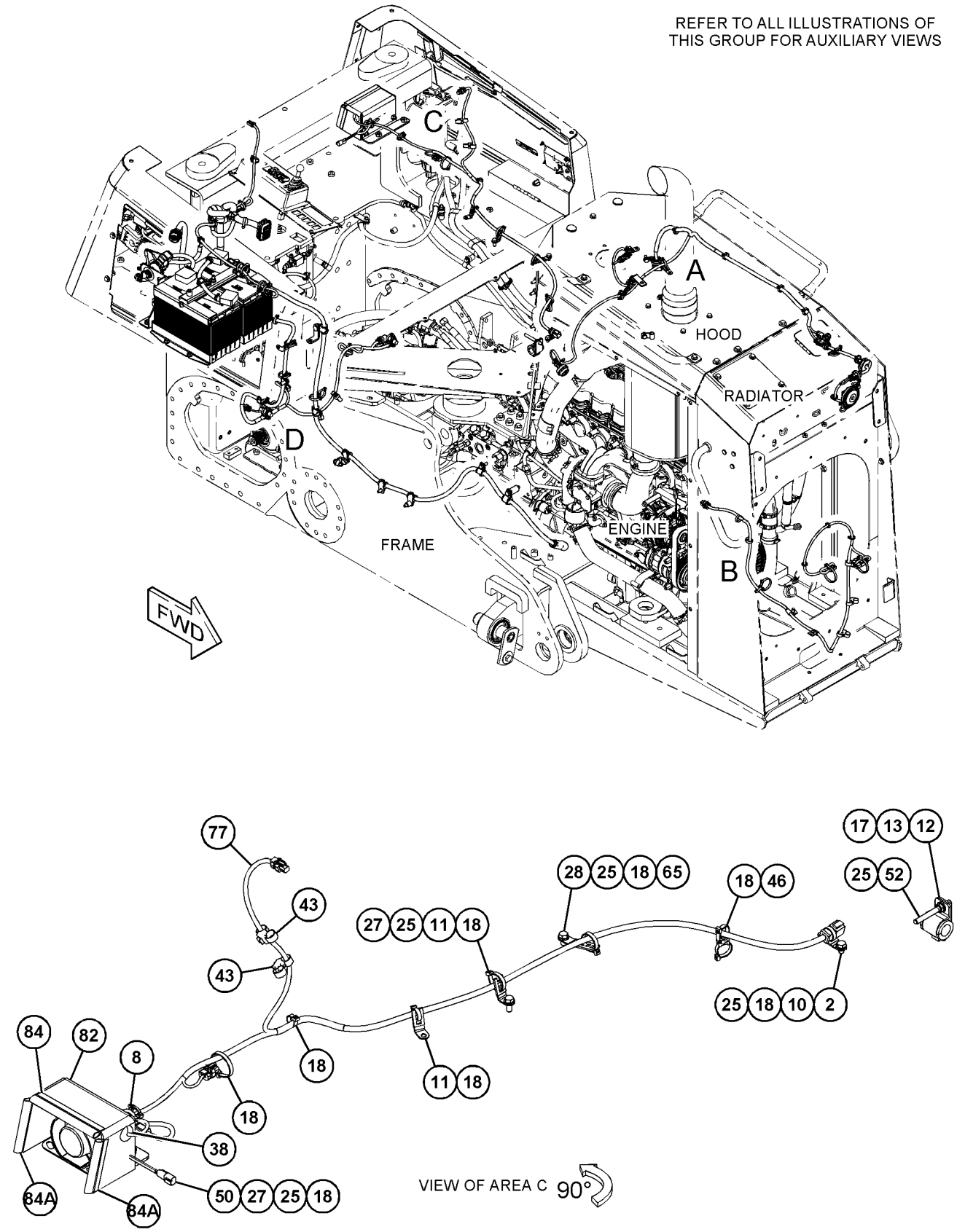

GRAPHIC #1 g06369878

550-0157 **BATTERY & WIRING GP (**contd.**)** **i07716446**

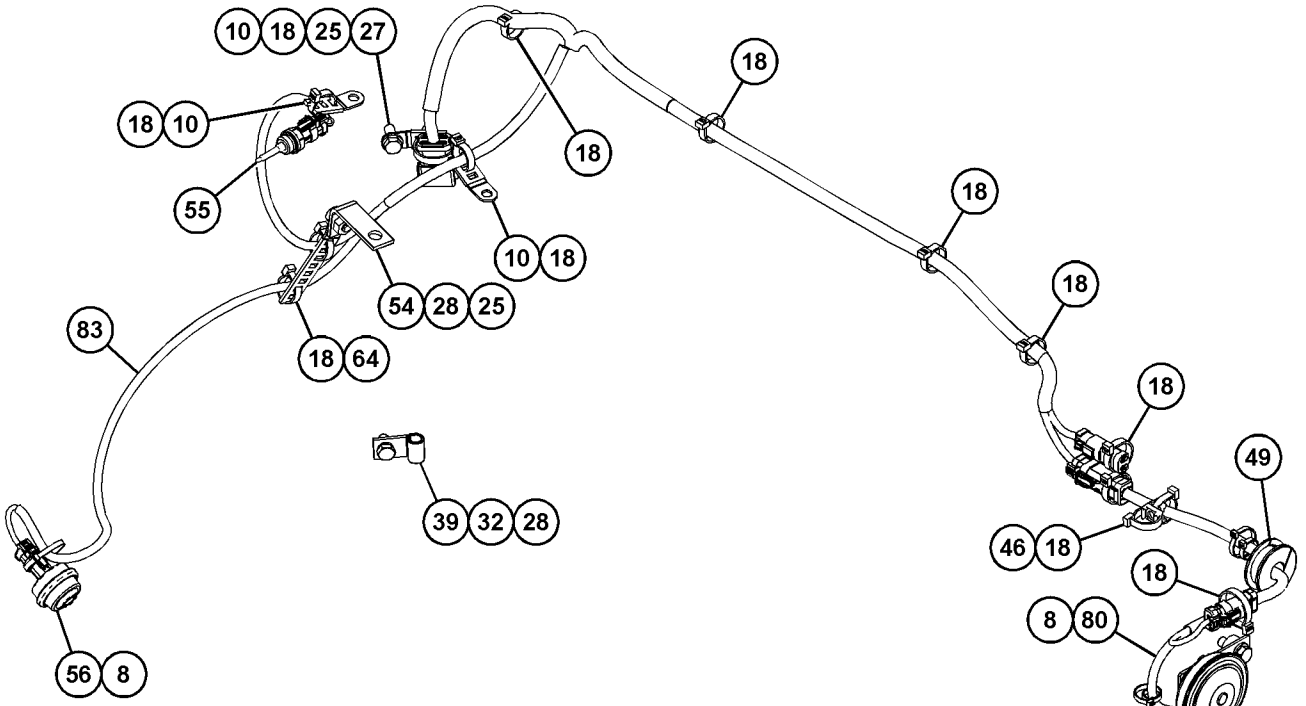

VIEW OF AREA A

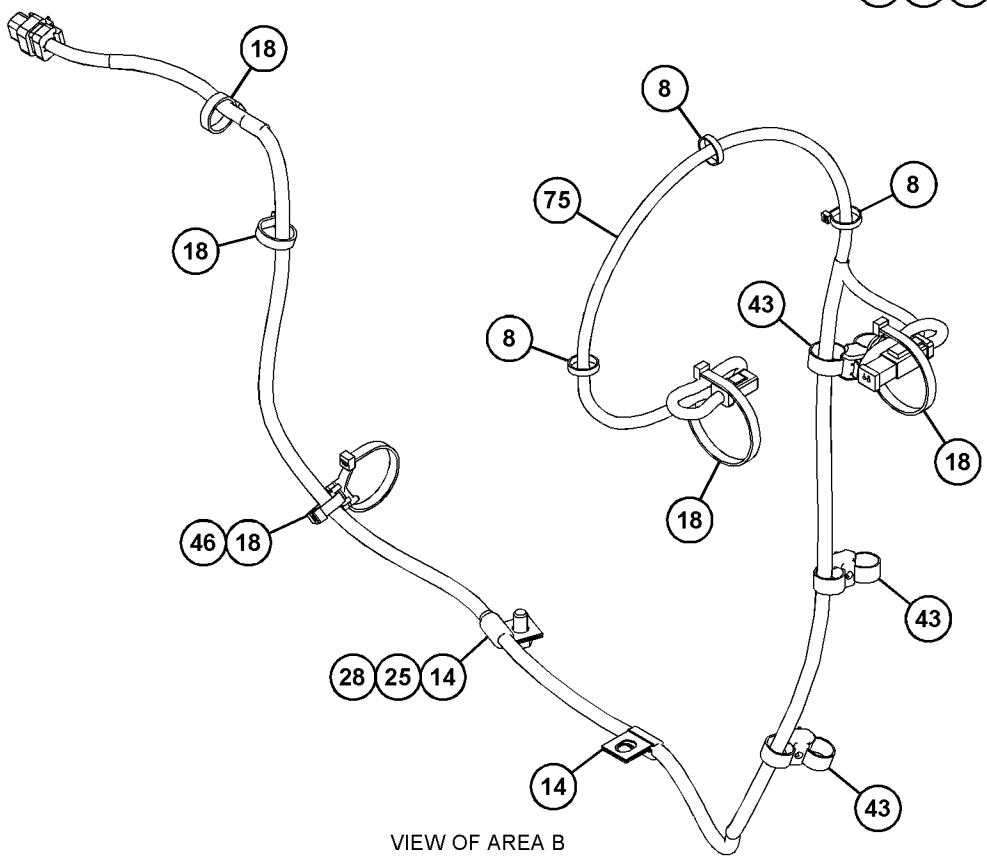

VIEW OF AREA B

GRAPHIC #2 g06369879

550-0157 **BATTERY & WIRING GP (**contd.**)** **i07716446**

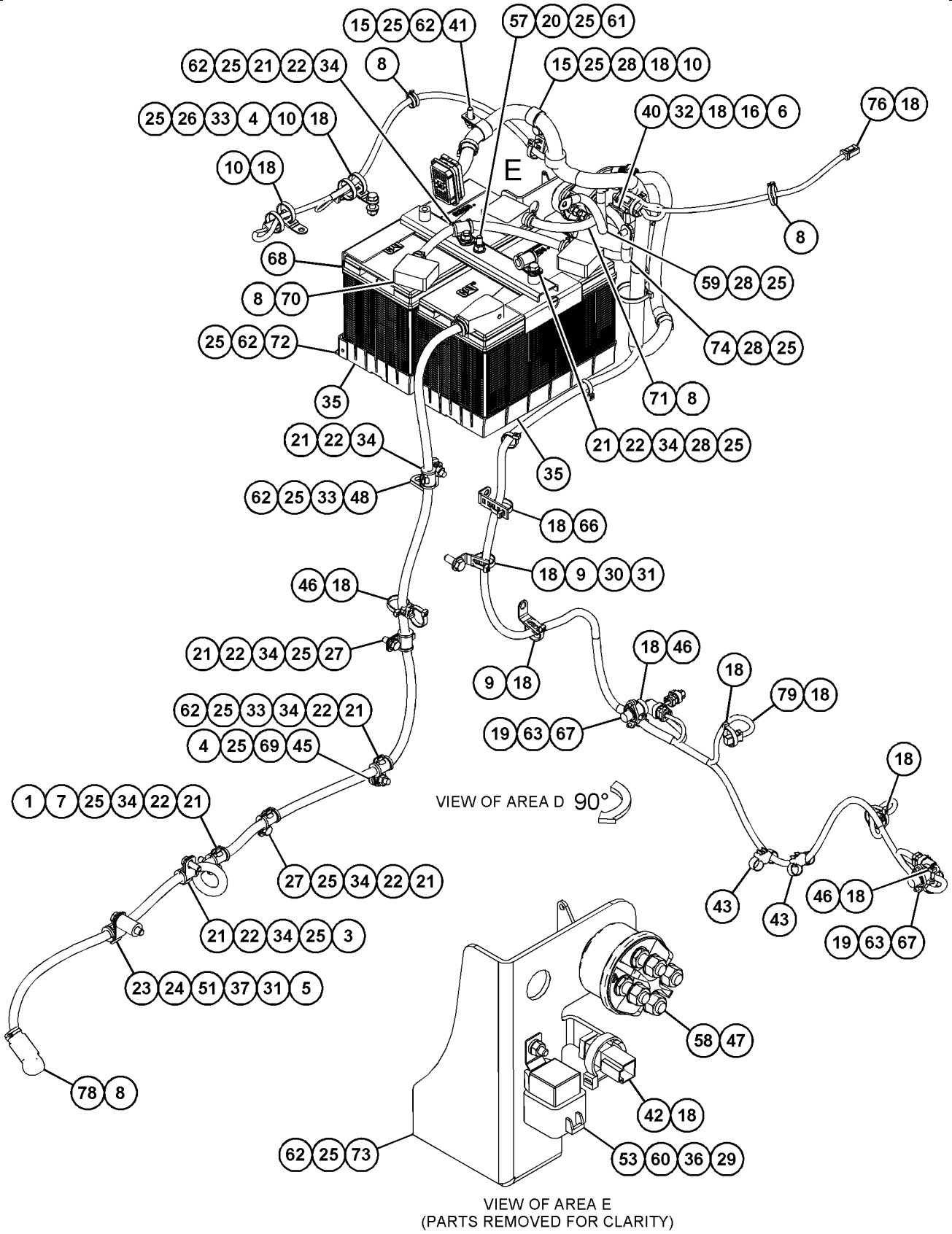

VIEW OF AREA E
(PARTS REMOVED FOR CLARITY)

GRAPHIC #3 <END> g06369880

538-7156 CAMERA AR

S/N: H3C1-UP; K3G1-UP
REAR
FOR USE WITH 536-8775—PAGE: 446
PART OF 589-6091 CAMERA AR
AN ATTACHMENT

SMCS-7348 **i07762306**

NOTE	PART NUMBER	QTY	PART NAME 1 2 3 4 5 6 (PRODUCT LEVEL)	SEE PAGE
Y	*438-8473*	1	CAMERA GP	117
Y	*488-4841*	1	WIRING GP-CAMERA	179

Y - SEPARATE ILLUSTRATION

<END>

589-6091 CAMERA AR

S/N: H3C1-UP; K3G1-UP
REAR
AN ATTACHMENT

SMCS-7348 **i08063023**

NOTE	PART NUMBER	QTY	PART NAME 1 2 3 4 5 6 (PRODUCT LEVEL)	SEE PAGE
Y	*538-7156*	1	CAMERA AR (REAR)	116

Y - SEPARATE ILLUSTRATION

<END>

438-8473 CAMERA GP

S/N: H3C1-UP; K3G1-UP
PART OF 538-7156 CAMERA AR
AN ATTACHMENT

SMCS-7348 **i07622957**

NOTE	REF NO	GRAPHIC REF	PART NUMBER	QTY	PART NAME 1 2 3 4 5 6 (PRODUCT LEVEL)	SEE PAGE
J	1	1	**459-1800**	1	CAMERA GP (12-VOLT, 24-VOLT)	
	2	1	**3S-2093**	1	STRAP-CABLE	
	3	1	**471-8309**	1	BRACKET	
	4	1	**8T-4224**	2	WASHER-HARD (8.8X16X2-MM THK)	
M	5	1	**8T-4908**	2	BOLT (M8X1.25X25-MM)	
					AVAILABLE REPAIR KIT(S):	
J			**251-4162**	1	KIT-BRACKET (CAMERA)	
					(INCLUDES BRACKET, BOLTS, NUTS, GASKET & ALLEN KEY)	

J - KIT MARKED J SERVICES PART(S) MARKED J
M - METRIC PART

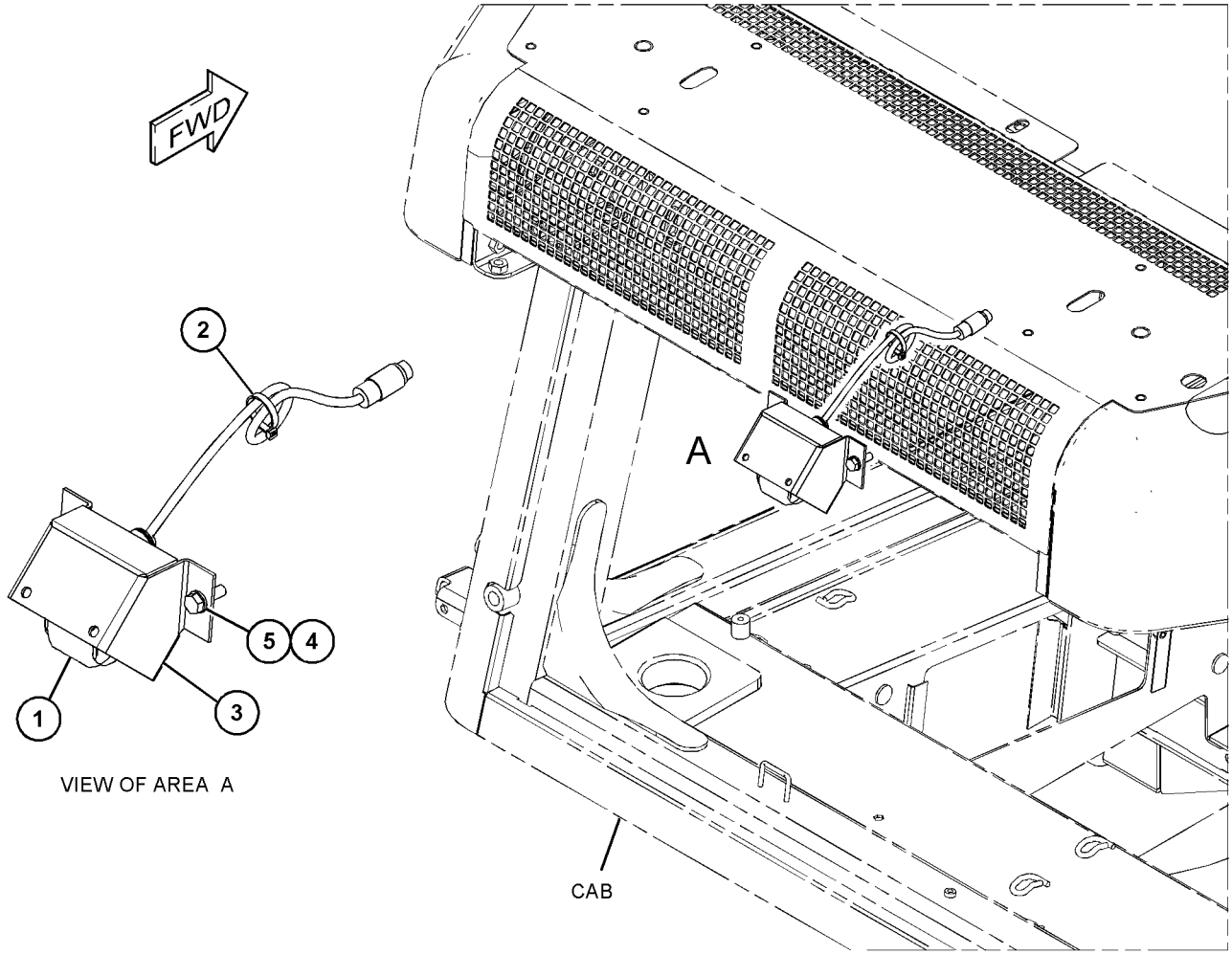

VIEW OF AREA A

GRAPHIC #1 <END> g06012771

426-4005 CONTROL & MTG GP-ELECTRONIC

S/N: H3C1-UP; K3G1-UP

PART OF 535-7631 CONTROL & MTG GP-ELECTRONIC, 421-9246 CONTROL GP-IMPLEMENT, 421-9241 CONTROL GP-RIPPER

AN ATTACHMENT

SMCS-1901, 3168 **i07829128**

NOTE	REF NO	GRAPHIC REF	PART NUMBER	QTY	PART NAME 1 2 3 4 5 6 (PRODUCT LEVEL)	SEE PAGE
	1	1	**3S-2093**	10	STRAP-CABLE	
	2	1	**7K-1181**	5	STRAP-CABLE	
	3	1	**155-0576**	8	MOUNT-ISOLATION	
Y	4	1	*292-4189*	1	CONTROL GP-UNPROGRAMMED (RIPPER, WINCH)	126
	5	1	**443-3962**	1	TIE	
CY	6	1	**527-6819**	1	HARNESS AS-CONTROL (RIPPER, WINCH)	135
	7	1	**206-2423**	1	SADDLE-MOUNTING	
	8	1	**8T-4224**	2	WASHER-HARD (8.8X16X2-MM THK)	
C	9	1	**4P-8134**	3	CLIP (LADDER)	
	10	1	**6I-1418**	4	SPACER (8.2X12.7X28.7-MM THK)	
	11	1	**7X-0579**	8	WASHER-HARD (8.8X25.5X2-MM THK)	
M	12	1	**7X-0818**	4	BOLT (M8X1.25X45-MM)	
FY			*375-5777*	1	ELECTRONICS GP-MACHINE	129

C - CHANGE FROM PREVIOUS TYPE
F - NOT SHOWN
M - METRIC PART
Y - SEPARATE ILLUSTRATION

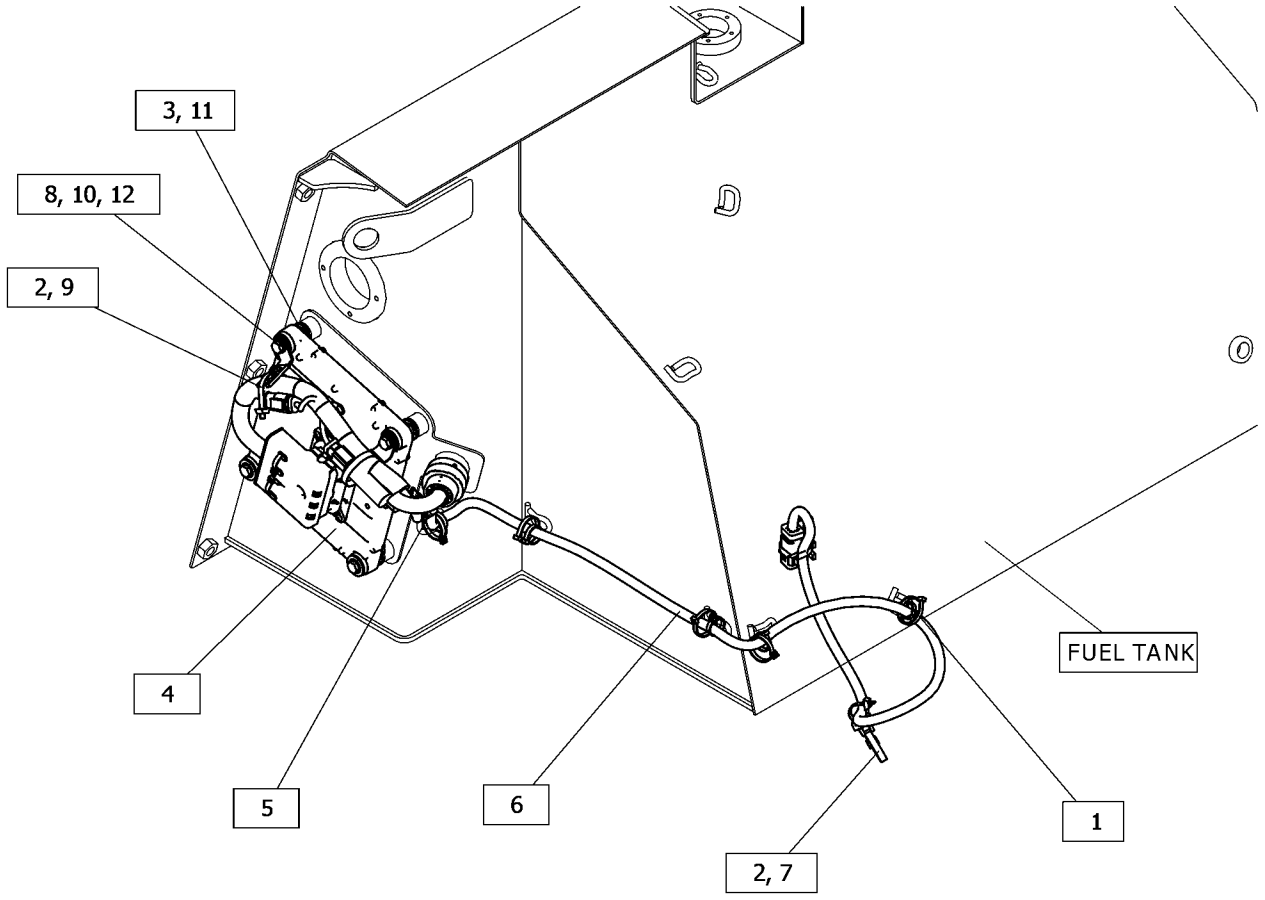

GRAPHIC #1 <END> g06496489

535-7631 CONTROL & MTG GP-ELECTRONIC

S/N: H3C1-UP; K3G1-UP
PART OF 549-6775 HYDRAULIC AR
AN ATTACHMENT

SMCS-1901, 3168

i07757621

NOTE	PART NUMBER	QTY	PART NAME 1 2 3 4 5 6 (PRODUCT LEVEL)	SEE PAGE
Y	*426-4005*	1	CONTROL & MTG GP-ELECTRONIC	118
Y	*438-3644*	1	COVER GP-CONSOLE	477
	540-4707	1	PLUG GP-CONTROL VALVE	
	9S-4183	2	PLUG (1-1/16-12-THD)	
	3D-2824	2	SEAL-O-RING	

Y - SEPARATE ILLUSTRATION

<END>

494-6472 CONTROL GP-COMMUNICATION–ELECTRONIC*R

S/N: H3C1-UP; K3G1-UP

PART OF 573-4529, 581-2223 INSTALLATION GP-COMMUNICATION

AN ATTACHMENT

SMCS-7610, 7620

i08019138

NOTE	REF NO	GRAPHIC REF	PART NUMBER	QTY	PART NAME 1 2 3 4 5 6 (PRODUCT LEVEL)	SEE PAGE
	1	1	**7X-6315**	1	STRAP AS-GROUND	

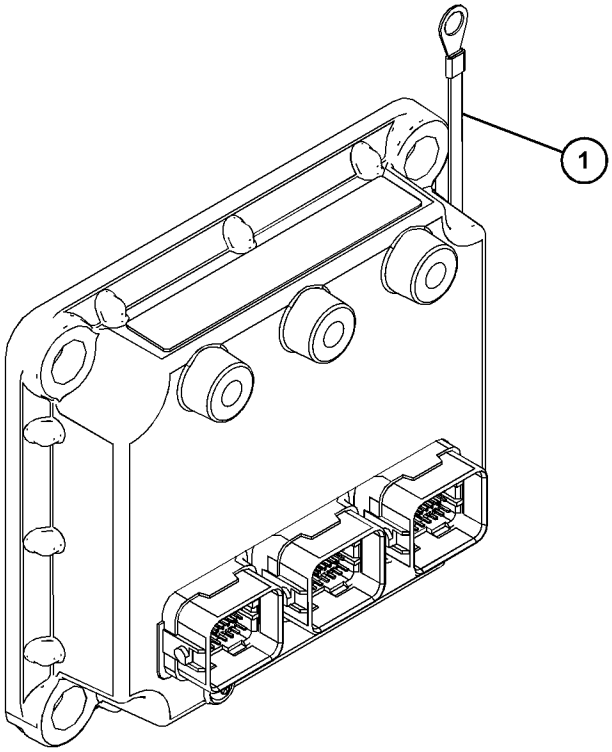

GRAPHIC #1 <END> g06323360

555-5510 CONTROL GP-ELECTRONIC–PL641E CELLULAR

S/N: H3C1-UP; K3G1-UP

PART OF 573-4529 INSTALLATION GP-COMMUNICATION

AN ATTACHMENT

SMCS-7490 **i08093780**

NOTE	REF NO	GRAPHIC REF	PART NUMBER	QTY	PART NAME 1 2 3 4 5 6 (PRODUCT LEVEL)	SEE PAGE
	1	1	**592-0391**	1	FILM-INFORMATION (INDONESIAN)	
F			**586-5325**	1	SOFTWARE GP-MONITOR	

F - NOT SHOWN

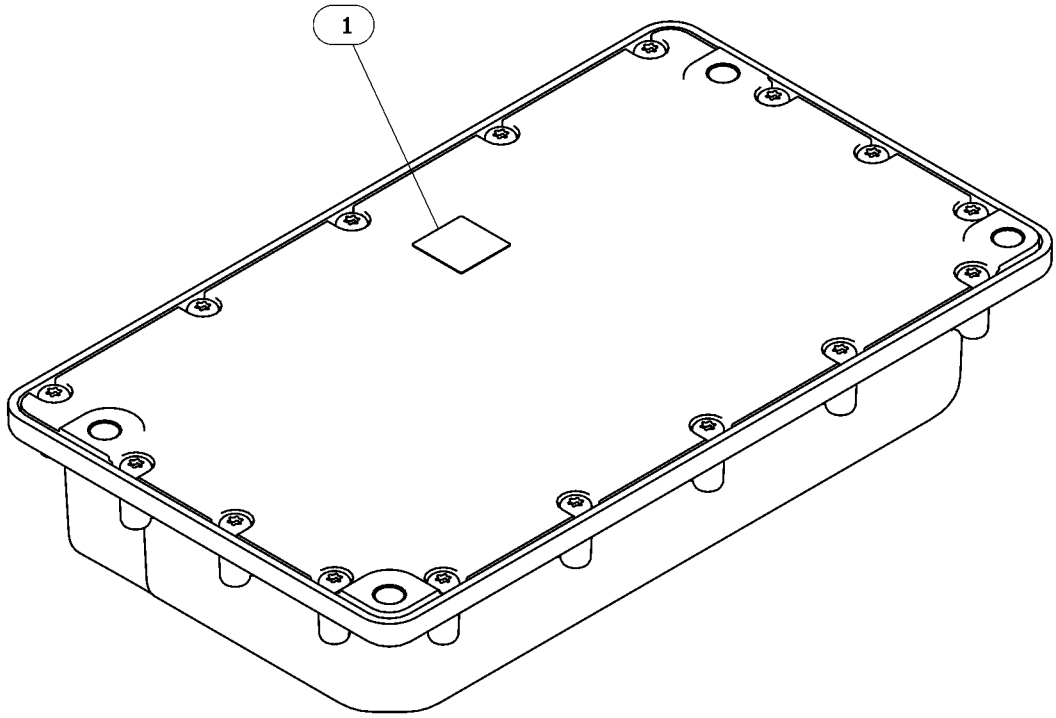

GRAPHIC #1 <END> g06541184

371-2537 CONTROL GP-ENGINE ELECTRONIC

S/N: 4501-UP

PART OF 553-3684 ENGINE AR-PRIMARY

SMCS-1901 **i05936675**

NOTE	REF NO	GRAPHIC REF	PART NUMBER	QTY	PART NAME 1 2 3 4 5 6 (PRODUCT LEVEL)	SEE PAGE
	1	1	**7W-2632**	1	WASHER (8.5X16.8X1.6-MM THK)	
	2	1	**217-0099**	4	SPACER (8.2X25X2-MM THK)	
	3	1	**278-5203**	4	SPACER	
	4	1	**155-0576**	8	MOUNT-ISOLATION	
M	5	1	**6I-0456**	4	BOLT (M8X1.25X45-MM)	
R	6	1	**374-2640**	1	CONTROL GP-UNPROGRAMMED	

M - METRIC PART
R - REMANUFACTURED PART MAY BE AVAILABLE

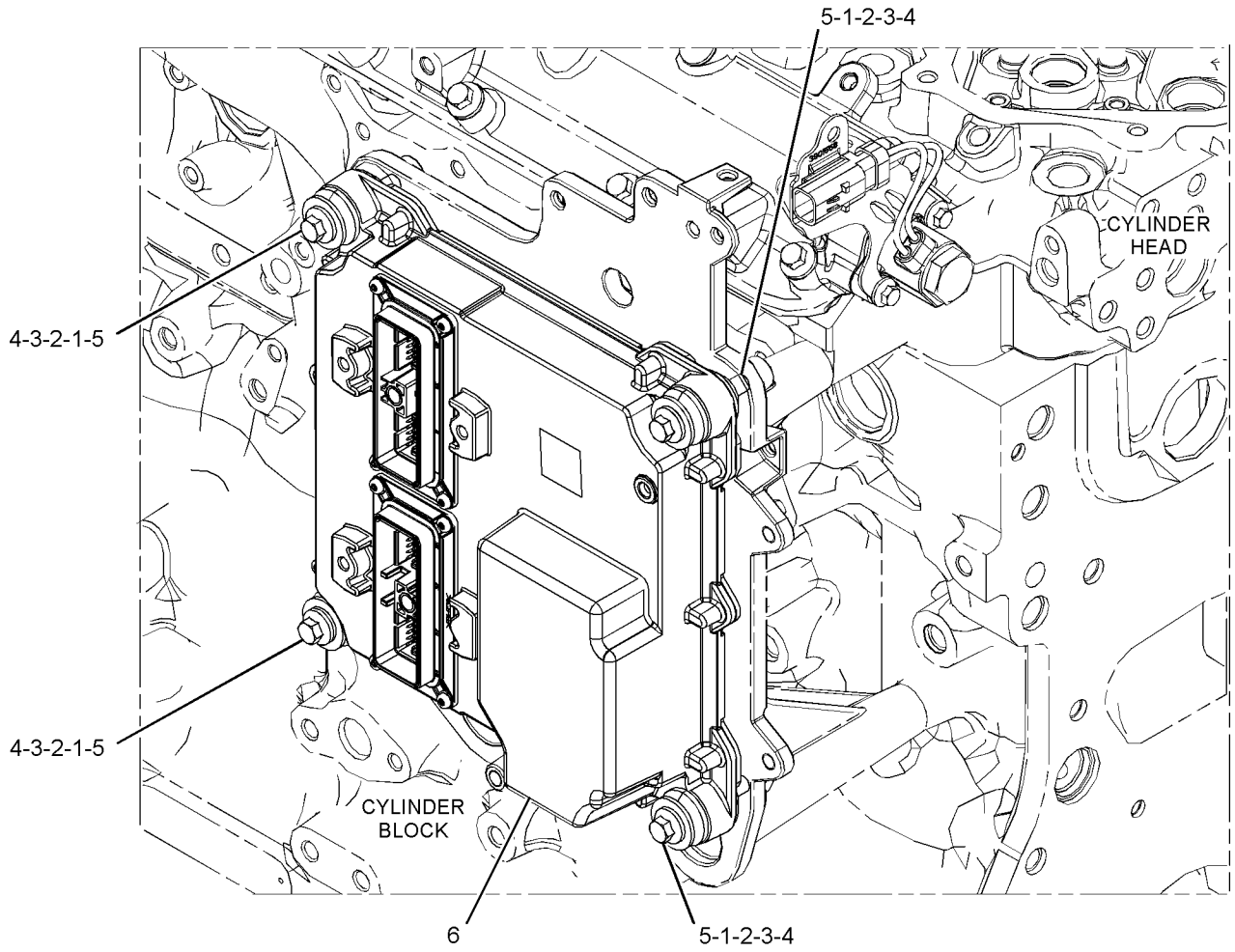

GRAPHIC #1 <END> g03644945

421-9246 CONTROL GP-IMPLEMENT

S/N: H3C1-UP; K3G1-UP
PART OF 535-7633 CONTROL AR-HYDRAULIC
AN ATTACHMENT

SMCS-5700, 5701

i06988389

NOTE	REF NO	GRAPHIC REF	PART NUMBER	QTY	PART NAME 1 2 3 4 5 6 (PRODUCT LEVEL)	SEE PAGE
Y	1	1	*426-4005*	1	CONTROL & MTG GP-ELECTRONIC (RIPPER, WINCH)	118
Y	2	1	*441-3019*	1	CONTROL GP-IMPLEMENT (RIPPER, WINCH)	124

Y - SEPARATE ILLUSTRATION

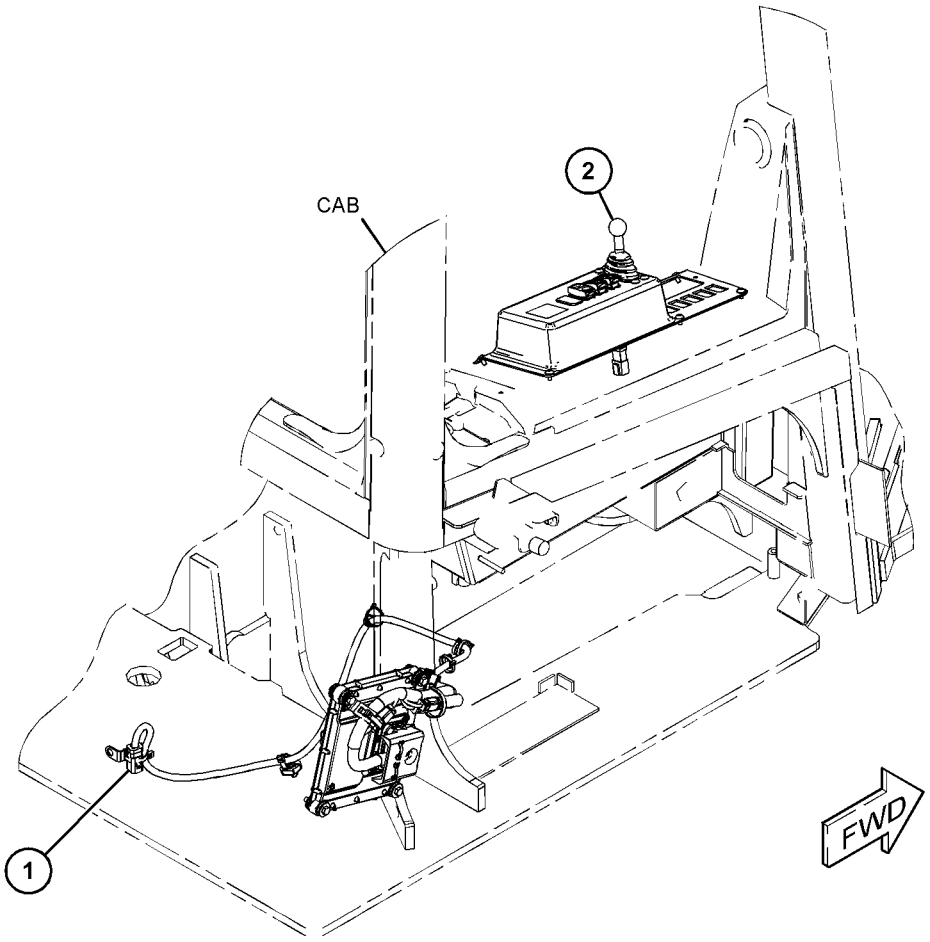

GRAPHIC #1

<END>

g06010962

441-3019 CONTROL GP-IMPLEMENT–RIPPER, WINCH

S/N: H3C1-UP; K3G1-UP
PART OF 421-9246 CONTROL GP-IMPLEMENT
AN ATTACHMENT

SMCS-5700, 5701 **i06713477**

NOTE	REF NO	GRAPHIC REF	PART NUMBER	QTY	PART NAME 1 2 3 4 5 6 (PRODUCT LEVEL)	SEE PAGE
	1	1	**228-6089**	1	PLUG (ROCKER SWITCH)	
	2	1	**266-8524**	1	SWITCH AS-ROCKER (24-VOLT) (WINCH BRAKE)	
	3	1	**266-8525**	1	SWITCH AS-ROCKER (24-VOLT) (WINCH FREESPOOL)	
	4	1	**266-9007**	1	FILM-INSTRUCTION (RIPPER, WINCH)	
	5	1	**284-3660**	1	SWITCH AS-ROCKER (RIPPER CYLINDER)	
Y	6	1	**378-8521**	1	CONTROL GP-HANDLE (RIPPER, WINCH)	460
	7	1	**393-4298**	1	BEZEL	
M	8	1	**9X-2042**	10	SCREW-TRUSS HEAD (M6X1X12-MM)	
	9	1	**8T-8737**	4	PLUG-SEAL	
	10	1	**102-8802**	2	KIT-RECEPTACLE (2-PIN)	
					(EACH INCLUDES RECEPTACLE AS & WEDGE)	
	11	1	**7K-1181**	1	STRAP-CABLE	

M - METRIC PART
Y - SEPARATE ILLUSTRATION

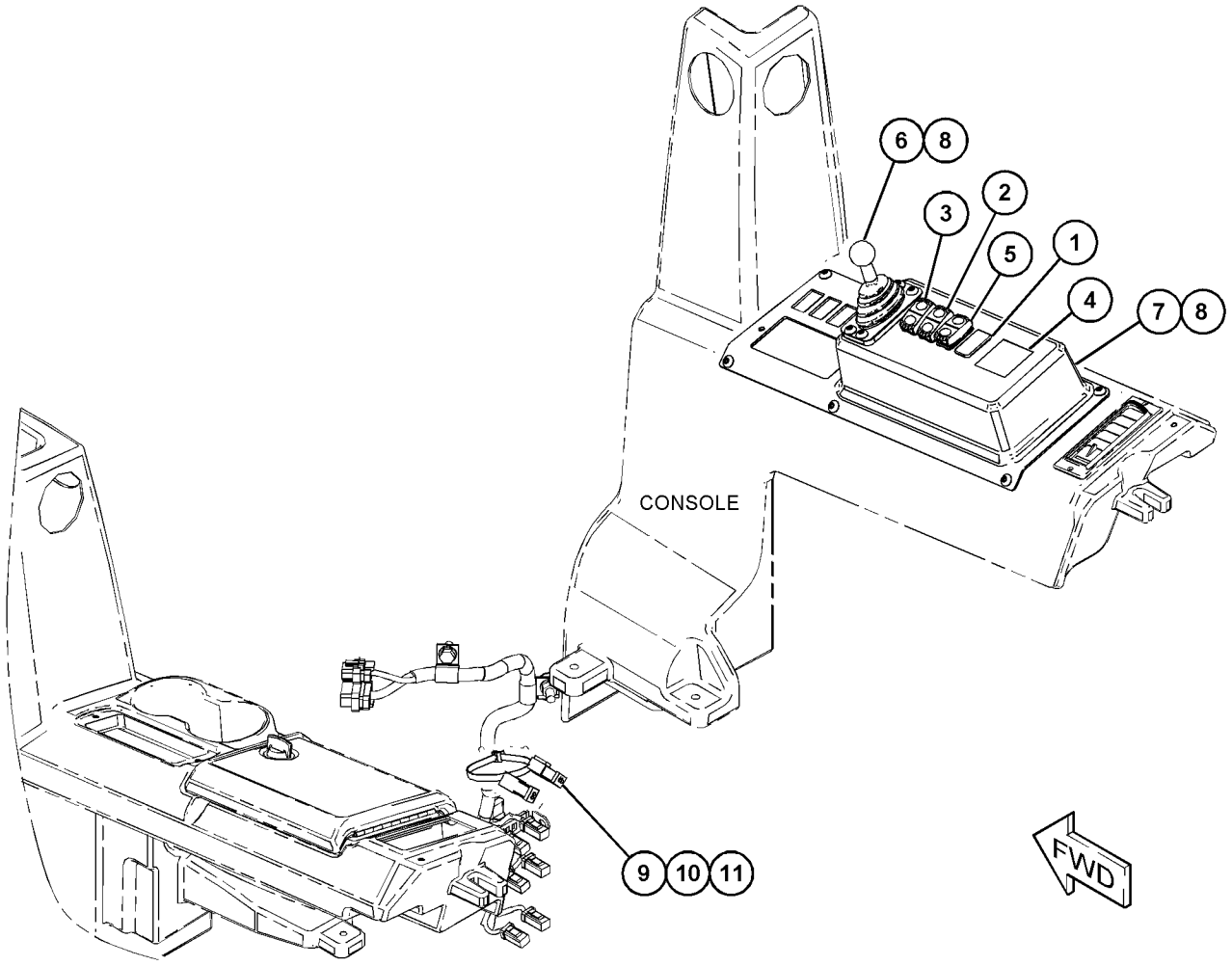

GRAPHIC #1 <END> g06086518

441-3080 CONTROL GP-IMPLEMENT–RIPPER

S/N: H3C1-UP; K3G1-UP
PART OF 421-9241 CONTROL GP-RIPPER
AN ATTACHMENT

SMCS-5700, 5701 **i06789537**

NOTE	REF NO	GRAPHIC REF	PART NUMBER	QTY	PART NAME 1 2 3 4 5 6 (PRODUCT LEVEL)	SEE PAGE
	1	1	**228-6089**	4	PLUG (ROCKER SWITCH)	
	2	1	**266-9005**	1	FILM-INSTRUCTION (RIPPER CONTROL)	
Y	3	1	**378-8521**	1	CONTROL GP-HANDLE (RIPPER)	460
	4	1	**393-4298**	1	BEZEL	
M	5	1	**9X-2042**	10	SCREW-TRUSS HEAD (M6X1X12-MM)	

M - METRIC PART
Y - SEPARATE ILLUSTRATION

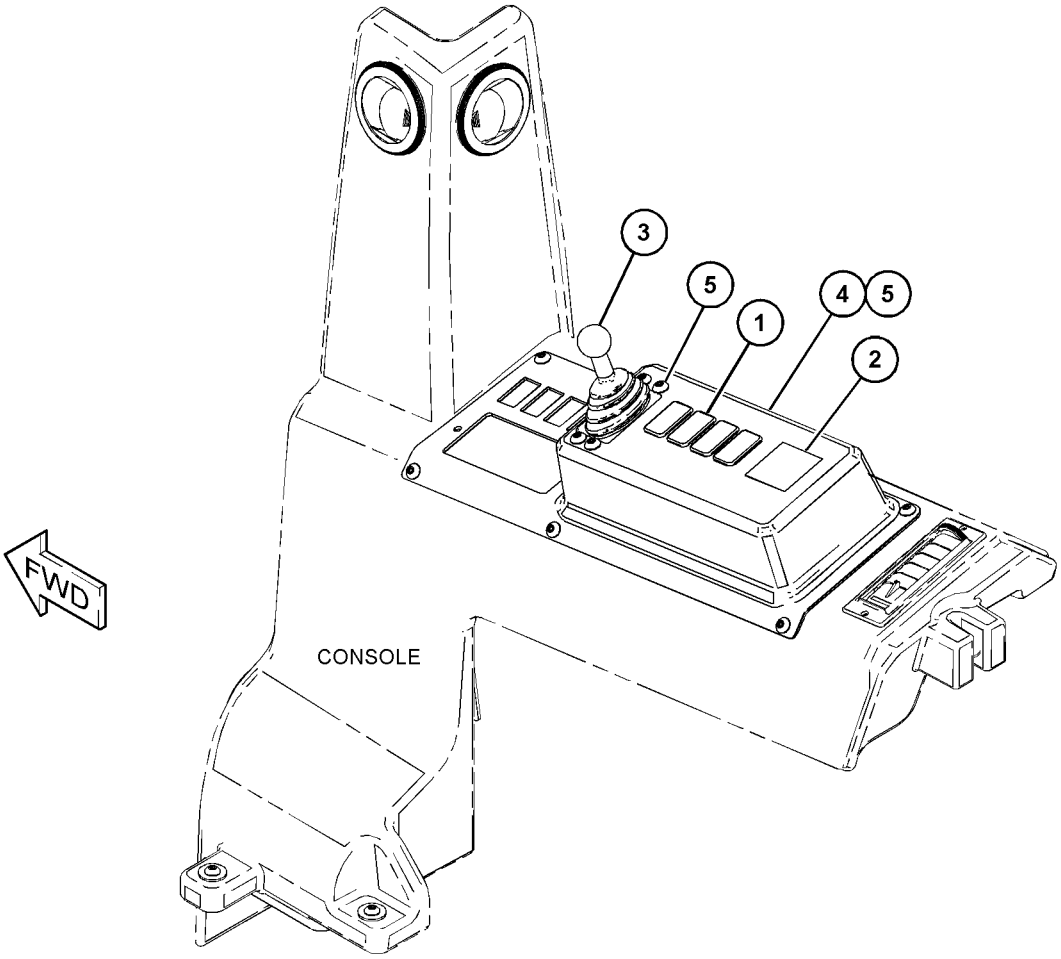

GRAPHIC #1 <END> g06010804

292-4189 CONTROL GP-UNPROGRAMMED

S/N: H3C1-UP; K3G1-UP

PART OF 426-4005 CONTROL & MTG GP-ELECTRONIC

AN ATTACHMENT

SMCS-7610 **i05059030**

NOTE	REF NO	GRAPHIC REF	PART NUMBER	QTY	PART NAME 1 2 3 4 5 6 (PRODUCT LEVEL)	SEE PAGE
R	1	1	**377-4710**	1	CONTROL GP-UNPROGRAMMED	

R - REMANUFACTURED PART MAY BE AVAILABLE

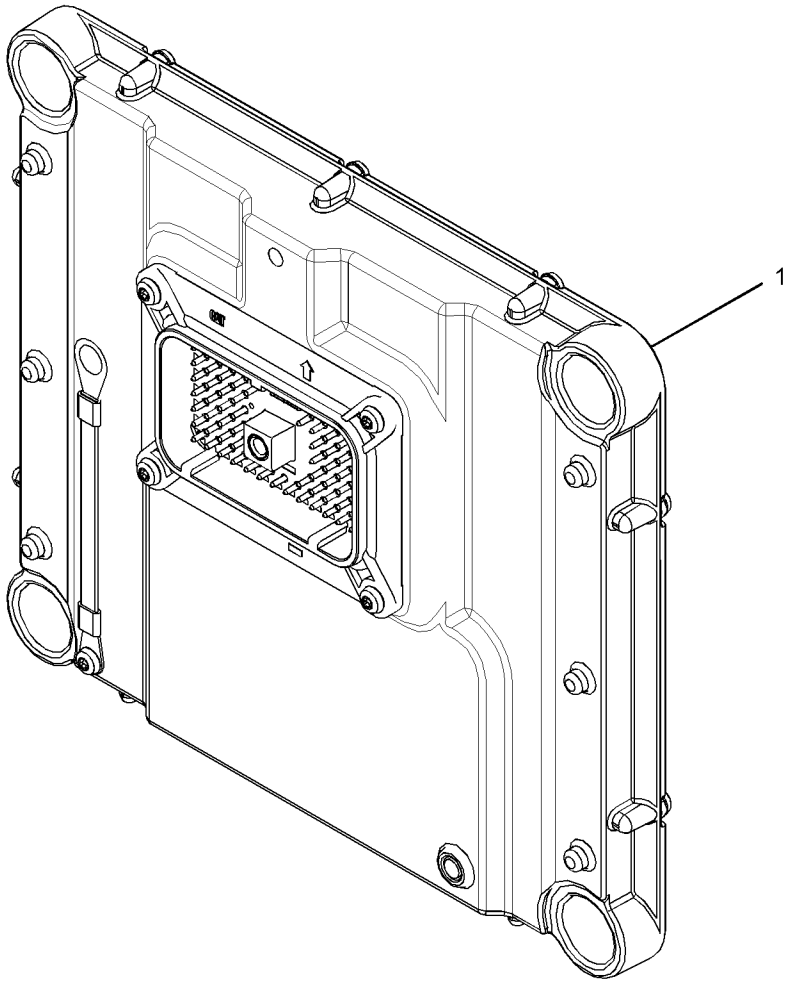

GRAPHIC #1 <END> g03042539

544-1881 CONTROL GP-UNPROGRAMMED*R

S/N: H3C1-UP; K3G1-UP
PART OF 543-1829 INSTALLATION GP-COMMUNICATION
AN ATTACHMENT

SMCS-7610 **i07676797**

NOTE	REF NO	GRAPHIC REF	PART NUMBER	QTY	PART NAME 1 2 3 4 5 6 (PRODUCT LEVEL)	SEE PAGE
F			**568-5140**	1	SOFTWARE GP-MONITOR (SATELLITE RADIO)	

F - NOT SHOWN

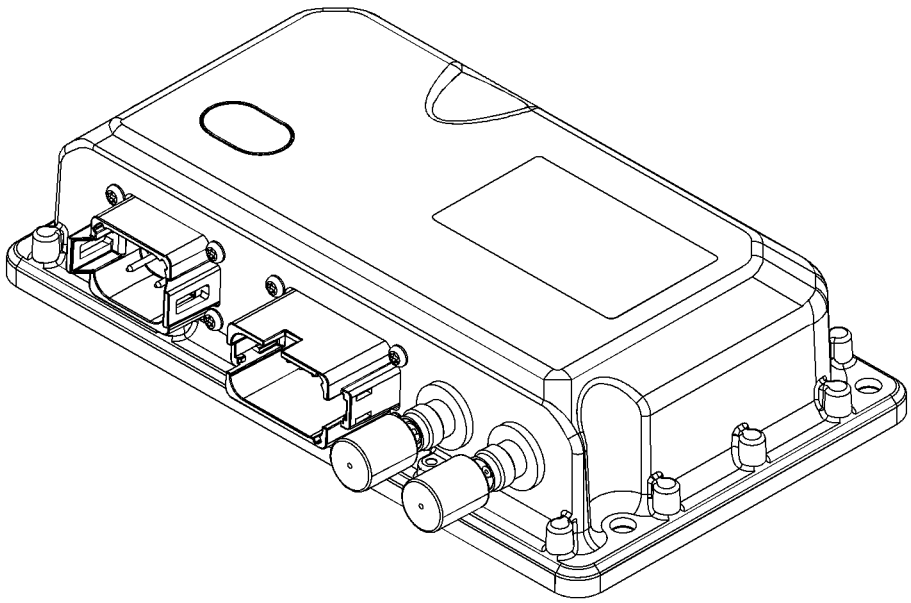

GRAPHIC #1 <END> g06131298

549-7639 ELECTRONICS AR-MACHINE

S/N: H3C1-UP; K3G1-UP
AN ATTACHMENT

SMCS-7610, 7620 **i07717092**

NOTE	PART NUMBER	QTY	PART NAME 1 2 3 4 5 6 (PRODUCT LEVEL)	SEE PAGE
Y	*549-9953*	1	COVER GP-ACCESS	471
Y	*549-8281*	1	ELECTRONICS AR-MACHINE	129
Y	*549-9613*	1	WIRING GP-SENSOR	198

Y - SEPARATE ILLUSTRATION

<END>

549-7642 ELECTRONICS AR-MACHINE

S/N: H3C1-UP; K3G1-UP
AN ATTACHMENT

SMCS-7610, 7620 **i08036988**

NOTE	PART NUMBER	QTY	PART NAME 1 2 3 4 5 6 (PRODUCT LEVEL)	SEE PAGE
Y	*549-8281*	1	ELECTRONICS AR-MACHINE	129
Y	*562-1817*	1	ELECTRONICS GP-MONITOR	130
Y	*393-4209*	1	MOUNTING GP-DISPLAY (GRADE CONTROL)	507
Y	*536-5045*	1	WIRING GP-CONTROL	180
Y	*537-5996*	1	WIRING GP-GRADE CONTROL	188
Y	*536-1598*	1	WIRING GP-SENSOR	196
	347-2729	1	FILM-INSTRUCTION (BULLDOZER CONTROL)	
			(ON REAR SIDE OF RIGHT B-POST, ON OPERATOR VIEW ABOVE FILM-DOZER)	

Y - SEPARATE ILLUSTRATION

<END>

549-7643 ELECTRONICS AR-MACHINE

S/N: H3C1-UP; K3G1-UP
AN ATTACHMENT

SMCS-7610, 7620 **i08009736**

NOTE	PART NUMBER	QTY	PART NAME 1 2 3 4 5 6 (PRODUCT LEVEL)	SEE PAGE
Y	*549-8281*	1	ELECTRONICS AR-MACHINE	129
Y	*562-1812*	1	ELECTRONICS GP-MONITOR	130
Y	*488-4958*	1	MOUNTING GP-DISPLAY (GRADE CONTROL)	508
Y	*536-7953*	1	WIRING GP-CAB	177
Y	*536-5045*	1	WIRING GP-CONTROL	180
Y	*537-5996*	1	WIRING GP-GRADE CONTROL	188
Y	*536-1598*	1	WIRING GP-SENSOR	196
J	*513-5980*	1	CONFIGURATION-PREMIUM	
	347-2729	1	FILM-INSTRUCTION (BULLDOZER CONTROL)	
			(ON REAR SIDE OF RIGHT B-POST, ON OPERATOR VIEW ABOVE FILM-DOZER)	

J - SEE DEALER FOR PRICING, INSTALLATION, AND ACTIVATION OF PREMIUM SOFTWARE
Y - SEPARATE ILLUSTRATION

<END>

549-8281 ELECTRONICS AR-MACHINE

S/N: H3C1-UP; K3G1-UP
PART OF 549-7639, 549-7642, 549-7643 ELECTRONICS AR-MACHINE
AN ATTACHMENT

SMCS-7610, 7620 **i07716439**

NOTE	PART NUMBER	QTY	PART NAME 1 2 3 4 5 6 (PRODUCT LEVEL)	SEE PAGE
Y	*550-0157*	1	BATTERY & WIRING GP	110
Y	*435-5965*	1	ELECTRONICS GP-MACHINE (IMPLEMENT)	129
Y	*549-6804*	1	ELECTRONICS GP-MACHINE	129
Y	*549-6805*	1	ELECTRONICS GP-MONITOR	130
Y	*550-0156*	1	WIRING GP-ENGINE	183
Y	*539-1226*	1	WIRING GP-VALVE	200

Y - SEPARATE ILLUSTRATION

<END>

375-5777 ELECTRONICS GP-MACHINE–RIPPER, WINCH

S/N: H3C1-UP; K3G1-UP
PART OF 426-4005 CONTROL & MTG GP-ELECTRONIC
AN ATTACHMENT

SMCS-7610, 7620 **i05962730**

NOTE	PART NUMBER	QTY	PART NAME 1 2 3 4 5 6 (PRODUCT LEVEL)	SEE PAGE
	367-0566	1	SOFTWARE GP-MACHINE	

<END>

435-5965 ELECTRONICS GP-MACHINE

S/N: H3C1-UP; K3G1-UP
PART OF 549-8281 ELECTRONICS AR-MACHINE
AN ATTACHMENT

SMCS-7610, 7620 **i07410148**

NOTE	PART NUMBER	QTY	PART NAME 1 2 3 4 5 6 (PRODUCT LEVEL)	SEE PAGE
	379-4973	1	SOFTWARE GP-MACHINE (IMPLEMENT)	

<END>

549-6804 ELECTRONICS GP-MACHINE

S/N: H3C1-UP; K3G1-UP
PART OF 549-8281 ELECTRONICS AR-MACHINE
AN ATTACHMENT

SMCS-7610, 7620 **i07923182**

NOTE	PART NUMBER	QTY	PART NAME 1 2 3 4 5 6 (PRODUCT LEVEL)	SEE PAGE
	581-8900	1	SOFTWARE GP-MACHINE	

<END>

549-6805 ELECTRONICS GP-MONITOR

S/N: H3C1-UP; K3G1-UP
PART OF 549-8281 ELECTRONICS AR-MACHINE
AN ATTACHMENT

SMCS-7490, 7601, 7603, 7610, 7620 **i07694761**

NOTE	PART NUMBER	QTY	PART NAME 1 2 3 4 5 6 (PRODUCT LEVEL)	SEE PAGE
	570-8719	1	SOFTWARE GP-MONITOR	

<END>

562-1812 ELECTRONICS GP-MONITOR

S/N: H3C1-UP; K3G1-UP
GRADE CONTROL
PART OF 549-7643 ELECTRONICS AR-MACHINE
AN ATTACHMENT

SMCS-7490, 7601, 7603, 7610, 7620 **i08043594**

NOTE	PART NUMBER	QTY	PART NAME 1 2 3 4 5 6 (PRODUCT LEVEL)	SEE PAGE
	540-8953	1	SOFTWARE GP-MONITOR (LICENSE)	
	561-2947	1	SOFTWARE GP-MONITOR (MACHINE DEFAULTS)	
	590-0878	1	SOFTWARE GP-MONITOR (APPLICATION)	

<END>

562-1817 ELECTRONICS GP-MONITOR

S/N: H3C1-UP; K3G1-UP
GRADE, SLOPE
PART OF 549-7642 ELECTRONICS AR-MACHINE
AN ATTACHMENT

SMCS-7490, 7601, 7603, 7610, 7620 **i08043582**

NOTE	PART NUMBER	QTY	PART NAME 1 2 3 4 5 6 (PRODUCT LEVEL)	SEE PAGE
	540-8952	1	SOFTWARE GP-MONITOR (LICENSE)	
	561-2941	1	SOFTWARE GP-MONITOR (MACHINE)	
	590-0878	1	SOFTWARE GP-MONITOR (APPLICATION)	

<END>

578-7531 ELECTRONICS GP-MONITOR

S/N: H3C1-UP; K3G1-UP
NETWORK MANAGER
PART OF 543-1829, 573-4529, 581-2223 INSTALLATION GP-COMMUNICATION
AN ATTACHMENT

SMCS-7490, 7601, 7603, 7610, 7620 **i08033484**

NOTE	PART NUMBER	QTY	PART NAME 1 2 3 4 5 6 (PRODUCT LEVEL)	SEE PAGE
	573-1607	1	SOFTWARE GP-MONITOR (NETWORK MANAGER)	

<END>

540-2958 HARNESS AS-CAB

S/N: H3C1-UP; K3G1-UP
PART OF 536-6699 WIRING GP-CAB
AN ATTACHMENT

SMCS-1408 **i07504740**

NOTE	PART NUMBER	QTY	PART NAME 1 2 3 4 5 6 (PRODUCT LEVEL)	SEE PAGE
	102-8804	1	KIT-RECEPTACLE (4-PIN)	
	102-8805	1	KIT-RECEPTACLE (6-PIN)	
	102-8806	1	KIT-RECEPTACLE (8-PIN)	
			(EACH RECEPTACLE KIT INCLUDES RECEPTACLE AS & WEDGE)	
	8T-8737	32	PLUG-SEAL	
	111-6792	3	TERMINAL-RECEPTACLE (18-GA TO 20-GA)	
	111-6795	1	HOUSING-RELAY	
	111-6816	1	LOCK	
E	**119-3662**		TUBE-HEAT SHRINK (10.85-MM DIA) (33-CM)	
E	**125-7874**		TUBE-HEAT SHRINK (5.72-MM DIA) (60-CM)	
E	**125-7875**		TUBE-HEAT SHRINK (7.44-MM DIA) (25-CM)	
	9X-3402	39	SOCKET-CONNECTOR (16-GA TO 18-GA)	
			—OR—	
	126-1768	39	SOCKET-CONNECTOR (14-GA TO 16-GA)	
	5P-4571	2	TERMINAL-BLADE (14-GA TO 16-GA)	
	097-7234	2	TERMINAL-BLADE (18-GA TO 22-GA)	
	2L-8069	4	TERMINAL-RING (2-GA TO 10-GA, 3/8-IN SCREW)	
	9X-3401	96	PIN-CONNECTOR (16-GA TO 18-GA)	
			—OR—	
	126-1767	96	PIN-CONNECTOR (14-GA TO 16-GA)	
	155-2265	1	KIT-CONNECTING PLUG (8-PIN)	
	155-2271	2	KIT-CONNECTING PLUG (4-PIN)	
	155-2274	3	KIT-CONNECTING PLUG (6-PIN)	
			(EACH PLUG KIT INCLUDES PLUG AS, WEDGE, & INTERFACE SEAL)	
	5P-2957	2	TERMINAL-BLADE (14-GA TO 16-GA)	
			—OR—	
	5P-5602	2	TERMINAL-BLADE (18-GA TO 22-GA)	
	167-3692	1	RECEPTACLE AS-CONNECTOR (31-PIN)	
	185-1860	87	SEAL-WIRE	
	202-5397	43	PLUG	
	204-1297	87	TERMINAL AS-BLADE (18-GA TO 20-GA)	
			(EACH INCLUDES)	
	235-4123	1	TERMINAL (18-GA TO 20-GA)	
	211-0052	1	NUT (1-11/16-18-THD)	
	214-4208	1	RECEPTACLE AS-CONNECTOR (70-PIN)	
	245-7434	13	KIT-CONNECTING PLUG (10-PIN)	
			(EACH INCLUDES PLUG CONNECTOR, WIRE AS, & PLUG)	
	230-5008	2	PLUG AS-CONNECTOR (4-PIN)	
			(EACH INCLUDES)	
	455-0706	1	SEAL-CONNECTOR	
	310-0674	1	LOCKWASHER	
	336-6741	1	KIT-RECEPTACLE CONNECTOR (6-PIN)	
			(INCLUDES RECEPTACLE AS & WEDGE)	
	483-6739	1	WIRE AS	
	102-8804	1	KIT-RECEPTACLE (4-PIN)	
			(INCLUDES RECEPTACLE AS & WEDGE)	
	8T-8737	2	PLUG-SEAL	

540-2958 **HARNESS AS-CAB (**contd.**)** **i07504740**

NOTE	PART NUMBER	QTY	PART NAME 1 2 3 4 5 6 (PRODUCT LEVEL)	SEE PAGE
	9X-3401	2	PIN-CONNECTOR (16-GA TO 18-GA)	
			—OR—	
	126-1767	2	PIN-CONNECTOR (14-GA TO 16-GA)	
E - ORDER BY THE CENTIMETER				

<END>

499-3460 HARNESS AS-CHASSIS

S/N: H3C1-UP; K3G1-UP
PART OF 550-0157 BATTERY & WIRING GP
AN ATTACHMENT

SMCS-1408 **i07019732**

NOTE	PART NUMBER	QTY	PART NAME 1 2 3 4 5 6 (PRODUCT LEVEL)	SEE PAGE
	102-8805	1	KIT-RECEPTACLE (6-PIN)	
			(INCLUDES RECEPTACLE AS & WEDGE)	
	3E-3383	1	WEDGE-RECEPTACLE LOCK (6-PIN)	
E	**125-7874**		TUBE-HEAT SHRINK (5.72-MM DIA) (5-CM)	
	9X-3402	7	SOCKET-CONNECTOR (16-GA TO 18-GA)	
			—OR—	
	126-1768	7	SOCKET-CONNECTOR (14-GA TO 16-GA)	
	9X-3401	6	PIN-CONNECTOR (16-GA TO 18-GA)	
			—OR—	
	126-1767	6	PIN-CONNECTOR (14-GA TO 16-GA)	
	155-2270	1	KIT-CONNECTING PLUG (2-PIN)	
			(INCLUDES PLUG AS, WEDGE, & INTERFACE SEAL)	
	230-4011	1	PLUG AS-CONNECTOR (2-PIN)	
	455-0704	1	SEAL-CONNECTOR	
	230-4013	1	PLUG AS-CONNECTOR (3-PIN)	
	455-0705	1	SEAL-CONNECTOR	
E - ORDER BY THE CENTIMETER				

<END>

504-4756 HARNESS AS-CHASSIS

S/N: H3C1-UP; K3G1-UP
PART OF 550-0157 BATTERY & WIRING GP
AN ATTACHMENT

SMCS-1408 **i07694414**

NOTE	PART NUMBER	QTY	PART NAME 1 2 3 4 5 6 (PRODUCT LEVEL)	SEE PAGE
	102-8802	1	KIT-RECEPTACLE (2-PIN)	
			(INCLUDES RECEPTACLE AS & WEDGE)	
	8T-8737	19	PLUG-SEAL	
	9W-1446	1	FUSE (20-AMPERE)	
	9X-1054	1	PLUG AS-CONNECTOR (4-PIN)	
	9X-1055	4	TERMINAL-RECEPTACLE (12-GA)	
	9X-1056	2	TERMINAL-RECEPTACLE (14-GA TO 16-GA)	
	107-0803	1	CAP-FUSE HOLDER	
E	**119-3662**		TUBE-HEAT SHRINK (10.85-MM DIA) (7-CM)	
E	**125-7874**		TUBE-HEAT SHRINK (5.72-MM DIA) (25-CM)	
E	**125-7875**		TUBE-HEAT SHRINK (7.44-MM DIA) (5-CM)	
	9X-3402	79	SOCKET-CONNECTOR (16-GA TO 18-GA)	
			—OR—	
	126-1768	79	SOCKET-CONNECTOR (14-GA TO 16-GA)	
	2L-8069	3	TERMINAL-RING (2-GA TO 10-GA, 3/8-IN SCREW)	
	9X-3401	31	PIN-CONNECTOR (16-GA TO 18-GA)	
			—OR—	
	126-1767	31	PIN-CONNECTOR (14-GA TO 16-GA)	
	155-2270	6	KIT-CONNECTING PLUG (2-PIN)	
			(EACH INCLUDES PLUG AS, WEDGE, & INTERFACE SEAL)	
	160-7689	1	PLUG AS-CONNECTOR (70-PIN)	
	159-9322	1	SEAL-O-RING	
	167-3692	1	RECEPTACLE AS-CONNECTOR (31-PIN)	
	211-0052	1	NUT (1-11/16-18-THD)	
	230-4011	1	PLUG AS-CONNECTOR (2-PIN)	
	455-0704	1	SEAL-CONNECTOR	
	230-5008	3	PLUG AS-CONNECTOR (4-PIN)	
			(EACH INCLUDES)	
	455-0706	1	SEAL-CONNECTOR	
E	**289-5151**		SLEEVE (31-CM)	
	310-0674	1	LOCKWASHER	

E - ORDER BY THE CENTIMETER

<END>

522-6004 HARNESS AS-CONTROL—RADIO

S/N: H3C1-UP; K3G1-UP
PART OF 537-5996 WIRING GP-GRADE CONTROL
AN ATTACHMENT

SMCS-1408 **i07562956**

NOTE	PART NUMBER	QTY	PART NAME 1 2 3 4 5 6 (PRODUCT LEVEL)	SEE PAGE
	102-8804	1	KIT-RECEPTACLE (4-PIN)	
			(INCLUDES RECEPTACLE AS & WEDGE)	
	8T-8729	4	PIN-CONNECTOR (16-GA TO 20-GA)	
	3E-3377	1	WEDGE-RECEPTACLE LOCK (4-PIN)	

<END>

522-6005 HARNESS AS-CONTROL

S/N: H3C1-UP; K3G1-UP
PART OF 536-7953 WIRING GP-CAB
AN ATTACHMENT

SMCS-1408 **i07694781**

NOTE	PART NUMBER	QTY	PART NAME 1 2 3 4 5 6 (PRODUCT LEVEL)	SEE PAGE
	8T-8729	6	PIN-CONNECTOR (16-GA TO 20-GA)	
	155-2255	2	KIT-CONNECTING PLUG (12-PIN)	
			(EACH INCLUDES PLUG AS, WEDGE, & INTERFACE SEAL)	
	155-2260	2	KIT-CONNECTING PLUG (3-PIN)	
	174-0503	2	KIT-CONNECTING PLUG (3-PIN)	
			(EACH PLUG KIT INCLUDES PLUG AS,WEDGES & INTERFACE SEAL)	
	8T-8737	13	PLUG-SEAL	
	102-8805	1	KIT-RECEPTACLE (6-PIN)	
			(INCLUDES RECEPTACLE AS & WEDGE)	
	134-2540	2	RECEPTACLE AS-CONNECTOR (3-PIN)	
	194-5226	6	TERMINAL AS (16-GA)	
			—OR—	
	194-5227	6	TERMINAL AS (14-GA)	
	8T-8730	11	SOCKET-CONNECTOR (16-GA TO 18-GA)	
E	**125-7874**		TUBE-HEAT SHRINK (5.72-MM DIA) (20-CM)	

E - ORDER BY THE CENTIMETER

<END>

527-6819 HARNESS AS-CONTROL

S/N: H3C1-UP; K3G1-UP
PART OF 426-4005 CONTROL & MTG GP-ELECTRONIC
AN ATTACHMENT

SMCS-1408 **i07609919**

NOTE	PART NUMBER	QTY	PART NAME 1 2 3 4 5 6 (PRODUCT LEVEL)	SEE PAGE
	126-1774	1	COVER-CONNECTOR	
	9X-3401	9	PIN-CONNECTOR (16-GA TO 18-GA)	
			—OR—	
	126-1767	9	PIN-CONNECTOR (14-GA TO 16-GA)	
	155-2260	1	KIT-CONNECTING PLUG (3-PIN)	
	155-2270	2	KIT-CONNECTING PLUG (2-PIN)	
			(EACH PLUG KIT INCLUDES PLUG AS, WEDGE(S) & INTERFACE SEAL)	
	160-7689	1	PLUG AS-CONNECTOR (70-PIN)	
	159-9322	1	SEAL-O-RING	
	167-3693	1	PLUG AS-CONNECTOR (31-PIN)	
	8T-8737	36	PLUG-SEAL	
	230-5010	1	PLUG AS-CONNECTOR (6-PIN)	
	102-8803	1	KIT-RECEPTACLE (3-PIN)	
			(INCLUDES RECEPTACLE AS & WEDGE)	
	230-5011	1	RECEPTACLE AS-CONNECTOR (6-PIN)	
	240-7193	2	RESISTOR AS (500-OHM, 2-WATT)	
			(EACH INCLUDES)	
	9X-3401	2	PIN-CONNECTOR (16-GA TO 18-GA)	
	102-8802	1	KIT-RECEPTACLE (2-PIN)	
			(INCLUDES RECEPTACLE AS & WEDGE)	
	9X-3402	78	SOCKET-CONNECTOR (16-GA TO 18-GA)	
			—OR—	
	126-1768	78	SOCKET-CONNECTOR (14-GA TO 16-GA)	
	3S-2093	2	STRAP-CABLE	
E	**119-3662**		TUBE-HEAT SHRINK (10.85-MM DIA) (7-CM)	
E	**125-7874**		TUBE-HEAT SHRINK (5.72-MM DIA) (10-CM)	
E	**125-7875**		TUBE-HEAT SHRINK (7.44-MM DIA) (5-CM)	
	3E-3371	1	WEDGE-RECEPTACLE LOCK	

E - ORDER BY THE CENTIMETER

<END>

537-5997 HARNESS AS-CONTROL

S/N: H3C1-UP; K3G1-UP
FRONT
PART OF 537-5996 WIRING GP-GRADE CONTROL
AN ATTACHMENT

SMCS-1408 **i07694787**

NOTE	PART NUMBER	QTY	PART NAME 1 2 3 4 5 6 (PRODUCT LEVEL)	SEE PAGE
	102-8804	1	KIT-RECEPTACLE (4-PIN)	
			(INCLUDES RECEPTACLE AS & WEDGE)	
	8T-8737	3	PLUG-SEAL	
E	**125-7874**		TUBE-HEAT SHRINK (5.72-MM DIA) (45-CM)	
E	**125-7875**		TUBE-HEAT SHRINK (7.44-MM DIA) (5-CM)	
	134-2540	3	RECEPTACLE AS-CONNECTOR (3-PIN)	
	9X-3401	2	PIN-CONNECTOR (16-GA TO 18-GA)	
			—OR—	
	126-1767	2	PIN-CONNECTOR (14-GA TO 16-GA)	
	155-2260	3	KIT-CONNECTING PLUG (3-PIN)	
			(EACH INCLUDES PLUG AS, WEDGE(S), & INTERFACE SEAL)	
	228-3323	2	CLIP-SPRING	
	9X-3401	2	PIN-CONNECTOR (16-GA TO 18-GA)	
	9X-3402	6	SOCKET-CONNECTOR (16-GA TO 18-GA)	

E - ORDER BY THE CENTIMETER

<END>

538-9857 HARNESS AS-CONTROL

S/N: H3C1-UP; K3G1-UP
PRODUCT LINK
PART OF 543-1829, 573-4529, 581-2223 INSTALLATION GP-COMMUNICATION
AN ATTACHMENT

SMCS-1408 **i07775423**

NOTE	PART NUMBER	QTY	PART NAME 1 2 3 4 5 6 (PRODUCT LEVEL)	SEE PAGE
	271-2811	1	KIT-RECEPTACLE (12-PIN)	
	370-4059	1	KIT-RECEPTACLE (12-PIN)	
			(EACH RECEPTACLE KIT INCLUDES RECEPTACLE AS & WEDGE)	
	8T-8737	7	PLUG-SEAL	
E	**125-7874**		TUBE-HEAT SHRINK (5.72-MM DIA) (15-CM)	
	331-4222	1	KIT-CONNECTING PLUG (12-PIN)	
			(EACH PLUG KIT INCLUDES PLUG AS, WEDGE, & INTERFACE SEAL)	
	9X-3401	21	PIN-CONNECTOR (16-GA TO 18-GA)	
	9X-3402	8	SOCKET-CONNECTOR (16-GA TO 18-GA)	
J	**467-2859**		CABLE (35-DM)	
	483-2761	1	PLUG AS-CONNECTOR (44-PIN)	
	483-2762	1	PLUG AS-CONNECTOR (44-PIN)	
	483-2763	1	PLUG AS-CONNECTOR (44-PIN)	
	483-2767	26	TERMINAL AS (18-GA)	
	483-2768	106	PLUG-SEAL	

E - ORDER BY THE CENTIMETER
J - ORDER BY THE DECIMETER

<END>

539-0442 HARNESS AS-DASH

S/N: H3C1-UP; K3G1-UP
PART OF 539-0441 MONITOR GP-OPERATOR
AN ATTACHMENT

SMCS-1408 **i07789742**

NOTE	PART NUMBER	QTY	PART NAME 1 2 3 4 5 6 (PRODUCT LEVEL)	SEE PAGE
	9X-3401	2	PIN-CONNECTOR (16-GA TO 18-GA)	
	155-2265	2	KIT-CONNECTING PLUG (8-PIN)	
	155-2260	1	KIT-CONNECTING PLUG (3-PIN)	
	155-2270	1	KIT-CONNECTING PLUG (2-PIN)	
	155-2271	2	KIT-CONNECTING PLUG (4-PIN)	
			(EACH PLUG KIT INCLUDES PLUG AS, WEDGE(S) & INTERFACE SEAL)	
	167-3693	1	PLUG AS-CONNECTOR (31-PIN)	
	230-4009	1	PLUG AS-CONNECTOR (12-PIN)	
	455-0709	1	SEAL-CONNECTOR	
	230-5008	1	PLUG AS-CONNECTOR (4-PIN)	
	455-0706	1	SEAL-CONNECTOR	
	231-2295	1	PLUG AS-CONNECTOR (8-PIN)	
	455-0708	1	SEAL-CONNECTOR	
	8T-8737	34	PLUG-SEAL	
	102-8802	1	KIT-RECEPTACLE (2-PIN)	
	102-8806	2	KIT-RECEPTACLE (8-PIN)	
			(EACH RECEPTACLE KIT INCLUDES RECEPTACLE AS & WEDGE)	
	230-5009	1	RECEPTACLE AS-CONNECTOR (4-PIN)	
	9X-3402	1	SOCKET-CONNECTOR (16-GA TO 18-GA)	
			—OR—	
	126-1768	1	SOCKET-CONNECTOR (14-GA TO 16-GA)	
	9X-3402	69	SOCKET-CONNECTOR (16-GA TO 18-GA)	
	2L-8069	1	TERMINAL-RING (2-GA TO 10-GA, 3/8-IN SCREW)	
E	**125-7874**		TUBE-HEAT SHRINK (5.72-MM DIA) (20-CM)	

E - ORDER BY THE CENTIMETER

<END>

385-5997 HARNESS AS-ENGINE

S/N: 4501-UP

PART OF 395-0113 WIRING GP-ENGINE

SMCS-1408 **i07383493**

NOTE	PART NUMBER	QTY	PART NAME 1 2 3 4 5 6 (PRODUCT LEVEL)	SEE PAGE
	377-6932	1	COVER	
E	**292-2896**		CONDUIT (16.9-MM ID) (45-CM)	
	155-2271	3	KIT-CONNECTING PLUG (4-PIN)	
			(EACH INCLUDES PLUG AS, WEDGE, & INTERFACE SEAL)	
	245-1044	2	LOCK-CONNECTOR	
	316-9351	7	MOUNTING-CABLE TIE	
	230-4011	2	PLUG AS-CONNECTOR (2-PIN)	
			(EACH INCLUDES)	
	264-7029	1	SEAL-CONNECTOR	
	238-8245	1	PLUG AS-CONNECTOR (2-PIN)	
	455-0704	1	SEAL-CONNECTOR	
	238-8247	2	PLUG AS-CONNECTOR (2-PIN)	
			(EACH INCLUDES)	
	455-0704	1	SEAL-CONNECTOR	
	245-1043	1	PLUG GP-CONNECTOR (64-PIN)	
	267-7208	1	RING-RETAINING	
	274-4990	1	SEAL	
M	**267-7207**	1	BOLT-SPECIAL (M6X1-THD)	
	281-8804	2	PLUG AS-CONNECTOR (3-PIN)	
			(EACH INCLUDES)	
	455-0705	1	SEAL-CONNECTOR	
	536-7946	1	PLUG AS-CONNECTOR	
	444-7604	2	SOCKET-CONNECTOR	
	536-7945	1	PLUG AS	
	444-7604	3	SOCKET-CONNECTOR	
	245-1048	33	PLUG-CONNECTOR (1-PIN)	
	185-1860	5	SEAL-WIRE	
	267-9572	31	SOCKET-CONNECTION (18-GA)	
	9X-3402	16	SOCKET-CONNECTOR (16-GA TO 18-GA)	
			—OR—	
	126-1768	16	SOCKET-CONNECTOR (14-GA TO 16-GA)	
	217-9039	6	STRAP-CABLE	
	356-1219	1	STRAP-CABLE	
	206-1345	14	STRAP-CABLE	
E	**125-7874**		TUBE-HEAT SHRINK (5.72-MM DIA) (10-CM)	
	194-5226	12	TERMINAL AS (16-GA)	
			—OR—	
	194-5227	12	TERMINAL AS (14-GA)	

E - ORDER BY THE CENTIMETER
M - METRIC PART

<END>

550-0154 HARNESS AS-ENGINE

S/N: H3C1-UP; K3G1-UP
PART OF 550-0156 WIRING GP-ENGINE
AN ATTACHMENT

SMCS-1408 **i07717075**

NOTE	PART NUMBER	QTY	PART NAME 1 2 3 4 5 6 (PRODUCT LEVEL)	SEE PAGE
	245-1045	1	COVER	
	121-2844	1	HARNESS AS-WIRING (CRANK WITHOUT INJECT)	
	8T-8729	4	PIN-CONNECTOR (16-GA TO 20-GA)	
	155-2260	1	KIT-CONNECTING PLUG (3-PIN)	
			(INCLUDES PLUG AS, WEDGES & INTERFACE SEAL)	
	8T-8737	5	PLUG-SEAL	
	102-8803	2	KIT-RECEPTACLE (3-PIN)	
			(EACH INCLUDES RECEPTACLE AS & WEDGE)	
	245-1044	2	LOCK-CONNECTOR	
	213-0139	7	PIN (4-MM)	
	9X-3401	1	PIN-CONNECTOR (16-GA TO 18-GA)	
			—OR—	
	126-1767	1	PIN-CONNECTOR (14-GA TO 16-GA)	
	9X-3401	13	PIN-CONNECTOR (16-GA TO 18-GA)	
	258-4172	1	PLUG AS-CONNECTOR (48-PIN)	
	155-2255	1	KIT-CONNECTING PLUG (12-PIN)	
	155-2270	12	KIT-CONNECTING PLUG (2-PIN)	
	155-2274	1	KIT-CONNECTING PLUG (6-PIN)	
			(EACH PLUG KIT INCLUDES PLUG AS, WEDGE, & INTERFACE SEAL)	
	155-2260	2	KIT-CONNECTING PLUG (3-PIN)	
			(EACH INCLUDES PLUG AS, WEDGES & INTERFACE SEAL)	
	230-4011	1	PLUG AS-CONNECTOR (2-PIN)	
	455-0704	1	SEAL-CONNECTOR	
	237-0227	5	PLUG AS-CONNECTOR (3-PIN)	
			(EACH INCLUDES)	
	455-0705	1	SEAL-CONNECTOR	
	245-1042	1	PLUG AS-CONNECTOR (64-PIN)	
M	**267-7207**	1	BOLT-SPECIAL (M6X1-THD)	
	245-1048	39	PLUG-CONNECTOR (1-PIN)	
	8T-8737	19	PLUG-SEAL	
	102-8802	2	KIT-RECEPTACLE (2-PIN)	
	102-8804	1	KIT-RECEPTACLE (4-PIN)	
	102-8806	1	KIT-RECEPTACLE (8-PIN)	
			(EACH RECEPTACLE KIT INCLUDES RECEPTACLE AS & WEDGE)	
	134-2540	1	RECEPTACLE AS-CONNECTOR (3-PIN)	
	230-5009	1	RECEPTACLE AS-CONNECTOR (4-PIN)	
	237-0228	1	RECEPTACLE AS-CONNECTOR (3-PIN)	
	9X-3402	6	SOCKET-CONNECTOR (16-GA TO 18-GA)	
			—OR—	
	126-1768	6	SOCKET-CONNECTOR (14-GA TO 16-GA)	
	194-5226	10	TERMINAL AS (16-GA)	
			—OR—	
	194-5227	10	TERMINAL AS (14-GA)	
	267-9572	25	SOCKET-CONNECTION (18-GA)	
	283-8106	22	SOCKET-CONNECTOR (20-GA)	

550-0154 **HARNESS AS-ENGINE (**contd.**)** **i07717075**

NOTE	PART NUMBER	QTY	PART NAME 1 2 3 4 5 6 (PRODUCT LEVEL)	SEE PAGE
			—OR—	
	374-8372	22	SOCKET-CONNECTOR (16-GA TO 18-GA)	
	9X-3402	58	SOCKET-CONNECTOR (16-GA TO 18-GA)	
	189-3158	1	SUPPRESSOR-ARC	
	2L-8069	2	TERMINAL-RING (2-GA TO 10-GA, 3/8-IN SCREW)	
E	**125-7874**		TUBE-HEAT SHRINK (5.72-MM DIA) (35-CM)	
E	**125-7875**		TUBE-HEAT SHRINK (7.44-MM DIA) (20-CM)	
	258-4176	1	WEDGE	

E - ORDER BY THE CENTIMETER
M - METRIC PART

<END>

440-6171 HARNESS AS-HEATER & AIR COND

S/N: H3C1-UP; K3G1-UP
PART OF 434-4309 AIR CONDITIONER GP
AN ATTACHMENT

SMCS-1408 **i06692650**

NOTE	PART NUMBER	QTY	PART NAME 1 2 3 4 5 6 (PRODUCT LEVEL)	SEE PAGE
	6T-6505	3	HOUSING-RECEPTACLE (BLADE, POSITIVE LOCK)	
	6T-6506	3	TERMINAL-BLADE (14-GA TO 18-GA)	
	8T-8737	3	PLUG-SEAL	
E	**125-7874**		TUBE-HEAT SHRINK (5.72-MM DIA) (5-CM)	
	9X-3402	9	SOCKET-CONNECTOR (16-GA TO 18-GA)	
			—OR—	
	126-1768	9	SOCKET-CONNECTOR (14-GA TO 16-GA)	
	9X-3401	14	PIN-CONNECTOR (16-GA TO 18-GA)	
			—OR—	
	126-1767	14	PIN-CONNECTOR (14-GA TO 16-GA)	
	155-2270	1	KIT-CONNECTING PLUG (2-PIN)	
	155-2271	1	KIT-CONNECTING PLUG (4-PIN)	
			(EACH PLUG KIT INCLUDES PLUG AS, WEDGE, & INTERFACE SEAL)	
	230-4010	1	RECEPTACLE AS-CONNECTOR (12-PIN)	
	230-4011	2	PLUG AS-CONNECTOR (2-PIN)	
			(EACH INCLUDES)	
	455-0704	1	SEAL-CONNECTOR	
	230-5009	1	RECEPTACLE AS-CONNECTOR (4-PIN)	

E - ORDER BY THE CENTIMETER

<END>

358-2691 HARNESS AS-LIGHTING

S/N: H3C1-UP; K3G1-UP
PART OF 536-6699 WIRING GP-CAB
AN ATTACHMENT

SMCS-1408 **i06692612**

NOTE	PART NUMBER	QTY	PART NAME 1 2 3 4 5 6 (PRODUCT LEVEL)	SEE PAGE
	8T-8737	1	PLUG-SEAL	
E	**125-7875**		TUBE-HEAT SHRINK (7.44-MM DIA) (5-CM)	
	9X-3402	13	SOCKET-CONNECTOR (16-GA TO 18-GA)	
			—OR—	
	126-1768	13	SOCKET-CONNECTOR (14-GA TO 16-GA)	
	155-2270	4	KIT-CONNECTING PLUG (2-PIN)	
	155-2274	1	KIT-CONNECTING PLUG (6-PIN)	
			(INCLUDES PLUG AS, WEDGE, & INTERFACE SEAL)	

E - ORDER BY THE CENTIMETER

<END>

510-4915 HARNESS AS-MONITOR—DISPLAY

S/N: H3C1-UP; K3G1-UP
PART OF 537-5996 WIRING GP-GRADE CONTROL
AN ATTACHMENT

SMCS-1408 **i07482926**

NOTE	PART NUMBER	QTY	PART NAME 1 2 3 4 5 6 (PRODUCT LEVEL)	SEE PAGE
	374-7465	1	CAP-SEAL	
	155-2271	1	KIT-CONNECTING PLUG (4-PIN)	
			(INCLUDES PLUG AS, WEDGE, & INTERFACE SEAL)	
	102-8806	1	KIT-RECEPTACLE (8-PIN)	
			(INCLUDES RECEPTACLE AS & WEDGE)	
	9W-0852	2	PIN-CONNECTOR (14-GA TO 16-GA)	
	9X-3401	6	PIN-CONNECTOR (16-GA TO 18-GA)	
	167-8987	1	PLUG AS-CONNECTOR (8-PIN)	
	9W-0844	2	SOCKET-CONNECTOR (14-GA TO 16-GA)	
	9X-3402	2	SOCKET-CONNECTOR (16-GA TO 18-GA)	
E	**125-7874**		TUBE-HEAT SHRINK (5.72-MM DIA) (10-CM)	
	3E-3389	1	WEDGE-RECEPTACLE LOCK (8-PIN)	

E - ORDER BY THE CENTIMETER

<END>

536-6703 HARNESS AS-PLATFORM

S/N: H3C1-UP; K3G1-UP
PART OF 536-6702 WIRING GP-PLATFORM
AN ATTACHMENT

SMCS-1408 **i07505053**

NOTE	PART NUMBER	QTY	PART NAME 1 2 3 4 5 6 (PRODUCT LEVEL)	SEE PAGE
	102-8802	2	KIT-RECEPTACLE (2-PIN)	
	102-8803	1	KIT-RECEPTACLE (3-PIN)	
	102-8806	1	KIT-RECEPTACLE (8-PIN)	
	336-6741	1	KIT-RECEPTACLE CONNECTOR (6-PIN)	
			(EACH RECEPTACLE KIT INCLUDES RECEPTACLE AS & WEDGE)	
	3S-2093	14	STRAP-CABLE	
D	**6V-2689**		TUBE-HEAT SHRINK (6.35-MM DIA) (0.2-M)	
	8T-8737	102	PLUG-SEAL	
E	**119-3662**		TUBE-HEAT SHRINK (10.85-MM DIA) (80-CM)	
E	**125-7874**		TUBE-HEAT SHRINK (5.72-MM DIA) (255-CM)	
E	**125-7875**		TUBE-HEAT SHRINK (7.44-MM DIA) (20-CM)	
	9X-3402	47	SOCKET-CONNECTOR (16-GA TO 18-GA)	
			—OR—	
	126-1768	47	SOCKET-CONNECTOR (14-GA TO 16-GA)	
	126-1774	2	COVER-CONNECTOR	
	5P-4571	2	TERMINAL-BLADE (14-GA TO 16-GA)	
	2L-8069	5	TERMINAL-RING (2-GA TO 10-GA, 3/8-IN SCREW)	
	2L-8079	1	TERMINAL-RING (14-GA TO 16-GA, 3/8-IN SCREW)	
	134-2540	4	RECEPTACLE AS-CONNECTOR (3-PIN)	
	9X-3401	8	PIN-CONNECTOR (16-GA TO 18-GA)	
			—OR—	
	126-1767	8	PIN-CONNECTOR (14-GA TO 16-GA)	
	147-1445	1	PLUG AS-CONNECTOR (70-PIN)	
	159-9322	1	SEAL-O-RING	
	147-1446	1	PLUG AS-CONNECTOR (70-PIN)	
	159-9322	1	SEAL-O-RING	
	155-2255	1	KIT-CONNECTING PLUG (12-PIN)	
	155-2256	1	KIT-CONNECTING PLUG (12-PIN)	
	155-2265	3	KIT-CONNECTING PLUG (8-PIN)	
	155-2260	5	KIT-CONNECTING PLUG (3-PIN)	
	155-2270	4	KIT-CONNECTING PLUG (2-PIN)	
	155-2274	1	KIT-CONNECTING PLUG (6-PIN)	
	237-0166	1	KIT-CONNECTING PLUG (12-PIN)	
			(EACH PLUG KIT INCLUDES PLUG AS, WEDGE(S), & INTERFACE SEAL)	
	160-7689	1	PLUG AS-CONNECTOR (70-PIN)	
	159-9322	1	SEAL-O-RING	
	167-3692	1	RECEPTACLE AS-CONNECTOR (31-PIN)	
	169-0705	4	PLUG-SEAL	
	9X-3401	11	PIN-CONNECTOR (16-GA TO 18-GA)	
			—OR—	
	126-1767	11	PIN-CONNECTOR (14-GA TO 16-GA)	
	185-1861	7	SEAL-WIRE	
	202-5397	3	PLUG	
	203-9007	1	NUT (1-1/2-18-THD)	
	204-1297	7	TERMINAL AS-BLADE (18-GA TO 20-GA)	
			(EACH INCLUDES)	
	235-4123	1	TERMINAL (18-GA TO 20-GA)	

536-6703 **HARNESS AS-PLATFORM (**contd.**)** **i07505053**

NOTE	PART NUMBER	QTY	PART NAME 1 2 3 4 5 6 (PRODUCT LEVEL)	SEE PAGE
	211-0052	1	NUT (1-11/16-18-THD)	
	214-4208	1	RECEPTACLE AS-CONNECTOR (70-PIN)	
	245-7434	1	KIT-CONNECTING PLUG (10-PIN)	
			(INCLUDES PLUG CONNECTOR, WIRE AS, & PLUG)	
	230-4009	1	PLUG AS-CONNECTOR (12-PIN)	
	455-0709	1	SEAL-CONNECTOR	
	230-4010	1	RECEPTACLE AS-CONNECTOR (12-PIN)	
	230-5008	3	PLUG AS-CONNECTOR (4-PIN)	
			(EACH INCLUDES)	
	455-0706	1	SEAL-CONNECTOR	
	231-2300	1	RECEPTACLE AS-CONNECTOR (8-PIN)	
	240-7193	1	RESISTOR AS (500-OHM, 2-WATT)	
	102-8802	1	KIT-RECEPTACLE (2-PIN)	
			(INCLUDES RECEPTACLE AS & WEDGE)	
	9X-3401	2	PIN-CONNECTOR (16-GA TO 18-GA)	
	253-8110	1	PLUG (12-PIN)	
	253-8111	1	PLUG (12-PIN)	
	253-8113	2	WEDGE (12-PIN)	
	258-4170	1	RECEPTACLE AS-CONNECTOR (48-PIN)	
	258-4174	1	WEDGE-RECEPTACLE LOCK	
	262-9151	10	PIN-CONNECTOR (12-GA TO 14-GA)	
	270-2679	1	LOCKWASHER	
	271-5604	24	PIN-CONNECTOR (20-GA)	
			—OR—	
	347-0109	24	WIRE AS (18-GA)	
	283-8106	20	SOCKET-CONNECTOR (20-GA)	
			—OR—	
	374-8372	20	SOCKET-CONNECTOR (16-GA TO 18-GA)	
	310-0674	1	LOCKWASHER	
	344-1678	1	PLUG AS-CONNECTOR	
	344-1682	1	PLUG AS-CONNECTOR (14-PIN)	
	344-1683	1	PLUG AS-CONNECTOR	
	344-1684	1	PLUG AS-CONNECTOR	
	344-1685	1	PLUG AS-CONNECTOR	
	344-1686	38	SOCKET-CONNECTOR (18-GA)	
	344-1687	17	SOCKET-CONNECTOR (14-GA TO 16-GA)	
	344-1690	19	PLUG-SEAL	
	9X-3401	106	PIN-CONNECTOR (16-GA TO 18-GA)	
	9X-3402	219	SOCKET-CONNECTOR (16-GA TO 18-GA)	
	419-5667	1	PLUG AS	
	451-8019	1	RECEPTACLE AS-CONNECTOR (14-PIN)	
J	**467-2859**		CABLE (60-DM)	
	468-0434	1	CAP AS	
E	**125-7875**		TUBE-HEAT SHRINK (7.44-MM DIA) (3-CM)	
	2L-8079	1	TERMINAL-RING (14-GA TO 16-GA, 3/8-IN SCREW)	
	424-4322	1	COVER-CONNECTOR	

D - ORDER BY THE METER
E - ORDER BY THE CENTIMETER
J - ORDER BY THE DECIMETER

<END>

536-6700 HARNESS AS-REAR LIGHTING

S/N: H3C1-UP; K3G1-UP
PART OF 536-6699 WIRING GP-CAB
AN ATTACHMENT

SMCS-1408 **i07694446**

NOTE	PART NUMBER	QTY	PART NAME 1 2 3 4 5 6 (PRODUCT LEVEL)	SEE PAGE
	9X-3401	4	PIN-CONNECTOR (16-GA TO 18-GA)	
			—OR—	
	126-1767	4	PIN-CONNECTOR (14-GA TO 16-GA)	
	9X-3401	4	PIN-CONNECTOR (16-GA TO 18-GA)	
	155-2260	1	KIT-CONNECTING PLUG (3-PIN)	
	155-2270	3	KIT-CONNECTING PLUG (2-PIN)	
	155-2271	1	KIT-CONNECTING PLUG (4-PIN)	
	155-2274	2	KIT-CONNECTING PLUG (6-PIN)	
			(EACH PLUG KIT INCLUDES PLUG AS, WEDGE(S) & INTERFACE SEAL)	
	8T-8737	14	PLUG-SEAL	
	102-8802	1	KIT-RECEPTACLE (2-PIN)	
	102-8804	1	KIT-RECEPTACLE (4-PIN)	
	102-8805	1	KIT-RECEPTACLE (6-PIN)	
	102-8806	1	KIT-RECEPTACLE (8-PIN)	
			(EACH RECEPTACLE KIT INCLUDES RECEPTACLE AS & WEDGE)	
	134-2540	1	RECEPTACLE AS-CONNECTOR (3-PIN)	
	9X-3402	9	SOCKET-CONNECTOR (16-GA TO 18-GA)	
			—OR—	
	126-1768	9	SOCKET-CONNECTOR (14-GA TO 16-GA)	
	9X-3402	14	SOCKET-CONNECTOR (16-GA TO 18-GA)	
	2L-8069	2	TERMINAL-RING (2-GA TO 10-GA, 3/8-IN SCREW)	
E	**125-7874**		TUBE-HEAT SHRINK (5.72-MM DIA) (40-CM)	
E	**125-7875**		TUBE-HEAT SHRINK (7.44-MM DIA) (5-CM)	

E - ORDER BY THE CENTIMETER

<END>

478-7013 HARNESS AS-SENSOR—FUEL SENDER

S/N: H3C1-UP; K3G1-UP
PART OF 550-0157 BATTERY & WIRING GP
AN ATTACHMENT

SMCS-1408 **i06720942**

NOTE	PART NUMBER	QTY	PART NAME 1 2 3 4 5 6 (PRODUCT LEVEL)	SEE PAGE
	102-8802	1	KIT-RECEPTACLE (2-PIN)	
			(INCLUDES RECEPTACLE AS & WEDGE)	
	9X-3402	2	SOCKET-CONNECTOR (16-GA TO 18-GA)	
			—OR—	
	126-1768	2	SOCKET-CONNECTOR (14-GA TO 16-GA)	
	9X-3401	2	PIN-CONNECTOR (16-GA TO 18-GA)	
			—OR—	
	126-1767	2	PIN-CONNECTOR (14-GA TO 16-GA)	
	155-2270	1	KIT-CONNECTING PLUG (2-PIN)	
			(INCLUDES PLUG AS, WEDGE, & INTERFACE SEAL)	

<END>

506-3946 HARNESS AS-SENSOR—SEAT

S/N: H3C1-UP; K3G1-UP
PART OF 506-3945 WIRING GP-SEAT
AN ATTACHMENT

SMCS-1408 **i07694444**

NOTE	PART NUMBER	QTY	PART NAME 1 2 3 4 5 6 (PRODUCT LEVEL)	SEE PAGE
E	**197-3800**		LOOM (14-CM)	
	9X-3401	2	PIN-CONNECTOR (16-GA TO 18-GA)	
			—OR—	
	126-1767	2	PIN-CONNECTOR (14-GA TO 16-GA)	
	155-2260	1	KIT-CONNECTING PLUG (3-PIN)	
	155-2270	2	KIT-CONNECTING PLUG (2-PIN)	
	155-2274	1	KIT-CONNECTING PLUG (6-PIN)	
			(EACH PLUG KIT INCLUDES PLUG AS, WEDGE(S) & INTERFACE SEAL)	
	167-3693	1	PLUG AS-CONNECTOR (31-PIN)	
	230-4009	2	PLUG AS-CONNECTOR (12-PIN)	
			(EACH INCLUDES)	
	455-0709	1	SEAL-CONNECTOR	
	230-5010	1	PLUG AS-CONNECTOR (6-PIN)	
	455-0707	1	SEAL-CONNECTOR	
	8T-8737	15	PLUG-SEAL	
	102-8802	1	KIT-RECEPTACLE (2-PIN)	
			(INCLUDES RECEPTACLE AS & WEDGE)	
	230-4012	1	RECEPTACLE AS-CONNECTOR (2-PIN)	
	9X-3402	61	SOCKET-CONNECTOR (16-GA TO 18-GA)	
			—OR—	
	126-1768	61	SOCKET-CONNECTOR (14-GA TO 16-GA)	
B	**329-3734**		TAPE-ELECTRICAL	
E	**135-5009**		TUBE-HEAT SHRINK (32-MM DIA) (32-CM)	
E	**125-7874**		TUBE-HEAT SHRINK (5.72-MM DIA) (40-CM)	

B - USE AS REQUIRED
E - ORDER BY THE CENTIMETER

<END>

525-6398 HARNESS AS-SENSOR

S/N: H3C1-UP; K3G1-UP
PART OF 550-0157 BATTERY & WIRING GP
AN ATTACHMENT

SMCS-1408 **i07034275**

NOTE	PART NUMBER	QTY	PART NAME 1 2 3 4 5 6 (PRODUCT LEVEL)	SEE PAGE
	8T-8737	4	PLUG-SEAL	
	9X-3402	5	SOCKET-CONNECTOR (16-GA TO 18-GA)	
			—OR—	
	126-1768	5	SOCKET-CONNECTOR (14-GA TO 16-GA)	
	9X-3401	5	PIN-CONNECTOR (16-GA TO 18-GA)	
			—OR—	
	126-1767	5	PIN-CONNECTOR (14-GA TO 16-GA)	
	155-2270	1	KIT-CONNECTING PLUG (2-PIN)	
			(INCLUDES PLUG AS, WEDGE, & INTERFACE SEAL)	
	230-4013	1	PLUG AS-CONNECTOR (3-PIN)	
	455-0705	1	SEAL-CONNECTOR	
	230-4014	1	RECEPTACLE AS-CONNECTOR (3-PIN)	
	230-5011	1	RECEPTACLE AS-CONNECTOR (6-PIN)	

<END>

536-1600 HARNESS AS-SENSOR

S/N: H3C1-UP; K3G1-UP
BLADE, STABILIZER
PART OF 536-1598 WIRING GP-SENSOR
AN ATTACHMENT

SMCS-1408 **i07717939**

NOTE	PART NUMBER	QTY	PART NAME 1 2 3 4 5 6 (PRODUCT LEVEL)	SEE PAGE
E	**6V-0744**		GUARD-HOSE (183-CM)	
G	**213-8705**		HOSE-HYDRAULIC (102-IN)	
	155-2260	1	KIT-CONNECTING PLUG (3-PIN)	
	155-2271	2	KIT-CONNECTING PLUG (4-PIN)	
			(EACH PLUG KIT INCLUDES PLUG AS, WEDGE(S), & INTERFACE SEAL)	
	230-5008	1	PLUG AS-CONNECTOR (4-PIN)	
	455-0706	1	SEAL-CONNECTOR	
	8T-8737	1	PLUG-SEAL	
	134-2540	1	RECEPTACLE AS-CONNECTOR (3-PIN)	
	9X-3402	14	SOCKET-CONNECTOR (16-GA TO 18-GA)	
E	**125-7874**		TUBE-HEAT SHRINK (5.72-MM DIA) (30-CM)	
E	**210-8958**		TUBE-HEAT SHRINK (24-MM DIA) (23-CM)	

E - ORDER BY THE CENTIMETER
G - ORDER BY THE INCH

<END>

536-5046 HARNESS AS-SENSOR

S/N: H3C1-UP; K3G1-UP
PART OF 536-5045 WIRING GP-CONTROL
AN ATTACHMENT

SMCS-1408 **i07694775**

NOTE	PART NUMBER	QTY	PART NAME 1 2 3 4 5 6 (PRODUCT LEVEL)	SEE PAGE
E	**6V-0744**		GUARD-HOSE (111-CM)	
E	**135-5009**		TUBE-HEAT SHRINK (32-MM DIA) (8-CM)	
B	**1P-0810**		TAPE-ELECTRICAL	
G	**213-8704**	1	HOSE-HYDRAULIC (62-IN)	
	230-5009	1	RECEPTACLE AS-CONNECTOR (4-PIN)	
	9X-3401	4	PIN-CONNECTOR (16-GA TO 18-GA)	

B - USE AS REQUIRED
E - ORDER BY THE CENTIMETER
G - ORDER BY THE INCH

<END>

550-2139 HARNESS AS-SENSOR

S/N: H3C1-UP; K3G1-UP
PART OF 550-0157 BATTERY & WIRING GP
AN ATTACHMENT

SMCS-1408 **i07716848**

NOTE	PART NUMBER	QTY	PART NAME 1 2 3 4 5 6 (PRODUCT LEVEL)	SEE PAGE
	102-8804	1	KIT-RECEPTACLE (4-PIN)	
	102-8801	1	KIT-RECEPTACLE (12-PIN)	
			(EACH RECEPTACLE KIT INCLUDES RECEPTACLE AS & WEDGE)	
	8T-8737	5	PLUG-SEAL	
E	**125-7874**		TUBE-HEAT SHRINK (5.72-MM DIA) (5-CM)	
	9X-3402	2	SOCKET-CONNECTOR (16-GA TO 18-GA)	
			—OR—	
	126-1768	2	SOCKET-CONNECTOR (14-GA TO 16-GA)	
	9X-3401	2	PIN-CONNECTOR (16-GA TO 18-GA)	
			—OR—	
	126-1767	2	PIN-CONNECTOR (14-GA TO 16-GA)	
	155-2271	1	KIT-CONNECTING PLUG (4-PIN)	
			(INCLUDES PLUG AS, WEDGE, & INTERFACE SEAL)	
	230-4011	2	PLUG AS-CONNECTOR (2-PIN)	
			(EACH INCLUDES)	
	455-0704	1	SEAL-CONNECTOR	
	230-5010	1	PLUG AS-CONNECTOR (6-PIN)	
	455-0707	1	SEAL-CONNECTOR	
	9X-3401	10	PIN-CONNECTOR (16-GA TO 18-GA)	
	9X-3402	11	SOCKET-CONNECTOR (16-GA TO 18-GA)	

E - ORDER BY THE CENTIMETER

<END>

438-8573 HARNESS AS-SOLENOID—REVERSING FAN

S/N: H3C1-UP; K3G1-UP
PART OF 550-0157 BATTERY & WIRING GP
AN ATTACHMENT

SMCS-1408 **i06720928**

NOTE	PART NUMBER	QTY	PART NAME 1 2 3 4 5 6 (PRODUCT LEVEL)	SEE PAGE
	102-8802	1	KIT-RECEPTACLE (2-PIN)	
			(INCLUDES RECEPTACLE AS & WEDGE)	
	8T-8737	2	PLUG-SEAL	
	9X-3402	8	SOCKET-CONNECTOR (16-GA TO 18-GA)	
			—OR—	
	126-1768	8	SOCKET-CONNECTOR (14-GA TO 16-GA)	
	155-2270	2	KIT-CONNECTING PLUG (2-PIN)	
			(EACH INCLUDES PLUG AS, WEDGE, & INTERFACE SEAL)	
	230-5008	1	PLUG AS-CONNECTOR (4-PIN)	
	455-0706	1	SEAL-CONNECTOR	

<END>

539-1227 HARNESS AS-VALVE

S/N: H3C1-UP; K3G1-UP
IMPLEMENT
PART OF 539-1226 WIRING GP-VALVE
AN ATTACHMENT

SMCS-1408 **i07694764**

NOTE	PART NUMBER	QTY	PART NAME 1 2 3 4 5 6 (PRODUCT LEVEL)	SEE PAGE
	102-8802	1	KIT-RECEPTACLE (2-PIN)	
			(INCLUDES RECEPTACLE AS & WEDGE)	
	8T-8737	3	PLUG-SEAL	
E	**125-7874**		TUBE-HEAT SHRINK (5.72-MM DIA) (15-CM)	
E	**125-7875**		TUBE-HEAT SHRINK (7.44-MM DIA) (5-CM)	
	155-2270	11	KIT-CONNECTING PLUG (2-PIN)	
			(EACH INCLUDES PLUG AS, WEDGE, & INTERFACE SEAL)	
	189-3158	1	SUPPRESSOR-ARC	
	230-4009	1	PLUG AS-CONNECTOR (12-PIN)	
	455-0709	1	SEAL-CONNECTOR	
	230-4013	1	PLUG AS-CONNECTOR (3-PIN)	
	455-0705	1	SEAL-CONNECTOR	
	231-2295	1	PLUG AS-CONNECTOR (8-PIN)	
	455-0708	1	SEAL-CONNECTOR	
	9X-3402	44	SOCKET-CONNECTOR (16-GA TO 18-GA)	

E - ORDER BY THE CENTIMETER

<END>

489-7905 HARNESS AS-WINDOW WIPER—RH

S/N: H3C1-UP; K3G1-UP
PART OF 484-7985, 486-0430 DOOR GP-CAB
AN ATTACHMENT

SMCS-1408 **i06692008**

NOTE	PART NUMBER	QTY	PART NAME 1 2 3 4 5 6 (PRODUCT LEVEL)	SEE PAGE
	9X-3402	4	SOCKET-CONNECTOR (16-GA TO 18-GA)	
			—OR—	
	126-1768	4	SOCKET-CONNECTOR (14-GA TO 16-GA)	
	9X-3401	4	PIN-CONNECTOR (16-GA TO 18-GA)	
			—OR—	
	126-1767	4	PIN-CONNECTOR (14-GA TO 16-GA)	
	230-5008	1	PLUG AS-CONNECTOR (4-PIN)	
	455-0706	1	SEAL-CONNECTOR	
	230-5009	1	RECEPTACLE AS-CONNECTOR (4-PIN)	
E	**289-5150**		SLEEVE (142-CM)	
E - ORDER BY THE CENTIMETER				

<END>

489-7906 HARNESS AS-WINDOW WIPER—LH

S/N: H3C1-UP; K3G1-UP
PART OF 484-7986, 486-0431 DOOR GP-CAB
AN ATTACHMENT

SMCS-1408 **i06692020**

NOTE	PART NUMBER	QTY	PART NAME 1 2 3 4 5 6 (PRODUCT LEVEL)	SEE PAGE
	9X-3402	4	SOCKET-CONNECTOR (16-GA TO 18-GA)	
			—OR—	
	126-1768	4	SOCKET-CONNECTOR (14-GA TO 16-GA)	
	9X-3401	4	PIN-CONNECTOR (16-GA TO 18-GA)	
			—OR—	
	126-1767	4	PIN-CONNECTOR (14-GA TO 16-GA)	
	230-5008	1	PLUG AS-CONNECTOR (4-PIN)	
	455-0706	1	SEAL-CONNECTOR	
	230-5009	1	RECEPTACLE AS-CONNECTOR (4-PIN)	
E	**289-5150**		SLEEVE (142-CM)	
E - ORDER BY THE CENTIMETER				

<END>

375-8407 HARNESS AS-WIRING—ENGINE

S/N: 4501-UP
PART OF 395-0113 WIRING GP-ENGINE

SMCS-1408 **i05333790**

NOTE	PART NUMBER	QTY	PART NAME 1 2 3 4 5 6 (PRODUCT LEVEL)	SEE PAGE
	102-8804	1	KIT-RECEPTACLE (4-PIN)	
			(INCLUDES RECEPTACLE AS & WEDGE)	
	113-4630	1	RECEPTACLE AS-CONNECTOR (4-PIN)	
	9X-3401	4	PIN-CONNECTOR (16-GA TO 18-GA)	
			—OR—	
	126-1767	4	PIN-CONNECTOR (14-GA TO 16-GA)	
	332-7865	1	TIE-CABLE	

<END>

549-9634 HARNESS AS-WIRING

S/N: H3C1-UP; K3G1-UP
JUMPER
PART OF 549-9613 WIRING GP-SENSOR
AN ATTACHMENT

SMCS-1408 **i07717380**

NOTE	PART NUMBER	QTY	PART NAME 1 2 3 4 5 6 (PRODUCT LEVEL)	SEE PAGE
	8T-8737	3	PLUG-SEAL	
	134-2540	1	RECEPTACLE AS-CONNECTOR (3-PIN)	
	155-2260	1	KIT-CONNECTING PLUG (3-PIN)	
	155-2271	1	KIT-CONNECTING PLUG (4-PIN)	
			(EACH PLUG KIT INCLUDES PLUG AS, WEDGE(S), & INTERFACE SEAL)	
	9X-3402	4	SOCKET-CONNECTOR (16-GA TO 18-GA)	

<END>

505-6019 HEATER GP-JACKET WATER

S/N: H3C1-UP; K3G1-UP
240-VOLT, 1000-WATT
AN ATTACHMENT

SMCS-1383 **i06989599**

NOTE	REF NO	GRAPHIC REF	PART NUMBER	QTY	PART NAME 1 2 3 4 5 6 (PRODUCT LEVEL)	SEE PAGE
M	1	1	**8T-4195**	1	BOLT (M10X1.5X30-MM)	
M	2	1	**8T-4200**	1	BOLT (M8X1.25X16-MM)	
	3	1	**3S-2093**	5	STRAP-CABLE	
	4	1	**8T-4121**	2	WASHER-HARD (11X21X2.5-MM THK)	
M	5	1	**8T-4137**	1	BOLT (M10X1.5X20-MM)	
	6	1	**8T-4224**	1	WASHER-HARD (8.8X16X2-MM THK)	
	7	1	**198-4777**	1	WASHER-HARD (11X25X10-MM THK)	
	8	1	**260-1556**	1	ELEMENT AS-JACKET WATER HEATER (240-VOLT, 1000-WATT)	
		1	**3D-2824**	1	SEAL-O-RING	
	9	1	**260-1569**	1	CORD AS-HEATER	
	10	1	**352-3970**	2	CLIP (LADDER)	
	11	1	**4P-7581**	1	CLIP (LADDER)	

M - METRIC PART

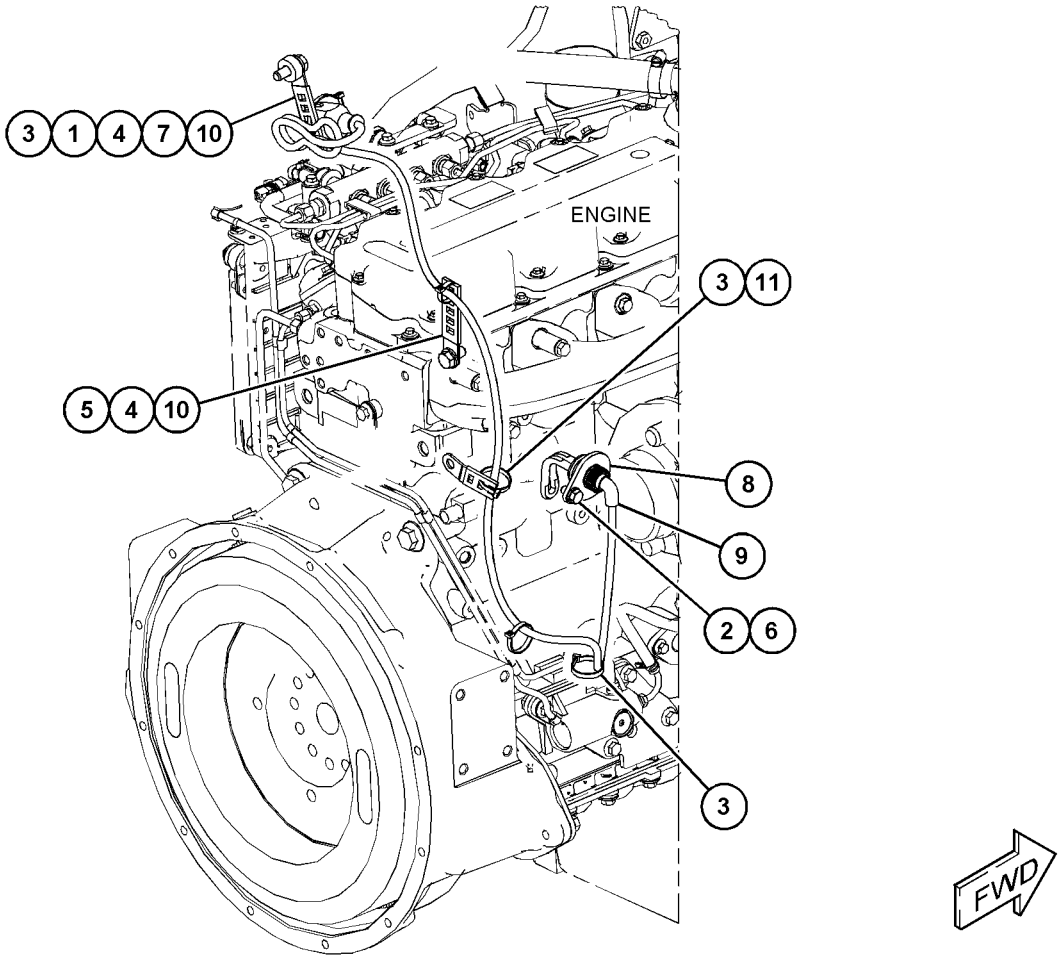

GRAPHIC #1 <END> g06189083

543-1829 INSTALLATION GP-COMMUNICATION

S/N: H3C1-UP; K3G1-UP
PL631V2 SATELLITE
AN ATTACHMENT

SMCS-7606 **i08088199**

NOTE	REF NO	GRAPHIC REF	PART NUMBER	QTY	PART NAME 1 2 3 4 5 6 (PRODUCT LEVEL)	SEE PAGE
R	1	1	**494-6472**	1	CONTROL GP-COMMUNICATION	
		1	**7X-6315**	1	STRAP AS-GROUND	
M	2	1	**7X-2534**	2	BOLT (M6X1X50-MM)	
	3	1	**307-0047**	1	FILM-INFORMATION (PRODUCT LINK, READ OMM)	
	4	1	**3S-2093**	21	STRAP-CABLE	
C	5	1	**558-6551**	1	ANTENNA AS	
		1	**460-4049**	1	CAP AS-CONNECTOR	
	6	1	**456-6921**	1	PLUG AS-CONNECTOR	
		1	**8T-8737**	8	PLUG-SEAL	
		1	**155-2265**	1	KIT-CONNECTING PLUG (8-PIN)	
					(INCLUDES PLUS AS, WEDGES & INTERFACE SEAL)	
	7	1	**465-1937**	1	PLATE AS	
M		1	**6V-9632**	4	NUT-WELD (M6X1-THD)	
	8	1	**465-1970**	1	PLATE AS	
M		1	**6V-9632**	4	NUT-WELD (M6X1-THD)	
	9	1	**4P-7581**	3	CLIP (LADDER)	
Y	10	1	**538-9857**	1	HARNESS AS-CONTROL	136
YR	11	1	**544-1881**	1	CONTROL GP-UNPROGRAMMED (PRODUCT LINK 631 SATELLITE)	127
	12	1	**544-5897**	1	CABLE AS	
	13	1	**9X-8256**	4	WASHER (6.6X12X2-MM THK)	
M	14	1	**6V-7357**	4	BOLT (M6X1X25-MM)	
	15	1	**7K-1181**	8	STRAP-CABLE	
	16	1	**8C-5607**	8	MOUNT-ISOLATION	
	17	1	**8C-5608**	4	SPACER (6.5X9.5X25.4-MM THK)	
	18	1	**8T-4121**	6	WASHER-HARD (11X21X2.5-MM THK)	
M	19	1	**8T-4137**	6	BOLT (M10X1.5X20-MM)	
	20	1	**9X-2038**	2	WASHER (7X19X2-MM THK)	
M	21	1	**9X-2480**	2	BOLT (M6X1X45-MM)	
	22	1	**9X-6165**	8	WASHER (6.5X22X2.5-MM THK)	
CFY			*578-7531*	1	ELECTRONICS GP-MONITOR	130

C - CHANGE FROM PREVIOUS TYPE
F - NOT SHOWN
M - METRIC PART
R - REMANUFACTURED PART MAY BE AVAILABLE
Y - SEPARATE ILLUSTRATION

543-1829 **INSTALLATION GP-COMMUNICATION (**contd.**)** **i08088199**

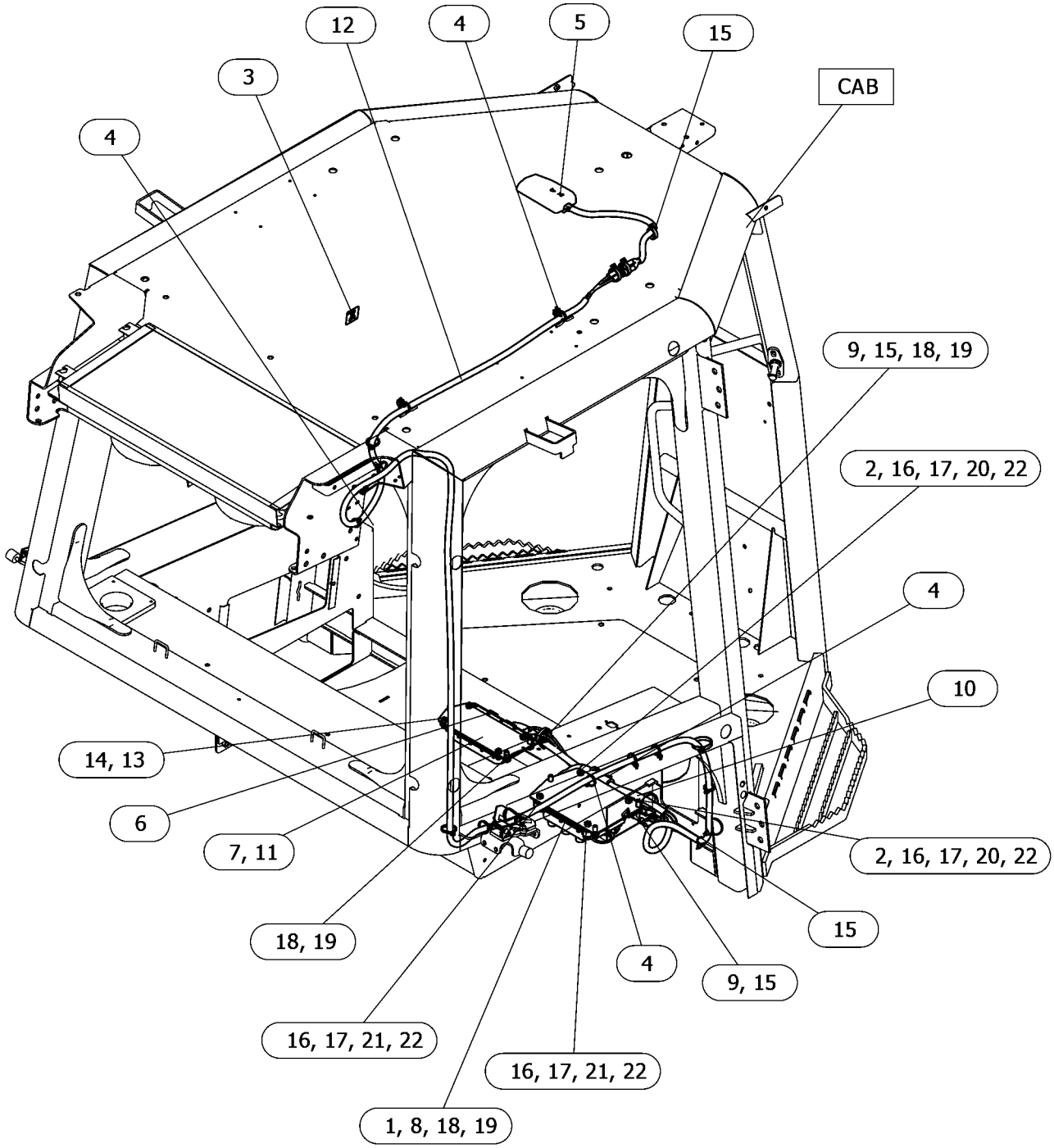

GRAPHIC #1 <END> g06536733

573-4529 INSTALLATION GP-COMMUNICATION

S/N: H3C1-UP; K3G1-UP
PL641V2 CELLULAR
AN ATTACHMENT

SMCS-7606 **i08033479**

NOTE	REF NO	GRAPHIC REF	PART NUMBER	QTY	PART NAME 1 2 3 4 5 6 (PRODUCT LEVEL)	SEE PAGE
YR	1	1	**494-6472**	1	CONTROL GP-COMMUNICATION	120
M	2	1	**7X-2534**	2	BOLT (M6X1X50-MM)	
	3	1	**307-0047**	1	FILM-INFORMATION (PRODUCT LINK, READ OMM)	
	4	1	**3S-2093**	21	STRAP-CABLE	
	5	1	**456-6921**	1	PLUG AS-CONNECTOR	
		1	**155-2265**	1	KIT-CONNECTING PLUG (8-PIN)	
					(INCLUDES PLUG AS, WEDGE(S), & INTERFACE SEAL)	
		1	**8T-8737**	8	PLUG-SEAL	
	6	1	**465-1937**	1	PLATE AS	
M		1	**6V-9632**	4	NUT-WELD (M6X1-THD)	
	7	1	**465-1970**	1	PLATE AS	
M		1	**6V-9632**	4	NUT-WELD (M6X1-THD)	
	8	1	**4P-7581**	3	CLIP (LADDER)	
Y	9	1	**538-9857**	1	HARNESS AS-CONTROL	136
	10	1	**544-5897**	1	CABLE AS	
Y	11	1	**555-5510**	1	CONTROL GP-ELECTRONIC (PL641E CELLULAR)	121
	12	1	**558-6551**	1	ANTENNA AS	
		1	**460-4049**	1	CAP AS-CONNECTOR	
	13	1	**9X-8256**	4	WASHER (6.6X12X2-MM THK)	
M	14	1	**6V-7357**	4	BOLT (M6X1X25-MM)	
	15	1	**7K-1181**	8	STRAP-CABLE	
	16	1	**8C-5607**	8	MOUNT-ISOLATION	
	17	1	**8C-5608**	4	SPACER (6.5X9.5X25.4-MM THK)	
	18	1	**8T-4121**	6	WASHER-HARD (11X21X2.5-MM THK)	
M	19	1	**8T-4137**	6	BOLT (M10X1.5X20-MM)	
	20	1	**9X-2038**	2	WASHER (7X19X2-MM THK)	
M	21	1	**9X-2480**	2	BOLT (M6X1X45-MM)	
	22	1	**9X-6165**	8	WASHER (6.5X22X2.5-MM THK)	
FY		1	*578-7531*	1	ELECTRONICS GP-MONITOR	130

F - NOT SHOWN
M - METRIC PART
R - REMANUFACTURED PART MAY BE AVAILABLE
Y - SEPARATE ILLUSTRATION

573-4529 **INSTALLATION GP-COMMUNICATION (**contd.**)** **i08033479**

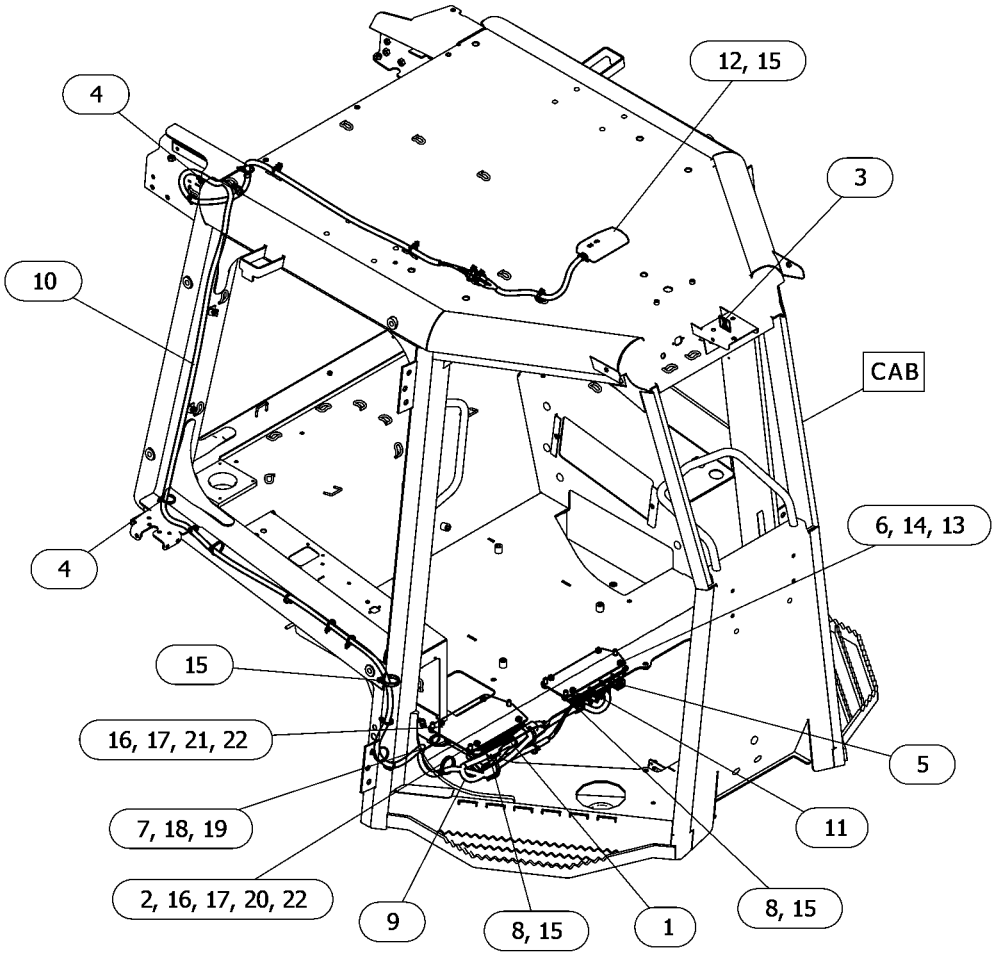

GRAPHIC #1 <END> g06544399

581-2223 INSTALLATION GP-COMMUNICATION

S/N: H3C1-UP; K3G1-UP

AN ATTACHMENT

SMCS-7606 **i08063018**

NOTE	REF NO	GRAPHIC REF	PART NUMBER	QTY	PART NAME 1 2 3 4 5 6 (PRODUCT LEVEL)	SEE PAGE
YR	1	1	**494-6472**	1	CONTROL GP-COMMUNICATION	120
M	2	1	**7X-2534**	2	BOLT (M6X1X50-MM)	
	3	1	**374-7468**	1	CAP-SEAL	
	4	1	**465-1970**	1	PLATE AS	
M		1	**6V-9632**	4	NUT-WELD (M6X1-THD)	
Y	5	1	**538-9857**	1	HARNESS AS-CONTROL	136
	6	1	**9X-6165**	8	WASHER (6.5X22X2.5-MM THK)	
	7	1	**3S-2093**	3	STRAP-CABLE	
	8	1	**4P-7581**	2	CLIP (LADDER)	
	9	1	**7K-1181**	2	STRAP-CABLE	
	10	1	**8C-5607**	8	MOUNT-ISOLATION	
	11	1	**8C-5608**	4	SPACER (6.5X9.5X25.4-MM THK)	
	12	1	**8T-4121**	3	WASHER-HARD (11X21X2.5-MM THK)	
M	13	1	**8T-4137**	3	BOLT (M10X1.5X20-MM)	
	14	1	**9X-2038**	2	WASHER (7X19X2-MM THK)	
M	15	1	**9X-2480**	2	BOLT (M6X1X45-MM)	
FY			*578-7531*	1	ELECTRONICS GP-MONITOR	130

F - NOT SHOWN
M - METRIC PART
R - REMANUFACTURED PART MAY BE AVAILABLE
Y - SEPARATE ILLUSTRATION

581-2223 **INSTALLATION GP-COMMUNICATION (**contd.**)** **i08063018**

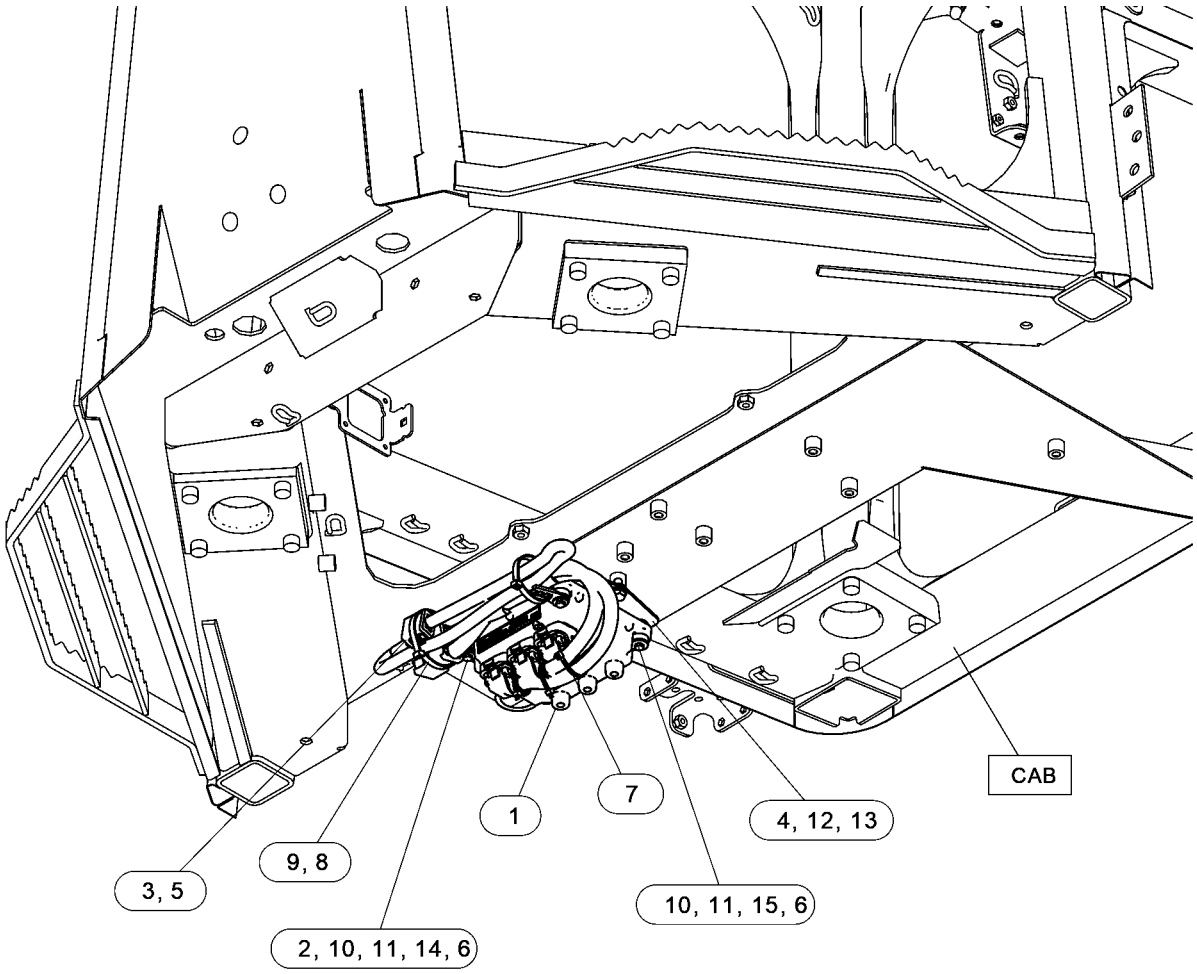

GRAPHIC #1 <END> g06536754

254-8155 LAMP GP-FLOOD

S/N: H3C1-UP; K3G1-UP
24-VOLT, 70-WATT
PART OF 536-9447 LIGHTING GP-FLOOD
AN ATTACHMENT

SMCS-1434 **i04197471**

NOTE	REF NO	GRAPHIC REF	PART NUMBER	QTY	PART NAME 1 2 3 4 5 6 (PRODUCT LEVEL)	SEE PAGE
	1	1	**351-9918**	1	LAMP-HALOGEN (24-VOLT, 70-WATT)	
M	2	1	**8T-4154**	1	BOLT (M8X1.25X35-MM)	
M	3	1	**5C-7261**	1	NUT (M8X1.25-THD)	
	4	1	**8T-4224**	2	WASHER-HARD (8.8X16X2-MM THK)	
M	5	1	**9X-4244**	2	SCREW-SPECIAL (M4X1.79X25-MM)	
	6	1	**202-6614**	1	LENS AS	
	7	1	**175-4292**	1	BODY AS	
	8	1	**164-7556**	1	BRACKET (LAMP RETAINING)	
	9	1	**175-4291**	1	BRACKET AS	

M - METRIC PART

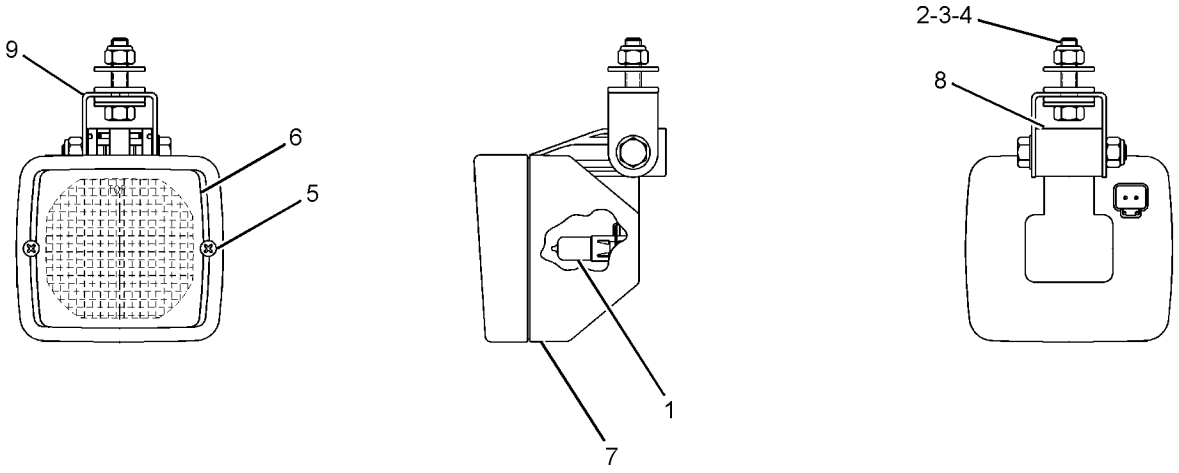

GRAPHIC #1 <END> g01205426

346-9593 LAMP GP-FLOOD

S/N: H3C1-UP; K3G1-UP
24-VOLT
PART OF 536-9447 LIGHTING GP-FLOOD
AN ATTACHMENT

SMCS-1434 **i06521165**

NOTE	REF NO	GRAPHIC REF	PART NUMBER	QTY	PART NAME 1 2 3 4 5 6 (PRODUCT LEVEL)	SEE PAGE
	1	1	**351-9918**	1	LAMP-HALOGEN (24-VOLT, 70-WATT)	
M	2	1	**6V-2317**	1	BOLT (M8X1.25X30-MM)	
M	3	1	**6V-9189**	1	LOCKNUT (M8X1.25-THD)	
	4	1	**8T-4224**	2	WASHER-HARD (8.8X16X2-MM THK)	
M	5	1	**9X-4244**	2	SCREW-SPECIAL (M4X1.79X25-MM)	
	6	1	**202-6611**	1	LENS AS	
	7	1	**175-4291**	1	BRACKET AS	
	8	1	**164-7556**	1	BRACKET (LAMP RETAINING)	

M - METRIC PART

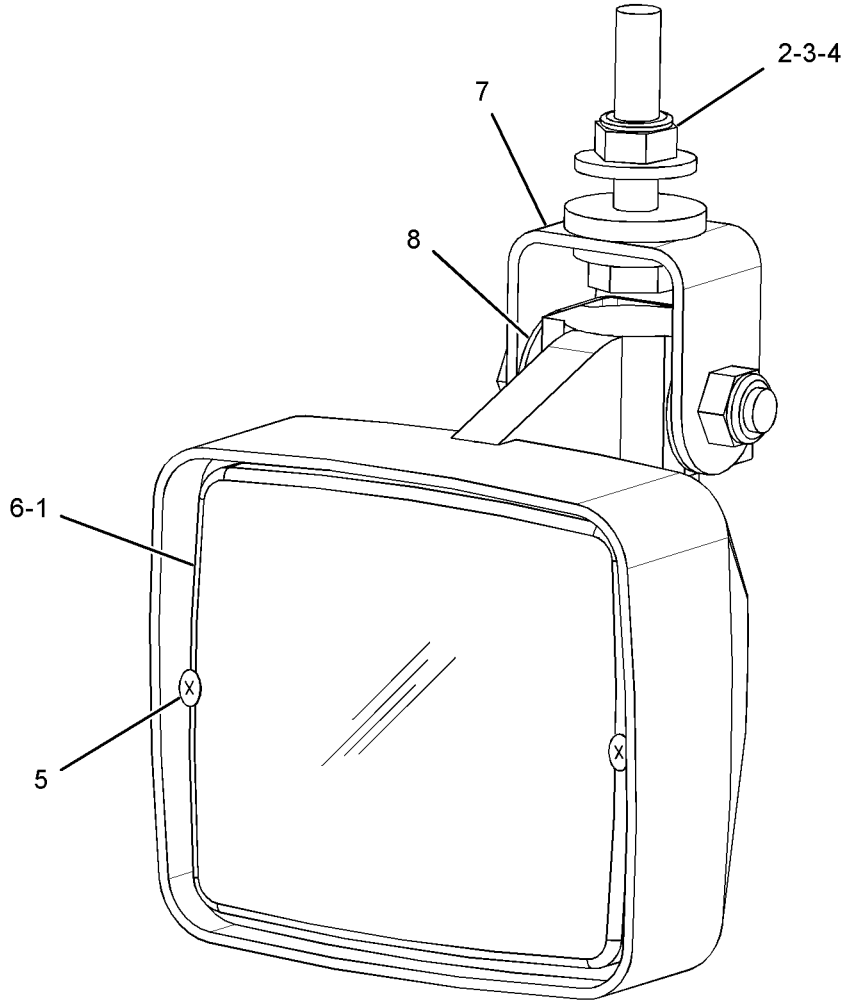

GRAPHIC #1 <END> g06007583

536-9447 LIGHTING GP-FLOOD

S/N: H3C1-UP; K3G1-UP
CAB, HALOGEN
AN ATTACHMENT

SMCS-1434 **i07748570**

NOTE	REF NO	GRAPHIC REF	PART NUMBER	QTY	PART NAME 1 2 3 4 5 6 (PRODUCT LEVEL)	SEE PAGE
Y	1	1	*254-8155*	4	LAMP GP-FLOOD (24-VOLT)	158
Y	2	1	*346-9593*	2	LAMP GP-FLOOD (24-VOLT)	159

Y - SEPARATE ILLUSTRATION

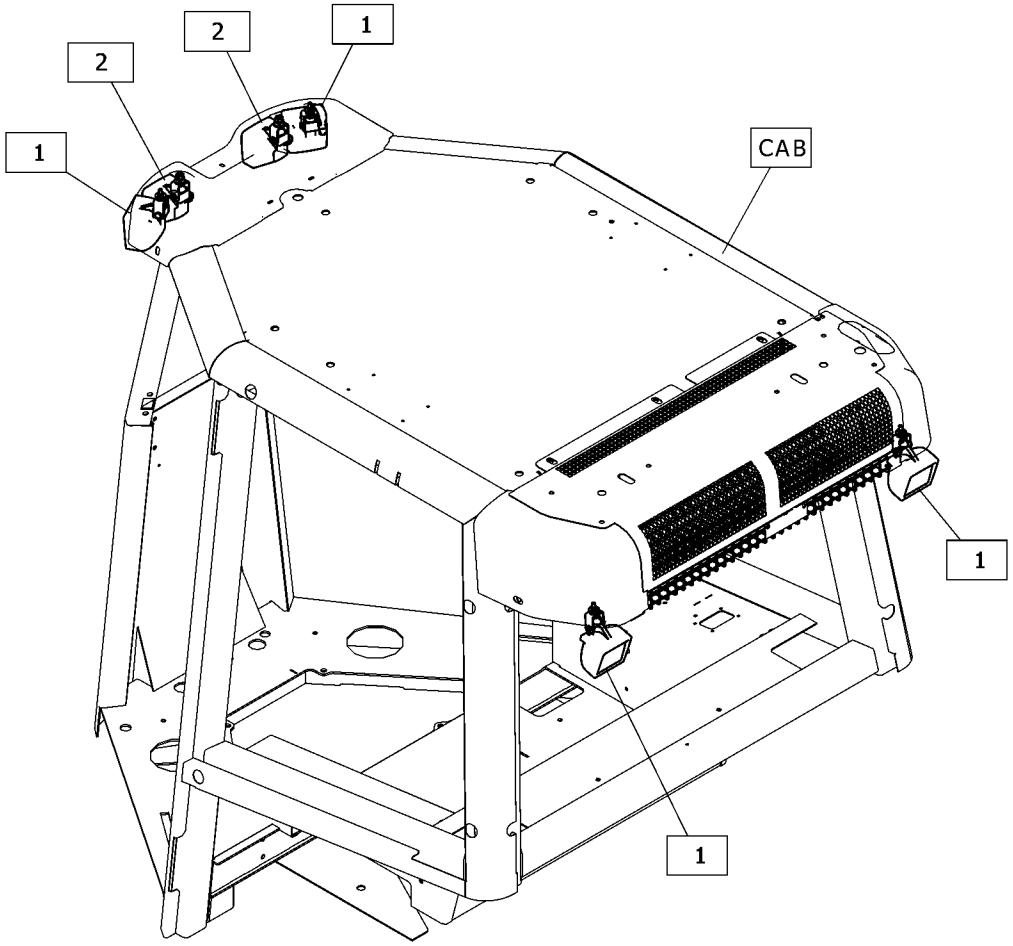

GRAPHIC #1 <END> g06359505

536-9448 LIGHTING GP-FLOOD

S/N: H3C1-UP; K3G1-UP

AN ATTACHMENT

SMCS-1434 **i07408157**

NOTE	REF NO	GRAPHIC REF	PART NUMBER	QTY	PART NAME 1 2 3 4 5 6 (PRODUCT LEVEL)	SEE PAGE
	1	1	**486-8214**	4	LAMP GP-FLOOD (9-32 VOLT, 850 LM. LED)	
					(EACH INCLUDES)	
M		1	**3T-0852**	2	LOCKNUT (M8X1.25-THD)	
		1	**5P-4116**	1	WASHER-HARD (8.8X20.5X2-MM THK)	
M		1	**8T-6912**	1	BOLT (M8X1.25X50-MM)	
	2	1	**486-8216**	2	LAMP GP-FLOOD (9 TO 32-VOLT)	
					(EACH INCLUDES)	
M		1	**3T-0852**	2	LOCKNUT (M8X1.25-THD)	
		1	**5P-4116**	1	WASHER-HARD (8.8X20.5X2-MM THK)	
M		1	**8T-6912**	1	BOLT (M8X1.25X50-MM)	

M - METRIC PART

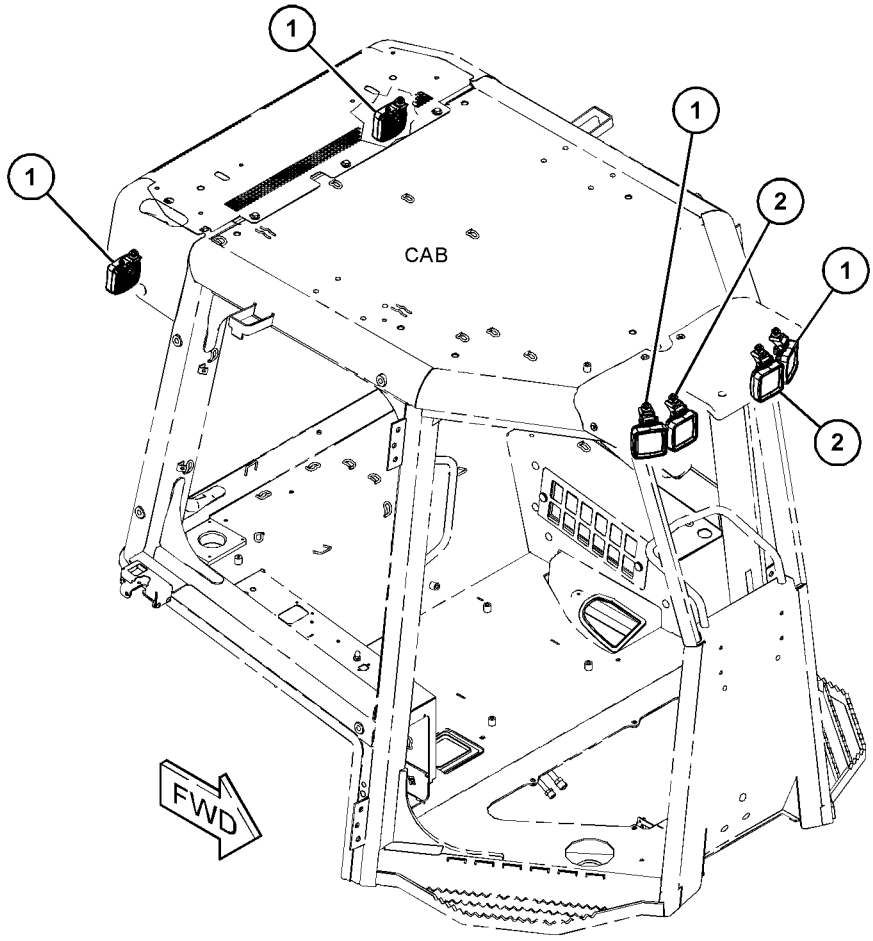

GRAPHIC #1 <END> g06321766

582-1981 LIGHTING GP-WARNING BEACON

S/N: H3C1-UP; K3G1-UP

AN ATTACHMENT

SMCS-1431 **i08063022**

NOTE	REF NO	GRAPHIC REF	PART NUMBER	QTY	PART NAME 1 2 3 4 5 6 (PRODUCT LEVEL)	SEE PAGE
	1	1	**7K-1181**	1	STRAP-CABLE	
	2	1	**378-6901**	1	LAMP GP-WARNING BEACON (AMBER, LED, 12/24-VOLT)	
	3	1	**4P-7581**	1	CLIP (LADDER)	

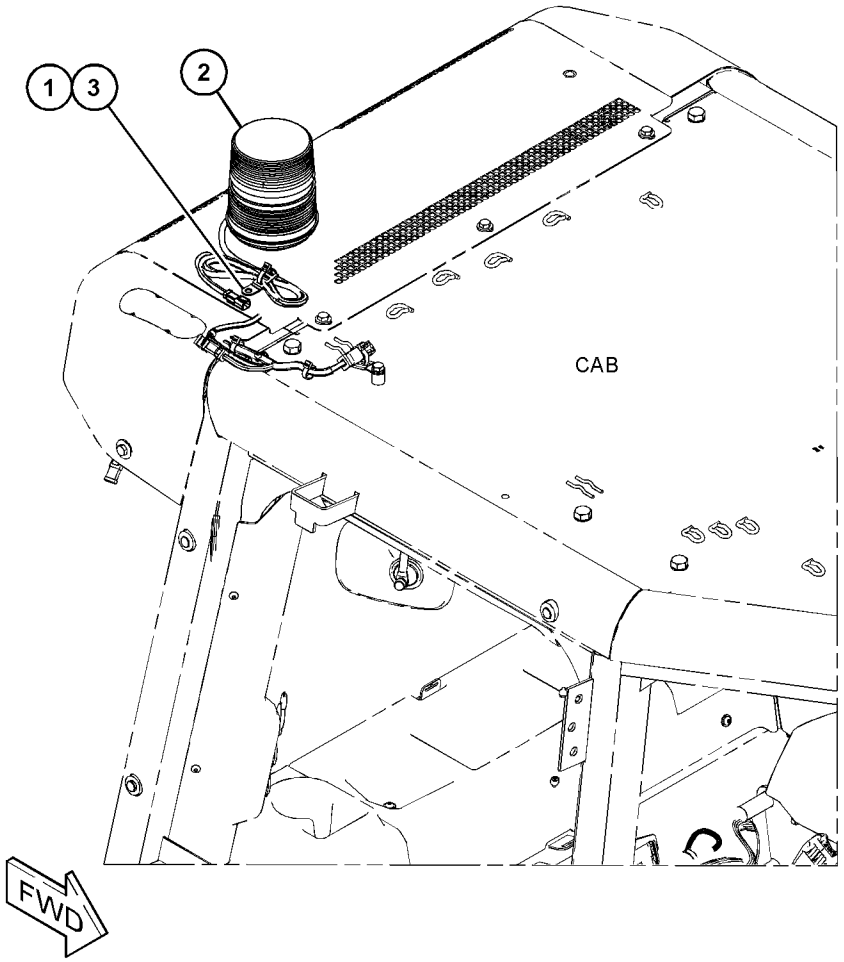

GRAPHIC #1 <END> g06535769

395-0112 MOUNTING GP-ELECTRONIC CONTROL

S/N: 4501-UP

PART OF 553-3684 ENGINE AR-PRIMARY

SMCS-1901, 7610

i06554274

NOTE	REF NO	GRAPHIC REF	PART NUMBER	QTY	PART NAME 1 2 3 4 5 6 (PRODUCT LEVEL)	SEE PAGE
	1	1	**446-1268**	1	BRACKET AS	
M	2	1	**6I-0292**	2	BOLT (M8X1.25X140-MM)	
M	3	1	**6I-0293**	2	BOLT (M8X1.25X80-MM)	

M - METRIC PART

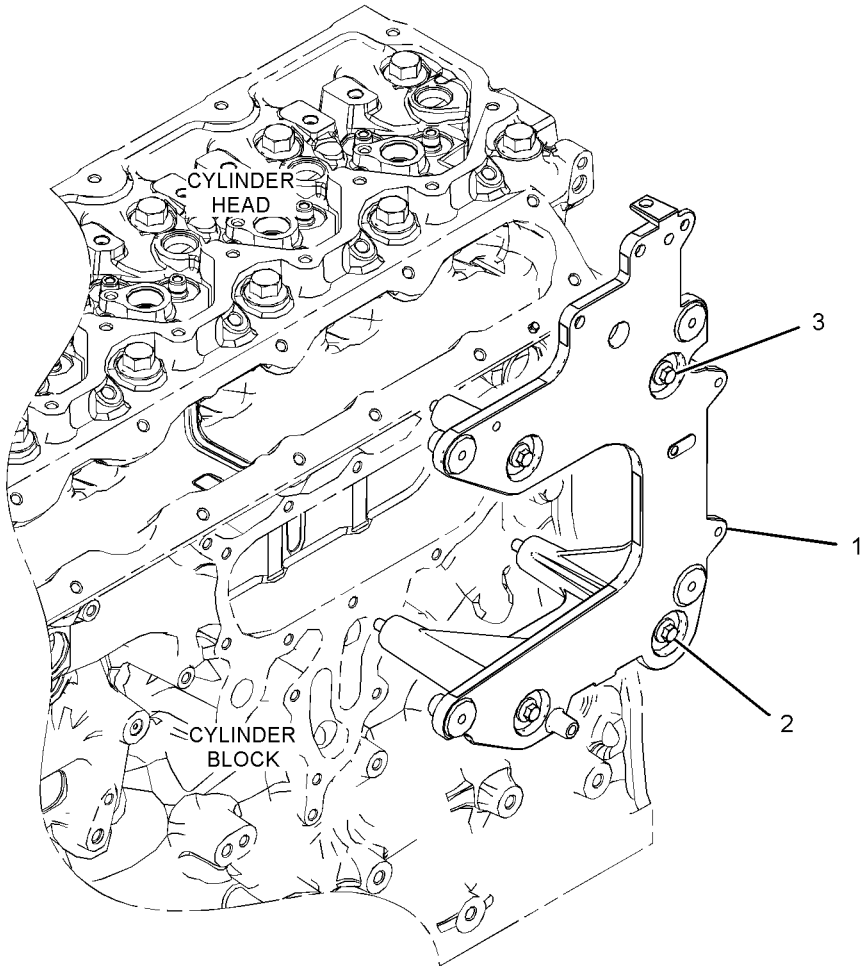

GRAPHIC #1

<END>

g06032947

549-4955 PANEL GP-CIRCUIT BREAKER

S/N: H3C1-UP; K3G1-UP
PART OF 536-6702 WIRING GP-PLATFORM
AN ATTACHMENT

SMCS-1417, 1420 **i07505066**

NOTE	REF NO	GRAPHIC REF	PART NUMBER	QTY	PART NAME 1 2 3 4 5 6 (PRODUCT LEVEL)	SEE PAGE
	1	1	**113-8490**	14	FUSE (10-AMPERE)	
	2	1	**113-8491**	14	FUSE (15-AMPERE)	
	3	1	**113-8492**	3	FUSE (20-AMPERE)	
	4	1	**443-7387**	1	RELAY AS (24-VOLT, 55-AMPERE) (MAIN)	
	4A	1	**443-7387**	1	RELAY AS (24-VOLT, 55-AMPERE) (GLOW PLUG)	
	4B	1	**443-7387**	1	RELAY AS (24-VOLT, 55-AMPERE) (SPARE)	
	5	1	**242-1555**	1	PULLER-FUSE	
	6	1	**232-6313**	2	FUSE (40-AMPERE)	
	7	1	*481-2484*	1	CIRCUIT BREAKER AS (120-AMPERE)	
		1	**1H-3244**	2	LOCKWASHER	
M		1	**6V-8225**	2	NUT (M6X1-THD)	
		1	**8T-4205**	2	WASHER-HARD (7.2X14.5X2-MM THK)	
	8	1	**280-2709**	3	CIRCUIT BREAKER AS (15-AMPERE, MANUAL RESET)	
	9	1	**248-2841**	1	RELAY AS (24-VOLT) (HEATED CONTROLS)	
	9A	1	**248-2841**	1	RELAY AS (24-VOLT) (WIPER-LH)	
	9B	1	**248-2841**	1	RELAY AS (24-VOLT) (SPARE)	
	9C	1	**248-2841**	1	RELAY AS (24-VOLT) (FUEL PUMP)	
	9D	1	**248-2841**	1	RELAY AS (24-VOLT) (FLOODLIGHTS)	
	9E	1	**248-2841**	1	RELAY AS (24-VOLT) (AIR CONDITIONER)	
	9F	1	**248-2841**	1	RELAY AS (24-VOLT) (DIVERTER VALVE)	
	9G	1	**248-2841**	1	RELAY AS (24-VOLT) (HORN)	
	9H	1	**248-2841**	1	RELAY AS (24-VOLT) (WIPER-RH)	
	9J	1	**248-2841**	1	RELAY AS (24-VOLT) (GRADE CONTROL)	
	10	1	**514-5167**	1	BRACKET-RELAY	
M	11	1	**514-5169**	2	SCREW (M6X2.5X30-MM)	

M - METRIC PART

549-4955 **PANEL GP-CIRCUIT BREAKER (**contd.**)** **i07505066**

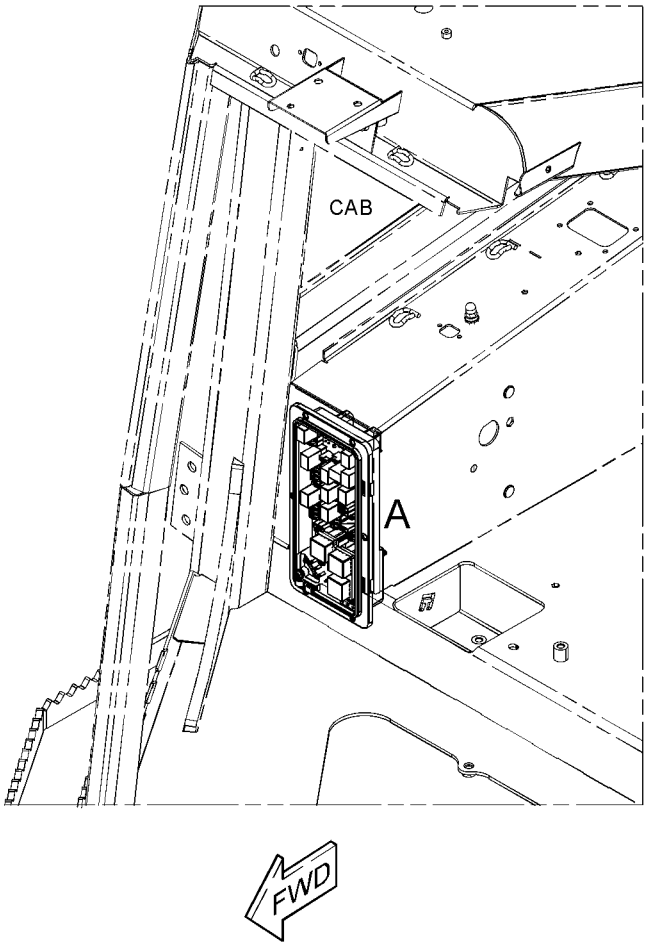

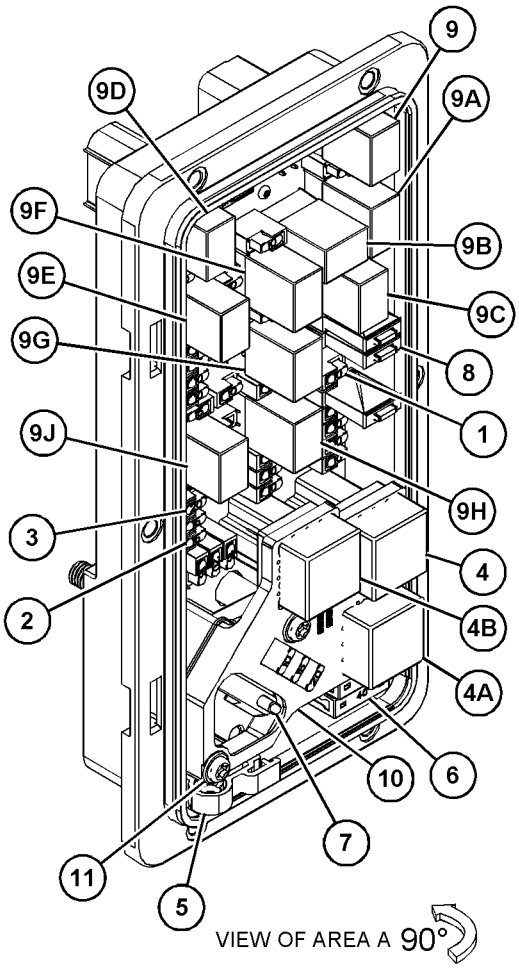

GRAPHIC #1 <END> g06368713

495-1449 RADIO GP-COMMUNICATION

S/N: H3C1-UP; K3G1-UP

AN ATTACHMENT

SMCS-733T **i08057085**

NOTE	REF NO	GRAPHIC REF	PART NUMBER	QTY	PART NAME 1 2 3 4 5 6 (PRODUCT LEVEL)	SEE PAGE
	1	1	**7K-1181**	1	STRAP-CABLE	
	2	1	**349-8642**	1	MICROPHONE (BLUETOOTH)	
	3	1	**353-1634**	1	HARNESS AS-RADIO (BLUETOOTH)	
Y	4	1	*452-6580*	1	RADIO GP (AM/FM/WB/CD PLAYER)	512

Y - SEPARATE ILLUSTRATION

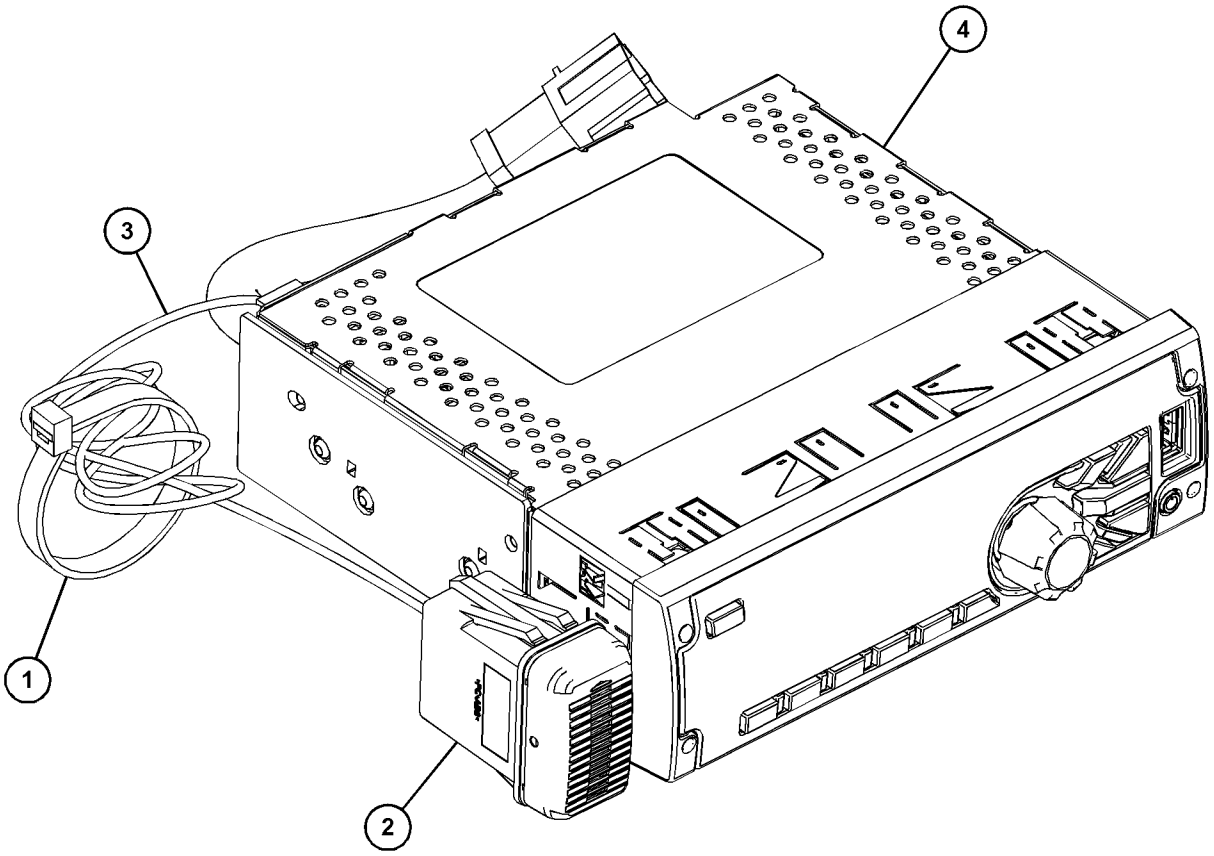

GRAPHIC #1 <END> g06016917

395-0110 SENSOR GP-ENGINE

S/N: 4501-UP

PART OF 553-3684 ENGINE AR-PRIMARY

SMCS-1718, 1906, 1907, 1912, 1917, 1923, 1924, 1925, 1928, 1929, 7400, 7422

i06828458

NOTE	REF NO	GRAPHIC REF	PART NUMBER	QTY	PART NAME 1 2 3 4 5 6 (PRODUCT LEVEL)	SEE PAGE
M	1	1	**124-3815**	2	BOLT (M8X1.25X16-MM)	
	2	1	**199-9252**	1	SEAL-O-RING	
	3	1	**199-9267**	1	SEAL-O-RING	
	4	1	**199-9751**	1	SEAL-O-RING	
	5	1	**384-3888**	2	SENSOR GP-SPEED (ENGINE)	
	6	1	**256-6454**	1	SENSOR-TEMPERATURE (2-PIN) (AIR INLET MANIFOLD)	
	6A	1	**256-6454**	1	SENSOR-TEMPERATURE (2-PIN) (COOLANT)	
	7	1	**276-5603**	1	SEAL-O-RING	
	8	1	**320-3060**	1	SENSOR GP-PRESSURE (ENGINE OIL)	
	9	1	**320-3062**	1	SENSOR GP-PRESSURE (INLET MANIFOLD AIR)	
	10	1	**228-4947**	2	SEAL-O-RING	

M - METRIC PART

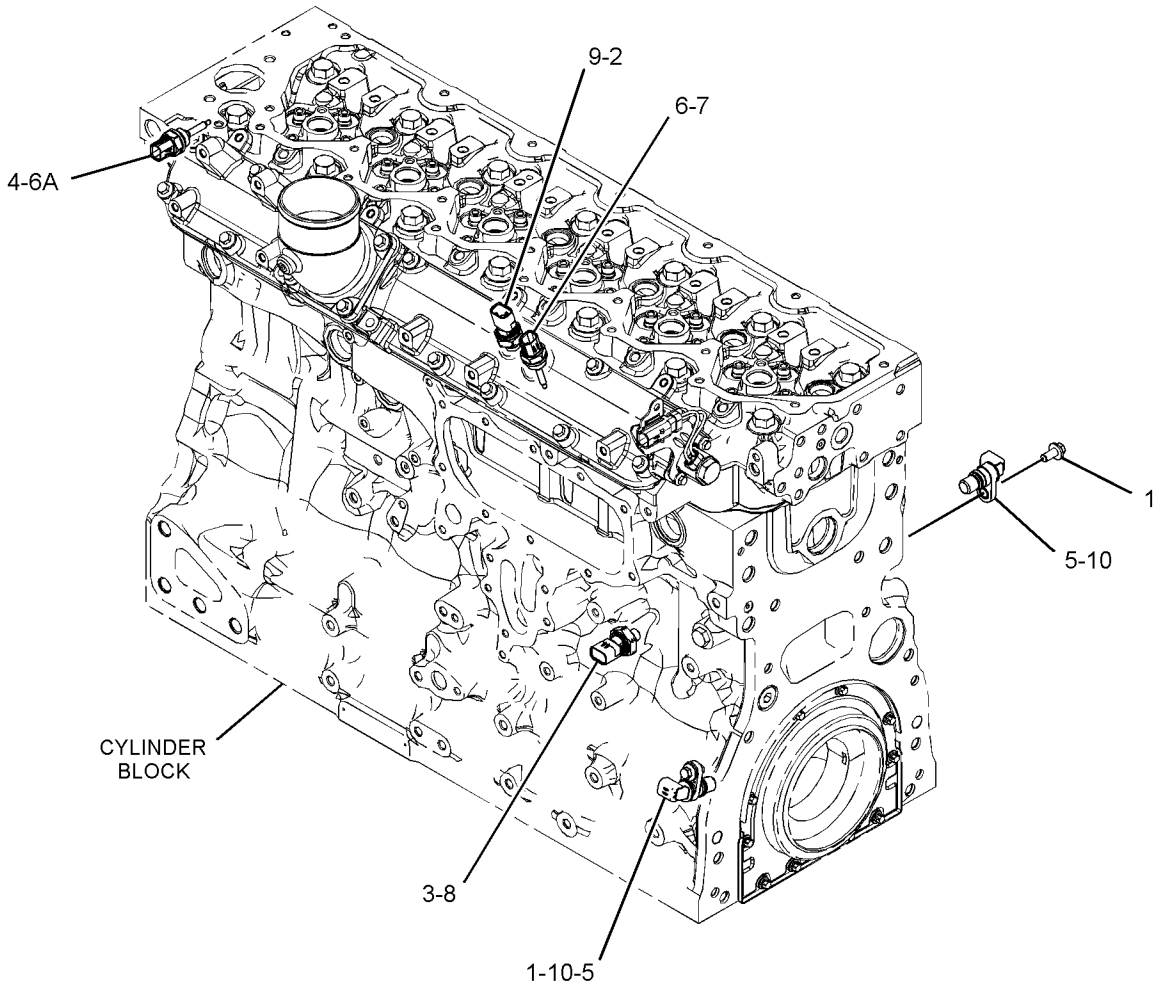

GRAPHIC #1

<END>

g03380662

266-1467 SENSOR GP-POSITION–ROTARY

S/N: H3C1-UP; K3G1-UP

PART OF 446-1002 PEDAL GP-GOVERNOR & BRAKE

AN ATTACHMENT

SMCS-1408, 1439 **i07284646**

NOTE	REF NO	GRAPHIC REF	PART NUMBER	QTY	PART NAME 1 2 3 4 5 6 (PRODUCT LEVEL)	SEE PAGE
	1	1	**9X-3401**	3	PIN-CONNECTOR (16-GA TO 18-GA)	
					–OR–	
		1	**126-1767**	3	PIN-CONNECTOR (14-GA TO 16-GA)	
	2	1	**102-8803**	1	KIT-RECEPTACLE (3-PIN)	
					(INCLUDES RECEPTACLE AS & WEDGE)	
E	3	1	**3E-9375**		CONDUIT (14-CM)	

E - ORDER BY THE CENTIMETER

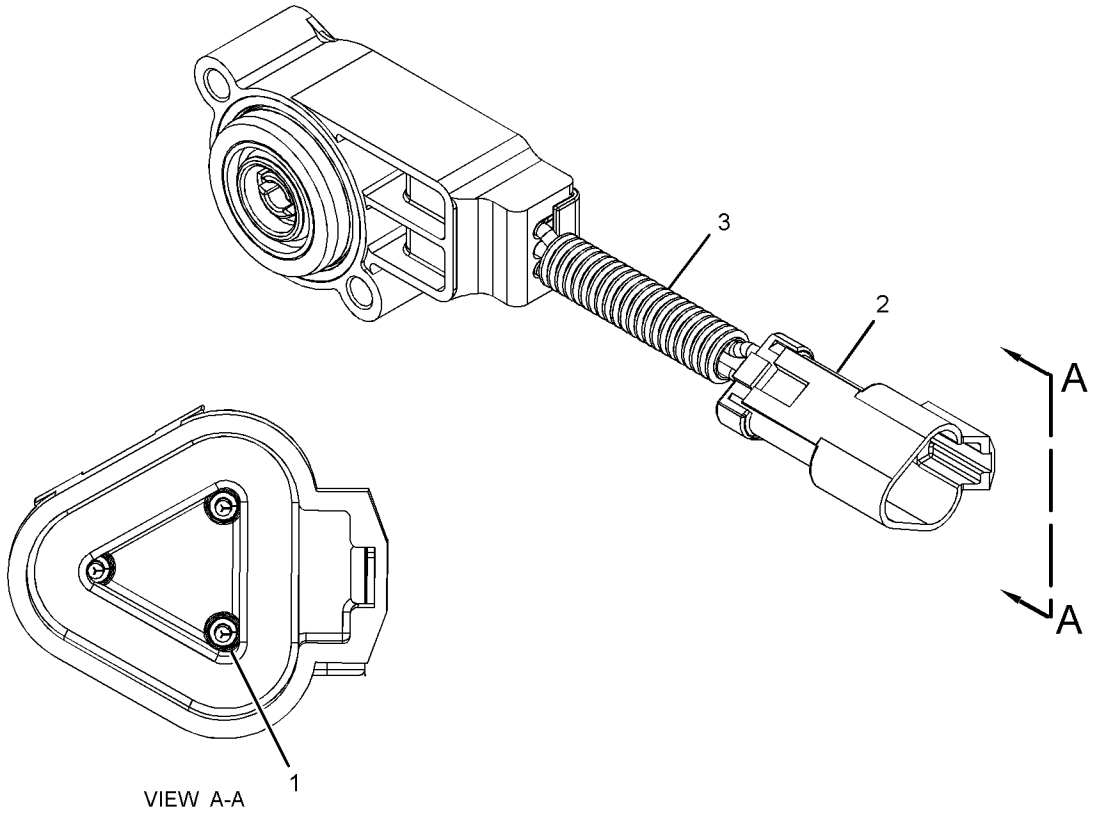

VIEW A-A

GRAPHIC #1 <END> g03547699

358-2398 SENSOR GP-SPEED

S/N: H3C1-UP; K3G1-UP
PART OF 550-0157 BATTERY & WIRING GP
AN ATTACHMENT

SMCS-1907 **i07232140**

NOTE	REF NO	GRAPHIC REF	PART NUMBER	QTY	PART NAME 1 2 3 4 5 6 (PRODUCT LEVEL)	SEE PAGE
					(NO SERVICED PARTS)	

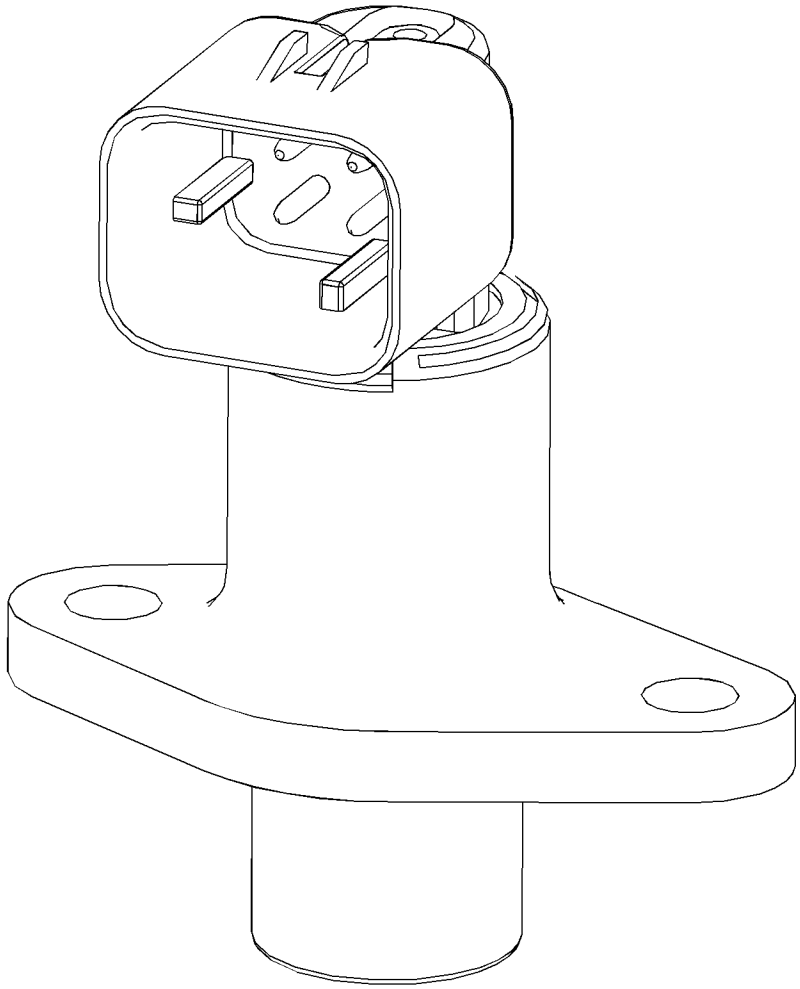

GRAPHIC #1 <END> g03348194

395-0114 STARTING AID GP

S/N: 4501-UP

PART OF 553-3684 ENGINE AR-PRIMARY

SMCS-1090 **i07383456**

NOTE	REF NO	GRAPHIC REF	PART NUMBER	QTY	PART NAME 1 2 3 4 5 6 (PRODUCT LEVEL)	SEE PAGE
M	1	1	**112-7704**	1	BOLT (M6X1X30-MM)	
M	2	1	**5C-2890**	2	NUT (M6X1-THD)	
	3	1	**217-9039**	1	STRAP-CABLE	
	4	1	**462-2235**	6	GLOW PLUG (24-VOLT)	
	5	1	**368-3145**	1	BUS BAR AS	
	6	1	**384-7567**	1	HARNESS AS-STARTING AID	
E		1	**292-2893**		CONDUIT (10.1-MM ID) (4-CM)	
		1	**2L-8050**	2	TERMINAL-RING (6-GA, 1/4-IN SCREW)	
					—OR—	
		1	**2L-8058**	2	TERMINAL-RING (8-GA, 1/4-IN SCREW)	
		1	**427-9771**	1	TIE	
M	7	1	**208-8469**	1	LOCKNUT (M6X1-THD)	
	8	1	**275-2428**	1	INSULATOR	
	9	1	**277-4409**	1	CAP	
	10	1	**067-6070**	1	WASHER	
	11	1	**275-2431**	1	WASHER	

E - ORDER BY THE CENTIMETER
M - METRIC PART

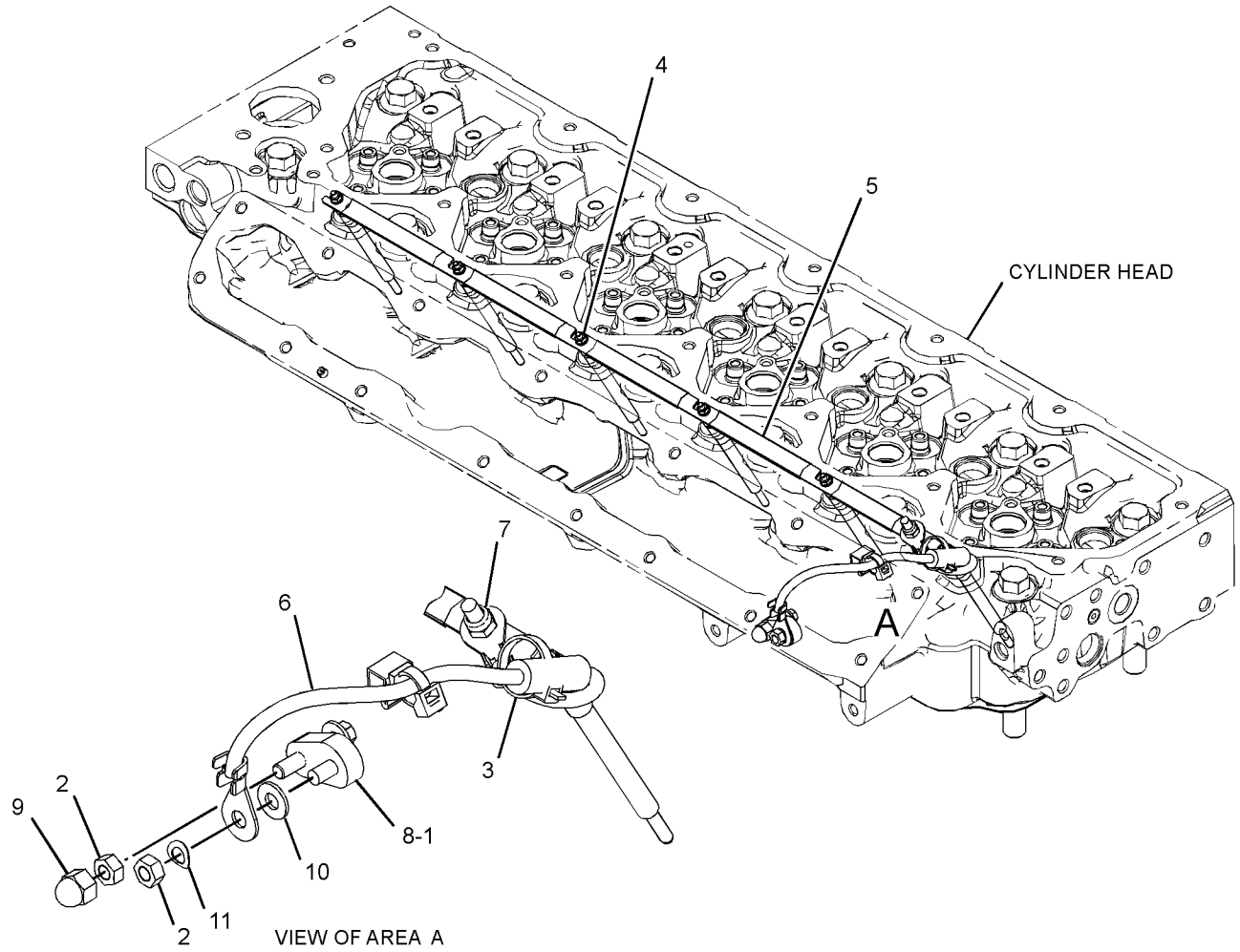

GRAPHIC #1 <END> g06032380

354-5671 STARTING MOTOR GP-ELECTRIC*R

S/N: 4501-UP

PART OF 385-8000 STARTING MOTOR GP-ELECTRIC

SMCS-1453 **i07761990**

NOTE	REF NO	GRAPHIC REF	PART NUMBER	QTY	PART NAME 1 2 3 4 5 6 (PRODUCT LEVEL)	SEE PAGE
	1	1	**230-4012**	1	RECEPTACLE AS-CONNECTOR (2-PIN)	
	2	1	**488-3767**	1	YOKE AS	
	3	1	**488-3768**	1	HOLDER AS-BRUSH	
	4	1	**488-3770**	1	ARMATURE AS	
	5	1	**488-3771**	1	DRIVE AS-CLUTCH	
	6	1	**488-3779**	1	HOUSING AS-DRIVE	
	7	1	**488-3787**	1	SWITCH AS-RELAY	
					AVAILABLE REPAIR KIT(S):	
			488-3794	1	KIT-GEAR	
					``(KIT INCLUDES: SHOCK ABSORBER AND GEAR)	
			488-3797	1	KIT-SHIFT LEVER	
					``(KIT INCLUDES: SHAFT, LEVER, AND WASHERS)	
			488-3798	1	KIT-PINION	
					``(KIT INCLUDES: NUTS, PINION,RETAINER, AND SPR)	
			488-3799	1	KIT-HARDWARE	
					``(KIT INCLUDES: BOLTS, NUTS, SCREWS, AND WASHERS)	

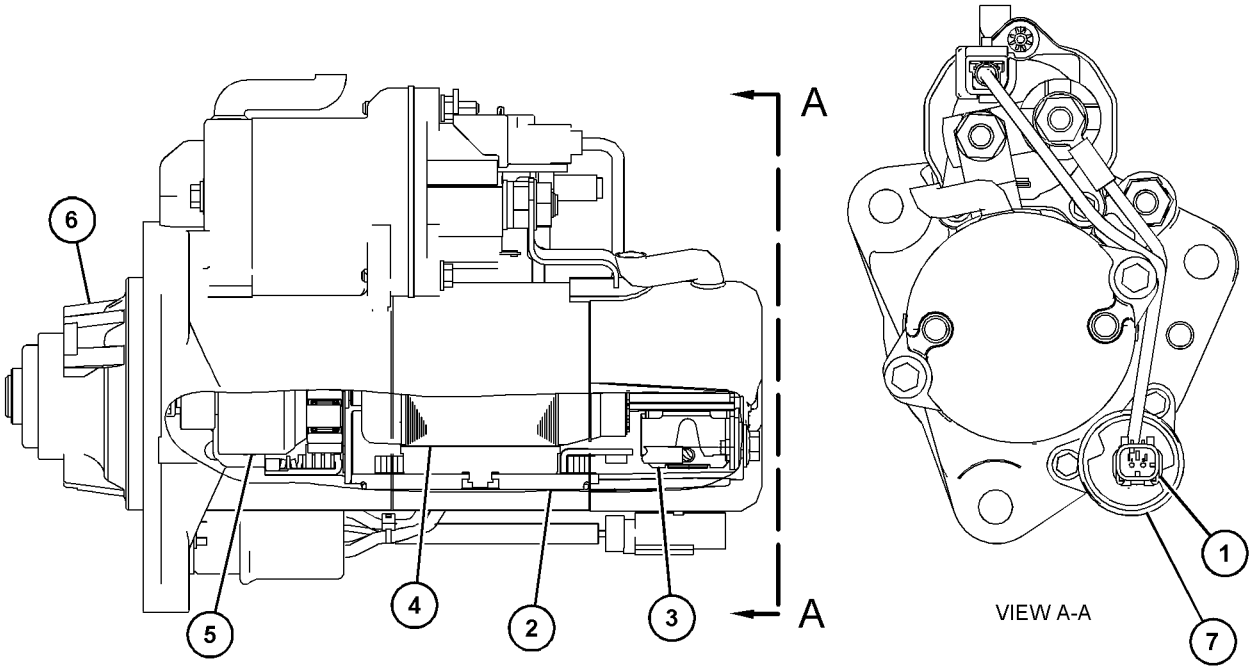

GRAPHIC #1 <END> g06016324

385-8000 STARTING MOTOR GP-ELECTRIC

S/N: 4501-UP

PART OF 553-3684 ENGINE AR-PRIMARY

SMCS-1453 **i06913711**

NOTE	REF NO	GRAPHIC REF	PART NUMBER	QTY	PART NAME 1 2 3 4 5 6 (PRODUCT LEVEL)	SEE PAGE
YR	1	1	**354-5671**	1	STARTING MOTOR GP-ELECTRIC	171
	2	1	**183-1343**	3	STUD	
M	3	1	**6I-0233**	3	NUT (M12X1.75-THD)	

M - METRIC PART
R - REMANUFACTURED PART MAY BE AVAILABLE
Y - SEPARATE ILLUSTRATION

385-8000 **STARTING MOTOR GP-ELECTRIC (**contd.**)** **i06913711**

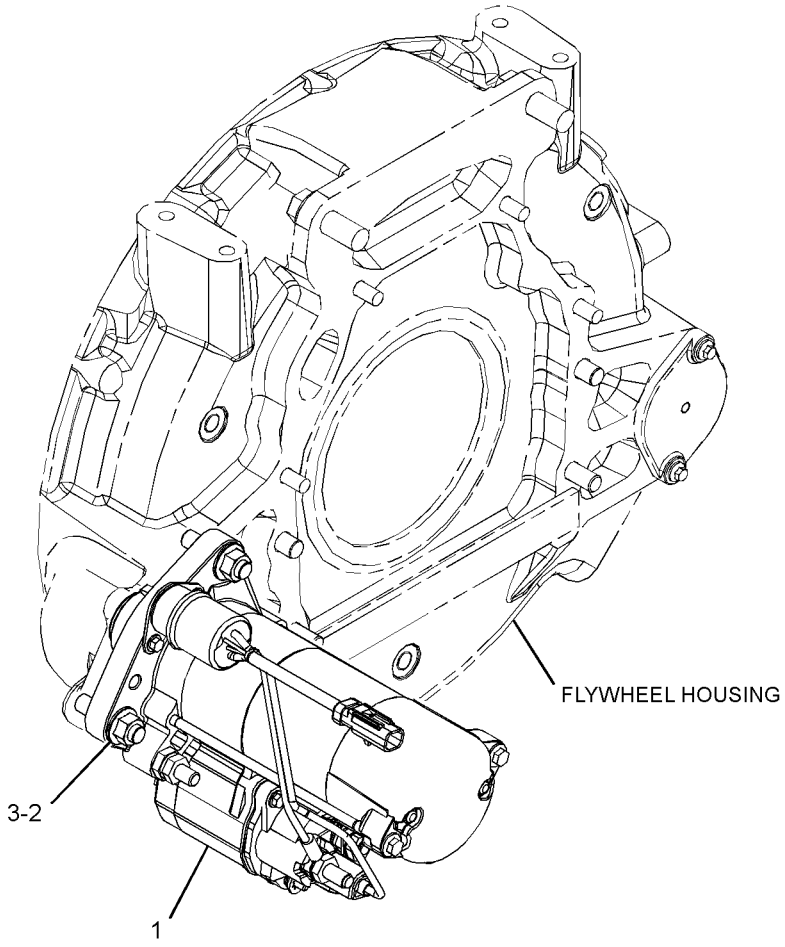

GRAPHIC #1 <END> g06165392

306-0166 SWITCH GP-DISCONNECT

S/N: H3C1-UP; K3G1-UP
PART OF 550-0157 BATTERY & WIRING GP
AN ATTACHMENT

SMCS-1411 **i07034273**

NOTE	REF NO	GRAPHIC REF	PART NUMBER	QTY	PART NAME 1 2 3 4 5 6 (PRODUCT LEVEL)	SEE PAGE
	1	1	**2H-3922**	2	LOCKWASHER	
	2	1	**8H-5303**	1	NUT (3/4-16-THD)	
	3	1	**264-3617**	4	LOCKWASHER	
	4	1	**6F-7045**	4	NUT-FULL (3/8-24-THD)	
	5	1	**8H-5306**	1	KEY (BATTERY DISCONNECT)	

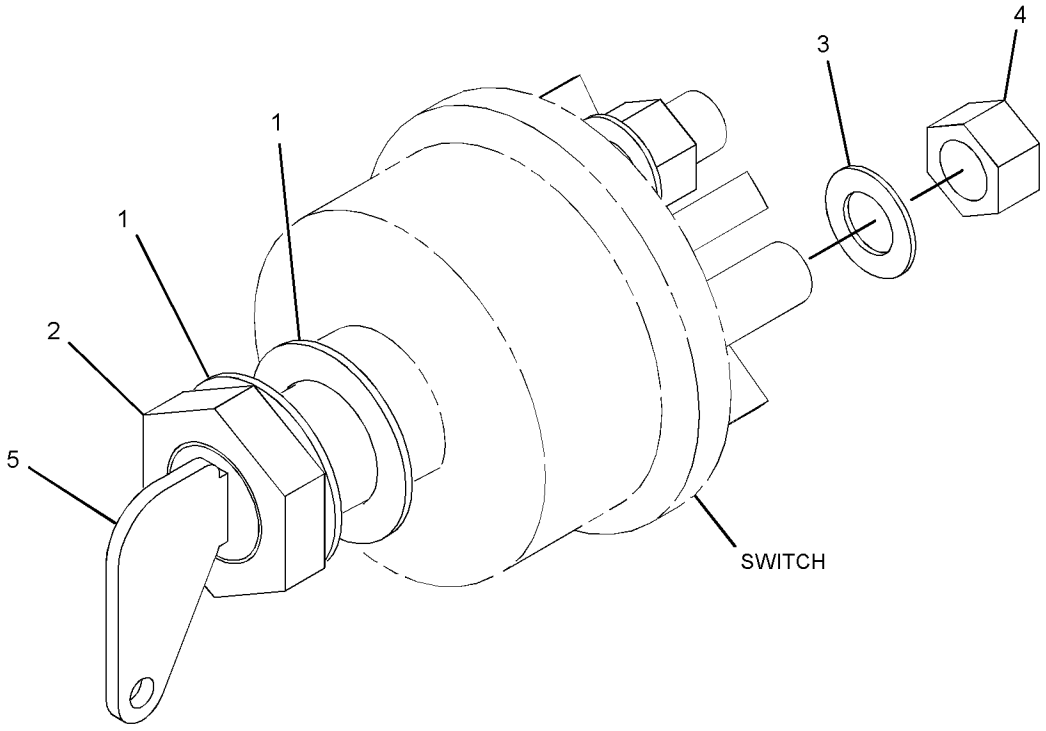

GRAPHIC #1 <END> g01423831

536-6699 WIRING GP-CAB

S/N: H3C1-UP; K3G1-UP
PART OF 568-1316, 568-1317, 568-1318 CAB AR
AN ATTACHMENT

SMCS-1408, 7301 **i07504712**

NOTE	REF NO	GRAPHIC REF	PART NUMBER	QTY	PART NAME 1 2 3 4 5 6 (PRODUCT LEVEL)	SEE PAGE
	1	1	**5P-8439**	2	GROMMET	
	2	1	**6T-7695**	2	SPEAKER AS-RADIO	
M	3	1	**7I-2272**	2	BOLT (M5X0.8X12-MM)	
M	4	1	**135-2370**	2	BOLT (M5X0.8X25-MM)	
	5	1	**8T-0328**	2	WASHER-HARD (5.5X10X1-MM THK)	
M	6	1	**8T-4138**	4	BOLT (M6X1X20-MM)	
	7	1	**9X-8256**	8	WASHER (6.6X12X2-MM THK)	
	8	1	**154-8079**	8	NUT-RETAINER (M4X0.7-THD)	
	9	1	**246-4311**	1	GUARD (SWITCH)	
	10	1	**251-1191**	1	SWITCH AS-ROCKER (24-VOLT) (FRONT WIPER)	
	11	1	**251-1194**	1	SWITCH AS-ROCKER (24-VOLT) (REAR WIPER)	
	12	1	**251-5848**	1	SWITCH AS-ROCKER (24-VOLT) (FLOODLIGHT)	
	13	1	**256-4965**	2	SWITCH AS-ROCKER (24-VOLT) (RIGHT SIDE WIPER)	
	14	1	**340-7161**	1	CONVERTER-POWER (24-VOLT TO 12-VOLT)	
M	15	1	**344-5673**	2	NUT (M6X1-THD)	
	16	1	**356-8350**	1	SWITCH AS-ROCKER (24-VOLT) (PARKING BRAKE)	
	17	1	**356-8351**	1	SWITCH AS-ROCKER (24-VOLT) (IMPLEMENT LOCKOUT)	
Y	18	1	**358-2691**	1	HARNESS AS-LIGHTING (FRONT FLOODLIGHTS)	141
	19	1	**431-4413**	1	SWITCH AS (THROTTLE)	
Y	20	1	**540-2958**	1	HARNESS AS-CAB	131
	21	1	**130-5300**	1	CLIP	
	22	1	**3S-2093**	24	STRAP-CABLE	
	23	1	**4S-1962**	1	CLIP (LOOP)	
Y	24	1	*506-3945*	1	WIRING GP-SEAT (CAB)	194
Y	25	1	**536-6700**	1	HARNESS AS-REAR LIGHTING	144
	26	1	**7K-1181**	47	STRAP-CABLE	
	27	1	**8T-4121**	2	WASHER-HARD (11X21X2.5-MM THK)	
M	28	1	**8T-4137**	1	BOLT (M10X1.5X20-MM)	
M	29	1	**8T-4191**	1	BOLT (M10X1.5X16-MM)	
M	30	1	**9X-1046**	8	SCREW (M4X0.7X18-MM)	
M	31	1	**9X-2045**	2	SCREW-TRUSS HEAD (M6X1X20-MM)	
E	32	1	**289-1072**		SEAL (26-CM)	

E - ORDER BY THE CENTIMETER
M - METRIC PART
Y - SEPARATE ILLUSTRATION

536-6699 **WIRING GP-CAB (**contd.**)** **i07504712**

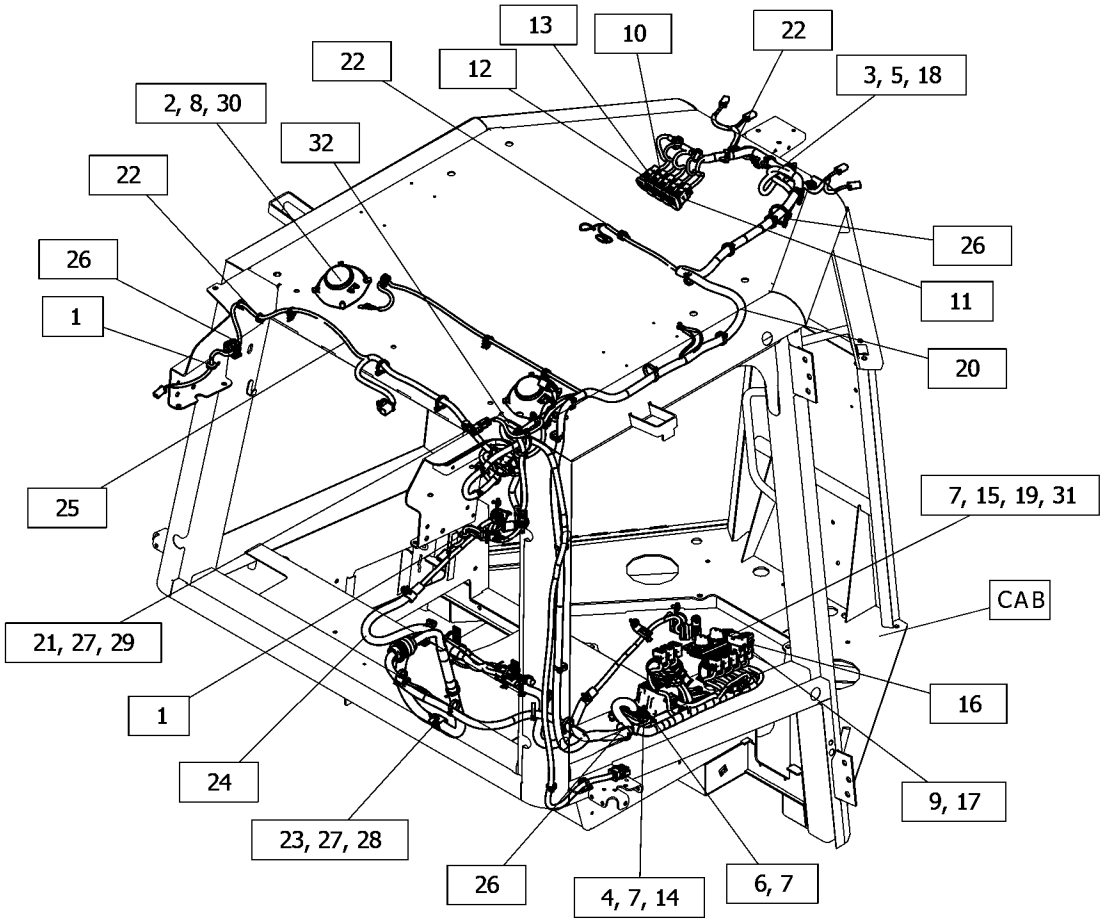

GRAPHIC #1 <END> g06365670

536-7953 WIRING GP-CAB

S/N: H3C1-UP; K3G1-UP
PART OF 549-7643 ELECTRONICS AR-MACHINE
AN ATTACHMENT

SMCS-1408, 7301 **i08003519**

NOTE	REF NO	GRAPHIC REF	PART NUMBER	QTY	PART NAME 1 2 3 4 5 6 (PRODUCT LEVEL)	SEE PAGE
	1	1	**490-3666**	1	COVER	
M	2	1	**8T-4200**	8	BOLT (M8X1.25X16-MM)	
M	3	1	**8T-7338**	4	BOLT (M16X2X45-MM)	
M	4	1	**344-5673**	8	NUT (M6X1-THD)	
	5	1	**3S-2093**	6	STRAP-CABLE	
	6	1	**3V-9244**	4	WASHER (16.5X50X5-MM THK)	
	7	1	**450-6214**	2	RECEIVER GP-SATELLITE (GPS)	
					(EACH INCLUDES)	
		1	**556-6068**	1	SOFTWARE GP-MONITOR	
	8	1	**484-3504**	2	CABLE AS	
	9	1	**492-7319**	2	ANTENNA (GPS)	
	10	1	**509-0269**	1	MODULE GP-DISPLAY	
	11	1	**520-5581**	1	COVER AS-ACCESS	
Y	12	1	**522-6005**	1	HARNESS AS-CONTROL	134
	13	1	**9X-8256**	18	WASHER (6.6X12X2-MM THK)	
	14	1	**5V-0500**	4	WASHER (16.5X75X6-MM THK)	
M	15	1	**6V-7357**	10	BOLT (M6X1X25-MM)	
	16	1	**7K-1181**	8	STRAP-CABLE	
	17	1	**8T-4224**	8	WASHER-HARD (8.8X16X2-MM THK)	

M - METRIC PART
Y - SEPARATE ILLUSTRATION

536-7953 **WIRING GP-CAB (**contd.**)** **i08003519**

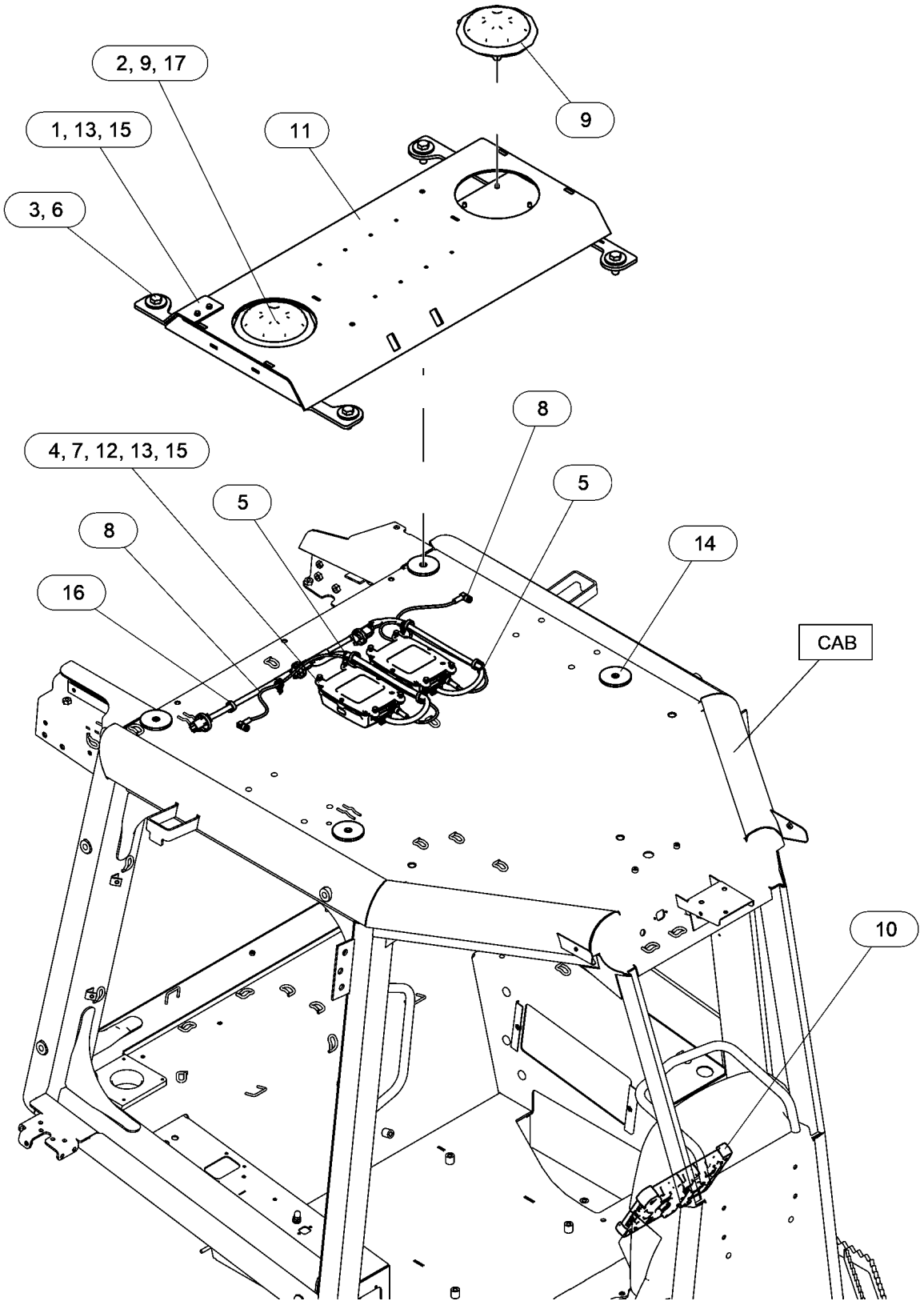

GRAPHIC #1 <END> g06544851

488-4841 WIRING GP-CAMERA

S/N: H3C1-UP; K3G1-UP
PART OF 538-7156 CAMERA AR
AN ATTACHMENT

SMCS-1408, 7348

i07651182

NOTE	REF NO	GRAPHIC REF	PART NUMBER	QTY	PART NAME 1 2 3 4 5 6 (PRODUCT LEVEL)	SEE PAGE
	1	1	**336-6687**	1	CAP-PROTECTIVE (FEMALE)	
	2	1	**3S-2093**	13	STRAP-CABLE	
	3	1	**251-8248**	1	CABLE AS-COMMUNICATION	
C	4	1	**514-3545**	1	HARNESS AS-WIRING (DISPLAY)	
	5	1	**4P-8134**	1	CLIP (LADDER)	
	6	1	**9X-7373**	1	GROMMET	

C - CHANGE FROM PREVIOUS TYPE

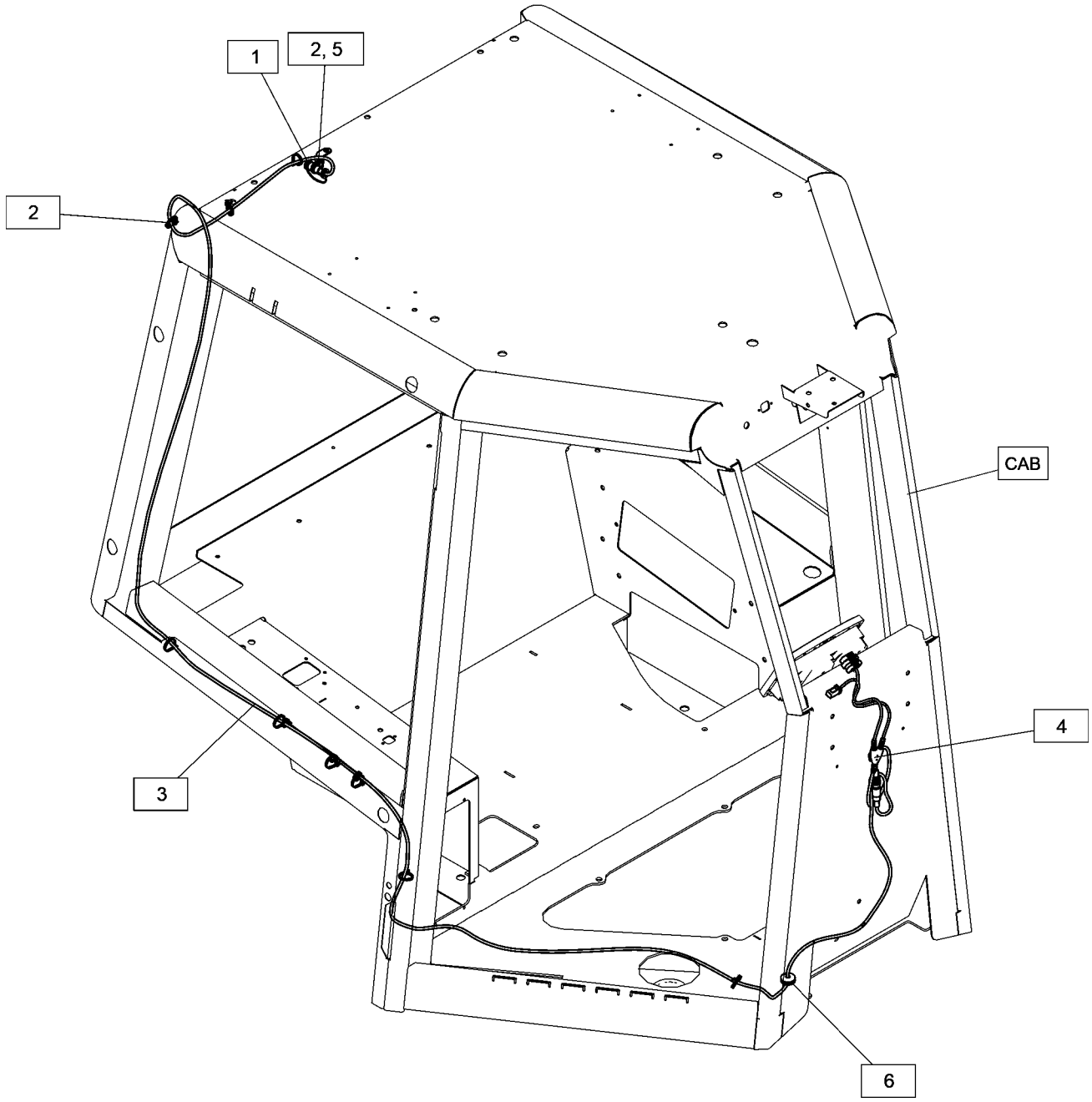

GRAPHIC #1 <END> g06369805

536-5045 WIRING GP-CONTROL

S/N: H3C1-UP; K3G1-UP
GRADE CONTROL
PART OF 549-7642, 549-7643 ELECTRONICS AR-MACHINE
AN ATTACHMENT

SMCS-1408 **i08018878**

NOTE	REF NO	GRAPHIC REF	PART NUMBER	QTY	PART NAME 1 2 3 4 5 6 (PRODUCT LEVEL)	SEE PAGE
M	1	1	**8T-4183**	1	BOLT (M12X1.75X40-MM)	
M	2	1	**8T-4185**	1	BOLT (M10X1.5X50-MM)	
M	3	1	**8T-4186**	1	BOLT (M10X1.5X40-MM)	
M	4	1	**105-3481**	4	BOLT-SOCKET HEAD (M8X1.25X20-MM)	
	5	1	**133-6934**	1	SPACER (11X20X25-MM THK)	
	6	1	**198-4778**	1	WASHER-HARD (13.5X30X12-MM THK)	
	7	1	**1M-4543**	1	GROMMET	
	8	1	**1S-0994**	1	CLIP (LOOP)	
	9	1	**261-6916**	2	SPACER (13.8X35X20-MM THK)	
	10	1	**352-3969**	1	CLIP (LADDER)	
	11	1	**375-1846**	2	FILM-IDENTIFICATION (GRADE CONTROL)	
	12	1	**397-9301**	1	WASHER-HARD (11.5X20X15-MM THK)	
	13	1	**461-5738**	1	FILM-INSTRUCTION (GRADE, SLOPE)	
	14	1	**470-4959**	1	SENSOR GP-GRADE (BLADE SLOPE)	
		1	**521-5127**	1	SOFTWARE GP-MONITOR	
		1	**552-3288**	1	PAD	
	15	1	**4P-8134**	1	CLIP (LADDER)	
Y	16	1	**536-5046**	1	HARNESS AS-SENSOR	147
	18	1	**554-8937**	1	CONTROL GP-ELECTRONIC (GRADE CONTROL)	
		1	**552-3289**	1	PAD	
	19	1	**579-0564**	1	PLATE AS	
M		1	**9R-2672**	1	BOSS-THREADED (M10X1.5X120-MM)	
	20	1	**5G-3676**	6	GROMMET	
	21	1	**5P-4295**	1	CLIP (SLOT)	
M	22	1	**6V-7357**	3	BOLT (M6X1X25-MM)	
	23	1	**8T-1889**	6	CLIP (SLOT)	
	24	1	**8T-1890**	6	CLIP (TAB)	
	25	1	**8T-4121**	8	WASHER-HARD (11X21X2.5-MM THK)	
M	26	1	**8T-4136**	1	BOLT (M10X1.5X25-MM)	
M	27	1	**8T-4137**	3	BOLT (M10X1.5X20-MM)	
M	28	1	**8T-4194**	2	BOLT (M12X1.75X50-MM)	
M	29	1	**8T-4195**	2	BOLT (M10X1.5X30-MM)	
	30	1	**8T-4223**	3	WASHER-HARD (13.5X25.5X3-MM THK)	
	31	1	**8T-4224**	4	WASHER-HARD (8.8X16X2-MM THK)	
	32	1	**9X-8256**	3	WASHER (6.6X12X2-MM THK)	

M - METRIC PART
Y - SEPARATE ILLUSTRATION

536-5045 **WIRING GP-CONTROL (**contd.**)** **i08018878**

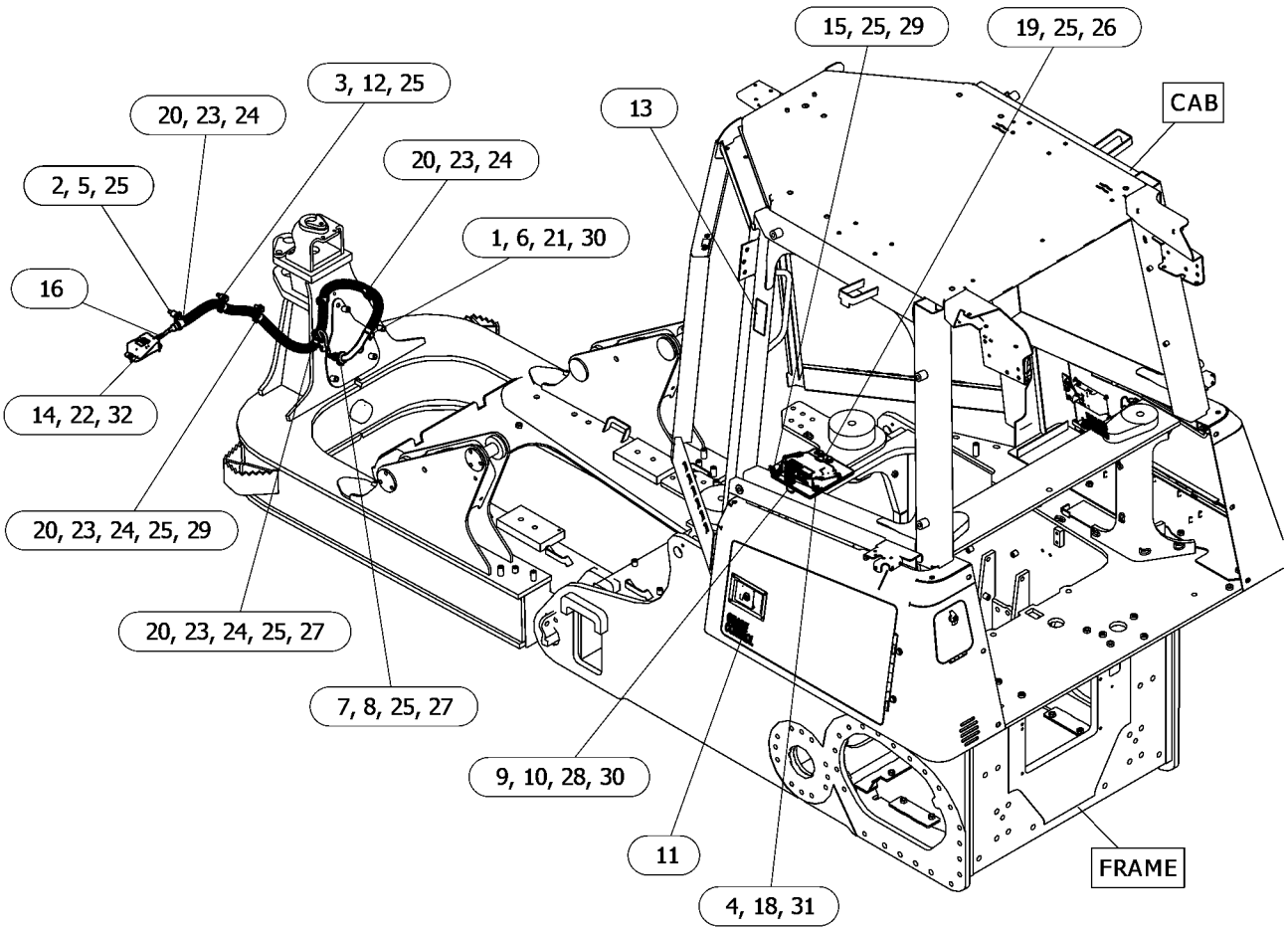

GRAPHIC #1 <END> g06544511

395-0113 WIRING GP-ENGINE

S/N: 4501-UP

PART OF 553-3684 ENGINE AR-PRIMARY

SMCS-1403, 1408 **i06997746**

NOTE	REF NO	GRAPHIC REF	PART NUMBER	QTY	PART NAME 1 2 3 4 5 6 (PRODUCT LEVEL)	SEE PAGE
C	1	1	**033-6034**	3	SEAL-O-RING	
C	2	1	**277-5065**	3	CLIP	
M	3	1	**124-3815**	4	BOLT (M8X1.25X16-MM)	
	4	1	**217-9039**	1	STRAP-CABLE	
	5	1	**348-4637**	1	BOLT	
CY	6	1	**375-8407**	3	HARNESS AS-WIRING (INJECTOR)	149
	7	1	**377-1293**	1	BRACKET	
Y	8	1	**385-5997**	1	HARNESS AS-ENGINE	138
	9	1	**389-3863**	1	BRACKET	
	10	1	**392-2780**	1	BRACKET	
	11	1	**132-5789**	1	CLIP (LADDER)	
M	12	1	**232-1693**	1	BOLT-FLANGE HEAD (M6X1X35-MM)	

C - CHANGE FROM PREVIOUS TYPE
M - METRIC PART
Y - SEPARATE ILLUSTRATION

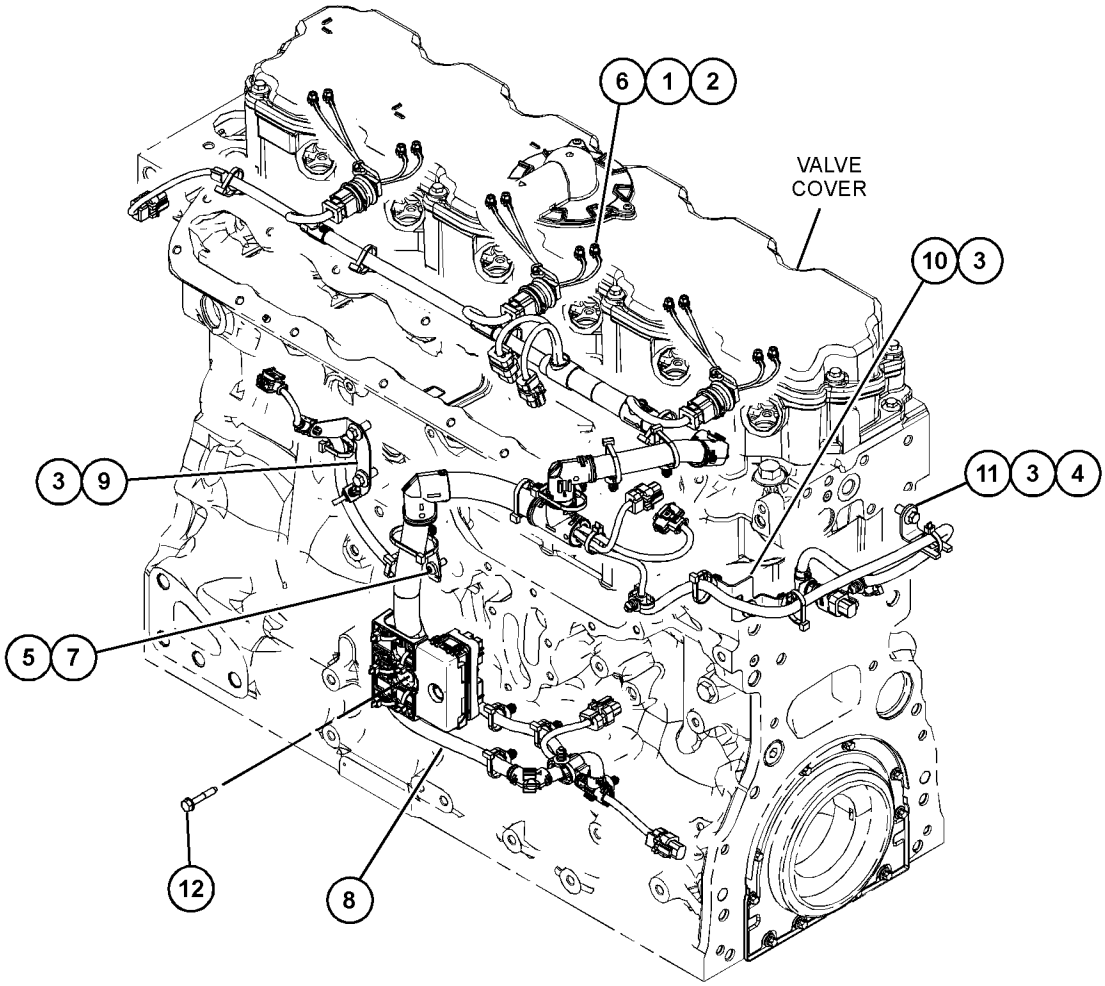

GRAPHIC #1 <END> g06177895

550-0156 WIRING GP-ENGINE

S/N: H3C1-UP; K3G1-UP
PART OF 549-8281 ELECTRONICS AR-MACHINE
AN ATTACHMENT

SMCS-1403, 1408

i07717045

NOTE	REF NO	GRAPHIC REF	PART NUMBER	QTY	PART NAME 1 2 3 4 5 6 (PRODUCT LEVEL)	SEE PAGE
M	1	2,3	**8T-4191**	4	BOLT (M10X1.5X16-MM)	
M	2	3	**8T-4195**	1	BOLT (M10X1.5X30-MM)	
M	3	3	**8T-4910**	1	BOLT (M12X1.75X60-MM)	
	4	2	**130-5300**	1	CLIP	
	5	2	**352-3968**	1	CLIP (LADDER)	
M	6	3	**8T-4189**	2	BOLT (M8X1.25X20-MM)	
M	7	2	**8T-4198**	1	BOLT (M10X1.5X100-MM)	
M	8	2	**8T-4200**	1	BOLT (M8X1.25X16-MM)	
	9	2	**3J-1907**	4	SEAL-O-RING	
	10	3	**3S-2093**	1	STRAP-CABLE	
	11	3	**4P-7428**	1	CLIP (LADDER)	
	12	1	**4P-7582**	1	CLIP (LADDER)	
	13	3	**5P-7464**	2	CLIP (SLOT)	
	14	3	**5P-7465**	2	CLIP (TAB)	
	15	2	**5P-9297**	1	CLIP (LOOP)	
	16	3	**6V-7359**	2	GROMMET (25-MM ID, 37-MM OD)	
	17	1,2,3	**7K-1181**	44	STRAP-CABLE	
M	18	3	**7X-2550**	1	BOLT (M12X1.75X110-MM)	
	19	2	**7X-7729**	1	WASHER (11X25X3-MM THK)	
	20	1,2,3	**8T-4121**	15	WASHER-HARD (11X21X2.5-MM THK)	
M	21	1	**8T-4136**	1	BOLT (M10X1.5X25-MM)	
M	22	2,3	**8T-4137**	8	BOLT (M10X1.5X20-MM)	
M	23	2	**8T-4139**	2	BOLT (M12X1.75X30-MM)	
	24	2,3	**8T-4223**	5	WASHER-HARD (13.5X25.5X3-MM THK)	
	25	2,3	**8T-4224**	4	WASHER-HARD (8.8X16X2-MM THK)	
M	26	3	**8T-6869**	1	BOLT (M8X1.25X60-MM)	
	27	1,2	**8T-7934**	3	WASHER-HARD (11X21X5-MM THK)	
	28	3	**124-1479**	1	CLIP (LOOP)	
	29	3	**132-5789**	1	CLIP (LADDER)	
	30	3	**165-4351**	1	SPACER (13X20X73-MM THK)	
	31	2	**167-3583**	1	STRAP AS-GROUND	
	32	3	**177-2215**	1	STRAP-DUAL CLAMP	
	33	3	**198-4776**	1	WASHER-HARD (8.8X20X8-MM THK)	
	34	3	**198-4777**	1	WASHER-HARD (11X25X10-MM THK)	
	35	2,3	**206-2423**	5	SADDLE-MOUNTING	
	36	3	**214-3509**	1	BRACKET AS	
	37	2	**277-1873**	1	CLIP (LADDER)	
	38	2,3	**297-3218**	2	CLIP (LADDER)	
	39	2	**306-6687**	1	STRAP AS	
M	40	3	**344-5675**	1	NUT (M10X1.5-THD)	
	41	2	**349-1178**	1	SENSOR-PRESSURE (HYDROSTATIC, FWD, LH)	
	41A	2	**349-1178**	1	SENSOR-PRESSURE (HYDROSTATIC, REV, LH)	
	41B	2	**349-1178**	1	SENSOR-PRESSURE (HYDROSTATIC, FWD, RH)	
	41C	2	**349-1178**	1	SENSOR-PRESSURE (HYDROSTATIC, REV, RH)	
	42	3	**350-8842**	1	BRACKET AS	
M		3	**8T-3490**	1	NUT-WELD (M10X1.5-THD)	

550-0156 **WIRING GP-ENGINE (**contd.**)** **i07717045**

NOTE	REF NO	GRAPHIC REF	PART NUMBER	QTY	PART NAME 1 2 3 4 5 6 (PRODUCT LEVEL)	SEE PAGE
	43	2	**357-7357**	1	CABLE AS	
E		2	**8C-0596**		CABLE (2-GA) (32-CM)	
		2	**030-1712**	1	TERMINAL-RING (2-GA, 1/4-IN SCREW)	
E		2	**125-7876**		TUBE-HEAT SHRINK (17.78-MM DIA) (4-CM)	
	44	2	**446-1928**	1	CABLE AS	
		2	**6T-5598**	1	TERMINAL-RING (1-GA TO 2-GA, 5/16-IN SCREW)	
E		2	**8C-3056**		CABLE (2-GA, RED) (98-CM)	
		2	**308-8161**	1	COVER-TERMINAL	
		2	**311-6184**	1	TERMINAL-RING (2-GA, 3/8-IN SCREW)	
	45	1	**499-4011**	1	BRACKET AS	
	46	3	**339-8938**	1	CLIP (LOOP)	
	47	2	**352-3964**	1	CLIP (LADDER)	
	48	2	**356-2771**	1	BRACKET AS	
	49	3	**499-3325**	1	WIRE AS	
	50	2,3	**4P-7581**	6	CLIP (LADDER)	
	51	2,3	**4P-8134**	3	CLIP (LADDER)	
Y	52	1	**550-0154**	1	HARNESS AS-ENGINE	139
M	53	1	**7X-2552**	1	BOLT (M16X2X30-MM)	
	54	3	**9R-2216**	1	BOSS (25X134X12-MM THK)	
	55	1	**9X-8257**	1	WASHER (17.5X30X3.5-MM THK)	

E - ORDER BY THE CENTIMETER
M - METRIC PART
Y - SEPARATE ILLUSTRATION

550-0156 **WIRING GP-ENGINE (**contd.**)** **i07717045**

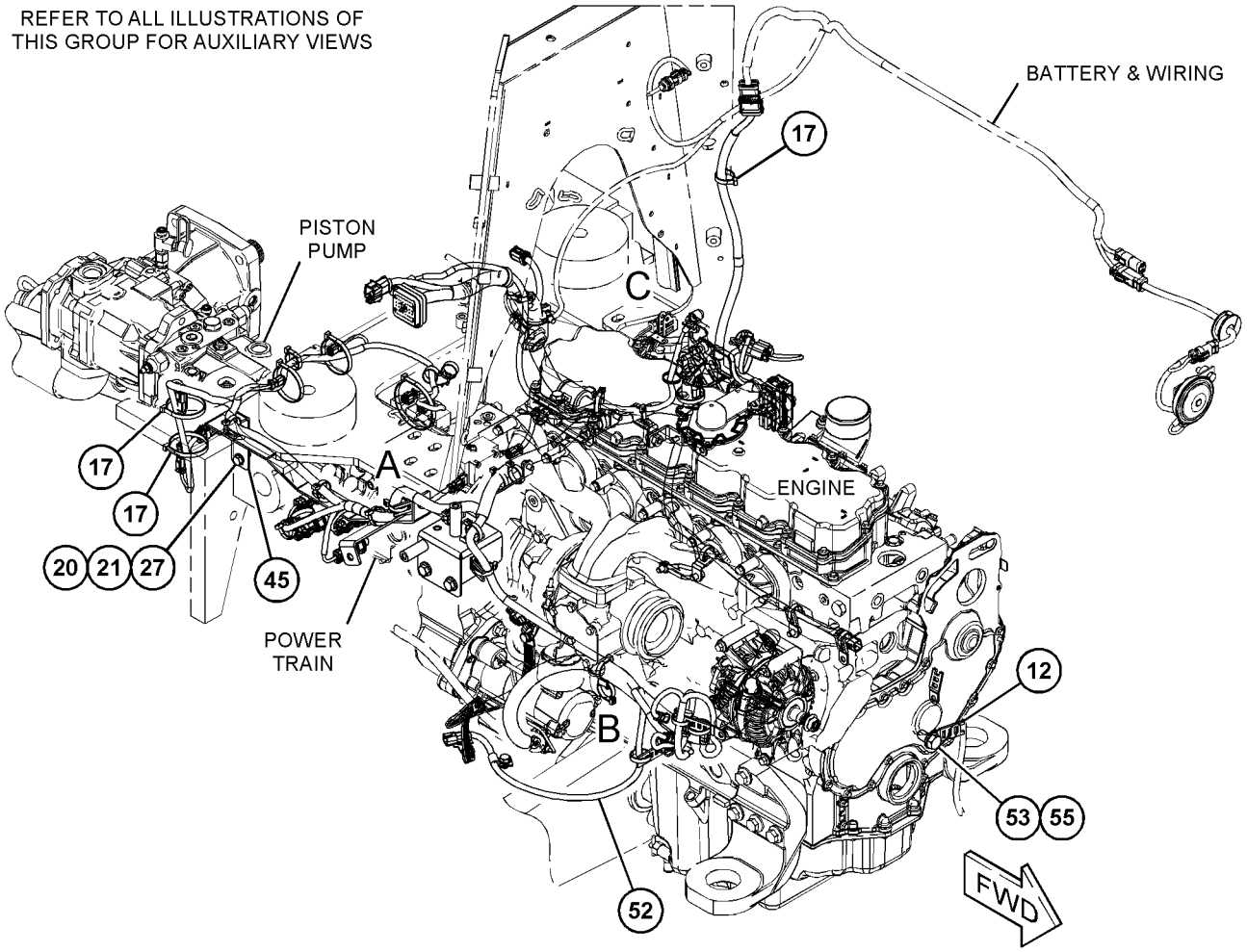

GRAPHIC #1 g06367702

550-0156 **WIRING GP-ENGINE (**contd.**)** **i07717045**

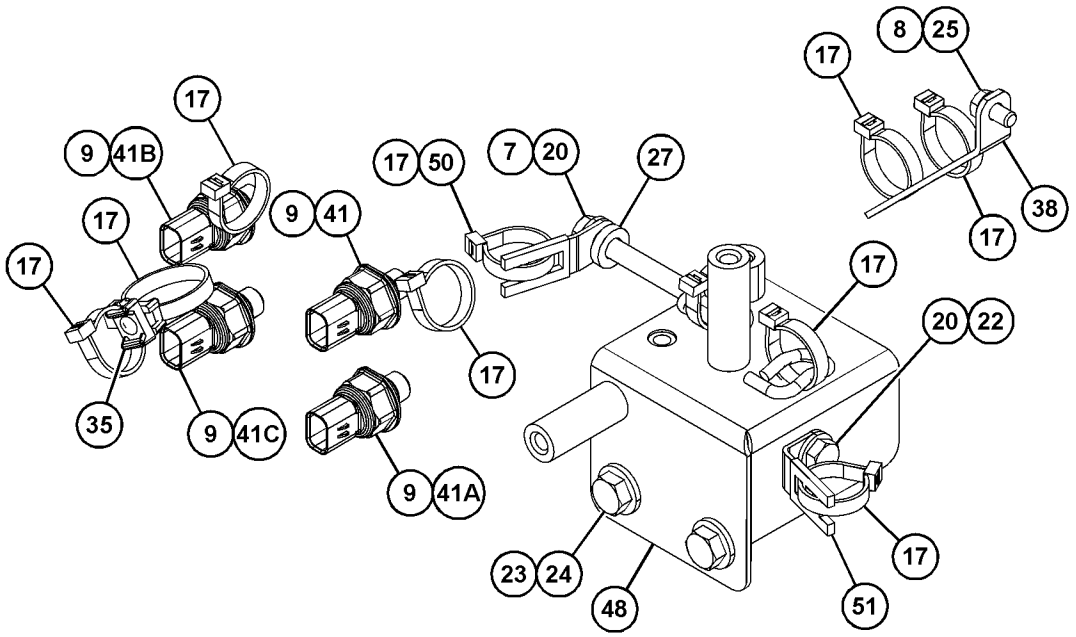

VIEW OF AREA A
(PARTS REMOVED FOR CLARITY)

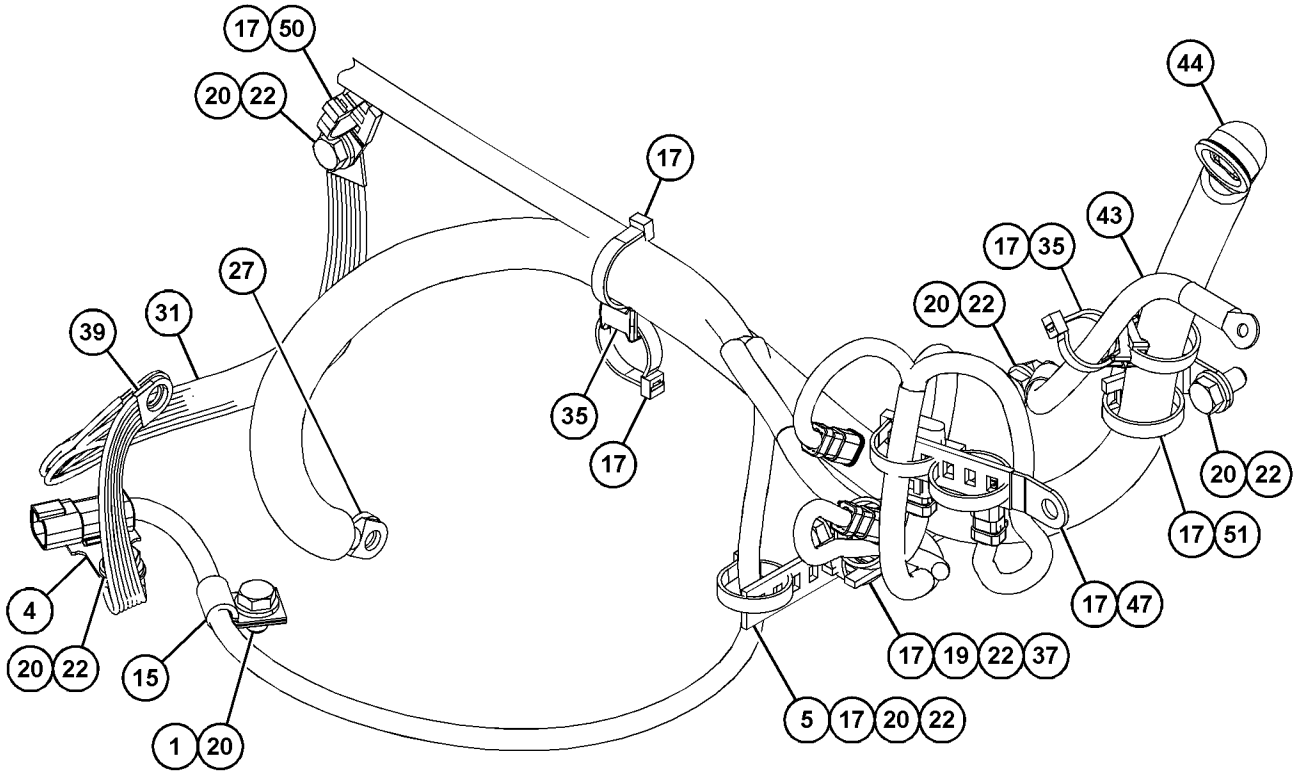

VIEW OF AREA B

GRAPHIC #2 g06367704

550-0156 **WIRING GP-ENGINE (**contd.**)** **i07717045**

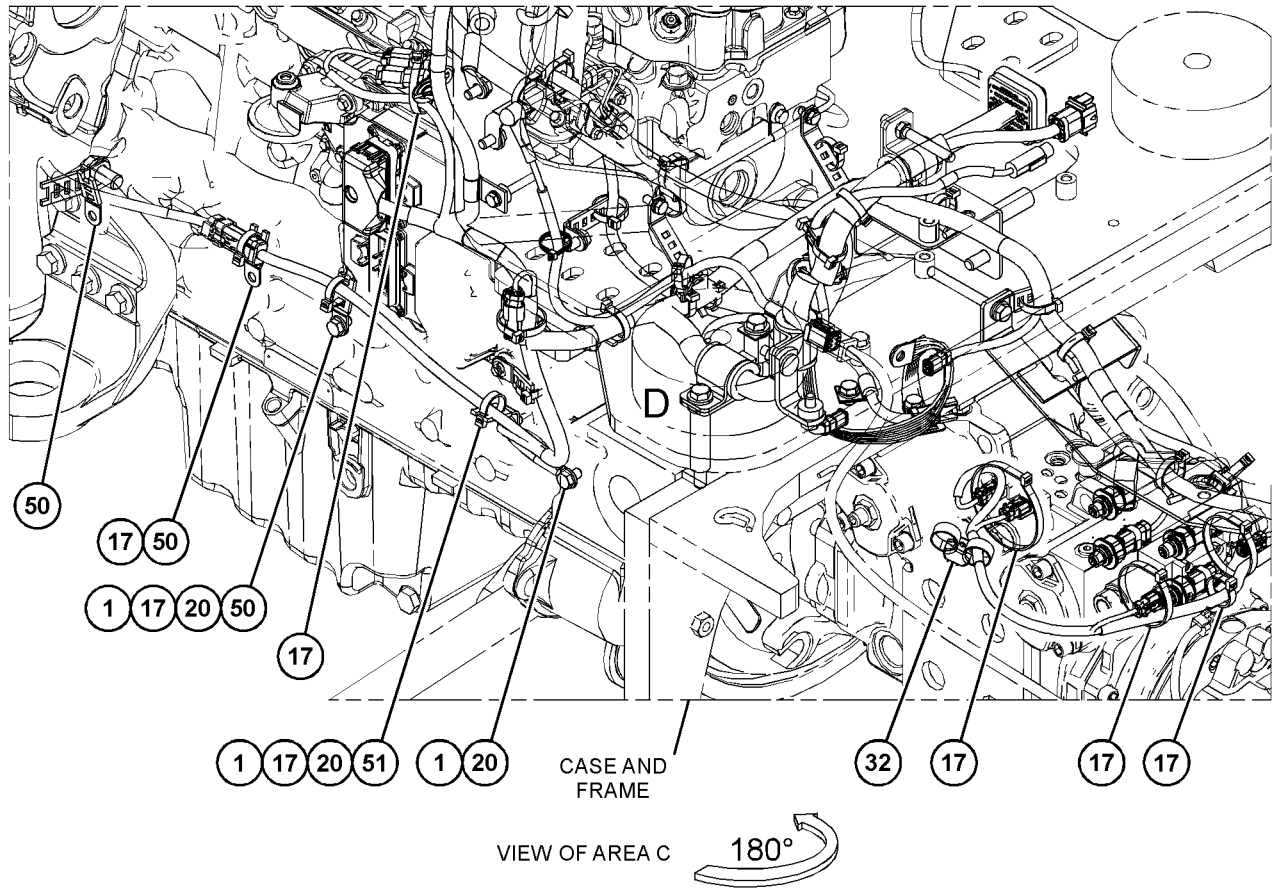

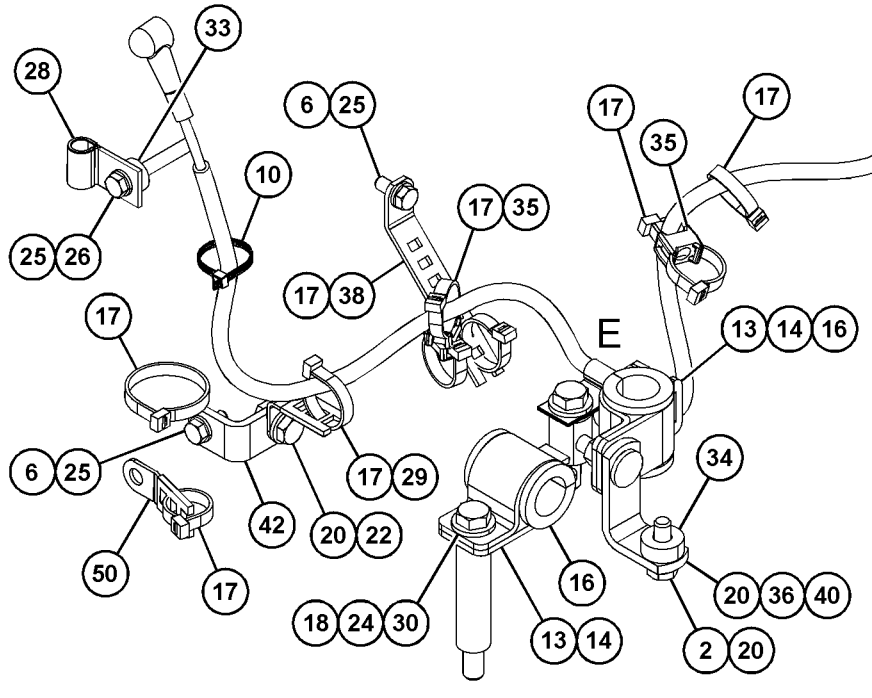

VIEW OF AREA D
(PARTS REMOVED FOR CLARITY)

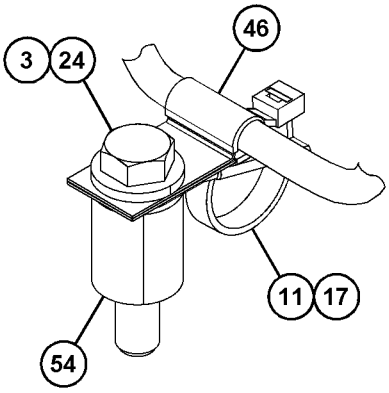

VIEW OF AREA E
(PARTS REMOVED FOR CLARITY)

GRAPHIC #3 <END> g06367705

537-5996 WIRING GP-GRADE CONTROL

S/N: H3C1-UP; K3G1-UP
PART OF 549-7642, 549-7643 ELECTRONICS AR-MACHINE
AN ATTACHMENT

SMCS-1408 **i08036431**

NOTE	REF NO	GRAPHIC REF	PART NUMBER	QTY	PART NAME 1 2 3 4 5 6 (PRODUCT LEVEL)	SEE PAGE
M	1	1	**8T-4971**	4	BOLT (M6X1X30-MM)	
	2	1	**6D-3033**	8	SCREW-SOCKET HEAD (4-40X0.5-IN)	
	3	1	**7K-1181**	9	STRAP-CABLE	
	4	1	**7R-3029**	2	CAP-DUST	
M	5	1	**8C-8451**	2	BOLT (M6X1X40-MM)	
	6	1	**8T-4121**	2	WASHER-HARD (11X21X2.5-MM THK)	
M	7	1	**8T-4136**	2	BOLT (M10X1.5X25-MM)	
	8	1	**8T-4224**	1	WASHER-HARD (8.8X16X2-MM THK)	
	9	1	**8T-9471**	1	GROMMET	
	10	1	**9X-8256**	6	WASHER (6.6X12X2-MM THK)	
M	11	1	**099-3649**	1	BOLT (M8X1.25X40-MM)	
	12	1	**132-8487**	2	NUT-RING	
M	13	1	**179-7262**	2	SCREW-FLAT HEAD (M8X1.25X40-MM)	
	14	1	**258-4819**	2	BOSS	
Y	15	1	**510-4915**	1	HARNESS AS-MONITOR (DISPLAY)	141
Y	16	1	**522-6004**	1	HARNESS AS-CONTROL (GRADE CONTROL) (RADIO)	133
Y	17	1	**537-5997**	1	HARNESS AS-CONTROL (FRONT)	136
	18	1	**542-1537**	1	BRACKET AS	
M		1	**8T-3490**	2	NUT-WELD (M10X1.5-THD)	
M		1	**8T-3612**	2	NUT-WELD (M8X1.25-THD)	
	19	1	**557-8970**	1	BRACKET AS	
		1	**2B-0941**	2	SPACER (10.5X19X19-MM THK)	
		1	**9V-9116**	1	SPACER (11.11X19.05X165-MM THK)	
	20	1	**198-4775**	2	WASHER-HARD (6.6X15X6-MM THK)	

M - METRIC PART
Y - SEPARATE ILLUSTRATION

537-5996 **WIRING GP-GRADE CONTROL** (contd.) **i08036431**

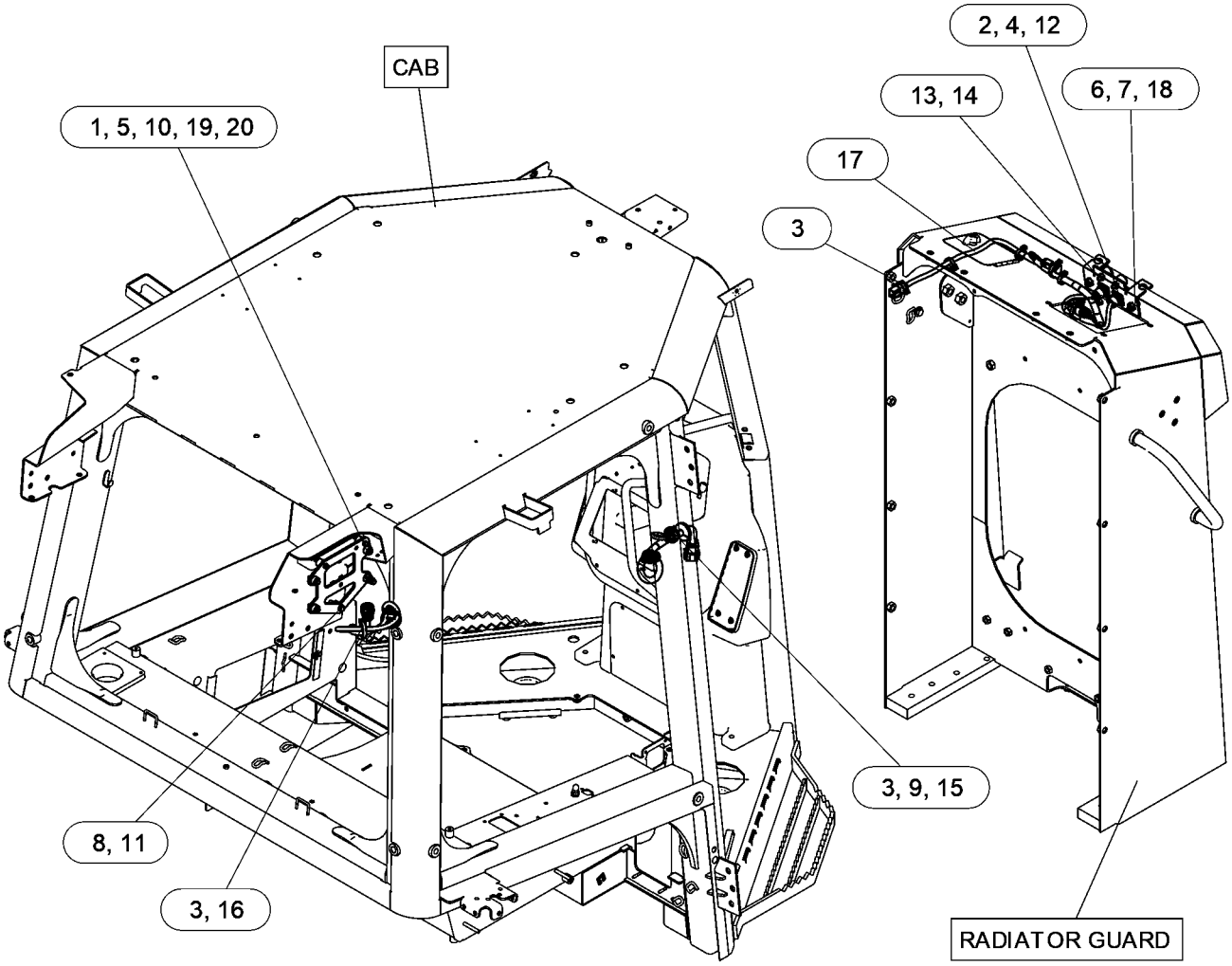

GRAPHIC #1 <END> g06545016

536-6702 WIRING GP-PLATFORM

S/N: H3C1-UP; K3G1-UP
PART OF 568-1316, 568-1317, 568-1318 CAB AR
AN ATTACHMENT

SMCS-1408 **i07504729**

NOTE	REF NO	GRAPHIC REF	PART NUMBER	QTY	PART NAME 1 2 3 4 5 6 (PRODUCT LEVEL)	SEE PAGE
M	1	2	**8T-4191**	1	BOLT (M10X1.5X16-MM)	
R	2	2	**455-9580**	1	CONTROL GP-UNPROGRAMMED (ELECTRONIC)	
M	3	2	**5C-9553**	4	BOLT (M6X1X16-MM)	
	4	2	**3F-9556**	1	LOCKWASHER	
	5	1	**3S-2093**	4	STRAP-CABLE	
M	6	2	**5C-2890**	4	NUT (M6X1-THD)	
	7	1	**5P-9297**	1	CLIP (LOOP)	
	8	2	**6I-1418**	4	SPACER (8.2X12.7X28.7-MM THK)	
M	9	2	**7I-2272**	2	BOLT (M5X0.8X12-MM)	
	10	1,2	**7K-1181**	32	STRAP-CABLE	
	11	2	**7X-0579**	2	WASHER-HARD (8.8X25.5X2-MM THK)	
	12	2	**8T-0328**	2	WASHER-HARD (5.5X10X1-MM THK)	
	13	2	**8T-1887**	2	CLIP (SLOT)	
	14	2	**8T-1888**	2	CLIP (TAB)	
	15	1,2	**8T-4121**	5	WASHER-HARD (11X21X2.5-MM THK)	
M	16	2	**8T-4136**	2	BOLT (M10X1.5X25-MM)	
M	17	1	**8T-4137**	1	BOLT (M10X1.5X20-MM)	
	18	2	**8T-4223**	1	WASHER-HARD (13.5X25.5X3-MM THK)	
	19	2	**8T-4224**	2	WASHER-HARD (8.8X16X2-MM THK)	
	20	1	**8T-9471**	1	GROMMET	
	21	2	**8T-9655**	8	MOUNT-ISOLATION	
	22	2	**8X-5489**	2	SLEEVE	
	23	1,2	**9X-8256**	12	WASHER (6.6X12X2-MM THK)	
	24	1	*104-6692*	1	RECEPTACLE AS-CONNECTOR (2-PIN)	
		1	**102-8802**	1	KIT-RECEPTACLE (2-PIN)	
					(INCLUDES RECEPTACLE AS & WEDGE)	
		1	**8T-8737**	2	PLUG-SEAL	
	25	1	**110-2028**	4	SCREW-PAN HEAD (10-14X0.75-IN)	
	26	1	**132-5789**	1	CLIP (LADDER)	
	27	1	**169-2876**	1	FILM-IDENTIFICATION (POWER RECEPTACLE, 12-VOLT)	
	28	1	**178-7539**	1	RECEPTACLE AS (POWER SUPPLY)	
	29	1	**199-7854**	1	SPACER (11.8X20X45-MM THK)	
	30	1	**206-2423**	1	SADDLE-MOUNTING	
	31	1	**258-4178**	1	FLANGE-MOUNTING	
	32	1	**266-8944**	1	GROMMET	
	33	2	**296-2649**	1	BRACKET AS	
M	34	2	**329-3356**	1	NUT (M12X1.75-THD)	
M	35	2	**344-5674**	5	NUT (M8X1.25-THD)	
M	36	1	**344-5675**	1	NUT (M10X1.5-THD)	
	37	1,2	**352-3968**	2	CLIP (LADDER)	
	38	2	**438-3080**	1	WIRE AS	
	39	2	**465-6303**	1	CABLE AS	
		2	**3L-6513**	1	TERMINAL-RING (1-GA TO 2-GA, 1/2-IN SCREW)	
		2	**6T-5598**	1	TERMINAL-RING (1-GA TO 2-GA, 5/16-IN SCREW)	
E		2	**8C-3056**		CABLE (2-GA, RED) (100-CM)	
		2	**8T-8827**	1	BOOT (RED)	

536-6702 **WIRING GP-PLATFORM (**contd.**)** **i07504729**

NOTE	REF NO	GRAPHIC REF	PART NUMBER	QTY	PART NAME 1 2 3 4 5 6 (PRODUCT LEVEL)	SEE PAGE
		2	**308-8161**	1	COVER-TERMINAL	
Y	40	1	**536-6703**	1	HARNESS AS-PLATFORM	142
	41	2	**549-2379**	1	FILM-IDENTIFICATION (FUSE/RELAY PANEL)	
Y	42	2	**549-4955**	1	PANEL GP-CIRCUIT BREAKER	164
	43	2	**9B-0453**	1	LOCKWASHER	

E - ORDER BY THE CENTIMETER
M - METRIC PART
R - REMANUFACTURED PART MAY BE AVAILABLE
Y - SEPARATE ILLUSTRATION

536-6702 **WIRING GP-PLATFORM (**contd.**)** **i07504729**

REFER TO ALL ILLUSTRATIONS OF
THIS GROUP FOR AUXILIARY VIEWS

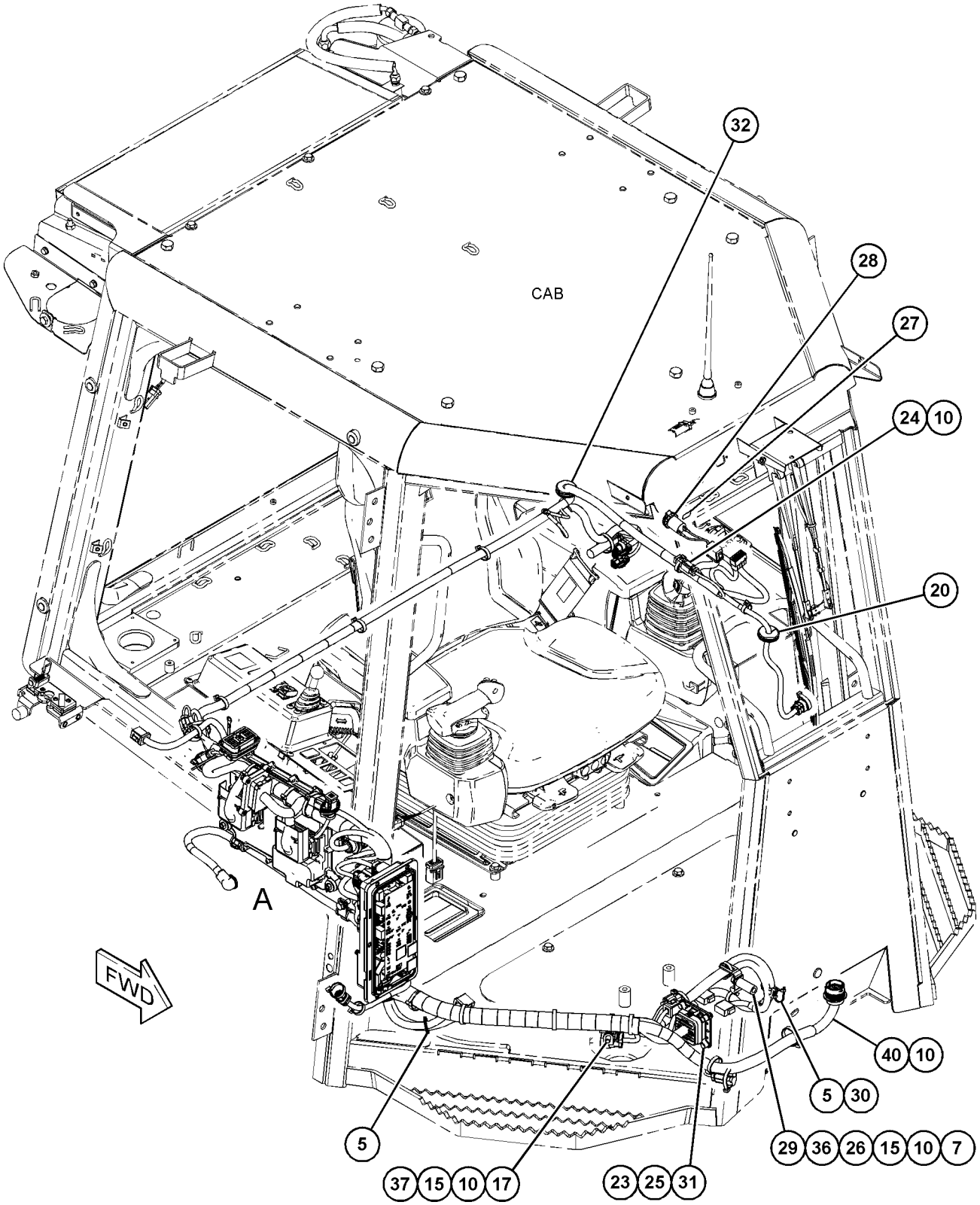

GRAPHIC #1 g06369369

536-6702 **WIRING GP-PLATFORM (**contd.**)** **i07504729**

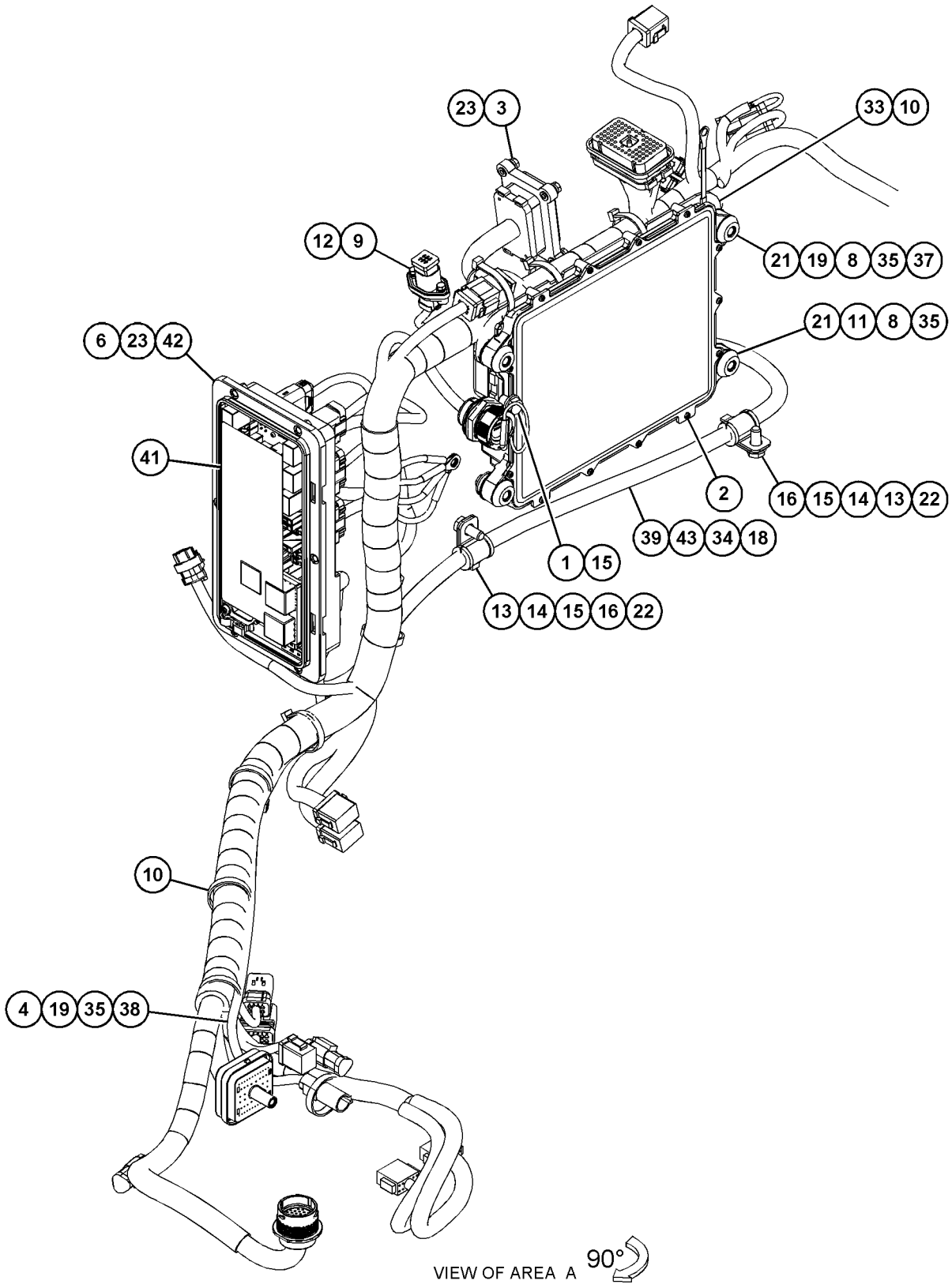

GRAPHIC #2 <END> g06369370

506-3945 WIRING GP-SEAT

S/N: H3C1-UP; K3G1-UP
PART OF 536-6699 WIRING GP-CAB
AN ATTACHMENT

SMCS-1408 **i07715542**

NOTE	REF NO	GRAPHIC REF	PART NUMBER	QTY	PART NAME 1 2 3 4 5 6 (PRODUCT LEVEL)	SEE PAGE
M	1	1	**8T-4138**	2	BOLT (M6X1X20-MM)	
	2	1	**3S-2093**	4	STRAP-CABLE	
	3	1	**4P-7581**	4	CLIP (LADDER)	
	4	1	**7K-1181**	5	STRAP-CABLE	
	5	1	**9X-2038**	4	WASHER (7X19X2-MM THK)	
	6	1	**156-6175**	4	CLIP (LADDER)	
	7	1	**177-2215**	2	STRAP-DUAL CLAMP	
M	8	1	**344-5673**	2	NUT (M6X1-THD)	
Y	9	1	**506-3946**	1	HARNESS AS-SENSOR (SEAT)	145
	10	1	**096-1349**	2	CLIP	
M	11	1	**3E-8020**	2	SCREW-TRUSS HEAD (M6X1X25-MM)	
M	12	1	**5C-2890**	2	NUT (M6X1-THD)	
M	13	1	**5C-9553**	4	BOLT (M6X1X16-MM)	
	14	1	**8T-4205**	4	WASHER-HARD (7.2X14.5X2-MM THK)	
M	15	1	**9X-2045**	2	SCREW-TRUSS HEAD (M6X1X20-MM)	
	16	1	**9X-6165**	6	WASHER (6.5X22X2.5-MM THK)	
	17	1	**352-3968**	2	CLIP (LADDER)	

M - METRIC PART
Y - SEPARATE ILLUSTRATION

506-3945 **WIRING GP-SEAT (**contd.**)** **i07715542**

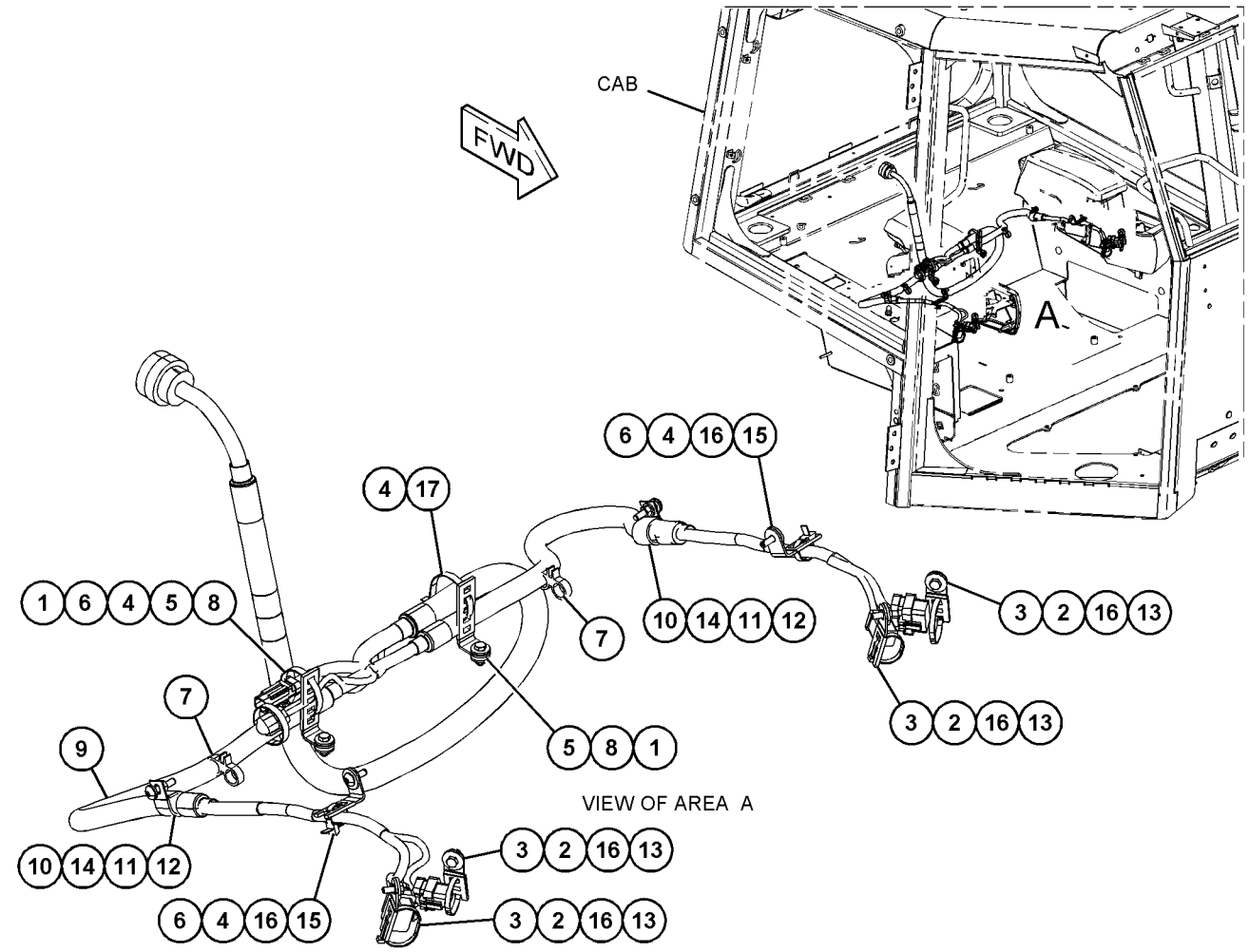

GRAPHIC #1 <END> g06205591

536-1598 WIRING GP-SENSOR

S/N: H3C1-UP; K3G1-UP
PART OF 549-7642, 549-7643 ELECTRONICS AR-MACHINE
AN ATTACHMENT

SMCS-1408, 1439 **i07717626**

NOTE	REF NO	GRAPHIC REF	PART NUMBER	QTY	PART NAME 1 2 3 4 5 6 (PRODUCT LEVEL)	SEE PAGE
M	1	1	**8T-4183**	2	BOLT (M12X1.75X40-MM)	
	2	1	**9X-8250**	1	CLIP (LOOP)	
	3	1	**9X-8256**	3	WASHER (6.6X12X2-MM THK)	
	4	1	**132-5789**	1	CLIP (LADDER)	
M	5	1	**344-5673**	3	NUT (M6X1-THD)	
	6	1	**425-8949**	1	SWITCH AS-ROCKER (TRACTION CONTROL)	
M	7	1	**101-3129**	1	STUD (M10X1.5-THD)	
	8	1	**198-4778**	2	WASHER-HARD (13.5X30X12-MM THK)	
M	9	1	**329-3356**	1	NUT (M12X1.75-THD)	
M	10	1	**344-5675**	2	NUT (M10X1.5-THD)	
	11	1	**3E-4321**	1	CLIP (LOOP)	
	12	1	**536-1599**	1	COVER AS	
Y	13	1	**536-1600**	1	HARNESS AS-SENSOR (BLADE, STABILIZER)	146
	14	1	**552-6116**	1	SENSOR AS-INERTIAL (STABLE BLADE)	
		1	**528-6793**	1	SOFTWARE GP-MONITOR	
	15	1	**6P-4467**	2	GROMMET	
	16	1	**7K-1181**	2	STRAP-CABLE	
	17	1	**7X-7729**	4	WASHER (11X25X3-MM THK)	
	18	1	**8J-8197**	3	CLIP	
	19	1	**8T-4121**	5	WASHER-HARD (11X21X2.5-MM THK)	
M	20	1	**8T-4136**	1	BOLT (M10X1.5X25-MM)	
M	21	1	**8T-4137**	4	BOLT (M10X1.5X20-MM)	
M	22	1	**8T-4139**	1	BOLT (M12X1.75X30-MM)	
	23	1	**8T-4223**	2	WASHER-HARD (13.5X25.5X3-MM THK)	

M - METRIC PART
Y - SEPARATE ILLUSTRATION

536-1598 **WIRING GP-SENSOR (**contd.**)** **i07717626**

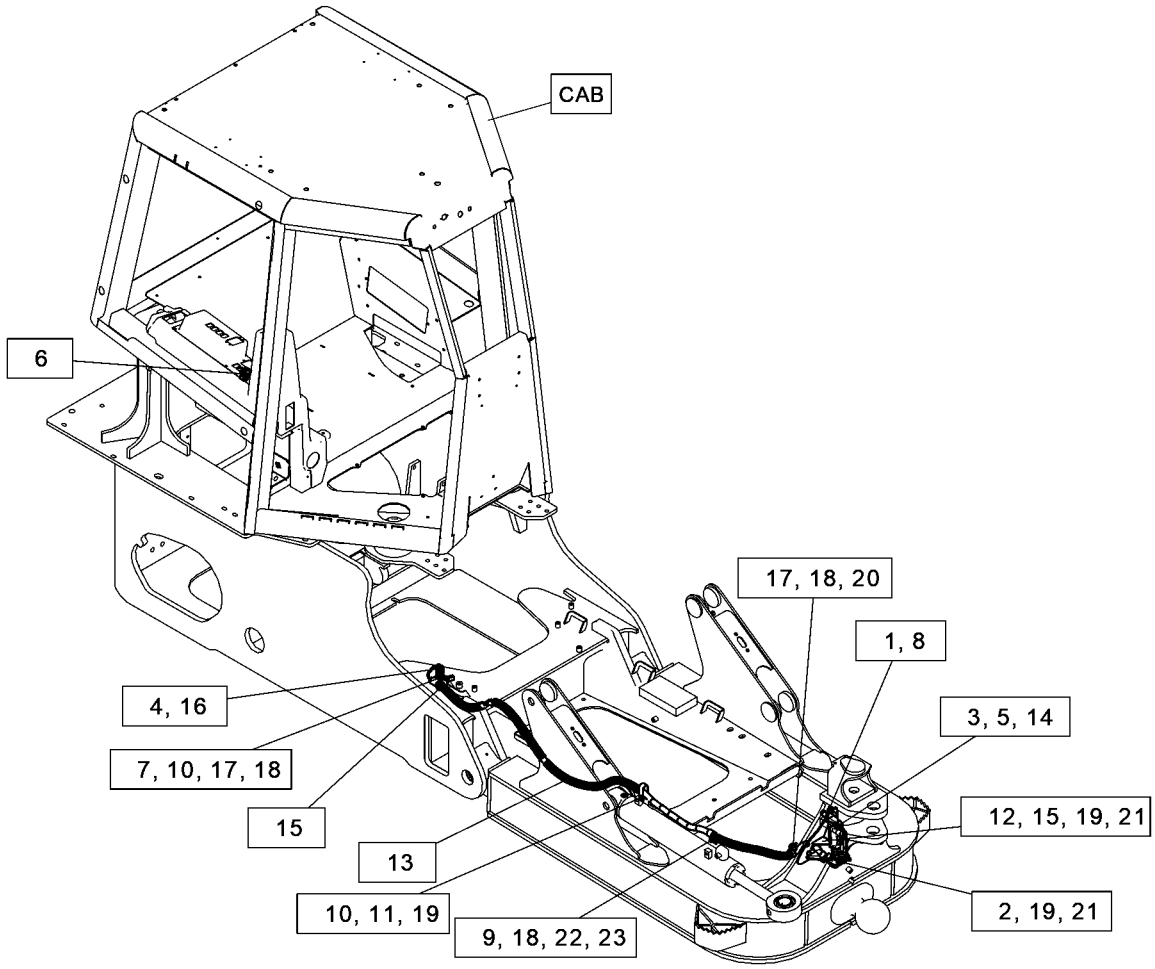

GRAPHIC #1 <END> g06366463

549-9613 WIRING GP-SENSOR

S/N: H3C1-UP; K3G1-UP
PART OF 549-7639 ELECTRONICS AR-MACHINE
AN ATTACHMENT

SMCS-1408, 1439 **i07717366**

NOTE	REF NO	GRAPHIC REF	PART NUMBER	QTY	PART NAME 1 2 3 4 5 6 (PRODUCT LEVEL)	SEE PAGE
M	1	1	**8T-4183**	3	BOLT (M12X1.75X40-MM)	
M	2	1	**8T-4192**	1	BOLT (M12X1.75X25-MM)	
	3	1	**4F-8711**	2	PLUG-BUTTON	
	4	1	**7K-1181**	2	STRAP-CABLE	
	5	1	**8T-4121**	5	WASHER-HARD (11X21X2.5-MM THK)	
M	6	1	**8T-4137**	4	BOLT (M10X1.5X20-MM)	
	7	1	**8T-4223**	1	WASHER-HARD (13.5X25.5X3-MM THK)	
	8	1	**9X-8250**	1	CLIP (LOOP)	
	9	1	**198-4778**	3	WASHER-HARD (13.5X30X12-MM THK)	
	10	1	**228-6089**	1	PLUG (ROCKER SWITCH)	
M	11	1	**344-5675**	1	NUT (M10X1.5-THD)	
	12	1	**352-3969**	1	CLIP (LADDER)	
	13	1	**536-1599**	1	COVER AS	
	14	1	**4P-8134**	1	CLIP (LADDER)	
Y	15	1	**549-9634**	1	HARNESS AS-WIRING (JUMPER)	150
	16	1	**564-7807**	1	RECEPTACLE AS-CONNECTOR	
		1	**169-0705**	12	PLUG-SEAL	
		1	**312-8811**	1	KIT-RECEPTACLE (12-PIN)	
					(INCLUDES RECEPTACLE AS & WEDGE)	
	17	1	**564-7808**	1	RECEPTACLE AS-CONNECTOR	
		1	**169-0705**	12	PLUG-SEAL	
		1	**435-9861**	1	RECEPTACLE AS-CONNECTOR (12-PIN)	

M - METRIC PART
Y - SEPARATE ILLUSTRATION

549-9613 **WIRING GP-SENSOR (**contd.**)** **i07717366**

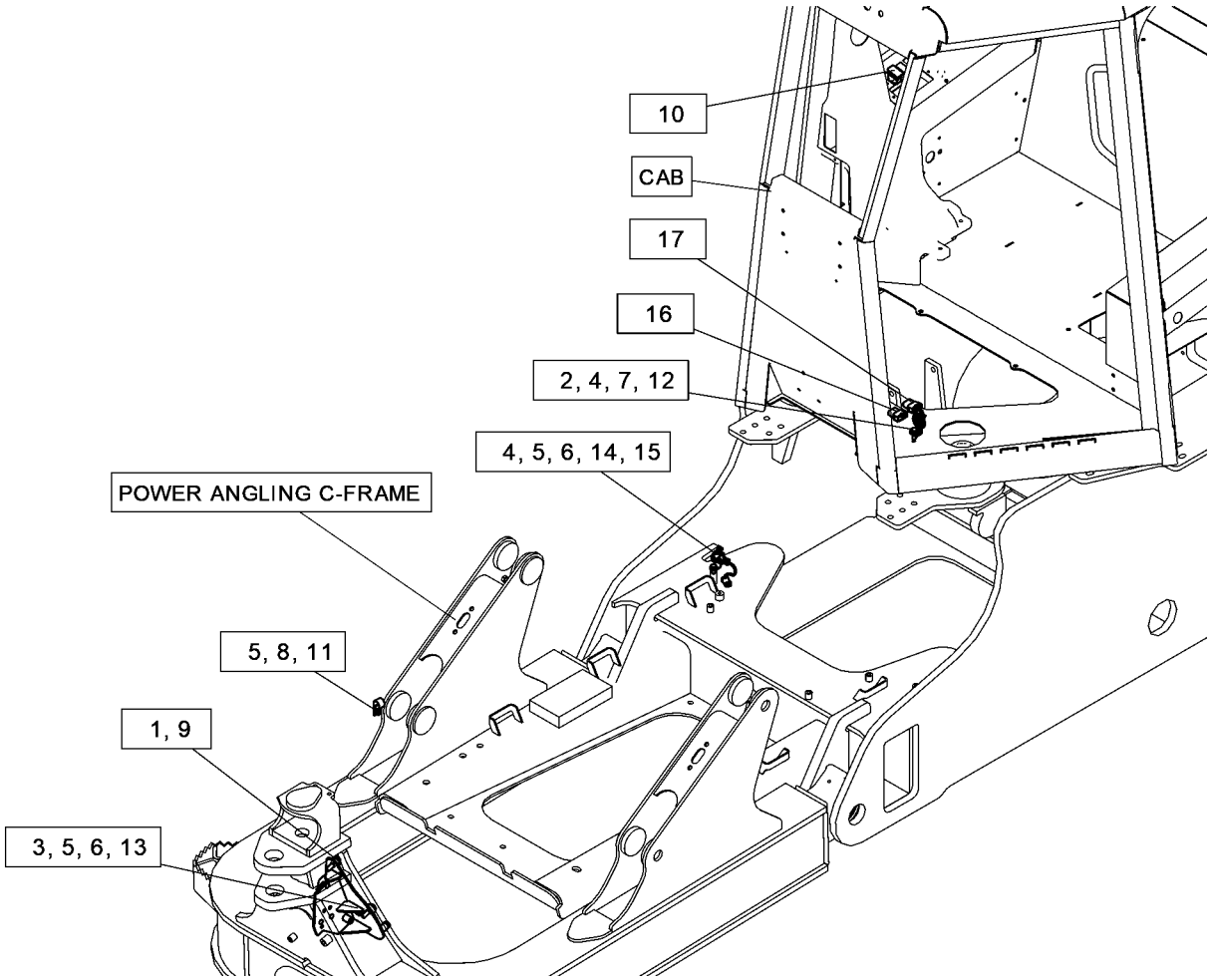

GRAPHIC #1 <END> g06366931

539-1226 WIRING GP-VALVE

S/N: H3C1-UP; K3G1-UP
IMPLEMENT
PART OF 549-8281 ELECTRONICS AR-MACHINE
AN ATTACHMENT

SMCS-1408, 5734 **i07694759**

NOTE	REF NO	GRAPHIC REF	PART NUMBER	QTY	PART NAME 1 2 3 4 5 6 (PRODUCT LEVEL)	SEE PAGE
	1	1	**3J-1907**	1	SEAL-O-RING	
	2	1	**6D-3479**	1	CLIP (LOOP)	
	3	1	**7K-1181**	7	STRAP-CABLE	
	4	1	**8T-4121**	3	WASHER-HARD (11X21X2.5-MM THK)	
M	5	1	**8T-4137**	2	BOLT (M10X1.5X20-MM)	
	6	1	**132-5789**	1	CLIP (LADDER)	
	7	1	**203-3847**	1	BRACKET AS	
M		1	**171-2419**	1	STUD-WELD (M10X1.5X35-MM)	
	8	1	**206-2423**	1	SADDLE-MOUNTING	
M	9	1	**344-5675**	1	NUT (M10X1.5-THD)	
	10	1	**344-7391**	1	SENSOR-PRESSURE	
	11	1	**352-3968**	1	CLIP (LADDER)	
Y	12	1	**539-1227**	1	HARNESS AS-VALVE	148

M - METRIC PART
Y - SEPARATE ILLUSTRATION

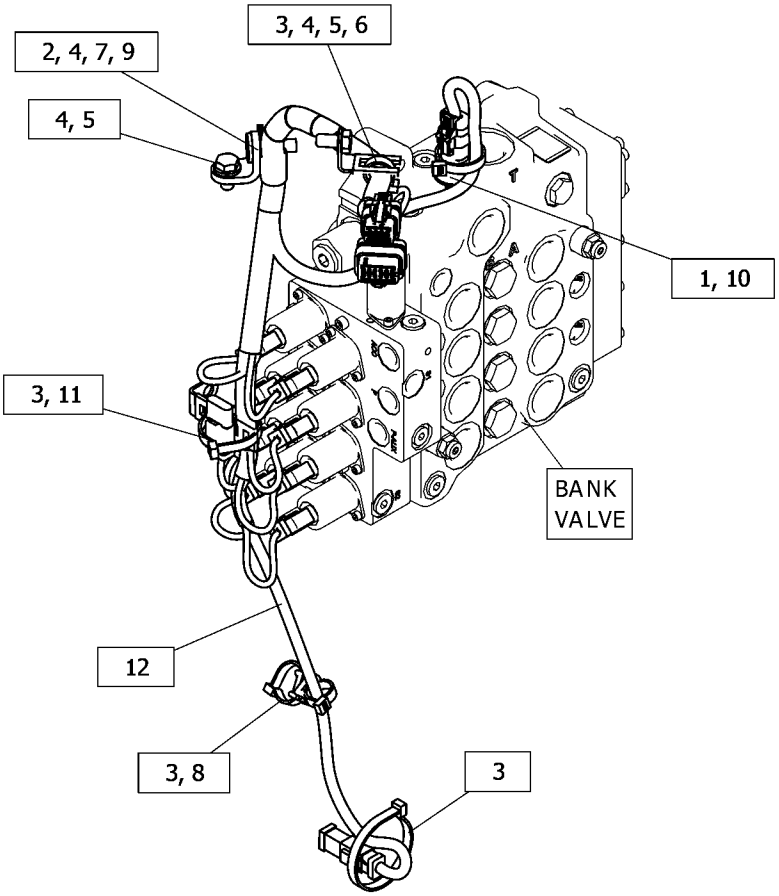

GRAPHIC #1 <END> g06365724

462-0496 ACTUATOR GP-PUMP

S/N: H3C1-UP; K3G1-UP

PART OF 461-2712 PUMP GP-PISTON

SMCS-5078 **i06721573**

NOTE	REF NO	GRAPHIC REF	PART NUMBER	QTY	PART NAME 1 2 3 4 5 6 (PRODUCT LEVEL)	SEE PAGE
	1	1	**462-0495**	1	PISTON	
M	2	1	**161-7614**	1	NUT (M16X1.5-THD)	
	3	1	**462-0494**	1	COVER	
M	4	1	**8T-3957**	6	BOLT-SOCKET HEAD (M12X1.75X30-MM)	
	5	1	**5P-0908**	2	SEAL-O-RING	
	6	1	**462-0493**	1	COVER	

M - METRIC PART

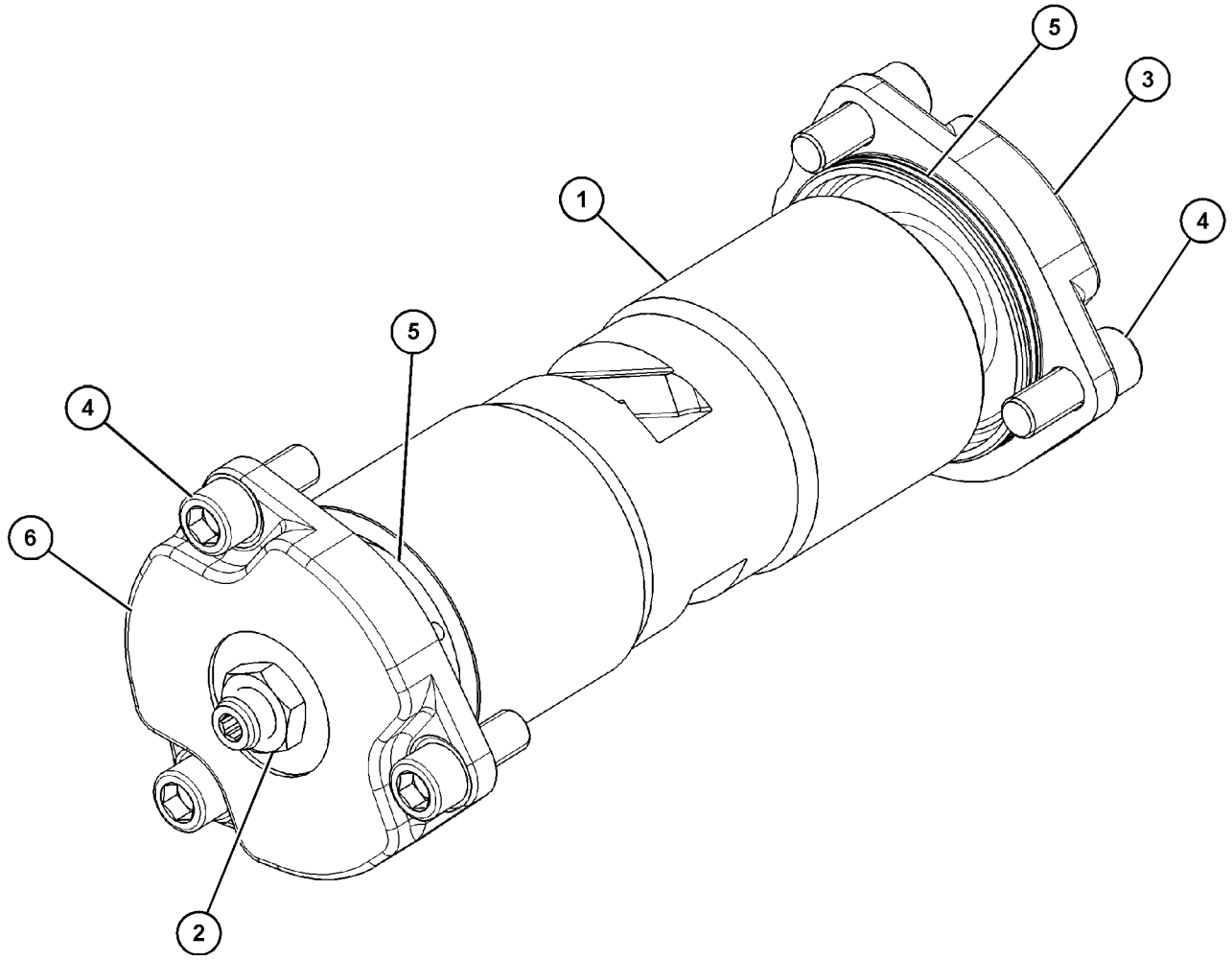

GRAPHIC #1 <END> g03859111

354-3334 BASE GP-OIL FILTER—HYDRAULIC, TRANSMISSION

S/N: H3C1-UP; K3G1-UP
PART OF 431-0681 FILTER GP-OIL
AN ATTACHMENT

SMCS-3004 **i06701975**

NOTE	REF NO	GRAPHIC REF	PART NUMBER	QTY	PART NAME 1 2 3 4 5 6 (PRODUCT LEVEL)	SEE PAGE
	1	1	**5P-7701**	1	SEAL-O-RING	
	2	1	**214-7568**	1	SEAL-O-RING	
	3	1	**6V-5048**	1	SEAL-O-RING	
	4	1	**9S-4181**	1	PLUG (1-5/16-12-THD)	
	5	1	**9S-4182**	1	PLUG (7/16-20-THD)	
	6	1	**9S-4191**	1	PLUG (9/16-18-THD)	

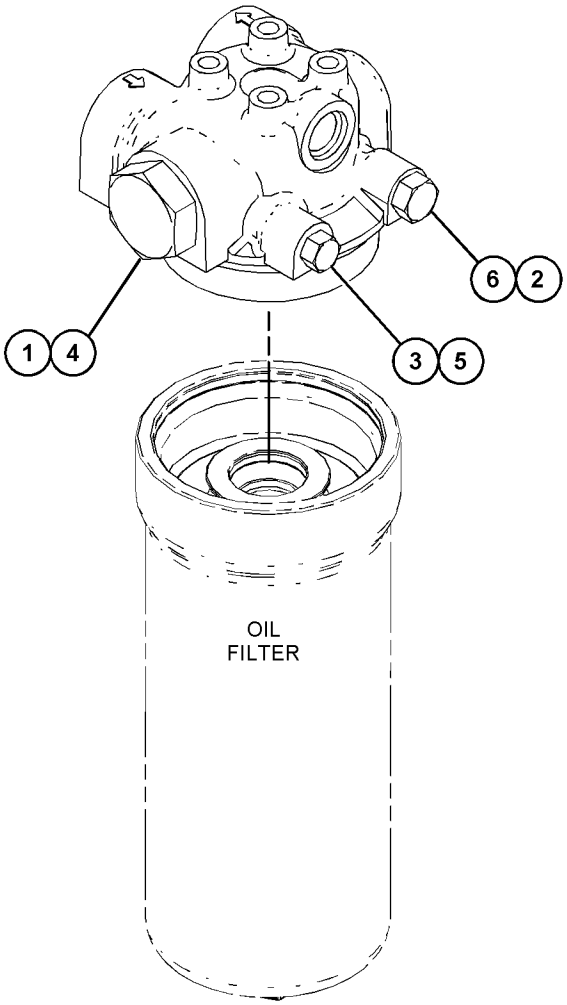

GRAPHIC #1 <END> g03824813

206-7255 COUPLING GP-PUMP

S/N: H3C1-UP; K3G1-UP

PART OF 457-1192 INSTALLATION AR-ENGINE

SMCS-5062 **i05893339**

NOTE	REF NO	GRAPHIC REF	PART NUMBER	QTY	PART NAME 1 2 3 4 5 6 (PRODUCT LEVEL)	SEE PAGE
	1	1	**252-0235**	1	COUPLING GP-FLEXIBLE	
M	2	1	**8T-2393**	4	BOLT-SOCKET HEAD (M16X2X60-MM)	

M - METRIC PART

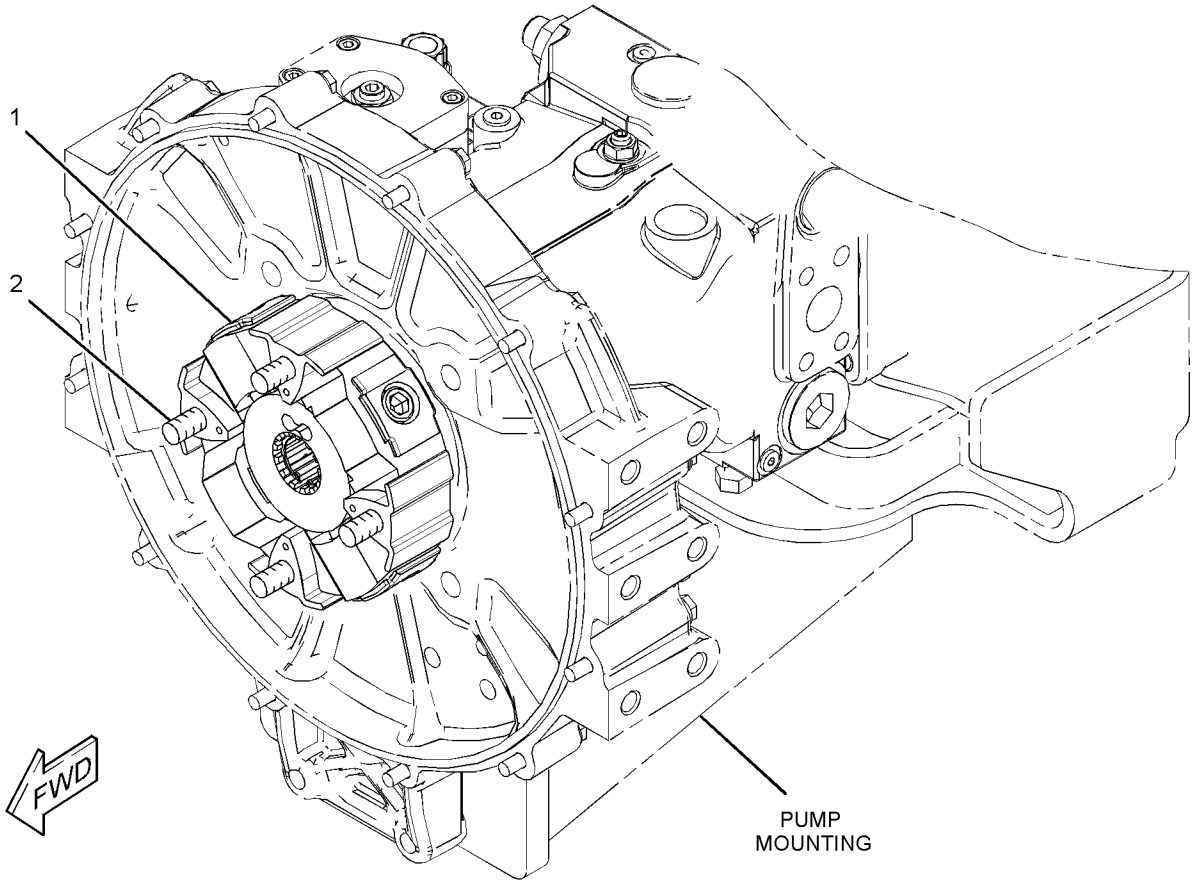

GRAPHIC #1 <END> g01456506

469-5548 DRIVE AR-FINAL

S/N: H3C1-UP

PART OF 591-7135 POWER TRAIN AR

SMCS-4050 **i07236144**

NOTE	REF NO	GRAPHIC REF	PART NUMBER	QTY	PART NAME 1 2 3 4 5 6 (PRODUCT LEVEL)	SEE PAGE
CY	1	1	*516-3774*	1	FINAL DRIVE & BRAKE GP (RH)	217
CY	2	1	*516-3773*	1	FINAL DRIVE & BRAKE GP (LH)	214
Y	3	1	*475-9553*	1	MOUNTING GP-FINAL DRIVE	237

C - CHANGE FROM PREVIOUS TYPE
Y - SEPARATE ILLUSTRATION

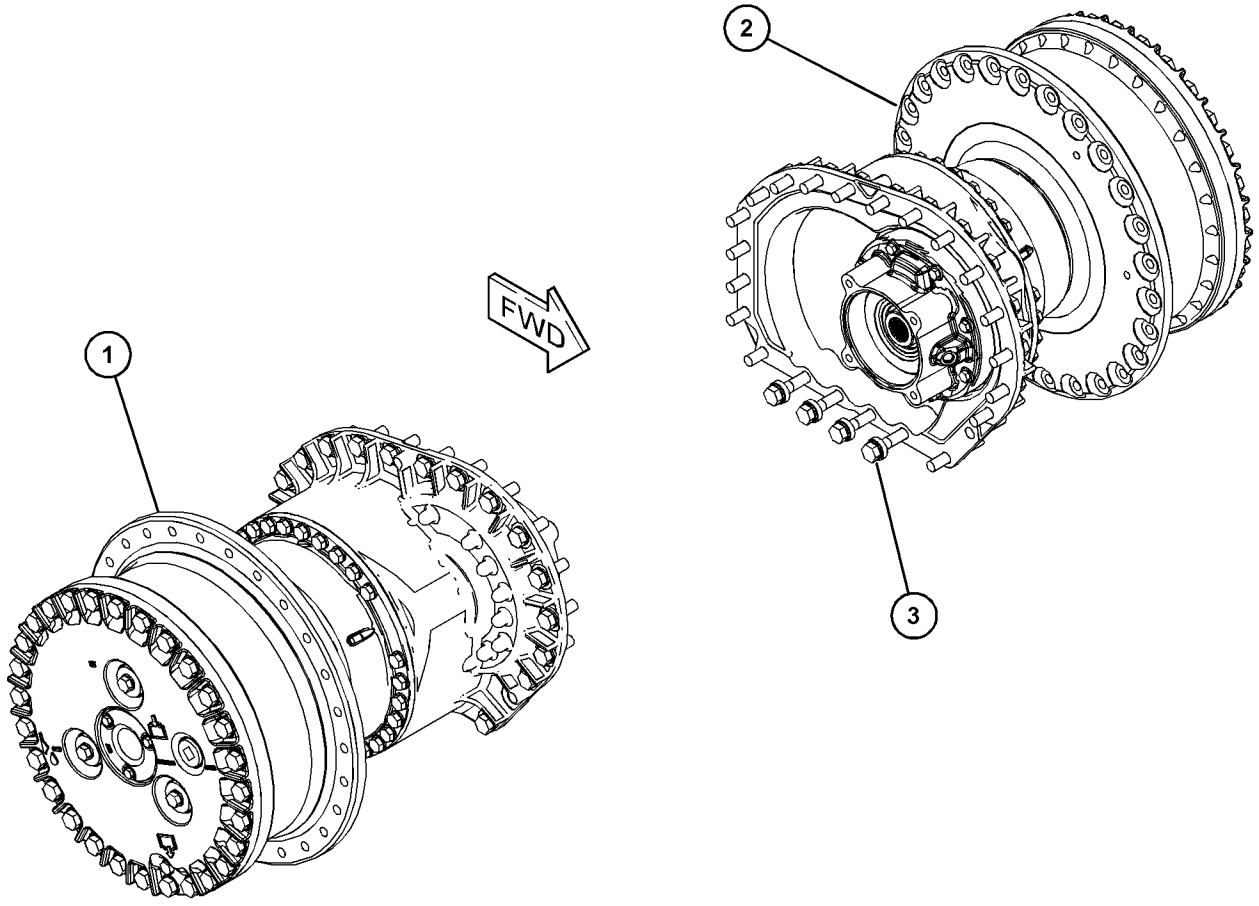

GRAPHIC #1 <END> g06019588

469-5550 DRIVE AR-FINAL

S/N: K3G1-UP

PART OF 591-7134 POWER TRAIN AR

SMCS-4050 **i07432967**

NOTE	REF NO	GRAPHIC REF	PART NUMBER	QTY	PART NAME 1 2 3 4 5 6 (PRODUCT LEVEL)	SEE PAGE
CY	1	1	*516-3772*	1	FINAL DRIVE & BRAKE GP (RH)	211
CY	2	1	*516-3771*	1	FINAL DRIVE & BRAKE GP (LH)	208
Y	3	1	*475-9553*	1	MOUNTING GP-FINAL DRIVE	237

C - CHANGE FROM PREVIOUS TYPE
Y - SEPARATE ILLUSTRATION

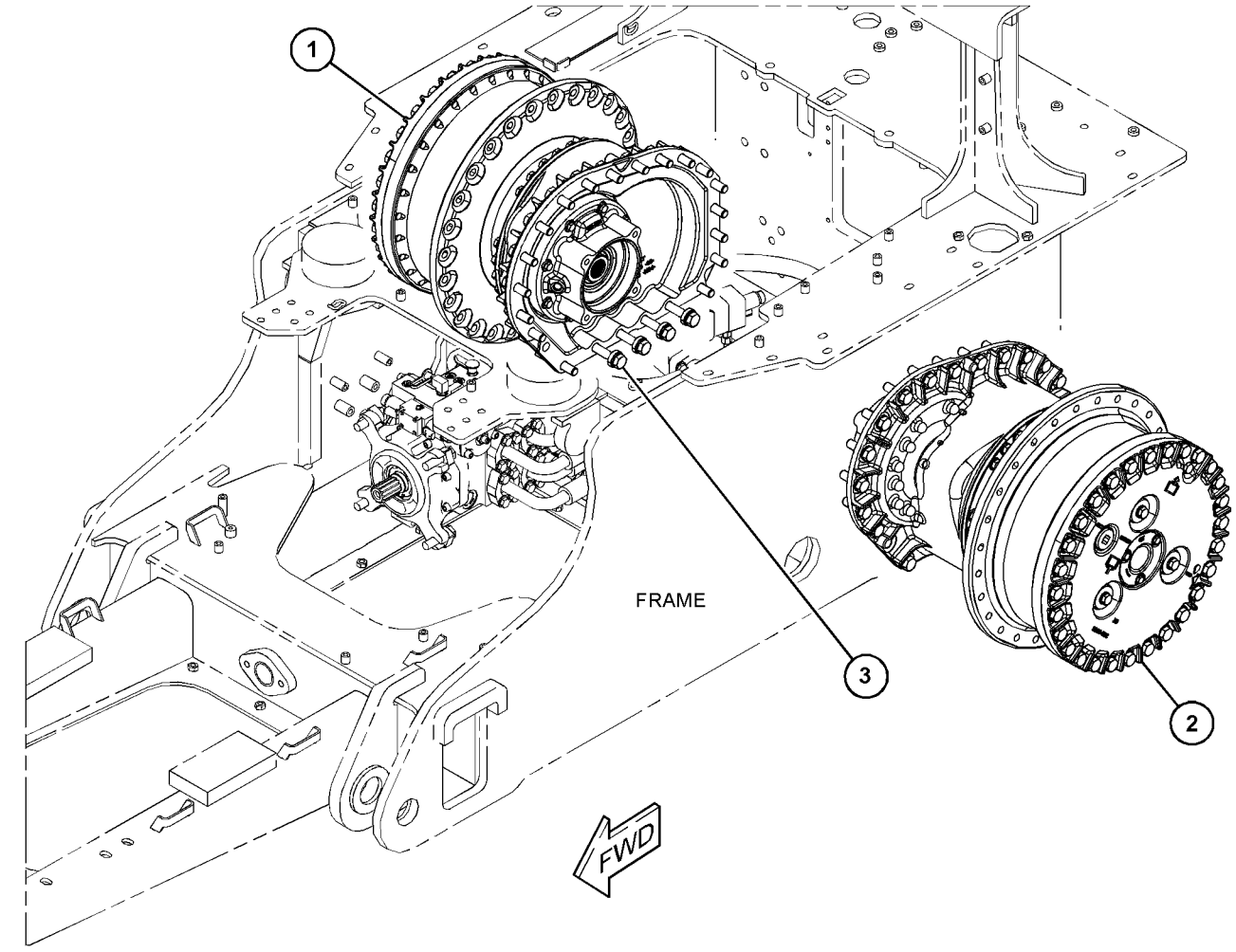

GRAPHIC #1 <END> g06226593

428-8645 FILTER GP-OIL

S/N: H3C1-UP; K3G1-UP
PART OF 431-0681 FILTER GP-OIL
AN ATTACHMENT

SMCS-3004, 3067

i06917855

NOTE	REF NO	GRAPHIC REF	PART NUMBER	QTY	PART NAME 1 2 3 4 5 6 (PRODUCT LEVEL)	SEE PAGE
	1	1	**9S-8002**	1	PLUG (7/16-20-THD)	
	2	1	**389-1079**	1	FILTER ELEMENT AS-OIL (HYDRAULIC, TRANSMISSION)	
	3	1	**095-1671**	1	SEAL-O-RING	
	4	1	**6V-5048**	1	SEAL-O-RING	

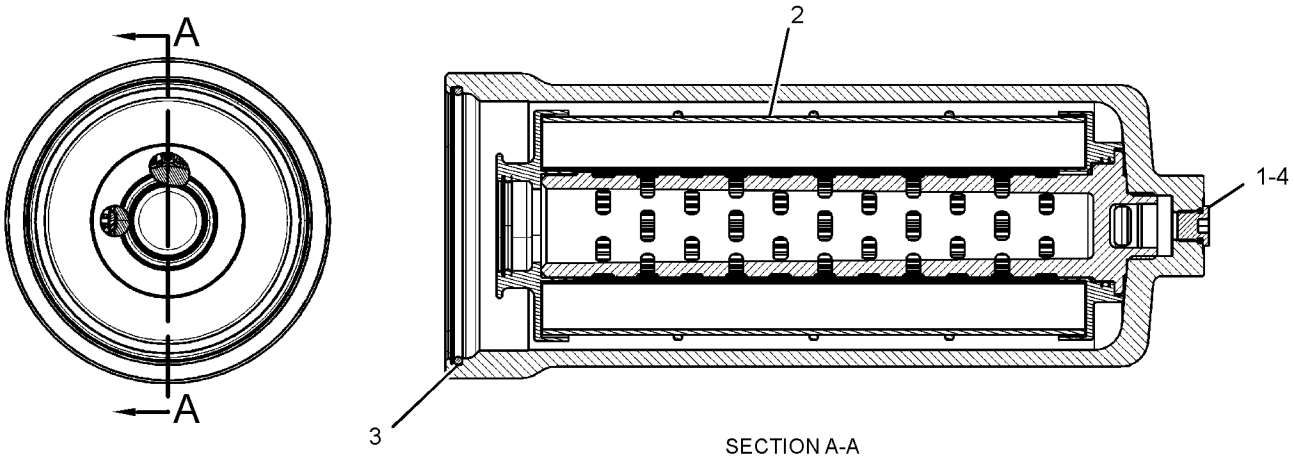

SECTION A-A

GRAPHIC #1 <END> g03582661

431-0681 FILTER GP-OIL

S/N: H3C1-UP; K3G1-UP

PART OF 457-5420 LINES GP-CHARGE PRESSURE, 549-8936 LINES GP-WINCH AN ATTACHMENT

SMCS-3004, 3067 **i07285059**

NOTE	REF NO	GRAPHIC REF	PART NUMBER	QTY	PART NAME 1 2 3 4 5 6 (PRODUCT LEVEL)	SEE PAGE
	1	1	**349-6097**	1	SWITCH AS-PRESSURE (OIL)	
		1	**033-6033**	1	SEAL-O-RING	
		1	**206-9295**	1	SEAL-O-RING	
Y	2	1	**354-3334**	1	BASE GP-OIL FILTER	202
Y	3	1	**428-8645**	1	FILTER GP-OIL (HYDRAULIC, TRANSMISSION)	206
	4	1	**095-1671**	1	SEAL-O-RING	
	5	1	**389-1079**	1	FILTER ELEMENT AS-OIL	
		1	**095-1671**	1	SEAL-O-RING	

Y - SEPARATE ILLUSTRATION

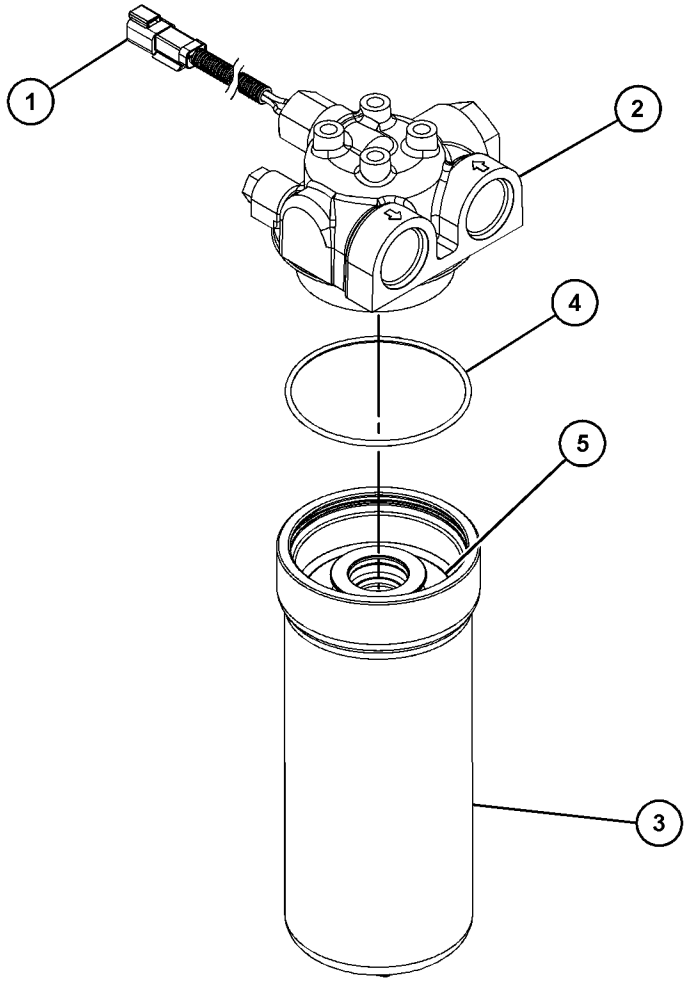

GRAPHIC #1 <END> g03828247

516-3771 FINAL DRIVE & BRAKE GP

S/N: K3G1-UP

PART OF 469-5550 DRIVE AR-FINAL

SMCS-4050, 4056, 4251 **i07432976**

NOTE	REF NO	GRAPHIC REF	PART NUMBER	QTY	PART NAME 1 2 3 4 5 6 (PRODUCT LEVEL)	SEE PAGE
	1	2	**3W-5159**	3	PLATE-PARKING BRAKE	
	2	2	**3W-5436**	1	BUTTON-THRUST	
	3	2	**3W-5451**	1	PISTON	
	4	2	**3W-5928**	1	SEAL AS	
		2	**5J-7852**	1	SEAL	
		2	**5F-0149**	1	SEAL-O-RING	
	5	2	**6Y-0859**	1	SEAL GP-DUO-CONE	
	6	1	**8E-3075**	3	RETAINER	
	7	2	**8G-1258**	1	PLATE-PRESSURE	
	8	2	**8G-1259**	1	RING-LOCK	
	9	1	**8G-4565**	3	GEAR-PLANETARY (30-TEETH)	
	10	1	**8G-4568**	1	GEAR-RING (74-TEETH)	
	11	2	*8T-6379*	1	SEAL AS	
		2	**7J-8956**	1	SEAL-O-RING	
		2	**8T-6378**	1	SEAL-RING	
	12	2	**170-8714**	4	DISC-FRICTION	
	13	1	**179-6707**	3	SHAFT	
	14	2	**239-1246**	1	SPINDLE	
	15	1	**239-1248**	1	SHAFT-SUN GEAR (10-TEETH)	
	16	2	**239-1251**	1	CASE-FINAL DRIVE (LH)	
	17	2	**506-6918**	1	HOUSING-BRAKE	
	18	2	**239-4481**	1	RETAINER	
	19	2	**246-8432**	1	RING	
	20	2	**247-2574**	1	SHAFT	
	21	2	**355-9853**	1	HUB-SPROCKET	
	22	1	**356-6853**	1	CARRIER	
	23	1	**356-6854**	1	COVER	
	24	2	**356-6855**	1	PLATE-RETAINER	
	25	2	**365-3717**	1	HUB-REACTION	
	26	1	**1B-3978**	6	CUP-BEARING (TAPERED ROLLER)	
	27	1	**1B-3980**	6	CONE-BEARING (TAPERED ROLLER)	
	28	1	**1H-8128**	1	SEAL-O-RING	
	29	1	**1H-9696**	3	SEAL-O-RING	
	30	2	**2H-6489**	1	RACE-BEARING OUTER	
	31	2	**2H-6490**	1	BEARING-INNER	
	32	1	**2S-4078**	1	SEAL-O-RING	
	33	1	**3K-0360**	1	SEAL-O-RING	
	34	2	**3S-9182**	1	PLUG-MAGNETIC (DRAIN)	
	35	2	**5F-0585**	2	CONE-BEARING (TAPERED ROLLER)	
	36	2	**5F-0589**	2	CUP-BEARING (TAPERED ROLLER)	
	37	2	**5P-8245**	9	WASHER-HARD (13.5X25.5X3-MM THK)	
	38	2	**5P-9147**	1	SEAL-O-RING	
	39	2	**491-4627**	1	GEAR-INPUT (19-TEETH)	
	40	2	**6V-0327**	2	CUP-BEARING (TAPERED ROLLER)	
	41	2	**8H-0902**	2	CONE-BEARING (TAPERED ROLLER)	
	42	1	**6V-0439**	1	PLUG-MAGNETIC (FINAL DRIVE, OIL CHECK, FILL)	
M	43	2	**6V-3823**	9	BOLT (M12X1.75X60-MM)	
M	44	2	**6V-6317**	6	BOLT (M10X1.5X20-MM)	

516-3771 **FINAL DRIVE & BRAKE GP (**contd.**)** **i07432976**

NOTE	REF NO	GRAPHIC REF	PART NUMBER	QTY	PART NAME 1 2 3 4 5 6 (PRODUCT LEVEL)	SEE PAGE
M	45	1	**7X-2563**	28	BOLT (M20X2.5X60-MM)	
	46	1	**8D-4771**	1	SEAL-O-RING	
	47	2	**8G-4392**	2	SPRING-DISC	
	48	2	**8G-4569**	1	RING	
	49	1	**8T-4121**	3	WASHER-HARD (11X21X2.5-MM THK)	
	50	1	**8T-4123**	28	WASHER (22X35X3.5-MM THK)	
M	51	1	**8T-4136**	3	BOLT (M10X1.5X25-MM)	
M	52	2	**8T-4140**	29	BOLT (M16X2X60-MM)	
M	53	2	**8T-4176**	8	BOLT (M12X1.75X90-MM)	
M	54	1	**8T-4193**	3	BOLT (M16X2X50-MM)	
	55	2	**8T-7971**	8	WASHER-HARD (13.5X25.5X5-MM THK)	
	56	1	**9S-4185**	1	PLUG (3/4-16-THD) (FINAL DRIVE OIL DRAIN)	
	57	1,2	**9X-8257**	32	WASHER (17.5X30X3.5-MM THK)	
	58	2	**5S-3676**	2	SEAL-O-RING	
	59	2	**491-4626**	1	GEAR (118-TEETH)	
BF			**6V-6640**	1	SEALANT	

B - USE AS REQUIRED
F - NOT SHOWN
M - METRIC PART

REFER TO ALL ILLUSTRATIONS OF THIS GROUP FOR AUXILIARY VIEWS

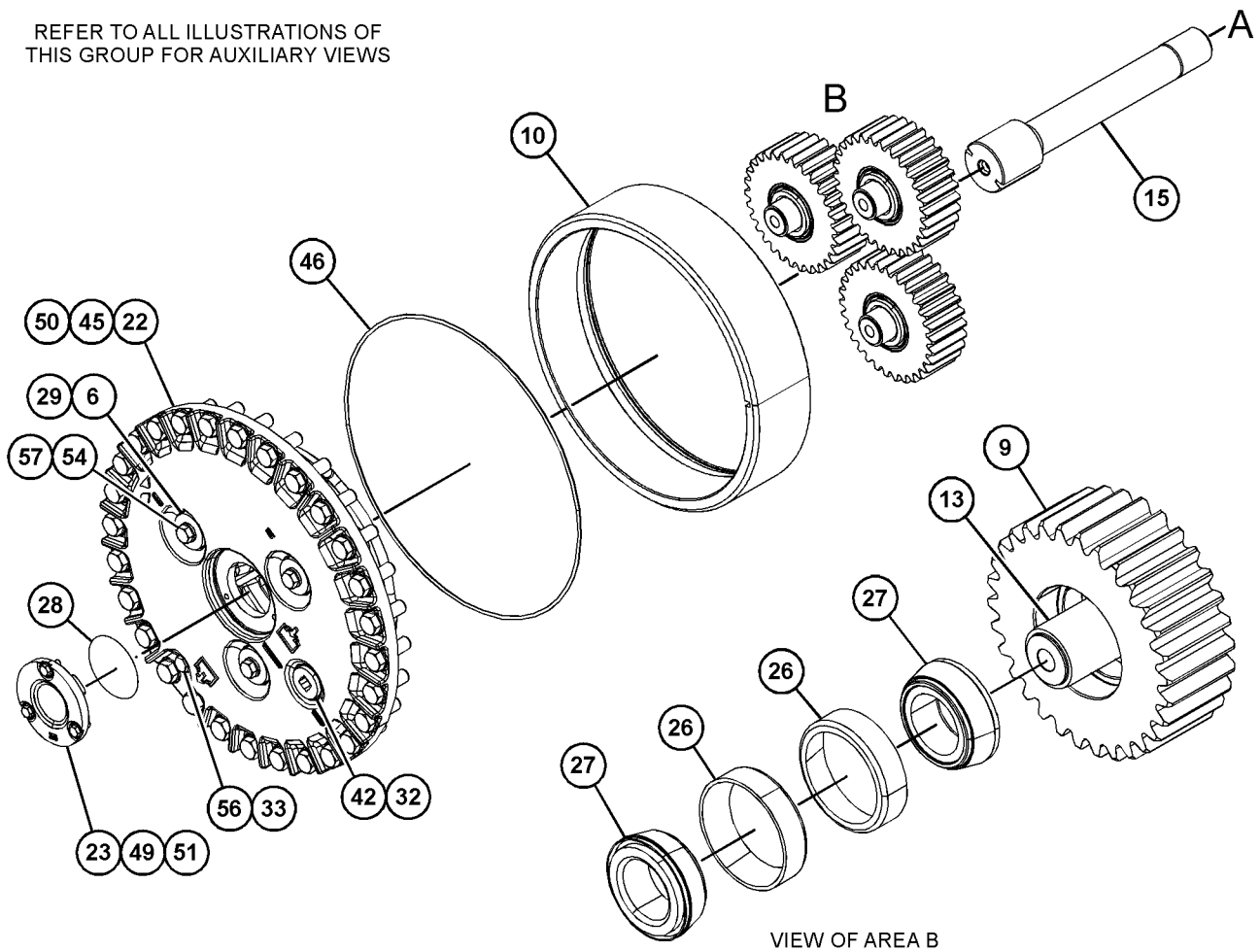

VIEW OF AREA B

GRAPHIC #1 g06228659

516-3771 **FINAL DRIVE & BRAKE GP (**contd.**)** **i07432976**

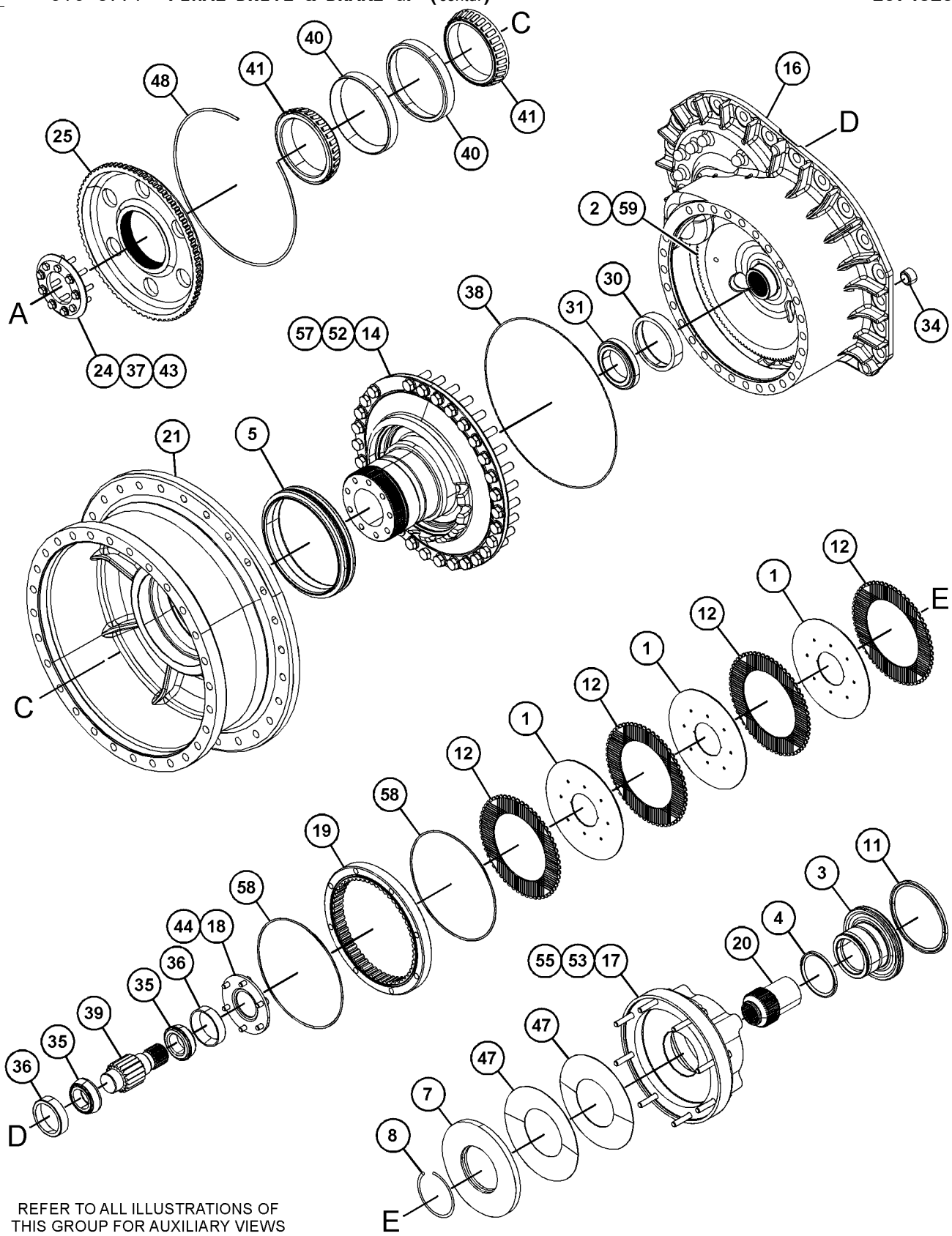

REFER TO ALL ILLUSTRATIONS OF THIS GROUP FOR AUXILIARY VIEWS

GRAPHIC #2 <END> g06228660

516-3772 FINAL DRIVE & BRAKE GP

S/N: K3G1-UP

RH

PART OF 469-5550 DRIVE AR-FINAL

SMCS-4050, 4056, 4251

i07838540

NOTE	REF NO	GRAPHIC REF	PART NUMBER	QTY	PART NAME 1 2 3 4 5 6 (PRODUCT LEVEL)	SEE PAGE
	1	2	**3W-5159**	3	PLATE-PARKING BRAKE	
	2	2	**3W-5436**	1	BUTTON-THRUST	
	3	2	**3W-5451**	1	PISTON	
	4	2	**3W-5928**	1	SEAL AS	
		2	**5F-0149**	1	SEAL-O-RING	
	5	2	**6Y-0859**	1	SEAL GP-DUO-CONE	
	6	1	**8E-3075**	3	RETAINER	
	7	2	**8G-1258**	1	PLATE-PRESSURE	
	8	2	**8G-1259**	1	RING-LOCK	
	9	1	**8G-4565**	3	GEAR-PLANETARY (30-TEETH)	
	10	1	**8G-4568**	1	GEAR-RING (74-TEETH)	
	11	2	**8T-6379**	1	SEAL AS	
		2	**7J-8956**	1	SEAL-O-RING	
		2	**8T-6378**	1	SEAL-RING	
	12	2	**170-8714**	4	DISC-FRICTION	
	13	1	**179-6707**	3	SHAFT	
	14	2	**239-1246**	1	SPINDLE	
	15	1	**239-1248**	1	SHAFT-SUN GEAR (10-TEETH)	
	16	2	**566-8404**	1	CASE-FINAL DRIVE (RH)	
	17	2	**506-6918**	1	HOUSING-BRAKE	
	18	2	**239-4481**	1	RETAINER	
	19	2	**246-8432**	1	RING	
	20	2	**247-2574**	1	SHAFT	
	21	2	**355-9853**	1	HUB-SPROCKET	
	22	1	**356-6853**	1	CARRIER	
	23	1	**356-6854**	1	COVER	
	24	1	**356-6855**	1	PLATE-RETAINER	
	25	1	**365-3717**	1	HUB-REACTION	
	26	1	**1B-3978**	6	CUP-BEARING (TAPERED ROLLER)	
	27	1	**1B-3980**	6	CONE-BEARING (TAPERED ROLLER)	
	28	1	**1H-8128**	1	SEAL-O-RING	
	29	1	**1H-9696**	3	SEAL-O-RING	
	30	2	**2H-6489**	1	RACE-BEARING OUTER	
	31	2	**2H-6490**	1	BEARING-INNER	
	32	1	**2S-4078**	1	SEAL-O-RING	
	33	1	**3K-0360**	1	SEAL-O-RING	
	34	2	**3S-9182**	1	PLUG-MAGNETIC (DRAIN)	
	35	2	**5F-0585**	2	CONE-BEARING (TAPERED ROLLER)	
	36	2	**5F-0589**	2	CUP-BEARING (TAPERED ROLLER)	
	37	1	**5P-8245**	9	WASHER-HARD (13.5X25.5X3-MM THK)	
	38	2	**5P-9147**	1	SEAL-O-RING	
	39	2	**491-4627**	1	GEAR-INPUT (19-TEETH)	
	40	2	**6V-0327**	2	CUP-BEARING (TAPERED ROLLER)	
	41	1,2	**8H-0902**	2	CONE-BEARING (TAPERED ROLLER)	
	42	1	**6V-0439**	1	PLUG-MAGNETIC (FINAL DRIVE, OIL CHECK, FILL)	
M	43	1	**6V-3823**	9	BOLT (M12X1.75X60-MM)	
M	44	2	**6V-6317**	6	BOLT (M10X1.5X20-MM)	

516-3772 **FINAL DRIVE & BRAKE GP** (contd.) **i07838540**

NOTE	REF NO	GRAPHIC REF	PART NUMBER	QTY	PART NAME 1 2 3 4 5 6 (PRODUCT LEVEL)	SEE PAGE
M	45	1	**7X-2563**	28	BOLT (M20X2.5X60-MM)	
	46	2	**5S-3676**	2	SEAL-O-RING	
	47	2	**8G-4392**	2	SPRING-DISC	
	48	1	**8G-4569**	1	RING	
	49	1	**8D-4771**	1	SEAL-O-RING	
	50	1	**8T-4121**	3	WASHER-HARD (11X21X2.5-MM THK)	
M	51	1	**8T-4136**	3	BOLT (M10X1.5X25-MM)	
M	52	2	**8T-4140**	29	BOLT (M16X2X60-MM)	
M	53	2	**8T-4176**	8	BOLT (M12X1.75X90-MM)	
M	54	1	**8T-4193**	3	BOLT (M16X2X50-MM)	
	55	1	**8T-4123**	28	WASHER (22X35X3.5-MM THK)	
	56	2	**8T-7971**	8	WASHER-HARD (13.5X25.5X5-MM THK)	
	57	1	**9S-4185**	1	PLUG (3/4-16-THD) (FINAL DRIVE OIL DRAIN)	
	58	1,2	**9X-8257**	32	WASHER (17.5X30X3.5-MM THK)	
	59	2	**491-4626**	1	GEAR (118-TEETH)	
BF			**6V-6640**		SEALANT	

B - USE AS REQUIRED
F - NOT SHOWN
M - METRIC PART

REFER TO ALL ILLUSTRATIONS OF THIS GROUP FOR AUXILIARY VIEWS

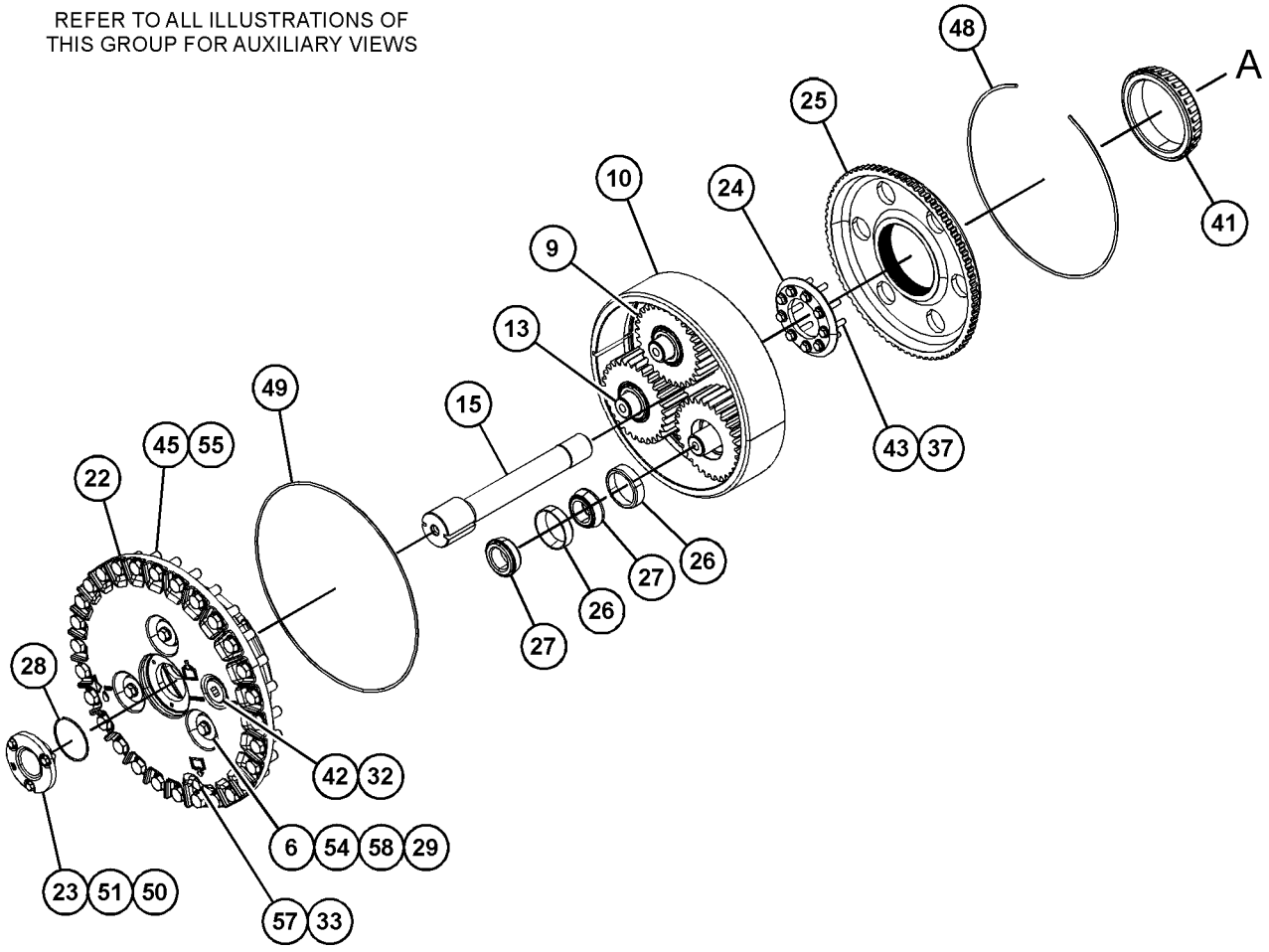

GRAPHIC #1 g06228713

516-3772 **FINAL DRIVE & BRAKE GP (**contd.**)** **i07838540**

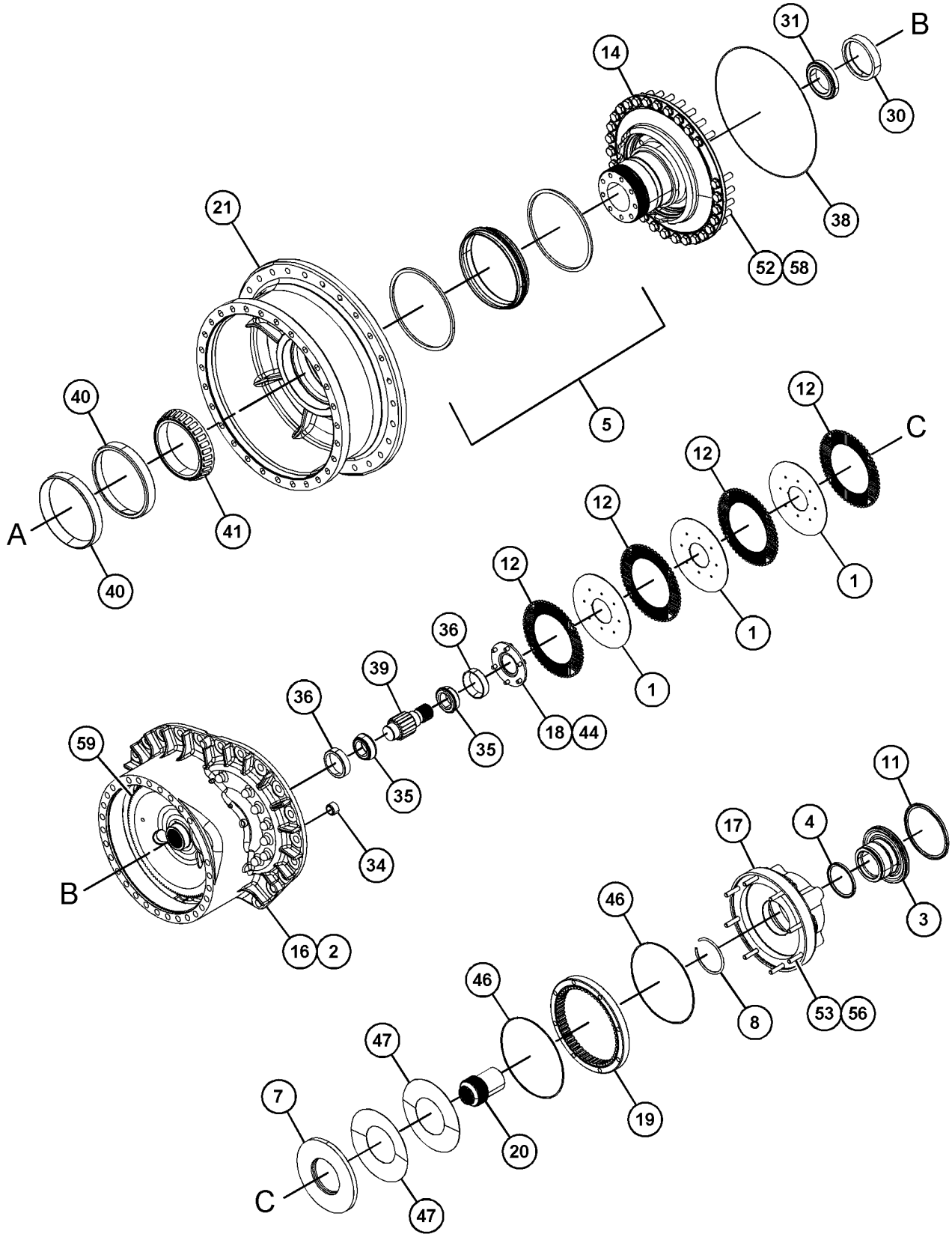

GRAPHIC #2 <END> g06229263

516-3773 FINAL DRIVE & BRAKE GP–LH

S/N: H3C1-UP

PART OF 469-5548 DRIVE AR-FINAL

SMCS-4050, 4056, 4251 **i07236163**

NOTE	REF NO	GRAPHIC REF	PART NUMBER	QTY	PART NAME 1 2 3 4 5 6 (PRODUCT LEVEL)	SEE PAGE
	1	1	**3W-5159**	3	PLATE-PARKING BRAKE	
	2	1	**3W-5436**	1	BUTTON-THRUST	
	3	1	**3W-5451**	1	PISTON	
	4	1	**3W-5928**	1	SEAL AS	
		1	**5F-0149**	1	SEAL-O-RING	
	5	1	**6Y-0859**	1	SEAL GP-DUO-CONE	
		1	**1M-9011**	2	RING-TORIC	
	6	1	**8E-3075**	3	RETAINER	
	7	1	**8G-1258**	1	PLATE-PRESSURE	
	8	1	**491-4627**	1	GEAR-INPUT (19-TEETH)	
	9	1	**8G-1259**	1	RING-LOCK	
	10	1	**8G-4565**	3	GEAR-PLANETARY (30-TEETH)	
	11	1	**8G-4568**	1	GEAR-RING (74-TEETH)	
	12	1	**8T-6379**	1	SEAL AS	
		1	**7J-8956**	1	SEAL-O-RING	
		1	**8T-6378**	1	SEAL-RING	
	13	1	**170-8714**	4	DISC-FRICTION	
	14	1	**179-6707**	3	SHAFT	
	15	1	**239-1247**	1	SPINDLE	
	16	1	**239-1249**	1	SHAFT-SUN GEAR (10-TEETH)	
	17	1	**239-1251**	1	CASE-FINAL DRIVE (LH)	
	18	1	**239-4481**	1	RETAINER	
	19	1	**506-6918**	1	HOUSING-BRAKE	
	20	1	**246-8432**	1	RING	
	21	1	**247-2574**	1	SHAFT	
	22	1	**355-9853**	1	HUB-SPROCKET	
	23	1	**356-6853**	1	CARRIER	
	24	1	**356-6854**	1	COVER	
	25	1	**356-6855**	1	PLATE-RETAINER	
	26	1	**365-3717**	1	HUB-REACTION	
	27	1	**491-4626**	1	GEAR (118-TEETH)	
	28	1	**1B-3978**	6	CUP-BEARING (TAPERED ROLLER)	
	29	1	**1B-3980**	6	CONE-BEARING (TAPERED ROLLER)	
	30	1	**1H-8128**	1	SEAL-O-RING	
	31	1	**1H-9696**	3	SEAL-O-RING	
	32	1	**2H-6489**	1	RACE-BEARING OUTER	
	33	1	**2H-6490**	1	BEARING-INNER	
	34	1	**2S-4078**	1	SEAL-O-RING	
	35	1	**3K-0360**	1	SEAL-O-RING	
	36	1	**3S-9182**	1	PLUG-MAGNETIC	
	37	1	**5F-0585**	2	CONE-BEARING (TAPERED ROLLER)	
	38	1	**5F-0589**	2	CUP-BEARING (TAPERED ROLLER)	
	39	1	**5P-8245**	9	WASHER-HARD (13.5X25.5X3-MM THK)	
	40	1	**5P-9147**	1	SEAL-O-RING	
	41	1	**5S-3676**	2	SEAL-O-RING	
	42	1	**6V-0327**	2	CUP-BEARING (TAPERED ROLLER)	
	43	1	**8H-0902**	2	CONE-BEARING (TAPERED ROLLER)	

516-3773 **FINAL DRIVE & BRAKE GP (**contd.**)** **i07236163**

NOTE	REF NO	GRAPHIC REF	PART NUMBER	QTY	PART NAME 1 2 3 4 5 6 (PRODUCT LEVEL)	SEE PAGE
	44	1	**6V-0439**	1	PLUG-MAGNETIC	
M	45	1	**6V-3823**	9	BOLT (M12X1.75X60-MM)	
M	46	1	**6V-6317**	6	BOLT (M10X1.5X20-MM)	
M	47	1	**7X-2563**	28	BOLT (M20X2.5X60-MM)	
	48	1	**8D-4771**	1	SEAL-O-RING	
	49	1	**8G-4392**	2	SPRING-DISC	
	50	1	**8G-4569**	1	RING	
	51	1	**8T-4121**	3	WASHER-HARD (11X21X2.5-MM THK)	
	52	1	**8T-4123**	28	WASHER (22X35X3.5-MM THK)	
M	53	1	**8T-4136**	3	BOLT (M10X1.5X25-MM)	
M	54	1	**8T-4140**	29	BOLT (M16X2X60-MM)	
M	55	1	**8T-4176**	8	BOLT (M12X1.75X90-MM)	
M	56	1	**8T-4193**	3	BOLT (M16X2X50-MM)	
	57	1	**8T-7971**	8	WASHER-HARD (13.5X25.5X5-MM THK)	
	58	1	**9S-4185**	1	PLUG (3/4-16-THD)	
	59	1	**9X-8257**	32	WASHER (17.5X30X3.5-MM THK)	
BF			**6V-6640**		SEALANT	

B - USE AS REQUIRED
F - NOT SHOWN
M - METRIC PART

516-3773 **FINAL DRIVE & BRAKE GP** (contd.) **i07236163**

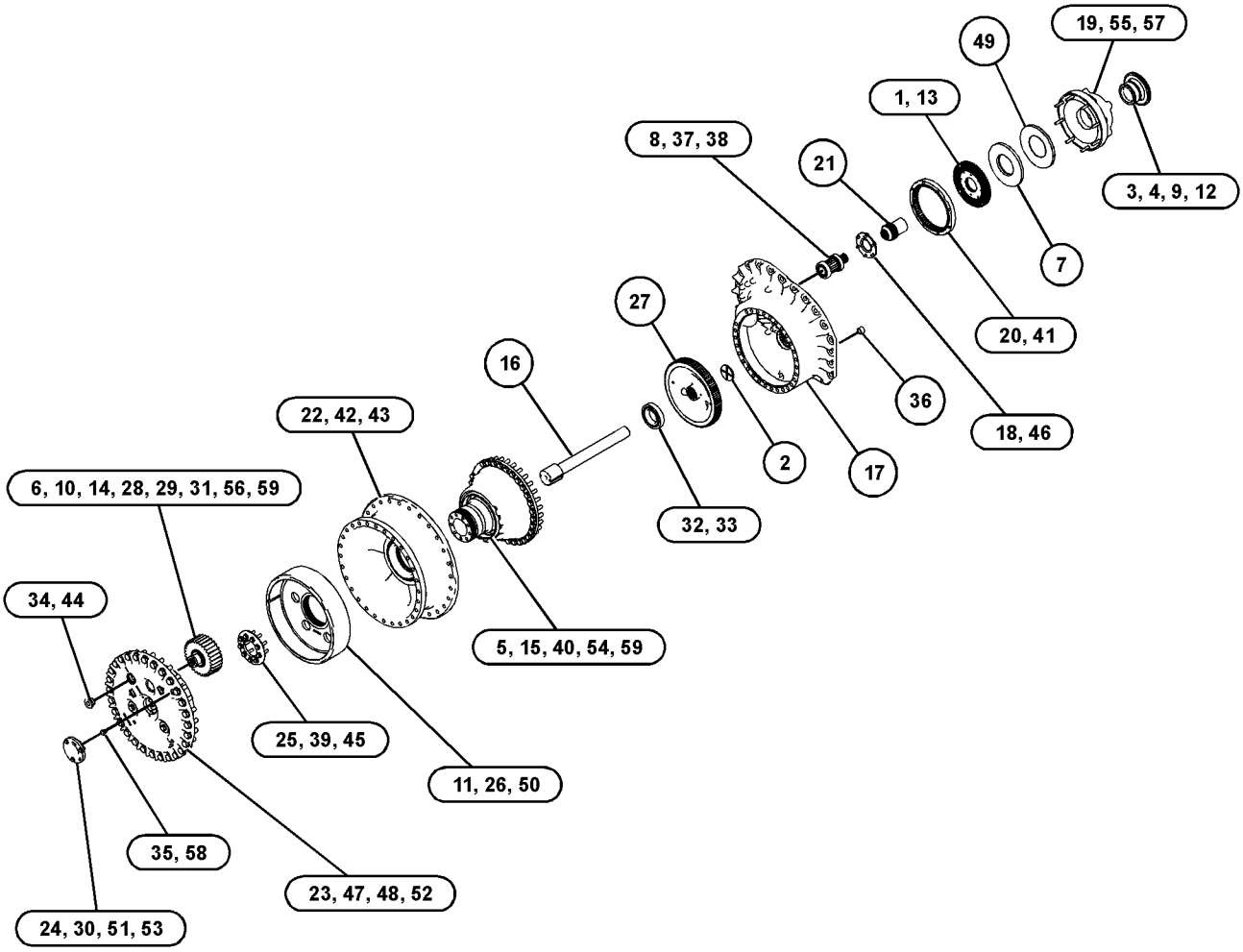

GRAPHIC #1 <END> g06244857

516-3774 FINAL DRIVE & BRAKE GP–RH

S/N: H3C1-UP

PART OF 469-5548 DRIVE AR-FINAL

SMCS-4050, 4056, 4251

i07839993

NOTE	REF NO	GRAPHIC REF	PART NUMBER	QTY	PART NAME 1 2 3 4 5 6 (PRODUCT LEVEL)	SEE PAGE
	1	1	**3W-5159**	3	PLATE-PARKING BRAKE	
	2	1	**3W-5436**	1	BUTTON-THRUST	
	3	1	**3W-5451**	1	PISTON	
	4	1	**3W-5928**	1	SEAL AS	
		1	**5F-0149**	1	SEAL-O-RING	
		1	**5J-7854**	1	SEAL	
	5	1	**6Y-0859**	1	SEAL GP-DUO-CONE	
	6	1	**491-4627**	1	GEAR-INPUT (19-TEETH)	
	7	1	**8E-3075**	3	RETAINER	
	8	1	**8G-1258**	1	PLATE-PRESSURE	
	9	1	**8G-1259**	1	RING-LOCK	
	10	1	**8G-4565**	3	GEAR-PLANETARY (30-TEETH)	
	11	1	**8G-4568**	1	GEAR-RING (74-TEETH)	
	12	1	*8T-6379*	1	SEAL AS	
		1	**7J-8956**	1	SEAL-O-RING	
		1	**8T-6378**	1	SEAL-RING	
	13	1	**170-8714**	4	DISC-FRICTION	
	14	1	**179-6707**	3	SHAFT	
	15	1	**239-1247**	1	SPINDLE	
	16	1	**239-1249**	1	SHAFT-SUN GEAR (10-TEETH)	
C	17	1	**566-8404**	1	CASE-FINAL DRIVE (RH)	
	18	1	**239-4481**	1	RETAINER	
	19	1	**506-6918**	1	HOUSING-BRAKE	
	20	1	**246-8432**	1	RING	
	21	1	**247-2574**	1	SHAFT	
	22	1	**355-9853**	1	HUB-SPROCKET	
	23	1	**356-6853**	1	CARRIER	
	24	1	**356-6854**	1	COVER	
	25	1	**356-6855**	1	PLATE-RETAINER	
	26	1	**365-3717**	1	HUB-REACTION	
	27	1	**491-4626**	1	GEAR (118-TEETH)	
	28	1	**1B-3978**	6	CUP-BEARING (TAPERED ROLLER)	
	29	1	**1B-3980**	6	CONE-BEARING (TAPERED ROLLER)	
	30	1	**1H-8128**	1	SEAL-O-RING	
	31	1	**1H-9696**	3	SEAL-O-RING	
	32	1	**2H-6489**	1	RACE-BEARING OUTER	
	33	1	**2H-6490**	1	BEARING-INNER	
	34	1	**2S-4078**	1	SEAL-O-RING	
	35	1	**3K-0360**	1	SEAL-O-RING	
	36	1	**3S-9182**	1	PLUG-MAGNETIC (DRAIN)	
	37	1	**5F-0585**	2	CONE-BEARING (TAPERED ROLLER)	
	38	1	**5F-0589**	2	CUP-BEARING (TAPERED ROLLER)	
	39	1	**5P-8245**	9	WASHER-HARD (13.5X25.5X3-MM THK)	
	40	1	**5P-9147**	1	SEAL-O-RING	
	41	1	**5S-3676**	2	SEAL-O-RING	
	42	1	**6V-0327**	2	CUP-BEARING (TAPERED ROLLER)	
	43	1	**8H-0902**	2	CONE-BEARING (TAPERED ROLLER)	

516-3774 **FINAL DRIVE & BRAKE GP** (contd.) **i07839993**

NOTE	REF NO	GRAPHIC REF	PART NUMBER	QTY	PART NAME 1 2 3 4 5 6 (PRODUCT LEVEL)	SEE PAGE
	44	1	**6V-0439**	1	PLUG-MAGNETIC (FINAL DRIVE, OIL CHECK, FILL)	
M	45	1	**6V-3823**	9	BOLT (M12X1.75X60-MM)	
M	46	1	**6V-6317**	6	BOLT (M10X1.5X20-MM)	
M	47	1	**7X-2563**	28	BOLT (M20X2.5X60-MM)	
	48	1	**8D-4771**	1	SEAL-O-RING	
	49	1	**8G-4392**	2	SPRING-DISC	
	50	1	**8G-4569**	1	RING	
	51	1	**8T-4121**	3	WASHER-HARD (11X21X2.5-MM THK)	
	52	1	**8T-4123**	28	WASHER (22X35X3.5-MM THK)	
M	53	1	**8T-4136**	3	BOLT (M10X1.5X25-MM)	
M	54	1	**8T-4140**	29	BOLT (M16X2X60-MM)	
M	55	1	**8T-4176**	8	BOLT (M12X1.75X90-MM)	
M	56	1	**8T-4193**	3	BOLT (M16X2X50-MM)	
	57	1	**8T-7971**	8	WASHER-HARD (13.5X25.5X5-MM THK)	
	58	1	**9S-4185**	1	PLUG (3/4-16-THD) (FINAL DRIVE OIL DRAIN)	
	59	1	**9X-8257**	32	WASHER (17.5X30X3.5-MM THK)	
BF			**6V-6640**		SEALANT	

B - USE AS REQUIRED
C - CHANGE FROM PREVIOUS TYPE
F - NOT SHOWN
M - METRIC PART

516-3774 **FINAL DRIVE & BRAKE GP (**contd.**)** **i07839993**

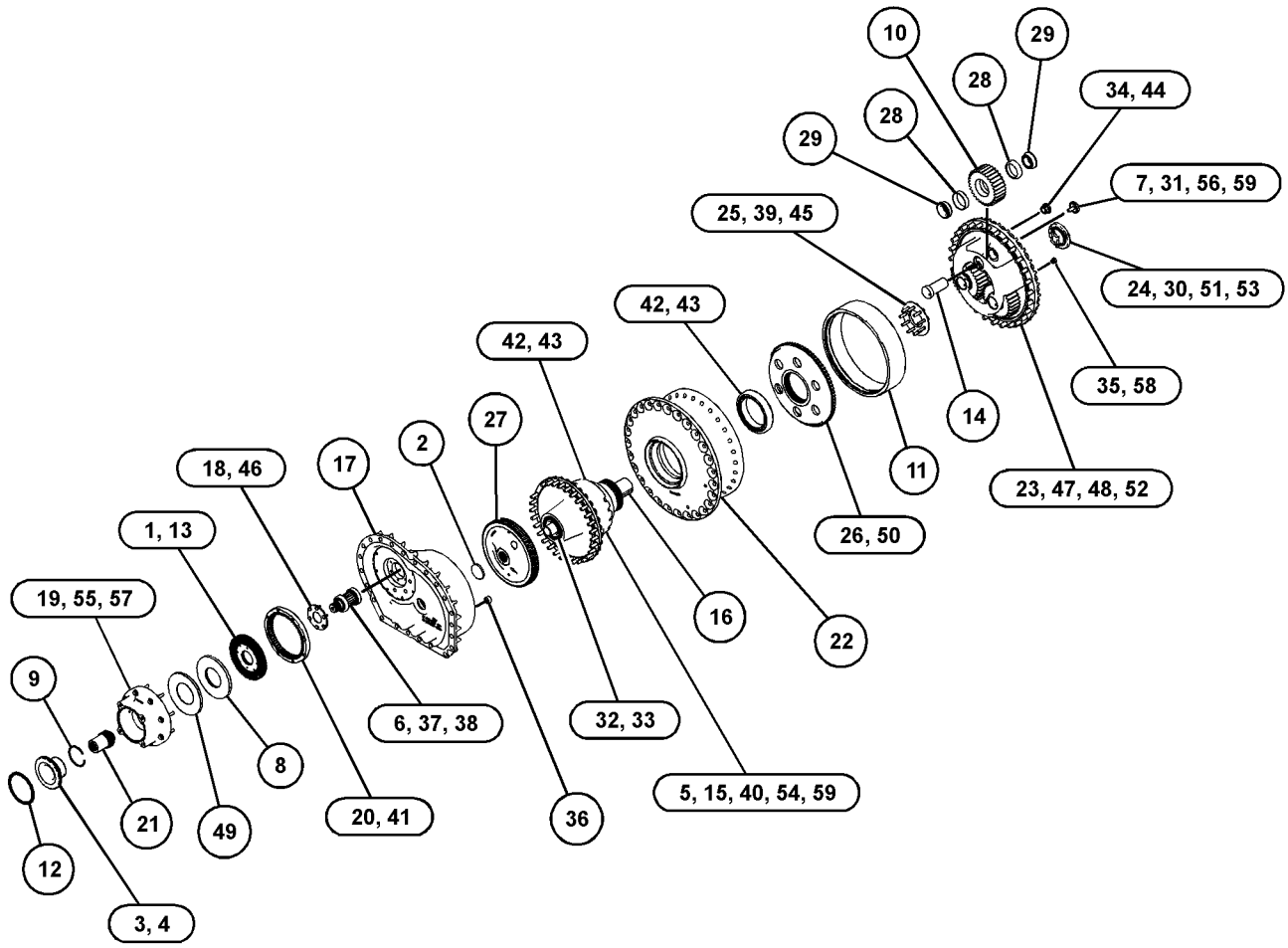

GRAPHIC #1 <END> g06248972

503-1876 FLANGE GP

S/N: H3C1-UP; K3G1-UP

PART OF 461-2712 PUMP GP-PISTON

SMCS-3108, 3203, 5070

i06721578

NOTE	REF NO	GRAPHIC REF	PART NUMBER	QTY	PART NAME 1 2 3 4 5 6 (PRODUCT LEVEL)	SEE PAGE
	1	1	**503-2949**	1	FLANGE-BEARING	
	2	1	**1J-2176**	1	SEAL-O-RING	
M	3	1	**095-0670**	8	BOLT (M12X1.75X45-MM)	
	4	1	**462-0701**	2	PIN-CYLINDER	

M - METRIC PART

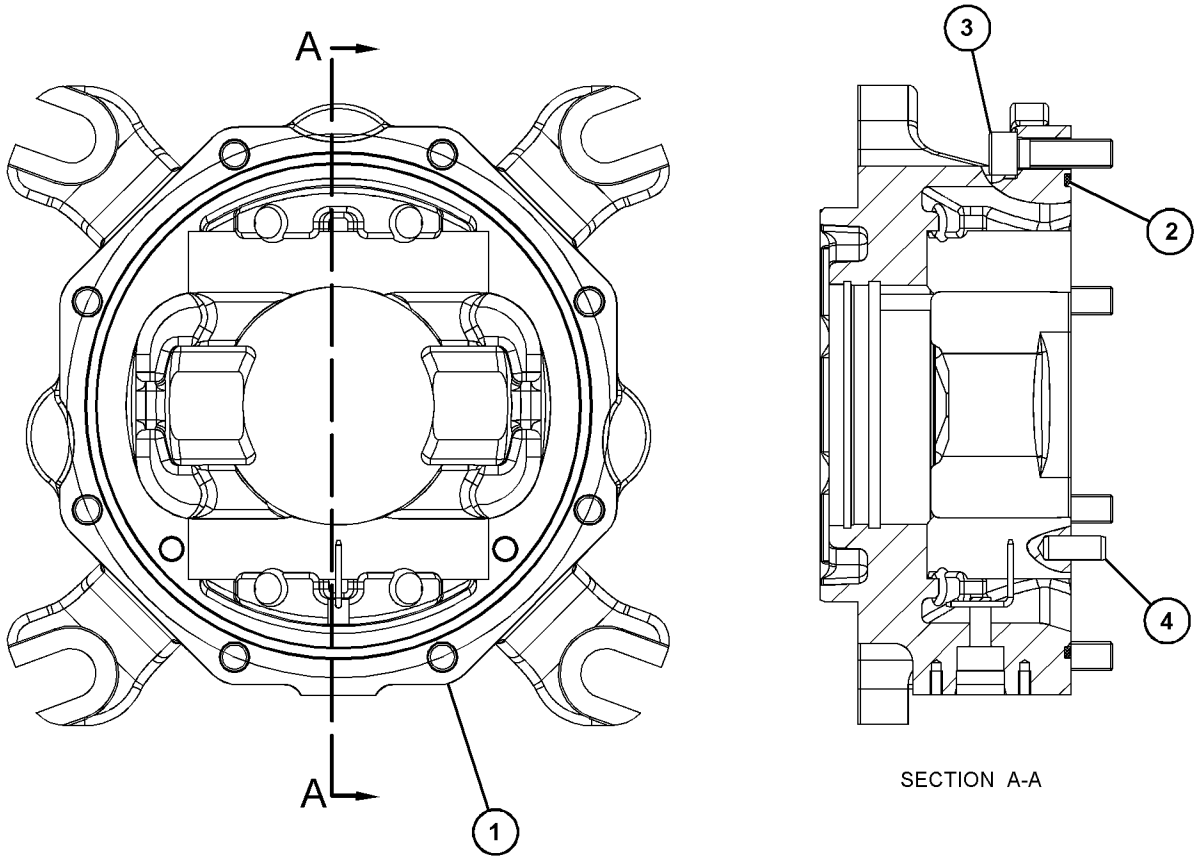

SECTION A-A

GRAPHIC #1 <END> g06092532

503-1877 FLANGE GP

S/N: H3C1-UP; K3G1-UP

PART OF 461-2712 PUMP GP-PISTON

SMCS-3108, 3203, 5070

i06721583

NOTE	REF NO	GRAPHIC REF	PART NUMBER	QTY	PART NAME 1 2 3 4 5 6 (PRODUCT LEVEL)	SEE PAGE
	1	1	**503-2925**	1	FLANGE-BEARING	
	2	1	**1J-2176**	1	SEAL-O-RING	
M	3	1	**6V-8200**	8	BOLT-SOCKET HEAD (M12X1.75X35-MM)	
	4	1	**462-0701**	4	PIN-CYLINDER	
	5	1	**351-1768**	1	SEAL-O-RING	
	6	1	**8T-6404**	1	SEAL-O-RING	
M	7	1	**8T-3957**	8	BOLT-SOCKET HEAD (M12X1.75X30-MM)	

M - METRIC PART

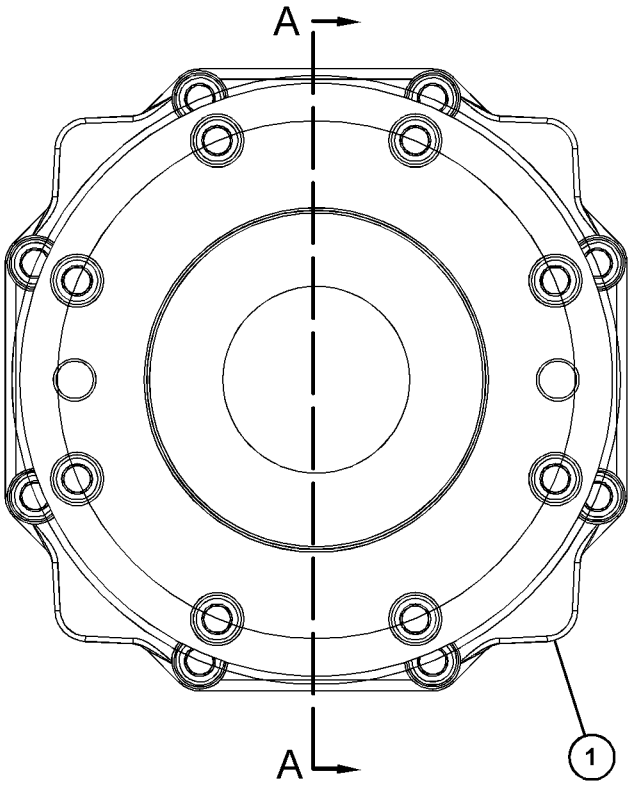

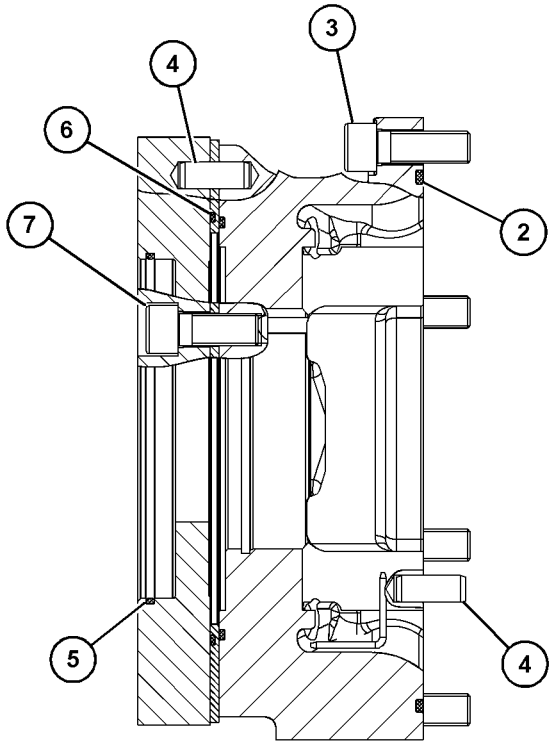

SECTION A-A

GRAPHIC #1

<END>

g06092538

278-8935 HEAD GP-MOTOR—HYDROSTATIC DRIVE, LH

S/N: H3C1-UP; K3G1-UP

PART OF 243-6639 MOTOR GP-PISTON

SMCS-3202, 5058 **i07287538**

NOTE	REF NO	GRAPHIC REF	PART NUMBER	QTY	PART NAME 1 2 3 4 5 6 (PRODUCT LEVEL)	SEE PAGE
	1	1	**124-9882**	1	TRUNNION	
C	2	1	**373-8445**	1	PISTON	
C	3	1	**343-9780**	1	PISTON	
M	4	1	**125-2205**	1	BOLT-SHALLOW HEAD (M14X1.5X25-MM)	
C	5	1	**373-8446**	1	PIN-THREADED	
C	6	1	**4J-5477**	3	SEAL-O-RING	
CM	7	1	**8T-0348**	8	BOLT-SOCKET HEAD (M16X2X50-MM)	
C	8	1	**227-0136**	2	PLUG	
	9	1	**123-5787**	2	SEAT	
Y	10	1	**301-7890**	2	VALVE GP-CHECK (HYDROSTATIC DRIVE MOTOR)	251
	11	1	**7X-2906**	2	PIN	
C	12	1	**9X-7408**	3	SEAL-O-RING	

C - CHANGE FROM PREVIOUS TYPE
M - METRIC PART
Y - SEPARATE ILLUSTRATION

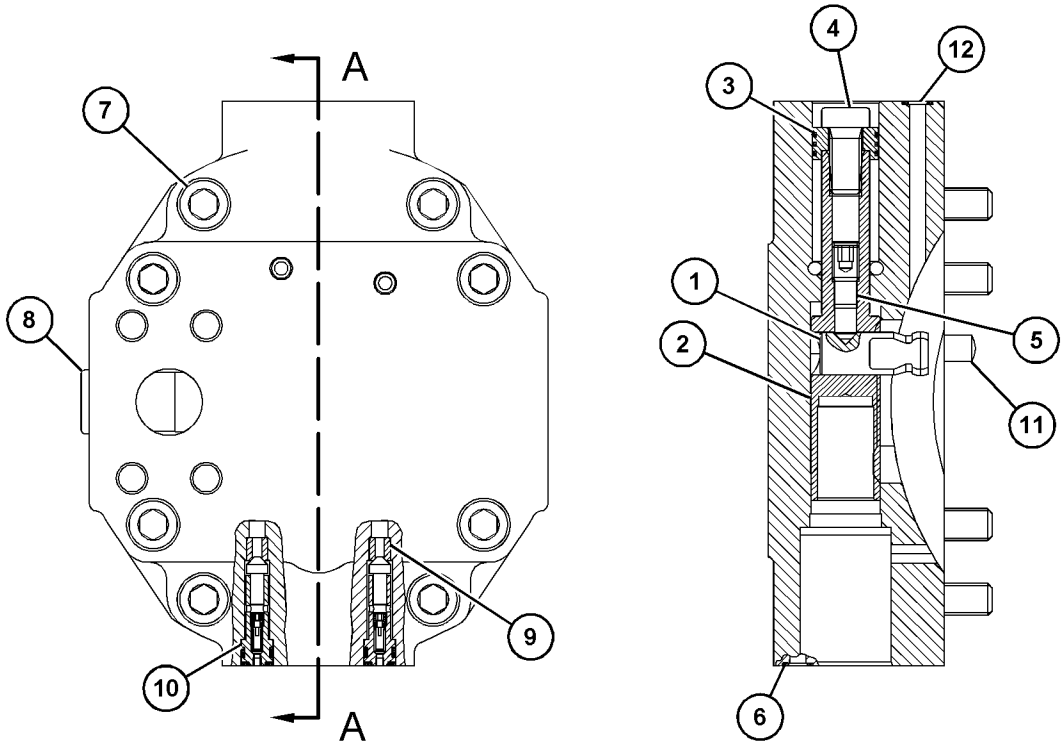

SECTION A-A

GRAPHIC #1 <END> g06274346

279-0543 HEAD GP-MOTOR—HYDROSTATIC DRIVE, RH

S/N: H3C1-UP; K3G1-UP

PART OF 243-6640 MOTOR GP-PISTON

SMCS-3202, 5058 **i07287586**

NOTE	REF NO	GRAPHIC REF	PART NUMBER	QTY	PART NAME 1 2 3 4 5 6 (PRODUCT LEVEL)	SEE PAGE
	1	1	**124-9882**	1	TRUNNION	
C	2	1	**373-8445**	1	PISTON	
C	3	1	**343-9780**	1	PISTON	
M	4	1	**125-2205**	1	BOLT-SHALLOW HEAD (M14X1.5X25-MM)	
C	5	1	**373-8446**	1	PIN-THREADED	
C	6	1	**4J-5477**	3	SEAL-O-RING	
CM	7	1	**8T-0348**	8	BOLT-SOCKET HEAD (M16X2X50-MM)	
C	8	1	**227-0136**	2	PLUG	
	9	1	**123-5787**	2	SEAT	
Y	10	1	**301-7890**	2	VALVE GP-CHECK (HYDROSTATIC DRIVE MOTOR)	251
	11	1	**7X-2906**	2	PIN	
C	12	1	**9X-7408**	3	SEAL-O-RING	

C - CHANGE FROM PREVIOUS TYPE
M - METRIC PART
Y - SEPARATE ILLUSTRATION

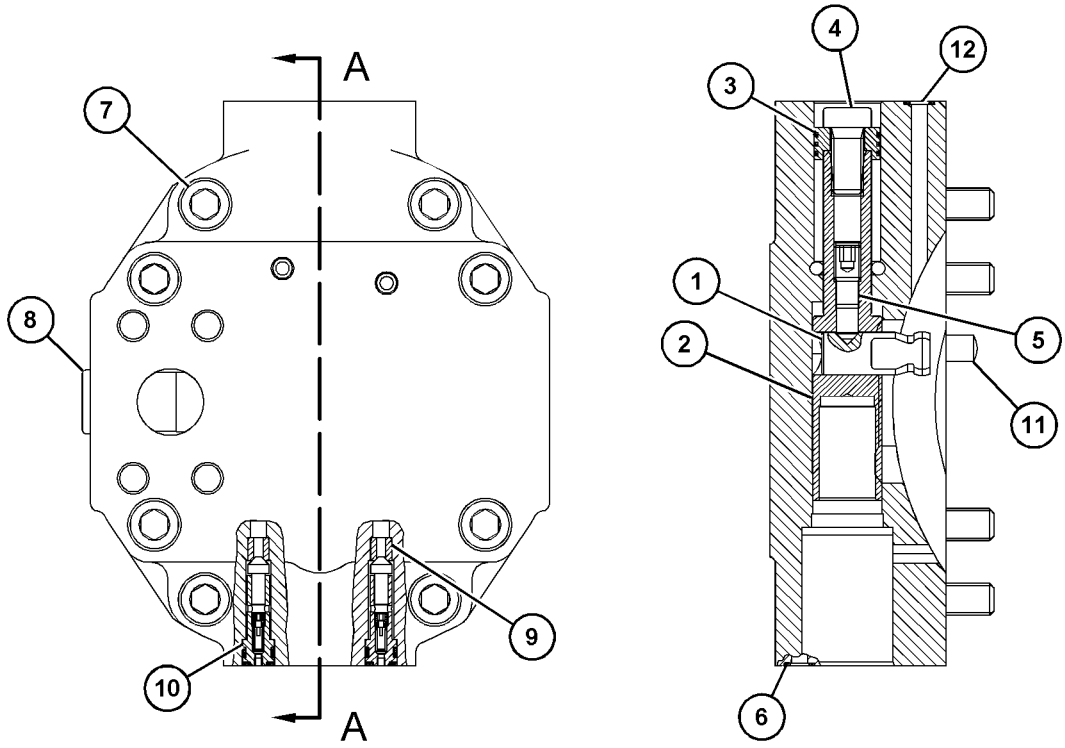

SECTION A-A

GRAPHIC #1 <END> g06274349

468-9805 HOUSING GP-PUMP

S/N: H3C1-UP; K3G1-UP

PART OF 461-2712 PUMP GP-PISTON

SMCS-3203, 5070

i06721579

NOTE	REF NO	GRAPHIC REF	PART NUMBER	QTY	PART NAME 1 2 3 4 5 6 (PRODUCT LEVEL)	SEE PAGE
	1	1	**478-3808**	1	HOUSING	
	2	1	**478-3809**	1	COUPLING	
	3	1	**199-3676**	1	RING-RETAINING	
	4	1	**462-0498**	4	KIT-SEAL (PUMP HOUSING)	
					(EACH SEAL KIT INCLUDES SEAL CARRIER & O-RING SEAL)	
	5	1	**462-0497**	4	RING-GUIDE	
	6	1	**9S-8004**	11	PLUG (9/16-18-THD)	
	7	1	**3J-1907**	11	SEAL-O-RING	
	8	1	**462-0503**	2	BEARING-BUSHING	
	9	1	**462-0702**	2	BUSHING	
	10	1	**382-9259**	7	FILTER (SCREEN) (SWING PUMP)	
	11	1	**458-9684**	2	PIN	

468-9805 **HOUSING GP-PUMP (**contd.**)** **i06721579**

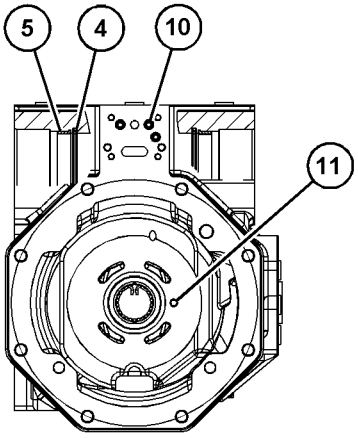

VIEW C-C

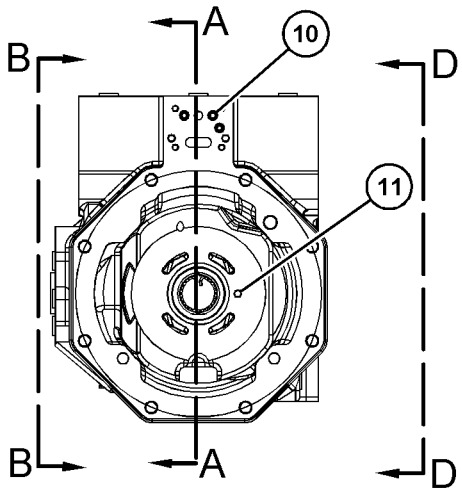

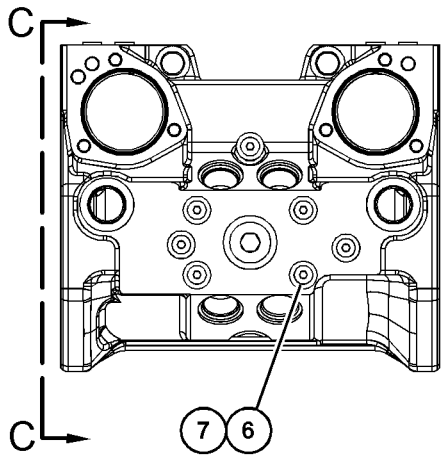

VIEW B-B

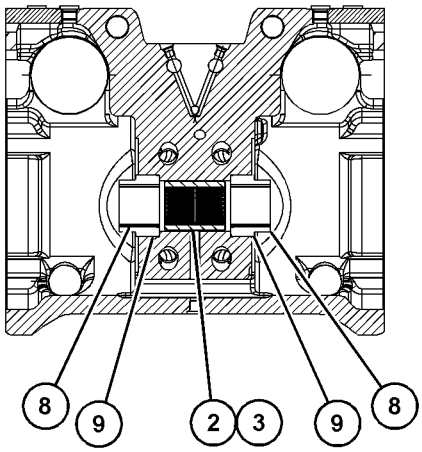

SECTION A-A

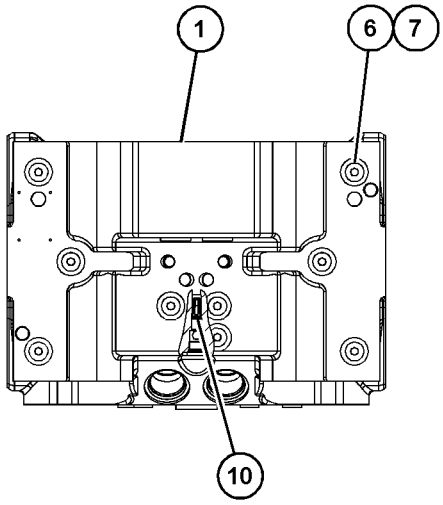

VIEW D-D

GRAPHIC #1 <END> g06092480

457-5420 LINES GP-CHARGE PRESSURE

S/N: H3C1-UP; K3G1-UP
PART OF 549-8324 PUMP & LINES AR
AN ATTACHMENT

SMCS-3016 **i07034239**

NOTE	REF NO	GRAPHIC REF	PART NUMBER	QTY	PART NAME 1 2 3 4 5 6 (PRODUCT LEVEL)	SEE PAGE
	1	1	**203-3847**	1	BRACKET AS	
	2	1	*241-6215*	1	ELBOW AS	
		1	**3J-1907**	1	SEAL-O-RING	
		1	**6V-8076**	1	ELBOW	
	3	1	**389-5919**	1	FILM-IDENTIFICATION (HYDRAULIC & XMSN OIL FILTER)	
	4	1	**428-9067**	1	BRACKET	
Y	5	1	*431-0681*	1	FILTER GP-OIL (HYDRAULIC)	207
I	6	1	**457-6430**	1	HOSE AS	
	7	1	*148-8335*	2	CONNECTOR AS	
					(EACH INCLUDES)	
		1	**5K-9090**	1	SEAL-O-RING	
		1	**6V-8635**	1	CONNECTOR	
		1	**7M-8485**	1	SEAL-O-RING	
	8	1	*148-8360*	1	ELBOW AS	
		1	**6V-9182**	1	ELBOW	
		1	**6V-9746**	1	SEAL-O-RING	
		1	**7M-8485**	1	SEAL-O-RING	
	9	1	*164-5567*	1	COUPLER AS-QUICK DISCONNECT (MALE)	
		1	**6V-3965**	1	FITTING (QUICK DISCONNECT)	
		1	**214-7568**	1	SEAL-O-RING	
	10	1	*164-5590*	1	VALVE AS-FLUID SAMPLING	
		1	**3J-7354**	1	SEAL-O-RING	
		1	**8C-3446**	1	VALVE-SAMPLING	
M	11	1	**344-5675**	1	NUT (M10X1.5-THD)	
	12	1	**6V-0852**	1	CAP-DUST	
	13	1	**7D-7233**	1	CLIP (LOOP)	
	14	1	**7X-7729**	1	WASHER (11X25X3-MM THK)	
	15	1	**8C-3451**	1	CAP-DUST (HYDRAULIC OIL)	
	16	1	**8T-4121**	1	WASHER-HARD (11X21X2.5-MM THK)	
M	17	1	**8T-4137**	1	BOLT (M10X1.5X20-MM)	
M	18	1	**8T-4196**	4	BOLT (M10X1.5X35-MM)	
	19	1	**8T-7934**	4	WASHER-HARD (11X21X5-MM THK)	

I - REFER TO HYDRAULIC INFORMATION SYSTEM
M - METRIC PART
Y - SEPARATE ILLUSTRATION

457-5420 **LINES GP-CHARGE PRESSURE (**contd.**)** **i07034239**

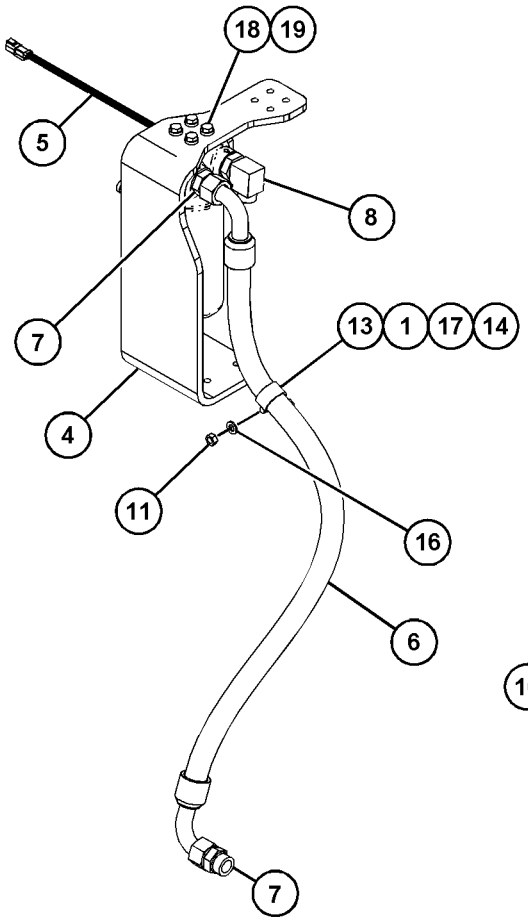

VIEW OF AREA A

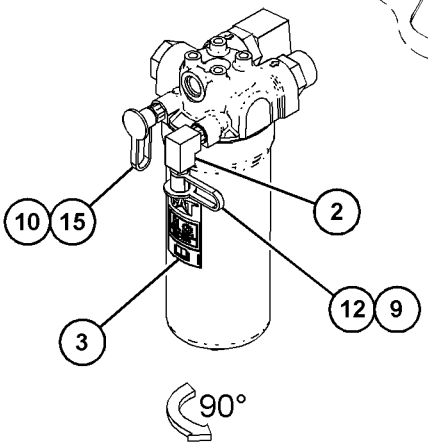

VIEW OF AREA B
(PARTS REMOVED FOR CLARITY)

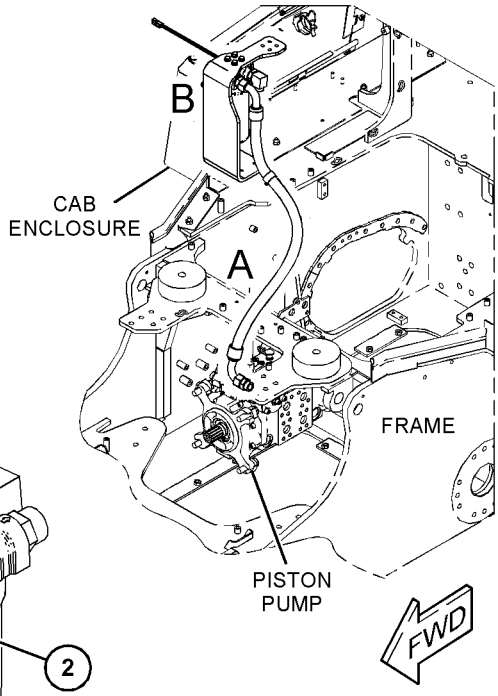

GRAPHIC #1

<END>

g06191826

457-5415 LINES GP-DRAIN

S/N: H3C1-UP; K3G1-UP

PART OF 591-7134, 591-7135 POWER TRAIN AR

SMCS-3016 **i07577224**

NOTE	REF NO	GRAPHIC REF	PART NUMBER	QTY	PART NAME 1 2 3 4 5 6 (PRODUCT LEVEL)	SEE PAGE
	1	1	*148-8318*	2	CONNECTOR AS	
					(EACH INCLUDES)	
		1	**3K-0360**	1	SEAL-O-RING	
		1	**6V-8397**	1	SEAL-O-RING	
		1	**6V-8634**	1	CONNECTOR	
	2	1	*148-8327*	2	CONNECTOR AS	
					(EACH INCLUDES)	
		1	**3D-2824**	1	SEAL-O-RING	
		1	**6V-8637**	1	CONNECTOR	
		1	**6V-9746**	1	SEAL-O-RING	
	3	1	*148-8339*	1	CONNECTOR AS	
		1	**6V-8716**	1	CONNECTOR (STRAIGHT)	
		1	**6V-9746**	1	SEAL-O-RING	
		1	**7M-8485**	1	SEAL-O-RING	
	4	1	*148-8435*	1	TEE AS	
		1	**3J-1907**	1	SEAL-O-RING	
		1	**6V-8397**	2	SEAL-O-RING	
		1	**6V-8781**	1	TEE	
	5	1	*150-4049*	1	ELBOW AS	
		1	**6V-9746**	1	SEAL-O-RING	
		1	**7M-8485**	1	SEAL-O-RING	
		1	**8T-4149**	1	ELBOW	
	6	1	**422-3637**	1	VALVE GP-CHECK (PUMP)	
		1	**7M-8485**	1	SEAL-O-RING	
	7	1	*439-1869*	1	ADAPTER AS	
		1	**3J-1907**	1	SEAL-O-RING	
		1	**439-1868**	1	ADAPTER	
	8	1	**457-6421**	1	HOSE	
I	9	1	**457-6422**	1	HOSE AS	
I	10	1	**457-6423**	1	HOSE AS	
I	11	1	**457-6424**	1	HOSE AS	
I	12	1	**457-6425**	1	HOSE AS	
	13	1	**177-2215**	2	STRAP-DUAL CLAMP	
	14	1	**200-6345**	1	SADDLE-MOUNTING (DUAL SWIVEL)	
	15	1	**204-2281**	2	STRAP-CABLE	
	16	1	**6K-8178**	1	CLIP (LOOP)	
	17	1	**8T-6703**	2	CLAMP-HOSE	

I - REFER TO HYDRAULIC INFORMATION SYSTEM

457-5415 **LINES GP-DRAIN (**contd.**)** **i07577224**

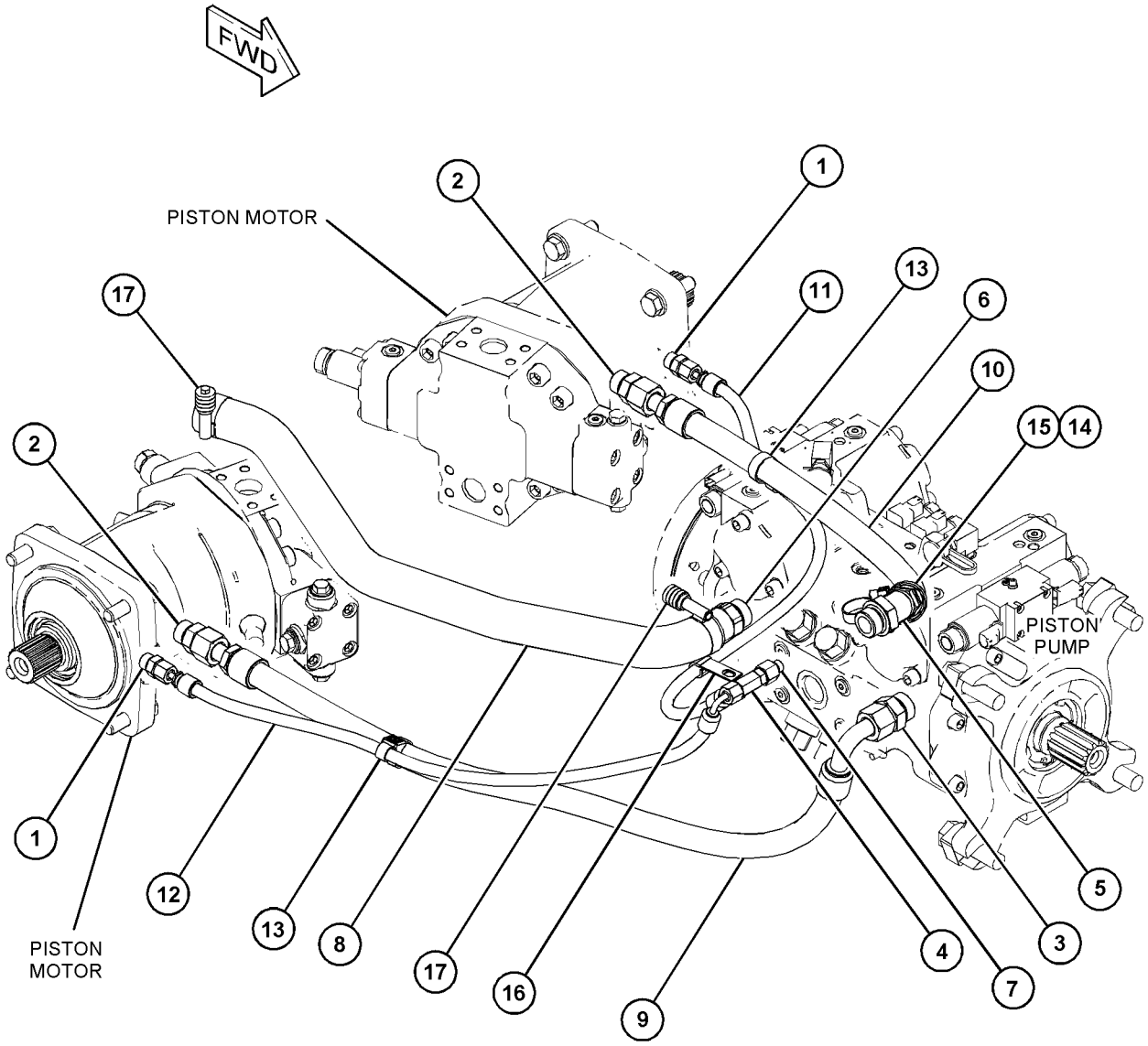

GRAPHIC #1 <END> g06187376

457-5412 LINES GP-HYDROSTATIC

S/N: H3C1-UP; K3G1-UP

PART OF 591-7134, 591-7135 POWER TRAIN AR

SMCS-3154 **i06984637**

NOTE	REF NO	GRAPHIC REF	PART NUMBER	QTY	PART NAME 1 2 3 4 5 6 (PRODUCT LEVEL)	SEE PAGE
I	1	1	**277-4267**	1	HOSE AS	
I	2	1	**457-6415**	1	HOSE AS	
I	3	1	**457-6416**	1	HOSE AS	
I	4	1	**457-6417**	1	HOSE AS	
I	5	1	**457-6418**	1	HOSE AS	
	6	1	*148-8378*	1	ELBOW AS	
		1	**3J-1907**	1	SEAL-O-RING	
		1	**6V-8397**	1	SEAL-O-RING	
		1	**6V-8724**	1	ELBOW	
	7	1	*164-9869*	1	CONNECTOR AS	
		1	**3J-1907**	1	SEAL-O-RING	
		1	**6V-8397**	1	SEAL-O-RING	
		1	**9X-2297**	1	CONNECTOR	
	8	1	**198-4777**	1	WASHER-HARD (11X25X10-MM THK)	
	9	1	**1P-3704**	8	SEAL-RECTANGULAR	
	10	1	**1P-5767**	8	FLANGE-HALF	
M	11	1	**344-5675**	1	NUT (M10X1.5-THD)	
	12	1	**5P-7468**	2	CLIP (SLOT)	
	13	1	**5P-7469**	2	CLIP (TAB)	
	14	1	**5P-8444**	2	GROMMET (37-MM ID)	
	15	1	**6V-0401**	8	FLANGE-HALF	
	16	1	**7X-0510**	16	WASHER-HARD (15.5X29X3-MM THK)	
M	17	1	**8C-6854**	16	BOLT (M14X2X50-MM)	
	18	1	**8T-4121**	2	WASHER-HARD (11X21X2.5-MM THK)	
M	19	1	**8T-4194**	16	BOLT (M12X1.75X50-MM)	
	20	1	**8T-4223**	16	WASHER-HARD (13.5X25.5X3-MM THK)	
M	21	1	**8T-6466**	1	BOLT (M10X1.5X60-MM)	

I - REFER TO HYDRAULIC INFORMATION SYSTEM
M - METRIC PART

457-5412 **LINES GP-HYDROSTATIC (**contd.**)** **i06984637**

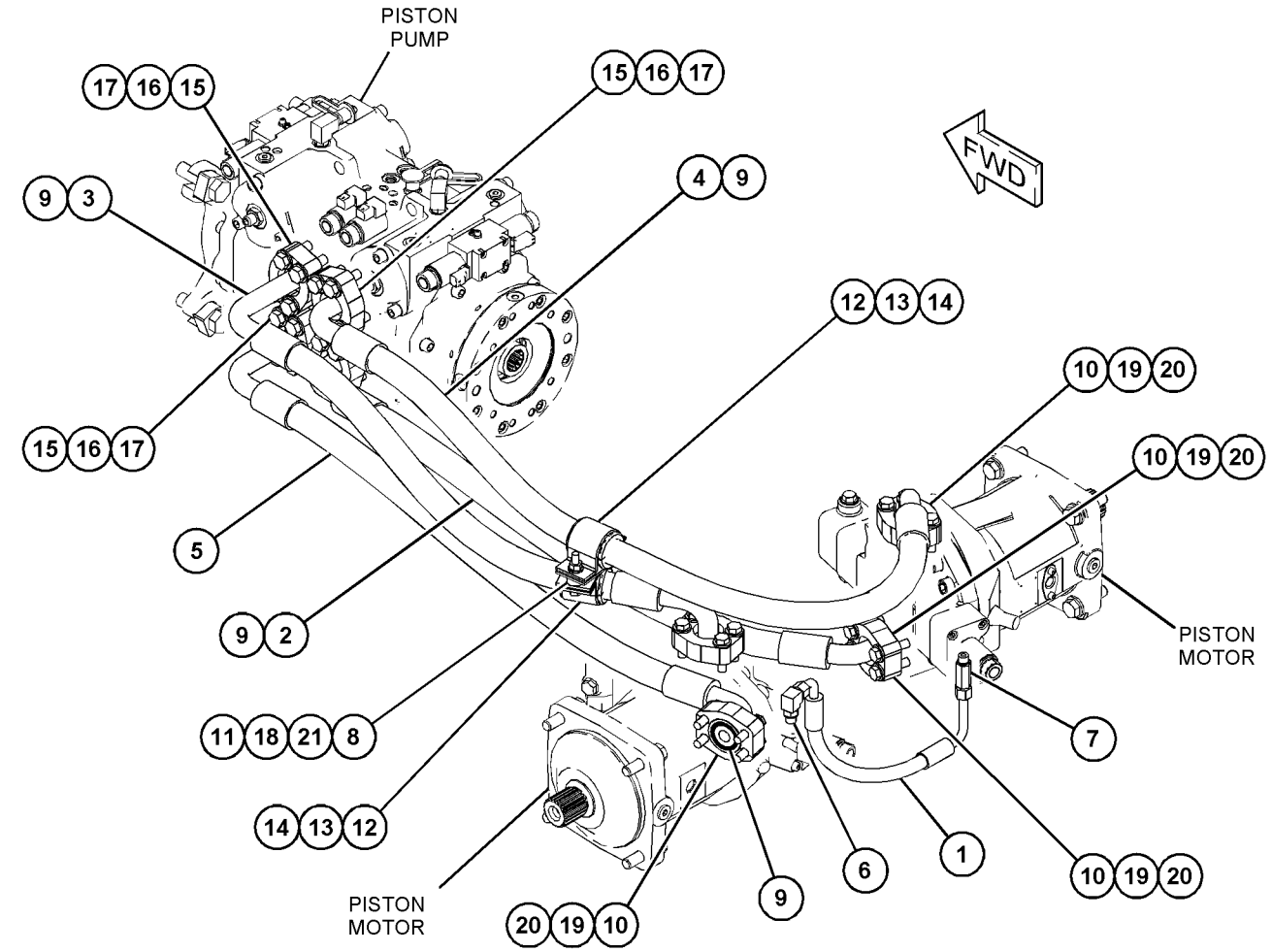

GRAPHIC #1 <END> g06181467

424-6986 MOTOR & MOUNTING GP

S/N: H3C1-UP; K3G1-UP

PART OF 591-7134, 591-7135 POWER TRAIN AR

SMCS-5084 **i06712200**

NOTE	REF NO	GRAPHIC REF	PART NUMBER	QTY	PART NAME 1 2 3 4 5 6 (PRODUCT LEVEL)	SEE PAGE
YR	1	1	**243-6639**	1	MOTOR GP-PISTON (HYDROSTATIC DRIVE, LH)	233
YR	2	1	**243-6640**	1	MOTOR GP-PISTON (HYDROSTATIC DRIVE, RH)	235
	3	1	**5P-8247**	8	WASHER-HARD (17X32X3.5-MM THK)	
M	4	1	**8T-4140**	8	BOLT (M16X2X60-MM)	

M - METRIC PART
R - REMANUFACTURED PART MAY BE AVAILABLE
Y - SEPARATE ILLUSTRATION

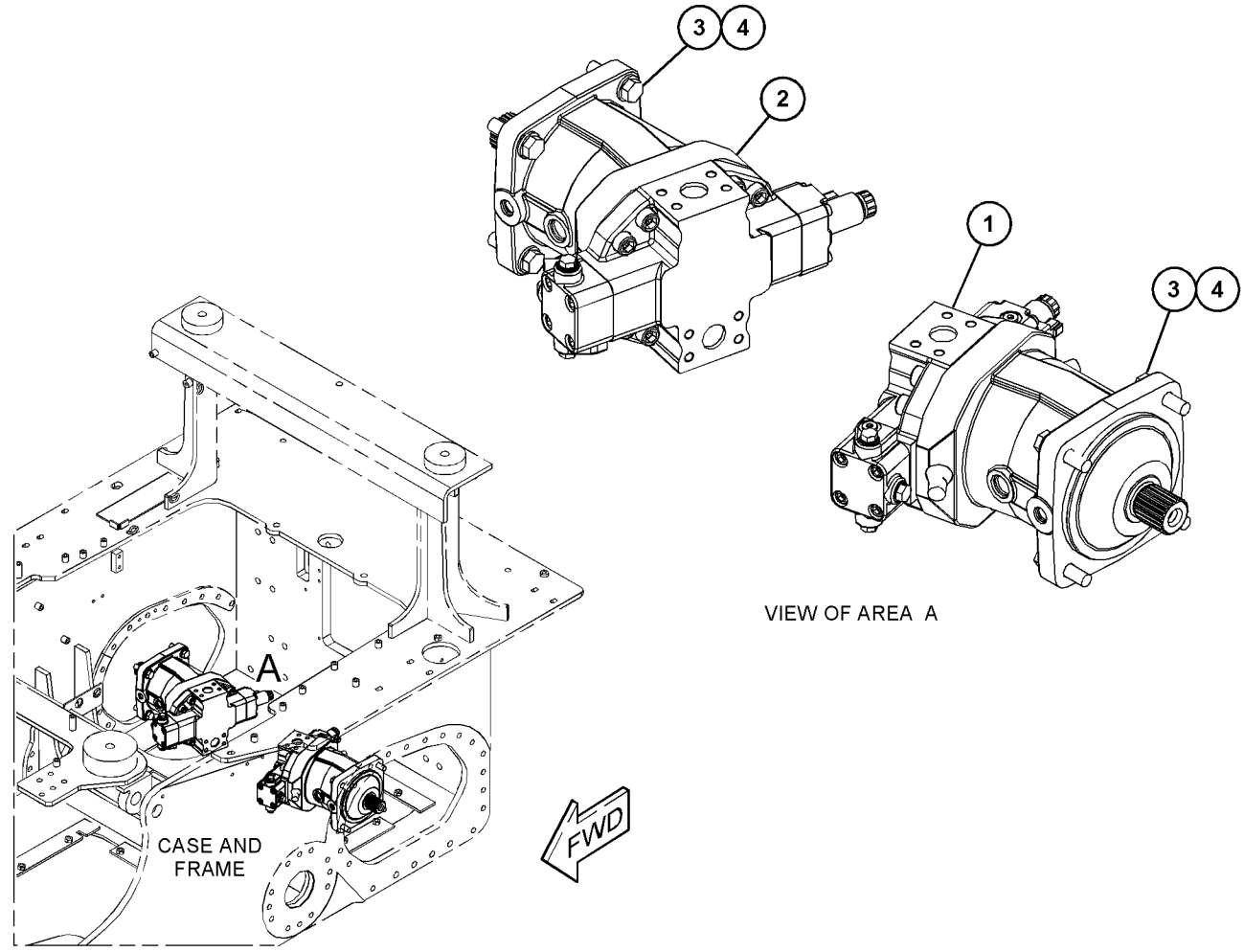

GRAPHIC #1 <END> g06019137

243-6639 MOTOR GP-PISTON—HYDROSTATIC DRIVE, LH*R

S/N: H3C1-UP; K3G1-UP

PART OF 424-6986 MOTOR & MOUNTING GP

SMCS-4351 **i07287565**

NOTE	REF NO	GRAPHIC REF	PART NUMBER	QTY	PART NAME 1 2 3 4 5 6 (PRODUCT LEVEL)	SEE PAGE
	1	1	**3J-0634**	1	SEAL-O-RING	
M	2	1	**6E-3283**	2	LOCKNUT (M12X1.75-THD)	
CM	3	1	**123-4954**	1	SETSCREW (M12X1.75-THD)	
M	4	1	**125-1379**	1	SETSCREW-SOCKET (M12X1.75-THD)	
	5	1	**9S-8008**	1	PLUG (1-1/16-12-THD)	
	6	1	**3K-0360**	1	SEAL-O-RING	
	7	1	**9S-8005**	2	PLUG (3/4-16-THD)	
	8	1	**2M-9780**	2	SEAL-O-RING	
	9	1	**2W-1145**	1	RING-RETAINING (INTERNAL)	
	10	1	**124-9914**	1	SHIM (3-MM THK)	
	11	1	**124-9913**	1	SEAL-SHAFT	
Y	12	1	**278-8935**	1	HEAD GP-MOTOR (HYDROSTATIC DRIVE, LH)	222
Y	13	1	*278-8934*	1	ROTATING GP-MOTOR (HYDROSTATIC DRIVE)	244
CY	14	1	**373-8447**	1	VALVE GP-MOTOR CONTROL (HYDROSTATIC DRIVE)	253
CM	15	1	**8T-0338**	4	BOLT-SOCKET HEAD (M8X1.25X45-MM)	
CY	16	1	**278-8937**	1	VALVE GP-FLUSHING (HYDROSTATIC DRIVE)	252
CM	17	1	**8T-7811**	4	BOLT-SOCKET HEAD (M12X1.75X50-MM)	
C	18	1	**061-7540**	1	SEAL-O-RING	

C - CHANGE FROM PREVIOUS TYPE
M - METRIC PART
Y - SEPARATE ILLUSTRATION

243-6639 **MOTOR GP-PISTON (**contd.**)** **i07287565**

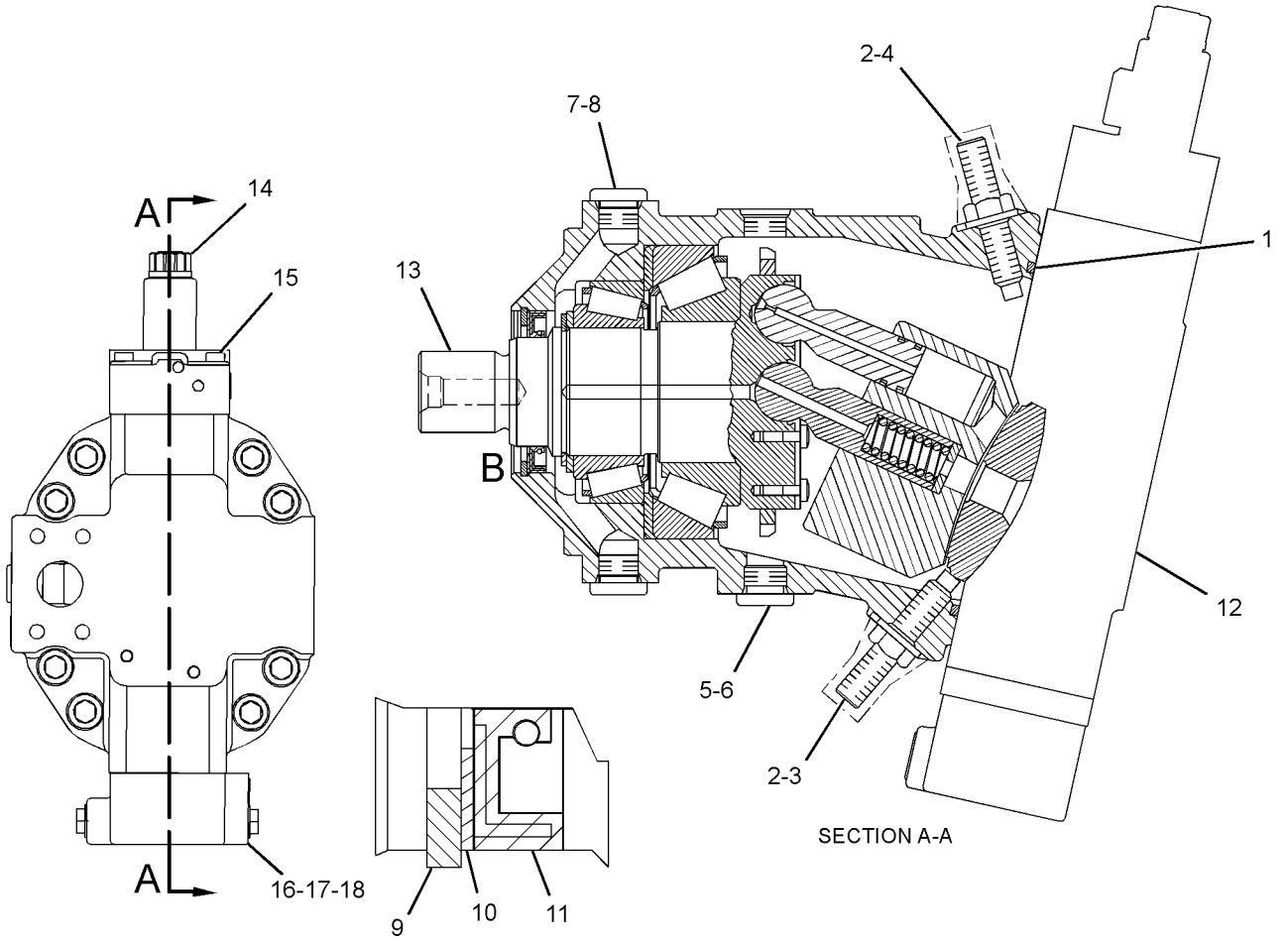

GRAPHIC #1 <END> g06274283

243-6640 MOTOR GP-PISTON—HYDROSTATIC DRIVE, RH*R

S/N: H3C1-UP; K3G1-UP

PART OF 424-6986 MOTOR & MOUNTING GP

SMCS-4351 **i07287575**

NOTE	REF NO	GRAPHIC REF	PART NUMBER	QTY	PART NAME 1 2 3 4 5 6 (PRODUCT LEVEL)	SEE PAGE
	1	1	**3J-0634**	1	SEAL-O-RING	
M	2	1	**6E-3283**	2	LOCKNUT (M12X1.75-THD)	
CM	3	1	**123-4954**	1	SETSCREW (M12X1.75-THD)	
M	4	1	**125-1379**	1	SETSCREW-SOCKET (M12X1.75-THD)	
	5	1	**9S-8008**	1	PLUG (1-1/16-12-THD)	
	6	1	**3K-0360**	1	SEAL-O-RING	
	7	1	**9S-8005**	2	PLUG (3/4-16-THD)	
	8	1	**2M-9780**	2	SEAL-O-RING	
	9	1	**2W-1145**	1	RING-RETAINING (INTERNAL)	
	10	1	**124-9914**	1	SHIM (3-MM THK)	
	11	1	**124-9913**	1	SEAL-SHAFT	
Y	12	1	**279-0543**	1	HEAD GP-MOTOR (HYDROSTATIC DRIVE, RH)	223
Y	13	1	*278-8934*	1	ROTATING GP-MOTOR (HYDROSTATIC DRIVE)	244
CY	14	1	**373-8447**	1	VALVE GP-MOTOR CONTROL (HYDROSTATIC DRIVE)	253
CM	15	1	**8T-0338**	4	BOLT-SOCKET HEAD (M8X1.25X45-MM)	
CY	16	1	**278-8937**	1	VALVE GP-FLUSHING (HYDROSTATIC DRIVE)	252
CM	17	1	**8T-7811**	4	BOLT-SOCKET HEAD (M12X1.75X50-MM)	
C	18	1	**061-7540**	1	SEAL-O-RING	

C - CHANGE FROM PREVIOUS TYPE
M - METRIC PART
Y - SEPARATE ILLUSTRATION

243-6640 **MOTOR GP-PISTON (**contd.**)** **i07287575**

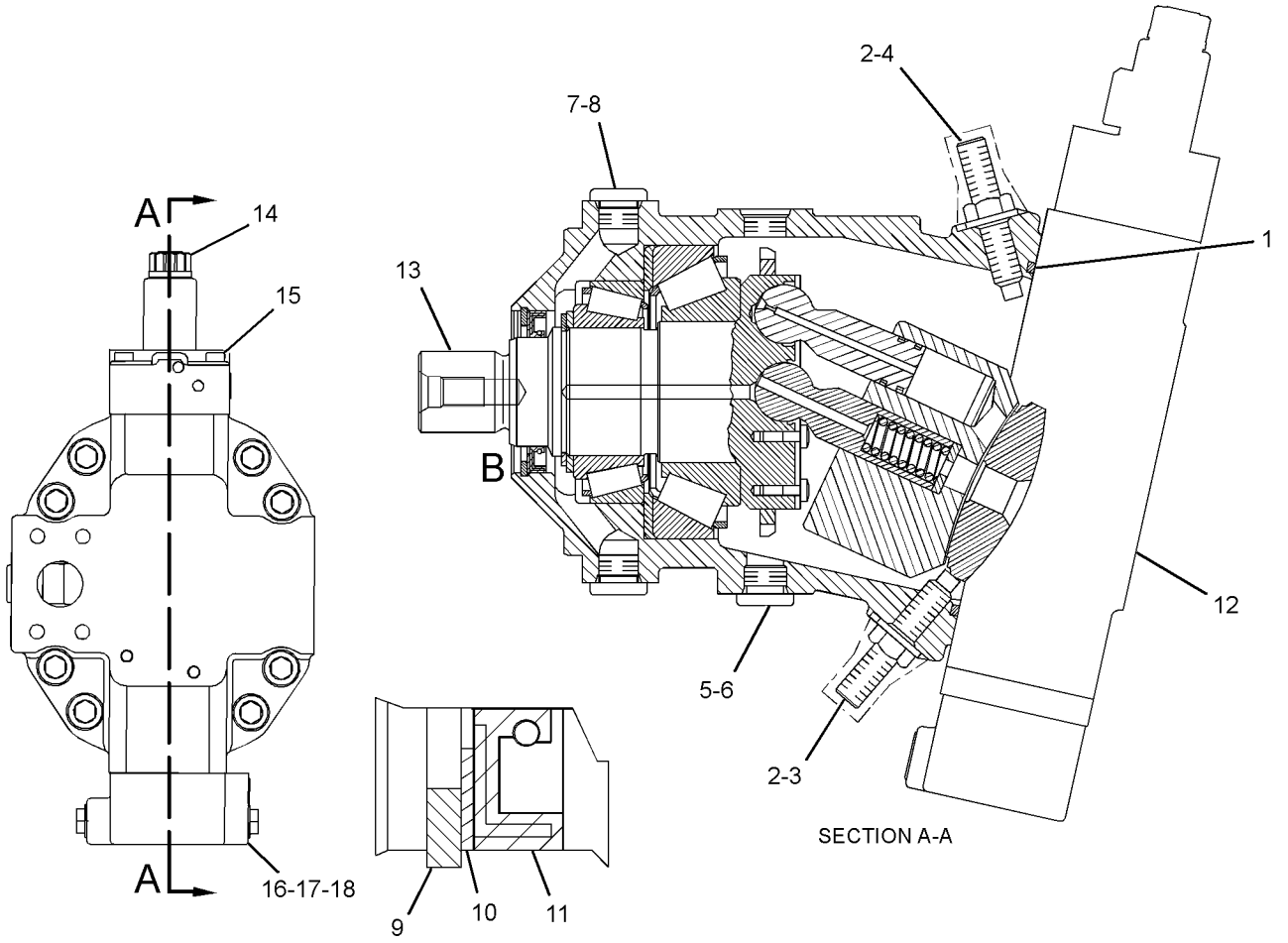

GRAPHIC #1 <END> g06274285

475-9553 MOUNTING GP-FINAL DRIVE

S/N: H3C1-UP; K3G1-UP

PART OF 469-5548, 469-5550 DRIVE AR-FINAL

SMCS-4050 **i07430979**

NOTE	REF NO	GRAPHIC REF	PART NUMBER	QTY	PART NAME 1 2 3 4 5 6 (PRODUCT LEVEL)	SEE PAGE
	1	1	**198-4781**	8	WASHER-HARD (22X40X10-MM THK)	
	2	1	**2K-2939**	2	SEAL-O-RING	
M	3	1	**7X-2563**	36	BOLT (M20X2.5X60-MM)	
	4	1	**8T-4123**	44	WASHER (22X35X3.5-MM THK)	
M	5	1	**213-5007**	8	BOLT (M20X2.5X80-MM)	

M - METRIC PART

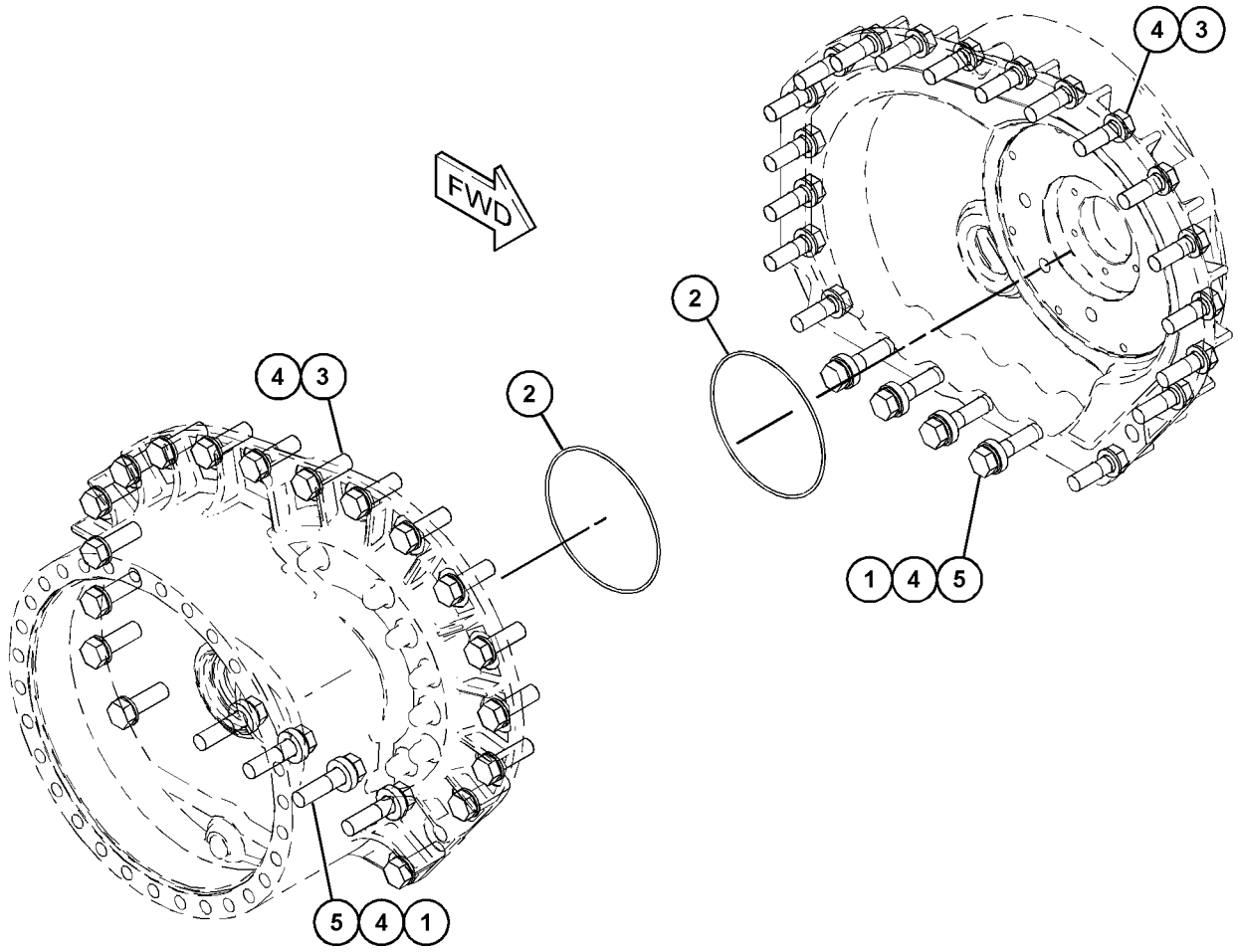

GRAPHIC #1 <END> g06017804

591-7134 POWER TRAIN AR

S/N: K3G1-UP

PART OF 590-7198 COMMON AR

SMCS-3000, 4000 **i08063033**

NOTE	PART NUMBER	QTY	PART NAME 1 2 3 4 5 6 (PRODUCT LEVEL)	SEE PAGE
Y	*421-4601*	1	BAR GP-EQUALIZER	294
Y	*469-5550*	1	DRIVE AR-FINAL	205
Y	*457-5414*	1	LINES GP-COOLANT	63
Y	*457-5415*	1	LINES GP-DRAIN	228
Y	*457-5416*	1	LINES GP-GREASE	285
Y	*457-5412*	1	LINES GP-HYDROSTATIC	230
Y	*424-6986*	1	MOTOR & MOUNTING GP	232
Y	*435-5593*	1	PIVOT BAR GP	325
Y	*591-7138*	1	PLATE & FILM GP	569
Y	*457-5411*	1	PUMP & MTG GP-POWER TRAIN	239

Y - SEPARATE ILLUSTRATION

<END>

591-7135 POWER TRAIN AR

S/N: H3C1-UP

PART OF 590-7199 COMMON AR

SMCS-3000, 4000 **i08063045**

NOTE	PART NUMBER	QTY	PART NAME 1 2 3 4 5 6 (PRODUCT LEVEL)	SEE PAGE
Y	*421-4602*	1	BAR GP-EQUALIZER	295
Y	*469-5548*	1	DRIVE AR-FINAL	204
Y	*457-5414*	1	LINES GP-COOLANT	63
Y	*457-5415*	1	LINES GP-DRAIN	228
Y	*457-5416*	1	LINES GP-GREASE	285
Y	*457-5412*	1	LINES GP-HYDROSTATIC	230
Y	*424-6986*	1	MOTOR & MOUNTING GP	232
Y	*435-5594*	1	PIVOT BAR GP (LGP)	326
Y	*591-7139*	1	PLATE & FILM GP	570
Y	*457-5411*	1	PUMP & MTG GP-POWER TRAIN	239

Y - SEPARATE ILLUSTRATION

<END>

457-5411 PUMP & MTG GP-POWER TRAIN

S/N: H3C1-UP; K3G1-UP

PART OF 591-7134, 591-7135 POWER TRAIN AR

SMCS-3203 **i06976159**

NOTE	REF NO	GRAPHIC REF	PART NUMBER	QTY	PART NAME 1 2 3 4 5 6 (PRODUCT LEVEL)	SEE PAGE
	1	1	*241-6215*	2	ELBOW AS	
					(EACH INCLUDES)	
		1	**3J-1907**	1	SEAL-O-RING	
		1	**6V-8076**	1	ELBOW	
Y	2	1	**461-2712**	1	PUMP GP-PISTON (HYDROSTATIC DRIVE)	240
	3	1	**498-4738**	4	WASHER	
	4	1	*164-5567*	3	COUPLER AS-QUICK DISCONNECT (MALE)	
					(EACH INCLUDES)	
		1	**6V-3965**	1	FITTING (QUICK DISCONNECT)	
		1	**214-7568**	1	SEAL-O-RING	
	5	1	**6V-0852**	3	CAP-DUST	
M	6	1	**8T-4141**	4	BOLT (M20X2.5X70-MM)	

M - METRIC PART
Y - SEPARATE ILLUSTRATION

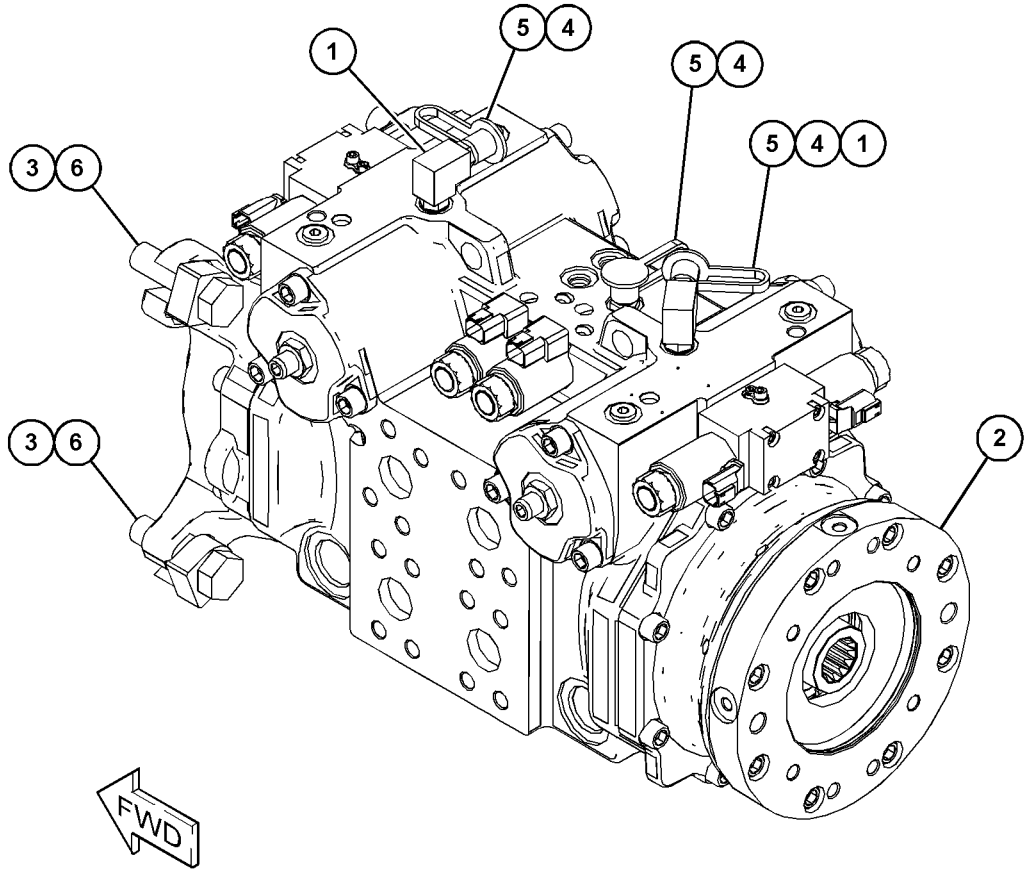

GRAPHIC #1 <END> g06180240

461-2712 PUMP GP-PISTON

S/N: H3C1-UP; K3G1-UP

PART OF 457-5411 PUMP & MTG GP-POWER TRAIN

SMCS-3203 **i08025280**

NOTE	REF NO	GRAPHIC REF	PART NUMBER	QTY	PART NAME 1 2 3 4 5 6 (PRODUCT LEVEL)	SEE PAGE
Y	1	1	**560-2621**	1	ROTATING GP-PUMP	245
Y	2	1	**560-2622**	1	ROTATING GP-PUMP	247
Y	3	1	**462-0496**	2	ACTUATOR GP-PUMP	201
CY	4	1	**468-9805**	1	HOUSING GP-PUMP	224
Y	5	1	**462-0698**	2	VALVE GP-PUMP CONTROL	254
Y	6	1	**503-1876**	1	FLANGE GP	220
Y	7	1	**503-1877**	1	FLANGE GP	221
M	8	1	**8T-3957**	12	BOLT-SOCKET HEAD (M12X1.75X30-MM)	
M	9	1	**161-7614**	2	NUT (M16X1.5-THD)	
CM	10	1	**108-1781**	8	BOLT-SOCKET HEAD (M12X1.75X35-MM)	
M	11	1	**095-0670**	8	BOLT (M12X1.75X45-MM)	
	12	1	**382-9274**	2	GASKET	
M	13	1	**105-3486**	8	BOLT-SOCKET HEAD (M6X1X50-MM)	
	14	1	**382-9276**	2	GASKET	
C	15	1	**573-1528**	4	VALVE GP-RELIEF	
					(EACH INCLUDES)	
		1	**468-9800**	1	VALVE AS-RELIEF	
		1	**252-8073**	1	SEAL-O-RING	
CY	16	1	**464-6779**	1	VALVE GP-RELIEF	256
C	17	1	**478-3802**	2	VALVE GP-SEQUENCE	

C - CHANGE FROM PREVIOUS TYPE
M - METRIC PART
Y - SEPARATE ILLUSTRATION

461-2712 **PUMP GP-PISTON (**contd.**)** **i08025280**

NO GRAPHIC AVAILABLE AT TIME OF PUBLICATION

GRAPHIC #1 <END> g01269539

191-0885 ROTATING GP-MOTOR

S/N: H3C1-UP; K3G1-UP

PART OF 278-8934 ROTATING GP-MOTOR

SMCS-5058 **i05891008**

NOTE	REF NO	GRAPHIC REF	PART NUMBER	QTY	PART NAME 1 2 3 4 5 6 (PRODUCT LEVEL)	SEE PAGE
	1	1	**191-1393**	1	BARREL-CYLINDER	
	2	1	**191-1394**	1	PLATE-CONTROL	
	3	1	**191-1395**	1	PIN	
	4	1	**191-1396**	7	PISTON AS	
					(EACH INCLUDES)	
		1	**191-1398**	2	RING-PISTON	
B	5	1	**124-9855**	1	SHIM (4.5-MM THK)	
B	6	1	**124-9856**	1	SHIM (4.6-MM THK)	
B	7	1	**124-9857**	1	SHIM (4.7-MM THK)	
B	8	1	**124-9858**	1	SHIM (4.8-MM THK)	
B	9	1	**124-9859**	1	SHIM (4.9-MM THK)	
B	10	1	**124-9860**	1	SHIM (5-MM THK)	
	11	1	**124-9861**	1	SPRING	
	12	1	**191-1397**	1	PLATE-RETAINING	
M	13	1	**252-0706**	7	SCREW-PAN HEAD (M8X1.25X20-MM)	

B - USE AS REQUIRED
M - METRIC PART

191-0885 **ROTATING GP-MOTOR (**contd.**)** **i05891008**

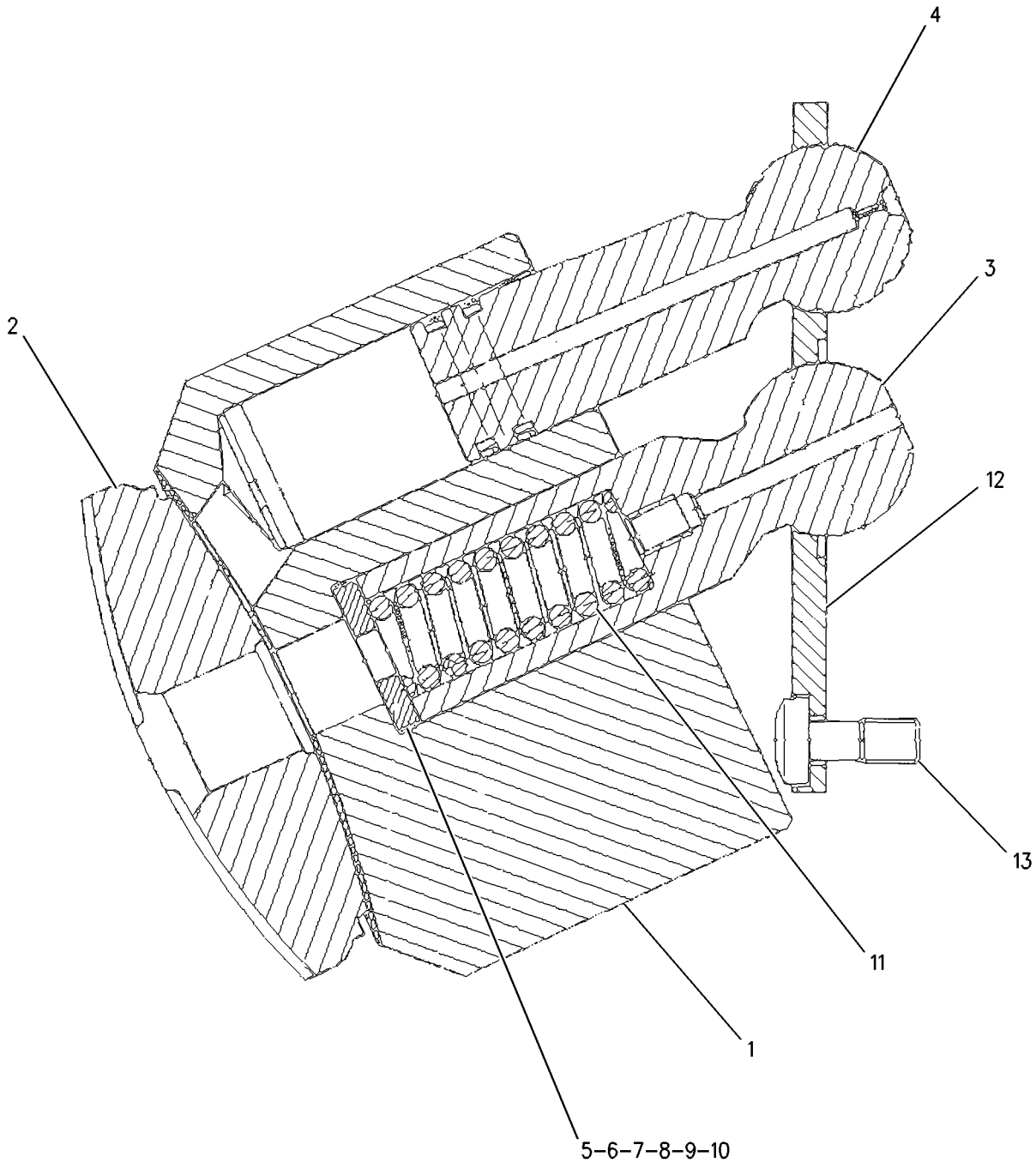

GRAPHIC #1 <END> g00713987

278-8934 ROTATING GP-MOTOR—HYDROSTATIC DRIVE

S/N: H3C1-UP; K3G1-UP

PART OF 243-6639, 243-6640 MOTOR GP-PISTON

SMCS-5058 **i05891002**

NOTE	REF NO	GRAPHIC REF	PART NUMBER	QTY	PART NAME 1 2 3 4 5 6 (PRODUCT LEVEL)	SEE PAGE
J	1	1	**191-1956**	1	KIT-BEARING	
					(INCLUDES BEARINGS, SPACER, SHIM, & RETAINING RING)	
Y	2	1	**191-0885**	1	ROTATING GP-MOTOR	242
J	3	1	**095-0929**	1	RING-RETAINING	
	4	1	**278-4977**	1	SHAFT-DRIVE	
M	5	1	**252-0706**	7	SCREW-PAN HEAD (M8X1.25X20-MM)	
B	6	1	**124-9855**	1	SHIM (4.5-MM THK)	
B	7	1	**124-9856**	1	SHIM (4.6-MM THK)	
B	8	1	**124-9857**	1	SHIM (4.7-MM THK)	
B	9	1	**124-9858**	1	SHIM (4.8-MM THK)	
B	10	1	**124-9859**	1	SHIM (4.9-MM THK)	
B	11	1	**124-9860**	1	SHIM (5-MM THK)	
					PARTS SHOWN IN GRAPHIC(S) WITHOUT A REFERENCE NUMBER ARE NOT SERVICED SEPARATELY	

B - USE AS REQUIRED
J - KIT MARKED J INCLUDES PART(S) MARKED J
M - METRIC PART
Y - SEPARATE ILLUSTRATION

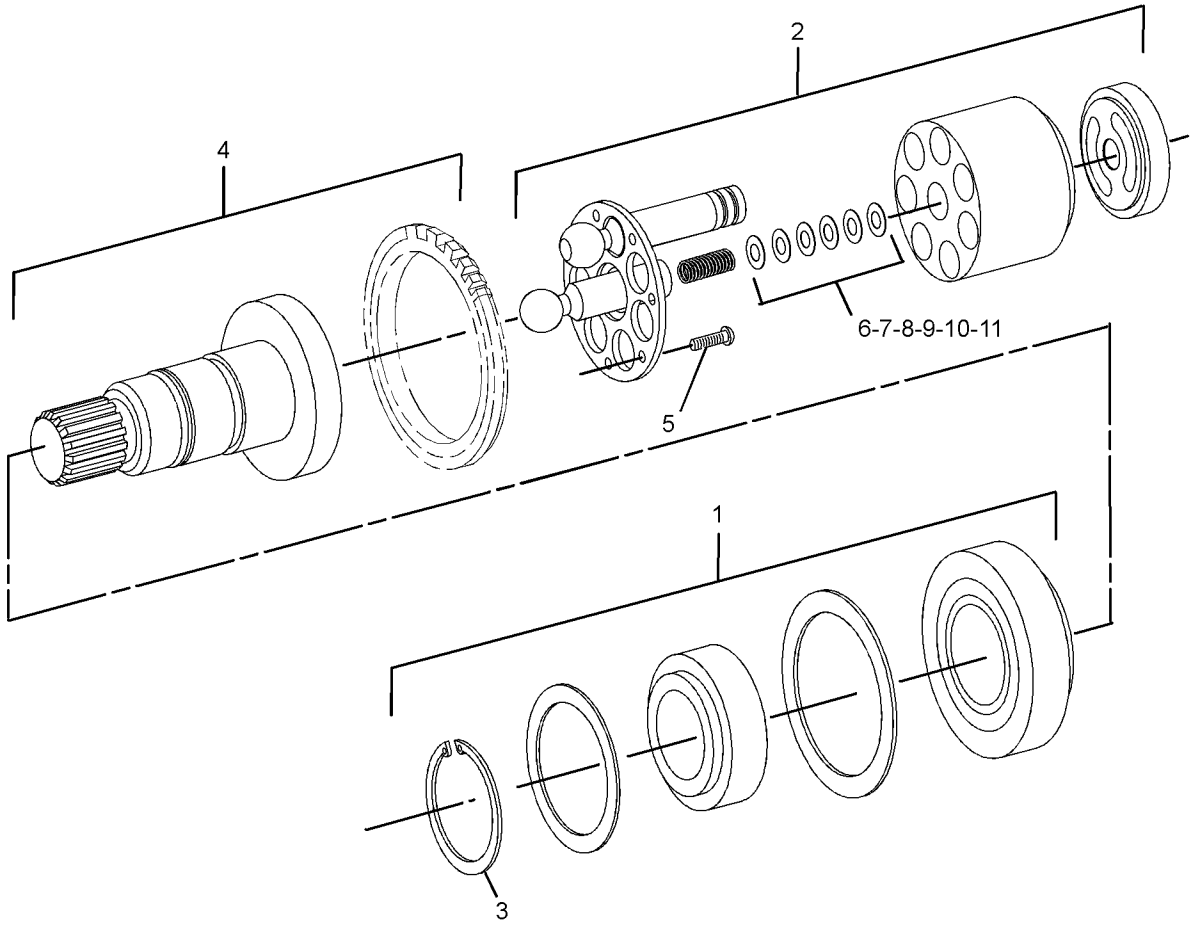

GRAPHIC #1 <END> g01412482

560-2621 ROTATING GP-PUMP

S/N: H3C1-UP; K3G1-UP

PART OF 461-2712 PUMP GP-PISTON

SMCS-5070 **i07443025**

NOTE	REF NO	GRAPHIC REF	PART NUMBER	QTY	PART NAME 1 2 3 4 5 6 (PRODUCT LEVEL)	SEE PAGE
	1	1	**560-2623**	1	SHAFT AS	
	1A	1	**560-2625**	1	BEARING-ROLLER	
		1	**6V-5201**	1	RING-RETAINING	
		1	**503-1879**	1	SHAFT-DRIVE	
	2	1	**503-1880**	1	SWASHPLATE AS	
	2A	1	**462-0433**	1	BEARING-CRADLE	
	2B	1	**462-0434**	1	LINER-BEARING	
		1	**462-0435**	1	BAR-SLIDE	
		1	**462-0440**	1	HOUSING	
	3	1	**462-0458**	1	PLATE-CONTROL	
	4	1	**503-1881**	1	BARREL AS-PUMP	
	4A	1	**462-0020**	1	BEARING-SPHERICAL	
	4B	1	**462-0420**	1	SHIM (1.2-MM THK)	
	4C	1	**462-0419**	1	SHIM (1-MM THK)	
	4D	1	**462-0296**	1	SHIM (0.8-MM THK)	
	4E	1	**462-0293**	1	SHIM (0.6-MM THK)	
		1	**352-4406**	1	RING-RETAINING	
		1	**462-0010**	1	SPRING-COIL	
		1	**462-0015**	2	SHIM (3-MM THK)	
		1	**462-0291**	1	PLATE-RETAINING	
		1	**462-0423**	1	SPRING	
		1	**462-0429**	9	PISTON	
		1	**462-0431**	1	BARREL	
	5	1	**462-0423**	1	SPRING	
					AVAILABLE REPAIR KIT(S):	
			503-1882	1	KIT-SEAL	
					(INCLUDES SHAFT SEAL & RETAINING RINGS)	

560-2621 **ROTATING GP-PUMP (**contd.**)** **i07443025**

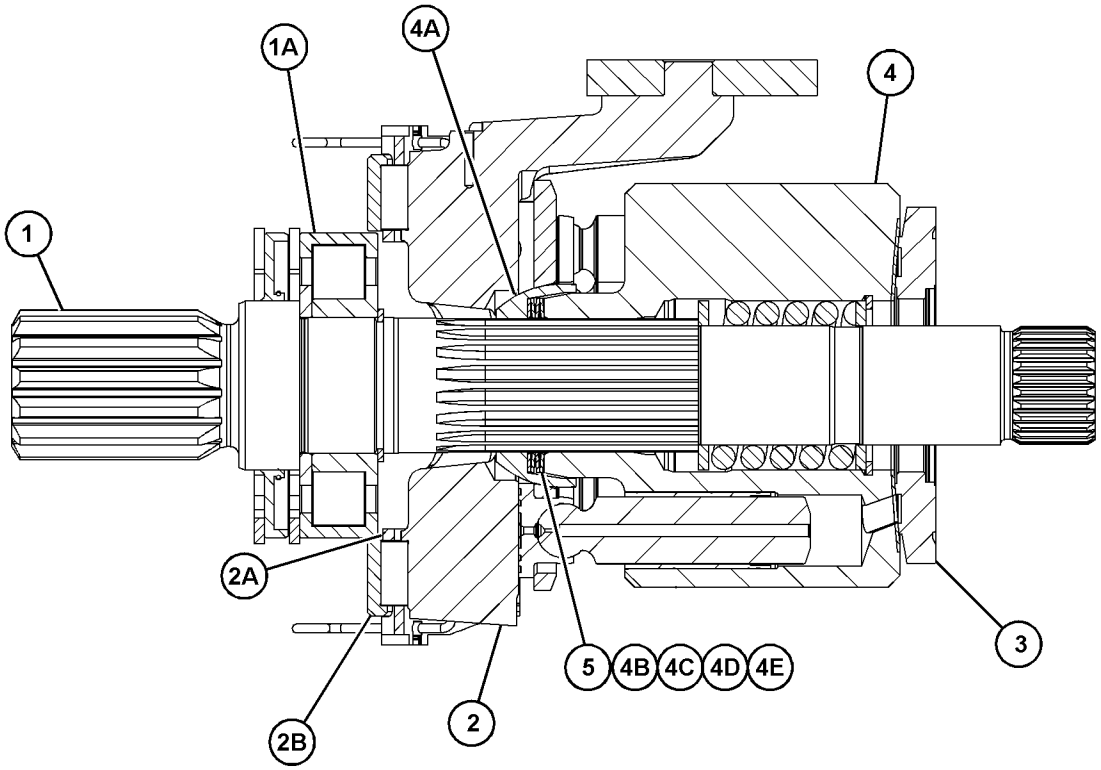

GRAPHIC #1 <END> g06092490

560-2622 ROTATING GP-PUMP

S/N: H3C1-UP; K3G1-UP

PART OF 461-2712 PUMP GP-PISTON

SMCS-5070 **i07443034**

NOTE	REF NO	GRAPHIC REF	PART NUMBER	QTY	PART NAME 1 2 3 4 5 6 (PRODUCT LEVEL)	SEE PAGE
	1	1	**560-2624**	1	SHAFT AS	
	1A	1	**560-2625**	1	BEARING-ROLLER	
		1	**6V-5201**	1	RING-RETAINING	
		1	**503-1884**	1	SHAFT-DRIVE	
	2	1	**503-1880**	1	SWASHPLATE AS	
	2A	1	**462-0433**	1	BEARING-CRADLE	
	2B	1	**462-0434**	1	LINER-BEARING	
		1	**462-0435**	1	BAR-SLIDE	
		1	**462-0440**	1	HOUSING	
	3	1	**503-1888**	1	PLATE-CONTROL	
	4	1	**503-1881**	1	BARREL AS-PUMP	
	4A	1	**462-0020**	1	BEARING-SPHERICAL	
B	4B	1	**462-0420**	1	SHIM (1.2-MM THK)	
B	4C	1	**462-0419**	1	SHIM (1-MM THK)	
B	4D	1	**462-0296**	1	SHIM (0.8-MM THK)	
B	4E	1	**462-0293**	1	SHIM (0.6-MM THK)	
		1	**352-4406**	1	RING-RETAINING	
		1	**462-0010**	1	SPRING-COIL	
B		1	**462-0015**	2	SHIM (3-MM THK)	
		1	**462-0291**	1	PLATE-RETAINING	
		1	**462-0423**	1	SPRING	
		1	**462-0429**	9	PISTON	
		1	**462-0431**	1	BARREL	
	5	1	**352-4407**	1	RING-RETAINING (INTERNAL)	
	6	1	**462-0423**	1	SPRING	

B - USE AS REQUIRED

560-2622 **ROTATING GP-PUMP** (contd.) **i07443034**

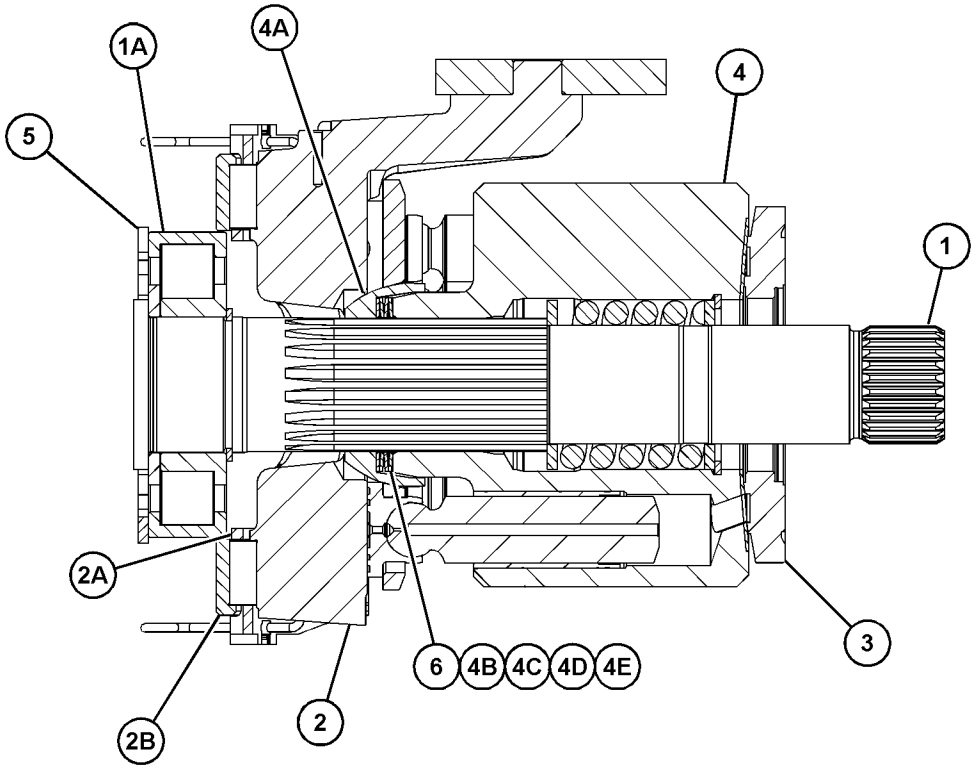

GRAPHIC #1 <END> g06092528

361-3978 SEGMENT GP-SPROCKET—SYSTEMONE

S/N: H3C1-UP; K3G1-UP
PART OF 431-7079 UNDERCARRIAGE AR
AN ATTACHMENT

SMCS-4155 **i05962862**

NOTE	REF NO	GRAPHIC REF	PART NUMBER	QTY	PART NAME 1 2 3 4 5 6 (PRODUCT LEVEL)	SEE PAGE
	1	1	**6V-4316**	27	WASHER-HARD (18.25X35X3.5-MM THK)	
M	2	1	**197-9674**	27	BOLT (M16X1.5X60-MM)	
	3	1	**361-3976**	3	SEGMENT-SPROCKET	
	4	1	**361-3977**	3	SEGMENT-SPROCKET	
M	5	1	**8T-3980**	27	NUT (M16X1.5-THD)	

M - METRIC PART

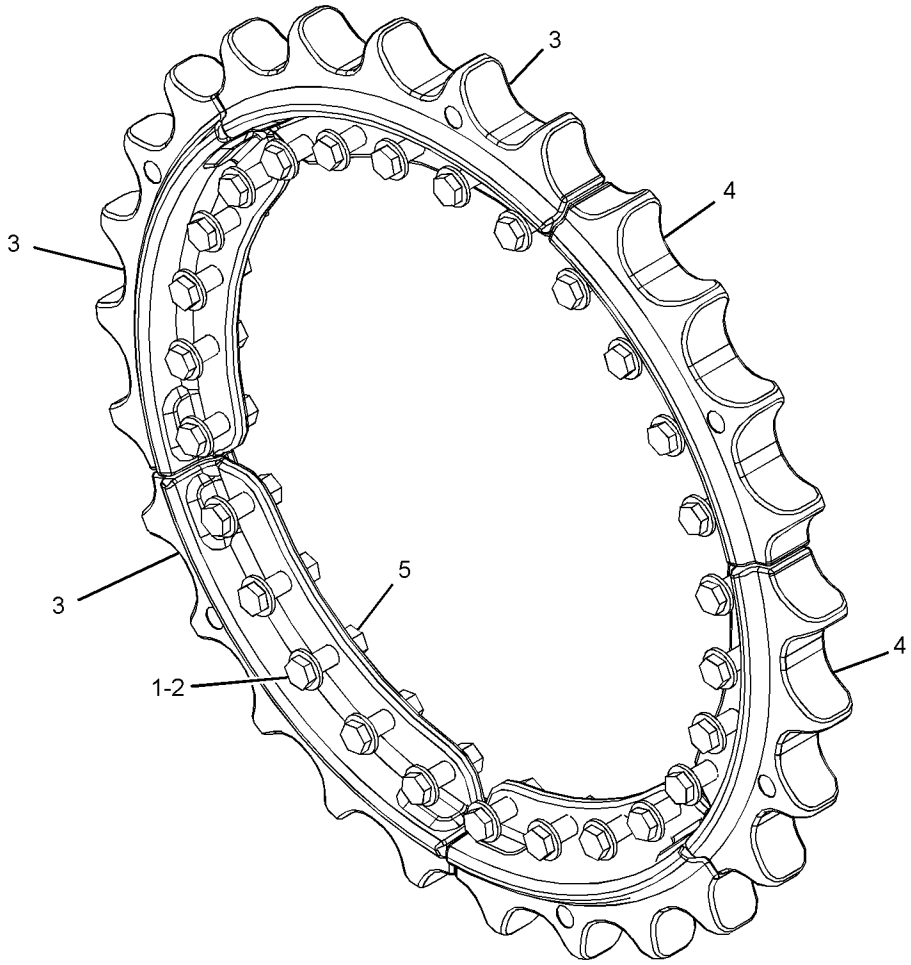

GRAPHIC #1 <END> g03001958

363-3571 SEGMENT GP-SPROCKET—HEAVY-DUTY

S/N: H3C1-UP; K3G1-UP
PART OF 431-7080 UNDERCARRIAGE AR
AN ATTACHMENT

SMCS-4155 **i05962863**

NOTE	REF NO	GRAPHIC REF	PART NUMBER	QTY	PART NAME 1 2 3 4 5 6 (PRODUCT LEVEL)	SEE PAGE
	1	1	**6V-4316**	27	WASHER-HARD (18.25X35X3.5-MM THK)	
M	2	1	**197-9674**	27	BOLT (M16X1.5X60-MM)	
	3	1	**363-3569**	3	SEGMENT-SPROCKET	
	4	1	**363-3570**	3	SEGMENT-SPROCKET	
M	5	1	**8T-3980**	27	NUT (M16X1.5-THD)	

M - METRIC PART

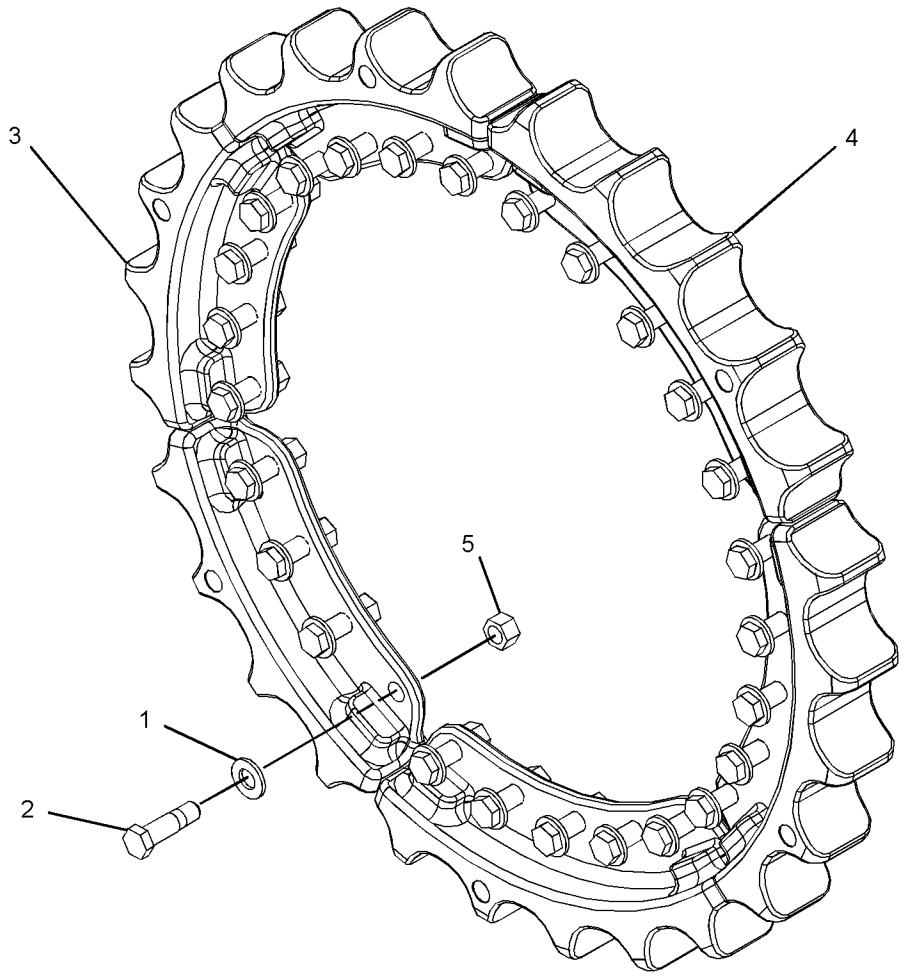

GRAPHIC #1 <END> g03015482

301-7890 VALVE GP-CHECK

S/N: H3C1-UP; K3G1-UP

PART OF 278-8935, 279-0543 HEAD GP-MOTOR

SMCS-5067 **i06728546**

NOTE	REF NO	GRAPHIC REF	PART NUMBER	QTY	PART NAME 1 2 3 4 5 6 (PRODUCT LEVEL)	SEE PAGE
	1	1	**033-6039**	1	SEAL-O-RING	
	2	1	**242-0262**	1	RING-BACKUP	
	3	1	**269-4676**	1	SEAL-O-RING	

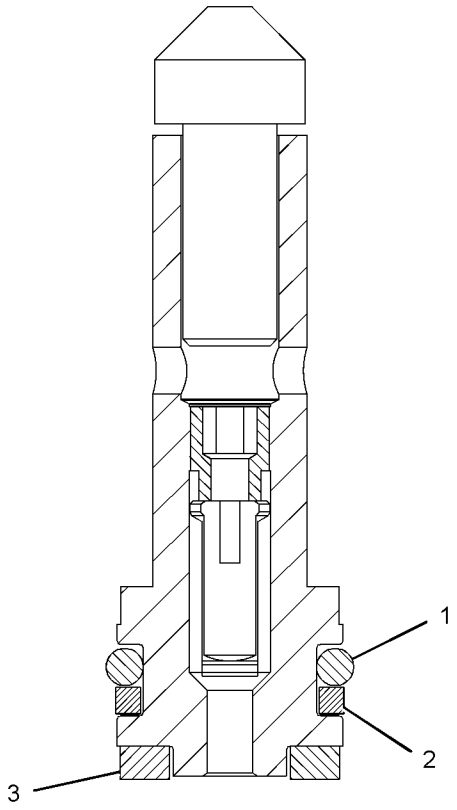

GRAPHIC #1 <END> g01332617

278-8937 VALVE GP-FLUSHING—HYDROSTATIC DRIVE

S/N: H3C1-UP; K3G1-UP

PART OF 243-6639, 243-6640 MOTOR GP-PISTON

SMCS-5066 **i07287557**

NOTE	REF NO	GRAPHIC REF	PART NUMBER	QTY	PART NAME 1 2 3 4 5 6 (PRODUCT LEVEL)	SEE PAGE
	1	1	**125-4572**	1	RING-RETAINING	
	2	1	**124-9898**	1	PLUG	
	3	1	**124-9901**	1	SPRING	
	4	1	**124-9904**	1	SHIM (1-MM THK)	
	5	1	**061-7540**	1	SEAL-O-RING	
	6	1	**3J-1907**	1	SEAL-O-RING	
	7	1	**6V-8351**	1	SEAL-O-RING	
	8	1	**124-9896**	1	VALVE-PISTON	
C	9	1	**113-0216**	1	ORIFICE	
M	10	1	**8T-7811**	4	BOLT-SOCKET HEAD (M12X1.75X50-MM)	
	11	1	**9S-8004**	1	PLUG (9/16-18-THD)	
	12	1	**124-9895**	1	PISTON	
	13	1	**124-9899**	2	SPACER	
	14	1	**107-3117**	2	SEAL-O-RING	
	15	1	**124-9900**	2	SPRING	
C	16	1	**460-6052**	2	LOCKSCREW	

C - CHANGE FROM PREVIOUS TYPE
M - METRIC PART

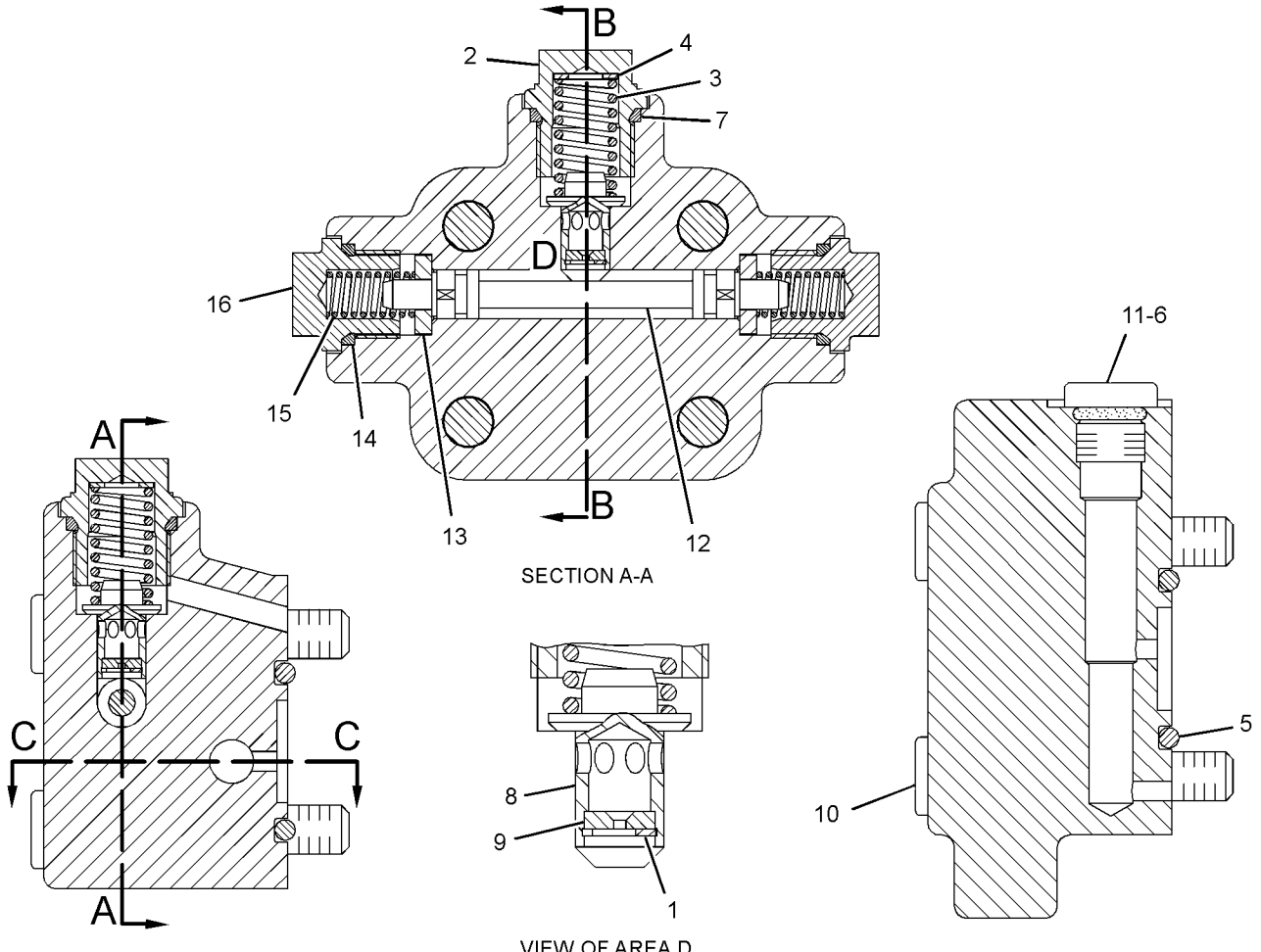

GRAPHIC #1

<END>

g06274282

373-8447 VALVE GP-MOTOR CONTROL

S/N: H3C1-UP; K3G1-UP

PART OF 243-6639, 243-6640 MOTOR GP-PISTON

SMCS-4351 **i07284616**

NOTE	REF NO	GRAPHIC REF	PART NUMBER	QTY	PART NAME 1 2 3 4 5 6 (PRODUCT LEVEL)	SEE PAGE
M	1	1	**8T-0338**	4	BOLT-SOCKET HEAD (M8X1.25X45-MM)	
	2	1	**9S-8004**	1	PLUG (9/16-18-THD)	
	3	1	**3J-1907**	1	SEAL-O-RING	
	4	1	**6V-1250**	1	SEAL-O-RING	
M	5	1	**9T-3853**	1	LOCKNUT (M6X1-THD)	
	6	1	**316-5999**	1	SOLENOID AS (PUMP CONTROL VALVE)	
	7	1	**9T-4367**	1	CAP AS	

M - METRIC PART

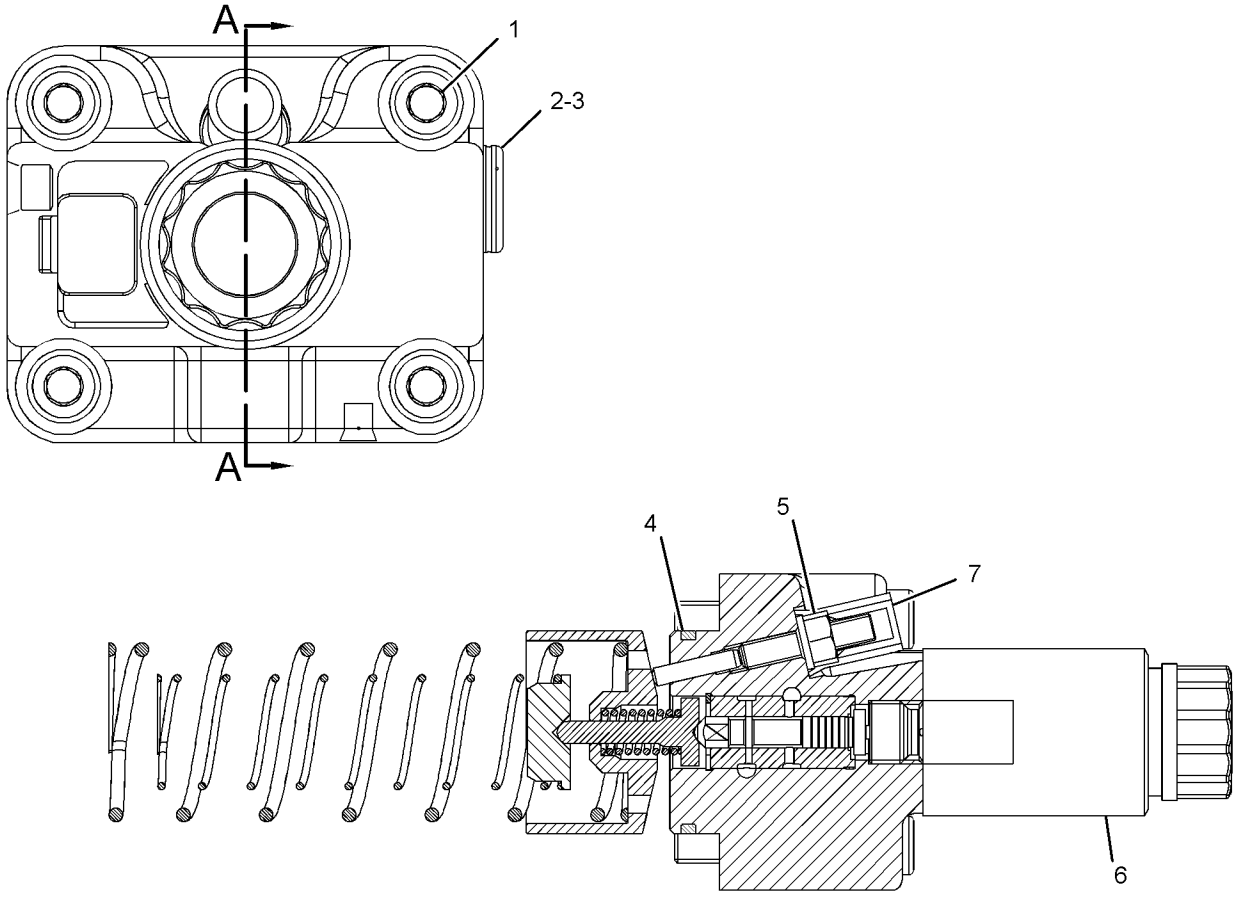

SECTION A-A

GRAPHIC #1 <END> g02793302

462-0698 VALVE GP-PUMP CONTROL

S/N: H3C1-UP; K3G1-UP

PART OF 461-2712 PUMP GP-PISTON

SMCS-5455 **i06721572**

NOTE	REF NO	GRAPHIC REF	PART NUMBER	QTY	PART NAME 1 2 3 4 5 6 (PRODUCT LEVEL)	SEE PAGE
	1	1	**316-5999**	2	SOLENOID AS (PUMP CONTROL VALVE)	
	2	1	**462-0697**	1	CONTROL-PISTON	
	3	1	**6H-9691**	1	SEAL-O-RING	
	4	1	**462-0689**	1	PIN-ECCENTRIC	
	5	1	**462-0687**	1	SPRING-PRESSURE	
	6	1	**462-0686**	1	LEVER-FEEDBACK	
	7	1	**382-9274**	1	GASKET	
	8	1	**462-0683**	1	SPRING-COIL	
	9	1	**382-9276**	1	GASKET	
	10	1	**258-0085**	4	BOLT	
	11	1	**202-6535**	2	PIN	
	12	1	**215-8011**	1	BOLT-SPECIAL	
B	13	1	**233-9808**	1	SHIM (0.6-MM THK)	
B	14	1	**216-4553**	1	SHIM (1.2-MM THK)	
B	15	1	**216-4552**	1	SHIM (1-MM THK)	
B	16	1	**216-4555**	1	SHIM (1.6-MM THK)	
B	17	1	**216-4554**	1	SHIM (1.4-MM THK)	
B	18	1	**216-4551**	1	SHIM (0.8-MM THK)	
	19	1	**462-0691**	1	KIT-LEVER	
					(INCLUDES LEVERS)	

B - USE AS REQUIRED

462-0698 **VALVE GP-PUMP CONTROL (**contd.**)** **i06721572**

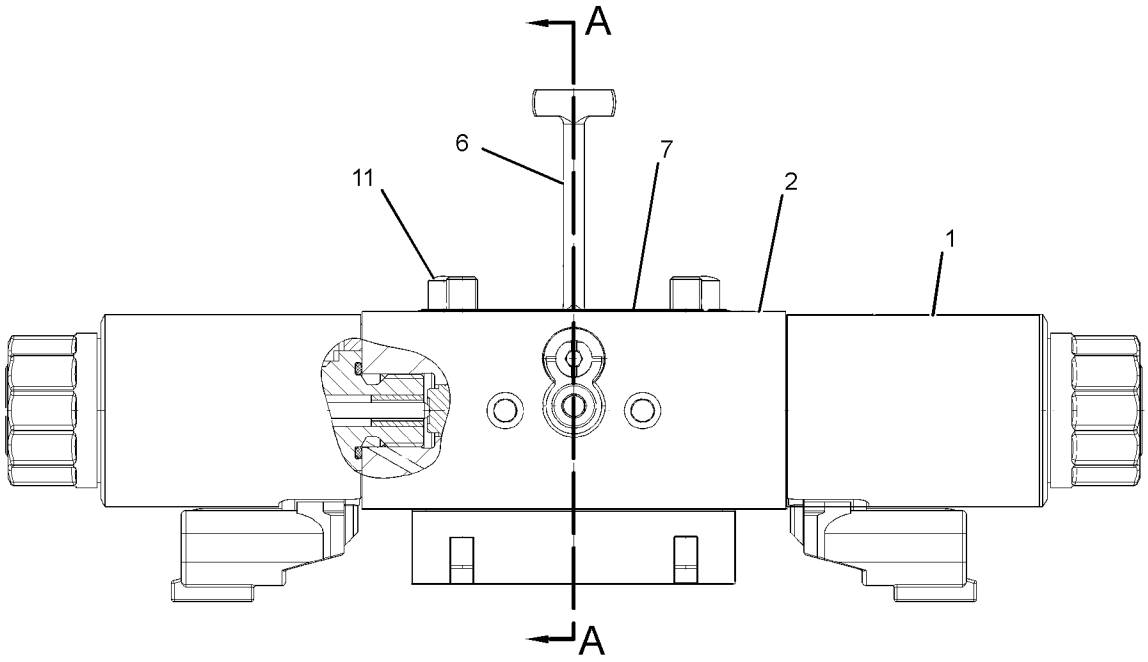

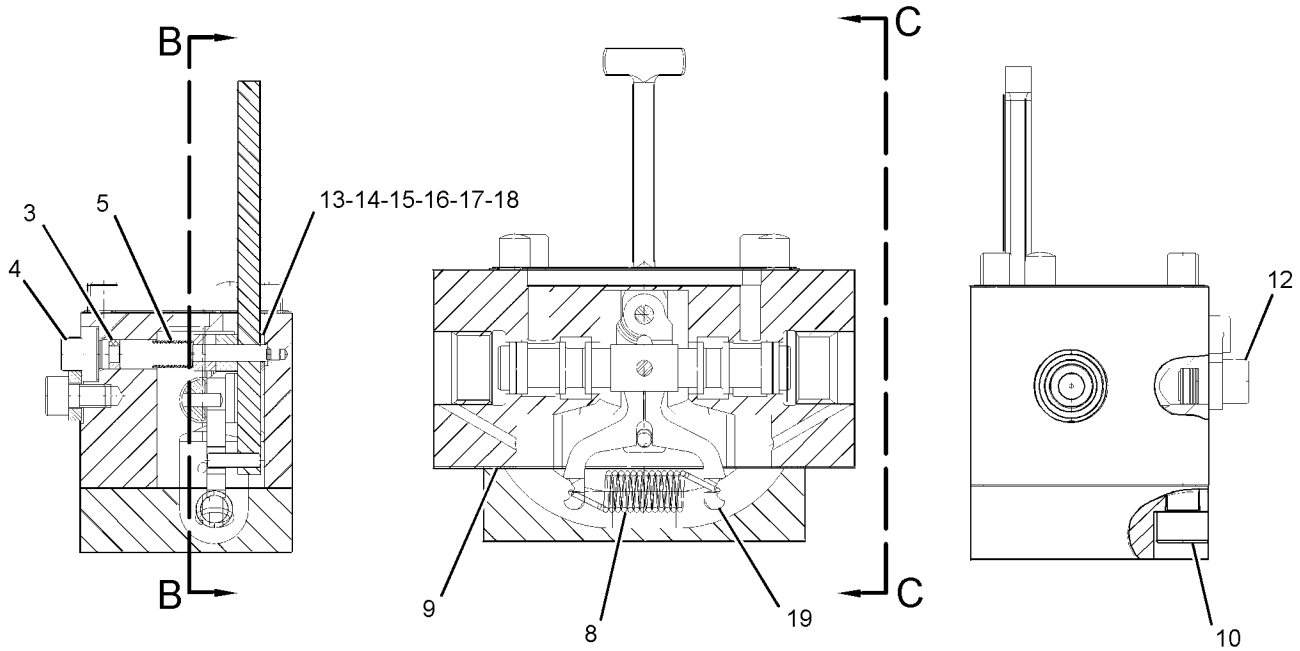

GRAPHIC #1 <END> g03859126

464-6779 VALVE GP-RELIEF

S/N: H3C1-UP; K3G1-UP

PART OF 461-2712 PUMP GP-PISTON

SMCS-3133, 3182

i07178382

NOTE	REF NO	GRAPHIC REF	PART NUMBER	QTY	PART NAME 1 2 3 4 5 6 (PRODUCT LEVEL)	SEE PAGE
	1	1	**252-8073**	1	SEAL-O-RING	
B	2	1	**135-8070**	1	SHIM (1-MM THK)	
B	3	1	**547-7724**	1	SHIM (0.5-MM THK)	
B	4	1	**547-7725**	1	SHIM (0.3-MM THK)	
B	5	1	**547-7726**	1	SHIM (1.5-MM THK)	
B	6	1	**547-7727**	1	SHIM (2.5-MM THK)	
B	7	1	**547-7728**	1	SHIM (3-MM THK)	

B - USE AS REQUIRED

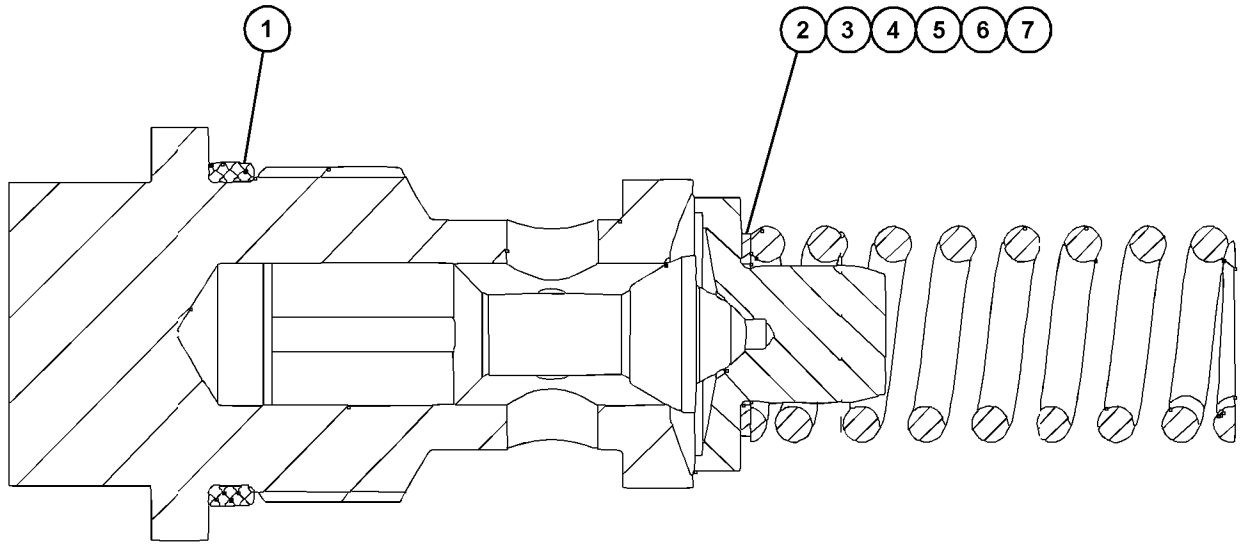

GRAPHIC #1 <END> g06243471

425-3337 BAFFLE GP-RADIATOR

S/N: H3C1-UP; K3G1-UP
PART OF 457-1194 COOLING AR

SMCS-1353, 1806 **i08036411**

NOTE	REF NO	GRAPHIC REF	PART NUMBER	QTY	PART NAME 1 2 3 4 5 6 (PRODUCT LEVEL)	SEE PAGE
	1	1	**432-4949**	1	BAFFLE	
	2	1	**433-0736**	2	PLATE AS	
					(EACH INCLUDES)	
M		1	**8T-3490**	3	NUT-WELD (M10X1.5-THD)	
	3	1	**433-8954**	2	STRIP	
	4	1	**187-7331**	8	MOUNT-RUBBER	
	5	1	**7X-0515**	6	WASHER-HARD (17X35X5-MM THK)	
	6	1	**7X-0607**	4	WASHER-HARD (20X55X8-MM THK)	
M	7	1	**7X-2554**	2	BOLT (M16X2X70-MM)	
M	8	1	**8T-4137**	6	BOLT (M10X1.5X20-MM)	
	9	1	**8T-4121**	14	WASHER-HARD (11X21X2.5-MM THK)	
M	10	1	**8T-4132**	2	NUT (M16X2-THD)	
M	11	1	**8T-4136**	4	BOLT (M10X1.5X25-MM)	
M	12	1	**8T-4175**	2	BOLT (M16X2X90-MM)	
E	13	1	**398-1743**		SEAL (72.8-CM)	
E	13A	1	**398-1743**		SEAL (14.6-CM)	
E	14	1	**253-7853**		SEAL (246-CM)	

E - ORDER BY THE CENTIMETER
M - METRIC PART

425-3337 **BAFFLE GP-RADIATOR (**contd.**)** **i08036411**

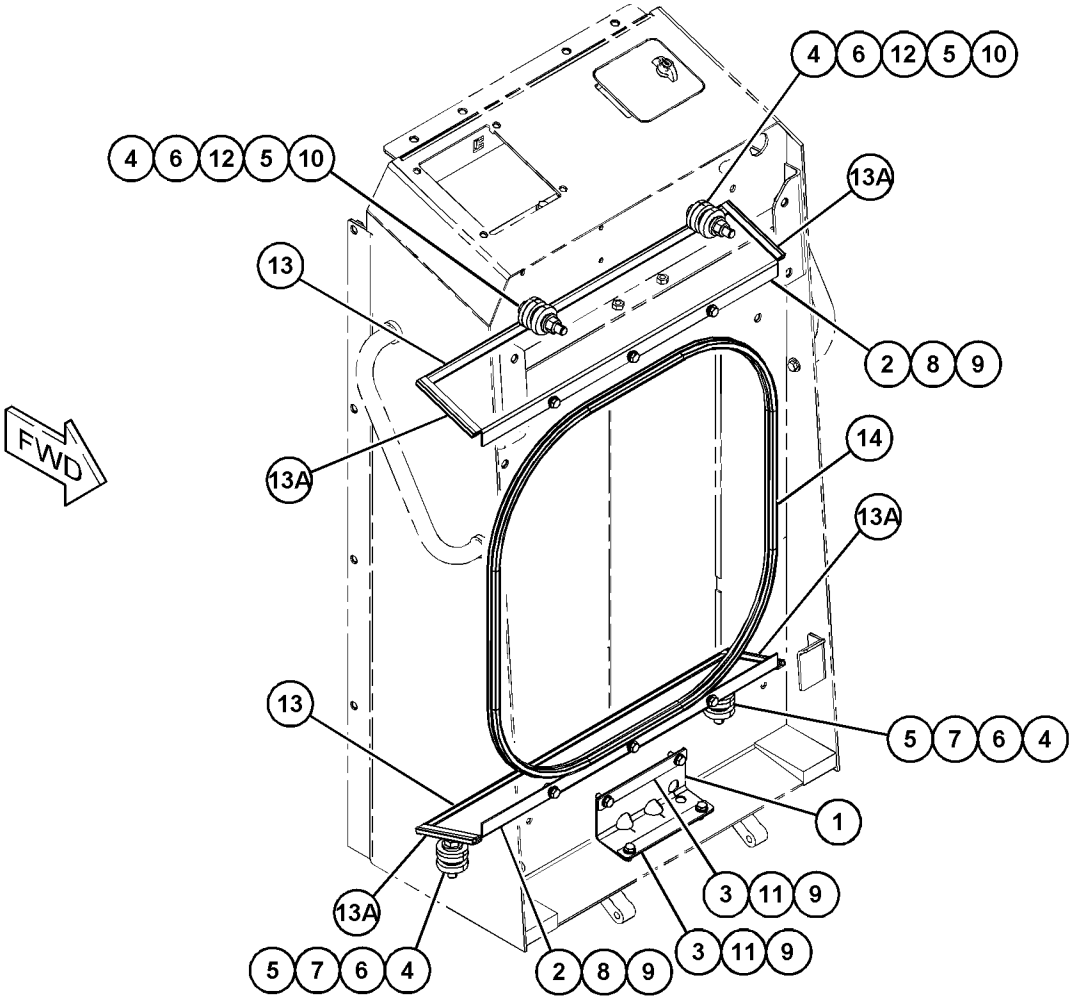

GRAPHIC #1 <END> g06090863

453-1588 BOX GP-STORAGE–SHOVEL

S/N: H3C1-UP; K3G1-UP
PART OF 460-1189 BOX GP-STORAGE
AN ATTACHMENT

SMCS-7268 **i06870598**

NOTE	REF NO	GRAPHIC REF	PART NUMBER	QTY	PART NAME 1 2 3 4 5 6 (PRODUCT LEVEL)	SEE PAGE
	1	1	**9M-3835**	2	LATCH-RUBBER	
	2	1	**453-1587**	1	PLATE AS	
		1	**8P-0612**	2	BRACKET	
		1	**9M-3838**	2	BRACKET	
	3	1	**2M-5795**	2	PIN-CLEVIS	
	4	1	**3B-4607**	2	PIN-COTTER	

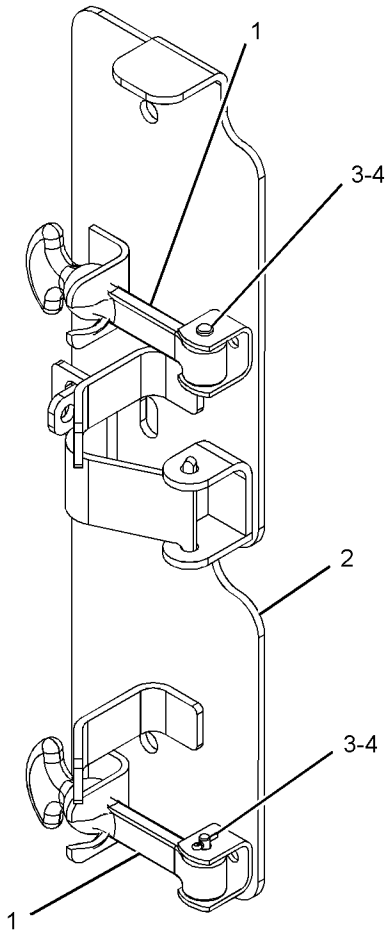

GRAPHIC #1 <END> g03661576

460-1189 BOX GP-STORAGE–SHOVEL

S/N: H3C1-UP; K3G1-UP

AN ATTACHMENT

SMCS-7268 **i08058372**

NOTE	REF NO	GRAPHIC REF	PART NUMBER	QTY	PART NAME 1 2 3 4 5 6 (PRODUCT LEVEL)	SEE PAGE
	1	1	**347-2280**	1	FILM-IDENTIFICATION (SHOVEL MOUNTING, READ OMM)	
Y	2	1	**453-1588**	1	BOX GP-STORAGE (SHOVEL)	259
	3	1	**5P-1076**	2	WASHER-HARD (13.5X30X4-MM THK)	
M	4	1	**8T-6868**	2	BOLT (M12X1.75X80-MM)	
	5	1	**288-6148**	2	SPACER (13.8X30X50-MM THK)	

M - METRIC PART
Y - SEPARATE ILLUSTRATION

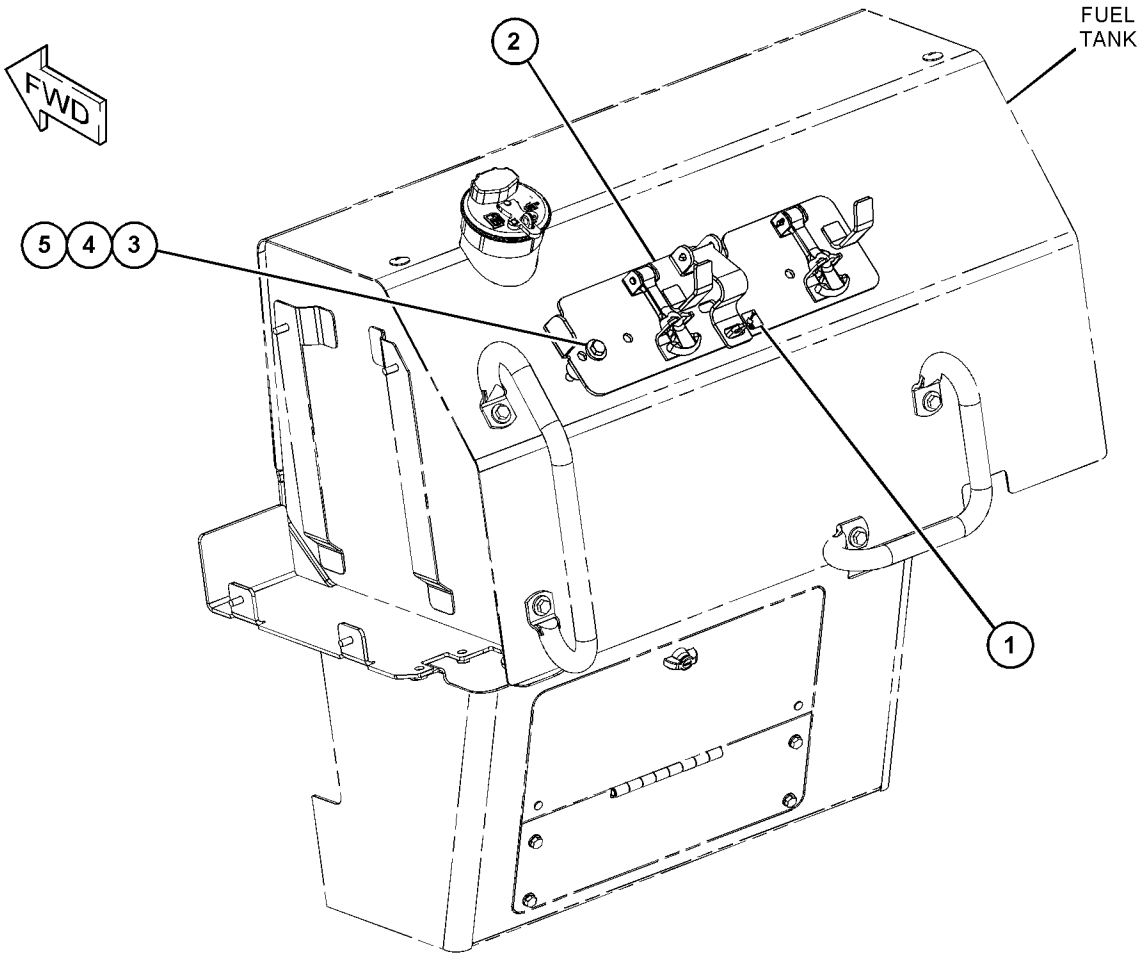

GRAPHIC #1 <END> g06224001

463-8196 BRACKET GP-SUPPORT

S/N: H3C1-UP; K3G1-UP
PART OF 387-2300 C-FRAME GP-POWER ANGLING
AN ATTACHMENT

SMCS-7212, 7273

i06707229

NOTE	REF NO	GRAPHIC REF	PART NUMBER	QTY	PART NAME 1 2 3 4 5 6 (PRODUCT LEVEL)	SEE PAGE
	1	1	**178-2593**	1	BUMPER	
	2	1	**439-4334**	1	BRACKET AS	
M	3	1	**5C-7261**	1	NUT (M8X1.25-THD)	
	4	1	**5P-4116**	1	WASHER-HARD (8.8X20.5X2-MM THK)	
	5	1	**8T-4121**	2	WASHER-HARD (11X21X2.5-MM THK)	
M	6	1	**8T-4195**	2	BOLT (M10X1.5X30-MM)	

M - METRIC PART

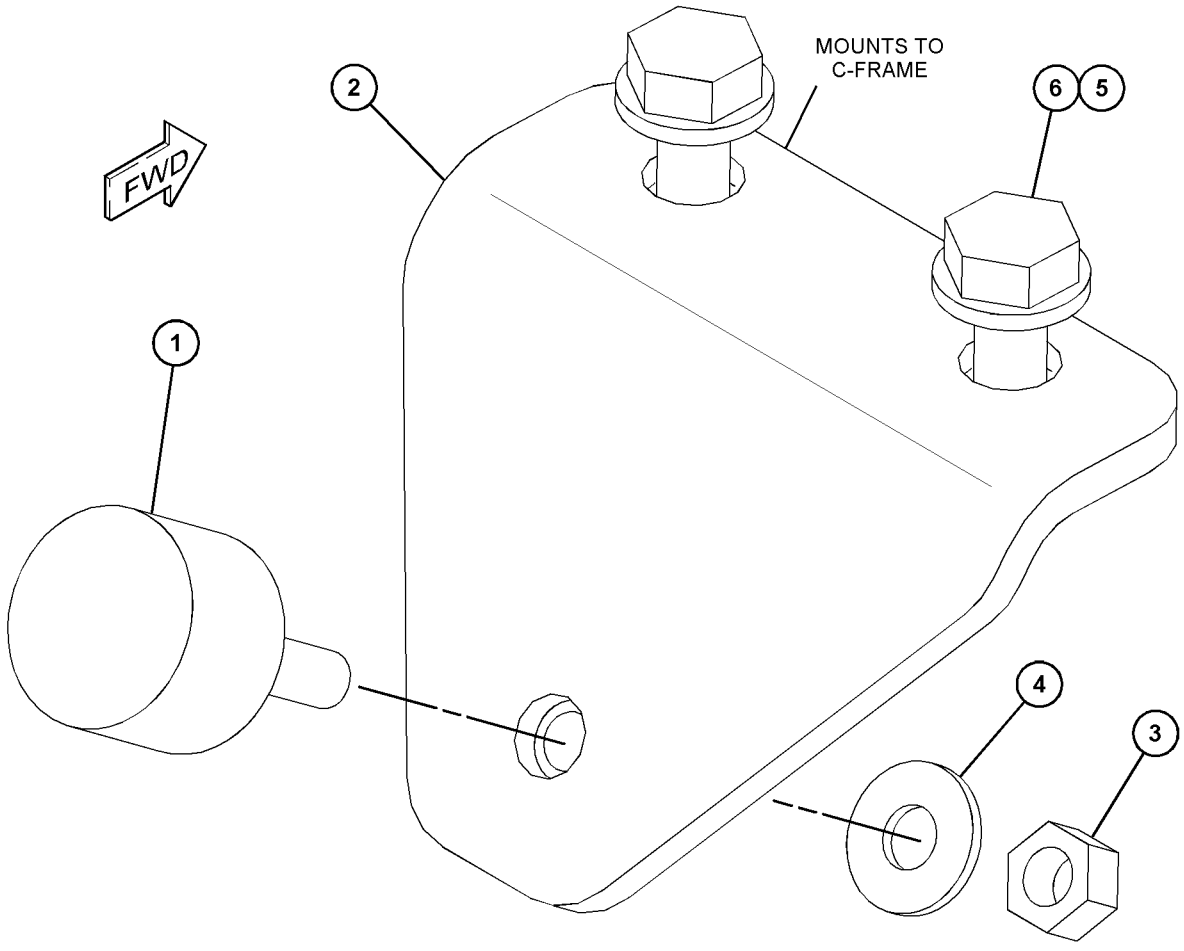

GRAPHIC #1 <END> g06012754

425-7130 COVER GP-ACCESS—RH

S/N: H3C1-UP; K3G1-UP

PART OF 483-9173 ENCLOSURE GP

SMCS-726A **i06713476**

NOTE	REF NO	GRAPHIC REF	PART NUMBER	QTY	PART NAME 1 2 3 4 5 6 (PRODUCT LEVEL)	SEE PAGE
	1	1	**1U-7684**	2	HOLDER AS (GREASE GUN)	
M	2	1	**099-6418**	4	NUT (M6X1-THD)	
B	3	1	**216-0143**	2	SHIM (1-MM THK)	
	4	1	**348-9380**	1	ROD AS	
	5	1	**358-0921**	1	LATCH AS	
J		1	**385-3458**	1	LOCK AS	
	6	1	**417-0724**	1	PLATE AS	
	7	1	**425-5430**	1	PANEL AS	
	8	1	**425-5432**	1	DOOR AS	
	9	1	**1S-9593**	2	STRAP-CABLE	
	10	1	**3B-4615**	1	PIN-COTTER	
M	11	1	**5C-7261**	2	NUT (M8X1.25-THD)	
	12	1	**5P-4116**	2	WASHER-HARD (8.8X20.5X2-MM THK)	
	13	1	**7X-0613**	2	WASHER-HARD (8.8X25.5X5-MM THK)	
	14	1	**7X-7729**	3	WASHER (11X25X3-MM THK)	
M	15	1	**8T-4137**	2	BOLT (M10X1.5X20-MM)	
M	16	1	**8T-4908**	2	BOLT (M8X1.25X25-MM)	
D	17	1	**202-5293**		SEAL (3-DM)	
D	17A	1	**202-5293**		SEAL (0.8-DM)	
D	17B	1	**202-5293**		SEAL (4.04-DM)	
D	17C	1	**202-5293**		SEAL (4.3-DM)	
D	17D	1	**202-5293**		SEAL (2.6-DM)	

B - USE AS REQUIRED
D - ORDER BY THE METER
J - REQUIRES CORPORATE KEY
M - METRIC PART

425-7130 **COVER GP-ACCESS (**contd.**)** **i06713476**

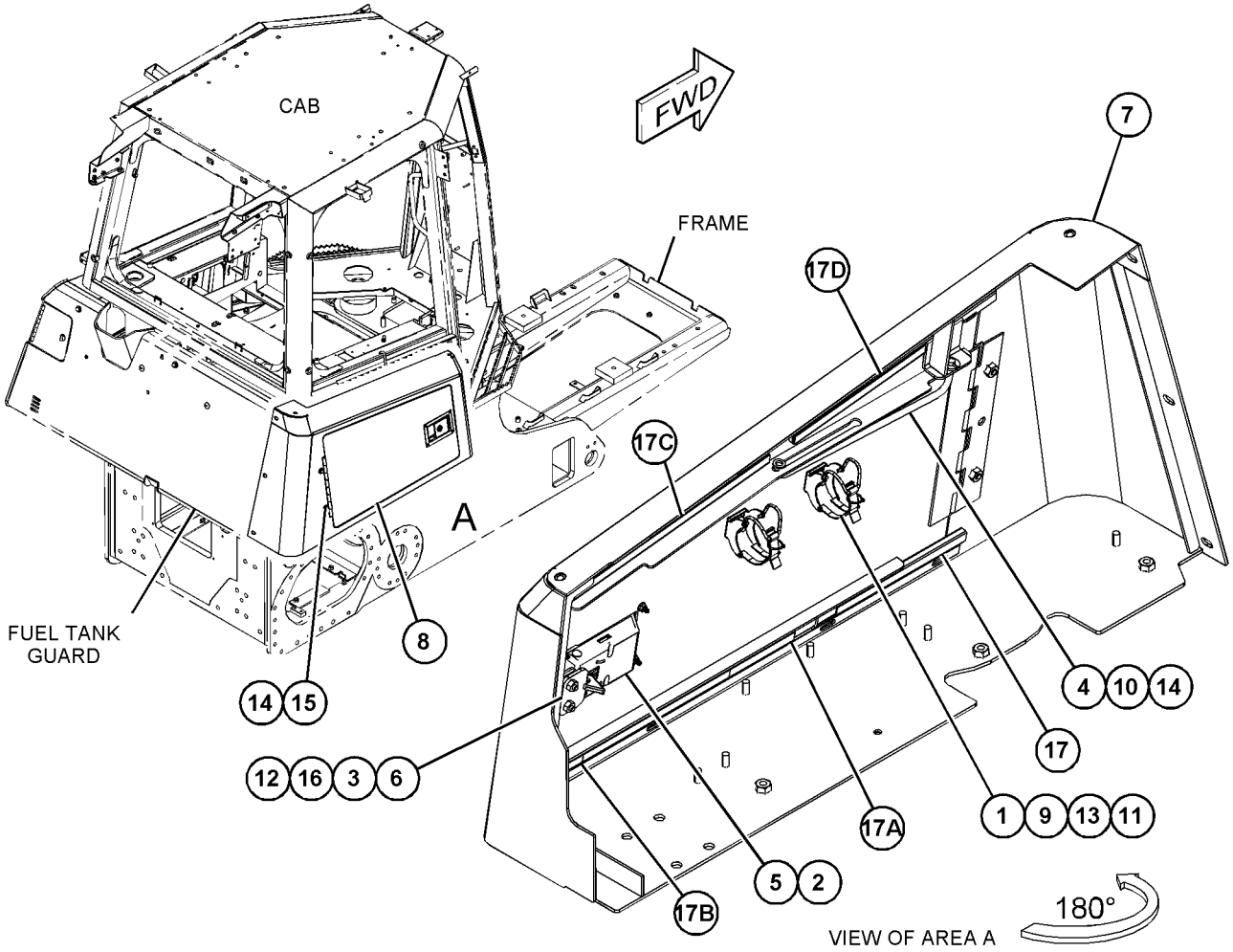

GRAPHIC #1 <END> g06086484

483-9180 COVER GP-ACCESS—LH

S/N: H3C1-UP; K3G1-UP

PART OF 483-9173 ENCLOSURE GP

SMCS-726A **i07019562**

NOTE	REF NO	GRAPHIC REF	PART NUMBER	QTY	PART NAME 1 2 3 4 5 6 (PRODUCT LEVEL)	SEE PAGE
M	1	1	**8T-4137**	2	BOLT (M10X1.5X20-MM)	
M	2	1	**8T-4908**	2	BOLT (M8X1.25X25-MM)	
	3	1	**5P-4116**	2	WASHER-HARD (8.8X20.5X2-MM THK)	
	4	1	**7X-7729**	3	WASHER (11X25X3-MM THK)	
M	5	1	**099-6418**	4	NUT (M6X1-THD)	
B	6	1	**216-0143**	2	SHIM (1-MM THK)	
	7	1	**348-9380**	1	ROD AS	
	8	1	**358-0921**	1	LATCH AS	
J		1	**385-3458**	1	LOCK AS	
	9	1	**417-0724**	1	PLATE AS	
	10	1	**425-5431**	1	DOOR AS (LH)	
	11	1	**483-9179**	1	PANEL AS	
	12	1	**3B-4615**	1	PIN-COTTER	
L	13	1	**202-5293**		SEAL (2.8-DM)	
L	13A	1	**202-5293**		SEAL (4.1-DM)	
L	13B	1	**202-5293**		SEAL (8.8-DM)	

B - USE AS REQUIRED
J - REQUIRES CORPORATE KEY
L - ORDER BY THE DECIMETER
M - METRIC PART

483-9180 **COVER GP-ACCESS (**contd.**)** **i07019562**

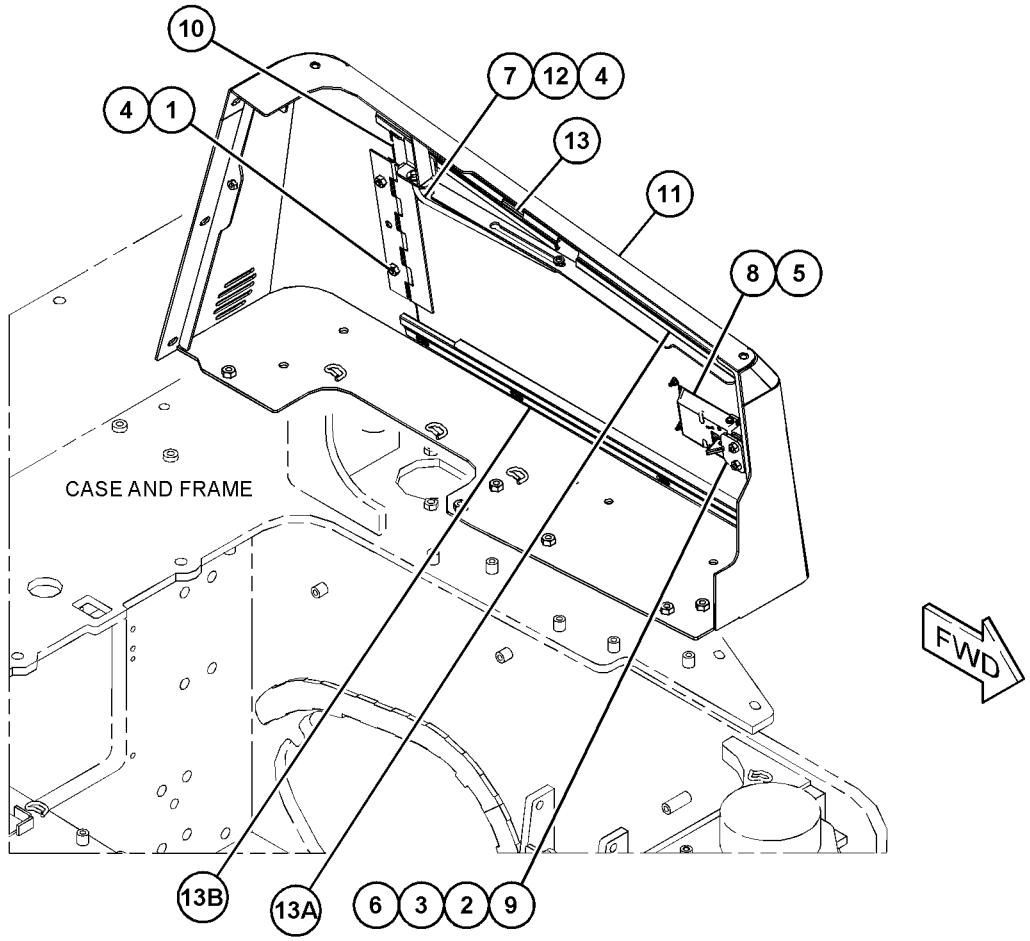

GRAPHIC #1 <END> g06180371

246-8384 DRAWBAR GP

S/N: H3C1-UP; K3G1-UP
CANNOT BE USED WITH RIPPER AR, WINCH AR-TOWING
AN ATTACHMENT

SMCS-7105, 7119

i06788805

NOTE	REF NO	GRAPHIC REF	PART NUMBER	QTY	PART NAME 1 2 3 4 5 6 (PRODUCT LEVEL)	SEE PAGE
	1	1	**248-6551**	1	DRAWBAR AS	
	2	1	**248-6566**	1	PIN	
	3	1	**3B-5319**	1	PIN-COTTER	
	4	1	**126-8928**	8	WASHER-HARD (26X40X8-MM THK)	
M	5	1	**7X-2577**	8	BOLT (M24X3X90-MM)	
	6	1	**142-2709**	12	PLUG	
	7	1	**357-6890**	1	FILM-INFORMATION (DRAWBAR, READ OMM)	
	8	1	**7X-7644**	1	FILM-IDENTIFICATION (TIE-DOWN)	

M - METRIC PART

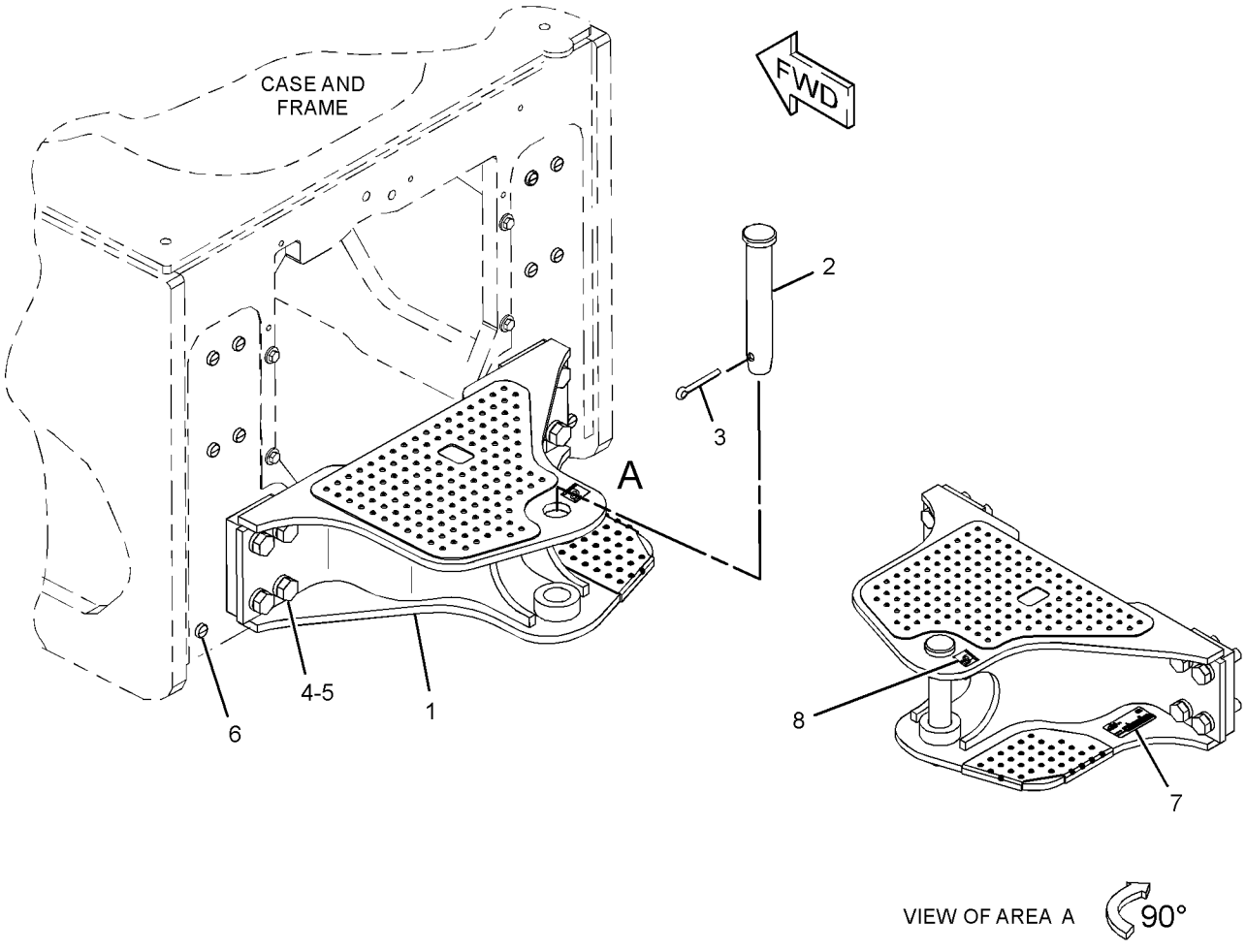

GRAPHIC #1

<END>

g06115283

483-9173 ENCLOSURE GP–REAR

S/N: H3C1-UP; K3G1-UP

PART OF 483-9172 ENCLOSURE GP-CAB

SMCS-7267, 7276

i07019720

NOTE	REF NO	GRAPHIC REF	PART NUMBER	QTY	PART NAME 1 2 3 4 5 6 (PRODUCT LEVEL)	SEE PAGE
Y	1	1	*425-7130*	1	COVER GP-ACCESS (RH)	262
Y	2	1	*434-0570*	1	BOX GP-TOOL	560
Y	3	1	*483-9180*	1	COVER GP-ACCESS (LH)	264

Y - SEPARATE ILLUSTRATION

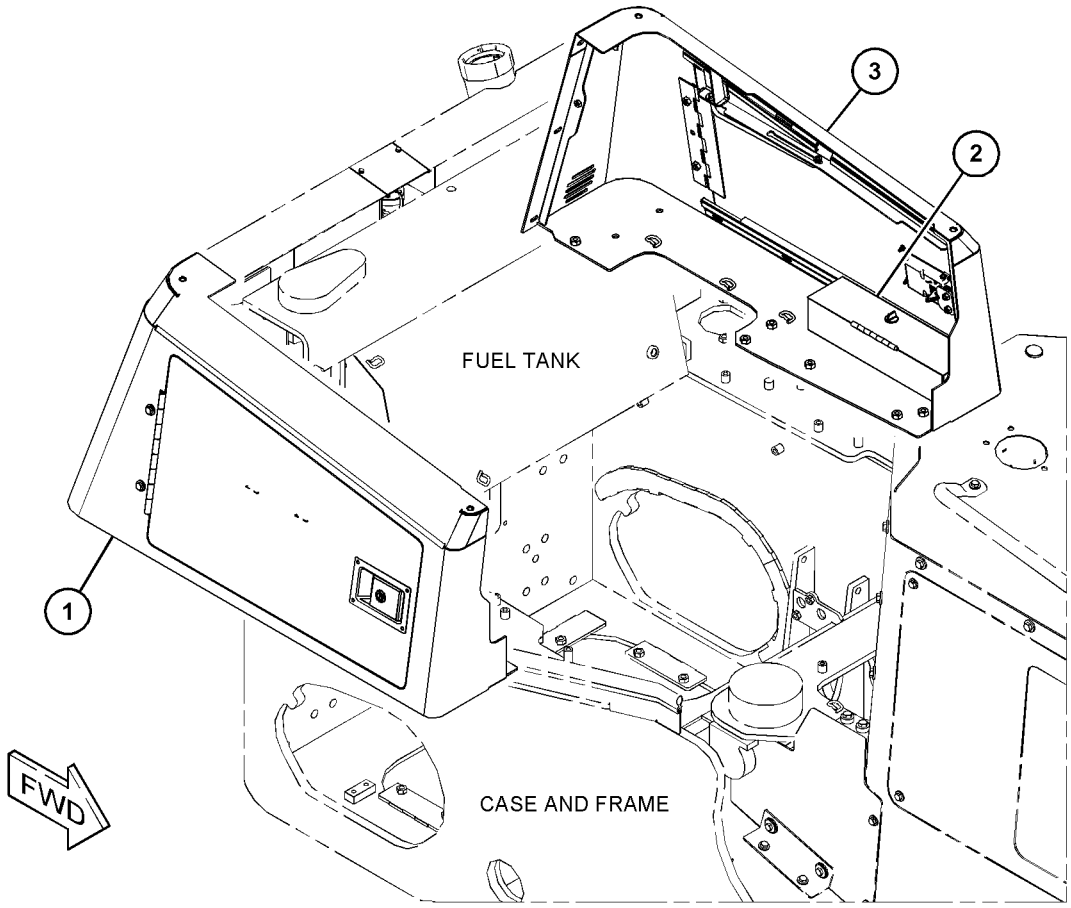

GRAPHIC #1 <END> g06180411

461-8770 ENCLOSURE GP-ENGINE–FRONT

S/N: H3C1-UP; K3G1-UP

PART OF 483-9182 ENCLOSURE GP-ENGINE

SMCS-7263 **i08033400**

NOTE	REF NO	GRAPHIC REF	PART NUMBER	QTY	PART NAME 1 2 3 4 5 6 (PRODUCT LEVEL)	SEE PAGE
	1	1	**559-2592**	1	COVER AS-PANEL (LH)	
	2	1	**559-2591**	1	COVER AS-PANEL (RH)	
Y	3	1	*462-8920*	1	PANEL GP-SIDE (LH)	286
	4	1	**483-9178**	1	DOOR AS (RH)	
	5	1	**483-9193**	1	PANEL AS (RH)	

Y - SEPARATE ILLUSTRATION

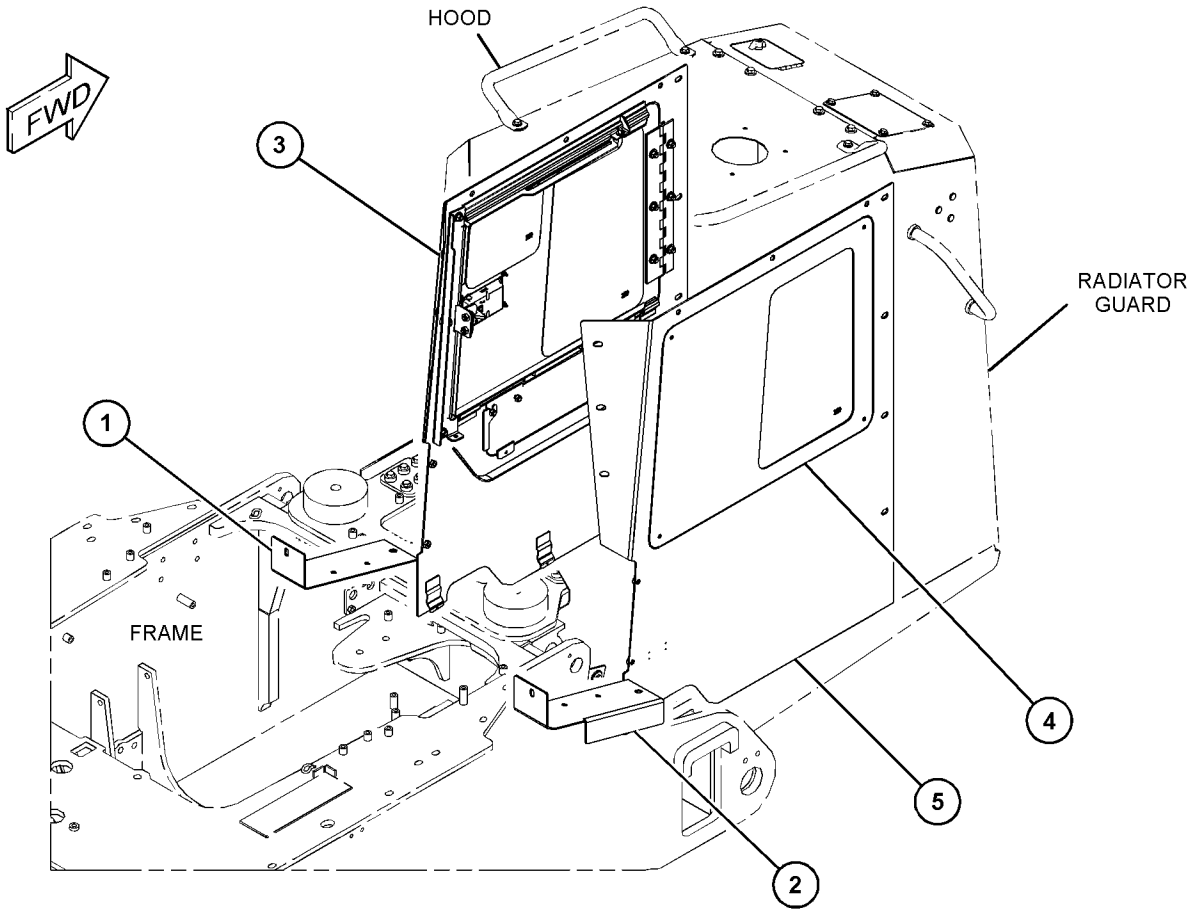

GRAPHIC #1 <END> g06180173

483-9182 ENCLOSURE GP-ENGINE–FRONT

S/N: H3C1-UP; K3G1-UP
PART OF 459-6582 CHASSIS AR

SMCS-7263 **i08033397**

NOTE	REF NO	GRAPHIC REF	PART NUMBER	QTY	PART NAME 1 2 3 4 5 6 (PRODUCT LEVEL)	SEE PAGE
M	1	1,2	**8T-4136**	18	BOLT (M10X1.5X25-MM)	
M	2	1,2	**8T-4910**	8	BOLT (M12X1.75X60-MM)	
M	3	1,2	**8T-4192**	14	BOLT (M12X1.75X25-MM)	
	4	1,2	**5P-1076**	22	WASHER-HARD (13.5X30X4-MM THK)	
	5	1,2	**7X-7729**	14	WASHER (11X25X3-MM THK)	
	6	1,2	**7Y-2854**	4	SPACER (24X38X3-MM THK)	
	7	1,2	**8T-4222**	4	WASHER-PLATED (11X32X2.5-MM THK)	
	8	1	**559-2589**	1	BRACKET (RH)	
Y	9	1	*461-8770*	1	ENCLOSURE GP-ENGINE (FRONT)	268
	10	2	**483-9197**	1	COVER AS (LH)	
M		2	**8T-3490**	2	NUT-WELD (M10X1.5-THD)	
	11	1	**483-9198**	1	COVER AS (RH)	
M		1	**8T-3490**	2	NUT-WELD (M10X1.5-THD)	
	12	1,2	**146-2282**	4	COLLAR	
	13	2	**559-2590**	1	BRACKET (LH)	

M - METRIC PART
Y - SEPARATE ILLUSTRATION

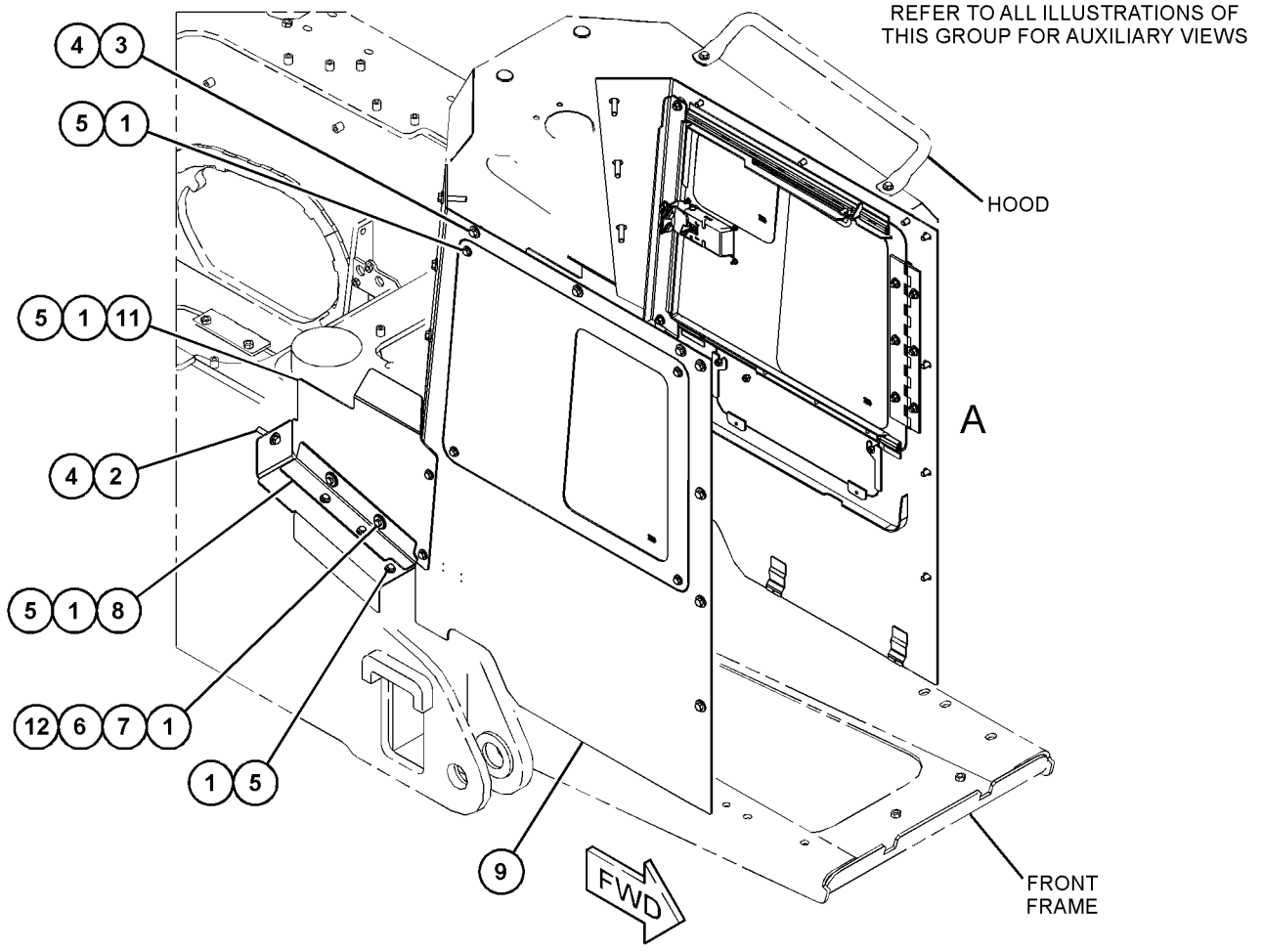

GRAPHIC #1 g06543614

483-9182 **ENCLOSURE GP-ENGINE (**contd.**)** **i08033397**

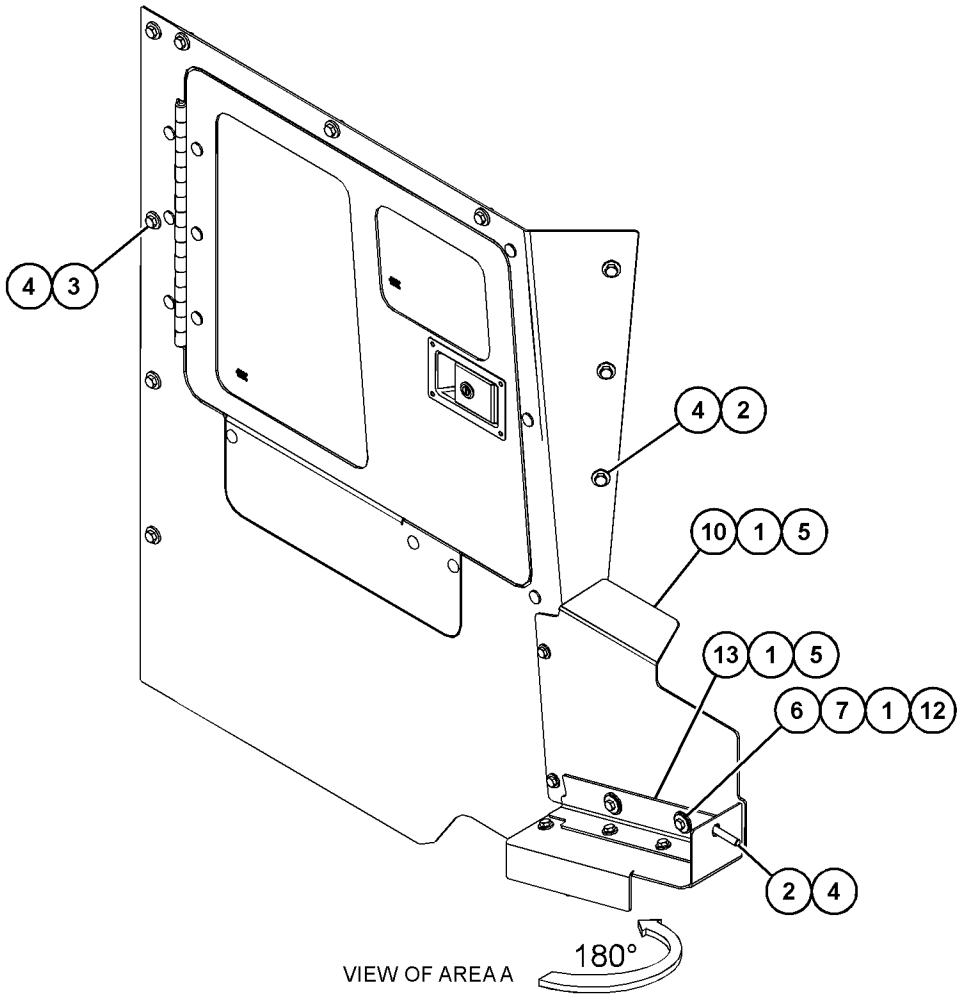

GRAPHIC #2

<END>

g06543631

543-2906 GRILL GP-RADIATOR

S/N: H3C1-UP; K3G1-UP
PART OF 543-2982 GRILL GP-RADIATOR
AN ATTACHMENT

SMCS-7170 **i07567498**

NOTE	REF NO	GRAPHIC REF	PART NUMBER	QTY	PART NAME 1 2 3 4 5 6 (PRODUCT LEVEL)	SEE PAGE
	1	1	**425-5439**	1	GRILL AS (BOTTOM)	
	2	1	**543-2909**	1	GRILL AS (TOP)	

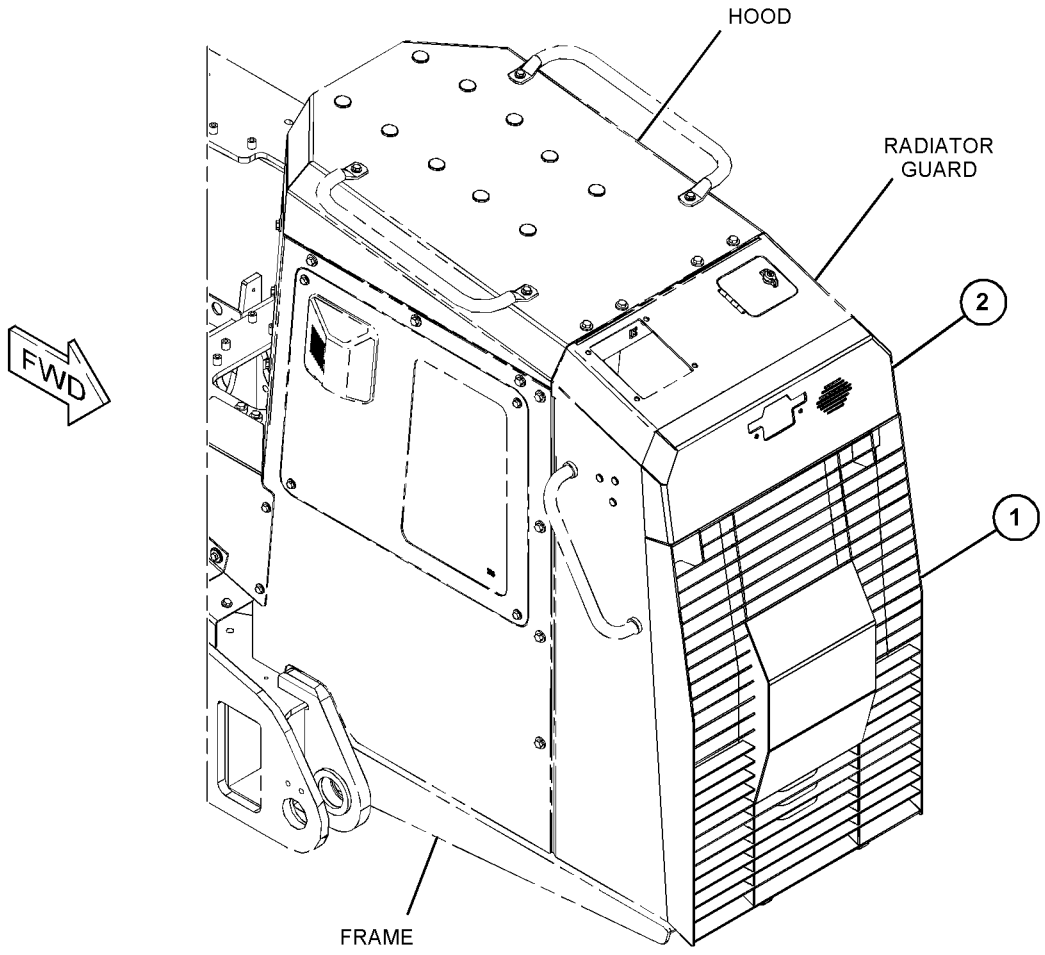

GRAPHIC #1 <END> g06329666

543-2982 GRILL GP-RADIATOR

S/N: H3C1-UP; K3G1-UP
PART OF 543-3284 GUARD AR-BOTTOM
AN ATTACHMENT

SMCS-7170 **i07459605**

NOTE	REF NO	GRAPHIC REF	PART NUMBER	QTY	PART NAME 1 2 3 4 5 6 (PRODUCT LEVEL)	SEE PAGE
M	1	1	**8T-4176**	2	BOLT (M12X1.75X90-MM)	
	2	1	**1A-2457**	1	PIN-CLEVIS	
	3	1	**6V-9197**	1	LOCK PIN	
	4	1	**8R-8847**	2	RETAINER-SPRING	
M	5	1	**8T-4194**	2	BOLT (M12X1.75X50-MM)	
	6	1	**8T-4223**	6	WASHER-HARD (13.5X25.5X3-MM THK)	
M	7	1	**8T-4956**	2	BOLT (M12X1.75X35-MM)	
M	8	1	**8T-8549**	2	LOCKNUT (M12X1.75-THD)	
	9	1	**198-4778**	4	WASHER-HARD (13.5X30X12-MM THK)	
	10	1	**328-3767**	1	CYLINDER AS	
	11	1	**348-9393**	1	STUD-BALL	
	12	1	**432-8272**	2	SPACER	
Y	13	1	*543-2906*	1	GRILL GP-RADIATOR	271

M - METRIC PART
Y - SEPARATE ILLUSTRATION

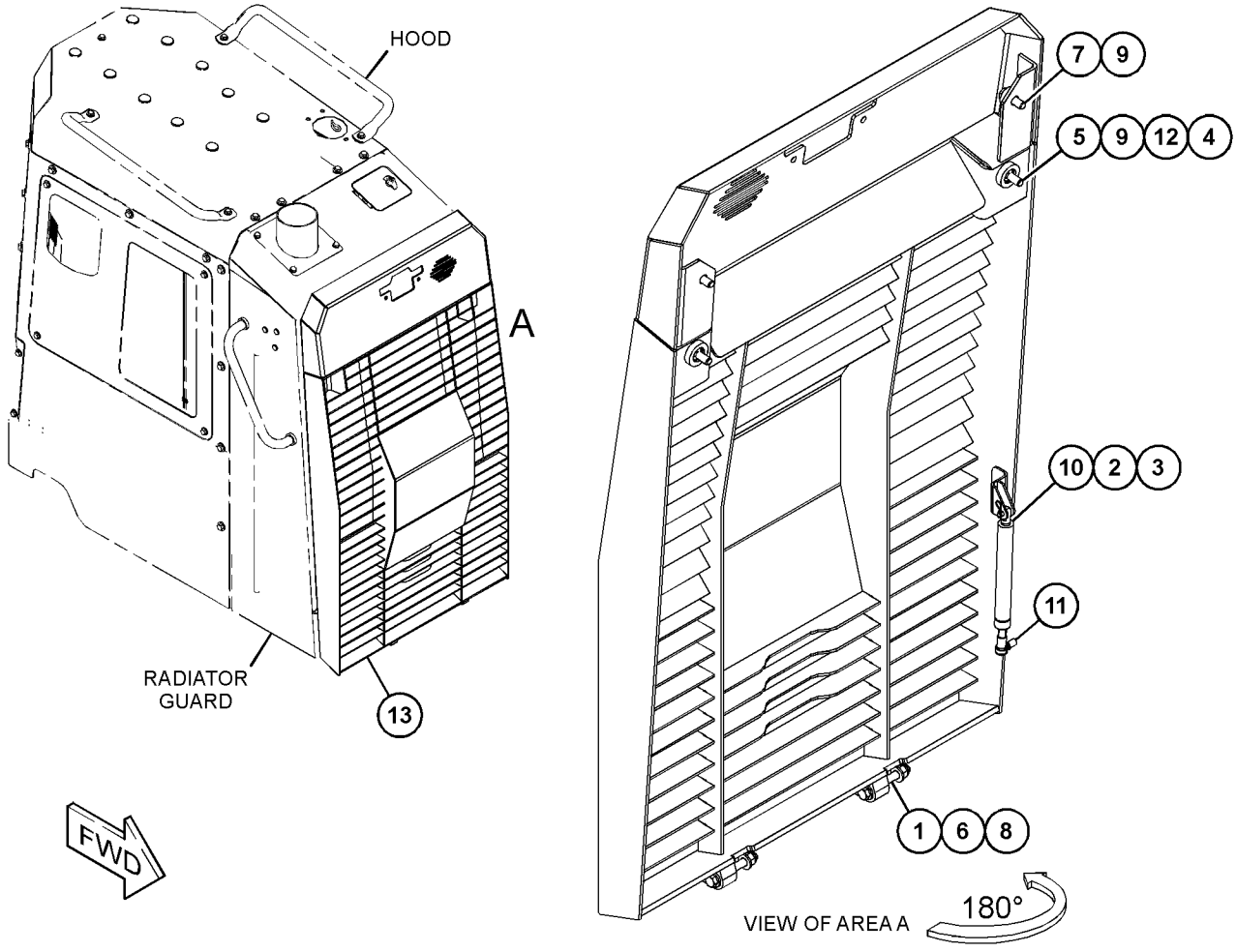

GRAPHIC #1 <END> g06329639

543-2984 GRILL GP-RADIATOR

S/N: H3C1-UP; K3G1-UP
HEAVY-DUTY
PART OF 543-3285, 543-3286 GUARD AR-BOTTOM
AN ATTACHMENT

SMCS-7170 **i07580358**

NOTE	REF NO	GRAPHIC REF	PART NUMBER	QTY	PART NAME 1 2 3 4 5 6 (PRODUCT LEVEL)	SEE PAGE
M	1	1	**8T-4176**	2	BOLT (M12X1.75X90-MM)	
	2	1	**1A-2457**	1	PIN-CLEVIS	
	3	1	**6V-9197**	1	LOCK PIN	
	4	1	**8R-8847**	2	RETAINER-SPRING	
M	5	1	**8T-4194**	2	BOLT (M12X1.75X50-MM)	
	6	1	**8T-4223**	6	WASHER-HARD (13.5X25.5X3-MM THK)	
M	7	1	**8T-4956**	2	BOLT (M12X1.75X35-MM)	
M	8	1	**8T-8549**	2	LOCKNUT (M12X1.75-THD)	
	9	1	**198-4778**	4	WASHER-HARD (13.5X30X12-MM THK)	
	10	1	**328-3767**	1	CYLINDER AS	
	11	1	**348-9393**	1	STUD-BALL	
	12	1	**432-8272**	2	SPACER	
	13	1	*543-2907*	1	GRILL GP-RADIATOR	
		1	**433-0765**	1	GRILL AS	
		1	**543-2909**	1	GRILL AS (TOP)	

M - METRIC PART

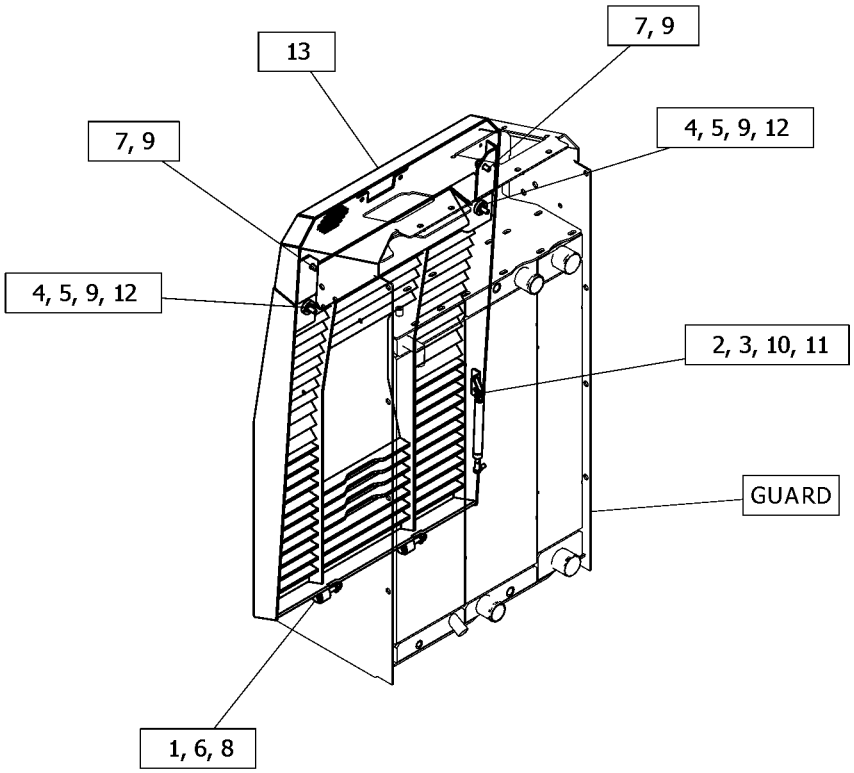

GRAPHIC #1 <END> g06365916

543-3284 GUARD AR-BOTTOM

S/N: H3C1-UP; K3G1-UP
AN ATTACHMENT

SMCS-7153 **i07459337**

NOTE	PART NUMBER	QTY	PART NAME 1 2 3 4 5 6 (PRODUCT LEVEL)	SEE PAGE
Y	*543-2982*	1	GRILL GP-RADIATOR	272
Y	*424-4928*	1	GUARD GP-BOTTOM	275

Y - SEPARATE ILLUSTRATION

<END>

543-3285 GUARD AR-BOTTOM

S/N: H3C1-UP; K3G1-UP
FRONT
AN ATTACHMENT

SMCS-7153 **i07756920**

NOTE	PART NUMBER	QTY	PART NAME 1 2 3 4 5 6 (PRODUCT LEVEL)	SEE PAGE
Y	*543-2984*	1	GRILL GP-RADIATOR	273
Y	*424-4928*	1	GUARD GP-BOTTOM	275

Y - SEPARATE ILLUSTRATION

<END>

543-3286 GUARD AR-BOTTOM—HEAVY-DUTY

S/N: H3C1-UP; K3G1-UP
AN ATTACHMENT

SMCS-7153 **i08057362**

NOTE	PART NUMBER	QTY	PART NAME 1 2 3 4 5 6 (PRODUCT LEVEL)	SEE PAGE
Y	*543-2984*	1	GRILL GP-RADIATOR	273
Y	*437-2632*	1	GUARD GP-BOTTOM (HEAVY-DUTY)	276
Y	*426-5026*	1	GUARD GP-FUEL TANK	277

Y - SEPARATE ILLUSTRATION

<END>

424-4928 GUARD GP-BOTTOM

S/N: H3C1-UP; K3G1-UP
PART OF 543-3284, 543-3285 GUARD AR-BOTTOM
AN ATTACHMENT

SMCS-7153 **i06701073**

NOTE	REF NO	GRAPHIC REF	PART NUMBER	QTY	PART NAME 1 2 3 4 5 6 (PRODUCT LEVEL)	SEE PAGE
	1	1	**106-1242**	23	SPACER (13.8X23.75X12.7-MM THK)	
	2	1	**288-6968**	2	PLATE	
	3	1	**469-8808**	1	PLATE AS	
	4	1	**484-7273**	1	PLATE AS	
	5	1	**484-7276**	1	PLATE AS	
	6	1	**7X-0618**	33	WASHER-HARD (13.5X40X5-MM THK)	
	7	1	**8T-4121**	6	WASHER-HARD (11X21X2.5-MM THK)	
M	8	1	**8T-4183**	33	BOLT (M12X1.75X40-MM)	
M	9	1	**8T-4195**	6	BOLT (M10X1.5X30-MM)	

M - METRIC PART

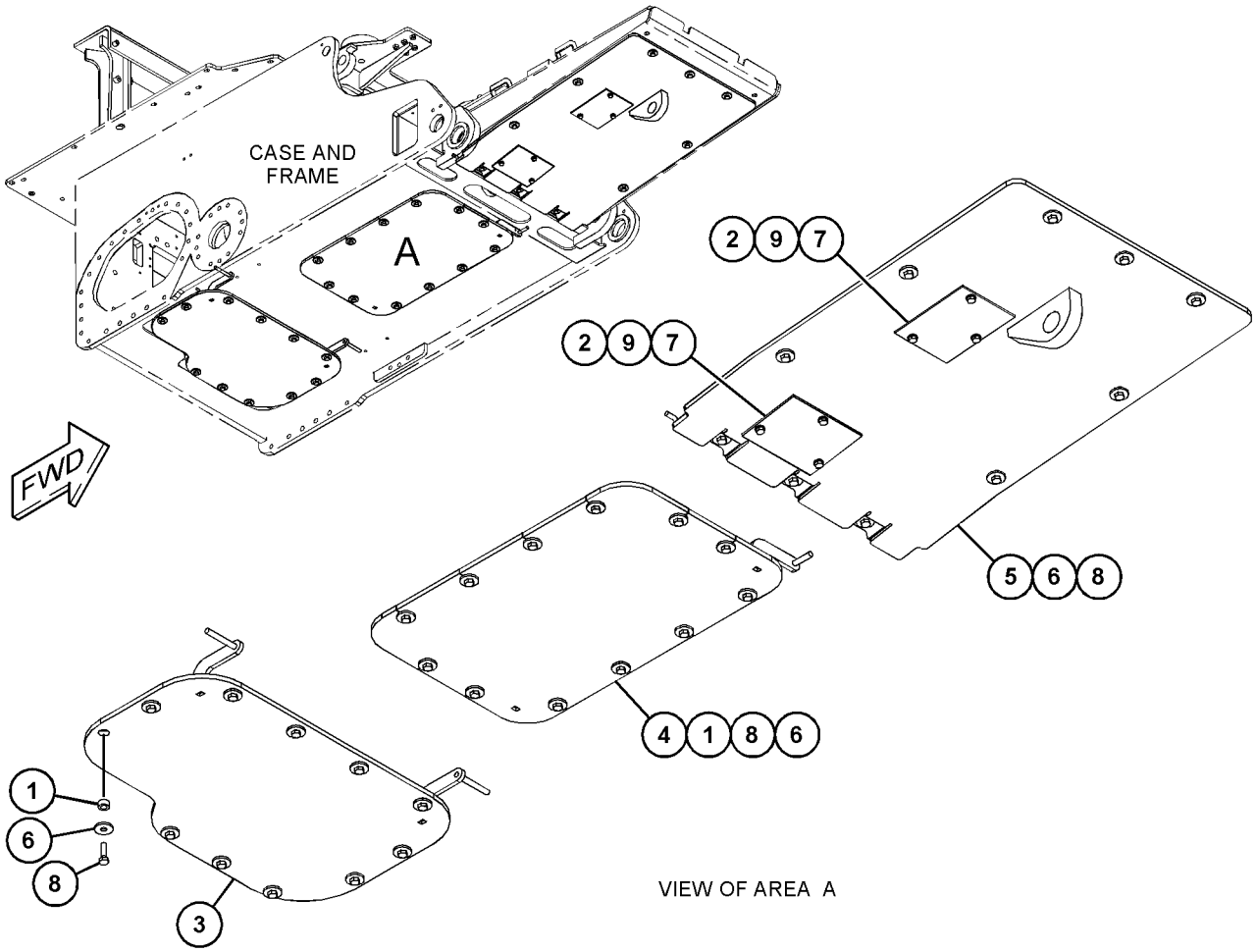

GRAPHIC #1 <END> g06010972

437-2632 GUARD GP-BOTTOM—HEAVY-DUTY

S/N: H3C1-UP; K3G1-UP
CANNOT BE USED WITH 424-4928—PAGE: 275
PART OF 543-3286 GUARD AR-BOTTOM
AN ATTACHMENT

SMCS-7153 **i07636547**

NOTE	REF NO	GRAPHIC REF	PART NUMBER	QTY	PART NAME 1 2 3 4 5 6 (PRODUCT LEVEL)	SEE PAGE
	1	1	**288-6968**	2	PLATE	
	2	1	**470-0620**	23	SPACER	
	3	1	**470-0621**	1	PLATE AS	
	4	1	**484-7276**	1	PLATE AS	
M		1	**8T-3490**	6	NUT-WELD (M10X1.5-THD)	
	5	1	**487-8301**	1	PLATE AS	
	6	1	**7X-0618**	33	WASHER-HARD (13.5X40X5-MM THK)	
	7	1	**8T-4121**	6	WASHER-HARD (11X21X2.5-MM THK)	
M	8	1	**8T-4183**	33	BOLT (M12X1.75X40-MM)	
M	9	1	**8T-4195**	6	BOLT (M10X1.5X30-MM)	

M - METRIC PART

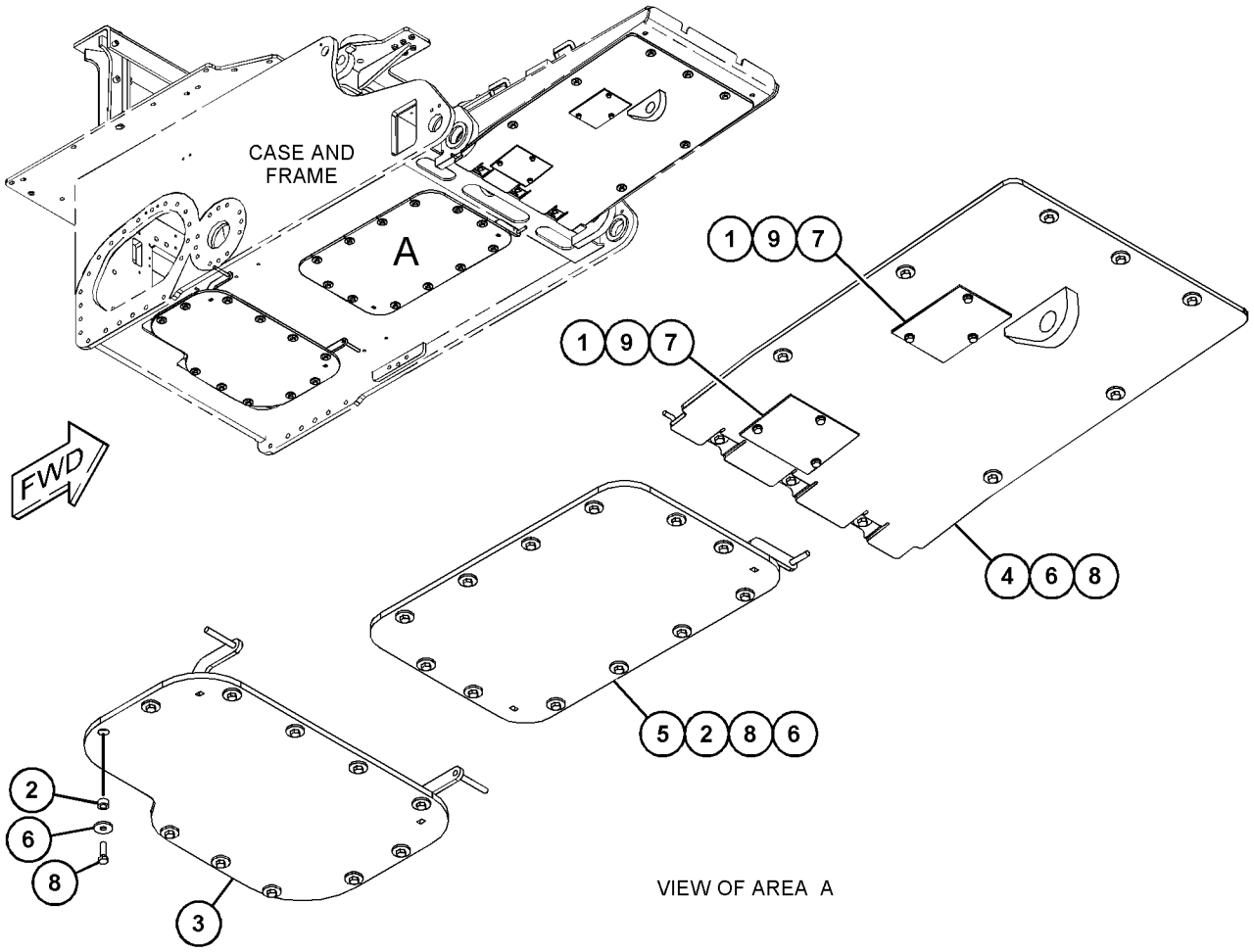

VIEW OF AREA A

GRAPHIC #1 <END> g06012351

426-5026 GUARD GP-FUEL TANK

S/N: H3C1-UP; K3G1-UP
PART OF 543-3286 GUARD AR-BOTTOM
AN ATTACHMENT

SMCS-1273, 7150

i06701108

NOTE	REF NO	GRAPHIC REF	PART NUMBER	QTY	PART NAME 1 2 3 4 5 6 (PRODUCT LEVEL)	SEE PAGE
	1	1	**125-7037**	4	INSERT	
Y	2	1	*430-8034*	1	GUARD GP-FUEL TANK	278
	3	1	**198-4778**	3	WASHER-HARD (13.5X30X12-MM THK)	
	4	1	**5P-1076**	3	WASHER-HARD (13.5X30X4-MM THK)	
M	5	1	**8T-4183**	3	BOLT (M12X1.75X40-MM)	
M	6	1	**8T-4910**	3	BOLT (M12X1.75X60-MM)	

M - METRIC PART
Y - SEPARATE ILLUSTRATION

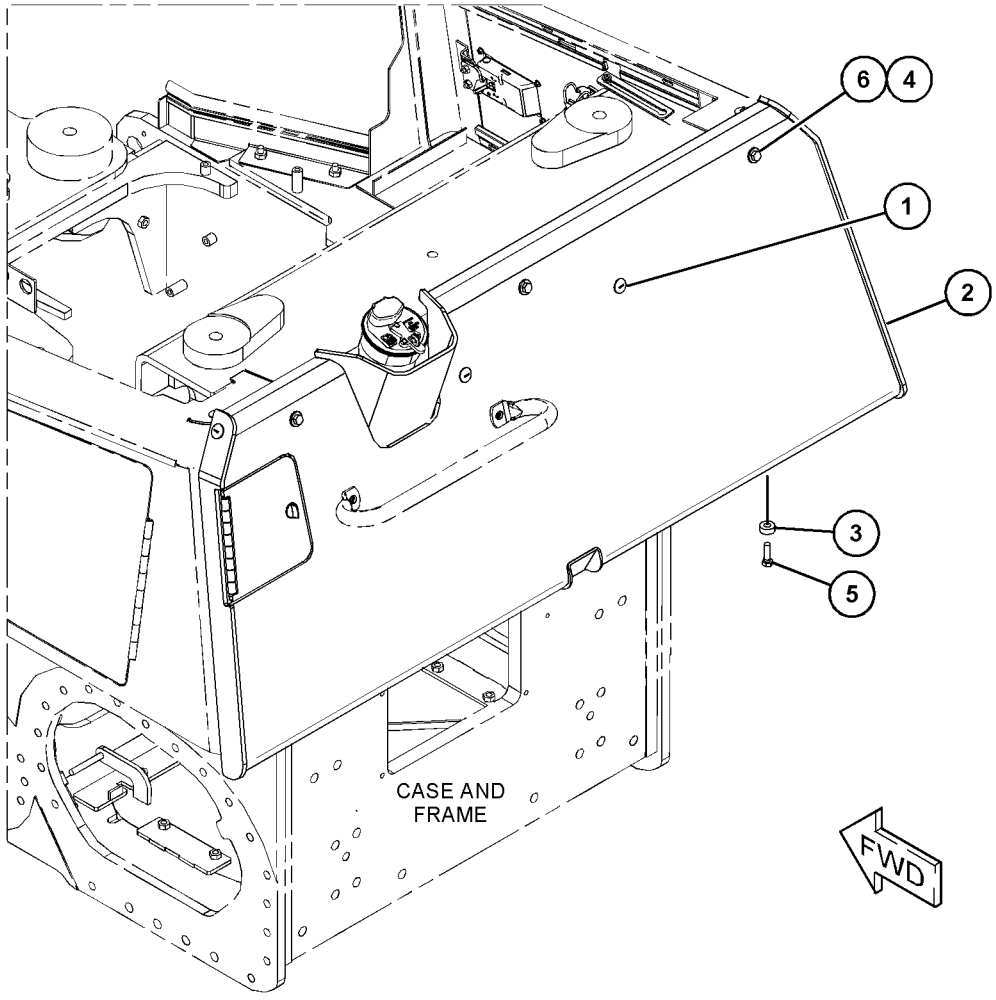

GRAPHIC #1

<END>

g06021052

430-8034 GUARD GP-FUEL TANK

S/N: H3C1-UP; K3G1-UP
PART OF 426-5026 GUARD GP-FUEL TANK
AN ATTACHMENT

SMCS-1273, 7150

i06701112

NOTE	REF NO	GRAPHIC REF	PART NUMBER	QTY	PART NAME 1 2 3 4 5 6 (PRODUCT LEVEL)	SEE PAGE
	1	1	**426-5027**	1	PLATE AS	
	2	1	**459-0386**	1	LATCH AS	

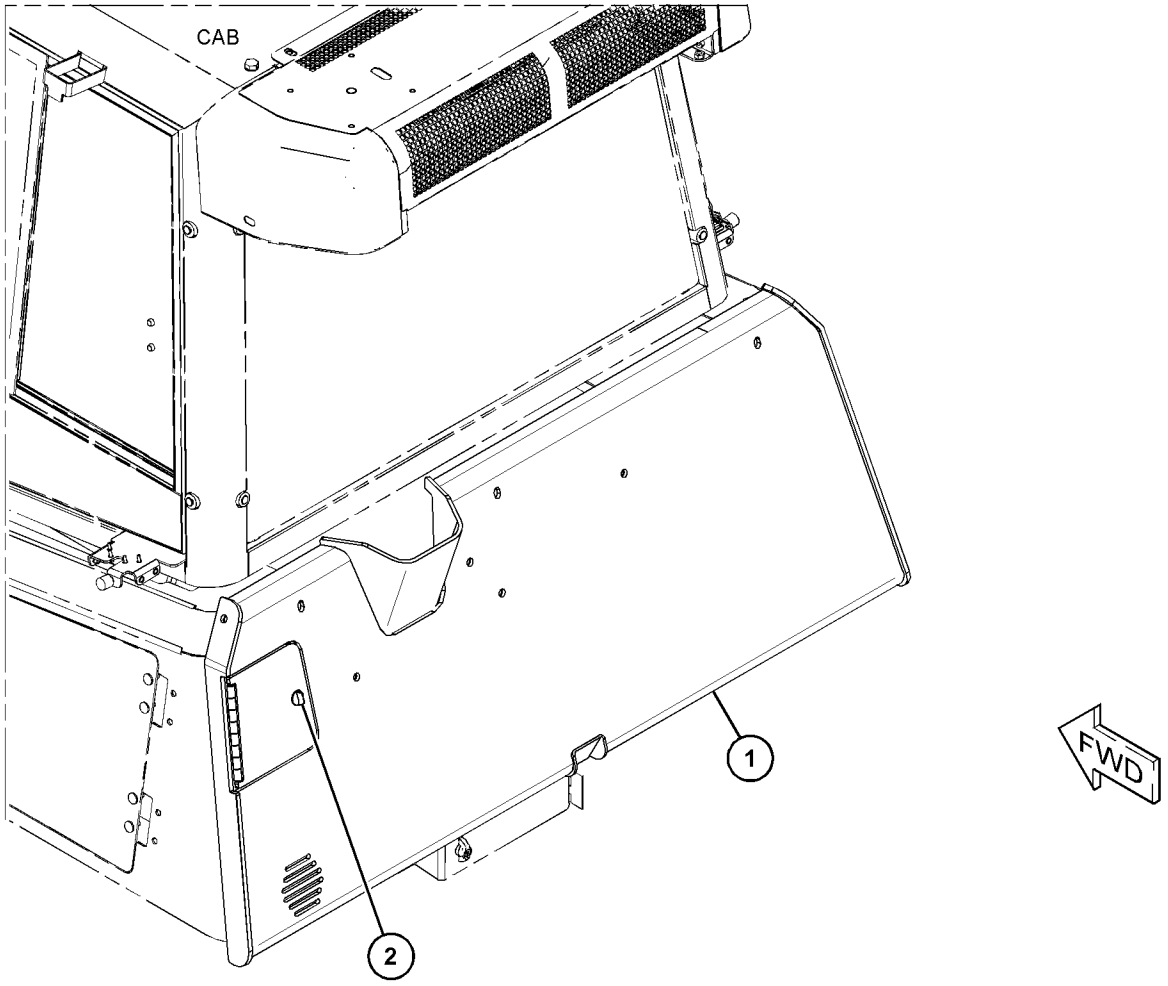

GRAPHIC #1 <END> g06019082

291-4110 GUARD GP-LIGHTING

S/N: H3C1-UP; K3G1-UP
FOR USE WITH CAB AR
PART OF 556-9002 SWEEP AR
AN ATTACHMENT

SMCS-715L **i08068825**

NOTE	REF NO	GRAPHIC REF	PART NUMBER	QTY	PART NAME 1 2 3 4 5 6 (PRODUCT LEVEL)	SEE PAGE
	1	1	**293-3746**	2	GRID	
	2	1	**587-9947**	2	BRACKET AS	
					(EACH INCLUDES)	
		1	**7T-1099**	2	LINK	
M		1	**8T-3490**	4	NUT-WELD (M10X1.5-THD)	
M		1	**8T-3612**	4	NUT-WELD (M8X1.25-THD)	
	3	1	**587-9949**	2	BRACKET	
	4	1	**7M-3361**	2	GROMMET	
	5	1	**7X-7729**	6	WASHER (11X25X3-MM THK)	
	6	1	**8T-4121**	4	WASHER-HARD (11X21X2.5-MM THK)	
M	7	1	**8T-4136**	10	BOLT (M10X1.5X25-MM)	
M	8	1	**8T-4189**	8	BOLT (M8X1.25X20-MM)	
	9	1	**8T-4224**	10	WASHER-HARD (8.8X16X2-MM THK)	
M	10	1	**131-3540**	2	LOCKNUT (M8X1.25-THD)	

M - METRIC PART

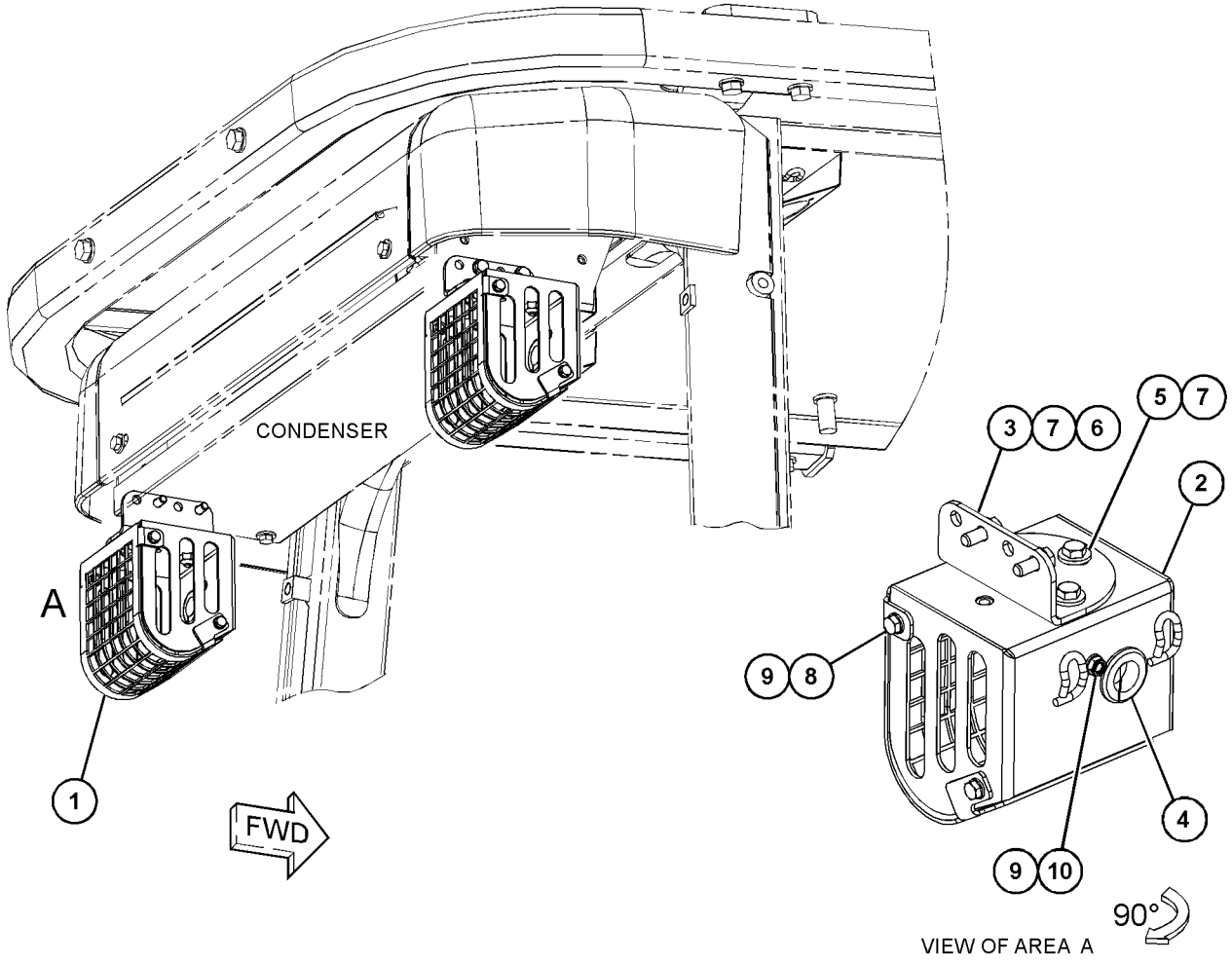

GRAPHIC #1 <END> g06542978

425-5434 GUARD GP-RADIATOR

S/N: H3C1-UP; K3G1-UP
PART OF 459-6582 CHASSIS AR

SMCS-7155 **i06707503**

NOTE	REF NO	GRAPHIC REF	PART NUMBER	QTY	PART NAME 1 2 3 4 5 6 (PRODUCT LEVEL)	SEE PAGE
Y	1	1	*440-0533*	1	GUARD GP-RADIATOR	281
	2	1	**461-1232**	6	PLUG	
	3	1	**198-4780**	6	WASHER-HARD (17.5X32X8-MM THK)	
M	4	1	**8T-7338**	6	BOLT (M16X2X45-MM)	

M - METRIC PART
Y - SEPARATE ILLUSTRATION

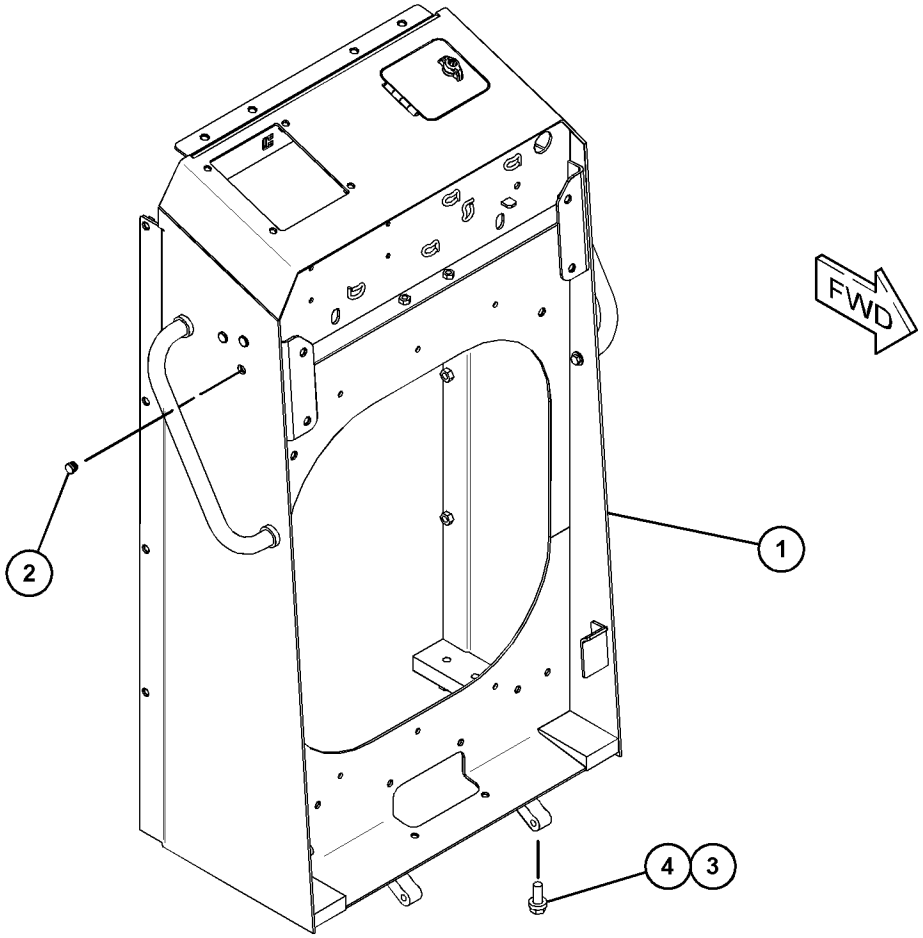

GRAPHIC #1 <END> g06017770

440-0533 GUARD GP-RADIATOR

S/N: H3C1-UP; K3G1-UP

PART OF 425-5434 GUARD GP-RADIATOR

SMCS-7155 **i08023123**

NOTE	REF NO	GRAPHIC REF	PART NUMBER	QTY	PART NAME 1 2 3 4 5 6 (PRODUCT LEVEL)	SEE PAGE
J	1	1	**275-0572**	1	LATCH AS	
	2	1	**319-2305**	1	CAM-LATCH	
	3	1	**348-9392**	2	HANDLE AS	
	4	1	**425-5435**	1	GUARD AS	
	5	1	**7X-7729**	4	WASHER (11X25X3-MM THK)	
M	6	1	**8T-4186**	4	BOLT (M10X1.5X40-MM)	

J - REQUIRES CORPORATE KEY
M - METRIC PART

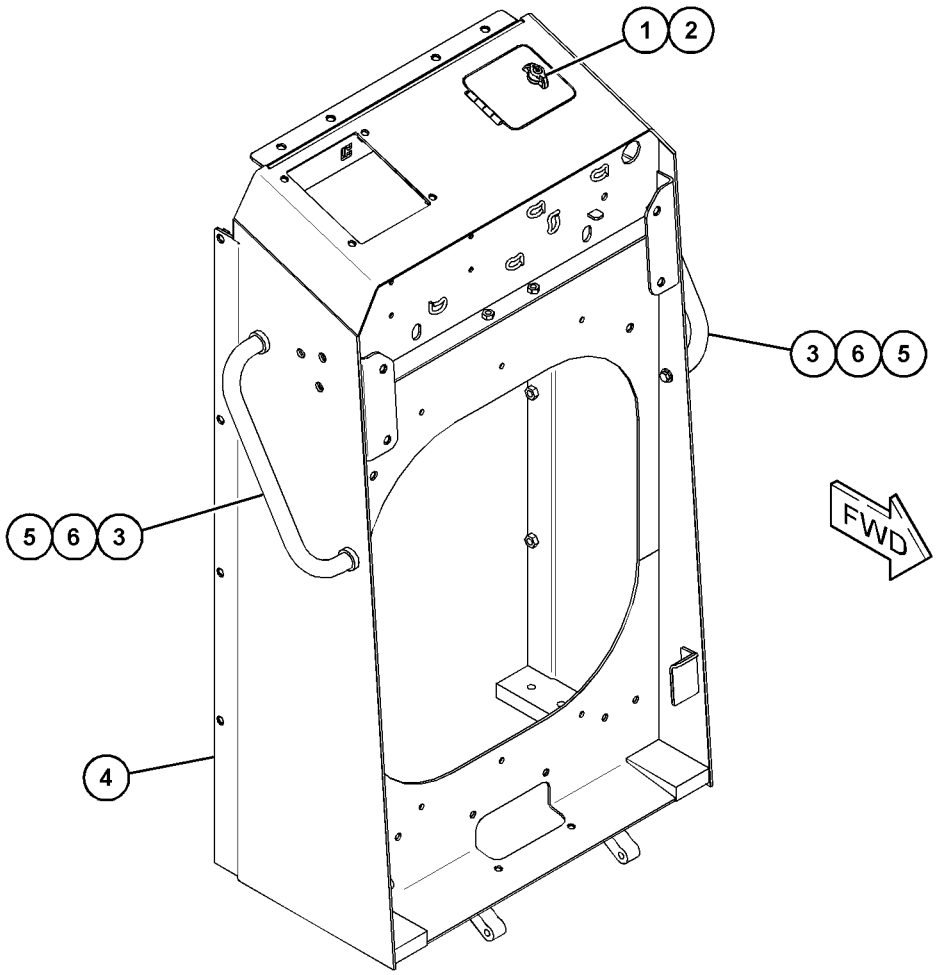

GRAPHIC #1 <END> g06017809

433-1767 GUARD GP-REAR—WINCH

S/N: H3C1-UP; K3G1-UP
PART OF 459-6582 CHASSIS AR

SMCS-7187 **i06707472**

NOTE	REF NO	GRAPHIC REF	PART NUMBER	QTY	PART NAME 1 2 3 4 5 6 (PRODUCT LEVEL)	SEE PAGE
	1	1	**438-3007**	1	PLATE (TOP)	
	2	1	**438-3008**	1	PLATE (BOTTOM)	
	3	1	**5P-1076**	8	WASHER-HARD (13.5X30X4-MM THK)	
M	4	1	**8T-4139**	8	BOLT (M12X1.75X30-MM)	

M - METRIC PART

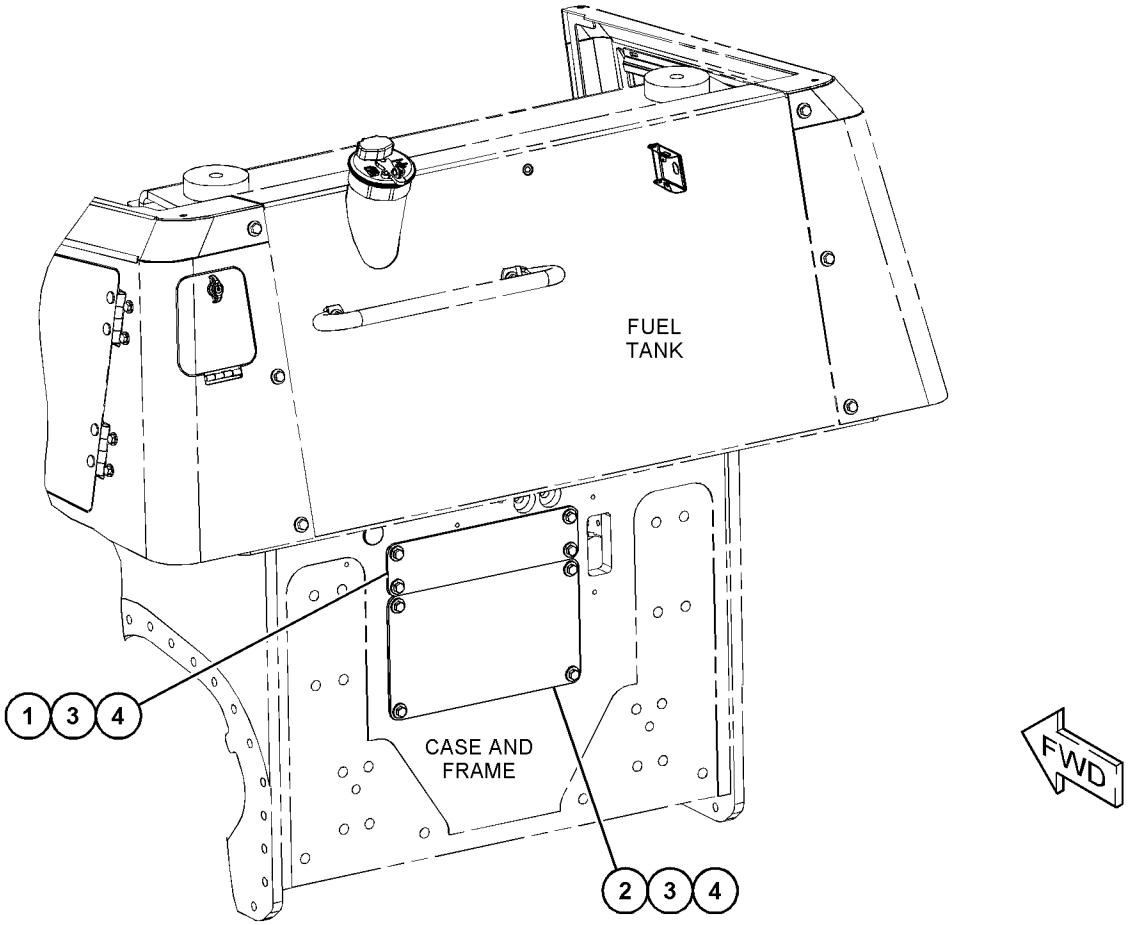

GRAPHIC #1 <END> g06017735

461-8771 HOOD GP

S/N: H3C1-UP; K3G1-UP
PART OF 459-6582 CHASSIS AR

SMCS-7251 **i07517550**

NOTE	REF NO	GRAPHIC REF	PART NUMBER	QTY	PART NAME 1 2 3 4 5 6 (PRODUCT LEVEL)	SEE PAGE
M	1	1	**8T-4136**	9	BOLT (M10X1.5X25-MM)	
M	2	1	**8T-4139**	6	BOLT (M12X1.75X30-MM)	
M	3	1	**8T-4194**	10	BOLT (M12X1.75X50-MM)	
	4	1	**5P-1076**	6	WASHER-HARD (13.5X30X4-MM THK)	
	5	1	**7X-7729**	9	WASHER (11X25X3-MM THK)	
	6	1	*483-9181*	1	SUPPORT GP-HOOD	
E		1	**280-7618**		SEAL (139-CM)	
		1	**461-8779**	1	SUPPORT AS-HOOD	
	7	1	**198-4778**	10	WASHER-HARD (13.5X30X12-MM THK)	
	8	1	**469-0522**	2	HANDLE	
	9	1	**461-1233**	2	PLUG	
	10	1	**461-8773**	1	HOOD AS	
	11	1	**465-1097**	1	PLATE	

E - ORDER BY THE CENTIMETER
M - METRIC PART

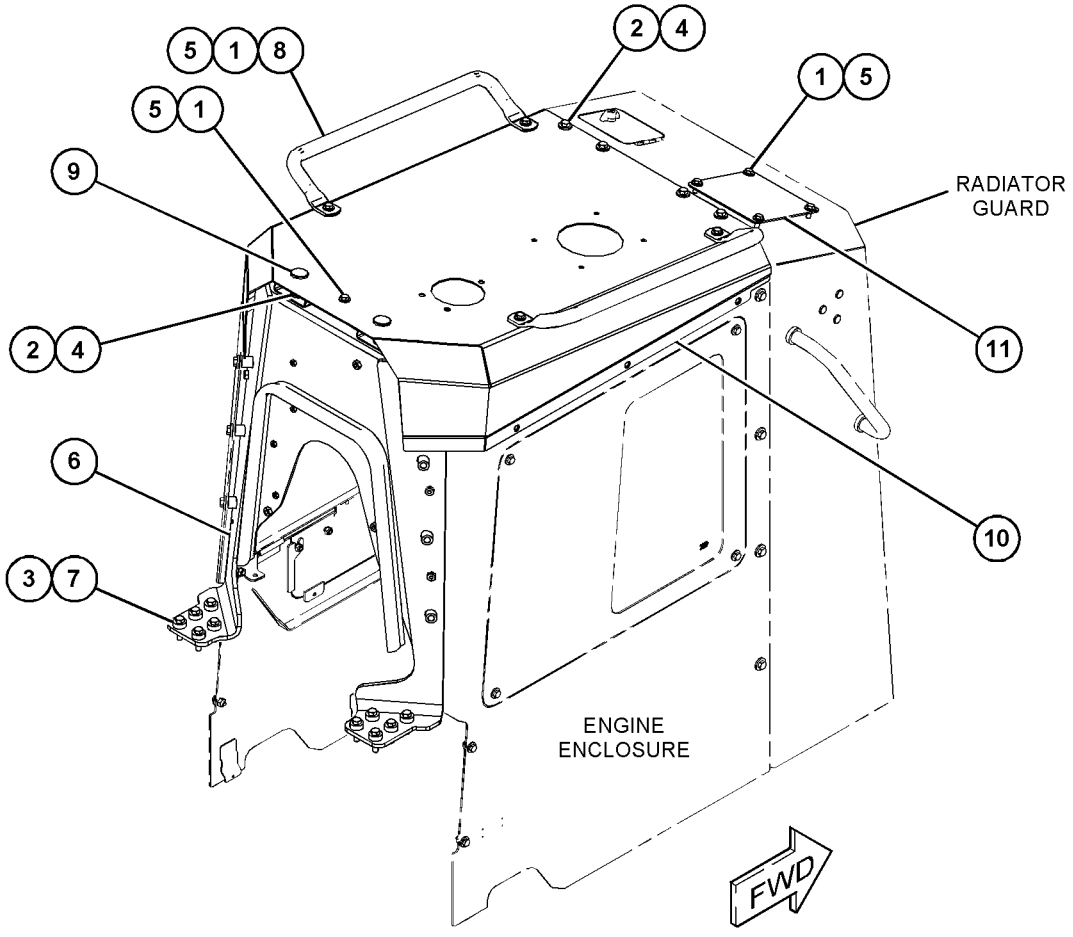

GRAPHIC #1 <END> g06376397

435-7594 INSULATION GP-SOUND SUPPR

S/N: H3C1-UP; K3G1-UP
PART OF 568-1316, 568-1317, 568-1318 CAB AR
AN ATTACHMENT

SMCS-1801, 7076, 7261 **i07573590**

NOTE	REF NO	GRAPHIC REF	PART NUMBER	QTY	PART NAME 1 2 3 4 5 6 (PRODUCT LEVEL)	SEE PAGE
	1	1	**438-1709**	1	FOAM	
	2	1	**438-1710**	1	FOAM	
	3	1	**438-1711**	1	FOAM	
	4	1	**438-1713**	1	FOAM	
	5	1	**490-9485**	1	FOAM	
	6	1	**490-9486**	1	FOAM	
	7	1	**491-0563**	1	INSULATION	
	8	1	**491-0564**	1	INSULATION	
	9	1	**491-0565**	1	INSULATION	
	10	1	**504-5594**	1	INSULATION	
	11	1	**491-6096**	1	FOAM	
	12	1	**491-6097**	1	FOAM	

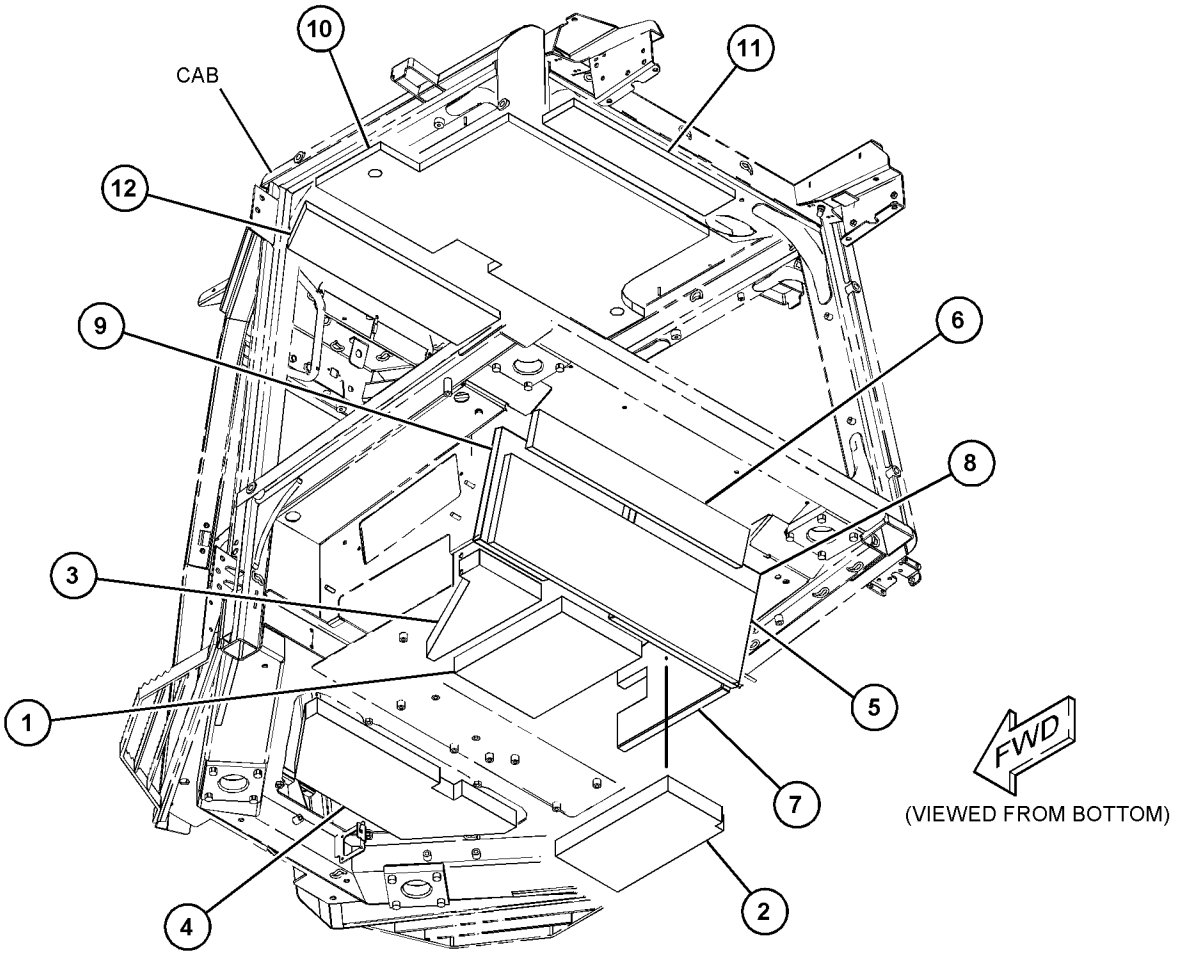

GRAPHIC #1 <END> g06187837

457-5416 LINES GP-GREASE

S/N: H3C1-UP; K3G1-UP

PART OF 591-7134, 591-7135 POWER TRAIN AR

SMCS-7510, 7517

i07577378

NOTE	REF NO	GRAPHIC REF	PART NUMBER	QTY	PART NAME 1 2 3 4 5 6 (PRODUCT LEVEL)	SEE PAGE
	1	1	**3B-6552**	1	ELBOW-PIPE	
	2	1	**8T-4121**	1	WASHER-HARD (11X21X2.5-MM THK)	
	3	1	**211-0238**	1	FILM-IDENTIFICATION (LUBE POINT)	
M	4	1	**344-5675**	1	NUT (M10X1.5-THD)	
	5	1	**499-1528**	1	HOSE AS	
	6	1	**3E-6909**	1	CLIP (LOOP)	

M - METRIC PART

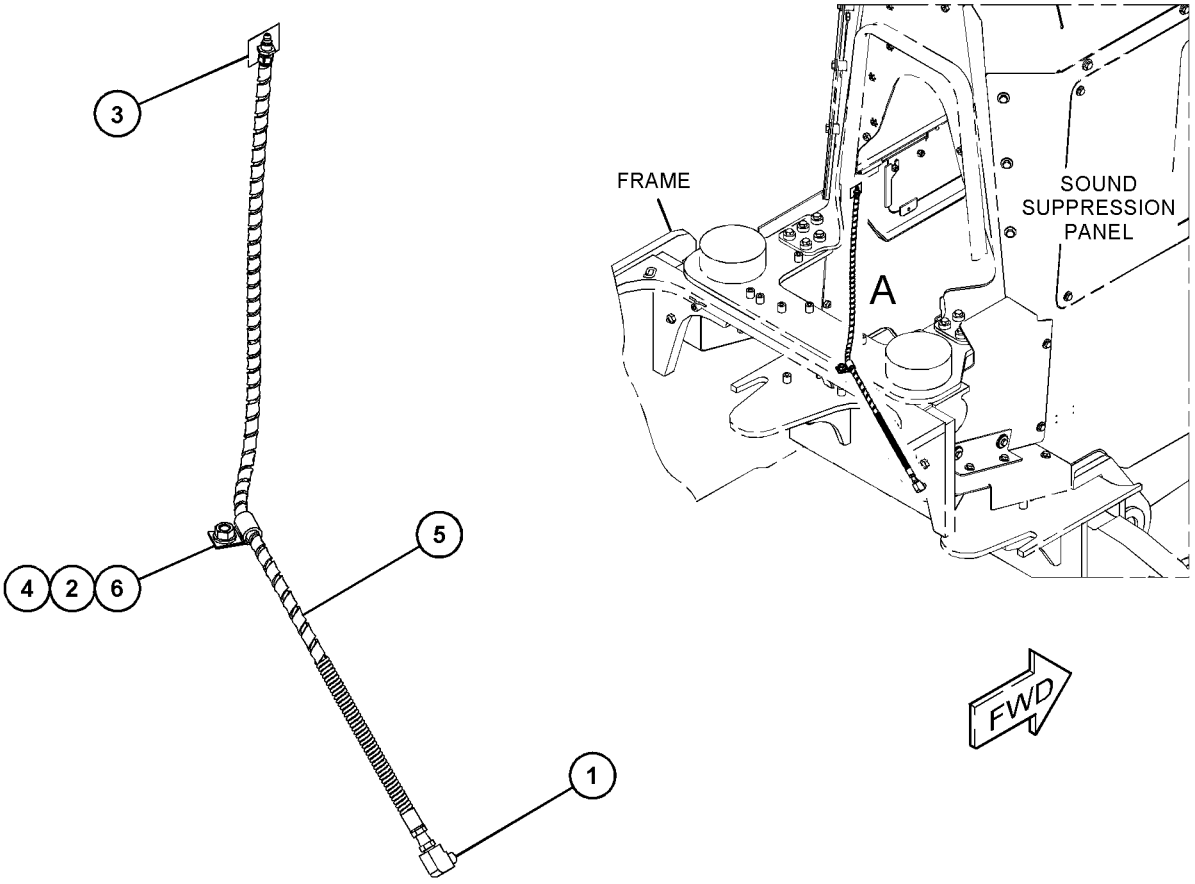

VIEW OF AREA A

GRAPHIC #1 <END> g06181465

462-8920 PANEL GP-SIDE–LH

S/N: H3C1-UP; K3G1-UP

PART OF 461-8770 ENCLOSURE GP-ENGINE

SMCS-7267 **i06988277**

NOTE	REF NO	GRAPHIC REF	PART NUMBER	QTY	PART NAME 1 2 3 4 5 6 (PRODUCT LEVEL)	SEE PAGE
M	1	1	**8T-4136**	2	BOLT (M10X1.5X25-MM)	
	2	1	**276-3990**	1	HINGE AS	
	3	1	**7X-7729**	11	WASHER (11X25X3-MM THK)	
	4	1	**8T-4121**	1	WASHER-HARD (11X21X2.5-MM THK)	
B	5	1	**216-0143**	1	SHIM (1-MM THK)	
	6	1	**221-2718**	3	BUMPER	
	7	1	**267-9928**	1	BRACKET	
M	8	1	**344-5675**	9	NUT (M10X1.5-THD)	
	9	1	**348-9380**	1	ROD AS	
	10	1	**430-8033**	1	PLATE AS	
	11	1	**462-8921**	1	PANEL AS	
	12	1	**483-9175**	1	COVER AS	
	13	1	**483-9176**	1	DOOR GP-ACCESS (LH)	
M		1	**099-6418**	4	NUT (M6X1-THD)	
		1	**358-0921**	1	LATCH AS	
J		1	**385-3458**	1	LOCK AS	
	14	1	**265-9596**	3	WASHER-HARD (13.5X30X9-MM THK)	
	15	1	**3B-4615**	1	PIN-COTTER	
D	16	1	**5P-7483**		SEAL (0.1-M EACH)	
D	16B	1	**5P-7483**		SEAL (0.3-M EACH)	
D	16C	1	**5P-7483**		SEAL (0.6-M)	

B - USE AS REQUIRED
D - ORDER BY THE METER
J - REQUIRES CORPORATE KEY
M - METRIC PART

462-8920 **PANEL GP-SIDE (**contd.**)** **i06988277**

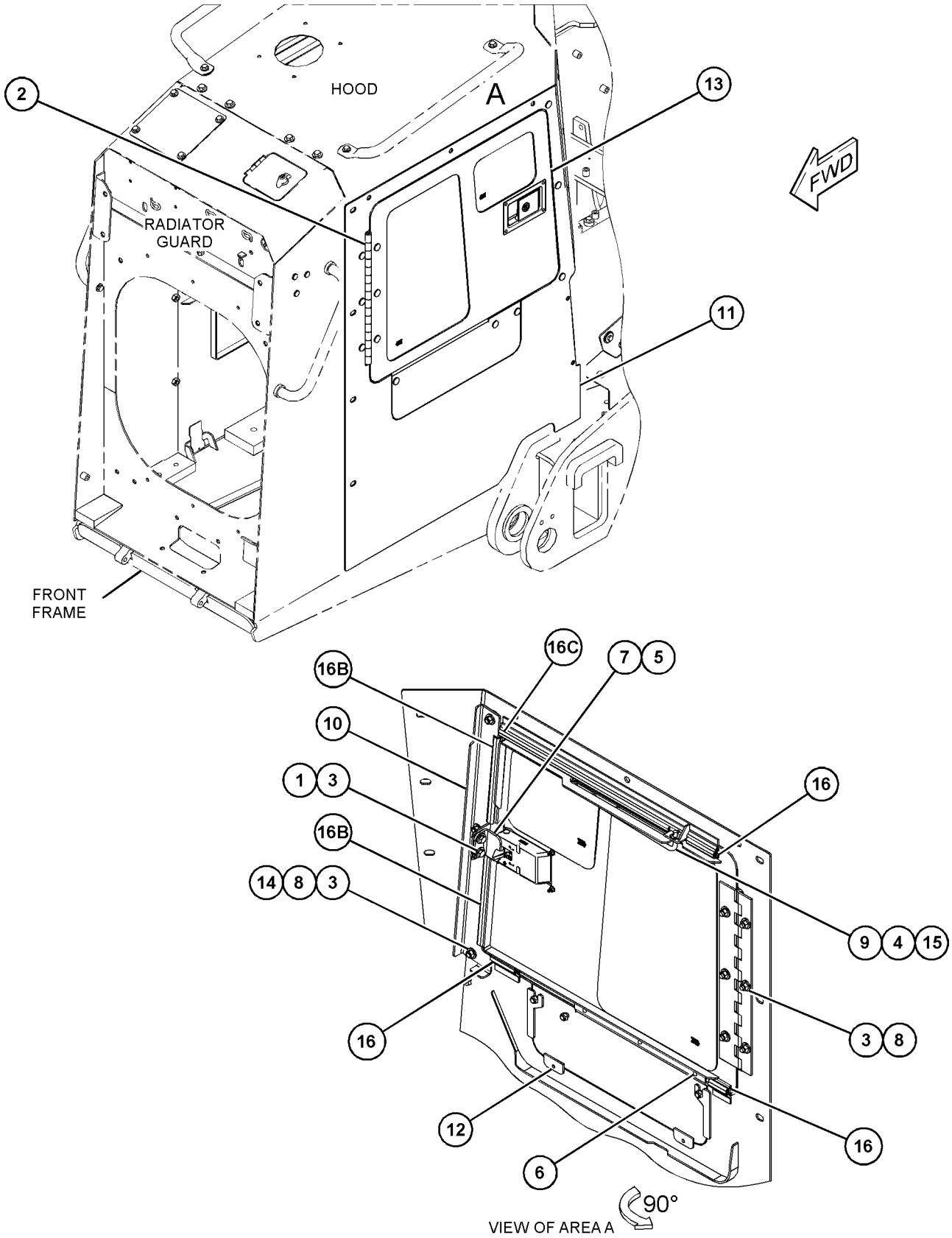

GRAPHIC #1 <END> g06185838

250-1699 SCREEN GP-PROTECTION—SIDES

S/N: H3C1-UP; K3G1-UP
CANNOT BE USED WITH 543-3284—PAGE: 274, 543-3286—PAGE: 274, 556-9001—PAGE: 289, 556-9002—PAGE: 289
PART OF 556-9002 SWEEP AR
AN ATTACHMENT

SMCS-7150 **i08062740**

NOTE	REF NO	GRAPHIC REF	PART NUMBER	QTY	PART NAME 1 2 3 4 5 6 (PRODUCT LEVEL)	SEE PAGE
	1	1	**252-0552**	1	SCREEN AS (RH)	
M		1	**8T-3597**	4	NUT-WELD (M12X1.75-THD)	
	2	1	**252-0553**	1	SCREEN AS (LH)	
M		1	**8T-3597**	4	NUT-WELD (M12X1.75-THD)	
M	3	1	**7X-2553**	6	BOLT (M16X2X40-MM)	
M	4	1	**7X-2554**	2	BOLT (M16X2X70-MM)	
	5	1	**7X-0515**	8	WASHER-HARD (17X35X5-MM THK)	

M - METRIC PART

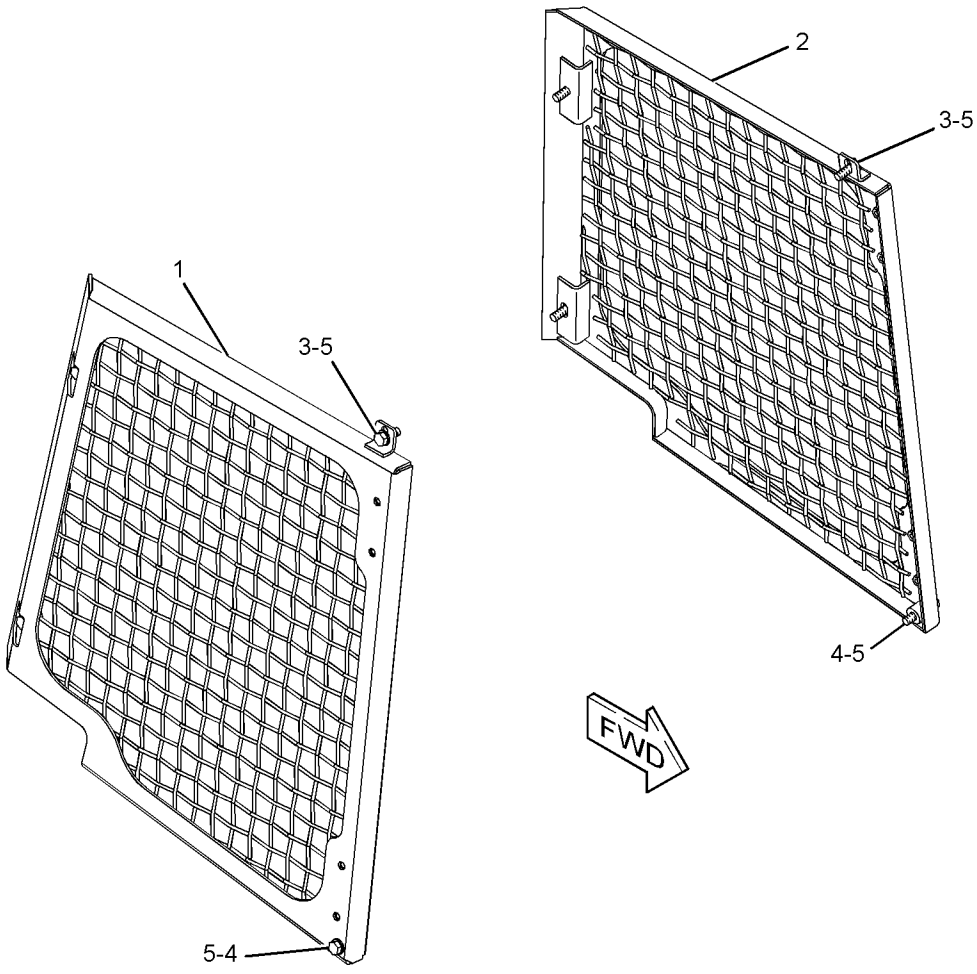

GRAPHIC #1 <END> g01202762

556-9001 SWEEP AR

S/N: H3C1-UP; K3G1-UP
AN ATTACHMENT

SMCS-7000 **i08057374**

NOTE	PART NUMBER	QTY	PART NAME 1 2 3 4 5 6 (PRODUCT LEVEL)	SEE PAGE
Y	*441-5461*	1	SCREEN GP-CAB	513
Y	*552-5113*	1	SWEEP GP	292

Y - SEPARATE ILLUSTRATION

<END>

556-9002 SWEEP AR

S/N: H3C1-UP; K3G1-UP
HEAVY-DUTY
AN ATTACHMENT

SMCS-7000 **i08057380**

NOTE	PART NUMBER	QTY	PART NAME 1 2 3 4 5 6 (PRODUCT LEVEL)	SEE PAGE
Y	*291-4110*	1	GUARD GP-LIGHTING	279
Y	*441-5461*	1	SCREEN GP-CAB	513
Y	*250-1699*	1	SCREEN GP-PROTECTION (SIDES)	288
Y	*552-5113*	1	SWEEP GP	292

Y - SEPARATE ILLUSTRATION

<END>

439-2580 SWEEP AS–FRONT

S/N: H3C1-UP; K3G1-UP
PART OF 439-2579 SWEEP GP
AN ATTACHMENT

SMCS-7162 **i06701032**

NOTE	REF NO	GRAPHIC REF	PART NUMBER	QTY	PART NAME 1 2 3 4 5 6 (PRODUCT LEVEL)	SEE PAGE
	1	1	**358-4774**	1	TUBE	
	2	1	**358-4777**	2	PLUG	
	3	1	**442-4665**	1	TUBE AS	
	4	1	**442-4666**	1	TUBE AS	

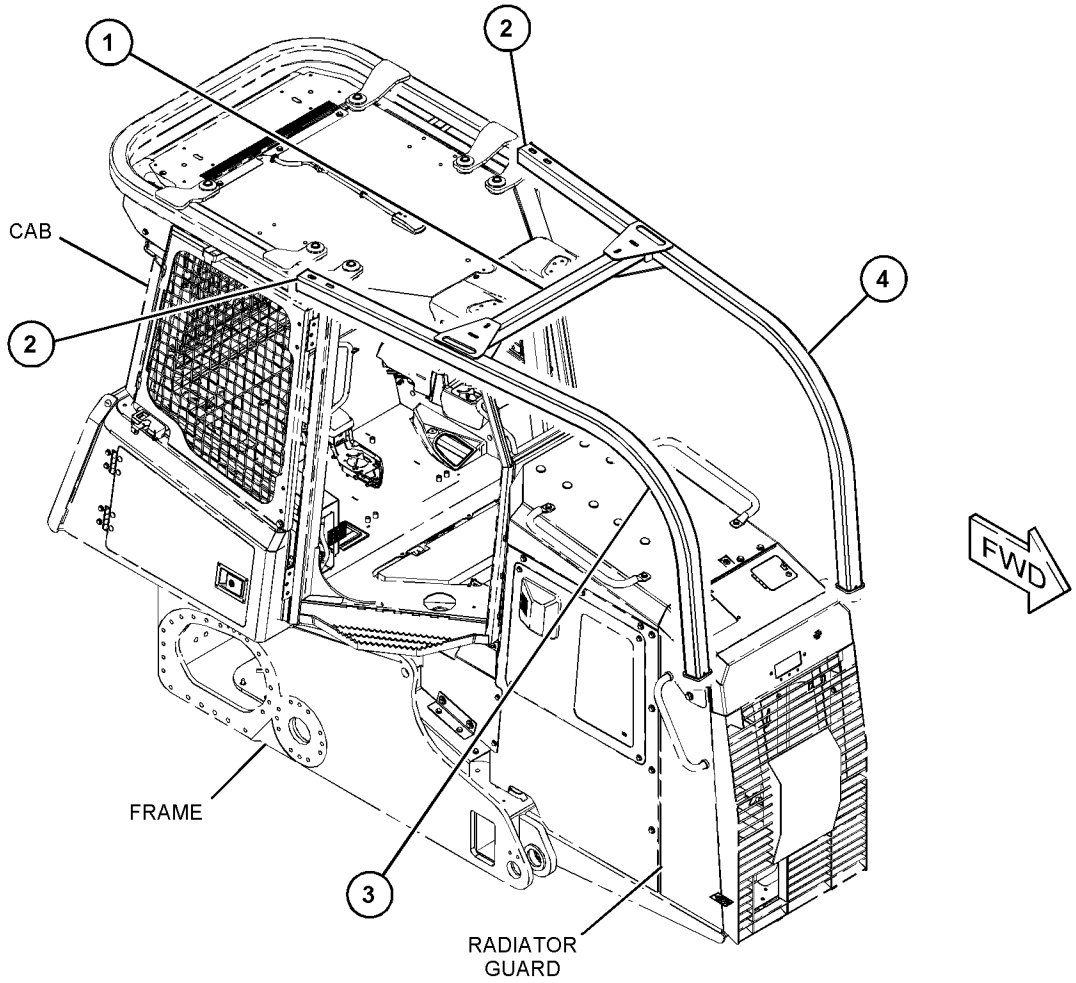

GRAPHIC #1 <END> g06021506

439-2579 SWEEP GP–FRONT

S/N: H3C1-UP; K3G1-UP
PART OF 552-5113 SWEEP GP
AN ATTACHMENT

SMCS-7162 **i06701029**

NOTE	REF NO	GRAPHIC REF	PART NUMBER	QTY	PART NAME 1 2 3 4 5 6 (PRODUCT LEVEL)	SEE PAGE
	1	1	**217-5807**	4	MOUNT	
	2	1	**358-4769**	2	PLATE	
Y	3	1	*439-2580*	1	SWEEP AS	290
	4	1	**439-2581**	1	SUPPORT (RH)	
	5	1	**439-2582**	1	SUPPORT (LH)	
	6	1	**090-8865**	4	SPACER (17X40X3-MM THK)	
M	7	1	**129-3180**	4	LOCKNUT (M12X1.75-THD)	
	8	1	**5P-1076**	8	WASHER-HARD (13.5X30X4-MM THK)	
	9	1	**5V-0500**	4	WASHER (16.5X75X6-MM THK)	
	10	1	**7X-0515**	6	WASHER-HARD (17X35X5-MM THK)	
M	11	1	**7X-2555**	2	BOLT (M16X2X80-MM)	
M	12	1	**7X-2556**	6	BOLT (M16X2X100-MM)	
M	13	1	**8T-4193**	6	BOLT (M16X2X50-MM)	
M	14	1	**8T-5041**	4	BOLT (M12X1.75X120-MM)	

M - METRIC PART
Y - SEPARATE ILLUSTRATION

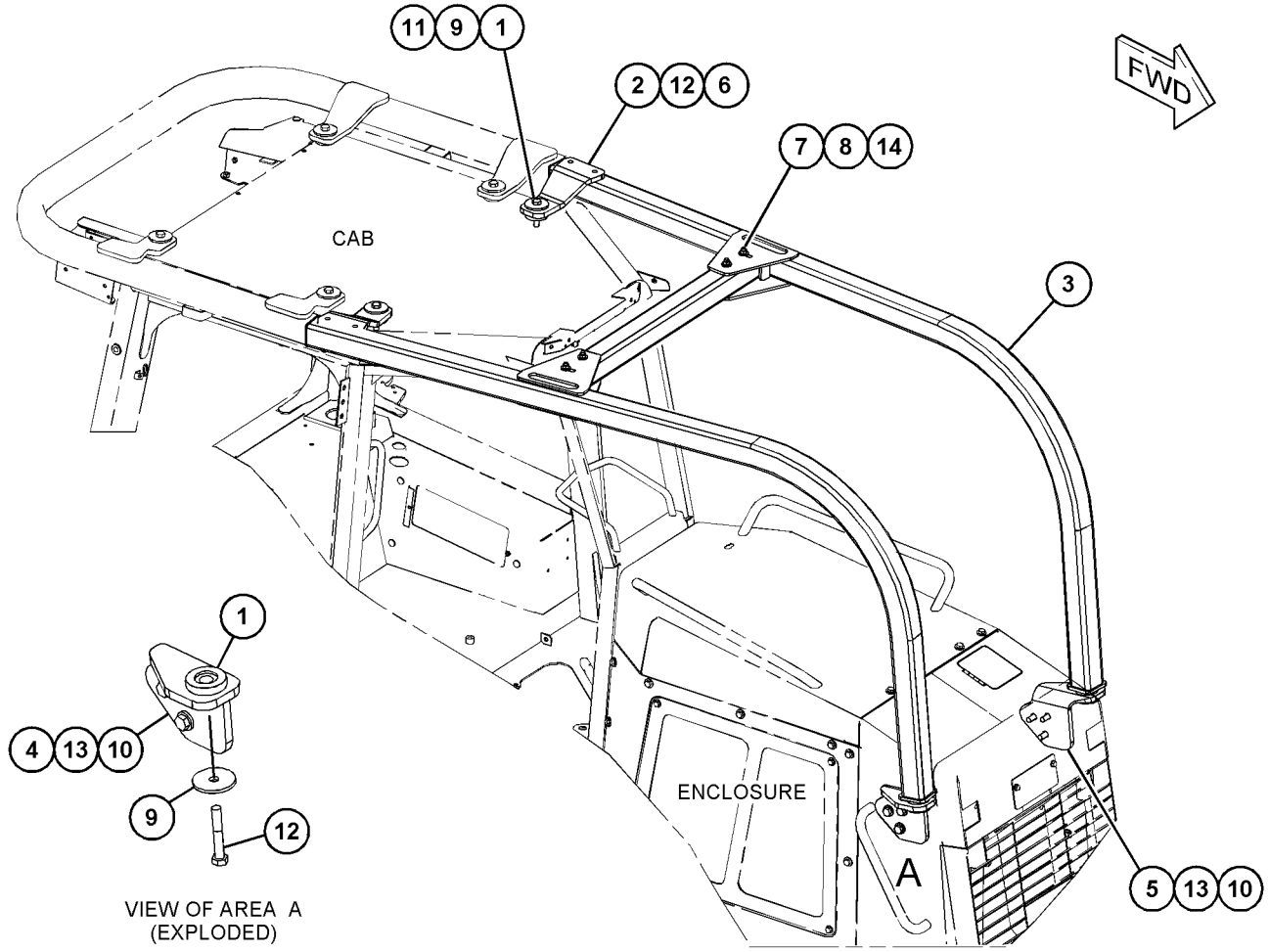

VIEW OF AREA A
(EXPLODED)

GRAPHIC #1 <END> g06021462

552-5113 SWEEP GP

S/N: H3C1-UP; K3G1-UP
PART OF 556-9001, 556-9002 SWEEP AR
AN ATTACHMENT

SMCS-7162 **i07868955**

NOTE	REF NO	GRAPHIC REF	PART NUMBER	QTY	PART NAME 1 2 3 4 5 6 (PRODUCT LEVEL)	SEE PAGE
Y	1	1	*439-2579*	1	SWEEP GP (FRONT)	291
Y	2	1	*552-5114*	1	SWEEP GP (REAR)	293

Y - SEPARATE ILLUSTRATION

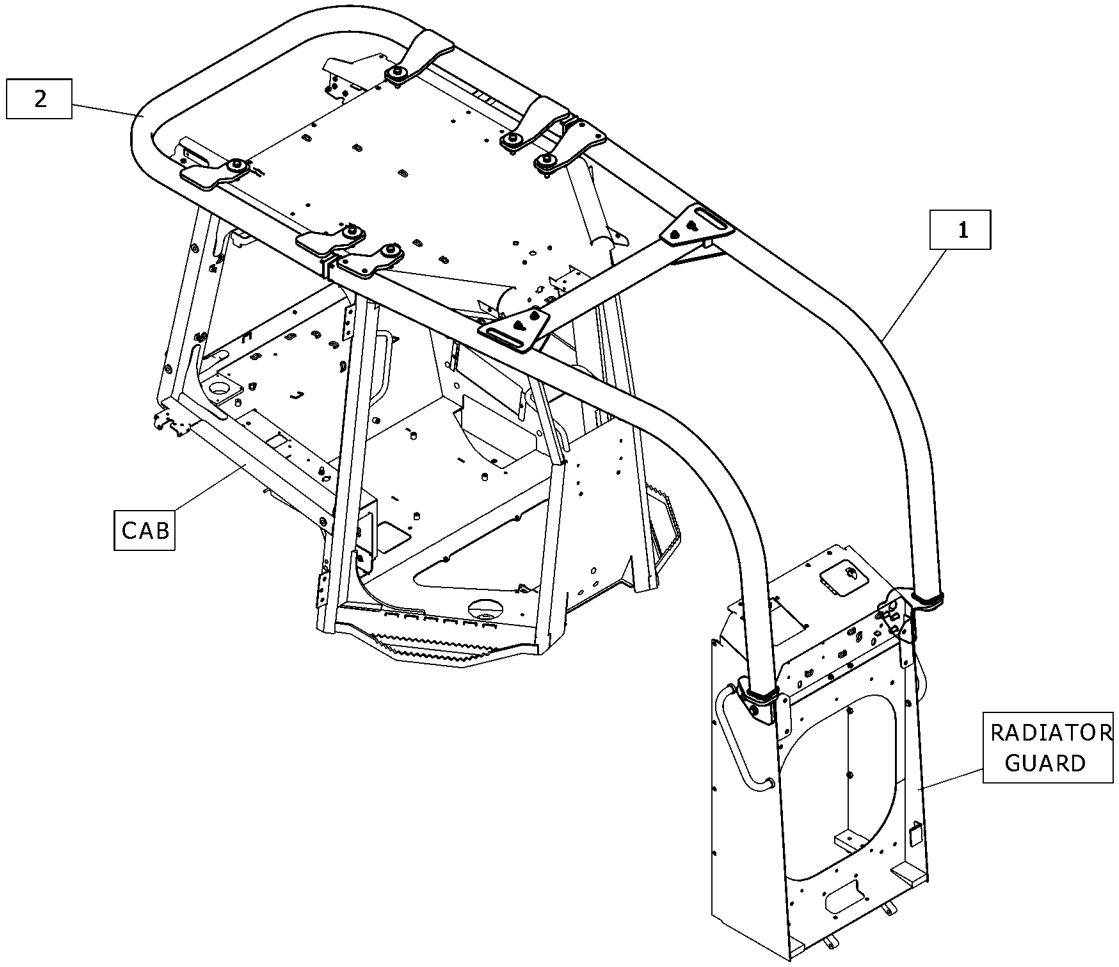

GRAPHIC #1 <END> g06365884

552-5114 SWEEP GP

S/N: H3C1-UP; K3G1-UP
REAR
PART OF 552-5113 SWEEP GP
AN ATTACHMENT

SMCS-7162 **i07868956**

NOTE	REF NO	GRAPHIC REF	PART NUMBER	QTY	PART NAME 1 2 3 4 5 6 (PRODUCT LEVEL)	SEE PAGE
	1	1	**5V-0500**	4	WASHER (16.5X75X6-MM THK)	
M	2	1	**7X-2554**	4	BOLT (M16X2X70-MM)	
	3	1	**142-1281**	4	RETAINER	
	4	1	**358-4777**	2	PLUG	
	5	1	**552-5122**	1	SWEEP AS	

M - METRIC PART

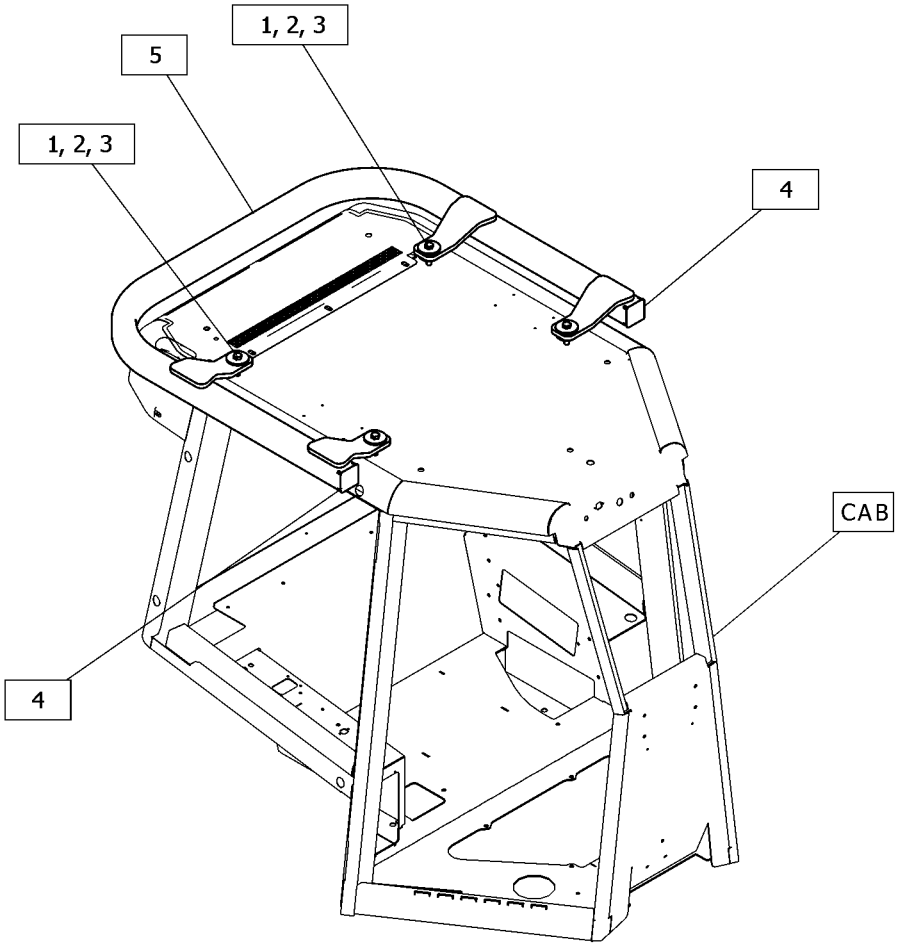

GRAPHIC #1 <END> g06365838

421-4601 BAR GP-EQUALIZER

S/N: K3G1-UP

PART OF 591-7134 POWER TRAIN AR

SMCS-7206 **i06712188**

NOTE	REF NO	GRAPHIC REF	PART NUMBER	QTY	PART NAME 1 2 3 4 5 6 (PRODUCT LEVEL)	SEE PAGE
	1	1	**3B-8489**	2	FITTING-GREASE (1/8-27 PTF)	
	2	1	**248-3946**	1	PIN (CENTER)	
	3	1	**8E-1339**	2	SPACER (52X85X7-MM THK)	
	4	1	**346-2900**	1	COVER	
Y	5	1	*421-4603*	1	BAR GP-EQUALIZER	296
	6	1	**435-5583**	2	PIN AS	
	7	1	**109-0382**	1	COVER	
	8	1	**7X-0587**	2	WASHER-HARD (17X54X3-MM THK)	
M	9	1	**8T-4190**	2	BOLT (M16X2X25-MM)	
M	10	1	**8T-7338**	4	BOLT (M16X2X45-MM)	
	11	1	**9X-8257**	4	WASHER (17.5X30X3.5-MM THK)	

M - METRIC PART
Y - SEPARATE ILLUSTRATION

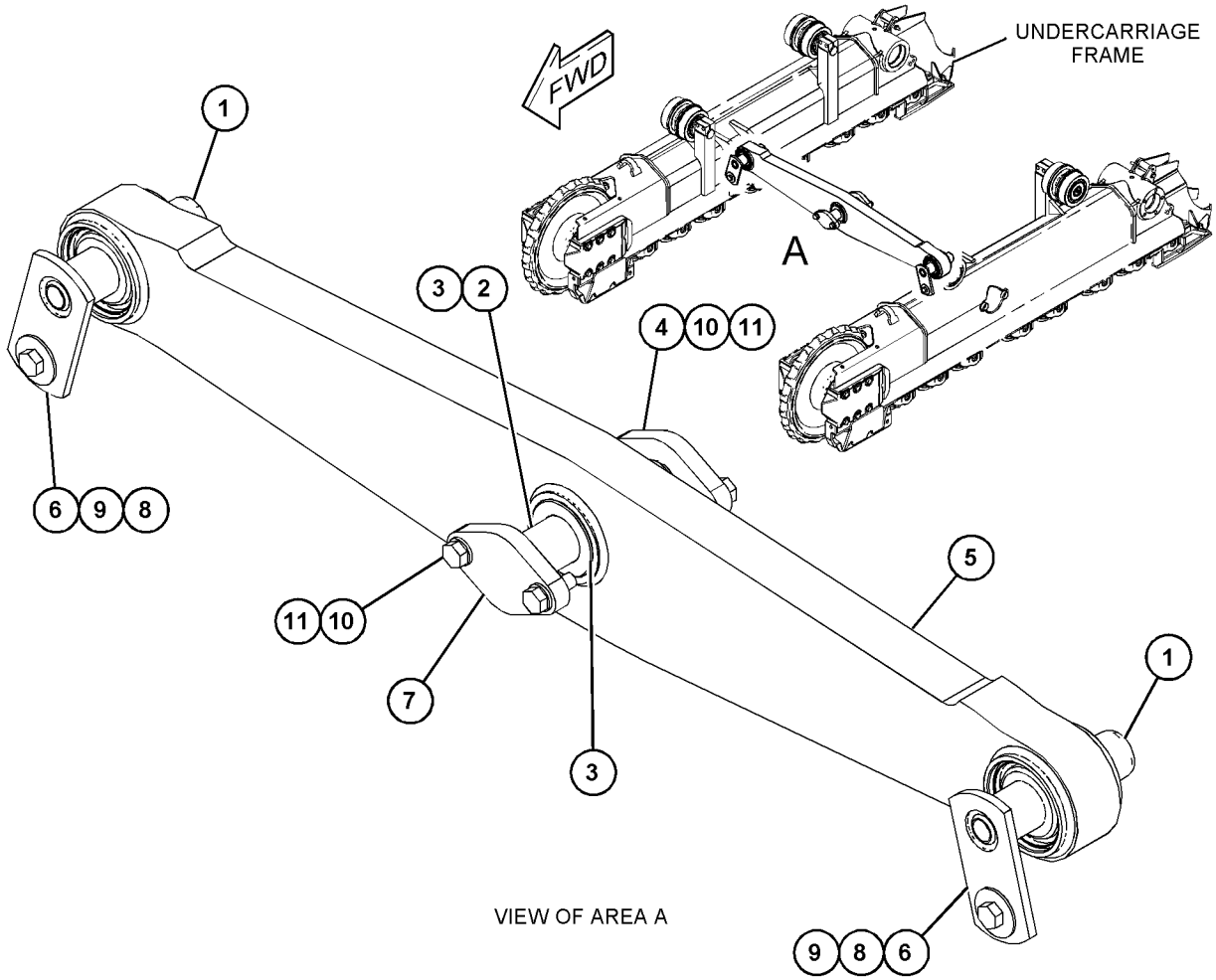

VIEW OF AREA A

GRAPHIC #1 <END> g06016912

421-4602 BAR GP-EQUALIZER

S/N: H3C1-UP

PART OF 591-7135 POWER TRAIN AR

SMCS-7206 **i06716030**

NOTE	REF NO	GRAPHIC REF	PART NUMBER	QTY	PART NAME 1 2 3 4 5 6 (PRODUCT LEVEL)	SEE PAGE
	1	1	**3B-8489**	2	FITTING-GREASE (1/8-27 PTF)	
	2	1	**8E-1339**	2	SPACER (52X85X7-MM THK)	
	3	1	**248-3946**	1	PIN (CENTER)	
	4	1	**346-2900**	1	COVER	
Y	5	1	**421-4604**	1	BAR GP-EQUALIZER	297
	6	1	**435-5583**	2	PIN AS	
	7	1	**109-0382**	1	COVER	
	8	1	**7X-0587**	2	WASHER-HARD (17X54X3-MM THK)	
M	9	1	**8T-4190**	2	BOLT (M16X2X25-MM)	
M	10	1	**8T-7338**	4	BOLT (M16X2X45-MM)	
	11	1	**9X-8257**	4	WASHER (17.5X30X3.5-MM THK)	

M - METRIC PART
Y - SEPARATE ILLUSTRATION

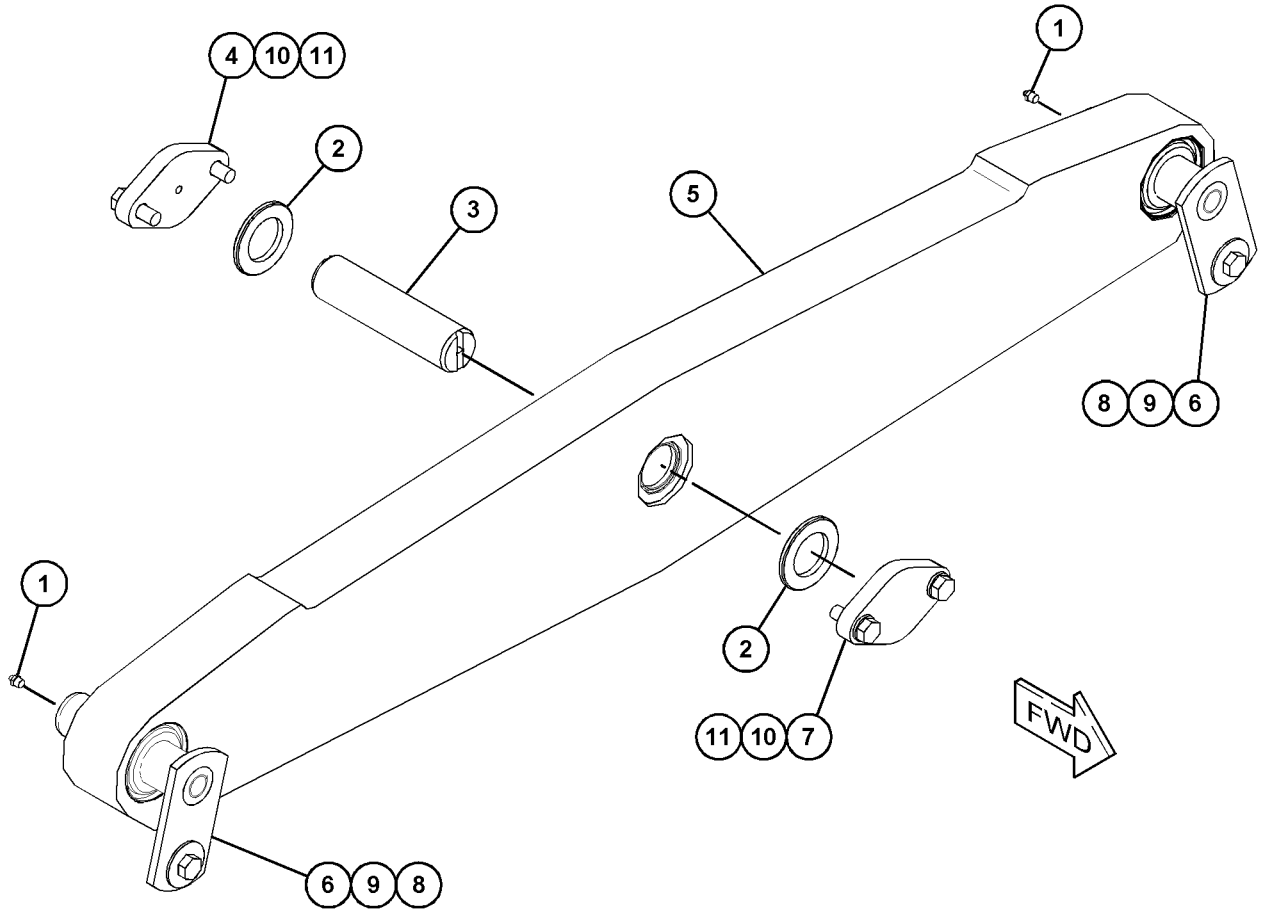

GRAPHIC #1 <END> g06017927

421-4603 BAR GP-EQUALIZER

S/N: K3G1-UP

PART OF 421-4601 BAR GP-EQUALIZER

SMCS-7206 **i06712194**

NOTE	REF NO	GRAPHIC REF	PART NUMBER	QTY	PART NAME 1 2 3 4 5 6 (PRODUCT LEVEL)	SEE PAGE
	1	1	**8G-3732**	4	SEAL	
	2	1	**421-4605**	1	BAR AS-EQUALIZER	
	3	1	**1K-6985**	4	RING-RETAINING	
	4	1	**7K-9203**	2	SEAL-LIP TYPE	
	5	1	**7P-7858**	1	BUSHING	
	6	1	**9M-1328**	2	BEARING-SELF-ALIGNING	

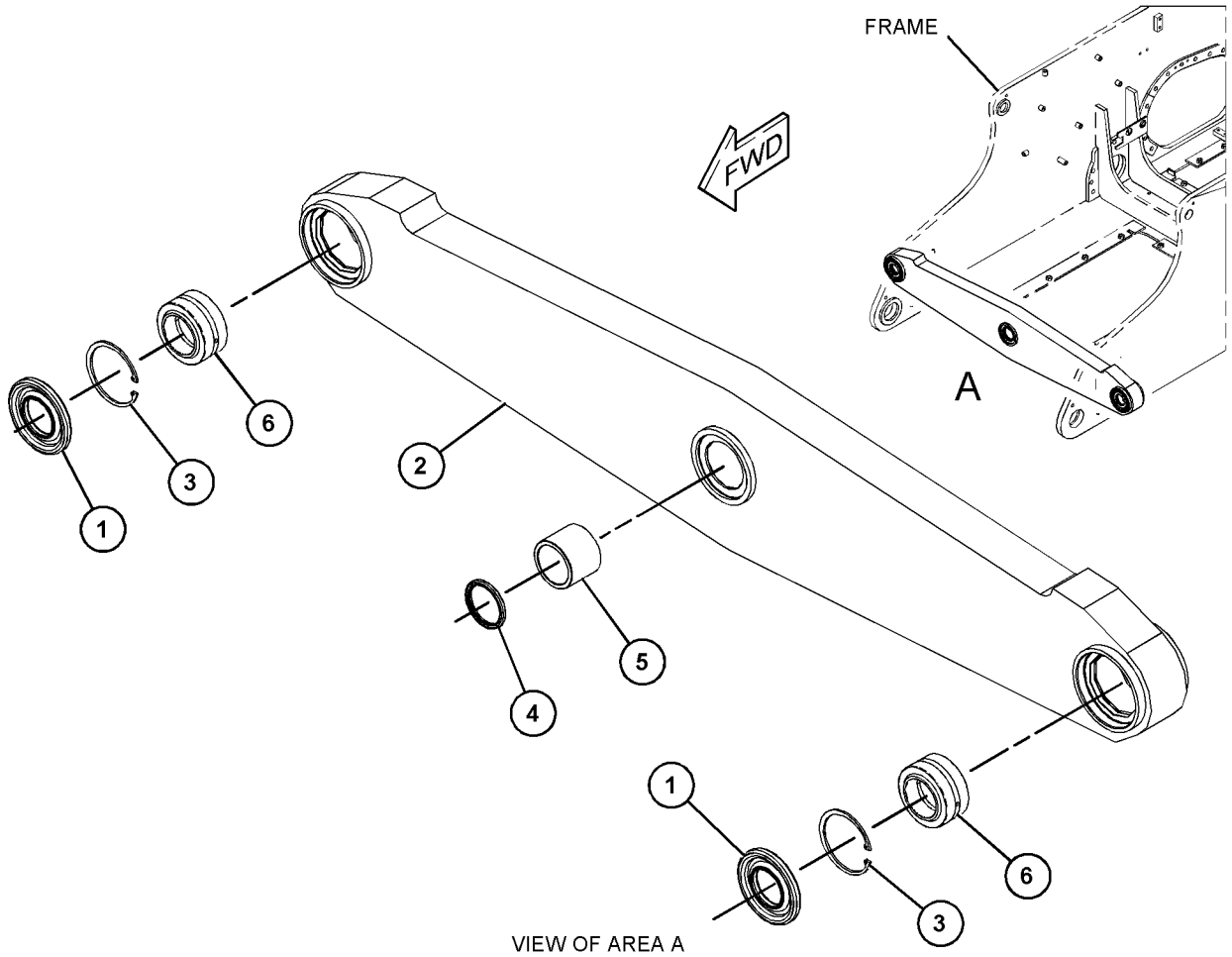

VIEW OF AREA A
(EXPLODED)

GRAPHIC #1 <END> g06016886

421-4604 BAR GP-EQUALIZER

S/N: H3C1-UP

PART OF 421-4602 BAR GP-EQUALIZER

SMCS-7206 **i07377750**

NOTE	REF NO	GRAPHIC REF	PART NUMBER	QTY	PART NAME 1 2 3 4 5 6 (PRODUCT LEVEL)	SEE PAGE
	1	1	**8G-3732**	4	SEAL	
	2	1	**9M-1328**	2	BEARING-SELF-ALIGNING	
	3	1	**1K-6985**	4	RING-RETAINING	
	4	1	**7K-9203**	2	SEAL-LIP TYPE	
	5	1	**7P-7858**	1	BUSHING	
					PARTS SHOWN IN GRAPHIC(S) WITHOUT A REFERENCE NUMBER ARE NOT SERVICED SEPARATELY	

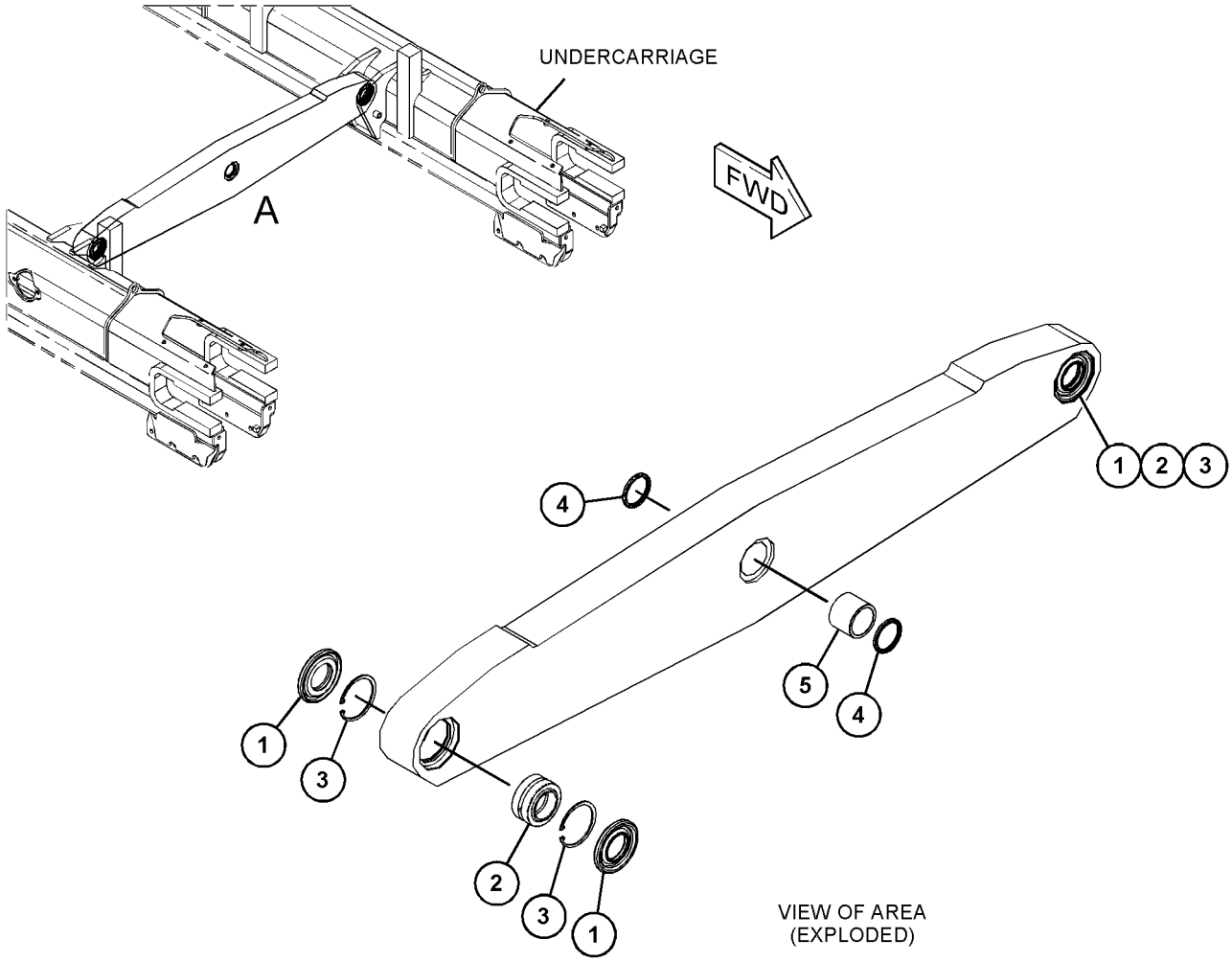

GRAPHIC #1 <END> g06019172

435-5578 BRACKET GP-MOUNTING

S/N: H3C1-UP; K3G1-UP

PART OF 421-4567, 421-4568, 421-4569, 421-4570 FRAME GP-TRACK ROLLER

AN ATTACHMENT

SMCS-4151 **i06694025**

NOTE	REF NO	GRAPHIC REF	PART NUMBER	QTY	PART NAME 1 2 3 4 5 6 (PRODUCT LEVEL)	SEE PAGE
	1	1	**431-7076**	1	BRACKET AS	
	2	1	**7K-9204**	1	SEAL-LIP TYPE	
	3	1	**8D-8704**	1	BEARING	

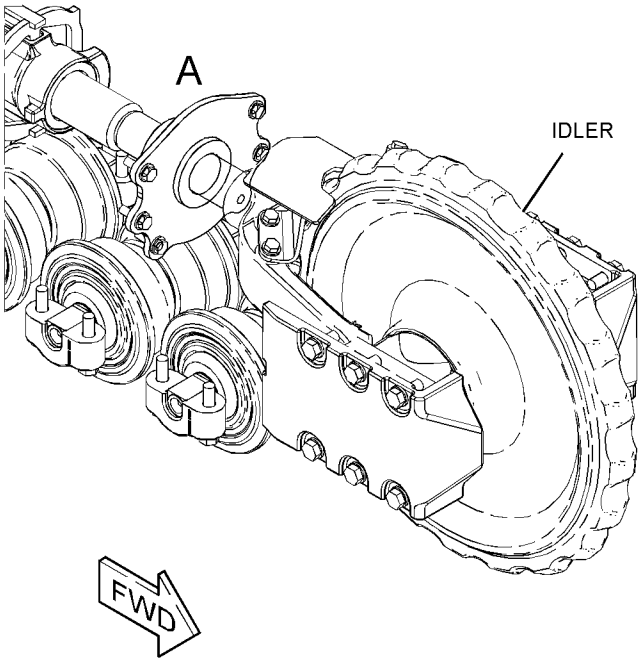

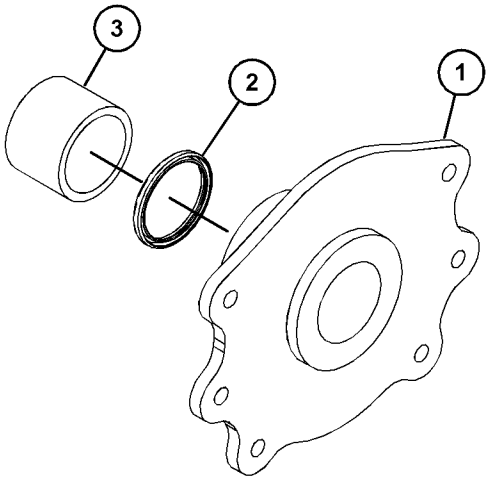

VIEW OF AREA A
(EXPLODED)

GRAPHIC #1 <END> g06018946

421-4567 FRAME GP-TRACK ROLLER—SYSTEMONE, RH

S/N: H3C1-UP; K3G1-UP
PART OF 431-7079 UNDERCARRIAGE AR
AN ATTACHMENT

SMCS-4151 **i07788601**

NOTE	REF NO	GRAPHIC REF	PART NUMBER	QTY	PART NAME 1 2 3 4 5 6 (PRODUCT LEVEL)	SEE PAGE
	1	1	**5P-9891**	1	PLATE-WARNING (HIGH PRESSURE CYLINDER)	
	2	1	**204-6365**	6	SPACER (15-MM THK)	
Y	3	1	*375-6404*	8	ROLLER GP-TRACK-SINGLE FLANGE	332
	4	1	**384-7390**	2	STRIP	
	5	1	**384-7392**	1	GUARD AS (RH)	
	6	1	**384-7393**	1	GUARD AS (LH)	
Y	7	1	**421-4610**	1	SPRING GP-RECOIL	333
	8	1	**421-4692**	1	DOOR AS-ACCESS	
Y	9	1	*431-7065*	1	IDLER GP-FRONT	318
Y	10	1	*435-5578*	1	BRACKET GP-MOUNTING	298
	11	1	**565-5808**	1	SCRAPER (RH)	
	12	1	**565-5810**	1	SCRAPER (LH)	
	13	1	**466-8362**	1	SEAL	
Y	14	1	*482-9664*	1	FRAME GP-TRACK ROLLER (RH)	307
Y	15	1	*490-1400*	1	TRACK ADJUSTER & RECOIL GP (RH)	334
M	16	1	**118-7313**	4	BOLT (M16X2X70-MM)	
	17	1	**198-4778**	6	WASHER-HARD (13.5X30X12-MM THK)	
	18	1	**3K-0360**	1	SEAL-O-RING	
	19	1	**7B-3028**	2	SCREW-DRIVE (NO 4X 3/16-IN)	
M	20	1	**8T-4140**	6	BOLT (M16X2X60-MM)	
M	21	1	**8T-4183**	20	BOLT (M12X1.75X40-MM)	
	22	1	**8T-4223**	14	WASHER-HARD (13.5X25.5X3-MM THK)	
	23	1	**9S-4185**	1	PLUG (3/4-16-THD)	
	24	1	**9X-8257**	4	WASHER (17.5X30X3.5-MM THK)	

M - METRIC PART
Y - SEPARATE ILLUSTRATION

421-4567 **FRAME GP-TRACK ROLLER (**contd.**)** **i07788601**

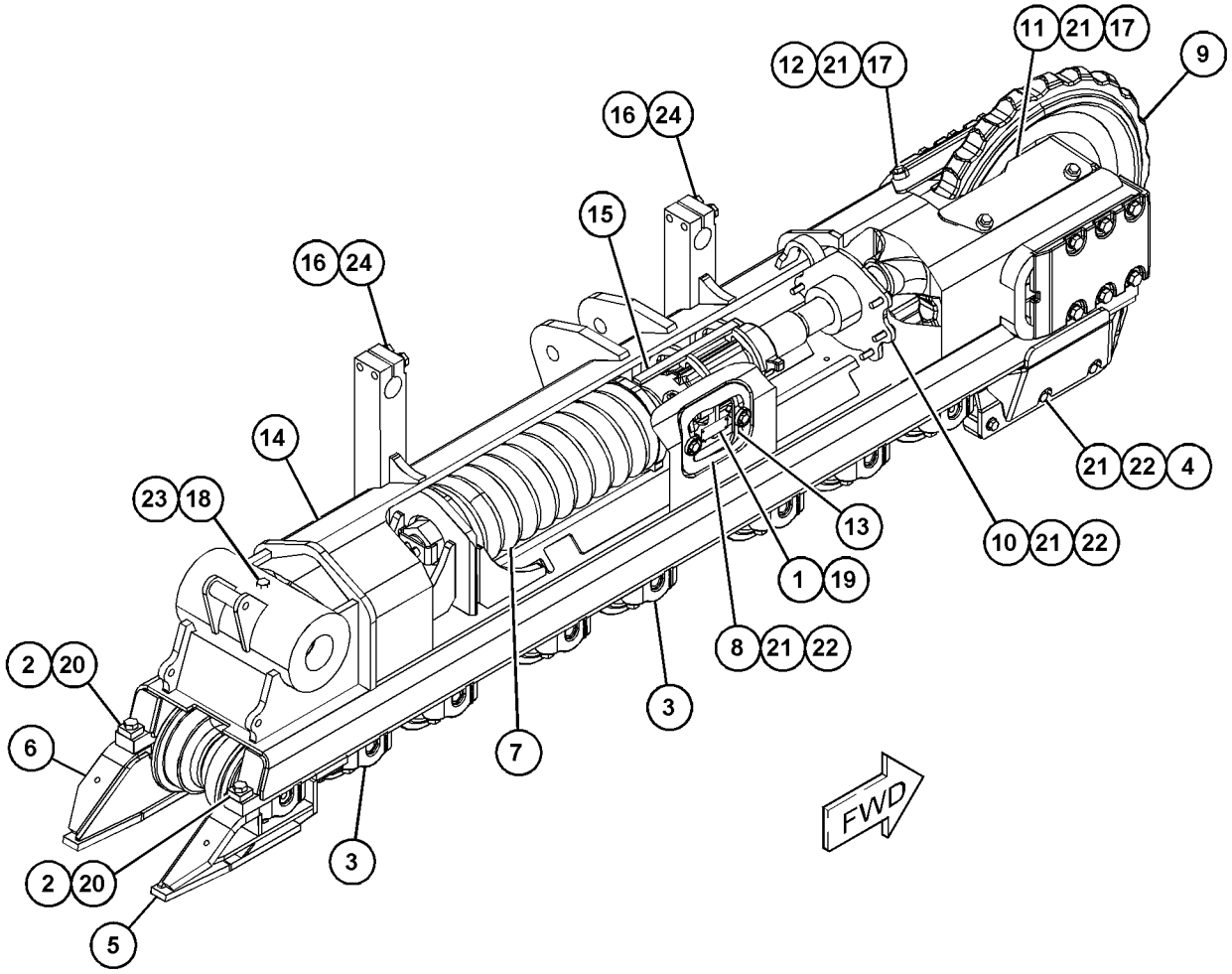

GRAPHIC #1 <END> g06019270

421-4568 FRAME GP-TRACK ROLLER—SYSTEMONE, LH

S/N: H3C1-UP; K3G1-UP
PART OF 431-7079 UNDERCARRIAGE AR
AN ATTACHMENT

SMCS-4151 **i07788607**

NOTE	REF NO	GRAPHIC REF	PART NUMBER	QTY	PART NAME 1 2 3 4 5 6 (PRODUCT LEVEL)	SEE PAGE
	1	1	**5P-9891**	1	PLATE-WARNING (HIGH PRESSURE CYLINDER)	
	2	1	**204-6365**	6	SPACER (15-MM THK)	
Y	3	1	*375-6404*	8	ROLLER GP-TRACK-SINGLE FLANGE	332
	4	1	**384-7390**	2	STRIP	
	5	1	**384-7392**	1	GUARD AS (RH)	
	6	1	**384-7393**	1	GUARD AS (LH)	
Y	7	1	**421-4610**	1	SPRING GP-RECOIL	333
	8	1	**421-4692**	1	DOOR AS-ACCESS	
Y	9	1	*431-7065*	1	IDLER GP-FRONT	318
Y	10	1	*435-5578*	1	BRACKET GP-MOUNTING	298
	11	1	**565-5808**	1	SCRAPER (RH)	
	12	1	**565-5810**	1	SCRAPER (LH)	
	13	1	**466-8362**	1	SEAL	
Y	14	1	*482-9665*	1	FRAME GP-TRACK ROLLER	308
Y	15	1	**490-1402**	1	TRACK ADJUSTER & RECOIL GP	335
M	16	1	**118-7313**	4	BOLT (M16X2X70-MM)	
	17	1	**198-4778**	6	WASHER-HARD (13.5X30X12-MM THK)	
	18	1	**3K-0360**	1	SEAL-O-RING	
	19	1	**7B-3028**	2	SCREW-DRIVE (NO 4X 3/16-IN)	
M	20	1	**8T-4140**	6	BOLT (M16X2X60-MM)	
M	21	1	**8T-4183**	20	BOLT (M12X1.75X40-MM)	
	22	1	**8T-4223**	14	WASHER-HARD (13.5X25.5X3-MM THK)	
	23	1	**9S-4185**	1	PLUG (3/4-16-THD)	
	24	1	**9X-8257**	4	WASHER (17.5X30X3.5-MM THK)	

M - METRIC PART
Y - SEPARATE ILLUSTRATION

421-4568 **FRAME GP-TRACK ROLLER (**contd.**)** **i07788607**

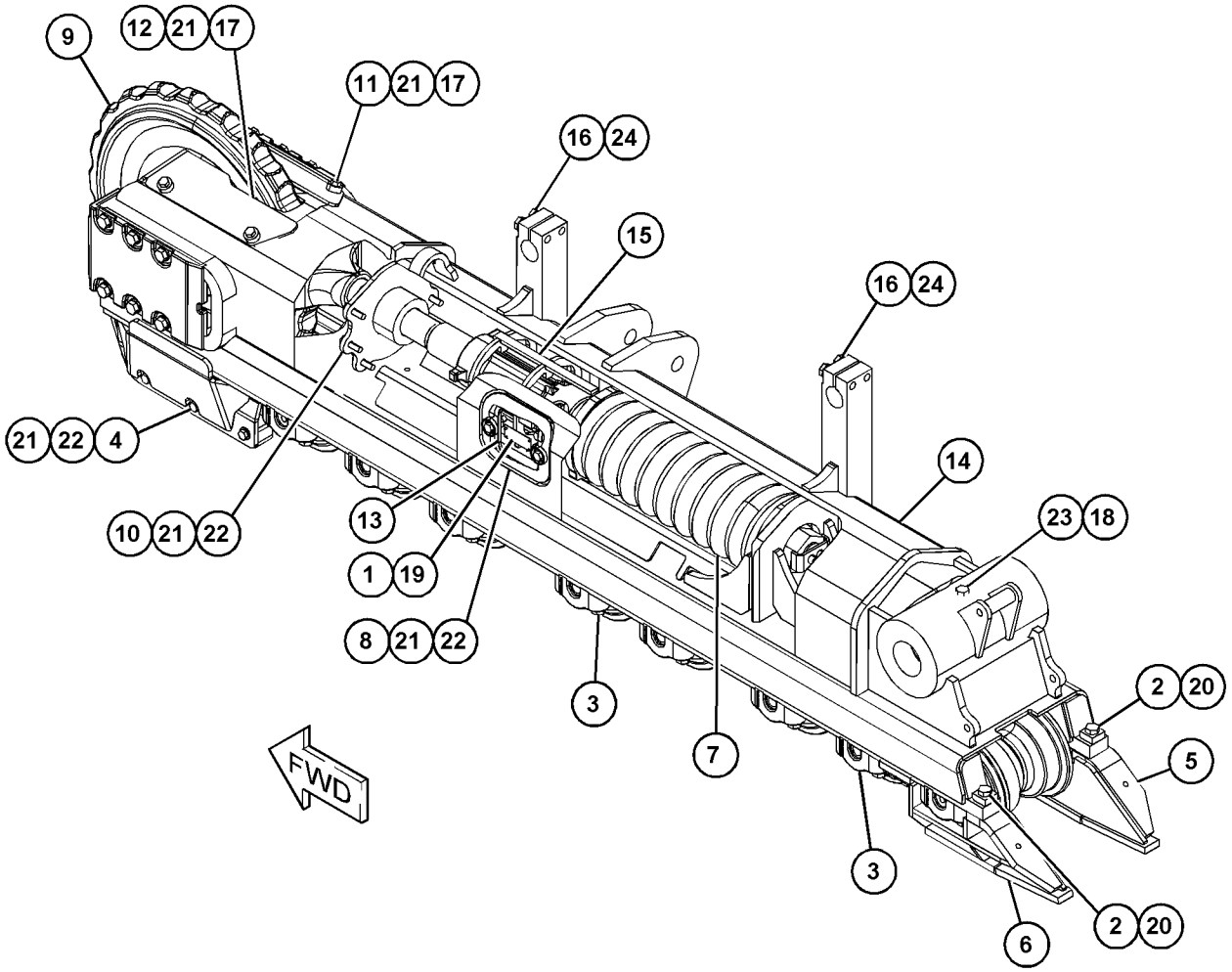

GRAPHIC #1 <END> g06021461

421-4569 FRAME GP-TRACK ROLLER—HEAVY-DUTY, RH

S/N: H3C1-UP; K3G1-UP
PART OF 431-7080 UNDERCARRIAGE AR
AN ATTACHMENT

SMCS-4151 **i07246147**

NOTE	REF NO	GRAPHIC REF	PART NUMBER	QTY	PART NAME 1 2 3 4 5 6 (PRODUCT LEVEL)	SEE PAGE
	1	1	**5P-9891**	1	PLATE-WARNING (HIGH PRESSURE CYLINDER)	
	2	1	**204-6365**	6	SPACER (15-MM THK)	
Y	3	1	*370-3825*	4	ROLLER GP-TRACK-DOUBLE FLANGE	329
	4	1	**380-7977**	2	STRIP (FRONT)	
	5	1	**380-7978**	2	STRIP (REAR)	
	6	1	**382-6505**	1	GUARD AS (RH)	
	7	1	**382-6506**	1	GUARD AS (LH)	
Y	8	1	**421-4610**	1	SPRING GP-RECOIL	333
	9	1	**421-4692**	1	DOOR AS-ACCESS	
Y	10	1	*431-7064*	1	IDLER GP-FRONT (HEAVY-DUTY)	317
Y	11	1	*435-5578*	1	BRACKET GP-MOUNTING	298
	12	1	**459-9051**	1	SCRAPER (RH)	
	13	1	**459-9052**	1	SCRAPER (LH)	
	14	1	**466-8362**	1	SEAL	
Y	15	1	*482-9664*	1	FRAME GP-TRACK ROLLER (RH)	307
Y	16	1	*490-1400*	1	TRACK ADJUSTER & RECOIL GP (RH)	334
M	17	1	**118-7313**	4	BOLT (M16X2X70-MM)	
	18	1	**198-4778**	6	WASHER-HARD (13.5X30X12-MM THK)	
Y	19	1	*370-3824*	4	ROLLER GP-TRACK-SINGLE FLANGE	331
	20	1	**3K-0360**	1	SEAL-O-RING	
	21	1	**7B-3028**	2	SCREW-DRIVE (NO 4X 3/16-IN)	
M	22	1	**8T-4140**	6	BOLT (M16X2X60-MM)	
M	23	1	**8T-4183**	14	BOLT (M12X1.75X40-MM)	
M	24	1	**8T-4192**	12	BOLT (M12X1.75X25-MM)	
	25	1	**8T-4223**	20	WASHER-HARD (13.5X25.5X3-MM THK)	
	26	1	**9S-4185**	1	PLUG (3/4-16-THD)	
	27	1	**9X-8257**	4	WASHER (17.5X30X3.5-MM THK)	

M - METRIC PART
Y - SEPARATE ILLUSTRATION

421-4569 **FRAME GP-TRACK ROLLER (**contd.**)** **i07246147**

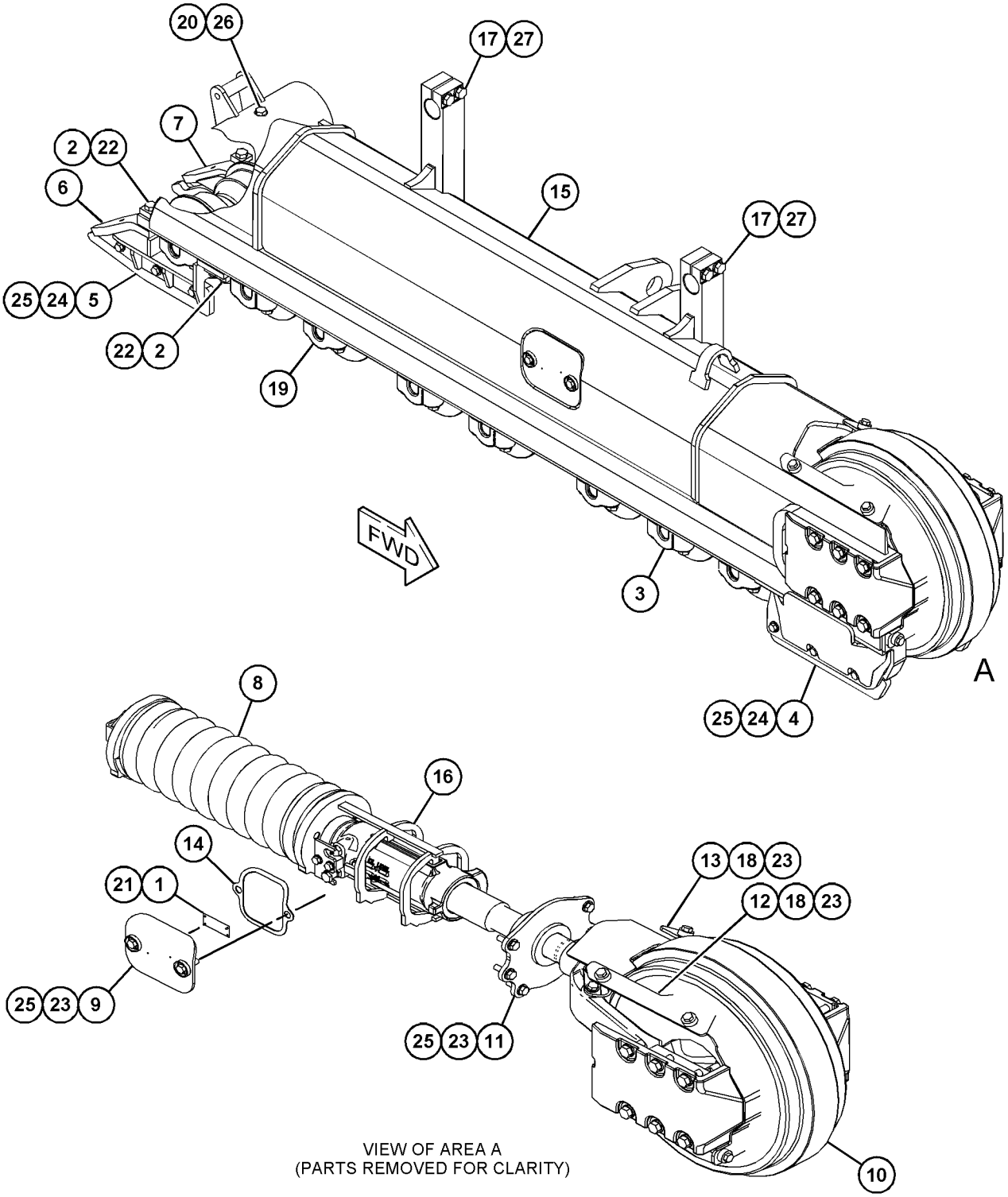

VIEW OF AREA A
(PARTS REMOVED FOR CLARITY)

GRAPHIC #1 <END> g06021190

421-4570 FRAME GP-TRACK ROLLER—HEAVY-DUTY, LH

S/N: H3C1-UP; K3G1-UP
PART OF 431-7080 UNDERCARRIAGE AR
AN ATTACHMENT

SMCS-4151 **i07246156**

NOTE	REF NO	GRAPHIC REF	PART NUMBER	QTY	PART NAME 1 2 3 4 5 6 (PRODUCT LEVEL)	SEE PAGE
	1	1	**5P-9891**	1	PLATE-WARNING (HIGH PRESSURE CYLINDER)	
	2	1	**204-6365**	6	SPACER (15-MM THK)	
Y	3	1	*370-3825*	4	ROLLER GP-TRACK-DOUBLE FLANGE	329
	4	1	**380-7977**	2	STRIP (FRONT)	
	5	1	**380-7978**	2	STRIP (REAR)	
	6	1	**382-6505**	1	GUARD AS (RH)	
	7	1	**382-6506**	1	GUARD AS (LH)	
Y	8	1	**421-4610**	1	SPRING GP-RECOIL	333
	9	1	**421-4692**	1	DOOR AS-ACCESS	
Y	10	1	*431-7064*	1	IDLER GP-FRONT (HEAVY-DUTY)	317
Y	11	1	*435-5578*	1	BRACKET GP-MOUNTING	298
	12	1	**459-9051**	1	SCRAPER (RH)	
	13	1	**459-9052**	1	SCRAPER (LH)	
	14	1	**466-8362**	1	SEAL	
Y	15	1	*482-9665*	1	FRAME GP-TRACK ROLLER	308
Y	16	1	**490-1402**	1	TRACK ADJUSTER & RECOIL GP	335
M	17	1	**118-7313**	4	BOLT (M16X2X70-MM)	
	18	1	**198-4778**	6	WASHER-HARD (13.5X30X12-MM THK)	
Y	19	1	*370-3824*	4	ROLLER GP-TRACK-SINGLE FLANGE	331
	20	1	**3K-0360**	1	SEAL-O-RING	
	21	1	**7B-3028**	2	SCREW-DRIVE (NO 4X 3/16-IN)	
M	22	1	**8T-4140**	6	BOLT (M16X2X60-MM)	
M	23	1	**8T-4183**	14	BOLT (M12X1.75X40-MM)	
M	24	1	**8T-4192**	12	BOLT (M12X1.75X25-MM)	
	25	1	**8T-4223**	20	WASHER-HARD (13.5X25.5X3-MM THK)	
	26	1	**9S-4185**	1	PLUG (3/4-16-THD)	
	27	1	**9X-8257**	4	WASHER (17.5X30X3.5-MM THK)	

M - METRIC PART
Y - SEPARATE ILLUSTRATION

421-4570 **FRAME GP-TRACK ROLLER (**contd.**)** **i07246156**

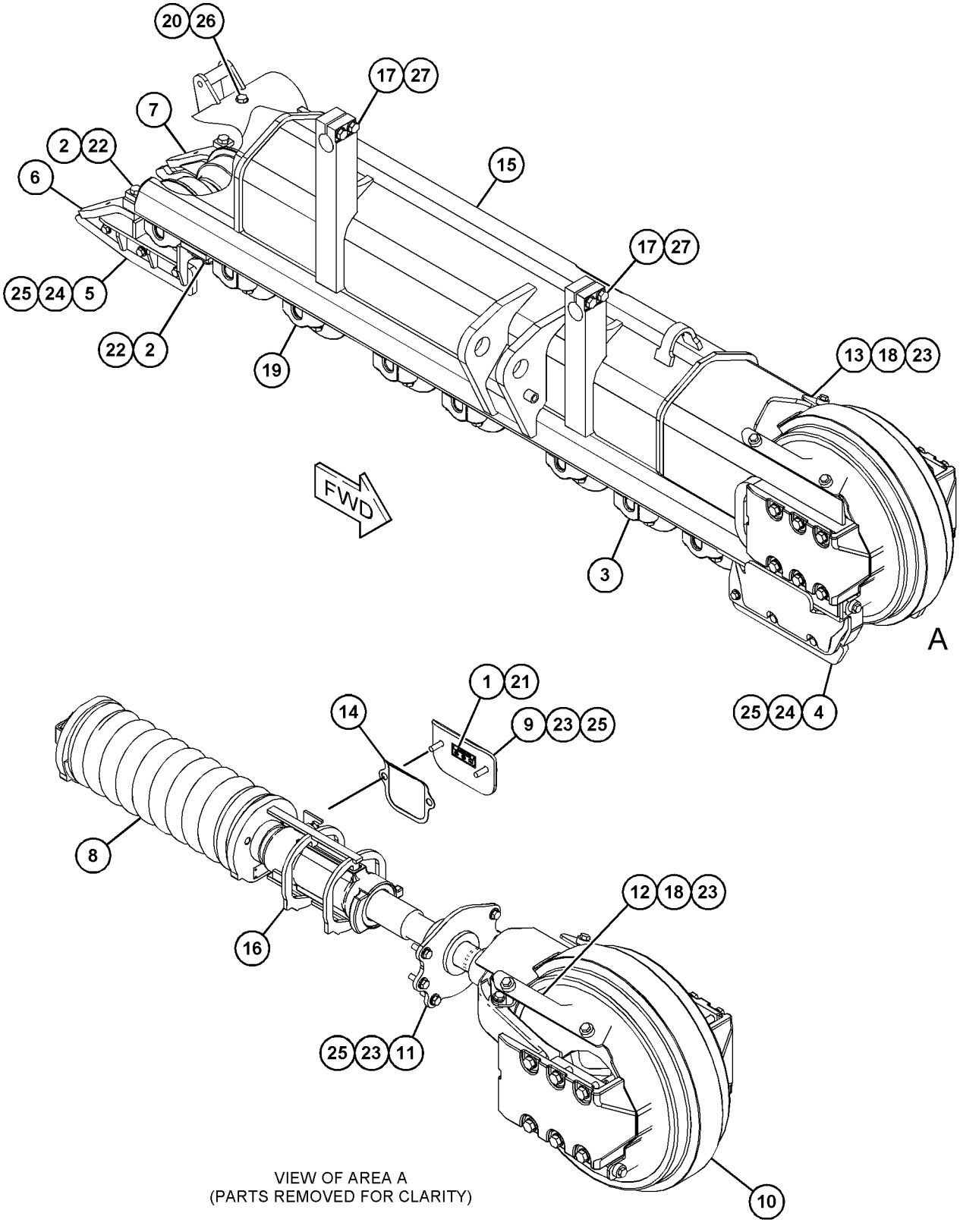

VIEW OF AREA A
(PARTS REMOVED FOR CLARITY)

GRAPHIC #1 <END> g06021138

482-9664 FRAME GP-TRACK ROLLER–RH

S/N: H3C1-UP; K3G1-UP

PART OF 421-4567, 421-4569 FRAME GP-TRACK ROLLER

AN ATTACHMENT

SMCS-4151 **i06694030**

NOTE	REF NO	GRAPHIC REF	PART NUMBER	QTY	PART NAME 1 2 3 4 5 6 (PRODUCT LEVEL)	SEE PAGE
	1	1	**221-3187**	1	BUSHING	
	2	1	**221-3197**	1	BUSHING	
	3	1	**421-4571**	1	FRAME AS (RH)	

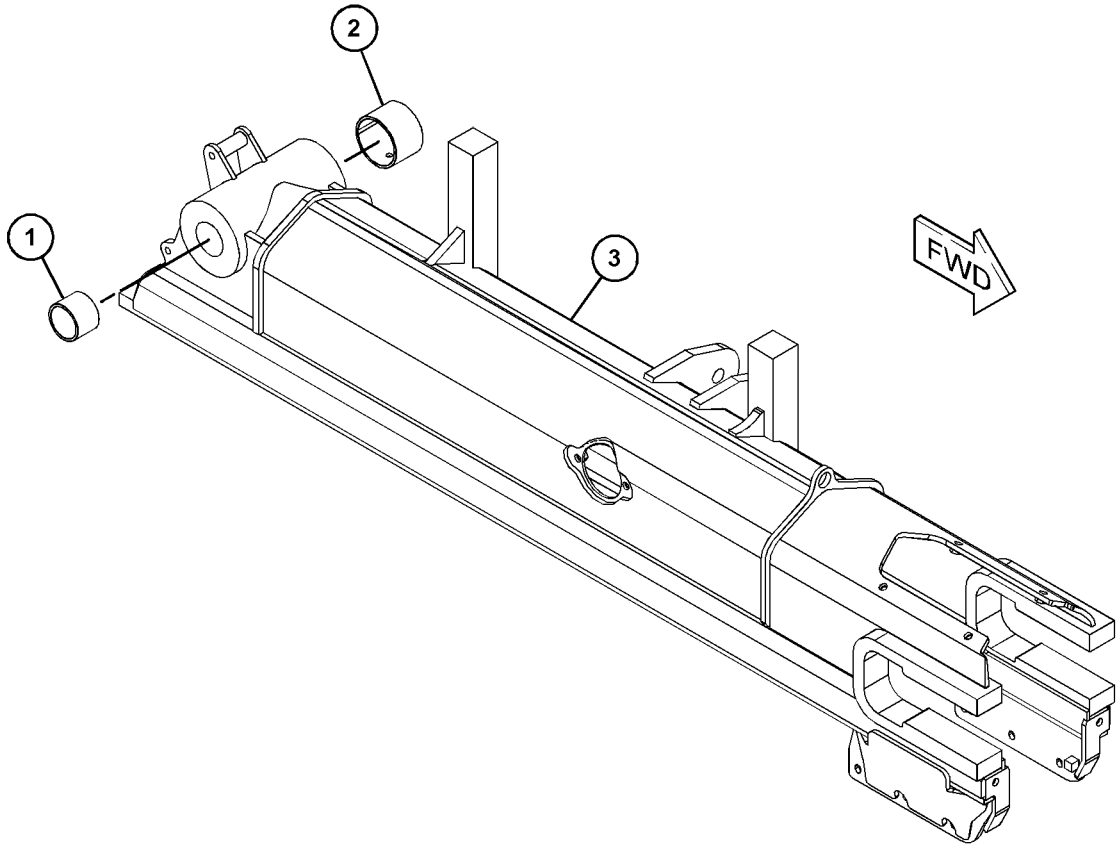

GRAPHIC #1 <END> g06018968

482-9665 FRAME GP-TRACK ROLLER–LH

S/N: H3C1-UP; K3G1-UP

PART OF 421-4568, 421-4570 FRAME GP-TRACK ROLLER

AN ATTACHMENT

SMCS-4151 **i08030488**

NOTE	REF NO	GRAPHIC REF	PART NUMBER	QTY	PART NAME 1 2 3 4 5 6 (PRODUCT LEVEL)	SEE PAGE
	1	1	**221-3187**	1	BUSHING	
	2	1	**221-3197**	1	BUSHING	
	3	1	**421-4572**	1	FRAME AS (LH)	

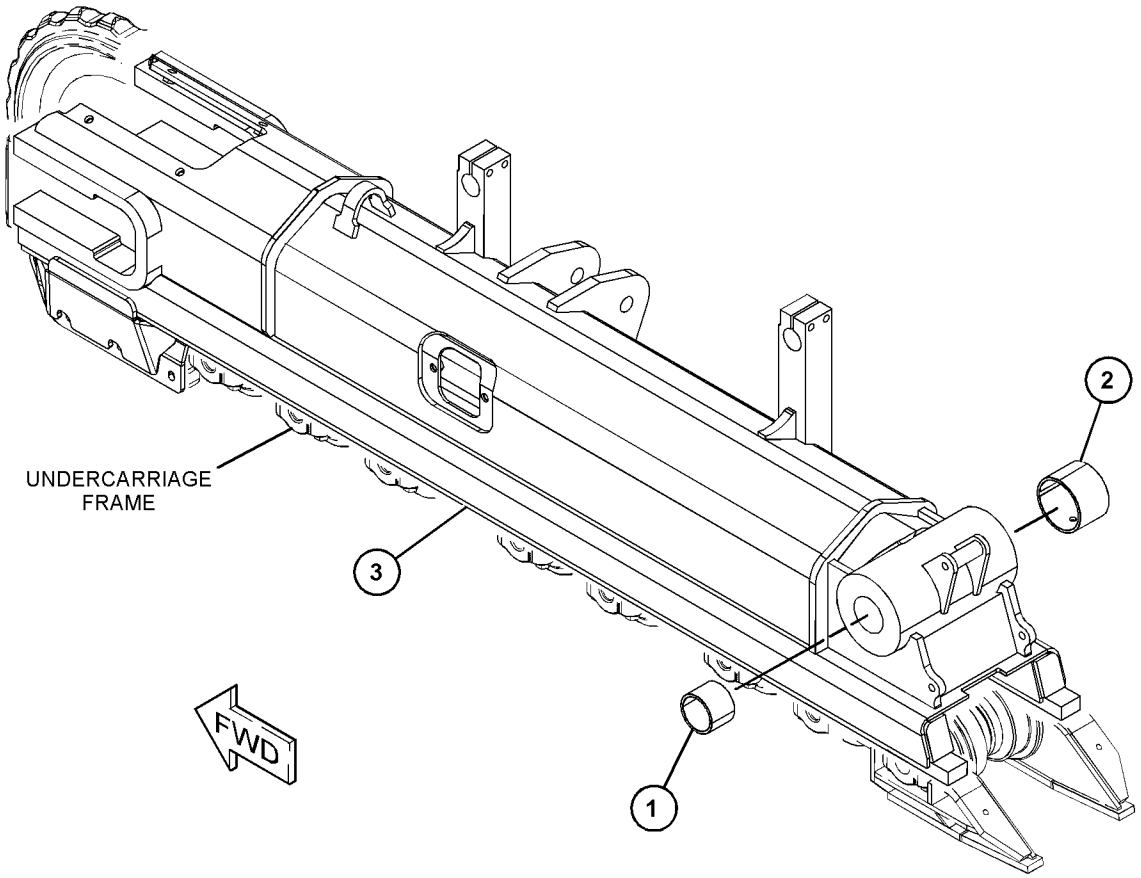

GRAPHIC #1 <END> g06021500

431-7078 GUARD GP-SPROCKET

S/N: H3C1-UP; K3G1-UP
PART OF 431-7079, 431-7080 UNDERCARRIAGE AR
AN ATTACHMENT

SMCS-4164 **i06694010**

NOTE	REF NO	GRAPHIC REF	PART NUMBER	QTY	PART NAME 1 2 3 4 5 6 (PRODUCT LEVEL)	SEE PAGE
	1	1	**431-7066**	1	SHEET AS (OUTER, RH)	
M		1	**8T-3597**	1	NUT-WELD (M12X1.75-THD)	
	2	1	**431-7067**	1	SHEET AS (INNER, RH)	
M		1	**8T-3597**	2	NUT-WELD (M12X1.75-THD)	
	3	1	**431-7068**	1	SHEET AS (OUTER, LH)	
M		1	**8T-3597**	1	NUT-WELD (M12X1.75-THD)	
	4	1	**431-7069**	1	SHEET AS (INNER, LH)	
M		1	**8T-3597**	2	NUT-WELD (M12X1.75-THD)	
	5	1	**198-4778**	6	WASHER-HARD (13.5X30X12-MM THK)	
M	6	1	**8T-4184**	8	BOLT (M12X1.75X45-MM)	
	7	1	**8T-4223**	4	WASHER-HARD (13.5X25.5X3-MM THK)	
M	8	1	**8T-5412**	2	BOLT (M12X1.75X140-MM)	

M - METRIC PART

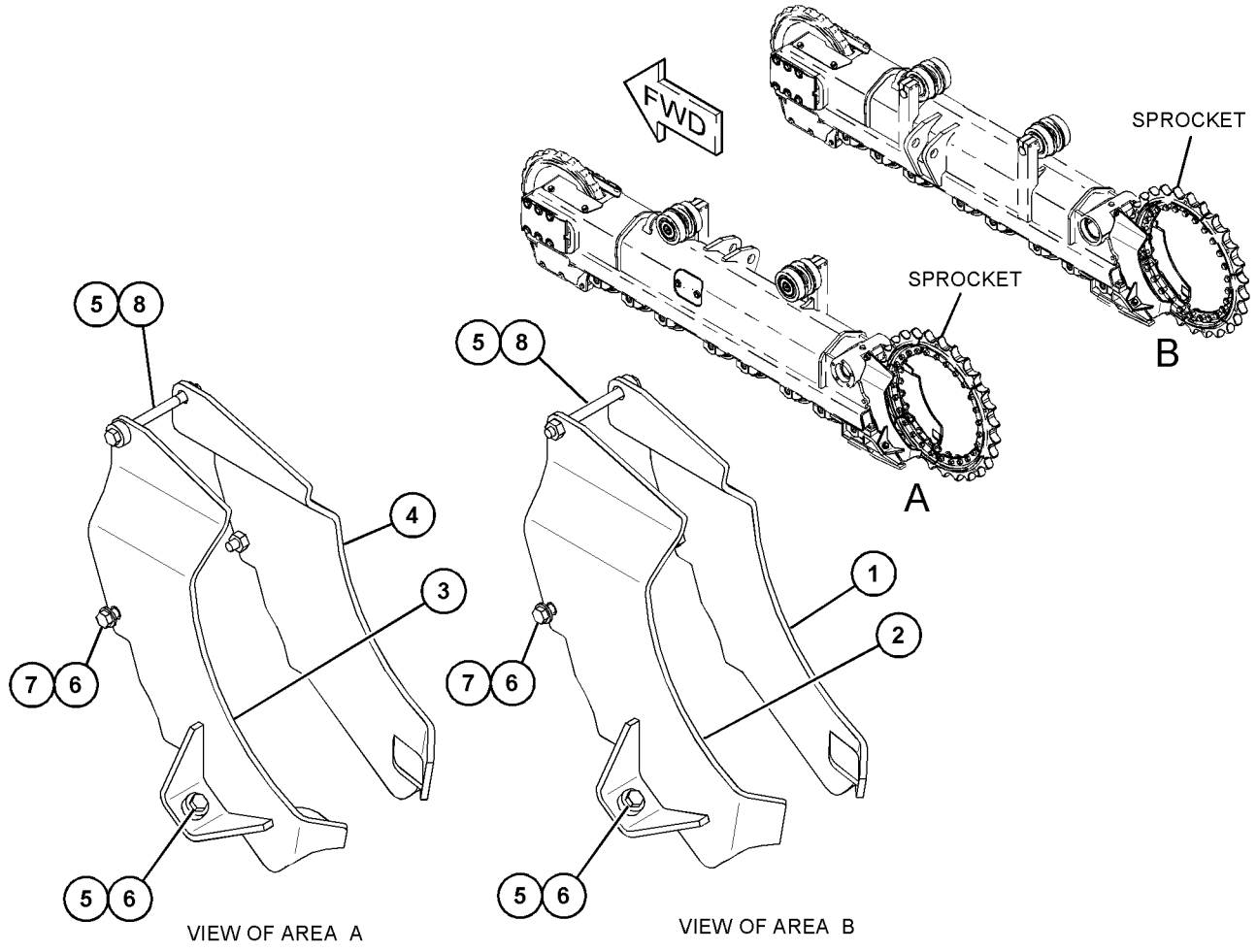

GRAPHIC #1 <END> g06016674

234-4747 GUARD GP-TRACK ROLLER

S/N: H3C1-UP; K3G1-UP

AN ATTACHMENT

SMCS-7152 **i06691370**

NOTE	REF NO	GRAPHIC REF	PART NUMBER	QTY	PART NAME 1 2 3 4 5 6 (PRODUCT LEVEL)	SEE PAGE
	1	1	**204-6365**	20	SPACER (15-MM THK)	
	2	1	**261-2070**	4	GUARD AS	
	3	1	**271-6033**	6	TUBE	
M	4	1	**8T-4140**	20	BOLT (M16X2X60-MM)	
M	5	1	**8T-4778**	6	LOCKNUT (M16X2-THD)	
M	6	1	**8T-6382**	6	BOLT (M16X2X260-MM)	
	7	1	**9X-8257**	12	WASHER (17.5X30X3.5-MM THK)	
					QUANTITIES SHOWN ARE THOSE REQUIRED FOR BOTH LH & RH SIDES	

M - METRIC PART

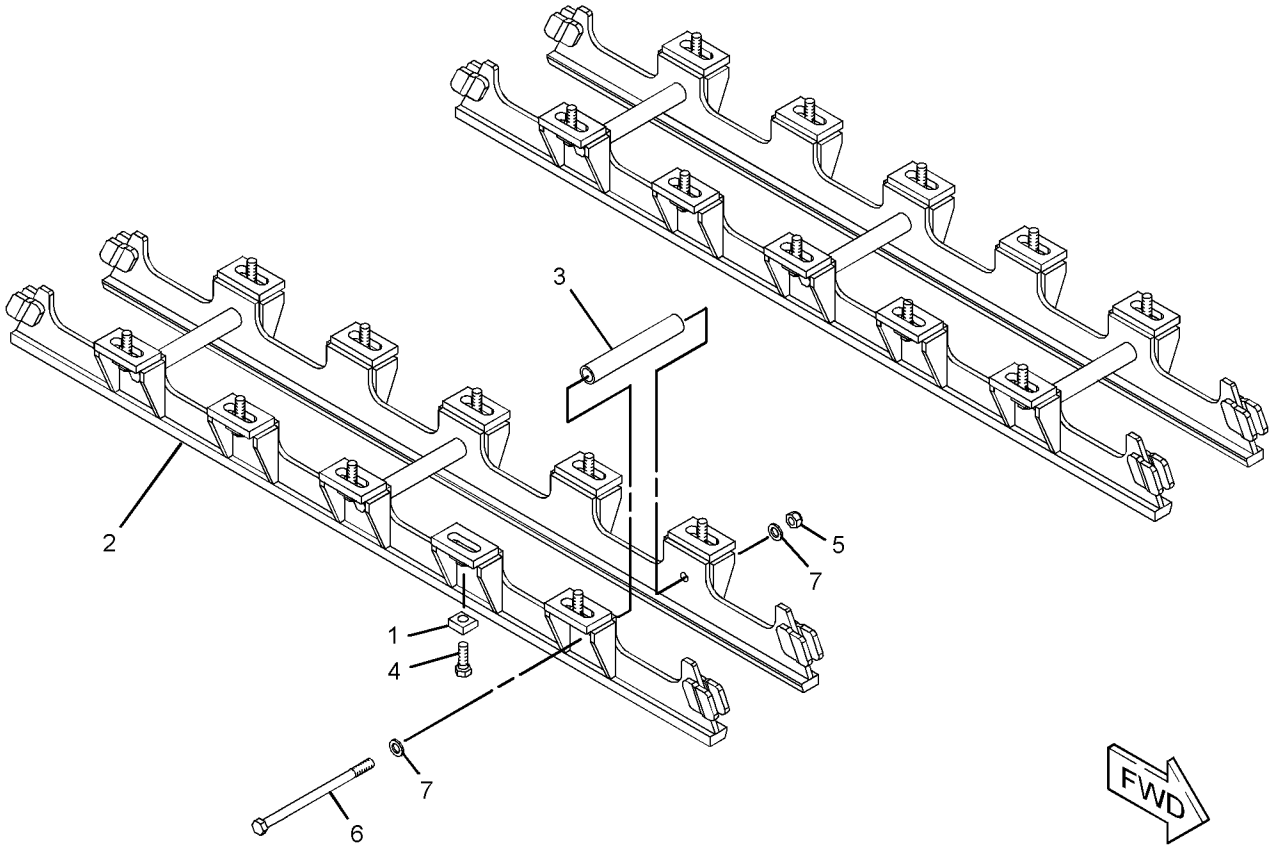

GRAPHIC #1 <END> g01201687

368-9741 GUARD GP-TRACK ROLLER—HEAVY-DUTY

S/N: H3C1-UP; K3G1-UP
8-ROLLER
CANNOT BE USED WITH 431-7079—PAGE: 354
AN ATTACHMENT

SMCS-7152 **i08056329**

NOTE	REF NO	GRAPHIC REF	PART NUMBER	QTY	PART NAME 1 2 3 4 5 6 (PRODUCT LEVEL)	SEE PAGE
	1	1	**204-6365**	24	SPACER (15-MM THK)	
	2	1	**205-6140**	6	TUBE	
	3	1	**380-7986**	2	GUARD AS (OUTER, RH; INNER, LH)	
	4	1	**380-7987**	2	GUARD AS (OUTER, LH; INNER, RH)	
M	5	1	**110-6968**	6	BOLT (M16X2X280-MM)	
M	6	1	**8T-4140**	24	BOLT (M16X2X60-MM)	
M	7	1	**8T-4778**	6	LOCKNUT (M16X2-THD)	
	8	1	**9X-8257**	12	WASHER (17.5X30X3.5-MM THK)	

M - METRIC PART

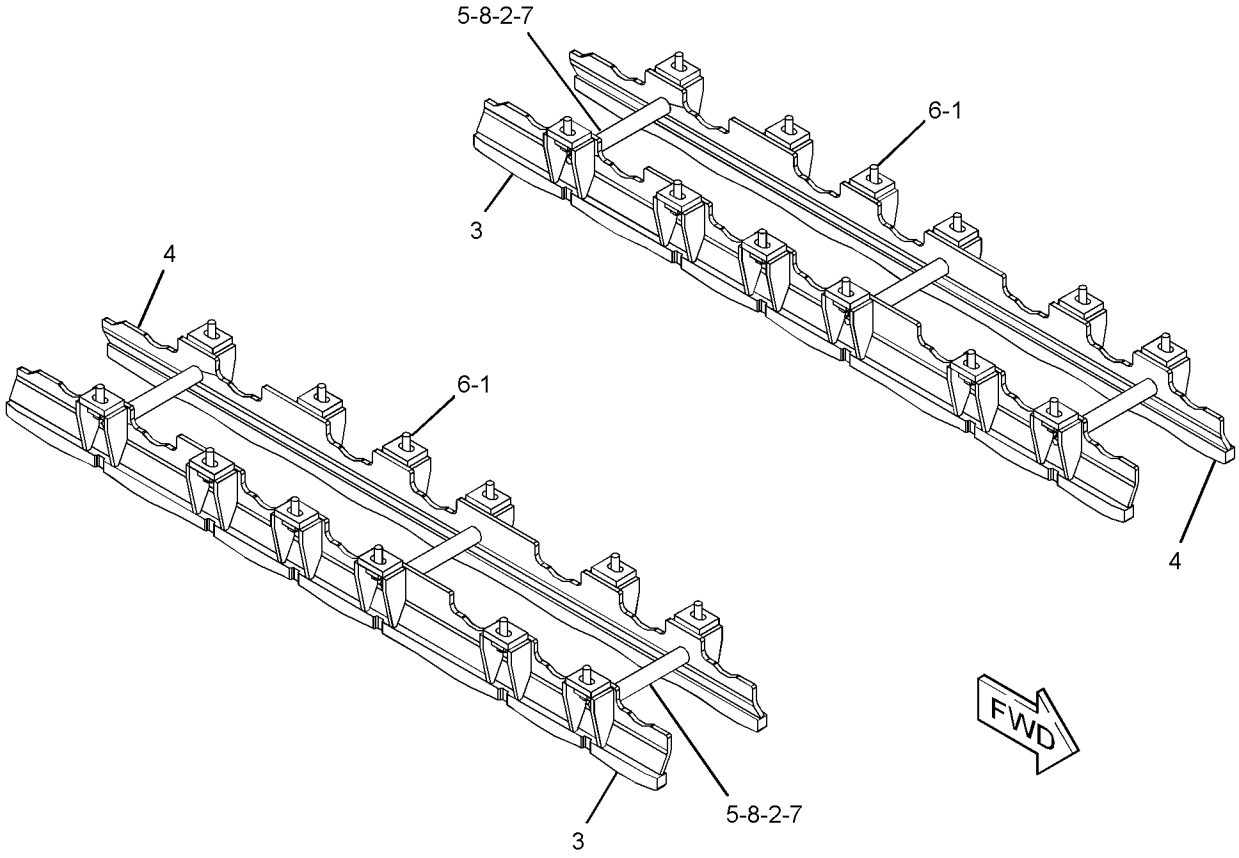

GRAPHIC #1 <END> g03010120

368-9742 GUARD GP-TRACK ROLLER—SYSTEMONE

S/N: H3C1-UP; K3G1-UP
8-ROLLER
CANNOT BE USED WITH 431-7080—PAGE: 354
AN ATTACHMENT

SMCS-7152 **i08056335**

NOTE	REF NO	GRAPHIC REF	PART NUMBER	QTY	PART NAME 1 2 3 4 5 6 (PRODUCT LEVEL)	SEE PAGE
	1	1	**204-6365**	24	SPACER (15-MM THK)	
	2	1	**205-6140**	6	TUBE	
	3	1	**380-7969**	2	GUARD AS (INNER, LH; OUTER, RH)	
	4	1	**380-7970**	2	GUARD AS (INNER, RH; OUTER, LH)	
M	5	1	**110-6968**	6	BOLT (M16X2X280-MM)	
M	6	1	**8T-4140**	24	BOLT (M16X2X60-MM)	
M	7	1	**8T-4778**	6	LOCKNUT (M16X2-THD)	
	8	1	**9X-8257**	12	WASHER (17.5X30X3.5-MM THK)	

M - METRIC PART

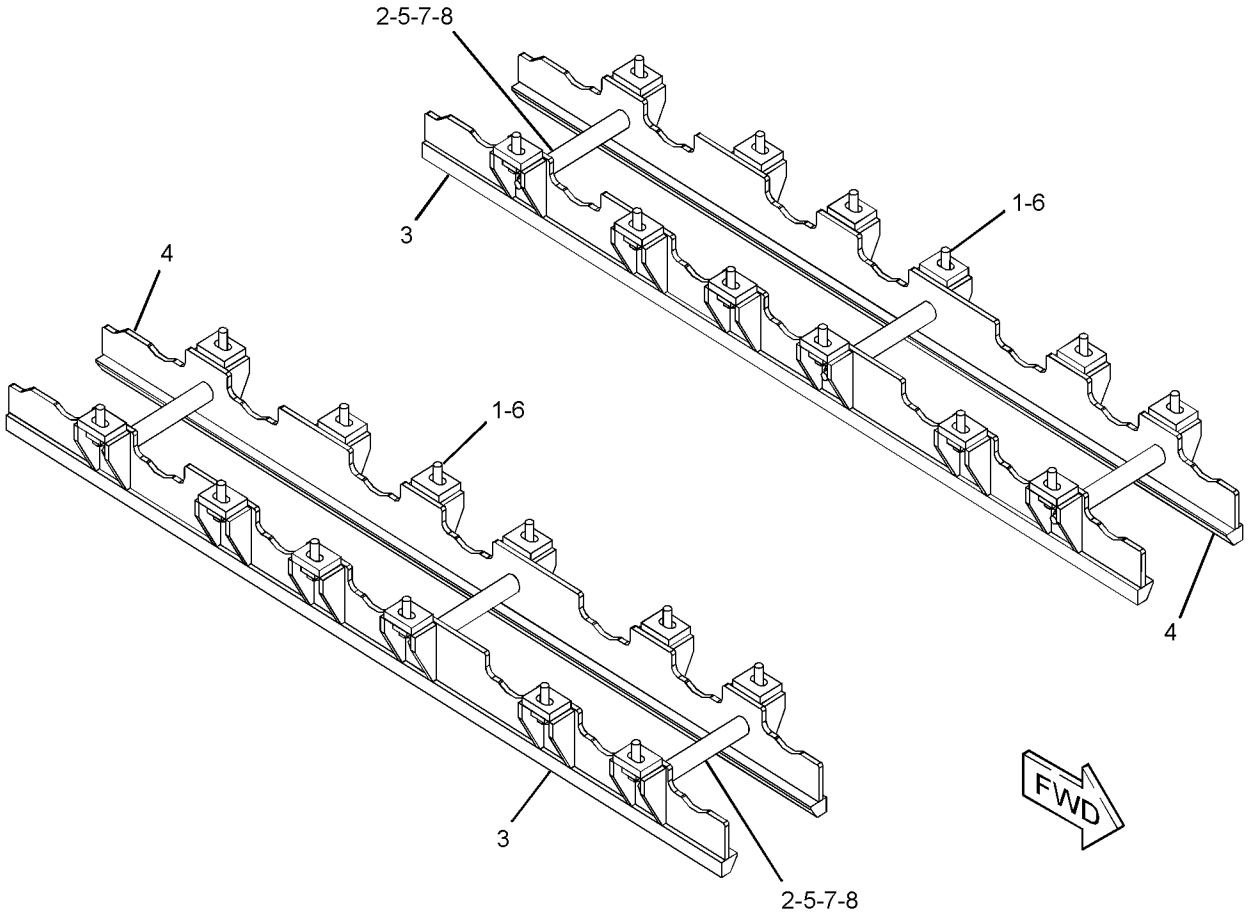

GRAPHIC #1 <END> g03011238

368-9744 GUARD GP-TRACK ROLLER—HEAVY-DUTY

S/N: H3C1-UP; K3G1-UP
7 OR 8-ROLLER. CENTER GUARD
CANNOT BE USED WITH 431-7079—PAGE: 354
AN ATTACHMENT

SMCS-7152 **i08056371**

NOTE	REF NO	GRAPHIC REF	PART NUMBER	QTY	PART NAME 1 2 3 4 5 6 (PRODUCT LEVEL)	SEE PAGE
	1	1	**204-6365**	8	SPACER (15-MM THK)	
	2	1	**380-7989**	2	GUIDE AS	
M	3	1	**8T-4140**	8	BOLT (M16X2X60-MM)	

M - METRIC PART

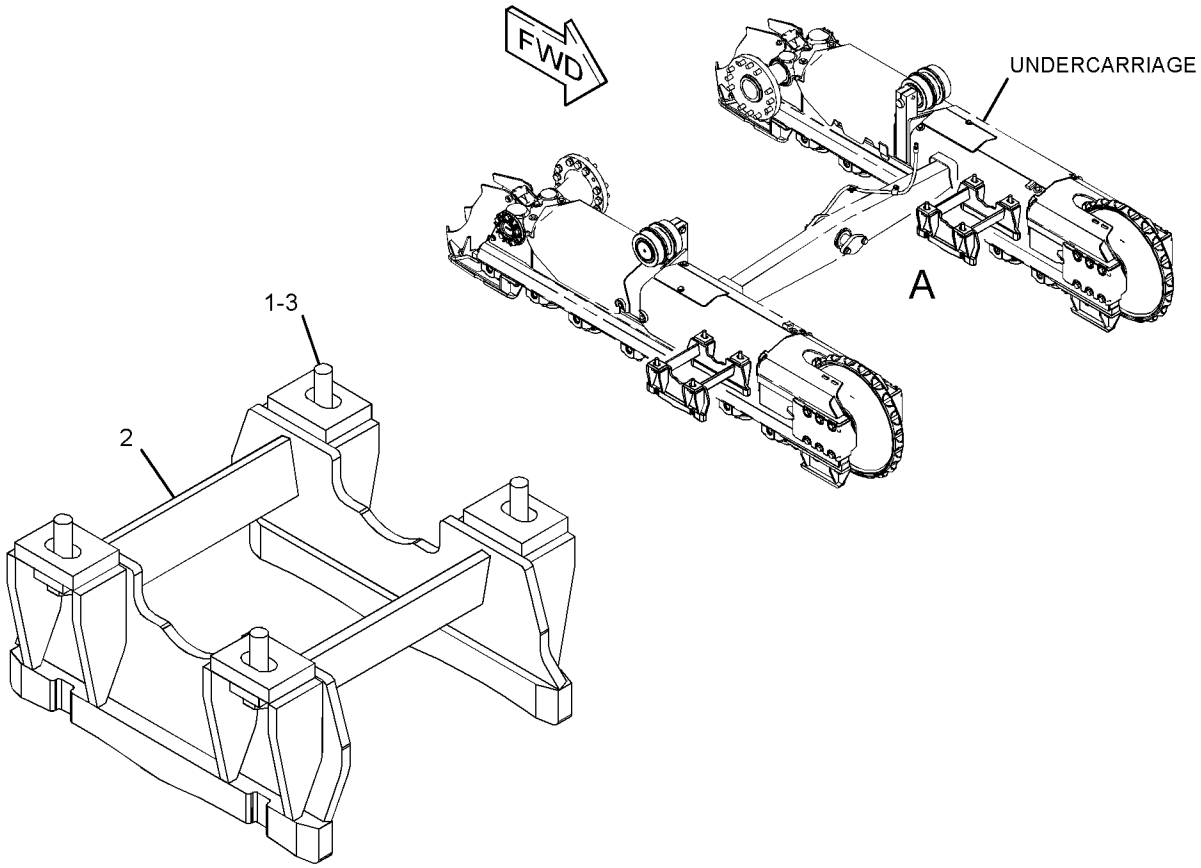

VIEW OF AREA A

GRAPHIC #1 <END> g03010076

382-6523 GUARD GP-TRACK ROLLER—SYSTEMONE

S/N: H3C1-UP; K3G1-UP
CENTER GUARD
FOR USE WITH 431-7079—PAGE: 354
CANNOT BE USED WITH 379-3982—PAGE: 336, 391-3941—PAGE: 338, 431-7080—PAGE: 354, 379-3983—PAGE: 337
AN ATTACHMENT

SMCS-7152 **i08056601**

NOTE	REF NO	GRAPHIC REF	PART NUMBER	QTY	PART NAME 1 2 3 4 5 6 (PRODUCT LEVEL)	SEE PAGE
	1	1	**204-6365**	8	SPACER (15-MM THK)	
	2	1	**380-7971**	2	GUIDE AS	
M	3	1	**8T-4140**	8	BOLT (M16X2X60-MM)	

M - METRIC PART

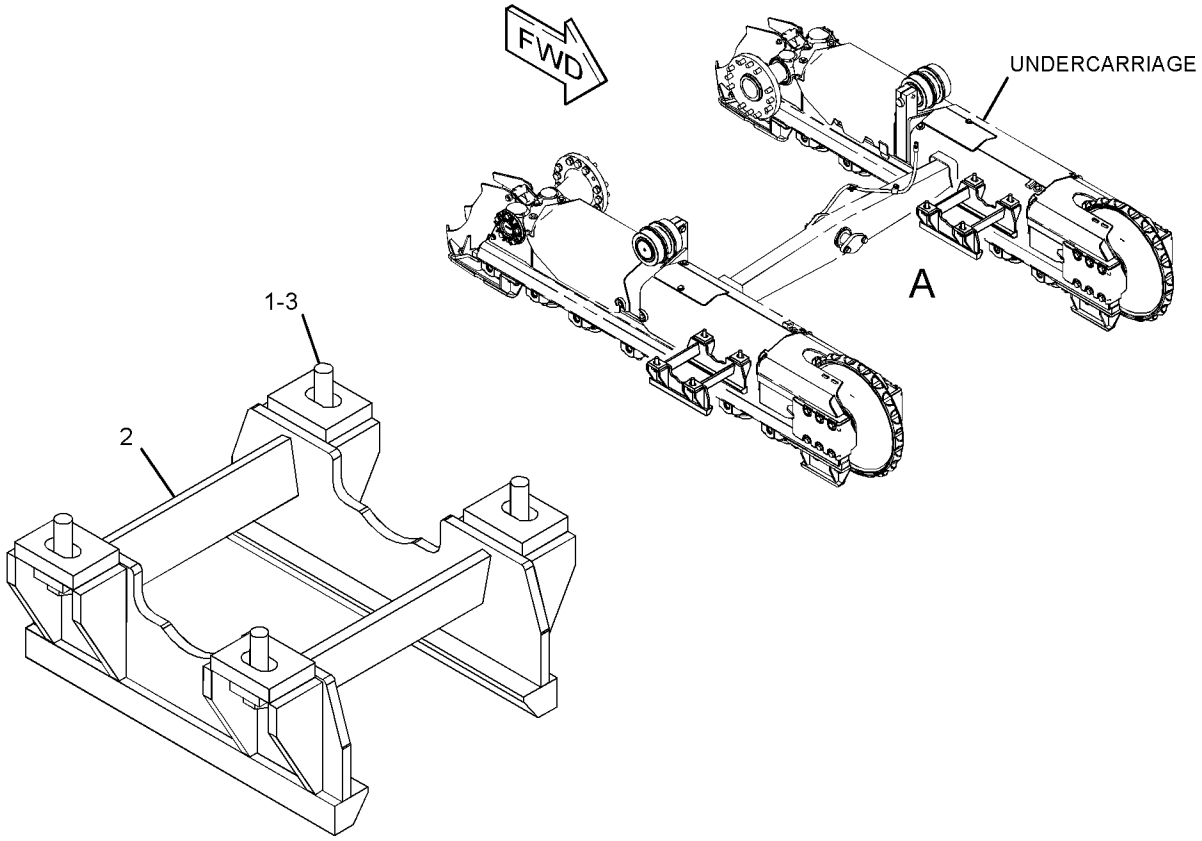

VIEW OF AREA A

GRAPHIC #1 <END> g03010119

382-6524 GUARD GP-TRACK ROLLER—HEAVY-DUTY

S/N: H3C1-UP; K3G1-UP
7 OR 8-ROLLER
CANNOT BE USED WITH 431-7079—PAGE: 354
AN ATTACHMENT

SMCS-7152 **i08056607**

NOTE	REF NO	GRAPHIC REF	PART NUMBER	QTY	PART NAME 1 2 3 4 5 6 (PRODUCT LEVEL)	SEE PAGE
	1	1	**204-6365**	16	SPACER (15-MM THK)	
	2	1	**380-7989**	4	GUIDE AS	
M	3	1	**8T-4140**	16	BOLT (M16X2X60-MM)	

M - METRIC PART

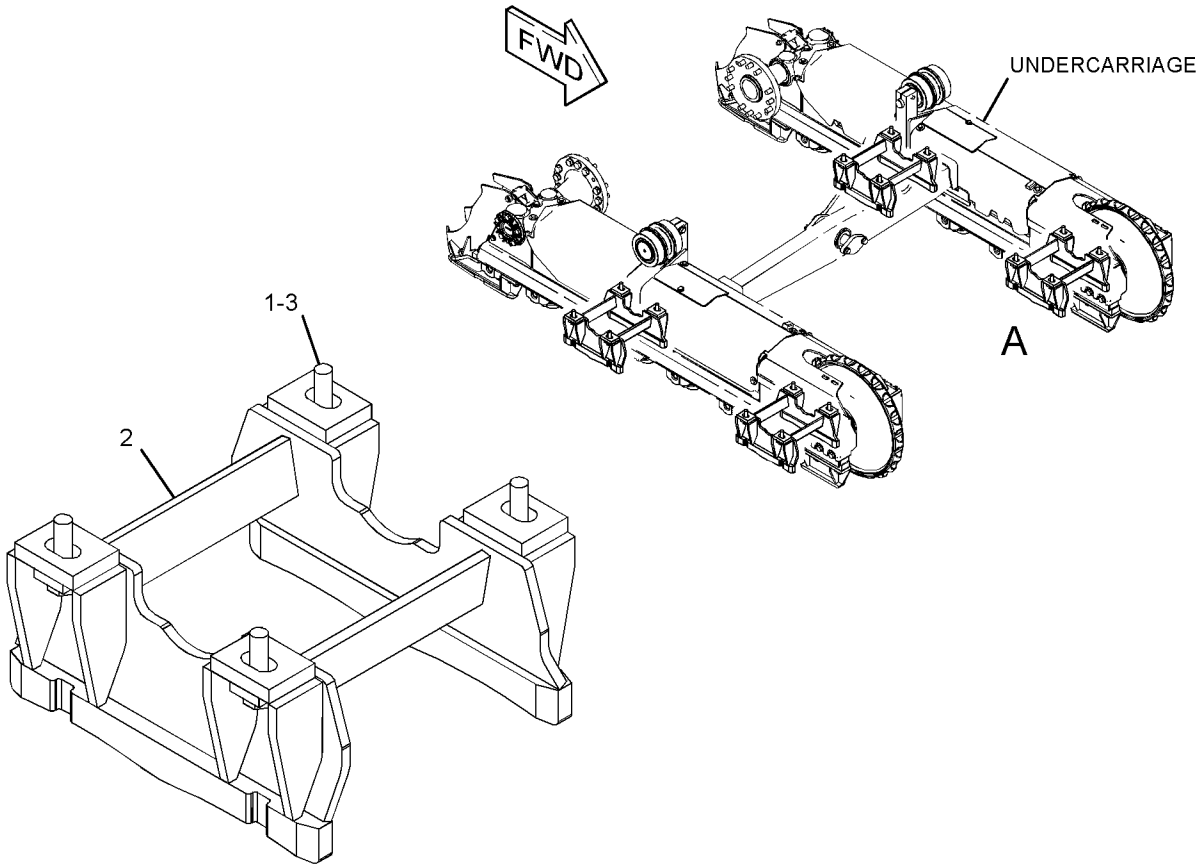

VIEW OF AREA A

GRAPHIC #1 <END> g03010217

382-6525 GUARD GP-TRACK ROLLER—SYSTEMONE

S/N: H3C1-UP; K3G1-UP
MODERATE SERVICE
CANNOT BE USED WITH 431-7080—PAGE: 354
AN ATTACHMENT

SMCS-7152 **i08056609**

NOTE	REF NO	GRAPHIC REF	PART NUMBER	QTY	PART NAME 1 2 3 4 5 6 (PRODUCT LEVEL)	SEE PAGE
	1	1	**204-6365**	16	SPACER (15-MM THK)	
	2	1	**380-7971**	4	GUIDE AS	
M	3	1	**8T-4140**	16	BOLT (M16X2X60-MM)	

M - METRIC PART

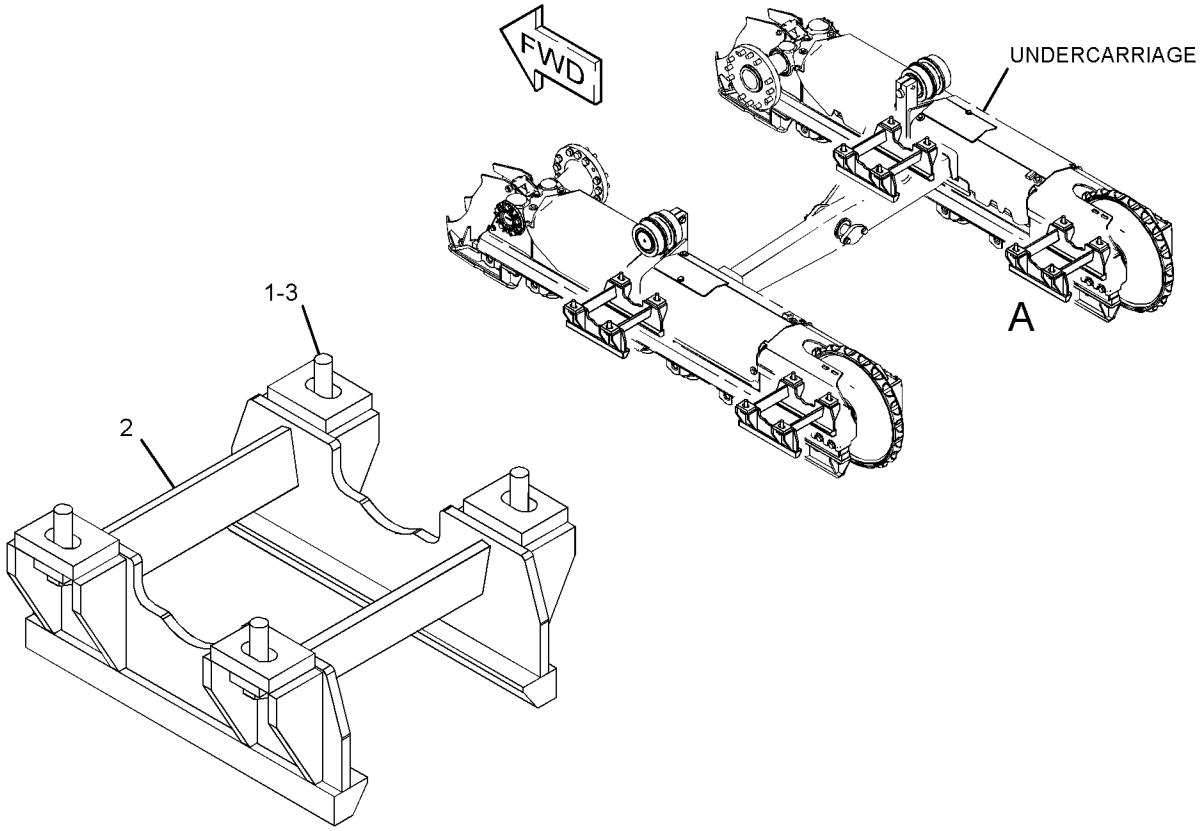

VIEW OF AREA A

GRAPHIC #1 <END> g06174183

431-7064 IDLER GP-FRONT—HEAVY-DUTY

S/N: H3C1-UP; K3G1-UP
PART OF 421-4569, 421-4570 FRAME GP-TRACK ROLLER
AN ATTACHMENT

SMCS-4159 **i06694049**

NOTE	REF NO	GRAPHIC REF	PART NUMBER	QTY	PART NAME 1 2 3 4 5 6 (PRODUCT LEVEL)	SEE PAGE
	1	1	**248-3959**	2	COVER	
	2	1	**421-4695**	1	YOKE AS	
	3	1	**435-5591**	1	GUARD AS	
	4	1	**471-6772**	1	PLATE (RH)	
	5	1	**471-6773**	1	PLATE (RH)	
	6	1	**471-6774**	1	PLATE (LH)	
	7	1	**471-6776**	1	PLATE (LH)	
	8	1	**198-4767**	4	WASHER-HARD (13.5X30X12-MM THK)	
Y	9	1	**368-9791**	1	IDLER GP-TRACK	320
M	10	1	**7X-2553**	12	BOLT (M16X2X40-MM)	
M	11	1	**8T-4192**	4	BOLT (M12X1.75X25-MM)	
	12	1	**8T-4223**	4	WASHER-HARD (13.5X25.5X3-MM THK)	
M	13	1	**8T-4910**	4	BOLT (M12X1.75X60-MM)	
	14	1	**9X-8257**	12	WASHER (17.5X30X3.5-MM THK)	

M - METRIC PART
Y - SEPARATE ILLUSTRATION

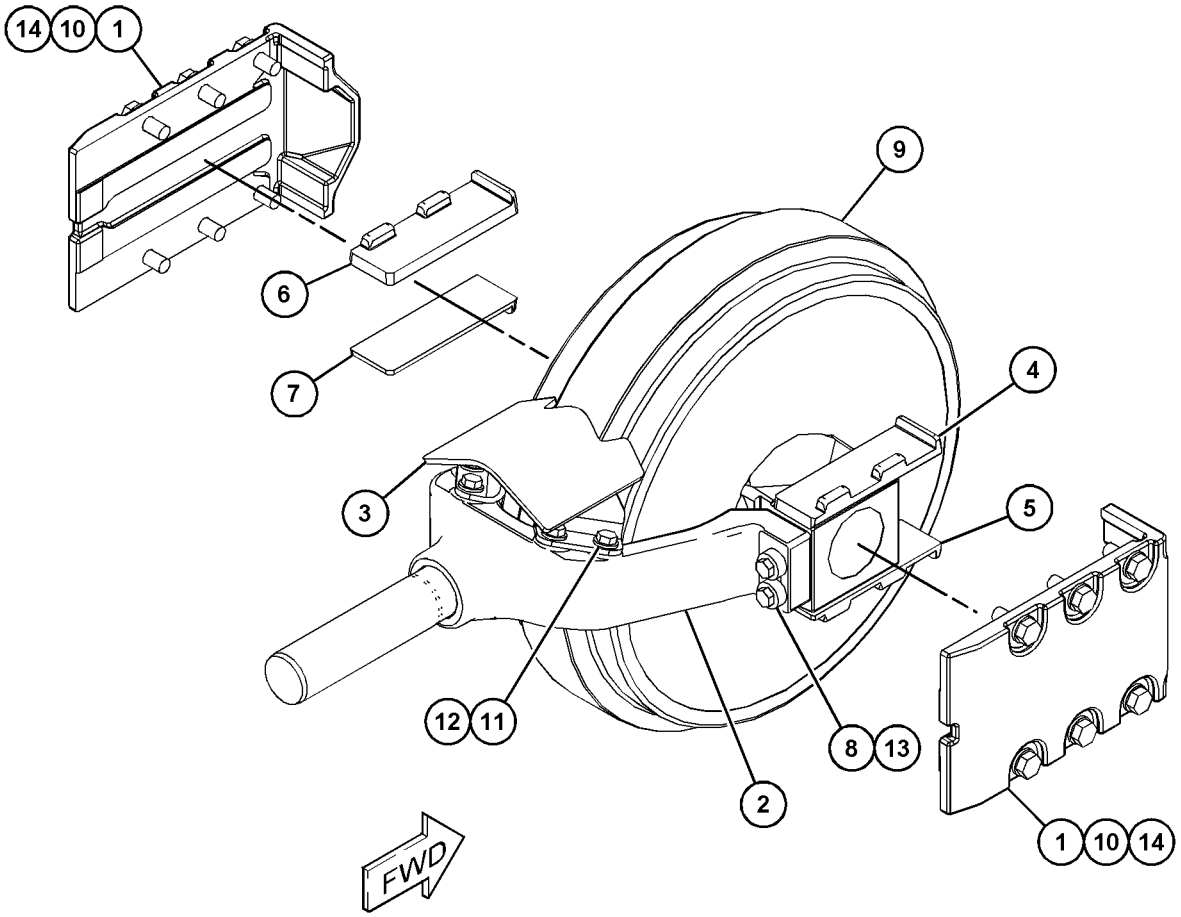

GRAPHIC #1 <END> g06021206

431-7065 IDLER GP-FRONT—SYSTEMONE

S/N: H3C1-UP; K3G1-UP
PART OF 421-4567, 421-4568 FRAME GP-TRACK ROLLER
AN ATTACHMENT

SMCS-4159 **i06694020**

NOTE	REF NO	GRAPHIC REF	PART NUMBER	QTY	PART NAME 1 2 3 4 5 6 (PRODUCT LEVEL)	SEE PAGE
	1	1	**248-3959**	2	COVER	
Y	2	1	**358-8557**	1	IDLER GP-TRACK	319
	3	1	**421-4695**	1	YOKE AS	
	4	1	**435-5582**	1	GUARD AS	
	5	1	**471-6772**	1	PLATE (RH)	
	6	1	**471-6773**	1	PLATE (RH)	
	7	1	**471-6774**	1	PLATE (LH)	
	8	1	**471-6776**	1	PLATE (LH)	
	9	1	**198-4767**	4	WASHER-HARD (13.5X30X12-MM THK)	
M	10	1	**7X-2553**	12	BOLT (M16X2X40-MM)	
M	11	1	**8T-4192**	4	BOLT (M12X1.75X25-MM)	
	12	1	**8T-4223**	4	WASHER-HARD (13.5X25.5X3-MM THK)	
M	13	1	**8T-4910**	4	BOLT (M12X1.75X60-MM)	
	14	1	**9X-8257**	12	WASHER (17.5X30X3.5-MM THK)	

M - METRIC PART
Y - SEPARATE ILLUSTRATION

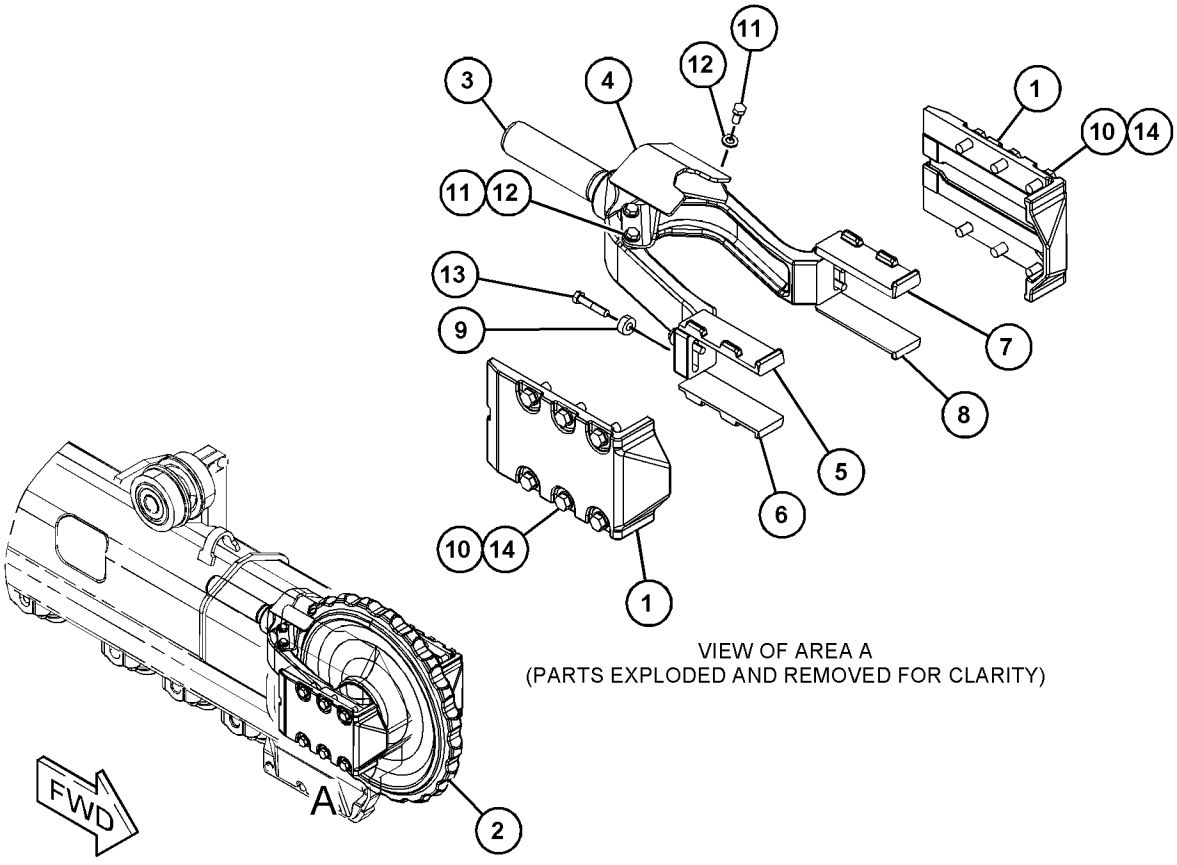

VIEW OF AREA A
(PARTS EXPLODED AND REMOVED FOR CLARITY)

GRAPHIC #1 <END> g06019071

358-8557 IDLER GP-TRACK—SYSTEMONE

S/N: H3C1-UP; K3G1-UP
PART OF 431-7065 IDLER GP-FRONT
AN ATTACHMENT

SMCS-4159 **i05962942**

NOTE	REF NO	GRAPHIC REF	PART NUMBER	QTY	PART NAME 1 2 3 4 5 6 (PRODUCT LEVEL)	SEE PAGE
	1	1	**9W-2146**	1	PLUG	
	2	1	**148-3533**	2	SEAL GP-DUO-CONE	
					(EACH INCLUDES)	
	2A	1	**160-6631**	2	RING-TORIC	
	3	1	**248-5327**	1	SHAFT	
	4	1	**251-8512**	2	DOWEL	
	5	1	**358-8556**	1	IDLER & BEARING AS	
	5A	1	**243-5321**	2	BEARING AS	
					(EACH INCLUDES)	
		1	**7K-1089**	1	BUSHING-TERMINAL	
	6	1	**360-3534**	2	BLOCK (IDLER)	
	7	1	**7F-8267**	2	SEAL-O-RING	

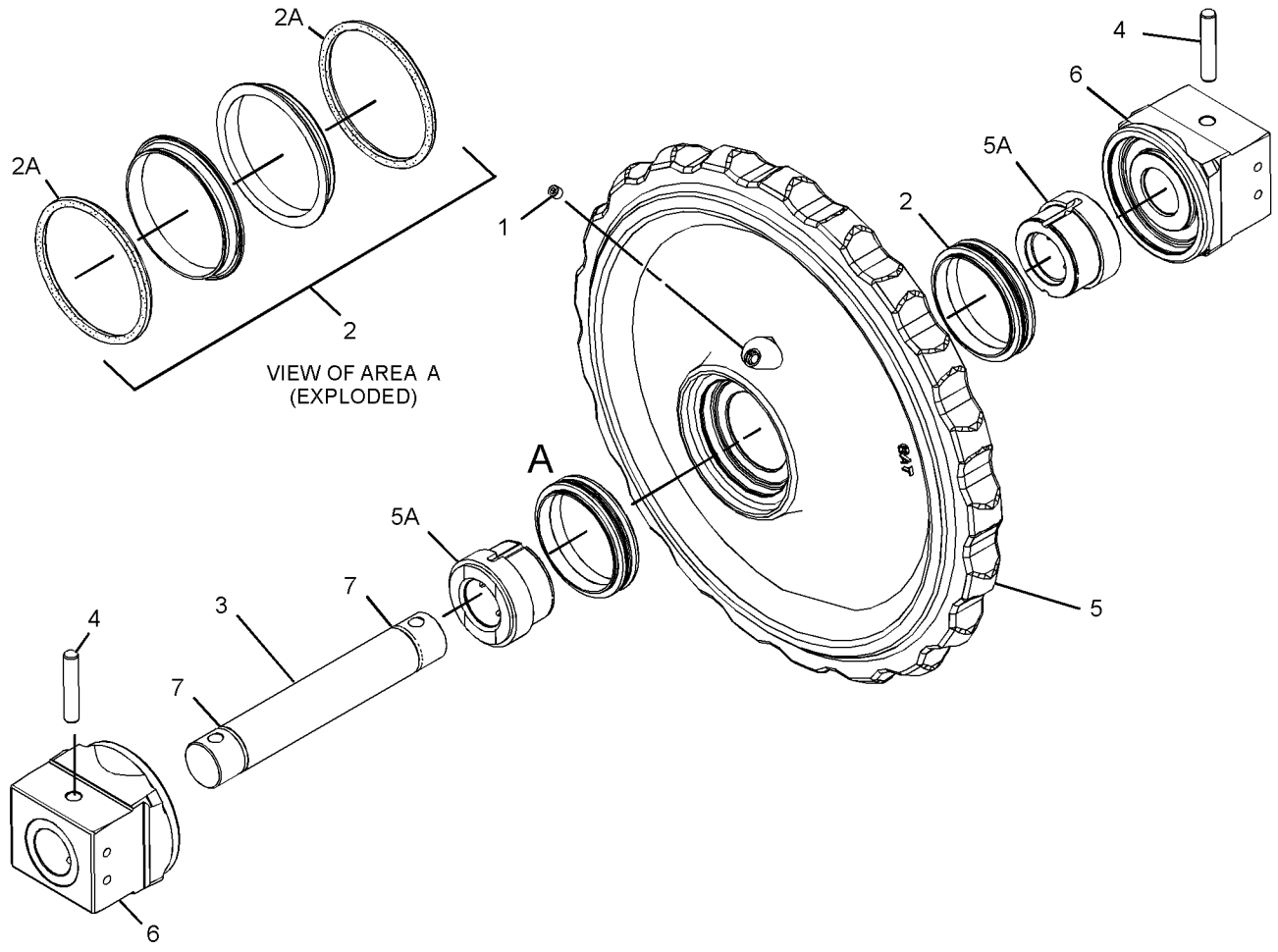

GRAPHIC #1 <END> g03002417

368-9791 IDLER GP-TRACK—HEAVY-DUTY

S/N: H3C1-UP; K3G1-UP
PART OF 431-7064 IDLER GP-FRONT
AN ATTACHMENT

SMCS-4159 **i06301457**

NOTE	REF NO	GRAPHIC REF	PART NUMBER	QTY	PART NAME 1 2 3 4 5 6 (PRODUCT LEVEL)	SEE PAGE
	1	1	**9W-2146**	1	PLUG	
	2	1	**320-8919**	2	SEAL GP-DUO-CONE	
					(EACH INCLUDES)	
	2A	1	**160-6631**	2	RING-TORIC	
	3	1	**248-5327**	1	SHAFT	
	4	1	**251-8512**	2	DOWEL	
	5	1	**360-3534**	2	BLOCK (IDLER)	
	6	1	**368-9792**	1	IDLER & BEARING AS	
	6A	1	**243-5321**	2	BEARING AS	
	7	1	**7F-8267**	2	SEAL-O-RING	

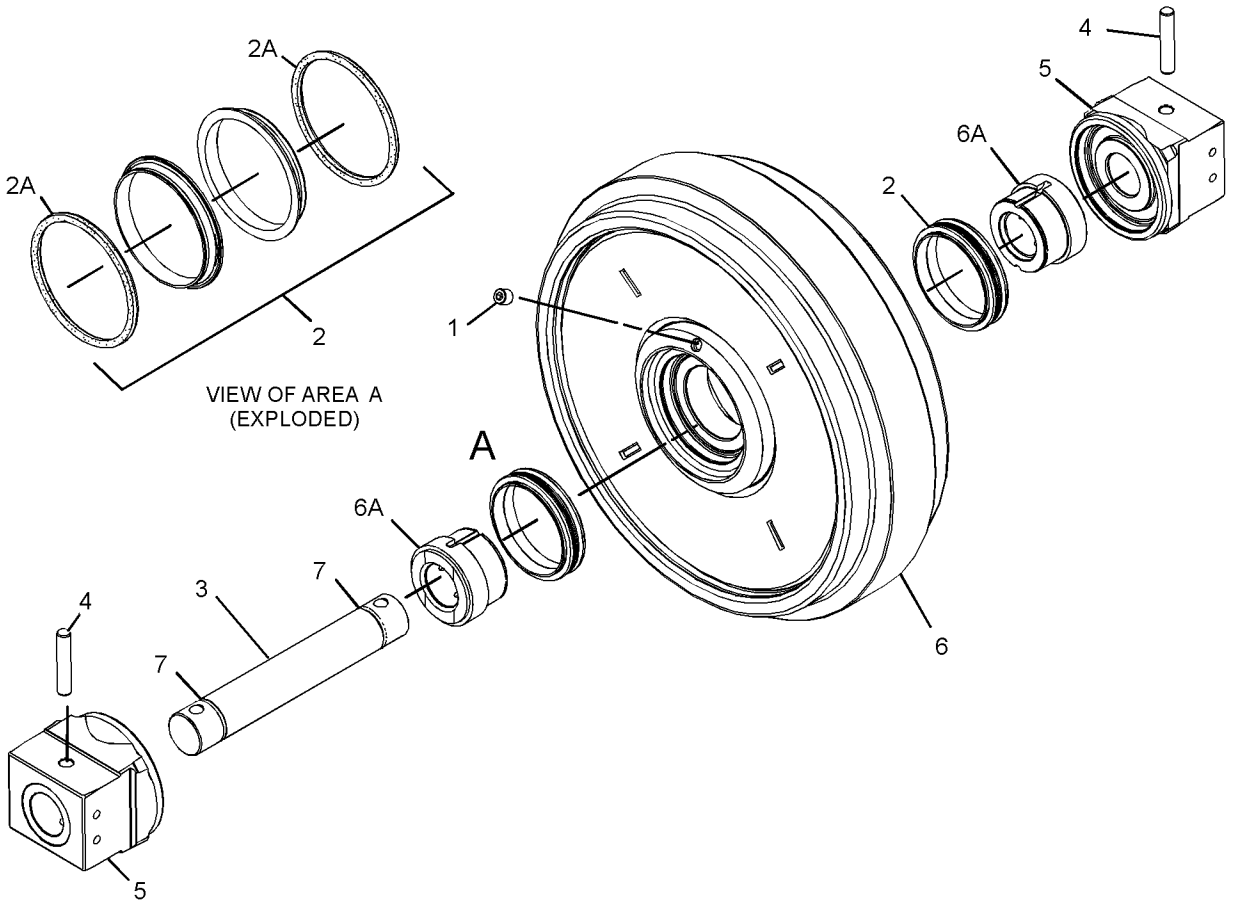

GRAPHIC #1 <END> g03067938

110-2976 LINK AS-TRACK

S/N: H3C1-UP; K3G1-UP
SEALED, LUBRICATED, HEAVY DUTY
PART OF 110-2977, 379-3984 TRACK GP
AN ATTACHMENT

SMCS-4169, 4171

i07576451

NOTE	REF NO	GRAPHIC REF	PART NUMBER	QTY	PART NAME 1 2 3 4 5 6 (PRODUCT LEVEL)	SEE PAGE
	1	1	**6Y-0473**	40	PLUG-CLEAR	
			5G-2247	40	STOPPER-RUBBER	
	2	1	**152-8070**	80	RING-THRUST	
	3	1	**250-3988**	80	SEAL AS	
	4	1	**106-1626**	39	LINK-TRACK (LH)	
	5	1	**106-1625**	39	LINK-TRACK (RH)	
	6	1	**106-1628**	1	LINK-MASTER (PIN END, LH)	
	7	1	**106-1627**	1	LINK-MASTER (PIN END, RH)	
	8	1	**106-1630**	1	LINK-TRACK MASTER (BUSHING END, LH)	
	9	1	**106-1629**	1	LINK-TRACK MASTER (BUSHING END, RH)	
	10	1	**106-1618**	40	BUSHING-TRACK	
	11	1	**179-0126**	40	PIN-TRACK	

110-2976 **LINK AS-TRACK (**contd.**)** **i07576451**

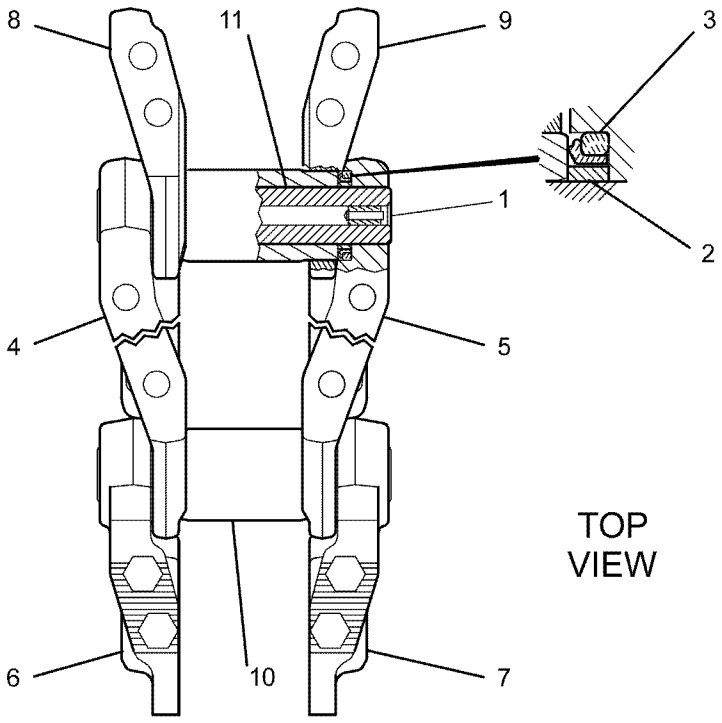

GRAPHIC #1 <END> g01088373

457-4775 LINK AS-TRACK—HEAVY-DUTY

S/N: K3G1-UP
40-JOINTS. SEALED, LUBRICATED
FIELD REPLACEMENT ORDER 110-2976—PAGE: 321
PART OF 391-3940 TRACK GP
AN ATTACHMENT

SMCS-4169, 4171 **i06906621**

NOTE	REF NO	GRAPHIC REF	PART NUMBER	QTY	PART NAME 1 2 3 4 5 6 (PRODUCT LEVEL)	SEE PAGE
	1	1	*6Y-1198*	40	STOP AS	
					(EACH INCLUDES)	
		1	**6Y-0473**	1	PLUG-CLEAR	
		1	**5G-2247**	1	STOPPER-RUBBER	
	2	1	**152-8070**	80	RING-THRUST	
	3	1	**250-3988**	80	SEAL AS	
	4	1	**106-1626**	39	LINK-TRACK (LH)	
	5	1	**106-1625**	39	LINK-TRACK (RH)	
	6	1	**106-1628**	1	LINK-MASTER (PIN END, LH)	
	7	1	**106-1627**	1	LINK-MASTER (PIN END, RH)	
	8	1	**106-1630**	1	LINK-TRACK MASTER (BUSHING END, LH)	
	9	1	**106-1629**	1	LINK-TRACK MASTER (BUSHING END, RH)	
	10	1	**106-1618**	40	BUSHING-TRACK	
	11	1	**179-0126**	40	PIN-TRACK	

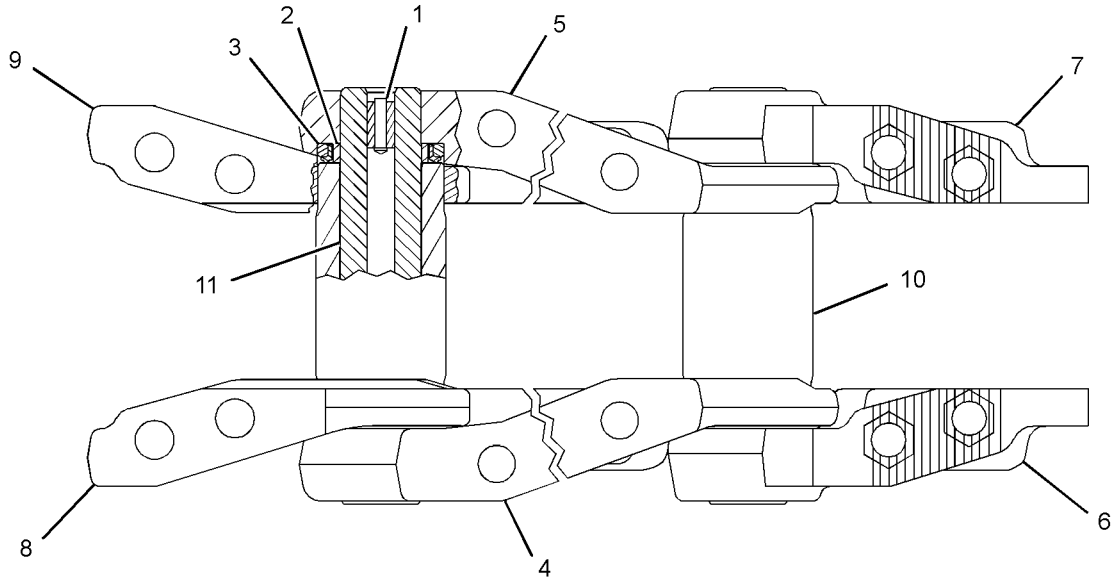

GRAPHIC #1 <END> g06162946

561-1080 LINK AS-TRACK–SYSTEMONE

S/N: H3C1-UP; K3G1-UP
40-JOINTS. SEALED, LUBRICATED
FOR USE WITH SYSTEMONE ROLLERS, GUARDS, GUIDESTRIPS
PART OF 595-4160, 595-4163, 595-4166, 595-4170, 595-4174, 595-4181 TRACK GP
AN ATTACHMENT

SMCS-4169, 4171 **i08075329**

NOTE	REF NO	GRAPHIC REF	PART NUMBER	QTY	PART NAME 1 2 3 4 5 6 (PRODUCT LEVEL)	SEE PAGE
	1	1	**561-1078**	20	LINK AS-TRACK BOX	
					(EACH INCLUDES)	
		1	**235-2529**	2	LINK-TRACK	
	2	1	**235-2529**	38	LINK-TRACK	

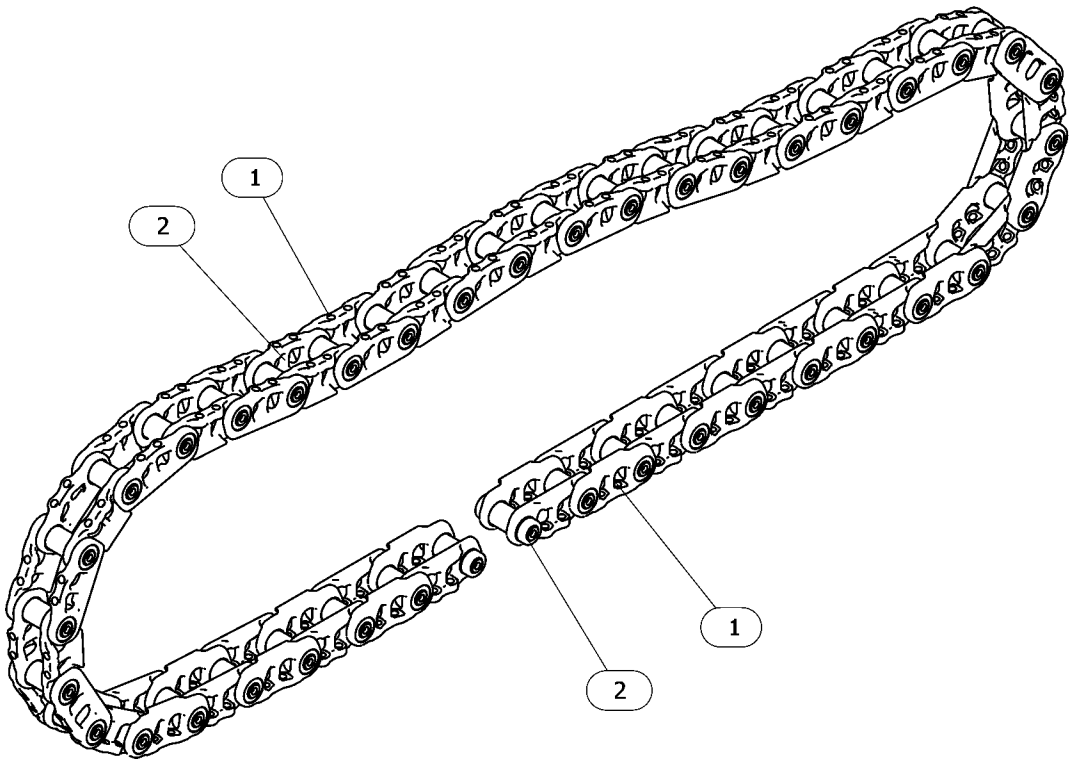

GRAPHIC #1 <END> g06536187

435-5593 PIVOT BAR GP

S/N: K3G1-UP

PART OF 591-7134 POWER TRAIN AR

SMCS-4153 **i06714541**

NOTE	REF NO	GRAPHIC REF	PART NUMBER	QTY	PART NAME 1 2 3 4 5 6 (PRODUCT LEVEL)	SEE PAGE
	1	1	**8P-8629**	2	PLATE	
	2	1	**9P-6790**	2	RETAINER	
	3	1	**435-5595**	2	SHAFT AS	
					(EACH INCLUDES)	
		1	**8G-5799**	1	RING	
	4	1	**8G-2943**	2	SEAL	
	5	1	**1H-8128**	2	SEAL-O-RING	
M	6	1	**7X-2553**	10	BOLT (M16X2X40-MM)	
M	7	1	**7X-2563**	24	BOLT (M20X2.5X60-MM)	
	8	1	**8T-4123**	24	WASHER (22X35X3.5-MM THK)	
M	9	1	**8T-4193**	6	BOLT (M16X2X50-MM)	
	10	1	**9X-8257**	10	WASHER (17.5X30X3.5-MM THK)	

M - METRIC PART

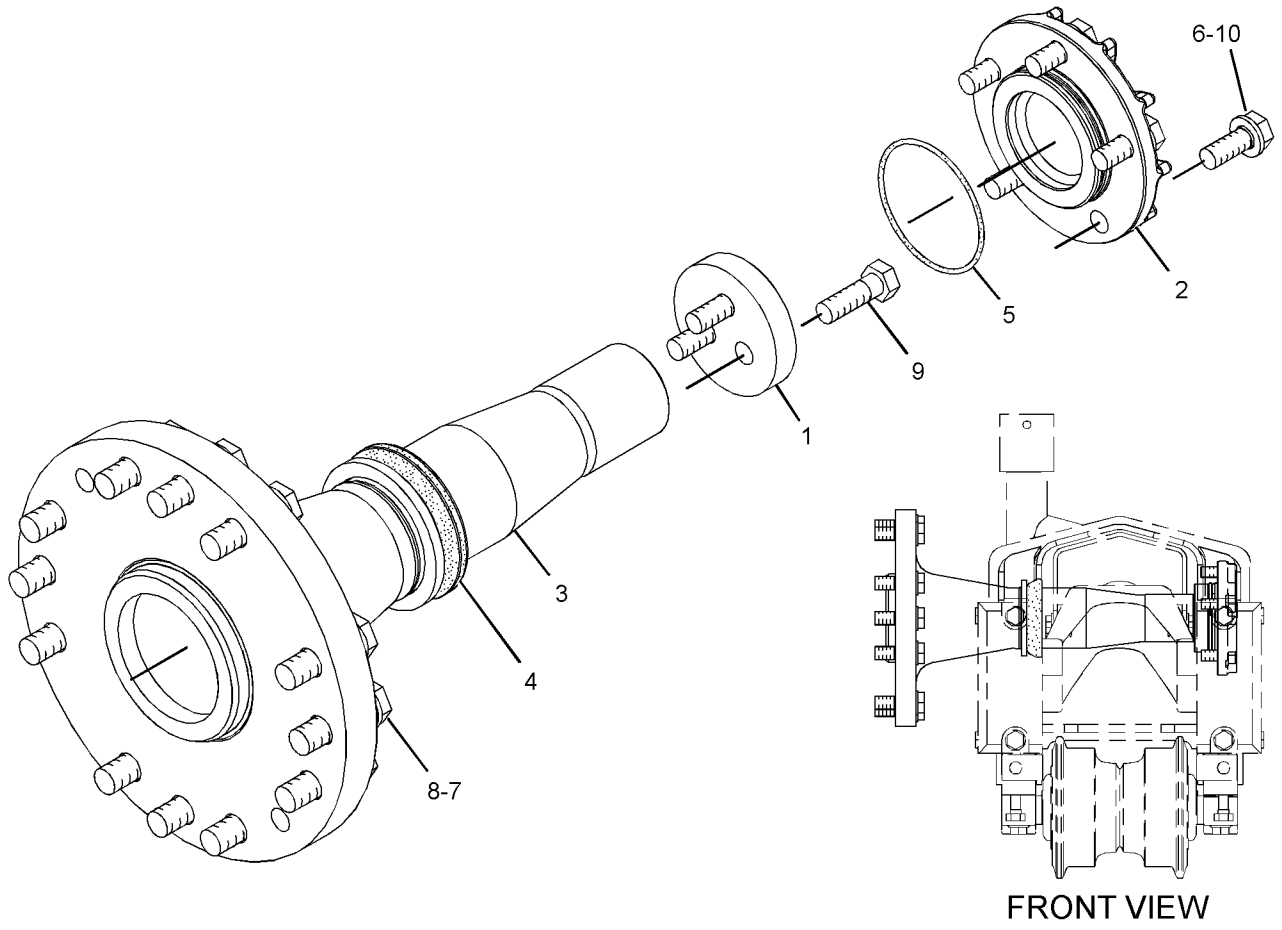

GRAPHIC #1 <END> g01196618

435-5594 PIVOT BAR GP

S/N: H3C1-UP

PART OF 591-7135 POWER TRAIN AR

SMCS-4153 **i06716033**

NOTE	REF NO	GRAPHIC REF	PART NUMBER	QTY	PART NAME 1 2 3 4 5 6 (PRODUCT LEVEL)	SEE PAGE
	1	1	**8G-2943**	2	SEAL	
	2	1	**8P-8629**	2	PLATE	
	3	1	**9P-6790**	2	RETAINER	
	4	1	**435-5596**	2	SHAFT AS	
					(EACH INCLUDES)	
		1	**8G-5799**	1	RING	
	5	1	**1H-8128**	2	SEAL-O-RING	
M	6	1	**7X-2553**	10	BOLT (M16X2X40-MM)	
M	7	1	**7X-2563**	24	BOLT (M20X2.5X60-MM)	
	8	1	**8T-4123**	24	WASHER (22X35X3.5-MM THK)	
M	9	1	**8T-4193**	6	BOLT (M16X2X50-MM)	
	10	1	**9X-8257**	10	WASHER (17.5X30X3.5-MM THK)	

M - METRIC PART

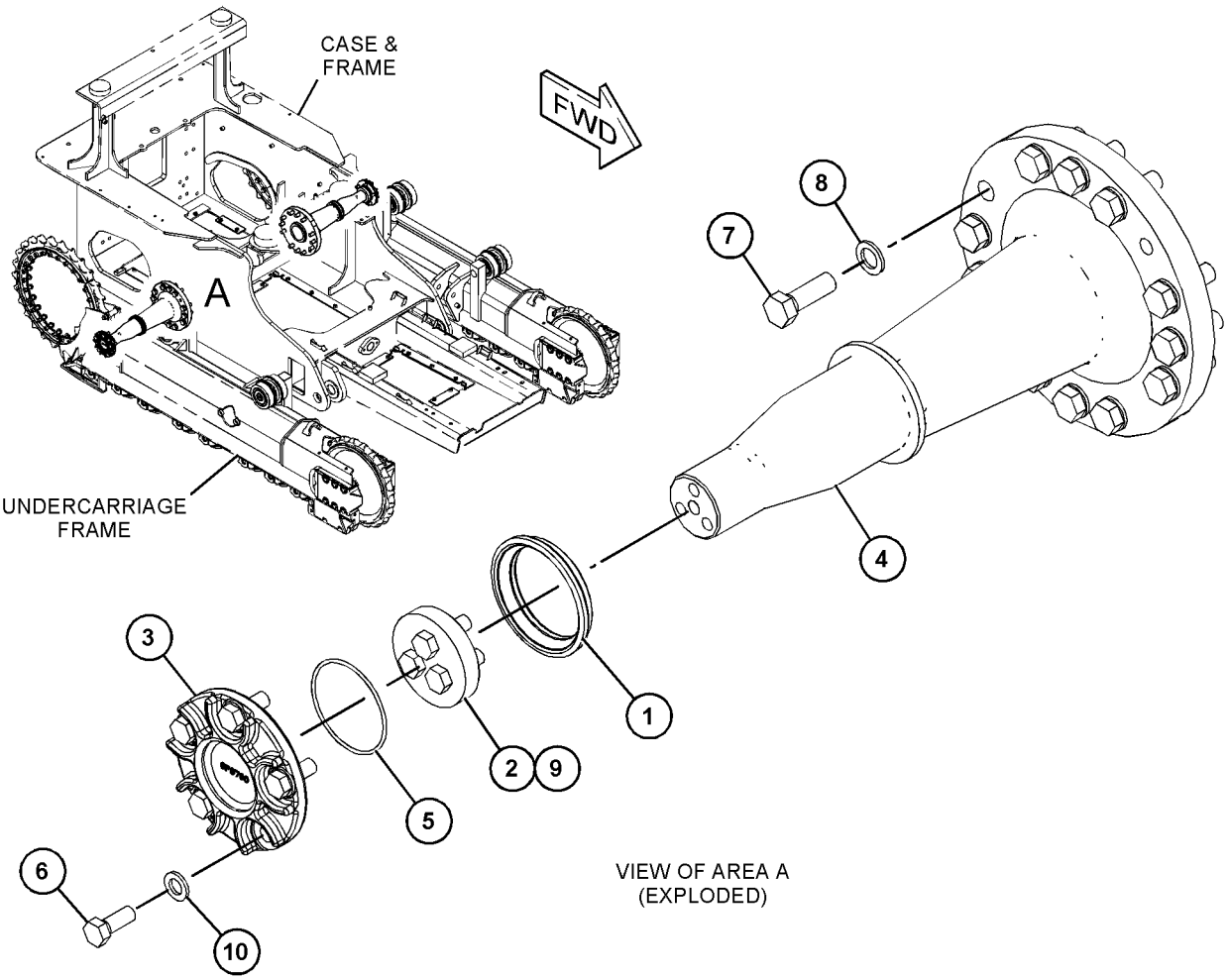

GRAPHIC #1 <END> g06021364

372-3375 ROLLER GP-TRACK CARRIER—HEAVY-DUTY

S/N: H3C1-UP; K3G1-UP
PART OF 431-7080 UNDERCARRIAGE AR
AN ATTACHMENT

SMCS-4154 **i08026537**

NOTE	REF NO	GRAPHIC REF	PART NUMBER	QTY	PART NAME 1 2 3 4 5 6 (PRODUCT LEVEL)	SEE PAGE
	1	1	**8P-6188**	1	PLATE-RETAINER	
	2	1	**7H-3171**	1	PLUG-PIPE	
	3	1	**9W-5224**	1	SEAL GP-DUO-CONE	
	4	1	**217-6359**	1	COLLAR	
	5	1	**241-8494**	2	BEARING AS-TAPERED ROLLER	
M	6	1	**192-4744**	2	BOLT (M10X1.5X20-MM)	

M - METRIC PART

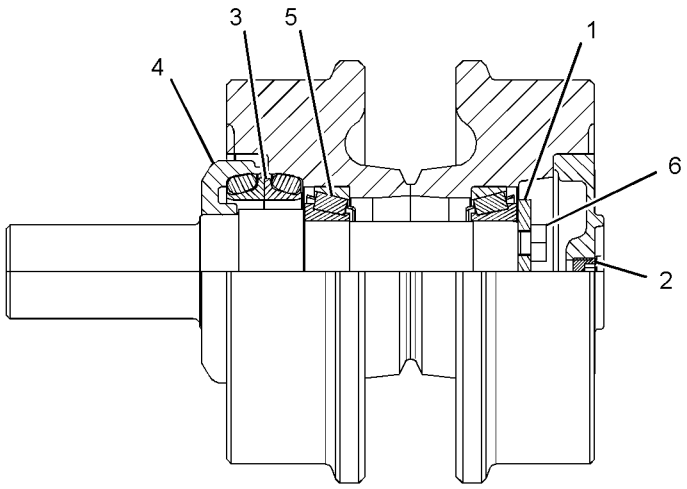

GRAPHIC #1 <END> g06513258

375-6431 ROLLER GP-TRACK CARRIER–SYSTEMONE

S/N: H3C1-UP; K3G1-UP
PART OF 431-7079 UNDERCARRIAGE AR
AN ATTACHMENT

SMCS-4154 **i06642710**

NOTE	REF NO	GRAPHIC REF	PART NUMBER	QTY	PART NAME 1 2 3 4 5 6 (PRODUCT LEVEL)	SEE PAGE
	1	1	**8P-6188**	1	PLATE-RETAINER	
	2	1	**7H-3171**	1	PLUG-PIPE	
	3	1	**9W-5224**	1	SEAL GP-DUO-CONE	
	4	1	**217-6359**	1	COLLAR	
	5	1	**241-8494**	2	BEARING AS-TAPERED ROLLER	
M	6	1	**192-4744**	2	BOLT (M10X1.5X20-MM)	
	7	1	**362-0514**	1	SHAFT	

M - METRIC PART

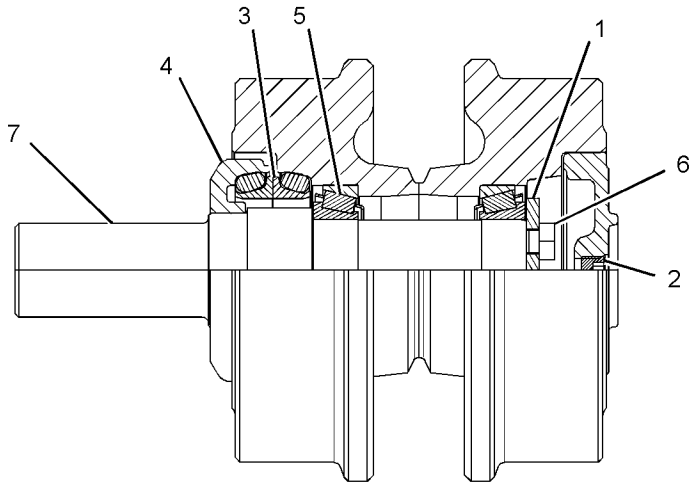

GRAPHIC #1 <END> g02730868

370-3825 ROLLER GP-TRACK-DOUBLE FLANGE—HEAVY-DUTY

S/N: H3C1-UP; K3G1-UP

PART OF 421-4569, 421-4570 FRAME GP-TRACK ROLLER

AN ATTACHMENT

SMCS-4180 **i07377760**

NOTE	REF NO	GRAPHIC REF	PART NUMBER	QTY	PART NAME 1 2 3 4 5 6 (PRODUCT LEVEL)	SEE PAGE
	1	1	**218-4993**	2	CAP (TRACK ROLLER)	
	2	1	**365-0751**	1	ROLLER GP-TRACK-DOUBLE FLANGE	
		1	**1H-8128**	2	SEAL-O-RING	
		1	**6V-6768**	2	RING-RETAINING	
		1	*6Y-0454*	1	STOPPER AS	
		1	**6Y-0473**	1	PLUG-CLEAR	
		1	**7G-4332**	1	STOPPER	
		1	**124-8248**	2	BUSHING AS	
		1	**171-5883**	2	SEAL GP-DUO-CONE	
		1	**217-6359**	2	COLLAR	
M	3	1	**137-3301**	4	BOLT (M16X2X80-MM)	
	4	1	**9X-8268**	4	WASHER (17.5X30X3.5-MM THK)	

M - METRIC PART

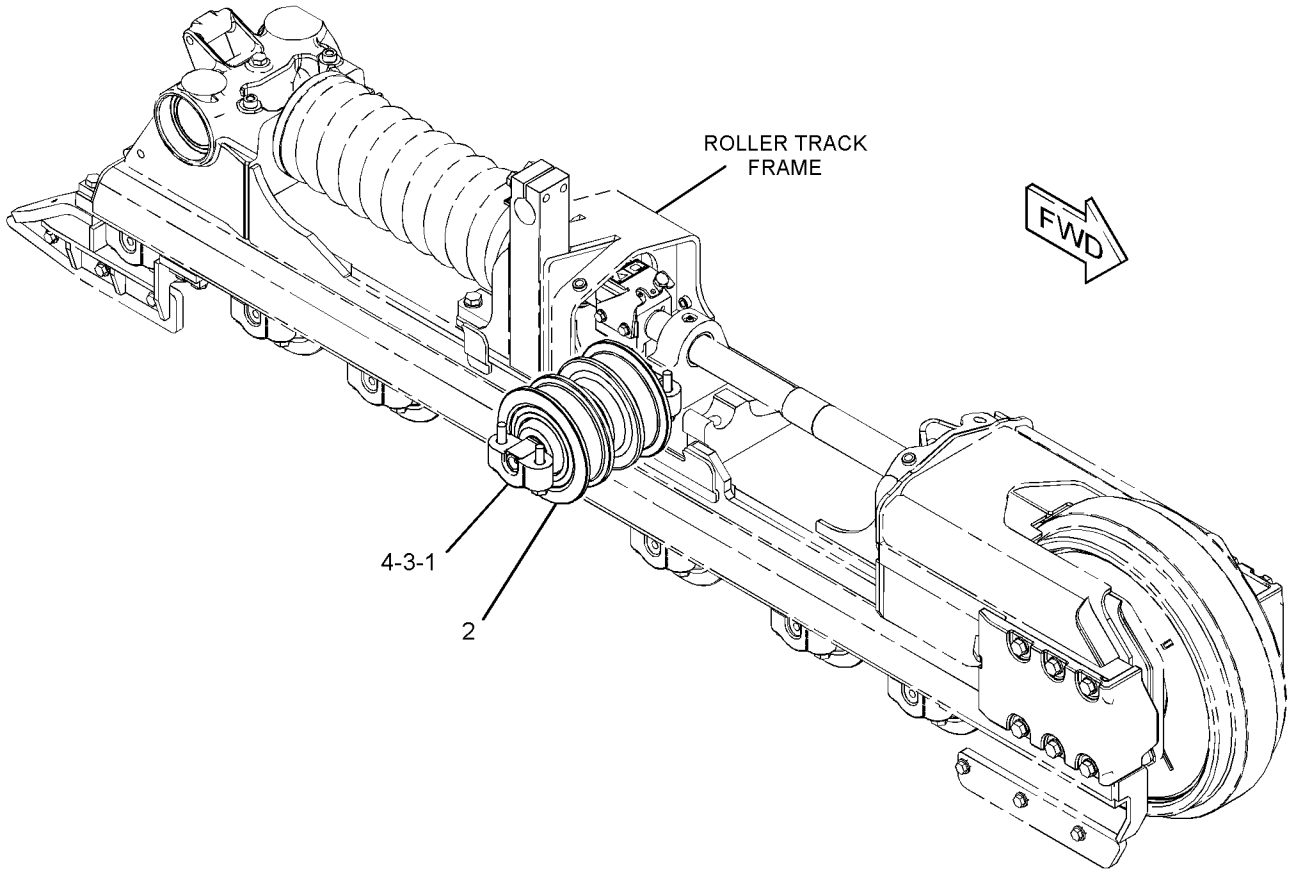

GRAPHIC #1 <END> g03009539

357-5368 ROLLER GP-TRACK-SINGLE FLANGE—SYSTEMONE

S/N: H3C1-UP; K3G1-UP

PART OF 375-6404 ROLLER GP-TRACK-SINGLE FLANGE

AN ATTACHMENT

SMCS-4180 **i07052572**

NOTE	REF NO	GRAPHIC REF	PART NUMBER	QTY	PART NAME 1 2 3 4 5 6 (PRODUCT LEVEL)	SEE PAGE
					(INDIVIDUAL PARTS ARE NOT SERVICED SEPARATELY)	

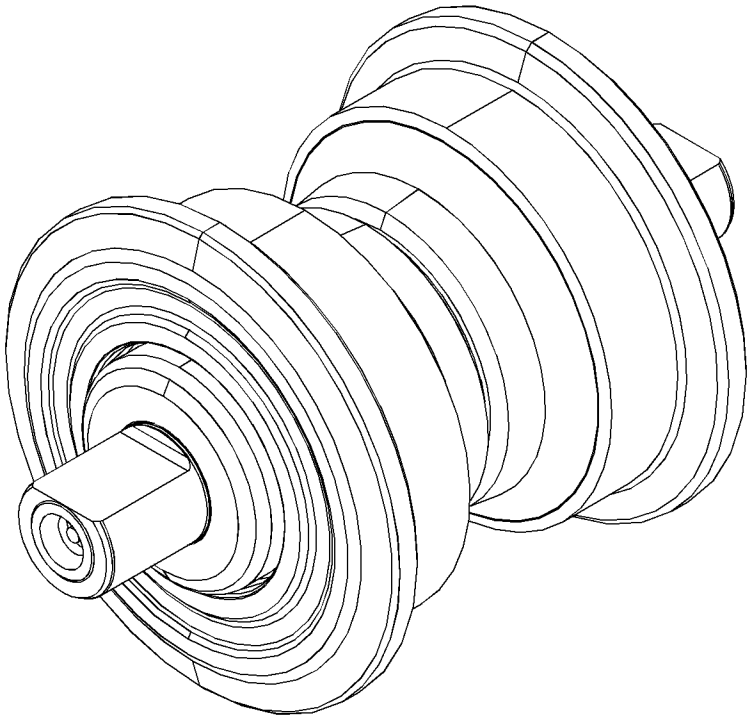

GRAPHIC #1 <END> g06208188

370-3824 ROLLER GP-TRACK-SINGLE FLANGE—HEAVY-DUTY

S/N: H3C1-UP; K3G1-UP

PART OF 421-4569, 421-4570 FRAME GP-TRACK ROLLER

AN ATTACHMENT

SMCS-4180 **i07377766**

NOTE	REF NO	GRAPHIC REF	PART NUMBER	QTY	PART NAME 1 2 3 4 5 6 (PRODUCT LEVEL)	SEE PAGE
	1	1	**218-4993**	2	CAP (TRACK ROLLER)	
	2	1	**365-0752**	1	ROLLER GP-TRACK-SINGLE FLANGE	
		1	**1H-8128**	2	SEAL-O-RING	
		1	**6V-6768**	2	RING-RETAINING	
		1	*6Y-0454*	1	STOPPER AS	
		1	**6Y-0473**	1	PLUG-CLEAR	
		1	**7G-4332**	1	STOPPER	
		1	**124-8248**	2	BUSHING AS	
		1	**171-5883**	2	SEAL GP-DUO-CONE	
		1	**217-6359**	2	COLLAR	
M	3	1	**137-3301**	4	BOLT (M16X2X80-MM)	
	4	1	**9X-8268**	4	WASHER (17.5X30X3.5-MM THK)	

M - METRIC PART

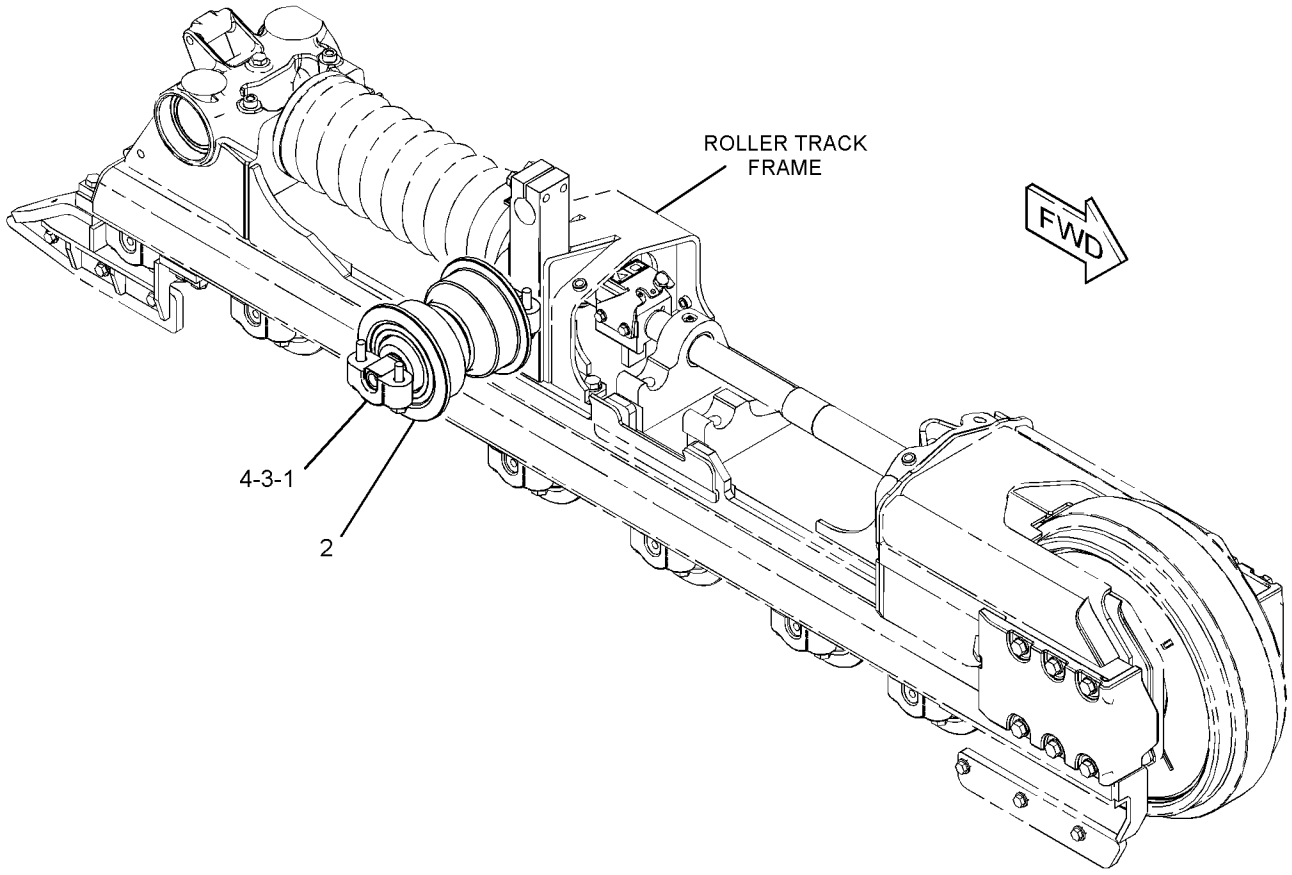

GRAPHIC #1 <END> g03009536

375-6404 ROLLER GP-TRACK-SINGLE FLANGE–SYSTEMONE

S/N: H3C1-UP; K3G1-UP

PART OF 421-4567, 421-4568 FRAME GP-TRACK ROLLER

AN ATTACHMENT

SMCS-4180 **i05940833**

NOTE	REF NO	GRAPHIC REF	PART NUMBER	QTY	PART NAME 1 2 3 4 5 6 (PRODUCT LEVEL)	SEE PAGE
	1	1	**218-4993**	2	CAP (TRACK ROLLER)	
Y	2	1	**357-5368**	1	ROLLER GP-TRACK-SINGLE FLANGE	330
M	3	1	**137-3301**	4	BOLT (M16X2X80-MM)	
	4	1	**9X-8268**	4	WASHER (17.5X30X3.5-MM THK)	

M - METRIC PART
Y - SEPARATE ILLUSTRATION

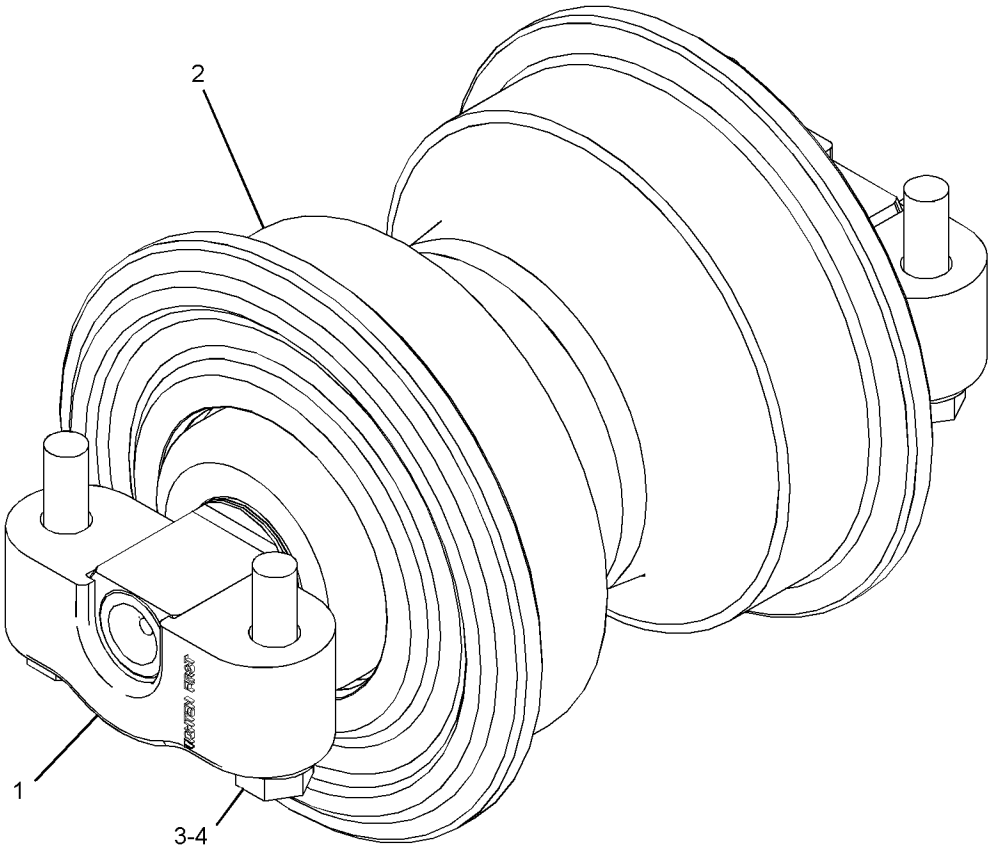

GRAPHIC #1 <END> g02935398

421-4610 SPRING GP-RECOIL

S/N: H3C1-UP; K3G1-UP

PART OF 421-4567, 421-4568, 421-4569, 421-4570 FRAME GP-TRACK ROLLER

AN ATTACHMENT

SMCS-4158 **i06694018**

NOTE	REF NO	GRAPHIC REF	PART NUMBER	QTY	PART NAME 1 2 3 4 5 6 (PRODUCT LEVEL)	SEE PAGE
	1	1	**7B-3028**	4	SCREW-DRIVE (NO 4X 3/16-IN)	
	2	1	**7Y-0735**	1	STRIP	
	3	1	**239-8240**	1	SPRING	
	4	1	**277-8378**	1	PLATE-WARNING (CRUSH HAZARD, READ OMM)	
	5	1	**421-4623**	1	ROD	
	6	1	**421-4625**	2	PLATE	
	7	1	**421-4638**	1	TUBE	
	8	1	**489-4303**	2	PLATE	
	9	1	**7Y-0725**	1	WASHER-HARD (52X92X8-MM THK)	
M	10	1	**8C-7328**	1	NUT (M48X5-THD)	
M	11	1	**8T-9080**	2	BOLT-SOCKET HEAD (M12X1.75X20-MM)	

M - METRIC PART

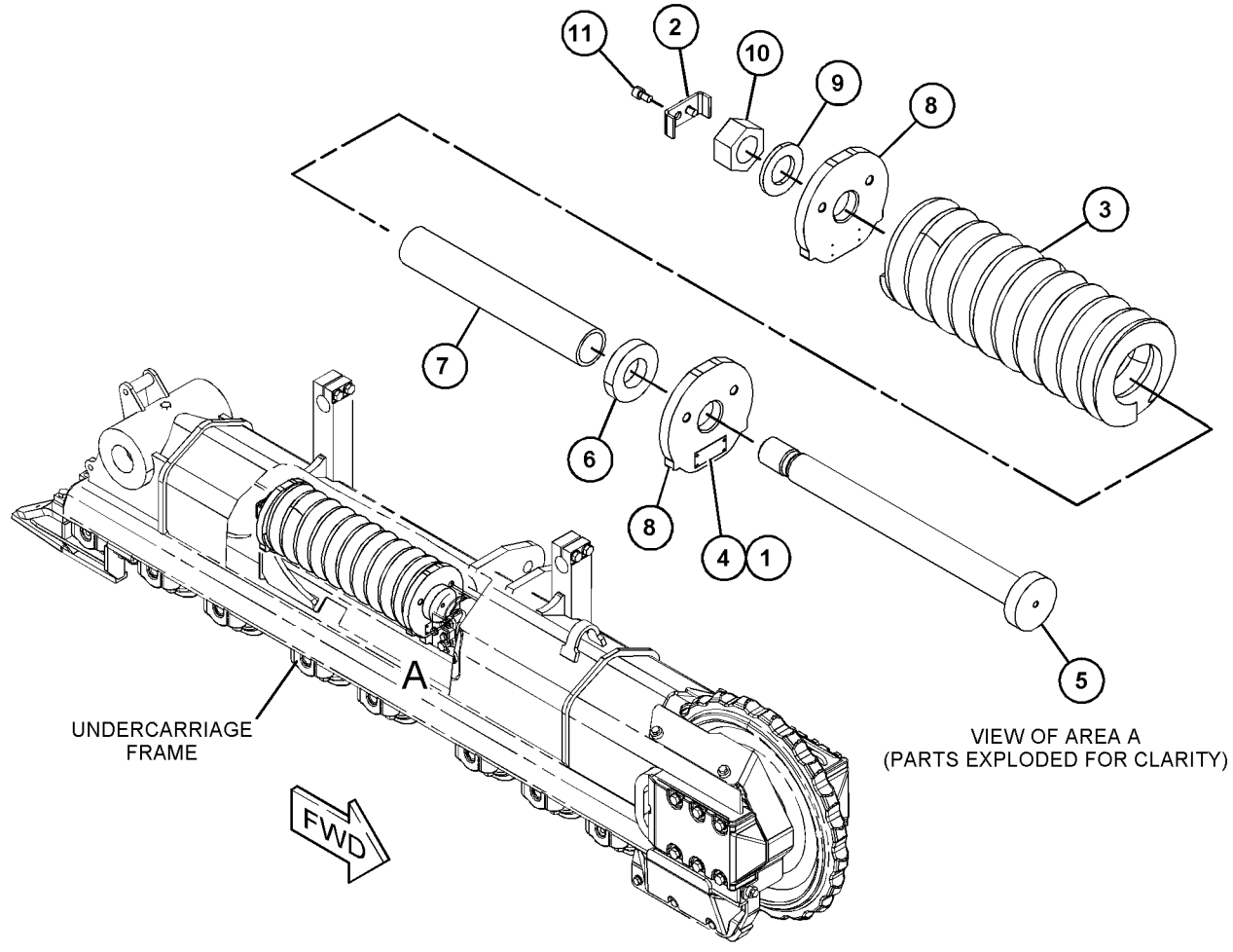

GRAPHIC #1 <END> g06019135

490-1400 TRACK ADJUSTER & RECOIL GP–RH

S/N: H3C1-UP; K3G1-UP

PART OF 421-4567, 421-4569 FRAME GP-TRACK ROLLER

AN ATTACHMENT

SMCS-4157, 4158 **i08069321**

NOTE	REF NO	GRAPHIC REF	PART NUMBER	QTY	PART NAME 1 2 3 4 5 6 (PRODUCT LEVEL)	SEE PAGE
	1	1	**2S-5926**	1	VALVE-RELIEF	
	2	1	**3W-2369**	1	PLATE AS	
	3	1	**8G-4945**	1	SEAL AS	
C	4	1	**580-8201**	1	CYLINDER	
	5	1	**190-8609**	1	VALVE-FILL	
	6	1	**421-4688**	1	PISTON	
	7	1	**582-2238**	1	BRACKET AS	
	8	1	**2J-6274**	1	SEAL-O-RING	
	9	1	**2S-4078**	1	SEAL-O-RING	
	10	1	**8T-4121**	2	WASHER-HARD (11X21X2.5-MM THK)	
M	11	1	**8T-4182**	2	BOLT (M10X1.5X45-MM)	
	12	1	**9S-8010**	1	PLUG	

C - CHANGE FROM PREVIOUS TYPE
M - METRIC PART

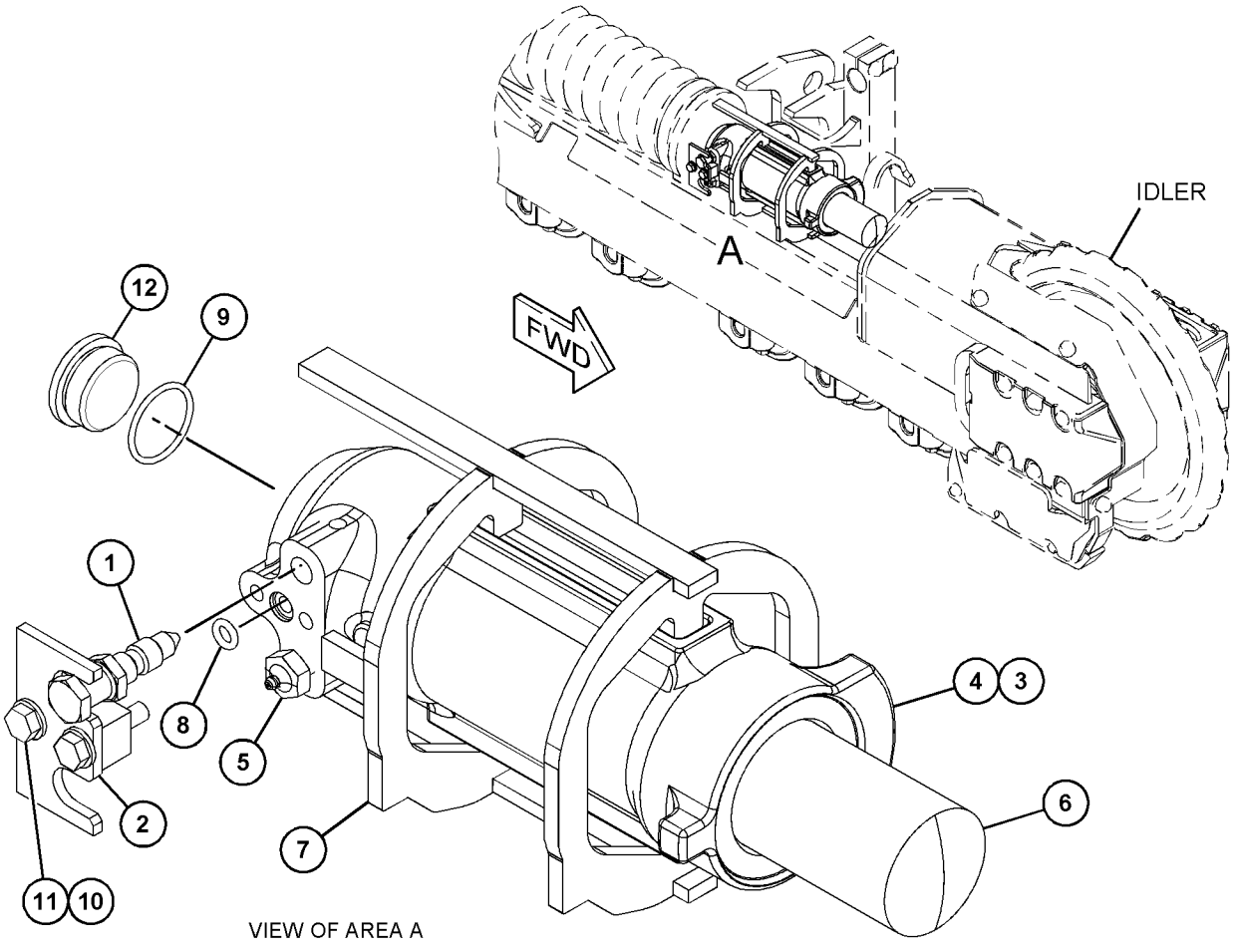

VIEW OF AREA A

GRAPHIC #1 <END> g06519240

490-1402 TRACK ADJUSTER & RECOIL GP–LH

S/N: H3C1-UP; K3G1-UP
PART OF 421-4568, 421-4570 FRAME GP-TRACK ROLLER
AN ATTACHMENT

SMCS-4157, 4158 **i08069324**

NOTE	REF NO	GRAPHIC REF	PART NUMBER	QTY	PART NAME 1 2 3 4 5 6 (PRODUCT LEVEL)	SEE PAGE
	1	1	**2S-5926**	1	VALVE-RELIEF	
	2	1	**3W-2369**	1	PLATE AS	
	3	1	**8G-4945**	1	SEAL AS	
C	4	1	**580-8201**	1	CYLINDER	
	5	1	**190-8609**	1	VALVE-FILL	
	6	1	**421-4688**	1	PISTON	
	7	1	**582-2238**	1	BRACKET AS	
	8	1	**2J-6274**	1	SEAL-O-RING	
	9	1	**2S-4078**	1	SEAL-O-RING	
	10	1	**8T-4121**	2	WASHER-HARD (11X21X2.5-MM THK)	
M	11	1	**8T-4182**	2	BOLT (M10X1.5X45-MM)	
	12	1	**9S-8010**	1	PLUG	

C - CHANGE FROM PREVIOUS TYPE
M - METRIC PART

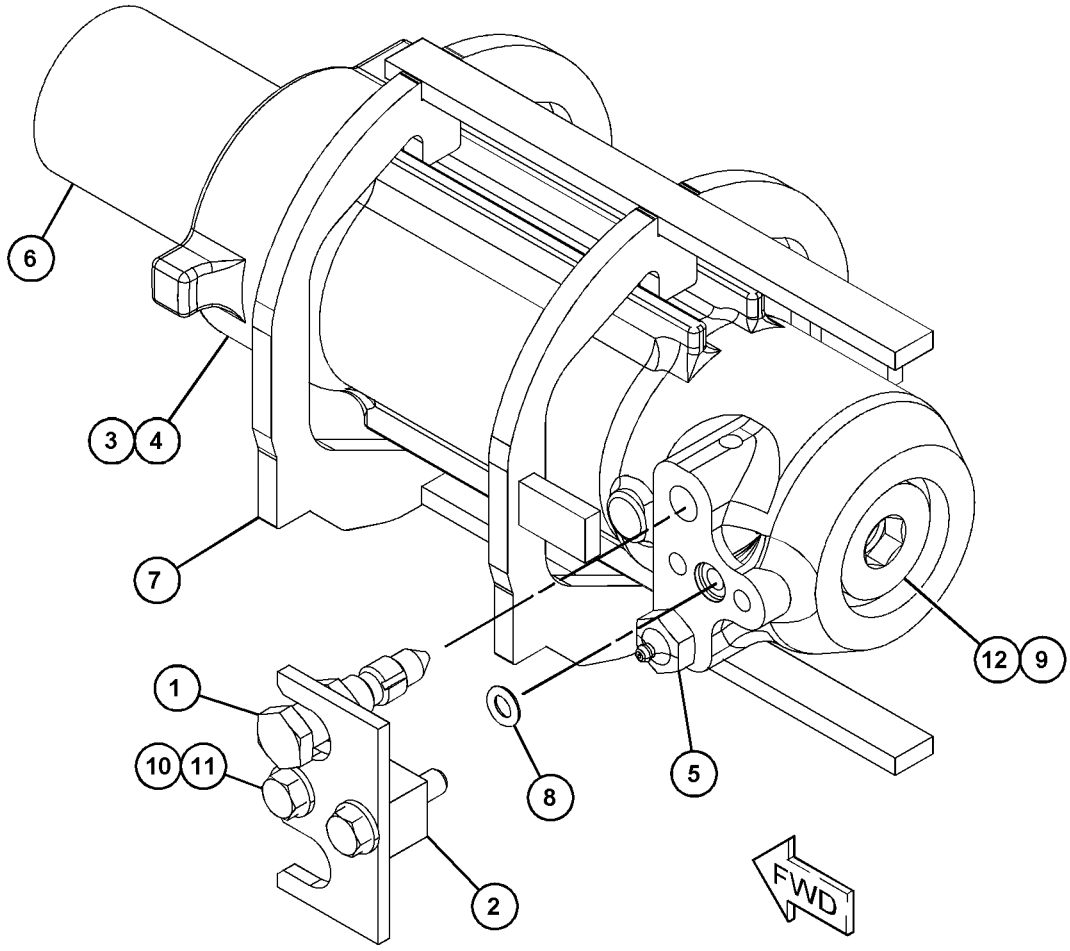

GRAPHIC #1 <END> g06520841

379-3982 TRACK AR—HEAVY-DUTY

S/N: K3G1-UP

560-MM (22-IN) GROUSER SHOE . SEALED, LUBRICATED. EXTREME SERVICE

FOR USE WITH HEAVY-DUTY ROLLERS, GUARDS, GUIDESTRIPS, CONVENTIONAL IDLERS, 431-7080—PAGE: 354

CANNOT BE USED WITH 431-7079—PAGE: 354

AN ATTACHMENT

SMCS-4170 **i08058895**

NOTE	REF NO	GRAPHIC REF	PART NUMBER	QTY	PART NAME 1 2 3 4 5 6 (PRODUCT LEVEL)	SEE PAGE
Y	1	1	**110-2977**	2	TRACK GP	345

Y - SEPARATE ILLUSTRATION

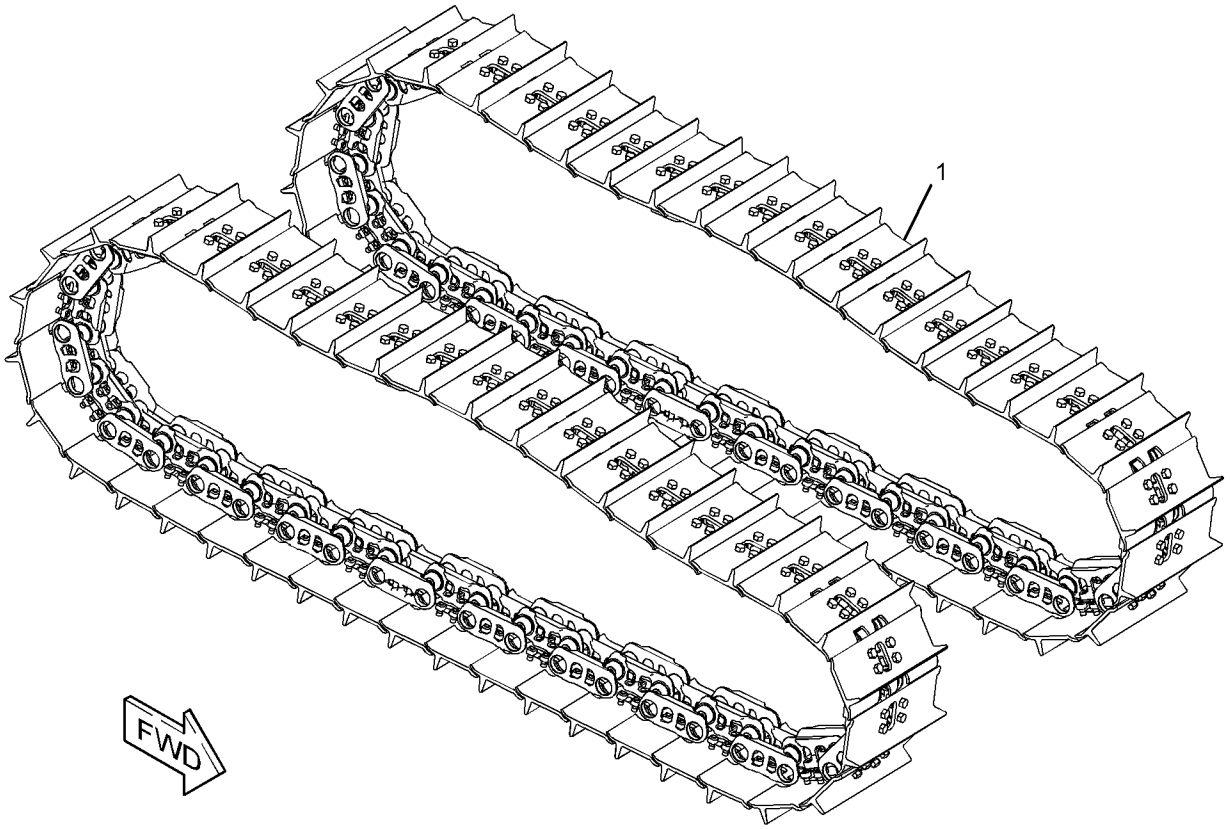

GRAPHIC #1 <END> g03131417

379-3983 TRACK AR—HEAVY-DUTY

S/N: H3C1-UP

760-MM (29.9-IN) GROUSER SHOE. SEALED, LUBRICATED. EXTREME SERVICE FOR USE WITH HEAVY-DUTY ROLLERS, GUARDS, GUIDESTRIPS & CONVENTIONAL IDLERS, 431-7080—PAGE: 354

CANNOT BE USED WITH UNDERCARRIAGE AR (SYSTEMONE), 431-7079—PAGE: 354

AN ATTACHMENT

SMCS-4170 **i08066457**

NOTE	REF NO	GRAPHIC REF	PART NUMBER	QTY	PART NAME 1 2 3 4 5 6 (PRODUCT LEVEL)	SEE PAGE
Y	1	1	**379-3984**	2	TRACK GP	346

Y - SEPARATE ILLUSTRATION

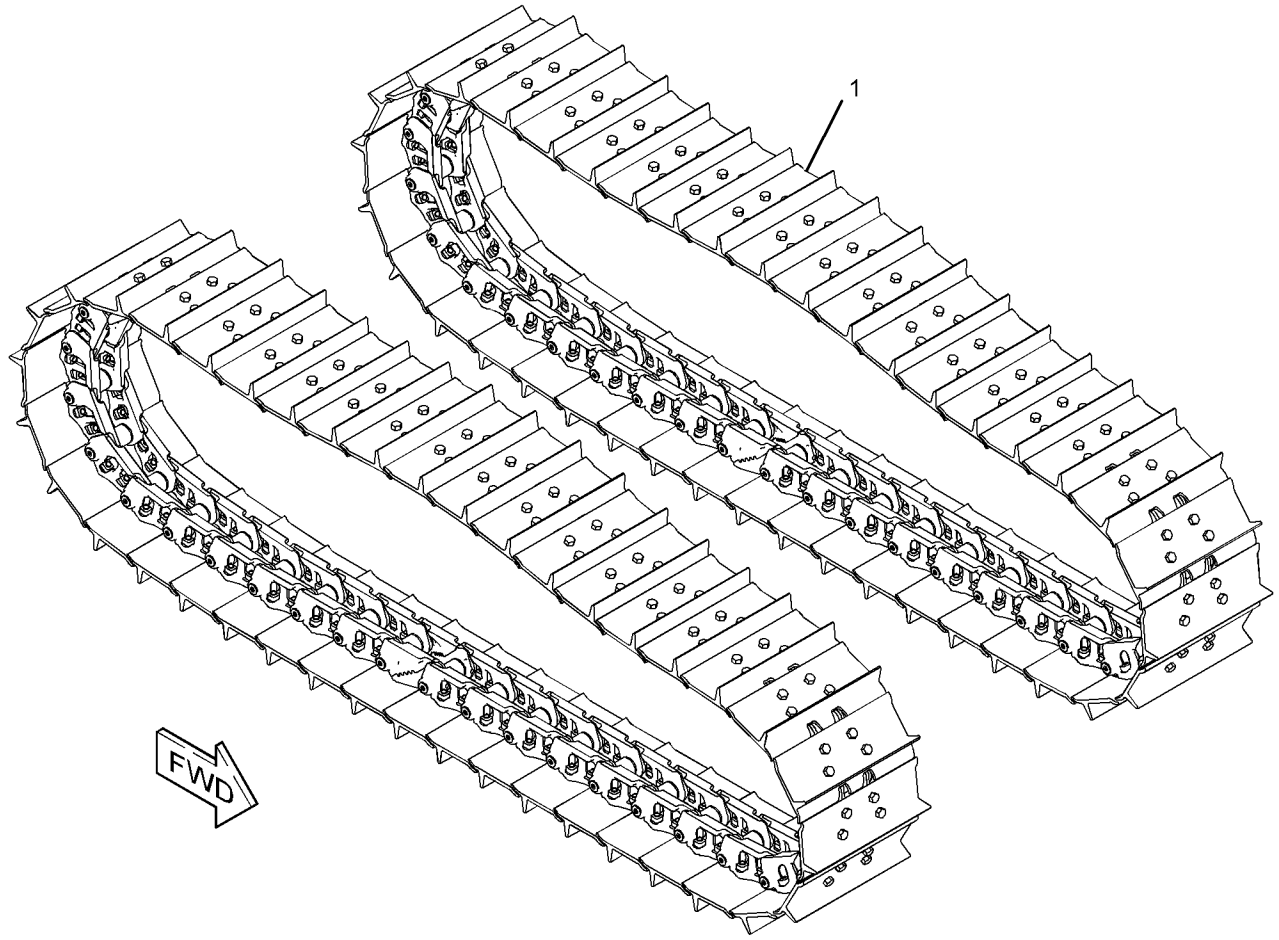

GRAPHIC #1 <END> g03131436

391-3941 TRACK AR—HEAVY-DUTY

S/N: K3G1-UP
510-MM (20-IN) GROUSER SHOE. SEALED, LUBRICATED. EXTREME SERVICE
FOR USE WITH HEAVY-DUTY ROLLERS, GUARDS, GUIDESTRIPS, CONVENTIONAL IDLERS, 431-7080—PAGE: 354
CANNOT BE USED WITH 431-7079—PAGE: 354
AN ATTACHMENT

SMCS-4170 **i08056632**

NOTE	REF NO	GRAPHIC REF	PART NUMBER	QTY	PART NAME 1 2 3 4 5 6 (PRODUCT LEVEL)	SEE PAGE
Y	1	1	*391-3940*	2	TRACK GP	347

Y - SEPARATE ILLUSTRATION

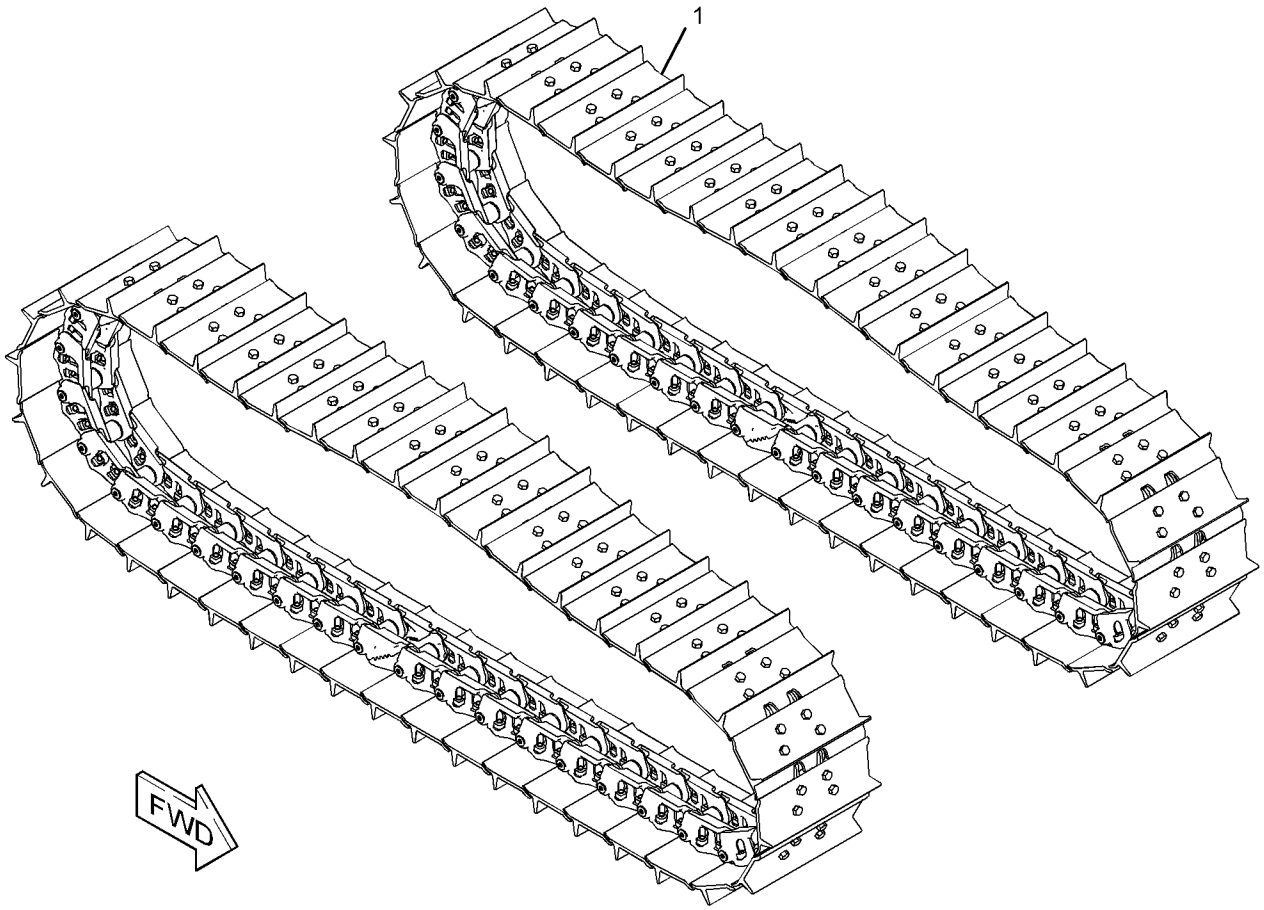

GRAPHIC #1 <END> g03132660

595-4161 TRACK AR–SYSTEMONE

S/N: H3C1-UP

760-MM (29.9-IN) GROUSER SHOE. SEALED, LUBRICATED. EXTREME SERVICE. HIGH ABRASION
FOR USE WITH SYSTEMONE ROLLERS, GUARDS & GUIDESTRIPS
AN ATTACHMENT

SMCS-4170 **i08062464**

NOTE	REF NO	GRAPHIC REF	PART NUMBER	QTY	PART NAME 1 2 3 4 5 6 (PRODUCT LEVEL)	SEE PAGE
Y	1	1	**595-4160**	2	TRACK GP	348

Y - SEPARATE ILLUSTRATION

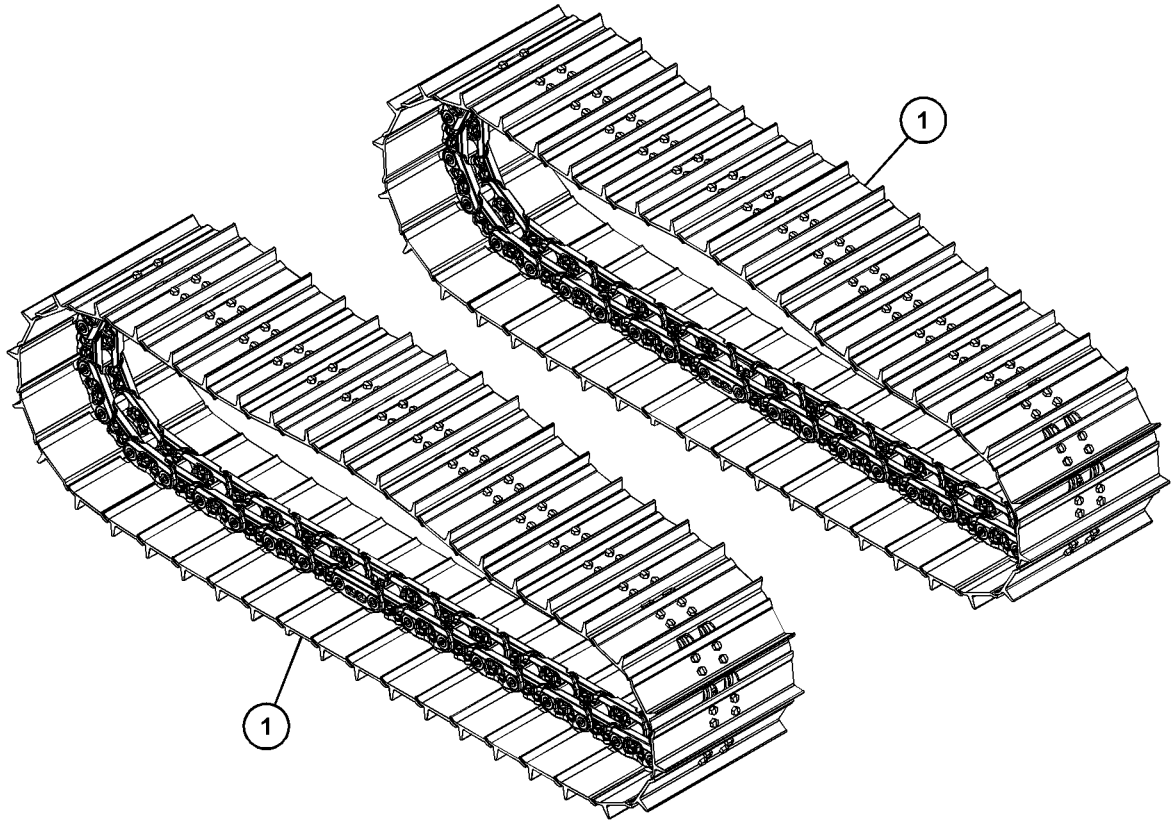

GRAPHIC #1 <END> g06534701

595-4164 TRACK AR

S/N: K3G1-UP

560-MM (22-IN) GROUSER SHOE. SEALED, LUBRICATED. EXTREME SERVICE. HIGH ABRASION
FOR USE WITH SYSTEMONE ROLLERS, GUARDS & GUIDESTRIPS
AN ATTACHMENT

SMCS-4170 **i08062396**

NOTE	REF NO	GRAPHIC REF	PART NUMBER	QTY	PART NAME 1 2 3 4 5 6 (PRODUCT LEVEL)	SEE PAGE
Y	1	1	**595-4163**	2	TRACK GP	349

Y - SEPARATE ILLUSTRATION

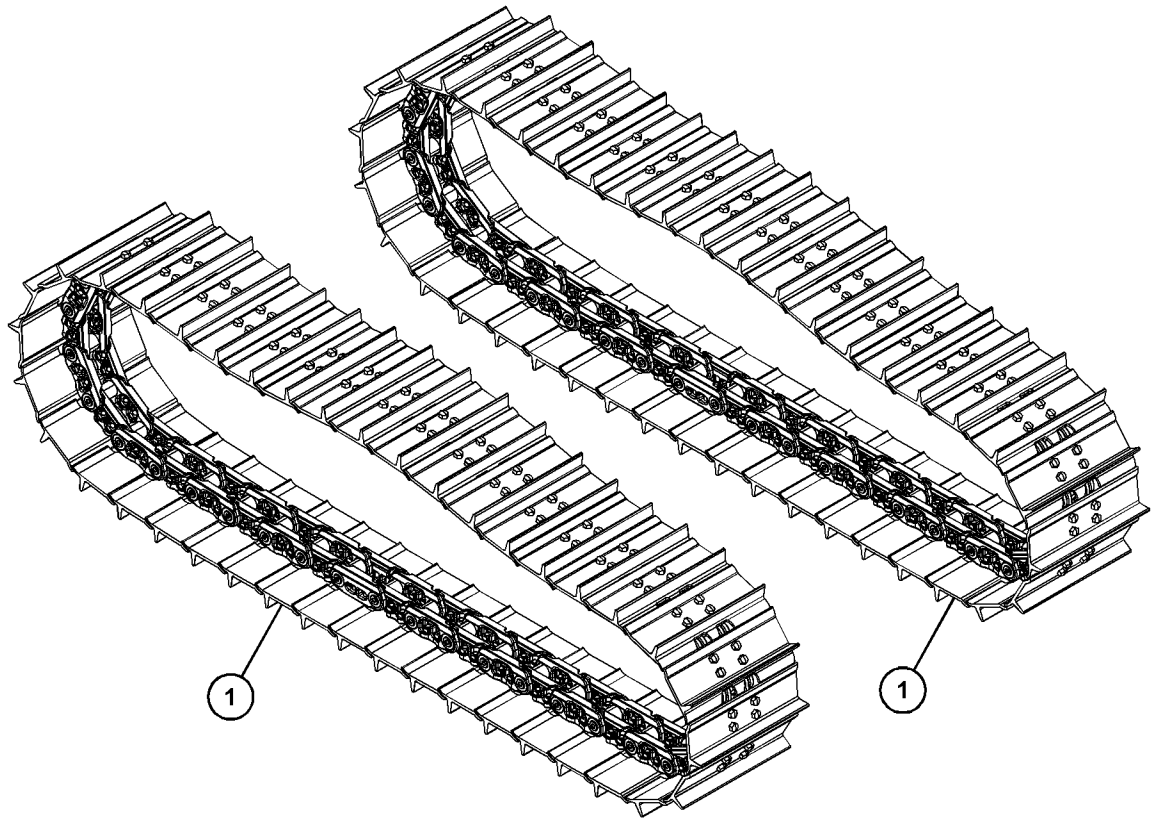

GRAPHIC #1 <END> g06534704

595-4167 TRACK AR–SYSTEMONE

S/N: H3C1-UP

760-MM (29.9-IN) GROUSER SHOE. SEALED, LUBRICATED. MODERATE SERVICE. HIGH ABRASION
FOR USE WITH SYSTEMONE ROLLERS, GUARDS, GUIDESTRIPS
AN ATTACHMENT

SMCS-4170 **i08062517**

NOTE	REF NO	GRAPHIC REF	PART NUMBER	QTY	PART NAME 1 2 3 4 5 6 (PRODUCT LEVEL)	SEE PAGE
Y	1	1	*595-4166*	2	TRACK GP	350

Y - SEPARATE ILLUSTRATION

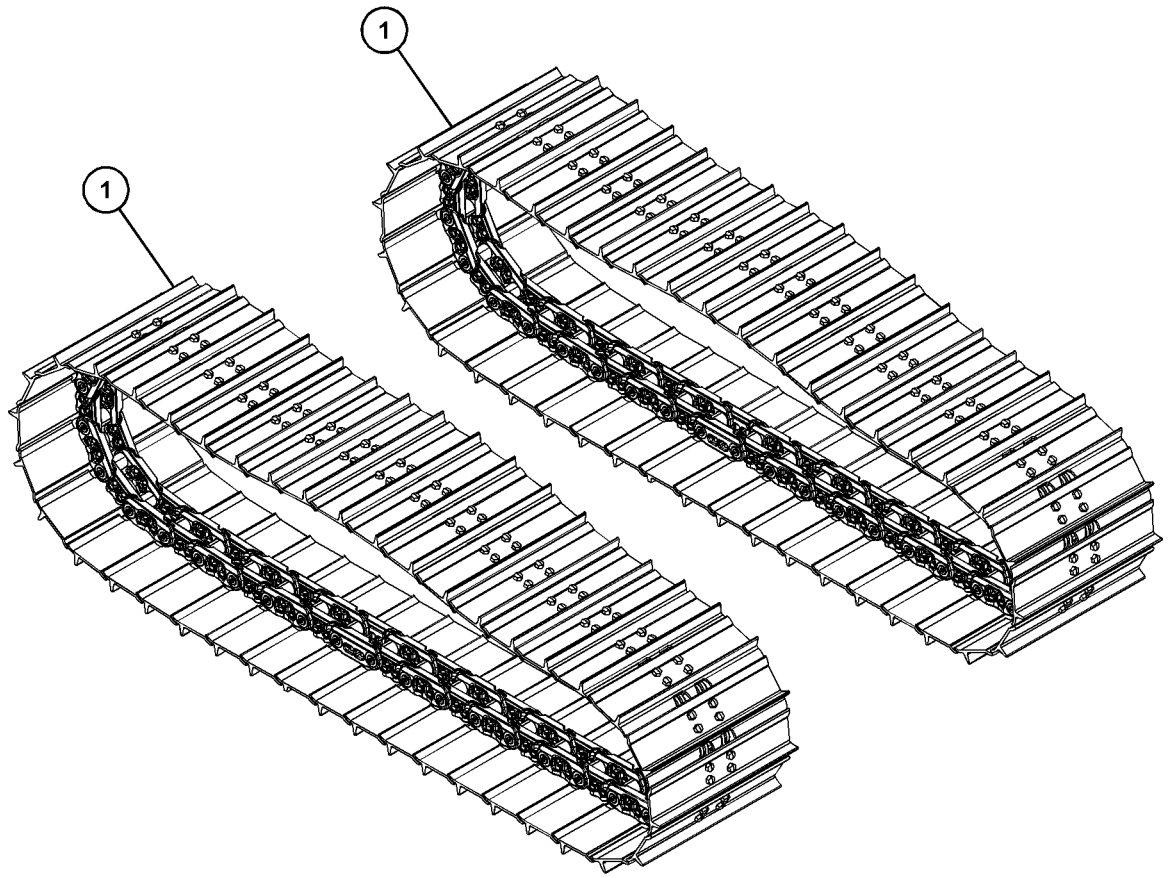

GRAPHIC #1 <END> g06533586

595-4171 TRACK AR

S/N: K3G1-UP

560-MM (22-IN) GROUSER SHOE. SEALED, LUBRICATED. MODERATE SERVICE. HIGH ABRASION
FOR USE WITH SYSTEMONE ROLLERS, GUARDS, GUIDESTRIPS
AN ATTACHMENT

SMCS-4170 **i08062537**

NOTE	REF NO	GRAPHIC REF	PART NUMBER	QTY	PART NAME 1 2 3 4 5 6 (PRODUCT LEVEL)	SEE PAGE
Y	1	1	*595-4170*	2	TRACK GP	351

Y - SEPARATE ILLUSTRATION

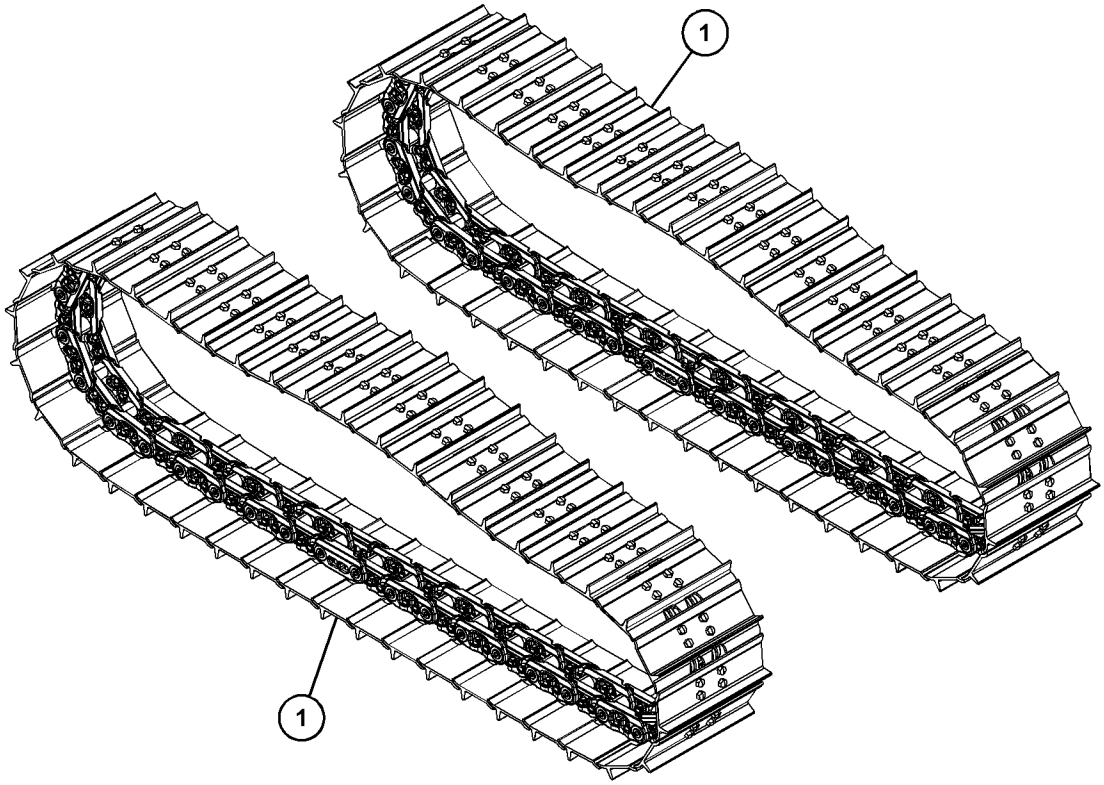

GRAPHIC #1 <END> g06534722

595-4175 TRACK AR–SYSTEMONE

S/N: K3G1-UP

510-MM (20-IN) GROUSER SHOE. SEALED, LUBRICATED. MODERATE SERVICE. HIGH ABRASION
FOR USE WITH SYSTEMONE ROLLERS, GUARDS & GUIDESTRIPS
AN ATTACHMENT

SMCS-4170 **i08062660**

NOTE	REF NO	GRAPHIC REF	PART NUMBER	QTY	PART NAME 1 2 3 4 5 6 (PRODUCT LEVEL)	SEE PAGE
Y	1	1	*595-4174*	2	TRACK GP	352

Y - SEPARATE ILLUSTRATION

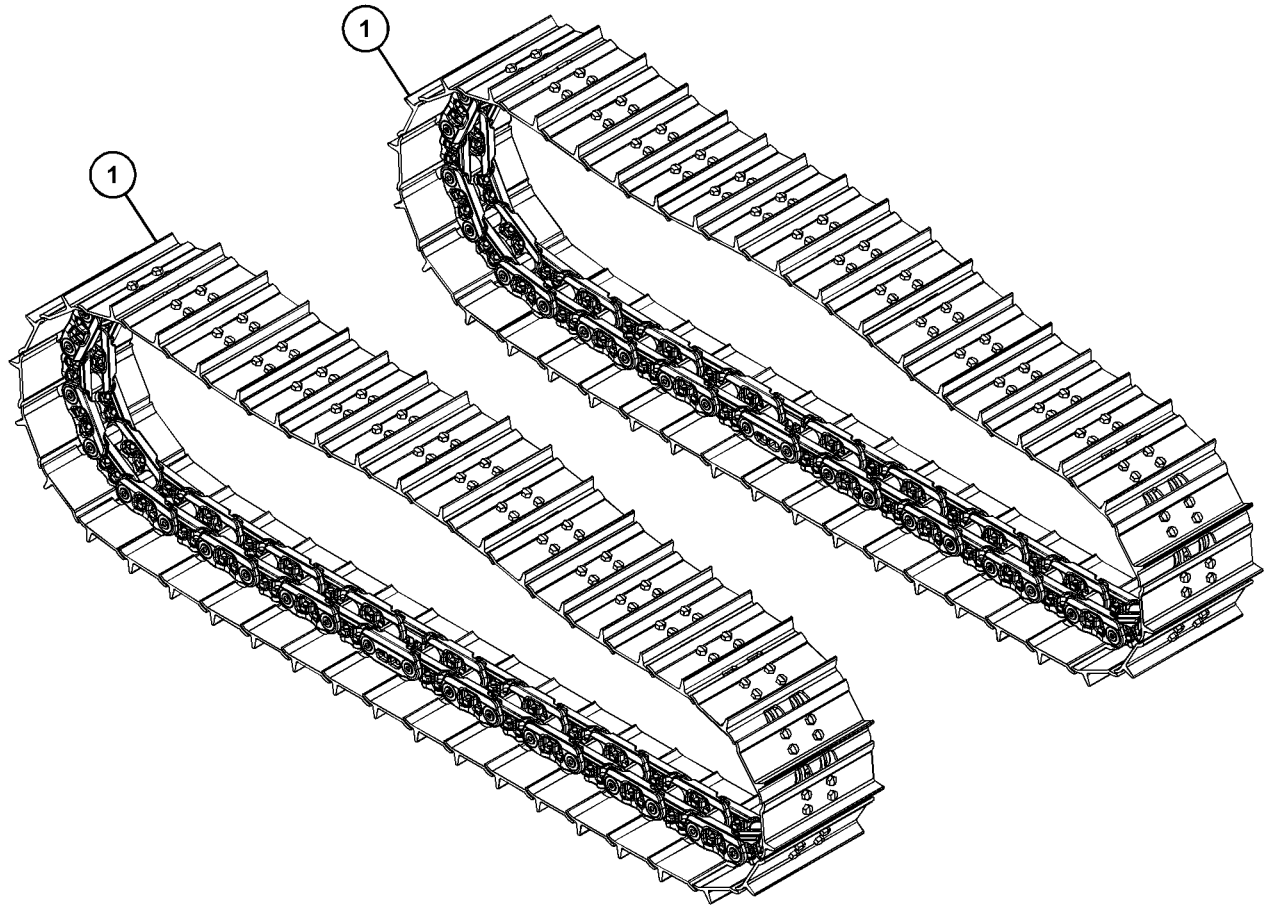

GRAPHIC #1 <END> g06535598

595-4182 TRACK AR–SYSTEMONE

S/N: K3G1-UP

510-MM (20-IN) GROUSER SHOE. SEALED, LUBRICATED. EXTREME SERVICE. HIGH ABRASION
FOR USE WITH SYSTEMONE ROLLERS, GUARDS & GUIDESTRIPS
AN ATTACHMENT

SMCS-4170 **i08062701**

NOTE	REF NO	GRAPHIC REF	PART NUMBER	QTY	PART NAME 1 2 3 4 5 6 (PRODUCT LEVEL)	SEE PAGE
Y	1	1	**595-4181**	2	TRACK GP	353

Y - SEPARATE ILLUSTRATION

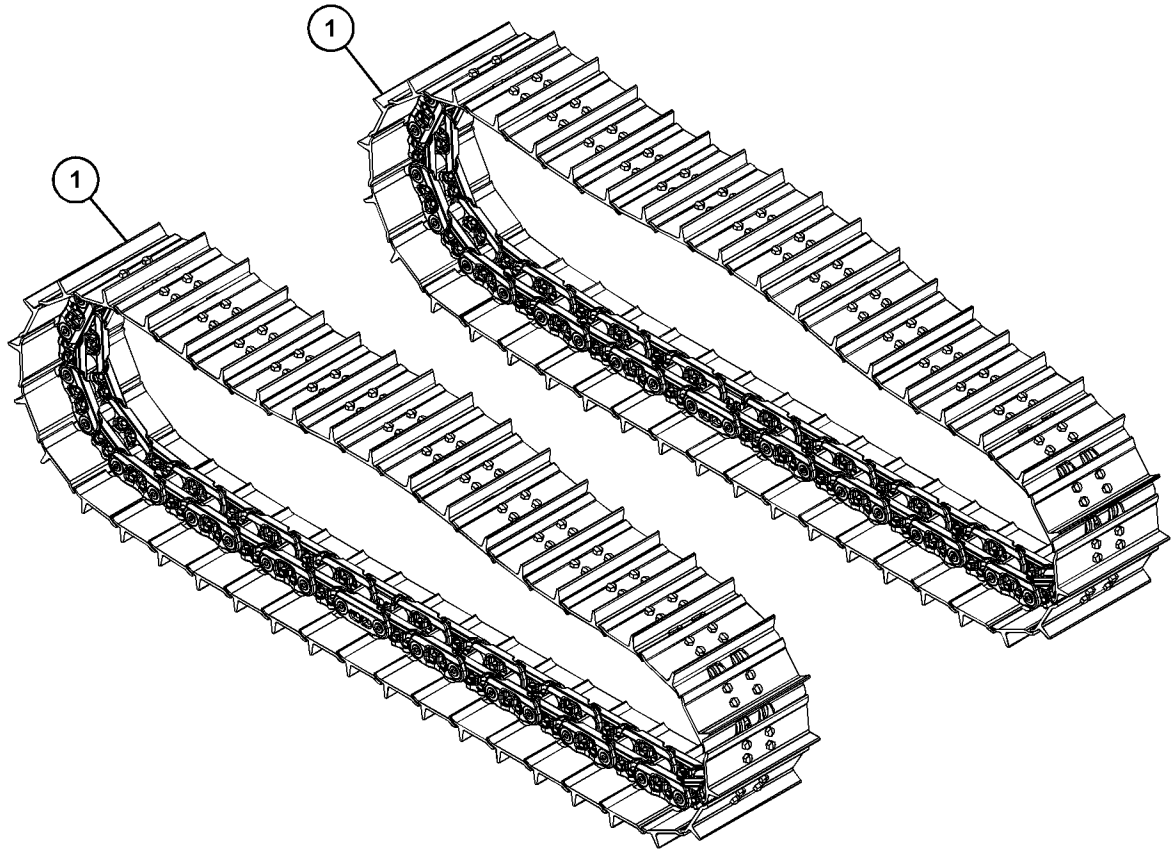

GRAPHIC #1 <END> g06534757

110-2977 TRACK GP–2 REQUIRED, HEAVY-DUTY

S/N: K3G1-UP
560-MM (22-IN) GROUSER SHOE. SEALED, LUBRICATED, EXTREME SERVICE
PART OF 379-3982 TRACK AR
AN ATTACHMENT

SMCS-4170 **i06807344**

NOTE	REF NO	GRAPHIC REF	PART NUMBER	QTY	PART NAME 1 2 3 4 5 6 (PRODUCT LEVEL)	SEE PAGE
	1	1	**106-1607**	39	SHOE-TRACK	
	2	1	**106-1613**	1	SHOE-TRACK	
Y	3	1	**110-2976**	1	LINK AS-TRACK	321
	4	1	**106-1642**	2	BOLT-TRACK MASTER (3/4-16X2.9-IN)	
	5	1	**107-0719**	2	BOLT-TRACK MASTER (3/4-16X3.9-IN)	
	6	1	**1S-1860**	156	NUT-TRACK (3/4-16-THD)	
	7	1	**6V-1792**	156	BOLT-TRACK (3/4-16X2.4-IN)	

Y - SEPARATE ILLUSTRATION

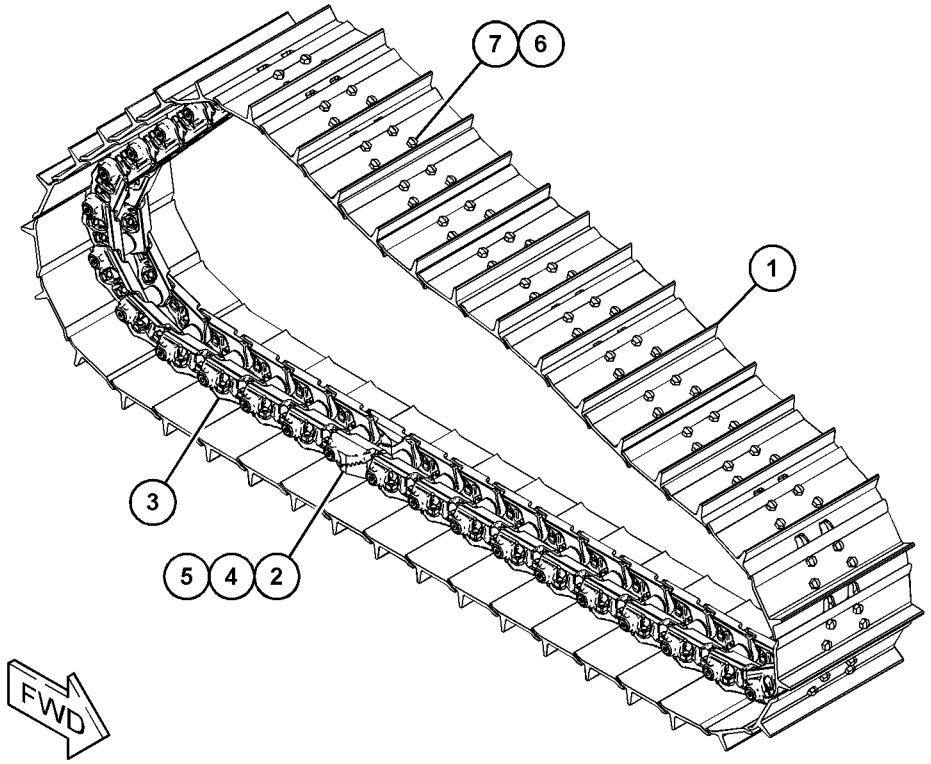

GRAPHIC #1 <END> g06034710

379-3984 TRACK GP–2-REQUIRED, HEAVY-DUTY

S/N: H3C1-UP

760-MM (29.9-IN) GROUSER SHOE. EXTREME SERVICE. SEALED, LUBRICATED

FOR USE WITH HEAVY-DUTY ROLLERS, GUARDS, GUIDESTRIPS, CONVENTIONAL IDLERS

PART OF 379-3983 TRACK AR

AN ATTACHMENT

SMCS-4170 **i06691483**

NOTE	REF NO	GRAPHIC REF	PART NUMBER	QTY	PART NAME 1 2 3 4 5 6 (PRODUCT LEVEL)	SEE PAGE
Y	1	1	**110-2976**	1	LINK AS-TRACK	321
	2	1	**379-8893**	39	SHOE-TRACK	
	3	1	**379-8894**	1	SHOE-TRACK MASTER	
	4	1	**106-1642**	2	BOLT-TRACK MASTER (3/4-16X2.9-IN)	
	5	1	**107-0719**	2	BOLT-TRACK MASTER (3/4-16X3.9-IN)	
	6	1	**1S-1860**	156	NUT-TRACK (3/4-16-THD)	
	7	1	**6V-1792**	156	BOLT-TRACK (3/4-16X2.4-IN)	

Y - SEPARATE ILLUSTRATION

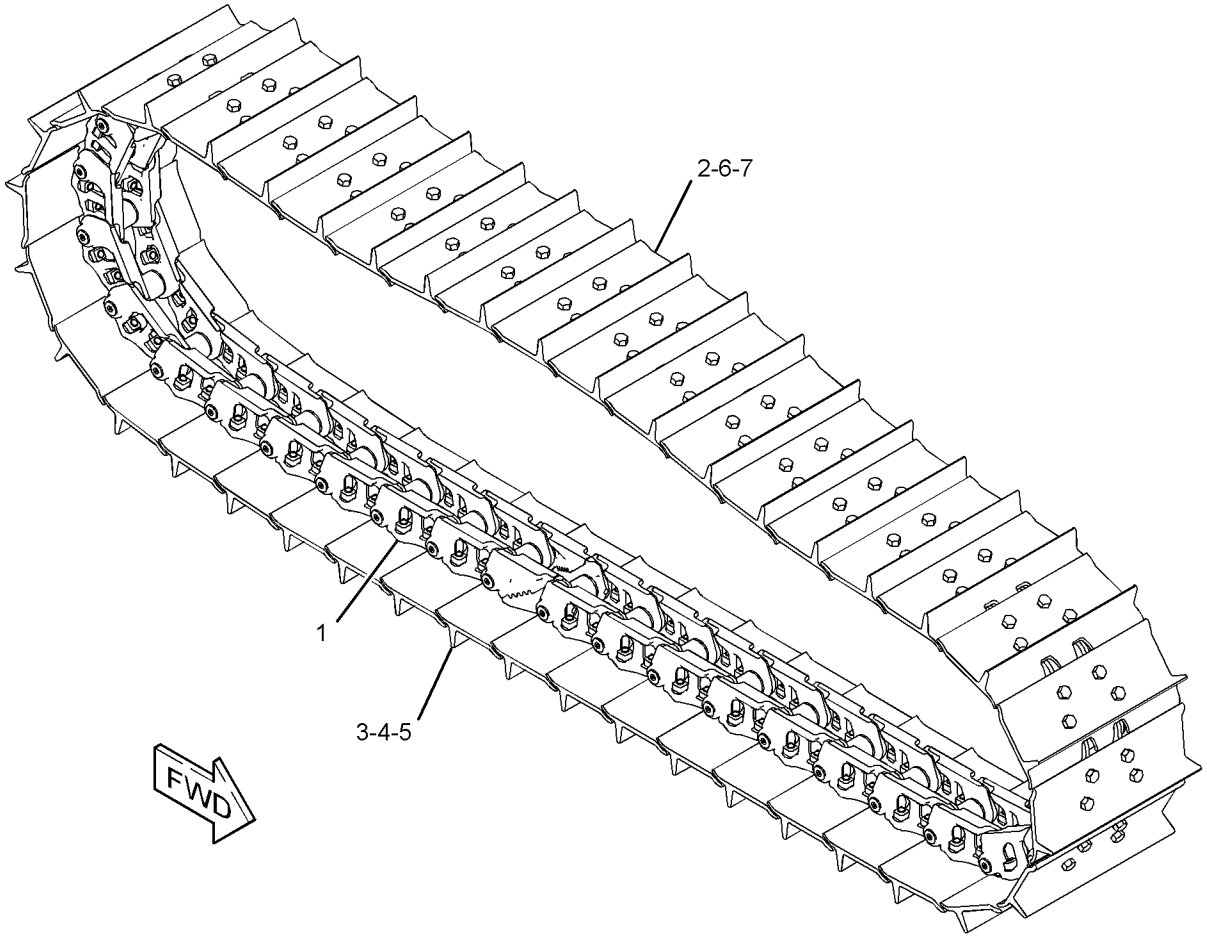

GRAPHIC #1 <END> g03132640

391-3940 TRACK GP–2-REQUIRED, HEAVY-DUTY

S/N: K3G1-UP
510-MM (20-IN) GROUSER SHOE. SEALED, LUBRICATED. EXTREME SERVICE
FOR USE WITH HEAVY-DUTY ROLLERS, GUARDS, GUIDESTRIPS, CONVENTIONAL IDLERS
PART OF 391-3941 TRACK AR
AN ATTACHMENT

SMCS-4170 **i05898916**

NOTE	REF NO	GRAPHIC REF	PART NUMBER	QTY	PART NAME 1 2 3 4 5 6 (PRODUCT LEVEL)	SEE PAGE
	1	1	**106-1604**	39	SHOE-TRACK	
	2	1	**106-1612**	1	SHOE-TRACK	
Y	3	1	**457-4775**	1	LINK AS-TRACK	323
	4	1	**106-1642**	2	BOLT-TRACK MASTER (3/4-16X2.9-IN)	
	5	1	**107-0719**	2	BOLT-TRACK MASTER (3/4-16X3.9-IN)	
	6	1	**1S-1860**	156	NUT-TRACK (3/4-16-THD)	
	7	1	**6V-1792**	156	BOLT-TRACK (3/4-16X2.4-IN)	

Y - SEPARATE ILLUSTRATION

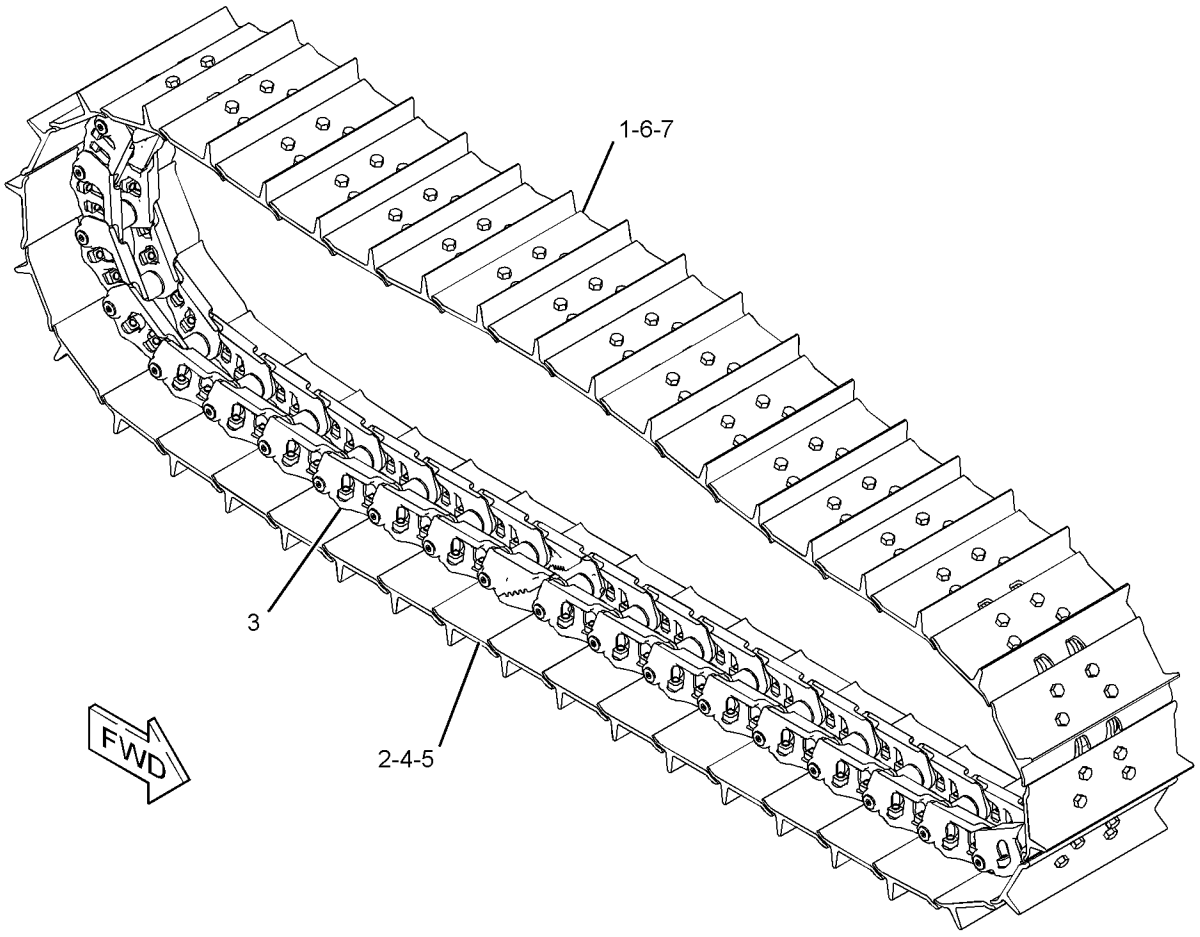

GRAPHIC #1 <END> g03132657

595-4160 TRACK GP–2-REQUIRED, SYSTEMONE

S/N: H3C1-UP

760-MM (29.9-IN) GROUSER SHOE. SEALED, LUBRICATED. EXTREME SERVICE. HIGH ABRASION

FOR USE WITH SYSTEMONE ROLLERS, GUARDS & GUIDESTRIPS

PART OF 595-4161 TRACK AR

AN ATTACHMENT

SMCS-4170 **i08062504**

NOTE	REF NO	GRAPHIC REF	PART NUMBER	QTY	PART NAME 1 2 3 4 5 6 (PRODUCT LEVEL)	SEE PAGE
	1	1	**246-5726**	39	SHOE-TRACK	
	2	1	**255-4184**	1	SHOE-TRACK MASTER	
	3	1	**318-2486**	2	LINK-TRACK MASTER	
M	4	1	**238-0472**	156	BOLT-TRACK (M18X1.5X59-MM, SYSTEMONE)	
M	5	1	**238-0473**	156	NUT-TRACK (M18X1.5-THD, SYSTEMONE)	
M	6	1	**254-0227**	4	BOLT-TRACK MASTER (M18X1.5X93-MM, SYSTEMONE)	
Y	7	1	**561-1080**	1	LINK AS-TRACK	324

M - METRIC PART
Y - SEPARATE ILLUSTRATION

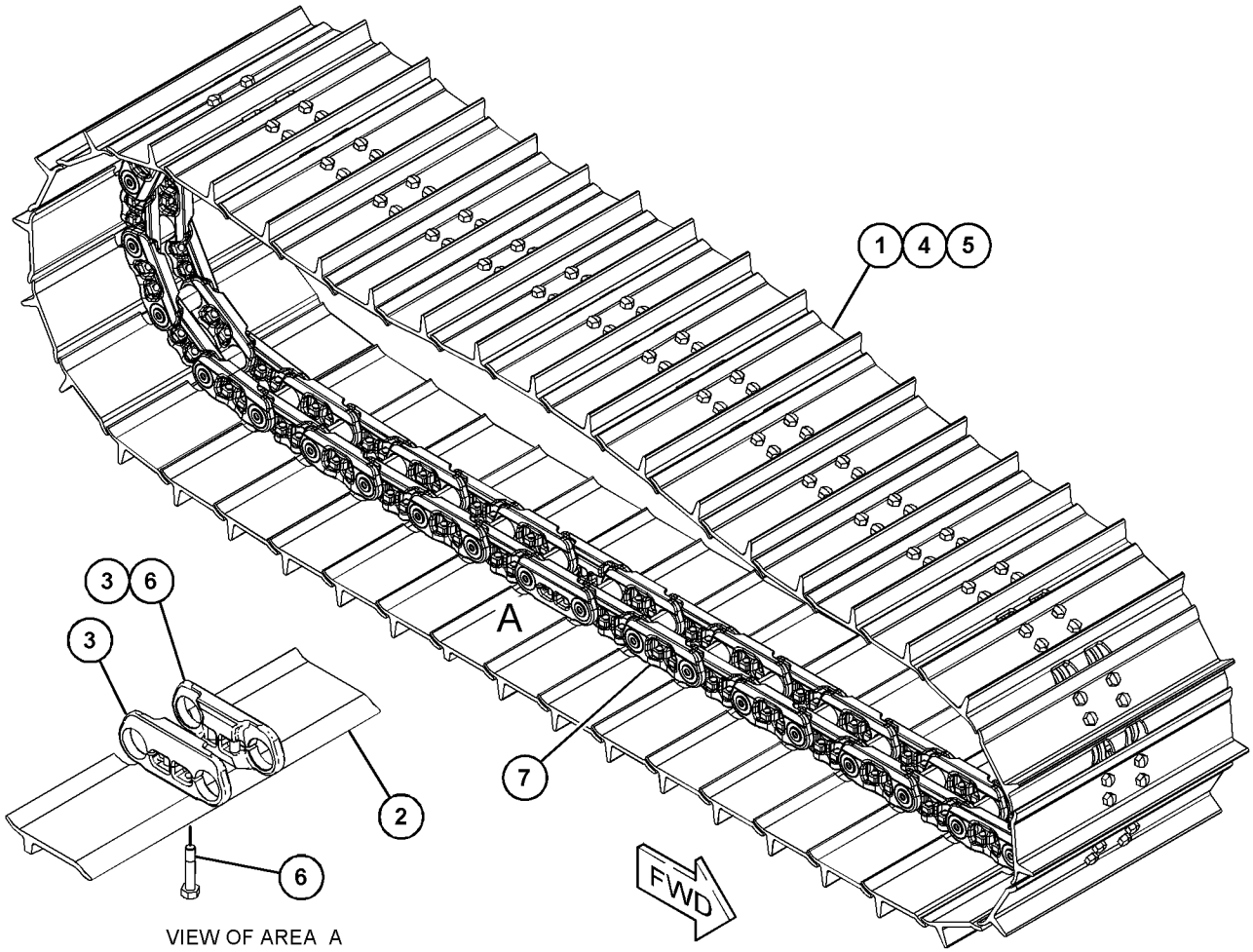

VIEW OF AREA A

GRAPHIC #1 <END> g06529733

595-4163 TRACK GP–2-REQUIRED, SYSTEMONE

S/N: K3G1-UP

560-MM (22-IN) GROUSER SHOE. SEALED, LUBRICATED. EXTREME SERVICE. HIGH ABRASION

FOR USE WITH SYSTEMONE ROLLERS, GUARDS & GUIDESTRIPS

PART OF 595-4164 TRACK AR

AN ATTACHMENT

SMCS-4170 **i08062402**

NOTE	REF NO	GRAPHIC REF	PART NUMBER	QTY	PART NAME 1 2 3 4 5 6 (PRODUCT LEVEL)	SEE PAGE
	1	1	**246-5727**	40	SHOE-TRACK	
	2	1	**318-2486**	2	LINK-TRACK MASTER	
M	3	1	**238-0472**	156	BOLT-TRACK (M18X1.5X59-MM, SYSTEMONE)	
M	4	1	**238-0473**	156	NUT-TRACK (M18X1.5-THD, SYSTEMONE)	
M	5	1	**254-0227**	4	BOLT-TRACK MASTER (M18X1.5X93-MM, SYSTEMONE)	
Y	6	1	**561-1080**	1	LINK AS-TRACK	324

M - METRIC PART
Y - SEPARATE ILLUSTRATION

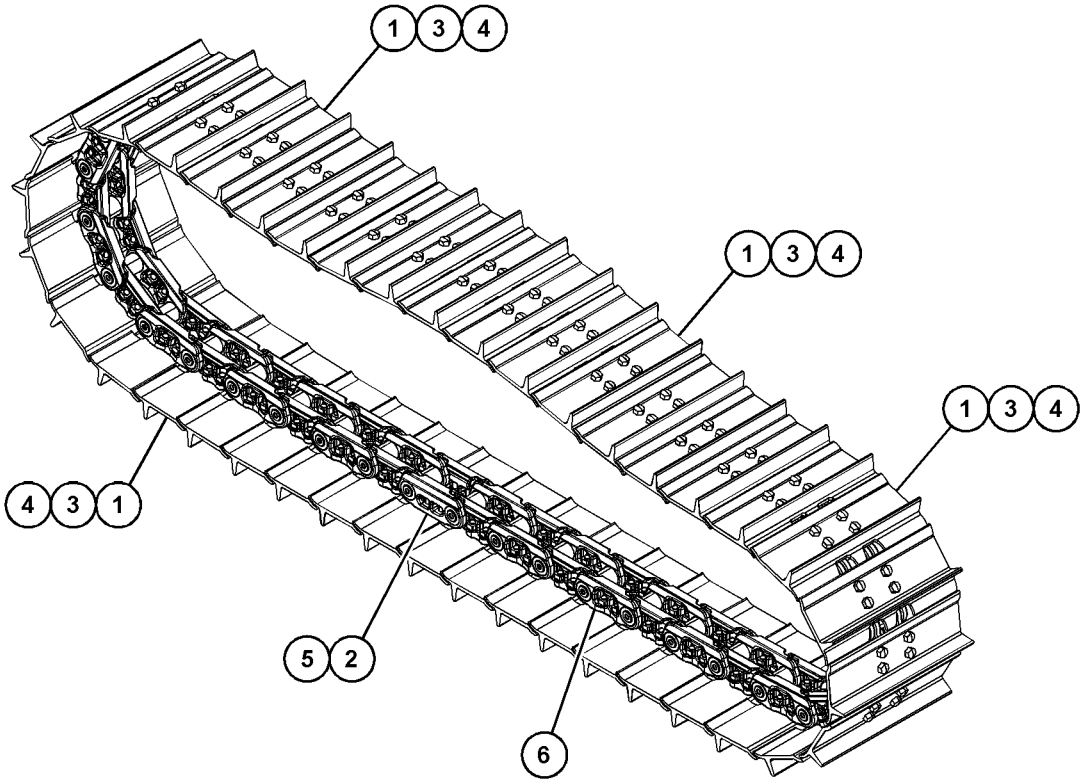

GRAPHIC #1 <END> g06534405

595-4166 TRACK GP–2-REQUIRED, SYSTEMONE

S/N: H3C1-UP
760-MM (29.9-IN) GROUSER SHOE. SEALED, LUBRICATED. MODERATE SERVICE. HIGH ABRASION
FOR USE WITH SYSTEMONE ROLLERS, GUARDS, GUIDESTRIPS
PART OF 595-4167 TRACK AR
AN ATTACHMENT

SMCS-4170 **i08062521**

NOTE	REF NO	GRAPHIC REF	PART NUMBER	QTY	PART NAME 1 2 3 4 5 6 (PRODUCT LEVEL)	SEE PAGE
	1	1	**235-2534**	39	SHOE-TRACK	
	2	1	**255-4182**	1	SHOE-TRACK MASTER	
	3	1	**318-2486**	2	LINK-TRACK MASTER	
M	4	1	**238-0472**	156	BOLT-TRACK (M18X1.5X59-MM, SYSTEMONE)	
M	5	1	**238-0473**	156	NUT-TRACK (M18X1.5-THD, SYSTEMONE)	
M	6	1	**254-0227**	4	BOLT-TRACK MASTER (M18X1.5X93-MM, SYSTEMONE)	
Y	7	1	**561-1080**	1	LINK AS-TRACK	324

M - METRIC PART
Y - SEPARATE ILLUSTRATION

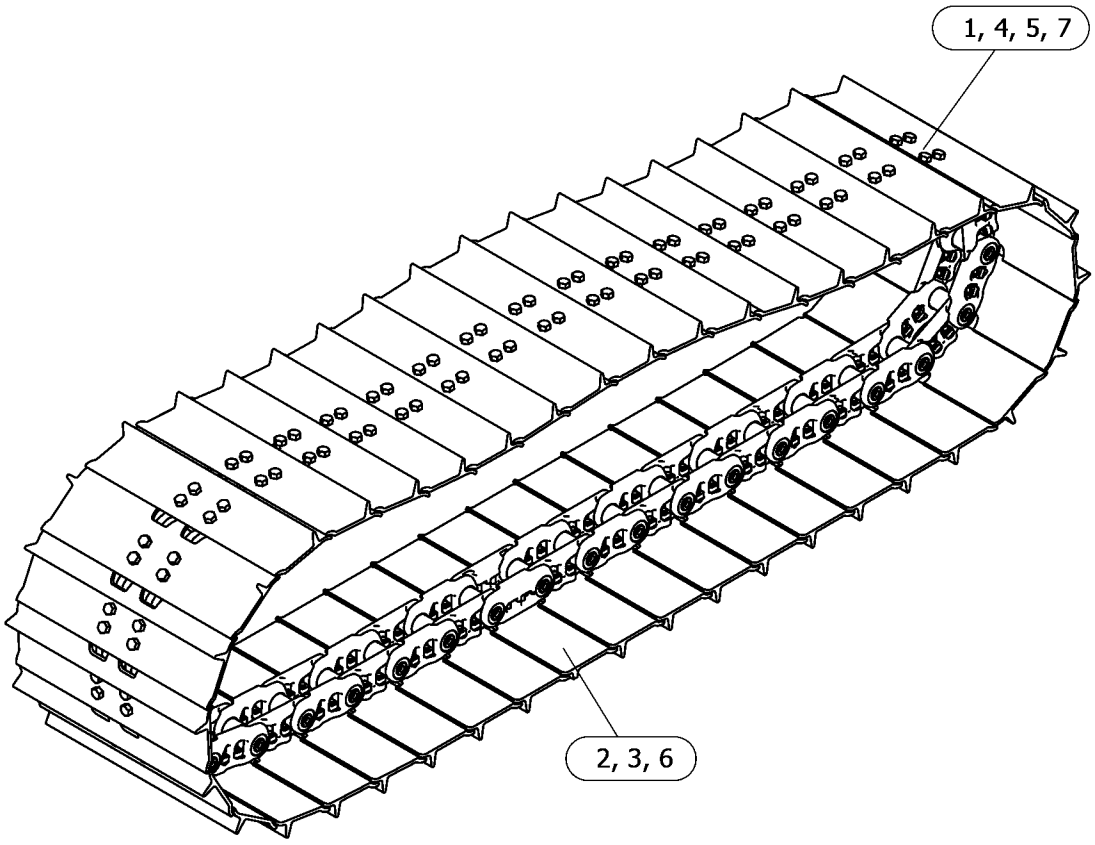

GRAPHIC #1 <END> g06536096

595-4170 TRACK GP–2-REQUIRED, SYSTEMONE

S/N: K3G1-UP

560-MM (22-IN) GROUSER SHOE. SEALED, LUBRICATED. MODERATE SERVICE. HIGH ABRASION
FOR USE WITH SYSTEMONE ROLLERS, GUARDS, GUIDESTRIPS
PART OF 595-4171 TRACK AR
AN ATTACHMENT

SMCS-4170 **i08062538**

NOTE	REF NO	GRAPHIC REF	PART NUMBER	QTY	PART NAME 1 2 3 4 5 6 (PRODUCT LEVEL)	SEE PAGE
	1	1	**235-2533**	40	SHOE-TRACK	
M	2	1	**238-0472**	156	BOLT-TRACK (M18X1.5X59-MM, SYSTEMONE)	
M	3	1	**238-0473**	156	NUT-TRACK (M18X1.5-THD, SYSTEMONE)	
M	4	1	**254-0227**	4	BOLT-TRACK MASTER (M18X1.5X93-MM, SYSTEMONE)	
	5	1	**318-2486**	2	LINK-TRACK MASTER	
Y	6	1	**561-1080**	1	LINK AS-TRACK	324

M - METRIC PART
Y - SEPARATE ILLUSTRATION

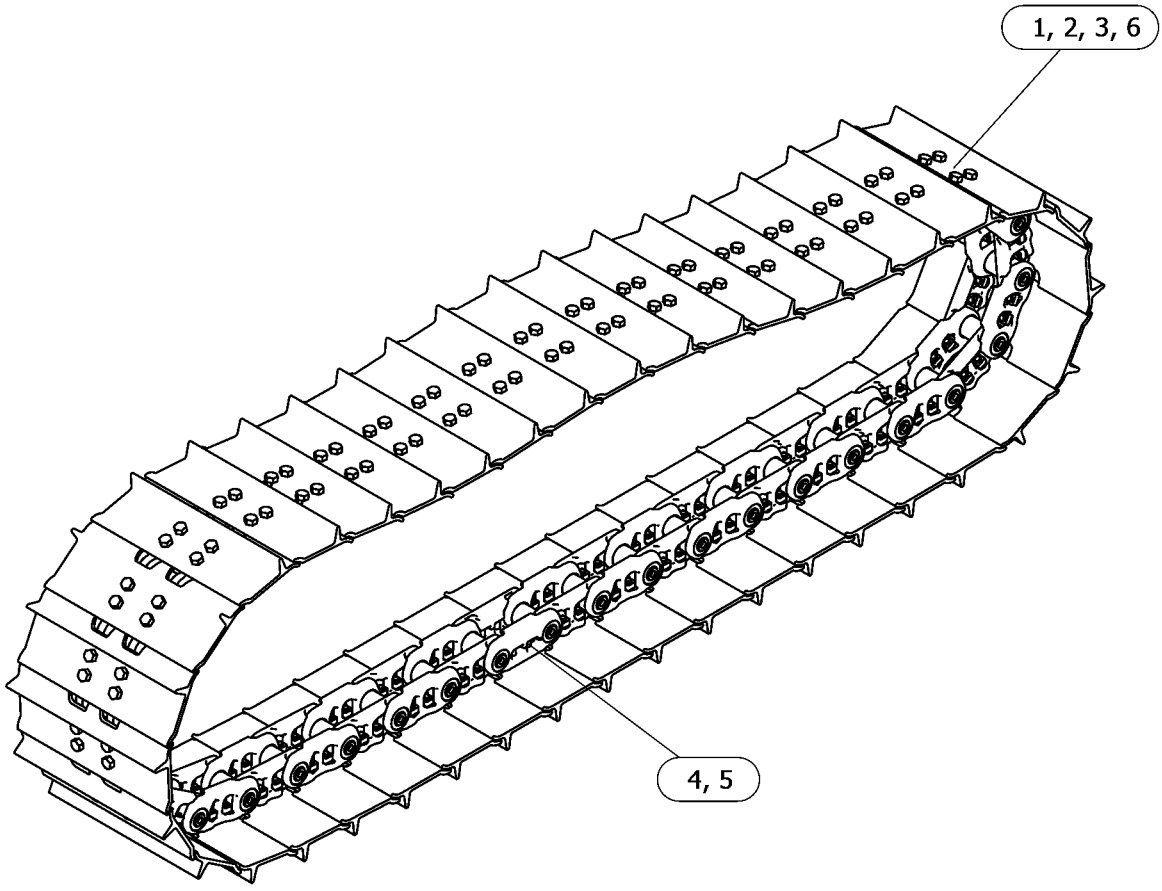

GRAPHIC #1 <END> g06536190

595-4174 TRACK GP–2-REQUIRED, SYSTEMONE

S/N: K3G1-UP

510-MM (20-IN) GROUSER SHOE. SEALED, LUBRICATED. MODERATE SERVICE. HIGH ABRASION

FOR USE WITH SYSTEMONE ROLLERS, GUARDS & GUIDESTRIPS

PART OF 595-4175 TRACK AR

AN ATTACHMENT

SMCS-4170 **i08062697**

NOTE	REF NO	GRAPHIC REF	PART NUMBER	QTY	PART NAME 1 2 3 4 5 6 (PRODUCT LEVEL)	SEE PAGE
	1	1	**235-2554**	40	SHOE-TRACK	
	2	1	**318-2486**	2	LINK-TRACK MASTER	
M	3	1	**238-0472**	156	BOLT-TRACK (M18X1.5X59-MM, SYSTEMONE)	
M	4	1	**238-0473**	156	NUT-TRACK (M18X1.5-THD, SYSTEMONE)	
M	5	1	**254-0227**	4	BOLT-TRACK MASTER (M18X1.5X93-MM, SYSTEMONE)	
Y	6	1	**561-1080**	1	LINK AS-TRACK	324

M - METRIC PART
Y - SEPARATE ILLUSTRATION

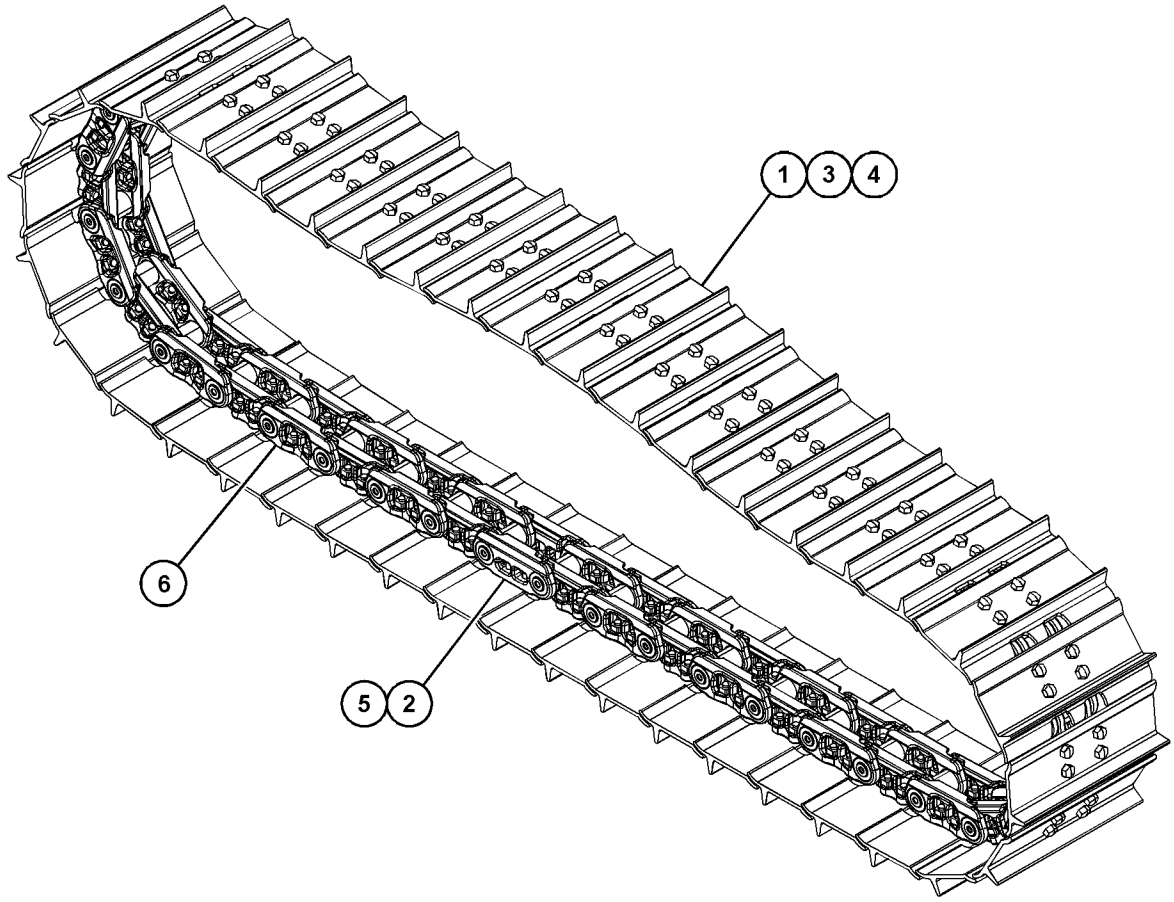

GRAPHIC #1 <END> g06534758

595-4181 TRACK GP–2-REQUIRED, SYSTEMONE

S/N: K3G1-UP

510-MM (20-IN) GROUSER SHOE. SEALED, LUBRICATED. EXTREME SERVICE. HIGH ABRASION
FOR USE WITH SYSTEMONE ROLLERS, GUARDS & GUIDESTRIPS
PART OF 595-4182 TRACK AR
AN ATTACHMENT

SMCS-4170 **i08062702**

NOTE	REF NO	GRAPHIC REF	PART NUMBER	QTY	PART NAME 1 2 3 4 5 6 (PRODUCT LEVEL)	SEE PAGE
	1	1	**277-2238**	40	SHOE-TRACK	
	2	1	**318-2486**	2	LINK-TRACK MASTER	
M	3	1	**238-0472**	156	BOLT-TRACK (M18X1.5X59-MM, SYSTEMONE)	
M	4	1	**238-0473**	156	NUT-TRACK (M18X1.5-THD, SYSTEMONE)	
M	5	1	**254-0227**	4	BOLT-TRACK MASTER (M18X1.5X93-MM, SYSTEMONE)	
Y	6	1	**561-1080**	1	LINK AS-TRACK	324

M - METRIC PART
Y - SEPARATE ILLUSTRATION

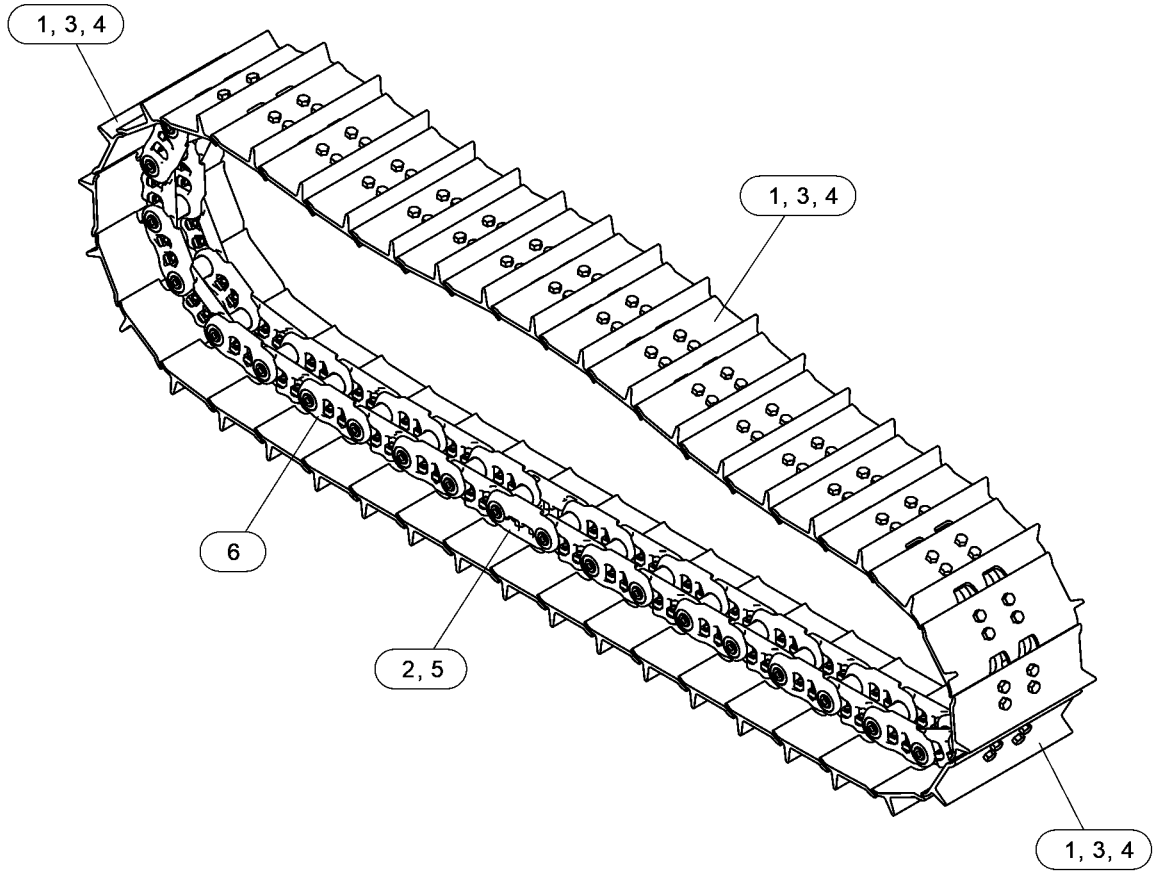

GRAPHIC #1 <END> g06536493

431-7079 UNDERCARRIAGE AR—SYSTEMONE

S/N: H3C1-UP; K3G1-UP

CANNOT BE USED WITH 379-3982—PAGE: 336, 379-3983—PAGE: 337, 379-3983—PAGE: 337

AN ATTACHMENT

SMCS-4150 **i08056712**

NOTE	PART NUMBER	QTY	PART NAME 1 2 3 4 5 6 (PRODUCT LEVEL)	SEE PAGE
Y	*421-4567*	1	FRAME GP-TRACK ROLLER (SYSTEMONE, RH)	299
Y	*421-4568*	1	FRAME GP-TRACK ROLLER (SYSTEMONE, LH)	301
Y	*431-7078*	1	GUARD GP-SPROCKET	309
Y	**375-6431**	4	ROLLER GP-TRACK CARRIER (SYSTEMONE)	328
Y	*361-3978*	2	SEGMENT GP-SPROCKET	249

Y - SEPARATE ILLUSTRATION

<END>

431-7080 UNDERCARRIAGE AR—HEAVY-DUTY

S/N: H3C1-UP; K3G1-UP

CANNOT BE USED WITH 595-4164—PAGE: 340, 595-4171—PAGE: 342, 595-4175—PAGE: 343, 595-4182—PAGE: 344, 595-4161—PAGE: 339, 595-4167—PAGE: 341

AN ATTACHMENT

SMCS-4150 **i08056725**

NOTE	PART NUMBER	QTY	PART NAME 1 2 3 4 5 6 (PRODUCT LEVEL)	SEE PAGE
Y	*421-4569*	1	FRAME GP-TRACK ROLLER (HEAVY-DUTY, RH)	303
Y	*421-4570*	1	FRAME GP-TRACK ROLLER (HEAVY-DUTY, LH)	305
Y	*431-7078*	1	GUARD GP-SPROCKET	309
Y	**372-3375**	4	ROLLER GP-TRACK CARRIER (HEAVY-DUTY)	327
Y	*363-3571*	2	SEGMENT GP-SPROCKET	250

Y - SEPARATE ILLUSTRATION

<END>

549-8937 LINES GP-BRAKE

S/N: H3C1-UP; K3G1-UP
PART OF 549-6773, 549-6775, 550-2352 HYDRAULIC AR
AN ATTACHMENT

SMCS-4257 **i07398178**

NOTE	REF NO	GRAPHIC REF	PART NUMBER	QTY	PART NAME 1 2 3 4 5 6 (PRODUCT LEVEL)	SEE PAGE
M	1	1	**8T-4195**	2	BOLT (M10X1.5X30-MM)	
	2	1	**204-2281**	4	STRAP-CABLE	
	3	1	**6V-0852**	1	CAP-DUST	
	4	1	**7X-7729**	2	WASHER (11X25X3-MM THK)	
	5	1	*148-8354*	2	ELBOW AS	
					(EACH INCLUDES)	
		1	**3K-0360**	1	SEAL-O-RING	
		1	**6V-8398**	1	SEAL-O-RING	
		1	**6V-9002**	1	ELBOW	
	6	1	*150-4043*	1	CONNECTOR AS	
		1	**3J-1907**	1	SEAL-O-RING	
		1	**6V-8398**	1	SEAL-O-RING	
		1	**6V-9873**	1	CONNECTOR	
	7	1	*164-5567*	1	COUPLER AS-QUICK DISCONNECT (MALE)	
		1	**6V-3965**	1	FITTING (QUICK DISCONNECT)	
		1	**214-7568**	1	SEAL-O-RING	
	8	1	*168-1968*	1	TEE AS	
		1	**3J-1907**	1	SEAL-O-RING	
		1	**6V-8397**	1	SEAL-O-RING	
		1	**126-6872**	1	TEE	
	9	1	**178-3620**	1	STRAP-DUAL CLAMP	
	10	1	**200-6345**	2	SADDLE-MOUNTING (DUAL SWIVEL)	
	11	1	**343-2388**	2	CLIP (LOOP)	
I	12	1	**457-6420**	1	HOSE AS	
	13	1	**541-9045**	1	BRACKET AS	
I	14	1	**550-7028**	1	HOSE AS	

I - REFER TO HYDRAULIC INFORMATION SYSTEM
M - METRIC PART

549-8937 **LINES GP-BRAKE (**contd.**)** **i07398178**

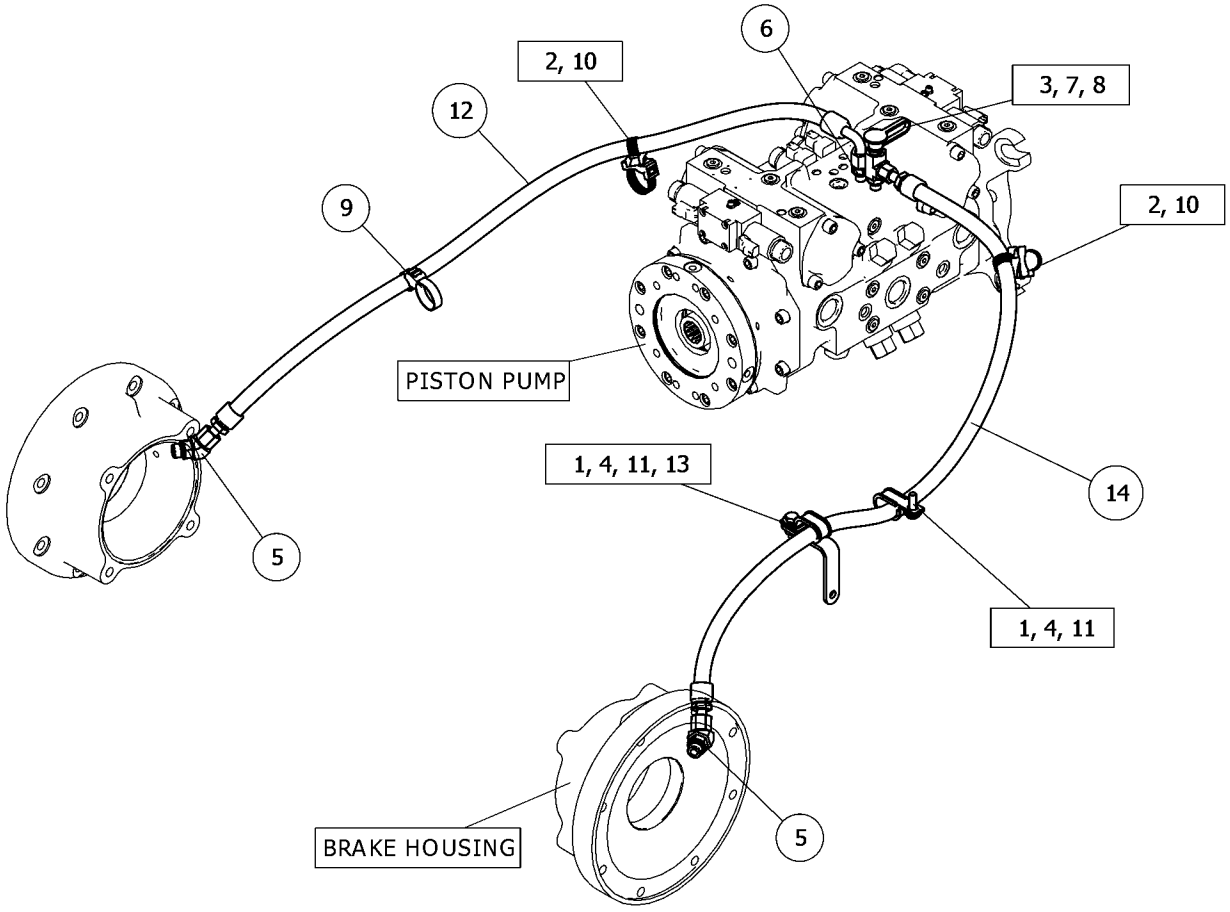

GRAPHIC #1 <END> g06321348

160-2669 ACCUMULATOR GP-HYDRAULIC—CHARGED

S/N: H3C1-UP; K3G1-UP
FIELD REPLACEMENT ORDER 180-9419—PAGE: 358
PART OF 549-8341 LINES GP-PILOT
AN ATTACHMENT

SMCS-5077 **i07452221**

NOTE	REF NO	GRAPHIC REF	PART NUMBER	QTY	PART NAME 1 2 3 4 5 6 (PRODUCT LEVEL)	SEE PAGE
	1	1	**512-8331**	1	FILM-IDENTIFICATION (HYDRAULIC ACCUMULATOR)	

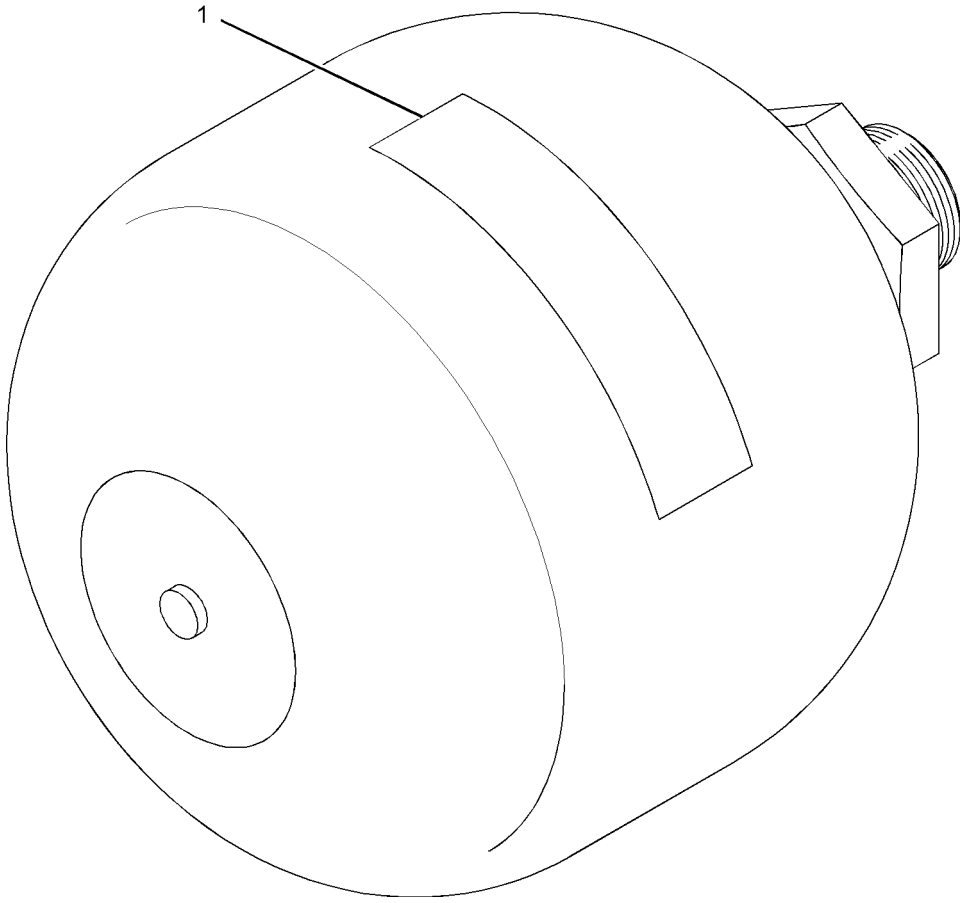

GRAPHIC #1 <END> g01034166

180-9419 ACCUMULATOR GP-HYDRAULIC—UNCHARGED

S/N: H3C1-UP; K3G1-UP

FIELD REPLACEMENT FOR 160-2669—PAGE: 357

SMCS-5077 **i03922093**

NOTE	REF NO	GRAPHIC REF	PART NUMBER	QTY	PART NAME 1 2 3 4 5 6 (PRODUCT LEVEL)	SEE PAGE
	1	1	**161-6879**	1	CAP	
	2	1	**159-4700**	1	FILM-WARNING (HIGH PRESSURE CYLINDER)	
	3	1	**161-6880**	1	CORE	

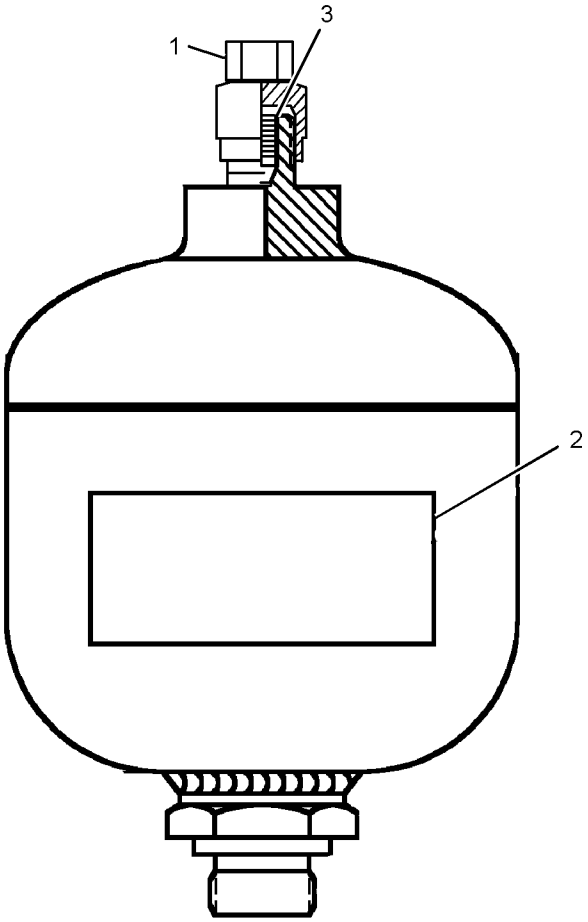

GRAPHIC #1 <END> g03053799

177-6949 ACTUATOR GP-PUMP

S/N: H3C1-UP; K3G1-UP
WINCH
PART OF 249-8600 PUMP GP-PISTON
AN ATTACHMENT

SMCS-5070, 5078

i03997921

NOTE	REF NO	GRAPHIC REF	PART NUMBER	QTY	PART NAME 1 2 3 4 5 6 (PRODUCT LEVEL)	SEE PAGE
	1	1	**145-3811**	1	COVER	
	2	1	**117-7273**	2	SEAL-O-RING	
	3	1	**145-3812**	2	RING (9.5-MM)	
	4	1	**145-3813**	2	RING-SEAL (2.93-MM)	
	5	1	**177-7783**	1	PISTON	
	6	1	**145-3810**	1	COVER	
M	7	1	**160-8499**	1	NUT (M12X1.5-THD)	
	8	1	**5W-1437**	8	LOCKWASHER	
M	9	1	**8T-1158**	8	BOLT-SOCKET HEAD (M8X1.25X20-MM)	

M - METRIC PART

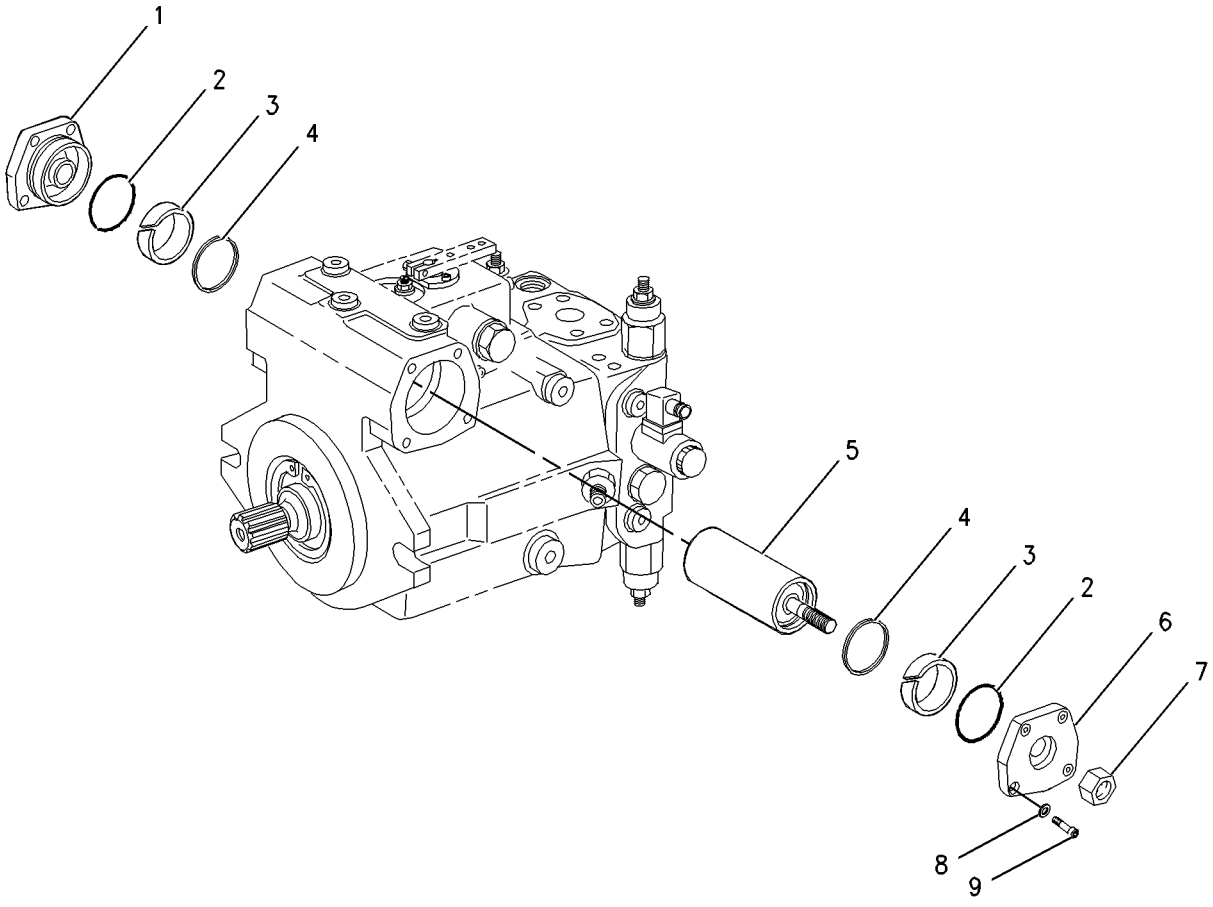

GRAPHIC #1 <END> g00648257

535-7632 CONTROL AR-HYDRAULIC

S/N: H3C1-UP; K3G1-UP
PART OF 549-6773 HYDRAULIC AR
AN ATTACHMENT

SMCS-5057, 5170, 5357 **i07398060**

NOTE	PART NUMBER	QTY	PART NAME 1 2 3 4 5 6 (PRODUCT LEVEL)	SEE PAGE
Y	*421-9241*	1	CONTROL GP-RIPPER	470
Y	*538-6213*	1	LINES GP-RIPPER	394

Y - SEPARATE ILLUSTRATION

<END>

535-7633 CONTROL AR-HYDRAULIC

S/N: H3C1-UP; K3G1-UP
IMPLEMENT
PART OF 550-2352 HYDRAULIC AR
AN ATTACHMENT

SMCS-5057, 5170, 5357 **i07766060**

NOTE	PART NUMBER	QTY	PART NAME 1 2 3 4 5 6 (PRODUCT LEVEL)	SEE PAGE
Y	*421-9246*	1	CONTROL GP-IMPLEMENT (RIPPER, WINCH)	123
Y	*540-4707*	1	PLUG GP-CONTROL VALVE	403

Y - SEPARATE ILLUSTRATION

<END>

379-3504 CYLINDER GP-ANGLING

S/N: H3C1-UP; K3G1-UP
90-MM (3.6-IN) BORE X 526-MM (20.7-IN) STROKE
PART OF 387-2300 C-FRAME GP-POWER ANGLING
AN ATTACHMENT

SMCS-5101 **i05885613**

NOTE	REF NO	GRAPHIC REF	PART NUMBER	QTY	PART NAME 1 2 3 4 5 6 (PRODUCT LEVEL)	SEE PAGE
	1	1	**4J-9224**	1	RING-BACKUP	
	2	1	**266-9384**	1	PISTON	
	3	1	**269-3945**	1	HEAD	
	4	1	**379-7040**	1	CYLINDER AS	
		1	**2H-5549**	2	RING-RETAINING	
	4A	1	**4D-4431**	1	BEARING-ALIGNING	
	5	1	**379-7041**	1	ROD AS	
		1	**1J-6472**	2	RING-RETAINING	
	5A	1	**237-4860**	1	BEARING-SELF-ALIGNING	
	6	1	**099-6976**	1	RING	
	7	1	**143-8916**	1	RING-WEAR	
	8	1	**144-5287**	1	SEAL-PISTON	
	9	1	**167-2242**	1	SEAL AS-BUFFER	
	10	1	**167-2297**	1	SEAL-U-CUP	
	11	1	**233-0617**	1	SEAL-WIPER	
	12	1	**2H-3931**	1	SEAL-O-RING	
	13	1	**2H-6338**	1	SEAL-O-RING	
	14	1	**6J-5730**	1	LOCKNUT (1-1/8-12-THD)	

379-3504 **CYLINDER GP-ANGLING (**contd.**)** **i05885613**

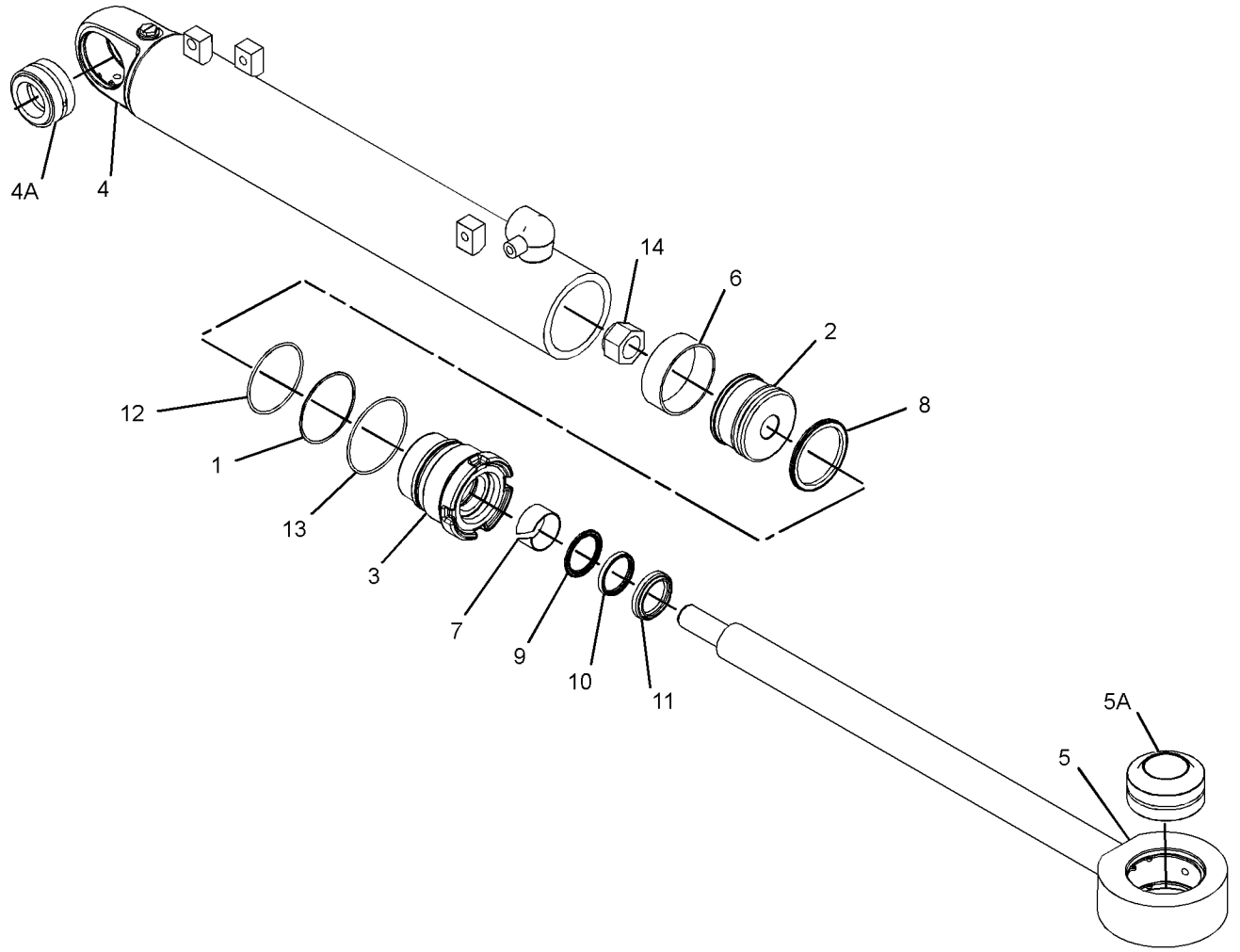

GRAPHIC #1 <END> g03038207

538-7829 CYLINDER GP-BULLDOZER LIFT

S/N: H3C1-UP; K3G1-UP
110-MM (4.3-IN) BORE X 390-MM (15.4-IN) STROKE
PART OF 387-2300 C-FRAME GP-POWER ANGLING
AN ATTACHMENT

SMCS-5102 **i07835118**

NOTE	REF NO	GRAPHIC REF	PART NUMBER	QTY	PART NAME 1 2 3 4 5 6 (PRODUCT LEVEL)	SEE PAGE
J	1	1	**5J-7865**	1	RING-BACKUP	
J	2	1	**9X-7301**	1	SEAL AS	
J	3	1	**119-5434**	1	RING	
J	4	1	**140-0176**	1	RING-WEAR	
J	5	1	**167-2185**	1	SEAL AS-BUFFER	
J	6	1	**167-2301**	1	SEAL-U-CUP	
J	7	1	**233-0618**	1	SEAL-WIPER	
	8	1	**266-9390**	1	PISTON	
	9	1	**269-3236**	1	ROD AS	
	9A	1	**2H-5549**	2	RING-RETAINING	
	9B	1	**4D-4431**	1	BEARING-ALIGNING	
	10	1	**269-3237**	1	HEAD	
J	11	1	**310-2184**	1	SEAL-O-RING	
J	12	1	**310-2186**	1	SEAL-O-RING	
	13	1	**538-7830**	1	CYLINDER AS	
	13A	1	**2H-5549**	2	RING-RETAINING	
	13B	1	**4D-4431**	1	BEARING-ALIGNING	
		1	**7J-9903**	1	BOSS	
	14	1	**2J-3950**	1	LOCKNUT (1-1/2-12-THD)	
					AVAILABLE REPAIR KIT(S):	
J			**392-5201**	1	KIT-HYD CYLINDER SEAL	

J - KIT MARKED J SERVICES PART(S) MARKED J

538-7829 **CYLINDER GP-BULLDOZER LIFT (**contd.**)** **i07835118**

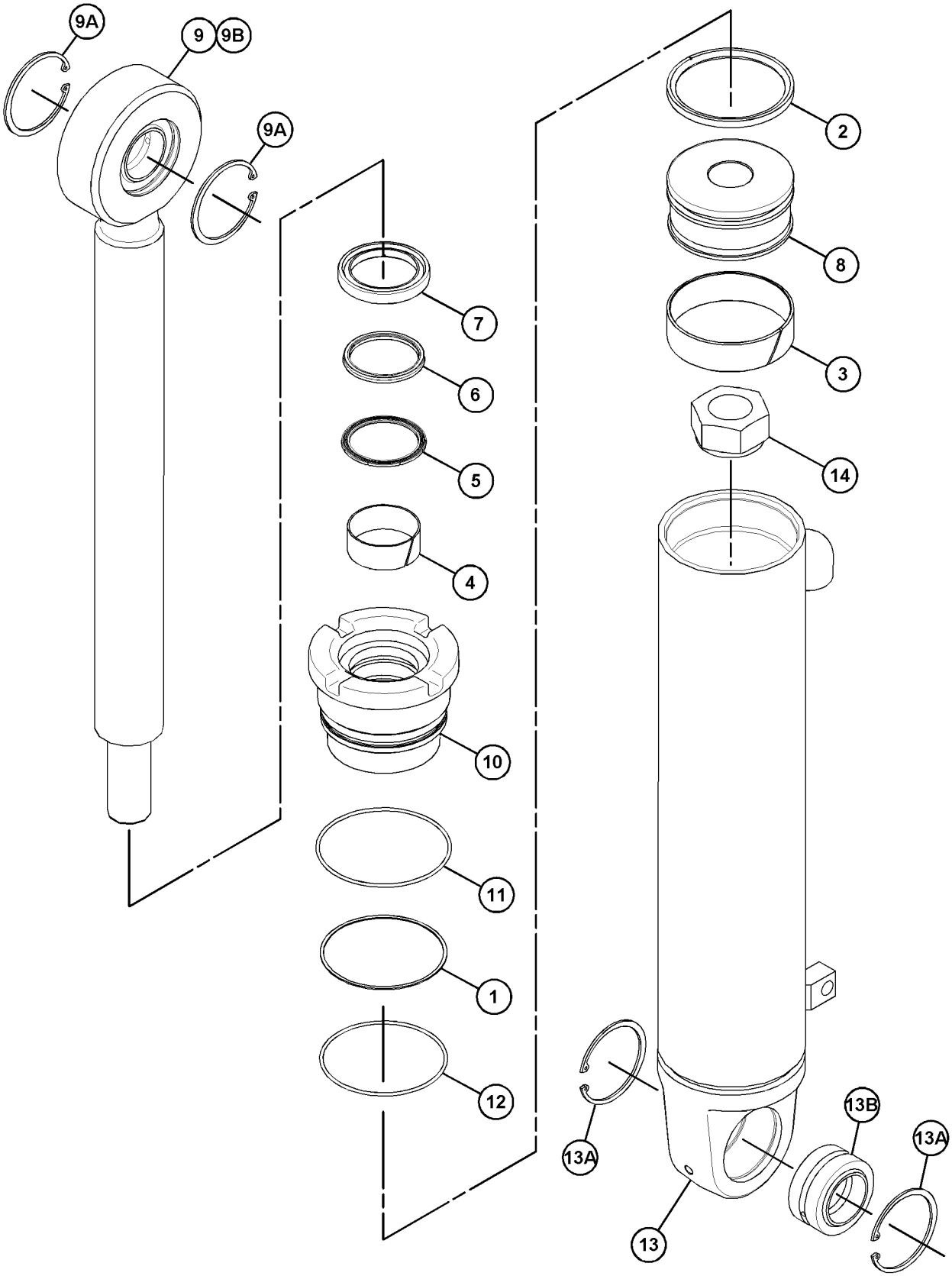

GRAPHIC #1 <END> g06008698

448-4913 CYLINDER GP-RIPPER–LIFT

S/N: JJJ1-UP
127-MM (5-IN) BORE X 362-MM (14.25-IN) STROKE
PART OF 436-1245 RIPPER AR
AN ATTACHMENT

SMCS-5352, 5356 **i05946022**

NOTE	REF NO	GRAPHIC REF	PART NUMBER	QTY	PART NAME 1 2 3 4 5 6 (PRODUCT LEVEL)	SEE PAGE
	1	1	**448-6997**	1	CYLINDER AS	
	1A	1	**4K-3128**	2	BUSHING	
	2	1	**2J-0564**	1	LOCKNUT (2-12-THD)	
	3	1	**3G-1753**	1	PISTON	
J	4	1	**4J-3420**	1	RING-WEAR	
J	5	1	**9X-7264**	1	SEAL AS	
	6	1	**3G-1757**	1	WASHER (50.95X82X12-MM THK)	
J	7	1	**2K-4096**	1	RING-BACKUP	
	8	1	**310-2189**	1	SEAL-O-RING	
	9	1	**230-4872**	1	HEAD	
	10	1	**9T-2714**	1	ROD AS	
	10A	1	**2K-4507**	1	BUSHING	
J	11	1	**8T-5668**	1	RING-WEAR	
J	12	1	**289-2937**	1	SEAL AS-BUFFER	
J	13	1	**289-2948**	1	SEAL-U-CUP	
J	14	1	**225-3281**	1	SEAL-WIPER	
	15	1	**6V-8237**	4	WASHER (26X44X4-MM THK)	
M	16	1	**173-9779**	4	BOLT (M24X3X80-MM)	
	17	1	**1P-4576**	4	FLANGE-HALF	
M	18	1	**8T-4186**	8	BOLT (M10X1.5X40-MM)	
	19	1	**8T-4121**	8	WASHER-HARD (11X21X2.5-MM THK)	
					AVAILABLE REPAIR KIT(S):	
J			**242-2542**	1	KIT-SEAL (HYDRAULIC CYLINDER)	
					(INCLUDES RINGS & SEALS) (FOR USE WITH REHS1392)	

J - KIT MARKED J SERVICES PART(S) MARKED J
M - METRIC PART

448-4913 **CYLINDER GP-RIPPER (**contd.**)** **i05946022**

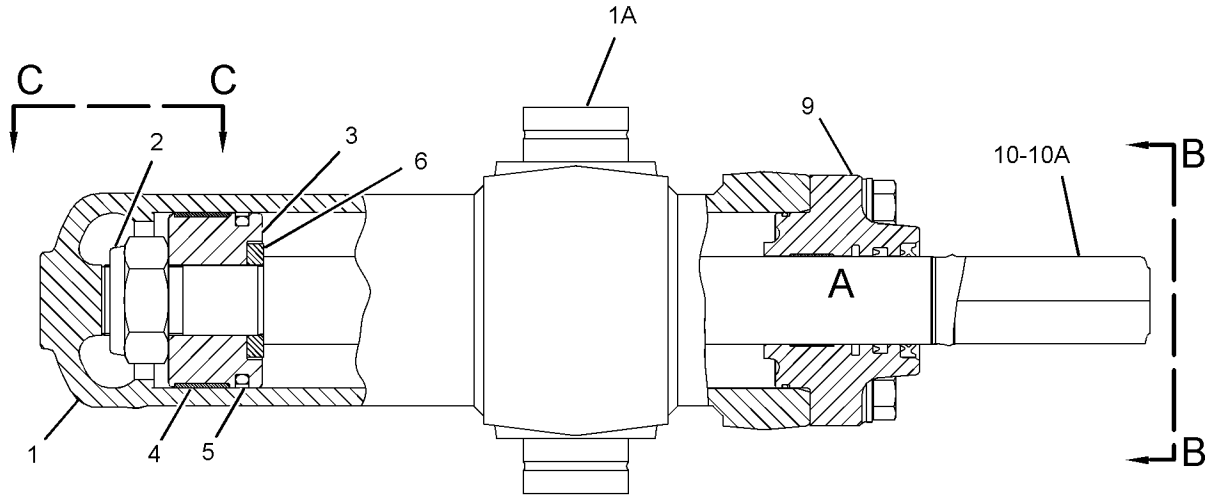

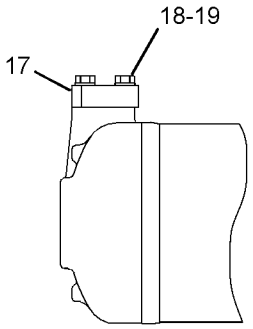

VIEW C-C

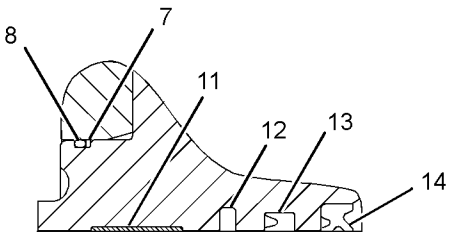

VIEW OF AREA A

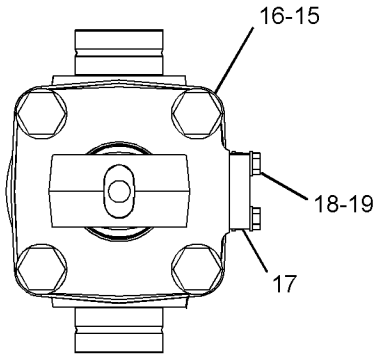

VIEW B-B

GRAPHIC #1 <END> g03733700

379-3503 CYLINDER GP-TILT

S/N: H3C1-UP; K3G1-UP
110-MM (4.3-IN) BORE X 153-MM (6.1-IN) STROKE
PART OF 387-2300 C-FRAME GP-POWER ANGLING
AN ATTACHMENT

SMCS-5104 **i07426490**

NOTE	REF NO	GRAPHIC REF	PART NUMBER	QTY	PART NAME 1 2 3 4 5 6 (PRODUCT LEVEL)	SEE PAGE
	1	1	**233-0618**	1	SEAL-WIPER	
	2	1	**266-9390**	1	PISTON	
	3	1	**269-3237**	1	HEAD	
	4	1	**380-1615**	1	CYLINDER AS-TILT	
	4A	1	**7J-1309**	1	BEARING	
	4B	1	**1S-3311**	1	RING-RETAINING	
	5	1	**380-1616**	1	ROD AS	
	5A	1	**7J-1309**	1	BEARING	
	5B	1	**1S-3311**	1	RING-RETAINING	
	6	1	**119-5434**	1	RING	
	7	1	**140-0176**	1	RING-WEAR	
	8	1	**167-2185**	1	SEAL AS-BUFFER	
	9	1	**167-2301**	1	SEAL-U-CUP	
	10	1	**2J-3950**	1	LOCKNUT (1-1/2-12-THD)	
	11	1	**310-2184**	1	SEAL-O-RING	
	12	1	**310-2186**	1	SEAL-O-RING	
	13	1	**5J-7865**	1	RING-BACKUP	
	14	1	**9X-7301**	1	SEAL AS	

379-3503 **CYLINDER GP-TILT (**contd.**)** **i07426490**

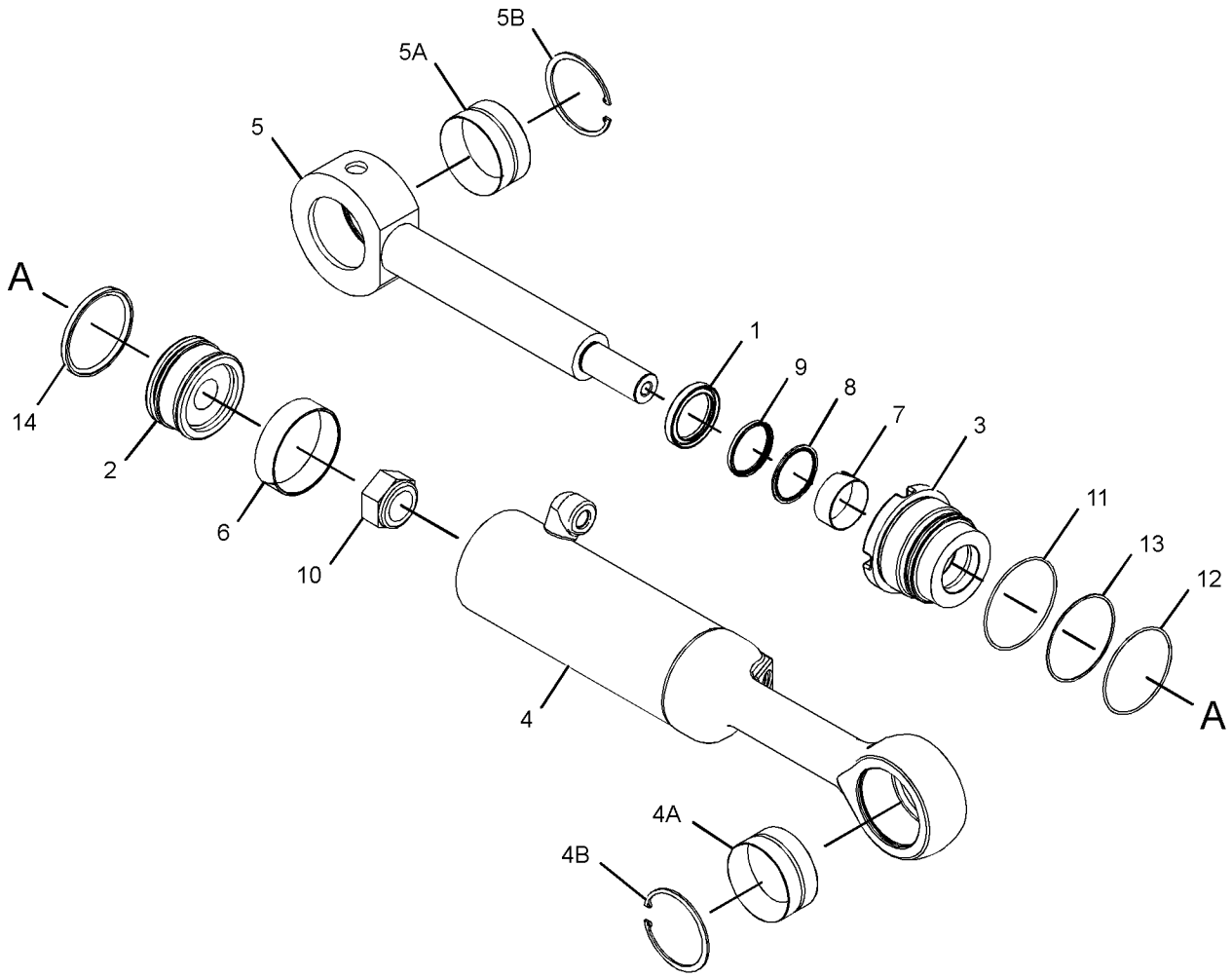

GRAPHIC #1 <END> g03035061

416-8305 FILTER GP-OIL

S/N: H3C1-UP; K3G1-UP
PART OF 549-8936 LINES GP-WINCH
AN ATTACHMENT

SMCS-5068 **i06145812**

NOTE	REF NO	GRAPHIC REF	PART NUMBER	QTY	PART NAME 1 2 3 4 5 6 (PRODUCT LEVEL)	SEE PAGE
	1	1	**349-6097**	1	SWITCH AS-PRESSURE (OIL)	
		1	**033-6033**	1	SEAL-O-RING	
		1	**206-9295**	1	SEAL-O-RING	
	2	1	**359-3609**	1	BASE AS-FILTER	
		1	**5P-7701**	1	SEAL-O-RING	
		1	**6V-5048**	1	SEAL-O-RING	
		1	**9S-4181**	1	PLUG (1-5/16-12-THD)	
		1	**9S-4182**	1	PLUG (7/16-20-THD)	
		1	**9S-4191**	1	PLUG (9/16-18-THD)	
		1	**214-7568**	1	SEAL-O-RING	
	3	1	**428-8644**	1	HOUSING AS-FILTER	
		1	**6V-5048**	1	SEAL-O-RING	
		1	**9S-8002**	1	PLUG (7/16-20-THD)	
		1	**095-1671**	1	SEAL-O-RING	
		1	**389-1076**	1	FILTER ELEMENT AS-OIL	
		1	**095-1671**	1	SEAL-O-RING	

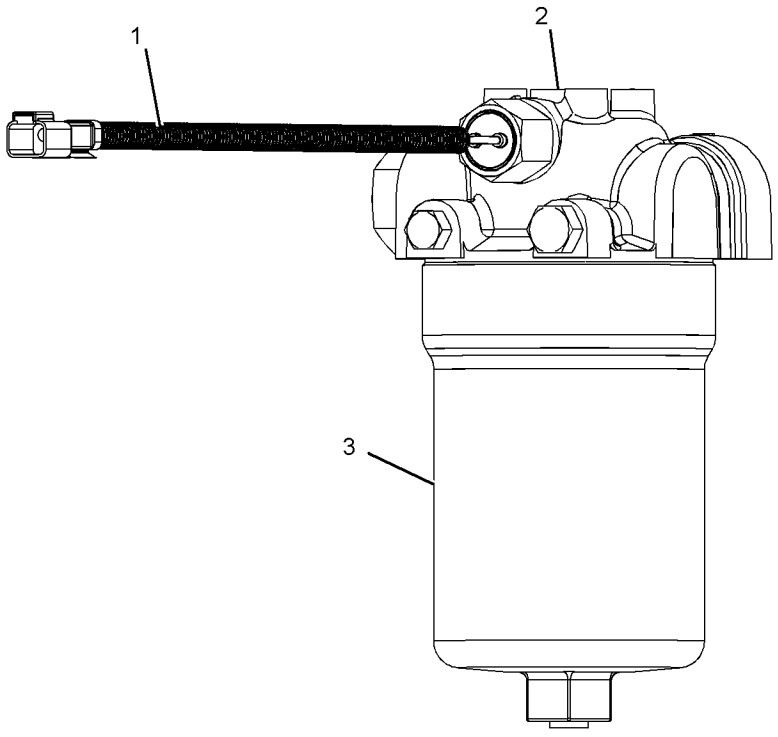

GRAPHIC #1 <END> g03783366

277-6553 HEAD GP-PUMP

S/N: H3C1-UP; K3G1-UP
WINCH
PART OF 249-8600 PUMP GP-PISTON
AN ATTACHMENT

SMCS-5070 **i07045531**

NOTE	REF NO	GRAPHIC REF	PART NUMBER	QTY	PART NAME 1 2 3 4 5 6 (PRODUCT LEVEL)	SEE PAGE
	1	1	**117-7280**	1	BUSHING (INTERNAL)	
	2	1	**117-7282**	1	SEAL-O-RING	
	3	1	**117-7279**	1	BUSHING (EXTERNAL)	
	4	1	**6V-8397**	1	SEAL-O-RING	
	5	1	**5W-1250**	2	PIN	
	6	1	**087-4772**	3	PLUG-O-RING	
Y	7	1	**152-1811**	1	VALVE GP-RELIEF	426
M	8	1	**8C-4365**	4	BOLT (M14X2X80-MM)	
	9	1	**192-3282**	1	BUSHING-BEARING	
	10	1	**120-4394**	3	PLUG-BREAK OFF	
	11	1	**9S-4182**	2	PLUG (7/16-20-THD)	
	12	1	**6V-8978**	1	SEAL-O-RING	
	13	1	**123-7575**	1	SCREW-LOCK	
Y	14	1	**177-7122**	1	VALVE GP-RELIEF (CHARGE PRESSURE)	427
	15	1	**9S-8002**	2	PLUG (7/16-20-THD)	
	16	1	**123-7583**	1	ORIFICE	
	17	1	**177-6854**	1	PLUG-PIN	
Y	18	1	**277-6679**	2	VALVE GP-RELIEF (CROSSOVER)	429
	19	1	**3J-7354**	2	SEAL-O-RING	

M - METRIC PART
Y - SEPARATE ILLUSTRATION

277-6553 **HEAD GP-PUMP (**contd.**)** **i07045531**

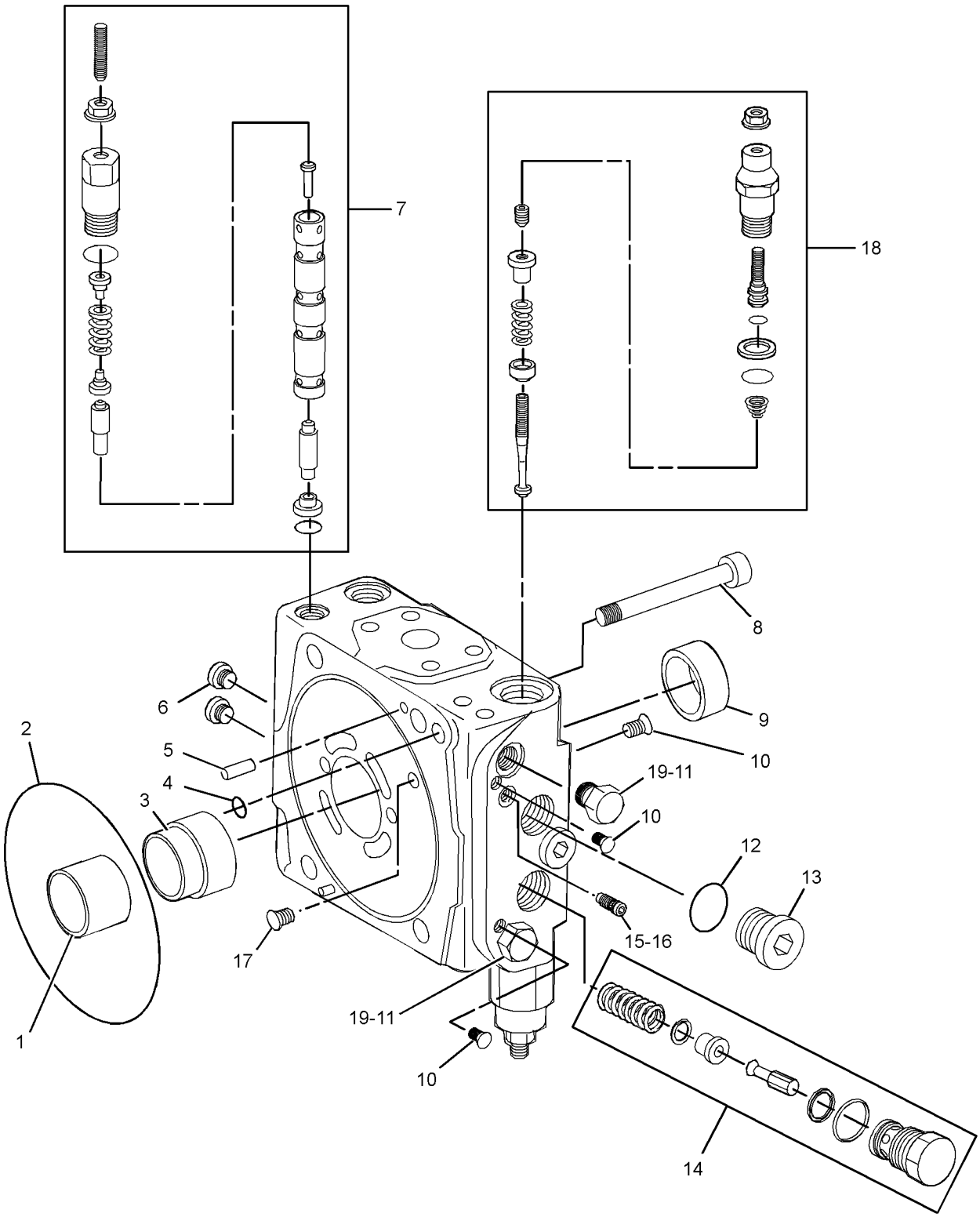

GRAPHIC #1 <END> g01203255

549-6773 HYDRAULIC AR

S/N: H3C1-UP; K3G1-UP
AN ATTACHMENT

SMCS-5050 **i07398032**

NOTE	PART NUMBER	QTY	PART NAME 1 2 3 4 5 6 (PRODUCT LEVEL)	SEE PAGE
Y	*535-7632*	1	CONTROL AR-HYDRAULIC	360
Y	*549-8280*	1	HYDRAULIC AR	372
Y	*535-7629*	1	LINES GP-ANGLE & TILT	376
Y	*549-8937*	1	LINES GP-BRAKE	355
Y	*549-8324*	1	PUMP & LINES AR	404

Y - SEPARATE ILLUSTRATION

<END>

549-6775 HYDRAULIC AR

S/N: H3C1-UP; K3G1-UP
FOR USE WITH FAN, DEMAND, FAN, DEMAND, REVERSING
CANNOT BE USED WITH FAN, DEMAND, WINCH, FAN, DEMAND, REVERSING, WINCH
AN ATTACHMENT

SMCS-5050 **i07757803**

NOTE	PART NUMBER	QTY	PART NAME 1 2 3 4 5 6 (PRODUCT LEVEL)	SEE PAGE
Y	*535-7631*	1	CONTROL & MTG GP-ELECTRONIC	119
Y	*549-8280*	1	HYDRAULIC AR	372
Y	*535-7629*	1	LINES GP-ANGLE & TILT	376
Y	*549-8937*	1	LINES GP-BRAKE	355
Y	*549-8324*	1	PUMP & LINES AR	404

Y - SEPARATE ILLUSTRATION

<END>

549-8280 HYDRAULIC AR

S/N: H3C1-UP; K3G1-UP
PART OF 549-6773, 549-6775, 550-2352 HYDRAULIC AR
AN ATTACHMENT

SMCS-5050 **i07398143**

NOTE	PART NUMBER	QTY	PART NAME 1 2 3 4 5 6 (PRODUCT LEVEL)	SEE PAGE
Y	*538-6210*	1	LINES GP-LIFT CYLINDER	390
Y	*549-8341*	1	LINES GP-PILOT	391
Y	*417-0341*	1	MOUNTING GP-HYDRAULIC TANK	400
Y	*538-5000*	1	MOUNTING GP-VALVE	401

Y - SEPARATE ILLUSTRATION

<END>

550-2352 HYDRAULIC AR

S/N: H3C1-UP; K3G1-UP
WINCH
AN ATTACHMENT

SMCS-5050 **i07765910**

NOTE	PART NUMBER	QTY	PART NAME 1 2 3 4 5 6 (PRODUCT LEVEL)	SEE PAGE
Y	*535-7633*	1	CONTROL AR-HYDRAULIC	360
Y	*549-8280*	1	HYDRAULIC AR	372
Y	*535-7629*	1	LINES GP-ANGLE & TILT	376
Y	*549-8937*	1	LINES GP-BRAKE	355
Y	*549-8882*	1	VALVE & LINES GP-HYD CONTROL	421

Y - SEPARATE ILLUSTRATION

<END>

457-5417 LINES GP-ANGLE & TILT

S/N: H3C1-UP; K3G1-UP
PART OF 387-2300 C-FRAME GP-POWER ANGLING
AN ATTACHMENT

SMCS-5057, 5101, 5104 **i07694676**

NOTE	REF NO	GRAPHIC REF	PART NUMBER	QTY	PART NAME 1 2 3 4 5 6 (PRODUCT LEVEL)	SEE PAGE
	1	1	**9J-4782**	8	PROTECTOR	
	2	1	**3B-8489**	4	FITTING-GREASE (1/8-27 PTF)	
	3	1	**241-0624**	2	BODY-CLAMP	
	4	1	**241-4169**	2	CLAMP GP-HYDRAULIC LINES	
					(EACH INCLUDES)	
		1	**206-0452**	1	PLATE	
M		1	**206-0451**	1	BOLT-STACKING (M8X1.25X44-MM)	
		1	**241-0624**	1	BODY-CLAMP	
I	5	1	**353-2675**	1	HOSE AS	
I	6	1	**353-2676**	2	HOSE AS	
I	7	1	**353-2677**	2	HOSE AS	
	8	1	**374-2060**	1	COVER AS-ACCESS	
	9	1	**374-2061**	1	COVER AS-ACCESS	
	10	1	**374-2064**	2	BRACKET AS	
	11	1	**374-2065**	2	HOSE AS	
	12	1	**374-7345**	2	BRACKET	
	13	1	**377-8337**	2	GUARD	
I	14	1	**380-4850**	1	HOSE AS	
	15	1	**460-4647**	2	PLATE	
C	16	1	**507-8255**	2	HOSE AS	
	17	1	**468-2490**	1	COVER	
	18	1	**468-2491**	1	COVER	
	19	1	*148-8340*	3	CONNECTOR AS	
					(EACH INCLUDES)	
		1	**3K-0360**	1	SEAL-O-RING	
		1	**6V-8398**	1	SEAL-O-RING	
		1	**6V-8639**	1	CONNECTOR	
	20	1	*148-8345*	1	CONNECTOR AS	
		1	**2M-9780**	1	SEAL-O-RING	
		1	**6V-8398**	1	SEAL-O-RING	
		1	**6V-8638**	1	CONNECTOR	
	21	1	*148-8364*	2	ELBOW AS	
					(EACH INCLUDES)	
		1	**3K-0360**	1	SEAL-O-RING	
		1	**6V-8398**	1	SEAL-O-RING	
		1	**6V-8625**	1	ELBOW	
	22	1	**197-2477**	2	PIN	
M	23	1	**329-3356**	2	NUT (M12X1.75-THD)	
M	24	1	**344-5675**	1	NUT (M10X1.5-THD)	
	26	1	**3E-4321**	1	CLIP (LOOP)	
	27	1	**5P-0370**	2	LOCK PIN	
	28	1	**5P-1076**	4	WASHER-HARD (13.5X30X4-MM THK)	
	29	1	**5P-7464**	4	CLIP (SLOT)	
	30	1	**5P-7465**	4	CLIP (TAB)	
	31	1	**6V-1249**	4	GROMMET (22-MM ID)	
	32	1	**6V-8398**	6	SEAL-O-RING	
M	33	1	**7X-0818**	2	BOLT (M8X1.25X45-MM)	

457-5417 **LINES GP-ANGLE & TILT (**contd.**)** **i07694676**

NOTE	REF NO	GRAPHIC REF	PART NUMBER	QTY	PART NAME 1 2 3 4 5 6 (PRODUCT LEVEL)	SEE PAGE
	34	1	**7X-7729**	12	WASHER (11X25X3-MM THK)	
	35	1	**8J-8197**	1	CLIP	
	36	1	**8L-5008**	2	ELBOW-PIPE	
	37	1	**8M-2770**	2	CLIP (LOOP)	
	38	1	**8T-4121**	10	WASHER-HARD (11X21X2.5-MM THK)	
M	39	1	**8T-4136**	13	BOLT (M10X1.5X25-MM)	
M	40	1	**8T-4139**	5	BOLT (M12X1.75X30-MM)	
M	41	1	**8T-4183**	1	BOLT (M12X1.75X40-MM)	
M	42	1	**8T-4185**	2	BOLT (M10X1.5X50-MM)	
M	43	1	**8T-4191**	2	BOLT (M10X1.5X16-MM)	
M	44	1	**8T-4195**	4	BOLT (M10X1.5X30-MM)	
	45	1	**8T-4223**	4	WASHER-HARD (13.5X25.5X3-MM THK)	
	46	1	**8T-4224**	2	WASHER-HARD (8.8X16X2-MM THK)	
	47	1	**8T-4994**	2	WASHER-HARD (20X36.5X3.5-MM THK)	
M	48	1	**310-1945**	1	STUD-TAPERLOCK (M12X1.75X70-MM)	

C - CHANGE FROM PREVIOUS TYPE
I - REFER TO HYDRAULIC INFORMATION SYSTEM
M - METRIC PART

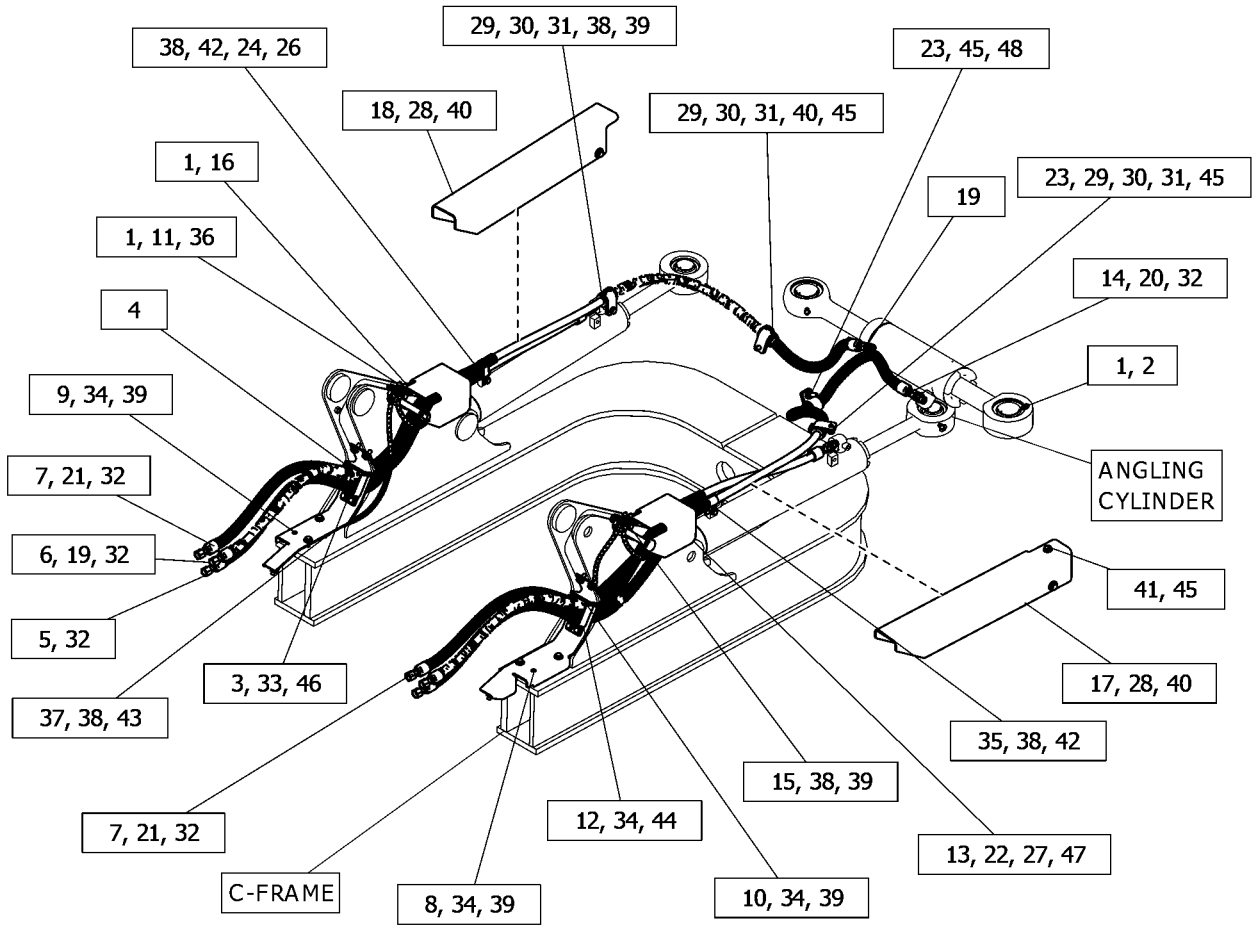

GRAPHIC #1 <END> g06395938

535-7629 LINES GP-ANGLE & TILT

S/N: H3C1-UP; K3G1-UP
PART OF 549-6773, 549-6775, 550-2352 HYDRAULIC AR
AN ATTACHMENT

SMCS-5057, 5101, 5104

i07404131

NOTE	PART NUMBER	QTY	PART NAME 1 2 3 4 5 6 (PRODUCT LEVEL)	SEE PAGE
Y	*538-6212*	1	LINES GP-ANGLE & TILT	377

Y - SEPARATE ILLUSTRATION

<END>

538-6212 LINES GP-ANGLE & TILT

S/N: H3C1-UP; K3G1-UP
PART OF 535-7629 LINES GP-ANGLE & TILT
AN ATTACHMENT

SMCS-5057, 5101, 5104 **i07748566**

NOTE	REF NO	GRAPHIC REF	PART NUMBER	QTY	PART NAME 1 2 3 4 5 6 (PRODUCT LEVEL)	SEE PAGE
	1	1	**204-2281**	2	STRAP-CABLE	
	2	1	**5K-1094**	6	LOCKWASHER	
	3	1	**6V-8398**	6	SEAL-O-RING	
	4	1	**6V-9169**	6	NUT (13/16-16-THD)	
	5	1	**7J-9108**	5	SEAL-O-RING	
	6	1	**7X-7729**	4	WASHER (11X25X3-MM THK)	
	7	1	**8T-4121**	5	WASHER-HARD (11X21X2.5-MM THK)	
M	8	1	**8T-4136**	5	BOLT (M10X1.5X25-MM)	
M	9	1	**8T-4137**	4	BOLT (M10X1.5X20-MM)	
	10	1	**9M-9162**	10	CLAMP	
	11	1	*106-8715*	1	ELBOW AS	
		1	**3D-2824**	1	SEAL-O-RING	
		1	**6V-9746**	1	SEAL-O-RING	
		1	**8C-8400**	1	ELBOW	
	12	1	*148-8347*	2	ELBOW AS	
					(EACH INCLUDES)	
		1	**3D-2824**	1	SEAL-O-RING	
		1	**6V-9007**	1	ELBOW	
		1	**6V-9746**	1	SEAL-O-RING	
	13	1	*185-2271*	1	CONNECTOR AS	
		1	**3D-2824**	1	SEAL-O-RING	
		1	**6V-9746**	1	SEAL-O-RING	
		1	**8T-9023**	1	CONNECTOR-O-RING	
	14	1	**200-6345**	1	SADDLE-MOUNTING (DUAL SWIVEL)	
	15	1	**444-5491**	1	BRACKET AS	
M		1	**8T-3490**	1	NUT-WELD (M10X1.5-THD)	
	16	1	**458-7127**	1	TUBE AS	
	17	1	**458-7129**	1	TUBE AS	
	18	1	**458-7130**	1	TUBE AS	
	19	1	**458-7132**	1	TUBE AS	
	20	1	**458-7133**	1	TUBE AS	
I	21	1	**539-4439**	1	HOSE AS	
I	22	1	**539-4440**	1	HOSE AS	
	23	1	**550-1496**	1	TUBE AS	
	24	1	**550-1497**	1	TUBE AS	
	25	1	**444-5492**	1	BRACKET AS	
M		1	**8T-3490**	1	NUT-WELD (M10X1.5-THD)	

I - REFER TO HYDRAULIC INFORMATION SYSTEM
M - METRIC PART

538-6212 **LINES GP-ANGLE & TILT** (contd.) **i07748566**

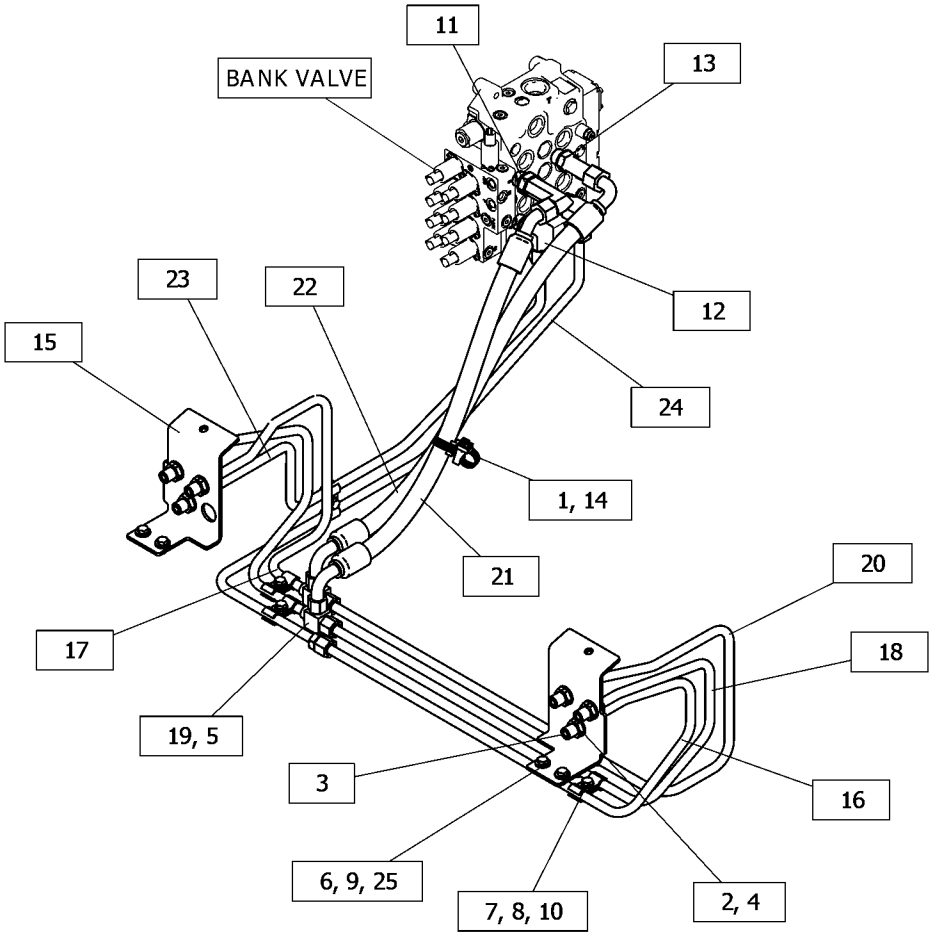

GRAPHIC #1 <END> g06432310

422-8723 LINES GP-BULLDOZER

S/N: H3C1-UP; K3G1-UP
PART OF 387-2300 C-FRAME GP-POWER ANGLING
AN ATTACHMENT

SMCS-5057 **i07430890**

NOTE	REF NO	GRAPHIC REF	PART NUMBER	QTY	PART NAME 1 2 3 4 5 6 (PRODUCT LEVEL)	SEE PAGE
	1	1	**217-5449**	1	SPACER (11X20X30-MM THK)	
I	2	1	**422-8727**	1	HOSE AS	
I	3	1	**422-8728**	1	HOSE AS	
I	4	1	**422-8729**	1	HOSE AS	
I	5	1	**422-8730**	1	HOSE AS	
	6	1	*148-8315*	2	CONNECTOR AS	
					(EACH INCLUDES)	
		1	**2M-9780**	1	SEAL-O-RING	
		1	**6V-8642**	1	CONNECTOR	
		1	**7J-9108**	1	SEAL-O-RING	
	7	1	*148-8382*	2	ELBOW AS	
					(EACH INCLUDES)	
		1	**3D-2824**	1	SEAL-O-RING	
		1	**7J-9108**	1	SEAL-O-RING	
		1	**8T-0404**	1	ELBOW	
M	8	1	**344-5675**	2	NUT (M10X1.5-THD)	
	9	1	**5P-7464**	2	CLIP (SLOT)	
	10	1	**5P-7465**	2	CLIP (TAB)	
	11	1	**6V-7359**	2	GROMMET (25-MM ID, 37-MM OD)	
	12	1	**8T-4121**	4	WASHER-HARD (11X21X2.5-MM THK)	
M	13	1	**8T-4172**	1	BOLT (M10X1.5X80-MM)	
M	14	1	**8T-4185**	1	BOLT (M10X1.5X50-MM)	
	15	1	**3B-8486**	2	FITTING-GREASE (1/8-27 PTF)	
	16	1	**3B-8489**	2	FITTING-GREASE (1/8-27 PTF)	
	17	1	**9J-4782**	4	PROTECTOR	

I - REFER TO HYDRAULIC INFORMATION SYSTEM
M - METRIC PART

422-8723 **LINES GP-BULLDOZER (**contd.**)** **i07430890**

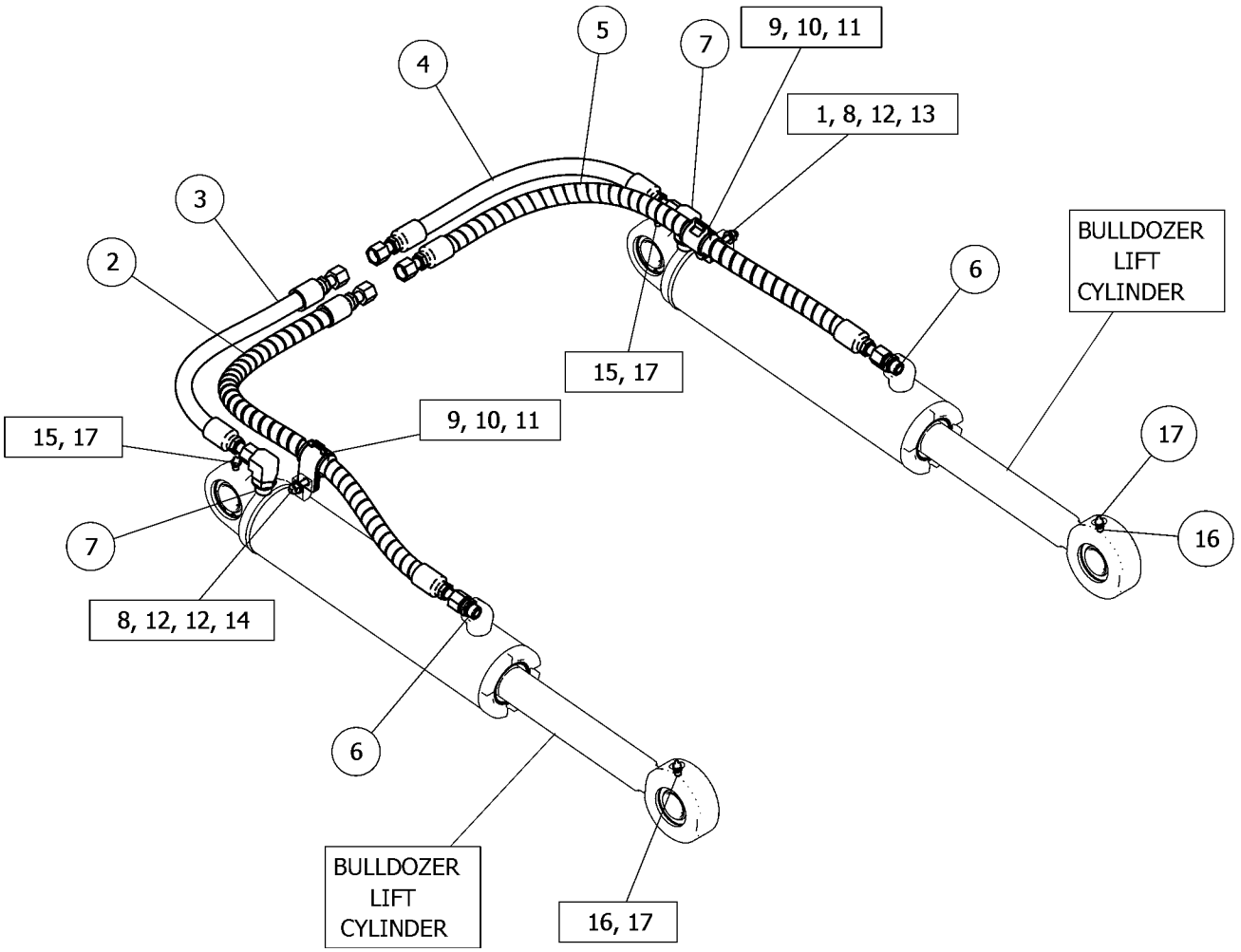

GRAPHIC #1 <END> g06282374

457-5423 LINES GP-HYDRAULIC FAN

S/N: H3C1-UP; K3G1-UP
CANNOT BE USED WITH 550-2352—PAGE: 373
AN ATTACHMENT

SMCS-1386, 1387, 5057 **i08062746**

NOTE	REF NO	GRAPHIC REF	PART NUMBER	QTY	PART NAME 1 2 3 4 5 6 (PRODUCT LEVEL)	SEE PAGE
M	1	1	**8T-4136**	1	BOLT (M10X1.5X25-MM)	
M	2	1	**8T-4195**	11	BOLT (M10X1.5X30-MM)	
M	3	1	**8T-4196**	4	BOLT (M10X1.5X35-MM)	
M	4	1	**8T-6685**	1	BOLT (M10X1.5X110-MM)	
	5	1	**2P-1293**	2	LOCKNUT (1-3/16-12-THD)	
	6	1	**4J-0520**	1	SEAL-O-RING	
	7	1	**4J-5267**	2	SEAL-O-RING	
	8	1	**5P-1076**	2	WASHER-HARD (13.5X30X4-MM THK)	
	9	1	**7X-3391**	2	WASHER-HARD (13.5X32X6-MM THK)	
	10	1	**7X-7729**	4	WASHER (11X25X3-MM THK)	
	11	1	**8C-3205**	4	FLANGE-HALF	
	12	1	**8C-3206**	2	FLANGE-HALF	
	13	1	**8T-4121**	15	WASHER-HARD (11X21X2.5-MM THK)	
M	14	1	**8T-4137**	1	BOLT (M10X1.5X20-MM)	
M	15	1	**8T-4956**	4	BOLT (M12X1.75X35-MM)	
	16	1	**8T-7934**	1	WASHER-HARD (11X21X5-MM THK)	
	17	1	**9X-2027**	1	WASHER (11X18X2-MM THK)	
	18	1	**110-6349**	1	FITTING AS (QUICK DISCONNECT)	
		1	**3J-7354**	1	SEAL-O-RING	
	19	1	**127-5447**	2	SPACER (10.5X20X12-MM THK)	
	20	1	**138-7500**	1	SPACER (11X25X50-MM THK)	
	21	1	*148-8326*	1	CONNECTOR AS	
		1	**3J-7354**	1	SEAL-O-RING	
		1	**6V-8397**	1	SEAL-O-RING	
		1	**6V-9872**	1	CONNECTOR	
	22	1	*148-8336*	1	CONNECTOR AS	
		1	**3J-1907**	1	SEAL-O-RING	
		1	**6V-8397**	1	SEAL-O-RING	
		1	**6V-8636**	1	CONNECTOR	
	23	1	*165-4933*	2	ELBOW AS	
					(EACH INCLUDES)	
		1	**6V-8990**	1	ELBOW	
		1	**6V-9746**	2	SEAL-O-RING	
M	24	1	**180-3998**	2	STUD (M10X1.5X55-MM)	
	25	1	**203-3847**	1	BRACKET AS	
	26	1	**228-6089**	1	PLUG (ROCKER SWITCH)	
	27	1	**279-6530**	1	VALVE GP-SOLENOID (HYDRAULIC FAN)	
		1	**261-6728**	1	COIL AS (10-VOLT)	
	28	1	**294-5374**	3	PLATE	
M	29	1	**309-1905**	1	STUD-TAPERLOCK (M10X1.5X100-MM)	
M	30	1	**344-5675**	3	NUT (M10X1.5-THD)	
I	31	1	**419-3723**	1	HOSE AS	
	32	1	**422-8724**	1	BRACKET	
I	33	1	**437-7677**	1	HOSE AS	
I	34	1	**437-7678**	1	HOSE AS	
Y	35	1	**456-3318**	1	PUMP GP-GEAR (HYDRAULIC FAN)	408
Y	36	1	**456-4196**	1	MOTOR GP-GEAR (HYDRAULIC FAN)	398

457-5423 **LINES GP-HYDRAULIC FAN (**contd.**)** **i08062746**

NOTE	REF NO	GRAPHIC REF	PART NUMBER	QTY	PART NAME 1 2 3 4 5 6 (PRODUCT LEVEL)	SEE PAGE
I	37	1	**457-6566**	1	HOSE AS	
I	38	1	**457-6567**	1	HOSE AS	
	39	1	**483-2517**	4	CLIP (LOOP)	
	40	1	**177-2215**	3	STRAP-DUAL CLAMP	
	41	1	**200-6345**	1	SADDLE-MOUNTING (DUAL SWIVEL)	
	42	1	**204-2281**	2	STRAP-CABLE	
	43	1	**391-8044**	1	CLIP (LOOP)	
	44	1	**4D-7735**	2	CLIP	
	45	1	**6V-0852**	1	CAP-DUST	
	46	1	**6V-1889**	1	CLIP (LOOP)	

I - REFER TO HYDRAULIC INFORMATION SYSTEM
M - METRIC PART
Y - SEPARATE ILLUSTRATION

457-5423 **LINES GP-HYDRAULIC FAN** (contd.) **i08062746**

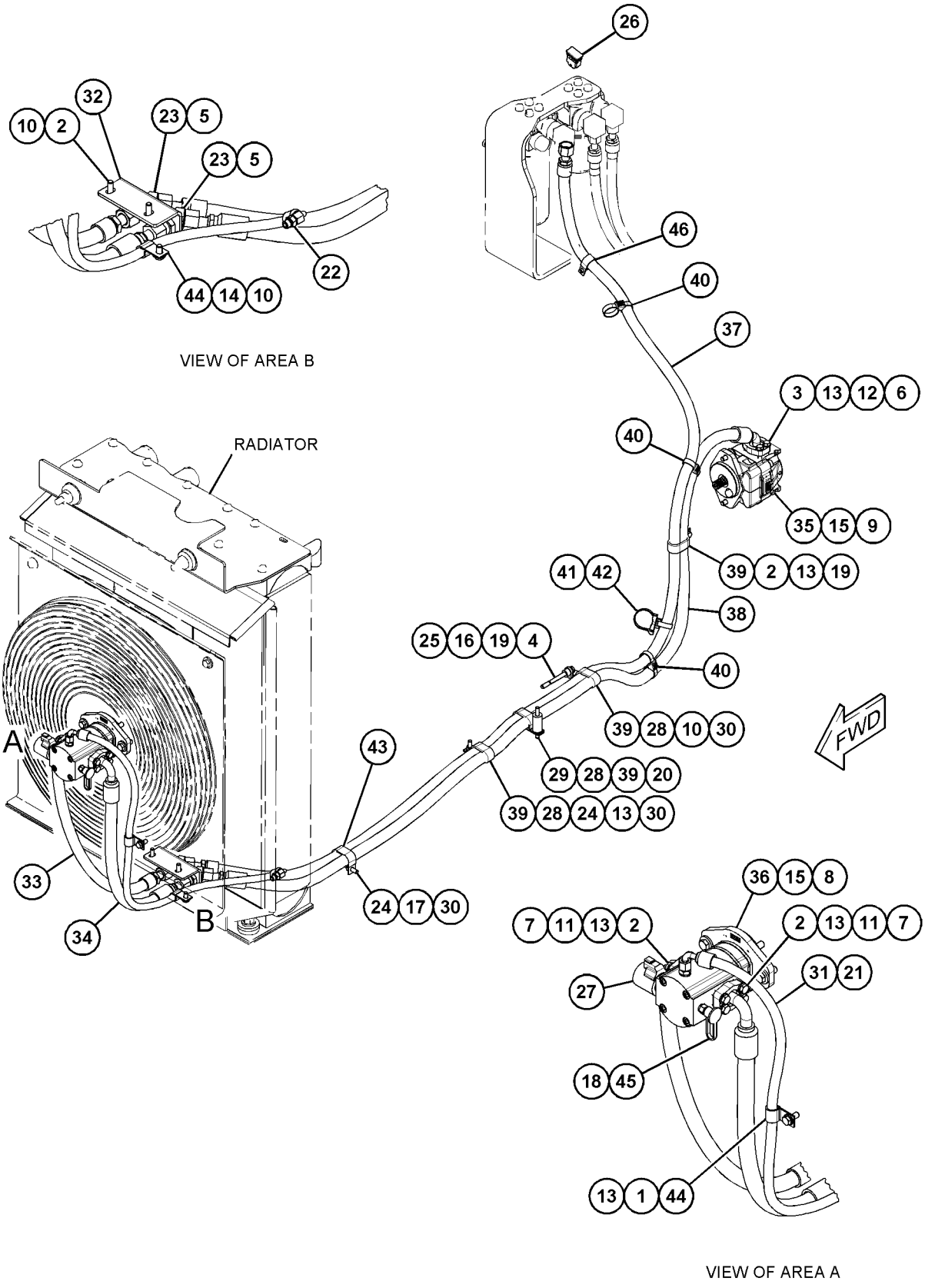

GRAPHIC #1 <END> g06189506

457-5424 LINES GP-HYDRAULIC FAN—REVERSING

S/N: H3C1-UP; K3G1-UP

CANNOT BE USED WITH 550-2352—PAGE: 373

AN ATTACHMENT

SMCS-1386, 1387, 5057

i08067584

NOTE	REF NO	GRAPHIC REF	PART NUMBER	QTY	PART NAME 1 2 3 4 5 6 (PRODUCT LEVEL)	SEE PAGE
M	1	1	**8T-4136**	1	BOLT (M10X1.5X25-MM)	
CM	2	1	**8T-4195**	5	BOLT (M10X1.5X30-MM)	
M	3	1	**8T-4196**	4	BOLT (M10X1.5X35-MM)	
M	4	1	**8T-6685**	1	BOLT (M10X1.5X110-MM)	
	5	1	**2P-1293**	2	LOCKNUT (1-3/16-12-THD)	
	6	1	**4J-0520**	1	SEAL-O-RING	
	7	1	**5P-1076**	2	WASHER-HARD (13.5X30X4-MM THK)	
	8	1	**7X-3391**	2	WASHER-HARD (13.5X32X6-MM THK)	
	9	1	**7X-7729**	3	WASHER (11X25X3-MM THK)	
	10	1	**8C-3206**	2	FLANGE-HALF	
C	11	1	**8T-4121**	10	WASHER-HARD (11X21X2.5-MM THK)	
M	12	1	**8T-4137**	1	BOLT (M10X1.5X20-MM)	
M	13	1	**8T-4956**	4	BOLT (M12X1.75X35-MM)	
C	14	1	**8T-7934**	3	WASHER-HARD (11X21X5-MM THK)	
	15	1	**9X-2027**	1	WASHER (11X18X2-MM THK)	
	16	1	**110-6349**	1	FITTING AS (QUICK DISCONNECT)	
		1	**3J-7354**	1	SEAL-O-RING	
C	17	1	**127-5447**	1	SPACER (10.5X20X12-MM THK)	
	18	1	**138-7500**	1	SPACER (11X25X50-MM THK)	
	19	1	*148-8322*	2	CONNECTOR AS	
					(EACH INCLUDES)	
		1	**2M-9780**	1	SEAL-O-RING	
		1	**6V-8640**	1	CONNECTOR	
		1	**6V-9746**	1	SEAL-O-RING	
	20	1	*148-8326*	1	CONNECTOR AS	
		1	**3J-7354**	1	SEAL-O-RING	
		1	**6V-8397**	1	SEAL-O-RING	
		1	**6V-9872**	1	CONNECTOR	
	21	1	*148-8336*	1	CONNECTOR AS	
		1	**3J-1907**	1	SEAL-O-RING	
		1	**6V-8397**	1	SEAL-O-RING	
		1	**6V-8636**	1	CONNECTOR	
	22	1	*165-4933*	2	ELBOW AS	
					(EACH INCLUDES)	
		1	**6V-8990**	1	ELBOW	
		1	**6V-9746**	2	SEAL-O-RING	
M	23	1	**180-3998**	2	STUD (M10X1.5X55-MM)	
	24	1	**203-3847**	1	BRACKET AS	
M		1	**171-2419**	1	STUD-WELD (M10X1.5X35-MM)	
	25	1	**236-4623**	1	SWITCH AS-ROCKER (24-VOLT) (REVERSING FAN)	
	26	1	**279-6530**	1	VALVE GP-SOLENOID (REVERSING FAN)	
		1	**261-6728**	1	COIL AS (10-VOLT)	
	27	1	**294-5374**	3	PLATE	
M	28	1	**309-1905**	1	STUD-TAPERLOCK (M10X1.5X100-MM)	
M	29	1	**344-5675**	3	NUT (M10X1.5-THD)	
I	30	1	**419-3726**	1	HOSE AS	
	31	1	**422-8724**	1	BRACKET	

457-5424 **LINES GP-HYDRAULIC FAN** (contd.) **i08067584**

NOTE	REF NO	GRAPHIC REF	PART NUMBER	QTY	PART NAME 1 2 3 4 5 6 (PRODUCT LEVEL)	SEE PAGE
Y	32	1	**437-2846**	1	VALVE GP-SOLENOID (12-VDC) (REVERSING FAN)	430
I	33	1	**437-7679**	1	HOSE AS	
I	34	1	**437-7680**	1	HOSE AS	
Y	35	1	**456-3318**	1	PUMP GP-GEAR (REVERSING FAN)	408
Y	36	1	**456-4197**	1	MOTOR GP-GEAR (REVERSING)	399
I	37	1	**457-6566**	1	HOSE AS	
I	38	1	**457-6567**	1	HOSE AS	
C	39	1	**483-2517**	5	CLIP (LOOP)	
	40	1	**177-2215**	3	STRAP-DUAL CLAMP	
	41	1	**200-6345**	1	SADDLE-MOUNTING (DUAL SWIVEL)	
	42	1	**204-2281**	2	STRAP-CABLE	
	43	1	**391-8044**	1	CLIP (LOOP)	
	44	1	**4D-7735**	2	CLIP	
	45	1	**6V-0852**	1	CAP-DUST	
	46	1	**6V-1889**	1	CLIP (LOOP)	
C	47	1	**4P-8134**	1	CLIP (LADDER)	
C	48	1	**550-6464**	1	BRACKET AS	

C - CHANGE FROM PREVIOUS TYPE
I - REFER TO HYDRAULIC INFORMATION SYSTEM
M - METRIC PART
Y - SEPARATE ILLUSTRATION

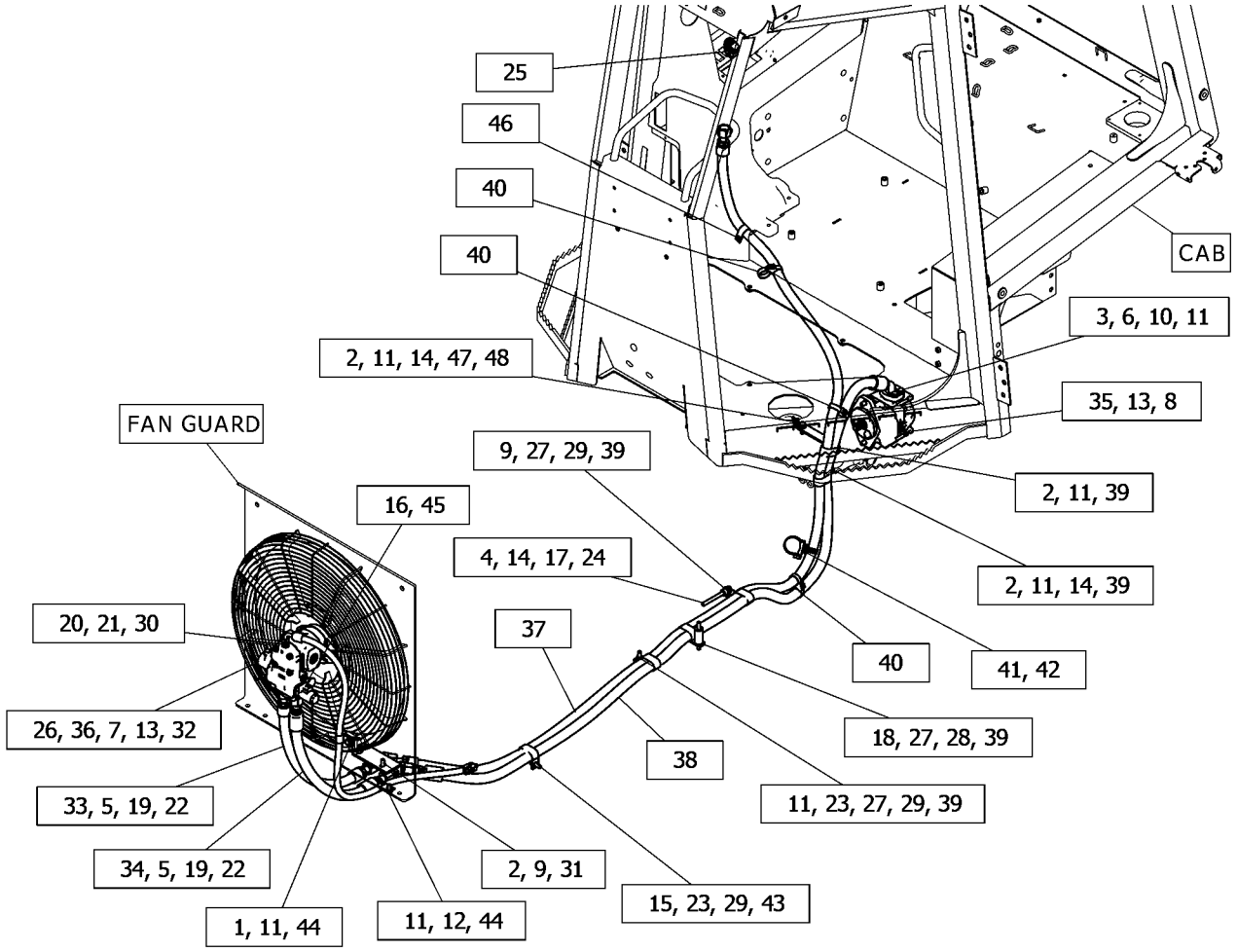

GRAPHIC #1 <END> g06368551

457-5425 LINES GP-HYDRAULIC FAN

S/N: H3C1-UP; K3G1-UP

CANNOT BE USED WITH 549-6773—PAGE: 372, 549-6775—PAGE: 372

AN ATTACHMENT

SMCS-1386, 1387, 5057

i08062753

NOTE	REF NO	GRAPHIC REF	PART NUMBER	QTY	PART NAME 1 2 3 4 5 6 (PRODUCT LEVEL)	SEE PAGE
M	1	1	**8T-4136**	1	BOLT (M10X1.5X25-MM)	
CM	2	1	**8T-4195**	13	BOLT (M10X1.5X30-MM)	
M	3	1	**8T-4196**	4	BOLT (M10X1.5X35-MM)	
M	4	1	**8T-6685**	1	BOLT (M10X1.5X110-MM)	
	5	1	**2P-1293**	2	LOCKNUT (1-3/16-12-THD)	
	6	1	**4J-0520**	1	SEAL-O-RING	
	7	1	**4J-5267**	2	SEAL-O-RING	
	8	1	**5P-1076**	2	WASHER-HARD (13.5X30X4-MM THK)	
	9	1	**7X-3391**	2	WASHER-HARD (13.5X32X6-MM THK)	
	10	1	**7X-7729**	3	WASHER (11X25X3-MM THK)	
	11	1	**8C-3205**	4	FLANGE-HALF	
	12	1	**8C-3206**	2	FLANGE-HALF	
C	13	1	**8T-4121**	18	WASHER-HARD (11X21X2.5-MM THK)	
M	14	1	**8T-4137**	1	BOLT (M10X1.5X20-MM)	
M	15	1	**8T-4956**	4	BOLT (M12X1.75X35-MM)	
C	16	1	**8T-7934**	3	WASHER-HARD (11X21X5-MM THK)	
	17	1	**9X-2027**	1	WASHER (11X18X2-MM THK)	
	18	1	**110-6349**	1	FITTING AS (QUICK DISCONNECT)	
		1	**3J-7354**	1	SEAL-O-RING	
C	19	1	**127-5447**	1	SPACER (10.5X20X12-MM THK)	
	20	1	**138-7500**	1	SPACER (11X25X50-MM THK)	
	21	1	*148-8326*	1	CONNECTOR AS	
		1	**3J-7354**	1	SEAL-O-RING	
		1	**6V-8397**	1	SEAL-O-RING	
		1	**6V-9872**	1	CONNECTOR	
	22	1	*148-8336*	1	CONNECTOR AS	
		1	**3J-1907**	1	SEAL-O-RING	
		1	**6V-8397**	1	SEAL-O-RING	
		1	**6V-8636**	1	CONNECTOR	
	23	1	*165-4933*	2	ELBOW AS	
					(EACH INCLUDES)	
		1	**6V-8990**	1	ELBOW	
		1	**6V-9746**	2	SEAL-O-RING	
M	24	1	**180-3998**	2	STUD (M10X1.5X55-MM)	
	25	1	**203-3847**	1	BRACKET AS	
	26	1	**228-6089**	1	PLUG (ROCKER SWITCH)	
	27	1	**279-6530**	1	VALVE GP-SOLENOID (HYDRAULIC FAN)	
		1	**261-6728**	1	COIL AS (10-VOLT)	
	28	1	**294-5374**	3	PLATE	
M	29	1	**309-1905**	1	STUD-TAPERLOCK (M10X1.5X100-MM)	
M	30	1	**344-5675**	3	NUT (M10X1.5-THD)	
I	31	1	**419-3723**	1	HOSE AS	
	32	1	**422-8724**	1	BRACKET	
I	33	1	**437-7677**	1	HOSE AS	
I	34	1	**437-7678**	1	HOSE AS	
Y	35	1	**456-3318**	1	PUMP GP-GEAR (HYDRAULIC FAN)	408
Y	36	1	**456-4196**	1	MOTOR GP-GEAR (HYDRAULIC FAN)	398

457-5425 **LINES GP-HYDRAULIC FAN** (contd.) **i08062753**

NOTE	REF NO	GRAPHIC REF	PART NUMBER	QTY	PART NAME 1 2 3 4 5 6 (PRODUCT LEVEL)	SEE PAGE
I	37	1	**457-6566**	1	HOSE AS	
I	38	1	**457-6568**	1	HOSE AS	
C	39	1	**483-2517**	5	CLIP (LOOP)	
	40	1	**177-2215**	4	STRAP-DUAL CLAMP	
	41	1	**200-6345**	1	SADDLE-MOUNTING (DUAL SWIVEL)	
	42	1	**204-2281**	2	STRAP-CABLE	
	43	1	**391-8044**	1	CLIP (LOOP)	
	44	1	**4D-7735**	2	CLIP	
	45	1	**6V-0852**	1	CAP-DUST	
	46	1	**6V-1889**	1	CLIP (LOOP)	
C	47	1	**550-6464**	1	BRACKET AS	
C	48	1	**4P-8134**	1	CLIP (LADDER)	

C - CHANGE FROM PREVIOUS TYPE
I - REFER TO HYDRAULIC INFORMATION SYSTEM
M - METRIC PART
Y - SEPARATE ILLUSTRATION

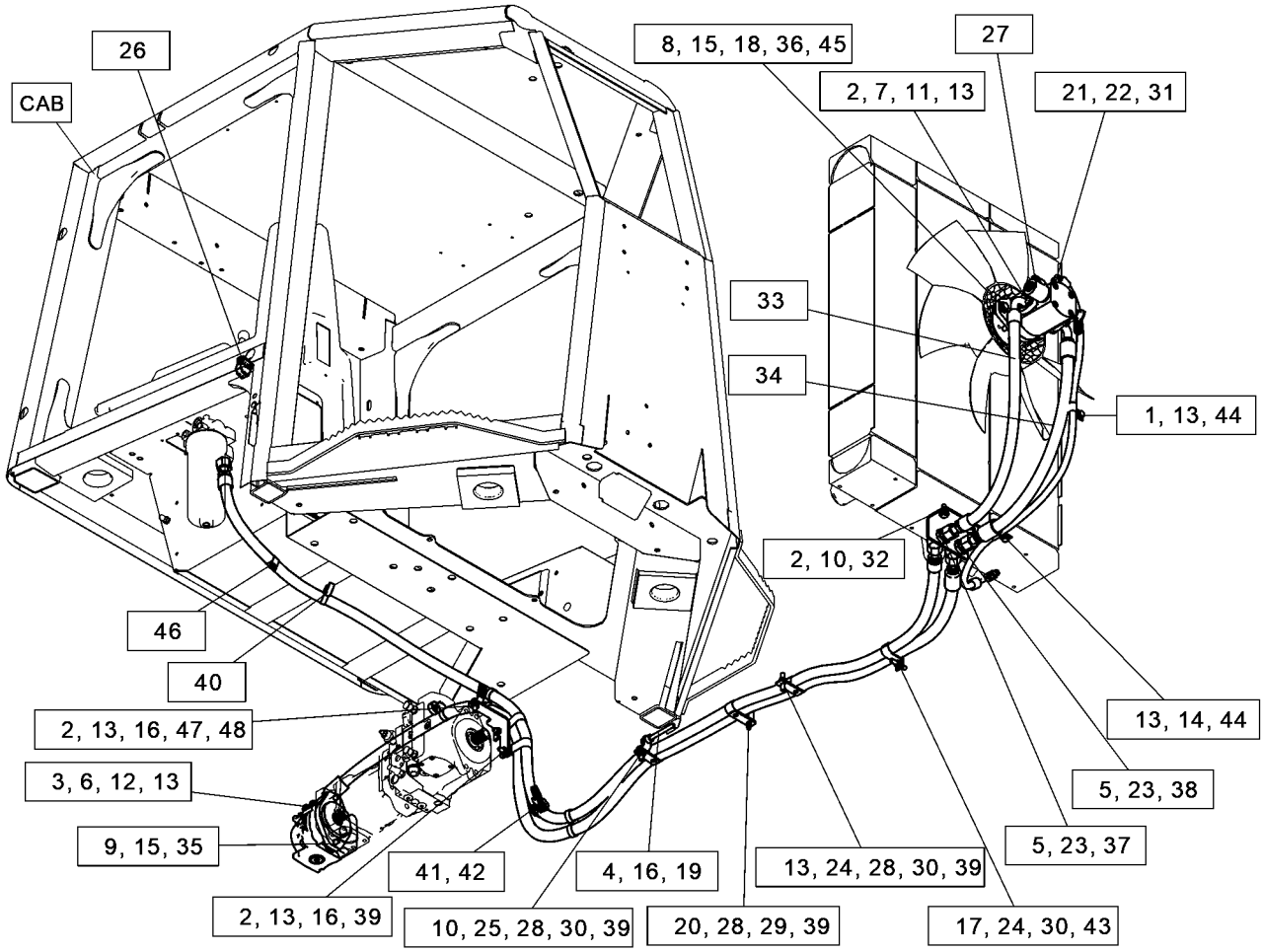

GRAPHIC #1 <END> g06366431

457-5426 LINES GP-HYDRAULIC FAN—REVERSING

S/N: H3C1-UP; K3G1-UP

CANNOT BE USED WITH 549-6773—PAGE: 372, 549-6775—PAGE: 372

AN ATTACHMENT

SMCS-1386, 1387, 5057

i08067592

NOTE	REF NO	GRAPHIC REF	PART NUMBER	QTY	PART NAME 1 2 3 4 5 6 (PRODUCT LEVEL)	SEE PAGE
M	1	1	**8T-4136**	1	BOLT (M10X1.5X25-MM)	
CM	2	1	**8T-4195**	5	BOLT (M10X1.5X30-MM)	
M	3	1	**8T-4196**	4	BOLT (M10X1.5X35-MM)	
M	4	1	**8T-6685**	1	BOLT (M10X1.5X110-MM)	
	5	1	**2P-1293**	2	LOCKNUT (1-3/16-12-THD)	
	6	1	**4J-0520**	1	SEAL-O-RING	
	7	1	**5P-1076**	2	WASHER-HARD (13.5X30X4-MM THK)	
	8	1	**7X-3391**	2	WASHER-HARD (13.5X32X6-MM THK)	
	9	1	**7X-7729**	3	WASHER (11X25X3-MM THK)	
	10	1	**8C-3206**	2	FLANGE-HALF	
C	11	1	**8T-4121**	10	WASHER-HARD (11X21X2.5-MM THK)	
M	12	1	**8T-4137**	1	BOLT (M10X1.5X20-MM)	
M	13	1	**8T-4956**	4	BOLT (M12X1.75X35-MM)	
C	14	1	**8T-7934**	3	WASHER-HARD (11X21X5-MM THK)	
	15	1	**9X-2027**	1	WASHER (11X18X2-MM THK)	
	16	1	**110-6349**	1	FITTING AS (QUICK DISCONNECT)	
		1	**3J-7354**	1	SEAL-O-RING	
C	17	1	**127-5447**	1	SPACER (10.5X20X12-MM THK)	
	18	1	**138-7500**	1	SPACER (11X25X50-MM THK)	
	19	1	*148-8322*	2	CONNECTOR AS	
					(EACH INCLUDES)	
		1	**2M-9780**	1	SEAL-O-RING	
		1	**6V-8640**	1	CONNECTOR	
		1	**6V-9746**	1	SEAL-O-RING	
	20	1	*148-8326*	1	CONNECTOR AS	
		1	**3J-7354**	1	SEAL-O-RING	
		1	**6V-8397**	1	SEAL-O-RING	
		1	**6V-9872**	1	CONNECTOR	
	21	1	*148-8336*	1	CONNECTOR AS	
		1	**3J-1907**	1	SEAL-O-RING	
		1	**6V-8397**	1	SEAL-O-RING	
		1	**6V-8636**	1	CONNECTOR	
	22	1	*165-4933*	2	ELBOW AS	
					(EACH INCLUDES)	
		1	**6V-8990**	1	ELBOW	
		1	**6V-9746**	2	SEAL-O-RING	
M	23	1	**180-3998**	2	STUD (M10X1.5X55-MM)	
	24	1	**203-3847**	1	BRACKET AS	
M		1	**171-2419**	1	STUD-WELD (M10X1.5X35-MM)	
	25	1	**236-4623**	1	SWITCH AS-ROCKER (24-VOLT) (REVERSING FAN)	
	26	1	**279-6530**	1	VALVE GP-SOLENOID (REVERSING FAN)	
		1	**261-6728**	1	COIL AS (10-VOLT)	
	27	1	**294-5374**	3	PLATE	
M	28	1	**309-1905**	1	STUD-TAPERLOCK (M10X1.5X100-MM)	
M	29	1	**344-5675**	3	NUT (M10X1.5-THD)	
I	30	1	**419-3726**	1	HOSE AS	
	31	1	**422-8724**	1	BRACKET	

457-5426 **LINES GP-HYDRAULIC FAN** (contd.) **i08067592**

NOTE	REF NO	GRAPHIC REF	PART NUMBER	QTY	PART NAME 1 2 3 4 5 6 (PRODUCT LEVEL)	SEE PAGE
Y	32	1	**437-2846**	1	VALVE GP-SOLENOID (12-VDC) (REVERSING FAN)	430
I	33	1	**437-7679**	1	HOSE AS	
I	34	1	**437-7680**	1	HOSE AS	
Y	35	1	**456-3318**	1	PUMP GP-GEAR (REVERSING FAN)	408
Y	36	1	**456-4197**	1	MOTOR GP-GEAR (REVERSING)	399
I	37	1	**457-6566**	1	HOSE AS	
I	38	1	**457-6568**	1	HOSE AS	
C	39	1	**483-2517**	5	CLIP (LOOP)	
	40	1	**177-2215**	4	STRAP-DUAL CLAMP	
	41	1	**200-6345**	1	SADDLE-MOUNTING (DUAL SWIVEL)	
	42	1	**204-2281**	2	STRAP-CABLE	
	43	1	**391-8044**	1	CLIP (LOOP)	
	44	1	**4D-7735**	2	CLIP	
	45	1	**6V-0852**	1	CAP-DUST	
	46	1	**6V-1889**	1	CLIP (LOOP)	
C	47	1	**550-6464**	1	BRACKET AS	
C	48	1	**4P-8134**	1	CLIP (LADDER)	

C - CHANGE FROM PREVIOUS TYPE
I - REFER TO HYDRAULIC INFORMATION SYSTEM
M - METRIC PART
Y - SEPARATE ILLUSTRATION

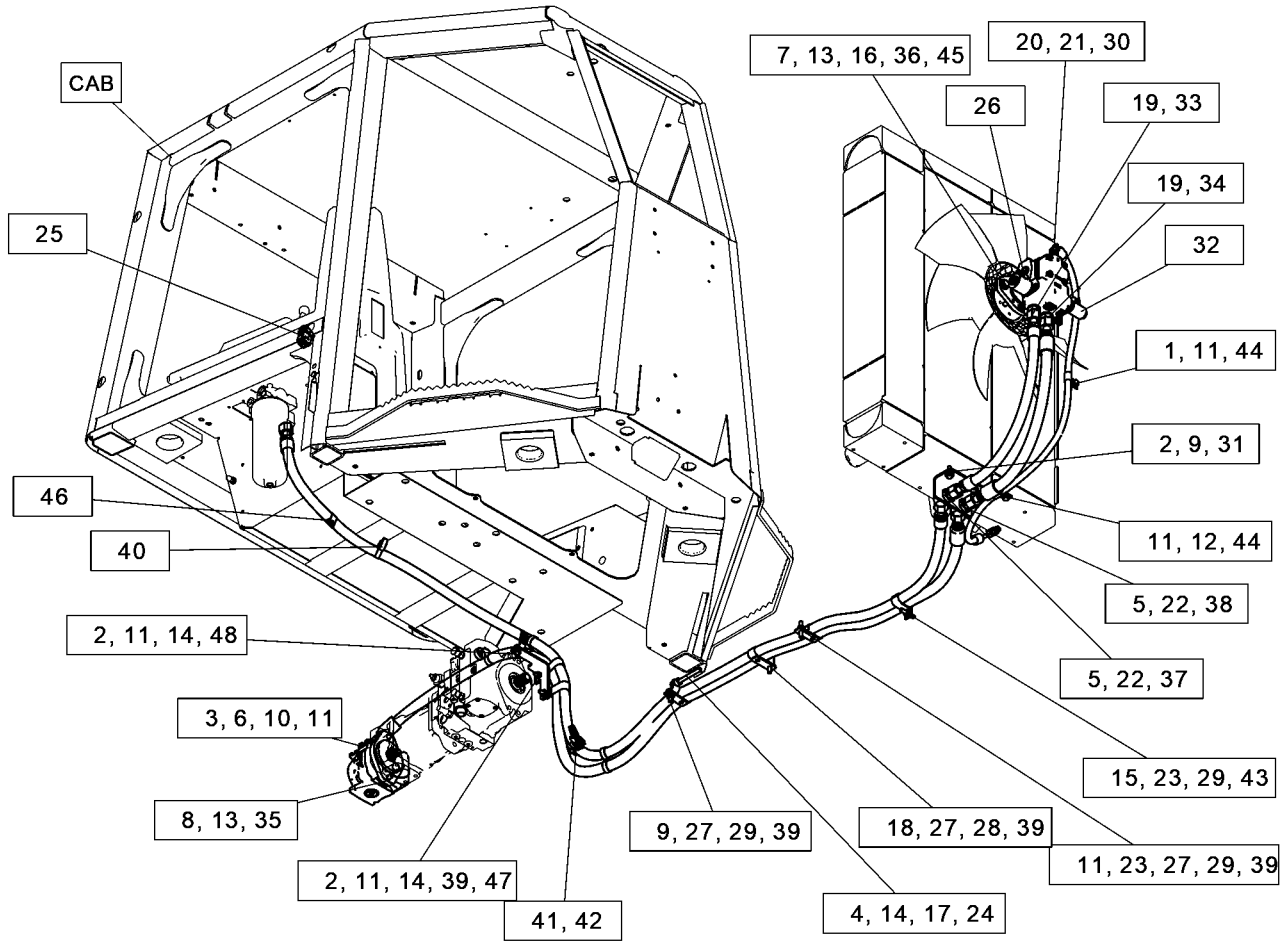

GRAPHIC #1 <END> g06366136

538-6210 LINES GP-LIFT CYLINDER

S/N: H3C1-UP; K3G1-UP
PART OF 549-8280 HYDRAULIC AR
AN ATTACHMENT

SMCS-5057, 5102 **i07862179**

NOTE	REF NO	GRAPHIC REF	PART NUMBER	QTY	PART NAME 1 2 3 4 5 6 (PRODUCT LEVEL)	SEE PAGE
	1	1	**2H-3924**	2	LOCKWASHER	
	2	1	**6V-9170**	2	NUT-BULKHEAD (1-14-THD)	
	3	1	*148-8327*	2	CONNECTOR AS	
					(EACH INCLUDES)	
		1	**3D-2824**	1	SEAL-O-RING	
		1	**6V-8637**	1	CONNECTOR	
		1	**6V-9746**	1	SEAL-O-RING	
	4	1	*319-6191*	2	TEE AS	
					(EACH INCLUDES)	
		1	**6V-9746**	1	SEAL-O-RING	
		1	**7J-9108**	2	SEAL-O-RING	
		1	**319-6190**	1	TEE-BULKHEAD	
I	5	1	**567-4526**	1	HOSE AS	
I	6	1	**567-4525**	1	HOSE AS	

I - REFER TO HYDRAULIC INFORMATION SYSTEM

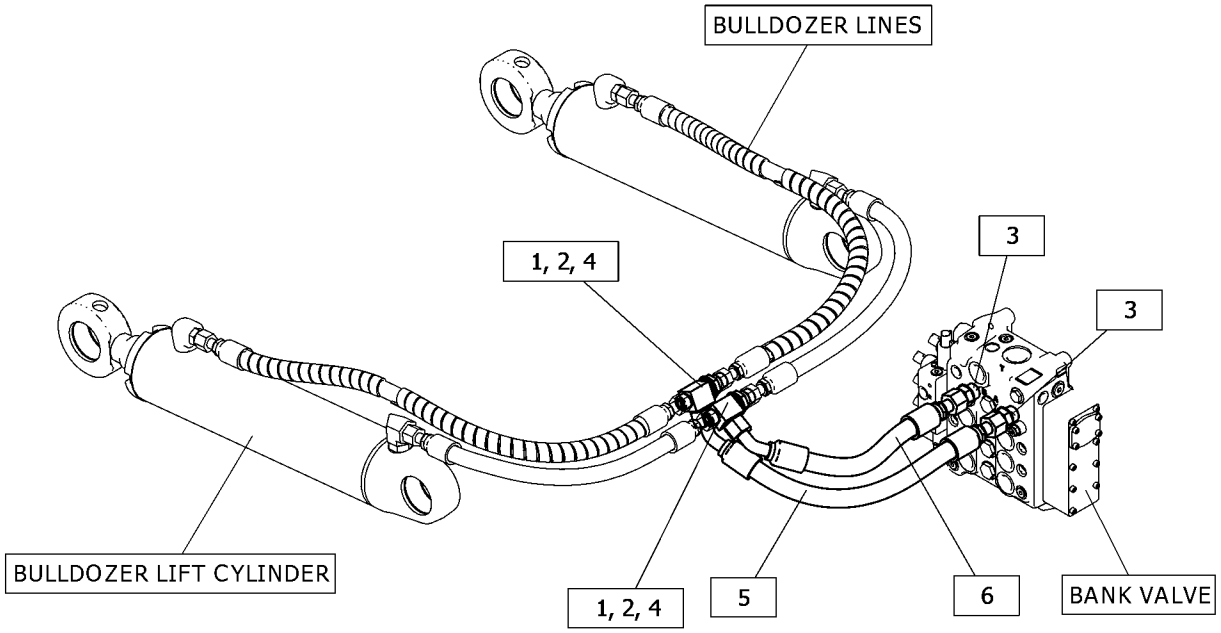

GRAPHIC #1 <END> g06461094

549-8341 LINES GP-PILOT

S/N: H3C1-UP; K3G1-UP
PART OF 549-8280 HYDRAULIC AR
AN ATTACHMENT

SMCS-5057 **i07398156**

NOTE	REF NO	GRAPHIC REF	PART NUMBER	QTY	PART NAME 1 2 3 4 5 6 (PRODUCT LEVEL)	SEE PAGE
	1	1	**204-2281**	2	STRAP-CABLE	
	2	1	**3K-0360**	1	SEAL-O-RING	
	3	1	**6V-8367**	1	LOCKWASHER	
	4	1	**6V-9168**	1	NUT (11/16-16-THD)	
M	5	1	**8T-4139**	1	BOLT (M12X1.75X30-MM)	
	6	1	**8T-4223**	1	WASHER-HARD (13.5X25.5X3-MM THK)	
	7	1	**123-4750**	1	VALVE AS-CHECK	
		1	**3J-1907**	1	SEAL-O-RING	
		1	**6V-8397**	1	SEAL-O-RING	
	8	1	*148-8325*	1	CONNECTOR AS	
		1	**3J-1907**	1	SEAL-O-RING	
		1	**4J-5477**	1	SEAL-O-RING	
		1	**6V-8641**	1	CONNECTOR	
	9	1	*148-8336*	1	CONNECTOR AS	
		1	**3J-1907**	1	SEAL-O-RING	
		1	**6V-8397**	1	SEAL-O-RING	
		1	**6V-8636**	1	CONNECTOR	
	10	1	*148-8365*	1	ELBOW AS	
		1	**3J-1907**	1	SEAL-O-RING	
		1	**6V-8398**	1	SEAL-O-RING	
		1	**8T-6876**	1	ELBOW	
Y	11	1	*160-2669*	1	ACCUMULATOR GP-HYDRAULIC (CHARGED)	357
	12	1	*164-5624*	1	ELBOW AS	
		1	**3J-1907**	1	SEAL-O-RING	
		1	**6V-8398**	1	SEAL-O-RING	
		1	**9X-2085**	1	ELBOW	
	13	1	**200-6345**	1	SADDLE-MOUNTING (DUAL SWIVEL)	
	14	1	*528-1007*	1	ADAPTER AS	
		1	**6V-8397**	1	SEAL-O-RING	
		1	**8C-8835**	1	ADAPTER-BULKHEAD	
I	15	1	**539-2474**	1	HOSE AS	
I	16	1	**539-2475**	1	HOSE AS	
	17	1	**540-4840**	1	BRACKET	
I	18	1	**550-7248**	1	HOSE AS	

I - REFER TO HYDRAULIC INFORMATION SYSTEM
M - METRIC PART
Y - SEPARATE ILLUSTRATION

549-8341 **LINES GP-PILOT (**contd.**)** **i07398156**

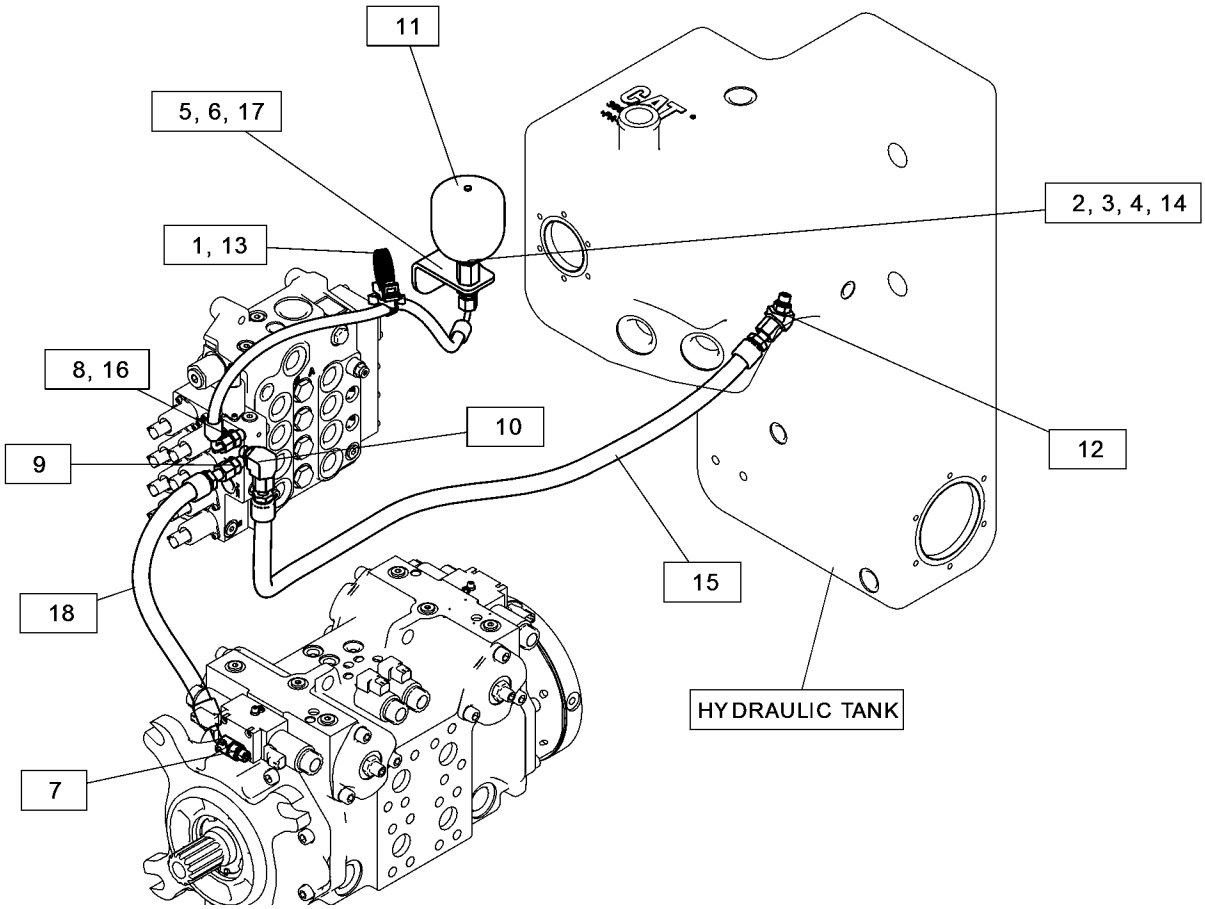

GRAPHIC #1 <END> g06317074

432-6469 LINES GP-RIPPER

S/N: JJJ1-UP
PART OF 436-1245 RIPPER AR
AN ATTACHMENT

SMCS-5057, 5352, 5356

i06810223

NOTE	REF NO	GRAPHIC REF	PART NUMBER	QTY	PART NAME 1 2 3 4 5 6 (PRODUCT LEVEL)	SEE PAGE
	1	1	**130-1977**	2	SHIELD	
	2	1	**208-6727**	1	SHIELD	
I	3	1	**432-6470**	1	HOSE AS	
I	4	1	**432-6471**	1	HOSE AS	
	5	1	**130-9192**	2	GROMMET	
	6	1	**133-6934**	1	SPACER (11X20X25-MM THK)	
	7	1	**4J-5267**	2	SEAL-O-RING	
	8	1	**5P-7466**	1	CLIP (SLOT)	
	9	1	**5P-7467**	1	CLIP (TAB)	
	10	1	**5P-8112**	1	GROMMET	
	11	1	**8T-4121**	8	WASHER-HARD (11X21X2.5-MM THK)	
M	12	1	**8T-4186**	7	BOLT (M10X1.5X40-MM)	
M	13	1	**8T-6466**	1	BOLT (M10X1.5X60-MM)	
	14	1	**9M-2904**	2	CLAMP-HOSE	

I - REFER TO HYDRAULIC INFORMATION SYSTEM
M - METRIC PART

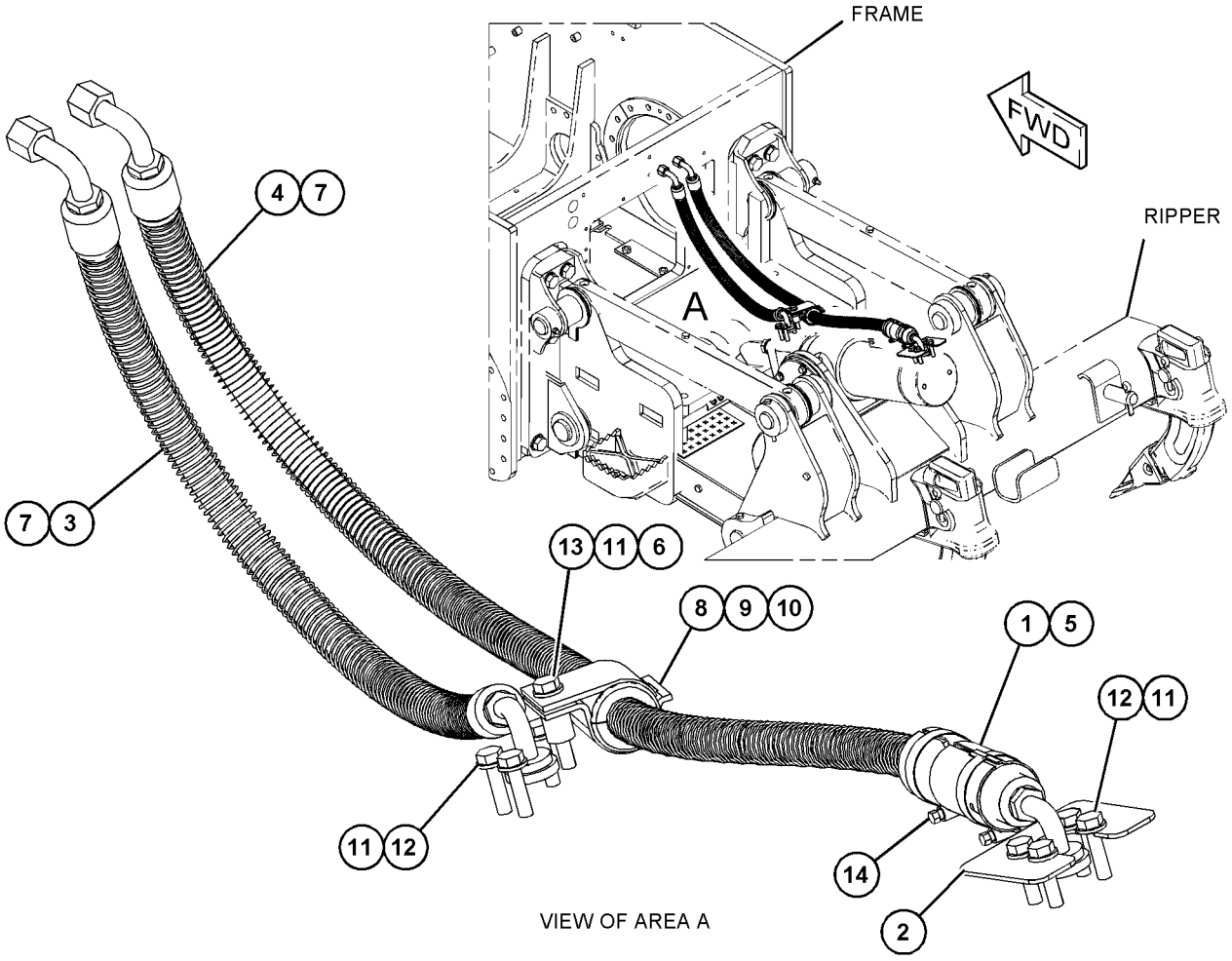

VIEW OF AREA A

GRAPHIC #1

<END>

g06016967

538-6213 LINES GP-RIPPER

S/N: H3C1-UP; K3G1-UP
PART OF 535-7632 CONTROL AR-HYDRAULIC
AN ATTACHMENT

SMCS-5057, 5352, 5356 **i07398089**

NOTE	REF NO	GRAPHIC REF	PART NUMBER	QTY	PART NAME 1 2 3 4 5 6 (PRODUCT LEVEL)	SEE PAGE
	1	1	**6V-9169**	2	NUT (13/16-16-THD)	
	2	1	**6V-9830**	2	CAP (ORFS)	
	3	1	*148-8328*	2	CONNECTOR AS	
					(EACH INCLUDES)	
		1	**3D-2824**	1	SEAL-O-RING	
		1	**6V-8398**	1	SEAL-O-RING	
		1	**6V-8633**	1	CONNECTOR	
	4	1	*148-8457*	2	UNION AS (STRAIGHT)	
					(EACH INCLUDES)	
		1	**6V-8398**	2	SEAL-O-RING	
		1	**6V-8995**	1	UNION (STRAIGHT)	
	5	1	**177-2215**	2	STRAP-DUAL CLAMP	
I	6	1	**539-4251**	1	HOSE AS	
I	7	1	**539-4252**	1	HOSE AS	

I - REFER TO HYDRAULIC INFORMATION SYSTEM

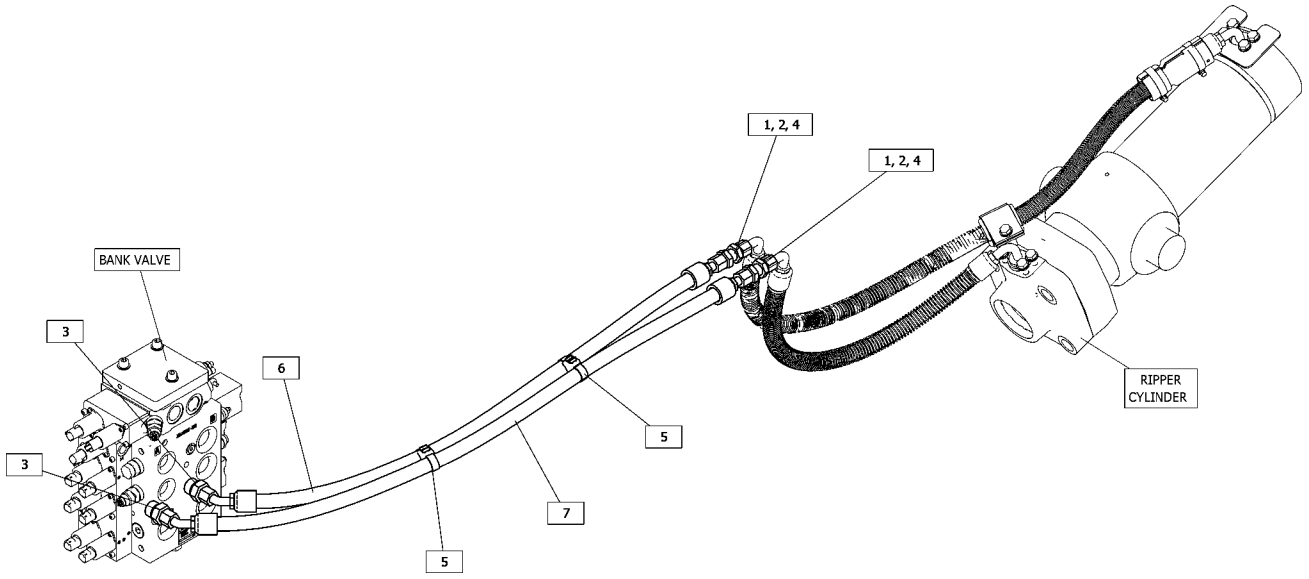

GRAPHIC #1 <END> g06317085

549-8936 LINES GP-WINCH

S/N: H3C1-UP; K3G1-UP

PART OF 549-8882 VALVE & LINES GP-HYD CONTROL

AN ATTACHMENT

SMCS-5179 **i07766197**

NOTE	REF NO	GRAPHIC REF	PART NUMBER	QTY	PART NAME 1 2 3 4 5 6 (PRODUCT LEVEL)	SEE PAGE
M	1	1	**8T-4182**	8	BOLT (M10X1.5X45-MM)	
M	2	1	**8T-4196**	8	BOLT (M10X1.5X35-MM)	
	3	1	**204-2281**	2	STRAP-CABLE	
	4	1	**1P-3702**	2	SEAL-RECTANGULAR	
	5	1	**3J-1907**	1	SEAL-O-RING	
	6	1	**5P-0046**	2	COVER	
	7	1	**5P-2370**	1	CLIP	
	8	1	**6D-4244**	2	CLIP (LOOP)	
	9	1	**6V-0852**	2	CAP-DUST	
	10	1	**6V-9829**	1	CAP (ORFS)	
	11	1	**6V-9832**	1	CAP (ORFS)	
	12	1	**7D-7233**	1	CLIP (LOOP)	
	13	1	**7M-8485**	1	SEAL-O-RING	
	14	1	**7X-7729**	3	WASHER (11X25X3-MM THK)	
	15	1	**8C-3451**	1	CAP-DUST (HYDRAULIC OIL)	
	16	1	**8T-4121**	10	WASHER-HARD (11X21X2.5-MM THK)	
M	17	1	**8T-4137**	2	BOLT (M10X1.5X20-MM)	
M	18	1	**8T-4194**	4	BOLT (M12X1.75X50-MM)	
	19	1	**8T-4983**	2	CLAMP-HOSE	
	20	1	**8T-7934**	8	WASHER-HARD (11X21X5-MM THK)	
	21	1	**8T-9403**	4	FLANGE-HALF	
	22	1	*148-8327*	1	CONNECTOR AS	
		1	**3D-2824**	1	SEAL-O-RING	
		1	**6V-8637**	1	CONNECTOR	
		1	**6V-9746**	1	SEAL-O-RING	
	23	1	*148-8335*	2	CONNECTOR AS	
					(EACH INCLUDES)	
		1	**5K-9090**	1	SEAL-O-RING	
		1	**6V-8635**	1	CONNECTOR	
		1	**7M-8485**	1	SEAL-O-RING	
	24	1	*148-8336*	1	CONNECTOR AS	
		1	**3J-1907**	1	SEAL-O-RING	
		1	**6V-8397**	1	SEAL-O-RING	
		1	**6V-8636**	1	CONNECTOR	
	25	1	*148-8341*	1	CONNECTOR AS	
		1	**3D-2824**	1	SEAL-O-RING	
		1	**6V-8713**	1	CONNECTOR	
		1	**7J-9108**	1	SEAL-O-RING	
	26	1	*148-8342*	2	CONNECTOR AS	
					(EACH INCLUDES)	
		1	**3K-0360**	1	SEAL-O-RING	
		1	**6V-8632**	1	CONNECTOR	
		1	**7J-9108**	1	SEAL-O-RING	
	27	1	*148-8360*	1	ELBOW AS	
		1	**6V-9182**	1	ELBOW	
		1	**6V-9746**	1	SEAL-O-RING	
		1	**7M-8485**	1	SEAL-O-RING	

549-8936 **LINES GP-WINCH (**contd.**)** **i07766197**

NOTE	REF NO	GRAPHIC REF	PART NUMBER	QTY	PART NAME 1 2 3 4 5 6 (PRODUCT LEVEL)	SEE PAGE
	28	1	*148-8382*	1	ELBOW AS	
		1	**3D-2824**	1	SEAL-O-RING	
		1	**7J-9108**	1	SEAL-O-RING	
		1	**8T-0404**	1	ELBOW	
	29	1	*148-8433*	1	TEE AS	
		1	**6V-8397**	2	SEAL-O-RING	
		1	**6V-9836**	1	TEE-SWIVEL	
	30	1	*148-8449*	1	TEE AS-SWIVEL	
		1	**6V-9746**	2	SEAL-O-RING	
		1	**6V-9839**	1	TEE-SWIVEL	
	31	1	*150-4049*	1	ELBOW AS	
		1	**6V-9746**	1	SEAL-O-RING	
		1	**7M-8485**	1	SEAL-O-RING	
		1	**8T-4149**	1	ELBOW	
	32	1	*164-5567*	2	COUPLER AS-QUICK DISCONNECT (MALE)	
					(EACH INCLUDES)	
		1	**6V-3965**	1	FITTING (QUICK DISCONNECT)	
		1	**214-7568**	1	SEAL-O-RING	
	33	1	*164-5590*	1	VALVE AS-FLUID SAMPLING	
		1	**3J-7354**	1	SEAL-O-RING	
		1	**8C-3446**	1	VALVE-SAMPLING	
	34	1	**173-3323**	1	ADAPTER	
	35	1	**176-5166**	4	SPACER (13X23.6X8.5-MM THK)	
	36	1	**177-2215**	1	STRAP-DUAL CLAMP	
	37	1	*180-9933*	1	ADAPTER AS	
		1	**3J-7354**	1	SEAL-O-RING	
		1	**135-9941**	1	ADAPTER	
	38	1	**200-6345**	1	SADDLE-MOUNTING (DUAL SWIVEL)	
	39	1	**203-3847**	3	BRACKET AS	
	40	1	*241-6215*	1	ELBOW AS	
		1	**3J-1907**	1	SEAL-O-RING	
		1	**6V-8076**	1	ELBOW	
YR	41	1	**249-8600**	1	PUMP GP-PISTON (WINCH)	409
M	42	1	**344-5675**	3	NUT (M10X1.5-THD)	
	43	1	**349-1178**	1	SENSOR-PRESSURE (WINCH OIL)	
	44	1	**389-5919**	1	FILM-IDENTIFICATION (HYDRAULIC & XMSN OIL FILTER)	
	45	1	**389-5922**	1	FILM-IDENTIFICATION (HYDRAULIC & XMSN OIL FILTER)	
Y	46	1	**416-8305**	1	FILTER GP-OIL (HYDRAULIC, TRANSMISSION)	369
	47	1	**428-9067**	1	BRACKET	
Y	48	1	**431-0681**	1	FILTER GP-OIL (HYDRAULIC OIL)	207
I	49	1	**457-6430**	1	HOSE AS	
	50	1	**457-6435**	1	HOSE	
I	51	1	**457-6533**	1	HOSE AS	
I	52	1	**457-6534**	1	HOSE AS	
I	53	1	**457-6535**	1	HOSE AS	
I	54	1	**551-1895**	1	HOSE AS	

I - REFER TO HYDRAULIC INFORMATION SYSTEM
M - METRIC PART
R - REMANUFACTURED PART MAY BE AVAILABLE
Y - SEPARATE ILLUSTRATION

549-8936 **LINES GP-WINCH (**contd.**)** **i07766197**

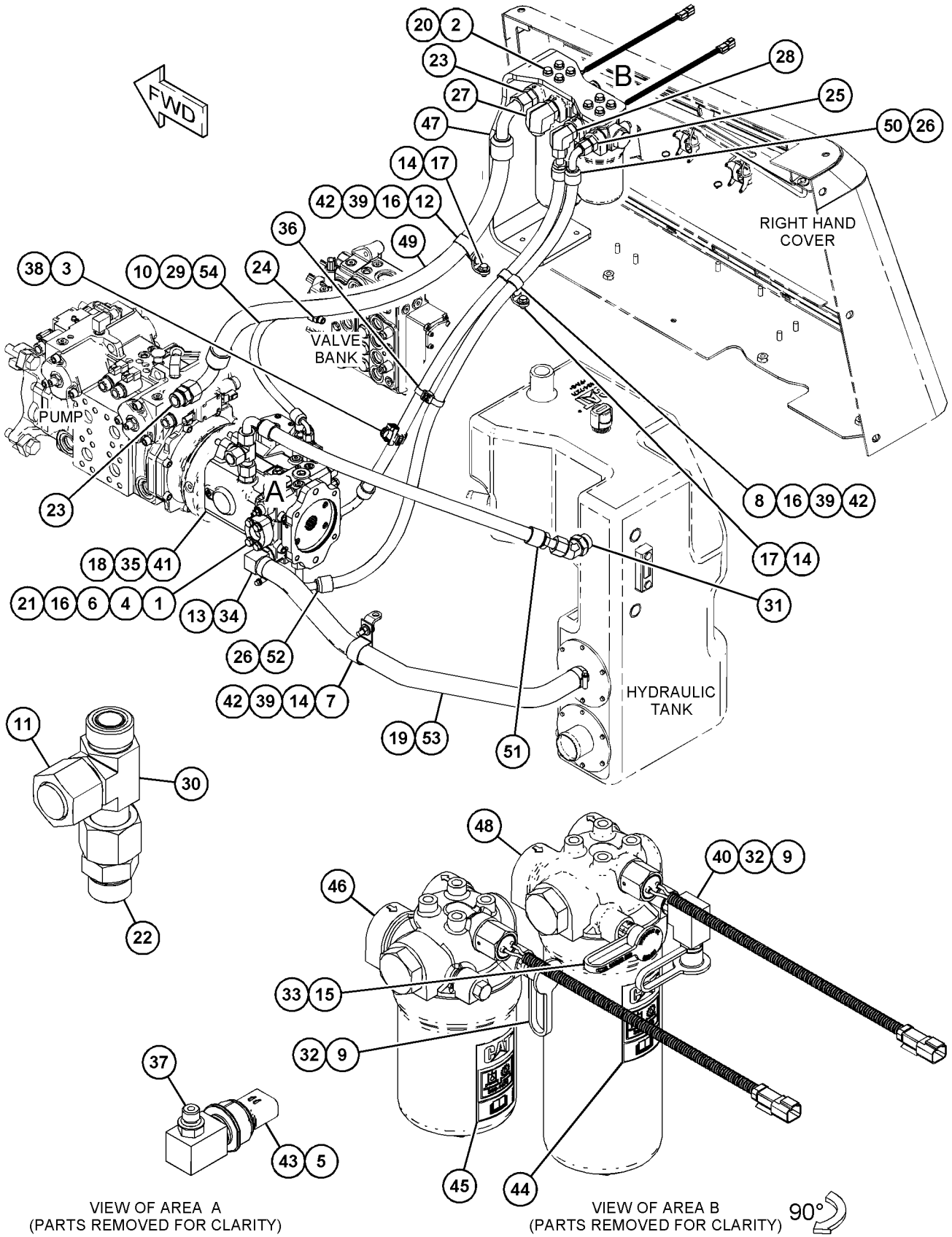

VIEW OF AREA A
(PARTS REMOVED FOR CLARITY)

VIEW OF AREA B
(PARTS REMOVED FOR CLARITY)

90°

GRAPHIC #1

<END>

g06364716

456-4196 MOTOR GP-GEAR

S/N: H3C1-UP; K3G1-UP
HYDRAULIC FAN
PART OF 457-5423, 457-5425 LINES GP-HYDRAULIC FAN
AN ATTACHMENT

SMCS-5061 **i07047659**

NOTE	REF NO	GRAPHIC REF	PART NUMBER	QTY	PART NAME 1 2 3 4 5 6 (PRODUCT LEVEL)	SEE PAGE
	1	1	**3E-4333**	1	KEY-WOODRUFF	
P	2	1	**095-0939**	1	RING-RETAINING	
	3	1	**095-0919**	1	RING-RETAINING	
					AVAILABLE REPAIR KIT(S):	
P			**380-8573**	1	KIT-SEAL (GEAR MOTOR)	
					(ALSO INCLUDES PARTS MARKED 'J' IN THE GRAPHICS)	

P - KIT MARKED P SERVICES PART(S) MARKED P

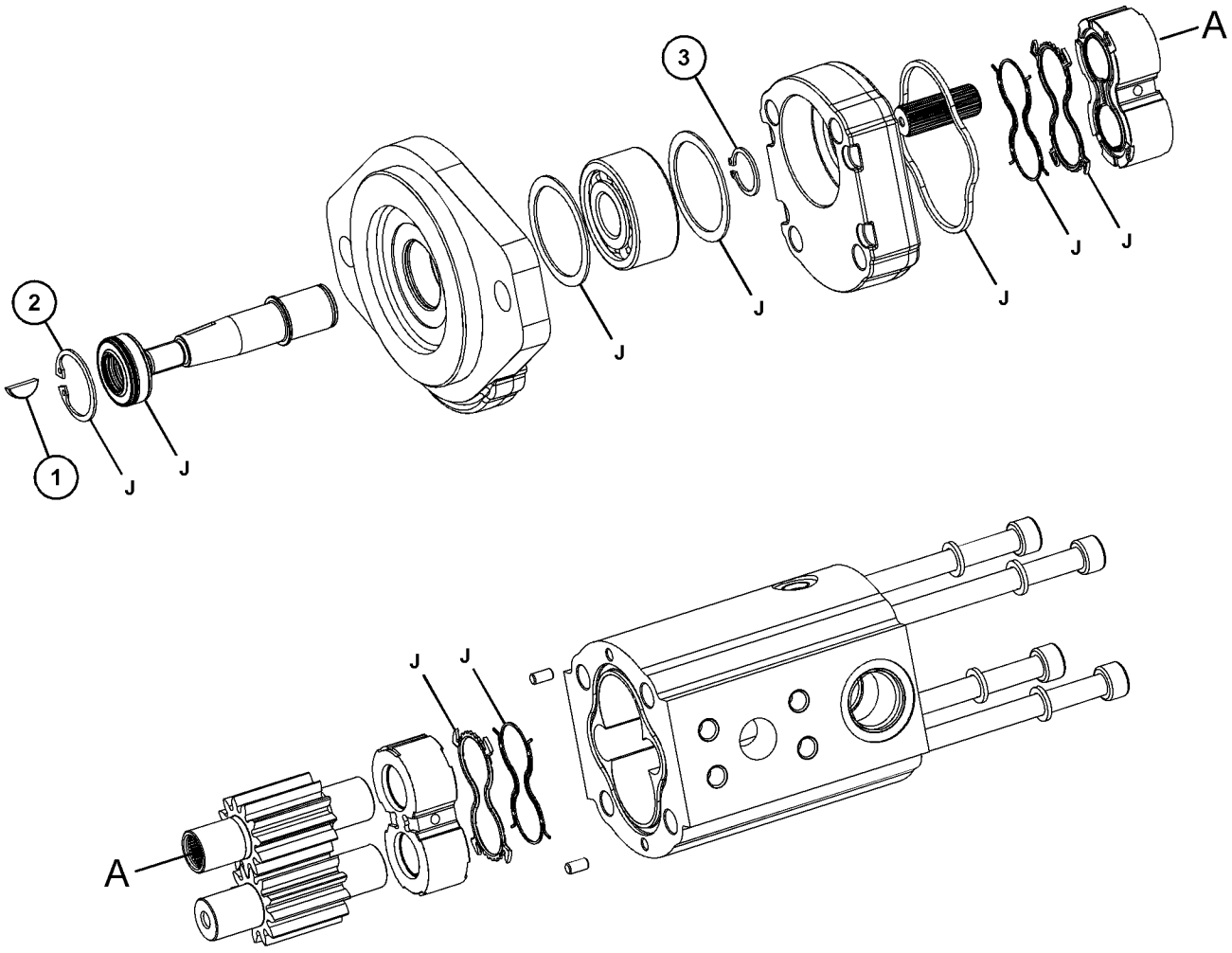

GRAPHIC #1 <END> g06085207

456-4197 MOTOR GP-GEAR–REVERSING

S/N: H3C1-UP; K3G1-UP
HYDRAULIC FAN
PART OF 457-5424, 457-5426 LINES GP-HYDRAULIC FAN
AN ATTACHMENT

SMCS-5061 **i07047726**

NOTE	REF NO	GRAPHIC REF	PART NUMBER	QTY	PART NAME 1 2 3 4 5 6 (PRODUCT LEVEL)	SEE PAGE
	1	1	**3E-4333**	1	KEY-WOODRUFF	
J	2	1	**095-0939**	1	RING-RETAINING	
	3	1	**095-0919**	1	RING-RETAINING	
	4	1	**283-8650**	8	WASHER-HARD (10.2X18.5X5-MM THK)	
M	5	1	**118-4651**	4	BOLT-SOCKET HEAD (M10X1.5X160-MM)	
	6	1	**468-9793**	1	VALVE-PRESSURE REDUCING (INLET AIR)	
					AVAILABLE REPAIR KIT(S):	
J			**380-8573**	1	KIT-SEAL (GEAR MOTOR)	
					(INCLUDES RING & SEALS)	

J - KIT MARKED J SERVICES PART(S) MARKED J
M - METRIC PART

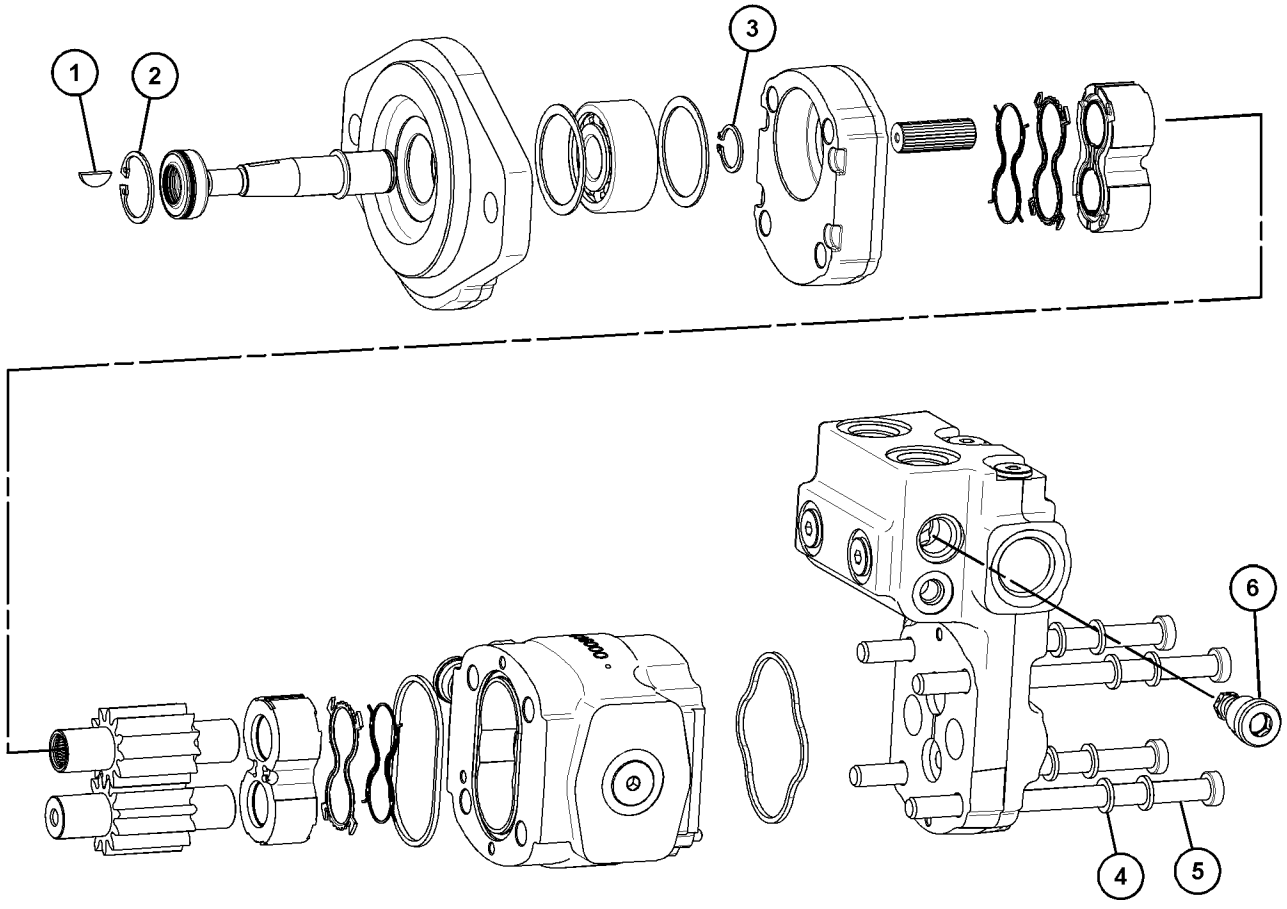

GRAPHIC #1 <END> g03795692

417-0341 MOUNTING GP-HYDRAULIC TANK

S/N: H3C1-UP; K3G1-UP
PART OF 549-8280 HYDRAULIC AR
AN ATTACHMENT

SMCS-5056 **i06715892**

NOTE	REF NO	GRAPHIC REF	PART NUMBER	QTY	PART NAME 1 2 3 4 5 6 (PRODUCT LEVEL)	SEE PAGE
	1	1	**142-8937**	1	CAP AS-FILLER (LOCKABLE)	
	2	1	**417-0344**	1	BRACKET AS	
	3	1	**417-4252**	1	HOSE	
	4	1	**424-3471**	2	BRACKET	
	5	1	**425-9685**	1	PLATE AS	
	6	1	**463-3324**	1	FILM-IDENTIFICATION (DIAGNOSTIC) (DIAGNOSTIC)	
	7	1	**115-6433**	2	WASHER (11X50X6-MM THK)	
M	8	1	**344-5675**	2	NUT (M10X1.5-THD)	
	9	1	**8T-4121**	8	WASHER-HARD (11X21X2.5-MM THK)	
M	10	1	**8T-4137**	6	BOLT (M10X1.5X20-MM)	
M	11	1	**8T-4139**	2	BOLT (M12X1.75X30-MM)	
	12	1	**8T-4223**	2	WASHER-HARD (13.5X25.5X3-MM THK)	
M	13	1	**8T-6408**	2	BOLT (M10X1.5X160-MM)	
	14	1	**8T-6703**	2	CLAMP-HOSE	

M - METRIC PART

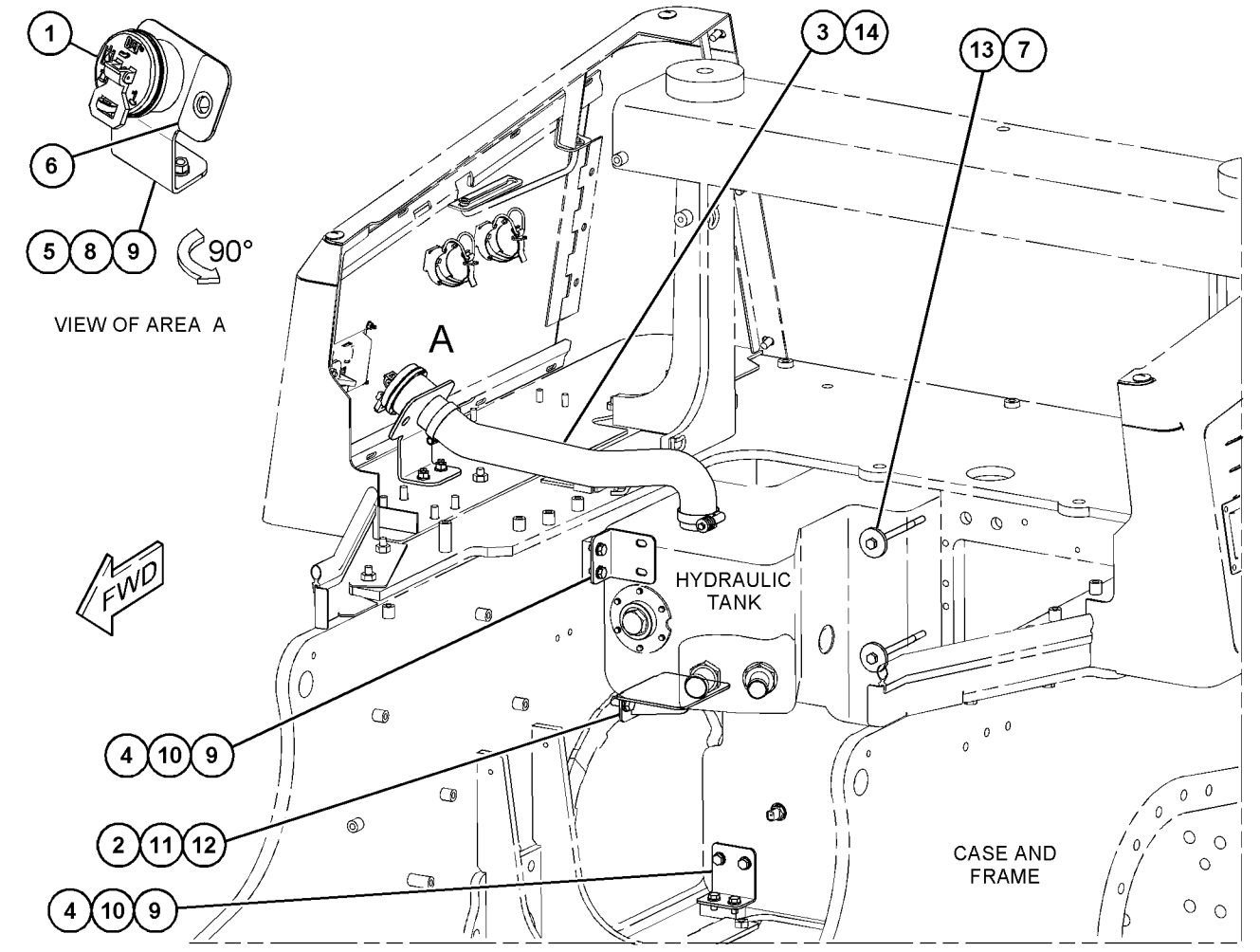

GRAPHIC #1 <END> g06017170

538-5000 MOUNTING GP-VALVE

S/N: H3C1-UP; K3G1-UP
PART OF 549-8280 HYDRAULIC AR
AN ATTACHMENT

SMCS-5051 **i07777398**

NOTE	REF NO	GRAPHIC REF	PART NUMBER	QTY	PART NAME 1 2 3 4 5 6 (PRODUCT LEVEL)	SEE PAGE
M	1	1	**8T-4195**	2	BOLT (M10X1.5X30-MM)	
M	2	1	**8T-5005**	3	BOLT (M10X1.5X70-MM)	
	3	1	**7X-7729**	3	WASHER (11X25X3-MM THK)	
	4	1	**8T-7934**	4	WASHER-HARD (11X21X5-MM THK)	
M	5	1	**8T-4136**	2	BOLT (M10X1.5X25-MM)	
	6	1	**326-4516**	4	TIE-CABLE	
	7	1	**468-0025**	1	BRACKET AS	
	8	1	**539-3006**	1	PLATE AS	

M - METRIC PART

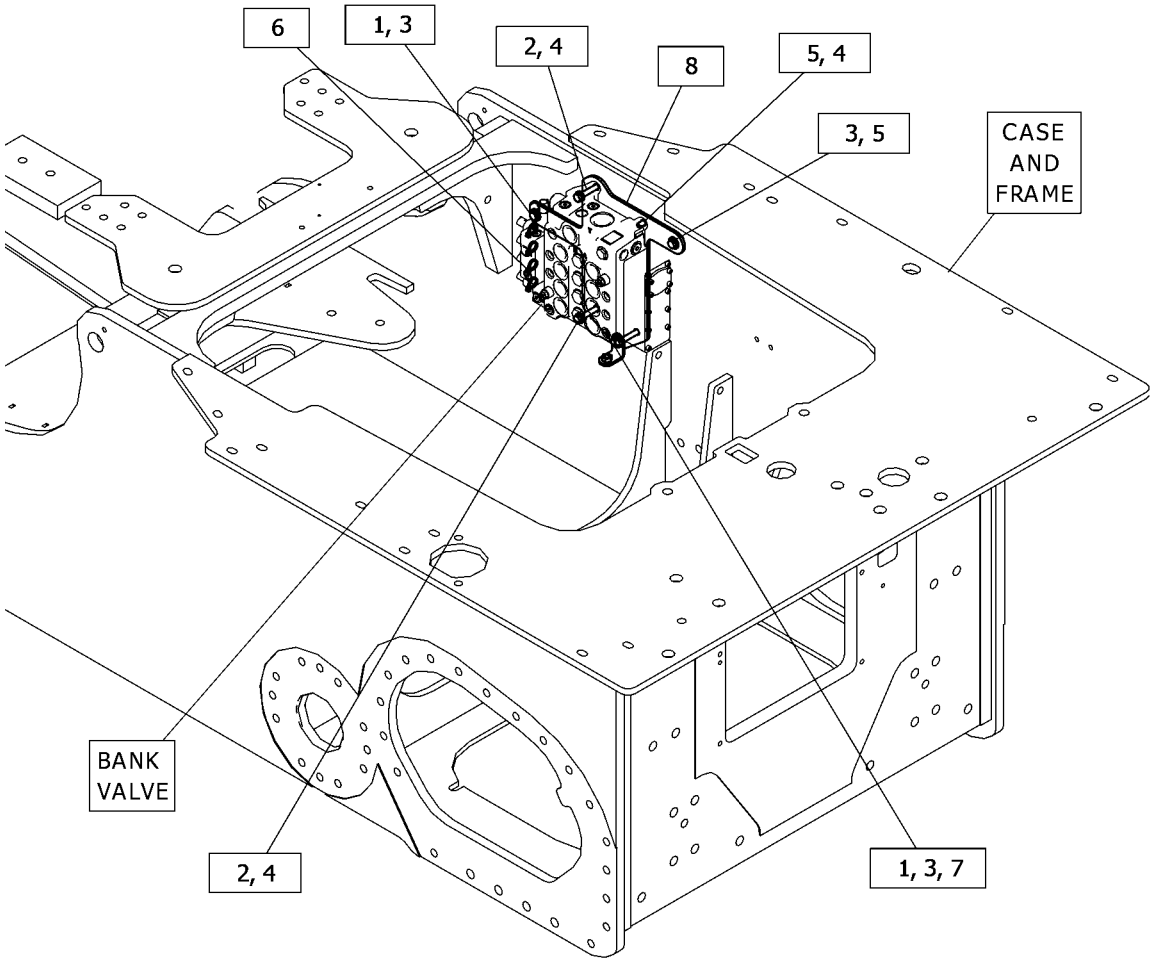

GRAPHIC #1 <END> g06422320

240-1506 PIN GP-CYLINDER

S/N: H3C1-UP; K3G1-UP
PART OF 387-2300 C-FRAME GP-POWER ANGLING
AN ATTACHMENT

SMCS-6068 **i05892048**

NOTE	REF NO	GRAPHIC REF	PART NUMBER	QTY	PART NAME 1 2 3 4 5 6 (PRODUCT LEVEL)	SEE PAGE
	1	1	**3G-8932**	2	PIN	
	2	1	**4T-0231**	2	RETAINER	
	3	1	**269-4215**	4	SPACER (45X50X13-MM THK)	
	4	1	**8T-4223**	2	WASHER-HARD (13.5X25.5X3-MM THK)	
M	5	1	**8T-4956**	2	BOLT (M12X1.75X35-MM)	

M - METRIC PART

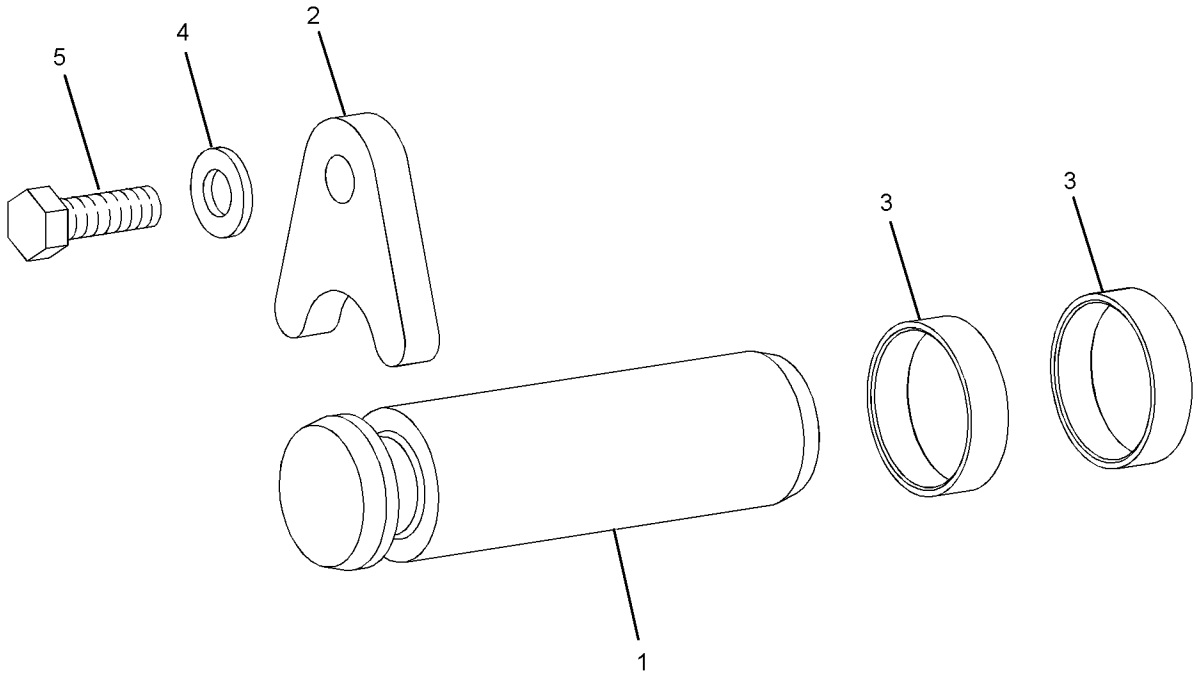

GRAPHIC #1 <END> g01204503

540-4707 PLUG GP-CONTROL VALVE

S/N: H3C1-UP; K3G1-UP
PART OF 535-7633 CONTROL AR-HYDRAULIC
AN ATTACHMENT

SMCS-5051, 5086 **i08009475**

NOTE	REF NO	GRAPHIC REF	PART NUMBER	QTY	PART NAME 1 2 3 4 5 6 (PRODUCT LEVEL)	SEE PAGE
	1	1	**142-2709**	2	PLUG	
	2	1	*148-8408*	2	PLUG AS	
					(EACH INCLUDES)	
		1	**3D-2824**	1	SEAL-O-RING	
		1	**9S-4183**	1	PLUG (1-1/16-12-THD)	

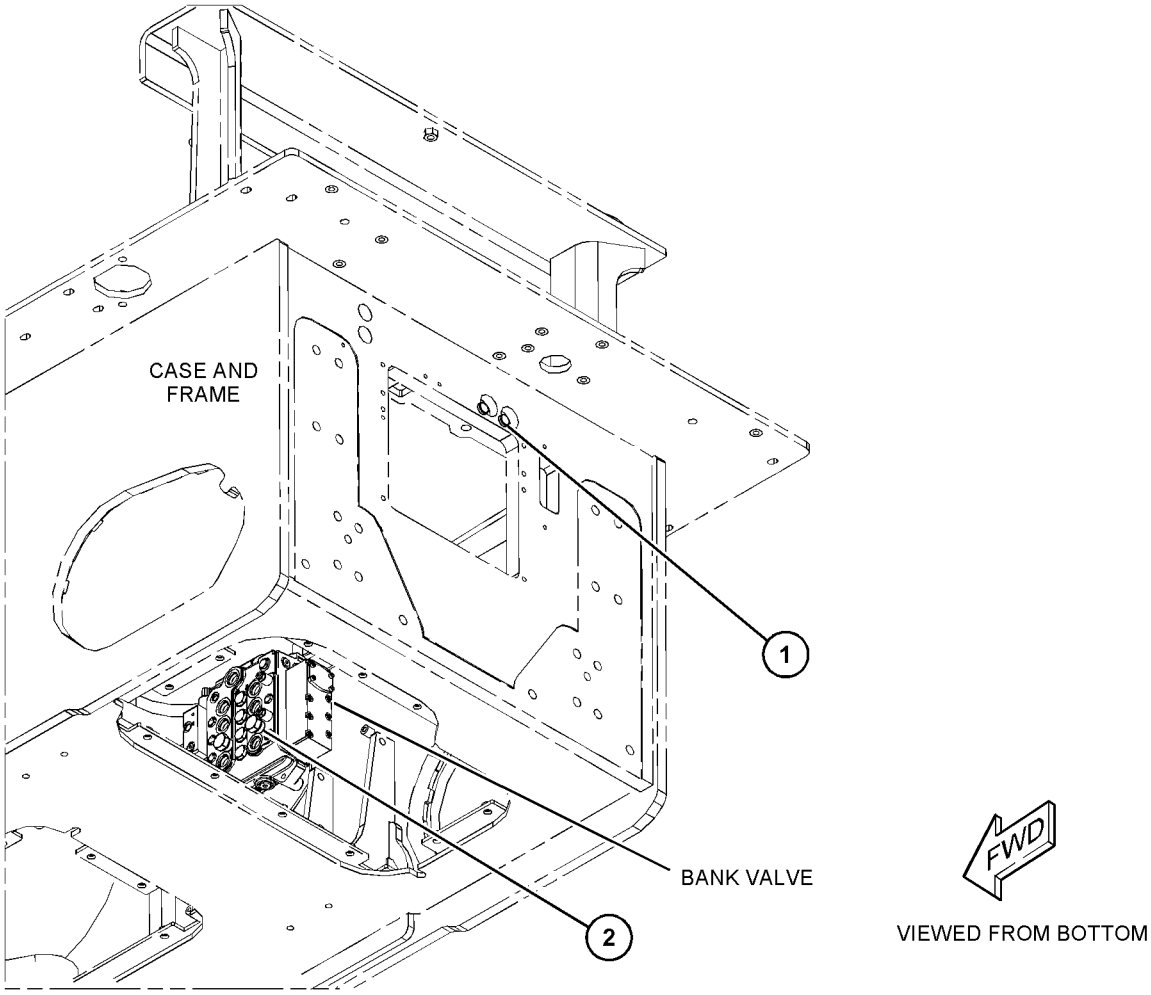

GRAPHIC #1 <END> g06543565

549-8324 PUMP & LINES AR

S/N: H3C1-UP; K3G1-UP
PART OF 549-6773, 549-6775 HYDRAULIC AR
AN ATTACHMENT

SMCS-5057, 5084

i07398163

NOTE	PART NUMBER	QTY	PART NAME 1 2 3 4 5 6 (PRODUCT LEVEL)	SEE PAGE
Y	*457-5420*	1	LINES GP-CHARGE PRESSURE	226
Y	*549-8934*	1	PUMP & LINES GP	405
Y	**398-7420**	1	TANK GP-HYDRAULIC	417
	507-1295	1	VALVE GP-BANK 4	

Y - SEPARATE ILLUSTRATION

<END>

549-8934 PUMP & LINES GP

S/N: H3C1-UP; K3G1-UP
PART OF 549-8324 PUMP & LINES AR
AN ATTACHMENT

SMCS-5057, 5084 **i07398170**

NOTE	REF NO	GRAPHIC REF	PART NUMBER	QTY	PART NAME 1 2 3 4 5 6 (PRODUCT LEVEL)	SEE PAGE
M	1	1	**8T-4183**	8	BOLT (M12X1.75X40-MM)	
	2	1	**204-2281**	8	STRAP-CABLE	
	3	1	**1P-3709**	1	SEAL-RECTANGULAR	
	4	1	**6D-3479**	1	CLIP (LOOP)	
	5	1	**6V-0852**	2	CAP-DUST	
	6	1	**6V-9168**	1	NUT (11/16-16-THD)	
	7	1	**7X-3391**	4	WASHER-HARD (13.5X32X6-MM THK)	
	8	1	**7X-3392**	4	WASHER-HARD (13.5X22.5X3-MM THK)	
	9	1	**8T-4121**	1	WASHER-HARD (11X21X2.5-MM THK)	
M	10	1	**8T-4137**	1	BOLT (M10X1.5X20-MM)	
	11	1	**8T-4984**	2	CLAMP-HOSE	
	12	1	**099-7241**	1	WASHER-HARD (19X34X3-MM THK)	
	13	1	**121-0530**	1	FITTING AS-HYDRAULIC (QUICK DISCONNECT)	
		1	**6V-8397**	1	SEAL-O-RING	
	14	1	*148-8326*	1	CONNECTOR AS	
		1	**3J-7354**	1	SEAL-O-RING	
		1	**6V-8397**	1	SEAL-O-RING	
		1	**6V-9872**	1	CONNECTOR	
	15	1	*148-8327*	1	CONNECTOR AS	
		1	**3D-2824**	1	SEAL-O-RING	
		1	**6V-8637**	1	CONNECTOR	
		1	**6V-9746**	1	SEAL-O-RING	
	16	1	*148-8336*	1	CONNECTOR AS	
		1	**3J-1907**	1	SEAL-O-RING	
		1	**6V-8397**	1	SEAL-O-RING	
		1	**6V-8636**	1	CONNECTOR	
	17	1	*148-8355*	1	ELBOW AS	
		1	**5K-9090**	1	SEAL-O-RING	
		1	**6V-9005**	1	ELBOW	
		1	**7M-8485**	1	SEAL-O-RING	
	18	1	*148-8357*	1	ELBOW AS	
		1	**5K-9090**	1	SEAL-O-RING	
		1	**6V-9008**	1	ELBOW	
		1	**7M-8485**	1	SEAL-O-RING	
	19	1	*150-4049*	1	ELBOW AS	
		1	**6V-9746**	1	SEAL-O-RING	
		1	**7M-8485**	1	SEAL-O-RING	
		1	**8T-4149**	1	ELBOW	
	20	1	*164-5567*	1	COUPLER AS-QUICK DISCONNECT (MALE)	
		1	**6V-3965**	1	FITTING (QUICK DISCONNECT)	
		1	**214-7568**	1	SEAL-O-RING	
	21	1	**200-6345**	4	SADDLE-MOUNTING (DUAL SWIVEL)	
	22	1	*205-3692*	1	ELBOW AS	
		1	**2M-9780**	1	SEAL-O-RING	
		1	**6V-8397**	1	SEAL-O-RING	
		1	**9X-2134**	1	ELBOW	
YR	23	1	**260-6781**	1	PUMP GP-PISTON & GEAR (FRONT)	411

549-8934 **PUMP & LINES GP** (contd.) **i07398170**

NOTE	REF NO	GRAPHIC REF	PART NUMBER	QTY	PART NAME 1 2 3 4 5 6 (PRODUCT LEVEL)	SEE PAGE
	24	1	**282-1825**	1	TUBE AS	
	25	1	**457-6426**	1	HOSE	
I	26	1	**457-6427**	1	HOSE AS	
I	27	1	**539-3163**	1	HOSE AS	
I	28	1	**550-7246**	1	HOSE AS	
I	29	1	**550-7247**	1	HOSE AS	

I - REFER TO HYDRAULIC INFORMATION SYSTEM
M - METRIC PART
R - REMANUFACTURED PART MAY BE AVAILABLE
Y - SEPARATE ILLUSTRATION

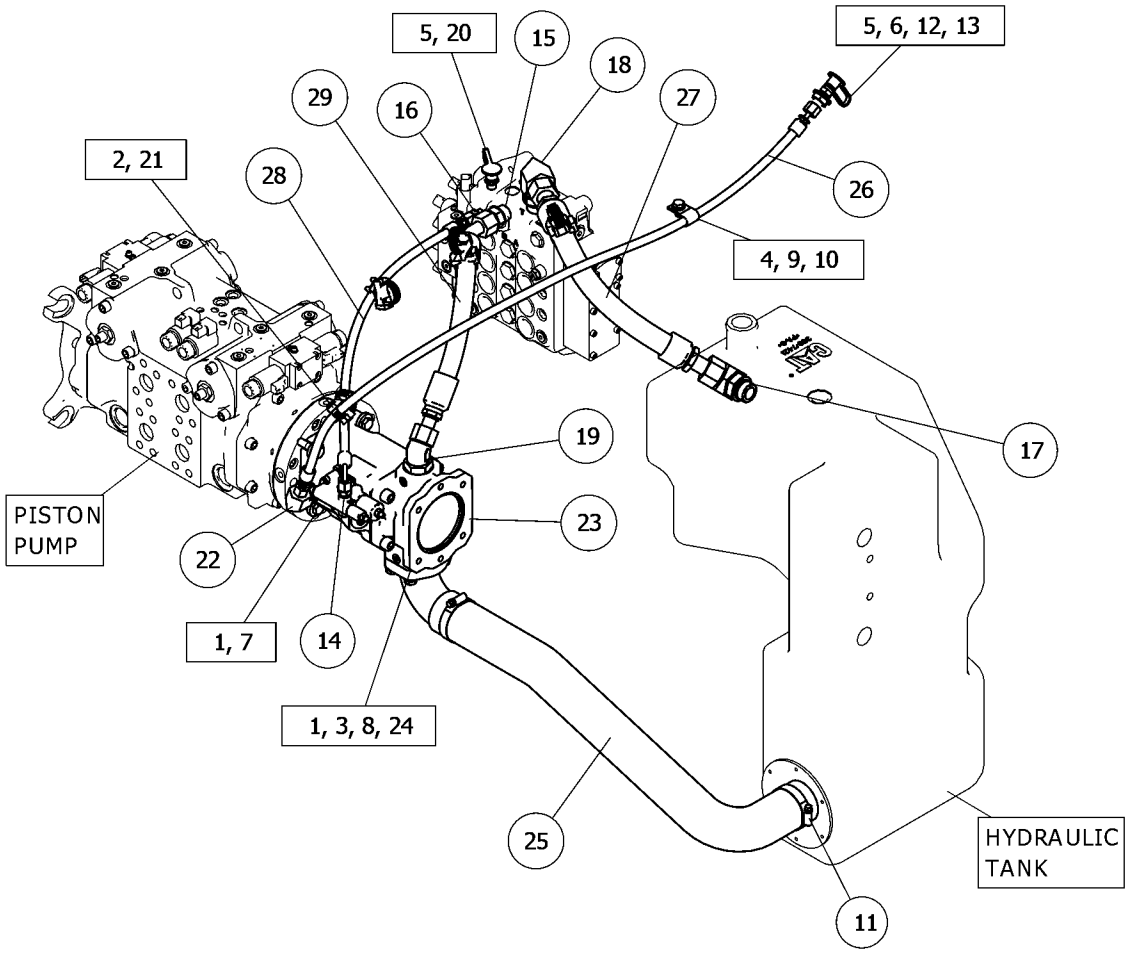

GRAPHIC #1 <END> g06322314

277-6557 PUMP GP-CHARGE

S/N: H3C1-UP; K3G1-UP
PART OF 249-8600 PUMP GP-PISTON
AN ATTACHMENT

SMCS-3204 **i05940218**

NOTE	REF NO	GRAPHIC REF	PART NUMBER	QTY	PART NAME 1 2 3 4 5 6 (PRODUCT LEVEL)	SEE PAGE
	1	1	**179-0464**	2	SEAL-O-RING	
	2	1	**277-6624**	1	PLATE-WEAR	
	3	1	**1T-1068**	1	SEAL-O-RING	
	4	1	**278-4956**	1	SHAFT-DRIVE	
	5	1	**278-4957**	1	KEY-SQUARE	
M	6	1	**122-3151**	4	BOLT (M8X1.25X35-MM)	
	7	1	**192-3282**	1	BUSHING-BEARING	
	8	1	**246-5804**	2	PLUG	
	9	1	**7J-6285**	1	SEAL-O-RING	

M - METRIC PART

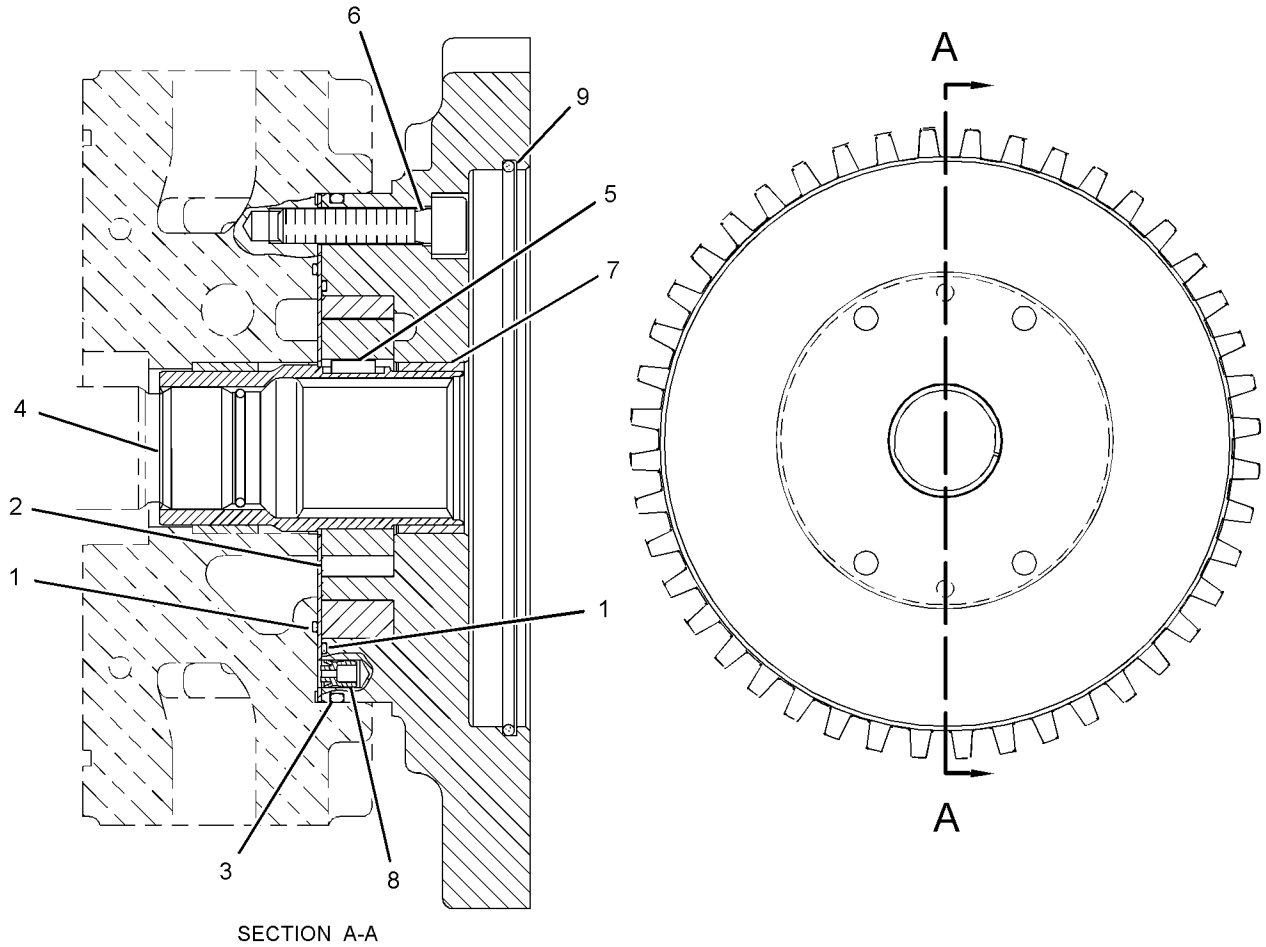

SECTION A-A

GRAPHIC #1 <END> g01203759

456-3318 PUMP GP-GEAR–HYDRAULIC FAN

S/N: H3C1-UP; K3G1-UP

PART OF 457-5423, 457-5424, 457-5425, 457-5426 LINES GP-HYDRAULIC FAN AN ATTACHMENT

SMCS-5073 **i07044160**

NOTE	REF NO	GRAPHIC REF	PART NUMBER	QTY	PART NAME 1 2 3 4 5 6 (PRODUCT LEVEL)	SEE PAGE
	1	1	**271-2360**	4	WASHER-HARD (15X22X2.5-MM THK)	
M	2	1	**150-5866**	4	BOLT-SOCKET HEAD (M14X2X65-MM)	
					AVAILABLE REPAIR KIT(S):	
			501-6991	1	KIT-SEAL	
					(INCLUDES SEALS & BACKUP RINGS)	

M - METRIC PART

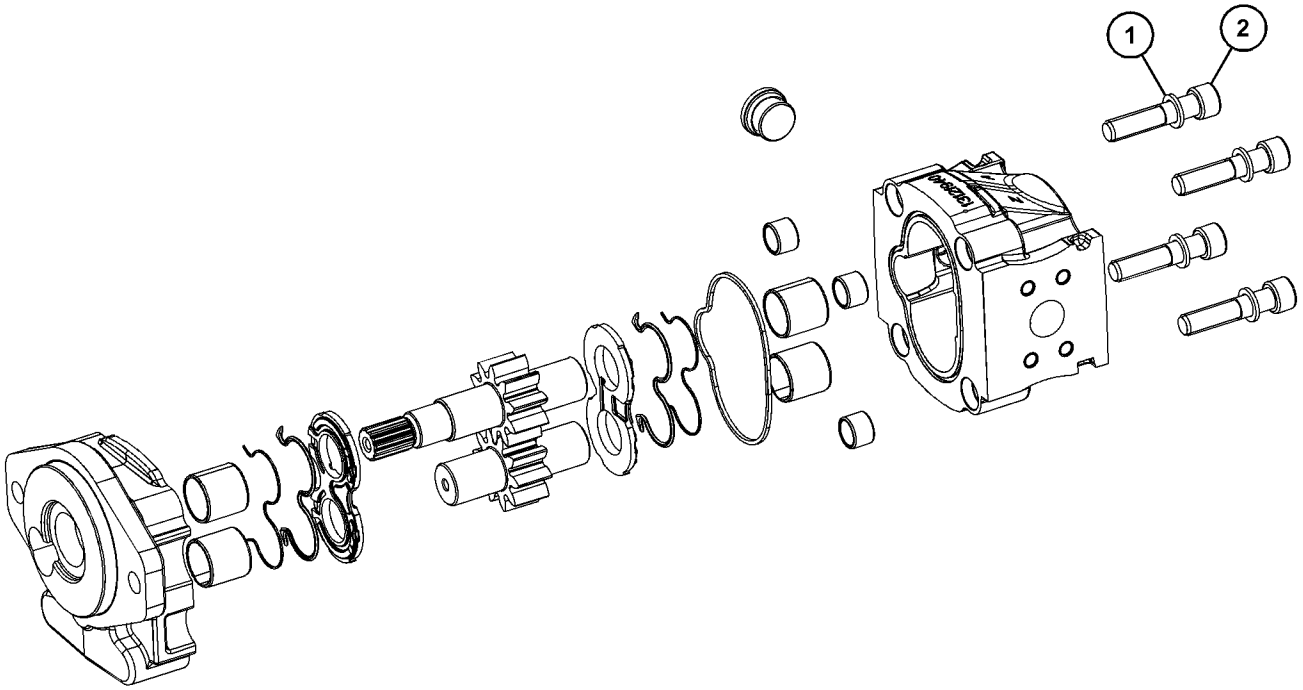

GRAPHIC #1 <END> g06085184

249-8600 PUMP GP-PISTON*R

S/N: H3C1-UP; K3G1-UP
WINCH
PART OF 549-8936 LINES GP-WINCH
AN ATTACHMENT

SMCS-5070 **i05940203**

NOTE	REF NO	GRAPHIC REF	PART NUMBER	QTY	PART NAME 1 2 3 4 5 6 (PRODUCT LEVEL)	SEE PAGE
	1	1	**9T-3928**	1	PLUG AS	
		1	**187-8001**	1	SEAL	
	2	1	**187-8001**	1	SEAL	
	3	1	**122-9718**	1	PIN	
	4	1	**1G-3180**	1	SCREW-ECCENTRIC	
M	5	1	**6E-4240**	1	NUT-SEALING (M10X1-THD)	
	6	1	**9S-8002**	3	PLUG (7/16-20-THD)	
	7	1	**3J-7354**	3	SEAL-O-RING	
Y	8	1	**335-5894**	1	VALVE GP-PUMP CONTROL (PRESSURE, FLOW COMPENSATOR) (WINCH)	424
	9	1	**167-6805**	2	PIN	
Y	10	1	*277-6551*	1	ROTATING GP-PUMP (WINCH)	414
	11	1	**6E-4350**	1	PIN	
	12	1	**9T-3726**	3	PLUG	
	13	1	**112-4629**	1	SCREW (3/4-16X0.6-IN)	
	14	1	**202-7704**	1	PLUG	
Y	15	1	**277-6553**	1	HEAD GP-PUMP (WINCH)	370
	16	1	**9S-8008**	1	PLUG (1-1/16-12-THD)	
	17	1	**6V-8978**	1	SEAL-O-RING	
	18	1	**123-7575**	1	SCREW-LOCK	
	19	1	**206-4881**	2	PLUG-ORIFICE	
	20	1	**123-7583**	1	ORIFICE	
	21	1	**087-4772**	1	PLUG-O-RING	
M	22	1	**1G-3176**	1	SCREW-LOCK	
	23	1	**9S-8004**	2	PLUG (9/16-18-THD)	
	24	1	**3J-1907**	4	SEAL-O-RING	
Y	25	1	**177-6949**	1	ACTUATOR GP-PUMP (PILOT PRESSURE CONTROL)	359
Y	26	1	**277-6557**	1	PUMP GP-CHARGE (WINCH)	407
	27	1	**3D-2824**	1	SEAL-O-RING	
	28	1	**6V-3965**	1	FITTING (QUICK DISCONNECT)	
	29	1	**6V-8636**	1	CONNECTOR	
	30	1	**6V-8397**	1	SEAL-O-RING	

M - METRIC PART
Y - SEPARATE ILLUSTRATION

249-8600 **PUMP GP-PISTON (**contd.**)** **i05940203**

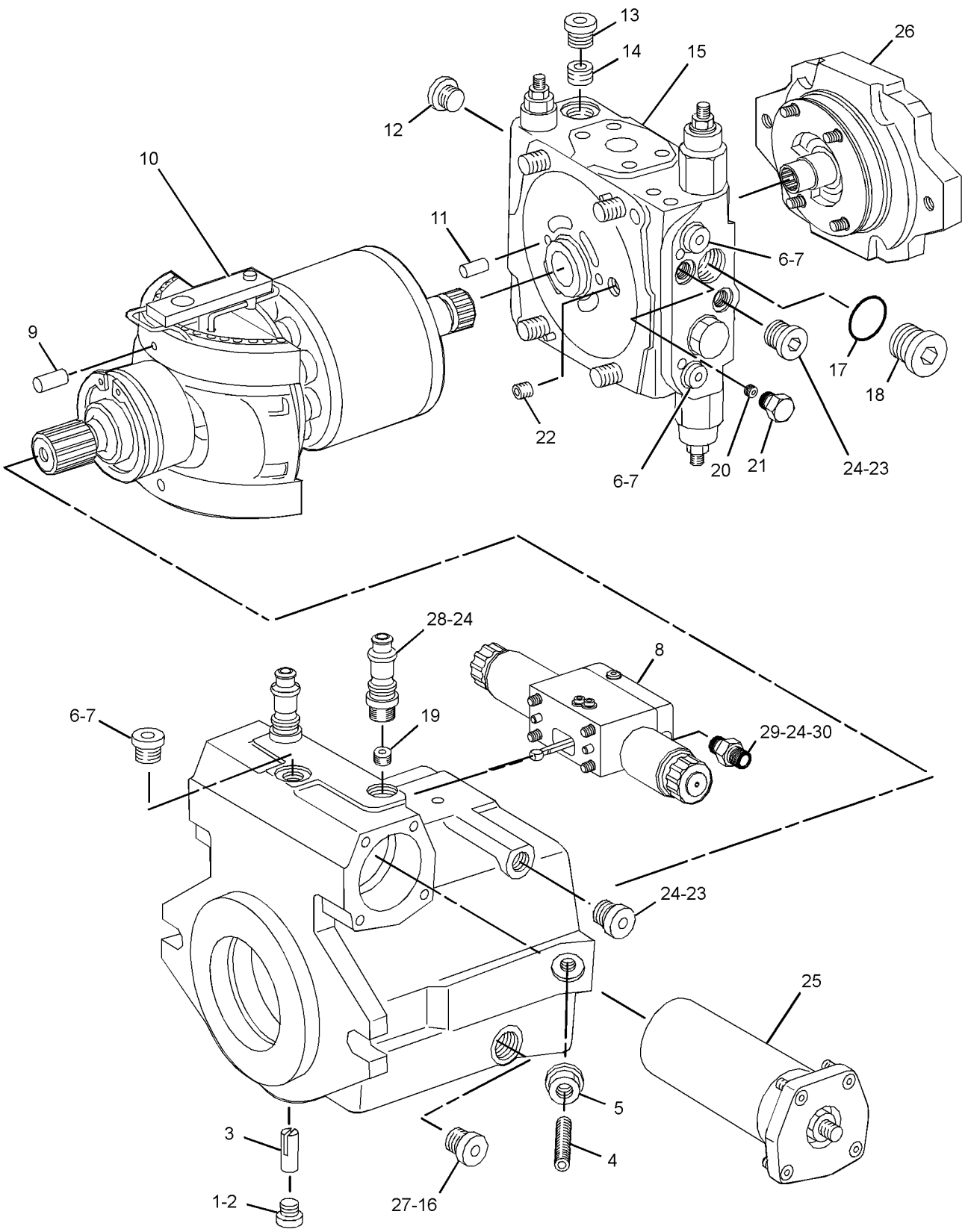

GRAPHIC #1 <END> g02540016

260-6781 PUMP GP-PISTON & GEAR—FRONT*R

S/N: H3C1-UP; K3G1-UP
IMPLEMENT
PART OF 549-8934 PUMP & LINES GP, 549-8935 PUMP & LINES GP-WINCH
AN ATTACHMENT

SMCS-5084 **i05834051**

NOTE	REF NO	GRAPHIC REF	PART NUMBER	QTY	PART NAME 1 2 3 4 5 6 (PRODUCT LEVEL)	SEE PAGE
	1	1	**180-6213**	1	RING-RETAINING	
	2	1	**168-7319**	1	SEAL-SHAFT	
M	3	1	**6R-7943**	2	SCREW (M5X0.8X15-MM)	
	4	1	**168-2197**	1	SPRING	
	5	1	**168-2198**	1	LINK-CONTROL	
	6	1	**174-9994**	1	PISTON-CONTROL	
	7	1	**8T-7525**	1	SEAL-O-RING	
	8	1	**198-5351**	1	PLUG	
	9	1	**9W-2109**	1	CONE-BEARING	
	10	1	**9W-2110**	1	CUP-TAPERED ROLLER	
M	11	1	**8T-2503**	4	BOLT-SOCKET HEAD (M14X2X35-MM)	
	12	1	**204-2799**	1	DOWEL	
	13	1	**192-7470**	1	SEAL-O-RING	
	14	1	**168-2203**	1	SHIM-SHAFT (3-MM THK)	
Y	15	1	**279-2486**	1	ROTATING GP-PUMP (IMPLEMENT)	416
	16	1	**279-2488**	1	SWASHPLATE	
	17	1	**279-2619**	1	COUPLER	
	18	1	**3P-1210**	1	CONE-BEARING	
	19	1	**227-5904**	1	SEAL-O-RING	
	20	1	**190-6507**	1	RING-STOP	
	21	1	**235-2404**	1	SHAFT	
	22	1	**120-4394**	2	PLUG-BREAK OFF	
	23	1	**168-3504**	2	SEAL	
	24	1	**9S-8006**	1	PLUG (7/8-14-THD)	
	25	1	**2M-9780**	1	SEAL-O-RING	
Y	26	1	**285-5240**	1	VALVE GP-PUMP CONTROL (PRESSURE, FLOW COMPENSATOR)	423
	27	1	**282-0918**	1	BEARING-CRADLE	
	28	1	**282-0919**	1	BEARING-CRADLE	
	29	1	**8J-0412**	1	CUP-BEARING	
	30	1	**9X-7680**	3	SEAL-O-RING	
M	31	1	**8T-8442**	4	BOLT-SOCKET HEAD (M6X1X30-MM)	
	32	1	**9S-8002**	1	PLUG (7/16-20-THD)	
	33	1	**3J-7354**	1	SEAL-O-RING	

M - METRIC PART
Y - SEPARATE ILLUSTRATION

260-6781 **PUMP GP-PISTON & GEAR** (contd.) **i05834051**

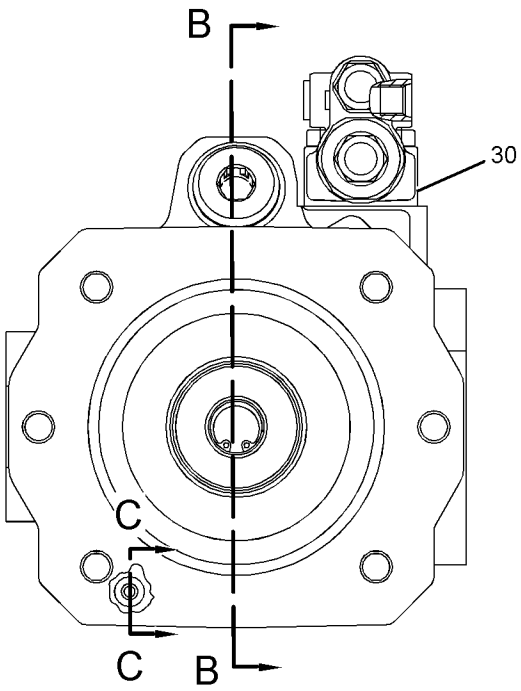

VIEW A-A

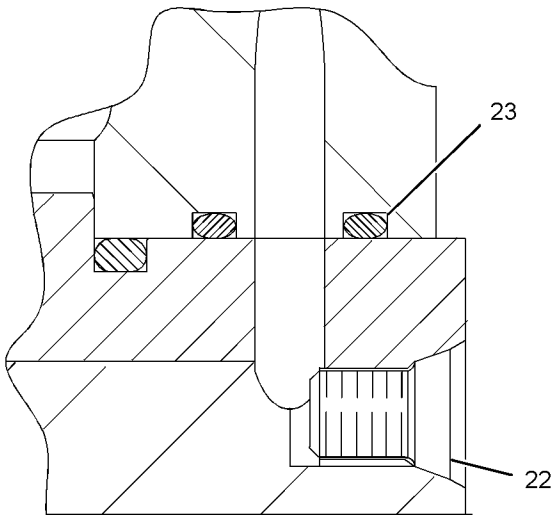

SECTION C-C

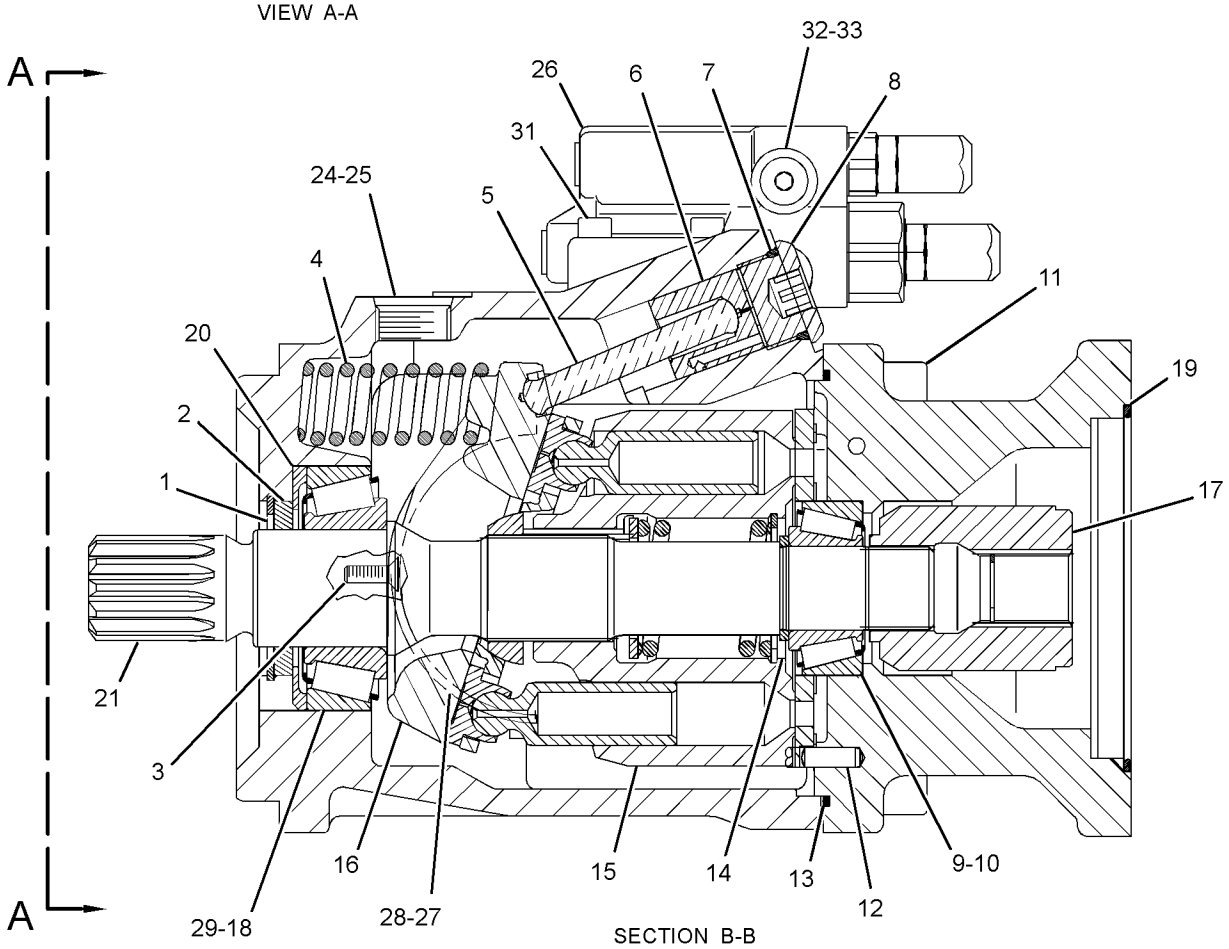

SECTION B-B

GRAPHIC #1 <END> g01296288

251-1752 ROTATING GP-PUMP

S/N: H3C1-UP; K3G1-UP
PART OF 277-6551 ROTATING GP-PUMP
AN ATTACHMENT

SMCS-5070 **i07899005**

NOTE	REF NO	GRAPHIC REF	PART NUMBER	QTY	PART NAME 1 2 3 4 5 6 (PRODUCT LEVEL)	SEE PAGE
	1	1	**117-7238**	9	PISTON	
	2	1	**117-7249**	1	PLATE-RETAINER	
	3	1	**117-7250**	1	RETAINER	
B	4	1	**117-7247**	1	SHIM (0.8-MM THK)	
B		1	**117-7245**	1	SHIM (1.2-MM THK)	
B		1	**117-7246**	1	SHIM (1-MM THK)	
B		1	**117-7248**	1	SHIM (0.6-MM THK)	
	5	1	**126-8842**	1	RING-SNAP	
	6	1	**122-9071**	1	SPRING	
	7	1	**122-9070**	2	SHIM (3-MM THK)	
	8	1	**117-7239**	1	SPRING SET	
	9	1	**126-8899**	1	BARREL	

B - USE AS REQUIRED

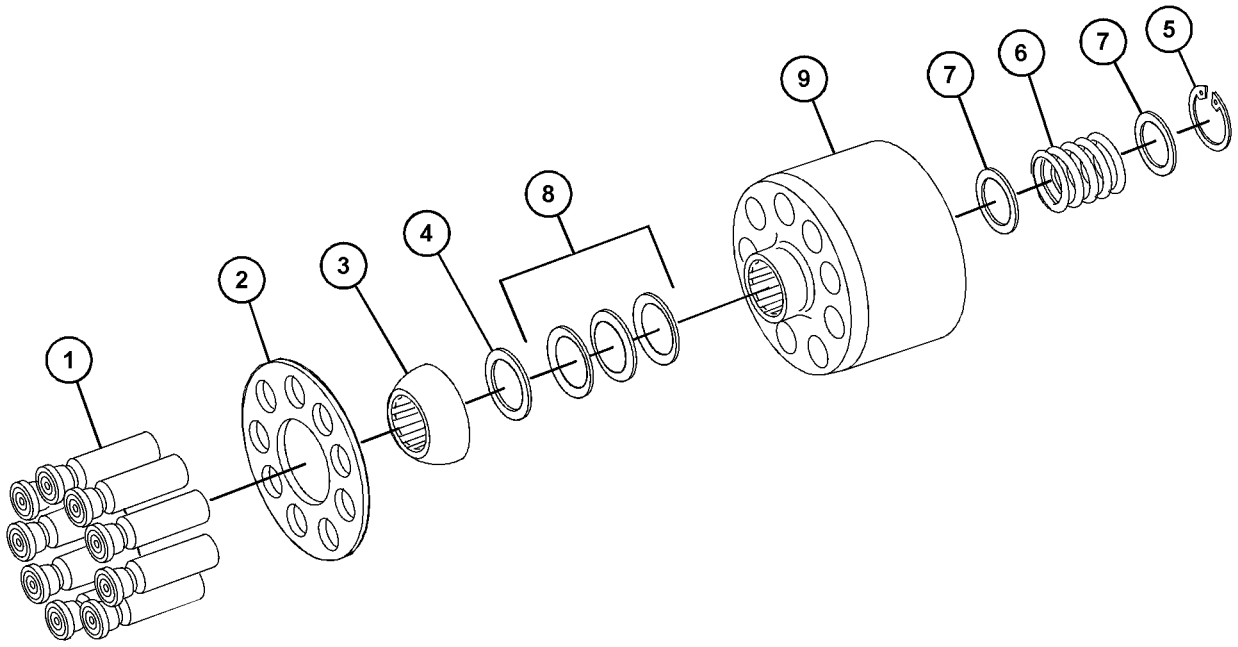

GRAPHIC #1 <END> g06301347

277-6551 ROTATING GP-PUMP

S/N: H3C1-UP; K3G1-UP
WINCH
PART OF 249-8600 PUMP GP-PISTON
AN ATTACHMENT

SMCS-5070 **i07899003**

NOTE	REF NO	GRAPHIC REF	PART NUMBER	QTY	PART NAME 1 2 3 4 5 6 (PRODUCT LEVEL)	SEE PAGE
	1	1	**212-4483**	1	RING-RETAINING	
	2	1	**194-1983**	1	SEAL-SHAFT	
	3	1	**126-9587**	1	RING-RETAINING	
	4	1	**178-1149**	1	SHAFT	
	5	1	**117-7251**	1	BEARING	
	6	1	**108-3565**	1	CLIP	
	7	1	**125-9134**	1	BEARING AS	
	8	1	**122-9068**	1	ROD	
	9	1	**340-5800**	1	BEARING AS-ROLLER	
	10	1	**112-4657**	1	PIN	
	11	1	**117-7241**	1	PLATE	
	12	1	**117-7240**	1	CRADLE	
	13	1	**1G-3410**	1	ROD	
	14	1	**126-8842**	1	RING-SNAP	
B	15	1	**122-9070**	2	SHIM (3-MM THK)	
	16	1	**122-9071**	1	SPRING	
	17	1	**117-7239**	1	SPRING SET	
B	18	1	**117-7245**	1	SHIM (1.2-MM THK)	
B		1	**117-7246**	1	SHIM (1-MM THK)	
B		1	**117-7247**	1	SHIM (0.8-MM THK)	
B		1	**117-7248**	1	SHIM (0.6-MM THK)	
	22	1	**117-7250**	1	RETAINER	
	23	1	**117-7249**	1	PLATE-RETAINER	
	24	1	**117-7238**	9	PISTON	
	25	1	**126-8899**	1	BARREL	
	26	1	**6E-0725**	2	ROLLER	
	27	1	**251-1803**	1	PLATE-CONTROL	
Y	28	1	**251-1752**	1	ROTATING GP-PUMP	413

B - USE AS REQUIRED
Y - SEPARATE ILLUSTRATION

277-6551 **ROTATING GP-PUMP (**contd.**)** **i07899003**

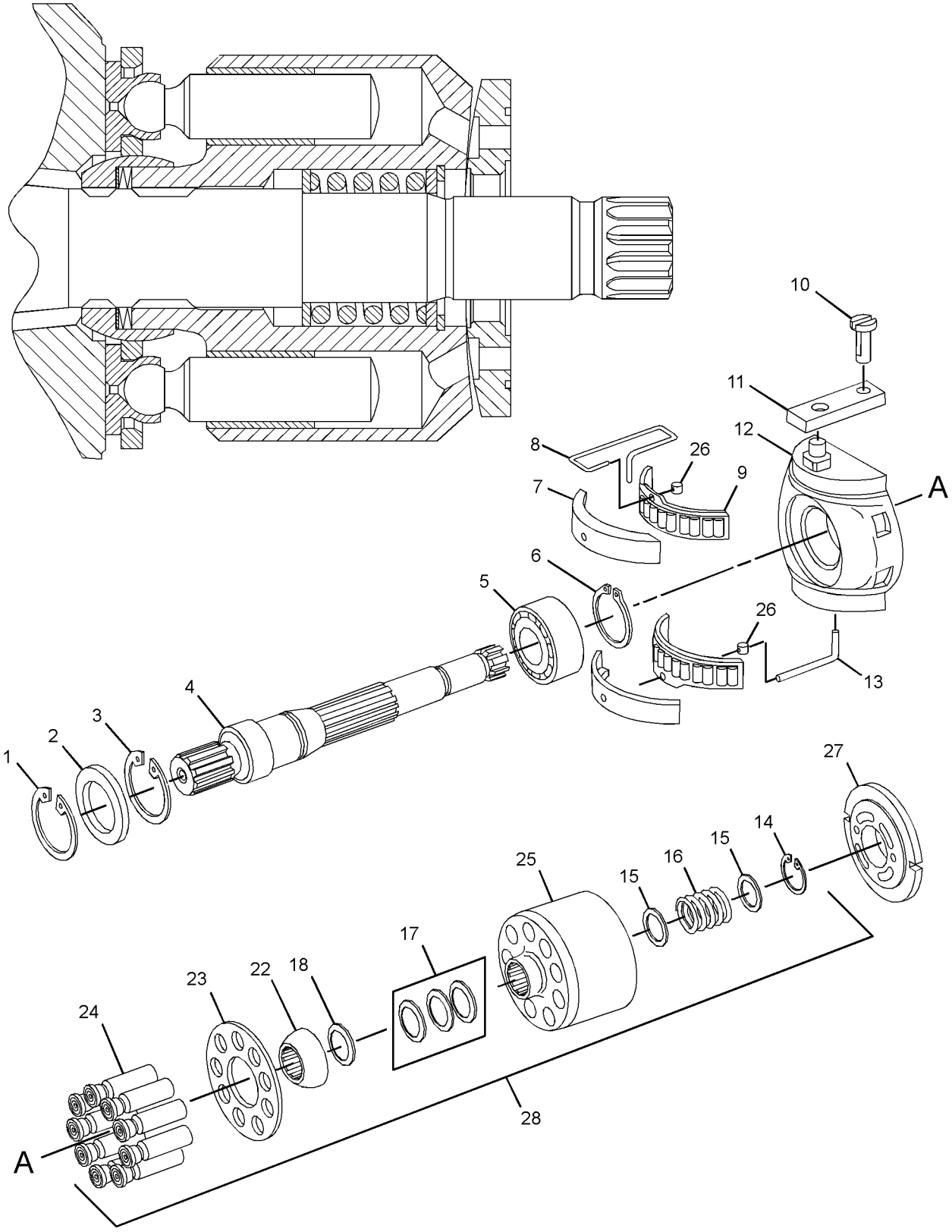

GRAPHIC #1 <END> g06472655

279-2486 ROTATING GP-PUMP

S/N: H3C1-UP; K3G1-UP
PART OF 260-6781 PUMP GP-PISTON & GEAR
AN ATTACHMENT

SMCS-5070 **i05834052**

NOTE	REF NO	GRAPHIC REF	PART NUMBER	QTY	PART NAME 1 2 3 4 5 6 (PRODUCT LEVEL)	SEE PAGE
	1	1	**168-3384**	9	PISTON AS-PUMP	
	2	1	**197-2851**	1	BARREL	
	3	1	**279-2491**	1	PLATE-PORT	
	4	1	**168-3385**	1	PLATE-RETRACTION	
	5	1	**168-3378**	1	BEARING-SPHERICAL	
	6	1	**168-3381**	1	SPRING	
	7	1	**168-3379**	3	PIN	
	8	1	**6V-7723**	1	RING-RETAINING	
	9	1	**168-3382**	1	WASHER (30X42X2.7-MM THK)	

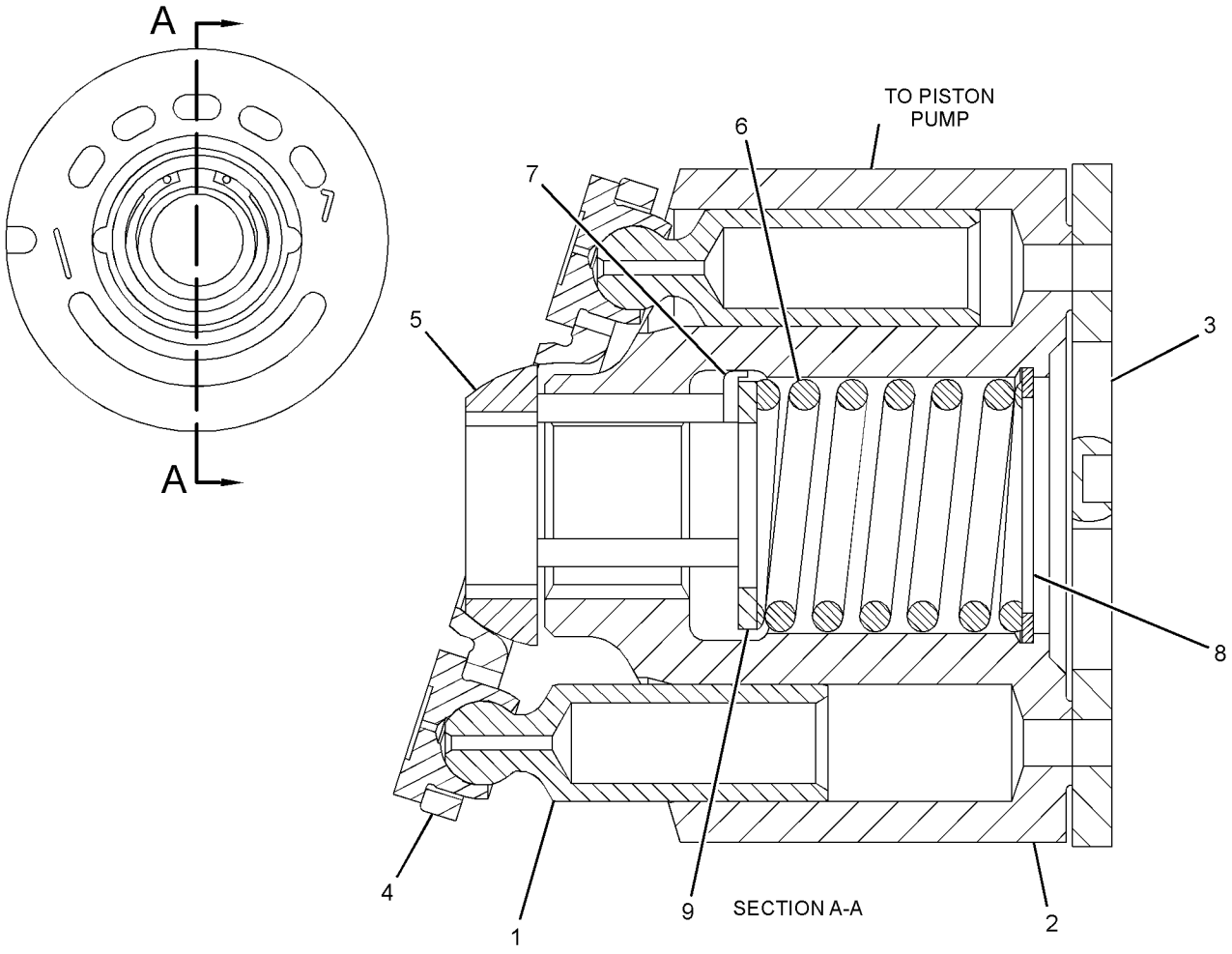

GRAPHIC #1 <END> g01355552

398-7420 TANK GP-HYDRAULIC

S/N: H3C1-UP; K3G1-UP
65-L (17.2-US GAL)
PART OF 549-8324 PUMP & LINES AR
AN ATTACHMENT

SMCS-5056 **i06701962**

NOTE	REF NO	GRAPHIC REF	PART NUMBER	QTY	PART NAME 1 2 3 4 5 6 (PRODUCT LEVEL)	SEE PAGE
	1	1	**2M-9780**	1	SEAL-O-RING	
M	2	1	**7I-2273**	12	BOLT (M5X0.8X16-MM)	
	3	1	**8T-0328**	12	WASHER-HARD (5.5X10X1-MM THK)	
	4	1	**8T-7524**	1	SEAL-O-RING	
	5	1	**101-4639**	1	VALVE-DRAIN (HYDRAULIC TANK) (HYDRAULIC TANK)	
	6	1	**110-7753**	1	SEAL-O-RING	
	7	1	**132-3056**	1	SEAL-O-RING	
	8	1	*148-8407*	1	PLUG AS	
		1	**9S-4191**	1	PLUG (9/16-18-THD)	
		1	**3J-1907**	1	SEAL-O-RING	
	9	1	**256-6454**	1	SENSOR-TEMPERATURE (2-PIN) (HYDRAULIC OIL)	
	10	1	**265-5644**	1	GAUGE GP-SIGHT (HYDRAULIC TANK OIL)	
	11	1	**322-9703**	1	SCREEN-SUCTION (HYDRAULIC TANK)	
	13	1	**422-3133**	1	COVER AS	
	14	1	**424-5535**	1	TUBE AS	
	15	1	**466-0886**	1	TUBE AS	
	16	1	**466-0889**	1	TUBE AS	
	17	1	**466-1627**	1	BREATHER AS (HYDRAULIC TANK)	
		1	**3D-2824**	1	SEAL-O-RING	

M - METRIC PART

398-7420 **TANK GP-HYDRAULIC (**contd.**)** **i06701962**

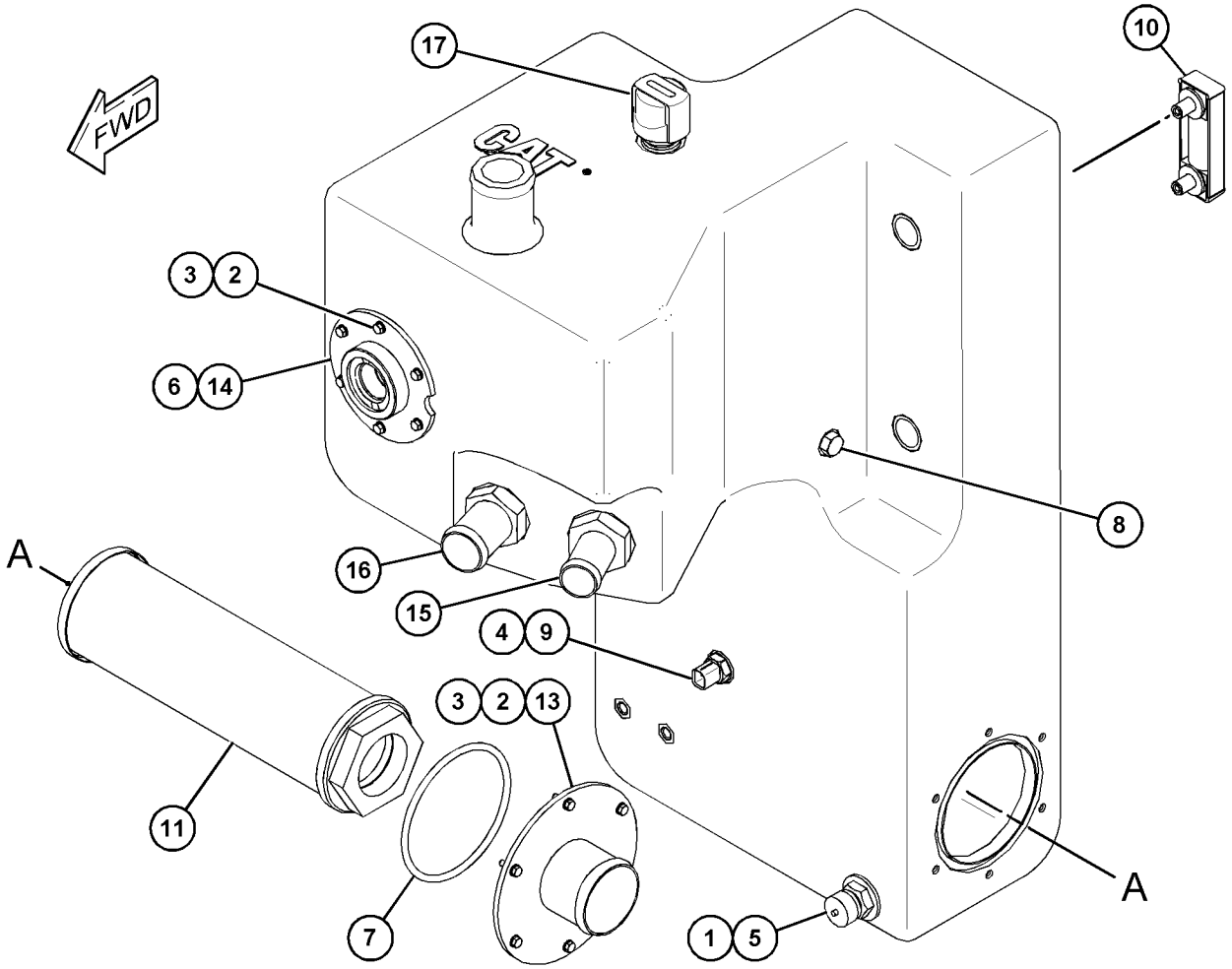

GRAPHIC #1 <END> g06019630

434-7270 TANK GP-HYDRAULIC

S/N: H3C1-UP; K3G1-UP
65-L (17.2-US GAL)
PART OF 549-8882 VALVE & LINES GP-HYD CONTROL
AN ATTACHMENT

SMCS-5056 **i06702729**

NOTE	REF NO	GRAPHIC REF	PART NUMBER	QTY	PART NAME 1 2 3 4 5 6 (PRODUCT LEVEL)	SEE PAGE
	1	1	**2M-9780**	1	SEAL-O-RING	
	2	1	**8T-7524**	1	SEAL-O-RING	
	3	1	**101-4639**	1	VALVE-DRAIN (HYDRAULIC TANK) (HYDRAULIC TANK)	
	4	1	**110-7753**	1	SEAL-O-RING	
	5	1	**132-3056**	2	SEAL-O-RING	
	6	1	**142-8929**	1	SCREEN-SUCTION (HYDRAULIC TANK)	
	7	1	*148-8407*	1	PLUG AS	
		1	**9S-4191**	1	PLUG (9/16-18-THD)	
		1	**3J-1907**	1	SEAL-O-RING	
	8	1	**256-6454**	1	SENSOR-TEMPERATURE (2-PIN) (HYDRAULIC OIL)	
	9	1	**265-5644**	1	GAUGE GP-SIGHT (HYDRAULIC TANK OIL)	
	10	1	**322-9703**	1	SCREEN-SUCTION (HYDRAULIC TANK)	
	11	1	**422-3133**	1	COVER AS	
	12	1	**422-3134**	1	COVER AS	
	13	1	**424-5535**	1	TUBE AS	
	14	1	**434-7271**	1	TANK AS-HYDRAULIC	
	15	1	**466-0886**	1	TUBE AS	
	16	1	**466-0889**	1	TUBE AS	
	17	1	**466-1627**	1	BREATHER AS (HYDRAULIC TANK)	
		1	**3D-2824**	1	SEAL-O-RING	
M	18	1	**7I-2273**	18	BOLT (M5X0.8X16-MM)	
	19	1	**8T-0328**	18	WASHER-HARD (5.5X10X1-MM THK)	

M - METRIC PART

434-7270 **TANK GP-HYDRAULIC (**contd.**)** **i06702729**

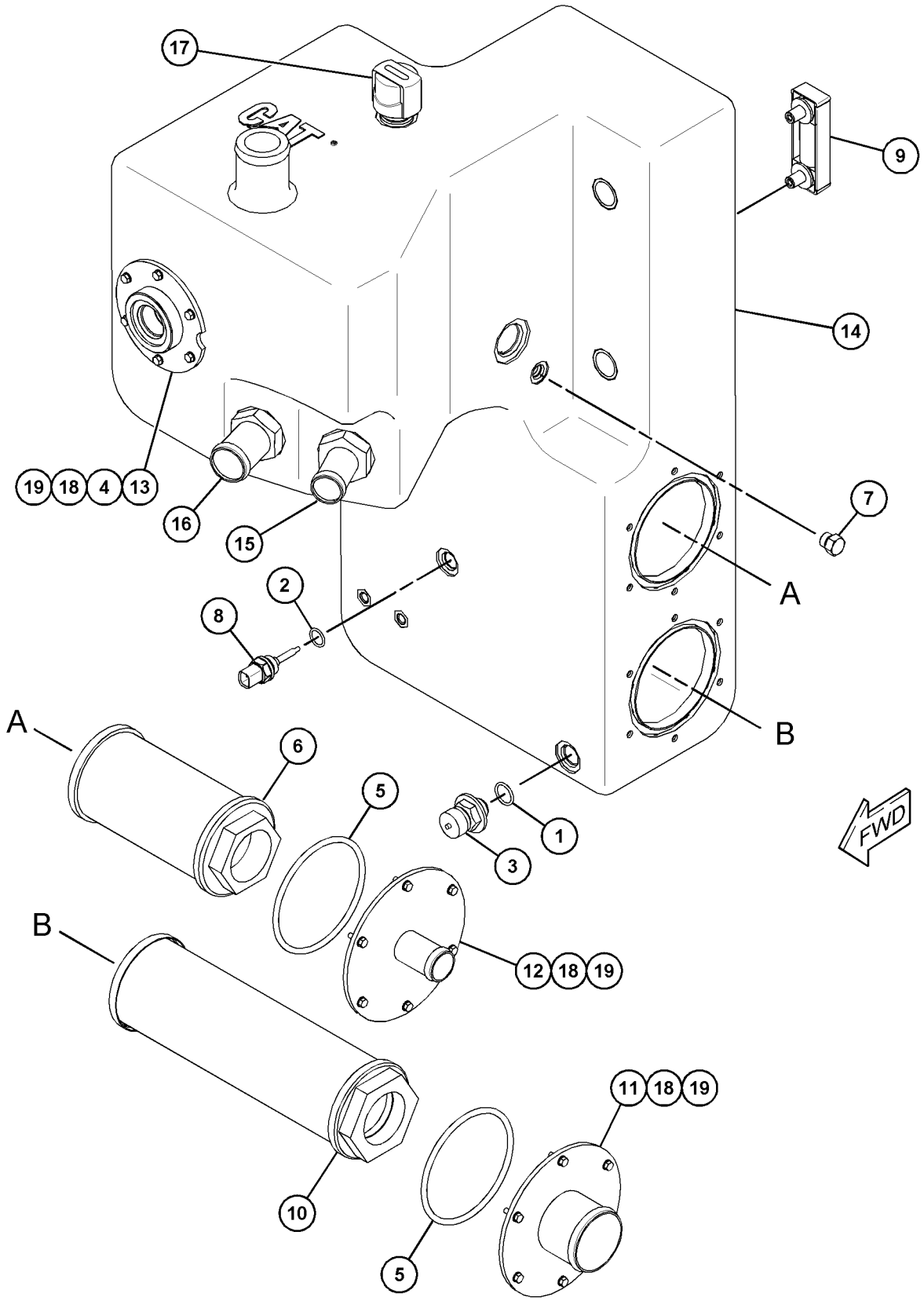

GRAPHIC #1 <END> g06020880

549-8882 VALVE & LINES GP-HYD CONTROL

S/N: H3C1-UP; K3G1-UP
IMPLEMENT
PART OF 550-2352 HYDRAULIC AR
AN ATTACHMENT

SMCS-5051, 5057, 5115 **i07765992**

NOTE	PART NUMBER	QTY	PART NAME 1 2 3 4 5 6 (PRODUCT LEVEL)	SEE PAGE
Y	*549-8936*	1	LINES GP-WINCH	395
Y	*549-8935*	1	PUMP & LINES GP-WINCH	551
Y	*434-7270*	1	TANK GP-HYDRAULIC	419
Y	**507-1295**	1	VALVE GP-BANK 4 (IMPLEMENT)	422

Y - SEPARATE ILLUSTRATION

<END>

507-1295 VALVE GP-BANK 4

S/N: H3C1-UP; K3G1-UP
IMPLEMENT
PART OF 549-8882 VALVE & LINES GP-HYD CONTROL
AN ATTACHMENT

SMCS-5051 **i07766145**

NOTE	PART NUMBER	QTY	PART NAME 1 2 3 4 5 6 (PRODUCT LEVEL)	SEE PAGE
M	**6V-8653**	4	BOLT-SOCKET HEAD (M6X1X40-MM)	
M	**105-3486**	6	BOLT-SOCKET HEAD (M6X1X50-MM)	
M	**9X-2537**	8	BOLT-SOCKET HEAD (M6X1X70-MM)	
M	**109-1393**	18	BOLT-SOCKET HEAD (M4X0.7X10-MM)	
	570-1054	1	HOUSING GP	
	570-1056	1	MANIFOLD & VALVE GP	
	9S-8005	3	PLUG (3/4-16-THD)	
	9S-8001	3	PLUG (5/16-24-THD)	
	9S-8004	10	PLUG (9/16-18-THD)	
	437-2831	4	VALVE AS-CHECK	
			(EACH INCLUDES)	
	2M-9780	1	SEAL-O-RING	
	570-1041	1	VALVE AS-CHECK	
	8J-2413	1	SEAL-O-RING	
	421-5456	1	VALVE GP-RELIEF	
	228-7103	1	SEAL-O-RING	
	570-1042	1	VALVE AS-RELIEF	
	228-7103	1	SEAL-O-RING	
	570-1038	4	VALVE AS-RELIEF	
			(EACH INCLUDES)	
	228-7103	1	SEAL-O-RING	
	570-1048	1	VALVE AS-RELIEF	
	238-5081	1	SEAL-O-RING	
	238-5082	1	SEAL-O-RING	
	485-9850	1	VALVE GP-SOLENOID (24-VDC)	
	346-4995	8	VALVE-SOLENOID (12-VDC)	
			AVAILABLE REPAIR KIT(S):	
	570-1055	1	KIT-SEAL	
			(INCLUDES O-RINGS)	
	570-1058	1	KIT-SEAL	
			(INCLUDES O-RINGS)	
	570-1050	1	KIT-SPRING	
			(INCLUDES NUT & SPRING)	
	570-1052	1	KIT-SPRING	
			(INCLUDES SPOOL, SPRING(S) & WASHER)	

M - METRIC PART

<END>

285-5240 VALVE GP-PUMP CONTROL–PRESSURE, FLOW COMPENSATOR

S/N: H3C1-UP; K3G1-UP
PART OF 260-6781 PUMP GP-PISTON & GEAR
AN ATTACHMENT

SMCS-5455 **i03996598**

NOTE	REF NO	GRAPHIC REF	PART NUMBER	QTY	PART NAME 1 2 3 4 5 6 (PRODUCT LEVEL)	SEE PAGE
M	1	1	**8T-8442**	4	BOLT-SOCKET HEAD (M6X1X30-MM)	
	2	1	**280-7870**	1	GASKET	
J	3	1	**6E-6528**	2	SEAL	
	4	1	**9S-8002**	1	PLUG (7/16-20-THD)	
	5	1	**3J-7354**	1	SEAL-O-RING	
J	6	1	**033-6043**	1	SEAL-O-RING	
J	7	1	**6V-6339**	1	SEAL-O-RING	
					AVAILABLE REPAIR KIT(S):	
J			**293-8350**	1	KIT-SEAL (FLOW COMPENSATOR)	
					(INCLUDES SEAL-O-RINGS & BACK-UP RINGS)	

J - KIT MARKED J SERVICES PART(S) MARKED J
M - METRIC PART

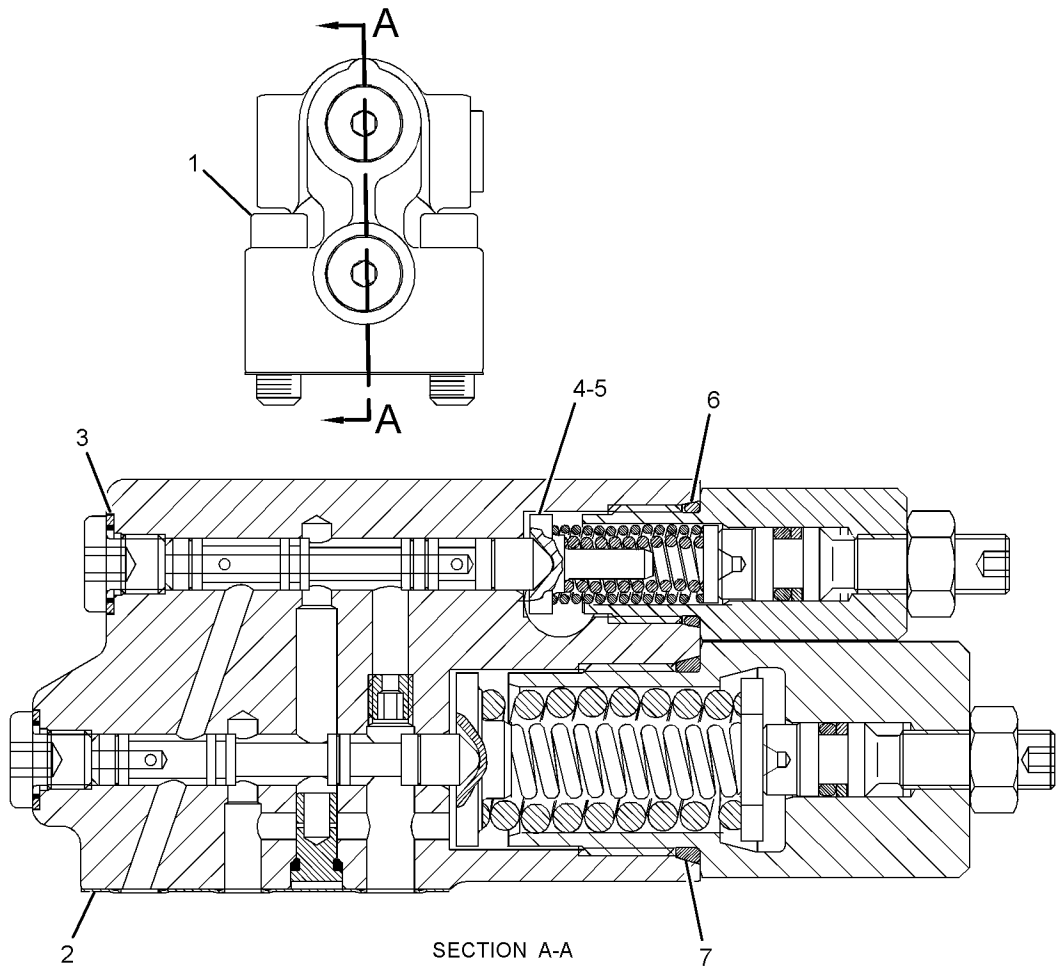

GRAPHIC #1 <END> g01297140

335-5894 VALVE GP-PUMP CONTROL

S/N: H3C1-UP; K3G1-UP
WINCH
PART OF 249-8600 PUMP GP-PISTON
AN ATTACHMENT

SMCS-5455 **i07046088**

NOTE	REF NO	GRAPHIC REF	PART NUMBER	QTY	PART NAME 1 2 3 4 5 6 (PRODUCT LEVEL)	SEE PAGE
	1	1	**316-5999**	2	SOLENOID AS	
	2	1	**202-6535**	2	PIN	
M	3	1	**8T-2922**	4	BOLT-SOCKET HEAD (M6X1X65-MM)	
	4	1	**342-8166**	1	COVER AS	
		1	**112-4629**	1	SCREW (3/4-16X0.6-IN)	
	5	1	**196-4253**	1	GASKET	
	6	1	**215-8014**	1	KIT-LEVER	
					(INCLUDES LEVERS)	
	7	1	**277-6631**	1	SPRING	
B	8	1	**216-4551**	1	SHIM (0.8-MM THK)	
B	9	1	**216-4552**	1	SHIM (1-MM THK)	
B	10	1	**216-4553**	1	SHIM (1.2-MM THK)	
B	11	1	**216-4554**	1	SHIM (1.4-MM THK)	
B	12	1	**216-4555**	1	SHIM (1.6-MM THK)	
B	13	1	**233-9808**	1	SHIM (0.6-MM THK)	
	14	1	**209-3565**	1	SEAL	
M	15	1	**196-9445**	1	BOLT-SOCKET HEAD (M6X1X45-MM)	
	16	1	**215-8008**	1	LEVER	
	17	1	**215-8012**	1	PIN	
	18	1	**6H-9691**	1	SEAL-O-RING	
	19	1	**215-8011**	1	BOLT-SPECIAL	
	20	1	**215-8010**	1	SHIM (3-MM THK)	
	21	1	**215-8015**	2	PIN	

PARTS SHOWN IN GRAPHIC(S) WITHOUT A REFERENCE NUMBER ARE NOT SERVICED SEPARATELY

B - USE AS REQUIRED
M - METRIC PART

335-5894 **VALVE GP-PUMP CONTROL (**contd.**)** **i07046088**

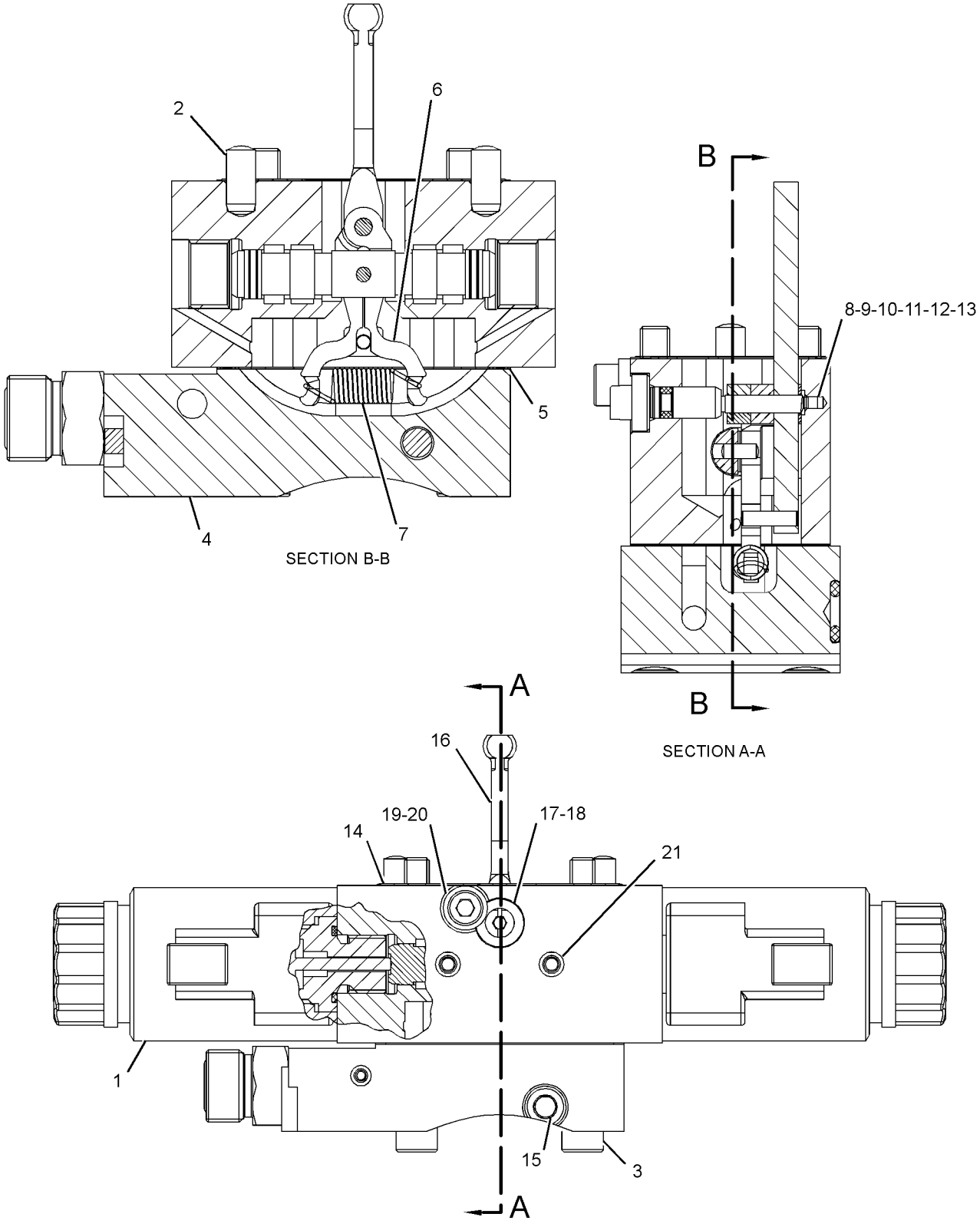

GRAPHIC #1 <END> g02539966

152-1811 VALVE GP-RELIEF–PRESSURE OVERRIDE

S/N: H3C1-UP; K3G1-UP
PART OF 277-6553 HEAD GP-PUMP
AN ATTACHMENT

SMCS-5069, 5117

i02992819

NOTE	REF NO	GRAPHIC REF	PART NUMBER	QTY	PART NAME 1 2 3 4 5 6 (PRODUCT LEVEL)	SEE PAGE
J	1	1	**7Y-5219**	1	SEAL-O-RING	
J	2	1	**6V-5586**	1	SEAL-O-RING	
J	3	1	**6E-1607**	1	LOCKNUT-SEALING	
					AVAILABLE REPAIR KIT(S):	
J			**122-9363**	1	KIT-SEAL (RELIEF VALVE)	
J - KIT MARKED J SERVICES PART(S) MARKED J						

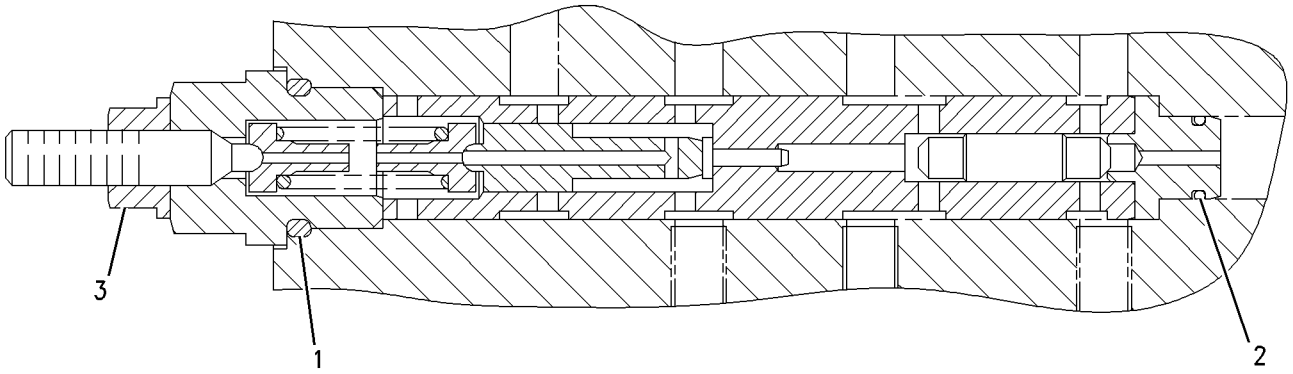

GRAPHIC #1 <END> g00813622

177-7122 VALVE GP-RELIEF

S/N: H3C1-UP; K3G1-UP
FIELD REPLACEMENT ORDER 212-6679—PAGE: 428
PART OF 277-6553 HEAD GP-PUMP
AN ATTACHMENT

SMCS-5069, 5117

i02787932

NOTE	REF NO	GRAPHIC REF	PART NUMBER	QTY	PART NAME 1 2 3 4 5 6 (PRODUCT LEVEL)	SEE PAGE
	1	1	**6E-4404**	1	VALVE-POPPET	
	2	1	**167-7715**	1	RETAINER-SPRING	
	3	1	**112-4645**	1	SPRING	
	4	1	**6V-8352**	1	SEAL-O-RING	
	5	1	**112-4647**	1	SHIM (0.3-MM THK)	
	6	1	**177-7747**	1	RING	
					AVAILABLE REPAIR KIT(S):	
			215-7697	1	KIT-SHIM	
					(INCLUDES 4 SHIMS)	

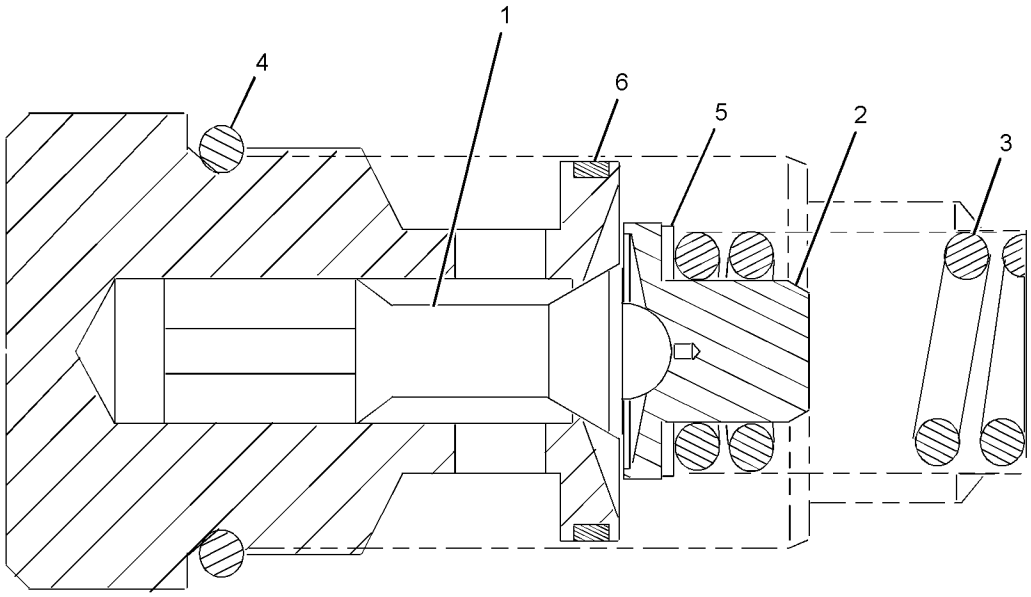

GRAPHIC #1

<END>

g01203400

212-6679 VALVE GP-RELIEF

S/N: H3C1-UP; K3G1-UP

FIELD REPLACEMENT FOR 177-7122—PAGE: 427

SMCS-5069, 5117 **i04938013**

NOTE	REF NO	GRAPHIC REF	PART NUMBER	QTY	PART NAME 1 2 3 4 5 6 (PRODUCT LEVEL)	SEE PAGE
	1	1	**6V-8352**	1	SEAL-O-RING	

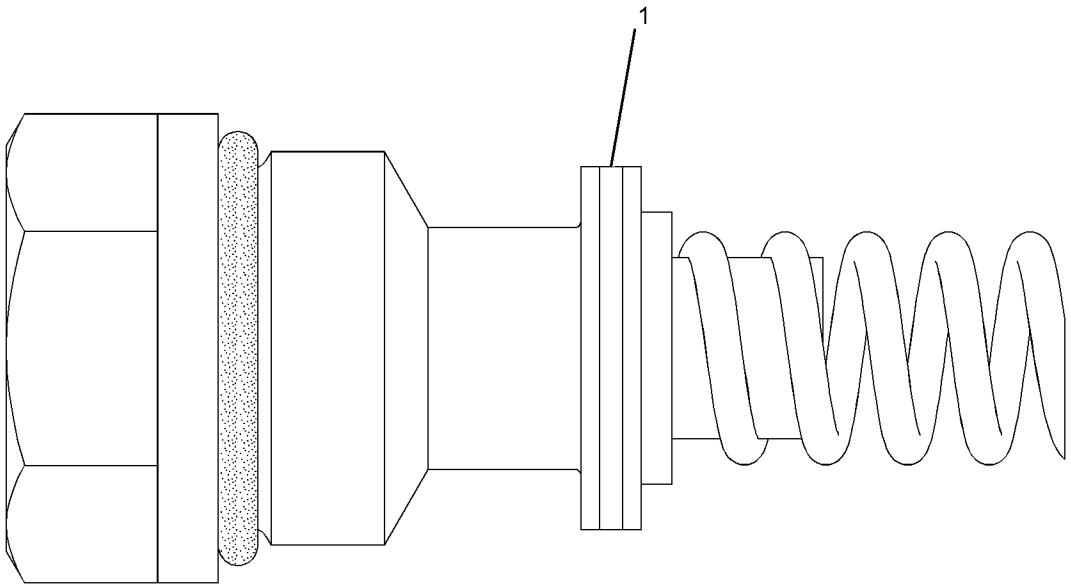

GRAPHIC #1 <END> g03035896

277-6679 VALVE GP-RELIEF

S/N: H3C1-UP; K3G1-UP
PART OF 277-6553 HEAD GP-PUMP
AN ATTACHMENT

SMCS-5069, 5117

i02573667

NOTE	REF NO	GRAPHIC REF	PART NUMBER	QTY	PART NAME 1 2 3 4 5 6 (PRODUCT LEVEL)	SEE PAGE
	1	1	**6V-5326**	1	SEAL-O-RING	
	2	1	**167-7713**	1	RING-BACKUP	

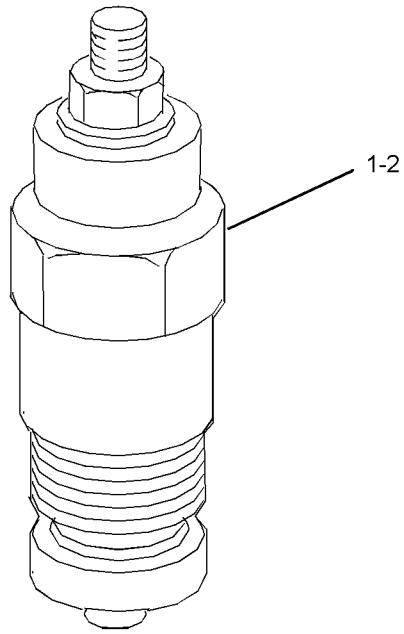

GRAPHIC #1

<END>

g01203296

437-2846 VALVE GP-SOLENOID–24-VDC

S/N: H3C1-UP; K3G1-UP
PART OF 457-5424, 457-5426 LINES GP-HYDRAULIC FAN
AN ATTACHMENT

SMCS-5479 **i07828625**

NOTE	REF NO	GRAPHIC REF	PART NUMBER	QTY	PART NAME 1 2 3 4 5 6 (PRODUCT LEVEL)	SEE PAGE
	1	1	**3E-6786**	1	SEAL-O-RING	
M	2	1	**465-5626**	1	NUT-SPECIAL (M18X1.5-THD)	
	3	1	**466-2974**	1	COIL AS	
	4	1	**456-1826**	1	SEAL-O-RING	
					AVAILABLE REPAIR KIT(S):	
			499-7325	1	KIT-SEAL	
					(INCLUDES PARTS MARKED "H" IN THE GRAPHIC)	

M - METRIC PART

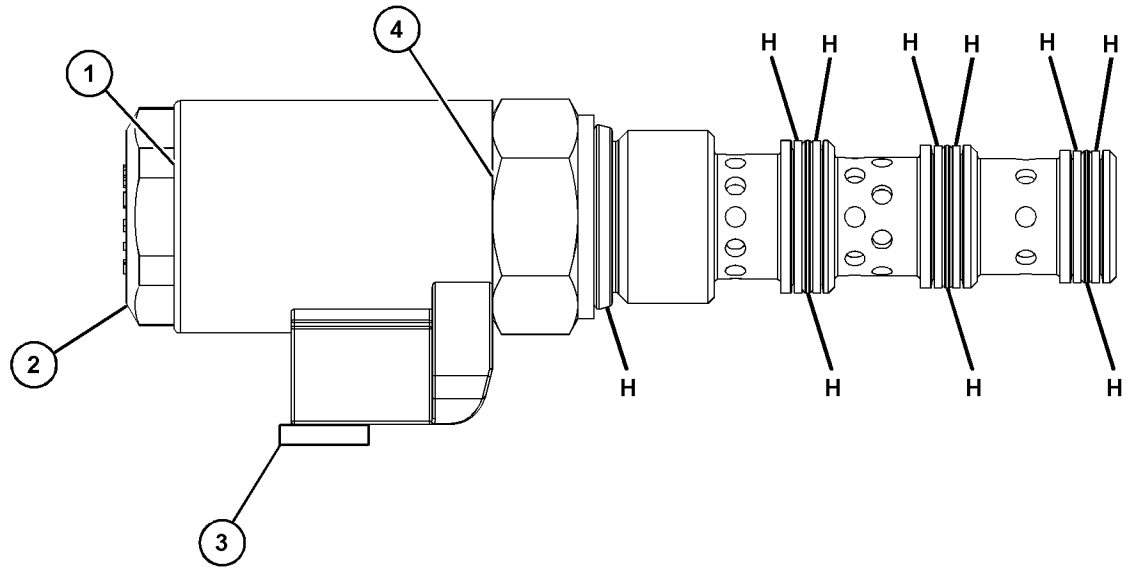

GRAPHIC #1 <END> g06391293

387-2300 C-FRAME GP-POWER ANGLING

S/N: H3C1-UP; K3G1-UP
PART OF 568-1819 INSTALLATION AR-BULLDOZER
AN ATTACHMENT

SMCS-6063 **i07426501**

NOTE	REF NO	GRAPHIC REF	PART NUMBER	QTY	PART NAME 1 2 3 4 5 6 (PRODUCT LEVEL)	SEE PAGE
Y	1	1	*240-1506*	1	PIN GP-CYLINDER	402
Y	2	1	*348-6250*	1	LINK GP-PITCH	435
Y	3	1	**379-3503**	1	CYLINDER GP-TILT	367
Y	4	1	**379-3504**	2	CYLINDER GP-ANGLING	361
Y	5	1	*422-8723*	1	LINES GP-BULLDOZER	379
CY	6	1	**538-7829**	2	CYLINDER GP-BULLDOZER LIFT	363
Y	7	1	*457-5417*	1	LINES GP-ANGLE & TILT	374
Y	8	1	*463-8196*	1	BRACKET GP-SUPPORT	261
Y	9	1	*469-7301*	1	C-FRAME GP-POWER ANGLING	432

C - CHANGE FROM PREVIOUS TYPE
Y - SEPARATE ILLUSTRATION

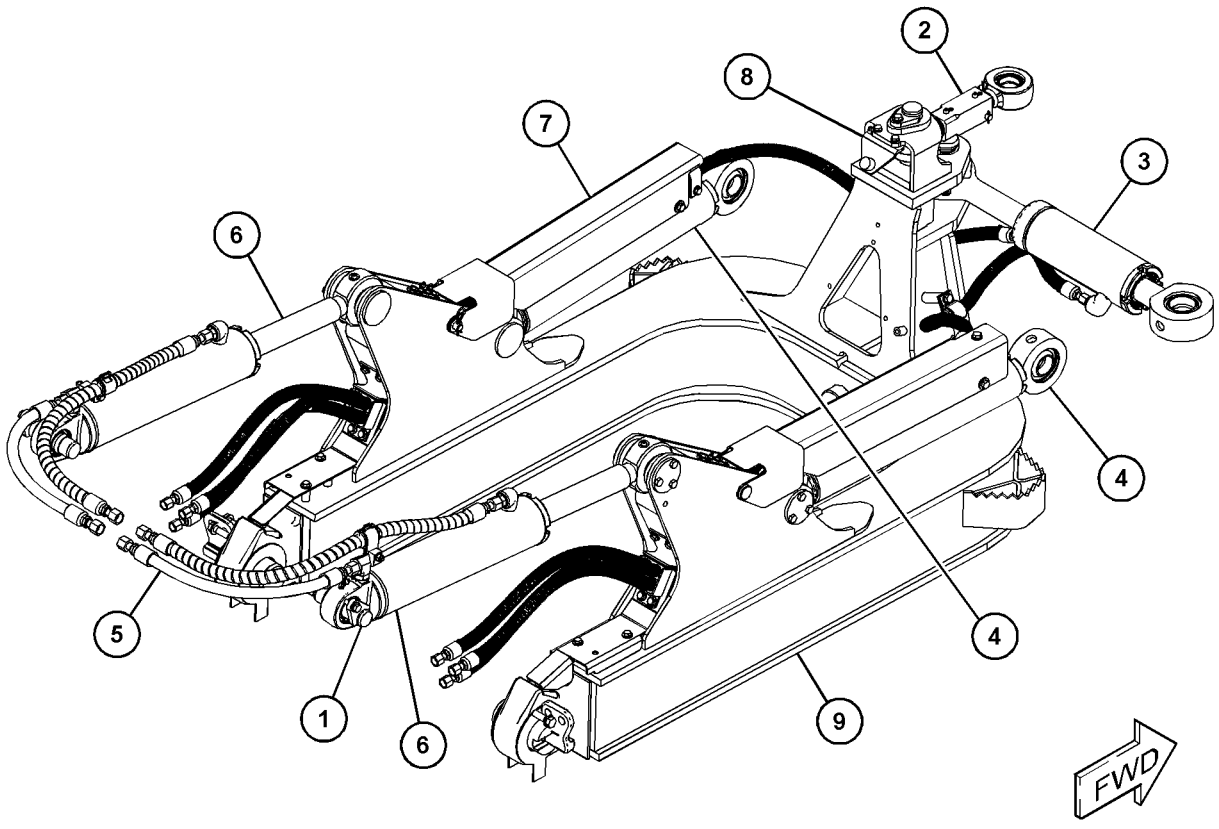

GRAPHIC #1 <END> g06284480

469-7301 C-FRAME GP-POWER ANGLING

S/N: H3C1-UP; K3G1-UP

PART OF 387-2300 C-FRAME GP-POWER ANGLING

AN ATTACHMENT

SMCS-6063 **i08101432**

NOTE	REF NO	GRAPHIC REF	PART NUMBER	QTY	PART NAME 1 2 3 4 5 6 (PRODUCT LEVEL)	SEE PAGE
	1	1	**4T-0231**	1	RETAINER	
	2	1	**7K-9210**	4	SEAL-LIP TYPE	
	3	1	**8G-5747**	8	SPACER (45X50X15-MM THK)	
	4	1	**104-4817**	1	PIN	
	5	1	**124-5234**	4	RETAINER	
	6	1	**124-5741**	4	PIN	
	7	1	**223-3279**	1	RETAINER	
	8	1	**226-7192**	1	SPACER (50.8X57.15X25-MM THK)	
	9	1	**245-1168**	1	PIN	
	10	1	**313-9790**	1	SPACER (50.8X57.15X35-MM THK)	
	11	1	**348-6197**	2	SPACER (64X72X20-MM THK)	
	12	1	**435-5617**	2	RETAINER	
	13	1	**435-5618**	2	PIN	
	14	1	**469-7300**	1	C-FRAME AS	
	14A	1	**240-1553**	2	BUSHING	
	14B	1	**342-8909**	1	TRUNNION	
	15	1	**8T-4123**	1	WASHER (22X35X3.5-MM THK)	
M	16	1	**8T-4139**	12	BOLT (M12X1.75X30-MM)	
M	17	1	**8T-4193**	4	BOLT (M16X2X50-MM)	
	18	1	**8T-4223**	1	WASHER-HARD (13.5X25.5X3-MM THK)	
M	19	1	**7X-2562**	1	BOLT (M20X2.5X45-MM)	
M	20	1	**8T-4956**	1	BOLT (M12X1.75X35-MM)	
	21	1	**9X-8257**	4	WASHER (17.5X30X3.5-MM THK)	
B	22	1	**276-4485**	8	SPACER	

B - USE AS REQUIRED
M - METRIC PART

469-7301 **C-FRAME GP-POWER ANGLING (**contd.**)** **i08101432**

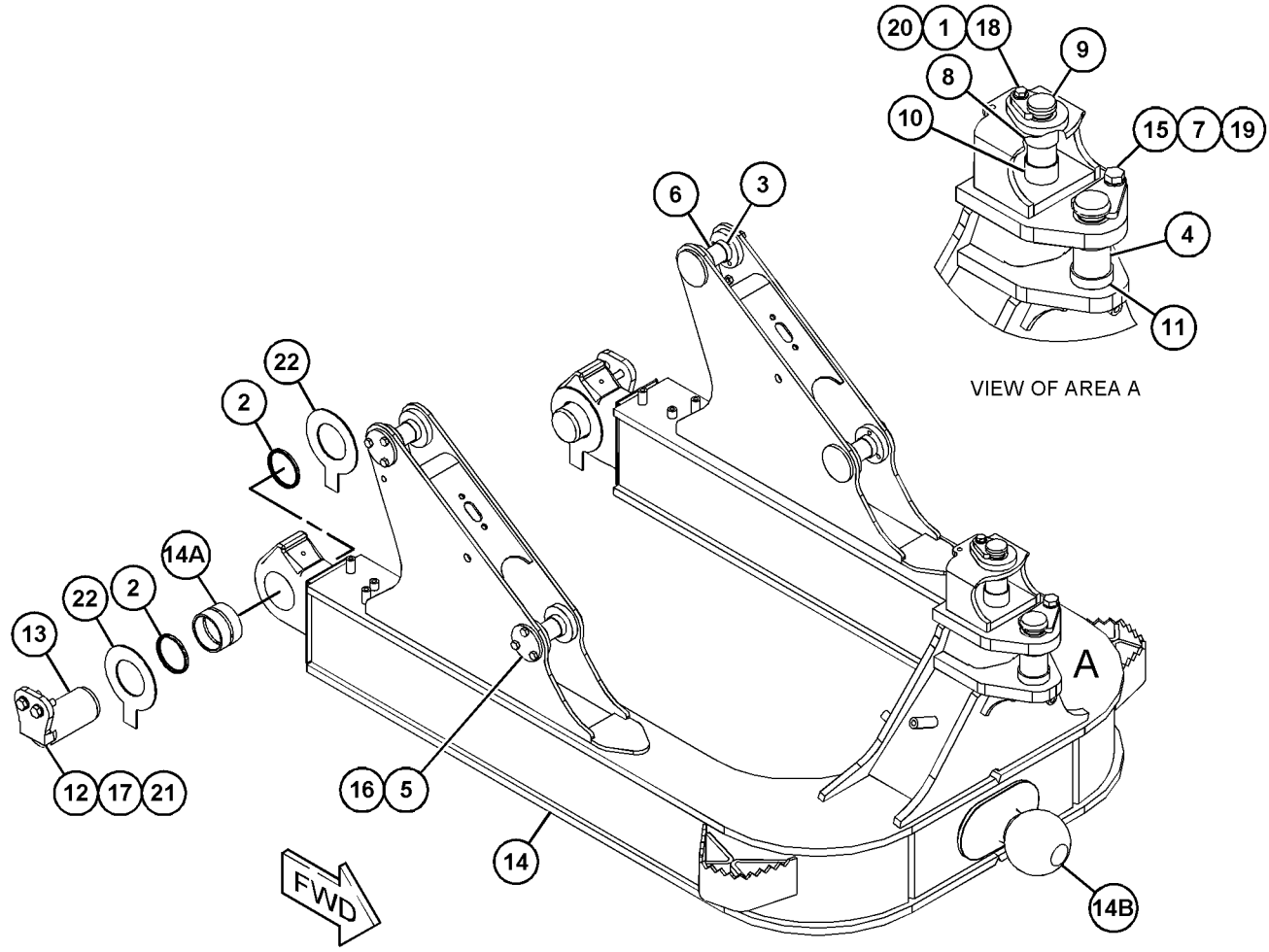

GRAPHIC #1 <END> g06544451

568-1819 INSTALLATION AR-BULLDOZER

S/N: H3C1-UP; K3G1-UP

AN ATTACHMENT

SMCS-6050 **i07775341**

NOTE	PART NUMBER	QTY	PART NAME 1 2 3 4 5 6 (PRODUCT LEVEL)	SEE PAGE
Y	*387-2300*	1	C-FRAME GP-POWER ANGLING	431
	346-9780	1	FILM-INSTRUCTION (BULLDOZER CONTROL)	
			(ON REAR SIDE OF RH B-POST, IN OPERATOR VIEW)	

Y - SEPARATE ILLUSTRATION

<END>

348-6250 LINK GP-PITCH

S/N: H3C1-UP; K3G1-UP
PART OF 387-2300 C-FRAME GP-POWER ANGLING
AN ATTACHMENT

SMCS-6079, 6081

i07107186

NOTE	REF NO	GRAPHIC REF	PART NUMBER	QTY	PART NAME 1 2 3 4 5 6 (PRODUCT LEVEL)	SEE PAGE
	1	1	**3B-8489**	4	FITTING-GREASE (1/8-27 PTF)	
	2	1	**9J-4782**	4	PROTECTOR	
	3	1	**444-0092**	1	ROD-EYE	
	4	1	**444-0093**	1	ROD-EYE	
	5	1	**348-6253**	1	SLEEVE	
	6	1	**3B-4617**	1	PIN-COTTER	
	7	1	**3T-7184**	1	PIN-CLEVIS	
	8	1	**5M-6214**	1	PLUG (1/8-27 PTF)	
	9	1	**8T-0333**	2	BEARING	
	10	1	**8T-9599**	2	RING-RETAINING	

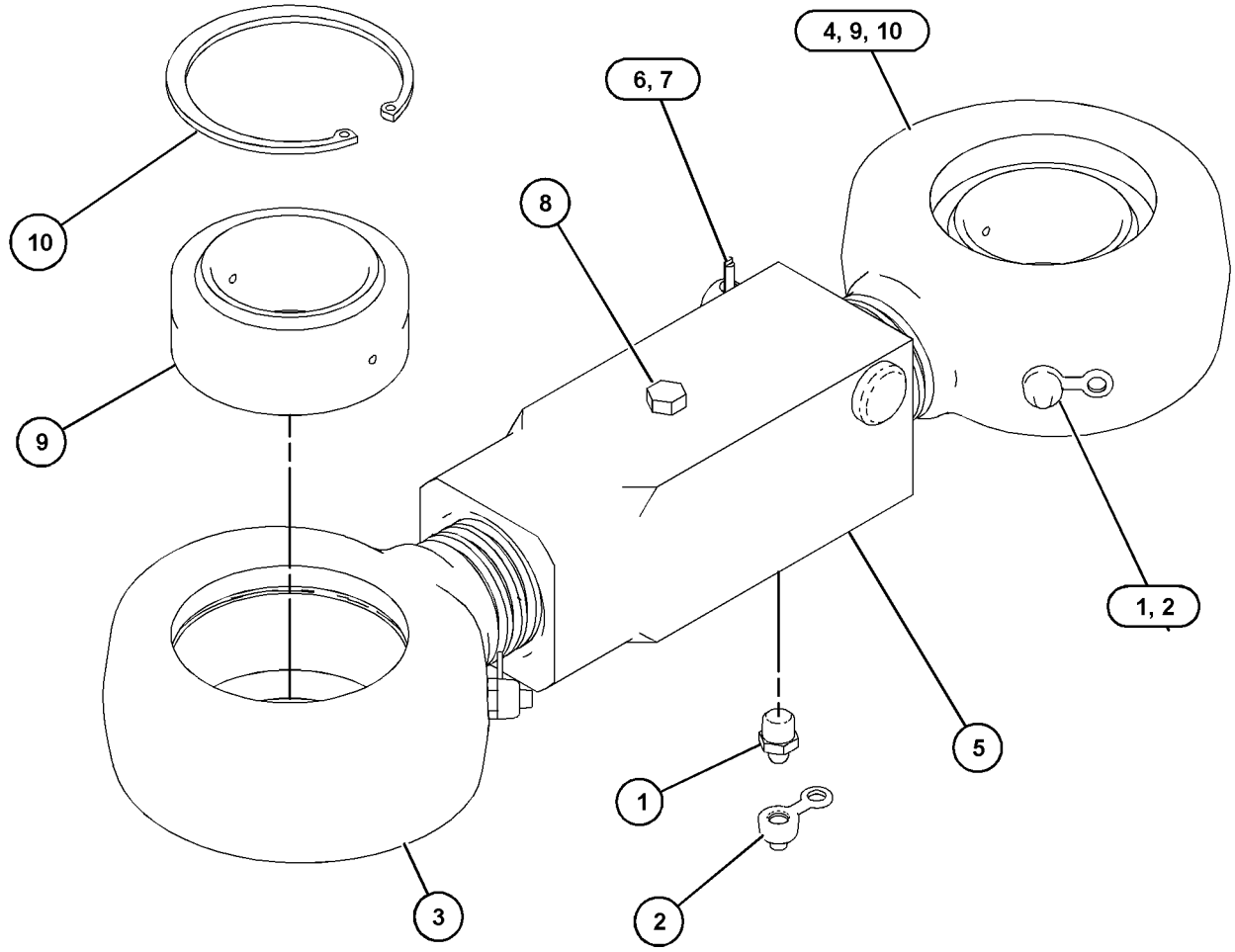

GRAPHIC #1 <END> g06239765

422-7069 AIR CONDITIONER GP

S/N: H3C1-UP; K3G1-UP
PART OF 568-1316, 568-1317, 568-1318 CAB AR
AN ATTACHMENT

SMCS-7320 **i07966617**

NOTE	REF NO	GRAPHIC REF	PART NUMBER	QTY	PART NAME 1 2 3 4 5 6 (PRODUCT LEVEL)	SEE PAGE
	1	2	**255-5153**	1	COVER-FILTER	
C	2	2	**425-8970**	1	SWITCH AS-ROCKER (24-VOLT) (AIR CONDITIONER ON, OFF)	
	3	2	**266-7765**	1	FILTER ELEMENT-AIR (STANDARD EFFICIENCY) (CAB HEATER, AIR CONDITIONER)	
	4	2	**358-4781**	1	COVER AS (LH)	
M		2	**8T-3490**	1	NUT-WELD (M10X1.5-THD)	
M		2	**8T-3612**	1	NUT-WELD (M8X1.25-THD)	
		2	**143-2236**	1	LINK	
	5	2	**358-4782**	1	COVER AS (RH)	
M		2	**8T-3490**	1	NUT-WELD (M10X1.5-THD)	
M		2	**8T-3612**	1	NUT-WELD (M8X1.25-THD)	
		2	**143-2236**	2	LINK	
C	6	2	**555-0643**	1	PANEL AS-CONTROL	
	6A	2	**271-7312**	1	KNOB (TEMPERATURE CONTROL)	
	6B	2	**285-7415**	1	KNOB (BLOWER FAN SPEED)	
	7	2	**393-4275**	1	GASKET	
	8	2	**393-4276**	1	GASKET	
	9	2	**393-4283**	1	DUCT AS	
Y	10	2	**434-4309**	1	AIR CONDITIONER GP	440
	11	2	**505-3759**	1	TUBE AS	
		2	**3E-4052**	1	CAP-SEAL (HIGH SIDE CHARGE PORT)	
		2	**3E-4058**	1	VALVE AS (REFRIGERANT, HIGH SIDE)	
I	12	2	**436-0443**	1	HOSE AS	
	13	2	**436-0461**	1	TUBE AS	
I	14	2	**436-0511**	1	HOSE AS	
I	15	2	**505-3756**	1	HOSE AS	
	16	2	**438-7901**	1	TUBE AS	
		2	**3E-4051**	1	CAP-SEAL (LOW SIDE CHARGE PORT)	
		2	**3E-4057**	1	VALVE AS (REFRIGERANT, LOW SIDE)	
	17	2	**450-6492**	1	DRYER-REFRIGERANT	
	18	2	**473-4303**	1	GRID AS	
M		2	**8T-3612**	2	NUT-WELD (M8X1.25-THD)	
Y	19	2	**479-8408**	1	CONDENSER GP-REFRIGERANT	452
C	20	1	**567-2881**	1	COVER AS-ACCESS	
		1	**3J-5169**	2	NUT-WELD (5/8-11-THD)	
M		1	**8T-3490**	4	NUT-WELD (M10X1.5-THD)	
		1	**5D-9629**	1	ROD	
M	21	2	**101-3129**	1	STUD (M10X1.5-THD)	
	22	2	**177-2215**	1	STRAP-DUAL CLAMP	
	23	2	**191-9256**	1	CLIP	
	24	2	**275-6710**	2	RETAINER (PUSH ON)	
M	25	2	**288-3657**	2	SCREW-THUMB (M6X1X10-MM)	
	26	2	**3E-6909**	3	CLIP (LOOP)	
	27	2	**4D-9517**	1	CLIP	
	28	2	**5K-6438**	1	CLIP	
	29	2	**6V-6782**	1	CLIP (SLOT)	

422-7069 **AIR CONDITIONER GP (**contd.**)** **i07966617**

NOTE	REF NO	GRAPHIC REF	PART NUMBER	QTY	PART NAME 1 2 3 4 5 6 (PRODUCT LEVEL)	SEE PAGE
	30	2	**6V-6783**	1	CLIP (TAB)	
	31	1,2	**7X-7729**	10	WASHER (11X25X3-MM THK)	
	32	2	**8F-8513**	1	CLIP (LOOP)	
	33	2	**8T-4121**	18	WASHER-HARD (11X21X2.5-MM THK)	
M	34	2	**344-5675**	5	NUT (M10X1.5-THD)	
M	35	2	**8T-4136**	3	BOLT (M10X1.5X25-MM)	
M	36	1,2	**8T-4137**	12	BOLT (M10X1.5X20-MM)	
M	37	2	**8T-4185**	1	BOLT (M10X1.5X50-MM)	
M	38	2	**8T-4189**	5	BOLT (M8X1.25X20-MM)	
M	39	2	**8T-4195**	4	BOLT (M10X1.5X30-MM)	
	40	2	**8T-4224**	5	WASHER-HARD (8.8X16X2-MM THK)	
M	41	2	**8T-4908**	2	BOLT (M8X1.25X25-MM)	
	42	2	**9M-8406**	3	CLIP (LOOP)	
M	43	2	**9X-2045**	2	SCREW-TRUSS HEAD (M6X1X20-MM)	
	44	2	**9X-7380**	5	SEAL-O-RING	
	45	2	**9X-7381**	2	SEAL-O-RING	
	46	2	**9X-7382**	1	SEAL-O-RING	
E	48	2	**8C-5064**		CONDUIT-FLEXIBLE (17.75-MM ID, SPLIT) (46-CM)	
E	48A	2	**8C-5064**		CONDUIT-FLEXIBLE (17.75-MM ID, SPLIT) (152-CM)	
E	48B	2	**8C-5064**		CONDUIT-FLEXIBLE (17.75-MM ID, SPLIT) (163-CM)	
	49	1	**8T-4222**	2	WASHER-PLATED (11X32X2.5-MM THK)	
D	50	2	**6V-2499**		SEAL (0.2-M)	

C - CHANGE FROM PREVIOUS TYPE
D - ORDER BY THE METER
E - ORDER BY THE CENTIMETER
I - REFER TO HYDRAULIC INFORMATION SYSTEM
M - METRIC PART
Y - SEPARATE ILLUSTRATION

422-7069 **AIR CONDITIONER GP (**contd.**)** **i07966617**

REFER TO ALL ILLUSTRATIONS OF
THIS GROUP FOR AUXILIARY VIEWS

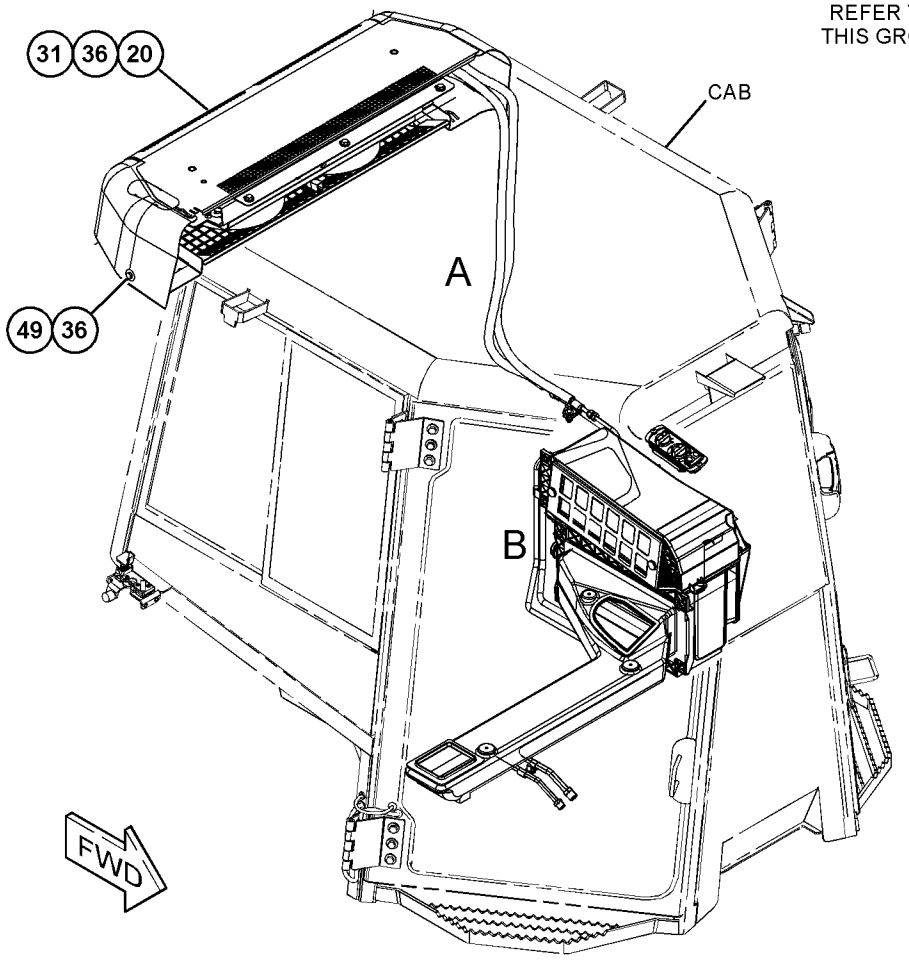

GRAPHIC #1 g06436757

422-7069 **AIR CONDITIONER GP (**contd.**)** **i07966617**

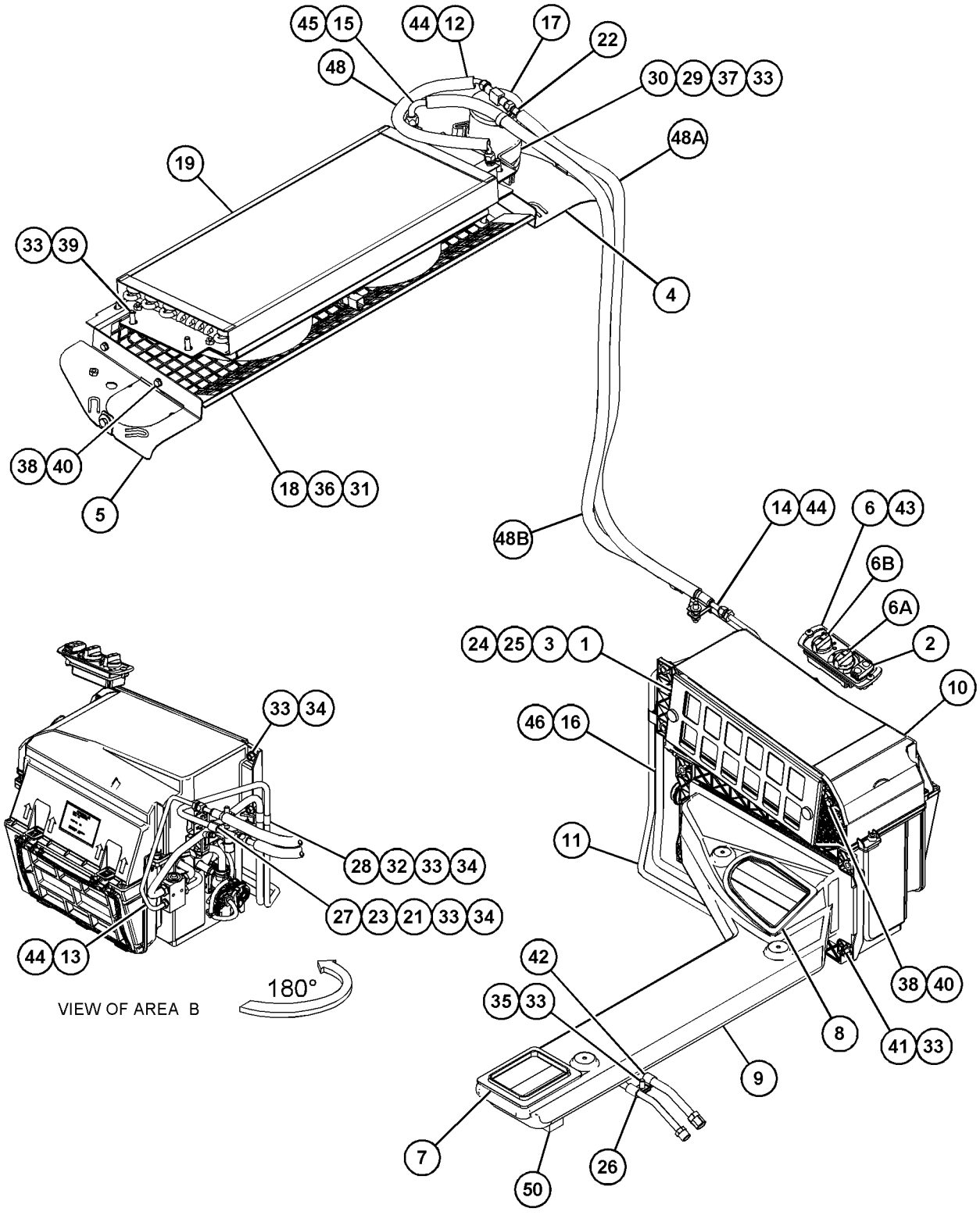

GRAPHIC #2 <END> g06219911

434-4309 AIR CONDITIONER GP

S/N: H3C1-UP; K3G1-UP
PART OF 422-7069 AIR CONDITIONER GP
AN ATTACHMENT

SMCS-7320 **i07388818**

NOTE	REF NO	GRAPHIC REF	PART NUMBER	QTY	PART NAME 1 2 3 4 5 6 (PRODUCT LEVEL)	SEE PAGE
	1	1	**3S-2093**	4	STRAP-CABLE	
	2	1	**7K-1181**	1	STRAP-CABLE	
	3	1	**275-6706**	1	MOTOR AS-BLOWER (24-VOLT)	
		1	**102-8802**	1	KIT-RECEPTACLE (2-PIN)	
					(INCLUDES RECEPTACLE AS & WEDGE)	
		1	**9W-0852**	2	PIN-CONNECTOR (14-GA TO 16-GA)	
	4	1	**279-0850**	1	ACTUATOR (ELECTRONIC)	
	5	1	**322-4474**	1	FILM-INFORMATION (24-VOLT HEATER)	
	6	1	**435-2988**	3	CLIP AS	
Y	7	1	**440-6171**	1	HARNESS AS-HEATER & AIR COND	140
	8	1	**443-4024**	1	HOUSING-BOTTOM	
	9	1	**443-4025**	1	SEAL	
	10	1	**443-4026**	1	SEAL	
	11	1	**443-4027**	1	SEAL	
	12	1	**443-4029**	2	GROMMET	
	13	1	**443-4033**	1	BRACKET	
	14	1	**443-4036**	1	HOUSING-FILTER	
	15	1	**443-4037**	1	FILTER ELEMENT-CAB AIR	
	16	1	**443-4038**	1	COVER-FILTER	
	17	1	**443-4039**	1	SEAL	
	18	1	**443-4040**	1	PLATE	
	19	1	**443-4041**	1	BRACKET	
	20	1	**443-4043**	1	HOUSING AS-UPPER	
	21	1	**443-4044**	1	GASKET	
	22	1	**443-4045**	1	COIL-HEATER	
	23	1	**448-9957**	1	INSULATION	
	24	1	**449-0002**	2	INSULATION	
	25	1	**449-1706**	22	SCREW-PAN HEAD (8-16X0.75-IN)	
J	26	1	**450-4968**	3	SCREW-HEX HEAD (8-16X0.5-IN)	
	27	1	**450-5228**	9	SCREW-PAN HEAD (8-18X0.5-IN)	
	28	1	**455-5444**	1	COIL AS-EVAPORATOR	
	29	1	**476-9504**	2	SENSOR (TEMPERATURE)	
	30	1	**477-8319**	1	CLIP	
	31	1	**477-9318**	1	SWITCH AS-THERMOSTAT	
	32	1	**489-9315**	1	RESISTOR	
	33	1	**277-1873**	1	CLIP (LADDER)	
M	34	1	**8T-4189**	1	BOLT (M8X1.25X20-MM)	
	35	1	**8T-4224**	1	WASHER-HARD (8.8X16X2-MM THK)	
	36	1	**9X-7381**	1	SEAL-O-RING	
	37	1	**9X-7382**	1	SEAL-O-RING	
	38	1	**215-3759**	1	VALVE AS-CHECK	
					AVAILABLE REPAIR KIT(S):	
J			**443-4030**	1	KIT-VALVE	
					(INCLUDES CLIPS, O-RING SEALS, TUBE, SPACER, SCREWS & WATER VALVE AS)	

J - KIT MARKED J SERVICES PART(S) MARKED J
M - METRIC PART
Y - SEPARATE ILLUSTRATION

434-4309 **AIR CONDITIONER GP (**contd.**)** **i07388818**

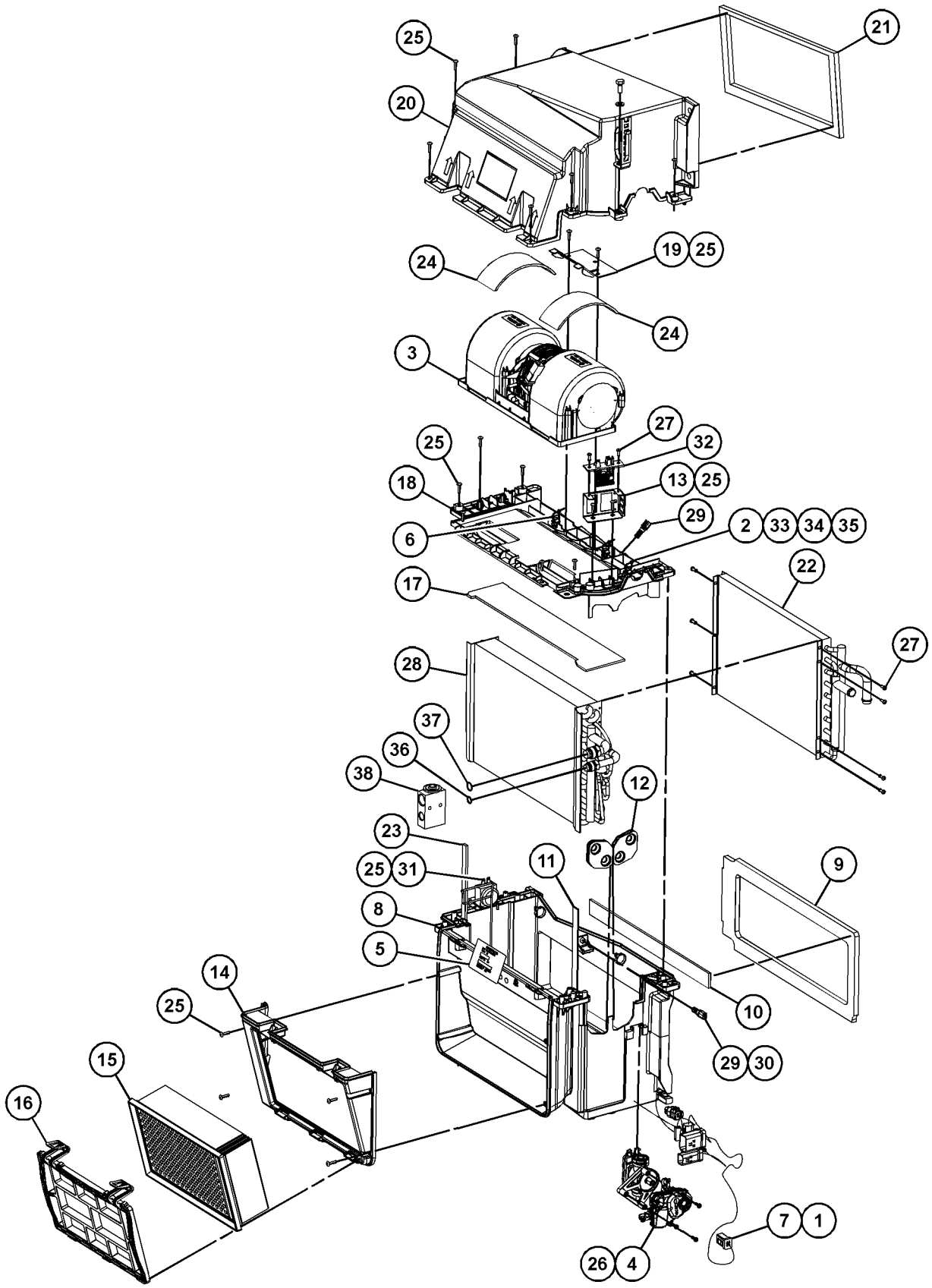

GRAPHIC #1 <END> g06305044

291-7980 ARM GP-SEAT SUSPENSION–CENTER

S/N: H3C1-UP; K3G1-UP
PART OF 354-7510 SUSPENSION GP-SEAT
AN ATTACHMENT

SMCS-7324 **i05980341**

NOTE	REF NO	GRAPHIC REF	PART NUMBER	QTY	PART NAME 1 2 3 4 5 6 (PRODUCT LEVEL)	SEE PAGE
	1	1	**291-7981**	1	ARM AS (INNER, RH)	
	2	1	**291-7984**	1	ARM AS (INNER, LH)	
	3	1	**291-7986**	1	PLATE AS	
	4	1	**291-7989**	2	PLATE	
	5	1	**291-7990**	2	BEARING	
	6	1	**291-7992**	1	SHAFT	
	7	1	**291-8030**	1	SPACER (19.3X25.4X225-MM THK)	
	8	1	**291-9310**	2	BELT-TETHER	
	9	1	**2B-2695**	4	BOLT (5/16-18X0.875-IN)	
	10	1	**6V-8189**	4	NUT (5/16-18-THD)	
	11	1	**6V-8801**	4	NUT (3/8-16-THD)	
	12	1	**7X-0289**	4	BOLT (3/8-16X1.875-IN)	
	13	1	**8T-4896**	8	WASHER-HARD (10.2X18.5X2.5-MM THK)	
	14	1	**9M-1974**	4	WASHER-HARD (8.8X16X2-MM THK)	
	15	1	**313-2794**	1	CLIP	

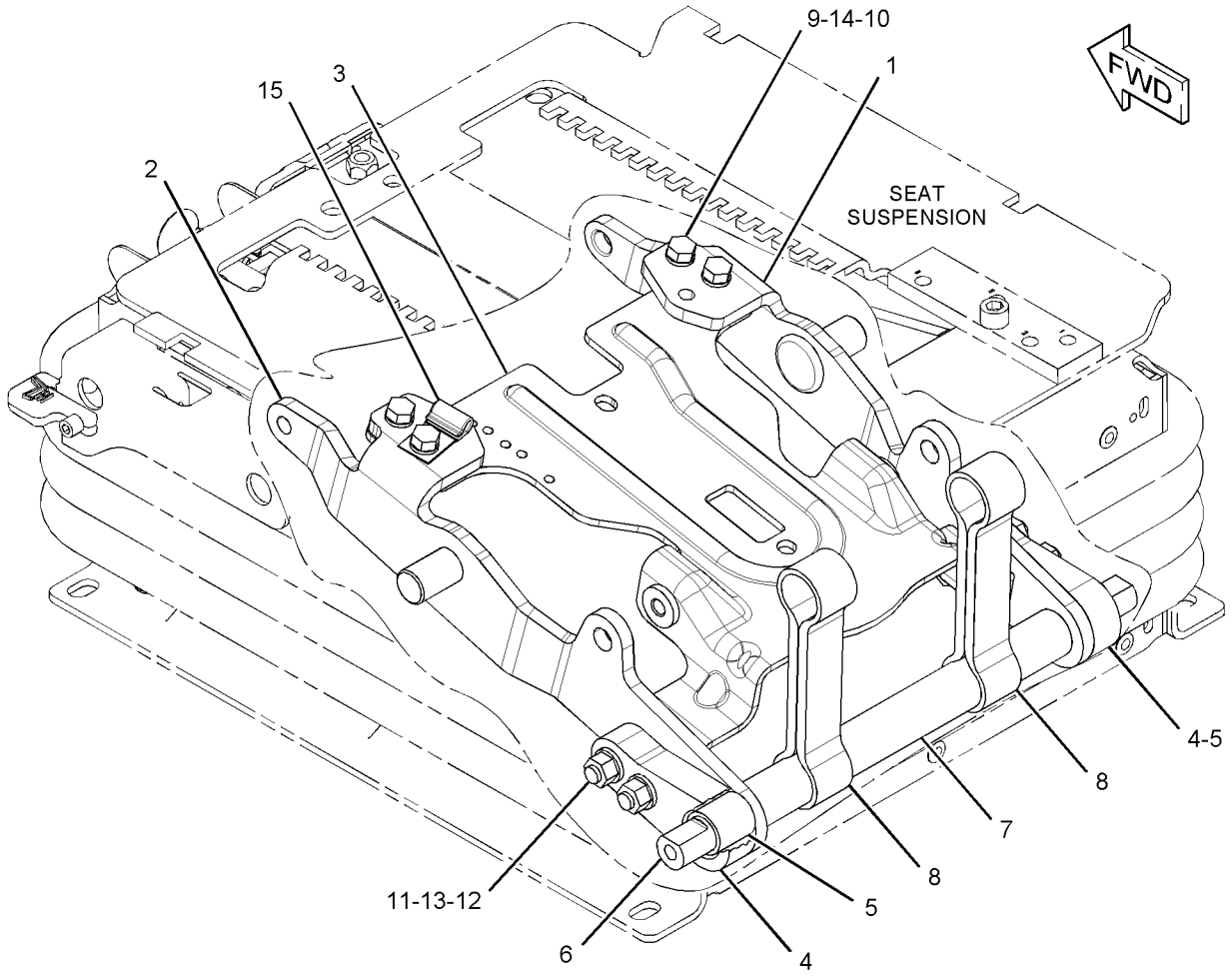

GRAPHIC #1 <END> g01445899

291-8004 ARM GP-SEAT SUSPENSION—OUTER, RH

S/N: H3C1-UP; K3G1-UP
PART OF 354-7510 SUSPENSION GP-SEAT
AN ATTACHMENT

SMCS-7324 **i05873547**

NOTE	REF NO	GRAPHIC REF	PART NUMBER	QTY	PART NAME 1 2 3 4 5 6 (PRODUCT LEVEL)	SEE PAGE
	1	1	**291-7990**	1	BEARING	
	2	1	**291-8005**	1	ARM AS (OUTER, RH)	
	3	1	**291-8008**	1	SPACER	
M	4	1	**5C-7261**	2	NUT (M8X1.25-THD)	
M	5	1	**8T-4197**	2	BOLT (M8X1.25X40-MM)	
	6	1	**8T-4224**	4	WASHER-HARD (8.8X16X2-MM THK)	

M - METRIC PART

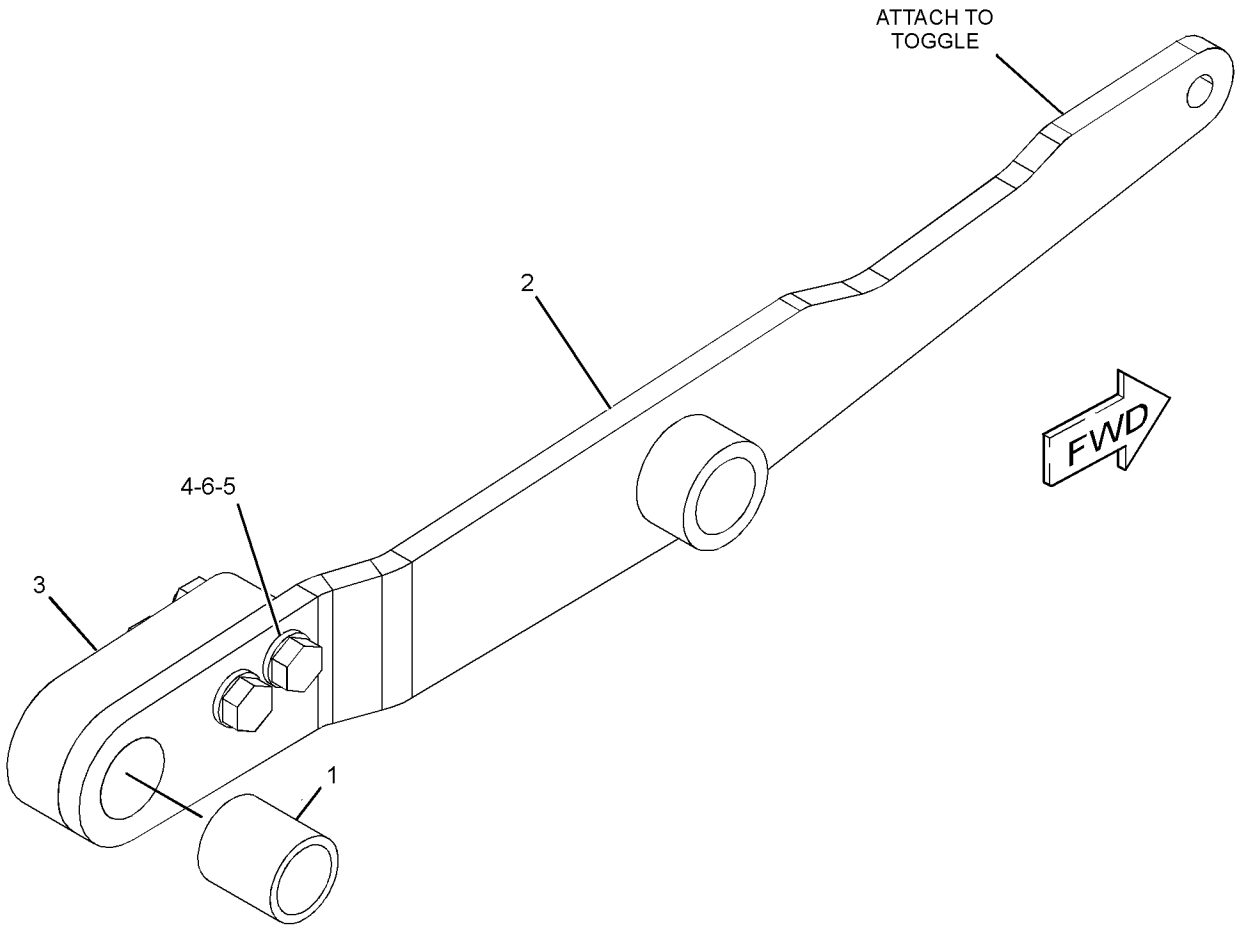

GRAPHIC #1 <END> g01578696

291-8011 ARM GP-SEAT SUSPENSION—OUTER, LH

S/N: H3C1-UP; K3G1-UP
PART OF 354-7510 SUSPENSION GP-SEAT
AN ATTACHMENT

SMCS-7324 **i05873556**

NOTE	REF NO	GRAPHIC REF	PART NUMBER	QTY	PART NAME 1 2 3 4 5 6 (PRODUCT LEVEL)	SEE PAGE
	1	1	**291-7990**	1	BEARING	
	2	1	**291-8008**	1	SPACER	
	3	1	**291-8012**	1	ARM (OUTER, LH)	
M	4	1	**5C-7261**	2	NUT (M8X1.25-THD)	
M	5	1	**8T-4197**	2	BOLT (M8X1.25X40-MM)	
	6	1	**8T-4224**	4	WASHER-HARD (8.8X16X2-MM THK)	

M - METRIC PART

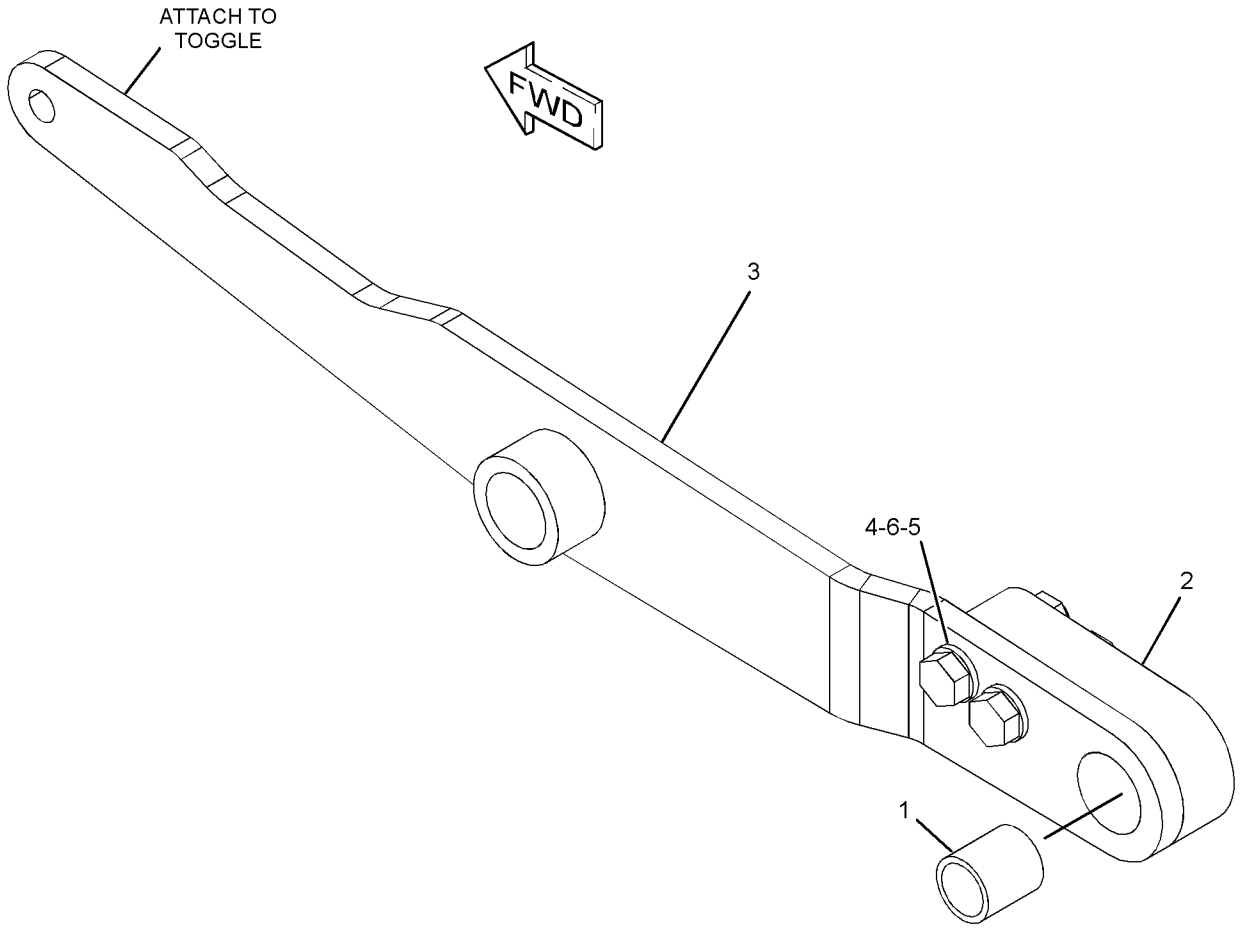

GRAPHIC #1 <END> g01578695

349-6799 ARMREST GP

S/N: H3C1-UP; K3G1-UP
PART OF 568-1316, 568-1317, 568-1318 CAB AR
AN ATTACHMENT

SMCS-7307, 7312

i06791504

NOTE	REF NO	GRAPHIC REF	PART NUMBER	QTY	PART NAME 1 2 3 4 5 6 (PRODUCT LEVEL)	SEE PAGE
Y	1	1	*341-9851*	1	CONSOLE GP-OPERATOR (RH)	455
Y	2	1	*341-9852*	1	CONSOLE GP-OPERATOR (LH)	456

Y - SEPARATE ILLUSTRATION

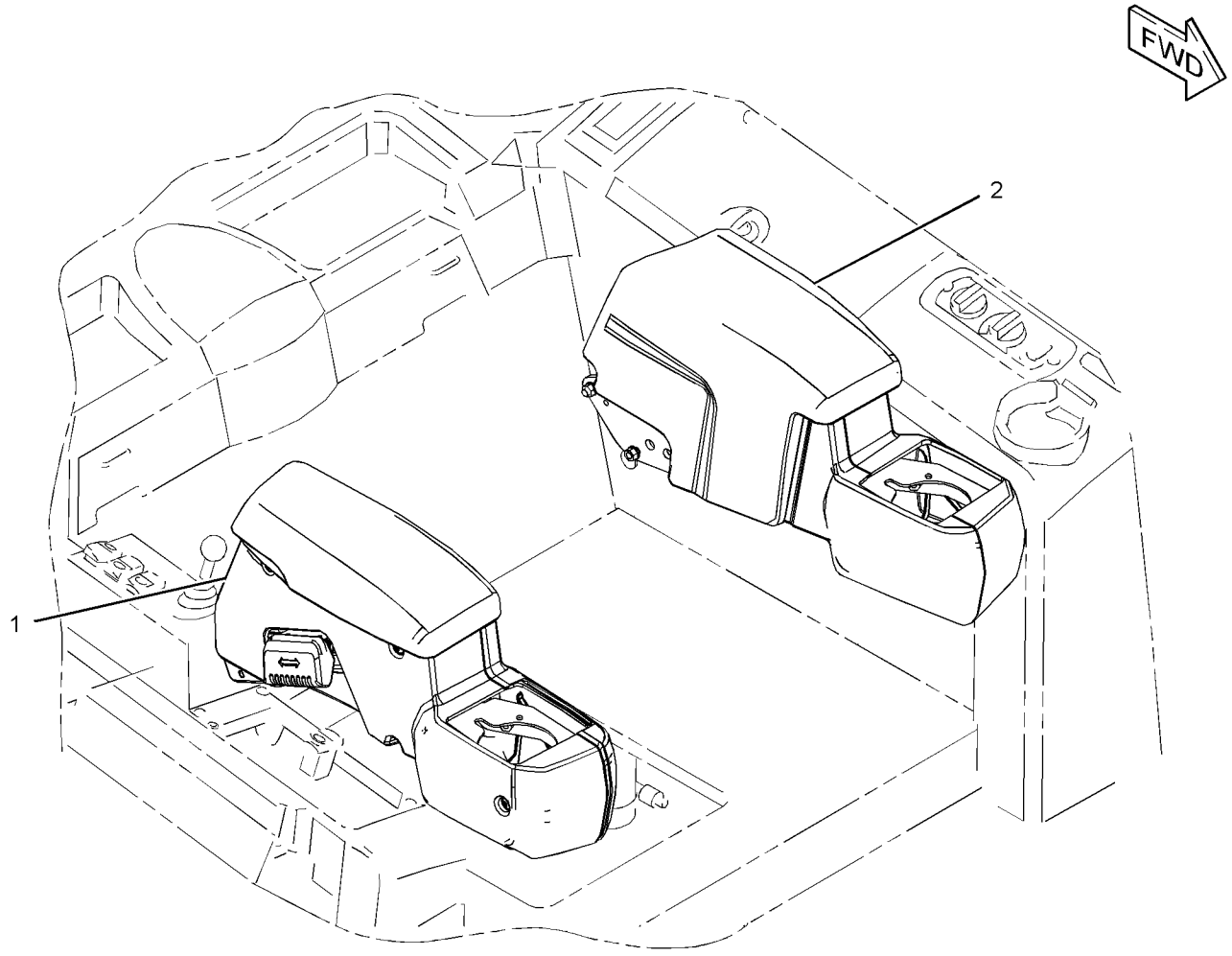

GRAPHIC #1 <END> g03000737

536-8775 CAB AR

S/N: H3C1-UP; K3G1-UP
AN ATTACHMENT

SMCS-7301 **i07775114**

NOTE	PART NUMBER	QTY	PART NAME 1 2 3 4 5 6 (PRODUCT LEVEL)	SEE PAGE
Y	*568-1316*	1	CAB AR	447
Y	*434-0581*	1	COVER GP-CAB	472
Y	*435-5891*	1	TANK GP-WINDOW WASHER	526

Y - SEPARATE ILLUSTRATION

<END>

536-8776 CAB AR

S/N: H3C1-UP; K3G1-UP
HEAVY DUTY
AN ATTACHMENT

SMCS-7301 **i07765370**

NOTE	PART NUMBER	QTY	PART NAME 1 2 3 4 5 6 (PRODUCT LEVEL)	SEE PAGE
Y	*568-1317*	1	CAB AR	447
Y	*434-0581*	1	COVER GP-CAB	472
Y	*435-5891*	1	TANK GP-WINDOW WASHER	526

Y - SEPARATE ILLUSTRATION

<END>

536-8777 CAB AR

S/N: H3C1-UP; K3G1-UP
AN ATTACHMENT

SMCS-7301 **i07772867**

NOTE	PART NUMBER	QTY	PART NAME 1 2 3 4 5 6 (PRODUCT LEVEL)	SEE PAGE
Y	*568-1318*	1	CAB AR	448
Y	*434-0581*	1	COVER GP-CAB	472
Y	*435-5891*	1	TANK GP-WINDOW WASHER	526

Y - SEPARATE ILLUSTRATION

<END>

568-1316 CAB AR

S/N: H3C1-UP; K3G1-UP
PART OF 536-8775 CAB AR
AN ATTACHMENT

SMCS-7301 **i07775166**

NOTE	PART NUMBER	QTY	PART NAME 1 2 3 4 5 6 (PRODUCT LEVEL)	SEE PAGE
Y	*422-7069*	1	AIR CONDITIONER GP	436
Y	*349-6799*	1	ARMREST GP	445
Y	**418-9377**	1	CAB GP	448
Y	*446-1003*	1	CONTROL & MTG GP-PEDAL	457
Y	*542-8466*	1	CONTROL GP-JOYSTICK	468
Y	*421-1022*	1	COVER GP-CONSOLE	474
Y	*486-0091*	1	INSTALLATION GP-CAB	493
Y	*435-7594*	1	INSULATION GP-SOUND SUPPR	284
Y	*435-7593*	1	LINES GP-WINDOW WASHER	500
Y	*539-0441*	1	MONITOR GP-OPERATOR	501
Y	*471-8313*	1	SEAT & MOUNTING GP	514
Y	*536-6699*	1	WIRING GP-CAB	175
Y	*536-6702*	1	WIRING GP-PLATFORM	190

Y - SEPARATE ILLUSTRATION

<END>

568-1317 CAB AR

S/N: H3C1-UP; K3G1-UP
HEAVY-DUTY
PART OF 536-8776 CAB AR
AN ATTACHMENT

SMCS-7301 **i07748033**

NOTE	PART NUMBER	QTY	PART NAME 1 2 3 4 5 6 (PRODUCT LEVEL)	SEE PAGE
Y	*422-7069*	1	AIR CONDITIONER GP	436
Y	*349-6799*	1	ARMREST GP	445
Y	**435-7611**	1	CAB GP	449
Y	*446-1003*	1	CONTROL & MTG GP-PEDAL	457
Y	*542-8466*	1	CONTROL GP-JOYSTICK	468
Y	*421-1022*	1	COVER GP-CONSOLE	474
Y	*486-0091*	1	INSTALLATION GP-CAB	493
Y	*435-7594*	1	INSULATION GP-SOUND SUPPR	284
Y	*435-7593*	1	LINES GP-WINDOW WASHER	500
Y	*539-0441*	1	MONITOR GP-OPERATOR	501
Y	*471-8313*	1	SEAT & MOUNTING GP	514
Y	*536-6699*	1	WIRING GP-CAB	175
Y	*536-6702*	1	WIRING GP-PLATFORM	190

Y - SEPARATE ILLUSTRATION

<END>

568-1318 CAB AR

S/N: H3C1-UP; K3G1-UP
COMFORT
PART OF 536-8777 CAB AR
AN ATTACHMENT

SMCS-7301 **i08025294**

NOTE	PART NUMBER	QTY	PART NAME 1 2 3 4 5 6 (PRODUCT LEVEL)	SEE PAGE
Y	*422-7069*	1	AIR CONDITIONER GP	436
Y	*349-6799*	1	ARMREST GP	445
Y	**418-9377**	1	CAB GP	448
Y	*446-1003*	1	CONTROL & MTG GP-PEDAL	457
Y	*542-8467*	1	CONTROL GP-JOYSTICK	469
Y	*421-1022*	1	COVER GP-CONSOLE	474
Y	*486-0091*	1	INSTALLATION GP-CAB	493
Y	*435-7594*	1	INSULATION GP-SOUND SUPPR	284
Y	*435-7593*	1	LINES GP-WINDOW WASHER	500
Y	*539-0441*	1	MONITOR GP-OPERATOR	501
Y	*471-8315*	1	SEAT & MOUNTING GP	515
Y	*536-6699*	1	WIRING GP-CAB	175
Y	*536-6702*	1	WIRING GP-PLATFORM	190

Y - SEPARATE ILLUSTRATION

<END>

418-9377 CAB GP

S/N: H3C1-UP; K3G1-UP
PART OF 568-1316, 568-1318 CAB AR
AN ATTACHMENT

SMCS-7301 **i08025303**

NOTE	PART NUMBER	QTY	PART NAME 1 2 3 4 5 6 (PRODUCT LEVEL)	SEE PAGE
Y	*484-7985*	1	DOOR GP-CAB (RH)	478
Y	*484-7986*	1	DOOR GP-CAB (LH)	481
Y	*420-9597*	1	INSTALLATION GP-CAB	491
Y	*483-9449*	1	INSTALLATION GP-RADIO	494
Y	*483-9594*	1	WINDOW GP-CAB	529
Y	*484-8213*	1	WIPER GP-WINDOW	533

Y - SEPARATE ILLUSTRATION

<END>

435-7611 CAB GP

S/N: H3C1-UP; K3G1-UP
PART OF 568-1317 CAB AR
AN ATTACHMENT

SMCS-7301 **i08033680**

NOTE	PART NUMBER	QTY	PART NAME 1 2 3 4 5 6 (PRODUCT LEVEL)	SEE PAGE
Y	*486-0430*	1	DOOR GP-CAB (RH)	483
Y	*486-0431*	1	DOOR GP-CAB (LH)	485
Y	*420-9597*	1	INSTALLATION GP-CAB	491
Y	*483-9449*	1	INSTALLATION GP-RADIO	494
Y	*486-0482*	1	WINDOW GP-CAB	530
Y	*484-8213*	1	WIPER GP-WINDOW	533

Y - SEPARATE ILLUSTRATION

<END>

374-7094 COMPRESSOR & MTG GP-REFRIG

S/N: 4501-UP

PART OF 553-3684 ENGINE AR-PRIMARY

SMCS-1802 **i05330642**

NOTE	REF NO	GRAPHIC REF	PART NUMBER	QTY	PART NAME 1 2 3 4 5 6 (PRODUCT LEVEL)	SEE PAGE
M	1	1	**127-3361**	2	BOLT (M8X1.25X95-MM)	
M	2	1	**101-7178**	3	BOLT (M10X1.5X55-MM)	
Y	3	1	**320-1291**	1	COMPRESSOR GP-REFRIGERANT	451
	4	1	**330-1725**	1	BRACKET AS	
		1	**161-9820**	2	PIN	
M	5	1	**346-2999**	2	BOLT (M8X1.25X16.6-MM)	

M - METRIC PART
Y - SEPARATE ILLUSTRATION

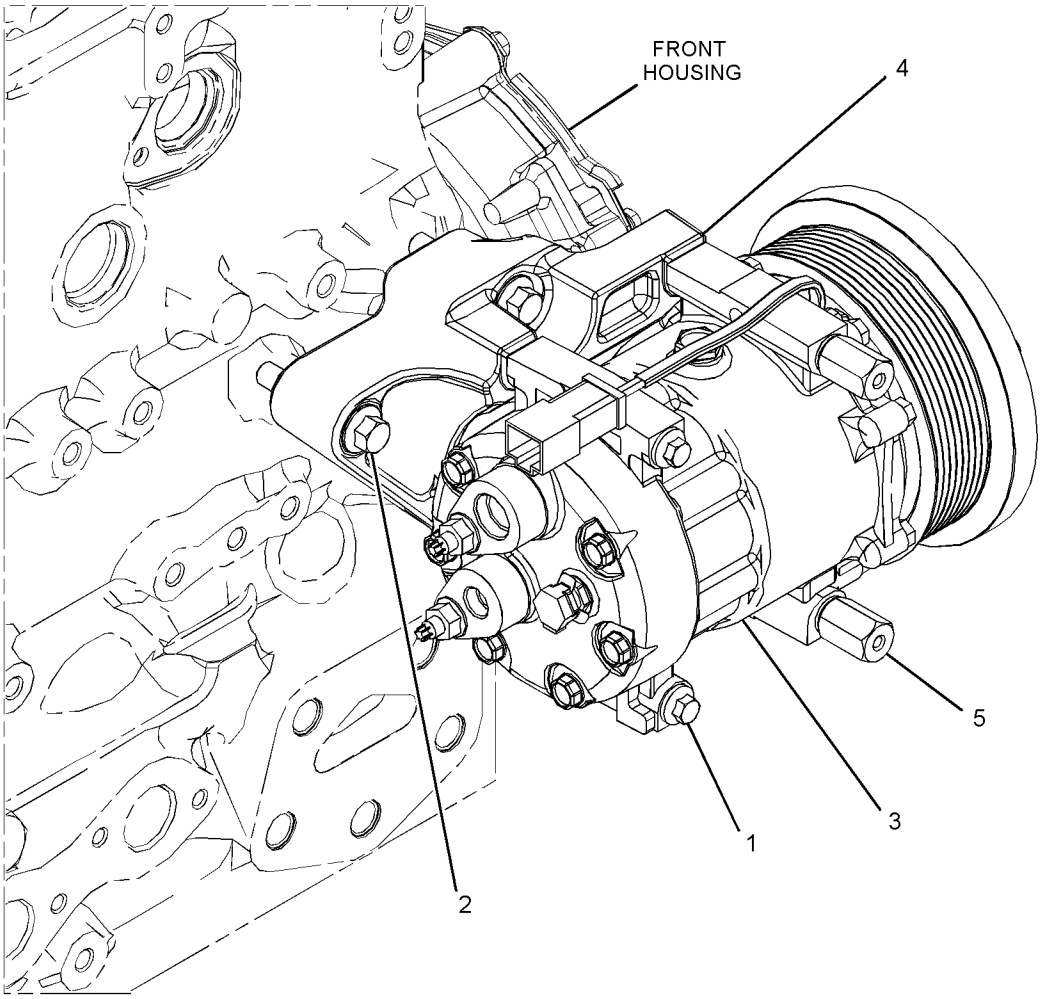

GRAPHIC #1 <END> g02510958

320-1291 COMPRESSOR GP-REFRIGERANT

S/N: 4501-UP

PART OF 374-7094 COMPRESSOR & MTG GP-REFRIG

SMCS-1802 **i07285125**

NOTE	REF NO	GRAPHIC REF	PART NUMBER	QTY	PART NAME 1 2 3 4 5 6 (PRODUCT LEVEL)	SEE PAGE
	1	1	**102-8802**	1	KIT-RECEPTACLE (2-PIN)	
					(INCLUDES RECEPTACLE AS & WEDGE)	
	2	1	**314-4018**	1	VALVE AS-PRESSURE RELIEF (REFRIGERANT COMPRESSOR)	
	3	1	**126-1767**	2	PIN-CONNECTOR (14-GA TO 16-GA)	
	4	1	**7T-4532**	1	PLUG AS	

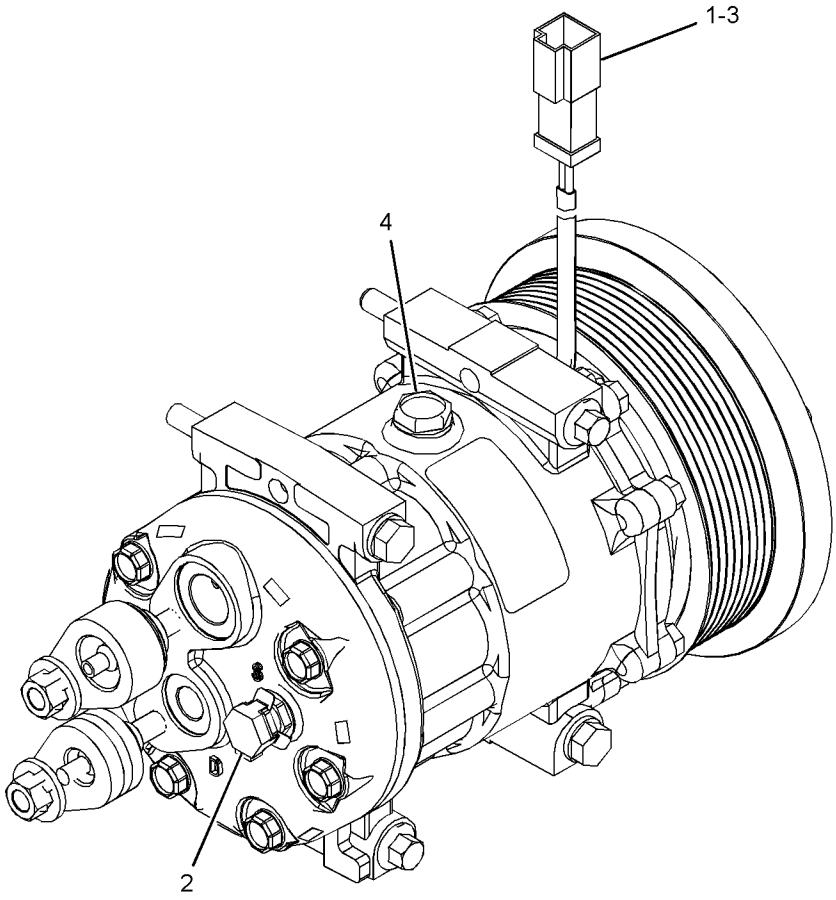

GRAPHIC #1 <END> g02214255

479-8408 CONDENSER GP-REFRIGERANT

S/N: H3C1-UP; K3G1-UP
PART OF 422-7069 AIR CONDITIONER GP
AN ATTACHMENT

SMCS-1805 **i06692652**

NOTE	REF NO	GRAPHIC REF	PART NUMBER	QTY	PART NAME 1 2 3 4 5 6 (PRODUCT LEVEL)	SEE PAGE
	1	1	**3E-5239**	2	RELAY AS (24-VOLT) (CONDENSER FAN)	
	2	1	**3S-2093**	2	STRAP-CABLE	
	3	1	**287-0553**	1	HARNESS AS-HEATER & AIR COND	
		1	**102-8805**	1	KIT-RECEPTACLE (6-PIN)	
					(INCLUDES RECEPTACLE AS & WEDGE)	
		1	**8T-8737**	1	PLUG-SEAL	
		1	**9W-0844**	4	SOCKET-CONNECTOR (14-GA TO 16-GA)	
		1	**9W-0852**	5	PIN-CONNECTOR (14-GA TO 16-GA)	
		1	**9X-1054**	2	PLUG AS-CONNECTOR (4-PIN)	
		1	**9X-1056**	4	TERMINAL-RECEPTACLE (14-GA TO 16-GA)	
		1	**100-5041**	4	TERMINAL-RECEPTACLE (18-GA TO 20-GA)	
E		1	**125-7874**		TUBE-HEAT SHRINK (5.72-MM DIA) (5-CM)	
E		1	**125-7875**		TUBE-HEAT SHRINK (7.44-MM DIA) (10-CM)	
		1	**155-2270**	2	KIT-CONNECTING PLUG (2-PIN)	
					(EACH INCLUDES PLUG AS, WEDGE, & INTERFACE SEAL)	
	4	1	**330-0003**	1	COIL AS (CONDENSER)	
	5	1	**331-1722**	1	PLATE AS	
	6	1	**484-8774**	2	FAN AS-CONDENSER (24-VOLT, 5-BLADE)	
	7	1	**4P-8134**	1	CLIP (LADDER)	
M	8	1	**5C-2890**	1	NUT (M6X1-THD)	
M	9	1	**8T-4138**	1	BOLT (M6X1X20-MM)	
M	10	1	**8T-4200**	5	BOLT (M8X1.25X16-MM)	
	11	1	**8T-4205**	2	WASHER-HARD (7.2X14.5X2-MM THK)	
	12	1	**8T-4224**	13	WASHER-HARD (8.8X16X2-MM THK)	
M	13	1	**8T-4908**	8	BOLT (M8X1.25X25-MM)	

E - ORDER BY THE CENTIMETER
M - METRIC PART

479-8408 **CONDENSER GP-REFRIGERANT (**contd.**)** **i06692652**

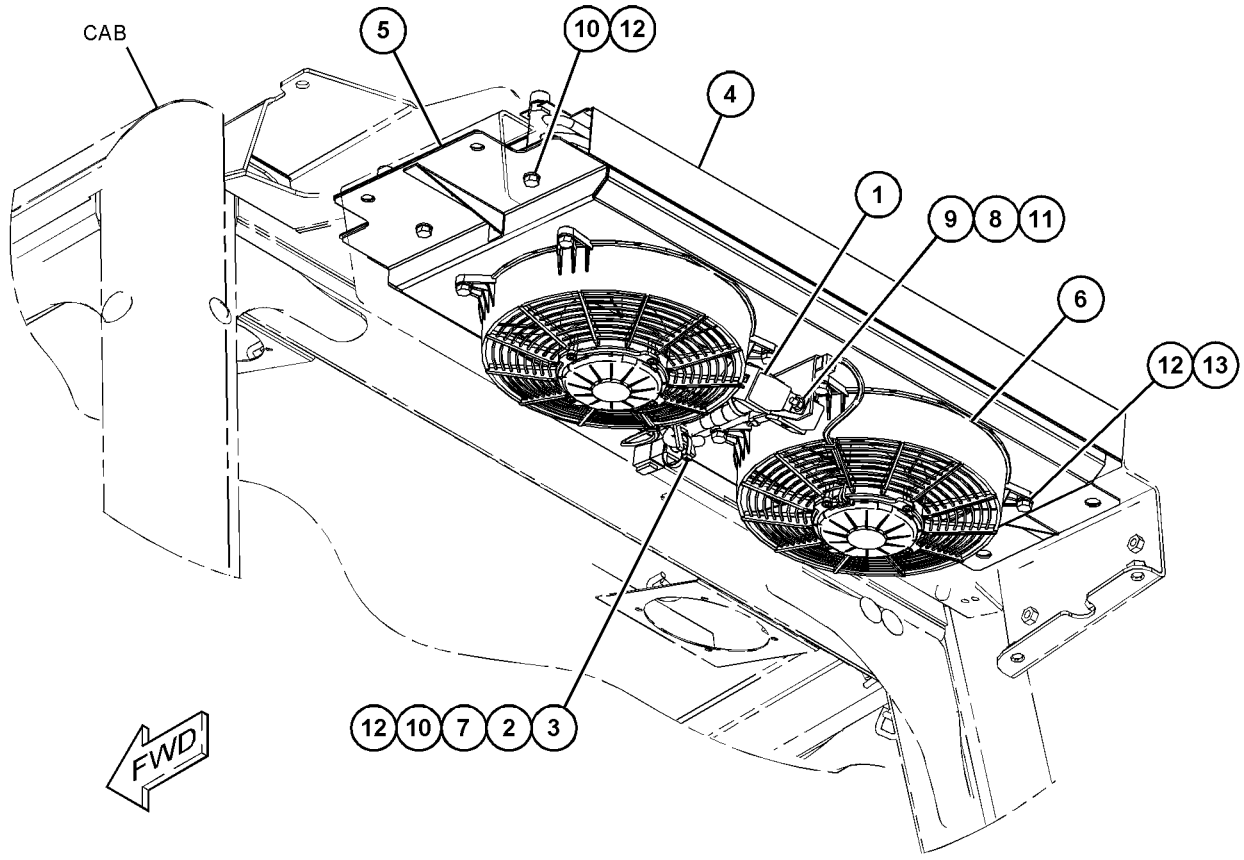

GRAPHIC #1 <END> g06010718

393-4263 CONSOLE GP

S/N: H3C1-UP; K3G1-UP
PART OF 421-1022 COVER GP-CONSOLE
AN ATTACHMENT

SMCS-5258 **i06692567**

NOTE	REF NO	GRAPHIC REF	PART NUMBER	QTY	PART NAME 1 2 3 4 5 6 (PRODUCT LEVEL)	SEE PAGE
	1	1	**188-8846**	1	LATCH AS	
	2	1	**393-4262**	1	HINGE AS	
	3	1	**393-4282**	1	CONSOLE AS	
	4	1	**393-4285**	1	COVER AS	
M	5	1	**138-8454**	6	SCREW-TRUSS HEAD (M4X0.7X10-MM)	

M - METRIC PART

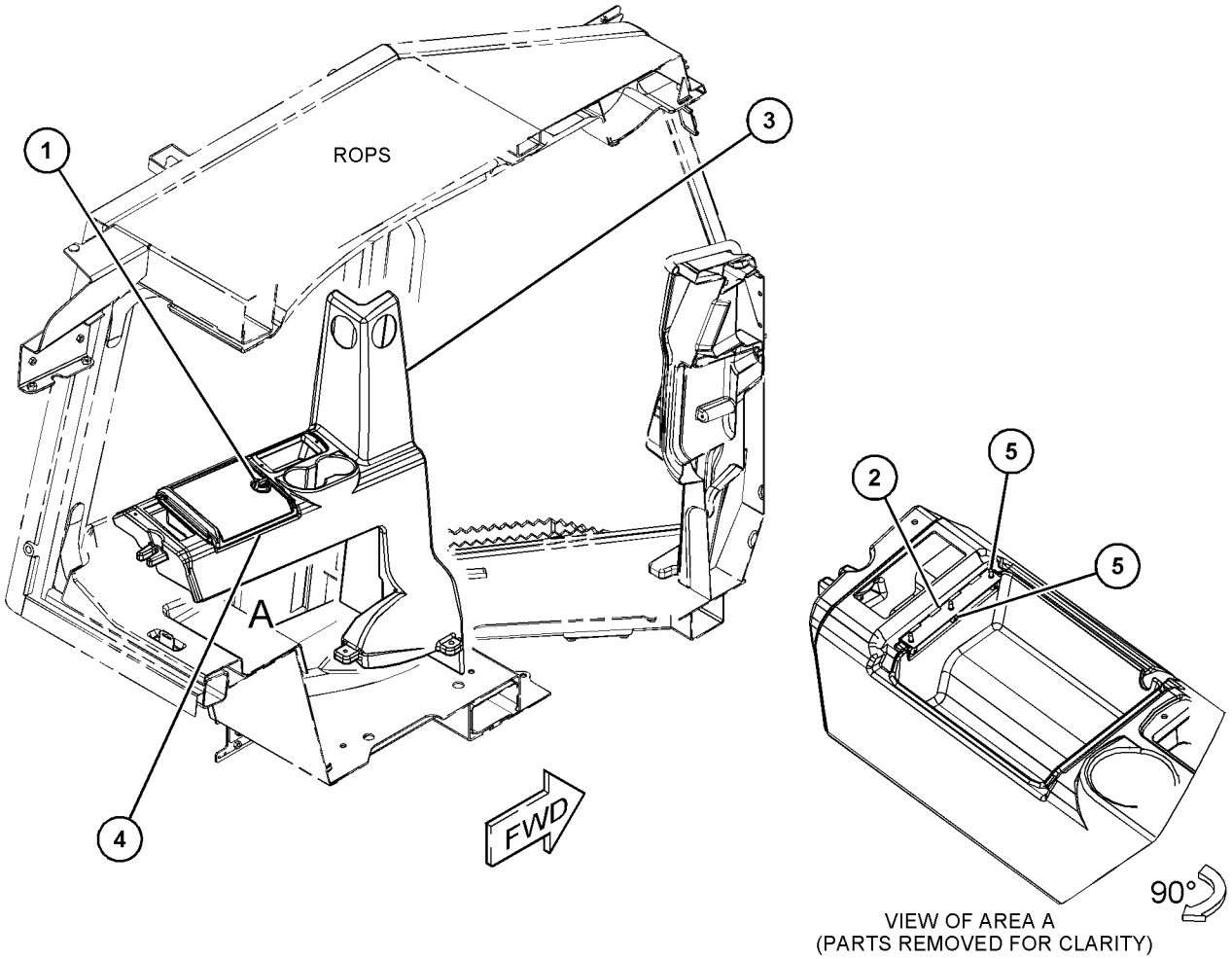

VIEW OF AREA A
(PARTS REMOVED FOR CLARITY)

GRAPHIC #1 <END> g03788985

341-9851 CONSOLE GP-OPERATOR–RH

S/N: H3C1-UP; K3G1-UP
PART OF 349-6799 ARMREST GP
AN ATTACHMENT

SMCS-5258, 7451

i06859484

NOTE	REF NO	GRAPHIC REF	PART NUMBER	QTY	PART NAME 1 2 3 4 5 6 (PRODUCT LEVEL)	SEE PAGE
	1	1	**258-3727**	4	SCREW-TRUSS HEAD (12-14X0.69-IN)	
	2	1	**342-0153**	1	BRACKET AS	
	3	1	**349-2592**	1	COVER	
	4	1	**349-2594**	1	COVER AS	
	5	1	**349-2599**	1	CUSHION AS-SEAT	
M		1	**205-7048**	4	INSERT-THREADED (M6X1-X14.73-MM)	
	6	1	**349-2600**	1	ADJUSTER GP-CONTROL	
M		1	**131-3987**	2	SCREW (M4X0.7X12-MM)	
		1	**349-2593**	1	HANDLE	
M	7	1	**5C-7261**	3	NUT (M8X1.25-THD)	
M	8	1	**8T-4138**	3	BOLT (M6X1X20-MM)	
	9	1	**8T-4224**	3	WASHER-HARD (8.8X16X2-MM THK)	
M	10	1	**9X-2045**	8	SCREW-TRUSS HEAD (M6X1X20-MM)	
	11	1	**9X-2038**	7	WASHER (7X19X2-MM THK)	

M - METRIC PART

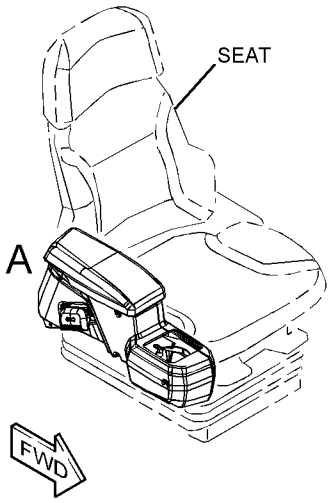

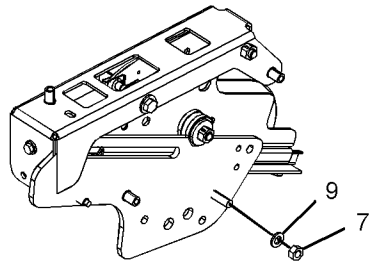

VIEW OF AREA B

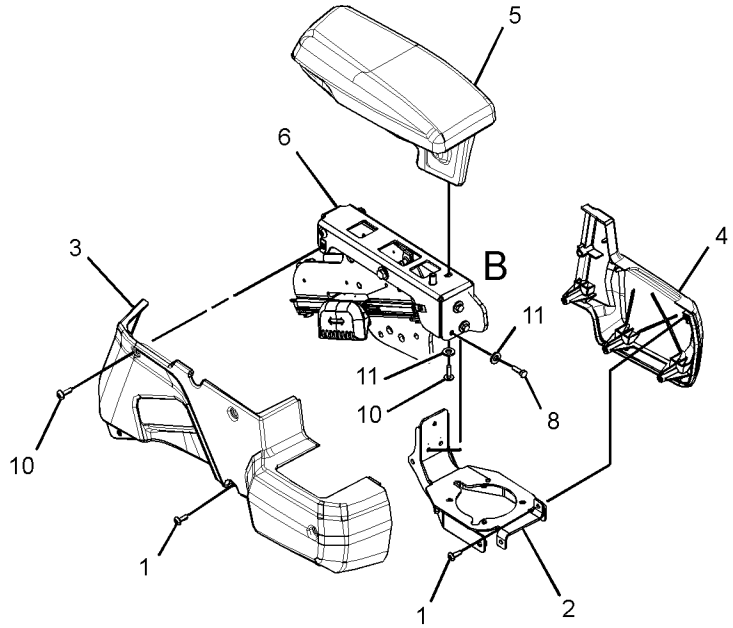

VIEW OF AREA A
(EXPLODED)

GRAPHIC #1

<END>

g02811677

341-9852 CONSOLE GP-OPERATOR–LH

S/N: H3C1-UP; K3G1-UP
PART OF 349-6799 ARMREST GP
AN ATTACHMENT

SMCS-5258, 7451

i06791309

NOTE	REF NO	GRAPHIC REF	PART NUMBER	QTY	PART NAME 1 2 3 4 5 6 (PRODUCT LEVEL)	SEE PAGE
	1	1	**258-3727**	4	SCREW-TRUSS HEAD (12-14X0.69-IN)	
	2	1	**342-0153**	1	BRACKET AS	
	3	1	**349-2595**	1	COVER AS	
	4	1	**349-2596**	1	COVER	
	5	1	**349-2598**	1	CUSHION AS	
	6	1	**349-2601**	1	ADJUSTER AS-SEAT	
M		1	**131-3987**	2	SCREW (M4X0.7X12-MM)	
		1	**349-2593**	1	HANDLE	
M	7	1	**5C-7261**	3	NUT (M8X1.25-THD)	
M	8	1	**8T-4138**	3	BOLT (M6X1X20-MM)	
	9	1	**8T-4224**	3	WASHER-HARD (8.8X16X2-MM THK)	
M	10	1	**9X-2045**	8	SCREW-TRUSS HEAD (M6X1X20-MM)	
	11	1	**9X-2038**	7	WASHER (7X19X2-MM THK)	

M - METRIC PART

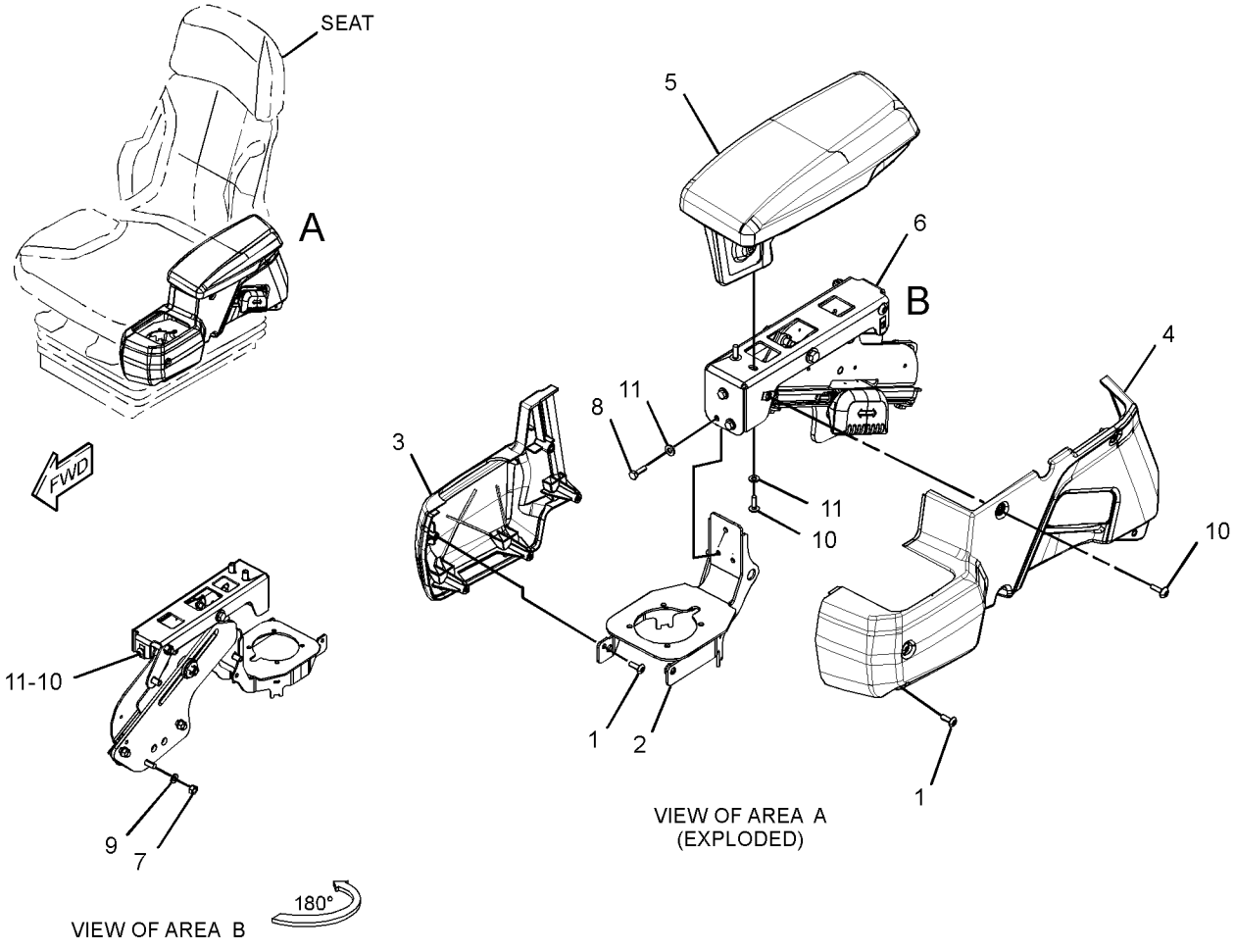

GRAPHIC #1

<END>

g02810697

446-1003 CONTROL & MTG GP-PEDAL

S/N: H3C1-UP; K3G1-UP
PART OF 568-1316, 568-1317, 568-1318 CAB AR
AN ATTACHMENT

SMCS-5462 **i06692856**

NOTE	REF NO	GRAPHIC REF	PART NUMBER	QTY	PART NAME 1 2 3 4 5 6 (PRODUCT LEVEL)	SEE PAGE
Y	1	1	*446-1002*	1	PEDAL GP-GOVERNOR & BRAKE	509
	2	1	**7X-7729**	3	WASHER (11X25X3-MM THK)	
M	3	1	**8T-4133**	3	NUT (M10X1.5-THD)	

M - METRIC PART
Y - SEPARATE ILLUSTRATION

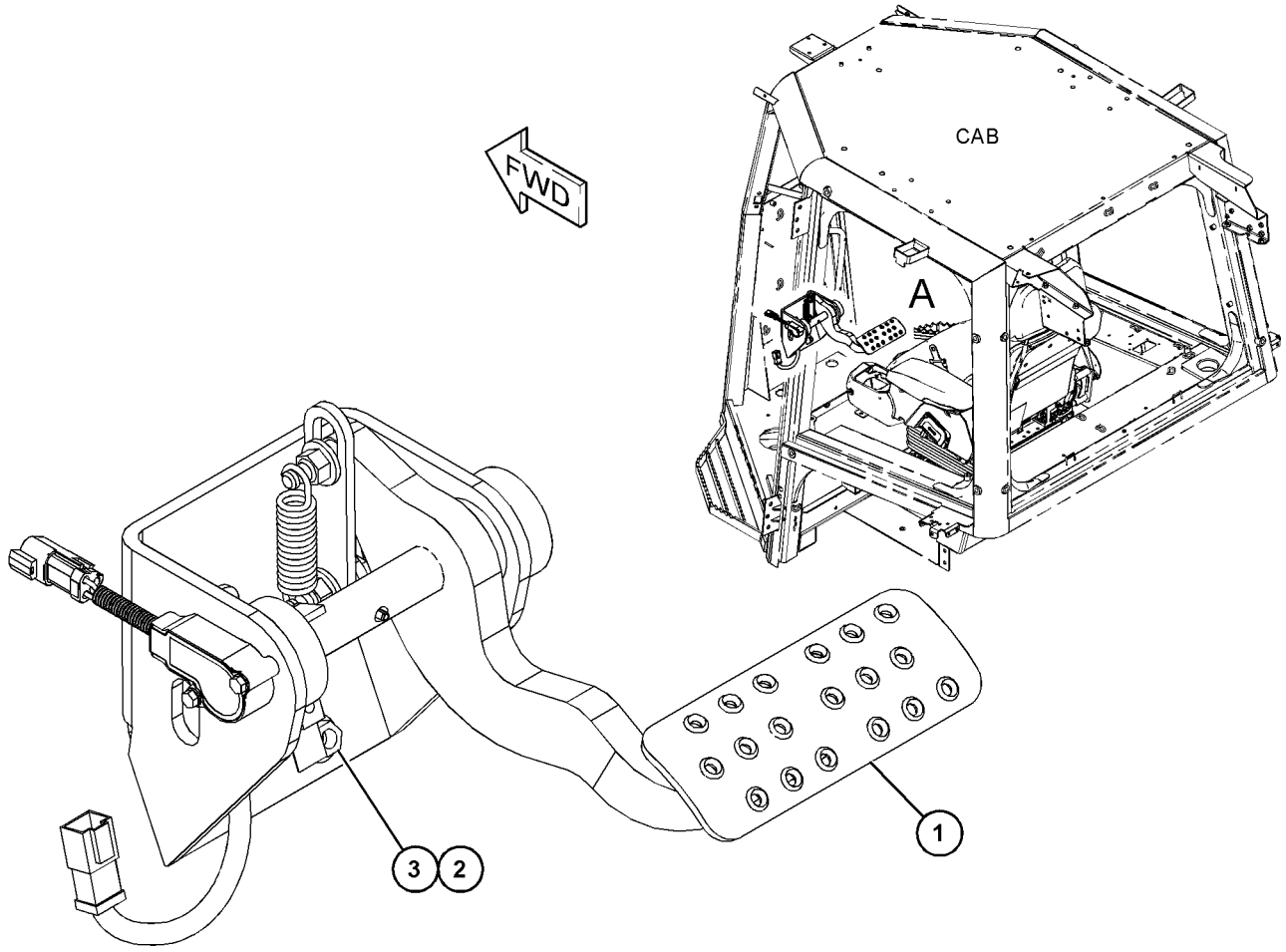

VIEW OF AREA A

GRAPHIC #1 <END> g06021368

266-7634 CONTROL GP-HANDLE–LH

S/N: H3C1-UP; K3G1-UP
PART OF 343-3676 CONTROL GP-JOYSTICK
AN ATTACHMENT

SMCS-5063, 5705

i05874342

NOTE	REF NO	GRAPHIC REF	PART NUMBER	QTY	PART NAME 1 2 3 4 5 6 (PRODUCT LEVEL)	SEE PAGE
	1	1	**260-6728**	1	RECEPTACLE AS-CONNECTOR (12-PIN)	
	2	1	**8T-8729**	8	PIN-CONNECTOR (16-GA TO 20-GA)	
	3	1	**8T-8737**	4	PLUG-SEAL	
M	4	1	**299-2214**	2	SETSCREW (M6X1X12-MM)	
	5	1	**144-0331**	1	CAP-PUSH BUTTON (YELLOW)	
	6	1	**220-8355**	1	CAP-PUSH BUTTON (BLACK)	

M - METRIC PART

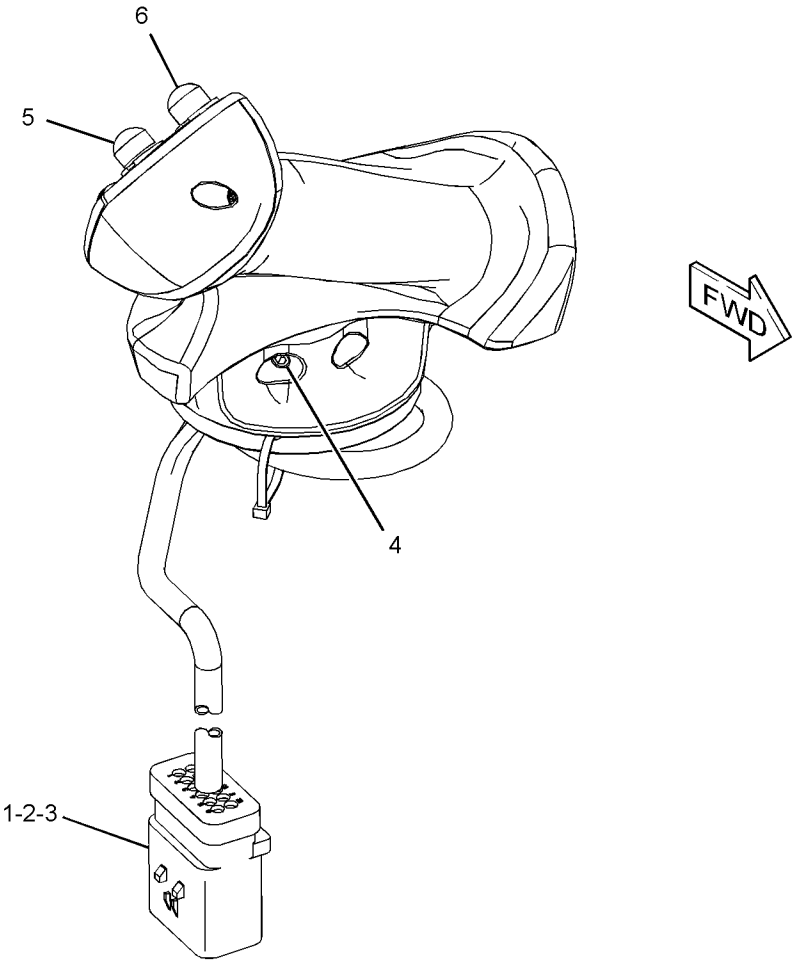

GRAPHIC #1 <END> g03384033

351-8682 CONTROL GP-HANDLE–HEATED, LH

S/N: H3C1-UP; K3G1-UP
PART OF 351-8684 CONTROL GP-JOYSTICK
AN ATTACHMENT

SMCS-5063, 5705

i06704942

NOTE	REF NO	GRAPHIC REF	PART NUMBER	QTY	PART NAME 1 2 3 4 5 6 (PRODUCT LEVEL)	SEE PAGE
	1	1	**260-6728**	1	RECEPTACLE AS-CONNECTOR (12-PIN)	
	2	1	**8T-8729**	12	PIN-CONNECTOR (16-GA TO 20-GA)	
M	3	1	**299-2214**	2	SETSCREW (M6X1X12-MM)	
	4	1	**144-0331**	1	CAP-PUSH BUTTON (YELLOW)	
	5	1	**220-8355**	1	CAP-PUSH BUTTON (BLACK)	

M - METRIC PART

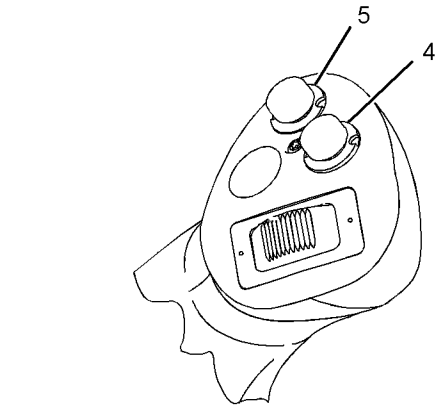

REAR VIEW

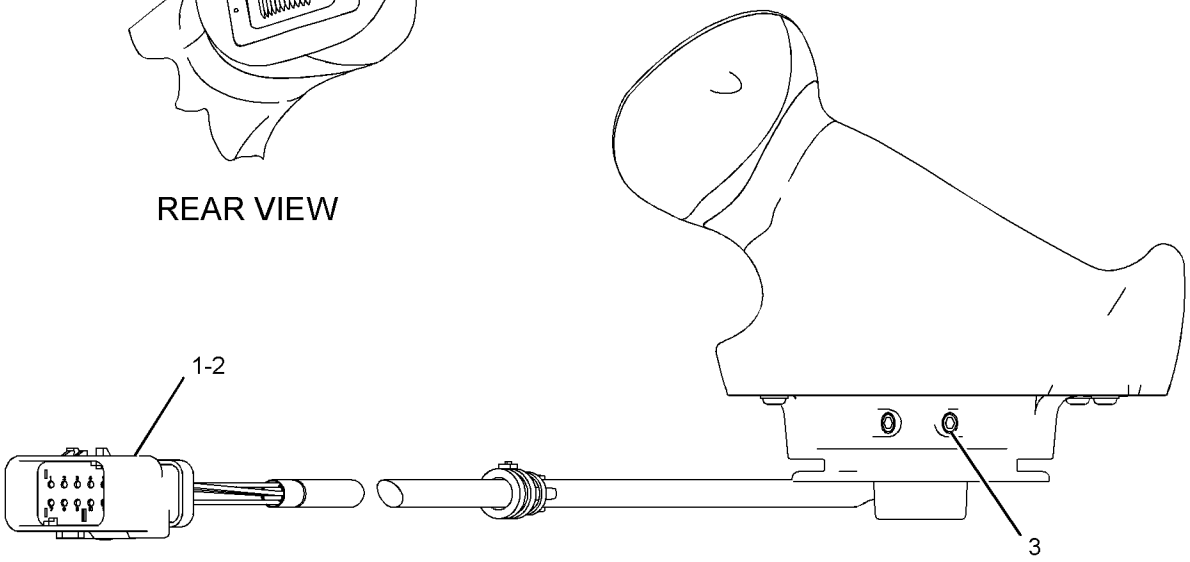

FRONT VIEW

GRAPHIC #1

<END>

g02790160

378-8521 CONTROL GP-HANDLE–RIPPER

S/N: H3C1-UP; K3G1-UP
PART OF 441-3019, 441-3080 CONTROL GP-IMPLEMENT
AN ATTACHMENT

SMCS-5063, 5705

i07509218

NOTE	REF NO	GRAPHIC REF	PART NUMBER	QTY	PART NAME 1 2 3 4 5 6 (PRODUCT LEVEL)	SEE PAGE
	1	1	**432-0049**	1	PLATE-MOUNTING	
	2	1	**151-9274**	1	KIT-RECEPTACLE (4-PIN)	
					(INCLUDES RECEPTACLE AS & WEDGE)	
Y	3	1	*563-5532*	1	KIT-HANDLE	495

Y - SEPARATE ILLUSTRATION

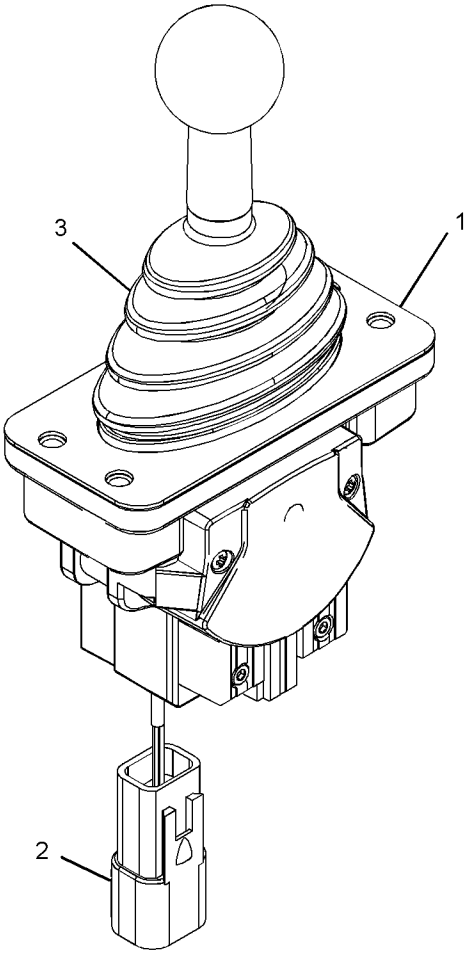

GRAPHIC #1

<END>

g06343382

461-9454 CONTROL GP-HANDLE—HEATED, RH

S/N: H3C1-UP; K3G1-UP
PART OF 454-6812 CONTROL GP-JOYSTICK
AN ATTACHMENT

SMCS-5063, 5705

i07505095

NOTE	REF NO	GRAPHIC REF	PART NUMBER	QTY	PART NAME 1 2 3 4 5 6 (PRODUCT LEVEL)	SEE PAGE
M	1	1	**299-2214**	2	SETSCREW (M6X1X12-MM)	
	2	1	**260-6728**	1	RECEPTACLE AS-CONNECTOR (12-PIN)	
	3	1	**8T-8729**	11	PIN-CONNECTOR (16-GA TO 20-GA)	
	4	1	**144-0331**	1	CAP-PUSH BUTTON (YELLOW)	
	5	1	**220-8355**	2	CAP-PUSH BUTTON (BLACK)	
	6	1	**8T-8737**	1	PLUG-SEAL	

M - METRIC PART

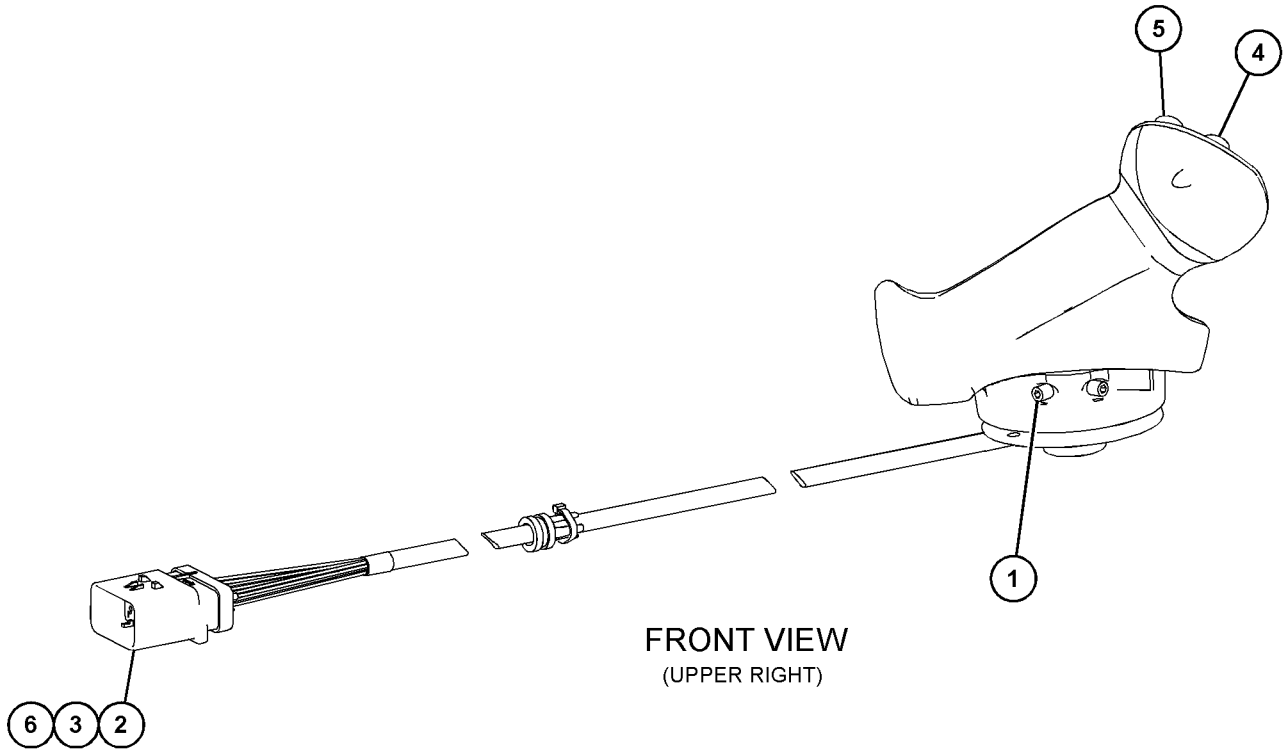

FRONT VIEW
(UPPER RIGHT)

GRAPHIC #1 <END> g06218617

461-9455 CONTROL GP-HANDLE

S/N: H3C1-UP; K3G1-UP
PART OF 454-6813 CONTROL GP-JOYSTICK
AN ATTACHMENT

SMCS-5063, 5705 **i07504662**

NOTE	REF NO	GRAPHIC REF	PART NUMBER	QTY	PART NAME 1 2 3 4 5 6 (PRODUCT LEVEL)	SEE PAGE
M	1	1	**299-2214**	2	SETSCREW (M6X1X12-MM)	
	2	1	**260-6728**	1	RECEPTACLE AS-CONNECTOR (12-PIN)	
	3	1	**8T-8729**	9	PIN-CONNECTOR (16-GA TO 20-GA)	
	4	1	**144-0331**	1	CAP-PUSH BUTTON (YELLOW)	
	5	1	**220-8355**	2	CAP-PUSH BUTTON (BLACK)	
	6	1	**8T-8737**	3	PLUG-SEAL	

M - METRIC PART

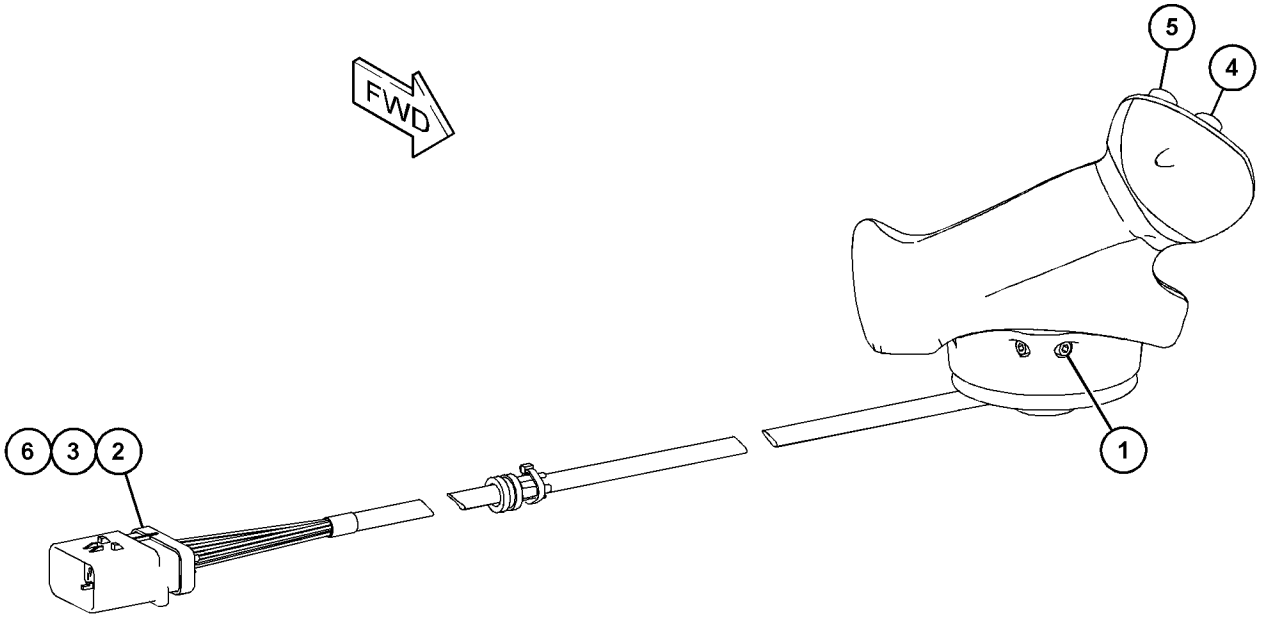

GRAPHIC #1 <END> g06134961

343-3676 CONTROL GP-JOYSTICK

S/N: H3C1-UP; K3G1-UP
PART OF 542-8466 CONTROL GP-JOYSTICK
AN ATTACHMENT

SMCS-5705 **i07240488**

NOTE	REF NO	GRAPHIC REF	PART NUMBER	QTY	PART NAME 1 2 3 4 5 6 (PRODUCT LEVEL)	SEE PAGE
Y	1	1	**266-7634**	1	CONTROL GP-HANDLE (LH) (STEERING, TRANSMISSION)	458
	2	1	**343-3677**	1	BASE AS	
	2A	1	**102-8805**	1	KIT-RECEPTACLE (6-PIN)	
					(INCLUDES RECEPTACLE AS & WEDGE)	
	2B	1	**284-8208**	1	SHAFT-ADAPTER	
		1	**8T-8729**	4	PIN-CONNECTOR (16-GA TO 20-GA)	
		1	**8T-8737**	2	PLUG-SEAL	
	3	1	**285-0151**	1	BOOT	
	4	1	**343-3527**	1	BRACKET AS	
M	5	1	**299-2214**	2	SETSCREW (M6X1X12-MM)	
	6	1	**260-6728**	1	RECEPTACLE AS-CONNECTOR (12-PIN)	
	7	1	**220-8355**	1	CAP-PUSH BUTTON (BLACK)	
	8	1	**8T-8729**	8	PIN-CONNECTOR (16-GA TO 20-GA)	
	9	1	**8T-8737**	4	PLUG-SEAL	
	10	1	**144-0331**	1	CAP-PUSH BUTTON (YELLOW)	
	11	1	**8L-8413**	1	STRAP-CABLE (WHITE)	

M - METRIC PART
Y - SEPARATE ILLUSTRATION

343-3676 **CONTROL GP-JOYSTICK (**contd.**)** **i07240488**

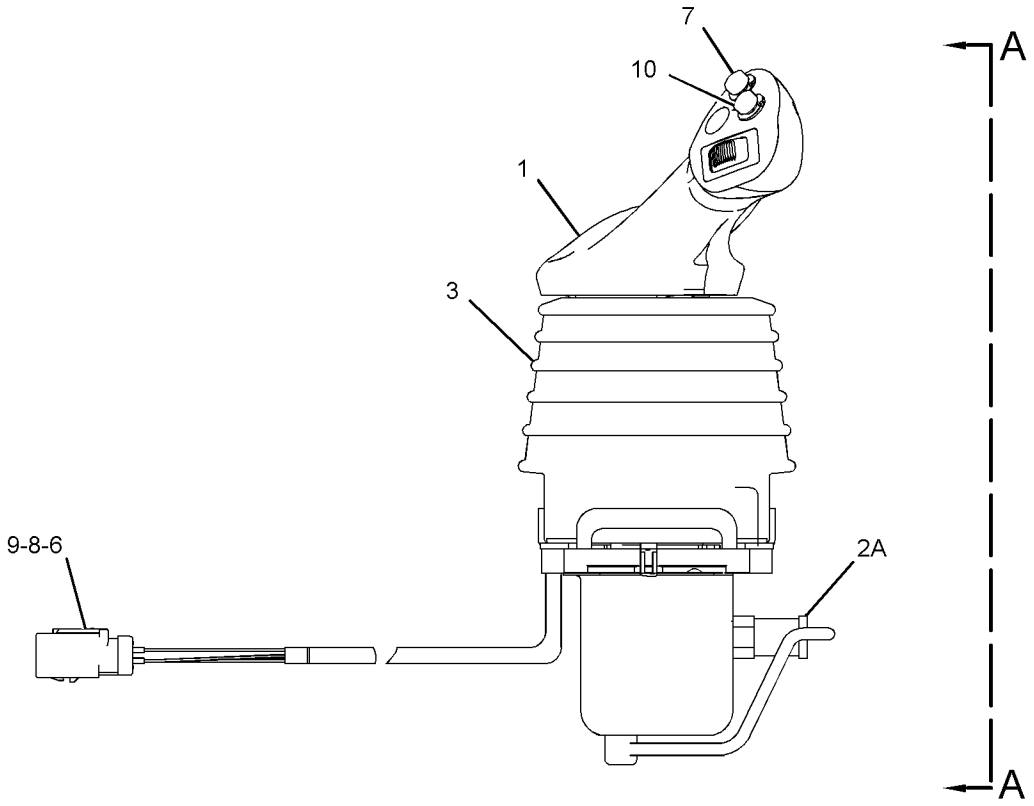

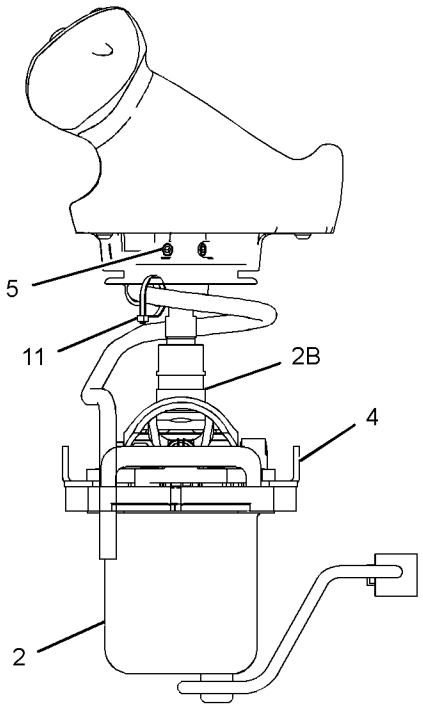

VIEW A-A
(BOOT REMOVED FOR CLARITY)

GRAPHIC #1 <END> g02789355

351-8684 CONTROL GP-JOYSTICK

S/N: H3C1-UP; K3G1-UP
PART OF 542-8467 CONTROL GP-JOYSTICK
AN ATTACHMENT

SMCS-5705 **i06704936**

NOTE	REF NO	GRAPHIC REF	PART NUMBER	QTY	PART NAME 1 2 3 4 5 6 (PRODUCT LEVEL)	SEE PAGE
Y	1	1	**351-8682**	1	CONTROL GP-HANDLE (HEATED, LH)	459
	2	1	**343-3677**	1	BASE AS	
	2A	1	**8T-8729**	4	PIN-CONNECTOR (16-GA TO 20-GA)	
	2B	1	**8T-8737**	2	PLUG-SEAL	
	2C	1	**102-8805**	1	KIT-RECEPTACLE (6-PIN)	
					(INCLUDES RECEPTACLE AS & WEDGE)	
	2D	1	**284-8208**	1	SHAFT-ADAPTER	
	3	1	**285-0151**	1	BOOT	
	4	1	**343-3527**	1	BRACKET AS	
	5	1	**8L-8413**	1	STRAP-CABLE (WHITE)	

Y - SEPARATE ILLUSTRATION

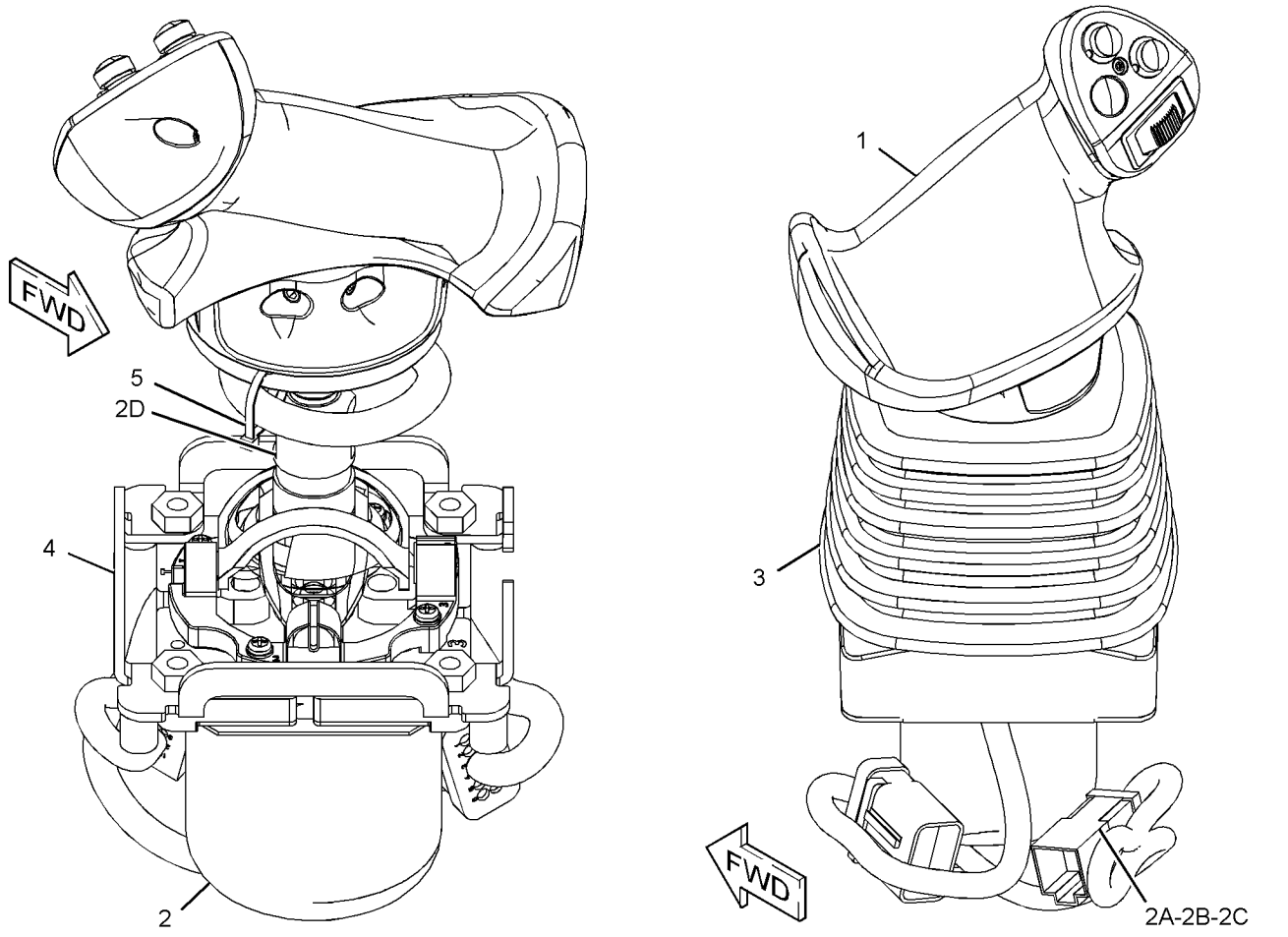

GRAPHIC #1 <END> g02790482

454-6812 CONTROL GP-JOYSTICK—HEATED, RH

S/N: H3C1-UP; K3G1-UP
PART OF 542-8467 CONTROL GP-JOYSTICK
AN ATTACHMENT

SMCS-5705 **i07505092**

NOTE	REF NO	GRAPHIC REF	PART NUMBER	QTY	PART NAME 1 2 3 4 5 6 (PRODUCT LEVEL)	SEE PAGE
	1	1	**454-6811**	1	BASE AS-JOYSTICK	
	1A	1	**281-3136**	1	RECEPTACLE AS-CONNECTOR (6-PIN)	
		1	**8T-8729**	6	PIN-CONNECTOR (16-GA TO 20-GA)	
Y	2	1	**461-9454**	1	CONTROL GP-HANDLE	461
	3	1	**285-0151**	1	BOOT	
	4	1	**8T-8737**	1	PLUG-SEAL	
	5	1	**8T-8729**	11	PIN-CONNECTOR (16-GA TO 20-GA)	
	6	1	**260-6728**	1	RECEPTACLE AS-CONNECTOR (12-PIN)	
M	7	1	**299-2214**	2	SETSCREW (M6X1X12-MM)	
	8	1	**8L-8413**	2	STRAP-CABLE (WHITE)	
	9	1	**144-0331**	1	CAP-PUSH BUTTON (YELLOW)	
	10	1	**220-8355**	2	CAP-PUSH BUTTON (BLACK)	

M - METRIC PART
Y - SEPARATE ILLUSTRATION

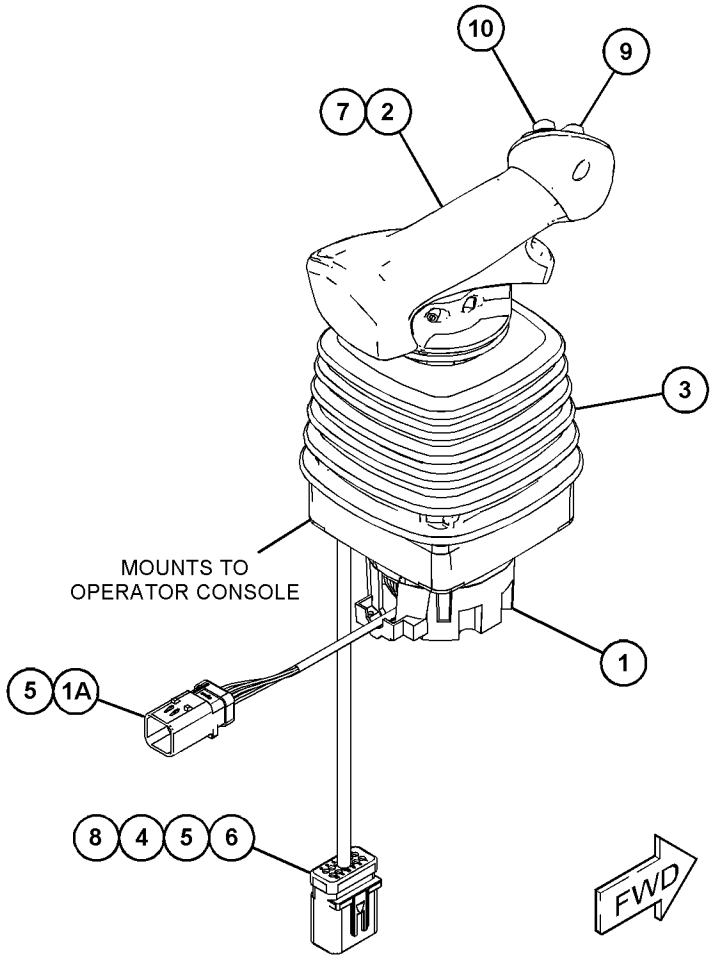

GRAPHIC #1 <END> g06206945

454-6813 CONTROL GP-JOYSTICK

S/N: H3C1-UP; K3G1-UP
PART OF 542-8466 CONTROL GP-JOYSTICK
AN ATTACHMENT

SMCS-5705 **i07504661**

NOTE	REF NO	GRAPHIC REF	PART NUMBER	QTY	PART NAME 1 2 3 4 5 6 (PRODUCT LEVEL)	SEE PAGE
	1	1	**454-6811**	1	BASE AS-JOYSTICK	
		1	**8T-8729**	6	PIN-CONNECTOR (16-GA TO 20-GA)	
		1	**281-3136**	1	RECEPTACLE AS-CONNECTOR (6-PIN)	
Y	2	1	**461-9455**	1	CONTROL GP-HANDLE	462
	3	1	**285-0151**	1	BOOT	
	4	1	**281-3136**	1	RECEPTACLE AS-CONNECTOR (6-PIN)	
	5	1	**8T-8729**	15	PIN-CONNECTOR (16-GA TO 20-GA)	
	6	1	**260-6728**	1	RECEPTACLE AS-CONNECTOR (12-PIN)	
M	7	1	**299-2214**	2	SETSCREW (M6X1X12-MM)	
	8	1	**8L-8413**	2	STRAP-CABLE (WHITE)	
	9	1	**144-0331**	1	CAP-PUSH BUTTON (YELLOW)	
	10	1	**220-8355**	2	CAP-PUSH BUTTON (BLACK)	
	11	1	**8T-8737**	3	PLUG-SEAL	

M - METRIC PART
Y - SEPARATE ILLUSTRATION

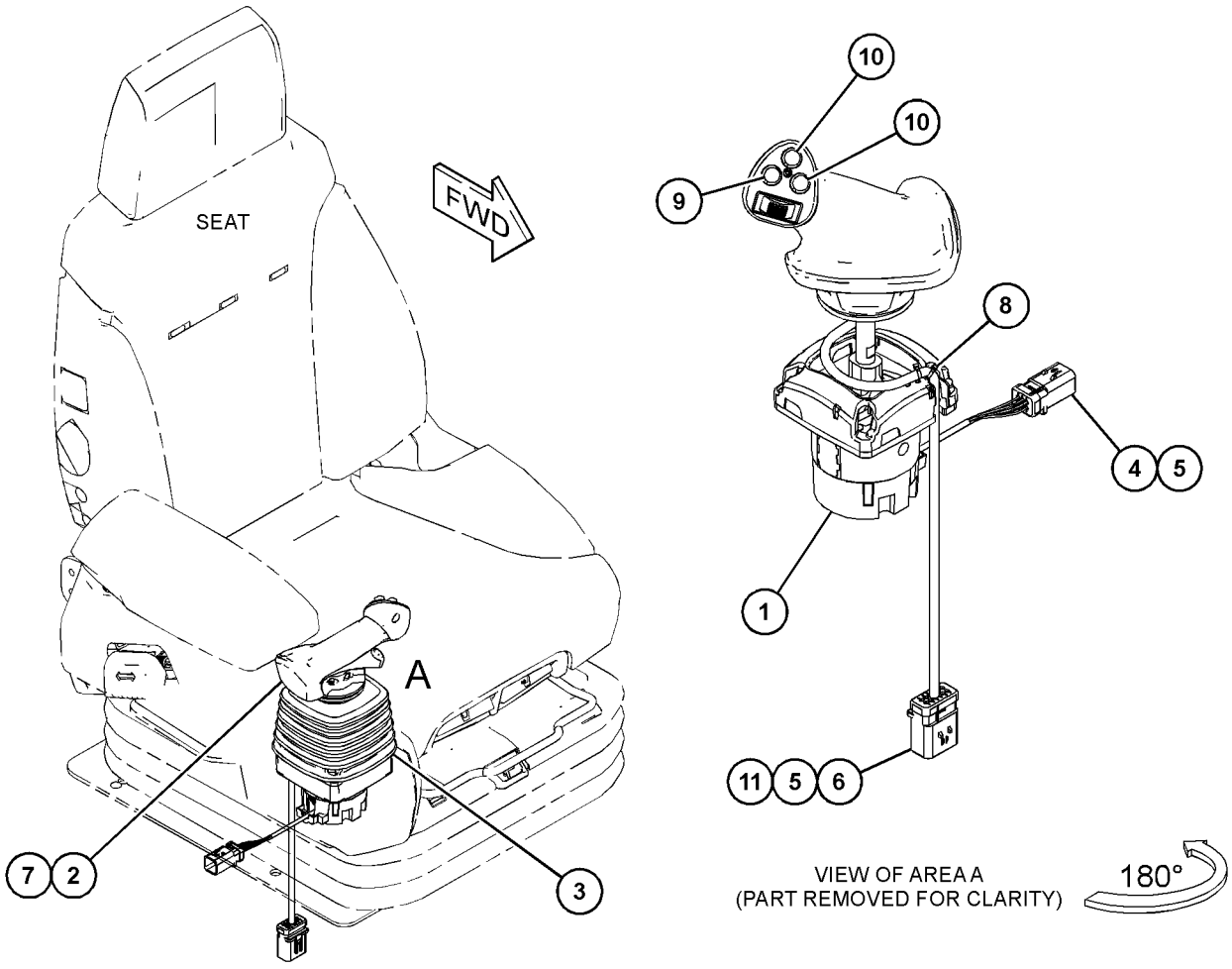

GRAPHIC #1 <END> g06134880

542-8466 CONTROL GP-JOYSTICK

S/N: H3C1-UP; K3G1-UP
PART OF 568-1316, 568-1317 CAB AR
AN ATTACHMENT

SMCS-5705 **i07504646**

NOTE	REF NO	GRAPHIC REF	PART NUMBER	QTY	PART NAME 1 2 3 4 5 6 (PRODUCT LEVEL)	SEE PAGE
M	1	1	**8T-4971**	4	BOLT (M6X1X30-MM)	
	2	1	**9X-8256**	8	WASHER (6.6X12X2-MM THK)	
	3	1	**228-6089**	1	PLUG (ROCKER SWITCH)	
Y	4	1	*343-3676*	1	CONTROL GP-JOYSTICK (LH)	463
M	5	1	**344-5673**	4	NUT (M6X1-THD)	
Y	6	1	**454-6813**	1	CONTROL GP-JOYSTICK (RH)	467

M - METRIC PART
Y - SEPARATE ILLUSTRATION

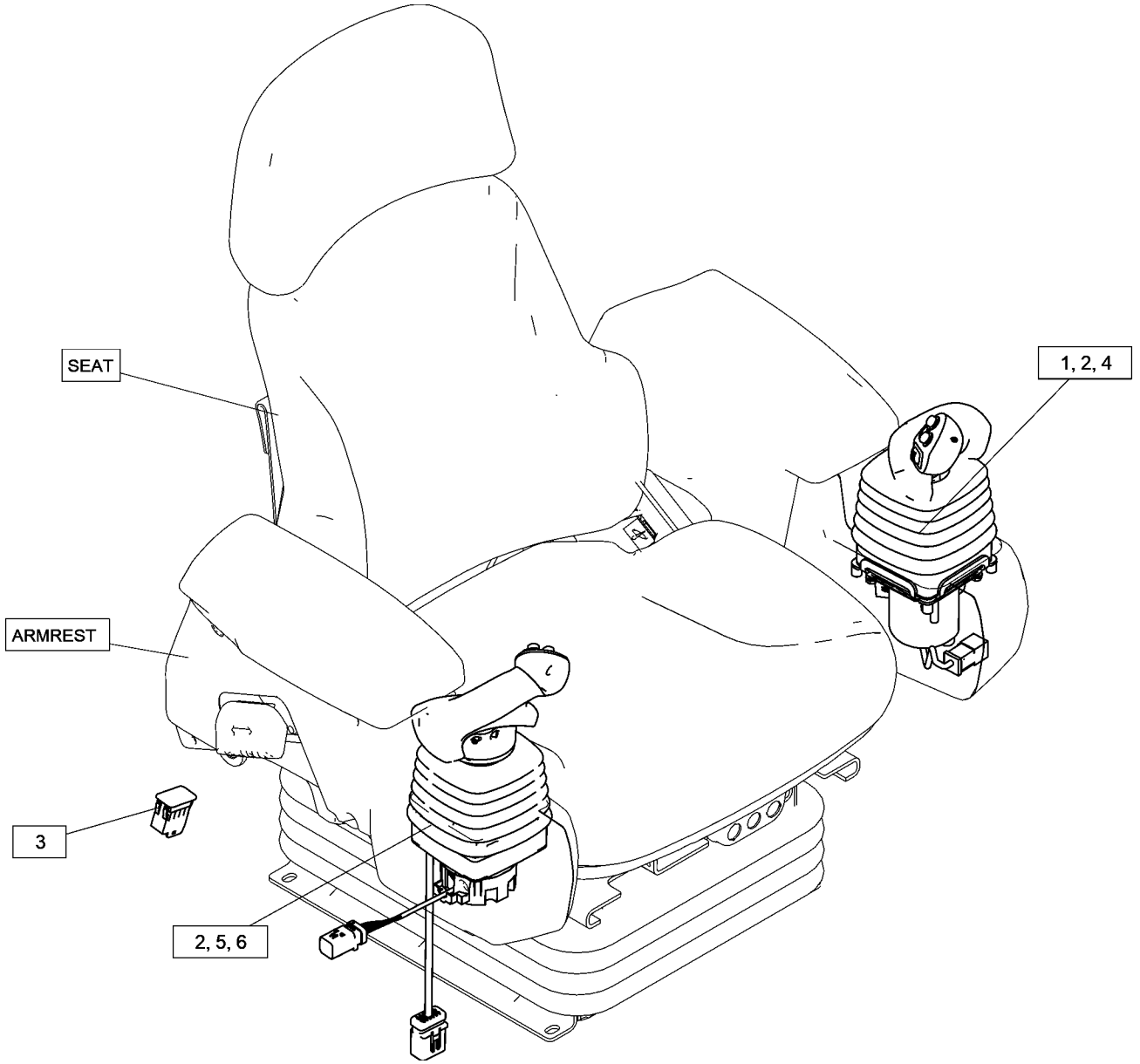

GRAPHIC #1 <END> g06358497

542-8467 CONTROL GP-JOYSTICK

S/N: H3C1-UP; K3G1-UP
HEATED
PART OF 568-1318 CAB AR
AN ATTACHMENT

SMCS-5705 **i07505075**

NOTE	REF NO	GRAPHIC REF	PART NUMBER	QTY	PART NAME 1 2 3 4 5 6 (PRODUCT LEVEL)	SEE PAGE
M	1	1	**8T-4971**	4	BOLT (M6X1X30-MM)	
	2	1	**9X-8256**	8	WASHER (6.6X12X2-MM THK)	
	3	1	**278-0461**	1	RELAY AS (12-VOLT) (HEATED CONTROLS)	
M	4	1	**344-5673**	4	NUT (M6X1-THD)	
Y	5	1	**351-8684**	1	CONTROL GP-JOYSTICK (HEATED, LH)	465
	6	1	**425-8940**	1	SWITCH AS-ROCKER (HEATED CONTROLS)	
Y	7	1	**454-6812**	1	CONTROL GP-JOYSTICK	466

M - METRIC PART
Y - SEPARATE ILLUSTRATION

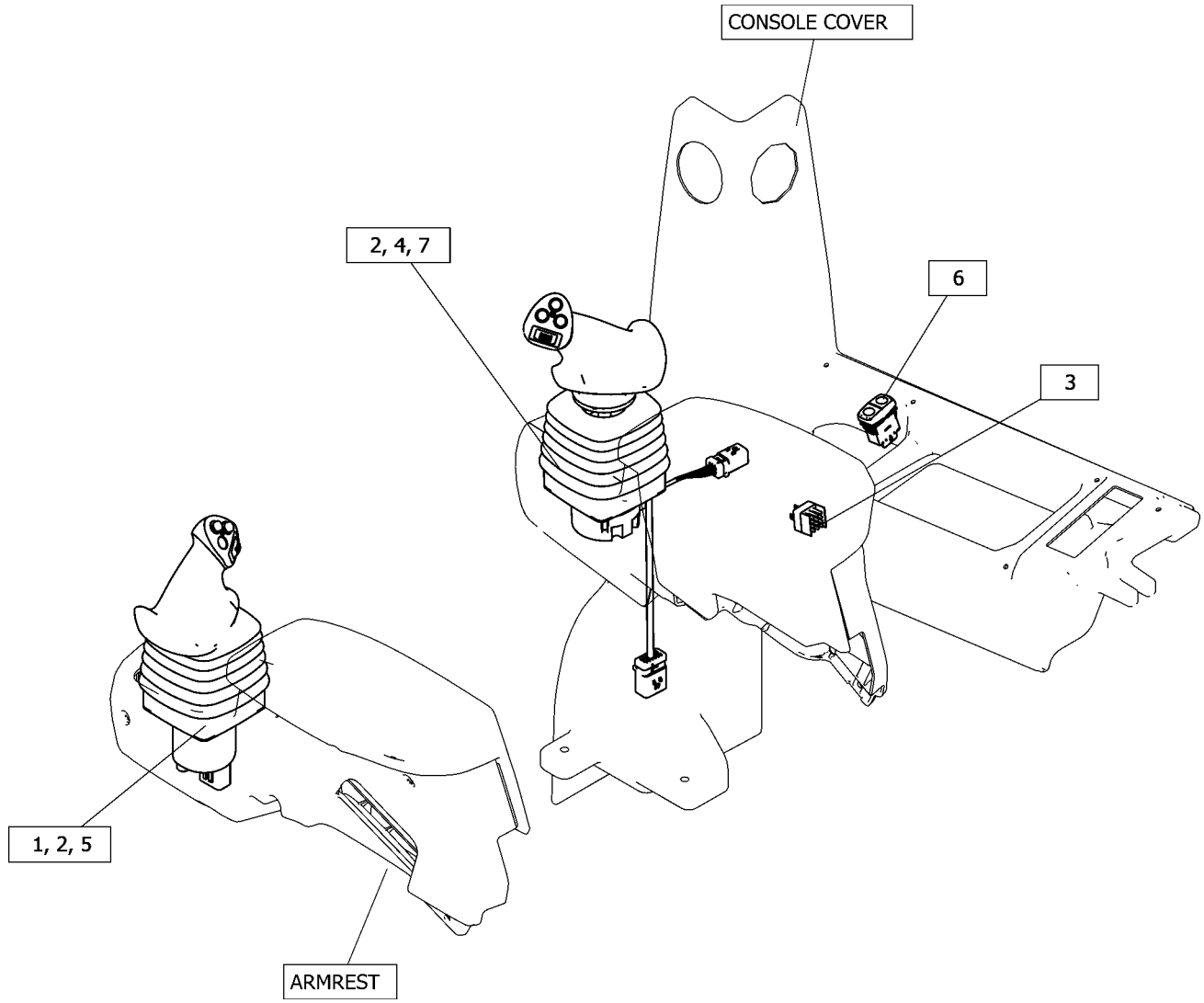

GRAPHIC #1 <END> g06359121

421-9241 CONTROL GP-RIPPER

S/N: H3C1-UP; K3G1-UP
PART OF 535-7632 CONTROL AR-HYDRAULIC
AN ATTACHMENT

SMCS-5357 **i06988394**

NOTE	REF NO	GRAPHIC REF	PART NUMBER	QTY	PART NAME 1 2 3 4 5 6 (PRODUCT LEVEL)	SEE PAGE
Y	1	1	*426-4005*	1	CONTROL & MTG GP-ELECTRONIC (RIPPER, WINCH)	118
Y	2	1	*441-3080*	1	CONTROL GP-IMPLEMENT (RIPPER)	125

Y - SEPARATE ILLUSTRATION

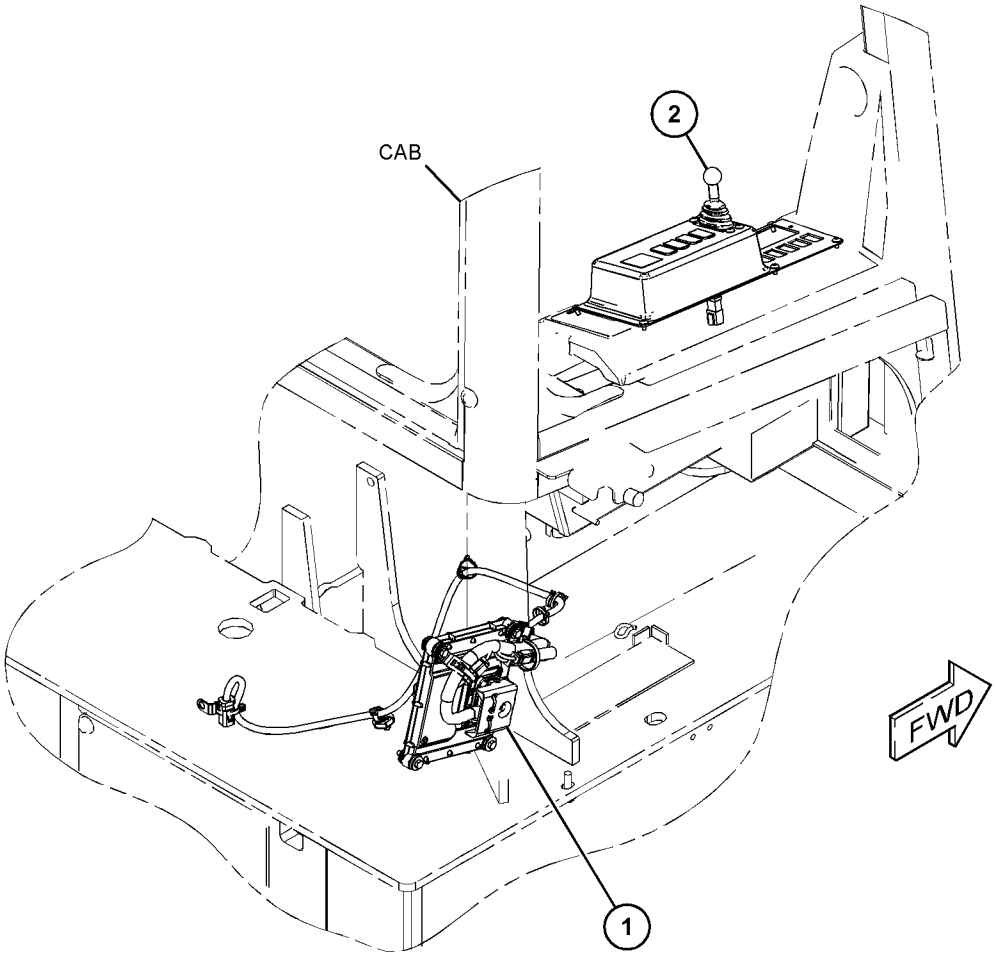

GRAPHIC #1 <END> g06009312

549-9953 COVER GP-ACCESS

S/N: H3C1-UP; K3G1-UP
PART OF 549-7639 ELECTRONICS AR-MACHINE
AN ATTACHMENT

SMCS-726A **i07717414**

NOTE	REF NO	GRAPHIC REF	PART NUMBER	QTY	PART NAME 1 2 3 4 5 6 (PRODUCT LEVEL)	SEE PAGE
	1	1	**8T-4121**	2	WASHER-HARD (11X21X2.5-MM THK)	
M	2	1	**8T-4136**	2	BOLT (M10X1.5X25-MM)	
Y	3	1	*472-6433*	1	DOOR GP-STORAGE	489
	4	1	**565-9880**	1	PLATE AS	
M		1	**8T-3490**	2	NUT-WELD (M10X1.5-THD)	

M - METRIC PART
Y - SEPARATE ILLUSTRATION

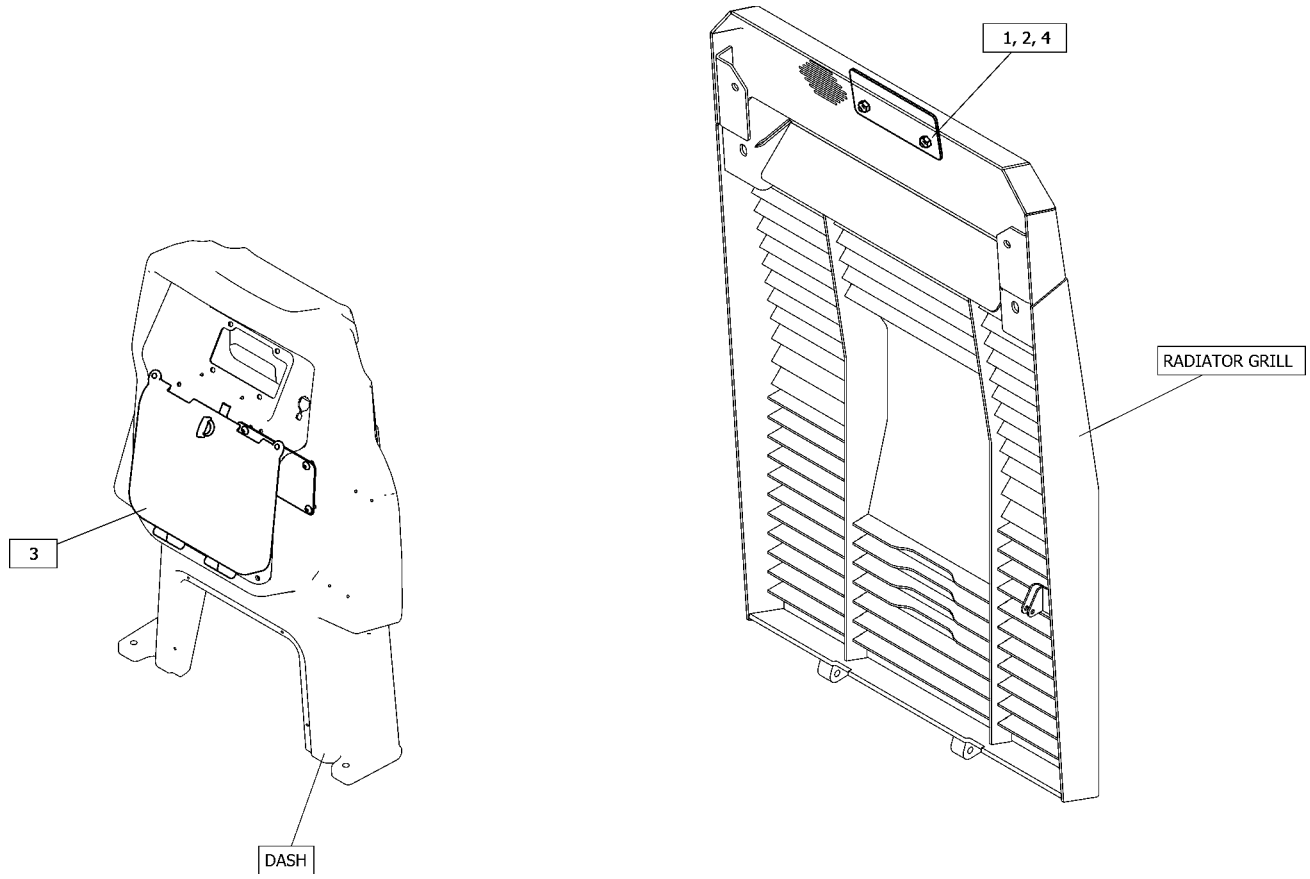

GRAPHIC #1 <END> g06369868

434-0581 COVER GP-CAB

S/N: H3C1-UP; K3G1-UP
PART OF 536-8775, 536-8776, 536-8777 CAB AR
AN ATTACHMENT

SMCS-7301 **i07711396**

NOTE	REF NO	GRAPHIC REF	PART NUMBER	QTY	PART NAME 1 2 3 4 5 6 (PRODUCT LEVEL)	SEE PAGE
M	1	1	**8T-4137**	4	BOLT (M10X1.5X20-MM)	
	2	1	**8T-4222**	4	WASHER-PLATED (11X32X2.5-MM THK)	
	3	1	**9X-2038**	4	WASHER (7X19X2-MM THK)	
M	4	1	**9X-2043**	10	SCREW-TRUSS HEAD (M6X1X14-MM)	
M	5	1	**9X-2045**	4	SCREW-TRUSS HEAD (M6X1X20-MM)	
	6	1	**9X-8399**	4	WASHER (33X56X6-MM THK)	
	7	1	**117-8131**	8	MOUNT AS	
	8	1	**126-1595**	4	WASHER (32X134X12-MM THK)	
	9	1	**144-2179**	4	SLEEVE	
M	10	1	**177-9755**	4	BOLT (M30X3.5X160-MM)	
	11	1	**271-2773**	1	SUPPORT AS (FOOT REST) (LH)	
	12	1	**393-4284**	1	COVER (REAR)	
	13	1	**393-4290**	1	FLOOR MAT	
	14	1	**417-2337**	1	SUPPORT AS (FOOT REST) (RH)	
	15	1	**494-4087**	1	COVER	
	16	1	**501-7753**	2	COVER AS-SOUND SUPPRESSION	
	17	1	**538-8913**	2	GASKET	

M - METRIC PART

434-0581 **COVER GP-CAB (**contd.**)** **i07711396**

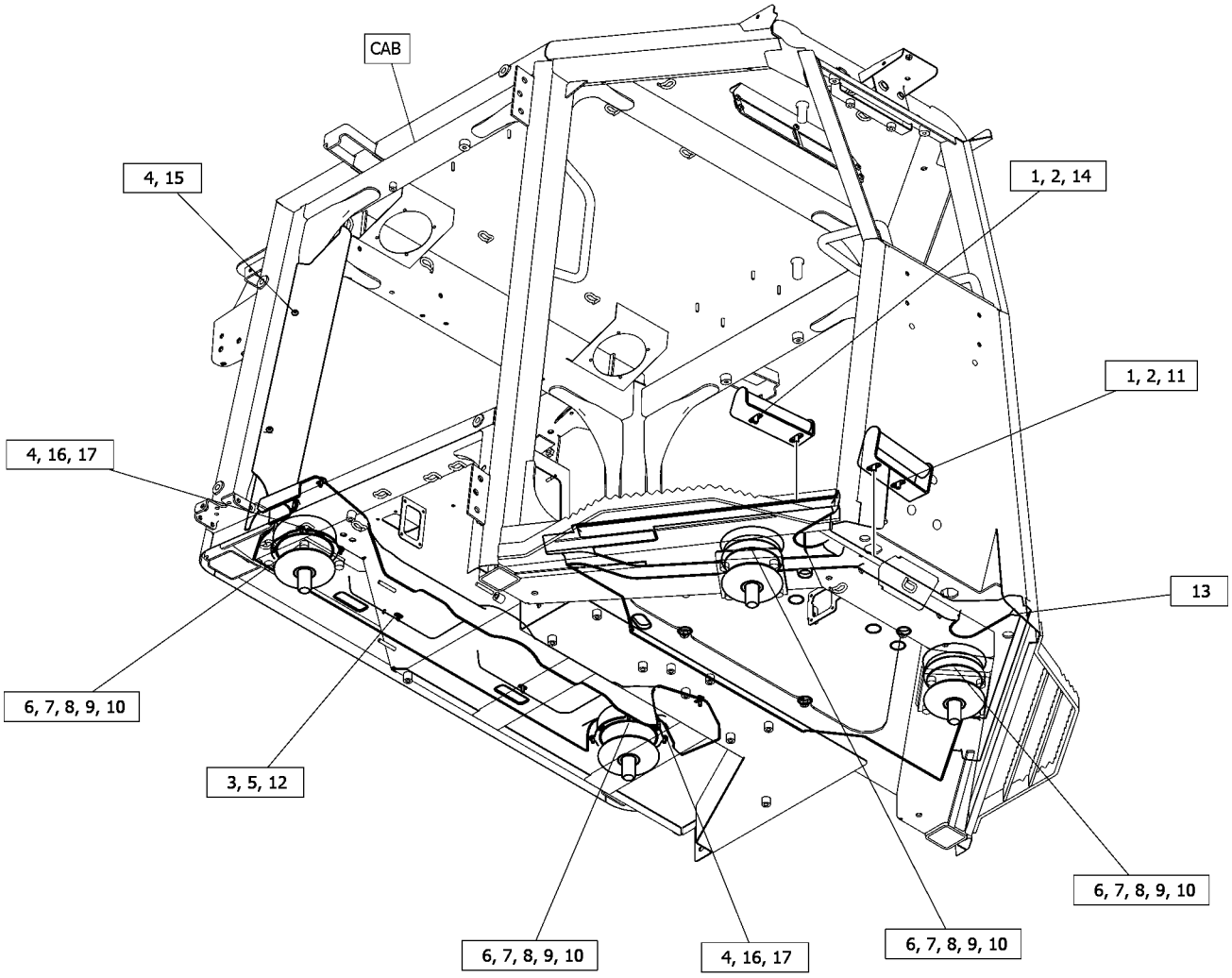

GRAPHIC #1 <END> g06448521

421-1022 COVER GP-CONSOLE

S/N: H3C1-UP; K3G1-UP
PART OF 568-1316, 568-1317, 568-1318 CAB AR
AN ATTACHMENT

SMCS-5258 **i07700243**

NOTE	REF NO	GRAPHIC REF	PART NUMBER	QTY	PART NAME 1 2 3 4 5 6 (PRODUCT LEVEL)	SEE PAGE
	1	2	**8Y-6388**	4	LOUVER AS-VENT	
	2	1	**9U-8263**	1	COVER	
	3	1	**107-6032**	1	LAMP AS-DOME (24-VOLT) (CAB)	
		1	**259-1286**	1	LAMP (24-VOLT, 10-WATT)	
	4	1	**154-7951**	12	SPACER	
	5	2	**164-8474**	6	LOUVER AS-VENT	
	6	1	**201-2638**	1	MIRROR AS (CAB ROOF, REAR)	
	7	1	**255-4233**	1	HEADLINER	
	8	1	**280-6070**	1	MIRROR AS (REAR VIEW)	
	9	2	**343-3587**	2	COVER	
	10	1	**343-3588**	1	COVER	
	11	1	**377-1433**	1	BRACKET	
Y	12	2	*393-4263*	1	CONSOLE GP (LH)	454
	13	2	**393-4273**	1	PAD AS-RUBBER (LH)	
	14	2	**393-4274**	1	PAD AS-RUBBER (RH)	
	15	2	**393-4278**	1	COVER-FUSE	
	16	2	**393-4280**	1	DASH AS	
	17	2	**393-4281**	1	CONSOLE AS (RH)	
	18	2	**393-4286**	1	BEZEL	
	19	2	**393-4294**	1	PLATE	
	20	1	**439-4987**	1	COVER-RADIO	
	21	2	**104-2091**	8	SCREW-FLAT HEAD (6-20X0.5-IN)	
M	22	2	**446-1483**	2	SCREW-TRUSS HEAD (M6X1X45-MM)	
M	23	2	**121-9870**	3	SCREW-MACHINE (M6X1X40-MM)	
M	24	1	**127-2170**	10	SCREW-TRUSS HEAD (M8X1.25X20-MM)	
	25	2	**275-6710**	2	RETAINER (PUSH ON)	
M	26	2	**314-3025**	2	SCREW-THUMB (M6X1X16-MM)	
M	27	2	**208-8469**	2	LOCKNUT (M6X1-THD)	
M	29	1	**344-5674**	1	NUT (M8X1.25-THD)	
	30	2	**7X-0579**	12	WASHER-HARD (8.8X25.5X2-MM THK)	
	31	1	**8K-1433**	1	GROMMET	
	32	1	**8T-4224**	2	WASHER-HARD (8.8X16X2-MM THK)	
M	33	1	**9X-2040**	2	SCREW-TRUSS HEAD (M10X1.5X25-MM)	
M	34	2	**9X-2042**	19	SCREW-TRUSS HEAD (M6X1X12-MM)	
M	35	1,2	**9X-2045**	13	SCREW-TRUSS HEAD (M6X1X20-MM)	
M	36	1,2	**9X-2046**	6	SCREW-TRUSS HEAD (M6X1X35-MM)	
D	37	1	**5P-5639**		SEAL (0.1-M)	
M	38	1	**7Y-9099**	4	SCREW-TRUSS HEAD (M8X1.25X25-MM)	
	39	1	**373-4446**	1	PLUG	

D - ORDER BY THE METER
M - METRIC PART
Y - SEPARATE ILLUSTRATION

421-1022 **COVER GP-CONSOLE (**contd.**)** **i07700243**

REFER TO ALL ILLUSTRATIONS OF
THIS GROUP FOR AUXILIARY VIEWS

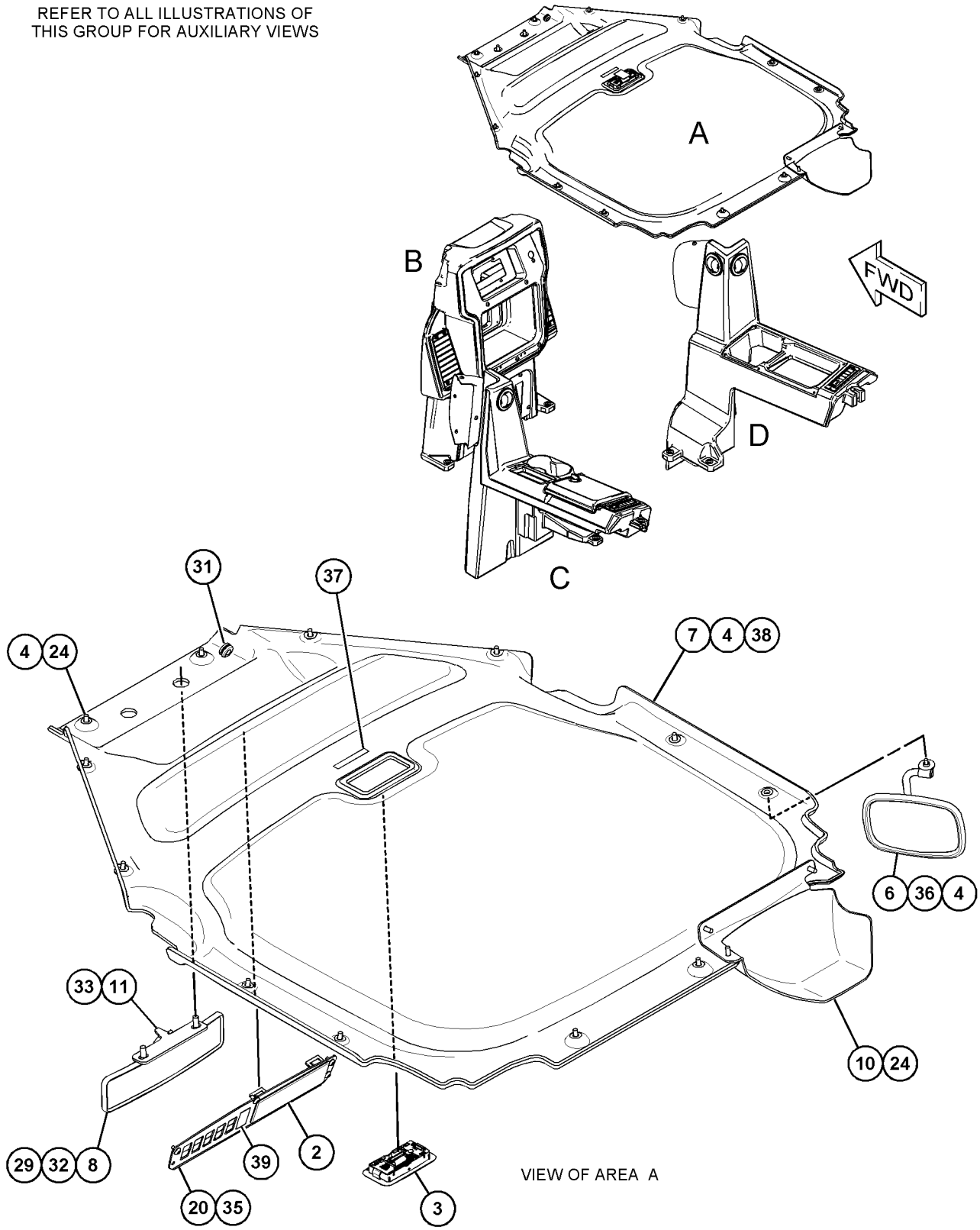

VIEW OF AREA A

GRAPHIC #1

g06203525

421-1022 **COVER GP-CONSOLE (**contd.**)** **i07700243**

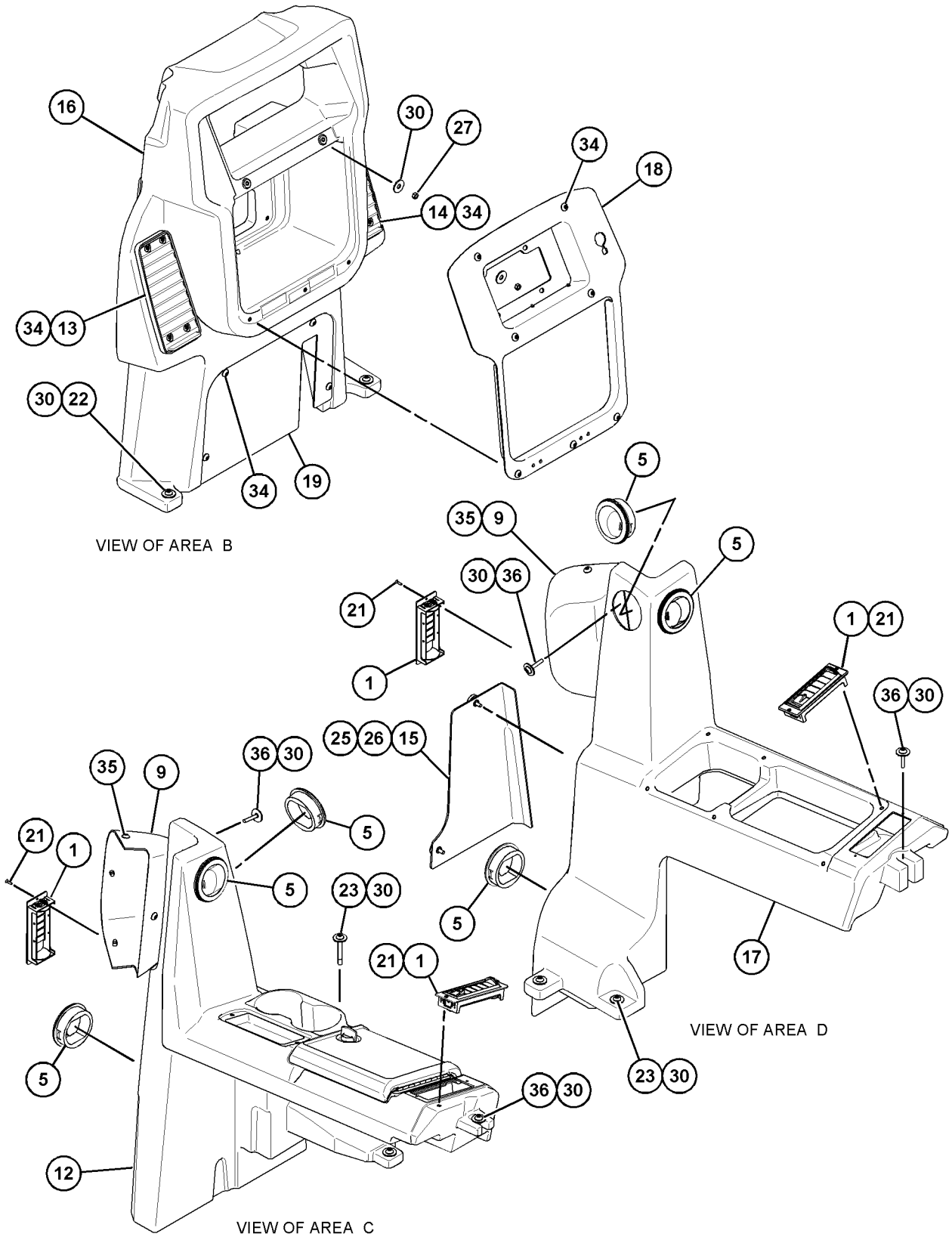

GRAPHIC #2 <END> g06203527

438-3644 COVER GP-CONSOLE

S/N: H3C1-UP; K3G1-UP
PART OF 535-7631 CONTROL & MTG GP-ELECTRONIC
AN ATTACHMENT

SMCS-5258 **i07694659**

NOTE	REF NO	GRAPHIC REF	PART NUMBER	QTY	PART NAME 1 2 3 4 5 6 (PRODUCT LEVEL)	SEE PAGE
	1	1	**393-4288**	1	BEZEL	
M	2	1	**9X-2042**	6	SCREW-TRUSS HEAD (M6X1X12-MM)	
	3	1	**102-8802**	2	KIT-RECEPTACLE (2-PIN)	
					(EACH INCLUDES RECEPTACLE AS & WEDGE)	
	4	1	**7K-1181**	1	STRAP-CABLE	
	5	1	**8T-8737**	35	PLUG-SEAL	
	6	1	**167-3693**	1	PLUG AS-CONNECTOR (31-PIN)	

M - METRIC PART

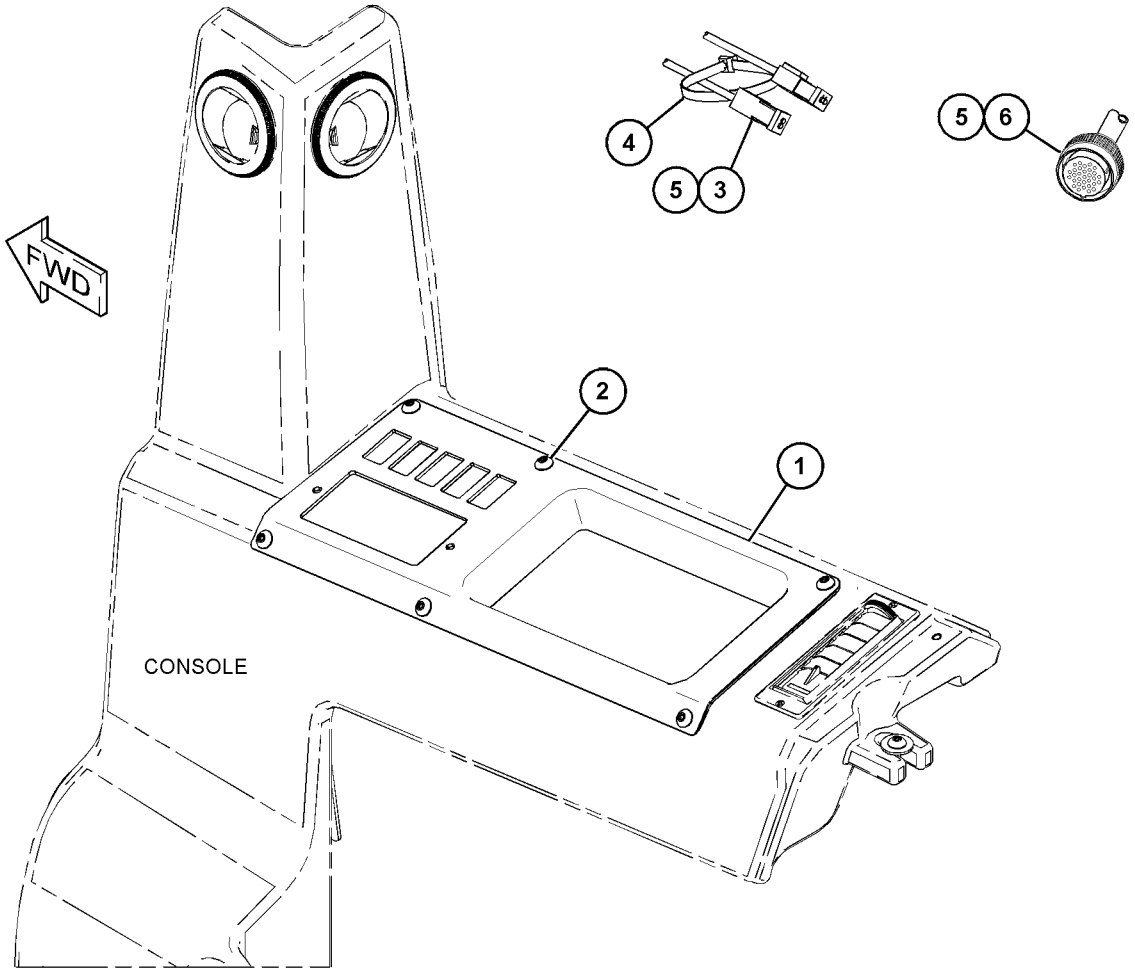

GRAPHIC #1 <END> g06158831

484-7985 DOOR GP-CAB—RH

S/N: H3C1-UP; K3G1-UP
PART OF 418-9377 CAB GP
AN ATTACHMENT

SMCS-7308 **i08025297**

NOTE	REF NO	GRAPHIC REF	PART NUMBER	QTY	PART NAME 1 2 3 4 5 6 (PRODUCT LEVEL)	SEE PAGE
	1	1	**3S-2093**	4	STRAP-CABLE	
	2	1	**6C-9003**	1	STOP	
	3	1	**8T-5400**	1	CONNECTOR	
	4	1	**125-8175**	1	BLADE AS-WIPER (450-MM) (DOOR, RH)	
	5	1	**218-7119**	1	GASKET	
	6	1	**262-1997**	1	ARM GP-WINDOW WIPER (DOOR, RH)	
		1	**305-9192**	1	NOZZLE AS-WASHER	
	7	1	**266-9307**	1	STRIKER AS (RH)	
	8	1	**281-4002**	1	PLUG	
E	9	1	**133-3234**		SEAL (425-CM)	
	10	1	**287-0548**	1	STICKER-DOOR SEAL (RH)	
Y	11	1	**304-4244**	1	MOTOR GP-WINDOW WIPER (DOOR, RH)	504
J	12	1	**336-6672**	1	HANDLE AS (PULL)	
	13	1	**343-3555**	1	WINDOW-DOOR (RH)	
	14	1	**343-3571**	1	FRAME AS-DOOR	
M		1	**8T-3597**	6	NUT-WELD (M12X1.75-THD)	
	15	1	**343-3585**	1	COVER-LATCH (RH)	
	16	1	**343-3589**	1	LATCH AS (RH)	
		1	**7M-9910**	1	SCREW-MACHINE (10-24X1-IN)	
		1	**031-0249**	1	LOCKNUT (10-24-THD)	
		1	**422-1675**	2	KNOB	
	17	1	**485-3308**	2	HINGE AS	
					(EACH INCLUDES)	
		1	**453-6825**	4	WASHER (10.2X20X2-MM THK)	
M		1	**8T-3597**	3	NUT-WELD (M12X1.75-THD)	
Y	18	1	**489-7905**	1	HARNESS AS-WINDOW WIPER (RH)	149
M	19	1	**131-3540**	2	LOCKNUT (M8X1.25-THD)	
	20	1	**317-5316**	1	GROMMET	
	21	1	**320-8448**	2	CAP-NUT	
	22	1	**339-8938**	2	CLIP (LOOP)	
M	23	1	**3E-8020**	4	SCREW-TRUSS HEAD (M6X1X25-MM)	
	24	1	**4D-0012**	1	GROMMET	
	25	1	**7X-0613**	2	WASHER-HARD (8.8X25.5X5-MM THK)	
M	26	1	**344-5674**	1	NUT (M8X1.25-THD)	
	27	1	**5P-1076**	12	WASHER-HARD (13.5X30X4-MM THK)	
	28	1	**5P-8439**	1	GROMMET	
M	29	1	**8T-4139**	6	BOLT (M12X1.75X30-MM)	
M	30	1	**8T-4183**	6	BOLT (M12X1.75X40-MM)	
	31	1	**8T-4224**	2	WASHER-HARD (8.8X16X2-MM THK)	
	32	1	**9D-8508**	1	GROMMET	
M	33	1	**9X-2045**	5	SCREW-TRUSS HEAD (M6X1X20-MM)	
E	34	1	**144-0195**		HOSE (29-CM)	
E	34A	1	**144-0195**		HOSE (36-CM)	
E	34B	1	**144-0195**		HOSE (90-CM)	
	35	1	**7K-1181**	1	STRAP-CABLE	
	36	1	**469-5745**	1	VALVE-CHECK	

484-7985 **DOOR GP-CAB (**contd.**)** **i08025297**

NOTE	REF NO	GRAPHIC REF	PART NUMBER	QTY	PART NAME 1 2 3 4 5 6 (PRODUCT LEVEL)	SEE PAGE
	37	1	**9X-2038**	2	WASHER (7X19X2-MM THK)	
	38	1	**140-9921**	4	INSERT-THREADED	

E - ORDER BY THE CENTIMETER
J - REQUIRES CORPORATE KEY
M - METRIC PART
Y - SEPARATE ILLUSTRATION

484-7985 **DOOR GP-CAB** (contd.) **i08025297**

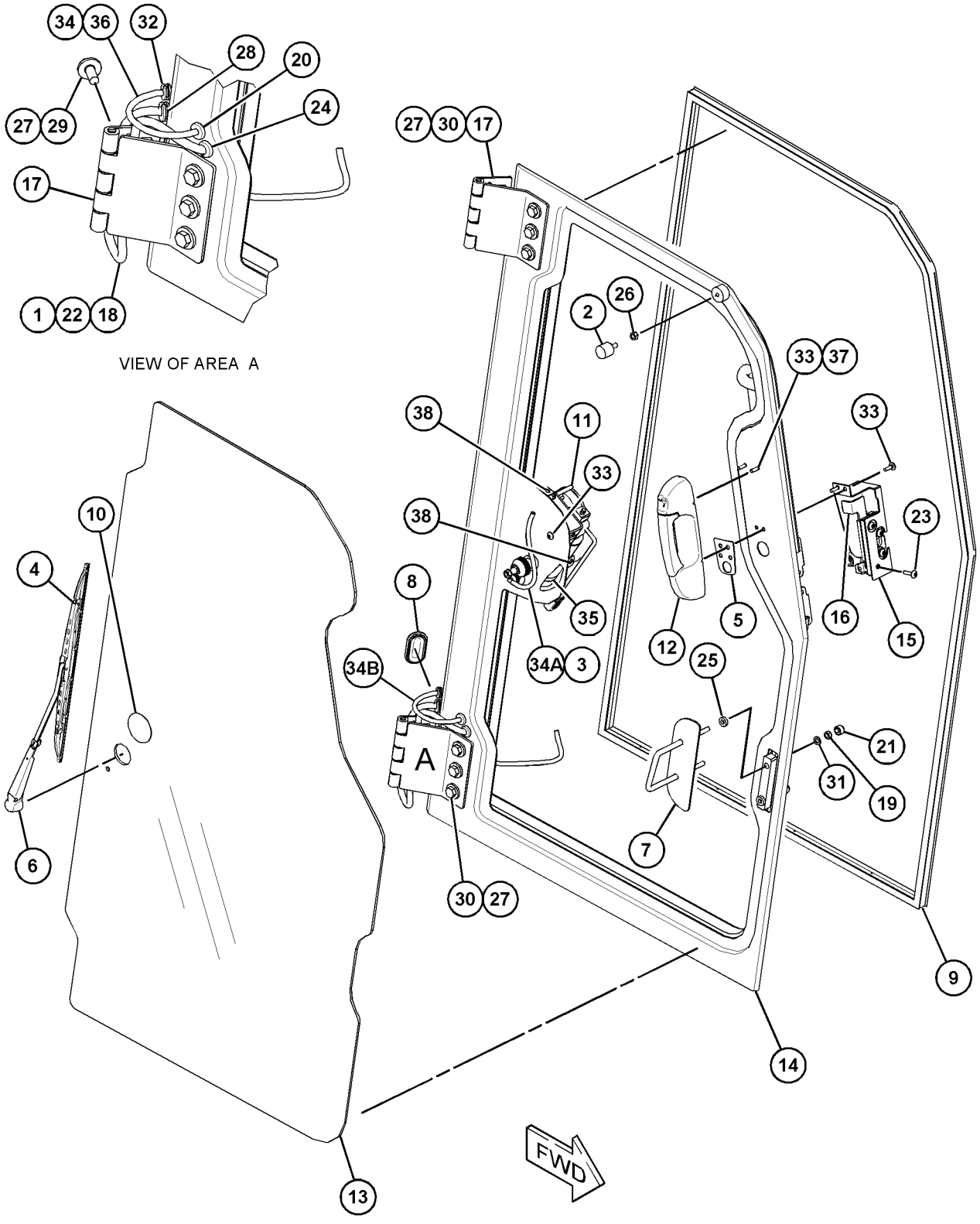

GRAPHIC #1 <END> g06202980

484-7986 DOOR GP-CAB—LH

S/N: H3C1-UP; K3G1-UP
PART OF 418-9377 CAB GP
AN ATTACHMENT

SMCS-7308 **i08025301**

NOTE	REF NO	GRAPHIC REF	PART NUMBER	QTY	PART NAME 1 2 3 4 5 6 (PRODUCT LEVEL)	SEE PAGE
	1	1	**3S-2093**	4	STRAP-CABLE	
	2	1	**6C-9003**	1	STOP	
	3	1	**8T-5400**	1	CONNECTOR	
	4	1	**125-8175**	1	BLADE AS-WIPER (450-MM) (DOOR, LH)	
	5	1	**469-5745**	1	VALVE-CHECK	
	6	1	**218-7119**	1	GASKET	
	7	1	**262-1998**	1	ARM GP-WINDOW WIPER (DOOR, LH)	
		1	**305-9192**	1	NOZZLE AS-WASHER	
	8	1	**266-9306**	1	STRIKER AS	
	9	1	**281-4002**	1	PLUG	
E	10	1	**133-3234**		SEAL (425-CM)	
	11	1	**287-0548**	1	STICKER-DOOR SEAL (LH)	
Y	12	1	**304-4243**	1	MOTOR GP-WINDOW WIPER (DOOR, LH)	503
J	13	1	**336-6672**	1	HANDLE AS (PULL)	
	14	1	**343-3556**	1	WINDOW-DOOR (LH)	
	15	1	**343-3572**	1	FRAME AS-DOOR	
	16	1	**343-3586**	1	COVER-LATCH (LH)	
	17	1	**343-3590**	1	LATCH AS (LH)	
	18	1	**485-3308**	2	HINGE AS	
Y	19	1	**489-7906**	1	HARNESS AS-WINDOW WIPER	149
M	20	1	**131-3540**	2	LOCKNUT (M8X1.25-THD)	
	21	1	**317-5316**	1	GROMMET	
	22	1	**320-8448**	2	CAP-NUT	
	23	1	**339-8938**	2	CLIP (LOOP)	
M	24	1	**3E-8020**	4	SCREW-TRUSS HEAD (M6X1X25-MM)	
	25	1	**4D-0012**	1	GROMMET	
	26	1	**7X-0613**	2	WASHER-HARD (8.8X25.5X5-MM THK)	
M	27	1	**344-5674**	1	NUT (M8X1.25-THD)	
	28	1	**5P-1076**	12	WASHER-HARD (13.5X30X4-MM THK)	
	29	1	**5P-8439**	1	GROMMET	
M	30	1	**8T-4139**	6	BOLT (M12X1.75X30-MM)	
M	31	1	**8T-4183**	6	BOLT (M12X1.75X40-MM)	
	32	1	**8T-4224**	2	WASHER-HARD (8.8X16X2-MM THK)	
	33	1	**9D-8508**	1	GROMMET	
M	34	1	**9X-2045**	5	SCREW-TRUSS HEAD (M6X1X20-MM)	
E	35	1	**144-0195**		HOSE (36-CM)	
E	35A	1	**144-0195**		HOSE (97-CM)	
	36	1	**7K-1181**	1	STRAP-CABLE	
	37	1	**9X-2038**	2	WASHER (7X19X2-MM THK)	
	38	1	**140-9921**	4	INSERT-THREADED	

E - ORDER BY THE CENTIMETER
J - REQUIRES CORPORATE KEY
M - METRIC PART
Y - SEPARATE ILLUSTRATION

484-7986 **DOOR GP-CAB** (contd.) **i08025301**

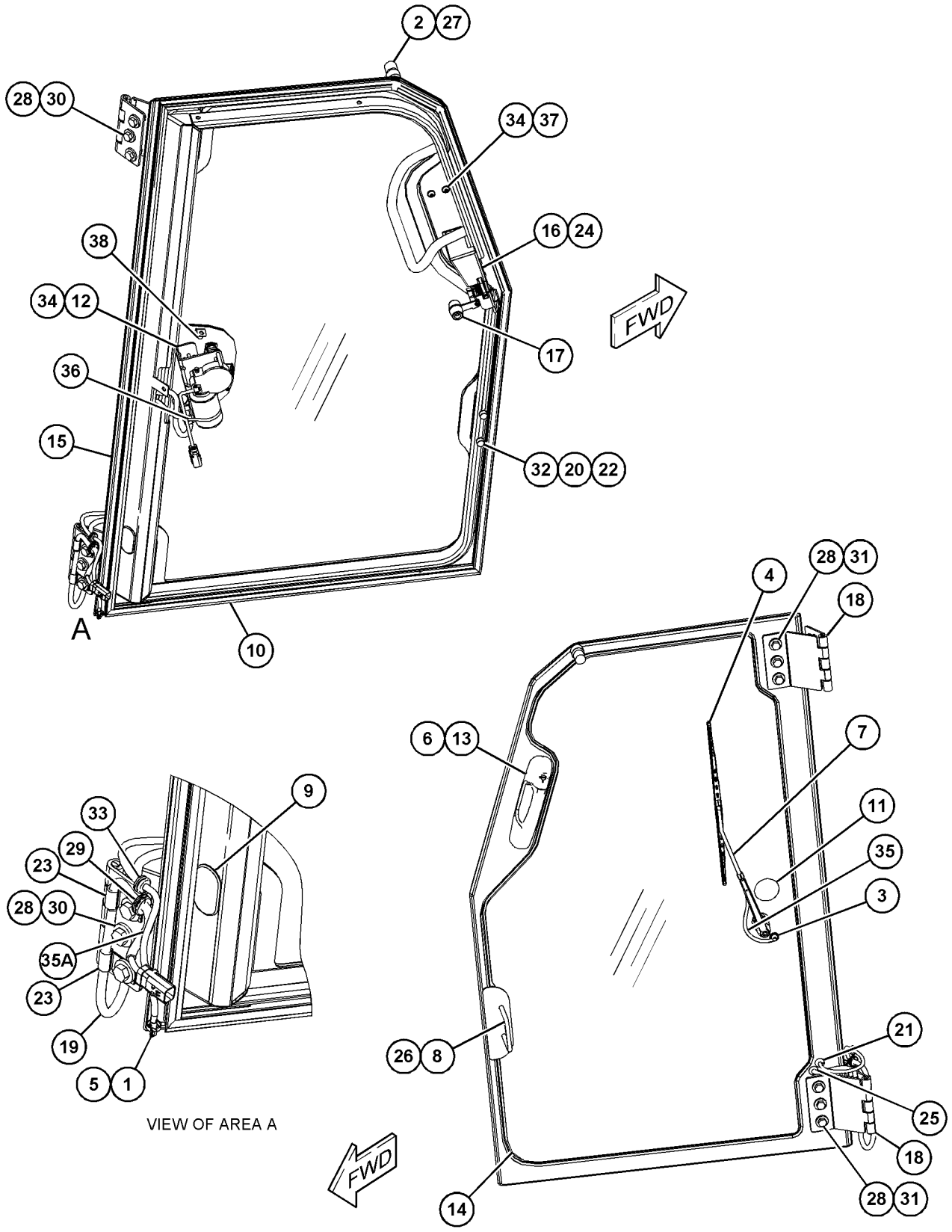

VIEW OF AREA A

GRAPHIC #1 <END> g06203056

486-0430 DOOR GP-CAB—RH

S/N: H3C1-UP; K3G1-UP
POLYCARBONATE
PART OF 435-7611 CAB GP
AN ATTACHMENT

SMCS-7308 **i07451083**

NOTE	REF NO	GRAPHIC REF	PART NUMBER	QTY	PART NAME 1 2 3 4 5 6 (PRODUCT LEVEL)	SEE PAGE
	1	1	**3S-2093**	4	STRAP-CABLE	
	2	1	**6C-9003**	1	STOP	
	3	1	**8T-5400**	1	CONNECTOR	
	4	1	**125-8175**	1	BLADE AS-WIPER (450-MM) (DOOR, RH)	
	5	1	**218-7119**	1	GASKET	
	6	1	**262-1997**	1	ARM GP-WINDOW WIPER (DOOR, RH)	
		1	**305-9192**	1	NOZZLE AS-WASHER	
	7	1	**266-9307**	1	STRIKER AS (RH)	
	8	1	**281-4002**	1	PLUG	
E	9	1	**133-3234**		SEAL (425-CM)	
	10	1	**287-0548**	1	STICKER-DOOR SEAL	
Y	11	1	**304-4244**	1	MOTOR GP-WINDOW WIPER (DOOR, RH)	504
J	12	1	**336-6672**	1	HANDLE AS (PULL)	
	13	1	**517-2462**	1	WINDOW-DOOR (RH)	
	14	1	**343-3571**	1	FRAME AS-DOOR	
	15	1	**343-3585**	1	COVER-LATCH (RH)	
	16	1	**343-3589**	1	LATCH AS (RH)	
	17	1	**485-3308**	2	HINGE AS	
Y	18	1	**489-7905**	1	HARNESS AS-WINDOW WIPER (RH)	149
M	19	1	**131-3540**	2	LOCKNUT (M8X1.25-THD)	
	20	1	**317-5316**	1	GROMMET	
	21	1	**320-8448**	2	CAP-NUT	
	22	1	**339-8938**	2	CLIP (LOOP)	
M	23	1	**3E-8020**	4	SCREW-TRUSS HEAD (M6X1X25-MM)	
	24	1	**4D-0012**	1	GROMMET	
	25	1	**7X-0613**	2	WASHER-HARD (8.8X25.5X5-MM THK)	
M	26	1	**344-5674**	1	NUT (M8X1.25-THD)	
	27	1	**5P-1076**	12	WASHER-HARD (13.5X30X4-MM THK)	
	28	1	**5P-8439**	1	GROMMET	
M	29	1	**8T-4139**	6	BOLT (M12X1.75X30-MM)	
M	30	1	**8T-4183**	6	BOLT (M12X1.75X40-MM)	
	31	1	**8T-4224**	2	WASHER-HARD (8.8X16X2-MM THK)	
	32	1	**9D-8508**	1	GROMMET	
M	33	1	**9X-2045**	5	SCREW-TRUSS HEAD (M6X1X20-MM)	
E	34	1	**144-0195**		HOSE (30-CM)	
E	34A	1	**144-0195**		HOSE (36-CM)	
E	34B	1	**144-0195**		HOSE (91-CM)	
	35	1	**7K-1181**	1	STRAP-CABLE	
	36	1	**9X-2038**	2	WASHER (7X19X2-MM THK)	
	37	1	**140-9921**	4	INSERT-THREADED	
	38	1	**469-5745**	1	VALVE-CHECK	
	39	1	**223-9818**	1	FILM-INSTRUCTION (WINDOW CLEANING, READ OMM)	

E - ORDER BY THE CENTIMETER
J - REQUIRES CORPORATE KEY
M - METRIC PART
Y - SEPARATE ILLUSTRATION

486-0430 **DOOR GP-CAB** (contd.) **i07451083**

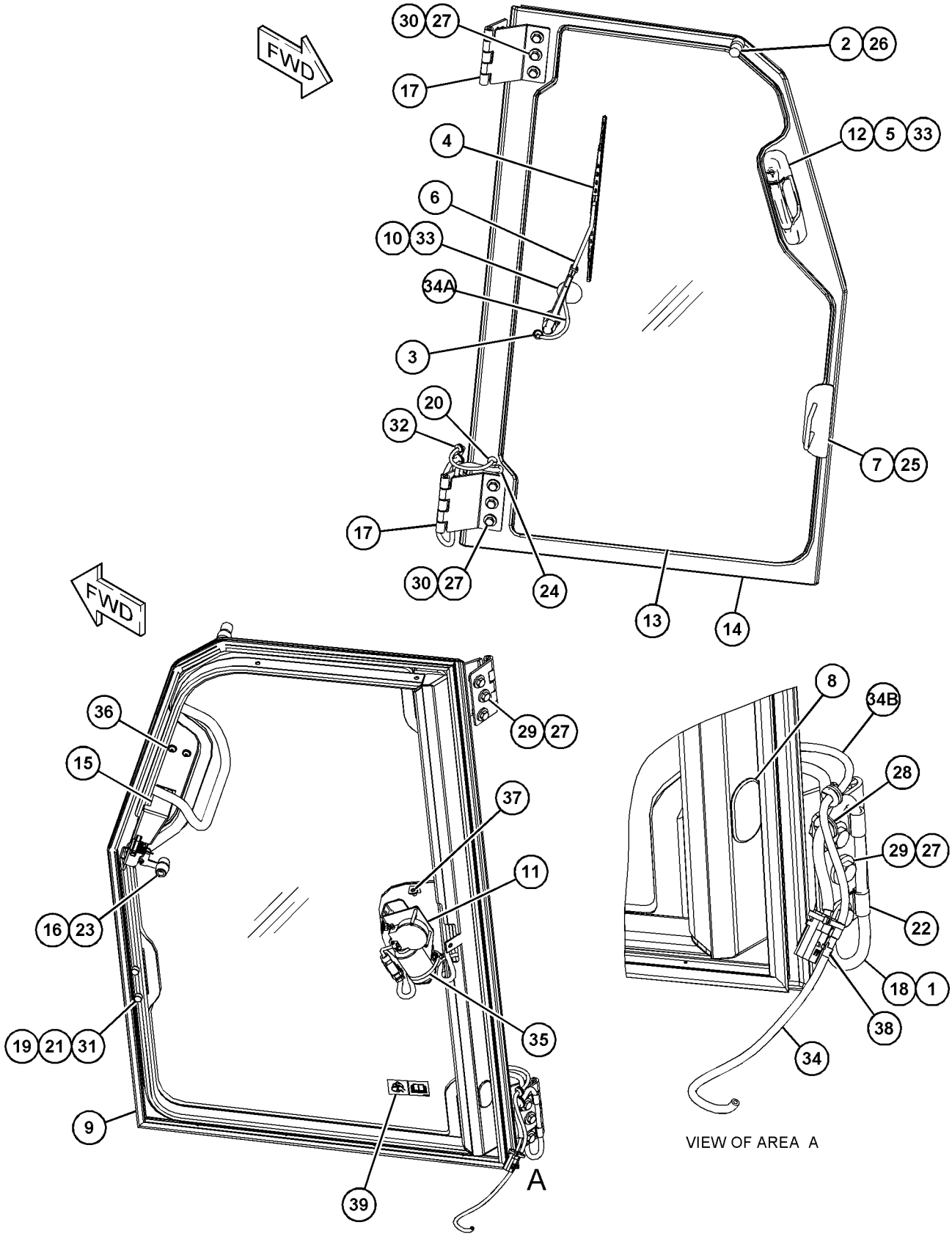

VIEW OF AREA A

GRAPHIC #1 <END> g06203164

486-0431 DOOR GP-CAB—LH

S/N: H3C1-UP; K3G1-UP
POLYCARBONATE
PART OF 435-7611 CAB GP
AN ATTACHMENT

SMCS-7308 **i08033687**

NOTE	REF NO	GRAPHIC REF	PART NUMBER	QTY	PART NAME 1 2 3 4 5 6 (PRODUCT LEVEL)	SEE PAGE
	1	1	**3S-2093**	4	STRAP-CABLE	
	2	1	**6C-9003**	1	STOP	
	3	1	**8T-5400**	1	CONNECTOR	
	4	1	**125-8175**	1	BLADE AS-WIPER (450-MM) (DOOR, LH)	
	5	1	**469-5745**	1	VALVE-CHECK	
	6	1	**218-7119**	1	GASKET	
	7	1	**262-1998**	1	ARM GP-WINDOW WIPER (DOOR, LH)	
		1	**305-9192**	1	NOZZLE AS-WASHER	
	8	1	**266-9306**	1	STRIKER AS	
	9	1	**281-4002**	1	PLUG	
E	10	1	**133-3234**		SEAL (425-CM)	
	11	1	**287-0548**	1	STICKER-DOOR SEAL (BLACK)	
Y	12	1	**304-4243**	1	MOTOR GP-WINDOW WIPER (DOOR, LH)	503
J	13	1	**336-6672**	1	HANDLE AS (PULL)	
	14	1	**517-2463**	1	WINDOW-DOOR (LH)	
	15	1	**343-3572**	1	FRAME AS-DOOR	
M		1	**8T-3597**	6	NUT-WELD (M12X1.75-THD)	
	16	1	**343-3586**	1	COVER-LATCH (LH)	
	17	1	**343-3590**	1	LATCH AS (LH)	
	18	1	**485-3308**	2	HINGE AS	
					(EACH INCLUDES)	
		1	**453-6825**	4	WASHER (10.2X20X2-MM THK)	
M		1	**8T-3597**	3	NUT-WELD (M12X1.75-THD)	
Y	19	1	**489-7906**	1	HARNESS AS-WINDOW WIPER	149
M	20	1	**131-3540**	2	LOCKNUT (M8X1.25-THD)	
	21	1	**317-5316**	1	GROMMET	
	22	1	**320-8448**	2	CAP-NUT	
	23	1	**339-8938**	2	CLIP (LOOP)	
M	24	1	**3E-8020**	4	SCREW-TRUSS HEAD (M6X1X25-MM)	
	25	1	**4D-0012**	1	GROMMET	
	26	1	**7X-0613**	2	WASHER-HARD (8.8X25.5X5-MM THK)	
M	27	1	**344-5674**	1	NUT (M8X1.25-THD)	
	28	1	**5P-1076**	12	WASHER-HARD (13.5X30X4-MM THK)	
	29	1	**5P-8439**	1	GROMMET	
M	30	1	**8T-4139**	6	BOLT (M12X1.75X30-MM)	
M	31	1	**8T-4183**	6	BOLT (M12X1.75X40-MM)	
	32	1	**8T-4224**	2	WASHER-HARD (8.8X16X2-MM THK)	
	33	1	**9D-8508**	1	GROMMET	
M	34	1	**9X-2045**	5	SCREW-TRUSS HEAD (M6X1X20-MM)	
E	35	1	**144-0195**		HOSE (97-CM)	
E	35A	1	**144-0195**		HOSE (36-CM)	
	36	1	**7K-1181**	1	STRAP-CABLE	
	37	1	**9X-2038**	2	WASHER (7X19X2-MM THK)	
	38	1	**140-9921**	4	INSERT-THREADED	
	39	1	**223-9818**	1	FILM-INSTRUCTION (WINDOW CLEANING, READ OMM)	

486-0431 **DOOR GP-CAB** (contd.) **i08033687**

NOTE	REF NO	GRAPHIC REF	PART NUMBER	QTY	PART NAME 1 2 3 4 5 6 (PRODUCT LEVEL)	SEE PAGE
E - ORDER BY THE CENTIMETER						
J - REQUIRES CORPORATE KEY						
M - METRIC PART						
Y - SEPARATE ILLUSTRATION						

486-0431 **DOOR GP-CAB (**contd.**)** **i08033687**

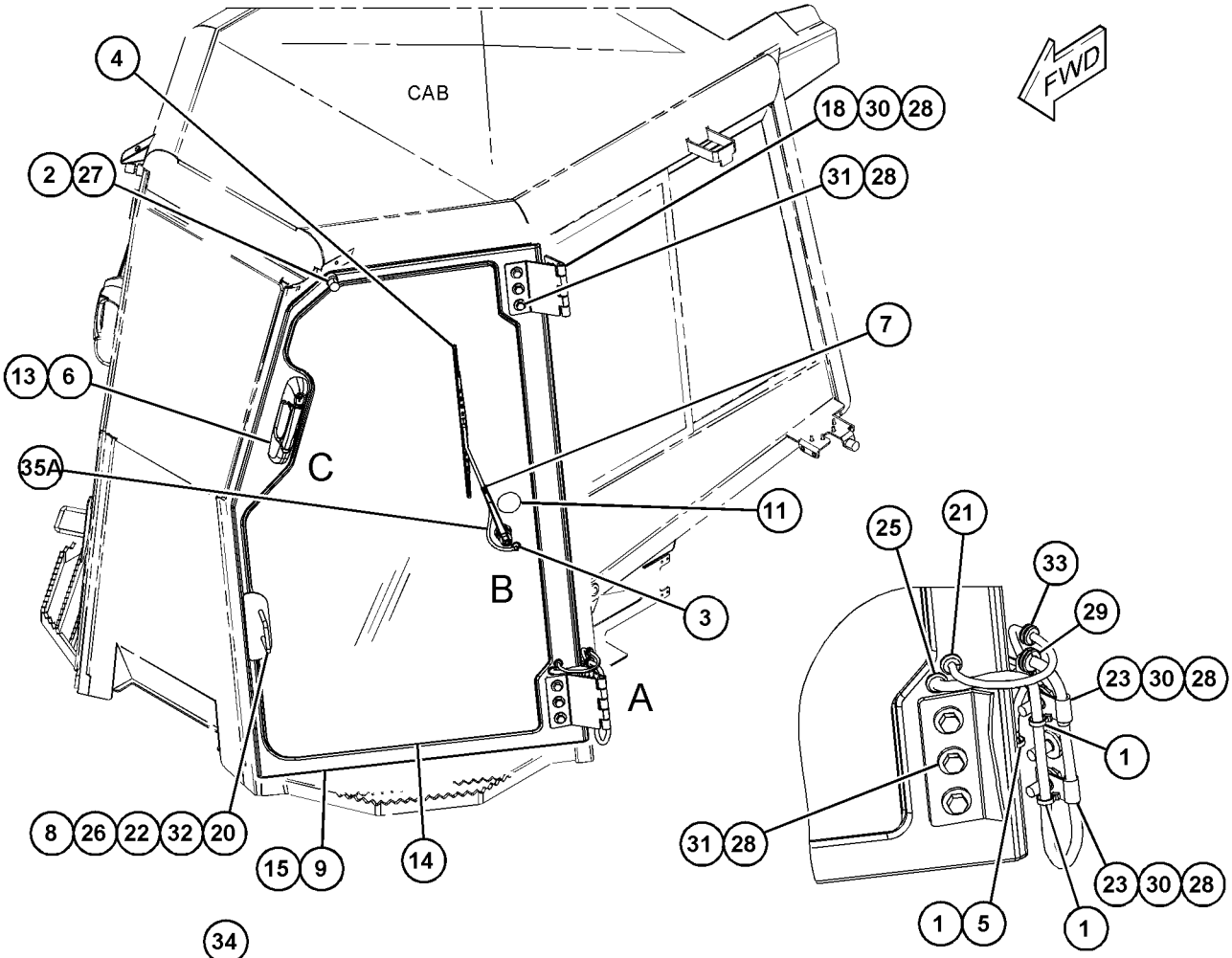

VIEW OF AREA A
(PARTS REMOVED FOR CLARITY)

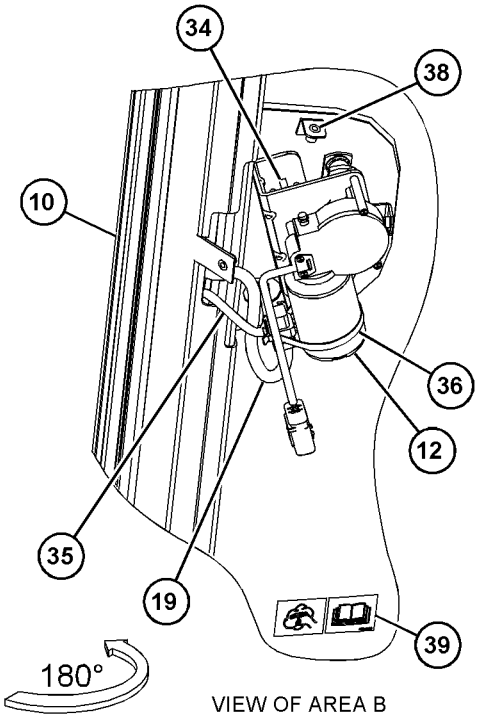

VIEW OF AREA B

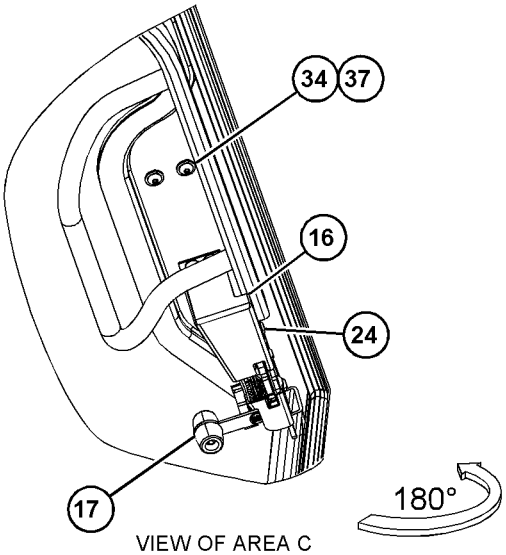

VIEW OF AREA C

GRAPHIC #1 <END> g06203230

393-4208 DOOR GP-STORAGE

S/N: H3C1-UP; K3G1-UP
PART OF 472-6433 DOOR GP-STORAGE
AN ATTACHMENT

SMCS-7268, 7273

i06996227

NOTE	REF NO	GRAPHIC REF	PART NUMBER	QTY	PART NAME 1 2 3 4 5 6 (PRODUCT LEVEL)	SEE PAGE
	1	1	**188-8846**	1	LATCH AS	
	2	1	**393-4272**	1	PLATE	
C	3	1	**427-5774**	2	HINGE AS	
C	4	1	**506-2725**	1	COVER AS	
		1	**143-4792**	2	BUMPER	
M	5	1	**271-9408**	8	SCREW-TRUSS HEAD (M5X0.8X10-MM)	
M	6	1	**9X-2043**	4	SCREW-TRUSS HEAD (M6X1X14-MM)	

C - CHANGE FROM PREVIOUS TYPE
M - METRIC PART

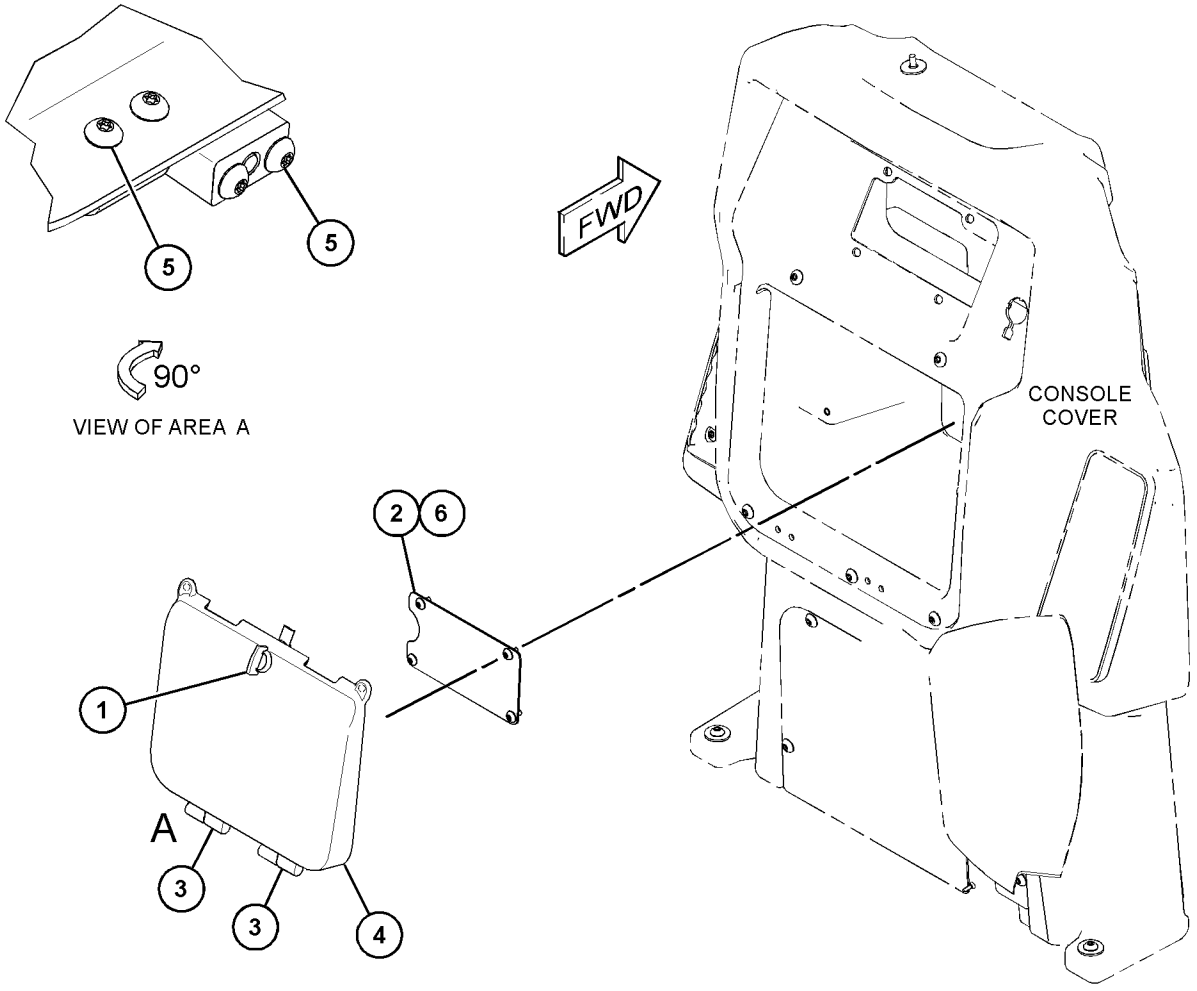

GRAPHIC #1 <END> g06192081

472-6433 DOOR GP-STORAGE–ENCLOSED ROPS

S/N: H3C1-UP; K3G1-UP
PART OF 549-9953 COVER GP-ACCESS
AN ATTACHMENT

SMCS-7268, 7273 **i06707243**

NOTE	REF NO	GRAPHIC REF	PART NUMBER	QTY	PART NAME 1 2 3 4 5 6 (PRODUCT LEVEL)	SEE PAGE
Y	1	1	*393-4208*	1	DOOR GP-STORAGE	488

Y - SEPARATE ILLUSTRATION

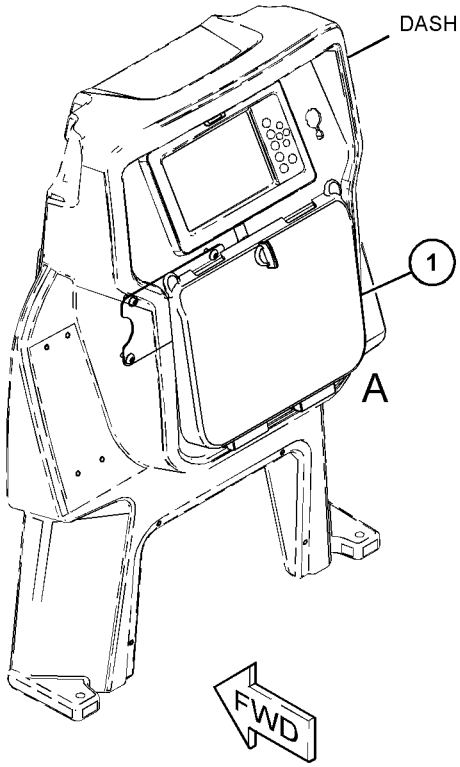

GRAPHIC #1 <END> g06011239

483-9172 ENCLOSURE GP-CAB

S/N: H3C1-UP; K3G1-UP
PART OF 459-6582 CHASSIS AR

SMCS-7301 **i07451180**

NOTE	REF NO	GRAPHIC REF	PART NUMBER	QTY	PART NAME 1 2 3 4 5 6 (PRODUCT LEVEL)	SEE PAGE
M	1	1	**8T-4139**	3	BOLT (M12X1.75X30-MM)	
M	2	1	**8T-4184**	16	BOLT (M12X1.75X45-MM)	
M	3	1	**8T-4192**	6	BOLT (M12X1.75X25-MM)	
	4	1	**5P-1076**	25	WASHER-HARD (13.5X30X4-MM THK)	
	5	1	**125-7037**	4	INSERT	
	6	1	**434-3576**	1	COVER AS	
	7	1	**434-3579**	1	COVER AS	
Y	8	1	*483-9173*	1	ENCLOSURE GP (REAR)	267
	9	1	**280-7618**		SEAL (45-CM EACH)	

M - METRIC PART
Y - SEPARATE ILLUSTRATION

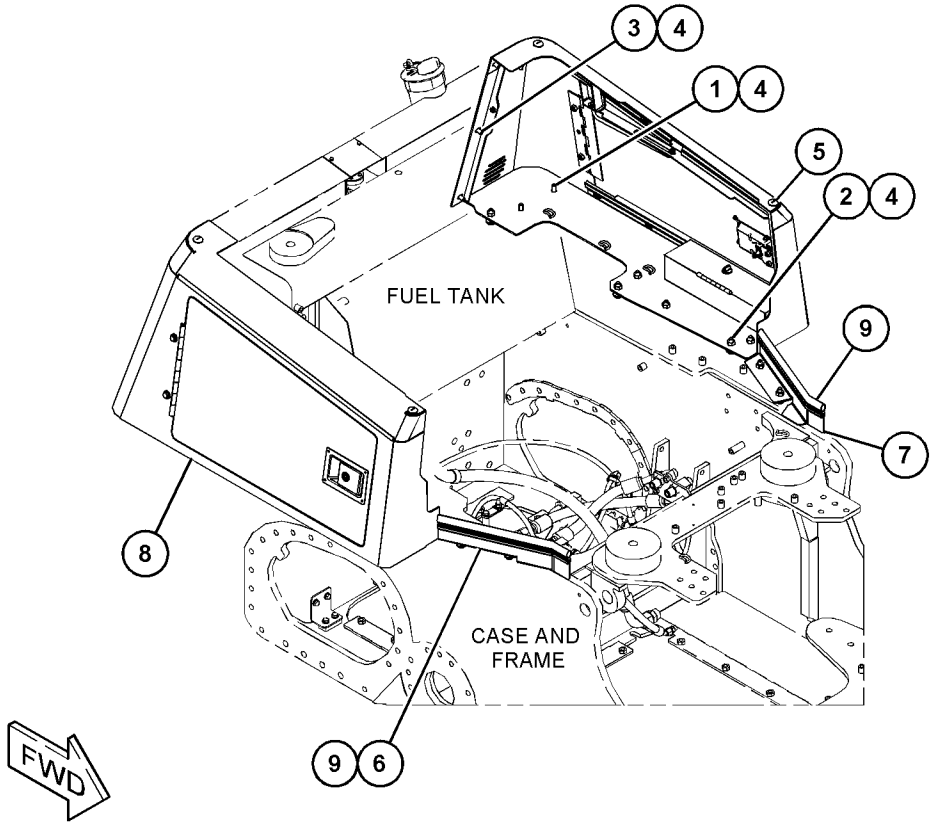

GRAPHIC #1 <END> g06233265

420-9597 INSTALLATION GP-CAB

S/N: H3C1-UP; K3G1-UP
PART OF 418-9377, 435-7611 CAB GP
AN ATTACHMENT

SMCS-7301 **i08009468**

NOTE	REF NO	GRAPHIC REF	PART NUMBER	QTY	PART NAME 1 2 3 4 5 6 (PRODUCT LEVEL)	SEE PAGE
	1	1	**6C-9003**	2	STOP	
	2	1	**8N-4409**	7	WASHER (16.89X27.05X1.91-MM THK)	
	3	1	**180-3153**	1	LATCH AS-DOOR (ROTARY) (RH)	
	4	1	**180-3154**	1	LATCH AS-DOOR (ROTARY) (LH)	
	5	1	**244-7094**	12	PLUG	
	6	1	**279-0942**	2	BOLT AS-STRIKER	
					(EACH INCLUDES)	
		1	**8T-4158**	1	WASHER-SPECIAL	
M	7	1	**327-6919**	3	INSERT-THREADED (M6X1-THD)	
	8	1	**343-3564**	1	PLATE AS	
	9	1	**343-3570**	2	STRIKER AS (BASE)	
	10	1	**393-4289**	1	PLATE AS	
	11	1	**489-8101**	11	STICKER-DOOR SEAL (BLACK)	
M	12	1	**195-0936**	10	INSERT-THREADED (M6X1-THD)	
M	13	1	**195-0937**	2	INSERT-THREADED (M8X1.25-THD)	
M	14	1	**195-0938**	6	INSERT-THREADED (M8X1.25-THD)	
M	15	1	**322-0819**	1	INSERT-THREADED (M10X1.5-THD)	
M	16	1	**344-5674**	2	NUT (M8X1.25-THD)	
	17	1	**346-3811**	2	NUT-SQUARE	
	18	1	**346-6584**	2	NUT-SPECIAL	
	19	1	**7X-7729**	8	WASHER (11X25X3-MM THK)	
M	20	1	**8T-4138**	8	BOLT (M6X1X20-MM)	
M	21	1	**8T-4189**	4	BOLT (M8X1.25X20-MM)	
M	22	1	**8T-4190**	7	BOLT (M16X2X25-MM)	
M	23	1	**8T-4195**	4	BOLT (M10X1.5X30-MM)	
	24	1	**5P-4116**	4	WASHER-HARD (8.8X20.5X2-MM THK)	
M	25	1	**9X-2040**	4	SCREW-TRUSS HEAD (M10X1.5X25-MM)	
	26	1	**9X-8256**	8	WASHER (6.6X12X2-MM THK)	
	27	1	**287-0548**	5	STICKER-DOOR SEAL	

M - METRIC PART

420-9597 **INSTALLATION GP-CAB (**contd.**)** **i08009468**

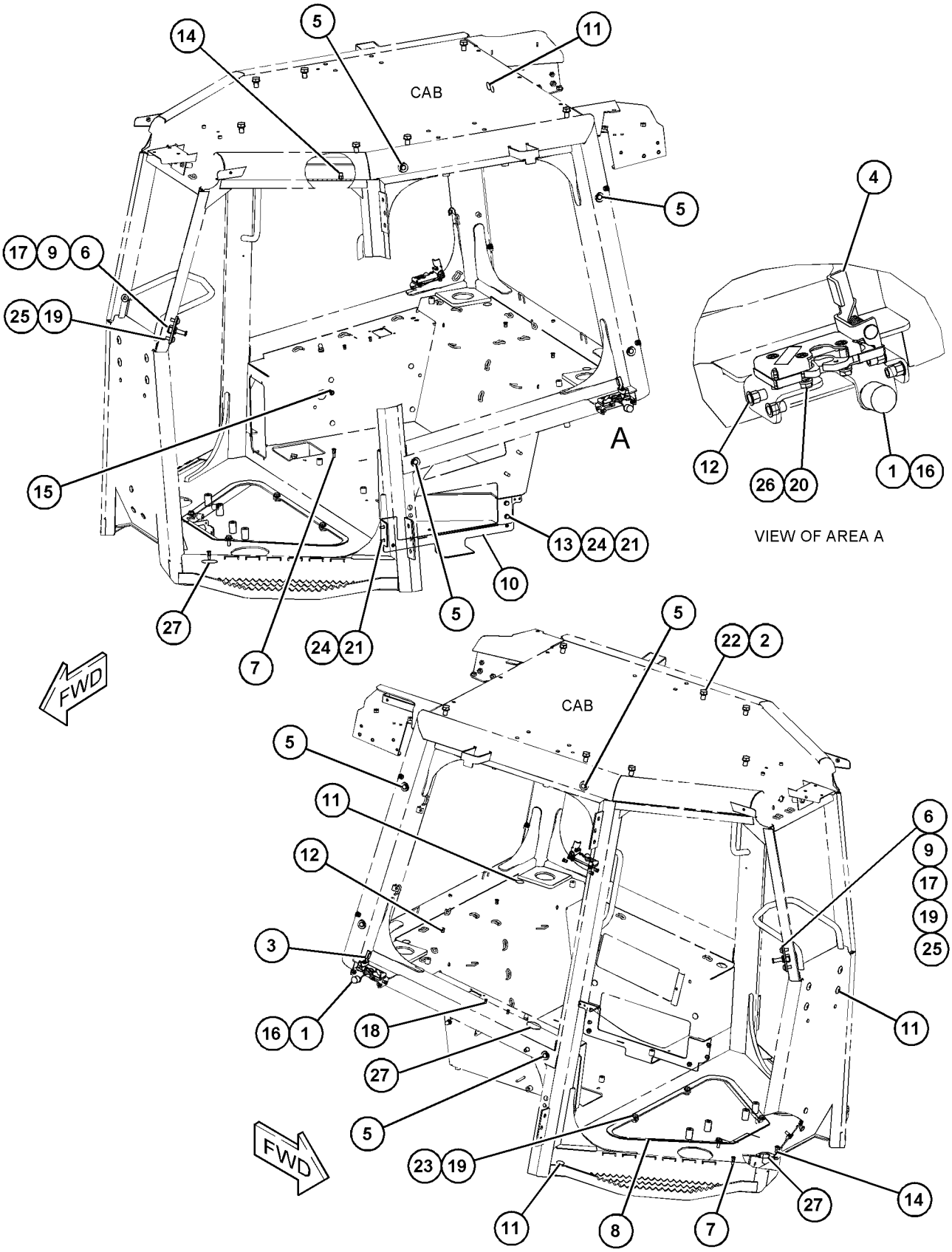

GRAPHIC #1 <END> g06116506

486-0091 INSTALLATION GP-CAB

S/N: H3C1-UP; K3G1-UP
PART OF 568-1316, 568-1317, 568-1318 CAB AR
AN ATTACHMENT

SMCS-7301 **i07585400**

NOTE	REF NO	GRAPHIC REF	PART NUMBER	QTY	PART NAME 1 2 3 4 5 6 (PRODUCT LEVEL)	SEE PAGE
	1	1	**393-4260**	1	COVER-LIGHT	
	2	1	**437-7479**	1	COVER (RH)	
	3	1	**437-7480**	1	COVER (LH)	
M	4	1	**8T-4171**	4	BOLT (M6X1X12-MM)	
M	5	1	**9X-2044**	8	SCREW-TRUSS HEAD (M6X1X16-MM)	
	6	1	**9X-6165**	5	WASHER (6.5X22X2.5-MM THK)	
E	7	1	**123-3827**		SEAL (433-CM)	
M	8	1	**5C-9553**	1	BOLT (M6X1X16-MM)	

E - ORDER BY THE CENTIMETER
M - METRIC PART

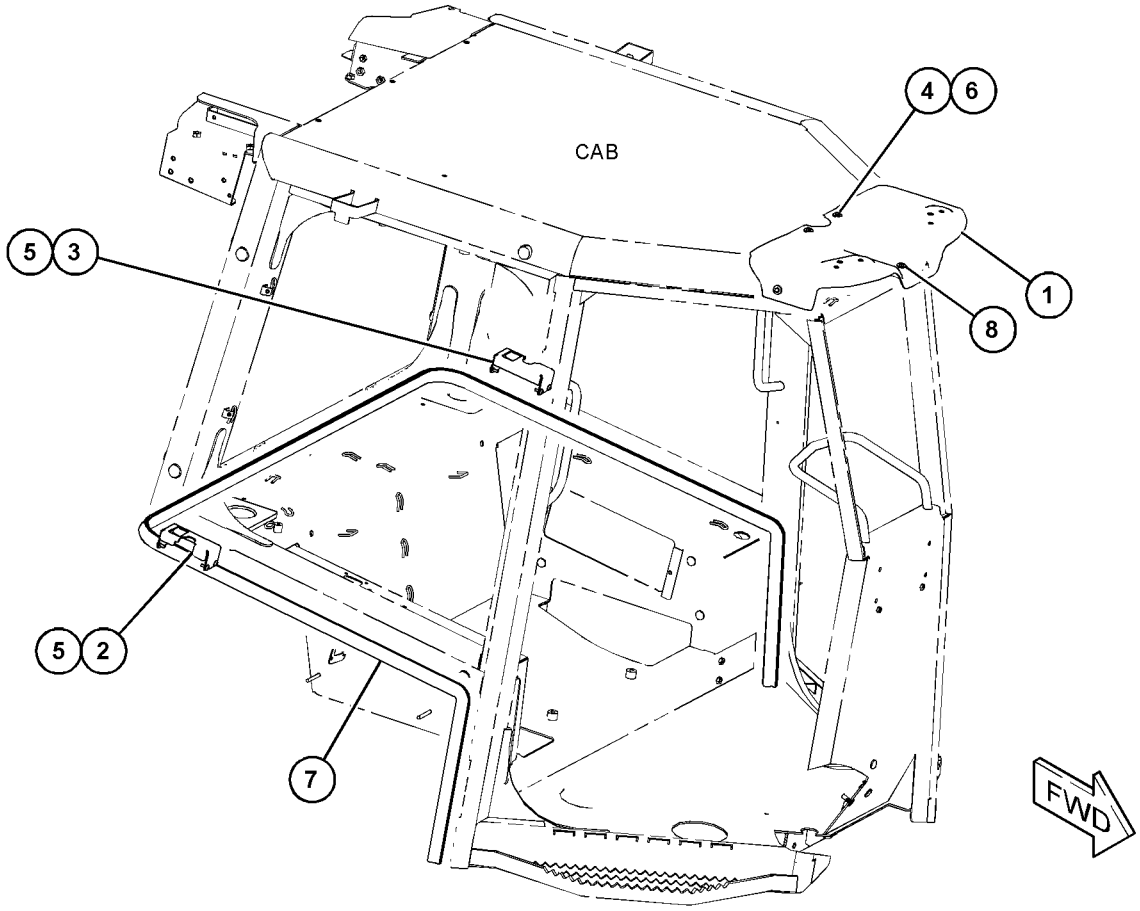

GRAPHIC #1 <END> g06370968

483-9449 INSTALLATION GP-RADIO

S/N: H3C1-UP; K3G1-UP
PART OF 418-9377, 435-7611 CAB GP
AN ATTACHMENT

SMCS-7338 **i07033789**

NOTE	REF NO	GRAPHIC REF	PART NUMBER	QTY	PART NAME 1 2 3 4 5 6 (PRODUCT LEVEL)	SEE PAGE
	1	1	**7K-1181**	1	STRAP-CABLE	
	2	1	**8E-1118**	1	ANTENNA AS (RADIO)	
	3	1	**9U-8746**	1	CABLE AS-COAXIAL	

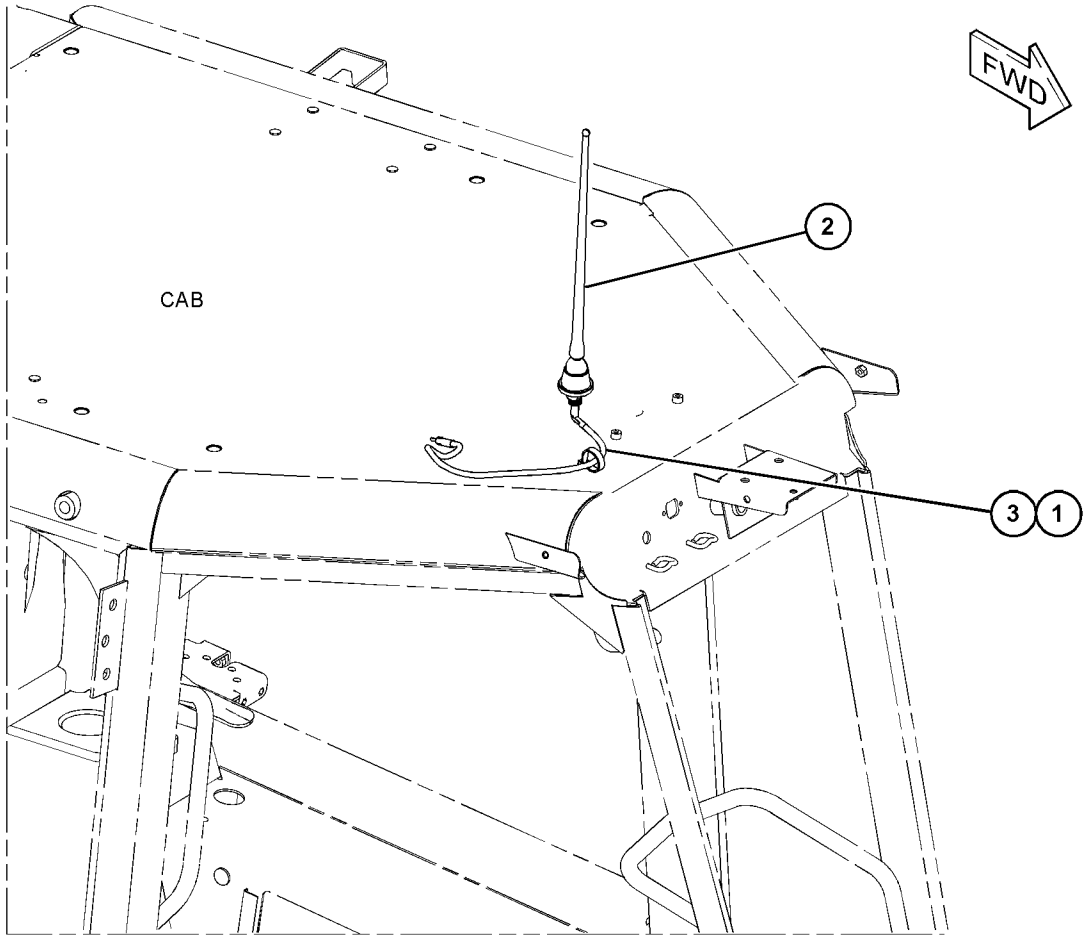

GRAPHIC #1 <END> g06203082

563-5532 KIT-HANDLE

S/N: H3C1-UP; K3G1-UP
PART OF 378-8521 CONTROL GP-HANDLE
AN ATTACHMENT

SMCS-7312 **i07435925**

NOTE	PART NUMBER	QTY	PART NAME 1 2 3 4 5 6 (PRODUCT LEVEL)	SEE PAGE
	566-2688	1	BOOT	
	566-2687	1	KNOB	
	566-2686	1	SLEEVE	

<END>

504-1202 LINES GP-AIR CONDITIONER

S/N: H3C1-UP; K3G1-UP

PART OF 457-1192 INSTALLATION AR-ENGINE

SMCS-1808 **i07443608**

NOTE	REF NO	GRAPHIC REF	PART NUMBER	QTY	PART NAME 1 2 3 4 5 6 (PRODUCT LEVEL)	SEE PAGE
M	1	1	**8T-4136**	1	BOLT (M10X1.5X25-MM)	
M	2	1	**8T-4196**	1	BOLT (M10X1.5X35-MM)	
	3	1	**9X-7381**	2	SEAL-O-RING	
M	4	1	**8T-4189**	1	BOLT (M8X1.25X20-MM)	
	5	1	**5P-4116**	1	WASHER-HARD (8.8X20.5X2-MM THK)	
	6	1	**7K-1181**	2	STRAP-CABLE	
	7	1	**8T-4121**	2	WASHER-HARD (11X21X2.5-MM THK)	
	8	1	**9X-7378**	2	SEAL-O-RING	
	9	1	**9X-7382**	2	SEAL-O-RING	
	10	1	**149-6371**	1	SWITCH AS-PRESSURE (A/C COMPRESSOR CLUTCH) (REFRIGERANT, LOW SIDE)	
		1	**102-8802**	1	KIT-RECEPTACLE (2-PIN)	
					(INCLUDES RECEPTACLE AS & WEDGE)	
		1	**8T-8729**	2	PIN-CONNECTOR (16-GA TO 20-GA)	
	11	1	**198-4777**	1	WASHER-HARD (11X25X10-MM THK)	
	12	1	**327-0282**	1	SEAL-INTEGRAL (1/2-IN) (REFRIGERANT, HIGH SIDE)	
	13	1	**327-0283**	1	SEAL-INTEGRAL (3/4-IN) (REFRIGERANT, LOW SIDE)	
	14	1	**355-3148**	1	SWITCH AS-PRESSURE (HIGH, LOW) (REFRIGERANT, HIGH SIDE)	
		1	**102-8802**	1	KIT-RECEPTACLE (2-PIN)	
					(INCLUDES RECEPTACLE AS & WEDGE)	
		1	**8T-8729**	2	PIN-CONNECTOR (16-GA TO 20-GA)	
	15	1	**421-2875**	1	TUBE AS	
	16	1	**421-2876**	1	TUBE AS	
	17	1	**489-5533**	1	PLATE-INSTRUCTION (AIR CONDITIONER)	
I	18	1	**504-1239**	1	HOSE AS	
I	19	1	**504-1240**	1	HOSE AS	
	20	1	**3E-6909**	1	CLIP (LOOP)	
	21	1	**4D-9517**	1	CLIP	
	22	1	**4S-1962**	2	CLIP (LOOP)	
	23	1	**8M-2773**	1	CLIP (LOOP)	
	24	1	**9M-8406**	1	CLIP (LOOP)	

I - REFER TO HYDRAULIC INFORMATION SYSTEM
M - METRIC PART

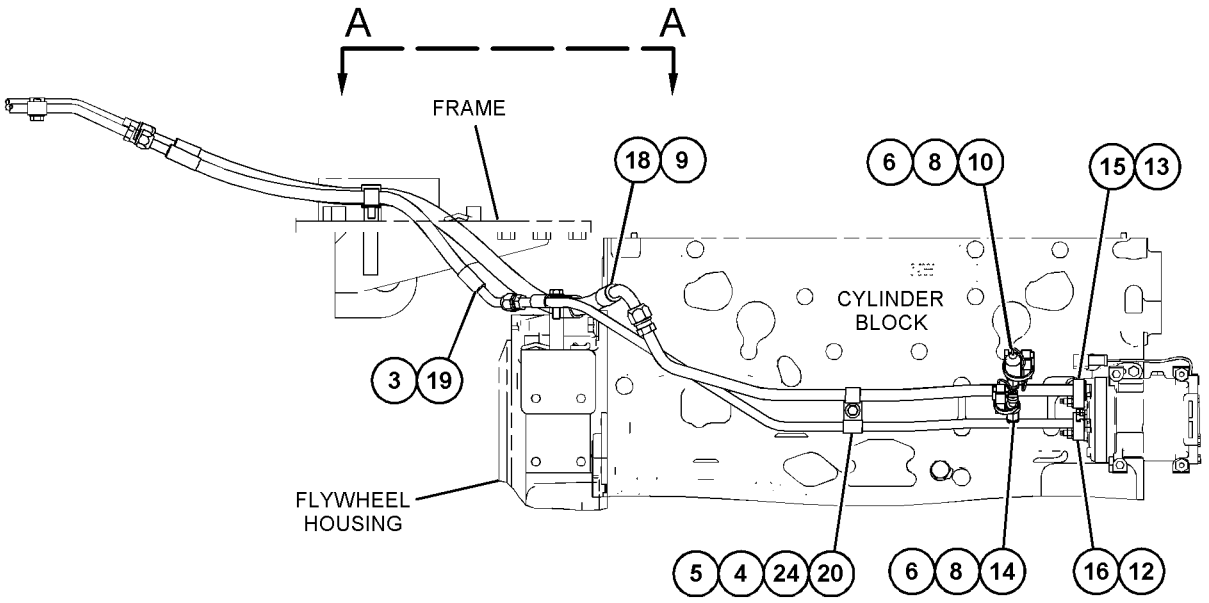

LEFT SIDE VIEW

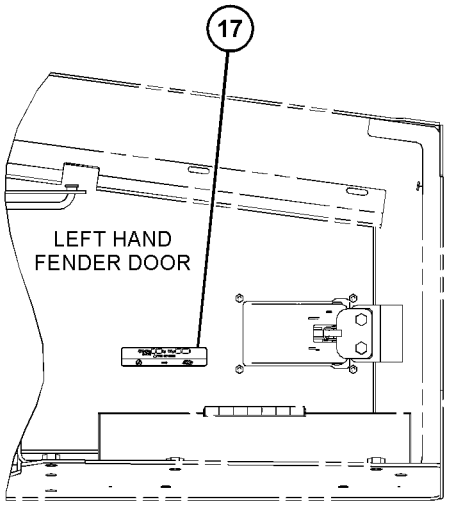

LEFT SIDE VIEW

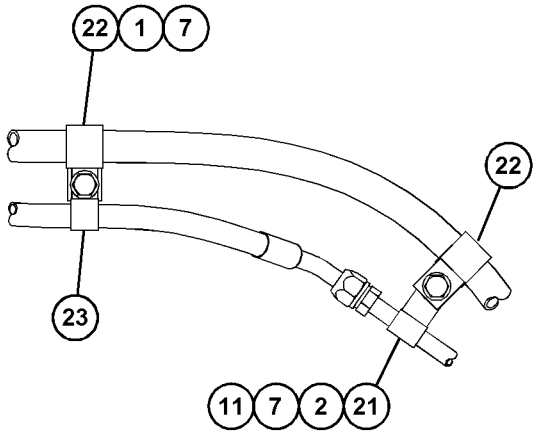

VIEW A-A

GRAPHIC #1 <END> g06189562

459-2093 LINES GP-HEATER

S/N: H3C1-UP; K3G1-UP

PART OF 457-1192 INSTALLATION AR-ENGINE

SMCS-1380, 1812, 7304 **i07577339**

NOTE	REF NO	GRAPHIC REF	PART NUMBER	QTY	PART NAME 1 2 3 4 5 6 (PRODUCT LEVEL)	SEE PAGE
M	1	1	**8T-4136**	2	BOLT (M10X1.5X25-MM)	
M	2	1	**8T-4139**	1	BOLT (M12X1.75X30-MM)	
M	3	1	**8T-4186**	1	BOLT (M10X1.5X40-MM)	
M	4	1	**8T-6466**	4	BOLT (M10X1.5X60-MM)	
M	5	1	**8T-4172**	1	BOLT (M10X1.5X80-MM)	
M	6	1	**8T-4189**	1	BOLT (M8X1.25X20-MM)	
M	7	1	**8T-6870**	1	BOLT (M8X1.25X70-MM)	
	8	1	**5D-1026**	10	CLAMP-BAND	
	9	1	**5E-6102**	3	FITTING	
	10	1	**7X-7729**	8	WASHER (11X25X3-MM THK)	
	11	1	**8T-4121**	8	WASHER-HARD (11X21X2.5-MM THK)	
M	12	1	**8T-4137**	1	BOLT (M10X1.5X20-MM)	
M	13	1	**8T-4178**	1	BOLT (M10X1.5X90-MM)	
	14	1	**8T-4223**	1	WASHER-HARD (13.5X25.5X3-MM THK)	
	15	1	**8T-4224**	2	WASHER-HARD (8.8X16X2-MM THK)	
	16	1	**091-7124**	1	SPACER (11X19X58-MM THK)	
	17	1	**091-9035**	3	SPACER (11X25X20-MM THK)	
M	18	1	**176-9237**	1	BOLT-SPECIAL (M10X1.5-THD)	
	19	1	**200-6345**	1	SADDLE-MOUNTING (DUAL SWIVEL)	
	20	1	**204-2281**	4	STRAP-CABLE	
	21	1	**275-4910**	2	STRAP	
	22	1	**316-0487**	1	SPACER (11X25X70-MM THK)	
	23	1	**318-2936**	1	BRACKET AS	
M	24	1	**344-5675**	5	NUT (M10X1.5-THD)	
	25	1	**417-5097**	2	BRACKET AS	
	26	1	**447-9370**	1	BRACKET AS	
	27	1	**499-3959**	1	HOSE	
	28	1	**134-3987**	1	CLIP (LOOP)	
	29	1	**211-0264**	1	SPACER (9X18X24-MM THK)	
	30	1	**6D-1641**	8	CLIP (LOOP)	
E	31	1	**5P-0767**		HOSE (137-CM)	
E	31A	1	**5P-0767**		HOSE (151-CM EACH)	
E	31B	1	**5P-0767**		HOSE (144-CM)	

E - ORDER BY THE CENTIMETER
M - METRIC PART

459-2093 **LINES GP-HEATER (**contd.**)** **i07577339**

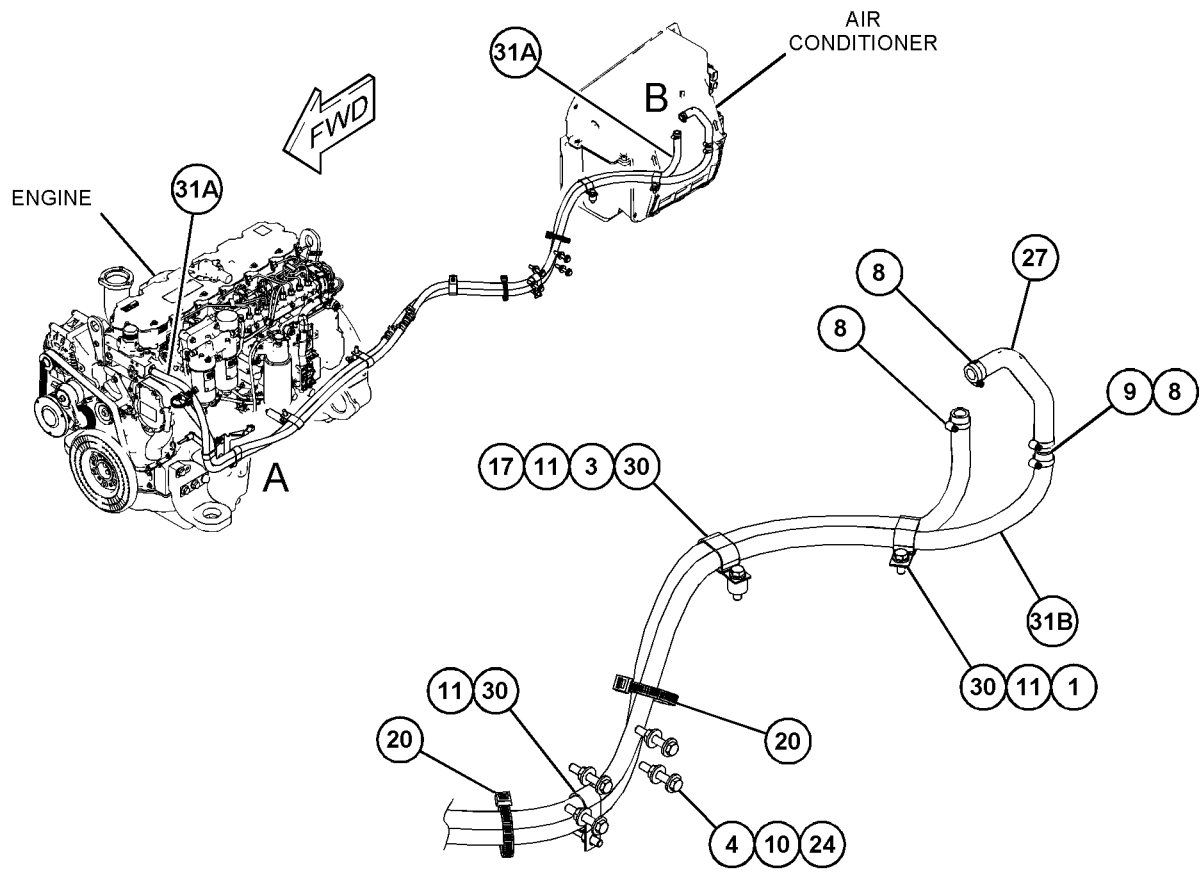

VIEW OF AREA B

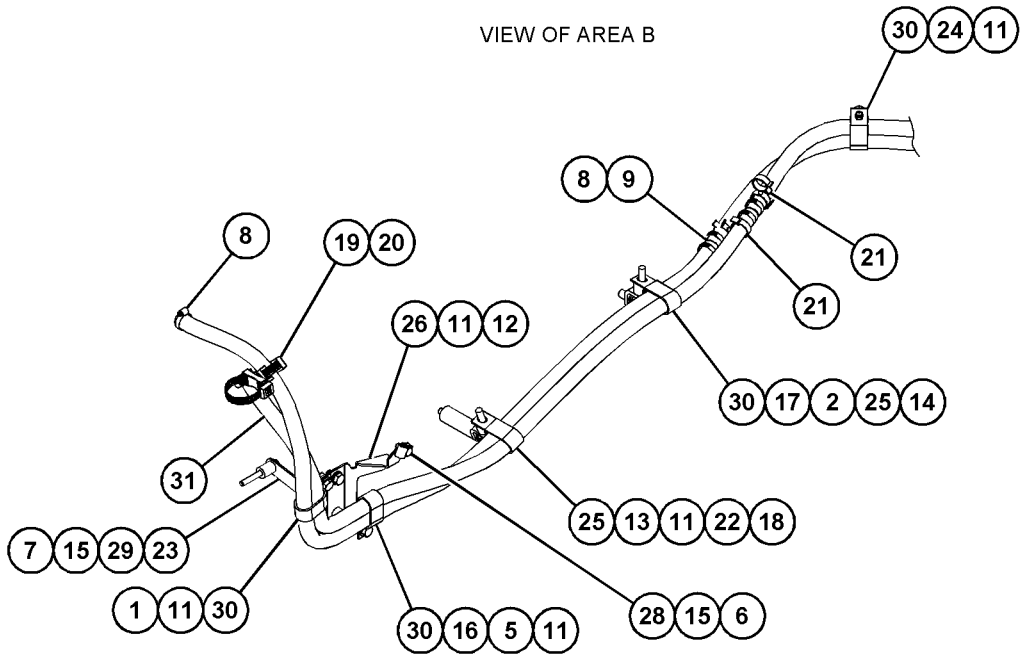

VIEW OF AREA A

GRAPHIC #1 <END> g06188126

435-7593 LINES GP-WINDOW WASHER

S/N: H3C1-UP; K3G1-UP
PART OF 568-1316, 568-1317, 568-1318 CAB AR
AN ATTACHMENT

SMCS-7306 **i08097865**

NOTE	REF NO	GRAPHIC REF	PART NUMBER	QTY	PART NAME 1 2 3 4 5 6 (PRODUCT LEVEL)	SEE PAGE
	1	1	**3S-2093**	26	STRAP-CABLE	
	2	1	**155-5487**	1	GROMMET	
	3	1	**218-2656**	2	FITTING	
	4	1	**249-9076**	4	CLIP	
	5	1	**9D-8508**	2	GROMMET	
E	6	1	**7X-7927**		TAPE-IDENTIFICATION (LETTER A) (3-CM)	
E	7	1	**7X-7928**		TAPE-IDENTIFICATION (LETTER B) (3-CM)	
E	8	1	**144-0195**		HOSE (87-CM)	
E	8A	1	**144-0195**		HOSE (33-CM)	
E	8B	1	**144-0195**		HOSE (142-CM)	
E	8C	1	**144-0195**		HOSE (301-CM)	
E	8D	1	**144-0195**		HOSE (194-CM)	
	9	1	**206-2423**	1	SADDLE-MOUNTING	

E - ORDER BY THE CENTIMETER

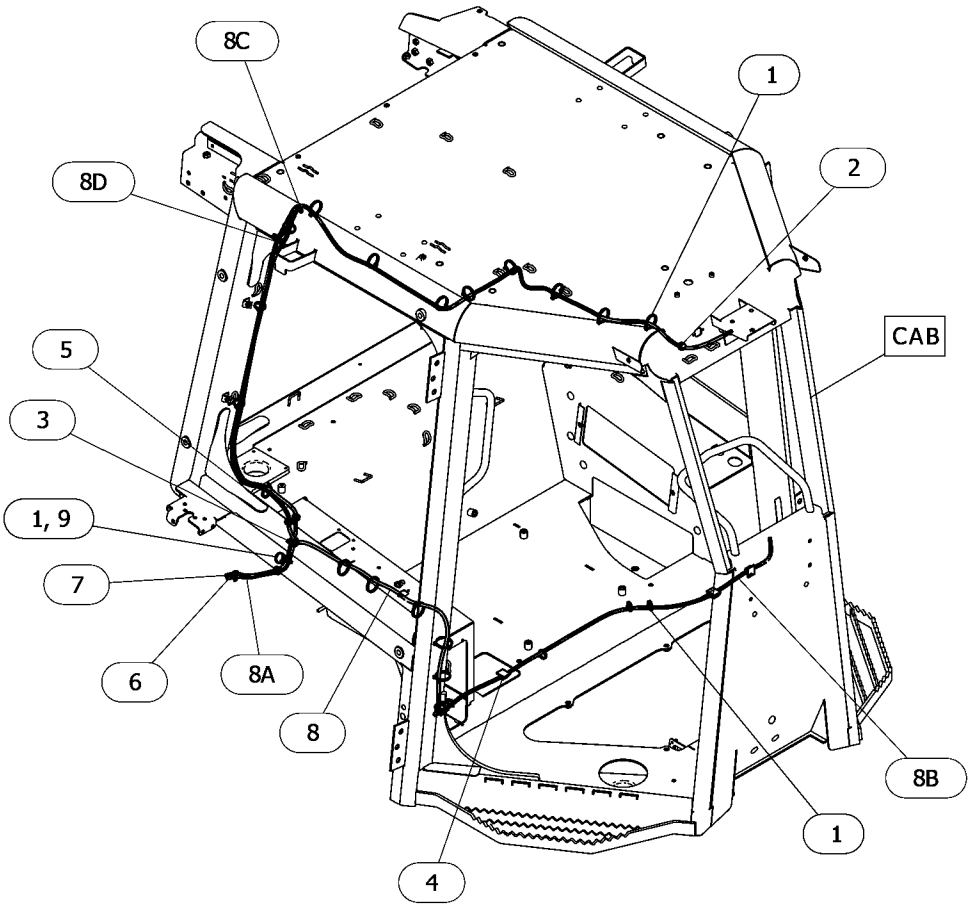

GRAPHIC #1 <END> g06542965

539-0441 MONITOR GP-OPERATOR

S/N: H3C1-UP; K3G1-UP
PART OF 568-1316, 568-1317, 568-1318 CAB AR
AN ATTACHMENT

SMCS-7490 **i07504679**

NOTE	REF NO	GRAPHIC REF	PART NUMBER	QTY	PART NAME 1 2 3 4 5 6 (PRODUCT LEVEL)	SEE PAGE
M	1	1	**5C-9553**	1	BOLT (M6X1X16-MM)	
Y	2	1	**3E-6328**	1	ALARM GP (24-VOLT)	106
	3	1	**4P-8134**	2	CLIP (LADDER)	
	4	1	**7K-1181**	7	STRAP-CABLE	
	5	1	**9X-2038**	2	WASHER (7X19X2-MM THK)	
M	6	1	**9X-2042**	3	SCREW-TRUSS HEAD (M6X1X12-MM)	
M	7	1	**9X-2044**	1	SCREW-TRUSS HEAD (M6X1X16-MM)	
	8	1	**218-0651**	1	FILM-INSTRUCTION (KEY START SWITCH)	
	9	1	*351-8647*	1	PLUG AS-CONNECTOR (12-PIN)	
		1	**8T-8737**	12	PLUG-SEAL	
		1	**241-8834**	1	PLUG AS-CONNECTOR (12-PIN)	
		1	**455-0709**	1	SEAL-CONNECTOR	
	10	1	**467-8535**	1	SWITCH AS-START (KEY)	
		1	**7T-6799**	1	NUT-MOUNTING (1-32-THD)	
		1	**8T-8729**	4	PIN-CONNECTOR (16-GA TO 20-GA)	
		1	**102-8804**	1	KIT-RECEPTACLE (4-PIN)	
					(INCLUDES RECEPTACLE AS & WEDGE)	
Y	11	1	**539-0442**	1	HARNESS AS-DASH	137
R	12	1	**541-5063**	1	MONITOR GP-OPERATOR	
		1	**364-8277**	1	FILM-IDENTIFICATION (CAT)	

M - METRIC PART
R - REMANUFACTURED PART MAY BE AVAILABLE
Y - SEPARATE ILLUSTRATION

539-0441 **MONITOR GP-OPERATOR (**contd.**)** **i07504679**

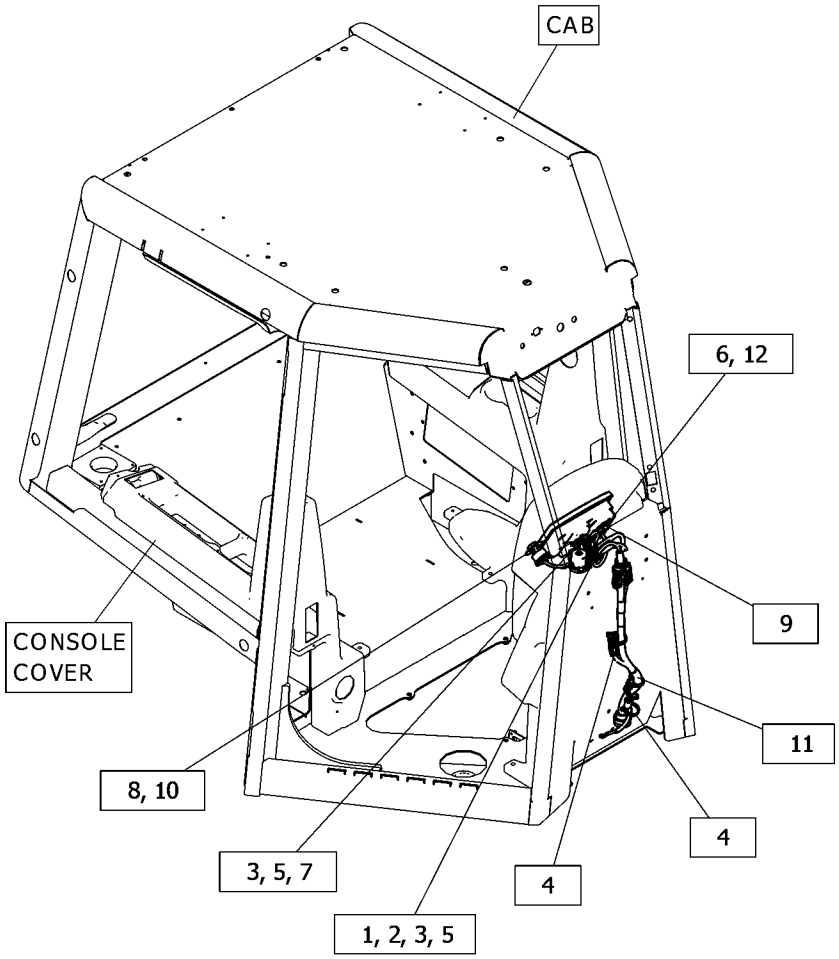

GRAPHIC #1 <END> g06369910

304-4243 MOTOR GP-WINDOW WIPER

S/N: H3C1-UP; K3G1-UP
24-VOLT
PART OF 484-7986, 486-0431 DOOR GP-CAB
AN ATTACHMENT

SMCS-7305 **i06063146**

NOTE	REF NO	GRAPHIC REF	PART NUMBER	QTY	PART NAME 1 2 3 4 5 6 (PRODUCT LEVEL)	SEE PAGE
	1	1	**206-5823**	1	CAP (WIPER MOTOR)	
	2	1	*304-4406*	1	MOTOR GP-WINDOW WIPER	
		1	**186-3735**	4	PIN-CONNECTOR (16-GA TO 18-GA)	
		1	**230-5009**	1	RECEPTACLE AS-CONNECTOR (4-PIN)	
	3	1	**3F-9556**	1	LOCKWASHER	
M	4	1	**5C-7261**	1	NUT (M8X1.25-THD)	

M - METRIC PART

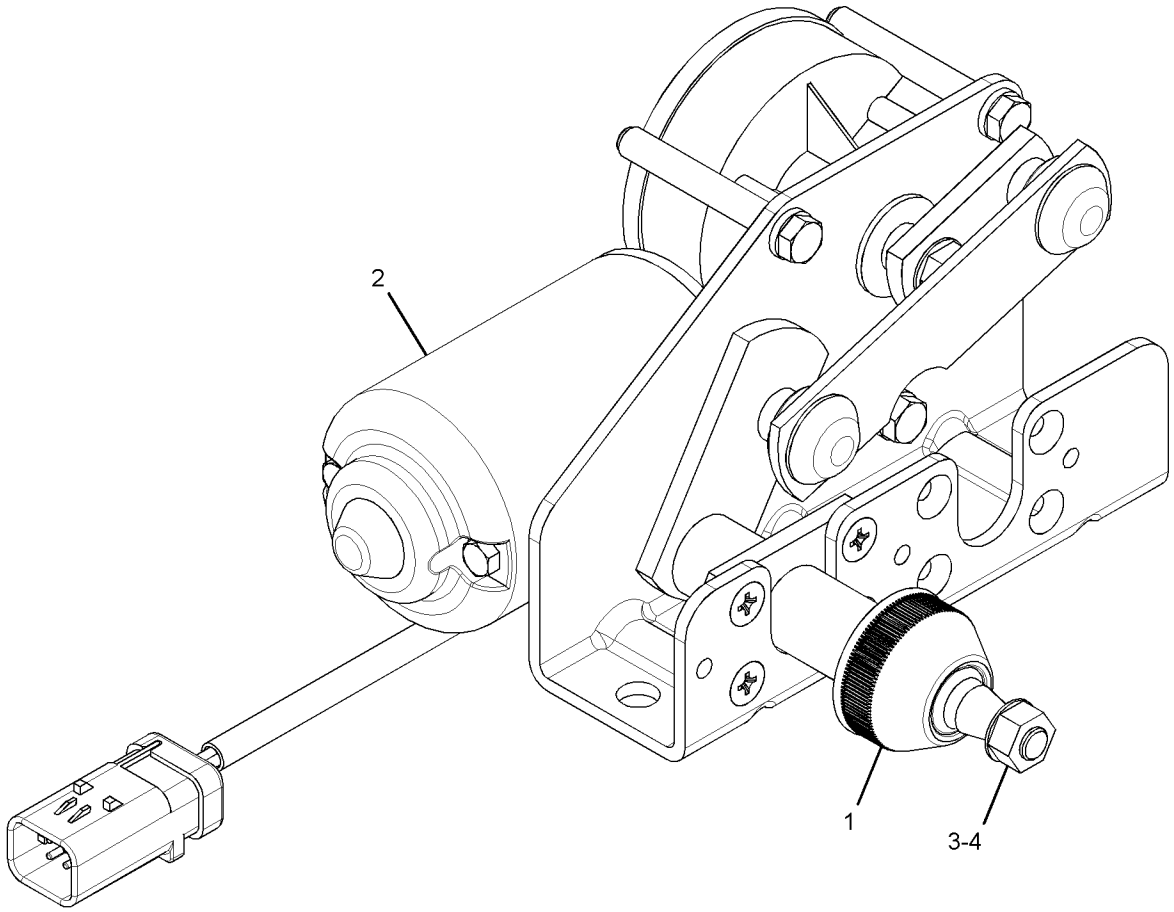

GRAPHIC #1 <END> g01403665

304-4244 MOTOR GP-WINDOW WIPER

S/N: H3C1-UP; K3G1-UP
24-VOLT
PART OF 484-7985, 486-0430 DOOR GP-CAB
AN ATTACHMENT

SMCS-7305 **i05834072**

NOTE	REF NO	GRAPHIC REF	PART NUMBER	QTY	PART NAME 1 2 3 4 5 6 (PRODUCT LEVEL)	SEE PAGE
	1	1	**206-5823**	1	CAP (WIPER MOTOR)	
	2	1	*304-4406*	1	MOTOR GP-WINDOW WIPER	
		1	**8T-8729**	4	PIN-CONNECTOR (16-GA TO 20-GA)	
		1	**230-5009**	1	RECEPTACLE AS-CONNECTOR (4-PIN)	
	3	1	**3F-9556**	1	LOCKWASHER	
M	4	1	**5C-7261**	1	NUT (M8X1.25-THD)	

M - METRIC PART

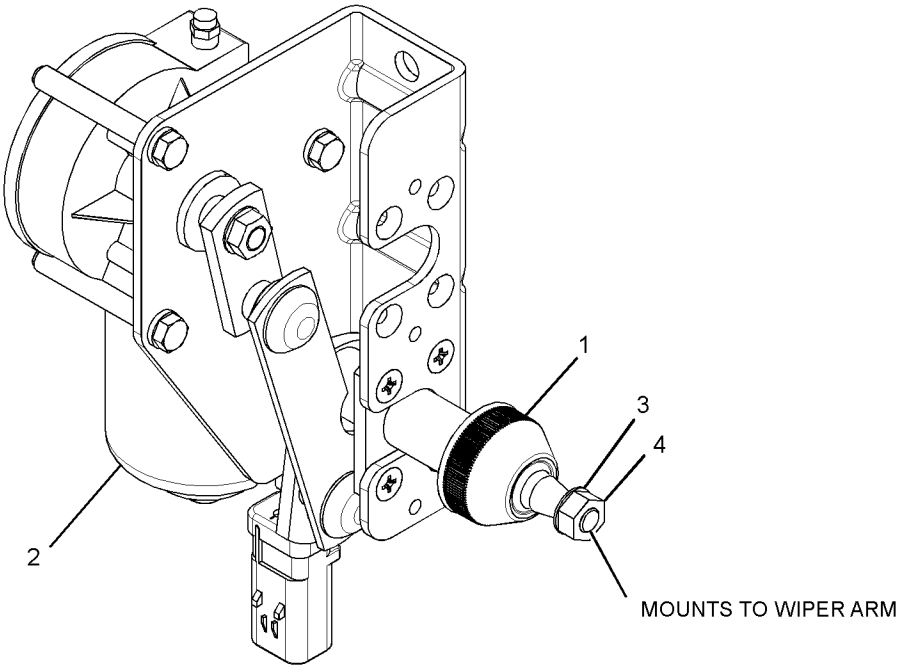

GRAPHIC #1 <END> g01407452

330-5023 MOTOR GP-WINDOW WIPER–REAR

S/N: H3C1-UP; K3G1-UP
24-VOLT
PART OF 484-8213 WIPER GP-WINDOW
AN ATTACHMENT

SMCS-7305 **i06078595**

NOTE	REF NO	GRAPHIC REF	PART NUMBER	QTY	PART NAME 1 2 3 4 5 6 (PRODUCT LEVEL)	SEE PAGE
	1	1	**8T-8729**	4	PIN-CONNECTOR (16-GA TO 20-GA)	
	2	1	**230-5009**	1	RECEPTACLE AS-CONNECTOR (4-PIN)	
	3	1	**263-3823**	1	CAP-WIPER	
	4	1	**3F-9556**	1	LOCKWASHER	
M	5	1	**5C-7261**	1	NUT (M8X1.25-THD)	

M - METRIC PART

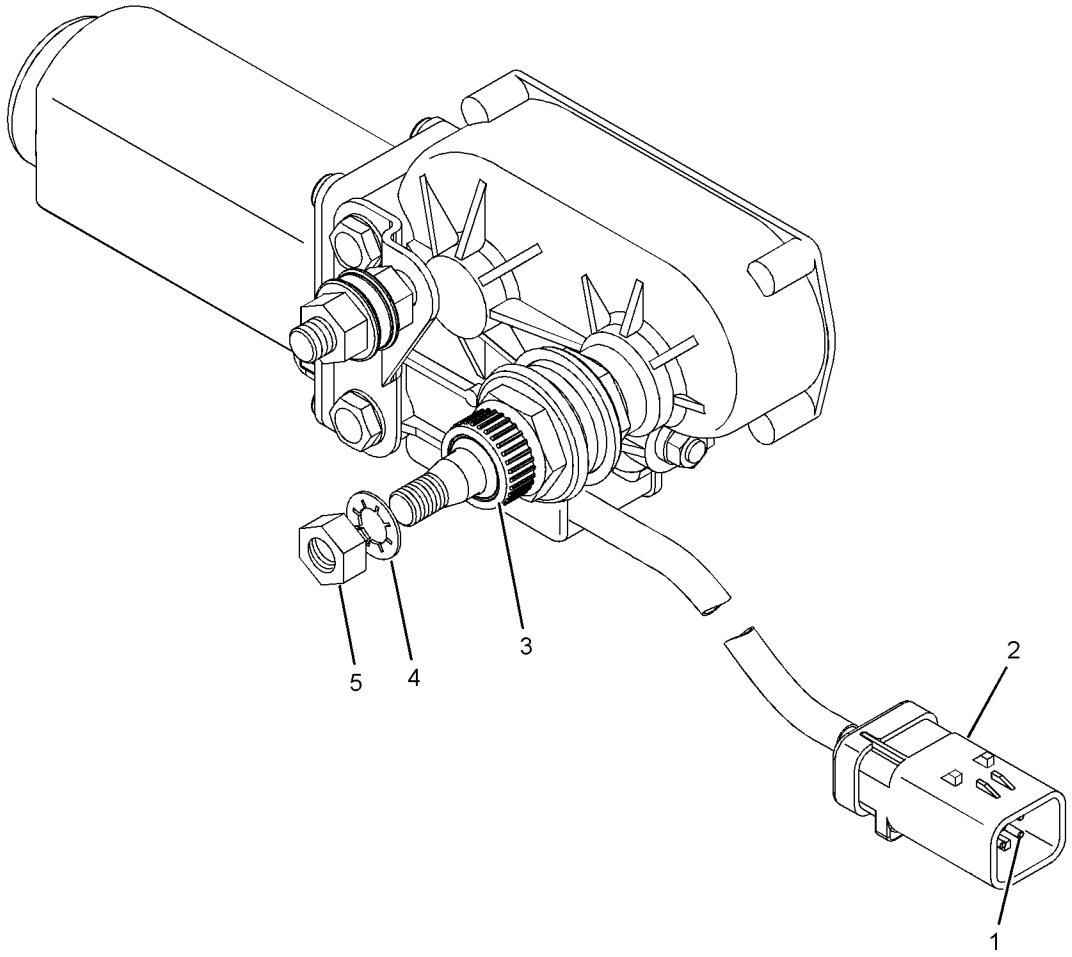

GRAPHIC #1 <END> g01204207

469-4657 MOTOR GP-WINDOW WIPER

S/N: H3C1-UP; K3G1-UP
24-VOLT
PART OF 484-8213 WIPER GP-WINDOW
AN ATTACHMENT

SMCS-7305 **i06692024**

NOTE	REF NO	GRAPHIC REF	PART NUMBER	QTY	PART NAME 1 2 3 4 5 6 (PRODUCT LEVEL)	SEE PAGE
	1	1	**8T-8729**	4	PIN-CONNECTOR (16-GA TO 20-GA)	
	2	1	**230-5009**	1	RECEPTACLE AS-CONNECTOR (4-PIN)	
	3	1	**263-3823**	1	CAP-WIPER	
	4	1	**3F-9556**	1	LOCKWASHER	
M	5	1	**5C-7261**	2	NUT (M8X1.25-THD)	

M - METRIC PART

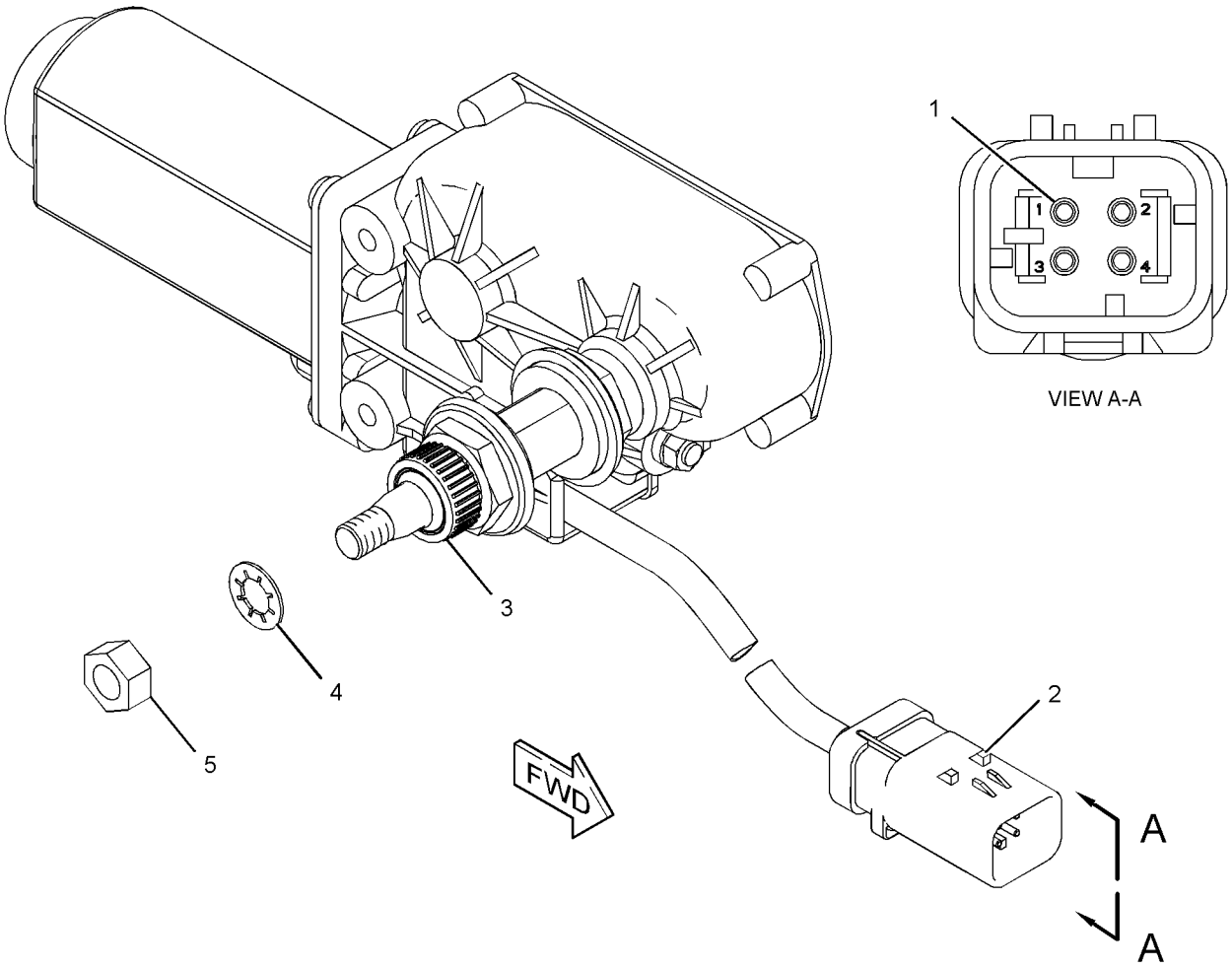

GRAPHIC #1 <END> g01203444

393-4209 MOUNTING GP-DISPLAY

S/N: H3C1-UP; K3G1-UP
PART OF 549-7642 ELECTRONICS AR-MACHINE
AN ATTACHMENT

SMCS-7347, 7490 **i07424341**

NOTE	REF NO	GRAPHIC REF	PART NUMBER	QTY	PART NAME 1 2 3 4 5 6 (PRODUCT LEVEL)	SEE PAGE
	1	1	**188-8846**	1	LATCH AS	
	2	1	**343-3593**	1	COVER	
	3	1	**393-4271**	1	PLATE	
	4	1	**427-5774**	2	HINGE AS	
C	5	1	**524-1340**	1	DOOR AS	
		1	**143-4792**	2	BUMPER	
M	6	1	**198-9706**	4	SCREW-TRUSS HEAD (M5X0.8X16-MM)	
M	7	1	**271-9408**	8	SCREW-TRUSS HEAD (M5X0.8X10-MM)	
M	8	1	**5C-2874**	4	NUT (M5X0.8-THD)	
M	9	1	**9X-2043**	4	SCREW-TRUSS HEAD (M6X1X14-MM)	
	10	1	**9X-8256**	4	WASHER (6.6X12X2-MM THK)	

C - CHANGE FROM PREVIOUS TYPE
M - METRIC PART

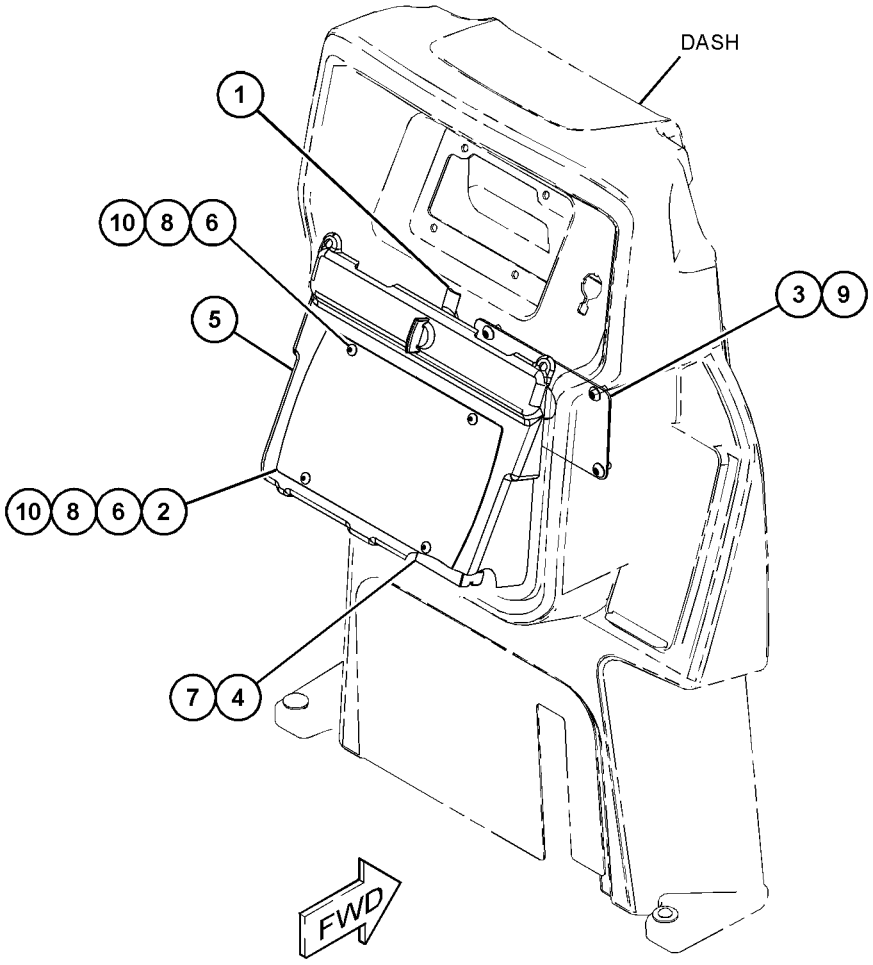

GRAPHIC #1 <END> g06321787

488-4958 MOUNTING GP-DISPLAY

S/N: H3C1-UP; K3G1-UP
PART OF 549-7643 ELECTRONICS AR-MACHINE
AN ATTACHMENT

SMCS-7347, 7490 **i07459753**

NOTE	REF NO	GRAPHIC REF	PART NUMBER	QTY	PART NAME 1 2 3 4 5 6 (PRODUCT LEVEL)	SEE PAGE
	1	1	**188-8846**	1	LATCH AS (COMPRESSION)	
	2	1	**427-5774**	2	HINGE AS	
	3	1	**393-4271**	1	PLATE	
	4	1	**506-2724**	1	DOOR AS (DISPLAY)	
		1	**143-4792**	2	BUMPER	
M	5	1	**198-9706**	4	SCREW-TRUSS HEAD (M5X0.8X16-MM)	
M	6	1	**271-9408**	8	SCREW-TRUSS HEAD (M5X0.8X10-MM)	
M	7	1	**9X-2043**	4	SCREW-TRUSS HEAD (M6X1X14-MM)	
	8	1	**9X-8256**	4	WASHER (6.6X12X2-MM THK)	

M - METRIC PART

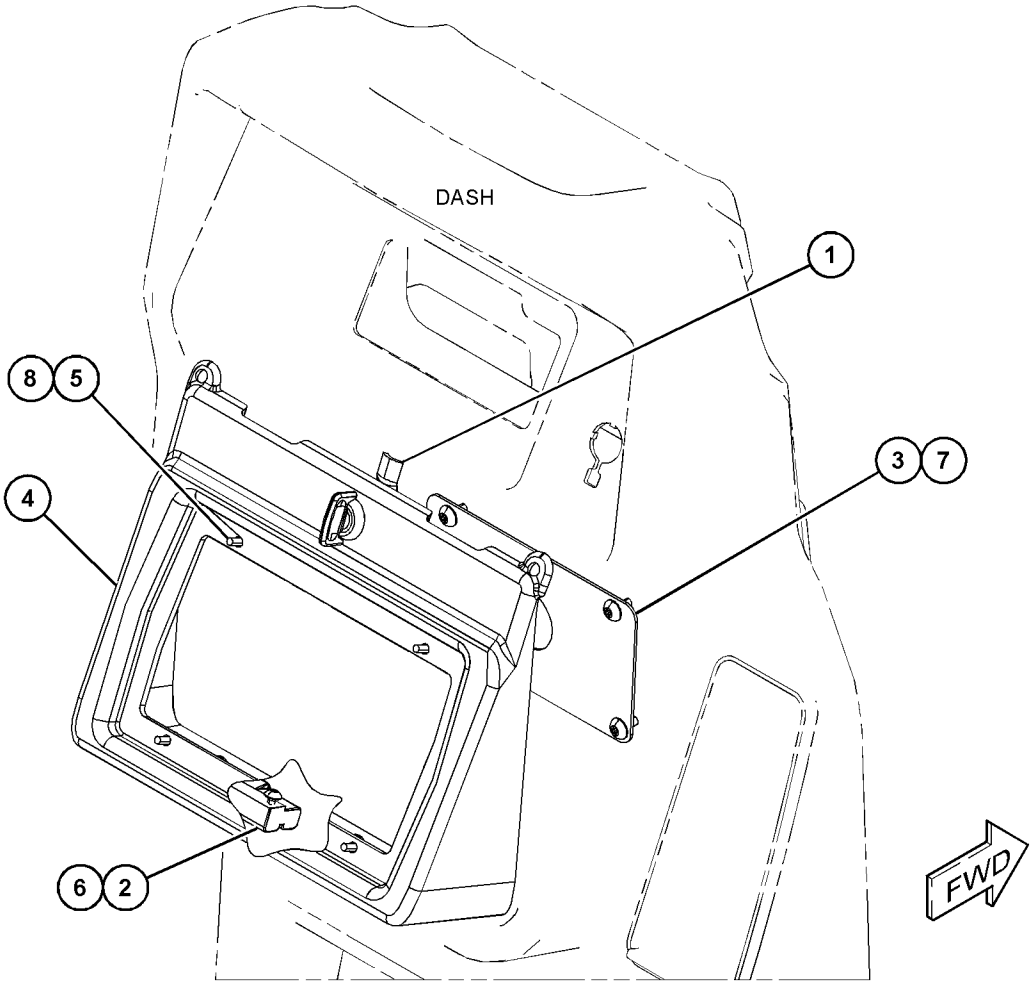

GRAPHIC #1 <END> g06174251

446-1002 PEDAL GP-GOVERNOR & BRAKE

S/N: H3C1-UP; K3G1-UP
PART OF 446-1003 CONTROL & MTG GP-PEDAL
AN ATTACHMENT

SMCS-4122 **i07233972**

NOTE	REF NO	GRAPHIC REF	PART NUMBER	QTY	PART NAME 1 2 3 4 5 6 (PRODUCT LEVEL)	SEE PAGE
	1	1	**191-3587**	1	SWITCH AS-LIMIT (SERVICE BRAKE)	
		1	**9G-3695**	1	PLUG-SEAL	
		1	**8T-8729**	3	PIN-CONNECTOR (16-GA TO 20-GA)	
		1	**102-8804**	1	KIT-RECEPTACLE (4-PIN)	
					(INCLUDES RECEPTACLE AS & WEDGE)	
Y	2	1	**266-1467**	1	SENSOR GP-POSITION (ROTARY) (GOVERNOR, BRAKE PEDAL)	168
	3	1	**287-2169**	1	PAD	
	4	1	**393-9694**	1	SUPPORT AS	
	5	1	**415-1487**	1	LINK	
	6	1	**415-1644**	1	SHAFT	
	7	1	**473-3767**	1	PEDAL AS	
		1	**4S-8264**	2	RIVET-POP	
		1	**148-2714**	1	SPRING	
	8	1	**484-2124**	1	PLATE	
	9	1	**489-8101**	1	STICKER-DOOR SEAL (BLACK)	
	10	1	**096-6166**	4	WASHER-HARD (4.5X9X1-MM THK)	
M	11	1	**111-3781**	2	BOLT-ANCHOR (M10X1.5X33-MM)	
	12	1	**138-1645**	1	PIN-SPRING	
	13	1	**145-3405**	2	SPACER (10.3X16.7X8-MM THK)	
M	14	1	**150-6257**	2	BOLT-SOCKET HEAD (M3X0.5X30-MM)	
	15	1	**446-4857**	2	BEARING-NEEDLE	
	16	1	**6V-0894**	1	SEAL-O-RING	
M	17	1	**6V-2314**	2	BOLT (M5X0.8X35-MM)	
	18	1	**7X-7729**	3	WASHER (11X25X3-MM THK)	
	19	1	**8T-0328**	2	WASHER-HARD (5.5X10X1-MM THK)	
M	20	1	**8T-2658**	2	LOCKNUT (M3X0.5-THD)	
M	21	1	**344-5675**	1	NUT (M10X1.5-THD)	
	22	1	**548-7682**	1	SPRING	

M - METRIC PART
Y - SEPARATE ILLUSTRATION

446-1002 **PEDAL GP-GOVERNOR & BRAKE (**contd.**)** **i07233972**

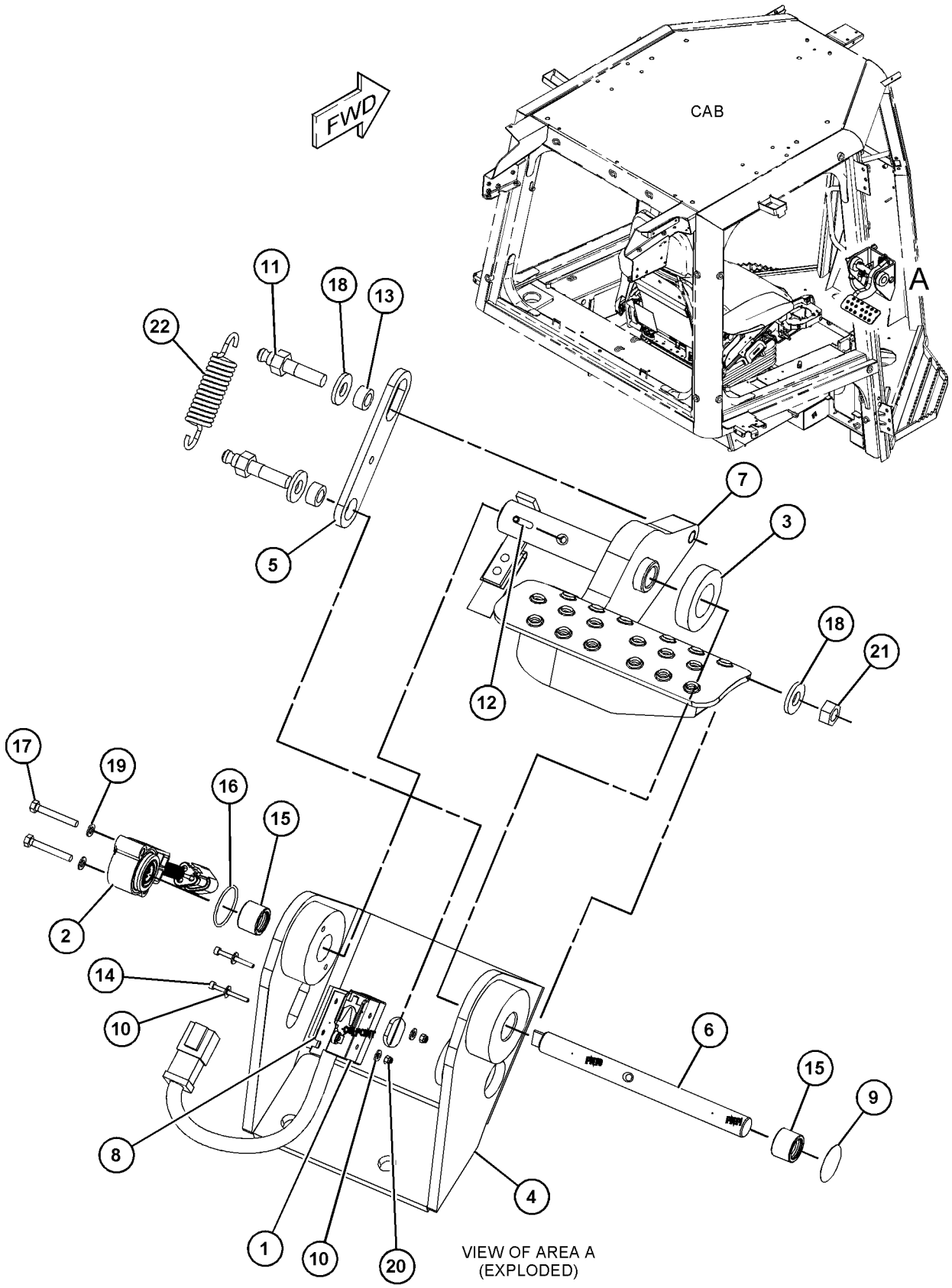

GRAPHIC #1 <END> g06021370

450-5739 RADIO GP–AM/FM/USB/BLUETOOTH

S/N: H3C1-UP; K3G1-UP
PART OF 452-6580 RADIO GP
AN ATTACHMENT

SMCS-7338 **i05658397**

NOTE	REF NO	GRAPHIC REF	PART NUMBER	QTY	PART NAME 1 2 3 4 5 6 (PRODUCT LEVEL)	SEE PAGE
	1	1	**200-5728**	1	HARNESS AS-RADIO (FLANGE)	
		1	**3E-3389**	1	WEDGE-RECEPTACLE LOCK (8-PIN)	
		1	**8T-8737**	1	PLUG-SEAL	
		1	**160-3518**	1	KIT-RECEPTACLE (8-PIN)	
					(INCLUDES RECEPTACLE AS & WEDGE)	
		1	**172-8037**	1	CONNECTOR (RADIO)	
		1	**172-8039**	11	TERMINAL (RADIO)	
		1	**8T-8729**	7	PIN-CONNECTOR (16-GA TO 20-GA)	
	2	1	**439-1562**	1	RADIO GP (AM/FM/USB/BLUETOOTH)	

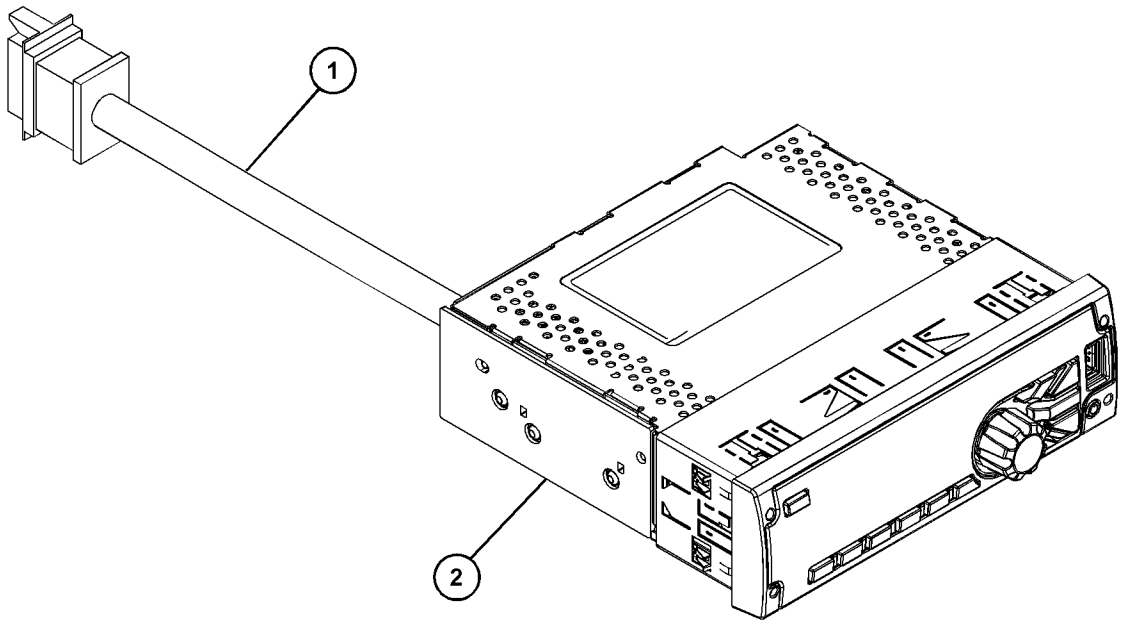

GRAPHIC #1 <END> g03589736

452-6580 RADIO GP–AM/FM/USB/BLUETOOTH

S/N: H3C1-UP; K3G1-UP
PART OF 495-1449 RADIO GP-COMMUNICATION
AN ATTACHMENT

SMCS-7338 **i05802212**

NOTE	REF NO	GRAPHIC REF	PART NUMBER	QTY	PART NAME 1 2 3 4 5 6 (PRODUCT LEVEL)	SEE PAGE
	1	1	**137-8165**	1	BUMPER	
Y	2	1	*450-5739*	1	RADIO GP (AM/FM/USB/BLUETOOTH)	511

Y - SEPARATE ILLUSTRATION

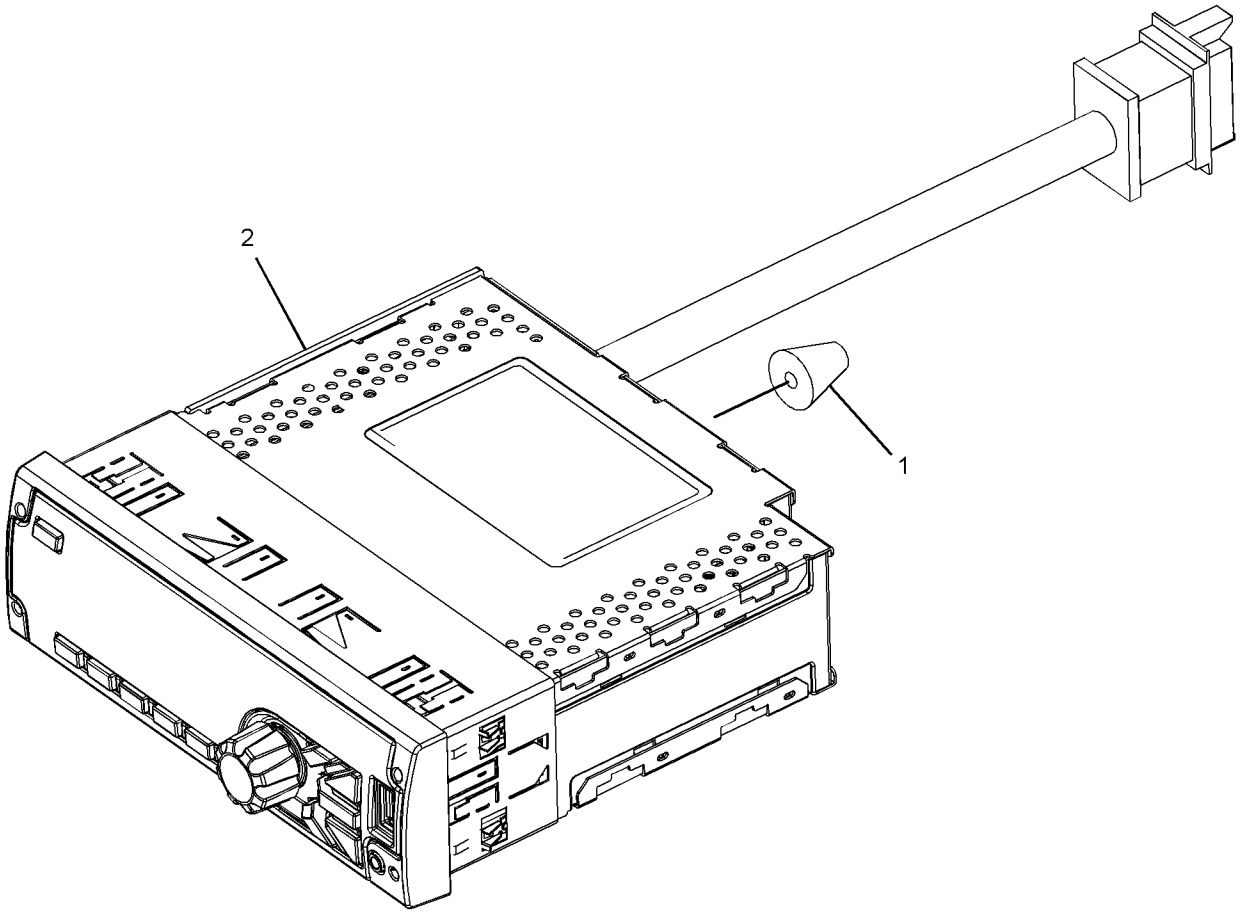

GRAPHIC #1 <END> g03589741

441-5461 SCREEN GP-CAB

S/N: H3C1-UP; K3G1-UP
PART OF 556-9001, 556-9002 SWEEP AR
AN ATTACHMENT

SMCS-7165, 7301

i08062392

NOTE	REF NO	GRAPHIC REF	PART NUMBER	QTY	PART NAME 1 2 3 4 5 6 (PRODUCT LEVEL)	SEE PAGE
	1	1	**180-5789**	2	NUT	
	2	1	**252-6803**	2	HINGE	
C	3	1	**524-5136**	1	ROD AS	
	4	1	**441-5462**	1	SCREEN AS-CAB (REAR)	
		1	**8E-7840**	1	CLIP	
		1	**9M-5732**	1	RIVET-POP	
	5	1	**3B-4618**	3	PIN-COTTER	
	6	1	**6S-9277**	2	PIN	
	7	1	**7X-0515**	4	WASHER-HARD (17X35X5-MM THK)	
M	8	1	**7X-2555**	2	BOLT (M16X2X80-MM)	
M	9	1	**8T-4779**	2	BOLT (M16X2X35-MM)	

C - CHANGE FROM PREVIOUS TYPE
M - METRIC PART

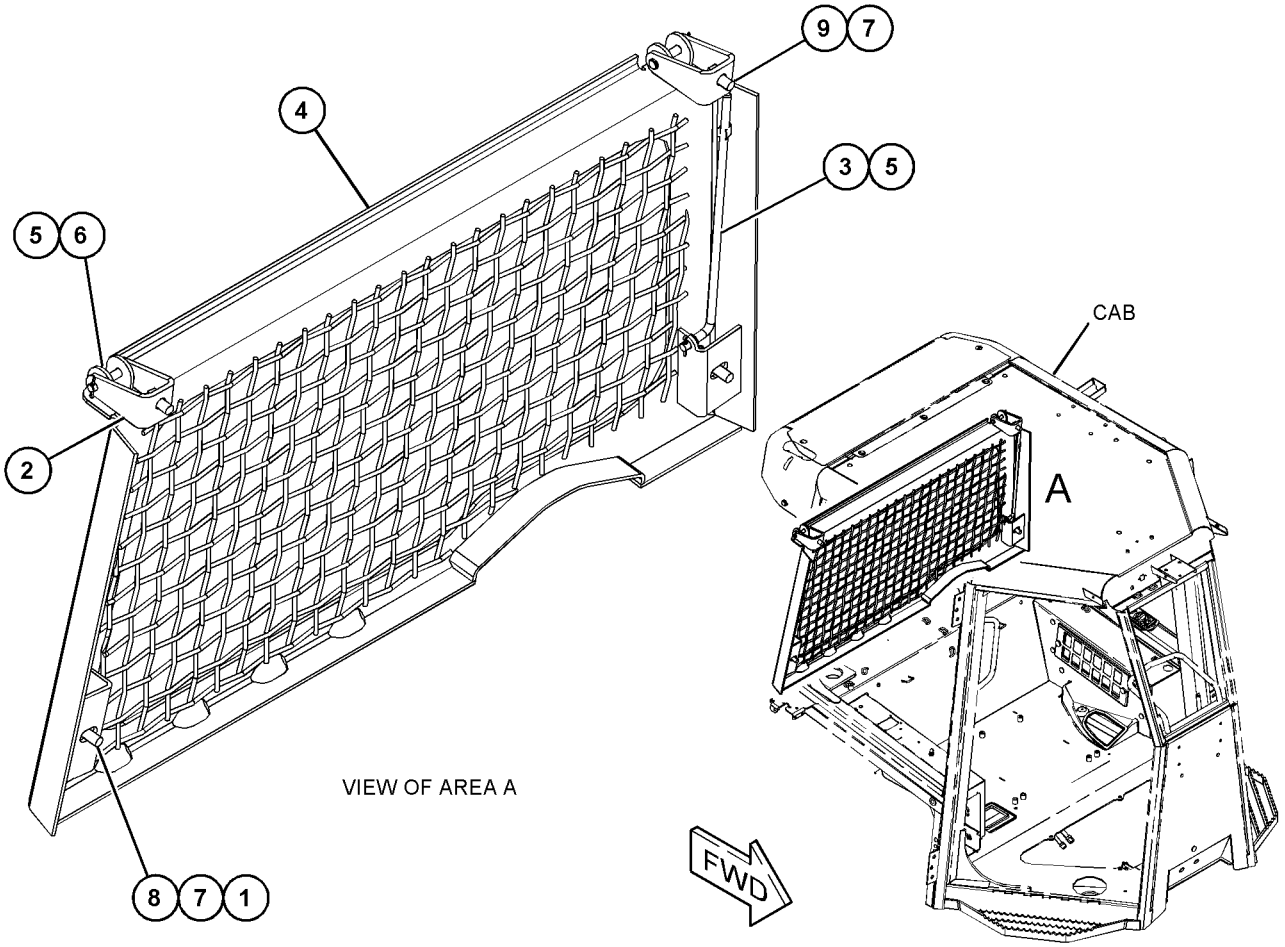

GRAPHIC #1 <END> g06021366

471-8313 SEAT & MOUNTING GP—CLOTH, AIR

S/N: H3C1-UP; K3G1-UP
PART OF 568-1316, 568-1317 CAB AR
AN ATTACHMENT

SMCS-7312 **i06692904**

NOTE	REF NO	GRAPHIC REF	PART NUMBER	QTY	PART NAME 1 2 3 4 5 6 (PRODUCT LEVEL)	SEE PAGE
Y	1	1	**381-4538**	1	SEAT BELT GP (RETRACT, LOWER)	516
Y	2	1	**443-8106**	1	SEAT GP-SUSPENSION (CLOTH)	521
	3	1	**7X-7729**	4	WASHER (11X25X3-MM THK)	
M	4	1	**8T-4137**	4	BOLT (M10X1.5X20-MM)	

M - METRIC PART
Y - SEPARATE ILLUSTRATION

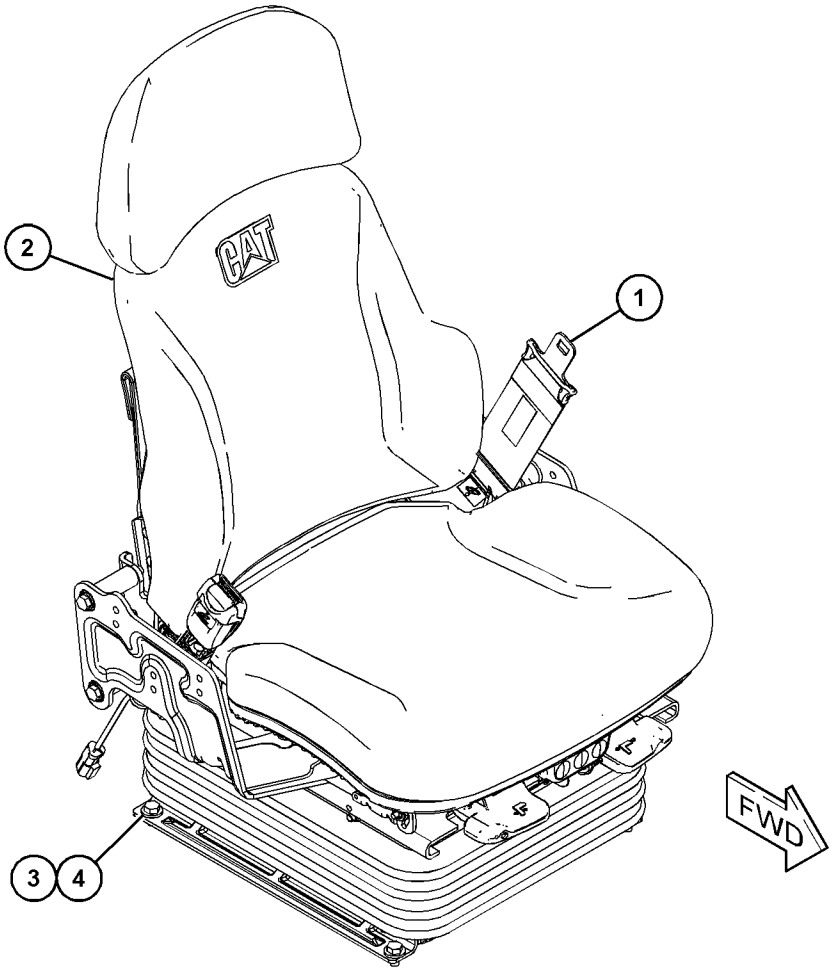

GRAPHIC #1 <END> g06019045

471-8315 SEAT & MOUNTING GP—CLOTH, HEATED, AIR

S/N: H3C1-UP; K3G1-UP
PART OF 568-1318 CAB AR
AN ATTACHMENT

SMCS-7312 **i06704906**

NOTE	REF NO	GRAPHIC REF	PART NUMBER	QTY	PART NAME 1 2 3 4 5 6 (PRODUCT LEVEL)	SEE PAGE
Y	1	1	**381-4538**	1	SEAT BELT GP (RETRACT, LOWER)	516
Y	2	1	**443-8116**	1	SEAT GP-SUSPENSION (CLOTH, AIR)	522
	3	1	**7X-7729**	4	WASHER (11X25X3-MM THK)	
M	4	1	**8T-4137**	4	BOLT (M10X1.5X20-MM)	

M - METRIC PART
Y - SEPARATE ILLUSTRATION

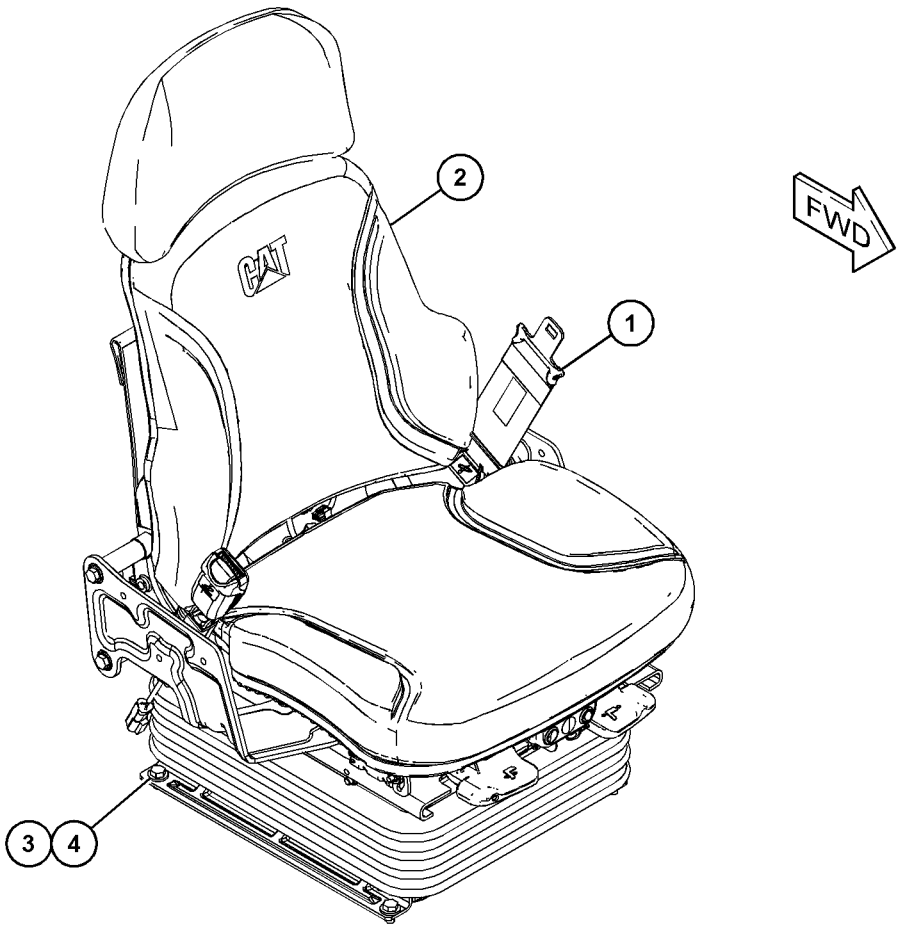

GRAPHIC #1 <END> g06012383

381-4538 SEAT BELT GP

S/N: H3C1-UP; K3G1-UP
PART OF 471-8313, 471-8315 SEAT & MOUNTING GP
AN ATTACHMENT

SMCS-7327 **i08036337**

NOTE	REF NO	GRAPHIC REF	PART NUMBER	QTY	PART NAME 1 2 3 4 5 6 (PRODUCT LEVEL)	SEE PAGE
	1	1	**0T-0489**	1	BOLT (7/16-20X2-IN)	
	2	1	**7X-7729**	1	WASHER (11X25X3-MM THK)	
	3	1	**275-7803**	1	SPACER (11.7X19.8X25.4-MM THK)	
	4	1	**0T-0244**	1	BOLT (7/16-20X1.25-IN)	

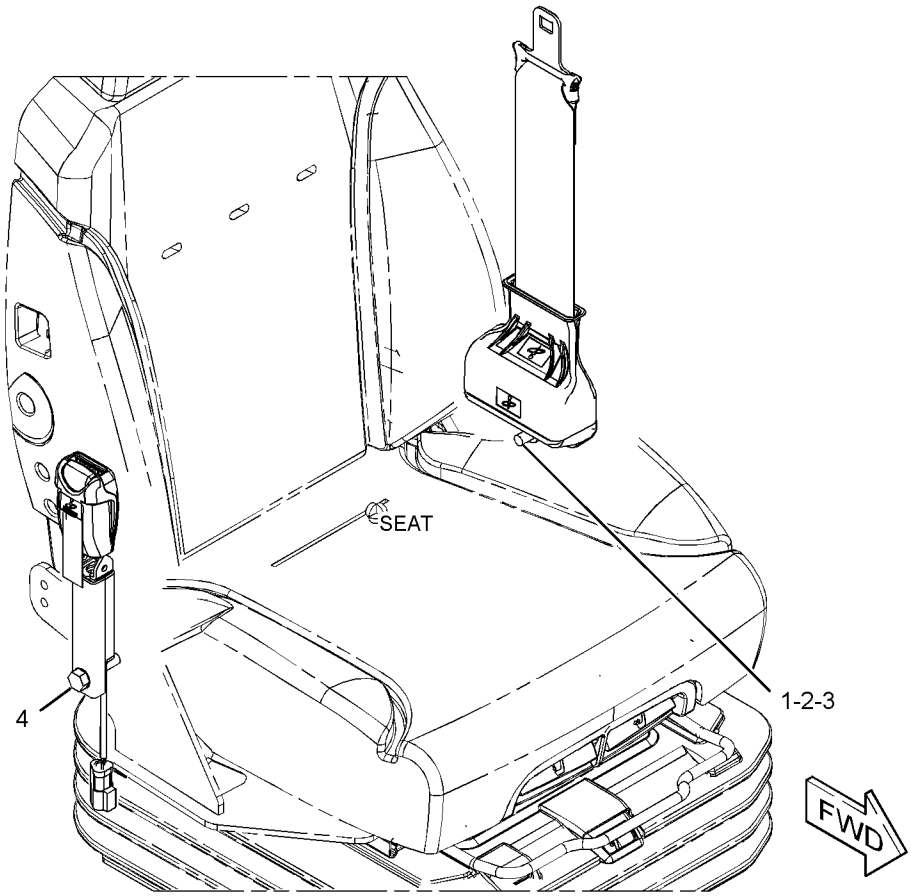

GRAPHIC #1 <END> g03449836

489-6486 SEAT GP–CLOTH

S/N: H3C1-UP; K3G1-UP
PART OF 443-8106 SEAT GP-SUSPENSION
AN ATTACHMENT

SMCS-7312 **i06783877**

NOTE	REF NO	GRAPHIC REF	PART NUMBER	QTY	PART NAME 1 2 3 4 5 6 (PRODUCT LEVEL)	SEE PAGE
M	1	1	**8T-4908**	4	BOLT (M8X1.25X25-MM)	
	2	1	**330-3860**	1	BRACKET AS	
	3	1	**229-1494**	1	EXTENSION GP-BACKREST (CLOTH)	
	4	1	**277-8103**	3	PLUG	
	5	1	**349-2602**	1	BRACKET AS	
	6	1	**355-3016**	1	PLATE AS	
	7	1	**488-2137**	1	KIT-SHAFT (RECLINER)	
					(INCLUDES SHAFT, CABLE AS, LEVERS, RECLINERS & BOLT)	
	8	1	**389-0879**	1	PAN-SEAT BACK	
	9	1	**488-1670**	1	PAN AS	
M	10	1	**238-0251**	8	SCREW-BUTTON HEAD (M10X1.5X25-MM)	
M	11	1	**6V-7744**	8	LOCKNUT (M10X1.5-THD)	
	12	1	**8T-4121**	12	WASHER-HARD (11X21X2.5-MM THK)	
M	13	1	**8T-4178**	4	BOLT (M10X1.5X90-MM)	
	14	1	**436-1687**	1	KIT-LATCH	
					(INCLUDES BOLTS, LATCHES, RODS, SPRINGS & WASHERS)	
	15	1	**436-1688**	1	KIT-SEAT	
					(INCLUDES RETAINERS, ROD, SPRINGS & WASHERS)	
	16	1	**443-8573**	1	KIT-HANDLE (SEAT ADJUSTMENT)	
					(INCLUDES ROD, LEVERS, SPRINGS & WASHERS)	
	17	1	**446-0635**	1	KIT-SEAT CUSHION (CLOTH)	
					(INCLUDES CUSHIONS & SCREWS)	

M - METRIC PART

489-6486 **SEAT GP** (contd.) **i06783877**

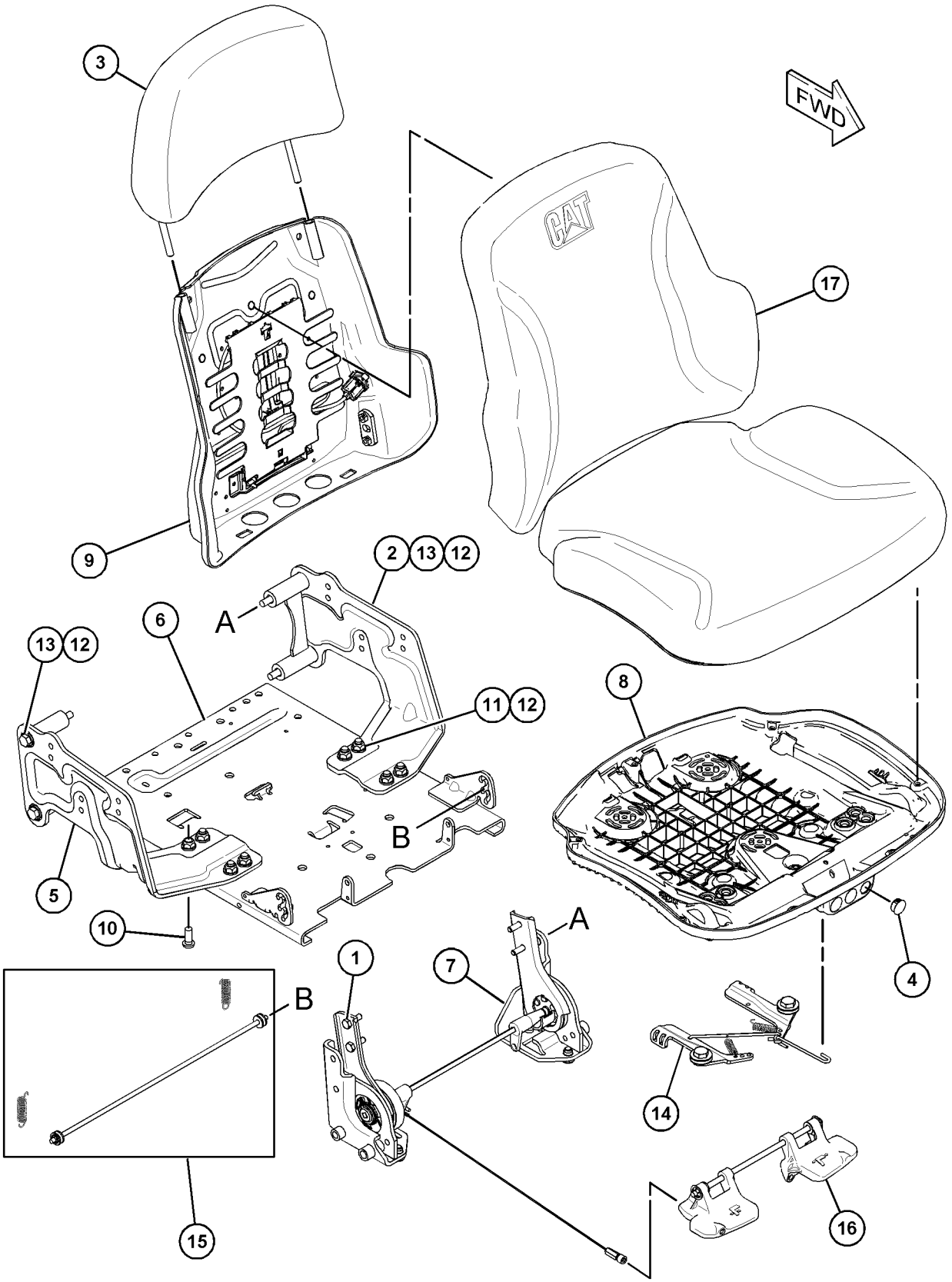

GRAPHIC #1 <END> g06102719

489-6505 SEAT GP—DELUXE, CLOTH

S/N: H3C1-UP; K3G1-UP
24-VOLT
PART OF 443-8116 SEAT GP-SUSPENSION
AN ATTACHMENT

SMCS-7312 **i06912517**

NOTE	REF NO	GRAPHIC REF	PART NUMBER	QTY	PART NAME 1 2 3 4 5 6 (PRODUCT LEVEL)	SEE PAGE
M	1	1	**8T-4908**	4	BOLT (M8X1.25X25-MM)	
	2	1	**330-3860**	1	BRACKET AS	
	3	1	**349-2602**	1	BRACKET AS	
	4	1	**355-3016**	1	PLATE AS	
	6	1	**384-8834**	1	EXTENSION GP-BACKREST	
	7	1	**492-6551**	1	PAN AS-BACK	
M	8	1	**238-0251**	8	SCREW-BUTTON HEAD (M10X1.5X25-MM)	
M	9	1	**6V-7744**	8	LOCKNUT (M10X1.5-THD)	
	10	1	**8T-4121**	12	WASHER-HARD (11X21X2.5-MM THK)	
M	11	1	**8T-4178**	4	BOLT (M10X1.5X90-MM)	
	12	1	**436-1687**	1	KIT-LATCH	
					(INCLUDES BOLTS, LATCHES, RODS, SPRINGS & WASHERS)	
	13	1	**436-1688**	1	KIT-SEAT	
					(INCLUDES RETAINERS, ROD, SPRINGS & WASHERS)	
	14	1	**443-8573**	1	KIT-HANDLE (SEAT ADJUSTMENT)	
					(INCLUDES ROD, LEVERS, RETAINERS, SPRINGS & WASHERS)	
	15	1	**488-2137**	1	KIT-SHAFT (RECLINER)	
					(INCLUDES SHAFT, CABLE AS, LEVERS, RECLINERS & BOLT)	
	16	1	**493-1014**	1	KIT-SEAT CUSHION	
					(INCLUDES CABLE-TIE, CLIP, CONNECTOR AS, CONVERTER, HARNESS AS, MOUNT CABLE, SCREW, WASHER, PLUG, PAN-SEAT, PAN AS-BACK & CUSHION AS)	

M - METRIC PART

489-6505 **SEAT GP** (contd.) **i06912517**

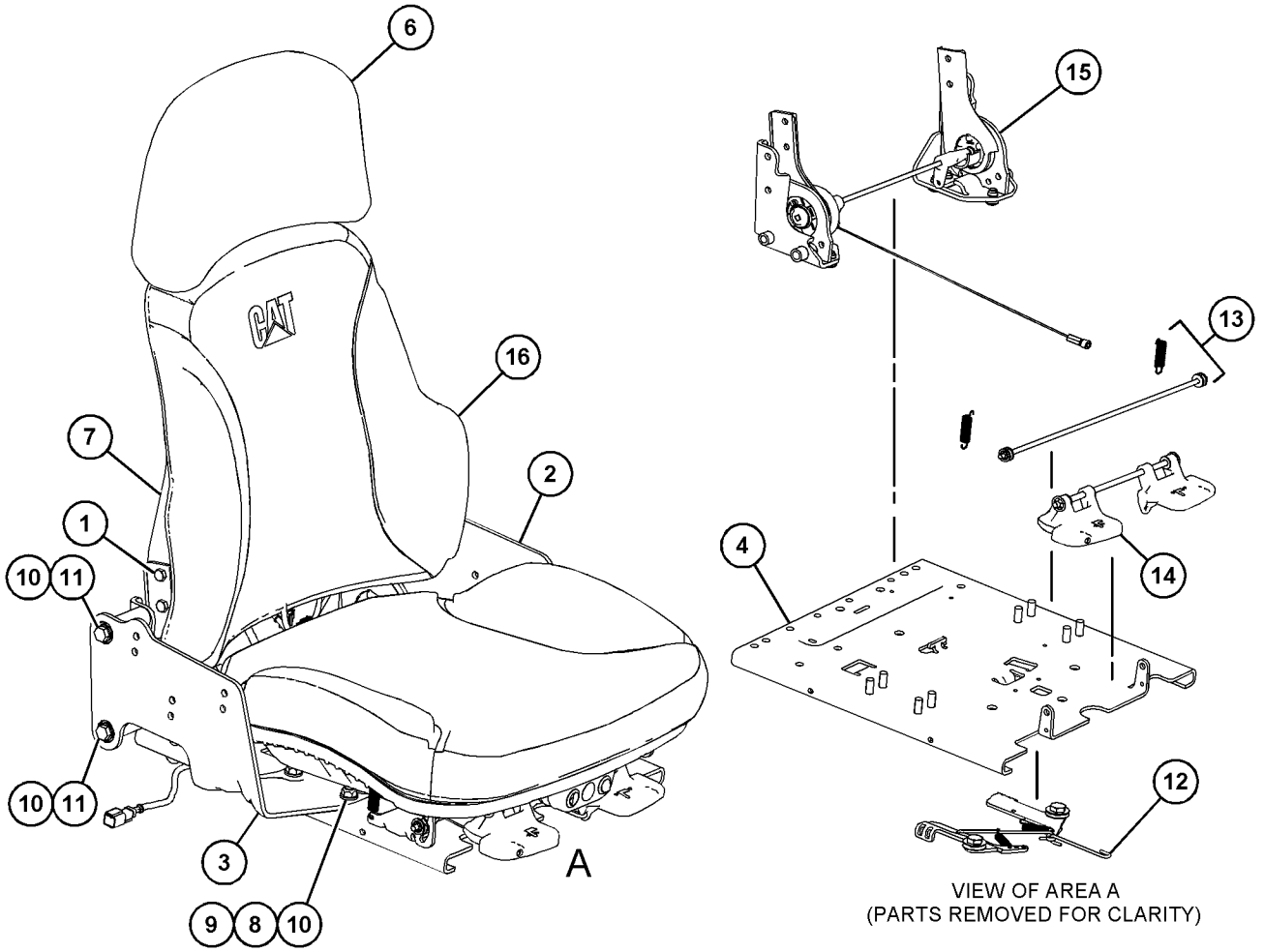

VIEW OF AREA A
(PARTS REMOVED FOR CLARITY)

GRAPHIC #1 <END> g06148672

443-8106 SEAT GP-SUSPENSION–CLOTH

S/N: H3C1-UP; K3G1-UP
24-VOLT
PART OF 471-8313 SEAT & MOUNTING GP
AN ATTACHMENT

SMCS-7321, 7324, 7336

i06745818

NOTE	REF NO	GRAPHIC REF	PART NUMBER	QTY	PART NAME 1 2 3 4 5 6 (PRODUCT LEVEL)	SEE PAGE
	1	1	**173-7035**	1	KIT-SLIDER BLOCK (SUSPENSION SEAT)	
					(INCLUDES WASHERS, BOLT, SLIDER BLOCKS & SETSCREWS)	
Y	2	1	**354-7510**	1	SUSPENSION GP-SEAT (AIR)	523
CY	3	1	**489-6486**	1	SEAT GP	517
C	4	1	**498-4463**	1	KIT-LITERATURE HOLDER	
		1	**5P-7957**	1	LANYARD	
		1	**173-2052**	1	RETAINER	
		1	**178-7907**	1	HOLDER (LITERATURE)	
		1	**4K-9429**	6	RIVET-POP	

C - CHANGE FROM PREVIOUS TYPE
Y - SEPARATE ILLUSTRATION

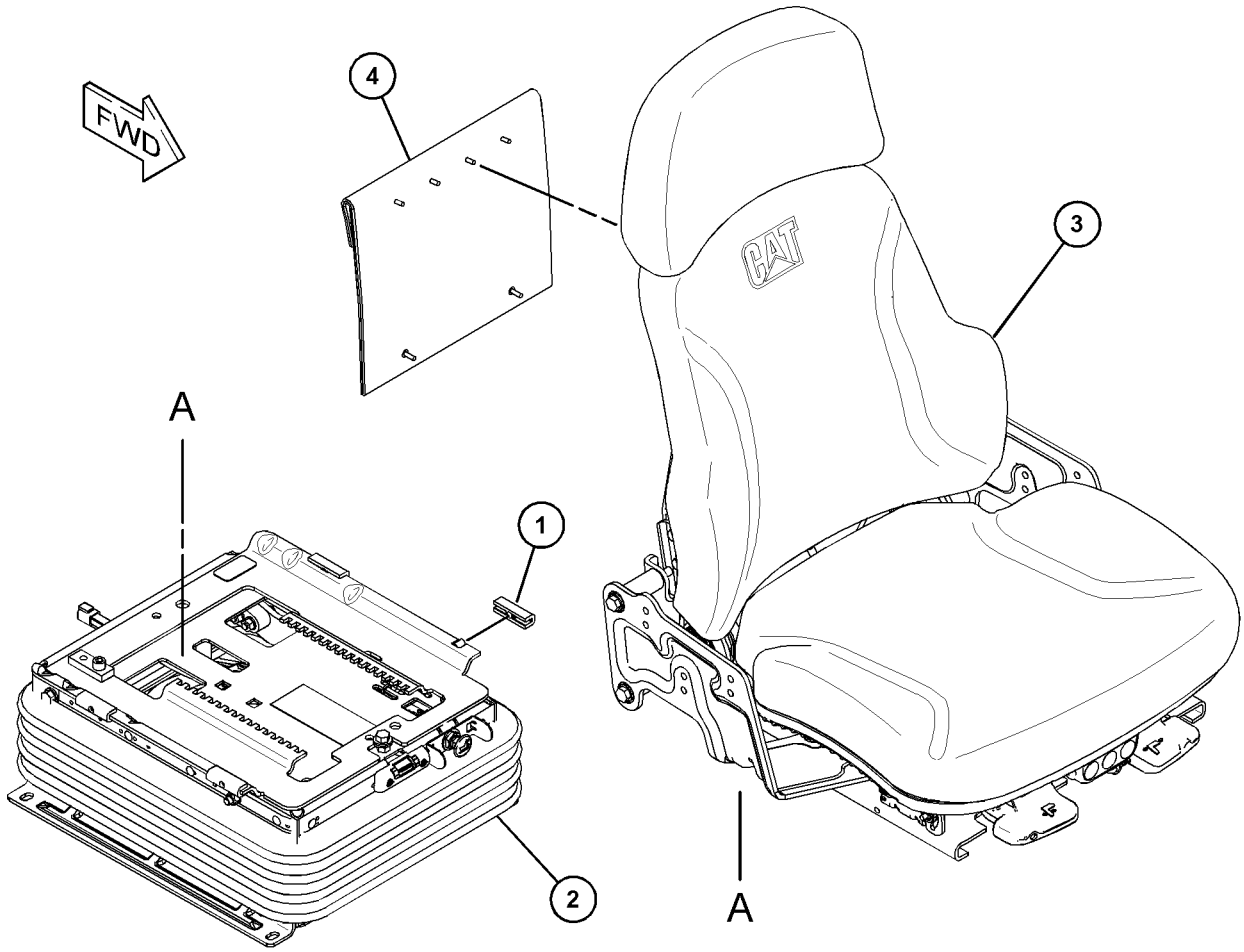

GRAPHIC #1 <END> g06102604

443-8116 SEAT GP-SUSPENSION—CLOTH, AIR

S/N: H3C1-UP; K3G1-UP
24-VOLT
PART OF 471-8315 SEAT & MOUNTING GP
AN ATTACHMENT

SMCS-7321, 7324, 7336 **i07245263**

NOTE	REF NO	GRAPHIC REF	PART NUMBER	QTY	PART NAME 1 2 3 4 5 6 (PRODUCT LEVEL)	SEE PAGE
Y	1	1	**354-7510**	1	SUSPENSION GP-SEAT (AIR)	523
	2	1	**498-4463**	1	KIT-LITERATURE HOLDER	
		1	**5P-7957**	1	LANYARD	
		1	**173-2052**	1	RETAINER	
		1	**178-7907**	1	HOLDER (LITERATURE)	
		1	**4K-9429**	6	RIVET-POP	
Y	3	1	**489-6505**	1	SEAT GP (CLOTH)	519
	4	1	**173-7035**	1	KIT-SLIDER BLOCK (SUSPENSION SEAT)	
					(INCLUDES BOLT, BLOCKS, SETSCREWS & WASHERS)	

Y - SEPARATE ILLUSTRATION

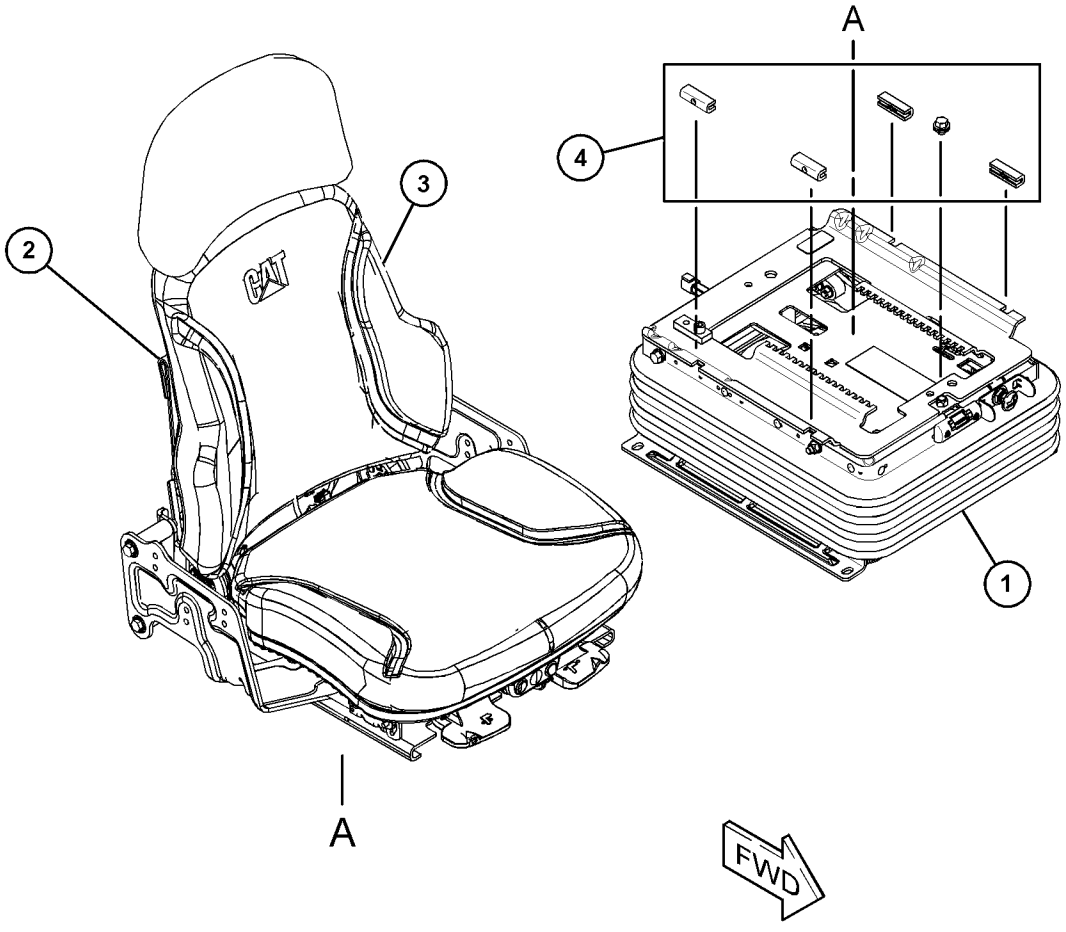

GRAPHIC #1 <END> g06264373

354-7510 SUSPENSION GP-SEAT—AIR

S/N: H3C1-UP; K3G1-UP
24-VOLT
PART OF 443-8106, 443-8116 SEAT GP-SUSPENSION
AN ATTACHMENT

SMCS-7324 **i07893052**

NOTE	REF NO	GRAPHIC REF	PART NUMBER	QTY	PART NAME 1 2 3 4 5 6 (PRODUCT LEVEL)	SEE PAGE
	1	1	**3P-9900**	1	WASHER (10.5X30X3-MM THK)	
	2	1	**4V-8577**	8	BEARING	
	3	1	**7L-0688**	2	BOLT-SOCKET HEAD (10-24X1.2-IN)	
	4	1	**8L-8413**	9	STRAP-CABLE (WHITE)	
	5	1	**031-0249**	2	LOCKNUT (10-24-THD)	
	6	1	**101-0003**	22	FASTENER	
	7	1	**145-0326**	1	FILM-INSTRUCTION (SEAT ADJUSTMENT)	
	8	1	**164-1234**	1	PLATE	
	9	1	**169-7380**	1	BOLT-SOCKET HEAD (3/8-16X0.375-IN)	
	10	1	**186-5107**	2	SCREW-DRIVE (NO 8-16X1.25-IN)	
	11	1	**192-7795**	1	BOOT	
	12	1	**192-7799**	1	KIT-AIR VALVE & SWITCH	
					(INCLUDES FITTING, LOCKWASHER, NUT, VALVE & KNOB AS)	
	13	1	**192-7805**	1	HARNESS AS-VALVE (SEAT AIR COMPRESSOR)	
		1	**102-8802**	1	KIT-RECEPTACLE (2-PIN)	
					(INCLUDES RECEPTACLE AS & WEDGE)	
		1	**5P-4571**	2	TERMINAL-BLADE (14-GA TO 16-GA)	
		1	**8T-8729**	2	PIN-CONNECTOR (16-GA TO 20-GA)	
E		1	**211-5358**		CONDUIT-FLEXIBLE (64-CM)	
	14	1	**192-7810**	1	SPRING AS-AIR	
		1	**5P-4423**	1	ELBOW	
		1	**163-1135**	1	SPRING	
	15	1	**192-7820**	1	BUMPER	
B	16	1	**192-7848**	2	KIT-SHOCK ABSORBER (SUSPENSION SEAT)	
					(EACH INCLUDES SHOCK ABSORBER, BEARINGS, WASHERS, BOLTS, LOCKNUT & LOCKWASHER)	
	17	1	**213-5167**	1	ROD	
	18	1	**213-5168**	1	ARM-INDICATOR	
	19	1	**213-5169**	1	HOUSING	
	20	1	**218-7252**	1	RETAINER	
	21	1	**370-9894**	1	COMPRESSOR AS	
	22	1	**251-2360**	1	TOGGLE AS (LOWER)	
	23	1	**251-2362**	1	TOGGLE AS (UPPER)	
	24	1	**291-7972**	1	HOUSING AS (LOWER)	
Y	25	1	*291-7980*	1	ARM GP-SEAT SUSPENSION (CENTER)	442
	26	1	**291-7993**	3	WASHER (20X40X2-MM THK)	
Y	27	1	*291-8004*	1	ARM GP-SEAT SUSPENSION (OUTER, RH)	443
	28	1	**291-8010**	2	BEARING	
Y	29	1	*291-8011*	1	ARM GP-SEAT SUSPENSION (OUTER, LH)	444
	30	1	**291-8014**	1	HOUSING AS	
	31	1	**291-8019**	2	SHAFT	
	32	1	**291-8026**	1	SHAFT	
	33	1	**291-8027**	4	BLOCK	
	34	1	**291-8028**	4	BLOCK	
	35	1	**291-8031**	1	SPACER (19.3X25.4X212.4-MM THK)	
	36	1	**291-8032**	1	BUMPER	

354-7510 **SUSPENSION GP-SEAT (**contd.**)** **i07893052**

NOTE	REF NO	GRAPHIC REF	PART NUMBER	QTY	PART NAME 1 2 3 4 5 6 (PRODUCT LEVEL)	SEE PAGE
	37	1	**308-3554**	1	SPACER (9.9X28.4X3.2-MM THK)	
	38	1	**308-3555**	1	SPACER (7.1X25.4X1.4-MM THK)	
	39	1	**308-8642**	1	FILM-IDENTIFICATION (SERIAL NUMBER)	
	40	1	**314-5274**	1	SHAFT (INNER)	
	41	1	**314-5275**	1	SHAFT (OUTER)	
	42	1	**108-4311**	1	SCREW-MACHINE (3/8-16X0.75-IN)	
	43	1	**372-2158**	1	BRACKET-MOUNTING	
	44	1	**2K-4973**	8	LOCKNUT (3/8-16-THD)	
	45	1	**3E-9865**	2	LOCKNUT (1/4-20-THD)	
	46	1	**4D-7794**	1	CLIP	
	47	1	**4L-6454**	4	BOLT (3/8-16X1-IN)	
M	48	1	**5C-2890**	1	NUT (M6X1-THD)	
	49	1	**8T-4224**	16	WASHER-HARD (8.8X16X2-MM THK)	
	50	1	**8T-4896**	12	WASHER-HARD (10.2X18.5X2.5-MM THK)	
M	51	1	**8T-7547**	16	BOLT (M8X1.25X30-MM)	
	52	1	**8T-9371**	1	BOLT (3/8-16X0.5-IN)	
E	53	1	**211-5358**		CONDUIT-FLEXIBLE (31.1-CM)	
E	53A	1	**211-5358**		CONDUIT-FLEXIBLE (26.1)	
	54	1	**351-1881**	1	KIT-WASHER	
					(INCLUDES WASHERS & SHIMS)	
BD	55	1	**5P-6010**		TUBE (1-M)	
	56	1	**387-0314**	1	WIRE AS (16-GA, ORANGE)	
	57	1	**387-0317**	1	WIRE AS (16-GA, BLACK)	
	58	1	**6V-8185**	1	NUT (1/4-20-THD)	
					AVAILABLE REPAIR KIT(S):	
AB			**213-5170**	1	KIT-SEAT ADJUSTER (SEAT ADJUSTMENT)	
					(INCLUDES BOLTS, NUTS, ROD, ARM & HOUSING)	
AB			**212-7779**	1	KIT-SHOCK ABSORBER (SUSPENSION SEAT) (ADJUSTABLE SEAT)	
					(STRAP, SPRING, BEARINGS, WASHERS, BOLTS, SHOCK ABSORBER, PULLEY KIT, KNOB, BRACKET, CABLE AS, ADJUSTER, LOCKNUTS, BALL, LOCKWASHER & HOSE CLAMP)	
AB			**346-4360**	1	KIT-SHOCK ABSORBER (SUSPENSION SEAT) (HEAVY-DUTY)	
					(EACH INCLUDES SHOCK ABSORBER, BEARINGS, WASHERS, BOLTS, LOCKNUT & LOCKWASHER)	

A - NOT PART OF THIS GROUP
B - USE AS REQUIRED
D - ORDER BY THE METER
E - ORDER BY THE CENTIMETER
M - METRIC PART
Y - SEPARATE ILLUSTRATION

354-7510 **SUSPENSION GP-SEAT (**contd.**)** **i07893052**

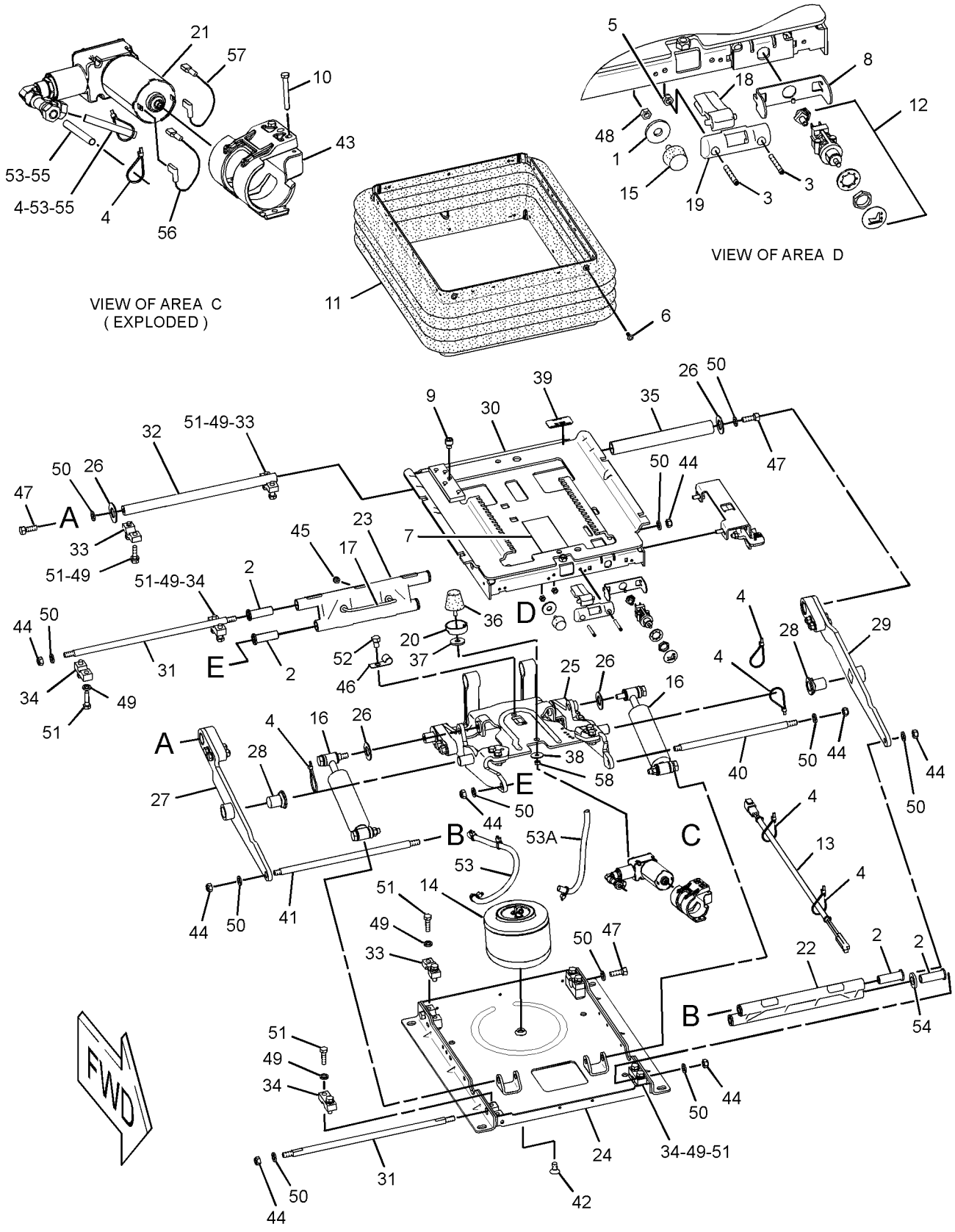

GRAPHIC #1 <END> g06471941

435-5891 TANK GP-WINDOW WASHER

S/N: H3C1-UP; K3G1-UP
PART OF 536-8775, 536-8776, 536-8777 CAB AR
AN ATTACHMENT

SMCS-7306 **i07907315**

NOTE	REF NO	GRAPHIC REF	PART NUMBER	QTY	PART NAME 1 2 3 4 5 6 (PRODUCT LEVEL)	SEE PAGE
	1	1	**3S-2093**	5	STRAP-CABLE	
C	2	1	**469-5745**	2	VALVE-CHECK	
	3	1	**249-9076**	1	CLIP	
	4	1	**352-4581**	1	HARNESS AS-WINDOW WIPER	
		1	**9X-0194**	2	TERMINAL AS	
		1	**5P-4571**	4	TERMINAL-BLADE (14-GA TO 16-GA)	
		1	**9X-3401**	4	PIN-CONNECTOR (16-GA TO 18-GA)	
					—OR—	
F			**126-1767**	4	PIN-CONNECTOR (14-GA TO 16-GA)	
		1	**230-5009**	1	RECEPTACLE AS-CONNECTOR (4-PIN)	
Y	5	1	*437-1088*	1	TANK GP-WINDOW WASHER	528
	6	1	**441-3225**	1	BRACKET AS	
		1	**143-2236**	2	LINK	
M	7	1	**344-5675**	1	NUT (M10X1.5-THD)	
	8	1	**8T-4121**	1	WASHER-HARD (11X21X2.5-MM THK)	
E	9	1	**144-0195**		HOSE (50-CM)	
CE	9A	1	**144-0195**		HOSE (44-CM)	
D	10	1	**6V-2496**		SEAL (0.4-M)	
D	10A	1	**6V-2496**		SEAL (0.3-M EACH)	
E	11	1	**7X-7927**		TAPE-IDENTIFICATION (LETTER A) (3-CM)	
E	12	1	**7X-7928**		TAPE-IDENTIFICATION (LETTER B) (3-CM)	
	13	1	**206-2423**	1	SADDLE-MOUNTING	

C - CHANGE FROM PREVIOUS TYPE
D - ORDER BY THE METER
E - ORDER BY THE CENTIMETER
F - NOT SHOWN
M - METRIC PART
Y - SEPARATE ILLUSTRATION

435-5891 **TANK GP-WINDOW WASHER (**contd.**)** **i07907315**

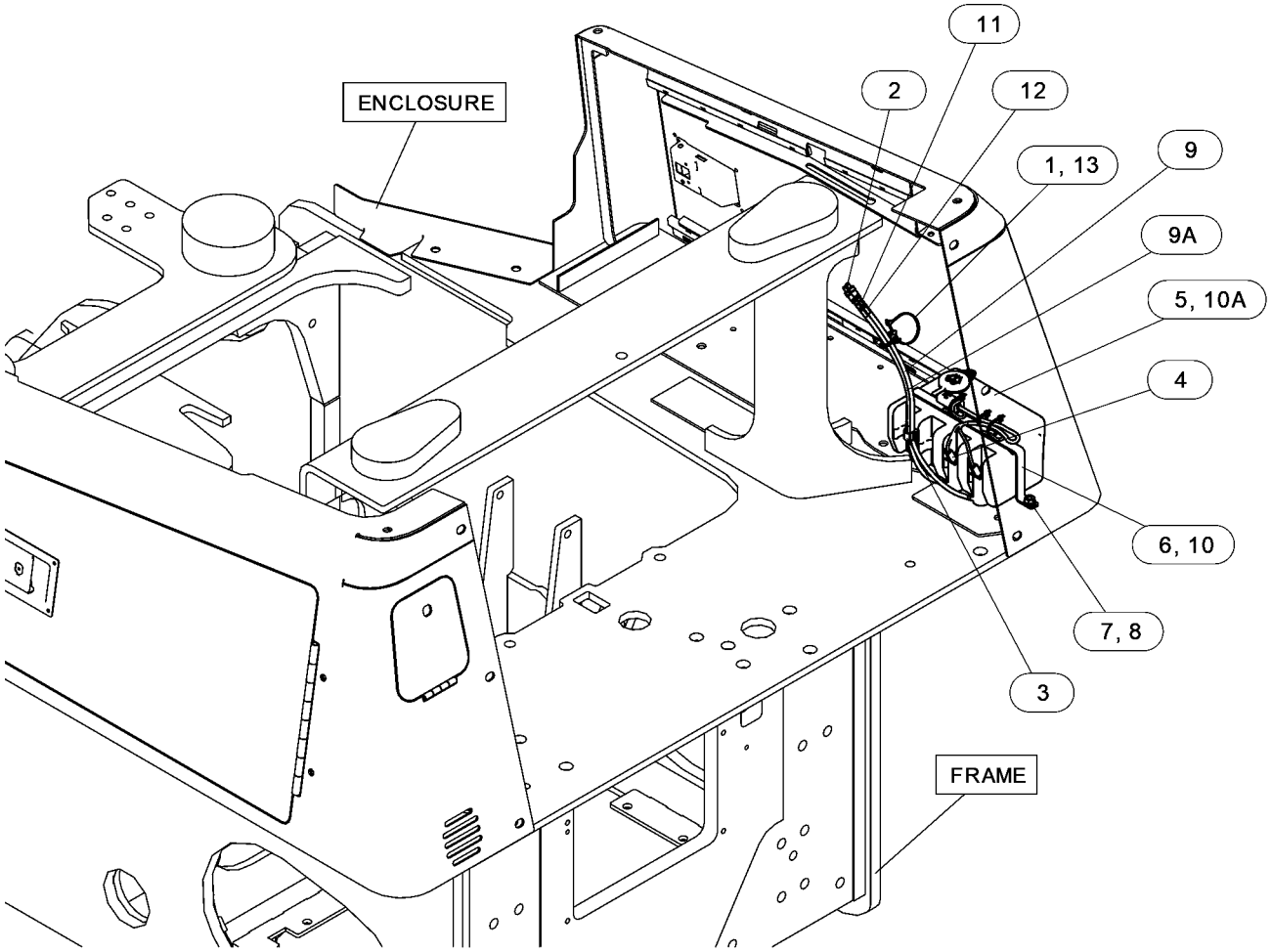

GRAPHIC #1 <END> g06520683

437-1088 TANK GP-WINDOW WASHER

S/N: H3C1-UP; K3G1-UP
PART OF 435-5891 TANK GP-WINDOW WASHER
AN ATTACHMENT

SMCS-7306 **i06692675**

NOTE	REF NO	GRAPHIC REF	PART NUMBER	QTY	PART NAME 1 2 3 4 5 6 (PRODUCT LEVEL)	SEE PAGE
	1	1	**7T-8890**	2	PUMP AS-WASHER (24-VOLT)	
	2	1	**209-4482**	1	CAP-VENTED (WINDOW WASHER RESERVOIR)	
	3	1	**267-8715**	2	GROMMET	
	4	1	*472-7063*	1	TANK-WASHER	
		1	**219-7738**	1	TANK-WASHER	
		1	**267-8715**	2	GROMMET	
		1	**321-5236**	2	PLUG	

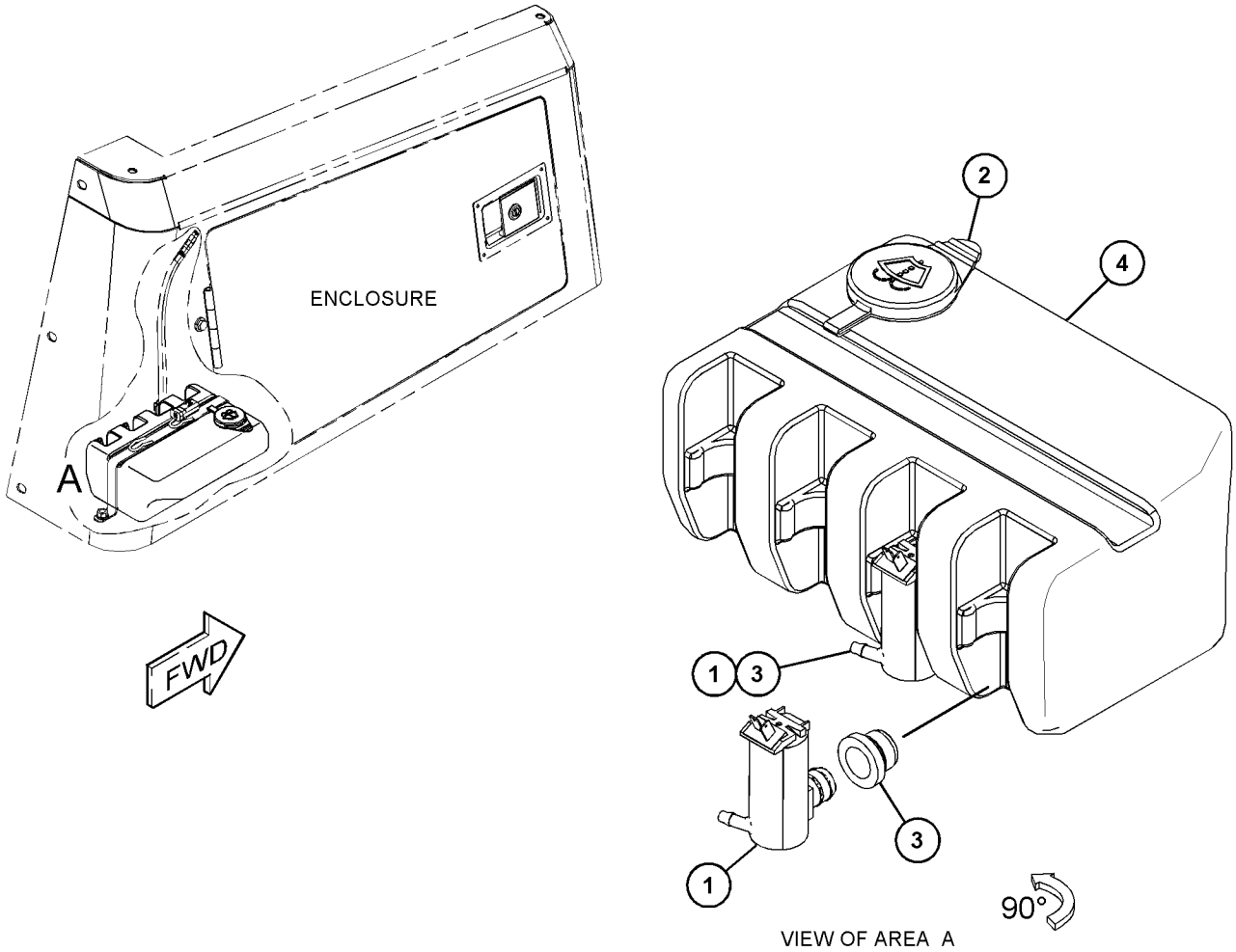

VIEW OF AREA A

GRAPHIC #1 <END> g06021268

483-9594 WINDOW GP-CAB

S/N: H3C1-UP; K3G1-UP
PART OF 418-9377 CAB GP
AN ATTACHMENT

SMCS-7310 **i07034918**

NOTE	REF NO	GRAPHIC REF	PART NUMBER	QTY	PART NAME 1 2 3 4 5 6 (PRODUCT LEVEL)	SEE PAGE
CY	1	1	**388-1410**	1	WINDOW GP-SLIDING (RH)	531
CY	2	1	**388-1411**	1	WINDOW GP-SLIDING (LH)	532
	3	1	**343-3552**	1	GLASS-FRONT	
	4	1	**483-9641**	1	GLASS-REAR	

C - CHANGE FROM PREVIOUS TYPE
Y - SEPARATE ILLUSTRATION

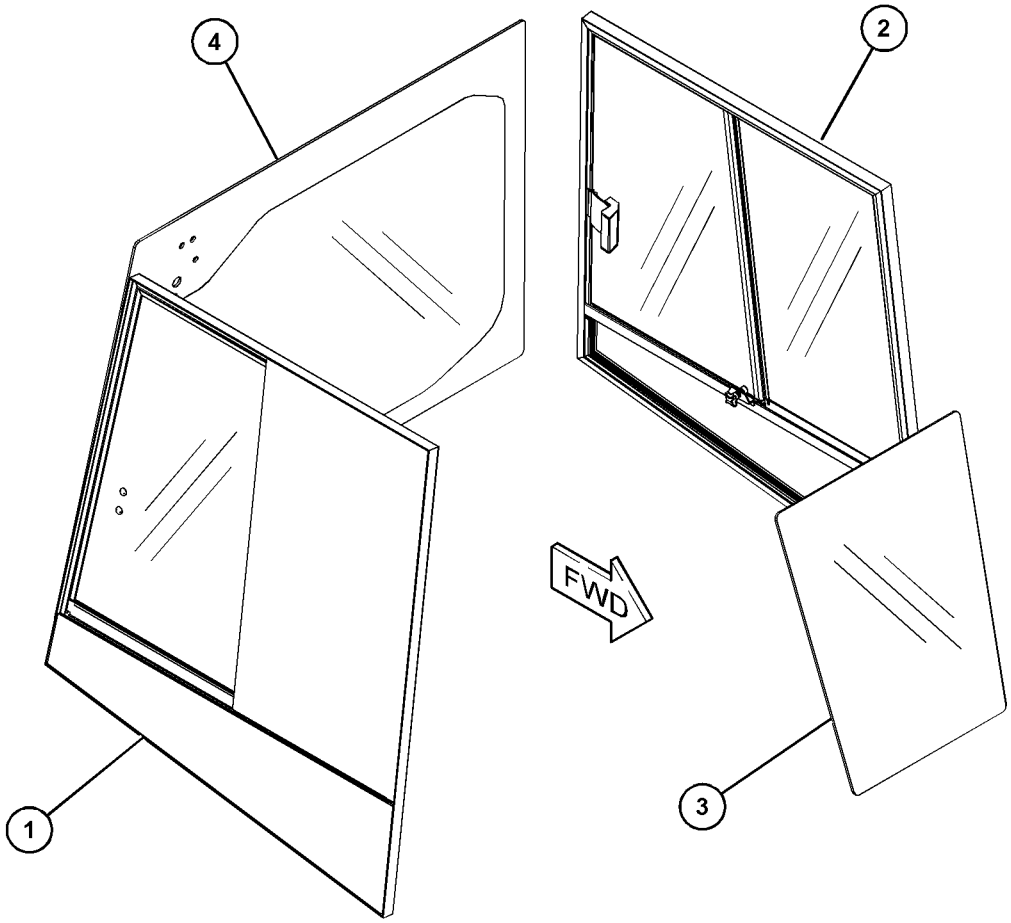

GRAPHIC #1 <END> g06153961

486-0482 WINDOW GP-CAB

S/N: H3C1-UP; K3G1-UP
PART OF 435-7611 CAB GP
AN ATTACHMENT

SMCS-7310 **i07713337**

NOTE	REF NO	GRAPHIC REF	PART NUMBER	QTY	PART NAME 1 2 3 4 5 6 (PRODUCT LEVEL)	SEE PAGE
CY	1	1	**388-1410**	1	WINDOW GP-SLIDING (RH)	531
CY	2	1	**388-1411**	1	WINDOW GP-SLIDING (LH)	532
	3	1	**536-6121**	1	WINDOW-FRONT (POLYCARBONATE)	
	4	1	**483-9641**	1	GLASS-REAR	
C	5	1	**223-9818**	1	FILM-INSTRUCTION (WINDOW CLEANING, READ OMM)	

C - CHANGE FROM PREVIOUS TYPE
Y - SEPARATE ILLUSTRATION

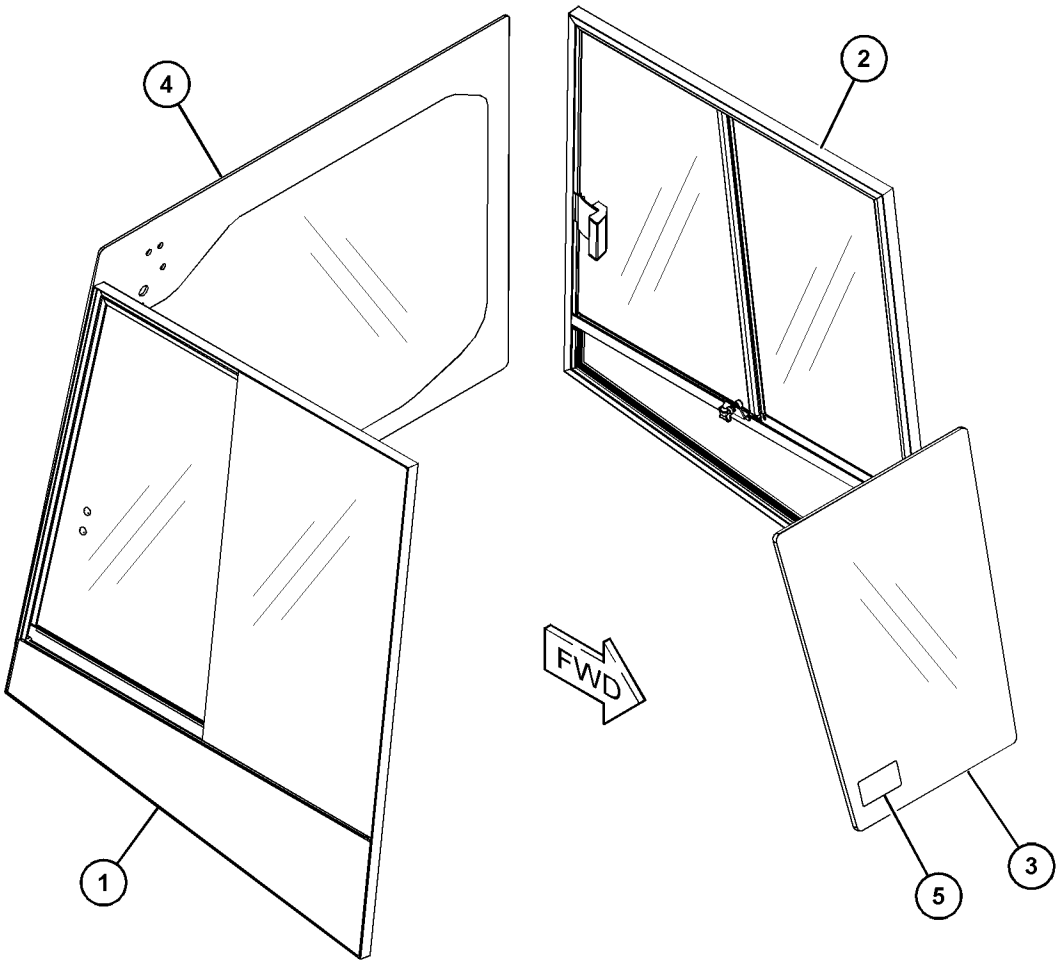

GRAPHIC #1 <END> g06153963

388-1410 WINDOW GP-SLIDING—RH

S/N: H3C1-UP; K3G1-UP
PART OF 483-9594, 486-0482 WINDOW GP-CAB
AN ATTACHMENT

SMCS-7310 **i06940961**

NOTE	REF NO	GRAPHIC REF	PART NUMBER	QTY	PART NAME 1 2 3 4 5 6 (PRODUCT LEVEL)	SEE PAGE
	1	1	**141-6595**	1	KIT-CATCH	
					(INCLUDES CATCH, SUPPORT, SCREWS & BUMPER)	
	2	1	**201-9820**	1	LATCH AS	
	3	1	**264-8899**	1	GLASS (RH)	
	4	1	**264-8900**	1	GLASS	
	5	1	**286-8868**	1	STOPPER	
	6	1	**348-7782**	1	SEAL-WINDOW	
	7	1	**348-7783**	1	KIT-SEAL (WEATHERPROOF)	
					(INCLUDES SEALS)	
	8	1	**418-0522**	1	GLASS AS-SLIDING	
E	9	1	**226-4872**		SEAL (78.5-CM)	
E	9A	1	**226-4872**		SEAL (74-CM)	

E - ORDER BY THE CENTIMETER

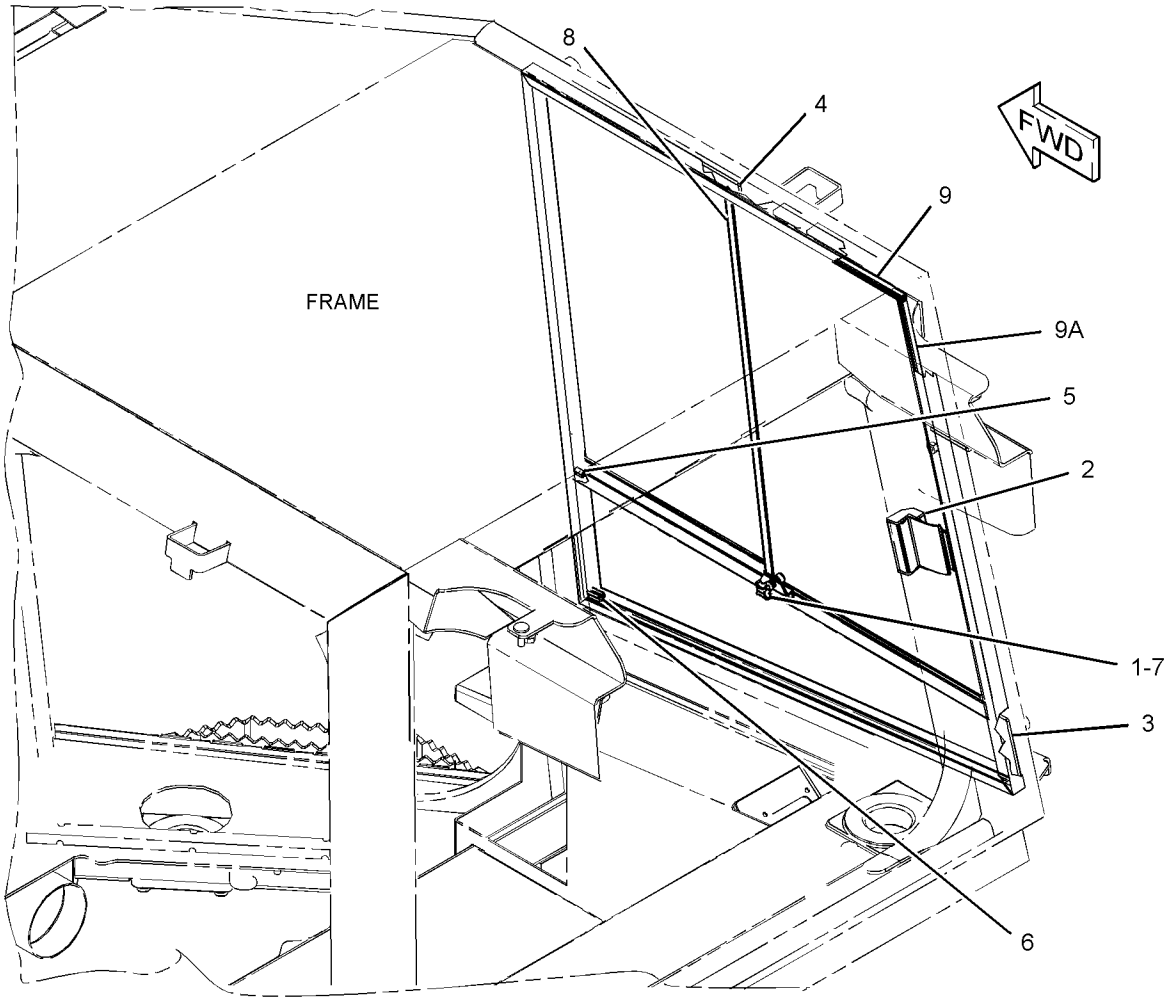

GRAPHIC #1 <END> g03324970

388-1411 WINDOW GP-SLIDING—LH

S/N: H3C1-UP; K3G1-UP
PART OF 483-9594, 486-0482 WINDOW GP-CAB
AN ATTACHMENT

SMCS-7310 **i06940964**

NOTE	REF NO	GRAPHIC REF	PART NUMBER	QTY	PART NAME 1 2 3 4 5 6 (PRODUCT LEVEL)	SEE PAGE
	1	1	**141-6595**	1	KIT-CATCH	
					(INCLUDES CATCH, SUPPORT, BUMPER & SCREWS)	
	2	1	**201-9820**	1	LATCH AS	
	3	1	**264-8900**	1	GLASS	
	4	1	**286-8868**	1	STOPPER	
	5	1	**295-4037**	1	GLASS (LH)	
	6	1	**348-7782**	1	SEAL-WINDOW	
	7	1	**348-7783**	1	KIT-SEAL (WEATHERPROOF)	
	8	1	**418-0523**	1	GLASS AS-SLIDING	
E	9	1	**226-4872**		SEAL (74-CM)	
E	9A	1	**226-4872**		SEAL (78.5-CM)	

E - ORDER BY THE CENTIMETER

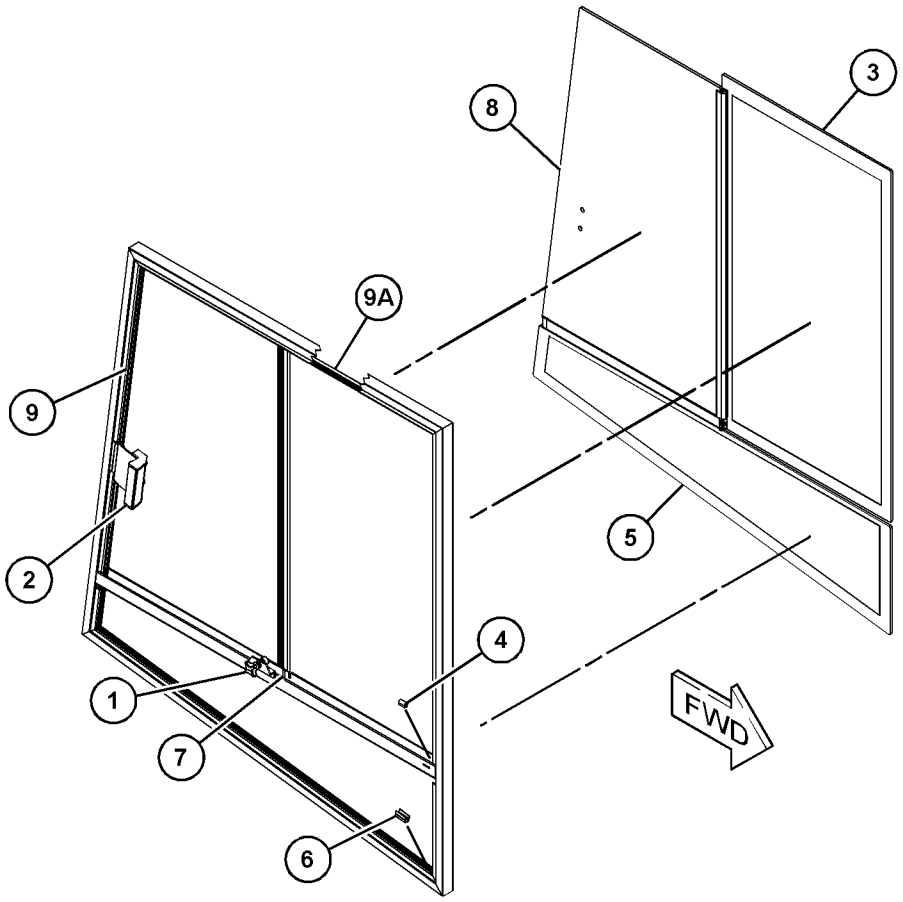

GRAPHIC #1 <END> g03695003

484-8213 WIPER GP-WINDOW

S/N: H3C1-UP; K3G1-UP
PART OF 418-9377, 435-7611 CAB GP
AN ATTACHMENT

SMCS-7305 **i07452240**

NOTE	REF NO	GRAPHIC REF	PART NUMBER	QTY	PART NAME 1 2 3 4 5 6 (PRODUCT LEVEL)	SEE PAGE
	1	1	**5C-8811**	1	BLADE AS-WIPER (500-MM) (FRONT)	
	2	1	**8T-5400**	2	CONNECTOR	
	3	1	**146-6433**	1	BLADE AS-WIPER (500-MM) (REAR)	
	4	1	**263-2135**	1	ARM GP-WINDOW WIPER (FRONT)	
		1	**136-3191**	1	NOZZLE AS-WASHER	
		1	**240-8666**	2	CLIP	
E		1	**194-5171**		HOSE (60-CM)	
	5	1	**266-3701**	1	ARM GP-WINDOW WIPER (REAR)	
		1	**305-9192**	1	NOZZLE AS-WASHER	
E		1	**194-5171**		HOSE (50-CM)	
Y	6	1	**330-5023**	1	MOTOR GP-WINDOW WIPER (REAR)	505
Y	7	1	**469-4657**	1	MOTOR GP-WINDOW WIPER (FRONT)	506
	8	1	**3S-2093**	1	STRAP-CABLE	

E - ORDER BY THE CENTIMETER
Y - SEPARATE ILLUSTRATION

484-8213 **WIPER GP-WINDOW (**contd.**)** **i07452240**

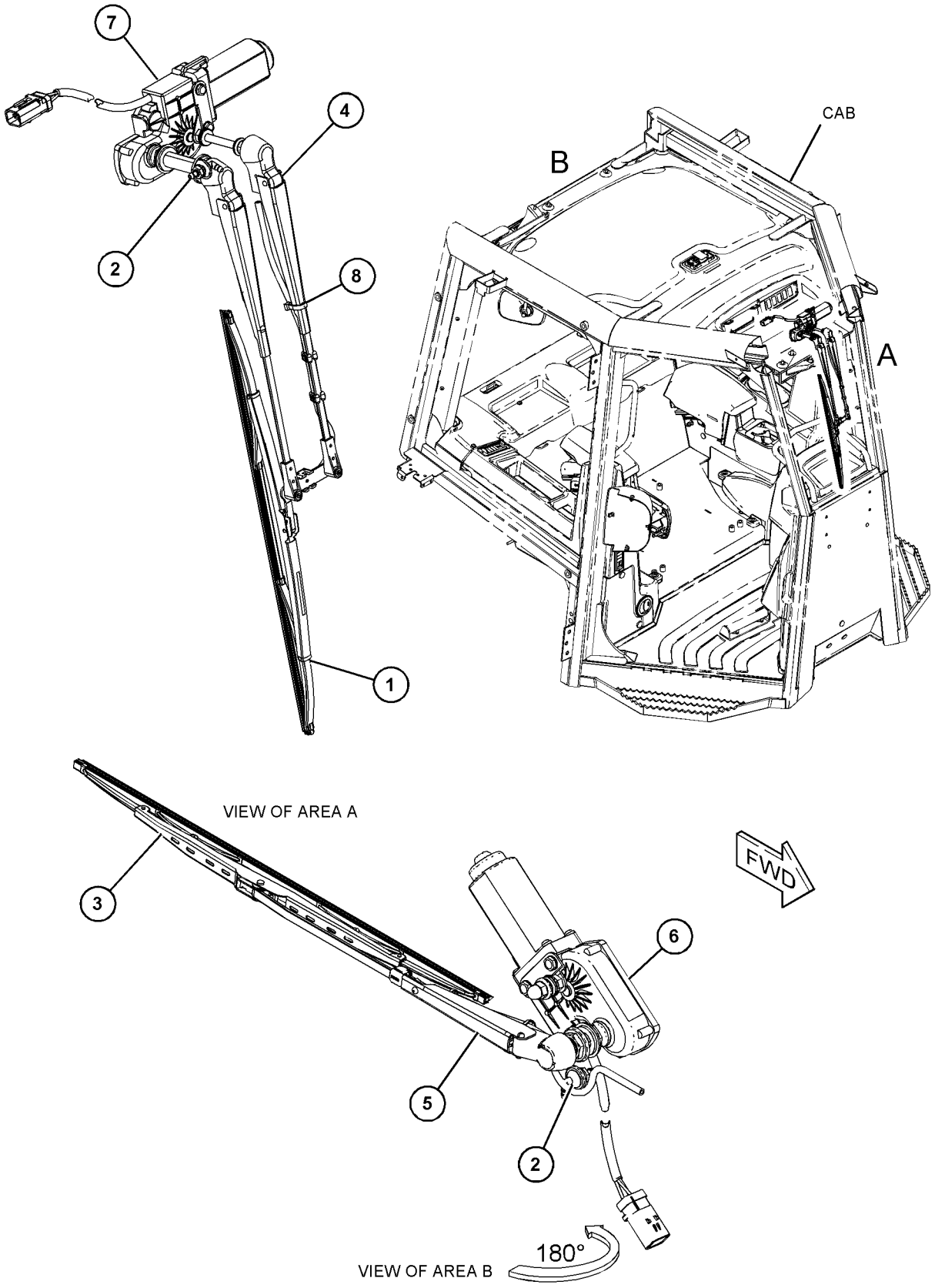

GRAPHIC #1 <END> g06175453

483-9320 BLADE & EDGE GP-ANGLING

S/N: FD61-UP

AN ATTACHMENT

SMCS-6060 **i08057063**

NOTE	REF NO	GRAPHIC REF	PART NUMBER	QTY	PART NAME 1 2 3 4 5 6 (PRODUCT LEVEL)	SEE PAGE
M	1	1	**8T-4183**	4	BOLT (M12X1.75X40-MM)	
CM	2	1	**8T-4184**	2	BOLT (M12X1.75X45-MM)	
CM	3	1	**8T-4193**	1	BOLT (M16X2X50-MM)	
M	4	1	**114-6099**	8	BOLT (M24X3X80-MM)	
	5	1	**3B-8489**	3	FITTING-GREASE (1/8-27 PTF)	
C	6	1	**3E-9411**	1	WASHER-HARD (17.5X38X6-MM THK)	
	7	1	**4T-0231**	3	RETAINER	
	8	1	**5P-1076**	4	WASHER-HARD (13.5X30X4-MM THK)	
C	9	1	**7D-1649**	2	WASHER-HARD (13.5X32X5-MM THK)	
C	10	1	**8T-4121**	9	WASHER-HARD (11X21X2.5-MM THK)	
	11	1	**8T-4123**	1	WASHER (22X35X3.5-MM THK)	
CM	12	1	**8T-4136**	5	BOLT (M10X1.5X25-MM)	
CM	13	1	**8T-4137**	4	BOLT (M10X1.5X20-MM)	
	14	1	**8T-4167**	8	WASHER-HARD (26X44X4-MM THK)	
	15	1	**8T-4223**	3	WASHER-HARD (13.5X25.5X3-MM THK)	
M	16	1	**8T-4956**	3	BOLT (M12X1.75X35-MM)	
M	17	1	**8T-5460**	1	BOLT (M20X2.5X40-MM)	
	18	1	**9J-4782**	3	PROTECTOR	
	19	1	**089-8249**	2	SPACER (64X72X13-MM THK)	
	20	1	**104-4817**	1	PIN	
	21	1	**144-5478**	2	BOLT (M20X2.5X130-MM)	
	22	1	**223-3279**	1	RETAINER	
C	23	1	**232-4810**	3	PIN	
	24	1	*240-1467*	1	PLATE & FILM GP	
		1	**4B-4158**	2	SCREW-DRIVE (NO 4X0.25-IN)	
		1	**8T-7371**	1	PLATE-SERIAL NUMBER (BLADE)	
C	25	1	**328-4847**	1	SPACER (28X17.5X13-MM THK)	
	26	1	**358-2194**	3	PIN	
	27	1	**358-2260**	1	ARM AS-SUPPORT	
	28	1	**359-3371**	4	SPACER (50X58X16-MM THK)	
Y	29	1	*371-0808*	1	EDGE GP-BIT & CUTTING	547
	30	1	**466-2917**	2	SPACER (51.2X57X23-MM THK)	
	31	1	**466-2918**	2	SPACER (51.2X57X10-MM THK)	
	32	1	**477-0065**	1	PLATE AS	
	33	1	**483-9298**	2	BOSS	
	34	1	**483-9299**	2	RETAINER	
BC	35	1	**483-9315**	20	SHIM (0.5-MM THK)	
	36	1	*483-9321*	1	BLADE AS	
	36A	1	**456-9700**	1	BEARING	
C	38	1	**484-0217**	1	PIN AS	
C	39	1	**490-1616**	2	CAP-BEARING	
C	40	1	**500-4763**	1	PLATE	
C	41	1	**505-7069**	1	PIN	
C	42	1	**505-7081**	2	PIN AS	
C	43	1	**541-3521**	1	COVER	
C	44	1	**541-3522**	1	BRACKET AS	
M		1	**6V-9632**	5	NUT-WELD (M6X1-THD)	

483-9320 **BLADE & EDGE GP-ANGLING (**contd.**)** **i08057063**

NOTE	REF NO	GRAPHIC REF	PART NUMBER	QTY	PART NAME 1 2 3 4 5 6 (PRODUCT LEVEL)	SEE PAGE
M		1	**8T-3490**	5	NUT-WELD (M10X1.5-THD)	
B	45	1	**348-6260**	6	SHIM (1.5-MM THK)	
B	46	1	**484-0219**	12	SHIM (0.5-MM THK)	

B - USE AS REQUIRED
C - CHANGE FROM PREVIOUS TYPE
M - METRIC PART
Y - SEPARATE ILLUSTRATION

483-9320 **BLADE & EDGE GP-ANGLING (**contd.**)** **i08057063**

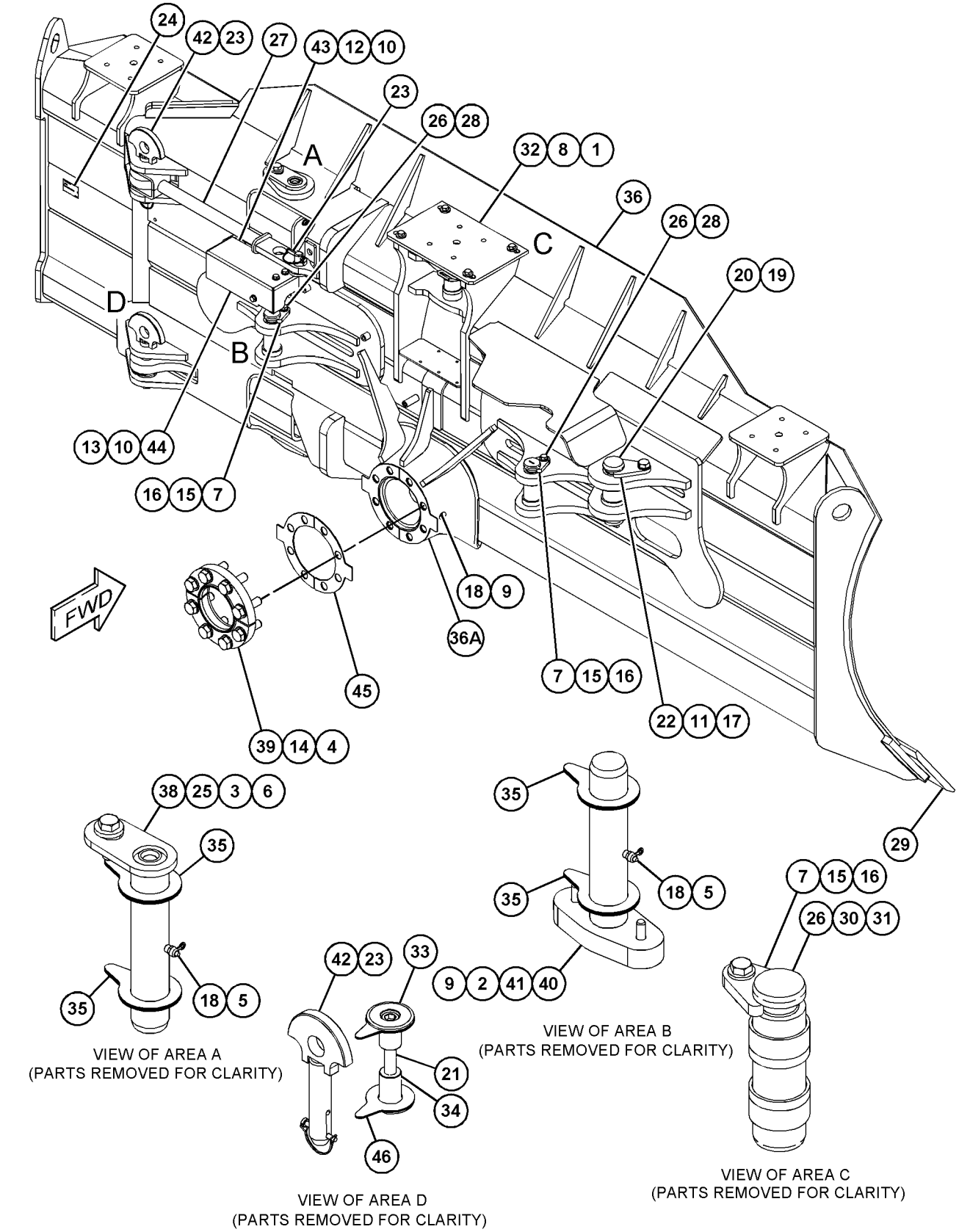

GRAPHIC #1 <END> g06309623

348-6280 BLADE GP-ANGLING

S/N: BB91-UP

AN ATTACHMENT

SMCS-6052, 6060, 6701 **i07452218**

NOTE	REF NO	GRAPHIC REF	PART NUMBER	QTY	PART NAME 1 2 3 4 5 6 (PRODUCT LEVEL)	SEE PAGE
	1	1	**3B-8489**	1	FITTING-GREASE (1/8-27 PTF)	
	2	1	**4T-0231**	3	RETAINER	
	3	1	**9J-4782**	1	PROTECTOR	
	4	1	**089-8249**	2	SPACER (64X72X13-MM THK)	
	5	1	**104-4817**	1	PIN	
	6	1	**223-3279**	1	RETAINER	
	7	1	*240-1467*	1	PLATE & FILM GP	
		1	**4B-4158**	2	SCREW-DRIVE (NO 4X0.25-IN)	
		1	**8T-7371**	1	PLATE-SERIAL NUMBER (BLADE)	
CM	8	1	**8T-4136**	5	BOLT (M10X1.5X25-MM)	
Y	9	1	*325-0002*	1	EDGE GP-BIT & CUTTING	545
B	10	1	**348-6260**	6	SHIM (1.5-MM THK)	
	11	1	*455-0790*	1	BLADE AS	
	11A	1	**456-9700**	1	BEARING	
	12	1	**358-2194**	3	PIN	
	13	1	**477-0065**	1	PLATE AS	
	14	1	**359-3371**	4	SPACER (50X58X16-MM THK)	
	15	1	**490-1616**	2	CAP-BEARING	
	16	1	**5P-1076**	4	WASHER-HARD (13.5X30X4-MM THK)	
M	17	1	**8T-5878**	8	BOLT (M24X3X80-MM)	
	18	1	**8T-4123**	1	WASHER (22X35X3.5-MM THK)	
	19	1	**8T-4167**	8	WASHER-HARD (26X44X4-MM THK)	
M	20	1	**8T-4183**	4	BOLT (M12X1.75X40-MM)	
	21	1	**8T-4223**	3	WASHER-HARD (13.5X25.5X3-MM THK)	
M	22	1	**8T-4956**	3	BOLT (M12X1.75X35-MM)	
M	23	1	**8T-5460**	1	BOLT (M20X2.5X40-MM)	
C	24	1	**541-3521**	1	COVER	
C	25	1	**541-3522**	1	BRACKET AS	
CM	26	1	**8T-4137**	2	BOLT (M10X1.5X20-MM)	
	27	1	**466-2917**	2	SPACER (51.2X57X23-MM THK)	
	28	1	**466-2918**	2	SPACER (51.2X57X10-MM THK)	
C	29	1	**8T-4121**	9	WASHER-HARD (11X21X2.5-MM THK)	

B - USE AS REQUIRED
C - CHANGE FROM PREVIOUS TYPE
M - METRIC PART
Y - SEPARATE ILLUSTRATION

348-6280 **BLADE GP-ANGLING (**contd.**)** **i07452218**

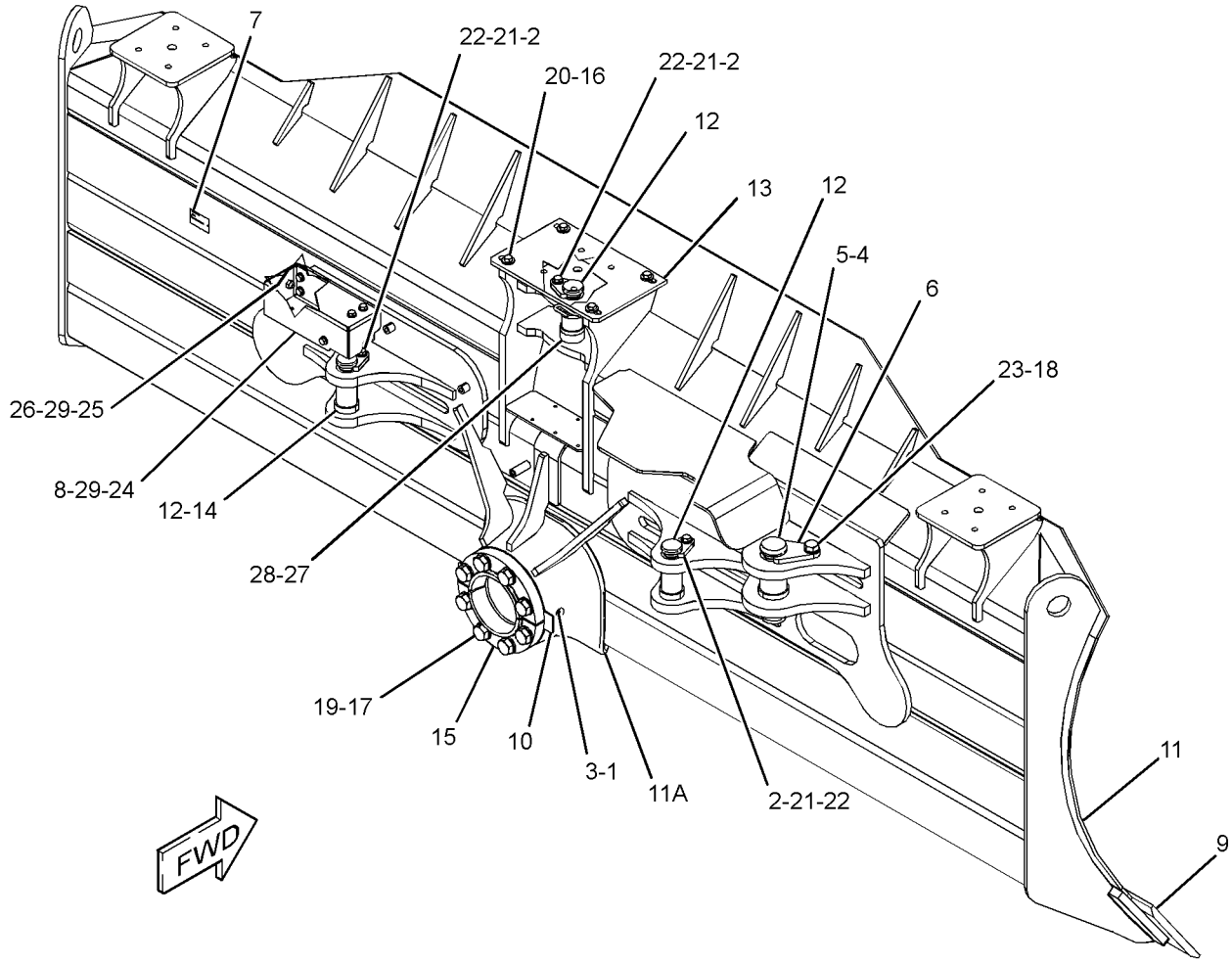

GRAPHIC #1 <END> g06324728

348-6300 BLADE GP-ANGLING

S/N: BG91-UP

AN ATTACHMENT

SMCS-6052, 6060, 6701 **i07455247**

NOTE	REF NO	GRAPHIC REF	PART NUMBER	QTY	PART NAME 1 2 3 4 5 6 (PRODUCT LEVEL)	SEE PAGE
	1	1	**3B-8489**	1	FITTING-GREASE (1/8-27 PTF)	
	2	1	**4T-0231**	3	RETAINER	
	3	1	**9J-4782**	1	PROTECTOR	
	4	1	**089-8249**	2	SPACER (64X72X13-MM THK)	
	5	1	**104-4817**	1	PIN	
	6	1	**223-3279**	1	RETAINER	
	7	1	*240-1467*	1	PLATE & FILM GP	
		1	**4B-4158**	2	SCREW-DRIVE (NO 4X0.25-IN)	
		1	**8T-7371**	1	PLATE-SERIAL NUMBER (BLADE)	
	8	1	**466-2917**	2	SPACER (51.2X57X23-MM THK)	
Y	9	1	*342-8850*	1	EDGE GP-CUTTING	548
B	10	1	**348-6260**	6	SHIM (1.5-MM THK)	
	11	1	*455-0780*	1	BLADE AS-ANGLING	
M		1	**9C-6809**	2	BLOCK (M10X1.5-MM)	
M		1	**9R-3761**	1	BOSS (M10X1.5X51-MM)	
	11A	1	**456-9700**	1	BEARING	
M		1	**9R-2672**	2	BOSS-THREADED (M10X1.5X120-MM)	
	12	1	**358-2194**	3	PIN	
	13	1	**477-0065**	1	PLATE AS	
	14	1	**359-3371**	4	SPACER (50X58X16-MM THK)	
	15	1	**490-1616**	2	CAP-BEARING	
	16	1	**5P-1076**	4	WASHER-HARD (13.5X30X4-MM THK)	
M	17	1	**8T-5878**	8	BOLT (M24X3X80-MM)	
	18	1	**8T-4123**	1	WASHER (22X35X3.5-MM THK)	
	19	1	**8T-4167**	8	WASHER-HARD (26X44X4-MM THK)	
M	20	1	**8T-4183**	4	BOLT (M12X1.75X40-MM)	
	21	1	**8T-4223**	3	WASHER-HARD (13.5X25.5X3-MM THK)	
M	22	1	**8T-4956**	3	BOLT (M12X1.75X35-MM)	
M	23	1	**8T-5460**	1	BOLT (M20X2.5X40-MM)	
C	25	1	**541-3521**	1	COVER	
C	26	1	**541-3522**	1	BRACKET AS	
	27	1	**466-2918**	2	SPACER (51.2X57X10-MM THK)	
CM	28	1	**8T-4137**	4	BOLT (M10X1.5X20-MM)	
CM	29	1	**8T-4136**	5	BOLT (M10X1.5X25-MM)	
C	30	1	**8T-4121**	9	WASHER-HARD (11X21X2.5-MM THK)	

B - USE AS REQUIRED
C - CHANGE FROM PREVIOUS TYPE
M - METRIC PART
Y - SEPARATE ILLUSTRATION

348-6300 **BLADE GP-ANGLING (**contd.**)** **i07455247**

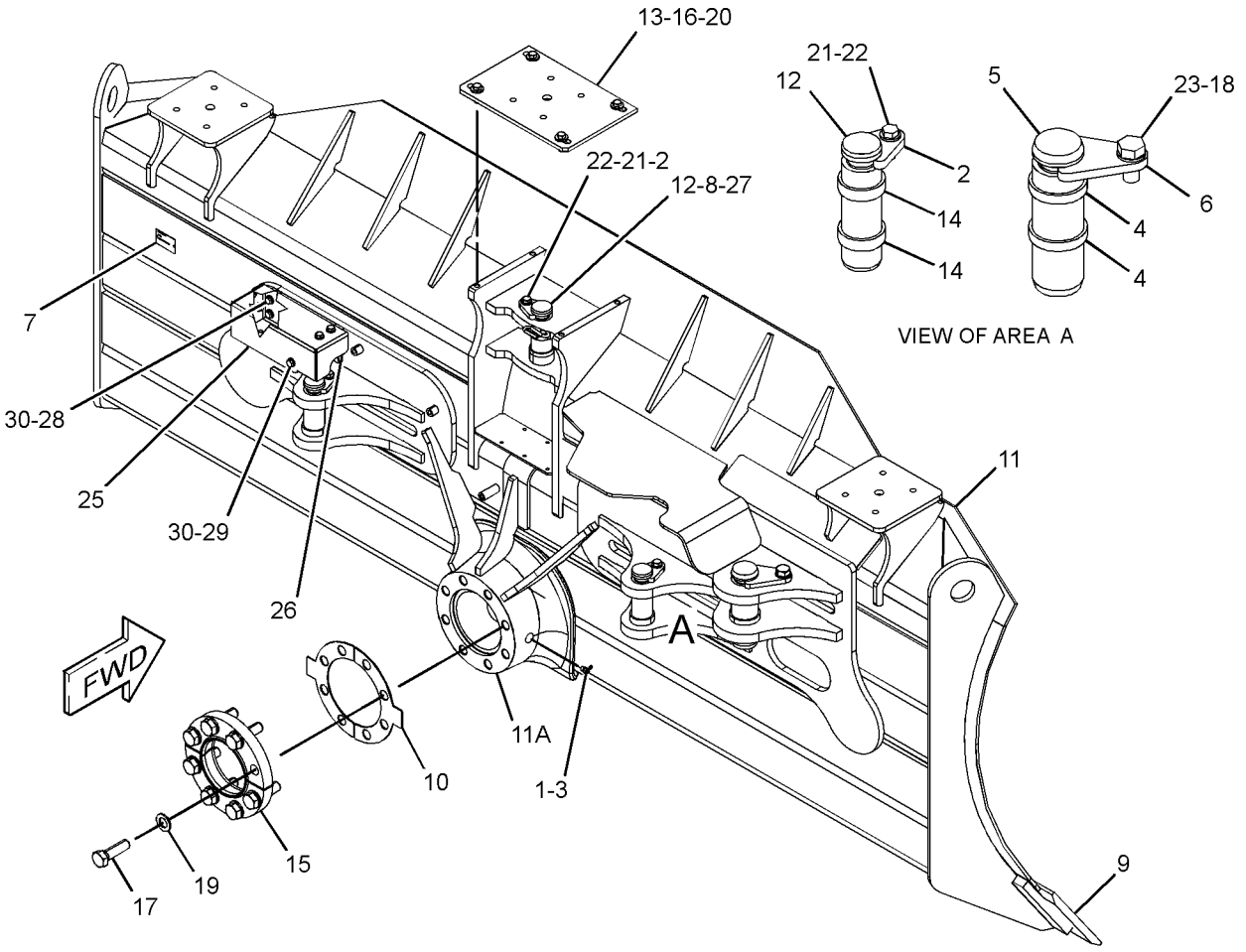

GRAPHIC #1 <END> g06321031

483-9250 BLADE GP-ANGLING—FOLDABLE

S/N: FD51-UP

AN ATTACHMENT

SMCS-6052, 6060, 6701 **i07708153**

NOTE	REF NO	GRAPHIC REF	PART NUMBER	QTY	PART NAME 1 2 3 4 5 6 (PRODUCT LEVEL)	SEE PAGE
M	1	1	**8T-4183**	4	BOLT (M12X1.75X40-MM)	
CM	2	1	**8T-4184**	2	BOLT (M12X1.75X45-MM)	
CM	3	1	**8T-4193**	1	BOLT (M16X2X50-MM)	
M	4	1	**114-6099**	8	BOLT (M24X3X80-MM)	
	5	1	**3B-8489**	3	FITTING-GREASE (1/8-27 PTF)	
C	6	1	**3E-9411**	1	WASHER-HARD (17.5X38X6-MM THK)	
	7	1	**4T-0231**	3	RETAINER	
	8	1	**5P-1076**	4	WASHER-HARD (13.5X30X4-MM THK)	
C	9	1	**7D-1649**	2	WASHER-HARD (13.5X32X5-MM THK)	
C	10	1	**8T-4121**	9	WASHER-HARD (11X21X2.5-MM THK)	
	11	1	**8T-4123**	1	WASHER (22X35X3.5-MM THK)	
CM	12	1	**8T-4136**	5	BOLT (M10X1.5X25-MM)	
CM	13	1	**8T-4137**	4	BOLT (M10X1.5X20-MM)	
	14	1	**8T-4167**	8	WASHER-HARD (26X44X4-MM THK)	
	15	1	**8T-4223**	3	WASHER-HARD (13.5X25.5X3-MM THK)	
M	16	1	**8T-4956**	3	BOLT (M12X1.75X35-MM)	
M	17	1	**8T-5460**	1	BOLT (M20X2.5X40-MM)	
	18	1	**9J-4782**	3	PROTECTOR	
	19	1	**089-8249**	2	SPACER (64X72X13-MM THK)	
	20	1	**104-4817**	1	PIN	
	21	1	**144-5478**	2	BOLT (M20X2.5X130-MM)	
	22	1	**223-3279**	1	RETAINER	
C	23	1	**232-4810**	3	PIN	
	24	1	*240-1467*	1	PLATE & FILM GP	
		1	**8T-7371**	1	PLATE-SERIAL NUMBER (BLADE)	
		1	**4B-4158**	2	SCREW-DRIVE (NO 4X0.25-IN)	
C	25	1	**328-4847**	1	SPACER (28X17.5X13-MM THK)	
	26	1	**358-2194**	3	PIN	
	27	1	**358-2260**	1	ARM AS-SUPPORT	
	28	1	**359-3371**	4	SPACER (50X58X16-MM THK)	
Y	29	1	*371-0759*	1	EDGE GP-BIT & CUTTING	546
	30	1	**466-2917**	2	SPACER (51.2X57X23-MM THK)	
	31	1	**466-2918**	2	SPACER (51.2X57X10-MM THK)	
	32	1	**477-0065**	1	PLATE AS	
	33	1	*483-9251*	1	BLADE AS (RH)	
	33A	1	**456-9700**	1	BEARING	
B	34	1	**484-0219**	12	SHIM (0.5-MM THK)	
	35	1	**483-9298**	2	BOSS	
	36	1	**483-9299**	2	RETAINER	
BC	37	1	**483-9315**	20	SHIM (0.5-MM THK)	
C	38	1	**484-0217**	1	PIN AS	
C	39	1	**490-1616**	2	CAP-BEARING	
C	40	1	**500-4763**	1	PLATE	
C	41	1	**505-7069**	1	PIN	
C	42	1	**505-7081**	2	PIN AS	
C	43	1	**541-3521**	1	COVER	

483-9250 **BLADE GP-ANGLING (**contd.**)** **i07708153**

NOTE	REF NO	GRAPHIC REF	PART NUMBER	QTY	PART NAME 1 2 3 4 5 6 (PRODUCT LEVEL)	SEE PAGE
C	44	1	**541-3522**	1	BRACKET AS	
B	45	1	**348-6260**	6	SHIM (1.5-MM THK)	

B - USE AS REQUIRED
C - CHANGE FROM PREVIOUS TYPE
M - METRIC PART
Y - SEPARATE ILLUSTRATION

483-9250 **BLADE GP-ANGLING** (contd.) **i07708153**

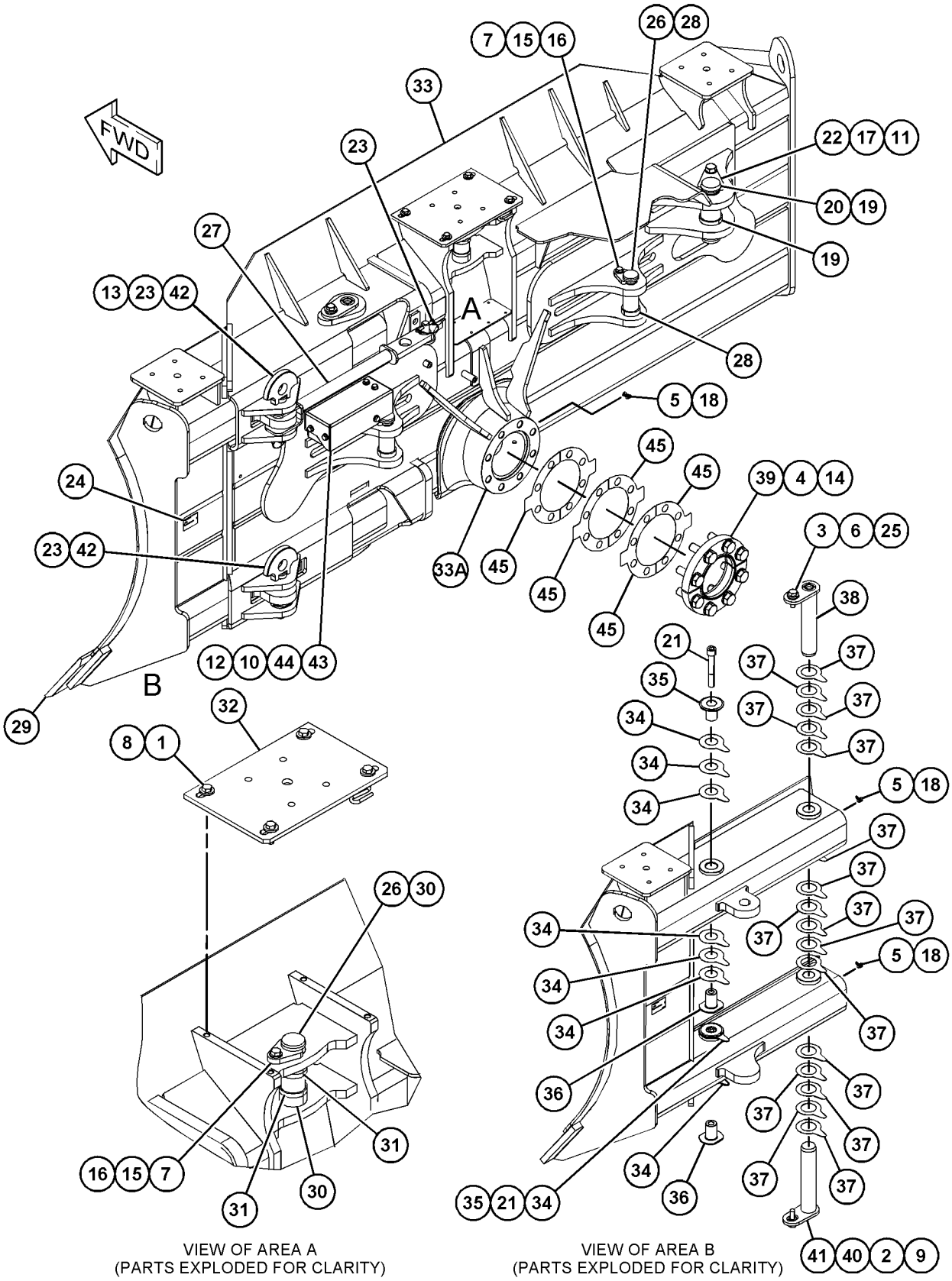

GRAPHIC #1 <END> g06308924

325-0002 EDGE GP-BIT & CUTTING

S/N: BB91-UP
PART OF 348-6280 BLADE GP-ANGLING
AN ATTACHMENT

SMCS-6801, 6804 **i07136161**

NOTE	REF NO	GRAPHIC REF	PART NUMBER	QTY	PART NAME 1 2 3 4 5 6 (PRODUCT LEVEL)	SEE PAGE
	1	1	**8E-9379**	1	BIT-END (RH)	
	2	1	**8E-9378**	1	BIT-END (LH)	
	3	1	**2J-3506**	26	NUT-FULL (3/4-10-THD)	
	4	1	**5J-4773**	26	BOLT-PLOW (3/4-10X2.5-IN)	
	5	1	**5P-8248**	26	WASHER-HARD (20X36.5X3.5-MM THK)	
	6	1	**8E-7245**	2	EDGE-CUTTING	

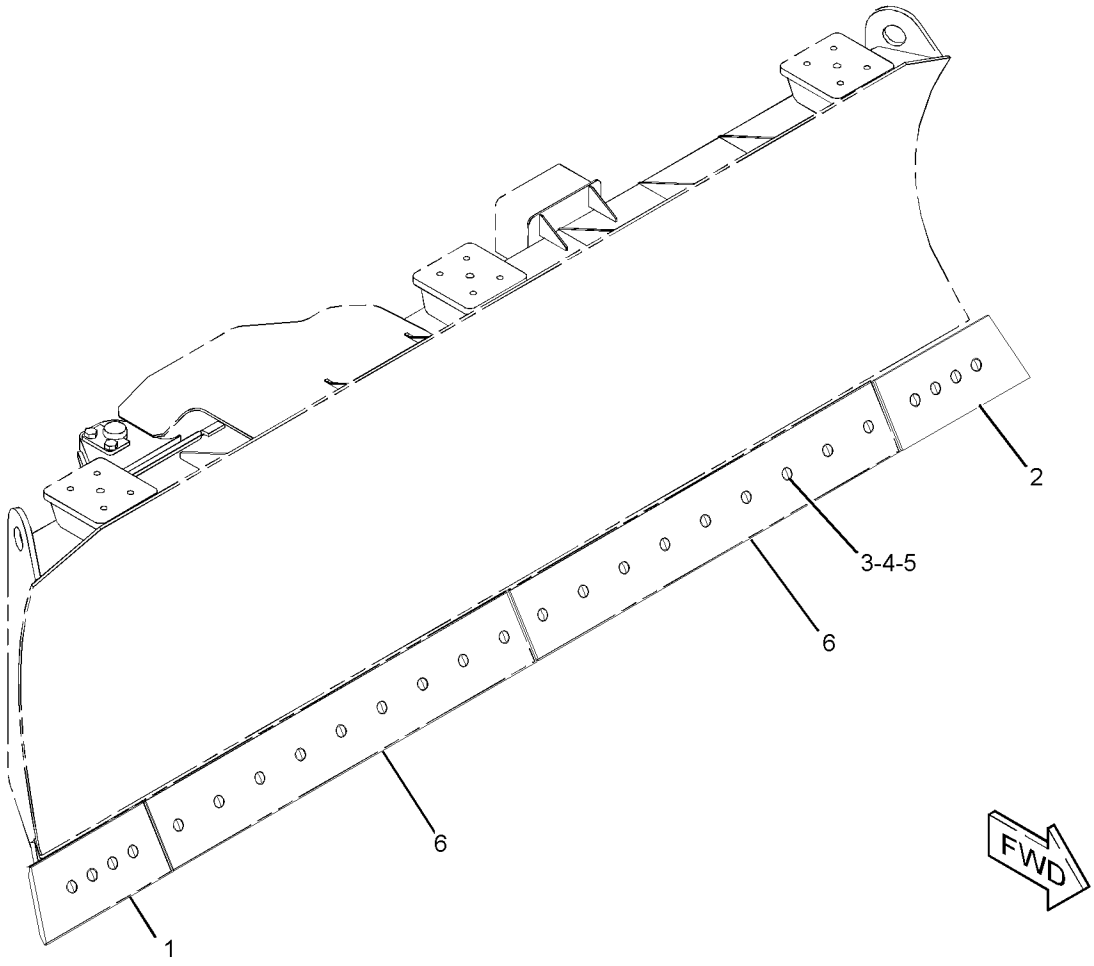

GRAPHIC #1 <END> g01967033

371-0759 EDGE GP-BIT & CUTTING

S/N: FD51-UP
FOR USE WITH FOLDABLE BLADE
PART OF 483-9250 BLADE GP-ANGLING
AN ATTACHMENT

SMCS-6801, 6804 **i06691451**

NOTE	REF NO	GRAPHIC REF	PART NUMBER	QTY	PART NAME 1 2 3 4 5 6 (PRODUCT LEVEL)	SEE PAGE
	1	1	**5J-4773**	22	BOLT-PLOW (3/4-10X2.5-IN)	
	2	1	**8E-9379**	1	BIT-END (RH)	
	3	1	**300-0168**	1	BIT-END (LH)	
	4	1	**342-8851**	1	EDGE-CUTTING	
	5	1	**371-0758**	1	EDGE-CUTTING	
	6	1	**2J-3506**	22	NUT-FULL (3/4-10-THD)	
	7	1	**5P-8248**	22	WASHER-HARD (20X36.5X3.5-MM THK)	

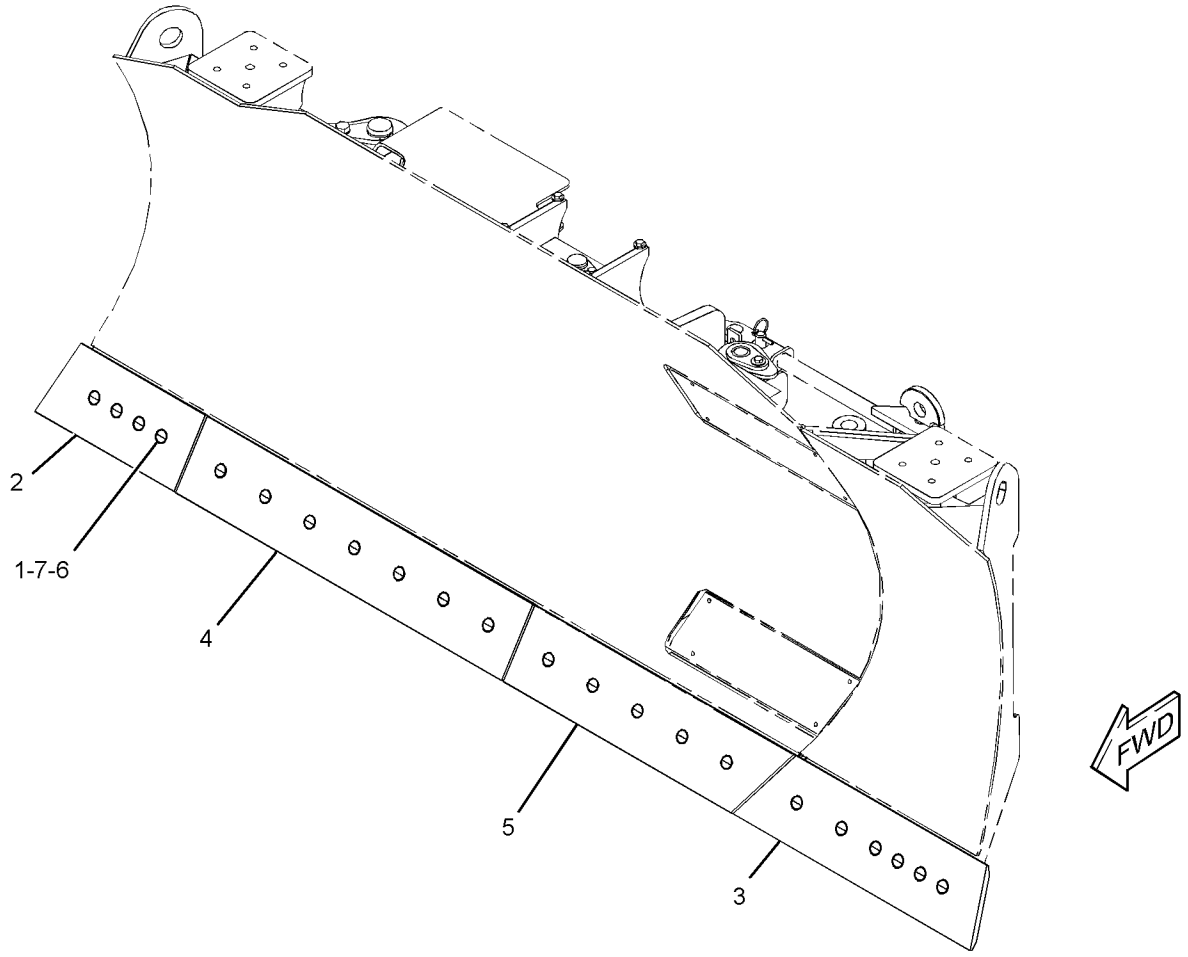

GRAPHIC #1 <END> g03054158

371-0808 EDGE GP-BIT & CUTTING

S/N: FD61-UP
FOR USE WITH FOLDABLE BLADE
PART OF 483-9320 BLADE & EDGE GP-ANGLING
AN ATTACHMENT

SMCS-6801, 6804 **i06709318**

NOTE	REF NO	GRAPHIC REF	PART NUMBER	QTY	PART NAME 1 2 3 4 5 6 (PRODUCT LEVEL)	SEE PAGE
	1	1	**8E-9379**	1	BIT-END (RH)	
	2	1	**297-1699**	1	BIT-END	
	3	1	**371-0786**	1	EDGE-CUTTING	
	4	1	**2J-3506**	26	NUT-FULL (3/4-10-THD)	
	5	1	**5J-4773**	26	BOLT-PLOW (3/4-10X2.5-IN)	
	6	1	**5P-8248**	26	WASHER-HARD (20X36.5X3.5-MM THK)	
	7	1	**8E-7245**	1	EDGE-CUTTING	

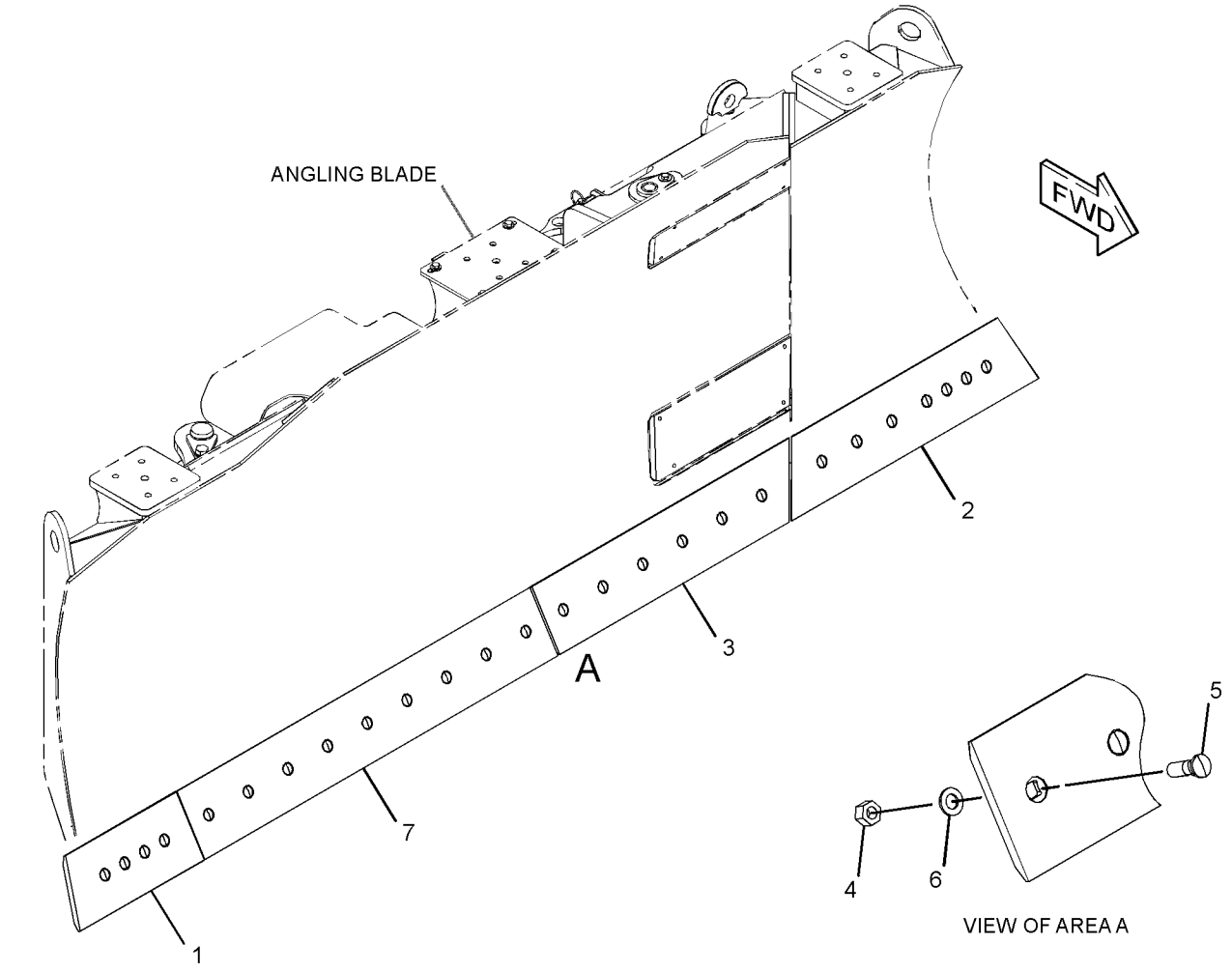

GRAPHIC #1 <END> g03012321

342-8850 EDGE GP-CUTTING

S/N: BG91-UP
PART OF 348-6300 BLADE GP-ANGLING
AN ATTACHMENT

SMCS-6801 **i05898704**

NOTE	REF NO	GRAPHIC REF	PART NUMBER	QTY	PART NAME 1 2 3 4 5 6 (PRODUCT LEVEL)	SEE PAGE
	1	1	**5J-4773**	22	BOLT-PLOW (3/4-10X2.5-IN)	
	2	1	**8E-9378**	1	BIT-END (LH)	
	3	1	**8E-9379**	1	BIT-END (RH)	
	4	1	**342-8851**	2	EDGE-CUTTING	
	5	1	**2J-3506**	22	NUT-FULL (3/4-10-THD)	
	6	1	**5P-8248**	22	WASHER-HARD (20X36.5X3.5-MM THK)	

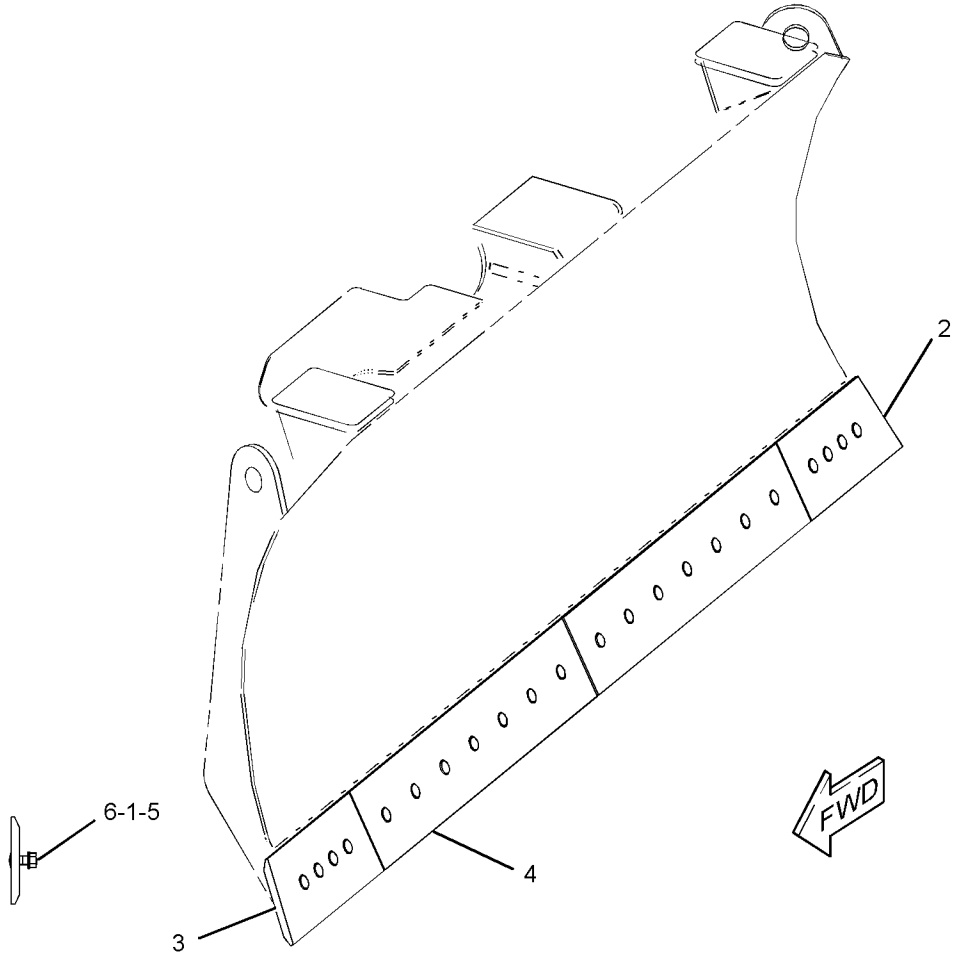

GRAPHIC #1 <END> g03030417

240-1476 MOUNTING GP-RIPPER

S/N: JJJ1-UP
PART OF 436-1245 RIPPER AR
AN ATTACHMENT

SMCS-6165, 6310, 6324

i05856153

NOTE	REF NO	GRAPHIC REF	PART NUMBER	QTY	PART NAME 1 2 3 4 5 6 (PRODUCT LEVEL)	SEE PAGE
B	1	1	**9N-4449**	12	SPACER (68X121X1.5-MM THK)	
B	2	1	**9N-4450**	4	SPACER (68X120X5-MM THK)	
B	3	1	**193-3074**	4	SPACER (52X120X5-MM THK)	
B	4	1	**193-3075**	10	SPACER (52X121X1.5-MM THK)	
	5	1	**240-1486**	1	BRACKET AS (RH)	
	6	1	**240-1487**	1	BRACKET AS (LH)	
	7	1	**240-1490**	2	PIN	
	8	1	**240-1491**	2	PIN	
	9	1	**240-1494**	1	BRACKET AS (LH)	
	10	1	**240-1495**	1	BRACKET AS (RH)	
	11	1	**6K-8987**	2	DOWEL	
M	12	1	**6V-7744**	2	LOCKNUT (M10X1.5-THD)	
M	13	1	**7X-2575**	8	BOLT (M24X3X60-MM)	
	14	1	**8T-1482**	8	WASHER-HARD (26X50X8-MM THK)	
	15	1	**8T-4167**	8	WASHER-HARD (26X44X4-MM THK)	
M	16	1	**8T-4198**	2	BOLT (M10X1.5X100-MM)	
M	17	1	**8T-4244**	2	NUT (M12X1.75-THD)	
M	18	1	**8T-5041**	2	BOLT (M12X1.75X120-MM)	
M	19	1	**8T-5878**	8	BOLT (M24X3X80-MM)	

B - USE AS REQUIRED
M - METRIC PART

240-1476 **MOUNTING GP-RIPPER (**contd.**)** **i05856153**

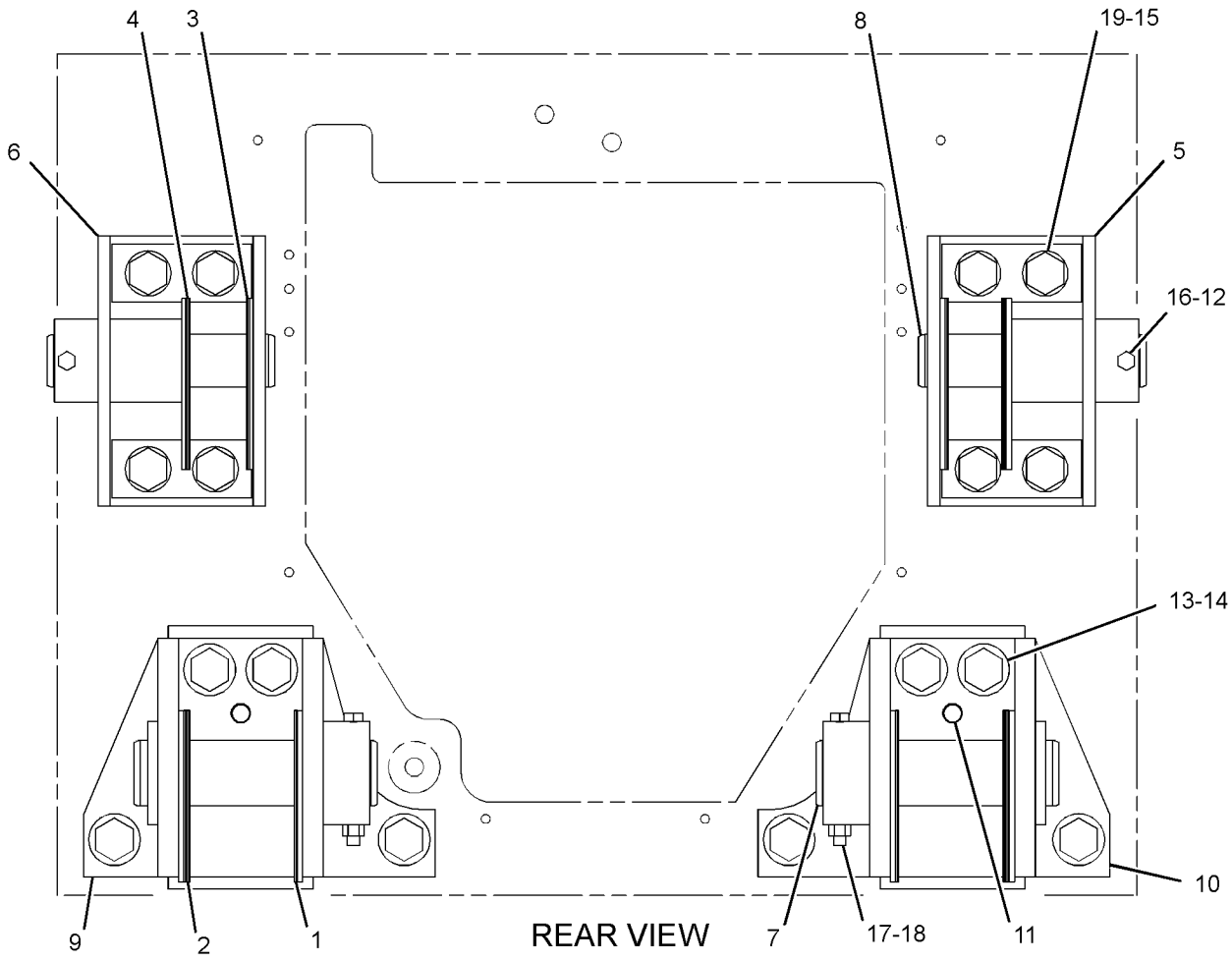

GRAPHIC #1 <END> g01299494

549-8935 PUMP & LINES GP-WINCH

S/N: H3C1-UP; K3G1-UP

PART OF 549-8882 VALVE & LINES GP-HYD CONTROL

AN ATTACHMENT

SMCS-5163, 5164, 5179

i07766179

NOTE	REF NO	GRAPHIC REF	PART NUMBER	QTY	PART NAME 1 2 3 4 5 6 (PRODUCT LEVEL)	SEE PAGE
M	1	1	**8T-4183**	4	BOLT (M12X1.75X40-MM)	
M	2	1	**8T-4184**	4	BOLT (M12X1.75X45-MM)	
	3	1	**204-2281**	12	STRAP-CABLE	
M	4	1	**8T-4189**	1	BOLT (M8X1.25X20-MM)	
	5	1	**1P-3709**	1	SEAL-RECTANGULAR	
	6	1	**5P-4116**	1	WASHER-HARD (8.8X20.5X2-MM THK)	
	7	1	**6V-0852**	2	CAP-DUST	
	8	1	**6V-9168**	1	NUT (11/16-16-THD)	
	9	1	**7X-3391**	4	WASHER-HARD (13.5X32X6-MM THK)	
	10	1	**7X-3392**	4	WASHER-HARD (13.5X22.5X3-MM THK)	
	11	1	**8T-4121**	2	WASHER-HARD (11X21X2.5-MM THK)	
M	12	1	**8T-4137**	1	BOLT (M10X1.5X20-MM)	
	13	1	**8T-4984**	2	CLAMP-HOSE	
	14	1	**099-7241**	1	WASHER-HARD (19X34X3-MM THK)	
	15	1	**121-0530**	1	FITTING AS-HYDRAULIC (QUICK DISCONNECT)	
		1	**6V-8397**	1	SEAL-O-RING	
	16	1	*148-8326*	1	CONNECTOR AS	
		1	**3J-7354**	1	SEAL-O-RING	
		1	**6V-8397**	1	SEAL-O-RING	
		1	**6V-9872**	1	CONNECTOR	
	17	1	*148-8327*	1	CONNECTOR AS	
		1	**3D-2824**	1	SEAL-O-RING	
		1	**6V-8637**	1	CONNECTOR	
		1	**6V-9746**	1	SEAL-O-RING	
	18	1	*148-8336*	1	CONNECTOR AS	
		1	**3J-1907**	1	SEAL-O-RING	
		1	**6V-8397**	1	SEAL-O-RING	
		1	**6V-8636**	1	CONNECTOR	
	19	1	*148-8355*	1	ELBOW AS	
		1	**5K-9090**	1	SEAL-O-RING	
		1	**6V-9005**	1	ELBOW	
		1	**7M-8485**	1	SEAL-O-RING	
	20	1	*148-8357*	1	ELBOW AS	
		1	**5K-9090**	1	SEAL-O-RING	
		1	**6V-9008**	1	ELBOW	
		1	**7M-8485**	1	SEAL-O-RING	
	21	1	*150-4049*	1	ELBOW AS	
		1	**6V-9746**	1	SEAL-O-RING	
		1	**7M-8485**	1	SEAL-O-RING	
		1	**8T-4149**	1	ELBOW	
	22	1	*164-5567*	1	COUPLER AS-QUICK DISCONNECT (MALE)	
		1	**6V-3965**	1	FITTING (QUICK DISCONNECT)	
		1	**214-7568**	1	SEAL-O-RING	
	23	1	**177-2215**	1	STRAP-DUAL CLAMP	
	24	1	**200-6345**	6	SADDLE-MOUNTING (DUAL SWIVEL)	
	25	1	**203-3847**	1	BRACKET AS	

549-8935 **PUMP & LINES GP-WINCH** (contd.) **i07766179**

NOTE	REF NO	GRAPHIC REF	PART NUMBER	QTY	PART NAME 1 2 3 4 5 6 (PRODUCT LEVEL)	SEE PAGE
	26	1	*205-3692*	1	ELBOW AS	
		1	**2M-9780**	1	SEAL-O-RING	
		1	**6V-8397**	1	SEAL-O-RING	
		1	**9X-2134**	1	ELBOW	
YR	27	1	**260-6781**	1	PUMP GP-PISTON & GEAR (FRONT)	411
	28	1	**282-1825**	1	TUBE AS	
M	29	1	**344-5675**	1	NUT (M10X1.5-THD)	
	30	1	**457-6431**	1	HOSE	
I	31	1	**457-6432**	1	HOSE AS	
I	32	1	**539-3163**	1	HOSE AS	
I	33	1	**551-1896**	1	HOSE AS	
I	34	1	**551-1897**	1	HOSE AS	
	35	1	**5P-2369**	1	CLIP (LOOP)	
	36	1	**6D-3479**	1	CLIP (LOOP)	

I - REFER TO HYDRAULIC INFORMATION SYSTEM
M - METRIC PART
R - REMANUFACTURED PART MAY BE AVAILABLE
Y - SEPARATE ILLUSTRATION

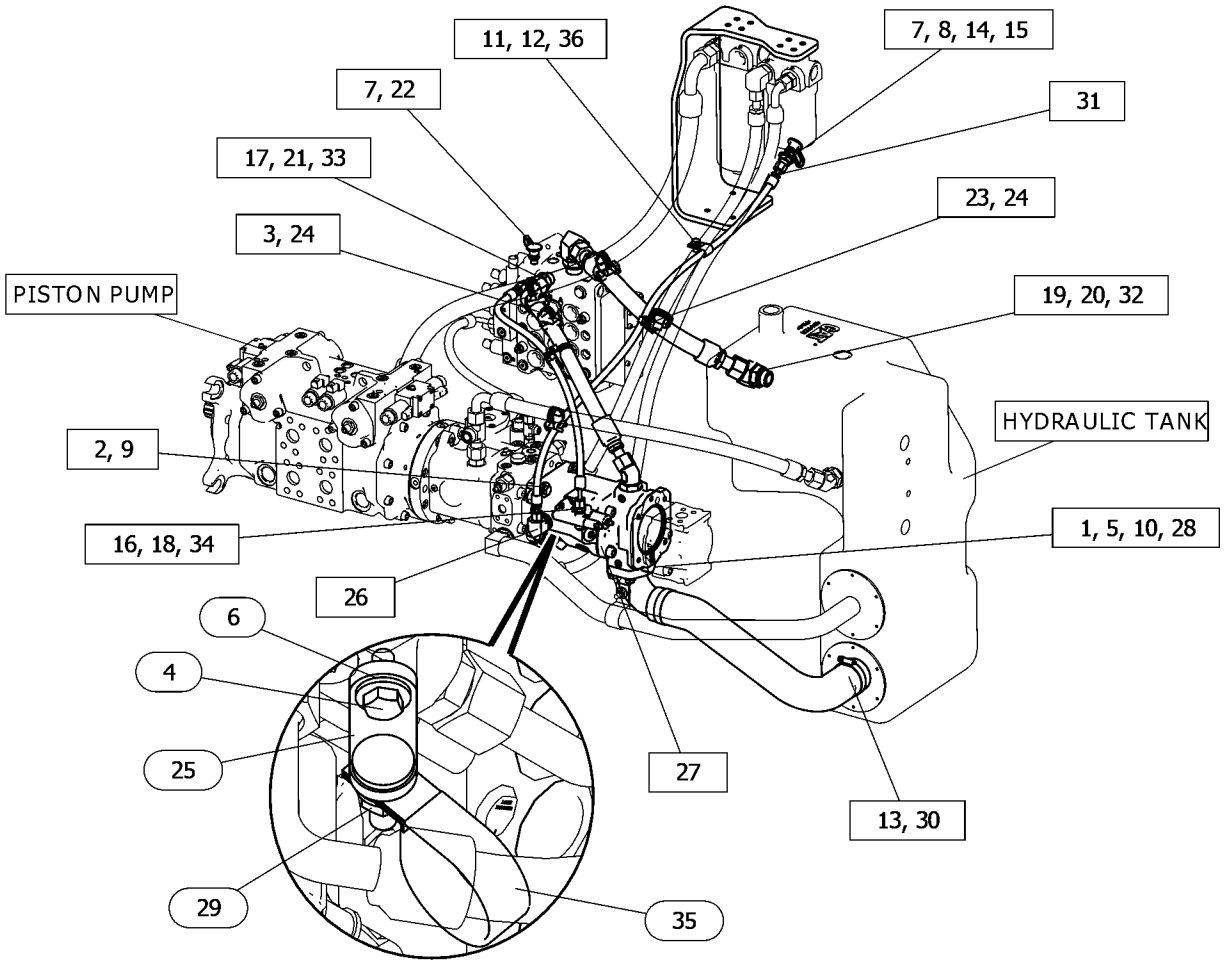

GRAPHIC #1 <END> g06365999

436-1245 RIPPER AR

S/N: JJJ1-UP
FOR USE WITH VALVE GP-BANK 4
PART OF 487-6095, 487-6096 OPTION AR-WORK TOOL
AN ATTACHMENT

SMCS-6310 **i06704896**

NOTE	PART NUMBER	QTY	PART NAME 1 2 3 4 5 6 (PRODUCT LEVEL)	SEE PAGE
Y	**448-4913**	1	CYLINDER GP-RIPPER	365
Y	*432-6469*	1	LINES GP-RIPPER	393
Y	*240-1476*	1	MOUNTING GP-RIPPER	549
Y	*240-1471*	1	RIPPER GP	554
	240-1469	1	PLATE & FILM GP	
	4B-4158	2	SCREW-DRIVE (NO 4X0.25-IN)	
	7X-7644	2	FILM-IDENTIFICATION (TIE-DOWN)	
			(ON REAR OF UNDERCARRIAGE, EACH SIDE)	
	8M-3494	1	PLATE-SERIAL NUMBER (RIPPER)	
			(ON CARRIAGE ASSEMBLY ON RH SIDE OF RH TOWER)	

Y - SEPARATE ILLUSTRATION

<END>

240-1471 RIPPER GP

S/N: JJJ1-UP
PART OF 436-1245 RIPPER AR
AN ATTACHMENT

SMCS-6310, 6325

i05893171

NOTE	REF NO	GRAPHIC REF	PART NUMBER	QTY	PART NAME 1 2 3 4 5 6 (PRODUCT LEVEL)	SEE PAGE
	1	1	**2K-0703**	1	BAR	
	2	1	**3B-8489**	11	FITTING-GREASE (1/8-27 PTF)	
	3	1	**3K-8510**	1	PIN	
	4	1	**4K-3004**	2	BEARING-TRUNNION SUPPLEMENTARY	
B	5	1	**9N-4449**	6	SPACER (68X121X1.5-MM THK)	
B	6	1	**9N-4450**	2	SPACER (68X120X5-MM THK)	
B	7	1	**193-3074**	4	SPACER (52X120X5-MM THK)	
	8	1	**240-1472**	1	LINK AS	
		1	**240-1473**	1	LINK AS-LOWER	
		1	**9W-0099**	4	BUSHING	
	9	1	**240-1477**	1	CARRIAGE AS	
	10	1	**240-1478**	2	LINK AS	
					(EACH INCLUDES)	
		1	**7J-9682**	2	BUSHING	
	11	1	**240-1490**	2	PIN	
	12	1	**240-1491**	2	PIN	
	13	1	**3B-5325**	1	PIN-COTTER	
M	14	1	**6V-7744**	2	LOCKNUT (M10X1.5-THD)	
M	15	1	**7X-2543**	2	BOLT (M10X1.5X120-MM)	
M	16	1	**8T-4139**	2	BOLT (M12X1.75X30-MM)	
	17	1	**8T-4223**	18	WASHER-HARD (13.5X25.5X3-MM THK)	
M	18	1	**8T-4244**	10	NUT (M12X1.75-THD)	
M	19	1	**8T-4648**	8	BOLT (M12X1.75X70-MM)	
M	20	1	**8T-7930**	2	BOLT (M12X1.75X160-MM)	
B	21	1	**193-3075**	10	SPACER (52X121X1.5-MM THK)	
M	22	1	**7X-2548**	6	BOLT (M12X1.75X16-MM)	

B - USE AS REQUIRED
M - METRIC PART

240-1471 **RIPPER GP (**contd.**)** **i05893171**

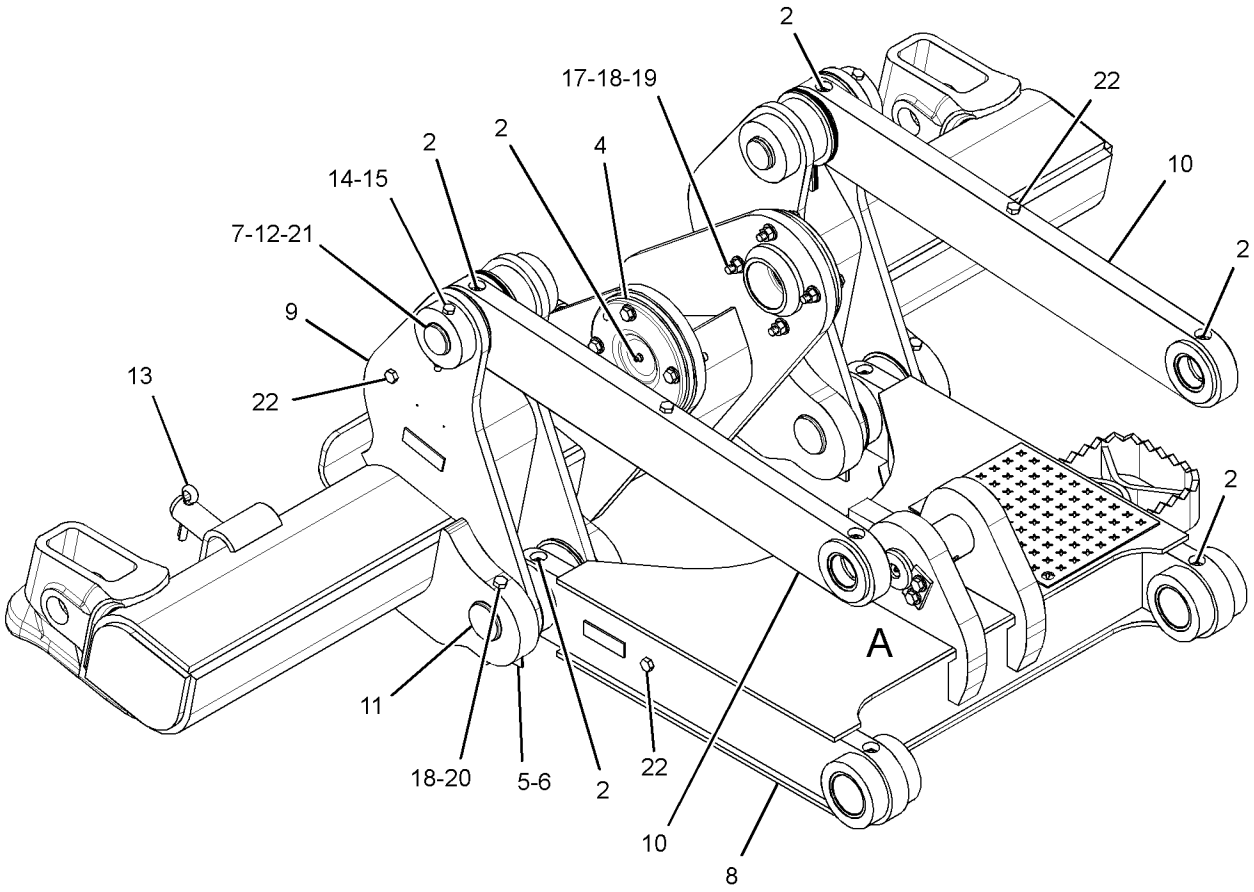

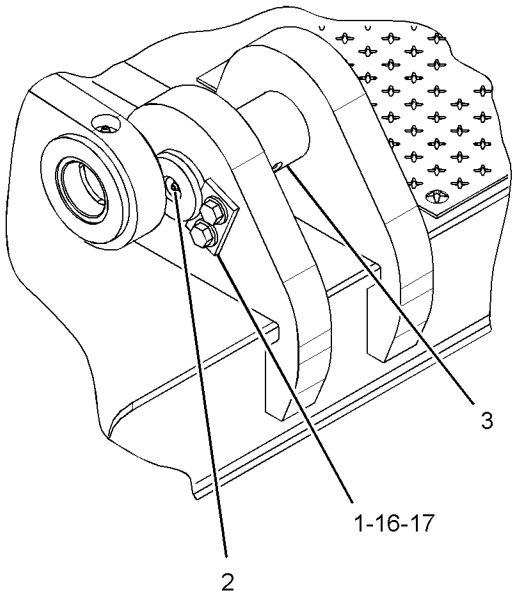



VIEW OF AREA A

GRAPHIC #1 <END> g01511214

276-4480 TOOTH GP-RIPPER—CURVED

S/N: H3C1-UP; K3G1-UP
PART OF 487-6095 OPTION AR-WORK TOOL
AN ATTACHMENT

SMCS-6808, 6810

i06751454

NOTE	REF NO	GRAPHIC REF	PART NUMBER	QTY	PART NAME 1 2 3 4 5 6 (PRODUCT LEVEL)	SEE PAGE
Y	1	1	*3G-0109*	3	TOOTH GP-RIPPER	558

Y - SEPARATE ILLUSTRATION

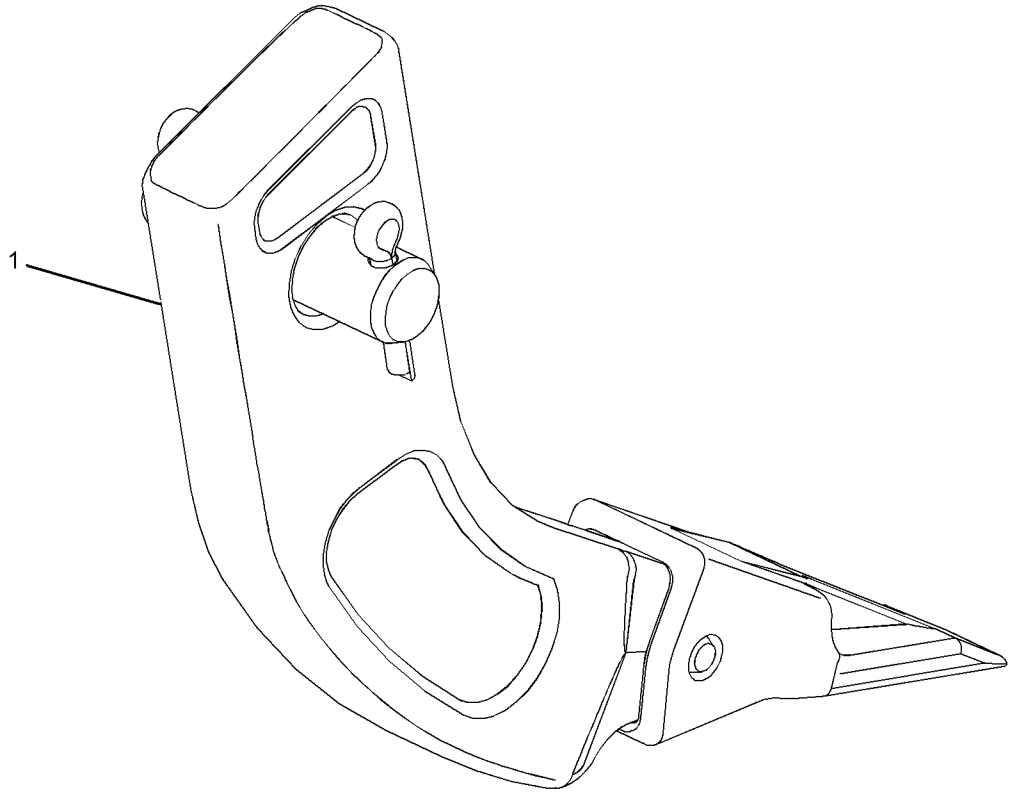

GRAPHIC #1 <END> g01199264

276-4483 TOOTH GP-RIPPER—STRAIGHT

S/N: H3C1-UP; K3G1-UP
PART OF 487-6096 OPTION AR-WORK TOOL
AN ATTACHMENT

SMCS-6808, 6810

i06751453

NOTE	REF NO	GRAPHIC REF	PART NUMBER	QTY	PART NAME 1 2 3 4 5 6 (PRODUCT LEVEL)	SEE PAGE
Y	1	1	*8J-1434*	3	TOOTH GP-RIPPER (STRAIGHT)	559

Y - SEPARATE ILLUSTRATION

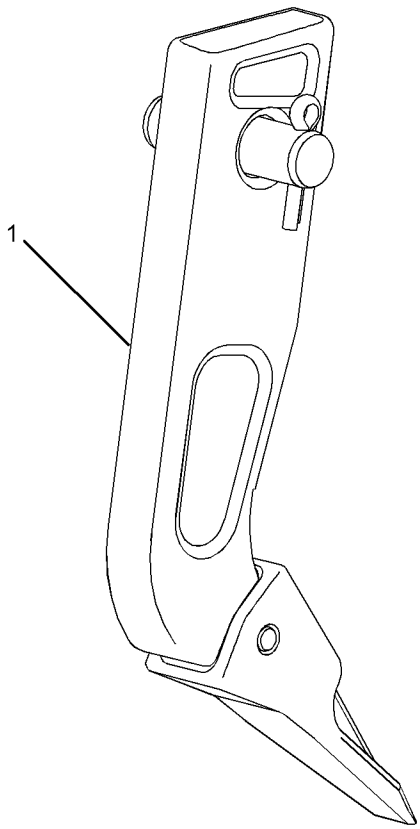

GRAPHIC #1 <END> g01199294

3G-0109 TOOTH GP-RIPPER

S/N: H3C1-UP; K3G1-UP
PART OF 276-4480 TOOTH GP-RIPPER
AN ATTACHMENT

SMCS-6808, 6810

i05890164

NOTE	REF NO	GRAPHIC REF	PART NUMBER	QTY	PART NAME 1 2 3 4 5 6 (PRODUCT LEVEL)	SEE PAGE
	1	1	**3B-5325**	2	PIN-COTTER	
	2	1	**2K-6413**	1	PIN	
	3	1	**9J-8913**	1	SHANK-RIPPER	
	4	1	**136-8308**	1	PIN	
	5	1	**6Y-0309**	1	TIP-RIPPER	
	6	1	**114-0359**	1	RETAINER AS	

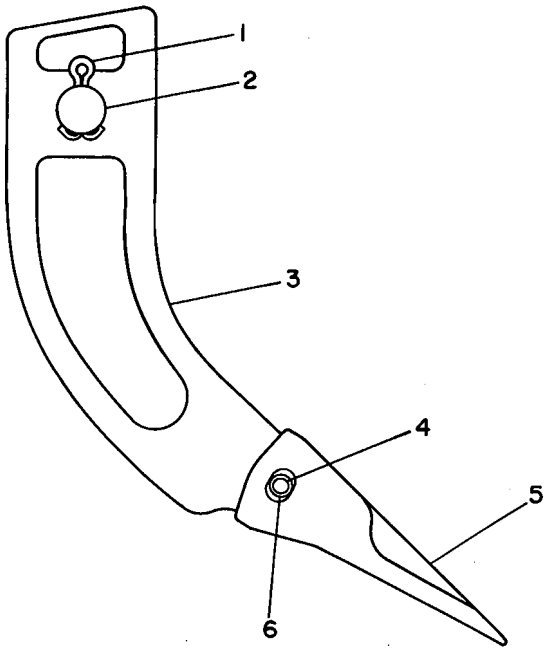

GRAPHIC #1 <END> g00173601

8J-1434 TOOTH GP-RIPPER—STRAIGHT

S/N: H3C1-UP; K3G1-UP
PART OF 276-4483 TOOTH GP-RIPPER
AN ATTACHMENT

SMCS-6808, 6810

i05893021

NOTE	REF NO	GRAPHIC REF	PART NUMBER	QTY	PART NAME 1 2 3 4 5 6 (PRODUCT LEVEL)	SEE PAGE
	1	1	**3B-5325**	2	PIN-COTTER	
	2	1	**2K-6413**	1	PIN	
	3	1	**9J-6586**	1	SHANK	
	4	1	**136-8308**	1	PIN	
	5	1	**6Y-0309**	1	TIP-RIPPER (PENETRATION)	
	6	1	**114-0359**	1	RETAINER AS	

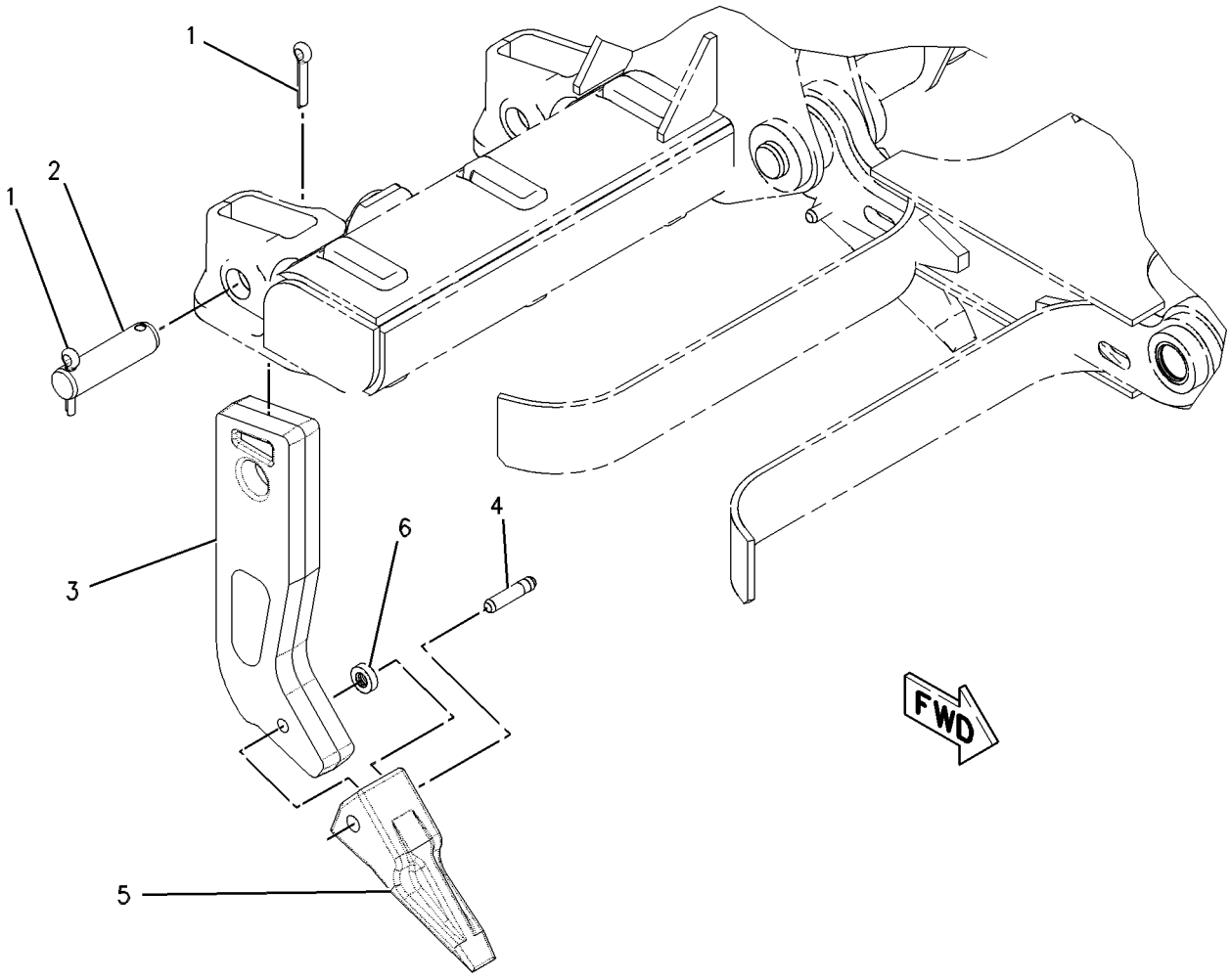

GRAPHIC #1 <END> g00632727

434-0570 BOX GP-TOOL

S/N: H3C1-UP; K3G1-UP
PART OF 483-9173 ENCLOSURE GP

SMCS-0600, 7259 **i06707489**

NOTE	REF NO	GRAPHIC REF	PART NUMBER	QTY	PART NAME 1 2 3 4 5 6 (PRODUCT LEVEL)	SEE PAGE
Y	1	1	*434-0571*	1	BOX GP-TOOL	561
	2	1	**7X-7729**	2	WASHER (11X25X3-MM THK)	
M	3	1	**8T-4137**	2	BOLT (M10X1.5X20-MM)	

M - METRIC PART
Y - SEPARATE ILLUSTRATION

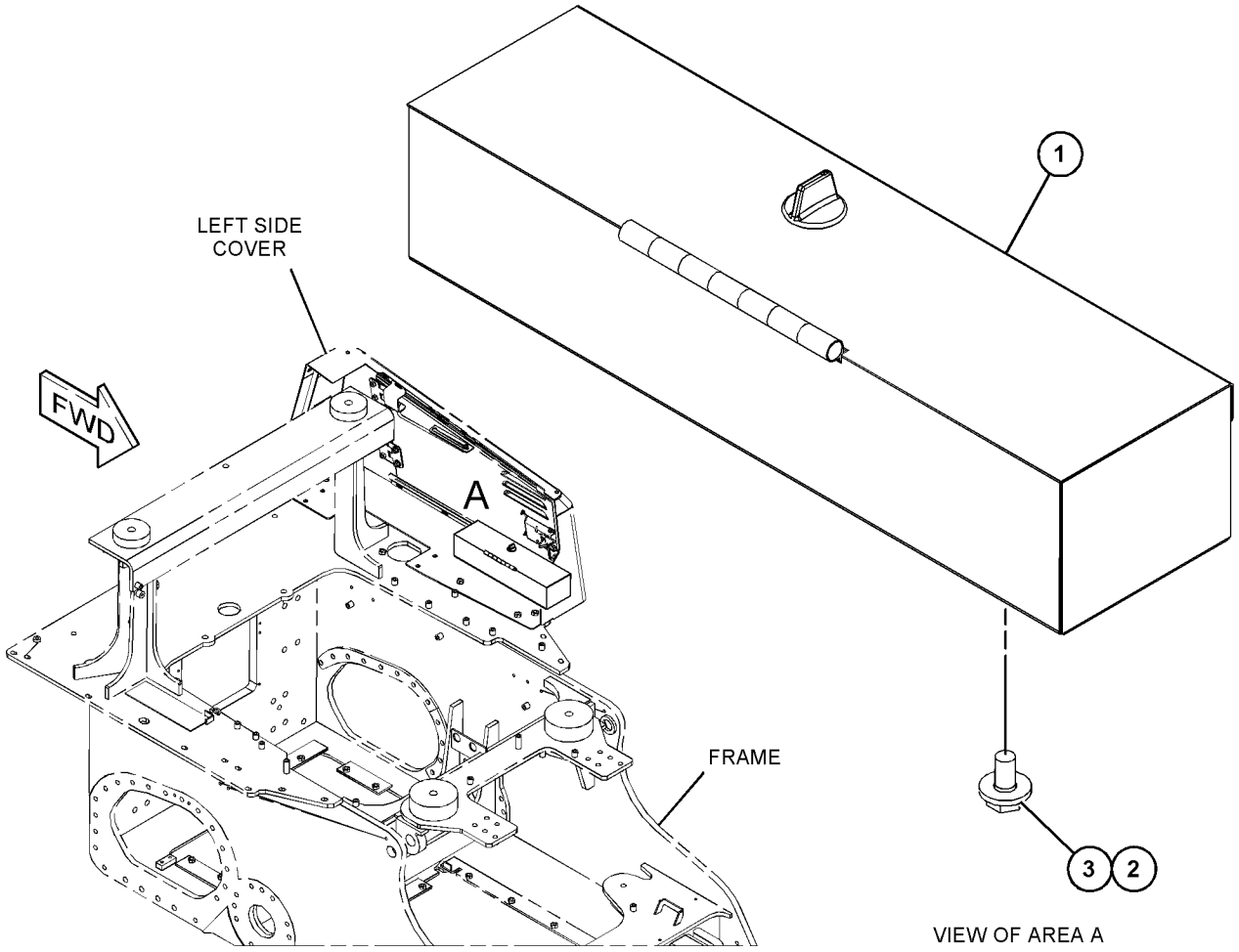

GRAPHIC #1 <END> g06020670

434-0571 BOX GP-TOOL

S/N: H3C1-UP; K3G1-UP

PART OF 434-0570 BOX GP-TOOL

SMCS-0600, 7259

i06707494

NOTE	REF NO	GRAPHIC REF	PART NUMBER	QTY	PART NAME 1 2 3 4 5 6 (PRODUCT LEVEL)	SEE PAGE
	1	1	**187-6156**	1	LATCH AS (PANEL)	
	2	1	**434-0572**	1	BOX AS (TOOL)	

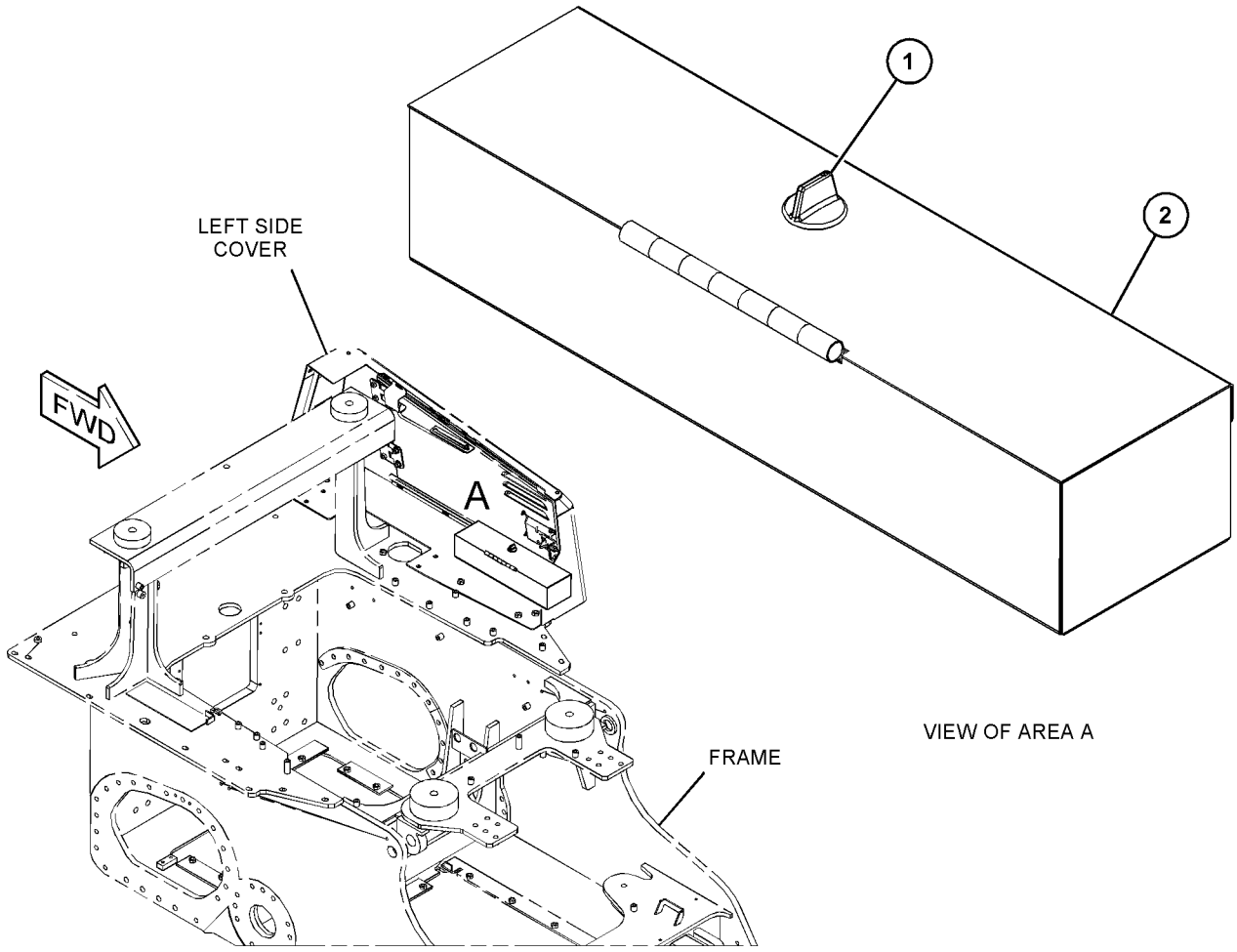

GRAPHIC #1

<END>

g06020672

523-7054 FILM GP

S/N: H3C1-UP; K3G1-UP

PART OF 590-7198, 590-7199 COMMON AR

SMCS-0375, 7405, 7557

i07452355

NOTE	PART NUMBER	QTY	PART NAME 1 2 3 4 5 6 (PRODUCT LEVEL)	SEE PAGE
	225-0312	1	FILM-WARNING (JUMP START, READ OMM, INTL)	
			(INSIDE RH BATTERY SERVICE DOOR)	
	227-7391	1	FILM-WARNING (SEAT BELT, INTERNATIONAL)	
			(INSIDE CAB ON SIDE FACE OF RH B-POST, IN OPERATOR VIEW)	
	228-2616	1	FILM-WARNING (UNIVERSAL, READ OMM)	
			(INSIDE CAB ON SIDE FACE OF LH B-POST, IN OPERATOR VIEW)	
	242-5054	2	FILM-WARNING (NO STEP)	
			(ON TOP OF BLADE ANGLE CYLINDER GUARD, EACH SIDE)	
	260-7653	1	FILM-WARNING (EXPLOSION HAZARD, PRODUCT LINK)	
			(INSIDE CAB ON REAR FACE OF LH B-POST, IN OPERATOR VIEW)	
	281-0547	1	FILM-WARNING (FAN, READ OMM)	
			(ON FAN DOOR, BELOW TOP LH LOCKING BOLTS)	
	288-0662	2	FILM-WARNING (HOT FLUID UND PRESS, READ OMM)	
			(1-UNDERSIDE OF DOOR TO ACCESS TO SHUNT TANK) (1-INSIDE TRAP OF FRONT GUARD BOTTOM)	
	293-6468	1	FILM-WARNING (HIGH PRESSURE, READ OMM)	
			(ON FUEL INJECTOR PUMP OF ENGINE)	
	364-4012	2	FILM-WARNING (DO NOT USE ETHER, READ OMM)	
			(1-ON TOP OF ENGINE BLOCK) (1-ON AIR CLEANER SUPPORT, IN OPERATOR VIEW)	
	364-4013	3	FILM-WARNING (UNIVERSAL, READ OMM)	
			(1-ON LH SIDE OF ENGINE BLOCK) (1-ON RH SIDE OF ENGINE BLOCK) (1-ON AIR CLEANER SUPPORT, IN OPERATOR VIEW)	
			<END>	

587-5863 FILM GP

S/N: H3C1-UP; K3G1-UP

PART OF 591-7138, 591-7139 PLATE & FILM GP

SMCS-0375, 7405, 7557

i08067882

NOTE	REF NO	GRAPHIC REF	PART NUMBER	QTY	PART NAME 1 2 3 4 5 6 (PRODUCT LEVEL)	SEE PAGE
	1	1	**219-0305**	1	FILM-WARNING (NO WELD, NO DRILL, READ OMM)	
	2	1	**270-7882**	1	FILM-INSTRUCTION (BULLDOZER, STEERING, CRUISE CONTROL)	
	3	1	**588-8769**	1	FILM-ROPS	

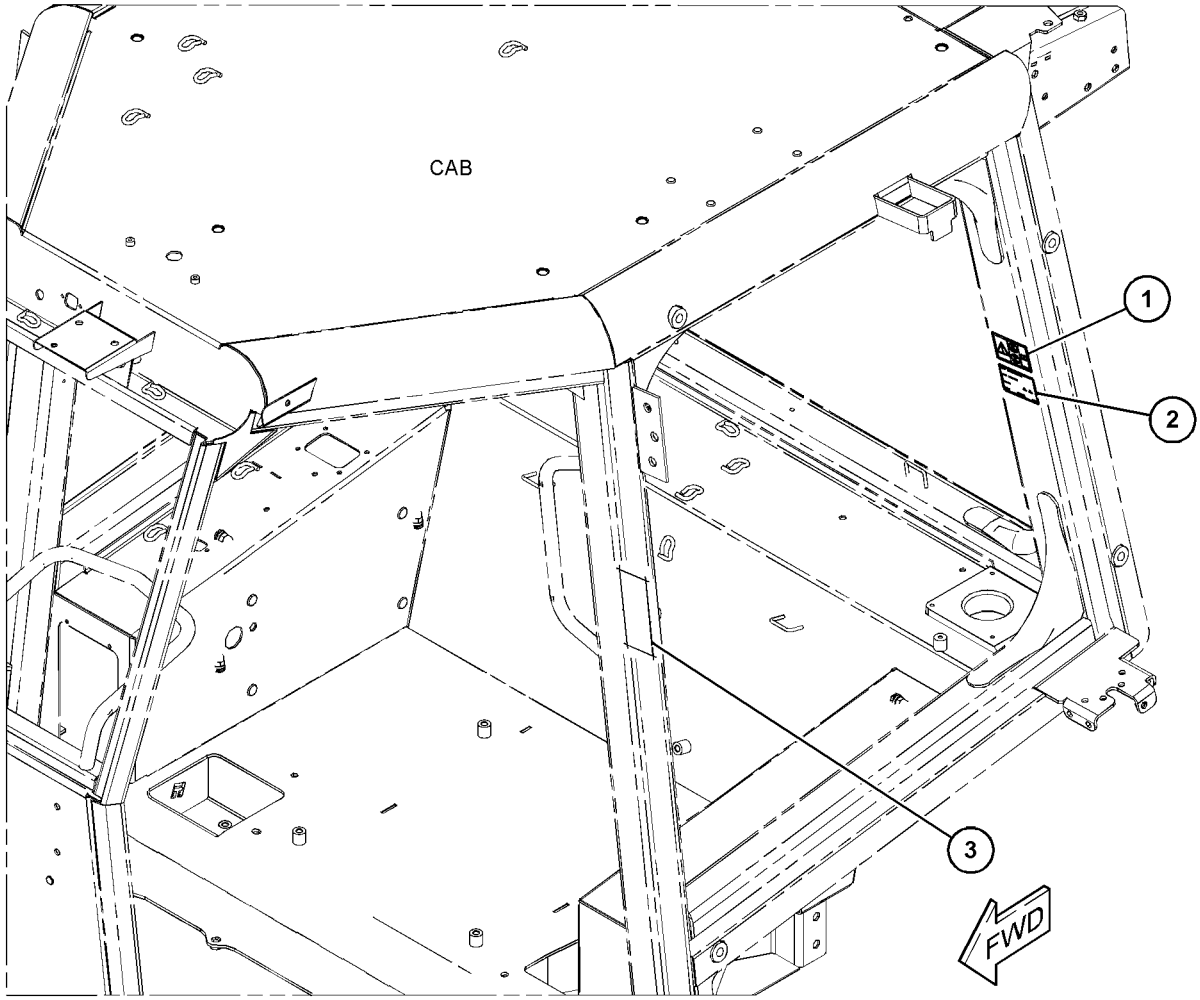

GRAPHIC #1 <END> g06536370

589-9461 FILM GP

S/N: K3G1-UP

PART OF 591-7138 PLATE & FILM GP

SMCS-0375, 7405, 7557

i08067988

NOTE	REF NO	GRAPHIC REF	PART NUMBER	QTY	PART NAME 1 2 3 4 5 6 (PRODUCT LEVEL)	SEE PAGE
	1	1	**589-9463**	2	FILM-IDENTIFICATION (D4)	
	2	2	**573-1721**	1	FILM-IDENTIFICATION (CAT)	
	3	2	**570-5029**	3	FILM-IDENTIFICATION (CAT)	

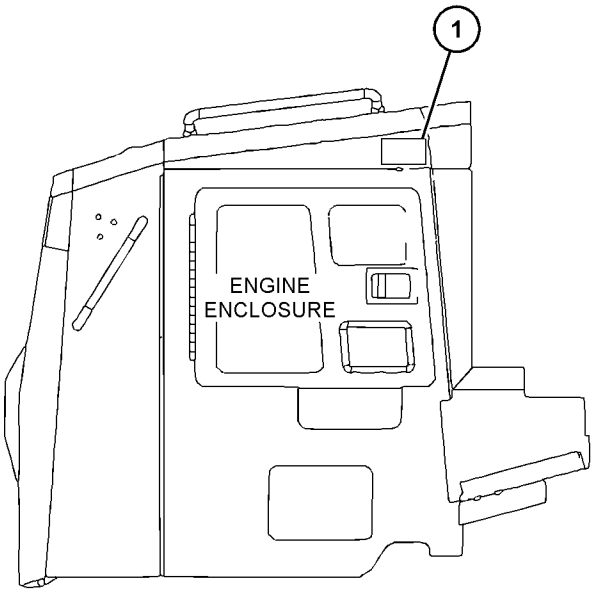

LEFT SIDE VIEW

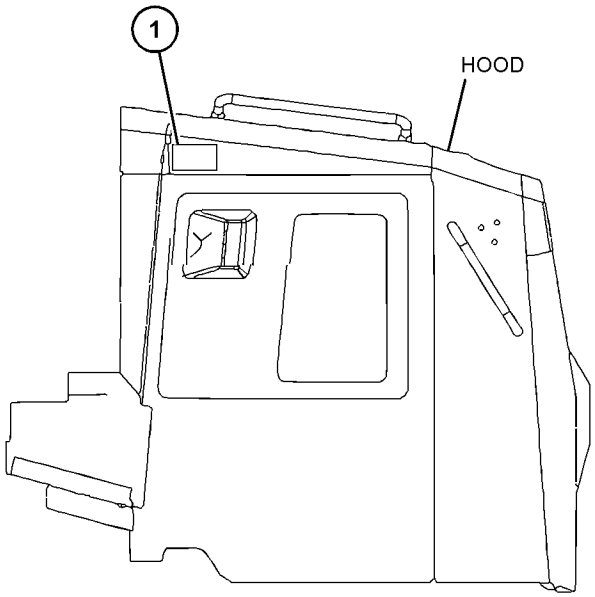

RIGHT SIDE VIEW

GRAPHIC #1

g06537720

589-9461 **FILM GP (**contd.**)** **i08067988**

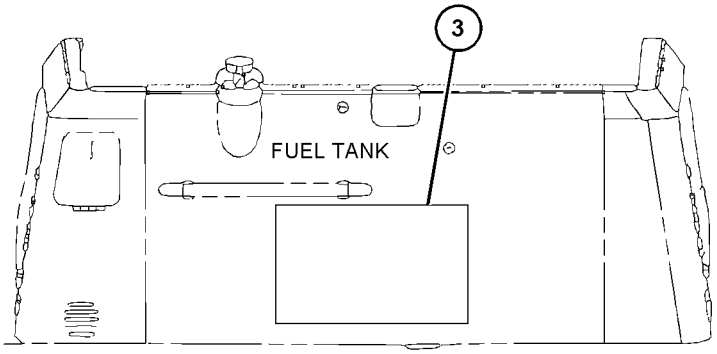

REAR VIEW

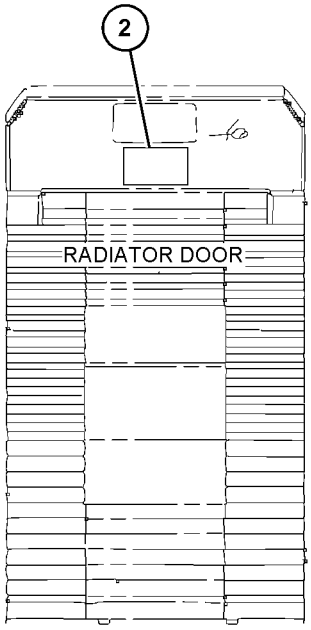

FRONT VIEW

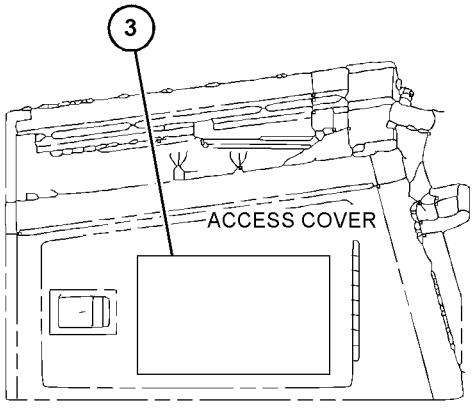

LEFT SIDE VIEW

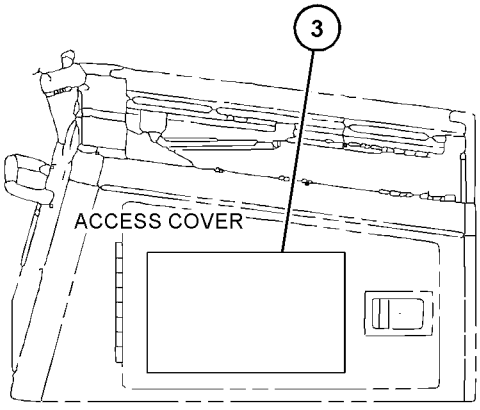

RIGHT SIDE VIEW

GRAPHIC #2 <END> g06537721

589-9462 FILM GP

S/N: H3C1-UP

PART OF 591-7139 PLATE & FILM GP

SMCS-0375, 7405, 7557 **i08067883**

NOTE	REF NO	GRAPHIC REF	PART NUMBER	QTY	PART NAME 1 2 3 4 5 6 (PRODUCT LEVEL)	SEE PAGE
	1	1	**589-9463**	2	FILM-IDENTIFICATION (D4)	
	2	1	**570-2440**	2	FILM-IDENTIFICATION (LGP)	
	3	2	**570-5029**	3	FILM-IDENTIFICATION (CAT)	
	4	2	**573-1721**	1	FILM-IDENTIFICATION (CAT)	

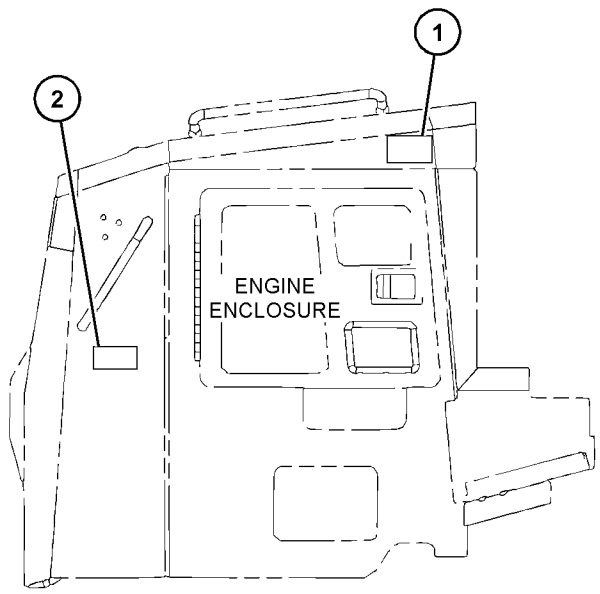

LEFT SIDE VIEW

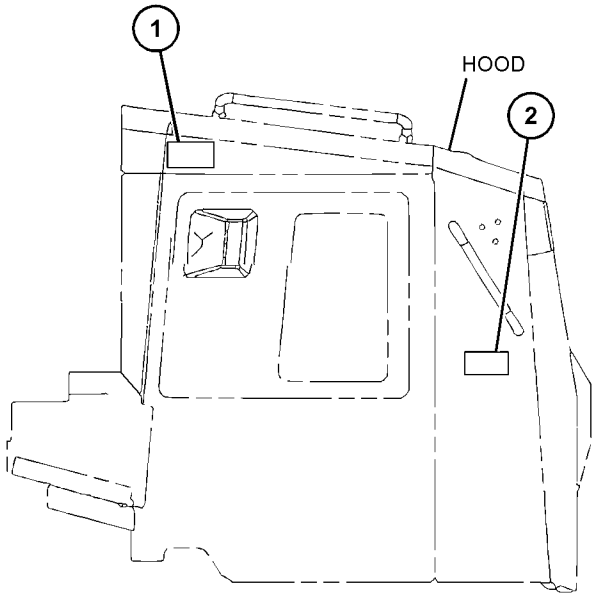

RIGHT SIDE VIEW

GRAPHIC #1 g06537754

589-9462 **FILM GP (**contd.**)** **i08067883**

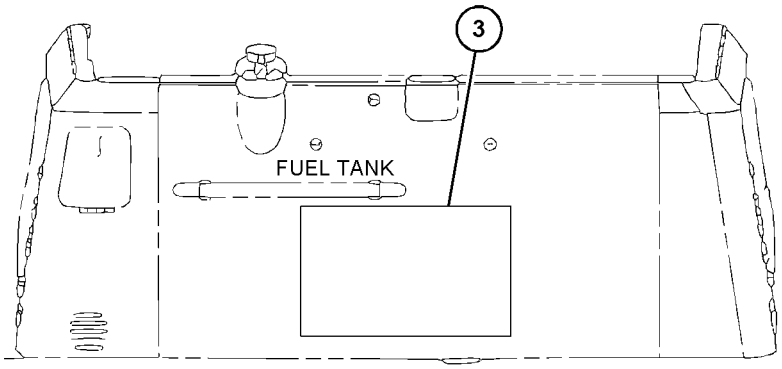

REAR VIEW

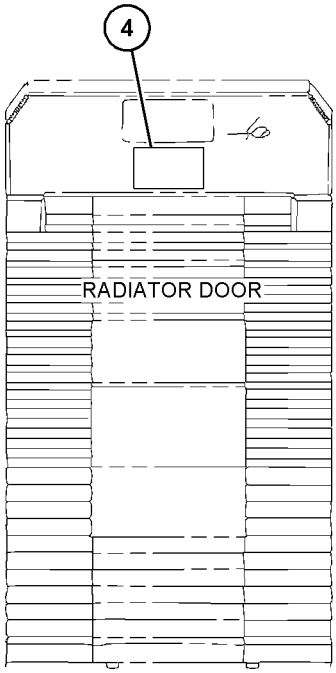

FRONT VIEW

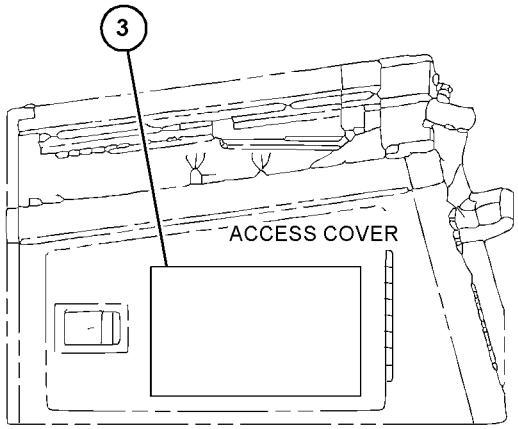

LEFT SIDE VIEW

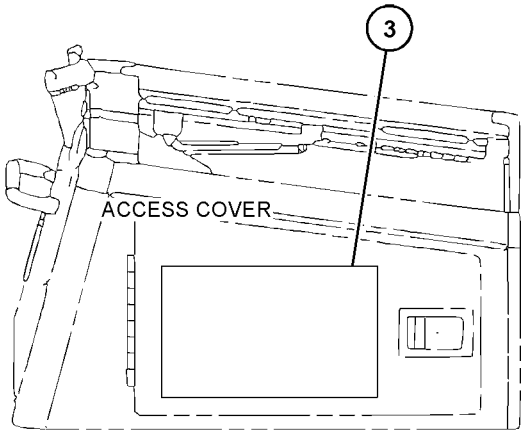

RIGHT SIDE VIEW

GRAPHIC #2 <END> g06537755

468-7356 PLATE & FILM GP

S/N: 4501-UP

PART OF 553-3684 ENGINE AR-PRIMARY

SMCS-7557, 7563

i08082630

NOTE	REF NO	GRAPHIC REF	PART NUMBER	QTY	PART NAME 1 2 3 4 5 6 (PRODUCT LEVEL)	SEE PAGE
	1	1	**576-1157**	1	FILM-IDENTIFICATION (CAT)	
	2	1	**326-9053**	1	FILM-WARNING (DO NOT SPRAY, READ OMM)	
	3	1	**346-8219**	2	FILM-WARNING (UNIVERSAL WARNING)	
	4	1	**355-3486**	1	STRIP-ADHESIVE	

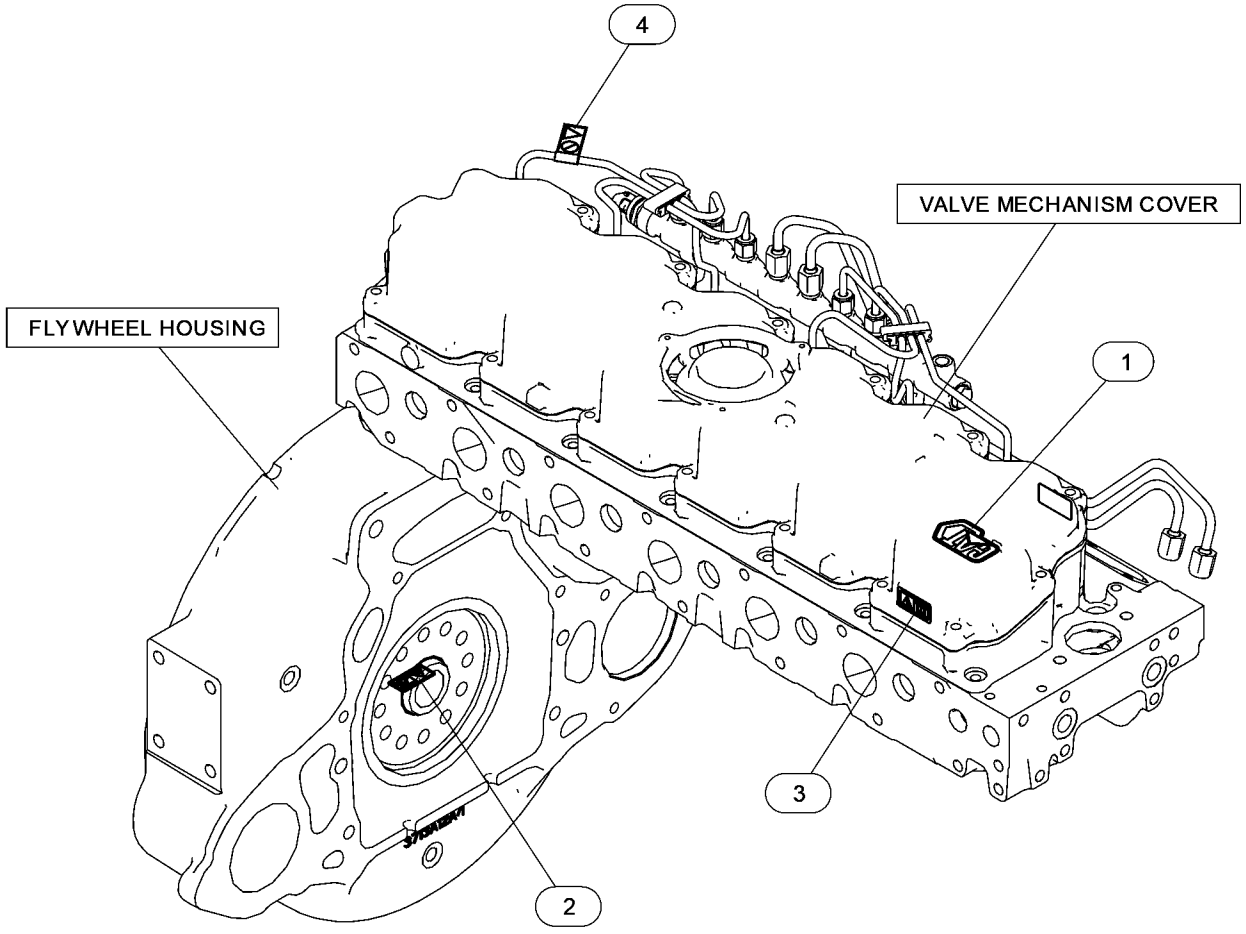

GRAPHIC #1 <END> g06544809

591-7138 PLATE & FILM GP

S/N: K3G1-UP

PART OF 591-7134 POWER TRAIN AR

SMCS-7557, 7563 **i08063036**

NOTE	PART NUMBER	QTY	PART NAME 1 2 3 4 5 6 (PRODUCT LEVEL)	SEE PAGE
Y	*587-5863*	1	FILM GP	563
Y	*589-9461*	1	FILM GP	564
	7X-3229	4	FILM-IDENTIFICATION (LIFT EYE, TIE-DOWN LOCATION)	
			(ON SIDE TRACK ROLLER FRAME, BETWEEN FRONT IDLER & ROLLER & BETWEEN REAR IDLER & ROLLER (EACH SIDE))	
	7X-7644	3	FILM-IDENTIFICATION (TIE-DOWN)	
			(CENTERED AT FRONT OF FRAME, BELOW RADIATOR GRILL ON SIDE OF TRACK ROLLER FRAME CENTERED BETWEEN FRONT & REAR ROLLER (EACH SIDE))	
	8C-5897	1	FILM-IDENTIFICATION (SIGHT GAUGE)	
			(ON REAR FACE OF MACHINE, NEXT HYDRAULIC OIL GAUGE)	
	158-7864	1	FILM-IDENTIFICATION (HYDRAULIC OIL)	
			(ON RH REAR SIDE, INSIDE HYDRAULIC ACCESS DOOR, ON FILLER NECK BRACKET)	
	455-1084	1	FILM-IDENTIFICATION (CAT)	
			(INSIDE RH REAR ENCLOSURE)	
	589-1827	1	FILM-IDENTIFICATION (LUBRICATION, MAINTENANCE)	
			(INSIDE REAR RH ENCLOSURE, BATTERY ACCESS, IN MIDDLE)	
	134-7258	2	FILM-INFORMATION (EXTENDED LIFE COOLANT)	
			(UNDERSIDE OF DOOR TO RADIATOR FILL & INSIDE TRAP OF FRONT GUARD BOTTOM)	
	9X-6340	1	FILM-INSTRUCTION (ENGINE OIL)	
			(ON ENGINE FILLER NECK)	
	307-6202	1	FILM-INSTRUCTION (AIR FILTER SERVICE, READ OMM)	
			(ON LH ENGINE ACCESS DOOR, ON AIR FILTER)	
	587-5841	1	FILM-NOTICE (SHIPPING)	
			(ON LH FRONT PANEL BELOW LH ENGINE DOOR ACCESS)	
	174-4590	1	PLATE-INFORMATION (SERVICE INFORMATION NUMBERS)	
			(INSIDE CAB, ON TOP OF LH C POST)	
	515-7905	1	PLATE-SERIAL NUMBER (MACHINE)	
			(ON LH REAR OF CASE)	
A	**350-8958**	1	PLATE-SERIAL NUMBER (ENGINE)	
			(ON LH SIDE OF CYLINDER BLOCK, TOWARD BOTTOM & REAR)	

A - NOT PART OF THIS GROUP
Y - SEPARATE ILLUSTRATION

<END>

591-7139 PLATE & FILM GP

S/N: H3C1-UP

PART OF 591-7135 POWER TRAIN AR

SMCS-7557, 7563 **i08063047**

NOTE	PART NUMBER	QTY	PART NAME 1 2 3 4 5 6 (PRODUCT LEVEL)	SEE PAGE
Y	*587-5863*	1	FILM GP	563
Y	*589-9462*	1	FILM GP	566
	7X-3229	4	FILM-IDENTIFICATION (LIFT EYE, TIE-DOWN LOCATION)	
			(ON SIDE TRACK ROLLER FRAME, BETWEEN FRONT IDLER & ROLLER & BETWEEN REAR IDLER & ROLLER (EACH SIDE))	
	7X-7644	3	FILM-IDENTIFICATION (TIE-DOWN)	
			(CENTERED AT FRONT OF FRAME, BELOW RADIATOR GRILL ON SIDE OF TRACK ROLLER FRAME CENTERED BETWEEN FRONT & REAR ROLLER (EACH SIDE))	
	8C-5897	1	FILM-IDENTIFICATION (SIGHT GAUGE)	
			(ON REAR FACE OF MACHINE, NEXT TO HYDRAULIC OIL GAUGE)	
	158-7864	1	FILM-IDENTIFICATION (HYDRAULIC OIL)	
			(ON RH REAR SIDE, INSIDE HYDRAULIC ACCESS DOOR, ON FILLER NECK BRACKET)	
	455-1084	1	FILM-IDENTIFICATION (CAT)	
			(INSIDE RH REAR ENCLOSURE)	
	589-1827	1	FILM-IDENTIFICATION (LUBRICATION, MAINTENANCE)	
			(INSIDE REAR RH ENCLOSURE, BATTERY ACCESS, IN MIDDLE)	
	134-7258	2	FILM-INFORMATION (EXTENDED LIFE COOLANT)	
			(UNDERSIDE OF DOOR TO RADIATOR FILL & INSIDE TRAP OF FRONT GUARD BOTTOM)	
	9X-6340	1	FILM-INSTRUCTION (ENGINE OIL)	
			(ON ENGINE FILLER NECK)	
	307-6202	1	FILM-INSTRUCTION (AIR FILTER SERVICE, READ OMM)	
			(ON LH ENGINE ACCESS DOOR, ON AIR FILTER)	
	587-5841	1	FILM-NOTICE (SHIPPING)	
			(ON LH FRONT PANEL BELOW LH ENGINE DOOR ACCESS)	
	174-4590	1	PLATE-INFORMATION (SERVICE INFORMATION NUMBERS)	
			(INSIDE CAB, ON TOP OF LH C POST)	
	515-7905	1	PLATE-SERIAL NUMBER (MACHINE)	
			(ON LH REAR OF CASE)	
A	**475-6787**	1	PLATE-SERIAL NUMBER (ENGINE)	
			(ON CYLINDER BLOCK)	

A - NOT PART OF THIS GROUP
Y - SEPARATE ILLUSTRATION

<END>

PART NUMBER INDEX

Part Page

0

0T-0244 516
0T-0489 516

1

1A-2457 272
273
1B-3978 208
211
214
217
1B-3980 208
211
214
217
1G-3176 409
1G-3180 409
1G-3410 414
1H-3244 108
164
1H-8128 208
211
214
217
325
326
329
331
1H-9696 208
211
214
217
1J-2176 220
221
1J-6472 361
1K-6985 296
297
1M-4543 180
1M-6119 111
112
1M-6120 111
112
1M-9011 214
1P-0810 147
1P-3702 395
1P-3704 230
1P-3709 405
551
1P-4278 86
1P-4576 365
1P-5767 230
1S-0994 180
1S-1860 345
346
347
1S-3311 367
1S-7251 112
1S-7252 112
1S-9593 262
1T-1068 407
1U-7684 262

2

2B-0941 110
188
2B-2695 442
2H-3922 174
2H-3924 390
2H-3931 361
2H-5549 361
363
2H-6338 361
2H-6489 208
211
214
217
2H-6490 208
211
214
217
2J-0564 365
2J-3506 545
546
547
548
2J-3950 363
367
2J-6274 334
335
2J-6540 70
2K-0703 554
2K-2939 237
2K-4096 365
2K-4507 365
2K-4821 108
2K-4973 524
2K-6413 558
559
2L-8050 170
2L-8058 170
2L-8069 131
133
137
140
142
144
2L-8079 142
143
2M-5795 259
2M-9780 103
233
235
374
379
384
388
405
411
417
419
422
552
2P-1293 381
384
386
388
2S-3440 70
2S-4078 208
211
214
217
334
335
2S-5926 334
335
2W-1145 233
235

3

3B-4607 259
3B-4615 262
264
286
3B-4617 435
3B-4618 513
3B-5319 266
3B-5325 554
558
559
3B-6552 285
3B-8486 379
3B-8489 294
295
374
379
435
535
538
540
542
554
3D-2824 119
151
228
377
379
390
394
395
396
403
405
409
417
419
551
3E-3371 135
3E-3377 133
3E-3383 132
3E-3389 141
511
3E-4051 436
3E-4052 436
3E-4057 436
3E-4058 436
3E-4321 196
374
3E-4333 398
399
3E-5239 452
3E-6328 . . . . . ▶106
▶501
3E-6786 430
3E-6909 285
436
496
3E-8020 194
478
481
483
485
3E-9375 168
3E-9411 535
542
3E-9865 524
3F-9556 108
190
503
504
505
506
3G-0109 556
558
3G-1753 365
3G-1757 365
3G-8932 402
3J-0634 233
235
3J-1907 183
200
224
226
228
230
239
252
253
355
381
384
386
388
391
395
396
405
409
417
419
551
3J-5169 436
3J-7354 226
370
381
384
386
388
396
405
409
411
423
551
3K-0360 22
65
208
211
214
217
228
233
235
299
301
303
305
355
374
391
395
3K-8510 554
3L-6513 190
3P-1210 411
3P-9900 523
3S-2093 110
117
118
135
142
151
152
154
156
175
177

► PRIMARY REFERENCE

PART NUMBER INDEX

Part	Page
	179
	183
	190
	194
	440
	452
	478
	481
	483
	485
	500
	526
	533
3S-6049	112
3S-9182	208
	211
	214
	217
3T-0852	161
3T-3349	112
3T-7184	435
3V-9244	177
3W-2369	334
	335
3W-5159	208
	211
	214
	217
3W-5436	208
	211
	214
	217
3W-5451	208
	211
	214
	217
3W-5928	208
	211
	214
	217

4

4B-4158	535
	538
	540
	542
	553
4D-0012	478
	481
	483
	485
4D-4431	361
	363
4D-7388	65
4D-7735	382
	385
	387
	389
4D-7794	524
4D-9517	436
	496
4F-8711	198
4J-0520	381
	384
	386
	388
4J-3420	365
4J-5267	381
	386
	393
4J-5477	222
	223
	391
4J-9224	361
4K-3004	554
4K-3128	365
4K-9429	521
	522
4L-6454	524
4P-7428	183
4P-7429	110
4P-7581	110
	151
	152
	154
	156
	162
	184
	194
4P-7582	183
4P-8134	86
	110
	118
	179
	180
	184
	198
	385
	387
	389
	452
	501
4S-1962	175
	496
4S-8264	509
4T-0231	402
	432
	535
	538
	540
	542
4V-8577	523

5

5C-2874	507
5C-2890	170
	190
	194
	452
	524
5C-7261	158
	261
	262
	443
	444
	455
	456
	503
	504
	505
	506
5C-8811	533
5C-9553	105
	190
	194
	493
	501
5D-1026	86
	498
5D-9629	436
5E-6102	498
5F-0149	208
	211
	214
	217
5F-0585	208
	211
	214
	217
5F-0589	208
	211
	214
	217
5G-2247	321
	323
5G-3676	180
5J-4773	545
	546
	547
	548
5J-7852	208
5J-7854	217
5J-7865	363
	367
5K-1094	377
5K-6438	436
5K-9090	226
	395
	405
	551
5M-6214	435
5P-0046	395
5P-0370	374
5P-0767	498
5P-0908	201
5P-1076	62
	86
	103
	260
	269
	277
	282
	283
	291
	374
	381
	384
	386
	388
	478
	481
	483
	485
	490
	535
	538
	540
	542
5P-2230	70
5P-2369	63
	552
5P-2370	395
5P-2957	131
5P-4116	65
	161
	261
	262
	264
	491
	496
	551
5P-4295	180
5P-4423	523
5P-4571	131
	142
	523
	526
5P-4961	86
5P-5602	131
5P-5639	474
5P-5991	86
5P-6010	524
5P-7464	110
	183
	374
	379
5P-7465	110
	183
	374
	379
5P-7466	393
5P-7467	393
5P-7468	230
5P-7469	230
5P-7483	286
5P-7701	202
	369
5P-7957	521
	522
5P-8112	393
5P-8245	208
	211
	214
	217
5P-8247	108
	232
5P-8248	545
	546
	547
	548
5P-8439	175
	478
	481
	483
	485
5P-8444	230
5P-8500	1
5P-9147	208
	211
	214
	217
5P-9297	110
	183
	190
5P-9891	299
	301
	303
	305
5S-3676	209
	212
	214
	217
5S-7349	108
5V-0500	177
	291
	293
5W-1250	370
5W-1437	359
5W-9419	62

6

6A-3361	111
6C-9003	478
	481
	483
	485
	491

PART NUMBER INDEX

Part	Page
6D-1641	498
6D-3033	188
6D-3479	200
	405
	552
6D-4244	110
	395
6D-4246	86
6E-0725	414
6E-1607	426
6E-3283	233
	235
6E-4240	409
6E-4350	409
6E-4404	427
6E-6528	423
6F-7045	174
6H-9691	254
	424
6I-0217	10
	27
	34
	48
	56
	67
	81
	96
	101
6I-0233	172
6I-0254	67
6I-0260	34
	56
	59
	75
	96
	102
6I-0289	50
6I-0292	163
6I-0293	50
	163
6I-0363	34
6I-0456	122
6I-0563	81
6I-0572	34
6I-0593	96
6I-0594	59
6I-0631	98
	99
6I-0645	27
6I-0650	27
6I-0654	30
	34
	101
6I-0839	67
6I-0917	75
6I-1090	48
	54
6I-1418	110
	118
	190
6I-1497	50
6I-4200	96
6I-4374	48
6I-4681	34
6I-4709	56
6J-5730	361
6K-8178	228
6K-8987	549
6P-4467	196
6R-7943	411
6S-9277	513
6T-5598	184
	190
6T-6505	140
6T-6506	140
6T-7695	175
6V-0327	208
	211
	214
	217
6V-0401	230
6V-0439	208
	211
	215
	218
6V-0744	146
	147
6V-0852	226
	239
	355
	382
	385
	387
	389
	395
	405
	551
6V-0894	509
6V-1249	374
6V-1250	253
6V-1581	71
6V-1582	71
6V-1792	345
	346
	347
6V-1867	71
6V-1868	71
6V-1889	382
	385
	387
	389
6V-1971	1
6V-2314	509
6V-2317	159
6V-2496	526
6V-2499	437
6V-2689	142
6V-3823	208
	211
	215
	218
6V-3965	226
	239
	355
	396
	405
	409
	551
6V-4316	249
	250
6V-5048	202
	206
	369
6V-5063	105
6V-5201	245
	247
6V-5326	429
6V-5586	426
6V-5632	70
6V-6317	208
	211
	215
	218
6V-6339	423
6V-6609	65
6V-6640	209
	212
	215
	218
6V-6768	329
	331
6V-6782	436
6V-6783	437
6V-7238	22
	65
6V-7357	152
	154
	177
	180
6V-7359	110
	183
	379
6V-7723	416
6V-7744	517
	519
	549
	554
6V-8076	226
	239
	396
6V-8185	524
6V-8189	108
	442
6V-8200	221
6V-8225	164
6V-8237	365
6V-8351	252
6V-8352	427
	428
6V-8367	391
6V-8397	228
	230
	355
	370
	381
	384
	386
	388
	391
	395
	396
	405
	409
	551
	552
6V-8398	355
	374
	377
	391
	394
6V-8625	374
6V-8632	395
6V-8633	394
6V-8634	228
6V-8635	226
	395
6V-8636	381
	384
	386
	388
	391
	395
	405
	409
	551
6V-8637	228
	390
	395
	405
	551
6V-8638	374
6V-8639	374
6V-8640	384
	388
6V-8641	391
6V-8642	379
6V-8653	422
6V-8713	395
6V-8716	228
6V-8724	230
6V-8781	228
6V-8801	442
6V-8978	370
	409
6V-8990	381
	384
	386
	388
6V-8995	394
6V-9002	355
6V-9005	405
	551
6V-9007	377
6V-9008	405
	551
6V-9168	391
	405
	551
6V-9169	377
	394
6V-9170	390
6V-9182	226
	395
6V-9189	159
6V-9197	272
	273
6V-9632	152
	154
	156
	535
6V-9746	226
	228
	377
	381
	384
	386
	388
	390
	395
	396
	405
	551
6V-9829	395
6V-9830	394
6V-9832	395
6V-9836	396
6V-9839	396
6V-9872	381
	384
	386
	388
	405
	551
6V-9873	355
6Y-0309	558
	559
6Y-0454	329
	331
6Y-0473	321
	323
	329
	331
6Y-0859	208
	211
	214
	217

► PRIMARY REFERENCE

PART NUMBER INDEX

Part	Page
6Y-1198	323
6Y-6681	33
7	
7B-3028	299
	301
	303
	305
	333
7C-4616	27
7D-1649	535
	542
7D-7111	105
7D-7233	226
	395
7F-8267	319
	320
7G-4332	329
	331
7H-3171	327
	328
7I-2272	175
	190
7I-2273	417
	419
7J-1309	367
7J-6285	407
7J-8956	208
	211
	214
	217
7J-9108	377
	379
	390
	395
	396
7J-9682	554
7J-9903	363
7K-1089	319
7K-1181	65
	86
	103
	110
	118
	124
	152
	154
	156
	162
	166
	175
	177
	183
	188
	190
	194
	196
	198
	200
	440
	477
	478
	481
	483
	485
	494
	496
	501
7K-9203	296
	297
7K-9204	298
7K-9210	432
7L-0688	523
7M-3361	279
7M-8485	63
	226
	228
	395
	396
	405
	551
7M-9910	478
7N-0900	63
7P-7858	1
	296
	297
7P-9131	103
7R-3029	188
7T-1099	279
7T-4532	451
7T-6799	501
7T-8890	528
7T-9987	112
7W-2632	122
7W-4669	57
7X-0289	442
7X-0510	230
7X-0515	257
	288
	291
	513
7X-0579	118
	190
	474
7X-0587	294
	295
7X-0607	257
7X-0613	262
	478
	481
	483
	485
7X-0618	275
	276
7X-0818	110
	118
	374
7X-2534	152
	154
	156
7X-2543	80
	554
7X-2548	554
7X-2550	183
7X-2552	184
7X-2553	288
	317
	318
	325
	326
7X-2554	33
	257
	288
	293
7X-2555	33
	291
	513
7X-2556	291
7X-2562	432
7X-2563	209
	212
	215
	218
	237
	325
	326
7X-2575	549
7X-2577	266
7X-2906	222
	223
7X-3229	569
	570
7X-3391	381
	384
	386
	388
	405
	551
7X-3392	405
	551
7X-6315	120
	152
7X-7644	266
	553
	569
	570
7X-7729	61
	63
	69
	79
	183
	196
	226
	262
	264
	269
	279
	281
	283
	286
	355
	375
	377
	381
	384
	386
	388
	395
	401
	437
	457
	491
	498
	509
	514
	515
	516
	560
7X-7927	500
	526
7X-7928	500
	526
7X-7958	65
7Y-0725	333
7Y-0735	333
7Y-2854	269
7Y-5219	426
7Y-9099	474
8	
8C-0596	184
8C-3056	184
	190
8C-3205	381
	386
8C-3206	381
	384
	386
	388
8C-3445	55
8C-3446	226
	396
8C-3451	226
	395
8C-3681	65
8C-4365	370
8C-5064	437
8C-5607	152
	154
	156
8C-5608	152
	154
	156
8C-5897	569
	570
8C-5918	111
8C-6854	230
8C-7328	333
8C-8400	377
8C-8451	188
8C-8478	33
8C-8835	391
8D-4771	209
	212
	215
	218
8D-8704	298
8E-1118	494
8E-1339	294
	295
8E-3075	208
	211
	214
	217
8E-7245	545
	547
8E-7840	513
8E-9378	545
	548
8E-9379	545
	546
	547
	548
8F-8513	437
8G-1258	208
	211
	214
	217
8G-1259	208
	211
	214
	217
8G-2943	325
	326
8G-3732	296
	297
8G-4392	209
	212
	215
	218
8G-4565	208
	211
	214
	217
8G-4568	208
	211
	214
	217
8G-4569	209
	212

PART NUMBER INDEX

Part	Page
	215
	218
8G-4945	334
	335
8G-5258	103
8G-5747	432
8G-5799	325
	326
8H-0902	208
	211
	214
	217
8H-5303	174
8H-5306	174
8J-0412	411
8J-1434	557
	559
8J-2413	422
8J-8197	196
	375
8K-1433	474
8L-2786	35
8L-5008	375
8L-8413	111
	112
	463
	465
	466
	467
	523
8M-2770	375
8M-2773	496
8M-3494	553
8N-4409	491
8P-0612	259
8P-6188	327
	328
8P-8629	325
	326
8R-8847	62
	272
	273
8T-0267	110
8T-0269	15
8T-0325	103
8T-0328	103
	175
	190
	417
	419
	509
8T-0333	435
8T-0338	233
	235
	253
8T-0348	222
	223
8T-0389	110
8T-0404	379
	396
8T-1158	359
8T-1482	549
8T-1887	110
	190
8T-1888	110
	190
8T-1889	110
	180
8T-1890	110
	180
8T-2393	203
8T-2503	411
8T-2658	509
8T-2922	424
8T-3490	63
	69
	111
	183
	188
	257
	269
	276
	279
	377
	436
	471
	536
8T-3597	288
	309
	478
	485
8T-3612	188
	279
	436
8T-3957	201
	221
	240
8T-3980	249
	250
8T-4121	53
	62
	63
	65
	69
	71
	76
	77
	79
	86
	110
	151
	152
	154
	156
	175
	180
	183
	188
	190
	196
	198
	200
	209
	212
	215
	218
	226
	230
	257
	261
	275
	276
	279
	285
	286
	334
	335
	365
	375
	377
	379
	381
	384
	386
	388
	393
	395
	400
	405
	437
	471
	496
	498
	517
	519
	526
	535
	538
	540
	542
	551
8T-4123	33
	209
	212
	215
	218
	237
	325
	326
	432
	535
	538
	540
	542
8T-4132	257
8T-4133	110
	457
8T-4136	62
	63
	69
	71
	77
	79
	86
	110
	180
	183
	188
	190
	196
	209
	212
	215
	218
	257
	269
	279
	283
	286
	375
	377
	381
	384
	386
	388
	401
	437
	471
	496
	498
	535
	538
	540
	542
8T-4137	110
	151
	152
	154
	156
	175
	180
	183
	190
	196
	198
	200
	226
	257
	262
	264
	377
	381
	384
	386
	388
	395
	400
	405
	437
	472
	498
	514
	515
	535
	538
	540
	542
	551
	560
8T-4138	105
	110
	175
	194
	452
	455
	456
	491
8T-4139	63
	103
	110
	183
	196
	282
	283
	375
	391
	400
	432
	478
	481
	483
	485
	490
	498
	554
8T-4140	103
	209
	212
	215
	218
	232
	299
	301
	303
	305
	310
	311
	312
	313
	314
	315
	316
8T-4141	239
8T-4149	228
	396
	405

► PRIMARY REFERENCE

PART NUMBER INDEX

Part	Page
	551
8T-4154	158
8T-4158	491
8T-4167	535
	538
	540
	542
	549
8T-4171	493
8T-4172	63
	379
	498
8T-4175	257
8T-4176	63
	209
	212
	215
	218
	272
	273
8T-4178	80
	498
	517
	519
8T-4182	69
	79
	86
	334
	335
	395
8T-4183	62
	180
	196
	198
	275
	276
	277
	299
	301
	303
	305
	375
	405
	478
	481
	483
	485
	535
	538
	540
	542
	551
8T-4184	86
	309
	490
	535
	542
	551
8T-4185	65
	180
	375
	379
	437
8T-4186	110
	180
	281
	365
	393
	498
8T-4189	183
	279
	437
	440
	491
	496
	498
	551
8T-4190	294
	295
	491
8T-4191	110
	175
	183
	190
	375
8T-4192	198
	269
	303
	305
	317
	318
	490
8T-4193	209
	212
	215
	218
	291
	325
	326
	432
	535
	542
8T-4194	103
	180
	230
	272
	273
	283
	395
8T-4195	61
	62
	71
	86
	110
	151
	180
	183
	261
	275
	276
	355
	375
	381
	384
	386
	388
	401
	437
	491
8T-4196	53
	76
	110
	226
	381
	384
	386
	388
	395
	496
8T-4197	443
	444
8T-4198	183
	549
8T-4200	65
	151
	177
	183
	452
8T-4205	108
	164
	194
	452
8T-4222	269
	437
	472
8T-4223	63
	110
	180
	183
	190
	196
	198
	230
	272
	273
	299
	301
	303
	305
	309
	317
	318
	375
	391
	400
	402
	432
	498
	535
	538
	540
	542
	554
8T-4224	53
	108
	110
	117
	118
	151
	158
	159
	177
	180
	183
	188
	190
	279
	375
	437
	440
	443
	444
	452
	455
	456
	474
	478
	481
	483
	485
	498
	524
8T-4244	549
	554
8T-4648	554
8T-4778	310
	311
	312
8T-4779	71
	513
8T-4896	442
	524
8T-4908	53
	117
	262
	264
	437
	452
	517
	519
8T-4910	110
	183
	269
	277
	317
	318
8T-4956	272
	273
	381
	384
	386
	388
	402
	432
	535
	538
	540
	542
8T-4971	188
	468
	469
8T-4983	63
	395
8T-4984	65
	405
	551
8T-4986	71
8T-4994	375
8T-5005	86
	401
8T-5041	291
	549
8T-5400	478
	481
	483
	485
	533
8T-5412	309
8T-5436	63
8T-5460	535
	538
	540
	542
8T-5668	365
8T-5878	538
	540
	549
8T-6378	208
	211
	214
	217
8T-6379	208
	211
	214
	217
8T-6381	33
8T-6382	310
8T-6404	221
8T-6408	400
8T-6466	230
	393
	498
8T-6685	381
	384
	386
	388

PART NUMBER INDEX

Part	Page
8T-6703	228
	400
8T-6868	260
8T-6869	183
8T-6870	498
8T-6876	391
8T-6912	161
8T-7338	177
	280
	294
	295
8T-7371	535
	538
	540
	542
8T-7524	417
	419
8T-7525	411
8T-7547	524
8T-7811	233
	235
	252
8T-7930	554
8T-7934	80
	110
	183
	226
	381
	384
	386
	388
	395
	401
8T-7971	209
	212
	215
	218
8T-8442	411
	423
8T-8549	272
	273
8T-8729	106
	111
	133
	134
	139
	458
	459
	461
	462
	463
	465
	466
	467
	496
	501
	504
	505
	506
	509
	511
	523
8T-8730	134
8T-8737	110
	124
	131
	133
	134
	135
	136
	137
	139
	140
	141
	142
	144
	145
	146
	147
	148
	150
	152
	154
	190
	452
	458
	461
	462
	463
	465
	466
	467
	477
	501
	511
8T-8827	190
8T-9023	377
8T-9080	333
8T-9371	524
8T-9403	395
8T-9471	188
	190
8T-9599	435
8T-9655	190
8T-9756	111
8T-9757	111
8X-5489	110
	190
8Y-6388	474

9

Part	Page
9B-0453	191
9C-6809	540
9D-8508	478
	481
	483
	485
	500
9G-0002	111
9G-0003	111
9G-0005	111
9G-3695	509
9J-4782	374
	379
	435
	535
	538
	540
	542
9J-6586	559
9J-8913	558
9L-6770	108
9M-1328	296
	297
9M-1974	442
9M-2904	393
9M-3835	259
9M-3838	259
9M-5732	513
9M-7958	53
9M-7959	70
9M-8406	86
	437
	496
9M-9162	377
9N-4449	549
	554
9N-4450	549
	554
9P-6790	325
	326
9P-7121	105
9R-2216	184
9R-2672	180
	540
9R-3761	540
9S-4181	202
	369
9S-4182	202
	369
	370
9S-4183	105
	119
	403
9S-4185	35
	209
	212
	215
	218
	299
	301
	303
	305
9S-4191	202
	369
	417
	419
9S-8001	422
9S-8002	206
	369
	370
	409
	411
	423
9S-8004	224
	252
	253
	409
	422
9S-8005	233
	235
	422
9S-8006	411
9S-8008	233
	235
	409
9S-8010	334
	335
9T-2714	365
9T-3726	409
9T-3853	253
9T-3928	409
9T-4367	253
9U-8263	474
9U-8746	494
9V-9116	188
9W-0099	554
9W-0844	141
	452
9W-0852	141
	440
	452
9W-1446	133
9W-2109	411
9W-2110	411
9W-2146	319
	320
9W-5224	327
	328
9W-6582	33
9W-6584	33
9W-9930	33
9X-0194	526
9X-1046	175
9X-1054	133
	452
9X-1055	133
9X-1056	133
	452
9X-1813	111
9X-2027	381
	384
	386
	388
9X-2038	152
	154
	156
	194
	455
	456
	472
	479
	481
	483
	485
	501
9X-2040	474
	491
9X-2042	124
	125
	474
	477
	501
9X-2043	472
	488
	507
	508
9X-2044	493
	501
9X-2045	175
	194
	437
	455
	456
	472
	474
	478
	481
	483
	485
9X-2046	474
9X-2085	391
9X-2133	65
9X-2134	405
	552
9X-2297	230
9X-2480	152
	154
	156
9X-2537	422
9X-3401	103
	131
	132
	133
	135
	136
	137
	139
	140
	141
	142
	143
	144

► PRIMARY REFERENCE

PART NUMBER INDEX

Part	Page
	145
	146
	147
	149
	168
	526
9X-3402	131
	132
	133
	135
	136
	137
	138
	139
	140
	141
	142
	143
	144
	145
	146
	147
	148
	149
	150
9X-3404	110
9X-3959	57
9X-4244	158
	159
9X-6165	152
	154
	156
	194
	493
9X-6340	569
	570
9X-7264	365
9X-7301	363
	367
9X-7373	179
9X-7378	496
9X-7380	437
9X-7381	437
	440
	496
9X-7382	437
	440
	496
9X-7408	222
	223
9X-7680	411
9X-8250	86
	196
	198
9X-8256	86
	105
	110
	152
	154
	175
	177
	180
	188
	190
	196
	468
	469
	491
	507
	508
9X-8257	33
	184
	209
	212
	215
	218
	294
	295
	299
	301
	303
	305
	310
	311
	312
	317
	318
	325
	326
	432
9X-8268	329
	331
	332
9X-8399	472

0

Part	Page
030-1712	184
031-0249	478
	523
033-6031	105
033-6033	207
	369
033-6034	182
033-6039	251
033-6043	423
061-7540	233
	235
	252
067-6043	13
067-6070	170
067-6135	8
	11
067-6179	27
067-6823	13
	57
070-0195	78
087-4772	370
	409
089-8249	535
	538
	540
	542
090-8865	291
091-0081	53
091-7124	498
091-9035	65
	498
095-0670	220
	240
095-0919	398
	399
095-0929	244
095-0939	398
	399
095-1671	206
	207
	369
096-1349	194
096-6166	509
097-7234	131
099-3649	188
099-6418	102
	262
	264
	286
099-6976	361
099-7241	405
	551

1

Part	Page
100-3751	27
	56
100-4458	96
100-4830	81
100-4841	29
100-5041	452
101-0003	523
101-3129	196
	436
101-3895	10
	27
101-3917	59
101-4639	103
	417
	419
101-7178	450
101-7547	59
102-8801	147
102-8802	103
	106
	110
	111
	124
	133
	135
	137
	139
	142
	143
	144
	145
	148
	190
	440
	451
	477
	496
	523
102-8803	135
	139
	142
	168
102-8804	131
	133
	136
	139
	144
	147
	149
	501
	509
102-8805	131
	132
	134
	144
	452
	463
	465
102-8806	131
	137
	139
	141
	142
	144
103-5705	10
104-2091	474
104-4817	432
	535
	538
	540
	542
104-6692	190
105-2740	7
	75
105-3481	180
105-3486	240
	422
105-7781	110
106-1242	275
106-1604	347
106-1607	345
106-1612	347
106-1613	345
106-1618	321
	323
106-1625	321
	323
106-1626	321
	323
106-1627	321
	323
106-1628	321
	323
106-1629	321
	323
106-1630	321
	323
106-1642	345
	346
	347
106-8715	377
107-0719	345
	346
	347
107-0803	133
107-2348	73
107-3117	252
107-6032	474
108-1781	240
108-3565	414
108-4311	524
109-0382	294
	295
109-1145	65
109-1393	422
110-2028	190
110-2976	▶321
	▶345
	▶346
110-2977	336
	345
110-6349	381
	384
	386
	388
110-6968	311
	312
110-7753	417
	419
111-0859	23
	31
	101
111-3781	509
111-6792	131
111-6795	131
111-6816	131
112-4629	409
	424
112-4645	427
112-4647	427

PART NUMBER INDEX

Part	Page
112-4657	414
112-7704	170
113-0216	252
113-4630	149
113-8129	67
113-8490	164
113-8491	164
113-8492	164
114-0359	558
	559
114-6099	535
	542
115-6433	400
116-8688	62
117-7238	413
	414
117-7239	413
	414
117-7240	414
117-7241	414
117-7245	413
	414
117-7246	413
	414
117-7247	413
	414
117-7248	413
	414
117-7249	413
	414
117-7250	413
	414
117-7251	414
117-7273	359
117-7279	370
117-7280	370
117-7282	370
117-8131	472
118-4651	399
118-7313	299
	301
	303
	305
119-3662	131
	133
	135
	142
119-5434	363
	367
119-6105	110
120-4394	370
	411
121-0530	405
	551
121-2844	139
121-9870	474
122-3151	407
122-9068	414
122-9070	413
	414
122-9071	413
	414
122-9363	426
122-9718	409
123-2899	30
	58
123-2933	51
123-3827	493
123-4750	391
123-4954	233
	235
123-5787	222
	223
123-7575	370
	409
123-7583	370
	409
124-1479	110
	183
124-3536	36
	38
124-3815	7
	27
	48
	81
	96
	167
	182
124-5234	432
124-5741	432
124-6998	111
124-8248	329
	331
124-9855	242
	244
124-9856	242
	244
124-9857	242
	244
124-9858	242
	244
124-9859	242
	244
124-9860	242
	244
124-9861	242
124-9882	222
	223
124-9895	252
124-9896	252
124-9898	252
124-9899	252
124-9900	252
124-9901	252
124-9904	252
124-9913	233
	235
124-9914	233
	235
125-1379	233
	235
125-2205	222
	223
125-4572	252
125-7037	103
	277
	490
125-7874	131
	132
	133
	135
	136
	137
	138
	140
	141
	142
	144
	145
	146
	147
	148
	149
125-7875	131
	133
	135
	136
	140
	141
	142
	143
	144
	148
	452
125-7876	184
125-8175	478
	481
	483
	485
125-9134	414
126-1595	472
126-1767	131
	132
	133
	135
	136
	139
	140
	142
	144
	145
	146
	147
	149
	168
	451
	526
126-1768	131
	132
	133
	135
	137
	138
	139
	140
	141
	142
	144
	145
	146
	147
	148
	149
126-1774	135
	142
126-6872	355
126-8842	413
	414
126-8899	413
	414
126-8928	266
126-9093	86
	88
126-9587	414
127-2170	474
127-3361	450
127-5447	381
	384
	386
	388
129-3180	291
130-1977	393
130-5300	175
	183
130-9192	393
131-3540	279
	478
	481
	483
	485
131-3987	455
	456
132-3056	417
	419
132-5789	110
	182
	183
	190
	196
	200
132-8487	188
133-1011	27
133-3234	478
	481
	483
	485
133-6934	180
	393
133-7810	110
133-9469	73
134-2540	134
	136
	139
	142
	144
	146
	150
134-3987	498
134-7258	569
	570
135-2370	175
135-5009	145
	147
135-8070	256
135-9941	396
136-3191	533
136-8308	558
	559
137-3301	329
	331
	332
137-8165	512
138-1645	509
138-7500	381
	384
	386
	388
138-8454	454
140-0176	363
	367
140-9921	479
	481
	483
	485
141-3983	86
141-6595	531
	532
142-1281	293
142-2709	266
	403
142-8929	419
142-8937	400
143-2236	436
	526
143-4792	488
	507
	508
143-8916	361
144-0195	478
	481
	483
	485
	500
	526
144-0331	458

► PRIMARY REFERENCE

PART NUMBER INDEX

Part	Page
	459
	461
	462
	463
	466
	467
144-2179	472
144-5287	361
144-5478	535
	542
145-0326	523
145-3405	509
145-3810	359
145-3811	359
145-3812	359
145-3813	359
145-4911	25
146-2282	269
146-6433	533
147-1445	142
147-1446	142
147-1685	69
	79
148-2714	509
148-3533	319
148-8315	379
148-8318	228
148-8322	384
	388
148-8325	391
148-8326	381
	384
	386
	388
	405
	551
148-8327	228
	390
	395
	405
	551
148-8328	394
148-8335	226
	395
148-8336	381
	384
	386
	388
	391
	395
	405
	551
148-8339	228
148-8340	374
148-8341	395
148-8342	395
148-8345	374
148-8347	377
148-8354	355
148-8355	405
	551
148-8357	405
	551
148-8360	226
	395
148-8364	374
148-8365	391
148-8378	230
148-8382	379
	396
148-8407	417
	419
148-8408	403
148-8433	396
148-8435	228
148-8449	396
148-8457	394
149-6371	496
150-4043	355
150-4049	228
	396
	405
	551
150-5866	408
150-6257	509
151-9274	460
152-1811	370
	426
152-8070	321
	323
153-1276	78
154-7951	474
154-8079	175
155-0576	118
	122
155-2255	134
	139
	142
155-2256	142
155-2260	134
	135
	136
	137
	139
	142
	144
	145
	146
	150
155-2265	131
	137
	142
	152
	154
155-2270	132
	133
	135
	137
	139
	140
	141
	142
	144
	145
	146
	148
	452
155-2271	131
	137
	138
	140
	141
	144
	146
	147
	150
155-2274	131
	139
	141
	142
	144
	145
155-5487	500
156-4130	76
156-6175	194
158-7864	569
	570
159-3727	103
159-4700	358
159-8049	111
	112
159-8050	111
	112
159-9322	133
	135
	142
160-2669	▶357
	▶391
160-3518	511
160-6631	319
	320
160-7689	133
	135
	142
160-8124	110
160-8499	359
160-9192	103
161-6879	358
161-6880	358
161-7614	201
	240
161-9820	31
	450
163-1135	523
164-1234	523
164-5567	226
	239
	355
	396
	405
	551
164-5590	226
	396
164-5624	391
164-7468	96
	107
164-7556	158
	159
164-8474	474
164-9869	230
165-2273	65
165-4351	183
165-4933	381
	384
	386
	388
167-2185	363
	367
167-2242	361
167-2297	361
167-2301	363
	367
167-3583	183
167-3692	131
	133
	142
167-3693	135
	137
	145
	477
167-6805	409
167-7713	429
167-7715	427
167-8987	141
168-1968	355
168-2197	411
168-2198	411
168-2203	411
168-3378	416
168-3379	416
168-3381	416
168-3382	416
168-3384	416
168-3385	416
168-3504	411
168-7319	411
169-0705	142
	198
169-2876	190
169-7380	523
170-8714	208
	211
	214
	217
171-2419	200
	384
	388
171-5883	329
	331
172-8037	511
172-8039	511
173-2052	521
	522
173-3323	396
173-7035	521
	522
173-9779	365
174-0503	134
174-4590	569
	570
174-5414	78
174-9994	411
175-4291	158
	159
175-4292	158
175-7141	101
176-5166	396
176-9237	86
	498
177-2215	111
	183
	194
	228
	382
	385
	387
	389
	394
	396
	436
	551
177-6854	370
177-6949	▶359
	▶409
177-7122	370
	427
177-7747	427
177-7783	359
177-9755	472
178-1149	414
178-2593	261
178-3620	355
178-7539	190
178-7907	521
	522
179-0126	321
	323
179-0464	407
179-6707	208
	211
	214
	217
179-7262	188
180-3153	491
180-3154	491
180-3998	381

▶ PRIMARY REFERENCE

PART NUMBER INDEX

Part	Page
	384
	386
	388
180-5789	513
180-6213	411
180-9419	▶358
180-9933	396
183-1343	172
185-0884	13
185-1860	131
	138
185-1861	142
185-2271	377
185-2638	108
185-2639	108
185-2644	108
185-2647	108
185-2650	108
185-2654	108
185-2655	108
185-2658	108
186-3735	503
186-5107	523
187-6156	561
187-7331	257
187-8001	409
188-8846	454
	488
	507
	508
189-3158	140
	148
190-6507	411
190-8609	334
	335
191-0885	▶242
	▶244
191-1393	242
191-1394	242
191-1395	242
191-1396	242
191-1397	242
191-1398	242
191-1956	244
191-3587	509
191-9256	436
192-3282	370
	407
192-4744	327
	328
192-7470	411
192-7795	523
192-7799	523
192-7805	523
192-7810	523
192-7820	523
192-7848	523
192-9207	88
193-3074	549
	554
193-3075	549
	554
194-1983	414
194-5171	533
194-5226	134
	138
	139
194-5227	134
	138
	139
195-0936	491
195-0937	491
195-0938	491
195-9245	10
196-4253	424
196-9445	424
197-2477	374
197-2851	416
197-3800	145
197-9674	249
	250
198-4767	317
	318
198-4775	188
198-4776	183
198-4777	76
	86
	111
	151
	183
	230
	496
198-4778	180
	196
	198
	272
	273
	277
	283
	299
	301
	303
	305
	309
198-4780	71
	280
198-4781	237
198-5351	411
198-7655	63
198-9706	507
	508
199-3676	224
199-7854	190
199-7891	108
199-8436	108
199-9252	167
199-9267	167
199-9751	18
	21
	167

2

Part	Page
200-5728	511
200-6345	53
	65
	70
	228
	355
	377
	382
	385
	387
	389
	391
	396
	405
	498
	551
201-2638	474
201-9820	531
	532
202-5293	262
	264
202-5397	131
	142
202-6535	254
	424
202-6611	159
202-6614	158
202-7704	409
203-3847	53
	63
	111
	200
	226
	381
	384
	386
	388
	396
	551
203-9007	142
204-1297	131
	142
204-2281	53
	65
	70
	228
	355
	377
	382
	385
	387
	389
	391
	395
	405
	498
	551
204-2799	411
204-6365	299
	301
	303
	305
	310
	311
	312
	313
	314
	315
	316
204-8000	53
205-0626	108
205-3692	405
	552
205-6140	311
	312
205-7048	455
206-0451	374
206-0452	374
206-1345	138
206-1826	102
206-2423	111
	118
	183
	190
	200
	500
	526
206-4881	409
206-5823	503
	504
206-7255	5
	203
206-9295	207
	369
208-6727	393
208-8469	170
	474
208-9287	96
209-3565	424
209-4482	528
209-4573	71
209-4582	71
209-4589	71
209-9219	14
210-8958	146
211-0052	131
	133
	143
211-0238	285
211-0264	498
211-0686	111
211-5358	523
	524
212-4483	414
212-6679	▶428
212-6934	71
212-7779	524
213-0139	139
213-5007	237
213-5167	523
213-5168	523
213-5169	523
213-5170	524
213-8704	147
213-8705	146
214-3509	111
	183
214-4208	131
	143
214-7568	202
	226
	239
	355
	369
	396
	405
	551
215-3717	111
215-3759	440
215-7697	427
215-8008	424
215-8010	424
215-8011	254
	424
215-8012	424
215-8014	424
215-8015	424
216-0143	262
	264
	286
216-2211	69
	79
216-4551	254
	424
216-4552	254
	424
216-4553	254
	424
216-4554	254
	424
216-4555	254
	424
216-4983	71
216-9633	55
217-0099	122
217-5449	379
217-5807	291
217-6359	327
	328
	329
	331

PART NUMBER INDEX

Part	Page
217-9039	138
	170
	182
218-0054	63
218-0651	501
218-2656	500
218-4993	329
	331
	332
218-7119	478
	481
	483
	485
218-7252	523
219-0305	563
219-7738	528
220-0229	111
220-8355	458
	459
	461
	462
	463
	466
	467
221-2718	286
221-3187	307
	308
221-3197	307
	308
221-3525	111
221-8310	112
223-3279	432
	535
	538
	540
	542
223-9818	483
	485
	530
225-0312	562
225-3281	365
225-6524	48
225-7738	67
225-7944	56
225-8019	67
225-8287	27
225-8524	73
225-8526	73
225-8858	13
226-4872	531
	532
226-7192	432
227-0136	222
	223
227-5904	411
227-7391	562
228-2616	562
228-3323	136
228-4947	167
228-6089	124
	125
	198
	381
	386
	468
228-7089	51
228-7100	96
228-7103	422
228-9655	108
228-9656	108
228-9657	108
229-1494	517
230-4009	137
	143
	145
	148
230-4010	140
	143
230-4011	132
	133
	138
	139
	140
	147
230-4012	145
	171
230-4013	132
	146
	148
230-4014	146
230-4872	365
230-5008	131
	133
	137
	143
	146
	148
	149
230-5009	137
	139
	140
	147
	149
	503
	504
	505
	506
	526
230-5010	135
	145
	147
230-5011	135
	146
230-8094	15
	34
231-1455	59
231-2295	137
	148
231-2300	143
232-1322	14
	18
	21
232-1693	182
232-3657	27
232-3666	27
232-3751	56
232-4810	535
	542
232-6313	164
232-7449	14
232-7596	13
232-7597	13
232-7599	13
233-0617	361
233-0618	363
	367
233-9808	254
	424
234-4747	▶310
234-9525	111
235-2404	411
235-2529	324
235-2533	351
235-2534	350
235-2554	352
235-4123	131
	142
236-4623	384
	388
236-5511	34
237-0166	142
237-0227	139
237-0228	139
237-4860	361
238-0251	517
	519
238-0472	348
	349
	350
	351
	352
	353
238-0473	348
	349
	350
	351
	352
	353
238-5080	86
	87
238-5081	422
238-5082	422
238-8245	138
238-8247	138
238-8288	75
238-8292	74
239-1246	208
	211
239-1247	214
	217
239-1248	208
	211
239-1249	214
	217
239-1251	208
	214
239-4481	208
	211
	214
	217
239-8240	333
240-1467	535
	538
	540
	542
240-1469	553
240-1471	553
	554
240-1472	554
240-1473	554
240-1476	▶549
	▶553
240-1477	554
240-1478	554
240-1486	549
240-1487	549
240-1490	549
	554
240-1491	549
	554
240-1494	549
240-1495	549
240-1506	▶402
	▶431
240-1553	432
240-7193	135
	143
240-8666	533
241-0624	374
241-4169	374
241-6157	96
241-6215	226
	239
	396
241-8494	327
	328
241-8834	501
242-0262	251
242-1555	164
242-2542	365
242-5054	562
243-2147	33
243-2158	77
243-5321	319
	320
243-5821	63
243-6639	232
	233
243-6640	232
	235
244-7094	491
245-1042	139
245-1043	138
245-1044	138
	139
245-1045	139
245-1048	138
	139
245-1168	432
245-7434	131
	143
246-2641	1
246-4311	175
246-4361	93
246-5726	348
246-5727	349
246-5804	407
246-8384	▶266
246-8432	208
	211
	214
	217
246-9371	111
247-1385	65
247-2574	208
	211
	214
	217
247-4928	93
	95
247-9730	70
248-2841	164
248-3946	294
	295
248-3959	317
	318
248-5327	319
	320
248-6551	266
248-6566	266
249-8600	396
	409
249-9076	500
	526
250-1699	▶288
	▶289
250-3988	321
	323
251-1191	175
251-1194	175
251-1752	▶413
	▶414
251-1803	414
251-2360	523
251-2362	523
251-3227	65

▶ PRIMARY REFERENCE

PART NUMBER INDEX

Part	Page
251-4162	117
251-5848	175
251-8248	179
251-8512	319
	320
252-0235	203
252-0552	288
252-0553	288
252-0706	242
	244
252-6803	513
252-8073	240
	256
253-7853	257
253-8110	143
253-8111	143
253-8113	143
254-0227	348
	349
	350
	351
	352
	353
254-8155	▶158
	▶160
255-4182	350
255-4184	348
255-4233	474
255-5153	436
256-1028	111
256-3455	▶78
	▶79
256-4965	175
256-6454	111
	167
	417
	419
256-7926	69
258-0085	254
258-3727	455
	456
258-4170	143
258-4172	139
258-4174	143
258-4176	140
258-4178	190
258-4819	188
259-1286	474
260-0634	70
260-1556	151
260-1569	151
260-6728	458
	459
	461
	462
	463
	466
	467
260-6781	405
	411
	552
260-7653	562
261-2070	310
261-6728	381
	384
	386
	388
261-6916	180
261-7504	62
262-1997	478
	483
262-1998	481
	485
262-9151	143
263-2135	533
263-3823	505
	506
264-3517	86
264-3518	86
264-3519	86
264-3520	86
264-3617	174
264-7029	138
264-8899	531
264-8900	531
	532
265-5644	417
	419
265-9596	286
266-1467	▶168
	▶509
266-3701	533
266-7634	▶458
	▶463
266-7765	436
266-8524	124
266-8525	124
266-8944	190
266-9005	125
266-9007	124
266-9306	481
	485
266-9307	478
	483
266-9384	361
266-9390	363
	367
267-6197	111
267-6417	86
267-7207	138
	139
267-7208	138
267-8715	528
267-9572	138
	139
267-9928	286
269-3236	363
269-3237	363
	367
269-3945	361
269-4215	402
269-4676	251
270-2679	143
270-7882	563
270-9433	86
271-2360	408
271-2773	472
271-2811	136
271-5604	143
271-6033	310
271-7312	436
271-9408	488
	507
	508
274-1931	43
274-1935	24
274-4990	138
275-0572	281
275-2428	170
275-2431	170
275-4910	86
	498
275-6706	440
275-6710	436
	474
275-7803	516
275-9891	51
275-9897	34
276-3990	286
276-4480	2
	556
276-4483	2
	557
276-4485	432
276-5600	13
276-5602	13
276-5603	14
	167
276-7391	11
276-7394	11
276-7476	36
	40
276-7478	9
	38
276-8116	17
276-8117	17
276-8123	46
	47
276-8133	46
	47
276-8134	18
276-9200	44
276-9201	44
276-9206	44
276-9207	44
276-9230	44
277-0588	25
277-1873	183
	440
277-1974	48
277-1975	48
277-2238	353
277-2500	59
277-2502	59
277-2503	59
277-2525	56
277-2526	56
277-2537	56
277-2923	67
277-2925	67
277-3012	27
277-3013	27
277-4223	42
277-4267	230
277-4302	18
	21
277-4409	170
277-4490	32
277-4993	91
277-5065	182
277-5307	44
277-5995	111
277-6551	409
	414
277-6553	▶370
	▶409
277-6557	▶407
	▶409
277-6624	407
277-6631	424
277-6679	370
	429
277-8103	517
277-8378	333
277-9938	81
	94
277-9940	81
278-0017	81
278-0461	469
278-3242	67
278-4956	407
278-4957	407
278-4977	244
278-5111	44
278-5112	44
278-5113	44
278-5125	8
278-5170	89
278-5203	122
278-8934	233
	235
	244
278-8935	▶222
	▶233
278-8937	233
	235
	252
279-0543	▶223
	▶235
279-0850	440
279-0942	491
279-2486	411
	416
279-2488	411
279-2491	416
279-2619	411
279-6530	381
	384
	386
	388
279-9254	25
279-9651	30
280-1384	34
280-1911	▶44
	▶46
280-1912	44
280-1913	44
280-1914	44
280-2424	76
280-2709	164
280-3090	65
280-6070	474
280-7618	283
	490
280-7870	423
281-0547	562
281-3136	466
	467
281-4002	478
	481
	483
	485
281-8744	58
281-8804	138
282-0918	411
282-0919	411
282-1825	406
	552
283-4662	26
283-8106	139
	143
283-8301	32
283-8302	32
283-8650	399
284-3660	124
284-8208	463
	465
285-0151	463
	465
	466
	467
285-5240	411
	423
285-7415	436
286-2890	91
	94

▶ PRIMARY REFERENCE

PART NUMBER INDEX

Part	Page
	95
286-7851	74
286-8868	531
	532
287-0427	65
287-0548	478
	481
	483
	485
	491
287-0553	452
287-2169	509
287-8597	26
288-0662	562
288-3657	436
288-6148	260
288-6968	275
	276
288-6974	26
288-6975	26
289-1072	175
289-2937	365
289-2948	365
289-5150	149
289-5151	133
290-5626	70
290-5638	76
291-4110	▶279
	▶289
291-7972	523
291-7980	▶442
	▶523
291-7981	442
291-7984	442
291-7986	442
291-7989	442
291-7990	442
	443
	444
291-7992	442
291-7993	523
291-8004	▶443
	▶523
291-8005	443
291-8008	443
	444
291-8010	523
291-8011	▶444
	▶523
291-8012	444
291-8014	523
291-8019	523
291-8026	523
291-8027	523
291-8028	523
291-8030	442
291-8031	523
291-8032	523
291-9310	442
292-2893	170
292-2896	138
292-3462	75
292-4189	118
	126
293-3746	279
293-6468	562
293-8350	423
294-2318	112
294-5076	86
294-5374	63
	381
	384
	386
	388
295-4037	532
295-4670	94
	95
295-6661	18
	21
295-8610	56
	59
295-8613	59
295-8615	59
296-2063	62
296-2649	190
297-1699	547
297-3218	183
299-2214	458
	459
	461
	462
	463
	466
	467
299-5511	46
	47
299-9092	112

3

Part	Page
300-0168	546
301-2722	86
301-7890	222
	223
	251
304-4243	481
	485
	503
304-4244	478
	483
	504
304-4406	503
	504
304-5062	30
305-9192	478
	481
	483
	485
	533
306-0166	111
	174
306-2337	48
306-6687	183
307-0047	152
	154
307-5172	63
307-6202	569
	570
308-3554	524
308-3555	524
308-8161	184
	191
308-8642	524
309-0572	71
309-1905	381
	384
	386
	388
309-6678	46
	47
310-0674	131
	133
	143
310-1945	375
310-2184	363
	367
310-2186	363
	367
310-2189	365
311-6184	184
311-8802	63
312-8811	198
313-2794	442
313-9790	432
314-3025	474
314-4018	451
314-5274	524
314-5275	524
315-0180	112
316-0487	498
316-5999	253
	254
	424
316-9351	138
317-5316	478
	481
	483
	485
317-5482	36
	38
317-6214	40
318-2486	348
	349
	350
	351
	352
	353
318-2936	498
319-2305	281
319-6190	390
319-6191	390
319-8426	8
320-1291	450
	451
320-3060	167
320-3062	167
320-3669	25
320-8448	478
	481
	483
	485
320-8919	320
321-5236	528
322-0819	491
322-4474	440
322-9703	417
	419
323-9312	9
	38
324-0444	27
325-0002	538
	545
326-4516	401
326-7289	10
326-9053	568
327-0282	496
327-0283	496
327-6919	491
328-0181	111
328-3767	272
	273
328-4847	535
	542
329-3356	190
	196
	374
329-3734	145
329-3796	29
330-0003	452
330-1725	450
330-3860	517
	519
330-5023	▶505
	▶533
330-9723	96
331-0290	▶9
	▶36
	▶38
331-1722	452
331-4222	136
331-6835	13
332-7865	149
335-5894	409
	424
335-7022	61
335-8611	73
336-6672	478
	481
	483
	485
336-6687	179
336-6741	131
	142
337-6324	107
339-8780	11
339-8938	184
	478
	481
	483
	485
339-9637	46
	47
340-5800	414
340-7161	175
341-9851	445
	455
341-9852	445
	456
342-0153	455
	456
342-6502	43
342-6510	43
342-8166	424
342-8850	540
	548
342-8851	546
	548
342-8909	432
343-2388	355
343-3527	463
	465
343-3552	529
343-3555	478
343-3556	481
343-3564	491
343-3570	491
343-3571	478
	483
343-3572	481
	485
343-3585	478
	483
343-3586	481
	485
343-3587	474
343-3588	474
343-3589	478
	483
343-3590	481
	485
343-3593	507
343-3676	▶463
	▶468
343-3677	463

PART NUMBER INDEX

Part	Page
	465
343-9780	222
	223
344-1678	143
344-1682	143
344-1683	143
344-1684	143
344-1685	143
344-1686	143
344-1687	143
344-1690	143
344-5673	111
	175
	177
	194
	196
	468
	469
344-5674	111
	190
	474
	478
	481
	483
	485
	491
344-5675	53
	62
	63
	69
	71
	76
	79
	86
	111
	183
	190
	196
	198
	200
	226
	230
	285
	286
	374
	379
	381
	384
	386
	388
	396
	400
	437
	498
	509
	526
	552
344-7391	200
346-0006	101
346-0007	101
346-0099	4
	56
346-0220	4
	49
346-0407	27
346-0408	27
346-1510	4
	32
346-2900	294
	295
346-2911	4
	57
346-2999	450
346-3811	491
346-4360	524
346-4709	46
346-4995	422
346-6584	491
346-8219	568
346-9593	▶159
	▶160
346-9780	434
347-0109	143
347-2280	260
347-2729	128
347-8645	87
347-8646	87
347-8647	87
348-0495	94
	101
348-4637	182
348-5055	86
348-5118	71
348-6197	432
348-6250	431
	435
348-6253	435
348-6260	536
	538
	540
	543
348-6280	▶538
348-6300	▶540
348-7782	531
	532
348-7783	531
	532
348-9380	262
	264
	286
348-9392	281
348-9393	272
	273
349-1178	183
	396
349-2592	455
349-2593	455
	456
349-2594	455
349-2595	456
349-2596	456
349-2598	456
349-2599	455
349-2600	455
349-2601	456
349-2602	517
	519
349-6097	207
	369
349-6799	▶445
	▶447
	▶448
349-7059	105
349-8642	166
350-7735	105
350-8742	107
350-8842	183
350-8958	569
351-1724	43
351-1768	221
351-1881	524
351-1904	111
351-3525	111
351-4749	34
351-8647	501
351-8682	▶459
	▶465
351-8684	▶465
	▶469
351-9918	158
	159
352-3964	111
	184
352-3968	111
	183
	190
	194
	200
352-3969	180
	198
352-3970	151
352-4406	245
	247
352-4407	247
352-4581	526
353-1634	166
353-2675	374
353-2676	374
353-2677	374
353-4847	68
354-3334	▶202
	▶207
354-5671	▶171
	▶172
354-7510	521
	522
	523
354-8322	26
355-3016	517
	519
355-3148	496
355-3486	568
355-4327	71
355-9853	208
	211
	214
	217
356-1219	138
356-2771	184
356-6853	208
	211
	214
	217
356-6854	208
	211
	214
	217
356-6855	208
	211
	214
	217
356-8350	175
356-8351	175
357-5368	▶330
	▶332
357-6890	266
357-7357	184
358-0921	262
	264
	286
358-2194	535
	538
	540
	542
358-2260	535
	542
358-2398	111
	169
358-2691	▶141
	▶175
358-4769	291
358-4774	290
358-4777	290
	293
358-4781	436
358-4782	436
358-8556	319
358-8557	318
	319
359-3371	535
	538
	540
	542
359-3609	369
360-1564	38
360-3534	319
	320
360-8958	▶83
	▶84
360-8960	83
361-3976	249
361-3977	249
361-3978	▶249
	▶354
362-0514	328
362-5412	83
	84
362-9689	84
363-0559	11
363-3569	250
363-3570	250
363-3571	▶250
	▶354
363-4123	103
363-4156	65
364-4012	562
364-4013	562
364-5145	11
364-8277	501
365-0751	329
365-0752	331
365-3717	208
	211
	214
	217
365-5823	81
366-9373	96
367-0566	129
367-3340	74
368-3145	170
368-8557	81
368-9741	▶311
368-9742	▶312
368-9744	▶313
368-9791	317
	320
368-9792	320
369-1255	6
369-1658	75
369-3188	40
369-3867	48
369-6840	65
369-7304	15
	36
369-7799	89
370-3824	303
	305
	331
370-3825	303
	305
	329
370-4059	136
370-5513	99
370-5516	98
370-5517	98
370-5518	98

▶ PRIMARY REFERENCE

PART NUMBER INDEX

Part	Page
370-5520	▶98
	▶102
370-6545	13
370-8376	83
370-9894	523
371-0758	546
371-0759	542
	546
371-0786	547
371-0808	535
	547
371-2478	4
	15
	29
371-2480	4
	46
371-2483	4
	89
371-2537	4
	122
371-2544	4
	34
371-2554	4
	43
371-2558	4
	31
371-2684	101
371-2691	101
371-2716	4
	27
371-2740	4
	30
371-2745	4
	55
371-3974	89
	90
371-7263	101
371-8298	23
372-2158	524
372-2297	4
	67
372-3375	▶327
	▶354
373-3607	4
	58
373-4446	474
373-8445	222
	223
373-8446	222
	223
373-8447	233
	235
	253
373-9151	111
374-2060	374
374-2061	374
374-2064	374
374-2065	374
374-2640	122
374-4419	67
374-6300	4
	11
	15
374-7094	4
	450
374-7345	374
374-7465	141
374-7468	156
374-8372	140
	143
374-9295	4
	42
375-0098	4
	24
375-0482	102
375-0483	102
375-1846	180
375-2647	▶100
	▶101
375-2649	102
375-3937	4
	23
375-5777	118
	129
375-6404	299
	301
	332
375-6431	▶328
	▶354
375-6988	102
375-8254	100
375-8407	▶149
	▶182
376-1108	4
	6
376-4074	11
376-4078	11
376-6403	90
376-6405	90
376-6409	100
376-6410	100
376-6411	100
377-0399	17
377-0400	17
377-1293	182
377-1433	474
377-4710	126
377-4718	34
	35
377-5988	91
377-6932	138
377-8337	374
377-9255	23
378-0625	4
	50
378-6901	162
378-8166	4
	22
378-8521	124
	125
	460
379-3503	▶367
	▶431
379-3504	▶361
	▶431
379-3982	▶336
379-3983	▶337
379-3984	337
	346
379-4973	129
379-7040	361
379-7041	361
379-8893	346
379-8894	346
380-1615	367
380-1616	367
380-2065	36
	38
	40
380-4850	374
380-7969	312
380-7970	312
380-7971	314
	316
380-7977	303
	305
380-7978	303
	305
380-7986	311
380-7987	311
380-7989	313
	315
380-8573	398
	399
380-9615	10
381-4538	514
	515
	516
382-6505	303
	305
382-6506	303
	305
382-6523	▶314
382-6524	▶315
382-6525	▶316
382-9259	224
382-9274	240
	254
382-9276	240
	254
383-1388	10
383-3581	▶13
	▶14
384-3888	167
384-5313	▶17
	▶18
	▶21
384-7390	299
	301
384-7392	299
	301
384-7393	299
	301
384-7567	170
384-8834	519
385-1398	93
385-2572	4
	18
385-3458	262
	264
	286
385-5997	▶138
	▶182
385-8000	4
	172
386-1864	93
386-2112	27
386-2737	95
386-2971	100
386-2976	100
386-3819	100
386-6219	63
387-0314	524
387-0317	524
387-2300	▶431
	▶434
387-3577	96
388-1410	529
	530
	531
388-1411	529
	530
	532
388-4707	18
388-7010	76
388-9525	77
389-0879	517
389-1076	369
389-1079	206
	207
389-3346	4
	10
389-3863	182
389-5775	96
389-5784	96
389-5919	226
	396
389-5922	396
390-0055	4
	25
390-0854	4
	14
	15
390-7626	75
391-1817	96
391-3732	38
391-3735	38
391-3940	338
	347
391-3941	▶338
391-4811	4
	101
391-5523	4
	75
391-8044	382
	385
	387
	389
392-0610	61
392-2780	182
392-5201	363
393-2034	102
393-2035	102
393-3369	4
	26
393-4006	26
393-4208	▶488
	▶489
393-4209	128
	507
393-4260	493
393-4262	454
393-4263	▶454
	▶474
393-4271	507
	508
393-4272	488
393-4273	474
393-4274	474
393-4275	436
393-4276	436
393-4278	474
393-4280	474
393-4281	474
393-4282	454
393-4283	436
393-4284	472
393-4285	454
393-4286	474
393-4288	477
393-4289	491
393-4290	472
393-4294	474
393-4298	124
	125
393-5467	99
393-5468	99
393-9694	509
394-0525	▶99
	▶102
394-4451	31
394-9639	4
	102
395-0110	4
	167
395-0112	4

PART NUMBER INDEX

Part	Page
	163
395-0113	5
	182
395-0114	4
	170
395-1633	98
	99
396-2615	4
	8
396-8052	74
396-8795	8
396-9529	73
396-9532	▶73
	▶81
397-3972	53
397-9301	86
	111
	180
398-1743	257
398-2972	62
398-6226	102
398-7420	404
	417

4

415-1487	509
415-1604	30
415-1644	509
416-1069	▶91
	▶96
416-7727	74
416-7808	4
	74
416-8305	▶369
	▶396
416-9520	48
417-0341	372
	400
417-0344	400
417-0724	262
	264
417-2337	472
417-4252	400
417-5097	498
417-7782	58
418-0522	531
418-0523	532
418-0800	1
418-9377	447
	448
419-0384	48
419-3723	381
	386
419-3726	384
	388
419-5667	143
419-6603	4
	48
420-0454	54
420-2372	81
420-4129	50
	51
420-4133	51
420-4136	51
420-4143	50
420-9597	448
	449
	491
421-1022	447
	448
	474
421-2875	496
421-2876	496
421-4567	▶299
	▶354
421-4568	▶301
	▶354
421-4569	▶303
	▶354
421-4570	▶305
	▶354
421-4571	307
421-4572	308
421-4601	238
	294
421-4602	238
	295
421-4603	294
	296
421-4604	295
	297
421-4605	296
421-4610	299
	301
	303
	305
	333
421-4623	333
421-4625	333
421-4638	333
421-4688	334
	335
421-4692	299
	301
	303
	305
421-4695	317
	318
421-5456	422
421-9241	360
	470
421-9246	▶123
	▶360
422-1675	478
422-3133	417
	419
422-3134	419
422-3637	228
422-7069	▶436
	▶447
	▶448
422-8723	▶379
	▶431
422-8724	381
	384
	386
	388
422-8727	379
422-8728	379
422-8729	379
422-8730	379
423-7576	23
424-3471	400
424-4322	143
424-4928	274
	275
424-5535	417
	419
424-6986	▶232
	▶238
425-2633	86
425-3336	60
	62
425-3337	60
	257
425-5430	262
425-5431	264
425-5432	262
425-5434	1
	280
425-5435	281
425-5439	271
425-6622	62
425-7103	27
425-7127	▶103
425-7130	▶262
	▶267
425-8940	469
425-8949	196
425-8970	436
425-9685	400
426-4005	▶118
	▶119
	▶123
	▶470
426-5026	274
	277
426-5027	278
427-5774	488
	507
	508
427-9771	170
428-7042	7
428-8644	369
428-8645	▶206
	▶207
428-9067	226
	396
430-4709	62
430-8033	286
430-8034	277
	278
431-0681	▶207
	▶226
	▶396
431-4413	175
431-7064	303
	305
	317
431-7065	299
	301
	318
431-7066	309
431-7067	309
431-7068	309
431-7069	309
431-7076	298
431-7078	▶309
	▶354
431-7079	▶354
431-7080	▶354
432-0049	460
432-4949	257
432-6469	▶393
	▶553
432-6470	393
432-6471	393
432-6484	4
	96
432-8272	62
	272
	273
432-8723	96
433-0736	257
433-0765	273
433-1316	▶93
	▶96
433-1683	111
433-1767	1
	282
433-1847	111
433-6913	71
433-6938	4
	7
433-8954	257
434-0570	267
	560
434-0571	560
	561
434-0572	561
434-0581	446
	472
434-1217	86
	103
434-3576	490
434-3579	490
434-4309	436
	440
434-7270	▶419
	▶421
434-7271	419
435-2988	440
435-5578	▶298
	▶299
	▶301
	▶303
	▶305
435-5582	318
435-5583	294
	295
435-5591	317
435-5593	238
	325
435-5594	238
	326
435-5595	325
435-5596	326
435-5617	432
435-5618	432
435-5891	446
	526
435-5965	129
435-7593	447
	448
	500
435-7594	▶284
	▶447
	▶448
435-7611	447
	449
435-8422	112
435-9861	198
436-0443	436
436-0461	436
436-0511	436
436-0521	46
	47
436-1245	2
	553
436-1687	517
	519
436-1688	517
	519
436-7781	36
	38
437-1088	526
	528
437-1171	112
437-2632	274
	276
437-2831	422
437-2846	385
	389

PART NUMBER INDEX

Part	Page
	430
437-4170	81
437-7479	493
437-7480	493
437-7677	381
	386
437-7678	381
	386
437-7679	385
	389
437-7680	385
	389
438-1709	284
438-1710	284
438-1711	284
438-1713	284
438-3007	282
438-3008	282
438-3080	190
438-3534	112
438-3644	119
	477
438-7901	436
438-8473	116
	117
438-8573	112
	148
439-1562	511
439-1840	86
439-1868	228
439-1869	228
439-2579	▶291
	▶292
439-2580	▶290
	▶291
439-2581	291
439-2582	291
439-4334	261
439-4987	474
439-5037	88
439-5039	88
439-5040	88
440-0533	280
	281
440-6171	▶140
	▶440
441-3019	123
	124
441-3080	▶125
	▶470
441-3225	526
441-5461	289
	513
441-5462	513
442-1579	86
442-4665	290
442-4666	290
442-8465	▶94
	▶96
442-8569	96
443-3962	118
443-4024	440
443-4025	440
443-4026	440
443-4027	440
443-4029	440
443-4030	440
443-4033	440
443-4036	440
443-4037	440
443-4038	440
443-4039	440
443-4040	440
443-4041	440
443-4043	440
443-4044	440
443-4045	440
443-7387	164
443-8106	514
	521
443-8116	515
	522
443-8573	517
	519
443-9475	36
	40
443-9543	38
443-9898	36
	40
443-9919	36
	40
444-0092	435
444-0093	435
444-2190	38
444-5022	86
	88
444-5491	377
444-5492	377
444-7604	138
445-5511	88
446-0105	88
446-0635	517
446-1002	457
	509
446-1003	447
	448
	457
446-1268	163
446-1483	474
446-1928	184
446-4857	509
447-9370	498
448-4217	11
448-4218	11
448-4220	11
448-4222	11
448-4227	11
448-4913	▶365
	▶553
448-6997	365
448-9957	440
449-0002	440
449-1706	440
450-4373	▶68
	▶69
	▶79
450-4968	440
450-5228	440
450-5739	▶511
	▶512
450-6214	177
450-6492	436
451-0489	63
451-0490	63
451-1222	▶15
	▶16
451-8019	143
451-8317	15
451-8385	3
	16
452-6580	166
	512
452-6582	3
	19
452-6584	19
	20
452-6585	20
	47
452-6586	20
	21
452-8547	▶84
	▶85
452-9704	75
453-0790	100
453-1587	259
453-1588	▶259
	▶260
453-5912	61
453-6241	61
453-6242	61
453-6825	478
	485
453-7163	4
	85
454-2372	71
454-5109	100
454-6811	466
	467
454-6812	▶466
	▶469
454-6813	▶467
	▶468
454-9560	40
454-9569	40
454-9573	40
455-0704	132
	133
	138
	139
	140
	147
455-0705	132
	138
	139
	146
	148
	149
455-0706	131
	133
	137
	143
	146
	148
	149
455-0707	145
	147
455-0708	137
	148
455-0709	137
	143
	145
	148
	501
455-0780	540
455-0790	538
455-1084	569
	570
455-5444	440
455-9580	190
456-1826	430
456-3318	381
	385
	386
	389
	408
456-4196	381
	386
	398
456-4197	385
	389
	399
456-6921	152
	154
456-9700	535
	538
	540
	542
457-1192	1
	5
457-1194	1
	60
457-3577	5
	76
457-4775	▶323
	▶347
457-5411	238
	239
457-5412	▶230
	▶238
457-5414	▶63
	▶238
457-5415	▶228
	▶238
457-5416	238
	285
457-5417	▶374
	▶431
457-5420	▶226
	▶404
457-5423	▶381
457-5424	▶384
457-5425	▶386
457-5426	▶388
457-6415	230
457-6416	230
457-6417	230
457-6418	230
457-6420	355
457-6421	228
457-6422	228
457-6423	228
457-6424	228
457-6425	228
457-6426	406
457-6427	406
457-6430	226
	396
457-6431	552
457-6432	552
457-6435	396
457-6533	396
457-6534	396
457-6535	396
457-6566	382
	385
	387
	389
457-6567	382
	385
457-6568	387
	389
458-3861	3
	33
458-3872	1
	3
458-6950	5
	86
458-7127	377
458-7129	377
458-7130	377
458-7132	377
458-7133	377
458-7918	38
458-7939	38
458-7940	38
458-9684	224
459-0386	278

▶ PRIMARY REFERENCE

PART NUMBER INDEX

Part	Page
459-0553	105
459-1800	117
459-2093	5
	498
459-6582	▶1
459-7322	103
459-9051	303
	305
459-9052	303
	305
460-1189	▶260
460-4049	152
	154
460-4647	374
460-6052	252
461-1232	280
461-1233	103
	283
461-2712	239
	240
461-5232	110
461-5738	180
461-8770	▶268
	▶269
461-8771	1
	283
461-8773	283
461-8779	283
461-9454	▶461
	▶466
461-9455	▶462
	▶467
462-0010	245
	247
462-0015	245
	247
462-0020	245
	247
462-0291	245
	247
462-0293	245
	247
462-0296	245
	247
462-0419	245
	247
462-0420	245
	247
462-0423	245
	247
462-0429	245
	247
462-0431	245
	247
462-0433	245
	247
462-0434	245
	247
462-0435	245
	247
462-0440	245
	247
462-0458	245
462-0493	201
462-0494	201
462-0495	201
462-0496	▶201
	▶240
462-0497	224
462-0498	224
462-0503	224
462-0683	254
462-0686	254
462-0687	254
462-0689	254
462-0691	254
462-0697	254
462-0698	240
	254
462-0701	220
	221
462-0702	224
462-1171	49
462-2235	170
462-6685	4
	54
462-8830	86
462-8920	268
	286
462-8921	286
463-1738	68
463-3324	400
463-8196	▶261
	▶431
464-6779	240
	256
465-0295	86
465-1097	283
465-1937	152
	154
465-1970	152
	154
	156
465-5626	430
465-6303	190
466-0886	417
	419
466-0889	417
	419
466-1627	417
	419
466-2917	535
	538
	540
	542
466-2918	535
	538
	540
	542
466-2974	430
466-4849	36
	38
	40
466-8362	299
	301
	303
	305
467-2859	136
	143
467-8535	501
468-0025	401
468-0177	63
468-0434	143
468-2490	374
468-2491	374
468-7356	4
	568
468-9793	399
468-9800	240
468-9805	▶224
	▶240
469-0522	283
469-4657	▶506
	▶533
469-5548	▶204
	▶238
469-5550	▶205
	▶238
469-5745	478
	481
	483
	485
	526
469-7300	432
469-7301	431
	432
469-8808	275
470-0620	276
470-0621	276
470-4959	180
470-8038	36
	38
470-8101	11
470-8171	11
471-6772	317
	318
471-6773	317
	318
471-6774	317
	318
471-6776	317
	318
471-8309	117
471-8313	447
	514
471-8315	448
	515
472-6433	471
	489
472-7063	528
473-1373	38
473-3767	509
473-4303	436
475-6787	570
475-9553	204
	205
	237
476-0301	103
	105
476-2947	101
476-9504	440
477-0065	535
	538
	540
	542
477-8319	440
477-9318	440
478-3802	240
478-3808	224
478-3809	224
478-6398	5
478-7013	112
	144
479-8408	436
	452
480-4489	36
	38
480-4490	36
	38
480-4491	36
	38
481-2484	164
482-5110	76
482-5134	63
482-7048	76
482-9664	299
	303
	307
482-9665	301
	305
	308
483-0513	▶70
	▶76
483-2517	382
	385
	387
	389
483-2761	136
483-2762	136
483-2763	136
483-2767	136
483-2768	136
483-6739	131
483-9172	1
	490
483-9173	▶267
	▶490
483-9175	286
483-9176	286
483-9178	268
483-9179	264
483-9180	▶264
	▶267
483-9181	283
483-9182	1
	269
483-9193	268
483-9197	269
483-9198	269
483-9250	▶542
483-9251	542
483-9298	535
	542
483-9299	535
	542
483-9315	535
	542
483-9320	▶535
483-9321	535
483-9449	448
	449
	494
483-9594	448
	529
483-9641	529
	530
484-0217	535
	542
484-0219	536
	542
484-2124	509
484-3504	177
484-7200	▶95
	▶96
484-7273	275
484-7276	275
	276
484-7985	448
	478
484-7986	448
	481
484-8213	448
	449
	533
484-8774	452
485-3308	478
	481
	483
	485
485-4894	67
485-4895	67
485-5354	103
485-9850	422
486-0091	447
	448
	493

▶ PRIMARY REFERENCE

PART NUMBER INDEX

Part	Page
486-0430	449
	483
486-0431	449
	485
486-0482	449
	530
486-3208	4
	38
486-8214	161
486-8216	161
487-6095	▶2
487-6096	▶2
487-8301	276
488-1670	517
488-2137	517
	519
488-3767	171
488-3768	171
488-3770	171
488-3771	171
488-3779	171
488-3787	171
488-3794	171
488-3797	171
488-3798	171
488-3799	171
488-4841	116
	179
488-4958	128
	508
489-4303	333
489-5533	496
489-5888	26
489-6486	▶517
	▶521
489-6505	▶519
	▶522
489-7905	▶149
	▶478
	▶483
489-7906	▶149
	▶481
	▶485
489-8101	491
	509
489-9315	440
489-9971	4
	81
490-1400	299
	303
	334
490-1402	301
	305
	335
490-1616	535
	538
	540
	542
490-1953	71
490-2792	69
	79
490-3666	177
490-9485	284
490-9486	284
491-0563	284
491-0564	284
491-0565	284
491-0636	86
491-2830	5
	77
491-4626	209
	212
	214
	217
491-4627	208
	211
	214
	217
491-6096	284
491-6097	284
492-6551	519
492-7319	177
492-8970	5
	80
493-1014	519
493-2817	69
493-2818	79
493-6673	80
493-8130	63
493-8131	63
494-1760	105
494-4087	472
494-6472	▶120
	▶152
	▶154
	▶156
495-1449	▶166
495-4369	61
495-4370	61
495-4371	60
	61
495-4687	5
	65
495-4688	5
	71
495-6269	65
495-6271	65
498-2272	65
498-4463	521
	522
498-4738	239
498-4902	71
498-4903	71
498-6212	71
498-7851	71
498-7852	71
499-1528	285
499-3325	184
499-3460	112
	132
499-3943	112
499-3959	498
499-4011	184
499-7325	430

5

Part	Page
500-0390	71
500-4763	535
	542
501-6991	408
501-7414	▶69
501-7416	▶79
501-7753	472
503-1876	▶220
	▶240
503-1877	▶221
	▶240
503-1879	245
503-1880	245
	247
503-1881	245
	247
503-1882	245
503-1884	247
503-1888	247
503-2925	221
503-2949	220
504-1202	5
	496
504-1231	▶52
504-1239	496
504-1240	496
504-2903	36
	40
504-4756	112
	133
504-5294	5
504-5594	284
504-8150	69
	79
505-3756	436
505-3759	436
505-6019	▶151
505-7069	535
	542
505-7081	535
	542
506-2724	508
506-2725	488
506-3945	175
	194
506-3946	▶145
	▶194
506-6918	208
	211
	214
	217
507-1295	404
	421
	422
507-8255	374
509-0269	177
510-4915	▶141
	▶188
512-8035	69
	79
512-8331	357
513-5980	128
514-3545	179
514-5167	164
514-5169	164
515-2111	86
515-7905	569
	570
516-3771	205
	208
516-3772	205
	211
516-3773	204
	214
516-3774	204
	217
517-2462	483
517-2463	485
517-8243	89
520-5581	177
521-5127	180
522-6004	▶133
	▶188
522-6005	▶134
	▶177
523-7054	1
	562
524-1340	507
524-3797	87
524-3798	87
524-5136	513
524-6301	52
525-5775	3
	53
525-6398	112
	146
525-8758	77
527-1637	10
527-1641	10
527-6819	118
	135
528-1007	391
528-6793	196
528-7222	68
529-0132	68
529-7523	86
529-7524	86
535-7629	372
	373
	376
535-7631	▶119
	▶372
535-7632	▶360
	▶372
535-7633	▶360
	▶373
535-8873	112
536-1598	128
	196
536-1599	196
	198
536-1600	▶146
	▶196
536-5045	128
	180
536-5046	▶147
	▶180
536-6121	530
536-6699	▶175
	▶447
	▶448
536-6700	▶144
	▶175
536-6702	▶190
	▶447
	▶448
536-6703	▶142
	▶191
536-7945	138
536-7946	138
536-7953	128
	177
536-8775	▶446
536-8776	▶446
536-8777	▶446
536-9447	▶160
536-9448	▶161
537-5996	128
	188
537-5997	▶136
	▶188
538-5000	372
	401
538-6210	372
	390
538-6212	376
	377
538-6213	360
	394
538-7156	▶116
538-7829	▶363
	▶431
538-7830	363
538-8913	472
538-9857	▶136
	▶152
	▶154

PART NUMBER INDEX

Part	Page
	▶156
539-0441	447
	448
	501
539-0442	▶137
	▶501
539-1226	129
	200
539-1227	▶148
	▶200
539-2474	391
539-2475	391
539-3006	401
539-3163	406
	552
539-4251	394
539-4252	394
539-4439	377
539-4440	377
540-2958	▶131
	▶175
540-4707	119
	360
	403
540-4840	391
540-8952	130
540-8953	130
541-1459	112
541-3521	535
	538
	540
	542
541-3522	535
	538
	540
	543
541-5063	501
541-9045	355
542-1537	188
542-8466	447
	468
542-8467	448
	469
543-1829	▶152
543-2906	▶271
	▶272
543-2907	273
543-2909	271
	273
543-2982	▶272
	▶274
543-2984	▶273
	▶274
543-3284	▶274
543-3285	▶274
543-3286	▶274
544-1881	▶127
	▶152
544-5897	152
	154
547-7724	256
547-7725	256
547-7726	256
547-7727	256
547-7728	256
548-7682	509
549-2379	191
549-4955	▶164
	▶191
549-5649	3
	107
549-6773	▶372
549-6775	▶372
549-6804	129
549-6805	129
	130
549-7639	▶128
549-7642	▶128
549-7643	▶128
549-8280	372
	373
549-8281	128
	129
549-8324	372
	404
549-8341	372
	391
549-8882	373
	421
549-8934	404
	405
549-8935	421
	551
549-8936	▶395
	▶421
549-8937	▶355
	▶372
	▶373
549-9613	128
	198
549-9634	▶150
	▶198
549-9953	128
	471
550-0154	▶139
	▶184
550-0156	129
	183
550-0157	▶110
	▶129
550-1496	377
550-1497	377
550-2139	112
	147
550-2352	▶373
550-6464	385
	387
	389
550-7028	355
550-7246	406
550-7247	406
550-7248	391
551-1895	396
551-1896	552
551-1897	552
552-3288	180
552-3289	180
552-5113	289
	292
552-5114	292
	293
552-5122	293
552-6116	196
553-3684	3
	4
553-5212	3
	5
554-8937	180
555-0643	436
555-5510	▶121
	▶154
556-3819	▶3
	▶5
556-6068	177
556-9001	▶289
556-9002	▶289
557-8970	188
558-6551	152
	154
559-2589	269
559-2590	269
559-2591	268
559-2592	268
560-2621	240
	245
560-2622	240
	247
560-2623	245
560-2624	247
560-2625	245
	247
561-1078	324
561-1080	▶324
	▶348
	349
	350
	351
	352
	353
561-2941	130
561-2947	130
561-3001	107
	108
561-3457	108
562-1812	128
	130
562-1817	128
	130
563-5532	460
	495
564-7807	198
564-7808	198
565-5808	299
	301
565-5810	299
	301
565-9880	471
566-2686	495
566-2687	495
566-2688	495
566-7931	10
566-8404	211
	217
567-2881	436
567-4525	390
567-4526	390
568-1316	446
	447
568-1317	446
	447
568-1318	446
	448
568-1819	▶434
568-5140	127
569-6097	81
570-1038	422
570-1041	422
570-1042	422
570-1048	422
570-1050	422
570-1052	422
570-1054	422
570-1055	422
570-1056	422
570-1058	422
570-2440	566
570-5029	564
	566
570-8719	130
573-1528	240
573-1607	130
573-1721	564
	566
573-4529	▶154
576-1157	568
578-7531	▶130
	▶152
	▶154
	▶156
579-0564	180
580-8201	334
	335
581-2223	▶156
581-8900	129
582-1981	▶162
582-2238	334
	335
586-5325	121
587-5841	569
	570
587-5863	▶563
	▶569
	▶570
587-9947	279
587-9949	279
588-8769	563
589-1827	569
	570
589-6091	▶116
589-9461	▶564
	▶569
589-9462	▶566
	▶570
589-9463	564
	566
590-0878	130
590-7198	▶1
590-7199	▶1
591-7134	1
	238
591-7135	1
	238
591-7138	238
	569
591-7139	238
	570
592-0391	121
595-4160	339
	348
595-4161	▶339
595-4163	340
	349
595-4164	▶340
595-4166	341
	350
595-4167	▶341
595-4170	342
	351
595-4171	▶342
595-4174	343
	352
595-4175	▶343
595-4181	344
	353
595-4182	▶344

▶ PRIMARY REFERENCE

MEMORANDA



©2020 Caterpillar
All Rights Reserved

CAT, CATERPILLAR, LET'S DO THE WORK, their respective logos, “Caterpillar Yellow”, the "Power Edge" and Cat "Modern Hex" trade dress as well as corporate and product identity used herein, are trademarks of Caterpillar and may not be used without permission.