RUTHZIL TRATOR COMERCIAL DE PEÇAS LTDA 11 97083-6812 ROLANDO CITRANGULO

D41E-6

KEPB003105

PARTS BOOK

D41E–6

Serial No. B35001 and up

ENGINE S6D102E–1

Engine No. 30769890 and up

KOMATSU

FOREWORD

When ordering a spare part, specify the part number, part name, and quantity required, and also specify your machine model code, machine serial number, engine serial number and the service meter reading.

This Parts Book describes not only standard items but also optional equipment and attachments. To order a part, please contact your nearest Komatsu distributor.

This Parts Book contains the information and special symbols as follows:

Figure and list

When you open this Parts Book, you will find an illustration on the left page (even-numbered page) for the spare parts group. Each individual part in the group is given an index number.
On the right page, the component parts of the group are listed in the order of the index numbers shown on the illustration page. The part number, part name, and applicable machine serial number are given for each part.

FIG. No.

The FIG. No. is the number of the illustration shown on the page. It is not the spare part number. The numbers are not always continuous.

INDEX

This is the same as the index number in the illustration. The parts are listed in index number order.

PART No.

The number given in the PART No. column is the part number for the part shown. It is the code used when ordering that part. It is important that there be no mistake in this code number when ordering.

DESCRIPTION

This gives the name of part that has the part number listed. The mark "." is put in front of the part name of an assembly part and the item is entered following the assembly. If a part marked with "." is a sub assembly, its components are marked with "..".

Example:
```
ELEMENT ASSEMBLY, AIR CLEANER
.ELEMENT ASSEMBLY, OUTER
..ELEMENT, OUTER
..NUT, WING
..WASHER
```

Q'TY (Quantity)

This specifies the number of pieces used for one machine. However, if a part is included in the assembly and/or component, the quantity per such assembly and/or component is specified.

SERIAL No.

Applicable engine serial number is indicated for the engine volume. In the chassis volume, this indicates the machine serial number in which the part is used.

Symbols and codes

Symbols and codes are used in the PART No. and DESCRIPTION columns, and represent the following:

☐	The part specified in the line above can be used instead of this part.

Symbols and codes (Cont'd)

⊡	This part can be used instead of the part specified in the line immediately above.
◆	This part and the part specified in the line immediately above are interchangeable.
■	The part specified in the DESCRIPTION column can be used instead of this part if it is used as a set.
☒	This shows discontinued part. The part specified in the above line is supplied instead.
▼	This shows a discontinued part. The part specified in the DESCRIPTION column is supplied instead as a set.
☆	This part cannot be supplied as an individual part. It is supplied as an assembly.
★	This part cannot be supplied as an individual part. It is supplied as an assembly. However, it is supplied as an individual part by authorized distributors only.
⊙	This indicates a part group. The part marked with this symbol is not considered a supply part.
====	The parts surrounded by this line are components of the part group specified in the above line.
G-1,G-2	These indicate categories of part groups.
KIT	This indicates kit parts. For kit parts, refer to the service kit tables provided in this Parts Book.
△	This indicates a part supplied as semi-finished. It requires additional work before installation.
PAINT(1)	This indicates parts shipped painted with undercoat.
PAINT(2)	This indicates parts supplied with different colors from the original color of your machine.
(A)	This code indicates special parts for cold weather "A" specification (-30°C) machines.
(B)	This indicates special parts for cold weather "B" specification (-50°C) machines.

AVANT-PROPOS

Lorsque vous passez une commande d'une ou plusieurs pièces détachées, vous êtes prié de spécifier, outre le ou les numéro(s), désignation(s) et quantité(s) des pièces commandée(s), le numéro de carrosserie, le numéro de série du moteur et la lecture du compteur de service du véhicule.

Sur le présent catalogue des pièces figurent non seulement les équipements standard, mais également les équipements et accessoires en option. Si vous désirez un équipement ou une pièce quelconque, vous êtes prié de prendre contact avec le concessionnaire Komatsu le plus proche.

Ce catalogue des pièces se présente de la manière suivante:

Figures et listes	Lorsque vous ouvrez le présent catalogue, vous trouvez: sur la page de gauche (numéro de page pair), les illustrations de toutes les pièces composant l'équipement en question avec les numéros de référence pour chacune des pièces, sur la page de droite (numéro de page impair), la liste des pièces dans l'ordre des numéro de référence des pièces avec indication du numéro des pièces, de la désignation des pièces, de la quantité utilisée et des numéros de série.
FIG. No. (Figure et liste)	Le numéro de figure (FIG. XX) correspond au numéro de la figure représentée sur cette page, mais ne correspond pas au numéro de la pièce détachée. Veuillez noter que les numéros de figure ne se suivent pas systématiquement.
INDEX (Numéros de référence)	Les numéros de référence correspondent aux numéros de référence notés sur la figure et sont énumérés dans l'ordre des numéros de référence.
PART No. (Numéros de pièce)	Les numéros indiqués dans cette colonne correspondent aux numéros des pièces représentées et constituent les codes à spécifier pour toute commande de pièce. Il est important de ne pas faire d'erreur avec ce code au moment de la commande.
DESCRIP-TION (Descript-ion)	Dans cette colonne est indiquée la désignation des différentes pièces. Dans le cas d'un ensemble constitué de pièces, la désignation de chacune de ces pièces est précédée d'un point "." et dans le cas d'un ensemble constitué de sous-ensembles eux-mêmes constitués de pièces, la désignation de chacune de ces pièces est précédée de deux points "..". Exemple: ELEMENT ASSEMBLY, AIR CLEANER .ELEMENT ASSEMBLY, OUTER ..ELEMENT, OUTER ..NUT, WING ..WASHER
Q'TY (Quantité)	Dans cette colonne est indiqué le nombre de pièces nécessaires pour l'équipement en question. S'il s'agit de pièces comprises dans un ensemble et/ou composant, et la quantité indiquée est le nombre de pièces nécessaires pour l'ensemble et/ou le composant en question.
SERIAL No. (Numéros de série)	S'il s'agit d'un élément du moteur, ces numéros sont les numéros de série des moteurs sur lesquels cette pièce est utilisée. S'il s'agit d'un élément de la carrosserie, ces numéros sont les numéros des carrosseries sur lesquelles la pièce en question est utilisée.

D41E-6

Codification

Les codes indiqués dans les colonnes "N° de pièce" et "Description" ont les significations suivantes:

□	Au lieu de la pièce affectée de ce code, il est possible d'utiliser la pièce qui figure juste au-dessus.
⊡	La pièce affectée de ce code peut être utilisée à la place de la pièce figurant juste au-dessus.
◆	La pièce affectée de ce code et la pièce figurant dans la ligne justeau-dessus sont interchangeables
☒	Au lieu de la pièce affectée de ce code, il est possible d'utiliser la combinaison des pièces indiquées dans la colonne "Description".
■	Les pièces affectées de ce code ne sont plus fournies. Au lieu de cette pièce, c'est la pièce figurant dans la ligne justeau-dessus qui sera fournie.
▼	Les pièces affectées de ce code ne sont plus fournies. Au lieu de cette pièce, c'est la combinaison de pièces figurant dans la colonne "Description" qui sera fournie.
☆	Les pièces affectées de ce code ne seront pas fournies à l'unité mais par jeu de pièces.
★	Les pièces affectées de ce code ne seront pas fournies à l'unité mais par jeu de pièces, sauf dans le cas de certains concessionnaires Komatsu.
⊙	Ce code indique qu'il s'agit d'un groupe de pièces. Les pièces affectées de ce code ne sont pas fournies en tant que pièces détachées.
====	Les pièces ainsi encadrées sont les pièces composantes du groupe de pièces indiqué dans la ligne d'au-dessus.
G-1, G-2	Indique le numéro du groupe de pièces
KIT	Indique qu'il s'agit d'un kit de pièces. Pour les pièces composantes des kits, veuillez vous reporter à la liste des kits de service.
△	Indique qu'il s'agit de pièces fournies à l'état semi-fini. Ces pièces devront être usinées avant l'installation.
PAINT(1)	Indique que sur les pièces fournies est appliquée uniquement une couche primaire.
PAINT(2)	Indique que la couleur de la peinture est différente de celle d'origine.
(A)	Indique qu'il s'agit de pièces pour spécifications artiques A (−30°C)
(B)	Indique qu'il s'agit de pièces pour spécifications artiques B (−50°C)

VORWORT

Bei der Bestellung von Teilen bitte die Teilenummer, die Teilebezeichnung und die Menge des jeweiligen Teils sowie die Modellnummer, die Seriennummer der Maschine, die Seriennummer des Motors und den Stand des Betriebsstundenzählers angeben.

In dieser Ersatzteilliste ist nicht nur das Standardzubehör aufgeführt, sondern auch als Sonderausstattung erhältliche Teile und Einrichtungen.

Bestellungen nimmt Ihr zuständiger Komatsu-Händler entgegen.

Die folgenden Angaben sind in der Ersatzteilliste aufgeführt.

Bild und Liste	Beim Aufschlagen des Ersatzteilkatalogs ist auf der linken Seite (d.h. der Seite mit der geraden Zahl) eine Darstellung der Bauteile der betreffenden Baugruppe zu finden. Jedes Einzelteil der Baugruppe ist mit einer Kennzahl versehen. Auf der rechten Seite (d.h. der Seite mit der ungeraden Zahl) sind die Bauteile der Baugruppe, geordnet nach den auf der linken Seite angegebenen Kennzahlen, aufgeführt. Jedes Einzelteil wird mit Teilenummer, Teilebezeichnung und entsprechender Seriennummer angegeben.
FIG. No. (Bildnummer)	Die Bildnummer entspricht der Nummer des auf der betreffenden Seite stehenden Bilds. Es handelt sich dabei nicht um die Nummer des Lieferteils. Es sei ferner erwähnt, daß die Bilder nicht fortlaufend numeriert sind.
INDEX (Kennzahl)	Dabei handelt es sich um die gleiche Zahl wie die Kennzahl im Bild. Die Teile sind geordnet nach der Kennzahl aufgeführt.
PART No. (Teilenummer)	Die in der Spalte "Teilenummer" aufgeführte Nummer entspricht der Teilenummer für das betreffende Teil. Diese Nummer dient zur Bestellung des Teils. Deshalb bei der Bestellung stets auf die genaue Angabe der Teilenummer achten.
DESCRIPTION (Beschreibung)	Hierunter wird die Bezeichnung des Teils mit der aufgeführten Teilenummer angegeben. Jedes Baugruppen-Bauteil ist mit dem vorangestellten Symbol "." gekennzeichnet und wird hinter der entsprechenden Baugruppe aufgeführt. Handelt es sich bei dem mit "." gekennzeichneten Bauteil um eine Baugruppe, sind die Bauteile dieser Baugruppe mit ".." gekennzeichnet. Beispiel: Element assembly, air cleaner . Element assembly, outer .. Element, outer .. Nut, wing .. Washer
Q'TY (Menge)	Hierunter wird die Anzahl der Bauteile für eine Maschine angegeben. Im Falle einer Baugruppe oder eines Aggregats wird allerdings die Anzahl der Teile pro Baugruppe angegeben.
SERIAL No. (Seriennummer)	Im Ersatzteilkatalog für den Motor versteht man hierunter die Seriennummer des Motors, in den das betreffende Teil eingebaut ist. Im Ersatzteilkatalog für die Maschine versteht man hierunter die Seriennummer der Maschine, in die das entsprechende Teil eingebaut ist.
Kodes	Die in den Spalten "Teile-Nr." und "Beschreibung" verwendeten Kodes haben folgende Bedeutung: □ Anstelle dieses Teils kann das in der vorangegangenen Zeile aufgeführte Teil verwendet werden.

⊡	Dieses Teil kann anstelle des in der vorangegangenen Zeile aufgeführten Teils verwendet werden.
◆	Dieses Teil ist mit dem in der vorangegangenen Zeile aufgeführten Teil austauschbar.
■	Anstelle dieses Teils kann das in der Spalte "Beschreibung" aufgeführte Teil verwendet werden, wenn das Teil zusammen mit anderen Teilen als ein Bauteilsatz verwendet wird.
⊠	Dieses Teil kann nicht mehr geliefert werden. Statt dessen wird das in der vorangegangenen Zeile aufgeführte Teil geliefert.
▼	Dieses Teil kann nicht mehr geliefert werden. Statt dessen wird das in der Spalte "Beschreibung" aufgeführte Teil als ein Bauteilsatz geliefert.
☆	Dieses Teil kann nicht als Einzelteil, sondern nur als Baugruppe geliefert werden.
★	Dieses Teil kann nicht als Einzelteil, sondern nur als Baugruppe geliefert werden. Nur bei bestimmten Händlern kann es als Einzelteil bezogen werden.
⊙	Hierdurch wird ein Aggregat gekennzeichnet. Es wird nicht zu den Lieferteilen gerechnet.
= = = =	Die Teile innerhalb dieser Markierung gehören zu dem oben aufgeführten Aggregat.
G-1, G-2	Hiermit wird die Kategorie eines Aggregats angegeben.
KIT	Hiermit werden Teile gekennzeichnet, die nur als Satz erhältlich sind. Siehe dazu die Tabelle der als Satz gelieferten Ersatzteile.
△	Hiermit werden Teile gekennzeichnet, die in vorbearbeitetem Zustand geliefert werden und für den Einbau nachbearbeitet werden müssen.
PAINT(1)	Hiermit werden Teile gekennzeichnet, die mit Grundierung geliefert werden.
PAINT(2)	Hiermit werden Teile gekennzeichnet, die in unterschiedlichen Farben geliefert werden.
(A)	Hiermit werden Teile gekennzeichnet, die speziell für kalte Witterung (A) (-30°C) ausgelegt sind.
(B)	Hiermit werden Teile gekennzeichnet, die speziell für kalte Witterung (B) (-50°C) ausgelegt sind.

PROLOGO

Cuando tenga que efectuar un pedido de repuestos, se ruega especificar el número, el nombre y la cantidad de piezas requeridas, indicando asimismo el número de modelo, el número de serie del motor y la lectura del contador de servicio.

Esta lista de piezas especifica no solamente accesorios estándar sino también piezas y accesorios opcionales. Para realizar un pedido, sírvase ponerse en contacto con su distribuidor Komatsu más cercano.

La lista de repuestos se compone de los elementos siguientes.

Figura y lista	Al abrir esta lista de repuestos, encontrará en la página izquierda (página de número impar) una ilustración de los componentes del conjunto. La figura de cada componente individual va provista de un número de índice. En la página derecha (página de número par), los componentes del conjunto están listados siguiendo el orden de los números de índice de la página izquierda.
FIG. NO. (Número de figura)	El número de figura es el número indicado en cada una de las respectivas figuras, y no es el número de la pieza. Los números de figura no son siempre continuos.
INDEX (Número de índice)	Coincide con el número de índice de cada figura, y aparecen en la lista en orden numérico.
PART NO. (Número de pieza)	El número indicado en la columna de "Número de piezas" es el número de pieza que aparece en la figura. Es sumamente importante debido a que se utiliza como código al efectuar el pedido de piezas.
DESCRIP-TION (Nombre de las piezas)	Indica la descripción correspondiente a cada número de pieza. Los componentes de un conjunto llevan la marca "." antes del nombre. Por otra parte, cuando se tratan de piezas armadas, llevan la marca ".." antes del nombre Ejemplo: ELEMENT ASSEMBLY, AIR CLEANER .ELEMENT ASSEMBLY, OUTER ..ELEMENT, OUTER ..NUT, WING ..WASHER
Q'ty (Cantidad)	Especifica el número de piezas utilizadas en cada máquina. Sin embargo, para un conjunto o componentes de un grupo de piezas, se especifica el número de piezas por conjunto.
SERIAL NO. (Número de serie)	En el manual de piezas del motor, indica el número de serie del motor en que se utiliza la pieza. En el manual de piezas de la máquina, indica el número de serie del vehículo en que se utiliza esa pieza.

Códigos

Los códigos y números de piezas especificados en las columnas "N°. de pieza" y "Nombre de la pieza" representan lo siguiente:

□	En lugar de esta pieza es posible utilizar la pieza indicada en el renglón de arriba.
⊡	Es posible utilizar esta pieza en lugar de la indicada en el renglón inmediatamente anterior.
◆	Esta pieza y la indicada en el renglón inmediatamente anterior son intercambiables.
■	Es posible utilizar la pieza especificada en la columna "Nombre de las piezas" si se utiliza como un conjunto.
☒	Esta pieza se ha dejado de suministrar. En su lugar, se suministra la pieza indicada en el renglón anterior.
▼	Esta pieza se ha dejado de suministrar. En su lugar, se suministra la pieza especificada en la columna "Nombre de las piezas" como un conjunto.
☆	Esta pieza no se suministra como pieza individual. Se suministra como un conjunto.
★	Esta pieza no se suministra como pieza individual. Se suministra como un conjunto. Sin embargo, es suministrada como pieza individual por ciertos distribuidores.
⊙	Indica grupo de piezas. Las piezas que llevan este código no son suministrables.
====	Las piezas rodeadas por esta línea son componentes del grupo de piezas especificado arriba.
G-1, G-2	Indica la clasificación del grupo de piezas.
KIT	Indica componentes de un juego. Para los componentes de un juego, refiérase a la tabla de los juegos de servicio.
Δ	Indica pieza suministrada como semiterminada. Debe ser reelaborada antes del uso.
PAINT(1)	Indica piezas despachadas con una primera mano de pintura.
PAINT(2)	Indica piezas despachadas con colores diferentes.
(A)	Indica piezas especiales (A) especificadas para climas fríos (-30°C).
(B)	Indica piezas especiales (B) especificadas para climas fríos (-50°C)

INTRODUÇÃO

Ao solicitar uma peça, informe o número, nome e quantidade da peça necessária, bem como o número da carroçaria, número do motor, e leitura do medidor de serviço.

Esta lista de peças não somente especifica os acessórios padrões mas também as peças opcionais e aditamentos. Para pedir uma peça, entre em contato com o revendedor Komatsu mais próximo.

Este livro de peças consiste nos seguintes itens.

Figura e lista

Ao abrir este livro de peças, você encontrará na página esquerda (a página com número par), uma ilustração das peças componentes do conjunto. Cada peça individual no conjunto tem um número de índice.
Na página direita (a página com número ímpar), as peças componentes do conjunto são relacionadas na ordem dos números de índice mostrados na página esquerda. Cada peça é designada com um número, nome, e número de série aplicável.

FIG. NO. (Número da figura)

O número da figura é o número da figura mostrada em tal página. Ele não é um número para fornecimento da peça. Do mesmo modo, os números das figuras nem sempre são contínuos.

INDEX (Número de índice)

Este número é igual ao número de índice na figura. As peças são relacionadas na ordem dos números de índice.

PART NO. (Número de peça)

O número designado na coluna "Número da peça" é o número para a peça mostrada. Ele é o código usado para o pedido da peça. É importante que não haja equívoco com respeito a este número ao pedir uma peça.

DESCRIPTION (Descrição)

Este item descreve o nome da peça que tem o número de peça relacionado. É colocado um "." na frente do nome de um componente de conjunto e o item é introduzido após o conjunto. Se uma peça marcada com "." é um conjunto, seus componentes são marcados com "..".

Exemplo:
ELEMENT ASSEMBLY, AIR CLEANER
.ELEMENT ASSEMBLY, OUTER
..ELEMENT, OUTER
..NUT, WING
..WASHER

Q'ty (Quantidade)

Este item especifica o número de peças usadas para 1 máquina. No entanto, para o conjunto ou componentes de um grupo de peças, o número de peças por conjunto é especificado.

SERIAL NO. (Número de série)

No livro de peças do motor, esse número indica o número de série do motor no qual a peça é usada. No livro de peças da máquina, esse número indica o número de série da máquina na qual a peça é usada.

Códigos

Os códigos e número de peça especificados nas colunas "N.º de peça" e "Descrição" representam o seguinte:

☐	A peça especificada na linha acima pode ser usada no lugar desta peça.
⊡	Esta peça pode ser usada no lugar da peça especificada na linha imediatamente acima.
◆	Esta peça e a peça especificada na linha imediatamente acima são intercambiáveis.
■	A peça especificada na coluna "Descrição" pode ser usada no lugar desta peça se ela for usada como um jogo.
☒	Esta peça não é mais fornecida. A peça especificada na linha acima é fornecida em seu lugar.
▼	Esta peça não é mais fornecida. A peça especificada na coluna "Descrição" é fornecida em seu lugar como um jogo.
☆	Esta peça não pode ser fornecida como uma peça individual. Ela é fornecida como um conjunto.
★	Esta peça não pode ser fornecida como uma peça individual. Ela é fornecida como um conjunto. No entanto, ela é fornecida como uma peça individual somente por revendedores específicos.
⊙	Isso indica um grupo de peças. Esta peça não é considerada uma peça de fornecimento.
====	As peças envolvidas por esta linha são componentes do grupo de peças especificado acima.
G-1, G-2	Isso indica a categoria do grupo de peças.
KIT	Isso indica componentes de um kit. Para os componentes de um kit, refira-se à tabela de kits de serviço.
Δ	Isso indica uma peça fornecida como produto semi-acabado. Ela deve ser reformada antes do uso.
PAINT(1)	Isso indica peças embarcadas pintadas com uma primeira mão de fundo.
PAINT(2)	Isso indica peças embarcadas com cores diferentes.
(A)	Isso indica peças especiais para especificação (A) de tempo frio (-30°C).
(B)	Isso indica peças especiais para especificação (B) de tempo frio (-50°C).

مقدمة

عند طلب القطع، يرجى تحديد رقم القطعة واسم القطعة والكمية المطلوبة من القطعة، مع تحديد رقم الموديل والرقم التسلسلي للمحرك وقراءة عداد الخدمة.

قائمة القطع هذه لا تقتصر على الكماليات القياسية فقط بل تشمل ايضاً القطع والملحقات الاختيارية. لطلب القطع، يرجى الاتصال بأقرب موزع لمنتجات كوماتسو.

قائمة القطع تتضمن البنود التالية.

الشكل والقائمة
عندما تفتح كتاب القطع، ستجد على الصفحة اليسرى (الصفحة ذات الرقم الزوجي) شكلاً توضيحياً للقطع المكونة للمجموعة. كل قطعة في مجموعة المكونات لها رقم فهرس.
على الصفحة اليمنى (الصفحة ذات الرقم الفردي) تم إدراج قائمة بالقطع التي تتكون منها المجموعة مرتبة حسب ارقام الفهرس المبيّنة في الصفحة اليسرى. وقد اعطيت كل قطعة من القطع رقم قطعة واسم قطعة ورقم تسلسلي ينطبق عليها.

FIG. No. (رقم الشكل)
رقم الشكل هو الرقم الخاص بالشكل التوضيحي الذي يظهر في تلك الصفحة. وهو ليس رقم القطعة التي يتم توريدها. كما ان ارقام الاشكال ليست دائماً متتابعة.

INDEX (رقم الفهرس)
هذا الرقم هو نفس رقم الفهرس الوارد في الشكل التوضيحي. تدرج القطع في القائمة مرتبة تبعاً لارقام الفهرس.

PART No. (رقم القطعة)
الرقم الوارد في عمود « رقم القطعة » هو رقم القطعة الخاص بالقطعة المبيّنة. وهو الرمز المستخدم لطلب تلك القطعة. ومن الضروري عدم ارتكاب اي خطأ في تحديد هذا الرقم عند طلب القطع.

DESCRIPTION (الوصف)
يعطي اسم القطعة المدرج رقمها في القائمة.
توضع العلامة " . " امام اسماء القطع المكونة للمجموعة ويدرج البند بعد المجموعة. اذا كانت القطعة المشار اليها بالعلامة " . " هي نفسها عبارة عن مجموعة مكونات فان كلاً من مكوناتها يشار اليها بالعلامة " .. ".
مثال : ELEMENT ASSEMBLY, AIR CLEANER
.ELEMENT ASSEMBLY, OUTER
.. ELEMENT, OUTER
..NUT, WING
..WASHER

Q'ty (الكمية)
هذا هو عدد القطع المستخدمة لآلية واحدة. أما بالنسبة لمجموعات المكونات ومجموعات القطع فانه يتم تحديد عدد القطع لكل مجموعة.

SERIAL No. (الرقم التسلسلي)
في كتاب قطع المحرك، يشير هذا الرقم الى الرقم التسلسلي للمحرك الذي تستخدم فيه القطعة. في كتاب قطع الآلية، يشير هذا الرقم الى الرقم التسلسلي للآلية التي تستخدم فيها القطعة.

الرموز
الرموز وارقام القطع المذكورة في عمود « رقم القطعة » وعمود « الوصف » تمثل كما يلى:

□ القطعة المذكورة في السطر السابق يمكن استعمالها بدلاً من هذه القطعة.

⊡ هذه القطعة يمكن استعمالها بدلاً من القطعة المذكورة في السطر السابق مباشرة.

◆ هذه القطعة والقطعة المذكورة في السطر السابق مباشرة يمكن لكل منهما ان تحل محل الاخرى.

■ القطعة المذكورة في عمود « الوصف » يمكن استعمالها بدلاً من هذه القطعة اذا استخدمت كطقم.

⊠ هذه القطعة توقف توريدها. يتم توريد القطعة المذكورة في السطر السابق بدلاً منها.

▼ هذه القطعة توقف توريدها. يتم توريد القطعة المذكورة في عمود « الوصف » بدلاً منها كطقم.

☆ هذه القطعة لا يمكن توريدها كقطعة منفردة. يتم توريدها كمجموعة.

★ هذه القطعة لا يمكن توريدها كقطعة منفردة. يتم توريدها كمجموعة. على انه يتم توريدها كقطعة منفردة من قبل موزعين معيّنين فقط.

⊙ هذا يشير الى مجموعة قطع.
هذه القطعة لا تعتبر قطعة للتوريد.

==== القطع المحاطة بهذا الخط هي مكونات لمجموعة القطع المذكورة اعلاه.

G-1,G-2 هذا يشير الى فئة مجموعة القطع.
KIT هذا يشير الى مكونات الاطقم التركيبية. بخصوص الاطقم التركيبية، يرجى مراجعة جدول الاطقم التركيبية للخدمة.

△ هذا يشير الى قطعة مورّدة شبه مكتملة التصنيع. تتطلب استكمال تصنيعها قبل الاستعمال.

PAINT(1) هذا يشير الى القطع المشحونة بعد طلائها بطبقة سفلية.
PAINT(2) هذا يشير الى القطع المشحونة بألوان مختلفة.

(A) هذا يشير الى قطع خاصة بمواصفات الطقس البارد من الفئة (A) (-٣٠°م).
(B) هذا يشير الى قطع خاصة بمواصفات الطقس البارد من الفئة (B) (-٥٠°م).

ПРЕДИСЛОВИЕ

При формировании заказа на детали, узлы и агрегаты, кроме их номера детали, наименования и количества, завод-изготовитель просит заказчиков информировать о серийном номере машины и двигателя, для которых делается заказ, а также показании счетчика мото-часов.

В Каталоге приведены не только стандартные агрегаты, но и дополнительные устройства и принадлежности, поставляемые по специальному заказу.
При необходимости приобретении их обратиться к местному дилеру фирмы "Комацу".

Каталог деталей составлен, как ниже изложено:

Рисунки и таблицы деталей

При открытии Каталога на левой странице (чётной) приведен рисунок деталей устройства или агрегата. Каждая деталь обозначена номером позиции.
На правой странице (нечётной) приведена таблица деталей, нарисованных на левой странице, с соответствующим номером детали, наименованием, количеством и серийными номерами машины, для которых предназначена данная деталь, в порядке возрастания номеров позиции.

FIG No. (№ рисунка)

Номер рисунка (фиг.) является собственным для данного рисунка и не является номером показанной детали. Номера рисунков (фиг.) могут быть непорядковыми.

INDEX (Указатель)

В указателе приведены номера позиции деталей на рисунке в порядке возрастания цифр.

PART No. (Номер детали)

При заказе на деталь, установленную на рисунке, следует указать номер, приведенный в данной колонне. Именно этот номер определяет каждую деталь.

DESCRIPTION (Наименование детали)

Приведено наименование детали, соответствующей выбранному номеру детали. Точка "." поставлена перед наименованием каждой составной части устройства. Если составная часть состоит из множества деталей, то эти детали обозначаются двумя точками "..".
Например:
ELEMENT ASSEMBLY, AIR CLEANER
. ELEMENT ASSEMBLY, OUTER
.. ELEMENT, OUTER
.. NUT, WING
.. WASHER

Q'TY (Количество)

Указано количество деталей, необходимое на единицу данного устройства. Для деталей составной части устройства, а также для группы деталей указано их количество на единицу составной части или на группу.

SERIAL No. (Серийные номера)

В части двигателя приведены серийные номера двигателей, а в части шасси — серийные номера машин, в которых применена данная деталь.

Условные обозначения

Условные обозначения, применяемые в колоннах "Номер детали" и "Наименование детали", характеризуют следующее:

- □ Вышеприведенная деталь может заменить настоящую деталь.

Условные обозначения (Продолжение)

- ◙ Настоящая деталь может заменить деталь, приведенную на одну строчку выше.
- ◆ Настоящая деталь и деталь, приведенную на одну строчку выше, имеют взаимозаменяемость.
- ■ Взамен настоящей детали возможно использовать детали, приведенные в колонне "Наименование детали", в комплекте.
- □ Поставка этой детали прекращена. Взамен этой детали поставляется деталь, приведенная на одну строчку выше.
- ▼ Поставка этой детали прекращена. Взамен этой детали поставляются детали, приведенные в колонне "Наименование детали", в комплекте.
- ☆ Настоящая деталь поставляется только в комплекте, а не в отдельности.
- ★ Настоящая деталь поставляется, как правило, только в комплекте, а не в отдельности. Ее можно достать только у отдельных дилеров фирмы "Комацу".
- ◉ Группа деталей.
  Детали не подлежат дополнительной поставке.
- ------ Детали, ограниченные этой линией, составляют вышеприведенную группу деталей.
- G-1, G-2 Обозначения, характеризующие отдельные группы деталей.
- KIT Составляющая комплекта.
  См. таблицы ремонтных комплектов.
- △ Деталь, поставляемая в неготовом виде.
  Перед употреблением необходимо дополнительно обработать.
- PAINT(1) Детали, отгружаемые в загрунтованном виде.
- PAINT(2) Детали, отгружаемые в окрашенном в другой цвет виде.
- (A) Детали, рассчитанные на холодные районы (-30° C)
- (B) Детали, рассчитанные на особо холодные районы (-50° C)

前　言

订购零件时，请注明需要零件的货号、品名、数量以及使用机器的车辆编号、发动机型号和系列号、工作时数。

此零件明细表上不仅记载有标准装备零件，还记载有选购零件、附件零件。如果您需要订货，请与最近的小松代理店联系。

为了清楚明了，零件手册中有如下规定:

图　　表	打开此零件清单后， 在左侧的页上（偶数页）用图示表示按安装的装置上的零件。在图示上标有各种零件的索引号码。 在右侧的页上（奇数页）按照左侧图示上表示的零件索引号码以表格的形式 表示货号、品名、数量、适用机型。
FIG. No.	图号（FIG.）表示该页图的号码，它不时补充零件用的货号. 同时，此号码不一定是连续号码。
INDEX	与图的索引号码一致，按索引号码顺序编制为表格形式。
PART No.	此栏所示的货号是图示零件的货号，它是在订货时需要的标明的特定代号，是非常重要的。
DESCRIP-TION	它表示相当于货号的零件名称。 构成组装品的零件，在品名的前面有标记，记载在组装品之后。 另外，如果标记的零件是组装品，在该构成零件的品名前标有 .. 标记。 例如: ELEMENT ASSEMBLY, AIR CLEANER .ELEMENT ASSEMBLY, OUTER ..ELEMENT, OUTER ..NUT, WING ..WASHER
Q'TY	表示 1 台机器中需要使用的该零件数量。 但是，如果是组装零件和零件组的构成零件时，表示其组装件的件数。
SERIAL No.	发动机篇中表示该使用零件的发动机型号，在机体篇中表示该使用零件的车辆号码。
代　　号	货号栏和零件品名栏里的代号如下所示: □　　上一行的零件可取代此行零件来使用。

代　　号 （续）	
⊡	此行零件可代替紧接着的上一行零件使用。
◆	此行零件可与紧挨着的上一行零件互换使用。
■	如果将此行零件说明栏内的零件配套后，可取代此零件来使用。
⊠	该行零件已停止供应，用上一行的零件代替使用。
▼	此行零件已停止供应，将此行零件说明栏内的零件配套后代替此零件供应。
☆	此行零件拟成套供应，不以单一零件供应。
★	此行零件拟成套供应，不以单一零件供应，但特定代理除外。
⊙	成组零件，一般不考虑成组供应。
====	用这种符号包括的零件是符号上一行指明成组件的零部件。
G-1,G-2	成组零件编号。
KIT	修理包，关于修理包构件详情，请参考技术服务修理包资料。
△	此行零件以半成品的形式供应，使用前必须再加工。
PAINT(1)	只涂底漆装船。
PAINT(2)	和本体不同颜色装船。
(A)	适用寒冷地区。（－30℃）
(B)	适用极寒冷地区。（－50℃）

CONTENTS

CONTENTS

FOREWORD ..... OF- 2
CONTENTS ..... OC- 2

	FIG. NO	PAGE
AA [ENGINE]		
CYLINDER HEAD	A1010-A0A1	030010
ENGINE HANGER	A1050-A0A1	030020
HEAD COVER	A1110-A0A1	030030
BREATHER ND HOSE	A111V-A0A1	030040
AIR INTAKE CONNECTION ABD EXHAUST MANIFOLD	A1310-A0A1	030050
TURBOCHARGER OIL PIPING	A1530-A0A1	030060
THERMOSTAT AND THERMOSTAT HOUSING	A1730-A0A1	030070
CYLINDER BLOCK	A2010-A0A1	030080
FRONT COVER	A2040-A0A1	030090
CAMFLLOWER COVER	A2060-A0A1	030100
OIL FILTER (WITHOUT FILLER)	A2070-A0A1	030110
OIL PAN	A2110-A0A1	030120
OIL LEVEL GAUGE	A2110-B0A1	030130
FLYWHELL HOUSING	A2210-A0A1	030140
FLYWHELL	A2250-A0A1	030150
CRANCSHAFT	A2310-A0A1	030160
DAMPER	A2330-A0A1	030170
PISTON	A2350-A0A1	030180
ROCKER ARM	A2410-A0A1	030190
CAMSHAFT AND TAPPET	A2510-A0A1	030200
OIL PUMP	A3010-A0A1	030210
OIL FILTER AND OIL COOLER	A3310-A0A1	030220
FUEL INJECTION PUMP MOUNTING	A4010-A0A1	030230
FUEL INJECTION PPING AND SPILL PIPE	A4030-A0A1	030240
FUEL INJECTION PUMP LUBRICATOR	A4050-A0A1	030250
FUEL TRANSFER PUMP	A4170-A0A1	030260
FUEL FILTER	A4180-A0A1	030270
INJECTION NOZZLE	A4210-A0A1	030280
SOLENOID	A451P-A0A1	030290
WATER PUMP	A5010-A0A1	030300
WATER INLET CONNECTION	A5030-A0A1	030310
FAN DRIVE	A5060-A0A1	030320
TENSION PULLEY	A5080-A0A1	030330
ALTERNATOR MOUNTING (40A)	A6010-A0A1	030340
STARTING MOTOR MOUNTING (5.5KW)	A6210-A0A1	030350
B0[ENGINE RELATED PARTS]		
HEATER SWITCH	B0000-01A0	030010
AIR CLEANER	B0000-02A0	030020
PRE CLEANER	B0000-03A0	030030
AIR CLEANER CAP	B0000-03A1	030031
HEAT SHIELD	B0000-04A0	030040
MUFFLER	B0000-05A0	030050
WATER TEMPERATURE SENSOR (WITH MONITORPANEL)	B0000-06A0	030060
OIL FILLER	B0000-07A0	030070
OIL PAN	B0000-08A0	030080
FLYWHEEL HOUSING	B0000-09A0	030090
MOUNT BRACKET	B0000-10A0	030100
PRESSURE SWITCH	B0000-11A0	030110
FUEL FILTER	B0000-12A0	030120
COOLING FAN (BLOWER TYPE)	B0000-13A0	030130
CORROSION RESISTER	B0000-14A0	030140
STARTING MOTOR SWITCH	B0000-15A0	030150
STARTING MOTOR MOUNTING (5.5KW)	B0000-16A0	030160
SAFETY GUARD	B0000-17A0	030170
ENGINE MOUNT	B0100-01A0	030180
ENGINE WIRING	B0500-01A0	030190
DAMPER	B0600-01A0	030200
C0[COOLING SYSTEM]		
COOLING (WITH AIR CONDITIONER)	C0100-01A0	060010

	FIG. NO	PAGE
COOLING (WITH AIR CONDITIONER)	C0100-01A1	060020
COOLING (WITH REVERSIBLE FAN)	C0100-01A2	060030
COOLING (HOUSE, MOUNT, RESERVE TANK)	C0100-02A0	060040
COOLING (SANDY DUSTY PROTECTION GRID)	C0100-03A3	060050
D0[FUEL TANK AND RELATED PARTS]		
FUEL TANK (FOR MONITOR PANEL)	D0100-01A0	090010
FUEL LINE	D0200-01A0	090020
ADDITIONAL FUEL STRAINER AND WATER SEPARATOR	D0210-01A0	090030
E0[ELETRICAL SYSTEM]		
BATTERY	E0110-01A0	120010
VEHICLE WIRING	E0200-01A0	120020
VEHICLE WIRING (TEMPERATURE SENSOR WIRING)	E0200-02A0	120030
VEHICLE WIRING (WITHOUT FAN CONTROLLER)	E0200-03A0	120040
VEHICLE WIRING (RELAY)	E0200-04A0	120050
BATTERY WIRING	E0210-01A0	120060
VEHICLE LAMP	E0300-01A0	120070
WORK LAMP (FRONT)	E0310-01A0	120120
WORK LAMP (REAR)	E0310-02A0	120130
ADDITIONAL REAR LAMP	E0320-01A0	120080
ADDITIONAL FRONT AND REAR LAMP (LAMP AND WIRING)	E0320-01A1	120081
BACK-UP ALARM	E0420-01A0	120090
F0[TRANSMISSION]		
UNIVERSAL JOINT	F2200-01A0	150010
POWER LINE (POWER LINE MOUNT)	F2300-01A0	150020
POWER LINE (BEVEL GEAR AND SHAFT)	F2300-02A0	150030
POWER LINE (CLUTCH AND BRAKE)	F2300-03A0	150040
POWER LINE (CASE)	F2300-04A0	150050
POWER LINE (STEERING CASE AND BRAKE VALVE PIPING)	F2300-05A0	150060
POWER LINE (PRIORITY VALVE PIPING)	F2300-06A0	150070
POWER LINE (OIL LINE)	F2300-07A0	150080
POWER LINE (CHECK LINE)	F2300-08A0	150090
POWER LINE (BRAKE CONTROL 1/2)	F2300-09A0	150100
POWER LINE (BRAKE CONTROL 2/2)	F2300-10A0	150110
POWER LINE (BRAKE CONTROL BRACKET)	F2300-11A0	150120
POWER LINE (TRANSMISSION CONTROL)	F2300-12A0	150130
POWER LINE (STEERING PISTON)	F2300-13A0	150140
POWER LINE (BRAKE VALVE)	F2300-14A0	150150
POWER LINE (PRIORITY VALVE)	F2300-15A0	150160
POWER LINE (BRAKE CYLINDER)	F2300-16A0	150170
POWER LINE (TRANSMISSION SUPPORT)	F2300-17A0	150180
POWER LINE PIPING (PUMP AND TRANSMISSION) (FOR PAT DOZER)	F2300-18A0	150190
POWER LINE PIPING (PUMP AND TRANSMISSION) (FOR ANGLE DOZER)	F2300-18A1	150200
POWER LINE PIPING (CASE)	F2300-19A0	150210
POWER LINE PIPING (OIL LINE)	F2300-20A0	150220
POWER LINE PIPING (CHECK LINE)	F2300-21A0	150230
POWER LINE (TRANSMISSION AND BRAKE CONTROL)	F2300-22A0	150240
TRANSMISSION (1ST CLUTCH)	F2320-01A0	150250
TRANSMISSION (2ND CLUTCH)	F2320-02A0	150260
TRANSMISSION (3RD AND FORWARD CLUTCH)	F2320-03A0	150270
TRANSMISSION (REVERSE CLUTCH)	F2320-04A0	150280
TRANSMISSION (CASE)	F2320-05A0	150290
TRANSMISSION (CASE ACCESSORIES PARTS)	F2320-06A0	150300
TRANSMISSION (INPUT)	F2320-07A0	150310
TRANSMISSION (OUTPUT)	F2320-08A0	150320
TRANSMISSION (SHIFT VALVE)	F2320-09A0	150330
TRANSMISSION (SHIFT VALVE MOUNT ANDVALVE PIPING)	F2320-10A0	150340
TRANSMISSION (PRESSURE VALVE)	F2320-11A0	150350
TRANSMISSION (FILLER AND PIPING)	F2320-12A0	150360
TRANSMISSION (INCHING CONTROL)	F2320-13A0	150370
FINAL DRIVE (L.H)	F2380-01A0	150380
FINAL DRIVE (R.H)	F2380-02A0	150390
FINAL DRIVE (MOUNT)	F2380-03A0	150400
POWER LINE OIL LINE (FILTER AND OIL GAUGE)	F2730-01A0	150410
POWER LINE OIL LINE (COOLING LINE)	F2730-02A0	150420

	FIG. NO	PAGE
TRAVEL CONTROL	F2820-01A0	150430
H0[HYDRAULIC SYSTEM]		
HYDRAULIC TANK	H0100-01A0	180010
CONTROL VALVE (1-SPOOL) (MOUNT)	H0120-01A0	180020
CONTROL VALVE (3-SPOOL) (MOUNT)	H0120-01A1	180030
CONTROL VALVE (4-SPOOL) (MOUNT)	H0120-01A2	180040
HYDRAULIC PUMP LINE (SUCTION AND VALVE LINE) (FOR PAT DOZER)	H0310-01A0	180050
HYDRAULIC PUMP LINE (FOR ANGLE DOZER)	H0310-01A1	180060
HYDRAULIC PUMP LINE (RETURN LINE) (FOR PAT DOZER)	H0310-02A0	180070
HYDRAULIC PUMP LINE (OIL COOLER LINE)	H0310-03A0	180080
LIFT CYLINDER LINE	H2210-01A0	180090
HYDRAULIC PUMP LINE (OIL COOLER LINE) (FOR RIPPER)	H2210-01A1	180100
TILT CYLINDER LINE	H2220-01A0	180110
ANGLE CYLINDER LINE	H2230-01A0	180120
REAR HYDRAULIC LINE (FOR RIPPER)	H2250-01A0	180130
J0[MAIN/REVOLVING FRAME AND RELATED PARTS]		
MAIN FRAME (PAT DOZER)	J2100-01A0	210010
MAIN FRAME (ANGLE DOZER)	J2100-01A1	210020
K0[OPERATOR'S COMPARTMENT AND CONTROL SYSTEM]		
OPERATOR´S SEAT (RIGID TYPE) (LEATHER SEAT)	K0110-01A0	240010
OPERATOR´S SEAT (TURN AND RECLINING TYPE) (FABRIC SEAT)	K0110-01A1	240020
OPERATOR´S SEAT (RECLINING TYPE) (LEATHER SEAT)	K0110-01A2	240030
OPERATOR´S SEAT (TURN AND RICLINING TYPE) (LEATHER SEAT)	K0110-01A3	240040
OPERATOR´S SEAT (RECLINING TYPE) (WITH HEAD REST)	K0110-01A4	240050
OPERATOR´S SEAT (RECLINING TYPE) (FABRIC SEAT)	K0110-01A5	240060
OPERATOR´S SEAT (TURN AND RECLINING TYPE) (FABRIC SEAT) (WITH HEAD REST)	K0110-01A6	240070
OPERATOR´S SEAT (RECLINING TYPE) (LEATHER SEAT) (HIBACK)	K0110-01A7	240080
OPERATOR´S SEAT (RECLINING TYPE) (FABRIC SEAT) (HIBACK)	K0110-01A8	240090
OPERATOR´S SEAT (TURN AND RICLINING TYPE) (MOUNT)	K0110-02A1	240100
OPERATOR'S SEAT (FABRIC SEAT) (AIR SUSPENSSION TYPE)	K0110-02A2	240101
SEAT FRAME (EXCEPT JAPAN)	K0120-01A0	240110
SEAT BELT (FOR SUSPENSION SEAT)	K0160-01A1	240120
CAB (BODY)	K0210-01A0	240130
CAB (DOOR AND DOOR LOCK)	K0210-02A0	240140
CAB (DOOR) (DUMPER, WINDOW, WIPER)	K0210-03A0	240150
CAB (DOOR OPEN LOCK BRACKET)	K0210-04A0	240160
CAB (DOOR OPEN LOCK LATCH)	K0210-05A0	240170
CAB (WINDOW)	K0210-06A0	240180
CAB (SASH)	K0210-07A0	240190
CAB (GRIP)	K0210-08A0	240200
CAB (ELECTRICAL EQUIPMENT) (SWITCH, ROOM LAMP, WIPER)	K0210-09A0	240210
CAB (WASHER HOSE)	K0210-10A0	240220
CAB (RADIO MOUNT BRACKET) (RADIO LESS)	K0210-11A0	240230
CAB (INSIDE COVER)	K0210-12A0	240240
CAB (MIRROR)	K0210-13A0	240250
CAB (AIR CONDITIONER DUCT)	K0210-14A0	240260
CAB (INSTALLATION PARTS)	K0210-15A0	240270
CAB (ENVELOPE PARTS) (1/2)	K0210-16A0	240280
CAB (ENVELOPE PARTS) (2/2)	K0210-17A0	240290
FLOOR (WITH CAB)	K0310-01A0	240300
FLOOR (WITHOUT CAB)	K0310-01A1	240310
ROPS (WITH CAB)	K0410-01A0	240320
REAR VIEW MIRROR	K0411-01A0	240355
ROPS (WITHOUT CAB)	K0410-01A1	240330
AIR CONDITIONER (CONDENSER AND COMPRESSOR)	K0710-01A0	240340
AIR CONDITIONER (PIPING BRACKET)	K0710-02A0	240350
AIR CONDITIONER (COMPRESSOR MOUNT AND CONDENSER WIRING)	K0710-03A0	240360
AIR CONDITIONER (HEATER LINE)	K0710-04A0	240370
FIRE EXTINGUISHER	K0830-01A0	240380
FIRE EXTINGUISHER (PAKISTAN)	K0830-01A1	240381
CUP HOLDER (WITHOUT CAB)	K0860-01A0	240390
FLOOR FRAME (MOUNT AND PLUG)	K2110-01B0	240400
FLOOR FRAME (MOUNT AND PLUG) (WITHOUT CAB)	K2110-01B1	240410
FLOOR FRAME (FUEL CONTROL)	K2110-02B0	240420

	FIG. NO	PAGE
FLOOR FRAME (BLADE CONTROL) (FOR ANGLE DOZER)	K2110-03B0	240430
FLOOR FRAME (BLADE CONTROL) (1/2) (FOR PAT DOZER)	K2110-04B0	240440
FLOOR FRAME (BLADE CONTROL) (2/2) (FOR PAT DOZER)	K2110-04B1	240450
FLOOR FRAME (SPEED CONTROL) (1/2)	K2110-05B0	240460
FLOOR FRAME (SPEED CONTROL) (2/2)	K2110-06B0	240470
FLOOR FRAME (STEERING CONTROL) (1/2)	K2110-07B0	240480
FLOOR FRAME (STEERING CONTROL) (2/2)	K2110-08B0	240490
FLOOR FRAME (BLADE LOCK) (FOR POWERANGLEPOWER TILT DOZER)	K2110-09B0	240500
FLOOR FRAME (BLADE LOCK) (FOR ANGLE DOZER)	K2110-09B1	240510
FLOOR FRAME (TRANSMISSION LOCK LEVER)	K2110-10B0	240520
FLOOR FRAME (TRANSMISSION LOCK SHAFT)	K2110-11B0	240530
FLOOR FRAME (ELECTRICAL EQUIPMENT)	K2110-12B0	240540
FLOOR FRAME (WIRING) (1/2)	K2110-13B0	240550
FLOOR FRAME (WIRING) (2/2)	K2110-14B0	240560
FLOOR FRAME (WINDOW WASHER HOSE)	K2110-15B0	240570
FLOOR FRAME (PILOT VALVE)	K2110-16B0	240580
FLOOR FRAME (HANDLE) (WITHOUT CAB)	K2110-17B1	240590
FLOOR FRAME (KNOB)	K2110-18B0	240600
FLOOR SUSPENTION (VISCOUS MOUNT)	K2120-01A0	240610
DASHBOARD (WITHOUT CAB) (WITH MONITOR PANEL)	K2210-01A0	240620
DASHBOARD (CAB) (WITH AIR-CONDITIONER) (AIR-CONDITIONER KIT)	K2210-01A1	240630
DASHBOARD (WITHOUT CAB) (SWITCH, TIMERAND WIRING)	K2210-02A0	240640
DASHBOARD (CAB) (WITH AIR-CONDITIONER) (AIR-CONDITIONER MOUNT)	K2210-02A1	240650
DASHBOARD (CAB) (WITH AIR-CONDITIONER) (AIR-CONDITIONER BOX)	K2210-03A1	240660
DASHBOARD (CAB) (WITH AIR-CONDITIONER) (FILTER COVER)	K2210-04A1	240670
DASHBOARD (CAB) (WITH AIR-CONDITIONER) (DASHBOARD)	K2210-05A1	240680
DASHBOARD (CAB) (WITH AIR-CONDITIONER)(PANEL BOARD)	K2210-06A1	240690
DASHBOARD (CAB) (WITH AIR-CONDITIONER) (MONITOR)	K2210-07A1	240700
DASHBOARD (CAB) (WITH AIR-CONDITIONER) (WIRING AND LAMP)	K2210-08A1	240710
BLADE CONTROL SYSTEM	K2241-01A0	240720
BLADE CONTROL SYSTEM (WITH RIPPER)	K2241-01A1	240730
FLOOR (FLOOR) (WITH DECELERATOR PEDAL)	K2400-01A0	240740
FLOOR (BRAKE PEDAL) (WITH DECELERATOR PEDAL)	K2400-02A0	240750
FLOOR (DECELERATOR PEDAL) (WITH DECELERATORPEDAL)	K2400-03A0	240760
FLOOR (INCHING PEDAL (WITH DECELERATORPEDAL)	K2400-04A0	240770
FLOOR (FLOOR MOUNT) (WITH DECELERATOR PEDAL)	K2400-05A0	240780
ARM REST COVER (UPPER)	K2500-01A0	240790
ARM REST COVER (LOWER (WITH CAB)	K2500-02A0	240800
ARM REST COVER (LOWER) (WITH CAB)(FOR RIPPER)	K2500-02A1	240810
ARM REST COVER (LOWER) (WITHOUT CAB)	K2500-02A2	240820
ARM REST COVER (LOWER) (WITHOUT CAB) (WITH EXTINGUISHER)	K2500-02A3	240830
HAND RAIL	K2810-01A0	240840
HAND RAIL (FOR CAB)	K2810-01A1	240850
WINDOW WASHER TANK	K2910-01A0	240860

M0[GUARD]

RADIATOR GUARD	M2110-01A0	270010
RADIATOR MASK (REINFORCED)	M2120-01A0	270020
FRONT GUARD (ENGINE HOOD) (WITH CAB)	M2140-01A0	270030
FRONT GUARD (ENGINE HOOD) (WITHOUT CAB)	M2140-01A1	270040
FRONT GUARD (ENGINE SIDE COVER, UPPER) (WITH CAB)	M2140-02A0	270050
FRONT GUARD (ENGINE SIDE COVER, UPPER) (WITH PRE-CLEANER) (WITHOUT CAB)	M2140-02A1	270060
FRONT GUARD(ENGINE SIDE COVER, LOWER) (WITH PRE-CLEANER)	M2140-03A0	270070
FRONT GUARD (ENGINE HOOD MOUNT)	M2140-04A0	270080
REAR GUARD (BATTERY COVER)	M2210-01A0	270090
REAR GUARD (FILTER COVER) (WITH AIRCONDITONER)	M2210-02A0	270100
REAR GUARD (FILTER COVER)	M2210-02A1	270110
REAR GUARD (BRACKET)	M2210-03A0	270120
REAR GUARD (FENDER)	M2210-04A0	270130
REAR GUARD (NON SLIP)	M2210-06A0	270140
REAR GUARD (TOOL BOX & BATTERYPLATE & BATTERY, FILTER COVER)	M2210-07A0	270150
REAR COVER	M2240-01A0	270160
REAR COVER (WITH RIPPER)	M2240-01A1	270170
COVER	M2811-01A0	270180
COVER (WITH FRONT HOOK)	M2811-01A2	270190

	FIG. NO	PAGE
R0[UNDER CARRIAGE]		
FRONT IDLER	R0100-01A0	300010
IDLER CUSHION	R0120-01A0	300020
TRACK ROLLER (HD LINK) (SINGLE GROUSER)	R0200-01A0	300030
RACK ROLLER (HD LINK) (DOUBLE GROUSER) (510MM WIDE)	R0200-02A0	300040
CARRIER ROLLER	R0300-01A0	300050
TRACK SHOE (LUBRICATE TYPE) (SINGLE GROUSER) (510MM WIDE) (HD LINK)	R0500-01B0	300060
TRACK SHOE (LUBRICATE TYPE) (SINGLE GROUSER) (560MM WIDE) (HD LINK)	R0500-01B1	300070
TRACK SHOE (LUBRICATE TYPE) (SINGLE GROUSER, WITH HOLE) (510MM WIDE) (HD LINK)	R0500-01B2	300080
TRACK SHOE (LUBRICATE TYPE) (SINGLE GROUSER, (WITH HOLE) (460MM WIDE) (HD LINK) (FOR TRIMMING)	R0500-01B4	300090
TRACK SHOE (LUBRICATE TYPE) (SINGLE GROUSER) (510MM WIDE) (HD LINK, AR BUSHING)	R0500-01B5	300100
TRACK SHOE (LUBRICATE TYPE) (SINGLE GROUSER) (560MM WIDE) (HD LINK, AR BUSHING)	R0500-01B6	300110
TRACK SHOE (LUBRICATE TYPE) (SINGLE GROUSER) (700MM WIDE)	R0500-01B7	300111
ROLLER GUARD (FOR HD LINK)	R2200-01A0	300120
ROLLER GUARD (FOR HD LINK)	R2200-01A1	300121
ROLLER GUARD (FULL GUARD)	R2200-02A0	300130
ROLLER GUARD (FULL GUARD)	R2200-02A1	300131
T0[WORK EQUIPMENT]		
DOZER FRAME	T2110-01A0	330010
ANGLE FRAME	T2110-01A1	330020
ANGLE FRAME (LINK)	T2110-02A1	330030
LINK (FOR PAT DOZER)	T2115-01A0	330040
ARM AND BRACE (FOR ANGLE DOZER)	T2115-01A1	330050
LINK (CYLINDER PIN) (FOR PAT DOZER)	T2115-02A0	330060
BLADE (FOR PAT DOZER)	T2120-01A0	330070
BLADE (FOR PAT DOZER) (B35111 AND UP)	T2120-01A0A	330071
BLADE (FOR PAT DOZER) (WIDE TYPE)	T2120-01A1	330080
BLADE (FOR PAT DOZER) (WIDE TYPE) (B35111 AND UP)	T2120-01A1A	330081
BLADE (FOR ANGLE DOZER)	T2120-02A0	330090
BLADE END BIT (STRONG)	T2121-01A0	330100
DOZER OIL LINE (ANGLE CYLINDER LINE) (FOR PAT DOZER)	T2160-01A0	330110
DOZER OIL LINE (TILT CYLINDER LINE AND COVER) (FOR PAT DOZER)	T2160-02A0	330120
DOZER OIL LINE (LIFT CYLINDER LINE) (FOR PAT DOZER)	T2160-03A0	330130
DOZER OIL LINE (LIFT CYLINDER LINE) (FOR ANGLE DOZER)	T2160-04A0	330140
RIPPER (RIGID TYPE)	T2400-01A0	330150
HITCH	T2810-01A0	330160
DRAWBAR	T2810-01A3	330170
U0[MARKS AND PLATES]		
MARKS AND PLATES (ENGLISH) (FOR U. S. A.)	U0100-01A0	360010
MARKS AND PLATES (ASIA)	U0100-01A3	360011
MARKS AND PLATES (PAKISTAN)	U0100-01A3A	360015
MARKS AND PLATES (SPANISH)	U0100-01A4	360020
MARKS AND PLATES (INDONESIAN)	U0100-01A5	360030
MARKS AND PLATES (PORTUGUESE)	U0100-01A6	360040
CENTER OF GRAVITY MARK	U0400-01A0	360050
ROPS PLATES	U0520-01A0	360060
V0[ACCESSORY AND TOOL]		
SPARE PARTS (MACHINE)	V0100-01A0	390010
SPARE PARTS (ENGINE)	V0100-01A1	390020
SPARE PARTS (ENGINE MACHINE)	V0100-01A2	390030
CAP AND OVERALL	V0200-01A0	390040
TOOL	V0300-01A0	390050
W0[MICELLANEOUS]		
VANDALISM PROTECTION (PANEL)	W2112-01A0	420010

	FIG. NO	PAGE
Y0[SERVICE KIT AND COMPONENT PARTS]		
SHOE BOLT AND NUT SERVICE KIT	Y0320-01A0	450010
TRACK LINK (LUBRICATE TYPE) (HEAVY DUTY (SUPPLY PARTS)	Y0322-01A6	450020
TRACK LINK (LUBRICATE TYPE) (HEAVY DUTY) (SUPPLY PARTS) (FOR TRIMING)	Y0322-01A7	450030
TRACK LINK (LUBRICATE TYPE) (HEAVY DUTY) (ABRASIVE RESISTANT TYPE BUSHING) (SUPPLY PARTS)	Y0322-01A8	450040
BLADE LIFT CYLINDER (INNER PARTS)	Y1620-01A0	450050
LADE ANGLE CYLINDER (INNER PARTS)	Y1620-21A0	450060
BLADE TILT CYLINDER (INNER PARTS)	Y1620-31A0	450070
RIPPER CYLINDER (INNER PARTS)	Y1621-01A0	450080
CONTROL VALVE (3-SPOOL) (1/4)	Y1663-01A0	450090
CONTROL VALVE (3-SPOOL) (2/4)	Y1663-02A0	450100
CONTROL VALVE (3-SPOOL) (3/4)	Y1663-03A0	450110
CONTROL VALVE (3-SPOOL) (4/4)	Y1663-04A0	450120
CONTROL VALVE (4-SPOOL) (1/7) (FOR RIPPER)	Y1664-01A0	450130
CONTROL VALVE (4-SPOOL) (2/7) (FOR RIPPER)	Y1664-02A0	450140
CONTROL VALVE (4-SPOOL) (3/7) (FOR RIPPER)	Y1664-03A0	450150
CONTROL VALVE (4-SPOOL) (4/7) (FOR RIPPER)	Y1664-04A0	450160
CONTROL VALVE (4-SPOOL) (5/7) (FOR RIPPER)	Y1664-05A0	450170
CONTROL VALVE (4-SPOOL) (6/7) (FOR RIPPER)	Y1664-06A0	450180
CONTROL VALVE (4-SPOOL) (7/7) (FOR RIPPER)	Y1664-07A0	450190
PPC VALVE	Y1670-01A0	450200

ZZ [INDEX]

NUMERICAL INDEX ..... ZZ

D41E-6

ENGINE

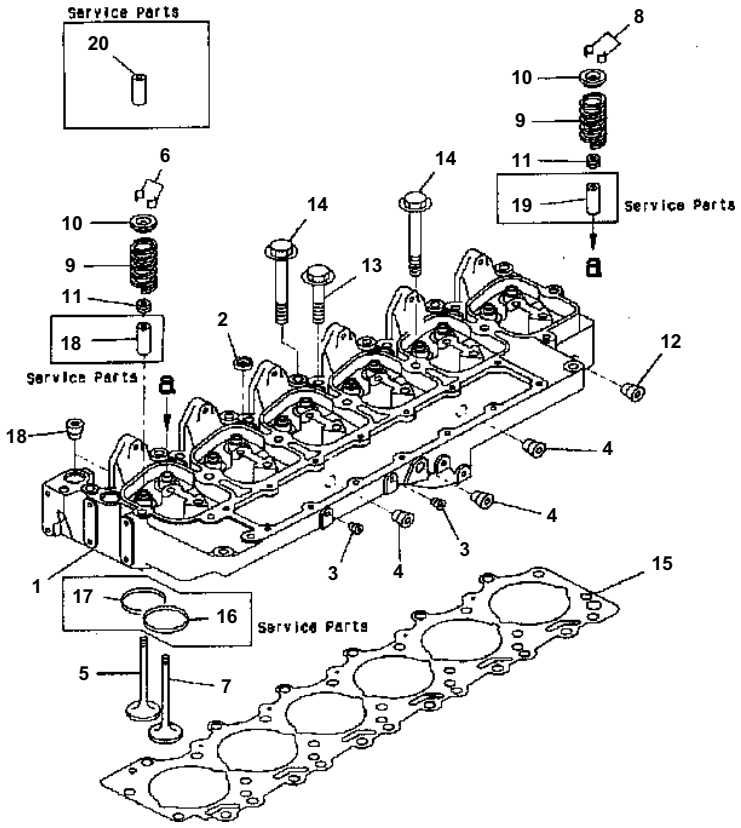

S6D102E1 S/N 30769890-UP

CYLINDER HEAD

Item	Part No.	Description	Qty	Options
	6735-11-1201	CYLINDER HEAD A.	1	SN:30769890--
1	☆	· HEAD, CYLINDER	1	SN:30769890--
2	6736-11-1150	· · PLUG	5	SN:30769890--
3	6732-11-1930	· · PLUG	2	SN:30769890--
4	6732-11-1910	· · PLUG	5	SN:30769890--
	6736-41-4110	· · INTAKE VALVE A. , INTAKE	6	SN:30769890--
5	☆	· · · VALVE	1	SN:30769890--
6	6732-41-4520	· · · COTTER	2	SN:30769890--
	6736-41-4210	· · EXHAUST VALVE A. , EXHAUST	6	SN:30769890--
7	☆	· · · VALVE	1	SN:30769890--
8	6732-41-4520	· · · COTTER	2	SN:30769890--
9	6732-41-4430	· · SPRING	12	SN:30769890--
10	6732-41-4510	· · RETAINER	12	SN:30769890--
11	6732-41-4540	· · SEAL, EXHAUST	12	SN:30769890--
12	6732-11-1920	· · PLUG	1	SN:30769890--
13	6732-11-1610	BOLT	6	SN:30769890--
14	6732-11-1620	BOLT	14	SN:30769890--
15	6735-11-1821	GASKET, (STD)	1	SN:30769890--
	6735-19-1820	GASKET, 0. 25MM, (OS)	AR	SN:30769890--
	6735-11-1830	GASKET, 0. 50MM, (OS)	AR	SN:30769890--
16	6732-11-1180	SEAT, EXHAUST	AR	SN:30769890--
17	6732-11-1170	SEAT, EXHAUST	AR	SN:30769890--
18	6736-19-1310	SEAT, INTAKE	AR	SN:30769890--
19	6736-19-1410	GUIDE, 60. 50MM, INTAKE	AR	SN:30769890--
20	6736-18-1310	GUIDE, 51. 75MM, EXHAUST	AR	SN:30769890--

Ref. A1010-A0A1 Page 030010

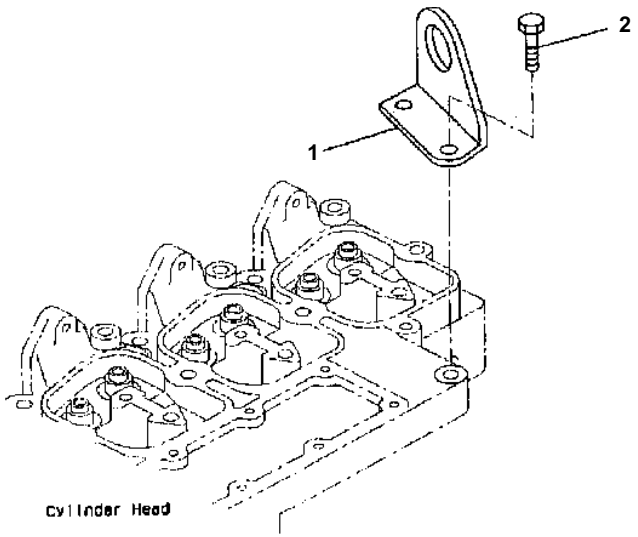

S6D102E1 S/N 30769890-UP

ENGINE HANGER

Item	Part No.	Description	Qty	Options
1	6736-11-1910	BRACKET	1	SN:30769890--
2	6732-11-1720	BOLT	2	SN:30769890--

Ref. A1050-A0A1 Page 030020

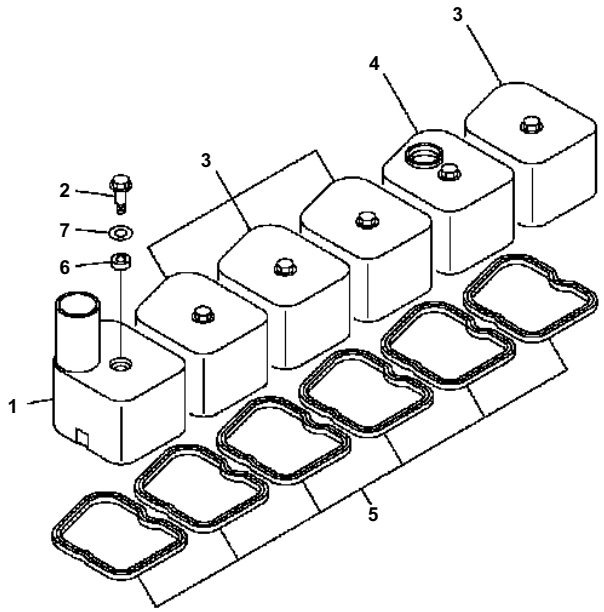

S6D102E1 S/N 30769890-UP

HEAD COVER

Item	Part No.	Description	Qty	Options
1	6735-11-8110	COVER, HEAD	1	SN:30769890--
2	6732-11-8130	BOLT	6	SN:30769890--
3	6735-11-8120	COVER	4	SN:30769890--
4	6732-11-8160	COVER	1	SN:30769890--
5	6732-11-8181	GASKET	6	SN:30769890--
6	6732-11-8210	GASKET	6	SN:30769890--
7	6732-11-8150	WASHER	6	SN:30769890--

Ref. A1110-A0A1 Page 030030

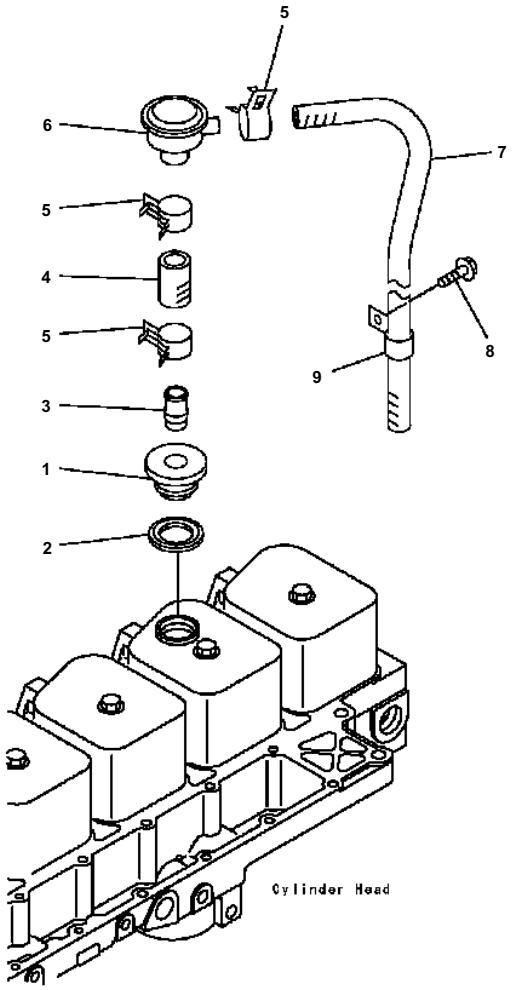

S6D102E1 S/N 30769890-UP

BREATHER ND HOSE

Item	Part No.	Description	Qty	Options
1	6735-21-7270	CAP, FILLER	1	SN:30769890--
2	6732-11-8640	SEAL	1	SN:30769890--
3	6736-61-5110	COUPLING	1	SN:30769890--
4	6735-21-7290	HOSE, PLAIN	1	SN:30769890--
5	6742-01-5380	CLAMP	3	SN:30769890--
6	6735-51-4110	VALVE, PRESSURE REGULATOR	1	SN:30769890--
7	6732-21-7350	HOSE, PLAIN	1	SN:30769890--
8	6732-51-5130	BOLT	1	SN:30769890--
9	6735-21-7260	CLIP	1	SN:30769890--

Ref. A111V-A0A1 Page 030040

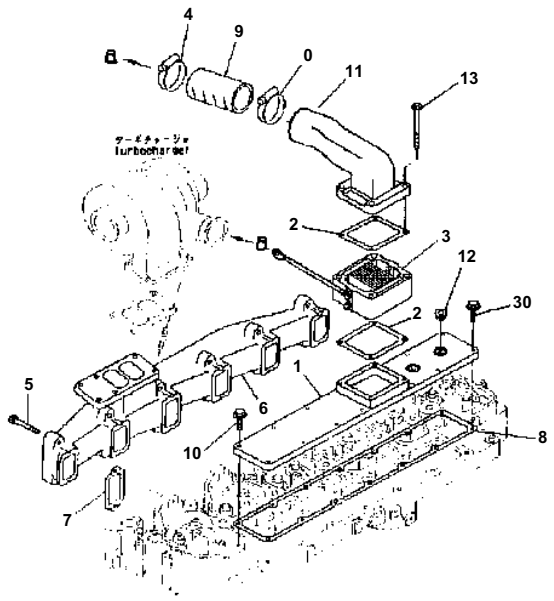

S6D102E1 S/N 30769890-UP

AIR INTAKE CONNECTION ABD EXHAUST MANIFOLD

Item	Part No.	Description	Qty	Options
1	6735-11-4110	COVER	1	SN:30769890--
2	6732-11-4812	GASKET	2	SN:30769890--
3	6743-82-4110	HEATER ASS'Y, ENGINE	1	SN:30769890--
4	6736-81-1810	CLAMP	2	SN:30769890--
5	6735-11-4150	BOLT	12	SN:30769890--
6	6735-11-5210	MANIFOLD, EXHAUST	1	SN:30769890--
7	6736-11-5820	GASKET	6	SN:30769890--
8	6735-11-4812	GASKET	1	SN:30769890--
9	6735-11-4420	HOSE	1	SN:30769890--
10	6732-11-4160	BOLT	10	SN:30769890--
11	6735-11-4340	CONNECTOR, AIR	1	SN:30769890--
12	6732-11-1910	PLUG	2	SN:30769890--
13	6735-11-4150	SCREW	4	SN:30769890--

Ref. A1310-A0A1 Page 030050

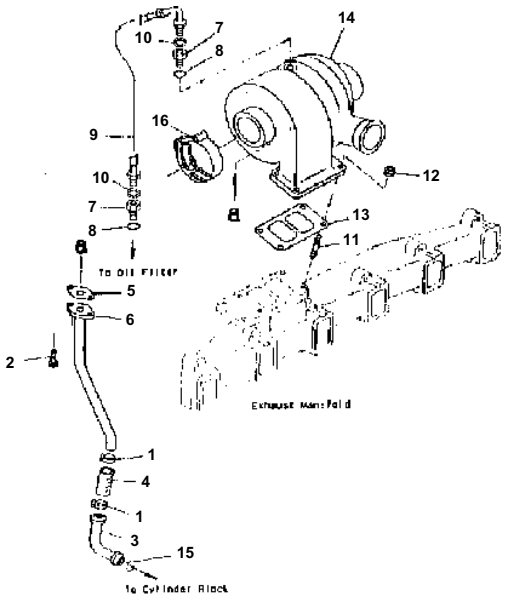

S6D102E1 S/N 30769890-UP

TURBOCHARGER OIL PIPING

Item	Part No.	Description	Qty	Options
1	6734-71-5170	CLAMP	2	SN:30769890--
2	6732-71-3220	BOLT	2	SN:30769890--
3	6731-51-8170	TUBE, DRAIN	1	SN:30769890--
4	6736-21-6110	HOSE	1	SN:30769890--
5	6735-51-8180	GASKET	1	SN:30769890--
6	6735-51-8170	CONNECTOR, DRAIN	1	SN:30769890--
	6736-51-8140	CONNECTOR ASS'Y	2	SN:30769890--
7	6736-51-8740	· CONNECTOR	1	SN:30769890--
8	6736-51-8710	· O-RING	1	SN:30769890--
9	6735-51-8130	HOSE	1	SN:30769890--
10	6736-51-8730	WASHER	2	SN:30769890--
11	6732-81-8810	STUD	4	SN:30769890--
12	6732-81-8820	NUT	4	SN:30769890--
13	6732-81-8830	GASKET	1	SN:30769890--
14	(6735-81-8110)	TURBOCHARGER ASS'Y	1	SN:30769890--
15	6731-51-8150	SEAL, O-RING	1	SN:30769890--
16	6732-81-8220	CLAMP	1	SN:30769890--

Ref. A1530-A0A1 Page 030060

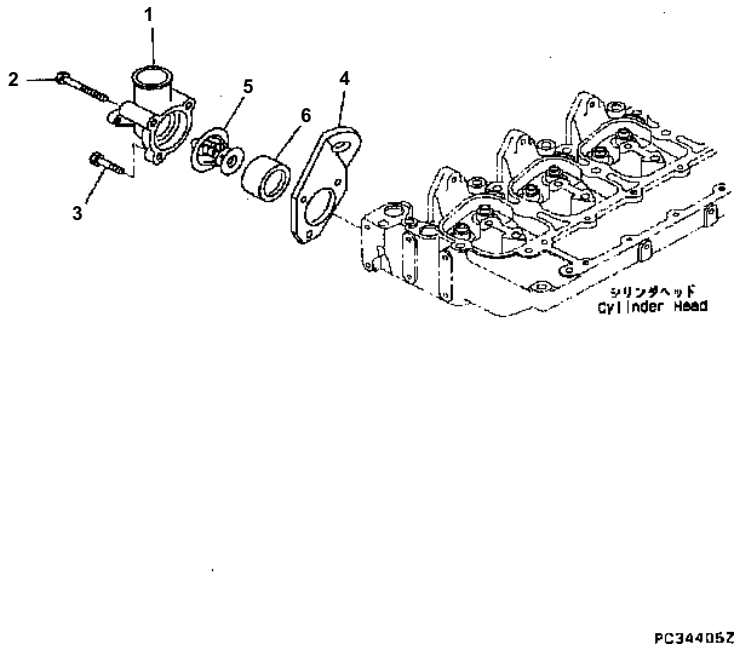

S6D102E1 S/N 30769890-UP

THERMOSTAT AND THERMOSTAT HOUSING

Item	Part No.	Description	Qty	Options
1	6735-61-6450	HOUSING, THERMOSTAT	1	SN:30769890--
2	6732-61-6180	BOLT	2	SN:30769890--
3	6732-61-6140	BOLT	1	SN:30769890--
4	6735-11-1910	BRACKET	1	SN:30769890--
5	6732-61-1610	THERMOSTAT	1	SN:30769890--
6	6732-61-6420	GASKET	1	SN:30769890--
	6735-81-3120	THERMOSTAT KIT	1	SN:30769890--
5	6732-61-1610	· THERMOSTAT	1	SN:30769890--
6	6732-61-6420	· GASKET	1	SN:30769890--

Ref. A1730-A0A1 Page 030070

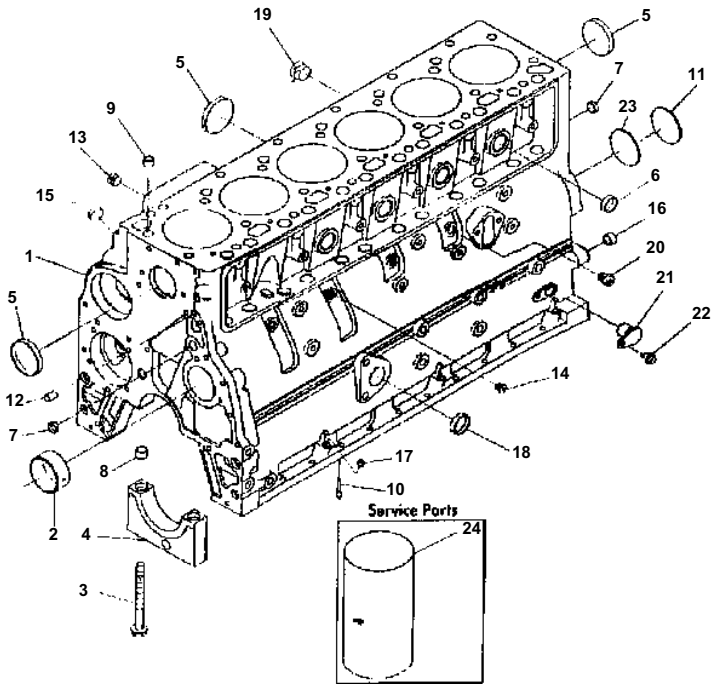

S6D102E1 S/N 30769890-UP

CYLINDER BLOCK

Item	Part No.	Description	Qty	Options
	6736-21-1160	CYLINDER BLOCK A.	1	SN:30382634--
	6736-21-1270	CYLINDER BLOCK A.	1	SN:30381313--30769890
1	☆	· BLOCK, CYLINDER	1	SN:30769890--
2	6732-21-1411	· BUSHING, (STD)	1	SN:30769890--
	6736-29-1410	· BUSHING, NO. 1, (OS)	AR	SN:30769890--
	6736-29-1420	· BUSHING, NO. 2, 3, 4, 5 (OS)	AR	SN:30769890--
3	6732-21-1611	· BOLT	14	SN:30769890--
4	6754-21-1210	· CAP	7	SN:30382634--
	6731-21-1260	· CAP	7	SN:30381313--30769890
5	6731-22-7140	· PLUG	5	SN:30382634--
	6736-21-1810	· PLUG	5	SN:30381313--30769890
6	6732-21-1820	· PLUG	4	SN:30769890--
7	6732-21-1810	· PLUG	3	SN:30769890--
8	6732-21-1910	· RING	2	SN:30769890--
	6731-21-1210	BLOCK SERVICE KIT, CYLINDER BLOCK	1	SN:30769890--
9	6732-21-6140	· RING	2	SN:30769890--
10	6732-21-1190	· NOZZLE, PISTON COOLING	6	SN:30769890--
11	6732-21-6130	· PLUG	1	SN:30769890--
12	6732-21-6120	· PIN	2	SN:30769890--
13	6732-11-1910	· PLUG	1	SN:30769890--
14	6732-21-1960	· PLUG	3	SN:30769890--
15	6735-21-5530	· PLUG, (FOR SHIPPING)	3	SN:30769890--
16	6732-21-1910	· RING	2	SN:30769890--
17	6732-21-5530	· PLUG	2	SN:30769890--
18	6732-21-6160	· PLUG	1	SN:30769890--
19	6732-11-1920	· PLUG, PIPE	1	SN:30769890--
20	6735-21-1910	· PLUG, THREAD	1	SN:30769890--
21	6735-21-1940	· PLUG, O-RING	1	SN:30769890--
22	6732-21-3120	· BOLT	1	SN:30769890--
23	6732-21-1930	· O-RING	1	SN:30769890--
24	6736-29-2110	· LINER	AR	SN:30769890--

Ref. A2010-A0A1 Page 030080

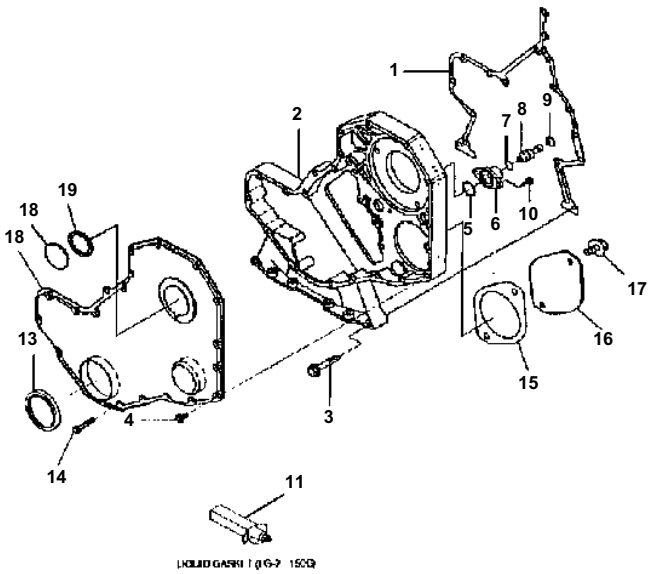

S6D102E1 S/N 30769890-UP

FRONT COVER

Item	Part No.	Description	Qty	Options
1	6732-21-3812	GASKET	1	SN:30769890--
2	6735-22-3110	HOUSING, GEAR	1	SN:30769890--
3	6742-01-0530	BOLT	11	SN:30769890--
4	6736-21-3220	BOLT	11	SN:30769890--
5	6732-21-3880	GASKET	1	SN:30769890--
	6735-21-3180	HOUSING ASS'Y	1	SN:30769890--
6	6732-21-3180	· HOUSING	1	SN:30769890--
7	6732-21-3870	· O-RING	1	SN:30769890--
8	6732-21-3140	· PIN	1	SN:30769890--
9	6732-21-3150	· RING	1	SN:30769890--
10	6732-21-3160	BOLT	2	SN:30769890--
11	☆	LIQUID GASKET (LG-7 150G)	1	SN:30769890--
	6735-21-3140	COVER ASS'Y, GEAR	1	SN:30769890--
12	6736-21-3310	· COVER	1	SN:30769890--
13	6732-21-3511	· SEAL	1	SN:30769890--
14	6742-01-0540	BOLT	5	SN:30769890--
15	6736-21-3380	GASKET	1	SN:30769890--
16	6732-21-9310	PLATE	1	SN:30769890--
17	6732-51-5130	BOLT	2	SN:30769890--
18	6732-21-3190	COVER	1	SN:30769890--
19	6732-21-3220	SEAL	1	SN:30769890--

Ref. A2040-A0A1 Page 030090

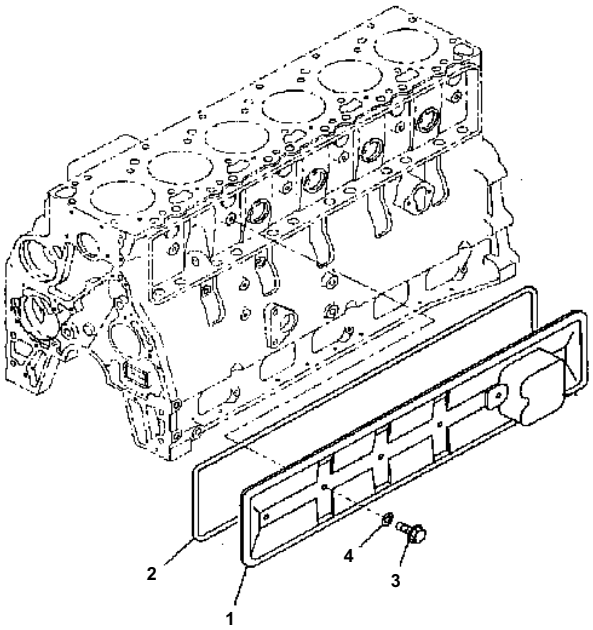

S6D102E1 S/N 30769890-UP

CAMFLLOWER COVER

Item	Part No.	Description	Qty	Options
1	6734-21-6210	COVER	1	SN:30769890--
2	6735-21-6261	GASKET	1	SN:30769890--
3	6732-21-3120	BOLT	4	SN:30769890--
4	6732-21-6280	SEAL	4	SN:30769890--

Ref. A2060-A0A1 Page 030100

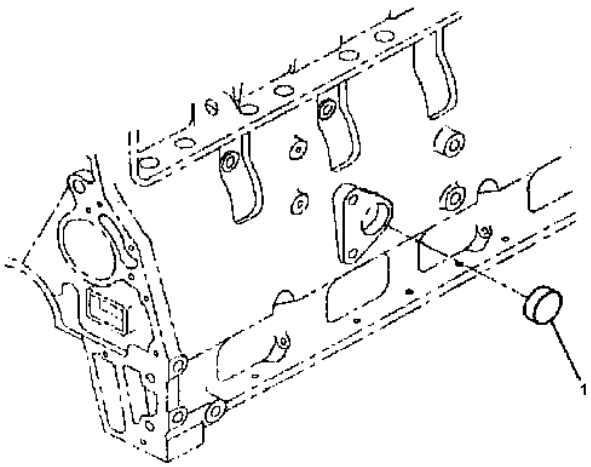

S6D102E1 S/N 30769890-UP

OIL FILTER (WITHOUT FILLER)

Item	Part No.	Description	Wt.	Options
1	6732-21-6160	PLUG	1	SN:30769890--

Ref. A2070-A0A1 Page 030110

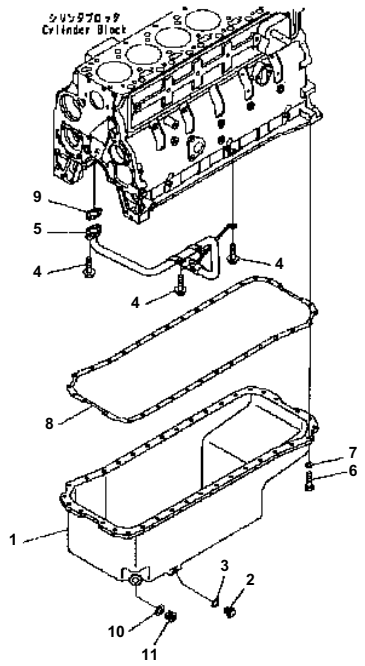

S6D102E1 S/N 30769890-UP

OIL PAN

Item	Part No.	Description	Qty	Options
1	6734-21-5111	PAN, OIL	1	SN:30769890--
2	6732-21-5210	PLUG	1	SN:30769890--
3	6732-21-5190	GASKET	1	SN:30769890--
4	6736-21-5310	BOLT	5	SN:30769890--
5	6735-21-5570	TUBE, SUCTION	1	SN:30769890--
6	6732-21-5160	BOLT	36	SN:30769890--
7	6732-21-5180	BOLT	36	SN:30769890--
8	6732-21-5661	GASKET	1	SN:30769890--
9	6733-21-5521	GASKET	1	SN:30769890--
10	6736-23-5630	WASHER	1	SN:30769890--
11	6735-21-5670	PLUG	1	SN:30769890--

Ref. A2110-A0A1 Page 030120

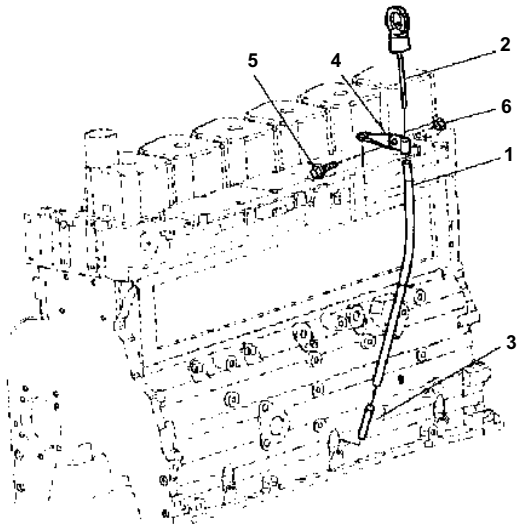

S6D102E1 S/N 30769890-UP

OIL LEVEL GAUGE

Item	Part No.	Description	Qty	Options
1	6735-21-5720	TUBE¤ OIL GAUGE	1	SN:30769890--
2	6735-21-5690	GAUGE¤ OIL	1	SN:30769890--
3	6742-01-5320	TUBE	1	SN:30769890--
4	6734-21-5320	STAY	1	SN:30769890--
5	6736-21-5310	BOLT	1	SN:30769890--
6	6732-41-6210	NUT	1	SN:30769890--

Ref. A2110-B0A1 Page 030130

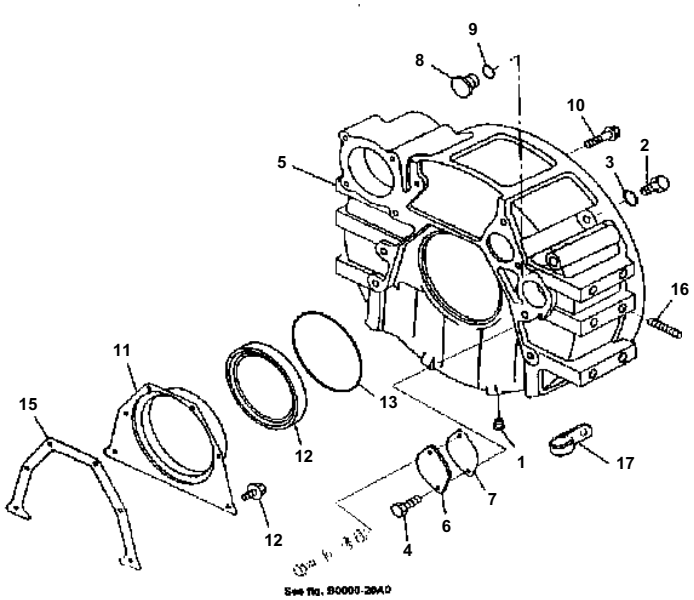

S6D102E1 S/N 30769890-UP

FLYWHELL HOUSING

Item	Part No.	Description	Wt.	Options
1	6732-11-1920	PLUG	1	SN:30769890--
	6735-21-4150	PLUG	1	SN:30769890--
2	6735-21-4170	· PLUG	1	SN:30769890--
3	6735-21-4160	· O-RING	1	SN:30769890--
4	6735-21-4120	BOLT	2	SN:30769890--
5	6735-21-4320	HOUSING¤ FLYWHEEL	1	SN:30769890--
6	6732-21-4130	PLATE	1	SN:30769890--
7	6742-01-5158	GASKET	1	SN:30769890--
8	6732-21-4150	PLUG	1	SN:30769890--
9	6732-21-4160	O-RING	1	SN:30769890--
10	6732-21-4220	BOLT	8	SN:30769890--
	6732-21-4200	COVER	1	SN:30769890--
11	6731-21-6231	· COVER¤ REAR	1	SN:30769890--
12	6732-21-1310	· SEAL	1	SN:30769890--
13	6732-21-4170	GASKET	1	SN:30769890--
14	6732-21-4180	BOLT	6	SN:30769890--
15	6736-21-4150	GASKET	1	SN:30769890--
16	6735-21-4230	BOLT	4	SN:30769890--
17	6735-21-4250	CLIP	1	SN:30769890--

Ref. A2210-A0A1 Page 030140

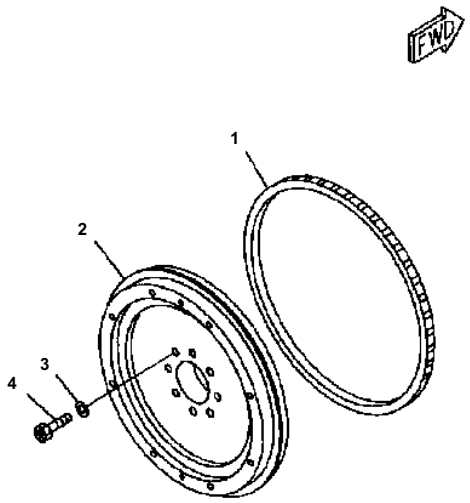

S6D102E1 S/N 30769890-UP

FLYWHELL

Item	Part No.	Description	Wt.	Options
1	124-01-55250	FLYWHEEL ASS'Y	1	SN:30769890--
2	☆	· FLYWHEEL	1	SN:30769890--
3	6732-31-4180	· GEAR	1	SN:30769890--
4	6732-31-4140	BOLT	8	SN:30769890--
5	6732-31-4120	WASHER	8	SN:30769890--

Ref. A2250-A0A1 Page 030150

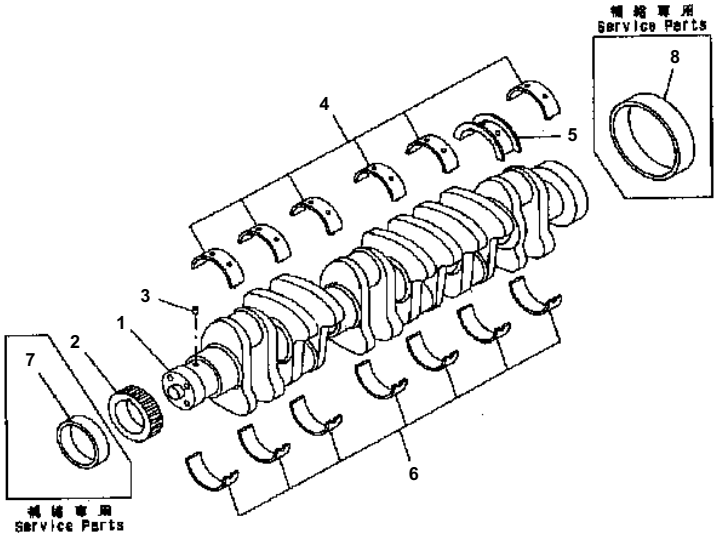

S6D102E1 S/N 30769890-UP

CRANCSHAFT

Item	Part No.	Description	Wt.	Options
	6736-31-1111	CRANKSHAFT ASS'Y	1	SN:30769890--
1	☆	· CRANKSHAFT	1	SN:30769890--
2	6736-31-1211	· GEAR	1	SN:30769890--
3	6732-21-6150	· PIN	1	SN:30769890--
STANDARD				
	6735-21-8100	MAIN METAL ASS'Y	1	SN:30769890--
4	☆	· METAL¤ UPPER	6	SN:30769890--
5	6732-21-8180	· METAL	1	SN:30769890--
6	☆	· METAL¤ LOWER	7	SN:30769890--
OVERSIZE 0. 25MM				
	6736-29-8100	MAIN METAL ASS'Y	1	SN:30769890--
4	☆	· METAL¤ UPPER	6	SN:30769890--
5	6731-29-8310	· METAL	1	SN:30769890--
6	☆	· METAL¤ LOWER	7	SN:30769890--
OVERSIZE 0. 50MM				
	6736-28-8100	MAIN METAL ASS'Y	1	SN:30769890--
4	☆	· METAL¤ UPPER	6	SN:30769890--
5	6731-28-8310	· METAL	1	SN:30769890--
6	☆	· METAL¤ LOWER	7	SN:30769890--
OVERSIZE 0. 75MM				
	6736-27-8100	MAIN METAL ASS'Y	1	SN:30769890--
4	☆	· METAL¤ UPPER	6	SN:30769890--
5	6731-27-8310	· METAL	1	SN:30769890--
6	☆	· METAL¤ LOWER	7	SN:30769890--
OVERSIZE 1. 00MM				
	6736-26-8100	MAIN METAL ASS'Y	1	SN:30769890--
4	☆	· METAL¤ UPPER	6	SN:30769890--
5	6731-26-8310	· METAL	1	SN:30769890--
6	☆	· METAL¤ LOWER	7	SN:30769890--
OVERSIZE 0. 50MM				
	6731-21-8610	THRUST METAL ASS'Y¤ THRUST	1	SN:30769890--
5	6731-28-8410	· METAL	1	SN:30769890--
6	☆	· METAL, LOWER	1	SN:30769890--
OVERSIZE 1. 00MM				
	6731-21-8620	THRUST METAL ASS'Y¤ THRUST	1	SN:30769890--
5	6731-26-8410	· METAL	1	SN:30769890--
6	☆	· METAL¤ LOWER	1	SN:30769890--
7	6736-39-1221	SLEEVE¤ FRONT	1	SN:30769890--
8	6736-39-1120	SLEEVE¤ REAR	1	SN:30769890--

Ref. A2310-A0A1 Page 030160

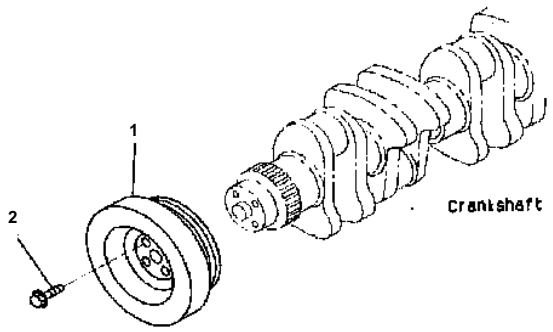

S6D102E1 S/N 30769890-UP

DAMPER

Item	Part No.	Description	Wt.	Options
1	6735-31-8120	DAMPER	1	SN:30769890--
2	6732-31-8120	BOLT	4	SN:30769890--

Ref. A2330-A0A1 Page 030170

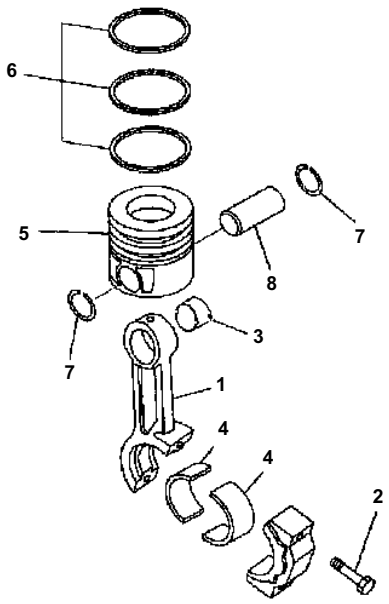

S6D102E1 S/N 30769890-UP

PISTON

Item	Part No.	Description	Qty	Options
	6737-32-3200	CONNECTING ROD A.	6	SN:30379274--
	6737-32-3200	CONNECTING ROD A.	6	SN:30769890--30789857
1	☆	· ROD	1	SN:30769890--
2	6732-31-3320	· BOLT	2	SN:30769890--
3	6732-31-3132	· BUSHING	1	SN:30769890--
4	6732-31-3420	METAL	6	SN:30769890--
5	6732-31-3410	PISTON	6	SN:30769890--
		STANDARD		
	6735-31-2110	KIT¤ ENGINE PISTON	6	SN:30769890--
6	☆	· PISTON	1	SN:30769890--
7	6735-31-2030	· PISTON RING ASS'Y	1	SN:30769890--
8	6732-31-2420	· RING	2	SN:30769890--
9	6731-31-2410	PIN	6	SN:30769890--
		OVERSIZE 0.50mm		
	6731-31-2150	KIT¤ ENGINE PISTON	6	SN:30769890--
6	☆	· PISTON	1	SN:30769890--
7	6735-31-2030	· PISTON RING ASS'Y	1	SN:30769890--
8	6731-31-2270	· RING	2	SN:30769890--
		OVERSIZE 1.00mm		
	6731-31-2140	KIT¤ ENGINE PISTON	6	SN:30769890--
6	☆	· PISTON	1	SN:30769890--
7	6735-31-2030	· PISTON RING ASS'Y	1	SN:30769890--
8	6731-31-2260	· RING	2	SN:30769890--

Ref. A2350-A0A1 Page 030180

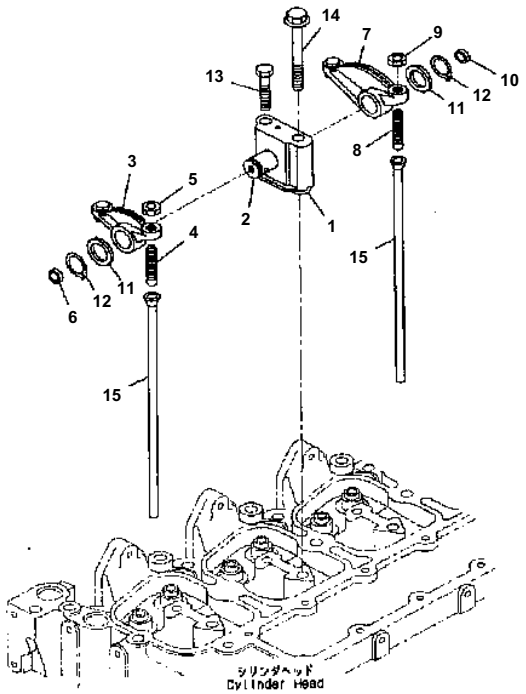

S6D102E1 S/N 30769890-UP

ROCKER ARM

Item	Part No.	Description	Qty	Options
	6736-41-5110	BRACKET ASS'Y, ROCKER LEVER	6	SN:30769890--
1	6732-41-5120	· BRACKET	1	SN:30769890--
2	6732-41-5130	· SHAFT ASS'Y	1	SN:30769890--
	6732-41-5200	ARM ASS'Y	6	SN:30769890--
3	6732-41-5210	· ARM	1	SN:30769890--
4	6731-41-5270	· SCREW	1	SN:30769890--
5	6735-41-5550	· NUT	1	SN:30769890--
6	6732-41-5440	· INSERT	1	SN:30769890--
	6732-41-5400	ARM ASS'Y	6	SN:30769890--
7	6732-41-5410	· ARM	1	SN:30769890--
8	6735-41-5560	· SCREW	1	SN:30769890--
9	6735-41-5550	· NUT	1	SN:30769890--
10	6732-41-5440	· INSERT	1	SN:30769890--
11	6732-41-5160	WASHER	12	SN:30769890--
12	6732-41-5170	RING	12	SN:30769890--
13	6732-41-5180	BOLT	6	SN:30769890--
14	6732-11-1640	BOLT	6	SN:30769890--
15	6732-41-3111	ROD¤ PUSH	12	SN:30769890--

Ref. A2410-A0A1 Page 030190

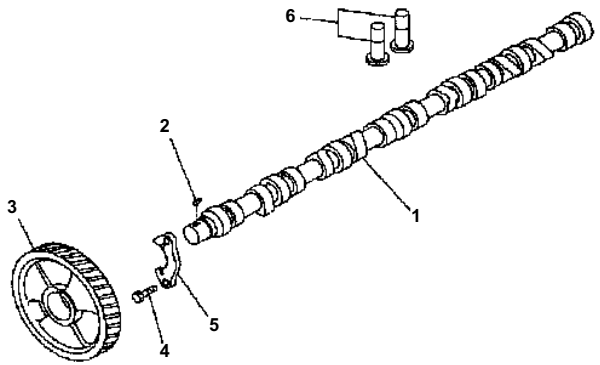

S6D102E1 S/N 30769890-UP

CAMSHAFT AND TAPPET

Item	Part No.	Description	Wt.	Options
1	6735-41-1111	CAMSHAFT	1	SN:30769890--
2	6732-41-1280	KEY	1	SN:30769890--
3	6732-41-1231	GEAR	1	SN:30769890--
4	6732-41-1260	BOLT	2	SN:30769890--
5	6732-41-1220	SUPPORT	1	SN:30769890--
6	6732-41-2110	TAPPET	12	SN:30769890--

Ref. A2510-A0A1 Page 030200

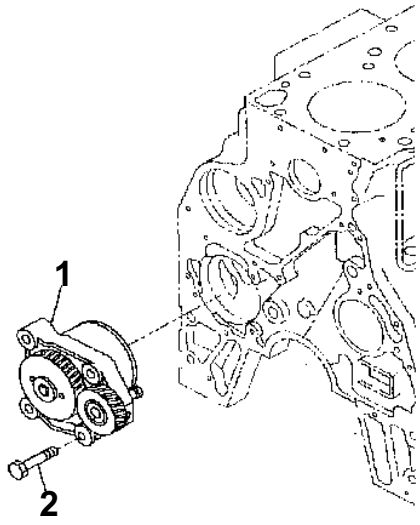

S6D102E1 S/N 30769890-UP

OIL PUMP

Item	Part No.	Description	Wt.	Options
1	6731-51-1111	OIL PUMP ASS'Y	1	SN:30769890--
2	6735-51-1120	BOLT	4	SN:30769890--

Ref. A3010-A0A1 Page 030210

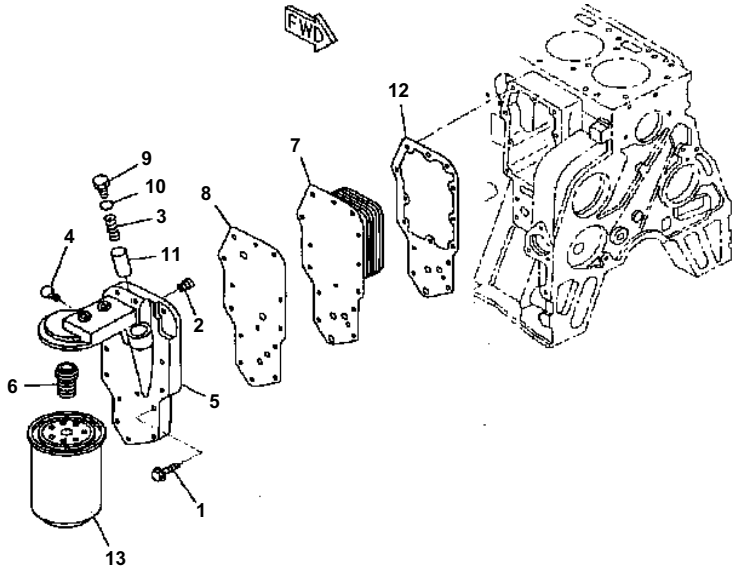

S6D102E1 S/N 30769890-UP

OIL FILTER AND OIL COOLER

Item	Part No.	Description	Qty	Options
1	6732-61-6140	BOLT	14	SN:30769890--
2	6731-61-2151	VALVE	1	SN:30769890--
3	6735-61-2190	SPRING	1	SN:30769890--
4	6732-11-1930	PLUG	1	SN:30769890--
	6736-61-5170	HEAD ASS'Y	1	SN:30769890--
5	6735-61-2260	· HEAD	1	SN:30769890--
6	6736-61-5180	· ADAPTER	1	SN:30769890--
7	6735-61-2110	CORE	1	SN:30769890--
8	6732-51-4431	GASKET	1	SN:30769890--
9	6735-61-2140	PLUG	1	SN:30769890--
10	6732-51-4420	O-RING	1	SN:30769890--
11	6735-61-2160	PLUNGER	1	SN:30769890--
12	6732-61-2311	GASKET	1	SN:30769890--
13	6735-51-5141	CARTRIDGE	1	SN:30769890--

Ref. A3310-A0A1 Page 030220

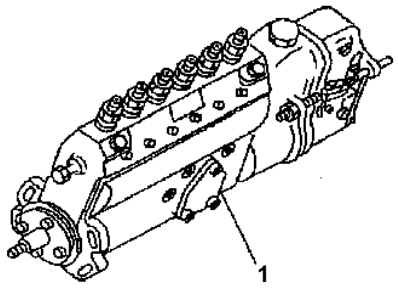

S6D102E1 S/N 30769890-UP

FUEL INJECTION PUMP MOUNTING

Item	Part No.	Description	Wt.	Options
1	6735-71-1120	INJECTION PUMP A.	1	SN:30769890--

Ref. A4010-A0A1 Page 030230

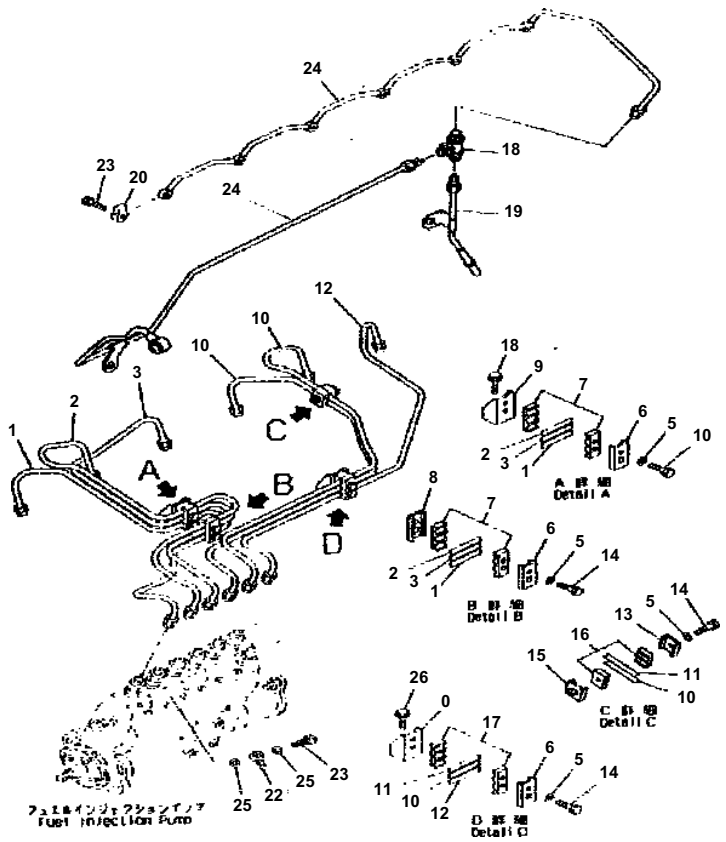

S6D102E1 S/N 30769890-UP

FUEL INJECTION PPING AND SPILL PIPE

Item	Part No.	Description	Wt.	Options
1	6735-71-5310	TUBE, INJECTION, NO. 1	1	SN:30769890--
2	6735-71-5320	TUBE, INJECTION, NO. 2	1	SN:30769890--
3	6735-71-5330	TUBE, INJECTION, NO. 3	1	SN:30769890--
4	6735-71-5990	BRACKET	1	SN:30769890--
5	6734-71-5530	WASHER	7	SN:30769890--
6	6734-71-5710	BRACKET	3	SN:30769890--
7	6734-71-5720	ISOLATOR	4	SN:30769890--
8	6735-71-5830	PLATE	1	SN:30769890--
9	6734-71-5740	BRACKET	1	SN:30769890--
10	6735-71-5340	TUBE, INJECTION, NO. 4	1	SN:30769890--
11	6735-71-5350	TUBE, INJECTION, NO. 5	1	SN:30769890--
12	6735-71-5360	TUBE, INJECTION, NO. 6	1	SN:30769890--
13	6735-71-5820	PLATE	1	SN:30769890--
14	6734-71-5520	BOLT	7	SN:30769890--
15	6735-71-5840	PLATE	1	SN:30769890--
16	6735-71-5860	ISOLATOR	2	SN:30769890--
17	6734-71-5720	ISOLATOR	2	SN:30769890--
18	6735-71-5550	CONNECTOR	1	SN:30769890--
19	6734-71-5310	TUBE, SPILL	1	SN:30769890--
20	6732-71-6230	GASKET	6	SN:30769890--
21	6732-71-6240	BOLT, JOINT	6	SN:30769890--
22	6735-71-5770	JOINT	1	SN:30769890--
23	6732-71-5690	VALVE	1	SN:30769890--
24	6735-71-5140	TUBE, SPILL	1	SN:30769890--
25	6735-71-3821	GASKET	2	SN:30769890--
26	6732-21-3120	BOLT	2	SN:30769890--
27	6734-71-5310	TUBE, FUEL DRAIN	1	SN:30769890--

Ref. A4030-A0A1 Page 030240

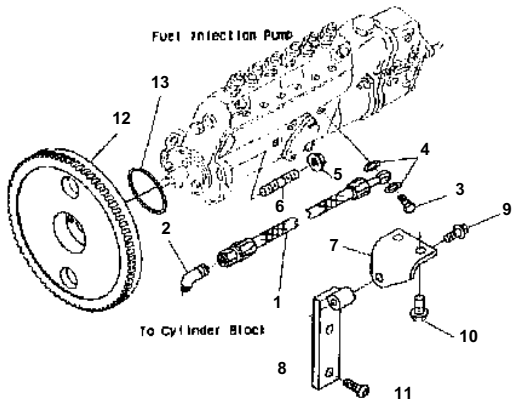

S6D102E1 S/N 30769890-UP

FUEL INJECTION PUMP LUBRICATOR

Item	Part No.	Description	Qty	Options
1	6735-71-5260	HOSE	1	SN:30769890--
2	6735-71-3760	ELBOW	1	SN:30769890--
3	6735-71-3740	BOLT	1	SN:30769890--
4	6731-71-5860	WASHER	2	SN:30769890--
5	6736-81-6170	NUT	4	SN:30769890--
6	6734-71-5270	STUD	4	SN:30769890--
7	6731-71-3350	BRACE	1	SN:30769890--
8	6734-71-6550	BRACE	1	SN:30769890--
9	6732-71-3220	BOLT	1	SN:30769890--
10	6732-61-3140	BOLT	2	SN:30769890--
11	6735-71-3110	BOLT	2	SN:30769890--
12	6731-71-3111	GEAR	1	SN:30769890--
13	6731-21-3250	SEAL	1	SN:30769890--

Ref. A4050-A0A1 Page 030250

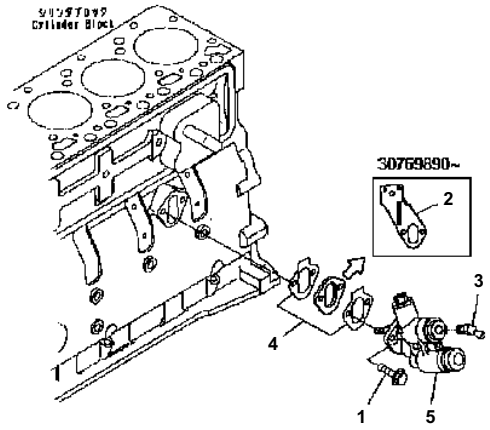

S6D102E1 S/N 30769890-UP

FUEL TRANSFER PUMP

Item	Part No.	Description	Qty	Options
1	6732-21-5160	BOLT	1	SN:30769890--
2	6731-81-9190	SPACER	1	SN:30769890--
3	6732-71-6540	ELBOW	1	SN:30769890--
4	6735-71-6610	GASKET	1	SN:30769890--
5	6736-71-5781	LIFT PUMP	1	SN:30769890--

Ref. A4170-A0A1 Page 030260

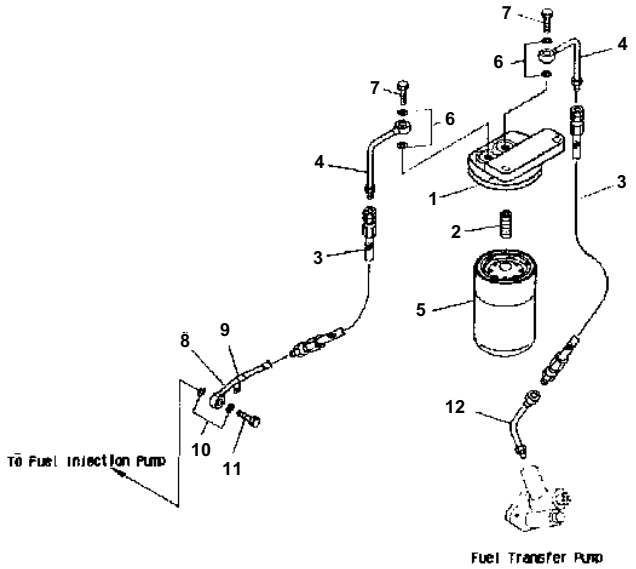

S6D102E1 S/N 30769890-UP

FUEL FILTER

Item	Part No.	Description	Qty	Options
1	124-01-55160	HEAD¤ FILTER	1	SN:30769890--
2	6732-71-6650	ADAPTER	1	SN:30769890--
3	124-01-55180	HOSE	2	SN:30769890--
4	124-01-55290	TUBE	2	SN:30769890--
5	6732-71-6111	CARTRIDGE¤ FUEL FILTER	1	SN:30769890--
6	6742-01-5157	WASHER¤ SEALING	4	SN:30769890--
7	6732-71-6510	BOLT	2	SN:30769890--
8	6735-72-5180	TUBE	1	SN:30769890--
9	124-01-55120	CLIP	1	SN:30769890--
10	6735-71-3821	CARTRIDGE¤ FUEL FILTER	2	SN:30769890--
11	6732-71-5620	BOLT¤ JOINT	1	SN:30769890--
12	124-01-55260	TUBE	1	SN:30769890--

Ref. A4180-A0A1 Page 030270

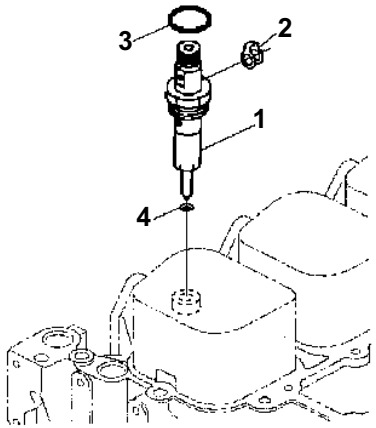

PC944472

S6D102E1 S/N 30769890-UP

INJECTION NOZZLE

Item	Part No.	Description	Qty	Options
1	6735-11-3130	KIT¤ INJECTOR	6	SN:30769890--
2	6732-71-6230	SEAL¤ BANJO CONNECTOR	1	SN:30769890--
3	6732-11-3850	SEAL¤ RECTANGULAR RING	1	SN:30769890--
4	6736-11-3430	SEAL¤ INJECTOR	1	SN:30769890--

Ref. A4210-A0A1 Page 030280

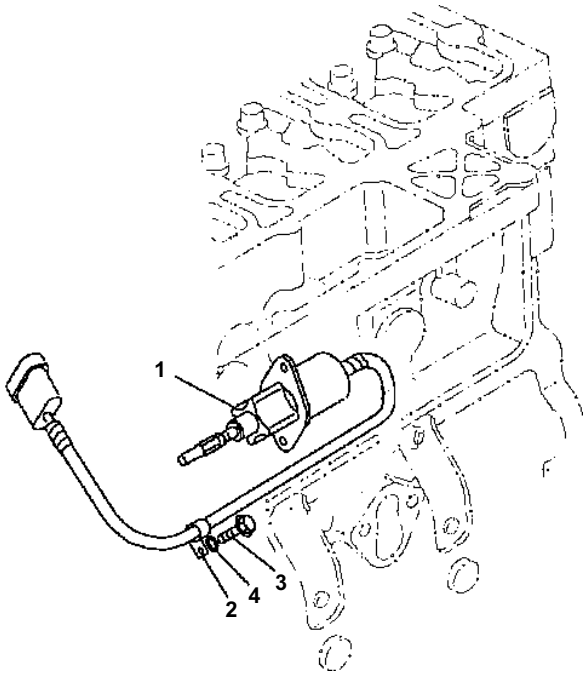

S6D102E1 S/N 30769890-UP

SOLENOID

Item	Part No.	Description	Qty	Options
1	6731-81-9210	SOLENOID	1	SN:30769890--
2	6735-81-9180	BOLT	2	SN:30769890--
3	6735-21-5180	NUT	1	SN:30769890--
4	6731-71-2160	WASHER	1	SN:30769890--

Ref. A451P-A0A1 Page 030290

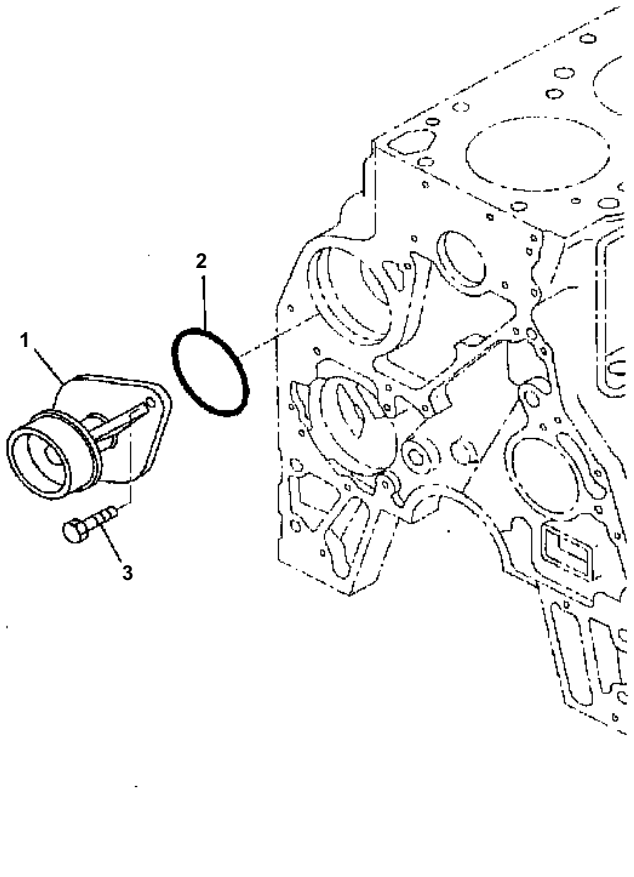

S6D102E1 S/N 30769890-UP

WATER PUMP

Item	Part No.	Description	Qty	Options
	6736-61-1202	WATER PUMP ASS'Y	1	SN:30769890--
1	6735-61-1102	· PUMP¤ WATER	1	SN:30769890--
2	6736-61-1520	· SEAL	1	SN:30769890--
3	6731-61-1370	BOLT	2	SN:30769890--

Ref. A5010-A0A1 Page 030300

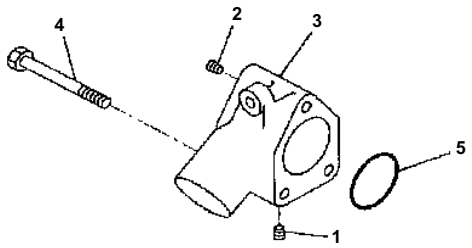

S6D102E1 S/N 30769890-UP

WATER INLET CONNECTION

Item	Part No.	Description	Qty	Options
1	6732-11-1910	PLUG	1	SN:30769890--
2	6732-11-1920	PLUG	1	SN:30769890--
3	6735-61-6110	CONNECTOR	1	SN:30769890--
4	6732-61-6120	BOLT	3	SN:30769890--
5	6732-61-6130	SEAL	1	SN:30769890--

Ref. A5030-A0A1 Page 030310

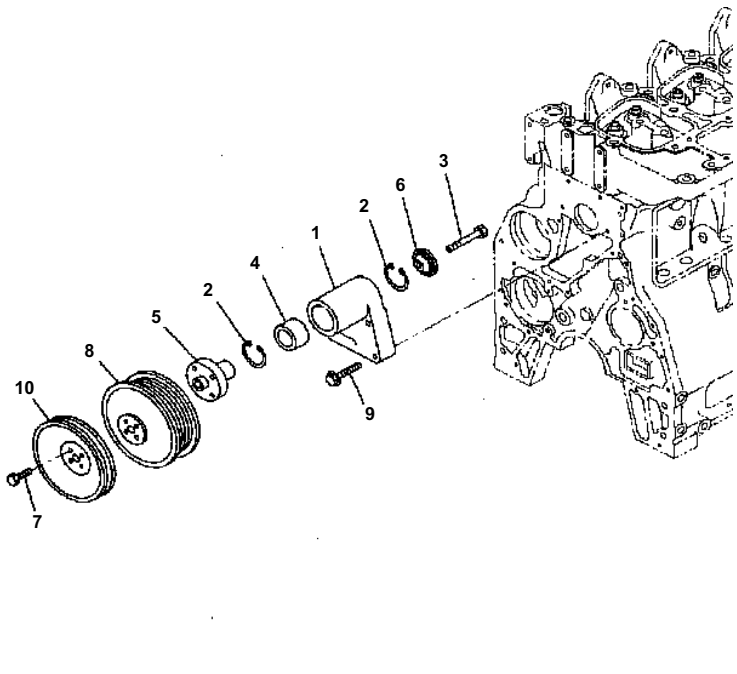

S6D102E1 S/N 30769890-UP

FAN DRIVE

Item	Part No.	Description	Qty	Options
	6732-61-3220	SUPPORT ASS'Y¤ FAN	1	SN:30769890--
1	6732-61-3320	· SUPPORT¤ FAN	1	SN:30769890--
2	6732-61-3450	· RING	2	SN:30769890--
3	6732-61-3440	· BOLT	1	SN:30769890--
4	6732-61-3420	· BEARING	1	SN:30769890--
5	6732-61-3410	· HUB	1	SN:30769890--
6	6732-61-3430	· RETAINER	1	SN:30769890--
7	6735-61-3810	BOLT	4	SN:30769890--
8	6732-61-3130	PULLEY	1	SN:30769890--
9	6735-61-3170	BOLT	4	SN:30769890--
10	6732-91-1550	PULLEY¤ ACCESSORY	1	SN:30769890--

Ref. A5060-A0A1 Page 030320

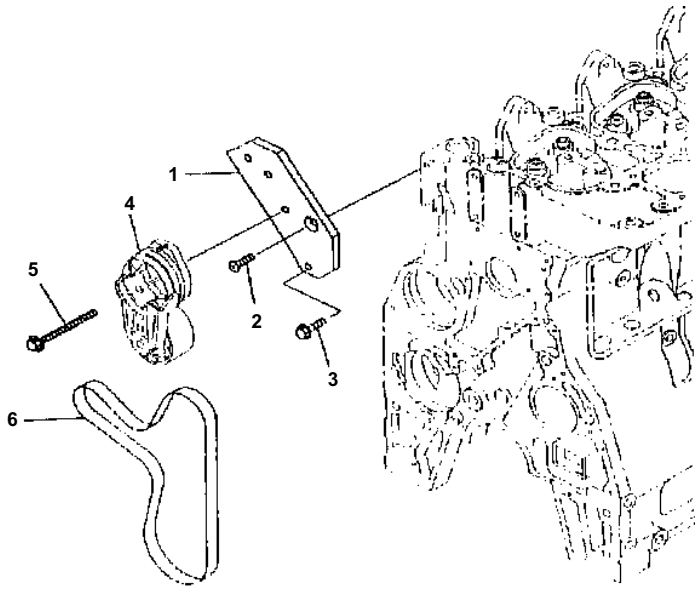

S6D102E1 S/N 30769890-UP

TENSION PULLEY

Item	Part No.	Description	Qty	Options
1	124-01-55490	BRACKET	1	SN:30769890--
2	6732-61-4220	SCREW	1	SN:30769890--
3	6732-21-5160	BOLT	1	SN:30769890--
4	6736-61-4110	TENSIONER	1	SN:30379274--
	6731-61-4141	TENSIONER	1	SN:30769890--30784180
5	6732-61-4120	BOLT	1	SN:30769890--
6	6732-81-3330	BELT	1	SN:30769890--

Ref. A5080-A0A1 Page 30330

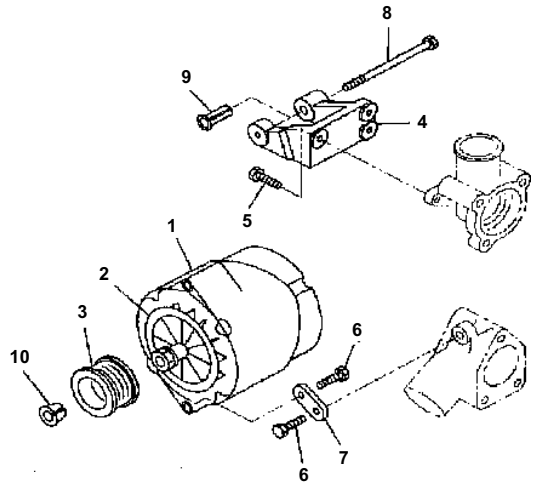

S6D102E1 S/N 30769890-UP

ALTERNATOR MOUNTING (40A)

Item	Part No.	Description	Qty	Options
1	6735-81-6110	ALTERNATOR A. (40A)	1	SN:30769890--
2	124-01-55380	FAN	1	SN:30769890--
3	124-01-55430	PULLEY	1	SN:30769890--
4	6735-81-6600	SUPPORT	1	SN:30769890--
5	6732-21-5160	BOLT	3	SN:30769890--
6	6732-71-3220	BOLT	2	SN:30769890--
7	6735-81-6190	BRACE	1	SN:30769890--
8	6732-81-6710	BOLT	1	SN:30769890--
9	124-01-55450	SPACER	1	SN:30769890--
10	124-01-55440	RETAINER	1	SN:30769890--

Ref. A6010-A0A1 Page 30340

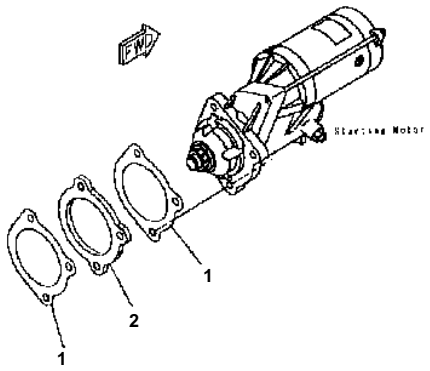

S6D102E1 S/N 30769890-UP

STARTING MOTOR MOUNTING (5.5KW)

Item	Part No.	Description	Qty	Options
1	6735-81-6180	GASKET	2	SN:30769890--
2	6732-81-6830	SPACER	1	SN:30769890--
3	6736-81-4820	BOLT	3	SN:30769890--

Ref. A6210-A0A1 Page 30350

ENGINE RELATED PARTS

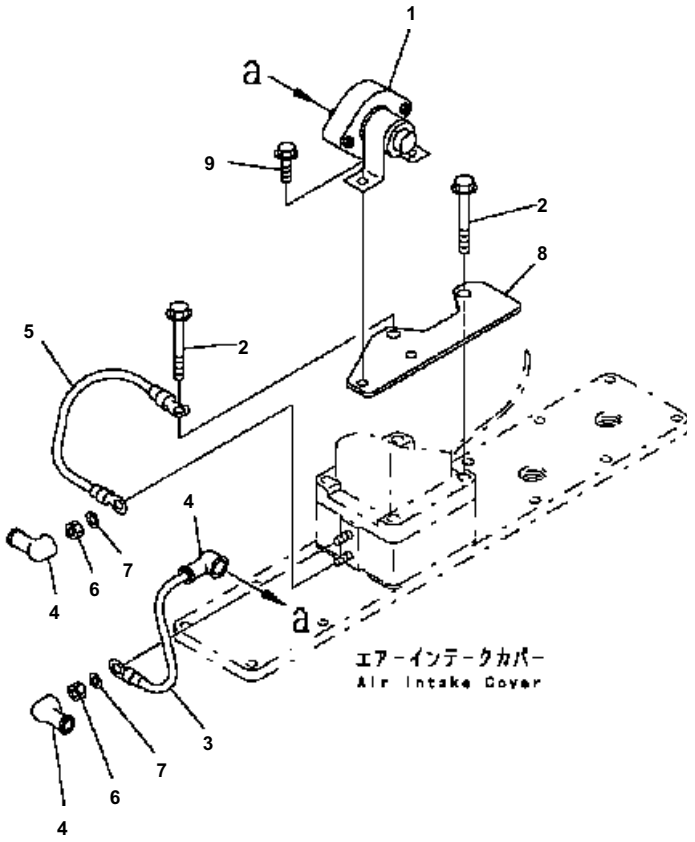

D41E6T S/N B35001-UP

HEATER SWITCH

Item	Part No.	Description	Qty	Options
1	600-815-2170	SWITCH{HEATER}	1	SN:B35001--
2	01435-00614	BOLT	2	SN:B35001--
3	124-01-51941	WIRE	1	SN:B35001--
4	08038-00519	CAP	3	SN:B35001--
5	124-01-51950	WIRE	1	SN:B35001--
6	01580-10504	NUT	2	SN:B35001--
7	01641-20508	WASHER	2	SN:B35001--
8	124-01-51825	BRACKET	1	SN:B35001--
9	01435-00895	BOLT	2	SN:B35001--

Ref. B0000-01A0 Page 030010

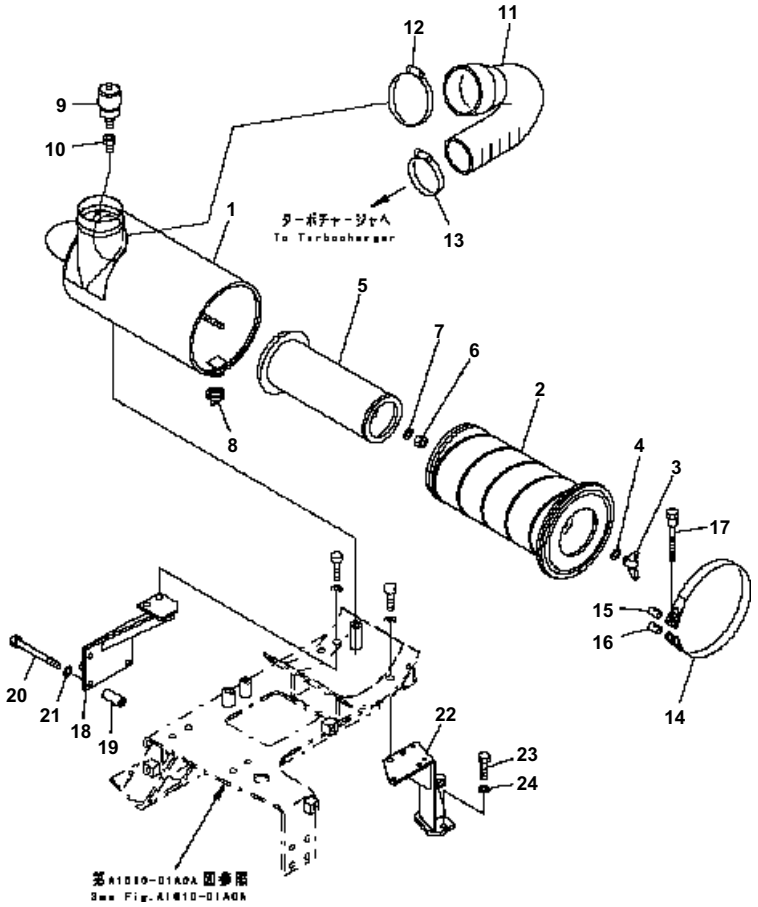

D41E6T S/N B35001-UP

AIR CLEANER

Item	Part No.	Description	Qty	Options
	124-01-61100	AIR CLEANER ASS'Y	1	SN:B35001--
1	124-01-61110	・ BODY	1	SN:B35001--
	600-181-6740	・ ELEMENT ASS'Y	1	SN:B35001--
	600-181-6820	・・ ELEMENT ASS'Y{OUTER}	1	SN:B35001--
2	(☆600-181-6830)	・・・ ELEMENT{OUTER}	1	SN:B35001--
3	600-181-6850	・・・ NUT	1	SN:B35001--
4	600-181-6840	・・・ GASKET	1	SN:B35001--
5	(☆600-181-6730)	・・ ELEMENT{INNER}	1	SN:B35001--
6	600-181-9671	・・ NUT	1	SN:B35001--
7	600-181-7511	・・ WASHER	1	SN:B35001--
8	600-181-6590	・ VALVE	1	SN:B35001--
9	08670-02001	INDICATOR{DUST}	1	SN:B35001--
10	124-01-51191	NIPPLE	1	SN:B35001--
11	124-01-61121	HOSE	1	SN:B35001--
12	6212-11-4840	CLAMP	1	SN:B35001--
13	6152-12-4490	CLAMP	1	SN:B35001--
14	6131-11-4520	BAND ASS'Y	2	SN:B35001--
15	6643-11-4620	PIN	2	SN:B35001--
16	6643-11-4630	PIN	2	SN:B35001--
17	6643-11-4641	BOLT	2	SN:B35001--
18	124-01-51151	BRACKET	1	SN:B35001--
19	195-979-5190	COLLAR	4	SN:B35001--
20	01436-01030	BOLT	4	SN:B35001--
21	01643-31032	WASHER	4	SN:B35001--
22	124-01-61160	BRACKET	1	SN:B35001--
23	01435-01240	BOLT	2	SN:B35001--
24	01643-31032	WASHER	2	SN:B35001--

Ref. B0000-02A0 Page 030020

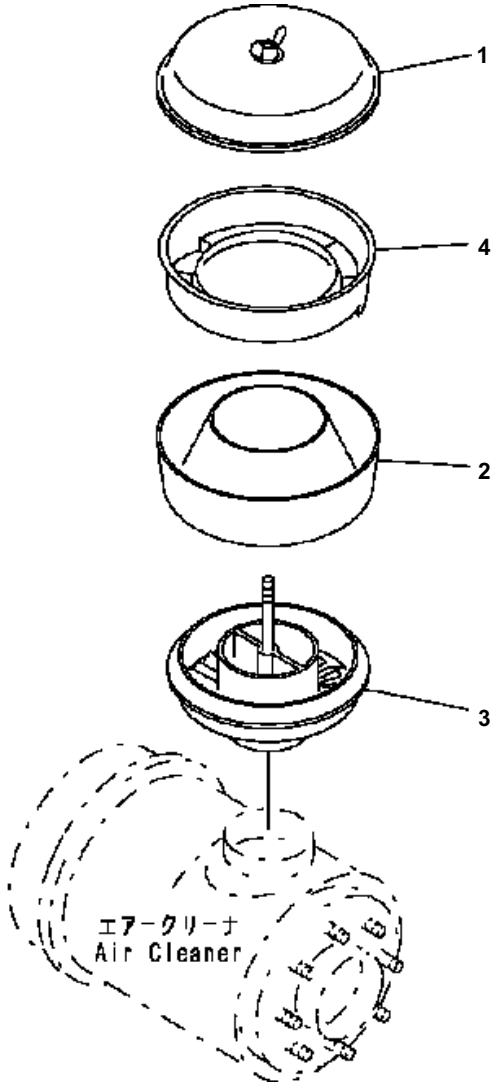

D41E6T S/N B35001-UP

PRE CLEANER

Item	Part No.	Description	Qty	Options
	600-181-2630	PRE-CLEANER ASS'Y	1	SN:B35001--
1	6672-82-7550	· COVER ASS'Y	1	SN:B35001--
2	600-181-2130	· BODY	1	SN:B35001--
3	6672-82-7510	· SLEEVE ASS'Y	1	SN:B35001--
4	6110-83-7590	· TRAP	1	SN:B35001--

Ref. B0000-03A0 Page 030030

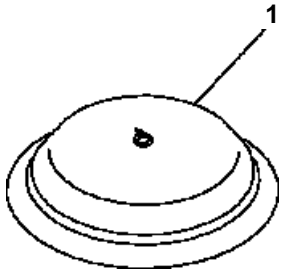

D41E6T S/N B35001-UP

AIR CLEANER CAP

Item	Part No.	Description	Qty	Options
1	600-181-3850	CAP	1	SN:B35001--

Ref. B0000-03A1 Page 030031

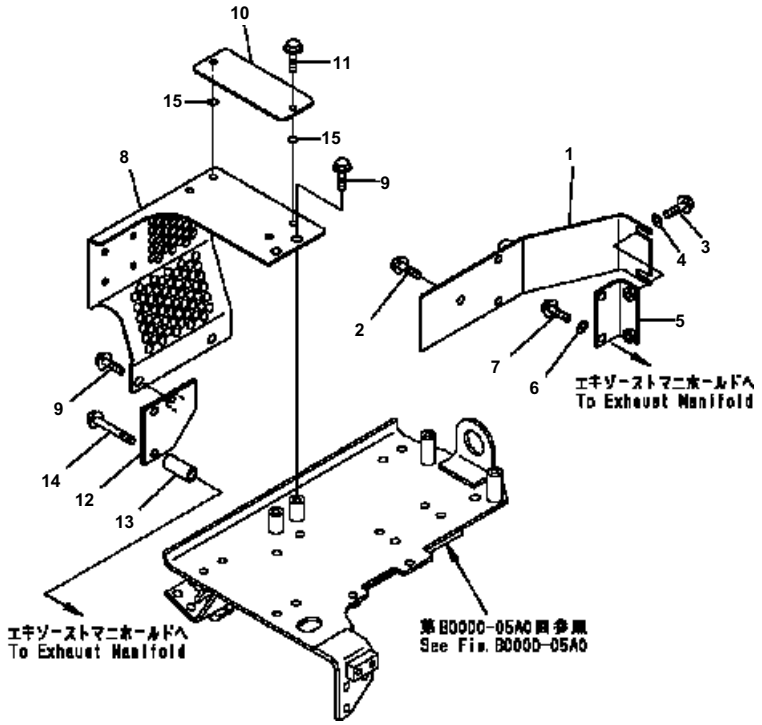

D41E6T S/N B35001-UP

HEAT SHIELD

Item	Part No.	Description	Qty	Options
1	124-01-51711	COVER	1	SN:B35001--
2	01435-01016	BOLT	3	SN:B35001--
3	01435-01020	BOLT	2	SN:B35001--
4	01643-31032	WASHER	2	SN:B35001--
5	124-01-51750	BRACKET	1	SN:B35001--
6	01643-31032	WASHER	2	SN:B35001--
7	01435-01075	BOLT	2	SN:B35001--
8	124-01-61721	COVER	1	SN:B35001--
9	01435-01016	BOLT	4	SN:B35001--
10	124-01-61772	COVER	1	SN:B35476--
	124-01-61771	COVER	1	SN:B35001--B35475
11	01435-00816	BOLT	2	SN:B35001--
12	124-01-61220	BRACKET	1	SN:B35001--
13	124-01-61660	COLLAR	2	SN:B35001--
14	01436-01030	BOLT	2	SN:B35001--
15	01643-31232	WASHER	2	SN:B35001--

Ref. B0000-04A0 Page 030040

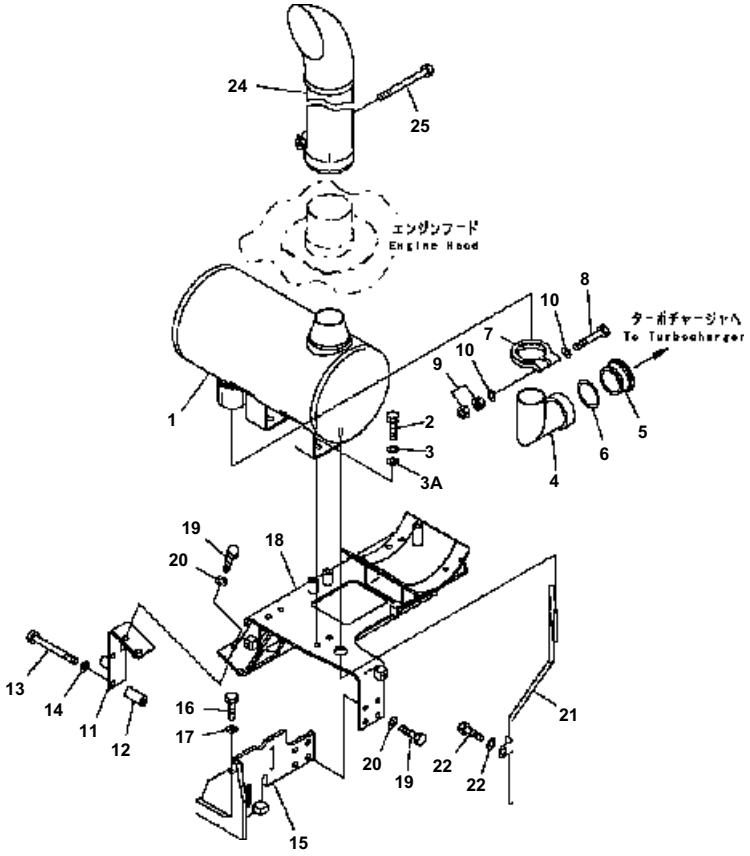

D41E6T S/N B35001-UP

MUFFLER

Item	Part No.	Description	Qty	Options
1	124-01-51330	MUFFLER	1	SN:B35001--
2	01435-01030	BOLT	4	SN:B35001--
3	01643-31032	WASHER	4	SN:B35001--
3A	175-54-34170	WASHER	4	SN:B35001--
4	124-01-51222	PIPE	1	SN:B35001--
5	124-01-51350	ADAPTER	1	SN:B35001--
6	6207-11-5380	RING{SEAL}	1	SN:B35001--
7	6205-11-5960	CLAMP	1	SN:B35001--
8	01435-01080	BOLT	1	SN:B35001--
9	01580-11008	NUT	2	SN:B35001--
10	01643-31032	WASHER	1	SN:B35001--
11	124-01-61230	BRACKET	1	SN:B35001--
12	195-979-5190	COLLAR	2	SN:B35001--
13	01436-01030	BOLT	2	SN:B35001--
14	01643-31032	WASHER	2	SN:B35001--
15	124-01-52270	BRACKET	1	SN:B35001--
16	01435-01025	BOLT	3	SN:B35001--
17	01643-31032	WASHER	3	SN:B35001--
18	124-01-61283	BRACKET	1	SN:B35001--
19	01435-01025	BOLT	11	SN:B35001--
20	01643-31032	WASHER	11	SN:B35001--
21	124-01-51293	TUBE	1	SN:B35001--
22	01435-01016	BOLT	1	SN:B35001--
23	01643-31032	WASHER	1	SN:B35001--
24	124-01-51360	EXHAUST PIPE	1	SN:B35001--
25	01016-51040	BOLT	1	SN:B35001--

Ref. B0000-05A0 Page 030050

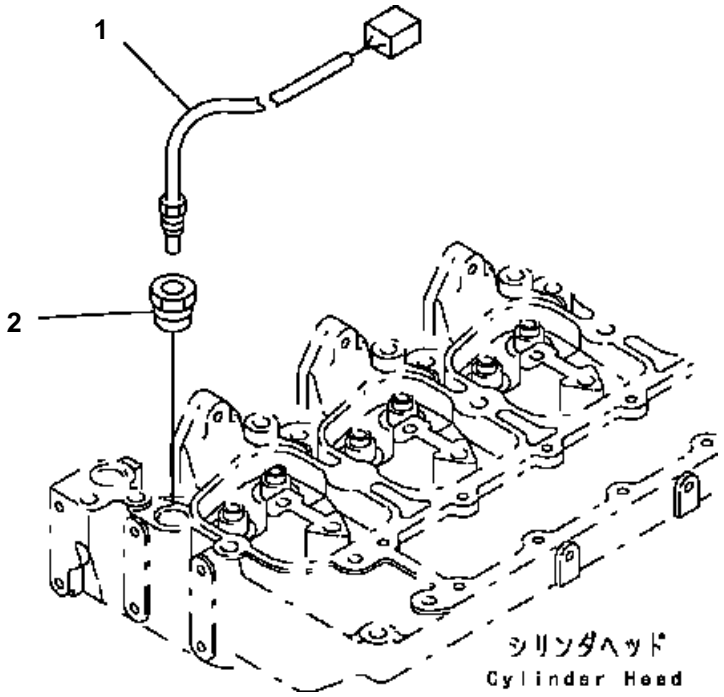

D41E6T S/N B35001-UP

WATER TEMPERATURE SENSOR (WITH MONITORPANEL)

Item	Part No.	Description	Qty	Options
1	7861-93-3320	SENSOR, WATER TEMPERATURE	1	SN:B35001--
2	565-06-13212	ADAPTER	1	SN:B35001--

Ref. B0000-06A0 Page 030060

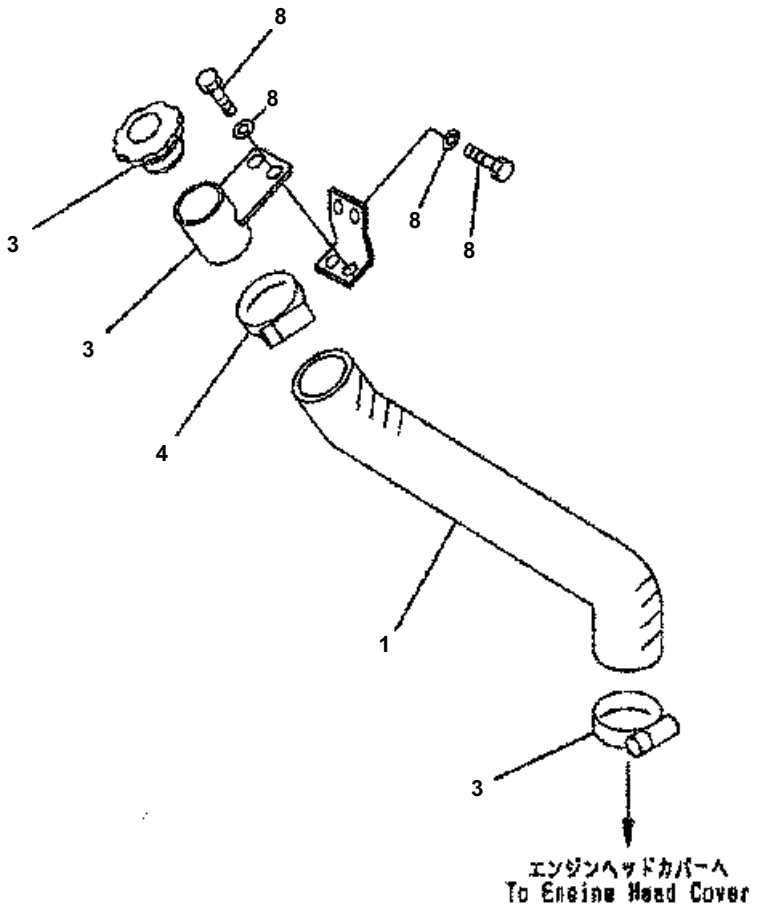

D41E6T S/N B35001-UP

OIL FILLER

Item	Part No.	Description	Qty	Options
1	124-01-51630	HOSE	1	SN:B35001--
2	124-01-51640	PIPE	1	SN:B35001--
3	6130-12-8610	CAP	1	SN:B35001--
4	07289-00070	CLAMP	2	SN:B35001--
5	124-01-61690	BRACKET	1	SN:B35316--
	124-01-61670	BRACKET	1	SN:B35001--B35315
6	01010-81020	BOLT	2	SN:B35154--
	01010-81020	BOLT	4	SN:B35001--B35153
7	01643-31032	WASHER	2	SN:B35154--
	01643-31032	WASHER	4	SN:B35001--B35153
8	01010-81220	BOLT	2	SN:B35154--
9	01643-31232	WASHER	2	SN:B35154--

Ref. B0000-07A0 Page 030070

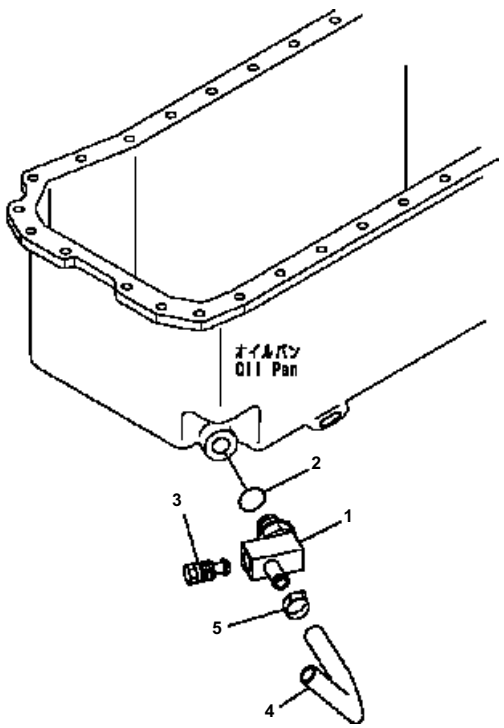

D41E6T S/N B35001-UP

OIL PAN

Item	Part No.	Description	Qty	Options
1	134-01-61830	ELBOW	1	SN:B35001--
2	07002-22434	O-RING	1	SN:B35001--
3	134-01-61840	PLUG	1	SN:B35001--
4	07270-21550	TUBE	1	SN:B35001--
5	07281-00197	CLAMP	1	SN:B35001--

Ref. B0000-08A0 Page 030080

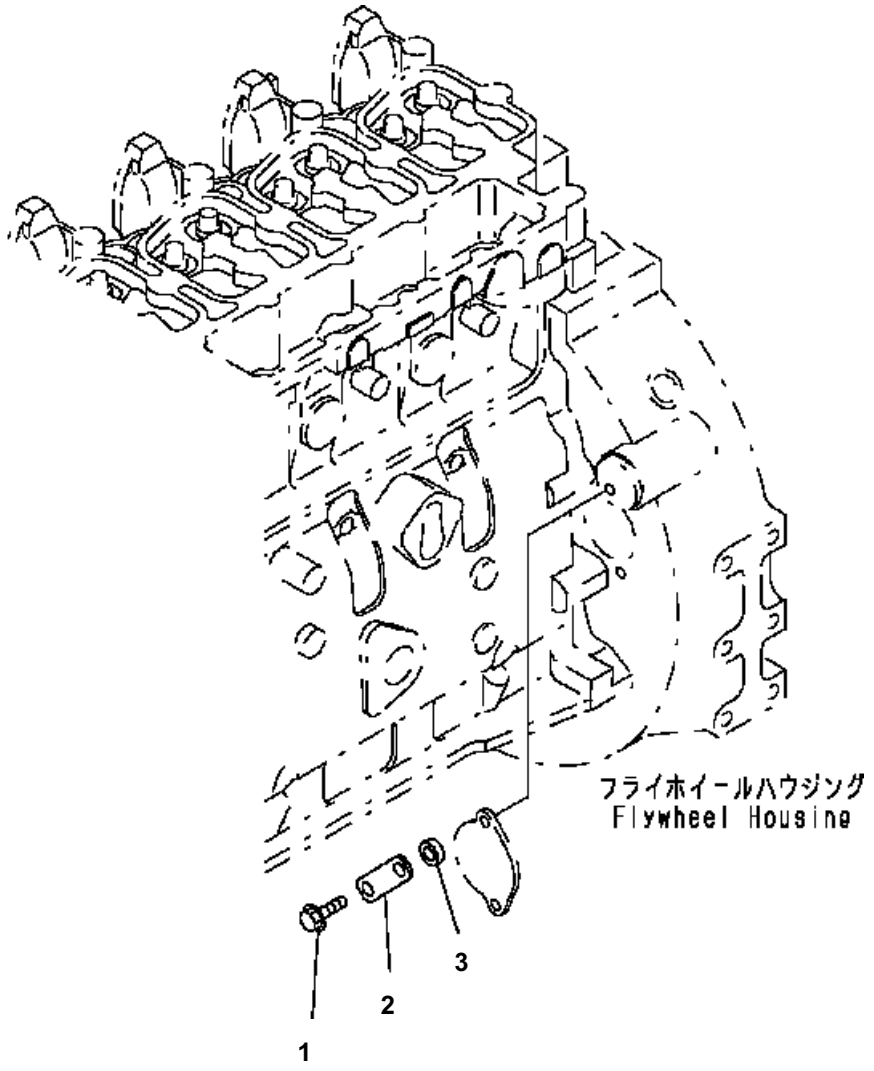

D41E6T S/N B35001-UP

FLYWHEEL HOUSING

Item	Part No.	Description	Qty	Options
1	01435-00825	BOLT	1	SN:B35001--
2	6301-11-4630	PLATE	1	SN:B35001--
3	6110-23-6490	SPACER	1	SN:B35001--

Ref. B0000-09A0 Page 030090

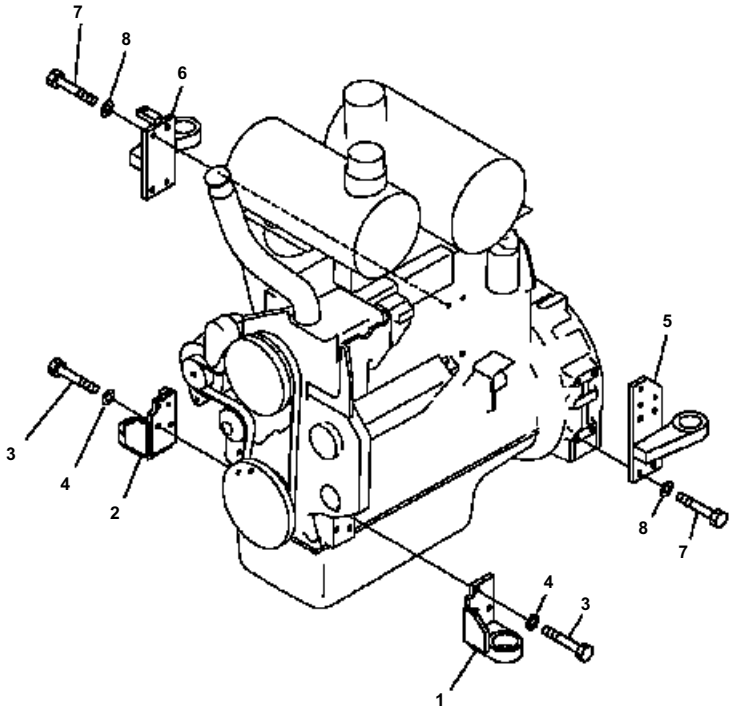

D41E6T S/N B35001-UP

MOUNT BRACKET

Item	Part No.	Description	Qty	Options
1	124-01-51412	BRACKET	1	SN:B35001--
2	124-01-62420	BRACKET	1	SN:B35001--
3	01011-81240	BOLT	6	SN:B35001--
4	01643-31232	WASHER	6	SN:B35001--
5	124-01-51431	BRACKET	1	SN:B35001--
6	124-01-51442	BRACKET	1	SN:B35001--
7	01011-81240	BOLT	8	SN:B35001--
8	01643-31232	WASHER	8	SN:B35001--

Ref. B0000-10A0 Page 030100

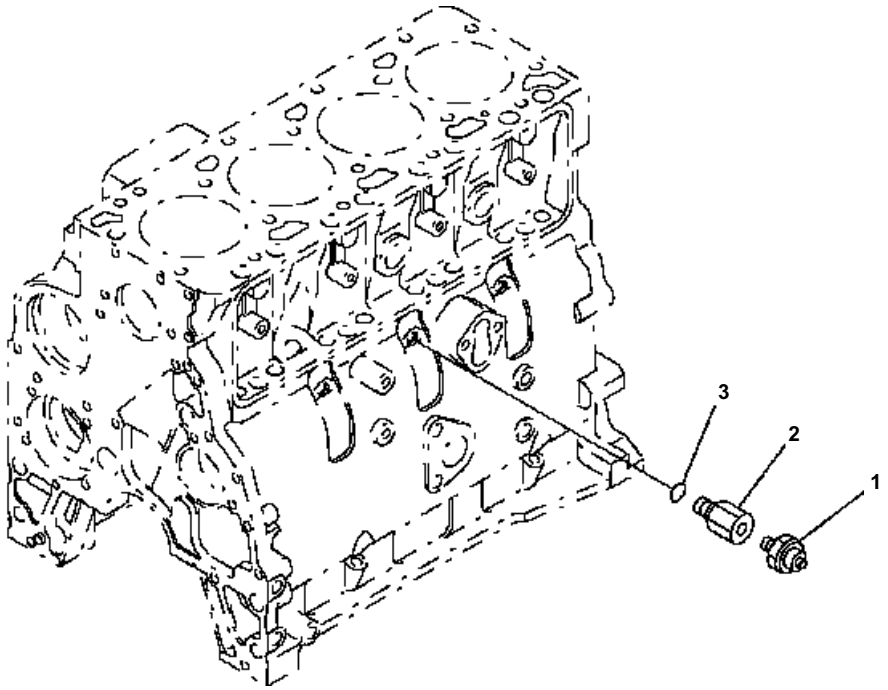

D41E6T S/N B35001-UP

PRESSURE SWITCH

Item	Part No.	Description	Qty	Options
1	08073-10505	SWITCH, OIL PRESSURE	1	SN:B35001--
2	6732-81-3170	ADAPTER	1	SN:B35001--
3	6215-81-9710	O-RING	6	SN:B35001--

Ref. B0000-11A0 Page 030110

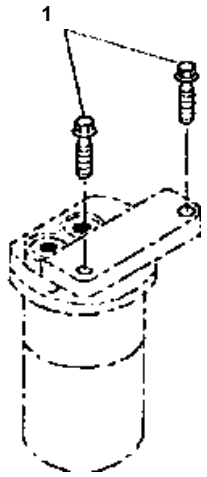

D41E6T S/N B35001-UP

FUEL FILTER

Item	Part No.	Description	Qty	Options
1	01435-00825	BOLT	2	SN:B35001--

Ref. B0000-12A0 Page 030120

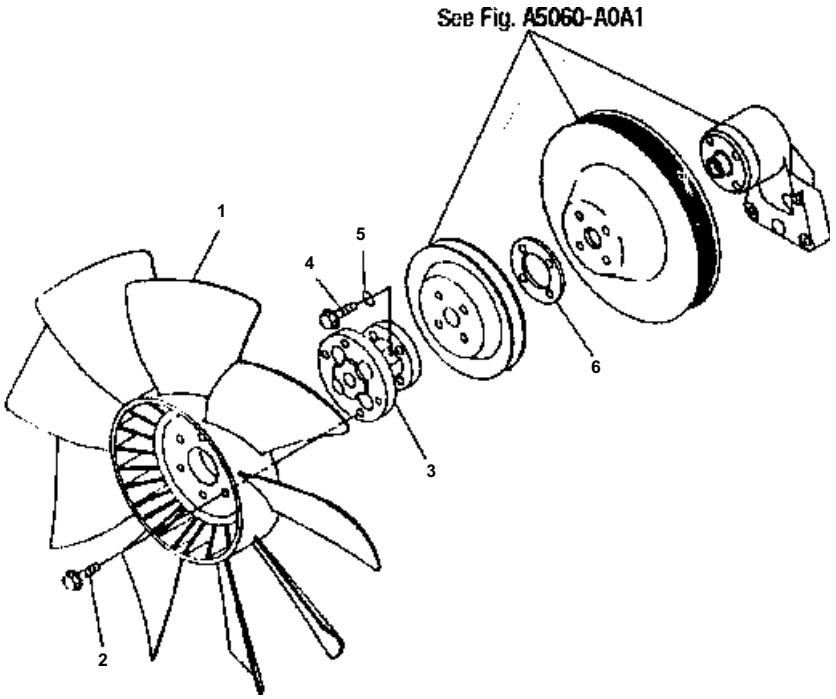

D41E6T S/N B35001-UP

COOLING FAN (BLOWER TYPE)

Item	Part No.	Description	Qty	Options
1	600-623-8580	FAN{COOLING}	1	SN:B35001--
2	01435-01030	BOLT	6	SN:B35001--
3	12G-01-61511	SPACER	1	SN:@--
	124-01-51510	SPACER	1	SN:B35001--@
4	01010-81040	BOLT	4	SN:B35001--
5	01643-31032	WASHER	4	SN:B35001--
6	124-01-51540	SPACER	1	SN:B35001--

Ref. B0000-13A0 Page 030130

1

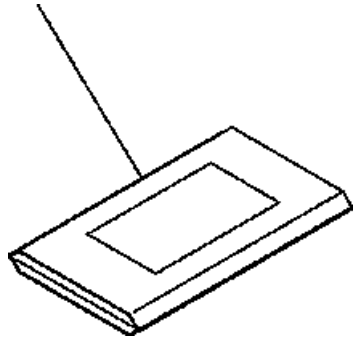

D41E6T S/N B35001-UP

CORROSION RESISTER

Item	Part No.	Description	Qty	Options
1	600-411-1120	INHIBITORZ	2	SN:B35001--

Ref. B0000-14A0 Page 030140

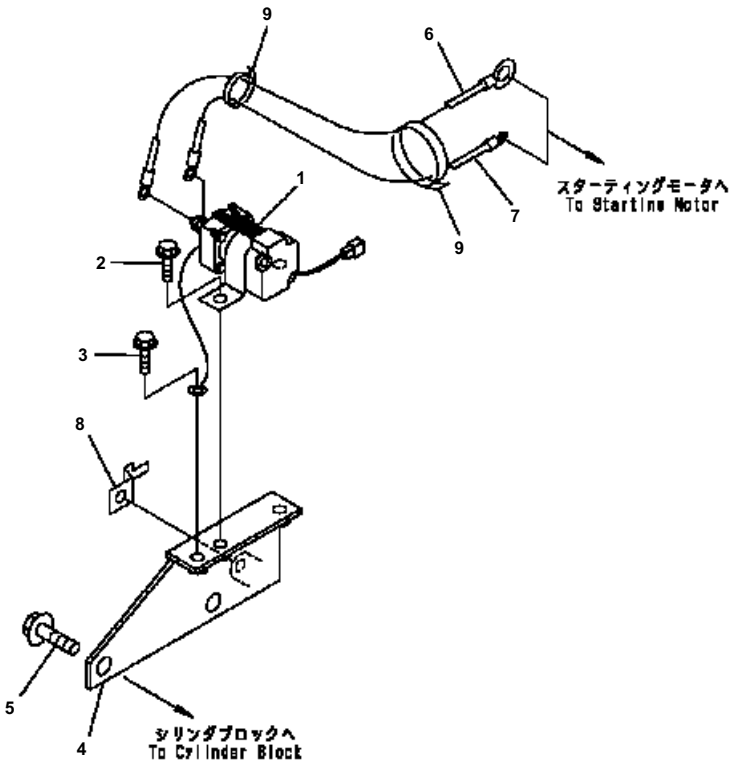

D41E6T S/N B35001-UP

STARTING MOTOR SWITCH

Item	Part No.	Description	Qty	Options
1	124-06-64321	SWITCH	1	SN:B35001--
2	01435-00816	BOLT	2	SN:B35001--
3	01435-00816	BOLT	1	SN:B35001--
4	124-01-61911	BRACKET	1	SN:B35001--
5	01435-01220	BOLT	2	SN:B35001--
6	124-01-61920	WIRE ASS'Y	1	SN:B35001--
7	124-01-61930	WIRE ASS'Y	1	SN:B35001--
8	08053-01510	CLIP	1	SN:B35001--
9	08034-00519	BAND	2	SN:B35001--

Ref. B0000-15A0 Page 030150

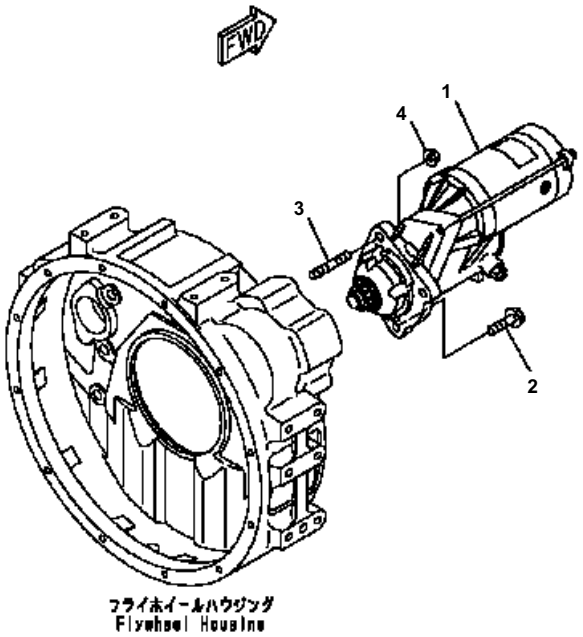

D41E6T S/N B35001-UP

STARTING MOTOR MOUNTING (5.5KW)

Item	Part No.	Description	Qty	Options
1	600-863-5111	STARTING MOTOR ASS'Y	1	SN:B35001--
2	01435-01040	BOLT	2	SN:B35001--
3	01144-31035	STUD	1	SN:B35401--
	01144-31030	STUD	1	SN:B35001--B35400
4	01584-01008	NUT	1	SN:B35001--

Ref. B0000-16A0 Page 030160

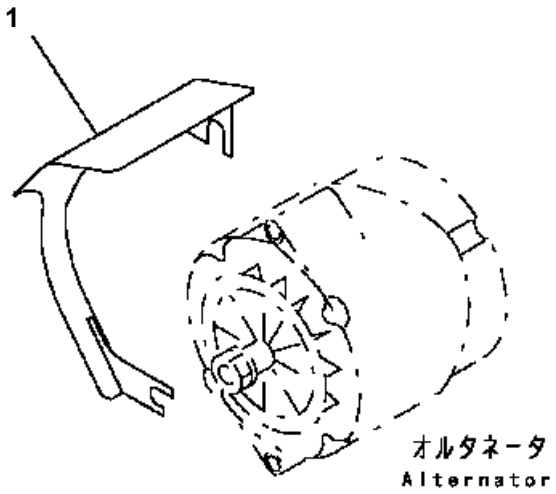

D41E6T S/N B35001-UP

SAFETY GUARD

Item	Part No.	Description	Qty	Options
1	124-01-61740	COVER	1	SN:B35154--
	124-01-51744	COVER	1	SN:B35001--B35153

Ref. B0000-17A0 Page 030170

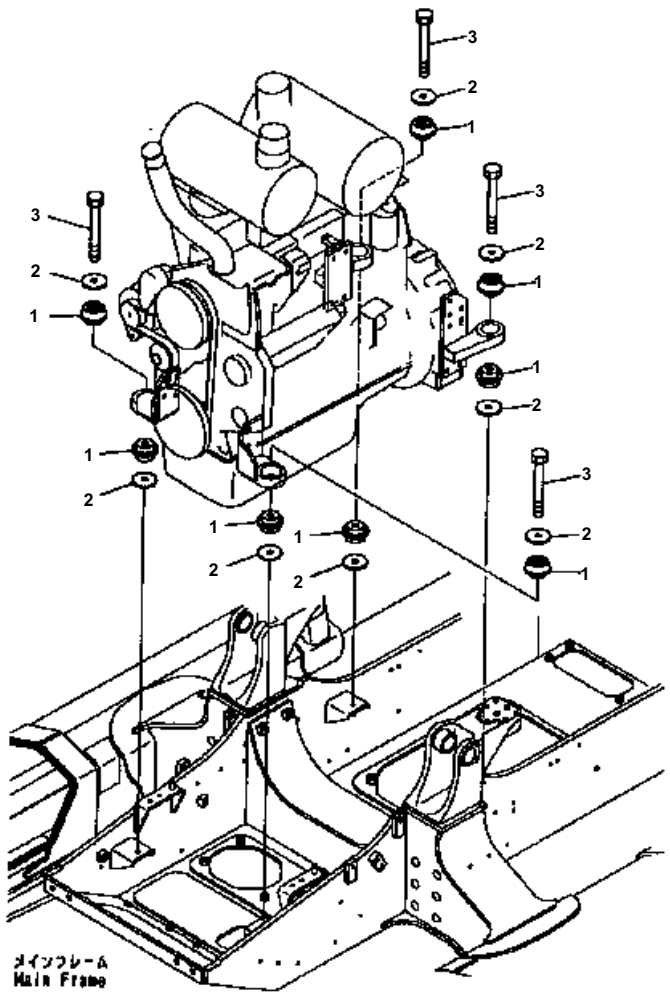

D41E6T S/N B35001-UP

ENGINE MOUNT

Item	Part No.	Description	Qty	Options
1	124-01-51450	CUSHION	8	SN:B35001--
2	113-01-21120	WASHER	8	SN:B35001--
3	01011-81620	BOLT	4	SN:B35001--

Ref. B0100-01A0 Page 030180

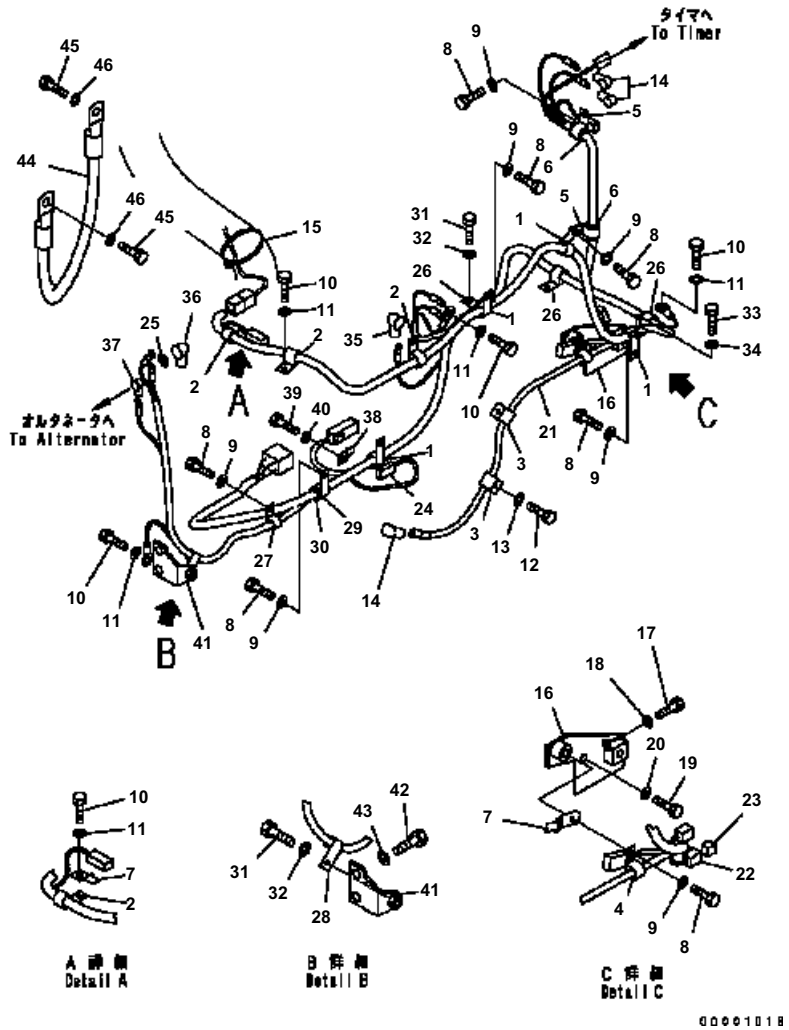

D41E6T S/N B35001-UP

ENGINE WIRING

Item	Part No.	Description	Qty	Options
1	04434-51710	CLIP	4	SN:B35001--
2	04434-51410	CLIP	3	SN:B35001--
3	04434-51008	CLIP	2	SN:B35001--
4	04434-51010	CLIP	1	SN:B35001--
5	04434-51810	CLIP	2	SN:B35001--
6	07095-20213	CUSHION	2	SN:B35001--
7	08193-20010	CLIP	2	SN:B35001--
8	01010-81020	BOLT	7	SN:B35001--
9	01643-31032	WASHER	7	SN:B35001--
10	01010-81016	BOLT	5	SN:B35001--
11	01643-31032	WASHER	5	SN:B35001--
12	01010-80816	BOLT	2	SN:B35001--
13	01643-30823	WASHER	2	SN:B35001--
14	08038-00519	CAP	3	SN:B35001--
15	134-03-61410	BAND	1	SN:B35001--
16	124-01-62180	BRACKET	1	SN:B35001--
17	01010-81220	BOLT	1	SN:B35001--
18	01643-31232	WASHER	1	SN:B35001--
19	01010-80820	BOLT	1	SN:B35001--
20	01643-30823	WASHER	1	SN:B35001--
21	124-06-64580	WIRING HARNESS	1	SN:B35369--
	124-06-64482	WIRING HARNESS	1	SN:B35001--B35368
22	21X-06-31540	· CONNECTOR	3	SN:B35001--
23	21X-06-31530	· DIODE	3	SN:B35001--
24	22U-06-11270	· FUSIBLE LINK§ 65A	1	SN:B35001--
25	01640-20610	WASHER	2	SN:B35001--
26	04434-51710	CLIP	3	SN:B35001--
27	04434-51412	CLIP	1	SN:B35001--
28	04434-51410	CLIP	1	SN:B35001--
29	04434-52512	CLIP	1	SN:B35001--
30	07095-20318	CUSHION	1	SN:B35001--
31	01010-81020	BOLT	3	SN:B35001--
32	01643-31032	WASHER	3	SN:B35001--
33	01010-81016	BOLT	2	SN:B35001--
34	01643-31032	WASHER	2	SN:B35001--
35	08038-00035	CAP	1	SN:B35001--
36	08038-00525	CAP	1	SN:B35001--
37	08038-00519	CAP	1	SN:B35001--
38	08053-01510	CLIP	1	SN:B35001--
39	01010-81216	BOLT	1	SN:B35001--
40	01643-31232	WASHER	1	SN:B35001--

Ref. B0500-01A0 Page 030190

D41E6T S/N B35001-UP

ENGINE WIRING

Item	Part No.	Description	Qty	Options
41	124-01-61880	BRACKET	1	SN:B35001--
42	01010-81020	BOLT	2	SN:B35001--
43	01643-31032	WASHER	2	SN:B35001--
44	08028-46050	WIRE	1	SN:B35001--
45	01010-81220	BOLT	2	SN:B35001--
46	01643-31232	WASHER	2	SN:B35001--

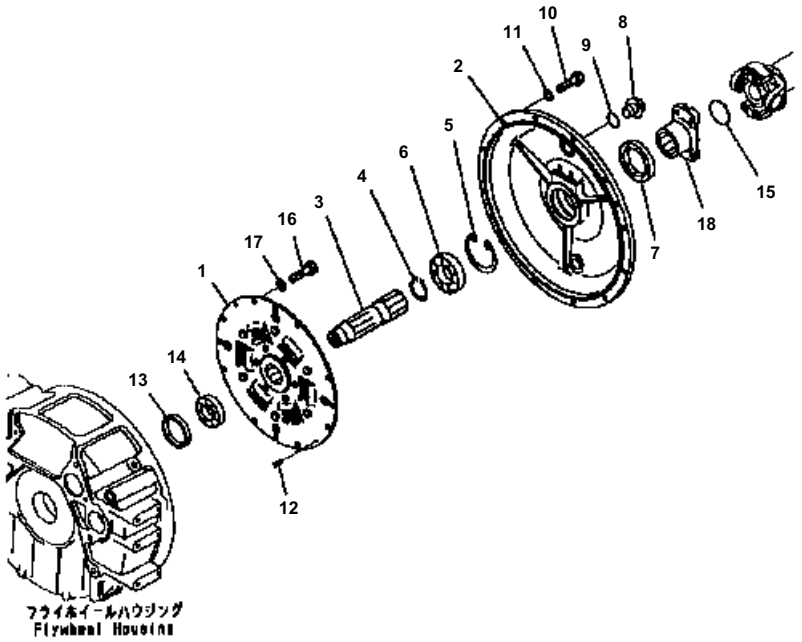

D41E6T S/N B35001-UP

DAMPER

Item	Part No.	Description	Qty	Options
1	124-12-51141	DAMPER DISC ASS'Y	1	SN:B35001--
2	124-12-51110	COVER	1	SN:B35001--
3	124-12-51132	SHAFT	1	SN:B35001--
4	04064-04518	RING	1	SN:B35001--
5	04065-08530	RING	1	SN:B35001--
6	06000-06209	BEARING	1	SN:B35001--
7	07012-10065	SEAL	1	SN:B35001--
8	07044-12412	PLUG	2	SN:B35001--
9	07002-32434	O-RING	2	SN:B35001--
10	01010-81035	BOLT	12	SN:B35001--
11	01643-31032	WASHER	12	SN:B35001--
12	203-01-51120	PIN	2	SN:B35001--
13	23S-12-11330	PLATE	1	SN:B35001--
14	06000-06207	BEARING	1	SN:B35001--
15	07046-15520	PLUG	1	SN:B35001--
16	01010-81025	BOLT	8	SN:B35001--
17	01643-31032	WASHER	8	SN:B35001--
18	12F-14-11290	YOKE	1	SN:B35001--

Ref. B0600-01A0 Page 030200

COOLING SYSTEM

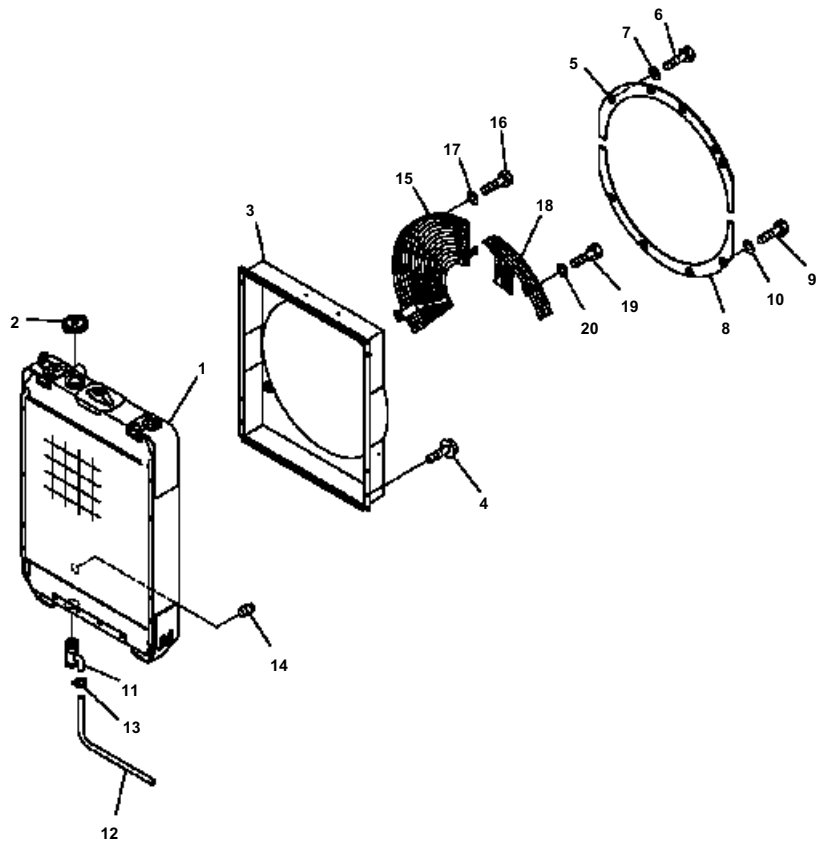

D41E6T S/N B35001-UP

COOLING (WITH AIR CONDITIONER)

Item	Part No.	Description	Qty	Options
1	124-03-63341	RADIATOR CORE ASS'Y	1	SN:B35527--
	124-03-63340	RADIATOR CORE ASS'Y	1	SN:B35001--B35062
2	114-03-48160	CAP	1	SN:B35001--
3	124-03-61122	SHROUD	1	SN:B35001--
4	01435-00814	BOLT	6	SN:B35001--
5	124-03-61522	COVER	1	SN:B35001--
6	01010-81030	BOLT	3	SN:B35001--
7	01643-31032	WASHER	3	SN:B35001--
8	124-03-61532	COVER	1	SN:B35001--
9	01010-81030	BOLT	3	SN:B35001--
10	01643-31032	WASHER	3	SN:B35001--
11	07730-50004	VALVE	1	SN:B35001--
12	07270-01525	TUBE	1	SN:B35001--
13	07280-01920	CLAMP	1	SN:B35001--
14	07042-70415	PLUG	1	SN:B35001--
15	124-03-61132	GUARD	1	SN:B35001--
16	01010-81030	BOLT	3	SN:B35001--
17	01643-31032	WASHER	3	SN:B35001--
18	124-03-61152	GUARD	1	SN:B35001--
19	01010-81030	BOLT	2	SN:B35001--
20	01643-31032	WASHER	2	SN:B35001--

Ref. C0100-01A0 Page 060010

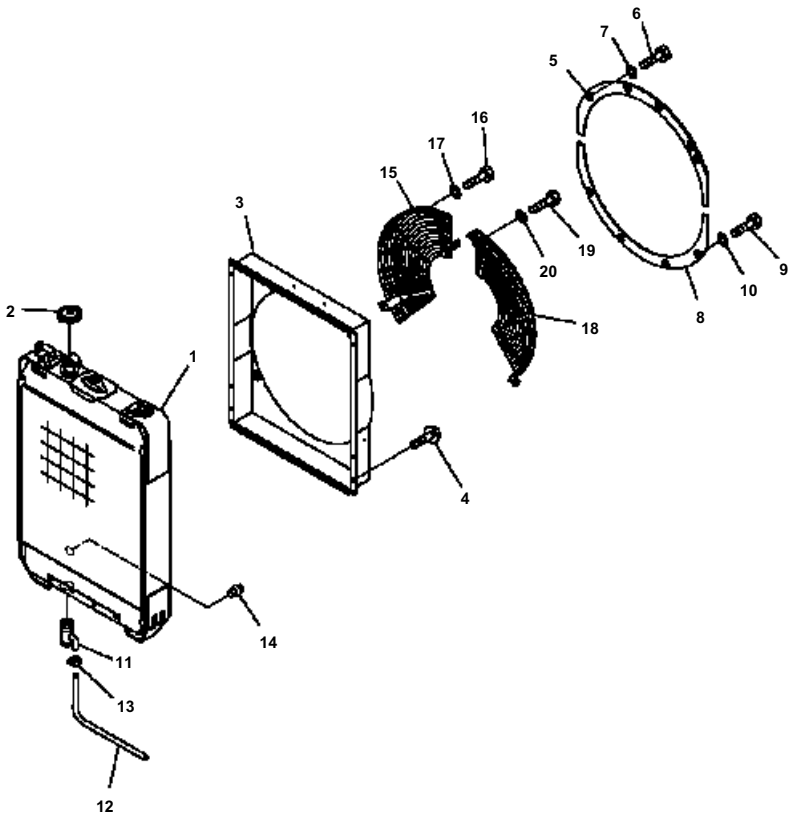

D41E6T S/N B35001-UP

COOLING (WITH AIR CONDITIONER)

Item	Part No.	Description	Qty	Options
1	124-03-63341	RADIATOR CORE ASS'Y	1	SN:B35063--
	124-03-63340	RADIATOR CORE ASS'Y	1	SN:B35001--B35062
2	114-03-48160	CAP	1	SN:B35001--
3	124-03-61122	SHROUD	1	SN:B35001--
4	01435-20814	BOLT	6	SN:B35001--
5	124-03-61522	COVER	1	SN:B35001--
6	01010-81030	BOLT	3	SN:B35001--
7	01643-31032	WASHER	3	SN:B35001--
8	124-03-61532	COVER	1	SN:B35001--
9	01010-81030	BOLT	3	SN:B35001--
10	01643-31032	WASHER	3	SN:B35001--
11	07730-50004	VALVE	1	SN:B35001--
12	07270-01525	TUBE	1	SN:B35001--
13	07280-01920	CLAMP	1	SN:B35001--
14	07042-70415	PLUG	1	SN:B35001--
15	124-03-61132	GUARD	1	SN:B35001--
16	01010-81030	BOLT	3	SN:B35001--
17	01643-31032	WASHER	3	SN:B35001--
18	124-03-61132	GUARD	1	SN:B35001--
19	01010-81030	BOLT	2	SN:B35001--
20	01643-31032	WASHER	2	SN:B35001--

Ref. C0100-01A1 Page 060020

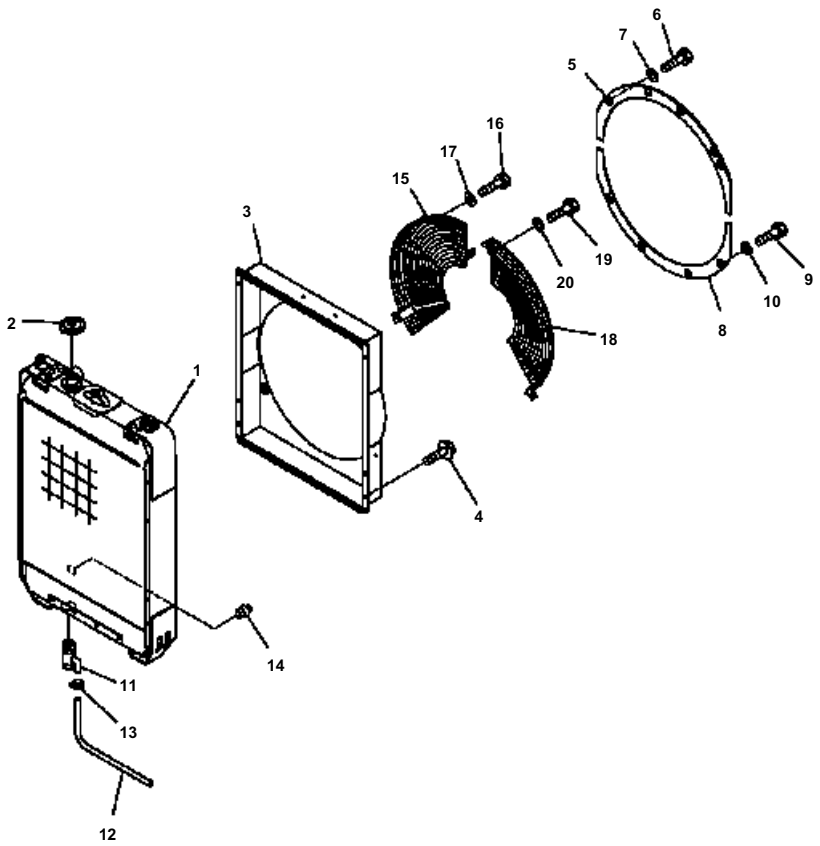

D41E6T S/N B35001-UP

COOLING (WITH REVERSIBLE FAN)

Item	Part No.	Description	Qty	Options
1	124-03-63341	RADIATOR CORE ASS'Y	1	SN:B35063--
	124-03-63340	RADIATOR CORE ASS'Y	1	SN:B35001--B35062
2	114-03-48160	CAP	1	SN:B35001--
3	124-03-61122	SHROUD	1	SN:B35001--
4	01435-20814	BOLT	6	SN:B35001--
5	124-03-61620	COVER	1	SN:B35001--
6	01010-81030	BOLT	3	SN:B35001--
7	01643-31032	WASHER	3	SN:B35001--
8	124-03-61630	COVER	1	SN:B35001--
9	01010-81030	BOLT	3	SN:B35001--
10	01643-31032	WASHER	3	SN:B35001--
11	07730-50004	VALVE	1	SN:B35001--
12	07270-01525	TUBE	1	SN:B35001--
13	07280-01920	CLAMP	1	SN:B35001--
14	07042-70415	PLUG	1	SN:B35001--
15	124-03-61160	GUARD	1	SN:B35001--
16	01010-81030	BOLT	3	SN:B35001--
17	01643-31032	WASHER	3	SN:B35001--
18	124-03-61152	GUARD	1	SN:B35001--
19	01010-81030	BOLT	2	SN:B35001--
20	01643-31032	WASHER	2	SN:B35001--

Ref. C0100-01A2 Page 060030

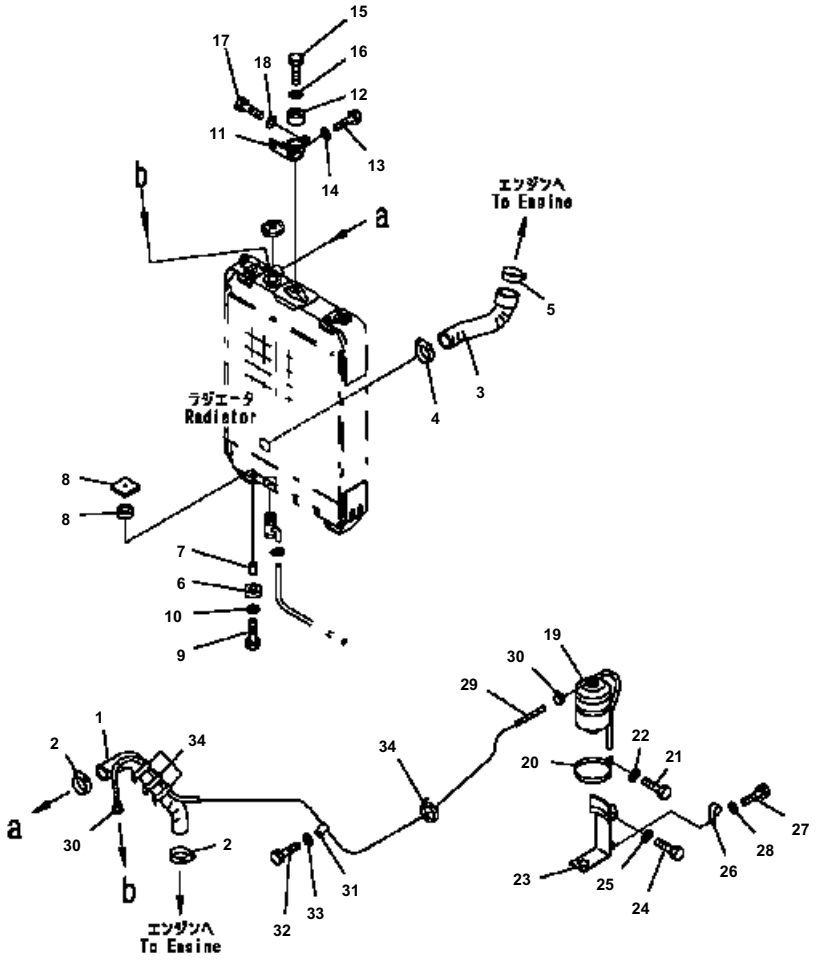

D41E6T S/N B35001-UP

COOLING (HOUSE, MOUNT, RESERVE TANK)

Item	Part No.	Description	Qty	Options
1	124-03-51212	HOSE{UPPER}	1	SN:B35001--
2	07289-00055	CLAMP	2	SN:B35001--
3	124-03-51221	HOSE{LOWER}	1	SN:B35001--
4	07289-00055	CLAMP	1	SN:B35001--
5	07289-00070	CLAMP	1	SN:B35001--
6	113-03-21160	SEAT	4	SN:B35001--
7	113-03-21170	SPACER	2	SN:B35001--
8	113-03-21180	PLATE	2	SN:B35001--
9	01010-81060	BOLT	2	SN:B35001--
10	01643-31032	WASHER	2	SN:B35001--
11	124-03-61590	BRACKET	1	SN:B35001--
12	135-03-12110	DAMPER	1	SN:B35001--
13	01010-81035	BOLT	2	SN:B35001--
14	01643-31032	WASHER	2	SN:B35001--
15	01010-81460	BOLT	1	SN:B35001--
16	01643-31445	WASHER	1	SN:B35001--
17	01010-81035	BOLT	1	SN:B35001--
18	01643-31032	WASHER	1	SN:B35001--
19	114-03-51510	TANK	1	SN:B35001--
20	114-03-51490	CLAMP	1	SN:B35001--
21	01010-80825	BOLT	1	SN:B35001--
22	01643-30823	WASHER	1	SN:B35001--
23	124-03-61252	BRACKET	1	SN:B35354--
	124-03-61251	BRACKET	1	SN:B35001--B35353
24	01010-81225	BOLT	2	SN:B35354--
	01010-81220	BOLT	2	SN:B35001--B35353
25	01643-31232	WASHER	2	SN:B35001--B35001
26	08036-10810	CLIP	1	SN:B35001--
27	01010-80816	BOLT	1	SN:B35001--
28	01643-30823	WASHER	1	SN:B35001--
29	124-03-61240	HOSE	1	SN:B35001--
30	07285-00110	CLIP	2	SN:B35001--
31	04434-51812	CLIP	2	SN:B35001--
32	01010-81020	BOLT	2	SN:B35001--
33	01643-31032	WASHER	2	SN:B35001--
34	134-03-61410	BAND	3	SN:B35001--

Ref. C0100-02A0 Page 060040

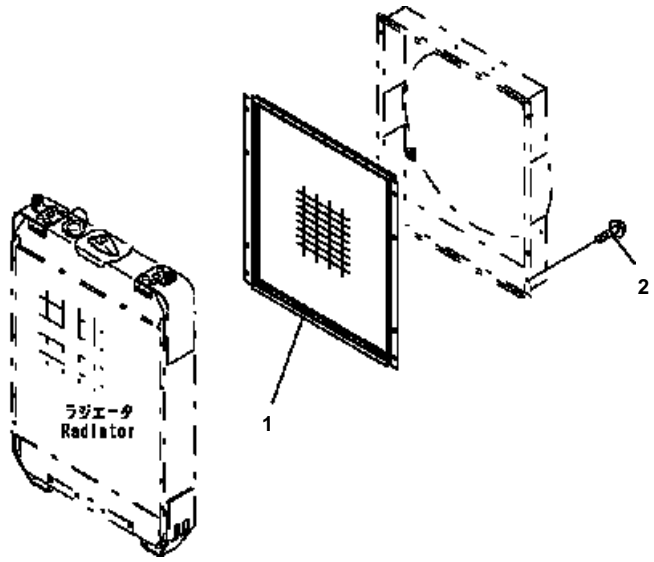

D41E6T S/N B35001-UP

COOLING (SANDY DUSTY PROTECTION GRID)

Item	Part No.	Description	Qty	Options
1	124-03-51410	GRID	1	SN:B35001--
2	01435-21016	BOLT	6	SN:B35001--

Ref. C0100-03A3 Page 060050

FUEL TANK AND RELATED PARTS

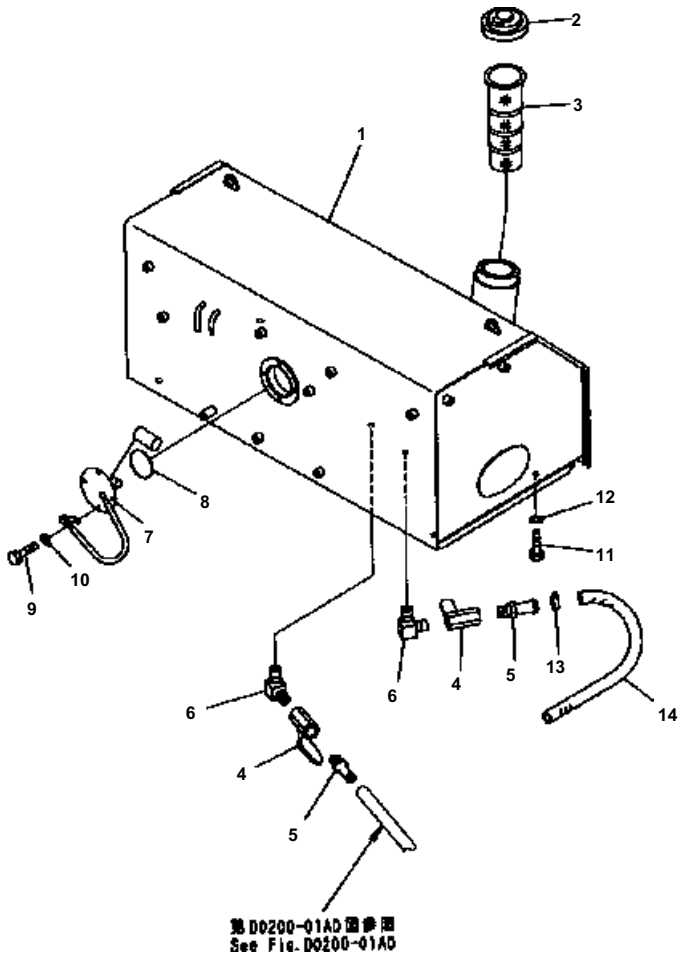

D41E6T S/N B35001-UP

FUEL TANK (FOR MONITOR PANEL)

Item	Part No.	Description	Qty	Options
1	124-04-61131	TANK{FUEL}	1	SN:B35001--
2	134-04-61180	CAP	1	SN:B35001--
3	22U-04-21231	STRAINER	1	SN:B35001--
4	07700-40240	VALVE	2	SN:B35001--
5	120-04-41130	NIPPLE	2	SN:B35001--
6	20D-68-11670	ELBOW	2	SN:B35001--
7	7861-93-4940	SENSOR{FUEL}	1	SN:B35001--
8	07000-02085	O-RING	1	SN:B35001--
9	01010-81020	BOLT	4	SN:B35001--
10	01643-31032	WASHER	4	SN:B35001--
11	01010-81680	BOLT	4	SN:B35001--
12	01643-31645	WASHER	4	SN:B35001--
13	07285-00115	CLIP	1	SN:B35001--
14	07270-01035	TUBE	1	SN:B35001--

Ref. D0100-01A0 Page 090010

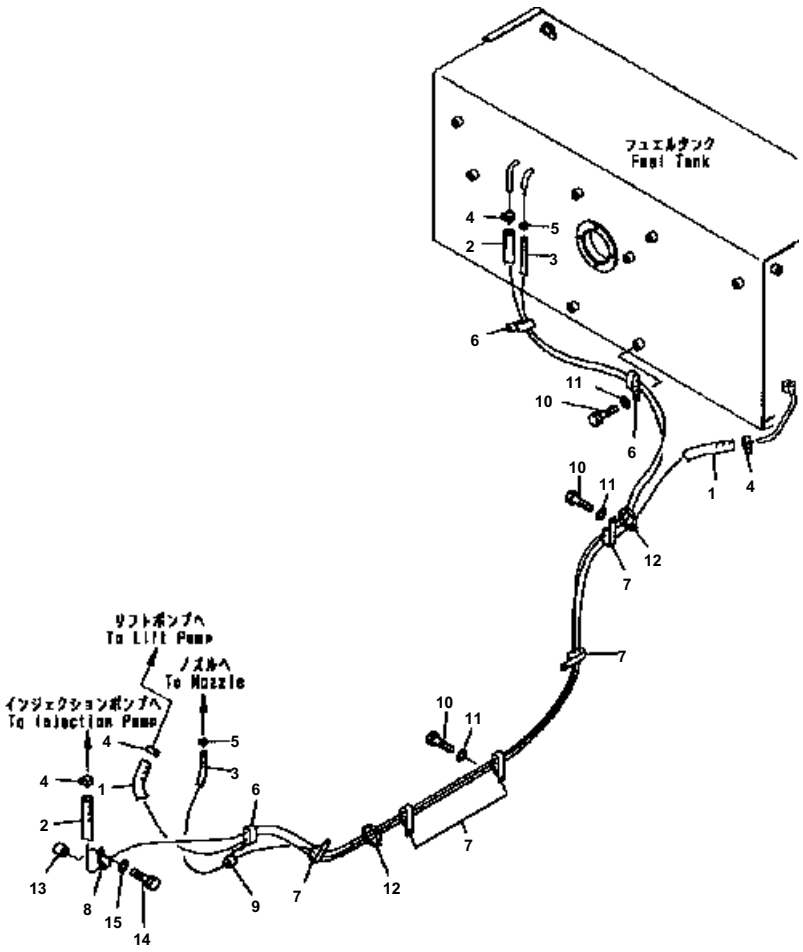

D41E6T S/N B35001-UP

FUEL LINE

Item	Part No.	Description	Qty	Options
1	124-04-61550	HOSE ASS'Y	1	SN:B35001--
	08017-31925	· CONDUIT	1	SN:B35001--
	08024-91020	· TAPE	1	SN:B35001--
2	124-04-61541	HOSE ASS'Y	1	SN:B35001--
	08017-31936	· CONDUIT	1	SN:B35001--
	08024-91020	· TAPE	1	SN:B35001--
3	124-04-61560	HOSE ASS'Y	1	SN:B35001--
	08017-31032	· CONDUIT	1	SN:B35001--
	08024-91020	· TAPE	1	SN:B35001--
4	11Y-09-11140	CLIP	4	SN:B35001--
5	07285-00085	CLIP	2	SN:B35001--
6	04435-52212	CLIP	3	SN:B35001--
7	419-09-11150	CLIP	5	SN:B35001--
8	04434-52312	CLIP	1	SN:B35001--
9	04434-51412	CLIP	1	SN:B35001--
10	01010-81220	BOLT	9	SN:B35001--
11	01643-31232	WASHER	9	SN:B35001--
12	08034-00823	BAND	2	SN:B35001--
13	6144-85-6680	SPACER	1	SN:B35001--
14	01010-81245	BOLT	1	SN:B35001--
15	01643-31232	WASHER	1	SN:B35001--

Ref. D0200-01A0 Page 090020

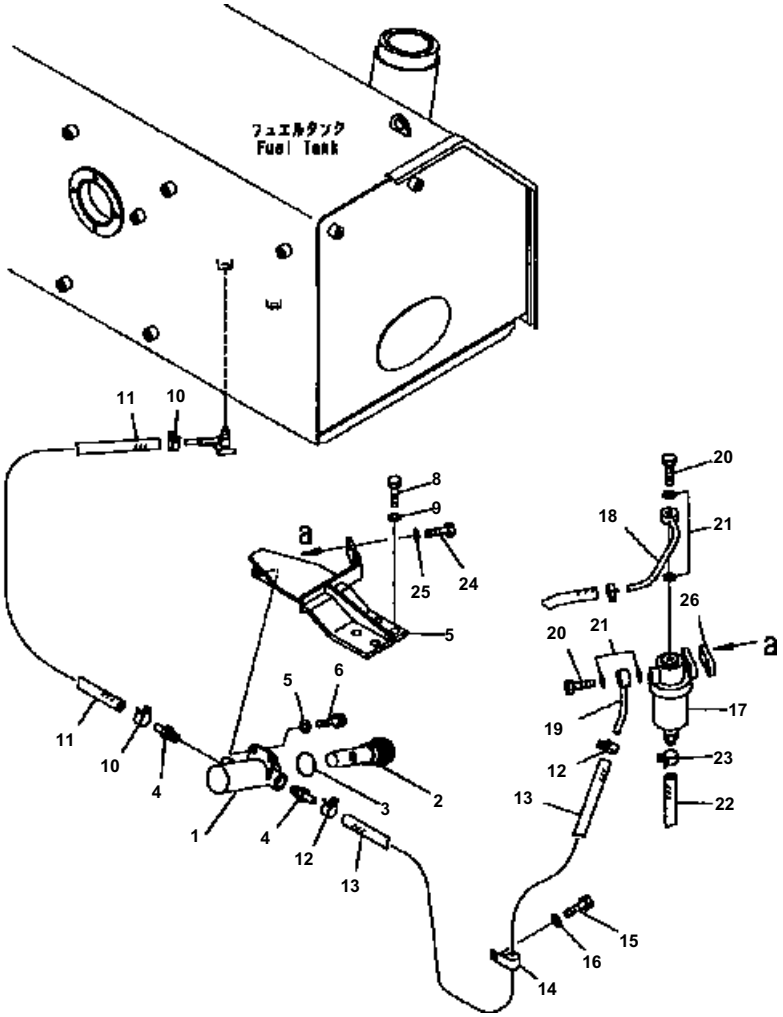

D41E6T S/N B35001-UP

ADDITIONAL FUEL STRAINER AND WATER SEPARATOR

Item	Part No.	Description	Qty	Options
	124-04-61260	STRAINER ASS'Y	1	SN:B35001--
1	07058-00001	・CASE	1	SN:B35001--
2	154-04-12531	・STRAINER	1	SN:B35001--
	150-04-11170	・・SCREEN	1	SN:B35001--
	154-04-12521	・・CAP	1	SN:B35001--
3	07002-14234	・O-RING	1	SN:B35001--
4	6212-61-6950	・NIPPLE	2	SN:B35001--
5	124-04-61311	BRACKET	1	SN:B35001--
6	01010-80825	BOLT	2	SN:B35001--
7	01643-30823	WASHER	2	SN:B35001--
8	01010-81235	BOLT	4	SN:B35001--
9	01643-31232	WASHER	4	SN:B35001--
10	11Y-09-11140	CLIP	2	SN:B35001--
11	124-04-61590	HOSE	1	SN:B35001--
12	11Y-09-11140	CLIP	2	SN:B35001--
13	07288-01004	HOSE	1	SN:B35001--
14	04434-51612	CLIP	1	SN:B35001--
15	01010-81220	BOLT	1	SN:B35001--
16	01643-31232	WASHER	1	SN:B35001--
17	600-311-9700	WATER SEPARATOR A.	1	SN:B35001--
18	124-04-51270	TUBE	1	SN:B35001--
19	6204-71-5730	JOINT	1	SN:B35001--
20	07206-31014	BOLT	2	SN:B35001--
21	07005-01412	GASKET	4	SN:B35001--
22	07270-01015	TUBE	1	SN:B35001--
23	07285-00095	CLIP	1	SN:B35001--
24	01010-81025	BOLT	2	SN:B35001--
25	01643-31032	WASHER	2	SN:B35001--
26	124-04-51280	PLATE	1	SN:B35001--

Ref. D0210-01A0 Page 090030

ELECTRICAL SYSTEM

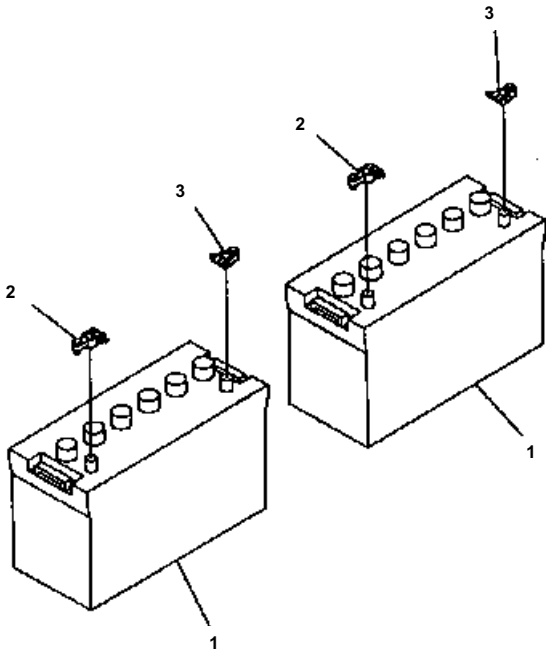

D41E6T S/N B35001-UP

BATTERY

Item	Part No.	Description	Qty	Options
1	124-06-61540	BATTERY{WET}	2	SN:B35527--
	124-06-51160	BATTERY{WET}	2	SN:B35001--B35526
2	08000-00000	TERMINAL, (+)	2	SN:B35001--
3	08000-00001	TERMINAL, (-)	2	SN:B35001--

Ref. E0110-01A0 Page 120010

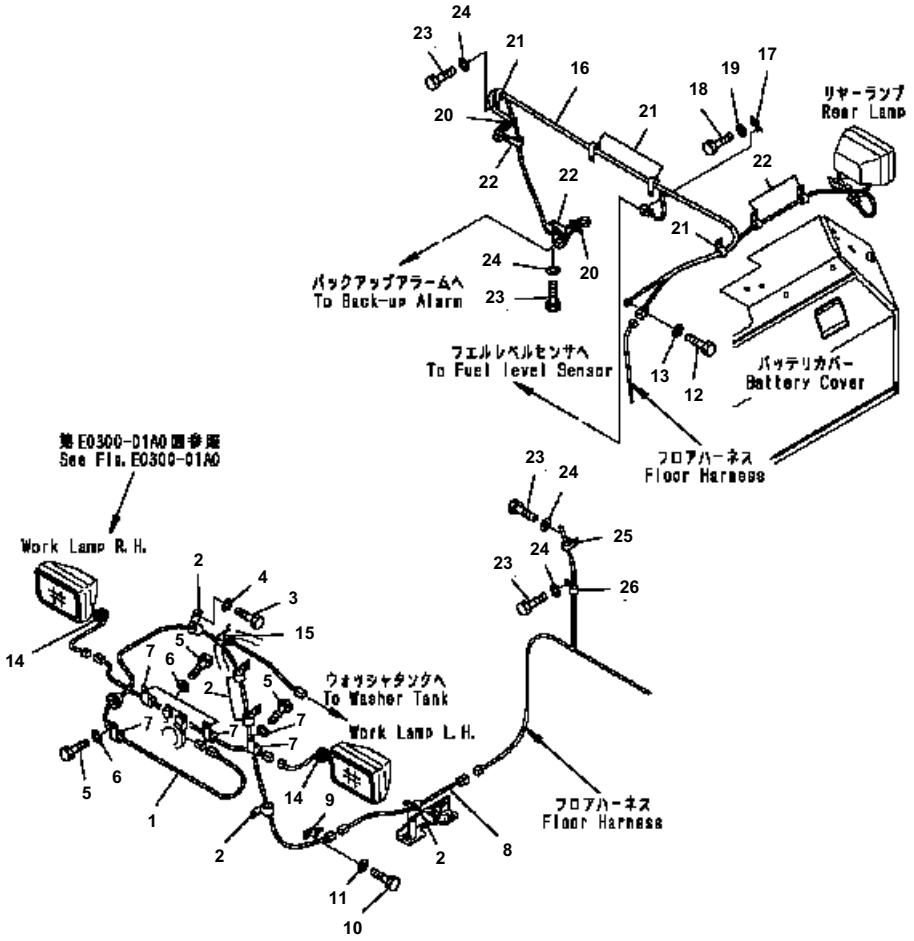

D41E6T S/N B35001-UP

VEHICLE WIRING

Item	Part No.	Description	Qty	Options
1	124-06-64142	WIRING HARNESS	1	SN:B35001--
2	04434-51410	CLIP	7	SN:B35001--
3	01010-81016	BOLT	6	SN:B35001--
4	01643-31032	WASHER	6	SN:B35001--
5	01010-81016	BOLT	1	SN:B35001--
6	01643-31032	WASHER	1	SN:B35001--
7	04434-51010	CLIP	1	SN:B35001--
8	124-06-64250	WIRING HARNESS	1	SN:B35001--
9	08053-00910	CLIP	1	SN:B35001--
10	01010-81016	BOLT	1	SN:B35001--
11	01643-31032	WASHER	1	SN:B35001--
12	01010-81016	BOLT	2	SN:B35001--
13	01643-31032	WASHER	2	SN:B35001--
14	201-43-28440	GROMMET	2	SN:B35001--
15	08034-20519	BAND	5	SN:B35001--
16	124-06-65151	WIRING HARNESS	1	SN:B35001--
17	08193-21012	CLIP	1	SN:B35001--
18	01010-81016	BOLT	1	SN:B35001--
19	01643-31032	WASHER	1	SN:B35001--
20	08034-00414	BAND	2	SN:B35001--
21	04434-51410	CLIP	4	SN:B35001--
22	04434-51010	CLIP	5	SN:B35001--
23	01010-81016	BOLT	11	SN:B35001--
24	01643-31032	WASHER	11	SN:B35001--
25	04434-51910	CLIP	1	SN:B35001--
26	04434-52710	CLIP	1	SN:B35001--

Ref. E0200-01A0 Page 120020

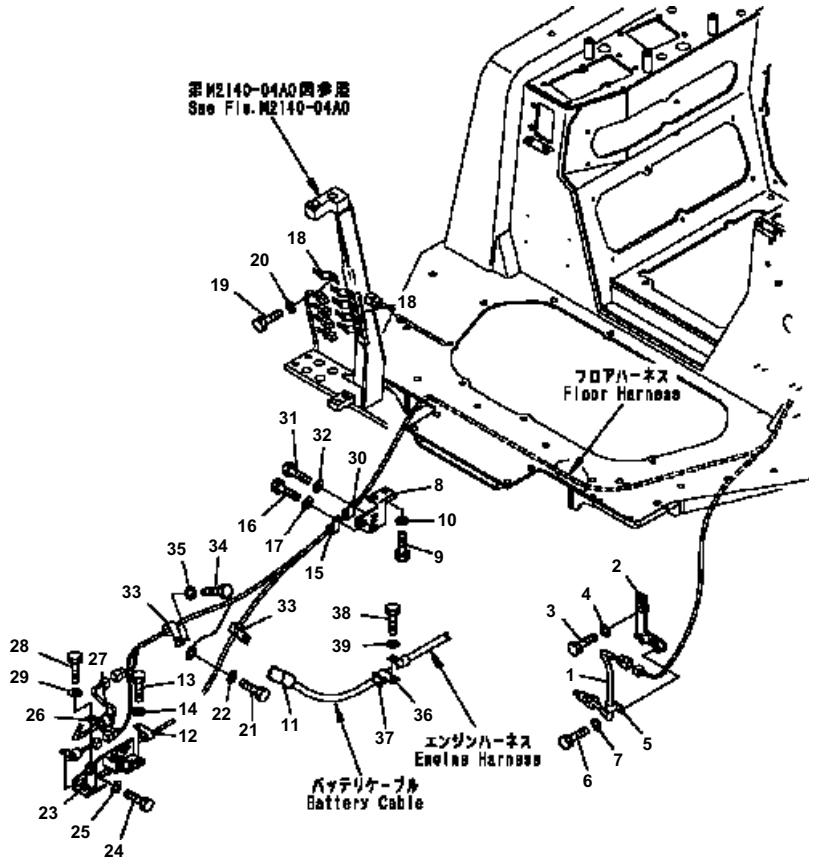

D41E6T S/N B35001-UP

VEHICLE WIRING (TEMPERATURE SENSOR WIRING)

Item	Part No.	Description	Qty	Options
1	7861-93-3320	SENSOR	1	SN:B35001--
2	124-06-61390	BRACKET	1	SN:B35001--
3	01010-81016	BOLT	1	SN:B35001--
4	01643-31032	WASHER	1	SN:B35001--
5	6127-81-4520	CLIP	1	SN:B35001--
6	01010-81016	BOLT	1	SN:B35001--
7	01643-31032	WASHER	1	SN:B35001--
8	124-54-65310	BRACKET	1	SN:B35001--
9	01010-81020	BOLT	2	SN:B35001--
10	01643-31032	WASHER	2	SN:B35001--
11	08038-00035	CAP	1	SN:B35001--
12	04434-51910	CLIP	1	SN:B35001--
13	01010-81016	BOLT	1	SN:B35001--
14	01643-31032	WASHER	1	SN:B35001--
15	04434-52712	CLIP	1	SN:B35001--
16	01010-81220	BOLT	1	SN:B35001--
17	01643-31232	WASHER	1	SN:B35001--
18	08193-21012	CLIP	5	SN:B35001--
19	01010-81016	BOLT	5	SN:B35001--
20	01643-31032	WASHER	5	SN:B35001--
21	01010-81220	BOLT	1	SN:B35001--
22	01643-31232	WASHER	1	SN:B35001--
23	124-06-62580	BRACKET	1	SN:B35001--
24	01010-81220	BOLT	2	SN:B35001--
25	01643-31232	WASHER	2	SN:B35001--
26	04434-52510	CLIP	1	SN:B35001--
27	07095-20318	CUSHION	1	SN:B35001--
28	01010-81020	BOLT	1	SN:B35001--
29	01643-31032	WASHER	1	SN:B35001--
30	04434-51910	CLIP	1	SN:B35001--
31	01010-81020	BOLT	1	SN:B35001--
32	01643-31032	WASHER	1	SN:B35001--
33	04434-51912	CLIP	2	SN:B35001--
34	01010-81220	BOLT	2	SN:B35001--
35	01643-31232	WASHER	2	SN:B35001--
36	04434-53212	CLIP	1	SN:B35001--
37	07095-20523	CUSHION	1	SN:B35001--
38	01010-81020	BOLT	1	SN:B35001--
39	01643-31032	WASHER	1	SN:B35001--

Ref. E0200-02A0 Page 120030

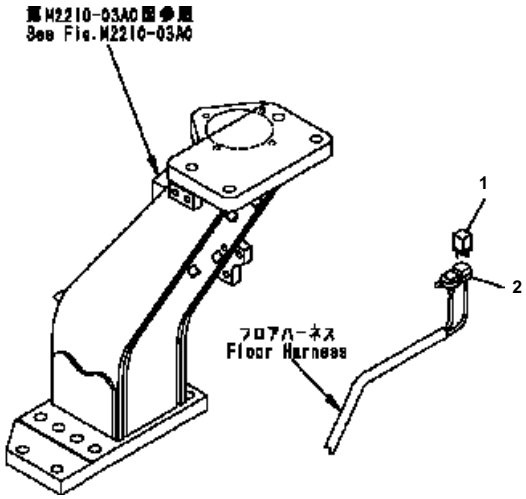

D41E6T S/N B35001-UP

VEHICLE WIRING (WITHOUT FAN CONTROLLER)

Item	Part No.	Description	Qty	Options
1	569-06-61970	RELAY	1	SN:B35001--
2	08034-20519	BAND	1	SN:B35001--

Ref. E0200-03A0 Page 120040

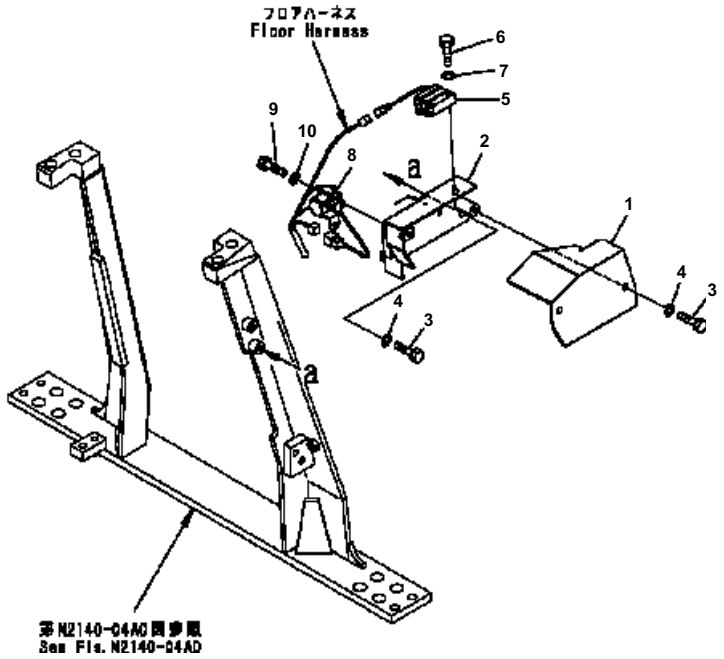

D41E6T S/N B35001-UP

VEHICLE WIRING (RELAY)

Item	Part No.	Description	Qty	Options
1	124-06-62272	COVER	1	SN:B35001--
2	124-06-62283	BRACKET	1	SN:B35001--
3	01010-81020	BOLT	4	SN:B35001--
4	01643-31032	WASHER	4	SN:B35001--
5	600-815-9270	TIMER	1	SN:B35001--
6	01010-80616	BOLT	2	SN:B35001--
7	01643-30623	WASHER	2	SN:B35001--
8	600-815-7870	RELAY	1	SN:B35001--
9	01010-80616	BOLT	2	SN:B35001--
10	01643-30623	WASHER	2	SN:B35001--

Ref. E0200-04A0 Page 120050

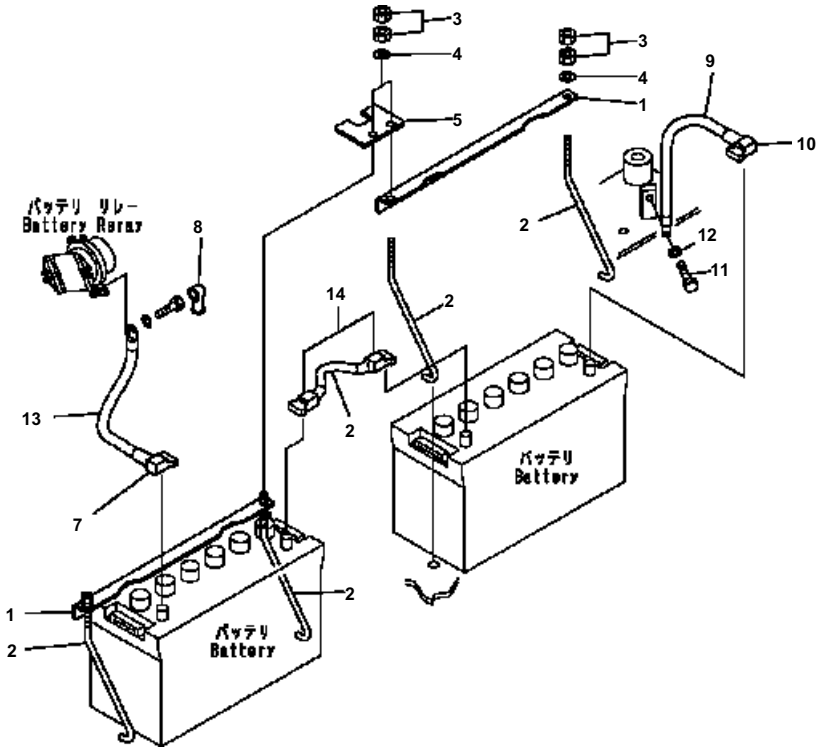

D41E6T S/N B35001-UP

BATTERY WIRING

Item	Part No.	Description	Qty	Options
1	124-06-51170	HOLDER	4	SN:B35001--
2	124-06-54340	BOLT	4	SN:B35001--
3	01580-11008	NUT	8	SN:B35001--
4	01643-31032	WASHER	4	SN:B35001--
5	124-06-65180	PLATE	1	SN:B35001--
6	08028-64025	WIRE	1	SN:B35001--
7	21J-06-11570	COVER	1	SN:B35001--
8	08038-00035	CAP	1	SN:B35001--
9	08028-44040	CABLE	1	SN:B35001--
10	14X-06-12260	COVER	1	SN:B35001--
11	01010-81016	BOLT	1	SN:B35001--
12	01643-31032	WASHER	1	SN:B35001--
13	08028-64030	WIRE	1	SN:B35001--
14	08038-42511	CAP	2	SN:B35001--

Ref. E0210-01A0 Page 120060

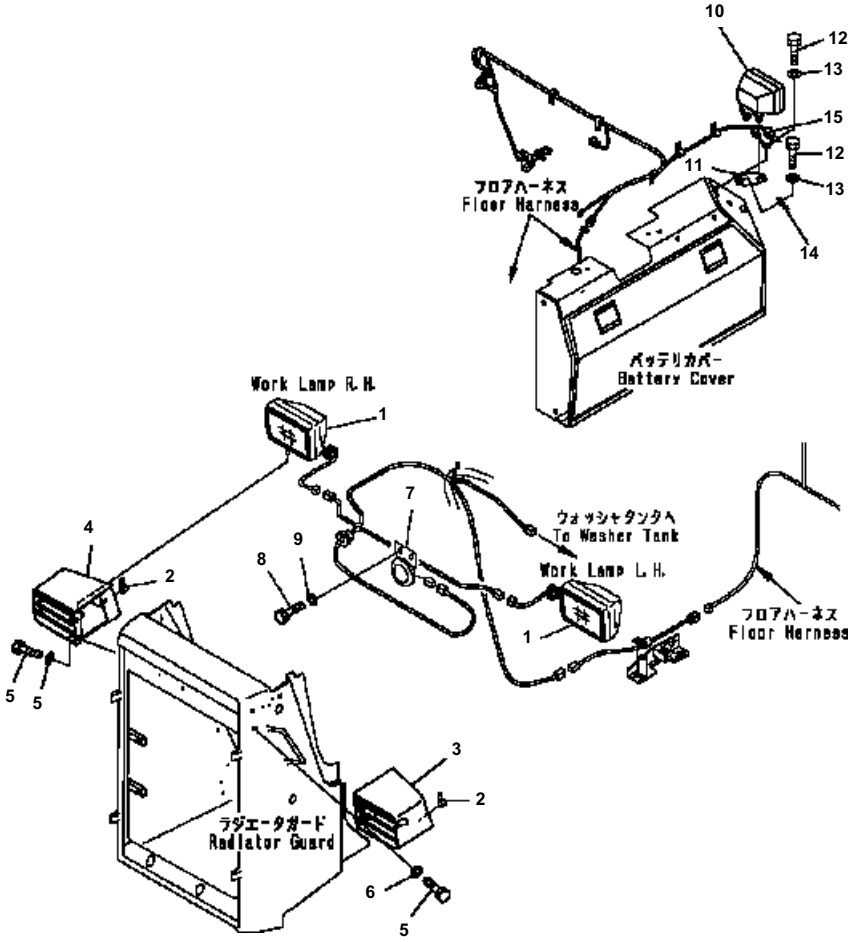

D41E6T S/N B35001-UP

VEHICLE LAMP

Item	Part No.	Description	Qty	Options
1	22B-06-11690	WORK LAMP ASS'Y	2	SN:B35001--
	421-06-23330	・ BULB, 70W	1	SN:B35001--
2	08193-21012	CLIP	2	SN:B35001--
3	124-54-61550	BRACKET{L.H.}	1	SN:B35001--
4	124-54-61560	BRACKET{R.H.}	1	SN:B35001--
5	01010-81230	BOLT	6	SN:B35001--
6	01643-31232	WASHER	6	SN:B35001--
7	08160-72400	HORN	1	SN:B35001--
8	01010-80816	BOLT	2	SN:B35001--
9	01643-30823	WASHER	2	SN:B35001--
10	22B-06-11690	WORK LAMP ASS'Y	1	SN:B35001--
	421-06-23330	・ BULB, 70W	1	SN:B35001--
11	124-06-54111	BRACKET	1	SN:B35001--
12	01010-81225	BOLT	2	SN:B35001--
13	01643-31232	WASHER	2	SN:B35001--
14	08193-21012	CLIP	1	SN:B35001--
15	04434-51012	CLIP	1	SN:B35001--

Ref. E0300-01A0 Page 120070

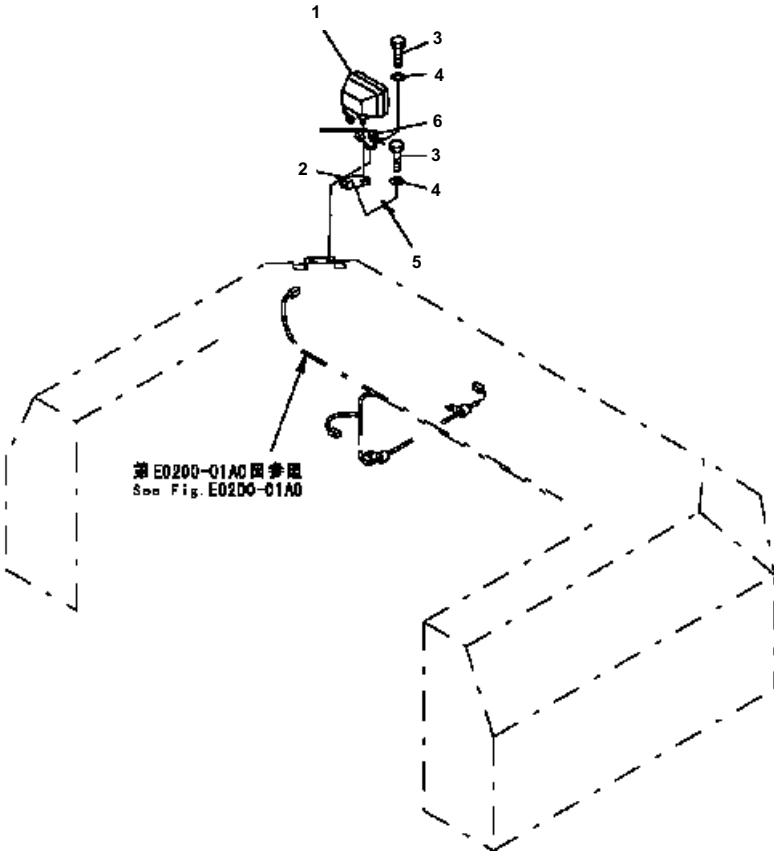

D41E6T S/N B35001-UP

ADDITIONAL REAR LAMP

Item	Part No.	Description	Qty	Options
1	22B-06-11690	WORK LAMP ASS'Y	1	SN:B35001--
	421-06-23330	・ BULB, 70W	1	SN:B35001--
2	124-06-54111	BRACKET	1	SN:B35001--
3	01010-81225	BOLT	2	SN:B35001--
4	01643-31232	WASHER	2	SN:B35001--
5	08193-21012	CLIP	1	SN:B35001--
6	04434-51012	CLIP	1	SN:B35001--

Ref. E0320-01A0 Page 120080

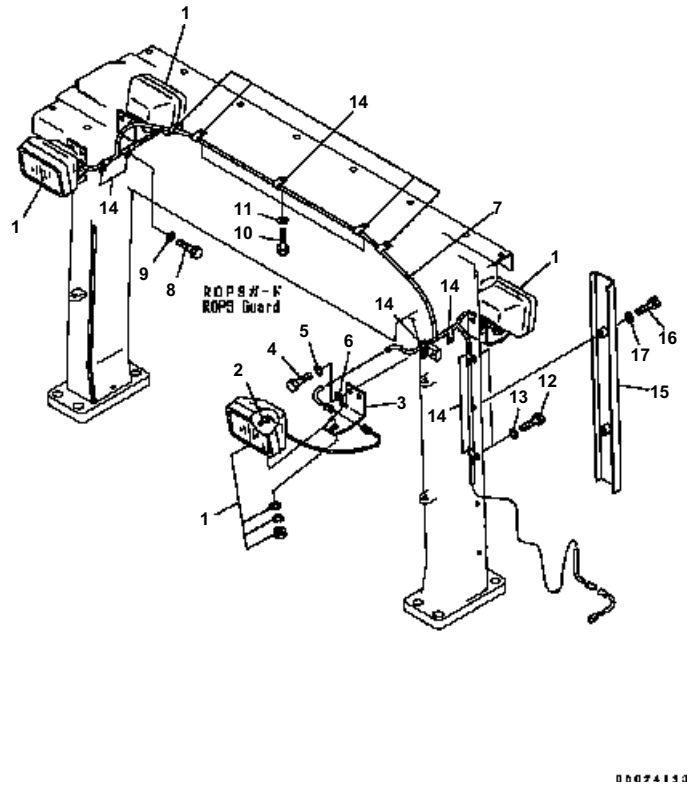

D41E6T S/N B35001-UP

ADDITIONAL FRONT AND REAR LAMP (LAMP AND WIRING)

Item	Part No.	Description	Qty	Options
1	22B-06-11690	WORK LAMP ASS'Y	4	SN:B35001--
2	421-06-23330	・ BULB, 70W	1	SN:B35001--
3	134-X78-7360	BRACKET	4	SN:B35001--
4	01010-81225	BOLT	8	SN:B35001--
5	01643-31232	WASHER	8	SN:B35001--
6	08193-20012	CLIP	4	SN:B35001--
7	124-Z78-6391	WIRING HARNESS	1	SN:B35001--
8	01010-81025	BOLT	9	SN:B40001--
9	01643-31032	WASHER	9	SN:B35001--
10	01010-81020	BOLT	5	SN:B35001--
11	01643-31032	WASHER	5	SN:B35001--
12	01010-81030	BOLT	2	SN:B35001--
13	01643-31032	WASHER	2	SN:B35001--
14	04434-51010	CLIP	15	SN:B35001--
15	124-Z78-6310	COVER	1	SN:B35001--
16	01010-81055	BOLT	2	SN:B35001--
17	01643-31032	WASHER	2	SN:B35001--

Ref. E0320-01A1 Page 120081

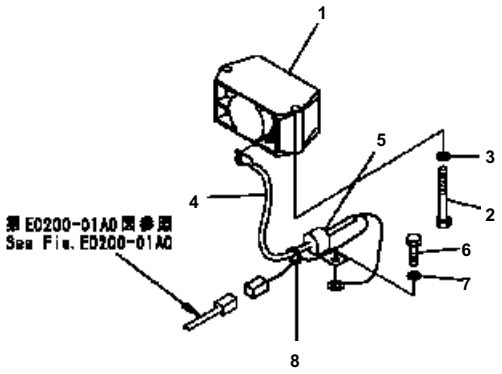

D41E6T S/N B35001-UP

BACK-UP ALARM

Item	Part No.	Description	Qty	Options
1	415-06-22100	ALARM	1	SN:B35001--
2	01011-81000	BOLT	2	SN:B35001--
3	01643-31032	WASHER	2	SN:B35001--
4	14X-06-24430	WIRING HARNESS	1	SN:B35001--
5	04435-50810	CLIP	2	SN:B35001--
6	01010-81016	BOLT	1	SN:B35001--
7	01643-31032	WASHER	1	SN:B35001--
8	08034-20414	BAND	2	SN:B35001--

Ref. E0420-01A0 Page 120090

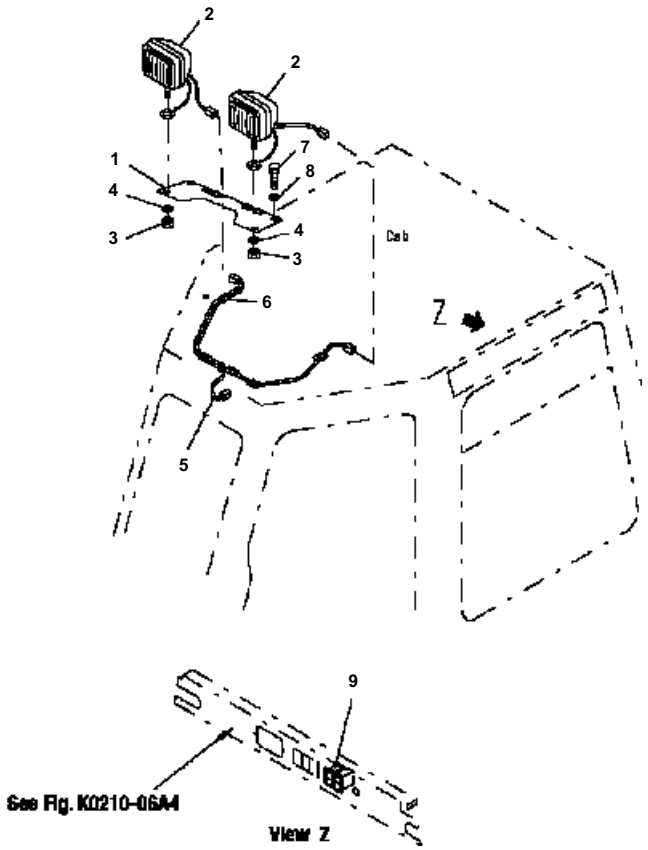

D41E6T S/N B35001-UP

WORK LAMP (FRONT)

Item	Part No.	Description	Qty	Options
1	17A-Z11-2370	BRACKET	1	SN:B35001--
2	17A-06-17931	WORK LAMP ASSEMBLY	2	SN:B35543--
	17A-06-17931	WORK LAMP ASSEMBLY	2	SN:B35001--B35542
3	☆	· NUT	1	SN:B35001--
4	☆	· WASHER	1	SN:B35001--
5	17A-Z11-2390	WIRE ASSEMBLY	1	SN:B35001--
6	21W-54-14690	CLIP	2	SN:B35001--
7	01010-D1225	BOLT	2	SN:B35001--
8	01643-71232	WASHER	2	SN:B35001--
9	14X-911-3710	SWITCH	1	SN:B35001--

Ref. E0310-01A0 Page 120120

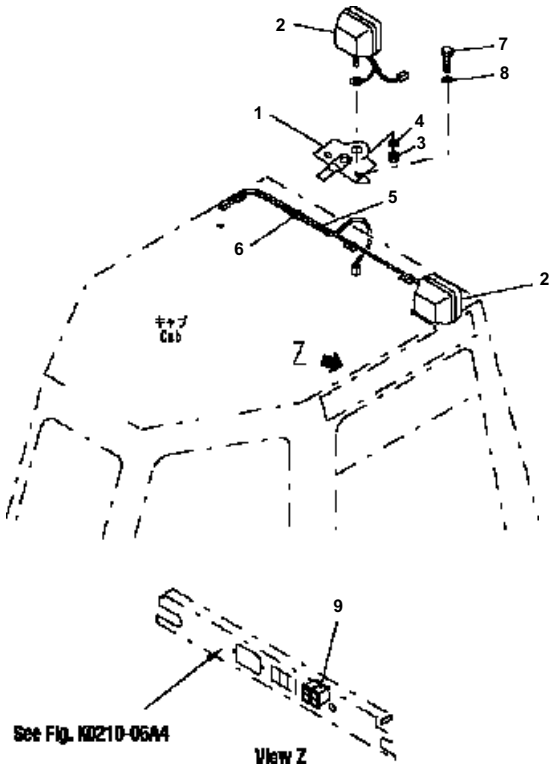

D41E6T S/N B35001-UP

WORK LAMP (REAR)

Item	Part No.	Description	Qty	Options
1	17A-Z11-2380	BRACKET	2	SN:B35001--
2	17A-06-17931	WORK LAMP ASSEMBLY	2	SN:B35543--
	17A-06-17930	WORK LAMP ASSEMBLY	2	SN:B35001--B35542
3	☆	・ NUT	1	SN:B35001--
4	☆	・ WASHER	1	SN:B35001--
5	17A-Z11-2410	WIRE ASSEMBLY	1	SN:B35001--
6	21W-54-14690	CLIP	2	SN:B35001--
7	01010-D1225	BOLT	2	SN:B35001--
8	01643-71232	WASHER	2	SN:B35001--
9	14X-911-3710	SWITCH	1	SN:B35001--

Ref. E0310-02A0 Page 120130

POWER TRAIN AND FINAL DRIVE

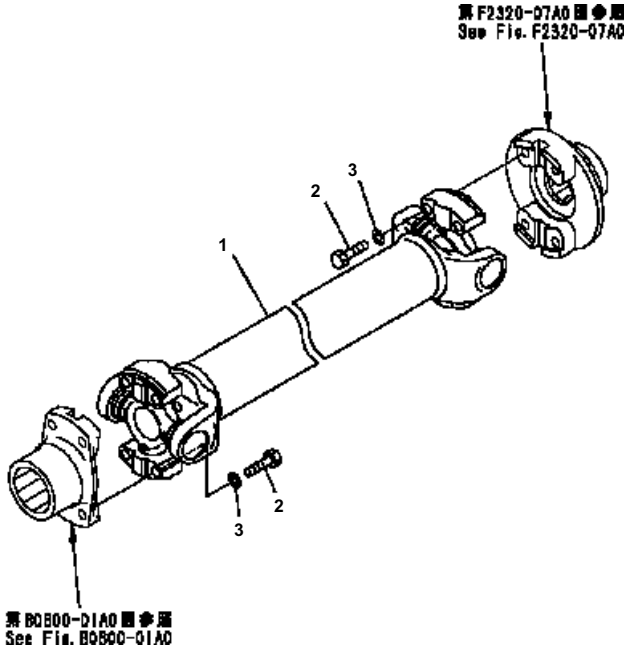

D41E6T S/N B35001-UP

UNIVERSAL JOINT

Item	Part No.	Description	Qty	Options
1	124-12-62150	UNIVERSAL JOINT	1	SN:B35001--
2	07372-21045	BOLT	8	SN:B35001--
3	01643-51032	WASHER	8	SN:B35001--

Ref. F2200-01A0 Page 150010

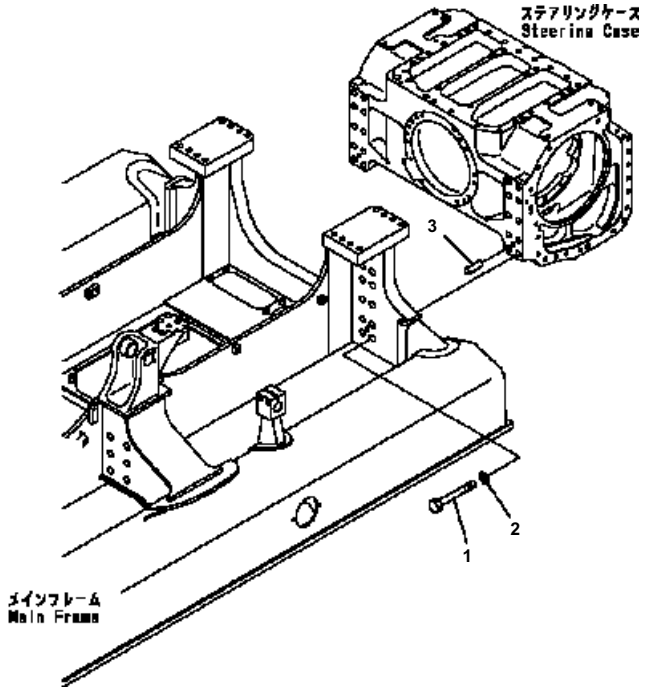

D41E6T S/N B35001-UP

POWER LINE (POWER LINE MOUNT)

Item	Part No.	Description	Qty	Options
1	01010-82495	BOLT	20	SN:B35001--
2	01643-32460	WASHER	20	SN:B35001--
3	04020-01638	PIN	2	SN:B35001--

Ref. F2300-01A0 Page 150020

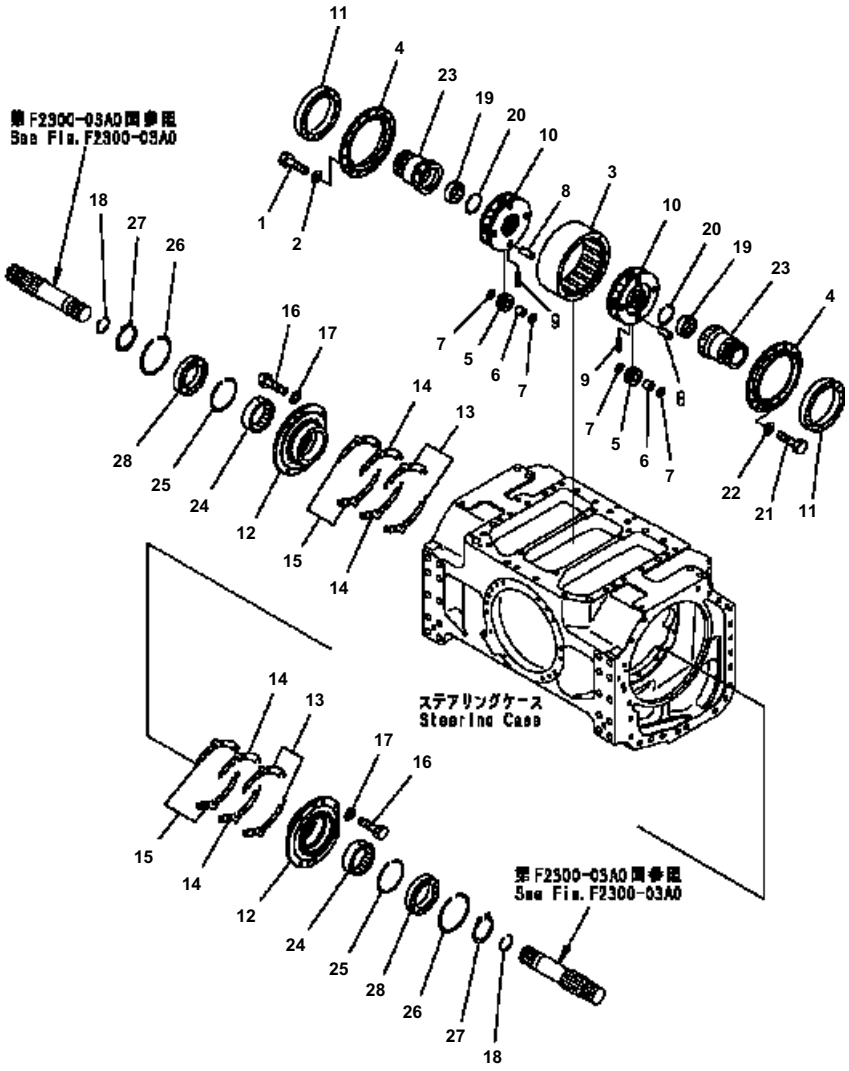

D41E6T S/N B35001-UP

POWER LINE (BEVEL GEAR AND SHAFT)

Item	Part No.	Description	Qty	Options
1	01010-81040	BOLT	16	SN:B35001--
2	01643-31032	WASHER	16	SN:B35001--
3	124-22-51120	GEAR, RING	1	SN:B35001--
4	124-22-51131	CAGE	2	SN:B35001--
5	124-22-51140	GEAR	8	SN:B35001--
6	423-15-19431	BEARING	8	SN:B35001--
7	124-22-51150	WASHER, THRUST	16	SN:B35001--
8	124-22-51160	SHAFT	8	SN:B35001--
9	124-22-51170	PIN	8	SN:B35001--
10	124-22-51180	CARRIER	2	SN:B35001--
11	124-22-51190	BEARING	2	SN:B35001--
12	124-22-51211	CAGE	2	SN:B35001--
13	124-22-51222	SHIM, 1.0MM	6	SN:B35001--
14	124-22-51232	SHIM, 0.3MM	8	SN:B35001--
15	124-22-51242	SHIM, 0.2MM	12	SN:B35001--
16	01010-81235	BOLT	12	SN:B35001--
17	01643-31232	WASHER	12	SN:B35001--
18	14Y-22-14180	RING	2	SN:B35001--
19	124-22-51260	BEARING	2	SN:B35001--
20	714-12-19520	RING	2	SN:B35001--
21	01010-81030	BOLT	8	SN:B35001--
22	01643-31032	WASHER	8	SN:B35001--
23	124-22-52111	GEAR, SAN	2	SN:B35001--
24	124-22-52120	BEARING	2	SN:B35001--
25	04077-00120	RING	2	SN:B35001--
26	04077-00140	RING	2	SN:B35001--
27	04064-09030	RING	2	SN:B35001--
28	06040-06018	BEARING	2	SN:B35001--

Ref. F2300-02A0 Page 150030

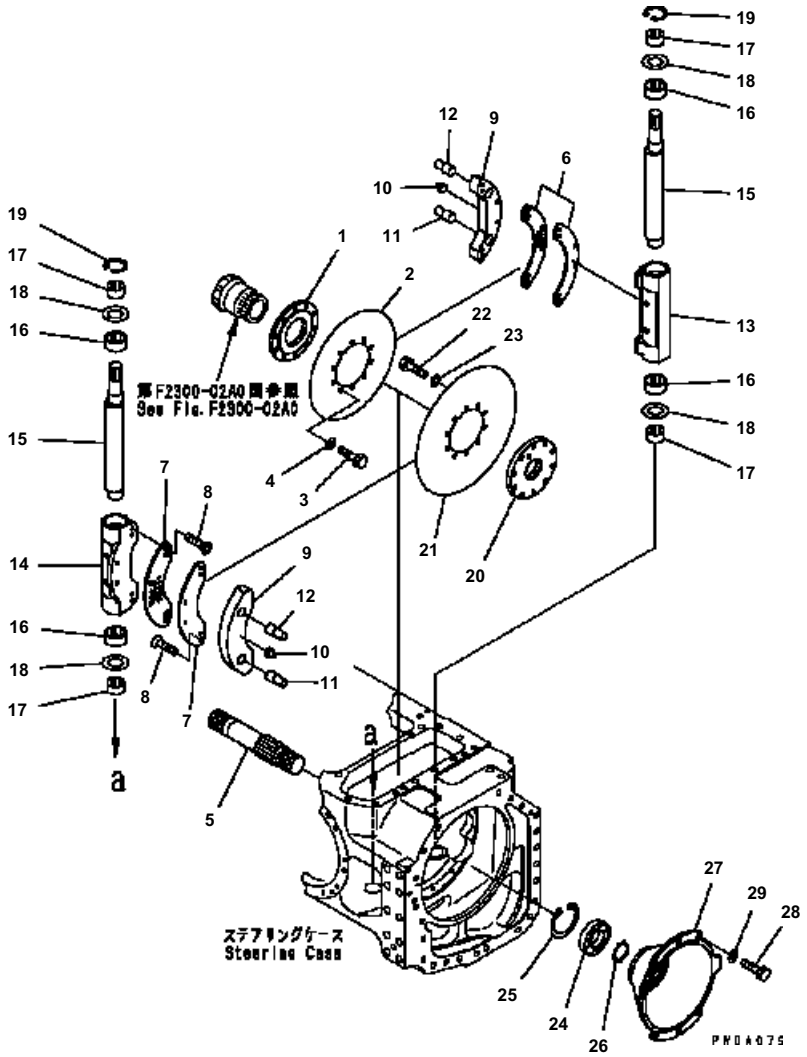

D41E6T S/N B35001-UP

POWER LINE (CLUTCH AND BRAKE)

Item	Part No.	Description	Qty	Options
1	124-22-52130	HUB	2	SN:B35001--
2	124-22-53130	PLATE	2	SN:B35001--
3	01010-81225	BOLT	20	SN:B35001--
4	01643-31232	WASHER	20	SN:B35001--
5	124-22-51251	SHAFT	2	SN:B35001--
6	124-22-53280	LINING	4	SN:B35001--
7	124-22-53280	LINING	4	SN:B35001--
8	01240-00820	SCREW	48	SN:B35001--
9	124-22-53331	PLATE	4	SN:B35001--
10	124-22-52171	PIN	4	SN:B35001--
11	124-22-52250	PIN	4	SN:B35001--
12	124-22-52260	PIN	4	SN:B35001--
13	124-22-53270	CASE	2	SN:B35001--
14	124-22-53270	CASE	2	SN:B35001--
15	124-22-52211	SHAFT	4	SN:B35001--
16	124-22-52220	BEARING	8	SN:B35001--
17	124-22-52230	BEARING	8	SN:B35001--
18	124-22-52240	SPACER	8	SN:B35001--
19	04064-03515	RING	4	SN:B35001--
20	124-22-53121	HUB	2	SN:B35001--
21	124-22-53242	PLATE	2	SN:B35001--
22	01010-81225	BOLT	20	SN:B35001--
23	01643-31232	WASHER	20	SN:B35001--
24	06040-06212	BEARING	2	SN:B35001--
25	04065-01104	RING	2	SN:B35001--
26	04064-06020	RING	2	SN:B35001--
27	124-22-55122	CAGE	2	SN:B35001--
28	01010-81230	BOLT	12	SN:B35001--
29	01643-31232	WASHER	12	SN:B35001--

Ref. F2300-03A0 Page 150040

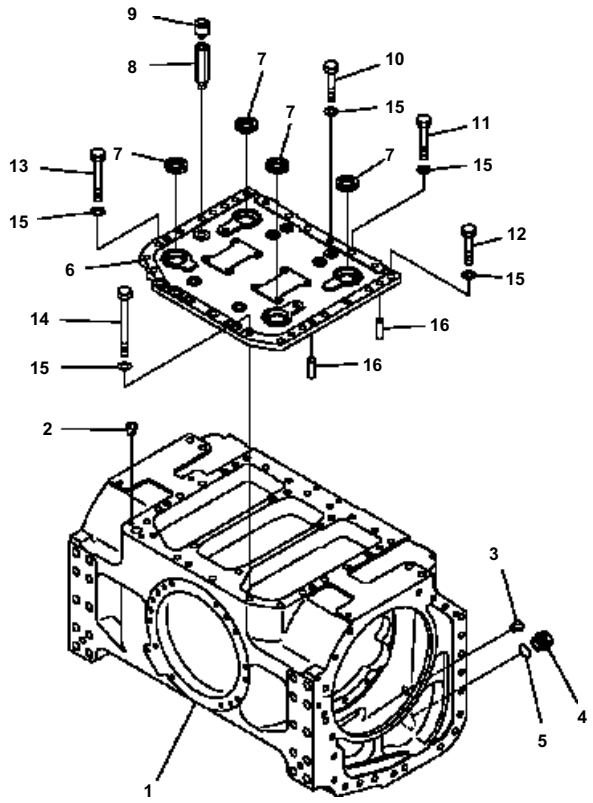

D41E6T S/N B35001-UP

POWER LINE (CASE)

Item	Part No.	Description	Qty	Options
1	124-22-65110	CASE	1	SN:B35001--
2	07049-01215	PLUG	4	SN:B35001--
3	07049-01620	PLUG	3	SN:B35001--
4	07044-13620	PLUG	1	SN:B35001--
5	07002-33634	O-RING	1	SN:B35001--
6	124-22-56115	COVER	1	SN:B35001--
7	07012-00038	SEAL	4	SN:B35001--
8	154-21-11830	NIPPLE	1	SN:B35001--
9	07030-00252	BREATHER	1	SN:B35001--
10	01010-81660	BOLT	9	SN:B35001--
11	01010-81660	BOLT	5	SN:B35001--
12	01010-81665	BOLT	10	SN:B35001--
13	01010-81675	BOLT	4	SN:B35001--
14	01011-81630	BOLT	1	SN:B35001--
15	01643-31645	WASHER	29	SN:B35001--
16	04020-01638	PIN	4	SN:B35001--

Ref. F2300-04A0 Page 150050

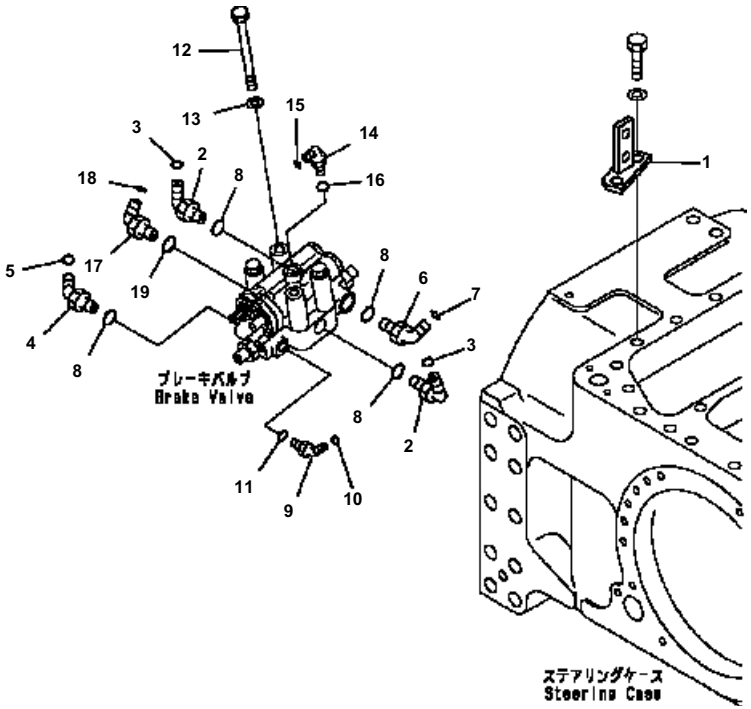

D41E6T S/N B35001-UP

POWER LINE (STEERING CASE AND BRAKE VALVE PIPING)

Item	Part No.	Description	Qty	Options
1	124-62-61170	BRACKET	1	SN:B35001--
2	02782-10422	ELBOW	3	SN:B35001--
3	02896-11012	O-RING	3	SN:B35001--
4	02783-10315	ELBOW	1	SN:B35001--
5	02896-11009	O-RING	1	SN:B35001--
6	02782-10315	ELBOW	1	SN:B35001--
7	02896-11009	O-RING	1	SN:B35001--
8	07002-32034	O-RING	5	SN:B35001--
9	02783-10210	ELBOW	1	SN:B35001--
10	02896-11008	O-RING	1	SN:B35001--
11	07002-31423	O-RING	1	SN:B35001--
12	01011-81235	BOLT	2	SN:B35001--
13	01643-31232	WASHER	2	SN:B35001--
14	02782-10311	ELBOW	1	SN:B35001--
15	02896-11009	O-RING	1	SN:B35001--
16	07002-31423	O-RING	1	SN:B35001--
17	02782-10423	ELBOW	1	SN:B35001--
18	02896-11012	O-RING	1	SN:B35001--
19	07002-32034	O-RING	1	SN:B35001--

Ref. F2300-05A0 Page 150060

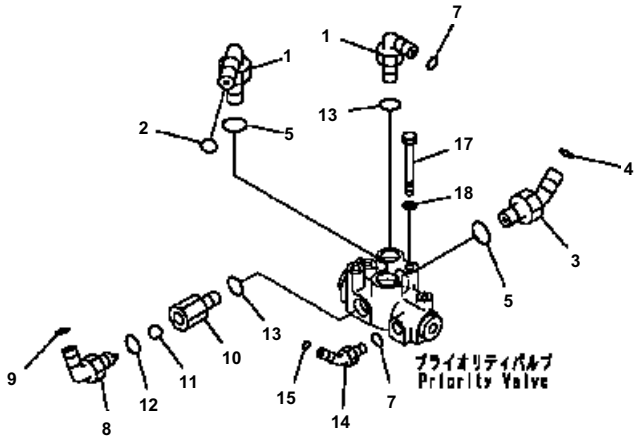

D41E6T S/N B35001-UP

POWER LINE (PRIORITY VALVE PIPING)

Item	Part No.	Description	Qty	Options
1	02782-10522	ELBOW	1	SN:B35001--
2	02896-11015	O-RING	1	SN:B35001--
3	02783-10522	ELBOW	1	SN:B35001--
4	02896-11015	O-RING	1	SN:B35001--
5	07002-32434	O-RING	2	SN:B35001--
6	02782-10315	ELBOW	1	SN:B35001--
7	02896-11009	O-RING	1	SN:B35001--
	124-49-61450	JOINT ASS'Y	1	SN:B35001--
8	124-49-61460	・ ELBOW	1	SN:B35001--
9	02896-11012	・・ O-RING	1	SN:B35001--
10	124-49-51430	・ JOINT	1	SN:B35001--
11	04260-01587	・ BALL	1	SN:B35001--
12	07002-32034	・ O-RING	1	SN:B35001--
13	07002-32034	O-RING	2	SN:B35001--
14	02783-10210	ELBOW	1	SN:B35001--
15	02896-11008	O-RING	1	SN:B35001--
16	07002-31423	O-RING	1	SN:B35001--
17	01010-81080	BOLT	2	SN:B35001--
18	01643-31032	WASHER	2	SN:B35001--

Ref. F2300-06A0 Page 150070

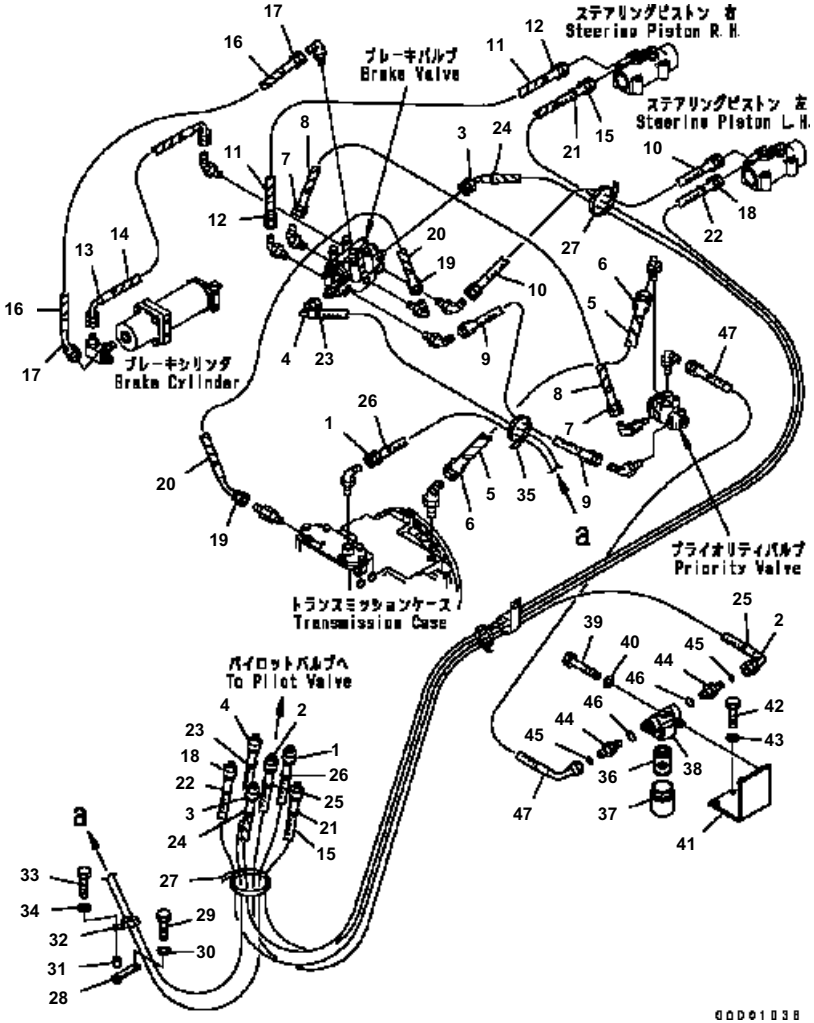

D41E6T S/N B35001-UP

POWER LINE (OIL LINE)

Item	Part No.	Description	Qty	Options
1	124-40-61111	HOSE	1	SN:B35001--
2	124-40-61120	HOSE	1	SN:B35001--
3	124-40-61330	HOSE ASS'Y	1	SN:B35001--
4	124-40-61141	HOSE	1	SN:B35001--
5	08210-01802	SPIRAL TUBE	1	SN:B35001--
6	02762-005A3	HOSE	1	SN:B35001--
7	02762-00405	HOSE	1	SN:B35001--
8	08210-01804	SPIRAL TUBE	1	SN:B35001--
9	02762-002A3	HOSE	1	SN:B35001--
10	02762-00304	HOSE	1	SN:B35001--
11	08210-01803	SPIRAL TUBE	1	SN:B35001--
12	02762-00305	HOSE	1	SN:B35001--
13	124-40-61150	HOSE	1	SN:B35001--
14	08210-01804	SPIRAL TUBE	1	SN:B35001--
15	124-40-61360	HOSE ASS'Y	1	SN:B35001--
16	08210-01203	SPIRAL TUBE	1	SN:B35001--
17	02766-B0305	HOSE	1	SN:B35001--
18	124-40-61280	HOSE	1	SN:B35001--
19	124-40-61311	HOSE	1	SN:B35001--
20	08210-01805	SPIRAL TUBE	1	SN:B35001--
21	203-62-57910	MARK, 1	3	SN:B35001--
22	203-62-57920	MARK, 2	3	SN:B35001--
23	203-62-57930	MARK, 3	2	SN:B35001--
24	203-62-57940	MARK, 4	3	SN:B35001--
25	203-62-57950	MARK, 5	3	SN:B35001--
26	203-62-57960	MARK, 6	2	SN:B35001--
27	08034-00834	BAND	2	SN:B35001--
28	124-43-63550	BRACKET	1	SN:B35001--
29	01024-81020	BOLT	1	SN:B35001--
	01010-81020	BOLT	1	SN:B35001--
30	01643-31032	WASHER	1	SN:B35001--
31	144-874-7470	BOSS	1	SN:B35001--
32	04435-51510	CLIP	1	SN:B35001--
33	01010-81050	BOLT	1	SN:B35001--
34	01643-31032	WASHER	1	SN:B35001--
35	08034-00823	BAND	1	SN:B35001--
	134-49-61770	FILTER ASS'Y	1	SN:B35001--
36	134-49-61780	· ELEMENT	1	SN:B35001--
37	134-49-61790	· CASE	1	SN:B35001--
38	134-49-61860	· HEAD	1	SN:B35001--
39	01010-81095	BOLT	2	SN:B35001--

Ref. F2300-07A0 Page 150080

D41E6T S/N B35001-UP

POWER LINE (OIL LINE)

Item	Part No.	Description	Qty	Options
40	01643-31032	WASHER	2	SN:B35001--
41	124-49-61530	BRACKET	1	SN:B35001--
42	01010-81225	BOLT	2	SN:B35001--
43	01643-31232	WASHER	2	SN:B35001--
44	56B-88-12220	UNION	2	SN:B35001--
45	02896-11009	O-RING	2	SN:B35001--
46	07000-12018	O-RING	2	SN:B35001--
47	124-40-61320	HOSE	2	SN:B35001--

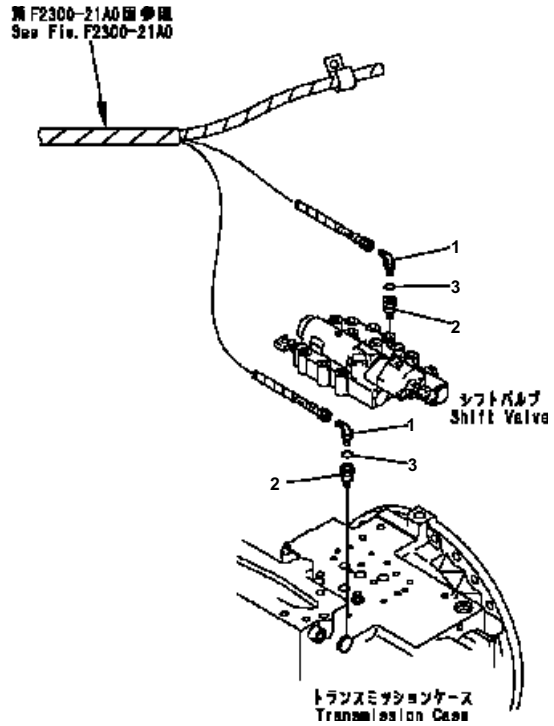

D41E6T S/N B35001-UP

POWER LINE (CHECK LINE)

Item	Part No.	Description	Qty	Options
1	124-62-61531	ELBOW	4	SN:B35001--
2	124-62-61931	NIPPLE	2	SN:B35001--
3	07002-31023	O-RING	4	SN:B35001--

Ref. F2300-08A0 Page 150090

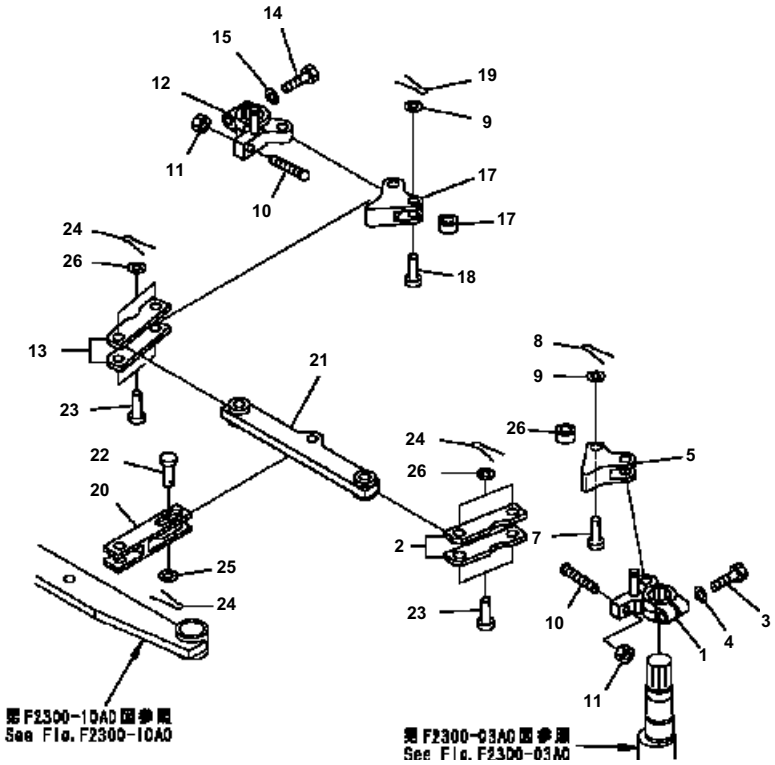

D41E6T S/N B35001-UP

POWER LINE (BRAKE CONTROL 1/2)

Item	Part No.	Description	Qty	Options
1	124-43-52824	LEVER{L.H.}	1	SN:B35001--
2	124-43-52971	PLATE	2	SN:B35001--
3	01010-81245	BOLT	1	SN:B35001--
4	01643-31232	WASHER	1	SN:B35001--
5	124-43-52864	YOKE	1	SN:B35001--
6	170-33-13330	ROLLER	1	SN:B35001--
7	04205-11645	PIN	2	SN:B35001--
8	04050-14028	PIN{COTTER}	2	SN:B35001--
9	01643-31645	WASHER	2	SN:B35001--
10	124-43-52411	SCREW	1	SN:B35001--
11	01583-11408	NUT	1	SN:B35001--
12	124-43-52834	LEVER{R.H.}	1	SN:B35001--
13	124-43-52971	PLATE	2	SN:B35001--
14	01010-81245	BOLT	1	SN:B35001--
15	01643-31232	WASHER	1	SN:B35001--
16	124-43-52864	YOKE	1	SN:B35001--
17	170-33-13330	ROLLER	1	SN:B35001--
18	04205-11645	PIN	1	SN:B35001--
19	04050-14028	PIN{COTTER}	1	SN:B35001--
20	124-43-52793	YOKE	1	SN:B35001--
21	124-43-52784	LEVER	1	SN:B35001--
22	04205-11645	PIN	1	SN:B35001--
23	04205-11658	PIN	4	SN:B35001--
24	04050-14028	PIN{COTTER}	5	SN:B35001--
25	01643-31645	WASHER	1	SN:B35001--
26	01640-21626	WASHER	4	SN:B35001--

Ref. F2300-09A0 Page 150100

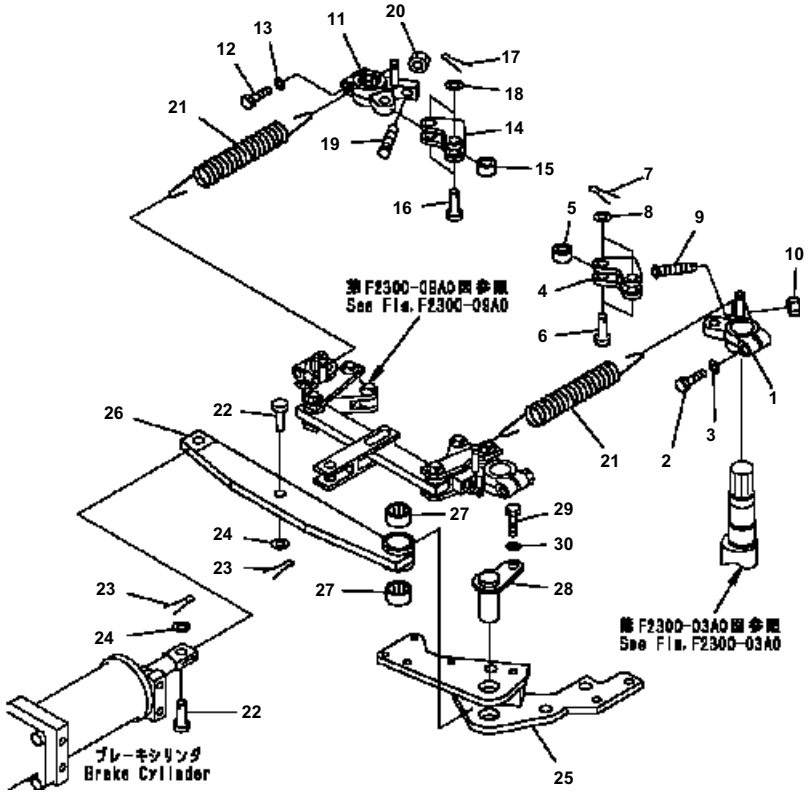

D41E6T S/N B35001-UP

POWER LINE (BRAKE CONTROL 2/2)

Item	Part No.	Description	Qty	Options
1	124-43-52832	LEVER	1	SN:B35001--
2	01010-81245	BOLT	1	SN:B35001--
3	01643-31232	WASHER	1	SN:B35001--
4	124-43-52960	YOKE	1	SN:B35001--
5	170-33-13330	ROLLER	1	SN:B35001--
6	04205-11645	PIN	2	SN:B35001--
7	04050-14028	PIN	2	SN:B35001--
8	01643-31645	WASHER	2	SN:B35001--
9	124-43-52411	SCREW	1	SN:B35001--
10	01583-11408	NUT	1	SN:B35001--
11	124-43-52822	LEVER	1	SN:B35001--
12	01010-81245	BOLT	1	SN:B35001--
13	01643-31232	WASHER	1	SN:B35001--
14	124-43-52960	YOKE	1	SN:B35001--
15	170-33-13330	ROLLER	1	SN:B35001--
16	04205-11645	PIN	2	SN:B35001--
17	04050-14028	PIN	2	SN:B35001--
18	01643-31645	WASHER	2	SN:B35001--
19	124-43-52411	SCREW	1	SN:B35001--
20	01583-11408	NUT	1	SN:B35001--
21	124-43-52911	SPRING	2	SN:B35001--
22	04205-11645	PIN	2	SN:B35001--
23	04050-14028	PIN	2	SN:B35001--
24	01643-31645	WASHER	2	SN:B35001--
25	124-43-62331	BRACKET	1	SN:B35001--
26	124-43-52773	LEVER	1	SN:B35001--
27	06123-03018	BEARING	2	SN:B35001--
28	124-43-52341	PIN	1	SN:B35001--
29	01010-81220	BOLT	1	SN:B35001--
30	01643-31232	WASHER	1	SN:B35001--

Ref. F2300-10A0 Page 150110

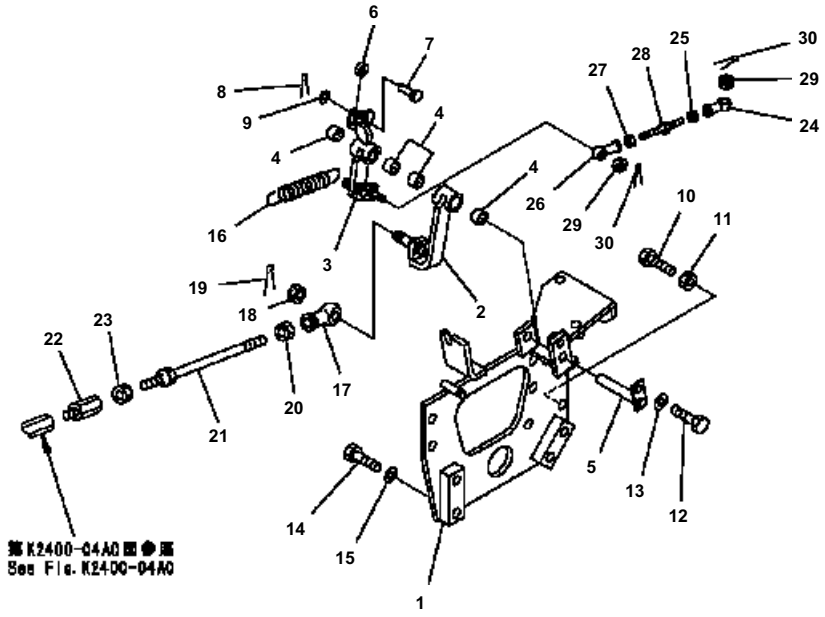

D41E6T S/N B35001-UP

POWER LINE (BRAKE CONTROL BRACKET)

Item	Part No.	Description	Qty	Options
1	124-43-62420	BRACKET	1	SN:B35001--
2	124-43-52462	LEVER	1	SN:B35001--
3	124-43-52470	LEVER	1	SN:B35001--
4	06123-01414	BEARING	4	SN:B35001--
5	124-43-52480	PIN	1	SN:B35001--
6	103-43-21380	ROLLER	1	SN:B35001--
7	04205-10625	PIN	1	SN:B35001--
8	04050-11610	PIN	1	SN:B35001--
9	01643-30623	WASHER	1	SN:B35001--
10	01016-51250	BOLT	2	SN:B35001--
11	01580-11210	NUT	2	SN:B35001--
12	01010-81025	BOLT	1	SN:B35001--
13	01643-31032	WASHER	1	SN:B35001--
14	01010-81245	BOLT	4	SN:B35001--
15	01643-31232	WASHER	4	SN:B35001--
16	124-43-61610	SPRING, (L=117.0)	1	SN:B35001--
17	04250-91474	END	1	SN:B35001--
18	01593-31411	NUT	1	SN:B35001--
19	04050-13022	PIN	1	SN:B35001--
20	01508-41408	NUT	1	SN:B35001--
21	04248-31430	ROD	1	SN:B35001--
22	17A-43-24170	JOINT	1	SN:B35001--
23	01582-11411	NUT	1	SN:B35001--
24	04250-80847	END	1	SN:B35001--
25	01580-10806	NUT	1	SN:B35001--
26	04250-90847	END	1	SN:B35001--
27	01508-40805	NUT	1	SN:B35001--
28	581-43-11870	ROD	1	SN:B35001--
29	01590-30809	NUT	2	SN:B35001--
30	04050-12015	PIN	2	SN:B35001--

Ref. F2300-11A0 Page 150120

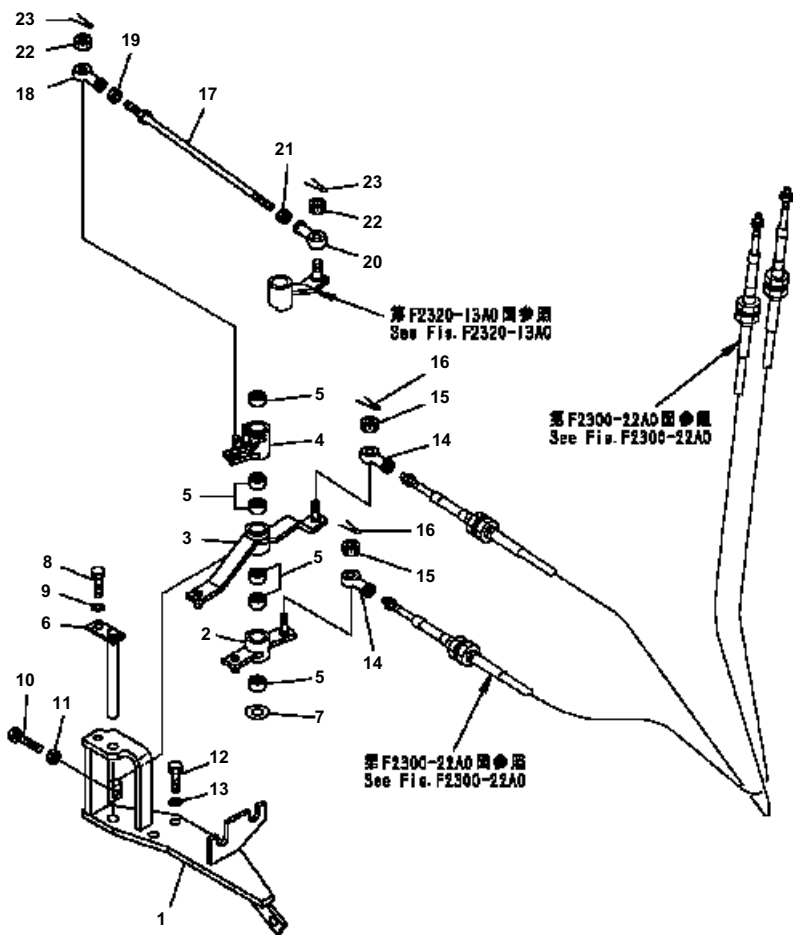

D41E6T S/N B35001-UP

POWER LINE (TRANSMISSION CONTROL)

Item	Part No.	Description	Qty	Options
1	124-43-51224	BRACKET	1	SN:B35001--
2	124-43-51211	LEVER	1	SN:B35001--
3	124-43-51192	LEVER	1	SN:B35001--
4	124-43-52941	LEVER	1	SN:B35001--
5	06123-01414	BEARING	6	SN:B35001--
6	124-43-52950	PIN	6	SN:B35001--
7	01643-31445	WASHER	1	SN:B35001--
8	01010-81020	BOLT	1	SN:B35001--
9	01643-31032	WASHER	1	SN:B35001--
10	01016-51030	BOLT	1	SN:B35001--
11	01580-11008	NUT	1	SN:B35001--
12	01010-81025	BOLT	3	SN:B35001--
13	01643-31032	WASHER	3	SN:B35001--
14	04250-80847	END	2	SN:B35001--
15	01590-30809	NUT	2	SN:B35001--
16	04050-12015	PIN	2	SN:B35001--
17	04248-30823	ROD	1	SN:B35001--
18	04250-80847	END	1	SN:B35001--
19	01580-10806	NUT	1	SN:B35001--
20	04250-90847	END	1	SN:B35001--
21	01508-40805	NUT	1	SN:B35001--
22	01590-30809	NUT	2	SN:B35001--
23	04050-12015	PIN	2	SN:B35001--

Ref. F2300-12A0 Page 150130

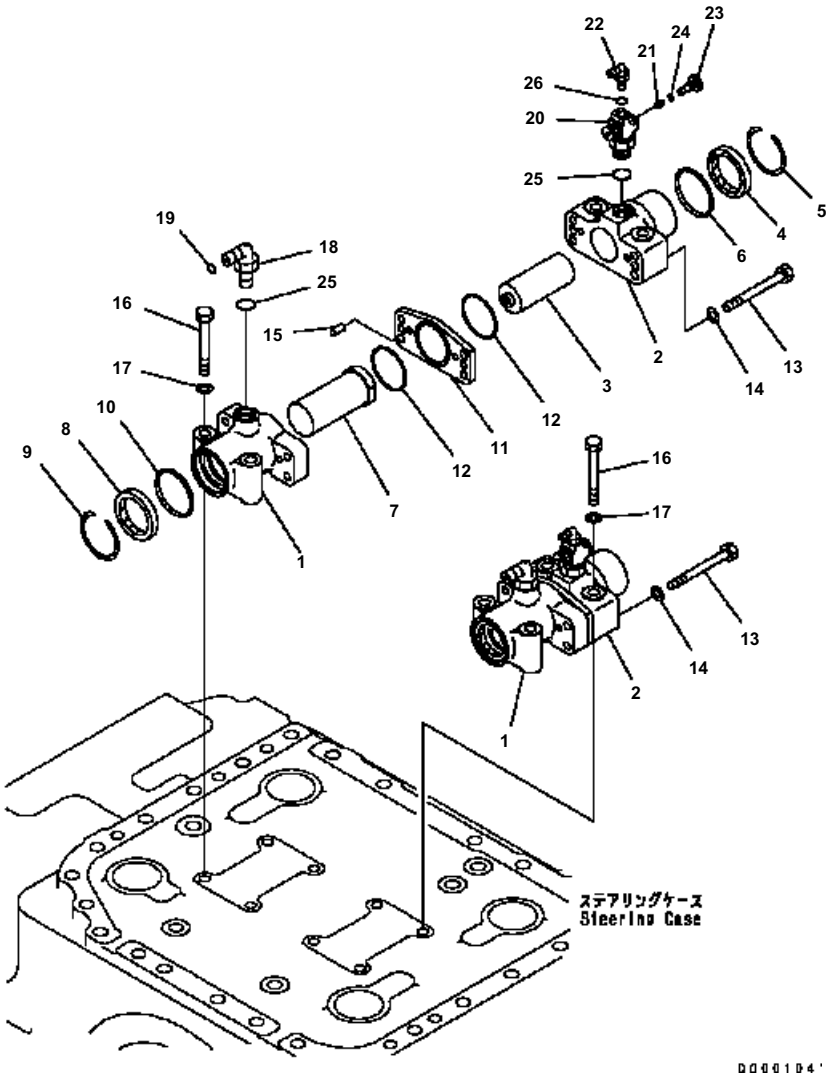

D41E6T S/N B35001-UP

POWER LINE (STEERING PISTON)

Item	Part No.	Description	Qty	Options
1	124-40-51114	CYLINDER	2	SN:B35001--
2	124-40-51440	CYLINDER	2	SN:B35001--
3	124-40-51132	ROD	2	SN:B35001--
4	07016-00407	SEAL	2	SN:B35001--
5	07179-12052	RING	2	SN:B35001--
6	124-40-51350	SEAL	2	SN:B35001--
7	124-40-51222	PIN	2	SN:B35001--
8	07016-00457	SEAL	2	SN:B35001--
9	07179-12057	RING	2	SN:B35001--
10	124-40-51330	SEAL	2	SN:B35001--
11	124-40-51450	PLATE	2	SN:B35001--
12	07000-A2055	O-RING	4	SN:B35001--
13	01010-81075	BOLT	8	SN:B35001--
14	01643-31032	WASHER	8	SN:B35001--
15	04020-00820	PIN	4	SN:B35001--
16	01010-81280	BOLT	8	SN:B35001--
17	01643-31232	WASHER	8	SN:B35001--
18	02782-50315	ELBOW	2	SN:B35001--
19	02896-11009	O-RING	2	SN:B35001--
	124-40-61301	VALVE ASS'Y	2	SN:B35001--
20	124-40-61250	· TEE	1	SN:B35001--
21	124-40-51370	· POPPET	1	SN:B35001--
22	124-62-61531	· ELBOW	1	SN:B35001--
23	124-40-61261	· PLUG	1	SN:B35001--
24	07002-11023	· O-RING	2	SN:B35001--
25	07002-32034	O-RING	4	SN:B35001--
26	02896-11009	O-RING	2	SN:B35001--

Ref. F2300-13A0 Page 150140

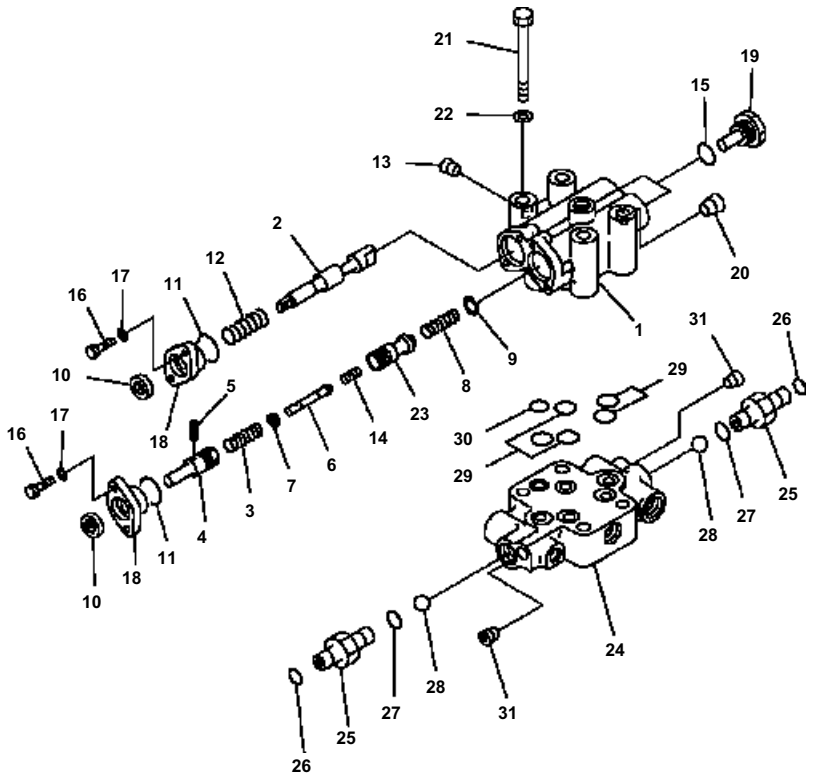

D41E6T S/N B35001-UP

POWER LINE (BRAKE VALVE)

Item	Part No.	Description	Qty	Options
1	124-43-53111	BODY, VALVE	1	SN:B35001--
2	124-43-53270	SPOOL	1	SN:B35001--
3	124-43-53121	SPRING	1	SN:B35001--
4	14Z-40-11320	GUIDE	1	SN:B35001--
5	04025-00316	PIN	1	SN:B35001--
6	14Z-40-11330	SHAFT	1	SN:B35001--
7	14Z-40-11340	GUIDE	1	SN:B35001--
8	14Z-40-11371	SPRING	1	SN:B35001--
9	14Z-40-11350	SHIM, 0.05MM	3	SN:B35001--
10	113-15-29110	SEAL	2	SN:B35001--
11	07002-33034	O-RING	2	SN:B35001--
12	565-62-11270	SPRING	1	SN:B35001--
13	07043-70211	PLUG	1	SN:B35001--
14	195-40-31540	PISTON	1	SN:B35001--
15	07002-32434	O-RING	2	SN:B35001--
16	01010-80620	BOLT	4	SN:B35001--
17	01643-30623	WASHER	4	SN:B35001--
18	14Z-40-11220	COVER	2	SN:B35001--
19	14Z-40-11360	PLUG	2	SN:B35001--
20	07043-70312	PLUG	1	SN:B35001--
21	01010-81290	BOLT	2	SN:B35001--
22	01643-31232	WASHER	2	SN:B35001--
23	124-43-53131	VALVE	1	SN:B35001--
24	124-43-53140	SEAT, VALVE	1	SN:B35001--
25	124-43-61140	UNION	2	SN:B35001--
26	02896-11009	O-RING	2	SN:B35001--
27	07002-32034	O-RING	2	SN:B35001--
28	04260-01587	BALL	2	SN:B35001--
29	07000-72018	O-RING	5	SN:B35001--
30	07000-72015	O-RING	1	SN:B35001--
31	07043-70211	PLUG	2	SN:B35001--

Ref. F2300-14A0 Page 150150

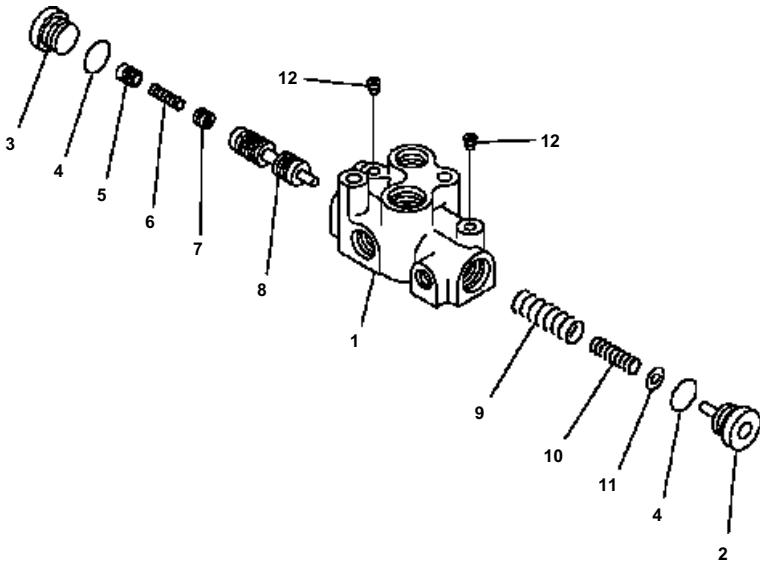

D41E6T S/N B35001-UP

POWER LINE (PRIORITY VALVE)

Item	Part No.	Description	Qty	Options
	124-43-00020	PRIORITY VALVE ASS'Y	1	SN:B35001--
1	124-43-53160	· BODY, VALVE	1	SN:B35001--
2	124-43-53170	· PLUG	1	SN:B35001--
3	102-10-46360	· PLUG	1	SN:B35001--
4	07002-32434	· O-RING	2	SN:B35001--
5	103-15-15450	· VALVE	1	SN:B35001--
6	125-15-15290	· SPRING	1	SN:B35001--
7	103-15-15460	· VALVE	1	SN:B35001--
8	124-43-53180	· SPOOL	1	SN:B35001--
9	113-15-25250	· SPRING	1	SN:B35001--
10	112-10-46180	· SPRING	1	SN:B35001--
11	112-10-46210	· SHIM, 0. 5MM	5	SN:B35001--
12	07043-70108	· PLUG	3	SN:B35001--

Ref. F2300-15A0 Page 150160

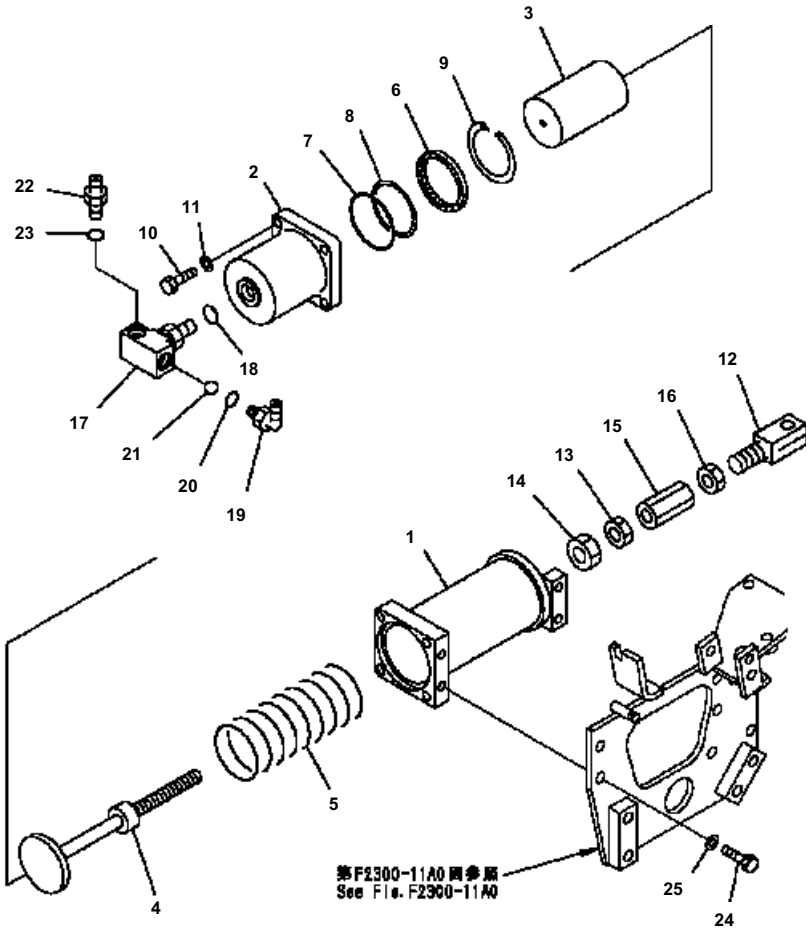

D41E6T S/N B35001-UP

POWER LINE (BRAKE CYLINDER)

Item	Part No.	Description	Qty	Options
	124-43-61190	CYLINDER ASS'Y	1	SN:B35001--
1	124-43-53221	· BRACKET	1	SN:B35001--
2	124-43-53230	· BODY	1	SN:B35001--
3	124-43-53241	· PISTON	1	SN:B35001--
4	124-43-53252	· ROD	1	SN:B35001--
5	124-43-53260	· SPRING	1	SN:B35001--
6	144-63-95170	· SEAL	1	SN:B35001--
7	07000-05070	· O-RING	1	SN:B35001--
8	07001-05070	· RING	1	SN:B35001--
9	07179-12084	· RING	1	SN:B35001--
10	01010-81035	· BOLT	4	SN:B35001--
11	01643-51032	· WASHER	4	SN:B35001--
12	124-43-53430	· YOKE	1	SN:B35001--
13	01583-12414	· NUT	1	SN:B35001--
14	124-43-53350	· NUT	1	SN:B35001--
15	124-43-53410	· JOINT	1	SN:B35001--
16	124-43-53420	· NUT	1	SN:B35001--
17	124-43-53290	· TEE	1	SN:B35001--
18	07002-12034	· O-RING	1	SN:B35001--
19	124-43-61170	· ELBOW	1	SN:B35001--
20	07002-12034	· O-RING	1	SN:B35001--
21	04260-01587	· BALL	1	SN:B35001--
22	02781-00422	· UNION	1	SN:B35001--
23	07002-12034	· O-RING	1	SN:B35001--
24	01010-81230	BOLT	4	SN:B35001--
25	01643-31232	WASHER	4	SN:B35001--

Ref. F2300-16A0 Page 150170

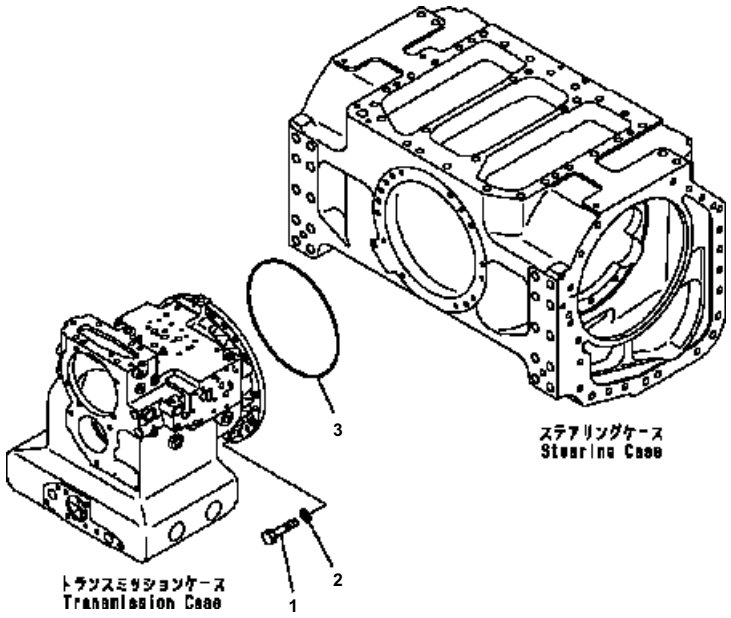

D41E6T S/N B35001-UP

POWER LINE (TRANSMISSION SUPPORT)

Item	Part No.	Description	Qty	Options
1	01010-81260	BOLT	16	SN:B35001--
2	01643-31232	WASHER	16	SN:B35001--
3	07000-75305	O-RING	1	SN:B35001--

Ref. F2300-17A0 Page 150180

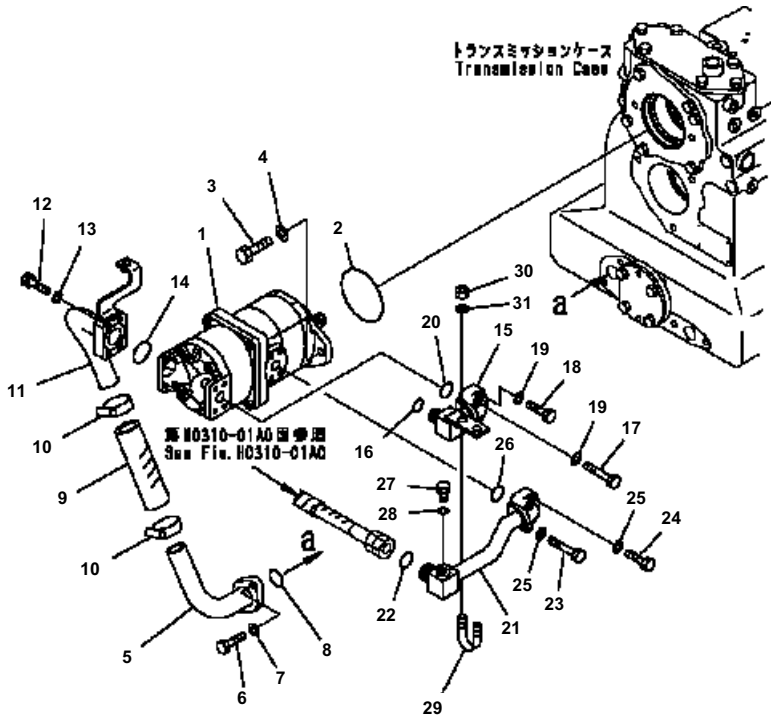

D41E6T S/N B35001-UP

POWER LINE PIPING (PUMP AND TRANSMISSION) (FOR PAT DOZER)

Item	Part No.	Description	Qty	Options
1	705-52-21170	PUMP ASS'Y	1	SN:B35001--
2	07000-72105	O-RING	1	SN:B35001--
3	01010-81235	BOLT	2	SN:B35001--
4	01643-31232	WASHER	2	SN:B35001--
5	124-49-61111	TUBE	1	SN:B35001--
6	01010-81040	BOLT	1	SN:B35001--
7	01643-31032	WASHER	1	SN:B35001--
8	07000-73032	O-RING	1	SN:B35001--
9	07260-03214	HOSE	1	SN:B35001--
10	07289-00045	CLAMP	2	SN:B35001--
11	124-49-61122	TUBE	1	SN:B35001--
12	01010-81040	BOLT	1	SN:B35001--
13	01643-31032	WASHER	1	SN:B35001--
14	07000-73042	O-RING	1	SN:B35001--
15	124-49-61140	TUBE	1	SN:B35001--
16	02896-11015	O-RING	1	SN:B35001--
17	01010-80855	BOLT	2	SN:B35001--
18	01010-80845	BOLT	2	SN:B35001--
19	01643-30823	WASHER	4	SN:B35001--
20	07000-73030	O-RING	1	SN:B35001--
21	124-62-61130	TUBE	1	SN:B35536--
	124-62-61220	TUBE	1	SN:B35001--B35535
22	02896-11018	O-RING	1	SN:B35001--
23	01010-80855	BOLT	2	SN:B35001--
24	01010-80845	BOLT	2	SN:B35001--
25	01643-30823	WASHER	4	SN:B35001--
26	07000-13030	O-RING	1	SN:B35001--
27	07040-11007	PLUG	1	SN:B35001--
28	07002-11023	O-RING	1	SN:B35001--
29	07283-22738	CLIP	1	SN:B35001--
30	01597-01009	NUT	2	SN:B35001--
31	01643-31032	WASHER	2	SN:B35001--

Ref. F2300-18A0 Page 150190

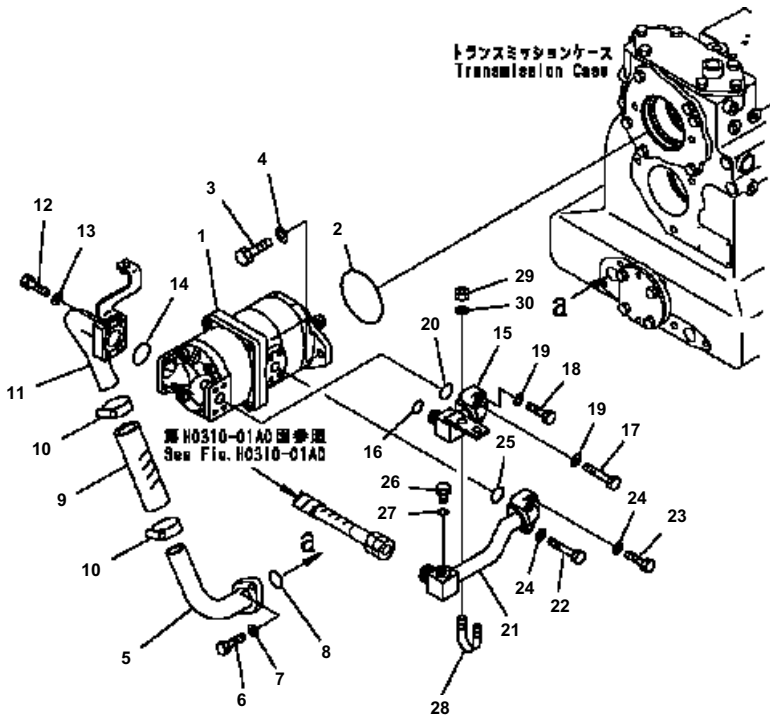

D41E6T S/N B35001-UP

POWER LINE PIPING (PUMP AND TRANSMISSION) (FOR ANGLE DOZER)

Item	Part No.	Description	Qty	Options
1	705-52-21170	PUMP ASS'Y	1	SN:B35001--
2	07000-72105	O-RING	1	SN:B35001--
3	01010-81235	BOLT	2	SN:B35001--
4	01643-31232	WASHER	2	SN:B35001--
5	124-49-61111	TUBE	1	SN:B35001--
6	01010-81040	BOLT	1	SN:B35001--
7	01643-31032	WASHER	1	SN:B35001--
8	07000-73032	O-RING	1	SN:B35001--
9	07260-03214	HOSE	1	SN:B35001--
10	07289-00045	CLAMP	2	SN:B35001--
11	124-49-61122	TUBE	1	SN:B35001--
12	01010-81040	BOLT	1	SN:B35001--
13	01643-31032	WASHER	1	SN:B35001--
14	07000-73042	O-RING	1	SN:B35001--
15	124-49-61140	TUBE	1	SN:B35001--
16	02896-11015	O-RING	1	SN:B35001--
17	01010-80855	BOLT	2	SN:B35001--
18	01010-80845	BOLT	2	SN:B35001--
19	01643-30823	WASHER	4	SN:B35001--
20	07000-73030	O-RING	1	SN:B35001--
21	124-62-61130	TUBE	1	SN:B35536--
	124-62-61220	TUBE	1	SN:B35001--B35535
22	01010-80855	BOLT	2	SN:B35001--
23	01010-80845	BOLT	2	SN:B35001--
24	01643-30823	WASHER	4	SN:B35001--
25	07000-13030	O-RING	1	SN:B35001--
26	07040-11007	PLUG	1	SN:B35001--
27	07002-11023	O-RING	1	SN:B35001--
28	07283-22738	CLIP	1	SN:B35001--
29	01597-01009	NUT	2	SN:B35001--
30	01643-31032	WASHER	2	SN:B35001--

Ref. F2300-18A1 Page 150200

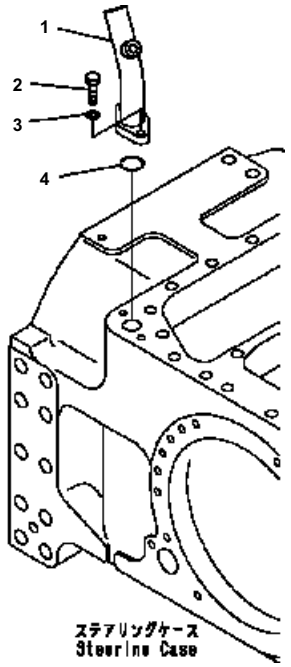

D41E6T S/N B35001-UP

POWER LINE PIPING (CASE)

Item	Part No.	Description	Qty	Options
1	124-49-51232	FILLER	1	SN:B35001--
2	01010-81030	BOLT	1	SN:B35001--
3	01643-31032	WASHER	1	SN:B35001--
4	07000-73035	O-RING	1	SN:B35001--

Ref. F2300-19A0 Page 150210

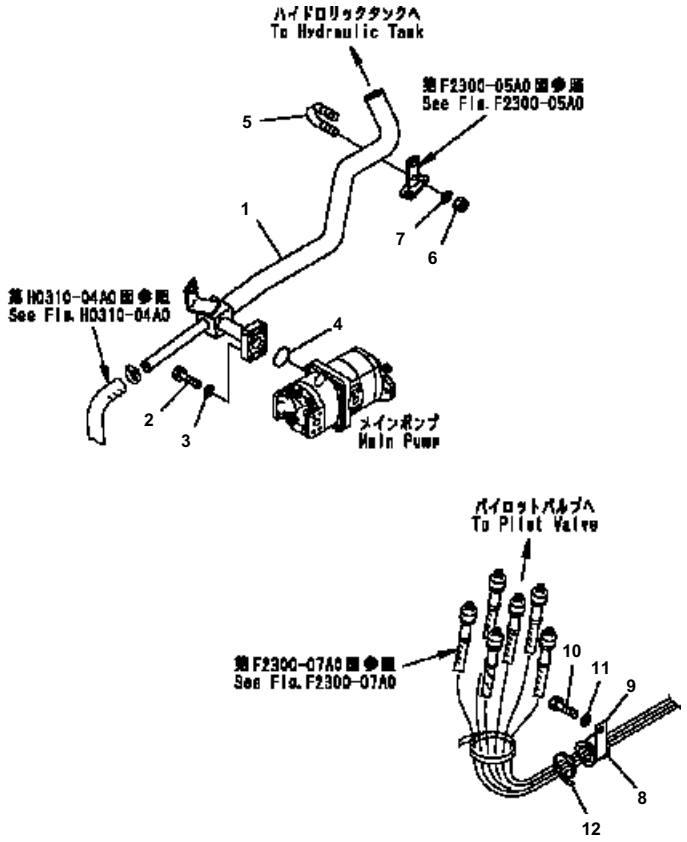

D41E6T S/N B35001-UP

POWER LINE PIPING (OIL LINE)

Item	Part No.	Description	Qty	Options
1	124-62-61161	TUBE	1	SN:B35001--
2	01010-81245	BOLT	4	SN:B35001--
3	01643-31232	WASHER	4	SN:B35001--
4	07000-03048	O-RING	1	SN:B35001--
5	07283-34949	CLIP	1	SN:B35001--
6	01597-01009	NUT	2	SN:B35001--
7	01643-31032	WASHER	2	SN:B35001--
8	07095-20318	CUSHION	1	SN:B35001--
9	04434-53412	CLIP	1	SN:B35001--
10	01010-81220	BOLT	1	SN:B35001--
11	01643-31232	WASHER	1	SN:B35001--
12	08034-00834	BAND	3	SN:B35001--

Ref. F2300-20A0 Page 150220

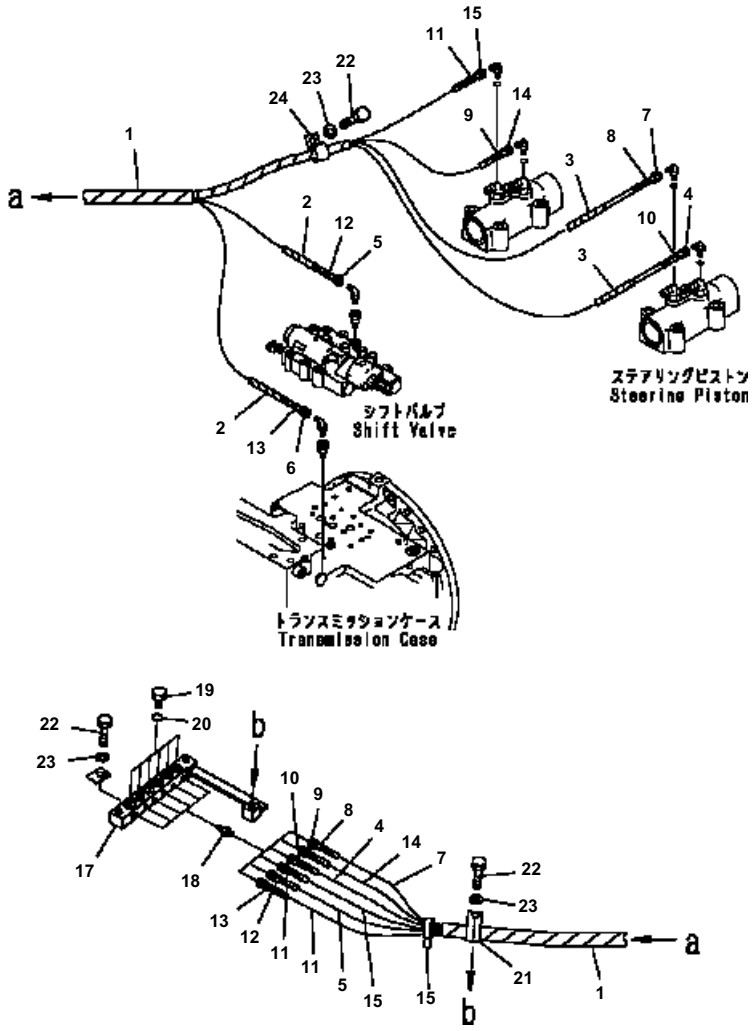

D41E6T S/N B35001-UP

POWER LINE PIPING (CHECK LINE)

Item	Part No.	Description	Qty	Options
1	08210-01810	SPIRAL TUBE	1	SN:B35001--
2	08210-01204	SPIRAL TUBE	2	SN:B35001--
3	08210-01203	SPIRAL TUBE	2	SN:B35001--
4	124-49-61510	HOSE, 1800MM	1	SN:B35001--
5	124-49-61541	HOSE, 1150MM	1	SN:B35001--
6	124-49-61541	HOSE, 1150MM	1	SN:B35001--
7	124-49-61550	HOSE, 1700MM	1	SN:B35001--
8	203-62-57910	MARK, 1	2	SN:B35001--
9	203-62-57920	MARK, 2	2	SN:B35001--
10	203-62-57930	MARK, 3	2	SN:B35001--
11	203-62-57940	MARK, 4	2	SN:B35001--
12	203-62-57950	MARK, 5	2	SN:B35001--
13	203-62-57960	MARK, 6	2	SN:B35001--
14	124-49-61480	HOSE, 1350MM	1	SN:B35001--
15	124-49-61490	HOSE, 1450MM	1	SN:B35001--
16	08034-00536	BAND	1	SN:B35001--
17	124-62-61920	BLOCK	1	SN:B35001--
18	124-62-61910	NIPPLE	6	SN:B35001--
19	07040-11007	PLUG	6	SN:B35001--
20	07002-31023	O-RING	6	SN:B35001--
21	04434-52712	CLIP	1	SN:B35001--
22	01010-81220	BOLT	4	SN:B35001--
23	01643-31232	WASHER	4	SN:B35001--
24	04434-52512	CLIP	1	SN:B35001--

Ref. F2300-21A0 Page 150230

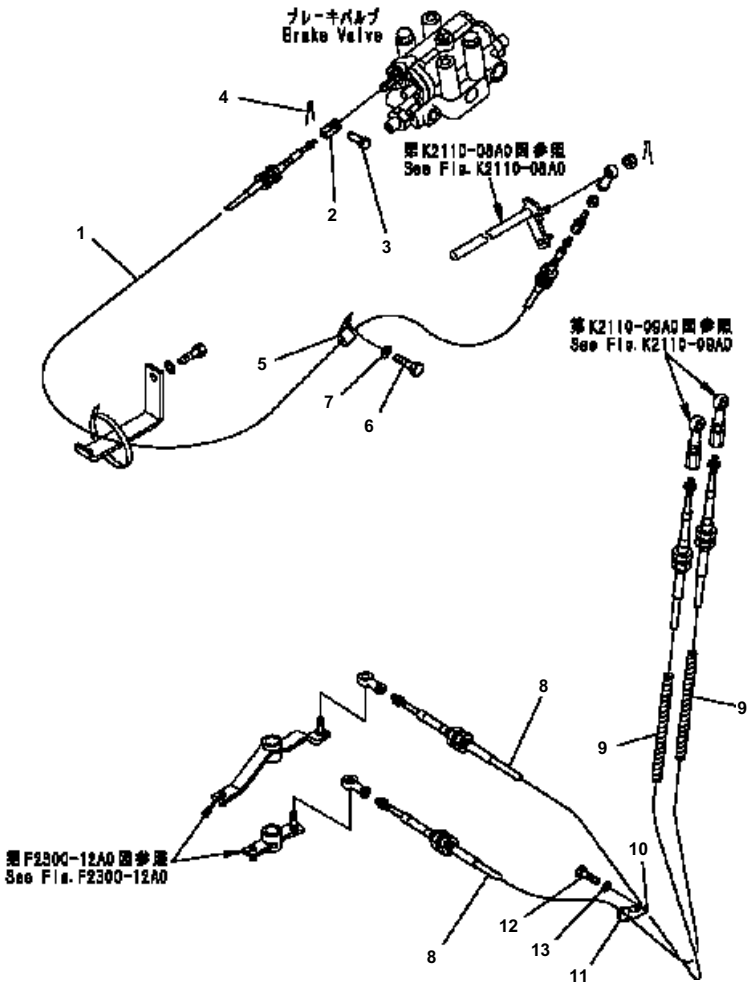

D41E6T S/N B35001-UP

POWER LINE (TRANSMISSION AND BRAKE CONTROL)

Item	Part No.	Description	Qty	Options
1	124-43-61180	CABLE	1	SN:B35001--
2	205-43-72890	YOKE	1	SN:B35001--
3	04205-10622	PIN	1	SN:B35001--
4	04050-11612	PIN	1	SN:B35001--
5	04434-51410	CLIP	1	SN:B35001--
6	01010-81020	BOLT	1	SN:B35001--
7	01643-31032	WASHER	1	SN:B35001--
8	362-43-34150	CABLE	2	SN:B35001--
9	08210-01204	SPIRAL TUBE	2	SN:B35001--
10	08036-00814	CLIP	1	SN:B35001--
11	08034-00823	BAND	1	SN:B35001--
12	01010-81220	BOLT	1	SN:B35001--
13	01643-31232	WASHER	1	SN:B35001--

Ref. F2300-22A0 Page 150240

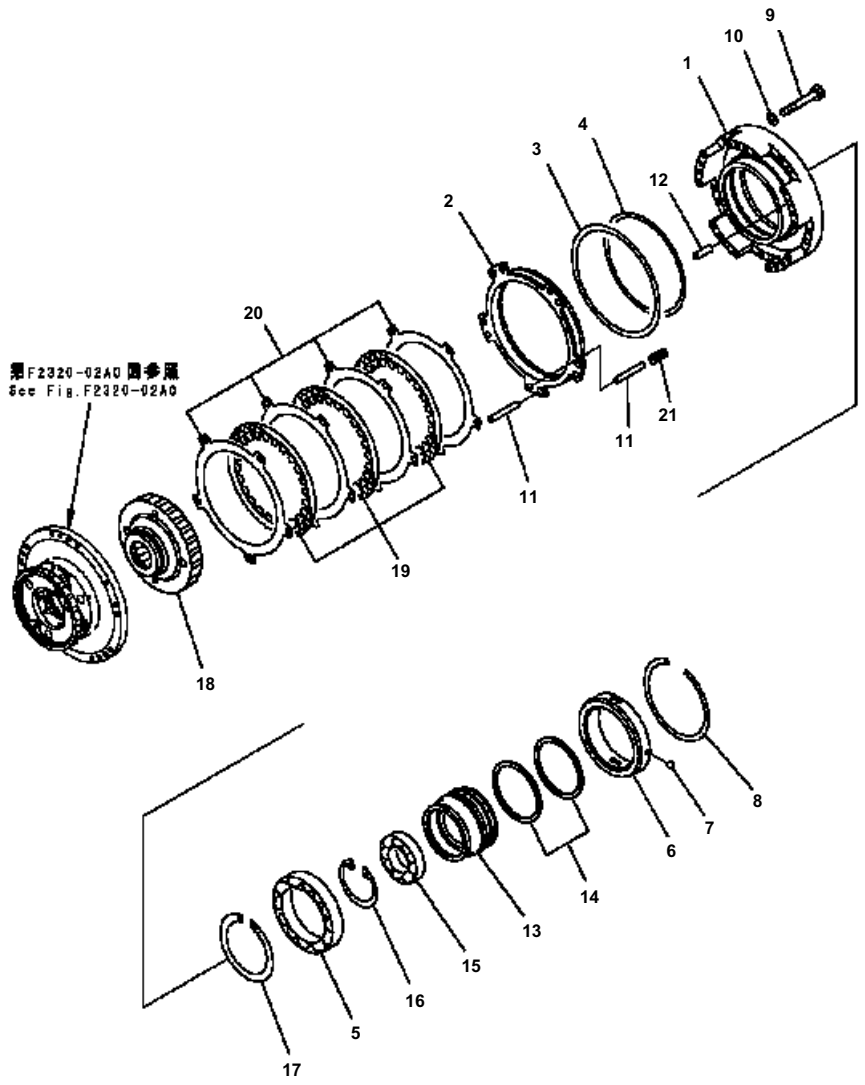

D41E6T S/N B35001-UP

TRANSMISSION (1ST CLUTCH)

Item	Part No.	Description	Qty	Options
	124-15-51010	TRANSMISSION ASS'Y THIS ASSEMBLY CONSISTS OF ALL PARTS SHOWN IN FIGS. F2320-01A0 TO F2320-13A0.	1	SN:B35001--
1	124-15-52341	· HOUSING{1ST}	1	SN:B35001--
2	124-15-52770	· PISTON	1	SN:B35001--
3	113-15-29250	· RING\((K1)\)	1	SN:B35001--
4	103-15-29270	· SEAL\((K1)\)	1	SN:B35001--
5	06000-06921	· BEARING	1	SN:B35001--
6	124-15-52390	· BUSHING	1	SN:B35001--
7	04260-00635	· BALL	1	SN:B35001--
8	04071-00150	· RING	1	SN:B35001--
9	01010-80875	· BOLT	18	SN:B35001--
10	01643-50823	· WASHER	18	SN:B35001--
11	22W-15-21290	· PIN{(D=10.0, L= 65.0)}	10	SN:B35001--
12	04020-01024	· PIN	2	SN:B35001--
13	124-15-52381	· CAGE	1	SN:B35001--
14	07018-21155	· RING	2	SN:B35001--
15	06042-00210	· BEARING	1	SN:B35001--
16	04065-09030	· RING	1	SN:B35001--
17	04070-00105	· RING	1	SN:B35001--
18	124-15-52271	· HUB	1	SN:B35001--
19	124-15-52710	· DISC	3	SN:B35001--
20	125-15-32750	· PLATE	4	SN:B35001--
21	23A-15-12910	· SPRING{(L= 35.0)}	5	SN:B35001--

Ref. F2320-01A0 Page 150250

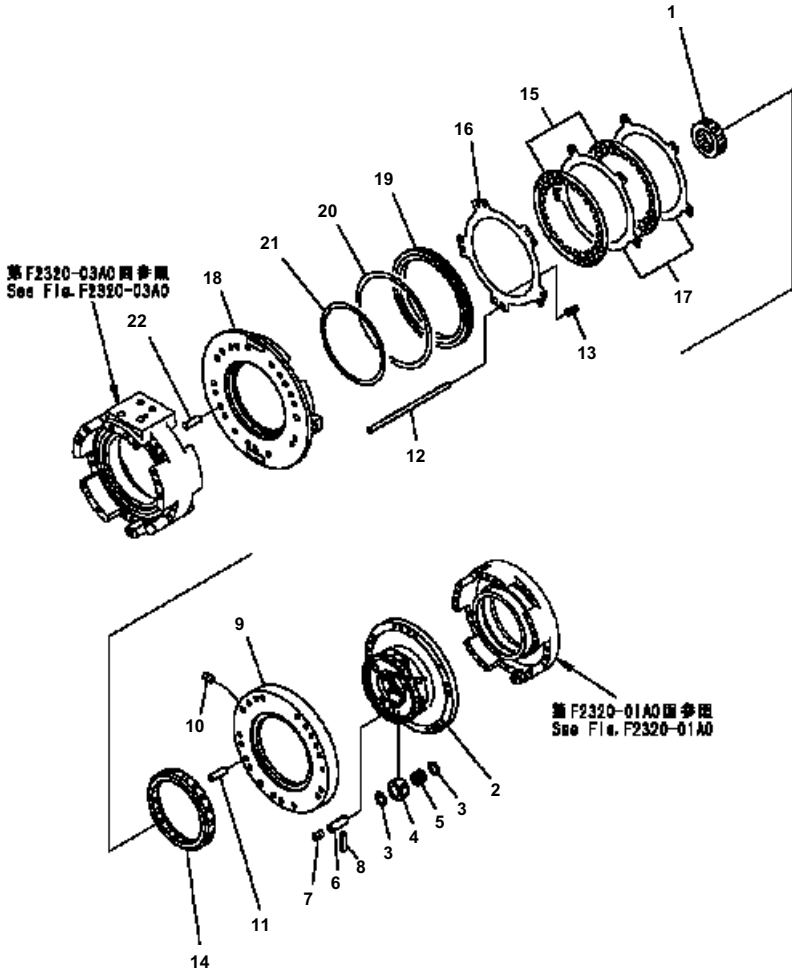

D41E6T S/N B35001-UP

TRANSMISSION (2ND CLUTCH)

Item	Part No.	Description	Qty	Options
	124-15-51010	TRANSMISSION ASS'Y THIS ASSEMBLY CONSISTS OF ALL PARTS SHOWN IN FIGS. F2320-01A0 TO F2320-13A0.	1	SN:B35001--
1	23E-15-12241	· GEAR	1	SN:B35001--
2	124-15-52331	· CARRIER	1	SN:B35001--
3	113-15-32560	· WASHER{THRUST}	6	SN:B35001--
4	23E-15-12441	· GEAR, 18 TEETH	3	SN:B35001--
5	113-15-29410	· BEARING	3	SN:B35001--
	124-15-01010	· SHAFT ASS'Y	3	SN:B35001--
6	(☆23E-15-12550)	· · SHAFT	3	SN:B35001--
7	145-14-11320	· · PLUG	3	SN:B35001--
8	124-15-52960	· PIN{(D= 3.0, L= 14.0)}	3	SN:B35001--
	124-15-01020	· PLATE ASS'Y	1	SN:B35001--
9	(☆124-15-51140)	· · PLATE	1	SN:B35001--
10	113-15-25490	· · PLUG	1	SN:B35001--
11	04020-01024	· PIN	2	SN:B35001--
12	23E-15-11270	· PIN{(D=10.0, L=232.0)}	5	SN:B35001--
13	104-15-22930	· SPRING{(L= 23.7)}	5	SN:B35001--
14	113-15-22640	· GEAR	1	SN:B35001--
15	124-15-52710	· DISC	2	SN:B35001--
16	113-15-22720	· PLATE	1	SN:B35001--
17	113-15-22730	· PLATE	2	SN:B35001--
18	124-15-51151	· HOUSING{2ND}	1	SN:B35001--
19	103-15-22730	· PISTON	1	SN:B35001--
20	103-15-29210	· SEAL{RING}\((K1)\)	1	SN:B35001--
21	113-15-29220	· RING{RING}\((K1)\)	1	SN:B35001--
22	04020-01024	· PIN	2	SN:B35001--

Ref. F2320-02A0 Page 150260

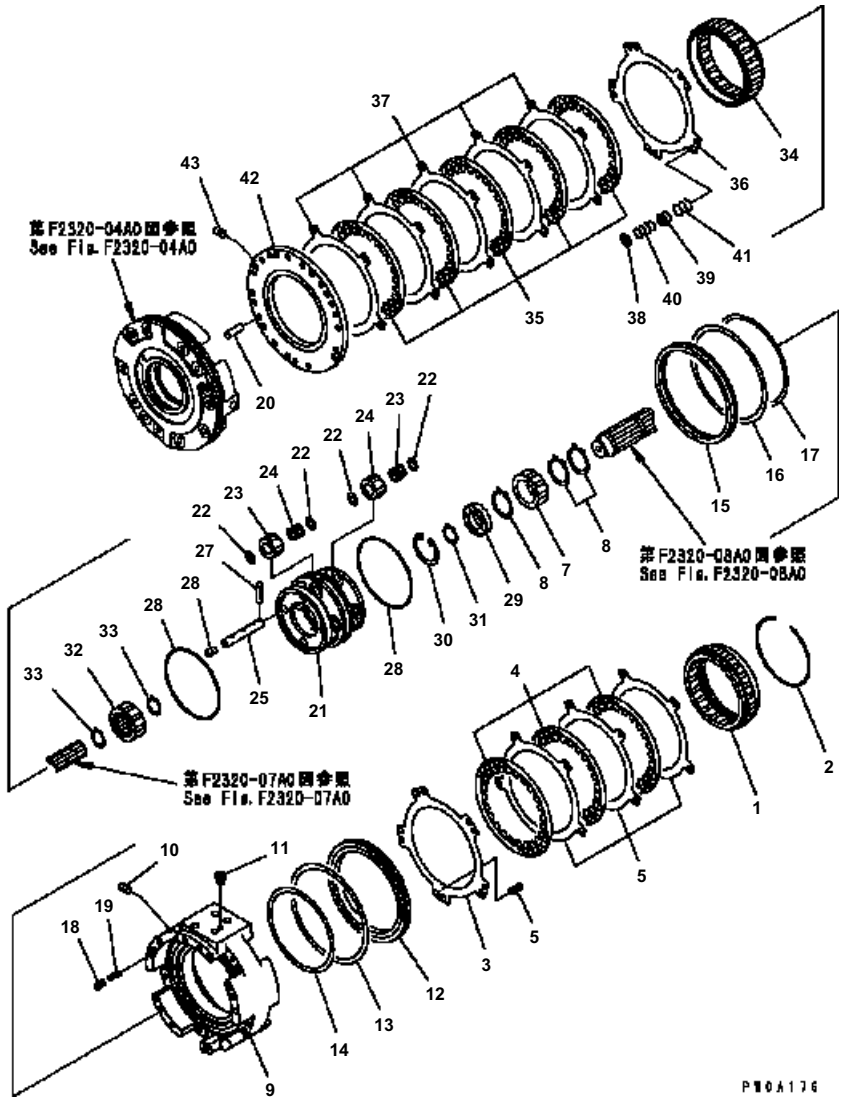

D41E6T S/N B35001-UP

TRANSMISSION (3RD AND FORWARD CLUTCH)

Item	Part No.	Description	Qty	Options
	124-15-51010	TRANSMISSION ASS'Y THIS ASSEMBLY CONSISTS OF ALL PARTS SHOWN IN FIGS. F2320-01A0 TO F2320-13A0.	1	SN:B35001--
1	124-15-52640	· GEAR, RING	1	SN:B35001--
2	113-15-29510	· RING	1	SN:B35001--
3	113-15-22920	· SPRING{(L= 29.0)}	5	SN:B35001--
4	124-15-52710	· DISC	3	SN:B35001--
5	113-15-22720	· PLATE	1	SN:B35001--
6	113-15-22730	· PLATE	3	SN:B35001--
7	124-15-52230	· GEAR, 34 TEETH	1	SN:B35001--
8	04064-04819	· RING	3	SN:B35001--
	124-15-01030	· HOUSING ASS'Y{3RD AND FORWARD}	1	SN:B35001--
9	(☆124-15-51160)	· · HOUSING{3RD AND FORWARD}	1	SN:B35001--
10	145-14-11320	· · PLUG	1	SN:B35001--
11	07043-70108	· · PLUG	1	SN:B35001--
12	103-15-22730	· PISTON	1	SN:B35001--
13	103-15-29210	· SEAL\((K1)\)	1	SN:B35001--
14	113-15-29220	· RING{SEAL}\((K1)\)	1	SN:B35001--
15	124-15-52750	· PISTON	1	SN:B35001--
16	113-15-29250	· RING\((K1)\)	1	SN:B35001--
17	113-15-29261	· RING\((K1)\)	1	SN:B35001--
18	287-15-15360	· PISTON	1	SN:B35001--
19	195-15-15261	· SPRING{(L= 25. 4)}	1	SN:B35001--
20	113-15-21290	· PIN{(D=10. 0, L= 35. 0)}	2	SN:B35001--
21	124-15-52320	· CARRIER	1	SN:B35001--
22	113-15-32560	· WASHER{THRUST}	16	SN:B35001--
23	124-15-52420	· GEAR, 19 TEETH	8	SN:B35001--
24	124-15-59420	· BEARING	8	SN:B35001--
	12G-15-01040	· SHAFT ASS'Y	4	SN:B35001--
25	(☆12G-15-52520)	· · SHAFT	1	SN:B35001--
26	145-14-11320	· · PLUG	1	SN:B35001--
27	124-15-52960	· PIN{(D= 3. 0, L= 14. 0)}	4	SN:B35001--
28	113-15-29240	· SEAL	2	SN:B35001--
29	06000-06007	· BEARING	1	SN:B35001--
30	04065-06220	· RING	1	SN:B35001--
31	04064-03515	· RING	1	SN:B35001--
32	124-15-52220	· GEAR, 34 TEETH	1	SN:B35001--
33	04064-03215	· RING	2	SN:B35001--
34	124-15-52631	· GEAR, RING	1	SN:B35001--

D41E6T S/N B35001-UP

TRANSMISSION (3RD AND FORWARD CLUTCH)

Item	Part No.	Description	Qty	Options
35	124-15-52710	・DISC	5	SN:B35001--
36	113-15-22720	・PLATE	1	SN:B35001--
37	113-15-22730	・PLATE	5	SN:B35001--
38	01643-51032	・WASHER	10	SN:B35001--
39	362-15-12810	・GUIDE	5	SN:B35001--
40	113-15-42910	・SPRING{(L= 18. 65)}	5	SN:B35001--
41	113-15-42920	・SPRING{(L= 22. 93)}	5	SN:B35001--
	12G-15-01050	・PLATE ASS'Y	1	SN:B35001--
42	(☆12G-15-51170)	・・PLATE	1	SN:B35001--
43	125-15-11230	・・PLUG	1	SN:B35001--

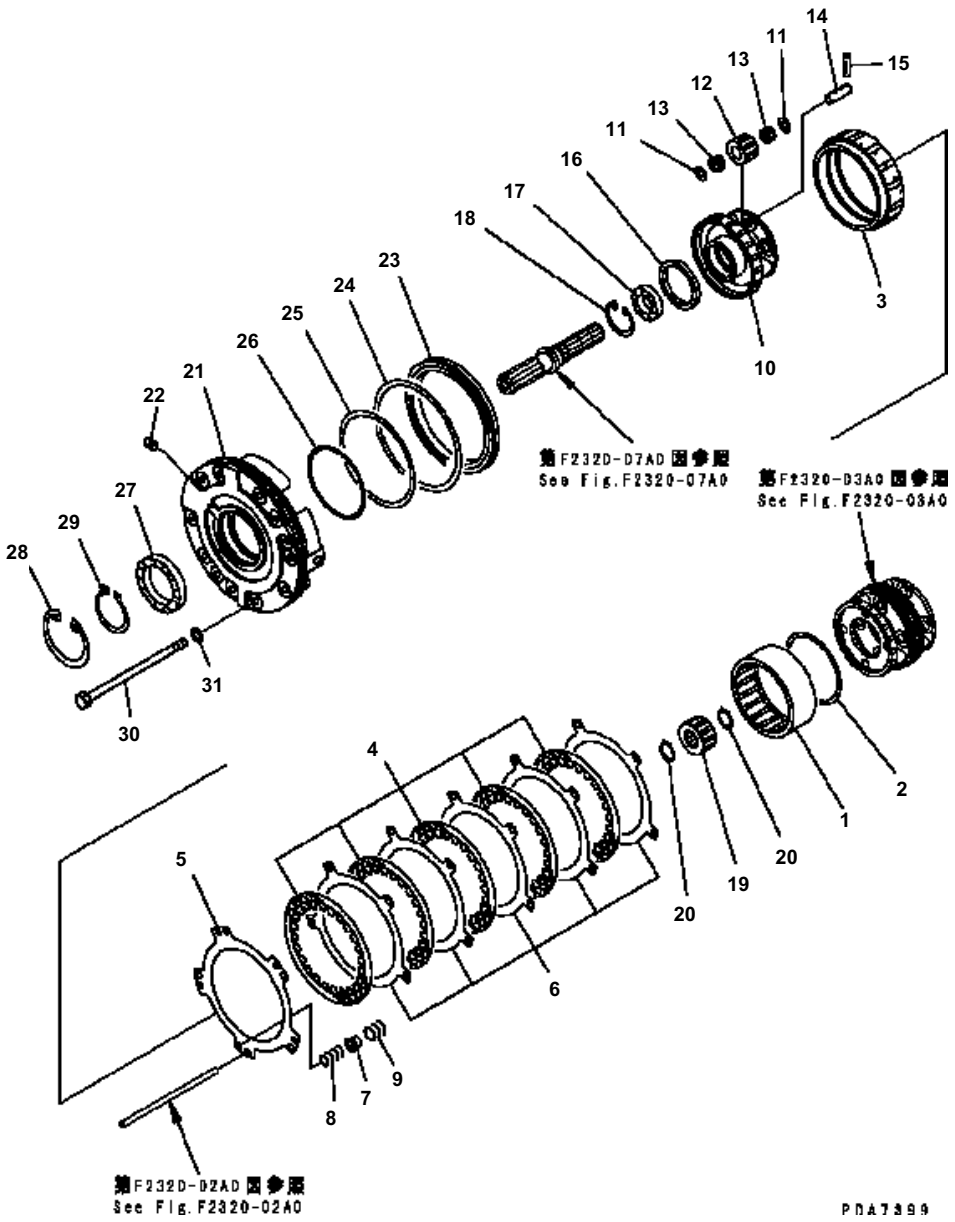

D41E6T S/N B35001-UP

TRANSMISSION (REVERSE CLUTCH)

Item	Part No.	Description	Qty	Options
	124-15-51010	TRANSMISSION ASS'Y THIS ASSEMBLY CONSISTS OF ALL PARTS SHOWN IN FIGS. F2320-01A0 TO F2320-13A0.	1	SN:B35001--
1	124-15-52620	· GEAR, RING	1	SN:B35001--
2	113-15-22930	· RING	1	SN:B35001--
3	124-15-52610	· GEAR, RING	1	SN:B35001--
4	124-15-52710	· DISC	5	SN:B35001--
5	113-15-22720	· PLATE	1	SN:B35001--
6	113-15-22730	· PLATE	5	SN:B35001--
7	362-15-12810	· GUIDE	5	SN:B35001--
8	124-15-52910	· SPRING{(L= 25. 0)}	5	SN:B35001--
9	124-15-52920	· SPRING{(L= 17. 55)}	5	SN:B35001--
10	124-15-52312	· CARRIER	1	SN:B35001--
11	113-15-32560	· WASHER{THRUST}	8	SN:B35001--
12	12G-15-52410	· GEAR, 20 TEETH	4	SN:B35001--
13	124-15-59410	· BEARING	8	SN:B35001--
14	12G-15-52510	· SHAFT	4	SN:B35001--
15	124-15-52960	· PIN{(D= 3. 0, L= 14. 0)}	4	SN:B35001--
16	12G-15-52130	· SPACER	1	SN:B35001--
17	124-15-59430	· BEARING	1	SN:B35001--
18	04065-06220	· RING	1	SN:B35001--
19	12G-15-52210	· GEAR, 27 TEETH	1	SN:B35001--
20	04064-03215	· RING	2	SN:B35001--
	124-15-01061	· HOUSING ASS'Y{REVERSE}	1	SN:B35001--
21	(☆124-15-51181)	· · HOUSING{REVERSE}	1	SN:B35001--
22	125-15-11230	· · PLUG	1	SN:B35001--
23	124-15-52730	· PISTON	1	SN:B35001--
24	113-15-29250	· RING\((K1)\)	1	SN:B35001--
25	113-15-29220	· RING{SEAL}\((K1)\)	1	SN:B35001--
26	07018-01405	· RING	1	SN:B35001--
27	06000-06915	· BEARING	1	SN:B35001--
28	04065-01054	· RING	1	SN:B35001--
29	04064-07525	· RING	1	SN:B35001--
30	113-15-21241	· BOLT	12	SN:B35001--
31	01643-31032	· WASHER	12	SN:B35001--

Ref. F2320-04A0 Page 150280

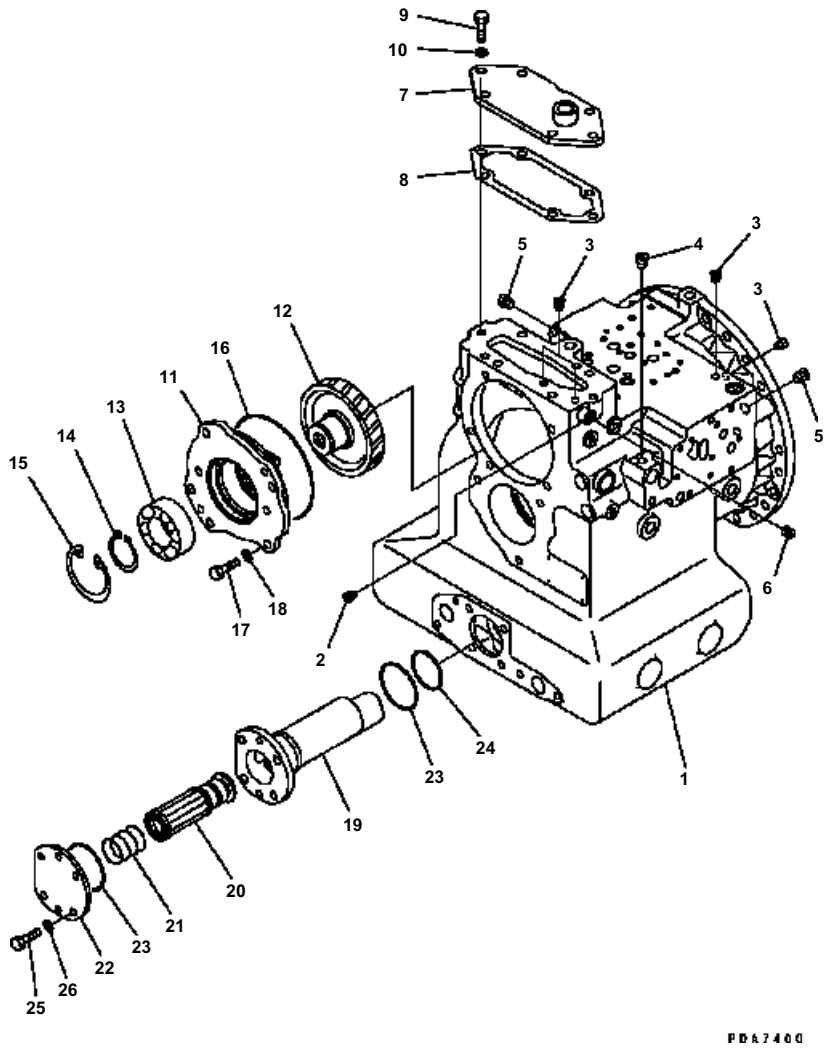

D41E6T S/N B35001-UP

TRANSMISSION (CASE)

Item	Part No.	Description	Qty	Options
	124-15-51010	TRANSMISSION ASS'Y THIS ASSEMBLY CONSISTS OF ALL PARTS SHOWN IN FIGS. F2320-01A0 TO F2320-13A0.	1	SN:B35001--
	124-15-01070	· CASE ASS'Y	1	SN:B35001--
1	(☆124-15-51111)	· · CASE	1	SN:B35001--
2	07043-00108	· · PLUG	1	SN:B35001--
3	07043-70108	· · PLUG	7	SN:B35001--
4	07043-00211	· · PLUG	2	SN:B35001--
5	07043-00312	· · PLUG	2	SN:B35001--
6	125-15-22780	· · PLUG	1	SN:B35001--
7	124-15-51811	· PLATE	1	SN:B35001--
8	124-15-51820	· GASKET\((K1)\)	1	SN:B35001--
9	01010-81235	· BOLT	6	SN:B35001--
10	01643-31232	· WASHER	6	SN:B35001--
11	124-15-52840	· COVER	1	SN:B35001--
12	124-15-52820	· GEAR§ 69 TEETH	1	SN:B35001--
13	06030-05210	· BEARING	1	SN:B35001--
14	04064-05020	· RING	1	SN:B35001--
15	04065-09030	· RING	1	SN:B35001--
16	07000-75165	· O-RING\((K1)\)	1	SN:B35001--
17	01010-81235	· BOLT	5	SN:B35001--
18	01643-31232	· WASHER	5	SN:B35001--
19	124-15-51711	· CASE	1	SN:B35001--
20	124-15-51740	· MAGNET ASS'Y	1	SN:B35001--
21	124-15-51720	· SPRING{(L= 50. 0)}	1	SN:B35001--
22	124-15-51731	· PLATE	1	SN:B35001--
23	07000-72070	· O-RING\((K1)\)	2	SN:B35001--
24	07000-72060	· O-RING\((K1)\)	1	SN:B35001--
25	01010-81245	· BOLT	4	SN:B35001--
26	01643-31232	· WASHER	4	SN:B35001--

Ref. F2320-05A0 Page 150290

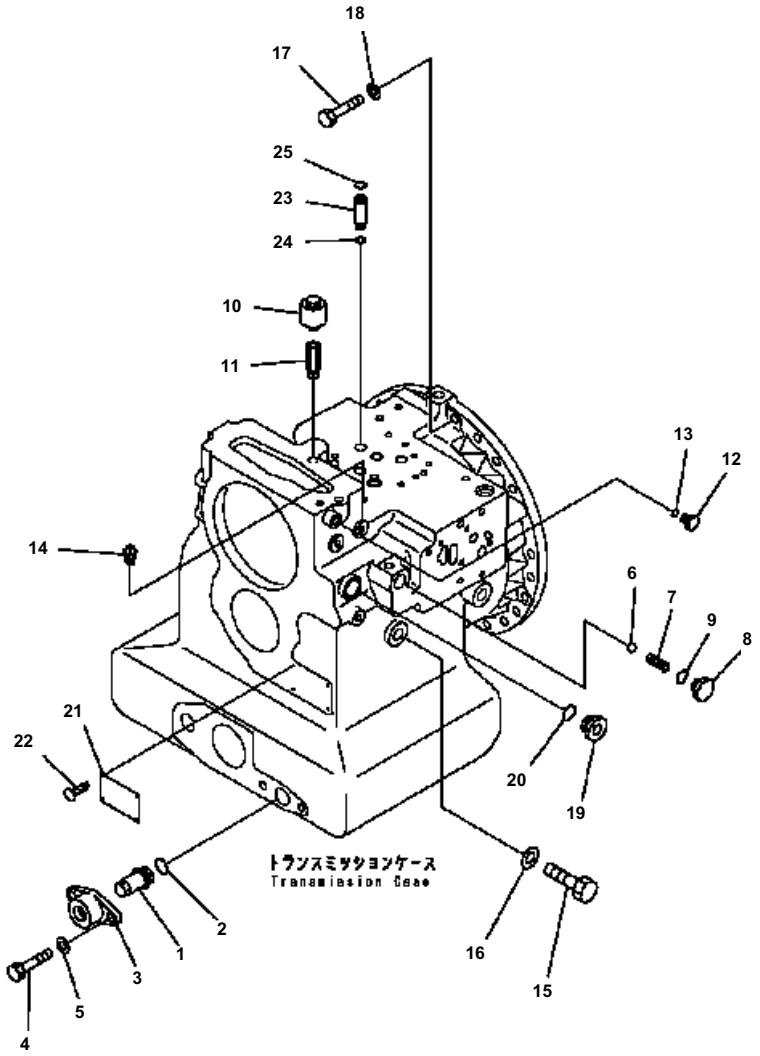

D41E6T S/N B35001-UP

TRANSMISSION (CASE ACCESSORIES PARTS)

Item	Part No.	Description	Qty	Options
	124-15-51010	TRANSMISSION ASS'Y THIS ASSEMBLY CONSISTS OF ALL PARTS SHOWN IN FIGS. F2320-01A0 TO F2320-13A0.	1	SN:B35001--
1	124-15-51630	· PLUG	1	SN:B35001--
2	07002-02434	· O-RING\((K1)\)	1	SN:B35001--
3	419-15-18230	· COVER{(L= 34. 3)}	1	SN:B35001--
4	01010-81235	· BOLT	2	SN:B35001--
5	01643-31232	· WASHER	2	SN:B35001--
6	04260-01270	· BALL	1	SN:B35001--
7	104-15-35150	· SPRING	1	SN:B35001--
8	124-15-51620	· PLUG	1	SN:B35001--
9	07002-02034	· O-RING\((K1)\)	1	SN:B35001--
10	07030-00252	· BREATHER	1	SN:B35001--
11	170-21-11190	· NIPPLE	1	SN:B35001--
12	569-13-46620	· PLUG	1	SN:B35001--
13	07005-01212	· GASKET\((K1)\)	1	SN:B35001--
14	07042-80108	· PLUG	1	SN:B35001--
15	01010-61665	· BOLT	4	SN:B35001--
16	01643-31645	· WASHER	4	SN:B35001--
17	01010-81245	· BOLT	3	SN:B35001--
18	01643-31232	· WASHER	3	SN:B35001--
19	124-15-51610	· PLUG{(HOLE=10. 5)}	1	SN:B35001--
20	07002-02434	· O-RING\((K1)\)	1	SN:B35001--
21	09608-05080	· PLATE§ NAME{(LIMITED SUPPLY)}	1	SN:B35001--
22	04418-13060	· SCREW	4	SN:B35001--
23	124-15-51311	· SLEEVE	4	SN:B35001--
24	07000-72010	· O-RING\((K1)\)	4	SN:B35001--
25	07000-72012	· O-RING\((K1)\)	4	SN:B35001--

Ref. F2320-06A0 Page 150300

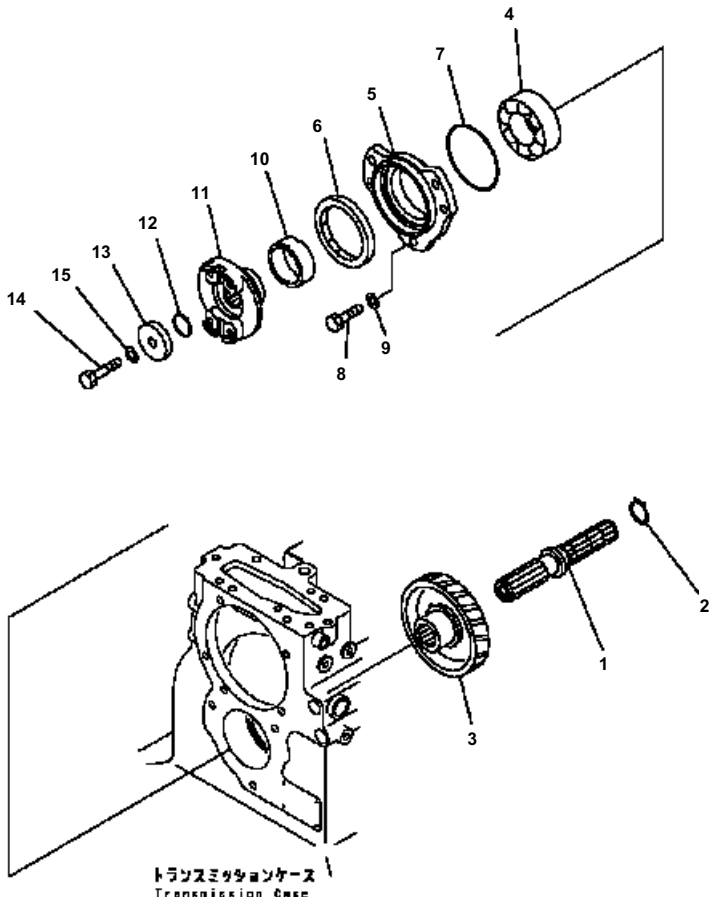

D41E6T S/N B35001-UP

TRANSMISSION (INPUT)

Item	Part No.	Description	Qty	Options
	124-15-51010	TRANSMISSION ASS'Y THIS ASSEMBLY CONSISTS OF ALL PARTS SHOWN IN FIGS. F2320-01A0 TO F2320-13A0.	1	SN:B35001--
1	124-15-52111	· SHAFT	1	SN:B35001--
2	04064-03515	· RING	1	SN:B35001--
3	124-15-52810	· GEAR, 75 TEETH	1	SN:B35001--
4	06030-05211	· BEARING	1	SN:B35001--
5	124-15-52830	· CAGE	1	SN:B35001--
6	07012-10090	· SEAL\((K1)\)	1	SN:B35001--
7	07000-72105	· O-RING\((K1)\)	1	SN:B35001--
8	01010-81235	· BOLT	3	SN:B35001--
9	01643-31232	· WASHER	3	SN:B35001--
10	124-15-52140	· COLLAR	1	SN:B35001--
11	124-15-42181	· COUPLING\((K1)\)	1	SN:B35001--
12	07000-73032	· O-RING	1	SN:B35001--
13	124-15-42190	· HOLDER	1	SN:B35001--
14	01010-61460	· BOLT	1	SN:B35001--
15	01643-31445	· WASHER	1	SN:B35001--

Ref. F2320-07A0 Page 150310

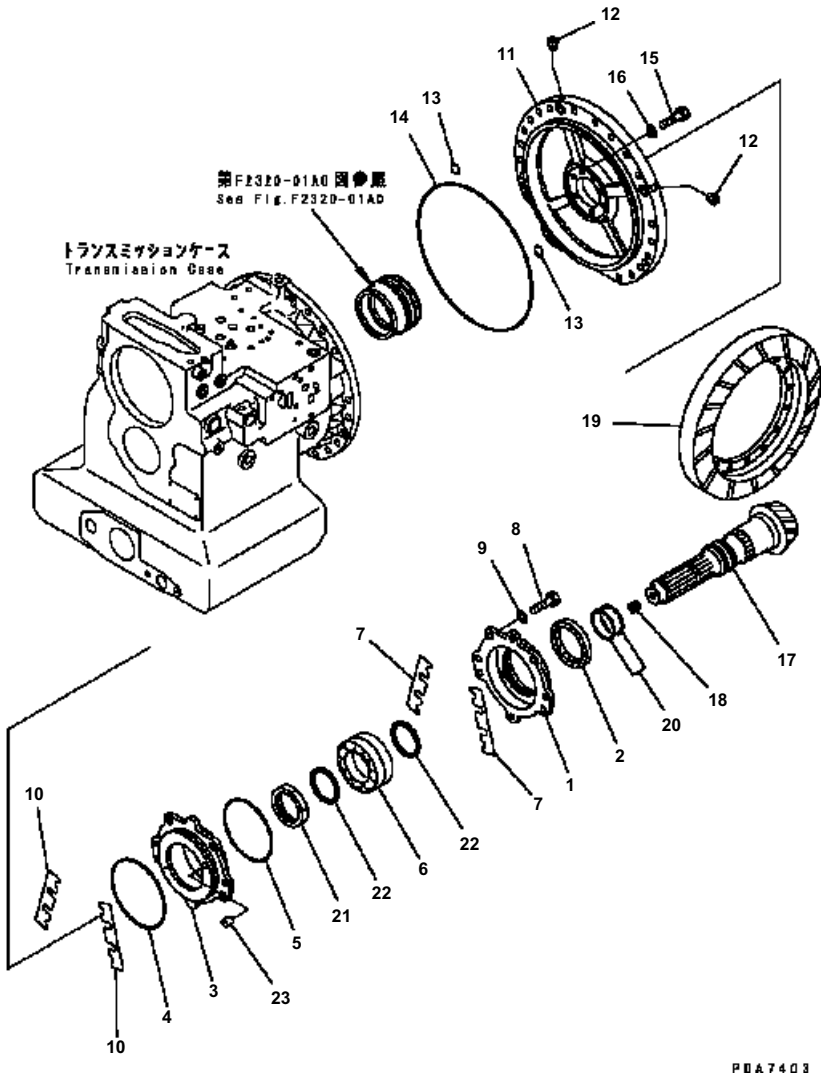

D41E6T S/N B35001-UP

TRANSMISSION (OUTPUT)

Item	Part No.	Description	Qty	Options
	124-15-51010	TRANSMISSION ASS'Y THIS ASSEMBLY CONSISTS OF ALL PARTS SHOWN IN FIGS. F2320-01A0 TO F2320-13A0.	1	SN:B35001--
1	124-15-51231	· COVER	1	SN:B35001--
2	07012-10075	· SEAL\((K1)\)	1	SN:B35001--
3	124-15-51240	· COVER	1	SN:B35001--
4	07000-72145	· O-RING\((K1)\)	1	SN:B35001--
5	07000-72130	· O-RING\((K1)\)	1	SN:B35001--
6	124-15-51220	· BEARING	1	SN:B35001--
7	124-15-05210	· SHIM ASS'Y\((K1)\)	1	SN:B35001--
	124-15-51941	· · SHIM, 0. 2MM\((K1)\)	4	SN:B35001--
	124-15-51951	· · SHIM, 0. 3MM\((K1)\)	6	SN:B35001--
8	01010-81245	· BOLT	4	SN:B35001--
9	01643-31232	· WASHER	4	SN:B35001--
10	124-15-05210	· SHIM ASS'Y\((K1)\)	1	SN:B35001--
	124-15-51941	· · SHIM, 0. 2MM\((K1)\)	4	SN:B35001--
	124-15-51951	· · SHIM, 0. 3MM\((K1)\)	6	SN:B35001--
	124-15-01080	· COVER ASS'Y	1	SN:B35001--
11	(☆124-15-51212)	· · COVER	1	SN:B35001--
12	07043-70211	· · PLUG	2	SN:B35001--
13	07000-72018	· O-RING\((K1)\)	2	SN:B35001--
14	07000-75305	· O-RING\((K1)\)	1	SN:B35001--
15	01010-81025	· BOLT	5	SN:B35001--
16	01643-31032	· WASHER	5	SN:B35001--
	124-15-02091	· SHAFT ASS'Y	1	SN:B35001--
17	(☆124-15-52123)	· · SHAFT	1	SN:B35001--
18	07043-70211	· · PLUG	1	SN:B35001--
19	(☆124-22-51111)	· · GEAR, BEVEL	1	SN:B35001--
20	124-15-59240	· RING	2	SN:B35001--
21	124-15-51251	· NUT	1	SN:B35001--
22	124-15-51261	· COLLAR	2	SN:B35001--
23	124-15-51270	· COLLAR	1	SN:B35001--

Ref. F2320-08A0 Page 150320

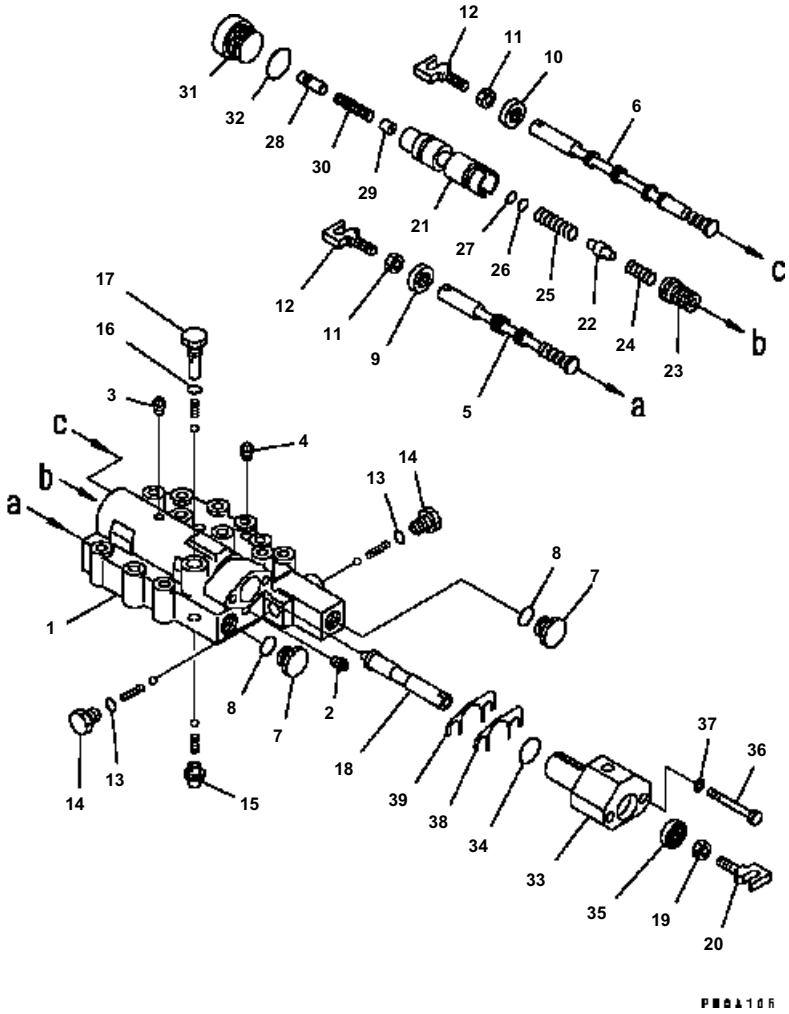

D41E6T S/N B35001-UP

TRANSMISSION (SHIFT VALVE)

Item	Part No.	Description	Qty	Options
	124-15-51010	TRANSMISSION ASS'Y THIS ASSEMBLY CONSISTS OF ALL PARTS SHOWN IN FIGS. F2320-01A0 TO F2320-13A0.	1	SN:B35001--
	124-15-56000	· VALVE ASS'Y	1	SN:B35001--
1	124-15-55410	· · BODY, VALVE	1	SN:B35001--
2	07043-70108	· · PLUG	1	SN:B35001--
3	07042-20108	· · PLUG	1	SN:B35001--
4	07042-20108	· · PLUG	1	SN:B35001--
5	363-15-15470	· · SPOOL	1	SN:B35001--
6	113-15-55450	· · SPOOL	1	SN:B35001--
7	113-15-25481	· · PLUG	2	SN:B35001--
8	07002-11823	· · O-RING\((K2)\)	2	SN:B35001--
9	113-15-29110	· · SEAL\((K2)\)	1	SN:B35001--
10	124-15-49110	· · SEAL\((K2)\)	1	SN:B35001--
11	01580-10806	· · NUT	2	SN:B35001--
12	124-15-56810	· · YOKE	2	SN:B35001--
13	07002-11223	· · O-RING\((K2)\)	2	SN:B35001--
14	124-15-55380	· · DETENT ASS'Y	2	SN:B35001--
15	103-15-25370	· · DETENT ASS'Y	1	SN:B35001--
16	07002-11223	· · O-RING\((K2)\)	1	SN:B35001--
17	363-15-15340	· · DETENT ASS'Y	1	SN:B35001--
18	124-15-55510	· · SPOOL	1	SN:B35001--
19	01580-10806	· · NUT	1	SN:B35001--
20	124-15-56810	· · YOKE	1	SN:B35001--
21	124-15-55520	· · VALVE	1	SN:B35001--
22	363-15-15530	· · STOPPER	1	SN:B35001--
23	104-15-35170	· · STOPPER	1	SN:B35001--
24	124-15-55530	· · SPRING{(L= 26. 0)}	1	SN:B35001--
25	124-15-55540	· · SPRING{(L= 33. 9)}	1	SN:B35001--
26	104-15-36480	· · SHIM, 0. 5MM	6	SN:B35001--
27	104-15-36490	· · SHIM, 0. 2MM	4	SN:B35001--
28	22W-75-18880	· · SLEEVE	1	SN:B35001--
29	22W-75-18890	· · VALVE	1	SN:B35001--
30	125-15-15290	· · SPRING{(L= 26. 0)}	1	SN:B35001--
31	124-15-45450	· · PLUG	1	SN:B35001--
32	07002-13034	· · O-RING\((K2)\)	1	SN:B35001--
33	124-15-55230	· · COVER	1	SN:B35001--
34	07000-72021	· · O-RING\((K2)\)	1	SN:B35001--
35	124-15-49110	· · SEAL\((K2)\)	1	SN:B35001--
36	01010-80855	· · BOLT	2	SN:B35001--

Ref. F2320-09A0 Page 150330

D41E6T S/N B35001-UP

TRANSMISSION (SHIFT VALVE)

Item	Part No.	Description	Qty	Options
37	01643-30823	・・ WASHER	2	SN:B35001--
38	104-15-36460	・・ SHIM, 0. 5MM\((K2)\)	4	SN:B35001--
39	104-15-36470	・・ SHIM, 0. 2MM\((K2)\)	6	SN:B35001--

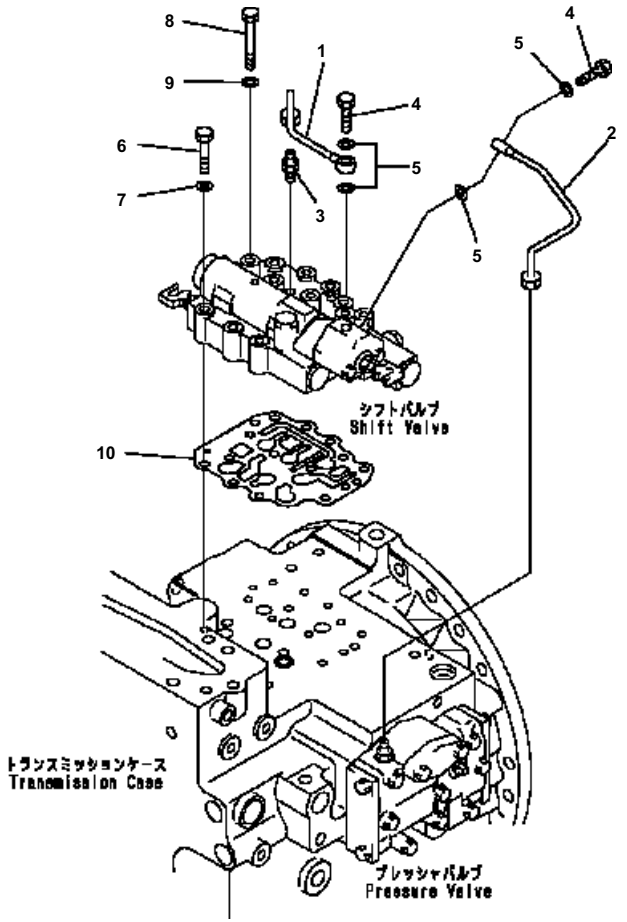

D41E6T S/N B35001-UP

TRANSMISSION (SHIFT VALVE MOUNT ANDVALVE PIPING)

Item	Part No.	Description	Qty	Options
	124-15-51010	TRANSMISSION ASS'Y THIS ASSEMBLY CONSISTS OF ALL PARTS SHOWN IN FIGS. F2320-01A0 TO F2320-13A0.	1	SN:B35001--
1	124-15-55610	· TUBE	1	SN:B35001--
2	124-15-55620	· TUBE	1	SN:B35001--
3	07213-50710	· CONNECTOR	1	SN:B35001--
4	07206-30710	· BOLT	2	SN:B35001--
5	07005-01012	· GASKET\((K2)\)	4	SN:B35001--
6	01010-80850	· BOLT	8	SN:B35001--
7	01643-30823	· WASHER	8	SN:B35001--
8	01010-80875	· BOLT	4	SN:B35001--
9	01643-30823	· WASHER	4	SN:B35001--
10	124-15-55920	· GASKET\((K2)\)	1	SN:B35001--

Ref. F2320-10A0 Page 150340

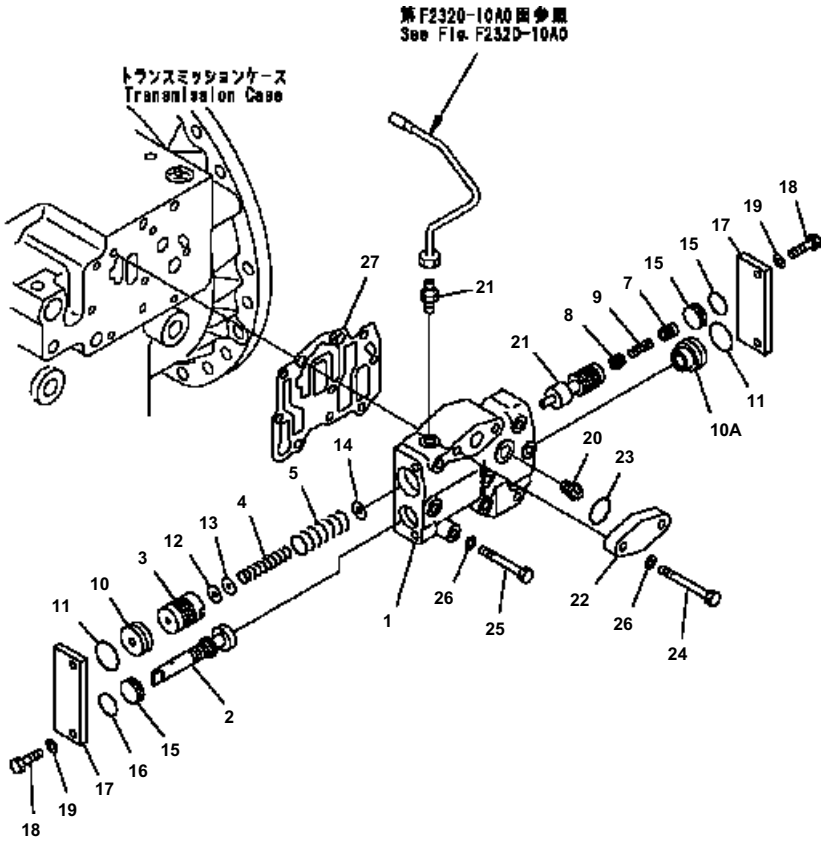

D41E6T S/N B35001-UP

TRANSMISSION (PRESSURE VALVE)

Item	Part No.	Description	Qty	Options
	124-15-51010	TRANSMISSION ASS'Y THIS ASSEMBLY CONSISTS OF ALL PARTS SHOWN IN FIGS. F2320-01A0 TO F2320-13A0.	1	SN:B35001--
	124-15-57000	· VALVE ASS'Y	1	SN:B35001--
1	124-15-55110	· · BODY, VALVE	1	SN:B35001--
2	124-15-55321	· · SPOOL	1	SN:B35001--
3	124-15-55221	· · VALVE	1	SN:B35001--
4	154-15-46140	· · SPRING{(L= 60. 5)}	1	SN:B35001--
5	124-15-55290	· · SPRING{(L= 64. 0)}	1	SN:B35001--
6	124-15-55210	· · SPOOL	1	SN:B35001--
7	103-15-15450	· · VALVE	1	SN:B35001--
8	103-15-15460	· · VALVE	1	SN:B35001--
9	125-15-15290	· · SPRING{(L= 26. 0)}	1	SN:B35001--
10	104-15-25330	· · STOPPER	1	SN:B35001--
	124-15-55390	· · STOPPER	1	SN:B35001--
11	07000-73025	· · O-RING\((K3)\)	2	SN:B35001--
12	113-15-25260	· · SHIM, 0. 5MM	3	SN:B35001--
13	113-15-25270	· · SHIM, 0. 2MM	3	SN:B35001--
14	569-15-36480	· · SHIM, 0. 5MM	3	SN:B35001--
15	104-15-25340	· · STOPPER	2	SN:B35001--
16	07000-72020	· · O-RING\((K3)\)	2	SN:B35001--
17	103-15-25350	· · PLATE	2	SN:B35001--
18	01010-80820	· · BOLT	4	SN:B35001--
19	01643-50823	· · WASHER	4	SN:B35001--
20	07042-00211	· · PLUG	1	SN:B35001--
21	07213-50710	· CONNECTOR	1	SN:B35001--
22	07336-50516	· FLANGE	1	SN:B35001--
23	07000-73025	· O-RING\((K3)\)	1	SN:B35001--
24	01010-80875	· BOLT	2	SN:B35001--
25	01010-80860	· BOLT	8	SN:B35001--
26	01643-50823	· WASHER	10	SN:B35001--
27	124-15-55140	· GASKET\((K3)\)	1	SN:B35001--

Ref. F2320-11A0 Page 150350

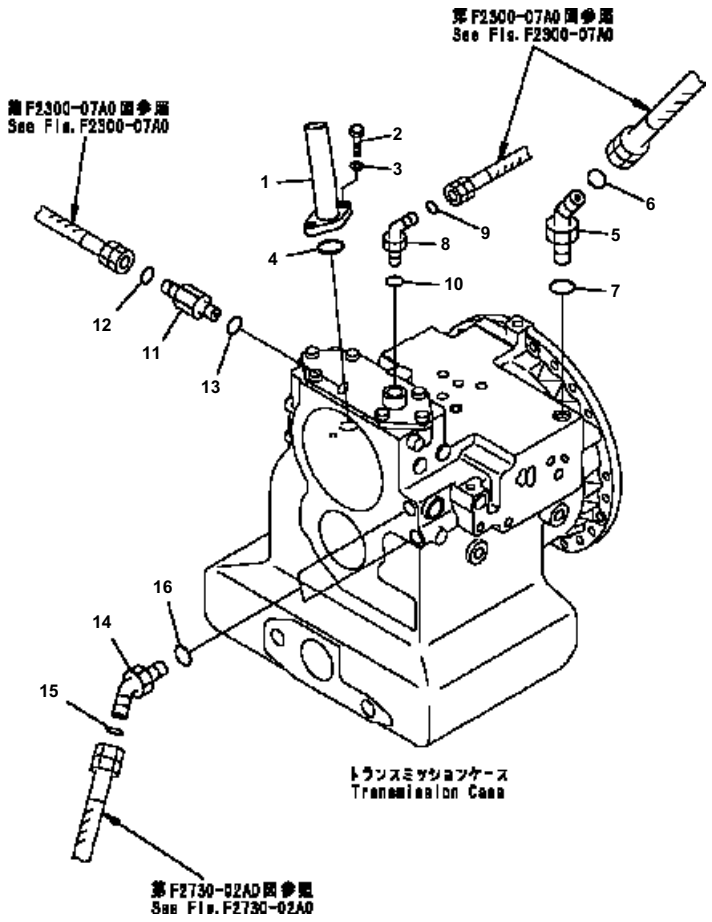

D41E6T S/N B35001-UP

TRANSMISSION (FILLER AND PIPING)

Item	Part No.	Description	Qty	Options
	124-15-51010	TRANSMISSION ASS'Y THIS ASSEMBLY CONSISTS OF ALL PARTS SHOWN IN FIGS. F2320-01A0 TO F2320-13A0.	1	SN:B35001--
1	124-49-51192	· FILLER	1	SN:B35001--
2	01010-81030	· BOLT	2	SN:B35001--
3	01643-31032	· WASHER	2	SN:B35001--
4	07000-73035	· O-RING\((K1)\)	1	SN:B35001--
5	02783-10522	· ELBOW	1	SN:B35001--
6	02896-11015	· O-RING	1	SN:B35001--
7	07002-32434	· O-RING\((K1)\)	1	SN:B35001--
8	02782-10315	· ELBOW	1	SN:B35001--
9	02896-11009	· O-RING	1	SN:B35001--
10	07002-32034	· O-RING\((K1)\)	1	SN:B35001--
11	21W-62-42470	· NIPPLE	1	SN:B35001--
12	02896-11012	· O-RING	1	SN:B35001--
13	07002-32034	· O-RING\((K1)\)	1	SN:B35001--
14	02783-10422	· ELBOW	2	SN:B35001--
15	02896-11012	· O-RING	2	SN:B35001--
16	07002-32034	· O-RING\((K1)\)	2	SN:B35001--

Ref. F2320-12A0 Page 150360

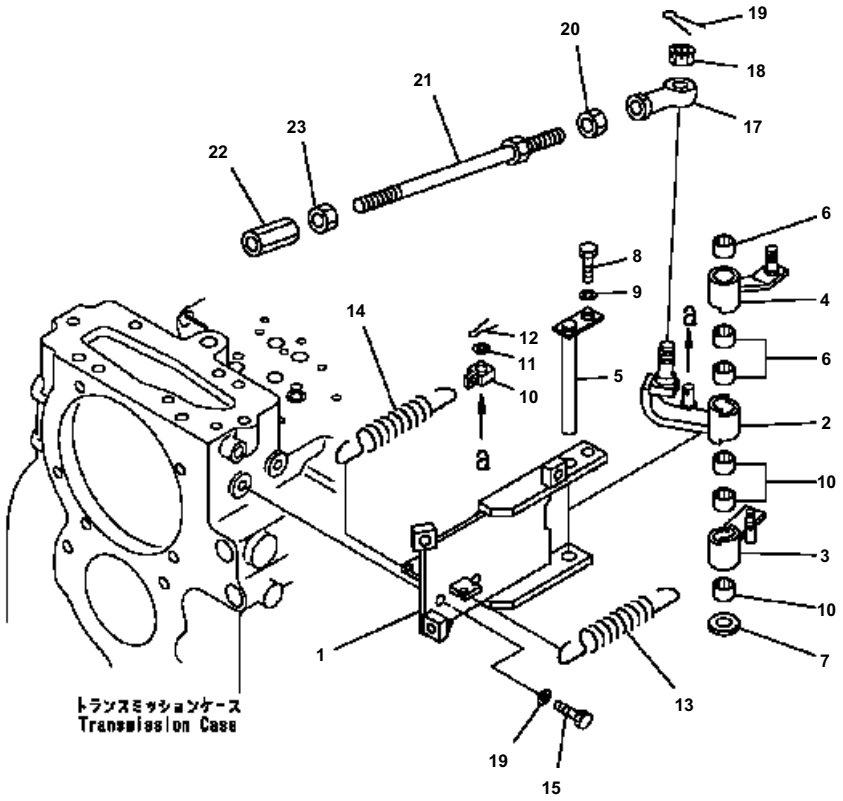

D41E6T S/N B35001-UP

TRANSMISSION (INCHING CONTROL)

Item	Part No.	Description	Qty	Options
	124-15-51010	TRANSMISSION ASS'Y THIS ASSEMBLY CONSISTS OF ALL PARTS SHOWN IN FIGS. F2320-01A0 TO F2320-13A0.	1	SN:B35001--
1	124-43-52653	· BRACKET	1	SN:B35001--
2	124-43-52684	· LEVER	1	SN:B35001--
3	124-43-52920	· LEVER	1	SN:B35001--
4	124-43-52931	· LEVER	1	SN:B35001--
5	124-43-52950	· PIN	1	SN:B35001--
6	06123-01414	· BEARING	6	SN:B35001--
7	01643-31445	· WASHER	1	SN:B35001--
8	01010-81025	· BOLT	1	SN:B35001--
9	01643-31032	· WASHER	1	SN:B35001--
10	124-43-52510	· LEVER	1	SN:B35001--
11	01640-21016	· WASHER	1	SN:B35001--
12	04050-13020	· PIN	1	SN:B35001--
13	113-43-11294	· SPRING	1	SN:B35001--
14	124-43-52671	· SPRING	1	SN:B35001--
15	01010-81025	· BOLT	2	SN:B35001--
16	01643-31032	· WASHER	2	SN:B35001--
17	04250-81474	· END	1	SN:B35001--
18	01593-31411	· NUT	1	SN:B35001--
19	04050-13022	· PIN	1	SN:B35001--
20	01582-11411	· NUT	1	SN:B35001--
21	04248-31426	· ROD	1	SN:B35001--
22	17A-43-24160	· JOINT	1	SN:B35001--
23	01508-41408	· NUT	1	SN:B35001--

Ref. F2320-13A0 Page 150370

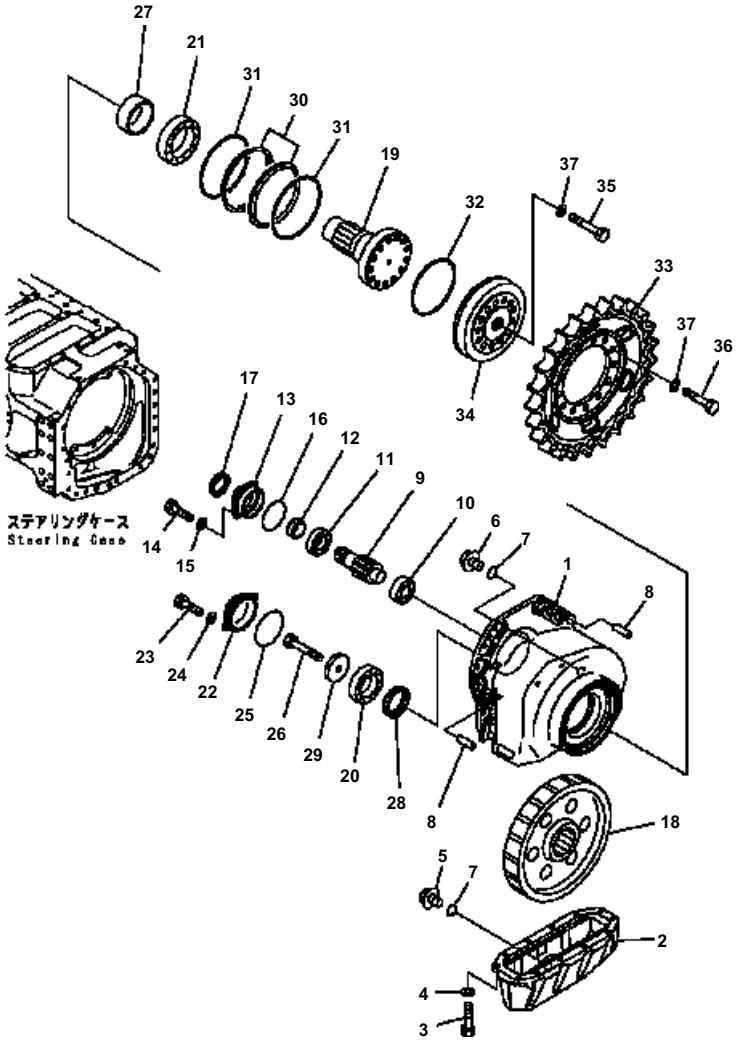

D41E6T S/N B35001-UP

FINAL DRIVE (L.H)

Item	Part No.	Description	Qty	Options
	12G-27-00030	FINAL DRIVE ASS'Y	1	SN:B35001--
1	124-27-51115	· CASE	1	SN:B35001--
2	124-27-51134	· COVER	1	SN:B35001--
3	01010-81645	· BOLT	12	SN:B35001--
4	01643-31645	· WASHER	12	SN:B35001--
5	07044-13620	· PLUG	1	SN:B35001--
6	07041-13612	· PLUG	1	SN:B35001--
7	07002-03634	· O-RING	2	SN:B35001--
8	04020-01638	· PIN	2	SN:B35001--
9	124-27-51212	· PINION	1	SN:B35001--
10	124-27-51412	· BEARING	1	SN:B35001--
11	124-27-51420	· BEARING	1	SN:B35001--
12	124-27-51241	· SPACER	1	SN:B35001--
13	124-27-51162	· CAGE	1	SN:B35001--
14	01010-81025	· BOLT	4	SN:B35001--
15	01643-31032	· WASHER	4	SN:B35001--
16	07000-72125	· O-RING	1	SN:B35001--
17	07013-50075	· SEAL	1	SN:B35001--
18	124-27-51221	· GEAR	1	SN:B35001--
19	124-27-51232	· SHAFT	1	SN:B35001--
20	124-27-51431	· BEARING	1	SN:B35001--
21	124-27-51441	· BEARING	1	SN:B35001--
22	124-27-51172	· COVER	1	SN:B35001--
23	01010-81030	· BOLT	2	SN:B35001--
24	01643-31232	· WASHER	2	SN:B35001--
25	195-30-36190	· O-RING	1	SN:B35001--
26	01011-82400	· BOLT	1	SN:B35001--
27	124-27-51250	· SPACER	1	SN:B35001--
28	124-27-51261	· SPACER	1	SN:B35001--
29	124-27-51290	· WASHER	1	SN:B35001--
	14X-27-00100	· FLOATING SEAL ASS'Y	1	SN:B35001--
	14X-27-00110	· · SEAL ASS'Y	1	SN:B35001--
30	(☆14X-27-11810)	· · · SEAL	2	SN:B35001--
	14X-27-00120	· · O-RING ASS'Y	1	SN:B35001--
31	(☆502-33-91110)	· · · O-RING	2	SN:B35001--
32	708-18-12140	· O-RING	1	SN:B35001--
33	12G-27-52350	· SPROCKET	1	SN:B35001--
34	124-27-51193	· HUB	1	SN:B35001--
35	01010-82470	· BOLT	1	SN:B35001--
36	01010-82490	· BOLT	13	SN:B35001--
37	01643-32460	· WASHER	14	SN:B35001--

Ref. F2380-01A0 Page 150380

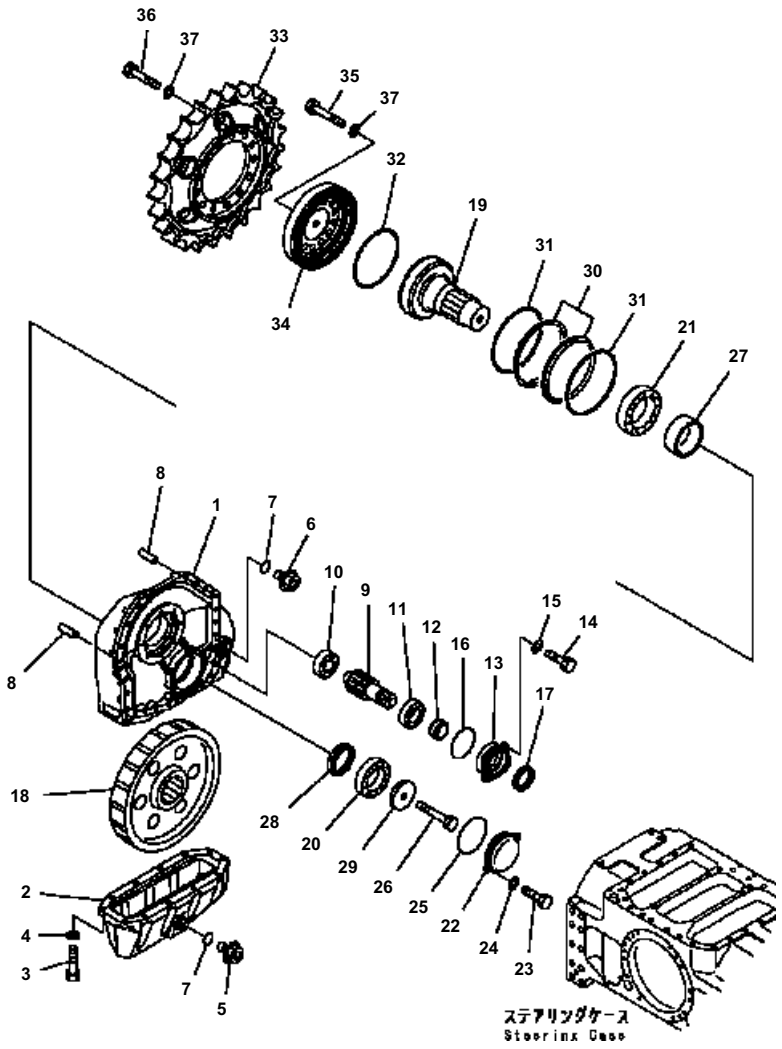

D41E6T S/N B35001-UP

FINAL DRIVE (R.H)

Item	Part No.	Description	Qty	Options
	12G-27-00040	FINAL DRIVE ASS'Y	1	SN:B35001--
1	124-27-51125	· CASE	1	SN:B35001--
2	124-27-51522	· COVER	1	SN:B35001--
3	01010-81645	· BOLT	10	SN:B35001--
4	01643-31645	· WASHER	10	SN:B35001--
5	07044-13620	· PLUG	1	SN:B35001--
6	07041-13612	· PLUG	1	SN:B35001--
7	07002-03634	· O-RING	2	SN:B35001--
8	04020-01638	· PIN	2	SN:B35001--
9	124-27-51212	· PINION	1	SN:B35001--
10	124-27-51412	· BEARING	1	SN:B35001--
11	124-27-51420	· BEARING	1	SN:B35001--
12	124-27-51241	· SPACER	1	SN:B35001--
13	124-27-51162	· CAGE	1	SN:B35001--
14	01010-81025	· BOLT	4	SN:B35001--
15	01643-31032	· WASHER	4	SN:B35001--
16	07000-72125	· O-RING	1	SN:B35001--
17	07013-50075	· SEAL	1	SN:B35001--
18	124-27-51221	· GEAR	1	SN:B35001--
19	124-27-51232	· SHAFT	1	SN:B35001--
20	124-27-51431	· BEARING	1	SN:B35001--
21	124-27-51441	· BEARING	1	SN:B35001--
22	124-27-51172	· COVER	1	SN:B35001--
23	01010-81030	· BOLT	2	SN:B35001--
24	01643-31232	· WASHER	2	SN:B35001--
25	195-30-36190	· O-RING	1	SN:B35001--
26	01011-82400	· BOLT	1	SN:B35001--
27	124-27-51250	· SPACER	1	SN:B35001--
28	124-27-51261	· SPACER	1	SN:B35001--
29	124-27-51290	· WASHER	1	SN:B35001--
	14X-27-00100	· FLOATING SEAL ASS'Y	1	SN:B35001--
	14X-27-00110	· · SEAL ASS'Y	1	SN:B35001--
30	14X-27-11810	· · · SEAL	2	SN:B35001--
	14X-27-00120	· · O-RING ASS'Y	1	SN:B35001--
31	502-33-91110	· · · O-RING	2	SN:B35001--
32	708-18-12140	· O-RING	1	SN:B35001--
33	12G-27-52350	· SPROCKET	1	SN:B35001--
34	124-27-51193	· HUB	1	SN:B35001--
35	01010-82470	· BOLT	1	SN:B35001--
36	01010-82490	BOLT	13	SN:B35001--
37	01643-32460	WASHER	14	SN:B35001--

Ref. F2380-02A0 Page 150390

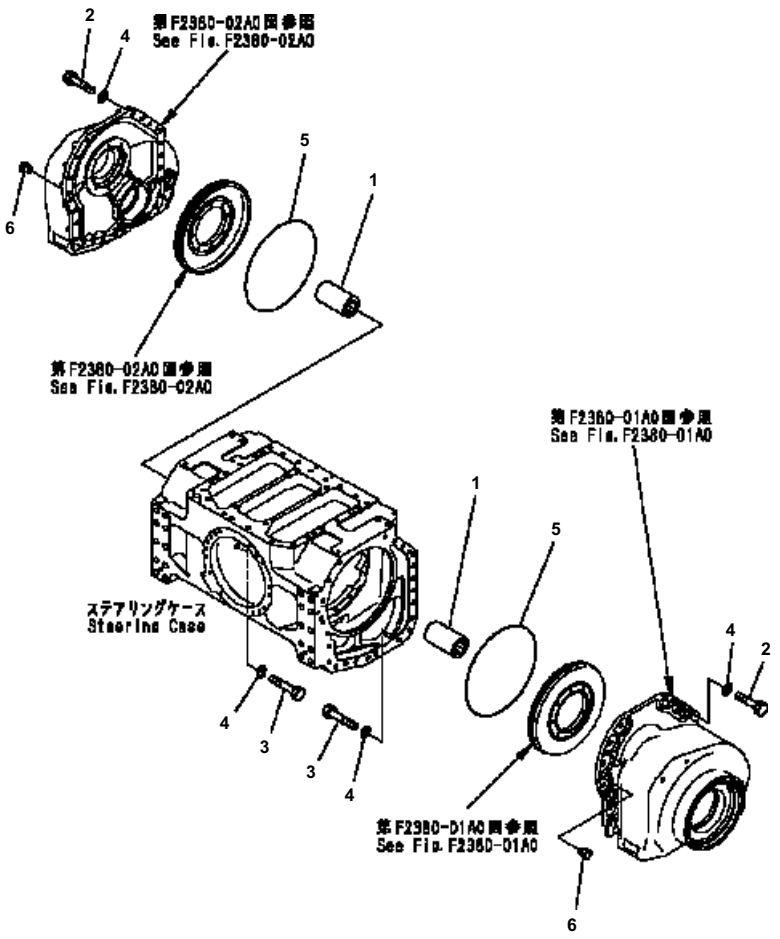

D41E6T S/N B35001-UP

FINAL DRIVE (MOUNT)

Item	Part No.	Description	Qty	Options
1	124-27-51321	BOSS	2	SN:B35001--
2	01010-81645	BOLT	40	SN:B35001--
3	01010-81645	BOLT	6	SN:B35001--
4	01643-31645	WASHER	46	SN:B35001--
5	07000-15405	O-RING	2	SN:B35001--
6	07049-01620	PLUG	8	SN:B35001--

Ref. F2380-03A0 Page 150400

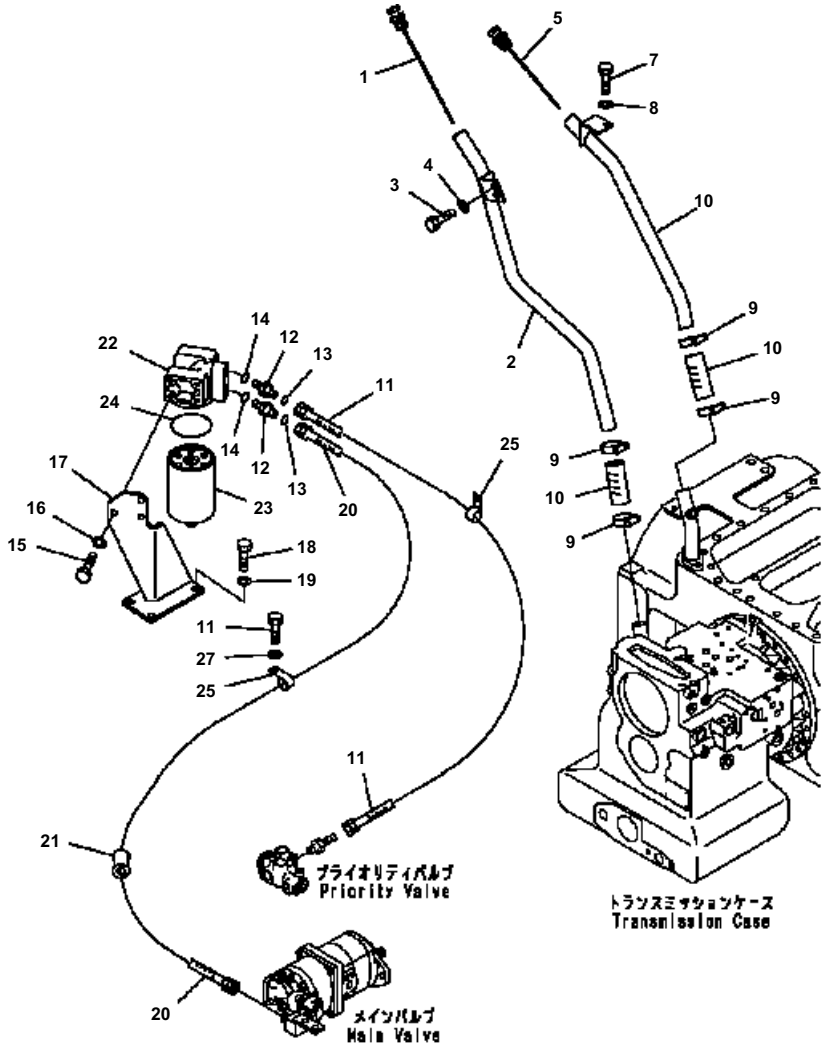

D41E6T S/N B35001-UP

POWER LINE OIL LINE (FILTER AND OIL GAUGE)

Item	Part No.	Description	Qty	Options
1	124-49-61170	GAUGE	1	SN:B35001--
2	124-49-61580	FILLER	1	SN:B35001--
3	01010-81225	BOLT	2	SN:B35001--
4	01643-31232	WASHER	2	SN:B35001--
5	124-49-61211	GAUGE	1	SN:B35001--
6	124-49-61220	FILLER	1	SN:B35001--
7	01010-81025	BOLT	1	SN:B35001--
8	01643-31032	WASHER	1	SN:B35001--
9	07289-00045	CLAMP	4	SN:B35001--
10	07260-23211	HOSE	2	SN:B35001--
11	02762-00510	HOSE	1	SN:B35001--
12	02781-00522	UNION	2	SN:B35001--
13	02896-11015	O-RING	2	SN:B35001--
14	07002-32434	O-RING	2	SN:B35001--
15	01010-81030	BOLT	3	SN:B35001--
16	01643-31032	WASHER	3	SN:B35001--
17	124-49-51142	BRACKET	1	SN:B35001--
18	01010-81225	BOLT	4	SN:B35001--
19	01643-31232	WASHER	4	SN:B35001--
20	124-49-61161	HOSE ASS'Y	1	SN:B35001--
	08210-01804	・ SPIRAL TUBE	2	SN:B35001--
21	07095-20523	CUSHION	4	SN:B35001--
	23S-49-13103	FILTER ASS'Y	1	SN:B35001--
22	23S-49-13110	・ HEAD	1	SN:B35001--
23	23S-49-13122	・ CARTRIDGE	1	SN:B35001--
24	23S-49-13132	・・ O-RING	1	SN:B35001--
25	04434-52712	CLIP	2	SN:B35001--
26	01010-81220	BOLT	2	SN:B35001--
27	01643-31232	WASHER	2	SN:B35001--

Ref. F2730-01A0 Page 150410

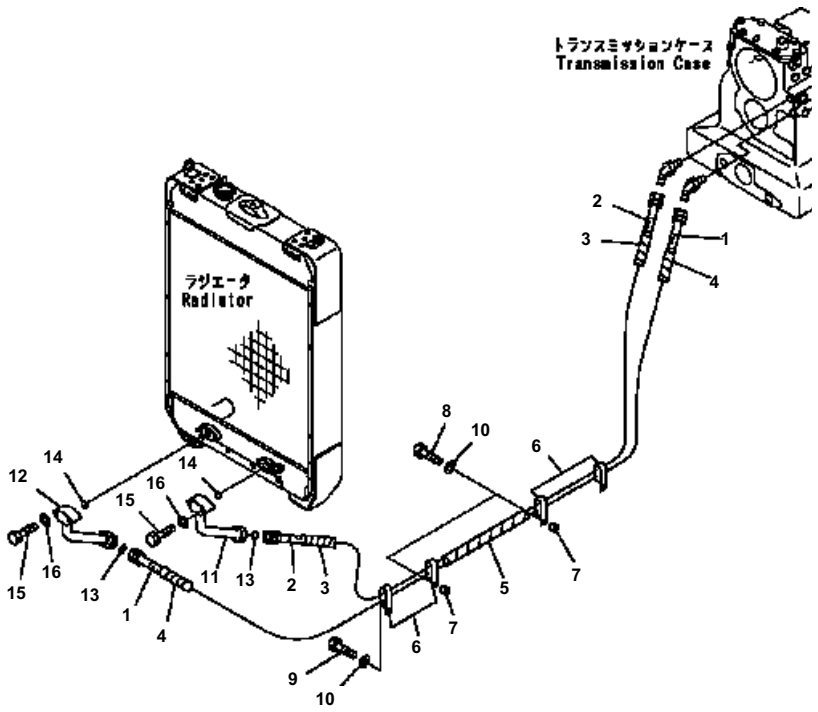

D41E6T S/N B35001-UP

POWER LINE OIL LINE (COOLING LINE)

Item	Part No.	Description	Qty	Options
1	02762-00419	HOSE	1	SN:B35001--
2	02762-00421	HOSE	1	SN:B35001--
3	08210-01820	SPIRAL TUBE	1	SN:B35001--
4	08210-01818	SPIRAL TUBE	1	SN:B35001--
5	08210-01804	SPIRAL TUBE	1	SN:B35001--
6	04435-52212	CLIP	4	SN:B35001--
7	421-03-11530	SPACER	2	SN:B35001--
8	01010-81235	BOLT	2	SN:B35001--
9	01010-81220	BOLT	2	SN:B35001--
10	01643-31232	WASHER	4	SN:B35001--
11	124-49-61611	TUBE{L.H.}	1	SN:B35001--
12	124-49-61621	TUBE{R.H.}	1	SN:B35001--
13	02896-11012	O-RING	2	SN:B35001--
14	07000-73025	O-RING	2	SN:B35001--
15	01010-81055	BOLT	4	SN:B35001--
16	01643-31032	WASHER	4	SN:B35001--

Ref. F2730-02A0 Page 150420

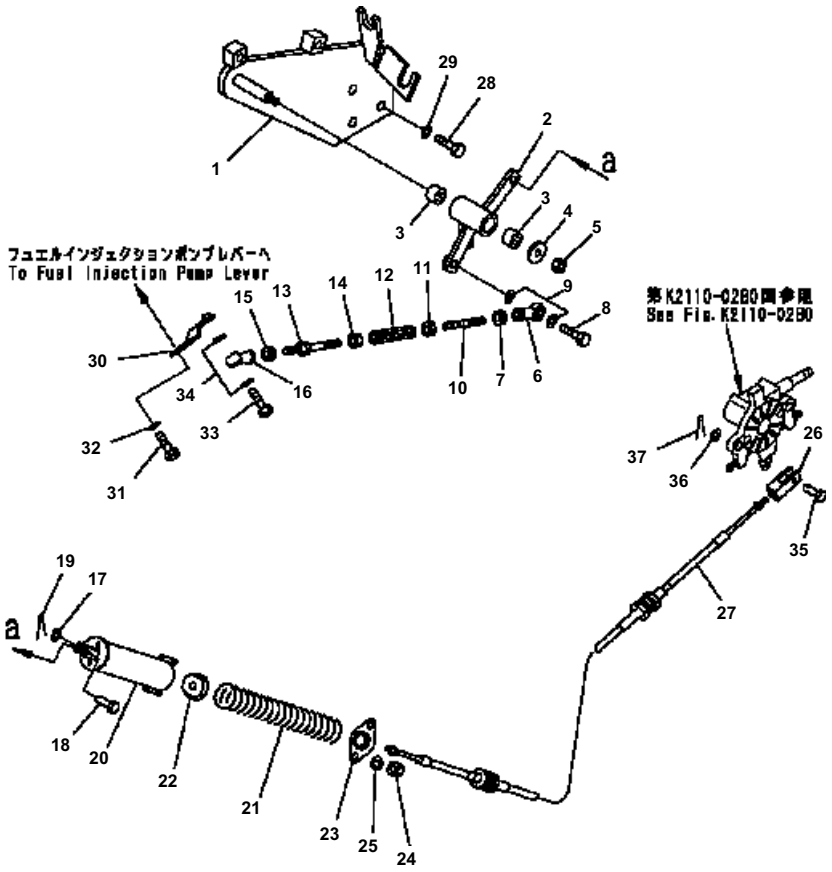

D41E6T S/N B35001-UP

TRAVEL CONTROL

Item	Part No.	Description	Qty	Options
1	124-43-61810	BRACKET	1	SN:B35001--
2	124-43-61721	LEVER	1	SN:B35001--
3	06123-01414	BEARING	2	SN:B35001--
4	113-43-23230	WASHER	1	SN:B35001--
5	01598-00809	NUT	1	SN:B35001--
6	04250-80847	END	1	SN:B35001--
7	01580-10806	NUT	1	SN:B35001--
8	01010-80830	BOLT	1	SN:B35001--
9	04254-10823	SPACER	2	SN:B35001--
10	04245-40807	ROD	1	SN:B35001--
11	01580-10806	NUT	1	SN:B35001--
12	131-43-58210	JOINT	1	SN:B35001--
13	04248-30807	ROD	1	SN:B35001--
14	01508-40805	NUT	1	SN:B35001--
15	01580-10806	NUT	1	SN:B35001--
16	04250-80847	END	1	SN:B35001--
17	01641-20608	WASHER	1	SN:B35001--
18	04205-10622	PIN	1	SN:B35001--
19	04050-11612	PIN	1	SN:B35001--
20	14X-43-13330	COUPLING	1	SN:B35001--
21	135-43-15821	SPRING	1	SN:B35001--
22	134-43-68240	NUT	1	SN:B35001--
23	134-43-68270	PLATE	1	SN:B35001--
24	01598-00608	NUT	2	SN:B35001--
25	01640-20610	WASHER	2	SN:B35001--
26	10S-43-16251	END	1	SN:B35001--
27	124-43-61330	CABLE	1	SN:B35001--
28	01010-81025	BOLT	3	SN:B35001--
29	01643-31032	WASHER	3	SN:B35001--
30	124-43-51710	LEVER	1	SN:B35001--
31	01010-80616	BOLT	2	SN:B35001--
32	01643-30623	WASHER	2	SN:B35001--
33	01010-80830	BOLT	1	SN:B35001--
34	04254-10823	SPACER	2	SN:B35001--
35	04205-10522	PIN	1	SN:B35001--
36	01643-30623	WASHER	1	SN:B35001--
37	04050-11210	PIN	1	SN:B35001--

Ref. F2820-01A0 Page 150430

HYDRAULIC SYSTEM

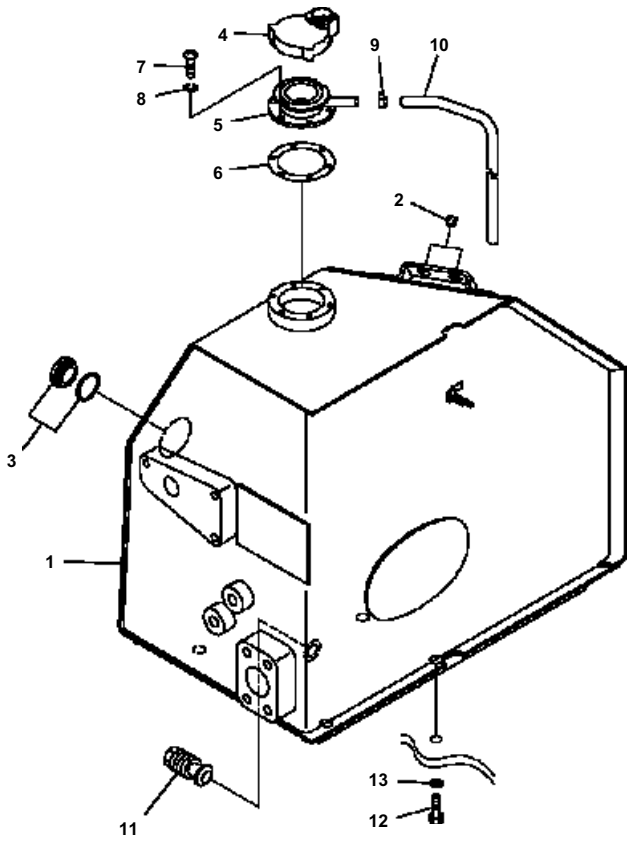

D41E6T S/N B35001-UP

HYDRAULIC TANK

Item	Part No.	Description	Qty	Options
1	124-60-61211	TANK{HYDRAULIC}	1	SN:B35001--
2	07049-01215	PLUG	2	SN:B35001--
3	20N-60-11142	GAUGE	1	SN:B35001--
	20N-60-11181	GASKET	1	SN:B35001--
4	14X-60-11130	CAP	1	SN:B35001--
5	20Y-60-21470	ELEMENT	1	SN:B35001--
	201-60-12171	FILLER	1	SN:B35001--
	205-60-51470	NECK	1	SN:B35001--
6	20Y-60-21340	GASKET	1	SN:B35001--
7	01252-70514	BOLT	6	SN:B35001--
8	01601-20513	WASHER	6	SN:B35001--
9	07285-00095	CLIP	1	SN:B35001--
10	07270-00890	TUBE	1	SN:B35001--
11	124-60-51150	PLUG	1	SN:B35001--
12	01010-81645	BOLT	4	SN:B35001--
13	01643-31645	WASHER	4	SN:B35001--

Ref. H0100-01A0 Page 180010

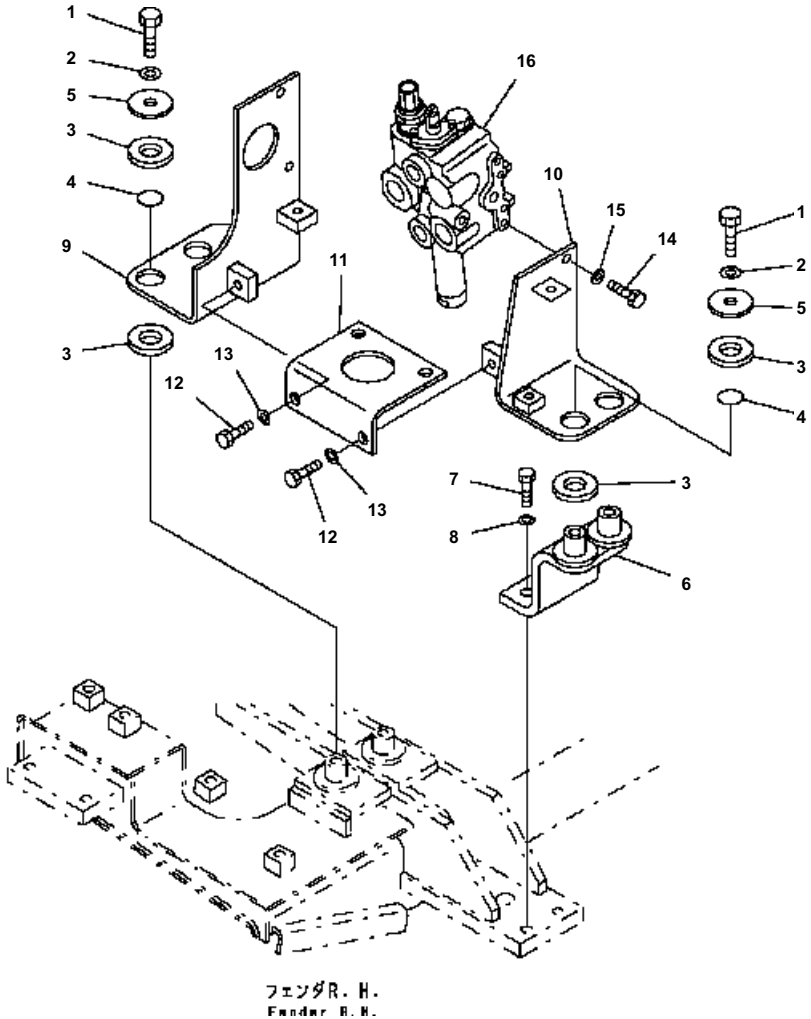

D41E6T S/N B35001-UP

CONTROL VALVE (1-SPOOL) (MOUNT)

Item	Part No.	Description	Qty	Options
1	01010-81225	BOLT	4	SN:B35001--
2	01643-31232	WASHER	4	SN:B35001--
3	14X-60-12120	CUSHION	8	SN:B35001--
4	07000-03025	O-RING	4	SN:B35001--
5	566-35-42430	PLATE	4	SN:B35001--
6	124-60-51121	BRACKET	1	SN:B35001--
7	01010-81235	BOLT	2	SN:B35001--
8	01643-31232	WASHER	2	SN:B35001--
9	126-60-51211	BRACKET{R.H.}	1	SN:B35001--
10	126-60-51221	BRACKET{L.H.}	1	SN:B35001--
11	126-60-51230	PLATE	1	SN:B35001--
12	01010-81225	BOLT	4	SN:B35001--
13	01643-31232	WASHER	4	SN:B35001--
14	01010-81025	BOLT	3	SN:B35001--
15	01602-21030	WASHER{SPRING}	3	SN:B35001--
16	709-81-11102	CONTROL VALVE	1	SN:B35001--

Ref. H0120-01A0 Page 180020

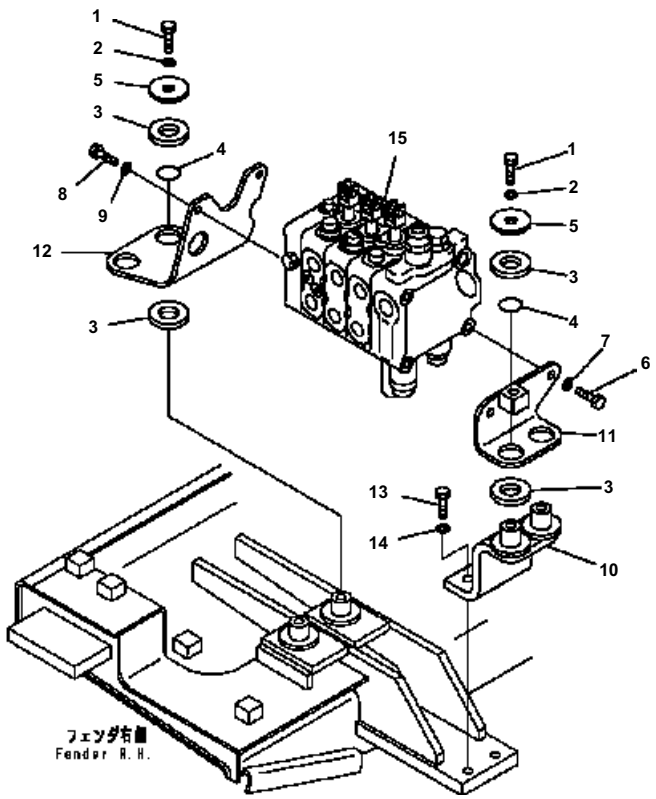

D41E6T S/N B35001-UP

CONTROL VALVE (3-SPOOL) (MOUNT)

Item	Part No.	Description	Qty	Options
1	01010-81225	BOLT	4	SN:B35001--
2	01643-31232	WASHER	4	SN:B35001--
3	14X-60-12120	CUSHION	8	SN:B35001--
4	07000-03025	O-RING	4	SN:B35001--
5	566-35-42430	PLATE	4	SN:B35001--
6	01010-81020	BOLT	2	SN:B35001--
7	01643-31032	WASHER	2	SN:B35001--
8	01010-80820	BOLT	2	SN:B35001--
9	01643-30823	WASHER	2	SN:B35001--
10	124-60-51121	BRACKET	1	SN:B35001--
11	124-60-51131	BRACKET	1	SN:B35001--
12	124-60-51142	BRACKET	1	SN:B35001--
13	01010-81235	BOLT	2	SN:B35001--
14	01643-31232	WASHER	2	SN:B35001--
15	723-23-10303	VALVE ASS'Y	1	SN:B35001--

Ref. H0120-01A1 Page 180030

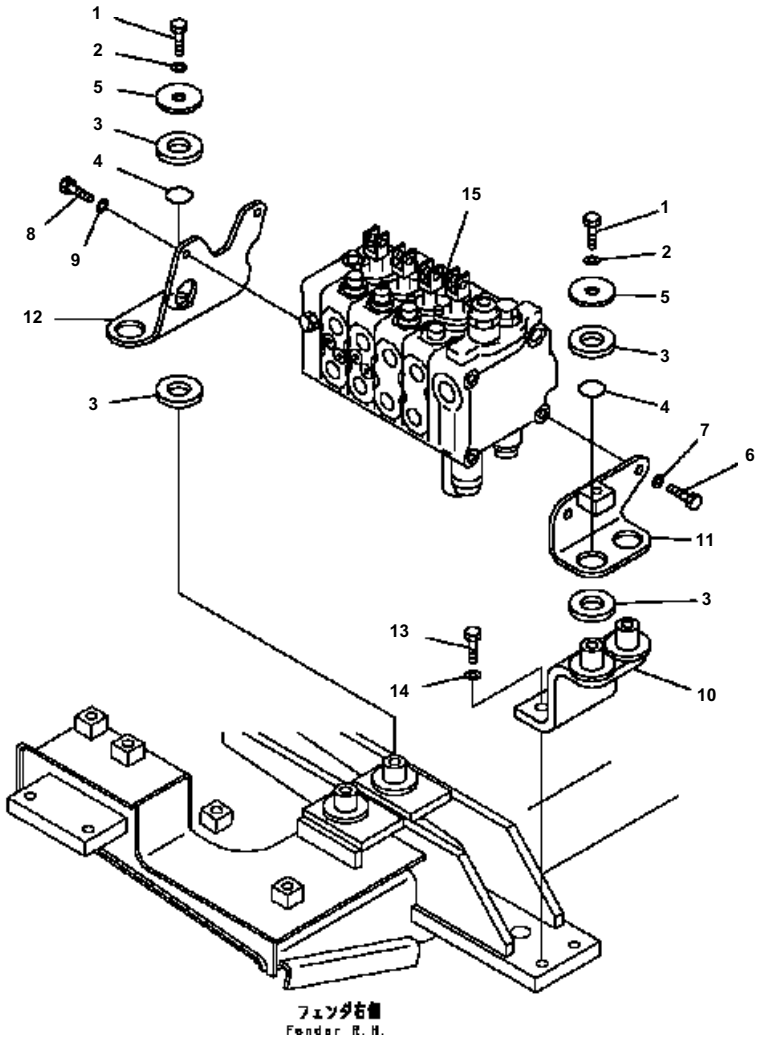

D41E6T S/N B35001-UP

CONTROL VALVE (4-SPOOL) (MOUNT)

Item	Part No.	Description	Qty	Options
1	01010-81225	BOLT	4	SN:B35001--
2	01643-31232	WASHER	4	SN:B35001--
3	14X-60-12120	CUSHION	8	SN:B35001--
4	07000-03025	O-RING	4	SN:B35001--
5	566-35-42430	PLATE	4	SN:B35001--
6	01010-81020	BOLT	2	SN:B35001--
7	01643-31032	WASHER	2	SN:B35001--
8	01010-80820	BOLT	2	SN:B35001--
9	01643-30823	WASHER	2	SN:B35001--
10	124-60-51121	BRACKET	1	SN:B35001--
11	124-60-51131	BRACKET	1	SN:B35001--
12	124-60-51180	BRACKET	1	SN:B35001--
13	01010-81235	BOLT	2	SN:B35001--
14	01643-31232	WASHER	2	SN:B35001--
15	723-24-10203	VALVE ASS'Y	1	SN:B35001--

Ref. H0120-01A2 Page 180040

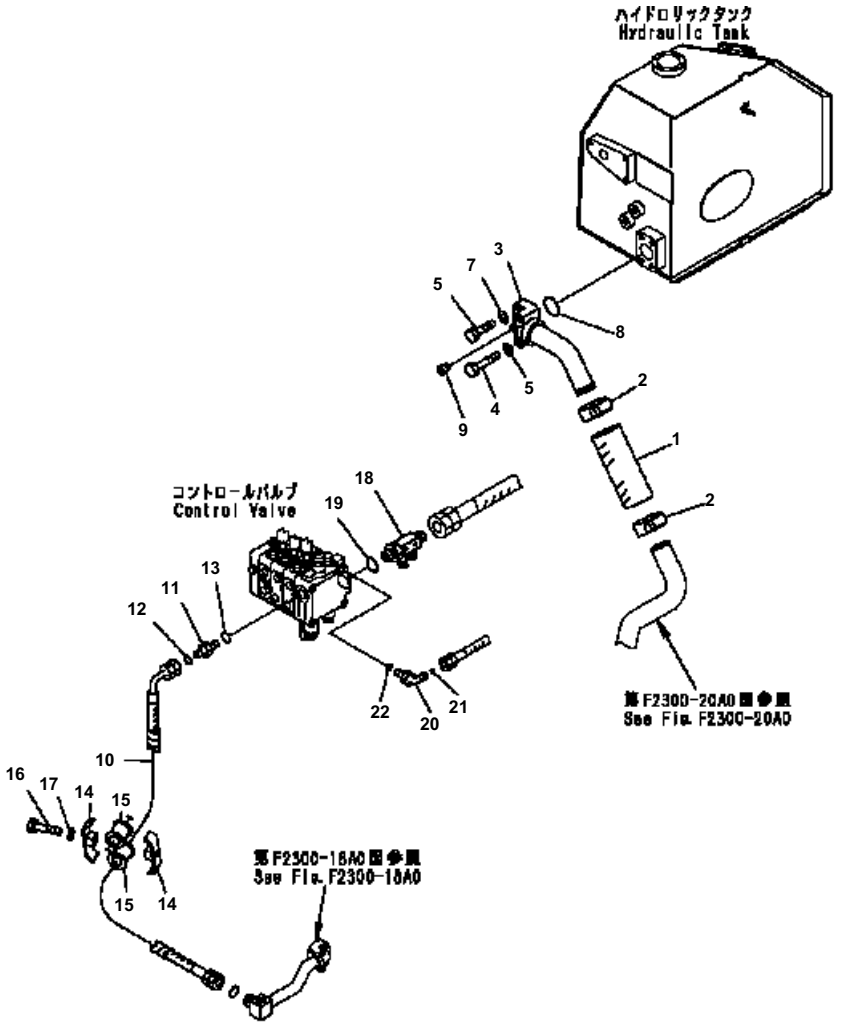

D41E6T S/N B35001-UP

HYDRAULIC PUMP LINE (SUCTION AND VALVE LINE) (FOR PAT DOZER)

Item	Part No.	Description	Qty	Options
1	07260-04713	HOSE	1	SN:B35001--
2	07289-00055	CLAMP	2	SN:B35001--
3	124-62-61150	TUBE	1	SN:B35001--
4	01010-81275	BOLT	2	SN:B35001--
5	01643-31232	WASHER	2	SN:B35001--
6	01010-81245	BOLT	2	SN:B35001--
7	01643-31232	WASHER	2	SN:B35001--
8	07000-12045	O-RING	1	SN:B35001--
9	07043-70108	PLUG	1	SN:B35001--
10	124-62-62170	HOSE ASS'Y	1	SN:B35001--
	08210-01804	・ SPIRAL TUBE	1	SN:B35001--
11	02781-00628	UNION	1	SN:B35001--
12	02896-11018	O-RING	1	SN:B35001--
13	07002-12434	O-RING	1	SN:B35001--
14	07094-30620	CLAMP	2	SN:B35001--
15	07095-00627	CUSHION	2	SN:B35001--
16	01010-81270	BOLT	1	SN:B35001--
17	01643-31232	WASHER	1	SN:B35001--
18	124-62-51752	ELBOW	1	SN:B35001--
19	07002-13334	O-RING	1	SN:B35001--
20	02782-10210	ELBOW	1	SN:B35001--
21	02896-11008	O-RING	1	SN:B35001--
22	07002-11423	O-RING	1	SN:B35001--

Ref. H0310-01A0 Page 180050

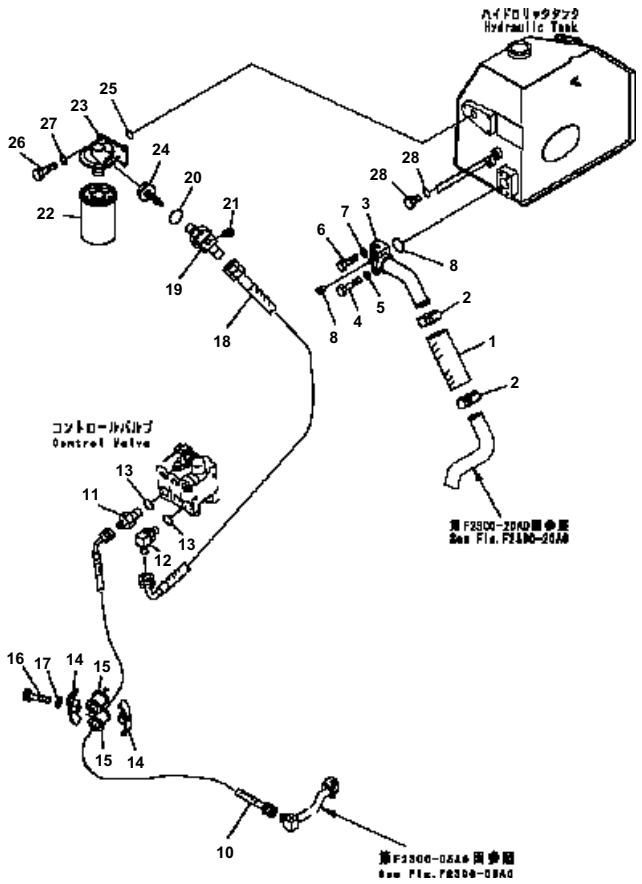

D41E6T S/N B35001-UP

HYDRAULIC PUMP LINE (FOR ANGLE DOZER)

Item	Part No.	Description	Qty	Options
1	07260-04713	HOSE	1	SN:B35001--
2	07289-00055	CLAMP	2	SN:B35001--
3	124-62-61150	TUBE	1	SN:B35001--
4	01010-81275	BOLT	2	SN:B35001--
5	01643-31232	WASHER	2	SN:B35001--
6	01010-81245	BOLT	2	SN:B35001--
7	01643-31232	WASHER	2	SN:B35001--
8	07000-12045	O-RING	1	SN:B35001--
9	07043-70108	PLUG	1	SN:B35001--
10	126-62-51250	HOSE	1	SN:B35001--
11	126-60-51250	NIPPLE	1	SN:B35001--
12	07235-11034	ELBOW	1	SN:B35001--
13	07002-13334	O-RING	2	SN:B35001--
14	07094-30620	CLAMP	2	SN:B35001--
15	07095-00627	CUSHION	2	SN:B35001--
16	01010-81270	BOLT	1	SN:B35001--
17	01643-31232	WASHER	1	SN:B35001--
18	126-60-51240	HOSE	1	SN:B35001--
19	07236-51034	ELBOW	1	SN:B35001--
20	07002-13334	O-RING	1	SN:B35001--
21	07042-70108	PLUG	1	SN:B35001--
22	113-60-43321	CARTRIDGE	1	SN:B35001--
23	113-60-43310	BASE	1	SN:B35001--
24	113-60-43330	VALVE	1	SN:B35001--
25	07000-13032	O-RING	1	SN:B35001--
26	01010-81025	BOLT	3	SN:B35001--
27	01643-31032	WASHER	3	SN:B35001--
28	07040-11409	PLUG	2	SN:B35001--
29	07002-11423	O-RING	2	SN:B35001--

Ref. H0310-01A1 Page 180060

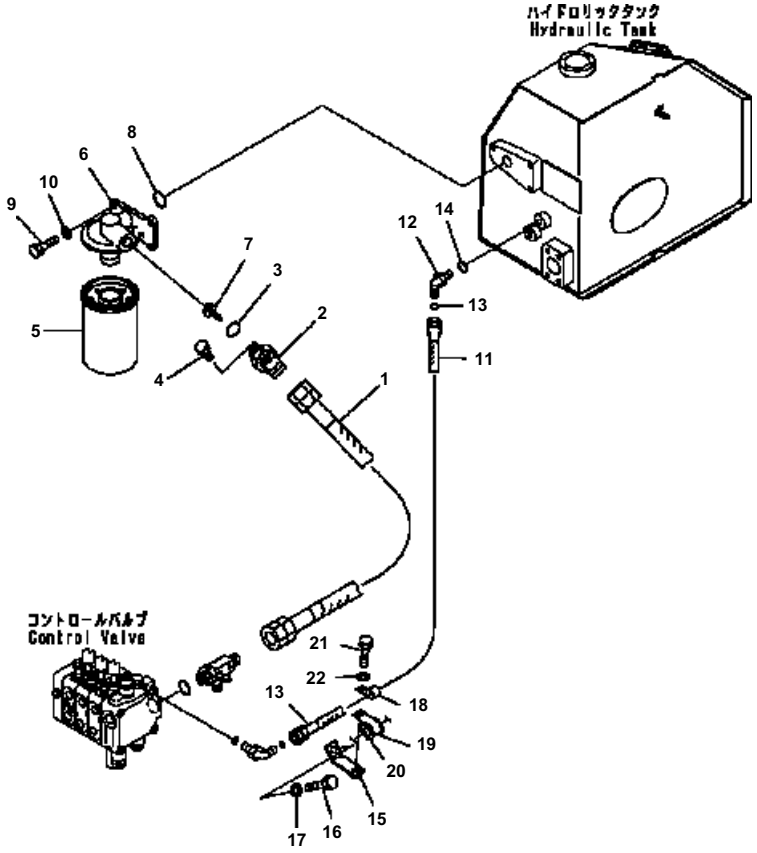

D41E6T S/N B35001-UP

HYDRAULIC PUMP LINE (RETURN LINE) (FOR PAT DOZER)

Item	Part No.	Description	Qty	Options
1	124-62-51810	HOSE	1	SN:B35001--
2	07236-51034	ELBOW	1	SN:B35001--
3	07002-13334	O-RING	1	SN:B35001--
4	07042-70108	PLUG	1	SN:B35001--
5	113-60-43321	CARTRIDGE	1	SN:B35001--
6	113-60-43310	BASE	1	SN:B35001--
7	113-60-43330	VALVE	1	SN:B35001--
8	07000-13032	O-RING	1	SN:B35001--
9	01010-81025	BOLT	3	SN:B35001--
10	01643-31032	WASHER	3	SN:B35001--
11	02762-002A6	HOSE	1	SN:B35001--
12	02783-10210	ELBOW	1	SN:B35001--
13	02896-11008	O-RING	1	SN:B35001--
14	07002-11423	O-RING	1	SN:B35001--
15	124-62-62191	BRACKET	1	SN:B35001--
16	01010-81225	BOLT	1	SN:B35001--
17	01643-31232	WASHER	1	SN:B35001--
18	04434-51212	CLIP	1	SN:B35001--
19	04434-53212	CLIP	1	SN:B35001--
20	07095-20522	CUSHION	1	SN:B35001--
21	01010-81225	BOLT	1	SN:B35001--
22	01643-31232	WASHER	1	SN:B35001--

Ref. H0310-02A0 Page 180070

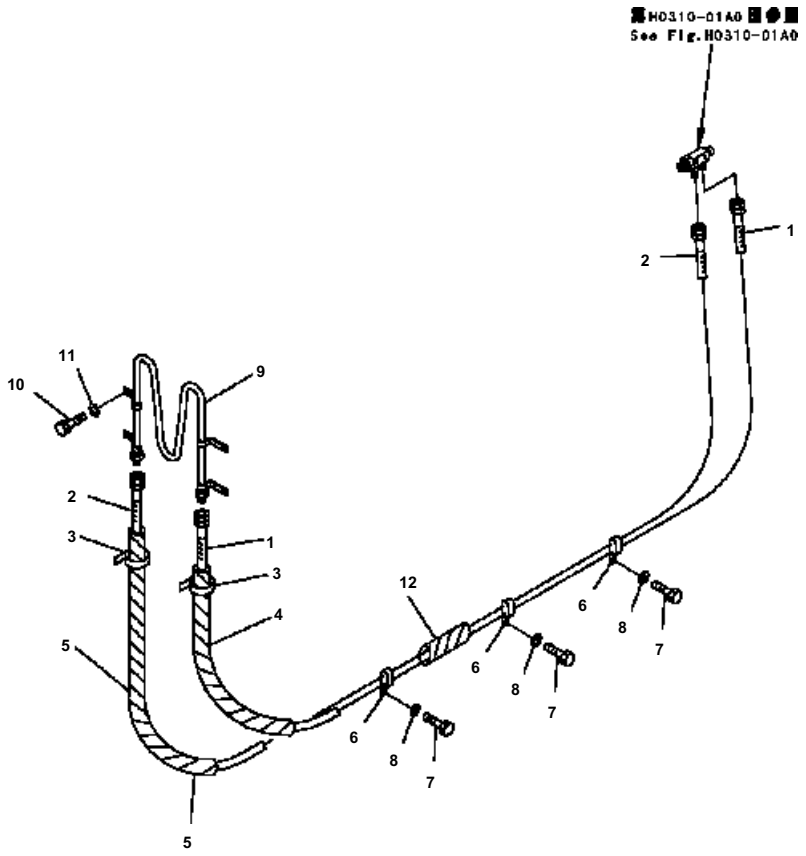

D41E6T S/N B35001-UP

HYDRAULIC PUMP LINE (OIL COOLER LINE)

Item	Part No.	Description	Qty	Options
1	124-62-51460	HOSE	1	SN:B35001--
2	07102-20533	HOSE	1	SN:B35001--
3	08034-20414	CLIP	2	SN:B35001--
4	08210-01830	SPIRAL	1	SN:B35001--
5	08210-01832	SPIRAL	1	SN:B35001--
6	144-A74-1460	CLIP	3	SN:B35001--
7	01010-81220	BOLT	3	SN:B35001--
8	01643-31232	WASHER	3	SN:B35001--
9	124-62-61491	OIL COOLER	1	SN:B35001--
10	01010-81025	BOLT	4	SN:B35001--
11	01643-31032	WASHER	4	SN:B35001--
12	08210-01808	SPIRAL	1	SN:B35001--

Ref. H0310-03A0 Page 180080

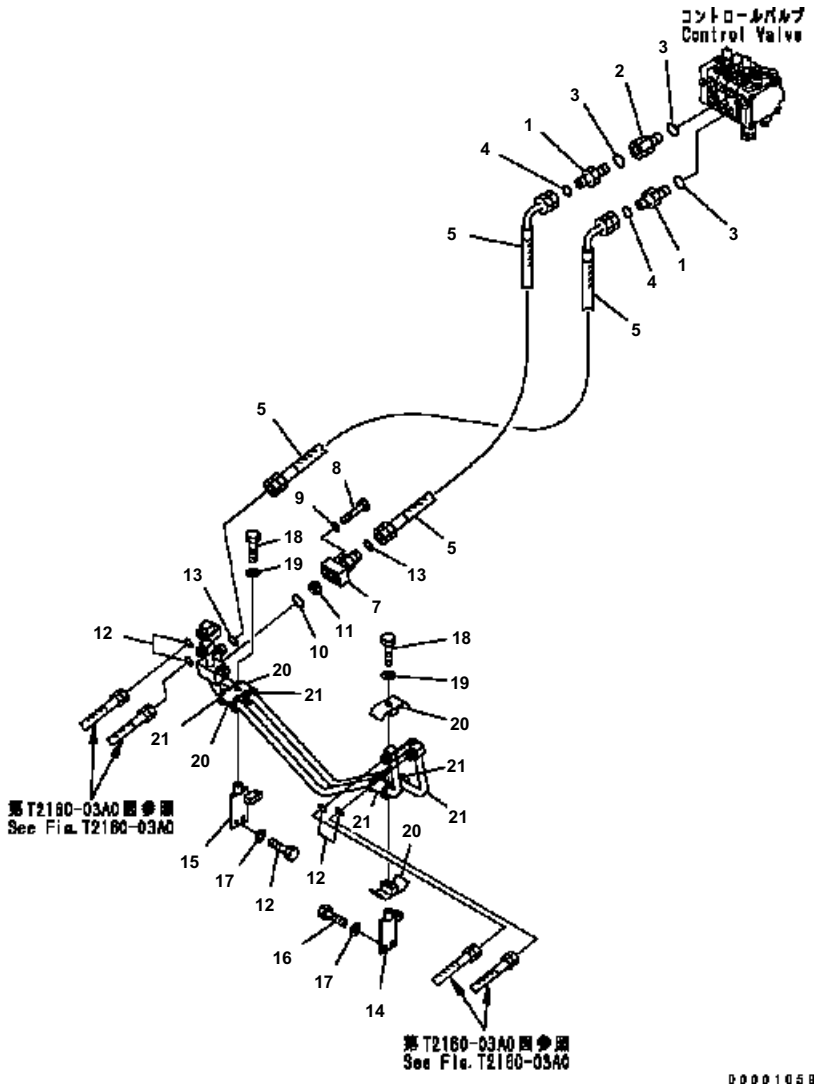

D41E6T S/N B35001-UP

LIFT CYLINDER LINE

Item	Part No.	Description	Qty	Options
1	02781-00628	UNION	2	SN:B35001--
2	201-62-71810	JOINT	1	SN:B35001--
3	07002-12434	O-RING	3	SN:B35001--
4	02896-11018	O-RING	2	SN:B35001--
5	02754-00606	O-RING	2	SN:B35001--
6	124-62-61290	TUBE	1	SN:B35001--
7	124-62-61340	TUBE	1	SN:B35001--
8	01010-80850	BOLT	4	SN:B35001--
9	01643-30823	WASHER	4	SN:B35001--
10	07000-13035	O-RING	1	SN:B35001--
11	12F-62-41180	VALVE	1	SN:B35001--
12	02896-11012	O-RING	4	SN:B35001--
13	02896-11018	O-RING	2	SN:B35001--
14	124-62-51263	BRACKET	1	SN:B35001--
15	124-62-51273	BRACKET	1	SN:B35001--
16	01010-81230	BOLT	4	SN:B35001--
17	01643-31232	WASHER	4	SN:B35001--
18	01010-81265	BOLT	2	SN:B35001--
19	01643-31232	WASHER	2	SN:B35001--
20	07094-30417	CLAMP	4	SN:B35001--
21	07095-00421	CUSHION	4	SN:B35001--

Ref. H2210-01A0 Page 180090

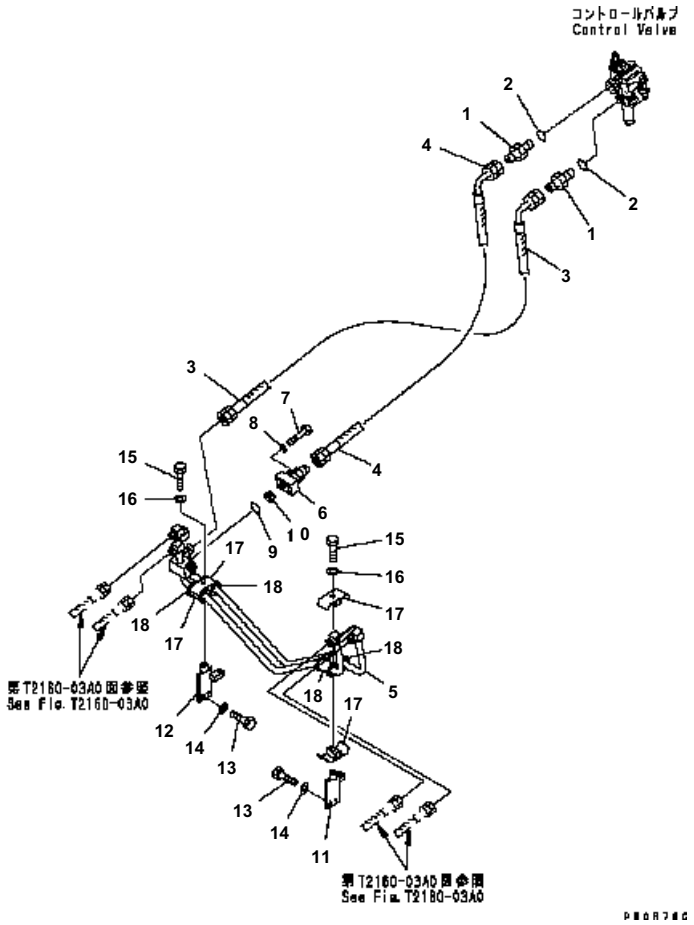

D41E6T S/N B35001-UP

HYDRAULIC PUMP LINE (OIL COOLER LINE) (FOR RIPPER)

Item	Part No.	Description	Qty	Options
1	07230-20628	UNION	2	SN:B35001--
2	07002-12434	O-RING	2	SN:B35001--
3	124-62-51321	HOSE	1	SN:B35001--
4	126-62-51260	HOSE	1	SN:B35001--
5	124-62-61281	TUBE	1	SN:B35001--
6	124-62-61360	TUBE	1	SN:B35001--
7	01010-80850	BOLT	4	SN:B35001--
8	01643-30823	WASHER	4	SN:B35001--
9	07000-13035	O-RING	1	SN:B35001--
10	12F-62-41180	VALVE	1	SN:B35001--
11	124-62-51263	BRACKET{L.H.}	1	SN:B35001--
12	124-62-51273	BRACKET{R.H.}	1	SN:B35001--
13	01010-81230	BOLT	4	SN:B35001--
14	01643-31232	WASHER	4	SN:B35001--
15	01010-81265	BOLT	2	SN:B35001--
16	01643-31232	WASHER	2	SN:B35001--
17	07094-30417	CLAMP	4	SN:B35001--
18	07095-00421	CUSHION	4	SN:B35001--

Ref. H2210-01A1 Page 180100

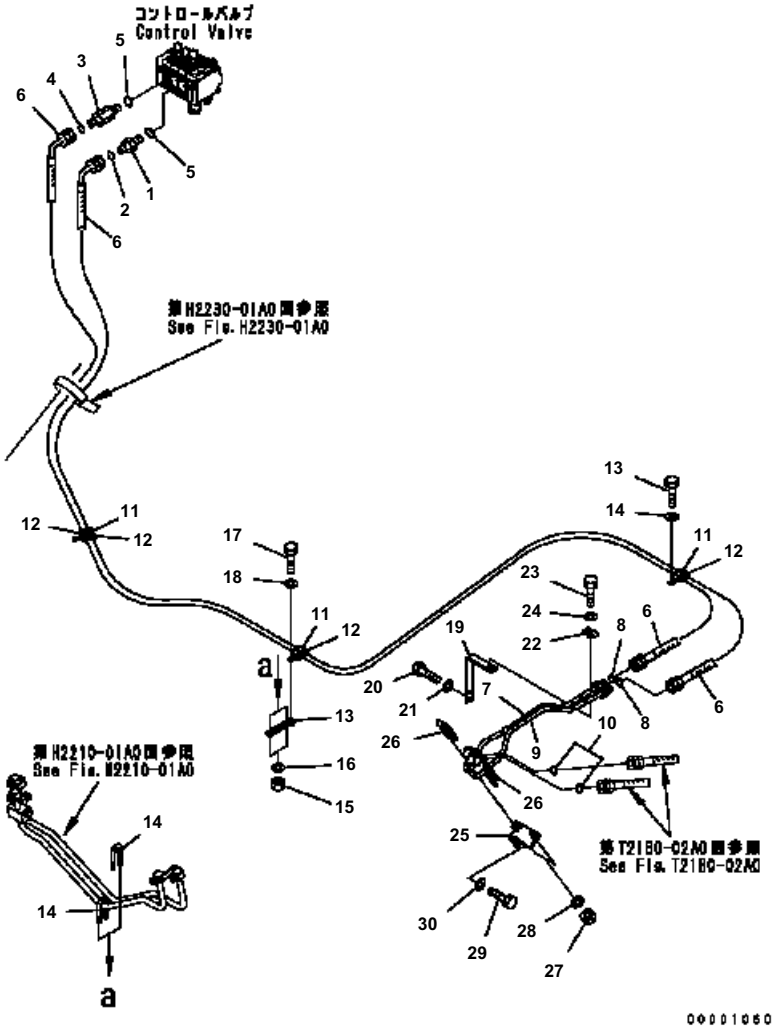

D41E6T S/N B35001-UP

TILT CYLINDER LINE

Item	Part No.	Description	Qty	Options
1	02781-00315	UNION	1	SN:B35001--
2	02896-11009	O-RING	1	SN:B35001--
3	124-62-61810	UNION	1	SN:B35001--
4	02896-11009	O-RING	1	SN:B35001--
5	07002-12034	O-RING	2	SN:B35001--
6	124-62-61350	HOSE	2	SN:B35001--
7	124-62-61380	TUBE	1	SN:B35001--
8	02896-11009	O-RING	2	SN:B35001--
9	124-62-61390	TUBE	1	SN:B35001--
10	02896-11009	O-RING	2	SN:B35001--
11	198-61-14180	CLIP	3	SN:B35001--
12	07095-20318	CUSHION	6	SN:B35001--
13	124-62-51760	PLATE	1	SN:B35001--
14	07283-22236	CLIP	2	SN:B35001--
15	01597-01009	NUT	4	SN:B35001--
16	01643-31032	WASHER	4	SN:B35001--
17	01010-81020	BOLT	3	SN:B35001--
18	01643-31032	WASHER	3	SN:B35001--
19	124-62-51771	BRACKET	1	SN:B35001--
20	01010-81025	BOLT	2	SN:B35001--
21	01643-31032	WASHER	2	SN:B35001--
22	124-62-51920	CLIP	1	SN:B35001--
23	01010-81245	BOLT	1	SN:B35001--
24	01643-31232	WASHER	1	SN:B35001--
25	124-62-62730	BRACKET{L.H.}	1	SN:B35001--
26	07283-21537	CLIP	2	SN:B35001--
27	01596-00807	NUT	4	SN:B35001--
28	01643-30823	WASHER	4	SN:B35001--
29	01010-81230	BOLT	2	SN:B35001--
30	01643-31232	WASHER	2	SN:B35001--

Ref. H2220-01A0 Page 180110

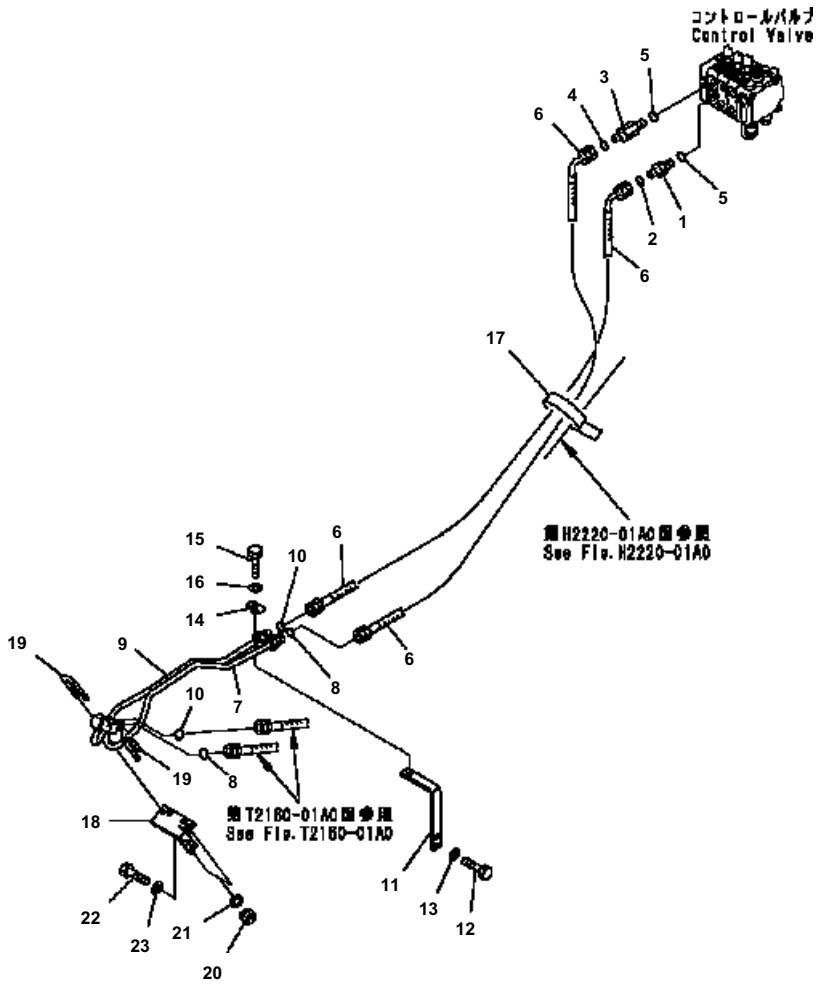

D41E6T S/N B35001-UP

ANGLE CYLINDER LINE

Item	Part No.	Description	Qty	Options
1	02781-00315	UNION	1	SN:B35001--
2	02896-11009	O-RING	1	SN:B35001--
3	124-62-61810	UNION	1	SN:B35001--
4	02896-11009	O-RING	1	SN:B35001--
5	07002-12034	O-RING	2	SN:B35001--
6	02754-00309	HOSE	2	SN:B35001--
7	124-62-61410	TUBE	1	SN:B35001--
8	02896-11009	O-RING	2	SN:B35001--
9	124-62-61420	TUBE	1	SN:B35001--
10	02896-11009	O-RING	2	SN:B35001--
11	124-62-51771	BRACKET	1	SN:B35001--
12	01010-81025	BOLT	2	SN:B35001--
13	01643-31032	WASHER	2	SN:B35001--
14	124-62-51920	CLIP	1	SN:B35001--
15	01010-81245	BOLT	1	SN:B35001--
16	01643-31232	WASHER	1	SN:B35001--
17	08034-00823	BAND	1	SN:B35001--
18	124-62-62740	PLATE	1	SN:B35001--
19	07283-21537	CLIP	2	SN:B35001--
20	01596-00807	NUT	4	SN:B35001--
21	01643-30823	WASHER	4	SN:B35001--
22	01010-81230	BOLT	2	SN:B35001--
23	01643-31232	WASHER	2	SN:B35001--

Ref. H2230-01A0 Page 180120

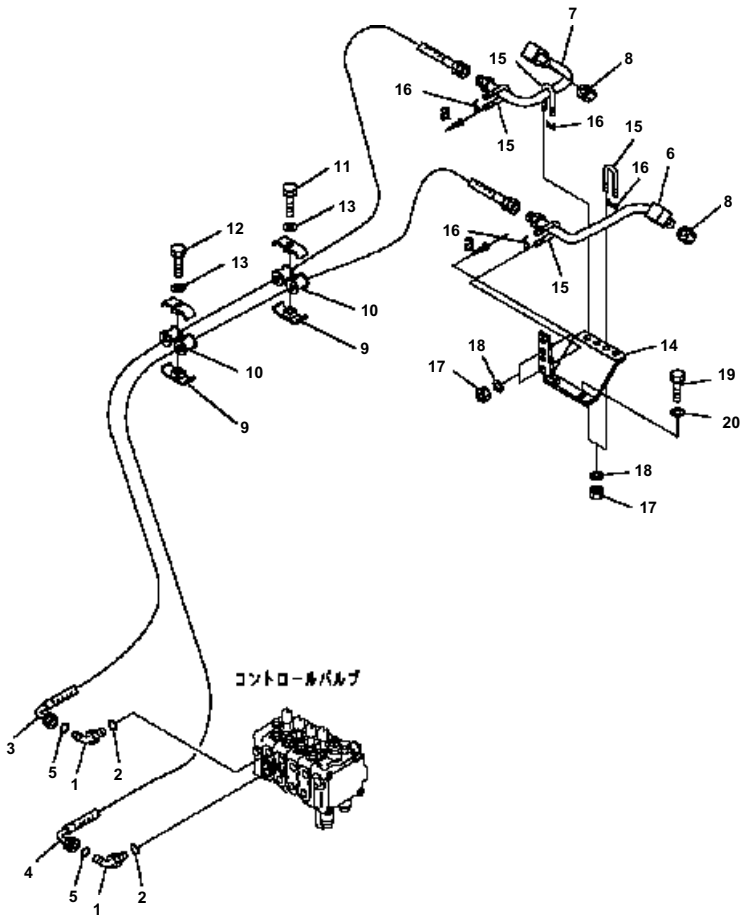

D41E6T S/N B35001-UP

REAR HYDRAULIC LINE (FOR RIPPER)

Item	Part No.	Description	Qty	Options
1	02782-10315	ELBOW	2	SN:B35001--
2	07002-12034	O-RING	2	SN:B35001--
3	124-78-62151	TUBE	1	SN:B35001--
4	124-78-62161	TUBE	1	SN:B35001--
5	02896-11009	O-RING	2	SN:B35001--
6	124-62-62381	HOSE	1	SN:B35001--
7	124-62-62390	HOSE	1	SN:B35001--
8	02789-00422	NUT	2	SN:B35001--
9	07094-30315	CLAMP	4	SN:B35001--
10	07095-00317	CUSHION	4	SN:B35001--
11	01010-81260	BOLT	1	SN:B35001--
12	01010-81270	BOLT	1	SN:B35001--
13	01643-31232	WASHER	2	SN:B35001--
14	124-78-62171	BRACKET	1	SN:B35001--
15	07283-31529	CLIP	4	SN:B35001--
16	07283-51523	SEAT	4	SN:B35001--
17	01596-00807	NUT	8	SN:B35001--
18	01643-30823	WASHER	8	SN:B35001--
19	01010-81230	BOLT	2	SN:B35001--
20	01643-31232	WASHER	2	SN:B35001--
21	02896-11009	O-RING	2	SN:B35083--
22	02896-11012	O-RING	2	SN:B35083--

Ref. H2250-01A0 Page 180130

MAIN FRAME AND RELATED PARTS

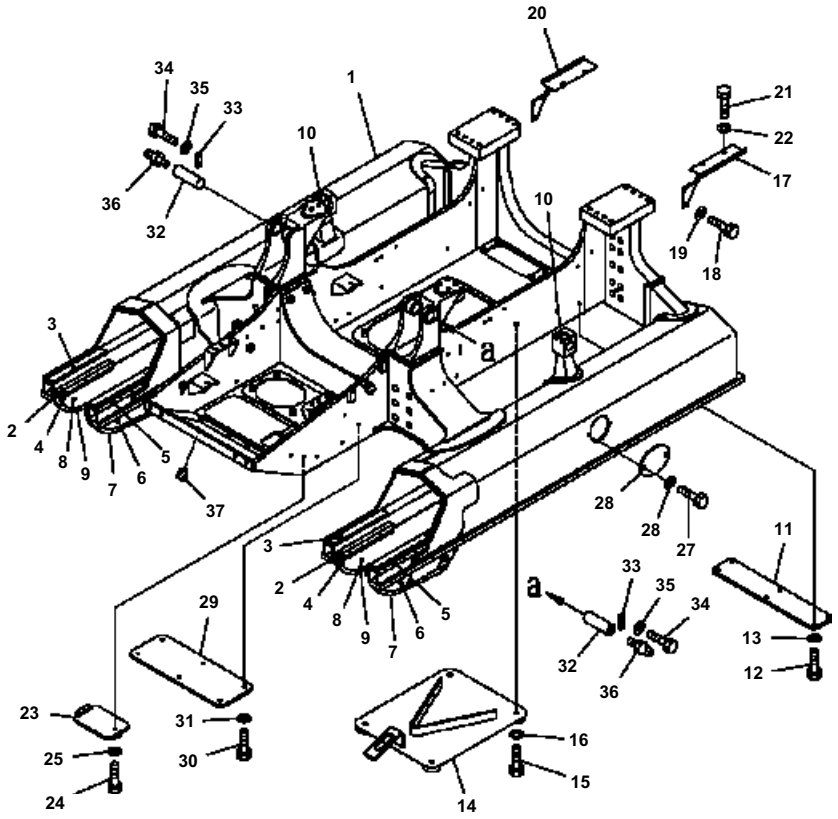

D41E6T S/N B35001-UP

MAIN FRAME (PAT DOZER)

Item	Part No.	Description	Qty	Options
1	124-21-64103	FRAME ASSY	1	SN:B35001--
2	12G-21-51G50	・PLATE	4	SN:B35001--
3	12G-21-51G60	・PLATE	4	SN:B35001--
4	12G-21-51G70	・PLATE	4	SN:B35001--
5	12G-21-51B41	・PLATE	4	SN:B35001--
6	12G-21-52131	・GUARD	2	SN:B35001--
7	12G-21-52B51	・・BAR	1	SN:B35001--
8	12G-21-52141	・GUARD	2	SN:B35001--
9	12G-21-52B51	・・BAR	1	SN:B35001--
10	12G-21-51171	・BRACKET	2	SN:B35001--
11	124-21-51311	PLATE	1	SN:B35001--
12	01010-81225	BOLT	6	SN:B35001--
13	01643-31232	WASHER	6	SN:B35001--
14	124-21-51323	COVER	1	SN:B35001--
15	01010-81635	BOLT	4	SN:B35001--
16	01643-31645	WASHER	4	SN:B35001--
17	124-21-51280	BRACKET	1	SN:B35001--
18	01010-81225	BOLT	2	SN:B35001--
19	01643-31232	WASHER	2	SN:B35001--
20	124-21-51290	BRACKET	1	SN:B35001--
21	01010-81225	BOLT	2	SN:B35001--
22	01643-31232	WASHER	2	SN:B35001--
23	124-21-51332	COVER	1	SN:B35001--
24	01010-81235	BOLT	1	SN:B35001--
25	01643-31232	WASHER	1	SN:B35001--
26	14Y-30-11277	COVER	2	SN:B35001--
27	01010-81235	BOLT	4	SN:B35001--
28	01643-31232	WASHER	4	SN:B35001--
29	124-21-51190	COVER	1	SN:B35001--
30	01010-81235	BOLT	6	SN:B35001--
31	01643-31232	WASHER	6	SN:B35001--
32	09241-5A140	PIN	2	SN:B35001--
33	04082-00212	LOCK	2	SN:B35001--
34	01010-81225	BOLT	4	SN:B35001--
35	01643-31232	WASHER	4	SN:B35001--
36	07020-00000	FITTING	2	SN:B35001--
37	07049-01620	PLUG	4	SN:B35001--

Ref. J2100-01A0 Page 210010

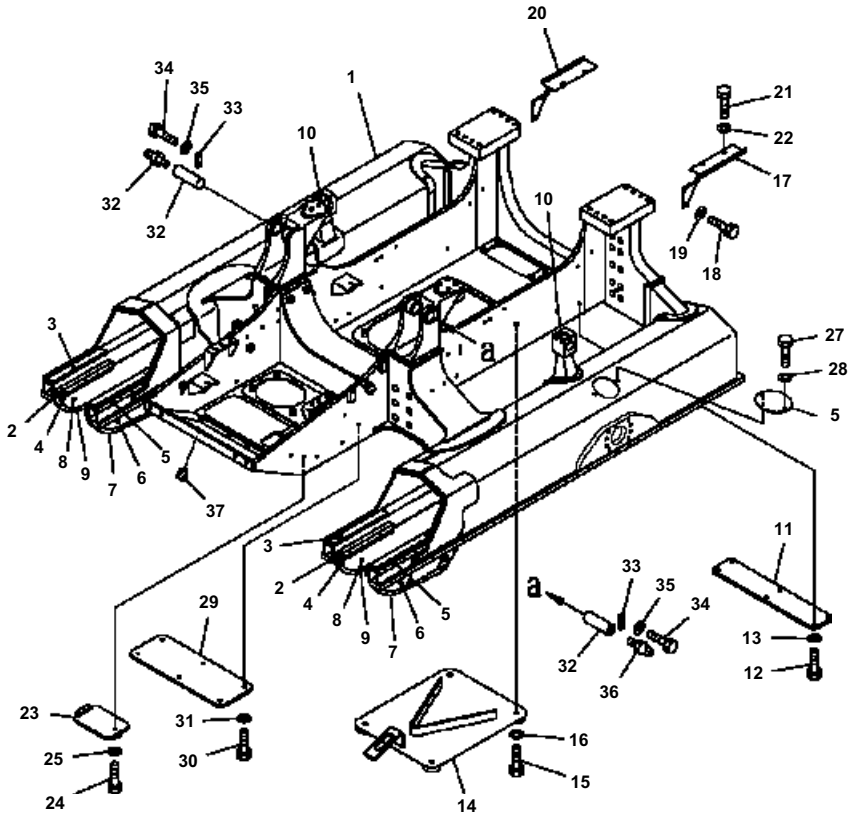

D41E6T S/N B35001-UP

MAIN FRAME (ANGLE DOZER)

Item	Part No.	Description	Qty	Options
1	124-21-63100	FRAME ASSY	1	SN:B35001--
2	12G-21-51G50	· PLATE	4	SN:B35001--
3	12G-21-51G60	· PLATE	4	SN:B35001--
4	12G-21-51G70	· PLATE	4	SN:B35001--
5	12G-21-51B41	· PLATE	4	SN:B35001--
6	12G-21-52131	· GUARD	2	SN:B35001--
7	12G-21-52B51	· · BAR	1	SN:B35001--
8	12G-21-52141	· GUARD	2	SN:B35001--
9	12G-21-52B51	· · BAR	1	SN:B35001--
10	12G-21-51171	· BRACKET	2	SN:B35001--
11	124-21-51311	PLATE	1	SN:B35001--
12	01010-81225	BOLT	6	SN:B35001--
13	01643-31232	WASHER	6	SN:B35001--
14	124-21-51323	COVER	1	SN:B35001--
15	01010-81635	BOLT	4	SN:B35001--
16	01643-31645	WASHER	4	SN:B35001--
17	124-21-51280	BRACKET	1	SN:B35001--
18	01010-81225	BOLT	2	SN:B35001--
19	01643-31232	WASHER	2	SN:B35001--
20	124-21-51290	BRACKET	1	SN:B35001--
21	01010-81225	BOLT	2	SN:B35001--
22	01643-31232	WASHER	2	SN:B35001--
23	124-21-51332	COVER	1	SN:B35001--
24	01010-81235	BOLT	1	SN:B35001--
25	01643-31232	WASHER	1	SN:B35001--
26	14Y-30-11277	COVER	2	SN:B35001--
27	01010-81235	BOLT	4	SN:B35001--
28	01643-31232	WASHER	4	SN:B35001--
29	124-21-51190	COVER	1	SN:B35001--
30	01010-81235	BOLT	6	SN:B35001--
31	01643-31232	WASHER	6	SN:B35001--
32	09241-5A140	PIN	2	SN:B35001--
33	04082-00212	LOCK	2	SN:B35001--
34	01010-81225	BOLT	4	SN:B35001--
35	01643-31232	WASHER	4	SN:B35001--
36	07020-00000	FITTING	2	SN:B35001--
37	07049-01620	PLUG	4	SN:B35001--

Ref. J2100-01A1 Page 210020

OPERATOR'S COMPARTMENT AND CONTROL SYSTEM

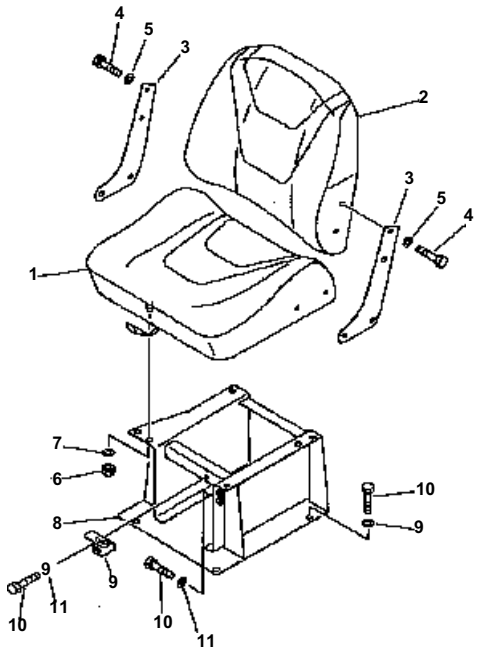

D41E6T S/N B35001-UP

OPERATOR´S SEAT (RIGID TYPE) (LEATHER SEAT)

Item	Part No.	Description	Qty	Options
1	114-57-41260	CUSHION	1	SN:B35001--
2	114-57-41271	CUSHION	1	SN:B35001--
3	114-57-41280	PLATE	2	SN:B35001--
4	01010-80825	BOLT	8	SN:B35001--
5	01643-30823	WASHER	8	SN:B35001--
6	01580-11210	NUT	4	SN:B35001--
7	01643-31232	WASHER	4	SN:B35001--
8	14X-57-11113	BRACKET	1	SN:B35001--
9	14X-57-11380	PLATE	1	SN:B35001--
10	01010-81230	BOLT	6	SN:B35001--
11	01643-31232	WASHER	6	SN:B35001--

Ref. K0110-01A0 Page 240010

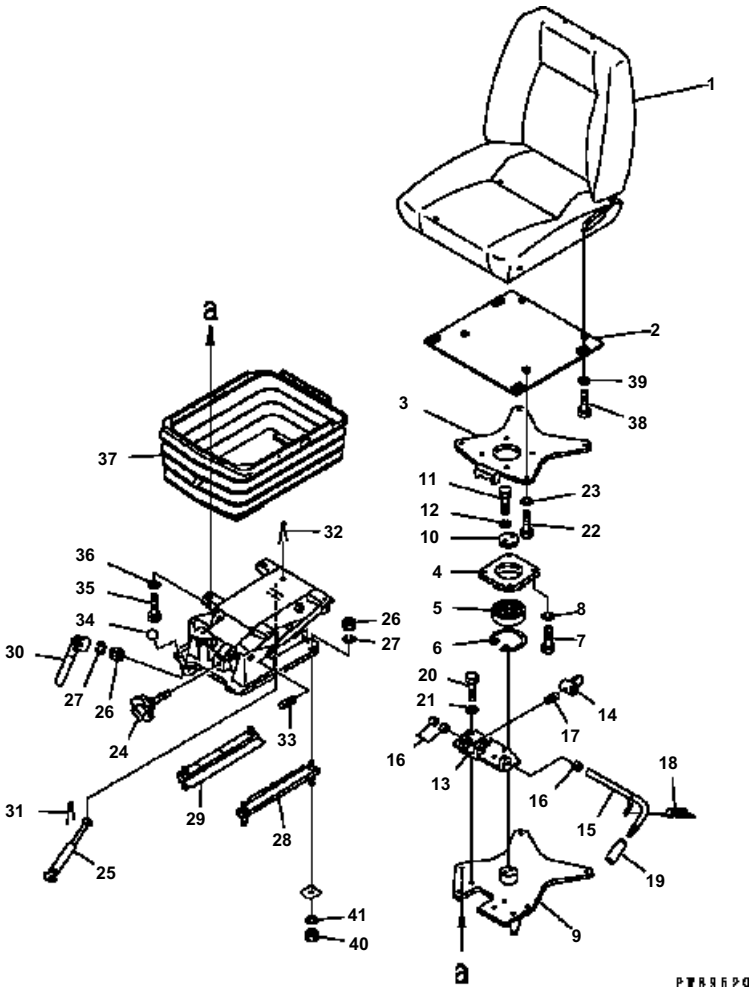

D41E6T S/N B35001-UP

OPERATOR´S SEAT (TURN AND RECLINING TYPE) (FABRIC SEAT)

Item	Part No.	Description	Qty	Options
	195-57-45501	SEAT ASS'Y	1	SN:B35001--
1	195-57-43510	· SEAT A.	1	SN:B35001--
2	195-57-41720	· BRACKET	1	SN:B35001--
	195-57-11100	· TURNING ASS'Y	1	SN:B35001--
3	195-57-11740	· · PLATE	1	SN:B35001--
4	195-57-11760	· · CAGE	1	SN:B35001--
5	06004-06210	· · BEARING	1	SN:B35001--
6	04065-09030	· · RING	1	SN:B35001--
7	01010-81025	· · BOLT	4	SN:B35001--
8	01602-21030	· · WASHER	4	SN:B35001--
9	195-57-11750	· · PLATE	1	SN:B35001--
10	04080-04508	· · HOLDER	1	SN:B35001--
11	01010-81025	· · BOLT	2	SN:B35001--
12	01602-21030	· · WASHER	2	SN:B35001--
13	195-57-11780	· · BRACKET	1	SN:B35001--
14	195-57-11770	· · LEVER	1	SN:B35001--
15	195-57-11790	· · LEVER	1	SN:B35001--
16	09350-01615	· · BUSHING	3	SN:B35001--
17	01322-40616	· · SCREW	1	SN:B35001--
18	154-44-12460	· · SPRING	1	SN:B35001--
19	09304-01240	· · KNOB	1	SN:B35001--
20	01010-81025	· · BOLT	5	SN:B35001--
21	01643-31032	· · WASHER	5	SN:B35001--
22	01010-81030	· BOLT	4	SN:B35001--
23	01602-21030	· WASHER	4	SN:B35001--
	195-57-21181	· SUSPENSION ASS'Y	1	SN:B35001--
24	155-57-12320	· · KNOB	1	SN:B35001--
25	155-57-12330	· · DAMPER	1	SN:B35001--
26	01580-11210	· · NUT	5	SN:B35001--
27	01602-31236	· · WASHER	5	SN:B35001--
28	195-57-21211	· · ADJUSTER	1	SN:B35001--
29	195-57-21221	· · ADJUSTER	1	SN:B35001--
30	195-57-21190	· · LEVER	1	SN:B35001--
31	04050-13015	· · PIN	2	SN:B35001--
32	04050-14025	· · PIN	2	SN:B35001--
33	04025-00432	· · PIN	7	SN:B35001--
34	09304-00835	· · KNOB	1	SN:B35001--
35	01010-81020	· BOLT	4	SN:B35001--
36	01602-21030	· WASHER	4	SN:B35001--
37	195-57-41760	· COVER	1	SN:B35001--

Ref. K0110-01A1 Page 240020

D41E6T S/N B35001-UP

OPERATOR´S SEAT (TURN AND RECLINING TYPE) (FABRIC SEAT)

Item	Part No.	Description	Qty	Options
38	01010-80630	· BOLT	4	SN:B35001--
39	01643-30623	· WASHER	4	SN:B35001--
40	01580-11210	NUT	4	SN:B35001--
41	01643-31232	WASHER	4	SN:B35001--

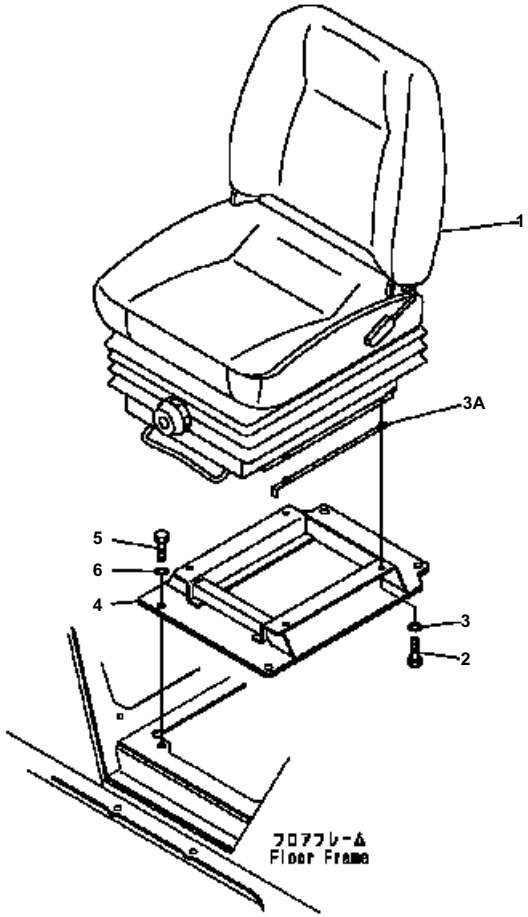

D41E6T S/N B35001-UP

OPERATOR´S SEAT (RECLINING TYPE) (LEATHER SEAT)

Item	Part No.	Description	Qty	Options
1	134-57-61300	SEAT ASS'Y	1	SN:B35001--
2	01010-B0820	BOLT	4	SN:B35001--
3	01643-30823	WASHER	4	SN:B35001--
3A	134-57-61150	BRACKET	2	SN:B35001--
4	134-57-61120	BRACKET	1	SN:B35001--
5	01010-81230	BOLT	4	SN:B35001--
6	01643-31232	WASHER	4	SN:B35001--

Ref. K0110-01A2 Page 240030

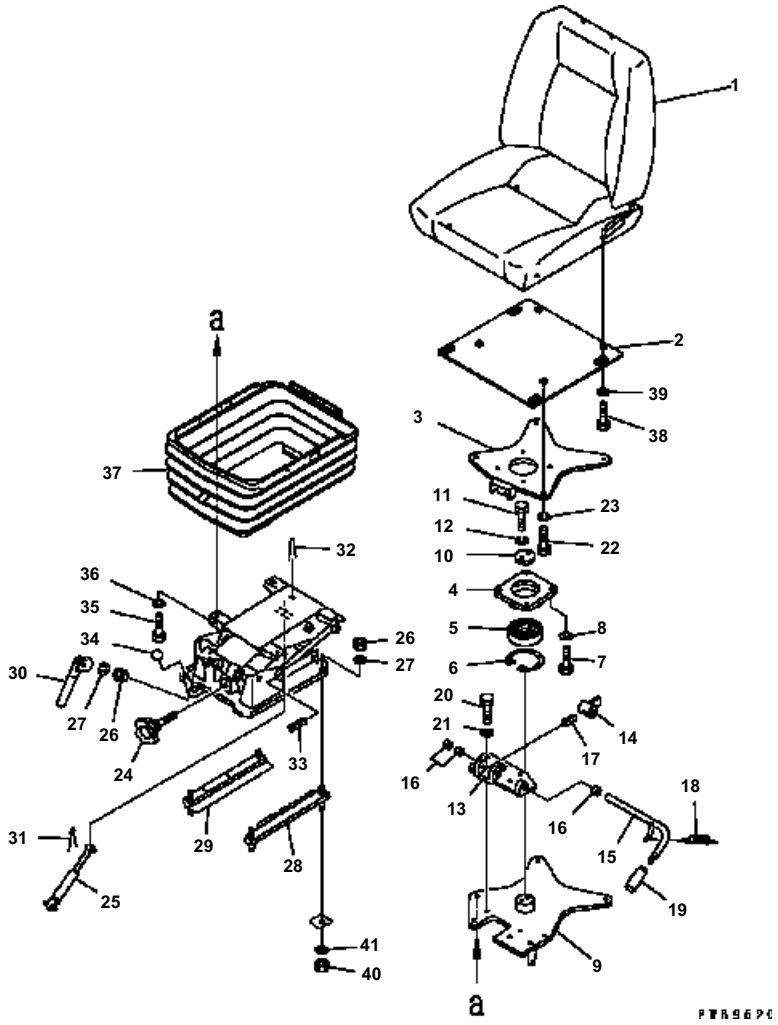

D41E6T S/N B35001-UP

OPERATOR´S SEAT (TURN AND RICLINING TYPE) (LEATHER SEAT)

Item	Part No.	Description	Qty	Options
	195-57-45601	SEAT ASS'Y	1	SN:B35001--
1	195-57-43610	· SEAT ASS'Y	1	SN:B35001--
2	195-57-41720	· BRACKET	1	SN:B35001--
	195-57-11100	· TURNING ASS'Y	1	SN:B35001--
3	195-57-11740	· · PLATE	1	SN:B35001--
4	195-57-11760	· · CAGE	1	SN:B35001--
5	06004-06210	· · BEARING	1	SN:B35001--
6	04065-09030	· · RING	1	SN:B35001--
7	01010-81025	· · BOLT	4	SN:B35001--
8	01602-21030	· · WASHER	4	SN:B35001--
9	195-57-11750	· · PLATE	1	SN:B35001--
10	04080-04508	· · HOLDER	1	SN:B35001--
11	01010-81025	· · BOLT	2	SN:B35001--
12	01602-21030	· · WASHER	2	SN:B35001--
13	195-57-11780	· · BRACKET	1	SN:B35001--
14	195-57-11770	· · LEVER	1	SN:B35001--
15	195-57-11790	· · LEVER	1	SN:B35001--
16	09350-01615	· · BUSHING	3	SN:B35001--
17	01322-40616	· · SCREW	1	SN:B35001--
18	154-44-12460	· · SPRING	1	SN:B35001--
19	09304-01240	· · KNOB	1	SN:B35001--
20	01010-81025	· · BOLT	5	SN:B35001--
21	01643-31032	· · WASHER	5	SN:B35001--
22	01010-81030	· BOLT	4	SN:B35001--
23	01602-21030	· WASHER	4	SN:B35001--
	195-57-21181	· SUSPENSION ASS'Y	1	SN:B35001--
24	155-57-12320	· · KNOB	1	SN:B35001--
25	155-57-12330	· · DAMPER	1	SN:B35001--
26	01580-00210	· · NUT	5	SN:B35001--
27	01602-31236	· · WASHER	5	SN:B35001--
28	195-57-21211	· · ADJUSTER	1	SN:B35001--
29	195-57-21221	· · ADJUSTER	1	SN:B35001--
30	195-57-21190	· · LEVER	1	SN:B35001--
31	04050-13015	· · PIN	2	SN:B35001--
32	04050-14025	· · PIN	2	SN:B35001--
33	04025-00432	· · PIN	7	SN:B35001--
34	09304-00835	· · KNOB	1	SN:B35001--
35	01010-81020	· BOLT	4	SN:B35001--
36	01602-21030	· WASHER	4	SN:B35001--
37	195-57-41760	· COVER	1	SN:B35001--

Ref. K0110-01A3 Page 240040

OPERATOR´S SEAT (TURN AND RICLINING TYPE) (LEATHER SEAT)

Item	Part No.	Description	Qty	Options
38	01010-80630	· BOLT	4	SN:B35001--
39	01643-30623	· WASHER	4	SN:B35001--
40	01580-11210	NUT	4	SN:B35001--
41	01643-31232	WASHER	4	SN:B35001--

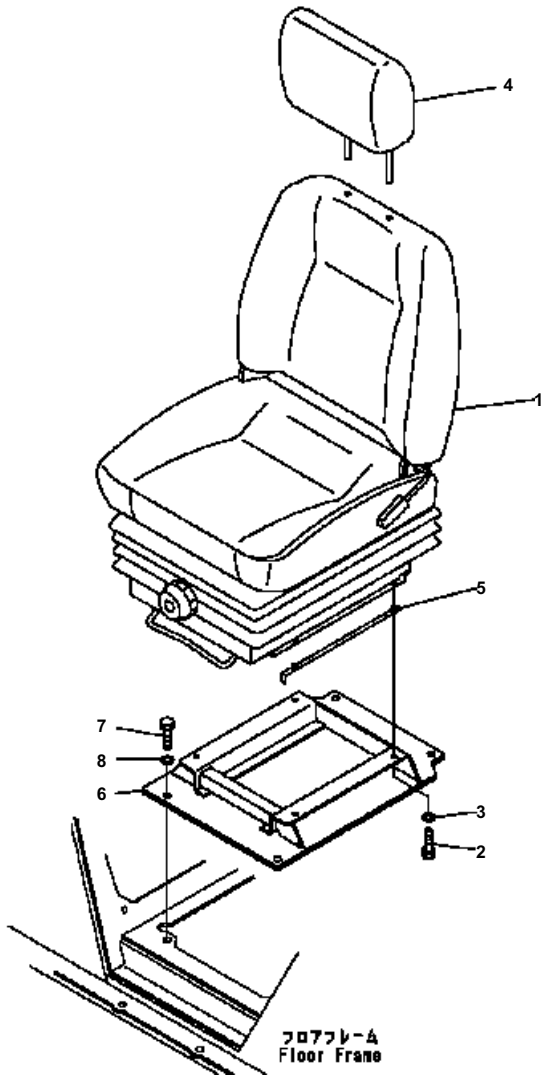

D41E6T S/N B35001-UP

OPERATOR´S SEAT (RECLINING TYPE) (WITH HEAD REST)

Item	Part No.	Description	Qty	Options
1	134-57-61200	SEAT ASS'Y	1	SN:B35001--
2	01010-B0820	BOLT	4	SN:B35001--
3	01643-30823	WASHER	4	SN:B35001--
4	17A-57-21170	HEAD REST	1	SN:B35001--
5	134-57-61150	BRACKET	2	SN:B35001--
6	134-57-61120	BRACKET	1	SN:B35001--
7	01010-81230	BOLT	4	SN:B35001--
8	01643-31232	WASHER	4	SN:B35001--

Ref. K0110-01A4 Page 240050

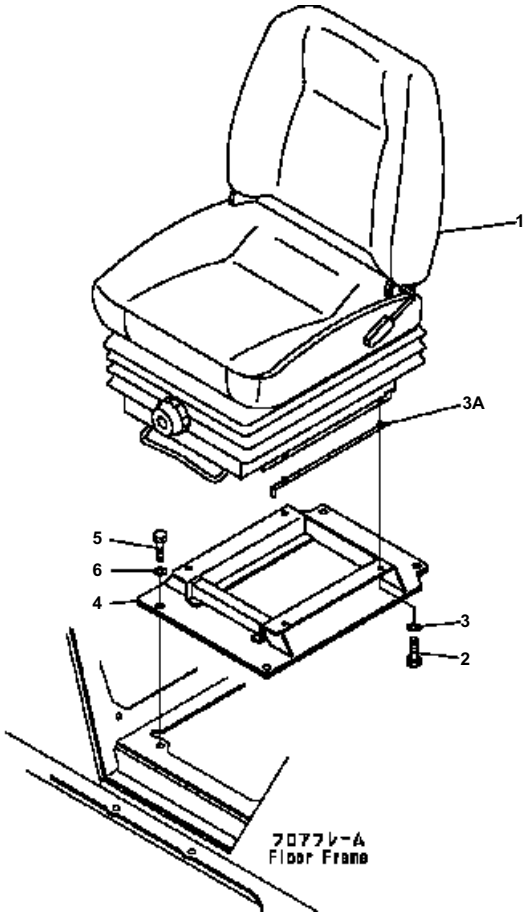

D41E6T S/N B35001-UP

OPERATOR´S SEAT (RECLINING TYPE) (FABRIC SEAT)

Item	Part No.	Description	Qty	Options
1	134-57-61200	SEAT ASS'Y	1	SN:B35001--
2	01010-B0820	BOLT	4	SN:B35001--
3	01643-30823	WASHER	4	SN:B35001--
3A	134-57-61150	BRACKET	2	SN:B35001--
4	134-57-61120	BRACKET	1	SN:B35001--
5	01010-81230	BOLT	4	SN:B35001--
6	01643-31232	WASHER	4	SN:B35001--

Ref. K0110-01A5 Page 240060

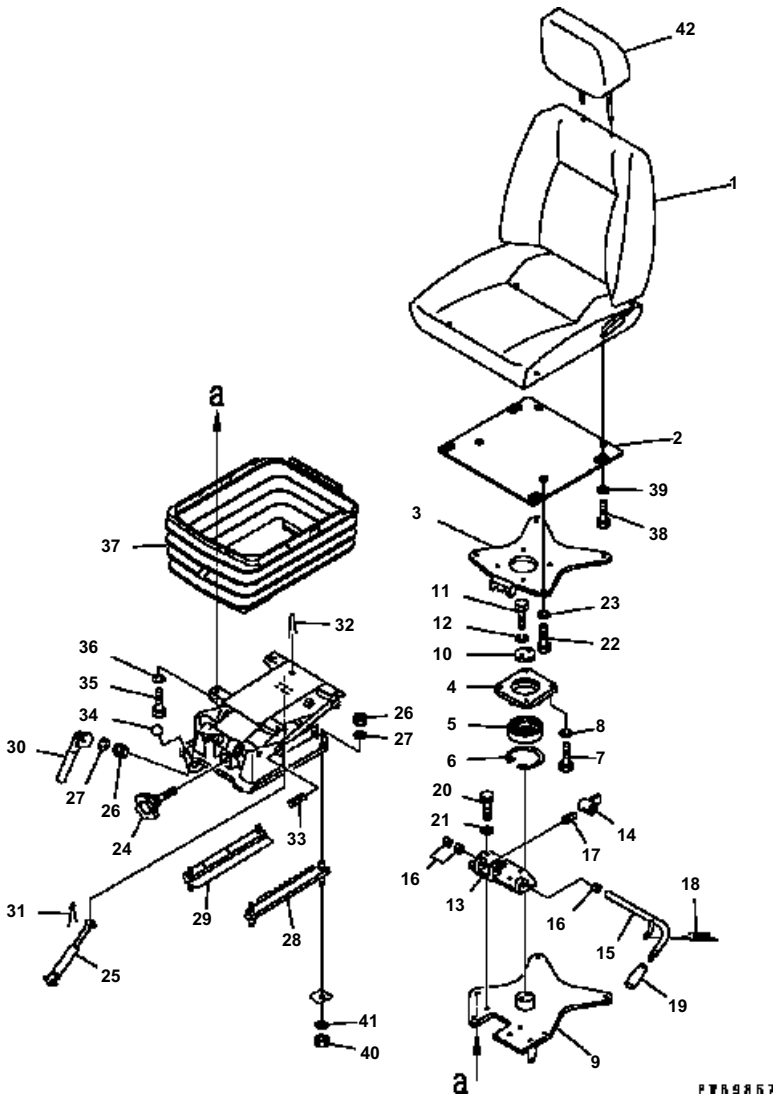

D41E6T S/N B35001-UP

OPERATOR´S SEAT (TURN AND RECLINING TYPE) (FABRIC SEAT) (WITH HEAD REST)

Item	Part No.	Description	Qty	Options
	195-57-45501	SEAT ASS'Y	1	SN:B35001--
1	195-57-43510	· SEAT A. {FABRIC}	1	SN:B35001--
2	195-57-41720	· BRACKET	1	SN:B35001--
	195-57-11100	· TURNING ASS'Y	1	SN:B35001--
3	195-57-11740	· · PLATE	1	SN:B35001--
4	195-57-11760	· · CAGE	1	SN:B35001--
5	06004-06210	· · BEARING	1	SN:B35001--
6	04065-09030	· · RING	1	SN:B35001--
7	01010-81025	· · BOLT	4	SN:B35001--
8	01602-21030	· · WASHER	4	SN:B35001--
9	195-57-11750	· · PLATE	1	SN:B35001--
10	04080-04508	· · HOLDER	1	SN:B35001--
11	01010-81025	· · BOLT	2	SN:B35001--
12	01602-21030	· · WASHER	2	SN:B35001--
13	195-57-11780	· · BRACKET	1	SN:B35001--
14	195-57-11770	· · LEVER	1	SN:B35001--
15	195-57-11790	· · LEVER	1	SN:B35001--
16	09350-01615	· · BUSHING	3	SN:B35001--
17	01322-40616	· · SCREW	1	SN:B35001--
18	154-44-12460	· · SPRING	1	SN:B35001--
19	09304-01240	· · KNOB	1	SN:B35001--
20	01010-81025	· · BOLT	5	SN:B35001--
21	01643-31032	· · WASHER	5	SN:B35001--
22	01010-81030	· BOLT	4	SN:B35001--
23	01602-21030	· WASHER	4	SN:B35001--
	195-57-21181	· SUSPENSION ASS'Y	1	SN:B35001--
24	155-57-12320	· · KNOB	1	SN:B35001--
25	155-57-12330	· · DAMPER	1	SN:B35001--
26	01580-11210	· · NUT	5	SN:B35001--
27	01602-31236	· · WASHER	5	SN:B35001--
28	195-57-21211	· · ADJUSTER	1	SN:B35001--
29	195-57-21221	· · ADJUSTER	1	SN:B35001--
30	195-57-21190	· · LEVER	1	SN:B35001--
31	04050-13015	· · PIN	2	SN:B35001--
32	04050-14025	· · PIN	2	SN:B35001--
33	04025-00432	· · PIN	7	SN:B35001--
34	09304-00835	· · KNOB	1	SN:B35001--
35	01010-81020	· BOLT	4	SN:B35001--
36	01602-21030	· WASHER	4	SN:B35001--
37	195-57-41760	· COVER	1	SN:B35001--

Ref. K0110-01A6 Page 240070

D41E6T S/N B35001-UP

OPERATOR´S SEAT (TURN AND RECLINING TYPE) (FABRIC SEAT) (WITH HEAD REST)

Item	Part No.	Description	Qty	Options
38	01010-80630	· BOLT	4	SN:B35001--
39	01643-30623	· WASHER	4	SN:B35001--
40	01580-11210	NUT	4	SN:B35001--
41	01643-31232	WASHER	4	SN:B35001--
42	17A-57-21170	HEAD REST	1	SN:B35001--

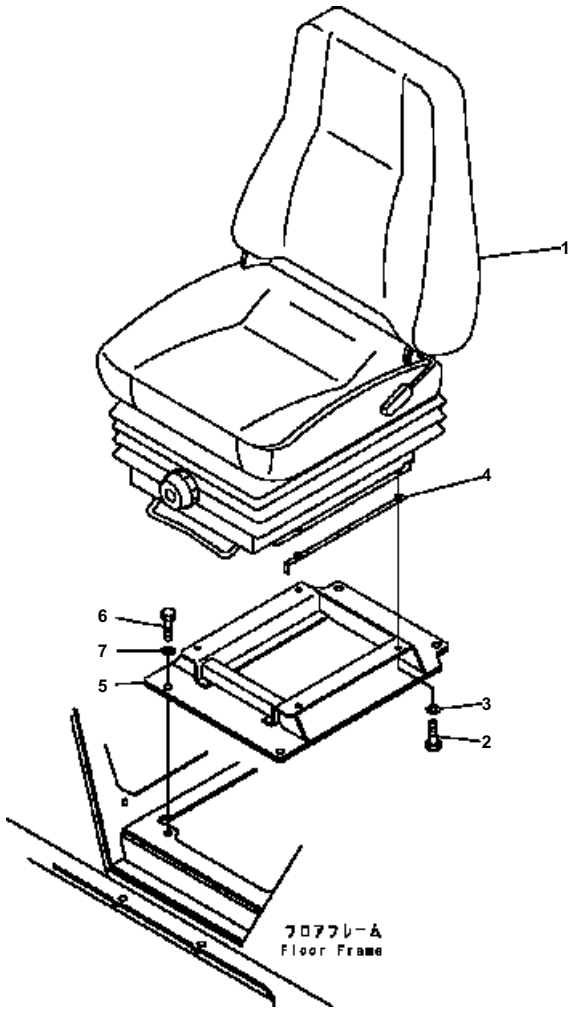

D41E6T S/N B35001-UP

OPERATOR´S SEAT (RECLINING TYPE) (LEATHER SEAT) (HIBACK)

Item	Part No.	Description	Qty	Options
1	14X-57-21200	SEAT ASS'Y{LEATHER}	1	SN:B35001--
2	01010-B0820	BOLT	4	SN:B35001--
3	01643-30823	WASHER	4	SN:B35001--
4	134-57-61150	BRACKET	2	SN:B35001--
5	134-57-61120	BRACKET	1	SN:B35001--
6	01010-81230	BOLT	4	SN:B35001--
7	01643-31232	WASHER	4	SN:B35001--

Ref. K0110-01A7 Page 240080

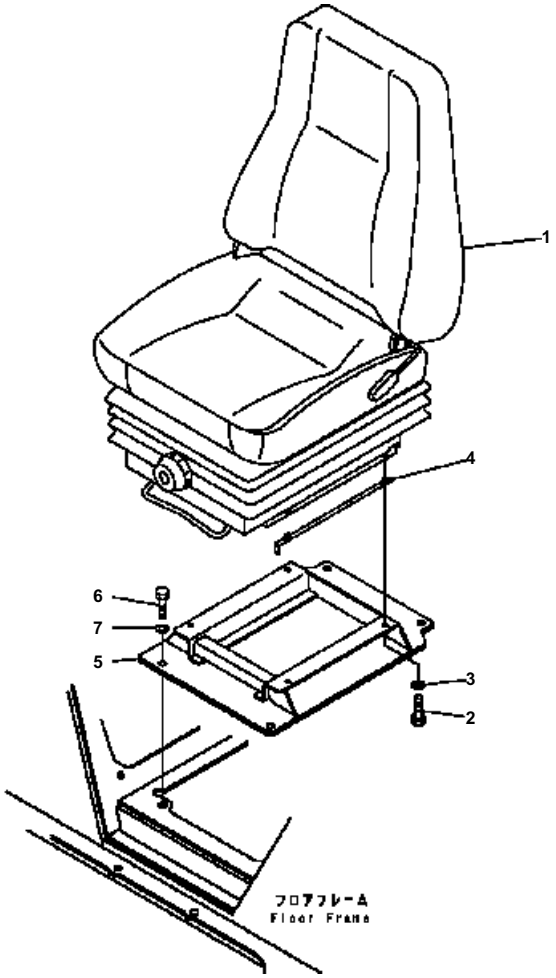

D41E6T S/N B35001-UP

OPERATOR´S SEAT (RECLINING TYPE) (FABRIC SEAT) (HIBACK)

Item	Part No.	Description	Qty	Options
1	14X-57-21100	SEAT ASS'Y{FABRIC}	1	SN:B35001--
2	01010-B0820	BOLT	4	SN:B35001--
3	01643-30823	WASHER	4	SN:B35001--
4	134-57-61150	BRACKET	2	SN:B35001--
5	134-57-61120	BRACKET	1	SN:B35001--
6	01010-81230	BOLT	4	SN:B35001--
7	01643-31232	WASHER	4	SN:B35001--

Ref. K0110-01A8 Page 240090

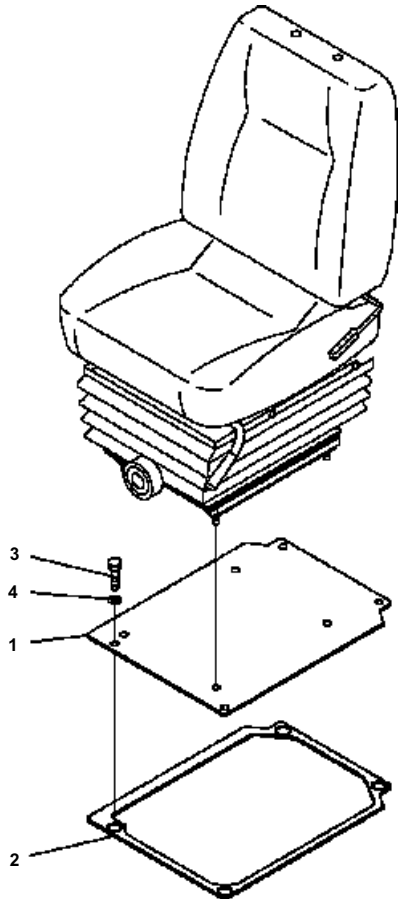

D41E6T S/N B35001-UP

OPERATOR´S SEAT (TURN AND RICLINING TYPE) (MOUNT)

Item	Part No.	Description	Qty	Options
1	134-57-61111	COVER	1	SN:B35001--
2	134-57-61131	・SEAL	1	SN:B35001--
3	01010-81230	BOLT	4	SN:B35001--
4	01643-31232	WASHER	4	SN:B35001--

Ref. K0110-02A1 Page 240100

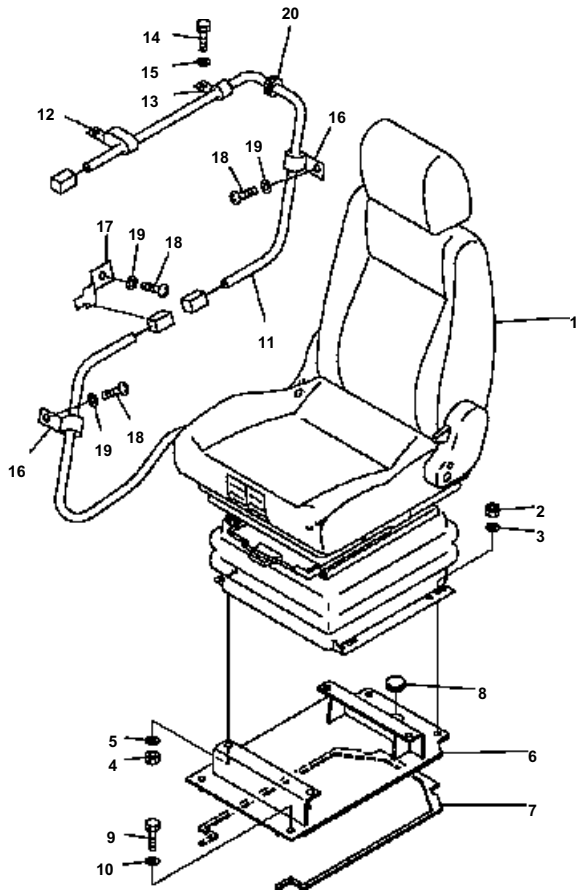

D41E6T S/N B35001-UP

OPERATOR'S SEAT (FABRIC SEAT) (AIR SUSPENSSION TYPE)

Item	Part No.	Description	Qty	Options
1	134-57-71200	SEAT ASS'Y	1	SN:B35001--
2	01580-10806	NUT	4	SN:B35001--
3	01643-50823	WASHER	4	SN:B35001--
4	01582-11210	NUT	4	SN:B35001--
5	01643-31232	WASHER	4	SN:B35001--
6	124-72-62110	BRACKET	1	SN:B35001--
7	17A-54-25540	· SHEET	1	SN:B35001--
8	09415-02512	CAP	1	SN:B35001--
9	01010-81230	BOLT	4	SN:B35001--
10	01643-31232	WASHER	4	SN:B35001--
11	124-06-61220	WIRING HARNESS	1	SN:B35001--
12	04435-51008	CLIP	1	SN:B35001--
13	04435-51010	CLIP	1	SN:B35001--
14	01010-81230	BOLT	1	SN:B35001--
15	01643-31232	WASHER	1	SN:B35001--
16	04434-51008	CLIP	2	SN:B35001--
17	08193-20010	CLIP	2	SN:B35001--
18	01245-0825	SCREW	3	SN:B35001--
19	01643-70823	WASHER	3	SN:B35001--
20	175-06-81610	GROMMET	1	SN:B35001--

Ref. K0110-02A2 Page 240101

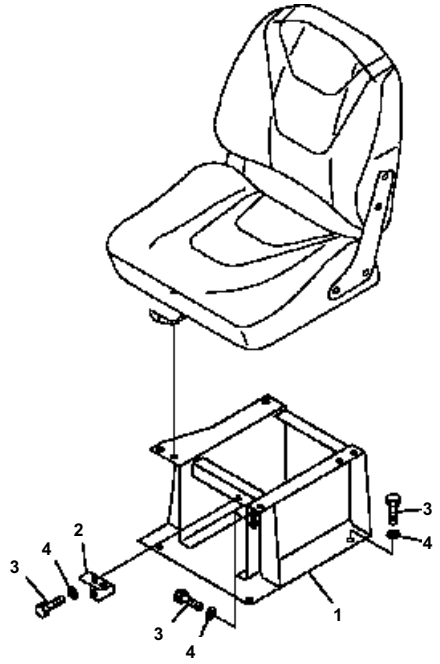

D41E6T S/N B35001-UP

SEAT FRAME (EXCEPT JAPAN)

Item	Part No.	Description	Qty	Options
1	14X-57-11113	BRACKET	1	SN:B35001--
2	14X-57-11380	PLATE	1	SN:B35001--
3	01010-81230	BOLT	6	SN:B35001--
4	01643-31232	WASHER	6	SN:B35001--

Ref. K0120-01A0 Page 240110

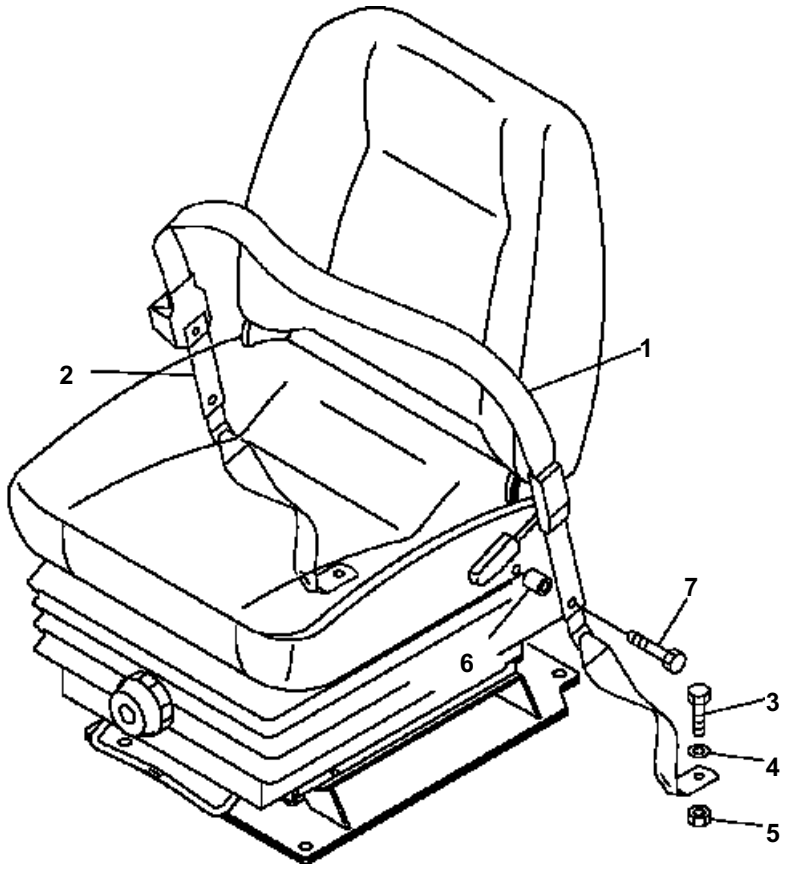

D41E6T S/N B35001-UP

SEAT BELT (FOR SUSPENSION SEAT)

Item	Part No.	Description	Qty	Options
1	09409-70000	BELT, LAP	1	SN:B35001--
2	09409-20000	BELT, TETHER	2	SN:B35001--
3	09409-00001	BOLT	4	SN:B35001--
4	09409-00002	WASHER	4	SN:B35001--
5	09409-00003	NUT	4	SN:B35001--
6	104-890-5610	COLLAR	2	SN:B35001--
7	02030-70744	BOLT	2	SN:B35001--

Ref. K0160-01A1 Page 240120

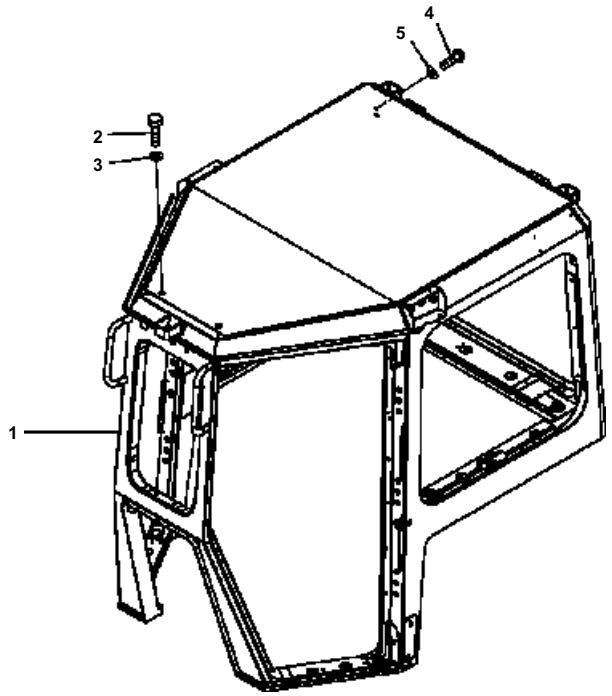

D41E6T S/N B35001-UP

CAB (BODY)

Item	Part No.	Description	Qty	Options
	17A-Z11-0010	CAB ASS'Y THIS ASSEMBLY CONSISTS OF ALL PARTS SHOWN IN FIGS. K0210-01A0 TO K0210-14A0.	1	SN:B35001--
1	17A-Z11-1111	· CAB	1	SN:B35001--
2	01010-D1220	· BOLT	6	SN:B35001--
3	01643-71232	· WASHER	6	SN:B35001--
4	01245-00620	· SCREW	2	SN:B35001--
5	01643-70623	· WASHER	2	SN:B35001--

Ref. K0210-01A0 Page 240130

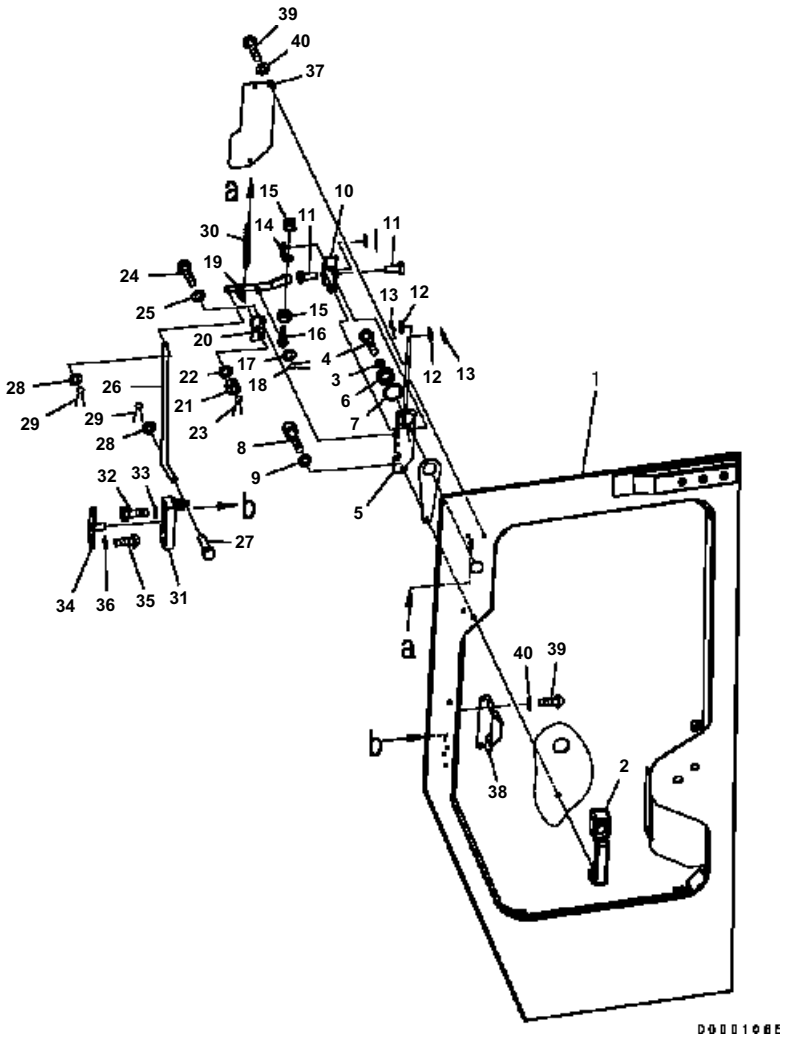

D41E6T S/N B35001-UP

CAB (DOOR AND DOOR LOCK)

Item	Part No.	Description	Qty	Options
	17A-Z11-0010	CAB ASS'Y	1	SN:B35001--
		THIS ASSEMBLY CONSISTS OF ALL PARTS SHOWN IN FIGS. K0210-01A0 TO K0210-14A0.		
	17A-Z11-0020	・ DOOR ASS'Y{L. H. }	1	SN:B35001--
	17A-Z11-0030	・ DOOR ASS'Y{R. H. }	1	SN:B35001--
		THESE ASSEMBLISE CONSIST OF ALL PARTS SHOWN IN FIGS. K0210-02A0 AND K0210-03A0.		
1	17A-Z11-3111	・・ DOOR ASS'Y{L. H. }	1	SN:B35001--
	17A-Z11-3121	・・ DOOR ASS'Y{R. H. }	1	SN:B35001--
2	17A-Z11-3221	・・ HANDLE	1	SN:B35001--
3	17A-Z11-3231	・・ PLATE	1	SN:B35001--
4	01245-00612	・・ SCREW	1	SN:B35001--
5	17A-Z11-3242	・・ PLATE{L. H. }	1	SN:B35001--
	17A-Z11-3252	・・ PLATE{R. H. }	1	SN:B35001--
6	17A-Z11-3261	・・ NUT	1	SN:B35001--
7	17A-Z11-3270	・・ WASHER	1	SN:B35001--
8	01010-D0635	・・ BOLT	1	SN:B35001--
9	01643-70623	・・ WASHER	1	SN:B35001--
10	17A-Z11-3282	・・ PLATE	1	SN:B35001--
	17A-Z11-3150	・・ PLATE	1	SN:B35001--
11	04205-10614	・・ PIN	2	SN:B35001--
12	01643-70623	・・ WASHER	2	SN:B35001--
13	04050-11612	・・ PIN	2	SN:B35001--
14	17A-Z11-3130	・・ PLATE	1	SN:B35001--
15	01580-10806	・・ NUT	2	SN:B35001--
16	04252-20853	・・ END	1	SN:B35001--
17	01640-20816	・・ WASHER	1	SN:B35001--
18	04050-12015	・・ PIN	1	SN:B35001--
19	17A-Z11-3290	・・ PLATE	1	SN:B35001--
	17A-Z11-3190	・・ PLATE	1	SN:B35001--
20	17A-Z11-3311	・・ PLATE	1	SN:B35001--
21	01590-30809	・・ NUT	1	SN:B35001--
22	01643-70823	・・ WASHER	1	SN:B35001--
23	04050-12015	・・ PIN	1	SN:B35001--
24	01245-00616	・・ SCREW	2	SN:B35001--
25	01643-70623	・・ WASHER	2	SN:B35001--
26	17A-Z11-3320	・・ PLATE	1	SN:B35001--
27	04205-10614	・・ PIN	1	SN:B35001--
28	01643-70623	・・ WASHER	2	SN:B35001--

Ref. K0210-02A0 Page 240140

D41E6T S/N B35001-UP

CAB (DOOR AND DOOR LOCK)

Item	Part No.	Description	Qty	Options
29	04050-11612	・・PIN	2	SN:B35001--
30	17A-Z11-3332	・・SPRING	1	SN:B35001--
31	195-Z11-4520	・・LATCH	1	SN:B35001--
32	01010-D0635	・・BOLT	4	SN:B35001--
33	01643-70623	・・WASHER	4	SN:B35001--
34	17A-Z11-3210	・・STRIKER	1	SN:B35001--
35	01245-00825	・・SCREW	4	SN:B35001--
36	01643-70823	・・WASHER	4	SN:B35001--
37	17A-Z11-3340	・・PLATE	1	SN:B35001--
38	17A-Z11-3351	・・PLATE	1	SN:B35001--
39	01245-00616	・・SCREW	7	SN:B35001--
40	01643-70623	・・WASHER	7	SN:B35001--

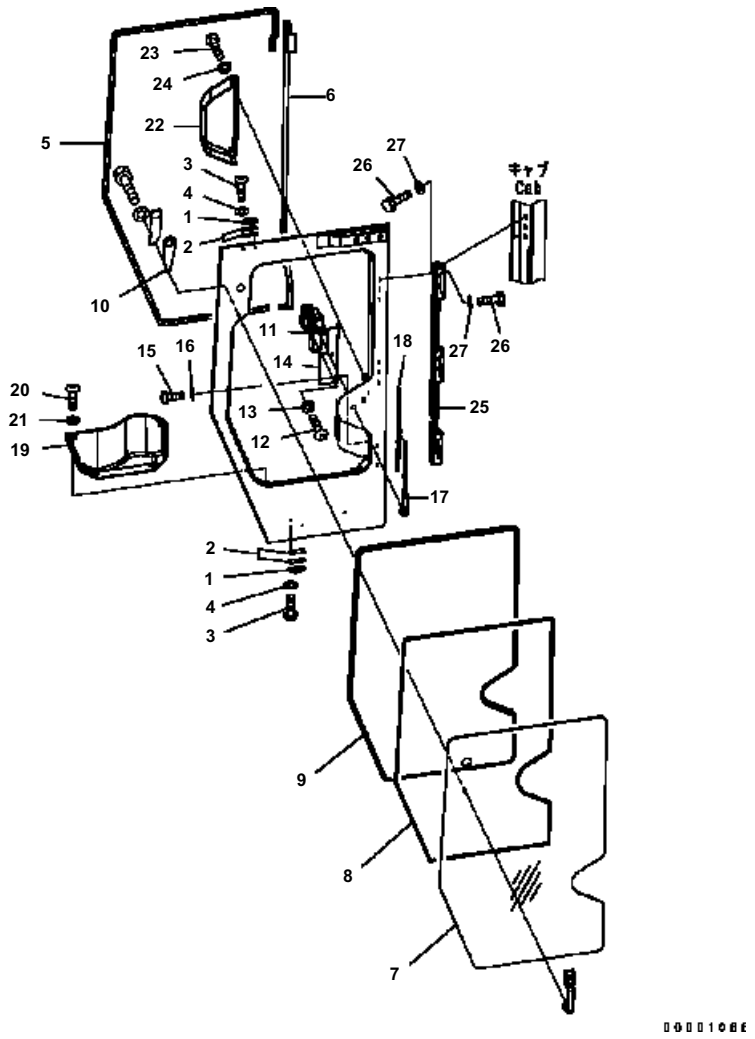

D41E6T S/N B35001-UP

CAB (DOOR) (DUMPER, WINDOW, WIPER)

Item	Part No.	Description	Qty	Options
	17A-Z11-0010	CAB ASS'Y	1	SN:B35001--
		THIS ASSEMBLY CONSISTS OF ALL PARTS SHOWN IN FIGS. K0210-01A0 TO K0210-14A0.		
	17A-Z11-0020	・ DOOR ASS'Y{L. H. }	1	SN:B35001--
	17A-Z11-0030	・ DOOR ASS'Y{R. H. }	1	SN:B35001--
		THESE ASSEMBLISE CONSIST OF ALL PARTS SHOWN IN FIGS. K0210-02A0 AND K0210-03A0.		
1	14X-911-1690	・・ DUMPER	2	SN:B35001--
2	14X-911-1761	・・ SHIM, 1. 2MM	8	SN:B35001--
3	01245-00616	・・ SCREW	4	SN:B35001--
4	01643-70623	・・ WASHER	4	SN:B35001--
5	17A-Z11-3362	・・ SEAL{L. H. }	1	SN:B35001--
	17A-Z11-1870	・・ SEAL{R. H. }	1	SN:B35001--
6	17A-Z11-3371	・・ SEAL{L. H. }	1	SN:B35001--
	17A-Z11-1880	・・ SEAL{R. H. }	1	SN:B35001--
7	17A-Z11-1261	・・ GLASS{L. H. }	1	SN:B35001--
	17A-Z11-1271	・・ GLASS{R. H. }	1	SN:B35001--
8	17A-Z11-1280	・・ SEAL	1	SN:B35001--
9	17A-Z11-3382	・・ TRIM	1	SN:B35001--
10	17A-Z11-3160	・・ RUBBER	1	SN:B35001--
11	17A-Z11-2521	・・ MOTOR ASS'Y	1	SN:B35001--
	17A-Z11-2430	・・ MOTOR ASS'Y	1	SN:B35001--
12	01245-00616	・・ SCREW	2	SN:B35001--
13	01643-70623	・・ WASHER	2	SN:B35001--
14	17A-Z11-3611	・・ PLATE{L. H. }	1	SN:B35001--
	17A-Z11-3621	・・ PLATE{R. H. }	1	SN:B35001--
15	01245-00825	・・ SCREW	2	SN:B35001--
16	01643-70823	・・ WASHER	2	SN:B35001--
17	17A-Z11-2570	・・ ARM{WIPER}	1	SN:B35001--
18	17A-Z11-2581	・・ BLADE{WIPER}	1	SN:B35001--
19	17A-Z11-3631	・・ POCKET{L. H. }	1	SN:B35001--
	17A-Z11-3641	・・ POCKET{R. H. }	1	SN:B35001--
20	17A-Z11-1890	・・ CLIP	4	SN:B35001--
21	17A-Z11-2811	・・ PLATE	4	SN:B35001--
22	17A-Z11-3651	・・ COVER	1	SN:B35001--
23	17A-Z11-1890	・・ CLIP	4	SN:B35001--
24	17A-Z11-2811	・・ PLATE	4	SN:B35001--
25	17A-Z11-3661	・ HINGE{L. H. }	1	SN:B35001--
	17A-Z11-3671	・ HINGE{R. H. }	1	SN:B35001--

Ref. K0210-03A0 Page 240150

D41E6T S/N B35001-UP

CAB (DOOR) (DUMPER, WINDOW, WIPER)

Item	Part No.	Description	Qty	Options
26	01010-81030	· BOLT	18	SN:B35001--
27	01643-71032	· WASHER	18	SN:B35001--

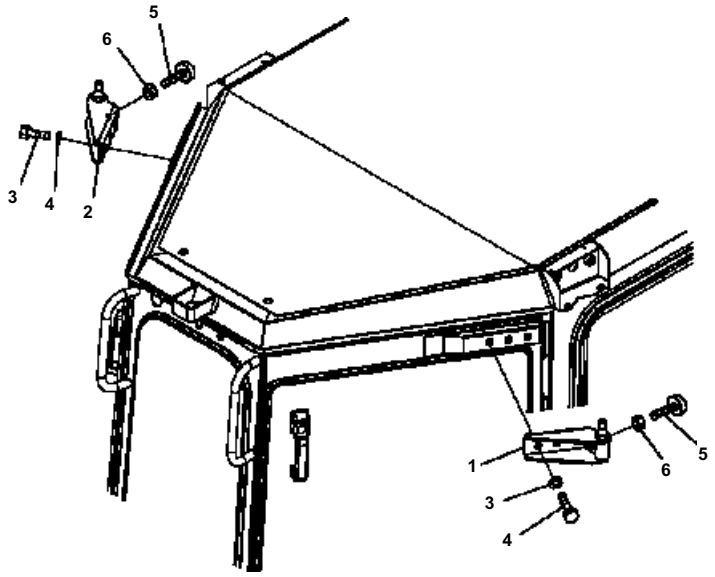

D41E6T S/N B35001-UP

CAB (DOOR OPEN LOCK BRACKET)

Item	Part No.	Description	Qty	Options
	17A-Z11-0010	CAB ASS'Y THIS ASSEMBLY CONSISTS OF ALL PARTS SHOWN IN FIGS. K0210-01A0 TO K0210-14A0.	1	SN:B35001--
1	17A-Z11-3413	· BRACKET{L. H. }	1	SN:B35001--
2	17A-Z11-3423	· BRACKET{R. H. }	1	SN:B35001--
3	01010-D1230	· BOLT	6	SN:B35001--
4	01643-71232	· WASHER	6	SN:B35001--
5	20Y-54-11611	· STOPPER	2	SN:B35001--
6	01580-11008	· NUT	2	SN:B35001--

Ref. K0210-04A0 Page 240160

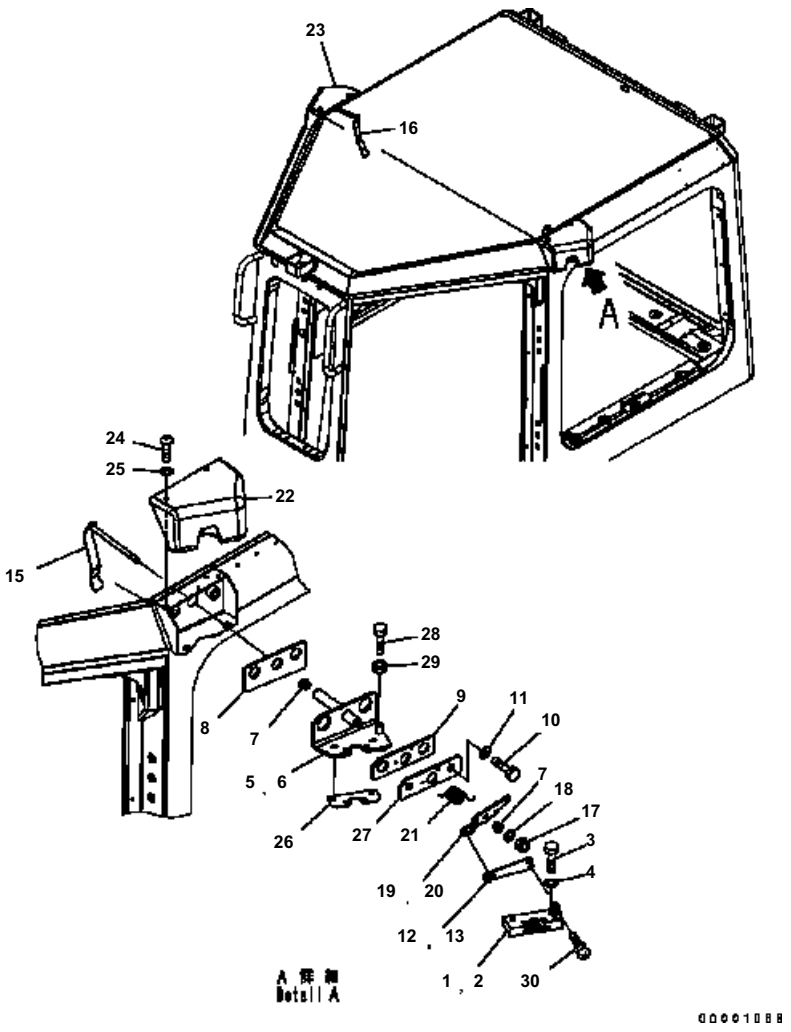

D41E6T S/N B35001-UP

CAB (DOOR OPEN LOCK LATCH)

Item	Part No.	Description	Qty	Options
	17A-Z11-0010	CAB ASS'Y THIS ASSEMBLY CONSISTS OF ALL PARTS SHOWN IN FIGS. K0210-01A0 TO K0210-14A0.	1	SN:B35001--
1	195-Z11-4510	· LATCH	1	SN:B35001--
2	195-Z11-4520	· LATCH	1	SN:B35001--
3	01010-D0635	· BOLT	8	SN:B35001--
4	01643-70623	· WASHER	8	SN:B35001--
5	17A-Z11-3462	· BRACKET{L. H. }	1	SN:B35001--
6	17A-Z11-3472	· BRACKET{R. H. }	1	SN:B35001--
7	17A-Z11-3490	· BUSHING	4	SN:B35001--
8	17A-Z11-3441	· RUBBER	2	SN:B35001--
9	17A-Z11-3452	· RUBBER	2	SN:B35001--
10	01010-D1230	· BOLT	4	SN:B35001--
11	01643-71232	· WASHER	4	SN:B35001--
12	17A-Z11-3692	· PLATE{L. H. }	1	SN:B35001--
13	17A-Z11-3711	· PLATE{R. H. }	1	SN:B35001--
15	17A-Z11-3912	· LEVER	1	SN:B35001--
16	17A-Z11-3731	· LEVER	1	SN:B35001--
17	01580-11008	· NUT	2	SN:B35001--
18	01643-70623	· WASHER	2	SN:B35001--
19	17A-Z11-3922	· LEVER{L. H. }	1	SN:B35001--
20	17A-Z11-3721	· LEVER{R. H. }	1	SN:B35001--
21	17A-Z11-3790	· SPRING	2	SN:B35001--
22	17A-Z11-2820	· COVER	1	SN:B35001--
23	17A-Z11-2830	· COVER	1	SN:B35001--
24	01245-00616	· SCREW	8	SN:B35001--
25	01643-70623	· WASHER	8	SN:B35001--
26	17A-Z11-3680	· PLATE	2	SN:B35001--
27	17A-Z11-3482	· PLATE	2	SN:B35001--
28	01010-80620	· BOLT	2	SN:B35001--
29	01580-10605	· NUT	2	SN:B35001--
30	01023-10516	· SCREW	2	SN:B35001--

Ref. K0210-05A0 Page 240170

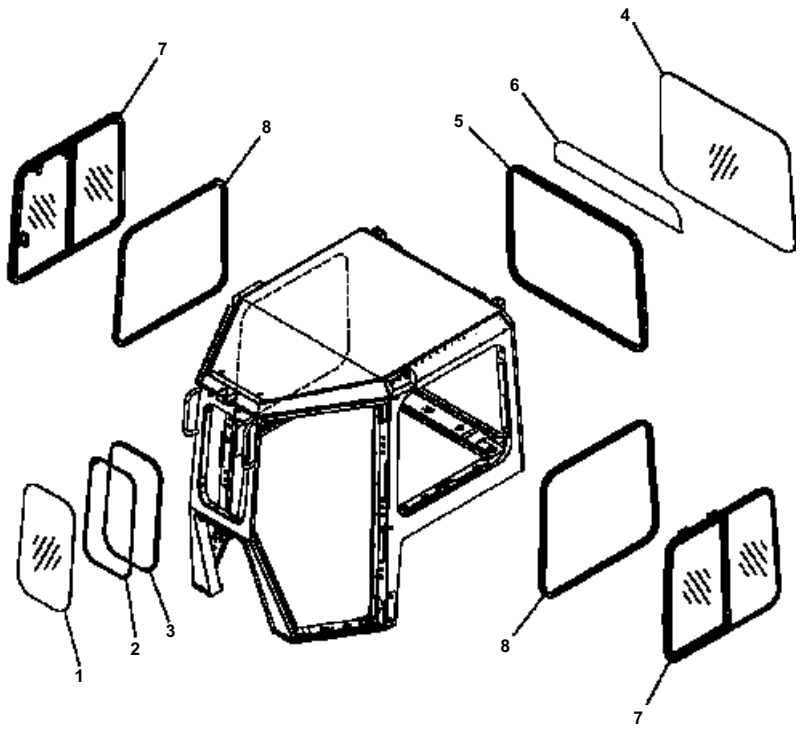

D41E6T S/N B35001-UP

CAB (WINDOW)

Item	Part No.	Description	Qty	Options
	17A-Z11-0010	CAB ASS'Y THIS ASSEMBLY CONSISTS OF ALL PARTS SHOWN IN FIGS. K0210-01A0 TO K0210-14A0.	1	SN:B35001--
1	17A-Z11-1210	· GLASS	1	SN:B35001--
2	17A-Z11-1220	· SEAL	1	SN:B35001--
3	17A-Z11-1231	· TRIM	1	SN:B35001--
4	17A-Z11-1240	· GLASS	1	SN:B35001--
5	17A-Z11-1250	· WEATHER STRIP	1	SN:B35001--
6	17A-Z11-3951	· SHEET	1	SN:B35001--
7	17A-Z11-1301	· SASH ASS'Y{L. H. }	1	SN:B35001--
	17A-Z11-1401	· SASH ASS'Y{R. H. }	1	SN:B35001--
8	17A-Z11-1291	· WEATHER STRIP	2	SN:B35001--

Ref. K0210-06A0 Page 240180

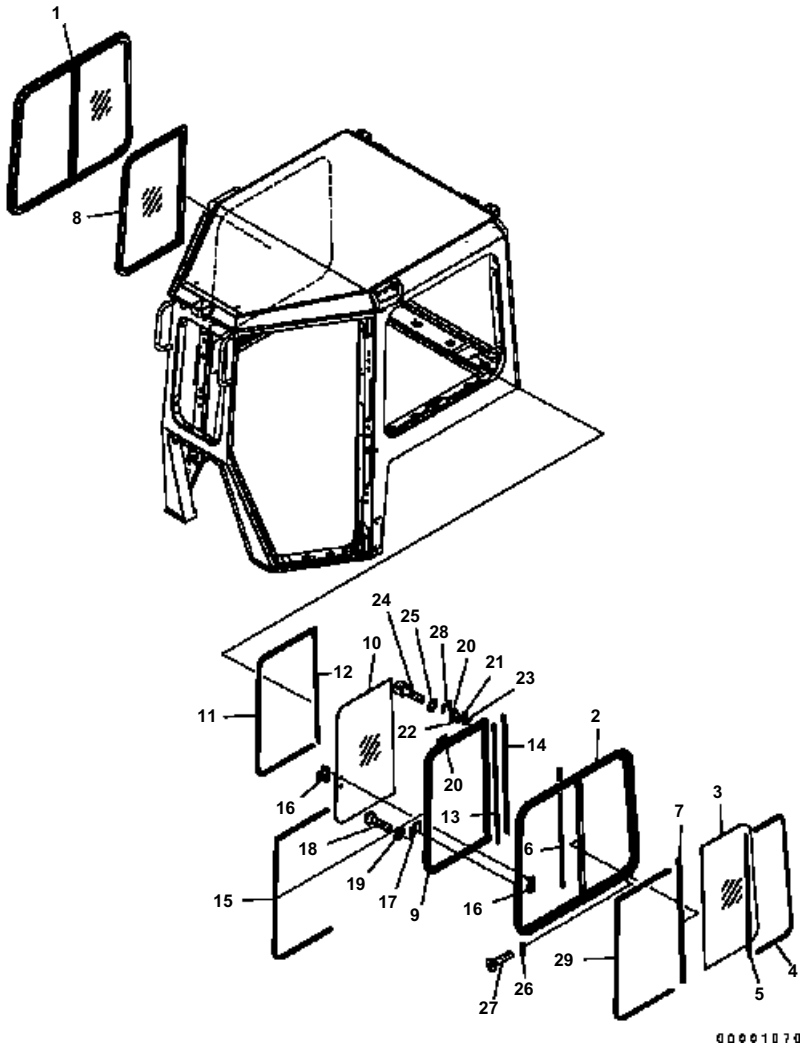

D41E6T S/N B35001-UP

CAB (SASH)

Item	Part No.	Description	Qty	Options
	17A-Z11-0010	CAB ASS'Y THIS ASSEMBLY CONSISTS OF ALL PARTS SHOWN IN FIGS. K0210-01A0 TO K0210-14A0.	1	SN:B35001--
	17A-Z11-1301	· SASH ASS'Y{L. H. }	1	SN:B35001--
	17A-Z11-1401	· SASH ASS'Y{R. H. }	1	SN:B35001--
1	17A-Z11-1310	· · SASH ASS'Y{L. H. }	1	SN:B35001--
	17A-Z11-1410	· · SASH ASS'Y{R. H. }	1	SN:B35001--
2	17A-Z11-1320	· · · FRAME{L. H. }	1	SN:B35001--
	17A-Z11-1420	· · · FRAME{R. H. }	1	SN:B35001--
3	17A-Z11-1330	· · · GLASS	1	SN:B35001--
4	17A-Z11-1340	· · · SEAL	1	SN:B35001--
5	17A-Z11-1350	· · · SEAL	1	SN:B35001--
6	17A-Z11-1360	· · · SEAL	1	SN:B35001--
7	17A-Z11-1370	· · · SEAL	1	SN:B35001--
8	17A-Z11-1510	· · SASH ASS'Y{L. H. }	1	SN:B35001--
	17A-Z11-1460	· · SASH ASS'Y{R. H. }	1	SN:B35001--
9	17A-Z11-1520	· · · FRAME{L. H. }	1	SN:B35001--
	17A-Z11-1470	· · · FRAME{R. H. }	1	SN:B35001--
10	17A-Z11-1530	· · · GLASS	1	SN:B35001--
11	17A-Z11-1540	· · · SEAL	1	SN:B35001--
12	17A-Z11-1550	· · · SEAL	1	SN:B35001--
13	17A-Z11-1560	· · · SEAL	1	SN:B35001--
14	17A-Z11-1570	· · · SEAL	1	SN:B35001--
15	17A-Z11-1580	· · · CHANNEL	1	SN:B35001--
16	17A-Z11-1610	· · LOCK ASS'Y	1	SN:B35001--
17	17A-Z11-1620	· · STRIKER	1	SN:B35001--
18	01225-40514	· · SCREW	2	SN:B35001--
19	01640-50508	· · WASHER	2	SN:B35001--
	195-Z11-1371	· · LOCK ASS'Y	2	SN:B35001--
20	195-Z11-3630	· · · LEVER	2	SN:B35001--
21	195-Z11-3640	· · · PLATE	2	SN:B35001--
22	195-Z11-3860	· · · PIN	2	SN:B35001--
23	195-Z11-3670	· · SHIM§ 0. 5MM	6	SN:B35001--
24	01252-40514	· · BOLT	4	SN:B35001--
25	01640-50508	· · WASHER	4	SN:B35001--
26	195-Z11-1381	· · STOPPER	2	SN:B35001--
27	01224-40316	· · SCREW	4	SN:B35001--
28	17A-Z11-1660	· · PLATE	2	SN:B35001--
29	17A-Z11-1390	· · SEAL	1	SN:B35001--

Ref. K0210-07A0 Page 240190

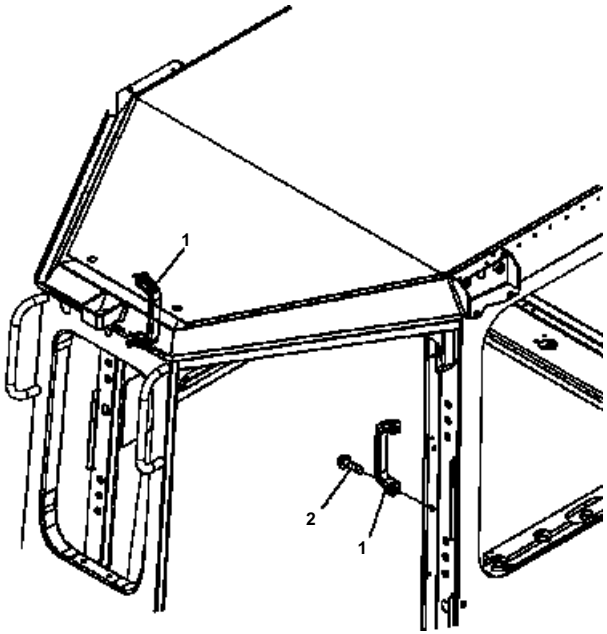

D41E6T S/N B35001-UP

CAB (GRIP)

Item	Part No.	Description	Qty	Options
	17A-Z11-0010	CAB ASS'Y THIS ASSEMBLY CONSISTS OF ALL PARTS SHOWN IN FIGS. K0210-01A0 TO K0210-14A0.	1	SN:B35001--
1	361-54-21150	· HANDLE	2	SN:B35001--
2	01245-00825	· SCREW	4	SN:B35001--

Ref. K0210-08A0 Page 240200

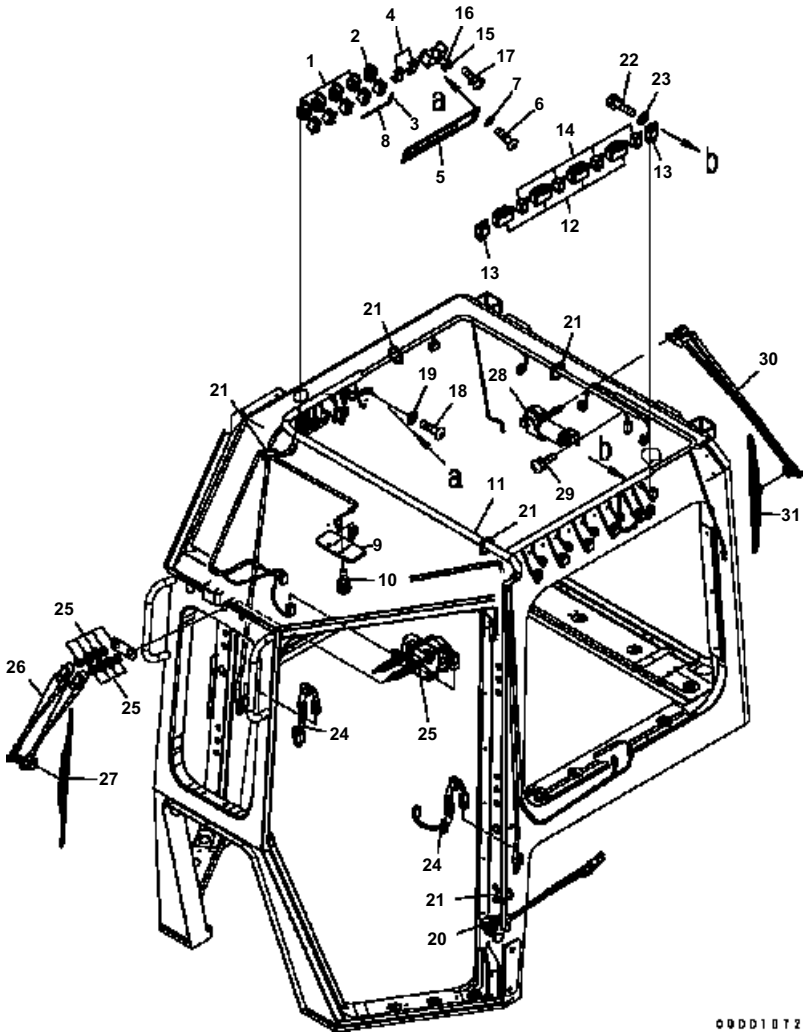

D41E6T S/N B35001-UP

CAB (ELECTRICAL EQUIPMENT) (SWITCH, ROOM LAMP, WIPER)

Item	Part No.	Description	Qty	Options
	17A-Z11-0010	CAB ASS'Y THIS ASSEMBLY CONSISTS OF ALL PARTS SHOWN IN FIGS. K0210-01A0 TO K0210-14A0.	1	SN:B35001--
1	20T-06-71410	· SWITCH	4	SN:B35001--
2	14X-911-3710	· SWITCH	1	SN:B35001--
3	17A-Z11-2491	· PLATE	1	SN:B35001--
4	14X-911-4280	· COVER	2	SN:B35001--
5	17A-Z11-2112	· PANEL	1	SN:B35001--
6	01245-00616	· SCREW	4	SN:B35001--
7	01643-70623	· WASHER	4	SN:B35001--
8	17A-Z11-2350	· PANEL	1	SN:B35001--
9	421-06-26210	· LAMP ASS'Y	1	SN:B35001--
	421-06-26250	· · LENS	2	SN:B35001--
	421-06-26260	· · BULB§ 10W	2	SN:B35001--
10	01023-10520	· SCREW	4	SN:B35001--
11	17A-Z11-2142	· WIRING HARNESS	1	SN:B35001--
12	17A-Z11-2420	· · RELAY	4	SN:B35001--
13	198-911-9240	· · RELAY ASS'Y	2	SN:B35001--
14	569-06-61960	· · RELAY	4	SN:B35001--
15	08041-01000	· · FUSE§ 10A	6	SN:B35001--
16	08041-02000	· · FUSE§ 20A	3	SN:B35001--
	08044-00600	· · BOX	1	SN:B35001--
17	01023-10520	· SCREW	2	SN:B35001--
18	01245-00820	· SCREW	2	SN:B35001--
19	01643-70823	· WASHER	2	SN:B35001--
20	14X-911-4541	· BOOT	1	SN:B35001--
21	08034-20519	· BAND	17	SN:B35001--
22	01010-80616	· BOLT	10	SN:B35001--
23	01643-70623	· WASHER	10	SN:B35001--
24	17A-Z11-2161	· SWITCH	2	SN:B35001--
25	17A-Z11-2511	· WIPER MOTOR	1	SN:B35001--
26	17A-Z11-2530	· WIPER ASS'Y	1	SN:B35001--
27	17A-Z11-2540	· BLACE	1	SN:B35001--
28	198-Z11-2540	· WIPER MOTOR{WIPER}	1	SN:B35001--
29	01023-10520	· SCREW	2	SN:B35001--
30	421-56-21760	· ARM{WIPER}	1	SN:B35001--
31	421-56-21770	· BLADE{WIPER}	1	SN:B35001--

Ref. K0210-09A0 Page 240210

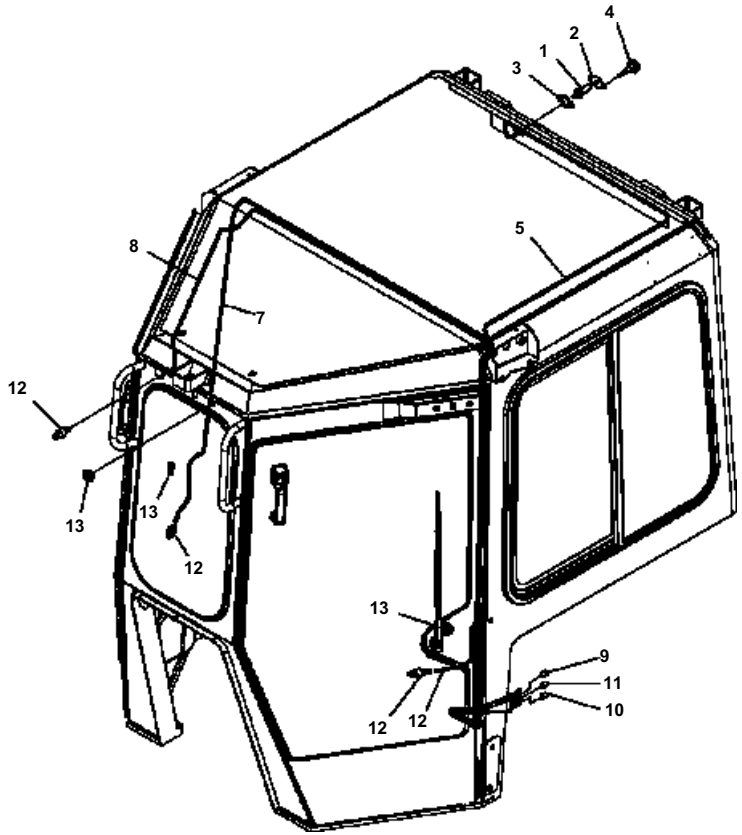

D41E6T S/N B35001-UP

CAB (WASHER HOSE)

Item	Part No.	Description	Qty	Options
	17A-Z11-0010	CAB ASS'Y THIS ASSEMBLY CONSISTS OF ALL PARTS SHOWN IN FIGS. K0210-01A0 TO K0210-14A0.	1	SN:B35001--
1	205-06-61220	· NOZZLE ASS'Y	1	SN:B35001--
2	14X-911-3560	· BRACKET	1	SN:B35001--
3	14X-911-3570	· PACKING	1	SN:B35001--
4	01370-00408	· SCREW	2	SN:B35001--
5	17A-Z11-2610	· HOSE	1	SN:B35001--
6	17A-Z11-2620	· HOSE	1	SN:B35001--
7	17A-Z11-2630	· HOSE	1	SN:B35001--
8	17A-Z11-2640	· HOSE	1	SN:B35001--
9	14X-911-1130	· TUBE	1	SN:B35001--
10	14X-911-1140	· TUBE	1	SN:B35001--
11	14X-911-1150	· TUBE	1	SN:B35001--
12	195-97-98590	· JOINT	3	SN:@--
	17A-Z11-2650	· JOINT	3	SN:B35001--@
13	17A-Z11-2660	· CAP	3	SN:B35001--

Ref. K0210-10A0 Page 240220

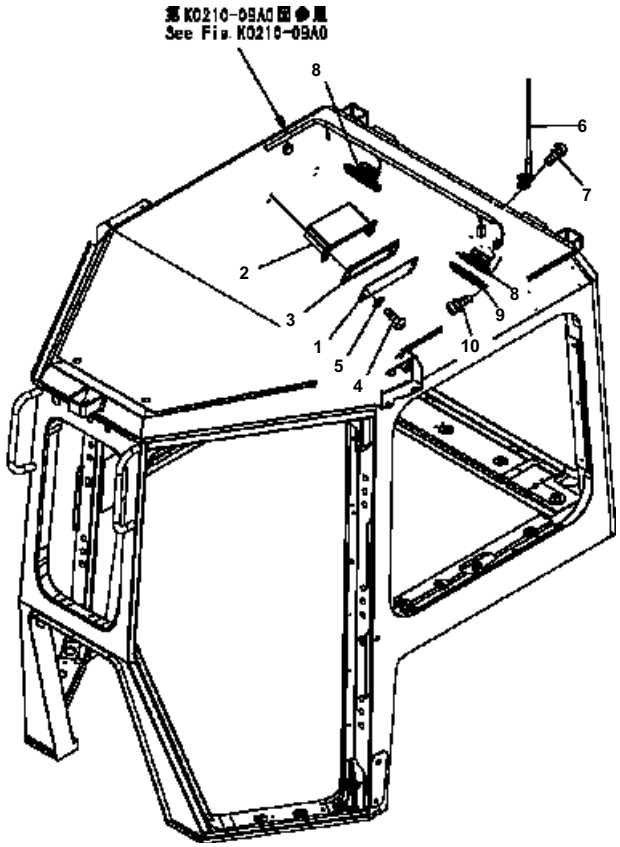

D41E6T S/N B35001-UP

CAB (RADIO MOUNT BRACKET) (RADIO LESS)

Item	Part No.	Description	Qty	Options
	17A-Z11-0010	CAB ASS'Y THIS ASSEMBLY CONSISTS OF ALL PARTS SHOWN IN FIGS. K0210-01A0 TO K0210-14A0.	1	SN:B35001--
1	17A-Z11-2240	· PLATE	1	SN:B35001--
2	17A-Z11-2251	· BRACKET	1	SN:B35001--
3	17A-Z11-2261	· PLATE	1	SN:B35001--
4	01245-00620	· SCREW	4	SN:B35001--
5	01643-70623	· WASHER	4	SN:B35001--
6	198-Z11-4610	· RUBBER ANTENNA	1	SN:B35001--
7	01023-20416	· SCREW	2	SN:B35001--
8	08910-10000	· SPEAKER	2	SN:B35001--
9	418-967-2150	· COVER{SPEAKER}	2	SN:B35001--
10	01023-20416	· SCREW	8	SN:B35001--

Ref. K0210-11A0 Page 240230

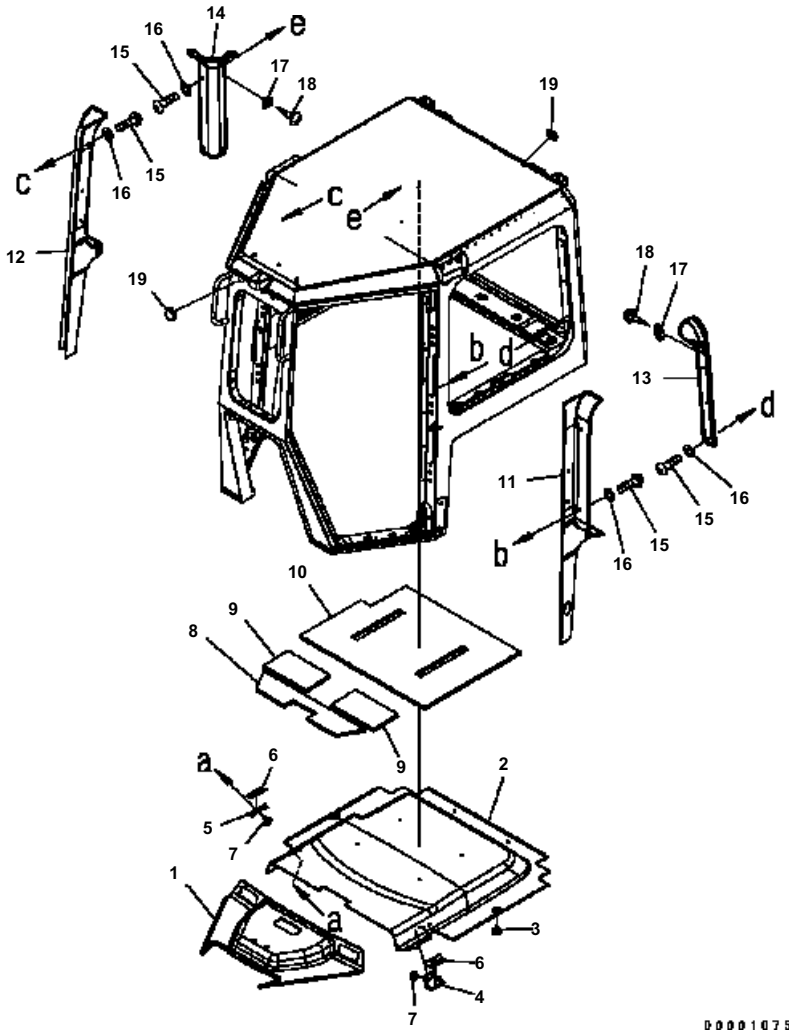

D41E6T S/N B35001-UP

CAB (INSIDE COVER)

Item	Part No.	Description	Qty	Options
	17A-Z11-0010	CAB ASS'Y THIS ASSEMBLY CONSISTS OF ALL PARTS SHOWN IN FIGS. K0210-01A0 TO K0210-14A0.	1	SN:B35001--
1	17A-Z11-2711	· COVER{FRONT}	1	SN:B35001--
2	17A-Z11-2721	· COVER{REAR}	1	SN:B35001--
3	20Y-54-18690	· RIVET	8	SN:B35001--
4	17A-Z11-1930	· PLATE	1	SN:B35001--
5	17A-Z11-1940	· PLATE	1	SN:B35001--
6	17A-Z11-1950	· AWNING	4	SN:B35001--
7	20Y-54-18690	· RIVET	4	SN:B35001--
8	17A-Z11-2850	· SHEET	1	SN:B35001--
9	17A-Z11-2860	· SHEET	2	SN:B35001--
10	17A-Z11-2840	· SHEET	1	SN:B35001--
11	17A-Z11-2731	· COVER	1	SN:B35001--
12	17A-Z11-2741	· COVER	1	SN:B35001--
13	17A-Z11-2751	· COVER	1	SN:B35001--
14	17A-Z11-2761	· COVER	1	SN:B35001--
15	17A-Z11-1890	· CLIP	12	SN:B35001--
16	17A-Z11-2811	· PLATE	12	SN:B35001--
17	17A-Z11-2940	· HOOK	2	SN:B35001--
18	01370-40412	· SCREW	4	SN:B35001--
19	17A-Z11-2950	· CAP	4	SN:B35001--

Ref. K0210-12A0 Page 240240

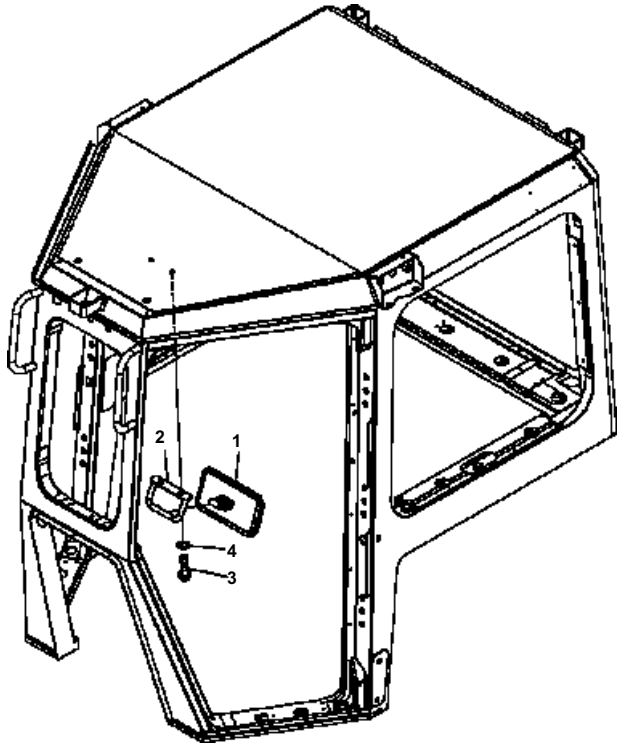

D41E6T S/N B35001-UP

CAB (MIRROR)

Item	Part No.	Description	Qty	Options
	17A-Z11-0010	CAB ASS'Y THIS ASSEMBLY CONSISTS OF ALL PARTS SHOWN IN FIGS. K0210-01A0 TO K0210-14A0.	1	SN:B35001--
1	195-Z11-2180	· MIRROR	1	SN:B35001--
2	17A-Z11-1922	· BRACKET	1	SN:B35001--
3	01245-00825	· SCREW	2	SN:B35001--
4	01643-70823	· WASHER	2	SN:B35001--

Ref. K0210-13A0 Page 240250

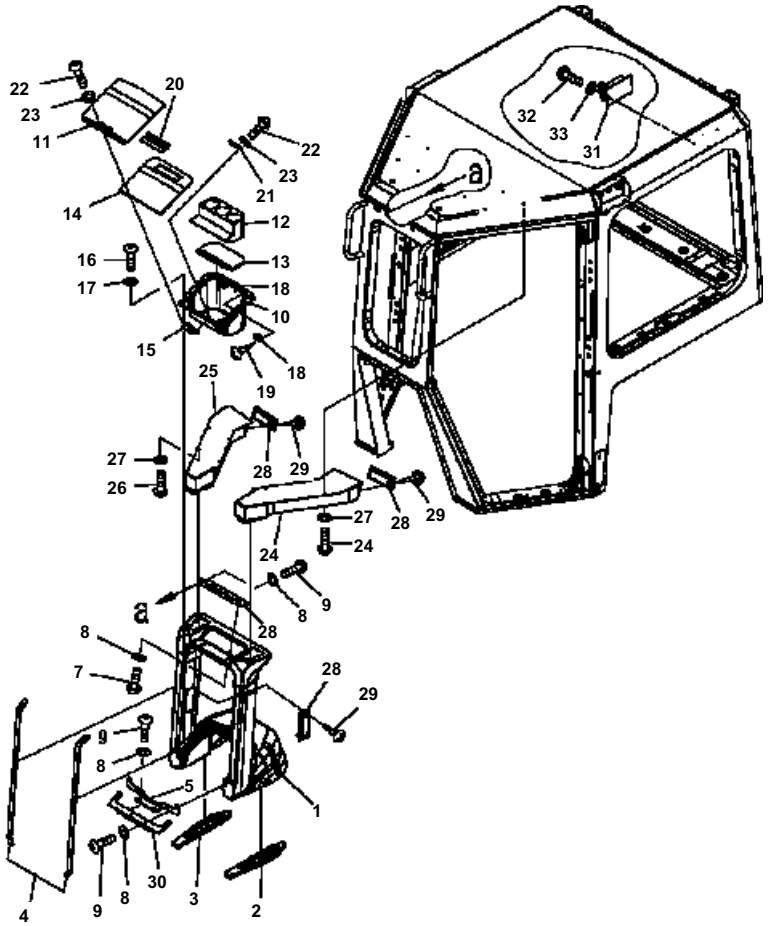

D41E6T S/N B35001-UP

CAB (AIR CONDITIONER DUCT)

Item	Part No.	Description	Qty	Options
	17A-Z11-0010	CAB ASS'Y THIS ASSEMBLY CONSISTS OF ALL PARTS SHOWN IN FIGS. K0210-01A0 TO K0210-14A0.	1	SN:B35001--
1	17A-Z11-3811	· DUCT	1	SN:B35001--
2	17A-Z11-3821	· SEAL	1	SN:B35001--
3	17A-Z11-3831	· SEAL	1	SN:B35001--
4	17A-Z11-3780	· SHEET	2	
5	17A-Z11-3841	· PLATE	1	SN:B35001--
6	17A-Z11-3890	· BRACKET	1	
7	01245-00840	· SCREW	2	SN:B35001--
8	01643-70823	· WASHER	8	SN:B35001--
9	01245-00816	· SCREW	6	SN:B35001--
10	17A-Z11-3931	· BOX	1	SN:B35001--
11	17A-Z11-3941	· PLATE	1	SN:B35001--
12	17A-Z11-2960	· CUSHION	1	SN:B35001--
13	17A-Z11-2970	· CUSHION	1	SN:B35001--
14	17A-Z11-2991	· SHEET	1	SN:B35001--
15	17A-Z11-3981	· HINGE	1	SN:B35001--
16	01245-00616	· SCREW	4	SN:B35001--
17	01643-70623	· WASHER	4	SN:B35001--
18	17A-Z11-3970	· LOCK ASS'Y	2	SN:B35001--
19	01370-10308	· SCREW	4	SN:B35001--
20	17A-Z11-2590	· PLATE	1	SN:B35001--
21	17A-Z11-2890	· PLATE	1	SN:B35001--
22	01245-00616	· SCREW	4	SN:B35001--
23	01643-70623	· WASHER	4	SN:B35001--
24	17A-Z11-3871	· DUCT	1	SN:B35001--
25	17A-Z11-3881	· DUCT	1	SN:B35001--
26	01245-00616	· SCREW	8	SN:B35001--
27	01643-70623	· WASHER	8	SN:B35001--
28	17A-Z11-7161	· LOUVER	3	SN:B35001--
29	01370-40308	· SCREW	6	SN:B35001--
30	17A-Z11-3961	· PLATE	1	SN:B35001--
31	22U-06-22250	· CONVERTER	1	SN:B35001--
32	01245-00620	· SCREW	2	SN:B35001--
33	01643-70623	· WASHER	2	SN:B35001--

Ref. K0210-14A0 Page 240260

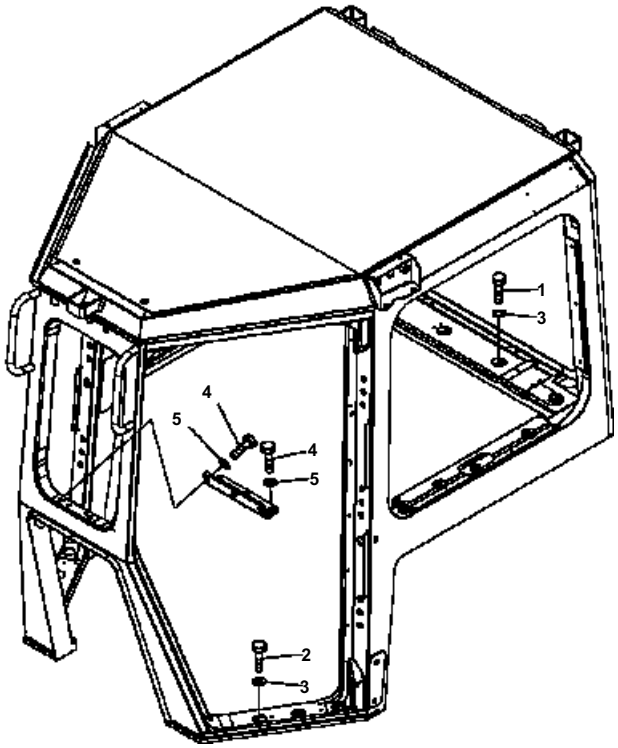

D41E6T S/N B35001-UP

CAB (INSTALLATION PARTS)

Item	Part No.	Description	Qty	Options
1	01010-81270	BOLT	15	SN:B35001--
2	01010-81240	BOLT	6	SN:B35001--
3	124-54-26540	WASHER	21	SN:B35001--
4	01010-81230	BOLT	6	SN:B35001--
5	01643-31232	WASHER	6	SN:B35001--

Ref. K0210-15A0 Page 240270

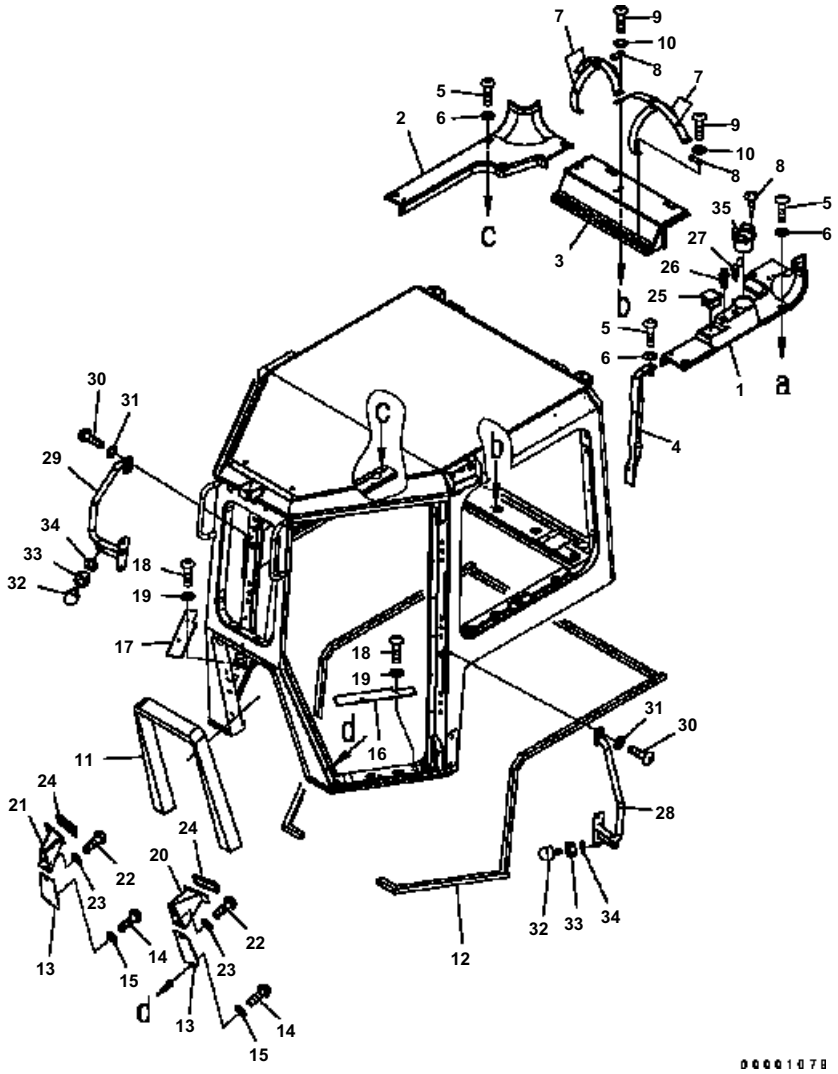

D41E6T S/N B35001-UP

CAB (ENVELOPE PARTS) (1/2)

Item	Part No.	Description	Qty	Options
1	124-Z11-8170	COVER	1	SN:B35001--
2	17A-Z11-2781	COVER	1	SN:B35001--
3	17A-Z11-2791	COVER	1	SN:B35001--
4	17A-Z11-2880	COVER	1	SN:B35001--
5	17A-Z11-1890	CLIP	13	SN:B35001--
6	17A-Z11-2811	PLATE	13	SN:B35001--
7	17A-Z11-2920	BAND	4	SN:B35001--
8	17A-Z11-2931	PLATE	7	SN:B35001--
9	01245-00620	SCREW	14	SN:B35001--
10	01643-70623	WASHER	14	SN:B35001--
11	124-Z11-8120	SEAL	1	SN:B35001--
12	17A-Z11-3541	SEAL	5	SN:B35001--
13	17A-Z11-3560	PLATE	2	SN:B35001--
14	01245-01230	SCREW	4	SN:B35001--
15	01643-71232	WASHER	4	SN:B35001--
16	17A-Z11-3512	PLATE{L.H.}	1	SN:B35001--
17	17A-Z11-3522	PLATE{R.H.}	1	SN:B35001--
18	01245-00620	SCREW	4	SN:B35001--
19	01643-70623	WASHER	4	SN:B35001--
20	14X-911-5711	BRACKET	1	SN:B35001--
21	14X-911-5721	BRACKET	1	SN:B35001--
22	01245-01230	SCREW	4	SN:B35001--
23	01643-71232	WASHER	4	SN:B35001--
24	203-43-56450	CAP, PEDAL	2	SN:B35001--
25	17A-Z11-3570	ASHTRAY	1	SN:B35001--
26	20Y-06-23472	LIGHTER	1	SN:B35001--
27	198-Z11-2640	SOCKET ASS'Y	1	SN:B35001--
28	17A-Z11-3581	GRIP{L.H.}	1	SN:B35001--
29	17A-Z11-3741	GRIP{R.H.}	1	SN:B35001--
30	01245-01230	SCREW	6	SN:B35001--
31	01643-71232	WASHER	6	SN:B35001--
32	09453-00002	STOPPER	2	SN:B35001--
33	01580-11210	NUT	2	SN:B35001--
34	01643-71232	WASHER	2	SN:B35001--
35	17A-Z11-3180	HOLDER	1	SN:B35001--
36	01370-40408	SCREW	2	SN:B35001--

Ref. K0210-16A0 Page 240280

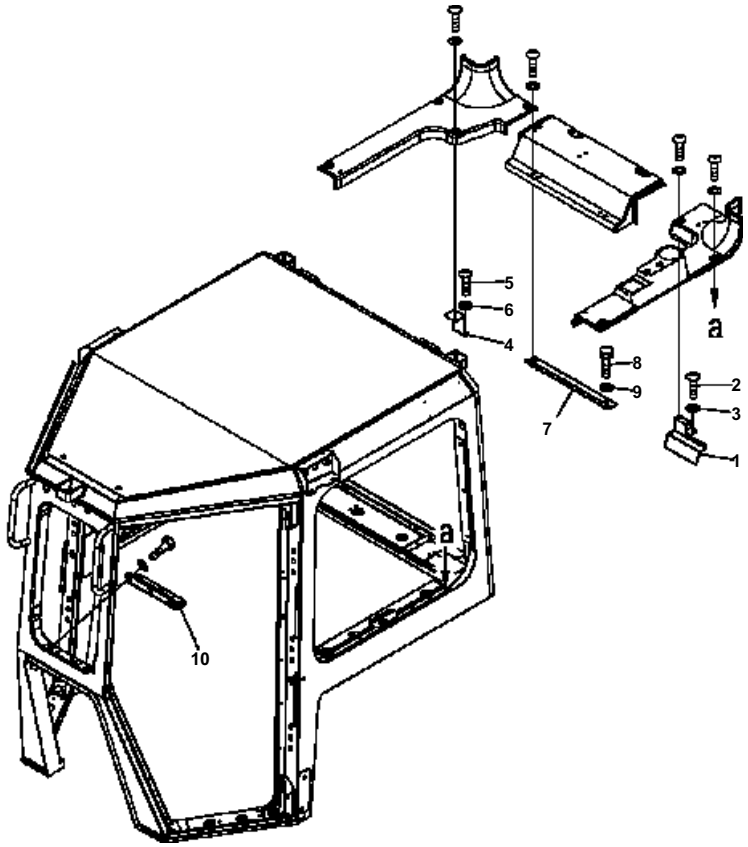

D41E6T S/N B35001-UP

CAB (ENVELOPE PARTS) (2/2)

Item	Part No.	Description	Qty	Options
1	17A-Z11-1970	BRACKET{L.H.}	1	SN:B35001--
2	01245-00620	SCREW	3	SN:B35001--
3	01643-70623	WASHER	3	SN:B35001--
4	17A-Z11-1980	BRACKET{R.H.}	1	SN:B35001--
5	01245-00620	SCREW	2	SN:B35001--
6	01643-70623	WASHER	2	SN:B35001--
7	17A-Z11-1990	BRACKET	1	SN:B35001--
8	01010-81016	BOLT	2	SN:B35001--
9	01643-31032	WASHER	2	SN:B35001--
10	124-Z11-8110	BRACKET	1	SN:B35001--

Ref. K0210-17A0 Page 240290

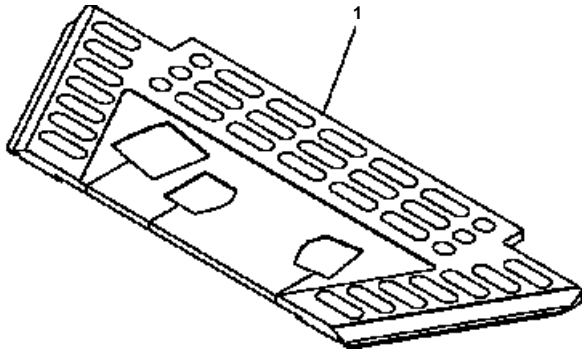

D41E6T S/N B35001-UP

FLOOR (WITH CAB)

Item	Part No.	Description	Qty	Options
1	124-54-68160	MAT{CANOPY}	1	SN:B35001--

Ref. K0310-01A0 Page 240300

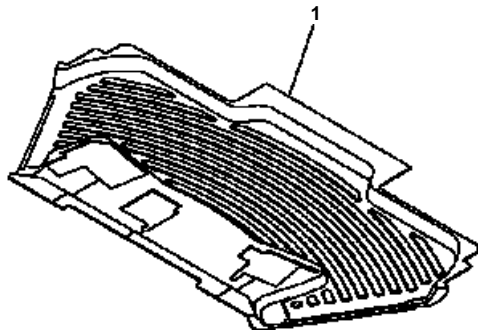

D41E6T S/N B35001-UP

FLOOR (WITHOUT CAB)

Item	Part No.	Description	Qty	Options
1	124-54-68180	MAT	1	SN:B35001--

Ref. K0310-01A1 Page 240310

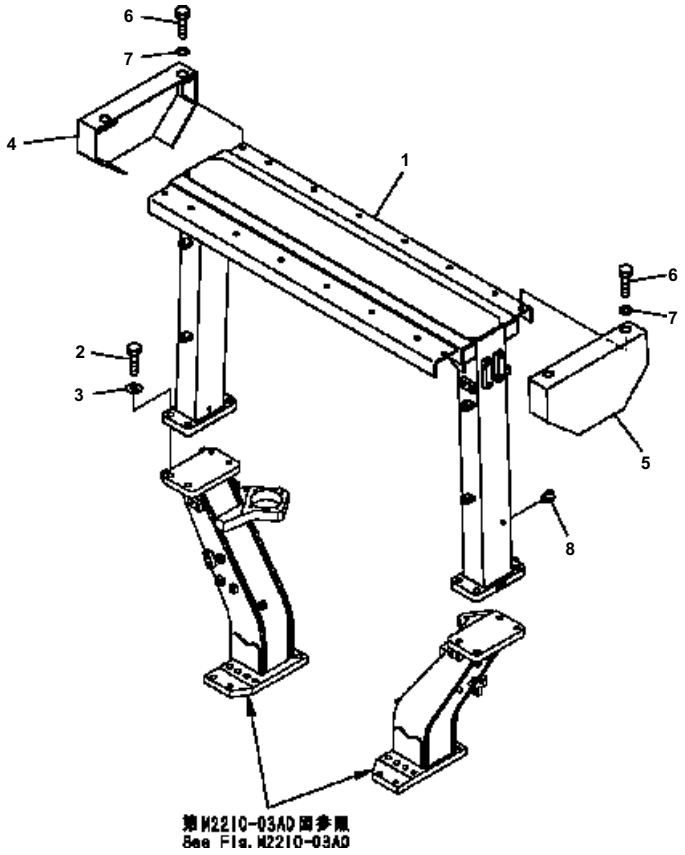

D41E6T S/N B35001-UP

ROPS (WITH CAB)

Item	Part No.	Description	Qty	Options
1	124-Z78-6213	GUARD	1	SN:B35001--
2	01010-82065	BOLT	8	SN:B35001--
3	708-8F-11260	WASHER	8	SN:B35001--
4	134-X78-7412	COVER{R.H.}	1	SN:B35001--
5	134-X78-7422	COVER{L.H.}	1	SN:B35001--
6	01010-81230	BOLT	4	SN:B35001--
7	01643-31232	WASHER	4	SN:B35001--
8	07049-01012	PLUG	13	SN:B35001--

Ref. K0410-01A0 Page 240320

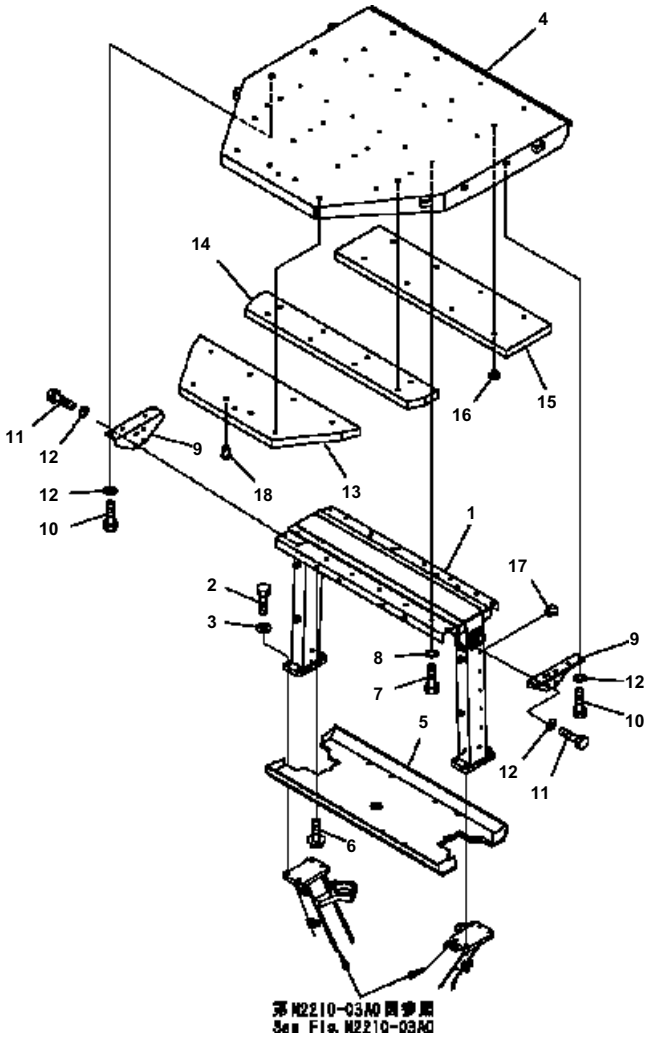

D41E6T S/N B35001-UP

ROPS (WITHOUT CAB)

Item	Part No.	Description	Qty	Options
1	124-Z78-6213	GUARD	1	SN:B35001--
2	01010-82065	BOLT	8	SN:B35001--
3	708-8F-11260	WASHER	8	SN:B35001--
4	134-X78-7152	ROOF	1	SN:B35001--
5	124-Z78-6182	LINING	1	SN:B35001--
6	01435-00850	BOLT	8	SN:B35001--
7	01010-81225	BOLT	12	SN:B35001--
8	01643-31232	WASHER	12	SN:B35001--
9	14X-978-2170	PLATE	2	SN:B35001--
10	01010-81235	BOLT	8	SN:B35001--
11	01010-81230	BOLT	8	SN:B35001--
12	01643-31232	WASHER	16	SN:B35001--
13	134-X78-7190	LINING	1	SN:B35001--
14	124-Z78-6161	LINING	1	SN:B35001--
15	124-Z78-6170	LINING	1	SN:B35001--
16	14X-978-1660	BUTTON	23	SN:B35001--
17	07049-01012	PLUG	13	SN:B35001--
18	07049-01215	PLUG	3	SN:B35001--

Ref. K0410-01A1 Page 240330

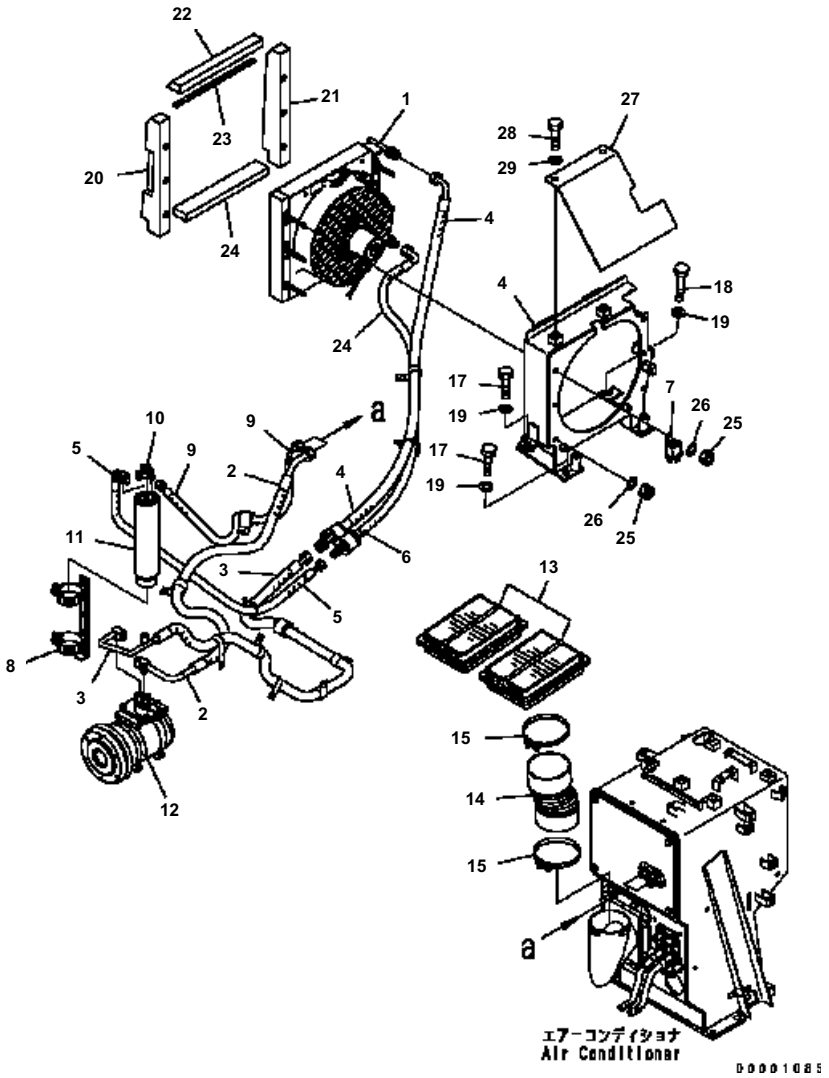

D41E6T S/N B35001-UP

AIR CONDITIONER (CONDENSER AND COMPRESSOR)

Item	Part No.	Description	Qty	Options
1	144-Y11-1851	CONDENSER ASS'Y	1	SN:B35001--
2	124-Z11-1371	HOSE ASS'Y	1	SN:B35001--
	20Y-979-3130	· O-RING	2	SN:B35001--
3	124-Z11-1271	HOSE ASS'Y	1	SN:B35001--
	20Y-979-3140	· O-RING	1	SN:B35001--
	08017-31917	· CONDUIT	1	SN:B35001--
4	124-Z11-2310	HOSE ASS'Y	1	SN:B35001--
	20Y-979-3140	· O-RING	1	SN:B35001--
	08017-31912	· CONDUIT	1	SN:B35001--
5	124-Z11-1620	HOSE ASS'Y	1	SN:B35001--
	20Y-979-3130	· O-RING	2	SN:B35001--
	08017-31505	· CONDUIT	1	SN:B35001--
6	124-Z11-1950	HOSE ASS'Y	1	SN:B35001--
	20Y-979-3150	· O-RING	2	SN:B35001--
7	205-979-6460	RELAY ASS'Y	1	SN:B35001--
8	120-X11-1510	HOLDER	1	SN:B35001--
9	124-Z11-1850	HOSE ASS'Y	1	SN:B35001--
	20Y-979-3150	· O-RING	2	SN:B35001--
	08017-31505	· CONDUIT	1	SN:B35001--
10	17A-911-1671	JOINT	1	SN:B35001--
	20Y-979-3150	· O-RING	1	SN:B35001--
11	20Y-979-3120	TANK	1	SN:B35001--
12	42C-07-11210	COMPRESSOR	1	SN:B35001--
	14X-911-7030	FILTER ASS'Y	1	SN:B35001--
13	14X-911-7750	· FILTER	2	SN:B35001--
14	09485-01003	· HOSE	1	SN:B35001--
15	14X-911-7670	· CLAMP	2	SN:B35001--
16	124-Z11-1791	BRACKET	1	SN:B35001--
17	01010-81225	BOLT	2	SN:B35001--
18	01010-81250	BOLT	2	SN:B35001--
19	01643-31232	WASHER	4	SN:B35001--
20	124-Z11-1220	SHEET	1	SN:B35001--
21	124-Z11-1230	SHEET	1	SN:B35001--
22	124-Z11-1240	SHEET	1	SN:B35001--
23	124-Z11-2210	SHEET	1	SN:B35001--
24	124-911-1251	SHEET	1	SN:B35001--
25	01580-10806	NUT	6	SN:B35001--
26	01643-30823	WASHER	6	SN:B35001--
27	124-911-1350	COVER	1	SN:B35001--
28	01010-81220	BOLT	2	SN:B35001--
29	01643-31232	WASHER	2	SN:B35001--

Ref. K0710-01A0 Page 240340

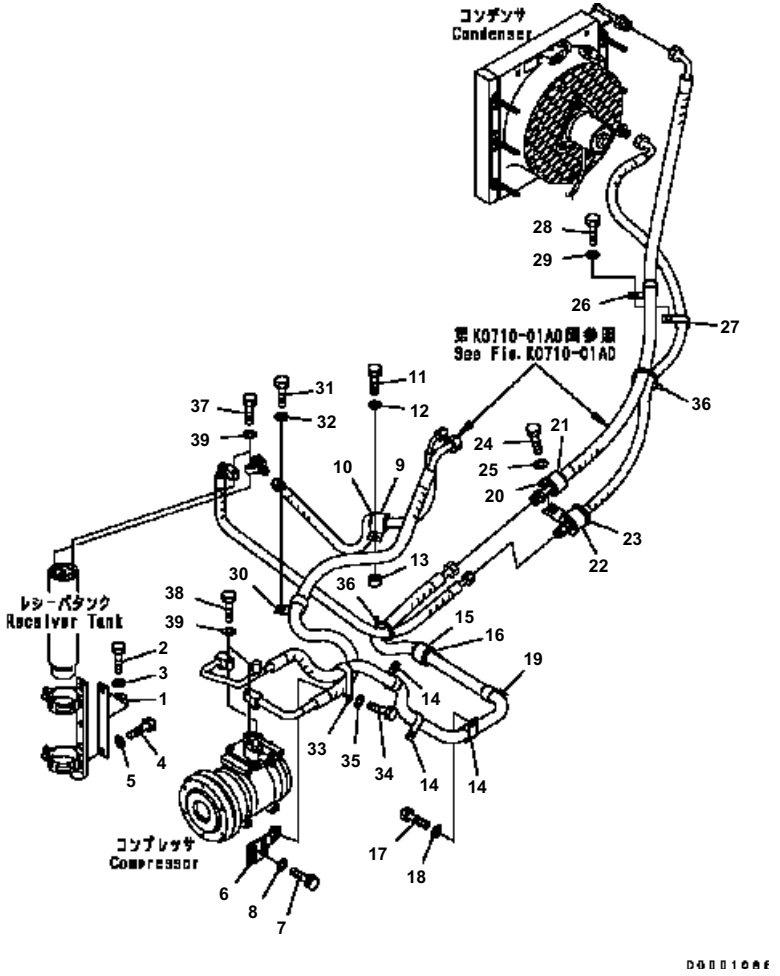

D41E6T S/N B35001-UP

AIR CONDITIONER (PIPING BRACKET)

Item	Part No.	Description	Qty	Options
1	124-Z11-1150	BRACKET	1	SN:B35001--
2	01010-81225	BOLT	2	SN:B35001--
3	01643-31232	WASHER	2	SN:B35001--
4	01010-80816	BOLT	2	SN:B35001--
5	01643-30823	WASHER	2	SN:B35001--
6	124-Z11-1890	PLATE	1	SN:B35001--
7	01010-81020	BOLT	2	SN:B35001--
8	01643-31032	WASHER	2	SN:B35001--
9	04434-52710	CLIP	1	SN:B35001--
10	07095-20419	CUSHION	1	SN:B35001--
11	01010-81035	BOLT	1	SN:B35001--
12	01643-31032	WASHER	1	SN:B35001--
13	201-03-29160	SPACER	1	SN:B35001--
14	04434-52310	CLIP	3	SN:B35001--
15	04434-53210	CLIP	1	SN:B35001--
16	07095-20523	CUSHION	1	SN:B35001--
17	01010-81020	BOLT	2	SN:B35001--
18	01643-31032	WASHER	2	SN:B35001--
19	04434-52312	CLIP	1	SN:B35001--
20	04434-53212	CLIP	1	SN:B35001--
21	07095-20522	CUSHION	1	SN:B35001--
22	144-874-6960	CLIP	1	SN:B35001--
23	07095-00418	CUSHION	1	SN:B35001--
24	01010-81220	BOLT	1	SN:B35001--
25	01643-31232	WASHER	1	SN:B35001--
26	04434-52312	CLIP	1	SN:B35001--
27	04434-51912	CLIP	1	SN:B35001--
28	01010-81220	BOLT	1	SN:B35001--
29	01643-31232	WASHER	1	SN:B35001--
30	04434-52710	CLIP	1	SN:B35001--
31	01010-81020	BOLT	1	SN:B35001--
32	01643-31032	WASHER	1	SN:B35001--
33	566-07-41440	CLIP	1	SN:B35001--
34	01010-81020	BOLT	1	SN:B35001--
35	01643-31032	WASHER	1	SN:B35001--
36	08034-00519	BAND	2	SN:B35001--
37	01010-80625	BOLT	2	SN:B35001--
38	01010-80630	BOLT	2	SN:B35001--
39	01641-20608	WASHER	4	SN:B35001--

Ref. K0710-02A0 Page 240350

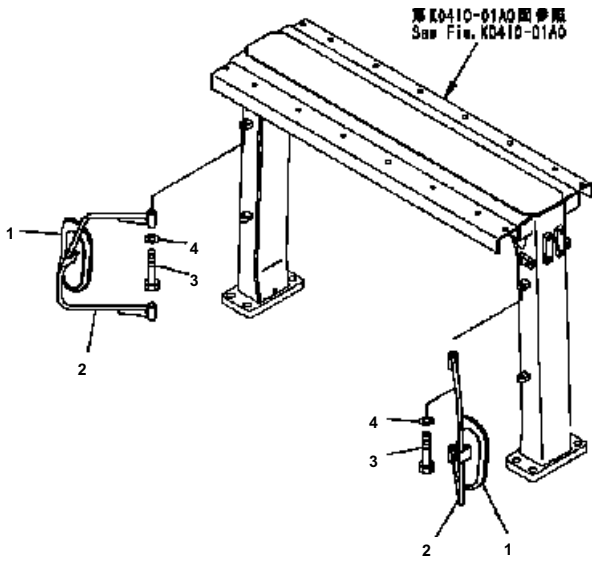

D41E6T S/N B35001-UP

REAR VIEW MIRROR

Item	Part No.	Description	Qty	Options
1	20Y-54-12810	MIRROR	2	SN:B35001--
2	134-X78-7342	STAY	2	SN:B35001--
3	01010-81280	BOLT	4	SN:B35001--
4	01643-31232	WASHER	4	SN:B35001--

Ref. K0411-01A0 Page 240355

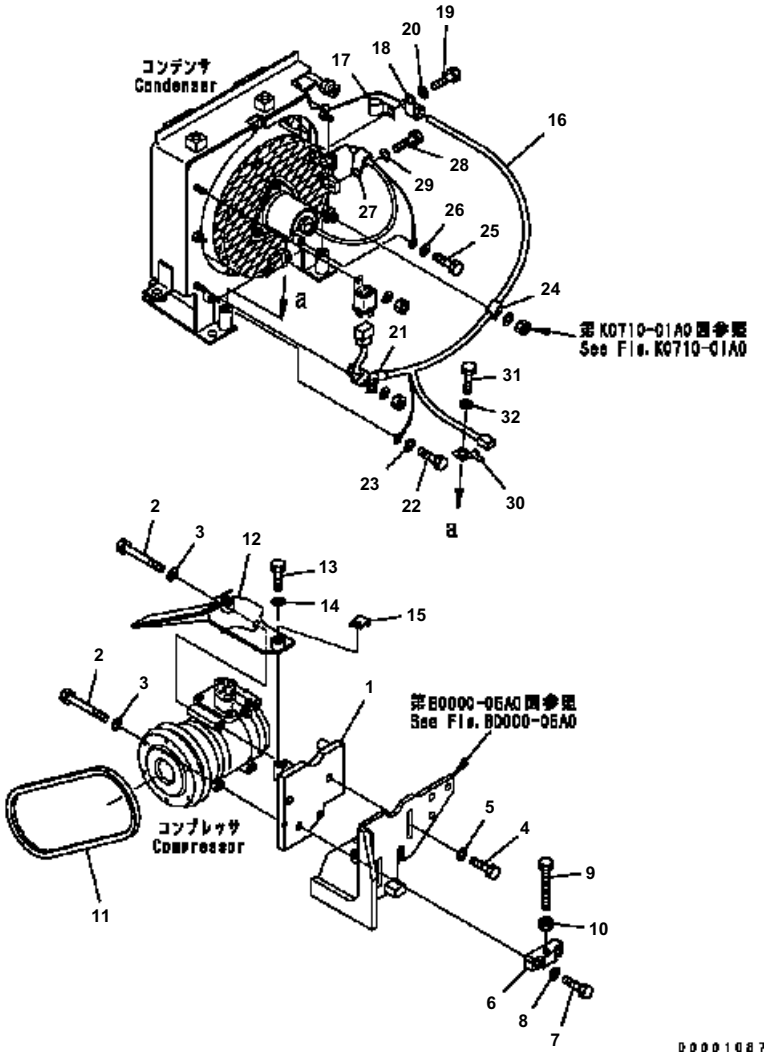

D41E6T S/N B35001-UP

AIR CONDITIONER (COMPRESSOR MOUNT AND CONDENSER WIRING)

Item	Part No.	Description	Qty	Options
1	124-911-1314	BRACKET	1	SN:B35001--
2	01010-80890	BOLT	3	SN:B35001--
3	01643-30823	WASHER	3	SN:B35001--
4	01010-81225	BOLT	2	SN:B35001--
5	01643-31232	WASHER	2	SN:B35001--
6	124-Z11-1361	BLOCK	1	SN:B35247--
	124-Z11-1360	BLOCK	1	SN:B35001--B35246
7	01010-81240	BOLT	2	SN:B35247--
	01010-81245	BOLT	2	SN:B35001--B35246
8	01643-31232	WASHER	2	SN:B35001--
9	01016-51090	BOLT	1	SN:B35001--
10	01580-11008	NUT	1	SN:B35001--
11	124-Z11-1720	V-BELT	1	SN:B35001--
12	124-Z11-2232	COVER	1	SN:B35001--
13	01010-80825	BOLT	1	SN:B35001--
14	01643-30823	WASHER	1	SN:B35001--
15	04434-50510	CLIP	1	SN:B35001--
16	124-Z11-2180	WIRING HARNESS	1	SN:B35001--
	21X-06-31530	DIODE	1	SN:B35001--
17	04434-51510	CLIP	1	SN:B35001--
18	04434-51810	CLIP	1	SN:B35001--
19	01010-81025	BOLT	1	SN:B35001--
20	01643-31032	WASHER	1	SN:B35001--
21	04434-51010	CLIP	1	SN:B35001--
22	01010-80816	BOLT	1	SN:B35001--
23	01643-30823	WASHER	1	SN:B35001--
24	04434-51010	CLIP	1	SN:B35001--
25	01010-80816	BOLT	1	SN:B35001--
26	01643-30823	WASHER	1	SN:B35001--
27	04434-51810	CLIP	1	SN:B35001--
28	01010-80820	BOLT	1	SN:B35001--
29	01643-30823	WASHER	1	SN:B35001--
30	08193-21012	CLIP	1	SN:B35001--
31	01010-81016	BOLT	1	SN:B35001--
32	01643-31032	WASHER	1	SN:B35001--

Ref. K0710-03A0 Page 240360

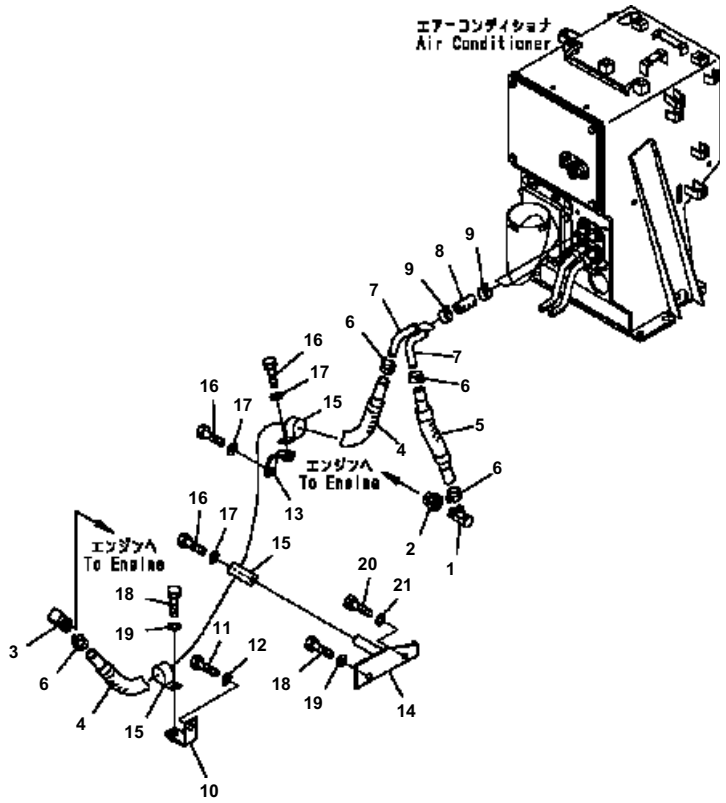

D41E6T S/N B35001-UP

AIR CONDITIONER (HEATER LINE)

Item	Part No.	Description	Qty	Options
1	567-07-15221	NIPPLE	1	SN:B35001--
2	124-Z11-1530	ADAPTER	1	SN:B35001--
3	124-Z11-1170	NIPPLE	1	SN:B35001--
4	124-Z11-1350	HOSE ASS'Y	1	SN:B35001--
	08017-32813	・ CONDUIT	1	SN:B35001--
5	124-Z11-1420	HOSE ASS'Y	1	SN:B35001--
	08017-32802	・ CONDUIT	1	SN:B35001--
6	09479-02400	CLAMP	4	SN:B35001--
7	195-979-4390	TUBE	2	SN:B35001--
8	195-979-4841	HOSE	2	SN:B35001--
9	09479-02400	CLAMP	4	SN:B35001--
10	124-Z11-2130	BRACKET	1	SN:B35001--
11	01010-81225	BOLT	1	SN:B35001--
12	01643-31232	WASHER	1	SN:B35001--
13	124-Z11-1930	BRACKET	1	SN:B35001--
14	124-Z11-1310	BRACKET	1	SN:B35001--
15	04434-53412	CLIP	3	SN:B35001--
16	01010-81020	BOLT	2	SN:B35001--
17	01643-31032	WASHER	2	SN:B35001--
18	01010-81225	BOLT	2	SN:B35001--
19	01643-31232	WASHER	2	SN:B35001--
20	01010-80820	BOLT	1	SN:B35001--
21	01643-30823	WASHER	1	SN:B35001--

Ref. K0710-04A0 Page 240370

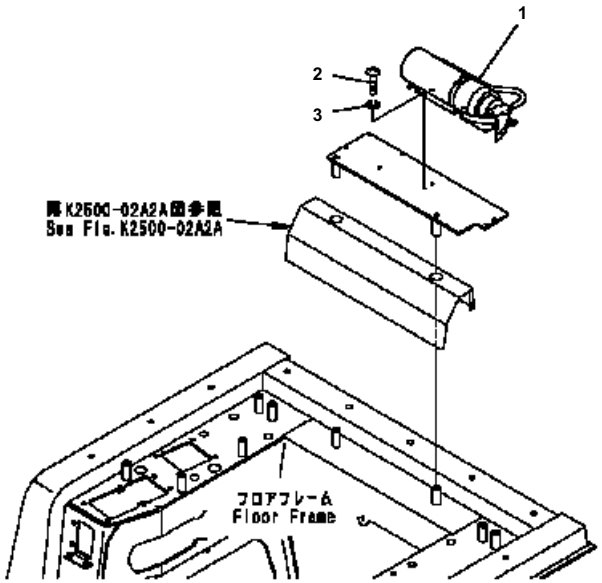

D41E6T S/N B35001-UP

FIRE EXTINGUISHER

Item	Part No.	Description	Options
1	09495-00010	EXTINGUISHER	SN:B35001--
2	01220-40616	SCREW	SN:B35001--
3	01602-20619	WASHER	SN:B35001--

Ref. K0830-01A0 Page 240380

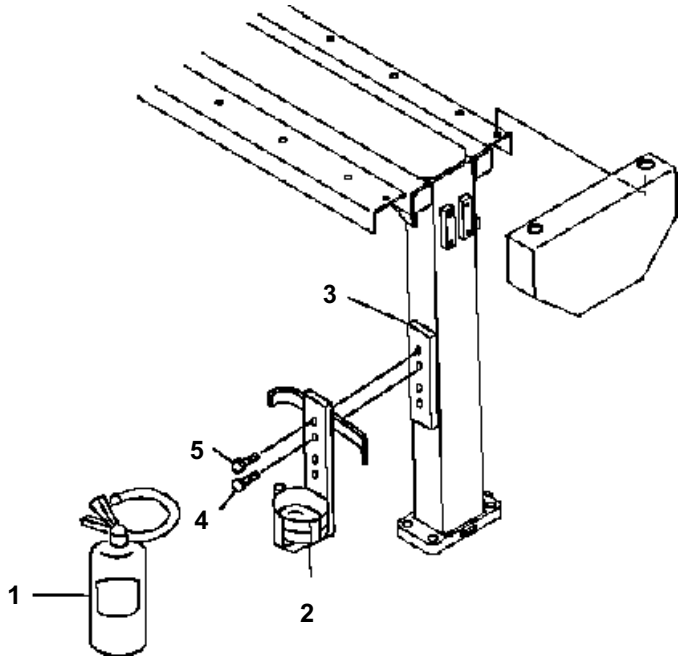

D41E6T S/N B35001-UP

FIRE EXTINGUISHER (PAKISTAN)

Item	Part No.	Description	Qty	Options
1	124-98-B1110	EXTINGUISHER	1	SN:B35532--
2	124-98-B1120	BRACKET	1	SN:B35532--
3	124-98-B1130	PLATE	1	SN:B35532--
4	01225-40820	BOLT	1	SN:B35532--
5	01245-00612	BOLT	1	SN:B35532--

Ref. K0830-01A1 Page 240381

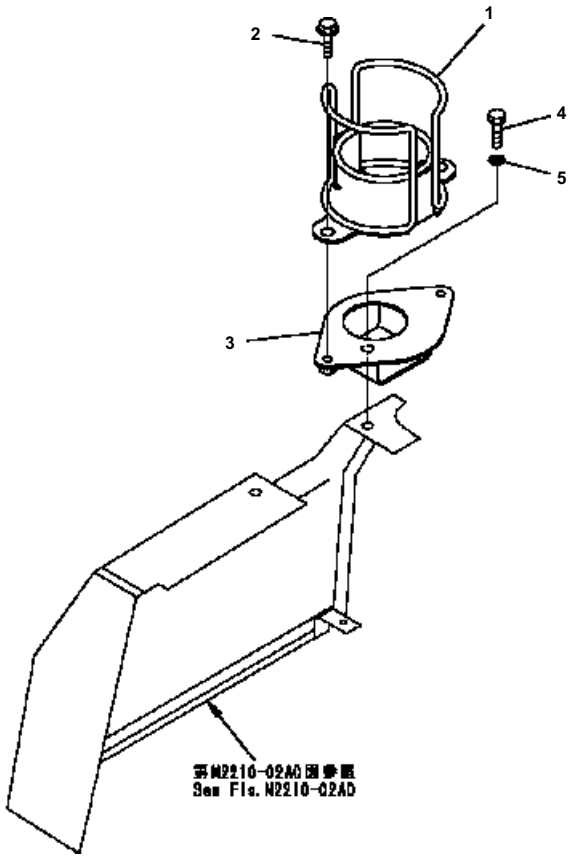

D41E6T S/N B35001-UP

CUP HOLDER (WITHOUT CAB)

Item	Part No.	Description	Qty	Options
1	14X-911-6180	BRACKET	1	SN:B35001--
2	01435-40816	BOLT	2	SN:B35001--
3	134-X11-1920	BRACKET	1	SN:B35001--
4	01010-81225	BOLT	1	SN:B35001--
5	01643-31232	WASHER	1	SN:B35001--

Ref. K0860-01A0 Page 240390

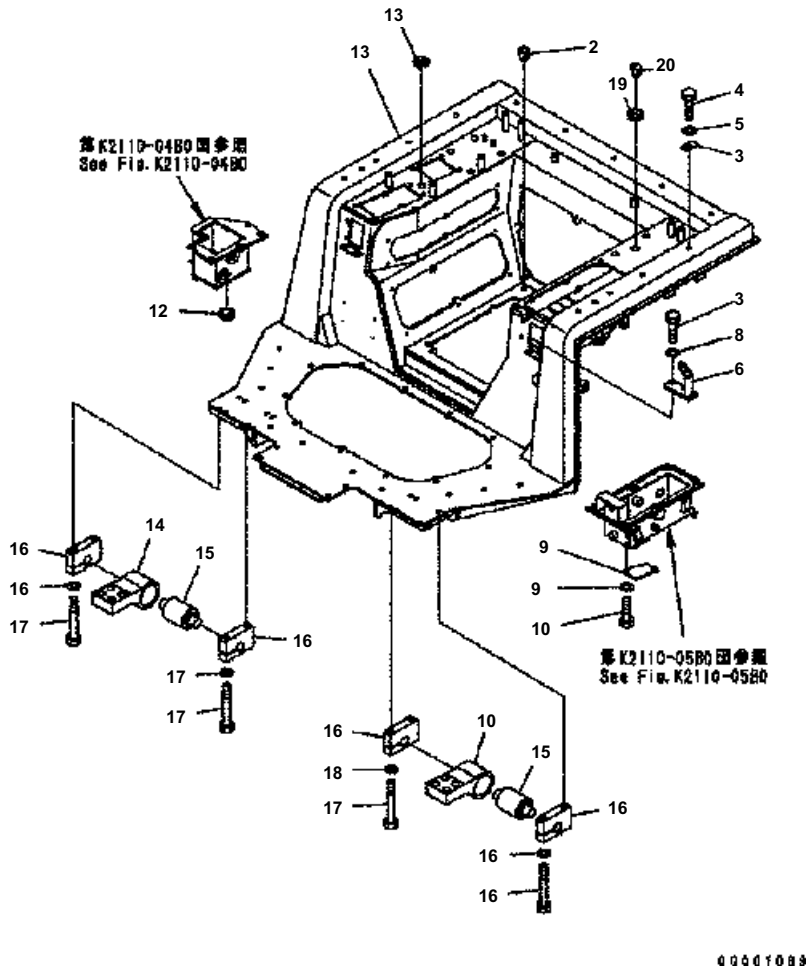

D41E6T S/N B35001-UP

FLOOR FRAME (MOUNT AND PLUG)

Item	Part No.	Description	Qty	Options
1	124-54-65512	FRAME	1	SN:B35210--
	124-54-65511	FRAME	1	SN:B35001--B35209
2	07049-01215	PLUG	8	SN:B35001--
3	14X-54-25190	PLATE	2	SN:B35001--
4	01010-81225	BOLT	2	SN:B35001--
5	01643-31232	WASHER	2	SN:B35001--
6	14X-54-16641	BRACKET	1	SN:B35001--
7	01010-81025	BOLT	2	SN:B35001--
8	01643-31032	WASHER	2	SN:B35001--
9	17A-43-25410	COVER	1	SN:B35001--
10	01010-81025	BOLT	2	SN:B35001--
11	01643-31032	WASHER	2	SN:B35001--
12	09415-02512	CAP	1	SN:B35001--
13	135-06-34260	GROMMET	1	SN:B35001--
14	124-54-53450	BRACKET	2	SN:B35001--
15	17A-54-16821	CUSHION	2	SN:B35001--
16	17A-54-16841	PLATE	4	SN:B35001--
17	01011-81615	BOLT	8	SN:B35001--
18	01643-31645	WASHER	8	SN:B35001--
19	112-860-1360	GROMMET	1	SN:B35210--
20	07049-01822	PLUG	1	SN:B35210--

Ref. K2110-01B0 Page 240400

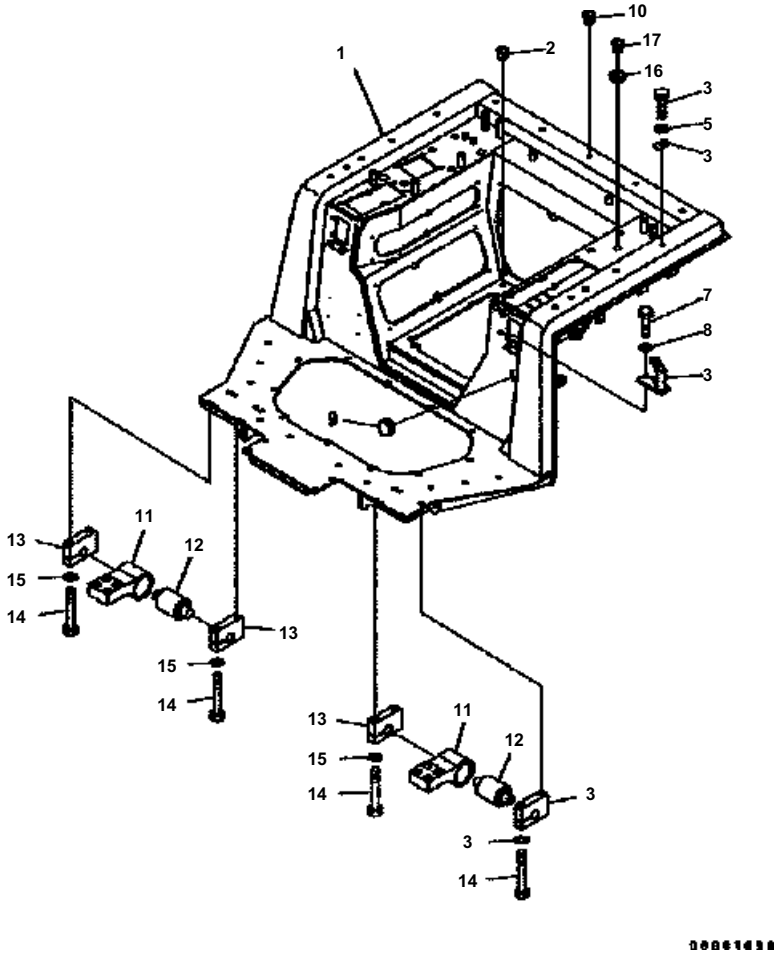

D41E6T S/N B35001-UP

FLOOR FRAME (MOUNT AND PLUG) (WITHOUT CAB)

Item	Part No.	Description	Qty	Options
1	124-54-65512	FRAME	1	SN:B35210--
	124-54-65511	FRAME	1	SN:B35001--B35209
2	07049-01215	PLUG	8	SN:B35001--
3	14X-54-25190	PLATE	2	SN:B35001--
4	01010-81225	BOLT	2	SN:B35001--
5	01643-31232	WASHER	2	SN:B35001--
6	14X-54-16641	BRACKET	1	SN:B35001--
7	01010-81025	BOLT	2	SN:B35001--
8	01643-31032	WASHER	2	SN:B35001--
9	09415-03614	CAP	1	SN:B35001--
10	07049-01215	PLUG	8	SN:B35001--
11	124-54-53450	BRACKET	2	SN:B35001--
12	17A-54-16821	CUSHION	2	SN:B35001--
13	17A-54-16841	PLATE	4	SN:B35001--
14	01011-81615	BOLT	8	SN:B35001--
15	01643-31645	WASHER	8	SN:B35001--
16	112-860-1360	GROMMET	1	SN:B35210--
17	07049-01822	PLUG		SN:B35210--

Ref. K2110-01B1 Page 240410

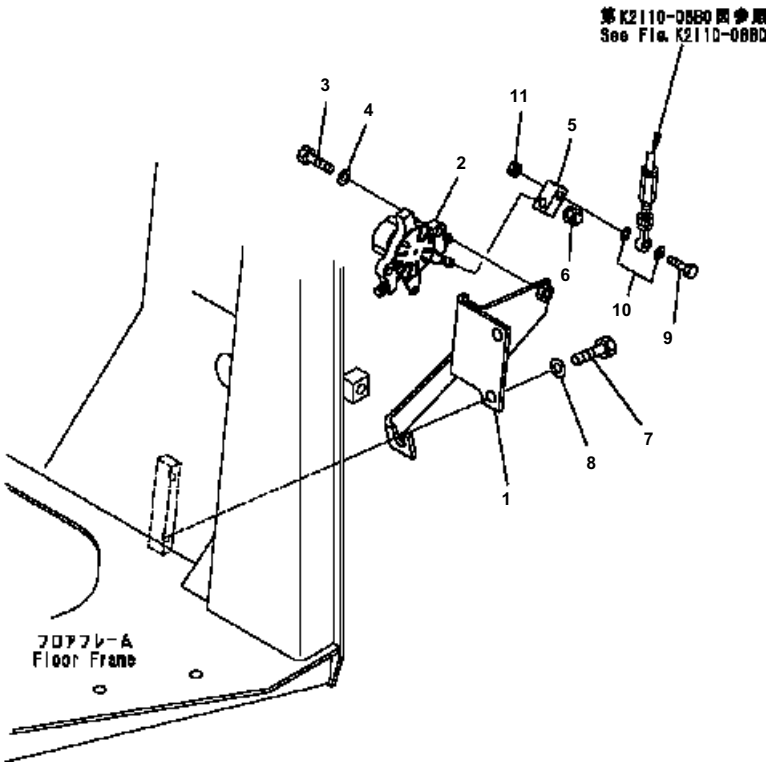

D41E6T S/N B35001-UP

FLOOR FRAME (FUEL CONTROL)

Item	Part No.	Description	Qty	Options
1	134-43-68251	BRACKET	1	SN:B35001--
2	134-43-66210	LEVER ASS'Y	1	SN:B35001--
3	01252-41030	BOLT	2	SN:B35001--
4	01643-31032	WASHER	2	SN:B35001--
5	124-43-54590	JOINT	1	SN:B35001--
6	01582-11008	NUT	1	SN:B35001--
7	01010-81220	BOLT	2	SN:B35001--
8	01643-31232	WASHER	2	SN:B35001--
9	04254-11032	SPACER	2	SN:B35001--
10	01010-81050	BOLT	1	SN:B35001--
11	01580-11008	NUT	2	SN:B35001--

Ref. K2110-02B0 Page 240420

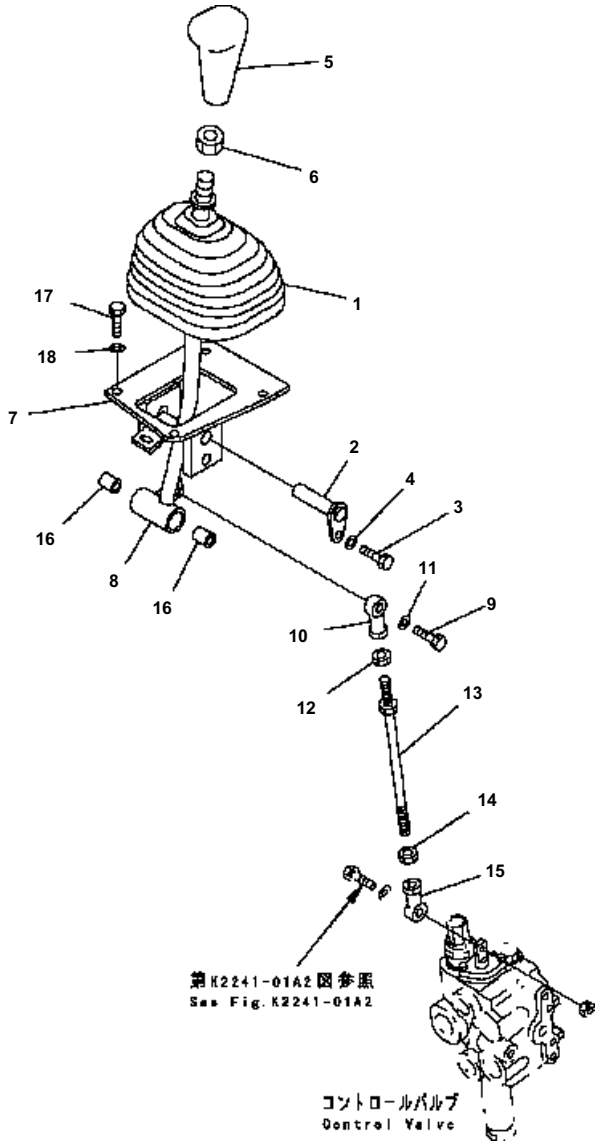

D41E6T S/N B35001-UP

FLOOR FRAME (BLADE CONTROL) (FOR ANGLE DOZER)

Item	Part No.	Description	Qty	Options
1	14X-43-11320	BOOT	1	SN:B35001--
2	21X-54-13340	SHAFT	1	SN:B35001--
3	01010-81220	BOLT	1	SN:B35001--
4	01643-51232	WASHER	1	SN:B35001--
5	14X-43-14170	KNOB	1	SN:B35001--
6	20T-43-71190	NUT	1	SN:B35001--
7	126-43-54210	BRACKET	1	SN:B35001--
8	126-43-54220	LEVER	1	SN:B35001--
9	01010-80830	BOLT	1	SN:B35001--
10	04250-80847	END	1	SN:B35001--
11	01643-50823	WASHER	1	SN:B35001--
12	01580-10806	NUT	1	SN:B35001--
13	04248-30816	ROD	1	SN:B35001--
14	01508-40805	NUT	1	SN:B35001--
15	04250-90847	END	1	SN:B35001--
16	06123-01614	BEARING	2	SN:B35001--
17	01010-80825	BOLT	4	SN:B35001--
18	01643-30823	WASHER	4	SN:B35001--

Ref. K2110-03B0 Page 240430

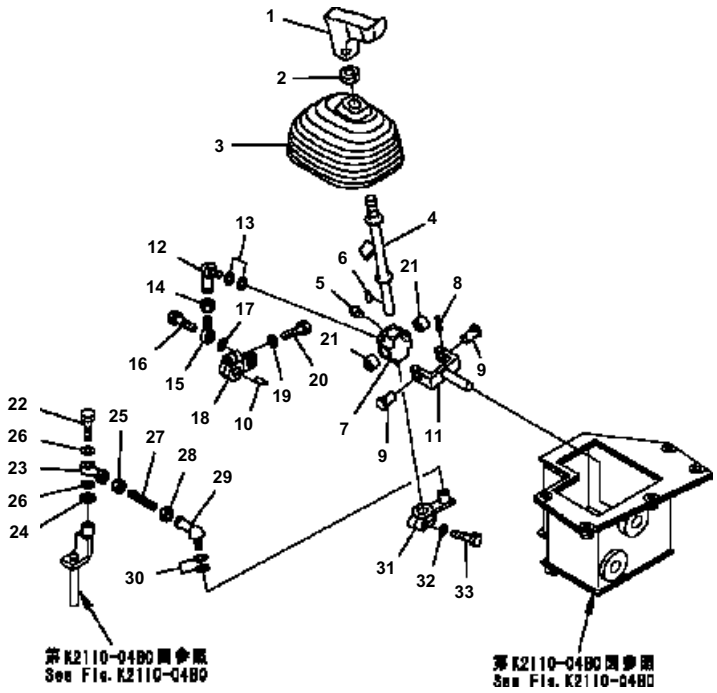

D41E6T S/N B35001-UP

FLOOR FRAME (BLADE CONTROL) (1/2) (FOR PAT DOZER)

Item	Part No.	Description	Qty	Options
1	124-43-54110	KNOB{R.H.}	1	SN:B35001--
2	20T-43-71190	NUT	1	SN:B35001--
3	14X-43-11320	BOOT	1	SN:B35001--
4	134-43-64320	LEVER	1	SN:B35001--
5	07042-70108	PLUG	1	SN:B35001--
6	04010-00516	KEY	1	SN:B35001--
7	17A-43-25151	LEVER	1	SN:B35001--
8	04025-00520	PIN	2	SN:B35001--
9	134-43-64370	PIN	2	SN:B35001--
10	04010-00516	KEY	1	SN:B35001--
11	134-43-64360	YOKE	1	SN:B35001--
12	04256-40817	JOINT	1	SN:B35001--
13	01643-30823	WASHER	2	SN:B35001--
14	01580-10806	NUT	1	SN:B35001--
15	04252-20853	END	1	SN:B35001--
16	01010-80830	BOLT	1	SN:B35001--
17	01643-30823	WASHER	1	SN:B35001--
18	124-43-54151	LEVER	1	SN:B35001--
19	01643-30823	WASHER	1	SN:B35001--
20	01010-80830	BOLT	1	SN:B35001--
21	06123-01414	BEARING	4	SN:B35001--
22	01010-80830	BOLT	1	SN:B35001--
23	04250-80847	END	1	SN:B35001--
24	01643-30823	WASHER	1	SN:B35001--
25	01580-10806	NUT	1	SN:B35001--
26	04254-10823	SPACER	2	SN:B35001--
27	04245-40805	ROD	1	SN:B35001--
28	01580-10806	NUT	1	SN:B35001--
29	04256-40817	JOINT	1	SN:B35001--
30	01643-30823	WASHER	2	SN:B35001--
31	124-43-54131	LEVER	1	SN:B35001--
	01571-00814	SEAT	1	SN:B35001--
	170-43-17330	BOSS	1	SN:B35001--
32	01643-30823	WASHER	2	SN:B35001--
33	01010-80830	BOLT	1	SN:B35001--

Ref. K2110-04B0 Page 240440

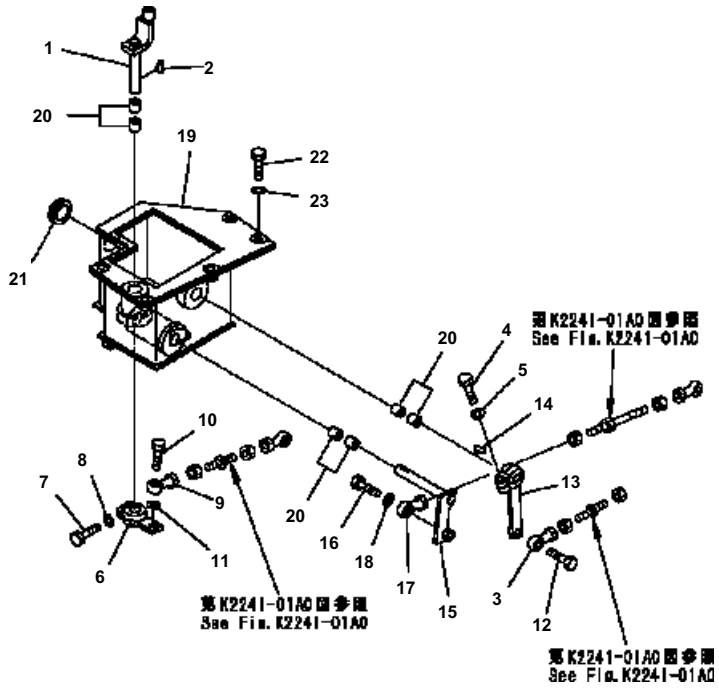

D41E6T S/N B35001-UP

FLOOR FRAME (BLADE CONTROL) (2/2) (FOR PAT DOZER)

Item	Part No.	Description	Qty	Options
1	124-43-54292	BRACKET	1	SN:B35001--
2	04010-00516	KEY	1	SN:B35001--
3	04250-90847	END	1	SN:B35001--
4	01010-80830	BOLT	1	SN:B35001--
5	01643-30823	WASHER	1	SN:B35001--
6	124-43-54261	LEVER	1	SN:B35001--
7	01643-30823	WASHER	1	SN:B35001--
8	01010-80830	BOLT	1	SN:B35001--
9	04250-90847	END	1	SN:B35001--
10	01010-80830	BOLT	1	SN:B35001--
11	01643-30823	WASHER	1	SN:B35001--
12	01010-80830	BOLT	1	SN:B35001--
13	124-43-54171	LEVER	1	SN:B35001--
14	04010-00516	KEY	1	SN:B35001--
15	124-43-54162	PIN	1	SN:B35001--
16	01010-80830	BOLT	1	SN:B35001--
17	04250-90847	END	1	SN:B35001--
18	01643-30823	WASHER	1	SN:B35001--
19	134-43-64310	PLATE	1	SN:B35001--
20	06123-01414	BEARING	6	SN:B35001--
21	09415-02512	CAP	2	SN:B35001--
22	01010-80830	BOLT	5	SN:B35001--
23	01643-30823	WASHER	5	SN:B35001--

Ref. K2110-04B1 Page 240450

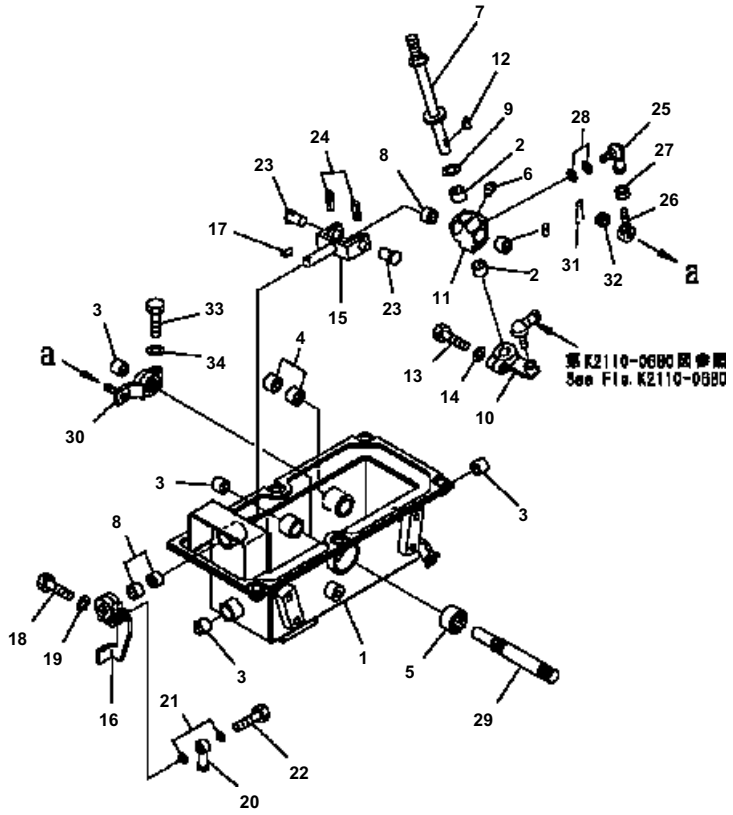

D41E6T S/N B35001-UP

FLOOR FRAME (SPEED CONTROL) (1/2)

Item	Part No.	Description	Qty	Options
1	134-43-61331	BRACKET	1	SN:B35001--
	14Z-43-13180	. SHEET	1	SN:B35001--
2	06123-01414	BEARING	6	SN:B35001--
3	06124-01416	BEARING	3	SN:B35001--
4	06123-01614	BEARING	2	SN:B35001--
5	06124-03520	BEARING	1	SN:B35001--
6	07042-70108	PLUG	1	SN:B35001--
7	124-43-51620	LEVER	1	SN:B35001--
8	06123-01414	BEARING	2	SN:B35001--
9	124-43-51610	SHIM, 2. 5MM	1	SN:B35001--
10	134-43-61420	LEVER	1	SN:B35001--
11	17A-43-25151	LEVER	1	SN:B35001--
12	04010-00516	KEY	1	SN:B35001--
13	01010-80830	BOLT	1	SN:B35001--
14	01643-30823	WASHER	1	SN:B35001--
15	17A-43-25131	YOKE	1	SN:B35001--
16	124-43-61130	LEVER	1	SN:B35001--
17	04010-00516	KEY	1	SN:B35001--
18	01010-80830	BOLT	1	SN:B35001--
19	01643-30823	WASHER	1	SN:B35001--
20	04250-80847	END	1	SN:B35001--
21	04254-10823	SPACER	2	SN:B35001--
22	01010-80835	BOLT	1	SN:B35001--
23	17A-43-25140	PIN	2	SN:B35001--
24	04025-00520	PIN	2	SN:B35001--
25	04256-40817	JOINT	1	SN:B35001--
26	04252-20853	END	1	SN:B35001--
27	01580-10806	NUT	1	SN:B35001--
28	01643-30823	WASHER	2	SN:B35001--
29	124-43-51631	SHAFT	1	SN:B35001--
30	17A-43-25171	LEVER	1	SN:B35001--
31	04050-12015	PIN	1	SN:B35001--
32	01590-30809	NUT	1	SN:B35001--
33	01010-80830	BOLT	1	SN:B35001--
34	01643-30823	WASHER	1	SN:B35001--

Ref. K2110-05B0 Page 240460

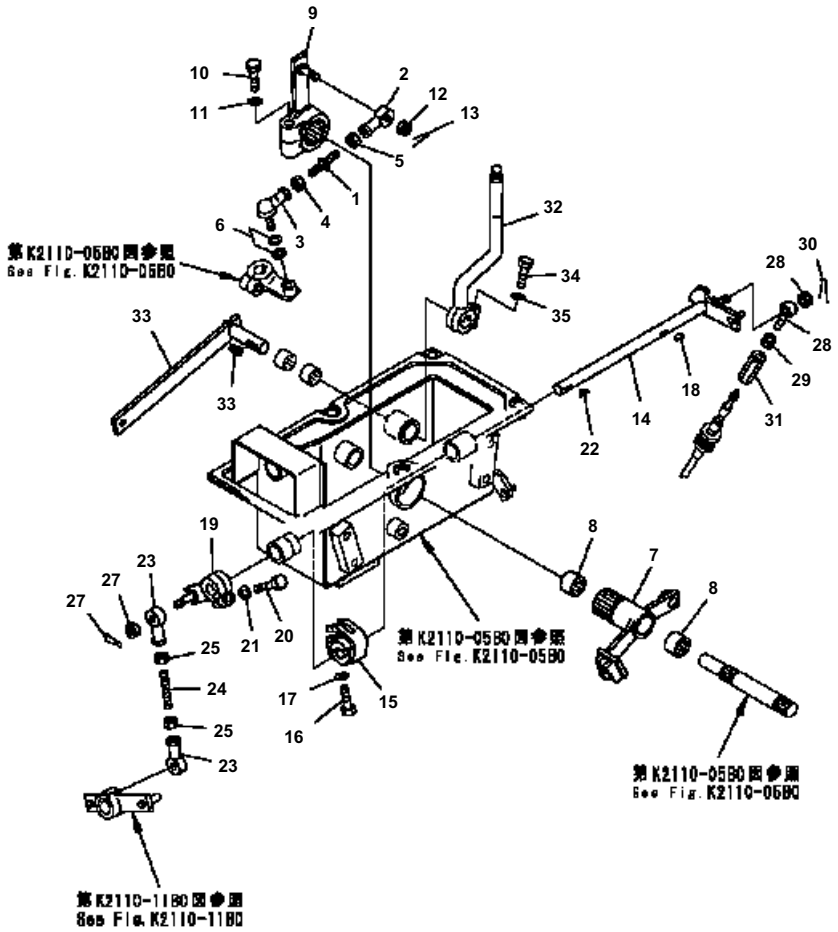

D41E6T S/N B35001-UP

FLOOR FRAME (SPEED CONTROL) (2/2)

Item	Part No.	Description	Qty	Options
1	205-43-72920	BOLT	1	SN:B35001--
2	04250-90847	END	1	SN:B35001--
3	04256-40817	JOINT	1	SN:B35001--
4	01580-10806	NUT	1	SN:B35001--
5	01508-20805	NUT	1	SN:B35001--
6	01643-30823	WASHER	2	SN:B35001--
7	134-43-61282	LEVER	1	SN:B35001--
8	06123-02018	BEARING	2	SN:B35001--
9	134-43-61230	LEVER	1	SN:B35001--
10	01010-81245	BOLT	1	SN:B35001--
11	01643-31232	WASHER	1	SN:B35001--
12	01590-30809	NUT	1	SN:B35001--
13	04050-12015	PIN	1	SN:B35001--
14	134-43-61220	LEVER	1	SN:B35001--
15	14X-43-15740	LEVER	1	SN:B35001--
16	01010-80830	BOLT	1	SN:B35001--
17	01643-30823	WASHER	1	SN:B35001--
18	04010-00516	KEY	1	SN:B35001--
19	17A-43-25271	LEVER	1	SN:B35001--
20	01010-80830	BOLT	1	SN:B35001--
21	01643-30823	WASHER	1	SN:B35001--
22	04010-00516	KEY	1	SN:B35001--
23	04250-80847	END	2	SN:B35001--
24	04245-40805	ROD	1	SN:B35001--
25	01580-10806	NUT	2	SN:B35001--
26	01590-30809	NUT	2	SN:B35001--
27	04050-12015	PIN	1	SN:B35001--
28	04252-30853	END	1	SN:B35001--
29	01508-40805	NUT	1	SN:B35001--
30	04050-12015	PIN	1	SN:B35001--
31	10S-43-13380	NUT	1	SN:B35001--
32	134-43-66172	LEVER	1	SN:B35001--
33	04010-00519	KEY	1	SN:B35001--
34	01010-80830	BOLT	1	SN:B35001--
35	01643-30823	WASHER	1	SN:B35001--
36	134-43-66241	LEVER	1	SN:B35001--

Ref. K2110-06B0 Page 240470

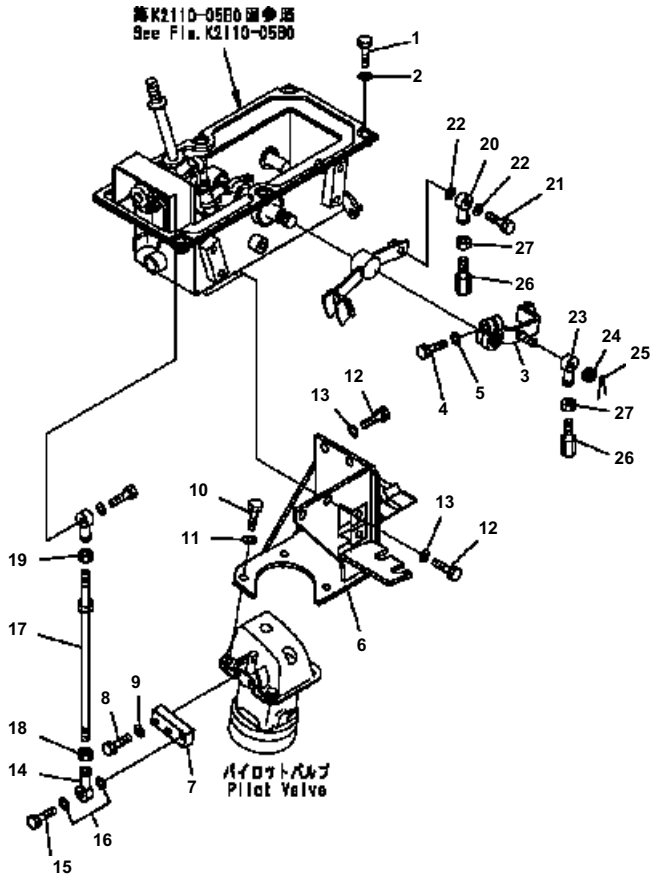

D41E6T S/N B35001-UP

FLOOR FRAME (STEERING CONTROL) (1/2)

Item	Part No.	Description	Qty	Options
1	01010-81025	BOLT	6	SN:B35001--
2	01643-31032	WASHER	6	SN:B35001--
3	124-43-61270	LEVER	1	SN:B35001--
4	01010-80830	BOLT	1	SN:B35001--
5	01643-30823	WASHER	1	SN:B35001--
6	124-43-61151	BRACKET	1	SN:B35001--
7	124-43-51480	LEVER	1	SN:B35001--
8	01010-80835	BOLT	2	SN:B35001--
9	01643-30823	WASHER	2	SN:B35001--
10	01010-80830	BOLT	3	SN:B35001--
11	01643-30823	WASHER	3	SN:B35001--
12	01010-81025	BOLT	4	SN:B35001--
13	01643-31032	WASHER	4	SN:B35001--
14	04250-90847	END	1	SN:B35001--
15	01010-80830	BOLT	1	SN:B35001--
16	04254-10823	SPACER	2	SN:B35001--
17	04248-30825	ROD	1	SN:B35001--
18	01508-40805	NUT	1	SN:B35001--
19	01580-10806	NUT	1	SN:B35001--
20	04250-91056	END	1	SN:B35001--
21	01010-81035	BOLT	1	SN:B35001--
22	01643-31032	WASHER	2	SN:B35001--
23	04250-91056	END	1	SN:B35001--
24	01593-11008	NUT	1	SN:B35001--
25	04050-12018	PIN	1	SN:B35001--
26	14Z-43-11170	JOINT	2	SN:B35001--
27	01508-41006	NUT	2	SN:B35001--

Ref. K2110-07B0 Page 240480

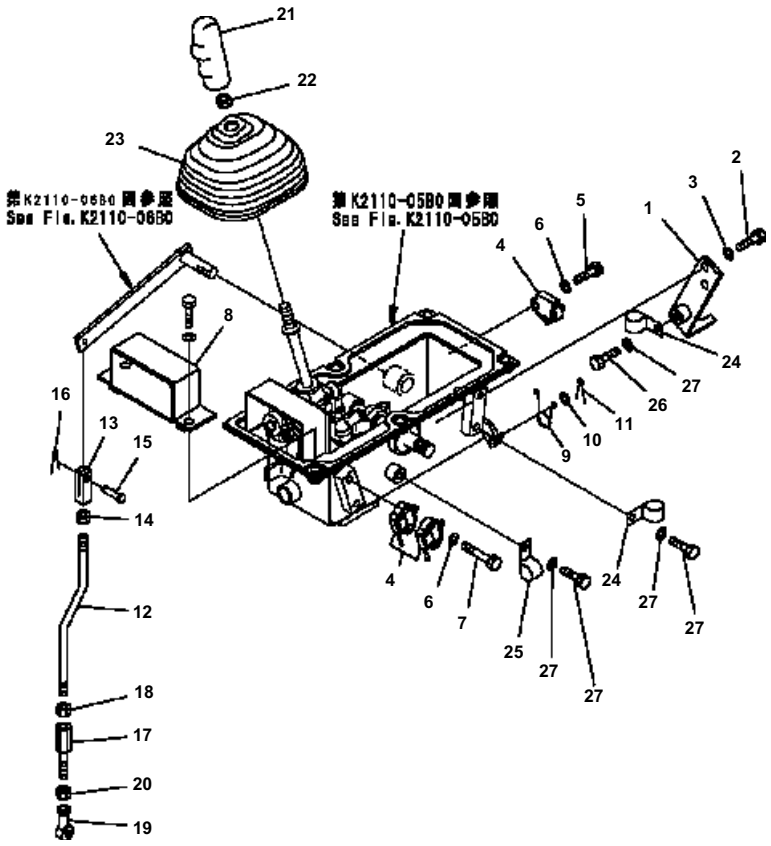

D41E6T S/N B35001-UP

FLOOR FRAME (STEERING CONTROL) (2/2)

Item	Part No.	Description	Qty	Options
1	124-43-61311	PLATE	1	SN:B35001--
2	01010-81025	BOLT	2	SN:B35001--
3	01643-31032	WASHER	2	SN:B35001--
4	14X-06-22120	SWITCH	4	SN:B35001--
5	01010-81030	BOLT	2	SN:B35001--
6	01643-31032	WASHER	6	SN:B35001--
7	01010-81050	BOLT	2	SN:B35001--
8	134-43-61340	PLATE	1	SN:B35001--
9	09463-00006	SPRING	1	SN:B35001--
10	01643-30623	WASHER	2	SN:B35001--
11	04050-11612	PIN	2	SN:B35001--
12	124-43-61210	ROD	1	SN:B35001--
13	198-43-18170	YOKE	1	SN:B35001--
14	01582-11008	NUT	1	SN:B35001--
15	04205-10822	PIN	1	SN:B35001--
16	04050-12015	PIN	1	SN:B35001--
17	198-43-41940	ROD	1	SN:B35001--
18	01508-41006	NUT	1	SN:B35001--
19	04250-81056	END	1	SN:B35001--
20	01582-11008	NUT	1	SN:B35001--
21	17A-43-25682	KNOB	1	SN:B35001--
22	20T-43-71190	NUT	1	SN:B35001--
23	14X-43-11320	BOOT	1	SN:B35001--
24	04434-51610	CLIP	1	SN:B35001--
25	01024-81020	BOLT{SEMS}	2	SN:B35001--
26	01010-81020	BOLT	2	SN:B35001--
27	01643-31032	WASHER	2	SN:B35001--

Ref. K2110-08B0 Page 240490

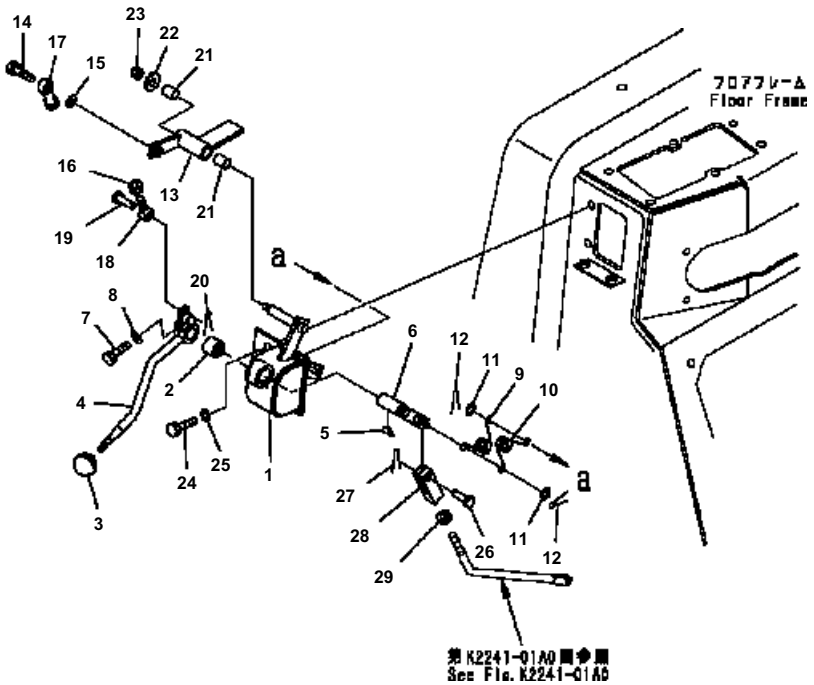

D41E6T S/N B35001-UP

FLOOR FRAME (BLADE LOCK) (FOR POWERANGLEPOWER TILT DOZER)

Item	Part No.	Description	Qty	Options
1	124-43-64410	BRACKET	1	SN:B35001--
	14X-43-14340	・ SHEET	1	SN:B35001--
2	06124-02020	BEARING	1	SN:B35001--
3	09304-10835	KNOB	1	SN:B35001--
4	124-43-65190	LEVER	1	SN:B35001--
5	04010-00516	KEY	1	SN:B35001--
6	17A-43-25460	LEVER	1	SN:B35001--
7	01010-80830	BOLT	1	SN:B35001--
8	01643-30823	WASHER	1	SN:B35001--
9	09463-00002	SPRING	1	SN:B35001--
10	09463-00006	SPRING	1	SN:B35001--
11	01641-20608	WASHER	2	SN:B35001--
12	04050-11612	PIN	2	SN:B35001--
13	134-43-64342	LEVER	1	SN:B35001--
14	01010-80830	BOLT	1	SN:B35001--
15	01643-30823	WASHER	1	SN:B35001--
16	01580-10806	NUT	1	SN:B35001--
17	04252-20853	END	1	SN:B35001--
18	04210-20832	YOKE	1	SN:B35001--
19	04205-10822	PIN	1	SN:B35001--
20	04050-12015	PIN	1	SN:B35001--
21	09350-01420	BUSHING	2	SN:B35001--
22	113-43-23230	WASHER	1	SN:B35001--
23	01598-00809	NUT	1	SN:B35001--
24	01010-81025	BOLT	2	SN:B35001--
25	01643-31032	WASHER	2	SN:B35001--
26	04205-10622	PIN	1	SN:B35001--
27	04050-11612	PIN	1	SN:B35001--
28	124-43-54340	YOKE	1	SN:B35001--
29	01583-11006	NUT	1	SN:B35001--

Ref. K2110-09B0 Page 240500

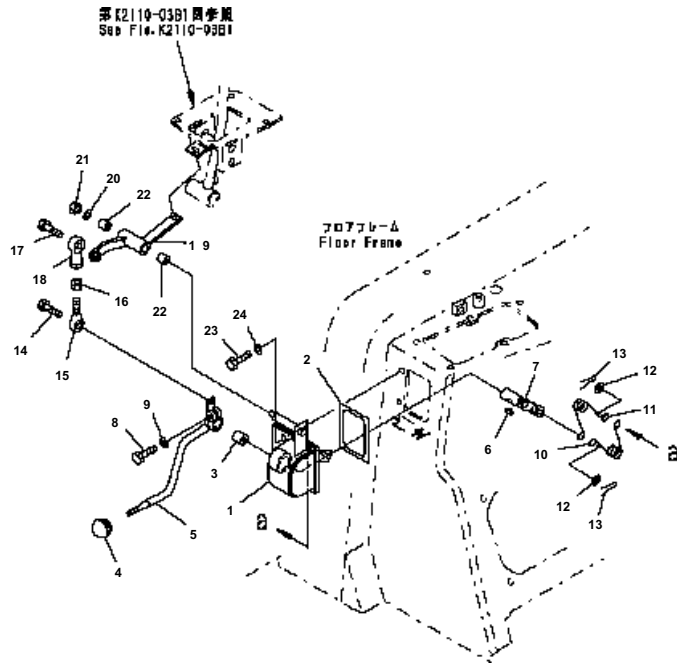

D41E6T S/N B35001-UP

FLOOR FRAME (BLADE LOCK) (FOR ANGLE DOZER)

Item	Part No.	Description	Qty	Options
1	14X-43-14412	BRACKET	1	SN:B35001--
2	14X-43-14340	・ SHEET	1	SN:B35001--
3	06124-02020	BEARING	1	SN:B35001--
4	09304-10835	KNOB	1	SN:B35001--
5	124-43-65120	LEVER	1	SN:B35001--
6	04010-00516	KEY	1	SN:B35001--
7	17A-43-25460	LEVER	1	SN:B35001--
8	01010-80830	BOLT	1	SN:B35001--
9	01643-30823	WASHER	1	SN:B35001--
10	09463-00002	SPRING	1	SN:B35001--
11	09463-00006	SPRING	1	SN:B35001--
12	01641-20608	WASHER	2	SN:B35001--
13	04050-11612	PIN	2	SN:B35001--
14	01010-80825	BOLT	1	SN:B35001--
15	04252-20853	END	1	SN:B35001--
16	01580-10806	NUT	1	SN:B35001--
17	01010-80825	BOLT	1	SN:B35001--
18	04250-80847	END	1	SN:B35001--
19	126-43-54230	LEVER	1	SN:B35001--
20	113-43-23230	WASHER	1	SN:B35001--
21	01598-00809	NUT	1	SN:B35001--
22	09350-01420	BUSHING	2	SN:B35001--
23	01010-81025	BOLT	2	SN:B35001--
24	01643-31032	WASHER	2	SN:B35001--

Ref. K2110-09B1 Page 240510

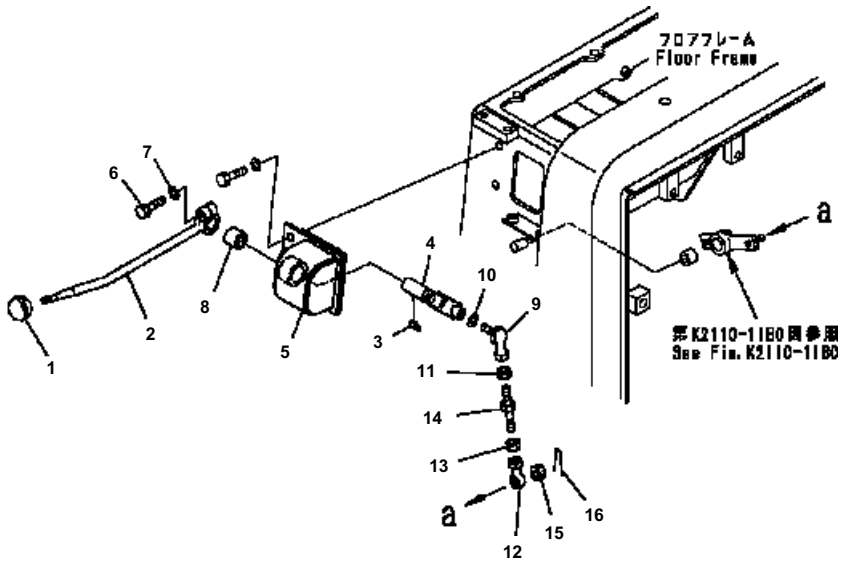

D41E6T S/N B35001-UP

FLOOR FRAME (TRANSMISSION LOCK LEVER)

Item	Part No.	Description	Qty	Options
1	09304-10835	KNOB	1	SN:B35001--
2	124-43-65440	LEVER	1	SN:B35001--
3	04010-00516	KEY	1	SN:B35001--
4	124-43-51272	LEVER	1	SN:B35001--
5	14Z-43-11751	BRACKET	1	SN:B35001--
	14Z-43-11940	・ SHEET	1	SN:B35001--
6	01010-80830	BOLT	1	SN:B35001--
7	01643-30823	WASHER	1	SN:B35001--
8	06124-02020	BEARING	1	SN:B35001--
9	04256-40817	JOINT	1	SN:B35001--
10	01643-30823	WASHER	2	SN:B35001--
11	01580-10806	NUT	1	SN:B35001--
12	04250-90847	END	1	SN:B35001--
13	01508-40805	NUT	1	SN:B35001--
14	581-43-11870	ROD	1	SN:B35001--
15	01590-30809	NUT	1	SN:B35001--
16	04050-12015	PIN	1	SN:B35001--

Ref. K2110-10B0 Page 240520

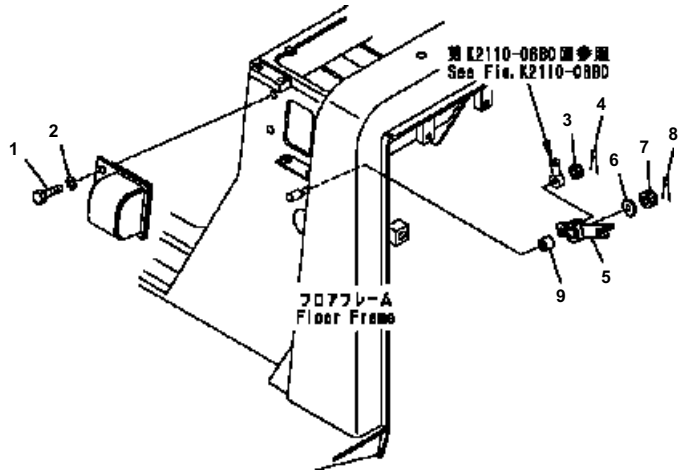

D41E6T S/N B35001-UP

FLOOR FRAME (TRANSMISSION LOCK SHAFT)

Item	Part No.	Description	Qty	Options
1	01010-81025	BOLT	4	SN:B35001--
2	01643-31032	WASHER	4	SN:B35001--
3	01590-30809	NUT	3	SN:B35001--
4	04050-12015	PIN	3	SN:B35001--
5	17A-43-25531	LEVER	1	SN:B35001--
6	113-43-23230	WASHER	1	SN:B35001--
7	01590-30809	NUT	1	SN:B35001--
8	04050-12015	PIN	1	SN:B35001--
9	06124-01416	BEARING	1	SN:B35001--

Ref. K2110-11B0 Page 240530

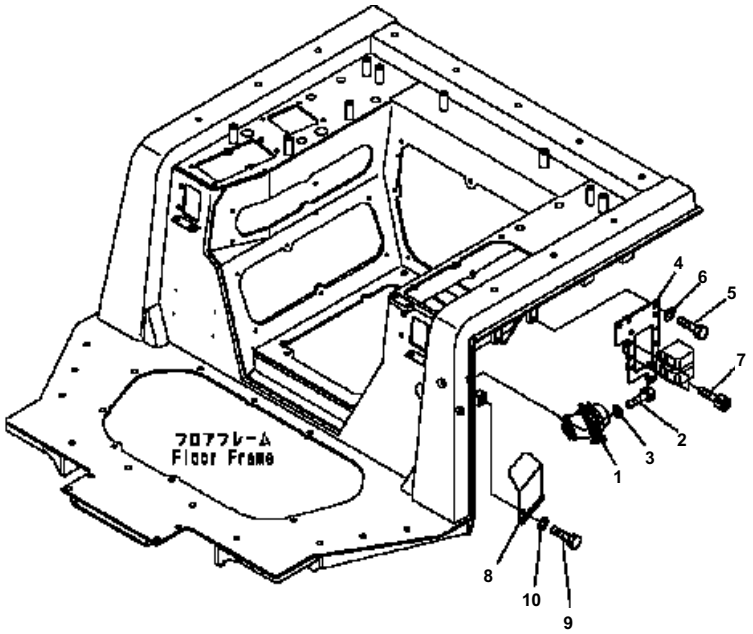

D41E6T S/N B35001-UP

FLOOR FRAME (ELECTRICAL EQUIPMENT)

Item	Part No.	Description	Qty	Options
1	08088-31000	SWITCH	1	SN:B35001--
2	01010-80825	BOLT	2	SN:B35001--
3	01643-30823	WASHER	2	SN:B35001--
4	124-06-62261	BRACKET	1	SN:B35001--
5	01010-81020	BOLT	2	SN:B35001--
6	01643-31032	WASHER	2	SN:B35001--
7	01252-40820	BOLT	4	SN:B35001--
8	134-06-61320	COVER	1	SN:B35001--
9	01010-81220	BOLT	1	SN:B35001--
10	01643-31232	WASHER	1	SN:B35001--

Ref. K2110-12B0 Page 240540

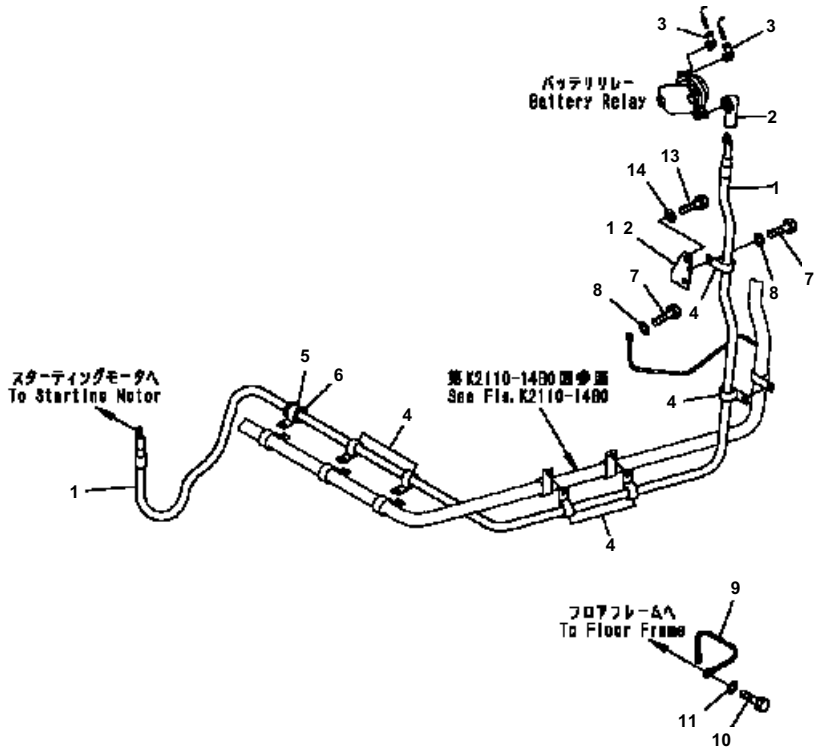

D41E6T S/N B35001-UP

FLOOR FRAME (WIRING) (1/2)

Item	Part No.	Description	Qty	Options
1	124-06-65161	CABLE	1	SN:B35001--
2	08038-00035	CAP	1	SN:B35001--
3	08038-00519	CAP	2	SN:B35001--
4	04434-52310	CLIP	6	SN:B35001--
5	04434-53210	CLIP	1	SN:B35001--
6	07095-20523	CUSHION	1	SN:B35001--
7	01010-81020	BOLT	2	SN:B35001--
8	01643-31032	WASHER	2	SN:B35001--
9	14X-06-14390	WIRE	1	SN:B35001--
10	01010-81020	BOLT	1	SN:B35001--
11	01643-31032	WASHER	1	SN:B35001--
12	124-06-62530	BRACKET	1	SN:B35001--
13	01010-81020	BOLT	2	SN:B35001--
14	01643-31032	WASHER	2	SN:B35001--

Ref. K2110-13B0 Page 240550

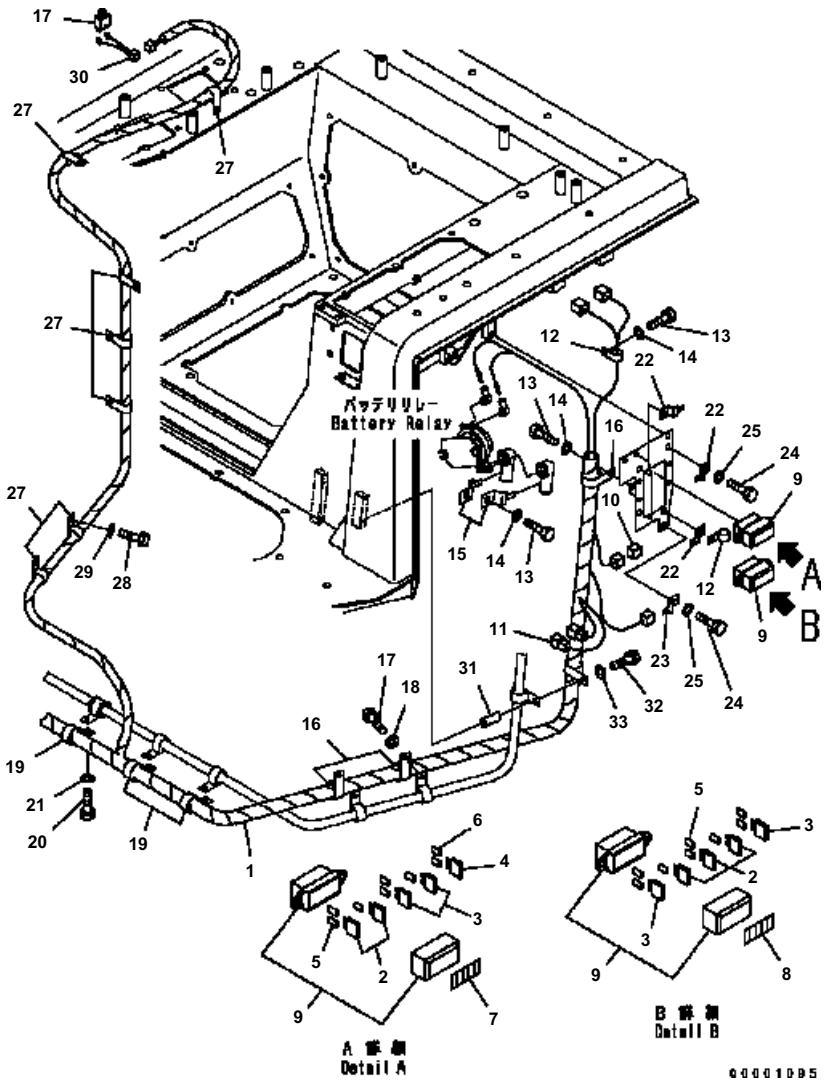

D41E6T S/N B35001-UP

FLOOR FRAME (WIRING) (2/2)

Item	Part No.	Description	Qty	Options
1	124-06-64510	WIRING HARNESS	1	SN:B35431--
	124-06-64415	WIRING HARNESS	1	SN:B35336--B35430
	124-06-64414	WIRING HARNESS	1	SN:B35001--B35335
2	08041-01000	· FUSE, 10A	8	SN:B35001--
3	08041-02000	· FUSE, 20A	5	SN:B35001--
4	08041-03000	· FUSE, 30A	2	SN:B35001--
5	08044-00010	· TERMINAL	14	SN:B35001--
6	08044-00030	· TERMINAL	2	SN:B35001--
7	124-06-54240	· PLATE, FUSE BOX	1	SN:B35001--
8	124-06-62510	· PLATE{FUSE}	1	SN:B35001--
9	20T-06-71560	· FUSE BOX	2	SN:B35001--
10	22U-06-11270	· FUSIBLE LINK, 65A	1	SN:B35001--
11	21X-06-31530	· DIODE	2	SN:B35001--
12	04434-51010	CLIP	3	SN:B35001--
13	01010-81020	BOLT	4	SN:B35001--
14	01643-31032	WASHER	4	SN:B35001--
15	08193-20010	CLIP	2	SN:B35001--
16	04434-52710	CLIP	3	SN:B35001--
17	01010-81025	BOLT	2	SN:B35001--
18	01643-31032	WASHER	2	SN:B35001--
19	04434-52710	CLIP	3	SN:B35001--
20	01010-81025	BOLT	3	SN:B35001--
21	01643-31032	WASHER	3	SN:B35001--
22	08193-20010	CLIP	5	SN:B35001--
23	08193-30010	CLIP	1	SN:B35001--
24	01010-81020	BOLT	6	SN:B35001--
25	01643-31032	WASHER	6	SN:B35001--
26	134-06-72200	SWITCH ASS'Y	1	SN:B35001--
27	04434-51010	CLIP	7	SN:B35001--
28	01024-81020	BOLT{SEMS}	7	SN:B35001--
	01010-81020	BOLT	7	SN:B35001--
29	01643-31032	WASHER	7	SN:B35001--
30	14X-06-21710	WIRING HARNESS	1	SN:B35001--
31	195-01-16140	SPACER	1	SN:B35001--
32	01010-81050	BOLT	1	SN:B35001--
33	01643-31032	WASHER	1	SN:B35001--

Ref. K2110-14B0 Page 240560

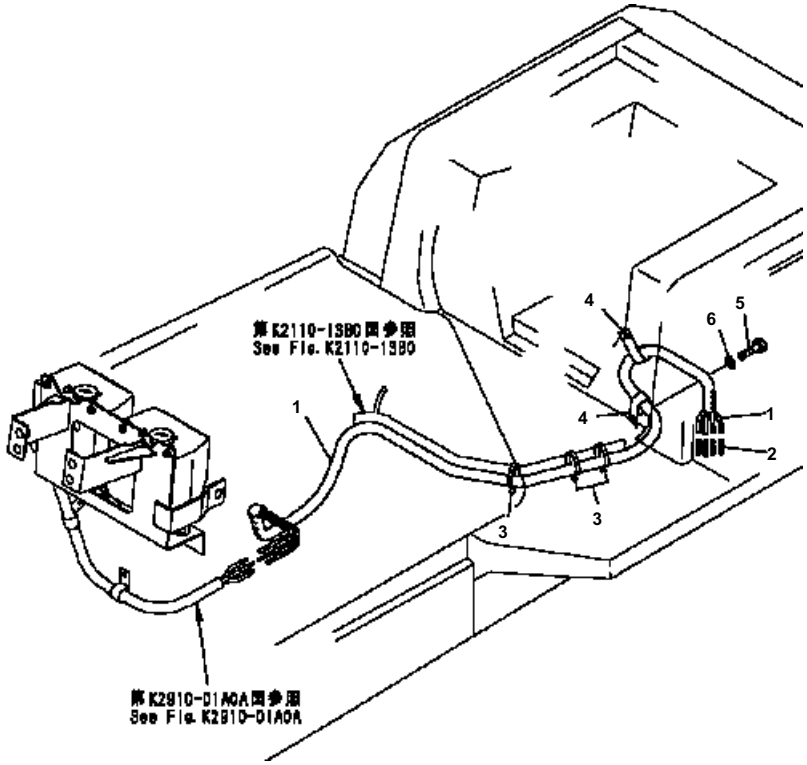

D41E6T S/N B35001-UP

FLOOR FRAME (WINDOW WASHER HOSE)

Item	Part No.	Description	Qty	Options
1	14X-911-1121	HOSE ASS'Y	1	SN:B35528--
	14X-911-1120	HOSE ASS'Y	1	SN:B35001--B35527
2	195-979-8590	· VALVE	4	SN:B35001--
3	08034-00823	BAND	8	SN:B35001--
4	04434-52310	CLIP	2	SN:B35001--
5	01010-81020	BOLT	1	SN:B35001--
6	01643-31032	WASHER	1	SN:B35001--

Ref. K2110-15B0 Page 240570

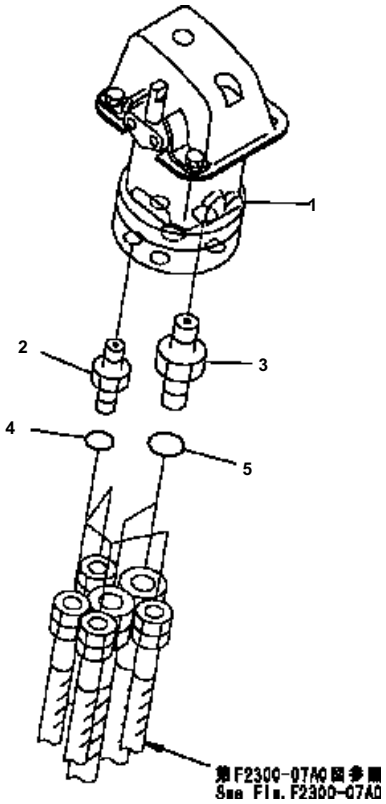

D41E6T S/N B35001-UP

FLOOR FRAME (PILOT VALVE)

Item	Part No.	Description	Qty	Options
1	(702-16-05013)	PILOT VALVE	1	SN:B35001--
2	114-40-48481	JOINT	4	SN:B35001--
3	134-49-61760	JOINT	2	SN:B35001--
4	07002-21423	O-RING	4	SN:B35001--
5	07002-21823	O-RING	2	SN:B35001--

Ref. K2110-16B0 Page 240580

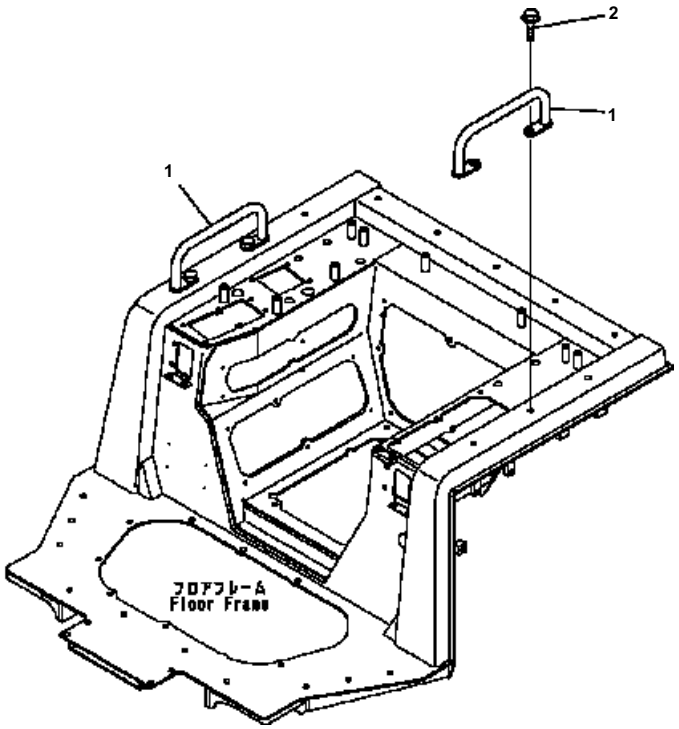

D41E6T S/N B35001-UP

FLOOR FRAME (HANDLE) (WITHOUT CAB)

Item	Part No.	Description	Qty	Options
1	14X-54-16670	HANDLE	2	SN:B35001--
2	01439-01225	BOLT	4	SN:B35001--

Ref. K2110-17B1 Page 240590

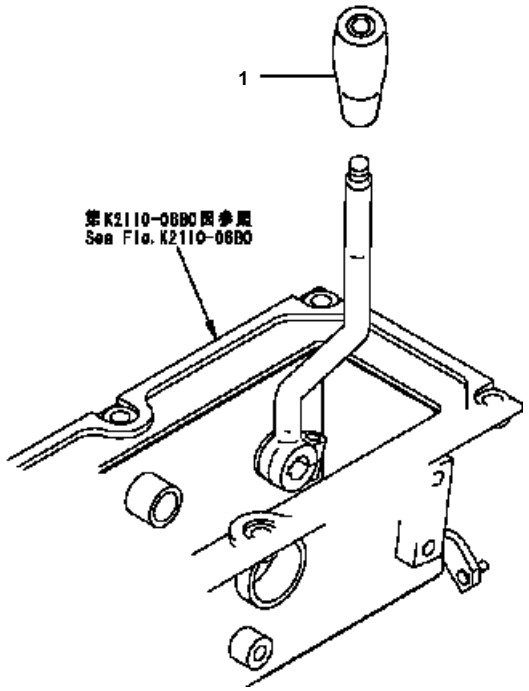

D41E6T S/N B35001-UP

FLOOR FRAME (KNOB)

Item	Part No.	Description	Qty	Options
1	14Z-43-11310	KNOB	1	SN:B35001--

Ref. K2110-18B0 Page 240600

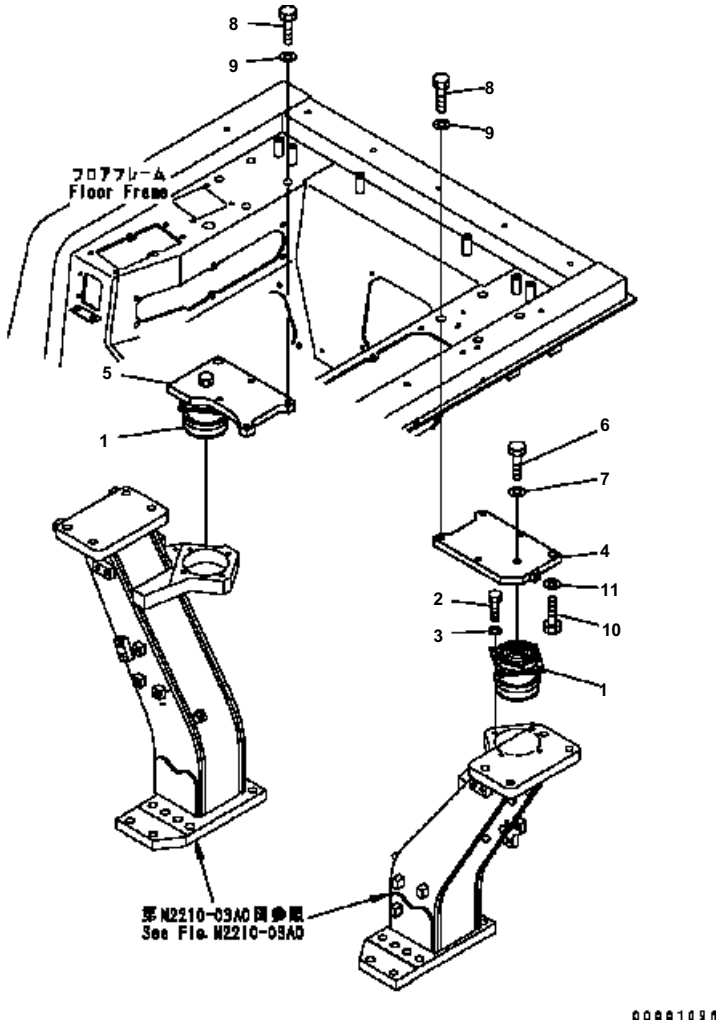

D41E6T S/N B35001-UP

FLOOR SUSPENTION (VISCOUS MOUNT)

Item	Part No.	Description	Qty	Options
1	14X-54-29310	VISCOUS MOUNT	2	SN:B35001--
2	01010-81025	BOLT	8	SN:B35001--
3	01643-31032	WASHER	8	SN:B35001--
4	124-54-63431	PLATE	1	SN:B35325--
	124-54-63430	PLATE	1	SN:B35001--B35324
5	124-54-63440	PLATE	1	SN:B35001--
6	01010-81850	BOLT	2	SN:B35001--
7	01643-31845	WASHER	2	SN:B35001--
8	01010-81675	BOLT	8	SN:B35001--
9	01643-31645	WASHER	8	SN:B35001--
10	01010-81645	BOLT	2	SN:B35001--
11	01643-31645	WASHER	2	SN:B35001--

Ref. K2120-01A0 Page 240610

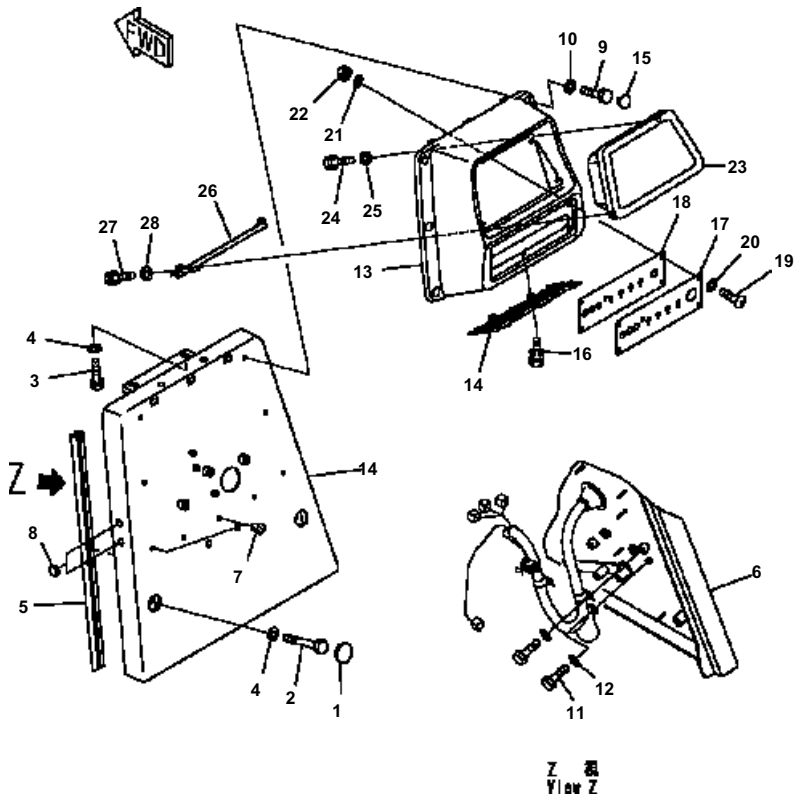

D41E6T S/N B35001-UP

DASHBOARD (WITHOUT CAB) (WITH MONITOR PANEL)

Item	Part No.	Description	Qty	Options
1	14X-54-18150	CAP	2	SN:B35001--
2	01010-81290	BOLT	2	SN:B35001--
3	01010-81225	BOLT	2	SN:B35001--
4	01643-31232	WASHER	4	SN:B35001--
5	14X-54-12940	SEAL	2	SN:B35001--
6	124-54-68510	COVER	1	SN:B35001--
7	07049-01215	PLUG	4	SN:B35001--
8	09415-01008	CAP	4	SN:B35001--
9	01010-80820	BOLT	9	SN:B35001--
10	01643-30823	WASHER	9	SN:B35001--
11	01010-80610	BOLT	1	SN:B35001--
12	01643-30623	WASHER	1	SN:B35001--
13	124-54-68240	DASHBOARD	1	SN:B35001--
14	14X-54-19120	COVER	1	SN:B35001--
15	14X-54-19130	CAP	6	SN:B35001--
16	14X-54-19170	BOLT	2	SN:B35001--
17	124-54-68250	PANEL	1	SN:B35001--
18	124-54-68280	PLATE	1	SN:B35001--
19	01245-00620	SCREW	4	SN:B35001--
20	01643-70623	WASHER	4	SN:B35001--
21	21W-54-32410	WASHER	4	SN:B35001--
22	01580-10605	NUT	4	SN:B35001--
23	7831-68-1000	PANEL ASS'Y	1	SN:B35001--
24	01010-80616	BOLT	2	SN:B35001--
25	01643-30623	WASHER	2	SN:B35001--
26	124-06-65330	BRACKET	1	SN:B35001--
27	01010-80618	BOLT	2	SN:B35001--
28	01643-30623	WASHER	2	SN:B35001--

Ref. K2210-01A0 Page 240620

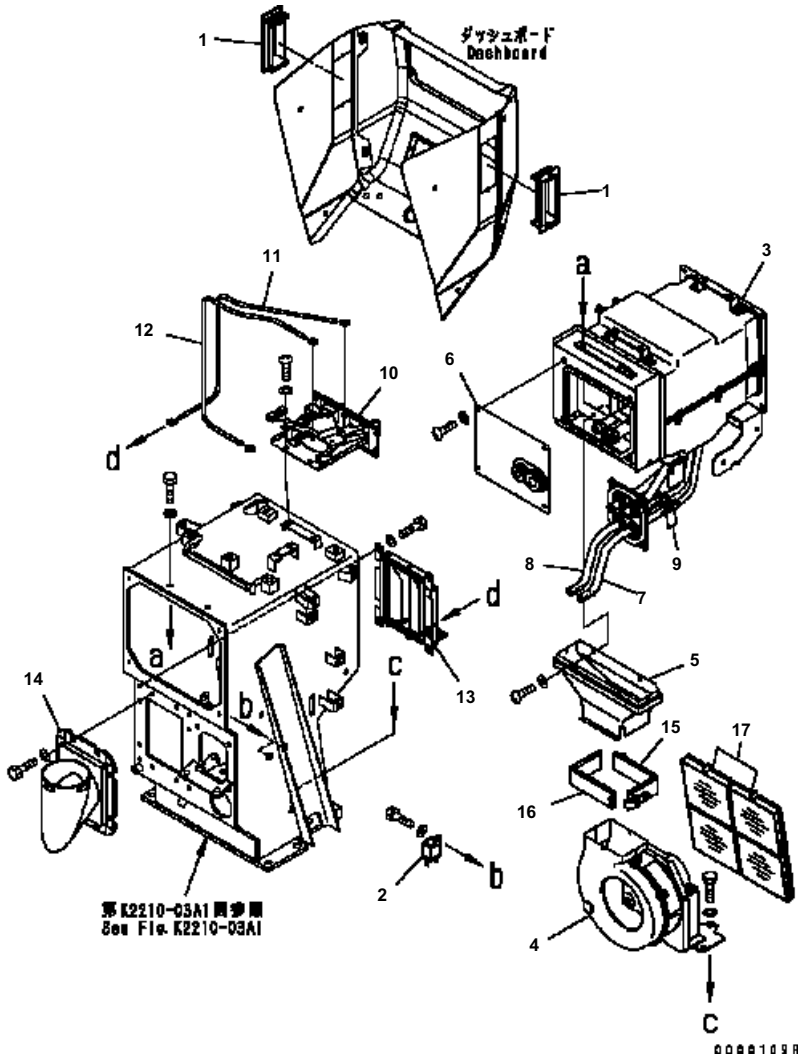

D41E6T S/N B35001-UP

DASHBOARD (CAB) (WITH AIR-CONDITIONER) (AIR-CONDITIONER KIT)

Item	Part No.	Description	Qty	Options
1	17A-Z11-7161	LOUVER	3	SN:B35001--
2	205-979-6460	RELAY ASS'Y	2	SN:B35001--
3	17A-911-7201	UNIT ASS'Y	1	SN:B35001--
4	14X-911-9380	BLOWER ASS'Y	1	SN:B35001--
5	17A-911-7310	DUCT	1	SN:B35001--
6	17A-911-7350	COVER	1	SN:B35001--
7	124-Z11-1730	HOSE	1	SN:B35001--
8	134-X11-1390	HOSE	1	SN:B35001--
9	14X-911-7690	CLAMP	2	SN:B35001--
10	14X-911-7701	CONTROL ASS'Y	1	SN:B35001--
11	14X-911-7720	CABLE	1	SN:B35001--
12	17A-911-7340	CABLE	1	SN:B35001--
13	14X-911-7620	DAMPER	1	SN:B35001--
14	14X-911-7631	DUCT	1	SN:B35001--
15	14X-911-7650	CLAMP	1	SN:B35001--
16	14X-911-7660	CLAMP	1	SN:B35001--
17	20Y-979-6261	FILTER	2	SN:B35001--

Ref. K2210-01A1 Page 240630

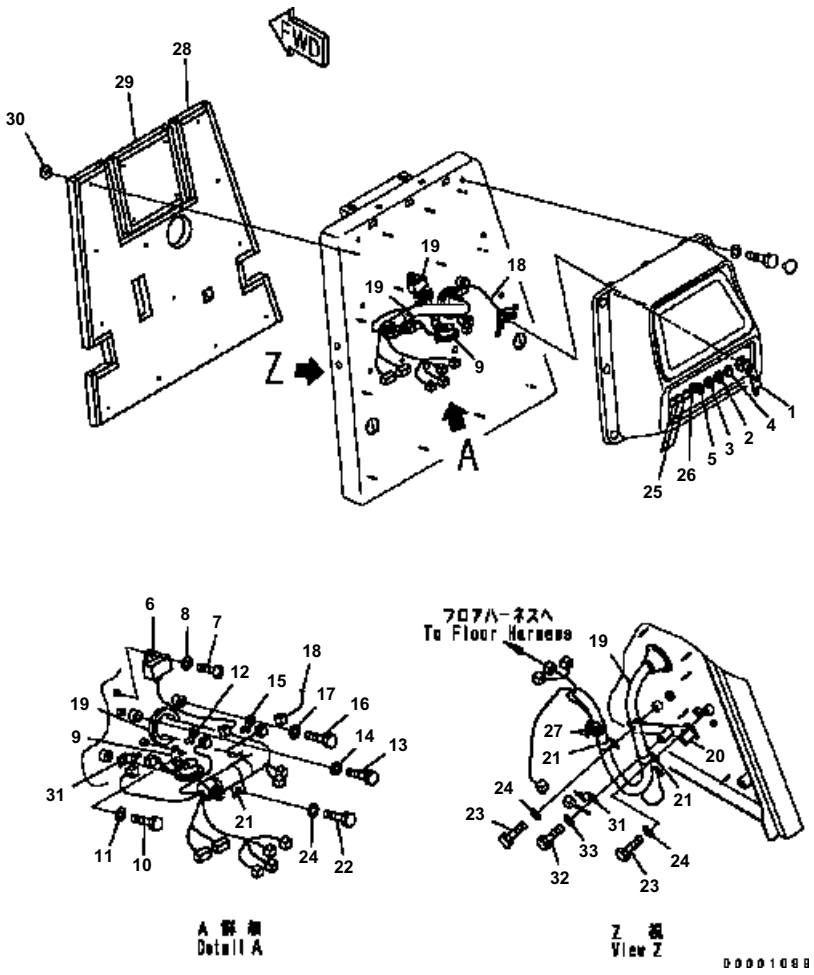

D41E6T S/N B35001-UP

DASHBOARD (WITHOUT CAB) (SWITCH, TIMERAND WIRING)

Item	Part No.	Description	Qty	Options
1	08086-10000	SWITCH{STARTING}	1	SN:B35001--
2	14X-06-12160	SWITCH{HEAD LAMP}	1	SN:B35001--
3	14X-06-12160	SWITCH{BACK LAMP}	1	SN:B35001--
4	14X-06-12190	SWITCH{GLOW}	1	SN:B35001--
5	114-06-42310	SWITCH{FAN REVERSE SWITCH}	1	SN:B35001--
6	14X-06-21550	TIMER	1	SN:B35001--
7	01220-40512	SCREW	2	SN:B35001--
8	01641-20508	WASHER	2	SN:B35001--
9	14X-06-22150	BUZZER ASS'Y	1	SN:B35001--
10	01010-80612	BOLT	1	SN:B35001--
11	01643-30623	WASHER	1	SN:B35001--
12	08193-20010	CLIP	1	SN:B35001--
13	01010-81018	BOLT	1	SN:B35001--
14	01643-31032	WASHER	1	SN:B35001--
15	08053-00910	CLIP	1	SN:B35001--
16	01010-81018	BOLT	1	SN:B35001--
17	01643-31032	WASHER	1	SN:B35001--
18	124-06-64251	WIRING HARNESS	1	SN:B35001--
19	124-06-65262	WIRING HARNESS	1	SN:B35001--
20	124-06-65350	BRACKET	1	SN:B35001--
21	04434-52710	CLIP	3	SN:B35001--
22	01010-81018	BOLT	1	SN:B35001--
23	01010-81035	BOLT	2	SN:B35001--
24	01643-31032	WASHER	3	SN:B35001--
25	134-06-61612	LAMP ASS'Y	1	SN:B35001--
	11Y-06-11560	・ BULB§ 3W	3	SN:B35001--
	134-06-61650	・ LENS	1	SN:B35001--
	134-06-61660	・ LENS	1	SN:B35001--
	134-06-61670	・ LENS	1	SN:B35001--
26	124-06-65271	DIODE	1	SN:B35001--
27	08034-00519	BAND	2	SN:B35001--
28	124-54-68210	ABSORBER	1	SN:B35001--
29	134-54-68180	ABSORBER	1	SN:B35001--
30	124-A62-1920	CAP	16	SN:B35001--
31	08193-20010	CLIP	2	SN:B35001--
32	01010-80820	BOLT	1	SN:B35001--
33	01643-31032	WASHER	1	SN:B35001--

Ref. K2210-02A0 Page 240640

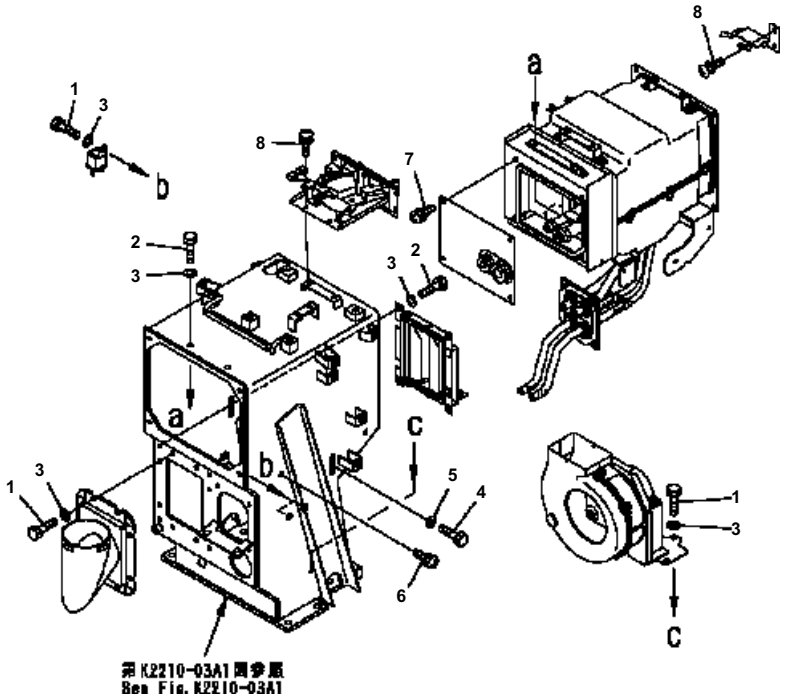

D41E6T S/N B35001-UP

DASHBOARD (CAB) (WITH AIR-CONDITIONER) (AIR-CONDITIONER MOUNT)

Item	Part No.	Description	Qty	Options
1	01010-80816	BOLT	14	SN:B35001--
2	01010-80820	BOLT	16	SN:B35001--
3	01643-30823	WASHER	30	SN:B35001--
4	01010-81020	BOLT	2	SN:B35001--
5	01643-31032	WASHER	2	SN:B35001--
6	01023-10510	SCREW	6	SN:B35001--
7	01023-10608	SCREW	4	SN:B35001--
8	01023-10612	SCREW	6	SN:B35001--

Ref. K2210-02A1 Page 240650

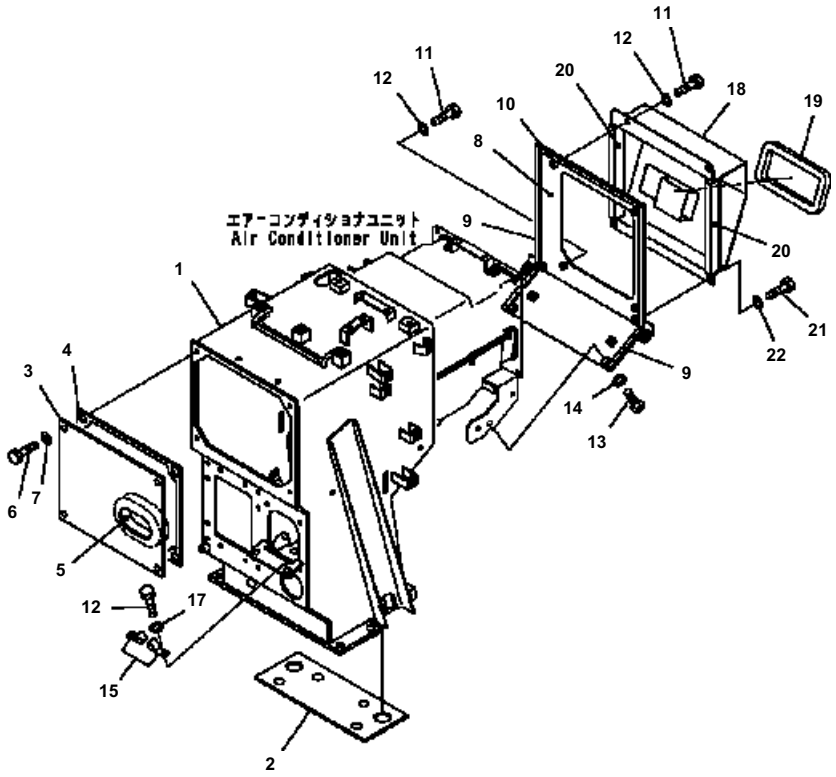

D41E6T S/N B35001-UP

DASHBOARD (CAB) (WITH AIR-CONDITIONER) (AIR-CONDITIONER BOX)

Item	Part No.	Description	Qty	Options
1	14X-911-9111	BRACKET	1	SN:B35001--
2	14X-911-9360	・SHEET	1	SN:B35001--
3	14X-911-8243	PLATE	1	SN:B35001--
4	14X-911-8820	・SHEET	1	SN:B35001--
5	14X-911-8950	・SHEET	1	SN:B35001--
6	01010-80816	BOLT	4	SN:B35001--
7	01643-30823	WASHER	4	SN:B35001--
8	14X-911-9121	PLATE	1	SN:B35001--
9	14X-911-9141	・SHEET	2	SN:B35001--
10	14X-911-8830	・SHEET	1	SN:B35001--
11	01010-80825	BOLT	4	SN:B35001--
12	01643-30823	WASHER	4	SN:B35001--
13	01245-00816	SCREW	2	SN:B35001--
14	01643-70823	WASHER	2	SN:B35001--
15	04434-51610	CLIP	2	SN:B35001--
16	01010-81020	BOLT	2	SN:B35001--
17	01643-31032	WASHER	2	SN:B35001--
18	14X-911-9370	COVER	1	SN:B35001--
19	17A-Z11-7630	・COVER	1	SN:B35001--
20	17A-Z11-7670	・COVER	2	SN:B35001--
21	01010-80816	BOLT	2	SN:B35001--
22	01643-30823	WASHER	2	SN:B35001--

Ref. K2210-03A1 Page 240660

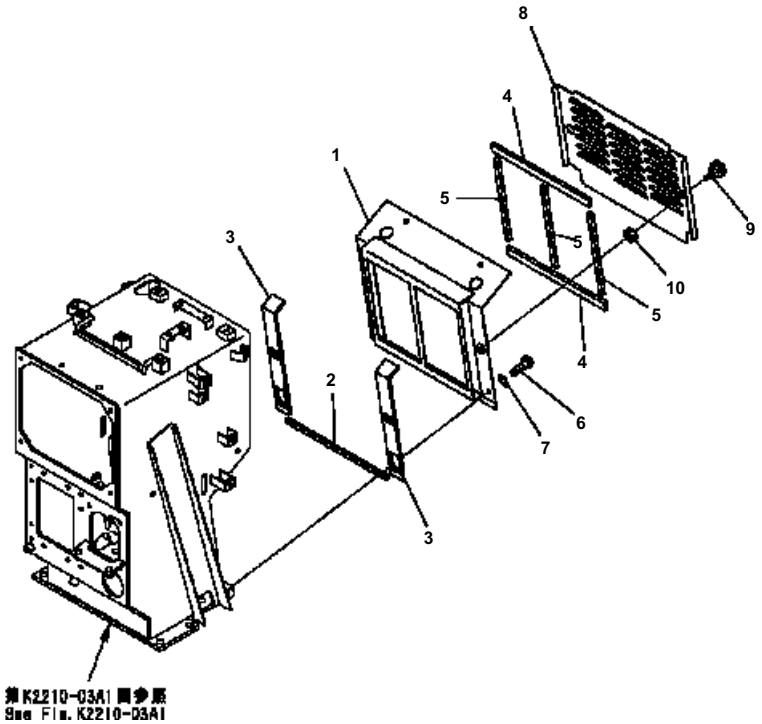

D41E6T S/N B35001-UP

DASHBOARD (CAB) (WITH AIR-CONDITIONER) (FILTER COVER)

Item	Part No.	Description	Qty	Options
1	17A-Z11-7250	COVER	1	SN:B35001--
2	17A-Z11-7460	・SHEET	1	SN:B35001--
3	17A-Z11-7470	・SHEET	2	SN:B35001--
4	17A-Z11-7480	・SHEET	2	SN:B35001--
5	17A-Z11-7490	・SHEET	3	SN:B35001--
6	01245-00816	SCREW	4	SN:B35001--
7	01643-70823	WASHER	4	SN:B35001--
8	17A-Z11-7240	COVER	1	SN:B35001--
9	11Y-979-4560	KNOB	2	SN:B35001--
10	01594-00807	NUT	2	SN:B35001--

Ref. K2210-04A1 Page 240670

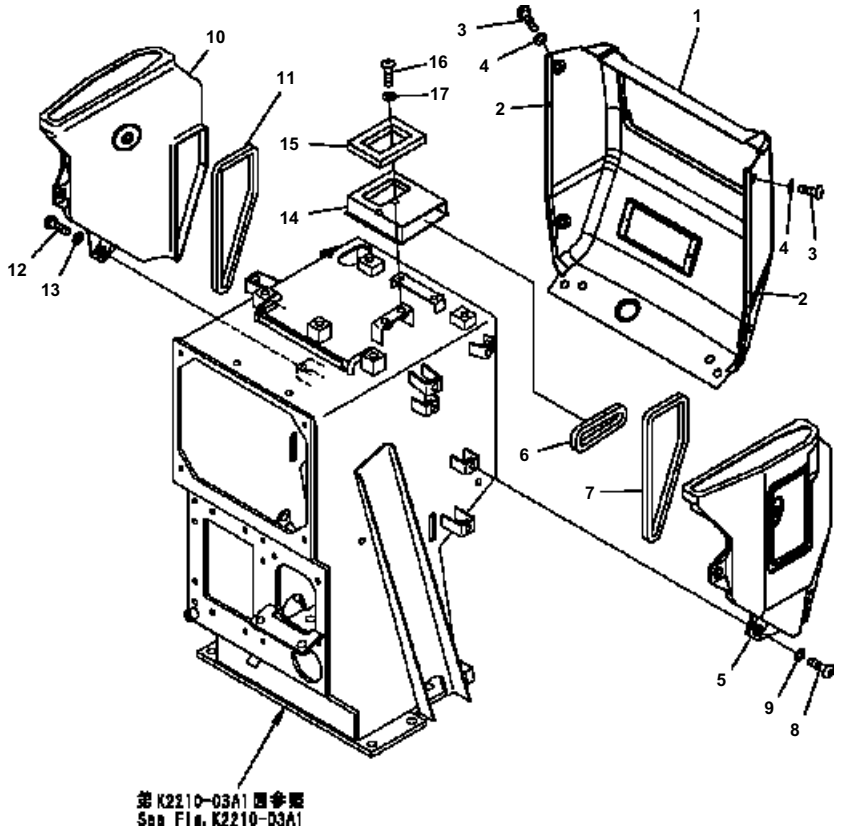

D41E6T S/N B35001-UP

DASHBOARD (CAB) (WITH AIR-CONDITIONER) (DASHBOARD)

Item	Part No.	Description	Qty	Options
1	14X-54-28661	COVER	1	SN:B35001--
2	14X-911-9240	・SHEET	2	SN:B35001--
3	01245-00816	SCREW	6	SN:B35001--
4	01643-70823	WASHER	6	SN:B35001--
5	14X-54-28310	DUCT	1	SN:B35001--
6	14X-911-9340	・SHEET	1	SN:B35001--
7	14X-911-9350	・SHEET	1	SN:B35001--
8	01245-00816	SCREW	3	SN:B35001--
9	01643-70823	WASHER	3	SN:B35001--
10	14X-54-28320	DUCT	1	SN:B35001--
11	14X-911-9350	・SHEET	1	SN:B35001--
12	01245-00816	SCREW	3	SN:B35001--
13	01643-70823	WASHER	3	SN:B35001--
14	17A-Z11-7420	DUCT	1	SN:B35001--
15	17A-Z11-7440	・SHEET	1	SN:B35001--
16	01245-00816	SCREW	2	SN:B35001--
17	01643-70823	WASHER	2	SN:B35001--

Ref. K2210-05A1 Page 240680

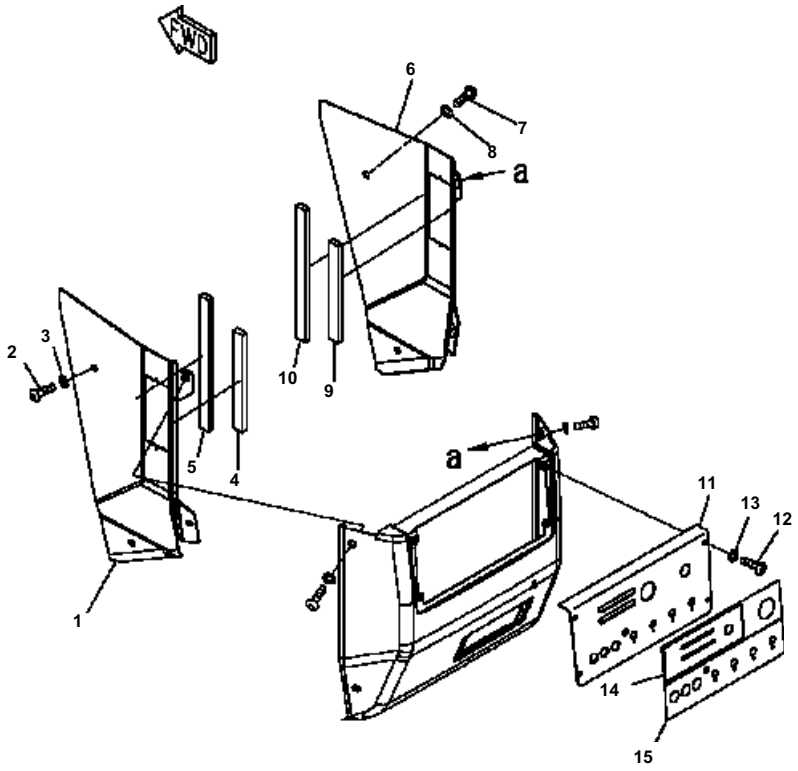

D41E6T S/N B35001-UP

DASHBOARD (CAB) (WITH AIR-CONDITIONER)(PANEL BOARD)

Item	Part No.	Description	Qty	Options
1	14X-54-28611	COVER{L.H.}	1	SN:B35001--
2	01245-00816	SCREW	2	SN:B35001--
3	01643-70823	WASHER	2	SN:B35001--
4	17A-Z11-7640	SHEET	1	SN:B35001--
5	17A-Z11-7650	SHEET	1	SN:B35001--
6	14X-54-28621	COVER{R.H.}	1	SN:B35001--
7	01245-00816	SCREW	2	SN:B35001--
8	01643-70823	WASHER	2	SN:B35001--
9	17A-Z11-7640	SHEET	1	SN:B35001--
10	17A-Z11-7650	SHEET	1	SN:B35001--
11	124-54-68260	COVER	1	SN:B35001--
12	01245-00616	SCREW	4	SN:B35001--
13	01643-70623	WASHER	4	SN:B35001--
14	14X-54-28751	PANEL	1	SN:B35001--
15	124-54-68270	PANEL	1	SN:B35001--

Ref. K2210-06A1 Page 240690

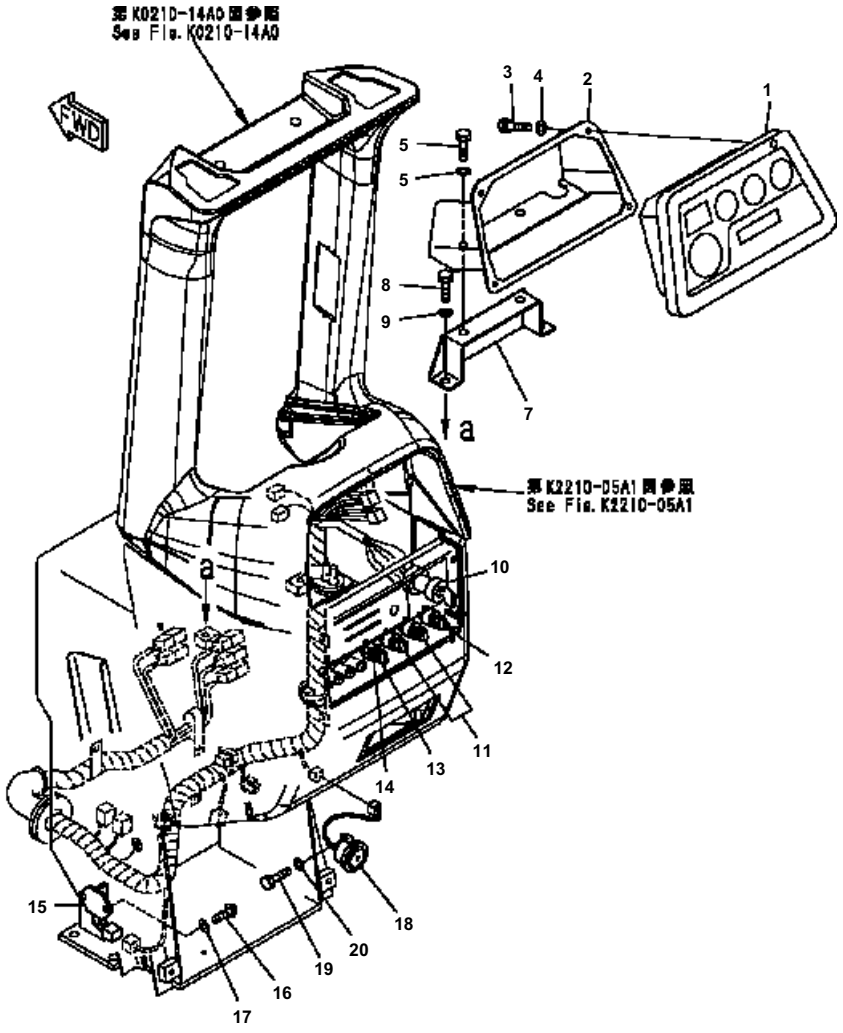

D41E6T S/N B35001-UP

DASHBOARD (CAB) (WITH AIR-CONDITIONER) (MONITOR)

Item	Part No.	Description	Qty	Options
1	7831-68-1000	PANEL ASS'Y	1	SN:B35001--
2	14X-911-9211	BRACKET	1	SN:B35001--
3	01010-80612	BOLT	4	SN:B35001--
4	01643-30623	WASHER	4	SN:B35001--
5	01010-81020	BOLT	2	SN:B35001--
6	01643-31032	WASHER	2	SN:B35001--
7	14X-911-9221	BRACKET	1	SN:B35001--
8	01010-81020	BOLT	2	SN:B35001--
9	01643-31032	WASHER	2	SN:B35001--
10	08086-10000	SWITCH	1	SN:B35001--
11	14X-06-12160	SWITCH	2	SN:B35001--
12	14X-06-12190	SWITCH	1	SN:B35001--
13	114-06-42310	SWITCH	1	SN:B35001--
14	124-06-65271	DIODE	1	SN:B35001--
15	14X-06-21550	TIMER	1	SN:B35001--
16	01220-40512	SCREW	2	SN:B35001--
17	01641-20508	WASHER	2	SN:B35001--
18	14X-06-22150	BUZZER ASS'Y	1	SN:B35001--
19	01010-80612	BOLT	1	SN:B35001--
20	01643-30623	WASHER	1	SN:B35001--

Ref. K2210-07A1 Page 240700

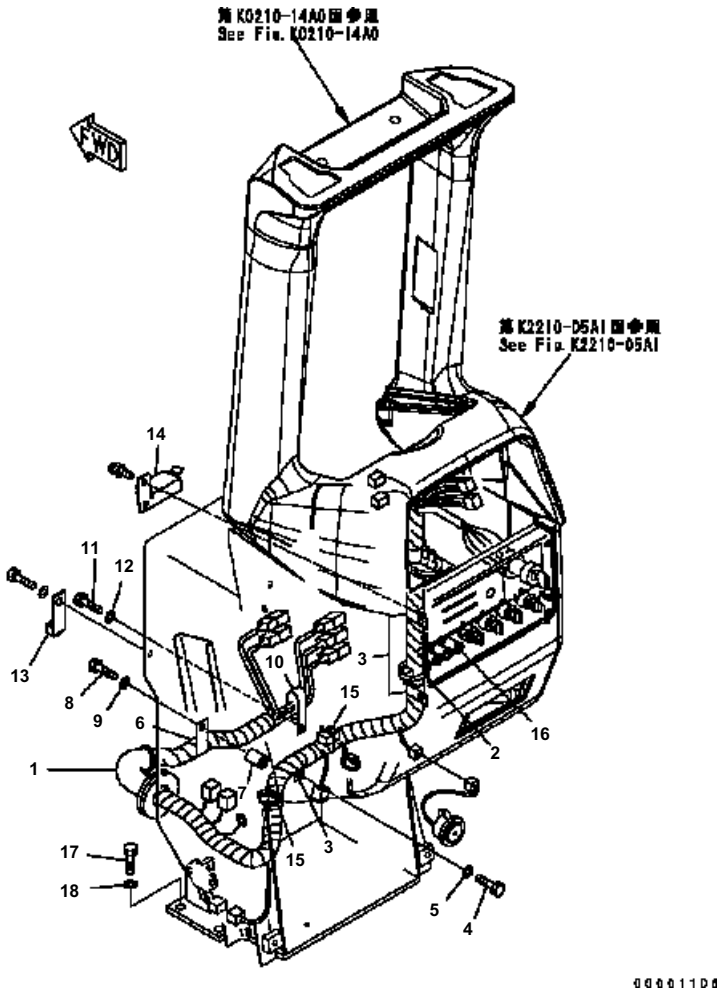

D41E6T S/N B35001-UP

DASHBOARD (CAB) (WITH AIR-CONDITIONER) (WIRING AND LAMP)

Item	Part No.	Description	Qty	Options
1	124-06-61124	WIRING HARNESS	1	SN:B35265--
	124-06-61123	WIRING HARNESS	1	SN:B35001--B35264
2	08034-00519	BAND	4	SN:B35001--
3	04434-52310	CLIP	3	SN:B35001--
4	01010-80816	BOLT	3	SN:B35001--
5	01643-30823	WASHER	3	SN:B35001--
6	04434-53408	CLIP	1	SN:B35001--
7	6162-23-5770	SPACER	1	SN:B35001--
8	01010-80840	BOLT	1	SN:B35001--
9	01643-30823	WASHER	1	SN:B35001--
10	04435-51908	CLIP	1	SN:B35001--
11	01010-80816	BOLT	1	SN:B35001--
12	01643-30823	WASHER	1	SN:B35001--
13	124-06-62330	PLATE	2	SN:B35001--
14	124-06-65310	BRACKET	1	SN:B35001--
15	08034-00519	BAND	2	SN:B35001--
16	134-06-61612	LAMP ASS'Y	1	SN:B35001--
	11Y-06-11560	・ BULB§ 3W	3	SN:B35001--
	134-06-61650	・ LENS	1	SN:B35001--
	134-06-61660	・ LENS	1	SN:B35001--
	134-06-61670	・ LENS	1	SN:B35001--
17	01010-81230	BOLT	6	SN:B35001--
18	01643-31232	WASHER	6	SN:B35001--

Ref. K2210-08A1 Page 240710

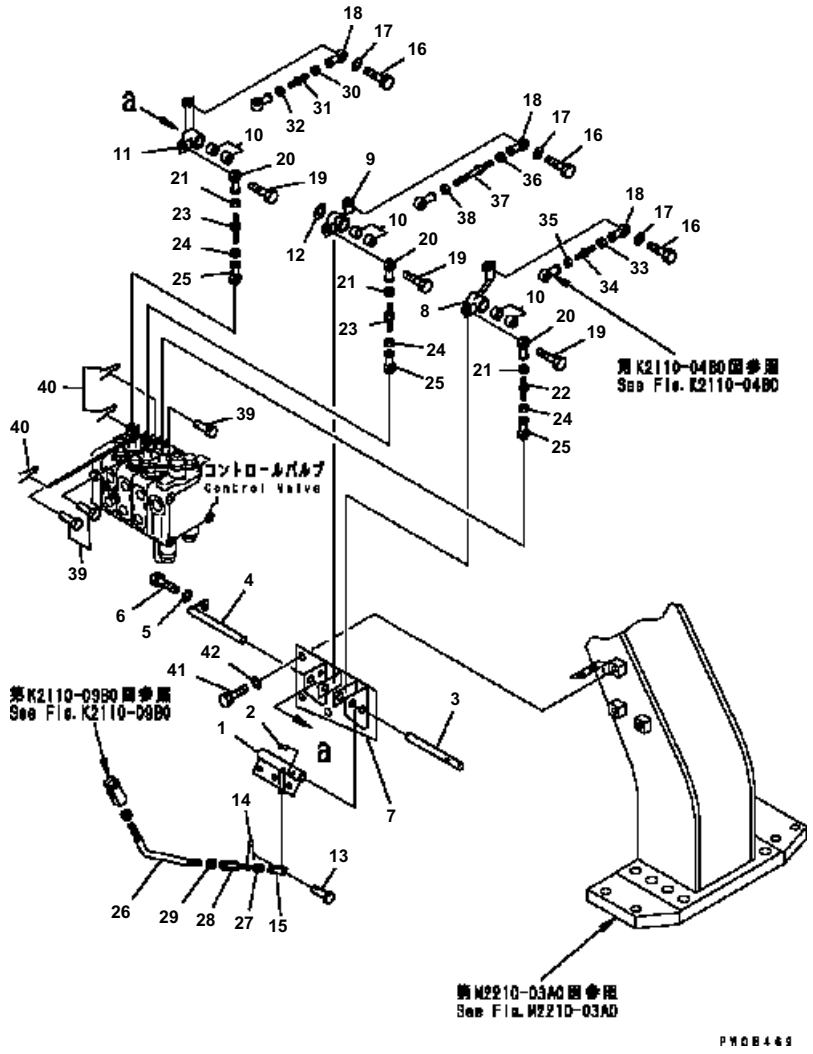

D41E6T S/N B35001-UP

BLADE CONTROL SYSTEM

Item	Part No.	Description	Qty	Options
1	124-43-64210	LEVER	1	SN:B35001--
2	124-43-54270	PIN	1	SN:B35001--
3	124-43-54222	PIN	1	SN:B35001--
4	134-43-64230	PIN	1	SN:B35001--
5	01643-50823	WASHER	1	SN:B35001--
6	01010-80830	BOLT	1	SN:B35001--
7	134-43-64510	BRACKET	1	SN:B35001--
8	124-43-54182	LEVER	1	SN:B35001--
9	124-43-54193	LEVER	1	SN:B35001--
10	06123-01414	BEARING	6	SN:B35001--
11	124-43-54142	LEVER	1	SN:B35001--
12	134-43-64240	SHIM	3	SN:B35001--
13	04205-10618	PIN	1	SN:B35001--
14	04050-11612	PIN	1	SN:B35001--
15	124-43-54340	YOKE	1	SN:B35001--
16	01010-80830	BOLT	3	SN:B35001--
17	01643-30823	WASHER	3	SN:B35001--
18	04250-80847	END	3	SN:B35001--
19	01010-80830	BOLT	3	SN:B35001--
20	04250-80847	END	3	SN:B35001--
21	01580-10806	NUT	3	SN:B35001--
22	205-43-72920	BOLT	1	SN:B35001--
23	581-43-11870	ROD	2	SN:B35001--
24	01508-40805	NUT	3	SN:B35001--
25	04250-90847	END	3	SN:B35001--
26	134-43-64260	ROD	1	SN:B35001--
27	01580-11008	NUT	1	SN:B35001--
28	198-43-41940	ROD	1	SN:B35001--
29	01508-41006	NUT	1	SN:B35001--
30	01580-10806	NUT	1	SN:B35001--
31	205-43-72920	BOLT	1	SN:B35001--
32	01508-40805	NUT	1	SN:B35001--
33	01580-10806	NUT	1	SN:B35001--
34	205-43-72920	BOLT	1	SN:B35001--
35	01508-40805	NUT	1	SN:B35001--
36	01580-10806	NUT	1	SN:B35001--
37	04248-30810	ROD	1	SN:B35001--
38	01508-40805	NUT	1	SN:B35001--
39	124-43-54390	PIN	3	SN:B35001--
40	04050-12015	PIN	3	SN:B35001--
41	01010-81220	BOLT	3	SN:B35001--

Ref. K2241-01A0 Page 240720

D41E6T S/N B35001-UP

BLADE CONTROL SYSTEM

Item	Part No.	Description	Qty	Options
42	01643-31232	WASHER	3	SN:B35001--

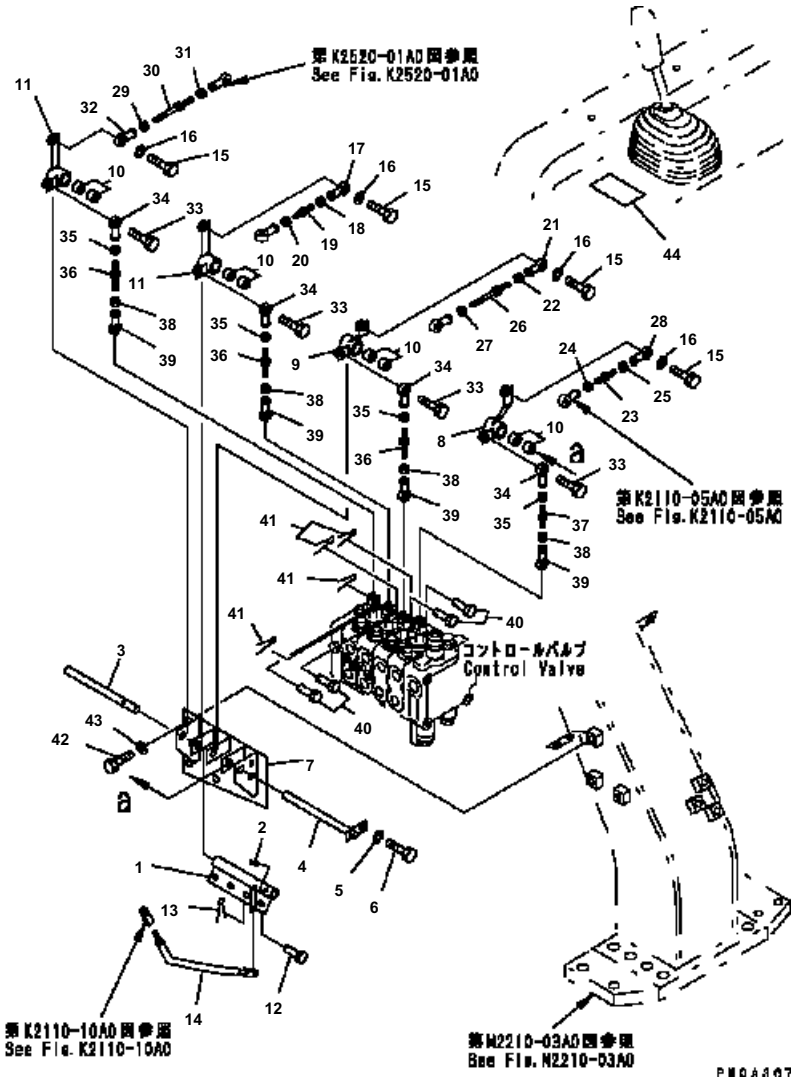

D41E6T S/N B35001-UP

BLADE CONTROL SYSTEM (WITH RIPPER)

Item	Part No.	Description	Qty	Options
1	124-78-64210	LEVER	1	SN:B35001--
2	124-43-54270	PIN	1	SN:B35001--
3	124-78-54190	PIN	1	SN:B35001--
4	134-43-64190	PIN	1	SN:B35001--
5	01643-50823	WASHER	1	SN:B35001--
6	01010-80830	BOLT	1	SN:B35001--
7	134-43-64610	BRACKET	1	SN:B35001--
8	124-43-54182	LEVER	1	SN:B35001--
9	124-43-54193	LEVER	1	SN:B35001--
10	06123-01414	BEARING	8	SN:B35001--
11	124-43-54142	LEVER	2	SN:B35001--
12	178-43-14330	SPACER	2	SN:B35001--
13	134-43-64240	SHIM	8	SN:B35001--
14	04205-10618	PIN	1	SN:B35001--
15	04050-11612	PIN	1	SN:B35001--
16	124-43-54340	YOKE	1	SN:B35001--
17	01583-11006	NUT	1	SN:B35001--
18	01010-80830	BOLT	4	SN:B35001--
19	01643-30823	WASHER	4	SN:B35001--
20	04250-80847	END	4	SN:B35001--
21	01010-80830	BOLT	4	SN:B35001--
22	04250-80847	END	4	SN:B35001--
23	01580-10806	NUT	4	SN:B35001--
24	205-43-72920	BOLT	1	SN:B35001--
25	581-43-11870	ROD	3	SN:B35001--
26	01508-40805	NUT	4	SN:B35001--
27	04250-90847	END	4	SN:B35001--
28	134-43-64260	ROD	1	SN:B35001--
29	198-43-41940	ROD	1	SN:B35001--
30	01508-41006	NUT	1	SN:B35001--
31	01580-10806	NUT	1	SN:B35001--
32	205-43-72920	BOLT	1	SN:B35001--
33	01508-40805	NUT	1	SN:B35001--
34	01580-10806	NUT	1	SN:B35001--
35	205-43-72920	BOLT	1	SN:B35001--
36	01508-40805	NUT	1	SN:B35001--
37	01580-10806	NUT	1	SN:B35001--
38	04248-30810	ROD	1	SN:B35001--
39	01508-40805	NUT	1	SN:B35001--
40	01580-10806	NUT	1	SN:B35001--
41	04248-30813	ROD	1	SN:B35001--

Ref. K2241-01A1 Page 240730

D41E6T S/N B35001-UP

BLADE CONTROL SYSTEM (WITH RIPPER)

Item	Part No.	Description	Qty	Options
42	01508-40805	NUT	1	SN:B35001--
43	124-43-54390	PIN	4	SN:B35001--
44	04050-12015	PIN	4	SN:B35001--
45	01010-81220	BOLT	3	SN:B35001--
46	01643-31232	WASHER	3	SN:B35001--
47	14X-78-11180	PLATE, OPERATING	1	SN:B35001--

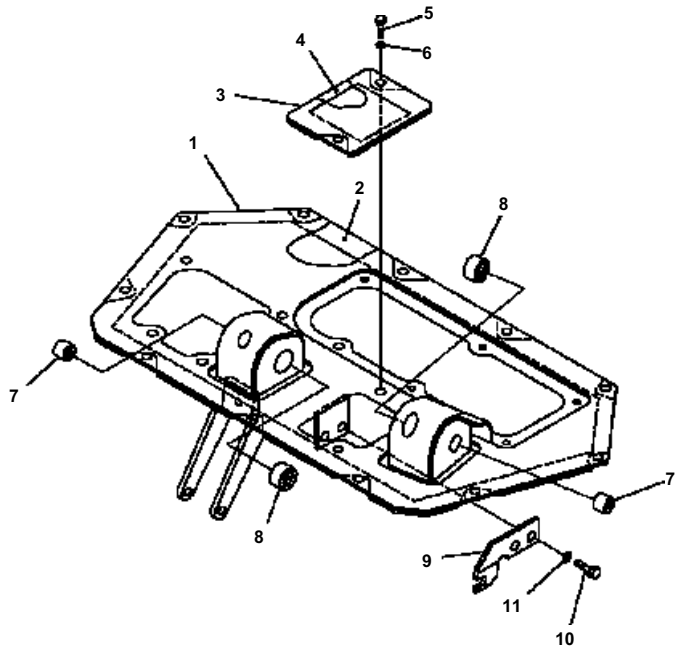

D41E6T S/N B35001-UP

FLOOR (FLOOR) (WITH DECELERATOR PEDAL)

Item	Part No.	Description	Qty	Options
1	124-43-61110	FLOOR	1	SN:B35001--
2	124-43-62360	･ SHEET	1	SN:B35001--
3	14X-43-12350	COVER	1	SN:B35001--
4	14X-43-12390	･ SHEET	1	SN:B35001--
5	01010-81230	BOLT	2	SN:B35001--
6	01643-31232	WASHER	2	SN:B35001--
7	06124-02020	BEARING	1	SN:B35001--
8	06124-03020	BEARING	1	SN:B35001--
9	124-43-63530	PLATE	1	SN:B35001--
10	01010-81225	BOLT	2	SN:B35001--
11	01643-31232	WASHER	2	SN:B35001--

Ref. K2400-01A0 Page 240740

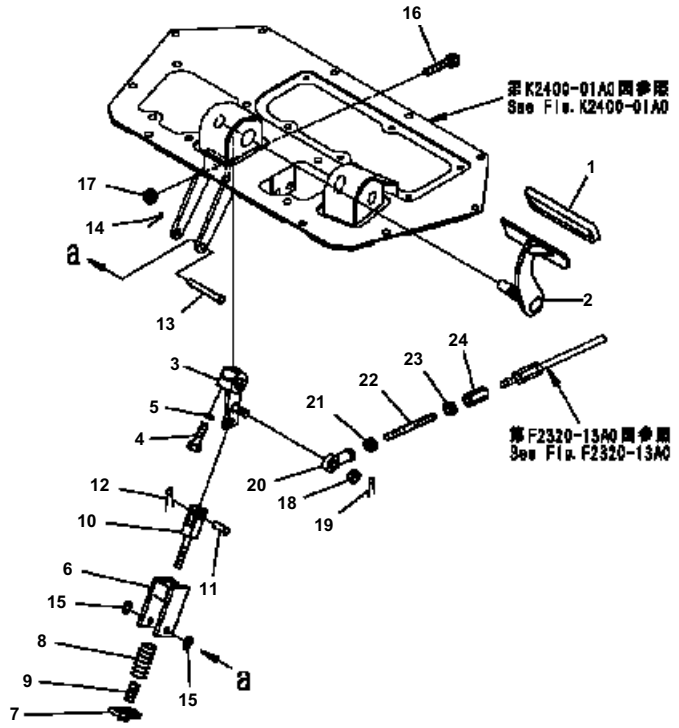

D41E6T S/N B35001-UP

FLOOR (BRAKE PEDAL) (WITH DECELERATOR PEDAL)

Item	Part No.	Description	Qty	Options
1	14X-43-12110	CAP	1	SN:B35001--
2	134-43-62320	PEDAL	1	SN:B35001--
3	124-43-63510	LEVER	1	SN:B35001--
4	01010-81245	BOLT	1	SN:B35001--
5	01643-51232	WASHER	1	SN:B35001--
6	14X-43-12251	HOLDER	1	SN:B35001--
7	14X-43-12260	PLATE	1	SN:B35001--
8	700-84-11660	SPRING	1	SN:B35001--
9	205-43-51470	SPRING	1	SN:B35001--
10	14X-43-12270	ROD	1	SN:B35001--
11	04205-11238	PIN	1	SN:B35001--
12	04050-13022	PIN	1	SN:B35001--
13	14X-43-11270	PIN	1	SN:B35001--
14	04050-13022	PIN	1	SN:B35001--
15	01641-21223	WASHER	2	SN:B35001--
16	09311-41237	BUMPER	1	SN:B35001--
17	01580-11210	NUT	1	SN:B35001--
18	01593-31411	NUT	1	SN:B35001--
19	04050-13022	PIN	1	SN:B35001--
20	04250-81474	END	1	SN:B35001--
21	01582-11411	NUT	1	SN:B35001--
22	14X-43-12410	ROD	1	SN:B35001--
23	01508-41408	NUT	1	SN:B35001--
24	17A-43-24160	JOINT	1	SN:B35001--

Ref. K2400-02A0 Page 240750

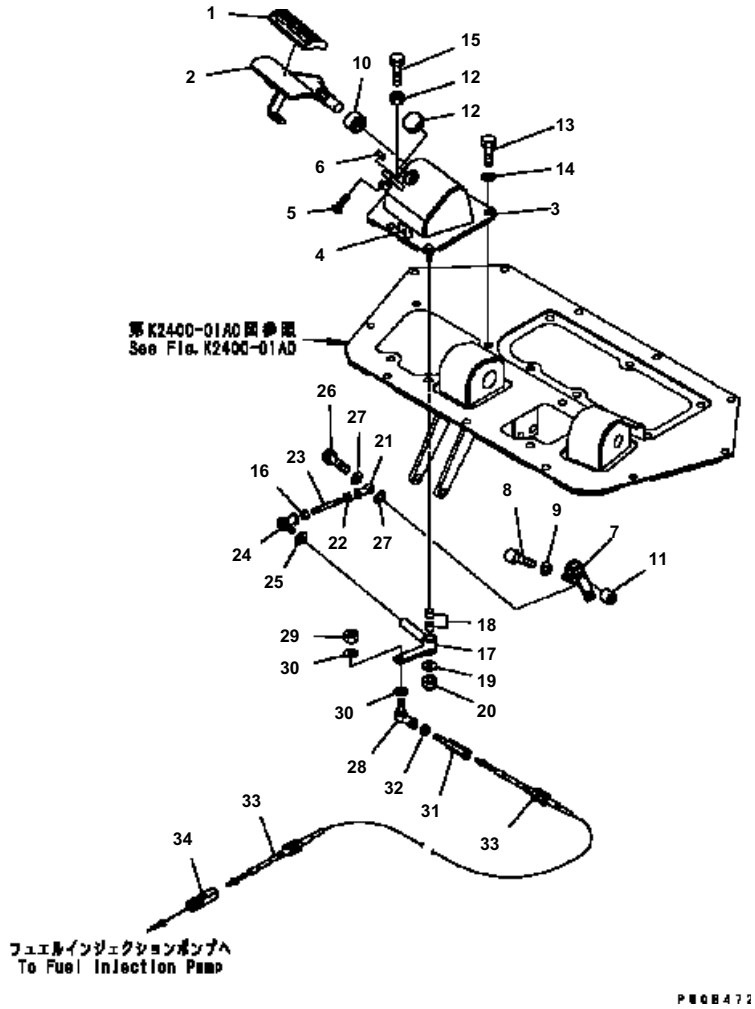

D41E6T S/N B35001-UP

FLOOR (DECELERATOR PEDAL) (WITH DECELERATORPEDAL)

Item	Part No.	Description	Qty	Options
1	14X-43-13760	CAP, PEDAL	1	SN:B35001--
2	134-43-62431	PEDAL	1	SN:B35001--
3	134-43-62421	BRACKET	1	SN:B35001--
4	14X-43-12380	· SHEET	1	SN:B35001--
5	09311-41237	BUMPER	1	SN:B35001--
6	01580-11210	NUT	1	SN:B35001--
7	124-43-55160	LEVER	1	SN:B35001--
8	01010-80830	BOLT	1	SN:B35001--
9	01643-30823	WASHER	1	SN:B35001--
10	06124-03020	BEARING	1	SN:B35001--
11	06124-02020	BEARING	1	SN:B35001--
12	09415-02512	CAP	1	SN:B35001--
13	01010-51230	BOLT	4	SN:B35001--
14	01643-31232	WASHER	4	SN:B35001--
15	01016-50830	BOLT	1	SN:B35001--
16	01580-10806	NUT	2	SN:B35001--
17	14X-43-13722	LEVER	1	SN:B35001--
18	09350-01415	BUSHING	2	SN:B35001--
19	113-43-23230	WASHER	1	SN:B35001--
20	01598-00809	NUT	1	SN:B35001--
21	04250-80847	END	1	SN:B35001--
22	01580-10806	NUT	1	SN:B35001--
23	04245-40805	ROD	1	SN:B35001--
24	04256-40817	JOINT	1	SN:B35001--
25	01643-30823	WASHER	1	SN:B35001--
26	01010-80830	BOLT	1	SN:B35001--
27	04254-10823	SPACER	2	SN:B35001--
28	04256-50615	JOINT	1	SN:B35001--
29	01580-10605	NUT	1	SN:B35001--
30	01641-20608	WASHER	2	SN:B35001--
31	14Z-43-12891	ROD	1	SN:B35001--
32	01508-40603	NUT	1	SN:B35001--
33	124-43-61730	CABLE	1	SN:B35001--
34	14X-43-13790	JOINT	1	SN:B35001--

Ref. K2400-03A0 Page 240760

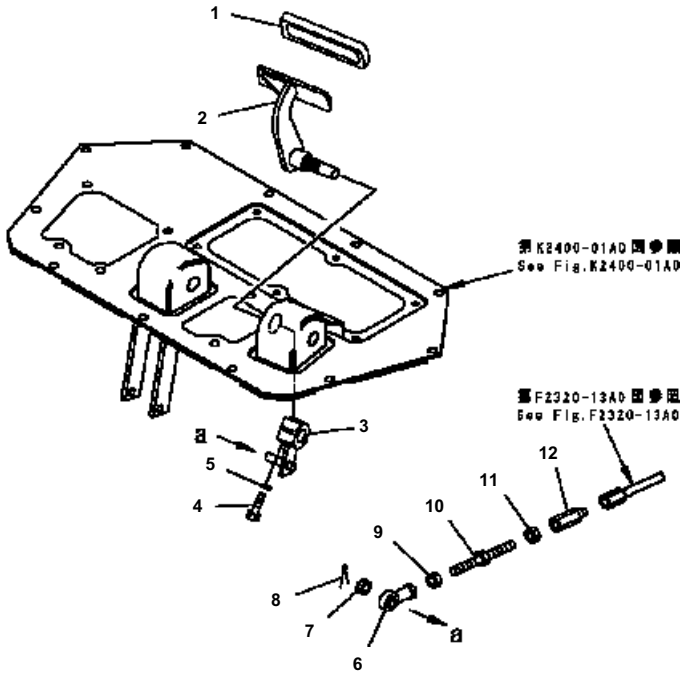

D41E6T S/N B35001-UP

FLOOR (INCHING PEDAL (WITH DECELERATORPEDAL)

Item	Part No.	Description	Qty	Options
1	14X-43-13760	CAP, PEDAL	1	SN:B35001--
2	12G-43-51550	PEDAL	1	SN:B35001--
3	124-43-52631	LEVER	1	SN:B35001--
4	01010-81245	BOLT	1	SN:B35001--
5	01643-31232	WASHER	1	SN:B35001--
6	04250-91474	END	1	SN:B35001--
7	01593-31411	NUT	1	SN:B35001--
8	04050-13022	PIN	1	SN:B35001--
9	01508-41408	NUT	1	SN:B35001--
10	04248-31415	ROD	1	SN:B35001--
11	01582-11411	NUT	1	SN:B35001--
12	17A-43-24170	JOINT	1	SN:B35001--

Ref. K2400-04A0 Page 240770

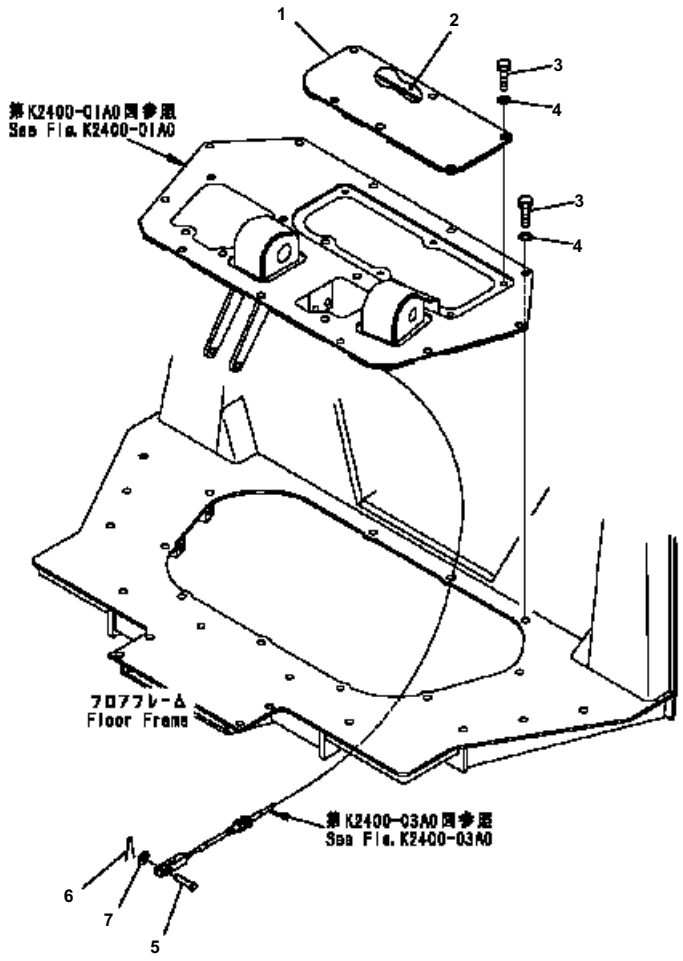

D41E6T S/N B35001-UP

FLOOR (FLOOR MOUNT) (WITH DECELERATOR PEDAL)

Item	Part No.	Description	Qty	Options
1	134-43-62380	COVER	1	SN:B35001--
2	134-43-62390	SHEET	1	SN:B35001--
3	01010-81230	BOLT	17	SN:B35001--
4	01643-31232	WASHER	17	SN:B35001--
5	04205-10625	PIN	1	SN:B35001--
6	04050-11612	PIN	1	SN:B35001--
7	01641-20608	WASHER	1	SN:B35001--

Ref. K2400-05A0 Page 240780

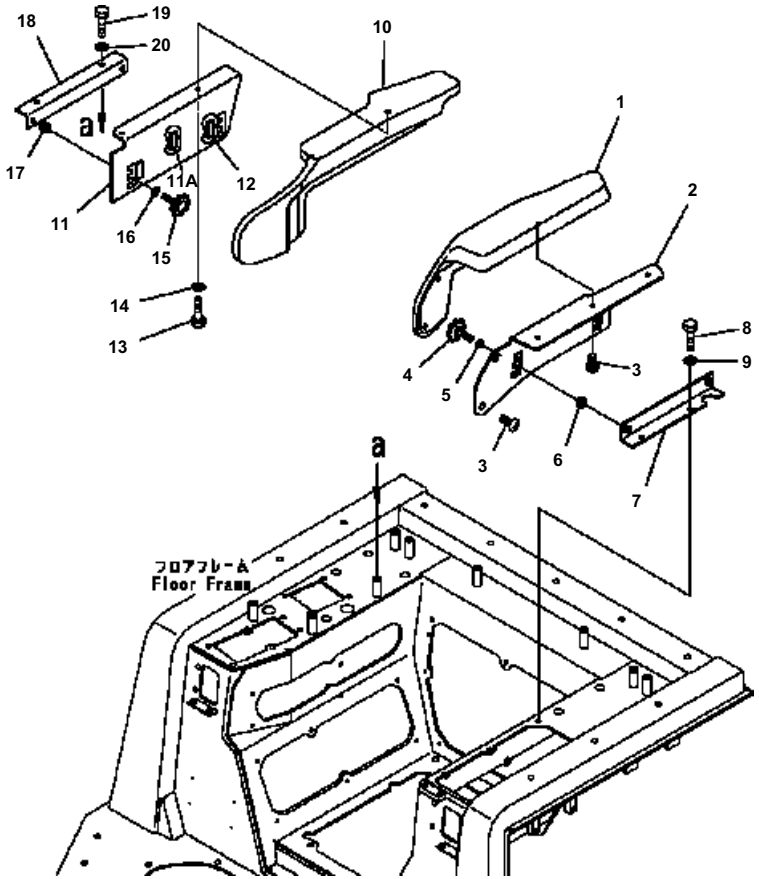

D41E6T S/N B35001-UP

ARM REST COVER (UPPER)

Item	Part No.	Description	Qty	Options
1	134-54-66112	ARM REST	1	SN:B35001--
2	134-54-66132	PLATE	1	SN:B35001--
3	01236-40816	SCREW	5	SN:B35001--
4	195-54-68760	KNOB	2	SN:B35001--
5	01643-31032	WASHER	2	SN:B35001--
6	134-54-66180	SPACER	2	SN:B35001--
7	134-54-66152	BRACKET	1	SN:B35001--
8	01010-81025	BOLT	2	SN:B35001--
9	01643-31032	WASHER	2	SN:B35001--
	124-54-36310	ARM REST ASS'Y	1	SN:B35491--
	124-54-68410	ARM REST ASS'Y	1	SN:B35000--B35490
10	14X-54-36320	・ REST {R. H. }	1	SN:B35491--
	124-54-68420	REST {R. H. }	1	SN:B35000--B35490
11	14X-54-36330	・ PLATE {R. H. }	1	SN:B35001--
11A	17A-43-42310	・ PLATE	1	SN:B35491--
12	134-54-66240	・ SHEET	2	SN:B35001--
13	01010-80820	・ BOLT	2	SN:B35001--
14	01643-30823	・ WASHER	2	SN:B35001--
15	195-54-68760	KNOB	2	SN:B35001--
16	01643-31032	WASHER	2	SN:B35001--
17	134-54-66180	SPACER	2	SN:B35001--
18	134-54-66161	BRACKET	1	SN:B35001--
19	01010-81025	BOLT	2	SN:B35001--
20	01643-31032	WASHER	2	SN:B35001--

Ref. K2500-01A0 Page 240790

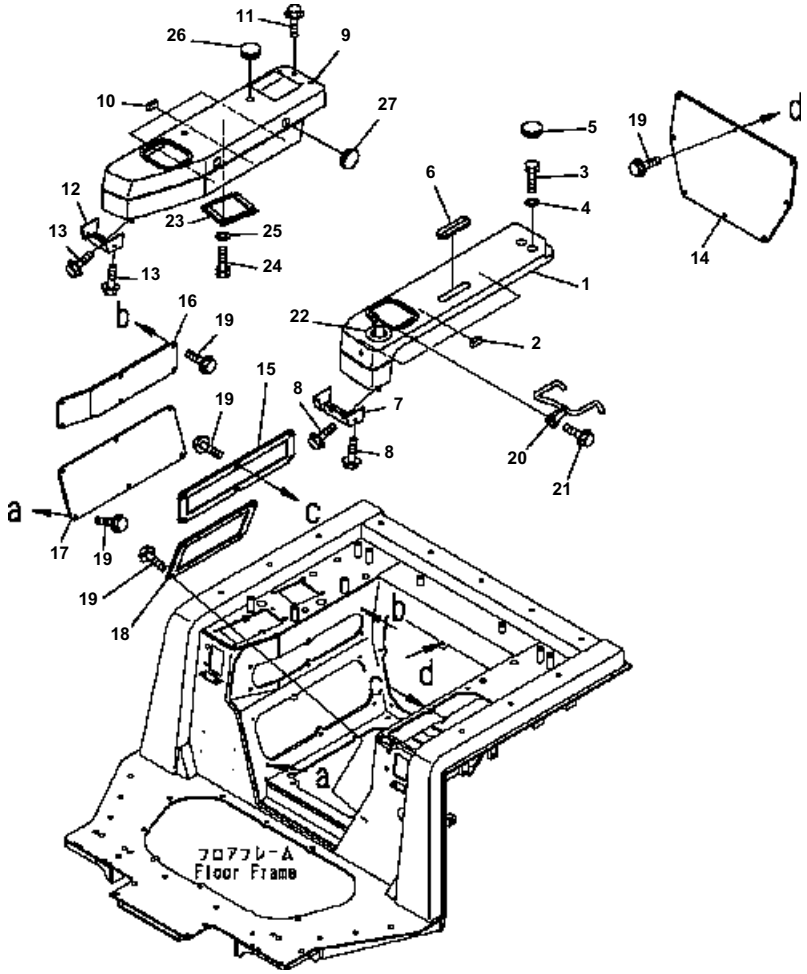

D41E6T S/N B35001-UP

ARM REST COVER (LOWER (WITH CAB)

Item	Part No.	Description	Qty	Options
1	134-54-68121	COVER	1	SN:B35001--
2	17A-54-16881	· SHEET	1	SN:B35001--
3	01010-81020	BOLT	2	SN:B35001--
4	01643-31032	WASHER	2	SN:B35001--
5	09415-02512	CAP	2	SN:B35001--
6	134-54-68161	GROMMET	1	SN:B35001--
7	14X-54-16442	COVER	1	SN:B35001--
8	01439-00814	BOLT	4	SN:B35001--
9	124-54-68330	COVER	1	SN:B35001--
10	17A-54-16881	SHEET	1	SN:B35001--
11	01439-00825	BOLT	2	SN:B35001--
12	14X-54-16452	COVER	1	SN:B35001--
13	01439-00814	BOLT	4	SN:B35001--
14	124-54-64620	COVER	1	SN:B35001--
	14X-54-26390	· SEAL	1	SN:B35001--
15	134-54-65121	COVER	1	SN:B35001--
	134-54-65140	· COVER	1	SN:B35001--
16	14X-54-16143	COVER	1	SN:B35001--
	14X-54-16183	· SEAL	1	SN:B35001--
17	14X-54-16153	COVER	1	SN:B35001--
	14X-54-16193	· SEAL	1	SN:B35001--
18	14X-54-26410	COVER	1	SN:B35001--
	14X-54-26380	· SEAL	1	SN:B35001--
19	01439-00820	BOLT	32	SN:B35001--
20	134-54-66211	HANDLE	1	SN:B35001--
21	01439-01025	BOLT	2	SN:B35001--
22	14X-54-16660	GROMMET	1	SN:B35001--
23	14X-43-14141	COVER	1	SN:B35001--
	14X-54-16270	SEAL	1	SN:B35001--
24	01010-80825	BOLT	4	SN:B35001--
25	01643-30823	WASHER	4	SN:B35001--
26	9415-01610	CAP	1	SN:B35001--
27	9415-01008	CAP	1	SN:B35001--

Ref. K2500-02A0 Page 240800

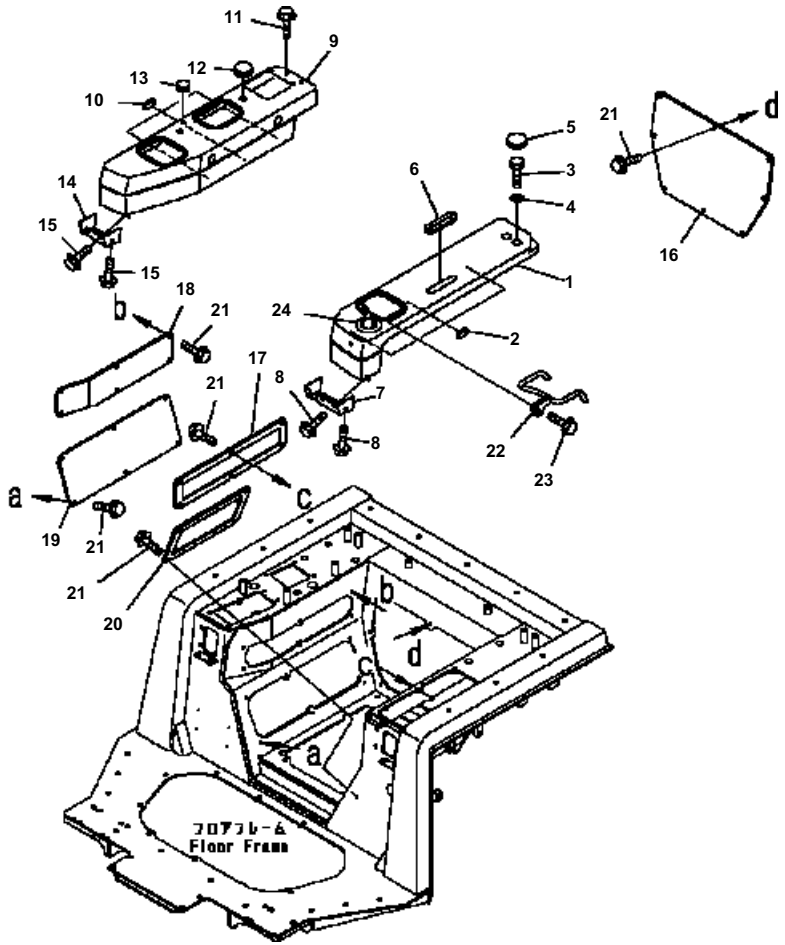

D41E6T S/N B35001-UP

ARM REST COVER (LOWER) (WITH CAB)(FOR RIPPER)

Item	Part No.	Description	Qty	Options
1	134-54-68121	COVER	1	SN:B35001--
2	17A-54-16881	· SHEET	1	SN:B35001--
3	01010-81020	BOLT	2	SN:B35001--
4	01643-31032	WASHER	2	SN:B35001--
5	09415-02512	CAP	2	SN:B35001--
6	134-54-68161	GROMMET	1	SN:B35001--
7	14X-54-16442	COVER	1	SN:B35001--
8	01439-00814	BOLT	4	SN:B35001--
9	124-54-68340	COVER	1	SN:B35001--
10	17A-54-16881	· SHEET	1	SN:B35001--
11	01439-00825	BOLT	2	SN:B35001--
12	09415-01610	CAP	1	SN:B35001--
13	09415-01008	CAP	1	SN:B35001--
14	14X-54-16452	COVER	1	SN:B35001--
15	01439-00814	BOLT	4	SN:B35001--
16	124-54-64620	COVER	1	SN:B35001--
	14X-54-26390	· SEAL	1	SN:B35001--
17	134-54-65121	COVER	1	SN:B35001--
	134-54-65140	· COVER	1	SN:B35001--
18	14X-54-16143	COVER	1	SN:B35001--
	14X-54-16183	· SEAL	1	SN:B35001--
19	14X-54-16153	COVER	1	SN:B35001--
	14X-54-16193	· SEAL	1	SN:B35001--
20	14X-54-26410	COVER	1	SN:B35001--
	14X-54-26380	· SEAL	1	SN:B35001--
21	01439-00820	BOLT	32	SN:B35001--
22	134-54-66211	HANDLE	1	SN:B35001--
23	01439-01025	BOLT	2	SN:B35001--
24	14X-54-16660	GROMMET	1	SN:B35001--

Ref. K2500-02A1 Page 240810

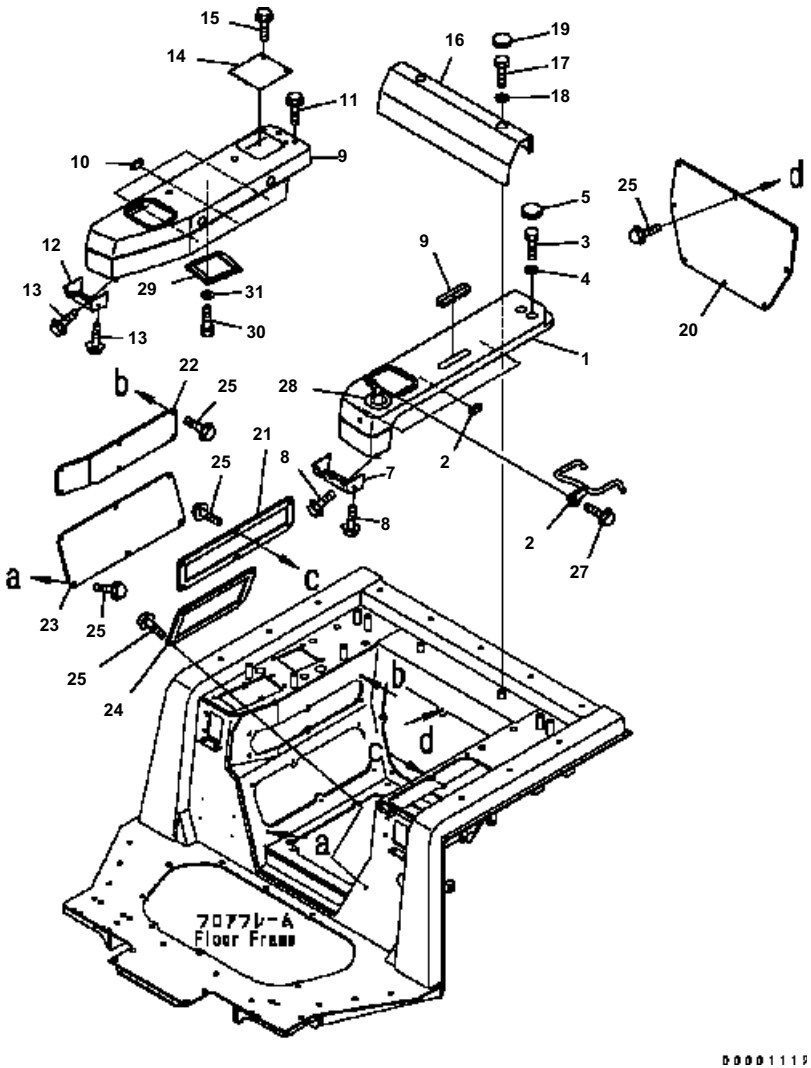

D41E6T S/N B35001-UP

ARM REST COVER (LOWER) (WITHOUT CAB)

Item	Part No.	Description	Qty	Options
1	134-54-68121	COVER	1	SN:B35001--
2	17A-54-16881	· SHEET	1	SN:B35001--
3	01010-81020	BOLT	2	SN:B35001--
4	01643-31032	WASHER	2	SN:B35001--
5	09415-02512	CAP	2	SN:B35001--
6	134-54-68161	GROMMET	1	SN:B35001--
7	14X-54-16442	COVER	1	SN:B35001--
8	01439-00814	BOLT	4	SN:B35001--
9	124-54-68330	COVER	1	SN:B35001--
10	17A-54-16881	· SHEET	1	SN:B35001--
11	01439-00825	BOLT	2	SN:B35001--
12	14X-54-16452	COVER	1	SN:B35001--
13	01439-00814	BOLT	4	SN:B35001--
14	17A-54-25650	COVER	1	SN:B35001--
	17A-54-25660	· COVER	1	SN:B35001--
15	01439-00825	BOLT	2	SN:B35001--
16	124-54-66480	COVER	1	SN:B35001--
	134-54-66880	· SHEET	1	SN:B35001--
17	01010-81045	BOLT	2	SN:B35001--
18	01643-31032	WASHER	2	SN:B35001--
19	09415-02512	CAP	2	SN:B35001--
20	124-54-64620	COVER	1	SN:B35001--
	14X-54-26390	· SEAL	1	SN:B35001--
21	134-54-65121	COVER	1	SN:B35001--
	134-54-65140	· COVER	1	SN:B35001--
22	14X-54-16143	COVER	1	SN:B35001--
	14X-54-16183	· SEAL	1	SN:B35001--
23	14X-54-16153	COVER	1	SN:B35001--
	14X-54-16193	· SEAL	1	SN:B35001--
24	14X-54-26410	COVER	1	SN:B35001--
	14X-54-26380	SEAL	1	SN:B35001--
25	01439-00820	BOLT	32	SN:B35001--
26	134-54-66211	HANDLE	1	SN:B35001--
27	01439-01025	BOLT	2	SN:B35001--
28	14X-54-16660	GROMMET	1	SN:B35001--
29	14X-43-14180	SPACER	4	SN:B35001--
	14X-54-16270	SEAL	1	SN:B35001--
30	01010-80825	BOLT	4	SN:B35001--
31	01643-30823	WASHER	4	SN:B35001--

Ref. K2500-02A2 Page 240820

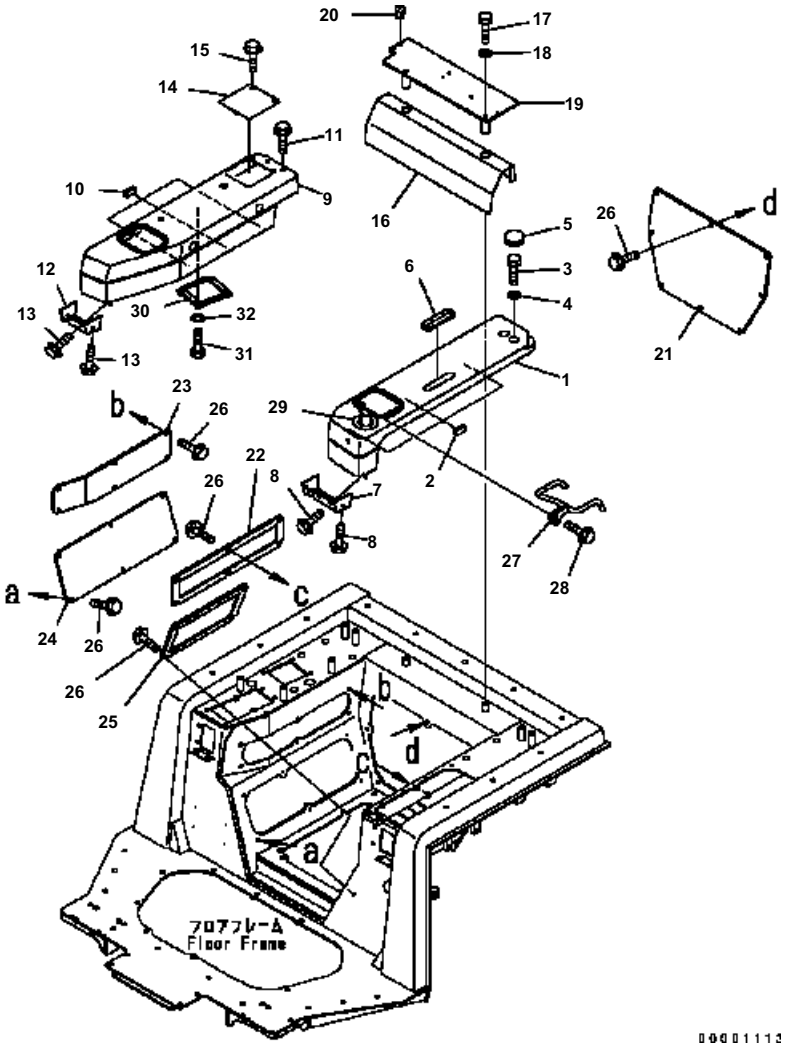

D41E6T S/N B35001-UP

ARM REST COVER (LOWER) (WITHOUT CAB) (WITH EXTINGUISHER)

Item	Part No.	Description	Qty	Options
1	134-54-68121	COVER	1	SN:B35001--
2	17A-54-16881	SHEET	1	SN:B35001--
3	01010-81020	BOLT	2	SN:B35001--
4	01643-31032	WASHER	2	SN:B35001--
5	09415-02512	CAP	2	SN:B35001--
6	134-54-68161	GROMMET	1	SN:B35001--
7	14X-54-16442	COVER	1	SN:B35001--
8	01439-00814	BOLT	4	SN:B35001--
9	124-54-68330	COVER	1	SN:B35001--
10	17A-54-16881	· SHEET	1	SN:B35001--
11	01439-00825	BOLT	2	SN:B35001--
12	14X-54-16452	COVER	1	SN:B35001--
13	01439-00814	BOLT	4	SN:B35001--
14	17A-54-25650	COVER	1	SN:B35001--
	17A-54-25660	· COVER	1	SN:B35001--
15	01439-00825	BOLT	2	SN:B35001--
16	124-54-66480	COVER	1	SN:B35001--
17	01011-81005	BOLT	2	SN:B35001--
18	01643-31032	WASHER	2	SN:B35001--
19	14X-A62-1690	BRACKET	2	SN:B35001--
20	07049-00608	PLUG	8	SN:B35001--
21	124-54-64620	COVER	1	SN:B35001--
	14X-54-26390	· SEAL	1	SN:B35001--
22	134-54-65121	COVER	1	SN:B35001--
	134-54-65140	· COVER	1	SN:B35001--
23	14X-54-16143	COVER	1	SN:B35001--
	14X-54-16183	· SEAL	1	SN:B35001--
24	14X-54-16153	COVER	1	SN:B35001--
	14X-54-16193	· SEAL	1	SN:B35001--
25	14X-54-26410	COVER	1	SN:B35001--
	14X-54-26380	· SEAL	1	SN:B35001--
26	01439-00820	BOLT	32	SN:B35001--
27	134-54-66211	HANDLE	1	SN:B35001--
28	01439-01025	BOLT	2	SN:B35001--
29	14X-54-16660	GROMMET	1	SN:B35001--
30	14X-43-14141	COVER	1	SN:B35001--
	14X-54-16270	· SEAL	1	SN:B35001--
31	01010-80825	BOLT	4	SN:B35001--
32	01643-30823	WASHER	4	SN:B35001--

Ref. K2500-02A3 Page 240830

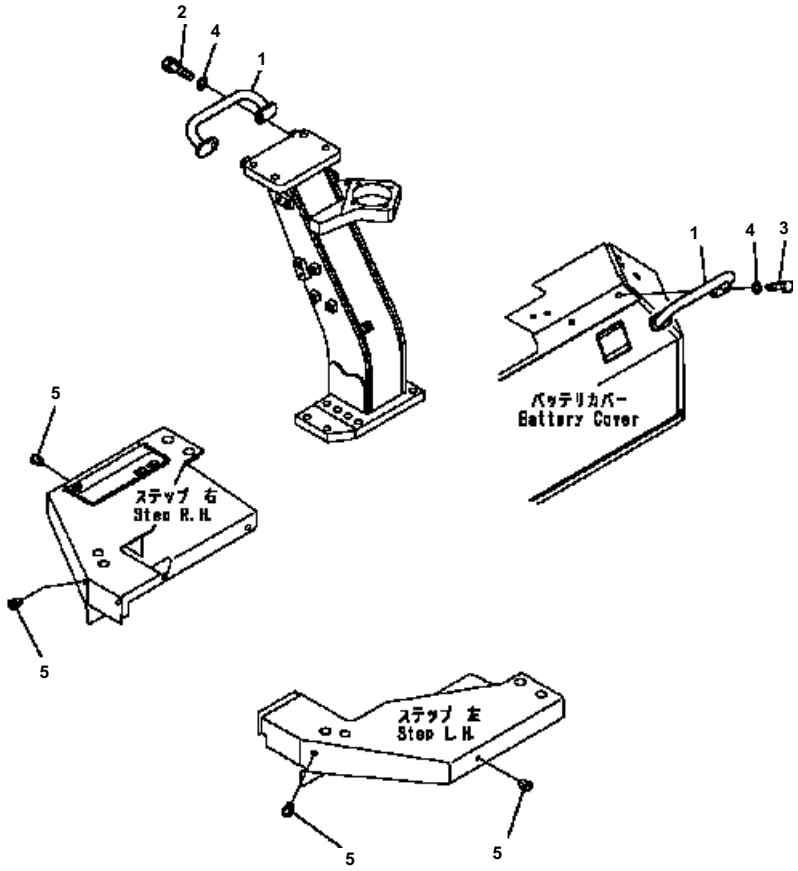

D41E6T S/N B35001-UP

HAND RAIL

Item	Part No.	Description	Qty	Options
1	124-54-63311	HAND RAIL	2	SN:B35001--
2	01010-81230	BOLT	2	SN:B35001--
3	01010-81235	BOLT	2	SN:B35001--
4	01643-31232	WASHER	4	SN:B35001--
5	07049-01215	PLUG	4	SN:B35001--

Ref. K2810-01A0 Page 240840

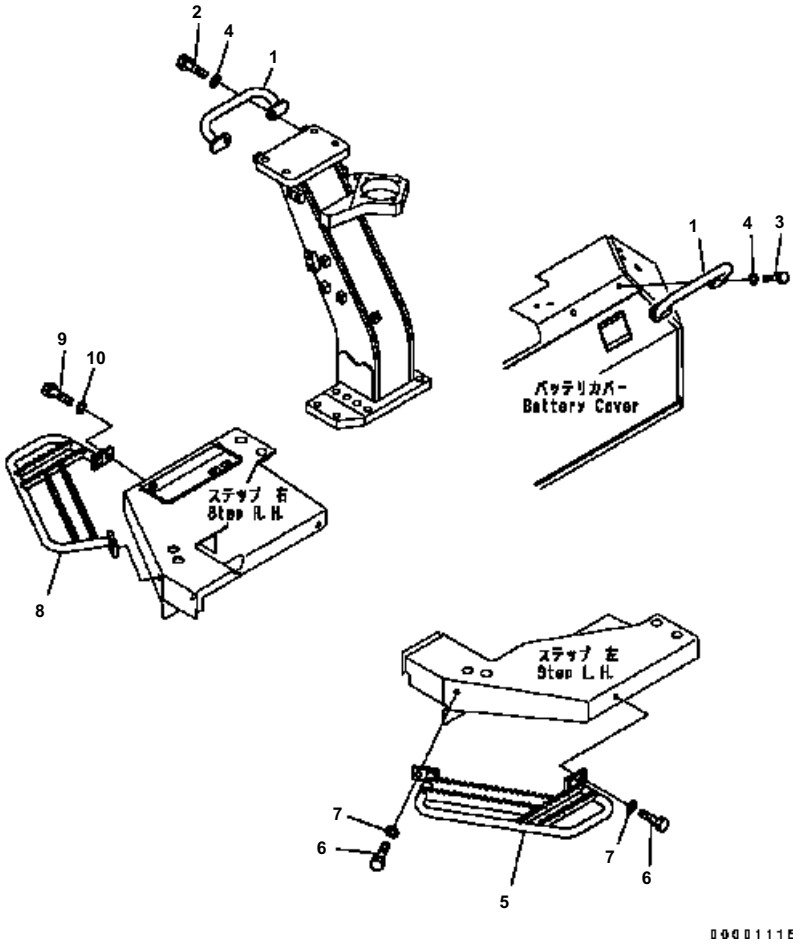

D41E6T S/N B35001-UP

HAND RAIL (FOR CAB)

Item	Part No.	Description	Qty	Options
1	124-54-63311	HAND RAIL	2	SN:B35001--
2	01010-81230	BOLT	2	SN:B35001--
3	01010-81235	BOLT	2	SN:B35001--
4	01643-31232	WASHER	4	SN:B35001--
5	14X-54-33211	HANDLE{L.H.}	1	SN:B35001--
6	01010-81230	BOLT	2	SN:B35001--
7	01643-31232	WASHER	2	SN:B35001--
8	14X-54-33251	HANDLE{R.H.}	1	SN:B35001--
9	01010-81230	BOLT	2	SN:B35001--
10	01643-31232	WASHER	2	SN:B35001--

Ref. K2810-01A1 Page 240850

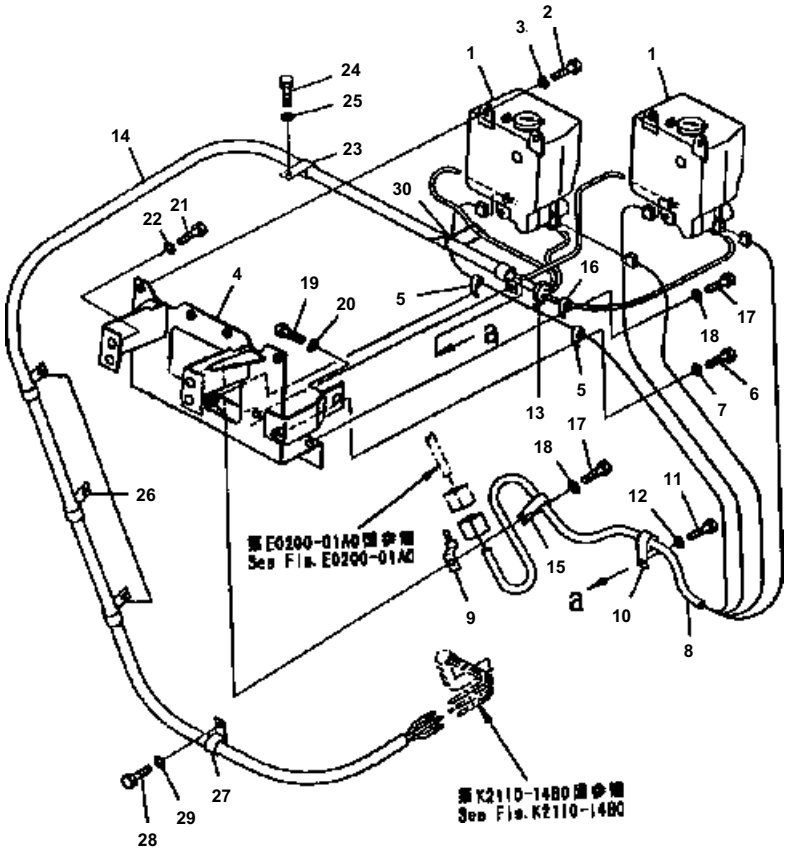

D41E6T S/N B35001-UP

WINDOW WASHER TANK

Item	Part No.	Description	Qty	Options
1	14X-911-1161	WASHER TANK	2	SN:B35001--
2	01010-80616	BOLT	4	SN:B35001--
3	01643-30623	WASHER	4	SN:B35001--
4	124-Z11-1740	BRACKET	1	SN:B35001--
5	04434-51010	CLIP	2	SN:B35001--
6	01010-81016	BOLT	2	SN:B35001--
7	01643-31032	WASHER	2	SN:B35001--
8	14X-06-14210	WIRING HARNESS	1	SN:B35001--
9	08053-00910	CLIP	1	SN:B35001--
10	04434-51210	CLIP	2	SN:B35001--
11	01010-81016	BOLT	1	SN:B35001--
12	01643-31032	WASHER	1	SN:B35001--
13	08034-00519	BAND	1	SN:B35001--
14	124-Z11-1330	HOSE ASS'Y	1	SN:B35001--
15	04434-51410	CLIP	1	SN:B35001--
16	04434-50810	CLIP	1	SN:B35001--
17	01010-81016	BOLT	2	SN:B35001--
18	01643-31032	WASHER	2	SN:B35001--
19	01010-81220	BOLT	1	SN:B35001--
20	01643-31232	WASHER	1	SN:B35001--
21	01010-81230	BOLT	4	SN:B35001--
22	01643-31032	WASHER	4	SN:B35001--
23	04434-51910	CLIP	1	SN:B35001--
24	01010-81016	BOLT	1	SN:B35001--
25	01643-31032	WASHER	1	SN:B35001--
26	04434-51910	CLIP	3	SN:B35001--
27	04434-51910	CLIP	1	SN:B35001--
28	01010-81016	BOLT	1	SN:B35001--
29	01643-31032	WASHER	1	SN:B35001--
30	08034-00519	BAND	1	SN:B35001--

Ref. K2910-01A0 Page 240860

GUARD

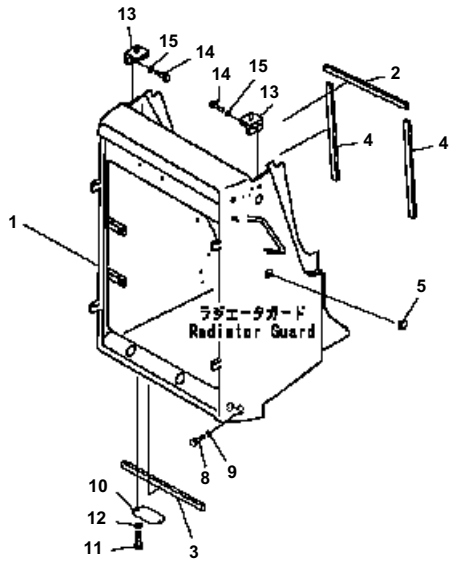

D41E6T S/N B35001-UP

RADIATOR GUARD

Item	Part No.	Description	Qty	Options
1	124-54-61543	GUARD ASS'Y	1	SN:B35380--
	124-54-61542	GUARD ASS'Y	1	SN:B35086--B35379
	124-54-61541	GUARD ASS'Y	1	SN:B35063--B35085
	124-54-61540	GUARD ASS'Y	1	SN:B35001--B35062
2	124-54-61160	SHEET	1	SN:B35001--
3	124-54-51410	SHEET	1	SN:B35001--
4	124-54-61170	SHEET	2	SN:B35001--
5	09415-02520	CAP	1	SN:B35001--
6	01010-81645	BOLT	4	SN:B35001--
7	01643-31645	WASHER	4	SN:B35001--
8	01010-82065	BOLT	4	SN:B35001--
9	01643-32060	WASHER	4	SN:B35001--
10	124-54-61230	COVER	1	SN:B35001--
11	01010-81235	BOLT	2	SN:B35001--
12	01643-31232	WASHER	2	SN:B35001--
13	124-54-62260	BRACKET	2	SN:B35001--
14	01010-81235	BOLT	6	SN:B35001--
15	01643-31232	WASHER	6	SN:B35001--

Ref. M2110-01A0 Page 270010

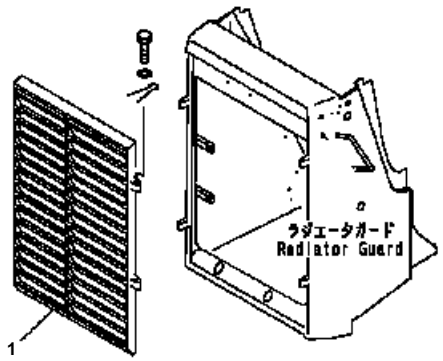

D41E6T S/N B35001-UP

RADIATOR MASK (REINFORCED)

Item	Part No.	Description	Qty	Options
1	124-54-61460	MASK	1	SN:B35001--

Ref. M2120-01A0 Page 270020

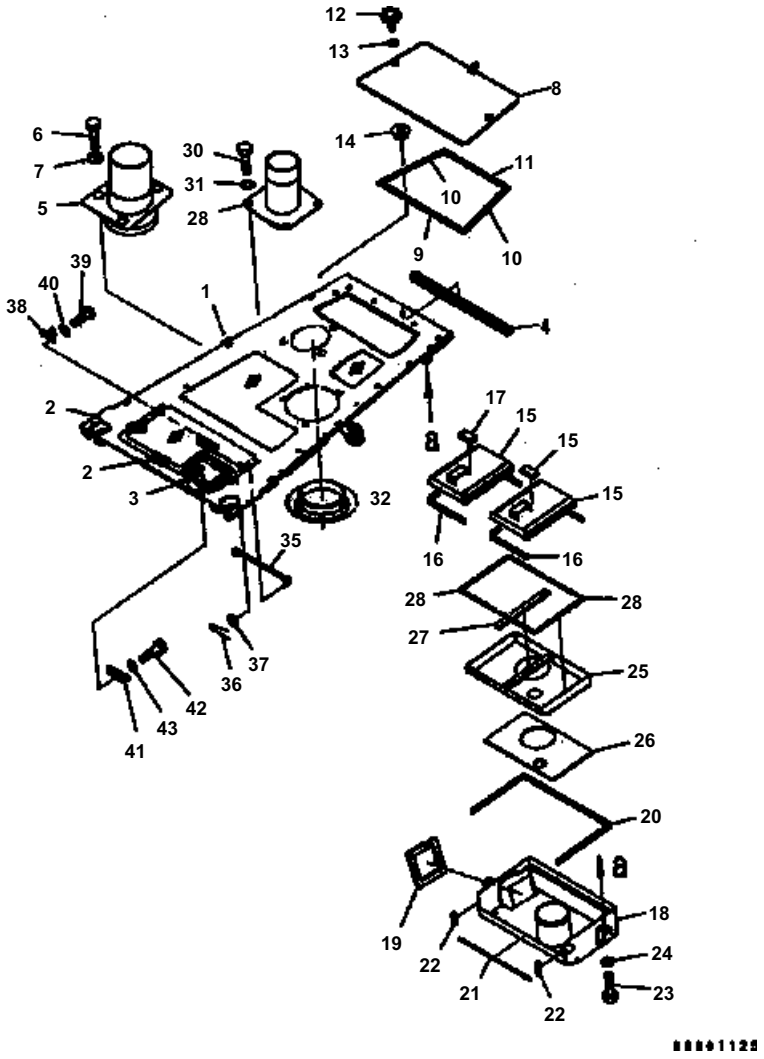

D41E6T S/N B35001-UP

FRONT GUARD (ENGINE HOOD) (WITH CAB)

Item	Part No.	Description	Qty	Options
1	124-54-62242	HOOD	1	SN:B35180--
	124-99-B3760	HOOD	1	SN:B35154--B35179
	124-54-62241	HOOD	1	SN:B35086--B35153
	124-54-62240	HOOD	1	SN:B35001--
2	124-54-64240	· SHEET	2	SN:B35001--
3	14X-54-12910	· LOCK	1	SN:B35001--
4	124-54-52460	SEAL	1	SN:B35001--
5	124-54-62280	PIPE	1	SN:B35001--
6	195-54-43210	BOLT	3	SN:B35001--
7	124-54-52480	WASHER	3	SN:B35001--
	124-Z11-2460	COVER ASS'Y	1	SN:B35001--
8	124-Z11-2470	· COVER	1	SN:B35001--
9	134-X11-1570	· SEAL	1	SN:B35001--
10	134-X11-1580	· SEAL	2	SN:B35001--
11	134-X11-1590	· SEAL	1	SN:B35001--
12	195-54-68760	· KNOB	2	SN:B35001--
13	01640-21016	· WASHER	2	SN:B35001--
14	01594-01008	· NUT	2	SN:B35001--
	134-X11-1611	COVER ASS'Y	2	SN:B35001--
15	134-X11-1621	· COVER	2	SN:B35001--
16	134-X11-1630	· SEAL	2	SN:B35001--
17	14X-911-8520	· SEAL	2	SN:B35001--
	124-Z11-1681	DUCT ASS'Y	1	SN:B35001--
18	124-Z11-1691	· DUCT	1	SN:B35001--
19	124-Z11-1670	· SEAL	1	SN:B35001--
20	14X-911-8480	· SEAL	1	SN:B35001--
21	14X-911-8490	· SEAL	1	SN:B35001--
22	14X-911-8550	· SEAL	2	SN:B35001--
23	01010-81220	BOLT	2	SN:B35001--
24	01643-31232	WASHER	2	SN:B35001--
	14X-911-8580	DUCT ASS'Y	1	SN:B35001--
25	14X-911-8590	· DUCT	1	SN:B35001--
26	14X-911-8610	· SEAL	1	SN:B35001--
27	14X-911-8620	· SEAL	1	SN:B35001--
28	14X-911-8630	· SEAL	2	SN:B35001--
29	124-54-62230	PIPE	1	SN:B35001--
30	01010-81225	BOLT	4	SN:B35001--
31	01643-31232	WASHER	4	SN:B35001--
32	124-54-52250	COVER	1	SN:B35001--
33	01010-80820	BOLT	3	SN:B35001--
34	113-43-23230	WASHER	3	SN:B35001--

Ref. M2140-01A0 Page 270030

D41E6T S/N B35001-UP

FRONT GUARD (ENGINE HOOD) (WITH CAB)

Item	Part No.	Description	Qty	Options
35	124-54-51271	ROD	1	SN:B35001--
36	04050-11612	PIN	1	SN:B35001--
37	01643-30823	WASHER	1	SN:B35001--
38	20B-54-12210	SPRING	1	SN:B35001--
39	01220-40406	SCREW	2	SN:B35001--
40	01641-20405	WASHER	2	SN:B35001--
41	14X-54-12150	PLATE	1	SN:B35001--
42	01010-81225	BOLT	2	SN:B35001--
43	01643-31232	WASHER	2	SN:B35001--

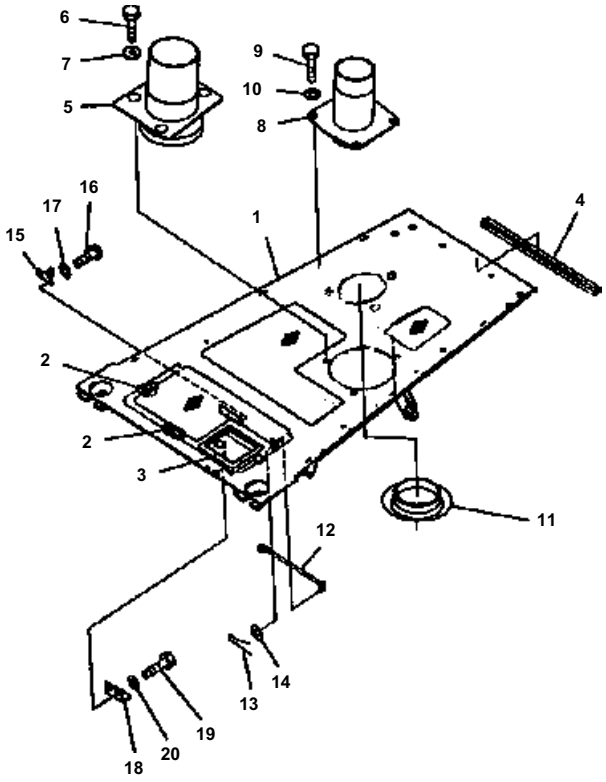

D41E6T S/N B35001-UP

FRONT GUARD (ENGINE HOOD) (WITHOUT CAB)

Item	Part No.	Description	Qty	Options
1	124-54-62222	HOOD	1	SN:B35182--
	124-99-B3770	HOOD	1	SN:B35154--B35181
	124-54-62221	HOOD	1	SN:B35028--B35153
	124-54-62220	HOOD	1	SN:B35001--B35027
2	124-54-64240	· SHEET	2	SN:B35001--
3	14X-54-12910	· LOCK	1	SN:B35001--
4	124-54-52460	SEAL	1	SN:B35001--
5	124-54-62280	PIPE	1	SN:B35001--
6	195-54-43210	BOLT	3	SN:B35001--
7	124-54-52480	WASHER	3	SN:B35001--
8	124-54-62230	PIPE	1	SN:B35001--
9	01010-81225	BOLT	4	SN:B35001--
10	01643-31232	WASHER	4	SN:B35001--
11	124-54-62250	BOOT	1	SN:B35001--
12	124-54-51271	ROD	1	SN:B35001--
13	04050-11612	PIN	1	SN:B35001--
14	01643-30823	WASHER	1	SN:B35001--
15	20B-54-12210	SPRING	1	SN:B35001--
16	01220-40406	SCREW	2	SN:B35001--
17	01641-20405	WASHER	2	SN:B35001--
18	14X-54-12150	PLATE	1	SN:B35001--
19	01010-81225	BOLT	2	SN:B35001--
20	01643-31232	WASHER	2	SN:B35001--

Ref. M2140-01A1 Page 270040

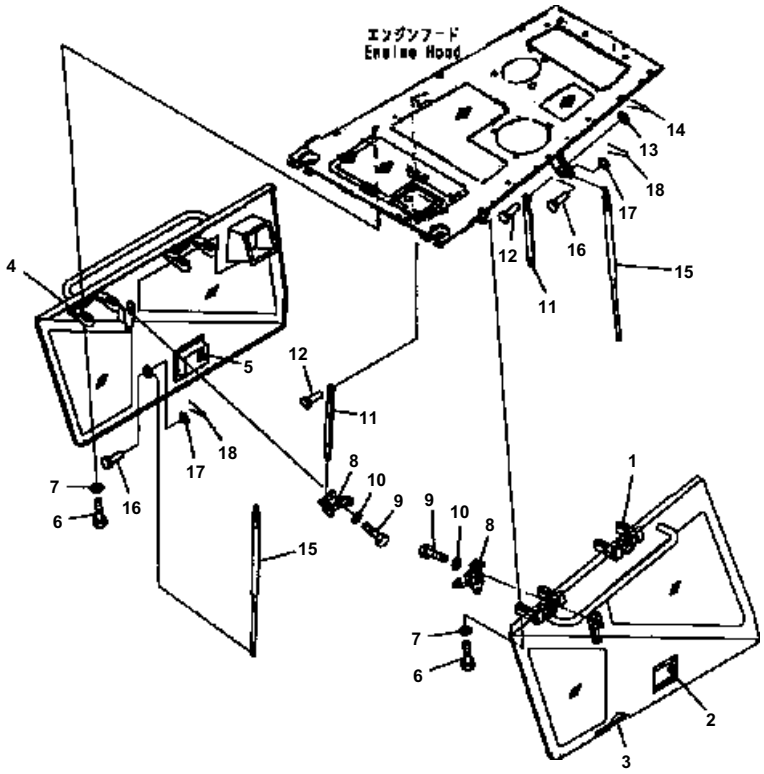

D41E6T S/N B35001-UP

FRONT GUARD (ENGINE SIDE COVER, UPPER) (WITH CAB)

Item	Part No.	Description	Qty	Options
	124-54-62364	COVER{L.H.}	1	SN:B35001--
1	11Y-54-11450	・ HINGE	2	SN:B35001--
2	17A-54-14230	・ LOCK	1	SN:B35001--
3	124-54-62380	・ SEAL	1	SN:B35001--
	124-54-62822	COVER{R.H.}	1	SN:B35001--
4	11Y-54-11450	・ HINGE	2	SN:B35001--
5	17A-54-14230	・ LOCK	1	SN:B35001--
6	01010-81050	BOLT	16	SN:B35001--
7	01643-31032	WASHER	16	SN:B35001--
8	134-54-62431	BRACKET	2	SN:B35001--
9	01010-81020	BOLT	4	SN:B35001--
10	01643-31032	WASHER	4	SN:B35001--
11	124-54-62770	STAY	2	SN:B35001--
12	135-43-33770	PIN	2	SN:B35001--
13	205-54-53470	WASHER	2	SN:B35001--
14	04050-13022	PIN	2	SN:B35001--
15	14X-54-12780	DUMPER	2	SN:B35001--
16	04205-10828	PIN	4	SN:B35001--
17	01641-20812	WASHER	4	SN:B35001--
18	04050-12015	PIN	4	SN:B35001--

Ref. M2140-02A0 Page 270050

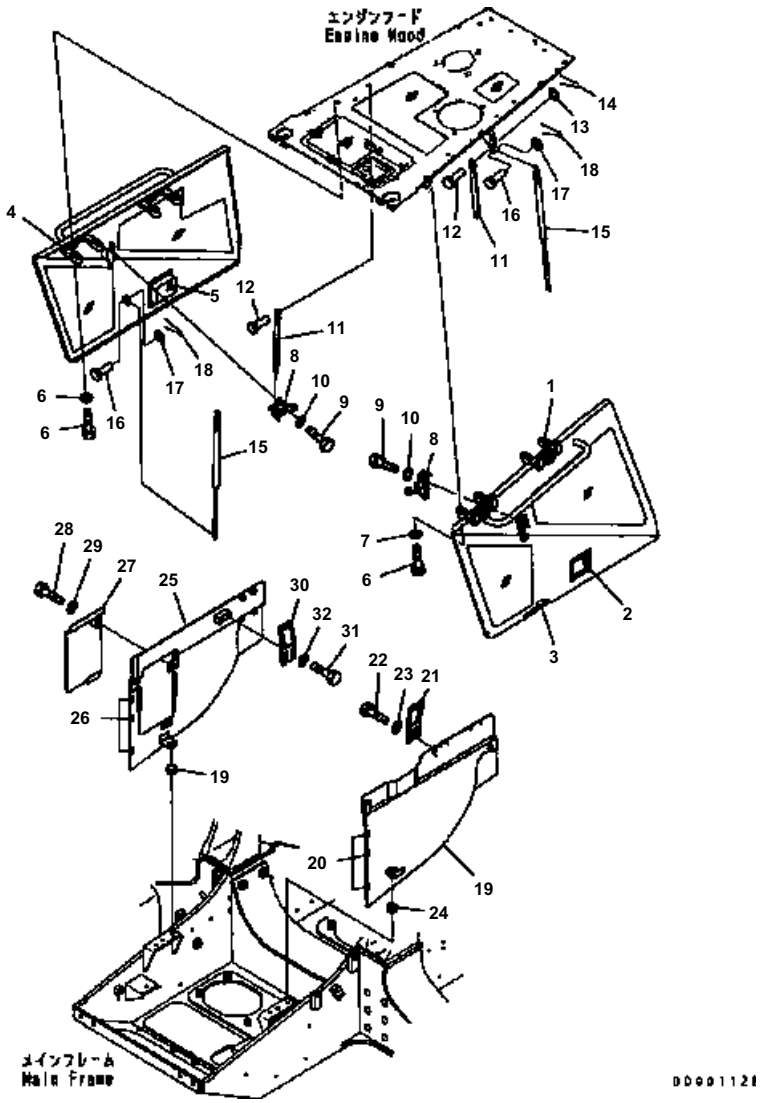

D41E6T S/N B35001-UP

FRONT GUARD (ENGINE SIDE COVER, UPPER) (WITH PRE-CLEANER) (WITHOUT CAB)

Item	Part No.	Description	Qty	Options
	124-54-62364	COVER{L.H.}	1	SN:B35001--
1	11Y-54-11450	・ HINGE	2	SN:B35001--
2	17A-54-14230	・ LOCK	1	SN:B35001--
3	124-54-62380	・ SEAL	1	SN:B35001--
	124-54-62822	COVER{R.H.}	1	SN:B35001--
4	11Y-54-11450	・ HINGE	2	SN:B35001--
5	17A-54-14230	・ LOCK	1	SN:B35001--
6	01010-81050	BOLT	16	SN:B35001--
7	01643-31032	WASHER	16	SN:B35001--
8	134-54-62431	BRACKET	2	SN:B35001--
9	01010-81020	BOLT	4	SN:B35001--
10	01643-31032	WASHER	4	SN:B35001--
11	124-54-62770	STAY	2	SN:B35001--
12	135-43-33770	PIN	2	SN:B35001--
13	205-54-53470	WASHER	2	SN:B35001--
14	04050-13022	PIN	2	SN:B35001--
15	14X-54-12780	DUMPER	2	SN:B35001--
16	04205-10828	PIN	4	SN:B35001--
17	01641-20812	WASHER	4	SN:B35001--
18	04050-12015	PIN	4	SN:B35001--
19	124-54-62613	COVER{L.H.}	1	SN:B35001--
20	124-54-62550	・ SHEET	3	SN:B35001--
21	14X-54-13980	PLATE	1	SN:B35001--
22	01010-81225	BOLT	2	SN:B35001--
23	01643-31232	WASHER	2	SN:B35001--
24	08037-01610	GROMMET	1	SN:B35001--
25	124-54-62342	COVER{R.H.}	1	SN:B35001--
26	124-54-62550	・ SHEET	3	SN:B35001--
27	124-54-62350	COVER{R.H.}	1	SN:B35001--
28	01010-81225	BOLT	1	SN:B35001--
29	01643-31232	WASHER	1	SN:B35001--
30	14X-54-13980	PLATE	1	SN:B35001--
31	01010-81225	BOLT	2	SN:B35001--
32	01643-31232	WASHER	2	SN:B35001--
33	08037-01610	GROMMET	1	SN:B35001--

Ref. M2140-02A1 Page 270060

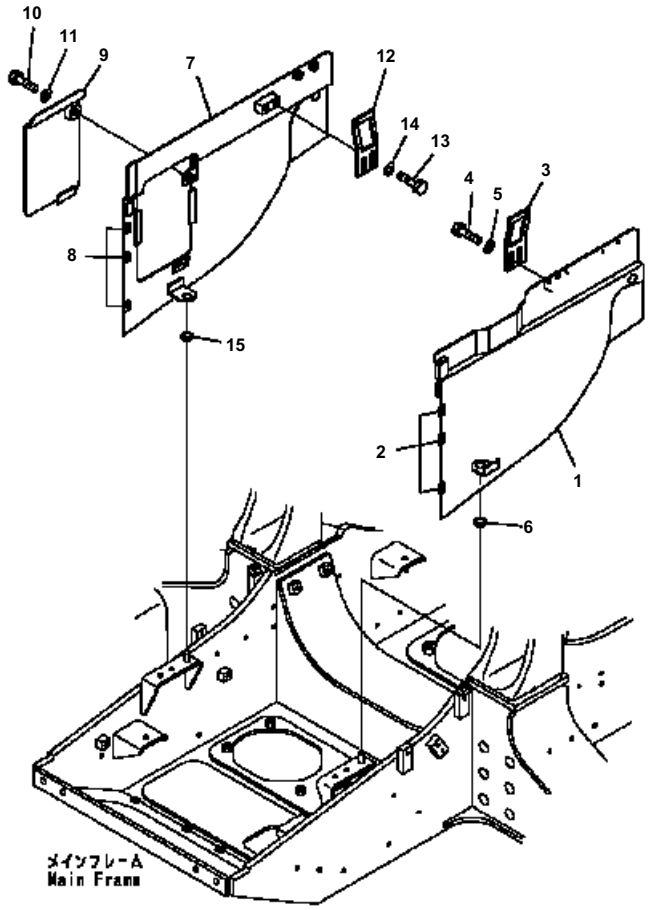

D41E6T S/N B35001-UP

FRONT GUARD(ENGINE SIDE COVER, LOWER) (WITH PRE-CLEANER)

Item	Part No.	Description	Qty	Options
1	124-54-62613	COVER{L.H.}	1	SN:B35001--
2	124-54-62550	・SHEET	3	SN:B35001--
3	14X-54-13980	PLATE	1	SN:B35001--
4	01010-81225	BOLT	2	SN:B35001--
5	01643-31232	WASHER	2	SN:B35001--
6	08037-01610	GROMMET	1	SN:B35001--
7	124-54-62342	COVER{R.H.}	1	SN:B35001--
8	124-54-62550	・SHEET	3	SN:B35001--
9	124-54-62350	COVER	1	SN:B35001--
10	01010-81225	BOLT	1	SN:B35001--
11	01643-31232	WASHER	1	SN:B35001--
12	14X-54-13980	PLATE	1	SN:B35001--
13	01010-81225	BOLT	2	SN:B35001--
14	01643-31232	WASHER	2	SN:B35001--
15	08037-01610	GROMMET	1	SN:B35001--

Ref. M2140-03A0 Page 270070

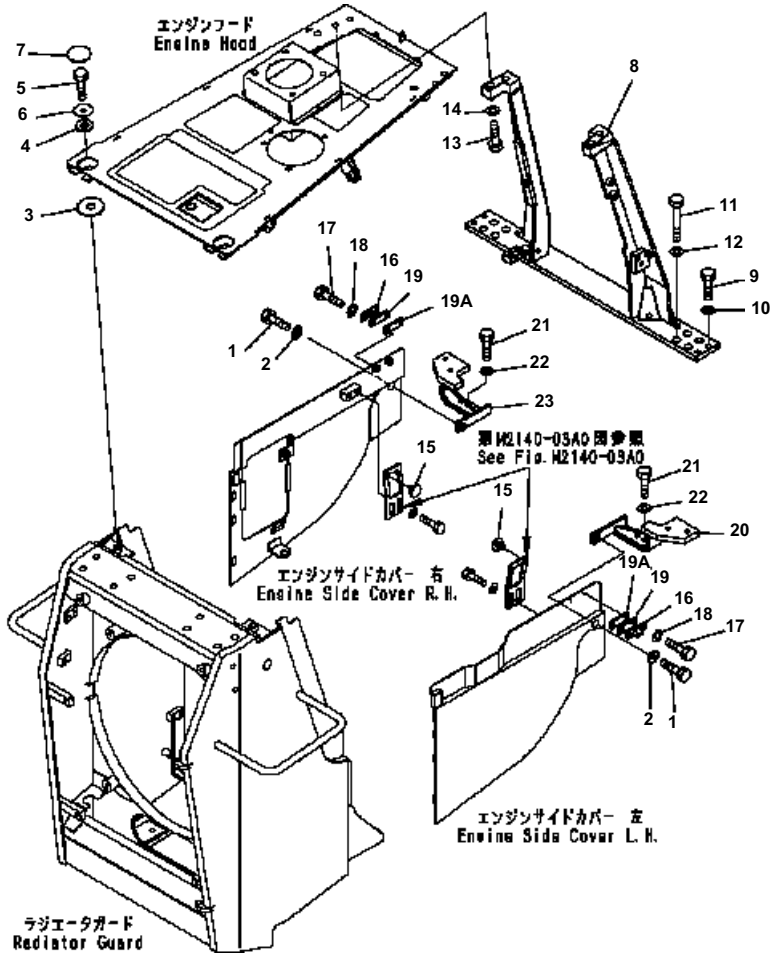

D41E6T S/N B35001-UP

FRONT GUARD (ENGINE HOOD MOUNT)

Item	Part No.	Description	Qty	Options
1	01010-81230	BOLT	2	SN:B35001--
2	205-54-76410	COLLAR	2	SN:B35001--
3	11Y-54-11561	SPACER	2	SN:B35001--
4	124-54-52180	SPACER	2	SN:B35001--
5	01010-81235	BOLT	2	SN:B35001--
6	416-03-11210	WASHER	2	SN:B35001--
7	14X-54-12590	CAP	2	SN:B35001--
8	124-54-62441	BRACKET	1	SN:B35001--
9	01010-81235	BOLT	4	SN:B35001--
10	01643-31232	WASHER	4	SN:B35001--
11	01010-82095	BOLT	8	SN:B35001--
12	01643-32060	WASHER	8	SN:B35001--
13	01010-81660	BOLT	4	SN:B35001--
14	01643-51645	WASHER	4	SN:B35001--
15	14X-54-12960	STOPPER	2	SN:B35001--
16	205-54-53550	DOVE TAIL	2	SN:B35001--
17	01010-80620	BOLT	4	SN:B35001--
18	01643-30623	WASHER	4	SN:B35001--
19	11Y-54-11270	PLATE	2	SN:B35001--
19A	124-54-62640	PLATE	2	SN:B35217--
20	124-54-52513	BRACKET	1	SN:B35001--
21	01010-81230	BOLT	4	SN:B35001--
22	01643-31232	WASHER	4	SN:B35001--
23	124-54-52542	BRACKET	1	SN:B35001--

Ref. M2140-04A0 Page 270080

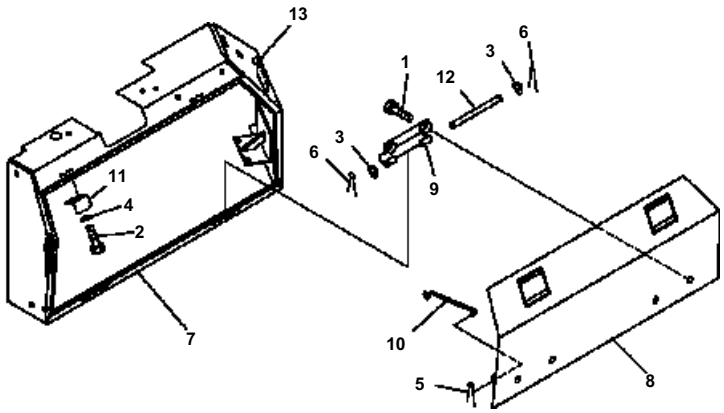

D41E6T S/N B35001-UP

REAR GUARD (BATTERY COVER)

Item	Part No.	Description	Qty	Options
	124-54-64502	COVER ASS'Y{L. H. }	1	SN:B35001--
1	01010-81020	· BOLT	4	SN:B35001--
2	01010-81225	· BOLT	4	SN:B35001--
3	01641-21016	· WASHER	4	SN:B35001--
4	01643-31232	· WASHER	4	SN:B35001--
5	04050-12015	· PIN	1	SN:B35001--
6	04050-13020	· PIN	4	SN:B35001--
7	124-54-64511	· COVER{L. H. }	1	SN:B35001--
8	124-54-64520	· COVER{L. H. }	1	SN:B35001--
9	124-54-54130	· HINGE	2	SN:B35001--
10	124-54-54161	· HOOK	1	SN:B35001--
11	17A-54-14160	· PLATE	2	SN:B35001--
12	124-54-54170	· PIN	2	SN:B35001--
13	124-54-64580	· SHEET	1	SN:B35001--

Ref. M2210-01A0 Page 270090

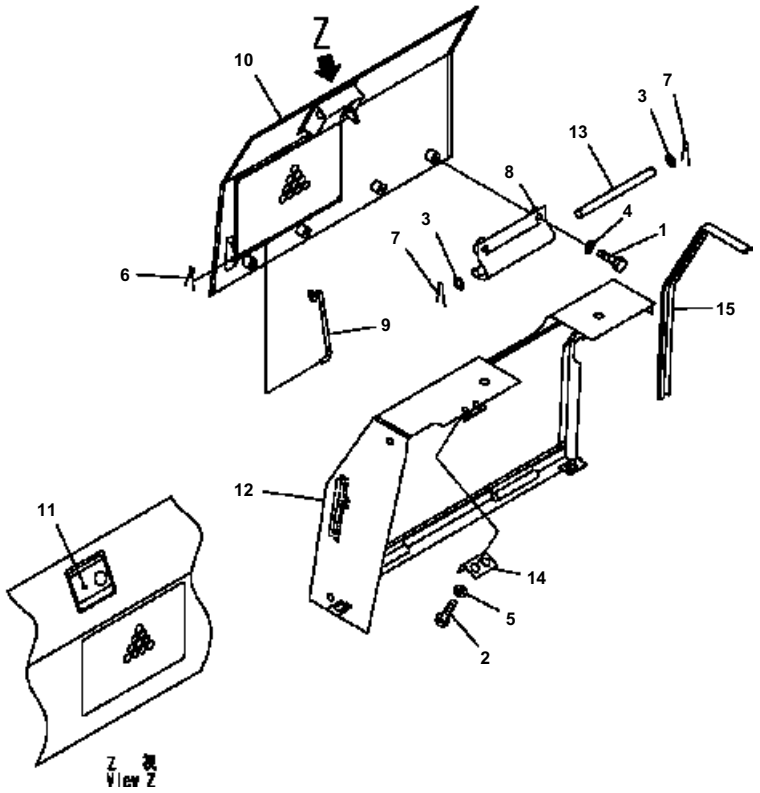

D41E6T S/N B35001-UP

REAR GUARD (FILTER COVER) (WITH AIRCONDITONER)

Item	Part No.	Description	Qty	Options
	124-54-64900	COVER ASS'Y{R. H. }	1	SN:B35001--
1	01010-81020	· BOLT	4	SN:B35001--
2	01010-81225	· BOLT	2	SN:B35001--
3	01641-21016	· WASHER	4	SN:B35001--
4	01643-31032	· WASHER	4	SN:B35001--
5	01643-31232	· WASHER	2	SN:B35001--
6	04050-12015	· PIN	1	SN:B35001--
7	04050-13020	· PIN	4	SN:B35001--
8	124-54-54130	· HINGE	2	SN:B35001--
9	124-54-54161	· HOOK	1	SN:B35001--
	124-54-64920	· COVER{R. H. }	1	SN:B35001--
10	124-54-54E50	· · SEAL	1	SN:B35001--
11	17A-54-14230	· · LOCK	1	SN:B35001--
12	124-54-64810	· COVER{R. H. }	1	SN:B35001--
13	124-54-54170	· PIN	2	SN:B35001--
14	17A-54-14160	· PLATE	1	SN:B35001--
15	124-54-64230	· SEAL	1	SN:B35001--

Ref. M2210-02A0 Page 270100

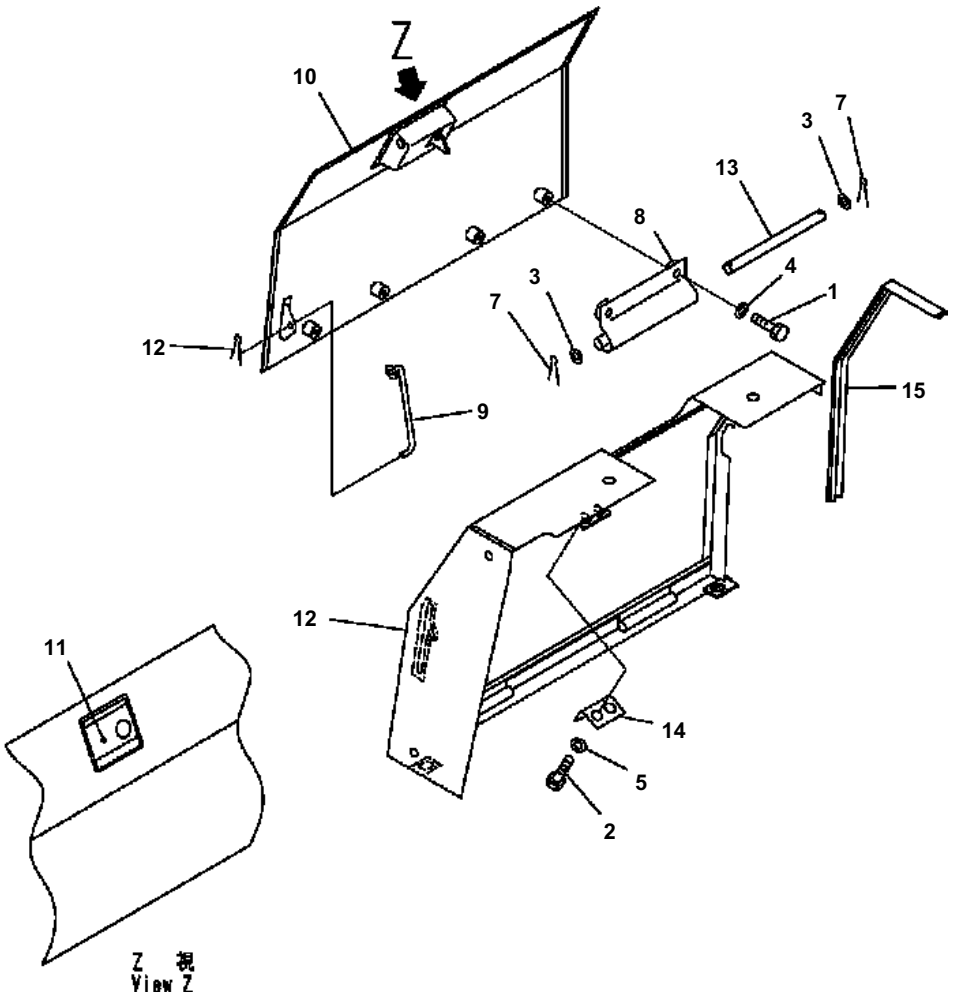

D41E6T S/N B35001-UP

REAR GUARD (FILTER COVER)

Item	Part No.	Description	Qty	Options
	124-54-64800	COVER ASS'Y{R. H. }	1	SN:B35001--
1	01010-81020	・ BOLT	4	SN:B35001--
2	01010-81225	・ BOLT	2	SN:B35001--
3	01641-21016	・ WASHER	4	SN:B35001--
4	01643-31032	・ WASHER	4	SN:B35001--
5	01643-31232	・ WASHER	2	SN:B35001--
6	04050-12015	・ PIN	1	SN:B35001--
7	04050-13020	・ PIN	4	SN:B35001--
8	124-54-54130	・ HINGE	2	SN:B35001--
9	124-54-54161	・ HOOK	1	SN:B35001--
	124-54-64220	・ COVER{R. H. }	1	SN:B35001--
10	124-54-54E50	・・ SEAL	1	SN:B35001--
11	17A-54-14230	・・ LOCK	1	SN:B35001--
12	124-54-64810	・ COVER{R. H. }	1	SN:B35001--
13	124-54-54170	・ PIN	2	SN:B35001--
14	17A-54-14160	・ PLATE	1	SN:B35001--
15	124-54-64230	・ SEAL	1	SN:B35001--

Ref. M2210-02A1 Page 270110

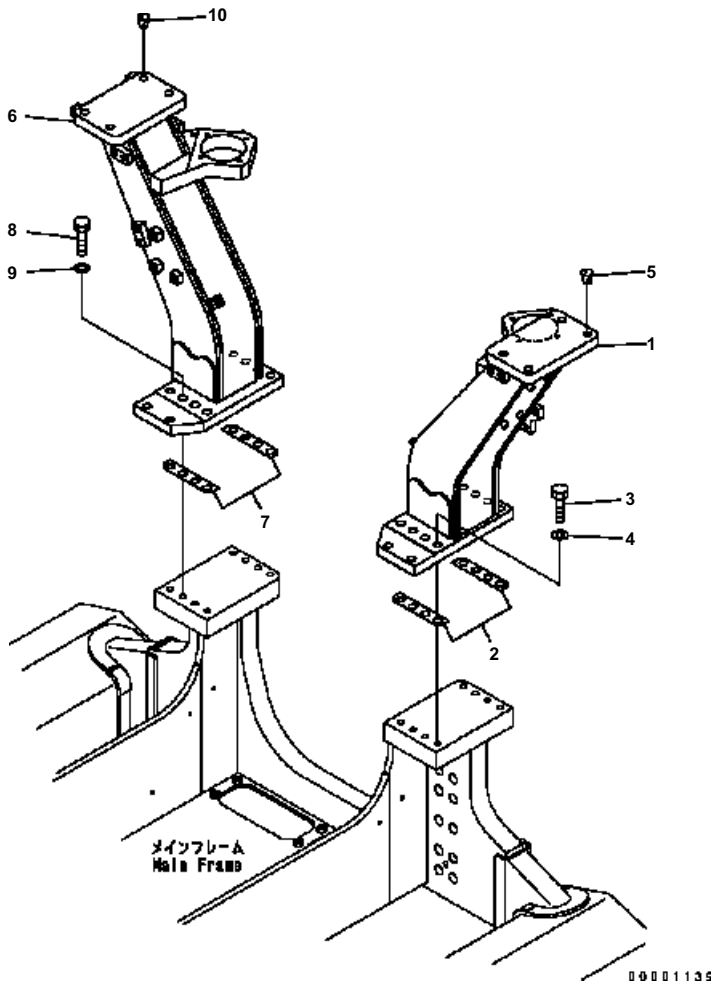

D41E6T S/N B35001-UP

REAR GUARD (BRACKET)

Item	Part No.	Description	Qty	Options
1	124-Z78-6112	BRACKET{L.H.}	1	SN:B35001--
2	124-Z78-6260	PLATE	2	SN:B35001--
3	01010-82090	BOLT	8	SN:B35001--
4	708-8F-11260	WASHER	8	SN:B35001--
5	07049-02025	PLUG	4	SN:B35001--
6	124-Z78-6122	BRACKET{R.H.}	1	SN:B35001--
7	124-Z78-6260	PLATE	2	SN:B35001--
8	01010-82090	BOLT	8	SN:B35001--
9	708-8F-11260	WASHER	8	SN:B35001--
10	07049-02025	PLUG	4	SN:B35001--

Ref. M2210-03A0 Page 270120

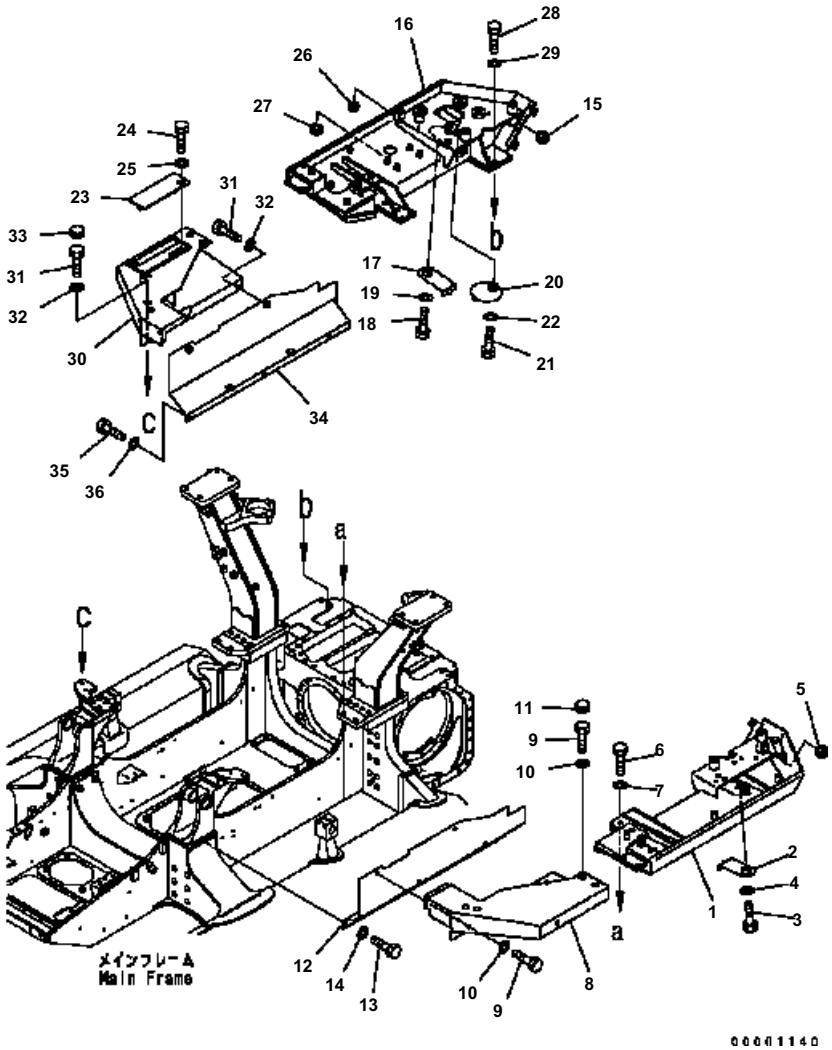

D41E6T S/N B35001-UP

REAR GUARD (FENDER)

Item	Part No.	Description	Qty	Options
1	124-54-63511	FENDER{L.H.}	1	SN:B35001--
2	124-54-53131	COVER	1	SN:B35001--
3	01010-81225	BOLT	1	SN:B35001--
4	01643-31232	WASHER	1	SN:B35001--
5	09415-05022	CAP	1	SN:B35001--
6	01010-82050	BOLT	4	SN:B35001--
7	01643-32060	WASHER	4	SN:B35001--
8	124-54-63541	STEP{L.H.}	1	SN:B35001--
9	01010-81225	BOLT	6	SN:B35001--
10	01643-31232	WASHER	6	SN:B35001--
11	09415-02512	CAP	4	SN:B35001--
12	124-54-53223	COVER	1	SN:B35001--
13	01010-81220	BOLT	3	SN:B35001--
14	01643-31232	WASHER	3	SN:B35001--
15	09415-05022	CAP	1	SN:B35001--
16	124-54-63521	FENDER{R.H.}	1	SN:B35001--
17	124-54-53131	COVER	1	SN:B35001--
18	01010-81225	BOLT	1	SN:B35001--
19	01643-31232	WASHER	1	SN:B35001--
20	14X-54-13160	COVER	1	SN:B35001--
21	01010-81225	BOLT	1	SN:B35001--
22	01643-31232	WASHER	1	SN:B35001--
23	14X-54-23130	COVER	1	SN:B35001--
24	01010-81225	BOLT	1	SN:B35001--
24A	09415-02512	CAP	1	SN:B35001--
25	01643-31232	WASHER	1	SN:B35001--
26	09415-03614	CAP	2	SN:B35001--
27	09415-05016	CAP	1	SN:B35001--
28	01010-82050	BOLT	4	SN:B35001--
29	01643-32060	WASHER	4	SN:B35001--
30	124-54-63551	STEP{R.H.}	1	SN:B35001--
31	01010-81225	BOLT	6	SN:B35001--
32	01643-31232	WASHER	6	SN:B35001--
33	09415-02512	CAP	4	SN:B35001--
34	124-54-53233	COVER{R.H.}	1	SN:B35001--
35	01010-81220	BOLT	3	SN:B35001--
36	01643-31232	WASHER	3	SN:B35001--

Ref. M2210-04A0 Page 270130

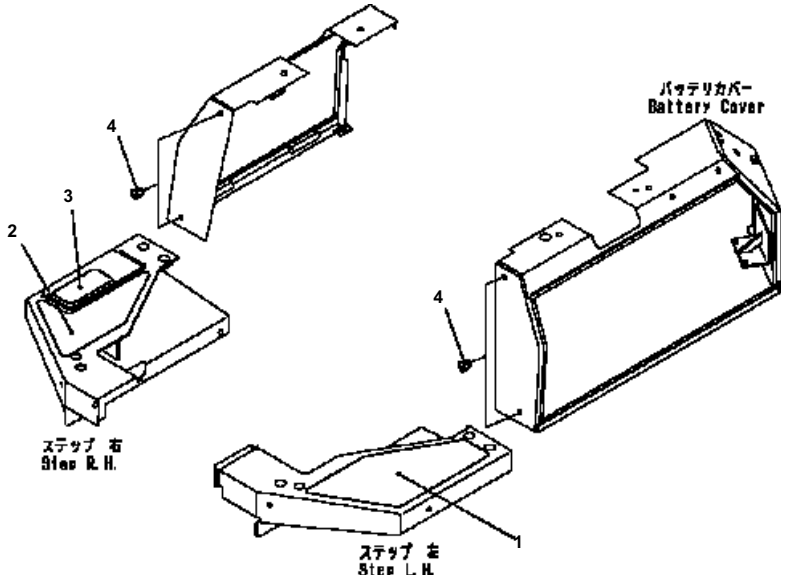

D41E6T S/N B35001-UP

REAR GUARD (NON SLIP)

Item	Part No.	Description	Qty	Options
1	14X-54-13811	SHEET	1	SN:B35001--
2	124-54-53160	SHEET	1	SN:B35001--
3	14X-54-13830	SHEET	1	SN:B35001--
4	07049-01215	PLUG	8	SN:B35001--

Ref. M2210-06A0 Page 270140

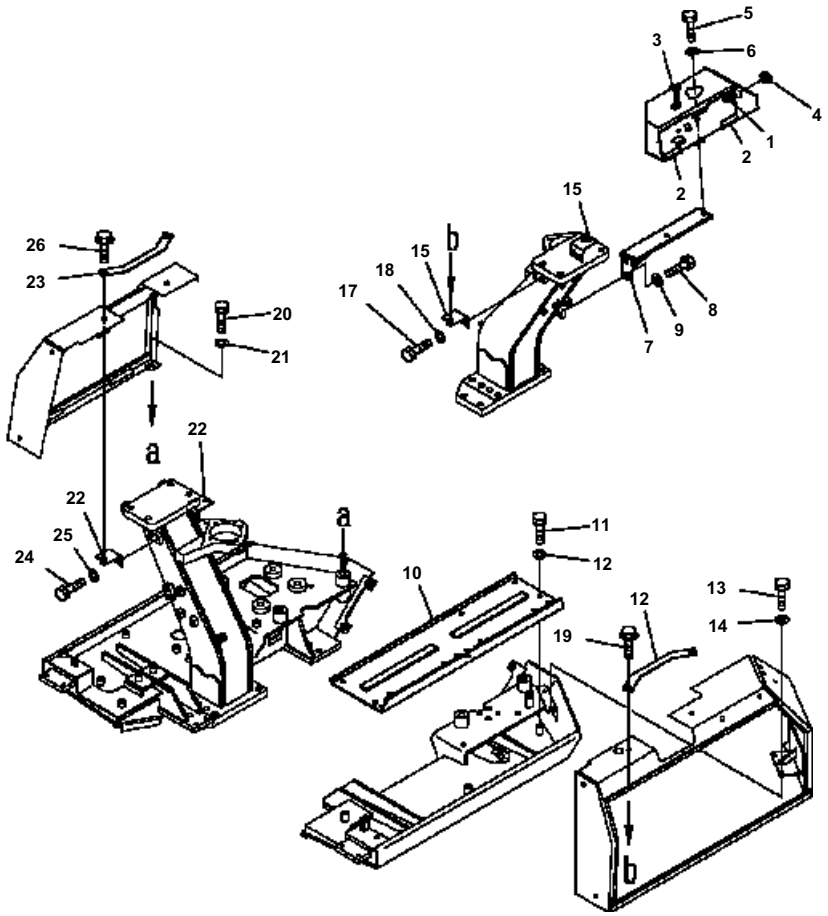

D41E6T S/N B35001-UP

REAR GUARD (TOOL BOX & BATTERYPLATE & BATTERY, FILTER COVER)

Item	Part No.	Description	Qty	Options
	124-54-64412	TOOL BOX	1	SN:B35001--
1	134-54-64H50	· SHEET	1	SN:B35001--
2	09455-13016	· HINGE	2	SN:B35001--
3	22W-54-11470	· BAND	1	SN:B35001--
4	08037-02512	· GROMMET	1	SN:B35001--
5	01010-81225	BOLT	2	SN:B35001--
6	01643-31232	WASHER	2	SN:B35001--
7	124-54-64440	BRACKET	1	SN:B35001--
8	01010-81230	BOLT	3	SN:B35001--
9	01643-31232	WASHER	3	SN:B35001--
10	124-54-53173	PLATE	1	SN:B35001--
11	01010-81230	BOLT	6	SN:B35001--
12	01643-31232	WASHER	6	SN:B35001--
13	01010-81225	BOLT	3	SN:B35001--
14	01643-31232	WASHER	3	SN:B35001--
15	124-54-54151	BRACKET	2	SN:B35001--
16	124-54-64711	PLATE	1	SN:B35001--
17	01010-81225	BOLT	4	SN:B35001--
18	01643-31232	WASHER	4	SN:B35001--
19	01439-01225	BOLT	2	SN:B35001--
20	01010-81225	BOLT	2	SN:B35001--
21	01643-31232	WASHER	2	SN:B35001--
22	124-54-54151	BRACKET	2	SN:B35001--
23	124-54-64711	PLATE	1	SN:B35001--
24	01010-81225	BOLT	4	SN:B35001--
25	01643-31232	WASHER	4	SN:B35001--
26	01439-01225	BOLT	2	SN:B35001--

Ref. M2210-07A0 Page 270150

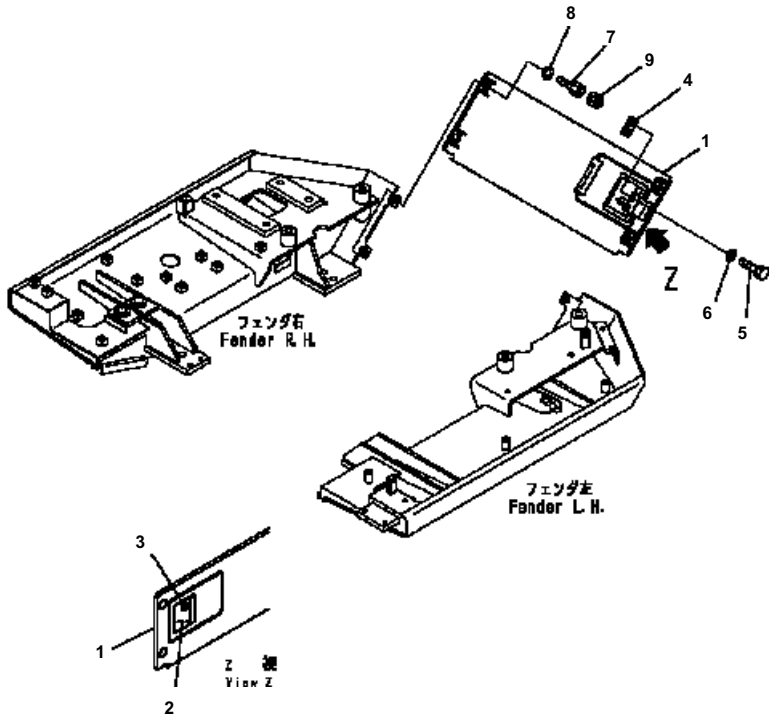

D41E6T S/N B35001-UP

REAR COVER

Item	Part No.	Description	Qty	Options
1	124-54-63210	COVER	1	SN:B35001--
2	14X-54-12910	・ LOCK	1	SN:B35001--
3	421-54-11381	・・ LOCK	1	SN:B35001--
4	09461-00014	PLATE	1	SN:B35001--
5	01010-81020	BOLT	2	SN:B35001--
6	01643-31032	WASHER	2	SN:B35001--
7	01010-81235	BOLT	4	SN:B35001--
8	01643-31232	WASHER	4	SN:B35001--
9	09415-02512	CAP	4	SN:B35001--

Ref. M2240-01A0 Page 270160

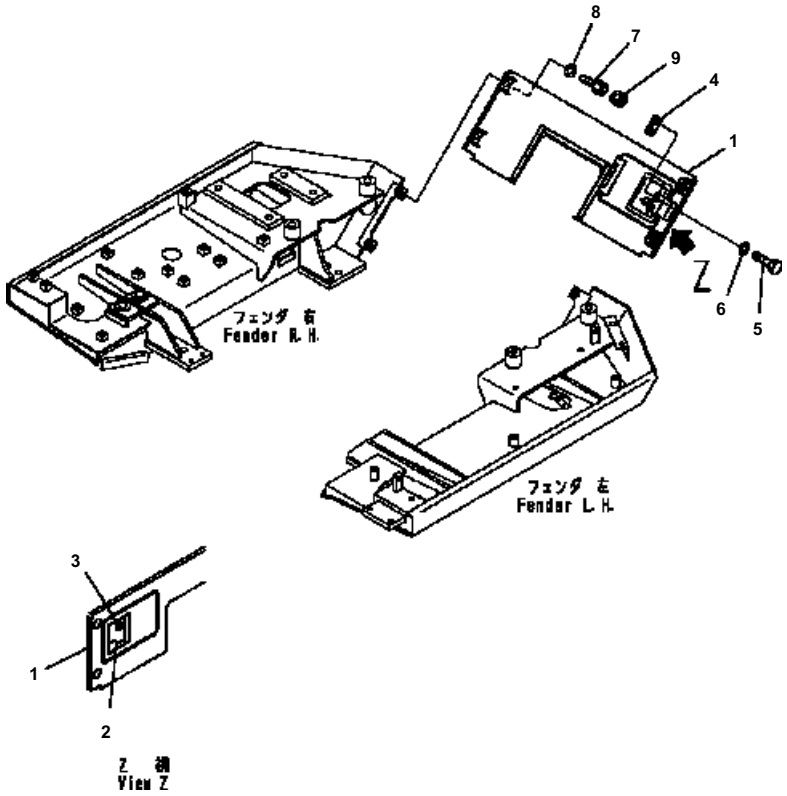

D41E6T S/N B35001-UP

REAR COVER (WITH RIPPER)

Item	Part No.	Description	Qty	Options
1	124-78-62180	COVER	1	SN:B35001--
2	14X-54-12910	・ LOCK	1	SN:B35001--
3	421-54-11381	・・ LOCK	1	SN:B35001--
4	09461-00014	PLATE	1	SN:B35001--
5	01010-81020	BOLT	2	SN:B35001--
6	01643-31032	WASHER	2	SN:B35001--
7	01010-81235	BOLT	4	SN:B35001--
8	01643-31232	WASHER	4	SN:B35001--
9	09415-02512	CAP	4	SN:B35001--

Ref. M2240-01A1 Page 270170

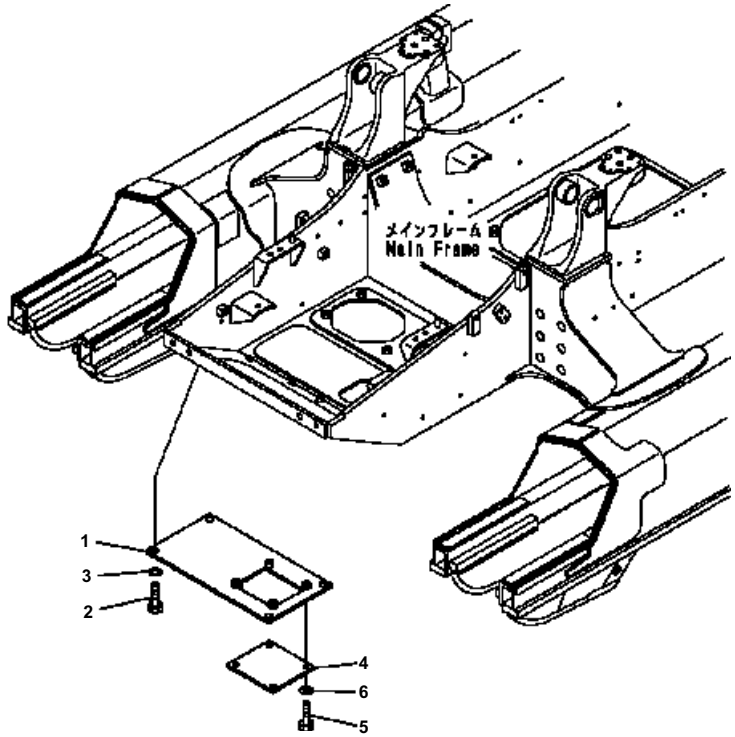

D41E6T S/N B35001-UP

COVER

Item	Part No.	Description	Qty	Options
1	124-21-61340	COVER	1	SN:B35001--
2	01010-81635	BOLT	4	SN:B35001--
3	01643-31645	WASHER	4	SN:B35001--
4	124-21-61470	COVER	1	SN:B35001--
5	01010-81230	BOLT	4	SN:B35001--
6	01643-31232	WASHER	4	SN:B35001--

Ref. M2811-01A0 Page 270180

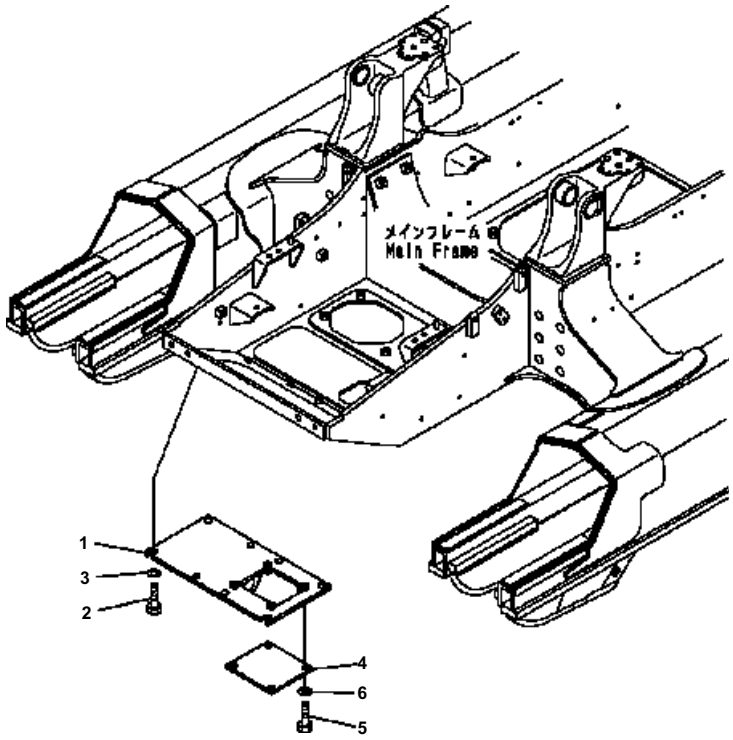

D41E6T S/N B35001-UP

COVER (WITH FRONT HOOK)

Item	Part No.	Description	Qty	Options
1	124-944-6111	HOOK	1	SN:B35001--
2	01010-81640	BOLT	8	SN:B35001--
3	01643-31645	WASHER	8	SN:B35001--
4	124-21-61470	COVER	1	SN:B35001--
5	01010-81235	BOLT	4	SN:B35001--
6	01643-31232	WASHER	4	SN:B35001--

Ref. M2811-01A2 Page 270190

UNDER CARRIAGE

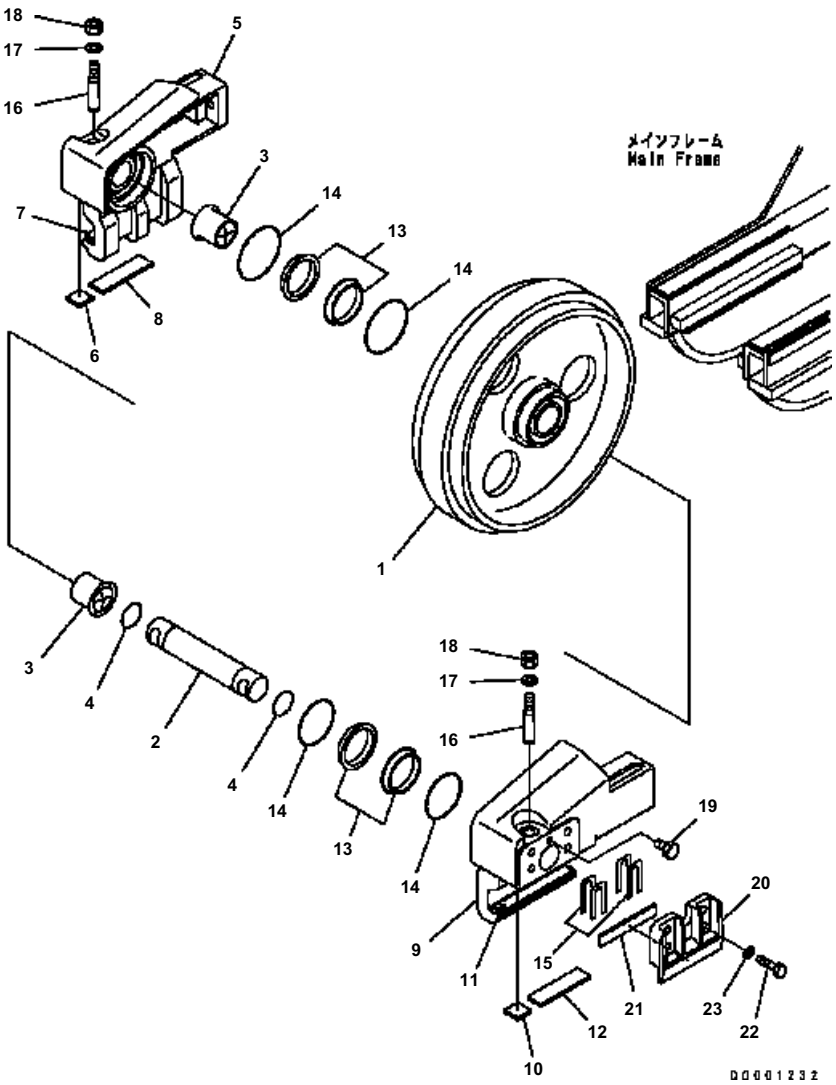

D41E6T S/N B35001-UP

FRONT IDLER

Item	Part No.	Description	Qty	Options
	124-30-00106	IDLER ASS'Y	2	SN:B35111--
	124-30-00105	IDLER ASS'Y	2	SN:B35001--
1	124-30-51113	・ IDLER	2	SN:B35111--
	124-30-51112	・ IDLER	2	SN:B35001--B35110
2	124-30-51181	・ SHAFT	2	SN:B35001--
3	12Y-30-11130	・ BUSHING	4	SN:B35111--
	203-30-52190	・ BUSHING	4	SN:B35001--B35110
4	07000-13048	・ O-RING	4	SN:B35111--
	07000-03048	・ O-RING	4	SN:B35001--B35110
5	124-30-51643	・ SUPPORT{L.H. }	1	SN:B35111--
	124-30-51642	・ SUPPORT{L. H. }	1	SN:B35001--B35110
6	124-30-51670	・・ PLATE	1	SN:B35001--
7	124-30-51680	・・ PLATE	1	SN:B35001--
8	124-30-51710	・・ PLATE	1	SN:B35001--
9	124-30-51653	・ SUPPORT{R.H. }	1	SN:B35111--
	124-30-51652	・ SUPPORT{R. H. }	1	SN:B35001--B35110
10	124-30-51670	・・ PLATE	1	SN:B35001--
11	124-30-51680	・・ PLATE	1	SN:B35001--
12	124-30-51710	・・ PLATE	1	SN:B35001--
	12Y-30-00100	・ FLOATING SEAL ASS'Y	4	SN:B35111--
	175-30-00702	・ FLOATING SEAL ASS'Y	4	SN:B35001--B35110
13	175-30-00691	・・ SEAL RING ASS'Y	1	SN:B35001--
	175-30-36273	・・・ RING	2	SN:B35001--
14	175-30-00581	・・ O-RING ASS'Y	1	SN:B35001--
	175-30-16215	・・・ O-RING	2	SN:B35001--
15	125-30-21650	SHIM	40	SN:B35001--
16	130-30-13170	BOLT	4	SN:B35001--
17	01643-31645	WASHER	4	SN:B35001--
18	01582-11613	NUT	4	SN:B35001--
19	07052-31217	PLUG	2	SN:B35001--
20	124-30-51661	GUIDE	2	SN:B35001--
21	124-30-51690	・ PLATE	1	SN:B35001--
22	01010-81640	BOLT	16	SN:B35001--
23	01643-31645	WASHER	16	SN:B35001--

Ref. R0100-01A0 Page 300010

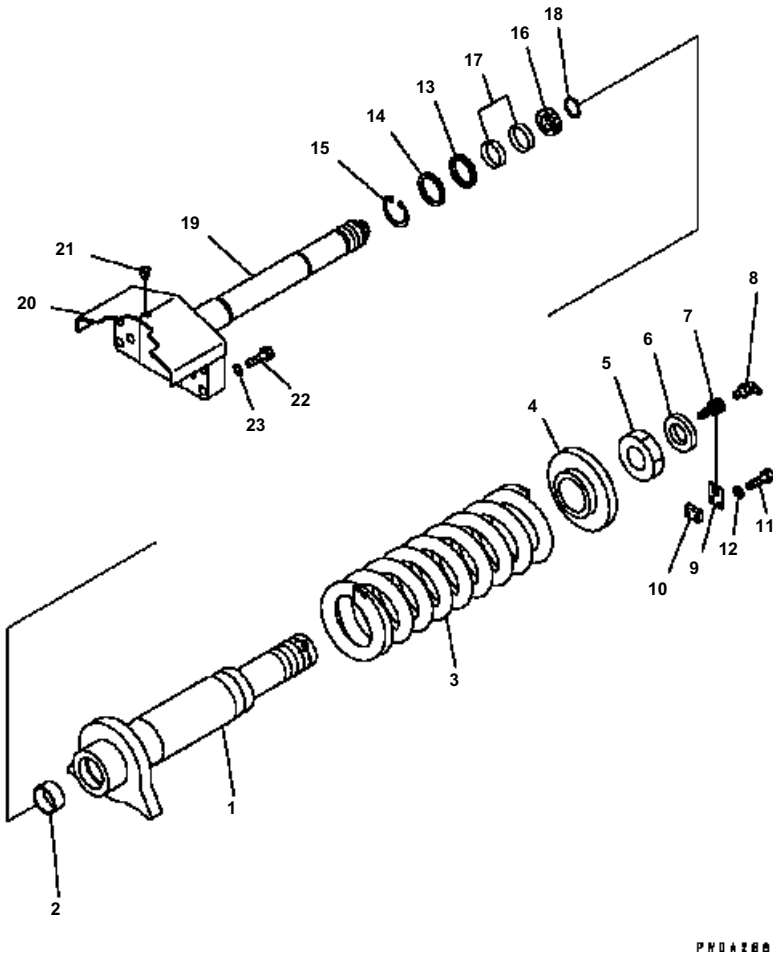

D41E6T S/N B35001-UP

IDLER CUSHION

Item	Part No.	Description	Qty	Options
1	124-30-64220	CYLINDER	2	SN:B35266--
	124-30-54123	CYLINDER	2	SN:B35001--B35265
2	07177-06530	BUSHING	2	SN:B35266--
	07177-06030	BUSHING	2	SN:B35001--B35265
3	124-30-64110	SPRING	2	SN:B35266--
	21K-30-24142	SPRING	2	SN:B35001--B35265
4	124-30-64230	PILOT	2	SN:B35266--
	21K-30-24130	PILOT	2	SN:B35001--B35265
5	124-30-54160	NUT	2	SN:B35001--
6	124-30-54170	SPACER	4	SN:B35001--
7	203-30-42260	VALVE	2	SN:B35001--
8	07020-00675	FITTING	2	SN:B35001--
9	124-30-54130	LOCK	2	SN:B35001--
10	201-30-52280	SEAT	2	SN:B35001--
11	01010-80830	BOLT	4	SN:B35001--
12	01643-30823	WASHER	4	SN:B35001--
13	12G-30-64340	SEAL	2	SN:B35266--
	144-30-14340	SEAL	2	SN:B35001--B35265
14	12G-30-64350	SPACER	2	SN:B35266--
	144-30-14350	SPACER	2	SN:B35001--B35265
15	04065-08025	RING	2	SN:B35266--
	04065-07525	RING	2	SN:B35001--B35265
16	09370-00060	U-PACKING	2	SN:B35001--
17	07155-00615	RING	4	SN:B35001--
18	04064-03515	RING	2	SN:B35001--
19	12G-30-64110	ROD	2	SN:B35266--
	124-30-54113	ROD	2	SN:B35001--B35265
20	124-30-54180	· COVER	2	SN:B35001--
21	07049-01215	PLUG	2	SN:B35001--
22	01010-81680	BOLT	12	SN:B35001--
23	01643-31645	WASHER	12	SN:B35001--

Ref. R0120-01A0 Page 300020

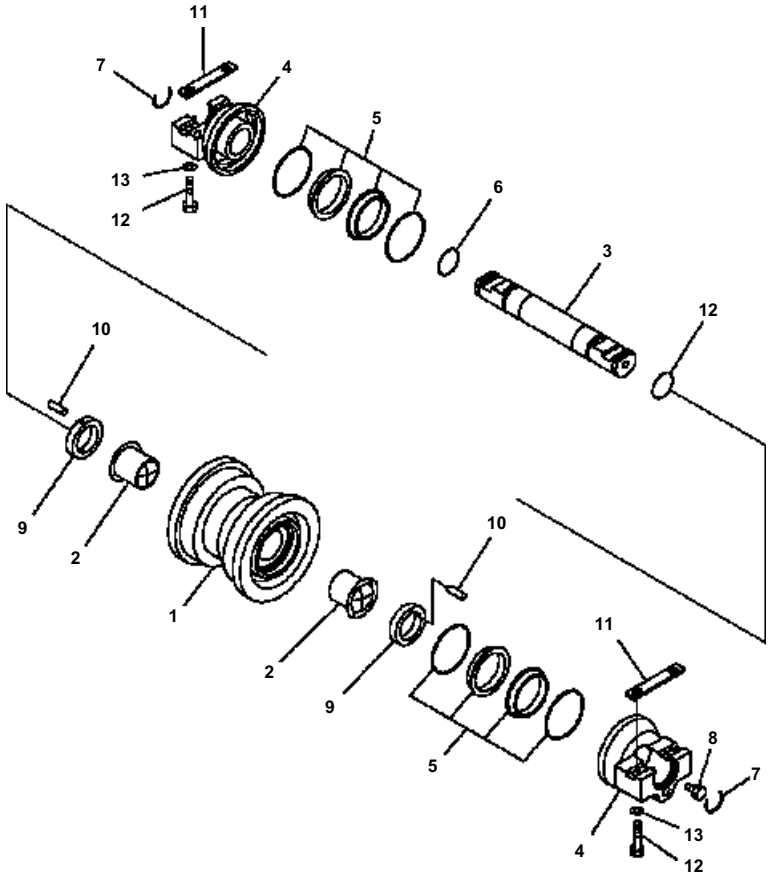

D41E6T S/N B35001-UP

TRACK ROLLER (HD LINK) (SINGLE GROUSER)

Item	Part No.	Description	Qty	Options
	124-30-00202	TRACK ROLLER ASS'Y{S}	1	SN:B35001--
1	124-30-52511	· ROLLER{S}	1	SN:B35001--
2	124-30-52540	· BUSHING	2	SN:B35001--
3	124-30-51143	· SHAFT	1	SN:B35001--
4	124-30-52552	· COLLAR	2	SN:B35001--
5	175-30-00900	· SEAL ASS'Y	2	SN:B35001--
	175-30-36280	· · SEAL	2	SN:B35001--
	175-30-16215	· · O-RING	2	SN:B35001--
6	07000-03042	· O-RING	2	SN:B35001--
7	124-30-51160	· LOCK	2	SN:B35001--
8	07052-31217	· PLUG	1	SN:B35001--
9	124-30-52571	· SPACER	2	SN:B35001--
10	04020-00616	· PIN	4	SN:B35001--
11	124-30-51150	KEY	16	SN:B35001--
12	01010-81675	BOLT	48	SN:B35001--
13	01643-31645	WASHER	48	SN:B35001--

Ref. R0200-01A0 Page 300030

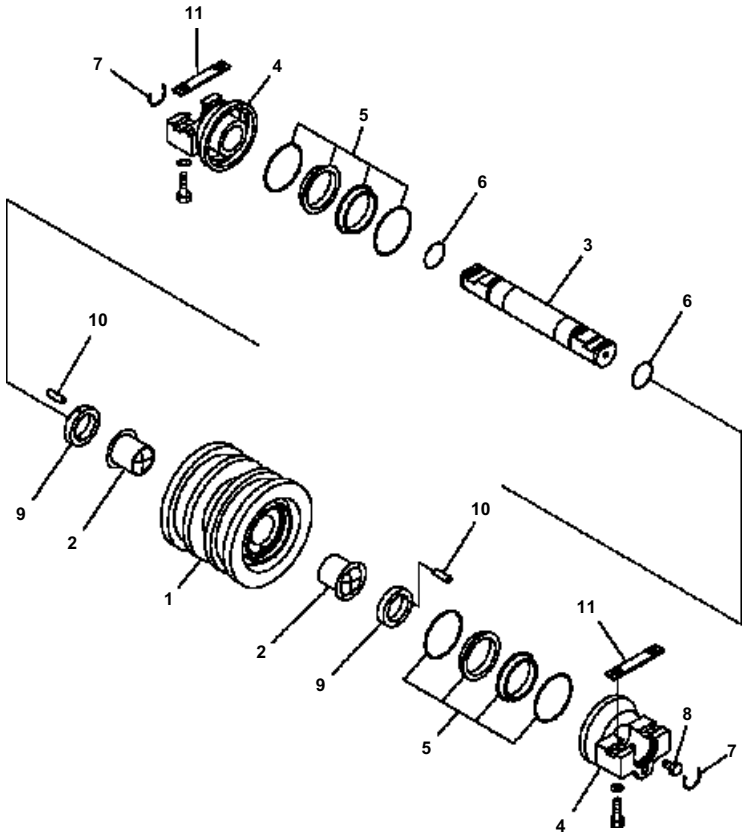

D41E6T S/N B35001-UP

RACK ROLLER (HD LINK) (DOUBLE GROUSER) (510MM WIDE)

Item	Part No.	Description	Qty	Options
	124-30-00212	TRACK ROLLER ASS'Y{D}	1	SN:B35001--
1	124-30-52521	· ROLLER{D}	1	SN:B35001--
2	124-30-52540	· BUSHING	2	SN:B35001--
3	124-30-51143	· SHAFT	1	SN:B35001--
4	124-30-52552	· COLLAR	2	SN:B35001--
5	175-30-00900	· SEAL ASS'Y	2	SN:B35001--
	175-30-36280	· · SEAL	2	SN:B35001--
	175-30-16215	· · O-RING	2	SN:B35001--
6	07000-03042	· O-RING	2	SN:B35001--
7	124-30-51160	· LOCK	2	SN:B35001--
8	07052-31217	· PLUG	1	SN:B35001--
9	124-30-52571	· SPACER	2	SN:B35001--
10	04020-00616	· PIN	4	SN:B35001--
11	124-30-51150	KEY	8	SN:B35001--

Ref. R0200-02A0 Page 300040

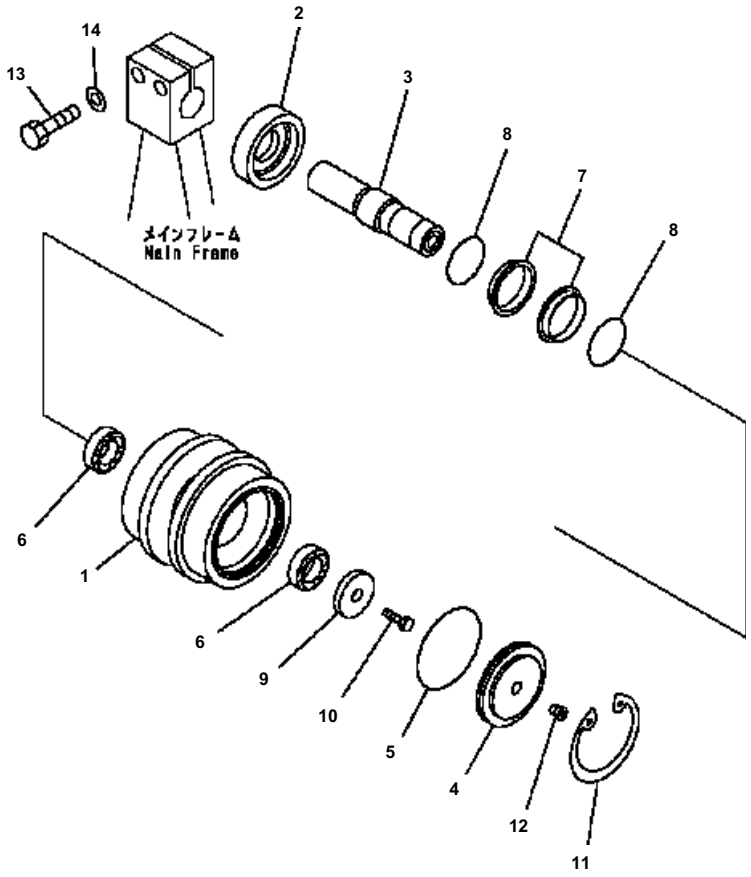

D41E6T S/N B35001-UP

CARRIER ROLLER

Item	Part No.	Description	Qty	Options
	124-30-00132	CARRIER ROLLER ASS'Y	2	SN:B35001--
1	124-30-53111	・ ROLLER	2	SN:B35001--
	124-30-00170	・ SHAFT ASS'Y	1	SN:B35001--
2	124-30-53130	・・ RING	2	SN:B35001--
3	124-30-53121	・・ SHAFT	2	SN:B35001--
4	14X-30-15131	・ COVER	2	SN:B35001--
5	07000-12105	・ O-RING	2	SN:B35001--
6	06002-32008	・ BEARING	4	SN:B35001--
	140-30-00141	・ FLOATING SEAL ASS'Y	2	SN:B35001--
7	140-30-00401	・・ SEAL RING ASS'Y	1	SN:B35001--
	120-30-12162	・・・ RING	2	SN:B35001--
8	140-30-00411	・・ O-RING ASS'Y	1	SN:B35001--
	140-30-16221	・・・ O-RING	2	SN:B35001--
9	14X-30-15251	・ HOLDER	2	SN:B35001--
10	01010-81630	・ BOLT	2	SN:B35001--
11	04065-01154	・ RING	2	SN:B35001--
12	20Y-30-16330	・ PLUG	2	SN:B35001--
13	01010-81670	BOLT	4	SN:B35001--
14	01643-31645	WASHER	4	SN:B35001--

Ref. R0300-01A0 Page 300050

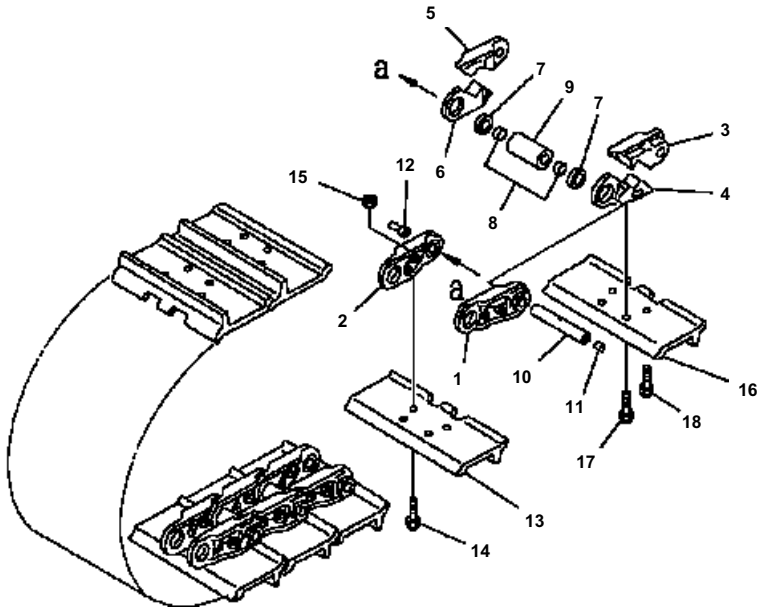

D41E6T S/N B35001-UP

TRACK SHOE (LUBRICATE TYPE) (SINGLE GROUSER) (510MM WIDE) (HD LINK)

Item	Part No.	Description	Qty	Options
	124-32-04101	TRACK SHOE ASS'Y	1	SN:B35398--
	124-32-04100	TRACK SHOE ASS'Y	1	SN:B35001--B35397
1	124-32-53120	・ LINK {REGULAR L. H. }	80	SN:B35001--
2	124-32-53130	・ LINK {REGULAR R. H. }	80	SN:B35001--
	124-32-08010	・ MASTER LINK K. L. H.	2	SN:B35001--
3	(☆124-32-53320)	・・ LINK MASTER {L. H. PIN SIDE}	1	SN:B35001--
4	(☆124-32-53330)	・・ LINK MASTER {L. H. BUSHING SIDE}	1	SN:B35001--
	124-32-08020	・ MASTER LINK K. R. H.	2	SN:B35001--
5	(☆124-32-53420)	・・ LINK MASTER {R. H. PIN SIDE}	1	SN:B35001--
6	(☆124-32-53430)	・・ LINK MASTER {R. H. BUSHING SIDE}	1	SN:B35001--
	124-32-54201	・ SEAL ASS'Y	164	SN:B35398--
7	124-32-53160	・ SEAL ASS'Y	164	SN:B35001--B35397
8	124-32-53190	・ SPACER	164	SN:B35001--
9	124-32-53140	・ BUSHING	82	SN:B35001--
10	124-32-53150	・ PIN	82	SN:B35001--
11	07059-11830	・ PLUG {SMALL}	82	SN:B35001--
12	07059-20721	・ PLUG {LARGE}	82	SN:B35001--
13	124-32-51110	・ SHOE {TRACK}	80	SN:B35001--
14	205-32-51121	・ BOLT SHOE \ ((Y0320-K1)\)	320	SN:B35001--
15	124-32-53220	・ NUT{SHOE} \ ((Y0320-K1)\)	320	SN:B35001--
16	124-32-51110	・ SHOE {TRACK}	2	SN:B35001--
17	124-32-53350	・ BOLT {MASTER}	4	SN:B35001--
18	124-32-53360	・ BOLT {MASTER}	4	SN:B35001--

Ref. R0500-01B0 Page 300060

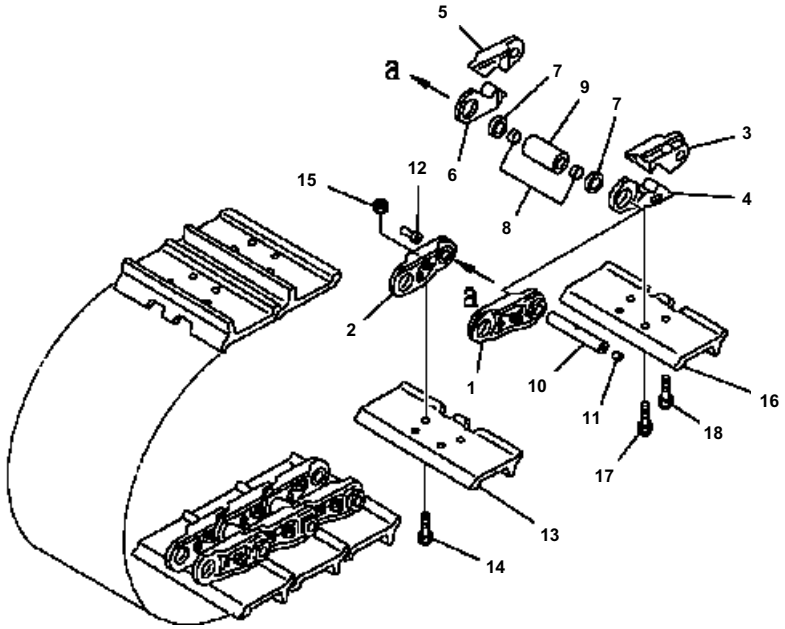

D41E6T S/N B35001-UP

TRACK SHOE (LUBRICATE TYPE) (SINGLE GROUSER) (560MM WIDE) (HD LINK)

Item	Part No.	Description	Qty	Options
	124-32-04110	TRACK SHOE ASS'Y	1	SN:B35001--
1	124-32-53120	・ LINK{REGULAR L. H. }	80	SN:B35001--
2	124-32-53130	・ LINK{REGULAR R. H. }	80	SN:B35001--
	124-32-08010	・ MASTER LINK K. L. H.	2	SN:B35001--
3	(☆124-32-53320)	・・ LINK MASTER{L. H. PIN SIDE}	1	SN:B35001--
4	(☆124-32-53330)	・・ LINK MASTER{L. H. BUSHING SIDE}	1	SN:B35001--
	124-32-08020	・ MASTER LINK K. R. H.	2	SN:B35001--
5	(☆124-32-53420)	・・ LINK MASTER{R. H. PIN SIDE}	1	SN:B35001--
6	(☆124-32-53430)	・・ LINK MASTER{R. H. BUSHING SIDE}	1	SN:B35001--
7	124-32-53160	・ SEAL ASS'Y	164	SN:B35001--
8	124-32-53190	・ SPACER	164	SN:B35001--
9	124-32-53140	・ BUSHING	82	SN:B35001--
10	124-32-53150	・ PIN	82	SN:B35001--
11	07059-11830	・ PLUG{SMALL}	82	SN:B35001--
12	07059-20721	・ PLUG{LARGE}	82	SN:B35001--
13	124-32-51210	・ SHOE{TRACK}	80	SN:B35001--
14	205-32-51121	・ BOLT SHOE\((Y0320-K1)\)	320	SN:B35001--
15	124-32-53220	・ NUT{SHOE}\((Y0320-K1)\)	320	SN:B35001--
16	124-32-51210	・ SHOE{TRACK}	2	SN:B35001--
17	124-32-53350	・ BOLT{MASTER}	4	SN:B35001--
18	124-32-53360	・ BOLT{MASTER}	4	SN:B35001--

Ref. R0500-01B1 Page 300070

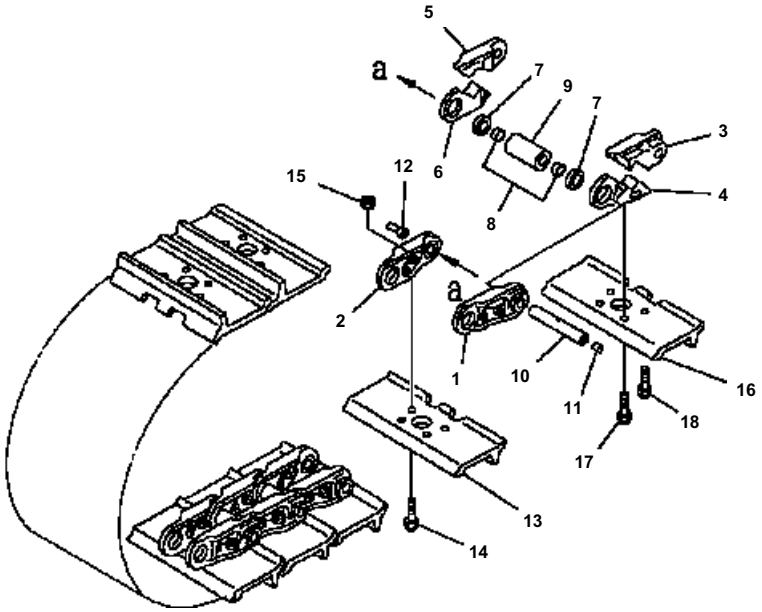

D41E6T S/N B35001-UP

TRACK SHOE (LUBRICATE TYPE) (SINGLE GROUSER, WITH HOLE) (510MM WIDE) (HD LINK)

Item	Part No.	Description	Qty	Options
	124-32-04120	TRACK SHOE ASS'Y	1	SN:B35001--
1	124-32-53120	・ LINK{REGULAR L. H. }	80	SN:B35001--
2	124-32-53130	・ LINK{REGULAR R. H. }	80	SN:B35001--
	124-32-08010	・ MASTER LINK K. L. H.	2	SN:B35001--
3	(☆124-32-53320)	・・ LINK MASTER{L. H. PIN SIDE}	1	SN:B35001--
4	(☆124-32-53330)	・・ LINK MASTER{L. H. BUSHING SIDE}	1	SN:B35001--
	124-32-08020	・ MASTER LINK K. R. H.	2	SN:B35001--
5	(☆124-32-53420)	・・ LINK MASTER{R. H. PIN SIDE}	1	SN:B35001--
6	(☆124-32-53430)	・・ LINK MASTER{R. H. BUSHING SIDE}	1	SN:B35001--
7	124-32-53160	・ SEAL ASS'Y	164	SN:B35001--
8	124-32-53190	・ SPACER	164	SN:B35001--
9	124-32-53140	・ BUSHING	82	SN:B35001--
10	124-32-53150	・ PIN	82	SN:B35001--
11	07059-11830	・ PLUG{SMALL}	82	SN:B35001--
12	07059-20721	・ PLUG{LARGE}	82	SN:B35001--
13	124-32-51310	・ SHOE{TRACK}	80	SN:B35001--
14	205-32-51121	・ BOLT SHOE\((Y0320-K1)\)	320	SN:B35001--
15	124-32-53220	・ NUT{SHOE}\((Y0320-K1)\)	320	SN:B35001--
16	124-32-51310	・ SHOE{TRACK}	2	SN:B35001--
17	124-32-53350	・ BOLT{MASTER}	4	SN:B35001--
18	124-32-53360	・ BOLT{MASTER}	4	SN:B35001--

Ref. R0500-01B2 Page 300080

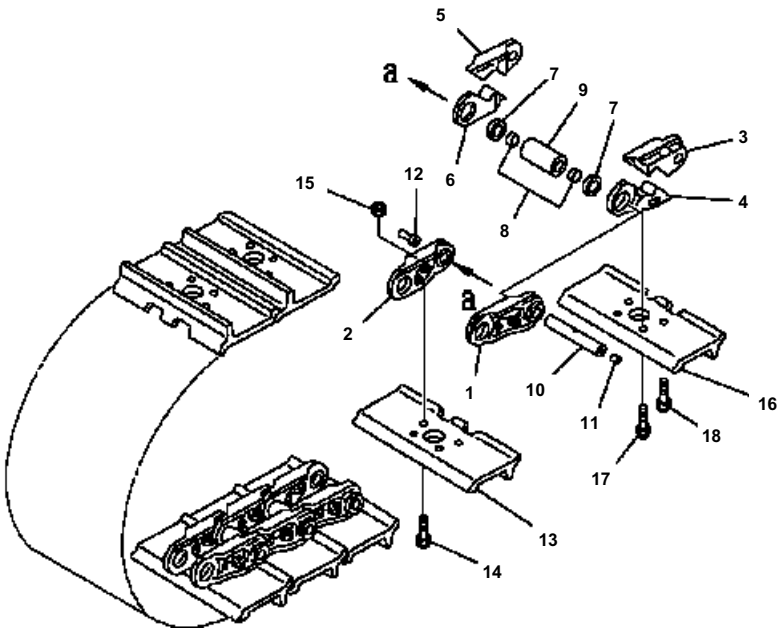

D41E6T S/N B35001-UP

TRACK SHOE (LUBRICATE TYPE) (SINGLE GROUSER, (WITH HOLE) (460MM WIDE) (HD LINK) (FOR TRIMMING)

Item	Part No.	Description	Qty	Options
	124-32-04140	TRACK SHOE ASS'Y	1	SN:B35001--
1	124-32-53120	・ LINK{REGULAR L. H. }	74	SN:B35001--
2	124-32-53130	・ LINK{REGULAR R. H. }	74	SN:B35001--
	124-32-08010	・ MASTER LINK K. L. H.	2	SN:B35001--
3	(☆124-32-53320)	・・ LINK MASTER{L. H. PIN SIDE}	1	SN:B35001--
4	(☆124-32-53330)	・・ LINK MASTER{L. H. BUSHING SIDE}	1	SN:B35001--
	124-32-08020	・ MASTER LINK K. R. H.	2	SN:B35001--
5	(☆124-32-53420)	・・ LINK MASTER{R. H. PIN SIDE}	1	SN:B35001--
6	(☆124-32-53430)	・・ LINK MASTER{R. H. BUSHING SIDE}	1	SN:B35001--
7	124-32-53160	・ SEAL ASS'Y	152	SN:B35001--
8	124-32-53190	・ SPACER	152	SN:B35001--
9	124-32-53140	・ BUSHING	76	SN:B35001--
10	124-32-53150	・ PIN	76	SN:B35001--
11	07059-11830	・ PLUG{SMALL}	76	SN:B35001--
12	07059-20721	・ PLUG{LARGE}	76	SN:B35001--
13	124-32-51410	・ SHOE{TRACK}	74	SN:B35001--
14	205-32-51121	・ BOLT SHOE\((Y0320-K1)\)	296	SN:B35001--
15	124-32-53220	・ NUT{SHOE}\((Y0320-K1)\)	296	SN:B35001--
16	124-32-51410	・ SHOE{TRACK}	2	SN:B35001--
17	124-32-53350	・ BOLT{MASTER}	4	SN:B35001--
18	124-32-53360	・ BOLT{MASTER}	4	SN:B35001--

Ref. R0500-01B4 Page 300090

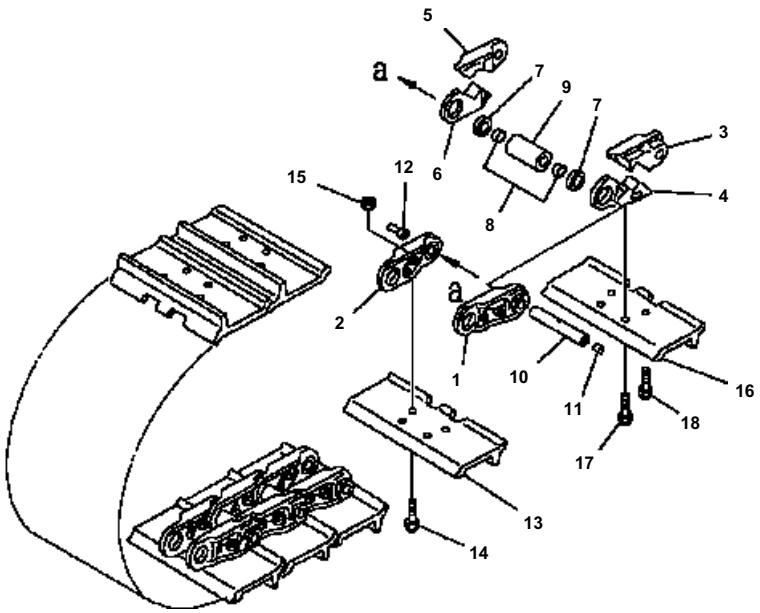

D41E6T S/N B35001-UP

TRACK SHOE (LUBRICATE TYPE) (SINGLE GROUSER) (510MM WIDE) (HD LINK, AR BUSHING)

Item	Part No.	Description	Qty	Options
	124-32-04200	TRACK SHOE ASS'Y	1	SN:B35001--
1	124-32-53120	・ LINK{REGULAR L. H. }	80	SN:B35001--
2	124-32-53130	・ LINK{REGULAR R. H. }	80	SN:B35001--
	124-32-08010	・ MASTER LINK K. L. H.	2	SN:B35001--
3	(☆124-32-53320)	・・ LINK MASTER{L. H. PIN SIDE}	1	SN:B35001--
4	(☆124-32-53330)	・・ LINK MASTER{L. H. BUSHING SIDE}	1	SN:B35001--
	124-32-08020	・ MASTER LINK K. R. H.	2	SN:B35001--
5	(☆124-32-53420)	・・ LINK MASTER{R. H. PIN SIDE}	1	SN:B35001--
6	(☆124-32-53430)	・・ LINK MASTER{R. H. BUSHING SIDE}	1	SN:B35001--
7	124-32-53160	・ SEAL ASS'Y	164	SN:B35001--
8	124-32-53190	・ SPACER	164	SN:B35001--
9	124-32-53240	・ BUSHING	82	SN:B35001--
10	124-32-53150	・ PIN	82	SN:B35001--
11	07059-11830	・ PLUG{SMALL}	82	SN:B35001--
12	07059-20721	・ PLUG{LARGE}	82	SN:B35001--
13	124-32-51110	・ SHOE{TRACK}	80	SN:B35001--
14	205-32-51121	・ BOLT SHOE\((Y0320-K1)\)	320	SN:B35001--
15	124-32-53220	・ NUT{SHOE}\((Y0320-K1)\)	320	SN:B35001--
16	124-32-51110	・ SHOE{TRACK}	2	SN:B35001--
17	124-32-53350	・ BOLT{MASTER}	4	SN:B35001--
18	124-32-53360	・ BOLT{MASTER}	4	SN:B35001--

Ref. R0500-01B5 Page 300100

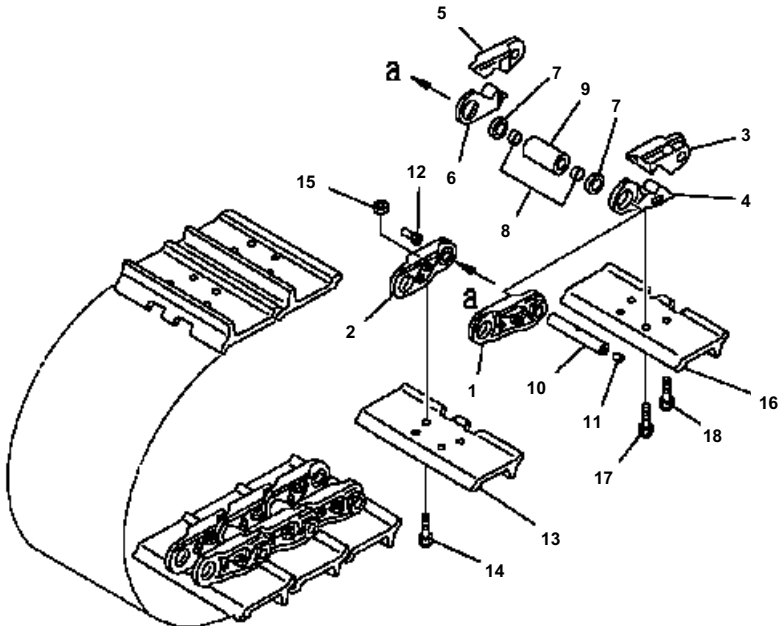

D41E6T S/N B35001-UP

TRACK SHOE (LUBRICATE TYPE) (SINGLE GROUSER) (560MM WIDE) (HD LINK, AR BUSHING)

Item	Part No.	Description	Qty	Options
	124-32-04210	TRACK SHOE ASS'Y	1	SN:B35001--
1	124-32-53120	・ LINK{REGULAR L. H. }	80	SN:B35001--
2	124-32-53130	・ LINK{REGULAR R. H. }	80	SN:B35001--
	124-32-08010	・ MASTER LINK K. L. H.	2	SN:B35001--
3	(☆124-32-53320)	・・ LINK MASTER{L. H. PIN SIDE}	1	SN:B35001--
4	(☆124-32-53330)	・・ LINK MASTER{L. H. BUSHING SIDE}	1	SN:B35001--
	124-32-08020	・ MASTER LINK K. R. H.	2	SN:B35001--
5	(☆124-32-53420)	・・ LINK MASTER{R. H. PIN SIDE}	1	SN:B35001--
6	(☆124-32-53430)	・・ LINK MASTER{R. H. BUSHING SIDE}	1	SN:B35001--
7	124-32-53160	・ SEAL ASS'Y	164	SN:B35001--
8	124-32-53190	・ SPACER	164	SN:B35001--
9	124-32-53240	・ BUSHING	82	SN:B35001--
10	124-32-53150	・ PIN	82	SN:B35001--
11	07059-11830	・ PLUG{SMALL}	82	SN:B35001--
12	07059-20721	・ PLUG{LARGE}	82	SN:B35001--
13	124-32-51210	・ SHOE{TRACK}	80	SN:B35001--
14	205-32-51121	・ BOLT SHOE\((Y0320-K1)\)	320	SN:B35001--
15	124-32-53220	・ NUT{SHOE}\((Y0320-K1)\)	320	SN:B35001--
16	124-32-51210	・ SHOE{TRACK}	2	SN:B35001--
17	124-32-53350	・ BOLT{MASTER}	4	SN:B35001--
18	124-32-53360	・ BOLT{MASTER}	4	SN:B35001--

Ref. R0500-01B6 Page 300110

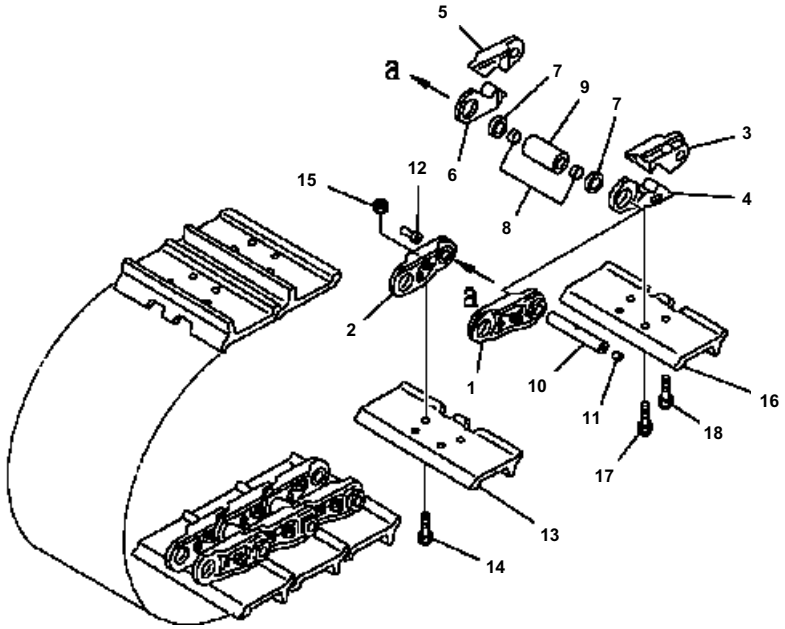

D41E6T S/N B35001-UP

TRACK SHOE (LUBRICATE TYPE) (SINGLE GROUSER) (700MM WIDE)

Item	Part No.	Description	Qty	Options
1	124-32-53120	LINK {L.H.}	80	SN:B35001--
2	124-32-53130	LINK {R.H.}	80	SN:B35001--
3	124-32-53320	MASTER LINK {PIN SIDE}	2	SN:B35001--
4	124-32-53330	MASTER LINK {BUSHING SIDE}	2	SN:B35001--
5	124-32-53420	MASTER LINK {PIN SIDE}	2	SN:B35001--
6	124-32-53430	MASTER LINK {BUSHING SIDE}	2	SN:B35001--
7	124-32-53160	SEAL ASS'Y	164	SN:B35001--
8	(☆124-32-53170)	SEAL	164	SN:B35001--
9	(☆124-35-53180)	RING	164	SN:B35001--
10	124-32-53190	SPACER	164	SN:B35001--
11	124-32-53140	BUSHING	82	SN:B35001--
12	124-32-53150	PIN	82	SN:B35001--
13	07059-11830	PLUG {LARGE}	82	SN:B35001--
14	07059-20721	PLUG {SMALL}	82	SN:B35001--
15	12G-32-51310	SHOE TRACK	80	SN:B35001--
16	205-32-51121	BOLT	320	SN:B35001--
17	124-32-53220	NUT	320	SN:B35001--
18	12G-32-51310	SHOE TRACK	2	SN:B35001--
19	124-32-53350	BOLT, MASTER	4	SN:B35001--
20	124-32-53360	BOLT, MASTER	4	SN:B35001--

Ref. R0500-01B7 Page 300111

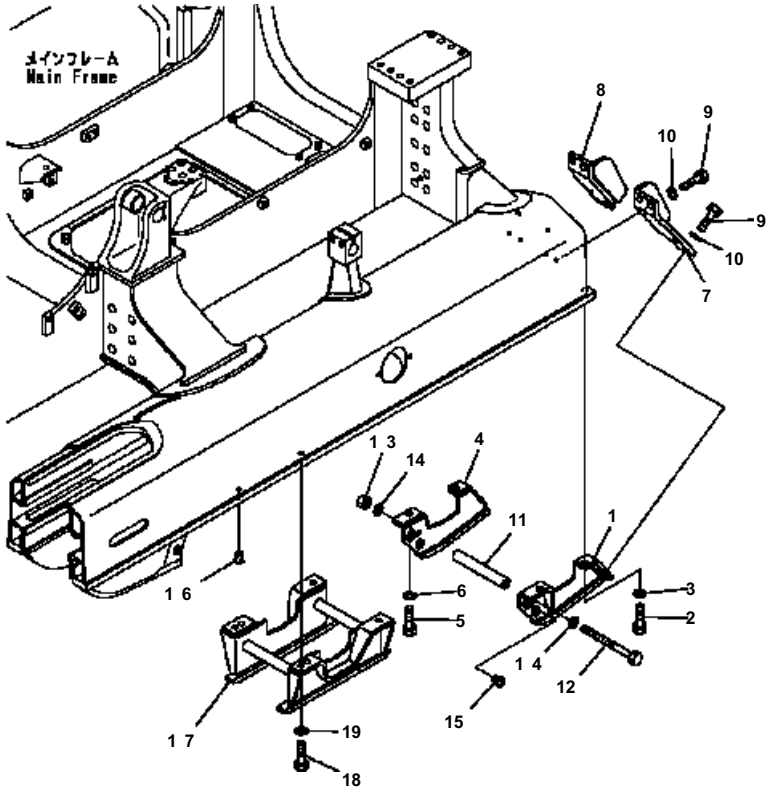

D41E6T S/N B35001-UP

ROLLER GUARD (FOR HD LINK)

Item	Part No.	Description	Qty	Options
1	12G-21-52151	BRACKET	2	SN:B35001--
2	01010-81635	BOLT	4	SN:B35001--
3	01643-31645	WASHER	4	SN:B35001--
4	12G-21-52161	BRACKET	2	SN:B35001--
5	01010-81635	BOLT	4	SN:B35001--
6	01643-31645	WASHER	4	SN:B35001--
7	12G-21-51182	GUARD	2	SN:B35001--
8	12G-21-51192	GUARD	2	SN:B35001--
9	01010-81645	BOLT	16	SN:B35001--
10	01643-31645	WASHER	16	SN:B35001--
11	12G-30-51531	COLLAR	2	SN:B35001--
12	09205-26270	BOLT	2	SN:B35001--
13	01580-11613	NUT	2	SN:B35001--
14	01643-31645	WASHER	4	SN:B35001--
15	07049-01215	PLUG	16	SN:B35001--
16	07049-01620	PLUG	6	SN:B35001--
17	12G-30-52611	GUARD	2	SN:B35001--
18	01010-81635	BOLT	8	SN:B35001--
19	01643-31645	WASHER	8	SN:B35001--

Ref. R2200-01A0 Page 300120

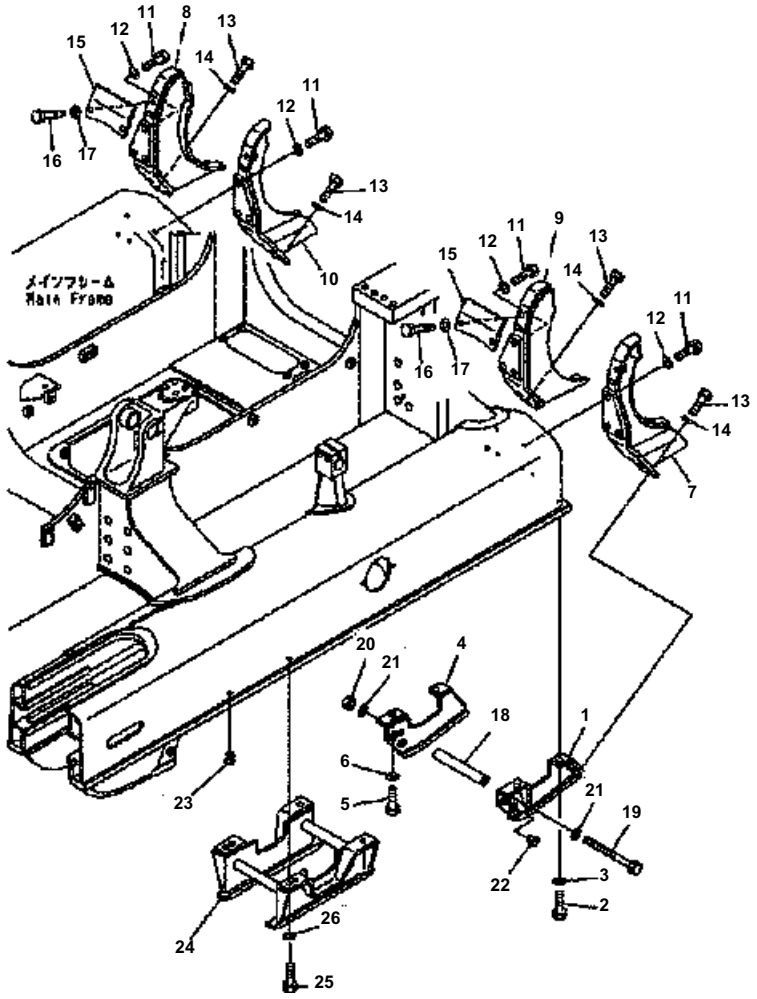

D41E6T S/N B35001-UP

ROLLER GUARD (FOR HD LINK)

Item	Part No.	Description	Qty	Options
1	12G-21-52151	BRACKET	2	SN:B35085--
2	01010-81635	BOLT	4	SN:B35085--
3	01643-31645	WASHER	4	SN:B35085--
4	12G-21-52161	BRACKET	2	SN:B35085--
5	01010-81635	BOLT	4	SN:B35085--
6	01643-31645	WASHER	4	SN:B35085--
7	12G-21-61310	GUARD	1	SN:B35085--
8	12G-21-61320	GUARD	1	SN:B35085--
9	12G-21-61330	GUARD	1	SN:B35085--
10	12G-21-61340	GUARD	1	SN:B35085--
11	01010-81665	BOLT	12	SN:B35085--
12	01643-31645	WASHER	12	SN:B35085--
13	01010-81645	BOLT	8	SN:B35085--
14	01643-31645	WASHER	8	SN:B35085--
15	12G-21-61350	PLATE	2	SN:B35085--
16	01010-81240	BOLT	4	SN:B35085--
17	01643-31232	WASHER	4	SN:B35085--
18	12G-30-51531	COLLAR	2	SN:B35085--
19	09205-26270	BOLT	2	SN:B35085--
20	01580-11613	NUT	2	SN:B35085--
21	01643-31645	WASHER	4	SN:B35085--
22	07049-01215	PLUG	16	SN:B35085--
23	07049-01620	PLUG	12	SN:B35085--
24	12G-30-52611	GUARD	2	SN:B35085--
25	01010-81635	BOLT	8	SN:B35085--
26	01643-31645	WASHER	8	SN:B35085--

Ref. R2200-01A1 Page 300121

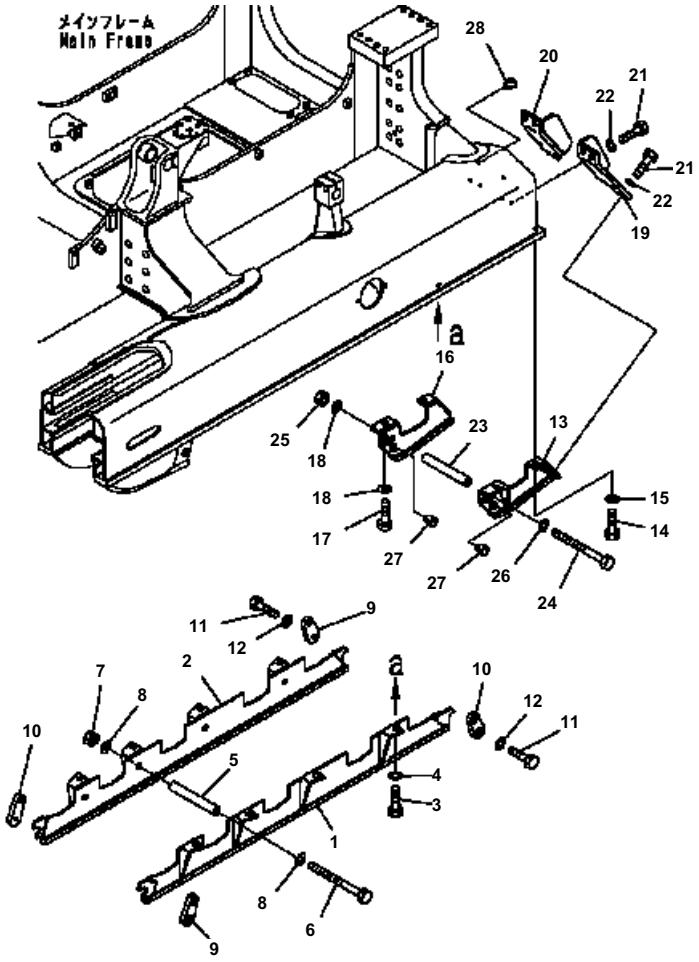

D41E6T S/N B35001-UP

ROLLER GUARD (FULL GUARD)

Item	Part No.	Description	Qty	Options
1	124-30-52311	GUARD	2	SN:B35001--
2	124-30-52321	GUARD	2	SN:B35001--
3	01010-81640	BOLT	16	SN:B35001--
4	01643-31645	WASHER	16	SN:B35001--
5	12G-30-51530	COLLAR	8	SN:B35001--
6	09205-26270	BOLT	8	SN:B35001--
7	01580-11613	NUT	8	SN:B35001--
8	01643-31645	WASHER	16	SN:B35001--
9	134-30-61460	PLATE	4	SN:B35001--
10	134-30-61460	PLATE	4	SN:B35001--
11	01010-81230	BOLT	16	SN:B35001--
12	01643-31232	WASHER	16	SN:B35001--
13	12G-21-52151	BRACKET	2	SN:B35001--
14	01010-81635	BOLT	4	SN:B35001--
15	01643-31645	WASHER	4	SN:B35001--
16	12G-21-52161	BRACKET	2	SN:B35001--
17	01010-81635	BOLT	4	SN:B35001--
18	01643-31645	WASHER	4	SN:B35001--
19	12G-21-51182	GUARD	2	SN:B35001--
20	12G-21-51192	GUARD	2	SN:B35001--
21	01010-81645	BOLT	16	SN:B35001--
22	01643-31645	WASHER	16	SN:B35001--
23	12G-30-51531	COLLAR	2	SN:B35001--
24	09205-26270	BOLT	2	SN:B35001--
25	01580-11613	NUT	2	SN:B35001--
26	01643-31645	WASHER	4	SN:B35001--
27	07049-01215	PLUG	16	SN:B35001--
28	07049-01620	PLUG	6	SN:B35001--

Ref. R2200-02A0 Page 300130

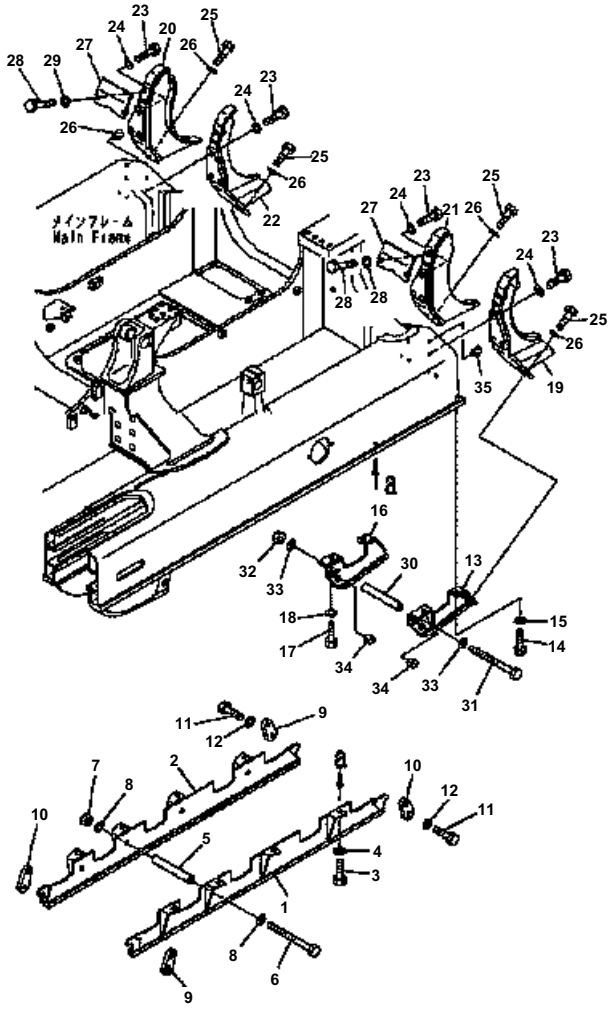

D41E6T S/N B35001-UP

ROLLER GUARD (FULL GUARD)

Item	Part No.	Description	Qty	Options
1	124-30-52311	GUARD	2	SN:B35085--
2	124-30-52321	GUARD	2	SN:B35085--
3	01010-81640	BOLT	16	SN:B35085--
4	01643-31645	WASHER	16	SN:B35085--
5	12G-30-51530	COLLAR	8	SN:B35085--
6	09205-26270	BOLT	8	SN:B35085--
7	01580-11613	NUT	8	SN:B35085--
8	01643-31645	WASHER	16	SN:B35085--
9	134-30-61460	PLATE	4	SN:B35085--
10	134-30-61460	PLATE	4	SN:B35085--
11	01010-81230	BOLT	16	SN:B35085--
12	01643-31232	WASHER	16	SN:B35085--
13	12G-2152151	BRACKET	2	SN:B35085--
14	01010-81635	BOLT	4	SN:B35085--
15	01643-31645	WHASER	4	SN:B35085--
16	12G-21-52161	BRACKET	2	SN:B35085--
17	01010-81635	BOLT	4	SN:B35085--
18	01643-31645	WASHER	4	SN:B35085--
19	12G-21-61310	GUARD	1	SN:B35085--
20	12G-21-61320	GUARD	1	SN:B35085--
21	12G-21-61330	GUARD	1	SN:B35085--
22	12G-21-61340	GUARD	1	SN:B35085--
23	01010-81665	BOLT	12	SN:B35085--
24	01643-31645	WASHER	12	SN:B35085--
25	01010-81645	BOLT	8	SN:B35085--
26	01643-31645	WASHER	8	SN:B35085--
27	12G-21-61350	PLATE	2	SN:B35085--
28	01010-81240	BOLT	4	SN:B35085--
29	01643-31232	WASHER	4	SN:B35085--
30	12G-30-51531	COLLAR	2	SN:B35085--
31	09205-26270	BOLT	2	SN:B35085--
32	01580-11613	NUT	2	SN:B35085--
33	01643-31645	WASHER	4	SN:B35085--
34	07049-01215	PLUG	16	SN:B35085--
35	07049-01620	PLUG	12	SN:B35085--

Ref. R2200-02A1 Page 300131

WORK EQUIPMENT

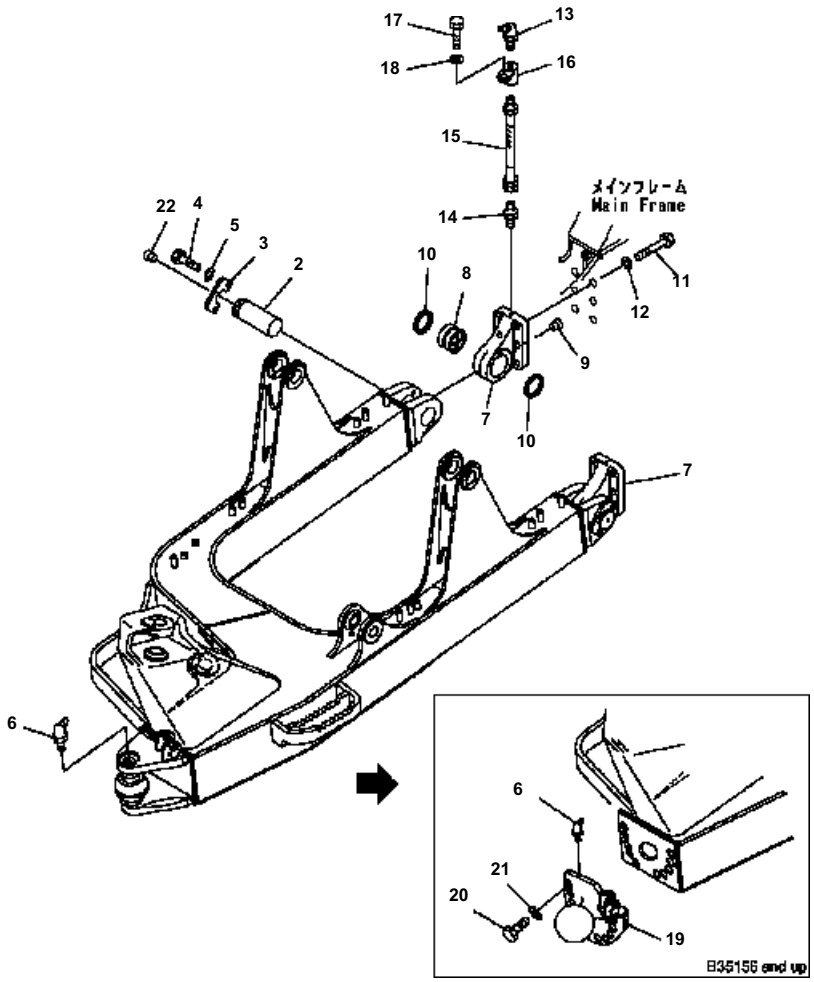

D41E6T S/N B35001-UP

DOZER FRAME

Item	Part No.	Description	Qty	Options
1	124-72-61602	FRAME ASS'Y	1	SN:B35156--
	124-72-61601	FRAME ASS'Y	1	SN:B35154--B35155
	124-72-61600	FRAME ASS'Y	1	SN:B35001--B35153
2	12F-72-41470	SHAFT	2	SN:B35001--
3	12F-72-41480	PLATE	2	SN:B35001--
4	01010-81230	BOLT	4	SN:B35001--
5	01643-31232	WASHER	4	SN:B35001--
6	07020-00000	FITTING	1	SN:B35136--
	07020-00675	FITTING	1	SN:B35001--B35135
	124-72-00014	BRACKET ASS'Y	2	SN:B35136--
	124-72-00011	BRACKET ASS'Y	2	SN:B35001--B35135
7	124-72-51314	BRACKET	2	SN:B35136--
	124-72-51312	· BRACKET	2	SN:B35001--B35135
8	124-72-61820	BUSHING	2	SN:B35136--
	12H-72-11380	· BUSHING	2	SN:B35001--B35135
9	07043-70108	· PLUG	2	SN:B35001--
10	07145-00070	· SEAL	4	SN:B35001--
11	208-01-11181	BOLT	12	SN:B35001--
12	01643-32460	WASHER	12	SN:B35001--
13	07020-00675	FITTING	2	SN:B35001--
14	203-62-21740	NIPPLE	2	SN:B35001--
15	11T-61-13710	HOSE	2	SN:B35001--
16	12G-72-51120	SEAT	2	SN:B35001--
17	01010-81020	BOLT	2	SN:B35001--
18	01643-31032	WASHER	2	SN:B35001--
19	124-72-61531	TRUNNION ASS'Y	1	SN:B35156--
20	154-54-73130	BOLT	10	SN:B35156--
21	01643-32060	WASHER	10	SN:B35156--
22	08034-00519	PLUG	2	SN:B35156--

Ref. T2110-01A0 Page 330010

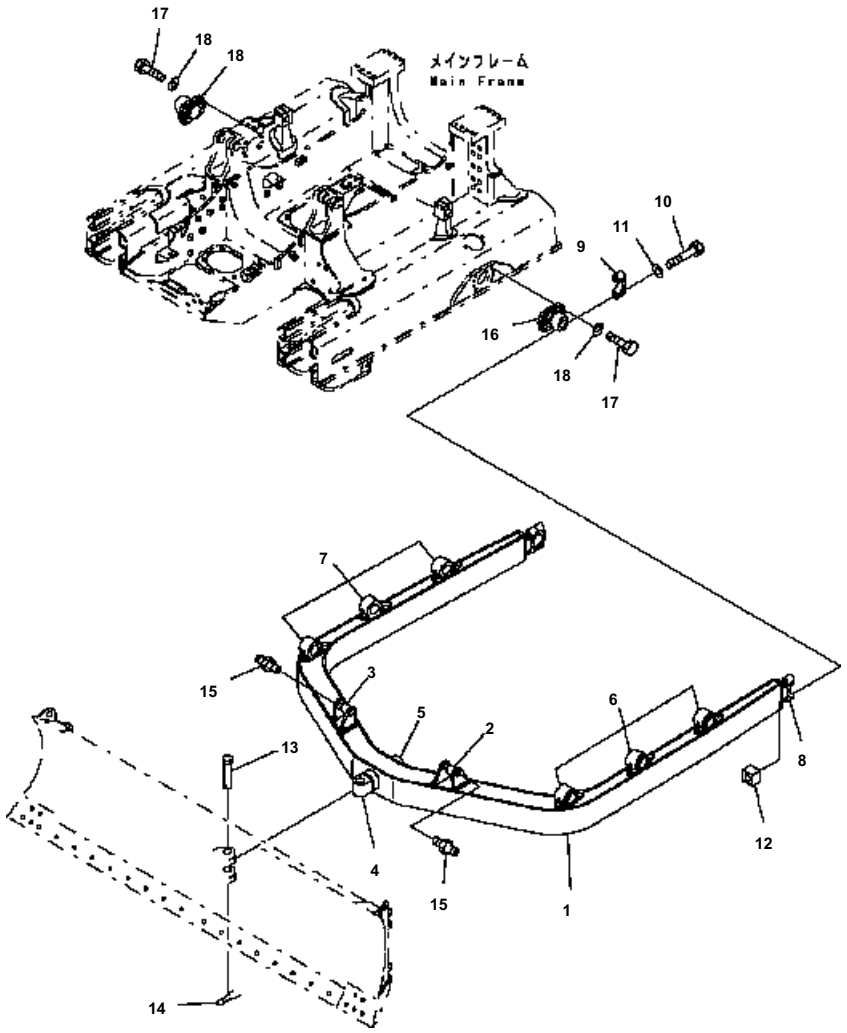

D41E6T S/N B35001-UP

ANGLE FRAME

Item	Part No.	Description	Qty	Options
	124-70-62200	C-FRAME ASS'Y	1	SN:B35001--
1	☆	・ FRAME ASS'Y	1	SN:B35001--
2	124-70-62210	・・ BRACKET{L. H. }\((WELDED)\)	1	SN:B35001--
3	124-70-62220	・・ BRACKET{R. H. }\((WELDED)\)	1	SN:B35001--
4	130-70-13125	・・ SHAFT	1	SN:B35001--
5	130-70-13132	・・ COLLAR\((WELDED)\)	1	SN:B35001--
6	130-70-43210	・・ BRACKET\((WELDED)\)	3	SN:B35001--
7	130-70-43220	・・ BRACKET\((WELDED)\)	3	SN:B35001--
8	130-70-B1221	・・ PIVOT{(WELDED)}\((KIT)\)	2	SN:B35001--
9	130-70-B1231	CAP\((KIT)\)	2	SN:B35001--
10	01011-82445	BOLT\((KIT)\)	4	SN:B35001--
11	01643-32460	WASHER\((KIT)\)	4	SN:B35001--
12	130-70-13241	NUT\((KIT)\)	4	SN:B35001--
13	130-70-41120	PIN	1	SN:B35001--
14	04050-18070	PIN	1	SN:B35001--
15	07020-00000	FITTING	2	SN:B35001--
16	124-70-62330	TRUNNION	2	SN:B35001--
17	01010-81650	BOLT	16	SN:B35001--
18	01643-31645	WASHER	16	SN:B35001--

Ref. T2110-01A1 Page 330020

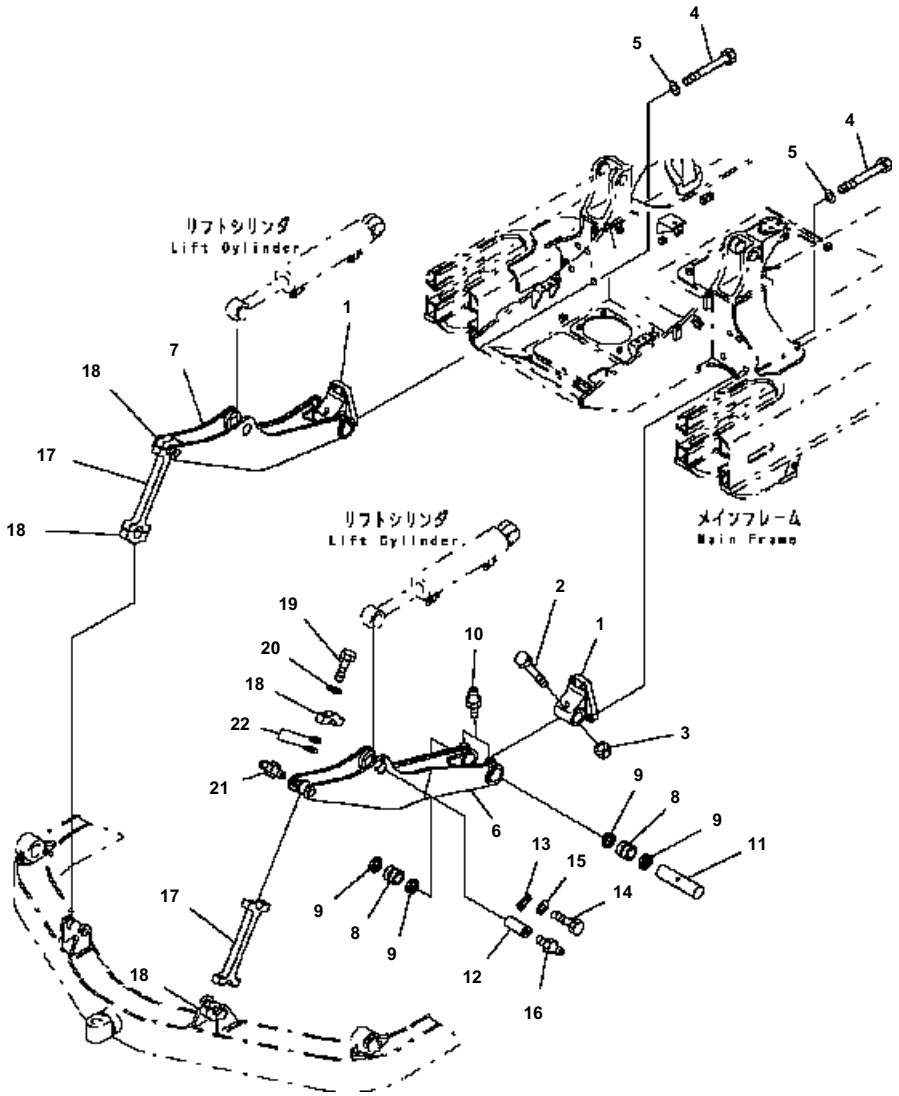

D41E6T S/N B35001-UP

ANGLE FRAME (LINK)

Item	Part No.	Description	Qty	Options
1	126-70-51410	BRACKET	2	SN:B35001--
2	01011-81210	BOLT	2	SN:B35001--
3	01598-01214	NUT	2	SN:B35001--
4	208-01-11181	BOLT	8	SN:B35001--
5	01643-32460	WASHER	8	SN:B35001--
6	124-70-62290	BRACKET{L.H.}	1	SN:B35001--
7	124-70-62310	BRACKET{R.H.}	1	SN:B35001--
8	07144-10506	BUSHING	4	SN:B35001--
9	07145-00055	SEAL	8	SN:B35001--
10	07020-00000	FITTING	4	SN:B35001--
11	126-70-51450	SHAFT	2	SN:B35001--
12	09241-5A140	PIN	2	SN:B35001--
13	04082-00212	LOCK	2	SN:B35001--
14	01010-81225	BOLT	4	SN:B35001--
15	01643-31232	WASHER	4	SN:B35001--
16	07020-00000	FITTING	2	SN:B35001--
17	124-70-62320	ROD	2	SN:B35001--
18	126-70-51480	CAP	4	SN:B35001--
19	01010-82070	BOLT	8	SN:B35001--
20	01643-32060	WASHER	8	SN:B35001--
21	07020-00000	FITTING	4	SN:B35001--
22	426-43-18850	SHIM 1.0MM	32	SN:B35001--

Ref. T2110-02A1 Page 330030

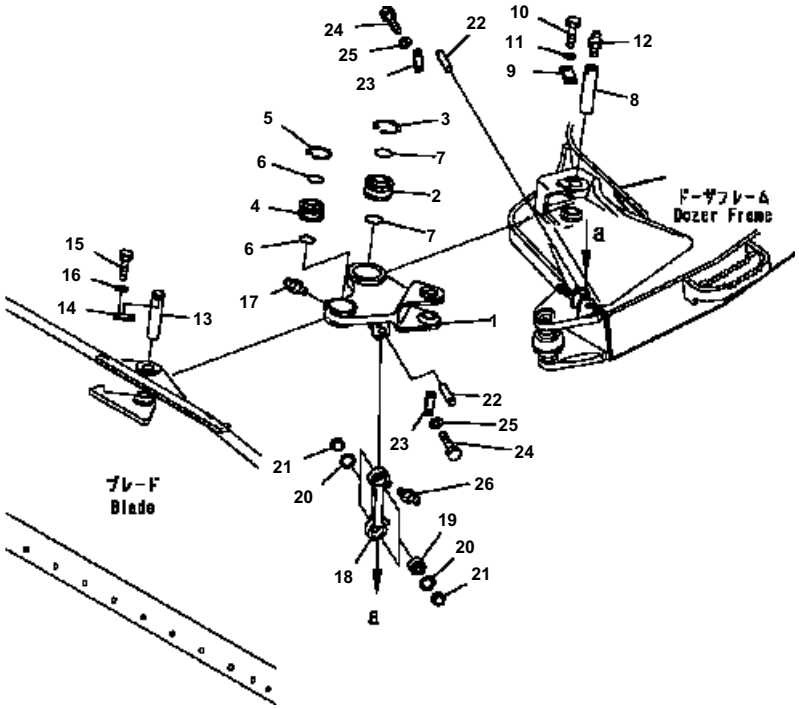

D41E6T S/N B35001-UP

LINK (FOR PAT DOZER)

Item	Part No.	Description	Qty	Options
1	124-72-51611	LINK	1	SN:B35001--
2	07137-04507	BUSHING	1	SN:B35001--
3	04065-01030	RING	2	SN:B35001--
4	124-72-51810	BUSHING	1	SN:B35001--
5	04065-09030	RING	2	SN:B35001--
6	07000-13040	O-RING	2	SN:B35156--
	07000-03040	O-RING	2	SN:B35001--B35155
7	07000-13045	O-RING	2	SN:B35156--
	07000-03045	O-RING	2	SN:B35001--B35155
8	124-72-51790	PIN	1	SN:B35001--
9	04082-00212	LOCK	1	SN:B35001--
10	01010-81225	BOLT	2	SN:B35001--
11	01643-31232	WASHER	2	SN:B35001--
12	07020-00000	FITTING	1	SN:B35001--
13	124-72-51770	PIN	1	SN:B35001--
14	04082-00212	LOCK	1	SN:B35001--
15	01010-81225	BOLT	2	SN:B35001--
16	01643-31232	WASHER	2	SN:B35001--
17	07020-00000	FITTING	1	SN:B35001--
18	124-72-61320	ROD	1	SN:B35111--
	124-72-51360	ROD	1	SN:B35001--B35110
19	124-72-51354	BUSHING	2	SN:B35001--
20	04065-04718	RING	2	SN:B35001--
21	124-72-51423	SPACER	4	SN:B35001--
22	124-72-51540	PIN	2	SN:B35001--
23	04082-00110	LOCK	2	SN:B35001--
24	01010-81020	BOLT	4	SN:B35001--
25	01643-31032	WASHER	4	SN:B35001--
26	07020-00000	FITTING	2	SN:B35001--

Ref. T2115-01A0 Page 330040

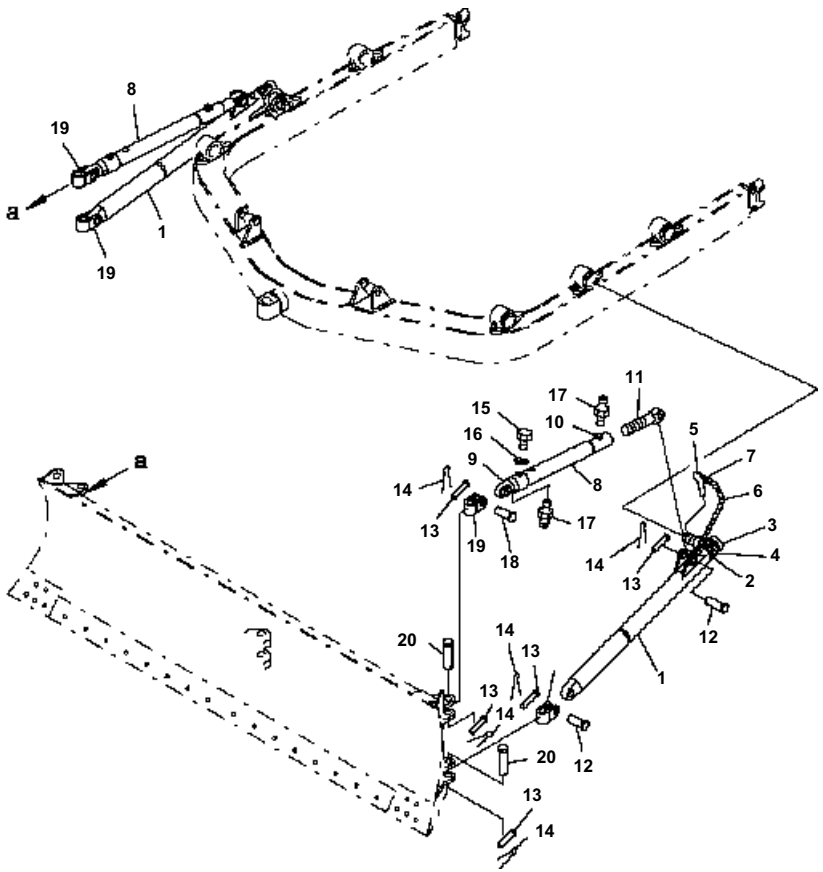

D41E6T S/N B35001-UP

ARM AND BRACE (FOR ANGLE DOZER)

Item	Part No.	Description	Qty	Options
1	124-70-62260	ARM	2	SN:B35001--
2	130-70-12160	· BOSS	1	SN:B35001--
3	130-70-12170	· COLLAR	1	SN:B35001--
4	130-70-12180	· PIN	1	SN:B35001--
5	130-70-12190	· PIN	1	SN:B35001--
6	09245-04830	· CHAIN	1	SN:B35001--
7	09245-50060	· HOOK	2	SN:B35001--
8	124-70-62270	BRACE	2	SN:B35001--
9	130-70-12250	· END	1	SN:B35001--
10	01099-03417	· PROTECTOR	1	SN:B35001--
11	130-70-12270	SCREW	2	SN:B35001--
12	130-70-B1410	PIN	4	SN:B35001--
13	130-70-12120	PIN	10	SN:B35001--
14	04050-15030	PIN	10	SN:B35001--
15	130-70-52110	SCREW	2	SN:B35001--
16	01643-31445	WASHER	2	SN:B35001--
17	07020-00000	FITTING	4	SN:B35001--
18	130-70-B1410	PIN	2	SN:B35001--
19	130-70-12131	JOINT	4	SN:B35001--
20	130-70-12111	PIN	4	SN:B35001--

Ref. T2115-01A1 Page 330050

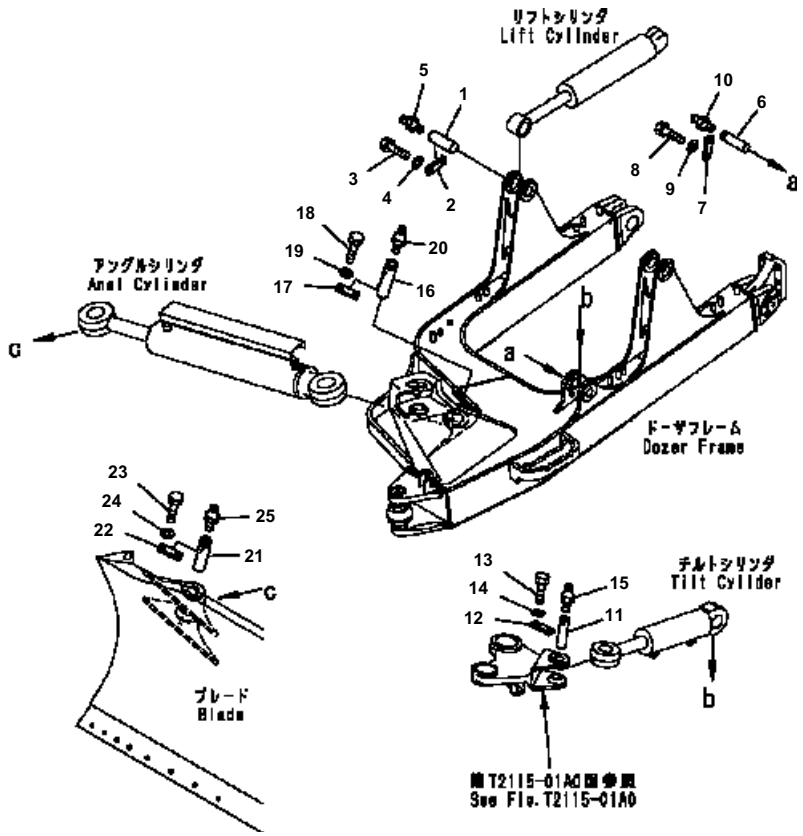

D41E6T S/N B35001-UP

LINK (CYLINDER PIN) (FOR PAT DOZER)

Item	Part No.	Description	Qty	Options
1	09241-5A140	PIN	2	SN:B35001--
2	04082-00212	LOCK	2	SN:B35001--
3	01010-81225	BOLT	4	SN:B35001--
4	01643-31232	WASHER	4	SN:B35001--
5	07020-00000	FITTING	2	SN:B35001--
6	12H-72-11581	PIN	1	SN:B35001--
7	04082-00212	LOCK	1	SN:B35001--
8	01010-81225	BOLT	2	SN:B35001--
9	01643-31232	WASHER	2	SN:B35001--
10	07020-00000	FITTING	1	SN:B35001--
11	12H-72-11581	PIN	1	SN:B35001--
12	04082-00212	LOCK	1	SN:B35001--
13	01010-81225	BOLT	2	SN:B35001--
14	01643-31232	WASHER	2	SN:B35001--
15	07020-00000	FITTING	1	SN:B35001--
16	09241-5A210	PIN	1	SN:B35001--
17	04082-00212	LOCK	1	SN:B35001--
18	01010-81225	BOLT	2	SN:B35001--
19	01643-31232	WASHER	2	SN:B35001--
20	07020-00000	FITTING	1	SN:B35001--
21	09241-5A210	PIN	1	SN:B35001--
22	04082-00212	LOCK	1	SN:B35001--
23	01010-81225	BOLT	2	SN:B35001--
24	01643-31232	WASHER	2	SN:B35001--
25	07020-00000	FITTING	1	SN:B35001--

Ref. T2115-02A0 Page 330060

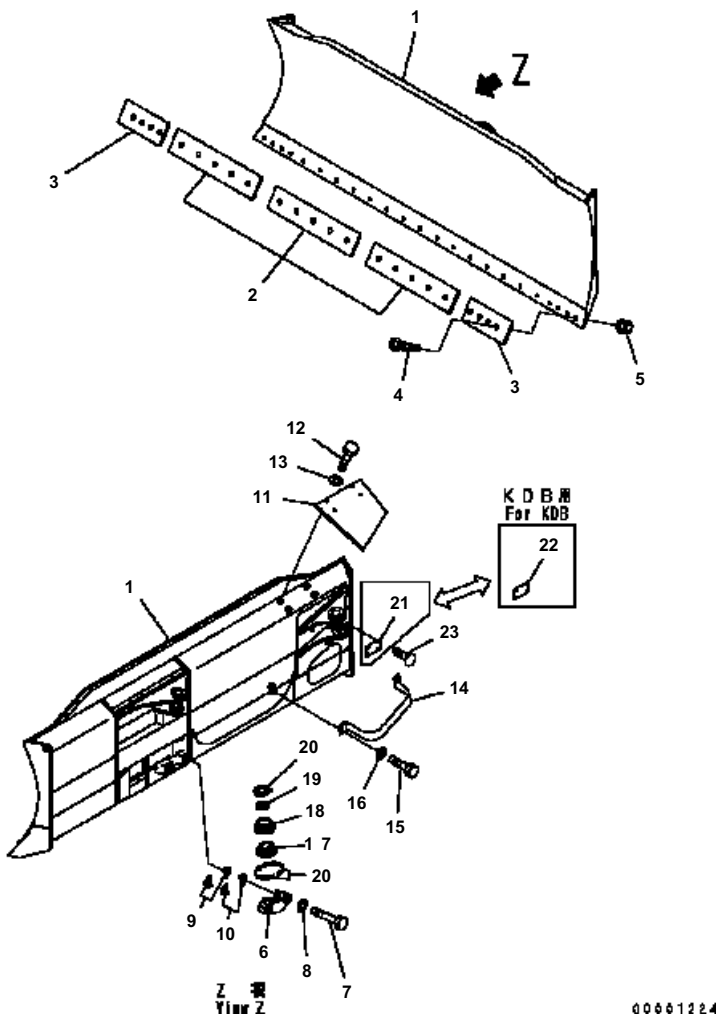

D41E6T S/N B35001-UP

BLADE (FOR PAT DOZER)

Item	Part No.	Description	Qty	Options
1	124-72-61500	BLADE ASS'Y	1	SN:B35001--
2	12F-70-31251	EDGE	3	SN:B35001--
3	11G-71-31170	BIT	2	SN:B35001--
4	02090-11055	BOLT	23	SN:B35001--
5	02290-11016	NUT	23	SN:B35001--
6	124-72-61180	CAP	1	SN:B35001--
7	01011-83010	BOLT	2	SN:B35001--
8	01643-33080	WASHER	2	SN:B35001--
9	124-72-61840	SHIM	8	SN:B35001--
10	124-72-61890	SHIM	6	SN:B35001--
11	124-72-61480	COVER	1	SN:B35197--
	124-72-51480	COVER	1	SN:B35001--B35196
12	01010-81230	BOLT	4	SN:B35001--
13	01643-31232	WASHER	4	SN:B35001--
14	124-72-51490	PLATE	1	SN:B35001--
15	01010-81635	BOLT	4	SN:B35001--
16	01643-31645	WASHER	4	SN:B35001--
17	124-72-51710	COVER	1	SN:B35001--
18	124-72-51720	COVER	1	SN:B35001--
19	124-72-51730	RETAINER	1	SN:B35001--
20	08034-00536	BAND	3	SN:B35001--
21	09601-60000	PLATE NAME	1	SN:B35001--
22	09601-60050	PLATE NAME	1	SN:B35001--
23	04418-13060	SCREW	4	SN:B35001--

Ref. T2120-01A0 Page 330070

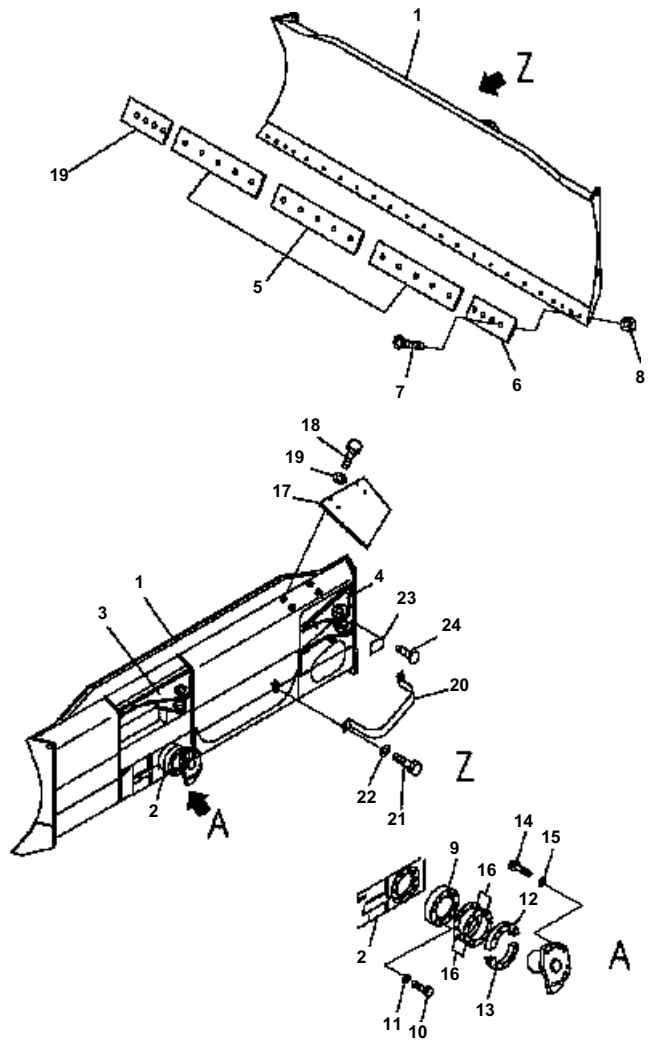

D41E6T S/N B35001-UP

BLADE (FOR PAT DOZER) (B35111 AND UP)

Item	Part No.	Description	Qty	Options
1	124-72-61501	BLADE ASS'Y	1	SN:B35111--
2	124-72-61240	BRACKET (WELDED)	1	SN:B35111--
3	124-72-51143	BRACKET (WELDED)	1	SN:B35111--
4	124-72-51132	BRACKET (WELDED)	1	SN:B35111--
5	12F-70-31251	EDGE	3	SN:B35111--
6	11G-71-31170	BIT	2	SN:B35111--
7	02090-11055	BOLT	23	SN:B35111--
8	02290-11016	NUT	23	SN:B35111--
9	124-72-61360	BEARING	1	SN:B35111--
10	01010-81260	BOLT	2	SN:B35111--
11	01643-31232	WASHER	2	SN:B35111--
12	124-72-61370	CAP	1	SN:B35111--
13	124-72-61470	CAP	1	SN:B35111--
14	01011-82020	BOLT	8	SN:B35111--
15	01643-32060	WASHER	8	SN:B35111--
16	124-72-61382	SHIM	4	SN:B35111--
	124-72-61392	SHIM	16	SN:B35111--
17	124-72-61480	COVER	1	SN:B35111--
18	01010-81230	BOLT	4	SN:B35111--
19	01643-31232	WASHER	4	SN:B35111--
20	124-72-51490	PLATE	1	SN:B35111--
21	01010-81635	BOLT	4	SN:B35111--
22	01643-31645	WASHER	4	SN:B35111--
23	09601-60050	PLATE¤ NAME	1	SN:B35111--
24	04418-13060	SCREW	4	SN:B35111--

Ref. T2120-01A0A Page 330071

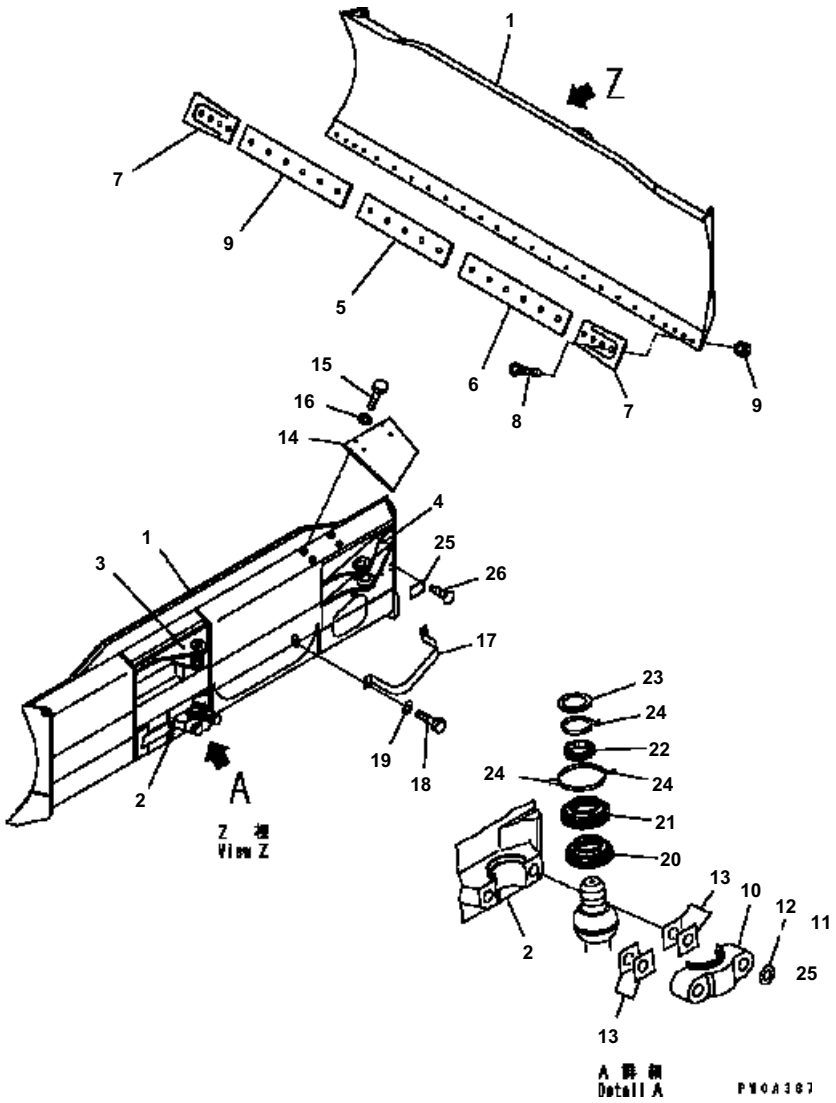

D41E6T S/N B35001-UP

BLADE (FOR PAT DOZER) (WIDE TYPE)

Item	Part No.	Description	Qty	Options
1	124-72-62200	BLADE ASS'Y	1	SN:B35001--
2	124-72-61190	· BRACKET	1	SN:B35001--
3	124-72-51143	· BRACKET	1	SN:B35001--
4	124-72-52131	· BRACKET	1	SN:B35001--
5	12F-70-31251	EDGE	1	SN:B35001--
6	12F-70-31261	EDGE	2	SN:B35001--
7	11G-71-31170	BIT	2	SN:B35001--
8	02090-11055	BOLT	25	SN:B35001--
9	02290-11016	NUT	25	SN:B35001--
10	124-72-51180	CAP	1	SN:B35001--
11	01011-83010	BOLT	2	SN:B35001--
12	01643-33080	WASHER	2	SN:B35001--
13	124-72-61840	SHIM	8	SN:B35001--
	124-72-61890	SHIM	6	SN:B35001--
14	124-72-61480	COVER	1	SN:B35197--
	124-72-51480	COVER	1	SN:B35001--B35196
15	01010-81230	BOLT	4	SN:B35001--
16	01643-31232	WASHER	4	SN:B35001--
17	124-72-51490	PLATE	1	SN:B35001--
18	01010-81635	BOLT	4	SN:B35001--
19	01643-31645	WASHER	4	SN:B35001--
20	124-72-51710	COVER	1	SN:B35001--
21	124-72-51720	COVER	1	SN:B35001--
22	124-72-51730	RETAINER	1	SN:B35001--
23	124-72-51740	COVER	1	SN:B35001--
24	08034-00536	BAND	3	SN:B35001--
25	09601-50050	PLATE NAME	1	SN:B35492--
	09601-60050	PLATE NAME	1	SN:B35001--B35491
26	04418-13060	SCREW	4	SN:B35001--

Ref. T2120-01A1 Page 330080

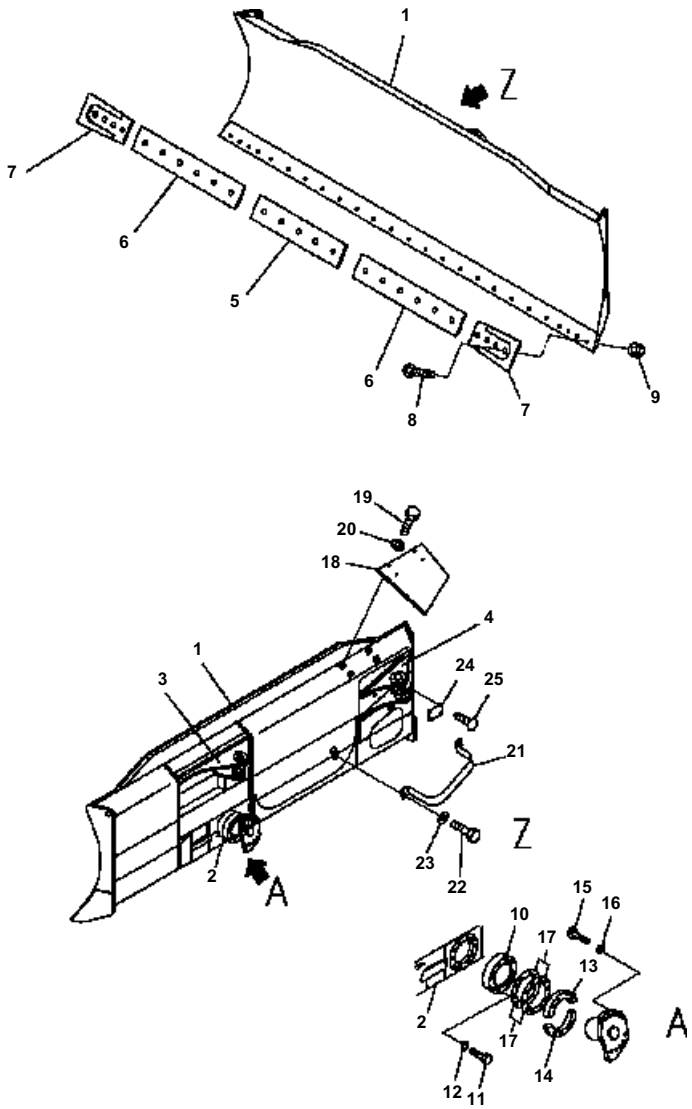

D41E6T S/N B35001-UP

BLADE (FOR PAT DOZER) (WIDE TYPE) (B35111 AND UP)

Item	Part No.	Description	Qty	Options
1	124-72-62201	BLADE ASS'Y	1	SN:B35111--
2	124-72-61240	· BRACKET	1	SN:B35111--
3	124-72-51143	· BRACKET	1	SN:B35111--
4	124-72-52131	· BRACKET	1	SN:B35111--
5	12F-70-31251	EDGE	1	SN:B35111--
6	12F-70-31261	EDGE	2	SN:B35111--
7	11G-71-31170	BIT	2	SN:B35111--
8	02090-11055	BOLT	25	SN:B35111--
9	02290-11016	NUT	25	SN:B35111--
10	124-72-61360	BEARING	1	SN:B35111--
11	01010-81260	BOLT	2	SN:B35111--
12	01643-31232	WASHER	2	SN:B35111--
13	124-72-61370	CAP	1	SN:B35111--
14	124-72-61470	CAP	1	SN:B35111--
15	01011-82020	BOLT	8	SN:B35111--
16	01643-32060	WASHER	8	SN:B35111--
17	124-72-61382	SHIM	4	SN:B35111--
	124-72-61392	SHIM	16	SN:B35111--
18	124-72-61480	COVER	1	SN:B35111--
19	01010-81230	BOLT	4	SN:B35111--
20	01643-31232	WASHER	4	SN:B35111--
21	124-72-51490	PLATE	1	SN:B35111--
22	01010-81635	BOLT	4	SN:B35111--
23	01643-31645	WASHER	4	SN:B35111--
24	09601-60000	PLATE¤ NAME	1	SN:B35111--
25	04418-13060	SCREW	4	SN:B35111--

Ref. T2120-01A1A Page 330081

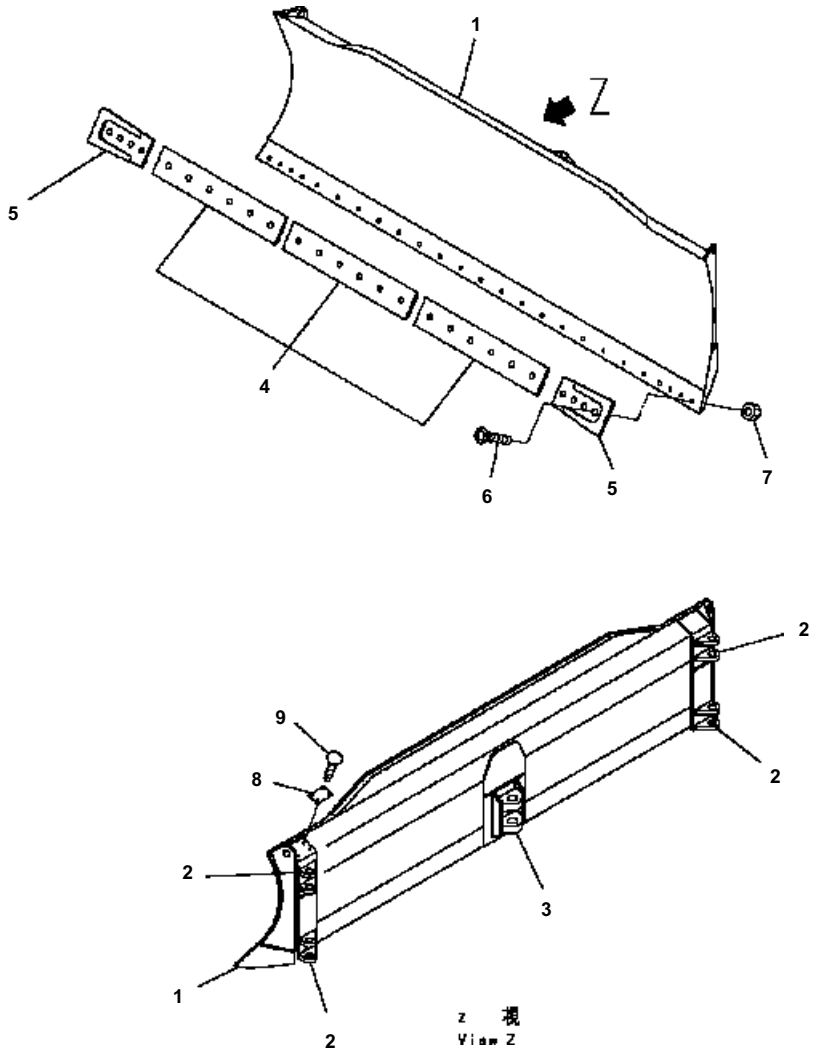

D41E6T S/N B35001-UP

BLADE (FOR ANGLE DOZER)

Item	Part No.	Description	Qty	Options
1	124-70-62101	BLADE ASS'Y	1	SN:B35001--
2	124-70-62120	· BRACKET .....(WELDED)	4	SN:B35001--
3	130-70-51140	· BRACKET .....(WELDED)	1	SN:B35001--
4	12F-70-31261	EDGE	3	SN:B35001--
5	11G-71-31170	BIT	2	SN:B35001--
6	02090-11065	BOLT	26	SN:B35001--
7	02290-11016	NUT	26	SN:B35001--
8	130-78-B1333	PLATE NAME (LIMITED SUPPLY)	1	SN:B35001--
9	04418-13060	SCREW	4	SN:B35001--

Ref. T2120-02A0 Page 330090

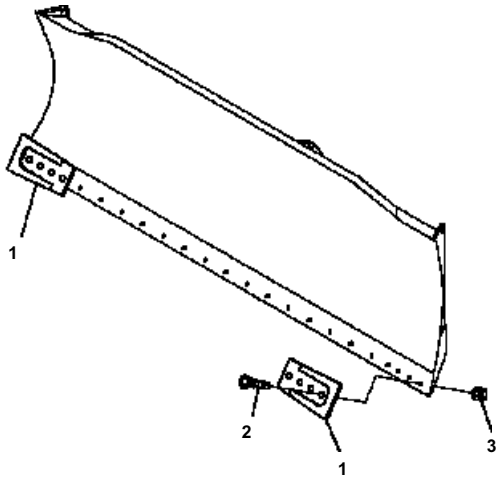

D41E6T S/N B35001-UP

BLADE END BIT (STRONG)

Item	Part No.	Description	Qty	Options
1	120-70-31411	BIT	2	SN:B35001--
2	02290-11016	NUT	8	SN:B35001--
3	02090-11055	BOLT	8	SN:B35001--

Ref. T2121-01A0 Page 330100

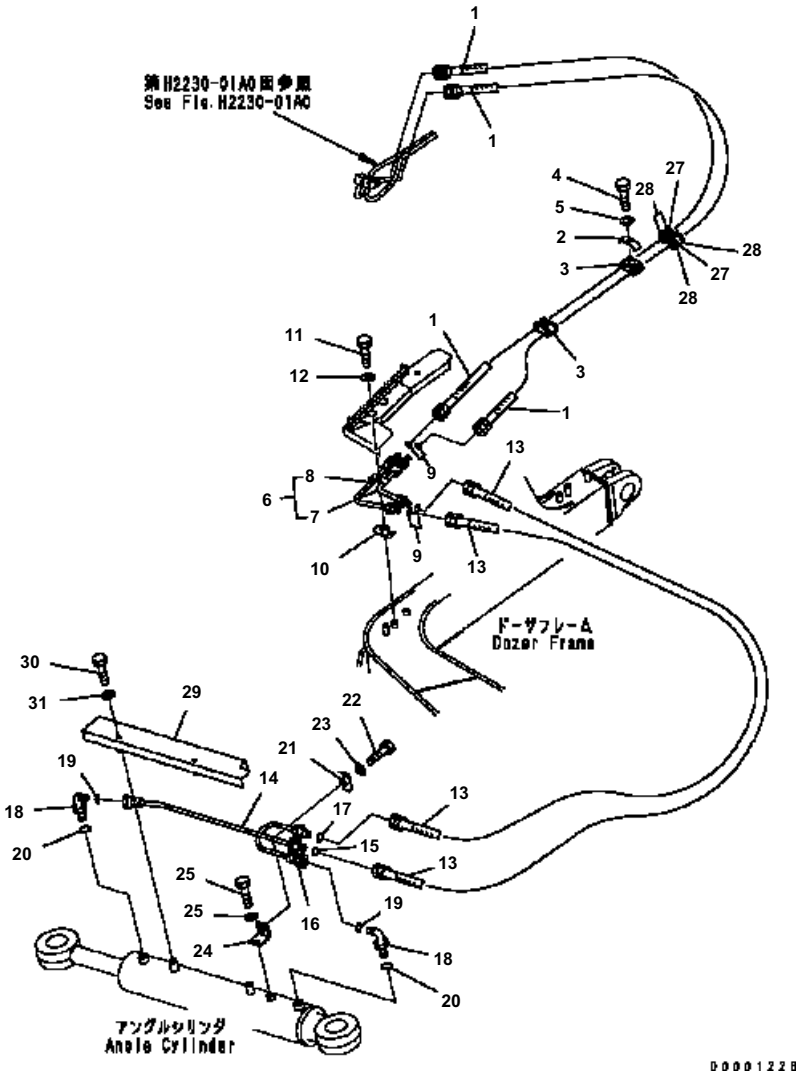

D41E6T S/N B35001-UP

DOZER OIL LINE (ANGLE CYLINDER LINE) (FOR PAT DOZER)

Item	Part No.	Description	Qty	Options
1	02765-B0313	HOSE	2	SN:B35001--
2	134-62-63451	PLATE	2	SN:B35001--
3	134-62-73470	CUSHION	2	SN:B35128--
	134-62-63471	CUSHION	2	SN:B35001--B35127
4	01010-81220	BOLT	2	SN:B35001--
5	01643-31232	WASHER	2	SN:B35001--
6	124-62-61231	TUBE	1	SN:B35001--
7	124-62-61191	･ UBE	1	SN:B35001--
8	124-62-61181	･ TUBE	1	SN:B35001--
9	02896-11009	O-RING	4	SN:B35001--
10	124-62-51920	CLIP	2	SN:B35001--
11	01010-81040	BOLT	2	SN:B35001--
12	01643-31032	WASHER	2	SN:B35001--
13	02765-B0309	HOSE	2	SN:B35001--
14	124-62-61240	TUBE	1	SN:B35001--
15	02896-11009	O-RING	1	SN:B35001--
16	124-62-61250	TUBE	1	SN:B35001--
17	02896-11009	O-RING	1	SN:B35001--
18	02782-10315	ELBOW	2	SN:B35001--
19	02896-11009	O-RING	2	SN:B35001--
20	07002-12034	O-RING	2	SN:B35001--
21	124-62-62920	CLIP	1	SN:B35197--
	124-62-51920	CLIP	1	SN:B35001--B35196
22	01010-81240	BOLT	1	SN:B35001--
23	01643-31232	WASHER	1	SN:B35001--
24	124-62-51530	BRACKET	1	SN:B35001--
25	01010-81225	BOLT	1	SN:B35001--
26	01643-31232	WASHER	1	SN:B35001--
27	07095-20523	CUSHION	2	SN:B35001--
28	08034-20519	BAND	4	SN:B35001--
29	12G-62-61823	COVER		SN:B35197--
	124-62-51821	COVER	1	SN:B35001--B35196
30	01010-81225	BOLT	2	SN:B35197--
	01010-81260	BOLT	2	SN:B35001--B35196
31	01643-31232	WASHER	2	SN:B35001--

Ref. T2160-01A0 Page 330110

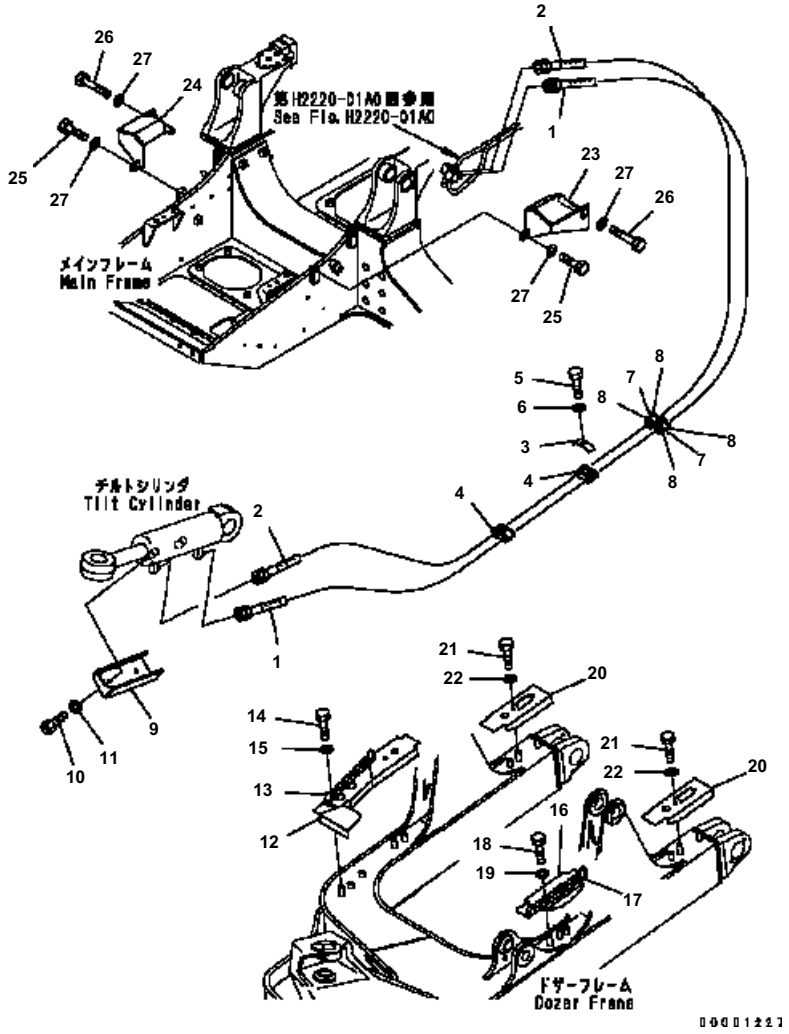

D41E6T S/N B35001-UP

DOZER OIL LINE (TILT CYLINDER LINE AND COVER) (FOR PAT DOZER)

Item	Part No.	Description	Qty	Options
1	124-62-61260	HOSE ASS'Y	1	SN:B35001--
	02765-B0315	· HOSE	1	SN:B35001--
2	124-62-61270	HOSE ASS'Y	1	SN:B35001--
	124-62-61870	· HOSE	1	SN:B35001--
3	134-62-63451	PLATE	2	SN:B35001--
4	134-62-63471	CUSHION	2	SN:B35001--
5	01010-81220	BOLT	2	SN:B35001--
6	01643-31232	WASHER	2	SN:B35001--
7	07095-20523	CUSHION	2	SN:B35001--
8	08034-20519	BAND	4	SN:B35001--
9	124-62-51680	COVER	1	SN:B35001--
10	01010-81225	BOLT	2	SN:B35001--
11	01643-31232	WASHER	2	SN:B35001--
12	124-62-61671	COVER ASS'Y	1	SN:B35001--
13	124-62-51690	· PLATE	1	SN:B35001--
14	01010-81020	BOLT	2	SN:B35001--
15	01643-31032	WASHER	2	SN:B35001--
16	124-62-61781	COVER	1	SN:B35001--
17	124-62-51690	· PLATE	1	SN:B35001--
18	01010-81020	BOLT	2	SN:B35001--
19	01643-31032	WASHER	2	SN:B35001--
20	124-62-61790	COVER	2	SN:B35001--
21	01010-81020	BOLT	4	SN:B35001--
22	01643-31032	WASHER	4	SN:B35001--
23	124-62-51711	COVER	1	SN:B35001--
24	124-62-51721	COVER	1	SN:B35001--
25	01010-81230	BOLT	2	SN:B35001--
26	01011-81235	BOLT	2	SN:B35001--
27	01643-31232	WASHER	4	SN:B35001--

Ref. T2160-02A0 Page 330120

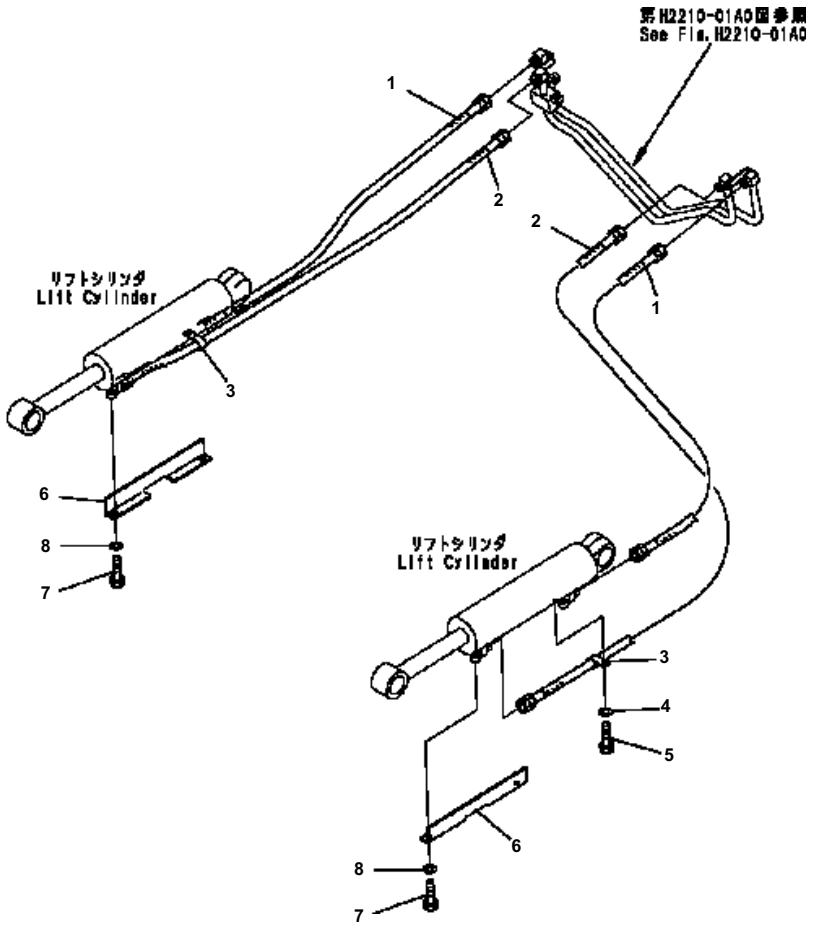

D41E6T S/N B35001-UP

DOZER OIL LINE (LIFT CYLINDER LINE) (FOR PAT DOZER)

Item	Part No.	Description	Qty	Options
1	02765-B0406	HOSE	2	SN:B35001--
2	124-62-61480	HOSE	2	SN:B35001--
3	08036-02514	CLIP	2	SN:B35001--
4	01643-31232	WASHER	2	SN:B35001--
5	01010-81220	BOLT	2	SN:B35001--
6	124-62-51651	COVER	2	SN:B35001--
7	01010-81225	BOLT	4	SN:B35001--
8	01643-31232	WASHER	4	SN:B35001--

Ref. T2160-03A0 Page 330130

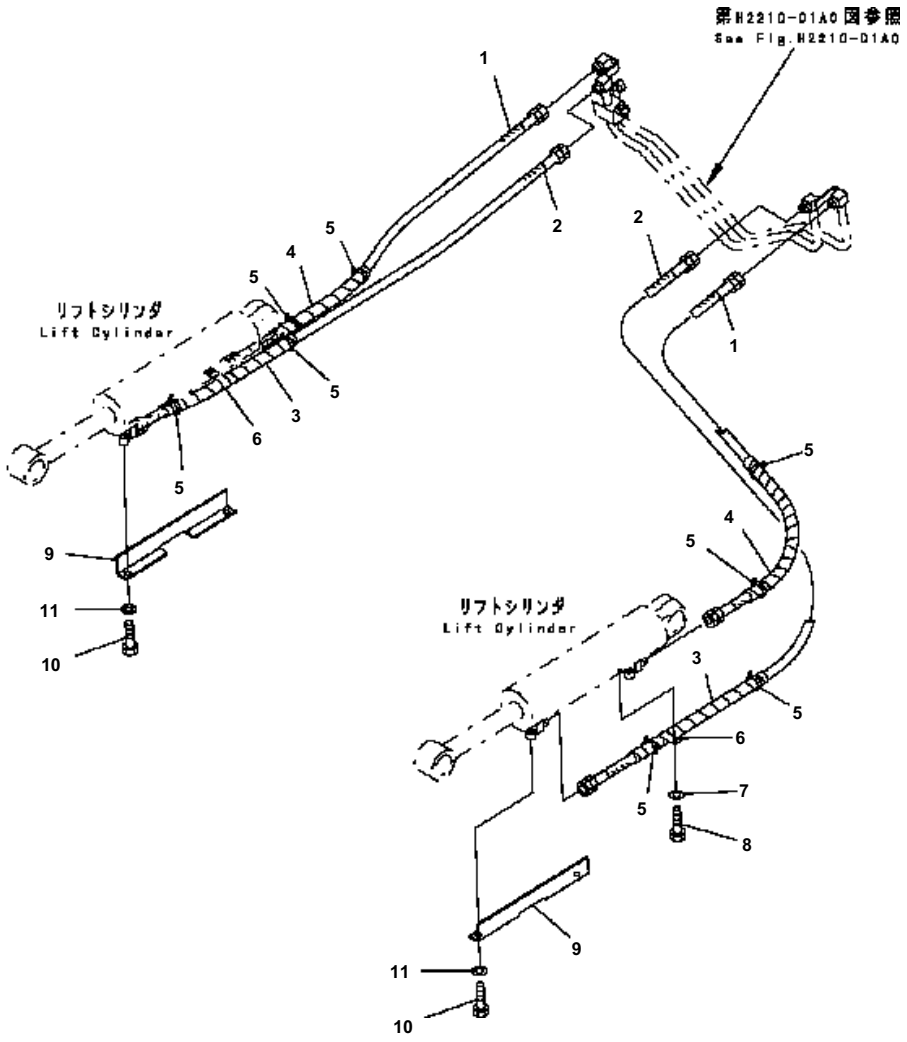

D41E6T S/N B35001-UP

DOZER OIL LINE (LIFT CYLINDER LINE) (FOR ANGLE DOZER)

Item	Part No.	Description	Qty	Options
1	07086-00406	HOSE	2	SN:B35001--
2	07086-00409	HOSE	2	SN:B35001--
3	08210-01807	SPIRAL TUBE	2	SN:B35001--
4	08210-01803	SPIRAL TUBE	4	SN:B35001--
5	08034-00519	BAND	8	SN:B35001--
6	08036-02514	CLIP	2	SN:B35001--
7	01643-31232	WASHER	2	SN:B35001--
8	01010-81220	BOLT	2	SN:B35001--
9	124-62-51651	COVER	2	SN:B35001--
10	01010-81225	BOLT	4	SN:B35001--
11	01643-31232	WASHER	4	SN:B35001--

Ref. T2160-04A0 Page 330140

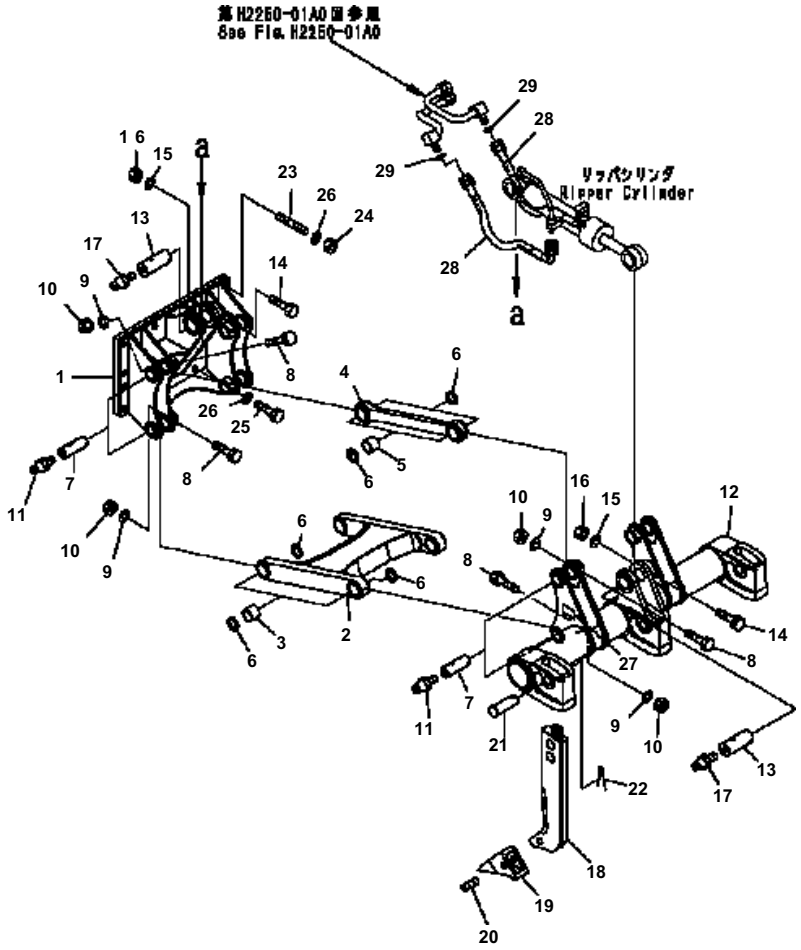

D41E6T S/N B35001-UP

RIPPER (RIGID TYPE)

Item	Part No.	Description	Qty	Options
1	125-78-31112	SUPPORT	1	SN:B35001--
	125-78-00030	LINK ASS'Y	1	SN:B35001--
2	125-78-22120	· LINK	1	SN:B35001--
3	07143-10506	· BUSHING	4	SN:B35001--
	125-78-00040	LINK ASS'Y	2	SN:B35001--
4	125-78-22130	· LINK	1	SN:B35001--
5	07143-10506	· BUSHING	2	SN:B35001--
6	07145-00055	SEAL	16	SN:B35001--
7	125-78-22180	PIN	8	SN:B35001--
8	01010-81095	BOLT	8	SN:B35001--
9	01602-21030	WASHER	8	SN:B35001--
10	01580-11008	NUT	8	SN:B35001--
11	07020-00000	FITTING	8	SN:B35001--
12	124-78-61120	BEAM	1	SN:B35232--
	125-78-31122	BEAM	1	SN:B35001--B35231
13	125-78-22190	PIN	2	SN:B35001--
14	01011-81025	BOLT	2	SN:B35001--
15	01602-21030	WASHER	2	SN:B35001--
16	01580-11008	NUT	2	SN:B35001--
17	07020-00000	FITTING	2	SN:B35001--
	125-78-00010	SHANK ASS'Y	3	SN:B35001--
18	125-78-22210	· SHANK	1	SN:B35001--
19	131-78-31190	· POINT	1	SN:B35001--
20	09244-02488	· PIN	1	SN:B35001--
21	144-817-3161	PIN	3	SN:B35001--
22	04050-10070	PIN	3	SN:B35001--
23	01124-52475	STUD	4	SN:B35001--
24	01580-12419	NUT	4	SN:B35001--
25	01010-82480	BOLT	12	SN:B35001--
26	01643-32460	WASHER	16	SN:B35001--
27	09601-60050	PLATE NAME	1	SN:B35001--
	04418-13060	SCREW	4	SN:B35001--
28	02765-003A6	HOSE	2	SN:B35001--
29	02896-11012	O-RING	4	SN:B35001--

Ref. T2400-01A0 Page 330150

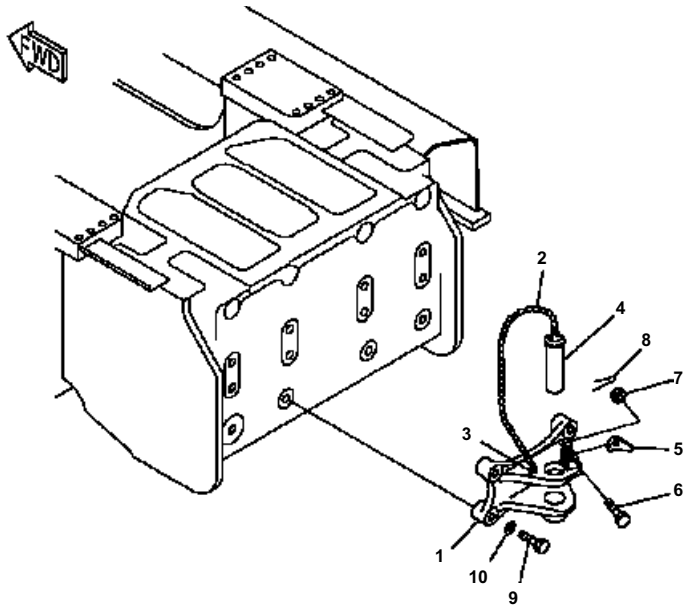

D41E6T S/N B35001-UP

HITCH

Item	Part No.	Description	Qty	Options
	131-69-00221	HITCH ASS'Y	1	SN:B35001--
	131-69-41102	· HITCH ASS'Y	1	SN:B35001--
1	131-69-41120	· · BRACKET	1	SN:B35001--
2	09245-04830	· · CHAIN	1	SN:B35001--
3	09245-50060	· · HOOK	2	SN:B35001--
4	130-69-11190	· · PIN	1	SN:B35001--
5	134-69-61130	· LATCH	1	SN:B35001--
6	01052-51260	· BOLT	1	SN:B35001--
7	01592-31215	· NUT	1	SN:B35001--
8	04050-13020	· PIN	1	SN:B35001--
9	01010-82490	BOLT	4	SN:B35001--
10	01643-32460	WASHER	4	SN:B35001--

Ref. T2810-01A0 Page 330160

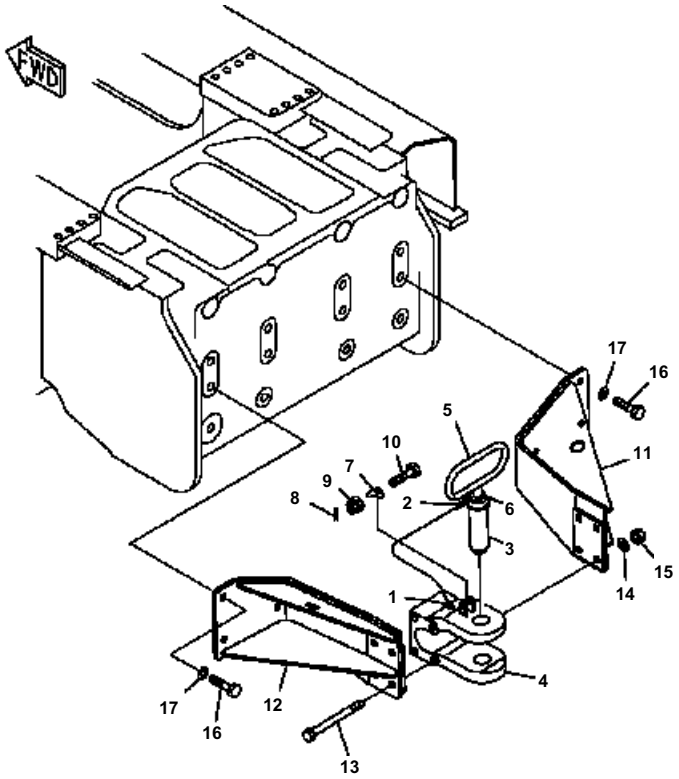

D41E6T S/N B35001-UP

DRAWBAR

Item	Part No.	Description	Qty	Options
	134-69-00020	DRAWBAR ASS'Y	1	SN:B35001--
	144-69-11170	· DRAWBAR ASS'Y	1	SN:B35001--
1	09245-50060	· · HOOK	1	SN:B35001--
2	09245-04830	· · CHAIN	1	SN:B35001--
3	09247-45180	· · PIN	1	SN:B35001--
4	144-69-11130	· · DRAWBAR	1	SN:B35001--
5	144-69-11210	· · HANDLE	1	SN:B35001--
6	144-69-11230	· · PLATE	1	SN:B35001--
7	09249-00016	· LATCH	1	SN:B35001--
8	04050-03025	· PIN	1	SN:B35001--
9	01592-11215	· NUT	1	SN:B35001--
10	01052-51260	· BOLT	1	SN:B35001--
11	134-69-13110	BRACKET	1	SN:B35001--
12	134-69-13120	BRACKET	1	SN:B35001--
13	144-69-11161	BOLT	4	SN:B35001--
14	01643-32460	WASHER	4	SN:B35001--
15	01580-12419	NUT	4	SN:B35001--
16	01010-82480	BOLT	6	SN:B35001--
17	01643-32460	WASHER	6	SN:B35001--

Ref. T2810-01A3 Page 330170

MARKS AND PLATES

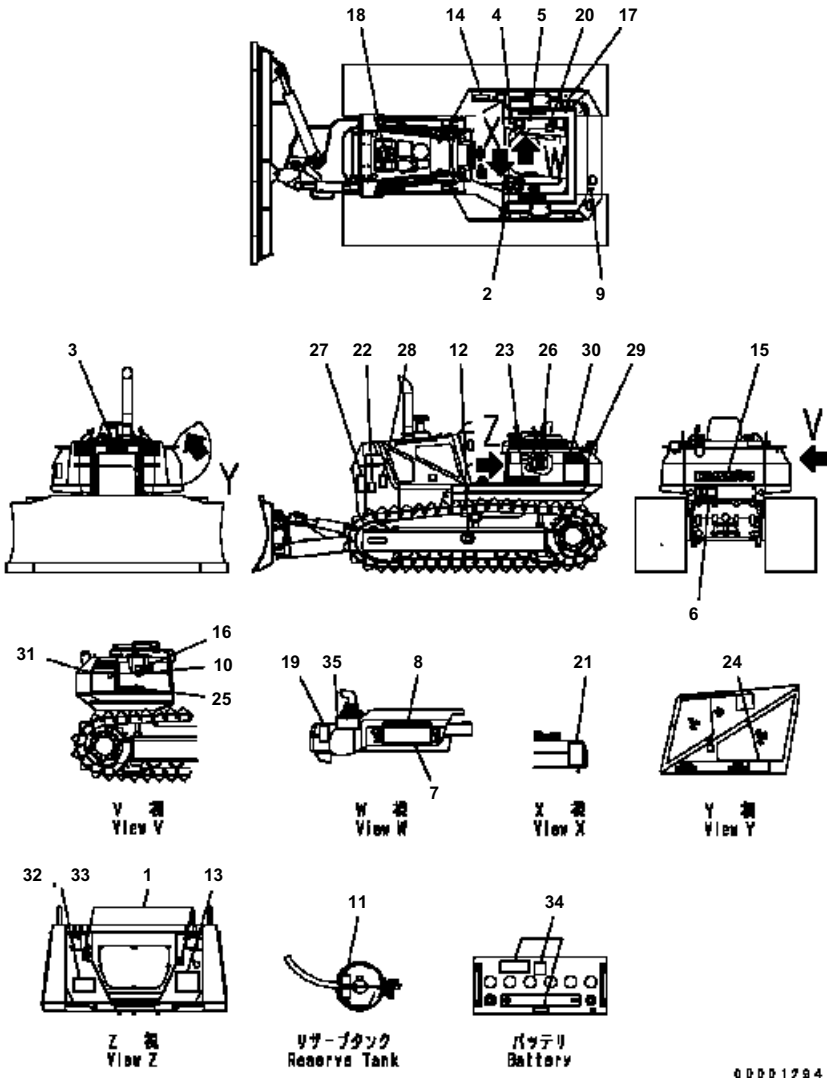

D41E6T S/N B35001-UP

MARKS AND PLATES (ENGLISH) (FOR U. S. A.)

Item	Part No.	Description	Qty	Options
1	14X-98-11170	PLATE. OPERATING	2	SN:B35001--
2	14X-98-11240	PLATE. OPERATING	1	SN:B35001--
3	09690-F0400	MARK	1	SN:B35001--
4	124-98-51140	PLATE. OPERATING	1	SN:B35001--
5	17A-98-11180	PLATE	1	SN:B35001--
6	09690-M0063	PLATE. MARK	1	SN:B35001--
7	134-54-66190	PLATE	1	SN:B35001--
8	134-54-66290	PLATE	1	SN:B35001--
9	09669-0000E	PLATE. CAUTION	1	SN:B35001--
10	124-98-61590	PLATE	1	SN:B35001--
11	124-98-61970	PLATE	1	SN:B35001--
12	09657-03003	PLATE. SAFETY	2	SN:B35001--
13	124-98-62120	OIL CHART	1	SN:B35001--
14	124-98-51170	PLATE	1	SN:B35001--
15	09690-P0800	PLATE. MARK	1	SN:B35001--
16	124-98-51290	PLATE. INSTRUCTION	1	SN:B35001--
17	14X-98-11521	PLATE. CAUTION	1	SN:B35001--
18	09668-03001	PLATE. SAFETY	1	SN:B35001--
19	09654-33001	PLATE. SAFETY	1	SN:B35001--
20	09651-03001	PLATE. SAFETY	1	SN:B35001--
21	09802-13000	PLATE. SAFETY	1	SN:B35001--
22	124-98-51260	PLATE. CAUTION{CAUTION}	1	SN:B35001--
23	09690-P0400	PLATE. MARK	1	SN:B35001--
24	09637-30163	PLATE. INSTRUCTION	1	SN:B35001--
25	09690-P0315	PLATE. MARK	1	SN:B35001--
26	09808-03000	PLATE. SAFETY	1	SN:B35001--
27	09812-13000	PLATE. SAFETY	2	SN:B35001--
28	09667-03001	PLATE. SAFETY	2	SN:B35001--
29	124-98-61810	PLATE. MARK	1	SN:B35001--
30	124-98-61651	PLATE. MARK	1	SN:B35001--
31	124-98-61820	PLATE. MARK	1	SN:B35001--
32	09602-10050	PLATE. NAME	1	SN:B35001--
33	04418-13060	SCREW	4	SN:B35001--
34	09664-30000	PLATE	2	SN:B35001--
35	09963-03001	TAG	1	SN:B35001--

Ref. U0100-01A0 Page 360010

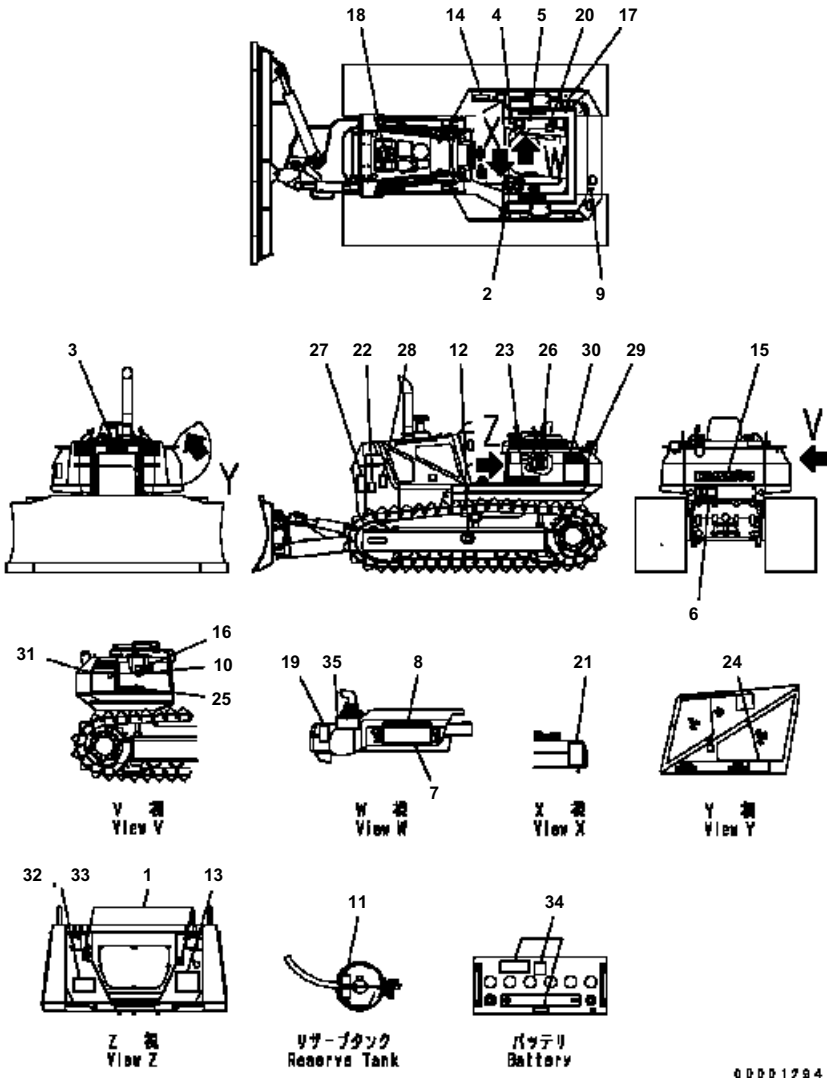

D41E6T S/N B35001-UP

MARKS AND PLATES (ASIA)

Item	Part No.	Description	Qty	Options
1	14X-98-11170	PLATE, OPERATING	2	SN:B35001--
2	14X-98-11240	PLATE, OPERATING	1	SN:B35001--
3	09690-P0400	MARK	1	SN:B35001--
4	124-98-51140	PLATE, OPERATING	1	SN:B35001--
5	17A-98-11180	PLATE	1	SN:B35001--
6	09690-M0063	PLATE, MARK	1	SN:B35001--
7	134-54-66190	PLATE	1	SN:B35001--
8	134-54-66290	PLATE	1	SN:B35001--
9	09669-0000E	PLATE, CAUTION	1	SN:B35001--
10	124-98-61590	PLATE	1	SN:B35001--
11	124-98-61970	PLATE	1	SN:B35001--
12	09657-03003	PLATE, SAFETY	2	SN:B35001--
13	124-98-62120	OIL CHART	1	SN:B35001--
14	124-98-51170	PLATE	1	SN:B35001--
15	09690-P0800	PLATE, MARK	1	SN:B35001--
16	124-98-51290	PLATE, INSTRUCTION	1	SN:B35001--
17	14X-98-11521	PLATE, CAUTION	1	SN:B35001--
18	09668-03001	PLATE, SAFETY	1	SN:B35001--
19	09654-33001	PLATE, SAFETY	1	SN:B35001--
20	09651-03001	PLATE, SAFETY	1	SN:B35001--
21	09802-13000	PLATE, SAFETY	1	SN:B35001--
22	124-98-51260	PLATE, CAUTION{CAUTION}	1	SN:B35001--
23	09690-P0400	PLATE, MARK	1	SN:B35001--
24	09637-30163	PLATE, INSTRUCTION	1	SN:B35001--
25	09690-P0315	PLATE, MARK	1	SN:B35001--
26	09808-03000	PLATE, SAFETY	1	SN:B35001--
27	09812-13000	PLATE, SAFETY	2	SN:B35001--
28	09667-03001	PLATE, SAFETY	2	SN:B35001--
29	12G-98-61240	PLATE, MARK	1	SN:B35001--
30	124-98-61651	PLATE, MARK	1	SN:B35001--
31	12G-98-61250	PLATE, MARK	1	SN:B35001--
32	09602-12051	PLATE, NAME	1	SN:B35001--
33	04418-13060	SCREW	4	SN:B35001--
34	09664-30000	PLATE	2	SN:B35001--
35	09963-03001	TAG	1	SN:B35001--

Ref. U0100-01A3 Page 360011

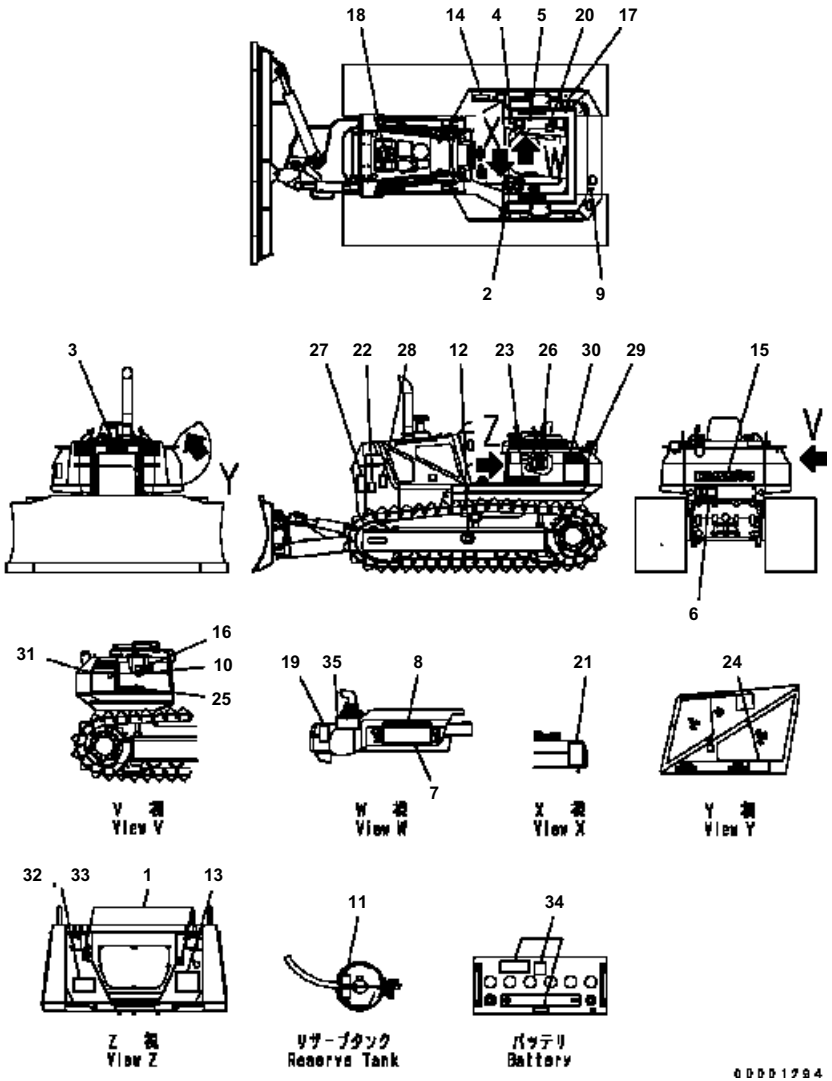

D41E6T S/N B35001-UP

MARKS AND PLATES (PAKISTAN)

Item	Part No.	Description	Qty	Options
1	14X-98-11170	PLATE, OPERATING	2	SN:B35275--
2	14X-98-11240	PLATE, OPERATING	1	SN:B35275--
3	09690-P0400	MARK	1	SN:B35275--
4	14X-98-11260	PLATE, OPERATING	1	SN:B35275--
5	17A-98-11180	PLATE	1	SN:B35275--
6	09690-M0063	PLATE, MARK	1	SN:B35275--
7	134-54-66190	PLATE	1	SN:B35275--
8	134-54-66290	PLATE	1	SN:B35275--
9	09669-0000E	PLATE, CAUTION	1	SN:B35275--
10	124-98-61590	PLATE	1	SN:B35275--
11	124-98-61970	PLATE	1	SN:B35275--
12	09657-03003	PLATE, SAFETY	2	SN:B35275--
13	124-98-62170	OIL CHART	1	SN:B35275--
14	124-98-51170	PLATE	1	SN:B35275--
15	09690-P0800	PLATE, MARK	1	SN:B35275--
16	124-98-51290	PLATE, INSTRUCTION	1	SN:B35275--
17	14X-98-11521	PLATE, CAUTION	1	SN:B35275--
18	09668-03001	PLATE, SAFETY	1	SN:B35275--
19	09654-33001	PLATE, SAFETY	1	SN:B35275--
20	09651-03001	PLATE, SAFETY	1	SN:B35275--
21	09802-13000	PLATE, SAFETY	1	SN:B35275--
22	124-98-51260	PLATE, CAUTION{CAUTION}	1	SN:B35001--B35554
23	09690-P0400	PLATE, MARK	1	SN:B35275--
24	09637-30163	PLATE, INSTRUCTION	1	SN:B35275--
25	09690-P0315	PLATE, MARK	1	SN:B35275--
26	09808-03000	PLATE, SAFETY	1	SN:B35275--
27	09812-13000	PLATE, SAFETY	2	SN:B35275--
28	09667-03001	PLATE, SAFETY	2	SN:B35275--
29	12G-98-61240	PLATE, MARK	1	SN:B35275--
30	124-98-61651	PLATE, MARK	1	SN:B35275--
31	12G-98-61250	PLATE, MARK	1	SN:B35275--
32	09602-12051	PLATE, NAME	1	SN:B35275--
33	04418-13060	SCREW	4	SN:B35275--
34	09664-30000	PLATE	2	SN:B35001--B35554
35	09963-03001	TAG	1	SN:B35275--

Ref. U0100-01A3A Page 360015

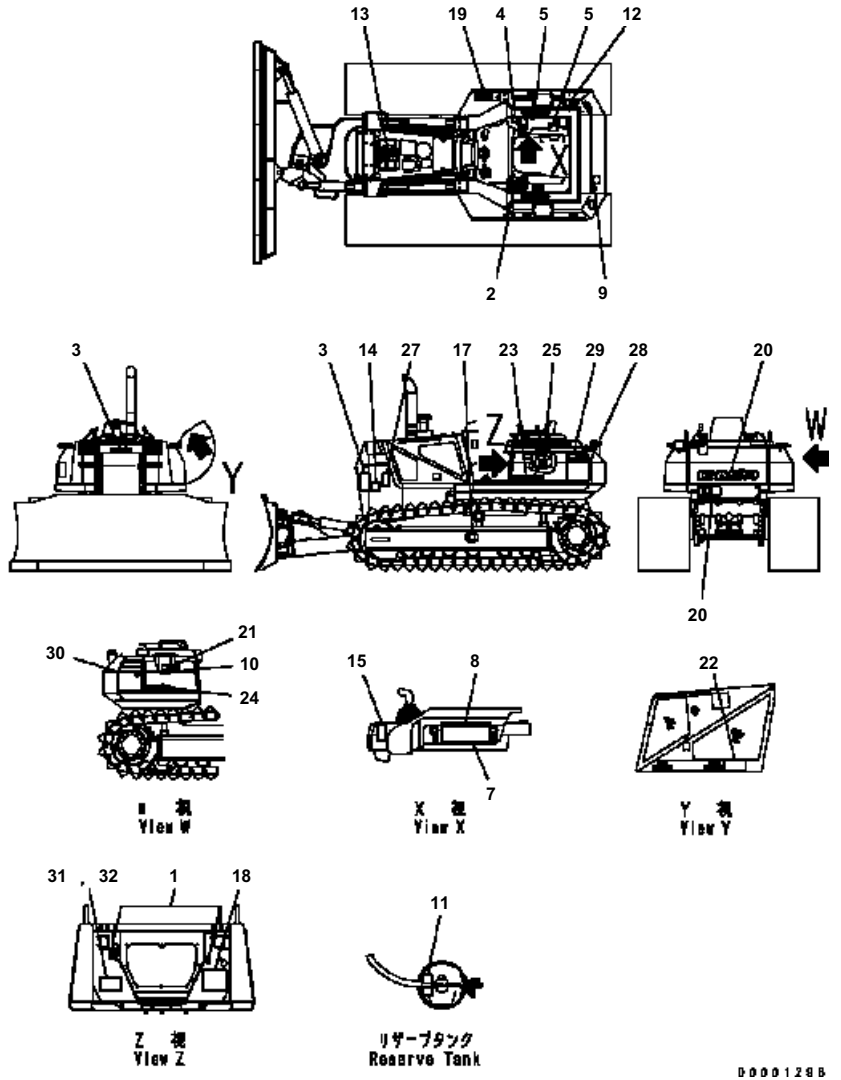

D41E6T S/N B35001-UP

MARKS AND PLATES (SPANISH)

Item	Part No.	Description	Qty	Options
1	14X-98-11170	PLATE. OPERATING	2	SN:B35001--
2	14X-98-11240	PLATE. OPERATING	1	SN:B35001--
3	09690-F0400	MARK	1	SN:B35001--
4	124-98-51140	PLATE. OPERATING	1	SN:B35001--
5	17A-98-11180	PLATE	1	SN:B35001--
6	09690-M0063	PLATE. MARK	1	SN:B35001--
7	134-54-66190	PLATE	1	SN:B35001--
8	134-54-66290	PLATE	1	SN:B35001--
9	09669-0000E	PLATE. CAUTION	1	SN:B35001--
10	124-98-61590	PLATE	1	SN:B35001--
11	124-98-61970	PLATE	1	SN:B35001--
12	09653-A0481	PLATE. SAFETY{SAFETY}	1	SN:B35001--
13	09653-A0481	PLATE. SAFETY{SAFETY}	1	SN:B35001--
14	124-98-51560	PLATE. CAUTION{CAUTION}	1	SN:B35001--
15	09654-B0481	PLATE. SAFETY	1	SN:B35001--
16	09651-A0481	PLATE. SAFETY	1	SN:B35001--
17	09657-A0881	PLATE. SAFETY	2	SN:B35001--
18	124-98-62120	OIL CHART	1	SN:B35001--
19	124-98-51520	PLATE	1	SN:B35001--
20	09690-P0800	PLATE. MARK	1	SN:B35001--
21	124-98-51530	PLATE. INSTRUCTION	1	SN:B35001--
22	09637-70163	PLATE. INSTRUCTION	1	SN:B35001--
23	09690-P0400	PLATE. MARK	1	SN:B35001--
24	09690-P0315	PLATE. MARK	1	SN:B35001--
25	09808-A0881	PLATE. SAFETY	1	SN:B35001--
26	09812-11000	PLATE. SAFETY	2	SN:B35001--
27	09667-01001	PLATE. SAFETY	2	SN:B35001--
28	124-98-61810	PLATE. MARK	1	SN:B35001--
29	124-98-61651	PLATE. MARK	1	SN:B35001--
30	124-98-61820	PLATE. MARK	1	SN:B35001--
31	09602-10050	PLATE. NAME	1	SN:B35001--
32	04418-13060	SCREW	4	SN:B35001--

Ref. U0100-01A4 Page 360020

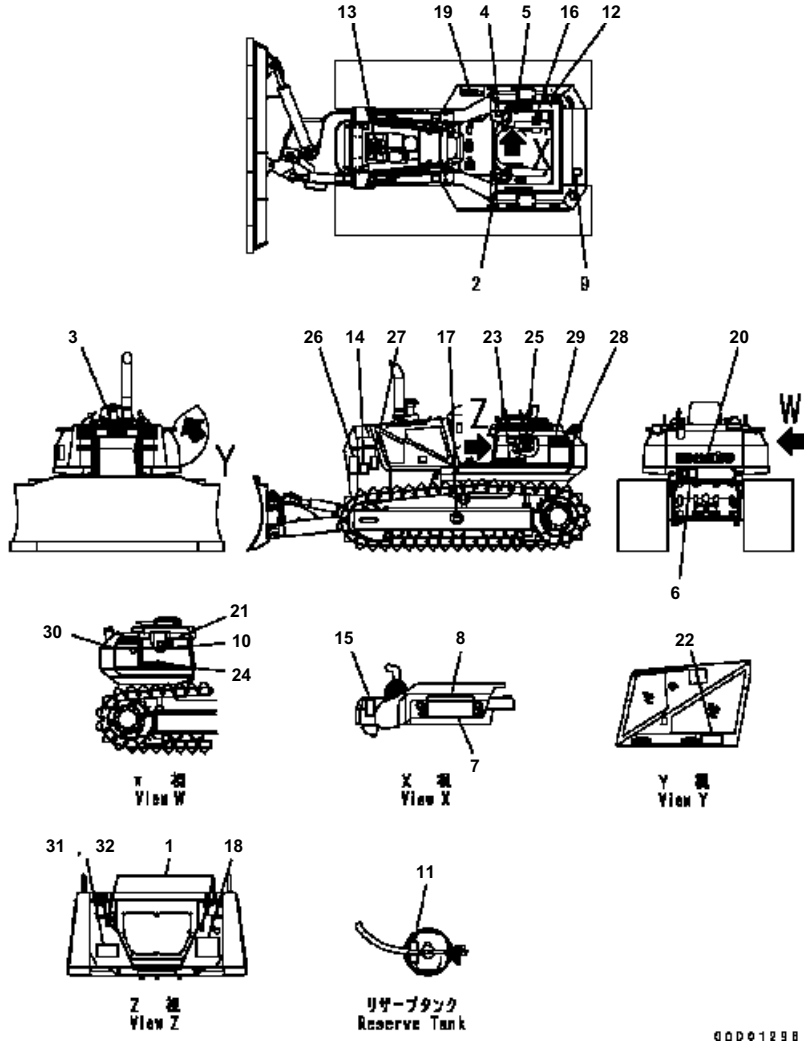

D41E6T S/N B35001-UP

MARKS AND PLATES (INDONESIAN)

Item	Part No.	Description	Qty	Options
1	14X-98-11170	PLATE. OPERATING	2	SN:B35001--
2	14X-98-11240	PLATE. OPERATING	1	SN:B35001--
3	09690-F0400	MARK	1	SN:B35001--
4	124-98-51140	PLATE. OPERATING	1	SN:B35001--
5	17A-98-11180	PLATE	1	SN:B35001--
6	09690-M0063	PLATE. MARK	1	SN:B35001--
7	134-54-66190	PLATE	1	SN:B35001--
8	134-54-66290	PLATE	1	SN:B35001--
9	09669-0000E	PLATE. CAUTION	1	SN:B35001--
10	124-98-61590	PLATE	1	SN:B35001--
11	124-98-61970	PLATE	1	SN:B35001--
12	09653-A0481	PLATE. SAFETY{SAFETY}	1	SN:B35001--
13	09653-A0481	PLATE. SAFETY{SAFETY}	1	SN:B35001--
14	124-98-52160	PLATE. CAUTION{STAY CLEAR}	1	SN:B35001--
15	09654-B0481	PLATE. SAFETY	1	SN:B35001--
16	09651-A0481	PLATE. SAFETY	1	SN:B35001--
17	09657-A0881	PLATE. SAFETY	2	SN:B35001--
18	124-98-62120	OIL CHART	1	SN:B35001--
19	124-98-51720	PLATE	1	SN:B35001--
20	09690-P0800	PLATE. MARK	1	SN:B35001--
21	124-98-51730	PLATE. INSTRUCTION	1	SN:B35001--
22	09637-05163	PLATE. INSTRUCTION	1	SN:B35001--
23	09690-P0400	PLATE. MARK	1	SN:B35001--
24	09690-P0315	PLATE. MARK	1	SN:B35001--
25	09808-A0881	PLATE. SAFETY	1	SN:B35001--
26	09806-B1201	PLATE. SAFETY	2	SN:B35001--
27	09667-A0481	PLATE. SAFETY	2	SN:B35001--
28	124-98-61810	PLATE. MARK	1	SN:B35001--
29	124-98-61651	PLATE. MARK	1	SN:B35001--
30	124-98-61820	PLATE. MARK	1	SN:B35001--
31	09602-10050	PLATE. NAME	1	SN:B35001--
32	04418-13060	SCREW	4	SN:B35001--

Ref. U0100-01A5 Page 360030

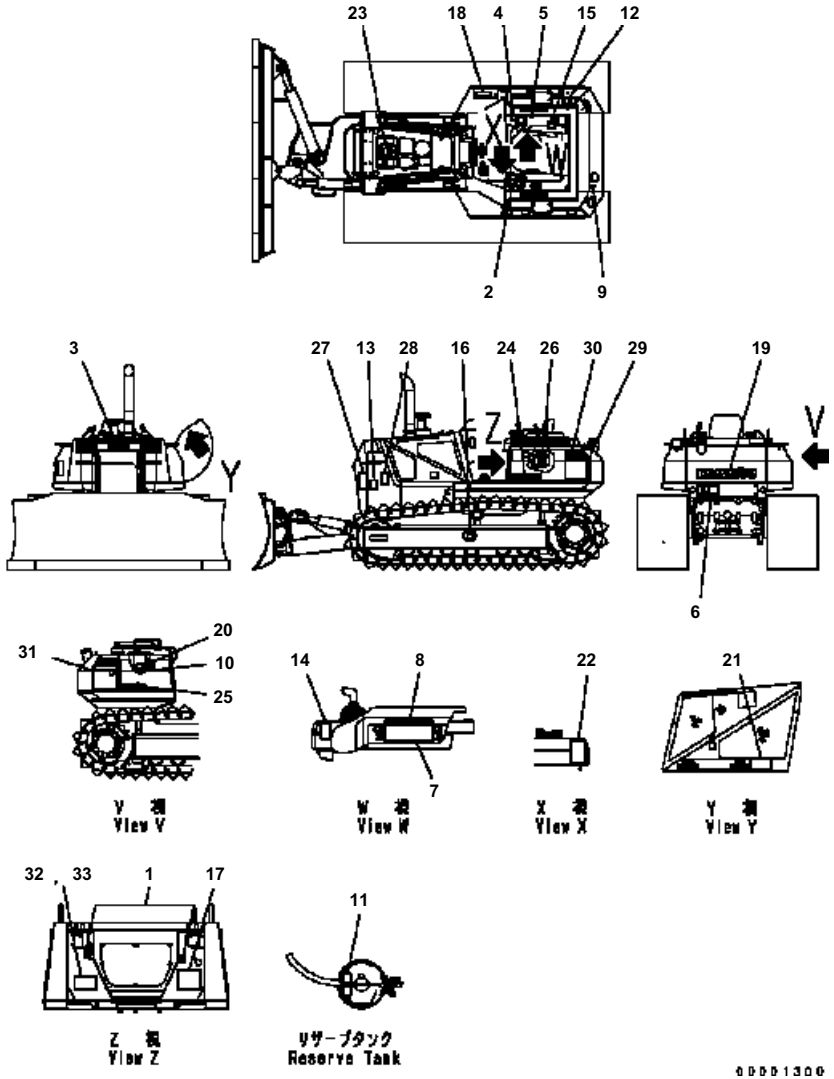

D41E6T S/N B35001-UP

MARKS AND PLATES (PORTUGUESE)

Item	Part No.	Description	Qty	Options
1	14X-98-11170	PLATE. OPERATING	2	SN:B35001--
2	14X-98-11240	PLATE. OPERATING	1	SN:B35001--
3	09690-F0400	MARK	1	SN:B35001--
4	124-98-51140	PLATE. OPERATING	1	SN:B35001--
5	17A-98-11180	PLATE	1	SN:B35001--
6	09690-M0063	PLATE. MARK	1	SN:B35001--
7	134-54-66190	PLATE	1	SN:B35001--
8	134-54-66290	PLATE	1	SN:B35001--
9	09669-0000E	PLATE. CAUTION	1	SN:B35001--
10	124-98-61590	PLATE	1	SN:B35001--
11	124-98-61970	PLATE	1	SN:B35001--
12	09653-07001	PLATE. SAFETY	1	SN:B35001--
13	124-98-51920	PLATE. CAUTION{CAUTION}	1	SN:B35001--
14	09654-37001	PLATE. SAFETY	1	SN:B35001--
15	09651-07001	PLATE. SAFETY	1	SN:B35001--
16	09657-07002	PLATE. SAFETY	2	SN:B35001--
17	124-98-62120	OIL CHART	1	SN:B35001--
18	124-98-51860	PLATE. INSTRUCTION	1	SN:B35001--
19	09690-P0800	PLATE. MARK	1	SN:B35001--
20	126-98-51190	PLATE. INSTRUCTION	1	SN:B35001--
21	09637-50263	PLATE. INSTRUCTION	1	SN:B35001--
22	09802-17000	PLATE. SAFETY	1	SN:B35001--
23	09668-07001	PLATE. SAFETY	1	SN:B35001--
24	09690-P0400	PLATE. MARK	1	SN:B35001--
25	09690-P0315	PLATE. MARK	1	SN:B35001--
26	09808-07000	PLATE. SAFETY	1	SN:B35001--
27	09812-17000	PLATE. SAFETY	2	SN:B35001--
28	09667-07001	PLATE. SAFETY	2	SN:B35001--
29	124-98-61810	PLATE. MARK	1	SN:B35001--
30	124-98-61651	PLATE. MARK	1	SN:B35001--
31	124-98-61820	PLATE. MARK	1	SN:B35001--
32	09602-10050	PLATE. NAME	1	SN:B35001--
33	04418-13060	SCREW	4	SN:B35001--

Ref. U0100-01A6 Page 360040

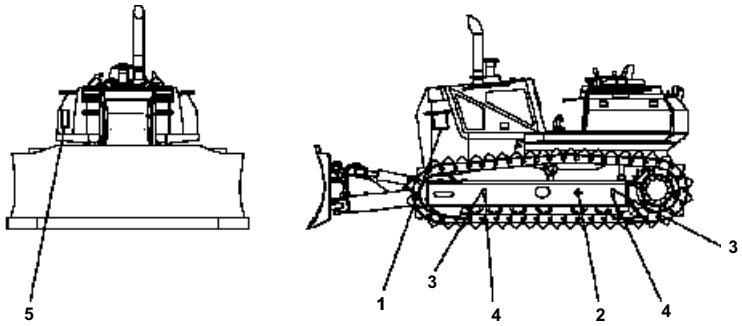

D41E6T S/N B35001-UP

CENTER OF GRAVITY MARK

Item	Part No.	Description	Qty	Options
1	126-98-51180	TABLE	1	SN:B35001--
2	09960-00611	PLATE. MARK	2	SN:B35336--
	21U-98-31160	PLATE. MARK	2	SN:B35001--B35335
3	09960-00801	PLATE. MARK	4	SN:B35336--
	21U-98-31160	PLATE. MARK	4	SN:B35001--B35335
4	09960-00802	PLATE. MARK	4	SN:B35336--
5	17A-98-45510	PLATE.CAUTION	1	SN:B35336--
	134-98-31370	PLATE.CAUTION	1	SN:B35001--B35335

Ref. U0400-01A0 Page 360050

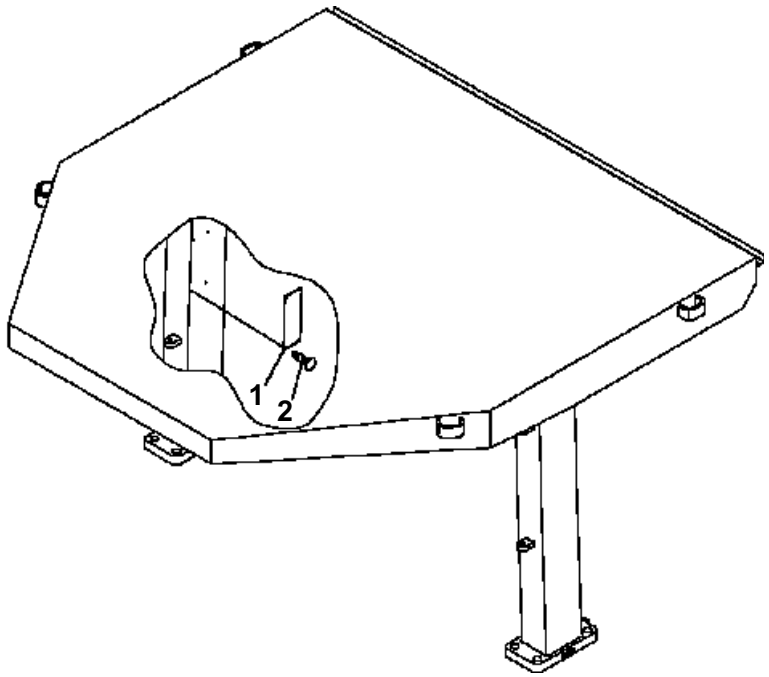

D41E6T S/N B35001-UP

ROPS PLATES

Item	Part No.	Description	Qty	Options
1	09620-B2000	PLATE. NAME	1	SN:B35001--
	09620-B2100	PLATE. NAME	1	SN:B35001--
	09620-B2080	PLATE. NAME	1	SN:B35001--
	09620-B2070	PLATE. NAME	1	SN:B35001--
	09620-B2120	PLATE. NAME	1	SN:B35001--
	09620-C2010	PLATE. NAME	1	SN:B35001--
2	04418-13060	SCREW	4	SN:B35001--

Ref. U0520-01A0 Page 360060

ACCESSORY

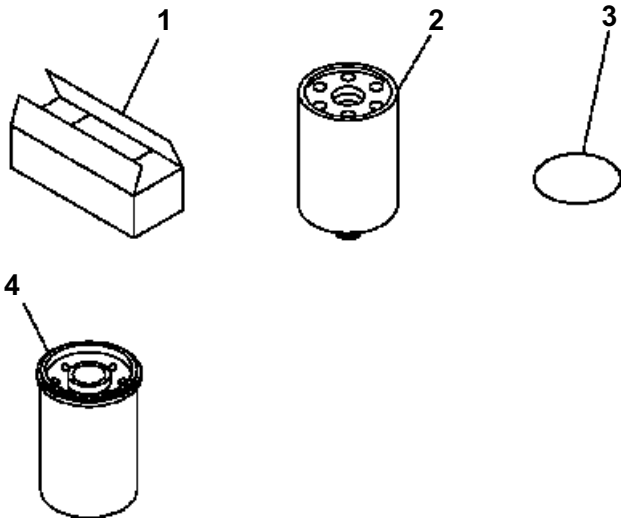

D41E6T S/N B35001-UP

SPARE PARTS (MACHINE)

Item	Part No.	Description	Qty	Options
1	09059-00800	BOX	1	SN:B35001--
2	23S-49-13122	CARTRIDGE	1	SN:B35001--
3	23S-49-13132	・ O-RING	1	SN:B35001--
4	113-60-43321	CARTRIDGE	1	SN:B35001--

Ref. V0100-01A0 Page 390010

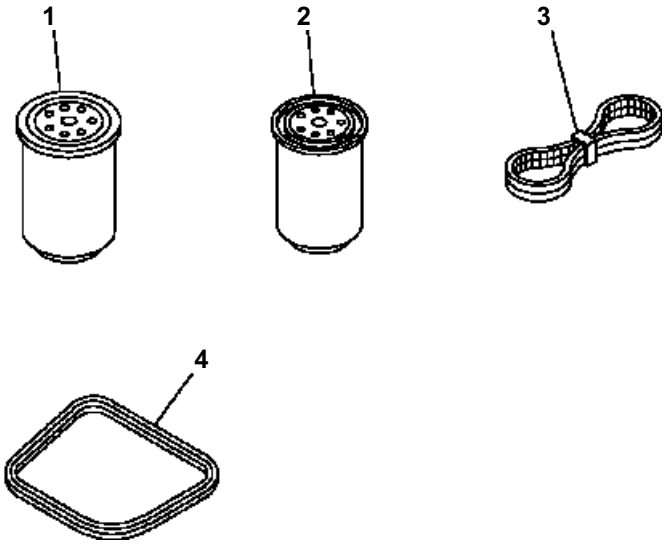

D41E6T S/N B35001-UP

SPARE PARTS (ENGINE)

Item	Part No.	Description	Qty	Options
1	6735-51-5141	CARTRIDGE	1	SN:B35001--
2	6732-71-6111	CARTRIDGE	1	SN:B35001--
3	6732-81-3330	BELT	1	SN:B35001--
4	6732-11-8181	GASKET	6	SN:B35001--

Ref. V0100-01A1 Page 390020

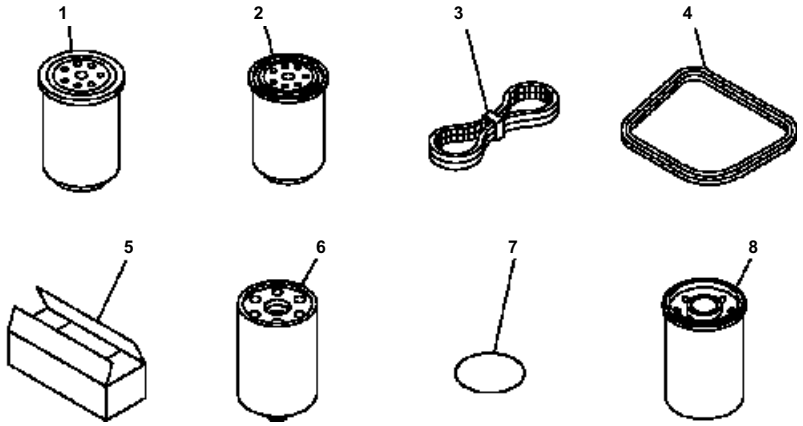

D41E6T S/N B35001-UP

SPARE PARTS (ENGINE MACHINE)

Item	Part No.	Description	Qty	Options
1	6735-51-5141	CARTRIDGE	1	SN:B35001--
2	6732-71-6111	CARTRIDGE	1	SN:B35001--
3	6732-81-3330	BELT	1	SN:B35001--
4	6732-11-8181	GASKET	6	SN:B35001--
5	09059-00800	BOX	1	SN:B35001--
6	23S-49-13122	CARTRIDGE	1	SN:B35001--
7	23S-49-13132	･ O-RING	1	SN:B35001--
8	113-60-43321	CARTRIDGE	1	SN:B35001--

Ref. V0100-01A2 Page 390030

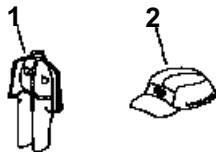

D41E6T S/N B35001-UP

CAP AND OVERALL

Item	Part No.	Description	Qty	Options
1	09980-10550	OVERALL	1	SN:B35001--
2	09982-10057	CAP	1	SN:B35001--

Ref. V0200-01A0 Page 390040

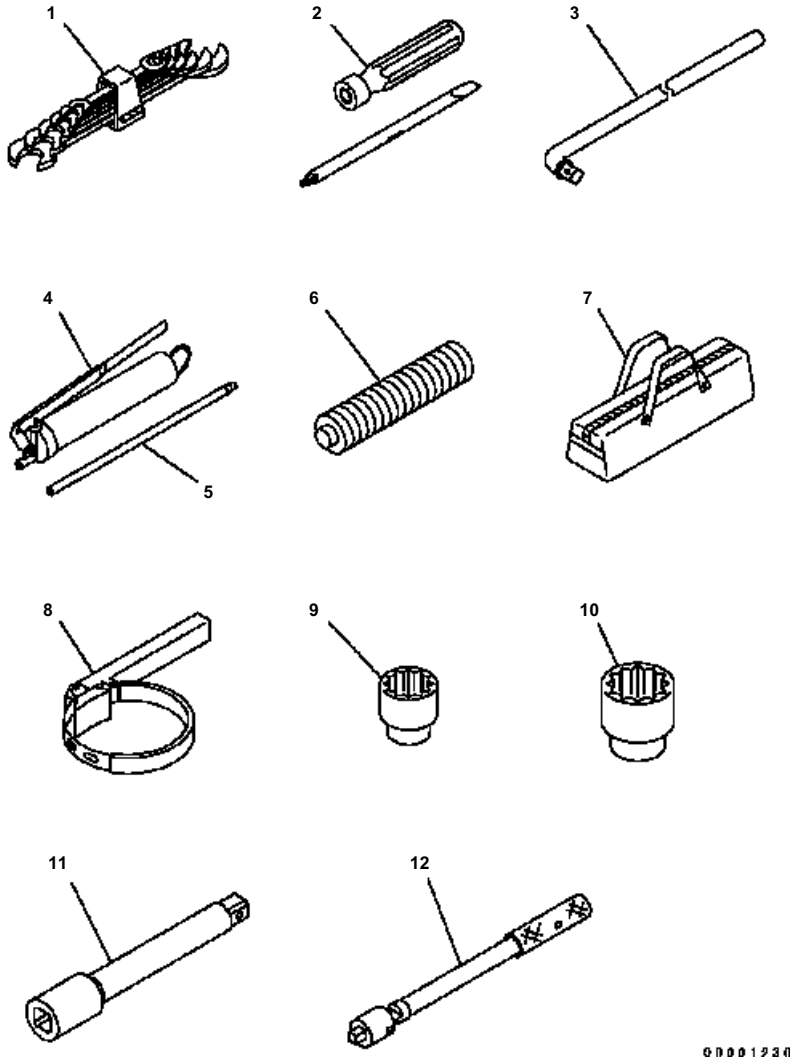

D41E6T S/N B35001-UP

TOOL

Item	Part No.	Description	Qty	Options
1	09000-30006	WRENCH SET	1	SN:B35001--
2	09033-00190	DRIVER	1	SN:B35001--
3	09024-00300	HANDLE	1	SN:B35001--
	07952-70002	GREASE PUMP ASS'Y	1	SN:B35001--
4	07950-10450	· PUMP	1	SN:B35001--
5	07951-21022	· NOZZLE	1	SN:B35001--
6	07950-90403	CARTRIDGE	1	SN:B35001--
7	09056-04613	BAG	1	SN:B35001--
8	09019-28035	WRENCH	1	SN:B35555--
	09019-08035	WRENCH	1	SN:B35001--B35554
9	09021-01725	SOCKET. 17	1	SN:B35001--
10	09021-02436	SOCKET. 24	1	SN:B35001--
11	09022-00150	EXTENSION	1	SN:B35001--
12	09023-00300	HANDLE	1	SN:B35001--

Ref. V0300-01A0 Page 390050

MISCELLANEOUS

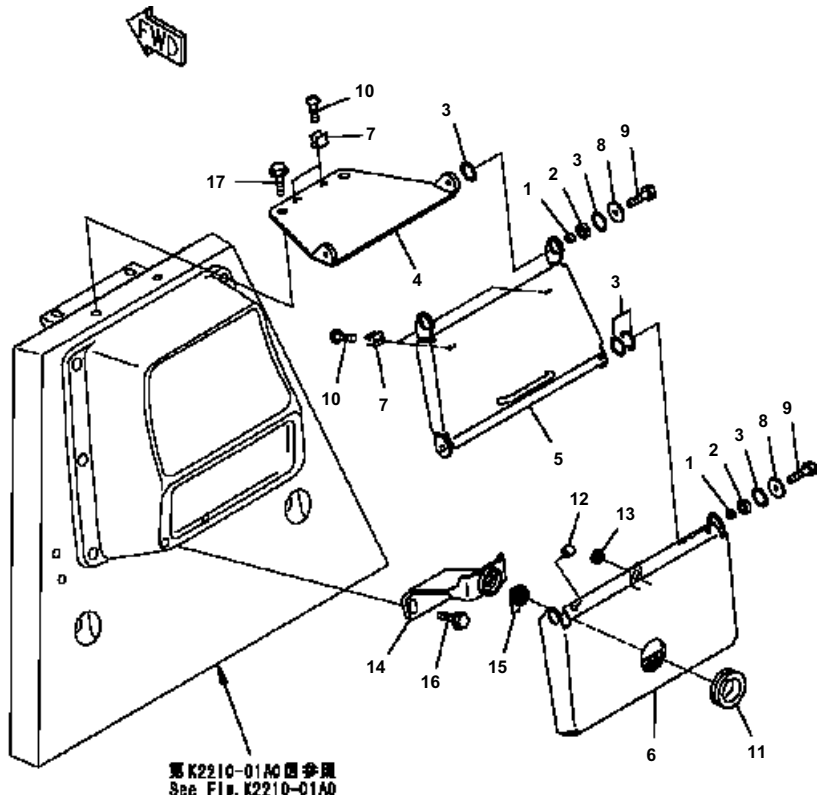

D41E6T S/N B35001-UP

VANDALISM PROTECTION (PANEL)

Item	Part No.	Description	Qty	Options
	134-54-69111	COVER ASS'Y	1	SN:B35001--
1	134-54-69190	· COLLAR	4	SN:B35001--
2	134-54-69130	· COLLAR	4	SN:B35001--
3	134-54-69140	· COLLAR	10	SN:B35001--
4	134-54-69150	· COVER	1	SN:B35001--
5	134-54-69160	· COVER	1	SN:B35001--
6	134-54-69170	· COVER	1	SN:B35001--
7	20R-54-11460	· SPRING	4	SN:B35001--
8	154-54-22830	· WASHER	4	SN:B35001--
9	01010-80825	· BOLT	4	SN:B35001--
10	01220-40406	· SCREW	8	SN:B35001--
11	08037-05016	GROMMET	1	SN:B35001--
12	09415-00506	CAP	2	SN:B35001--
13	09415-01008	CAP	1	SN:B35001--
14	14X-54-18830	BRACKET	1	SN:B35001--
15	205-60-71220	LOCK ASS'Y	1	SN:B35001--
16	01439-01230	BOLT	2	SN:B35001--
17	01439-01225	BOLT	2	SN:B35001--

Ref. W2112-01A0 Page 420010

SERVICE KIT AND COMPONENT PARTS

KIT 詳細については次のページを参照して下さい。
See subsequent pages for details.

K1 124-32-05000 シュー ボルト および ナット サービス キット シングルグローサ 用
SHOE BOLT AND NUT SERVICE KIT, FOR SINGLE GROUSER
強化型リンク用
FOR HEAVY DUTY LINK

D41E6T S/N B35001-UP

SHOE BOLT AND NUT SERVICE KIT

Part No.	Description	Qty	Options
124-32-05000	SHOE BOLT AND NUT K.	1	SN:B35001--
205-32-51121	・ BOLT SHOE	50	SN:B35001--
124-32-53220	・ NUT{SHOE}	50	SN:B35001--

Ref. Y0320-01A0 Page 450010

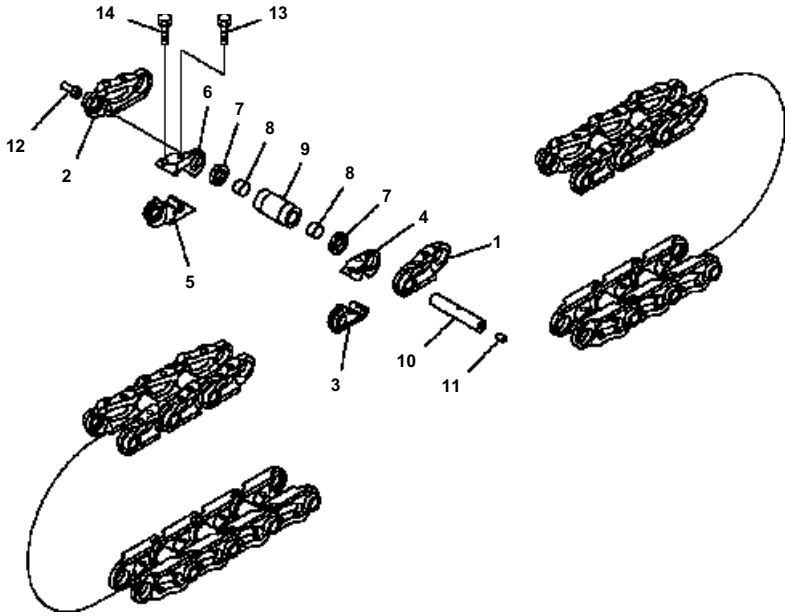

D41E6T S/N B35001-UP

TRACK LINK (LUBRICATE TYPE) (HEAVY DUTY (SUPPLY PARTS)

Item	Part No.	Description	Qty	Options
	124-32-00040	TRACK LINK ASS'Y	1	SN:B35001--
1	124-32-53120	・ LINK{REGULAR. L. H. }	80	SN:B35001--
2	124-32-53130	・ LINK{REGULAR. R. H. }	80	SN:B35001--
	124-32-08010	・ MASTER LINK K. L. H.	2	SN:B35001--
3	(☆124-32-53320)	・・ LINK MASTER{L. H. . PIN SIDE}	1	SN:B35001--
4	(☆124-32-53330)	・・ LINK MASTER{L. H. . BUSHING SIDE}	1	SN:B35001--
	124-32-08020	・ MASTER LINK K. R. H.	2	SN:B35001--
5	(☆124-32-53420)	・・ LINK MASTER{R. H. . PIN SIDE}	1	SN:B35001--
6	(☆124-32-53430)	・・ LINK MASTER{R. H. . BUSHING SIDE}	1	SN:B35001--
7	124-32-53160	・ SEAL ASS'Y	164	SN:B35001--
8	124-32-53190	・ SPACER	164	SN:B35001--
9	124-32-53140	・ BUSHING	82	SN:B35001--
10	124-32-53150	・ PIN	82	SN:B35001--
11	07059-11830	・ PLUG{LARGE}	82	SN:B35001--
12	07059-20721	・ PLUG{SMALL}	82	SN:B35001--
13	124-32-53350	・ BOLT{MASTER}	4	SN:B35001--
14	124-32-53360	・ BOLT{MASTER}	4	SN:B35001--

Ref. Y0322-01A6 Page 450020

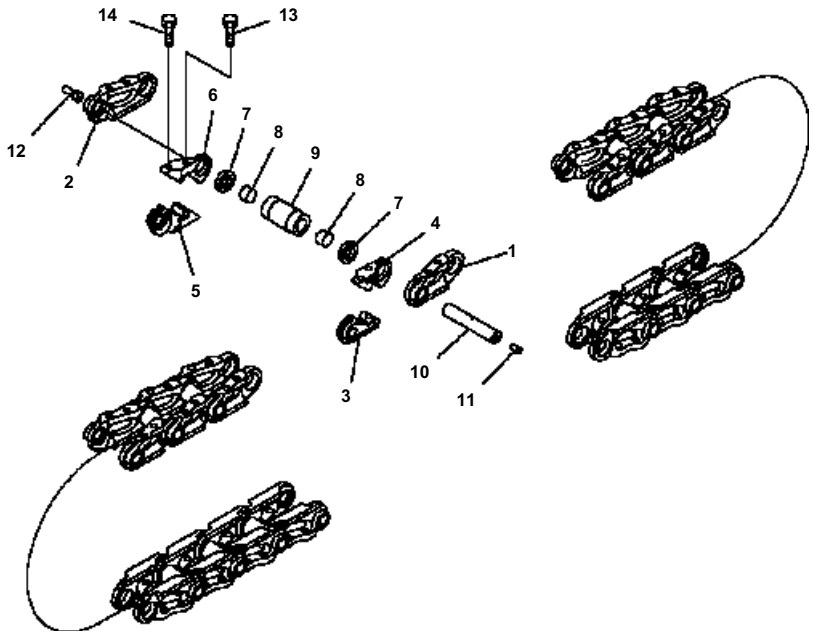

D41E6T S/N B35001-UP

TRACK LINK (LUBRICATE TYPE) (HEAVY DUTY) (SUPPLY PARTS) (FOR TRIMING)

Item	Part No.	Description	Qty	Options
	124-32-00050	TRACK LINK ASS'Y	1	SN:B35001--
1	124-32-53120	・ LINK{REGULAR. L. H. }	74	SN:B35001--
2	124-32-53130	・ LINK{REGULAR. R. H. }	74	SN:B35001--
	124-32-08010	・ ASTER LINK K. L. H.	2	SN:B35001--
3	(☆124-32-53320)	・・ LINK. MASTER{L. H. . PIN SIDE}	1	SN:B35001--
4	(☆124-32-53330)	・・ LINK. MASTER{L. H. . BUSHING SIDE}	1	SN:B35001--
	124-32-08020	・ MASTER LINK K. R. H.	2	SN:B35001--
5	(☆124-32-53420)	・・ LINK. MASTER{R. H. . PIN SIDE}	1	SN:B35001--
6	(☆124-32-53430)	・・ LINK. MASTER{R. H. . BUSHING SIDE}	1	SN:B35001--
7	124-32-53160	・ SEAL ASS'Y	152	SN:B35001--
8	124-32-53190	・ SPACER	152	SN:B35001--
9	124-32-53140	・ BUSHING	76	SN:B35001--
10	124-32-53150	・ PIN	76	SN:B35001--
11	07059-11830	・ PLUG{LARGE}	76	SN:B35001--
12	07059-20721	・ PLUG{SMALL}	76	SN:B35001--
13	124-32-53350	・ BOLT{MASTER}	4	SN:B35001--
14	124-32-53360	・ BOLT{MASTER}	4	SN:B35001--

Ref. Y0322-01A7 Page 450030

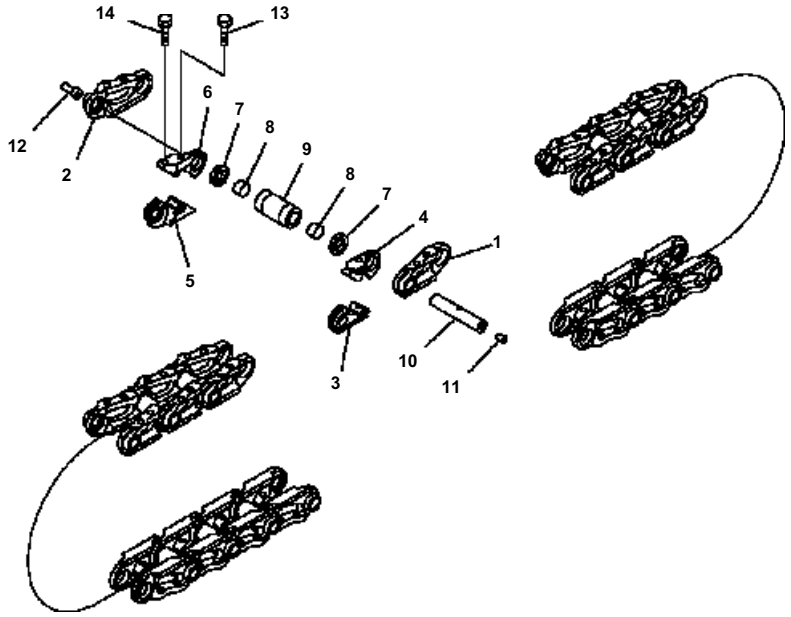

D41E6T S/N B35001-UP

TRACK LINK (LUBRICATE TYPE) (HEAVY DUTY) (ABRASIVE RESISTANT TYPE BUSHING) (SUPPLY PARTS)

Item	Part No.	Description	Qty	Options
	124-32-00060	TRACK LINK ASS'Y	1	SN:B35001--
1	124-32-53120	・ LINK{REGULAR. L. H. }	80	SN:B35001--
2	124-32-53130	・ LINK{REGULAR. R. H. }	80	SN:B35001--
	124-32-08010	・ MASTER LINK K. L. H.	2	SN:B35001--
3	(☆124-32-53320)	・・ LINK. MASTER{L. H. . PIN SIDE}	1	SN:B35001--
4	(☆124-32-53330)	・・ LINK. MASTER{L. H. . BUSHING SIDE}	1	SN:B35001--
	124-32-08020	・ MASTER LINK K. R. H.	2	SN:B35001--
5	(☆124-32-53420)	・・ LINK. MASTER{R. H. . PIN SIDE}	1	SN:B35001--
6	(☆124-32-53430)	・・ LINK. MASTER{R. H. . BUSHING SIDE}	1	SN:B35001--
7	124-32-53160	・ SEAL ASS'Y	164	SN:B35001--
8	124-32-53190	・ SPACER	164	SN:B35001--
9	124-32-53240	・ BUSHING	82	SN:B35001--
10	124-32-53150	・ PIN	82	SN:B35001--
11	07059-11830	・ PLUG{LARGE}	82	SN:B35001--
12	07059-20721	・ PLUG{SMALL}	82	SN:B35001--
13	124-32-53350	・ BOLT{MASTER}	4	SN:B35001--
14	124-32-53360	・ BOLT{MASTER}	4	SN:B35001--

Ref. Y0322-01A8 Page 450040

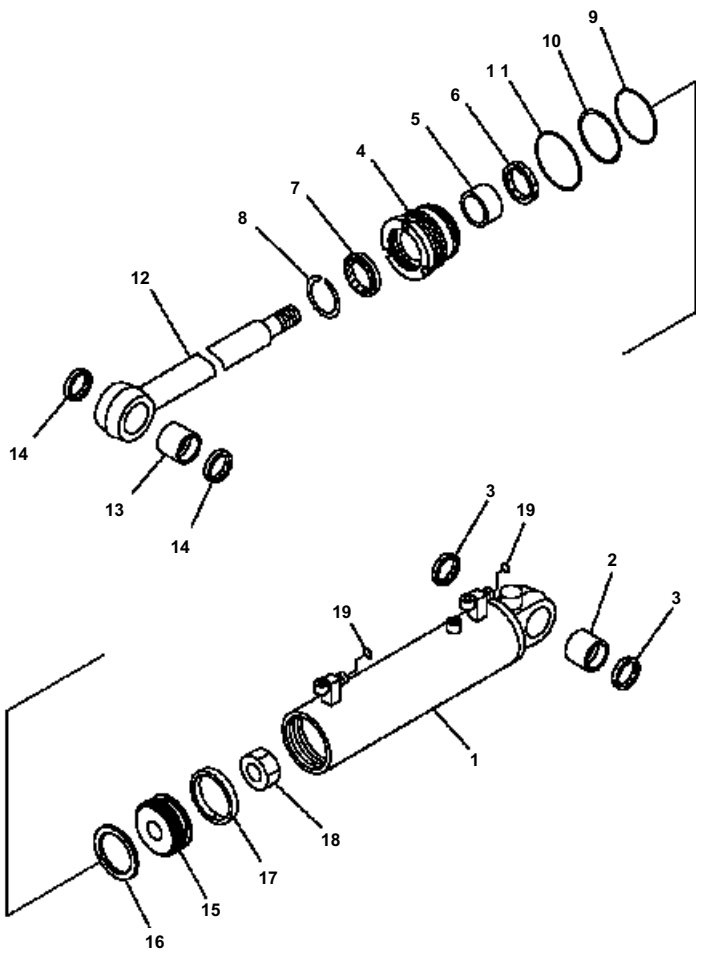

D41E6T S/N B35001-UP

BLADE LIFT CYLINDER (INNER PARTS)

Item	Part No.	Description	Qty	Options
	707-00-0C790	CYLINDER ASS'Y	2	SN:B35001--
1	707-11-10F30	· CYLINDER	1	SN:B35001--
2	07143-10505	· BUSHING	1	SN:B35001--
3	07145-00050	· SEAL{DUST}\((KIT)\)	2	SN:B35001--
4	707-29-10420	· HEAD{CYLINDER}	1	SN:B35001--
5	07177-05030	· BUSHING	1	SN:B35001--
6	707-51-50211	· PACKING{ROD}\((KIT)\)	1	SN:B35001--
7	176-63-92240	· SEAL{DUST}\((KIT)\)	1	SN:B35001--
8	07179-12062	· RING{SNAP}	1	SN:B35001--
9	07000-12100	· O-RING\((KIT)\)	1	SN:B35001--
10	707-35-52360	· RING{BACK-UP}\((KIT)\)	1	SN:B35001--
11	07000-02105	· O-RING\((KIT)\)	1	SN:B35001--
12	707-58-50E10	· ROD{PISTON}	1	SN:B35001--
13	07143-10505	· BUSHING	1	SN:B35001--
14	07145-00050	· SEAL{DUST}\((KIT)\)	2	SN:B35001--
15	707-36-10630	· PISTON	1	SN:B35001--
16	707-44-10280	· RING{PISTON}\((KIT)\)	1	SN:B35001--
17	707-39-10510	· RING{WEAR}\((KIT)\)	1	SN:B35001--
18	707-67-36010	· NUT	1	SN:B35001--
19	02896-11012	· O-RING	2	SN:B35001--
	707-98-32820	SERVICE KIT	2	SN:B35001--

Ref. Y1620-01A0 Page 450050

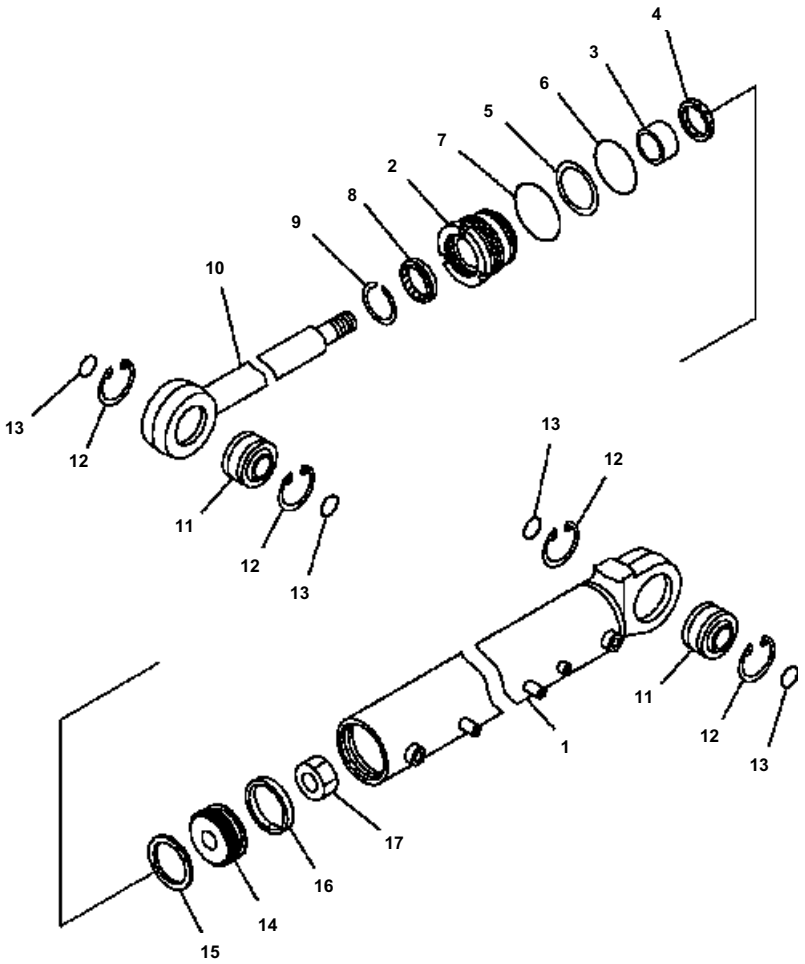

D41E6T S/N B35001-UP

LADE ANGLE CYLINDER (INNER PARTS)

Item	Part No.	Description	Qty	Options
	124-63-02210	CYLINDER ASS'Y	1	SN:B35001--
1	124-63-65540	· CYLINDER	1	SN:B35001--
2	707-29-13730	· HEAD{CYLINDER}	1	SN:B35001--
3	707-52-10660	· BUSHING	1	SN:B35001--
4	707-51-65211	· PACKING{ROD}\((KIT)\)	1	SN:B35001--
5	07146-02126	· RING{BACK-UP}\((KIT)\)	1	SN:B35001--
6	07000-12125	· O-RING\((KIT)\)	1	SN:B35001--
7	07000-02130	· O-RING\((KIT)\)	1	SN:B35001--
8	144-63-92170	· SEAL{DUST}\((KIT)\)	1	SN:B35001--
9	07179-12079	· RING{SNAP}	1	SN:B35001--
10	124-63-65520	· ROD{PISTON}	1	SN:B35001--
11	07137-05008	· BUSHING	2	SN:B35001--
	07137-00060	· · SEAL{DUST}	2	SN:B35001--
12	04065-01104	· RING{SNAP}	4	SN:B35001--
13	07000-03050	· O-RING\((KIT)\)	4	SN:B35001--
14	707-36-13140	· PISTON	1	SN:B35001--
15	707-44-13070	· RING{PISTON}\((KIT)\)	1	SN:B35001--
16	07156-01315	· RING{WEAR}\((KIT)\)	1	SN:B35001--
17	07165-13941	· NUT	1	SN:B35001--
	707-98-42420	SERVICE KIT	1	SN:B35001--

Ref. Y1620-21A0 Page 450060

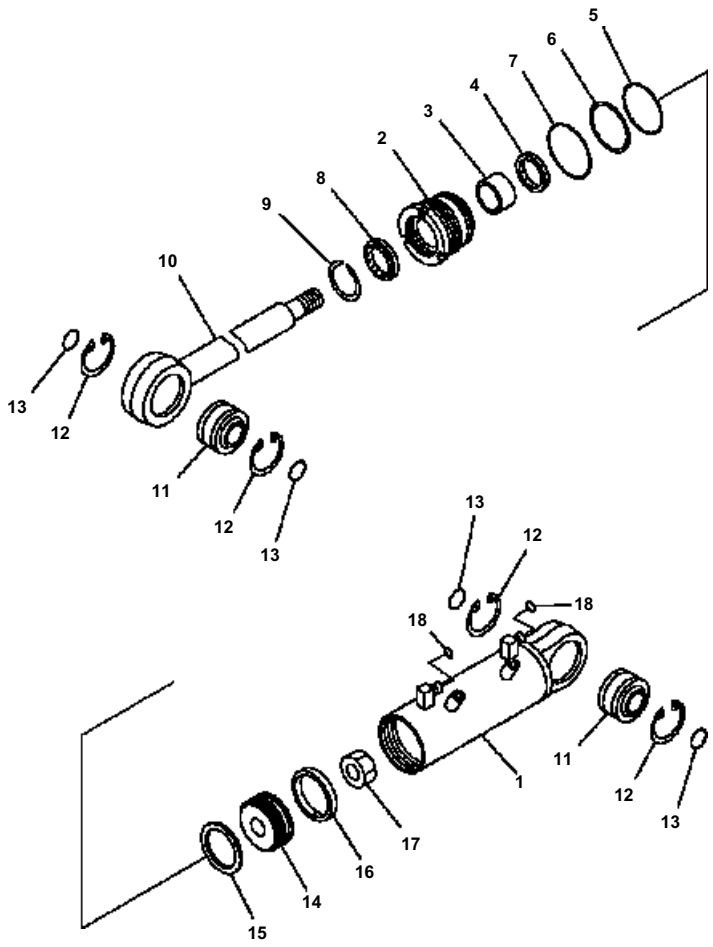

D41E6T S/N B35001-UP

BLADE TILT CYLINDER (INNER PARTS)

Item	Part No.	Description	Qty	Options
	707-00-0C800	CYLINDER ASS'Y	1	SN:B35001--
1	707-11-11A00	· CYLINDER	1	SN:B35001--
2	707-29-11730	· HEAD{CYLINDER}	1	SN:B35001--
3	07177-05530	· BUSHING	1	SN:B35001--
4	707-51-55211	· PACKING{ROD}\((KIT)\)	1	SN:B35001--
5	07000-12105	· O-RING\((KIT)\)	1	SN:B35001--
6	07146-02106	· RING{BACK-UP}\((KIT)\)	1	SN:B35001--
7	07000-12110	· O-RING\((KIT)\)	1	SN:B35001--
8	707-56-55510	· SEAL{DUST}\((KIT)\)	1	SN:B35001--
9	07179-12069	· RING{SNAP}	1	SN:B35001--
10	124-63-64621	· ROD{PISTON}	1	SN:B35001--
11	07137-04006	· BUSHING	2	SN:B35001--
	07137-00040	· · SEAL{DUST}	2	SN:B35001--
12	04065-09030	· RING{SNAP}	4	SN:B35001--
13	07000-03040	· O-RING\((KIT)\)	4	SN:B35001--
14	707-36-11100	· PISTON	1	SN:B35001--
15	707-44-11180	· RING{PISTON}\((KIT)\)	1	SN:B35001--
16	07156-01112	· RING{WEAR}\((KIT)\)	1	SN:B35001--
17	707-67-36010	· NUT	1	SN:B35001--
18	02896-11009	· O-RING	2	SN:B35001--
	707-98-34590	SERVICE KIT	1	SN:B35001--

Ref. Y1620-31A0 Page 450070

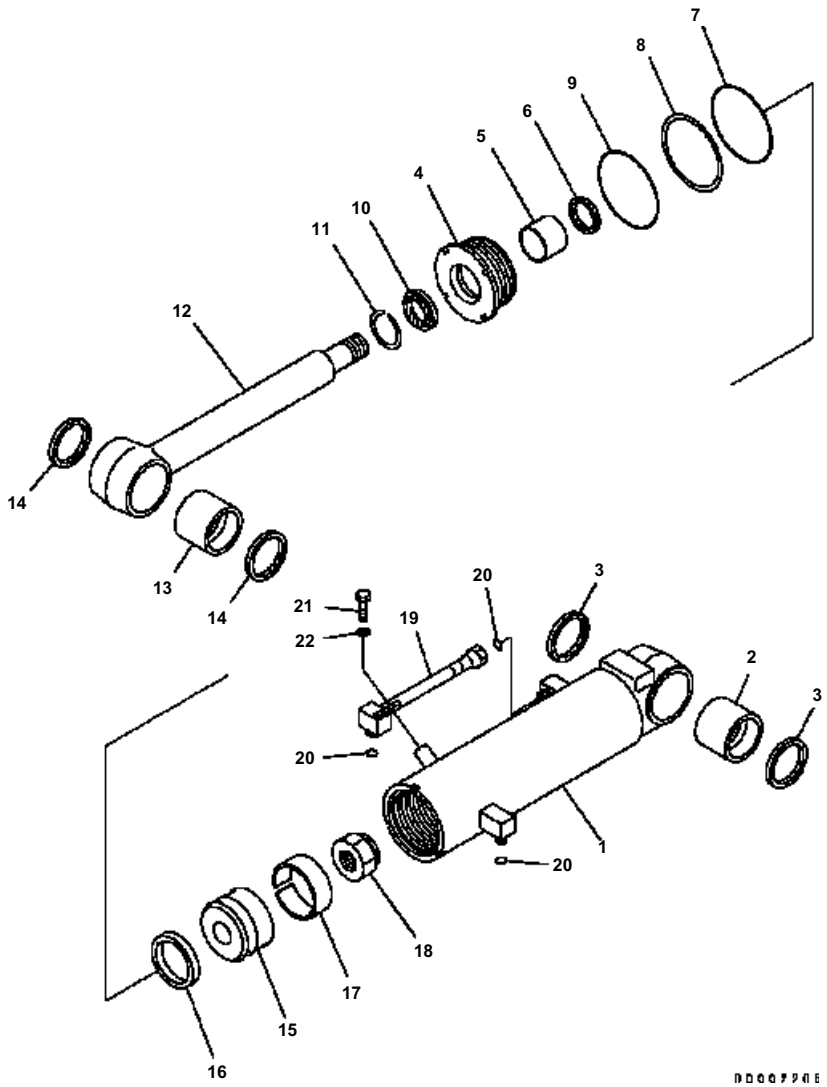

D41E6T S/N B35001-UP

RIPPER CYLINDER (INNER PARTS)

Item	Part No.	Description	Qty	Options
	707-00-XC811	CYLINDER ASS'Y	1	SN:B35111--
	707-00-XC810	CYLINDER ASS'Y	1	SN:B35001--
1	721-11-12780	· TUBE	1	SN:B35001--
2	07143-10706	· BUSHING	1	SN:B35001--
3	07145-00070	· SEAL{DUST}\((KIT)\)	2	SN:B35001--
4	707-29-12730	· HEAD{CYLINDER}	1	SN:B35001--
5	07177-60030	· BUSHING	1	SN:B35001--
6	707-51-60640	· PACKING\((KIT)\)	1	SN:B35001--
6A	707-56-60540	BUSHING	1	SN:B35001--
7	07000-12115	· O-RING\((KIT)\)	1	SN:B35001--
8	07146-02116	· RING{BACK-UP}\((KIT)\)	1	SN:B35001--
9	07000-12120	· O-RING\((KIT)\)	1	SN:B35001--
10	141-63-93270	· SEAL{DUST}\((KIT)\)	1	SN:B35001--
11	07179-12074	· RING{SNAP}	1	SN:B35001--
12	721-58-60440	· ROD	1	SN:B35001--
13	07143-10706	· BUSHING	1	SN:B35001--
14	07145-00070	· SEAL{DUST}\((KIT)\)	2	SN:B35001--
15	707-36-12130	· PISTON	1	SN:B35001--
16	707-44-12180	· RING{PISTON}\((KIT)\)	1	SN:B35001--
17	07156-01215	· RING{WEAR}\((KIT)\)	1	SN:B35001--
18	707-67-45010	· NUT	1	SN:B35001--
19	707-86-47130	· TUBE	1	SN:B35001--
20	02896-11012	O-RING\((KIT)\)	3	SN:B35001--
21	01010-81225	BOLT	1	SN:B35001--
22	01643-31232	WASHER	1	SN:B35001--
	707-98-41060	SERVICE KIT	1	SN:B35001--

Ref. Y1621-01A0 Page 450080

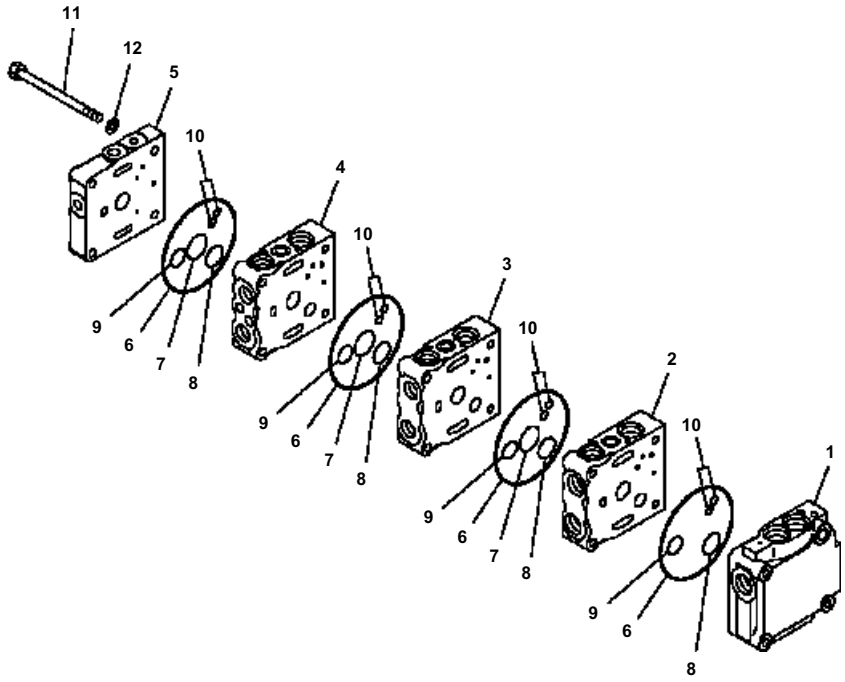

D41E6T S/N B35001-UP

CONTROL VALVE (3-SPOOL) (1/4)

Item	Part No.	Description	Qty	Options
	723-23-10303	VALVE ASS'Y THIS ASSEMBLY CONSISTS OF ALL PARTS SHOWN IN FIGS. Y1663-01A0 T0 Y1663-04A0.	1	SN:B35001--
1	(☆723-26-21110)	・ BLOCK	1	SN:B35001--
2	(☆723-26-21210)	・ BLOCK{VALVE}	1	SN:B35001--
3	(☆723-26-21310)	・ BLOCK{VALVE}	1	SN:B35001--
4	(☆723-26-21410)	・ BLOCK{VALVE}	1	SN:B35001--
5	(☆723-26-21710)	・ COVER	1	SN:B35001--
6	07000-12120	・ O-RING	4	SN:B35001--
7	723-26-15830	・ O-RING	3	SN:B35001--
8	723-26-15840	・ O-RING	4	SN:B35001--
9	07000-12020	・ O-RING	4	SN:B35001--
10	07000-11008	・ O-RING	8	SN:B35001--
11	700-84-11172	・ BOLT	4	SN:B35001--
12	01643-31032	・ WASHER	4	SN:B35001--

Ref. Y1663-01A0 Page 450090

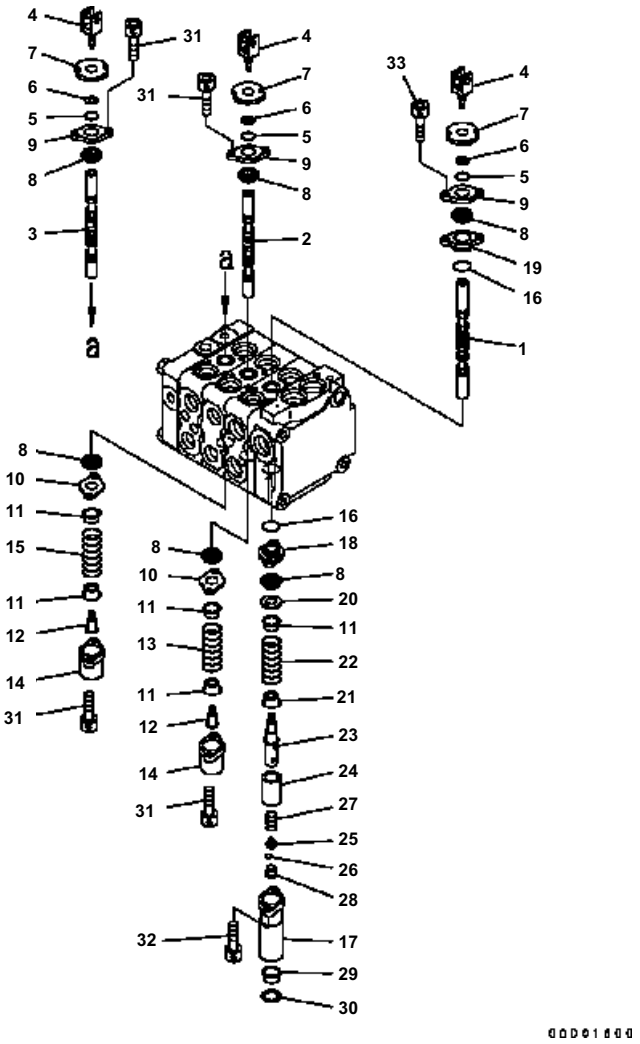

CONTROL VALVE (3-SPOOL) (2/4)

Item	Part No.	Description	Qty	Options
	(723-23-10303)	VALVE ASS'Y THIS ASSEMBLY CONSISTS OF ALL PARTS SHOWN IN FIGS. Y1663-01A0 T0 Y1663-04A0.	1	SN:B35001--
1	(☆723-26-12512)	· SPOOL	1	SN:B35001--
2	(☆723-26-12521)	· SPOOL	1	SN:B35001--
3	(☆723-26-12531)	· SPOOL	1	SN:B35001--
4	723-26-15480	· PLUG	3	SN:B35001--
5	07000-11003	· O-RING	3	SN:B35001--
6	07001-01003	· RING{BACK-UP}	3	SN:B35001--
7	723-26-15880	· SEAL	3	SN:B35001--
8	709-25-11290	· SEAL	6	SN:B35001--
9	723-26-15820	· PLATE	3	SN:B35001--
10	723-26-15810	· PLATE	2	SN:B35001--
11	700-22-11291	· RETAINER	5	SN:B35001--
12	700-22-11321	· PLUG	2	SN:B35001--
13	700-22-11311	· SPRING	1	SN:B35001--
14	723-26-15420	· CASE	2	SN:B35001--
15	723-26-14450	· SPRING	1	SN:B35001--
16	700-80-61260	· O-RING	2	SN:B35001--
17	723-26-15410	· CASE	1	SN:B35001--
18	723-26-15770	· PLATE	1	SN:B35001--
19	723-26-15780	· PLATE	1	SN:B35001--
20	723-26-15790	· PLATE	1	SN:B35001--
21	700-22-11520	· RETAINER	1	SN:B35001--
22	700-22-11510	· SPRING	1	SN:B35001--
23	700-22-12250	· PLUG	1	SN:B35001--
24	700-22-12440	· DETENT	1	SN:B35001--
25	700-22-12480	· GUIDE	1	SN:B35001--
26	(☆700-84-11730)	· BALL	3	SN:B35001--
27	723-26-14170	· SPRING	1	SN:B35001--
28	700-21-11210	· PLUG	1	SN:B35001--
29	700-22-12270	· PLUG	1	SN:B35001--
30	700-22-11610	· RING{SNAP}	1	SN:B35001--
31	01252-60616	· BOLT	8	SN:B35001--
32	01252-60625	· BOLT	2	SN:B35001--
33	01252-60620	· BOLT	2	SN:B35001--

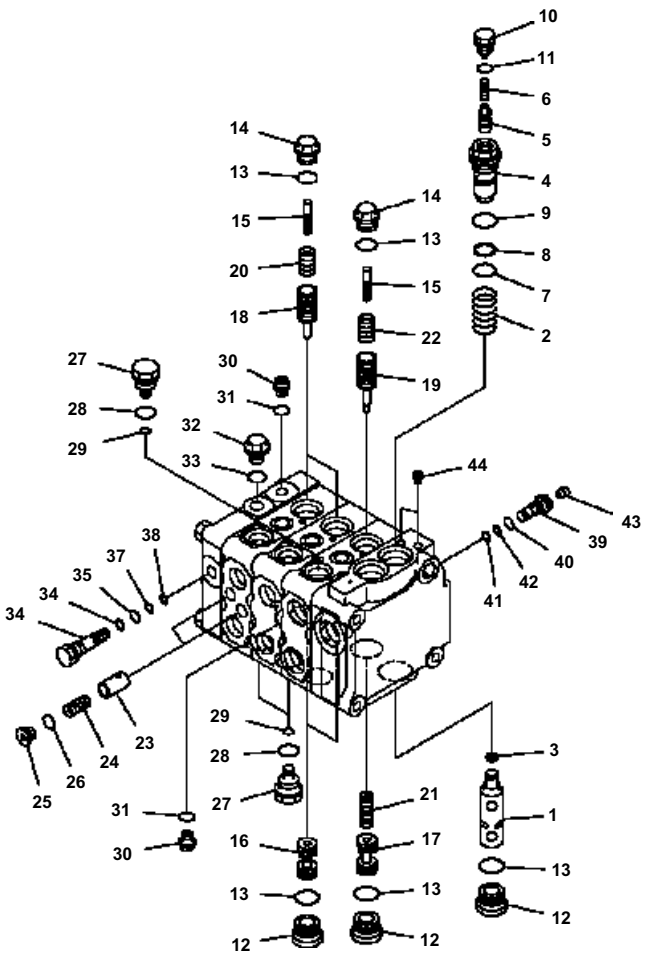

CONTROL VALVE (3-SPOOL) (3/4)

Item	Part No.	Description	Qty	Options
	(723-23-10303)	VALVE ASS'Y THIS ASSEMBLY CONSISTS OF ALL PARTS SHOWN IN FIGS. Y1663-01A0 T0 Y1663-04A0.	1	SN:B35001--
1	(☆723-26-12590)	・ SPOOL	1	SN:B35001--
2	723-26-14180	・ SPRING	1	SN:B35001--
3	(☆709-70-71610)	・ SEAL	1	SN:B35001--
4	(☆723-26-15510)	・ SLEEVE	1	SN:B35001--
5	(☆723-26-15520)	・ PISTON	1	SN:B35001--
6	723-26-14190	・ SPRING	1	SN:B35001--
7	07000-12018	・ O-RING	1	SN:B35001--
8	07001-02018	・ RING{BACK-UP}	1	SN:B35001--
9	07002-12434	・ O-RING	1	SN:B35001--
10	(☆723-40-56130)	・ PLUG	1	SN:B35001--
11	07002-11423	・ O-RING	1	SN:B35001--
12	723-26-15230	・ PLUG	4	SN:B35001--
13	07002-12434	・ O-RING	7	SN:B35001--
14	723-26-15370	・ PLUG	3	SN:B35001--
15	(☆723-26-51250)	・ PISTON	3	SN:B35001--
16	(☆723-26-41160)	・ VALVE	2	SN:B35001--
17	(☆723-26-41210)	・ VALVE	1	SN:B35001--
18	(☆723-26-51240)	・ VALVE	2	SN:B35001--
19	(☆723-26-51211)	・ VALVE	1	SN:B35001--
20	723-26-14230	・ SPRING	2	SN:B35001--
21	723-26-14220	・ SPRING	1	SN:B35001--
22	723-26-14240	・ SPRING	1	SN:B35001--
23	(☆723-26-15210)	・ VALVE	2	SN:B35001--
24	723-26-14150	・ SPRING	2	SN:B35001--
25	723-26-15220	・ PLUG	2	SN:B35001--
26	07002-11223	・ O-RING	2	SN:B35001--
27	723-26-15310	・ PLUG	3	SN:B35001--
28	07002-12034	・ O-RING	3	SN:B35001--
29	07000-11007	・ O-RING	3	SN:B35001--
30	708-8E-16160	・ PLUG	2	SN:B35001--
31	07002-11023	・ O-RING	2	SN:B35001--
32	706-73-71450	・ PLUG	1	SN:B35001--
33	07002-11423	・ O-RING	1	SN:B35001--
34	723-26-15190	・ PLUG	1	SN:B35001--
35	07000-11009	・ O-RING	1	SN:B35001--
36	07001-01009	・ RING{BACK-UP}	1	SN:B35001--
37	07000-11007	・ O-RING	1	SN:B35001--

D41E6T S/N B35001-UP

CONTROL VALVE (3-SPOOL) (3/4)

Item	Part No.	Description	Qty	Options
38	07001-01007	· RING{BACK-UP}	1	SN:B35001--
39	(☆723-26-15360)	· PLUG	1	SN:B35001--
40	07002-11223	· O-RING	1	SN:B35001--
41	07000-11007	· O-RING	1	SN:B35001--
42	07001-01007	· RING{BACK-UP}	1	SN:B35001--
43	(☆702-16-54490)	· SCREW	1	SN:B35001--
44	(☆708-21-12541)	· PLUG	2	SN:B35001--

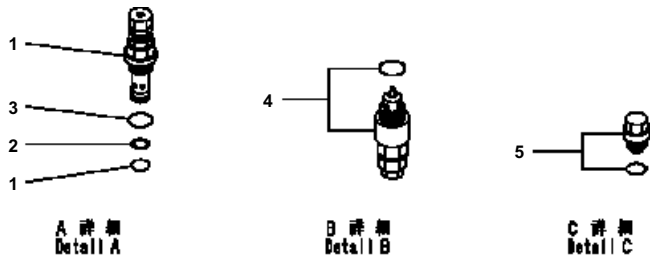

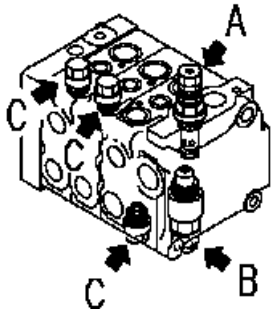

D41E6T S/N B35001-UP

CONTROL VALVE (3-SPOOL) (4/4)

Item	Part No.	Description	Qty	Options
	(723-23-10303)	VALVE ASS'Y THIS ASSEMBLY CONSISTS OF ALL PARTS SHOWN IN FIGS. Y1663-01A0 T0 Y1663-04A0.	1	SN:B35001--
	723-20-60300	・VALVE ASS'Y{RELIEF}	1	SN:B35001--
1	700-22-11410	・・O-RING	1	SN:B35001--
2	700-80-64220	・・RING	1	SN:B35001--
3	07002-02434	・・O-RING	1	SN:B35001--
	709-70-74600	・VALVE ASS'Y{SUCTION AND SAFETY}	1	SN:B35001--
4	709-25-11390	・・O-RING	1	SN:B35001--
	723-20-80100	・VALVE ASS'Y{SUCTION}	3	SN:B35001--
5	07002-12034	・・O-RING	1	SN:B35001--

Ref. Y1663-04A0 Page 450120

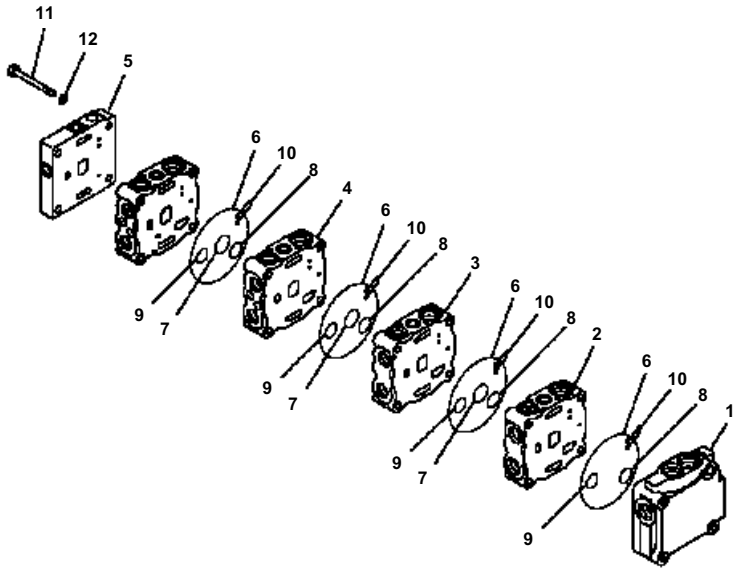

D41E6T S/N B35001-UP

CONTROL VALVE (4-SPOOL) (1/7) (FOR RIPPER)

Item	Part No.	Description	Qty	Options
	723-24-10203	VALVE ASS'Y THIS ASSEMBLY CONSISTS OF ALL PARTS SHOWN IN FIGS. Y1664-01A0 T0 Y1664-07A0.	1	SN:B35001--
1	(☆723-26-21110)	・ BLOCK	1	SN:B35001--
2	(☆723-26-21210)	・ BLOCK{VALVE}	1	SN:B35001--
3	(☆723-26-21310)	・ BLOCK{VALVE}	1	SN:B35001--
4	(☆723-26-21410)	・ BLOCK{VALVE}	1	SN:B35001--
5	(☆723-26-21710)	・ COVER	1	SN:B35001--
6	07000-12120	・ O-RING	4	SN:B35001--
7	723-26-15830	・ O-RING	3	SN:B35001--
8	723-26-15840	・ O-RING	4	SN:B35001--
9	07000-12020	・ O-RING	4	SN:B35001--
10	07000-11008	・ O-RING	8	SN:B35001--
11	723-26-15750	・ BOLT	4	SN:B35001--
12	01643-31032	・ WASHER	4	SN:B35001--

Ref. Y1664-01A0 Page 450130

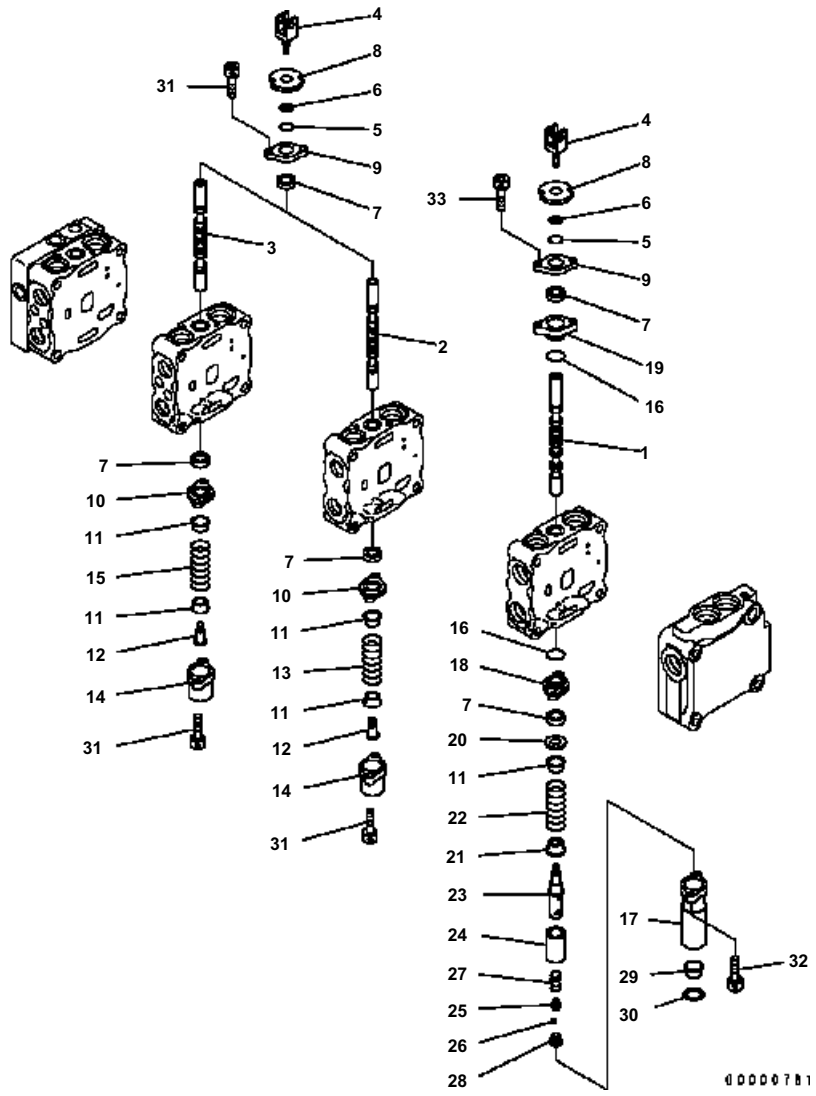

D41E6T S/N B35001-UP

CONTROL VALVE (4-SPOOL) (2/7) (FOR RIPPER)

Item	Part No.	Description	Qty	Options
	(723-24-10203)	VALVE ASS'Y THIS ASSEMBLY CONSISTS OF ALL PARTS SHOWN IN FIGS. Y1664-01A0 T0 Y1664-07A0.	1	SN:B35001--
1	(☆723-26-12512)	· SPOOL	1	SN:B35001--
2	(☆723-26-12521)	· SPOOL	1	SN:B35001--
3	(☆723-26-12531)	· SPOOL	1	SN:B35001--
4	723-26-15480	· PLUG	3	SN:B35001--
5	07000-11003	· O-RING	3	SN:B35001--
6	07001-01003	· RING{BACK-UP}	3	SN:B35001--
7	709-25-11290	· SEAL	6	SN:B35001--
8	723-26-15880	· SEAL	3	SN:B35001--
9	723-26-15820	· PLATE	3	SN:B35001--
10	723-26-15810	· PLATE	2	SN:B35001--
11	700-22-11291	· RETAINER	5	SN:B35001--
12	700-22-11321	· PLUG	2	SN:B35001--
13	700-22-11311	· SPRING	1	SN:B35001--
14	723-26-15420	· CASE	2	SN:B35001--
15	723-26-14450	· SPRING	1	SN:B35001--
16	700-80-61260	· O-RING	2	SN:B35001--
17	723-26-15410	· CASE	1	SN:B35001--
18	723-26-15770	· PLATE	1	SN:B35001--
19	723-26-15780	· PLATE	1	SN:B35001--
20	723-26-15790	· PLATE	1	SN:B35001--
21	700-22-11520	· RETAINER	1	SN:B35001--
22	700-22-11510	· SPRING	1	SN:B35001--
23	700-22-12250	· PLUG	1	SN:B35001--
24	700-22-12440	· DETENT	1	SN:B35001--
25	700-22-12480	· GUIDE	1	SN:B35001--
26	(☆700-84-11730)	· BALL	3	SN:B35001--
27	723-26-14170	· SPRING	1	SN:B35001--
28	700-21-11210	· PLUG	1	SN:B35001--
29	700-22-12270	· PLUG	1	SN:B35001--
30	700-22-11610	· RING{SNAP}	1	SN:B35001--
31	01252-60616	· BOLT	8	SN:B35001--
32	01252-60625	· BOLT	2	SN:B35001--
33	01252-60620	· BOLT	2	SN:B35001--

Ref. Y1664-02A0 Page 450140

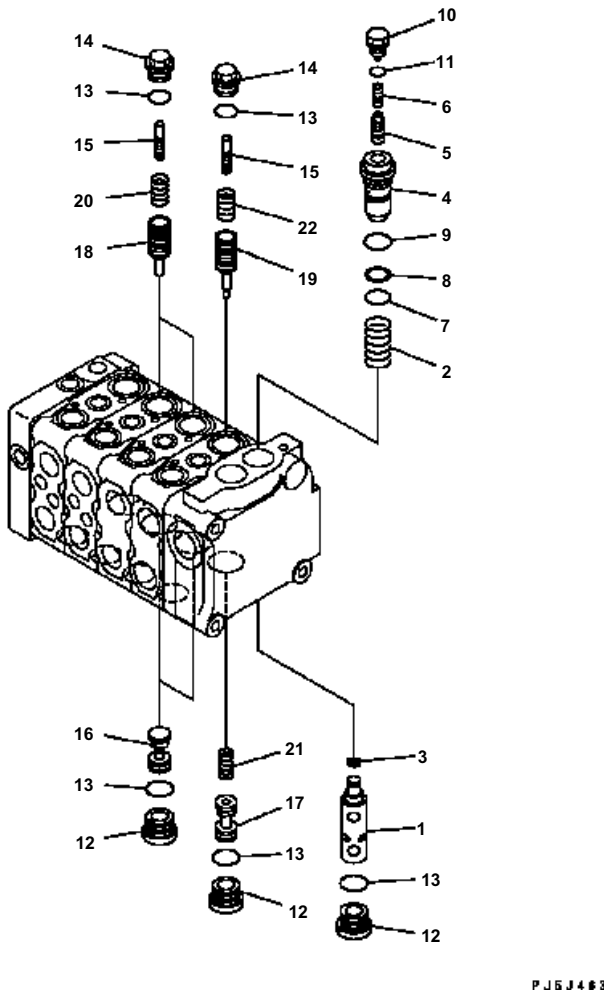

D41E6T S/N B35001-UP

CONTROL VALVE (4-SPOOL) (3/7) (FOR RIPPER)

Item	Part No.	Description	Qty	Options
	(723-24-10203)	VALVE ASS'Y THIS ASSEMBLY CONSISTS OF ALL PARTS SHOWN IN FIGS. Y1664-01A0 T0 Y1664-07A0.	1	SN:B35001--
1	(☆723-26-12590)	· SPOOL	1	SN:B35001--
2	723-26-14180	· SPRING	1	SN:B35001--
3	(☆709-70-71610)	· SEAL	1	SN:B35001--
4	(☆723-26-15510)	· SLEEVE	1	SN:B35001--
5	(☆723-26-15520)	· PISTON	1	SN:B35001--
6	723-26-14190	· SPRING	1	SN:B35001--
7	07000-12018	· O-RING	1	SN:B35001--
8	07001-02018	· RING{BACK-UP}	1	SN:B35001--
9	07002-12434	· O-RING	1	SN:B35001--
10	(☆723-40-56130)	· PLUG	1	SN:B35001--
11	07002-11423	· O-RING	1	SN:B35001--
12	723-26-15230	· PLUG	4	SN:B35001--
13	07002-12434	· O-RING	7	SN:B35001--
14	723-26-15370	· PLUG	3	SN:B35001--
15	(☆723-26-51250)	· PISTON	3	SN:B35001--
16	(☆723-26-41160)	· VALVE	2	SN:B35001--
17	(☆723-26-41210)	· VALVE	1	SN:B35001--
18	(☆723-26-51240)	· VALVE	2	SN:B35001--
19	(☆723-26-51211)	· VALVE	1	SN:B35001--
20	723-26-14230	· SPRING	2	SN:B35001--
21	723-26-14220	· SPRING	1	SN:B35001--
22	723-26-14240	· SPRING	1	SN:B35001--

Ref. Y1664-03A0 Page 450150

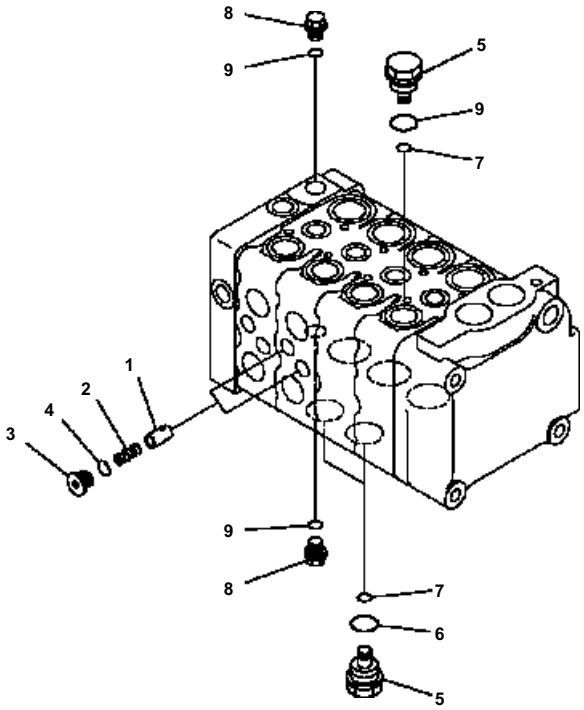

D41E6T S/N B35001-UP

CONTROL VALVE (4-SPOOL) (4/7) (FOR RIPPER)

Item	Part No.	Description	Qty	Options
	(723-24-10203)	VALVE ASS'Y THIS ASSEMBLY CONSISTS OF ALL PARTS SHOWN IN FIGS. Y1664-01A0 T0 Y1664-07A0.	1	SN:B35001--
1	(☆723-26-15210)	・ VALVE	2	SN:B35001--
2	723-26-14150	・ SPRING	2	SN:B35001--
3	723-26-15220	・ PLUG	2	SN:B35001--
4	07002-11223	・ O-RING	2	SN:B35001--
5	723-26-15310	・ PLUG	3	SN:B35001--
6	07002-12034	・ O-RING	3	SN:B35001--
7	07000-11007	・ O-RING	3	SN:B35001--
8	708-8E-16160	・ PLUG	2	SN:B35001--
9	07002-11023	・ O-RING	2	SN:B35001--

Ref. Y1664-04A0 Page 450160

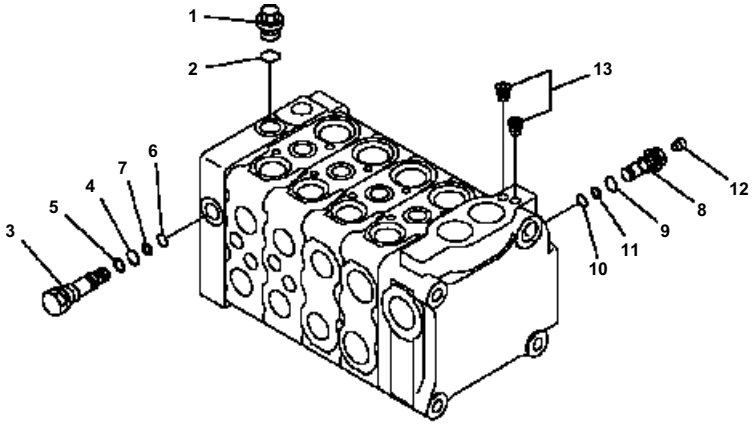

D41E6T S/N B35001-UP

CONTROL VALVE (4-SPOOL) (5/7) (FOR RIPPER)

Item	Part No.	Description	Qty	Options
	(723-24-10203)	VALVE ASS'Y THIS ASSEMBLY CONSISTS OF ALL PARTS SHOWN IN FIGS. Y1664-01A0 T0 Y1664-07A0.	1	SN:B35001--
1	706-73-71450	· PLUG	1	SN:B35001--
2	07002-11423	· O-RING	1	SN:B35001--
3	723-26-15190	· PLUG	1	SN:B35001--
4	07000-11009	· O-RING	1	SN:B35001--
5	07001-01009	· RING{BACK-UP}	1	SN:B35001--
6	07000-11007	· O-RING	1	SN:B35001--
7	07001-01007	· RING{BACK-UP}	1	SN:B35001--
8	(☆723-26-15360)	· PLUG	1	SN:B35001--
9	07002-11223	· O-RING	1	SN:B35001--
10	07000-11007	· O-RING	1	SN:B35001--
11	07001-01007	· RING{BACK-UP}	1	SN:B35001--
12	(☆702-16-54490)	· SCREW	1	SN:B35001--
13	(☆708-21-12541)	· PLUG	2	SN:B35001--

Ref. Y1664-05A0 Page 450170

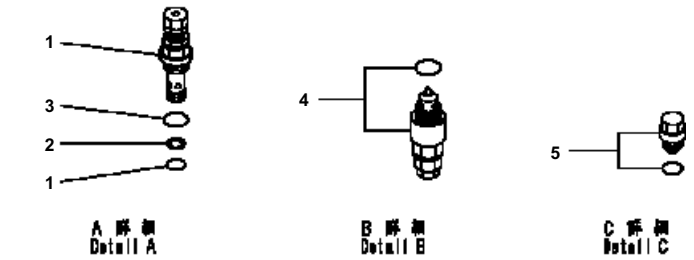

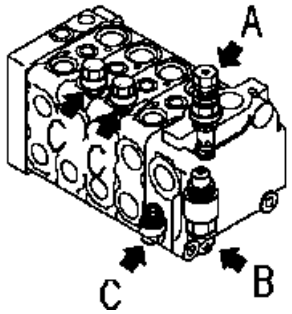

D41E6T S/N B35001-UP

CONTROL VALVE (4-SPOOL) (6/7) (FOR RIPPER)

Item	Part No.	Description	Qty	Options
	(723-24-10203)	VALVE ASS'Y THIS ASSEMBLY CONSISTS OF ALL PARTS SHOWN IN FIGS. Y1664-01A0 T0 Y1664-07A0.	1	SN:B35001--
	723-20-60300	・ VALVE ASS'Y{RELIEF}	1	SN:B35001--
1	700-22-11410	・・ O-RING	1	SN:B35001--
2	700-80-64220	・・ RING	1	SN:B35001--
3	07002-02434	・・ O-RING	1	SN:B35001--
	709-70-74600	・ VALVE ASS'Y{SUCTION AND SAFETY}	1	SN:B35001--
4	709-25-11390	・・ O-RING	1	SN:B35001--
	723-20-80100	・ VALVE ASS'Y{SUCTION}	3	SN:B35001--
5	07002-12034	・・ O-RING	1	SN:B35001--

Ref. Y1664-06A0 Page 450180

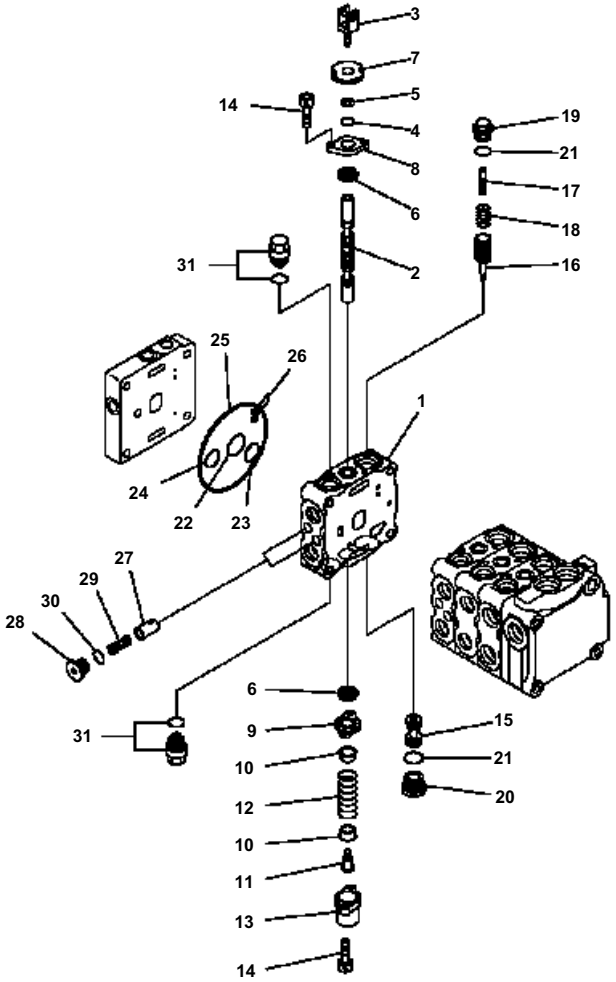

D41E6T S/N B35001-UP

CONTROL VALVE (4-SPOOL) (7/7) (FOR RIPPER)

Item	Part No.	Description	Qty	Options
	(723-24-10203)	VALVE ASS'Y THIS ASSEMBLY CONSISTS OF ALL PARTS SHOWN IN FIGS. Y1664-01A0 T0 Y1664-07A0.	1	SN:B35001--
	723-21-02104	· VALVE SUB ASS'Y	1	SN:B35100--
	723-21-02103	· VALVE SUB ASS'Y	1	SN:B35001--B35099
1	(☆723-26-21410)	· · BLOCK{VALVE}	1	SN:B35001--
2	(☆723-26-12531)	· · SPOOL	1	SN:B35001--
3	723-26-15480	· · PLUG	1	SN:B35001--
4	07000-11003	· · O-RING	1	SN:B35001--
5	07001-01003	· · RING{BACK-UP}	1	SN:B35001--
6	709-25-11290	· · SEAL	2	SN:B35001--
7	723-26-15880	· · SEAL	1	SN:B35001--
8	723-26-15820	· · PLATE	1	SN:B35001--
9	723-26-15810	· · PLATE	1	SN:B35001--
10	700-22-11291	· · RETAINER	2	SN:B35001--
11	700-22-11321	· · PLUG	1	SN:B35001--
12	700-22-11311	· · SPRING	1	SN:B35001--
13	723-26-15420	· · CASE	1	SN:B35001--
14	01252-60616	· · BOLT	4	SN:B35001--
15	(☆723-26-41160)	· · VALVE	1	SN:B35001--
16	(☆723-26-51240)	· · VALVE	1	SN:B35001--
17	(☆723-26-51250)	· · PISTON	1	SN:B35001--
18	723-26-14230	· · SPRING	1	SN:B35001--
19	723-26-15370	· · PLUG	1	SN:B35001--
20	723-26-15230	· · PLUG	1	SN:B35001--
21	07002-12434	· · O-RING	2	SN:B35001--
22	723-26-15830	· · O-RING	1	SN:B35001--
23	723-26-15840	· · O-RING	1	SN:B35001--
24	07000-12020	· · O-RING	1	SN:B35001--
25	07000-12120	· · O-RING	1	SN:B35001--
26	07000-11008	· · O-RING	2	SN:B35001--
27	(☆723-26-15210)	· · VALVE	2	SN:B35001--
28	723-26-15220	· · PLUG	2	SN:B35001--
29	723-26-14150	· · SPRING	2	SN:B35001--
30	07002-11223	· · O-RING	2	SN:B35001--
	723-20-80100	· · VALVE ASS'Y{SUCTION}	2	SN:B35001--
31	07002-12034	· · · O-RING	1	SN:B35001--

Ref. Y1664-07A0 Page 450190

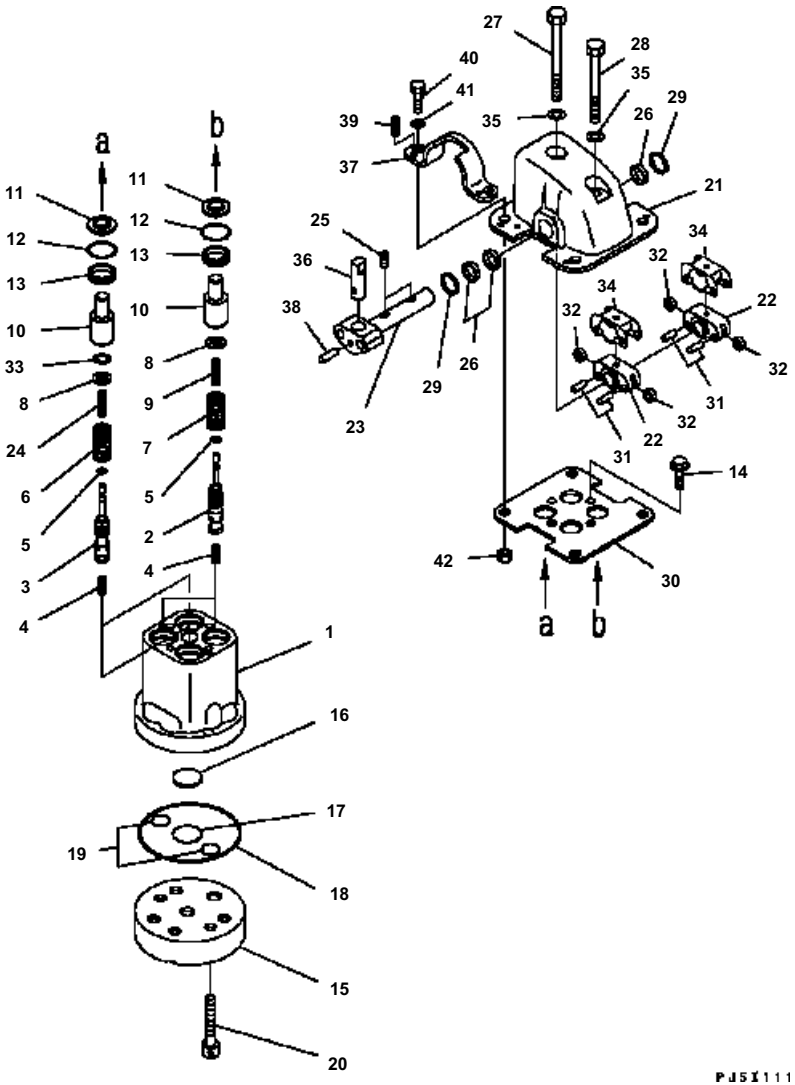

D41E6T S/N B35001-UP

PPC VALVE

Item	Part No.	Description	Qty	Options
	702-16-05013	PILOT VALVE	1	SN:B35001--
1	(☆702-16-53751)	· BODY{VALVE}	1	SN:B35001--
2	(☆?702-16-55390)	· VALVE	2	SN:B35001--
3	☆702-16-55410)	· VALVE	2	SN:B35001--
4	702-16-55240	· PISTON	4	SN:B35001--
5	702-16-51140	· SHIM§ 0. 30MM	4	SN:B35001--
6	702-16-53160	· SPRING	2	SN:B35001--
7	702-16-53470	· SPRING	2	SN:B35001--
8	702-16-53140	· RETAINER	4	SN:B35001--
9	702-16-55371	· SPRING	2	SN:B35001--
10	702-16-55360	· PISTON	4	SN:B35001--
11	702-16-51270	· SEAL	4	SN:B35001--
12	07000-12020	· O-RING	4	SN:B35001--
13	702-16-54170	· COLLAR	4	SN:B35001--
14	01435-00620	· BOLT	2	SN:B35001--
15	702-16-53761	· COVER	1	SN:B35001--
16	720-68-15240	· FILTER	1	SN:B35001--
17	07000-12021	· O-RING	1	SN:B35001--
18	702-16-53910	· O-RING	1	SN:B35001--
19	702-16-53920	· O-RING	2	SN:B35001--
20	01252-60835	· BOLT	2	SN:B35001--
21	(☆702-16-56730)	· CASE	1	SN:B35001--
22	(☆702-16-55350)	· LINK	2	SN:B35001--
23	(☆702-16-56710)	· SHAFT	1	SN:B35001--
24	702-16-55382	· SPRING	2	SN:B35001--
25	(☆702-16-54220)	· SCREW	2	SN:B35001--
26	(☆702-16-55290)	· BUSHING	3	SN:B35001--
27	702-16-55260	· BOLT	1	SN:B35001--
28	702-16-55270	· BOLT	1	SN:B35001--
29	(☆581-35-21890)	· SCRAPER	2	SN:B35001--
30	702-16-56740	· PLATE	1	SN:B35001--
31	(☆702-16-55320)	· PIN	4	SN:B35001--
32	(☆702-16-55310)	· BEARING	4	SN:B35001--
33	702-16-55330	· SPACER§ 0. 4MM	2	SN:B35001--
	702-16-57370	· SPACER§ 0. 2MM	2	SN:B35001--
34	(☆702-16-55340)	· PLATE	2	SN:B35001--
35	01643-30623	· WASHER	2	SN:B35001--
36	(☆702-16-56690)	· PIN	1	SN:B35001--
37	(☆702-16-56720)	· PLATE	1	SN:B35001--
38	04025-00520	· PIN{SPRING}	1	SN:B35001--
39	(☆04022-04008)	· PIN{DOWEL}	2	SN:B35001--

Ref. Y1670-01A0 Page 450200

D41E6T S/N B35001-UP

PPC VALVE

Item	Part No.	Description	Qty	Options
40	01010-80830	· BOLT	2	SN:B35001--
41	01640-20816	· WASHER	2	SN:B35001--
42	01580-00806	· NUT	2	SN:B35001--

NUMERICAL INDEX

PARTS Nº	FIG. Nº	INDEX	PAGE
01010-51230	K2400-03A0	13	240760
01010-61460	F2320-07A0	14	150310
01010-61665	F2320-06A0	15	150300
01010-80610	K2210-01A0	11	240620
01010-80612	K2210-02A0	10	240640
01010-80612	K2210-07A1	19	240700
01010-80612	K2210-07A1	3	240700
01010-80616	E0200-04A0	6	120050
01010-80616	E0200-04A0	9	120050
01010-80616	F2820-01A0	31	150430
01010-80616	K0210-09A0	22	240210
01010-80616	K2210-01A0	24	240620
01010-80616	K2910-01A0	2	240860
01010-80618	K2210-01A0	27	240620
01010-80620	F2300-14A0	16	150150
01010-80620	K0210-05A0	28	240170
01010-80620	M2140-04A0	17	270080
01010-80625	K0710-02A0	37	240350
01010-80630	K0110-01A1	38	240020
01010-80630	K0110-01A3	38	240040
01010-80630	K0110-01A6	38	240070
01010-80630	K0710-02A0	38	240350
01010-80816	B0500-01A0	12	030190
01010-80816	C0100-02A0	27	060040
01010-80816	E0300-01A0	8	120070
01010-80816	K0710-02A0	4	240350
01010-80816	K0710-03A0	22	240360
01010-80816	K0710-03A0	25	240360
01010-80816	K2210-02A1	1	240650
01010-80816	K2210-03A1	21	240660
01010-80816	K2210-03A1	6	240660
01010-80816	K2210-08A1	11	240710
01010-80816	K2210-08A1	4	240710
01010-80820	B0500-01A0	19	030190
01010-80820	F2320-11A0	18	150350
01010-80820	H0120-01A1	8	180030
01010-80820	H0120-01A2	8	180040
01010-80820	K0710-03A0	28	240360
01010-80820	K0710-04A0	20	240370
01010-80820	K2210-01A0	9	240620
01010-80820	K2210-02A0	32	240640
01010-80820	K2210-02A1	2	240650
01010-80820	K2500-01A0	13	240790
01010-80820	M2140-01A0	33	270030
01010-80825	C0100-02A0	21	060040
01010-80825	D0210-01A0	6	090030
01010-80825	K0110-01A0	4	240010
01010-80825	K0710-03A0	13	240360
01010-80825	K2110-03B0	17	240430
01010-80825	K2110-09B1	14	240510
01010-80825	K2110-09B1	17	240510
01010-80825	K2110-12B0	2	240540
01010-80825	K2210-03A1	11	240660
01010-80825	K2500-02A0	24	240800
01010-80825	K2500-02A2	30	240820
01010-80825	K2500-02A3	31	240830
01010-80825	W2112-01A0	9	420010
01010-80830	F2820-01A0	33	150430
01010-80830	F2820-01A0	8	150430
01010-80830	K2110-03B0	9	240430
01010-80830	K2110-04B0	16	240440
01010-80830	K2110-04B0	20	240440
01010-80830	K2110-04B0	22	240440
01010-80830	K2110-04B0	33	240440
01010-80830	K2110-04B1	10	240450
01010-80830	K2110-04B1	12	240450
01010-80830	K2110-04B1	16	240450
01010-80830	K2110-04B1	22	240450
01010-80830	K2110-04B1	4	240450
01010-80830	K2110-04B1	8	240450
01010-80830	K2110-05B0	13	240460
01010-80830	K2110-05B0	18	240460
01010-80830	K2110-05B0	33	240460
01010-80830	K2110-06B0	16	240470
01010-80830	K2110-06B0	20	240470
01010-80830	K2110-06B0	34	240470
01010-80830	K2110-07B0	10	240480
01010-80830	K2110-07B0	15	240480
01010-80830	K2110-07B0	4	240480
01010-80830	K2110-09B0	14	240500
01010-80830	K2110-09B0	7	240500
01010-80830	K2110-09B1	8	240510
01010-80830	K2110-10B0	6	240520
01010-80830	K2241-01A0	16	240720
01010-80830	K2241-01A0	19	240720
01010-80830	K2241-01A0	6	240720
01010-80830	K2241-01A1	18	240730
01010-80830	K2241-01A1	21	240730
01010-80830	K2241-01A1	6	240730
01010-80830	K2400-03A0	26	240760
01010-80830	K2400-03A0	8	240760
01010-80830	R0120-01A0	11	300020
01010-80830	Y1670-01A0	40	450200
01010-80835	K2110-05B0	22	240460
01010-80835	K2110-07B0	8	240480
01010-80840	K2210-08A1	8	240710
01010-80845	F2300-18A0	18	150190
01010-80845	F2300-18A0	24	150190
01010-80845	F2300-18A1	18	150200
01010-80845	F2300-18A1	23	150200
01010-80850	F2320-10A0	6	150340
01010-80850	H2210-01A0	8	180090
01010-80850	H2210-01A1	7	180100
01010-80855	F2300-18A0	17	150190
01010-80855	F2300-18A0	23	150190
01010-80855	F2300-18A1	17	150200
01010-80855	F2300-18A1	22	150200
01010-80855	F2320-09A0	36	150330
01010-80860	F2320-11A0	25	150350
01010-80875	F2320-01A0	9	150250
01010-80875	F2320-10A0	8	150340
01010-80875	F2320-11A0	24	150350
01010-80890	K0710-03A0	2	240360
01010-81016	B0500-01A0	10	030190
01010-81016	B0500-01A0	33	030190
01010-81016	E0200-01A0	10	120020
01010-81016	E0200-01A0	12	120020
01010-81016	E0200-01A0	18	120020
01010-81016	E0200-01A0	23	120020
01010-81016	E0200-01A0	3	120020
01010-81016	E0200-01A0	5	120020
01010-81016	E0200-02A0	13	120030
01010-81016	E0200-02A0	19	120030
01010-81016	E0200-02A0	3	120030
01010-81016	E0200-02A0	6	120030
01010-81016	E0210-01A0	11	120060
01010-81016	E0420-01A0	6	120090
01010-81016	K0210-17A0	8	240290
01010-81016	K0710-03A0	31	240360
01010-81016	K2910-01A0	11	240860
01010-81016	K2910-01A0	17	240860
01010-81016	K2910-01A0	24	240860
01010-81016	K2910-01A0	28	240860
01010-81016	K2910-01A0	6	240860
01010-81018	K2210-02A0	13	240640
01010-81018	K2210-02A0	16	240640
01010-81018	K2210-02A0	22	240640
01010-81020	B0000-07A0	6	030070
01010-81020	B0000-07A0	6	030070
01010-81020	B0500-01A0	31	030190
01010-81020	B0500-01A0	42	030190
01010-81020	B0500-01A0	8	030190
01010-81020	C0100-02A0	32	060040
01010-81020	D0100-01A0	9	090010
01010-81020	E0200-02A0	28	120030
01010-81020	E0200-02A0	31	120030
01010-81020	E0200-02A0	38	120030
01010-81020	E0200-02A0	9	120030
01010-81020	E0200-04A0	3	120050
01010-81020	E0320-01A1	10	120081

PARTS Nº	FIG. Nº	INDEX	PAGE
01010-81020	F2300-07A0	29	150080
01010-81020	F2300-12A0	8	150130
01010-81020	F2300-22A0	6	150240
01010-81020	H0120-01A1	6	180030
01010-81020	H0120-01A2	6	180040
01010-81020	H2220-01A0	17	180110
01010-81020	K0110-01A1	35	240020
01010-81020	K0110-01A3	35	240040
01010-81020	K0110-01A6	35	240070
01010-81020	K0710-02A0	17	240350
01010-81020	K0710-02A0	31	240350
01010-81020	K0710-02A0	34	240350
01010-81020	K0710-02A0	7	240350
01010-81020	K0710-04A0	16	240370
01010-81020	K2110-08B0	26	240490
01010-81020	K2110-12B0	5	240540
01010-81020	K2110-13B0	10	240550
01010-81020	K2110-13B0	13	240550
01010-81020	K2110-13B0	7	240550
01010-81020	K2110-14B0	13	240560
01010-81020	K2110-14B0	24	240560
01010-81020	K2110-14B0	28	240560
01010-81020	K2110-15B0	5	240570
01010-81020	K2210-02A1	4	240650
01010-81020	K2210-03A1	16	240660
01010-81020	K2210-07A1	5	240700
01010-81020	K2210-07A1	8	240700
01010-81020	K2500-02A0	3	240800
01010-81020	K2500-02A1	3	240810
01010-81020	K2500-02A2	3	240820
01010-81020	K2500-02A3	3	240830
01010-81020	M2140-02A0	9	270050
01010-81020	M2140-02A1	9	270060
01010-81020	M2210-01A0	1	270090
01010-81020	M2210-02A0	1	270100
01010-81020	M2210-02A1	1	270110
01010-81020	M2240-01A0	5	270160
01010-81020	M2240-01A1	5	270170
01010-81020	T2110-01A0	17	330010
01010-81020	T2115-01A0	24	330040
01010-81020	T2160-02A0	14	330120
01010-81020	T2160-02A0	18	330120
01010-81020	T2160-02A0	21	330120
01010-81025	B0600-01A0	16	030200
01010-81025	D0210-01A0	24	090030
01010-81025	E0320-01A1	8	120081
01010-81025	F2300-11A0	12	150120
01010-81025	F2300-12A0	12	150130
01010-81025	F2320-08A0	15	150320
01010-81025	F2320-13A0	15	150370
01010-81025	F2320-13A0	8	150370
01010-81025	F2380-01A0	14	150380
01010-81025	F2380-02A0	14	150390
01010-81025	F2730-01A0	7	150410
01010-81025	F2820-01A0	28	150430
01010-81025	H0120-01A0	14	180020
01010-81025	H0310-01A1	26	180060
01010-81025	H0310-02A0	9	180070
01010-81025	H0310-03A0	10	180080
01010-81025	H2220-01A0	20	180110
01010-81025	H2230-01A0	12	180120
01010-81025	K0110-01A1	11	240020
01010-81025	K0110-01A1	20	240020
01010-81025	K0110-01A1	7	240020
01010-81025	K0110-01A3	11	240040
01010-81025	K0110-01A3	20	240040
01010-81025	K0110-01A3	7	240040
01010-81025	K0110-01A6	11	240070
01010-81025	K0110-01A6	20	240070
01010-81025	K0110-01A6	7	240070
01010-81025	K0710-03A0	19	240360
01010-81025	K2110-01B0	10	240400
01010-81025	K2110-01B0	7	240400
01010-81025	K2110-01B1	7	240410
01010-81025	K2110-07B0	1	240480
01010-81025	K2110-07B0	12	240480
01010-81025	K2110-08B0	2	240490
01010-81025	K2110-09B0	24	240500
01010-81025	K2110-09B1	23	240510
01010-81025	K2110-11B0	1	240530
01010-81025	K2110-14B0	17	240560
01010-81025	K2110-14B0	20	240560
01010-81025	K2120-01A0	2	240610
01010-81025	K2500-01A0	19	240790
01010-81025	K2500-01A0	8	240790
01010-81030	C0100-01A0	16	060010
01010-81030	C0100-01A0	19	060010
01010-81030	C0100-01A0	6	060010
01010-81030	C0100-01A0	9	060010
01010-81030	C0100-01A1	16	060020
01010-81030	C0100-01A1	19	060020
01010-81030	C0100-01A1	6	060020
01010-81030	C0100-01A1	9	060020
01010-81030	C0100-01A2	16	060030
01010-81030	C0100-01A2	19	060030
01010-81030	C0100-01A2	6	060030
01010-81030	C0100-01A2	9	060030
01010-81030	E0320-01A1	12	120081
01010-81030	F2300-02A0	21	150030
01010-81030	F2300-19A0	2	150210
01010-81030	F2320-12A0	2	150360
01010-81030	F2380-01A0	23	150380
01010-81030	F2380-02A0	23	150390
01010-81030	F2730-01A0	15	150410
01010-81030	K0110-01A1	22	240020
01010-81030	K0110-01A3	22	240040
01010-81030	K0110-01A6	22	240070
01010-81030	K0210-03A0	26	240150
01010-81030	K2110-08B0	5	240490
01010-81035	B0600-01A0	10	030200
01010-81035	C0100-02A0	13	060040
01010-81035	C0100-02A0	17	060040
01010-81035	F2300-16A0	10	150170
01010-81035	K0710-02A0	11	240350
01010-81035	K2110-07B0	21	240480
01010-81035	K2210-02A0	23	240640
01010-81040	B0000-13A0	4	030130
01010-81040	F2300-02A0	1	150030
01010-81040	F2300-18A0	12	150190
01010-81040	F2300-18A0	6	150190
01010-81040	F2300-18A1	12	150200
01010-81040	F2300-18A1	6	150200
01010-81040	T2160-01A0	11	330110
01010-81045	K2500-02A2	17	240820
01010-81050	F2300-07A0	33	150080
01010-81050	K2110-02B0	10	240420
01010-81050	K2110-08B0	7	240490
01010-81050	K2110-14B0	32	240560
01010-81050	M2140-02A0	6	270050
01010-81050	M2140-02A1	6	270060
01010-81055	E0320-01A1	16	120081
01010-81055	F2730-02A0	15	150420
01010-81060	C0100-02A0	9	060040
01010-81075	F2300-13A0	13	150140
01010-81080	F2300-06A0	17	150070
01010-81095	F2300-07A0	39	150080
01010-81095	T2400-01A0	8	330150
01010-81216	B0500-01A0	39	030190
01010-81220	B0000-07A0	8	030070
01010-81220	B0500-01A0	17	030190
01010-81220	B0500-01A0	45	030190
01010-81220	C0100-02A0	24	060040
01010-81220	D0200-01A0	10	090020
01010-81220	D0210-01A0	15	090030
01010-81220	E0200-02A0	16	120030
01010-81220	E0200-02A0	21	120030
01010-81220	E0200-02A0	24	120030
01010-81220	E0200-02A0	34	120030
01010-81220	F2300-10A0	29	150110
01010-81220	F2300-20A0	10	150220

PARTS N°	FIG. N°	INDEX	PAGE
01010-81220	F2300-21A0	22	150230
01010-81220	F2300-22A0	12	150240
01010-81220	F2730-01A0	26	150410
01010-81220	F2730-02A0	9	150420
01010-81220	H0310-03A0	7	180080
01010-81220	K0710-01A0	28	240340
01010-81220	K0710-02A0	24	240350
01010-81220	K0710-02A0	28	240350
01010-81220	K2110-02B0	7	240420
01010-81220	K2110-03B0	3	240430
01010-81220	K2110-12B0	9	240540
01010-81220	K2241-01A0	41	240720
01010-81220	K2241-01A1	45	240730
01010-81220	K2910-01A0	19	240860
01010-81220	M2140-01A0	23	270030
01010-81220	M2210-04A0	13	270130
01010-81220	M2210-04A0	35	270130
01010-81220	T2160-01A0	4	330110
01010-81220	T2160-02A0	5	330120
01010-81220	T2160-03A0	5	330130
01010-81220	T2160-04A0	8	330140
01010-81225	C0100-02A0	24	060040
01010-81225	E0300-01A0	12	120070
01010-81225	E0320-01A0	3	120080
01010-81225	E0320-01A1	4	120081
01010-81225	F2300-03A0	22	150040
01010-81225	F2300-03A0	3	150040
01010-81225	F2300-07A0	42	150080
01010-81225	F2730-01A0	18	150410
01010-81225	F2730-01A0	3	150410
01010-81225	H0120-01A0	1	180020
01010-81225	H0120-01A0	12	180020
01010-81225	H0120-01A1	1	180030
01010-81225	H0120-01A2	1	180040
01010-81225	H0310-02A0	16	180070
01010-81225	H0310-02A0	21	180070
01010-81225	J2100-01A0	12	210010
01010-81225	J2100-01A0	18	210010
01010-81225	J2100-01A0	21	210010
01010-81225	J2100-01A0	34	210010
01010-81225	J2100-01A1	12	210020
01010-81225	J2100-01A1	18	210020
01010-81225	J2100-01A1	21	210020
01010-81225	J2100-01A1	34	210020
01010-81225	K0410-01A1	7	240330
01010-81225	K0710-01A0	17	240340
01010-81225	K0710-02A0	2	240350
01010-81225	K0710-03A0	4	240360
01010-81225	K0710-04A0	11	240370
01010-81225	K0710-04A0	18	240370

PARTS N°	FIG. N°	INDEX	PAGE
01010-81225	K0860-01A0	4	240390
01010-81225	K2110-01B0	4	240400
01010-81225	K2110-01B1	4	240410
01010-81225	K2210-01A0	3	240620
01010-81225	K2400-01A0	10	240740
01010-81225	M2140-01A0	30	270030
01010-81225	M2140-01A0	42	270030
01010-81225	M2140-01A1	19	270040
01010-81225	M2140-01A1	9	270040
01010-81225	M2140-02A1	22	270060
01010-81225	M2140-02A1	28	270060
01010-81225	M2140-02A1	31	270060
01010-81225	M2140-03A0	10	270070
01010-81225	M2140-03A0	13	270070
01010-81225	M2140-03A0	4	270070
01010-81225	M2210-01A0	2	270090
01010-81225	M2210-02A0	2	270100
01010-81225	M2210-02A1	2	270110
01010-81225	M2210-04A0	18	270130
01010-81225	M2210-04A0	21	270130
01010-81225	M2210-04A0	24	270130
01010-81225	M2210-04A0	3	270130
01010-81225	M2210-04A0	31	270130
01010-81225	M2210-04A0	9	270130
01010-81225	M2210-07A0	13	270150
01010-81225	M2210-07A0	17	270150
01010-81225	M2210-07A0	20	270150
01010-81225	M2210-07A0	24	270150
01010-81225	M2210-07A0	5	270150
01010-81225	T2110-02A1	14	330030
01010-81225	T2115-01A0	10	330040
01010-81225	T2115-01A0	15	330040
01010-81225	T2115-02A0	13	330060
01010-81225	T2115-02A0	18	330060
01010-81225	T2115-02A0	23	330060
01010-81225	T2115-02A0	3	330060
01010-81225	T2115-02A0	8	330060
01010-81225	T2160-01A0	25	330110
01010-81225	T2160-01A0	30	330110
01010-81225	T2160-02A0	10	330120
01010-81225	T2160-03A0	7	330130
01010-81225	T2160-04A0	10	330140
01010-81225	Y1621-01A0	21	450080
01010-81230	E0300-01A0	5	120070
01010-81230	F2300-03A0	28	150040
01010-81230	F2300-16A0	24	150170
01010-81230	H2210-01A0	16	180090
01010-81230	H2210-01A1	13	180100
01010-81230	H2220-01A0	29	180110
01010-81230	H2230-01A0	22	180120

PARTS N°	FIG. N°	INDEX	PAGE
01010-81230	H2250-01A0	19	180130
01010-81230	K0110-01A0	10	240010
01010-81230	K0110-01A2	5	240030
01010-81230	K0110-01A4	7	240050
01010-81230	K0110-01A5	5	240060
01010-81230	K0110-01A7	6	240080
01010-81230	K0110-01A8	6	240090
01010-81230	K0110-02A1	3	240100
01010-81230	K0110-02A2	14	240101
01010-81230	K0110-02A2	9	240101
01010-81230	K0120-01A0	3	240110
01010-81230	K0210-15A0	4	240270
01010-81230	K0410-01A0	6	240320
01010-81230	K0410-01A1	11	240330
01010-81230	K2210-08A1	17	240710
01010-81230	K2400-01A0	5	240740
01010-81230	K2400-05A0	3	240780
01010-81230	K2810-01A0	2	240840
01010-81230	K2810-01A1	2	240850
01010-81230	K2810-01A1	6	240850
01010-81230	K2810-01A1	9	240850
01010-81230	K2910-01A0	21	240860
01010-81230	M2140-04A0	1	270080
01010-81230	M2140-04A0	21	270080
01010-81230	M2210-07A0	11	270150
01010-81230	M2210-07A0	8	270150
01010-81230	M2811-01A0	5	270180
01010-81230	R2200-02A0	11	300130
01010-81230	R2200-02A1	11	300131
01010-81230	T2110-01A0	4	330010
01010-81230	T2120-01A0	12	330070
01010-81230	T2120-01A0A	18	330071
01010-81230	T2120-01A1	15	330080
01010-81230	T2120-01A1A	19	330081
01010-81230	T2160-02A0	25	330120
01010-81235	D0210-01A0	8	090030
01010-81235	F2300-02A0	16	150030
01010-81235	F2300-18A0	3	150190
01010-81235	F2300-18A1	3	150200
01010-81235	F2320-05A0	17	150290
01010-81235	F2320-05A0	9	150290
01010-81235	F2320-06A0	4	150300
01010-81235	F2320-07A0	8	150320
01010-81235	F2730-02A0	8	150420
01010-81235	H0120-01A0	7	180020
01010-81235	H0120-01A1	13	180030
01010-81235	H0120-01A2	13	180040
01010-81235	J2100-01A0	24	210010
01010-81235	J2100-01A0	27	210010
01010-81235	J2100-01A0	30	210010

PARTS N°	FIG. N°	INDEX	PAGE
01010-81235	J2100-01A1	24	210020
01010-81235	J2100-01A1	27	210020
01010-81235	J2100-01A1	30	210020
01010-81235	K0410-01A1	10	240330
01010-81235	K2810-01A0	3	240840
01010-81235	K2810-01A1	3	240850
01010-81235	M2110-01A0	11	270010
01010-81235	M2110-01A0	14	270010
01010-81235	M2140-04A0	5	270080
01010-81235	M2140-04A0	9	270080
01010-81235	M2240-01A0	7	270160
01010-81235	M2240-01A1	7	270170
01010-81235	M2811-01A2	5	270190
01010-81240	K0210-15A0	2	240270
01010-81240	K0710-03A0	7	240360
01010-81240	R2200-01A1	16	300121
01010-81240	R2200-02A1	28	300131
01010-81240	T2160-01A0	22	330110
01010-81245	D0200-01A0	14	090020
01010-81245	F2300-09A0	14	150100
01010-81245	F2300-09A0	3	150100
01010-81245	F2300-10A0	12	150110
01010-81245	F2300-10A0	2	150110
01010-81245	F2300-11A0	14	150120
01010-81245	F2300-20A0	2	150220
01010-81245	F2320-05A0	25	150290
01010-81245	F2320-06A0	17	150300
01010-81245	F2320-08A0	8	150320
01010-81245	H0310-01A0	6	180050
01010-81245	H0310-01A1	6	180060
01010-81245	H2220-01A0	23	180110
01010-81245	H2230-01A0	15	180120
01010-81245	K0710-03A0	7	240360
01010-81245	K2110-06B0	10	240470
01010-81245	K2400-02A0	4	240750
01010-81245	K2400-04A0	4	240770
01010-81250	K0710-01A0	18	240340
01010-81260	F2300-17A0	1	150180
01010-81260	H2250-01A0	11	180130
01010-81260	T2120-01A0A	10	330071
01010-81260	T2120-01A1A	11	330081
01010-81260	T2160-01A0	30	330110
01010-81265	H2210-01A0	18	180090
01010-81265	H2210-01A1	15	180100
01010-81270	H0310-01A0	16	180050
01010-81270	H0310-01A1	16	180060
01010-81270	H2250-01A0	12	180130
01010-81270	K0210-15A0	1	240270
01010-81275	H0310-01A0	4	180050
01010-81275	H0310-01A1	4	180060

PARTS N°	FIG. N°	INDEX	PAGE
01010-81280	F2300-13A0	16	150140
01010-81280	K0411-01A0	3	240355
01010-81290	F2300-14A0	21	150150
01010-81290	K2210-01A0	2	240620
01010-81460	C0100-02A0	15	060040
01010-81630	R0300-01A0	10	300050
01010-81635	J2100-01A0	15	210010
01010-81635	J2100-01A1	15	210020
01010-81635	M2811-01A0	2	270180
01010-81635	R2200-01A0	18	300120
01010-81635	R2200-01A0	2	300120
01010-81635	R2200-01A0	5	300120
01010-81635	R2200-01A1	2	300121
01010-81635	R2200-01A1	25	300121
01010-81635	R2200-01A1	5	300121
01010-81635	R2200-02A0	14	300130
01010-81635	R2200-02A0	17	300130
01010-81635	R2200-02A1	14	300131
01010-81635	R2200-02A1	17	300131
01010-81635	T2120-01A0	15	330070
01010-81635	T2120-01A0A	21	330071
01010-81635	T2120-01A1	18	330080
01010-81635	T2120-01A1A	22	330081
01010-81640	M2811-01A2	2	270190
01010-81640	R0100-01A0	22	300010
01010-81640	R2200-02A0	3	300130
01010-81640	R2200-02A1	3	300131
01010-81645	F2380-01A0	3	150380
01010-81645	F2380-02A0	3	150390
01010-81645	F2380-03A0	2	150400
01010-81645	F2380-03A0	3	150400
01010-81645	H0100-01A0	12	180010
01010-81645	K2120-01A0	10	240610
01010-81645	M2110-01A0	6	270010
01010-81645	R2200-01A0	9	300120
01010-81645	R2200-01A1	13	300121
01010-81645	R2200-02A0	21	300130
01010-81645	R2200-02A1	25	300131
01010-81650	T2110-01A1	17	330020
01010-81660	F2300-04A0	10	150050
01010-81660	F2300-04A0	11	150050
01010-81660	M2140-04A0	13	270080
01010-81665	F2300-04A0	12	150050
01010-81665	R2200-01A1	11	300121
01010-81665	R2200-02A1	23	300131
01010-81670	R0300-01A0	13	300050
01010-81675	F2300-04A0	13	150050
01010-81675	K2120-01A0	8	240610
01010-81675	R0200-01A0	12	300030
01010-81680	D0100-01A0	11	090010

PARTS N°	FIG. N°	INDEX	PAGE
01010-81680	R0120-01A0	22	300020
01010-81850	K2120-01A0	6	240610
01010-82050	M2210-04A0	28	270130
01010-82050	M2210-04A0	6	270130
01010-82065	K0410-01A0	2	240320
01010-82065	K0410-01A1	2	240330
01010-82065	M2110-01A0	8	270010
01010-82070	T2110-02A1	19	330030
01010-82090	M2210-03A0	3	270120
01010-82090	M2210-03A0	8	270120
01010-82095	M2140-04A0	11	270080
01010-82470	F2380-01A0	35	150380
01010-82470	F2380-02A0	35	150390
01010-82480	T2400-01A0	25	330150
01010-82480	T2810-01A3	16	330170
01010-82490	F2380-01A0	36	150380
01010-82490	F2380-02A0	36	150390
01010-82490	T2810-01A0	9	330160
01010-82495	F2300-01A0	1	150020
01010-B0820	K0110-01A2	2	240030
01010-B0820	K0110-01A4	2	240050
01010-B0820	K0110-01A5	2	240060
01010-B0820	K0110-01A7	2	240080
01010-B0820	K0110-01A8	2	240090
01010-D0635	K0210-02A0	32	240140
01010-D0635	K0210-02A0	8	240140
01010-D0635	K0210-05A0	3	240170
01010-D1220	K0210-01A0	2	240130
01010-D1225	E0310-01A0	7	120120
01010-D1225	E0310-02A0	7	120130
01010-D1230	K0210-04A0	3	240160
01010-D1230	K0210-05A0	10	240170
01011-81000	E0420-01A0	2	120090
01011-81005	K2500-02A3	17	240830
01011-81025	T2400-01A0	14	330150
01011-81210	T2110-02A1	2	330030
01011-81235	F2300-05A0	12	150060
01011-81235	T2160-02A0	26	330120
01011-81240	B0000-10A0	3	030100
01011-81240	B0000-10A0	7	030100
01011-81615	K2110-01B0	17	240400
01011-81615	K2110-01B1	14	240410
01011-81620	B0100-01A0	3	030180
01011-81630	F2300-04A0	14	150050
01011-82020	T2120-01A0A	14	330071
01011-82020	T2120-01A1A	15	330081
01011-82400	F2380-01A0	26	150380
01011-82400	F2380-02A0	26	150390
01011-82445	T2110-01A1	10	330020
01011-83010	T2120-01A0	7	330070

PARTS Nº	FIG. Nº	INDEX	PAGE
01011-83010	T2120-01A1	11	330080
01016-50830	K2400-03A0	15	240760
01016-51030	F2300-12A0	10	150130
01016-51040	B0000-05A0	25	030050
01016-51090	K0710-03A0	9	240360
01016-51250	F2300-11A0	10	150120
01023-10510	K2210-02A1	6	240650
01023-10516	K0210-05A0	30	240170
01023-10520	K0210-09A0	10	240210
01023-10520	K0210-09A0	17	240210
01023-10520	K0210-09A0	29	240210
01023-10608	K2210-02A1	7	240650
01023-10612	K2210-02A1	8	240650
01023-20416	K0210-11A0	10	240230
01023-20416	K0210-11A0	7	240230
01024-81020	F2300-07A0	29	150080
01024-81020	K2110-08B0	25	240490
01024-81020	K2110-14B0	28	240560
01052-51260	T2810-01A0	6	330160
01052-51260	T2810-01A3	10	330170
01099-03417	T2115-01A1	10	330050
01124-52475	T2400-01A0	23	330150
01144-31030	B0000-15A0	3	030150
01144-31035	B0000-15A0	3	030150
01220-40406	M2140-01A0	39	270030
01220-40406	M2140-01A1	16	270040
01220-40406	W2112-01A0	10	420010
01220-40512	K2210-02A0	7	240640
01220-40512	K2210-07A1	16	240700
01220-40616	K0830-01A0	2	240380
01224-40316	K0210-07A0	27	240190
01225-40514	K0210-07A0	18	240190
01225-40820	K0830-01A1	4	240381
01236-40816	K2500-01A0	3	240790
01240-00820	F2300-03A0	8	150040
01245-00612	K0210-02A0	4	240140
01245-00612	K0830-01A1	5	240381
01245-00616	K0210-02A0	24	240140
01245-00616	K0210-02A0	39	240140
01245-00616	K0210-03A0	12	240150
01245-00616	K0210-03A0	3	240150
01245-00616	K0210-05A0	24	240170
01245-00616	K0210-09A0	6	240210
01245-00616	K0210-14A0	16	240260
01245-00616	K0210-14A0	22	240260
01245-00616	K0210-14A0	26	240260
01245-00616	K2210-06A1	12	240690
01245-00620	K0210-01A0	4	240130
01245-00620	K0210-11A0	4	240230
01245-00620	K0210-14A0	32	240260
01245-00620	K0210-16A0	18	240280
01245-00620	K0210-16A0	9	240280
01245-00620	K0210-17A0	2	240290
01245-00620	K0210-17A0	5	240290
01245-00620	K2210-01A0	19	240620
01245-00816	K0210-14A0	9	240260
01245-00816	K2210-03A1	13	240660
01245-00816	K2210-04A1	6	240670
01245-00816	K2210-05A1	12	240680
01245-00816	K2210-05A1	16	240680
01245-00816	K2210-05A1	3	240680
01245-00816	K2210-05A1	8	240680
01245-00816	K2210-06A1	2	240690
01245-00816	K2210-06A1	7	240690
01245-00820	K0210-09A0	18	240210
01245-00825	K0210-02A0	35	240140
01245-00825	K0210-03A0	15	240150
01245-00825	K0210-08A0	2	240200
01245-00825	K0210-13A0	3	240250
01245-00840	K0210-14A0	7	240260
01245-01230	K0210-16A0	14	240280
01245-01230	K0210-16A0	22	240280
01245-01230	K0210-16A0	30	240280
01245-0825	K0110-02A2	18	240101
01252-40514	K0210-07A0	24	240190
01252-40820	K2110-12B0	7	240540
01252-41030	K2110-02B0	3	240420
01252-60616	Y1663-02A0	31	450100
01252-60616	Y1664-02A0	31	450140
01252-60616	Y1664-07A0	14	450190
01252-60620	Y1663-02A0	33	450100
01252-60620	Y1664-02A0	33	450140
01252-60625	Y1663-02A0	32	450100
01252-60625	Y1664-02A0	32	450140
01252-60835	Y1670-01A0	20	450200
01252-70514	H0100-01A0	7	180010
01322-40616	K0110-01A1	17	240020
01322-40616	K0110-01A3	17	240040
01322-40616	K0110-01A6	17	240070
01370-00408	K0210-10A0	4	240220
01370-10308	K0210-14A0	19	240260
01370-40308	K0210-14A0	29	240260
01370-40408	K0210-16A0	36	240280
01370-40412	K0210-12A0	18	240240
01435-00614	B0000-01A0	2	030010
01435-00620	Y1670-01A0	14	450200
01435-00814	C0100-01A0	4	060010
01435-00816	B0000-04A0	11	030040
01435-00816	B0000-15A0	2	030150
01435-00816	B0000-15A0	3	030150
01435-00825	B0000-09A0	1	030090
01435-00825	B0000-12A0	1	030120
01435-00850	K0410-01A1	6	240330
01435-00895	B0000-01A0	9	030010
01435-01016	B0000-04A0	2	030040
01435-01016	B0000-04A0	9	030040
01435-01016	B0000-05A0	22	030050
01435-01020	B0000-04A0	3	030040
01435-01025	B0000-05A0	16	030050
01435-01025	B0000-05A0	19	030050
01435-01030	B0000-05A0	2	030050
01435-01030	B0000-13A0	2	030130
01435-01040	B0000-15A0	2	030150
01435-01075	B0000-04A0	7	030040
01435-01080	B0000-05A0	8	030050
01435-01220	B0000-15A0	5	030150
01435-01240	B0000-02A0	23	030020
01435-20814	C0100-01A1	4	060020
01435-20814	C0100-01A2	4	060030
01435-21016	C0100-03A3	2	060050
01435-40816	K0860-01A0	2	240390
01436-01030	B0000-02A0	20	030020
01436-01030	B0000-04A0	14	030040
01436-01030	B0000-05A0	13	030050
01439-00814	K2500-02A0	13	240800
01439-00814	K2500-02A0	8	240800
01439-00814	K2500-02A1	15	240810
01439-00814	K2500-02A1	8	240810
01439-00814	K2500-02A2	13	240820
01439-00814	K2500-02A2	8	240820
01439-00814	K2500-02A3	13	240830
01439-00814	K2500-02A3	8	240830
01439-00820	K2500-02A0	19	240800
01439-00820	K2500-02A1	21	240810
01439-00820	K2500-02A2	25	240820
01439-00820	K2500-02A3	26	240830
01439-00825	K2500-02A0	11	240800
01439-00825	K2500-02A1	11	240810
01439-00825	K2500-02A2	11	240820
01439-00825	K2500-02A2	15	240820
01439-00825	K2500-02A3	11	240830
01439-00825	K2500-02A3	15	240830
01439-01025	K2500-02A0	21	240800
01439-01025	K2500-02A1	23	240810
01439-01025	K2500-02A2	27	240820
01439-01025	K2500-02A3	28	240830
01439-01225	K2110-17B1	2	240590
01439-01225	M2210-07A0	19	270150
01439-01225	M2210-07A0	26	270150
01439-01225	W2112-01A0	17	420010

PARTS Nº	FIG. Nº	INDEX	PAGE
01439-01230	W2112-01A0	16	420010
01508-20805	K2110-06B0	5	240470
01508-40603	K2400-03A0	32	240760
01508-40805	F2300-11A0	27	150120
01508-40805	F2300-12A0	21	150130
01508-40805	F2820-01A0	14	150430
01508-40805	K2110-03B0	14	240430
01508-40805	K2110-06B0	29	240470
01508-40805	K2110-07B0	18	240480
01508-40805	K2110-10B0	13	240520
01508-40805	K2241-01A0	24	240720
01508-40805	K2241-01A0	32	240720
01508-40805	K2241-01A0	35	240720
01508-40805	K2241-01A0	38	240720
01508-40805	K2241-01A1	26	240730
01508-40805	K2241-01A1	33	240730
01508-40805	K2241-01A1	36	240730
01508-40805	K2241-01A1	39	240730
01508-40805	K2241-01A1	42	240730
01508-41006	K2110-07B0	27	240480
01508-41006	K2110-08B0	18	240490
01508-41006	K2241-01A0	29	240720
01508-41006	K2241-01A1	30	240730
01508-41408	F2300-11A0	20	150120
01508-41408	F2320-13A0	23	150370
01508-41408	K2400-02A0	23	240750
01508-41408	K2400-04A0	9	240770
01571-00814	K2110-04B0	31	240440
01580-00210	K0110-01A3	26	240040
01580-00806	Y1670-01A0	42	450200
01580-10504	B0000-01A0	6	030010
01580-10605	K0210-05A0	29	240170
01580-10605	K2210-01A0	22	240620
01580-10605	K2400-03A0	29	240760
01580-10806	F2300-11A0	25	150120
01580-10806	F2300-12A0	19	150130
01580-10806	F2320-09A0	11	150330
01580-10806	F2320-09A0	19	150330
01580-10806	F2820-01A0	11	150430
01580-10806	F2820-01A0	15	150430
01580-10806	F2820-01A0	7	150430
01580-10806	K0110-02A2	2	240101
01580-10806	K0210-02A0	15	240140
01580-10806	K0710-01A0	25	240340
01580-10806	K2110-03B0	12	240430
01580-10806	K2110-04B0	14	240440
01580-10806	K2110-04B0	25	240440
01580-10806	K2110-04B0	28	240440
01580-10806	K2110-05B0	27	240460
01580-10806	K2110-06B0	25	240470
01580-10806	K2110-06B0	4	240470
01580-10806	K2110-07B0	19	240480
01580-10806	K2110-09B0	16	240500
01580-10806	K2110-09B1	16	240510
01580-10806	K2110-10B0	11	240520
01580-10806	K2241-01A0	21	240720
01580-10806	K2241-01A0	30	240720
01580-10806	K2241-01A0	33	240720
01580-10806	K2241-01A0	36	240720
01580-10806	K2241-01A1	23	240730
01580-10806	K2241-01A1	31	240730
01580-10806	K2241-01A1	34	240730
01580-10806	K2241-01A1	37	240730
01580-10806	K2241-01A1	40	240730
01580-10806	K2400-03A0	16	240760
01580-10806	K2400-03A0	22	240760
01580-11008	B0000-05A0	9	030050
01580-11008	E0210-01A0	3	120060
01580-11008	F2300-12A0	11	150130
01580-11008	K0210-04A0	6	240160
01580-11008	K0210-05A0	17	240170
01580-11008	K0710-03A0	10	240360
01580-11008	K2110-02B0	11	240420
01580-11008	K2241-01A0	27	240720
01580-11008	T2400-01A0	10	330150
01580-11008	T2400-01A0	16	330150
01580-11210	F2300-11A0	11	150120
01580-11210	K0110-01A0	6	240010
01580-11210	K0110-01A1	26	240020
01580-11210	K0110-01A1	40	240020
01580-11210	K0110-01A3	40	240040
01580-11210	K0110-01A6	26	240070
01580-11210	K0110-01A6	40	240070
01580-11210	K0210-16A0	33	240280
01580-11210	K2400-02A0	17	240750
01580-11210	K2400-03A0	6	240760
01580-11613	R2200-01A0	13	300120
01580-11613	R2200-01A1	20	300121
01580-11613	R2200-02A0	25	300130
01580-11613	R2200-02A0	7	300130
01580-11613	R2200-02A1	32	300131
01580-11613	R2200-02A1	7	300131
01580-12419	T2400-01A0	24	330150
01580-12419	T2810-01A3	15	330170
01582-11008	K2110-02B0	6	240420
01582-11008	K2110-08B0	14	240490
01582-11008	K2110-08B0	20	240490
01582-11210	K0110-02A2	4	240101
01582-11411	F2300-11A0	23	150120
01582-11411	F2320-13A0	20	150370
01582-11411	K2400-02A0	21	240750
01582-11411	K2400-04A0	11	240770
01582-11613	R0100-01A0	18	300010
01583-11006	K2110-09B0	29	240500
01583-11006	K2241-01A1	17	240730
01583-11408	F2300-09A0	11	150100
01583-11408	F2300-10A0	10	150110
01583-11408	F2300-10A0	20	150110
01583-12414	F2300-16A0	13	150170
01584-01008	B0000-15A0	4	030150
01590-30809	F2300-11A0	29	150120
01590-30809	F2300-12A0	15	150130
01590-30809	F2300-12A0	22	150130
01590-30809	K0210-02A0	21	240140
01590-30809	K2110-05B0	32	240460
01590-30809	K2110-06B0	12	240470
01590-30809	K2110-06B0	26	240470
01590-30809	K2110-10B0	15	240520
01590-30809	K2110-11B0	3	240530
01590-30809	K2110-11B0	7	240530
01592-11215	T2810-01A3	9	330170
01592-31215	T2810-01A0	7	330160
01593-11008	K2110-07B0	24	240480
01593-31411	F2300-11A0	18	150120
01593-31411	F2320-13A0	18	150370
01593-31411	K2400-02A0	18	240750
01593-31411	K2400-04A0	7	240770
01594-00807	K2210-04A1	10	240670
01594-01008	M2140-01A0	14	270030
01596-00807	H2220-01A0	27	180110
01596-00807	H2230-01A0	20	180120
01596-00807	H2250-01A0	17	180130
01597-01009	F2300-18A0	30	150190
01597-01009	F2300-18A1	29	150200
01597-01009	F2300-20A0	6	150220
01597-01009	H2220-01A0	15	180110
01598-00608	F2820-01A0	24	150430
01598-00809	F2820-01A0	5	150430
01598-00809	K2110-09B0	23	240500
01598-00809	K2110-09B1	21	240510
01598-00809	K2400-03A0	20	240760
01598-01214	T2110-02A1	3	330030
01601-20513	H0100-01A0	8	180010
01602-20619	K0830-01A0	3	240380
01602-21030	H0120-01A0	15	180020
01602-21030	K0110-01A1	12	240020
01602-21030	K0110-01A1	23	240020
01602-21030	K0110-01A1	36	240020
01602-21030	K0110-01A1	8	240020
01602-21030	K0110-01A3	12	240040

PARTS N°	FIG. N°	INDEX	PAGE
01602-21030	K0110-01A3	23	240040
01602-21030	K0110-01A3	36	240040
01602-21030	K0110-01A3	8	240040
01602-21030	K0110-01A6	12	240070
01602-21030	K0110-01A6	23	240070
01602-21030	K0110-01A6	36	240070
01602-21030	K0110-01A6	8	240070
01602-21030	T2400-01A0	15	330150
01602-21030	T2400-01A0	9	330150
01602-31236	K0110-01A1	27	240020
01602-31236	K0110-01A3	27	240040
01602-31236	K0110-01A6	27	240070
01640-20610	B0500-01A0	25	030190
01640-20610	F2820-01A0	25	150430
01640-20816	K0210-02A0	17	240140
01640-20816	Y1670-01A0	41	450200
01640-21016	F2320-13A0	11	150370
01640-21016	M2140-01A0	13	270030
01640-21626	F2300-09A0	26	150100
01640-50508	K0210-07A0	19	240190
01640-50508	K0210-07A0	25	240190
01641-20405	M2140-01A0	40	270030
01641-20405	M2140-01A1	17	270040
01641-20508	B0000-01A0	7	030010
01641-20508	K2210-02A0	8	240640
01641-20508	K2210-07A1	17	240700
01641-20608	F2820-01A0	17	150430
01641-20608	K0710-02A0	39	240350
01641-20608	K2110-09B0	11	240500
01641-20608	K2110-09B1	12	240510
01641-20608	K2400-03A0	30	240760
01641-20608	K2400-05A0	7	240780
01641-20812	M2140-02A0	17	270050
01641-20812	M2140-02A1	17	270060
01641-21016	M2210-01A0	3	270090
01641-21016	M2210-02A0	3	270100
01641-21016	M2210-02A1	3	270110
01641-21223	K2400-02A0	15	240750
01643-30623	E0200-04A0	10	120050
01643-30623	E0200-04A0	7	120050
01643-30623	F2300-11A0	9	150120
01643-30623	F2300-14A0	17	150150
01643-30623	F2820-01A0	32	150430
01643-30623	F2820-01A0	36	150430
01643-30623	K0110-01A1	39	240020
01643-30623	K0110-01A3	39	240040
01643-30623	K0110-01A6	39	240070
01643-30623	K2110-08B0	10	240490
01643-30623	K2210-01A0	12	240620
01643-30623	K2210-01A0	25	240620
01643-30623	K2210-01A0	28	240620
01643-30623	K2210-02A0	11	240640
01643-30623	K2210-07A1	20	240700
01643-30623	K2210-07A1	4	240700
01643-30623	K2910-01A0	3	240860
01643-30623	M2140-04A0	18	270080
01643-30623	Y1670-01A0	35	450200
01643-30823	B0500-01A0	13	030190
01643-30823	B0500-01A0	20	030190
01643-30823	C0100-02A0	22	060040
01643-30823	C0100-02A0	28	060040
01643-30823	D0210-01A0	7	090030
01643-30823	E0300-01A0	9	120070
01643-30823	F2300-18A0	19	150190
01643-30823	F2300-18A0	25	150190
01643-30823	F2300-18A1	19	150200
01643-30823	F2300-18A1	24	150200
01643-30823	F2320-09A0	37	150330
01643-30823	F2320-10A0	7	150340
01643-30823	F2320-10A0	9	150340
01643-30823	H0120-01A1	9	180030
01643-30823	H0120-01A2	9	180040
01643-30823	H2210-01A0	9	180090
01643-30823	H2210-01A1	8	180100
01643-30823	H2220-01A0	28	180110
01643-30823	H2230-01A0	21	180120
01643-30823	H2250-01A0	18	180130
01643-30823	K0110-01A0	5	240010
01643-30823	K0110-01A2	3	240030
01643-30823	K0110-01A4	3	240050
01643-30823	K0110-01A5	3	240060
01643-30823	K0110-01A7	3	240080
01643-30823	K0110-01A8	3	240090
01643-30823	K0710-01A0	26	240340
01643-30823	K0710-02A0	5	240350
01643-30823	K0710-03A0	14	240360
01643-30823	K0710-03A0	23	240360
01643-30823	K0710-03A0	26	240360
01643-30823	K0710-03A0	29	240360
01643-30823	K0710-03A0	3	240360
01643-30823	K0710-04A0	21	240370
01643-30823	K2110-03B0	18	240430
01643-30823	K2110-04B0	13	240440
01643-30823	K2110-04B0	17	240440
01643-30823	K2110-04B0	19	240440
01643-30823	K2110-04B0	24	240440
01643-30823	K2110-04B0	30	240440
01643-30823	K2110-04B0	32	240440
01643-30823	K2110-04B1	11	240450
01643-30823	K2110-04B1	18	240450
01643-30823	K2110-04B1	23	240450
01643-30823	K2110-04B1	5	240450
01643-30823	K2110-04B1	7	240450
01643-30823	K2110-05B0	14	240460
01643-30823	K2110-05B0	19	240460
01643-30823	K2110-05B0	28	240460
01643-30823	K2110-05B0	34	240460
01643-30823	K2110-06B0	17	240470
01643-30823	K2110-06B0	21	240470
01643-30823	K2110-06B0	35	240470
01643-30823	K2110-06B0	6	240470
01643-30823	K2110-07B0	11	240480
01643-30823	K2110-07B0	5	240480
01643-30823	K2110-07B0	9	240480
01643-30823	K2110-09B0	15	240500
01643-30823	K2110-09B0	8	240500
01643-30823	K2110-09B1	9	240510
01643-30823	K2110-10B0	10	240520
01643-30823	K2110-10B0	7	240520
01643-30823	K2110-12B0	3	240540
01643-30823	K2210-01A0	10	240620
01643-30823	K2210-02A1	3	240650
01643-30823	K2210-03A1	12	240660
01643-30823	K2210-03A1	22	240660
01643-30823	K2210-03A1	7	240660
01643-30823	K2210-08A1	12	240710
01643-30823	K2210-08A1	5	240710
01643-30823	K2210-08A1	9	240710
01643-30823	K2241-01A0	17	240720
01643-30823	K2241-01A1	19	240730
01643-30823	K2400-03A0	25	240760
01643-30823	K2400-03A0	9	240760
01643-30823	K2500-01A0	14	240790
01643-30823	K2500-02A0	25	240800
01643-30823	K2500-02A2	31	240820
01643-30823	K2500-02A3	32	240830
01643-30823	M2140-01A0	37	270030
01643-30823	M2140-01A1	14	270040
01643-30823	R0120-01A0	12	300020
01643-31032	B0000-02A0	21	030020
01643-31032	B0000-02A0	24	030020
01643-31032	B0000-04A0	4	030040
01643-31032	B0000-04A0	6	030040
01643-31032	B0000-05A0	10	030050
01643-31032	B0000-05A0	14	030050
01643-31032	B0000-05A0	17	030050
01643-31032	B0000-05A0	20	030050
01643-31032	B0000-05A0	23	030050
01643-31032	B0000-05A0	3	030050
01643-31032	B0000-07A0	7	030070

PARTS N°	FIG. N°	INDEX	PAGE
01643-31032	B0000-07A0	7	030070
01643-31032	B0000-13A0	5	030130
01643-31032	B0500-01A0	11	030190
01643-31032	B0500-01A0	32	030190
01643-31032	B0500-01A0	34	030190
01643-31032	B0500-01A0	43	030190
01643-31032	B0500-01A0	9	030190
01643-31032	B0600-01A0	11	030200
01643-31032	B0600-01A0	17	030200
01643-31032	C0100-01A0	10	060010
01643-31032	C0100-01A0	17	060010
01643-31032	C0100-01A0	20	060010
01643-31032	C0100-01A0	7	060010
01643-31032	C0100-01A1	10	060020
01643-31032	C0100-01A1	17	060020
01643-31032	C0100-01A1	20	060020
01643-31032	C0100-01A1	7	060020
01643-31032	C0100-01A2	10	060030
01643-31032	C0100-01A2	17	060030
01643-31032	C0100-01A2	20	060030
01643-31032	C0100-01A2	7	060030
01643-31032	C0100-02A0	10	060040
01643-31032	C0100-02A0	14	060040
01643-31032	C0100-02A0	18	060040
01643-31032	C0100-02A0	33	060040
01643-31032	D0100-01A0	10	090010
01643-31032	D0210-01A0	25	090030
01643-31032	E0200-01A0	11	120020
01643-31032	E0200-01A0	13	120020
01643-31032	E0200-01A0	19	120020
01643-31032	E0200-01A0	24	120020
01643-31032	E0200-01A0	4	120020
01643-31032	E0200-01A0	6	120020
01643-31032	E0200-02A0	10	120030
01643-31032	E0200-02A0	14	120030
01643-31032	E0200-02A0	20	120030
01643-31032	E0200-02A0	29	120030
01643-31032	E0200-02A0	32	120030
01643-31032	E0200-02A0	39	120030
01643-31032	E0200-02A0	4	120030
01643-31032	E0200-02A0	7	120030
01643-31032	E0200-04A0	4	120050
01643-31032	E0210-01A0	12	120060
01643-31032	E0210-01A0	4	120060
01643-31032	E0320-01A1	11	120081
01643-31032	E0320-01A1	13	120081
01643-31032	E0320-01A1	17	120081
01643-31032	E0320-01A1	9	120081
01643-31032	E0420-01A0	3	120090
01643-31032	E0420-01A0	7	120090
01643-31032	F2300-02A0	2	150030
01643-31032	F2300-02A0	22	150030
01643-31032	F2300-06A0	18	150070
01643-31032	F2300-07A0	30	150080
01643-31032	F2300-07A0	34	150080
01643-31032	F2300-07A0	40	150080
01643-31032	F2300-11A0	13	150120
01643-31032	F2300-12A0	13	150130
01643-31032	F2300-12A0	9	150130
01643-31032	F2300-13A0	14	150140
01643-31032	F2300-18A0	13	150190
01643-31032	F2300-18A0	31	150190
01643-31032	F2300-18A0	7	150190
01643-31032	F2300-18A1	13	150200
01643-31032	F2300-18A1	30	150200
01643-31032	F2300-18A1	7	150200
01643-31032	F2300-19A0	3	150210
01643-31032	F2300-20A0	7	150220
01643-31032	F2300-22A0	7	150240
01643-31032	F2320-04A0	31	150280
01643-31032	F2320-08A0	16	150320
01643-31032	F2320-12A0	3	150360
01643-31032	F2320-13A0	16	150370
01643-31032	F2320-13A0	9	150370
01643-31032	F2380-01A0	15	150380
01643-31032	F2380-02A0	15	150390
01643-31032	F2730-01A0	16	150410
01643-31032	F2730-01A0	8	150410
01643-31032	F2730-02A0	16	150420
01643-31032	F2820-01A0	29	150430
01643-31032	H0120-01A1	7	180030
01643-31032	H0120-01A2	7	180040
01643-31032	H0310-01A1	27	180060
01643-31032	H0310-02A0	10	180070
01643-31032	H0310-03A0	11	180080
01643-31032	H2220-01A0	16	180110
01643-31032	H2220-01A0	18	180110
01643-31032	H2220-01A0	21	180110
01643-31032	H2230-01A0	13	180120
01643-31032	K0110-01A1	21	240020
01643-31032	K0110-01A3	21	240040
01643-31032	K0110-01A6	21	240070
01643-31032	K0210-17A0	9	240290
01643-31032	K0710-02A0	12	240350
01643-31032	K0710-02A0	18	240350
01643-31032	K0710-02A0	32	240350
01643-31032	K0710-02A0	35	240350
01643-31032	K0710-02A0	8	240350
01643-31032	K0710-03A0	20	240360
01643-31032	K0710-03A0	32	240360
01643-31032	K0710-04A0	17	240370
01643-31032	K2110-01B0	11	240400
01643-31032	K2110-01B0	8	240400
01643-31032	K2110-01B1	8	240410
01643-31032	K2110-02B0	4	240420
01643-31032	K2110-07B0	13	240480
01643-31032	K2110-07B0	2	240480
01643-31032	K2110-07B0	22	240480
01643-31032	K2110-08B0	27	240490
01643-31032	K2110-08B0	3	240490
01643-31032	K2110-08B0	6	240490
01643-31032	K2110-09B0	25	240500
01643-31032	K2110-09B1	24	240510
01643-31032	K2110-11B0	2	240530
01643-31032	K2110-12B0	6	240540
01643-31032	K2110-13B0	11	240550
01643-31032	K2110-13B0	14	240550
01643-31032	K2110-13B0	8	240550
01643-31032	K2110-14B0	14	240560
01643-31032	K2110-14B0	18	240560
01643-31032	K2110-14B0	21	240560
01643-31032	K2110-14B0	25	240560
01643-31032	K2110-14B0	29	240560
01643-31032	K2110-14B0	33	240560
01643-31032	K2110-15B0	6	240570
01643-31032	K2120-01A0	3	240610
01643-31032	K2210-02A0	14	240640
01643-31032	K2210-02A0	17	240640
01643-31032	K2210-02A0	24	240640
01643-31032	K2210-02A0	33	240640
01643-31032	K2210-02A1	5	240650
01643-31032	K2210-03A1	17	240660
01643-31032	K2210-07A1	6	240700
01643-31032	K2210-07A1	9	240700
01643-31032	K2500-01A0	16	240790
01643-31032	K2500-01A0	20	240790
01643-31032	K2500-01A0	5	240790
01643-31032	K2500-01A0	9	240790
01643-31032	K2500-02A0	4	240800
01643-31032	K2500-02A1	4	240810
01643-31032	K2500-02A2	18	240820
01643-31032	K2500-02A2	4	240820
01643-31032	K2500-02A3	18	240830
01643-31032	K2500-02A3	4	240830
01643-31032	K2910-01A0	12	240860
01643-31032	K2910-01A0	18	240860
01643-31032	K2910-01A0	22	240860
01643-31032	K2910-01A0	25	240860
01643-31032	K2910-01A0	29	240860
01643-31032	K2910-01A0	7	240860

PARTS Nº	FIG. Nº	INDEX	PAGE
01643-31032	M2140-02A0	10	270050
01643-31032	M2140-02A0	7	270050
01643-31032	M2140-02A1	10	270060
01643-31032	M2140-02A1	7	270060
01643-31032	M2210-02A0	4	270100
01643-31032	M2210-02A1	4	270110
01643-31032	M2240-01A0	6	270160
01643-31032	M2240-01A1	6	270170
01643-31032	T2110-01A0	18	330010
01643-31032	T2115-01A0	25	330040
01643-31032	T2160-01A0	12	330110
01643-31032	T2160-02A0	15	330120
01643-31032	T2160-02A0	19	330120
01643-31032	T2160-02A0	22	330120
01643-31032	Y1663-01A0	12	450090
01643-31032	Y1664-01A0	12	450130
01643-31232	B0000-04A0	15	030040
01643-31232	B0000-07A0	9	030070
01643-31232	B0000-10A0	4	030100
01643-31232	B0000-10A0	8	030100
01643-31232	B0500-01A0	18	030190
01643-31232	B0500-01A0	40	030190
01643-31232	B0500-01A0	46	030190
01643-31232	C0100-02A0	25	060040
01643-31232	D0200-01A0	11	090020
01643-31232	D0200-01A0	15	090020
01643-31232	D0210-01A0	16	090030
01643-31232	D0210-01A0	9	090030
01643-31232	E0200-02A0	17	120030
01643-31232	E0200-02A0	22	120030
01643-31232	E0200-02A0	25	120030
01643-31232	E0200-02A0	35	120030
01643-31232	E0300-01A0	13	120070
01643-31232	E0300-01A0	6	120070
01643-31232	E0320-01A0	4	120080
01643-31232	E0320-01A1	5	120081
01643-31232	F2300-02A0	17	150030
01643-31232	F2300-03A0	23	150040
01643-31232	F2300-03A0	29	150040
01643-31232	F2300-03A0	4	150040
01643-31232	F2300-05A0	13	150060
01643-31232	F2300-07A0	43	150080
01643-31232	F2300-09A0	15	150100
01643-31232	F2300-09A0	4	150100
01643-31232	F2300-10A0	13	150110
01643-31232	F2300-10A0	3	150110
01643-31232	F2300-10A0	30	150110
01643-31232	F2300-11A0	15	150120
01643-31232	F2300-13A0	17	150140
01643-31232	F2300-14A0	22	150150
01643-31232	F2300-16A0	25	150170
01643-31232	F2300-17A0	2	150180
01643-31232	F2300-18A0	4	150190
01643-31232	F2300-18A1	4	150200
01643-31232	F2300-20A0	11	150220
01643-31232	F2300-20A0	3	150220
01643-31232	F2300-21A0	23	150230
01643-31232	F2300-22A0	13	150240
01643-31232	F2320-05A0	10	150290
01643-31232	F2320-05A0	18	150290
01643-31232	F2320-05A0	26	150290
01643-31232	F2320-06A0	18	150300
01643-31232	F2320-06A0	5	150300
01643-31232	F2320-07A0	9	150310
01643-31232	F2320-08A0	9	150320
01643-31232	F2380-01A0	24	150380
01643-31232	F2380-02A0	24	150390
01643-31232	F2730-01A0	19	150410
01643-31232	F2730-01A0	27	150410
01643-31232	F2730-01A0	4	150410
01643-31232	F2730-02A0	10	150420
01643-31232	H0120-01A0	13	180020
01643-31232	H0120-01A0	2	180020
01643-31232	H0120-01A0	8	180020
01643-31232	H0120-01A1	14	180030
01643-31232	H0120-01A1	2	180030
01643-31232	H0120-01A2	14	180040
01643-31232	H0120-01A2	2	180040
01643-31232	H0310-01A0	17	180050
01643-31232	H0310-01A0	5	180050
01643-31232	H0310-01A0	7	180050
01643-31232	H0310-01A1	17	180060
01643-31232	H0310-01A1	5	180060
01643-31232	H0310-01A1	7	180060
01643-31232	H0310-02A0	17	180070
01643-31232	H0310-02A0	22	180070
01643-31232	H0310-03A0	8	180080
01643-31232	H2210-01A0	17	180090
01643-31232	H2210-01A0	19	180090
01643-31232	H2210-01A1	14	180100
01643-31232	H2210-01A1	16	180100
01643-31232	H2220-01A0	24	180110
01643-31232	H2220-01A0	30	180110
01643-31232	H2230-01A0	16	180120
01643-31232	H2230-01A0	23	180120
01643-31232	H2250-01A0	13	180130
01643-31232	H2250-01A0	20	180130
01643-31232	J2100-01A0	13	210010
01643-31232	J2100-01A0	19	210010
01643-31232	J2100-01A0	22	210010
01643-31232	J2100-01A0	25	210010
01643-31232	J2100-01A0	28	210010
01643-31232	J2100-01A0	31	210010
01643-31232	J2100-01A0	35	210010
01643-31232	J2100-01A1	13	210020
01643-31232	J2100-01A1	19	210020
01643-31232	J2100-01A1	22	210020
01643-31232	J2100-01A1	25	210020
01643-31232	J2100-01A1	28	210020
01643-31232	J2100-01A1	31	210020
01643-31232	J2100-01A1	35	210020
01643-31232	K0110-01A0	11	240010
01643-31232	K0110-01A0	7	240010
01643-31232	K0110-01A1	41	240020
01643-31232	K0110-01A2	6	240030
01643-31232	K0110-01A3	41	240040
01643-31232	K0110-01A4	8	240050
01643-31232	K0110-01A5	6	240060
01643-31232	K0110-01A6	41	240070
01643-31232	K0110-01A7	7	240080
01643-31232	K0110-01A8	7	240090
01643-31232	K0110-02A1	4	240100
01643-31232	K0110-02A2	10	240101
01643-31232	K0110-02A2	15	240101
01643-31232	K0110-02A2	5	240101
01643-31232	K0120-01A0	4	240110
01643-31232	K0210-15A0	5	240270
01643-31232	K0410-01A0	7	240320
01643-31232	K0410-01A1	12	240330
01643-31232	K0410-01A1	8	240330
01643-31232	K0411-01A0	4	240355
01643-31232	K0710-01A0	19	240340
01643-31232	K0710-01A0	29	240340
01643-31232	K0710-02A0	25	240350
01643-31232	K0710-02A0	29	240350
01643-31232	K0710-02A0	3	240350
01643-31232	K0710-03A0	5	240360
01643-31232	K0710-03A0	8	240360
01643-31232	K0710-04A0	12	240370
01643-31232	K0710-04A0	19	240370
01643-31232	K0860-01A0	5	240390
01643-31232	K2110-01B0	5	240400
01643-31232	K2110-01B1	5	240410
01643-31232	K2110-02B0	8	240420
01643-31232	K2110-06B0	11	240470
01643-31232	K2110-12B0	10	240540
01643-31232	K2210-01A0	4	240620
01643-31232	K2210-08A1	18	240710
01643-31232	K2241-01A0	42	240720
01643-31232	K2241-01A1	46	240730

PARTS Nº	FIG. Nº	INDEX	PAGE
01643-31232	K2400-01A0	11	240740
01643-31232	K2400-01A0	6	240740
01643-31232	K2400-03A0	14	240760
01643-31232	K2400-04A0	5	240770
01643-31232	K2400-05A0	4	240780
01643-31232	K2810-01A0	4	240840
01643-31232	K2810-01A1	10	240850
01643-31232	K2810-01A1	4	240850
01643-31232	K2810-01A1	7	240850
01643-31232	K2910-01A0	20	240860
01643-31232	M2110-01A0	12	270010
01643-31232	M2110-01A0	15	270010
01643-31232	M2140-01A0	24	270030
01643-31232	M2140-01A0	31	270030
01643-31232	M2140-01A0	43	270030
01643-31232	M2140-01A1	10	270040
01643-31232	M2140-01A1	20	270040
01643-31232	M2140-02A1	23	270060
01643-31232	M2140-02A1	29	270060
01643-31232	M2140-02A1	32	270060
01643-31232	M2140-03A0	11	270070
01643-31232	M2140-03A0	14	270070
01643-31232	M2140-03A0	5	270070
01643-31232	M2140-04A0	10	270080
01643-31232	M2140-04A0	22	270080
01643-31232	M2210-01A0	4	270090
01643-31232	M2210-02A0	5	270100
01643-31232	M2210-02A1	5	270110
01643-31232	M2210-04A0	10	270130
01643-31232	M2210-04A0	14	270130
01643-31232	M2210-04A0	19	270130
01643-31232	M2210-04A0	22	270130
01643-31232	M2210-04A0	25	270130
01643-31232	M2210-04A0	32	270130
01643-31232	M2210-04A0	36	270130
01643-31232	M2210-04A0	4	270130
01643-31232	M2210-07A0	12	270150
01643-31232	M2210-07A0	14	270150
01643-31232	M2210-07A0	18	270150
01643-31232	M2210-07A0	21	270150
01643-31232	M2210-07A0	25	270150
01643-31232	M2210-07A0	6	270150
01643-31232	M2210-07A0	9	270150
01643-31232	M2240-01A0	8	270160
01643-31232	M2240-01A1	8	270170
01643-31232	M2811-01A0	6	270180
01643-31232	M2811-01A2	6	270190
01643-31232	R2200-01A1	17	300121
01643-31232	R2200-02A0	12	300130
01643-31232	R2200-02A1	12	300131
01643-31232	R2200-02A1	29	300131
01643-31232	T2110-01A0	5	330010
01643-31232	T2110-02A1	15	330030
01643-31232	T2115-01A0	11	330040
01643-31232	T2115-01A0	16	330040
01643-31232	T2115-02A0	14	330060
01643-31232	T2115-02A0	19	330060
01643-31232	T2115-02A0	24	330060
01643-31232	T2115-02A0	4	330060
01643-31232	T2115-02A0	9	330060
01643-31232	T2120-01A0	13	330070
01643-31232	T2120-01A0A	11	330071
01643-31232	T2120-01A0A	19	330071
01643-31232	T2120-01A1	16	330080
01643-31232	T2120-01A1A	12	330081
01643-31232	T2120-01A1A	20	330081
01643-31232	T2160-01A0	23	330110
01643-31232	T2160-01A0	26	330110
01643-31232	T2160-01A0	31	330110
01643-31232	T2160-01A0	5	330110
01643-31232	T2160-02A0	11	330120
01643-31232	T2160-02A0	27	330120
01643-31232	T2160-02A0	6	330120
01643-31232	T2160-03A0	4	330130
01643-31232	T2160-03A0	8	330130
01643-31232	T2160-04A0	11	330140
01643-31232	T2160-04A0	7	330140
01643-31232	Y1621-01A0	22	450080
01643-31445	C0100-02A0	16	060040
01643-31445	F2300-12A0	7	150130
01643-31445	F2320-07A0	15	150310
01643-31445	F2320-13A0	7	150370
01643-31445	T2115-01A1	16	330050
01643-31645	D0100-01A0	12	090010
01643-31645	F2300-04A0	15	150050
01643-31645	F2300-09A0	25	150100
01643-31645	F2300-09A0	9	150100
01643-31645	F2300-10A0	18	150110
01643-31645	F2300-10A0	24	150110
01643-31645	F2300-10A0	8	150110
01643-31645	F2320-06A0	16	150300
01643-31645	F2380-01A0	4	150380
01643-31645	F2380-02A0	4	150390
01643-31645	F2380-03A0	4	150400
01643-31645	H0100-01A0	13	180010
01643-31645	J2100-01A0	16	210010
01643-31645	J2100-01A1	16	210020
01643-31645	K2110-01B0	18	240400
01643-31645	K2110-01B1	15	240410
01643-31645	K2120-01A0	11	240610
01643-31645	K2120-01A0	9	240610
01643-31645	M2110-01A0	7	270010
01643-31645	M2811-01A0	3	270180
01643-31645	M2811-01A2	3	270190
01643-31645	R0100-01A0	17	300010
01643-31645	R0100-01A0	23	300010
01643-31645	R0120-01A0	23	300020
01643-31645	R0200-01A0	13	300030
01643-31645	R0300-01A0	14	300050
01643-31645	R2200-01A0	10	300120
01643-31645	R2200-01A0	14	300120
01643-31645	R2200-01A0	19	300120
01643-31645	R2200-01A0	3	300120
01643-31645	R2200-01A0	6	300120
01643-31645	R2200-01A1	12	300121
01643-31645	R2200-01A1	14	300121
01643-31645	R2200-01A1	21	300121
01643-31645	R2200-01A1	26	300121
01643-31645	R2200-01A1	3	300121
01643-31645	R2200-01A1	6	300121
01643-31645	R2200-02A0	15	300130
01643-31645	R2200-02A0	18	300130
01643-31645	R2200-02A0	22	300130
01643-31645	R2200-02A0	26	300130
01643-31645	R2200-02A0	4	300130
01643-31645	R2200-02A0	8	300130
01643-31645	R2200-02A1	15	300131
01643-31645	R2200-02A1	18	300131
01643-31645	R2200-02A1	24	300131
01643-31645	R2200-02A1	26	300131
01643-31645	R2200-02A1	33	300131
01643-31645	R2200-02A1	4	300131
01643-31645	R2200-02A1	8	300131
01643-31645	T2110-01A1	18	330020
01643-31645	T2120-01A0	16	330070
01643-31645	T2120-01A0A	22	330071
01643-31645	T2120-01A1	19	330080
01643-31645	T2120-01A1A	23	330081
01643-31845	K2120-01A0	7	240610
01643-32060	M2110-01A0	9	270010
01643-32060	M2140-04A0	12	270080
01643-32060	M2210-04A0	29	270130
01643-32060	M2210-04A0	7	270130
01643-32060	T2110-01A0	21	330010
01643-32060	T2110-02A1	20	330030
01643-32060	T2120-01A0A	15	330071
01643-32060	T2120-01A1A	16	330081
01643-32460	F2300-01A0	2	150020
01643-32460	F2380-01A0	37	150380
01643-32460	F2380-02A0	37	150390

PARTS Nº	FIG. Nº	INDEX	PAGE
01643-32460	T2110-01A0	12	330010
01643-32460	T2110-01A1	11	330020
01643-32460	T2110-02A1	5	330030
01643-32460	T2400-01A0	26	330150
01643-32460	T2810-01A0	10	330160
01643-32460	T2810-01A3	14	330170
01643-32460	T2810-01A3	17	330170
01643-33080	T2120-01A0	8	330070
01643-33080	T2120-01A1	12	330080
01643-50823	F2320-01A0	10	150250
01643-50823	F2320-11A0	19	150350
01643-50823	F2320-11A0	26	150350
01643-50823	K0110-02A2	3	240101
01643-50823	K2110-03B0	11	240430
01643-50823	K2241-01A0	5	240720
01643-50823	K2241-01A1	5	240730
01643-51032	F2200-01A0	3	150010
01643-51032	F2300-16A0	11	150170
01643-51032	F2320-03A0	38	150270
01643-51232	K2110-03B0	4	240430
01643-51232	K2400-02A0	5	240750
01643-51645	M2140-04A0	14	270080
01643-70623	K0210-01A0	5	240130
01643-70623	K0210-02A0	12	240140
01643-70623	K0210-02A0	25	240140
01643-70623	K0210-02A0	28	240140
01643-70623	K0210-02A0	33	240140
01643-70623	K0210-02A0	40	240140
01643-70623	K0210-02A0	9	240140
01643-70623	K0210-03A0	13	240150
01643-70623	K0210-03A0	4	240150
01643-70623	K0210-05A0	18	240170
01643-70623	K0210-05A0	25	240170
01643-70623	K0210-05A0	4	240170
01643-70623	K0210-09A0	23	240210
01643-70623	K0210-09A0	7	240210
01643-70623	K0210-11A0	5	240230
01643-70623	K0210-14A0	17	240260
01643-70623	K0210-14A0	23	240260
01643-70623	K0210-14A0	27	240260
01643-70623	K0210-14A0	33	240260
01643-70623	K0210-16A0	10	240280
01643-70623	K0210-16A0	19	240280
01643-70623	K0210-17A0	3	240290
01643-70623	K0210-17A0	6	240290
01643-70623	K2210-01A0	20	240620
01643-70623	K2210-06A1	13	240690
01643-70823	K0110-02A2	19	240101
01643-70823	K0210-02A0	22	240140
01643-70823	K0210-02A0	36	240140
01643-70823	K0210-03A0	16	240150
01643-70823	K0210-09A0	19	240210
01643-70823	K0210-13A0	4	240250
01643-70823	K0210-14A0	8	240260
01643-70823	K2210-03A1	14	240660
01643-70823	K2210-04A1	7	240670
01643-70823	K2210-05A1	13	240680
01643-70823	K2210-05A1	17	240680
01643-70823	K2210-05A1	4	240680
01643-70823	K2210-05A1	9	240680
01643-70823	K2210-06A1	3	240690
01643-70823	K2210-06A1	8	240690
01643-71032	K0210-03A0	27	240150
01643-71232	E0310-01A0	8	120120
01643-71232	E0310-02A0	8	120130
01643-71232	K0210-01A0	3	240130
01643-71232	K0210-04A0	4	240160
01643-71232	K0210-05A0	11	240170
01643-71232	K0210-16A0	15	240280
01643-71232	K0210-16A0	23	240280
01643-71232	K0210-16A0	31	240280
01643-71232	K0210-16A0	34	240280
02030-70744	K0160-01A1	7	240120
02090-11055	T2120-01A0	4	330070
02090-11055	T2120-01A0A	7	330071
02090-11055	T2120-01A1	8	330080
02090-11055	T2120-01A1A	8	330081
02090-11055	T2121-01A0	3	330100
02090-11065	T2120-02A0	6	330090
02290-11016	T2120-01A0	5	330070
02290-11016	T2120-01A0A	8	330071
02290-11016	T2120-01A1	9	330080
02290-11016	T2120-01A1A	9	330081
02290-11016	T2120-02A0	7	330090
02290-11016	T2121-01A0	2	330100
02754-00309	H2230-01A0	6	180120
02754-00606	H2210-01A0	5	180090
02762-002A3	F2300-07A0	9	150080
02762-002A6	H0310-02A0	11	180070
02762-00304	F2300-07A0	10	150080
02762-00305	F2300-07A0	12	150080
02762-00405	F2300-07A0	7	150080
02762-00419	F2730-02A0	1	150420
02762-00421	F2730-02A0	2	150420
02762-00510	F2730-01A0	11	150410
02762-005A3	F2300-07A0	6	150080
02765-003A6	T2400-01A0	28	330150
02765-B0309	T2160-01A0	13	330110
02765-B0313	T2160-01A0	1	330110
02765-B0315	T2160-02A0	1	330120
02765-B0406	T2160-03A0	1	330130
02766-B0305	F2300-07A0	17	150080
02781-00315	H2220-01A0	1	180110
02781-00315	H2230-01A0	1	180120
02781-00422	F2300-16A0	22	150170
02781-00522	F2730-01A0	12	150410
02781-00628	H0310-01A0	11	180050
02781-00628	H2210-01A0	1	180090
02782-10210	H0310-01A0	20	180050
02782-10311	F2300-05A0	14	150060
02782-10315	F2300-05A0	6	150060
02782-10315	F2300-06A0	6	150070
02782-10315	F2320-12A0	8	150360
02782-10315	H2250-01A0	1	180130
02782-10315	T2160-01A0	18	330110
02782-10422	F2300-05A0	2	150060
02782-10423	F2300-05A0	17	150060
02782-10522	F2300-06A0	1	150070
02782-50315	F2300-13A0	18	150140
02783-10210	F2300-05A0	9	150060
02783-10210	F2300-06A0	14	150070
02783-10210	H0310-02A0	12	180070
02783-10315	F2300-05A0	4	150060
02783-10422	F2320-12A0	14	150360
02783-10522	F2300-06A0	3	150070
02783-10522	F2320-12A0	5	150360
02789-00422	H2250-01A0	8	180130
02896-11008	F2300-05A0	10	150060
02896-11008	F2300-06A0	15	150070
02896-11008	H0310-01A0	21	180050
02896-11008	H0310-02A0	13	180070
02896-11009	F2300-05A0	15	150060
02896-11009	F2300-05A0	5	150060
02896-11009	F2300-05A0	7	150060
02896-11009	F2300-06A0	7	150070
02896-11009	F2300-07A0	45	150080
02896-11009	F2300-13A0	19	150140
02896-11009	F2300-13A0	26	150140
02896-11009	F2300-14A0	26	150150
02896-11009	F2320-12A0	9	150360
02896-11009	H2220-01A0	10	180110
02896-11009	H2220-01A0	2	180110
02896-11009	H2220-01A0	4	180110
02896-11009	H2220-01A0	8	180110
02896-11009	H2230-01A0	10	180120
02896-11009	H2230-01A0	2	180120
02896-11009	H2230-01A0	4	180120
02896-11009	H2230-01A0	8	180120
02896-11009	H2250-01A0	21	180130
02896-11009	H2250-01A0	5	180130

PARTS Nº	FIG. Nº	INDEX	PAGE
02896-11009	T2160-01A0	15	330110
02896-11009	T2160-01A0	17	330110
02896-11009	T2160-01A0	19	330110
02896-11009	T2160-01A0	9	330110
02896-11009	Y1620-31A0	18	450070
02896-11012	F2300-05A0	18	150060
02896-11012	F2300-05A0	3	150060
02896-11012	F2300-06A0	9	150070
02896-11012	F2320-12A0	12	150360
02896-11012	F2320-12A0	15	150360
02896-11012	F2730-02A0	13	150420
02896-11012	H2210-01A0	12	180090
02896-11012	H2250-01A0	22	180130
02896-11012	T2400-01A0	29	330150
02896-11012	Y1620-01A0	19	450050
02896-11012	Y1621-01A0	20	450080
02896-11015	F2300-06A0	2	150070
02896-11015	F2300-06A0	4	150070
02896-11015	F2300-18A0	16	150190
02896-11015	F2300-18A1	16	150200
02896-11015	F2320-12A0	6	150360
02896-11015	F2730-01A0	13	150410
02896-11018	F2300-18A0	22	150190
02896-11018	H0310-01A0	12	180050
02896-11018	H2210-01A0	13	180090
02896-11018	H2210-01A0	4	180090
04010-00516	K2110-04B0	10	240440
04010-00516	K2110-04B0	6	240440
04010-00516	K2110-04B1	14	240450
04010-00516	K2110-04B1	2	240450
04010-00516	K2110-05B0	12	240460
04010-00516	K2110-05B0	17	240460
04010-00516	K2110-06B0	18	240470
04010-00516	K2110-06B0	22	240470
04010-00516	K2110-09B0	5	240500
04010-00516	K2110-09B1	6	240510
04010-00516	K2110-10B0	3	240520
04010-00519	K2110-06B0	33	240470
04020-00616	R0200-01A0	10	300030
04020-00616	R0200-02A0	10	300040
04020-00820	F2300-13A0	15	150140
04020-01024	F2320-01A0	12	150250
04020-01024	F2320-02A0	11	150260
04020-01024	F2320-02A0	22	150260
04020-01638	F2300-01A0	3	150020
04020-01638	F2300-04A0	16	150050
04020-01638	F2380-01A0	8	150380
04020-01638	F2380-02A0	8	150390
04022-04008	Y1670-01A0	39	450200
04025-00316	F2300-14A0	5	150150
04025-00432	K0110-01A1	33	240020
04025-00432	K0110-01A3	33	240040
04025-00432	K0110-01A6	33	240070
04025-00520	K2110-04B0	8	240440
04025-00520	K2110-05B0	24	240460
04025-00520	Y1670-01A0	38	450200
04050-03025	T2810-01A3	8	330170
04050-10070	T2400-01A0	22	330150
04050-11210	F2820-01A0	37	150430
04050-11610	F2300-11A0	8	150120
04050-11612	F2300-22A0	4	150240
04050-11612	F2820-01A0	19	150430
04050-11612	K0210-02A0	13	240140
04050-11612	K0210-02A0	29	240140
04050-11612	K2110-08B0	11	240490
04050-11612	K2110-09B0	12	240500
04050-11612	K2110-09B0	27	240500
04050-11612	K2110-09B1	13	240510
04050-11612	K2241-01A0	14	240720
04050-11612	K2241-01A1	15	240730
04050-11612	K2400-05A0	6	240780
04050-11612	M2140-01A0	36	270030
04050-11612	M2140-01A1	13	270040
04050-12015	F2300-11A0	30	150120
04050-12015	F2300-12A0	16	150130
04050-12015	F2300-12A0	23	150130
04050-12015	K0210-02A0	18	240140
04050-12015	K0210-02A0	23	240140
04050-12015	K2110-05B0	31	240460
04050-12015	K2110-06B0	13	240470
04050-12015	K2110-06B0	27	240470
04050-12015	K2110-06B0	30	240470
04050-12015	K2110-08B0	16	240490
04050-12015	K2110-09B0	20	240500
04050-12015	K2110-10B0	16	240520
04050-12015	K2110-11B0	4	240530
04050-12015	K2110-11B0	8	240530
04050-12015	K2241-01A0	40	240720
04050-12015	K2241-01A1	44	240730
04050-12015	M2140-02A0	18	270050
04050-12015	M2140-02A1	18	270060
04050-12015	M2210-01A0	5	270090
04050-12015	M2210-02A0	6	270100
04050-12015	M2210-02A1	6	270110
04050-12018	K2110-07B0	25	240480
04050-13015	K0110-01A1	31	240020
04050-13015	K0110-01A3	31	240040
04050-13015	K0110-01A6	31	240070
04050-13020	F2320-13A0	12	150370
04050-13020	M2210-01A0	6	270090
04050-13020	M2210-02A0	7	270100
04050-13020	M2210-02A1	7	270110
04050-13020	T2810-01A0	8	330160
04050-13022	F2300-11A0	19	150120
04050-13022	F2320-13A0	19	150370
04050-13022	K2400-02A0	12	240750
04050-13022	K2400-02A0	14	240750
04050-13022	K2400-02A0	19	240750
04050-13022	K2400-04A0	8	240770
04050-13022	M2140-02A0	14	270050
04050-13022	M2140-02A1	14	270060
04050-14025	K0110-01A1	32	240020
04050-14025	K0110-01A3	32	240040
04050-14025	K0110-01A6	32	240070
04050-14028	F2300-09A0	19	150100
04050-14028	F2300-09A0	24	150100
04050-14028	F2300-09A0	8	150100
04050-14028	F2300-10A0	17	150110
04050-14028	F2300-10A0	23	150110
04050-14028	F2300-10A0	7	150110
04050-15030	T2115-01A1	14	330050
04050-18070	T2110-01A1	14	330020
04064-03215	F2320-03A0	33	150270
04064-03215	F2320-04A0	20	150280
04064-03515	F2300-03A0	19	150040
04064-03515	F2320-03A0	31	150270
04064-03515	F2320-07A0	2	150310
04064-03515	R0120-01A0	18	300020
04064-04518	B0600-01A0	4	030200
04064-04819	F2320-03A0	8	150270
04064-05020	F2320-05A0	14	150290
04064-06020	F2300-03A0	26	150040
04064-07525	F2320-04A0	29	150280
04064-09030	F2300-02A0	27	150030
04065-01030	T2115-01A0	3	330040
04065-01054	F2320-04A0	28	150280
04065-01104	F2300-03A0	25	150040
04065-01104	Y1620-21A0	12	450060
04065-01154	R0300-01A0	11	300050
04065-04718	T2115-01A0	20	330040
04065-06220	F2320-03A0	30	150270
04065-06220	F2320-04A0	18	150280
04065-07525	R0120-01A0	15	300020
04065-08025	R0120-01A0	15	300020
04065-08530	B0600-01A0	5	030200
04065-09030	F2320-01A0	16	150250
04065-09030	F2320-05A0	15	150290
04065-09030	K0110-01A1	6	240020
04065-09030	K0110-01A3	6	240040
04065-09030	K0110-01A6	6	240070

PARTS N°	FIG. N°	INDEX	PAGE
04065-09030	T2115-01A0	5	330040
04065-09030	Y1620-31A0	12	450070
04070-00105	F2320-01A0	17	150250
04071-00150	F2320-01A0	8	150250
04077-00120	F2300-02A0	25	150030
04077-00140	F2300-02A0	26	150030
04080-04508	K0110-01A1	10	240020
04080-04508	K0110-01A3	10	240040
04080-04508	K0110-01A6	10	240070
04082-00110	T2115-01A0	23	330040
04082-00212	J2100-01A0	33	210010
04082-00212	J2100-01A1	33	210020
04082-00212	T2110-02A1	13	330030
04082-00212	T2115-01A0	14	330040
04082-00212	T2115-01A0	9	330040
04082-00212	T2115-02A0	12	330060
04082-00212	T2115-02A0	17	330060
04082-00212	T2115-02A0	2	330060
04082-00212	T2115-02A0	22	330060
04082-00212	T2115-02A0	7	330060
04205-10522	F2820-01A0	35	150430
04205-10614	K0210-02A0	11	240140
04205-10614	K0210-02A0	27	240140
04205-10618	K2241-01A0	13	240720
04205-10618	K2241-01A1	14	240730
04205-10622	F2300-22A0	3	150240
04205-10622	F2820-01A0	18	150430
04205-10622	K2110-09B0	26	240500
04205-10625	F2300-11A0	7	150120
04205-10625	K2400-05A0	5	240780
04205-10822	K2110-08B0	15	240490
04205-10822	K2110-09B0	19	240500
04205-10828	M2140-02A0	16	270050
04205-10828	M2140-02A1	16	270060
04205-11238	K2400-02A0	11	240750
04205-11645	F2300-09A0	18	150100
04205-11645	F2300-09A0	22	150100
04205-11645	F2300-09A0	7	150100
04205-11645	F2300-10A0	16	150110
04205-11645	F2300-10A0	22	150110
04205-11645	F2300-10A0	6	150110
04205-11658	F2300-09A0	23	150100
04210-20832	K2110-09B0	18	240500
04245-40805	K2110-04B0	27	240440
04245-40805	K2110-06B0	24	240470
04245-40805	K2400-03A0	23	240760
04245-40807	F2820-01A0	10	150430
04248-30807	F2820-01A0	13	150430
04248-30810	K2241-01A0	37	240720
04248-30810	K2241-01A1	38	240730
04248-30813	K2241-01A1	41	240730
04248-30816	K2110-03B0	13	240430
04248-30823	F2300-12A0	17	150130
04248-30825	K2110-07B0	17	240480
04248-31415	K2400-04A0	10	240770
04248-31426	F2320-13A0	21	150370
04248-31430	F2300-11A0	21	150120
04250-80847	F2300-11A0	24	150120
04250-80847	F2300-12A0	14	150130
04250-80847	F2300-12A0	18	150130
04250-80847	F2820-01A0	16	150430
04250-80847	F2820-01A0	6	150430
04250-80847	K2110-03B0	10	240430
04250-80847	K2110-04B0	23	240440
04250-80847	K2110-05B0	20	240460
04250-80847	K2110-06B0	23	240470
04250-80847	K2110-09B1	18	240510
04250-80847	K2241-01A0	18	240720
04250-80847	K2241-01A0	20	240720
04250-80847	K2241-01A1	20	240730
04250-80847	K2241-01A1	22	240730
04250-80847	K2400-03A0	21	240760
04250-81056	K2110-08B0	19	240490
04250-81474	F2320-13A0	17	150370
04250-81474	K2400-02A0	20	240750
04250-90847	F2300-11A0	26	150120
04250-90847	F2300-12A0	20	150130
04250-90847	K2110-03B0	15	240430
04250-90847	K2110-04B1	17	240450
04250-90847	K2110-04B1	3	240450
04250-90847	K2110-04B1	9	240450
04250-90847	K2110-06B0	2	240470
04250-90847	K2110-07B0	14	240480
04250-90847	K2110-10B0	12	240520
04250-90847	K2241-01A0	25	240720
04250-90847	K2241-01A1	27	240730
04250-91056	K2110-07B0	20	240480
04250-91056	K2110-07B0	23	240480
04250-91474	F2300-11A0	17	150120
04250-91474	K2400-04A0	6	240770
04252-20853	K0210-02A0	16	240140
04252-20853	K2110-04B0	15	240440
04252-20853	K2110-05B0	26	240460
04252-20853	K2110-09B0	17	240500
04252-20853	K2110-09B1	15	240510
04252-30853	K2110-06B0	28	240470
04254-10823	F2820-01A0	34	150430
04254-10823	F2820-01A0	9	150430
04254-10823	K2110-04B0	26	240440
04254-10823	K2110-05B0	21	240460
04254-10823	K2110-07B0	16	240480
04254-10823	K2400-03A0	27	240760
04254-11032	K2110-02B0	9	240420
04256-40817	K2110-04B0	12	240440
04256-40817	K2110-04B0	29	240440
04256-40817	K2110-05B0	25	240460
04256-40817	K2110-06B0	3	240470
04256-40817	K2110-10B0	9	240520
04256-40817	K2400-03A0	24	240760
04256-50615	K2400-03A0	28	240760
04260-00635	F2320-01A0	7	150250
04260-01270	F2320-06A0	6	150300
04260-01587	F2300-06A0	11	150070
04260-01587	F2300-14A0	28	150150
04260-01587	F2300-16A0	21	150170
04418-13060	F2320-06A0	22	150300
04418-13060	T2120-01A0	23	330070
04418-13060	T2120-01A0A	24	330071
04418-13060	T2120-01A1	26	330080
04418-13060	T2120-01A1A	25	330081
04418-13060	T2120-02A0	9	330090
04418-13060	T2400-01A0	27	330150
04418-13060	U0100-01A0	33	360010
04418-13060	U0100-01A3	33	360011
04418-13060	U0100-01A3A	33	360015
04418-13060	U0100-01A4	32	360020
04418-13060	U0100-01A5	32	360030
04418-13060	U0100-01A6	33	360040
04418-13060	U0520-01A0	2	360060
04434-50510	K0710-03A0	15	240360
04434-50810	K2910-01A0	16	240860
04434-51008	B0500-01A0	3	030190
04434-51008	K0110-02A2	16	240101
04434-51010	B0500-01A0	4	030190
04434-51010	E0200-01A0	22	120020
04434-51010	E0200-01A0	7	120020
04434-51010	E0320-01A1	14	120081
04434-51010	K0710-03A0	21	240360
04434-51010	K0710-03A0	24	240360
04434-51010	K2110-14B0	12	240560
04434-51010	K2110-14B0	27	240560
04434-51010	K2910-01A0	5	240860
04434-51012	E0300-01A0	15	120070
04434-51012	E0320-01A0	6	120080
04434-51210	K2910-01A0	10	240860
04434-51212	H0310-02A0	18	180070
04434-51410	B0500-01A0	2	030190
04434-51410	B0500-01A0	28	030190
04434-51410	E0200-01A0	2	120020
04434-51410	E0200-01A0	21	120020

PARTS N°	FIG. N°	INDEX	PAGE
04434-51410	F2300-22A0	5	150240
04434-51410	K2910-01A0	15	240860
04434-51412	B0500-01A0	27	030190
04434-51412	D0200-01A0	9	090020
04434-51510	K0710-03A0	17	240360
04434-51610	K2110-08B0	24	240490
04434-51610	K2210-03A1	15	240660
04434-51612	D0210-01A0	14	090030
04434-51710	B0500-01A0	1	030190
04434-51710	B0500-01A0	26	030190
04434-51810	B0500-01A0	5	030190
04434-51810	K0710-03A0	18	240360
04434-51810	K0710-03A0	27	240360
04434-51812	C0100-02A0	31	060040
04434-51910	E0200-01A0	25	120020
04434-51910	E0200-02A0	12	120030
04434-51910	E0200-02A0	30	120030
04434-51910	K2910-01A0	23	240860
04434-51910	K2910-01A0	26	240860
04434-51910	K2910-01A0	27	240860
04434-51912	E0200-02A0	33	120030
04434-51912	K0710-02A0	27	240350
04434-52310	K0710-02A0	14	240350
04434-52310	K2110-13B0	4	240550
04434-52310	K2110-15B0	4	240570
04434-52310	K2210-08A1	3	240710
04434-52312	D0200-01A0	8	090020
04434-52312	K0710-02A0	19	240350
04434-52312	K0710-02A0	26	240350
04434-52510	E0200-02A0	26	120030
04434-52512	B0500-01A0	29	030190
04434-52512	F2300-21A0	24	150230
04434-52710	E0200-01A0	26	120020
04434-52710	K0710-02A0	30	240350
04434-52710	K0710-02A0	9	240350
04434-52710	K2110-14B0	16	240560
04434-52710	K2110-14B0	19	240560
04434-52710	K2210-02A0	21	240640
04434-52712	E0200-02A0	15	120030
04434-52712	F2300-21A0	21	150230
04434-52712	F2730-01A0	25	150410
04434-53210	K0710-02A0	15	240350
04434-53210	K2110-13B0	5	240550
04434-53212	E0200-02A0	36	120030
04434-53212	H0310-02A0	19	180070
04434-53212	K0710-02A0	20	240350
04434-53408	K2210-08A1	6	240710
04434-53412	F2300-20A0	9	150220
04434-53412	K0710-04A0	15	240370
04435-50810	E0420-01A0	5	120090
04435-51008	K0110-02A2	12	240101
04435-51010	K0110-02A2	13	240101
04435-51510	F2300-07A0	32	150080
04435-51908	K2210-08A1	10	240710
04435-52212	D0200-01A0	6	090020
04435-52212	F2730-02A0	6	150420
06000-06007	F2320-03A0	29	150270
06000-06207	B0600-01A0	14	030200
06000-06209	B0600-01A0	6	030200
06000-06915	F2320-04A0	27	150280
06000-06921	F2320-01A0	5	150250
06002-32008	R0300-01A0	6	300050
06004-06210	K0110-01A1	5	240020
06004-06210	K0110-01A3	5	240040
06004-06210	K0110-01A6	5	240070
06030-05210	F2320-05A0	13	150290
06030-05211	F2320-07A0	4	150310
06040-06018	F2300-02A0	28	150030
06040-06212	F2300-03A0	24	150040
06042-00210	F2320-01A0	15	150250
06123-01414	F2300-11A0	4	150120
06123-01414	F2300-12A0	5	150130
06123-01414	F2320-13A0	6	150370
06123-01414	F2820-01A0	3	150430
06123-01414	K2110-04B0	21	240440
06123-01414	K2110-04B1	20	240450
06123-01414	K2110-05B0	2	240460
06123-01414	K2110-05B0	8	240460
06123-01414	K2241-01A0	10	240720
06123-01414	K2241-01A1	10	240730
06123-01614	K2110-03B0	16	240430
06123-01614	K2110-05B0	4	240460
06123-02018	K2110-06B0	8	240470
06123-03018	F2300-10A0	27	150110
06124-01416	K2110-05B0	3	240460
06124-01416	K2110-11B0	9	240530
06124-02020	K2110-09B0	2	240500
06124-02020	K2110-09B1	3	240510
06124-02020	K2110-10B0	8	240520
06124-02020	K2400-01A0	7	240740
06124-02020	K2400-03A0	11	240760
06124-03020	K2400-01A0	8	240740
06124-03020	K2400-03A0	10	240760
06124-03520	K2110-05B0	5	240460
07000-02085	D0100-01A0	8	090010
07000-02105	Y1620-01A0	11	450050
07000-02130	Y1620-21A0	7	450060
07000-03025	H0120-01A0	4	180020
07000-03025	H0120-01A1	4	180030
07000-03025	H0120-01A2	4	180040
07000-03040	T2115-01A0	6	330040
07000-03040	Y1620-31A0	13	450070
07000-03042	R0200-01A0	6	300030
07000-03042	R0200-02A0	6	300040
07000-03045	T2115-01A0	7	330040
07000-03048	F2300-20A0	4	150220
07000-03048	R0100-01A0	4	300010
07000-03050	Y1620-21A0	13	450060
07000-05070	F2300-16A0	7	150170
07000-11003	Y1663-02A0	5	450100
07000-11003	Y1664-02A0	5	450140
07000-11003	Y1664-07A0	4	450190
07000-11007	Y1663-03A0	29	450110
07000-11007	Y1663-03A0	37	450110
07000-11007	Y1663-03A0	41	450110
07000-11007	Y1664-04A0	7	450160
07000-11007	Y1664-05A0	10	450170
07000-11007	Y1664-05A0	6	450170
07000-11008	Y1663-01A0	10	450090
07000-11008	Y1664-01A0	10	450130
07000-11008	Y1664-07A0	26	450190
07000-11009	Y1663-03A0	35	450110
07000-11009	Y1664-05A0	4	450170
07000-12018	F2300-07A0	46	150080
07000-12018	Y1663-03A0	7	450110
07000-12018	Y1664-03A0	7	450150
07000-12020	Y1663-01A0	9	450090
07000-12020	Y1664-01A0	9	450130
07000-12020	Y1664-07A0	24	450190
07000-12020	Y1670-01A0	12	450200
07000-12021	Y1670-01A0	17	450200
07000-12045	H0310-01A0	8	180050
07000-12045	H0310-01A1	8	180060
07000-12100	Y1620-01A0	9	450050
07000-12105	R0300-01A0	5	300050
07000-12105	Y1620-31A0	5	450070
07000-12110	Y1620-31A0	7	450070
07000-12115	Y1621-01A0	7	450080
07000-12120	Y1621-01A0	9	450080
07000-12120	Y1663-01A0	6	450090
07000-12120	Y1664-01A0	6	450130
07000-12120	Y1664-07A0	25	450190
07000-12125	Y1620-21A0	6	450060
07000-13030	F2300-18A0	26	150190
07000-13030	F2300-18A1	25	150200
07000-13032	H0310-01A1	25	180060
07000-13032	H0310-02A0	8	180070
07000-13035	H2210-01A0	10	180090
07000-13035	H2210-01A1	9	180100
07000-13040	T2115-01A0	6	330040

PARTS N°	FIG. N°	INDEX	PAGE
07000-13045	T2115-01A0	7	330040
07000-13048	R0100-01A0	4	300010
07000-15405	F2380-03A0	5	150400
07000-72010	F2320-06A0	24	150300
07000-72012	F2320-06A0	25	150300
07000-72015	F2300-14A0	30	150150
07000-72018	F2300-14A0	29	150150
07000-72018	F2320-08A0	13	150320
07000-72020	F2320-11A0	16	150350
07000-72021	F2320-09A0	34	150330
07000-72060	F2320-05A0	24	150290
07000-72070	F2320-05A0	23	150290
07000-72105	F2300-18A0	2	150190
07000-72105	F2300-18A1	2	150200
07000-72105	F2320-07A0	7	150310
07000-72125	F2380-01A0	16	150380
07000-72125	F2380-02A0	16	150390
07000-72130	F2320-08A0	5	150320
07000-72145	F2320-08A0	4	150320
07000-73025	F2320-11A0	11	150350
07000-73025	F2320-11A0	23	150350
07000-73025	F2730-02A0	14	150420
07000-73030	F2300-18A0	20	150190
07000-73030	F2300-18A1	20	150200
07000-73032	F2300-18A0	8	150190
07000-73032	F2300-18A1	8	150200
07000-73032	F2320-07A0	12	150310
07000-73035	F2300-19A0	4	150210
07000-73035	F2320-12A0	4	150360
07000-73042	F2300-18A0	14	150190
07000-73042	F2300-18A1	14	150200
07000-75165	F2320-05A0	16	150290
07000-75305	F2300-17A0	3	150180
07000-75305	F2320-08A0	14	150320
07000-A2055	F2300-13A0	12	150140
07001-01003	Y1663-02A0	6	450100
07001-01003	Y1664-02A0	6	450140
07001-01003	Y1664-07A0	5	450190
07001-01007	Y1663-03A0	38	450110
07001-01007	Y1663-03A0	42	450110
07001-01007	Y1664-05A0	11	450170
07001-01007	Y1664-05A0	7	450170
07001-01009	Y1663-03A0	36	450110
07001-01009	Y1664-05A0	5	450170
07001-02018	Y1663-03A0	8	450110
07001-02018	Y1664-03A0	8	450150
07001-05070	F2300-16A0	8	150170
07002-02034	F2320-06A0	9	150300
07002-02434	F2320-06A0	2	150300
07002-02434	F2320-06A0	20	150300
07002-02434	Y1663-04A0	3	450120
07002-02434	Y1664-06A0	3	450180
07002-03634	F2380-01A0	7	150380
07002-03634	F2380-02A0	7	150390
07002-11023	F2300-13A0	24	150140
07002-11023	F2300-18A0	28	150190
07002-11023	F2300-18A1	27	150200
07002-11023	Y1663-03A0	31	450110
07002-11023	Y1664-04A0	9	450160
07002-11223	F2320-09A0	13	150330
07002-11223	F2320-09A0	16	150330
07002-11223	Y1663-03A0	26	450110
07002-11223	Y1663-03A0	40	450110
07002-11223	Y1664-04A0	4	450160
07002-11223	Y1664-05A0	9	450170
07002-11223	Y1664-07A0	30	450190
07002-11423	H0310-01A0	22	180050
07002-11423	H0310-01A1	29	180060
07002-11423	H0310-02A0	14	180070
07002-11423	Y1663-03A0	11	450110
07002-11423	Y1663-03A0	33	450110
07002-11423	Y1664-03A0	11	450150
07002-11423	Y1664-05A0	2	450170
07002-11823	F2320-09A0	8	150330
07002-12034	F2300-16A0	18	150170
07002-12034	F2300-16A0	20	150170
07002-12034	F2300-16A0	23	150170
07002-12034	H2220-01A0	5	180110
07002-12034	H2230-01A0	5	180120
07002-12034	H2250-01A0	2	180130
07002-12034	T2160-01A0	20	330110
07002-12034	Y1663-03A0	28	450110
07002-12034	Y1663-04A0	5	450120
07002-12034	Y1664-04A0	6	450160
07002-12034	Y1664-06A0	5	450180
07002-12034	Y1664-07A0	31	450190
07002-12434	H0310-01A0	13	180050
07002-12434	H2210-01A0	3	180090
07002-12434	H2210-01A1	2	180100
07002-12434	Y1663-03A0	13	450110
07002-12434	Y1663-03A0	9	450110
07002-12434	Y1664-03A0	13	450150
07002-12434	Y1664-03A0	9	450150
07002-12434	Y1664-07A0	21	450190
07002-13034	F2320-09A0	32	150330
07002-13334	H0310-01A0	19	180050
07002-13334	H0310-01A1	13	180060
07002-13334	H0310-01A1	20	180060
07002-13334	H0310-02A0	3	180070
07002-14234	D0210-01A0	3	090030
07002-21423	K2110-16B0	4	240580
07002-21823	K2110-16B0	5	240580
07002-22434	B0000-08A0	2	030080
07002-31023	F2300-08A0	3	150090
07002-31023	F2300-21A0	20	150230
07002-31423	F2300-05A0	11	150060
07002-31423	F2300-05A0	16	150060
07002-31423	F2300-06A0	16	150070
07002-32034	F2300-05A0	19	150060
07002-32034	F2300-05A0	8	150060
07002-32034	F2300-06A0	12	150070
07002-32034	F2300-06A0	13	150070
07002-32034	F2300-13A0	25	150140
07002-32034	F2300-14A0	27	150150
07002-32034	F2320-12A0	10	150360
07002-32034	F2320-12A0	13	150360
07002-32034	F2320-12A0	16	150360
07002-32434	B0600-01A0	9	030200
07002-32434	F2300-06A0	5	150070
07002-32434	F2300-14A0	15	150150
07002-32434	F2300-15A0	4	150160
07002-32434	F2320-12A0	7	150360
07002-32434	F2730-01A0	14	150410
07002-33034	F2300-14A0	11	150150
07002-33634	F2300-04A0	5	150050
07005-01012	F2320-10A0	5	150340
07005-01212	F2320-06A0	13	150300
07005-01412	D0210-01A0	21	090030
07012-00038	F2300-04A0	7	150050
07012-10065	B0600-01A0	7	030200
07012-10075	F2320-08A0	2	150320
07012-10090	F2320-07A0	6	150310
07013-50075	F2380-01A0	17	150380
07013-50075	F2380-02A0	17	150390
07016-00407	F2300-13A0	4	150140
07016-00457	F2300-13A0	8	150140
07018-01405	F2320-04A0	26	150280
07018-21155	F2320-01A0	14	150250
07020-00000	J2100-01A0	36	210010
07020-00000	J2100-01A1	36	210020
07020-00000	T2110-01A0	6	330010
07020-00000	T2110-01A1	15	330020
07020-00000	T2110-02A1	10	330030
07020-00000	T2110-02A1	16	330030
07020-00000	T2110-02A1	21	330030
07020-00000	T2115-01A0	12	330040
07020-00000	T2115-01A0	17	330050
07020-00000	T2115-02A0	10	330060
07020-00000	T2115-02A0	13	330070
07020-00000	T2115-02A0	25	330060
07020-00000	T2115-02A0	5	330060
07020-00000	T2400-01A0	11	330150
07020-00000	T2400-01A0	17	330150
07020-00675	R0120-01A0	8	300020
07020-00675	T2110-01A0	13	330010
07020-00675	T2110-01A0	6	330010
07030-00252	F2300-04A0	9	150050
07030-00252	F2320-06A0	10	150300
07040-11007	F2300-18A0	27	150190
07040-11007	F2300-18A1	26	150200
07040-11007	F2300-21A0	19	150230
07040-11409	H0310-01A1	28	180060
07041-13612	F2380-01A0	6	150380
07041-13612	F2380-02A0	6	150390
07042-00211	F2320-11A0	20	150350
07042-20108	F2320-09A0	3	150330
07042-20108	F2320-09A0	4	150330
07042-70108	H0310-01A1	21	180060
07042-70108	H0310-02A0	4	180070
07042-70108	K2110-04B0	5	240440
07042-70108	K2110-05B0	6	240460
07042-70415	C0100-01A0	14	060010
07042-70415	C0100-01A1	14	060020
07042-70415	C0100-01A2	14	060030
07042-80108	F2320-06A0	14	150300
07043-00108	F2320-05A0	2	150290
07043-00211	F2320-05A0	4	150290
07043-00312	F2320-05A0	5	150290
07043-70108	F2300-15A0	12	150160
07043-70108	F2320-03A0	11	150270
07043-70108	F2320-05A0	3	150290
07043-70108	F2320-09A0	2	150330
07043-70108	H0310-01A0	9	180050
07043-70108	H0310-01A1	9	180060
07043-70108	T2110-01A0	9	330010
07043-70211	F2300-14A0	13	150150
07043-70211	F2300-14A0	31	150150
07043-70211	F2320-08A0	12	150320
07043-70211	F2320-08A0	18	150320
07043-70312	F2300-14A0	20	150150
07044-12412	B0600-01A0	8	030200
07044-13620	F2300-04A0	4	150050
07044-13620	F2380-01A0	5	150380
07044-13620	F2380-02A0	5	150390
07046-15520	B0600-01A0	15	030200
07049-00608	K2500-02A3	20	240830
07049-01012	K0410-01A0	8	240320
07049-01012	K0410-01A1	17	240330
07049-01215	F2300-04A0	2	150050
07049-01215	H0100-01A0	2	180010
07049-01215	K0410-01A1	18	240330
07049-01215	K2110-01B0	2	240400
07049-01215	K2110-01B1	10	240410
07049-01215	K2110-01B1	2	240410
07049-01215	K2210-01A0	7	240620
07049-01215	K2810-01A0	5	240840
07049-01215	M2210-06A0	4	270140
07049-01215	R0120-01A0	21	300020
07049-01215	R2200-01A0	15	300120
07049-01215	R2200-01A1	22	300121
07049-01215	R2200-02A0	27	300130
07049-01215	R2200-02A1	34	300131
07049-01620	F2300-04A0	3	150050
07049-01620	F2380-03A0	6	150400
07049-01620	J2100-01A0	37	210010
07049-01620	J2100-01A1	37	210020
07049-01620	R2200-01A0	16	300120
07049-01620	R2200-01A1	23	300121
07049-01620	R2200-02A0	28	300130
07049-01620	R2200-02A1	35	300131
07049-01822	K2110-01B0	20	240400
07049-01822	K2110-01B1	17	240410
07049-02025	M2210-03A0	10	270120
07049-02025	M2210-03A0	5	270120
07052-31217	R0100-01A0	19	300010
07052-31217	R0200-01A0	8	300030
07052-31217	R0200-02A0	8	300040
07058-00001	D0210-01A0	1	090030
07059-11830	R0500-01B0	11	300060
07059-11830	R0500-01B1	11	300070
07059-11830	R0500-01B2	11	300080
07059-11830	R0500-01B4	11	300090
07059-11830	R0500-01B5	11	300100
07059-11830	R0500-01B6	11	300110
07059-11830	R0500-01B7	13	300111
07059-11830	Y0322-01A6	11	450020
07059-11830	Y0322-01A7	11	450030
07059-11830	Y0322-01A8	11	450040
07059-20721	R0500-01B0	12	300060
07059-20721	R0500-01B1	12	300070
07059-20721	R0500-01B2	12	300080
07059-20721	R0500-01B4	12	300090
07059-20721	R0500-01B5	12	300100
07059-20721	R0500-01B6	12	300110
07059-20721	R0500-01B7	14	300111
07059-20721	Y0322-01A6	12	450020
07059-20721	Y0322-01A7	12	450030
07059-20721	Y0322-01A8	12	450040
07086-00406	T2160-04A0	1	330140
07086-00409	T2160-04A0	2	330140
07094-30315	H2250-01A0	9	180130
07094-30417	H2210-01A0	20	180090
07094-30417	H2210-01A1	17	180100
07094-30620	H0310-01A0	14	180050
07094-30620	H0310-01A1	14	180060
07095-00317	H2250-01A0	10	180130
07095-00418	K0710-02A0	23	240350
07095-00421	H2210-01A0	21	180090
07095-00421	H2210-01A1	18	180100
07095-00627	H0310-01A0	15	180050
07095-00627	H0310-01A1	15	180060
07095-20213	B0500-01A0	6	030190
07095-20318	B0500-01A0	30	030190
07095-20318	E0200-02A0	27	120030
07095-20318	F2300-20A0	8	150220
07095-20318	H2220-01A0	12	180110
07095-20419	K0710-02A0	10	240350
07095-20522	H0310-02A0	20	180070
07095-20522	K0710-02A0	21	240350
07095-20523	E0200-02A0	37	120030
07095-20523	F2730-01A0	21	150410
07095-20523	K0710-02A0	16	240350
07095-20523	K2110-13B0	6	240550
07095-20523	T2160-01A0	27	330110
07095-20523	T2160-02A0	7	330120
07102-20533	H0310-03A0	2	180080
07137-00040	Y1620-31A0	11	450070
07137-00060	Y1620-21A0	11	450060
07137-04006	Y1620-31A0	11	450070
07137-04507	T2115-01A0	2	330040
07137-05008	Y1620-21A0	11	450060
07143-10505	Y1620-01A0	13	450050
07143-10505	Y1620-01A0	2	450050
07143-10506	T2400-01A0	3	330150
07143-10506	T2400-01A0	5	330150
07143-10706	Y1621-01A0	13	450080
07143-10706	Y1621-01A0	2	450080
07144-10506	T2110-02A1	8	330030
07145-00050	Y1620-01A0	14	450050
07145-00050	Y1620-01A0	3	450050
07145-00055	T2110-02A1	9	330030
07145-00055	T2400-01A0	6	330150
07145-00070	T2110-01A0	10	330010
07145-00070	Y1621-01A0	14	450080
07145-00070	Y1621-01A0	3	450080
07146-02106	Y1620-31A0	6	450070
07146-02116	Y1621-01A0	8	450080

PARTS Nº	FIG. Nº	INDEX	PAGE
07146-02126	Y1620-21A0	5	450060
07155-00615	R0120-01A0	17	300020
07156-01112	Y1620-31A0	16	450070
07156-01215	Y1621-01A0	17	450080
07156-01315	Y1620-21A0	16	450060
07165-13941	Y1620-21A0	17	450060
07177-05030	Y1620-01A0	5	450050
07177-05530	Y1620-31A0	3	450070
07177-06030	R0120-01A0	2	300020
07177-06530	R0120-01A0	2	300020
07177-60030	Y1621-01A0	5	450080
07179-12052	F2300-13A0	5	150140
07179-12057	F2300-13A0	9	150140
07179-12062	Y1620-01A0	8	450050
07179-12069	Y1620-31A0	9	450070
07179-12074	Y1621-01A0	11	450080
07179-12079	Y1620-21A0	9	450060
07179-12084	F2300-16A0	9	150170
07206-30710	F2320-10A0	4	150340
07206-31014	D0210-01A0	20	090030
07213-50710	F2320-10A0	3	150340
07213-50710	F2320-11A0	21	150350
07230-20628	H2210-01A1	1	180100
07235-11034	H0310-01A1	12	180060
07236-51034	H0310-01A1	19	180060
07236-51034	H0310-02A0	2	180070
07260-03214	F2300-18A0	9	150190
07260-03214	F2300-18A1	9	150200
07260-04713	H0310-01A0	1	180050
07260-04713	H0310-01A1	1	180060
07260-23211	F2730-01A0	10	150410
07270-00890	H0100-01A0	10	180010
07270-01015	D0210-01A0	22	090030
07270-01035	D0100-01A0	14	090010
07270-01525	C0100-01A0	12	060010
07270-01525	C0100-01A1	12	060020
07270-01525	C0100-01A2	12	060030
07270-21550	B0000-08A0	4	030080
07280-01920	C0100-01A0	13	060010
07280-01920	C0100-01A1	13	060020
07280-01920	C0100-01A2	13	060030
07281-00197	B0000-08A0	5	030080
07283-21537	H2220-01A0	26	180110
07283-21537	H2230-01A0	19	180120
07283-22236	H2220-01A0	14	180110
07283-22738	F2300-18A0	29	150190
07283-22738	F2300-18A1	28	150200
07283-31529	H2250-01A0	15	180130
07283-34949	F2300-20A0	5	150220
07283-51523	H2250-01A0	16	180130
07285-00085	D0200-01A0	5	090020
07285-00095	D0210-01A0	23	090030
07285-00095	H0100-01A0	9	180010
07285-00110	C0100-02A0	30	060040
07285-00115	D0100-01A0	13	090010
07288-01004	D0210-01A0	13	090030
07289-00045	F2300-18A0	10	150190
07289-00045	F2300-18A1	10	150200
07289-00045	F2730-01A0	9	150410
07289-00055	C0100-02A0	2	060040
07289-00055	C0100-02A0	4	060040
07289-00055	H0310-01A0	2	180050
07289-00055	H0310-01A1	2	180060
07289-00070	B0000-07A0	4	030070
07289-00070	C0100-02A0	5	060040
07336-50516	F2320-11A0	22	150350
07372-21045	F2200-01A0	2	150010
07700-40240	D0100-01A0	4	090010
07730-50004	C0100-01A0	11	060010
07730-50004	C0100-01A1	11	060020
07730-50004	C0100-01A2	11	060030
07950-10450	V0300-01A0	4	390050
07950-90403	V0300-01A0	6	390050
07951-21022	V0300-01A0	5	390050
07952-70002	V0300-01A0	3	390050
08000-00000	E0110-01A0	2	120010
08000-00001	E0110-01A0	3	120010
08017-31032	D0200-01A0	3	090020
08017-31505	K0710-01A0	5	240340
08017-31505	K0710-01A0	9	240340
08017-31912	K0710-01A0	4	240340
08017-31917	K0710-01A0	3	240340
08017-31925	D0200-01A0	1	090020
08017-31936	D0200-01A0	2	090020
08017-32802	K0710-04A0	5	240370
08017-32813	K0710-04A0	4	240370
08024-91020	D0200-01A0	1	090020
08024-91020	D0200-01A0	2	090020
08024-91020	D0200-01A0	3	090020
08028-44040	E0210-01A0	9	120060
08028-46050	B0500-01A0	44	030190
08028-64025	E0210-01A0	6	120060
08028-64030	E0210-01A0	13	120060
08034-00414	E0200-01A0	20	120020
08034-00519	B0000-15A0	9	030150
08034-00519	K0710-02A0	36	240350
08034-00519	K2210-02A0	27	240640
08034-00519	K2210-08A1	15	240710
08034-00519	K2210-08A1	2	240710
08034-00519	K2910-01A0	13	240860
08034-00519	K2910-01A0	30	240860
08034-00519	T2110-01A0	22	330010
08034-00519	T2160-04A0	5	330140
08034-00536	F2300-21A0	16	150230
08034-00536	T2120-01A0	20	330070
08034-00536	T2120-01A1	24	330080
08034-00823	D0200-01A0	12	090020
08034-00823	F2300-07A0	35	150080
08034-00823	F2300-22A0	11	150240
08034-00823	H2230-01A0	17	180120
08034-00823	K2110-15B0	3	240570
08034-00834	F2300-07A0	27	150080
08034-00834	F2300-20A0	12	150220
08034-20414	E0420-01A0	8	120090
08034-20414	H0310-03A0	3	180080
08034-20519	E0200-01A0	15	120020
08034-20519	E0200-03A0	2	120040
08034-20519	K0210-09A0	21	240210
08034-20519	T2160-01A0	28	330110
08034-20519	T2160-02A0	8	330120
08036-00814	F2300-22A0	10	150240
08036-02514	T2160-03A0	3	330130
08036-02514	T2160-04A0	6	330140
08036-10810	C0100-02A0	26	060040
08037-01610	M2140-02A1	24	270060
08037-01610	M2140-02A1	33	270060
08037-01610	M2140-03A0	15	270070
08037-01610	M2140-03A0	6	270070
08037-02512	M2210-07A0	4	270150
08037-05016	W2112-01A0	11	420010
08038-00035	B0500-01A0	35	030190
08038-00035	E0200-02A0	11	120030
08038-00035	E0210-01A0	8	120060
08038-00035	K2110-13B0	2	240550
08038-00519	B0000-01A0	4	030010
08038-00519	B0500-01A0	14	030190
08038-00519	B0500-01A0	37	030190
08038-00519	K2110-13B0	3	240550
08038-00525	B0500-01A0	36	030190
08038-42511	E0210-01A0	14	120060
08041-01000	K0210-09A0	15	240210
08041-01000	K2110-14B0	2	240560
08041-02000	K0210-09A0	16	240210
08041-02000	K2110-14B0	3	240560
08041-03000	K2110-14B0	4	240560
08044-00010	K2110-14B0	5	240560
08044-00030	K2110-14B0	6	240560
08044-00600	K0210-09A0	16	240210
08053-00910	E0200-01A0	9	120020
08053-00910	K2210-02A0	15	240640

PARTS Nº	FIG. Nº	INDEX	PAGE
08053-00910	K2910-01A0	9	240860
08053-01510	B0000-15A0	8	030150
08053-01510	B0500-01A0	38	030190
08073-10505	B0000-11A0	1	030110
08086-10000	K2210-02A0	1	240640
08086-10000	K2210-07A1	10	240700
08088-31000	K2110-12B0	1	240540
08160-72400	E0300-01A0	7	120070
08193-20010	B0500-01A0	7	030190
08193-20010	K0110-02A2	17	240101
08193-20010	K2110-14B0	15	240560
08193-20010	K2110-14B0	22	240560
08193-20010	K2210-02A0	12	240640
08193-20010	K2210-02A0	31	240640
08193-20012	E0320-01A1	6	120081
08193-21012	E0200-01A0	17	120020
08193-21012	E0200-02A0	18	120030
08193-21012	E0300-01A0	14	120070
08193-21012	E0300-01A0	2	120070
08193-21012	E0320-01A0	5	120080
08193-21012	K0710-03A0	30	240360
08193-30010	K2110-14B0	23	240560
08210-01203	F2300-07A0	16	150080
08210-01203	F2300-21A0	3	150230
08210-01204	F2300-21A0	2	150230
08210-01204	F2300-22A0	9	150240
08210-01802	F2300-07A0	5	150080
08210-01803	F2300-07A0	11	150080
08210-01803	T2160-04A0	4	330140
08210-01804	F2300-07A0	14	150080
08210-01804	F2300-07A0	8	150080
08210-01804	F2730-01A0	20	150410
08210-01804	F2730-02A0	5	150420
08210-01804	H0310-01A0	11	180050
08210-01805	F2300-07A0	20	150080
08210-01807	T2160-04A0	3	330140
08210-01808	H0310-03A0	12	180080
08210-01810	F2300-21A0	1	150230
08210-01818	F2730-02A0	4	150420
08210-01820	F2730-02A0	3	150420
08210-01830	H0310-03A0	4	180080
08210-01832	H0310-03A0	5	180080
08670-02001	B0000-02A0	9	030020
08910-10000	K0210-11A0	8	240230
09000-30006	V0300-01A0	1	390050
09019-08035	V0300-01A0	8	390050
09019-28035	V0300-01A0	8	390050
09021-01725	V0300-01A0	9	390050
09021-02436	V0300-01A0	10	390050
09022-00150	V0300-01A0	11	390050
09023-00300	V0300-01A0	12	390050
09024-00300	V0300-01A0	3	390050
09033-00190	V0300-01A0	2	390050
09056-04613	V0300-01A0	7	390050
09059-00800	V0100-01A0	1	390010
09059-00800	V0100-01A2	5	390030
09205-26270	R2200-01A0	12	300120
09205-26270	R2200-01A1	19	300121
09205-26270	R2200-02A0	24	300130
09205-26270	R2200-02A0	6	300130
09205-26270	R2200-02A1	31	300131
09205-26270	R2200-02A1	6	300131
09241-5A140	J2100-01A0	32	210010
09241-5A140	J2100-01A1	32	210020
09241-5A140	T2110-02A1	12	330030
09241-5A140	T2115-02A0	1	330060
09241-5A210	T2115-02A0	16	330060
09241-5A210	T2115-02A0	21	330060
09244-02488	T2400-01A0	20	330150
09245-04830	T2115-01A1	6	330050
09245-04830	T2810-01A0	2	330160
09245-04830	T2810-01A3	2	330170
09245-50060	T2115-01A1	7	330050
09245-50060	T2810-01A0	3	330160
09245-50060	T2810-01A3	1	330170
09247-45180	T2810-01A3	3	330170
09249-00016	T2810-01A3	7	330170
09304-00835	K0110-01A1	34	240020
09304-00835	K0110-01A3	34	240040
09304-00835	K0110-01A6	34	240070
09304-01240	K0110-01A1	19	240020
09304-01240	K0110-01A3	19	240040
09304-01240	K0110-01A6	19	240070
09304-10835	K2110-09B0	3	240500
09304-10835	K2110-09B1	4	240510
09304-10835	K2110-10B0	1	240520
09311-41237	K2400-02A0	16	240750
09311-41237	K2400-03A0	5	240760
09350-01415	K2400-03A0	18	240760
09350-01420	K2110-09B0	21	240500
09350-01420	K2110-09B1	22	240510
09350-01615	K0110-01A1	16	240020
09350-01615	K0110-01A3	16	240040
09350-01615	K0110-01A6	16	240070
09370-00060	R0120-01A0	16	300020
09409-00001	K0160-01A1	3	240120
09409-00002	K0160-01A1	4	240120
09409-00003	K0160-01A1	5	240120
09409-20000	K0160-01A1	2	240120
09409-70000	K0160-01A1	1	240120
09415-00506	W2112-01A0	12	420010
09415-01008	K2210-01A0	8	240620
09415-01008	K2500-02A1	13	240810
09415-01008	W2112-01A0	13	420010
09415-01610	K2500-02A1	12	240810
09415-02512	K0110-02A2	8	240101
09415-02512	K2110-01B0	12	240400
09415-02512	K2110-04B1	21	240450
09415-02512	K2400-03A0	12	240760
09415-02512	K2500-02A0	5	240800
09415-02512	K2500-02A1	5	240810
09415-02512	K2500-02A2	19	240820
09415-02512	K2500-02A2	5	240820
09415-02512	K2500-02A3	5	240830
09415-02512	M2210-04A0	11	270130
09415-02512	M2210-04A0	24A	270130
09415-02512	M2210-04A0	33	270130
09415-02512	M2240-01A0	9	270160
09415-02512	M2240-01A1	9	270170
09415-02520	M2110-01A0	5	270010
09415-03614	K2110-01B1	9	240410
09415-03614	M2210-04A0	26	270130
09415-05016	M2210-04A0	27	270130
09415-05022	M2210-04A0	15	270130
09415-05022	M2210-04A0	5	270130
09453-00002	K0210-16A0	32	240280
09455-13016	M2210-07A0	2	270150
09461-00014	M2240-01A0	4	270160
09461-00014	M2240-01A1	4	270170
09463-00002	K2110-09B0	9	240500
09463-00002	K2110-09B1	10	240510
09463-00006	K2110-08B0	9	240490
09463-00006	K2110-09B0	10	240500
09463-00006	K2110-09B1	11	240510
09479-02400	K0710-04A0	6	240370
09479-02400	K0710-04A0	9	240370
09485-01003	K0710-01A0	14	240340
09495-00010	K0830-01A0	1	240380
09601-50050	T2120-01A1	25	330080
09601-60000	T2120-01A0	21	330070
09601-60000	T2120-01A1A	24	330081
09601-60050	T2120-01A0	22	330070
09601-60050	T2120-01A0A	23	330071
09601-60050	T2120-01A1	25	330080
09601-60050	T2400-01A0	27	330150
09602-10050	U0100-01A0	32	360010
09602-10050	U0100-01A4	31	360020
09602-10050	U0100-01A5	31	360030
09602-10050	U0100-01A6	32	360040
09602-12051	U0100-01A3	32	360011

PARTS N°	FIG. N°	INDEX	PAGE
09602-12051	U0100-01A3A	32	360015
09608-05080	F2320-06A0	21	150300
09620-B2000	U0520-01A0	1	360060
09620-B2070	U0520-01A0	1	360060
09620-B2080	U0520-01A0	1	360060
09620-B2100	U0520-01A0	1	360060
09620-B2120	U0520-01A0	1	360060
09620-C2010	U0520-01A0	1	360060
09637-05163	U0100-01A5	22	360030
09637-30163	U0100-01A0	24	360010
09637-30163	U0100-01A3	24	360011
09637-30163	U0100-01A3A	24	360015
09637-50263	U0100-01A6	21	360040
09637-70163	U0100-01A4	22	360020
09651-03001	U0100-01A0	20	360010
09651-03001	U0100-01A3	20	360011
09651-03001	U0100-01A3A	20	360015
09651-07001	U0100-01A6	15	360040
09651-A0481	U0100-01A4	16	360020
09651-A0481	U0100-01A5	16	360030
09653-07001	U0100-01A6	12	360040
09653-A0481	U0100-01A4	12	360020
09653-A0481	U0100-01A4	13	360020
09653-A0481	U0100-01A5	12	360030
09653-A0481	U0100-01A5	13	360030
09654-33001	U0100-01A0	19	360010
09654-33001	U0100-01A3	19	360011
09654-33001	U0100-01A3A	19	360015
09654-37001	U0100-01A6	14	360040
09654-B0481	U0100-01A4	15	360020
09654-B0481	U0100-01A5	15	360030
09657-03003	U0100-01A0	12	360010
09657-03003	U0100-01A3	12	360011
09657-03003	U0100-01A3A	12	360015
09657-07002	U0100-01A6	16	360040
09657-A0881	U0100-01A4	17	360020
09657-A0881	U0100-01A5	17	360030
09664-30000	U0100-01A0	34	360010
09664-30000	U0100-01A3	34	360011
09664-30000	U0100-01A3A	34	360015
09667-01001	U0100-01A4	27	360020
09667-03001	U0100-01A0	28	360010
09667-03001	U0100-01A3	28	360011
09667-03001	U0100-01A3A	28	360015
09667-07001	U0100-01A6	28	360040
09667-A0481	U0100-01A5	27	360030
09668-03001	U0100-01A0	18	360010
09668-03001	U0100-01A3	18	360011
09668-03001	U0100-01A3A	18	360015
09668-07001	U0100-01A6	23	360040

PARTS N°	FIG. N°	INDEX	PAGE
09669-0000E	U0100-01A0	9	360010
09669-0000E	U0100-01A3	9	360011
09669-0000E	U0100-01A3A	9	360015
09669-0000E	U0100-01A4	9	360020
09669-0000E	U0100-01A5	9	360030
09669-0000E	U0100-01A6	9	360040
09690-F0400	U0100-01A0	3	360010
09690-F0400	U0100-01A4	3	360020
09690-F0400	U0100-01A5	3	360030
09690-F0400	U0100-01A6	3	360040
09690-M0063	U0100-01A0	6	360010
09690-M0063	U0100-01A3	6	360011
09690-M0063	U0100-01A3A	6	360015
09690-M0063	U0100-01A4	6	360020
09690-M0063	U0100-01A5	6	360030
09690-M0063	U0100-01A6	6	360040
09690-P0315	U0100-01A0	25	360010
09690-P0315	U0100-01A3	25	360011
09690-P0315	U0100-01A3A	25	360015
09690-P0315	U0100-01A4	24	360020
09690-P0315	U0100-01A5	24	360030
09690-P0315	U0100-01A6	25	360040
09690-P0400	U0100-01A0	23	360010
09690-P0400	U0100-01A3	23	360011
09690-P0400	U0100-01A3	3	360011
09690-P0400	U0100-01A3A	23	360015
09690-P0400	U0100-01A3A	3	360015
09690-P0400	U0100-01A4	23	360020
09690-P0400	U0100-01A5	23	360030
09690-P0400	U0100-01A6	24	360040
09690-P0800	U0100-01A0	15	360010
09690-P0800	U0100-01A3	15	360011
09690-P0800	U0100-01A3A	15	360015
09690-P0800	U0100-01A4	20	360020
09690-P0800	U0100-01A5	20	360030
09690-P0800	U0100-01A6	19	360040
09802-13000	U0100-01A0	21	360010
09802-13000	U0100-01A3	21	360011
09802-13000	U0100-01A3A	21	360015
09802-17000	U0100-01A6	22	360040
09806-B1201	U0100-01A5	26	360030
09808-03000	U0100-01A0	26	360010
09808-03000	U0100-01A3	26	360011
09808-03000	U0100-01A3A	26	360015
09808-07000	U0100-01A6	26	360040
09808-A0881	U0100-01A4	25	360020
09808-A0881	U0100-01A5	25	360030
09812-11000	U0100-01A4	26	360020
09812-13000	U0100-01A0	27	360010
09812-13000	U0100-01A3	27	360011

PARTS N°	FIG. N°	INDEX	PAGE
09812-13000	U0100-01A3A	27	360015
09812-17000	U0100-01A6	27	360040
09960-00611	U0400-01A0	2	360050
09960-00801	U0400-01A0	3	360050
09960-00802	U0400-01A0	4	360050
09963-03001	U0100-01A0	35	360010
09963-03001	U0100-01A3	35	360011
09963-03001	U0100-01A3A	35	360015
09980-10550	V0200-01A0	1	390040
09982-10057	V0200-01A0	2	390040
102-10-46360	F2300-15A0	3	150160
103-15-15450	F2300-15A0	5	150160
103-15-15450	F2320-11A0	7	150350
103-15-15460	F2300-15A0	7	150160
103-15-15460	F2320-11A0	8	150350
103-15-22730	F2320-02A0	19	150260
103-15-22730	F2320-03A0	12	150270
103-15-25350	F2320-11A0	17	150350
103-15-25370	F2320-09A0	15	150330
103-15-29210	F2320-02A0	20	150260
103-15-29210	F2320-03A0	13	150270
103-15-29270	F2320-01A0	4	150250
103-43-21380	F2300-11A0	6	150120
104-15-22930	F2320-02A0	13	150260
104-15-25330	F2320-11A0	10	150350
104-15-25340	F2320-11A0	15	150350
104-15-35150	F2320-06A0	7	150300
104-15-35170	F2320-09A0	23	150330
104-15-36460	F2320-09A0	38	150330
104-15-36470	F2320-09A0	39	150330
104-15-36480	F2320-09A0	26	150330
104-15-36490	F2320-09A0	27	150330
104-890-5610	K0160-01A1	6	240120
10S-43-13380	K2110-06B0	31	240470
10S-43-16251	F2820-01A0	26	150430
112-10-46180	F2300-15A0	10	150160
112-10-46210	F2300-15A0	11	150160
112-860-1360	K2110-01B0	19	240400
112-860-1360	K2110-01B1	16	240410
113-01-21120	B0100-01A0	2	030180
113-03-21160	C0100-02A0	6	060040
113-03-21170	C0100-02A0	7	060040
113-03-21180	C0100-02A0	8	060040
113-15-21241	F2320-04A0	30	150280
113-15-21290	F2320-03A0	20	150270
113-15-22640	F2320-02A0	14	150260
113-15-22720	F2320-02A0	16	150260
113-15-22720	F2320-03A0	36	150270
113-15-22720	F2320-03A0	5	150270
113-15-22720	F2320-04A0	5	150280

PARTS N°	FIG. N°	INDEX	PAGE
113-15-22730	F2320-02A0	17	150260
113-15-22730	F2320-03A0	37	150270
113-15-22730	F2320-03A0	6	150270
113-15-22730	F2320-04A0	6	150280
113-15-22920	F2320-03A0	3	150270
113-15-22930	F2320-04A0	2	150280
113-15-25250	F2300-15A0	9	150160
113-15-25260	F2320-11A0	12	150350
113-15-25270	F2320-11A0	13	150350
113-15-25481	F2320-09A0	7	150330
113-15-25490	F2320-02A0	10	150260
113-15-29110	F2300-14A0	10	150150
113-15-29110	F2320-09A0	9	150330
113-15-29220	F2320-02A0	21	150260
113-15-29220	F2320-03A0	14	150270
113-15-29220	F2320-04A0	25	150280
113-15-29240	F2320-03A0	28	150270
113-15-29250	F2320-01A0	3	150250
113-15-29250	F2320-03A0	16	150270
113-15-29250	F2320-04A0	24	150280
113-15-29261	F2320-03A0	17	150270
113-15-29410	F2320-02A0	5	150260
113-15-29510	F2320-03A0	2	150270
113-15-32560	F2320-02A0	3	150260
113-15-32560	F2320-03A0	22	150270
113-15-32560	F2320-04A0	11	150280
113-15-42910	F2320-03A0	40	150270
113-15-42920	F2320-03A0	41	150270
113-15-55450	F2320-09A0	6	150330
113-43-11294	F2320-13A0	13	150370
113-43-23230	F2820-01A0	4	150430
113-43-23230	K2110-09B0	22	240500
113-43-23230	K2110-09B1	20	240510
113-43-23230	K2110-11B0	6	240530
113-43-23230	K2400-03A0	19	240760
113-43-23230	M2140-01A0	34	270030
113-60-43310	H0310-01A1	23	180060
113-60-43310	H0310-02A0	6	180070
113-60-43321	H0310-01A1	22	180060
113-60-43321	H0310-02A0	5	180070
113-60-43321	V0100-01A0	4	390010
113-60-43321	V0100-01A2	8	390030
113-60-43330	H0310-01A1	24	180060
113-60-43330	H0310-02A0	7	180070
114-03-48160	C0100-01A0	2	060010
114-03-48160	C0100-01A1	2	060020
114-03-48160	C0100-01A2	2	060030
114-03-51490	C0100-02A0	20	060040
114-03-51510	C0100-02A0	19	060040
114-06-42310	K2210-02A0	5	240640

PARTS N°	FIG. N°	INDEX	PAGE
114-06-42310	K2210-07A1	13	240700
114-40-48481	K2110-16B0	2	240580
114-57-41260	K0110-01A0	1	240010
114-57-41271	K0110-01A0	2	240010
114-57-41280	K0110-01A0	3	240010
11G-71-31170	T2120-01A0	3	330070
11G-71-31170	T2120-01A0A	6	330071
11G-71-31170	T2120-01A1	7	330080
11G-71-31170	T2120-01A1A	7	330081
11G-71-31170	T2120-02A0	5	330090
11T-61-13710	T2110-01A0	15	330010
11Y-06-11560	K2210-02A0	25	240640
11Y-06-11560	K2210-08A1	16	240710
11Y-09-11140	D0200-01A0	4	090020
11Y-09-11140	D0210-01A0	10	090030
11Y-09-11140	D0210-01A0	12	090030
11Y-54-11270	M2140-04A0	19	270080
11Y-54-11450	M2140-02A0	1	270050
11Y-54-11450	M2140-02A0	4	270050
11Y-54-11450	M2140-02A1	1	270060
11Y-54-11450	M2140-02A1	4	270060
11Y-54-11561	M2140-04A0	3	270080
11Y-979-4560	K2210-04A1	9	240670
120-04-41130	D0100-01A0	5	090010
120-30-12162	R0300-01A0	7	300050
120-70-31411	T2121-01A0	1	330100
120-X11-1510	K0710-01A0	8	240340
124-01-51151	B0000-02A0	18	030020
124-01-51191	B0000-02A0	10	030020
124-01-51222	B0000-05A0	4	030050
124-01-51293	B0000-05A0	21	030050
124-01-51330	B0000-05A0	1	030050
124-01-51350	B0000-05A0	5	030050
124-01-51360	B0000-05A0	24	030050
124-01-51412	B0000-10A0	1	030100
124-01-51431	B0000-10A0	5	030100
124-01-51442	B0000-10A0	6	030100
124-01-51450	B0100-01A0	1	030180
124-01-51510	B0000-13A0	3	030130
124-01-51540	B0000-13A0	6	030130
124-01-51630	B0000-07A0	1	030070
124-01-51640	B0000-07A0	2	030070
124-01-51711	B0000-04A0	1	030040
124-01-51744	B0000-17A0	1	030170
124-01-51750	B0000-04A0	5	030040
124-01-51825	B0000-01A0	8	030010
124-01-51941	B0000-01A0	3	030010
124-01-51950	B0000-01A0	5	030010
124-01-52270	B0000-05A0	15	030050
124-01-55120	A4180-A0A1	9	030270

PARTS N°	FIG. N°	INDEX	PAGE
124-01-55160	A4180-A0A1	1	030270
124-01-55180	A4180-A0A1	3	030270
124-01-55250	A2250-A0A1	1	030150
124-01-55260	A4180-A0A1	12	030270
124-01-55290	A4180-A0A1	4	030270
124-01-55380	A6010-A0A1	2	030340
124-01-55430	A6010-A0A1	3	030340
124-01-55440	A6010-A0A1	10	030340
124-01-55450	A6010-A0A1	9	030340
124-01-55490	A5080-A0A1	1	030330
124-01-61100	B0000-02A0	1	030020
124-01-61110	B0000-02A0	1	030020
124-01-61121	B0000-02A0	11	030020
124-01-61160	B0000-02A0	22	030020
124-01-61220	B0000-04A0	12	030040
124-01-61230	B0000-05A0	11	030050
124-01-61283	B0000-05A0	18	030050
124-01-61660	B0000-04A0	13	030040
124-01-61670	B0000-07A0	5	030070
124-01-61690	B0000-07A0	5	030070
124-01-61721	B0000-04A0	8	030040
124-01-61740	B0000-17A0	1	030170
124-01-61771	B0000-04A0	11	030040
124-01-61772	B0000-04A0	10	030040
124-01-61880	B0500-01A0	41	030190
124-01-61911	B0000-15A0	4	030150
124-01-61920	B0000-15A0	6	030150
124-01-61930	B0000-15A0	7	030150
124-01-62180	B0500-01A0	16	030190
124-01-62420	B0000-10A0	2	030100
124-03-51212	C0100-02A0	1	060040
124-03-51221	C0100-02A0	3	060040
124-03-51410	C0100-03A3	1	060050
124-03-61122	C0100-01A0	3	060010
124-03-61122	C0100-01A1	3	060020
124-03-61122	C0100-01A2	3	060030
124-03-61132	C0100-01A0	15	060010
124-03-61132	C0100-01A1	15	060020
124-03-61132	C0100-01A1	18	060020
124-03-61152	C0100-01A0	18	060010
124-03-61152	C0100-01A2	18	060030
124-03-61160	C0100-01A2	15	060030
124-03-61240	C0100-02A0	29	060040
124-03-61251	C0100-02A0	23	060040
124-03-61252	C0100-02A0	23	060040
124-03-61522	C0100-01A0	5	060010
124-03-61522	C0100-01A1	5	060020
124-03-61532	C0100-01A0	8	060010
124-03-61532	C0100-01A1	8	060020
124-03-61590	C0100-02A0	11	060040

PARTS Nº	FIG. Nº	INDEX	PAGE
124-03-61620	C0100-01A2	5	060030
124-03-61630	C0100-01A2	8	060030
124-03-63340	C0100-01A0	1	060010
124-03-63340	C0100-01A1	1	060020
124-03-63340	C0100-01A2	1	060030
124-03-63341		1	060030
124-03-63341	C0100-01A0	1	060010
124-03-63341	C0100-01A1	1	060020
124-04-51270	D0210-01A0	18	090030
124-04-51280	D0210-01A0	26	090030
124-04-61131	D0100-01A0	1	090010
124-04-61260	D0210-01A0	1	090030
124-04-61311	D0210-01A0	5	090030
124-04-61541	D0200-01A0	2	090020
124-04-61550	D0200-01A0	1	090020
124-04-61560	D0200-01A0	3	090020
124-04-61590	D0210-01A0	11	090030
124-06-51160	E0110-01A0	1	120010
124-06-51170	E0210-01A0	1	120060
124-06-54111	E0300-01A0	11	120070
124-06-54111	E0320-01A0	2	120080
124-06-54240	K2110-14B0	7	240560
124-06-54340	E0210-01A0	2	120060
124-06-61123	K2210-08A1	1	240710
124-06-61124	K2210-08A1	1	240710
124-06-61220	K0110-02A2	11	240101
124-06-61390	E0200-02A0	2	120030
124-06-61540	E0110-01A0	1	120010
124-06-62261	K2110-12B0	4	240540
124-06-62272	E0200-04A0	1	120050
124-06-62283	E0200-04A0	2	120050
124-06-62330	K2210-08A1	13	240710
124-06-62510	K2110-14B0	8	240560
124-06-62530	K2110-13B0	12	240550
124-06-62580	E0200-02A0	23	120030
124-06-64142	E0200-01A0	1	120020
124-06-64250	E0200-01A0	8	120020
124-06-64251	K2210-02A0	18	240640
124-06-64321	B0000-15A0	1	030150
124-06-64414	K2110-14B0	1	240560
124-06-64415	K2110-14B0	1	240560
124-06-64482	B0500-01A0	21	030190
124-06-64510	K2110-14B0	1	240560
124-06-64580	B0500-01A0	21	030190
124-06-65151	E0200-01A0	16	120020
124-06-65161	K2110-13B0	1	240550
124-06-65180	E0210-01A0	5	120060
124-06-65262	K2210-02A0	19	240640
124-06-65271	K2210-02A0	26	240640
124-06-65271	K2210-07A1	14	240700

PARTS Nº	FIG. Nº	INDEX	PAGE
124-06-65310	K2210-08A1	14	240710
124-06-65330	K2210-01A0	26	240620
124-06-65350	K2210-02A0	20	240640
124-12-51110	B0600-01A0	2	030200
124-12-51132	B0600-01A0	3	030200
124-12-51141	B0600-01A0	1	030200
124-12-62150	F2200-01A0	1	150010
124-15-01010	F2320-02A0	5	150260
124-15-01020	F2320-02A0	8	150260
124-15-01030	F2320-03A0	8	150270
124-15-01061	F2320-04A0	21	150280
124-15-01070	F2320-05A0	1	150290
124-15-01080	F2320-08A0	11	150320
124-15-02091	F2320-08A0	17	150320
124-15-05210	F2320-08A0	10	150320
124-15-05210	F2320-08A0	7	150320
124-15-42181	F2320-07A0	11	150310
124-15-42190	F2320-07A0	13	150310
124-15-45450	F2320-09A0	31	150330
124-15-49110	F2320-09A0	10	150330
124-15-49110	F2320-09A0	35	150330
124-15-51010	F2320-01A0	1	150250
124-15-51010	F2320-02A0	1	150260
124-15-51010	F2320-03A0	1	150270
124-15-51010	F2320-04A0	1	150280
124-15-51010	F2320-05A0	1	150290
124-15-51010	F2320-06A0	1	150300
124-15-51010	F2320-07A0	1	150310
124-15-51010	F2320-08A0	1	150320
124-15-51010	F2320-09A0	1	150330
124-15-51010	F2320-10A0	1	150340
124-15-51010	F2320-11A0	1	150350
124-15-51010	F2320-12A0	1	150360
124-15-51010	F2320-13A0	1	150370
124-15-51111	F2320-05A0	1	150290
124-15-51140	F2320-02A0	9	150260
124-15-51151	F2320-02A0	18	150260
124-15-51160	F2320-03A0	9	150270
124-15-51181	F2320-04A0	21	150280
124-15-51212	F2320-08A0	11	150320
124-15-51220	F2320-08A0	6	150320
124-15-51231	F2320-08A0	1	150320
124-15-51240	F2320-08A0	3	150320
124-15-51251	F2320-08A0	21	150320
124-15-51261	F2320-08A0	22	150320
124-15-51270	F2320-08A0	23	150320
124-15-51311	F2320-06A0	23	150300
124-15-51610	F2320-06A0	19	150300
124-15-51620	F2320-06A0	8	150300
124-15-51630	F2320-06A0	1	150300

PARTS Nº	FIG. Nº	INDEX	PAGE
124-15-51711	F2320-05A0	19	150290
124-15-51720	F2320-05A0	21	150290
124-15-51731	F2320-05A0	22	150290
124-15-51740	F2320-05A0	20	150290
124-15-51811	F2320-05A0	7	150290
124-15-51820	F2320-05A0	8	150290
124-15-51941	F2320-08A0	7	150320
124-15-51941	F2320-08A0	10	150320
124-15-51951	F2320-08A0	7	150320
124-15-51951	F2320-08A0	10	150320
124-15-52111	F2320-07A0	1	150310
124-15-52123	F2320-08A0	17	150320
124-15-52140	F2320-07A0	10	150310
124-15-52220	F2320-03A0	32	150270
124-15-52230	F2320-03A0	7	150270
124-15-52271	F2320-01A0	18	150250
124-15-52312	F2320-04A0	10	150280
124-15-52320	F2320-03A0	21	150270
124-15-52331	F2320-02A0	2	150260
124-15-52341	F2320-01A0	1	150250
124-15-52381	F2320-01A0	13	150250
124-15-52390	F2320-01A0	6	150250
124-15-52420	F2320-03A0	23	150270
124-15-52610	F2320-04A0	3	150280
124-15-52620	F2320-04A0	1	150280
124-15-52631	F2320-03A0	34	150270
124-15-52640	F2320-03A0	1	150270
124-15-52710	F2320-01A0	19	150250
124-15-52710	F2320-02A0	15	150260
124-15-52710	F2320-03A0	35	150270
124-15-52710	F2320-03A0	4	150270
124-15-52710	F2320-04A0	4	150280
124-15-52730	F2320-04A0	23	150280
124-15-52750	F2320-03A0	15	150270
124-15-52770	F2320-01A0	2	150250
124-15-52810	F2320-07A0	3	150310
124-15-52820	F2320-05A0	12	150290
124-15-52830	F2320-07A0	5	150310
124-15-52840	F2320-05A0	11	150290
124-15-52910	F2320-04A0	8	150280
124-15-52920	F2320-04A0	9	150280
124-15-52960	F2320-02A0	8	150260
124-15-52960	F2320-03A0	27	150270
124-15-52960	F2320-04A0	15	150280
124-15-55110	F2320-11A0	1	150350
124-15-55140	F2320-11A0	27	150350
124-15-55210	F2320-11A0	6	150350
124-15-55221	F2320-11A0	3	150350
124-15-55230	F2320-09A0	33	150330
124-15-55290	F2320-11A0	5	150350

PARTS Nº	FIG. Nº	INDEX	PAGE
124-15-55321	F2320-11A0	2	150350
124-15-55380	F2320-09A0	14	150330
124-15-55390	F2320-11A0	11	150350
124-15-55410	F2320-09A0	1	150330
124-15-55510	F2320-09A0	18	150330
124-15-55520	F2320-09A0	21	150330
124-15-55530	F2320-09A0	24	150330
124-15-55540	F2320-09A0	25	150330
124-15-55610	F2320-10A0	1	150340
124-15-55620	F2320-10A0	2	150340
124-15-55920	F2320-10A0	10	150340
124-15-56000	F2320-09A0	1	150330
124-15-56810	F2320-09A0	12	150330
124-15-56810	F2320-09A0	20	150330
124-15-57000	F2320-11A0	1	150350
124-15-59240	F2320-08A0	20	150320
124-15-59410	F2320-04A0	13	150280
124-15-59420	F2320-03A0	24	150270
124-15-59430	F2320-04A0	17	150280
124-21-51190	J2100-01A0	29	210010
124-21-51190	J2100-01A1	29	210020
124-21-51280	J2100-01A0	17	210010
124-21-51280	J2100-01A1	17	210020
124-21-51290	J2100-01A0	20	210010
124-21-51290	J2100-01A1	20	210020
124-21-51311	J2100-01A0	11	210010
124-21-51311	J2100-01A1	11	210020
124-21-51323	J2100-01A0	14	210010
124-21-51323	J2100-01A1	14	210020
124-21-51332	J2100-01A0	23	210010
124-21-51332	J2100-01A1	23	210020
124-21-61340	M2811-01A0	1	270180
124-21-61470	M2811-01A0	4	270180
124-21-61470	M2811-01A2	4	270190
124-21-63100	J2100-01A1	1	210020
124-21-64103	J2100-01A0	1	210010
124-22-51111	F2320-08A0	19	150320
124-22-51120	F2300-02A0	3	150030
124-22-51131	F2300-02A0	4	150030
124-22-51140	F2300-02A0	5	150030
124-22-51150	F2300-02A0	7	150030
124-22-51160	F2300-02A0	8	150030
124-22-51170	F2300-02A0	9	150030
124-22-51180	F2300-02A0	10	150030
124-22-51190	F2300-02A0	11	150030
124-22-51211	F2300-02A0	12	150030
124-22-51222	F2300-02A0	13	150030
124-22-51232	F2300-02A0	14	150030
124-22-51242	F2300-02A0	15	150030
124-22-51251	F2300-03A0	5	150040

PARTS Nº	FIG. Nº	INDEX	PAGE
124-22-51260	F2300-02A0	19	150030
124-22-52111	F2300-02A0	23	150030
124-22-52120	F2300-02A0	24	150030
124-22-52130	F2300-03A0	1	150040
124-22-52171	F2300-03A0	10	150040
124-22-52211	F2300-03A0	15	150040
124-22-52220	F2300-03A0	16	150040
124-22-52230	F2300-03A0	17	150040
124-22-52240	F2300-03A0	18	150040
124-22-52250	F2300-03A0	11	150040
124-22-52260	F2300-03A0	12	150040
124-22-53121	F2300-03A0	20	150040
124-22-53130	F2300-03A0	2	150040
124-22-53242	F2300-03A0	21	150040
124-22-53270	F2300-03A0	13	150040
124-22-53270	F2300-03A0	14	150040
124-22-53280	F2300-03A0	6	150040
124-22-53280	F2300-03A0	7	150040
124-22-53331	F2300-03A0	9	150040
124-22-55122	F2300-03A0	27	150040
124-22-56115	F2300-04A0	6	150050
124-22-65110	F2300-04A0	1	150050
124-27-51115	F2380-01A0	1	150380
124-27-51125	F2380-02A0	1	150390
124-27-51134	F2380-01A0	2	150380
124-27-51162	F2380-01A0	13	150380
124-27-51162	F2380-02A0	13	150390
124-27-51172	F2380-01A0	22	150380
124-27-51172	F2380-02A0	22	150390
124-27-51193	F2380-01A0	34	150380
124-27-51193	F2380-02A0	34	150390
124-27-51212	F2380-01A0	9	150380
124-27-51212	F2380-02A0	9	150390
124-27-51221	F2380-01A0	18	150380
124-27-51221	F2380-02A0	18	150390
124-27-51232	F2380-01A0	19	150380
124-27-51232	F2380-02A0	19	150390
124-27-51241	F2380-01A0	12	150380
124-27-51241	F2380-02A0	12	150390
124-27-51250	F2380-01A0	27	150380
124-27-51250	F2380-02A0	27	150390
124-27-51261	F2380-01A0	28	150380
124-27-51261	F2380-02A0	28	150390
124-27-51290	F2380-01A0	29	150380
124-27-51290	F2380-02A0	29	150390
124-27-51321	F2380-03A0	1	150400
124-27-51412	F2380-01A0	10	150380
124-27-51412	F2380-02A0	10	150390
124-27-51420	F2380-01A0	11	150380
124-27-51420	F2380-02A0	11	150390

PARTS Nº	FIG. Nº	INDEX	PAGE
124-27-51431	F2380-01A0	20	150380
124-27-51431	F2380-02A0	20	150390
124-27-51441	F2380-01A0	21	150380
124-27-51441	F2380-02A0	21	150390
124-27-51522	F2380-02A0	2	150390
124-30-00105	R0100-01A0	1	300010
124-30-00106	R0100-01A0	1	300010
124-30-00132	R0300-01A0	1	300050
124-30-00170	R0300-01A0	1	300050
124-30-00202	R0200-01A0	1	300030
124-30-00212	R0200-02A0	1	300040
124-30-51112	R0100-01A0	1	300010
124-30-51113	R0100-01A0	1	300010
124-30-51143	R0200-01A0	3	300030
124-30-51143	R0200-02A0	3	300040
124-30-51150	R0200-01A0	11	300030
124-30-51150	R0200-02A0	11	300040
124-30-51160	R0200-01A0	7	300030
124-30-51160	R0200-02A0	7	300040
124-30-51181	R0100-01A0	2	300010
124-30-51642	R0100-01A0	5	300010
124-30-51643	R0100-01A0	5	300010
124-30-51652	R0100-01A0	9	300010
124-30-51653	R0100-01A0	9	300010
124-30-51661	R0100-01A0	20	300010
124-30-51670	R0100-01A0	10	300010
124-30-51670	R0100-01A0	6	300010
124-30-51680	R0100-01A0	11	300010
124-30-51680	R0100-01A0	7	300010
124-30-51690	R0100-01A0	21	300010
124-30-51710	R0100-01A0	12	300010
124-30-51710	R0100-01A0	8	300010
124-30-52311	R2200-02A0	1	300130
124-30-52311	R2200-02A1	1	300131
124-30-52321	R2200-02A0	2	300130
124-30-52321	R2200-02A1	2	300131
124-30-52511	R0200-01A0	1	300030
124-30-52521	R0200-02A0	1	300040
124-30-52540	R0200-01A0	2	300030
124-30-52540	R0200-02A0	2	300040
124-30-52552	R0200-01A0	4	300030
124-30-52552	R0200-02A0	4	300040
124-30-52571	R0200-01A0	9	300030
124-30-52571	R0200-02A0	9	300040
124-30-53111	R0300-01A0	1	300050
124-30-53121	R0300-01A0	3	300050
124-30-53130	R0300-01A0	2	300050
124-30-54113	R0120-01A0	19	300020
124-30-54123	R0120-01A0	1	300020
124-30-54130	R0120-01A0	9	300020

PARTS Nº	FIG. Nº	INDEX	PAGE
124-30-54160	R0120-01A0	5	300020
124-30-54170	R0120-01A0	6	300020
124-30-54180	R0120-01A0	20	300020
124-30-64110	R0120-01A0	3	300020
124-30-64220	R0120-01A0	1	300020
124-30-64230	R0120-01A0	4	300020
124-32-00040	Y0322-01A6	1	450020
124-32-00050	Y0322-01A7	1	450030
124-32-00060	Y0322-01A8	1	450040
124-32-04100	R0500-01B0	1	300060
124-32-04101	R0500-01B0	1	300060
124-32-04110	R0500-01B1	1	300070
124-32-04120	R0500-01B2	1	300080
124-32-04140	R0500-01B4	1	300090
124-32-04200	R0500-01B5	1	300100
124-32-04210	R0500-01B6	1	300110
124-32-05000	Y0320-01A0	1	450010
124-32-08010	R0500-01B0	2	300060
124-32-08010	R0500-01B1	2	300070
124-32-08010	R0500-01B2	2	300080
124-32-08010	R0500-01B4	2	300090
124-32-08010	R0500-01B5	2	300100
124-32-08010	R0500-01B6	2	300110
124-32-08010	Y0322-01A6	2	450020
124-32-08010	Y0322-01A7	2	450030
124-32-08010	Y0322-01A8	2	450040
124-32-08020	R0500-01B0	4	300060
124-32-08020	R0500-01B1	4	300070
124-32-08020	R0500-01B2	4	300080
124-32-08020	R0500-01B4	4	300090
124-32-08020	R0500-01B5	4	300100
124-32-08020	R0500-01B6	4	300110
124-32-08020	Y0322-01A6	4	450020
124-32-08020	Y0322-01A7	4	450030
124-32-08020	Y0322-01A8	4	450040
124-32-51110	R0500-01B0	13	300060
124-32-51110	R0500-01B0	16	300060
124-32-51110	R0500-01B5	13	300100
124-32-51110	R0500-01B5	16	300100
124-32-51210	R0500-01B1	13	300070
124-32-51210	R0500-01B1	16	300070
124-32-51210	R0500-01B6	13	300110
124-32-51210	R0500-01B6	16	300110
124-32-51310	R0500-01B2	13	300080
124-32-51310	R0500-01B2	16	300080
124-32-51410	R0500-01B4	13	300090
124-32-51410	R0500-01B4	16	300090
124-32-53120	R0500-01B0	1	300060
124-32-53120	R0500-01B1	1	300070
124-32-53120	R0500-01B2	1	300080
124-32-53120	R0500-01B4	1	300090
124-32-53120	R0500-01B5	1	300100
124-32-53120	R0500-01B6	1	300110
124-32-53120	R0500-01B7	1	300111
124-32-53120	Y0322-01A6	1	450020
124-32-53120	Y0322-01A7	1	450030
124-32-53120	Y0322-01A8	1	450040
124-32-53130	R0500-01B0	2	300060
124-32-53130	R0500-01B1	2	300070
124-32-53130	R0500-01B2	2	300080
124-32-53130	R0500-01B4	2	300090
124-32-53130	R0500-01B5	2	300100
124-32-53130	R0500-01B6	2	300110
124-32-53130	R0500-01B7	2	300111
124-32-53130	Y0322-01A6	2	450020
124-32-53130	Y0322-01A7	2	450030
124-32-53130	Y0322-01A8	2	450040
124-32-53140	R0500-01B0	9	300060
124-32-53140	R0500-01B1	9	300070
124-32-53140	R0500-01B2	9	300080
124-32-53140	R0500-01B4	9	300090
124-32-53140	R0500-01B7	11	300111
124-32-53140	Y0322-01A6	9	450020
124-32-53140	Y0322-01A7	9	450030
124-32-53150	R0500-01B0	10	300060
124-32-53150	R0500-01B1	10	300070
124-32-53150	R0500-01B2	10	300080
124-32-53150	R0500-01B4	10	300090
124-32-53150	R0500-01B5	10	300100
124-32-53150	R0500-01B6	10	300110
124-32-53150	R0500-01B7	12	300111
124-32-53150	Y0322-01A6	10	450020
124-32-53150	Y0322-01A7	10	450030
124-32-53150	Y0322-01A8	10	450040
124-32-53160	R0500-01B0	7	300060
124-32-53160	R0500-01B1	7	300070
124-32-53160	R0500-01B2	7	300080
124-32-53160	R0500-01B4	7	300090
124-32-53160	R0500-01B5	7	300100
124-32-53160	R0500-01B6	7	300110
124-32-53160	R0500-01B7	7	300111
124-32-53160	Y0322-01A6	7	450020
124-32-53160	Y0322-01A7	7	450030
124-32-53160	Y0322-01A8	7	450040
124-32-53170	R0500-01B7	8	300111
124-32-53190	R0500-01B0	8	300060
124-32-53190	R0500-01B1	8	300070
124-32-53190	R0500-01B2	8	300080
124-32-53190	R0500-01B4	8	300090
124-32-53190	R0500-01B5	8	300100
124-32-53190	R0500-01B6	8	300110
124-32-53190	R0500-01B7	10	300111
124-32-53190	Y0322-01A6	8	450020
124-32-53190	Y0322-01A7	8	450030
124-32-53190	Y0322-01A8	8	450040
124-32-53220	R0500-01B0	15	300060
124-32-53220	R0500-01B1	15	300070
124-32-53220	R0500-01B2	15	300080
124-32-53220	R0500-01B4	15	300090
124-32-53220	R0500-01B5	15	300100
124-32-53220	R0500-01B6	15	300110
124-32-53220	R0500-01B7	17	300111
124-32-53220	Y0320-01A0	1	450010
124-32-53240	R0500-01B5	9	300100
124-32-53240	R0500-01B6	9	300110
124-32-53240	Y0322-01A8	9	450040
124-32-53320	R0500-01B0	3	300060
124-32-53320	R0500-01B1	3	300070
124-32-53320	R0500-01B2	3	300080
124-32-53320	R0500-01B4	3	300090
124-32-53320	R0500-01B5	3	300100
124-32-53320	R0500-01B6	3	300110
124-32-53320	R0500-01B7	3	300111
124-32-53320	Y0322-01A6	3	450020
124-32-53320	Y0322-01A7	3	450030
124-32-53320	Y0322-01A8	3	450040
124-32-53330	R0500-01B0	4	300060
124-32-53330	R0500-01B1	4	300070
124-32-53330	R0500-01B2	4	300080
124-32-53330	R0500-01B4	4	300090
124-32-53330	R0500-01B5	4	300100
124-32-53330	R0500-01B6	4	300110
124-32-53330	R0500-01B7	4	300111
124-32-53330	Y0322-01A6	4	450020
124-32-53330	Y0322-01A7	4	450030
124-32-53330	Y0322-01A8	4	450040
124-32-53350	R0500-01B0	17	300060
124-32-53350	R0500-01B1	17	300070
124-32-53350	R0500-01B2	17	300080
124-32-53350	R0500-01B4	17	300090
124-32-53350	R0500-01B5	17	300100
124-32-53350	R0500-01B6	17	300110
124-32-53350	R0500-01B7	19	300111
124-32-53350	Y0322-01A6	13	450020
124-32-53350	Y0322-01A7	13	450030
124-32-53350	Y0322-01A8	13	450040
124-32-53360	R0500-01B0	18	300060
124-32-53360	R0500-01B1	18	300070
124-32-53360	R0500-01B2	18	300080
124-32-53360	R0500-01B4	18	300090

PARTS Nº	FIG. Nº	INDEX	PAGE
124-32-53360	R0500-01B5	18	300100
124-32-53360	R0500-01B6	18	300110
124-32-53360	R0500-01B7	20	300111
124-32-53360	Y0322-01A6	14	450020
124-32-53360	Y0322-01A7	14	450030
124-32-53360	Y0322-01A8	14	450040
124-32-53420	R0500-01B0	5	300060
124-32-53420	R0500-01B1	5	300070
124-32-53420	R0500-01B2	5	300080
124-32-53420	R0500-01B4	5	300090
124-32-53420	R0500-01B5	5	300100
124-32-53420	R0500-01B6	5	300110
124-32-53420	R0500-01B7	5	300111
124-32-53420	Y0322-01A6	5	450020
124-32-53420	Y0322-01A7	5	450030
124-32-53420	Y0322-01A8	5	450040
124-32-53430	R0500-01B0	6	300060
124-32-53430	R0500-01B1	6	300070
124-32-53430	R0500-01B2	6	300080
124-32-53430	R0500-01B4	6	300090
124-32-53430	R0500-01B5	6	300100
124-32-53430	R0500-01B6	6	300110
124-32-53430	R0500-01B7	6	300111
124-32-53430	Y0322-01A6	6	450020
124-32-53430	Y0322-01A7	6	450030
124-32-53430	Y0322-01A8	6	450040
124-32-54201	R0500-01B0	6	300060
124-35-53180	R0500-01B7	9	300111
124-40-51114	F2300-13A0	1	150140
124-40-51132	F2300-13A0	3	150140
124-40-51222	F2300-13A0	7	150140
124-40-51330	F2300-13A0	10	150140
124-40-51350	F2300-13A0	6	150140
124-40-51370	F2300-13A0	21	150140
124-40-51440	F2300-13A0	2	150140
124-40-51450	F2300-13A0	11	150140
124-40-61111	F2300-07A0	1	150080
124-40-61120	F2300-07A0	2	150080
124-40-61141	F2300-07A0	4	150080
124-40-61150	F2300-07A0	13	150080
124-40-61250	F2300-13A0	20	150140
124-40-61261	F2300-13A0	23	150140
124-40-61280	F2300-07A0	18	150080
124-40-61301	F2300-13A0	19	150140
124-40-61311	F2300-07A0	19	150080
124-40-61320	F2300-07A0	47	150080
124-40-61330	F2300-07A0	3	150080
124-40-61360	F2300-07A0	15	150080
124-43-00020	F2300-15A0	1	150160
124-43-51192	F2300-12A0	3	150130
124-43-51211	F2300-12A0	2	150130
124-43-51224	F2300-12A0	1	150130
124-43-51272	K2110-10B0	4	240520
124-43-51480	K2110-07B0	7	240480
124-43-51610	K2110-05B0	9	240460
124-43-51620	K2110-05B0	7	240460
124-43-51631	K2110-05B0	29	240460
124-43-51710	F2820-01A0	30	150430
124-43-52341	F2300-10A0	28	150110
124-43-52411	F2300-09A0	10	150100
124-43-52411	F2300-10A0	19	150110
124-43-52411	F2300-10A0	9	150110
124-43-52462	F2300-11A0	2	150120
124-43-52470	F2300-11A0	3	150120
124-43-52480	F2300-11A0	5	150120
124-43-52510	F2320-13A0	10	150370
124-43-52631	K2400-04A0	3	240770
124-43-52653	F2320-13A0	1	150370
124-43-52671	F2320-13A0	14	150370
124-43-52684	F2320-13A0	2	150370
124-43-52773	F2300-10A0	26	150110
124-43-52784	F2300-09A0	21	150100
124-43-52793	F2300-09A0	20	150100
124-43-52822	F2300-10A0	11	150110
124-43-52824	F2300-09A0	1	150100
124-43-52832	F2300-10A0	1	150110
124-43-52834	F2300-09A0	12	150100
124-43-52864	F2300-09A0	16	150100
124-43-52864	F2300-09A0	5	150100
124-43-52911	F2300-10A0	21	150110
124-43-52920	F2320-13A0	3	150370
124-43-52931	F2320-13A0	4	150370
124-43-52941	F2300-12A0	4	150130
124-43-52950	F2300-12A0	6	150130
124-43-52950	F2320-13A0	5	150370
124-43-52960	F2300-10A0	14	150110
124-43-52960	F2300-10A0	4	150110
124-43-52971	F2300-09A0	13	150100
124-43-52971	F2300-09A0	2	150100
124-43-53111	F2300-14A0	1	150150
124-43-53121	F2300-14A0	3	150150
124-43-53131	F2300-14A0	23	150150
124-43-53140	F2300-14A0	24	150150
124-43-53160	F2300-15A0	1	150160
124-43-53170	F2300-15A0	2	150160
124-43-53180	F2300-15A0	8	150160
124-43-53221	F2300-16A0	1	150170
124-43-53230	F2300-16A0	2	150170
124-43-53241	F2300-16A0	3	150170
124-43-53252	F2300-16A0	4	150170
124-43-53260	F2300-16A0	5	150170
124-43-53270	F2300-14A0	2	150150
124-43-53290	F2300-16A0	17	150170
124-43-53350	F2300-16A0	14	150170
124-43-53410	F2300-16A0	15	150170
124-43-53420	F2300-16A0	16	150170
124-43-53430	F2300-16A0	12	150170
124-43-54110	K2110-04B0	1	240440
124-43-54131	K2110-04B0	31	240440
124-43-54142	K2241-01A0	11	240720
124-43-54142	K2241-01A1	11	240730
124-43-54151	K2110-04B0	18	240440
124-43-54162	K2110-04B1	15	240450
124-43-54171	K2110-04B1	13	240450
124-43-54182	K2241-01A0	8	240720
124-43-54182	K2241-01A1	8	240730
124-43-54193	K2241-01A0	9	240720
124-43-54193	K2241-01A1	9	240730
124-43-54222	K2241-01A0	3	240720
124-43-54261	K2110-04B1	6	240450
124-43-54270	K2241-01A0	2	240720
124-43-54270	K2241-01A1	2	240730
124-43-54292	K2110-04B1	1	240450
124-43-54340	K2110-09B0	28	240500
124-43-54340	K2241-01A0	15	240720
124-43-54340	K2241-01A1	16	240730
124-43-54390	K2241-01A0	39	240720
124-43-54390	K2241-01A1	43	240730
124-43-54590	K2110-02B0	5	240420
124-43-55160	K2400-03A0	7	240760
124-43-61110	K2400-01A0	1	240740
124-43-61130	K2110-05B0	16	240460
124-43-61140	F2300-14A0	25	150150
124-43-61151	K2110-07B0	6	240480
124-43-61170	F2300-16A0	19	150170
124-43-61180	F2300-22A0	1	150240
124-43-61190	F2300-16A0	1	150170
124-43-61210	K2110-08B0	12	240490
124-43-61270	K2110-07B0	3	240480
124-43-61311	K2110-08B0	1	240490
124-43-61330	F2820-01A0	27	150430
124-43-61610	F2300-11A0	16	150120
124-43-61721	F2820-01A0	2	150430
124-43-61730	K2400-03A0	33	240760
124-43-61810	F2820-01A0	1	150430
124-43-62331	F2300-10A0	25	150110
124-43-62360	K2400-01A0	2	240740
124-43-62420	F2300-11A0	1	150120
124-43-63510	K2400-02A0	3	240750
124-43-63530	K2400-01A0	9	240740

PARTS Nº	FIG. Nº	INDEX	PAGE
124-43-63550	F2300-07A0	28	150080
124-43-64210	K2241-01A0	1	240720
124-43-64410	K2110-09B0	1	240500
124-43-65120	K2110-09B1	5	240510
124-43-65190	K2110-09B0	4	240500
124-43-65440	K2110-10B0	2	240520
124-49-51142	F2730-01A0	17	150410
124-49-51192	F2320-12A0	1	150360
124-49-51232	F2300-19A0	1	150210
124-49-51430	F2300-06A0	10	150070
124-49-61111	F2300-18A0	5	150190
124-49-61111	F2300-18A1	5	150200
124-49-61122	F2300-18A0	11	150190
124-49-61122	F2300-18A1	11	150200
124-49-61140	F2300-18A0	15	150190
124-49-61140	F2300-18A1	15	150200
124-49-61161	F2730-01A0	20	150410
124-49-61170	F2730-01A0	1	150410
124-49-61211	F2730-01A0	5	150410
124-49-61220	F2730-01A0	6	150410
124-49-61450	F2300-06A0	7	150070
124-49-61460	F2300-06A0	8	150070
124-49-61480	F2300-21A0	14	150230
124-49-61490	F2300-21A0	15	150230
124-49-61510	F2300-21A0	4	150230
124-49-61530	F2300-07A0	41	150080
124-49-61541	F2300-21A0	5	150230
124-49-61541	F2300-21A0	6	150230
124-49-61550	F2300-21A0	7	150230
124-49-61580	F2730-01A0	2	150410
124-49-61611	F2730-02A0	11	150420
124-49-61621	F2730-02A0	12	150420
124-54-26540	K0210-15A0	3	240270
124-54-36310	K2500-01A0	10	240790
124-54-51271	M2140-01A0	35	270030
124-54-51271	M2140-01A1	12	270040
124-54-51410	M2110-01A0	3	270010
124-54-52180	M2140-04A0	4	270080
124-54-52250	M2140-01A0	32	270030
124-54-52460	M2140-01A0	4	270030
124-54-52460	M2140-01A1	4	270040
124-54-52480	M2140-01A0	7	270030
124-54-52480	M2140-01A1	7	270040
124-54-52513	M2140-04A0	20	270080
124-54-52542	M2140-04A0	23	270080
124-54-53131	M2210-04A0	17	270130
124-54-53131	M2210-04A0	2	270130
124-54-53160	M2210-06A0	2	270140
124-54-53173	M2210-07A0	10	270150
124-54-53223	M2210-04A0	12	270130
124-54-53233	M2210-04A0	34	270130
124-54-53450	K2110-01B0	14	240400
124-54-53450	K2110-01B1	11	240410
124-54-54130	M2210-01A0	9	270090
124-54-54130	M2210-02A0	8	270100
124-54-54130	M2210-02A1	8	270110
124-54-54151	M2210-07A0	15	270150
124-54-54151	M2210-07A0	22	270150
124-54-54161	M2210-01A0	10	270090
124-54-54161	M2210-02A0	9	270100
124-54-54161	M2210-02A1	9	270110
124-54-54170	M2210-01A0	12	270090
124-54-54170	M2210-02A0	13	270100
124-54-54170	M2210-02A1	13	270110
124-54-54E50	M2210-02A0	10	270100
124-54-54E50	M2210-02A1	10	270110
124-54-61160	M2110-01A0	2	270010
124-54-61170	M2110-01A0	4	270010
124-54-61230	M2110-01A0	10	270010
124-54-61460	M2120-01A0	1	270020
124-54-61540	M2110-01A0	1	270010
124-54-61541	M2110-01A0	1	270010
124-54-61542	M2110-01A0	1	270010
124-54-61543	M2110-01A0	1	270010
124-54-61550	E0300-01A0	3	120070
124-54-61560	E0300-01A0	4	120070
124-54-62220	M2140-01A1	1	270040
124-54-62221	M2140-01A1	1	270040
124-54-62222	M2140-01A1	1	270040
124-54-62230	M2140-01A0	29	270030
124-54-62230	M2140-01A1	8	270040
124-54-62240	M2140-01A0	1	270030
124-54-62241	M2140-01A0	1	270030
124-54-62242	M2140-01A0	1	270030
124-54-62250	M2140-01A1	11	270040
124-54-62260	M2110-01A0	13	270010
124-54-62280	M2140-01A0	5	270030
124-54-62280	M2140-01A1	5	270040
124-54-62342	M2140-02A1	25	270060
124-54-62342	M2140-03A0	7	270070
124-54-62350	M2140-02A1	27	270060
124-54-62350	M2140-03A0	9	270070
124-54-62364	M2140-02A0	1	270050
124-54-62364	M2140-02A1	1	270060
124-54-62380	M2140-02A0	3	270050
124-54-62380	M2140-02A1	3	270060
124-54-62441	M2140-04A0	8	270080
124-54-62550	M2140-02A1	20	270060
124-54-62550	M2140-02A1	26	270060
124-54-62550	M2140-03A0	2	270070
124-54-62550	M2140-03A0	8	270070
124-54-62613	M2140-02A1	19	270060
124-54-62613	M2140-03A0	1	270070
124-54-62640	M2140-04A0	19A	270080
124-54-62770	M2140-02A0	11	270050
124-54-62770	M2140-02A1	11	270060
124-54-62822	M2140-02A0	3	270050
124-54-62822	M2140-02A1	3	270060
124-54-63210	M2240-01A0	1	270160
124-54-63311	K2810-01A0	1	240840
124-54-63311	K2810-01A1	1	240850
124-54-63430	K2120-01A0	4	240610
124-54-63431	K2120-01A0	4	240610
124-54-63440	K2120-01A0	5	240610
124-54-63511	M2210-04A0	1	270130
124-54-63521	M2210-04A0	16	270130
124-54-63541	M2210-04A0	8	270130
124-54-63551	M2210-04A0	30	270130
124-54-64220	M2210-02A1	9	270110
124-54-64230	M2210-02A0	15	270100
124-54-64230	M2210-02A1	15	270110
124-54-64240	M2140-01A0	2	270030
124-54-64240	M2140-01A1	2	270040
124-54-64412	M2210-07A0	1	270150
124-54-64440	M2210-07A0	7	270150
124-54-64502	M2210-01A0	1	270090
124-54-64511	M2210-01A0	7	270090
124-54-64520	M2210-01A0	8	270090
124-54-64580	M2210-01A0	13	270090
124-54-64620	K2500-02A0	14	240800
124-54-64620	K2500-02A1	16	240810
124-54-64620	K2500-02A2	20	240820
124-54-64620	K2500-02A3	21	240830
124-54-64711	M2210-07A0	16	270150
124-54-64711	M2210-07A0	23	270150
124-54-64800	M2210-02A1	1	270110
124-54-64810	M2210-02A0	12	270100
124-54-64810	M2210-02A1	12	270110
124-54-64900	M2210-02A0	1	270100
124-54-64920	M2210-02A0	9	270100
124-54-65310	E0200-02A0	8	120030
124-54-65511	K2110-01B0	1	240400
124-54-65511	K2110-01B1		240410
124-54-65512	K2110-01B0	1	240400
124-54-65512	K2110-01B1	1	240410
124-54-66480	K2500-02A2	16	240820
124-54-66480	K2500-02A3	16	240830
124-54-68160	K0310-01A0	1	240300
124-54-68180	K0310-01A1	1	240310
124-54-68210	K2210-02A0	28	240640

PARTS Nº	FIG. Nº	INDEX	PAGE
124-54-68240	K2210-01A0	13	240620
124-54-68250	K2210-01A0	17	240620
124-54-68260	K2210-06A1	11	240690
124-54-68270	K2210-06A1	15	240690
124-54-68280	K2210-01A0	18	240620
124-54-68330	K2500-02A0	9	240800
124-54-68330	K2500-02A2	9	240820
124-54-68330	K2500-02A3	9	240830
124-54-68340	K2500-02A1	9	240810
124-54-68410	K2500-01A0	10	240790
124-54-68420	K2500-01A0	10	240790
124-54-68510	K2210-01A0	6	240620
124-60-51121	H0120-01A0	6	180020
124-60-51121	H0120-01A1	10	180030
124-60-51121	H0120-01A2	10	180040
124-60-51131	H0120-01A1	11	180030
124-60-51131	H0120-01A2	11	180040
124-60-51142	H0120-01A1	12	180030
124-60-51150	H0100-01A0	11	180010
124-60-51180	H0120-01A2	12	180040
124-60-61211	H0100-01A0	1	180010
124-62-51263	H2210-01A0	14	180090
124-62-51263	H2210-01A1	11	180100
124-62-51273	H2210-01A0	15	180090
124-62-51273	H2210-01A1	12	180100
124-62-51321	H2210-01A1	3	180100
124-62-51460	H0310-03A0	1	180080
124-62-51530	T2160-01A0	24	330110
124-62-51651	T2160-03A0	6	330130
124-62-51651	T2160-04A0	9	330140
124-62-51680	T2160-02A0	9	330120
124-62-51690	T2160-02A0	13	330120
124-62-51690	T2160-02A0	17	330120
124-62-51711	T2160-02A0	23	330120
124-62-51721	T2160-02A0	24	330120
124-62-51752	H0310-01A0	18	180050
124-62-51760	H2220-01A0	13	180110
124-62-51771	H2220-01A0	19	180110
124-62-51771	H2230-01A0	11	180120
124-62-51810	H0310-02A0	1	180070
124-62-51821	T2160-01A0	29	330110
124-62-51920	H2220-01A0	22	180110
124-62-51920	H2230-01A0	14	180120
124-62-51920	T2160-01A0	10	330110
124-62-51920	T2160-01A0	21	330110
124-62-61130	F2300-18A0	21	150190
124-62-61130	F2300-18A1	21	150200
124-62-61150	H0310-01A0	3	180050
124-62-61150	H0310-01A1	3	180060
124-62-61161	F2300-20A0	1	150220
124-62-61170	F2300-05A0	1	150060
124-62-61181	T2160-01A0	8	330110
124-62-61191	T2160-01A0	7	330110
124-62-61220	F2300-18A0	21	150190
124-62-61220	F2300-18A1	21	150200
124-62-61231	T2160-01A0	6	330110
124-62-61240	T2160-01A0	14	330110
124-62-61250	T2160-01A0	16	330110
124-62-61260	T2160-02A0	1	330120
124-62-61270	T2160-02A0	2	330120
124-62-61281	H2210-01A1	5	180100
124-62-61290	H2210-01A0	6	180090
124-62-61340	H2210-01A0	7	180090
124-62-61350	H2220-01A0	6	180110
124-62-61360	H2210-01A1	6	180100
124-62-61380	H2220-01A0	7	180110
124-62-61390	H2220-01A0	9	180110
124-62-61410	H2230-01A0	7	180120
124-62-61420	H2230-01A0	9	180120
124-62-61480	T2160-03A0	2	330130
124-62-61491	H0310-03A0	9	180080
124-62-61531	F2300-08A0	1	150090
124-62-61531	F2300-13A0	22	150140
124-62-61671	T2160-02A0	12	330120
124-62-61781	T2160-02A0	16	330120
124-62-61790	T2160-02A0	20	330120
124-62-61810	H2220-01A0	3	180110
124-62-61810	H2230-01A0	3	180120
124-62-61870	T2160-02A0	2	330120
124-62-61910	F2300-21A0	18	150230
124-62-61920	F2300-21A0	17	150230
124-62-61931	F2300-08A0	2	150090
124-62-62170	H0310-01A0	10	180050
124-62-62191	H0310-02A0	15	180070
124-62-62381	H2250-01A0	6	180130
124-62-62390	H2250-01A0	7	180130
124-62-62730	H2220-01A0	25	180110
124-62-62740	H2230-01A0	18	180120
124-62-62920	T2160-01A0	21	330110
124-63-02210	Y1620-21A0	1	450060
124-63-64621	Y1620-31A0	10	450070
124-63-65520	Y1620-21A0	10	450060
124-63-65540	Y1620-21A0	1	450060
124-70-62101	T2120-02A0	1	330090
124-70-62120	T2120-02A0	2	330090
124-70-62200	T2110-01A1	1	330020
124-70-62210	T2110-01A1	2	330020
124-70-62220	T2110-01A1	3	330020
124-70-62260	T2115-01A1	1	330050
124-70-62270	T2115-01A1	8	330050
124-70-62290	T2110-02A1	6	330030
124-70-62310	T2110-02A1	7	330030
124-70-62320	T2110-02A1	17	330030
124-70-62330	T2110-01A1	16	330020
124-72-00011	T2110-01A0	7	330010
124-72-00014	T2110-01A0	6	330010
124-72-51132	T2120-01A0A	4	330071
124-72-51143	T2120-01A0A	3	330071
124-72-51143	T2120-01A1	3	330080
124-72-51143	T2120-01A1A	3	330081
124-72-51180	T2120-01A1	10	330080
124-72-51312	T2110-01A0	7	330010
124-72-51314	T2110-01A0	7	330010
124-72-51354	T2115-01A0	19	330040
124-72-51360	T2115-01A0	18	330040
124-72-51423	T2115-01A0	21	330040
124-72-51480	T2120-01A0	11	330070
124-72-51480	T2120-01A1	14	330080
124-72-51490	T2120-01A0	14	330070
124-72-51490	T2120-01A0A	20	330071
124-72-51490	T2120-01A1	17	330080
124-72-51490	T2120-01A1A	21	330081
124-72-51540	T2115-01A0	22	330040
124-72-51611	T2115-01A0	1	330040
124-72-51710	T2120-01A0	17	330070
124-72-51710	T2120-01A1	20	330080
124-72-51720	T2120-01A0	18	330070
124-72-51720	T2120-01A1	21	330080
124-72-51730	T2120-01A0	19	330070
124-72-51730	T2120-01A1	22	330080
124-72-51740	T2120-01A1	23	330080
124-72-51770	T2115-01A0	13	330040
124-72-51790	T2115-01A0	8	330040
124-72-51810	T2115-01A0	4	330040
124-72-52131	T2120-01A1	4	330080
124-72-52131	T2120-01A1A	4	330081
124-72-61180	T2120-01A0	6	330070
124-72-61190	T2120-01A1	2	330080
124-72-61240	T2120-01A0A	2	330071
124-72-61240	T2120-01A1A	2	330081
124-72-61320	T2115-01A0	18	330040
124-72-61360	T2120-01A0A	9	330071
124-72-61360	T2120-01A1A	10	330081
124-72-61370	T2120-01A0A	12	330071
124-72-61370	T2120-01A1A	13	330081
124-72-61382	T2120-01A0A	16	330071
124-72-61382	T2120-01A1A	17	330081
124-72-61392	T2120-01A0A	16	330071
124-72-61392	T2120-01A1A	17	330081
124-72-61470	T2120-01A0A	13	330071

PARTS Nº	FIG. Nº	INDEX	PAGE
124-72-61470	T2120-01A1A	14	330081
124-72-61480	T2120-01A0	11	330070
124-72-61480	T2120-01A0A	17	330071
124-72-61480	T2120-01A1	14	330080
124-72-61480	T2120-01A1A	18	330081
124-72-61500	T2120-01A0	1	330070
124-72-61501	T2120-01A0A	1	330071
124-72-61531	T2110-01A0	19	330010
124-72-61600	T2110-01A0	1	330010
124-72-61601	T2110-01A0	1	330010
124-72-61602	T2110-01A0	1	330010
124-72-61820	T2110-01A0	8	330010
124-72-61840	T2120-01A0	9	330070
124-72-61840	T2120-01A1	13	330080
124-72-61890	T2120-01A0	10	330070
124-72-61890	T2120-01A1	13	330080
124-72-62110	K0110-02A2	6	240101
124-72-62200	T2120-01A1	1	330080
124-72-62201	T2120-01A1A	1	330081
124-78-54190	K2241-01A1	3	240730
124-78-61120	T2400-01A0	12	330150
124-78-62151	H2250-01A0	3	180130
124-78-62161	H2250-01A0	4	180130
124-78-62171	H2250-01A0	14	180130
124-78-62180	M2240-01A1	1	270170
124-78-64210	K2241-01A1	1	240730
124-911-1251	K0710-01A0	24	240340
124-911-1314	K0710-03A0	1	240360
124-911-1350	K0710-01A0	27	240340
124-944-6111	M2811-01A2	1	270190
124-98-51140	U0100-01A0	4	360010
124-98-51140	U0100-01A3	4	360011
124-98-51140	U0100-01A4	4	360020
124-98-51140	U0100-01A5	4	360030
124-98-51140	U0100-01A6	4	360040
124-98-51170	U0100-01A0	14	360010
124-98-51170	U0100-01A3	14	360011
124-98-51170	U0100-01A3A	14	360015
124-98-51260	U0100-01A0	22	360010
124-98-51260	U0100-01A3	22	360011
124-98-51260	U0100-01A3A	22	360015
124-98-51290	U0100-01A0	16	360010
124-98-51290	U0100-01A3	16	360011
124-98-51290	U0100-01A3A	16	360015
124-98-51520	U0100-01A4	19	360020
124-98-51530	U0100-01A4	21	360020
124-98-51560	U0100-01A4	14	360020
124-98-51720	U0100-01A5	19	360030
124-98-51730	U0100-01A5	21	360030
124-98-51860	U0100-01A6	18	360040
124-98-51920	U0100-01A6	13	360040
124-98-52160	U0100-01A5	14	360030
124-98-61590	U0100-01A0	10	360010
124-98-61590	U0100-01A3	10	360011
124-98-61590	U0100-01A3A	10	360015
124-98-61590	U0100-01A4	10	360020
124-98-61590	U0100-01A5	10	360030
124-98-61590	U0100-01A6	10	360040
124-98-61651	U0100-01A0	30	360010
124-98-61651	U0100-01A3	30	360011
124-98-61651	U0100-01A3A	30	360015
124-98-61651	U0100-01A4	29	360020
124-98-61651	U0100-01A5	29	360030
124-98-61651	U0100-01A6	30	360040
124-98-61810	U0100-01A0	29	360010
124-98-61810	U0100-01A4	28	360020
124-98-61810	U0100-01A5	28	360030
124-98-61810	U0100-01A6	29	360040
124-98-61820	U0100-01A0	31	360010
124-98-61820	U0100-01A4	30	360020
124-98-61820	U0100-01A5	30	360030
124-98-61820	U0100-01A6	31	360040
124-98-61970	U0100-01A0	11	360010
124-98-61970	U0100-01A3	11	360011
124-98-61970	U0100-01A3A	11	360015
124-98-61970	U0100-01A4	11	360020
124-98-61970	U0100-01A5	11	360030
124-98-61970	U0100-01A6	11	360040
124-98-62120	U0100-01A0	13	360010
124-98-62120	U0100-01A3	13	360011
124-98-62120	U0100-01A4	18	360020
124-98-62120	U0100-01A5	18	360030
124-98-62120	U0100-01A6	17	360040
124-98-62170	U0100-01A3A	13	360015
124-98-B1110	K0830-01A1	1	240381
124-98-B1120	K0830-01A1	2	240381
124-98-B1130	K0830-01A1	3	240381
124-99-B3760	M2140-01A0	1	270030
124-99-B3770	M2140-01A1	1	270040
124-A62-1920	K2210-02A0	30	240640
124-Z11-1150	K0710-02A0	1	240350
124-Z11-1170	K0710-04A0	3	240370
124-Z11-1220	K0710-01A0	20	240340
124-Z11-1230	K0710-01A0	21	240340
124-Z11-1240	K0710-01A0	22	240340
124-Z11-1271	K0710-01A0	3	240340
124-Z11-1310	K0710-04A0	14	240370
124-Z11-1330	K2910-01A0	14	240860
124-Z11-1350	K0710-04A0	4	240370
124-Z11-1360	K0710-03A0	6	240360
124-Z11-1361	K0710-03A0	6	240360
124-Z11-1371	K0710-01A0	2	240340
124-Z11-1420	K0710-04A0	5	240370
124-Z11-1530	K0710-04A0	2	240370
124-Z11-1620	K0710-01A0	5	240340
124-Z11-1670	M2140-01A0	19	270030
124-Z11-1681	M2140-01A0	18	270030
124-Z11-1691	M2140-01A0	18	270030
124-Z11-1720	K0710-03A0	11	240360
124-Z11-1730	K2210-01A1	7	240630
124-Z11-1740	K2910-01A0	4	240860
124-Z11-1791	K0710-01A0	16	240340
124-Z11-1850	K0710-01A0	9	240340
124-Z11-1890	K0710-02A0	6	240350
124-Z11-1930	K0710-04A0	13	240370
124-Z11-1950	K0710-01A0	6	240340
124-Z11-2130	K0710-04A0	10	240370
124-Z11-2180	K0710-03A0	16	240360
124-Z11-2210	K0710-01A0	23	240340
124-Z11-2232	K0710-03A0	12	240360
124-Z11-2310	K0710-01A0	4	240340
124-Z11-2460	M2140-01A0	8	270030
124-Z11-2470	M2140-01A0	8	270030
124-Z11-8110	K0210-17A0	10	240290
124-Z11-8120	K0210-16A0	11	240280
124-Z11-8170	K0210-16A0	1	240280
124-Z78-6112	M2210-03A0	1	270120
124-Z78-6122	M2210-03A0	6	270120
124-Z78-6161	K0410-01A1	14	240330
124-Z78-6170	K0410-01A1	15	240330
124-Z78-6182	K0410-01A1	5	240330
124-Z78-6213	K0410-01A0	1	240320
124-Z78-6213	K0410-01A1	1	240330
124-Z78-6260	M2210-03A0	2	270120
124-Z78-6260	M2210-03A0	7	270120
124-Z78-6310	E0320-01A1	15	120081
124-Z78-6391	E0320-01A1	7	120081
125-15-11230	F2320-03A0	43	150270
125-15-11230	F2320-04A0	22	150280
125-15-15290	F2300-15A0	6	150160
125-15-15290	F2320-09A0	30	150330
125-15-15290	F2320-11A0	9	150350
125-15-22780	F2320-05A0	6	150290
125-15-32750	F2320-01A0	20	150250
125-30-21650	R0100-01A0	15	300010
125-78-00010	T2400-01A0	18	330150
125-78-00030	T2400-01A0	1	330150
125-78-00040	T2400-01A0	4	330150
125-78-22120	T2400-01A0	2	330150
125-78-22130	T2400-01A0	4	330150

PARTS Nº	FIG. Nº	INDEX	PAGE
125-78-22180	T2400-01A0	7	330150
125-78-22190	T2400-01A0	13	330150
125-78-22210	T2400-01A0	18	330150
125-78-31112	T2400-01A0	1	330150
125-78-31122	T2400-01A0	12	330150
126-43-54210	K2110-03B0	7	240430
126-43-54220	K2110-03B0	8	240430
126-43-54230	K2110-09B1	19	240510
126-60-51211	H0120-01A0	9	180020
126-60-51221	H0120-01A0	10	180020
126-60-51230	H0120-01A0	11	180020
126-60-51240	H0310-01A1	18	180060
126-60-51250	H0310-01A1	11	180060
126-62-51250	H0310-01A1	10	180060
126-62-51260	H2210-01A1	4	180100
126-70-51410	T2110-02A1	1	330030
126-70-51450	T2110-02A1	11	330030
126-70-51480	T2110-02A1	18	330030
126-98-51180	U0400-01A0	1	360050
126-98-51190	U0100-01A6	20	360040
12F-14-11290	B0600-01A0	18	030200
12F-62-41180	H2210-01A0	11	180090
12F-62-41180	H2210-01A1	10	180100
12F-70-31251	T2120-01A0	2	330070
12F-70-31251	T2120-01A0A	5	330071
12F-70-31251	T2120-01A1	5	330080
12F-70-31251	T2120-01A1A	5	330081
12F-70-31261	T2120-01A1	6	330080
12F-70-31261	T2120-01A1A	6	330081
12F-70-31261	T2120-02A0	4	330090
12F-72-41470	T2110-01A0	2	330010
12F-72-41480	T2110-01A0	3	330010
12G-01-61511	B0000-13A0	3	030130
12G-15-01040	F2320-03A0	24	150270
12G-15-01050	F2320-03A0	42	150270
12G-15-51170	F2320-03A0	42	150270
12G-15-52130	F2320-04A0	16	150280
12G-15-52210	F2320-04A0	19	150280
12G-15-52410	F2320-04A0	12	150280
12G-15-52510	F2320-04A0	14	150280
12G-15-52520	F2320-03A0	25	150270
12G-21-51171	J2100-01A0	10	210010
12G-21-51171	J2100-01A1	10	210020
12G-21-51182	R2200-01A0	7	300120
12G-21-51182	R2200-02A0	19	300130
12G-21-51192	R2200-01A0	8	300120
12G-21-51192	R2200-02A0	20	300130
12G-21-51B41	J2100-01A0	5	210010
12G-21-51B41	J2100-01A1	5	210020
12G-21-51G50	J2100-01A0	2	210010
12G-21-51G50	J2100-01A1	2	210020
12G-21-51G60	J2100-01A0	3	210010
12G-21-51G60	J2100-01A1	3	210020
12G-21-51G70	J2100-01A0	4	210010
12G-21-51G70	J2100-01A1	4	210020
12G-21-52131	J2100-01A0	6	210010
12G-21-52131	J2100-01A1	6	210020
12G-21-52141	J2100-01A0	8	210010
12G-21-52141	J2100-01A1	8	210020
12G-2152151	R2200-02A1	13	300131
12G-21-52151	R2200-01A0	1	300120
12G-21-52151	R2200-01A1	1	300121
12G-21-52151	R2200-02A0	13	300130
12G-21-52161	R2200-01A0	4	300120
12G-21-52161	R2200-01A1	4	300121
12G-21-52161	R2200-02A0	16	300130
12G-21-52161	R2200-02A1	16	300131
12G-21-52B51	J2100-01A0	7	210010
12G-21-52B51	J2100-01A0	9	210010
12G-21-52B51	J2100-01A1	7	210020
12G-21-52B51	J2100-01A1	9	210020
12G-21-61310	R2200-01A1	7	300121
12G-21-61310	R2200-02A1	19	300131
12G-21-61320	R2200-01A1	8	300121
12G-21-61320	R2200-02A1	20	300131
12G-21-61330	R2200-01A1	9	300121
12G-21-61330	R2200-02A1	21	300131
12G-21-61340	R2200-01A1	10	300121
12G-21-61340	R2200-02A1	22	300131
12G-21-61350	R2200-01A1	15	300121
12G-21-61350	R2200-02A1	27	300131
12G-27-00030	F2380-01A0	1	150380
12G-27-00040	F2380-02A0	1	150390
12G-27-52350	F2380-01A0	33	150380
12G-27-52350	F2380-02A0	33	150390
12G-30-51530	R2200-02A0	5	300130
12G-30-51530	R2200-02A1	5	300131
12G-30-51531	R2200-01A0	11	300120
12G-30-51531	R2200-01A1	18	300121
12G-30-51531	R2200-02A0	23	300130
12G-30-51531	R2200-02A1	30	300131
12G-30-52611	R2200-01A0	17	300120
12G-30-52611	R2200-01A1	24	300121
12G-30-64110	R0120-01A0	19	300020
12G-30-64340	R0120-01A0	13	300020
12G-30-64350	R0120-01A0	14	300020
12G-32-51310	R0500-01B7	15	300111
12G-32-51310	R0500-01B7	18	300111
12G-43-51550	K2400-04A0	2	240770
12G-62-61823	T2160-01A0	29	330110
12G-72-51120	T2110-01A0	16	330010
12G-98-61240	U0100-01A3	29	360011
12G-98-61240	U0100-01A3A	29	360015
12G-98-61250	U0100-01A3	31	360011
12G-98-61250	U0100-01A3A	31	360015
12H-72-11380	T2110-01A0	8	330010
12H-72-11581	T2115-02A0	11	330060
12H-72-11581	T2115-02A0	6	330060
12Y-30-00100	R0100-01A0	12	300010
12Y-30-11130	R0100-01A0	3	300010
130-30-13170	R0100-01A0	16	300010
130-69-11190	T2810-01A0	4	330160
130-70-12111	T2115-01A1	20	330050
130-70-12120	T2115-01A1	13	330050
130-70-12131	T2115-01A1	19	330050
130-70-12160	T2115-01A1	2	330050
130-70-12170	T2115-01A1	3	330050
130-70-12180	T2115-01A1	4	330050
130-70-12190	T2115-01A1	5	330050
130-70-12250	T2115-01A1	9	330050
130-70-12270	T2115-01A1	11	330050
130-70-13125	T2110-01A1	4	330020
130-70-13132	T2110-01A1	5	330020
130-70-13241	T2110-01A1	12	330020
130-70-41120	T2110-01A1	13	330020
130-70-43210	T2110-01A1	6	330020
130-70-43220	T2110-01A1	7	330020
130-70-51140	T2120-02A0	3	330090
130-70-52110	T2115-01A1	15	330050
130-70-B1221	T2110-01A1	8	330020
130-70-B1231	T2110-01A1	9	330020
130-70-B1410	T2115-01A1	12	330050
130-70-B1410	T2115-01A1	18	330050
130-78-B1333	T2120-02A0	8	330090
131-43-58210	F2820-01A0	12	150430
131-69-00221	T2810-01A0	1	330160
131-69-41102	T2810-01A0	1	330160
131-69-41120	T2810-01A0	1	330160
131-78-31190	T2400-01A0	19	330150
134-01-61830	B0000-08A0	1	030080
134-01-61840	B0000-08A0	3	030080
134-03-61410	B0500-01A0	15	030190
134-03-61410	C0100-02A0	34	060040
134-04-61180	D0100-01A0	2	090010
134-06-61320	K2110-12B0	8	240540
134-06-61612	K2210-02A0	25	240640
134-06-61612	K2210-08A1	16	240710
134-06-61650	K2210-02A0	25	240640
134-06-61650	K2210-08A1	16	240710
134-06-61660	K2210-02A0	25	240640

PARTS Nº	FIG. Nº	INDEX	PAGE
134-06-61660	K2210-08A1	16	240710
134-06-61670	K2210-02A0	25	240640
134-06-61670	K2210-08A1	16	240710
134-06-72200	K2110-14B0	26	240560
134-30-61460	R2200-02A0	10	300130
134-30-61460	R2200-02A0	9	300130
134-30-61460	R2200-02A1	10	300131
134-30-61460	R2200-02A1	9	300131
134-43-61220	K2110-06B0	14	240470
134-43-61230	K2110-06B0	9	240470
134-43-61282	K2110-06B0	7	240470
134-43-61331	K2110-05B0	1	240460
134-43-61340	K2110-08B0	8	240490
134-43-61420	K2110-05B0	10	240460
134-43-62320	K2400-02A0	2	240750
134-43-62380	K2400-05A0	1	240780
134-43-62390	K2400-05A0	2	240780
134-43-62421	K2400-03A0	3	240760
134-43-62431	K2400-03A0	2	240760
134-43-64190	K2241-01A1	4	240730
134-43-64230	K2241-01A0	4	240720
134-43-64240	K2241-01A0	12	240720
134-43-64240	K2241-01A1	13	240730
134-43-64260	K2241-01A0	26	240720
134-43-64260	K2241-01A1	28	240730
134-43-64310	K2110-04B1	19	240450
134-43-64320	K2110-04B0	4	240440
134-43-64342	K2110-09B0	13	240500
134-43-64360	K2110-04B0	11	240440
134-43-64370	K2110-04B0	9	240440
134-43-64510	K2241-01A0	7	240720
134-43-64610	K2241-01A1	7	240730
134-43-66172	K2110-06B0	32	240470
134-43-66210	K2110-02B0	2	240420
134-43-66241	K2110-06B0	36	240470
134-43-68240	F2820-01A0	22	150430
134-43-68251	K2110-02B0	1	240420
134-43-68270	F2820-01A0	23	150430
134-49-61760	K2110-16B0	3	240580
134-49-61770	F2300-07A0	36	150080
134-49-61780	F2300-07A0	36	150080
134-49-61790	F2300-07A0	37	150080
134-49-61860	F2300-07A0	38	150080
134-54-62431	M2140-02A0	8	270050
134-54-62431	M2140-02A1	8	270060
134-54-64H50	M2210-07A0	1	270150
134-54-65121	K2500-02A0	15	240800
134-54-65121	K2500-02A1	17	240810
134-54-65121	K2500-02A2	21	240820
134-54-65121	K2500-02A3	22	240830

PARTS Nº	FIG. Nº	INDEX	PAGE
134-54-65140	K2500-02A0	15	240800
134-54-65140	K2500-02A1	17	240810
134-54-65140	K2500-02A2	21	240820
134-54-65140	K2500-02A3	22	240830
134-54-66112	K2500-01A0	1	240790
134-54-66132	K2500-01A0	2	240790
134-54-66152	K2500-01A0	7	240790
134-54-66161	K2500-01A0	18	240790
134-54-66180	K2500-01A0	17	240790
134-54-66180	K2500-01A0	6	240790
134-54-66190	U0100-01A0	7	360010
134-54-66190	U0100-01A3	7	360011
134-54-66190	U0100-01A3A	7	360015
134-54-66190	U0100-01A4	7	360020
134-54-66190	U0100-01A5	7	360030
134-54-66190	U0100-01A6	7	360040
134-54-66211	K2500-02A0	20	240800
134-54-66211	K2500-02A1	22	240810
134-54-66211	K2500-02A2	26	240820
134-54-66211	K2500-02A3	27	240830
134-54-66240	K2500-01A0	12	240790
134-54-66290	U0100-01A0	8	360010
134-54-66290	U0100-01A3	8	360011
134-54-66290	U0100-01A3A	8	360015
134-54-66290	U0100-01A4	8	360020
134-54-66290	U0100-01A5	8	360030
134-54-66290	U0100-01A6	8	360040
134-54-66880	K2500-02A2	16	240820
134-54-68121	K2500-02A0	1	240800
134-54-68121	K2500-02A1	1	240810
134-54-68121	K2500-02A2	1	240820
134-54-68121	K2500-02A3	1	240830
134-54-68161	K2500-02A0	6	240800
134-54-68161	K2500-02A1	6	240810
134-54-68161	K2500-02A2	6	240820
134-54-68161	K2500-02A3	6	240830
134-54-68180	K2210-02A0	29	240640
134-54-69111	W2112-01A0	1	420010
134-54-69130	W2112-01A0	2	420010
134-54-69140	W2112-01A0	3	420010
134-54-69150	W2112-01A0	4	420010
134-54-69160	W2112-01A0	5	420010
134-54-69170	W2112-01A0	6	420010
134-54-69190	W2112-01A0	1	420010
134-57-61111	K0110-02A1	1	240100
134-57-61120	K0110-01A2	4	240030
134-57-61120	K0110-01A4	6	240050
134-57-61120	K0110-01A5	4	240060
134-57-61120	K0110-01A7	5	240080
134-57-61120	K0110-01A8	5	240090

PARTS Nº	FIG. Nº	INDEX	PAGE
134-57-61131	K0110-02A1	2	240100
134-57-61150	K0110-01A2	3A	240030
134-57-61150	K0110-01A4	5	240050
134-57-61150	K0110-01A5	3A	240060
134-57-61150	K0110-01A7	4	240080
134-57-61150	K0110-01A8	4	240090
134-57-61200	K0110-01A4	1	240050
134-57-61200	K0110-01A5	1	240060
134-57-61300	K0110-01A2	1	240030
134-57-71200	K0110-02A2	1	240101
134-62-63451	T2160-01A0	2	330110
134-62-63451	T2160-02A0	3	330120
134-62-63471	T2160-01A0	3	330110
134-62-63471	T2160-02A0	4	330120
134-62-73470	T2160-01A0	3	330110
134-69-00020	T2810-01A3	1	330170
134-69-13110	T2810-01A3	11	330170
134-69-13120	T2810-01A3	12	330170
134-69-61130	T2810-01A0	5	330160
134-98-31370	U0400-01A0	5	360050
134-X11-1390	K2210-01A1	8	240630
134-X11-1570	M2140-01A0	9	270030
134-X11-1580	M2140-01A0	10	270030
134-X11-1590	M2140-01A0	11	270030
134-X11-1611	M2140-01A0	15	270030
134-X11-1621	M2140-01A0	15	270030
134-X11-1630	M2140-01A0	16	270030
134-X11-1920	K0860-01A0	3	240390
134-X78-7152	K0410-01A1	4	240330
134-X78-7190	K0410-01A1	13	240330
134-X78-7342	K0411-01A0	2	240355
134-X78-7360	E0320-01A1	3	120081
134-X78-7412	K0410-01A0	4	240320
134-X78-7422	K0410-01A0	5	240320
135-03-12110	C0100-02A0	12	060040
135-06-34260	K2110-01B0	13	240400
135-43-15821	F2820-01A0	21	150430
135-43-33770	M2140-02A0	12	270050
135-43-33770	M2140-02A1	12	270060
140-30-00141	R0300-01A0	6	300050
140-30-00401	R0300-01A0	7	300050
140-30-00411	R0300-01A0	8	300050
140-30-16221	R0300-01A0	8	300050
141-63-93270	Y1621-01A0	10	450080
144-30-14340	R0120-01A0	13	300020
144-30-14350	R0120-01A0	14	300020
144-63-92170	Y1620-21A0	8	450060
144-63-95170	F2300-16A0	6	150170
144-69-11130	T2810-01A3	4	330170
144-69-11161	T2810-01A3	13	330170

PARTS Nº	FIG. Nº	INDEX	PAGE
144-69-11170	T2810-01A3	1	330170
144-69-11210	T2810-01A3	5	330170
144-69-11230	T2810-01A3	6	330170
144-817-3161	T2400-01A0	21	330150
144-874-6960	K0710-02A0	22	240350
144-874-7470	F2300-07A0	31	150080
144-A74-1460	H0310-03A0	6	180080
144-Y11-1851	K0710-01A0	1	240340
145-14-11320	F2320-02A0	7	150260
145-14-11320	F2320-03A0	10	150270
145-14-11320	F2320-03A0	26	150270
14X-06-12160	K2210-02A0	2	240640
14X-06-12160	K2210-02A0	3	240640
14X-06-12160	K2210-07A1	11	240700
14X-06-12190	K2210-02A0	4	240640
14X-06-12190	K2210-07A1	12	240700
14X-06-12260	E0210-01A0	10	120060
14X-06-14210	K2910-01A0	8	240860
14X-06-14390	K2110-13B0	9	240550
14X-06-21550	K2210-02A0	6	240640
14X-06-21550	K2210-07A1	15	240700
14X-06-21710	K2110-14B0	30	240560
14X-06-22120	K2110-08B0	4	240490
14X-06-22150	K2210-02A0	9	240640
14X-06-22150	K2210-07A1	18	240700
14X-06-24430	E0420-01A0	4	120090
14X-27-00100	F2380-01A0	29	150380
14X-27-00100	F2380-02A0	29	150390
14X-27-00110	F2380-01A0	29	150380
14X-27-00110	F2380-02A0	29	150390
14X-27-00120	F2380-01A0	30	150380
14X-27-00120	F2380-02A0	30	150390
14X-27-11810	F2380-01A0	30	150380
14X-27-11810	F2380-02A0	30	150390
14X-30-15131	R0300-01A0	4	300050
14X-30-15251	R0300-01A0	9	300050
14X-43-11270	K2400-02A0	13	240750
14X-43-11320	K2110-03B0	1	240430
14X-43-11320	K2110-04B0	3	240440
14X-43-11320	K2110-08B0	23	240490
14X-43-12110	K2400-02A0	1	240750
14X-43-12251	K2400-02A0	6	240750
14X-43-12260	K2400-02A0	7	240750
14X-43-12270	K2400-02A0	10	240750
14X-43-12350	K2400-01A0	3	240740
14X-43-12380	K2400-03A0	4	240760
14X-43-12390	K2400-01A0	4	240740
14X-43-12410	K2400-02A0	22	240750
14X-43-13330	F2820-01A0	20	150430
14X-43-13722	K2400-03A0	17	240760

PARTS Nº	FIG. Nº	INDEX	PAGE
14X-43-13760	K2400-03A0	1	240760
14X-43-13760	K2400-04A0	1	240770
14X-43-13790	K2400-03A0	34	240760
14X-43-14141	K2500-02A0	23	240800
14X-43-14141	K2500-02A3	30	240830
14X-43-14170	K2110-03B0	5	240430
14X-43-14180	K2500-02A2	29	240820
14X-43-14340	K2110-09B0	1	240500
14X-43-14340	K2110-09B1	2	240510
14X-43-14412	K2110-09B1	1	240510
14X-43-15740	K2110-06B0	15	240470
14X-54-12150	M2140-01A0	41	270030
14X-54-12150	M2140-01A1	18	270040
14X-54-12590	M2140-04A0	7	270080
14X-54-12780	M2140-02A0	15	270050
14X-54-12780	M2140-02A1	15	270060
14X-54-12910	M2140-01A0	3	270030
14X-54-12910	M2140-01A1	3	270040
14X-54-12910	M2240-01A0	2	270160
14X-54-12910	M2240-01A1	2	270170
14X-54-12940	K2210-01A0	5	240620
14X-54-12960	M2140-04A0	15	270080
14X-54-13160	M2210-04A0	20	270130
14X-54-13811	M2210-06A0	1	270140
14X-54-13830	M2210-06A0	3	270140
14X-54-13980	M2140-02A1	21	270060
14X-54-13980	M2140-02A1	30	270060
14X-54-13980	M2140-03A0	12	270070
14X-54-13980	M2140-03A0	3	270070
14X-54-16143	K2500-02A0	16	240800
14X-54-16143	K2500-02A1	18	240810
14X-54-16143	K2500-02A2	22	240820
14X-54-16143	K2500-02A3	23	240830
14X-54-16153	K2500-02A0	17	240800
14X-54-16153	K2500-02A1	19	240810
14X-54-16153	K2500-02A2	23	240820
14X-54-16153	K2500-02A3	24	240830
14X-54-16183	K2500-02A0	16	240800
14X-54-16183	K2500-02A1	18	240810
14X-54-16183	K2500-02A2	22	240820
14X-54-16183	K2500-02A3	23	240830
14X-54-16193	K2500-02A0	17	240800
14X-54-16193	K2500-02A1	19	240810
14X-54-16193	K2500-02A2	23	240820
14X-54-16193	K2500-02A3	24	240830
14X-54-16270	K2500-02A0	23	240800
14X-54-16270	K2500-02A2	29	240820
14X-54-16270	K2500-02A3	30	240830
14X-54-16442	K2500-02A0	7	240800
14X-54-16442	K2500-02A1	7	240810

PARTS Nº	FIG. Nº	INDEX	PAGE
14X-54-16442	K2500-02A2	7	240820
14X-54-16442	K2500-02A3	7	240830
14X-54-16452	K2500-02A0	12	240800
14X-54-16452	K2500-02A1	14	240810
14X-54-16452	K2500-02A2	12	240820
14X-54-16452	K2500-02A3	12	240830
14X-54-16641	K2110-01B0	6	240400
14X-54-16641	K2110-01B1	6	240410
14X-54-16660	K2500-02A0	22	240800
14X-54-16660	K2500-02A1	24	240810
14X-54-16660	K2500-02A2	28	240820
14X-54-16660	K2500-02A3	29	240830
14X-54-16670	K2110-17B1	1	240590
14X-54-18150	K2210-01A0	1	240620
14X-54-18830	W2112-01A0	14	420010
14X-54-19120	K2210-01A0	14	240620
14X-54-19130	K2210-01A0	15	240620
14X-54-19170	K2210-01A0	16	240620
14X-54-23130	M2210-04A0	23	270130
14X-54-25190	K2110-01B0	3	240400
14X-54-25190	K2110-01B1	3	240410
14X-54-26380	K2500-02A0	18	240800
14X-54-26380	K2500-02A1	20	240810
14X-54-26380	K2500-02A2	24	240820
14X-54-26380	K2500-02A3	25	240830
14X-54-26390	K2500-02A0	14	240800
14X-54-26390	K2500-02A1	16	240810
14X-54-26390	K2500-02A2	20	240820
14X-54-26390	K2500-02A3	21	240830
14X-54-26410	K2500-02A0	18	240800
14X-54-26410	K2500-02A1	20	240810
14X-54-26410	K2500-02A2	24	240820
14X-54-26410	K2500-02A3	25	240830
14X-54-28310	K2210-05A1	5	240680
14X-54-28320	K2210-05A1	10	240680
14X-54-28611	K2210-06A1	1	240690
14X-54-28621	K2210-06A1	6	240690
14X-54-28661	K2210-05A1	1	240680
14X-54-28751	K2210-06A1	14	240690
14X-54-29310	K2120-01A0	1	240610
14X-54-33211	K2810-01A1	5	240850
14X-54-33251	K2810-01A1	8	240850
14X-54-36320	K2500-01A0	10	240790
14X-54-36330	K2500-01A0	11	240790
14X-57-11113	K0110-01A0	8	240010
14X-57-11113	K0120-01A0	1	240110
14X-57-11380	K0110-01A0	9	240010
14X-57-11380	K0120-01A0	2	240110
14X-57-21100	K0110-01A8	1	240090
14X-57-21200	K0110-01A7	1	240080

PARTS N°	FIG. N°	INDEX	PAGE
14X-60-11130	H0100-01A0	4	180010
14X-60-12120	H0120-01A0	3	180020
14X-60-12120	H0120-01A1	3	180030
14X-60-12120	H0120-01A2	3	180040
14X-78-11180	K2241-01A1	47	240730
14X-911-1120	K2110-15B0	1	240570
14X-911-1121	K2110-15B0	1	240570
14X-911-1130	K0210-10A0	9	240220
14X-911-1140	K0210-10A0	10	240220
14X-911-1150	K0210-10A0	11	240220
14X-911-1161	K2910-01A0	1	240860
14X-911-1690	K0210-03A0	1	240150
14X-911-1761	K0210-03A0	2	240150
14X-911-3560	K0210-10A0	2	240220
14X-911-3570	K0210-10A0	3	240220
14X-911-3710	E0310-01A0	9	120120
14X-911-3710	E0310-02A0	9	120130
14X-911-3710	K0210-09A0	2	240210
14X-911-4280	K0210-09A0	4	240210
14X-911-4541	K0210-09A0	20	240210
14X-911-5711	K0210-16A0	20	240280
14X-911-5721	K0210-16A0	21	240280
14X-911-6180	K0860-01A0	1	240390
14X-911-7030	K0710-01A0	12	240340
14X-911-7620	K2210-01A1	13	240630
14X-911-7631	K2210-01A1	14	240630
14X-911-7650	K2210-01A1	15	240630
14X-911-7660	K2210-01A1	16	240630
14X-911-7670	K0710-01A0	15	240340
14X-911-7690	K2210-01A1	9	240630
14X-911-7701	K2210-01A1	10	240630
14X-911-7720	K2210-01A1	11	240630
14X-911-7750	K0710-01A0	13	240340
14X-911-8243	K2210-03A1	3	240660
14X-911-8480	M2140-01A0	20	270030
14X-911-8490	M2140-01A0	21	270030
14X-911-8520	M2140-01A0	17	270030
14X-911-8550	M2140-01A0	22	270030
14X-911-8580	M2140-01A0	25	270030
14X-911-8590	M2140-01A0	25	270030
14X-911-8610	M2140-01A0	26	270030
14X-911-8620	M2140-01A0	27	270030
14X-911-8630	M2140-01A0	28	270030
14X-911-8820	K2210-03A1	4	240660
14X-911-8830	K2210-03A1	10	240660
14X-911-8950	K2210-03A1	5	240660
14X-911-9111	K2210-03A1	1	240660
14X-911-9121	K2210-03A1	8	240660
14X-911-9141	K2210-03A1	9	240660
14X-911-9211	K2210-07A1	2	240700

PARTS N°	FIG. N°	INDEX	PAGE
14X-911-9221	K2210-07A1	7	240700
14X-911-9240	K2210-05A1	2	240680
14X-911-9340	K2210-05A1	6	240680
14X-911-9350	K2210-05A1	11	240680
14X-911-9350	K2210-05A1	7	240680
14X-911-9360	K2210-03A1	2	240660
14X-911-9370	K2210-03A1	18	240660
14X-911-9380	K2210-01A1	4	240630
14X-978-1660	K0410-01A1	16	240330
14X-978-2170	K0410-01A1	9	240330
14X-98-11170	U0100-01A0	1	360010
14X-98-11170	U0100-01A3	1	360011
14X-98-11170	U0100-01A3A	1	360015
14X-98-11170	U0100-01A4	1	360020
14X-98-11170	U0100-01A5	1	360030
14X-98-11170	U0100-01A6	1	360040
14X-98-11240	U0100-01A0	2	360010
14X-98-11240	U0100-01A3	2	360011
14X-98-11240	U0100-01A3A	2	360015
14X-98-11240	U0100-01A4	2	360020
14X-98-11240	U0100-01A5	2	360030
14X-98-11240	U0100-01A6	2	360040
14X-98-11260	U0100-01A3A	4	360015
14X-98-11521	U0100-01A0	17	360010
14X-98-11521	U0100-01A3	17	360011
14X-98-11521	U0100-01A3A	17	360015
14X-A62-1690	K2500-02A3	19	240830
14Y-22-14180	F2300-02A0	18	150030
14Y-30-11277	J2100-01A0	26	210010
14Y-30-11277	J2100-01A1	26	210020
14Z-40-11220	F2300-14A0	18	150150
14Z-40-11320	F2300-14A0	4	150150
14Z-40-11330	F2300-14A0	6	150150
14Z-40-11340	F2300-14A0	7	150150
14Z-40-11350	F2300-14A0	9	150150
14Z-40-11360	F2300-14A0	19	150150
14Z-40-11371	F2300-14A0	8	150150
14Z-43-11170	K2110-07B0	26	240480
14Z-43-11310	K2110-18B0	1	240600
14Z-43-11751	K2110-10B0	5	240520
14Z-43-11940	K2110-10B0	5	240520
14Z-43-12891	K2400-03A0	31	240760
14Z-43-13180	K2110-05B0	1	240460
150-04-11170	D0210-01A0	2	090030
154-04-12521	D0210-01A0	2	090030
154-04-12531	D0210-01A0	2	090030
154-15-46140	F2320-11A0	4	150350
154-21-11830	F2300-04A0	8	150050
154-44-12460	K0110-01A1	18	240020
154-44-12460	K0110-01A3	18	240040

PARTS N°	FIG. N°	INDEX	PAGE
154-44-12460	K0110-01A6	18	240070
154-54-22830	W2112-01A0	8	420010
154-54-73130	T2110-01A0	20	330010
155-57-12320	K0110-01A1	24	240020
155-57-12320	K0110-01A3	24	240040
155-57-12320	K0110-01A6	24	240070
155-57-12330	K0110-01A1	25	240020
155-57-12330	K0110-01A3	25	240040
155-57-12330	K0110-01A6	25	240070
170-21-11190	F2320-06A0	11	150300
170-33-13330	F2300-09A0	17	150100
170-33-13330	F2300-09A0	6	150100
170-33-13330	F2300-10A0	15	150110
170-33-13330	F2300-10A0	5	150110
170-43-17330	K2110-04B0	31	240440
175-06-81610	K0110-02A2	20	240101
175-30-00581	R0100-01A0	14	300010
175-30-00691	R0100-01A0	13	300010
175-30-00702	R0100-01A0	12	300010
175-30-00900	R0200-01A0	5	300030
175-30-00900	R0200-02A0	5	300040
175-30-16215	R0100-01A0	14	300010
175-30-16215	R0200-01A0	5	300030
175-30-16215	R0200-02A0	5	300040
175-30-36273	R0100-01A0	13	300010
175-30-36280	R0200-01A0	5	300030
175-30-36280	R0200-02A0	5	300040
175-54-34170	B0000-05A0	3A	030050
176-63-92240	Y1620-01A0	7	450050
178-43-14330	K2241-01A1	12	240730
17A-06-17930	E0310-02A0	2	120130
17A-06-17931	E0310-01A0	2	120120
17A-06-17931	E0310-01A0	2	120120
17A-06-17931	E0310-02A0	2	120130
17A-43-24160	F2320-13A0	22	150370
17A-43-24160	K2400-02A0	24	240750
17A-43-24170	F2300-11A0	22	150120
17A-43-24170	K2400-04A0	12	240770
17A-43-25131	K2110-05B0	15	240460
17A-43-25140	K2110-05B0	23	240460
17A-43-25151	K2110-04B0	7	240440
17A-43-25151	K2110-05B0	11	240460
17A-43-25171	K2110-05B0	30	240460
17A-43-25271	K2110-06B0	19	240470
17A-43-25410	K2110-01B0	9	240400
17A-43-25460	K2110-09B0	6	240500
17A-43-25460	K2110-09B1	7	240510
17A-43-25531	K2110-11B0	5	240530
17A-43-25682	K2110-08B0	21	240490
17A-43-42310	K2500-01A0	11A	240790

PARTS N°	FIG. N°	INDEX	PAGE
17A-54-14160	M2210-01A0	11	270090
17A-54-14160	M2210-02A0	14	270100
17A-54-14160	M2210-02A1	14	270110
17A-54-14230	M2140-02A0	2	270050
17A-54-14230	M2140-02A0	5	270050
17A-54-14230	M2140-02A1	2	270060
17A-54-14230	M2140-02A1	5	270060
17A-54-14230	M2210-02A0	11	270100
17A-54-14230	M2210-02A1	11	270110
17A-54-16821	K2110-01B0	15	240400
17A-54-16821	K2110-01B1	12	240410
17A-54-16841	K2110-01B0	16	240400
17A-54-16841	K2110-01B1	13	240410
17A-54-16881	K2500-02A0	10	240800
17A-54-16881	K2500-02A0	2	240800
17A-54-16881	K2500-02A1	10	240810
17A-54-16881	K2500-02A1	2	240810
17A-54-16881	K2500-02A2	10	240820
17A-54-16881	K2500-02A2	2	240820
17A-54-16881	K2500-02A3	10	240830
17A-54-16881	K2500-02A3	2	240830
17A-54-25540	K0110-02A2	7	240101
17A-54-25650	K2500-02A2	14	240820
17A-54-25650	K2500-02A3	14	240830
17A-54-25660	K2500-02A2	14	240820
17A-54-25660	K2500-02A3	14	240830
17A-57-21170	K0110-01A4	4	240050
17A-57-21170	K0110-01A6	42	240070
17A-911-1671	K0710-01A0	10	240340
17A-911-7201	K2210-01A1	3	240630
17A-911-7310	K2210-01A1	5	240630
17A-911-7340	K2210-01A1	12	240630
17A-911-7350	K2210-01A1	6	240630
17A-98-11180	U0100-01A0	5	360010
17A-98-11180	U0100-01A3	5	360011
17A-98-11180	U0100-01A3A	5	360015
17A-98-11180	U0100-01A4	5	360020
17A-98-11180	U0100-01A5	5	360030
17A-98-11180	U0100-01A6	5	360040
17A-98-45510	U0400-01A0	5	360050
17A-Z11-0010	K0210-01A0	1	240130
17A-Z11-0010	K0210-02A0	1	240140
17A-Z11-0010	K0210-03A0	1	240150
17A-Z11-0010	K0210-04A0	1	240160
17A-Z11-0010	K0210-05A0	1	240170
17A-Z11-0010	K0210-06A0	1	240180
17A-Z11-0010	K0210-07A0	1	240190
17A-Z11-0010	K0210-08A0	1	240200
17A-Z11-0010	K0210-09A0	1	240210
17A-Z11-0010	K0210-10A0	1	240220

PARTS N°	FIG. N°	INDEX	PAGE
17A-Z11-0010	K0210-11A0	1	240230
17A-Z11-0010	K0210-12A0	1	240240
17A-Z11-0010	K0210-13A0	1	240250
17A-Z11-0010	K0210-14A0	1	240260
17A-Z11-0020	K0210-02A0	1	240140
17A-Z11-0020	K0210-03A0	1	240150
17A-Z11-0030	K0210-02A0	1	240140
17A-Z11-0030	K0210-03A0	1	240150
17A-Z11-1111	K0210-01A0	1	240130
17A-Z11-1210	K0210-06A0	1	240180
17A-Z11-1220	K0210-06A0	2	240180
17A-Z11-1231	K0210-06A0	3	240180
17A-Z11-1240	K0210-06A0	4	240180
17A-Z11-1250	K0210-06A0	5	240180
17A-Z11-1261	K0210-03A0	7	240150
17A-Z11-1271	K0210-03A0	7	240150
17A-Z11-1280	K0210-03A0	8	240150
17A-Z11-1291	K0210-06A0	8	240180
17A-Z11-1301	K0210-06A0	7	240180
17A-Z11-1301	K0210-07A0	1	240190
17A-Z11-1310	K0210-07A0	1	240190
17A-Z11-1320	K0210-07A0	2	240190
17A-Z11-1330	K0210-07A0	3	240190
17A-Z11-1340	K0210-07A0	4	240190
17A-Z11-1350	K0210-07A0	5	240190
17A-Z11-1360	K0210-07A0	6	240190
17A-Z11-1370	K0210-07A0	7	240190
17A-Z11-1390	K0210-07A0	29	240190
17A-Z11-1401	K0210-06A0	7	240180
17A-Z11-1401	K0210-07A0	1	240190
17A-Z11-1410	K0210-07A0	1	240190
17A-Z11-1420	K0210-07A0	2	240190
17A-Z11-1460	K0210-07A0	8	240190
17A-Z11-1470	K0210-07A0	9	240190
17A-Z11-1510	K0210-07A0	8	240190
17A-Z11-1520	K0210-07A0	9	240190
17A-Z11-1530	K0210-07A0	10	240190
17A-Z11-1540	K0210-07A0	11	240190
17A-Z11-1550	K0210-07A0	12	240190
17A-Z11-1560	K0210-07A0	13	240190
17A-Z11-1570	K0210-07A0	14	240190
17A-Z11-1580	K0210-07A0	15	240190
17A-Z11-1610	K0210-07A0	16	240190
17A-Z11-1620	K0210-07A0	17	240190
17A-Z11-1660	K0210-07A0	28	240190
17A-Z11-1870	K0210-03A0	5	240150
17A-Z11-1880	K0210-03A0	6	240150
17A-Z11-1890	K0210-03A0	20	240150
17A-Z11-1890	K0210-03A0	23	240150
17A-Z11-1890	K0210-12A0	15	240240

PARTS N°	FIG. N°	INDEX	PAGE
17A-Z11-1890	K0210-16A0	5	240280
17A-Z11-1922	K0210-13A0	2	240250
17A-Z11-1930	K0210-12A0	4	240240
17A-Z11-1940	K0210-12A0	5	240240
17A-Z11-1950	K0210-12A0	6	240240
17A-Z11-1970	K0210-17A0	1	240290
17A-Z11-1980	K0210-17A0	4	240290
17A-Z11-1990	K0210-17A0	7	240290
17A-Z11-2112	K0210-09A0	5	240210
17A-Z11-2142	K0210-09A0	11	240210
17A-Z11-2161	K0210-09A0	24	240210
17A-Z11-2240	K0210-11A0	1	240230
17A-Z11-2251	K0210-11A0	2	240230
17A-Z11-2261	K0210-11A0	3	240230
17A-Z11-2350	K0210-09A0	8	240210
17A-Z11-2370	E0310-01A0	1	120120
17A-Z11-2380	E0310-02A0	1	120130
17A-Z11-2390	E0310-01A0	5	120120
17A-Z11-2410	E0310-02A0	5	120130
17A-Z11-2420	K0210-09A0	12	240210
17A-Z11-2430	K0210-03A0	11	240150
17A-Z11-2491	K0210-09A0	3	240210
17A-Z11-2511	K0210-09A0	25	240210
17A-Z11-2521	K0210-03A0	11	240150
17A-Z11-2530	K0210-09A0	26	240210
17A-Z11-2540	K0210-09A0	27	240210
17A-Z11-2570	K0210-03A0	17	240150
17A-Z11-2581	K0210-03A0	18	240150
17A-Z11-2590	K0210-14A0	20	240260
17A-Z11-2610	K0210-10A0	5	240220
17A-Z11-2620	K0210-10A0	6	240220
17A-Z11-2630	K0210-10A0	7	240220
17A-Z11-2640	K0210-10A0	8	240220
17A-Z11-2650	K0210-10A0	12	240220
17A-Z11-2660	K0210-10A0	13	240220
17A-Z11-2711	K0210-12A0	1	240240
17A-Z11-2721	K0210-12A0	2	240240
17A-Z11-2731	K0210-12A0	11	240240
17A-Z11-2741	K0210-12A0	12	240240
17A-Z11-2751	K0210-12A0	13	240240
17A-Z11-2761	K0210-12A0	14	240240
17A-Z11-2781	K0210-16A0	2	240280
17A-Z11-2791	K0210-16A0	3	240280
17A-Z11-2811	K0210-03A0	21	240150
17A-Z11-2811	K0210-03A0	24	240150
17A-Z11-2811	K0210-12A0	16	240240
17A-Z11-2811	K0210-16A0	6	240280
17A-Z11-2820	K0210-05A0	22	240170
17A-Z11-2830	K0210-05A0	23	240170
17A-Z11-2840	K0210-12A0	10	240240

PARTS N°	FIG. N°	INDEX	PAGE
17A-Z11-2850	K0210-12A0	8	240240
17A-Z11-2860	K0210-12A0	9	240240
17A-Z11-2880	K0210-16A0	4	240280
17A-Z11-2890	K0210-14A0	21	240260
17A-Z11-2920	K0210-16A0	7	240280
17A-Z11-2931	K0210-16A0	8	240280
17A-Z11-2940	K0210-12A0	17	240240
17A-Z11-2950	K0210-12A0	19	240240
17A-Z11-2960	K0210-14A0	12	240260
17A-Z11-2970	K0210-14A0	13	240260
17A-Z11-2991	K0210-14A0	14	240260
17A-Z11-3111	K0210-02A0	1	240140
17A-Z11-3121	K0210-02A0	1	240140
17A-Z11-3130	K0210-02A0	14	240140
17A-Z11-3150	K0210-02A0	10	240140
17A-Z11-3160	K0210-03A0	10	240150
17A-Z11-3180	K0210-16A0	35	240280
17A-Z11-3190	K0210-02A0	19	240140
17A-Z11-3210	K0210-02A0	34	240140
17A-Z11-3221	K0210-02A0	2	240140
17A-Z11-3231	K0210-02A0	3	240140
17A-Z11-3242	K0210-02A0	5	240140
17A-Z11-3252	K0210-02A0	5	240140
17A-Z11-3261	K0210-02A0	6	240140
17A-Z11-3270	K0210-02A0	7	240140
17A-Z11-3282	K0210-02A0	10	240140
17A-Z11-3290	K0210-02A0	19	240140
17A-Z11-3311	K0210-02A0	20	240140
17A-Z11-3320	K0210-02A0	26	240140
17A-Z11-3332	K0210-02A0	30	240140
17A-Z11-3340	K0210-02A0	37	240140
17A-Z11-3351	K0210-02A0	38	240140
17A-Z11-3362	K0210-03A0	5	240150
17A-Z11-3371	K0210-03A0	6	240150
17A-Z11-3382	K0210-03A0	9	240150
17A-Z11-3413	K0210-04A0	1	240160
17A-Z11-3423	K0210-04A0	2	240160
17A-Z11-3441	K0210-05A0	8	240170
17A-Z11-3452	K0210-05A0	9	240170
17A-Z11-3462	K0210-05A0	5	240170
17A-Z11-3472	K0210-05A0	6	240170
17A-Z11-3482	K0210-05A0	27	240170
17A-Z11-3490	K0210-05A0	7	240170
17A-Z11-3512	K0210-16A0	16	240280
17A-Z11-3522	K0210-16A0	17	240280
17A-Z11-3541	K0210-16A0	12	240280
17A-Z11-3560	K0210-16A0	13	240280
17A-Z11-3570	K0210-16A0	25	240280
17A-Z11-3581	K0210-16A0	28	240280
17A-Z11-3611	K0210-03A0	14	240150

PARTS N°	FIG. N°	INDEX	PAGE
17A-Z11-3621	K0210-03A0	14	240150
17A-Z11-3631	K0210-03A0	19	240150
17A-Z11-3641	K0210-03A0	19	240150
17A-Z11-3651	K0210-03A0	22	240150
17A-Z11-3661	K0210-03A0	25	240150
17A-Z11-3671	K0210-03A0	25	240150
17A-Z11-3680	K0210-05A0	26	240170
17A-Z11-3692	K0210-05A0	12	240170
17A-Z11-3711	K0210-05A0	13	240170
17A-Z11-3721	K0210-05A0	20	240170
17A-Z11-3731	K0210-05A0	16	240170
17A-Z11-3741	K0210-16A0	29	240280
17A-Z11-3780	K0210-14A0	4	240260
17A-Z11-3790	K0210-05A0	21	240170
17A-Z11-3811	K0210-14A0	1	240260
17A-Z11-3821	K0210-14A0	2	240260
17A-Z11-3831	K0210-14A0	3	240260
17A-Z11-3841	K0210-14A0	5	240260
17A-Z11-3871	K0210-14A0	24	240260
17A-Z11-3881	K0210-14A0	25	240260
17A-Z11-3890	K0210-14A0	6	240260
17A-Z11-3912	K0210-05A0	15	240170
17A-Z11-3922	K0210-05A0	19	240170
17A-Z11-3931	K0210-14A0	10	240260
17A-Z11-3941	K0210-14A0	11	240260
17A-Z11-3951	K0210-06A0	6	240180
17A-Z11-3961	K0210-14A0	30	240260
17A-Z11-3970	K0210-14A0	18	240260
17A-Z11-3981	K0210-14A0	15	240260
17A-Z11-7161	K0210-14A0	28	240260
17A-Z11-7161	K2210-01A1	1	240630
17A-Z11-7240	K2210-04A1	8	240670
17A-Z11-7250	K2210-04A1	1	240670
17A-Z11-7420	K2210-05A1	14	240680
17A-Z11-7440	K2210-05A1	15	240680
17A-Z11-7460	K2210-04A1	2	240670
17A-Z11-7470	K2210-04A1	3	240670
17A-Z11-7480	K2210-04A1	4	240670
17A-Z11-7490	K2210-04A1	5	240670
17A-Z11-7630	K2210-03A1	19	240660
17A-Z11-7640	K2210-06A1	4	240690
17A-Z11-7640	K2210-06A1	9	240690
17A-Z11-7650	K2210-06A1	10	240690
17A-Z11-7650	K2210-06A1	5	240690
17A-Z11-7670	K2210-03A1	20	240660
195-01-16140	K2110-14B0	31	240560
195-15-15261	F2320-03A0	19	150270
195-30-36190	F2380-01A0	25	150380
195-30-36190	F2380-02A0	25	150390
195-40-31540	F2300-14A0	14	150150

PARTS N°	FIG. N°	INDEX	PAGE
195-54-43210	M2140-01A0	6	270030
195-54-43210	M2140-01A1	6	270040
195-54-68760	K2500-01A0	15	240790
195-54-68760	K2500-01A0	4	240790
195-54-68760	M2140-01A0	12	270030
195-57-11100	K0110-01A1	3	240020
195-57-11100	K0110-01A3	2	240040
195-57-11100	K0110-01A6	2	240070
195-57-11740	K0110-01A1	3	240020
195-57-11740	K0110-01A3	3	240040
195-57-11740	K0110-01A6	3	240070
195-57-11750	K0110-01A1	9	240020
195-57-11750	K0110-01A3	9	240040
195-57-11750	K0110-01A6	9	240070
195-57-11760	K0110-01A1	4	240020
195-57-11760	K0110-01A3	4	240040
195-57-11760	K0110-01A6	4	240070
195-57-11770	K0110-01A1	14	240020
195-57-11770	K0110-01A3	14	240040
195-57-11770	K0110-01A6	14	240070
195-57-11780	K0110-01A1	13	240020
195-57-11780	K0110-01A3	13	240040
195-57-11780	K0110-01A6	13	240070
195-57-11790	K0110-01A1	15	240020
195-57-11790	K0110-01A3	15	240040
195-57-11790	K0110-01A6	15	240070
195-57-21181	K0110-01A1	24	240020
195-57-21181	K0110-01A3	23	240040
195-57-21181	K0110-01A6	24	240070
195-57-21190	K0110-01A1	30	240020
195-57-21190	K0110-01A3	30	240040
195-57-21190	K0110-01A6	30	240070
195-57-21211	K0110-01A1	28	240020
195-57-21211	K0110-01A3	28	240040
195-57-21211	K0110-01A6	28	240070
195-57-21221	K0110-01A1	29	240020
195-57-21221	K0110-01A3	29	240040
195-57-21221	K0110-01A6	29	240070
195-57-41720	K0110-01A1	2	240020
195-57-41720	K0110-01A3	2	240040
195-57-41720	K0110-01A6	2	240070
195-57-41760	K0110-01A1	37	240020
195-57-41760	K0110-01A3	37	240040
195-57-41760	K0110-01A6	37	240070
195-57-43510	K0110-01A1	1	240020
195-57-43510	K0110-01A6	1	240070
195-57-43610	K0110-01A3	1	240040
195-57-45501	K0110-01A1		240020
195-57-45501	K0110-01A6	1	240070
195-57-45601	K0110-01A3	1	240040

PARTS N°	FIG. N°	INDEX	PAGE
195-979-4390	K0710-04A0	7	240370
195-979-4841	K0710-04A0	8	240370
195-979-5190	B0000-02A0	19	030020
195-979-5190	B0000-05A0	12	030050
195-97-98590	K0210-10A0	12	240220
195-979-8590	K2110-15B0	2	240570
195-Z11-1371	K0210-07A0	19	240190
195-Z11-1381	K0210-07A0	26	240190
195-Z11-2180	K0210-13A0	1	240250
195-Z11-3630	K0210-07A0	20	240190
195-Z11-3640	K0210-07A0	21	240190
195-Z11-3670	K0210-07A0	23	240190
195-Z11-3860	K0210-07A0	22	240190
195-Z11-4510	K0210-05A0	1	240170
195-Z11-4520	K0210-02A0	31	240140
195-Z11-4520	K0210-05A0	2	240170
198-43-18170	K2110-08B0	13	240490
198-43-41940	K2110-08B0	17	240490
198-43-41940	K2241-01A0	28	240720
198-43-41940	K2241-01A1	29	240730
198-61-14180	H2220-01A0	11	180110
198-911-9240	K0210-09A0	13	240210
198-Z11-2540	K0210-09A0	28	240210
198-Z11-2640	K0210-16A0	27	240280
198-Z11-4610	K0210-11A0	6	240230
201-03-29160	K0710-02A0	13	240350
201-30-52280	R0120-01A0	10	300020
201-43-28440	E0200-01A0	14	120020
201-60-12171	H0100-01A0	5	180010
201-62-71810	H2210-01A0	2	180090
203-01-51120	B0600-01A0	12	030200
203-30-42260	R0120-01A0	7	300020
203-30-52190	R0100-01A0	3	300010
203-43-56450	K0210-16A0	24	240280
203-62-21740	T2110-01A0	14	330010
203-62-57910	F2300-07A0	21	150080
203-62-57910	F2300-21A0	8	150230
203-62-57920	F2300-07A0	22	150080
203-62-57920	F2300-21A0	9	150230
203-62-57930	F2300-07A0	23	150080
203-62-57930	F2300-21A0	10	150230
203-62-57940	F2300-07A0	24	150080
203-62-57940	F2300-21A0	11	150230
203-62-57950	F2300-07A0	25	150080
203-62-57950	F2300-21A0	12	150230
203-62-57960	F2300-07A0	26	150080
203-62-57960	F2300-21A0	13	150230
205-06-61220	K0210-10A0	1	240220
205-32-51121	R0500-01B0	14	300060
205-32-51121	R0500-01B1	14	300070

PARTS N°	FIG. N°	INDEX	PAGE
205-32-51121	R0500-01B2	14	300080
205-32-51121	R0500-01B4	14	300090
205-32-51121	R0500-01B5	14	300100
205-32-51121	R0500-01B6	14	300110
205-32-51121	R0500-01B7	16	300111
205-32-51121	Y0320-01A0	1	450010
205-43-51470	K2400-02A0	9	240750
205-43-72890	F2300-22A0	2	150240
205-43-72920	K2110-06B0	1	240470
205-43-72920	K2241-01A0	22	240720
205-43-72920	K2241-01A0	31	240720
205-43-72920	K2241-01A0	34	240720
205-43-72920	K2241-01A1	24	240730
205-43-72920	K2241-01A1	32	240730
205-43-72920	K2241-01A1	35	240730
205-54-53470	M2140-02A0	13	270050
205-54-53470	M2140-02A1	13	270060
205-54-53550	M2140-04A0	16	270080
205-54-76410	M2140-04A0	2	270080
205-60-51470	H0100-01A0	5	180010
205-60-71220	W2112-01A0	15	420010
205-979-6460	K0710-01A0	7	240340
205-979-6460	K2210-01A1	2	240630
208-01-11181	T2110-01A0	11	330010
208-01-11181	T2110-02A1	4	330030
20B-54-12210	M2140-01A0	38	270030
20B-54-12210	M2140-01A1	15	270040
20D-68-11670	D0100-01A0	6	090010
20N-60-11142	H0100-01A0	3	180010
20N-60-11181	H0100-01A0	3	180010
20R-54-11460	W2112-01A0	7	420010
20T-06-71410	K0210-09A0	1	240210
20T-06-71560	K2110-14B0	9	240560
20T-43-71190	K2110-03B0	6	240430
20T-43-71190	K2110-04B0	2	240440
20T-43-71190	K2110-08B0	22	240490
20Y-06-23472	K0210-16A0	26	240280
20Y-30-16330	R0300-01A0	12	300050
20Y-54-11611	K0210-04A0	5	240160
20Y-54-12810	K0411-01A0	1	240355
20Y-54-18690	K0210-12A0	3	240240
20Y-54-18690	K0210-12A0	7	240240
20Y-60-21340	H0100-01A0	6	180010
20Y-60-21470	H0100-01A0	5	180010
20Y-979-3120	K0710-01A0	11	240340
20Y-979-3130	K0710-01A0	2	240340
20Y-979-3130	K0710-01A0	5	240340
20Y-979-3140	K0710-01A0	3	240340
20Y-979-3140	K0710-01A0	4	240340
20Y-979-3150	K0710-01A0	6	240340

PARTS N°	FIG. N°	INDEX	PAGE
20Y-979-3150	K0710-01A0	9	240340
20Y-979-3150	K0710-01A0	10	240340
20Y-979-6261	K2210-01A1	17	240630
21J-06-11570	E0210-01A0	7	120060
21K-30-24130	R0120-01A0	4	300020
21K-30-24142	R0120-01A0	3	300020
21U-98-31160	U0400-01A0	2	360050
21U-98-31160	U0400-01A0	3	360050
21W-54-14690	E0310-01A0	6	120120
21W-54-14690	E0310-02A0	6	120130
21W-54-32410	K2210-01A0	21	240620
21W-62-42470	F2320-12A0	11	150360
21X-06-31530	B0500-01A0	23	030190
21X-06-31530	K0710-03A0	16	240360
21X-06-31530	K2110-14B0	11	240560
21X-06-31540	B0500-01A0	22	030190
21X-54-13340	K2110-03B0	2	240430
22B-06-11690	E0300-01A0	1	120070
22B-06-11690	E0300-01A0	10	120070
22B-06-11690	E0320-01A0	1	120080
22B-06-11690	E0320-01A1	1	120081
22U-04-21231	D0100-01A0	3	090010
22U-06-11270	B0500-01A0	24	030190
22U-06-11270	K2110-14B0	10	240560
22U-06-22250	K0210-14A0	31	240260
22W-15-21290	F2320-01A0	11	150250
22W-54-11470	M2210-07A0	3	270150
22W-75-18880	F2320-09A0	28	150330
22W-75-18890	F2320-09A0	29	150330
23A-15-12910	F2320-01A0	21	150250
23E-15-11270	F2320-02A0	12	150260
23E-15-12241	F2320-02A0	1	150260
23E-15-12441	F2320-02A0	4	150260
23E-15-12550	F2320-02A0	6	150260
23S-12-11330	B0600-01A0	13	030200
23S-49-13103	F2730-01A0	21	150410
23S-49-13110	F2730-01A0	22	150410
23S-49-13122	F2730-01A0	23	150410
23S-49-13122	V0100-01A0	2	390010
23S-49-13122	V0100-01A2	6	390030
23S-49-13132	F2730-01A0	24	150410
23S-49-13132	V0100-01A0	3	390010
23S-49-13132	V0100-01A2	7	390030
287-15-15360	F2320-03A0	18	150270
361-54-21150	K0210-08A0	1	240200
362-15-12810	F2320-03A0	39	150270
362-15-12810	F2320-04A0	7	150280
362-43-34150	F2300-22A0	8	150240
363-15-15340	F2320-09A0	17	150330
363-15-15470	F2320-09A0	5	150330

PARTS Nº	FIG. Nº	INDEX	PAGE
363-15-15530	F2320-09A0	22	150330
415-06-22100	E0420-01A0	1	120090
416-03-11210	M2140-04A0	6	270080
418-967-2150	K0210-11A0	9	240230
419-09-11150	D0200-01A0	7	090020
419-15-18230	F2320-06A0	3	150300
421-03-11530	F2730-02A0	7	150420
421-06-23330	E0300-01A0	1	120070
421-06-23330	E0300-01A0	10	120070
421-06-23330	E0320-01A0		120080
421-06-23330	E0320-01A1	2	120081
421-06-26210	K0210-09A0	9	240210
421-06-26250	K0210-09A0	9	240210
421-06-26260	K0210-09A0	9	240210
421-54-11381	M2240-01A0	3	270160
421-54-11381	M2240-01A1	3	270170
421-56-21760	K0210-09A0	30	240210
421-56-21770	K0210-09A0	31	240210
423-15-19431	F2300-02A0	6	150030
426-43-18850	T2110-02A1	22	330030
42C-07-11210	K0710-01A0	12	240340
502-33-91110	F2380-01A0	31	150380
502-33-91110	F2380-02A0	31	150390
565-06-13212	B0000-06A0	2	030060
565-62-11270	F2300-14A0	12	150150
566-07-41440	K0710-02A0	33	240350
566-35-42430	H0120-01A0	5	180020
566-35-42430	H0120-01A1	5	180030
566-35-42430	H0120-01A2	5	180040
567-07-15221	K0710-04A0	1	240370
569-06-61960	K0210-09A0	14	240210
569-06-61970	E0200-03A0	1	120040
569-13-46620	F2320-06A0	12	150300
569-15-36480	F2320-11A0	14	150350
56B-88-12220	F2300-07A0	44	150080
581-35-21890	Y1670-01A0	29	450200
581-43-11870	F2300-11A0	28	150120
581-43-11870	K2110-10B0	14	240520
581-43-11870	K2241-01A0	23	240720
581-43-11870	K2241-01A1	25	240730
600-181-2130	B0000-03A0	2	030030
600-181-2630	B0000-03A0	1	030030
600-181-3850	B0000-03A1	1	030031
600-181-6590	B0000-02A0	8	030020
600-181-6730	B0000-02A0	5	030020
600-181-6740	B0000-02A0	2	030020
600-181-6820	B0000-02A0	2	030020
600-181-6830	B0000-02A0	2	030020
600-181-6840	B0000-02A0	4	030020
600-181-6850	B0000-02A0	3	030020
600-181-7511	B0000-02A0	7	030020
600-181-9671	B0000-02A0	6	030020
600-311-9700	D0210-01A0	17	090030
600-411-1120	B0000-14A0	1	030140
600-623-8580	B0000-13A0	1	030130
600-815-2170	B0000-01A0	1	030010
600-815-7870	E0200-04A0	8	120050
600-815-9270	E0200-04A0	5	120050
600-863-5111	B0000-15A0	1	030150
6110-23-6490	B0000-09A0	3	030090
6110-83-7590	B0000-03A0	4	030030
6127-81-4520	E0200-02A0	5	120030
6130-12-8610	B0000-07A0	3	030070
6131-11-4520	B0000-02A0	14	030020
6144-85-6680	D0200-01A0	13	090020
6152-12-4490	B0000-02A0	13	030020
6162-23-5770	K2210-08A1	7	240710
6204-71-5730	D0210-01A0	19	090030
6205-11-5960	B0000-05A0	7	030050
6207-11-5380	B0000-05A0	6	030050
6212-11-4840	B0000-02A0	12	030020
6212-61-6950	D0210-01A0	4	090030
6215-81-9710	B0000-11A0	3	030110
6301-11-4630	B0000-09A0	2	030090
6643-11-4620	B0000-02A0	15	030020
6643-11-4630	B0000-02A0	16	030020
6643-11-4641	B0000-02A0	17	030020
6672-82-7510	B0000-03A0	3	030030
6672-82-7550	B0000-03A0	1	030030
6731-21-1210	A2010-A0A1	8	030080
6731-21-1260	A2010-A0A1	4	030080
6731-21-3250	A4050-A0A1	13	030250
6731-21-6231	A2210-A0A1	11	030140
6731-21-8610	A2310-A0A1	5	030160
6731-21-8620	A2310-A0A1	5	030160
6731-22-7140	A2010-A0A1	5	030080
6731-26-8310	A2310-A0A1	5	030160
6731-26-8410	A2310-A0A1	5	030160
6731-27-8310	A2310-A0A1	5	030160
6731-28-8310	A2310-A0A1	5	030160
6731-28-8410	A2310-A0A1	5	030160
6731-29-8310	A2310-A0A1	5	030160
6731-31-2140	A2350-A0A1	6	030180
6731-31-2150	A2350-A0A1	6	030180
6731-31-2260	A2350-A0A1	8	030180
6731-31-2270	A2350-A0A1	8	030180
6731-31-2410	A2350-A0A1	9	030180
6731-41-5270	A2410-A0A1	4	030190
6731-51-1111	A3010-A0A1	1	030210
6731-51-8150	A1530-A0A1	15	030060
6731-51-8170	A1530-A0A1	3	030060
6731-61-1370	A5010-A0A1	3	030300
6731-61-2151	A3310-A0A1	2	030220
6731-61-4141	A5080-A0A1	4	030330
6731-71-2160	A451P-A0A1	4	030290
6731-71-3111	A4050-A0A1	12	030250
6731-71-3350	A4050-A0A1	7	030250
6731-71-5860	A4050-A0A1	4	030250
6731-81-9190	A4170-A0A1	2	030260
6731-81-9210	A451P-A0A1	1	030290
6732-11-1170	A1010-A0A1	17	030010
6732-11-1180	A1010-A0A1	16	030010
6732-11-1610	A1010-A0A1	13	030010
6732-11-1620	A1010-A0A1	14	030010
6732-11-1640	A2410-A0A1	14	030190
6732-11-1720	A1050-A0A1	2	030020
6732-11-1910	A1010-A0A1	4	030010
6732-11-1910	A1310-A0A1	12	030050
6732-11-1910	A2010-A0A1	13	030080
6732-11-1910	A5030-A0A1	1	030310
6732-11-1920	A1010-A0A1	12	030010
6732-11-1920	A2010-A0A1	19	030080
6732-11-1920	A2210-A0A1	1	030140
6732-11-1920	A5030-A0A1	2	030310
6732-11-1930	A1010-A0A1	3	030010
6732-11-1930	A3310-A0A1	4	030220
6732-11-3850	A4210-A0A1	3	030280
6732-11-4160	A1310-A0A1	10	030050
6732-11-4812	A1310-A0A1	2	030050
6732-11-8130	A1110-A0A1	2	030030
6732-11-8150	A1110-A0A1	7	030030
6732-11-8160	A1110-A0A1	4	030030
6732-11-8181	A1110-A0A1	5	030030
6732-11-8181	V0100-01A1	4	390020
6732-11-8181	V0100-01A2	4	390030
6732-11-8210	A1110-A0A1	6	030030
6732-11-8640	A111V-A0A1	2	030040
6732-21-1190	A2010-A0A1	10	030080
6732-21-1310	A2210-A0A1	12	030140
6732-21-1411	A2010-A0A1	2	030080
6732-21-1611	A2010-A0A1	3	030080
6732-21-1810	A2010-A0A1	7	030080
6732-21-1820	A2010-A0A1	6	030080
6732-21-1910	A2010-A0A1	16	030080
6732-21-1910	A2010-A0A1	8	030080
6732-21-1930	A2010-A0A1	23	030080
6732-21-1960	A2010-A0A1	14	030080
6732-21-3120	A2010-A0A1	22	030080
6732-21-3120	A2060-A0A1	3	030100
6732-21-3120	A4030-A0A1	26	030240

PARTS Nº	FIG. Nº	INDEX	PAGE
6732-21-3140	A2040-A0A1	8	030090
6732-21-3150	A2040-A0A1	9	030090
6732-21-3160	A2040-A0A1	10	030090
6732-21-3180	A2040-A0A1	6	030090
6732-21-3190	A2040-A0A1	18	030090
6732-21-3220	A2040-A0A1	19	030090
6732-21-3511	A2040-A0A1	13	030090
6732-21-3812	A2040-A0A1	1	030090
6732-21-3870	A2040-A0A1	7	030090
6732-21-3880	A2040-A0A1	5	030090
6732-21-4130	A2210-A0A1	6	030140
6732-21-4150	A2210-A0A1	8	030140
6732-21-4160	A2210-A0A1	9	030140
6732-21-4170	A2210-A0A1	13	030140
6732-21-4180	A2210-A0A1	14	030140
6732-21-4200	A2210-A0A1	11	030140
6732-21-4220	A2210-A0A1	10	030140
6732-21-5160	A2110-A0A1	6	030120
6732-21-5160	A4170-A0A1	1	030260
6732-21-5160	A5080-A0A1	3	030330
6732-21-5160	A6010-A0A1	5	030340
6732-21-5180	A2110-A0A1	7	030120
6732-21-5190	A2110-A0A1	3	030120
6732-21-5210	A2110-A0A1	2	030120
6732-21-5530	A2010-A0A1	17	030080
6732-21-5661	A2110-A0A1	8	030120
6732-21-6120	A2010-A0A1	12	030080
6732-21-6130	A2010-A0A1	11	030080
6732-21-6140	A2010-A0A1	9	030080
6732-21-6150	A2310-A0A1	3	030160
6732-21-6160	A2010-A0A1	18	030080
6732-21-6160	A2070-A0A1	1	030110
6732-21-6280	A2060-A0A1	4	030100
6732-21-7350	A111V-A0A1	7	030040
6732-21-8180	A2310-A0A1	5	030160
6732-21-9310	A2040-A0A1	16	030090
6732-31-2420	A2350-A0A1	8	030180
6732-31-3132	A2350-A0A1	3	030180
6732-31-3320	A2350-A0A1	2	030180
6732-31-3410	A2350-A0A1	5	030180
6732-31-3420	A2350-A0A1	4	030180
6732-31-4120	A2250-A0A1	5	030150
6732-31-4140	A2250-A0A1	4	030150
6732-31-4180	A2250-A0A1	3	030150
6732-31-8120	A2330-A0A1	2	030170
6732-41-1220	A2510-A0A1	5	030200
6732-41-1231	A2510-A0A1	3	030200
6732-41-1260	A2510-A0A1	4	030200
6732-41-1280	A2510-A0A1	2	030200
6732-41-2110	A2510-A0A1	6	030200
6732-41-3111	A2410-A0A1	15	030190
6732-41-4430	A1010-A0A1	9	030010
6732-41-4510	A1010-A0A1	10	030010
6732-41-4520	A1010-A0A1	6	030010
6732-41-4520	A1010-A0A1	8	030010
6732-41-4540	A1010-A0A1	11	030010
6732-41-5120	A2410-A0A1	1	030190
6732-41-5130	A2410-A0A1	2	030190
6732-41-5160	A2410-A0A1	11	030190
6732-41-5170	A2410-A0A1	12	030190
6732-41-5180	A2410-A0A1	13	030190
6732-41-5200	A2410-A0A1	3	030190
6732-41-5210	A2410-A0A1	3	030190
6732-41-5400	A2410-A0A1	7	030190
6732-41-5410	A2410-A0A1	7	030190
6732-41-5440	A2410-A0A1	10	030190
6732-41-5440	A2410-A0A1	6	030190
6732-41-6210	A2110-B0A1	6	030130
6732-51-4420	A3310-A0A1	10	030220
6732-51-4431	A3310-A0A1	8	030220
6732-51-5130	A111V-A0A1	8	030040
6732-51-5130	A2040-A0A1	17	030090
6732-61-1610	A1730-A0A1	5	030070
6732-61-1610	A1730-A0A1	5	030070
6732-61-2311	A3310-A0A1	12	030220
6732-61-3130	A5060-A0A1	8	030320
6732-61-3140	A4050-A0A1	10	030250
6732-61-3220	A5060-A0A1	1	030320
6732-61-3320	A5060-A0A1	1	030320
6732-61-3410	A5060-A0A1	5	030320
6732-61-3420	A5060-A0A1	4	030320
6732-61-3430	A5060-A0A1	6	030320
6732-61-3440	A5060-A0A1	3	030320
6732-61-3450	A5060-A0A1	2	030320
6732-61-4120	A5080-A0A1	5	030330
6732-61-4220	A5080-A0A1	2	030330
6732-61-6120	A5030-A0A1	4	030310
6732-61-6130	A5030-A0A1	5	030310
6732-61-6140	A1730-A0A1	3	030070
6732-61-6140	A3310-A0A1	1	030220
6732-61-6180	A1730-A0A1	2	030070
6732-61-6420	A1730-A0A1	6	030070
6732-61-6420	A1730-A0A1	6	030070
6732-71-3220	A1530-A0A1	2	030060
6732-71-3220	A4050-A0A1	9	030250
6732-71-3220	A6010-A0A1	6	030340
6732-71-5620	A4180-A0A1	11	030270
6732-71-5690	A4030-A0A1	23	030240
6732-71-6111	A2410-A0A1	5	030270
6732-71-6111	V0100-01A1	2	390020
6732-71-6111	V0100-01A2	2	390030
6732-71-6230	A4030-A0A1	20	030240
6732-71-6230	A4210-A0A1	2	030280
6732-71-6240	A4030-A0A1	21	030240
6732-71-6510	A4180-A0A1	7	030270
6732-71-6540	A4170-A0A1	3	030260
6732-71-6650	A4180-A0A1	2	030270
6732-81-3170	B0000-11A0	2	030110
6732-81-3330	A5080-A0A1	6	030330
6732-81-3330	V0100-01A1	3	390020
6732-81-3330	V0100-01A2	3	390030
6732-81-6710	A6010-A0A1	8	030340
6732-81-6830	A6210-A0A1	2	030350
6732-81-8220	A1530-A0A1	16	030060
6732-81-8810	A1530-A0A1	11	030060
6732-81-8820	A1530-A0A1	12	030060
6732-81-8830	A1530-A0A1	13	030060
6732-91-1550	A5060-A0A1	10	030320
6733-21-5521	A2110-A0A1	9	030120
6734-21-5111	A2110-A0A1	1	030120
6734-21-5320	A2110-B0A1	4	030130
6734-21-6210	A2060-A0A1	1	030100
6734-71-5170	A1530-A0A1	1	030060
6734-71-5270	A4050-A0A1	6	030250
6734-71-5310	A4030-A0A1	19	030240
6734-71-5310	A4030-A0A1	27	030240
6734-71-5520	A4030-A0A1	14	030240
6734-71-5530	A4030-A0A1	5	030240
6734-71-5710	A4030-A0A1	6	030240
6734-71-5720	A4030-A0A1	17	030240
6734-71-5720	A4030-A0A1	7	030240
6734-71-5740	A4030-A0A1	9	030240
6734-71-6550	A4050-A0A1	8	030250
6735-11-1201	A1010-A0A1	1	030010
6735-11-1821	A1010-A0A1	15	030010
6735-11-1830	A1010-A0A1	15	030010
6735-11-1910	A1730-A0A1	4	030070
6735-11-3130	A4210-A0A1	1	030280
6735-11-4110	A1310-A0A1	1	030050
6735-11-4150	A1310-A0A1	13	030050
6735-11-4150	A1310-A0A1	5	030050
6735-11-4340	A1310-A0A1	11	030050
6735-11-4420	A1310-A0A1	9	030050
6735-11-4812	A1310-A0A1	8	030050
6735-11-5210	A1310-A0A1	6	030050
6735-11-8110	A1110-A0A1	1	030030
6735-11-8120	A1110-A0A1	3	030030
6735-19-1820	A1010-A0A1	15	030010
6735-21-1910	A2010-A0A1	20	030080
6735-21-1940	A2010-A0A1	21	030080

PARTS Nº	FIG. Nº	INDEX	PAGE
6735-21-3140	A2040-A0A1	12	030090
6735-21-3180	A2040-A0A1	6	030090
6735-21-4120	A2210-A0A1	4	030140
6735-21-4150	A2210-A0A1	1	030140
6735-21-4160	A2210-A0A1	3	030140
6735-21-4170	A2210-A0A1	2	030140
6735-21-4230	A2210-A0A1	16	030140
6735-21-4250	A2210-A0A1	17	030140
6735-21-4320	A2210-A0A1	5	030140
6735-21-5180	A451P-A0A1	3	030290
6735-21-5530	A2010-A0A1	15	030080
6735-21-5570	A2110-A0A1	5	030120
6735-21-5670	A2110-A0A1	11	030120
6735-21-5690	A2110-B0A1	2	030130
6735-21-5720	A2110-B0A1	1	030130
6735-21-6261	A2060-A0A1	2	030100
6735-21-7260	A111V-A0A1	9	030040
6735-21-7270	A111V-A0A1	1	030040
6735-21-7290	A111V-A0A1	4	030040
6735-21-8100	A2310-A0A1	4	030160
6735-22-3110	A2040-A0A1	2	030090
6735-31-2030	A2350-A0A1	7	030180
6735-31-2030	A2350-A0A1	7	030180
6735-31-2030	A2350-A0A1	7	030180
6735-31-2110	A2350-A0A1	6	030180
6735-31-8120	A2330-A0A1	1	030170
6735-41-1111	A2510-A0A1	1	030200
6735-41-5550	A2410-A0A1	5	030190
6735-41-5550	A2410-A0A1	9	030190
6735-41-5560	A2410-A0A1	8	030190
6735-51-1120	A3010-A0A1	2	030210
6735-51-4110	A111V-A0A1	6	030040
6735-51-5141	A3310-A0A1	13	030220
6735-51-5141	V0100-01A1	1	390020
6735-51-5141	V0100-01A2	1	390030
6735-51-8130	A1530-A0A1	9	030060
6735-51-8170	A1530-A0A1	6	030060
6735-51-8180	A1530-A0A1	5	030060
6735-61-1102	A5010-A0A1	1	030300
6735-61-2110	A3310-A0A1	7	030220
6735-61-2140	A3310-A0A1	9	030220
6735-61-2160	A3310-A0A1	11	030220
6735-61-2190	A3310-A0A1	3	030220
6735-61-2260	A3310-A0A1	5	030220
6735-61-3170	A5060-A0A1	9	030320
6735-61-3810	A5060-A0A1	7	030320
6735-61-6110	A5030-A0A1	3	030310
6735-61-6450	A1730-A0A1	1	030070
6735-71-1120	A4010-A0A1	1	030230
6735-71-3110	A4050-A0A1	11	030250
6735-71-3740	A4050-A0A1	3	030250
6735-71-3760	A4050-A0A1	2	030250
6735-71-3821	A4030-A0A1	25	030240
6735-71-3821	A4180-A0A1	10	030270
6735-71-5140	A4030-A0A1	24	030240
6735-71-5260	A4050-A0A1	1	030250
6735-71-5310	A4030-A0A1	1	030240
6735-71-5320	A4030-A0A1	2	030240
6735-71-5330	A4030-A0A1	3	030240
6735-71-5340	A4030-A0A1	10	030240
6735-71-5350	A4030-A0A1	11	030240
6735-71-5360	A4030-A0A1	12	030240
6735-71-5550	A4030-A0A1	18	030240
6735-71-5770	A4030-A0A1	22	030240
6735-71-5820	A4030-A0A1	13	030240
6735-71-5830	A4030-A0A1	8	030240
6735-71-5840	A4030-A0A1	15	030240
6735-71-5860	A4030-A0A1	16	030240
6735-71-5990	A4030-A0A1	4	030240
6735-71-6610	A4170-A0A1	4	030260
6735-72-5180	A4180-A0A1	8	030270
6735-81-3120	A1730-A0A1	5	030070
6735-81-6110	A6010-A0A1	1	030340
6735-81-6180	A6210-A0A1	1	030350
6735-81-6190	A6010-A0A1	7	030340
6735-81-6600	A6010-A0A1	4	030340
6735-81-8110	A1530-A0A1	14	030060
6735-81-9180	A451P-A0A1	2	030290
6736-11-1150	A1010-A0A1	2	030010
6736-11-1910	A1050-A0A1	1	030020
6736-11-3430	A4210-A0A1	4	030280
6736-11-5820	A1310-A0A1	7	030050
6736-18-1310	A1010-A0A1	20	030010
6736-19-1310	A1010-A0A1	18	030010
6736-19-1410	A1010-A0A1	19	030010
6736-21-1160	A2010-A0A1	1	030080
6736-21-1270	A2010-A0A1	1	030080
6736-21-1810	A2010-A0A1	5	030080
6736-21-3220	A2040-A0A1	4	030090
6736-21-3310	A2040-A0A1	12	030090
6736-21-3380	A2040-A0A1	15	030090
6736-21-4150	A2210-A0A1	15	030140
6736-21-5310	A2110-A0A1	4	030120
6736-21-5310	A2110-B0A1	5	030130
6736-21-6110	A1530-A0A1	4	030060
6736-23-5630	A2110-A0A1	10	030120
6736-26-8100	A2310-A0A1	4	030160
6736-27-8100	A2310-A0A1	4	030160
6736-28-8100	A2310-A0A1	4	030160
6736-29-1410	A2010-A0A1	2	030080
6736-29-1420	A2010-A0A1	2	030080
6736-29-2110	A2010-A0A1	24	030080
6736-29-8100	A2310-A0A1	4	030160
6736-31-1111	A2310-A0A1	1	030160
6736-31-1211	A2310-A0A1	2	030160
6736-39-1120	A2310-A0A1	8	030160
6736-39-1221	A2310-A0A1	7	030160
6736-41-4110	A1010-A0A1	5	030010
6736-41-4210	A1010-A0A1	7	030010
6736-41-5110	A2410-A0A1	1	030190
6736-51-8140	A1530-A0A1	6	030060
6736-51-8710	A1530-A0A1	8	030060
6736-51-8730	A1530-A0A1	10	030060
6736-51-8740	A1530-A0A1	7	030060
6736-61-1202	A5010-A0A1	1	030300
6736-61-1520	A5010-A0A1	2	030300
6736-61-4110	A5080-A0A1	4	030330
6736-61-5110	A111V-A0A1	3	030040
6736-61-5170	A3310-A0A1	5	030220
6736-61-5180	A3310-A0A1	6	030220
6736-71-5781	A4170-A0A1	5	030260
6736-81-1810	A1310-A0A1	4	030050
6736-81-4820	A6210-A0A1	3	030350
6736-81-6170	A4050-A0A1	5	030250
6737-32-3200	A2350-A0A1	1	030180
6737-32-3200	A2350-A0A1	1	030180
6742-01-0530	A2040-A0A1	3	030090
6742-01-0540	A2040-A0A1	14	030090
6742-01-5157	A4180-A0A1	6	030270
6742-01-5158	A2210-A0A1	7	030140
6742-01-5320	A2110-B0A1	3	030130
6742-01-5380	A111V-A0A1	5	030040
6743-82-4110	A1310-A0A1	3	030050
6754-21-1210	A2010-A0A1	4	030080
700-21-11210	Y1663-02A0	28	450100
700-21-11210	Y1664-02A0	28	450140
700-22-11291	Y1663-02A0	11	450100
700-22-11291	Y1664-02A0	11	450140
700-22-11291	Y1664-07A0	10	450190
700-22-11311	Y1663-02A0	13	450100
700-22-11311	Y1664-02A0	13	450140
700-22-11311	Y1664-07A0	12	450190
700-22-11321	Y1663-02A0	12	450100
700-22-11321	Y1664-02A0	12	450140
700-22-11321	Y1664-07A0	11	450190
700-22-11410	Y1663-04A0	1	450120
700-22-11410	Y1664-06A0	1	450180
700-22-11510	Y1663-02A0	22	450100
700-22-11510	Y1664-02A0	22	450140
700-22-11520	Y1663-02A0	21	450100

PARTS Nº	FIG. Nº	INDEX	PAGE
700-22-11520	Y1664-02A0	21	450140
700-22-11610	Y1663-02A0	30	450100
700-22-11610	Y1664-02A0	30	450140
700-22-12250	Y1663-02A0	23	450100
700-22-12250	Y1664-02A0	23	450140
700-22-12270	Y1663-02A0	29	450100
700-22-12270	Y1664-02A0	29	450140
700-22-12440	Y1663-02A0	24	450100
700-22-12440	Y1664-02A0	24	450140
700-22-12480	Y1663-02A0	25	450100
700-22-12480	Y1664-02A0	25	450140
700-80-61260	Y1663-02A0	16	450100
700-80-61260	Y1664-02A0	16	450140
700-80-64220	Y1663-04A0	2	450120
700-80-64220	Y1664-06A0	2	450180
700-84-11172	Y1663-01A0	11	450090
700-84-11660	K2400-02A0	8	240750
700-84-11730	Y1663-02A0	26	450100
700-84-11730	Y1664-02A0	26	450140
702-16-05013	K2110-16B0	1	240580
702-16-05013	Y1670-01A0	1	450200
702-16-51140	Y1670-01A0	5	450200
702-16-51270	Y1670-01A0	11	450200
702-16-53140	Y1670-01A0	8	450200
702-16-53160	Y1670-01A0	6	450200
702-16-53470	Y1670-01A0	7	450200
702-16-53751	Y1670-01A0	1	450200
702-16-53761	Y1670-01A0	15	450200
702-16-53910	Y1670-01A0	18	450200
702-16-53920	Y1670-01A0	19	450200
702-16-54170	Y1670-01A0	13	450200
702-16-54220	Y1670-01A0	25	450200
702-16-54490	Y1663-03A0	43	450110
702-16-54490	Y1664-05A0	12	450170
702-16-55240	Y1670-01A0	4	450200
702-16-55260	Y1670-01A0	27	450200
702-16-55270	Y1670-01A0	28	450200
702-16-55290	Y1670-01A0	26	450200
702-16-55310	Y1670-01A0	32	450200
702-16-55320	Y1670-01A0	31	450200
702-16-55330	Y1670-01A0	33	450200
702-16-55340	Y1670-01A0	34	450200
702-16-55350	Y1670-01A0	22	450200
702-16-55360	Y1670-01A0	10	450200
702-16-55371	Y1670-01A0	9	450200
702-16-55382	Y1670-01A0	24	450200
702-16-55390	Y1670-01A0	2	450200
702-16-55410	Y1670-01A0	3	450200
702-16-56690	Y1670-01A0	36	450200
702-16-56710	Y1670-01A0	23	450200
702-16-56720	Y1670-01A0	37	450200
702-16-56730	Y1670-01A0	21	450200
702-16-56740	Y1670-01A0	30	450200
702-16-57370	Y1670-01A0	33	450200
705-52-21170	F2300-18A0	1	150190
705-52-21170	F2300-18A1	1	150200
706-73-71450	Y1663-03A0	32	450110
706-73-71450	Y1664-05A0	1	450170
707-00-0C790	Y1620-01A0	1	450050
707-00-0C800	Y1620-31A0	1	450070
707-00-XC810	Y1621-01A0	1	450080
707-00-XC811	Y1621-01A0	1	450080
707-11-10F30	Y1620-01A0	1	450050
707-11-11A00	Y1620-31A0	1	450070
707-29-10420	Y1620-01A0	4	450050
707-29-11730	Y1620-31A0	2	450070
707-29-12730	Y1621-01A0	4	450080
707-29-13730	Y1620-21A0	2	450060
707-35-52360	Y1620-01A0	10	450050
707-36-10630	Y1620-01A0	15	450050
707-36-11100	Y1620-31A0	14	450070
707-36-12130	Y1621-01A0	15	450080
707-36-13140	Y1620-21A0	14	450060
707-39-10510	Y1620-01A0	17	450050
707-44-10280	Y1620-01A0	16	450050
707-44-11180	Y1620-31A0	15	450070
707-44-12180	Y1621-01A0	16	450080
707-44-13070	Y1620-21A0	15	450060
707-51-50211	Y1620-01A0	6	450050
707-51-55211	Y1620-31A0	4	450070
707-51-60640	Y1621-01A0	6	450080
707-51-65211	Y1620-21A0	4	450060
707-52-10660	Y1620-21A0	3	450060
707-56-55510	Y1620-31A0	8	450070
707-56-60540	Y1621-01A0	6A	450080
707-58-50E10	Y1620-01A0	12	450050
707-67-36010	Y1620-01A0	18	450050
707-67-36010	Y1620-31A0	17	450070
707-67-45010	Y1621-01A0	18	450080
707-86-47130	Y1621-01A0	19	450080
707-98-32820	Y1620-01A0	19	450050
707-98-34590	Y1620-31A0	18	450070
707-98-41060	Y1621-01A0	22	450080
707-98-42420	Y1620-21A0	17	450060
708-18-12140	F2380-01A0	32	150380
708-18-12140	F2380-02A0	32	150390
708-21-12541	Y1663-03A0	44	450110
708-21-12541	Y1664-05A0	13	450170
708-8E-16160	Y1663-03A0	30	450110
708-8E-16160	Y1664-04A0	8	450160
708-8F-11260	K0410-01A0	3	240320
708-8F-11260	K0410-01A1	3	240330
708-8F-11260	M2210-03A0	4	270120
708-8F-11260	M2210-03A0	9	270120
709-25-11290	Y1663-02A0	8	450100
709-25-11290	Y1664-02A0	7	450140
709-25-11290	Y1664-07A0	6	450190
709-25-11390	Y1663-04A0	4	450120
709-25-11390	Y1664-06A0	4	450180
709-70-71610	Y1663-03A0	3	450110
709-70-71610	Y1663-03A0	3	450150
709-70-74600	Y1663-04A0	3	450120
709-70-74600	Y1664-06A0	3	450180
709-81-11102	H0120-01A0	16	180020
714-12-19520	F2300-02A0	20	150030
720-68-15240	Y1670-01A0	16	450200
721-11-12780	Y1621-01A0	1	450080
721-58-60440	Y1621-01A0	12	450080
723-20-60300	Y1663-04A0	1	450120
723-20-60300	Y1664-06A0	1	450180
723-20-80100	Y1663-04A0	4	450120
723-20-80100	Y1664-06A0	4	450180
723-20-80100	Y1664-07A0	30	450190
723-21-02103	Y1664-07A0	1	450190
723-21-02104	Y1664-07A0	1	450190
723-23-10303	H0120-01A1	15	180030
723-23-10303	Y1663-01A0	1	450090
723-23-10303	Y1663-02A0	1	450100
723-23-10303	Y1663-03A0	1	450110
723-23-10303	Y1663-04A0	1	450120
723-24-10203	H0120-01A2	15	180040
723-24-10203	Y1664-01A0	1	450130
723-24-10203	Y1664-02A0	1	450140
723-24-10203	Y1664-03A0	1	450150
723-24-10203	Y1664-04A0	1	450160
723-24-10203	Y1664-05A0	1	450170
723-24-10203	Y1664-06A0	1	450180
723-24-10203	Y1664-07A0	1	450190
723-26-12512	Y1663-02A0	1	450100
723-26-12512	Y1664-02A0	1	450140
723-26-12521	Y1663-02A0	2	450100
723-26-12521	Y1664-02A0	2	450140
723-26-12531	Y1663-02A0	3	450100
723-26-12531	Y1664-02A0	3	450140
723-26-12531	Y1664-07A0	2	450190
723-26-12590	Y1663-03A0	1	450110
723-26-12590	Y1664-03A0	1	450150
723-26-14150	Y1663-03A0	24	450110
723-26-14150	Y1664-04A0	2	450160
723-26-14150	Y1664-07A0	29	450190

PARTS Nº	FIG. Nº	INDEX	PAGE
723-26-14170	Y1663-02A0	27	450100
723-26-14170	Y1664-02A0	27	450140
723-26-14180	Y1663-03A0	2	450110
723-26-14180	Y1664-03A0	2	450150
723-26-14190	Y1663-03A0	6	450110
723-26-14190	Y1664-03A0	6	450150
723-26-14220	Y1663-03A0	21	450110
723-26-14220	Y1664-03A0	21	450150
723-26-14230	Y1663-03A0	20	450110
723-26-14230	Y1664-03A0	20	450150
723-26-14230	Y1664-07A0	18	450190
723-26-14240	Y1663-03A0	22	450110
723-26-14240	Y1664-03A0	22	450150
723-26-14450	Y1663-02A0	15	450100
723-26-14450	Y1664-02A0	15	450140
723-26-15190	Y1663-03A0	34	450110
723-26-15190	Y1664-05A0	3	450170
723-26-15210	Y1663-03A0	23	450110
723-26-15210	Y1664-04A0	1	450160
723-26-15210	Y1664-07A0	27	450190
723-26-15220	Y1663-03A0	25	450110
723-26-15220	Y1664-04A0	3	450160
723-26-15220	Y1664-07A0	28	450190
723-26-15230	Y1663-03A0	12	450110
723-26-15230	Y1664-03A0	12	450150
723-26-15230	Y1664-07A0	20	450190
723-26-15310	Y1663-03A0	27	450110
723-26-15310	Y1664-04A0	5	450160
723-26-15360	Y1663-03A0	39	450110
723-26-15360	Y1664-05A0	8	450170
723-26-15370	Y1663-03A0	14	450110
723-26-15370	Y1664-03A0	14	450150
723-26-15370	Y1664-07A0	19	450190
723-26-15410	Y1663-02A0	17	450100
723-26-15410	Y1664-02A0	17	450140
723-26-15420	Y1663-02A0	14	450100
723-26-15420	Y1664-02A0	14	450140
723-26-15420	Y1664-07A0	13	450190
723-26-15480	Y1663-02A0	4	450100
723-26-15480	Y1664-02A0	4	450140
723-26-15480	Y1664-07A0	3	450190
723-26-15510	Y1663-03A0	4	450110
723-26-15510	Y1664-03A0	4	450150
723-26-15520	Y1663-03A0	5	450110
723-26-15520	Y1664-03A0	5	450150
723-26-15750	Y1664-01A0	11	450130
723-26-15770	Y1663-02A0	18	450100
723-26-15770	Y1664-02A0	18	450140
723-26-15780	Y1663-02A0	19	450100
723-26-15780	Y1664-02A0	19	450140
723-26-15790	Y1663-02A0	20	450100
723-26-15790	Y1664-02A0	20	450140
723-26-15810	Y1663-02A0	10	450100
723-26-15810	Y1664-02A0	10	450140
723-26-15810	Y1664-07A0	9	450190
723-26-15820	Y1663-02A0	9	450100
723-26-15820	Y1664-02A0	9	450140
723-26-15820	Y1664-07A0	8	450190
723-26-15830	Y1663-01A0	7	450090
723-26-15830	Y1664-01A0	7	450130
723-26-15830	Y1664-07A0	22	450190
723-26-15840	Y1663-01A0	8	450090
723-26-15840	Y1664-01A0	8	450130
723-26-15840	Y1664-07A0	23	450190
723-26-15880	Y1663-02A0	7	450100
723-26-15880	Y1664-02A0	8	450140
723-26-15880	Y1664-07A0	7	450190
723-26-21110	Y1663-01A0	1	450090
723-26-21110	Y1664-01A0	1	450130
723-26-21210	Y1663-01A0	2	450090
723-26-21210	Y1664-01A0	2	450130
723-26-21310	Y1663-01A0	3	450090
723-26-21310	Y1664-01A0	3	450130
723-26-21410	Y1663-01A0	4	450090
723-26-21410	Y1664-01A0	4	450130
723-26-21410	Y1664-07A0	1	450190
723-26-21710	Y1663-01A0	5	450090
723-26-21710	Y1664-01A0	5	450130
723-26-41160	Y1663-03A0	16	450110
723-26-41160	Y1664-03A0	16	450150
723-26-41160	Y1664-07A0	15	450190
723-26-41210	Y1663-03A0	17	450110
723-26-41210	Y1664-03A0	17	450150
723-26-51211	Y1663-03A0	19	450110
723-26-51211	Y1664-03A0	19	450150
723-26-51240	Y1663-03A0	18	450110
723-26-51240	Y1664-03A0	18	450150
723-26-51240	Y1664-07A0	16	450190
723-26-51250	Y1663-03A0	15	450110
723-26-51250	Y1664-03A0	15	450150
723-26-51250	Y1664-07A0	17	450190
723-40-56130	Y1663-03A0	10	450110
723-40-56130	Y1664-03A0	10	450150
7831-68-1000	K2210-01A0	23	240620
7831-68-1000	K2210-07A1	1	240700
7861-93-3320	B0000-06A0	1	030060
7861-93-3320	E0200-02A0	1	120030
7861-93-4940	D0100-01A0	7	090010
9415-01008	K2500-02A0	27	240800
9415-01610	K2500-02A0	26	240800

PARTS Nº	FIG. Nº	INDEX	PAGE