ABRIL 2004
RUTHZIL TRATOR COMERCIAL DE PEÇAS LTDA 11 97083-6812 ROLANDO

KEPB002901



PARTS BOOK

D41P-6

BULLDOZER

SERIAL NUMBERS D41P-6 B30001 and up

KOMATSU

KOMATSU

© 2004 KOMATSU
All Rights Reserved
Printed in Brazil 04-04

D41P-6

KEPB002901

PARTS BOOK

D41P–6

Serial No. B30001 and up

ENGINE S6D102E–1

Engine No. 30751974 and up

FOREWORD

When ordering a spare part, specify the part number, part name, and quantity required, and also specify your machine model code, machine serial number, engine serial number and the service meter reading.

This Parts Book describes not only standard items but also optional equipment and attachments. To order a part, please contact your nearest Komatsu distributor.

This Parts Book contains the information and special symbols as follows:

Figure and list

When you open this Parts Book, you will find an illustration on the left page (even-numbered page) for the spare parts group. Each individual part in the group is given an index number.
On the right page, the component parts of the group are listed in the order of the index numbers shown on the illustration page. The part number, part name, and applicable machine serial number are given for each part.

FIG. No.

The FIG. No. is the number of the illustration shown on the page. It is not the spare part number. The numbers are not always continuous.

INDEX

This is the same as the index number in the illustration. The parts are listed in index number order.

PART No.

The number given in the PART No. column is the part number for the part shown. It is the code used when ordering that part. It is important that there be no mistake in this code number when ordering.

DESCRIPTION

This gives the name of part that has the part number listed. The mark "." is put in front of the part name of an assembly part and the item is entered following the assembly. If a part marked with "." is a sub assembly, its components are marked with "..".

Example:
```
ELEMENT ASSEMBLY, AIR CLEANER
.ELEMENT ASSEMBLY, OUTER
..ELEMENT, OUTER
..NUT, WING
..WASHER
```

Q'TY (Quantity)

This specifies the number of pieces used for one machine. However, if a part is included in the assembly and/or component, the quantity per such assembly and/or component is specified.

SERIAL No.

Applicable engine serial number is indicated for the engine volume. In the chassis volume, this indicates the machine serial number in which the part is used.

Symbols and codes

Symbols and codes are used in the PART No. and DESCRIPTION columns, and represent the following:

□	The part specified in the line above can be used instead of this part.

Symbols and codes (Cont'd)

⊡	This part can be used instead of the part specified in the line immediately above.
◆	This part and the part specified in the line immediately above are interchangeable.
■	The part specified in the DESCRIPTION column can be used instead of this part if it is used as a set.
☒	This shows discontinued part. The part specified in the above line is supplied instead.
▼	This shows a discontinued part. The part specified in the DESCRIPTION column is supplied instead as a set.
☆	This part cannot be supplied as an individual part. It is supplied as an assembly.
★	This part cannot be supplied as an individual part. It is supplied as an assembly. However, it is supplied as an individual part by authorized distributors only.
⊙	This indicates a part group. The part marked with this symbol is not considered a supply part.
====	The parts surrounded by this line are components of the part group specified in the above line.
G-1,G-2	These indicate categories of part groups.
KIT	This indicates kit parts. For kit parts, refer to the service kit tables provided in this Parts Book.
△	This indicates a part supplied as semi-finished. It requires additional work before installation.
PAINT(1)	This indicates parts shipped painted with undercoat.
PAINT(2)	This indicates parts supplied with different colors from the original color of your machine.
(A)	This code indicates special parts for cold weather "A" specification (-30°C) machines.
(B)	This indicates special parts for cold weather "B" specification (-50°C) machines.

AVANT-PROPOS

Lorsque vous passez une commande d'une ou plusieurs pièces détachées, vous êtes prié de spécifier, outre le ou les numéro(s), désignation(s) et quantité(s) des pièces commandée(s), le numéro de carrosserie, le numéro de série du moteur et la lecture du compteur de service du véhicule.
Sur le présent catalogue des pièces figurent non seulement les équipements standard, mais également les équipements et accessoires en option. Si vous désirez un équipement ou une pièce quelconque, vous êtes prié de prendre contact avec le concessionnaire Komatsu le plus proche.

Ce catalogue des pièces se présente de la manière suivante:

Figures et listes	Lorsque vous ouvrez le présent catalogue, vous trouvez: sur la page de gauche (numéro de page pair), les illustrations de toutes les pièces composant l'équipement en question avec les numéros de référence pour chacune des pièces, sur la page de droite (numéro de page impair), la liste des pièces dans l'ordre des numéro de référence des pièces avec indication du numéro des pièces, de la désignation des pièces, de la quantité utilisée et des numéros de série.
FIG. No. (Figure et liste)	Le numéro de figure (FIG. XX) correspond au numéro de la figure représentée sur cette page, mais ne correspond pas au numéro de la pièce détachée. Veuillez noter que les numéros de figure ne se suivent pas systématiquement.
INDEX (Numéros de référence)	Les numéros de référence correspondent aux numéros de référence notés sur la figure et sont énumérés dans l'ordre des numéros de référence.
PART No. (Numéros de pièce)	Les numéros indiqués dans cette colonne correspondent aux numéros des pièces représentées et constituent les codes à spécifier pour toute commande de pièce. Il est important de ne pas faire d'erreur avec ce code au moment de la commande.
DESCRIP-TION (Descript-ion)	Dans cette colonne est indiquée la désignation des différentes pièces. Dans le cas d'un ensemble constitué de pièces, la désignation de chacune de ces pièces est précédée d'un point "." et dans le cas d'un ensemble constitué de sous-ensembles eux-mêmes constitués de pièces, la désignation de chacune de ces pièces est précédée de deux points "..". Exemple: ELEMENT ASSEMBLY, AIR CLEANER .ELEMENT ASSEMBLY, OUTER ..ELEMENT, OUTER ..NUT, WING ..WASHER
Q'TY (Quantité)	Dans cette colonne est indiqué le nombre de pièces nécessaires pour l'équipement en question. S'il s'agit de pièces comprises dans un ensemble et/ou composant, et la quantité indiquée est le nombre de pièces nécessaires pour l'ensemble et/ou le composant en question.
SERIAL No. (Numéros de série)	S'il s'agit d'un élément du moteur, ces numéros sont les numéros de série des moteurs sur lesquels cette pièce est utilisée. S'il s'agit d'un élément de la carrosserie, ces numéros sont les numéros des carrosseries sur lesquelles la pièce en question est utilisée.

Codification

Les codes indiqués dans les colonnes "N° de pièce" et "Description" ont les significations suivantes:

□	Au lieu de la pièce affectée de ce code, il est possible d'utiliser la pièce qui figure juste au-dessus.
⊡	La pièce affectée de ce code peut être utilisée à la place de la pièce figurant juste au-dessus.
◆	La pièce affectée de ce code et la pièce figurant dans la ligne justeau-dessus sont interchangeables
⊠	Au lieu de la pièce affectée de ce code, il est possible d'utiliser la combinaison des pièces indiquées dans la colonne "Description".
■	Les pièces affectées de ce code ne sont plus fournies. Au lieu de cette pièce, c'est la pièce figurant dans la ligne justeau-dessus qui sera fournie.
▼	Les pièces affectées de ce code ne sont plus fournies. Au lieu de cette pièce, c'est la combinaison de pièces figurant dans la colonne "Description" qui sera fournie.
☆	Les pièces affectées de ce code ne seront pas fournies à l'unité mais par jeu de pièces.
★	Les pièces affectées de ce code ne seront pas fournies à l'unité mais par jeu de pièces, sauf dans le cas de certains concessionnaires Komatsu.
⊙	Ce code indique qu'il s'agit d'un groupe de pièces. Les pièces affectées de ce code ne sont pas fournies en tant que pièces détachées.
= = = =	Les pièces ainsi encadrées sont les pièces composantes du groupe de pièces indiqué dans la ligne d'au-dessus.
G-1, G-2	Indique le numéro du groupe de pièces
KIT	Indique qu'il s'agit d'un kit de pièces. Pour les pièces composantes des kits, veuillez vous reporter à la liste des kits de service.
△	Indique qu'il s'agit de pièces fournies à l'état semi-fini. Ces pièces devront être usinées avant l'installation.
PAINT(1)	Indique que sur les pièces fournies est appliquée uniquement une couche primaire.
PAINT(2)	Indique que la couleur de la peinture est différente de celle d'origine.
(A)	Indique qu'il s'agit de pièces pour spécifications artiques A (–30°C)
(B)	Indique qu'il s'agit de pièces pour spécifications artiques B (–50°C)

VORWORT

Bei der Bestellung von Teilen bitte die Teilenummer, die Teilebezeichnung und die Menge des jeweiligen Teils sowie die Modellnummer, die Seriennummer der Maschine, die Seriennummer des Motors und den Stand des Betriebsstundenzählers angeben.

In dieser Ersatzteilliste ist nicht nur das Standardzubehör aufgeführt, sondern auch als Sonderausstattung erhältliche Teile und Einrichtungen.

Bestellungen nimmt Ihr zuständiger Komatsu-Händler entgegen.

Die folgenden Angaben sind in der Ersatzteilliste aufgeführt.

Bild und Liste

Beim Aufschlagen des Ersatzteilkatalogs ist auf der linken Seite (d.h. der Seite mit der geraden Zahl) eine Darstellung der Bauteile der betreffenden Baugruppe zu finden. Jedes Einzelteil der Baugruppe ist mit einer Kennzahl versehen.
Auf der rechten Seite (d.h. der Seite mit der ungeraden Zahl) sind die Bauteile der Baugruppe, geordnet nach den auf der linken Seite angegebenen Kennzahlen, aufgeführt. Jedes Einzelteil wird mit Teilenummer, Teilebezeichnung und entsprechender Seriennummer angegeben.

FIG. No. (Bildnummer)

Die Bildnummer entspricht der Nummer des auf der betreffenden Seite stehenden Bilds. Es handelt sich dabei nicht um die Nummer des Lieferteils. Es sei ferner erwähnt, daß die Bilder nicht fortlaufend numeriert sind.

INDEX (Kennzahl)

Dabei handelt es sich um die gleiche Zahl wie die Kennzahl im Bild. Die Teile sind geordnet nach der Kennzahl aufgeführt.

PART No. (Teilenummer)

Die in der Spalte "Teilenummer" aufgeführte Nummer entspricht der Teilenummer für das betreffende Teil. Diese Nummer dient zur Bestellung des Teils. Deshalb bei der Bestellung stets auf die genaue Angabe der Teilenummer achten.

DESCRIPTION (Beschreibung)

Hierunter wird die Bezeichnung des Teils mit der aufgeführten Teilenummer angegeben.
Jedes Baugruppen-Bauteil ist mit dem vorangestellten Symbol "." gekennzeichnet und wird hinter der entsprechenden Baugruppe aufgeführt. Handelt es sich bei dem mit "." gekennzeichneten Bauteil um eine Baugruppe, sind die Bauteile dieser Baugruppe mit ".." gekennzeichnet.

Beispiel: Element assembly, air cleaner
. Element assembly, outer
.. Element, outer
.. Nut, wing
.. Washer

QTY (Menge)

Hierunter wird die Anzahl der Bauteile für eine Maschine angegeben.
Im Falle einer Baugruppe oder eines Aggregats wird allerdings die Anzahl der Teile pro Baugruppe angegeben.

SERIAL No. (Seriennummer)

Im Ersatzteilkatalog für den Motor versteht man hierunter die Seriennummer des Motors, in den das betreffende Teil eingebaut ist.
Im Ersatzteilkatalog für die Maschine versteht man hierunter die Seriennummer der Maschine, in die das entsprechende Teil eingebaut ist.

Kodes

Die in den Spalten "Teile-Nr." und "Beschreibung" verwendeten Kodes haben folgende Bedeutung:

□	Anstelle dieses Teils kann das in der vorangegangenen Zeile aufgeführte Teil verwendet werden.
⊡	Dieses Teil kann anstelle des in der vorangegangenen Zeile aufgeführten Teils verwendet werden.
◆	Dieses Teil ist mit dem in der vorangegangenen Zeile aufgeführten Teil austauschbar.
■	Anstelle dieses Teils kann das in der Spalte "Beschreibung" aufgeführte Teil verwendet werden, wenn das Teil zusammen mit anderen Teilen als ein Bauteilsatz verwendet wird.
☒	Dieses Teil kann nicht mehr geliefert werden. Statt dessen wird das in der vorangegangenen Zeile aufgeführte Teil geliefert.
▼	Dieses Teil kann nicht mehr geliefert werden. Statt dessen wird das in der Spalte "Beschreibung" aufgeführte Teil als ein Bauteilsatz geliefert.
☆	Dieses Teil kann nicht als Einzelteil, sondern nur als Baugruppe geliefert werden.
★	Dieses Teil kann nicht als Einzelteil, sondern nur als Baugruppe geliefert werden. Nur bei bestimmten Händlern kann es als Einzelteil bezogen werden.
⊙	Hierdurch wird ein Aggregat gekennzeichnet. Es wird nicht zu den Lieferteilen gerechnet.
= = = =	Die Teile innerhalb dieser Markierung gehören zu dem oben aufgeführten Aggregat.
G-1, G-2	Hiermit wird die Kategorie eines Aggregats angegeben.
KIT	Hiermit werden Teile gekennzeichnet, die nur als Satz erhältlich sind. Siehe dazu die Tabelle der als Satz gelieferten Ersatzteile.
△	Hiermit werden Teile gekennzeichnet, die in vorbearbeitetem Zustand geliefert werden und für den Einbau nachbearbeitet werden müssen.
PAINT(1)	Hiermit werden Teile gekennzeichnet, die mit Grundierung geliefert werden.
PAINT(2)	Hiermit werden Teile gekennzeichnet, die in unterschiedlichen Farben geliefert werden.
(A)	Hiermit werden Teile gekennzeichnet, die speziell für kalte Witterung (A) (-30°C) ausgelegt sind.
(B)	Hiermit werden Teile gekennzeichnet, die speziell für kalte Witterung (B) (-50°C) ausgelegt sind.

PROLOGO

Cuando tenga que efectuar un pedido de repuestos, se ruega especificar el número, el nombre y la cantidad de piezas requeridas, indicando asimismo el número de modelo, el número de serie del motor y la lectura del contador de servicio.

Esta lista de piezas especifica no solamente accesorios estándar sino también piezas y accesorios opcionales. Para realizar un pedido, sírvase ponerse en contacto con su distribuidor Komatsu más cercano.

La lista de repuestos se compone de los elementos siguientes.

Figura y lista	Al abrir esta lista de repuestos, encontrará en la página izquierda (página de número impar) una ilustración de los componentes del conjunto. La figura de cada componente individual va provista de un número de índice. En la página derecha (página de número par), los componentes del conjunto están listados siguiendo el orden de los números de índice de la página izquierda.
FIG. NO. (Número de figura)	El número de figura es el número indicado en cada una de las respectivas figuras, y no es el número de la pieza. Los números de figura no son siempre continuos.
INDEX (Número de índice)	Coincide con el número de índice de cada figura, y aparecen en la lista en orden numérico.
PART NO. (Número de pieza)	El número indicado en la columna de "Número de piezas" es el número de pieza que aparece en la figura. Es sumamente importante debido a que se utiliza como código al efectuar el pedido de piezas.
DESCRIP-TION (Nombre de las piezas)	Indica la descripción correspondiente a cada número de pieza. Los componentes de un conjunto llevan la marca "." antes del nombre. Por otra parte, cuando se tratan de piezas armadas, llevan la marca ".." antes del nombre Ejemplo: ELEMENT ASSEMBLY, AIR CLEANER .ELEMENT ASSEMBLY, OUTER ..ELEMENT, OUTER ..NUT, WING ..WASHER
Q'ty (Cantidad)	Especifica el número de piezas utilizadas en cada máquina. Sin embargo, para un conjunto o componentes de un grupo de piezas, se especifica el número de piezas por conjunto.
SERIAL NO. (Número de serie)	En el manual de piezas del motor, indica el número de serie del motor en que se utiliza la pieza. En el manual de piezas de la máquina, indica el número de serie del vehículo en que se utiliza esa pieza.

Códigos	Los códigos y números de piezas especificados en las columnas "N°. de pieza" y "Nombre de la pieza" representan lo siguiente:
□	En lugar de esta pieza es posible utilizar la pieza indicada en el renglón de arriba.
⊡	Es posible utilizar esta pieza en lugar de la indicada en el renglón inmediatamente anterior.
◆	Esta pieza y la indicada en el renglón inmediatamente anterior son intercambiables.
■	Es posible utilizar la pieza especificada en la columna "Nombre de las piezas" si se utiliza como un conjunto.
☒	Esta pieza se ha dejado de suministrar. En su lugar, se suministra la pieza indicada en el renglón anterior.
▼	Esta pieza se ha dejado de suministrar. En su lugar, se suministra la pieza especificada en la columna "Nombre de las piezas" como un conjunto.
☆	Esta pieza no se suministra como pieza individual. Se suministra como un conjunto.
★	Esta pieza no se suministra como pieza individual. Se suministra como un conjunto. Sin embargo, es suministrada como pieza individual por ciertos distribuidores.
⊙	Indica grupo de piezas. Las piezas que llevan este código no son suministrables.
====	Las piezas rodeadas por esta línea son componentes del grupo de piezas especificado arriba.
G-1, G-2	Indica la clasificación del grupo de piezas.
KIT	Indica componentes de un juego. Para los componentes de un juego, refiérase a la tabla de los juegos de servicio.
Δ	Indica pieza suministrada como semiterminada. Debe ser reelaborada antes del uso.
PAINT(1)	Indica piezas despachadas con una primera mano de pintura.
PAINT(2)	Indica piezas despachadas con colores diferentes.
(A)	Indica piezas especiales (A) especificadas para climas fríos (-30°C).
(B)	Indica piezas especiales (B) especificadas para climas fríos (-50°C)

INTRODUÇÃO

Ao solicitar uma peça, informe o número, nome e quantidade da peça necessária, bem como o número da carroçaria, número do motor, e leitura do medidor de serviço.

Esta lista de peças não somente especifica os acessórios padrões mas também as peças opcionais e aditamentos. Para pedir uma peça, entre em contato com o revendedor Komatsu mais próximo.

Este livro de peças consiste nos seguintes itens.

Figura e lista	Ao abrir este livro de peças, você encontrará na página esquerda (a página com número par), uma ilustração das peças componentes do conjunto. Cada peça individual no conjunto tem um número de índice. Na página direita (a página com número ímpar), as peças componentes do conjunto são relacionadas na ordem dos números de índice mostrados na página esquerda. Cada peça é designada com um número, nome, e número de série aplicável.
FIG. NO. (Número da figura)	O número da figura é o número da figura mostrada em tal página. Ele não é um número para fornecimento da peça. Do mesmo modo, os números das figuras nem sempre são contínuos.
INDEX (Número de índice)	Este número é igual ao número de índice na figura. As peças são relacionadas na ordem dos números de índice.
PART NO. (Número de peça)	O número designado na coluna "Número da peça" é o número para a peça mostrada. Ele é o código usado para o pedido da peça. É importante que não haja equívoco com respeito a este número ao pedir uma peça.
DESCRIP-TION (Descrição)	Este item descreve o nome da peça que tem o número de peça relacionado. É colocado um "." na frente do nome de um componente de conjunto e o item é introduzido após o conjunto. Se uma peça marcada com "." é um conjunto, seus componentes são marcados com "..". Exemplo: ELEMENT ASSEMBLY, AIR CLEANER .ELEMENT ASSEMBLY, OUTER ..ELEMENT, OUTER ..NUT, WING ..WASHER
Q'ty (Quantidade)	Este item especifica o número de peças usadas para 1 máquina. No entanto, para o conjunto ou componentes de um grupo de peças, o número de peças por conjunto é especificado.
SERIAL NO. (Número de série)	No livro de peças do motor, esse número indica o número de série do motor no qual a peça é usada. No livro de peças da máquina, esse número indica o número de série da máquina na qual a peça é usada.
Códigos	Os códigos e número de peça especificados nas colunas "N.º de peça" e "Descrição" representam o seguinte: □ A peça especificada na linha acima pode ser usada no lugar desta peça.

⊡	Esta peça pode ser usada no lugar da peça especificada na linha imediatamente acima.
◆	Esta peça e a peça especificada na linha imediatamente acima são intercambiáveis.
■	A peça especificada na coluna "Descrição" pode ser usada no lugar desta peça se ela for usada como um jogo.
☒	Esta peça não é mais fornecida. A peça especificada na linha acima é fornecida em seu lugar.
▼	Esta peça não é mais fornecida. A peça especificada na coluna "Descrição" é fornecida em seu lugar como um jogo.
☆	Esta peça não pode ser fornecida como uma peça individual. Ela é fornecida como um conjunto.
★	Esta peça não pode ser fornecida como uma peça individual. Ela é fornecida como um conjunto. No entanto, ela é fornecida como uma peça individual somente por revendedores específicos.
⊙	Isso indica um grupo de peças. Esta peça não é considerada uma peça de fornecimento.
====	As peças envolvidas por esta linha são componentes do grupo de peças especificado acima.
G-1, G-2	Isso indica a categoria do grupo de peças.
KIT	Isso indica componentes de um kit. Para os componentes de um kit, refira-se à tabela de kits de serviço.
Δ	Isso indica uma peça fornecida como produto semi-acabado. Ela deve ser reformada antes do uso.
PAINT(1)	Isso indica peças embarcadas pintadas com uma primeira mão de fundo.
PAINT(2)	Isso indica peças embarcadas com cores diferentes.
(A)	Isso indica peças especiais para especificação (A) de tempo frio (-30°C).
(B)	Isso indica peças especiais para especificação (B) de tempo frio (-50°C).

مقدمة

عند طلب القطع، يرجى تحديد رقم القطعة واسم القطعة والكمية المطلوبة من القطعة، مع تحديد رقم الموديل والرقم التسلسلي للمحرك وقراءة عداد الخدمة.

قائمة القطع هذه لا تقتصر على الكماليات القياسية فقط بل تشمل ايضاً القطع والملحقات الاختيارية. لطلب القطع، يرجى الاتصال بأقرب موزع لمنتجات كوماتسو.

قائمة القطع تتضمن البنود التالية.

الشكل والقائمة

عندما تفتح كتاب القطع، ستجد على الصفحة اليسرى (الصفحة ذات الرقم الزوجي) شكلاً توضيحياً للقطع المكونة للمجموعة. كل قطعة في مجموعة المكونات لها رقم فهرس.
على الصفحة اليمنى (الصفحة ذات الرقم الفردي) تم إدراج قائمة بالقطع التي تتكون منها المجموعة مرتبة حسب ارقام الفهرس المبيّنة في الصفحة اليسرى. وقد اعطيت كل قطعة من القطع رقم قطعة واسم قطعة ورقم تسلسلي ينطبق عليها.

FIG. No. (رقم الشكل)

رقم الشكل هو الرقم الخاص بالشكل التوضيحي الذي يظهر في تلك الصفحة. وهو ليس رقم القطعة التي يتم توريدها. كما ان ارقام الاشكال ليست دائماً متتابعة.

INDEX (رقم الفهرس)

هذا الرقم هو نفس رقم الفهرس الوارد في الشكل التوضيحي. تدرج القطع في القائمة مرتبة تبعاً لارقام الفهرس.

PART No. (رقم القطعة)

الرقم الوارد في عمود « رقم القطعة » هو رقم القطعة الخاص بالقطعة المبيّنة. وهو الرمز المستخدم لطلب تلك القطعة. ومن الضروري عدم ارتكاب اي خطأ في تحديد هذا الرقم عند طلب القطع.

DESCRIPTION (الوصف)

يعطي اسم القطعة المدرج رقمها في القائمة.
توضع العلامة " . " امام اسماء القطع المكونة للمجموعة ويدرج البند بعد المجموعة. اذا كانت القطعة المشار اليها بالعلامة " . " هي نفسها عبارة عن مجموعة مكونات فان كلاً من مكوناتها يشار اليها بالعلامة " .. ".

مثال : ELEMENT ASSEMBLY, AIR CLEANER
.ELEMENT ASSEMBLY, OUTER
.. ELEMENT, OUTER
..NUT, WING
..WASHER

Q'ty (الكمية)

هذا هو عدد القطع المستخدمة لآلية واحدة. أما بالنسبة لمجموعات المكونات ومجموعات القطع فانه يتم تحديد عدد القطع لكل مجموعة.

SERIAL No. (الرقم التسلسلي)

في كتاب قطع المحرك، يشير هذا الرقم الى الرقم التسلسلي للمحرك الذي تستخدم فيه القطعة. في كتاب قطع الآلية، يشير هذا الرقم الى الرقم التسلسلي للآلية التي تستخدم فيها القطعة.

الرموز

الرموز وارقام القطع المذكورة في عمود « رقم القطعة » وعمود « الوصف » تمثل كما يلي:

□ القطعة المذكورة في السطر السابق يمكن استعمالها بدلاً من هذه القطعة.

⊡ هذه القطعة يمكن استعمالها بدلاً من القطعة المذكورة في السطر السابق مباشرة.

◆ هذه القطعة والقطعة المذكورة في السطر السابق مباشرة يمكن لكل منهما ان تحل محل الاخرى.

■ القطعة المذكورة في عمود « الوصف » يمكن استعمالها بدلاً من هذه القطعة اذا استخدمت كطقم.

⊠ هذه القطعة توقف توريدها. يتم توريد القطعة المذكورة في السطر السابق بدلاً منها.

▼ هذه القطعة توقف توريدها. يتم توريد القطعة المذكورة في عمود « الوصف » بدلاً منها كطقم.

☆ هذه القطعة لا يمكن توريدها كقطعة منفردة. يتم توريدها كمجموعة.

★ هذه القطعة لا يمكن توريدها كقطعة منفردة. يتم توريدها كمجموعة. على انه يتم توريدها كقطعة منفردة من قبل موزعين معيّنين فقط.

⊙ هذا يشير الى مجموعة قطع.
هذه القطعة لا تعتبر قطعة للتوريد.

==== القطع المحاطة بهذا الخط هي مكونات لمجموعة القطع المذكورة اعلاه.

G-1,G-2 هذا يشير الى فئة مجموعة القطع.

KIT هذا يشير الى مكونات الاطقم التركيبية. بخصوص الاطقم التركيبية، يرجى مراجعة جدول الاطقم التركيبية للخدمة.

△ هذا يشير الى قطعة مورّدة شبه مكتملة التصنيع. تتطلب استكمال تصنيعها قبل الاستعمال.

PAINT(1) هذا يشير الى القطع المشحونة بعد طلائها بطبقة سفلية.

PAINT(2) هذا يشير الى القطع المشحونة بألوان مختلفة.

(A) هذا يشير الى قطع خاصة بمواصفات الطقس البارد من الفئة (A) (-٣٢°م).

(B) هذا يشير الى قطع خاصة بمواصفات الطقس البارد من الفئة (B) (-٥٠°م).

ПРЕДИСЛОВИЕ

При формировании заказа на детали, узлы и агрегаты, кроме их номера детали, наименования и количества, завод-изготовитель просит заказчиков информировать о серийном номере машины и двигателя, для которых делается заказ, а также показании счетчика мото-часов.

В Каталоге приведены не только стандартные агрегаты, но и дополнительные устройства и принадлежности, поставляемые по специальному заказу. При необходимости приобретении их обратиться к местному дилеру фирмы "Комацу".

Каталог деталей составлен, как ниже изложено:

Рисунки и таблицы деталей	При открытии Каталога на левой странице (чётной) приведен рисунок деталей устройства или агрегата. Каждая деталь обозначена номером позиции. На правой странице (нечётной) приведена таблица деталей, нарисованных на левой странице, с соответствующим номером детали, наименованием, количеством и серийными номерами машины, для которых предназначена данная деталь, в порядке возрастания номеров позиции.
FIG No. (№ рисунка)	Номер рисунка (фиг.) является собственным для данного рисунка и не является номером показанной детали. Номера рисунков (фиг.) могут быть непорядковыми.
INDEX (Указатель)	В указателе приведены номера позиции деталей на рисунке в порядке возрастания цифр.
PART No. (Номер детали)	При заказе на деталь, установленную на рисунке, следует указать номер, приведенный в данной колонне. Именно этот номер определяет каждую деталь.
DESCRIPTION (Наименование детали)	Приведено наименование детали, соответствующей выбранному номеру детали. Точка "." поставлена перед наименованием каждой составной части устройства. Если составная часть состоит из множества деталей, то эти детали обозначаются двумя точками "..". Например: ELEMENT ASSEMBLY, AIR CLEANER . ELEMENT ASSEMBLY, OUTER .. ELEMENT, OUTER .. NUT, WING .. WASHER
Q'TY (Количество)	Указано количество деталей, необходимое на единицу данного устройства. Для деталей составной части устройства, а также для группы деталей указано их количество на единицу составной части или на группу.
SERIAL No. (Серийные номера)	В части двигателя приведены серийные номера двигателей, а в части шасси — серийные номера машин, в которых применена данная деталь.
Условные обозначения	Условные обозначения, применяемые в колоннах "Номер детали" и "Наименование детали", характеризуют следующее: □ Вышеприведенная деталь может заменить настоящую деталь.

Условные обозначения (Продолжение)	◙ Настоящая деталь может заменить деталь, приведенную на одну строчку выше.
	◆ Настоящая деталь и деталь, приведенную на одну строчку выше, имеют взаимозаменяемость.
	■ Взамен настоящей детали возможно использовать детали, приведенные в колонне "Наименование детали", в комплекте.
	□ Поставка этой детали прекращена. Взамен этой детали поставляется деталь, приведенная на одну строчку выше.
	▼ Поставка этой детали прекращена. Взамен этой детали поставляются детали, приведенные в колонне "Наименование детали", в комплекте.
	☆ Настоящая деталь поставляется только в комплекте, а не в отдельности.
	★ Настоящая деталь поставляется, как правило, только в комплекте, а не в отдельности. Ее можно достать только у отдельных дилеров фирмы "Комацу".
	◉ Группа деталей. Детали не подлежат дополнительной поставке.
	------ Детали, ограниченные этой линией, составляют вышеприведенную группу деталей.
	G-1, G-2 Обозначения, характеризующие отдельные группы деталей.
	KIT Составляющая комплекта. См. таблицы ремонтных комплектов.
	△ Деталь, поставляемая в неготовом виде. Перед употреблением необходимо дополнительно обработать.
	PAINT(1) Детали, отгружаемые в загрунтованном виде.
	PAINT(2) Детали, отгружаемые в окрашенном в другой цвет виде.
	(A) Детали, рассчитанные на холодные районы (-30° C)
	(B) Детали, рассчитанные на особо холодные районы (-50° C)

前　言

订购零件时，请注明需要零件的货号、品名、数量以及使用机器的车辆编号、发动机型号和系列号、工作时数。

此零件明细表上不仅记载有标准装备零件，还记载有选购零件、附件零件。如果您需要订货，请与最近的小松代理店联系。

为了清楚明了，零件手册中有如下规定:

图　　表	打开此零件清单后， 在左侧的页上（偶数页）用图示表示按安装的装置上的零件。在图示上标有各种零件的索引号码。 在右侧的页上（奇数页）按照左侧图示上表示的零件索引号码以表格的形式 表示货号、品名、数量、适用机型。
FIG. No.	图号 (FIG.) 表示该页图的号码，它不时补充零件用的货号同时，此号码不一定是连续号码。
INDEX	与图的索引号码一致，按索引号码顺序编制为表格形式。
PART No.	此栏所示的货号是图示零件的货号，它是在订货时需要的标明的特定代号，是非常重要的。
DESCRIP-TION	它表示相当于货号的零件名称。 构成组装品的零件，在品名的前面有标记，记载在组装品之后。 另外，如果标记的零件是组装品，在该构成零件的品名前标有 .. 标记。 例如: ELEMENT ASSEMBLY, AIR CLEANER .ELEMENT ASSEMBLY, OUTER ..ELEMENT, OUTER ..NUT, WING ..WASHER
Q'TY	表示 1 台机器中需要使用的该零件数量。 但是，如果是组装零件和零件组的构成零件时，表示其组装件的件数。
SERIAL No.	发动机篇中表示该使用零件的发动机型号，在机体篇中表示该使用零件的车辆号码。
代　　号	货号栏和零件品名栏里的代号如下所示: □　　上一行的零件可取代此行零件来使用。

代　　号（续）

⊡	此行零件可代替紧接着的上一行零件使用。
◆	此行零件可与紧挨着的上一行零件互换使用。
■	如果将此行零件说明栏内的零件配套后，可取代此零件来使用。
☒	该行零件已停止供应，用上一行的零件代替使用。
▼	此行零件已停止供应，将此行零件说明栏内的零件配套后代替此零件供应。
☆	此行零件拟成套供应，不以单一零件供应。
★	此行零件拟成套供应，不以单一零件供应，但特定代理除外。
⊙	成组零件，一般不考虑成组供应。
====	用这种符号包括的零件是符号上一行指明成组件的零部件。
G-1,G-2	成组零件编号。
KIT	修理包，关于修理包构件详情，请参考技术服务修理包资料。
△	此行零件以半成品的形式供应，使用前必须再加工。
PAINT(1)	只涂底漆装船。
PAINT(2)	和本体不同颜色装船。
(A)	适用寒冷地区。(- 30℃)
(B)	适用极寒冷地区。(- 50℃)

CONTENTS

D41P-6 Serial No. B30001 and up

ENGINE S6D102E-1 Engine No. 30751974 and up

CONTENTS

FOREWORD		OF- 2
CONTENTS		OC- 1

	FIG. NO	PAGE
AA [ENGINE]		
CYLINDER HEAD	A1010-A0A1	AA- 2
ENGINE HANGER	A1050-A0A1	AA- 4
HEAD COVER	A1110-A0A1	AA- 6
BREATHER AND HOSE	A111V-A0A1	AA- 8
AIR INTAKE CONNECTION AND EXHAUST MANIFOLD	A1310-01A1	AA- 10
TURBOCHARGER OIL PIPING	A1530-A0A1	AA- 12
TURBOCHARGER (INNER PARTS)	A1530-B0A1	AA- 14
THERMOSTAT AND THERMOSTAT HOUSING	A1730-A0A1	AA- 16
CYLINDER BLOCK	A2010-A0A1	AA- 18
FRONT COVER	A2040-A0A1	AA- 20
CAMFOLLOWER COVER	A2060-A0A1	AA- 22
OIL FILLER (WITHOUT OIL FILLER)	A2070-A0A1	AA- 24
OIL PAN	A2110-A0A1	AA- 26
OIL LEVEL GAUGE	A2110-B0A1	AA- 28
FLYWHEEL HOUSING	A2210-B0A1	AA- 30
FLYWHEEL	A2250-A0A1	AA- 32
CRANKSHAFT	A2310-A0A1	AA- 34
DAMPER	A2330-A0A1	AA- 36
PISTON	A2350-A0A1	AA- 38
ROCKER ARM	A2410-A0A1	AA- 40
CAMSHAFT AND TAPPET	A2510-A0A1	AA- 42
OIL PUMP	A3010-A0A1	AA- 44
OIL FILTER AND OIL COOLER	A3310-A0A1	AA- 46
FUEL INJECTION PUMP MOUNTING	A4010-A0A1	AA- 48
FUEL INJECTION PIPING AND SPILL PIPE	A4030-A0A1	AA- 50
FUEL INJECTION PUMP LUBRICATOR	A4050-A0A1	AA- 52
FUEL TRANSFER PUMP	A4170-A0A1	AA- 54
FUEL FILTER	A4180-A0A1	AA- 56
INJECTION NOZZLE	A4210-A0A1	AA- 58
WATER PUMP	A5010-A0A1	AA- 60
WATER INLET CONNECTION	A5030-A0A1	AA- 62
FAN DRIVE	A5060-A0A1	AA- 64
TENSION PULLEY	A5080-A0A1	AA- 66
ALTERNATOR MOUNTING (40A)	A6010-A0A1	AA- 68
STARTING MOTOR MOUNTING (5.5KW)	A6210-A0A1	AA- 70
B0 [ENGINE RELATED PARTS]		
HEATER SWITCH	B0000-01A0	B0- 02
AIR CLEANER	B0000-02A0	B0- 04
PRE-CLEANER	B0000-03A0	B0- 06
AIR CLEANER CAP	B0000-03A1	B0- 08
HEAT SHIELD	B0000-04A0	B0- 10
MUFFLER	B0000-05A0	B0- 12
WATER TEMPERATURE SENSOR (WITH MONITOR PANEL)	B0000-06A0	B0- 14
OIL FILLER	B0000-07A0	B0- 16
MOUNT BRACKET	B0000-09A0	B0- 18
PRESSURE SWITCH	B0000-11A0	B0- 20
FILTER HEAD BOLT	B0000-12A0	B0- 22
SOLENOID	B0000-13A0	B0- 24
COOLING FAN (BLOWER TYPE)	B0000-14A0	B0- 26
COOLING FAN (REVERSIBLE TYPE)	B0000-14A1	B0- 28
COOLING FAN (BLOWER TYPE) (REGULATION OF EC INCLUSION)	B0000-14A2	B0- 30
STARTING MOTOR SWITCH	B0000-17A0	B0- 32
STARTING MOTOR MOUNTING (5.5KW)	B0000-18A1	B0- 34
STARTING MOTOR (5.5KW) (INNER PARTS)	B0000-18A2	B0- 36
OIL PAN DRAIN HOSE	B0000-19A0	B0- 40
FLYWHEEL HOUSING	B0000-20A0	B0- 42
CORROSION RESISTER	B0000-21A0	B0- 44
SAFETY GUARD	B0000-22A0	B0- 46
ENGINE MOUNT	B0100-01A0	B0- 48

	FIG. NO	PAGE
ENGINE WIRING	B0500-01A0	B0- 50
DAMPER	B0600-01A0	B0- 52
WATER VALVE	B0730-01A1	B0- 54
C0 [COOLING SYSTEM]		
COOLING (WITH AIR CONDITIONER)	C0100-01A0	C0- 02
COOLING (WITHOUT AIR CONDITIONER)	C0100-01A1	C0- 04
COOLING (WITH REVERSIBLE FAN)	C0100-01A2	C0- 06
COOLING (WITH SANDY DUSTY PROTECTION GRID)	C0100-01A3	C0- 08
COOLING (WITH AIR CONDITIONER) (WITH SANDY DUSTY PROTECTION GRID)	C0100-01A4	C0- 10
COOLING (HOSE, MOUNT, RESERVE TANK)	C0100-02A0	C0- 12
COOLING (SANDY DUSTY PROTECTION GRID)	C0100-03A3	C0- 14
D0 [FUEL TANK AND RELATED PARTS]		
FUEL TANK (FOR MONITOR PANEL)	D0100-01A0	D0- 02
FUEL LINE	D0200-01A0	D0- 04
ADDITIONAL FUEL STRAINER	D0210-01A0	D0- 06
ADDITIONAL FUEL STRAINER AND WATER SEPARATOR	D0210-01A1	D0- 08
WATER SEPARATOR	D0210-51A1	D0- 10
E0 [ELECTRICAL SYSTEM]		
BATTERY	E0110-01A0	E0- 02
BATTERY (REGULATION OF EC INCLUSION)	E0110-01A1	E0- 04
DRY BATTERY	E0110-01A2	E0- 06
BATTERY (LARGE CAPACITY)	E0110-01A3	E0- 08
DRY BATTERY (REGULATION OF EC INCLUSION)	E0110-01A4	E0- 10
VEHICLE WIRING	E0200-01A0	E0- 12
VEHICLE WIRING (SENSOR WIRING)	E0200-02A0	E0- 14
BATTERY WIRING	E0210-01A0	E0- 16
BATTERY WIRING (FOR LARGE CAPACITY BATTERY)	E0210-01A1	E0- 18
VEHICLE LAMP	E0300-01A0	E0- 20
WORK LAMP (FRONT)	E0310-01A0	E0- 22
WORK LAMP (REAR)	E0310-02A0	E0- 24
ADDITIONAL REAR LAMP	E0320-01A0	E0- 26
BACK-UP ALARM	E0420-01A0	E0- 28
F0 [POWER TRAIN AND FINAL DRIVE]		
UNIVERSAL JOINT	F2200-01A0	F0- 02
POWER LINE (POWER LINE MOUNT)	F2300-01A0	F0- 04
POWER LINE (BEVEL GEAR AND SHAFT)	F2300-02A0	F0- 06
POWER LINE (CLUTCH AND BRAKE)	F2300-03A0	F0- 08
POWER LINE (CASE)	F2300-04A0	F0- 10
POWER LINE (MAIN PUMP AND TRANSMISSION PIPING)	F2300-05A0	F0- 12
POWER LINE (STEERING CASE, BRAKE VALVE AND PRIORITY VALVE PIPING)	F2300-06A0	F0- 14
POWER LINE (POWER LINE OIL LINE)	F2300-07A0	F0- 16
POWER LINE (CHECK LINE)	F2300-08A0	F0- 20
POWER LINE (BRAKE CONTROL) (1/2)	F2300-09A0	F0- 22
POWER LINE (BRAKE CONTROL) (2/2)	F2300-10A0	F0- 24
POWER LINE (BRAKE CONTROL BRACKET)	F2300-11A0	F0- 26
POWER LINE (TRANSMISSION CONTROL)	F2300-12A0	F0- 30
POWER LINE (STEERING PISTON)	F2300-13A0	F0- 32
POWER LINE (BRAKE VALVE)	F2300-14A0	F0- 34
POWER LINE (PRIORITY VALVE)	F2300-15A0	F0- 36
POWER LINE (BRAKE CYLINDER)	F2300-16A0	F0- 38
POWER LINE (TRANSMISSION SUPPORT)	F2300-17A0	F0- 40
TRANSMISSION (1ST CLUTCH)	F2320-01A0	F0- 42
TRANSMISSION (2ND CLUTCH)	F2320-02A0	F0- 44
TRANSMISSION (3RD AND FORWARD CLUTCH)	F2320-03A0	F0- 46
TRANSMISSION (REVERSE CLUTCH)	F2320-04A0	F0- 50
TRANSMISSION (CASE)	F2320-05A0	F0- 52
TRANSMISSION (CASE ACCESSORIES PARTS)	F2320-06A0	F0- 54
TRANSMISSION (INPUT)	F2320-07A0	F0- 56
TRANSMISSION (OUTPUT)	F2320-08A0	F0- 58
TRANSMISSION (SHIFT VALVE)	F2320-09A0	F0- 60

	FIG. NO	PAGE
TRANSMISSION (SHITF VALVE MOUNT AND VALVE PIPING)	F2320-10A0	F0- 64
TRANSMISSION (PRESSURE VALVE)	F2320-11A0	F0- 66
TRANSMISSION (FILLER AND PIPING)	F2320-12A0	F0- 68
TRANSMISSION (INCHING CONTROL)	F2320-13A0	F0- 70
FINAL DRIVE (L.H.)	F2380-01A0	F0- 72
FINAL DRIVE (R.H.)	F2380-02A0	F0- 74
FINAL DRIVE (MOUNT)	F2380-03A0	F0- 76
POWER LINE OIL LINE (FILTER AND OIL GAUGE)	F2730-01A0	F0- 78
POWER LINE OIL LINE (COOLING LINE)	F2730-02A0	F0- 80
TRAVEL CONTROL	F2820-01A0	F0- 82
H0 [HYDRAULIC SYSTEM]		
HYDRAULIC TANK	H0100-01A0	H0- 02
CONTROL VALVE (MOUNT)	H0120-01A0	H0- 04
HYDRAULIC PUMP LINE (HYDRAULIC PUMP AND VALVE LINE)	H0310-01A0	H0- 06
HYDRAULIC PUMP LINE (OIL COOLER LINE)	H0310-02A0	H0- 08
LIFT CYLINDER LINE	H2210-01A0	H0- 10
TILT CYLINDER LINE	H2220-01A0	H0- 12
ANGLE CYLINDER LINE	H2230-01A0	H0- 14
J0 [MAIN FRAME AND RELATED PARTS]		
MAIN FRAME	J2100-01A0	J0- 02
K0 [OPERATOR'S COMPARTMENT AND CONTROL SYSTEM]		
OPERATOR'S SEAT (RIGID TYPE) (LEATHER SEAT)	K0110-01A0	K0- 02
OPERATOR'S SEAT (TURN AND RECLINING TYPE) (FABRIC SEAT)	K0110-01A2	K0- 04
OPERATOR'S SEAT (RECLINING TYPE) (LEATHER SEAT)	K0110-01A3	K0- 08
OPERATOR'S SEAT (RECLINING TYPE) (LEATHER SEAT)	K0110-01A4	K0- 10
OPERATOR'S SEAT (RECLINING TYPE) (FABRIC SEAT) (WITH HEAD REST)	K0110-01A5	K0- 14
OPERATOR'S SEAT (RECLINING TYPE) (FABRIC SEAT)	K0110-01A6	K0- 16
OPERATOR'S SEAT (TURN AND RECLINING TYPE) (FABRIC SEAT) (WITH HEAD REST)	K0110-01A7	K0- 18
OPERATOR'S SEAT (RECLINING TYPE) (LEATHER SEAT) (HIBACK)	K0110-01A8	K0- 22
OPERATOR'S SEAT (RECLINING TYPE) (FABRIC SEAT) (HIBACK)	K0110-01A9	K0- 24
OPERATOR'S SEAT (TURN AND RECLINING TYPE) (MOUNT)	K0110-04A2	K0- 26
SEAT FRAME (EXCEPT JAPAN)	K0120-01A0	K0- 28
SEAT BELT (FOR RIGID SEAT)	K0160-01A0	K0- 30
SEAT BELT (FOR SUSPENTION SEAT)	K0160-01A1	K0- 32
CAB (BODY)	K0210-01A0	K0- 34
CAB (DOOR AND DOOR LOCK)	K0210-02A0	K0- 36
CAB (DOOR OPEN LOCK)	K0210-03A0	K0- 38
CAB (SASH AND GRIP)	K0210-04A0	K0- 40
CAB (ROOF LINING AND GARNISH)	K0210-05A0	K0- 42
CAB (ROOM LAMP AND WIRING)	K0210-06A0	K0- 44
CAB (FRONT AND REAR WIPER)	K0210-07A0	K0- 46
CAB (RADIO MOUNT BRACKET) (RADIO LESS)	K0210-08A0	K0- 48
CAB (ACCESSORY)	K0210-09A0	K0- 50
CAB (ROOF LINING AND COVER) (RADIO LESS)	K0210-12A0	K0- 52
CAB (MOUNT BOLT AND SEAL)	K0210-13A0	K0- 54
FLOOR MAT (WITH CAB)	K0310-01A0	K0- 56
FLOOR MAT (WITHOUT CAB)	K0310-01A1	K0- 58
ROOM MIRROR	K0320-01A0	K0- 60
SUNVISOR	K0330-01A0	K0- 62
ROPS (WITH CAB)	K0410-01A0	K0- 64
ROPS (WITHOUT CAB)	K0410-01A1	K0- 66
CANOPY	K0410-01A2	K0- 68
AIR CONDITIONER (CONDENSER AND COMPRESSOR)	K0710-01A0	K0- 70
HEATER	K0710-01A1	K0- 72
AIR CONDITIONER (PIPING BRACKET)	K0710-02A0	K0- 74
AIR CONDITIONER (COMPRESSOR MOUNT AND CONDENSERWIRING)	K0710-03A0	K0- 76
AIR CONDITIONER (HEATER LINE)	K0710-04A0	K0- 78
AIR CONDITIONER (COMPRESSOR)	K0710-51A0	K0- 80
FIRE EXTINGUISHER	K0830-01A1	K0- 82
CUP HOLDER	K0860-01A0	K0- 84
CUP HOLDER (WITHOUT CAB)	K0860-01A1	K0- 86
LUNCH BOX BRACKET	K0890-01A0	K0- 88
FLOOR FRAME (MOUNT AND PLUG)	K2110-01B0	K0- 90

	FIG. NO	PAGE
FLOOR FRAME (MOUNT AND PLUG) (WITHOUT CAB)	K2110-01B1	K0- 92
FLOOR FRAME (FUEL CONTROL)	K2110-02B0	K0- 94
FLOOR FRAME (BLADE CONTROL) (1/2) (FOR POWER ANGLE POWER TILT DOZER)	K2110-03B0	K0- 96
FLOOR FRAME (BLADE CONTROL) (2/2) (FOR POWER ANGLE POWER TILT DOZER)	K2110-04B0	K0- 98
FLOOR FRAME (SPEED CONTROL) (1/2)	K2110-05B0	K0- 100
FLOOR FRAME (SPEED CONTROL) (2/2)	K2110-06B0	K0- 102
FLOOR FRAME (STEERING CONTROL) (1/2)	K2110-07B0	K0- 104
FLOOR FRAME (STEERING CONTROL) (2/2)	K2110-08B0	K0- 106
FLOOR FRAME (BLADE LOCK) (FOR POWER ANGLE POWER TILT DOZER)	K2110-09B0	K0- 108
FLOOR FRAME (TRANSMISSION LOCK LEVER)	K2110-10B0	K0- 110
FLOOR FRAME (TRANSMISSION LOCK SHAFT)	K2110-11B0	K0- 112
FLOOR FRAME (ELECTRICAL EQUIPMENT)	K2110-12B0	K0- 114
FLOOR FRAME (WIRING)	K2110-13B0	K0- 116
FLOOR FRAME (WINDOW WASHER HOSE)	K2110-14B0	K0- 118
FLOOR FRAME (STTERING VALVE PIPING)	K2110-15B0	K0- 120
FLOOR FRAME (HANDLE) (WITHOUT CAB)	K2110-16B1	K0- 122
FLOOR FRAME (KNOB)	K2110-17B0	K0- 124
FLOOR SUSPENTION (VISCOUS MOUNT) (WITH CAB)	K2120-01A0	K0- 126
DASH BOARD (WITHOUT CAB) (WITH MONITOR PANEL)	K2210-01A0	K0- 128
DASHBOARD (AIR CONDITIONER KIT)	K2210-01B1	K0- 130
DASHBOARD (HEATER KIT)	K2210-01B2	K0- 132
DASHBOARD (AIR CONDITIONER BOX)	K2210-02B1	K0- 134
DASHBOARD (HEATER BOX)	K2210-02B2	K0- 136
DASHBOARD (FILTER COVER) (FOR AIR CONDITIONER AND HEATER)	K2210-03B1	K0- 138
DASHBOARD (FOR AIR CONDITIONER AND HEATER)	K2210-04B1	K0- 140
DASHBOARD (PANEL BOARD) (FOR AIR CONDITIONER AND HEATER)	K2210-05B1	K0- 142
DASHBOARD (ACCESORY) (FOR AIR CONDITIONER AND HEATER)	K2210-06B1	K0- 144
DASHBOARD (MOUNT) (FOR AIR CONDITIONER AND HEATER)	K2210-07B1	K0- 146
AIR CONDITIONER UNIT (EVAPORATOR AND RADIATOR)	K2210-51B1	K0- 148
HEATER BLOWER (FOR AIR CONDITIONER OR HEATER)	K2210-53A1	K0- 152
MONITOR PANEL	K2210-54A0	K0- 154
HIGH MOUNT FOOT REST	K2212-01A0	K0- 156
BLADE CONTROL SYSTEM	K2241-01A0	K0- 158
FLOOR (FLOOR) (WITH DECELERATOR PEDAL)	K2400-01A0	K0- 162
FLOOR (BRAKE PEDAL) (WITH DECELERATOR PEDAL)	K2400-02A0	K0- 164
FLOOR (DECELERATOR PEDAL) (WITH DECELERATOR PEDAL)	K2400-03A0	K0- 166
FLOOR (INCHING PEDAL) (WITH DECELERATOR PEDAL)	K2400-04A0	K0- 168
FLOOR (FLOOR MOUNT) (WITH DECELERATOR PEDAL)	K2400-05A0	K0- 170
ARM REST COVER (UPPER)	K2500-01A0	K0- 172
ARM REST COVER (LOWER) (WITH CAB)	K2500-02A0	K0- 174
ARM REST COVER (LOWER) (REGULATION OF EC INCLUSION)	K2500-02A2	K0- 176
REAR WORK EQUIPMENT CONTROL (FOR RIPPER)	K2520-01A1	K0- 178
WINDOW WASHER TANK	K2910-01A0	K0- 180
M0 [GUARD]		
RADIATOR GUARD	M2110-01A0	M0- 02
RADIATOR GUARD (REGULATION OF EU DYNAMIC NOISE)	M2110-01A1	M0- 04
RADIATOR MASK	M2120-01A0	M0- 08
RADIATOR MASK (REGULATION OF EU DYNAMIC NOISE)	M2120-01A1	M0- 10
FRONT GUARD (ENGINE HOOD) (WITH CAB)	M2140-01A2	M0- 12
FRONT GUARD (ENGINE HOOD) (WITH PRE CLEANER) (WITHOUT CAB)	M2140-01A3	M0- 14
FRONT GUARD (ENGINE SIDE COVER, UPPER) (WITH PRE CLEANER) (WITH CAB)	M2140-02A0	M0- 16
FRONT GUARD (ENGINE SIDE COVER, UPPER) (WITH PRE CLEANER) (WITHOUT CAB)	M2140-02A1	M0- 18
FRONT GUARD (ENGINE SIDE COVER, UPPER) (REGULATION OF EU DYNAMIC NOISE)	M2140-02A2	M0- 20
FRONT GUARD (ENGINE SIDE COVER, LOWER) (WITH PRE CLEANER)	M2140-03A0	M0- 22
FRONT GUARD (ENGINE SIDE COVER, LOWER) (REGULATION OF EU DYNAMIC NOISE)	M2140-03A2	M0- 24
FRONT GUARD (ENGINE HOOD MOUNT)	M2140-04A0	M0- 26
FRONT GUARD (BOOT)	M2140-05A2	M0- 28
REAR GUARD (BATTERY COVER)	M2210-01A0	M0- 30
REAR GUARD (BATTERY COVER) (REGULATION OF EU DYNAMIC NOISE)	M2210-01A1	M0- 32
REAR GUARD (FILTER COVER) (WITH AIR CONDITIONER)	M2210-02A0	M0- 34
REAR GUARD (FILTER COVER)	M2210-02A1	M0- 36

	FIG. NO	PAGE
REAR GUARD (FILTER COVER) (REGULATION OF EU DYNAMIC NOISE) (WITH HEATER)	M2210-02A2	M0- 38
REAR GUARD (FILTER COVER) (REGULATION OF EU DYNAMIC NOISE) (WITH AIR CONDITIONER)	M2210-02A3	M0- 40
REAR GUARD (BRACKET)	M2210-03A0	M0- 42
REAR GUARD (FENDER)	M2210-04A0	M0- 44
REAR GUARD (FENDER) (REGULATION OF EU DYNAMIC NOISE)	M2210-04A1	M0- 46
REAR GUARD (HANDIE AND PLUG)	M2210-05A0	M0- 48
REAR GUARD (TOOL BOX AND BATTERY PLATE)	M2210-06A0	M0- 50
REAR COVER	M2240-01A0	M0- 52
REAR COVER (REGULATION OF EU DYNAMIC NOISE)	M2240-01A2	M0- 54
UNDER GUARD	M2811-01A0	M0- 58
UNDER GUARD (WITH FRONT FOOK)	M2811-01A1	M0- 60

R0 [UNDER CARRIAGE]

FRONT IDLER	R0110-01A0	R0- 02
IDLER CUSHION	R0120-01A0	R0- 04
TRACK ROLLER (HD LINK) (SINGLE GROUSER)	R0200-01A1	R0- 06
TRACK ROLLER (HD LINK) (DOUBLE GROUSER)	R0200-02A1	R0- 08
CARRIER ROLLER	R0300-01A0	R0- 10
TRACK SHOE (LUBRICATE TYPE) (SWAMP TYPE) (700MM WIDE) (HEAVY DUTY LINK)	R0500-01A6	R0- 12
TRACK SHOE (LUBRICATE TYPE) (SINGLE GROUSER) (700MM WIDE) (HEAVY DUTY LINK)	R0500-01A7	R0- 14
TRACK SHOE (LUBRICATE TYPE) (SINGLE GROUSER) (510MM WIDE) (HEAVY DUTY LINK)	R0500-01A8	R0- 16
TRACK SHOE (LUBRICATE TYPE) (SINGLE GROUSER) (700MM WIDE) (HD LINK, AR BUSHING)	R0500-01B1	R0- 18
ROLLER GUARD (FOR HD LINK)	R2200-01A2	R0- 20
ROLLER GUARD (FULL GUARD) (FOR HD LINK)	R2200-01A3	R0- 22

T0 [WORK EQUIPMENT]

DOZER FRAME	T2110-01A0	T0- 02
LINK	T2115-01A0	T0- 04
LINK (CYLINDER PIN)	T2115-02A0	T0- 06
BLADE (FOR POWER ANGLE POWER TILT DOZER)	T2120-01A0	T0- 08
BLADE (FOR POWER ANGLE POWER TILT DOZER) (WIDE TYPE)	T2120-01A1	T0- 10
BLADE END BIT (STRONG)	T2121-01A0	T0- 12
BLADE LIFT CYLINDER	T2140-01A0	T0- 14
BLADE TILT CYLINDER	T2150-01A0	T0- 16
BLADE ANGLE CYLINDER	T2153-01A0	T0- 18
DOZER OIL LINE (ANGLE CYLINDER LINE)	T2160-01A0	T0- 20
DOZER OIL LINE (TILT CYLINDER LINE AND COVER)	T2160-02A0	T0- 22
DOZER OIL LINE (LIFT CYLINDER LINE)	T2160-03A0	T0- 24
HITCH	T2810-01A0	T0- 26
HITCH (REGULATION OF EU DYNAMIC NOISE)	T2810-01A1	T0- 28
DRAWBAR	T2810-01A3	T0- 30

U0 [MARKS AND PLATES]

MARKS AND PLATES (PORTUGUESE)	U0100-01A0	U0- 02
MARKS AND PLATES (ENGLISH) (FOR U.S.A.)	U0100-01A1	U0- 04
MARKS AND PLATES (ENGLISH)	U0100-01A2	U0- 06
MARKS AND PLATES (ITALIAN)	U0100-01A3	U0- 08
MARKS AND PLATES (FRENCH)	U0100-01A4	U0- 10
MARKS AND PLATES (SPANISH)	U0100-01A5	U0- 12
MARKS AND PLATES (INDONESIAN)	U0100-01A6	U0- 14
MARKS AND PLATES (ENGLISH) (REGULATION OF EU DYNAMIC NOISE)	U0100-01A7	U0- 16
MARKS AND PLATES (GERMAN) (REGULATION OF EU DYNAMIC NOISE)	U0100-01A8	U0- 18
MARKS AND PLATES (ITALIAN) (REGULATION OF EU DYNAMIC NOISE)	U0100-01A9	U0- 20
MARKS AND PLATES (FRENCH) (REGULATION OF EU DYNAMIC NOISE)	U0100-01B0	U0- 22
MARKS AND PLATES (SPANISH) (REGULATION OF EU DYNAMIC NOISE)	U0100-01B1	U0- 24
CENTER OF GRAVITY MARK	U0400-01A0	U0- 26
ROPS PLATES	U0520-01A0	U0- 28

V0 [ACCESSORY]

SPARE PARTS	V0100-01A0	V0- 02

	FIG. NO	PAGE
SPARE PARTS (ENGINE) (REGULATION OF EU DYNAMIC NOISE)	V0100-01A2	V0- 04
SPARE PARTS (ENGINE)	V0100-01A3	V0- 06
CAP AND OVERALL	V0200-01A0	V0- 08
TOOL	V0300-01A0	V0- 10
TOOL (WITH GREASE GUN HOLDER)	V0300-01A1	V0- 12
TOOL (FOR REVERSIBLE FAN)	V0301-01A0	V0- 14
W0 [MISCELLANEOUS]		
VANDALISM PROTECTION (PANEL)	W2112-01A0	W0- 02
Y0 [SERVICE KIT AND COMPONENT PARTS]		
SERVICE KIT	Y0100-01A0	Y0- 02
SHOE BOLT AND NUT SERVICE KIT	Y0320-01A0	Y0- 06
TRACK LINK (LUBRICATE TYPE) (FOR SWAMP TYPE) (HEAVY DUTY LINK) (SUPLY PARTS)	Y0322-01A4	Y0- 08
TRACK LINK (LUBRICATE TYPE) (FOR SINGLE GROUSER) (HEAVY DUTY LINK) (SUPLY PARTS)	Y0322-01A5	Y0- 10
TRACK SHOE (LUBRICATE TYPE) (HD LINK, AR BUSHING) (FOR SINGLE GROUSER) (SUPPLY PARTS)	Y0322-01A7	Y0- 12
MAIN PUMP (FOR WORK EQUIPMENT)	Y1600-01A1	Y0- 14
MAIN PUMP (FOR STEERING)	Y1600-02A1	Y0- 16
BLADE LIFT CYLINDER (INNER PARTS)	Y1620-01A0	Y0- 18
BLADE ANGLE CYLINDER (INNER PARTS)	Y1620-21A0	Y0- 20
BLADE ANGLE CYLINDER (INNER PARTS) (WIDE TYPE)	Y1620-21A1	Y0- 22
BLADE TILT CYLINDER (INNER PARTS)	Y1620-31A0	Y0- 24
CONTROL VALVE (3-SPOOL) (1/4)	Y1663-01A0	Y0- 26
CONTROL VALVE (3-SPOOL) (2/4)	Y1663-02A0	Y0- 28
CONTROL VALVE (3-SPOOL) (3/4)	Y1663-03A0	Y0- 30
CONTROL VALVE (3-SPOOL) (4/4)	Y1663-04A0	Y0- 34
PPC VALVE	Y1670-01A0	Y0- 38
ZZ [NUMERICAL INDEX]		
NUMERICAL INDEX		ZZ- 1

ENGINE

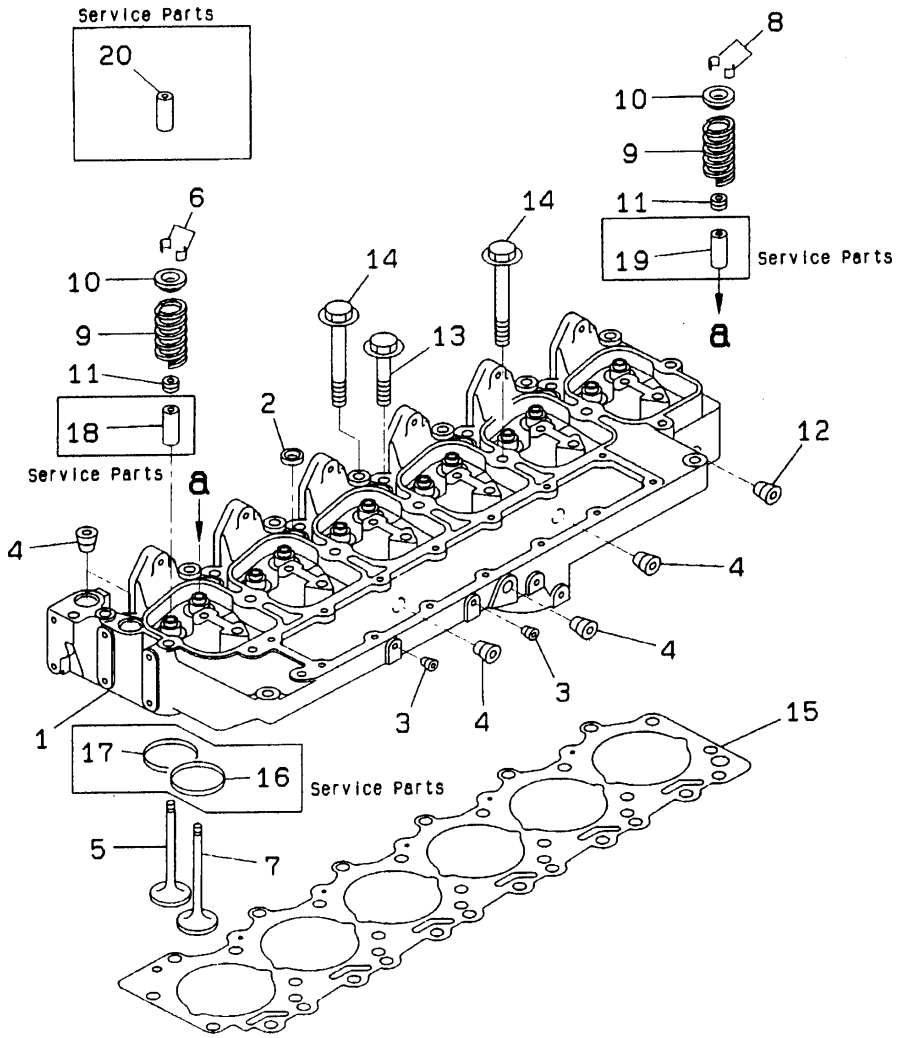

INDEX	PART NO.	DESCRIPTION	Q'TY	SERIAL NO.
	6735-11-1201	CYLINDER HEAD A.	1	30751974-
1	☆	. HEAD, CYLINDER	1	30751974-
2	6736-11-1150	. . PLUG	5	30751974-
3	6732-11-1930	. . PLUG	2	30751974-
4	6732-11-1910	. . PLUG	5	30751974-
	6736-41-4110	. . INTAKE VALVE A. , INTAKE	6	30751974-
5	☆	. . . VALVE	1	30751974-
6	6732-41-4520	. . . COTTER	2	30751974-
	6736-41-4210	. . EXHAUST VALVE A. , EXHAUST	6	30751974-
7	☆	. . . VALVE	1	30751974-
8	6732-41-4520	. . . COTTER	2	30751974-
9	6732-41-4430	. . SPRING	12	30751974-
10	6732-41-4510	. . RETAINER	12	30751974-
11	6732-41-4540	. . SEAL, EXHAUST	12	30751974-
12	6732-11-1920	. . PLUG	1	30751974-
13	6732-11-1610	BOLT	6	30751974-
14	6732-11-1620	BOLT	14	30751974-
15	6735-11-1821	GASKET, (STD)	1	30751974-
	6735-19-1820	GASKET, 0.25MM, (OS)	AR	30751974-
	6735-11-1830	GASKET, 0.50MM, (OS)	AR	30751974-
16	6732-11-1180	SEAT, EXHAUST	AR	30751974-
	6732-11-1170	SEAT, EXHAUST	AR	30751974-
18	6736-19-1310	SEAT, INTAKE	AR	30751974-
19	6736-19-1410	GUIDE, 60. 50MM, INTAKE	AR	30751974-
20	6736-18-1310	GUIDE, 51. 75MM, EXHAUST	AR	30751974-

FIG. A1050-A0A1 ENGINE HANGER

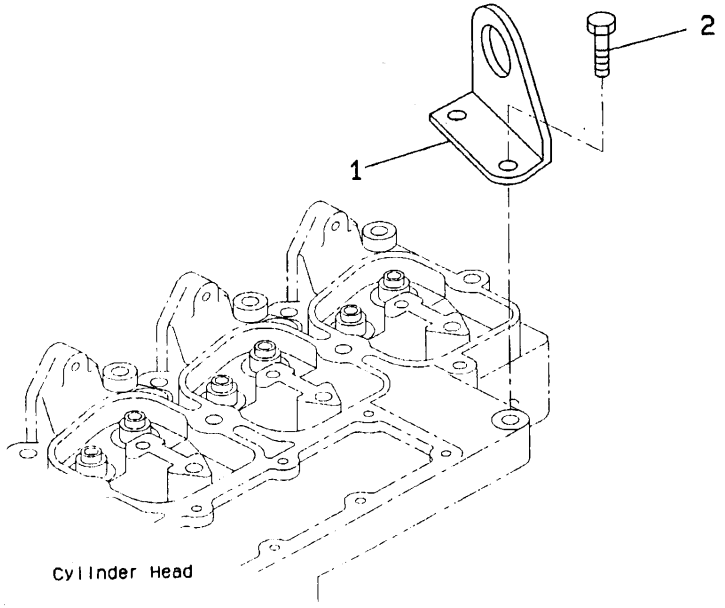

PC34381Z

FIG. NO. : A1050-A0A1

INDEX	PART NO.	DESCRIPTION	Q'TY	SERIAL NO.
1	6736-11-1910	BRACKET	1	30751974-
2	6732-11-1720	BOLT	2	30751974-

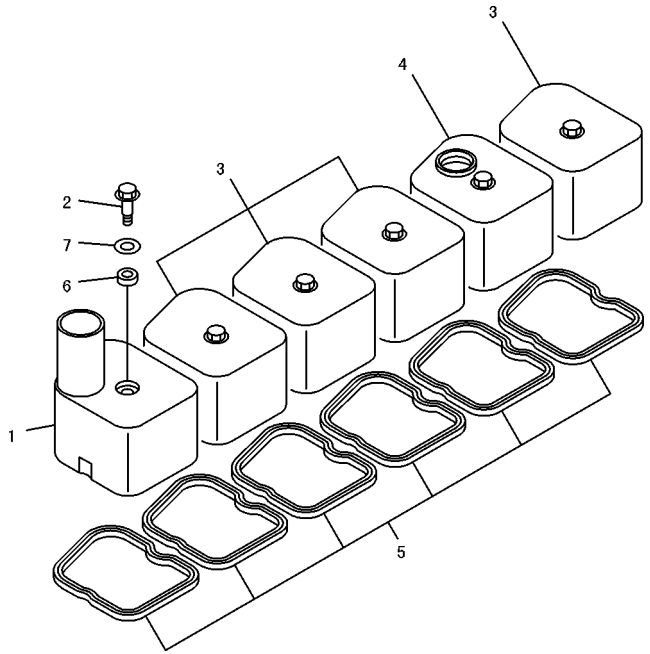

INDEX	PART NO.	DESCRIPTION	Q'TY	SERIAL NO.
1	6735-11-8110	COVER, HEAD	1	30751974-
2	6732-11-8130	BOLT	6	30751974-
3	6735-11-8120	COVER	4	30751974-
4	6732-11-8160	COVER	1	30751974-
5	6732-11-8181	GASKET	6	30751974-
6	6732-11-8210	GASKET	6	30751974-
7	6732-11-8150	WASHER	6	30751974-

FIG. A111V-A0A1 BREATHER AND HOSE

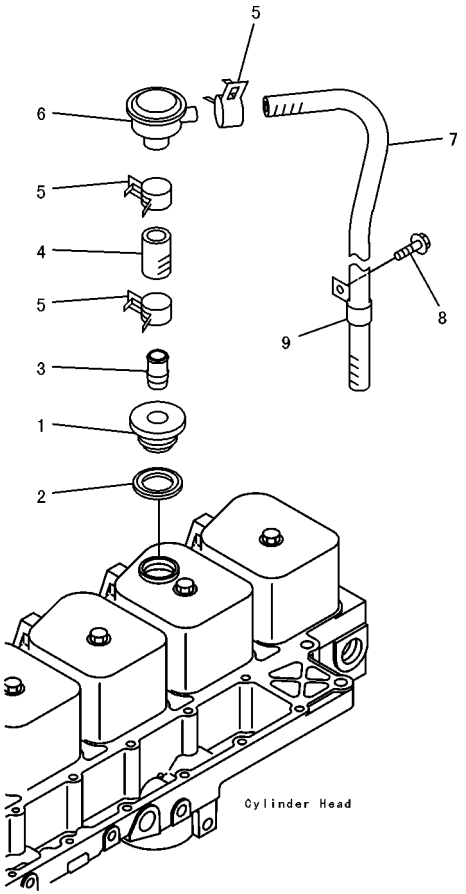

FIG. NO. : A111V-A0A1

INDEX	PART NO.	DESCRIPTION	Q'TY	SERIAL NO.
1	6735-21-7270	CAP, FILLER	1	30751974-
2	6732-11-8620	SEAL	1	30751974-
3	6736-61-5110	COUPLING	1	30751974-
4	6735-21-7290	HOSE, PLAIN	1	30751974-
5	6742-01-5380	CLAMP	3	30751974-
6	6735-51-4110	VALVE, PRESSURE REGULATOR	1	30751974-
7	6732-21-7350	HOSE, PLAIN	1	30751974-
8	6732-51-5130	BOLT	1	30751974-
9	6735-21-7260	CLIP	1	30751974-

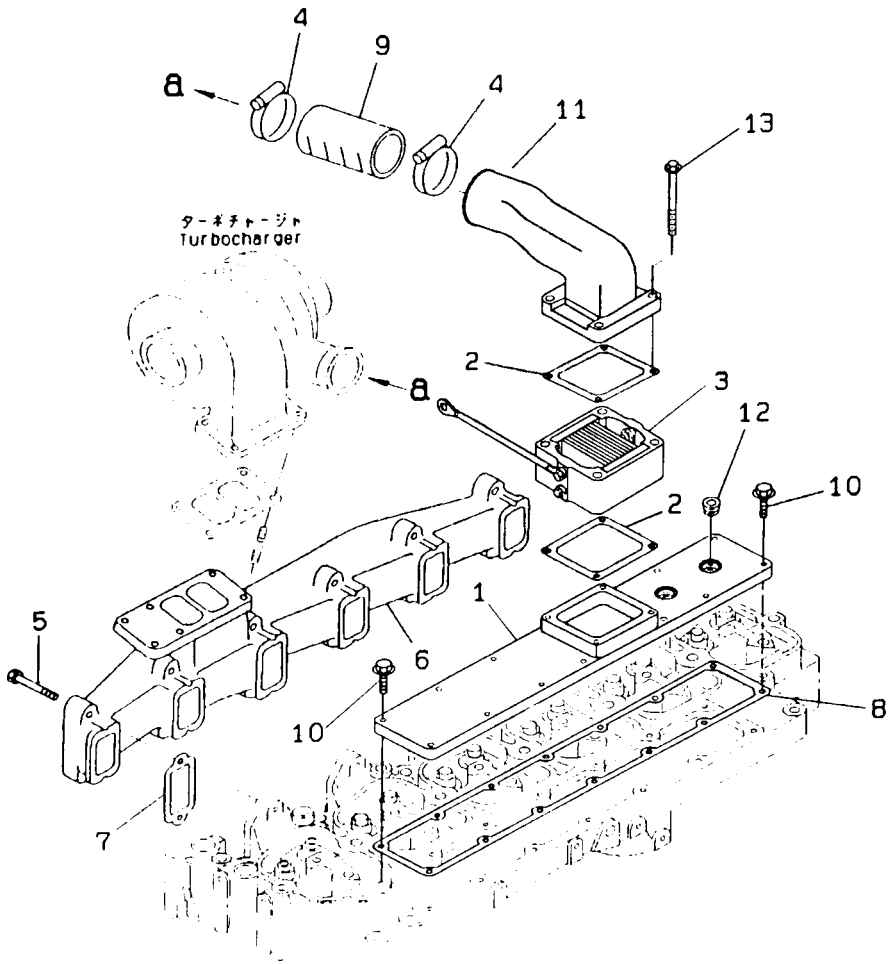

INDEX	PART NO.	DESCRIPTION	Q'TY	SERIAL NO.
1	6735-11-4110	COVER	1	30751974-
2	6732-11-4811	GASKET	2	30751974-
3	6732-81-5120	HEATER ASS'Y, ENGINE	1	30751974-
4	6736-81-1810	CLAMP	2	30751974-
5	6735-11-4150	BOLT	12	30751974-
6	6735-11-5210	MANIFOLD, EXHAUST	1	30751974-
7	6736-11-5820	GASKET	6	30751974-
8	6735-11-4811	GASKET	1	30751974-
9	6735-11-4420	HOSE	1	30751974-
10	6732-11-4160	BOLT	10	30751974-
11	6735-11-4340	CONNECTOR, AIR	1	30751974-
12	6732-11-1910	PLUG	2	30751974-
13	6732-11-4150	SCREW	4	30751974-

FIG. A1530-A0A1 TURBOCHARGER OIL PIPING

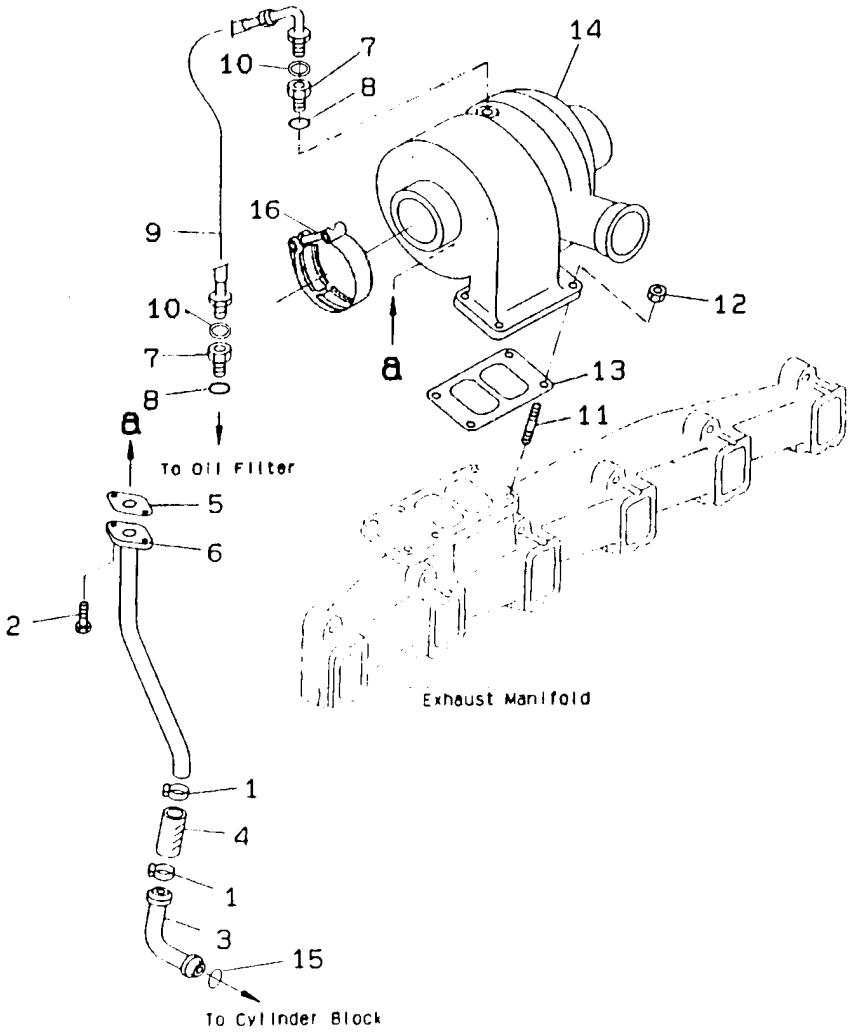

FIG. NO. : A1530-A0A1

INDEX	PART NO.	DESCRIPTION	Q'TY	SERIAL NO.
1	6735-81-8360	CLAMP	2	30751974-
2	6732-71-3220	BOLT	2	30751974-
3	6731-51-8170	TUBE, DRAIN	1	30751974-
4	6731-51-8220	HOSE	1	30751974-
5	6735-51-8160	GASKET	1	30751974-
6	6731-51-8190	CONNECTOR, DRAIN	1	30751974-
	6736-51-8140	CONNECTOR ASS'Y	2	30751974-
7	6736-51-8740	. CONNECTOR	1	30751974-
8	6736-51-8710	. O-RING	1	30751974-
9	6735-51-8130	HOSE	1	30751974-
10	6736-51-8730	WASHER	2	30751974-
11	6732-81-8810	STUD	4	30751974-
12	6732-81-8820	NUT	4	30751974-
13	6732-81-8830	GASKET	1	30751974-
14	(6735-01-8110)	TURBOCHARGER ASS'Y, (SEE FIG. A1530-B0A1)	1	30751974-
15	6731-51-8150	SEAL, O-RING	1	30751974-
16	6732-81-8220	CLAMP	1	30751974-

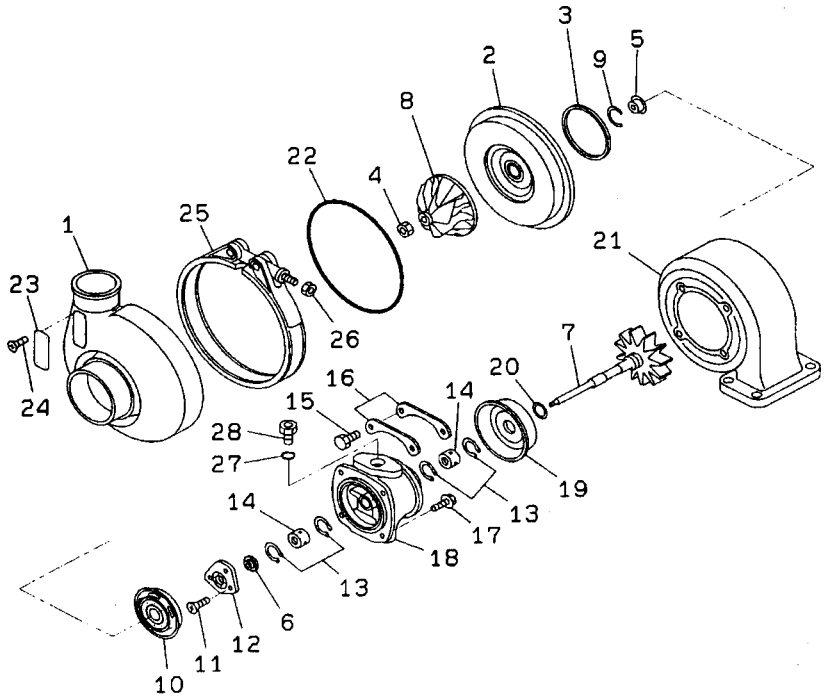

INDEX	PART NO.	DESCRIPTION	Q'TY	SERIAL NO.
	6735-01-8110	TURBOCHARGER ASS'Y	1	30751974-
	6735-81-8100	. TURBOCHARGER ASS'Y	1	30751974-
	6735-81-8110	. . TURBOCHARGER ASS'Y	1	30751974-
1	6736-81-8210	. . . HOUSING, BLOWER	1	30751974-
2	6736-81-8220	. . . DIFFUSER	1	30751974-
3	6736-81-8230	. . . SEAL	1	30751974-
4	6736-81-8250	. . . NUT	1	30751974-
5	6736-81-8260	. . . SLINGER	1	30751974-
6	6736-81-8270	. . . COLLAR	1	30751974-
7	6736-81-8280	. . . ROTOR	1	30751974-
8	6736-81-8310	. . . IMPELLER	1	30751974-
9	6736-81-8320	. . . SEAL	1	30751974-
10	6736-81-8330	. . . BAFFLE	1	30751974-
11	6736-81-8340	. . . SCREW	3	30751974-
12	6736-81-8350	. . . BEARING	1	30751974-
13	6736-81-8360	. . . RING	4	30751974-
14	6736-81-8370	. . . BEARING	2	30751974-
15	6736-81-8380	. . . BOLT	4	30751974-
16	6736-81-8390	. . . PLATE	2	30751974-
17	6736-81-8410	. . . BOLT	4	30751974-
18	6735-81-8420	. . . HOUSING, CENTER	1	30751974-
19	6736-81-8430	. . . SHIELD	1	30751974-
20	6736-81-8440	. . . SEAL	1	30751974-
21	6736-81-8450	. . . HOUSING	1	30751974-
22	6736-81-8460	. . . O-RING	1	30751974-
23	6736-81-8470	. . . PLATE	1	30751974-
24	6736-81-8480	. . . SCREW	2	30751974-
25	6736-81-8490	. . . CLAMP	1	30751974-
26	6736-81-8510	. . . NUT	1	30751974-
27	6736-51-8710	. . . O-RING	1	30751974-
28	6736-51-8140	. . . CONNECTOR ASS'Y	2	30751974-

FIG. A1730-A0A1 THERMOSTAT AND THERMOSTAT HOUSING

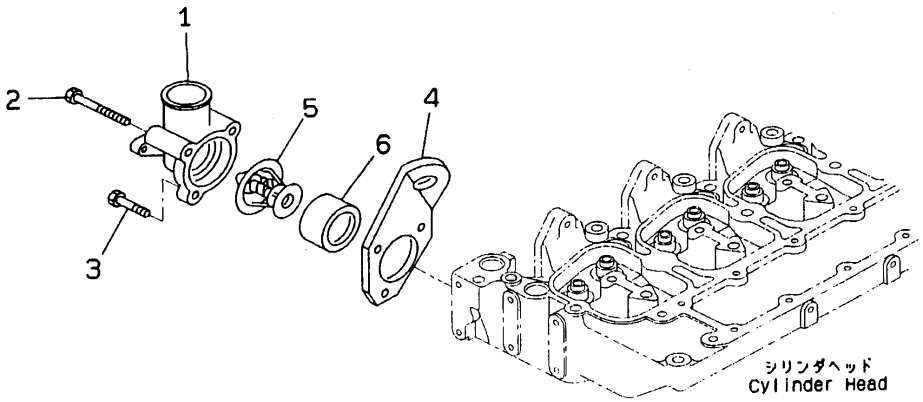

PC34405Z

FIG. NO. : A1730-A0A1

INDEX	PART NO.	DESCRIPTION	Q'TY	SERIAL NO.
1	6735-61-6410	HOUSING, THERMOSTAT	1	30751974-
2	6732-61-6180	BOLT	2	30751974-
3	6732-61-6140	BOLT	1	30751974-
4	6735-11-1910	BRACKET	1	30751974-
5	6732-61-1610	THERMOSTAT	1	30751974-
6	6732-61-6420	GASKET	1	30751974-
	6735-81-3120	THERMOSTAT KIT	1	30751974-
5	6732-61-1610	. THERMOSTAT	1	30751974-
6	6732-61-6420	. GASKET	1	30751974-

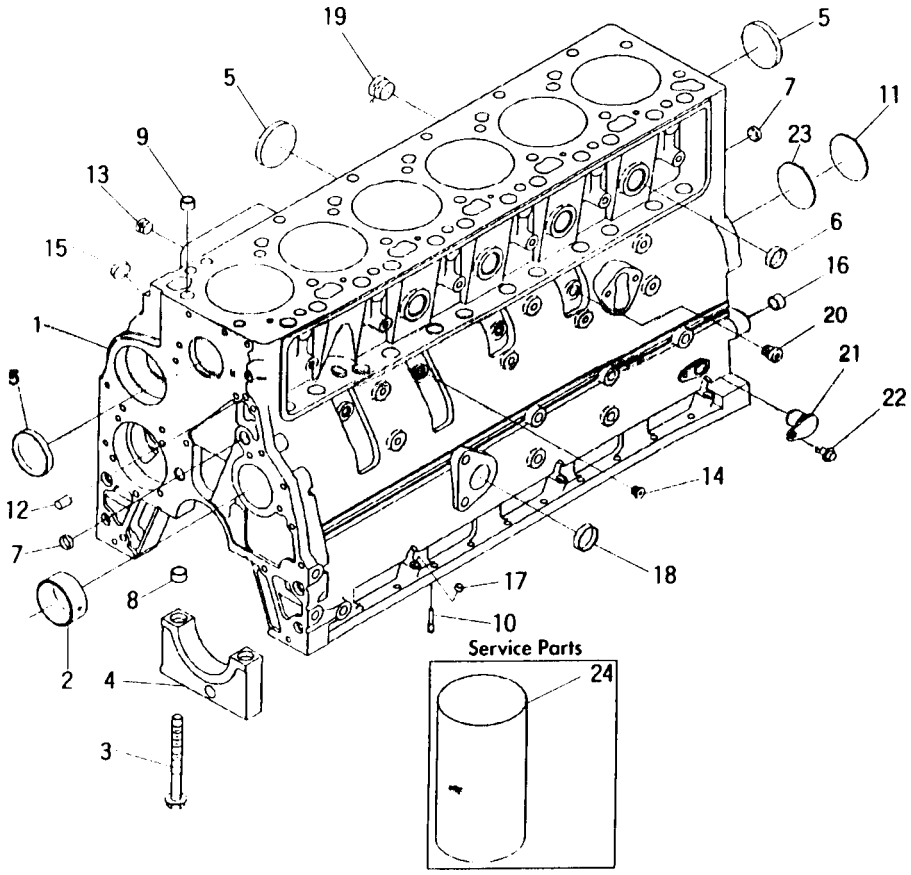

INDEX	PART NO.	DESCRIPTION	Q'TY	SERIAL NO.
	6736-21-1270	CYLINDER BLOCK A.	1	30751974-
1	☆	. BLOCK, CYLINDER	1	30751974-
2	6732-21-1411	. BUSHING, (STD)	1	30751974-
	6736-29-1410	. BUSHING, NO. 1, (OS)	AR	30751974-
	6736-29-1420	. BUSHING, NO. 2, 3, 4, 5 (OS)	AR	30751974-
3	6732-21-1611	. BOLT	14	30751974-
4	6731-21-1260	. CAP	7	30751974-
5	6736-21-1810	. PLUG	5	30751974-
6	6732-21-1820	. PLUG	4	30751974-
7	6732-21-1810	. PLUG	3	30751974-
8	6732-21-1910	. RING	2	30751974-
	6731-21-1210	BLOCK SERVICE KIT, CYLINDER BLOCK	1	30751974-
9	6732-21-6140	. RING	2	30751974-
10	6732-21-1190	. NOZZLE, PISTON COOLING	6	30751974-
11	6732-21-6130	. PLUG	1	30751974-
12	6732-21-6120	. PIN	2	30751974-
13	6732-11-1910	. PLUG	1	30751974-
14	6732-21-1960	. PLUG	3	30751974-
15	6735-21-5530	. PLUG, (FOR SHIPPING)	3	30751974-
16	6732-21-1910	. RING	2	30751974-
17	6732-21-5530	. PLUG	2	30751974-
18	6732-21-6160	. PLUG	1	30751974-
19	6732-11-1920	. PLUG, PIPE	1	30751974-
20	6735-21-1910	. PLUG, THREAD	1	30751974-
21	6735-21-1940	. PLUG, O-RING	1	30751974-
22	6732-21-3120	. BOLT	1	30751974-
23	6732-21-1930	. O-RING	1	30751974-
24	6736-29-2110	LINER	AR	30751974-

FIG. A2040-A0A1 FRONT COVER

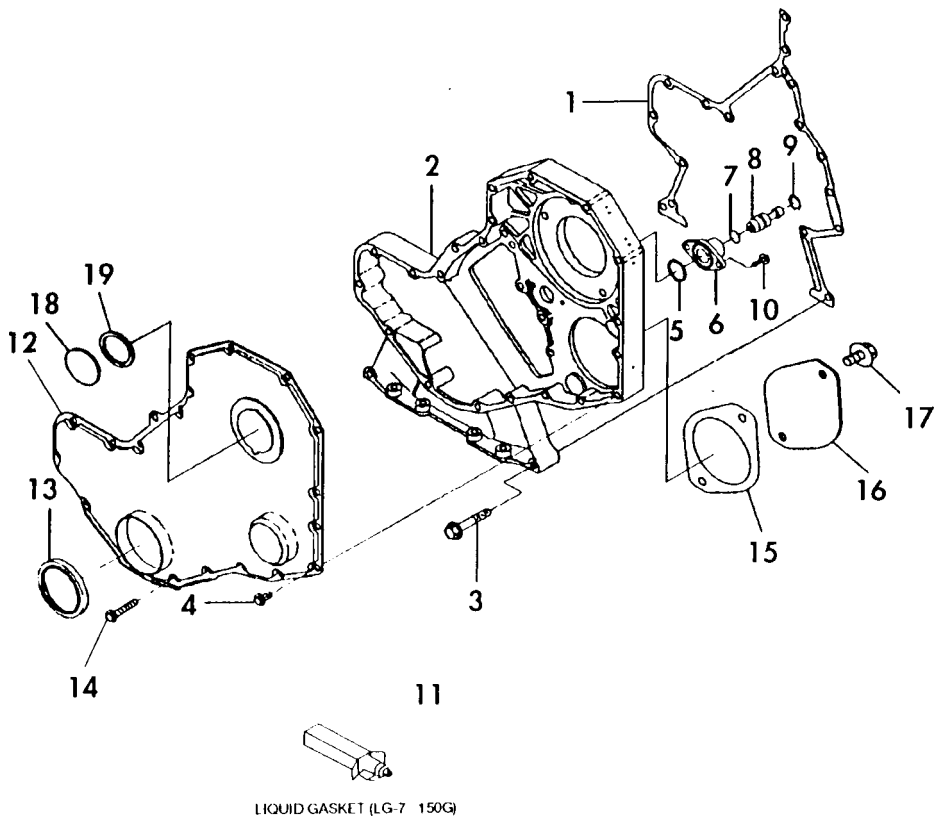

FIG. NO. : A2040-A0A1

INDEX	PART NO.	DESCRIPTION	Q'TY	SERIAL NO.
1	6732-21-3811	GASKET	1	30751974-
2	6735-21-3122	HOUSING, GEAR	1	30751974-
3	6736-21-3210	BOLT	11	30751974-
4	6736-21-3220	BOLT	11	30751974-
5	6732-21-3880	GASKET	1	30751974-
	6735-21-3180	HOUSING ASS'Y	1	30751974-
6	6732-21-3180	. HOUSING	1	30751974-
7	6732-21-3870	. O-RING	1	30751974-
8	6732-21-3140	. PIN	1	30751974-
9	6732-21-3150	. RING	1	30751974-
10	6732-21-3160	BOLT	2	30751974-
11	☆	LIQUID GASKET (LG-7 150G)	1	30751974-
	6735-21-3140	COVER ASS'Y, GEAR	1	30751974-
12	6736-21-3310	. COVER	1	30751974-
13	6732-21-3511	. SEAL	1	30751974-
14	6742-01-0540	BOLT	5	30751974-
15	6736-21-3380	GASKET	1	30751974-
16	6732-21-9310	PLATE	1	30751974-
17	6732-51-5130	BOLT	2	30751974-
18	6732-21-3190	COVER	1	30751974-
19	6732-21-3220	SEAL	1	30751974-

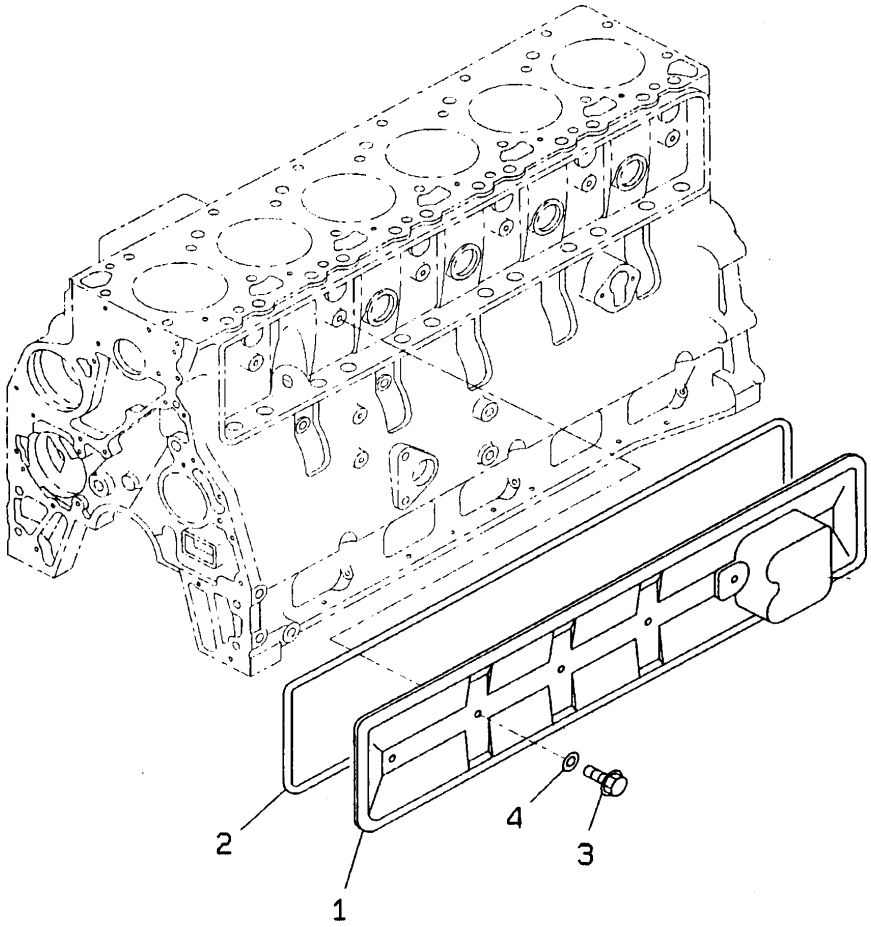

INDEX	PART NO.	DESCRIPTION	Q'TY	SERIAL NO.
1	6734-21-6210	COVER	1	30751974-
2	6735-21-6261	GASKET	1	30751974-
3	6732-21-3120	BOLT	4	30751974-
4	6732-21-6280	SEAL	4	30751974-

FIG. A2070-A0A1 OIL FILLER (WITHOUT OIL FILLER)

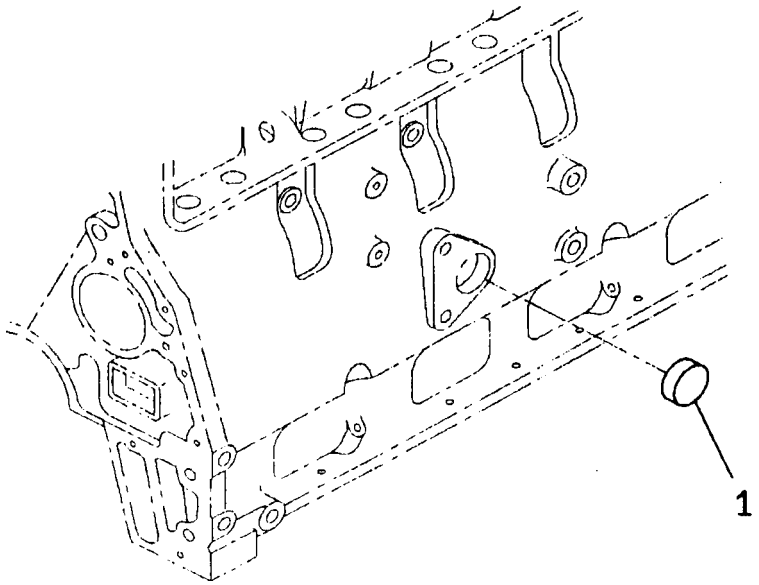

FIG. NO. : A2070-A0A1

INDEX	PART NO.	DESCRIPTION	Q'TY	SERIAL NO.
1	6732-21-6160	PLUG	1	30751974-

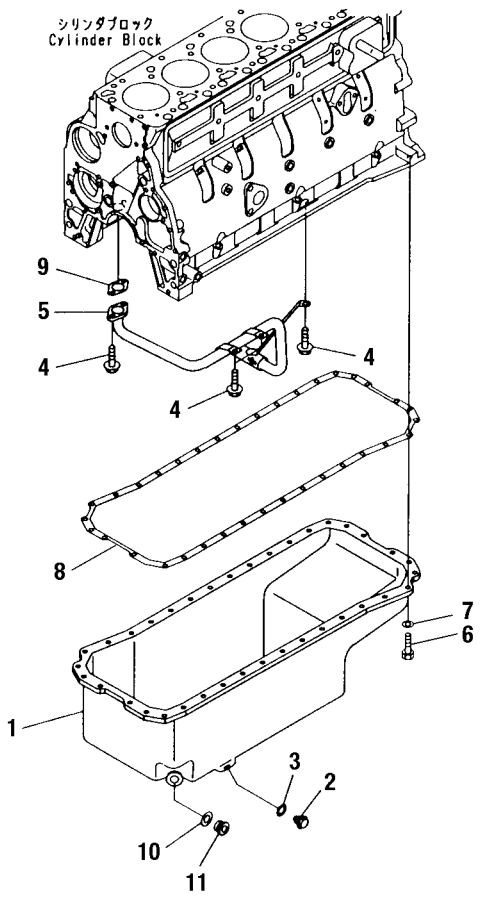

00000968

INDEX	PART NO.	DESCRIPTION	Q'TY	SERIAL NO.
1	6734-21-5110	PAN, OIL	1	30751974-
2	6732-21-5210	PLUG	1	30751974-
3	6732-21-5190	GASKET	1	30751974-
4	6736-21-5310	BOLT	5	30751974-
5	6734-21-5570	TUBE, SUCTION	1	30751974-
6	6732-21-5160	BOLT	36	30751974-
7	6732-21-5180	BOLT	36	30751974-
8	6732-21-5660	GASKET	1	30751974-
9	6733-21-5521	GASKET	1	30751974-
10	6736-23-5630	WASHER	1	30751974-
11	6735-21-5670	PLUG	1	30751974-

FIG. A2110-B0A1 OIL LEVEL GAUGE

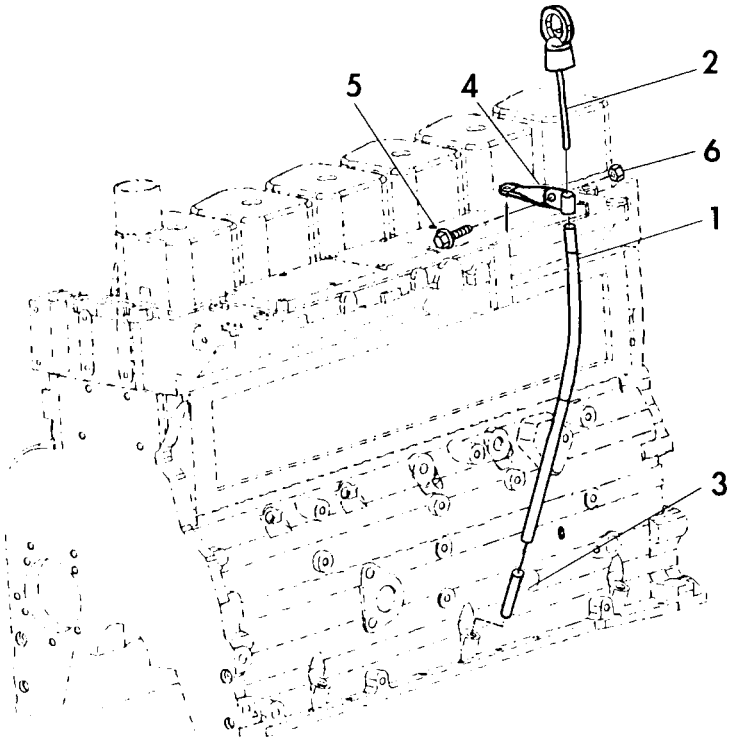

FIG. NO. : A2110-B0A1

INDEX	PART NO.	DESCRIPTION	Q'TY	SERIAL NO.
1	6735-21-5720	TUBE, OIL GAUGE	1	30751974-
2	6735-21-5690	GAUGE, OIL	1	30751974-
3	6742-01-5320	TUBE	1	30751974-
4	6734-21-5320	STAY	1	30751974-
5	6736-21-5310	BOLT	1	30751974-
6	6732-41-6210	NUT	1	30751974-

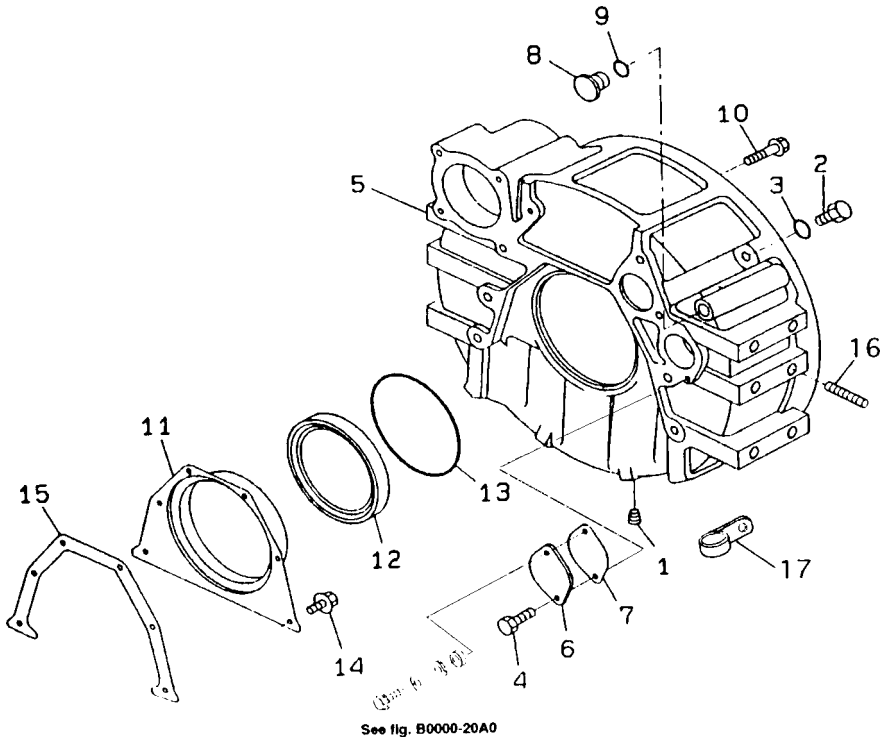

INDEX	PART NO.	DESCRIPTION	Q'TY	SERIAL NO.
1	6732-11-1920	PLUG	1	30751974-
	6735-21-4150	PLUG	1	30751974-
2	6735-21-4170	. PLUG	1	30751974-
3	6735-21-4160	. O-RING	1	30751974-
4	6735-21-4120	BOLT	2	30751974-
5	6735-21-4280	HOUSING, FLYWHEEL	1	30751974-
6	6732-21-4130	PLATE	1	30751974-
7	6742-01-5158	GASKET	1	30751974-
8	6732-21-4150	PLUG	1	30751974-
9	6732-21-4160	O-RING	1	30751974-
10	6732-21-4220	BOLT	8	30751974-
	6732-21-4200	COVER	1	30751974-
11	6731-21-6231	. COVER, REAR	1	30751974-
12	6732-21-1310	. SEAL	1	30751974-
13	6732-21-4170	GASKET	1	30751974-
14	6732-21-4180	BOLT	6	30751974-
15	6735-21-4190	GASKET	1	30751974-
16	6735-21-4230	BOLT	4	30751974-
17	6735-21-4250	CLIP	1	30751974-

FIG. A2250-A0A1 FLYWHELL

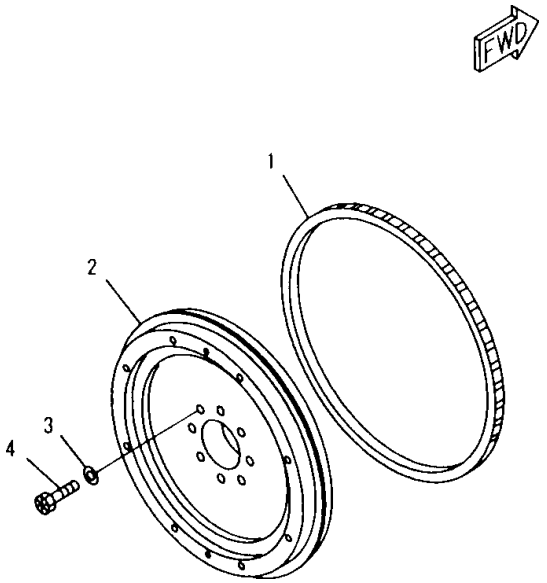

FIG. NO. : A2250-A0A1

INDEX	PART NO.	DESCRIPTION	Q'TY	SERIAL NO.
1	124-01-55251	FLYWHEEL ASS'Y	1	30751974-
2	☆	. FLYWHEEL	1	30751974-
3	6732-31-4180	. GEAR	1	30751974-
4	6732-31-4140	BOLT	8	30751974-
5	6732-31-4120	WASHER	8	30751974-

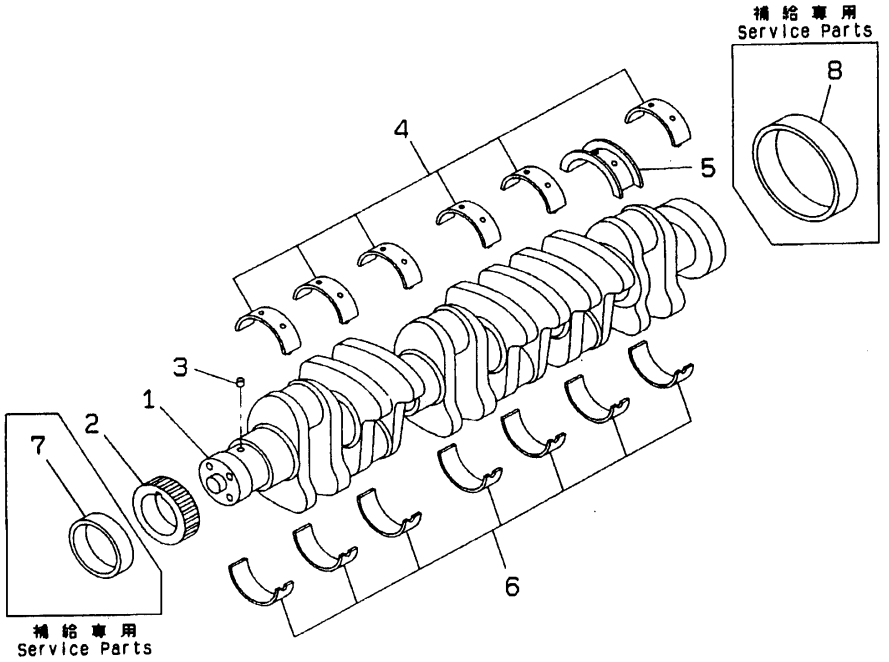

PC34418Z

INDEX	PART NO.	DESCRIPTION	Q'TY	SERIAL NO.
	6736-31-1100	CRANKSHAFT ASS'Y	1	30751974-
1	☆	. CRANKSHAFT	1	30751974-
2	6736-31-1211	. GEAR	1	30751974-
3	6732-21-6150	. PIN	1	30751974-
		STANDARD		
	6735-21-8100	MAIN METAL ASS'Y	1	30751974-
4	☆	. METAL, UPPER	6	30751974-
5	6732-21-8180	. METAL	1	30751974-
6	☆	. METAL, LOWER	7	30751974-
		OVERSIZE 0.25MM		
	6736-29-8100	MAIN METAL ASS'Y	1	30751974-
4	☆	. METAL, UPPER	6	30751974-
5	6731-29-8310	. METAL	1	30751974-
6	☆	. METAL, LOWER	7	30751974-
		OVERSIZE 0.50MM		
	6736-28-8100	MAIN METAL ASS'Y	1	30751974-
4	☆	. METAL, UPPER	6	30751974-
5	6731-28-8310	. METAL	1	30751974-
6	☆	. METAL, LOWER	7	30751974-
		OVERSIZE 0.75MM		
	6736-27-8100	MAIN METAL ASS'Y	1	30751974-
4	☆	. METAL, UPPER	6	30751974-
5	6731-27-8310	. METAL	1	30751974-
6	☆	. METAL, LOWER	7	30751974-
		OVERSIZE 1.00MM		
	6736-26-8100	MAIN METAL ASS'Y	1	30751974-
4	☆	. METAL, UPPER	6	30751974-
5	6731-26-8310	. METAL	1	30751974-
6	☆	. METAL, LOWER	7	30751974-
		OVERSIZE 0.50MM		
	6731-21-8610	THRUST METAL ASS'Y, THRUST	1	30751974-
5	6731-28-8410	. METAL	1	30751974-
6	☆	. METAL, LOWER	1	30751974-
		OVERSIZE 1.00MM		
	6731-21-8620	THRUST METAL ASS'Y, THRUST	1	30751974-
5	6731-26-8410	. METAL	1	30751974-
6	☆	. METAL, LOWER	1	30751974-
7	6736-39-1220	SLEEVE, FRONT	1	30751974-
8	6736-39-1120	SLEEVE, REAR	1	30751974-

FIG. A2330-A0A1 DAMPER

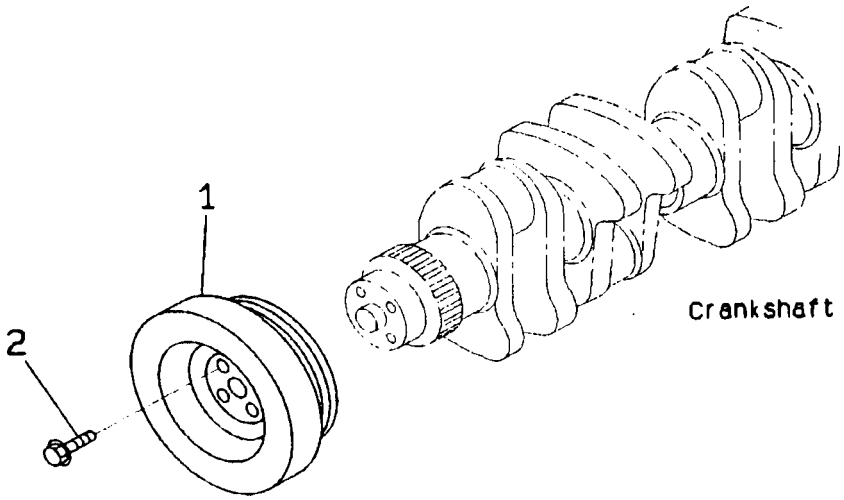

FIG. NO. : A2330-A0A1

INDEX	PART NO.	DESCRIPTION	Q'TY	SERIAL NO.
1	6735-31-8110	DAMPER	1	30751974-
2	6732-31-8120	BOLT	4	30751974-

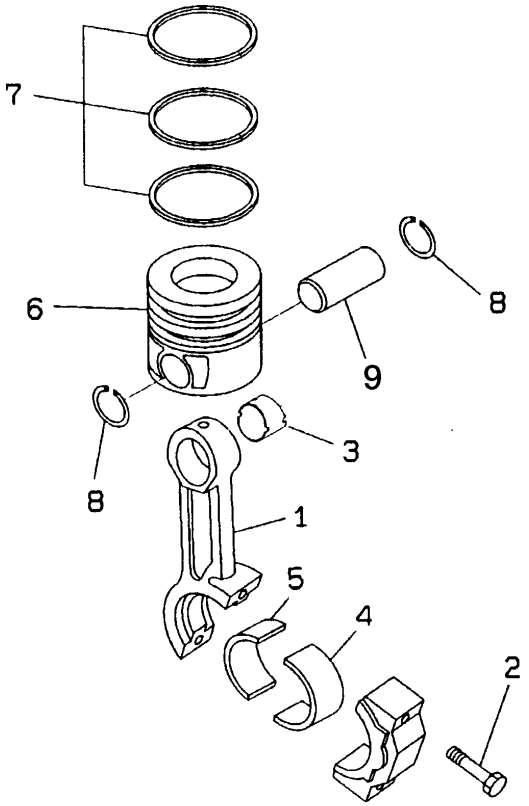

INDEX	PART NO.	DESCRIPTION	Q'TY	SERIAL NO.
	6737-32-3101	CONNECTING ROD A.	6	30751974-
1	☆ 6732-31-3111	. ROD	1	30751974-
2	6732-31-3310	. BOLT	2	30751974-
3	6732-31-3131	. BUSHING	1	30751974-
4	6732-31-3410	PISTON	12	30751974-
		STANDARD		
	6735-31-2140	KIT, ENGINE PISTON	6	30751974-
5	☆ 6735-31-2110	. PISTON	1	30751974-
6	6732-31-2300	. PISTON RING ASS'Y	1	30751974-
7	6732-31-2420	. RING	2	30751974-
8	6736-31-2420	PIN	6	30751974-
		OVERSIZE 0.50mm		
	6735-39-2210	KIT, ENGINE PISTON	6	30751974-
5	☆ 6735-38-2120	. PISTON	1	30751974-
6	6732-39-2300	. PISTON RING ASS'Y	1	30751974-
7	6732-31-2420	. RING	2	30751974-
		OVERSIZE 1.00mm		
	6731-38-2210	KIT, ENGINE PISTON	6	30751974-
5	☆ 6735-38-2130	. PISTON	1	30751974-
6	6732-38-2300	. PISTON RING ASS'Y	1	30751974-
7	6732-31-2420	. RING	2	30751974-

FIG. A2410-A0A1 ROCKER ARM

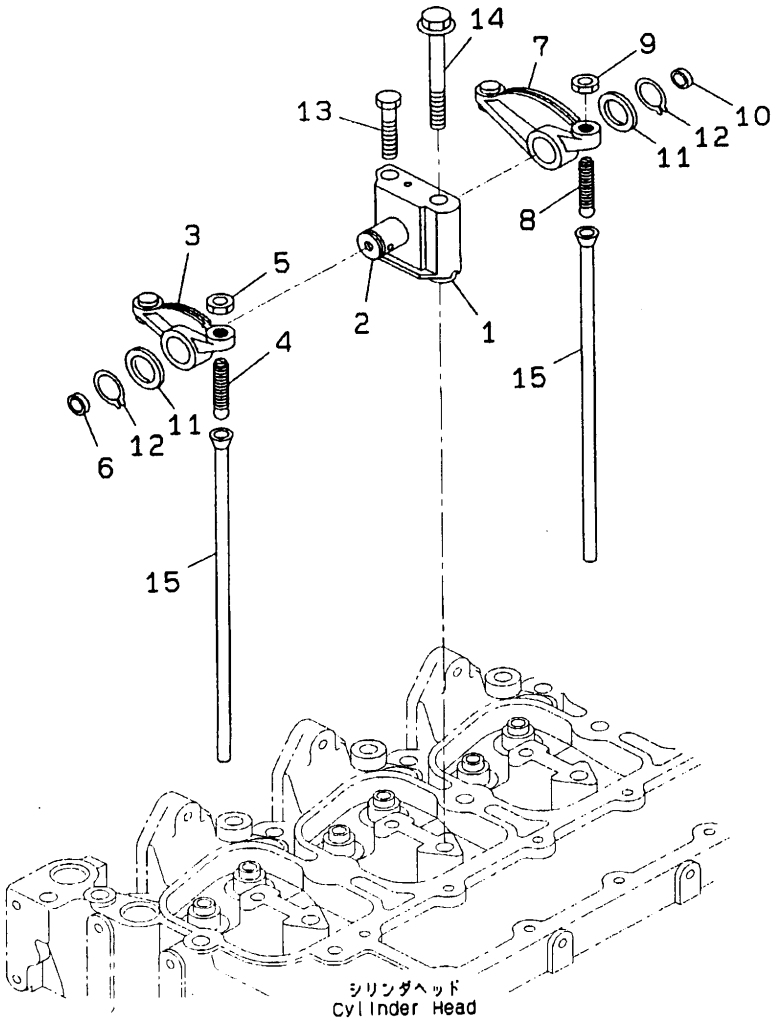

PC34421Z

FIG. NO. : A2410-A0A1

INDEX	PART NO.	DESCRIPTION	Q'TY	SERIAL NO.
	6736-41-5110	BRACKET ASS'Y, ROCKER LEVER	6	30751974-
1	6732-41-5120	. BRACKET	1	30751974-
2	6732-41-5130	. SHAFT ASS'Y	1	30751974-
	6732-41-5200	ARM ASS'Y	6	30751974-
3	6732-41-5210	. ARM	1	30751974-
4	6731-41-5270	. SCREW	1	30751974-
5	6735-41-5550	. NUT	1	30751974-
6	6732-41-5440	. INSERT	1	30751974-
	6732-41-5400	ARM ASS'Y	6	30751974-
7	6732-41-5410	. ARM	1	30751974-
8	6731-41-5270	. SCREW	1	30751974-
9	6735-41-5550	. NUT	1	30751974-
10	6732-41-5440	. INSERT	1	30751974-
11	6732-41-5160	WASHER	12	30751974-
12	6732-41-5170	RING	12	30751974-
13	6732-41-5180	BOLT	6	30751974-
14	6732-11-1640	BOLT	6	30751974-
15	6732-41-3111	ROD, PUSH	12	30751974-

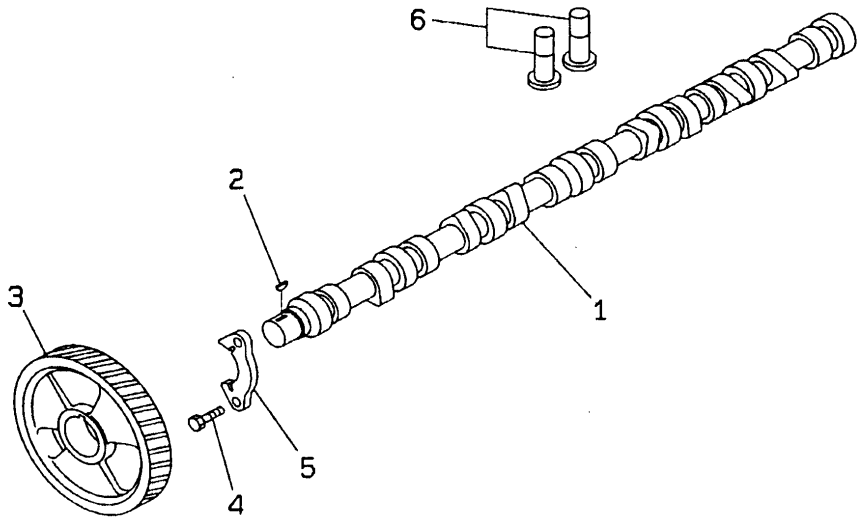

PD34423Z

INDEX	PART NO.	DESCRIPTION	Q'TY	SERIAL NO.
1	6735-41-1111	CAMSHAFT	1	30751974-
2	6732-41-1280	KEY	1	30751974-
3	6732-41-1231	GEAR	1	30751974-
4	6732-41-1260	BOLT	2	30751974-
5	6732-41-1220	SUPPORT	1	30751974-
6	6732-41-2110	TAPPET	12	30751974-

FIG. A3010-A0A1 OIL PUMP

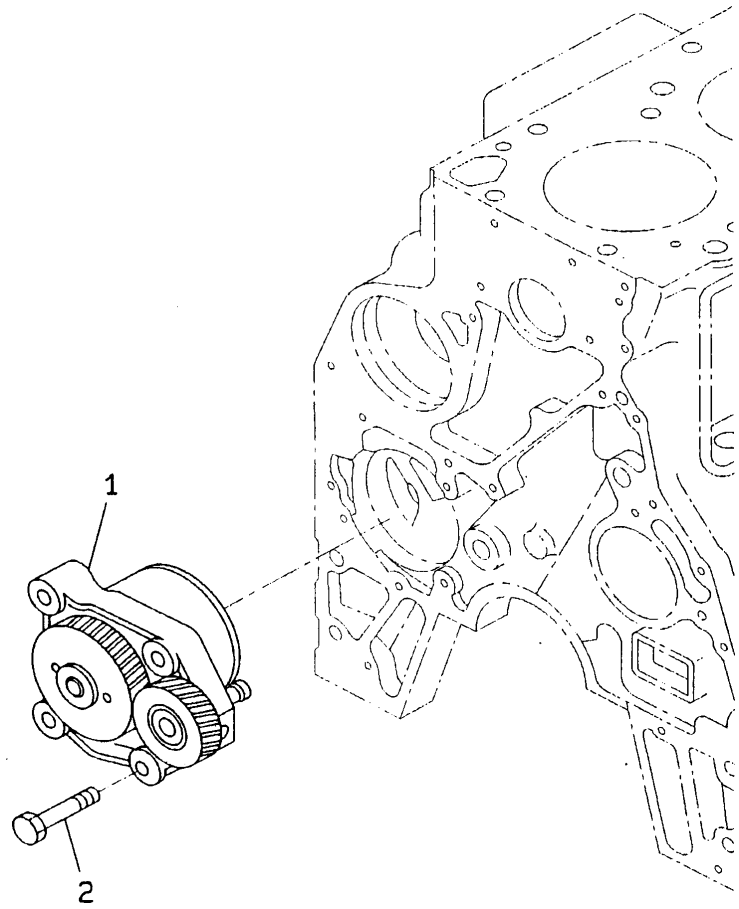

FIG. NO. : A3010-A0A1

INDEX	PART NO.	DESCRIPTION	Q'TY	SERIAL NO.
1	6731-51-1111	OIL PUMP ASS'Y	1	30751974-
2	6735-51-1120	BOLT	4	30751974-

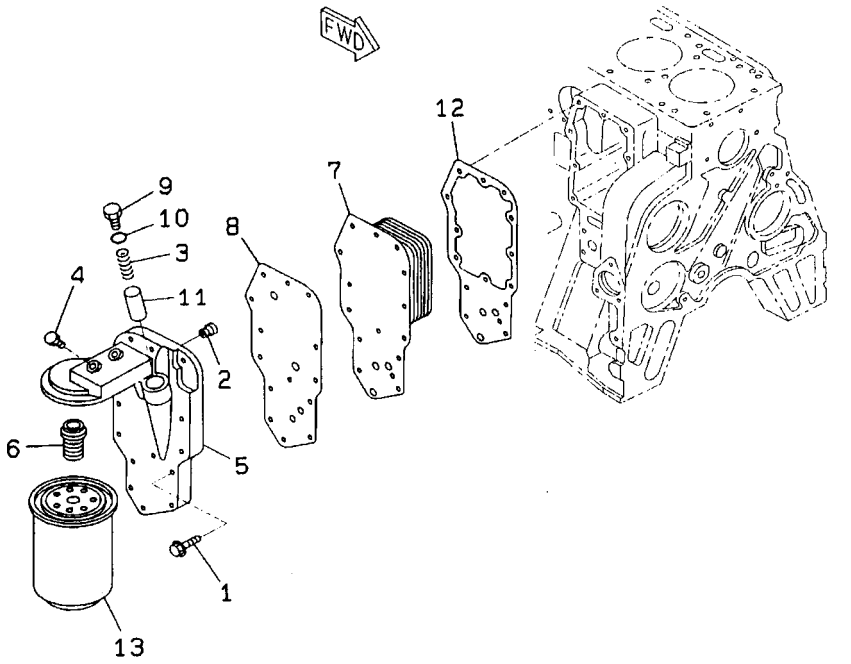

PC34426Z

INDEX	PART NO.	DESCRIPTION	Q'TY	SERIAL NO.
1	6732-61-6140	BOLT	14	30751974-
2	6731-61-2151	VALVE	1	30751974-
3	6735-61-2190	SPRING	1	30751974-
4	6732-11-1930	PLUG	1	30751974-
	6736-61-5170	HEAD ASS'Y	1	30751974-
5	6735-61-2260	. HEAD	1	30751974-
6	6736-61-5180	. ADAPTER	1	30751974-
7	6735-61-2110	CORE	1	30751974-
8	6732-51-4431	GASKET	1	30751974-
9	6735-61-2140	PLUG	1	30751974-
10	6732-51-4420	O-RING	1	30751974-
11	6735-61-2160	PLUNGER	1	30751974-
12	6732-61-2311	GASKET	1	30751974-
13	6735-51-5141	CARTRIDGE	1	30751974-

FIG. A4010-A0A1 FUEL INJECTION PUMP MOUNTING

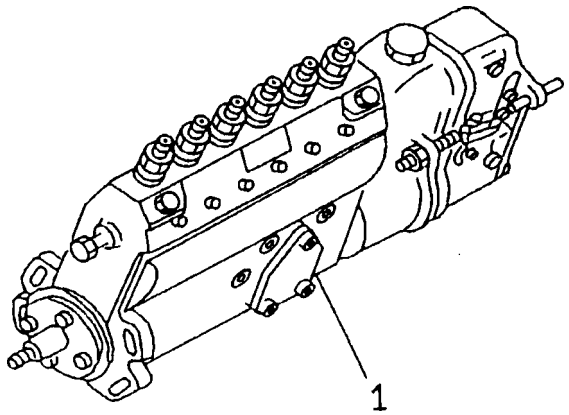

FIG. NO. : A4010-A0A1

INDEX	PART NO.	DESCRIPTION	Q'TY	SERIAL NO.
1	6735-71-1560	INJECTION PUMP A.	1	30751974-

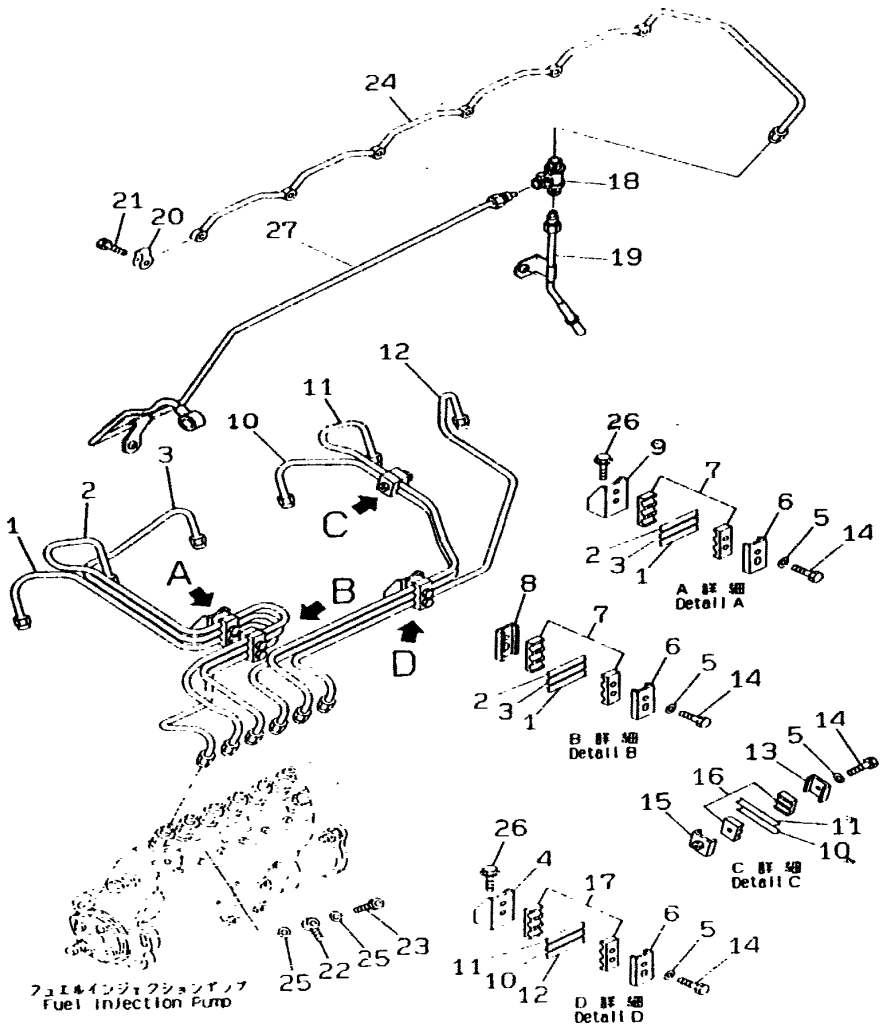

INDEX	PART NO.	DESCRIPTION	Q'TY	SERIAL NO.
1	6735-71-5310	TUBE, INJECTION, NO. 1	1	30751974-
2	6735-71-5320	TUBE, INJECTION, NO. 2	1	30751974-
3	6735-71-5330	TUBE, INJECTION, NO. 3	1	30751974-
4	6735-71-5990	BRACKET	1	30751974-
5	6734-71-5530	WASHER	7	30751974-
6	6734-71-5710	BRACKET	3	30751974-
7	6734-71-5720	ISOLATOR	4	30751974-
8	6735-71-5830	PLATE	1	30751974-
9	6734-71-5740	BRACKET	1	30751974-
10	6735-71-5340	TUBE, INJECTION, NO. 4	1	30751974-
11	6735-71-5350	TUBE, INJECTION, NO. 5	1	30751974-
12	6735-71-5360	TUBE, INJECTION, NO. 6	1	30751974-
13	6735-71-5820	PLATE	1	30751974-
14	6734-71-5520	BOLT	7	30751974-
15	6735-71-5840	PLATE	1	30751974-
16	6735-71-5860	ISOLATOR	2	30751974-
17	6734-71-5720	ISOLATOR	2	30751974-
18	6735-71-5550	CONNECTOR	1	30751974-
19	6735-71-5390	TUBE, SPILL	1	30751974-
20	6732-71-6230	GASKET	6	30751974-
21	6732-71-6240	BOLT, JOINT	6	30751974-
22	6735-71-5770	JOINT	1	30751974-
23	6732-71-5690	VALVE	1	30751974-
24	6732-71-5890	TUBE, SPILL	1	30751974-
25	6732-21-6280	GASKET	2	30751974-
26	6732-21-3120	BOLT	2	30751974-
27	6734-71-5310	TUBE, FUEL DRAIN	1	30751974-

FIG. A4050-A0A1 FUEL INJECTION PUMP LUBRICATOR

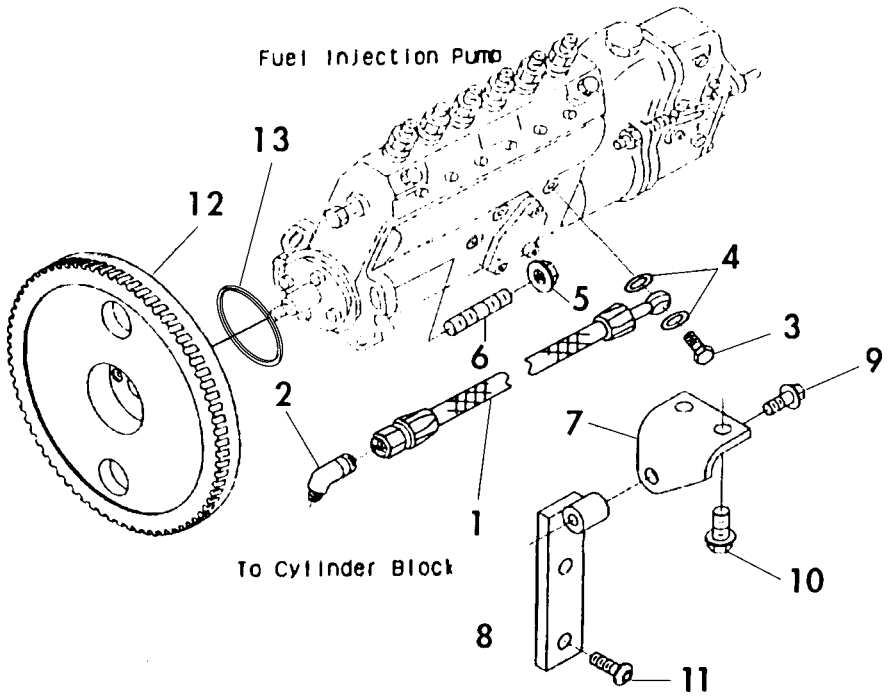

FIG. NO. : A4050-A0A1

INDEX	PART NO.	DESCRIPTION	Q'TY	SERIAL NO.
1	6735-71-5260	HOSE	1	30751974-
2	6735-71-3760	ELBOW	1	30751974-
3	6735-71-3740	BOLT	1	30751974-
4	6731-71-5860	WASHER	2	30751974-
5	6736-81-6170	NUT	4	30751974-
6	6735-71-5220	STUD	4	30751974-
7	6731-71-3350	BRACE	1	30751974-
8	6734-71-6550	BRACE	1	30751974-
9	6732-71-3220	BOLT	1	30751974-
10	6732-61-3140	BOLT	2	30751974-
11	6735-71-3110	BOLT	2	30751974-
12	6731-71-3111	GEAR	1	30751974-
13	6731-21-3250	SEAL	1	30751974-

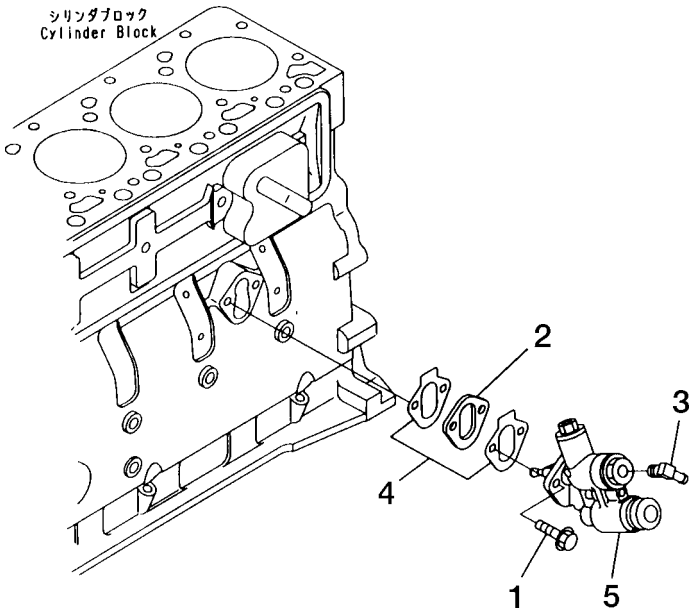

INDEX	PART NO.	DESCRIPTION	Q'TY	SERIAL NO.
1	6732-21-5160	BOLT	1	30751974-
2	6732-71-6520	SPACER	1	30751974-
3	6732-71-6540	ELBOW	1	30751974-
4	6731-71-6550	GASKET	1	30751974-
5	6736-71-5781	LIFT PUMP	1	30751974-

FIG. A4180-A0A1 FUEL FILTER

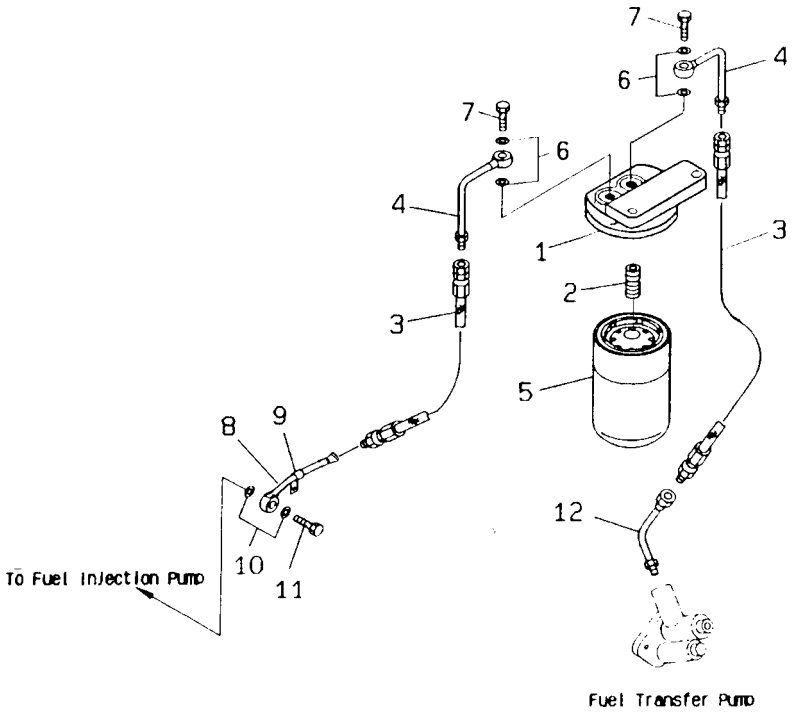

FIG. NO. : A4180-A0A1

INDEX	PART NO.	DESCRIPTION	Q'TY	SERIAL NO.
1	124-01-55160	HEAD, FILTER	1	30751974-
2	6732-71-6650	ADAPTER	1	30751974-
3	124-01-55180	HOSE	2	30751974-
4	124-01-55290	TUBE	2	30751974-
5	6732-71-6111	CARTRIDGE, FUEL FILTER	1	30751974-
6	6742-01-5157	WASHER, SEALING	4	30751974-
7	6732-71-6510	BOLT	2	30751974-
8	124-01-55270	TUBE	1	30751974-
9	124-01-55120	CLIP	1	30751974-
10	6731-71-5880	CARTRIDGE, FUEL FILTER	2	30751974-
11	6732-71-5620	BOLT, JOINT	1	30751974-
12	124-01-55260	TUBE	1	30751974-

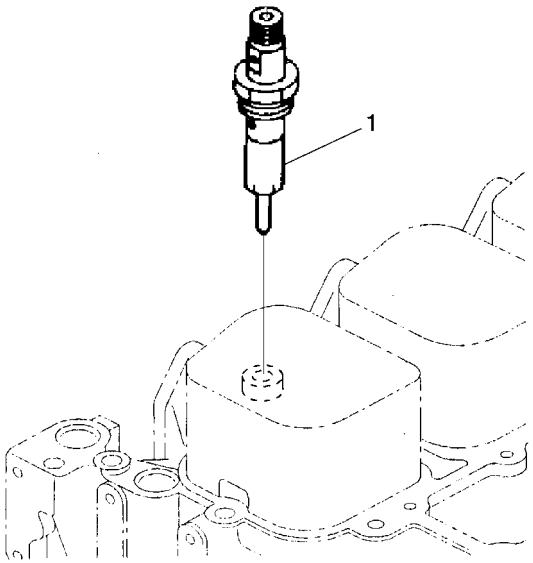

PC34447Z

INDEX	PART NO.	DESCRIPTION	Q'TY	SERIAL NO.
1	6735-11-3110	INJECTOR	6	30751974-

FIG. A5010-A0A1 WATER PUMP

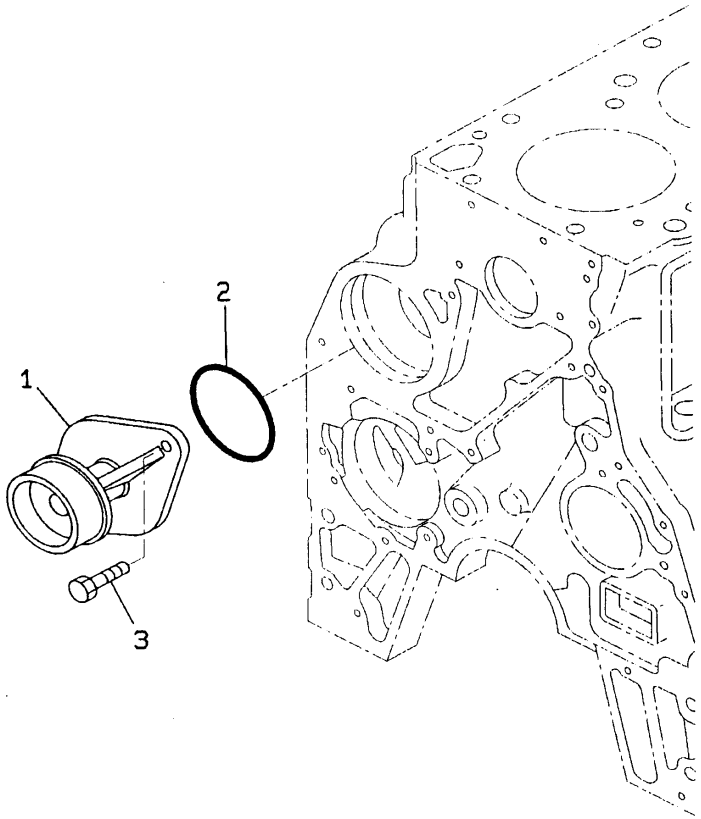

PC34449Z

FIG. NO. : A5010-A0A1

INDEX	PART NO.	DESCRIPTION	Q'TY	SERIAL NO.
	6736-61-1202	WATER PUMP ASS'Y	1	30751974-
1	6735-61-1102	. PUMP, WATER	1	30751974-
2	6736-61-1520	. SEAL	1	30751974-
3	6731-61-1370	BOLT	2	30751974-

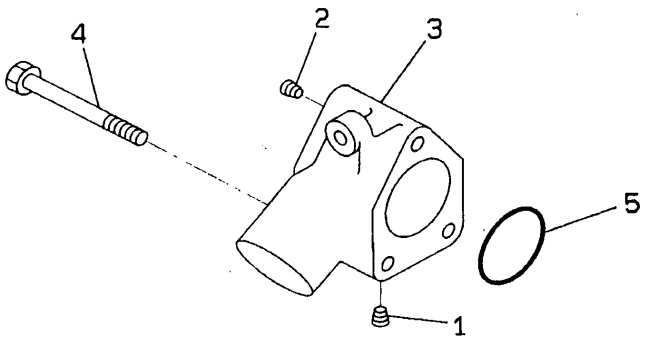

PC34451Z

INDEX	PART NO.	DESCRIPTION	Q'TY	SERIAL NO.
1	6732-11-1910	PLUG	1	30751974-
2	6732-11-1920	PLUG	1	30751974-
3	6735-61-6110	CONNECTOR	1	30751974-
4	6732-61-6120	BOLT	3	30751974-
5	6732-61-6130	SEAL	1	30751974-

FIG. A5060-A0A1 FAN DRIVE

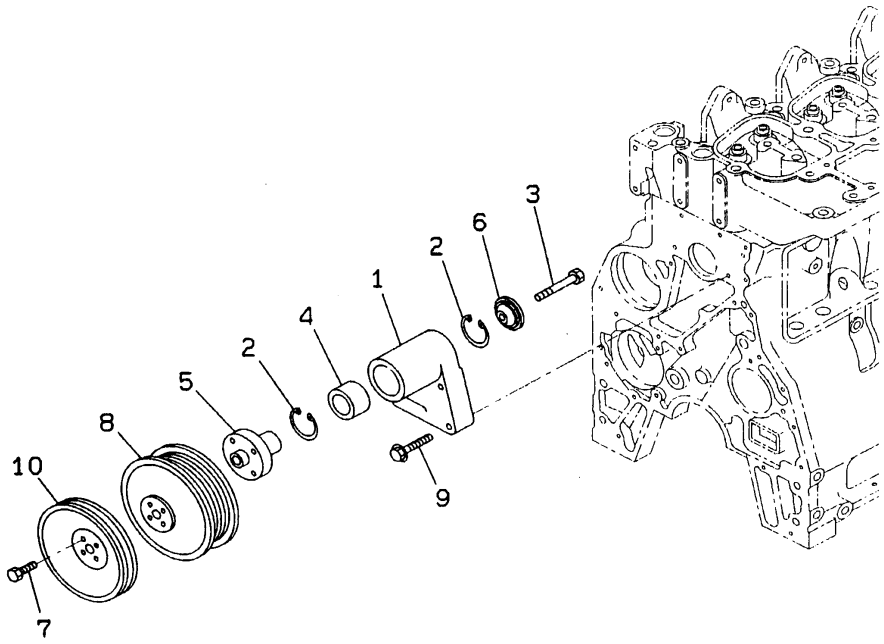

PC34452Z

FIG. NO. : A5060-A0A1

INDEX	PART NO.	DESCRIPTION	Q'TY	SERIAL NO.
	6732-61-3220	SUPPORT ASS'Y, FAN	1	30751974-
1	6732-61-3320	. SUPPORT, FAN	1	30751974-
2	6732-61-3450	. RING	2	30751974-
3	6732-61-3440	. BOLT	1	30751974-
4	6732-61-3420	. BEARING	1	30751974-
5	6732-61-3410	. HUB	1	30751974-
6	6732-61-3430	. RETAINER	1	30751974-
7	6735-61-3810	BOLT	4	30751974-
8	6732-61-3130	PULLEY (STD)	1	30751974-
8	6732-61-3770	PULLEY (FOR EUROPE)	1	30751974-
8	6734-61-3610	PULLEY (FOR REVERSIBLE FAN)	1	30751974-
9	6735-61-3170	BOLT	4	30751974-
10	6732-91-1550	PULLEY, ACCESSORY	1	30751974-

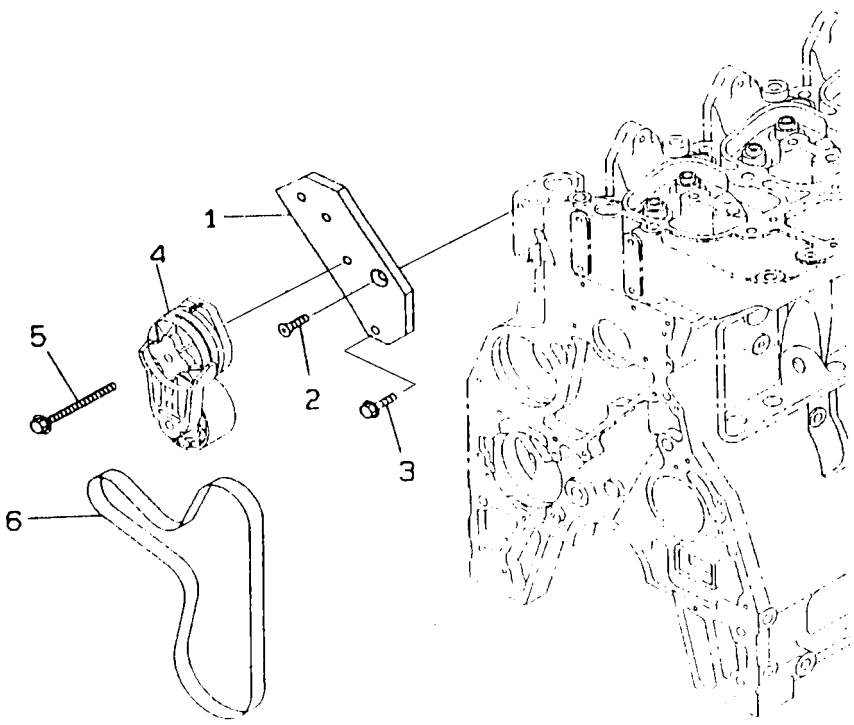

INDEX	PART NO.	DESCRIPTION	Q'TY	SERIAL NO.
1	124-01-55490	BRACKET (STD)	1	30751974-
1	6731-81-6360	BRACKET (FOR EUROPE)	1	30751974-
1	124-01-55510	BRACKET (FOR REVERSIBLE FAN)	1	30751974-
2	6732-61-4220	SCREW	1	30751974-
3	6732-21-5160	BOLT	1	30751974-
4	6731-61-4141	TENSIONER	1	30751974-
5	6732-61-4120	BOLT	1	30751974-
6	6732-81-3330	BELT (STD)	1	30751974-
6	6732-81-3510	BELT (FOR EUROPE)	1	30751974-
6	6734-81-6410	BELT (FOR REVERSIBLE FAN)	1	30751974-

FIG. A6010-A0A1 ALTERNATOR MOUNTING (40A)

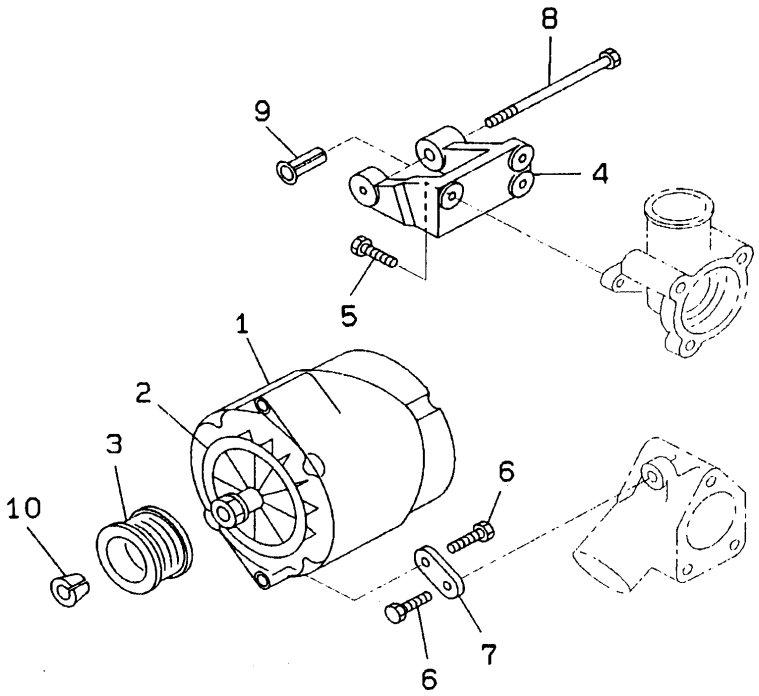

FIG. NO. : A6010-A0A1

INDEX	PART NO.	DESCRIPTION	Q'TY	SERIAL NO.
1	6735-81-6110	ALTERNATOR A. (40A)	1	30751974-
2	124-01-55380	FAN	1	30751974-
3	124-01-55430	PULLEY	1	30751974-
4	124-01-55480	SUPPORT	1	30751974-
5	6732-21-5160	BOLT	3	30751974-
6	6732-71-3220	BOLT	2	30751974-
7	6735-81-6190	BRACE	1	30751974-
8	6734-21-8610	BOLT	1	30751974-
9	124-01-55450	SPACER	1	30751974-
10	124-01-55440	RETAINER	1	30751974-

FIG. A6210-A0A1 STARTING MOTOR MOUNTING (5. 5KW)

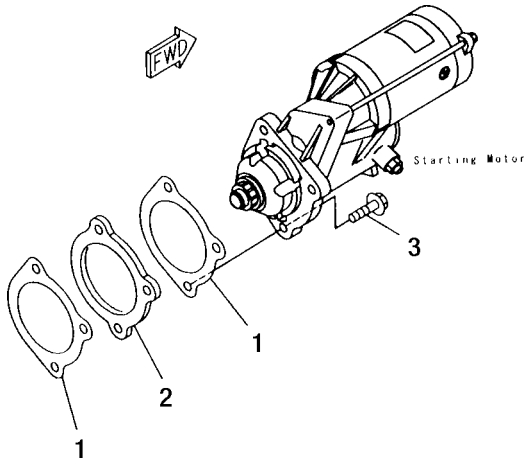

FIG. NO. : A6210-A0A1

INDEX	PART NO.	DESCRIPTION	Q'TY	SERIAL NO.
1	6735-81-6180	GASKET	2	30751974-
2	6732-81-6830	SPACER	1	30751974-
3	6736-81-4820	BOLT	3	30751974-

ENGINE RELATED PARTS

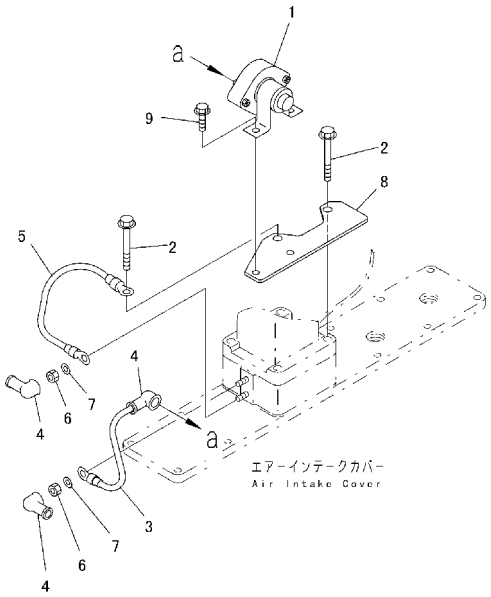

PJD4899

INDEX	PART NO.	DESCRIPTION	Q'TY	SERIAL NO.
1	600-815-2170	SWITCH, HEATER	1	B30001-
2	01435-00614	BOLT	2	B30001-
3	124-01-51941	WIRE	1	B30001-
4	08038-00519	CAP	3	B30001-
5	124-01-51950	WIRE	1	B30001-
6	01580-10504	NUT	2	B30001-
7	01641-20508	WASHER	2	B30001-
8	124-01-51825	BRACKET	1	B30001-
9	01435-00895	BOLT	2	B30001-

FIG. B0000-02A0 AIR CLEANER

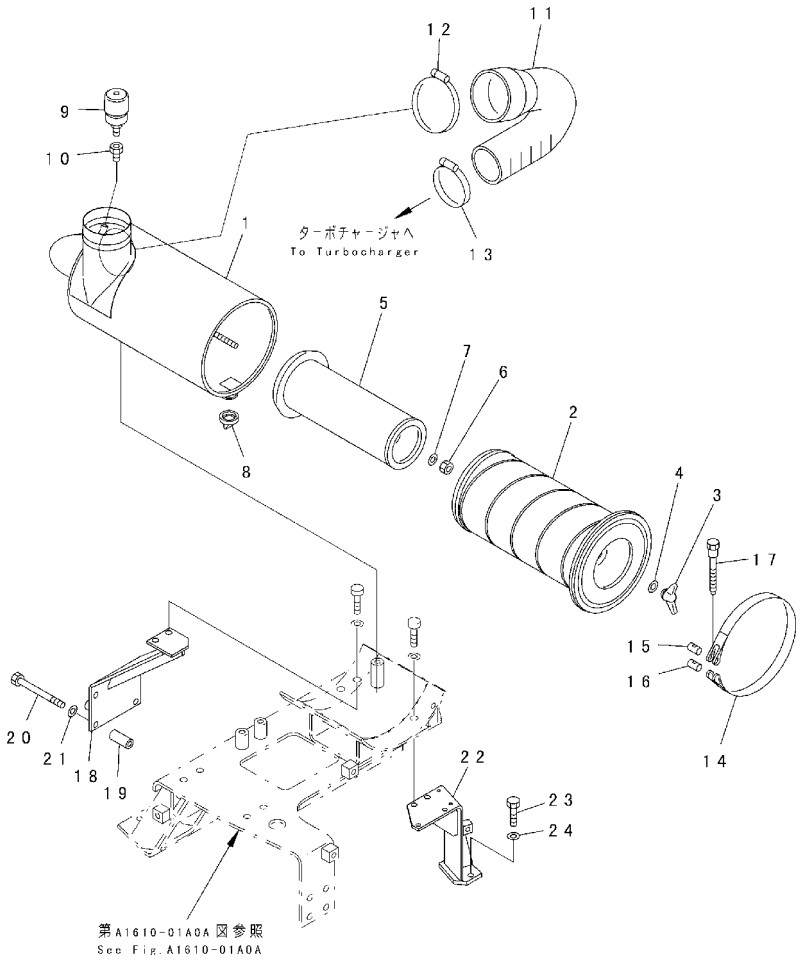

PKK2120

FIG. NO. : B0000-02A0

INDEX	PART NO.	DESCRIPTION	Q'TY	SERIAL NO.
	124-01-61100	AIR CLEANER ASS'Y	1	B30001-
1	124-01-61110	. BODY	1	B30001-
	600-181-6740	. ELEMENT ASS'Y	1	B30001-
	600-181-6820	. . ELEMENT ASS'Y, OUTER	1	B30001-
2	☆	. . . ELEMENT, OUTER	1	B30001-
3	600-181-6850	. . . NUT	1	B30001-
4	600-181-6840	. . . GASKET	1	B30001-
5	☆	. . ELEMENT, INNER	1	B30001-
6	600-181-9671	. . NUT	1	B30001-
7	600-181-7511	. . WASHER	1	B30001-
8	600-181-6590	. VALVE	1	B30001-
9	08670-02001	INDICATOR, DUST	1	B30001-
10	124-01-51191	NIPPLE	1	B30001-
11	124-01-61121	HOSE	1	B30001-
12	6212-11-4840	CLAMP	1	B30001-
13	6152-12-4490	CLAMP	1	B30001-
14	6131-11-4520	BAND ASS'Y	2	B30001-
15	6643-11-4620	PIN	2	B30001-
16	6643-11-4630	PIN, WITH THREAD	2	B30001-
17	6643-11-4641	BOLT	2	B30001-
18	124-01-51151	BRACKET	1	B30001-
19	195-979-5190	COLLAR	4	B30001-
20	01436-01030	BOLT	4	B30001-
21	01643-31032	WASHER	4	B30001-B30001
22	124-01-61160	BRACKET	1	B30001-
23	01435-01240	BOLT	2	B30001-
24	01643-31032	WASHER	2	B30001-B30001

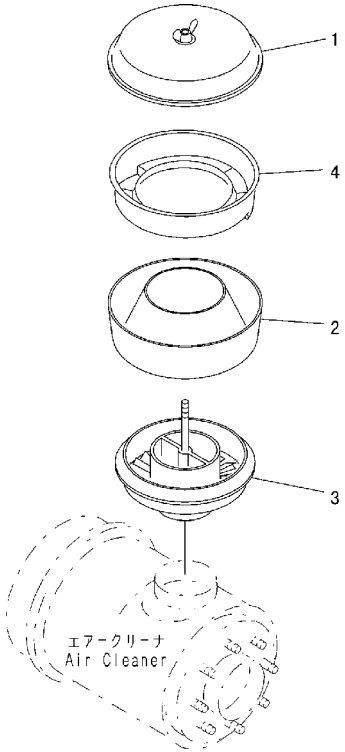

PW0B577

INDEX	PART NO.	DESCRIPTION	Q'TY	SERIAL NO.
	600-181-2630	PRE-CLEANER ASS'Y	1	B30001-
1	6672-82-7550	. COVER ASS'Y	1	B30001-
2	600-181-2130	. BODY	1	B30001-
3	6672-82-7510	. SLEEVE ASS'Y	1	B30001-
4	6110-83-7590	. TRAP	1	B30001-

FIG. B0000-03A1 AIR CLEANER CAP

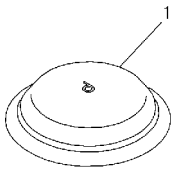

PG38955

FIG. NO. : B0000-03A1

INDEX	PART NO.	DESCRIPTION	Q'TY	SERIAL NO.
1	600-181-3850	CAP	1	B30001-

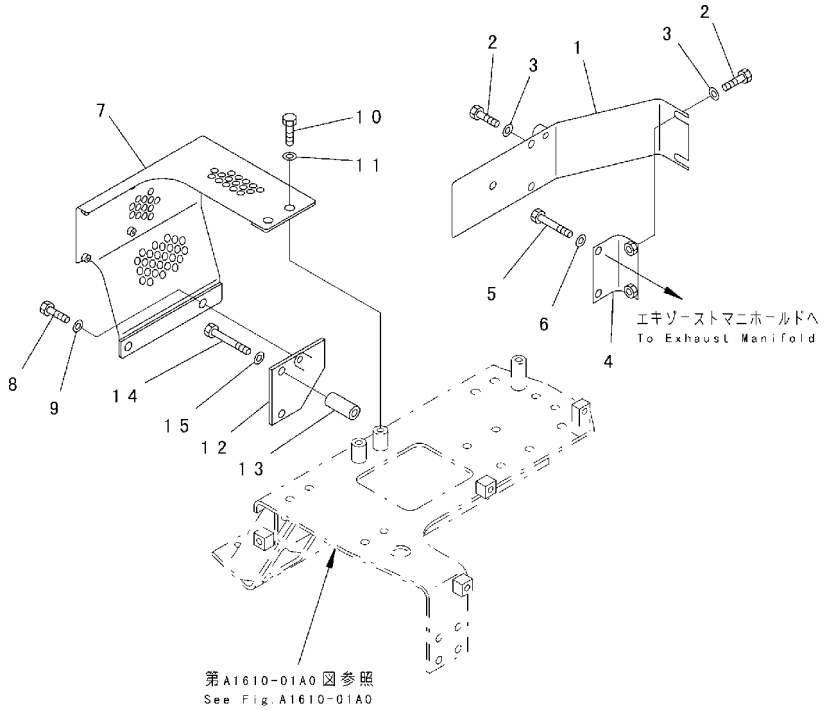

INDEX	PART NO.	DESCRIPTION	Q'TY	SERIAL NO.
1	124-01-51711	COVER	1	B30001-
2	01435-01020	BOLT	5	B30001-
3	01643-31032	WASHER	5	B30001-B30001
4	124-01-51750	BRACKET	1	B30001-
5	01435-01075	BOLT	2	B30001-
6	01643-31032	WASHER	2	B30001-B30001
7	124-01-51724	COVER	1	B30001-
8	01435-01016	BOLT	2	B30001-
9	01643-31032	WASHER	2	B30001-B30001
10	01435-01016	BOLT	2	B30001-
11	01643-31032	WASHER	2	B30001-B30001
12	124-01-51240	BRACKET	1	B30001-
13	195-979-5190	COLLAR	2	B30001-
14	01436-01030	BOLT	2	B30001-
15	01643-31032	WASHER	2	B30001-B30001

FIG. B0000-05A0 MUFFLER

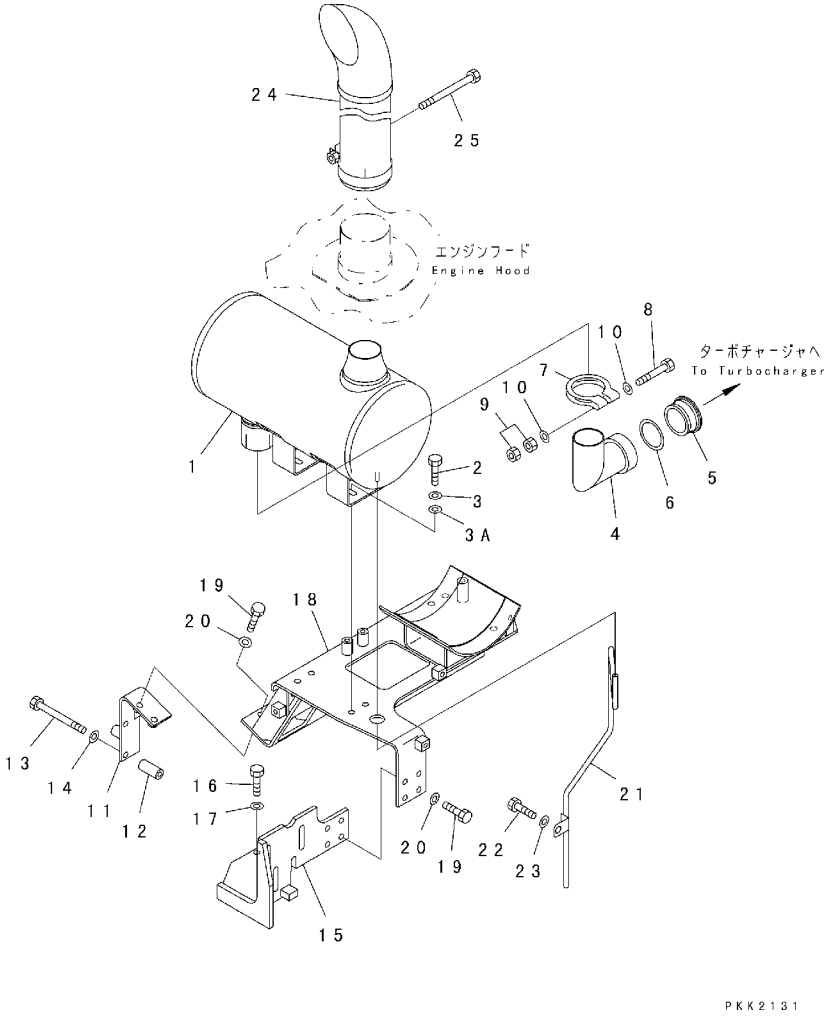

FIG. NO. : B0000-05A0

INDEX	PART NO.	DESCRIPTION	Q'TY	SERIAL NO.
1	124-01-51330	MUFFLER	1	B30001-
2	01435-01025	BOLT	4	B30001-
3	01643-31032	WASHER	4	B30001-B30001
3A	175-54-34170	WASHER	4	B30001-
4	124-01-51222	PIPE	1	B30001-
5	124-01-51350	ADAPTER	1	B30001-
6	6207-11-5380	RING, SEAL	1	B30001-
7	6205-11-5960	CLAMP	1	B30001-
8	01435-01080	BOLT	1	B30001-
9	01580-11008	NUT	2	B30001-
10	01643-31032	WASHER	2	B30001-
11	124-01-61230	BRACKET	1	B30001-
12	195-979-5190	COLLAR	2	B30001-
13	01436-01030	BOLT	2	B30001-
14	01643-31032	WASHER	2	B30001-
15	124-01-52270	BRACKET	1	B30001-
16	01435-01030	BOLT	3	B30001-
17	01643-31032	WASHER	3	B30001-B30001
18	124-01-61283	BRACKET	1	B30001-
19	01435-01025	BOLT	11	B30001-
20	01643-31032	WASHER	11	B30001-B30001
21	124-01-51293	TUBE	1	B30001-
22	01435-01016	BOLT	1	B30001-
23	01643-31032	WASHER	1	B30001-B30001
24	124-01-51360	EXHAUST PIPE	1	B30001-
25	01016-51040	. BOLT	1	B30001-

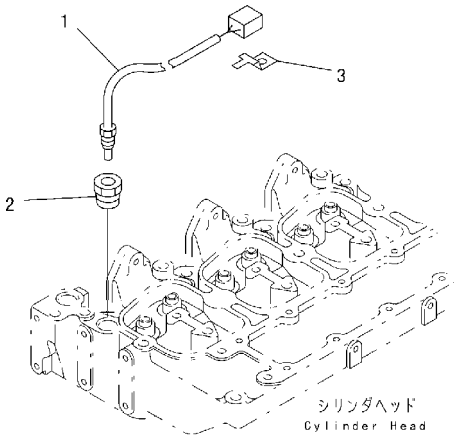

PDA7347

INDEX	PART NO.	DESCRIPTION	Q'TY	SERIAL NO.
1	7861-93-3320	SENSOR, WATER TEMPERATURE	1	B30001-
2	565-06-13212	ADAPTER	1	B30001-
3	08053-01510	CLIP	1	B30001-B30001

FIG. B0000-07A0 OIL FILLER

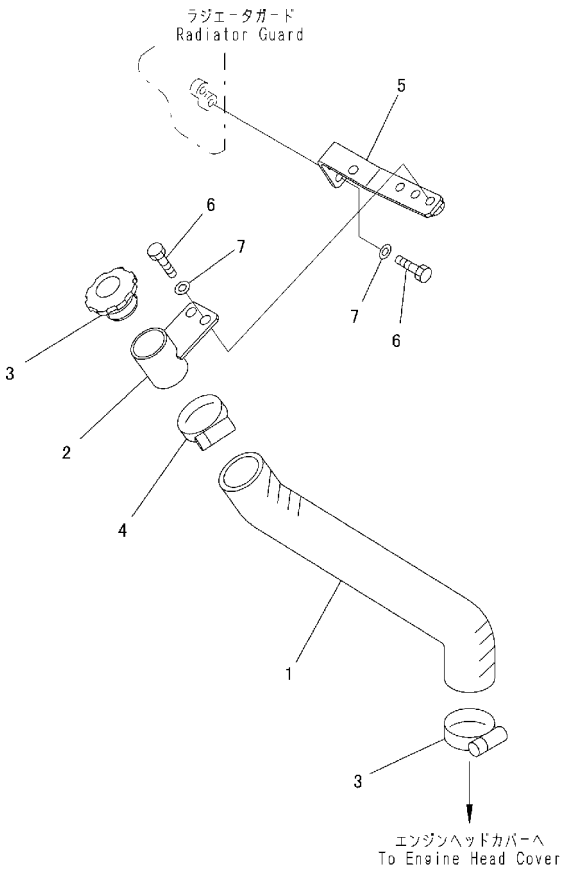

PWOB782

FIG. NO. : B0000-07A0

INDEX	PART NO.	DESCRIPTION	Q'TY	SERIAL NO.
1	124-01-51630	HOSE	1	B30001-
2	124-01-51640	PIPE	1	B30001-
3	6130-12-8610	CAP	1	B30001-
4	07289-00070	CLAMP	2	B30001-
5	124-01-61650	BRACKET	1	B30001-
6	01010-81020	BOLT	4	B30001-
7	01643-31032	WASHER	4	B30001-

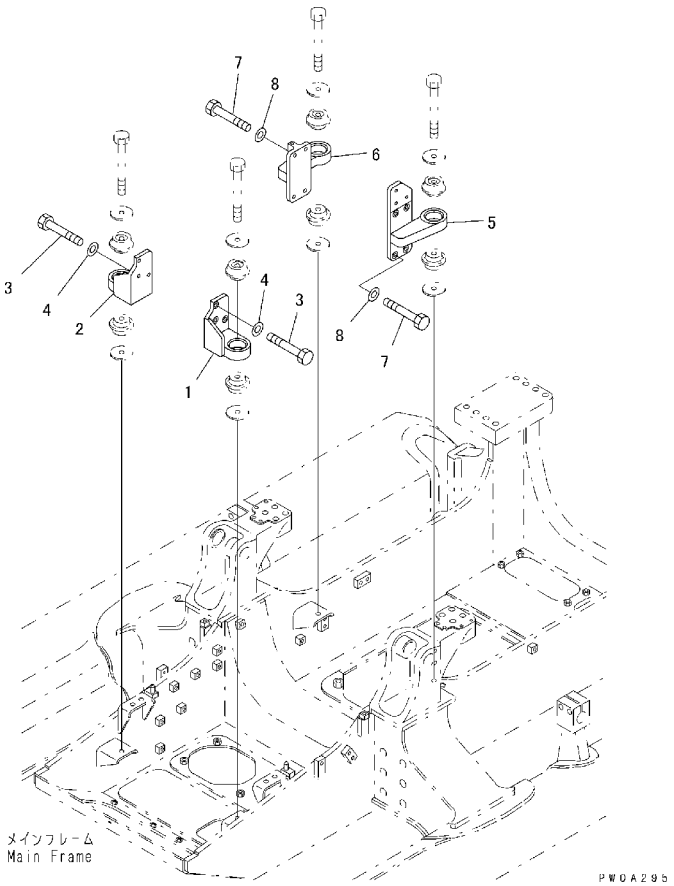

INDEX	PART NO.	DESCRIPTION	Q'TY	SERIAL NO.
1	124-01-51412	BRACKET	1	B30001-
2	124-01-51421	BRACKET	1	B30001-
3	01010-81240	BOLT	6	B30001-
4	01643-31232	WASHER	6	B30001-
5	124-01-51431	BRACKET	1	B30001-
6	124-01-51442	BRACKET	1	B30001-
7	01010-81240	BOLT	8	B30001-
8	01643-31232	WASHER	8	B30001-

FIG. B0000-11A0 PRESSURE SWITCH

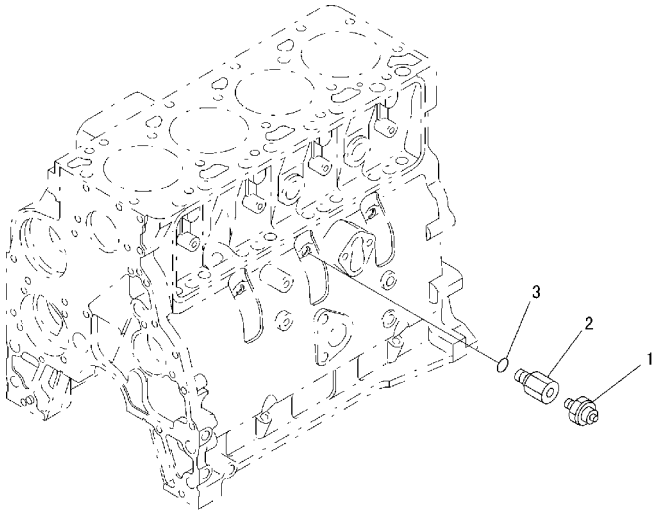

PQD3983

FIG. NO. : B0000-11A0

INDEX	PART NO.	DESCRIPTION	Q'TY	SERIAL NO.
1	08073-10505	SWITCH, OIL PRESSURE	1	B30001-
2	6732-81-3170	ADAPTER	1	B30001-
3	6215-81-9710	O-RING	1	B30001-

FIG. B0000-12A0 FILTER HEAD BOLT

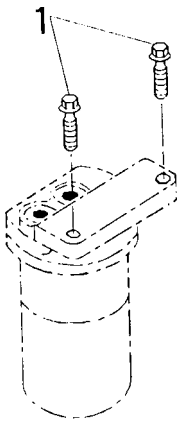

PKK2133

FIG. NO. : B0000-12A0

INDEX	PART NO.	DESCRIPTION	Q'TY	SERIAL NO.
1	01435-00825	BOLT	2	B30001-

FIG. B0000-13A0 SOLENOID

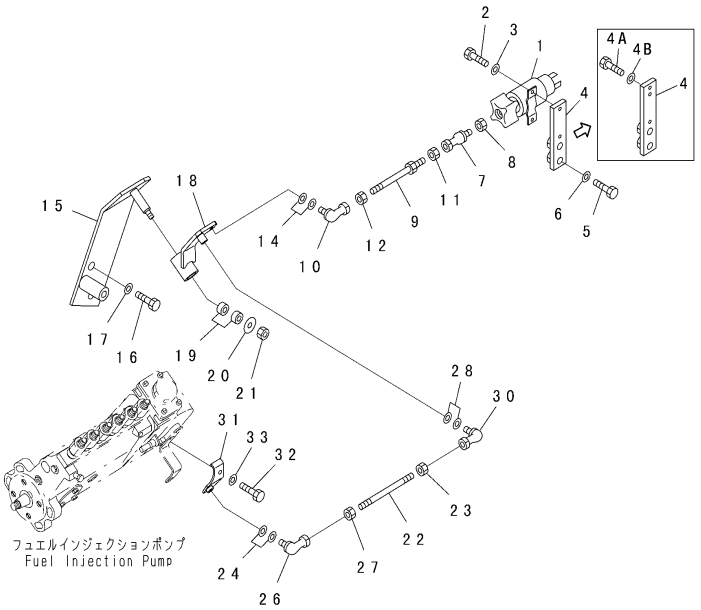

FIG. NO. : B0000-13A0

INDEX	PART NO.	DESCRIPTION	Q'TY	SERIAL NO.
1	600-815-7550	SOLENOID ASS'Y	1	B30001-
2	01010-80616	BOLT	2	B30001-
3	01643-30623	WASHER	2	B30001-
4	124-01-61390	BRACKET	1	B30226-
	124-01-51390	BRACKET	1	B30001-B30225
4A	01010-80616	BOLT	1	B30226-
4B	01643-30623	WASHER	1	B30226-
5	01010-81035	BOLT	2	B30001-
6	01643-31032	WASHER	2	B30001-
7	6204-81-9640	JOINT	1	B30001-
8	01580-10605	NUT	1	B30001-
9	124-01-51850	ROD, SOLENOID	1	B30001-
10	04256-50615	JOINT	1	B30001-
11	01580-10605	NUT	1	B30001-
12	01508-40603	NUT, L. H. THREAD	1	B30001-
14	01643-30623	WASHER	2	B30001-
15	124-01-51880	BRACKET	1	B30001-
16	01010-81225	BOLT	2	B30001-
17	01643-31232	WASHER	2	B30001-
18	124-01-51872	LEVER	1	B30001-
19	06123-01414	BEARING	2	B30001-
20	113-43-23230	WASHER	1	B30001-
21	01598-00809	NUT	1	B30001-
22	04248-30606	ROD	1	B30001-
23	01580-10605	NUT	1	B30001-
24	01643-30623	WASHER	2	B30001-
26	04256-40615	JOINT	1	B30001-
27	01508-40603	NUT	1	B30001-
28	01643-30623	WASHER	2	B30001-
30	04256-50615	JOINT	1	B30001-
31	124-01-51860	LEVER	1	B30001-
32	01010-80620	BOLT	1	B30001-
33	01643-30623	WASHER	1	B30001-

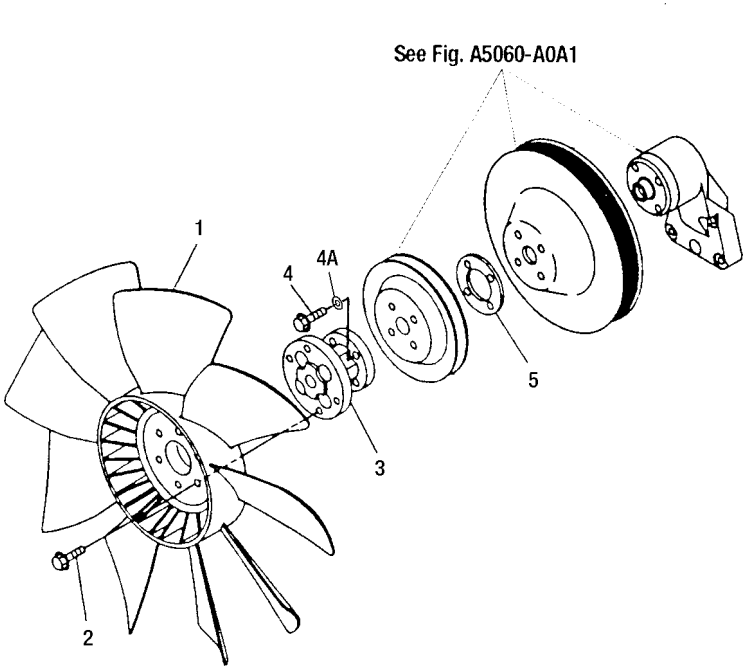

P J 6 B 7 5 7

INDEX	PART NO.	DESCRIPTION	Q'TY	SERIAL NO.
1	600-623-8580	FAN, COOLING	1	B30001-
2	01435-01030	BOLT	6	B30001-
3	124-01-51510	SPACER	1	B30025-
	6732-61-3610	SPACER	1	B30001-B30024
4	01010-81040	BOLT	4	B30025-
	01435-01035	BOLT	4	B30001-B30024
4A	01643-31032	WASHER	4	B30025-
5	124-01-51540	SPACER	1	B30001-

FIG. B0000-14A1 COOLING FAN (REVERSIBLE TYPE)

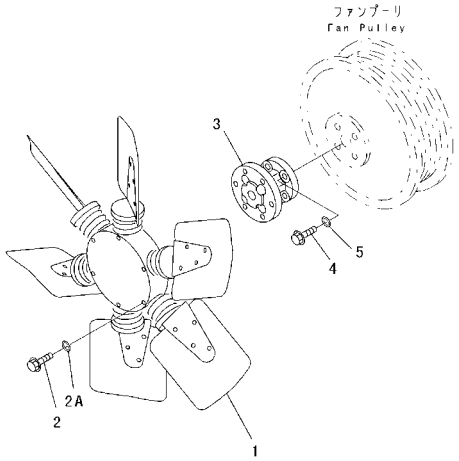

PWDB785

FIG. NO. : B0000-14A1

INDEX	PART NO.	DESCRIPTION	Q'TY	SERIAL NO.
1	600-614-2581	FAN, COOLING, (REVERSIBLE TYPE)	1	B30001-
2	01010-81030	BOLT	6	B30025-
	01010-81040	BOLT	6	B30001-B30024
2A	01643-31032	WASHER	6	B30025-
3	124-01-51510	SPACER	1	B30001-
4	01010-81040	BOLT	4	B30001-
5	01643-31032	WASHER	4	B30001-

FIG. B0000-14A2 COOLING FAN (BLOWER TYPE) (REGULATION OF EC INCLUSION)

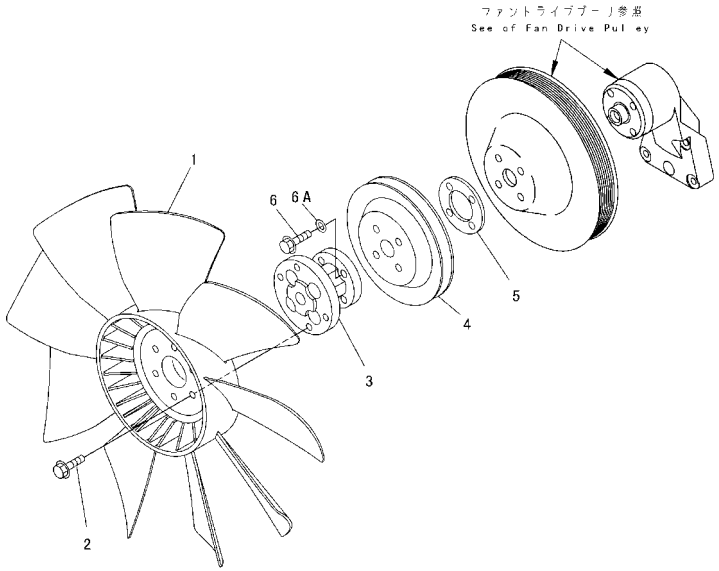

FIG. NO. : B0000-14A2

INDEX	PART NO.	DESCRIPTION	Q'TY	SERIAL NO.
1	600-623-8580	FAN, COOLING	1	B30001-
2	01435-01030	BOLT	6	B30001-
3	124-01-51510	SPACER	1	B30025-
	6732-61-3610	SPACER	1	B30001-B30024
4	01010-81040	BOLT	4	B30025-
	01435-01035	BOLT	4	B30001-B30024
4A	01643-31032	WASHER	4	B30025-
5	124-01-51590	SPACER	1	B30001-

FIG. B0000-17A0 STARTING MOTOR SWITCH

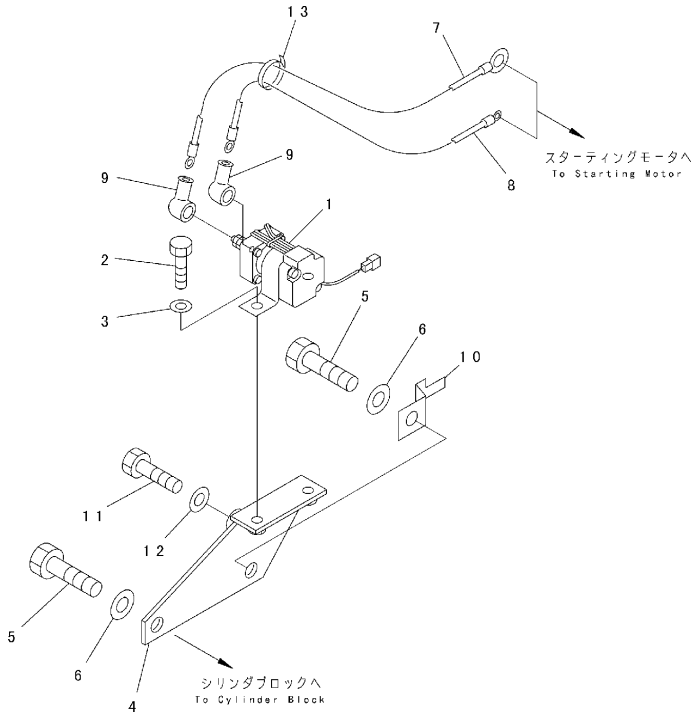

PDA7353

FIG. NO. : B0000-17A0

INDEX	PART NO.	DESCRIPTION	Q'TY	SERIAL NO.
1	124-06-64320	SWITCH	1	B30001-
2	01435-00816	BOLT	3	B30001-
3	01643-30823	WASHER	2	B30001-B30001
4	124-01-61911	BRACKET	1	B30001-
5	01435-01220	BOLT	2	B30001-
6	01643-31232	WASHER	2	B30001-B30001
7	124-01-51920	WIRE	1	B30001-
8	124-01-51930	WIRE	1	B30001-
9	08038-00519	CAP	2	B30001-
10	08053-01510	CLIP	1	B30001-B30001
11	01435-01014	BOLT	1	B30001-B30001
12	01643-31032	WASHER	1	B30001-B30001
13	08034-00519	BAND	1	B30001-

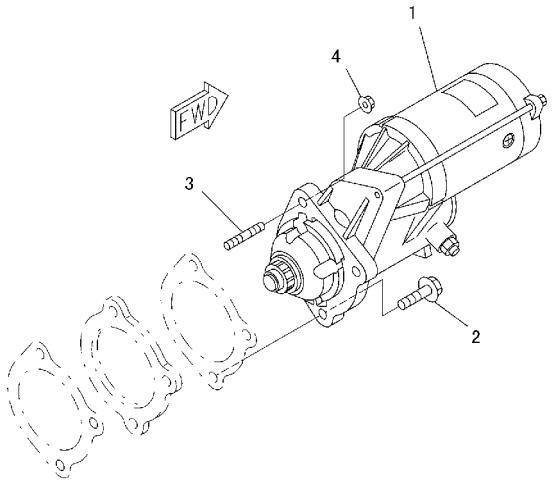

PJD4930

INDEX	PART NO.	DESCRIPTION	Q'TY	SERIAL NO.
1	(600-863-5110)	STARTING MOTOR ASS'Y, ... (5. 5KW)(SEE FIG. B0000-18A2)	1	B30001-
2	01435-01040	BOLT	2	B30001-
3	01144-31030	STUD	1	B30001-
4	01584-01008	NUT	1	B30001-

FIG. B0000-18A2 STARTING MOTOR (5.5KW) (INNER PARTS)

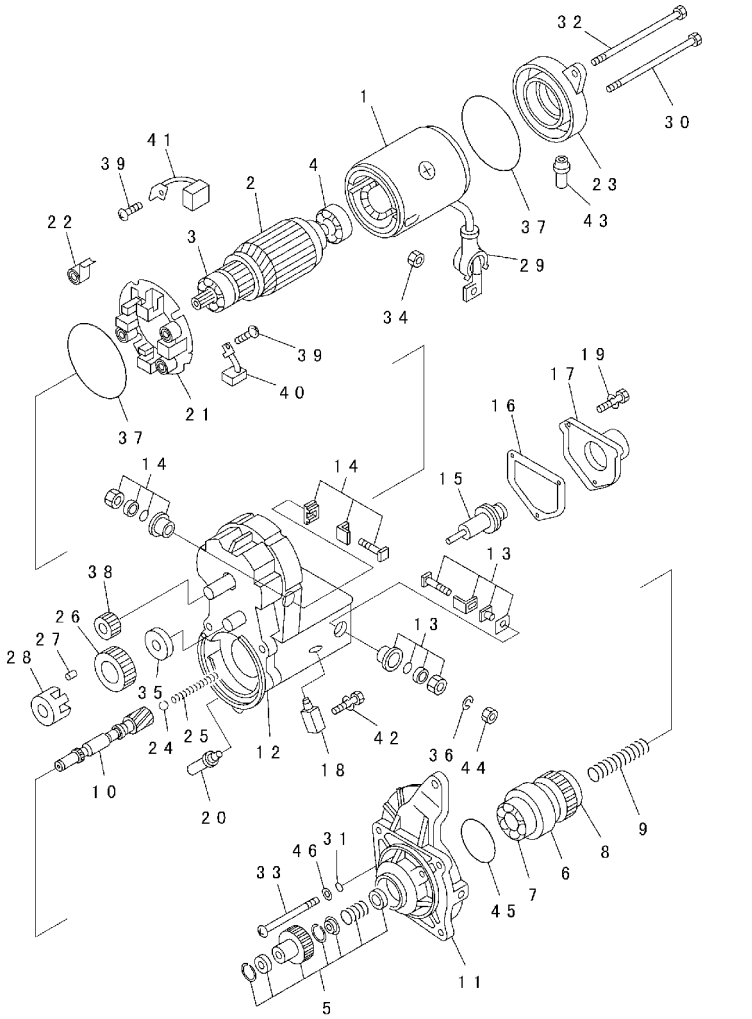

FIG. NO. : B0000-18A2

INDEX	PART NO.	DESCRIPTION	Q'TY	SERIAL NO.
	600-863-5110	STARTING MOTOR ASS'Y, (5. 5KW)	1	B30001-
		THE DENSO PART NUMBER IS THAT ND IS REMOVED FROM KOMATSU PART NUMBER LISTED BELOW.		
1	ND028100-5410	. YOKE ASS'Y	1	B30001-
2	ND028200-5250	. ARMATURE ASS'Y	1	B30001-
3	ND949100-3161	. . BEARING, BALL	1	B30001-
	ND949100-5290	. . BEARING, BALL	1	B30001-
4	ND949100-3540	. . BEARING, BALL	1	B30001-
	ND028300-6551	. CLUTCH ASS'Y	1	B30001-
5	ND028099-3270	. . STARTER KIT	1	B30001-
6	ND028300-6751	. . CLUTCH ASS'Y	1	B30001-
7	ND949100-4500	. . . BEARING, BALL, FRONT	1	B30001-
8	ND949100-1920	. . . BEARING, BALL, REAR	1	B30001-
9	ND949170-4040	. . SPRING	1	B30001-
10	ND028381-0071	. . SHAFT	1	B30001-
11	ND128401-5621	. HOUSING	1	B30001-
12	ND153400-2600	. SWITCH ASS'Y, MAGNETIC	1	B30001-
13	ND028099-5090	. . KIT, STARTER	1	B30001-
14	ND028099-5100	. . KIT, STARTER	1	B30001-
15	ND053660-0443	. . PLUNGER	1	B30001-
16	ND053404-0240	. . GASKET	1	B30001-
17	ND053505-0290	. . COVER, SOLENOID	1	B30001-
18	ND053480-7560	. . BOLT ASS'Y, TERMINAL	1	B30001-
19	ND949047-4440	. . BOLT	3	B30001-
20	ND028065-0250	. . BUSHING, DRAIN	1	B30001-
21	ND028510-0880	. HOLDER ASS'Y, BRUSH	1	B30001-
22	ND028520-0011	. . SPRING, BRUSH	4	B30001-
23	ND028501-7711	. FRAME	1	B30001-
24	ND949120-0240	. BALL, STEEL	1	B30001-
25	ND949170-4070	. SPRING	1	B30001-
26	ND028371-3210	. PINION, STARTER	1	B30001-
27	ND028306-0070	. ROLLER, CLUTCH	5	B30001-
28	ND028063-0030	. RETAINER	1	B30001-
29	ND028062-0130	. CAP	1	B30001-
30	ND949042-3680	. BOLT	1	B30001-
31	ND90801-10050	. O-RING	3	B30001-
32	ND949042-3690	. BOLT	1	B30001-
33	ND949006-4720	. SCREW	3	B30001-
34	ND949056-4480	. NUT	1	B30001-
35	ND028327-0171	. RETAINER, SNAP	1	B30001-
36	ND90258-10001	. WASHER, SPRING	1	B30001-
37	ND028901-0361	. SEAL	2	B30001-

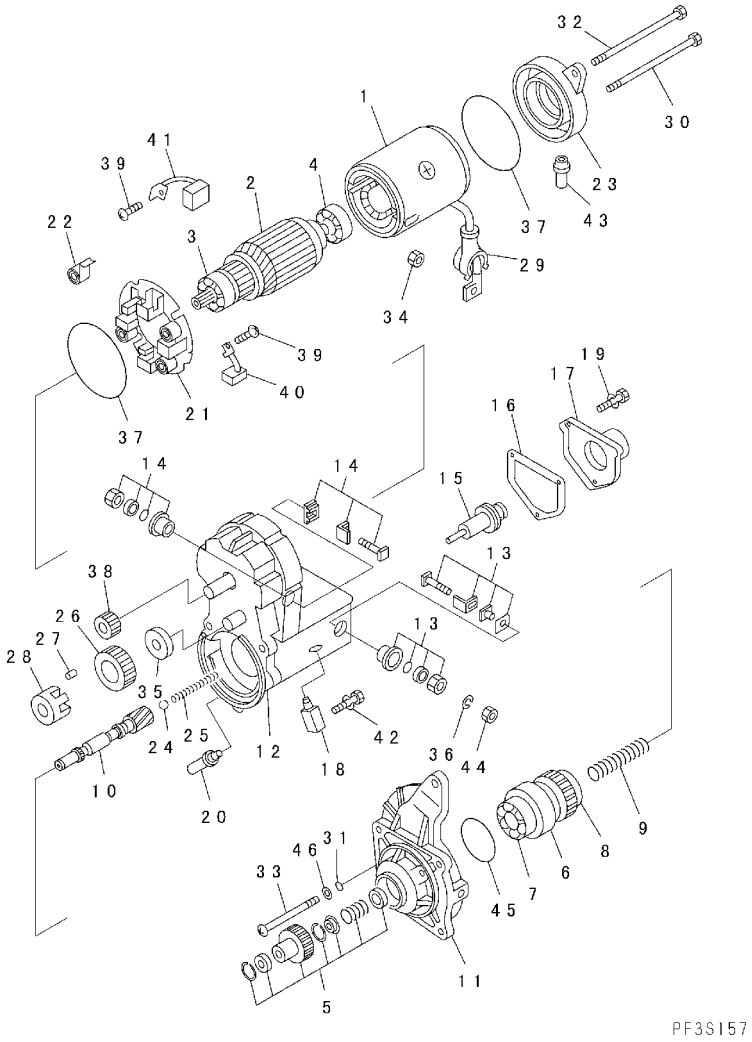

INDEX	PART NO.	DESCRIPTION	Q'TY	SERIAL NO.
38	ND028371-3200	. PINION	1	B30001-
39	ND949007-6530	. SCREW	4	B30001-
40	ND028530-1090	. BRUSH ASS'Y	2	B30001-
41	ND028530-1100	. BRUSH ASS'Y	2	B30001-
42	ND949007-6850	. SCREW	1	B30001-
43	ND028062-5790	. COVER	1	B30001-
44	ND90170-10061	. NUT	1	B30001-
45	ND90801-20470	. O-RING	1	B30001-
46	ND90200-06241	. WASHER	3	B30001-

FIG. B0000-19A0 OIL PAN DRAIN HOSE

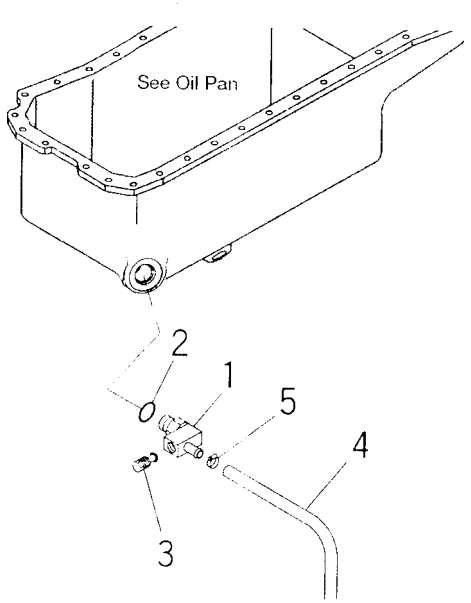

P#DA869

FIG. NO. : B0000-19A0

INDEX	PART NO.	DESCRIPTION	Q'TY	SERIAL NO.
1	134-01-61830	ELBOW	1	B30001-
2	07002-22434	O-RING	1	B30001-
3	134-01-61840	PLUG	1	B30001-
4	07270-21550	TUBE	1	B30001-
5	07281-00197	CLAMP	1	B30001-

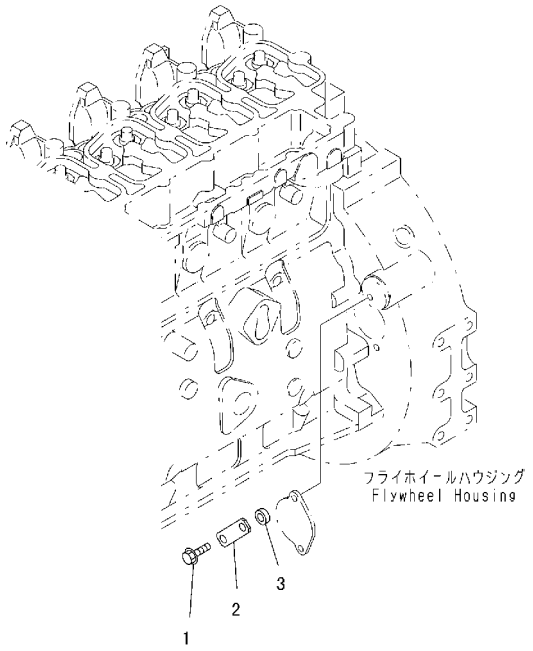

PWOB786

INDEX	PART NO.	DESCRIPTION	Q'TY	SERIAL NO.
1	01435-00825	BOLT	1	B30001-
2	6301-11-4630	PLATE	1	B30001-
3	6110-23-6490	SPACER	1	B30001-

FIG. B0000-21A0 CORROSION RESISTER

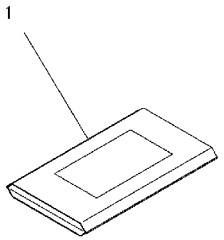

PD39931

FIG. NO. : B0000-21A0

INDEX	PART NO.	DESCRIPTION	Q'TY	SERIAL NO.
1	600-411-1120	INHIBITOR	2	B30001-

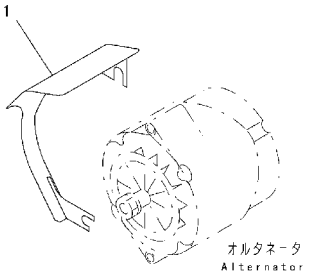

PDA7354

INDEX	PART NO.	DESCRIPTION	Q'TY	SERIAL NO.
1	124-01-51744	COVER, ALTERNATOR	1	B30001-

FIG. B0100-01A0 ENGINE MOUNT

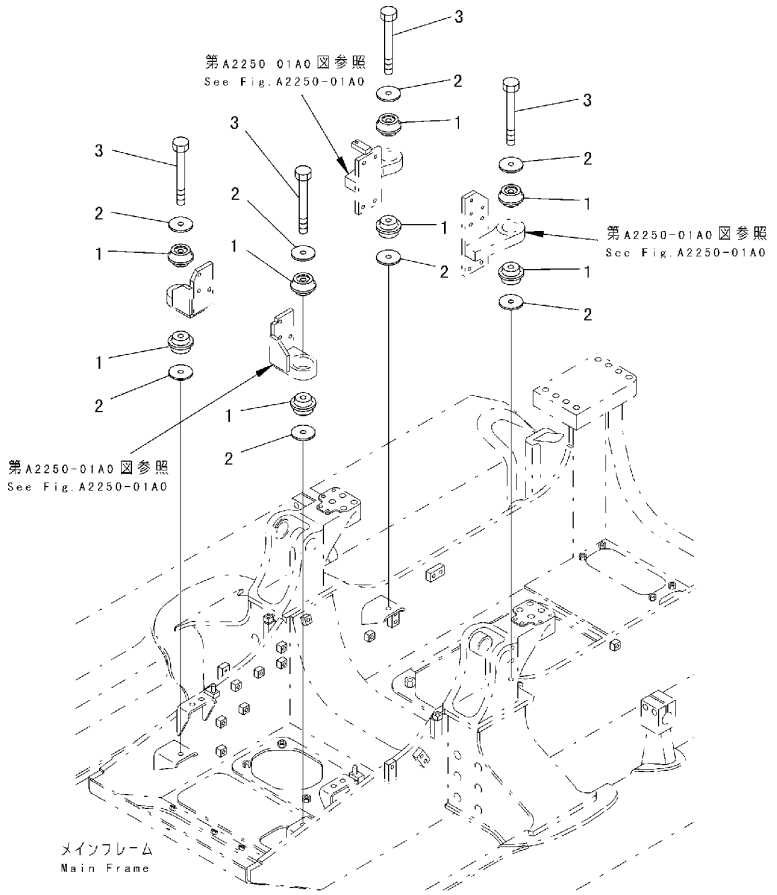

FIG. NO. : B0100-01A0

INDEX	PART NO.	DESCRIPTION	Q'TY	SERIAL NO.
1	124-01-51450	CUSHION	8	B30001-
2	113-01-21120	WASHER	8	B30001-
3	01011-81620	BOLT	4	B30001-

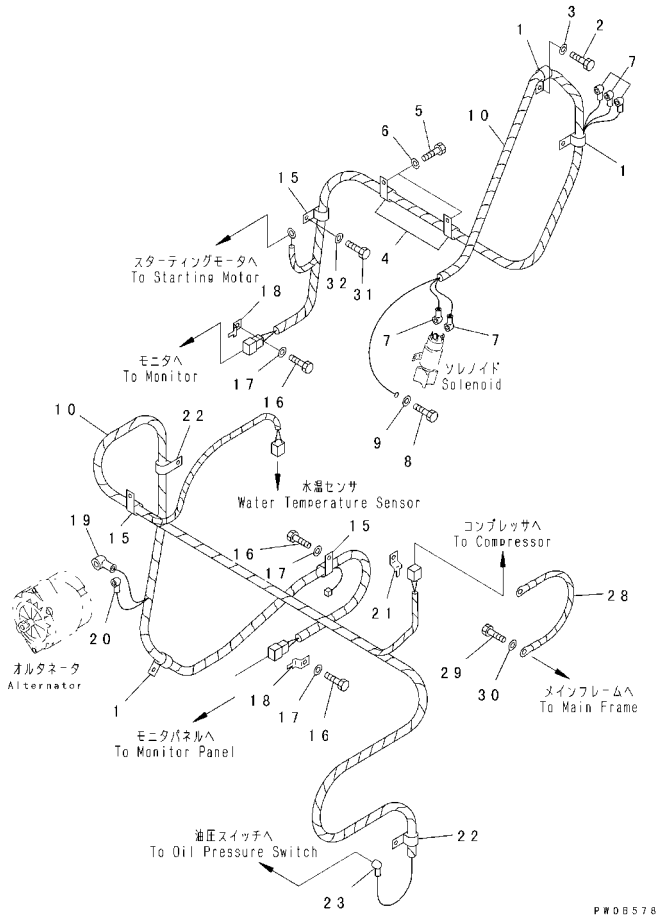

INDEX	PART NO.	DESCRIPTION	Q'TY	SERIAL NO.
1	04434-51410	CLIP	3	B30001-
2	01010-81016	BOLT	3	B30001-
3	01643-31032	WASHER	3	B30001-
4	04434-51412	CLIP	2	B30001-
5	01010-81220	BOLT	2	B30001-
6	01643-31232	WASHER	2	B30001-
7	08038-00519	CAP	5	B30001-
8	01010-80616	BOLT	1	B30001-
9	01643-30623	WASHER	1	B30001-
10	124-06-64132	WIRING HARNESS	1	B30001-
	22U-06-11270	. FUSIBLE LINK	1	B30001-
	21X-06-31530	. DIODE	1	B30001-
15	04434-51410	CLIP	6	B30001-
16	01010-81016	BOLT	6	B30001-
17	01643-31032	WASHER	6	B30001-
18	08053-01510	CLIP	2	B30001-
19	08038-00525	CAP	1	B30001-
20	08038-00519	CAP	1	B30001-
21	08193-21012	CLIP	2	B30001-
22	04434-51010	CLIP	2	B30001-
23	08038-00519	CAP	1	B30001-
28	08028-46050	WIRE	1	B30001-
29	01010-81220	BOLT	2	B30001-
30	01643-31232	WASHER	2	B30001-
31	01010-81020	BOLT	1	B30001-
32	01643-31032	WASHER	1	B30001-

FIG. B0600-01A0 DAMPER

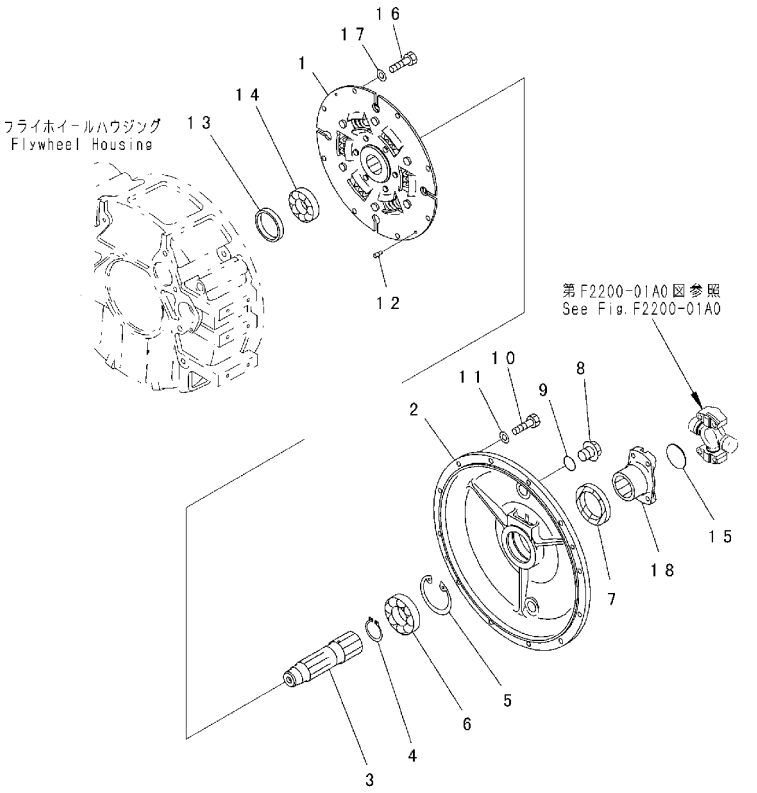

FIG. NO. : B0600-01A0

INDEX	PART NO.	DESCRIPTION	Q'TY	SERIAL NO.
1	124-12-51141	DAMPER DISC ASS'Y	1	B30001-
2	124-12-51110	COVER	1	B30001-
3	124-12-51132	SHAFT	1	B30001-
4	04064-04518	RING	1	B30001-
5	04065-08530	RING	1	B30001-
6	06000-06209	BEARING	1	B30001-
7	07012-10065	SEAL	1	B30001-
8	07044-12412	PLUG	2	B30001-
9	07002-32434	O-RING	2	B30001-
10	01010-81035	BOLT	12	B30001-
11	01643-31032	WASHER	12	B30001-
12	203-01-51120	PIN	2	B30001-
13	23S-12-11330	PLATE	1	B30001-
14	06000-06207	BEARING	1	B30001-
15	07046-15520	PLUG	1	B30001-
16	01010-81025	BOLT	8	B30001-
17	01643-31032	WASHER	8	B30001-
18	12F-14-11290	YOKE	1	B30001-

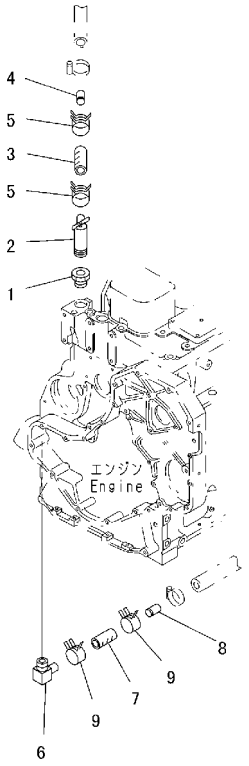

PW0B789

INDEX	PART NO.	DESCRIPTION	Q'TY	SERIAL NO.
1	124-Z11-1530	ADAPTER	1	B30001-
2	09482-10000	VALVE	1	B30001-
3	195-979-4841	HOSE	1	B30001-
4	144-Z79-2840	PLUG	1	B30001-
5	09479-02400	CLAMP	2	B30001-
6	124-Z11-1170	NIPPLE	1	B30001-
7	195-979-4841	HOSE	1	B30001-
8	144-Z79-2840	PLUG	1	B30001-
9	09479-02400	CLAMP	1	B30001-

COOLING SYSTEM

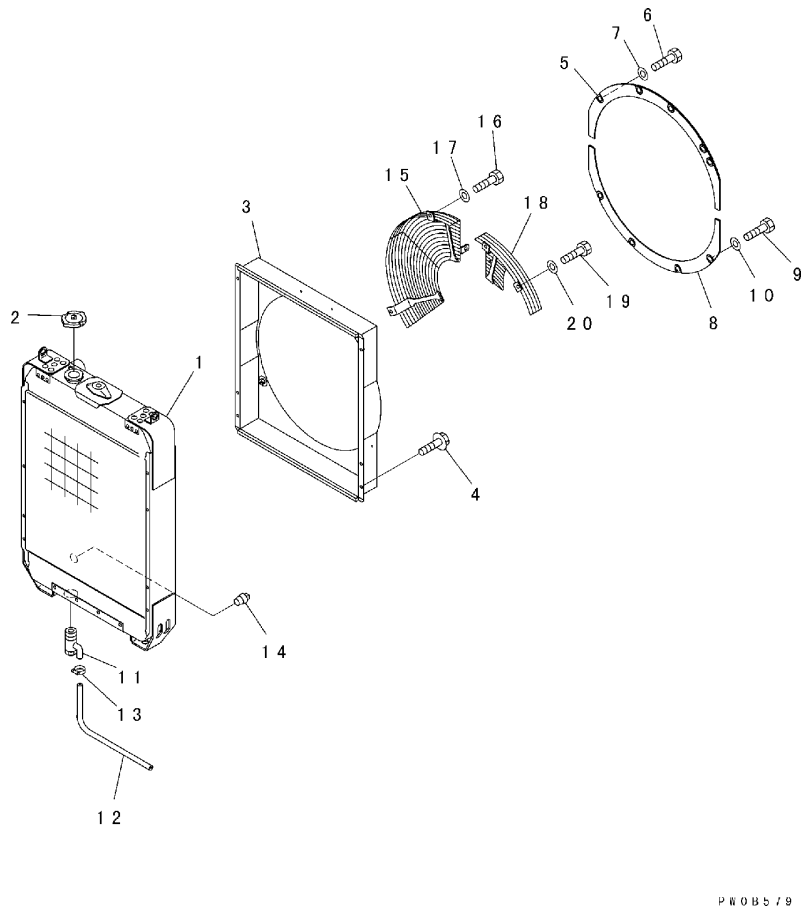

INDEX	PART NO.	DESCRIPTION	Q'TY	SERIAL NO.
1	124-03-51141	RADIATOR CORE ASS'Y	1	B30001-
2	114-03-48160	CAP	1	B30001-
3	124-03-61122	SHROUD	1	B30001-
4	01435-20814	BOLT	6	B30001-
5	124-03-61522	COVER	1	B30001-
6	01010-81030	BOLT	3	B30001-
7	01643-31032	WASHER	3	B30001-
8	124-03-61532	COVER	1	B30001-
9	01010-81030	BOLT	3	B30001-
10	01643-31032	WASHER	3	B30001-
11	07730-50004	VALVE	1	B30001-
12	07270-01525	TUBE	1	B30001-
13	07280-01920	CLAMP	1	B30001-
14	07042-70415	PLUG	1	B30001-
15	124-03-61132	GUARD	1	B30001-
16	01010-81030	BOLT	2	B30001-
17	01643-31032	WASHER	2	B30001-
18	124-03-61132	GUARD	1	B30001-
19	01010-81030	BOLT	2	B30001-
20	01643-31032	WASHER	2	B30001-

FIG. C0100-01A1 COOLING (WITHOUT AIR CONDITIONER)

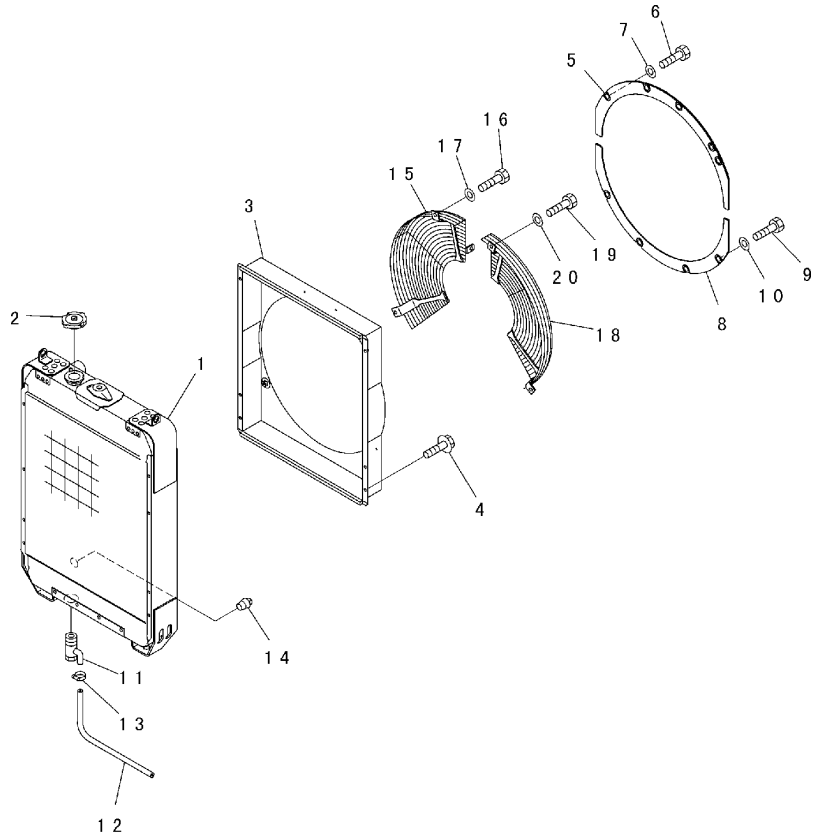

FIG. NO. : C0100-01A1

INDEX	PART NO.	DESCRIPTION	Q'TY	SERIAL NO.
1	124-03-51141	RADIATOR CORE ASS'Y	1	B30001-
2	114-03-48160	CAP	1	B30001-
3	124-03-61122	SHROUD	1	B30001-
4	01435-20814	BOLT	6	B30001-
5	124-03-61522	COVER	1	B30001-
6	01010-81030	BOLT	3	B30001-
7	01643-31032	WASHER	3	B30001-
8	124-03-61532	COVER	1	B30001-
9	01010-81030	BOLT	3	B30001-
10	01643-31032	WASHER	3	B30001-
11	07730-50004	VALVE	1	B30001-
12	07270-01525	TUBE	1	B30001-
13	07280-01920	CLAMP	1	B30001-
14	07042-70415	PLUG	1	B30001-
15	124-03-61132	GUARD	1	B30001-
16	01010-81030	BOLT	2	B30001-
17	01643-31032	WASHER	2	B30001-
18	124-03-61132	GUARD	1	B30001-
19	01010-81030	BOLT	2	B30001-
20	01643-31032	WASHER	2	B30001-

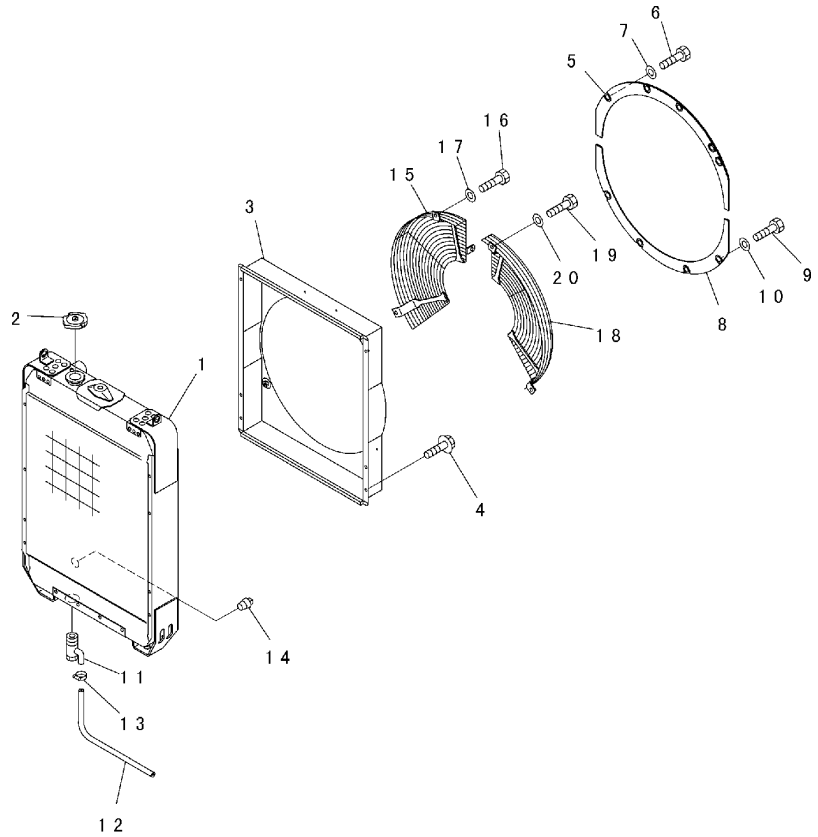

INDEX	PART NO.	DESCRIPTION	Q'TY	SERIAL NO.
1	124-03-51141	RADIATOR CORE ASS'Y	1	B30001-
2	114-03-48160	CAP	1	B30001-
3	124-03-61122	SHROUD	1	B30001-
4	01435-20814	BOLT	6	B30001-
5	124-03-61620	COVER	1	B30001-
6	01010-81030	BOLT	3	B30001-
7	01643-31032	WASHER	3	B30001-
8	124-03-61630	COVER	1	B30001-
9	01010-81030	BOLT	3	B30001-
10	01643-31032	WASHER	3	B30001-
11	07730-50004	VALVE	1	B30001-
12	07270-01525	TUBE	1	B30001-
13	07280-01920	CLAMP	1	B30001-
14	07042-70415	PLUG	1	B30001-
15	124-03-61160	GUARD	1	B30001-
16	01010-81030	BOLT	2	B30001-
17	01643-31032	WASHER	2	B30001-
18	124-03-61152	GUARD	1	B30001-
19	01010-81030	BOLT	2	B30001-
20	01643-31032	WASHER	2	B30001-

FIG. C0100-01A3 COOLING (WITH SANDY DUSTY PROTECTION GRID)

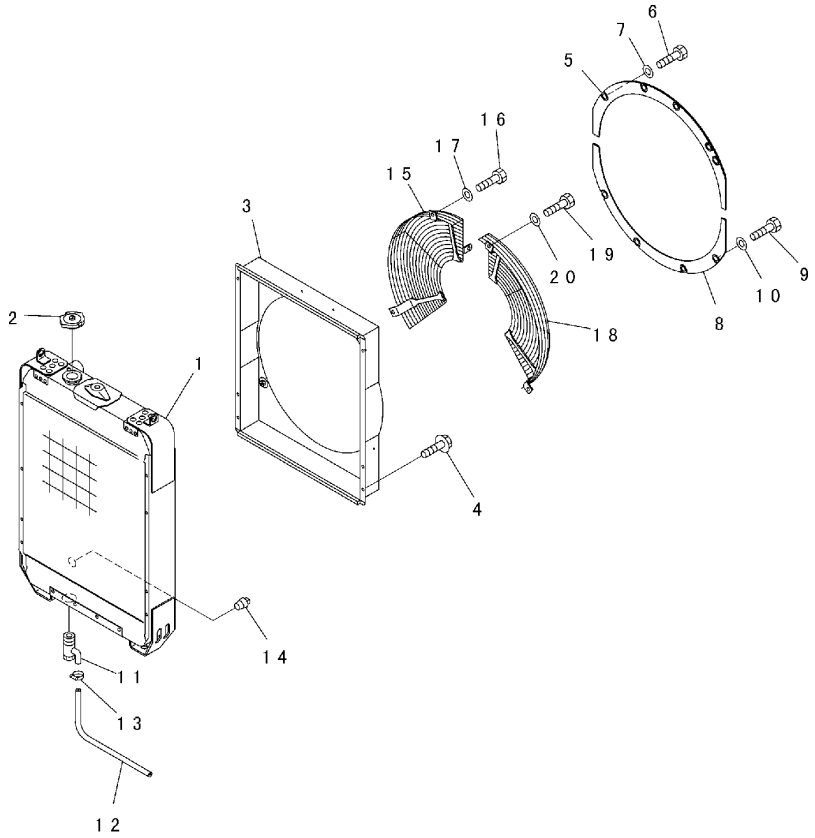

FIG. NO. : C0100-01A3

INDEX	PART NO.	DESCRIPTION	Q'TY	SERIAL NO.
1	124-03-51141	RADIATOR CORE ASS'Y	1	B30001-
2	114-03-48160	CAP	1	B30001-
3	124-03-61122	SHROUD	1	B30001-
4	01435-20814	BOLT	6	B30001-
5	124-03-61522	COVER	1	B30001-
6	01010-81030	BOLT	3	B30001-
7	01643-31032	WASHER	3	B30001-
8	124-03-61532	COVER	1	B30001-
9	01010-81030	BOLT	3	B30001-
10	01643-31032	WASHER	3	B30001-
11	07730-50004	VALVE	1	B30001-
12	07270-01525	TUBE	1	B30001-
13	07280-01920	CLAMP	1	B30001-
14	07042-70415	PLUG	1	B30001-
15	124-03-61132	GUARD	1	B30001-
16	01010-81030	BOLT	2	B30001-
17	01643-31032	WASHER	2	B30001-
18	124-03-61152	GUARD	1	B30001-
19	01010-81030	BOLT	2	B30001-
20	01643-31032	WASHER	2	B30001-

FIG. C0100-01A4 COOLING (WITH AIR CONDITIONER) (WITH SANDY DUSTY PROTECTION GRID)

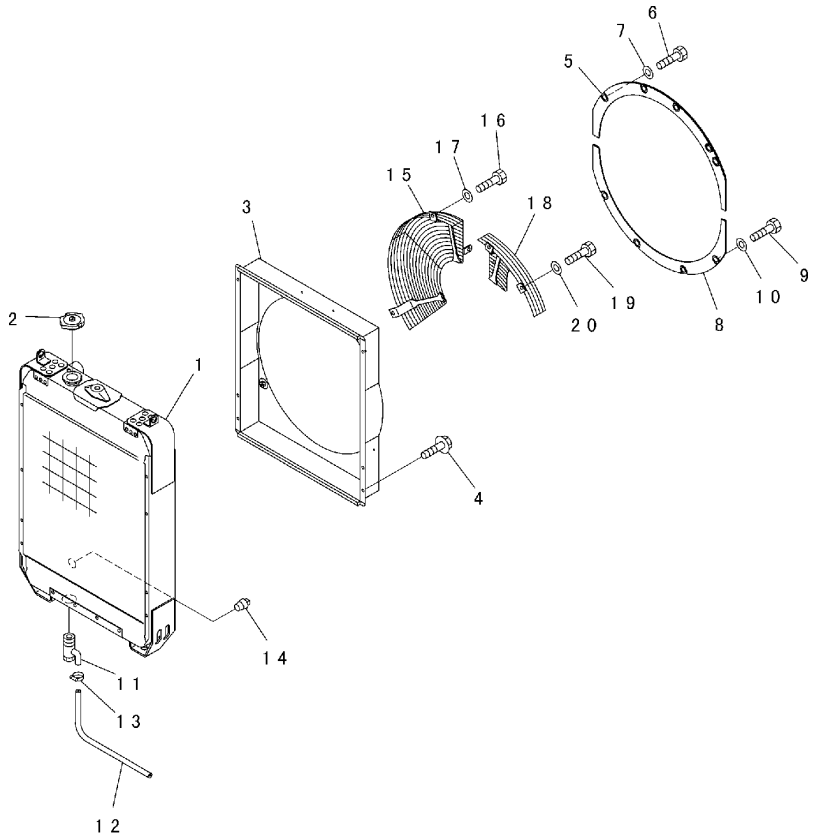

FIG. NO. : C0100-01A4

INDEX	PART NO.	DESCRIPTION	Q'TY	SERIAL NO.
1	124-03-51141	RADIATOR CORE ASS'Y	1	B30001-
2	114-03-48160	CAP	1	B30001-
3	124-03-61122	SHROUD	1	B30001-
4	01435-20814	BOLT	6	B30001-
5	124-03-61522	COVER	1	B30001-
6	01010-81030	BOLT	3	B30001-
7	01643-31032	WASHER	3	B30001-
8	124-03-61532	COVER	1	B30001-
9	01010-81030	BOLT	3	B30001-
10	01643-31032	WASHER	3	B30001-
11	07730-50004	VALVE	1	B30001-
12	07270-01525	TUBE	1	B30001-
13	07280-01920	CLAMP	1	B30001-
14	07042-70415	PLUG	1	B30001-
15	124-03-61132	GUARD	1	B30001-
16	01010-81030	BOLT	2	B30001-
17	01643-31032	WASHER	2	B30001-
18	124-03-61152	GUARD	1	B30001-
19	01010-81030	BOLT	2	B30001-
20	01643-31032	WASHER	2	B30001-

FIG. C0100-02A0 COOLING (HOSE, MOUNT, RESERVE TANK)

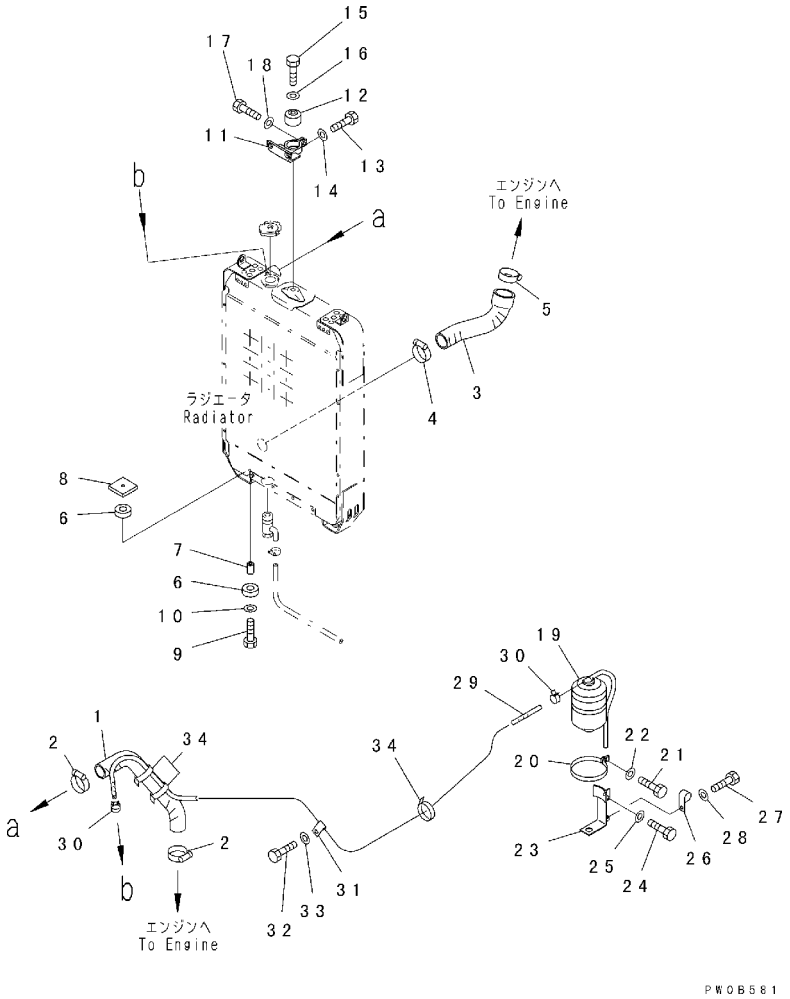

FIG. NO. : C0100-02A0

INDEX	PART NO.	DESCRIPTION	Q'TY	SERIAL NO.
1	124-03-51212	HOSE, UPPER	1	B30001-
2	07289-00055	CLAMP	2	B30001-
3	124-03-51221	HOSE, LOWER	1	B30001-
4	07289-00055	CLAMP	1	B30001-
5	07289-00070	CLAMP	1	B30001-
6	113-03-21160	SEAT	4	B30001-
7	113-03-21170	SPACER	2	B30001-
8	113-03-21180	PLATE	2	B30001-
9	01010-81060	BOLT	2	B30001-
10	01643-31032	WASHER	2	B30001-
11	124-03-61590	BRACKET	1	B30001-
12	135-03-12110	DAMPER	1	B30001-
13	01010-81035	BOLT	2	B30001-
14	01643-31032	WASHER	2	B30001-
15	01010-81460	BOLT	1	B30001-
16	01643-31445	WASHER	1	B30001-
17	01010-81035	BOLT	1	B30001-
18	01643-31032	WASHER	2	B30114-
	01643-31032	WASHER	1	B30001-B30113
19	114-03-51510	TANK	1	B30128-
	417-03-10230	TANK	1	B30001-B30127
20	114-03-51490	CLAMP	1	B30001-
21	01010-80825	BOLT	1	B30001-
22	01643-30823	WASHER	1	B30001-
23	124-03-61230	BRACKET	1	B30001-
24	01010-81220	BOLT	2	B30001-
25	01643-31232	WASHER	2	B30001-
26	08036-10810	CLIP	1	B30001-
27	01010-80816	BOLT	1	B30001-
28	01643-30823	WASHER	1	B30001-
29	124-03-61240	HOSE	1	B30001-
30	07285-00110	CLIP	2	B30001-
31	04434-51812	CLIP	2	B30001-
32	01010-81020	BOLT	2	B30001-
33	01643-31032	WASHER	2	B30001-
34	134-03-61410	BAND	2	B30001-

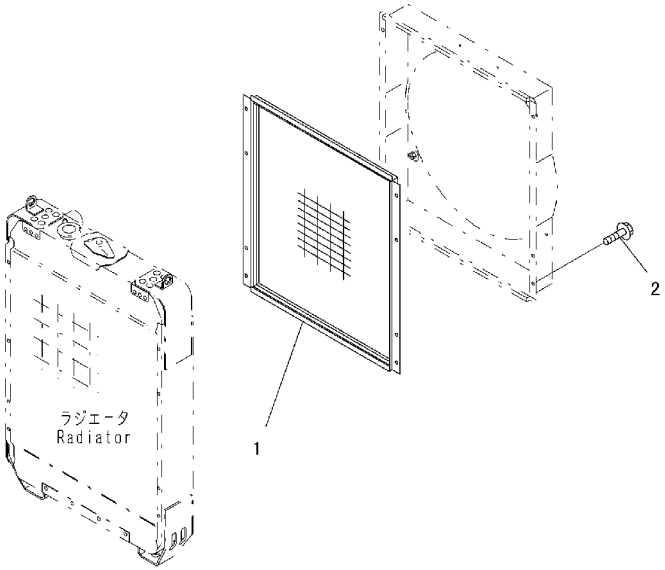

PWGB582

INDEX	PART NO.	DESCRIPTION	Q'TY	SERIAL NO.
1	124-03-51410	GRID	1	B30001-
2	01435-21016	BOLT	6	B30001-

FUEL TANK AND RELATED PARTS

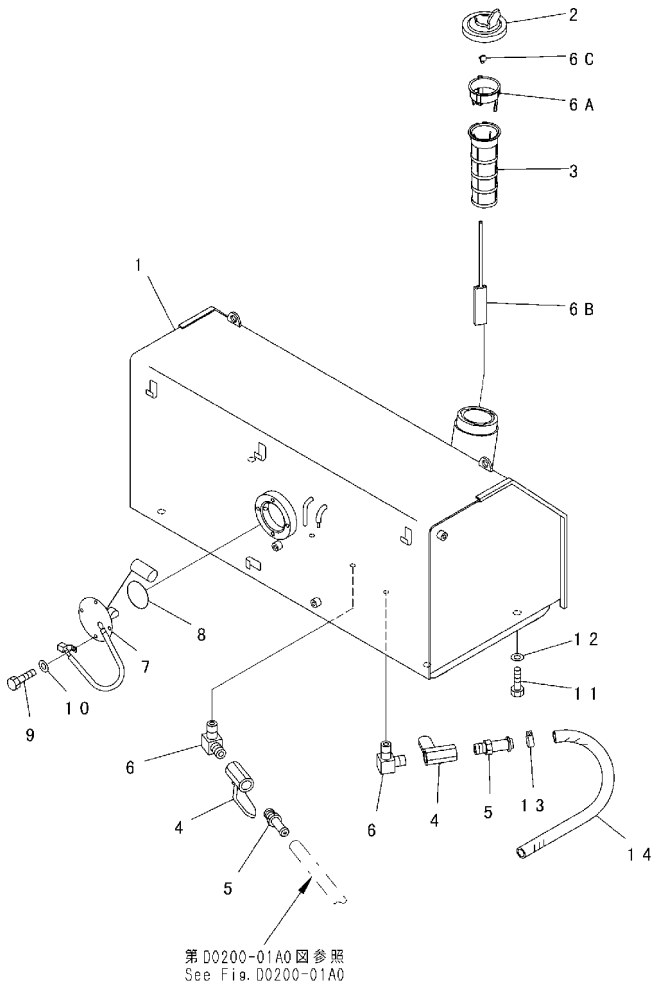

INDEX	PART NO.	DESCRIPTION	Q'TY	SERIAL NO.
1	124-04-61160	TANK, FUEL	1	B30001-
2	134-04-61180	CAP	1	B30001-
3	22U-04-21231	STRAINER	1	B30001-
4	07700-40240	VALVE	2	B30001-
5	120-04-41130	NIPPLE	2	B30001-
6	20D-68-11670	ELBOW	2	B30001-
	22U-04-21200	FLOAT ASS'Y	1	B30001-
6A	22U-04-21210	. GUIDE	1	B30001-
6B	22U-04-21220	. FLOAT	1	B30001-
6C	20Y-04-21580	. CAP	1	B30001-
7	7861-93-4940	SENSOR, FUEL LEVEL	1	B30001-
8	07000-02085	O-RING	1	B30001-
9	01010-81020	BOLT	4	B30001-
10	01643-31032	WASHER	4	B30001-
11	01010-81680	BOLT	4	B30001-
12	01643-31645	WASHER	4	B30001-
13	07285-00115	CLIP	1	B30001-
14	07270-01035	TUBE	1	B30001-

FIG. D0200-01A0 FUEL LINE

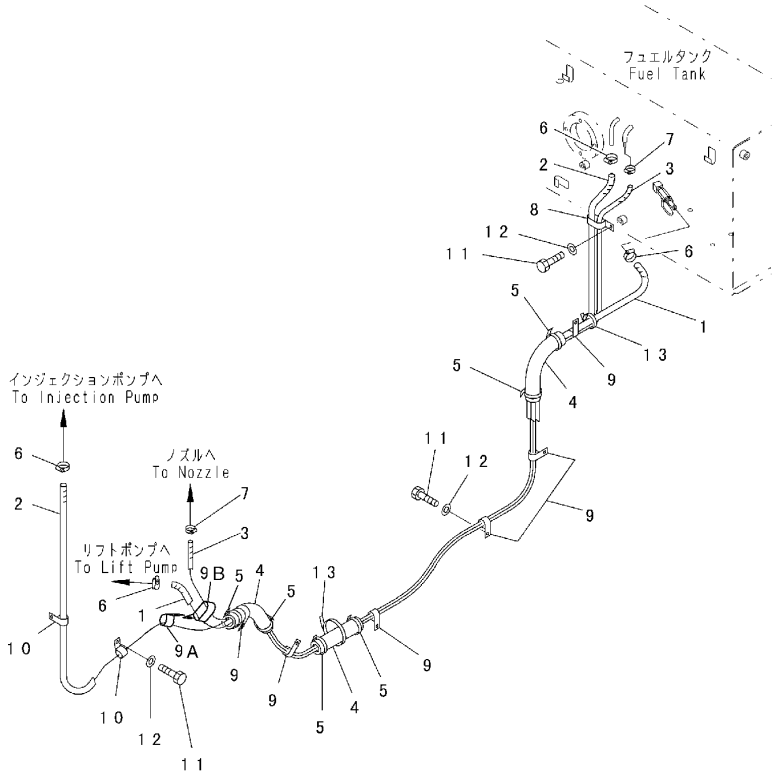

PKK2304

FIG. NO. : D0200-01A0

INDEX	PART NO.	DESCRIPTION	Q'TY	SERIAL NO.
1	124-04-61230	HOSE, FUEL	1	B30001-
2	124-04-61241	HOSE, FUEL	1	B30001-
3	124-04-61251	HOSE, FUEL	1	B30001-
4	203-04-31230	COVER	3	B30001-B30000
5	08034-00823	BAND	6	B30001-B30000
6	11Y-09-11140	CLIP	4	B30001-
7	07285-00110	CLIP	2	B30001-
8	04434-53412	CLIP	2	B30001-
9	134-04-61290	CLIP	5	B30026-
	134-04-61290	CLIP	6	B30001-B30025
9A	421-07-11550	CLIP	1	B30026-
9B	04434-52312	CLIP	1	B30026-
10	04434-52310	CLIP	2	B30001-
11	01010-81220	BOLT	9	B30001-
12	01643-31232	WASHER	9	B30001-
13	08034-00823	BAND	2	B30001-

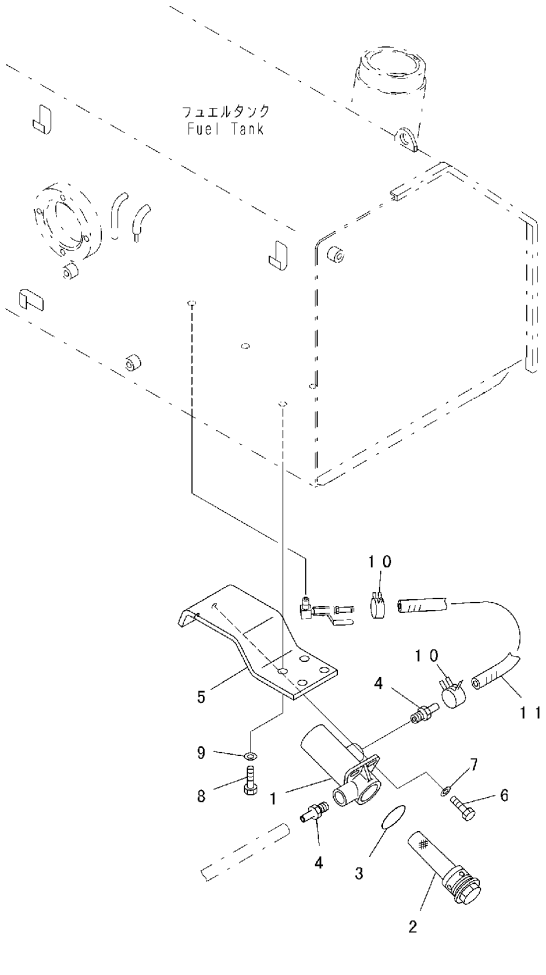

INDEX	PART NO.	DESCRIPTION	Q'TY	SERIAL NO.
1	07058-00001	CASE	1	B30001-
2	154-04-12531	STRAINER	1	B30001-
3	07002-14234	O-RING	1	B30001-
4	6212-61-6950	NIPPLE	2	B30001-
5	124-04-61151	BRACKET	1	B30001-
6	01010-80825	BOLT	2	B30001-
7	01643-30823	WASHER	2	B30001-
8	01010-81225	BOLT	4	B30001-
9	01643-31232	WASHER	4	B30001-
10	11Y-09-11140	CLIP	2	B30001-
11	07288-01003	HOSE	1	B30001-

FIG. D0210-01A1 ADDITIONAL FUEL STRAINER AND WATER SEPARATOR

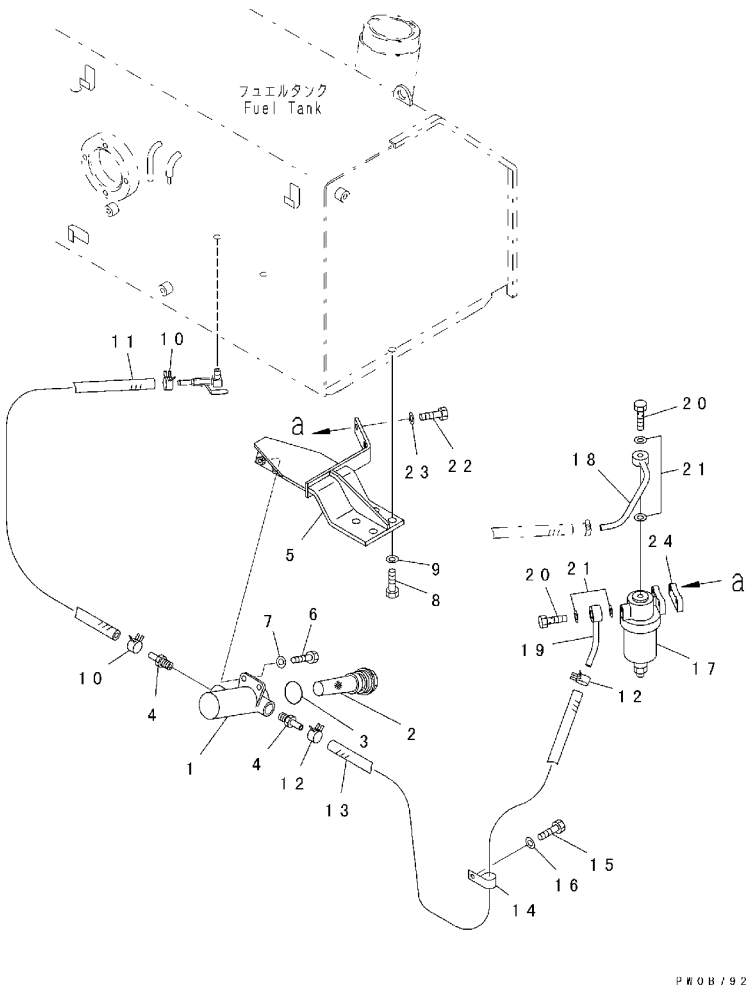

FIG. NO. : D0210-01A1

INDEX	PART NO.	DESCRIPTION	Q'TY	SERIAL NO.
1	07058-00001	CASE	1	B30001-
2	154-04-12531	STRAINER	1	B30001-
3	07002-14234	O-RING	1	B30001-
4	6212-61-6950	NIPPLE	2	B30001-
5	124-04-61310	BRACKET	1	B30001-
6	01010-80825	BOLT	2	B30001-
7	01643-30823	WASHER	2	B30001-
8	01010-81225	BOLT	4	B30001-
9	01643-31232	WASHER	4	B30001-
10	11Y-09-11140	CLIP	2	B30001-
11	124-04-51290	HOSE	1	B30001-
12	07281-00197	CLAMP	2	B30001-
13	07288-01004	HOSE	1	B30001-
14	04434-51612	CLIP	1	B30001-
15	01010-81220	BOLT	1	B30001-
16	01643-31232	WASHER	1	B30001-
17	(600-311-9700)	WATER SEPARATOR A.	1	B30001-
18	124-04-51270	TUBE	1	B30001-
19	6204-71-5730	JOINT	1	B30001-
20	07206-31014	BOLT	2	B30001-
21	07005-01412	GASKET	4	B30001-
22	01010-81030	BOLT	2	B30001-
23	01643-31032	WASHER	2	B30001-
24	124-04-51320	PLATE	1	B30001-

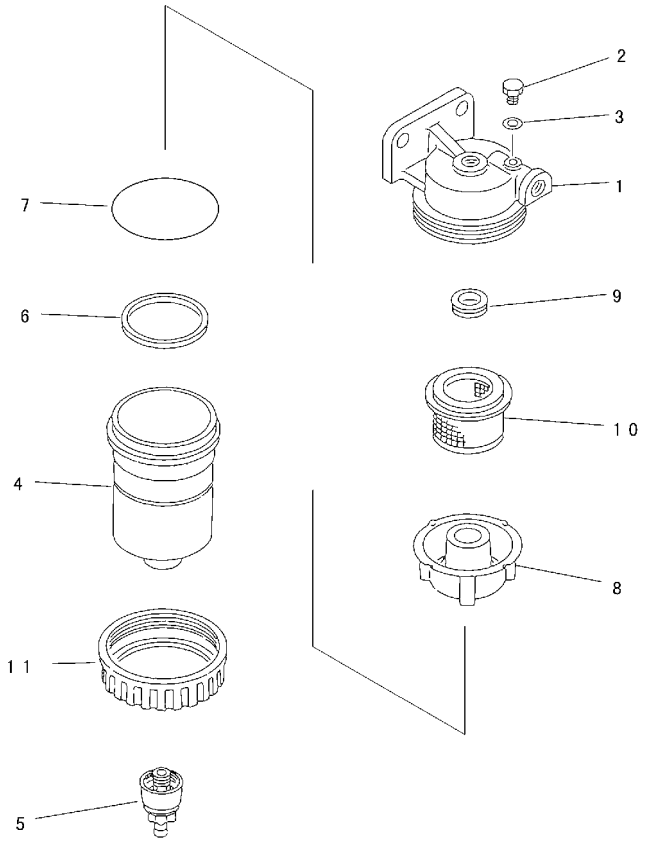

PE30742

INDEX	PART NO.	DESCRIPTION	Q'TY	SERIAL NO.
	600-311-9732	WATER SEPARATOR A.	1	B30001-
1	600-311-9912	. COVER	1	B30001-
2	6110-73-6231	. PLUG, AIR	1	B30001-
3	07005-00812	. GASKET	1	B30001-
4	600-311-9921	. CASE	1	B30001-
5	600-311-9760	. PLUG, DRAIN	1	B30001-
6	600-311-9950	. RING	1	B30001-
7	600-311-9490	. O-RING	1	B30001-
8	600-311-9941	. BAFFLE	1	B30001-
9	600-311-9961	. GASKET	1	B30001-
10	600-311-9971	. SCREEN	1	B30001-
11	600-311-9931	. NUT	1	B30001-

ELECTRICAL SYSTEM

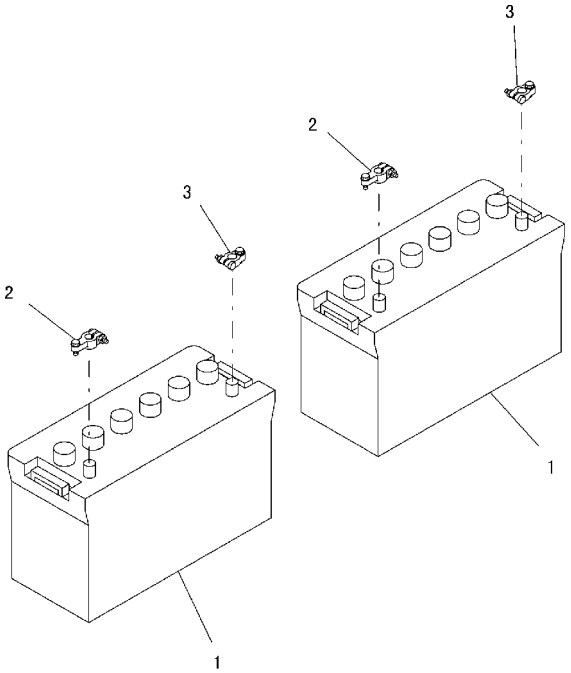

PAA7366

INDEX	PART NO.	DESCRIPTION	Q'TY	SERIAL NO.
1	124-06-51160	BATTERY	2	B30025-
	124-06-51150	BATTERY	2	B30001-B30024
2	08000-00000	TERMINAL, (+)	2	B30001-
3	08000-00001	TERMINAL, (-)	2	B30001-

FIG. E0110-01A1 BATTERY (REGULATION OF EC INCLUSION)

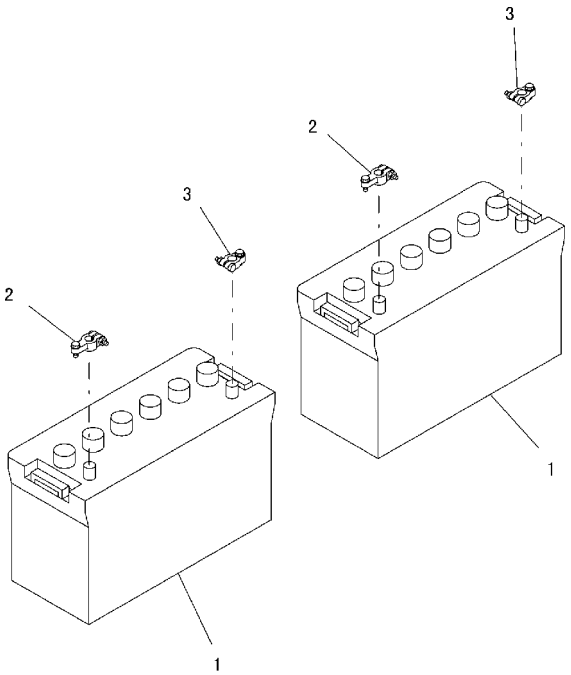

PAA7366

FIG. NO. : E0110-01A1

INDEX	PART NO.	DESCRIPTION	Q'TY	SERIAL NO.
1	08000-32212	BATTERY (115E41R)	2	B30001-
2	08000-00000	TERMINAL, (+)	2	B30001-
3	08000-00001	TERMINAL, (-)	2	B30001-

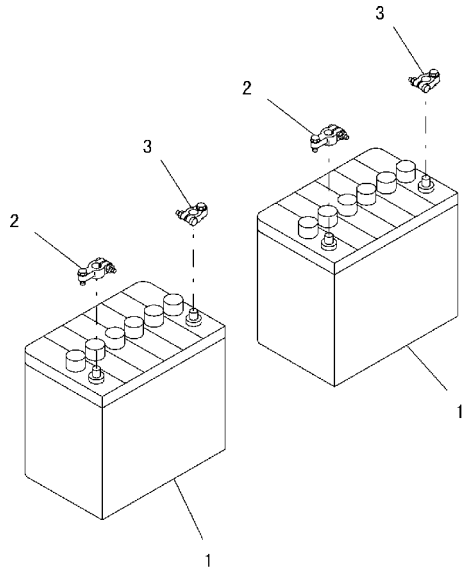

PAA7365

INDEX	PART NO.	DESCRIPTION	Q'TY	SERIAL NO.
1	08000-42207	BATTERY (65D26R)	2	B30001-
2	08000-00000	TERMINAL, (+)	2	B30001-
3	08000-00001	TERMINAL, (-)	2	B30001-

FIG. E0110-01A3 BATTERY (LARGE CAPACITY)

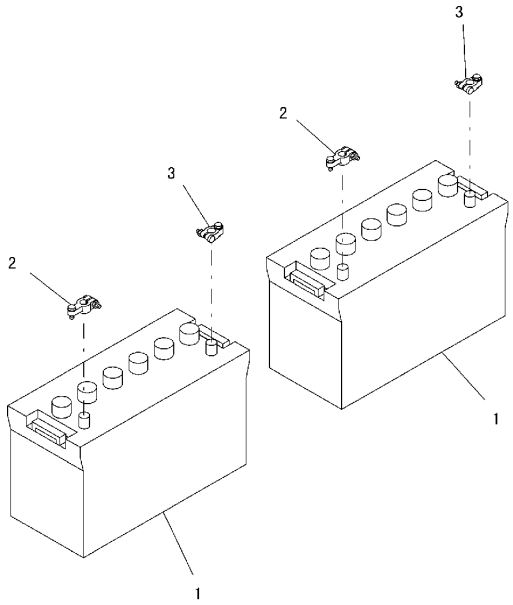

PAA7368

FIG. NO. : E0110-01A3

INDEX	PART NO.	DESCRIPTION	Q'TY	SERIAL NO.
1	203-06-51150	BATTERY (130E41R)	2	B30001-
2	08000-00000	TERMINAL, (+)	2	B30001-
3	08000-00001	TERMINAL, (-)	2	B30001-

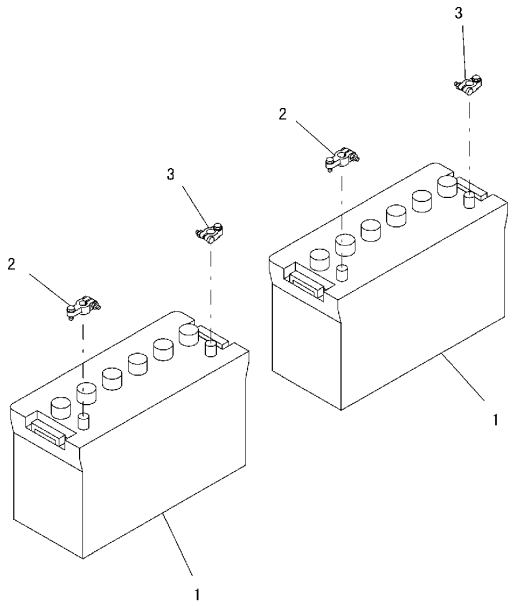

PAA7366

INDEX	PART NO.	DESCRIPTION	Q'TY	SERIAL NO.
1	08000-42212	BATTERY (115E41R)	2	B30001-
2	08000-00000	TERMINAL, (+)	2	B30001-
3	08000-00001	TERMINAL, (-)	2	B30001-

FIG. E0200-01A0 VEHICLE WIRING

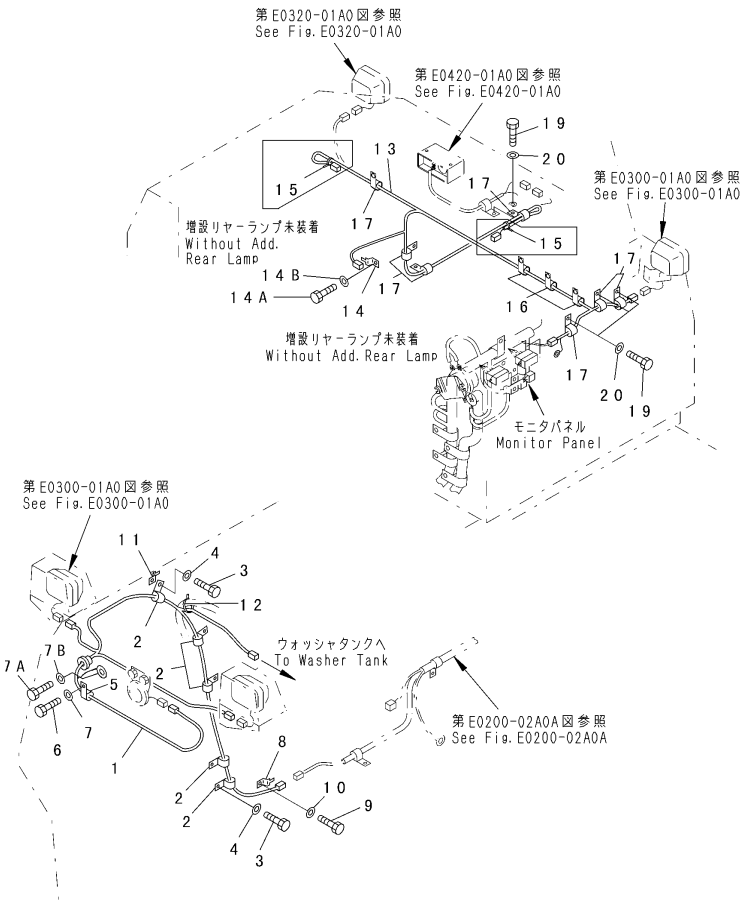

FIG. NO. : E0200-01A0

INDEX	PART NO.	DESCRIPTION	Q'TY	SERIAL NO.
1	124-06-64142	WIRING HARNESS	1	B30001-
2	04434-51410	CLIP	6	B30084-
	04434-51410	CLIP	4	B30001-B30083
3	01010-81016	BOLT	6	B30084-
	01010-81016	BOLT	4	B30001-B30083
4	01643-31032	WASHER	6	B30084-
	01643-31032	WASHER	4	B30001-B30083
5	04434-51010	CLIP	1	B30001-
6	01010-81016	BOLT	1	B30001-
7	01643-31032	WASHER	1	B30001-
7A	01010-81016	BOLT	1	B30084-
7B	01643-31032	WASHER	1	B30084-
8	08053-00910	CLIP	1	B30001-
9	01010-81016	BOLT	1	B30001-
10	01643-31032	WASHER	1	B30001-
11	08053-00910	CLIP	1	B30001-
12	08034-00519	BAND	1	B30001-
13	124-06-64151	WIRING HARNESS	1	B30001-
14	08193-21012	CLIP	1	B30001-
14A	01010-81016	BOLT	1	B30084-
14B	01643-31032	WASHER	1	B30084-
15	08034-00414	BAND	2	B30001-
16	04434-51410	CLIP	4	B30084-
	04434-51010	CLIP	2	B30001-B30083
17	04434-51010	CLIP	6	B30084-
	04434-51010	CLIP	1	B30001-B30083
19	01010-81016	BOLT	10	B30084-
	01010-81016	BOLT	4	B30001-B30083
20	01643-31032	WASHER	10	B30084-
	01643-31032	WASHER	4	B30001-B30083

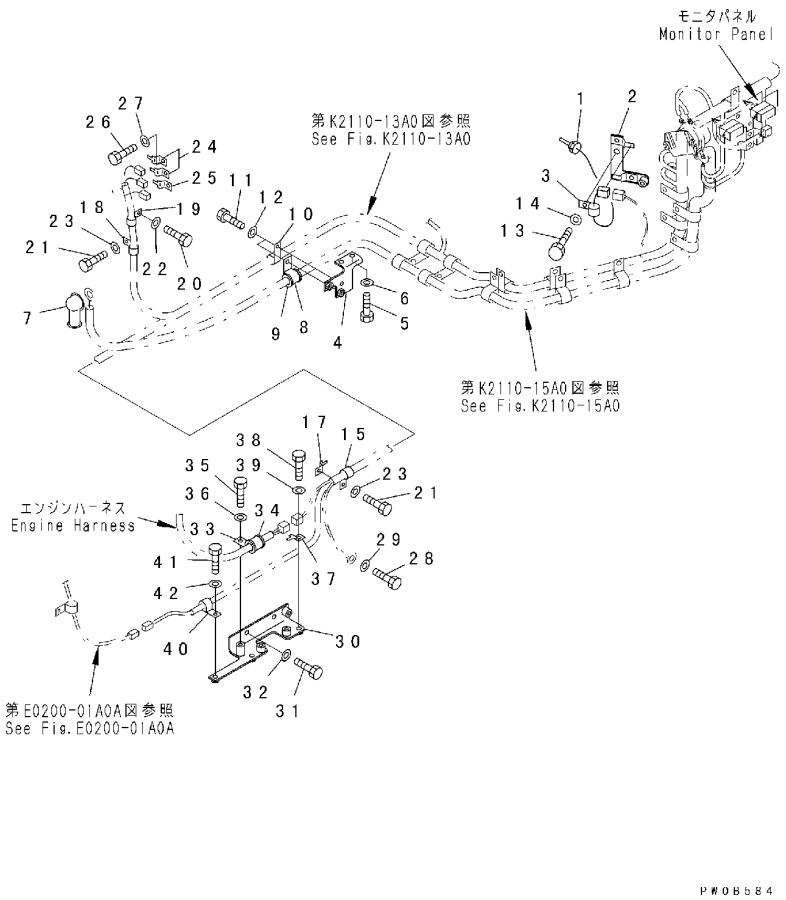

INDEX	PART NO.	DESCRIPTION	Q'TY	SERIAL NO.
1	7861-93-3320	SENSOR	1	B30001-
2	124-06-61390	BRACKET	1	B30001-
3	04434-50810	CLIP	1	B30001-
4	124-54-64111	BRACKET	1	B30001-
5	01010-81020	BOLT	2	B30001-
6	01643-31032	WASHER	2	B30001-
7	08038-00035	CAP	1	B30001-
8	04434-53212	CLIP	1	B30001-
9	07095-20523	CUSHION	1	B30001-
10	04434-52312	CLIP	1	B30001-
11	01010-81016	BOLT	2	B30001-
12	01643-31032	WASHER	2	B30001-
13	01010-81016	BOLT	1	B30001-
14	01643-31032	WASHER	1	B30001-
15	04434-52312	CLIP	1	B30001-
17	08193-21021	CLIP	2	B30001-
18	04434-52712	CLIP	1	B30001-
19	04434-51912	CLIP	1	B30001-
20	01010-81016	BOLT	2	B30001-
21	01010-81220	BOLT	2	B30001-
22	01643-31032	WASHER	2	B30001-
23	01643-31232	WASHER	2	B30001-
24	08053-00910	CLIP	2	B30001-
25	08193-21021	CLIP	1	B30001-
26	01010-81016	BOLT	3	B30001-
27	01643-31032	WASHER	3	B30001-
28	01010-81220	BOLT	1	B30001-
29	01643-31232	WASHER	1	B30001-
30	124-06-64111	BRACKET	1	B30001-
31	01010-81220	BOLT	2	B30001-
32	01643-31232	WASHER	2	B30001-
33	04434-52512	CLIP	1	B30001-
34	07095-20318	CUSHION	1	B30001-
35	01010-81016	BOLT	1	B30001-
36	01643-31032	WASHER	1	B30001-
37	08053-00910	CLIP	2	B30001-
38	01010-81016	BOLT	2	B30001-
39	01643-31032	WASHER	2	B30001-
40	04434-51912	CLIP	1	B30001-
41	01010-81016	BOLT	1	B30001-
42	01643-31032	WASHER	1	B30001-

FIG. E0210-01A0 BATTERY WIRING

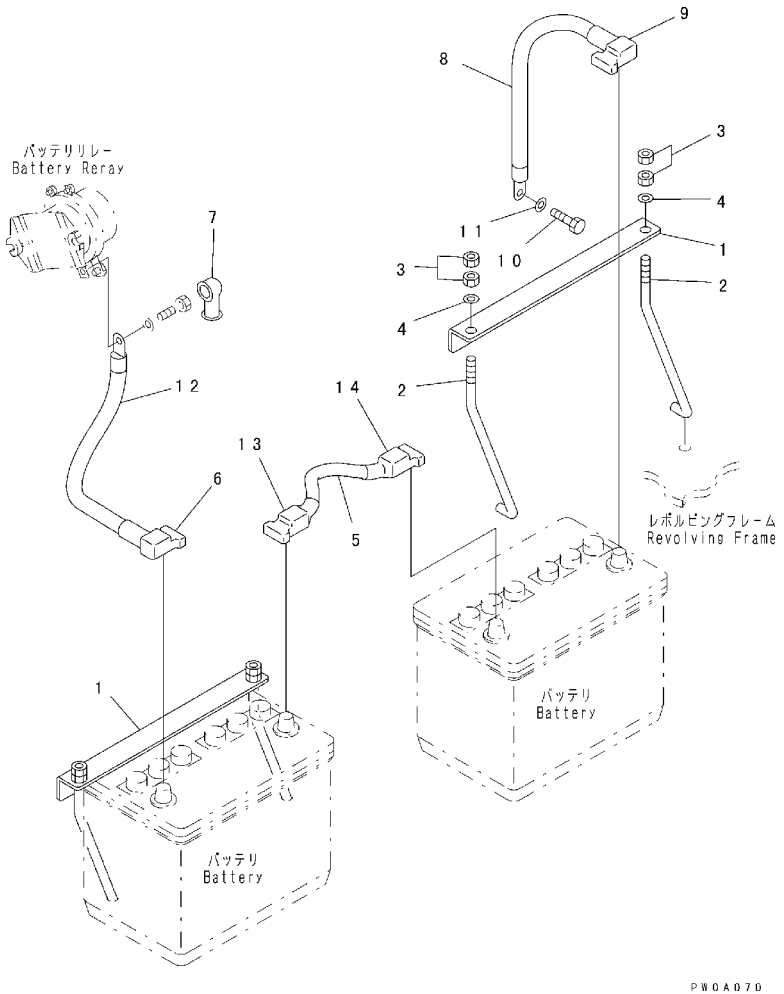

FIG. NO. : E0210-01A0

INDEX	PART NO.	DESCRIPTION	Q'TY	SERIAL NO.
1	124-06-51113	HOLDER	2	B30001-
2	124-06-54340	BOLT	4	B30001-
3	01580-11008	NUT	8	B30001-
4	01643-31032	WASHER	4	B30001-
5	08028-64025	WIRE	1	B30001-
6	21J-06-11570	COVER, R. H.	1	B30001-
7	08038-00035	CAP	1	B30001-
8	08028-44040	CABLE	1	B30001-
9	14X-06-12260	COVER, L. H.	1	B30001-
10	01010-81016	BOLT	1	B30001-
11	01643-31032	WASHER	1	B30001-
12	08028-64030	WIRE	1	B30001-
13	08038-42511	CAP	1	B30001-
14	08038-42511	CAP	1	B30001-

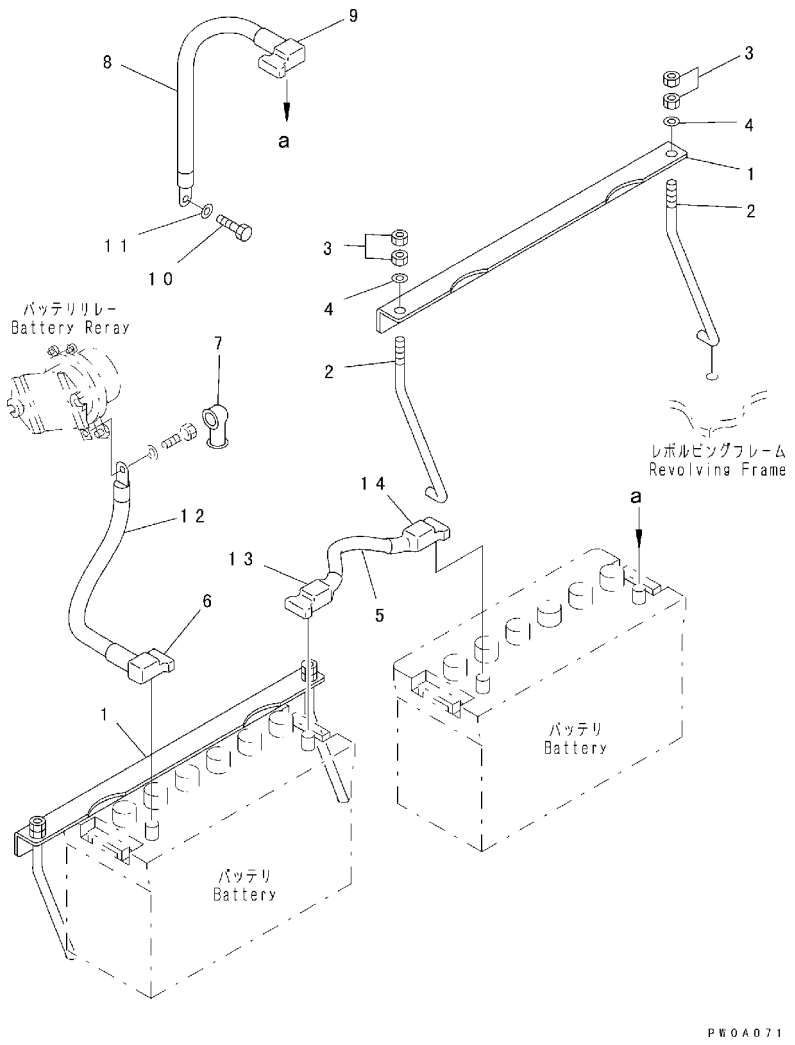

INDEX	PART NO.	DESCRIPTION	Q'TY	SERIAL NO.
1	124-06-51170	HOLDER	2	B30028-
	124-06-51140	HOLDER	2	B30001-B30027
2	124-06-54340	BOLT	4	B30001-
3	01580-11008	NUT	8	B30001-
4	01643-31032	WASHER	4	B30001-
5	08028-64025	WIRE	1	B30008-
	08028-64015	WIRE	1	B30001-B30007
6	21J-06-11570	COVER, L. H.	1	B30001-
7	08038-00035	CAP	1	B30001-
8	08028-44040	CABLE	1	B30001-
9	14X-06-12260	COVER, L. H.	1	B30001-
10	01010-81016	BOLT	1	B30001-
11	01643-31032	WASHER	1	B30001-
12	08028-64030	WIRE	1	B30001-
13	08038-42511	CAP	1	B30001-
14	08038-42511	CAP	1	B30001-

FIG. E0300-01A0 VEHICLE LAMP

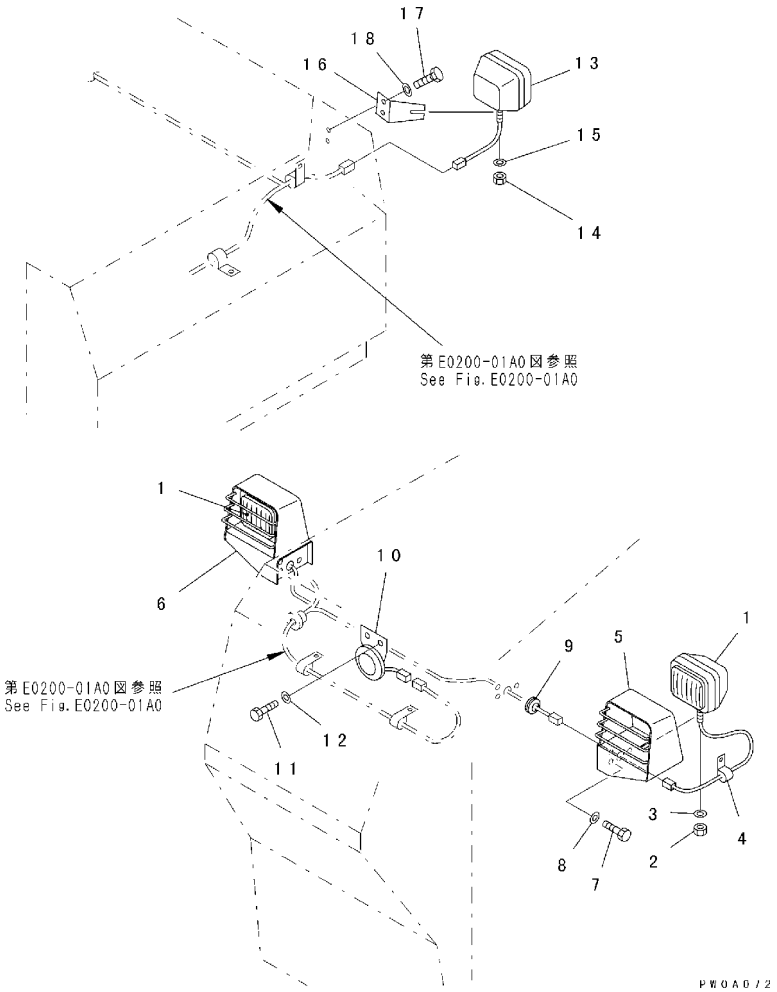

FIG. NO. : E0300-01A0

INDEX	PART NO.	DESCRIPTION	Q'TY	SERIAL NO.
1	14X-06-21120	WORK LAMP ASS'Y, 60W	2	B30001-
2	01582-11411	. NUT	1	B30001-
3	01643-31445	. WASHER	1	B30001-
4	08036-01014	CLIP	2	B30001-
5	134-54-61711	GUARD, LAMP, L. H.	1	B30001-
6	134-54-61721	GUARD, LAMP, R. H.	1	B30001-
7	01010-81220	BOLT	6	B30001-
8	01643-31232	WASHER	6	B30001-
9	287-43-13270	CUSHION	2	B30001-
10	08160-72400	HORN	1	B30001-
11	01010-80816	BOLT	2	B30001-
12	01643-30823	WASHER	2	B30001-
13	14X-06-21120	WORK LAMP ASS'Y, 60W	1	B30001-
14	01582-11411	. NUT	1	B30001-
15	01643-31445	. WASHER	1	B30001-
16	124-06-54111	BRACKET	1	B30001-
17	01010-81225	BOLT	2	B30001-
18	01643-31232	WASHER	2	B30001-

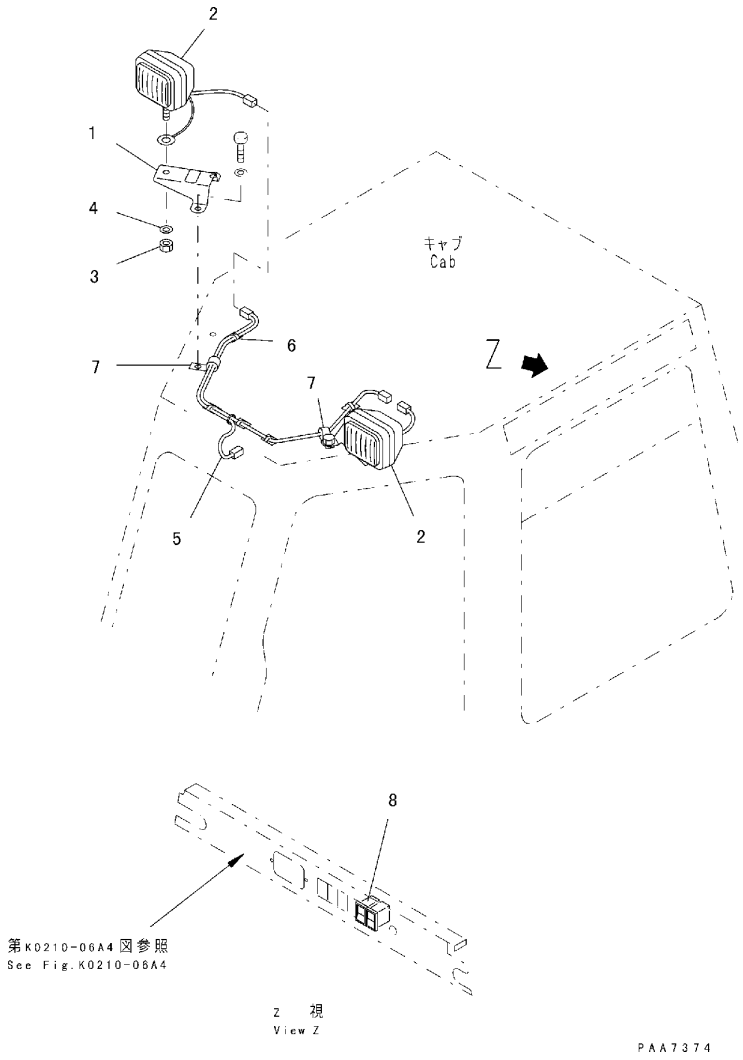

INDEX	PART NO.	DESCRIPTION	Q'TY	SERIAL NO.
1	14X-911-6241	BRACKET	2	B30001-
2	14X-06-11120	WORK LAMP ASS'Y, 60W	2	B30001-
3	01582-11411	. NUT	1	B30001-
4	01643-31445	. WASHER	1	B30001-
5	14X-911-6321	WIRE ASS'Y	1	B30001-
6	21W-54-14690	CLIP	5	B30001-
7	08036-11214	CLIP	2	B30001-
8	14X-911-3710	SWITCH	1	B30001-

FIG. E0310-02A0 WORK LAMP (REAR)

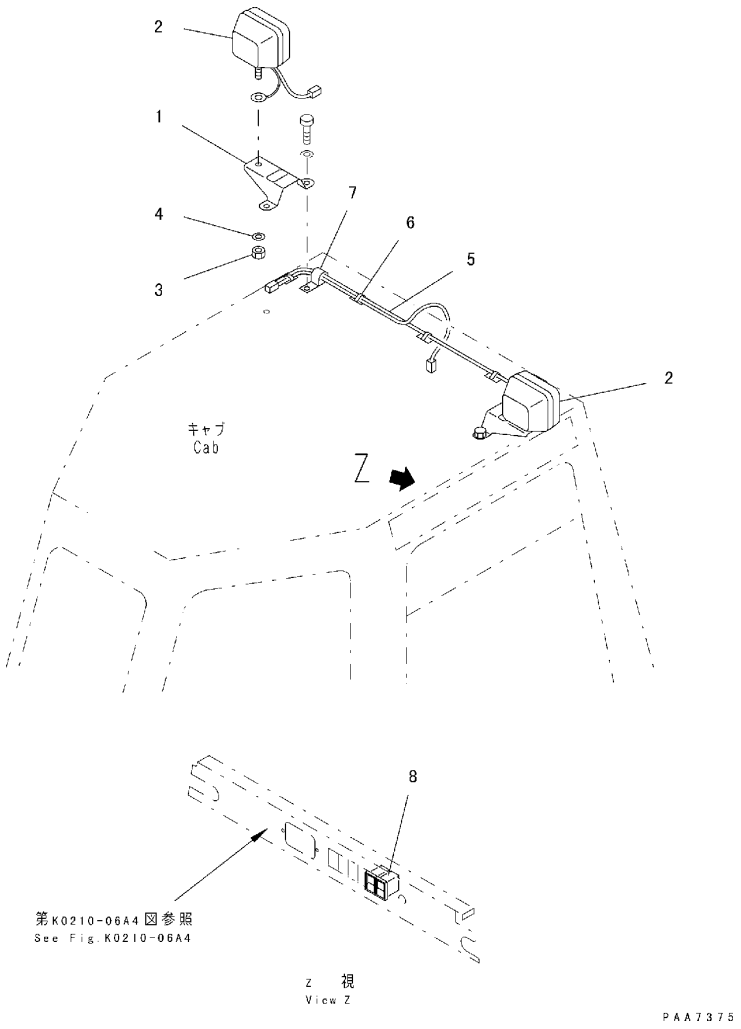

FIG. NO. : E0310-02A0

INDEX	PART NO.	DESCRIPTION	Q'TY	SERIAL NO.
1	14X-911-6241	BRACKET	2	B30001-
2	14X-06-11120	WORK LAMP ASS'Y, 60W	2	B30001-
3	01582-11411	. NUT	1	B30001-
4	01643-31445	. WASHER	1	B30001-
5	14X-911-6331	WIRE ASS'Y	1	B30001-
6	21W-54-14690	CLIP	5	B30001-
7	08036-11214	CLIP	2	B30001-
8	14X-911-3710	SWITCH	1	B30001-

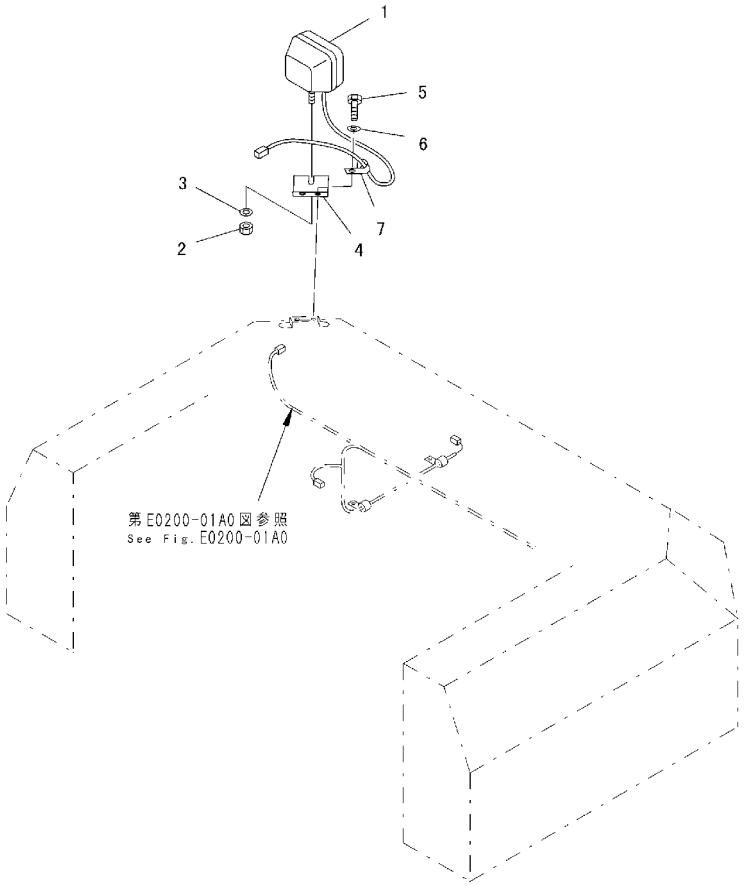

INDEX	PART NO.	DESCRIPTION	Q'TY	SERIAL NO.
1	14X-06-21120	WORK LAMP ASS'Y, 60W	1	B30001-
2	01582-11411	. NUT	1	B30001-
3	01643-31445	. WASHER	1	B30001-
4	124-06-54111	BRACKET	1	B30001-
5	01010-81220	BOLT	2	B30001-
6	01643-31232	WASHER	2	B30001-
7	04434-51012	CLIP	1	B30001-

FIG. E0420-01A0 BACK-UP ALARM

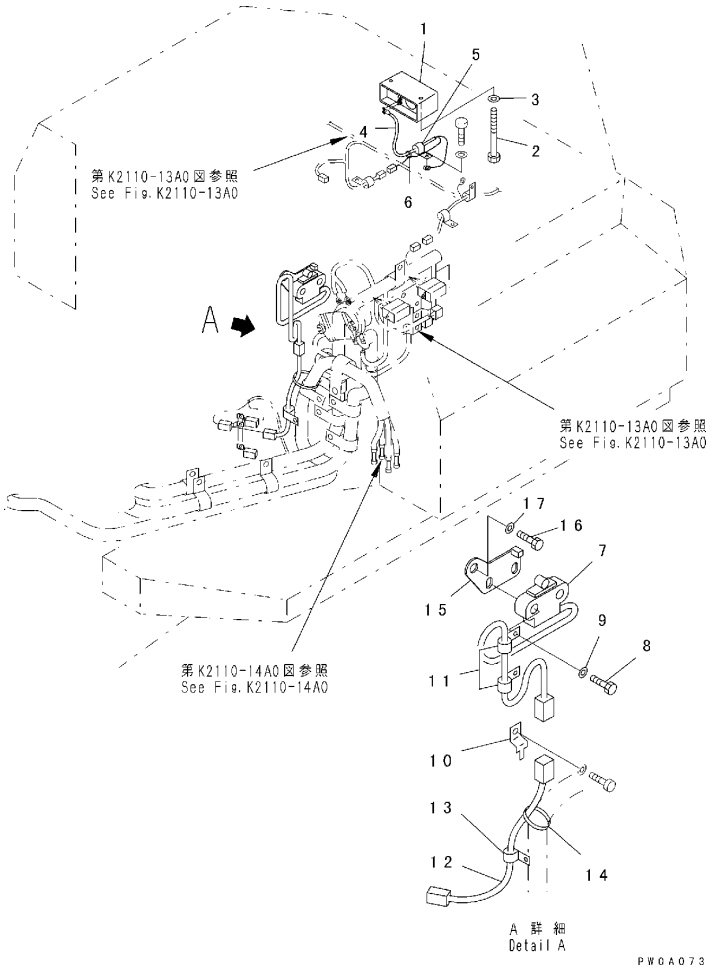

FIG. NO. : E0420-01A0

INDEX	PART NO.	DESCRIPTION	Q'TY	SERIAL NO.
1	415-06-22100	ALARM, BACK-UP	1	B30234-
	14X-06-11130	ALARM, BACK-UP	1	B30001-B30233
2	01011-81000	BOLT	2	B30001-
3	01643-31032	WASHER	2	B30001-
4	14X-06-24430	WIRING HARNESS	1	B30001-
5	08036-01214	CLIP	1	B30001-
6	08034-00414	BAND	2	B30001-
7	14X-06-12120	SWITCH	1	B30001-
8	01010-81035	BOLT	2	B30001-
9	01643-31032	WASHER	2	B30001-
10	08053-01510	CLIP	1	B30001-
11	04435-50810	CLIP	2	B30001-
12	14X-06-14460	WIRING HARNESS	1	B30001-
13	08036-01214	CLIP	1	B30001-
14	08034-00414	BAND	2	B30001-
15	124-06-54350	PLATE	1	B30001-
16	01010-81020	BOLT	1	B30001-
17	01643-31032	WASHER	1	B30001-

POWER TRAIN AND FINAL DRIVE

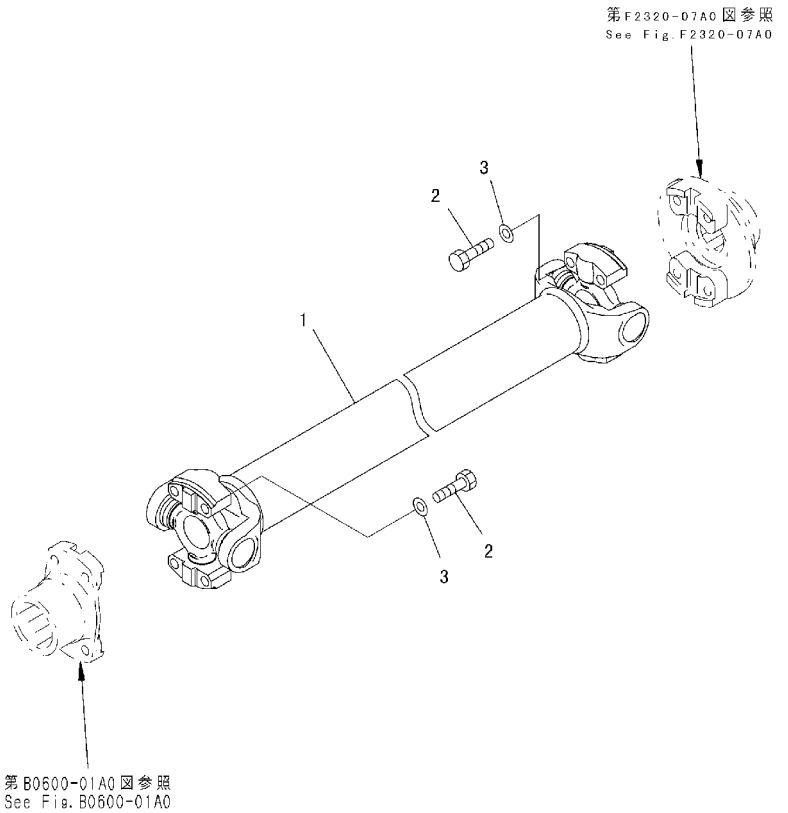

INDEX	PART NO.	DESCRIPTION	Q'TY	SERIAL NO.
1	124-12-51151	UNIVERSAL JOINT A.	1	B30001-
2	07372-21045	BOLT	8	B30001-
3	01643-51032	WASHER	8	B30001-

FIG. F2300-01A0 POWER LINE (POWER LINE MOUNT)

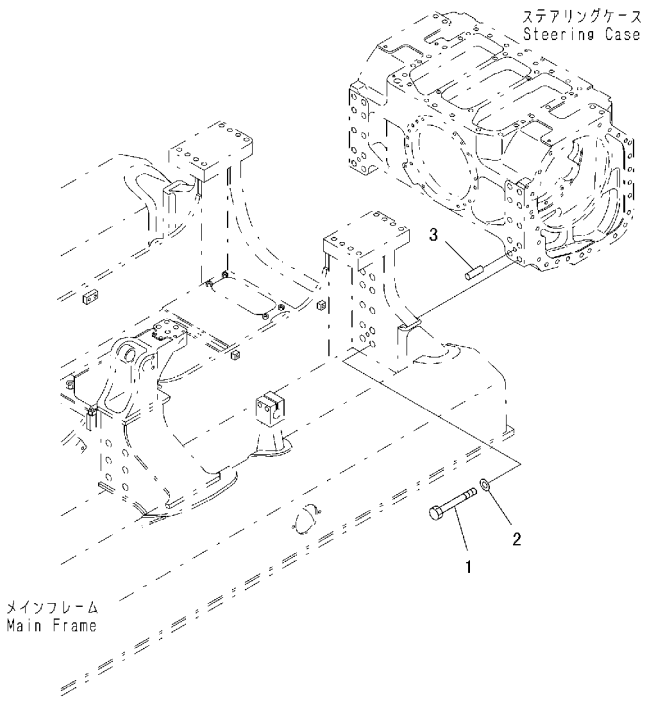

PWOA076

FIG. NO. : F2300-01A0

INDEX	PART NO.	DESCRIPTION	Q'TY	SERIAL NO.
1	01010-82495	BOLT	20	B30001-
2	01643-32460	WASHER	20	B30001-
3	04020-01638	PIN, DOWEL	2	B30001-

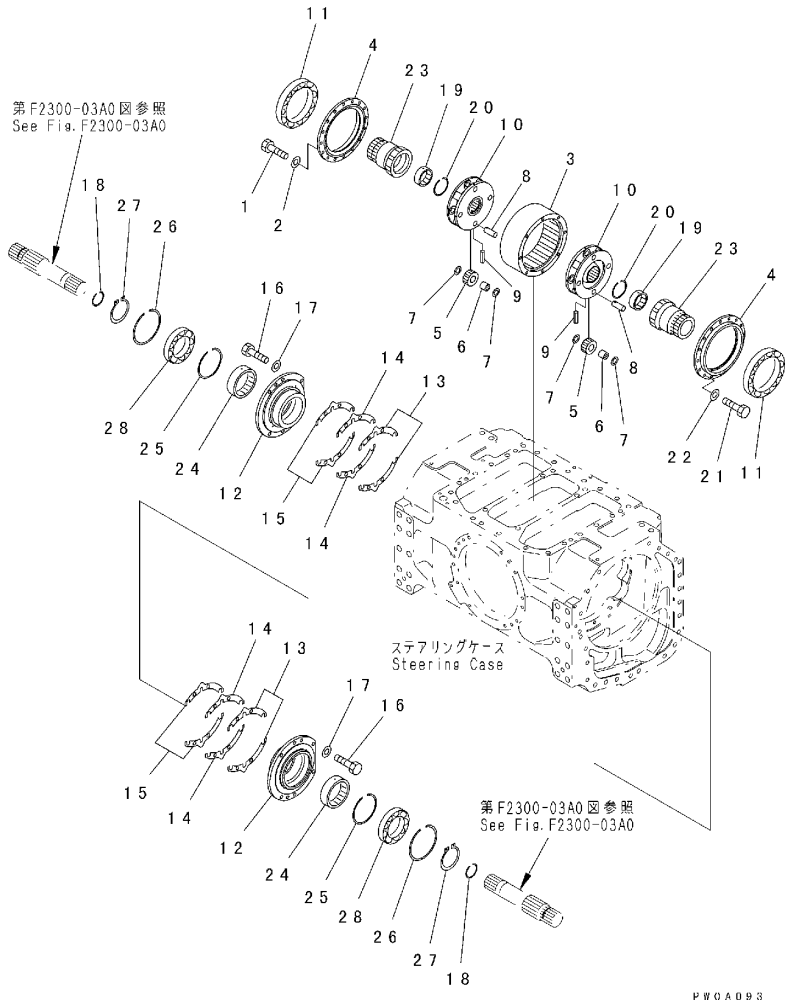

INDEX	PART NO.	DESCRIPTION	Q'TY	SERIAL NO.
1	01010-81040	BOLT	16	B30001-
2	01643-31032	WASHER	16	B30001-
3	124-22-51120	GEAR, RING	1	B30001-
4	124-22-51131	CAGE	2	B30001-
5	124-22-51140	GEAR	8	B30001-
6	423-15-19431	BEARING	8	B30001-
7	124-22-51150	WASHER, THRUST	16	B30001-
8	124-22-51160	SHAFT	8	B30001-
9	124-22-51170	PIN	8	B30001-
10	124-22-51180	CARRIER	2	B30001-
11	124-22-51190	BEARING	2	B30001-
12	124-22-51211	CAGE	2	B30001-
13	124-22-51222	SHIM, 1. 0MM	6	B30001-
14	124-22-51232	SHIM, 0. 3MM	8	B30001-
15	124-22-51242	SHIM, 0. 2MM	12	B30001-
16	01010-81235	BOLT	12	B30001-
17	01643-31232	WASHER	12	B30001-
18	14Y-22-14180	RING, SNAP	2	B30001-
19	124-22-51260	BEARING	2	B30001-
20	714-12-19520	RING	2	B30001-
21	01010-81030	BOLT	8	B30001-
22	01643-31032	WASHER	8	B30001-
23	124-22-52111	GEAR, SAN	2	B30001-
24	124-22-52120	BEARING	2	B30001-
25	04077-00120	RING	2	B30001-
26	04077-00140	RING	2	B30001-
27	04064-09030	RING	2	B30001-
28	06040-06018	BEARING	2	B30001-

FIG. F2300-03A0 POWER LINE (CLUTCH AND BRAKE)

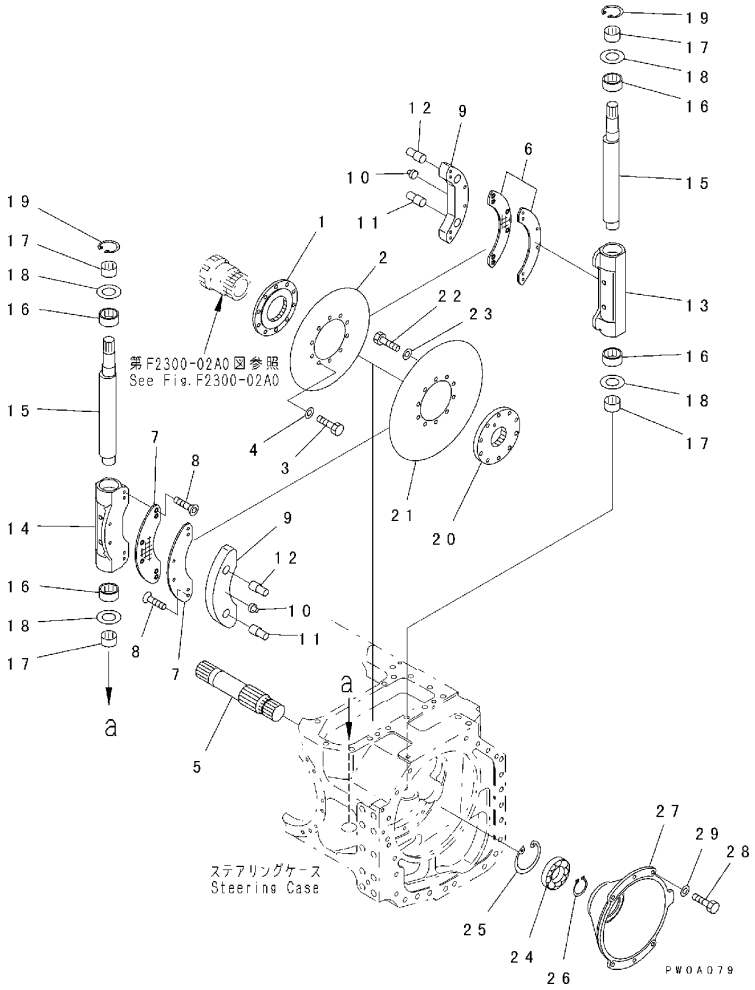

FIG. NO. : F2300-03A0

INDEX	PART NO.	DESCRIPTION	Q'TY	SERIAL NO.
1	124-22-52130	HUB	2	B30001-
2	124-22-53130	PLATE, CLUTCH	2	B30001-
3	01010-81225	BOLT	20	B30001-
4	01643-31232	WASHER	20	B30001-
5	124-22-51251	SHAFT	2	B30001-
6	124-22-53280	LINING, CLUTCH	4	B30001-
7	124-22-53280	LINING, BRAKE	4	B30001-
8	01240-00820	SCREW	48	B30001-
9	124-22-53331	PLATE, BACK-UP, CLUTCH	4	B30001-
10	124-22-52171	PIN	4	B30001-
11	124-22-52250	PIN	4	B30001-
12	124-22-52260	PIN	4	B30001-
13	124-22-53270	CASE, CAM, CLUTCH	2	B30001-
14	124-22-53270	CASE, CAM, BRAKE	2	B30001-
15	124-22-52211	SHAFT	4	B30001-
16	124-22-52220	BEARING	8	B30001-
17	124-22-52230	BEARING	8	B30001-
18	124-22-52240	SPACER	8	B30001-
19	04064-03515	RING	4	B30001-
20	124-22-53121	HUB	2	B30001-
21	124-22-53242	PLATE, BRAKE	2	B30001-
22	01010-81225	BOLT	20	B30001-
23	01643-31232	WASHER	20	B30001-
24	06040-06212	BEARING	2	B30001-
25	04065-01104	RING	2	B30001-
26	04064-06020	RING	2	B30001-
27	124-22-55122	CAGE	2	B30001-
28	01010-81230	BOLT	12	B30001-
29	01643-31232	WASHER	12	B30001-

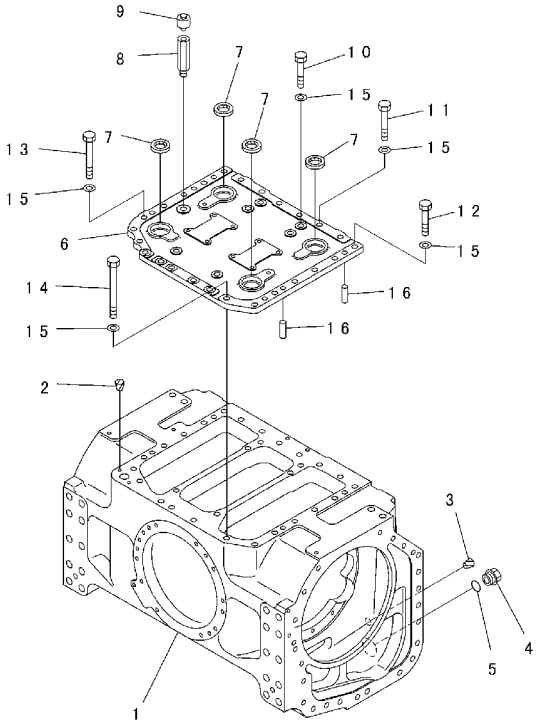

INDEX	PART NO.	DESCRIPTION	Q'TY	SERIAL NO.
1	124-22-55117	CASE	1	B30001-
2	07049-01215	PLUG	4	B30001-
3	07049-01620	PLUG	3	B30001-
4	07044-13620	PLUG	1	B30001-
5	07002-33634	O-RING	1	B30001-
6	124-22-56115	COVER	1	B30001-
7	07012-00038	SEAL	4	B30001-
8	154-21-11830	NIPPLE	1	B30001-
9	07030-00252	BREATHER	1	B30001-
10	01010-81660	BOLT	9	B30001-
11	01010-81660	BOLT	5	B30001-
12	01010-81665	BOLT	10	B30001-
13	01010-81675	BOLT	4	B30001-
14	01011-81630	BOLT	1	B30001-
15	01643-31645	WASHER	29	B30001-
16	04020-01638	PIN	4	B30001-

FIG. F2300-05A0 POWER LINE (MAIN PUMP AND TRANSMISSION PIPING)

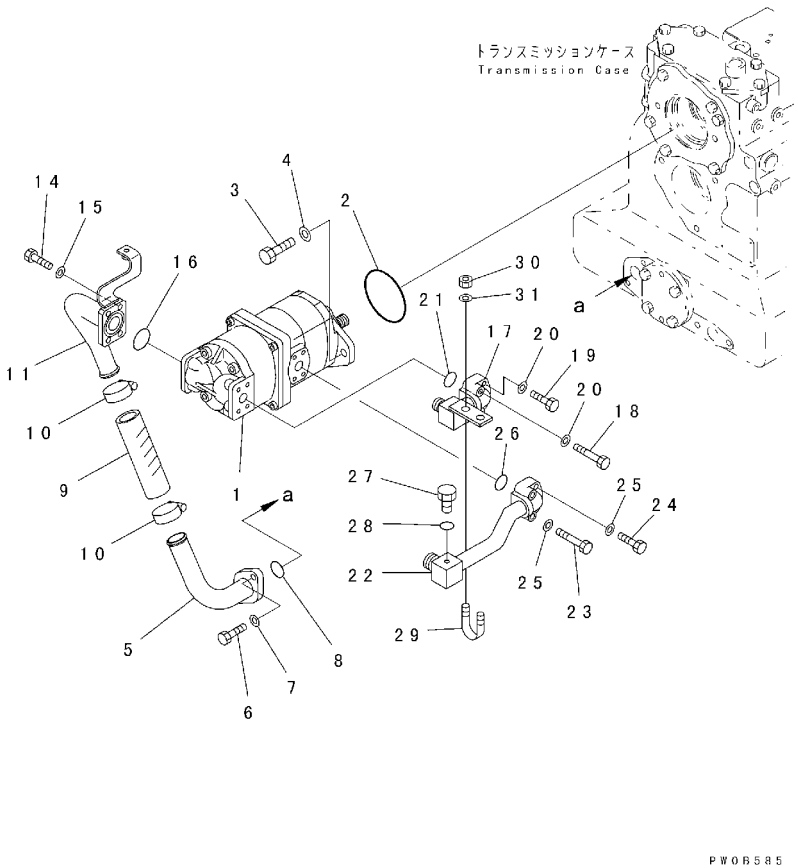

FIG. NO. : F2300-05A0

INDEX	PART NO.	DESCRIPTION	Q'TY	SERIAL NO.
1	(705-52-21070)	PUMP ASS'Y	1	B30001-
2	07000-72105	O-RING	1	B30001-
3	01010-81235	BOLT	2	B30001-
4	01643-31232	WASHER	2	B30001-
5	124-49-61111	TUBE	1	B30001-
6	01010-81040	BOLT	2	B30001-
7	01643-31032	WASHER	2	B30001-
8	07000-73032	O-RING	1	B30001-
9	07260-03214	HOSE	1	B30001-
10	07289-00045	CLAMP	2	B30001-
11	124-49-61122	TUBE	1	B30001-
14	01010-81040	BOLT	2	B30001-
15	01643-31032	WASHER	4	B30001-
16	07000-73042	O-RING	1	B30001-
17	124-49-61131	TUBE	1	B30001-
18	01010-80855	BOLT	2	B30001-
19	01010-80845	BOLT	2	B30001-
20	01643-30823	WASHER	4	B30001-
21	07000-73030	O-RING	1	B30001-
22	124-62-61220	TUBE	1	B30001-
23	01010-80855	BOLT	2	B30001-
24	01010-80845	BOLT	2	B30001-
25	01643-30823	WASHER	4	B30001-
26	07000-13030	O-RING	1	B30001-
27	07040-11007	PLUG	1	B30001-
28	07002-11023	O-RING	1	B30001-
29	07283-22738	CLIP	1	B30001-
30	01599-01011	NUT	2	B30001-
31	01643-31032	WASHER	2	B30001-

FIG. F2300-06A0 POWER LINE (STEERING CASE, BRAKE VALVE AND PRIORITY VALVE PIPING)

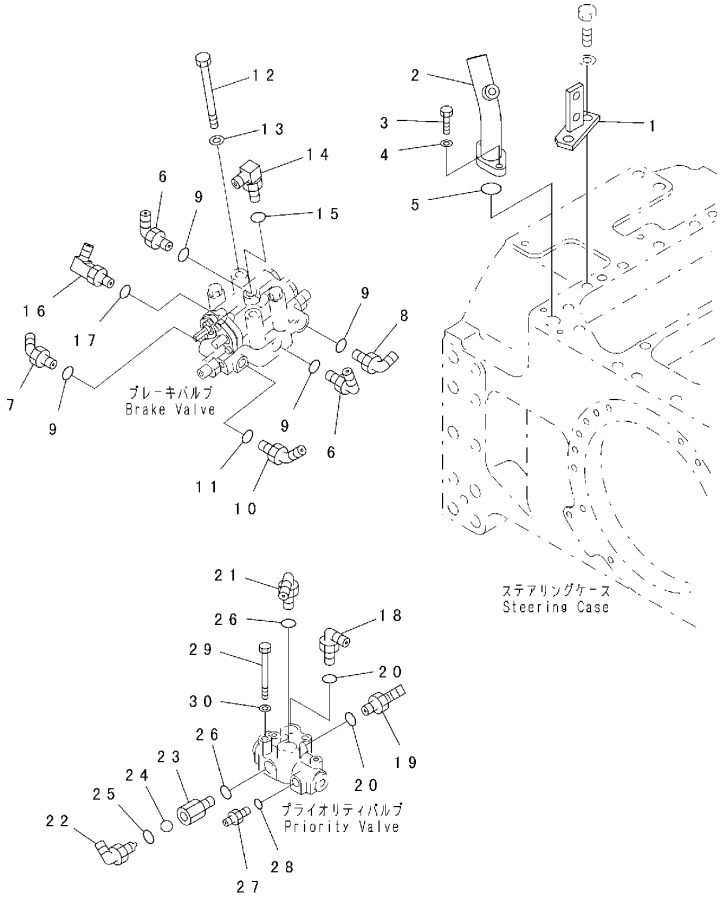

FIG. NO. : F2300-06A0

INDEX	PART NO.	DESCRIPTION	Q'TY	SERIAL NO.
1	124-62-51411	BRACKET	1	B30001-
2	124-49-51232	FILLER	1	B30001-
3	01010-81030	BOLT	2	B30001-
4	01643-31032	WASHER	2	B30001-
5	07000-73035	O-RING	1	B30001-
6	07235-10422	ELBOW	3	B30001-
7	07236-10315	ELBOW	1	B30001-
8	07235-10315	ELBOW	1	B30001-
9	07002-32034	O-RING	5	B30001-
10	07236-10210	ELBOW	1	B30001-
11	07002-31423	O-RING	1	B30001-
12	01011-81235	BOLT	2	B30001-
13	01643-31232	WASHER	2	B30001-
14	20Y-970-1731	ELBOW	1	B30001-
15	07002-31423	O-RING	1	B30001-
16	20T-62-56510	ELBOW	1	B30001-
17	07002-32034	O-RING	1	B30001-
18	07235-10522	ELBOW	1	B30001-
19	07236-10522	ELBOW	1	B30001-
20	07002-32434	O-RING	2	B30001-
21	07235-10315	ELBOW	1	B30001-
	124-49-51460	JOINT ASS'Y	1	B30001-
22	124-49-33161	. ELBOW	1	B30001-
23	124-49-51430	. JOINT	1	B30001-
24	04260-01587	. BALL	1	B30001-
25	07002-32034	. O-RING	1	B30001-
26	07002-32034	O-RING	2	B30001-
27	07236-10210	UNION	1	B30186-
	07230-20210	UNION	1	B30001-B30185
28	07002-31423	O-RING	1	B30001-
29	01010-81080	BOLT	2	B30001-
30	01643-31032	WASHER	2	B30001-

FIG. F2300-07A0 POWER LINE (POWER LINE OIL LINE)

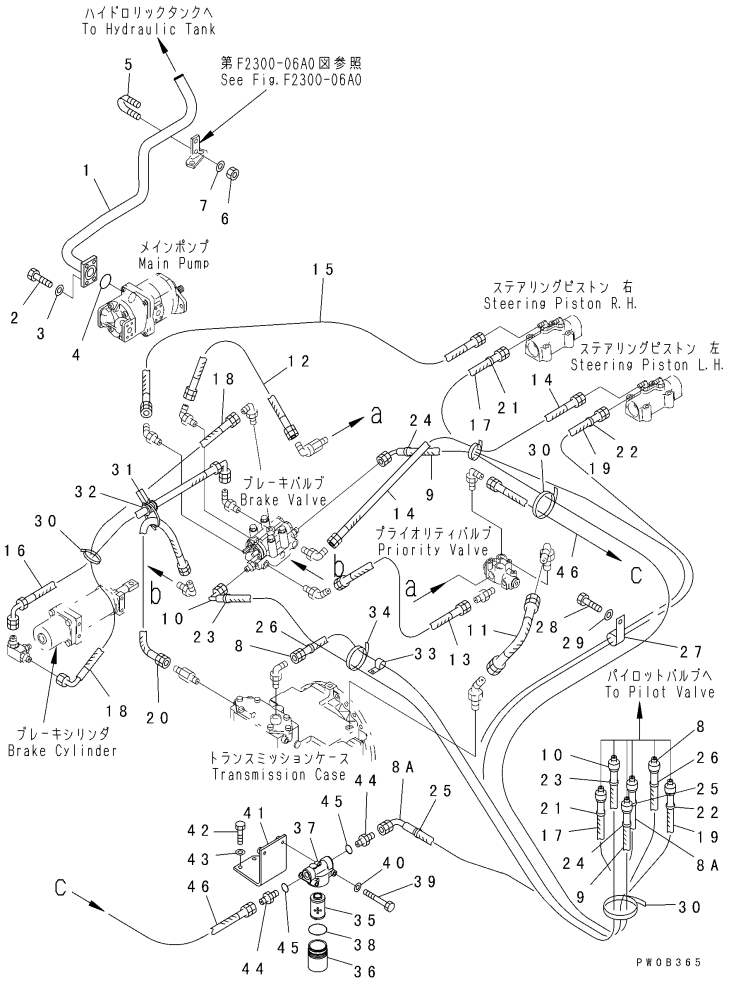

FIG. NO. : F2300-07A0

INDEX	PART NO.	DESCRIPTION	Q'TY	SERIAL NO.
1	124-62-61211	TUBE	1	B30001-
2	01010-81245	BOLT	4	B30001-
3	01643-31232	WASHER	4	B30001-
4	07000-13048	O-RING	1	B30001-
5	07283-23442	CLIP	1	B30001-
6	01599-01011	NUT	2	B30001-
7	01643-31032	WASHER	2	B30001-
8	124-40-61211	HOSE	1	B30001-
8A	124-40-61461	HOSE	1	B30001-
9	124-40-61220	HOSE	1	B30001-
10	124-40-61231	HOSE	1	B30001-
11	124-40-51240	HOSE	1	B30001-
12	07102-20405	HOSE	1	B30001-
13	124-40-51260	HOSE	1	B30001-
14	124-40-51270	HOSE	1	B30001-
15	124-40-51281	HOSE	1	B30001-
16	124-40-51410	HOSE	1	B30001-
17	134-49-61850	HOSE	1	B30001-
18	124-40-51420	HOSE	1	B30001-
19	124-40-61180	HOSE, 750MM	1	B30001-
20	124-40-51310	HOSE	1	B30001-
21	203-62-57910	MARK, 1	2	B30001-
22	203-62-57920	MARK, 2	2	B30001-
23	203-62-57930	MARK, 3	2	B30001-
24	203-62-57940	MARK, 4	2	B30001-
25	203-62-57950	MARK, 5	2	B30001-
26	203-62-57960	MARK, 6	2	B30001-
27	04434-53412	CLIP	1	B30001-
28	01010-81220	BOLT	1	B30001-
29	01643-31232	WASHER	1	B30001-
30	08034-00834	BAND	2	B30186-
	08034-00834	BAND	3	B30001-B30185
31	08034-00536	BAND	3	B30001-B30185
32	07095-20420	CUSHION	1	B30001-B30185
33	04434-51512	CLIP	1	B30001-
34	08034-00823	BAND	1	B30001-
	134-49-61770	FILTER ASS'Y	1	B30001-
35	134-49-61780	. ELEMENT	1	B30001-
36	134-49-61790	. CASE	1	B30001-
37	134-49-61860	. HEAD	1	B30001-
38	07000-02060	. O-RING	1	B30001-
39	01010-81095	BOLT	2	B30001-

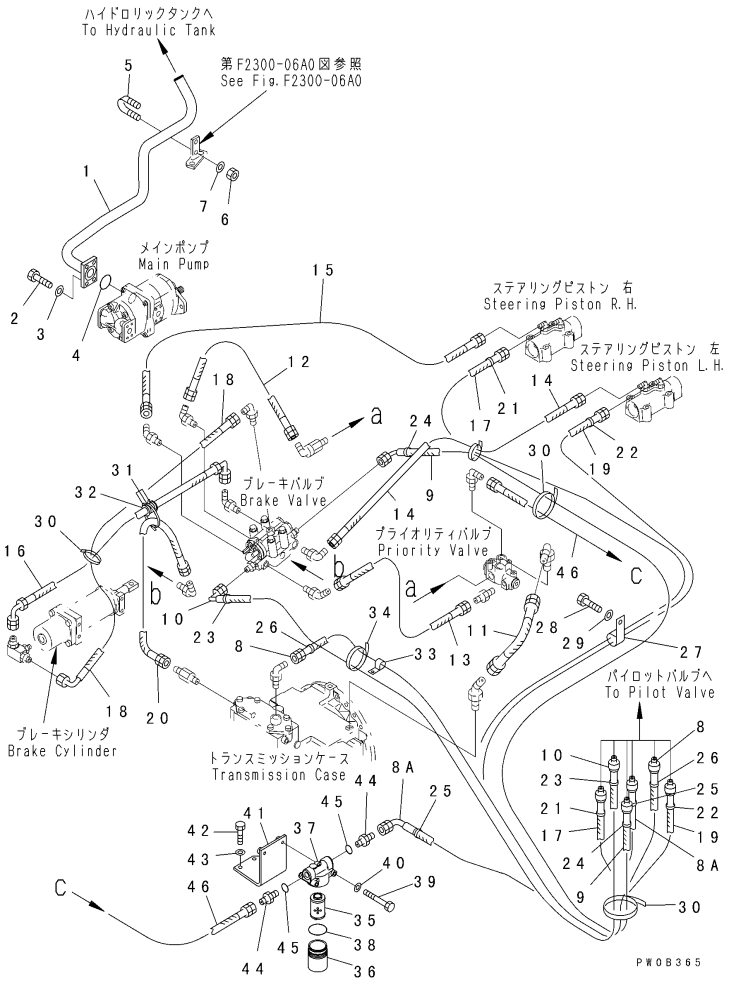

INDEX	PART NO.	DESCRIPTION	Q'TY	SERIAL NO.
30	08034-00834	BAND	3	B30001-
40	01643-31032	WASHER	2	B30001-
41	124-49-61530	BRACKET	1	B30001-
42	01010-81225	BOLT	2	B30001-
43	01643-31232	WASHER	2	B30001-
44	419-15-14710	NIPPLE	2	B30001-
45	07000-12018	O-RING	2	B30001-
46	07185-003A2	HOSE	1	B30001-

FIG. F2300-08A0 POWER LINE (CHECK LINE)

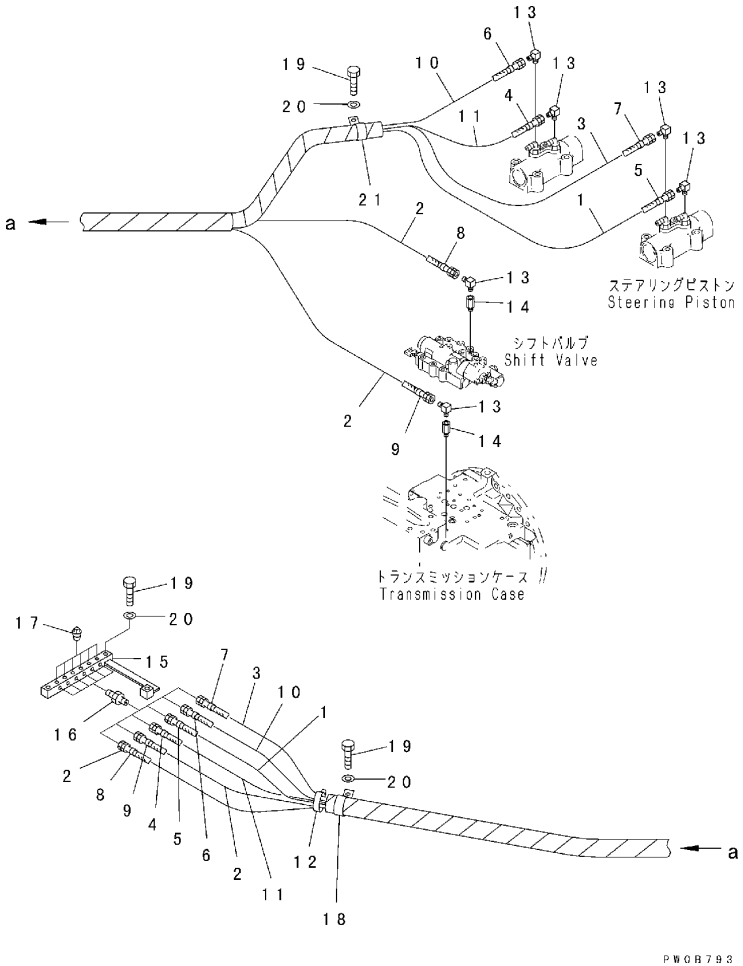

FIG. NO. : F2300-08A0

INDEX	PART NO.	DESCRIPTION	Q'TY	SERIAL NO.
1	124-49-61510	HOSE, 1800MM	1	B30001-
2	124-49-61541	HOSE, 1150MM	2	B30001-
3	124-49-61550	HOSE, 1700MM	1	B30001-
4	203-62-57910	MARK, 1	2	B30001-
5	203-62-57920	MARK, 2	2	B30001-
6	203-62-57930	MARK, 3	2	B30001-
7	203-62-57940	MARK, 4	2	B30001-
8	203-62-57950	MARK, 5	2	B30001-
9	203-62-57960	MARK, 6	2	B30001-
10	124-49-61480	HOSE, 1350MM	1	B30001-
11	124-49-61490	HOSE, 1450MM	1	B30001-
12	08034-00536	BAND	1	B30001-
13	202-62-21430	ELBOW	6	B30001-
14	203-70-56570	NIPPLE	2	B30001-
15	124-49-61440	BLOCK	1	B30001-
16	203-62-21740	NIPPLE	6	B30001-
17	07042-70108	PLUG	6	B30001-
18	04434-52712	CLIP	1	B30001-
19	01010-81220	BOLT	4	B30001-
20	01643-31232	WASHER	4	B30001-
21	04434-52512	CLIP	1	B30001-

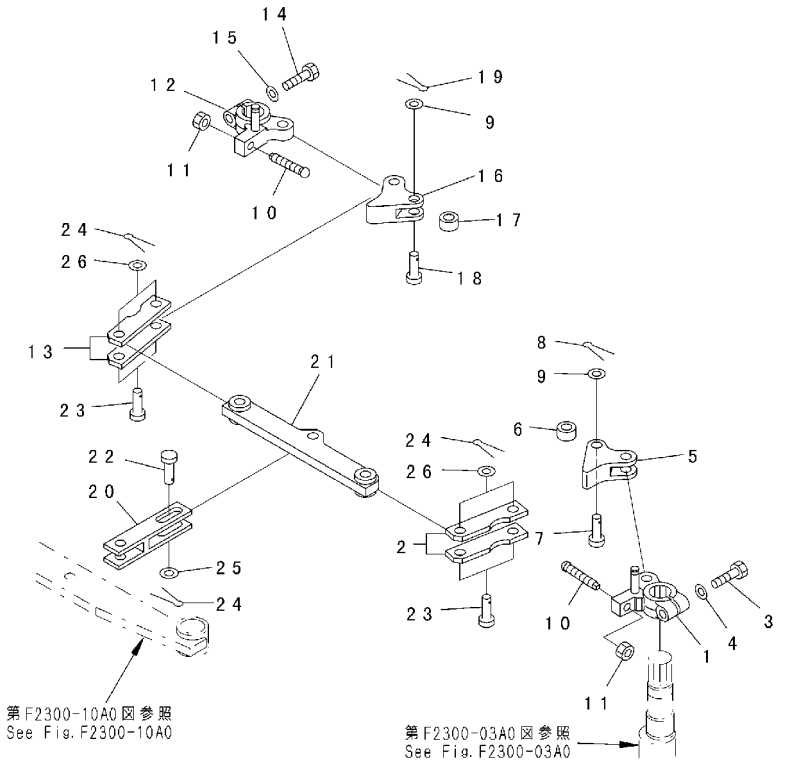

INDEX	PART NO.	DESCRIPTION	Q'TY	SERIAL NO.
1	124-43-52824	LEVER, L. H.	1	B30001-
2	124-43-52971	PLATE	2	B30001-
3	01010-81245	BOLT	1	B30001-
4	01643-31232	WASHER	1	B30001-
5	124-43-52864	YOKE	1	B30001-
6	170-33-13330	ROLLER	1	B30001-
7	04205-11645	PIN	2	B30001-
8	04050-14028	PIN	2	B30001-
9	01643-31645	WASHER	2	B30001-
10	124-43-52411	SCREW	1	B30001-
11	01583-11408	NUT	1	B30001-
12	124-43-52834	LEVER, R. H.	1	B30001-
13	124-43-52971	PLATE	2	B30001-
14	01010-81245	BOLT	1	B30001-
15	01643-31232	WASHER	1	B30001-
16	124-43-52864	YOKE	1	B30001-
17	170-33-13330	ROLLER	1	B30001-
18	04205-11645	PIN	1	B30001-
19	04050-14028	PIN	1	B30001-
20	124-43-52793	YOKE	1	B30001-
21	124-43-52784	LEVER	1	B30001-
22	04205-11645	PIN	1	B30001-
23	04205-11658	PIN	4	B30001-
24	04050-14028	PIN	5	B30001-
25	01643-31645	WASHER	1	B30001-
26	01640-21626	WASHER	4	B30001-

FIG. F2300-10A0 POWER LINE (BRAKE CONTROL) (2/2)

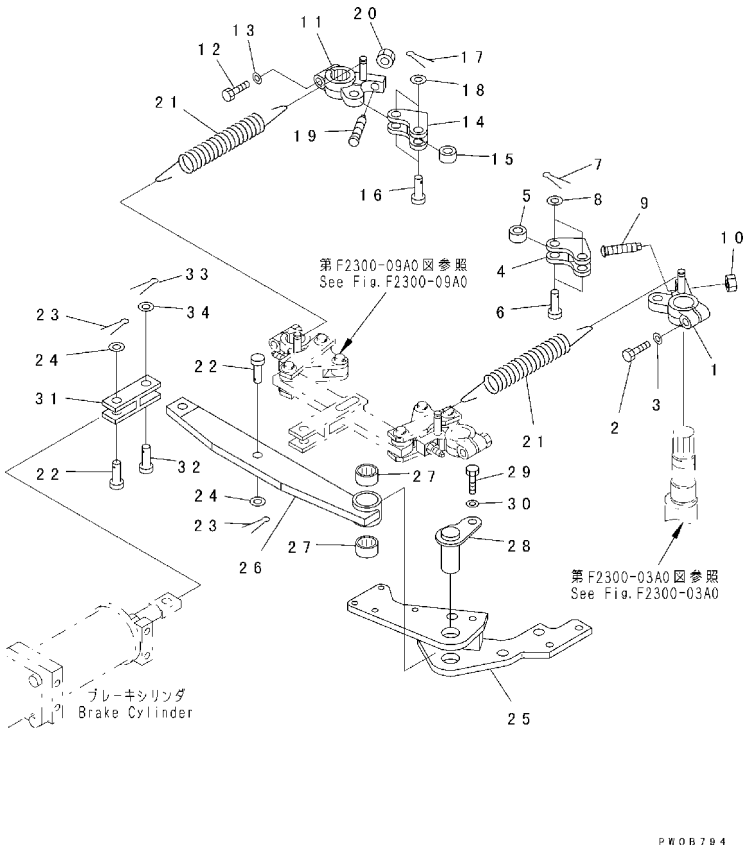

FIG. NO. : F2300-10A0

INDEX	PART NO.	DESCRIPTION	Q'TY	SERIAL NO.
1	124-43-52832	LEVER	1	B30001-
2	01010-81245	BOLT	1	B30001-
3	01643-31232	WASHER	1	B30001-
4	124-43-52960	YOKE	1	B30001-
5	170-33-13330	ROLLER	1	B30001-
6	04205-11645	PIN	2	B30001-
7	04050-14028	PIN	2	B30001-
8	01643-31645	WASHER	2	B30001-
9	124-43-52411	SCREW	1	B30001-
10	01583-11408	NUT	1	B30001-
11	124-43-52822	LEVER	1	B30001-
12	01010-81245	BOLT	1	B30001-
13	01643-31232	WASHER	1	B30001-
14	124-43-52960	YOKE	1	B30001-
15	170-33-13330	ROLLER	1	B30001-
16	04205-11645	PIN	2	B30001-
17	04050-14028	PIN	2	B30001-
18	01643-31645	WASHER	2	B30001-
19	124-43-52411	SCREW	1	B30001-
20	01583-11408	NUT	1	B30001-
21	124-43-52911	SPRING	2	B30001-
22	04205-11645	PIN	2	B30001-
23	04050-14028	PIN	2	B30001-
24	01643-31645	WASHER	2	B30001-
25	124-43-62331	BRACKET	1	B30001-
26	124-43-52773	LEVER	1	B30001-
27	06123-03018	BEARING	2	B30001-
28	124-43-52341	PIN	1	B30001-
29	01010-81220	BOLT	1	B30001-
30	01643-31232	WASHER	1	B30001-
31	124-43-55151	YOKE	1	B30001-
32	04205-11645	PIN	1	B30001-
33	04050-14028	PIN	1	B30001-
34	01643-31645	WASHER	1	B30001-

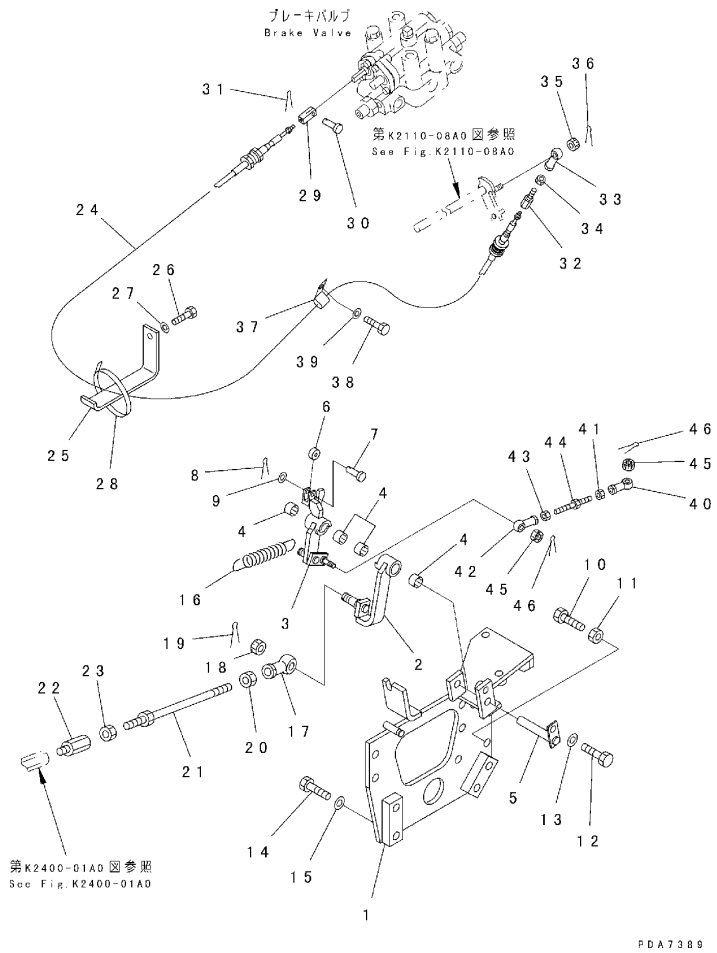

INDEX	PART NO.	DESCRIPTION	Q'TY	SERIAL NO.
1	124-43-62420	BRACKET	1	B30001-
2	124-43-52462	LEVER	1	B30001-
3	124-43-52470	LEVER	1	B30001-
4	06123-01414	BEARING	4	B30001-
5	124-43-52480	PIN	1	B30001-
6	103-43-21380	ROLLER	1	B30001-
7	04205-10625	PIN	1	B30001-
8	04050-11610	PIN	1	B30001-
9	01643-30623	WASHER	1	B30001-
10	01016-51250	BOLT	2	B30001-
11	01580-11210	NUT	2	B30001-
12	01010-81025	BOLT	1	B30001-
13	01643-31032	WASHER	1	B30001-
14	01010-81245	BOLT	4	B30001-
15	01643-31232	WASHER	4	B30001-
16	175-33-24650	SPRING	1	B30001-
17	04250-91474	END	1	B30001-
18	01593-31411	NUT	1	B30001-
19	04050-13022	PIN	1	B30001-
20	01508-41408	NUT	1	B30001-
21	04248-31430	ROD	1	B30001-
22	17A-43-24170	JOINT	1	B30001-
23	01582-11411	NUT	1	B30001-
24	124-43-61180	CABLE	1	B30001-
25	124-43-52240	PLATE	1	B30001-B30001
26	01010-81025	BOLT	1	B30001-B30001
27	01643-31032	WASHER	1	B30001-B30001
28	08034-00414	BAND	1	B30001-B30001
29	205-43-72890	YOKE	1	B30001-
30	04205-10622	PIN	1	B30001-
31	04050-11612	PIN	1	B30001-
32	124-43-52160	JOINT	1	B30001-
33	04250-90847	END	1	B30001-
34	01508-40805	NUT	1	B30001-
35	01590-30809	NUT	1	B30001-
36	04050-12015	PIN	1	B30001-
37	04434-51410	CLIP	1	B30001-
38	01010-81020	BOLT	1	B30001-
39	01643-31032	WASHER	1	B30001-
40	04250-80847	END	1	B30001-
41	01580-10806	NUT	1	B30001-
42	04250-90847	END	1	B30001-

FIG. F2300-11A0 POWER LINE (BRAKE CONTROL BRACKET)

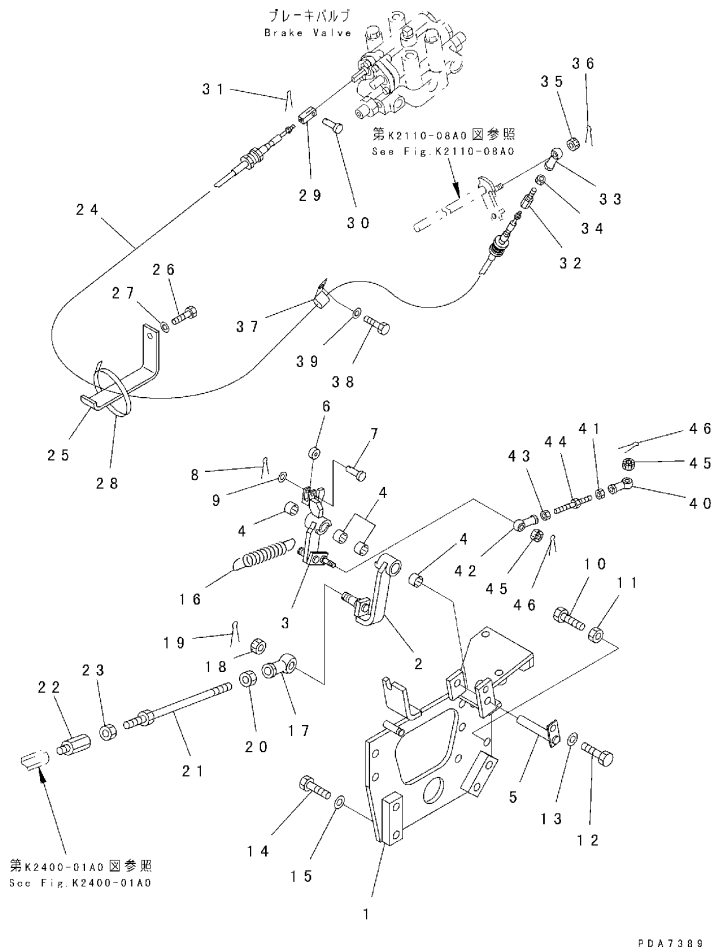

FIG. NO. : F2300-11A0

INDEX	PART NO.	DESCRIPTION	Q'TY	SERIAL NO.
43	01508-40805	NUT	1	B30001-
44	581-43-11870	ROD	1	B30001-
45	01590-30809	NUT	2	B30001-
46	04050-12015	PIN	2	B30001-

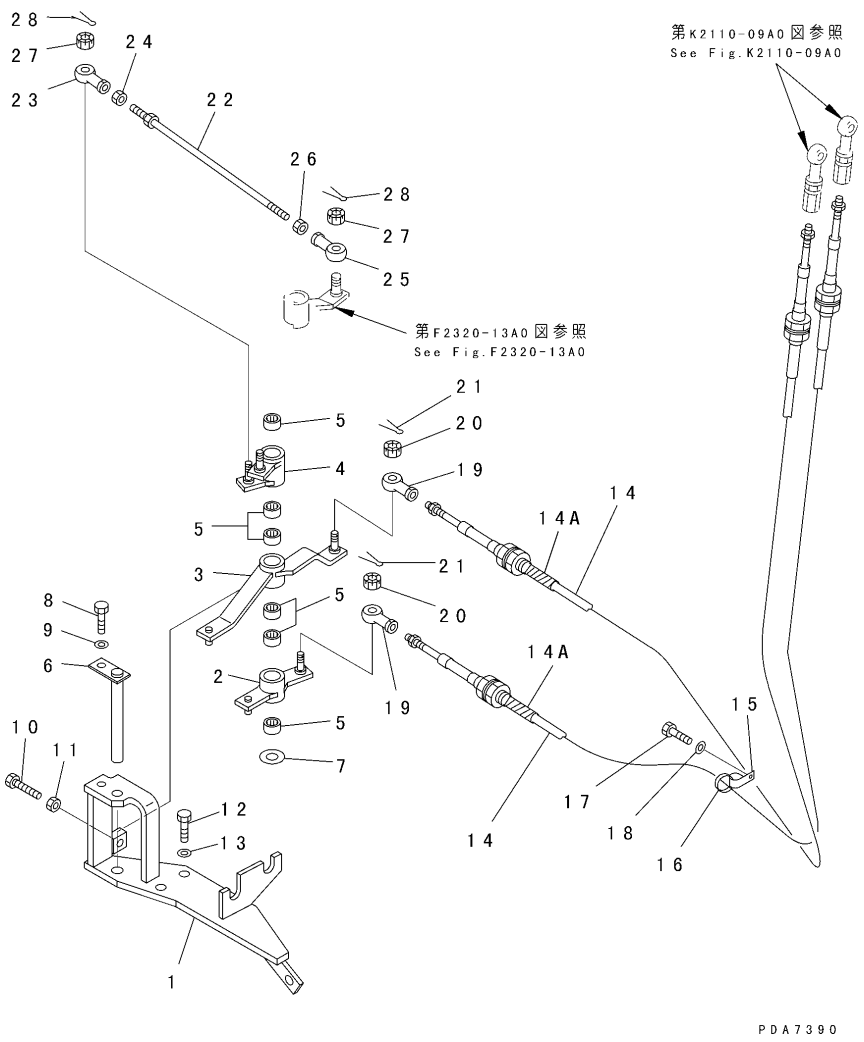

INDEX	PART NO.	DESCRIPTION	Q'TY	SERIAL NO.
1	124-43-51224	BRACKET	1	B30001-
2	124-43-51211	LEVER	1	B30001-
3	124-43-51192	LEVER	1	B30001-
4	124-43-52941	LEVER	1	B30001-
5	06123-01414	BEARING	6	B30001-
6	124-43-52950	PIN	6	B30001-
7	01643-31445	WASHER	1	B30001-
8	01010-81030	BOLT	1	B30001-
9	01643-31032	WASHER	1	B30001-
10	01016-51030	BOLT	1	B30001-
11	01580-11008	NUT	1	B30001-
12	01010-81025	BOLT	3	B30001-
13	01643-31032	WASHER	3	B30001-
14	362-43-34150	CABLE	2	B30001-
14A	08210-01204	SPIRAL	2	B30001-
15	08036-00814	CLIP	1	B30001-
16	08034-00823	BAND	1	B30001-
17	01010-81220	BOLT	1	B30001-
18	01643-31232	WASHER	1	B30001-
19	04250-80847	END	2	B30001-
20	01590-30809	NUT	2	B30001-
21	04050-12015	PIN	2	B30001-
22	04248-30823	ROD	1	B30001-
23	04250-80847	END	1	B30001-
24	01580-10806	NUT	1	B30001-
25	04250-90847	END	1	B30001-
26	01508-40805	NUT	1	B30001-
27	01590-30809	NUT	2	B30001-
28	04050-12015	PIN	2	B30001-

FIG. F2300-13A0 POWER LINE (STEERING PISTON)

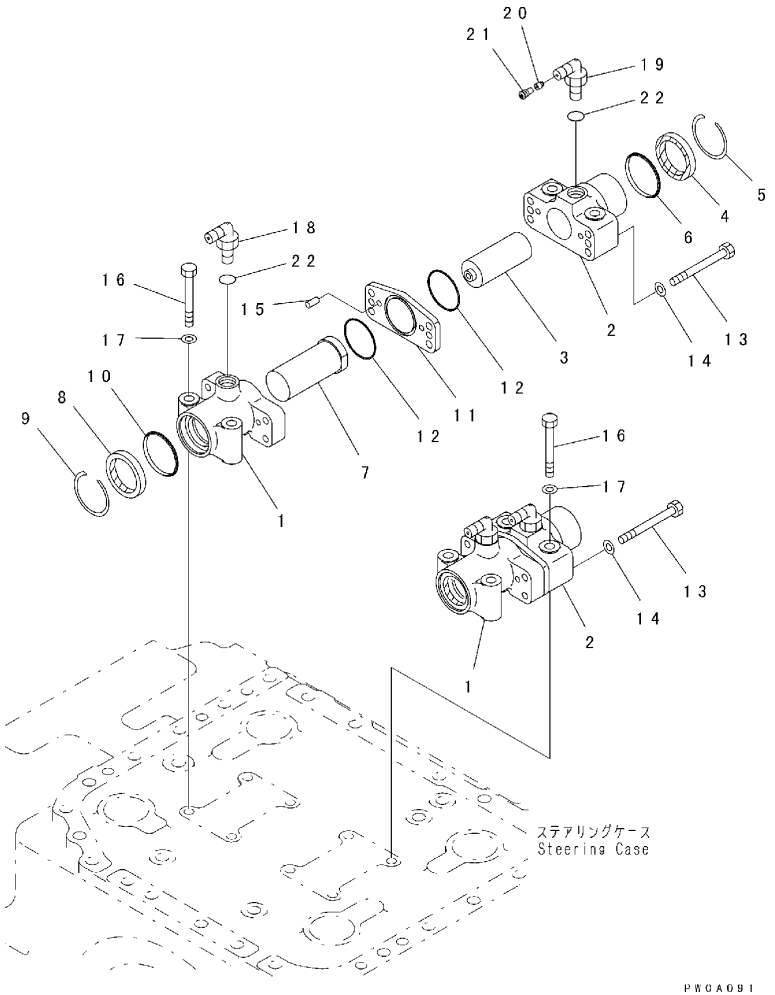

FIG. NO. : F2300-13A0

INDEX	PART NO.	DESCRIPTION	Q'TY	SERIAL NO.
1	124-40-51114	CYLINDER	2	B30001-
2	124-40-51440	CYLINDER	2	B30001-
3	124-40-51132	ROD	2	B30001-
4	07016-00407	SEAL	2	B30001-
5	07179-12052	RING	2	B30001-
6	124-40-51350	SEAL	2	B30001-
7	124-40-51222	PIN	2	B30001-
8	07016-00457	SEAL	2	B30001-
9	07179-12057	RING	2	B30001-
10	124-40-51330	SEAL	2	B30001-
11	124-40-51450	PLATE	2	B30001-
12	07000-A2055	O-RING	4	B30001-
13	01010-81075	BOLT	8	B30001-
14	01643-31032	WASHER	8	B30001-
15	04020-00820	PIN, DOWEL	4	B30001-
16	01010-81280	BOLT	8	B30001-
17	01643-31232	WASHER	8	B30001-
18	07235-50315	ELBOW	2	B30001-
	124-40-51300	VALVE ASS'Y	2	B30001-
19	124-40-51360	. ELBOW	1	B30001-
20	124-40-51370	. POPPET	1	B30001-
21	124-40-51380	. PLUG	1	B30001-
22	07002-32034	O-RING	4	B30001-

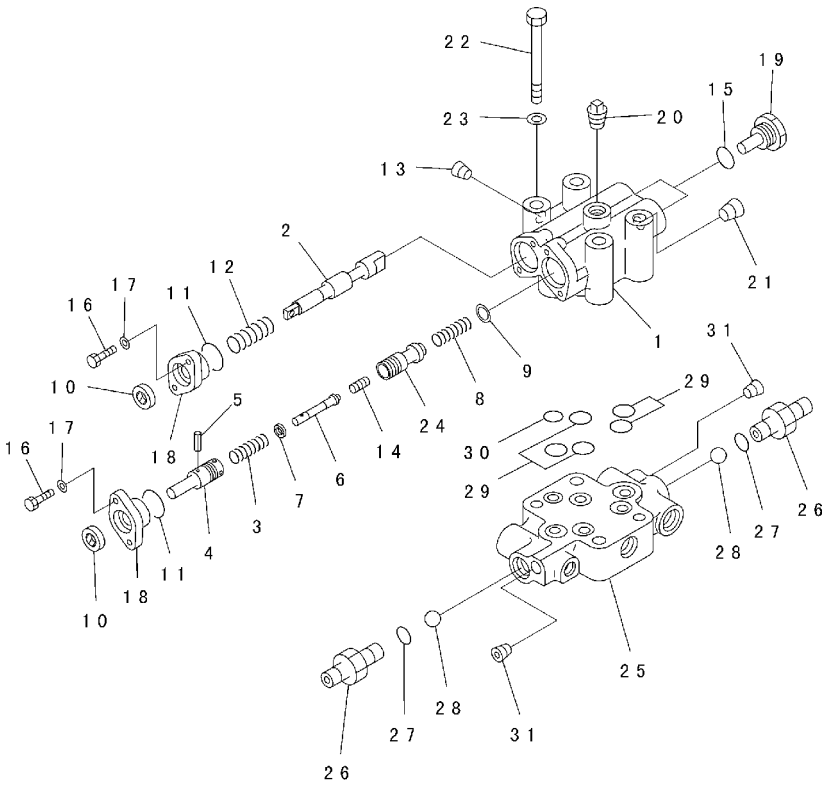

PW0B795

INDEX	PART NO.	DESCRIPTION	Q'TY	SERIAL NO.
	124-43-00031	BRAKE VALVE ASS'Y	1	B30001-
1	124-43-53111	. BODY, VALVE	1	B30001-
2	124-43-53270	. SPOOL	1	B30001-
3	124-43-53121	. SPRING, (L= 39. 55)	1	B30001-
4	14Z-40-11320	. GUIDE	1	B30001-
5	04025-00316	. PIN	1	B30001-
6	14Z-40-11330	. SHAFT	1	B30001-
7	14Z-40-11340	. GUIDE	1	B30001-
8	14Z-40-11371	. SPRING, (L= 52. 0)	1	B30001-
9	14Z-40-11350	. SHIM, 0. 05MM	3	B30001-
10	113-15-29110	. SEAL	2	B30001-
11	07002-33034	. O-RING	2	B30001-
12	565-62-11270	. SPRING, (L= 36. 5)	1	B30001-
13	07043-70211	. PLUG	1	B30001-
14	195-40-31540	. PISTON	1	B30001-
15	07002-32434	. O-RING	2	B30001-
16	01010-80620	. BOLT	4	B30001-
17	01643-30623	. WASHER	4	B30001-
18	14Z-40-11220	. COVER	2	B30001-
19	14Z-40-11360	. PLUG	2	B30001-
20	07042-70312	. PLUG	1	B30001-B30001
21	07043-70312	. PLUG	1	B30001-
22	01010-81290	. BOLT	2	B30001-
23	01643-31232	. WASHER	2	B30001-
24	124-43-53131	. VALVE	1	B30001-
25	124-43-53140	. SEAT, VALVE	1	B30001-
26	124-43-53150	. UNION	2	B30001-
27	07002-32034	. O-RING	2	B30001-
28	04260-01587	. BALL	2	B30001-
29	07000-72018	. O-RING	5	B30001-
30	07000-72015	. O-RING	1	B30001-
31	07043-70211	. PLUG	2	B30001-

FIG. F2300-15A0 POWER LINE (PRIORITY VALVE)

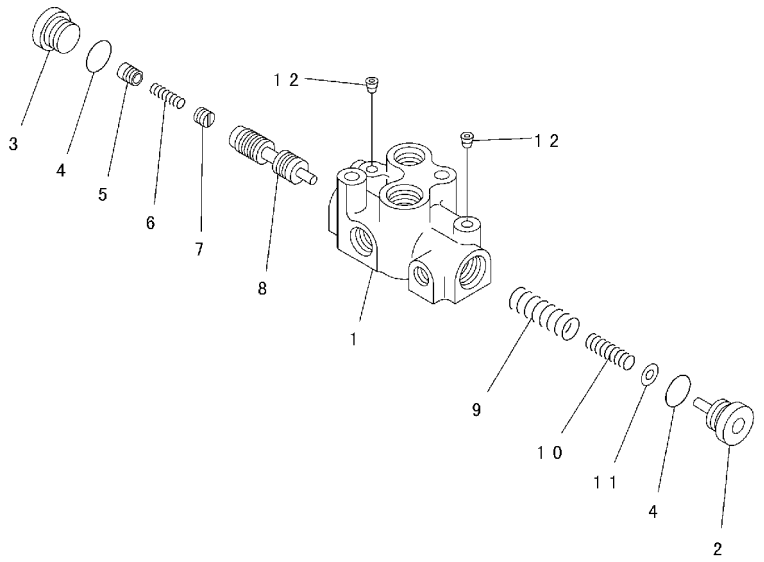

FIG. NO. : F2300-15A0

INDEX	PART NO.	DESCRIPTION	Q'TY	SERIAL NO.
	124-43-00020	PRIORITY VALVE ASS'Y	1	B30001-
1	124-43-53160	. BODY, VALVE	1	B30001-
2	124-43-53170	. PLUG	1	B30001-
3	102-10-46360	. PLUG	1	B30001-
4	07002-32434	. O-RING	2	B30001-
5	103-15-15450	. VALVE	1	B30001-
6	125-15-15290	. SPRING, (L= 26. 0)	1	B30001-
7	103-15-15460	. VALVE	1	B30001-
8	124-43-53180	. SPOOL	1	B30001-
9	113-15-25250	. SPRING, (L= 60. 6)	1	B30001-
10	112-10-46180	. SPRING, (L= 53. 5)	1	B30001-
11	112-10-46210	. SHIM, 0. 5MM	5	B30001-
12	07043-70108	. PLUG	3	B30001-

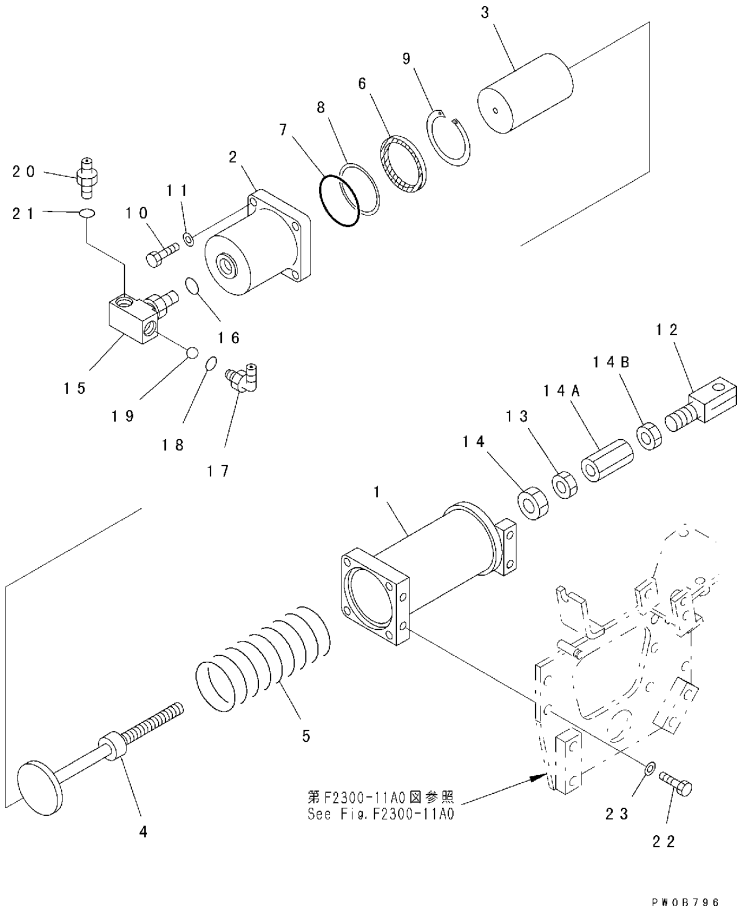

INDEX	PART NO.	DESCRIPTION	Q'TY	SERIAL NO.
	124-43-63210	CYLINDER ASS'Y	1	B30001-
1	124-43-53221	. BRACKET	1	B30001-
2	124-43-53230	. BODY	1	B30001-
3	124-43-53241	. PISTON	1	B30001-
4	124-43-53252	. ROD	1	B30001-
5	124-43-53260	. SPRING, (L=256. 0)	1	B30001-
6	144-63-95170	. SEAL	1	B30001-
7	07000-05070	. O-RING	1	B30001-
8	07001-05070	. RING	1	B30001-
9	07179-12084	. RING	1	B30001-
10	01010-81035	. BOLT	4	B30001-
11	01643-51032	. WASHER	4	B30001-
12	124-43-53430	. YOKE	1	B30001-
13	01583-12414	. NUT	1	B30001-
14	124-43-53350	. NUT	1	B30001-
14A	124-43-53410	. JOINT	1	B30001-
14B	124-43-53420	. NUT	1	B30001-
15	124-43-53290	. TEE	1	B30001-
16	07002-02034	. O-RING	1	B30001-
17	124-43-63150	. ELBOW	1	B30001-
18	07002-02034	. O-RING	1	B30001-
19	04260-01587	. BALL	1	B30001-
20	07230-20422	. UNION	1	B30001-
21	07002-02034	. O-RING	1	B30001-
22	01010-81230	BOLT	4	B30001-
23	01643-31232	WASHER	4	B30001-

FIG. F2300-17A0 POWER LINE (TRANSMISSION SUPPORT)

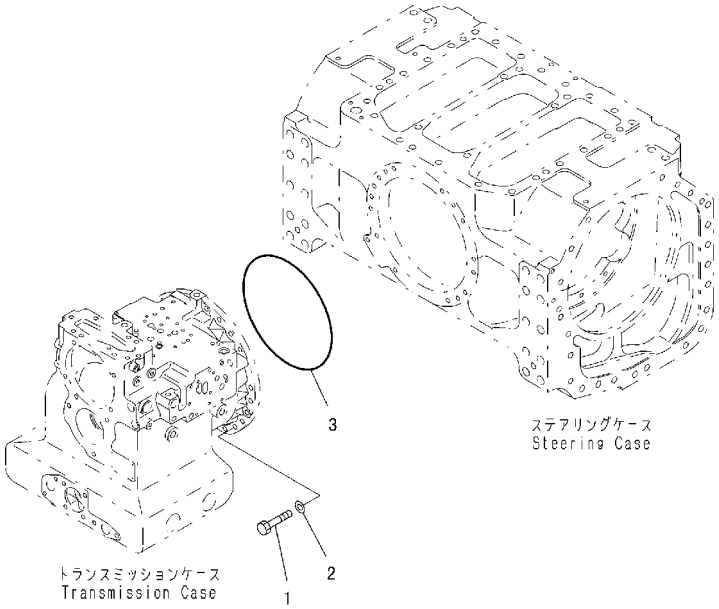

PWOA098

FIG. NO. : F2300-17A0

INDEX	PART NO.	DESCRIPTION	Q'TY	SERIAL NO.
1	01010-81260	BOLT	16	B30001-
2	01643-31232	WASHER	16	B30001-
3	07000-75305	O-RING	1	B30001-

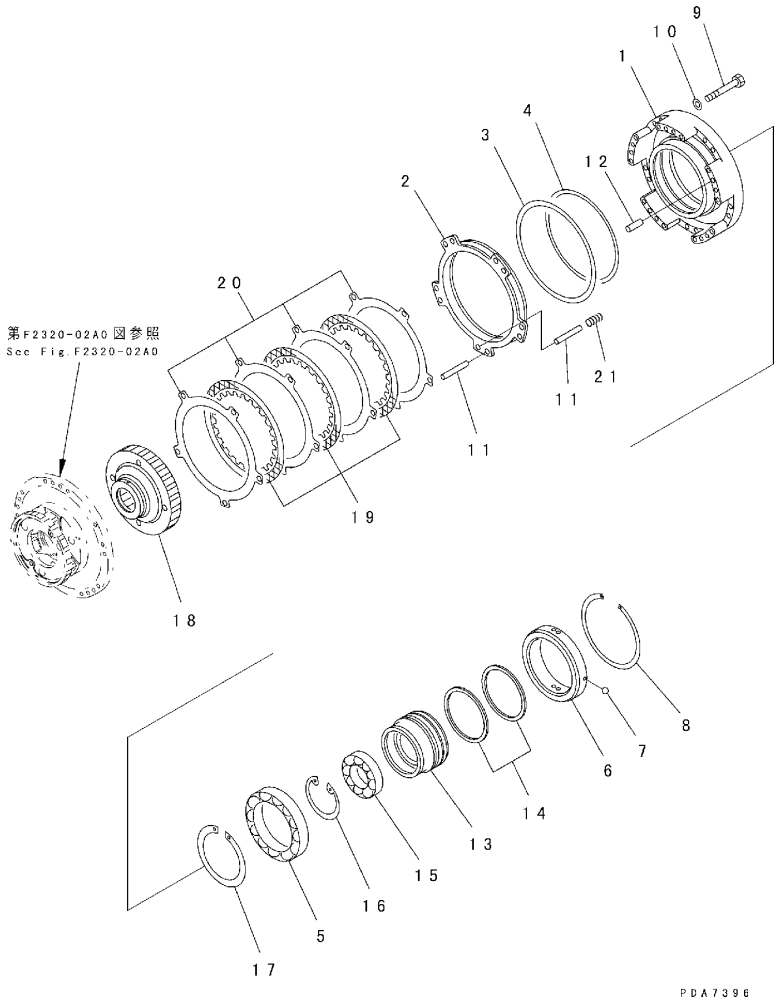

INDEX	PART NO.	DESCRIPTION	Q'TY	SERIAL NO.
	124-15-00031	TRANSMISSION ASS'Y	1	B30001-
		THIS ASSEMBLY CONSISTS OF ALL PARTS SHOWN IN FIGS. F2320-01A0 TO F2320-13A0.		
1	124-15-52341	. HOUSING, 1ST	1	B30001-
2	124-15-52770	. PISTON	1	B30001-
3	113-15-29250	. RING ..... (K1)	1	B30001-
4	103-15-29270	. SEAL ..... (K1)	1	B30001-
5	06000-06921	. BEARING	1	B30001-
6	124-15-52390	. BUSHING	1	B30001-
7	04260-00635	. BALL	1	B30001-
8	04071-00150	. RING	1	B30001-
9	01010-80875	. BOLT	18	B30001-
10	01643-50823	. WASHER	18	B30001-
11	22W-15-21290	. PIN, (D=10. 0, L= 65. 0)	10	B30001-
12	04020-01024	. PIN	2	B30001-
13	124-15-52381	. CAGE	1	B30001-
14	07018-21155	. RING	2	B30001-
15	06042-00210	. BEARING	1	B30001-
16	04065-09030	. RING	1	B30001-
17	04070-00105	. RING	1	B30001-
18	124-15-52271	. HUB	1	B30001-
19	124-15-52710	. DISC	3	B30001-
20	125-15-32750	. PLATE	4	B30001-
21	23A-15-12910	. SPRING, (L= 35. 0)	5	B30001-

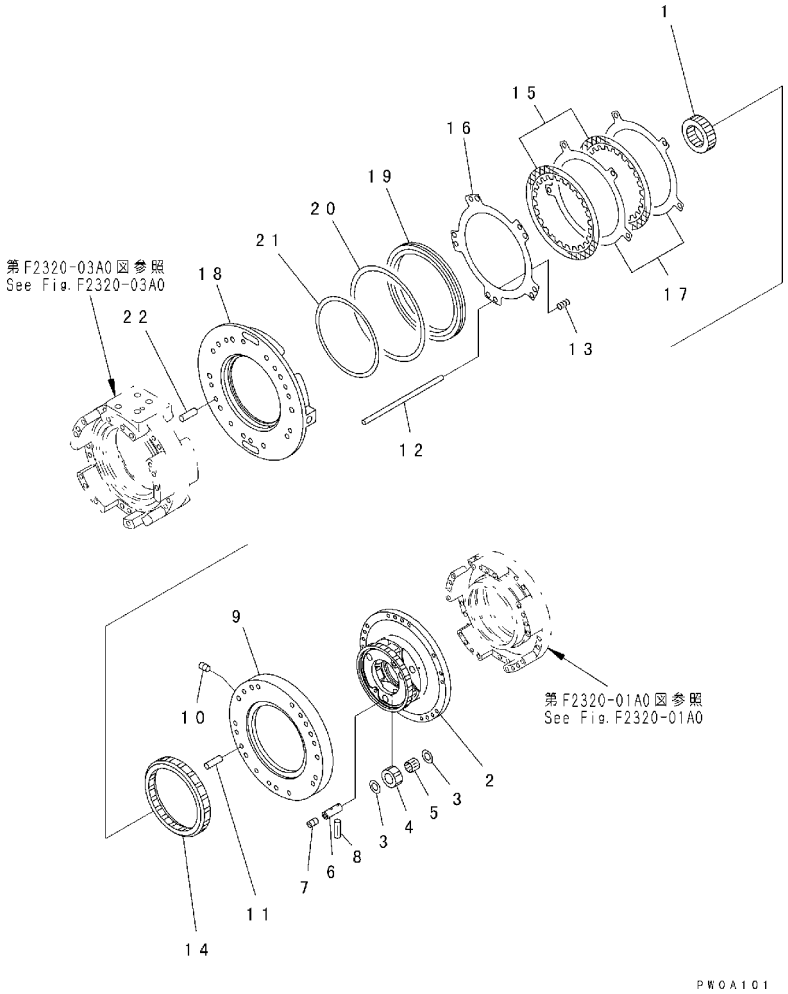

FIG. NO. : F2320-02A0

INDEX	PART NO.	DESCRIPTION	Q'TY	SERIAL NO.
	(124-15-00031)	TRANSMISSION ASS'Y ..... THIS ASSEMBLY CONSISTS OF ALL PARTS SHOWN IN FIGS. F2320-01A0 TO F2320-13A0.	1	B30001-
1	23E-15-12241	. GEAR	1	B30001-
2	124-15-52331	. CARRIER	1	B30001-
3	113-15-32560	. WASHER, THRUST	6	B30001-
4	23E-15-12441	. GEAR, 18 TEETH	3	B30001-
5	113-15-29410	. BEARING	3	B30001-
	124-15-01010	. SHAFT ASS'Y	3	B30001-
6	☆	. . SHAFT	3	B30001-
7	145-14-11320	. . PLUG	3	B30001-
8	124-15-52960	. PIN, (D= 3. 0, L= 14. 0)	3	B30001-
	124-15-01020	. PLATE ASS'Y	1	B30001-
9	☆	. . PLATE	1	B30001-
10	113-15-25490	. . PLUG	1	B30001-
11	04020-01024	. PIN	2	B30001-
12	23E-15-11270	. PIN, (D=10. 0, L=232. 0)	5	B30001-
13	104-15-22930	. SPRING, (L= 23. 7)	5	B30001-
14	113-15-22640	. GEAR	1	B30001-
15	124-15-52710	. DISC	2	B30001-
16	113-15-22720	. PLATE	1	B30001-
17	113-15-22730	. PLATE	2	B30001-
18	124-15-51151	. HOUSING, 2ND	1	B30001-
19	103-15-22730	. PISTON	1	B30001-
20	103-15-29210	. SEAL, RING ..... (K1)	1	B30001-
21	113-15-29220	. RING, RING ..... (K1)	1	B30001-
22	04020-01024	. PIN	2	B30001-

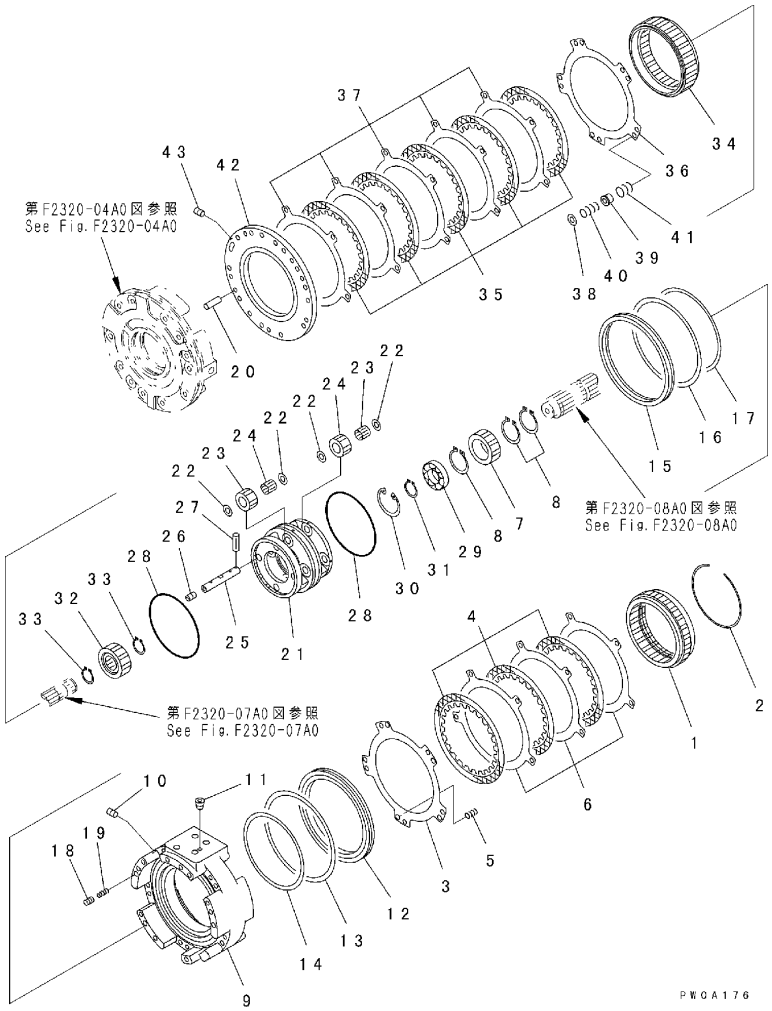

INDEX	PART NO.	DESCRIPTION	Q'TY	SERIAL NO.
	(124-15-00031)	TRANSMISSION ASS'Y	1	B30001-
		THIS ASSEMBLY CONSISTS OF ALL PARTS SHOWN IN FIGS. F2320-01A0 TO F2320-13A0.		
1	124-15-52640	. GEAR, RING	1	B30001-
2	113-15-29510	. RING	1	B30001-
3	113-15-22920	. SPRING, (L= 29. 0)	5	B30001-
4	124-15-52710	. DISC	3	B30001-
5	113-15-22720	. PLATE	1	B30001-
6	113-15-22730	. PLATE	3	B30001-
7	124-15-52230	. GEAR, 34 TEETH	1	B30001-
8	04064-04819	. RING	3	B30001-
	124-15-01030	. HOUSING ASS'Y, 3RD AND FORWARD	1	B30001-
9	☆	. . HOUSING, 3RD AND FORWARD	1	B30001-
10	145-14-11320	. . PLUG	1	B30001-
11	07043-70108	. . PLUG	1	B30001-
12	103-15-22730	. PISTON	1	B30001-
13	103-15-29210	. SEAL (K1)	1	B30001-
14	113-15-29220	. RING, SEAL (K1)	1	B30001-
15	124-15-52750	. PISTON	1	B30001-
16	113-15-29250	. RING (K1)	1	B30001-
17	113-15-29261	. RING (K1)	1	B30001-
18	287-15-15360	. PISTON	1	B30001-
19	195-15-15261	. SPRING, (L= 25. 4)	1	B30001-
20	113-15-21290	. PIN, (D=10. 0, L= 35. 0)	2	B30001-
21	124-15-52320	. CARRIER	1	B30001-
22	113-15-32560	. WASHER, THRUST	16	B30001-
23	124-15-52420	. GEAR, 19 TEETH	8	B30001-
24	124-15-59420	. BEARING	8	B30001-
	12G-15-01040	. SHAFT ASS'Y	4	B30001-
25	☆	. . SHAFT	1	B30001-
26	145-14-11320	. . PLUG	1	B30001-
27	124-15-52960	. PIN, (D= 3. 0, L= 14. 0)	4	B30001-
28	113-15-29240	. SEAL	2	B30001-
29	06000-06007	. BEARING	1	B30001-
30	04065-06220	. RING	1	B30001-
31	04064-03515	. RING	1	B30001-
32	124-15-52220	. GEAR, 34 TEETH	1	B30001-
33	04064-03215	. RING	2	B30001-
34	124-15-52631	. GEAR, RING	1	B30001-
35	124-15-52710	. DISC	5	B30001-
36	113-15-22720	. PLATE	1	B30001-
37	113-15-22730	. PLATE	5	B30001-

FIG. F2320-03A0 TRANSMISSION (3RD AND FORWARD CLUTCH)

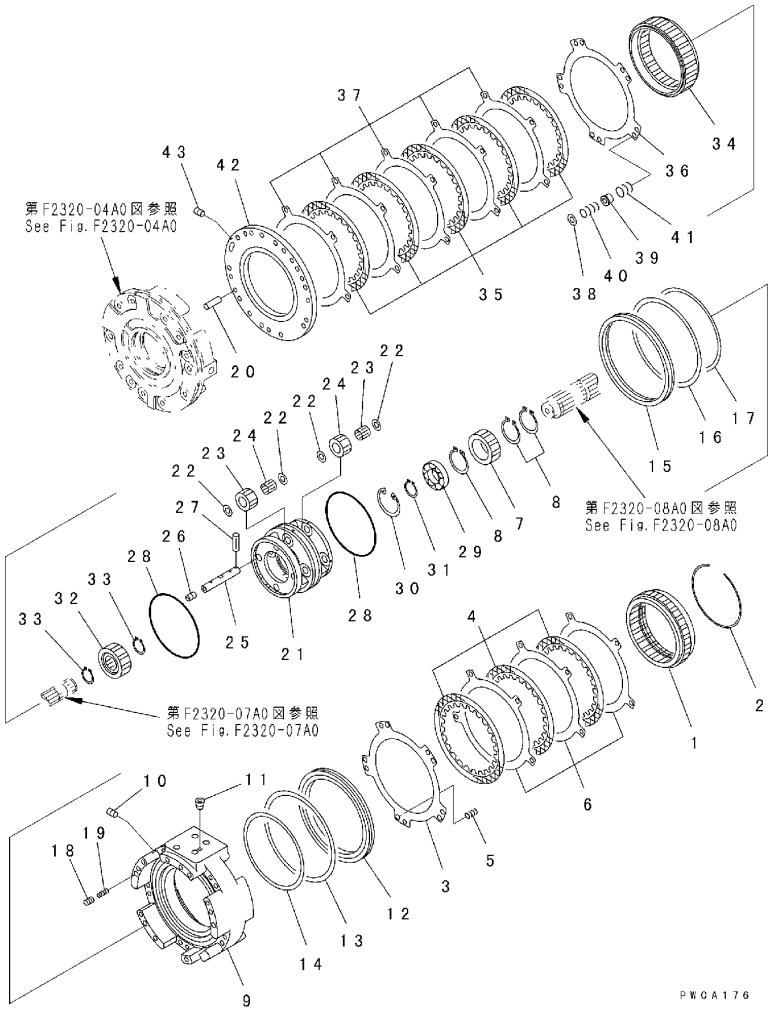

FIG. NO. : F2320-03A0

INDEX	PART NO.	DESCRIPTION	Q'TY	SERIAL NO.
38	01643-51032	. WASHER	10	B30001-
39	362-15-12810	. GUIDE	5	B30001-
40	113-15-42910	. SPRING, (L= 18. 65)	5	B30001-
41	113-15-42920	. SPRING, (L= 22. 93)	5	B30001-
	12G-15-01050	. PLATE ASS'Y	1	B30001-
42	☆	. . PLATE	1	B30001-
43	125-15-11230	. . PLUG	1	B30001-

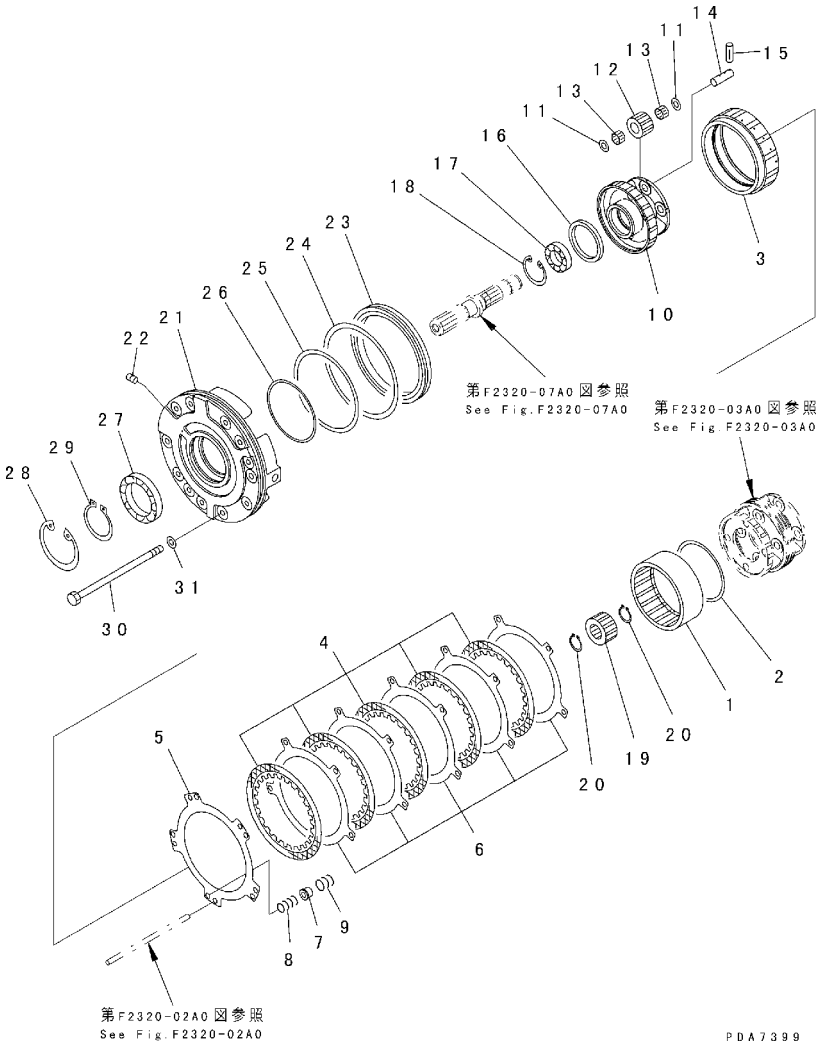

INDEX	PART NO.	DESCRIPTION	Q'TY	SERIAL NO.
		THIS ASSEMBLY CONSISTS OF ALL PARTS SHOWN IN FIGS. F2320-01A0 TO F2320-13A0.		
	(124-15-00031)	TRANSMISSION ASS'Y	1	B30001-
1	124-15-52620	. GEAR, RING	1	B30001-
2	113-15-22930	. RING	1	B30001-
3	124-15-52610	. GEAR, RING	1	B30001-
4	124-15-52710	. DISC	5	B30001-
5	113-15-22720	. PLATE	1	B30001-
6	113-15-22730	. PLATE	5	B30001-
7	362-15-12810	. GUIDE	5	B30001-
8	124-15-52910	. SPRING, (L= 25. 0)	5	B30001-
9	124-15-52920	. SPRING, (L= 17. 55)	5	B30001-
10	124-15-52312	. CARRIER	1	B30001-
11	113-15-32560	. WASHER, THRUST	8	B30001-
12	12G-15-52410	. GEAR, 20 TEETH	4	B30001-
13	124-15-59410	. BEARING	8	B30001-
14	12G-15-52510	. SHAFT	4	B30001-
15	124-15-52960	. PIN, (D= 3. 0, L= 14. 0)	4	B30001-
16	12G-15-52130	. SPACER	1	B30001-
17	124-15-59430	. BEARING	1	B30001-
18	04065-06220	. RING	1	B30001-
19	12G-15-52210	. GEAR, 27 TEETH	1	B30001-
20	04064-03215	. RING	2	B30001-
	124-15-01061	. HOUSING ASS'Y, REVERSE	1	B30001-
21	☆	. . HOUSING, REVERSE	1	B30001-
22	125-15-11230	. . PLUG	1	B30001-
23	124-15-52730	. PISTON	1	B30001-
24	113-15-29250	. RING (K1)	1	B30001-
25	113-15-29220	. RING, SEAL (K1)	1	B30001-
26	07018-01405	. RING	1	B30001-
27	06000-06915	. BEARING	1	B30001-
28	04065-01054	. RING	1	B30001-
29	04064-07525	. RING	1	B30001-
30	113-15-21241	. BOLT	12	B30001-
31	01643-31032	. WASHER	12	B30001-

FIG. F2320-05A0 TRANSMISSION (CASE)

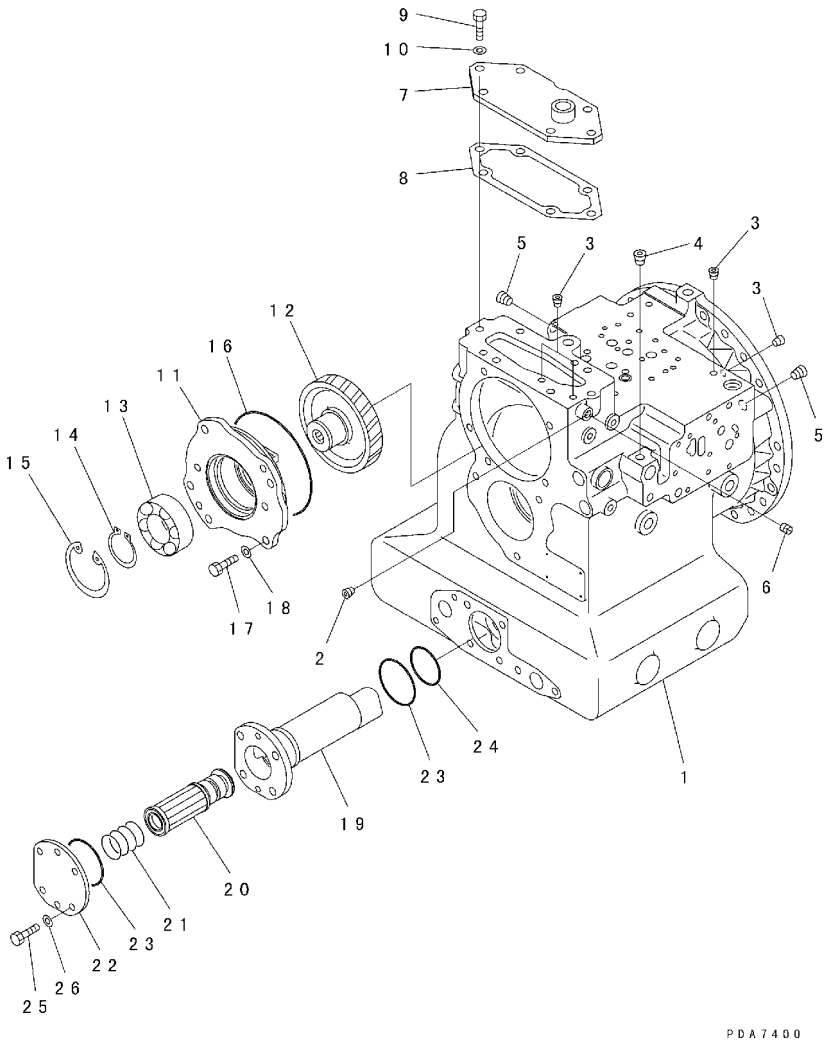

FIG. NO. : F2320-05A0

INDEX	PART NO.	DESCRIPTION	Q'TY	SERIAL NO.
	(124-15-00031)	TRANSMISSION ASS'Y	1	B30001-
		THIS ASSEMBLY CONSISTS OF ALL PARTS SHOWN IN FIGS. F2320-01A0 TO F2320-13A0.		
	124-15-01070	. CASE ASS'Y	1	B30001-
1	☆	. . CASE	1	B30001-
2	07043-00108	. . PLUG	1	B30001-
3	07043-70108	. . PLUG	7	B30001-
4	07043-00211	. . PLUG	2	B30001-
5	07043-00312	. . PLUG	2	B30001-
6	125-15-22780	. . PLUG	1	B30001-
7	124-15-51811	. PLATE	1	B30001-
8	124-15-51820	. GASKET ..... (K1)	1	B30001-
9	01010-81235	. BOLT	6	B30001-
10	01643-31232	. WASHER	6	B30001-
11	124-15-52840	. COVER	1	B30001-
12	124-15-52820	. GEAR, 69 TEETH	1	B30001-
13	06030-05210	. BEARING	1	B30001-
14	04064-05020	. RING	1	B30001-
15	04065-09030	. RING	1	B30001-
16	07000-75165	. O-RING ..... (K1)	1	B30001-
17	01010-81235	. BOLT	5	B30001-
18	01643-31232	. WASHER	5	B30001-
19	124-15-51711	. CASE	1	B30001-
20	124-15-51740	. MAGNET ASS'Y	1	B30001-
21	124-15-51720	. SPRING, (L= 50. 0)	1	B30001-
22	124-15-51731	. PLATE	1	B30001-
23	07000-72070	. O-RING ..... (K1)	2	B30001-
24	07000-72060	. O-RING ..... (K1)	1	B30001-
25	01010-81245	. BOLT	4	B30001-
26	01643-31232	. WASHER	4	B30001-

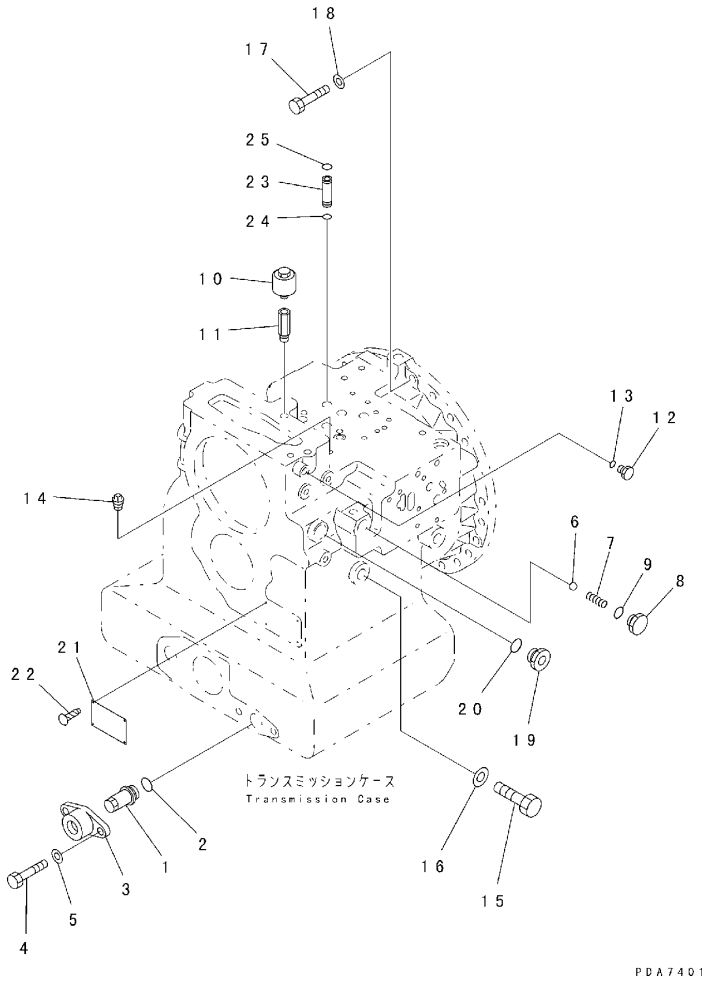

FIG. NO. : F2320-06A0

INDEX	PART NO.	DESCRIPTION	Q'TY	SERIAL NO.
	(124-15-00031)	TRANSMISSION ASS'Y	1	B30001-
		THIS ASSEMBLY CONSISTS OF ALL PARTS SHOWN IN FIGS. F2320-01A0 TO F2320-13A0.		
1	124-15-51630	. PLUG	1	B30001-
2	07002-02434	. O-RING ..... (K1)	1	B30001-
3	419-15-18230	. COVER, (L= 34. 3)	1	B30001-
4	01010-81235	. BOLT	2	B30001-
5	01643-31232	. WASHER	2	B30001-
6	04260-01270	. BALL	1	B30001-
7	104-15-35150	. SPRING	1	B30001-
8	124-15-51620	. PLUG	1	B30001-
9	07002-02034	. O-RING ..... (K1)	1	B30001-
10	07030-00252	. BREATHER	1	B30001-
11	170-21-11190	. NIPPLE	1	B30001-
12	569-13-46620	. PLUG	1	B30001-
13	07005-01212	. GASKET ..... (K1)	1	B30001-
14	07042-80108	. PLUG	1	B30001-
15	01010-61665	. BOLT	4	B30001-
16	01643-31645	. WASHER	4	B30001-
17	01010-81245	. BOLT	3	B30001-
18	01643-31232	. WASHER	3	B30001-
19	124-15-51610	. PLUG, (HOLE=10. 5)	1	B30001-
20	07002-02434	. O-RING ..... (K1)	1	B30001-
21	09608-05080	. PLATE, NAME, (LIMITED SUPPLY)	1	B30001-
22	04418-13060	. SCREW	4	B30001-
23	124-15-51311	. SLEEVE	4	B30001-
24	07000-72010	. O-RING ..... (K1)	4	B30001-
25	07000-72012	. O-RING ..... (K1)	4	B30001-

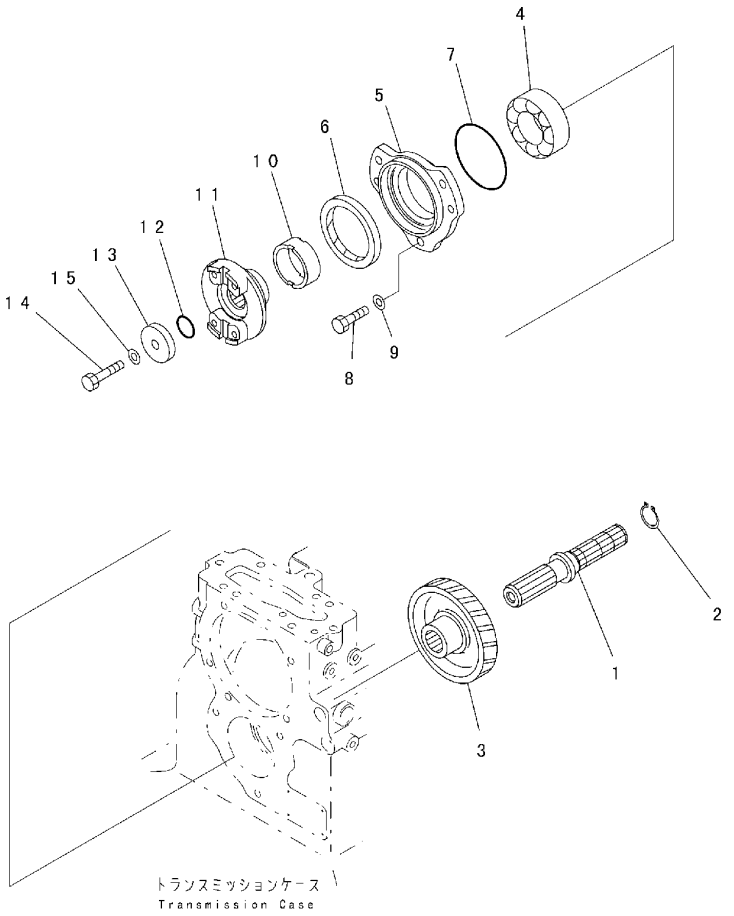

FIG. NO. : F2320-07A0

INDEX	PART NO.	DESCRIPTION	Q'TY	SERIAL NO.
		THIS ASSEMBLY CONSISTS OF ALL PARTS SHOWN IN FIGS. F2320-01A0 TO F2320-13A0.		
	(124-15-00031)	TRANSMISSION ASS'Y	1	B30001-
1	124-15-52111	. SHAFT	1	B30001-
2	04064-03515	. RING	1	B30001-
3	124-15-52810	. GEAR, 75 TEETH	1	B30001-
4	06030-05211	. BEARING	1	B30001-
5	124-15-52830	. CAGE	1	B30001-
6	07012-10090	. SEAL (K1)	1	B30001-
7	07000-72105	. O-RING (K1)	1	B30001-
8	01010-81235	. BOLT	3	B30001-
9	01643-31232	. WASHER	3	B30001-
10	124-15-52140	. COLLAR	1	B30001-
11	124-15-42181	. COUPLING	1	B30001-
12	07000-73032	. O-RING	1	B30001-
13	124-15-42190	. HOLDER	1	B30001-
14	01010-61460	. BOLT	1	B30001-
15	01643-31445	. WASHER	1	B30001-

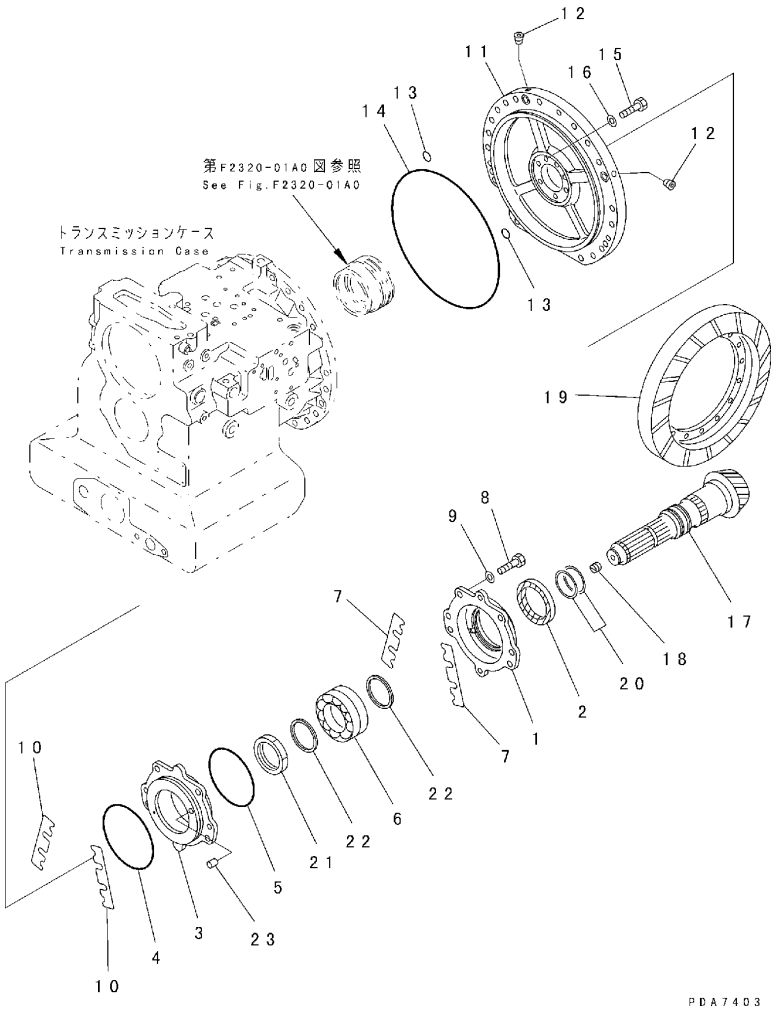

INDEX	PART NO.	DESCRIPTION	Q'TY	SERIAL NO.
		THIS ASSEMBLY CONSISTS OF ALL PARTS SHOWN IN FIGS. F2320-01A0 TO F2320-13A0.		
	(124-15-00031)	TRANSMISSION ASS'Y	1	B30001-
1	124-15-51231	. COVER	1	B30001-
2	07012-10075	. SEAL (K1)	1	B30001-
3	124-15-51240	. COVER	1	B30001-
4	07000-72145	. O-RING (K1)	1	B30001-
5	07000-72130	. O-RING (K1)	1	B30001-
6	124-15-51220	. BEARING	1	B30001-
7	124-15-05210	. SHIM ASS'Y (K1)	1	B30001-
	124-15-51941	. . SHIM, 0.2MM (K1)	4	B30001-
	124-15-51951	. . SHIM, 0.3MM (K1)	6	B30001-
8	01010-81245	. BOLT	4	B30001-
9	01643-31232	. WASHER	4	B30001-
10	124-15-05210	. SHIM ASS'Y (K1)	1	B30001-
	124-15-51941	. . SHIM, 0.2MM (K1)	4	B30001-
	124-15-51951	. . SHIM, 0.3MM (K1)	6	B30001-
	124-15-01080	. COVER ASS'Y	1	B30001-
11	☆	. . COVER	1	B30001-
12	07043-70211	. . PLUG	2	B30001-
13	07000-72018	. O-RING (K1)	2	B30001-
14	07000-75305	. O-RING (K1)	1	B30001-
15	01010-81025	. BOLT	5	B30001-
16	01643-31032	. WASHER	5	B30001-
	124-15-01091	. SHAFT ASS'Y	1	B30001-
17	☆	. . SHAFT	1	B30001-
18	07043-70211	. . PLUG	1	B30001-
19	124-22-51111	. GEAR, BEVEL	1	B30001-
20	124-15-59240	. RING, SEAL	2	B30001-
21	124-15-51251	. NUT	1	B30001-
22	124-15-51261	. COLLAR	2	B30001-
23	124-15-51270	. COLLAR	1	B30001-

FIG. F2320-09A0 TRANSMISSION (SHIFT VALVE)

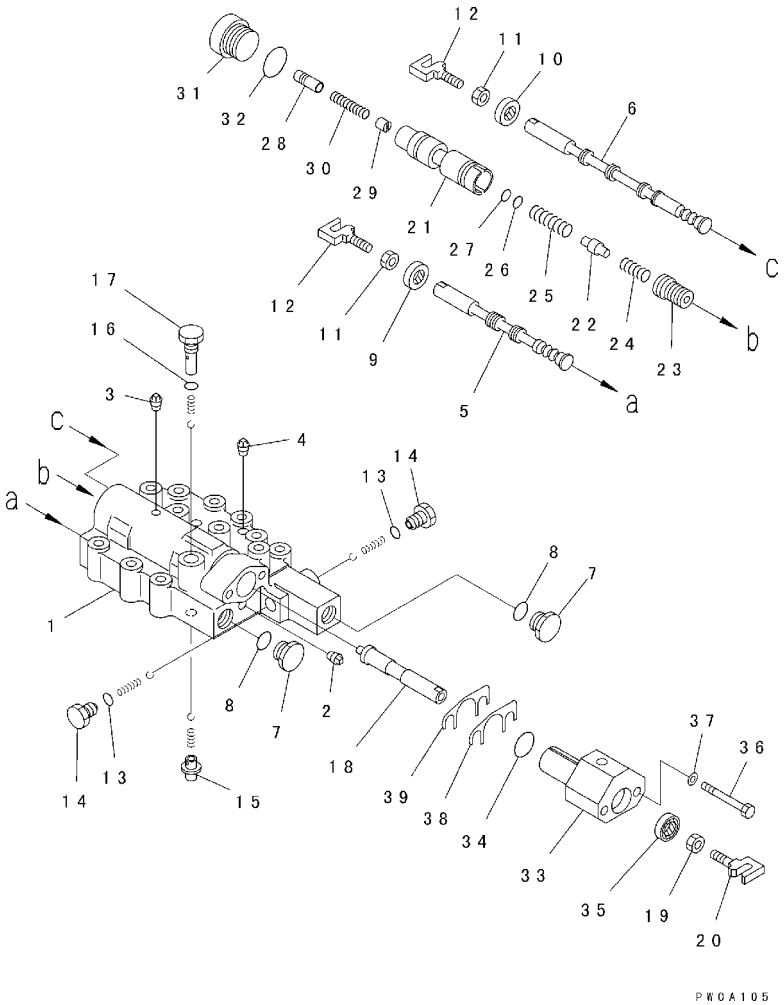

FIG. NO. : F2320-09A0

INDEX	PART NO.	DESCRIPTION	Q'TY	SERIAL NO.
	(124-15-00031)	TRANSMISSION ASS'Y	1	B30001-
		THIS ASSEMBLY CONSISTS OF ALL PARTS SHOWN IN FIGS. F2320-01A0 TO F2320-13A0.		
	124-15-01100	. VALVE ASS'Y, SHIFT	1	B30001-
1	124-15-55410	. . BODY, VALVE	1	B30001-
2	07043-00108	. . PLUG	1	B30001-
3	07042-20108	. . PLUG	1	B30001-
4	07042-20108	. . PLUG	1	B30001-
5	363-15-15470	. . SPOOL	1	B30001-
6	113-15-55450	. . SPOOL	1	B30001-
7	113-15-25481	. . PLUG	2	B30001-
8	07002-01823	. . O-RING (K2)	2	B30001-
9	113-15-29110	. . SEAL (K2)	1	B30001-
10	124-15-49110	. . SEAL (K2)	1	B30001-
11	01580-10806	. . NUT	2	B30001-
12	09363-00850	. . YOKE	2	B30001-
13	07002-01223	. . O-RING (K2)	2	B30001-
14	124-15-55380	. . DETENT ASS'Y	2	B30001-
15	103-15-25370	. . DETENT ASS'Y	1	B30001-
16	07002-01223	. . O-RING (K2)	1	B30001-
17	363-15-15340	. . DETENT ASS'Y	1	B30001-
18	124-15-55510	. . SPOOL	1	B30001-
19	01580-10806	. . NUT	1	B30001-
20	09363-00850	. . YOKE	1	B30001-
21	124-15-55520	. . VALVE	1	B30001-
22	363-15-15530	. . STOPPER	1	B30001-
23	104-15-35170	. . STOPPER	1	B30001-
24	124-15-55530	. . SPRING, (L= 26. 0)	1	B30001-
25	124-15-55540	. . SPRING, (L= 33. 9)	1	B30001-
26	104-15-36480	. . SHIM, 0. 5MM	6	B30001-
27	104-15-36490	. . SHIM, 0. 2MM	4	B30001-
28	22W-75-18880	. . SLEEVE	1	B30001-
29	22W-75-18890	. . VALVE	1	B30001-
30	125-15-15290	. . SPRING, (L= 26. 0)	1	B30001-
31	124-15-45450	. . PLUG	1	B30001-
32	07002-03034	. . O-RING (K2)	1	B30001-
33	124-15-55230	. . COVER	1	B30001-
34	07000-72021	. . O-RING (K2)	1	B30001-
35	124-15-49110	. . SEAL (K2)	1	B30001-
36	01010-80855	. . BOLT	2	B30001-
37	01643-30823	. . WASHER	2	B30001-
38	104-15-36460	. . SHIM, 0. 5MM (K2)	4	B30001-

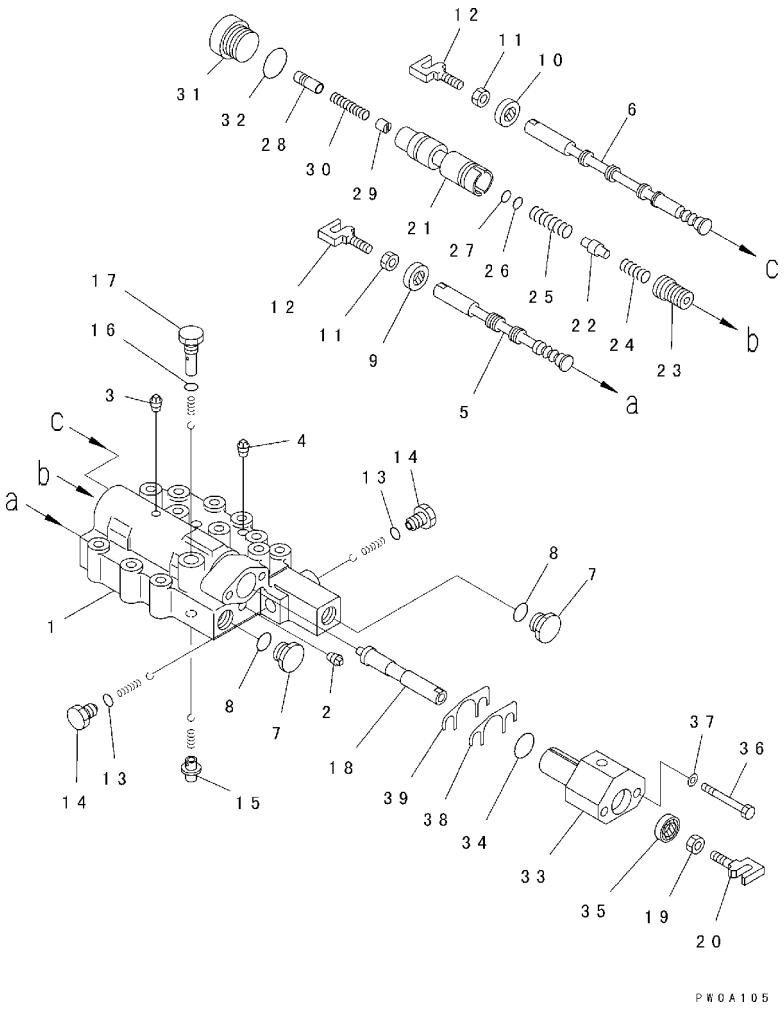

INDEX	PART NO.	DESCRIPTION	Q'TY	SERIAL NO.
39	104-15-36470	. . SHIM, 0. 2MM ..... (K2)	6	B30001-

FIG. F2320-10A0 TRANSMISSION (SHIFT VALVE MOUNT AND VALVE PIPING)

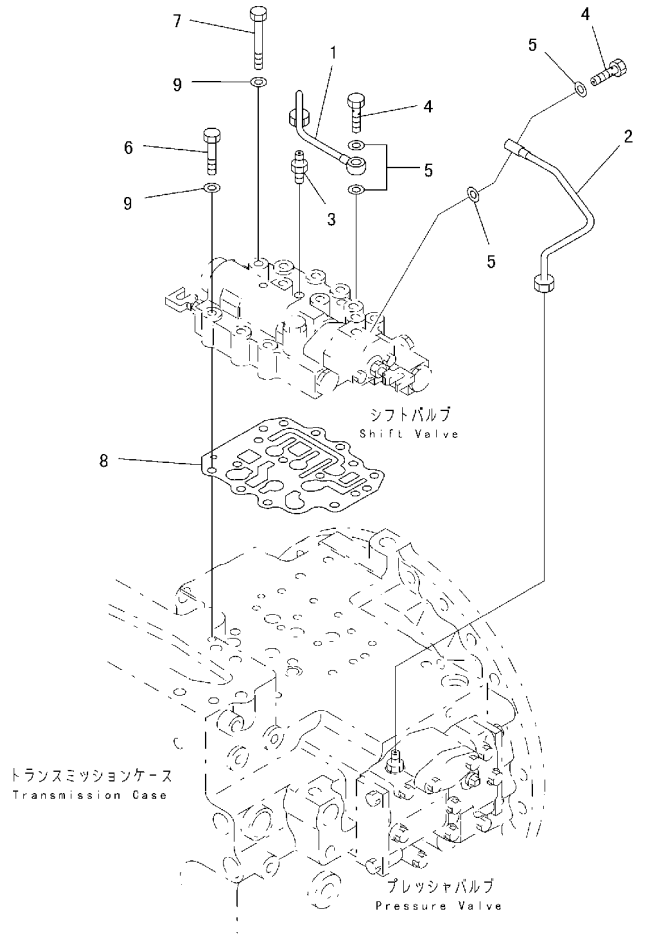

FIG. NO. : F2320-10A0

INDEX	PART NO.	DESCRIPTION	Q'TY	SERIAL NO.
	(124-15-00031)	TRANSMISSION ASS'Y	1	B30001-
		THIS ASSEMBLY CONSISTS OF ALL PARTS SHOWN IN FIGS. F2320-01A0 TO F2320-13A0.		
1	124-15-55610	. TUBE	1	B30001-
2	124-15-55620	. TUBE	1	B30001-
3	07213-50710	. CONNECTOR	1	B30001-
4	07206-30710	. BOLT	2	B30001-
5	07005-01012	. GASKET ..... (K2)	4	B30001-
6	01010-80850	. BOLT	8	B30001-
7	01010-80875	. BOLT	4	B30001-
8	124-15-55920	. GASKET ..... (K2)	1	B30001-
9	01643-30823	. WASHER	12	B30001-

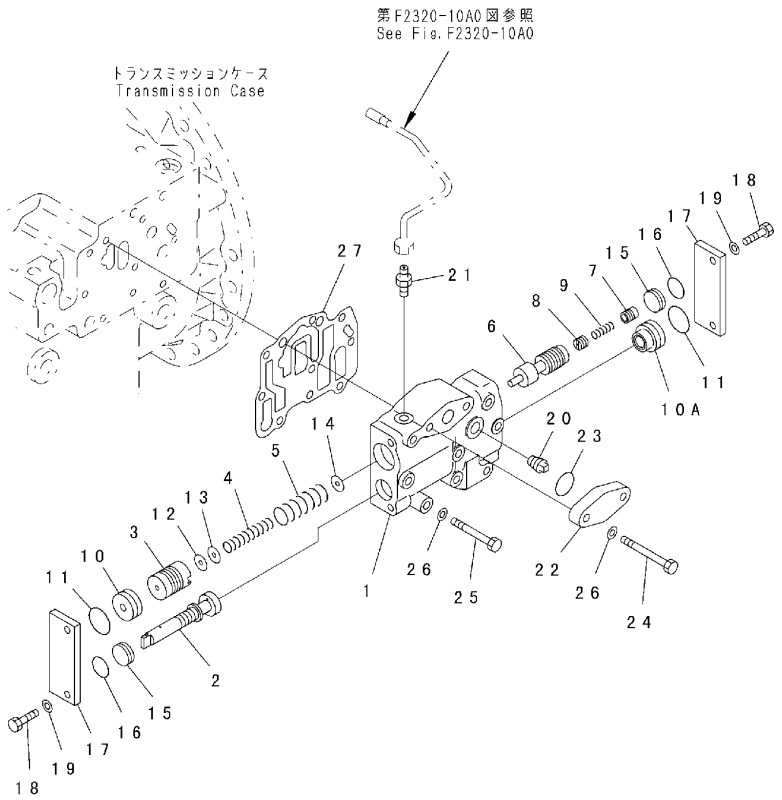

INDEX	PART NO.	DESCRIPTION	Q'TY	SERIAL NO.
		THIS ASSEMBLY CONSISTS OF ALL PARTS SHOWN IN FIGS. F2320-01A0 TO F2320-13A0.		
	(124-15-00031)	TRANSMISSION ASS'Y	1	B30001-
	124-15-01110	. VALVE ASS'Y, PRESSURE	1	B30001-
1	124-15-55110	. . BODY, VALVE	1	B30001-
2	124-15-55321	. . SPOOL	1	B30001-
3	124-15-55221	. . VALVE	1	B30001-
4	124-15-55280	. . SPRING, (L= 60. 5)	1	B30001-
5	124-15-55290	. . SPRING, (L= 64. 0)	1	B30001-
6	124-15-55210	. . SPOOL	1	B30001-
7	103-15-15450	. . VALVE	1	B30001-
8	103-15-15460	. . VALVE	1	B30001-
9	125-15-15290	. . SPRING, (L= 26. 0)	1	B30001-
10	104-15-25330	. . STOPPER	1	B30001-
10A	124-15-55390	. . STOPPER	1	B30001-
11	07000-73025	. . O-RING (K3)	2	B30001-
12	113-15-25260	. . SHIM, 0. 5MM	3	B30001-
13	113-15-25270	. . SHIM, 0. 2MM	3	B30001-
14	569-15-36480	. . SHIM, 0. 5MM	3	B30001-
15	104-15-25340	. . STOPPER	2	B30001-
16	07000-72020	. . O-RING (K3)	2	B30001-
17	103-15-25350	. . PLATE	2	B30001-
18	01010-80820	. . BOLT	4	B30001-
19	01643-50823	. . WASHER	4	B30001-
20	07042-00211	. . PLUG	1	B30001-
21	07213-50710	. CONNECTOR	1	B30001-
22	07336-50516	. FLANGE	1	B30001-
23	07000-73025	. O-RING (K3)	1	B30001-
24	01010-80875	. BOLT	2	B30001-
25	01010-80860	. BOLT	8	B30001-
26	01643-50823	. WASHER	10	B30001-
27	124-15-55140	. GASKET (K3)	1	B30001-

FIG. F2320-12A0 TRANSMISSION (FILLER AND PIPING)

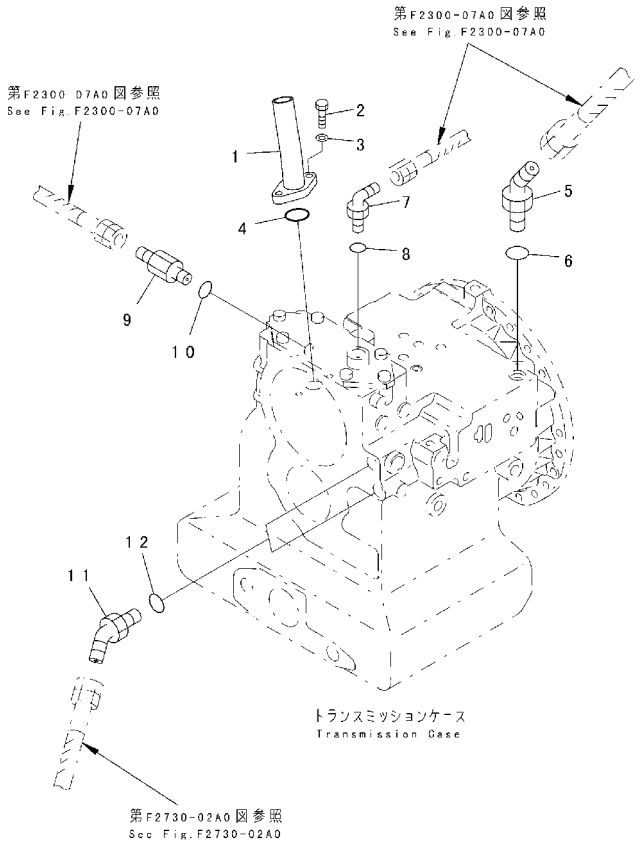

PDA7407

FIG. NO. : F2320-12A0

INDEX	PART NO.	DESCRIPTION	Q'TY	SERIAL NO.
	(124-15-00031)	TRANSMISSION ASS'Y THIS ASSEMBLY CONSISTS OF ALL PARTS SHOWN IN FIGS. F2320-01A0 TO F2320-13A0.	1	B30001-
1	124-49-51192	. FILLER	1	B30001-
2	01010-81030	. BOLT	2	B30001-
3	01643-31032	. WASHER	2	B30001-
4	07000-73035	. O-RING (K1)	1	B30001-
5	07236-10522	. ELBOW	1	B30001-
6	07002-32434	. O-RING (K1)	1	B30001-
7	07235-10315	. ELBOW	1	B30001-
8	07002-32034	. O-RING (K1)	1	B30001-
9	21W-62-11290	. UNION	1	B30001-
10	07002-32034	. O-RING (K1)	1	B30001-
11	07236-10422	. ELBOW	2	B30001-
12	07002-32034	. O-RING (K1)	2	B30001-

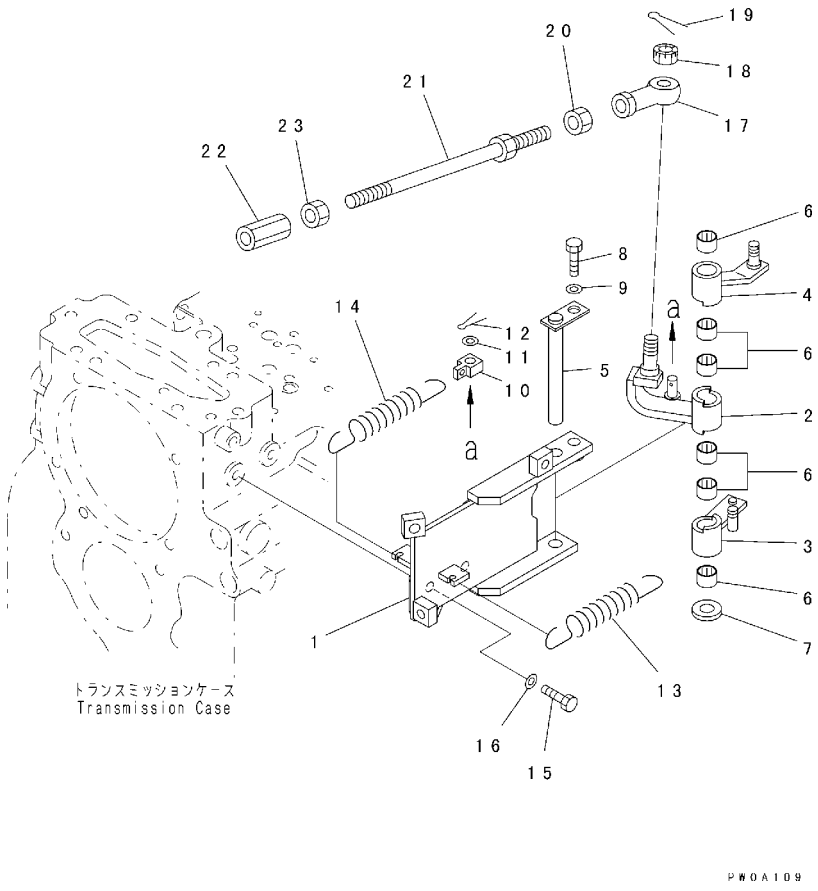

INDEX	PART NO.	DESCRIPTION	Q'TY	SERIAL NO.
	(124-15-00031)	TRANSMISSION ASS'Y	1	B30001-
		THIS ASSEMBLY CONSISTS OF ALL PARTS SHOWN IN FIGS. F2320-01A0 TO F2320-13A0.		
1	124-43-52653	. BRACKET	1	B30001-
2	124-43-52684	. LEVER	1	B30001-
3	124-43-52920	. LEVER	1	B30001-
4	124-43-52931	. LEVER	1	B30001-
5	124-43-52950	. PIN	1	B30001-
6	06123-01414	. BEARING	6	B30001-
7	01643-31445	. WASHER	1	B30001-
8	01010-81025	. BOLT	1	B30001-
9	01643-31032	. WASHER	1	B30001-
10	124-43-52510	. LEVER	1	B30001-
11	01640-21016	. WASHER	1	B30001-
12	04050-13020	. PIN	1	B30001-
13	113-43-11294	. SPRING	1	B30001-
14	124-43-52671	. SPRING	1	B30001-
15	01010-81025	. BOLT	2	B30001-
16	01643-31032	. WASHER	2	B30001-
17	04250-81474	. END	1	B30001-
18	01593-31411	. NUT	1	B30001-
19	04050-13022	. PIN	1	B30001-
20	01582-11411	. NUT	1	B30001-
21	04248-31426	. ROD	1	B30001-
22	17A-43-24160	. JOINT	1	B30001-
23	01508-41408	. NUT	1	B30001-

FIG. F2380-01A0 FINAL DRIVE (L.H.)

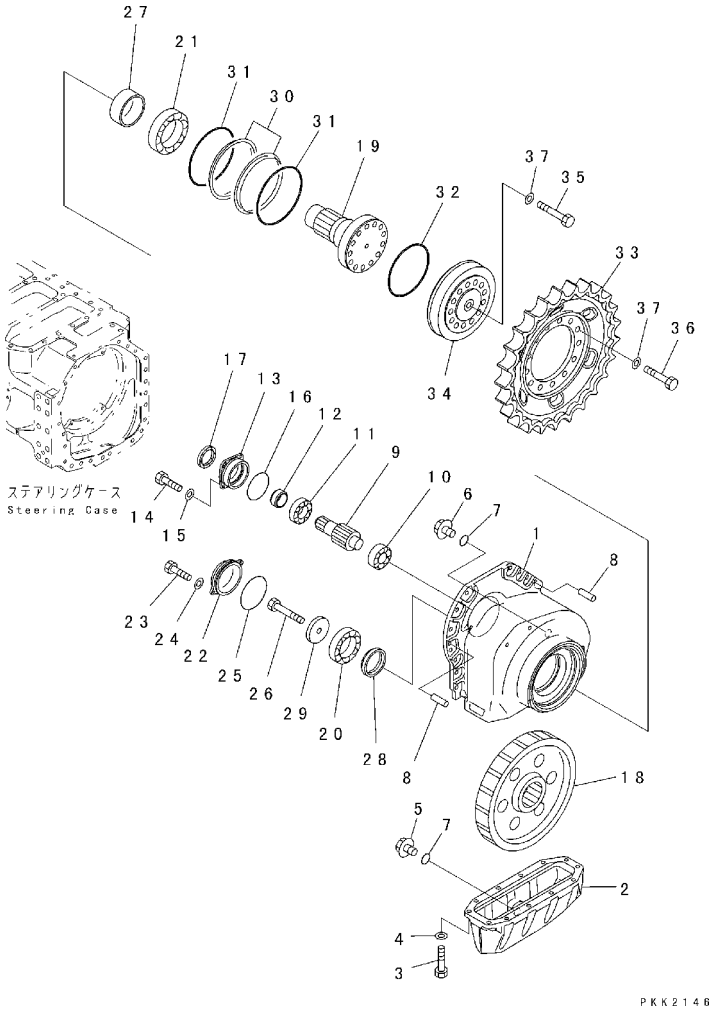

FIG. NO. : F2380-01A0

INDEX	PART NO.	DESCRIPTION	Q'TY	SERIAL NO.
	12G-27-00030	FINAL DRIVE ASS'Y, L. H.	1	B30001-
1	124-27-51115	. CASE, L. H.	1	B30001-
2	124-27-51134	. COVER, L. H.	1	B30001-
3	01010-81645	. BOLT	12	B30001-
4	01643-31645	. WASHER	12	B30001-
5	07044-13620	. PLUG	1	B30001-
6	07041-13612	. PLUG	1	B30001-
7	07002-03634	. O-RING	2	B30001-
8	04020-01638	. PIN	2	B30001-
9	124-27-51212	. PINION	1	B30001-
10	124-27-51412	. BEARING	1	B30001-
11	124-27-51420	. BEARING	1	B30001-
12	124-27-51241	. SPACER	1	B30001-
13	124-27-51162	. CAGE	1	B30001-
14	01010-81025	. BOLT	4	B30001-
15	01643-31032	. WASHER	4	B30001-
16	07000-72125	. O-RING	1	B30001-
17	07013-50075	. SEAL	1	B30001-
18	124-27-51221	. GEAR	1	B30001-
19	124-27-51232	. SHAFT	1	B30001-
20	124-27-51431	. BEARING	1	B30001-
21	124-27-51441	. BEARING	1	B30001-
22	124-27-51172	. COVER	1	B30001-
23	01010-81030	. BOLT	2	B30001-
24	01643-31232	. WASHER	2	B30001-
25	195-30-36190	. O-RING	1	B30001-
26	01011-82400	. BOLT	1	B30001-
27	124-27-51250	. SPACER	1	B30001-
28	124-27-51261	. SPACER	1	B30001-
29	124-27-51290	. WASHER	1	B30001-
	14X-27-00100	. FLOATING SEAL ASS'Y	1	B30001-
	14X-27-00110	. . SEAL ASS'Y	1	B30001-
30	☆	. . . SEAL	2	B30001-
	14X-27-00120	. . O-RING ASS'Y	1	B30001-
31	☆	. . . O-RING	2	B30001-
32	708-18-12140	. O-RING	1	B30001-
33	12G-27-52350	. SPROCKET	1	B30001-
34	124-27-51193	. HUB	1	B30001-
35	01010-82470	. BOLT	1	B30001-
36	01010-82490	. BOLT	13	B30001-
37	01643-32460	. WASHER	14	B30001-

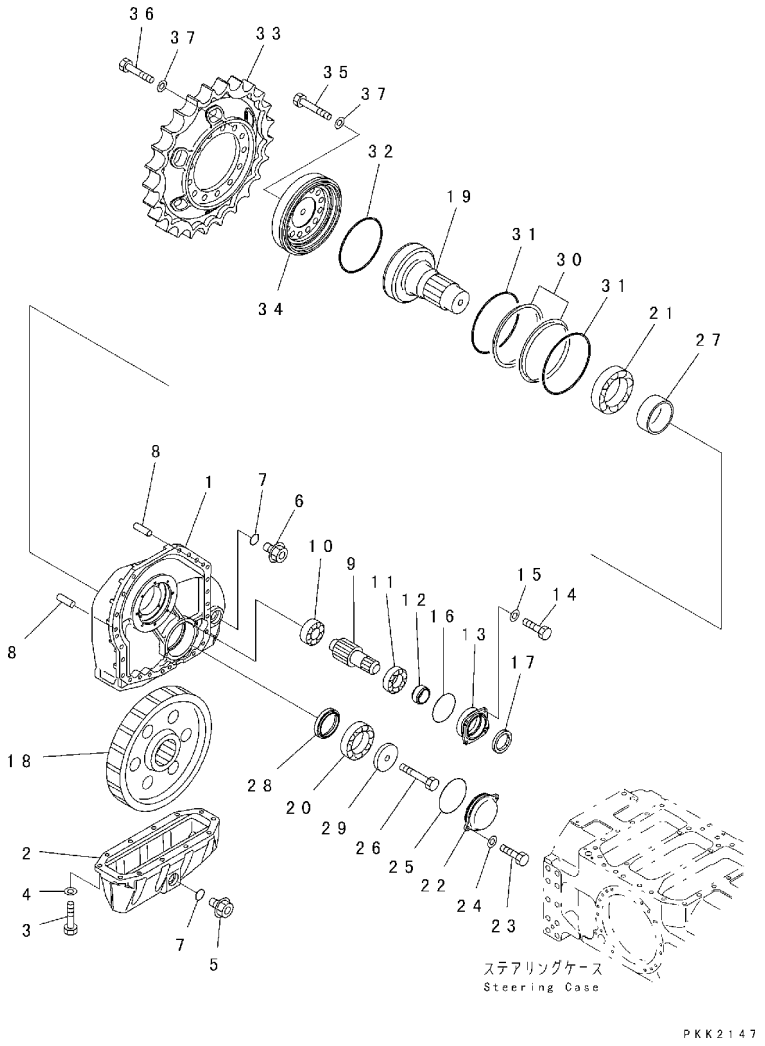

INDEX	PART NO.	DESCRIPTION	Q'TY	SERIAL NO.
	12G-27-00040	FINAL DRIVE ASS'Y, R. H.	1	B30001-
1	124-27-51125	. CASE, R. H.	1	B30001-
2	124-27-51522	. COVER, R. H.	1	B30001-
3	01010-81645	. BOLT	12	B30001-
4	01643-31645	. WASHER	12	B30001-
5	07044-13620	. PLUG	1	B30001-
6	07041-13612	. PLUG	1	B30001-
7	07002-03634	. O-RING	2	B30001-
8	04020-01638	. PIN	2	B30001-
9	124-27-51212	. PINION	1	B30001-
10	124-27-51412	. BEARING	1	B30001-
11	124-27-51420	. BEARING	1	B30001-
12	124-27-51241	. SPACER	1	B30001-
13	124-27-51162	. CAGE	1	B30001-
14	01010-81025	. BOLT	4	B30001-
15	01643-31032	. WASHER	4	B30001-
16	07000-72125	. O-RING	1	B30001-
17	07013-50075	. SEAL	1	B30001-
18	124-27-51221	. GEAR	1	B30001-
19	124-27-51232	. SHAFT	1	B30001-
20	124-27-51431	. BEARING	1	B30001-
21	124-27-51441	. BEARING	1	B30001-
22	124-27-51172	. COVER	1	B30001-
23	01010-81030	. BOLT	2	B30001-
24	01643-31232	. WASHER	2	B30001-
25	195-30-36190	. O-RING	1	B30001-
26	01011-82400	. BOLT	1	B30001-
27	124-27-51250	. SPACER	1	B30001-
28	124-27-51261	. SPACER	1	B30001-
29	124-27-51290	. WASHER	1	B30001-
	14X-27-00100	. FLOATING SEAL ASS'Y	1	B30001-
	14X-27-00110	. . SEAL ASS'Y	1	B30001-
30	☆	. . . SEAL	2	B30001-
	14X-27-00120	. . O-RING ASS'Y	1	B30001-
31	☆	. . . O-RING	2	B30001-
32	708-18-12140	. O-RING	1	B30001-
33	12G-27-52350	. SPROCKET	1	B30001-
34	124-27-51193	. HUB	1	B30001-
35	01010-82470	. BOLT	1	B30001-
36	01010-82490	. BOLT	13	B30001-
37	01643-32460	. WASHER	14	B30001-

FIG. F2380-03A0 FINAL DRIVE (MOUNT)

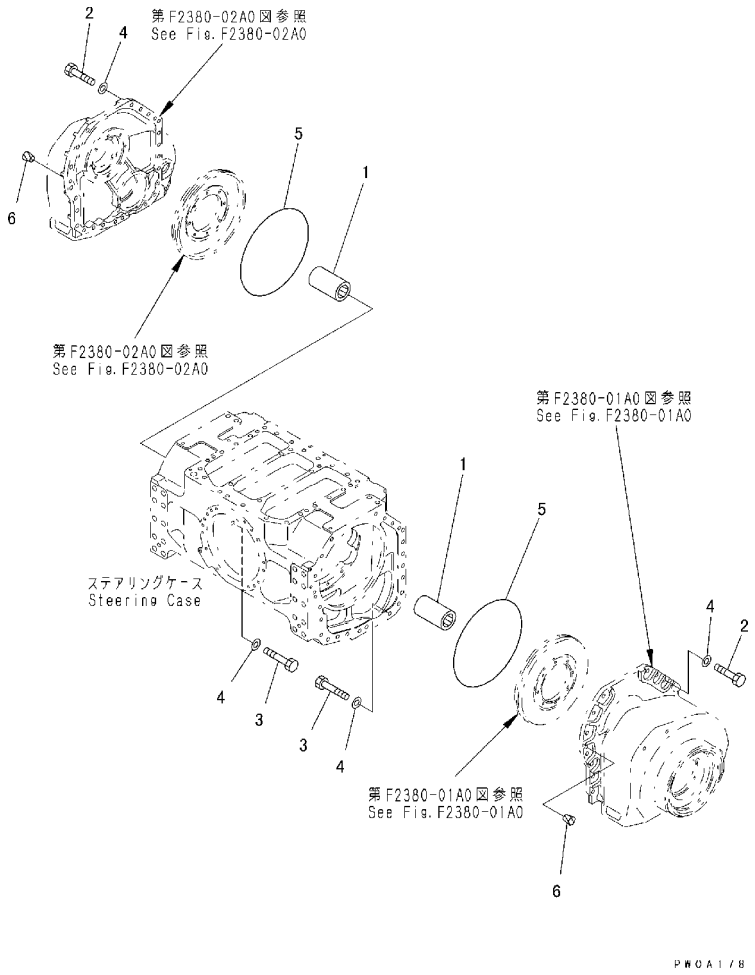

FIG. NO. : F2380-03A0

INDEX	PART NO.	DESCRIPTION	Q'TY	SERIAL NO.
1	124-27-51321	BOSS	2	B30001-
2	01010-81645	BOLT	40	B30001-
3	01010-81645	BOLT	6	B30001-
4	01643-31645	WASHER	46	B30001-
5	07000-15405	O-RING	2	B30001-
6	07049-01620	PLUG	8	B30001-

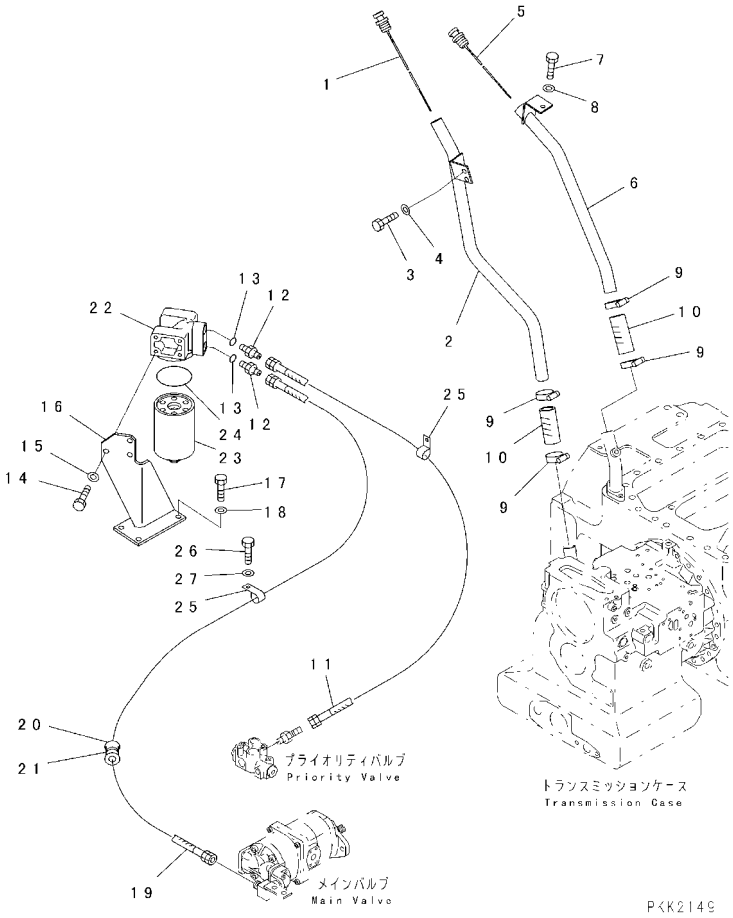

INDEX	PART NO.	DESCRIPTION	Q'TY	SERIAL NO.
1	124-49-61170	GAUGE	1	B30001-
2	124-49-61180	FILLER	1	B30001-
3	01010-81225	BOLT	2	B30001-
4	01643-31232	WASHER	2	B30001-
5	124-49-61210	GAUGE	1	B30001-
6	124-49-61220	FILLER	1	B30001-
7	01010-81025	BOLT	1	B30001-
8	01643-31032	WASHER	1	B30001-
9	07289-00045	CLAMP	4	B30001-
10	07260-23211	HOSE	2	B30001-
11	124-49-51390	HOSE	1	B30001-
12	07230-20522	UNION	2	B30001-
13	07002-32434	O-RING	2	B30001-
14	01010-81030	BOLT	3	B30001-
15	01643-31032	WASHER	3	B30001-
16	124-49-51142	BRACKET	1	B30001-
17	01010-81225	BOLT	3	B30001-
18	01643-31232	WASHER	3	B30001-
	124-49-61570	HOSE ASS'Y	1	B30001-
19	07102-20517	. HOSE	1	B30001-
19	08210-01804	. SPIRAL	1	B30001-
20	07095-20523	CUSHION	4	B30001-
21	08034-00536	BAND	1	B30001-
	23S-49-13103	FILTER ASS'Y	1	B30001-
22	23S-49-13110	. HEAD	1	B30001-
23	23S-49-13122	. CARTRIDGE	1	B30001-
24	23S-49-13132	. . O-RING	1	B30001-
25	04434-52712	CLIP	2	B30001-
26	01010-81220	BOLT	2	B30001-
27	01643-31232	WASHER	2	B30001-

FIG. F2730-02A0 POWER LINE OIL LINE (COOLING LINE)

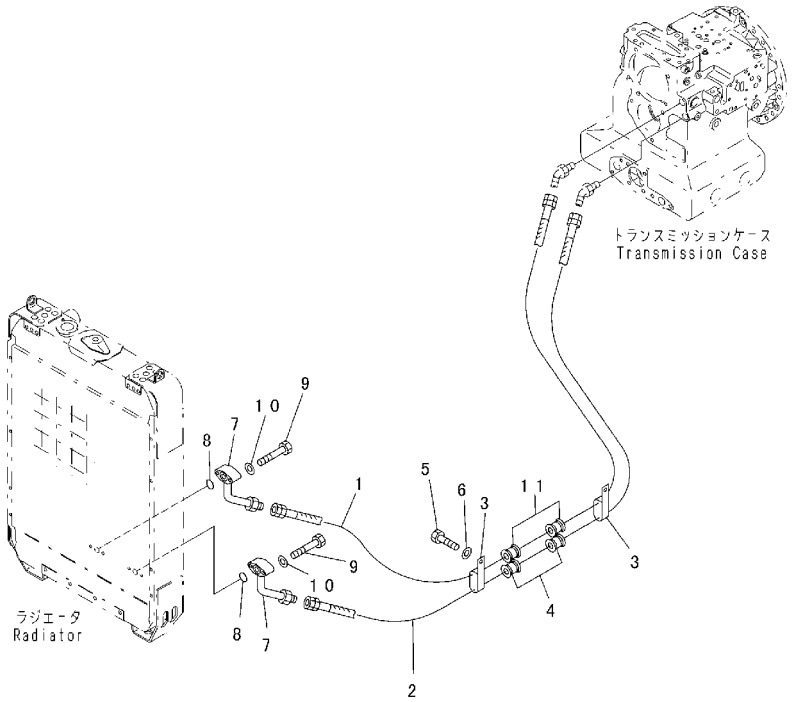

FIG. NO. : F2730-02A0

INDEX	PART NO.	DESCRIPTION	Q'TY	SERIAL NO.
1	124-49-51281	HOSE	1	B30001-
2	124-49-61290	HOSE	1	B30001-
3	198-61-14180	CLIP	2	B30001-
4	07095-20420	CUSHION	4	B30001-
5	01010-81220	BOLT	2	B30001-
6	01643-31232	WASHER	2	B30001-
7	124-49-61151	TUBE	2	B30001-
8	07000-73025	O-RING	2	B30001-
9	01010-81055	BOLT	4	B30001-
10	01643-31032	WASHER	4	B30001-
11	08034-00536	BAND	8	B30001-

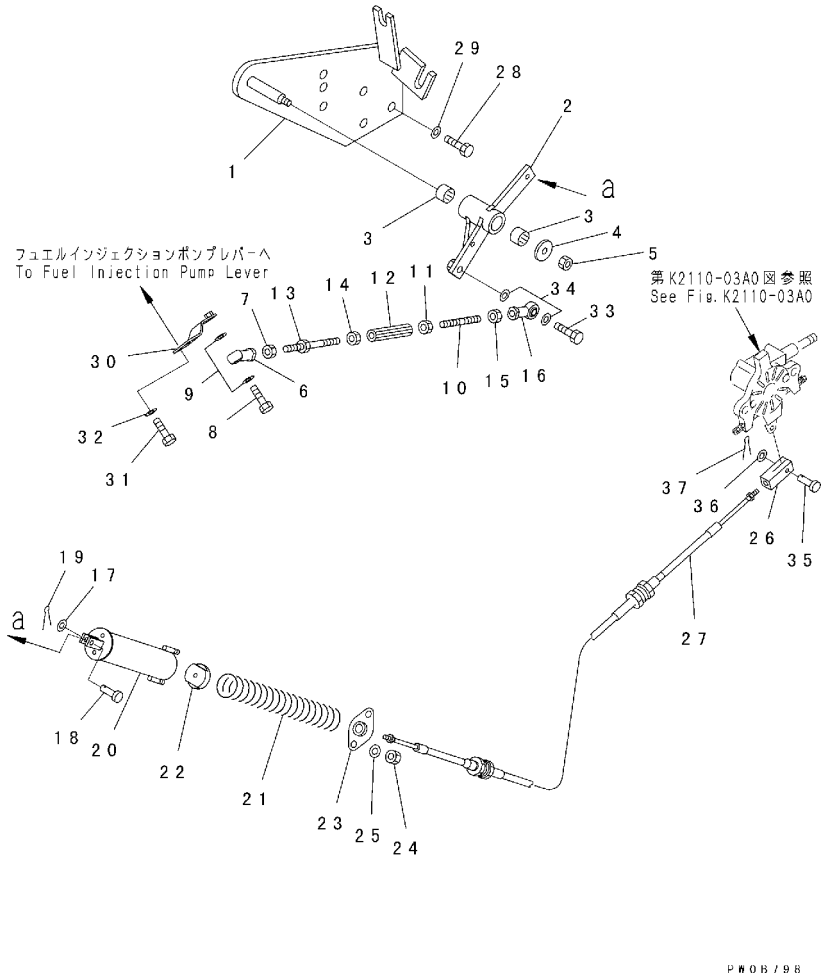

INDEX	PART NO.	DESCRIPTION	Q'TY	SERIAL NO.
1	124-43-61341	BRACKET	1	B30001-
2	124-43-51362	LEVER	1	B30001-
3	06123-01414	BEARING	2	B30001-
4	113-43-23230	WASHER	1	B30001-
5	01598-00809	NUT	1	B30001-
6	04250-80847	END	1	B30001-
7	01580-10806	NUT	1	B30001-
8	01010-80830	BOLT	1	B30001-
9	04254-10823	SPACER	2	B30001-
10	04245-40807	ROD	1	B30001-
11	01580-10806	NUT	1	B30001-
12	131-43-58210	JOINT	1	B30001-
13	04248-30807	ROD	1	B30001-
14	01508-40805	NUT	1	B30001-
15	01580-10806	NUT	1	B30001-
16	04250-80847	END	1	B30001-
17	01641-20608	WASHER	1	B30001-
18	04205-10622	PIN	1	B30001-
19	04050-11612	PIN	1	B30001-
20	14X-43-13330	COUPLING	1	B30001-
21	135-43-15821	SPRING, (L=140. 0)	1	B30001-
22	134-43-68240	NUT	1	B30001-
23	134-43-68270	PLATE	1	B30001-
24	01598-00608	NUT	2	B30001-
25	01640-20610	WASHER	2	B30001-
26	10S-43-16251	END	1	B30001-
27	124-43-61330	CABLE	1	B30001-
28	01010-81030	BOLT	3	B30001-
29	01643-31032	WASHER	3	B30001-
30	124-43-51383	LEVER	1	B30001-
31	01010-80616	BOLT	2	B30001-
32	01643-30623	WASHER	2	B30001-
33	01010-80830	BOLT	1	B30001-
34	04254-10823	SPACER	2	B30001-
35	04205-10522	PIN	1	B30001-
36	01643-30623	WASHER	1	B30001-
37	04050-11210	PIN	1	B30001-

HYDRAULIC SYSTEM

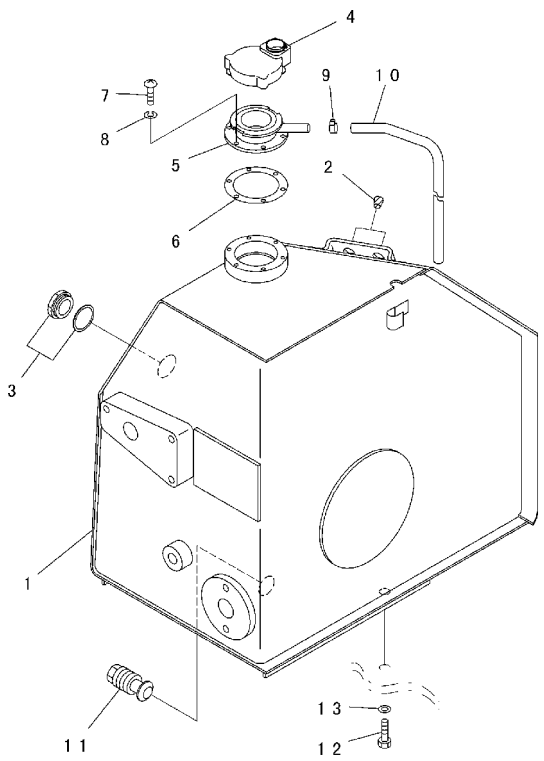

PW0A120

INDEX	PART NO.	DESCRIPTION	Q'TY	SERIAL NO.
1	124-60-61110	TANK	1	B30001-
2	07049-01215	PLUG	2	B30001-
3	20N-60-11143	GAUGE	1	B30002-
	20N-60-11142	GAUGE	1	B30001-B30001
	20N-60-11181	. GASKET	1	B30001-
4	14X-60-11130	CAP	1	B30001-
	20Y-60-21470	. ELEMENT	1	B30001-
5	201-60-12171	FILLER	1	B30001-
6	20Y-60-21340	GASKET	1	B30074-
	205-60-51460	GASKET	1	B30001-B30073
7	01252-70514	BOLT	6	B30074-
	01220-40514	SCREW	6	B30001-B30073
8	01601-20513	WASHER	6	B30001-
9	07285-00095	CLIP	1	B30001-
10	07270-00890	TUBE	1	B30001-
11	124-60-51150	PLUG	1	B30001-
12	01010-81645	BOLT	4	B30001-
13	01643-31645	WASHER	4	B30001-

FIG. H0120-01A0 CONTROL VALVE (MOUNT)

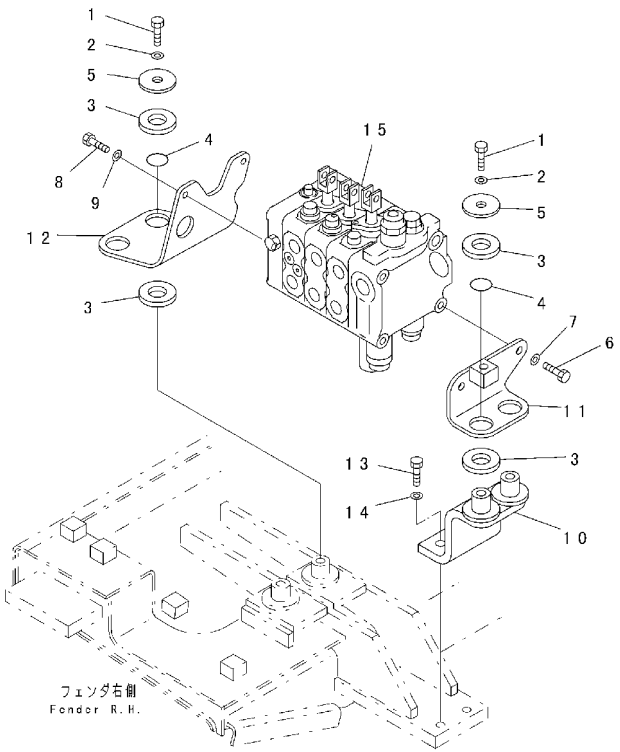

PKA7415

FIG. NO. : H0120-01A0

INDEX	PART NO.	DESCRIPTION	Q'TY	SERIAL NO.
1	01010-81225	BOLT	4	B30001-
2	01643-31232	WASHER	4	B30001-
3	14X-60-12120	CUSHION	8	B30001-
4	07000-03025	O-RING	4	B30001-
5	566-35-42430	PLATE	4	B30001-
6	01010-81020	BOLT	2	B30001-
7	01643-31032	WASHER	2	B30001-
8	01010-80820	BOLT	2	B30001-
9	01643-30823	WASHER	2	B30001-
10	124-60-51121	BRACKET	1	B30001-
11	124-60-51131	BRACKET	1	B30001-
12	124-60-51142	BRACKET	1	B30001-
13	01010-81235	BOLT	2	B30001-
14	01643-31232	WASHER	2	B30001-
15	(723-23-10303)	VALVE ASS'Y	1	B30197-
	(723-23-10302)	VALVE ASS'Y	1	B30001-B30196

FIG. H0310-01A0 HYDRAULIC PUMP LINE (HYDRAULIC PUMP AND VALVE LINE)

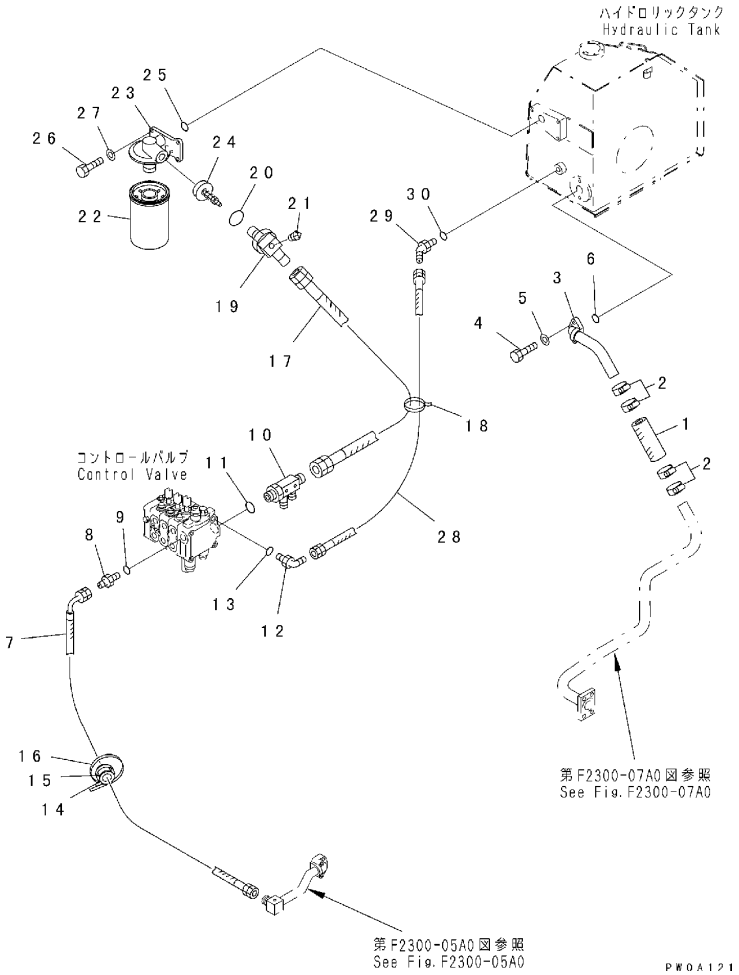

FIG. NO. : H0310-01A0

INDEX	PART NO.	DESCRIPTION	Q'TY	SERIAL NO.
1	07260-03214	HOSE	1	B30001-
2	07289-00045	CLAMP	2	B30001-
3	124-62-61440	TUBE	1	B30001-
4	01010-81030	BOLT	2	B30001-
5	01643-31032	WASHER	2	B30001-
6	07000-13032	O-RING	1	B30001-
7	124-62-51430	HOSE	1	B30001-
8	07230-20628	UNION	1	B30001-
9	07002-12434	O-RING	1	B30001-
10	124-62-51752	ELBOW	1	B30001-
11	07002-03334	O-RING	1	B30001-
12	07235-10210	ELBOW	1	B30001-
13	07002-01423	O-RING	1	B30001-
14	07095-20627	CUSHION	1	B30001-
15	08034-00536	BAND	1	B30001-
16	08034-00834	BAND	1	B30001-
17	124-62-51810	HOSE	1	B30001-
18	08034-00823	BAND	1	B30001-
19	07236-51034	ELBOW	1	B30001-
20	07002-03334	O-RING	1	B30001-
21	07042-70108	PLUG	1	B30001-
22	113-60-43321	CARTRIDGE	1	B30001-
23	113-60-43310	BASE	1	B30001-
24	113-60-43330	VALVE	1	B30001-
25	07000-03032	O-RING	1	B30001-
26	01010-81025	BOLT	3	B30001-
27	01643-31032	WASHER	3	B30001-
28	124-62-51250	HOSE	1	B30001-
29	07236-10210	ELBOW	1	B30001-
30	07002-01423	O-RING	1	B30001-

FIG. H0310-02A0 HYDRAULIC PUMP LINE (OIL COOLER LINE)

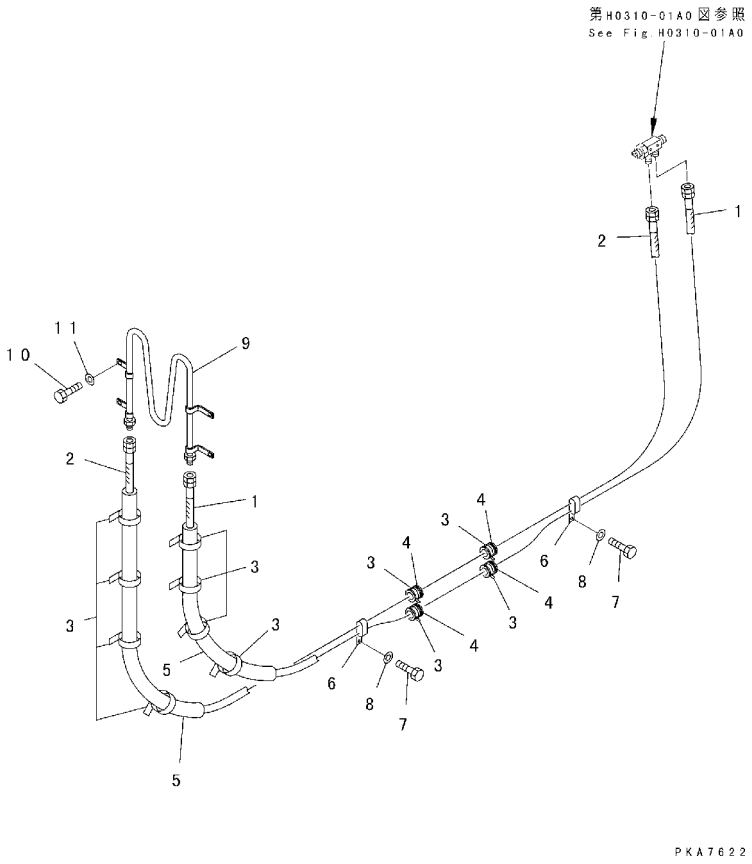

FIG. NO. : H0310-02A0

INDEX	PART NO.	DESCRIPTION	Q'TY	SERIAL NO.
1	124-62-51460	HOSE	1	B30001-
2	07102-20533	HOSE	1	B30001-
3	08034-00536	BAND	16	B30001-B30001
4	07095-20523	CUSHION	6	B30001-B30001
5	20U-62-11760	VINYL	2	B30001-B30001
6	144-A74-1460	CLIP	3	B30001-
7	01010-81220	BOLT	3	B30001-
8	01643-31232	WASHER	3	B30001-
9	124-62-61491	OIL COOLER	1	B30001-
10	01010-81025	BOLT	4	B30001-
11	01643-31032	WASHER	4	B30001-

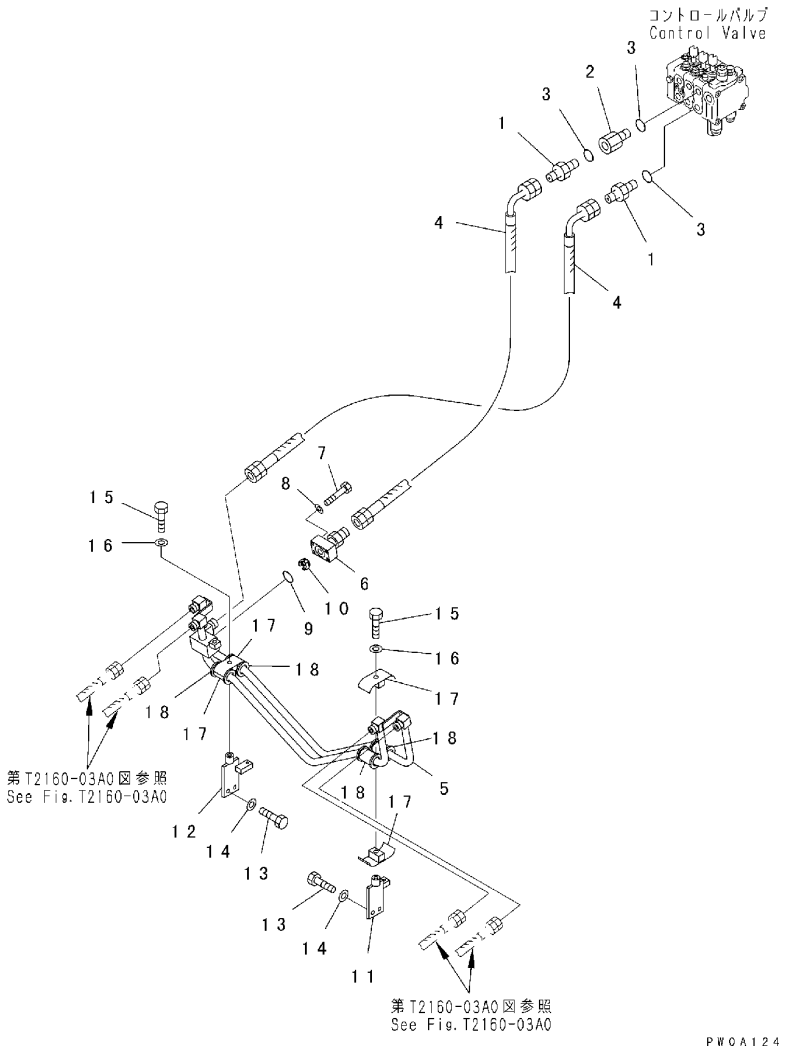

INDEX	PART NO.	DESCRIPTION	Q'TY	SERIAL NO.
1	07230-20628	UNION	2	B30001-
2	201-62-71810	JOINT	1	B30001-
3	07002-12434	O-RING	3	B30001-
4	124-62-51321	HOSE	2	B30001-
5	124-62-61281	TUBE	1	B30001-
6	124-62-61360	TUBE	1	B30001-
7	01010-80850	BOLT	4	B30001-
8	01643-30823	WASHER	4	B30001-
9	07000-13035	O-RING	1	B30001-
10	12F-62-41180	VALVE	1	B30001-
11	124-62-51263	BRACKET, L. H.	1	B30001-
12	124-62-51273	BRACKET, R. H.	1	B30001-
13	01010-81230	BOLT	4	B30001-
14	01643-31232	WASHER	4	B30001-
15	01010-81265	BOLT	2	B30001-
16	01643-31232	WASHER	2	B30001-
17	07094-30417	CLAMP	4	B30001-
18	07095-00421	CUSHION	4	B30001-

FIG. H2220-01A0 TILT CYLINDER LINE

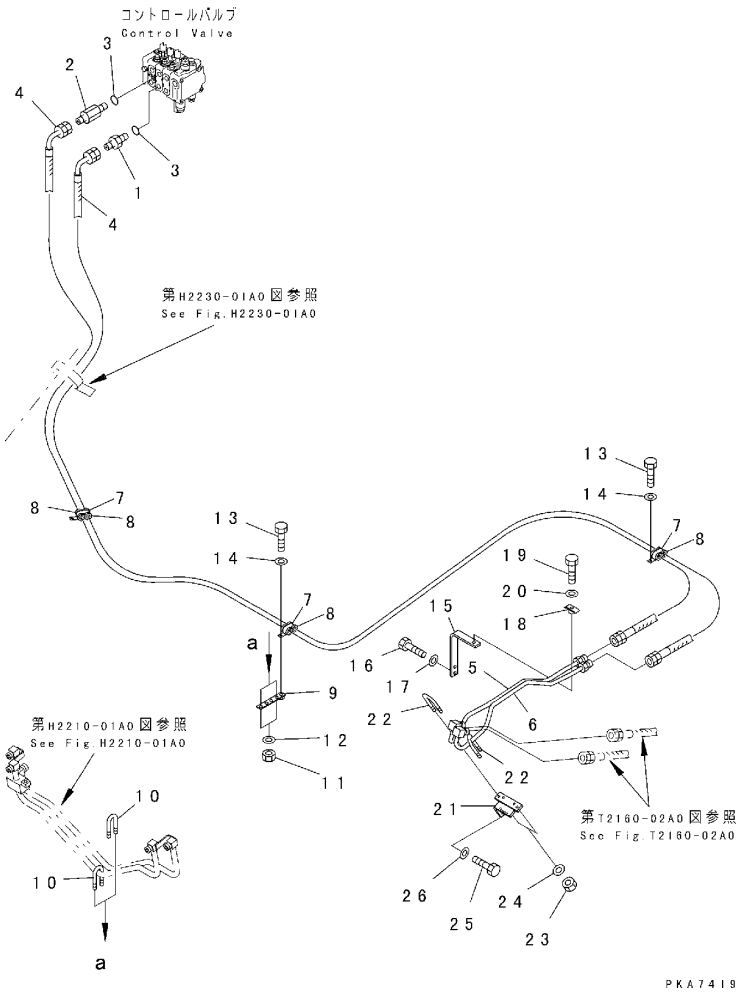

FIG. NO. : H2220-01A0

INDEX	PART NO.	DESCRIPTION	Q'TY	SERIAL NO.
1	07230-20315	UNION	1	B30001-
2	201-62-15340	NIPPLE	1	B30001-
3	07002-12034	O-RING	2	B30001-
4	124-62-51371	HOSE	2	B30001-
5	124-62-61511	TUBE	1	B30001-
6	124-62-61521	TUBE	1	B30001-
7	198-61-14180	CLIP	3	B30001-
8	07095-20318	CUSHION	6	B30001-
9	124-62-51760	PLATE	1	B30001-
10	07283-22236	CLIP	2	B30001-
11	01599-01011	NUT	4	B30001-
12	01643-31032	WASHER	4	B30001-
13	01010-81020	BOLT	3	B30001-
14	01643-31032	WASHER	3	B30001-
15	124-62-51771	BRACKET	1	B30001-
16	01010-81025	BOLT	2	B30001-
17	01643-31032	WASHER	2	B30001-
18	124-62-51920	CLIP	1	B30001-
19	01010-81245	BOLT	1	B30001-
20	01643-31232	WASHER	1	B30001-
21	124-62-51732	BRACKET	1	B30001-
22	07283-21537	CLIP	2	B30001-
23	01598-00809	NUT	4	B30001-
24	01643-30823	WASHER	4	B30001-
25	01010-81230	BOLT	2	B30001-
26	01643-31232	WASHER	2	B30001-

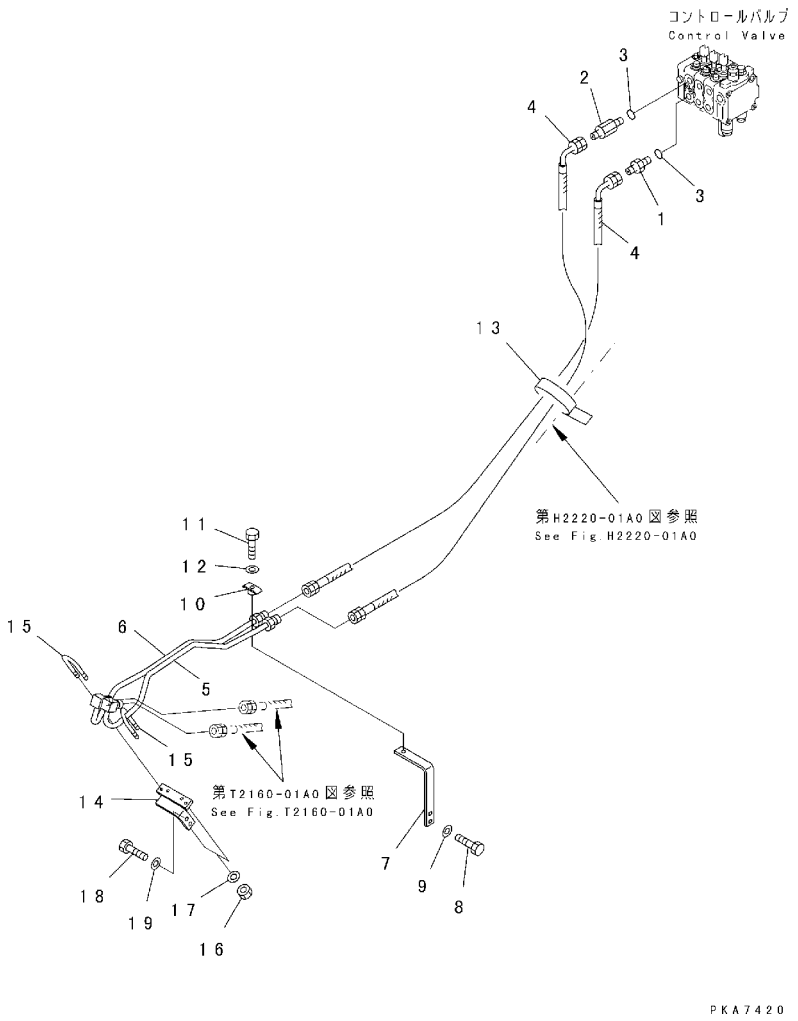

INDEX	PART NO.	DESCRIPTION	Q'TY	SERIAL NO.
1	07230-20315	UNION	1	B30001-
2	201-62-15340	NIPPLE	1	B30001-
3	07002-12034	O-RING	2	B30001-
4	124-62-51382	HOSE	2	B30001-
5	124-62-61561	TUBE	1	B30001-
6	124-62-61551	TUBE	1	B30001-
7	124-62-51771	BRACKET	1	B30001-
8	01010-81225	BOLT	2	B30226-
	01010-81025	BOLT	2	B30001-B30225
9	01643-31032	WASHER	2	B30001-
10	124-62-51920	CLIP	1	B30001-
11	01010-81245	BOLT	1	B30001-
12	01643-31232	WASHER	1	B30001-
13	08034-00823	BAND	1	B30001-
14	124-62-51742	BRACKET	1	B30001-
15	07283-21537	CLIP	2	B30001-
16	01598-00809	NUT	4	B30001-
17	01643-30823	WASHER	4	B30001-
18	01010-81230	BOLT	2	B30001-
19	01643-31232	WASHER	2	B30001-

MAIN FRAME AND RELATED PARTS

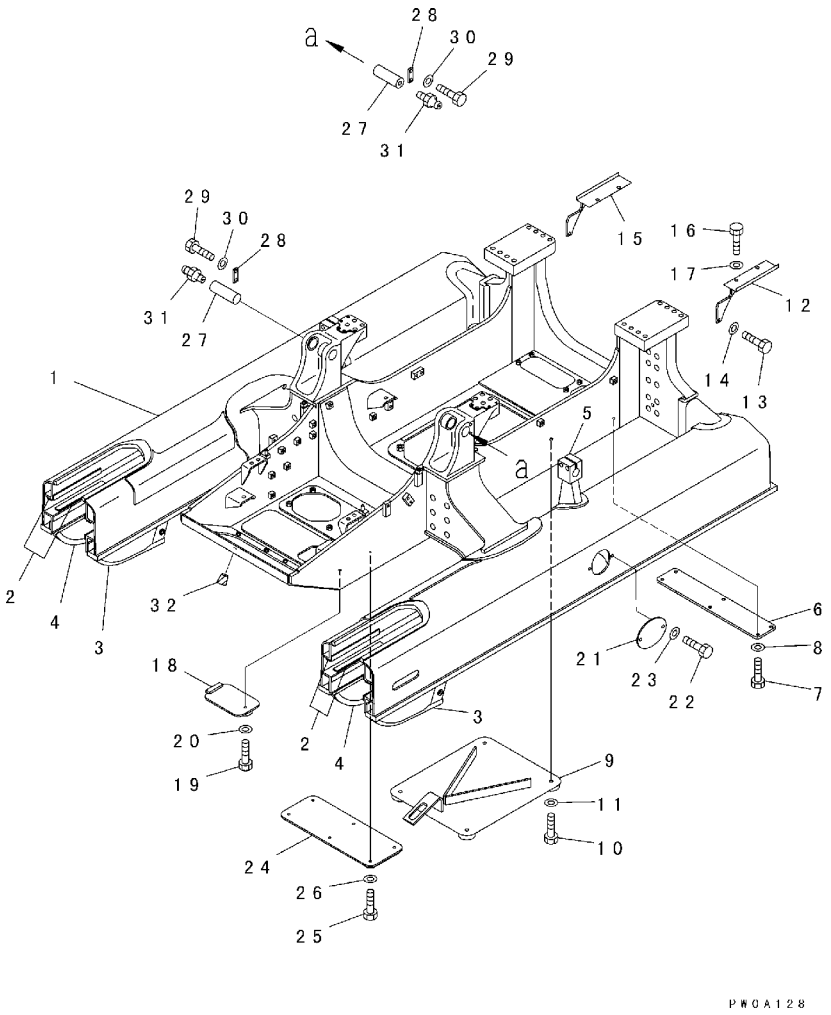

INDEX	PART NO.	DESCRIPTION	Q'TY	SERIAL NO.
1	12G-21-62100	FRAME ASS'Y	1	B30001-
2	12G-21-51B41	. PLATE (WELDED)\)	16	B30001-
3	12G-21-52131	. GUARD, L. H. (WELDED)\)	2	B30001-
4	12G-21-52141	. GUARD, R. H. (WELDED)\)	2	B30001-
5	12G-21-51171	. BRACKET (WELDED)\)	2	B30001-
6	124-21-51311	PLATE	1	B30001-
7	01010-81225	BOLT	6	B30001-
8	01643-31232	WASHER	6	B30001-
9	124-21-51323	COVER	1	B30001-
10	01010-81635	BOLT	4	B30001-
11	01643-31645	WASHER	4	B30001-
12	124-21-51280	BRACKET, L. H.	1	B30001-
13	01010-81225	BOLT	2	B30001-
14	01643-31232	WASHER	2	B30001-
15	124-21-51290	BRACKET, R. H.	1	B30001-
16	01010-81225	BOLT	2	B30001-
17	01643-31232	WASHER	2	B30001-
18	124-21-51332	COVER	1	B30001-
19	01010-81235	BOLT	1	B30001-
20	01643-31232	WASHER	1	B30001-
21	14Y-30-11277	COVER	2	B30001-
22	01010-81235	BOLT	4	B30001-
23	01643-31232	WASHER	4	B30001-
24	124-21-51190	COVER	1	B30001-
25	01010-81235	BOLT	6	B30001-
26	01643-31232	WASHER	6	B30001-
27	09241-5A140	PIN	2	B30001-
28	04082-00212	LOCK	2	B30001-
29	01010-81225	BOLT	4	B30001-
30	01643-31232	WASHER	4	B30001-
31	07020-00000	FITTING	2	B30001-
32	07049-01620	PLUG	4	B30001-

OPERATOR'S COMPARTMENT AND CONTROL SYSTEM

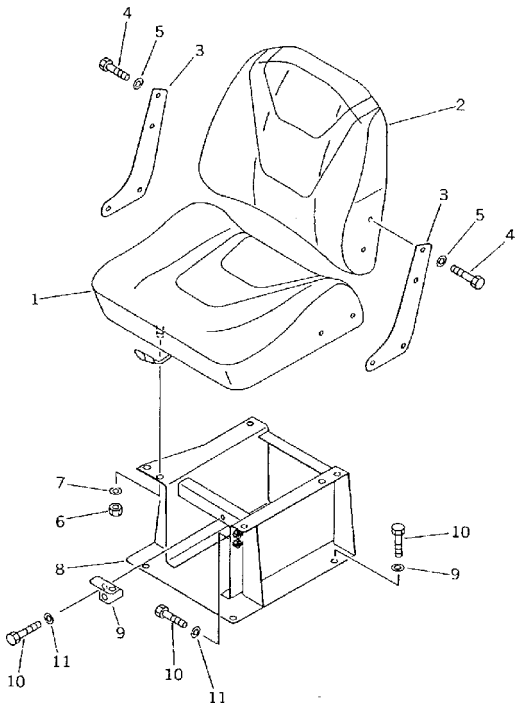

INDEX	PART NO.	DESCRIPTION	Q'TY	SERIAL NO.
1	114-57-41260	CUSHION	1	B30001-
2	114-57-41271	CUSHION	1	B30001-
3	114-57-41280	PLATE	2	B30001-
4	01010-80825	BOLT	8	B30001-
5	01643-30823	WASHER	8	B30001-
6	01580-11210	NUT	4	B30001-
7	01643-31232	WASHER	4	B30001-
8	14X-57-11113	BRACKET	1	B30001-
9	14X-57-11380	PLATE	1	B30001-
10	01010-81230	BOLT	6	B30001-
11	01643-31232	WASHER	6	B30001-

FIG. K0110-01A2 OPERATOR'S SEAT (TURN AND RECLINING TYPE) (FABRIC SEAT)

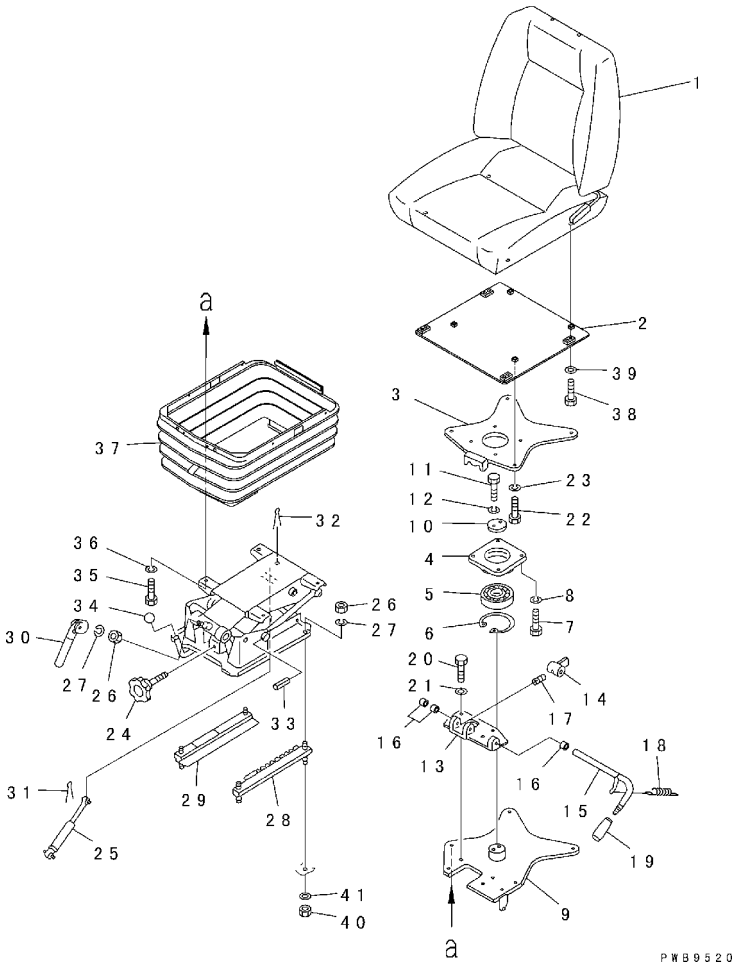

FIG. NO. : K0110-01A2

INDEX	PART NO.	DESCRIPTION	Q'TY	SERIAL NO.
	195-57-45501	SEAT ASS'Y	1	B30001-
1	195-57-43510	. SEAT A.	1	B30001-
2	195-57-41720	. BRACKET	1	B30001-
	195-57-11100	. TURNING ASS'Y	1	B30001-
3	195-57-11740	. . PLATE	1	B30001-
4	195-57-11760	. . CAGE	1	B30001-
5	06004-06210	. . BEARING	1	B30001-
6	04065-09030	. . RING	1	B30001-
7	01010-81025	. . BOLT	4	B30001-
8	01602-21030	. . WASHER	4	B30001-
9	195-57-11750	. . PLATE	1	B30001-
10	04080-04508	. . HOLDER	1	B30001-
11	01010-81025	. . BOLT	2	B30001-
12	01602-21030	. . WASHER	2	B30001-
13	195-57-11780	. . BRACKET	1	B30001-
14	195-57-11770	. . LEVER	1	B30001-
15	195-57-11790	. . LEVER	1	B30001-
16	09350-01615	. . BUSHING	3	B30001-
17	01322-40616	. . SCREW	1	B30001-
18	154-44-12460	. . SPRING	1	B30001-
19	09304-01240	. . KNOB	1	B30001-
20	01010-81025	. . BOLT	5	B30001-
21	01643-31032	. . WASHER	5	B30001-
22	01010-81030	. BOLT	4	B30001-
23	01602-21030	. WASHER	4	B30001-
	195-57-21181	. SUSPENSION ASS'Y	1	B30001-
24	155-57-12320	. . KNOB	1	B30001-
25	155-57-12330	. . DAMPER	1	B30001-
26	01580-11210	. . NUT	5	B30001-
27	01602-31236	. . WASHER	5	B30001-
28	195-57-21211	. . ADJUSTER	1	B30001-
29	195-57-21221	. . ADJUSTER	1	B30001-
30	195-57-21190	. . LEVER	1	B30001-
31	04050-13015	. . PIN	2	B30001-
32	04050-14025	. . PIN	2	B30001-
33	04025-00432	. . PIN	7	B30001-
34	09304-00835	. . KNOB	1	B30001-
35	01010-81020	. BOLT	4	B30001-
36	01602-21030	. WASHER	4	B30001-
37	195-57-41760	. COVER	1	B30001-
38	01010-80630	. BOLT	4	B30001-
39	01643-30623	. WASHER	4	B30001-

FIG. K0110-01A2 OPERATOR'S SEAT (TURN AND RECLINING TYPE) (FABRIC SEAT)

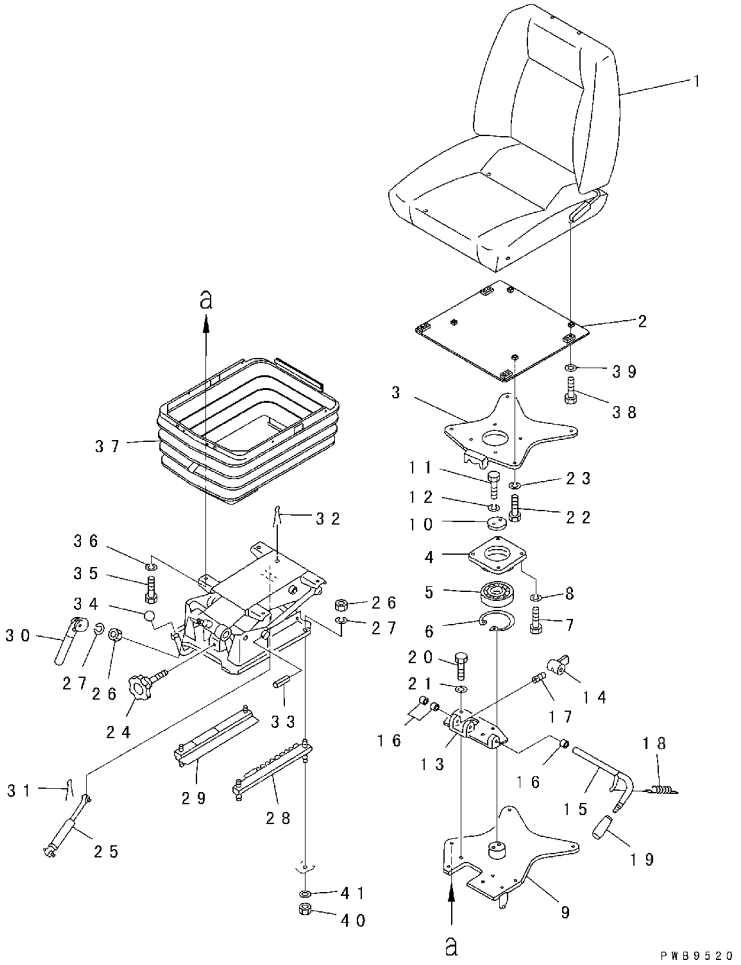

FIG. NO. : K0110-01A2

INDEX	PART NO.	DESCRIPTION	Q'TY	SERIAL NO.
40	01580-11210	NUT	4	B30001-
41	01643-31232	WASHER	4	B30001-

FIG. K0110-01A3 OPERATOR'S SEAT (RECLINING TYPE) (LEATHER SEAT)

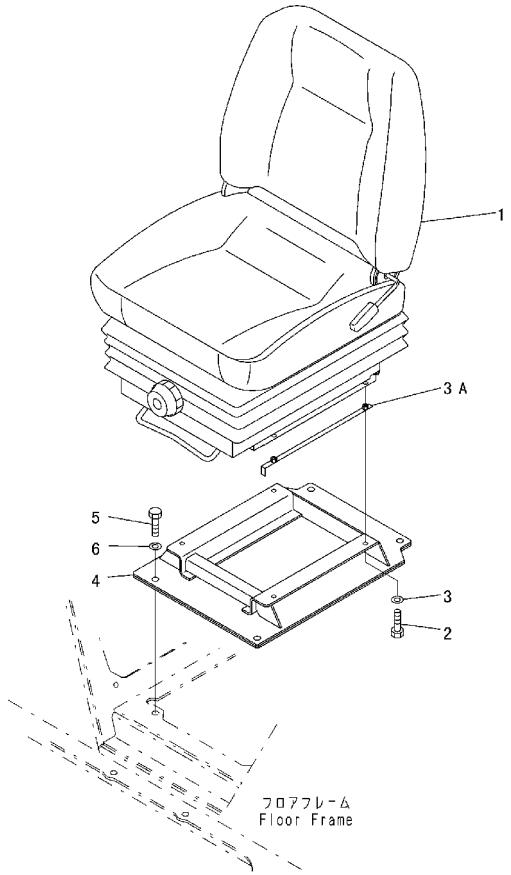

FIG. NO. : K0110-01A3

INDEX	PART NO.	DESCRIPTION	Q'TY	SERIAL NO.
1	134-57-61300	SEAT ASS'Y	1	B30001-
2	01010-B0820	BOLT	4	B30001-
3	01643-30823	WASHER	4	B30001-
3A	134-57-61150	BRACKET	2	B30001-
4	134-57-61120	BRACKET	1	B30001-
5	01010-81230	BOLT	4	B30001-
6	01643-31232	WASHER	4	B30001-

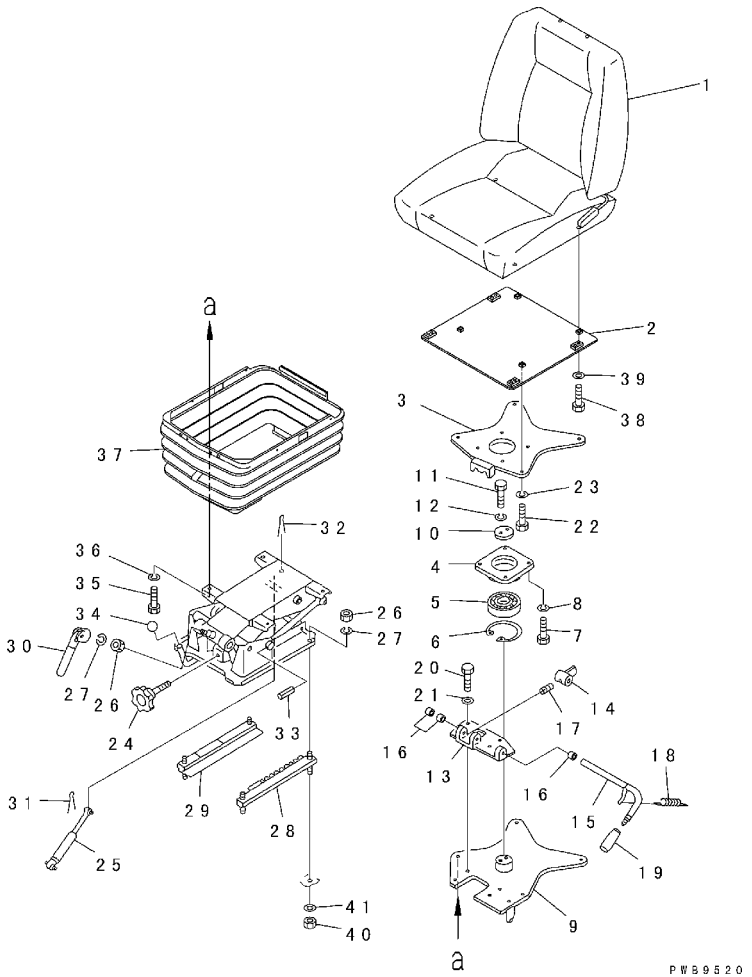

FIG. NO. : K0110-01A4

INDEX	PART NO.	DESCRIPTION	Q'TY	SERIAL NO.
	195-57-45601	SEAT ASS'Y	1	B30001-
1	195-57-43610	. SEAT ASS'Y	1	B30001-
2	195-57-41720	. BRACKET	1	B30001-
	195-57-11100	. TURNING ASS'Y	1	B30001-
3	195-57-11740	. . PLATE	1	B30001-
4	195-57-11760	. . CAGE	1	B30001-
5	06004-06210	. . BEARING	1	B30001-
6	04065-09030	. . RING	1	B30001-
7	01010-81025	. . BOLT	4	B30001-
8	01602-21030	. . WASHER	4	B30001-
9	195-57-11750	. . PLATE	1	B30001-
10	04080-04508	. . HOLDER	1	B30001-
11	01010-81025	. . BOLT	2	B30001-
12	01602-21030	. . WASHER	2	B30001-
13	195-57-11780	. . BRACKET	1	B30001-
14	195-57-11770	. . LEVER	1	B30001-
15	195-57-11790	. . LEVER	1	B30001-
16	09350-01615	. . BUSHING	3	B30001-
17	01322-40616	. . SCREW	1	B30001-
18	154-44-12460	. . SPRING	1	B30001-
19	09304-01240	. . KNOB	1	B30001-
20	01010-81025	. . BOLT	5	B30001-
21	01643-31032	. . WASHER	5	B30001-
22	01010-81030	. BOLT	4	B30001-
23	01602-21030	. WASHER	4	B30001-
	195-57-21181	. SUSPENSION ASS'Y	1	B30001-
24	155-57-12320	. . KNOB	1	B30001-
25	155-57-12330	. . DAMPER	1	B30001-
26	01580-00210	. . NUT	5	B30001-
27	01602-31236	. . WASHER	5	B30001-
28	195-57-21211	. . ADJUSTER	1	B30001-
29	195-57-21221	. . ADJUSTER	1	B30001-
30	195-57-21190	. . LEVER	1	B30001-
31	04050-13015	. . PIN	2	B30001-
32	04050-14025	. . PIN	2	B30001-
33	04025-00432	. . PIN	7	B30001-
34	09304-00835	. . KNOB	1	B30001-
35	01010-81020	. BOLT	4	B30001-
36	01602-21030	. WASHER	4	B30001-
37	195-57-41760	. COVER	1	B30001-
38	01010-80630	. BOLT	4	B30001-
39	01643-30623	. WASHER	4	B30001-

FIG. K0110-01A4 OPERATOR'S SEAT (RECLINING TYPE) (LEATHER SEAT)

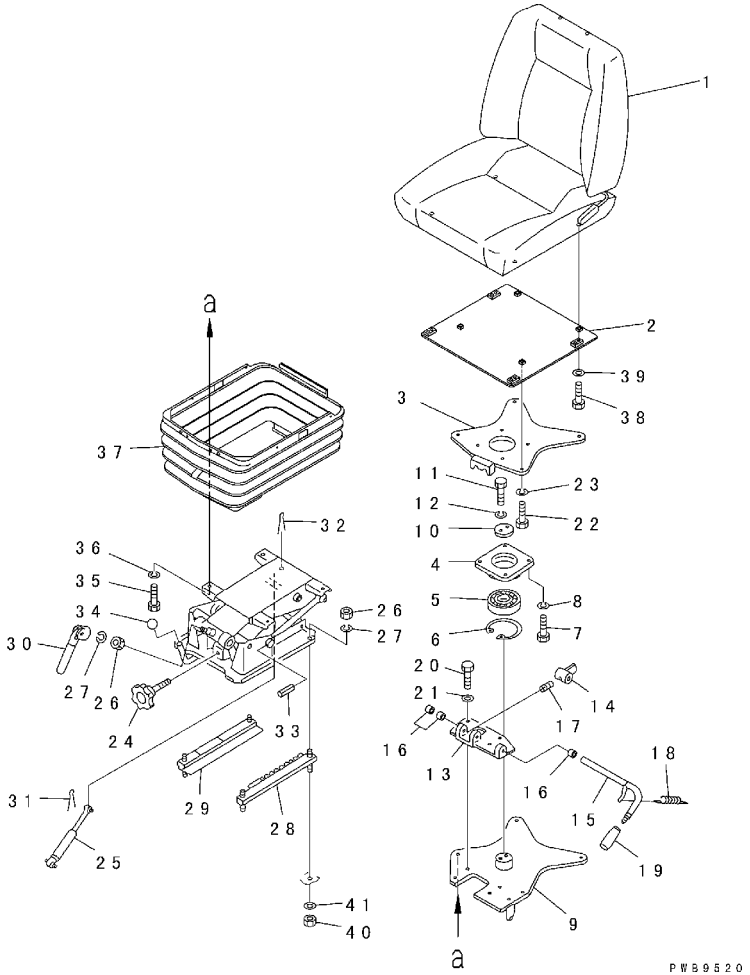

FIG. NO. : K0110-01A4

INDEX	PART NO.	DESCRIPTION	Q'TY	SERIAL NO.
40	01580-11210	NUT	4	B30001-
41	01643-31232	WASHER	4	B30001-

FIG. K0110-01A5 OPERATOR'S SEAT (RECLINING TYPE) (FABRIC SEAT) (WITH HEAD REST)

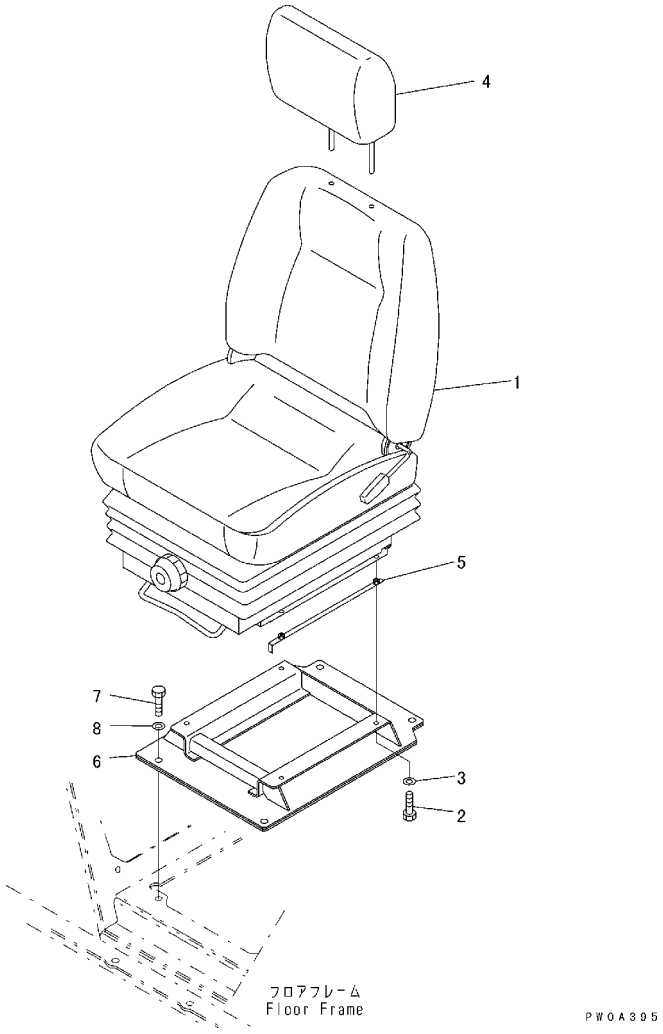

FIG. NO. : K0110-01A5

INDEX	PART NO.	DESCRIPTION	Q'TY	SERIAL NO.
1	134-57-61200	SEAT ASS'Y	1	B30001-
2	01010-B0820	BOLT	4	B30001-
3	01643-30823	WASHER	4	B30001-
4	17A-57-21170	HEAD REST	1	B30001-
5	134-57-61150	BRACKET	2	B30001-
6	134-57-61120	BRACKET	1	B30001-
7	01010-81230	BOLT	4	B30001-
8	01643-31232	WASHER	4	B30001-

FIG. K0110-01A6 OPERATOR'S SEAT (RECLINING TYPE) (FABRIC SEAT)

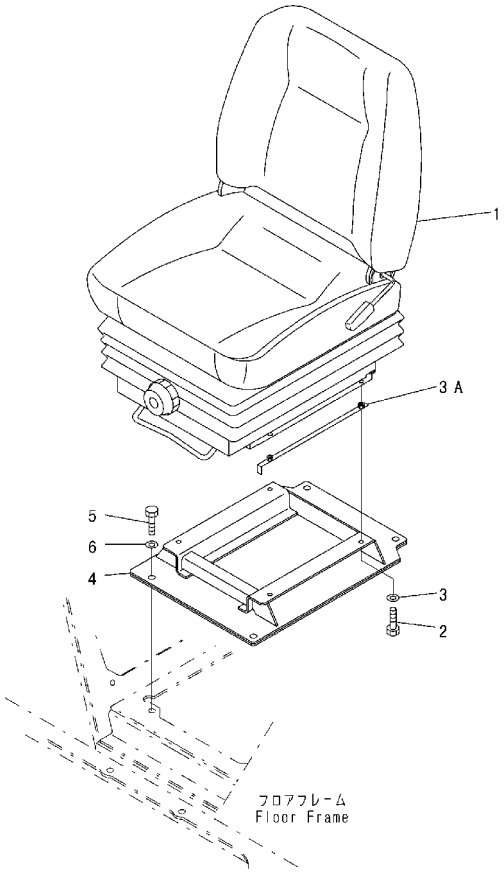

FIG. NO. : K0110-01A6

INDEX	PART NO.	DESCRIPTION	Q'TY	SERIAL NO.
1	134-57-61200	SEAT ASS'Y	1	B30001-
2	01010-B0820	BOLT	4	B30001-
3	01643-30823	WASHER	4	B30001-
3A	134-57-61150	BRACKET	2	B30001-
4	134-57-61120	BRACKET	1	B30001-
5	01010-81230	BOLT	4	B30001-
6	01643-31232	WASHER	4	B30001-

FIG. K0110-01A7 OPERATOR'S SEAT (TURN AND RECLINING TYPE) (FABRIC SEAT) (WITH HEAD REST)

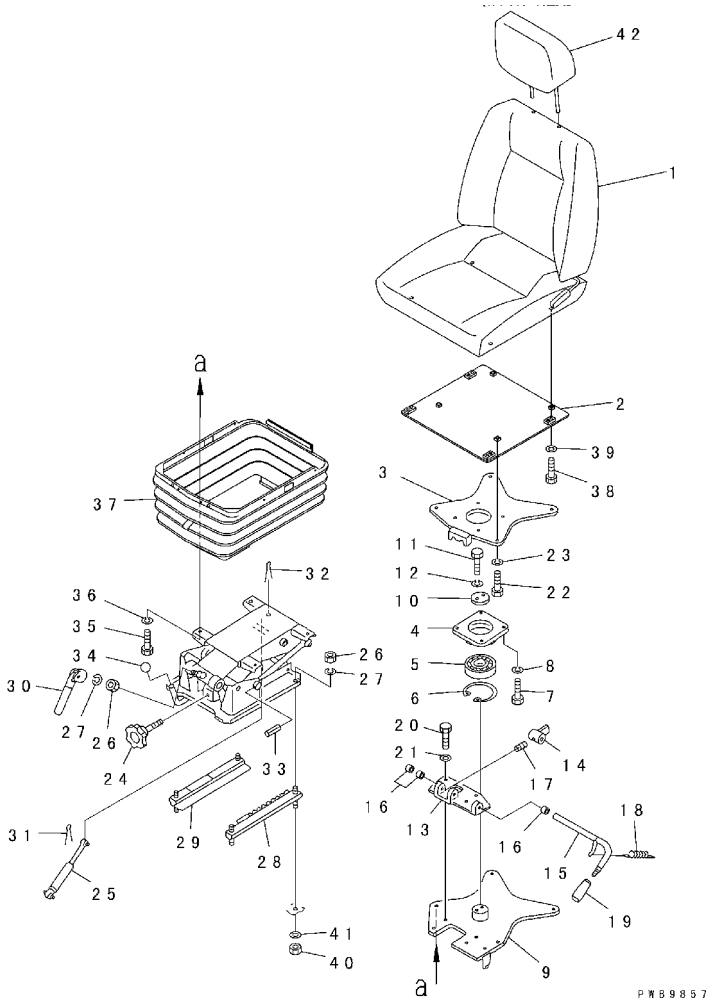

FIG. NO. : K0110-01A7

INDEX	PART NO.	DESCRIPTION	Q'TY	SERIAL NO.
	195-57-45501	SEAT ASS'Y	1	B30001-
1	195-57-43510	. SEAT A. , FABRIC	1	B30001-
2	195-57-41720	. BRACKET	1	B30001-
	195-57-11100	. TURNING ASS'Y	1	B30001-
3	195-57-11740	. . PLATE	1	B30001-
4	195-57-11760	. . CAGE	1	B30001-
5	06004-06210	. . BEARING	1	B30001-
6	04065-09030	. . RING	1	B30001-
7	01010-81025	. . BOLT	4	B30001-
8	01602-21030	. . WASHER	4	B30001-
9	195-57-11750	. . PLATE	1	B30001-
10	04080-04508	. . HOLDER	1	B30001-
11	01010-81025	. . BOLT	2	B30001-
12	01602-21030	. . WASHER	2	B30001-
13	195-57-11780	. . BRACKET	1	B30001-
14	195-57-11770	. . LEVER	1	B30001-
15	195-57-11790	. . LEVER	1	B30001-
16	09350-01615	. . BUSHING	3	B30001-
17	01322-40616	. . SCREW	1	B30001-
18	154-44-12460	. . SPRING	1	B30001-
19	09304-01240	. . KNOB	1	B30001-
20	01010-81025	. . BOLT	5	B30001-
21	01643-31032	. . WASHER	5	B30001-
22	01010-81030	. BOLT	4	B30001-
23	01602-21030	. WASHER	4	B30001-
	195-57-21181	. SUSPENSION ASS'Y	1	B30001-
24	155-57-12320	. . KNOB	1	B30001-
25	155-57-12330	. . DAMPER	1	B30001-
26	01580-11210	. . NUT	5	B30001-
27	01602-31236	. . WASHER	5	B30001-
28	195-57-21211	. . ADJUSTER	1	B30001-
29	195-57-21221	. . ADJUSTER	1	B30001-
30	195-57-21190	. . LEVER	1	B30001-
31	04050-13015	. . PIN	2	B30001-
32	04050-14025	. . PIN	2	B30001-
33	04025-00432	. . PIN	7	B30001-
34	09304-00835	. . KNOB	1	B30001-
35	01010-81020	. BOLT	4	B30001-
36	01602-21030	. WASHER	4	B30001-
37	195-57-41760	. COVER	1	B30001-
38	01010-80630	. BOLT	4	B30001-
39	01643-30623	. WASHER	4	B30001-

FIG. K0110-01A7 OPERATOR'S SEAT (TURN AND RECLINING TYPE) (FABRIC SEAT) (WITH HEAD REST)

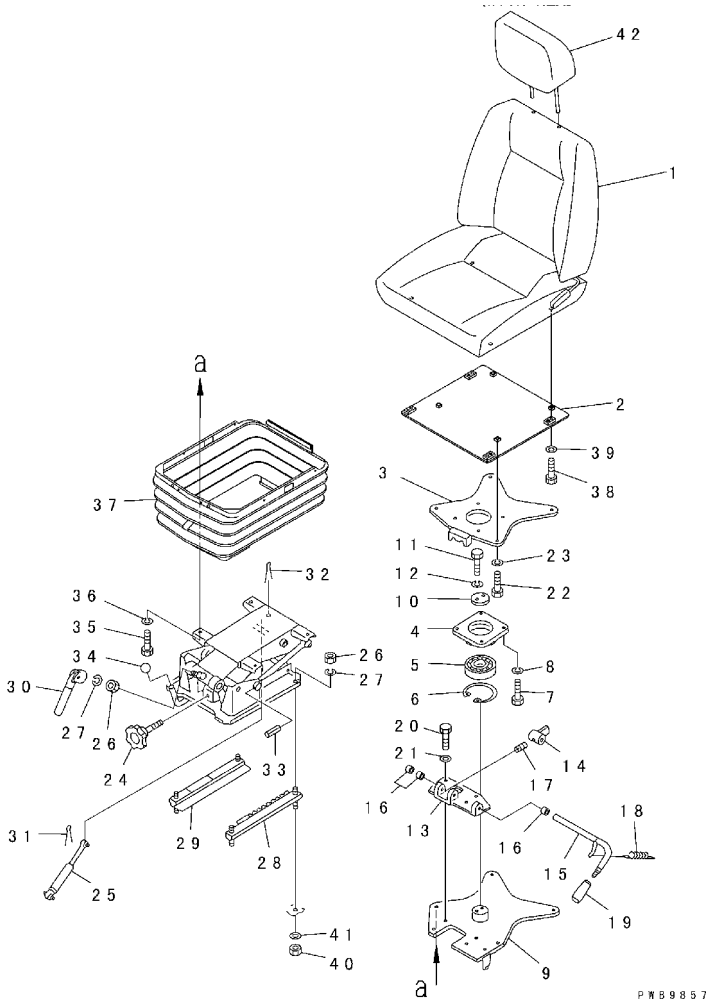

FIG. NO. : K0110-01A7

INDEX	PART NO.	DESCRIPTION	Q'TY	SERIAL NO.
40	01580-11210	NUT	4	B30001-
41	01643-31232	WASHER	4	B30001-
42	17A-57-21170	HEAD REST	1	B30001-

FIG. K0110-01A8 OPERATOR'S SEAT (RECLINING TYPE) (LEATHER SEAT) (HIBACK)

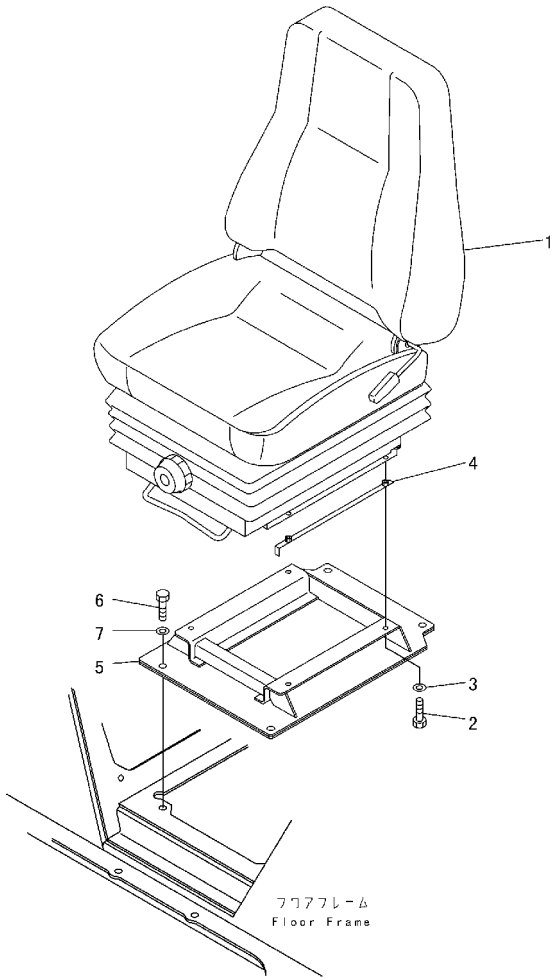

PJ0A677

FIG. NO. : K0110-01A8

INDEX	PART NO.	DESCRIPTION	Q'TY	SERIAL NO.
1	14X-57-21200	SEAT ASS'Y, LEATHER	1	B30001-
2	01010-B0820	BOLT	4	B30001-
3	01643-30823	WASHER	4	B30001-
4	134-57-61150	BRACKET	2	B30001-
5	134-57-61120	BRACKET	1	B30001-
6	01010-81230	BOLT	4	B30001-
7	01643-31232	WASHER	4	B30001-

FIG. K0110-01A9 OPERATOR'S SEAT (RECLINING TYPE) (FABRIC SEAT) (HIBACK)

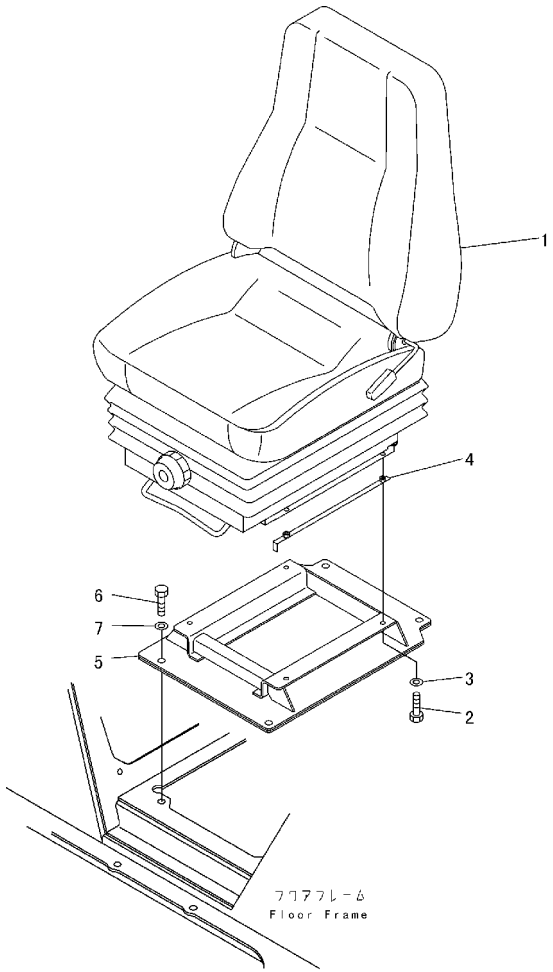

FIG. NO. : K0110-01A9

INDEX	PART NO.	DESCRIPTION	Q'TY	SERIAL NO.
1	14X-57-21100	SEAT ASS'Y, FABRIC	1	B30001-
2	01010-B0820	BOLT	4	B30001-
3	01643-30823	WASHER	4	B30001-
4	134-57-61150	BRACKET	2	B30001-
5	134-57-61120	BRACKET	1	B30001-
6	01010-81230	BOLT	4	B30001-
7	01643-31232	WASHER	4	B30001-

FIG. K0110-04A2 OPERATOR'S SEAT (TURN AND RECLINING TYPE) (MOUNT)

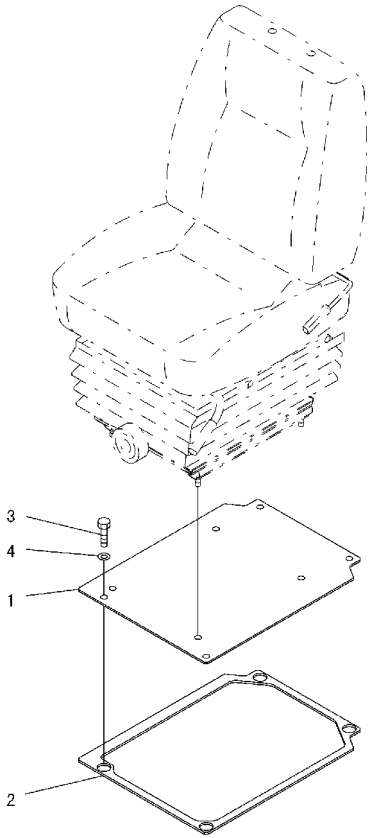

PWOA396

FIG. NO. : K0110-04A2

INDEX	PART NO.	DESCRIPTION	Q'TY	SERIAL NO.
1	134-57-61111	COVER	1	B30001-
2	134-57-61131	. SEAL	1	B30001-
3	01010-81230	BOLT	4	B30001-
4	01643-31232	WASHER	4	B30001-

FIG. K0120-01A0 SEAT FRAME (EXCEPT JAPAN)

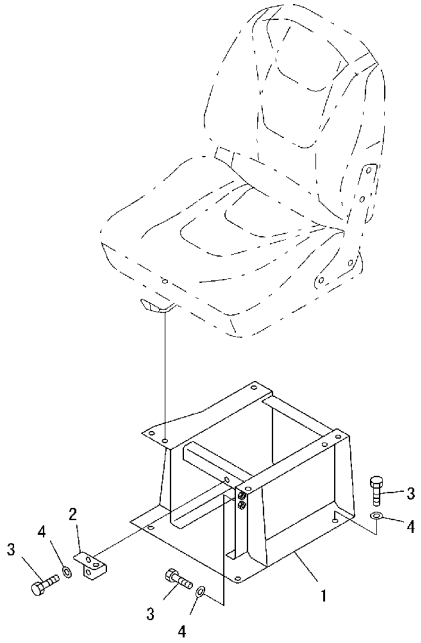

PWOA133

FIG. NO. : K0120-01A0

INDEX	PART NO.	DESCRIPTION	Q'TY	SERIAL NO.
1	14X-57-11113	BRACKET	1	B30001-
2	14X-57-11380	PLATE	1	B30001-
3	01010-81230	BOLT	6	B30001-
4	01643-31232	WASHER	6	B30001-

FIG. K0160-01A0 SEAT BELT (FOR RIGID SEAT)

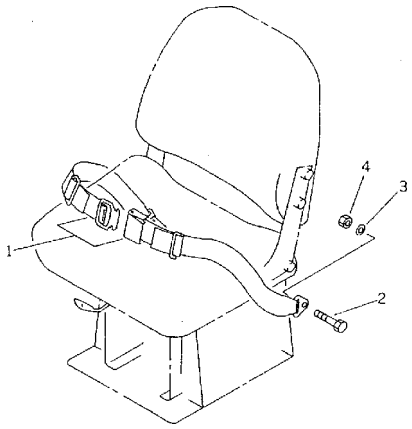

FIG. NO. : K0160-01A0

INDEX	PART NO.	DESCRIPTION	Q'TY	SERIAL NO.
1	09409-10001	BELT, LAP	1	B30001-
2	09409-00001	. BOLT	2	B30001-
3	09409-00002	. WASHER	2	B30001-
4	09409-00003	. NUT	2	B30001-

FIG. K0160-01A1 SEAT BELT (FOR SUSPENTION SEAT)

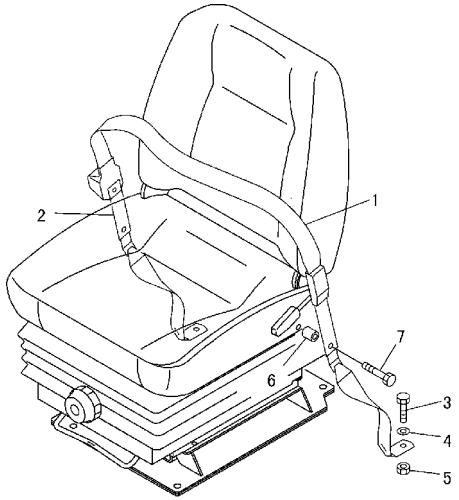

PJK8947

FIG. NO. : K0160-01A1

INDEX	PART NO.	DESCRIPTION	Q'TY	SERIAL NO.
1	09409-70000	BELT, LAP	1	B30001-
2	09409-20000	BELT, TETHER	2	B30001-
3	09409-00001	. BOLT	1	B30001-
4	09409-00002	. WASHER	1	B30001-
5	09409-00003	. NUT	1	B30001-
6	104-890-5610	COLLAR	2	B30001-
7	02030-70744	BOLT	2	B30001-

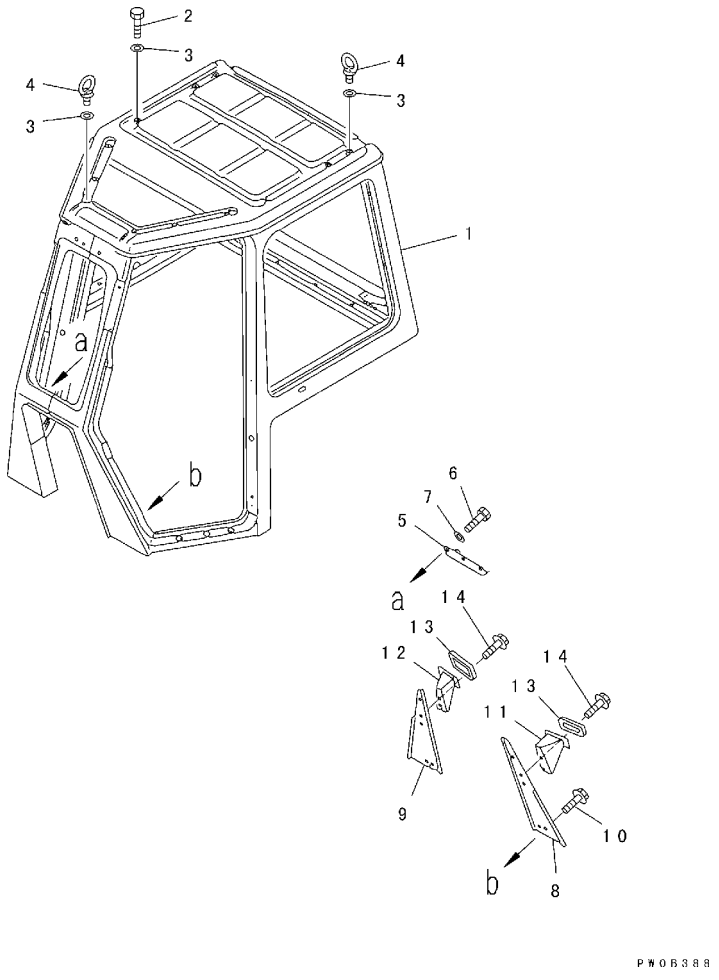

INDEX	PART NO.	DESCRIPTION	Q'TY	SERIAL NO.
	14X-911-0070	CAB ASS'Y, WITHOUT RADIO	1	B30001-
1	14X-911-1114	.	1	B30001-
2	01010-81220	. BOLT	8	B30001-
3	01643-31232	. WASHER	8	B30001-
4	04530-12222	. EYE BOLT	4	B30001-
5	14X-911-5671	. BRACKET	1	B30001-
6	01010-81225	. BOLT	3	B30001-
7	01643-31232	. WASHER	3	B30001-
8	14X-911-2541	. COVER	1	B30001-
9	14X-911-2551	. COVER	1	B30001-
10	01435-31016	. BOLT	6	B30001-
11	14X-911-5711	. BRACKET	1	B30001-
12	14X-911-5721	. BRACKET	1	B30001-
13	203-43-56450	. CAP, PEDAL	2	B30001-
14	01439-01225	. BOLT	4	B30001-

FIG. K0210-02A0 CAB (DOOR AND DOOR LOCK)

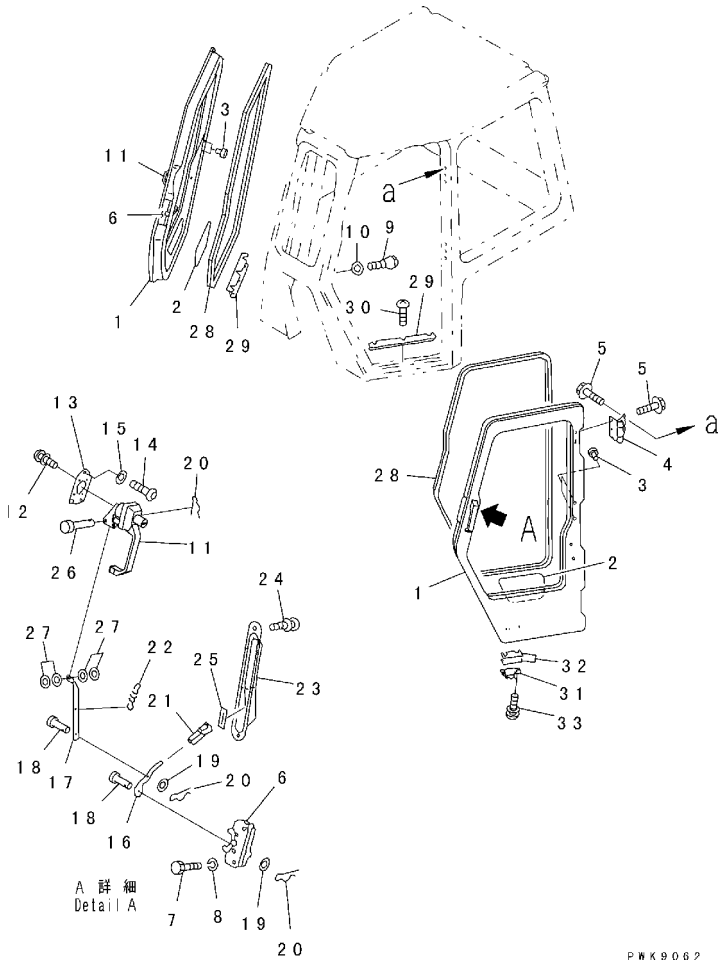

FIG. NO. : K0210-02A0

INDEX	PART NO.	DESCRIPTION	Q'TY	SERIAL NO.
	(14X-911-0070)	CAB ASS'Y, WITHOUT RADIO	1	B30001-
1	14X-911-1323	. DOOR	1	B30001-
	14X-911-1423	. DOOR	1	B30001-
2	14X-911-1390	. SEAL	2	B30001-
3	14X-911-5310	. RIVET	4	B30001-
4	14X-911-1330	. HINGE	1	B30001-
5	01435-01025	. BOLT	36	B30001-
6	195-Z11-4510	. LOCK, L. H.	1	B30001-
	195-Z11-4520	. LOCK, R. H.	1	B30001-
7	01010-80635	. BOLT	8	B30001-
8	01602-20619	. WASHER	8	B30001-
9	14X-911-1631	. STRIKER	2	B30001-
10	01643-31232	. WASHER	2	B30001-
11	198-Z11-3710	. HANDLE ASS'Y	2	B30001-
12	01023-10520	. SCREW	10	B30001-
13	14X-911-1721	. PLATE	2	B30001-
14	23S-06-14990	. SCREW	6	B30001-
15	362-06-21140	. WASHER	6	B30001-
16	14X-911-1941	. LEVER, L. H.	1	B30001-
	14X-911-1951	. LEVER, R. H.	1	B30001-
17	14X-911-1643	. PLATE, L. H.	1	B30001-
	14X-911-1653	. PLATE, R. H.	1	B30001-
18	04205-10614	. PIN	4	B30001-
19	01641-20608	. WASHER	4	B30001-
20	04050-11612	. PIN	6	B30001-
21	14X-911-1540	. KNOB	2	B30001-
22	176-06-42170	. SPRING	2	B30001-
23	14X-911-1712	. COVER	6	B30001-
24	01023-20512	. SCREW	4	B30001-
25	14X-911-1780	. SEAL	2	B30001-
26	04205-10622	. PIN	2	B30001-
27	01643-10623	. WASHER	8	B30001-
28	14X-911-2341	. TRIM	2	B30001-
29	14X-911-5831	. PLATE	2	B30001-
30	01023-20616	. SCREW	6	B30001-
31	14X-911-1690	. DUMPER	4	B30001-
32	14X-911-1761	. SHIM, 1. 2MM	8	B30001-
33	01023-20616	. SCREW	8	B30001-

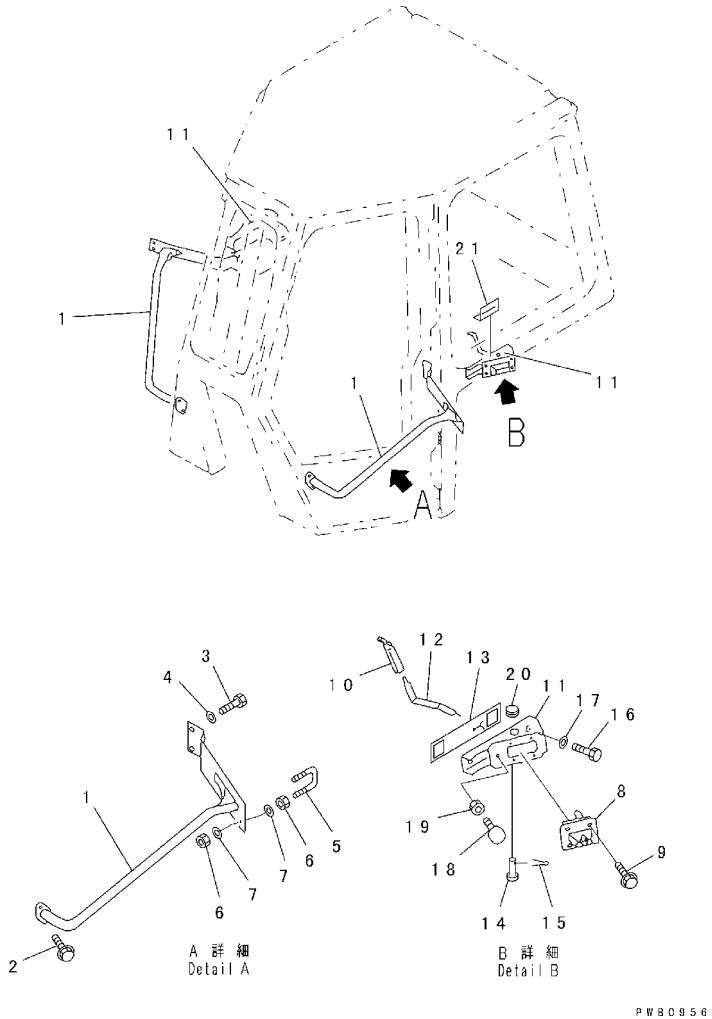

INDEX	PART NO.	DESCRIPTION	Q'TY	SERIAL NO.
	(14X-911-0070)	CAB ASS'Y, WITHOUT RADIO	1	B30001-
1	14X-911-1812	. SUPPORT, L. H.	1	B30001-
	14X-911-1522	. SUPPORT, R. H.	1	B30001-
2	20Y-54-14360	. BOLT	4	B30001-
3	01010-81225	. BOLT	4	B30001-
4	01643-31232	. WASHER	4	B30001-
5	14X-911-1921	. STRIKER	2	B30001-
6	01580-11008	. NUT	8	B30001-
7	01643-31032	. WASHER	8	B30001-
8	14X-911-1832	. LATCH	2	B30001-
9	01435-30820	. BOLT	8	B30001-
10	14X-911-1540	. KNOB	2	B30001-
	14X-911-1510	. BRACKET ASS'Y, L. H.	1	B30001-
	14X-911-1520	. BRACKET ASS'Y, R. H.	1	B30001-
11	14X-911-1911	. . BRACKET	1	B30001-
12	14X-911-1610	. . LEVER, L. H.	1	B30001-
	14X-911-1620	. . LEVER, R. H.	1	B30001-
13	14X-911-1990	. . SEAT	1	B30001-
14	04205-10614	. . PIN	1	B30001-
15	04050-11612	. . PIN	1	B30001-
16	01010-81025	. BOLT	4	B30001-
17	01643-31032	. WASHER	4	B30001-
18	09453-00002	. STOPPER	2	B30001-
19	01580-11210	. NUT	2	B30001-
20	09415-01610	. CAP	2	B30001-
21	14X-911-1932	. SEAT	2	B30001-

FIG. K0210-04A0 CAB (SASH AND GRIP)

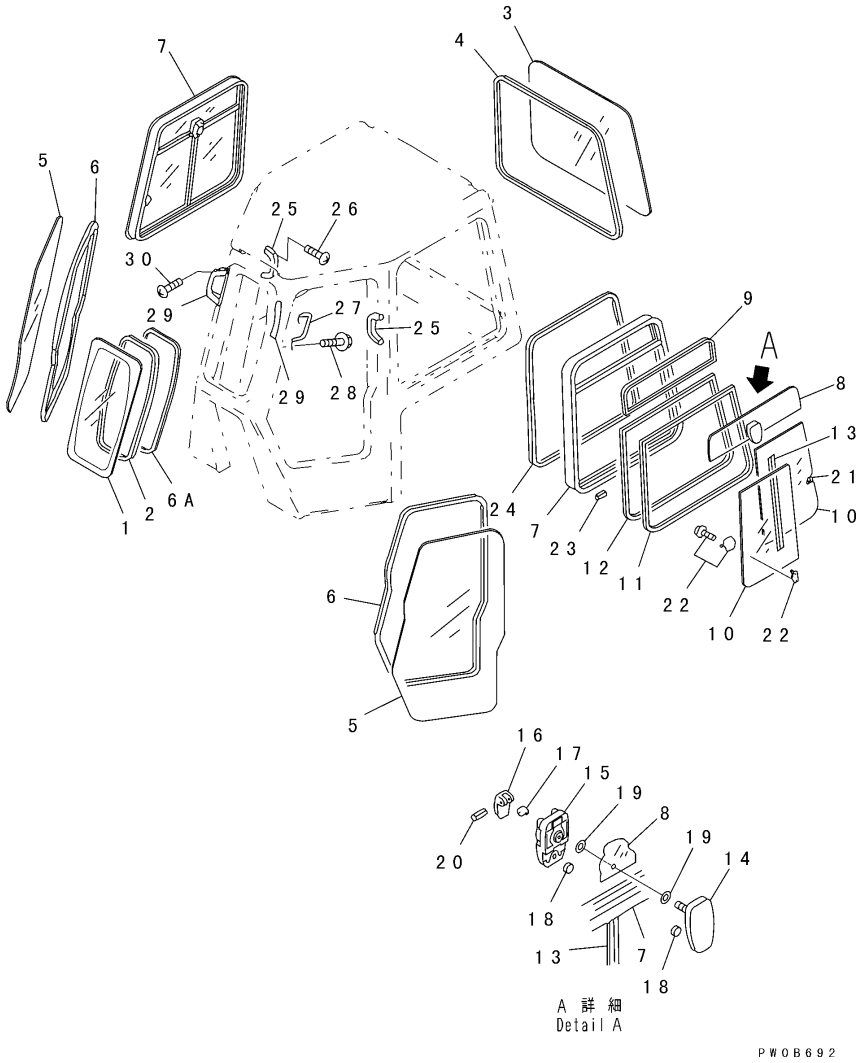

FIG. NO. : K0210-04A0

INDEX	PART NO.	DESCRIPTION	Q'TY	SERIAL NO.
	(14X-911-0070)	CAB ASS'Y, WITHOUT RADIO	1	B30001-
1	14X-911-2211	. GLASS, FRONT	1	B30001-
2	14X-911-2291	. SPACER	1	B30001-
3	14X-911-2241	. GLASS, REAR	1	B30001-
4	14X-911-2311	. STRIP	1	B30001-
5	14X-911-2221	. GLASS, DOOR	2	B30001-
6	14X-911-2321	. STRIP	2	B30001-
6A	198-Z11-2260	. SEAL	1	B30001-
	14X-911-2113	. SASH ASS'Y, L. H.	2	B30001-
	14X-911-2613	. SASH ASS'Y, R. H.	2	B30001-
7	☆	. . FRAME	2	B30001-
8	☆	. . GLASS	2	B30001-
9	☆	. . SEAL	2	B30001-
10	☆	. . GLASS	4	B30001-
11	☆	. . SEAL	2	B30001-
12	☆	. . SEAL	2	B30001-
13	☆	. . SEAL	2	B30001-
	☆	. . BRACKET ASS'Y	1	B30001-
14	☆	. . . BRACKET	2	B30001-
15	☆	. . . BRACKET	2	B30001-
16	☆	. . . LEVER	2	B30001-
17	☆	. . . BLOCK	2	B30001-
18	☆	. . . CUSHION	4	B30001-
19	☆	. . . SEAL	4	B30001-
20	☆	. . . PIN	4	B30001-
21	☆	. . . LOCK	2	B30001-
22	☆	. . . LOCK ASS'Y	2	B30001-
23	20Y-54-13180	. SEAT	20	B30001-
24	14X-911-2350	. TRIM	2	B30001-
25	361-54-21150	. HANDLE	2	B30001-
26	01220-40820	. SCREW	4	B30001-
27	14X-911-5521	. GRIP	2	B30001-
28	01435-30816	. BOLT	4	B30001-
29	361-54-21150	. HANDLE	2	B30001-
30	01220-40820	. SCREW	4	B30001-

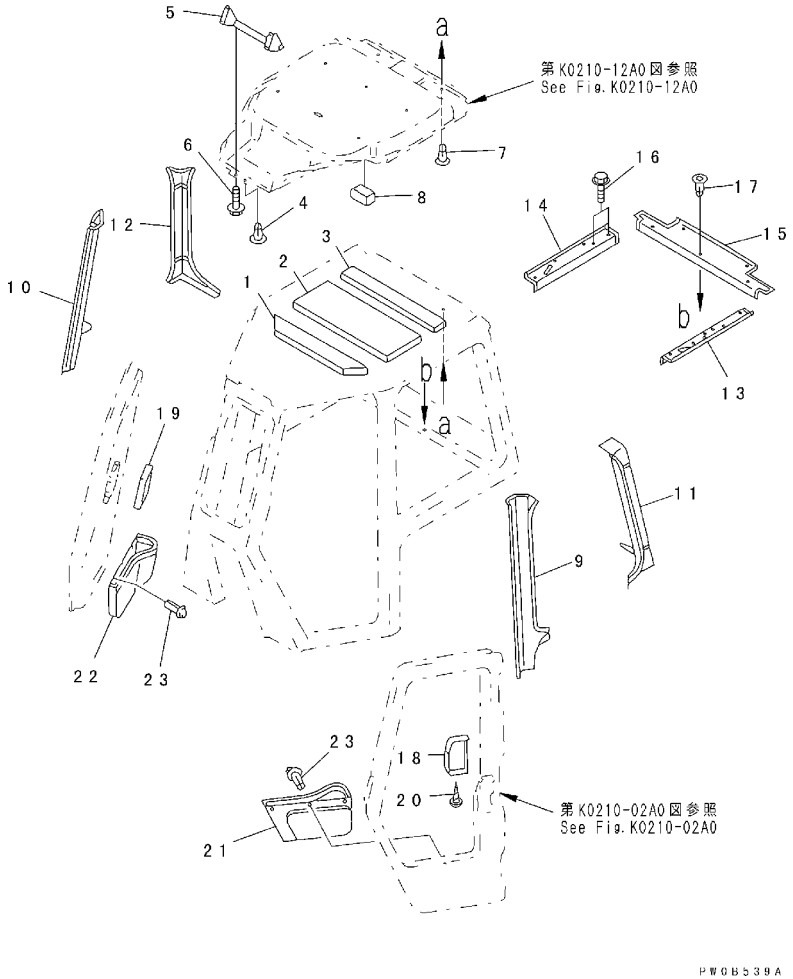

INDEX	PART NO.	DESCRIPTION	Q'TY	SERIAL NO.
	(14X-911-0070)	CAB ASS'Y, WITHOUT RADIO	1	B30001-
1	14X-911-5631	. ABSORBER	1	B30001-
2	14X-911-5641	. ABSORBER	1	B30001-
3	14X-911-5651	. ABSORBER	1	B30001-
4	14X-911-5310	. RIVET	2	B30001-
5	14X-911-5661	. BRACKET	1	B30001-
6	01435-20612	. BOLT	4	B30001-
7	20Y-54-18690	. RIVET	7	B30001-
8	14X-911-5540	. SPACER	1	B30001-
9	14X-911-5141	. GARNISH, L. H.	1	B30001-
10	14X-911-5151	. GARNISH, R. H.	1	B30001-
11	14X-911-5181	. GARNISH, L. H.	1	B30001-
12	14X-911-5191	. GARNISH, R. H.	1	B30001-
13	14X-911-5211	. GARNISH, L. H.	1	B30001-
14	14X-911-5222	. GARNISH, R. H.	1	B30001-
15	14X-911-5231	. GARNISH	1	B30001-
16	01435-30820	. BOLT	2	B30001-
17	20Y-54-18690	. RIVET	12	B30001-
18	14X-911-3431	. COVER, L. H.	1	B30001-
19	14X-911-3441	. COVER, R. H.	1	B30001-
20	14X-911-1770	. SCREW	8	B30001-
21	14X-911-5412	. POCKET, L. H.	1	B30001-
22	14X-911-5422	. POCKET, R. H.	1	B30001-
23	14X-911-5430	. CLIP	6	B30001-

FIG. K0210-06A0 CAB (ROOM LAMP AND WIRING)

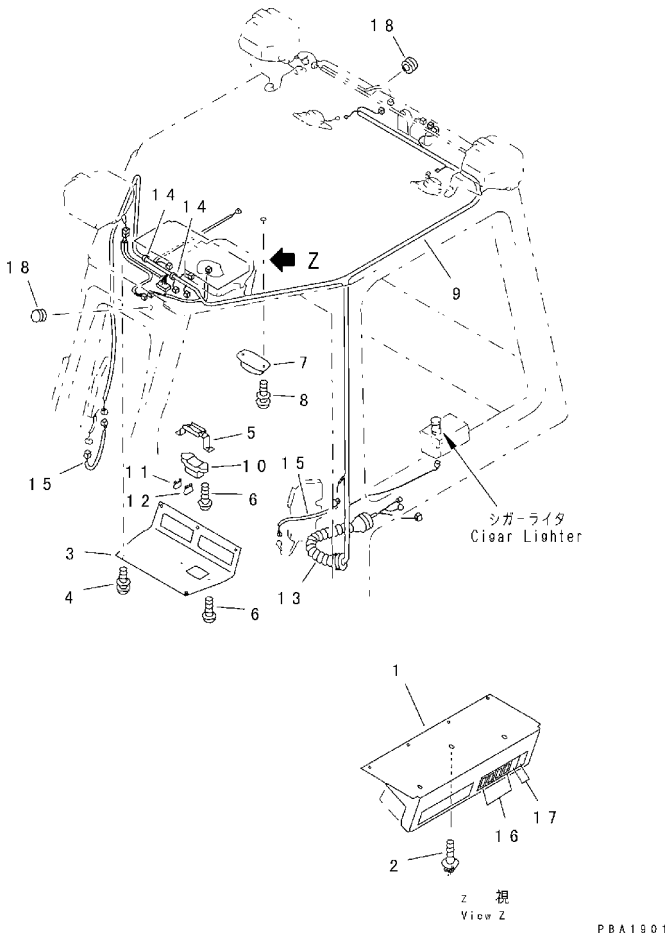

FIG. NO. : K0210-06A0

INDEX	PART NO.	DESCRIPTION	Q'TY	SERIAL NO.
	(14X-911-0070)	CAB ASS'Y, WITHOUT RADIO	1	B30001-
1	14X-911-4251	. BRACKET	1	B30001-
2	01435-01020	. BOLT	3	B30001-
3	14X-911-4121	. PANEL	1	B30001-
4	01023-20620	. SCREW	5	B30001-
5	14X-911-4141	. BRACKET	1	B30001-
6	01220-70516	. SCREW	4	B30001-
7	08141-02400	. LAMP	1	B30001-
	08116-02410	. . BULB, 10W	1	B30001-
8	01023-10420	. SCREW	2	B30001-
9	14X-911-4513	. WIRE ASS'Y	1	B30001-
10	205-06-71480	. . BOX	1	B30001-
11	283-06-16190	. . FUSE, 10A	7	B30001-
12	22W-06-13160	. . FUSE, 20A	2	B30001-
13	14X-911-4541	. BOOT	1	B30001-
14	14X-911-4551	. CLIP	15	B30001-
15	14X-911-4521	. WIRING HARNESS	2	B30001-
16	20T-06-71410	. SWITCH	4	B30001-
17	14X-911-4280	. COVER	2	B30001-
18	09415-01008	. CAP	2	B30001-

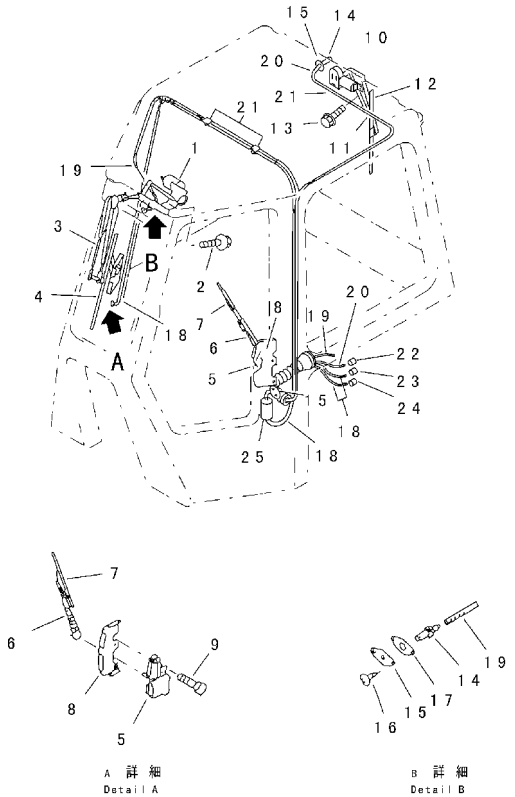

INDEX	PART NO.	DESCRIPTION	Q'TY	SERIAL NO.
	(14X-911-0070)	CAB ASS'Y, WITHOUT RADIO	1	B30001-
1	14X-911-3111	. WIPER MOTOR ASS'Y	1	B30001-
2	01435-20612	. BOLT	4	B30001-
3	14X-911-3210	. ARM	1	B30001-
4	14X-911-3310	. BLADE	1	B30001-
5	14X-911-3120	. WIPER MOTOR ASS'Y, L. H.	1	B30001-
	14X-911-3130	. WIPER MOTOR ASS'Y, R. H.	1	B30001-
6	14X-911-3221	. ARM	2	B30001-
7	14X-911-3321	. BLADE	2	B30001-
8	14X-911-3411	. BRACKET, L. H.	1	B30001-
	14X-911-3421	. BRACKET, R. H.	1	B30001-
9	01435-01016	. BOLT	4	B30001-
10	14X-911-3141	. WIPER MOTOR ASS'Y, REAR	1	B30001-
11	14X-911-3241	. ARM, WIPER	1	B30001-
12	14X-911-3330	. BLADE, WIPER	1	B30001-
13	01023-10512	. SCREW	2	B30001-
14	205-06-61220	. NOZZLE ASS'Y	4	B30001-
15	14X-911-3560	. BRACKET	4	B30001-
16	01370-00408	. SCREW	8	B30001-
17	14X-911-3570	. PACKING	2	B30001-
18	14X-911-3531	. HOSE, L. H.	1	B30001-
	14X-911-3541	. HOSE, R. H.	1	B30001-
19	14X-911-3611	. HOSE	1	B30001-
20	14X-911-3621	. HOSE	1	B30001-
21	08051-00801	. CLIP	10	B30001-
22	14X-911-1130	. TUBE	1	B30001-
23	14X-911-1140	. TUBE	1	B30001-
24	14X-911-1150	. TUBE	1	B30001-
25	08210-00401	. SPIRAL TUBE, SPIRAL	2	B30001-

FIG. K0210-08A0 CAB (RADIO MOUNT BRACKET) (RADIO LESS)

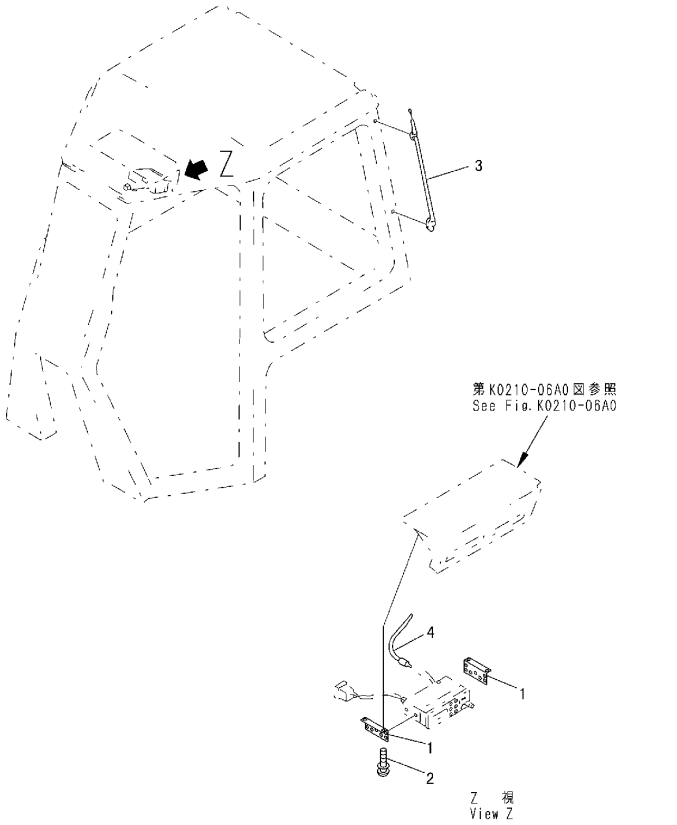

FIG. NO. : K0210-08A0

INDEX	PART NO.	DESCRIPTION	Q'TY	SERIAL NO.
	(14X-911-0070)	CAB ASS'Y, WITHOUT RADIO	1	B30001-
1	14X-911-4341	. BRACKET	2	B30001-
2	01023-10616	. SCREW	4	B30001-
3	08912-00000	. ANTENNA	1	B30001-
4	08912-50900	. CORD	1	B30001-

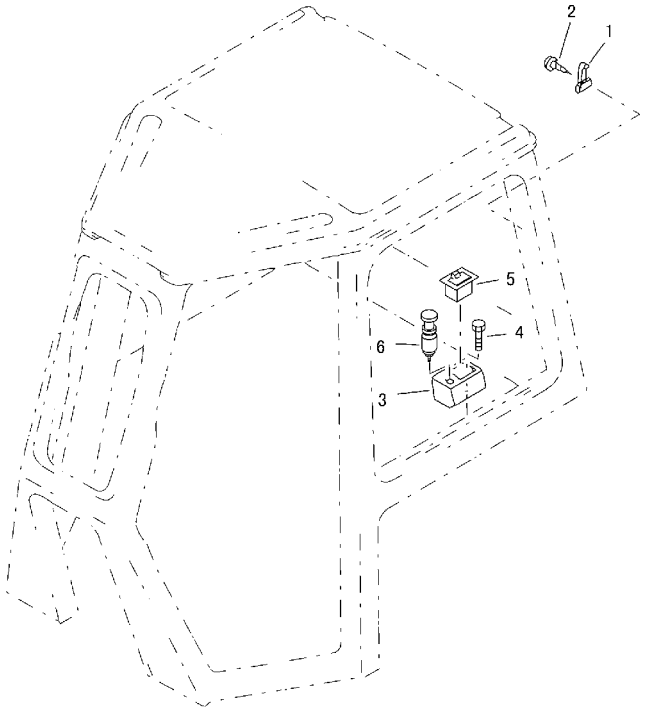

PBA1905

INDEX	PART NO.	DESCRIPTION	Q'TY	SERIAL NO.
	(14X-911-0070)	CAB ASS'Y, WITHOUT RADIO	1	B30001-
1	205-54-51250	. HANGER	1	B30001-
2	01370-00416	. SCREW	2	B30001-
3	14X-911-6161	. BOX	1	B30001-
4	01435-00816	. BOLT	2	B30001-
5	20G-54-13420	. ASHTRAY	1	B30001-
6	08913-02400	. LIGHTER	1	B30001-

FIG. K0210-12A0 CAB (ROOF LINING AND COVER) (RADIO LESS)

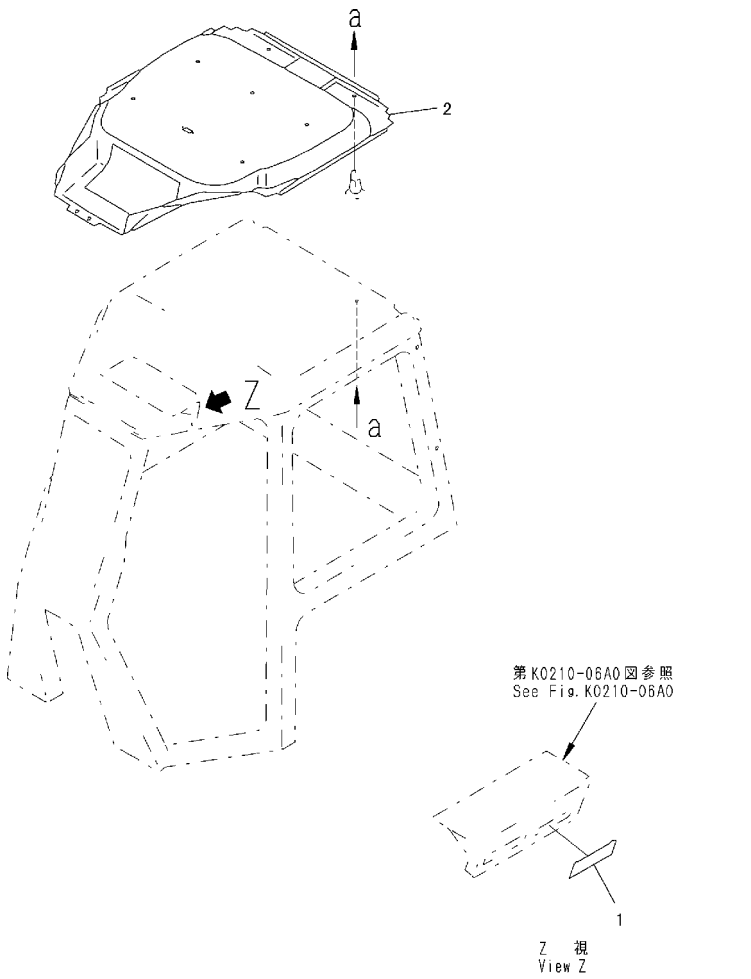

FIG. NO. : K0210-12A0

INDEX	PART NO.	DESCRIPTION	Q'TY	SERIAL NO.
	(14X-911-0070)	CAB ASS'Y, WITHOUT RADIO	1	B30001-
1	14X-911-6520	. COVER	1	B30001-
2	14X-911-5531	. LINING	1	B30001-

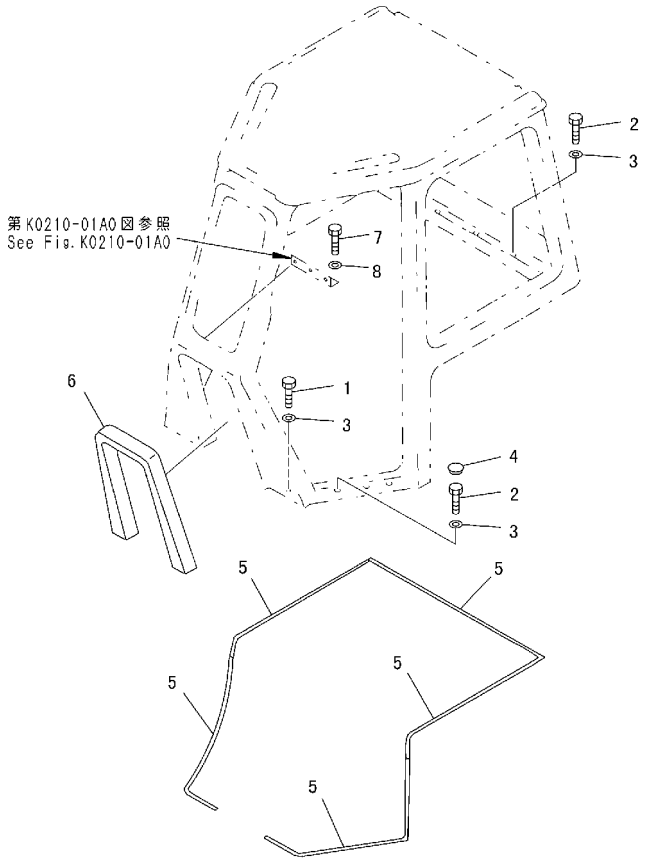

INDEX	PART NO.	DESCRIPTION	Q'TY	SERIAL NO.
1	01010-81265	BOLT	2	B30001-
2	01010-81245	BOLT	17	B30001-
3	124-54-26540	WASHER	19	B30001-
4	14X-54-18150	CAP	6	B30001-
5	14X-911-5911	SEAL	5	B30001-
6	14X-911-2521	SEAL	1	B30001-
7	01010-81225	BOLT	2	B30001-
8	01643-31232	WASHER	2	B30001-

FIG. K0310-01A0 FLOOR MAT (WITH CAB)

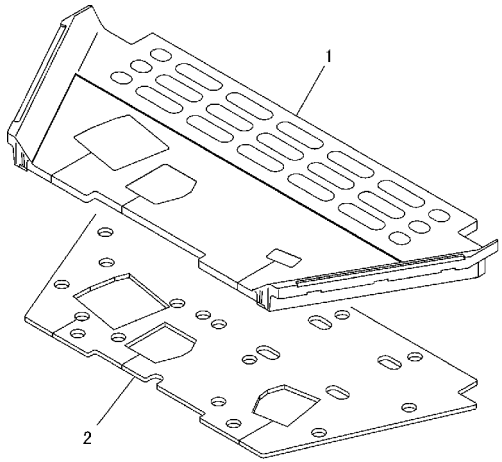

PW0B544

FIG. NO. : K0310-01A0

INDEX	PART NO.	DESCRIPTION	Q'TY	SERIAL NO.
1	124-54-68141	MAT, CAB	1	B30001-
2	124-54-68171	MAT	1	B30001-

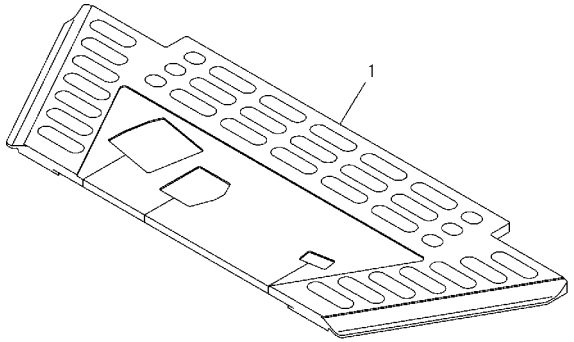

PWK9066

INDEX	PART NO.	DESCRIPTION	Q'TY	SERIAL NO.
1	124-54-68160	MAT, CANOPY	1	B30001-

FIG. K0320-01A0 ROOM MIRROR

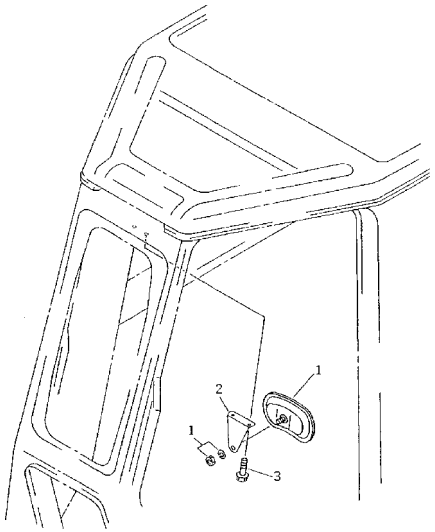

FIG. NO. : K0320-01A0

INDEX	PART NO.	DESCRIPTION	Q'TY	SERIAL NO.
1	14X-911-6140	MIRROR	1	B30001-
2	14X-911-6131	BRACKET	1	B30001-
3	01435-00820	BOLT	2	B30001-

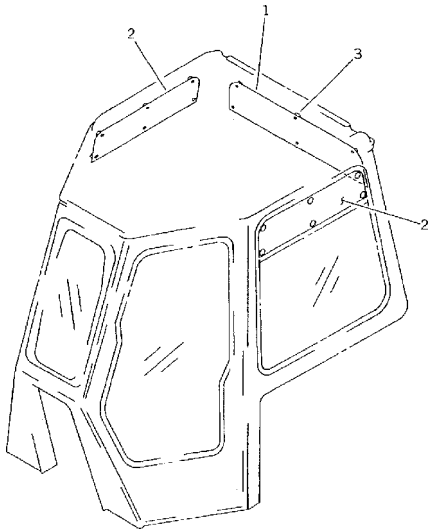

FIG. NO. : K0330-01A0

INDEX	PART NO.	DESCRIPTION	Q'TY	SERIAL NO.
1	14X-911-6271	FILM, SUNSHADE	1	B30001-
2	14X-911-6281	FILM, SUNSHADE	2	B30001-
3	14X-911-6291	CLIP	18	B30001-

FIG. K0410-01A0 ROPS (WITH CAB)

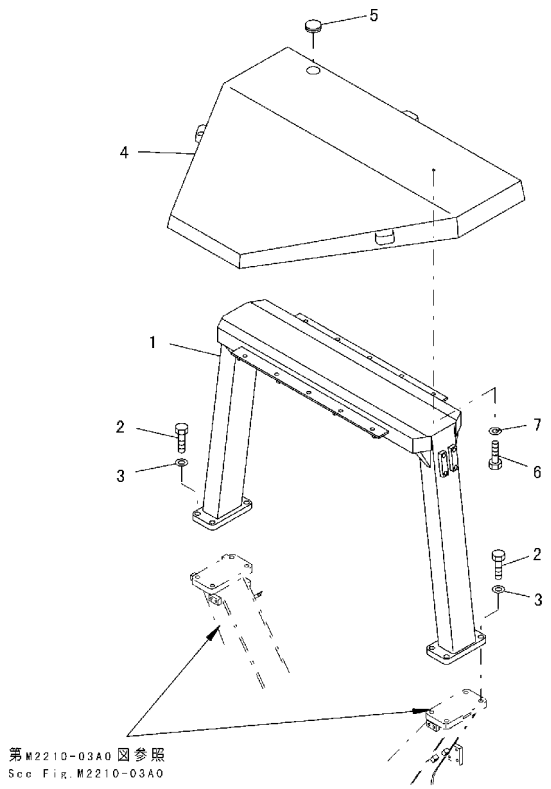

PAA7427

FIG. NO. : K0410-01A0

INDEX	PART NO.	DESCRIPTION	Q'TY	SERIAL NO.
1	124-978-5112	GUARD	1	B30001-
2	01010-82060	BOLT	8	B30001-
3	01643-32060	WASHER	8	B30001-
4	124-978-5120	ROOF	1	B30001-
5	08037-05016	GROMMET	1	B30001-
6	01010-81230	BOLT	10	B30001-
7	01643-31232	WASHER	10	B30001-

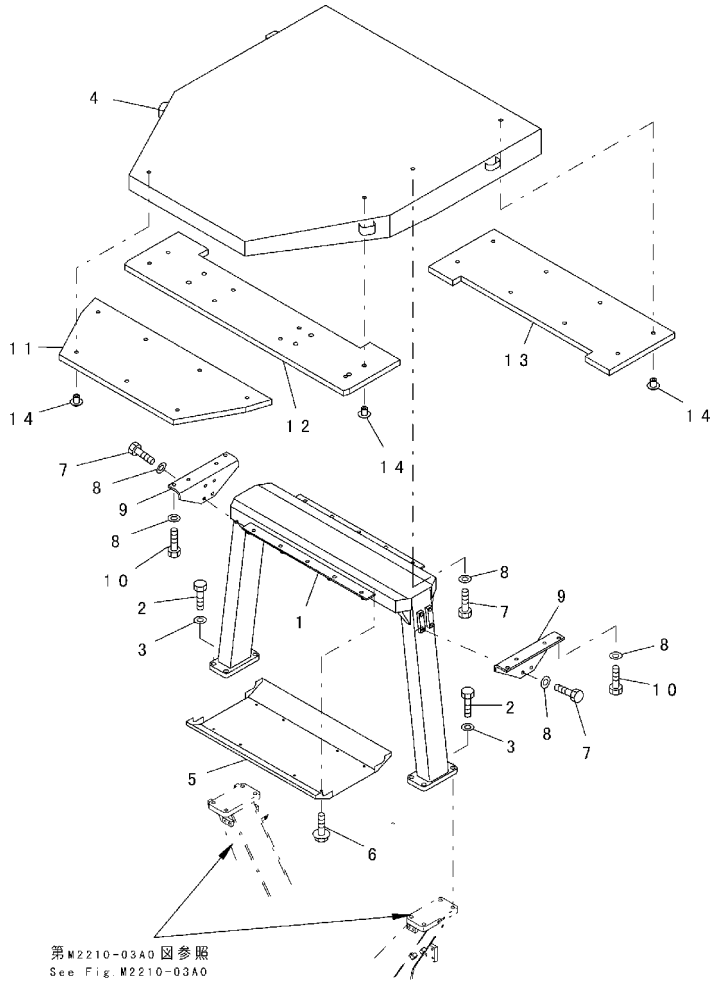

INDEX	PART NO.	DESCRIPTION	Q'TY	SERIAL NO.
1	124-978-5112	GUARD	1	B30001-
2	01010-82060	BOLT	8	B30001-
3	01643-32060	WASHER	8	B30001-
4	124-Z78-5150	ROOF	1	B30001-
5	124-Z78-5181	LINING	1	B30001-
6	01435-00850	BOLT	8	B30001-
7	01010-81230	BOLT	18	B30001-
8	01643-31232	WASHER	26	B30001-
9	14X-978-1172	BRACKET	2	B30001-
10	01010-81235	BOLT	8	B30001-
11	14X-978-1620	LINING, ROOF	1	B30001-
12	124-Z78-5160	LINING, ROOF	1	B30001-
13	124-Z78-5170	LINING, ROOF	1	B30001-
14	14X-978-1660	BUTTON	23	B30001-

FIG. K0410-01A2 CANOPY

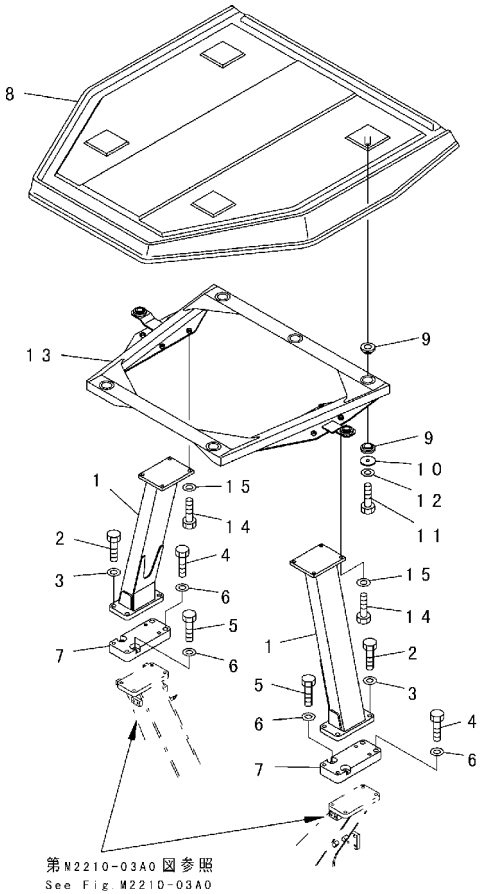

PKK2114

FIG. NO. : K0410-01A2

INDEX	PART NO.	DESCRIPTION	Q'TY	SERIAL NO.
1	124-906-5122	POLE	2	B30001-
2	01010-81650	BOLT	8	B30001-
3	01643-31645	WASHER	8	B30001-
4	01010-82085	BOLT	4	B30001-
5	01010-82060	BOLT	4	B30001-
6	01643-32060	WASHER	8	B30001-
7	124-906-5140	PLATE	4	B30001-
8	14X-Z06-1110	ROOF	1	B30001-
9	14X-906-1130	CUSHION	8	B30001-
10	14X-906-1220	PLATE	4	B30001-
11	01010-81225	BOLT	4	B30001-
12	01643-31232	WASHER	4	B30001-
13	124-906-5130	BRACKET	1	B30001-
14	01010-81230	BOLT	8	B30001-
15	01643-31232	WASHER	8	B30001-

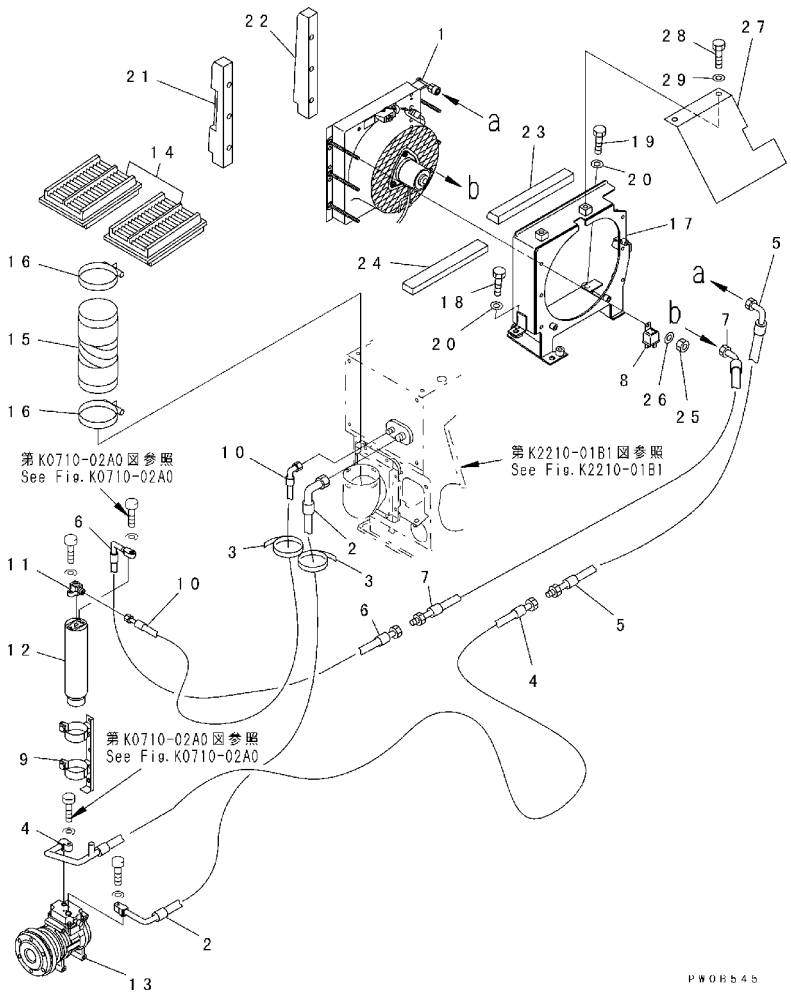

INDEX	PART NO.	DESCRIPTION	Q'TY	SERIAL NO.
1	144-Y11-1851	CONDENSER ASS'Y	1	B30001-
2	124-Z11-1141	HOSE ASS'Y	1	B30001-
3	134-03-61410	BAND	2	B30001-
4	124-Z11-1111	HOSE ASS'Y	1	B30001-
5	124-Z11-1191	HOSE ASS'Y	1	B30001-
6	124-Z11-1620	HOSE ASS'Y	1	B30001-
7	124-Z11-1640	HOSE ASS'Y	1	B30001-
8	205-979-6460	RELAY ASS'Y	1	B30001-
9	120-X11-1510	HOLDER	1	B30001-
10	124-Z11-1131	HOSE ASS'Y	1	B30001-
11	17A-911-1671	JOINT	1	B30001-
12	20Y-979-3120	TANK	1	B30001-
13	(42C-07-11210)	COMPRESSOR, (SEE FIG.K0710-51A0A)	1	B30001-
14	14X-911-7750	FILTER	2	B30001-
15	09485-01003	HOSE	1	B30001-
16	14X-911-7670	CLAMP	2	B30001-
17	124-Z11-1211	BRACKET	1	B30001-
18	01010-81225	BOLT	2	B30001-
19	01010-81250	BOLT	2	B30001-
20	01643-31232	WASHER	4	B30001-
21	124-911-1221	SHEET	1	B30001-
22	124-911-1231	SHEET	1	B30001-
23	124-911-1241	SHEET	1	B30001-
24	124-911-1251	SHEET	1	B30001-
25	01580-10806	NUT	6	B30001-
26	01643-30823	WASHER	6	B30001-
27	124-911-1350	COVER	1	B30001-
28	01010-81220	BOLT	2	B30048-
	01010-81225	BOLT	2	B30001-B30047
29	01643-31232	WASHER	2	B30001-

FIG. K0710-01A1 HEATER

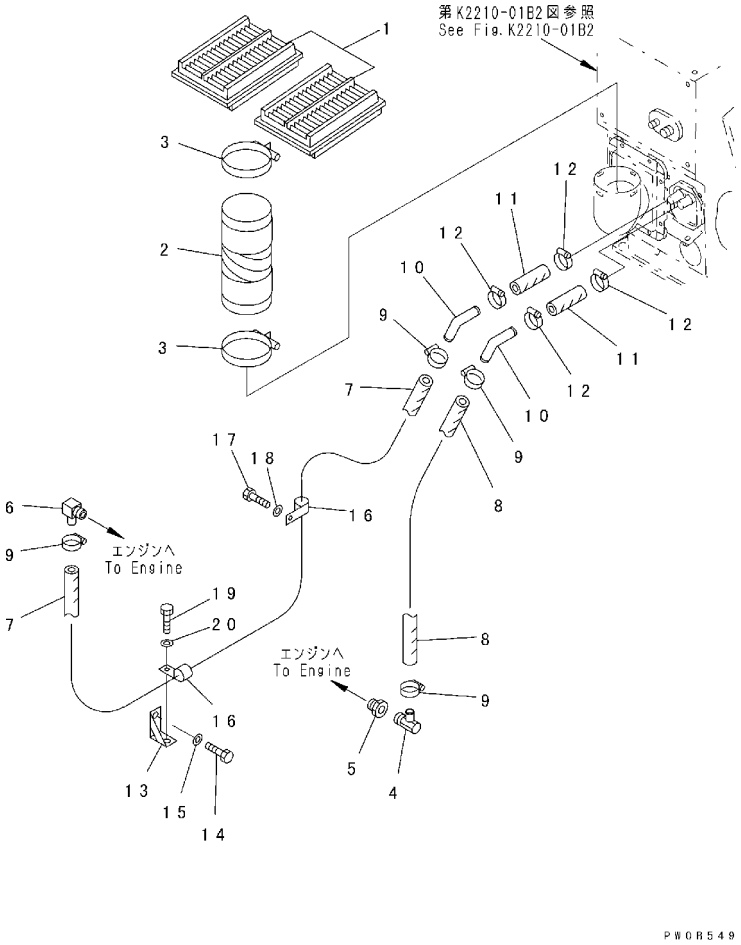

FIG. NO. : K0710-01A1

INDEX	PART NO.	DESCRIPTION	Q'TY	SERIAL NO.
1	14X-911-7750	FILTER	2	B30001-
2	09485-01003	HOSE	1	B30001-
3	14X-911-7670	CLAMP	2	B30001-
4	567-07-15221	NIPPLE	1	B30001-
5	124-Z11-1530	ADAPTER	1	B30001-
6	124-Z11-1170	NIPPLE	1	B30001-
7	124-Z11-1391	HOSE ASS'Y	1	B30001-
8	124-Z11-1441	HOSE ASS'Y	1	B30001-
9	09479-02400	CLAMP	4	B30001-
10	195-979-4390	TUBE	2	B30001-
11	195-979-4841	HOSE	2	B30001-
12	09479-02400	CLAMP	4	B30001-
13	124-911-1290	BRACKET	1	B30001-
14	01010-81225	BOLT	1	B30001-
15	01643-31232	WASHER	1	B30001-
16	04434-53411	CLIP	2	B30001-
17	01010-81020	BOLT	1	B30001-
18	01643-31032	WASHER	1	B30001-
19	01010-81225	BOLT	1	B30001-
20	01643-31232	WASHER	1	B30001-

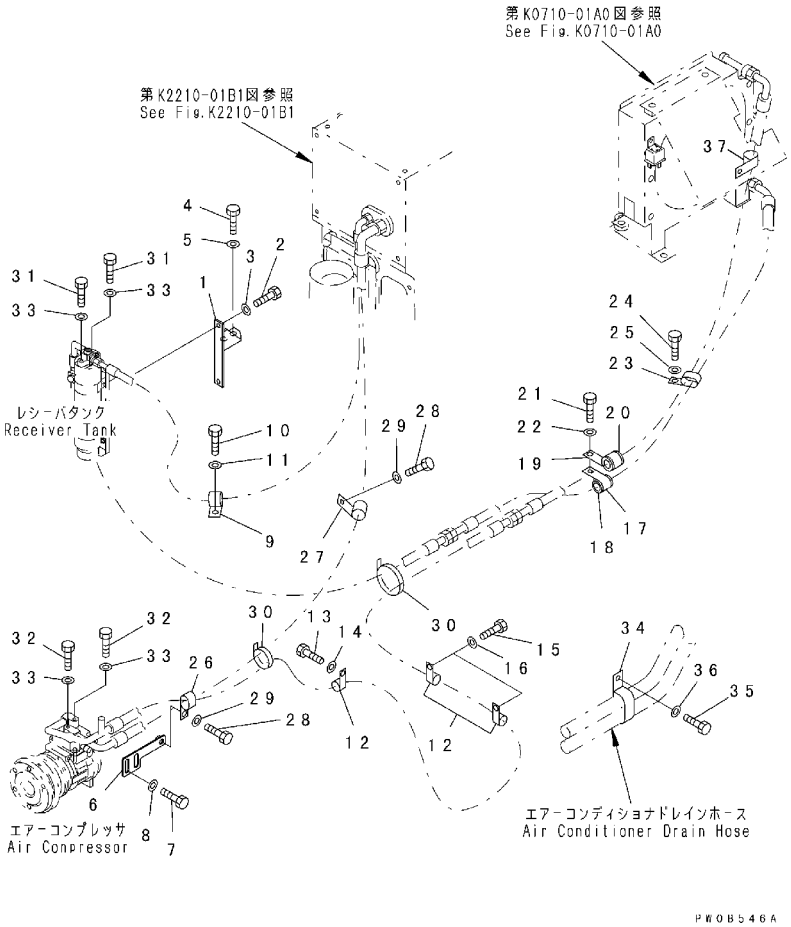

FIG. NO. : K0710-02A0

INDEX	PART NO.	DESCRIPTION	Q'TY	SERIAL NO.
1	124-Z11-1150	BRACKET	1	B30001-
2	01010-81225	BOLT	2	B30001-
3	01643-31232	WASHER	2	B30001-
4	01010-80816	BOLT	2	B30001-
5	01643-30823	WASHER	2	B30001-
6	124-Z11-1550	PLATE	1	B30001-
7	01010-81020	BOLT	2	B30001-
8	01643-31032	WASHER	2	B30001-
9	04434-51910	CLIP	1	B30001-
10	01010-81020	BOLT	1	B30001-
11	01643-31032	WASHER	1	B30001-
12	04434-52312	CLIP	3	B30001-
13	01010-81020	BOLT	1	B30001-
14	01643-31032	WASHER	1	B30001-
15	01010-81020	BOLT	2	B30001-B30047
16	01643-31032	WASHER	2	B30001-B30047
17	04434-53212	CLIP	1	B30001-
18	07095-20522	CUSHION	1	B30001-
19	144-874-6960	CLIP	1	B30001-
20	07095-00418	CUSHION	1	B30001-
21	01010-81220	BOLT	1	B30001-
22	01643-31232	WASHER	1	B30001-
23	176-911-4180	CLIP	1	B30001-
24	01010-81220	BOLT	1	B30001-
25	01643-31232	WASHER	1	B30001-
26	566-07-41440	CLIP	1	B30001-
27	04434-53212	CLIP	1	B30001-B30047
28	01010-81020	BOLT	1	B30048-
	01010-81020	BOLT	2	B30001-B30047
29	01643-31032	WASHER	1	B30048-
	01643-31032	WASHER	2	B30001-B30047
30	08034-00519	BAND	2	B30001-
31	01010-80625	BOLT	2	B30001-
32	01010-80630	BOLT	2	B30001-
33	01641-20608	WASHER	4	B30001-
34	04435-51912	CLIP	1	B30001-
35	01010-81220	BOLT	1	B30001-
36	01643-31232	WASHER	1	B30001-
37	04434-51510	CLIP	1	B30048-

FIG. K0710-03A0 AIR CONDITIONER (COMPRESSOR MOUNT AND CONDENSERWIRING)

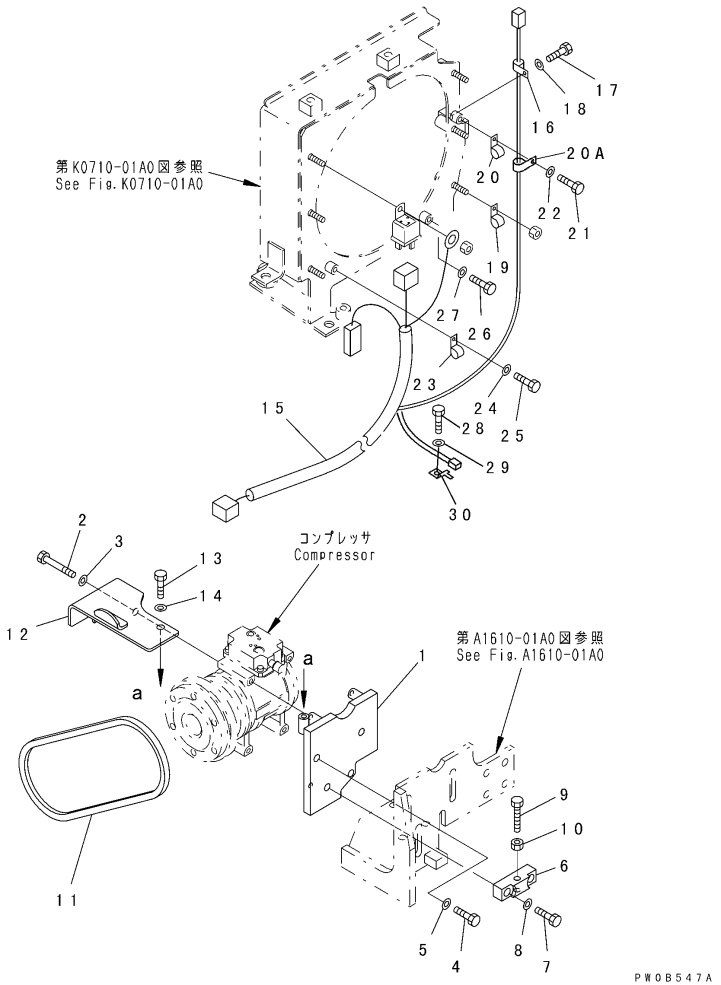

FIG. NO. : K0710-03A0

INDEX	PART NO.	DESCRIPTION	Q'TY	SERIAL NO.
1	124-911-1314	BRACKET	1	B30001-
2	01010-80890	BOLT	3	B30001-
3	01643-30823	WASHER	3	B30001-
4	01010-81225	BOLT	2	B30001-
5	01643-31232	WASHER	2	B30001-
6	124-Z11-1360	BLOCK	1	B30001-
7	01010-81245	BOLT	2	B30001-
8	01643-31232	WASHER	2	B30001-
9	01016-51090	BOLT	1	B30001-
10	01580-11008	NUT	1	B30001-
11	124-Z11-1720	V-BELT	1	B30001-
12	124-Z11-1321	COVER	1	B30001-
13	01010-80825	BOLT	1	B30001-
14	01643-30823	WASHER	1	B30001-
15	124-Z11-1710	WIRING HARNESS	1	B30001-
16	04434-51510	CLIP	1	B30001-
17	01010-81025	BOLT	1	B30001-
18	01643-31032	WASHER	1	B30001-
19	04434-51010	CLIP	1	B30001-
20	04435-52110	CLIP	1	B30001-B30047
20A	04434-51810	CLIP	1	B30048-
21	01010-80816	BOLT	1	B30001-
22	01643-30823	WASHER	1	B30001-
23	04434-51010	CLIP	1	B30001-
24	01010-80816	BOLT	1	B30001-
25	01643-30823	WASHER	1	B30001-
26	01010-80816	BOLT	1	B30001-
27	01643-30823	WASHER	1	B30001-
28	01010-81016	BOLT	1	B30048-
29	01643-31032	WASHER	1	B30048-
30	08193-21012	CLIP	1	B30048-

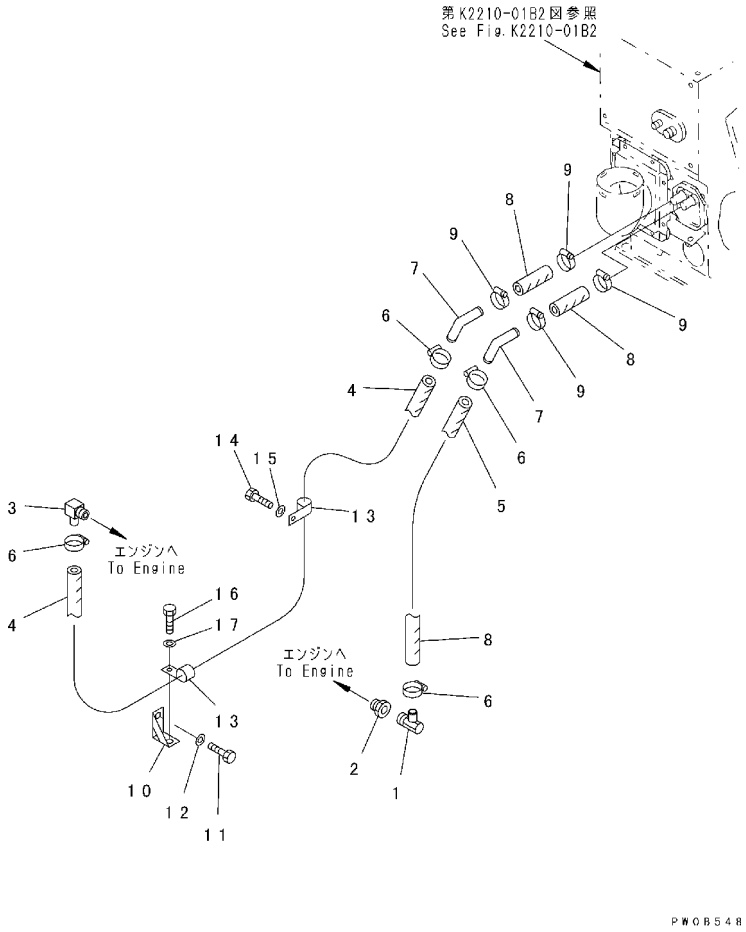

INDEX	PART NO.	DESCRIPTION	Q'TY	SERIAL NO.
1	567-07-15221	NIPPLE	1	B30001-
2	124-Z11-1530	ADAPTER	1	B30001-
3	124-Z11-1170	NIPPLE	1	B30001-
4	124-Z11-1391	HOSE ASS'Y	1	B30001-
5	124-Z11-1441	HOSE ASS'Y	1	B30001-
6	09479-02400	CLAMP	4	B30001-
7	195-979-4390	TUBE	2	B30001-
8	195-979-4841	HOSE	2	B30001-
9	09479-02400	CLAMP	4	B30001-
10	124-911-1290	BRACKET	1	B30001-
11	01010-81225	BOLT	1	B30001-
12	01643-31232	WASHER	1	B30001-
13	04434-53412	CLIP	2	B30048-
	04434-53411	CLIP	2	B30001-B30047
14	01010-81020	BOLT	1	B30001-
15	01643-31032	WASHER	1	B30001-
16	01010-81225	BOLT	1	B30001-
17	01643-31232	WASHER	1	B30001-

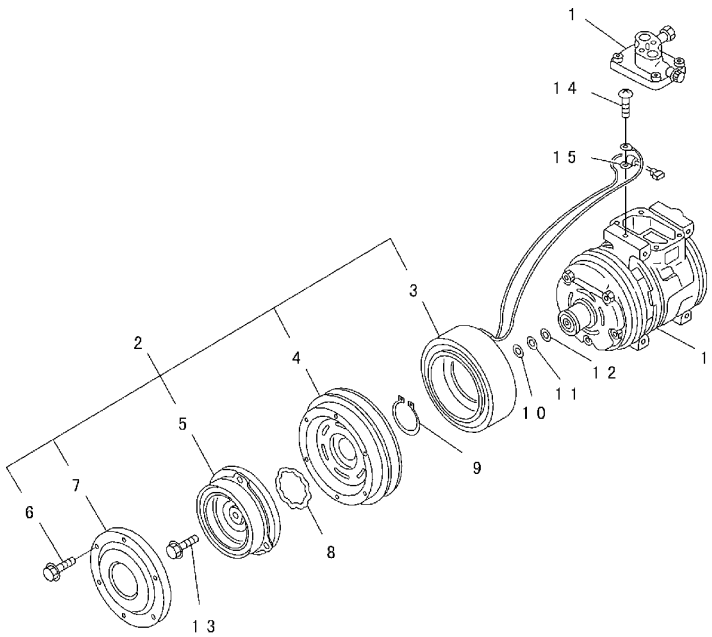

FIG. NO. : K0710-51A0

INDEX	PART NO.	DESCRIPTION	Q'TY	SERIAL NO.
	42C-07-11210	COMPRESSOR	1	B30001-
1	ND447200-0240	. COMPRESSOR ASS'Y	1	B30001-
2	ND447300-1440	. CLUTCH ASS'Y	1	B30001-
3	ND047310-7240	. . STATOR	1	B30001-
4	ND047350-7130	. . ROTOR	1	B30001-
5	ND447410-0020	. . HUB	1	B30001-
6	ND949047-2950	. . BOLT	6	B30001-
7	ND047372-0660	. . COVER	1	B30001-
8	ND949070-0831	. RING, SNAP	1	B30001-
9	ND949070-0640	. RING, SNAP	1	B30001-
10	ND949013-7480	. WASHER, 0. 1MM	1	B30001-
11	ND949013-7500	. WASHER, 0. 3MM	1	B30001-
12	ND949013-7510	. WASHER, 0. 5MM	1	B30001-
13	ND949048-0430	. BOLT	1	B30001-
14	ND91310-05081	. SCREW	1	B30001-
15	ND146691-4470	. CLAMP	1	B30001-

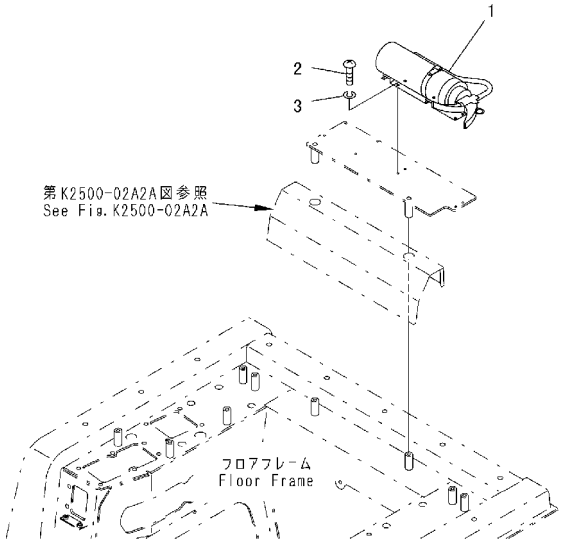

P#0B571

INDEX	PART NO.	DESCRIPTION	Q'TY	SERIAL NO.
1	09495-00010	EXTINGUISHER	1	B30001-
2	01220-40616	SCREW	4	B30001-
3	01602-20619	WASHER	4	B30001-

FIG. K0860-01A0 CUP HOLDER

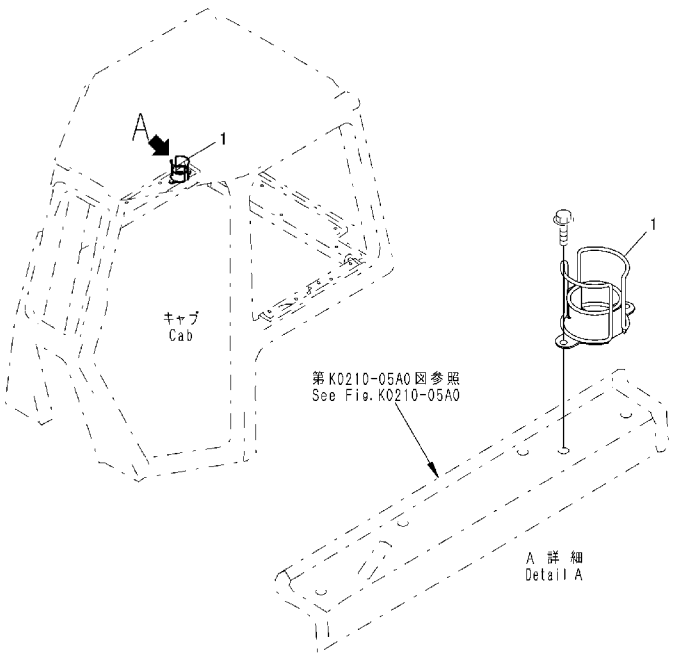

PWK9077

FIG. NO. : K0860-01A0

INDEX	PART NO.	DESCRIPTION	Q'TY	SERIAL NO.
1	14X-911-6180	BRACKET	1	B30001-

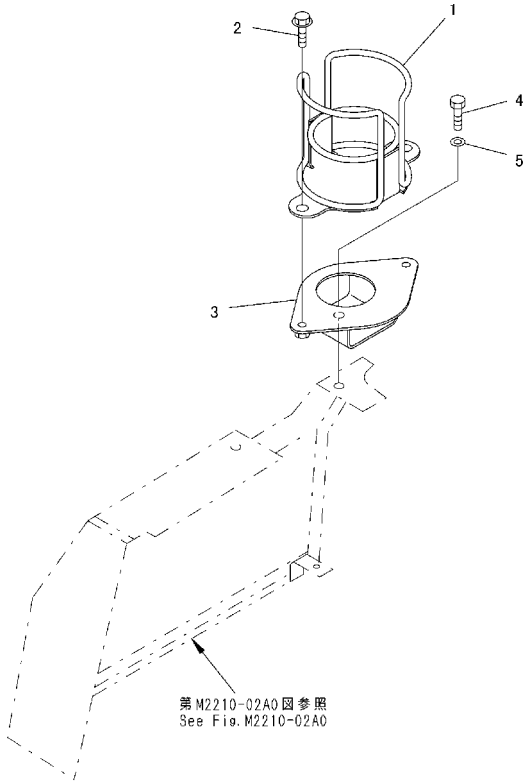

PWOA682A

INDEX	PART NO.	DESCRIPTION	Q'TY	SERIAL NO.
1	14X-911-6180	BRACKET	1	B30001-
2	01435-40816	BOLT	2	B30001-
3	134-X11-1920	BRACKET	1	B30001-
4	01010-81225	BOLT	1	B30001-
5	01643-31232	WASHER	1	B30001-

FIG. K0890-01A0 LUNCH BOX BRACKET

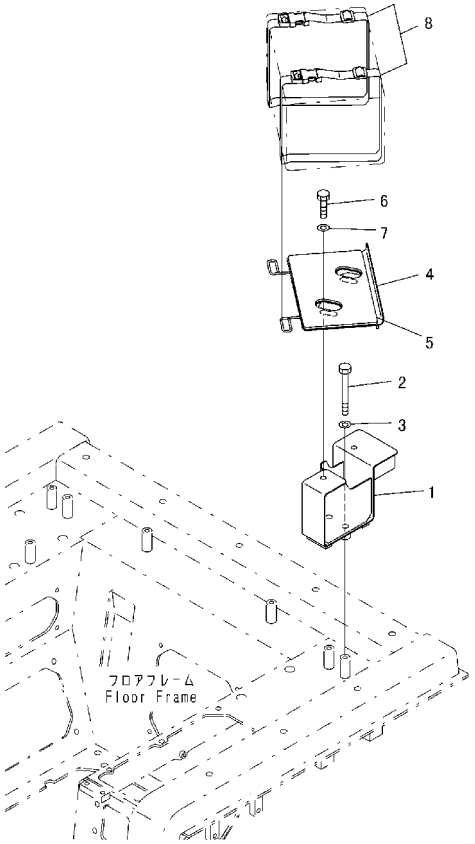

PWK9078

FIG. NO. : K0890-01A0

INDEX	PART NO.	DESCRIPTION	Q'TY	SERIAL NO.
1	134-X11-1910	BRACKET	1	B30001-
2	01010-81050	BOLT	2	B30001-
3	01643-31032	WASHER	2	B30001-
4	17A-911-1920	BRACKET	1	B30001-
5	17A-911-1930	. SHEET	1	B30001-
6	01010-81020	BOLT	2	B30001-
7	01643-31032	WASHER	2	B30001-
8	198-911-7340	BAND	2	B30001-

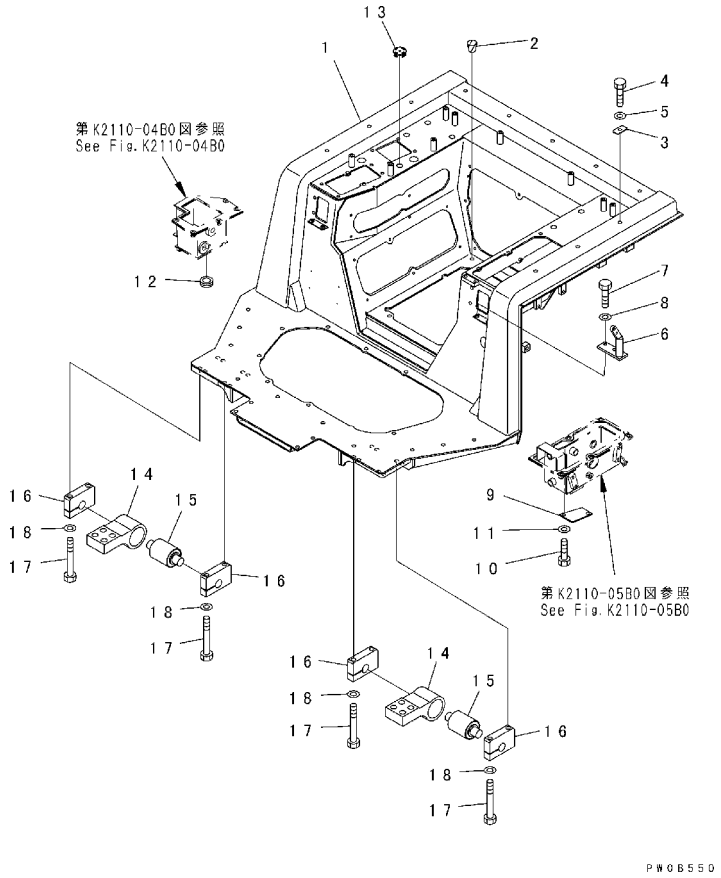

INDEX	PART NO.	DESCRIPTION	Q'TY	SERIAL NO.
1	14X-54-25515	FRAME	1	B30057-
	14X-54-25513	FRAME	1	B30001-B30056
2	07049-01215	PLUG	8	B30001-
3	14X-54-25190	PLATE	2	B30001-B30106
4	01010-81225	BOLT	2	B30001-B30106
5	01643-31232	WASHER	2	B30001-B30106
6	14X-54-16641	BRACKET	1	B30001-
7	01010-81025	BOLT	2	B30001-
8	01643-31032	WASHER	2	B30001-
9	17A-43-25410	COVER	1	B30001-
10	01010-81025	BOLT	2	B30001-
11	01643-31032	WASHER	2	B30001-
12	09415-02512	CAP	1	B30001-
13	135-06-34260	GROMMET	1	B30001-
14	124-54-53450	BRACKET	2	B30001-
15	17A-54-16821	CUSHION	2	B30001-
16	17A-54-16841	PLATE	4	B30001-
17	01011-81615	BOLT	8	B30001-
18	01643-31645	WASHER	8	B30001-

FIG. K2110-01B1 FLOOR FRAME (MOUNT AND PLUG) (WITHOUT CAB)

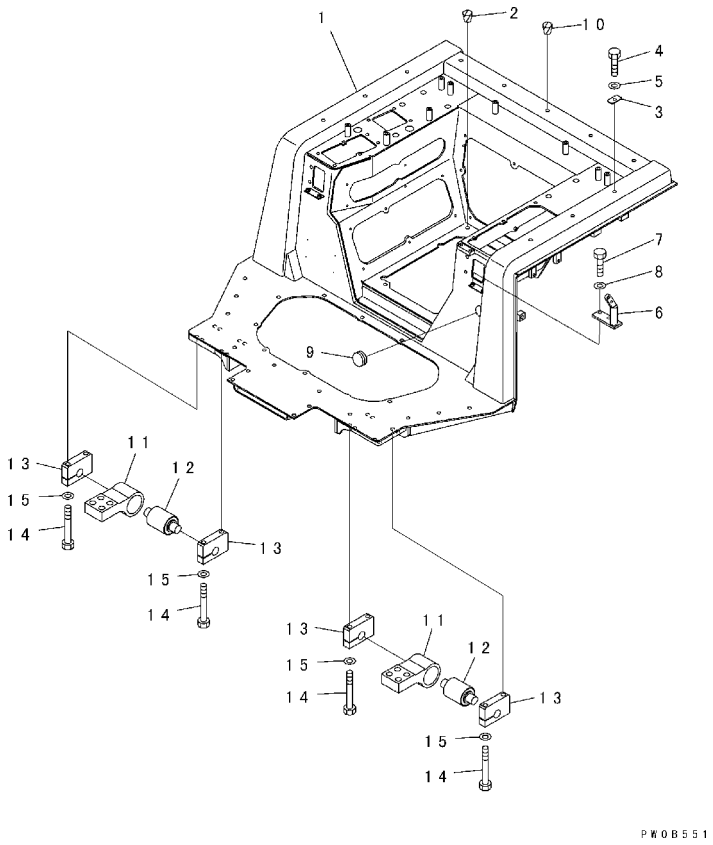

FIG. NO. : K2110-01B1

INDEX	PART NO.	DESCRIPTION	Q'TY	SERIAL NO.
1	14X-54-25515	FRAME	1	B30057-
	14X-54-25513	FRAME	1	B30001-B30056
2	07049-01215	PLUG	8	B30001-
3	14X-54-25190	PLATE	2	B30001-
4	01010-81225	BOLT	2	B30001-
5	01643-31232	WASHER	2	B30001-
6	14X-54-16641	BRACKET	1	B30001-
7	01010-81025	BOLT	2	B30001-
8	01643-31032	WASHER	2	B30001-
9	09415-03614	CAP	1	B30001-
10	07049-01215	PLUG	8	B30001-
11	124-54-53450	BRACKET	2	B30001-
12	17A-54-16821	CUSHION	2	B30001-
13	17A-54-16841	PLATE	4	B30001-
14	01011-81615	BOLT	8	B30001-
15	01643-31645	WASHER	8	B30001-

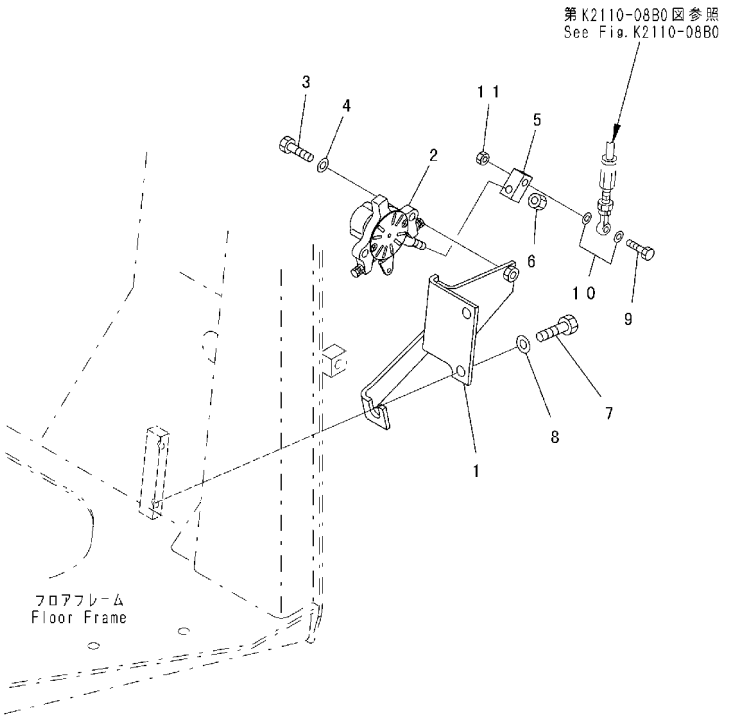

FIG. NO. : K2110-02B0

INDEX	PART NO.	DESCRIPTION	Q'TY	SERIAL NO.
1	134-43-68251	BRACKET	1	B30001-
2	134-43-66210	LEVER ASS'Y	1	B30001-
3	01252-41030	BOLT	2	B30001-
4	01643-31032	WASHER	2	B30001-
5	124-43-54590	JOINT	1	B30001-
6	01582-11008	NUT	1	B30001-
7	01010-81220	BOLT	2	B30001-
8	01643-31232	WASHER	2	B30001-
9	04254-11032	SPACER	2	B30001-
10	01010-81050	BOLT	1	B30001-
11	01580-11008	NUT	2	B30001-

FIG. K2110-03B0 FLOOR FRAME (BLADE CONTROL) (1/2) (FOR POWER ANGLE POWER TILT DOZER)

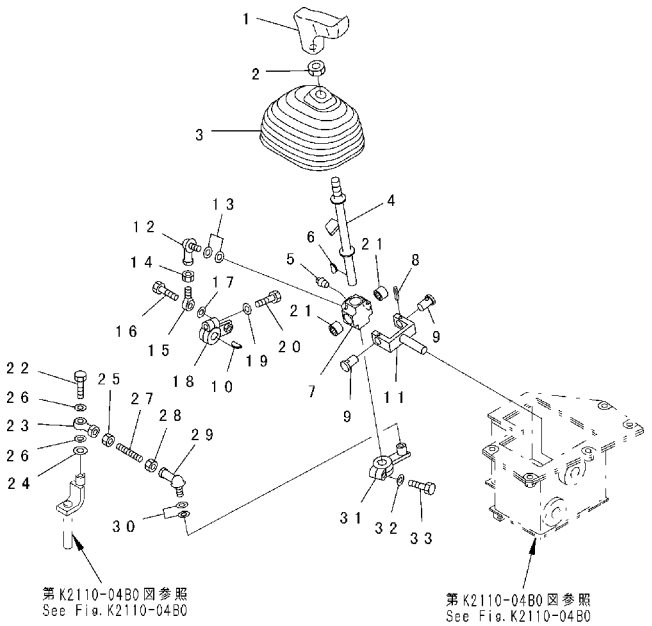

FIG. NO. : K2110-03B0

INDEX	PART NO.	DESCRIPTION	Q'TY	SERIAL NO.
1	124-43-54110	KNOB, R.H	1	B30001-
2	20T-43-71190	NUT	1	B30001-
3	14X-43-11320	BOOT	1	B30001-
4	134-43-64320	LEVER	1	B30001-
5	07042-70108	PLUG	1	B30001-
6	04010-00516	KEY	1	B30001-
7	17A-43-25151	LEVER	1	B30001-
8	04025-00520	PIN	2	B30001-
9	134-43-64370	PIN	2	B30001-
10	04010-00516	KEY	1	B30001-
11	134-43-64360	YOKE	1	B30001-
12	04256-40817	JOINT	1	B30001-
13	01643-30823	WASHER	2	B30001-
14	01580-10806	NUT	1	B30001-
15	04252-20853	END	1	B30001-
16	01010-80830	BOLT	1	B30001-
17	01643-30823	WASHER	1	B30001-
18	124-43-54151	LEVER	1	B30001-
19	01643-30823	WASHER	1	B30001-
20	01010-80830	BOLT	1	B30001-
21	06123-01414	BEARING	4	B30001-
22	01010-80830	BOLT	1	B30001-
23	04250-80847	END	1	B30001-
24	01643-30823	WASHER	1	B30001-
25	01580-10806	NUT	1	B30001-
26	04254-10823	SPACER	2	B30001-
27	04245-40805	ROD	1	B30001-
28	01580-10806	NUT	1	B30001-
29	04256-40817	JOINT	1	B30001-
30	01643-30823	WASHER	2	B30001-
31	124-43-54131	LEVER	1	B30001-
32	01643-30823	WASHER	2	B30001-
33	01010-80830	BOLT	1	B30001-

FIG. K2110-04B0 FLOOR FRAME (BLADE CONTROL) (2/2) (FOR POWER ANGLE POWER TILT DOZER)

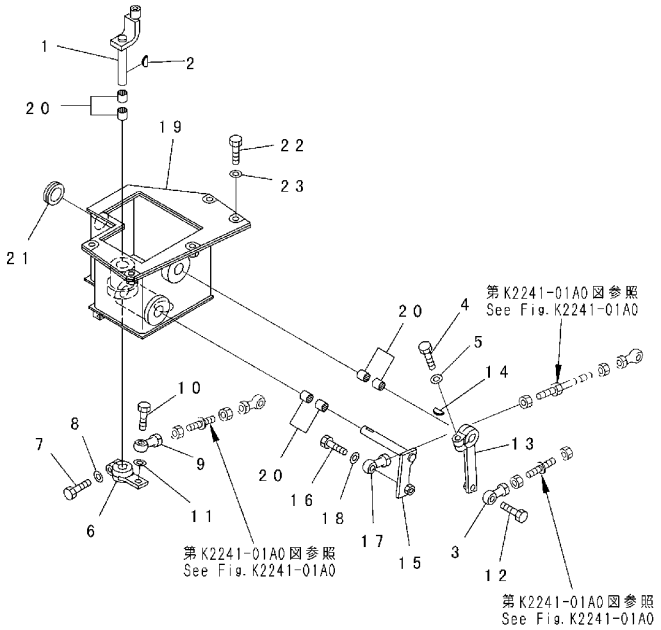

PW0B594B

FIG. NO. : K2110-04B0

INDEX	PART NO.	DESCRIPTION	Q'TY	SERIAL NO.
1	124-43-54292	BRACKET	1	B30001-
2	04010-00516	KEY	1	B30001-
3	04250-90847	END	1	B30001-
4	01010-80830	BOLT	1	B30001-
5	01643-30823	WASHER	1	B30001-
6	124-43-54261	LEVER	1	B30001-
7	01643-30823	WASHER	1	B30001-
8	01010-80830	BOLT	1	B30001-
9	04250-90847	END	1	B30001-
10	01010-80830	BOLT	1	B30001-
11	01643-30823	WASHER	1	B30001-
12	01010-80825	BOLT	1	B30001-
	01010-80830	BOLT	1	B30001-B30000
13	124-43-54171	LEVER	1	B30001-
14	04010-00516	KEY	1	B30001-
15	124-43-54162	PIN	1	B30001-
16	01010-80830	BOLT	1	B30001-
17	04250-90847	END	1	B30001-
18	01643-30823	WASHER	1	B30001-
19	134-43-64310	PLATE	1	B30001-
20	06123-01414	BEARING	6	B30001-
21	09415-02512	CAP	2	B30001-
22	01010-80830	BOLT	5	B30001-
23	01643-30823	WASHER	5	B30001-

FIG. K2110-05B0 FLOOR FRAME (SPEED CONTROL) (1/2)

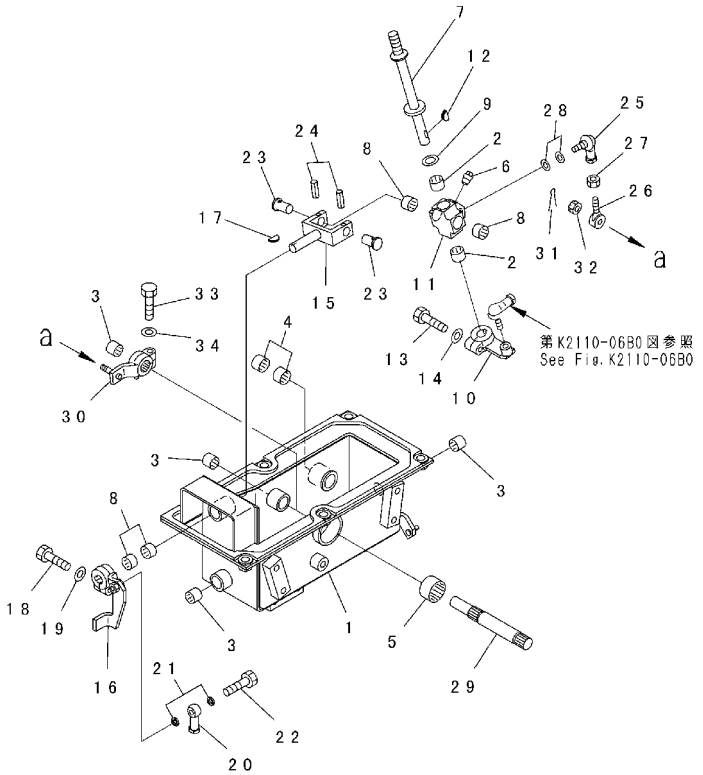

FIG. NO. : K2110-05B0

INDEX	PART NO.	DESCRIPTION	Q'TY	SERIAL NO.
1	134-43-61331	BRACKET	1	B30001-
	14Z-43-13180	. SHEET	1	B30001-
2	06123-01414	BEARING	6	B30001-
3	06124-01416	BEARING	3	B30001-
4	06123-01614	BEARING	2	B30001-
5	06124-03520	BEARING	1	B30001-
6	07042-70108	PLUG	1	B30001-
7	124-43-51620	LEVER	1	B30001-
8	06123-01414	BEARING	2	B30001-
9	124-43-51610	SHIM, 2. 5MM	1	B30001-
10	134-43-61420	LEVER	1	B30001-
11	17A-43-25151	LEVER	1	B30001-
12	04010-00516	KEY	1	B30001-
13	01010-80830	BOLT	1	B30001-
14	01643-30823	WASHER	1	B30001-
15	17A-43-25131	YOKE	1	B30001-
16	124-43-61130	LEVER	1	B30001-
17	04010-00516	KEY	1	B30001-
18	01010-80830	BOLT	1	B30001-
19	01643-30823	WASHER	1	B30001-
20	04250-80847	END	1	B30001-
21	04254-10823	SPACER	2	B30001-
22	01010-80835	BOLT	1	B30001-
23	17A-43-25140	PIN	4	B30001-
24	04025-00520	PIN	2	B30001-
25	04256-40817	JOINT	1	B30001-
26	04252-20853	END	1	B30001-
27	01580-10806	NUT	1	B30001-
28	01643-30823	WASHER	2	B30001-
29	124-43-51631	SHAFT	1	B30001-
30	17A-43-25171	LEVER	1	B30001-
31	04050-12015	PIN	1	B30001-
32	01590-30809	NUT	1	B30001-
33	01010-80830	BOLT	1	B30001-
34	01643-30823	WASHER	1	B30001-

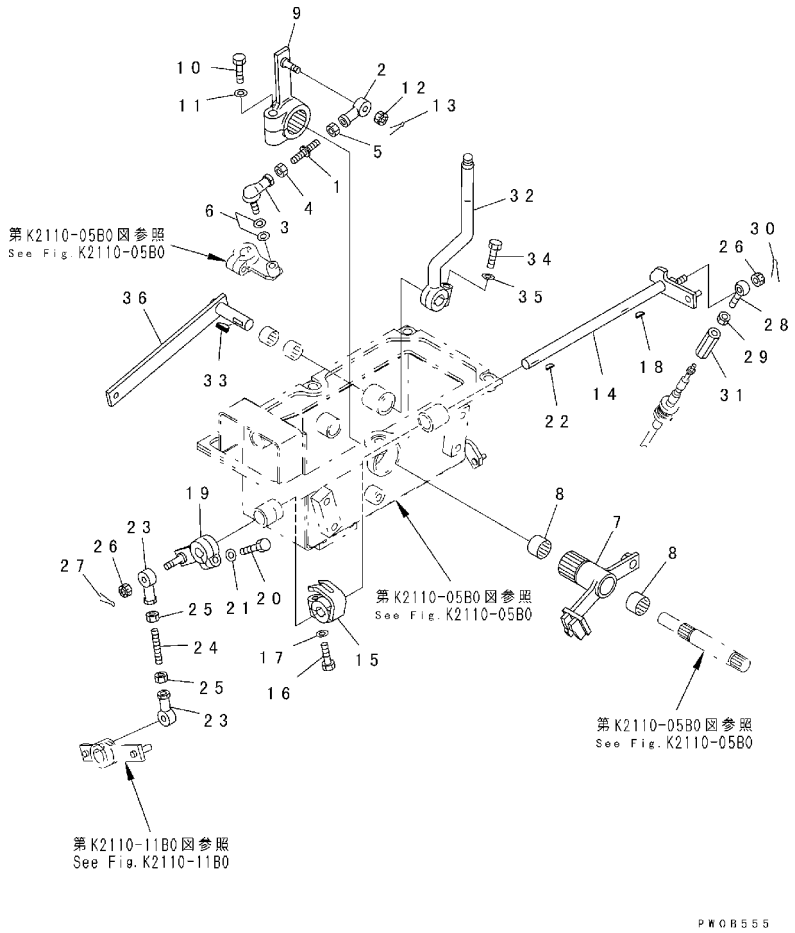

INDEX	PART NO.	DESCRIPTION	Q'TY	SERIAL NO.
1	205-43-72920	BOLT	1	B30001-
2	04250-90847	END	1	B30001-
3	04256-40817	JOINT	1	B30001-
4	01580-10806	NUT	1	B30001-
5	01508-20805	NUT	1	B30001-
6	01643-30823	WASHER	2	B30001-
7	134-43-61282	LEVER	1	B30001-
8	06123-02018	BEARING	2	B30001-
9	134-43-61230	LEVER	1	B30001-
10	01010-81245	BOLT	1	B30001-
11	01643-31232	WASHER	1	B30001-
12	01590-30809	NUT	1	B30001-
13	04050-12015	PIN	1	B30001-
14	134-43-61220	LEVER	1	B30001-
15	14X-43-15740	LEVER	1	B30001-
16	01010-80830	BOLT	1	B30001-
17	01643-30823	WASHER	1	B30001-
18	04010-00516	KEY	1	B30001-
19	17A-43-25271	LEVER	1	B30001-
20	01010-80830	BOLT	1	B30001-
21	01643-30823	WASHER	1	B30001-
22	04010-00516	KEY	1	B30001-
23	04250-80847	END	2	B30001-
24	04245-40805	ROD	1	B30001-
25	01580-10806	NUT	2	B30001-
26	01590-30809	NUT	2	B30001-
27	04050-12015	PIN	1	B30001-
28	04252-30853	END	1	B30001-
29	01508-40805	NUT	1	B30001-
30	04050-12015	PIN	1	B30001-
31	10S-43-13380	NUT	1	B30001-
32	134-43-66172	LEVER	1	B30001-
33	04010-00519	KEY	1	B30001-
34	01010-80830	BOLT	1	B30001-
35	01643-30823	WASHER	1	B30001-
36	134-43-66241	LEVER	1	B30001-

FIG. K2110-07B0 FLOOR FRAME (STEERING CONTROL) (1/2)

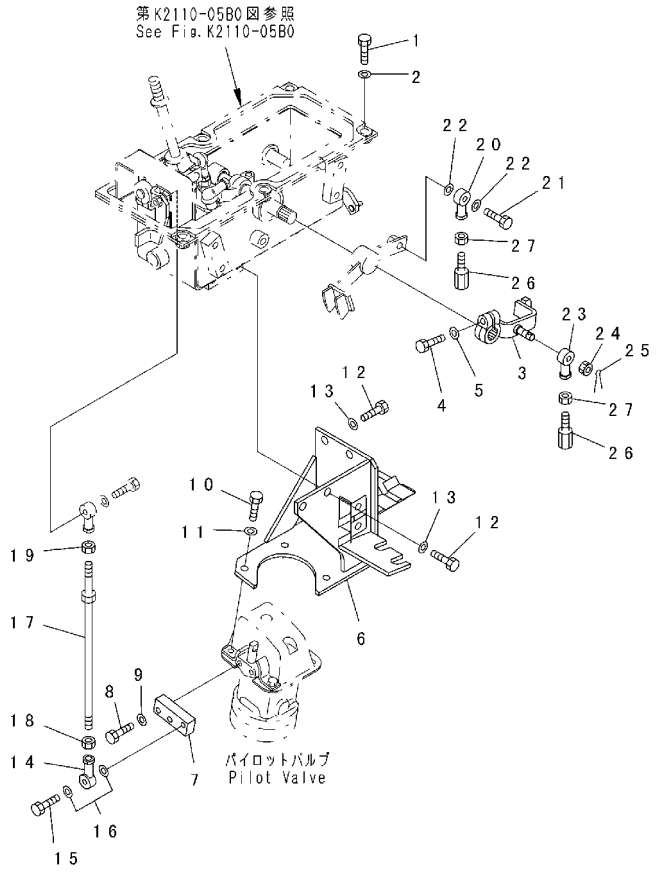

FIG. NO. : K2110-07B0

INDEX	PART NO.	DESCRIPTION	Q'TY	SERIAL NO.
1	01010-81030	BOLT	6	B30001-
2	01643-31032	WASHER	6	B30001-
3	124-43-61270	LEVER	1	B30001-
4	01010-80830	BOLT	1	B30001-
5	01643-30823	WASHER	1	B30001-
6	124-43-61151	BRACKET	1	B30001-
7	124-43-51480	LEVER	1	B30001-
8	01010-80835	BOLT	2	B30001-
9	01643-30823	WASHER	2	B30001-
10	01010-80830	BOLT	3	B30001-
11	01643-30823	WASHER	3	B30001-
12	01010-81030	BOLT	4	B30001-
13	01643-31032	WASHER	4	B30001-
14	04250-90847	END	1	B30001-
15	01010-80830	BOLT	1	B30001-
16	04254-10823	SPACER	2	B30001-
17	04248-30825	ROD	1	B30001-
18	01508-40805	NUT	1	B30001-
19	01580-10806	NUT	1	B30001-
20	04250-91056	END	1	B30001-
21	01010-81035	BOLT	1	B30001-
22	01643-31032	WASHER	2	B30001-
23	04250-91056	END	1	B30001-
24	01593-11008	NUT	1	B30001-
25	04050-12018	PIN	1	B30001-
26	14Z-43-11170	JOINT	2	B30001-
27	01508-41006	NUT	2	B30001-

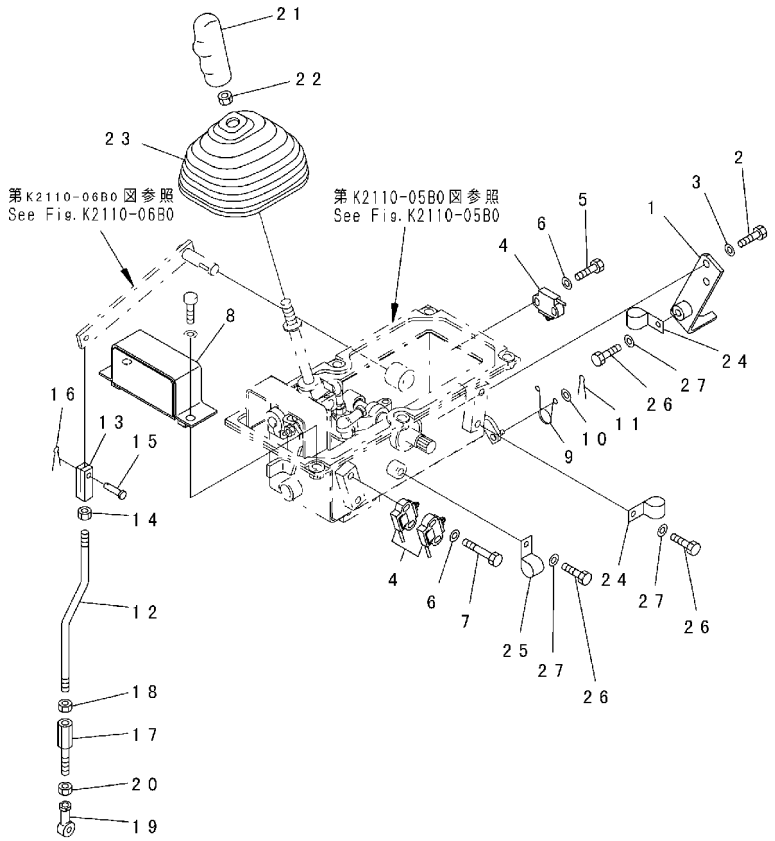

INDEX	PART NO.	DESCRIPTION	Q'TY	SERIAL NO.
1	124-43-61311	PLATE	1	B30001-
2	01010-81025	BOLT	2	B30001-
3	01643-31032	WASHER	2	B30001-
4	14X-06-22120	SWITCH	3	B30001-
5	01010-81030	BOLT	2	B30001-
6	01643-31032	WASHER	6	B30001-
7	01010-81050	BOLT	2	B30001-
8	134-43-61340	PLATE	1	B30001-
9	09463-00006	SPRING	1	B30001-
10	01643-30623	WASHER	2	B30001-
11	04050-11612	PIN	2	B30001-
12	124-43-61210	ROD	1	B30223-
	134-43-61211	ROD	1	B30001-B30222
13	198-43-18170	YOKE	1	B30001-
14	01582-11008	NUT	1	B30001-
15	04205-10822	PIN	1	B30001-
16	04050-12015	PIN	1	B30001-
17	198-43-41940	ROD	1	B30001-
18	01508-41006	NUT	1	B30001-
19	04250-81056	END	1	B30001-
20	01582-11008	NUT	1	B30001-
21	17A-43-25682	KNOB	1	B30001-
22	20T-43-71190	NUT	1	B30001-
23	14X-43-11320	BOOT	1	B30001-
24	04434-50810	CLIP	4	B30001-
25	04434-51610	CLIP	1	B30001-
26	01010-81020	BOLT	2	B30001-
27	01643-31032	WASHER	2	B30001-

FIG. K2110-09B0 FLOOR FRAME (BLADE LOCK) (FOR POWER ANGLE POWER TILT DOZER)

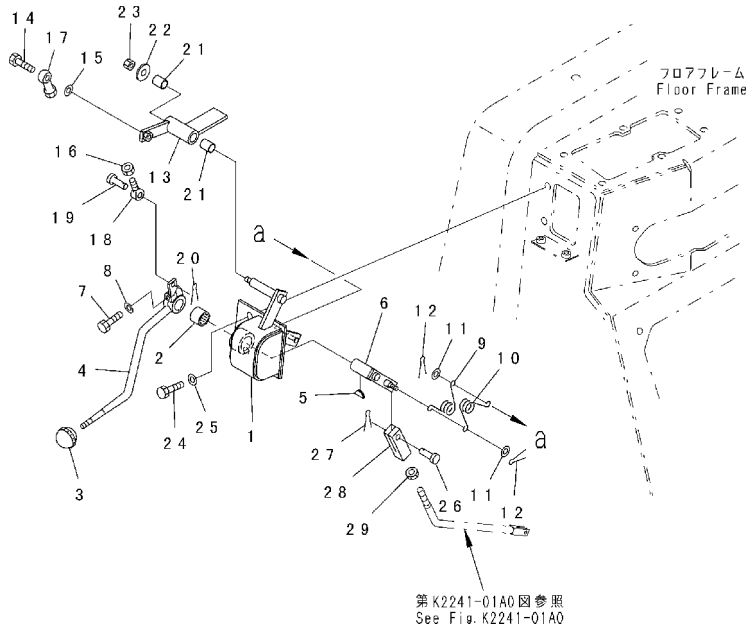

FIG. NO. : K2110-09B0

INDEX	PART NO.	DESCRIPTION	Q'TY	SERIAL NO.
1	124-43-64410	BRACKET	1	B30001-
	14X-43-14340	. SHEET	1	B30001-
2	06124-02020	BEARING	1	B30001-
3	09304-10835	KNOB	1	B30001-
4	124-43-65120	LEVER	1	B30001-
5	04010-00516	KEY	1	B30001-
6	17A-43-25460	LEVER	1	B30001-
7	01010-80830	BOLT	1	B30001-
8	01643-30823	WASHER	1	B30001-
9	09463-00002	SPRING	1	B30001-
10	09463-00006	SPRING	1	B30001-
11	01641-20608	WASHER	2	B30001-
12	04050-11612	PIN	2	B30001-
13	134-43-64342	LEVER	1	B30001-
14	01010-80830	BOLT	1	B30001-
15	01643-30823	WASHER	1	B30001-
16	01580-10806	NUT	1	B30001-
17	04252-20853	END	1	B30001-
18	04210-20832	YOKE	1	B30001-
19	04205-10822	PIN	1	B30001-
20	04050-12015	PIN	1	B30001-
21	09350-01420	BUSHING	2	B30001-
22	113-43-23230	WASHER	1	B30001-
23	01598-00809	NUT	1	B30001-
24	01010-81025	BOLT	2	B30001-
25	01643-31032	WASHER	2	B30001-
26	04205-10622	PIN	1	B30001-
27	04050-11612	PIN	1	B30001-
28	124-43-54340	YOKE	1	B30001-
29	01583-11006	NUT	1	B30001-

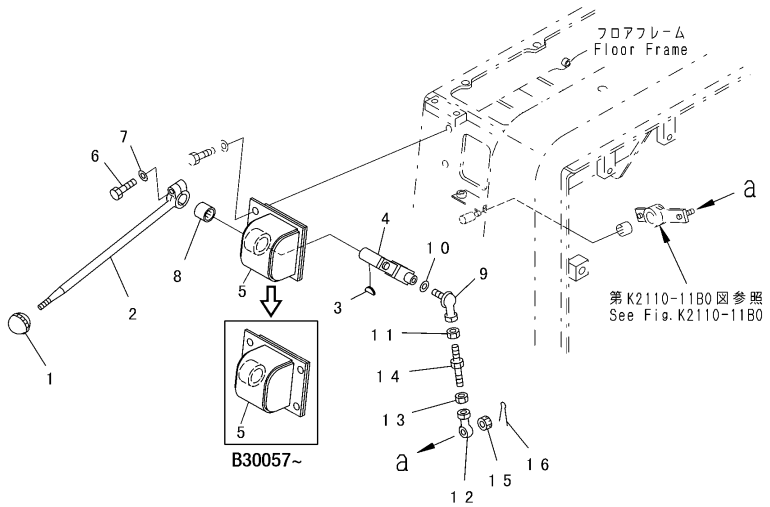

INDEX	PART NO.	DESCRIPTION	Q'TY	SERIAL NO.
1	09304-10835	KNOB	1	B30001-
2	124-43-65430	LEVER	1	B30001-
3	04010-00516	KEY	1	B30001-
4	124-43-51272	LEVER	1	B30001-
5	14Z-43-11751	BRACKET	1	B30057-
	14Z-43-21751	BRACKET	1	B30001-B30056
	14Z-43-21940	. SHEET	1	B30001-
6	01010-80830	BOLT	1	B30001-
7	01643-30823	WASHER	1	B30001-
8	06124-02020	BEARING	1	B30001-
9	04256-40817	JOINT	1	B30001-
10	01643-30823	WASHER	2	B30001-
11	01580-10806	NUT	1	B30001-
12	04250-90847	END	1	B30001-
13	01508-40805	NUT	1	B30001-
14	581-43-11870	ROD	1	B30001-
15	01590-30809	NUT	1	B30001-
16	04050-12015	PIN	1	B30001-

FIG. K2110-11B0 FLOOR FRAME (TRANSMISSION LOCK SHAFT)

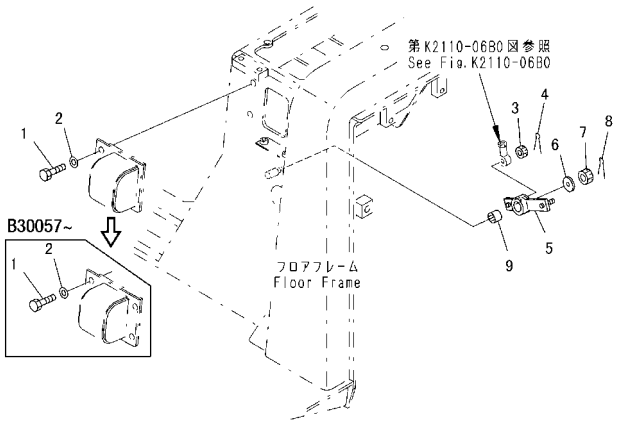

FIG. NO. : K2110-11B0

INDEX	PART NO.	DESCRIPTION	Q'TY	SERIAL NO.
1	01010-81025	BOLT	4	B30057-
	01010-81025	BOLT	2	B30001-B30056
2	01643-31032	WASHER	4	B30057-
	01643-31032	WASHER	2	B30001-B30056
3	01590-30809	NUT	3	B30001-
4	04050-12015	PIN	3	B30001-
5	17A-43-25531	LEVER	1	B30001-
6	113-43-23230	WASHER	1	B30001-
7	01590-30809	NUT	1	B30001-
8	04050-12015	PIN	1	B30001-
9	06124-01416	BEARING	1	B30001-

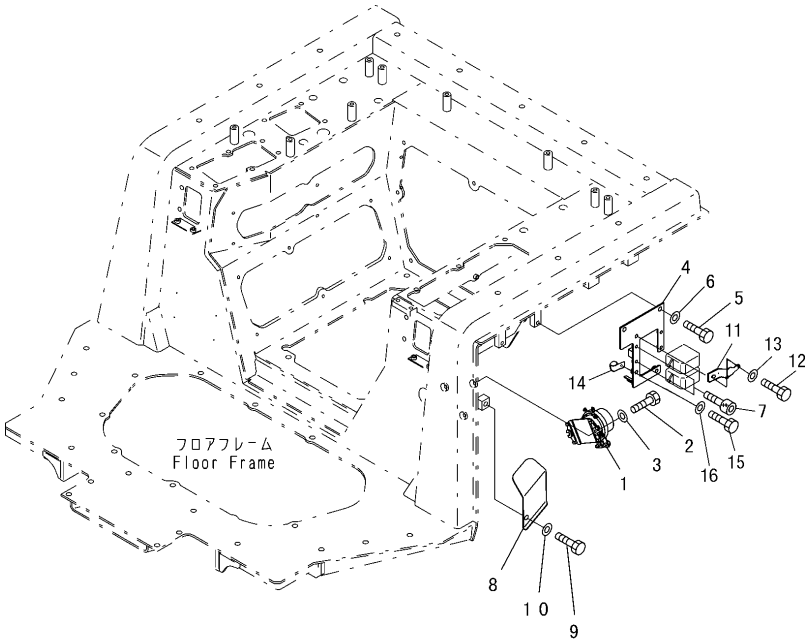

INDEX	PART NO.	DESCRIPTION	Q'TY	SERIAL NO.
1	08088-31000	SWITCH	1	B30001-
2	01010-80825	BOLT	2	B30001-
3	01643-30823	WASHER	2	B30001-
4	124-06-62120	BRACKET	1	B30001-
5	01010-81020	BOLT	2	B30001-
6	01643-31032	WASHER	2	B30001-
7	01252-40820	BOLT	4	B30001-
8	134-06-61320	COVER	1	B30001-
9	01010-81220	BOLT	1	B30001-
10	01643-31232	WASHER	1	B30001-
11	08053-00910	CLIP	1	B30001-
12	01010-81020	BOLT	1	B30223-
	01010-81016	BOLT	1	B30001-B30222
13	01643-31032	WASHER	1	B30001-
14	04434-52310	CLIP	1	B30223-
15	01010-81020	BOLT	1	B30223-
16	01643-31032	WASHER	1	B30223-

FIG. K2110-13B0 FLOOR FRAME (WIRING)

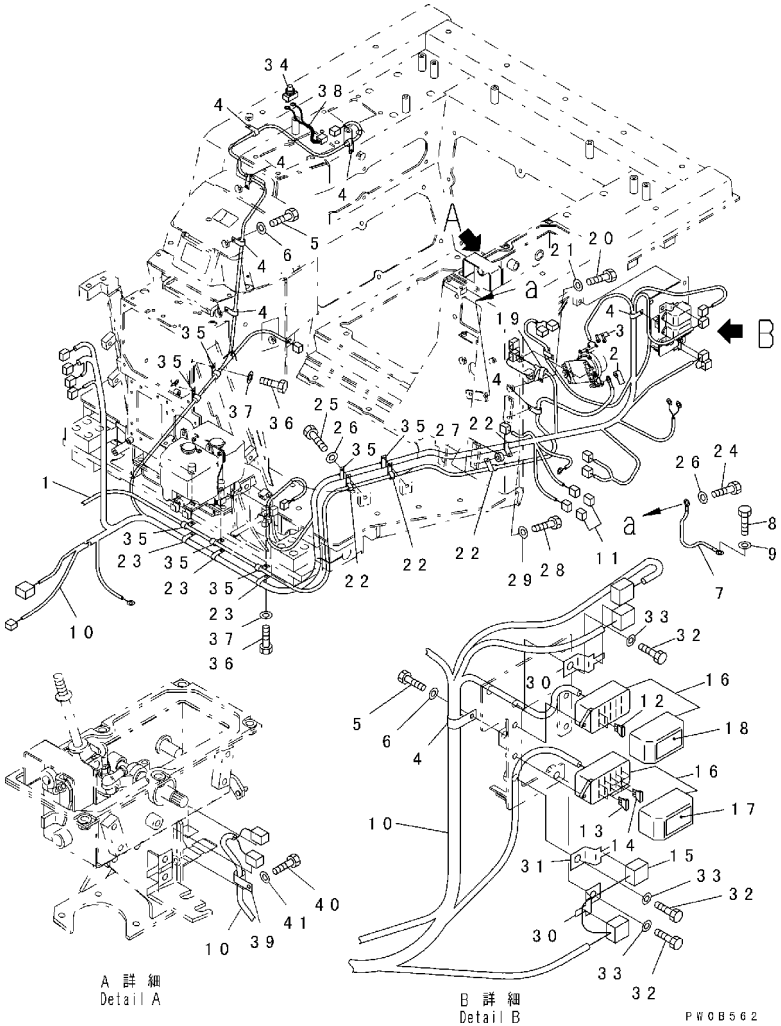

FIG. NO. : K2110-13B0

INDEX	PART NO.	DESCRIPTION	Q'TY	SERIAL NO.
1	124-06-64160	CABLE	1	B30001-
2	08038-00035	CAP	1	B30001-
3	08038-00519	CAP	2	B30001-
4	04434-52310	CLIP	7	B30001-
5	01010-81020	BOLT	4	B30001-
6	01643-31032	WASHER	4	B30001-
7	14X-06-14390	WIRE	1	B30001-
8	01010-81020	BOLT	1	B30001-
9	01643-31032	WASHER	1	B30001-
10	124-06-64172	WIRING HARNESS	1	B30001-
11	21X-06-31530	. DIODE	2	B30001-
12	08041-03000	. FUSE, 30A	2	B30001-
13	08041-02000	. FUSE, 20A	4	B30001-
14	08041-01000	. FUSE, 10A	8	B30001-
15	20T-06-81230	. FUSIBLE LINK	1	B30001-
16	20T-06-71560	. FUSE BOX	2	B30001-
17	124-06-61440	. PLATE FUSE	1	B30001-
18	124-06-54240	. PLATE, FUSE BOX	1	B30001-
19	04434-51410	CLIP	1	B30001-
20	01010-81020	BOLT	1	B30001-
21	01643-31032	WASHER	1	B30001-
22	04434-52310	CLIP	4	B30001-
23	6150-51-5480	CLIP	3	B30001-
24	01010-81020	BOLT	1	B30001-
25	01010-81025	BOLT	2	B30001-
26	01643-31032	WASHER	3	B30001-
27	195-01-16140	SPACER	1	B30223-
	581-95-19870	BOSS	1	B30001-B30222
28	01010-81050	BOLT	1	B30223-
	01010-81025	BOLT	1	B30001-B30222
29	01643-31032	WASHER	1	B30001-
30	08193-20010	CLIP	2	B30001-
31	08053-01510	CLIP	1	B30001-
32	01010-81020	BOLT	3	B30001-
33	01643-31032	WASHER	3	B30001-
34	08064-10000	SWITCH, PUSH	1	B30001-
35	04434-51010	CLIP	7	B30001-
36	01010-81020	BOLT	7	B30001-
37	01643-31032	WASHER	7	B30001-
38	14X-06-21710	WIRING HARNESS	1	B30001-
39	04434-51010	CLIP	2	B30001-
40	01010-81020	BOLT	1	B30001-
41	01643-31032	WASHER	1	B30001-

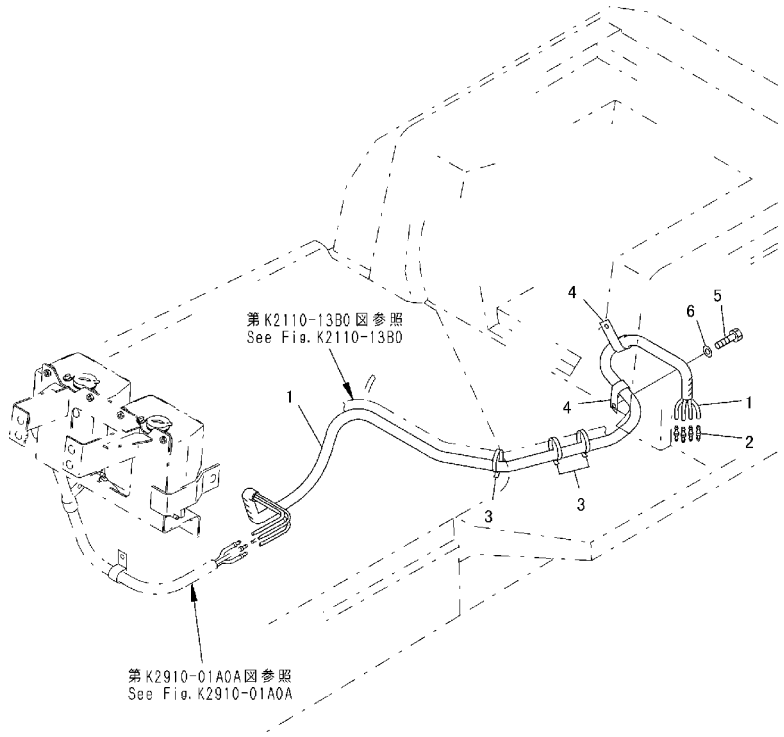

INDEX	PART NO.	DESCRIPTION	Q'TY	SERIAL NO.
1	14X-911-1120	HOSE ASS'Y	1	B30001-
2	195-979-8590	. VALVE	4	B30001-
3	08034-00823	BAND	8	B30001-
4	04434-52310	CLIP	2	B30001-
5	01010-81020	BOLT	2	B30001-
6	01643-31032	WASHER	2	B30001-

FIG. K2110-15B0 FLOOR FRAME (STEERING VALVE PIPING)

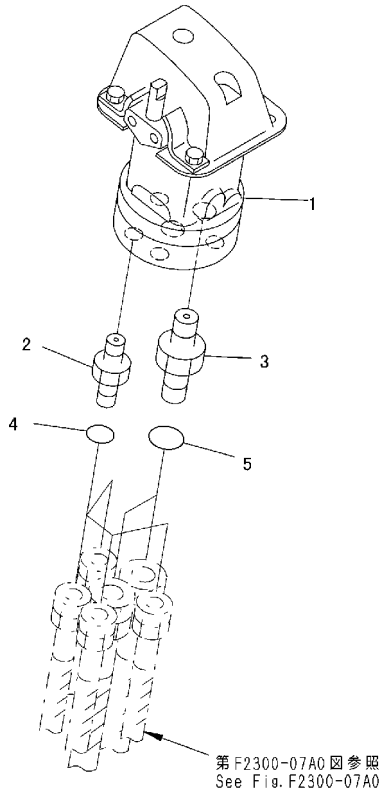

PW0B564

FIG. NO. : K2110-15B0

INDEX	PART NO.	DESCRIPTION	Q'TY	SERIAL NO.
1	(702-16-05013)	PILOT VALVE, (SEE FIG.Y1670-01A0)	1	B30001-
2	114-40-48481	JOINT	4	B30001-
3	134-49-61760	JOINT	2	B30001-
4	07002-21423	O-RING	4	B30001-
5	07002-21823	O-RING	2	B30001-

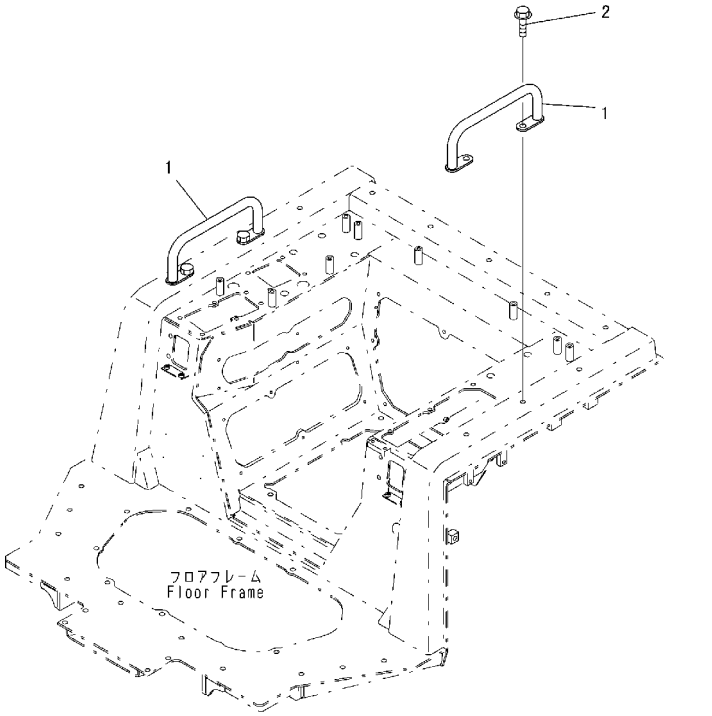

INDEX	PART NO.	DESCRIPTION	Q'TY	SERIAL NO.
1	14X-54-16670	HANDLE	2	B30001-
2	01439-01225	BOLT	4	B30001-

FIG. K2110-17B0 FLOOR FRAME (KNOB)

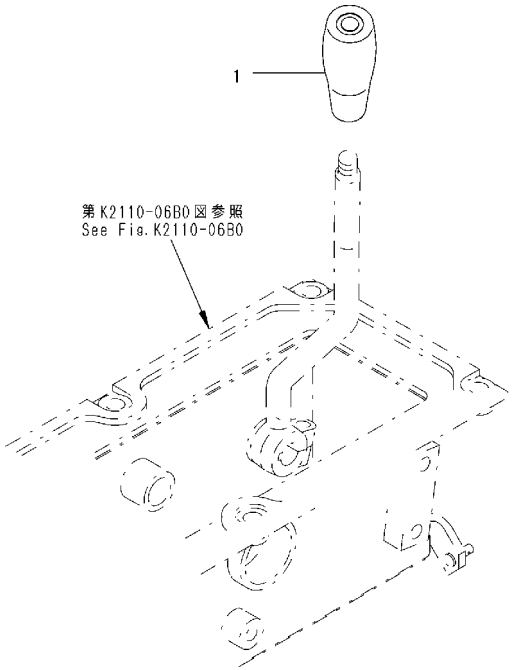

PW0B565

FIG. NO. : K2110-17B0

INDEX	PART NO.	DESCRIPTION	Q'TY	SERIAL NO.
1	14Z-43-11310	KNOB	1	B30001-

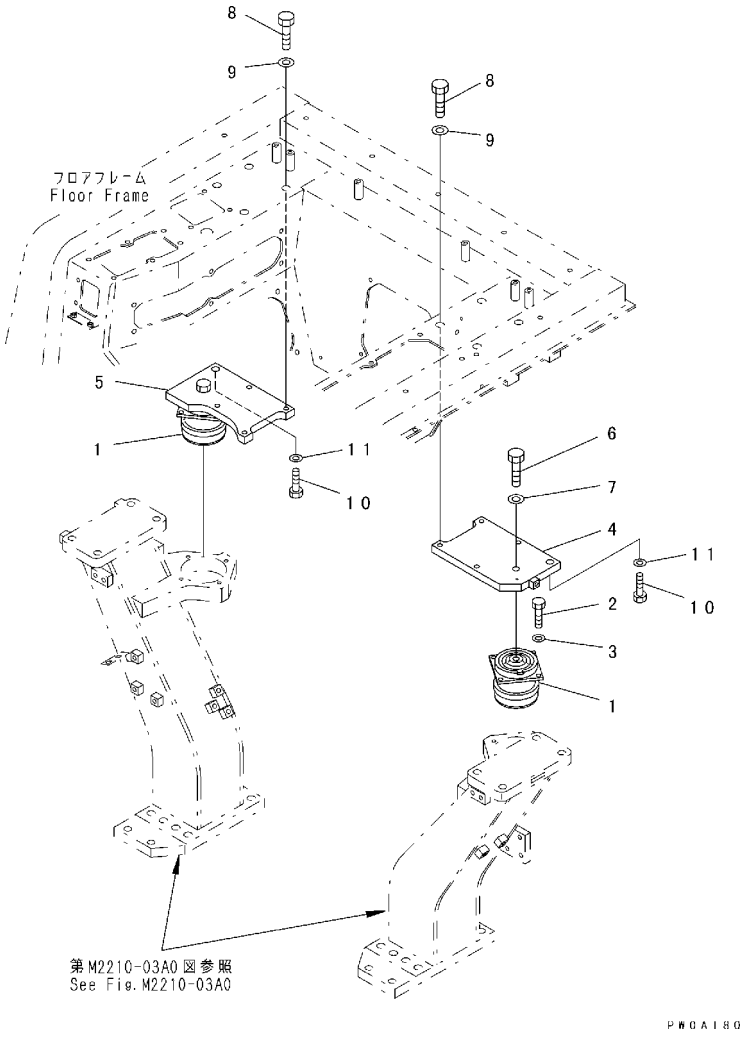

INDEX	PART NO.	DESCRIPTION	Q'TY	SERIAL NO.
1	124-54-53411	VISCOUS MOUNT	2	B30001-
2	01010-81025	BOLT	8	B30001-
3	01643-31032	WASHER	8	B30001-
4	124-54-53433	PLATE, L.H.	1	B30001-
5	124-54-53443	PLATE, R.H.	1	B30001-
6	01010-81645	BOLT	2	B30001-
7	01643-31645	WASHER	2	B30001-
8	01010-81675	BOLT	8	B30001-
9	01643-31645	WASHER	8	B30001-
10	01010-81645	BOLT	2	B30001-
11	01643-31645	WASHER	2	B30001-

FIG. K2210-01A0 DASHBOARD (WITHOUT CAB) (WITH MONITOR PANEL)

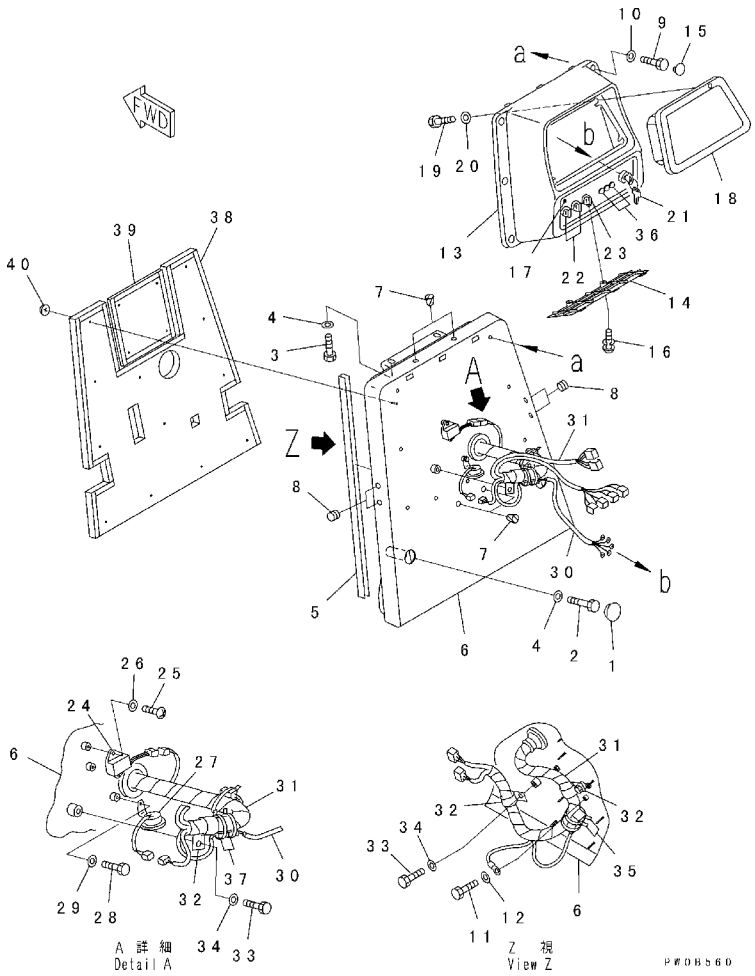

FIG. NO. : K2210-01A0

INDEX	PART NO.	DESCRIPTION	Q'TY	SERIAL NO.
1	14X-54-18150	CAP	2	B30001-
2	01010-81290	BOLT	2	B30001-
3	01010-81225	BOLT	2	B30001-
4	01643-31232	WASHER	4	B30001-
5	14X-54-12940	SEAL	2	B30001-
6	124-54-68110	COVER	1	B30001-
7	07049-01215	PLUG	4	B30001-
8	09415-01008	CAP	4	B30001-
9	01010-80820	BOLT	9	B30001-
10	01643-30823	WASHER	9	B30001-
11	01010-80610	BOLT	1	B30001-
12	01643-30623	WASHER	1	B30001-
13	134-54-69121	DASHBOARD	1	B30197-
	134-54-69120	DASHBOARD	1	B30001-B30196
14	14X-54-19120	COVER	1	B30001-
15	14X-54-19130	CAP	6	B30001-
16	14X-54-19170	BOLT	2	B30001-
17	134-54-61661	PANEL	1	B30001-
18	(7831-68-1000)	PANEL ASS'Y, (SEE FIG. K2210-54A0)	1	B30001-
19	01010-80616	BOLT	4	B30001-
20	01643-30623	WASHER	4	B30001-
21	08086-10000	SWITCH	1	B30001-
22	14X-06-12160	SWITCH	2	B30001-
23	14X-06-12190	SWITCH	1	B30001-
24	14X-06-21550	TIMER, BI-METAL	1	B30001-
25	01220-40512	SCREW	2	B30001-
26	01641-20508	WASHER	2	B30001-
27	14X-06-22150	BUZZER ASS'Y	1	B30001-
28	01010-80612	BOLT	1	B30001-
29	01643-30623	WASHER	1	B30001-
30	124-06-64251	WIRING HARNESS	1	B30001-
31	124-06-64261	WIRING HARNESS	1	B30001-
32	08036-03014	CLIP	3	B30001-
33	01010-81018	BOLT	3	B30001-
34	01643-31032	WASHER	3	B30001-
35	08034-00519	BAND	2	B30001-
36	134-06-61611	LAMP ASS'Y	1	B30001-
	08102-12403	. BULB, 3W	1	B30001-
37	08034-00519	BAND	2	B30001-
38	124-54-68210	ABSORBER	1	B30001-
39	134-54-68180	ABSORBER	1	B30001-
40	124-A62-1920	CAP	16	B30001-

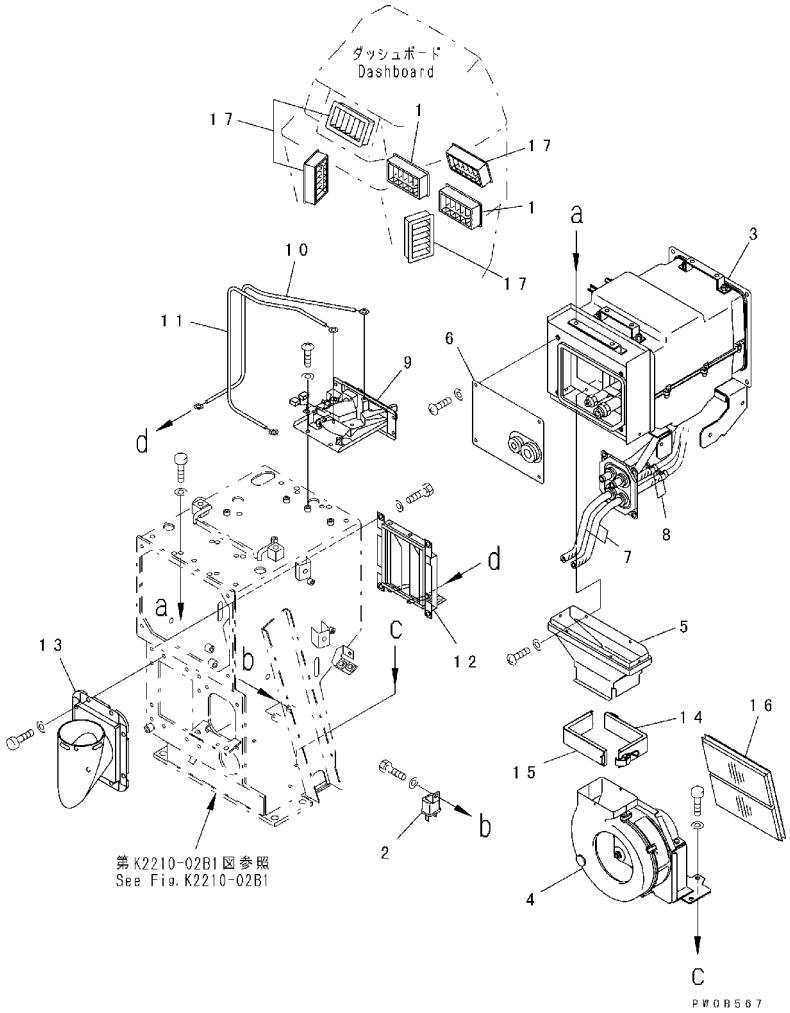

INDEX	PART NO.	DESCRIPTION	Q'TY	SERIAL NO.
1	17A-54-18270	GRILLE ASS'Y	4	B30001-
2	205-979-6460	RELAY ASS'Y	2	B30001-
3	(17A-911-7201)	UNIT ASS'Y, (SEE FIG. K2210-51B1)	1	B30171-
	(17A-911-7200)	UNIT ASS'Y, (SEE FIG. K2210-51B1)	1	B30001-B30170
4	(14X-911-7501)	BLOWER ASS'Y, (SEE FIG. K2210-53A1)	1	B30001-
5	17A-911-7310	DUCT	1	B30001-
6	17A-911-7350	COVER	1	B30001-
7	124-Z11-1730	HOSE	2	B30001-
	134-X11-1390	HOSE	2	B30001-B30000
8	14X-911-7690	CLAMP	2	B30001-
9	14X-911-7701	CONTROL ASS'Y	1	B30001-
10	14X-911-7720	CABLE	1	B30001-
11	17A-911-7340	CABLE	1	B30001-
12	14X-911-7620	DAMPER	1	B30001-
13	14X-911-7631	DUCT	1	B30001-
14	14X-911-7650	CLAMP	1	B30001-
15	14X-911-7660	CLAMP	1	B30001-
16	14X-911-7741	FILTER	1	B30001-
17	17A-54-18270	GRILLE ASS'Y	2	B30001-

FIG. K2210-01B2 DASHBOARD (HEATER KIT)

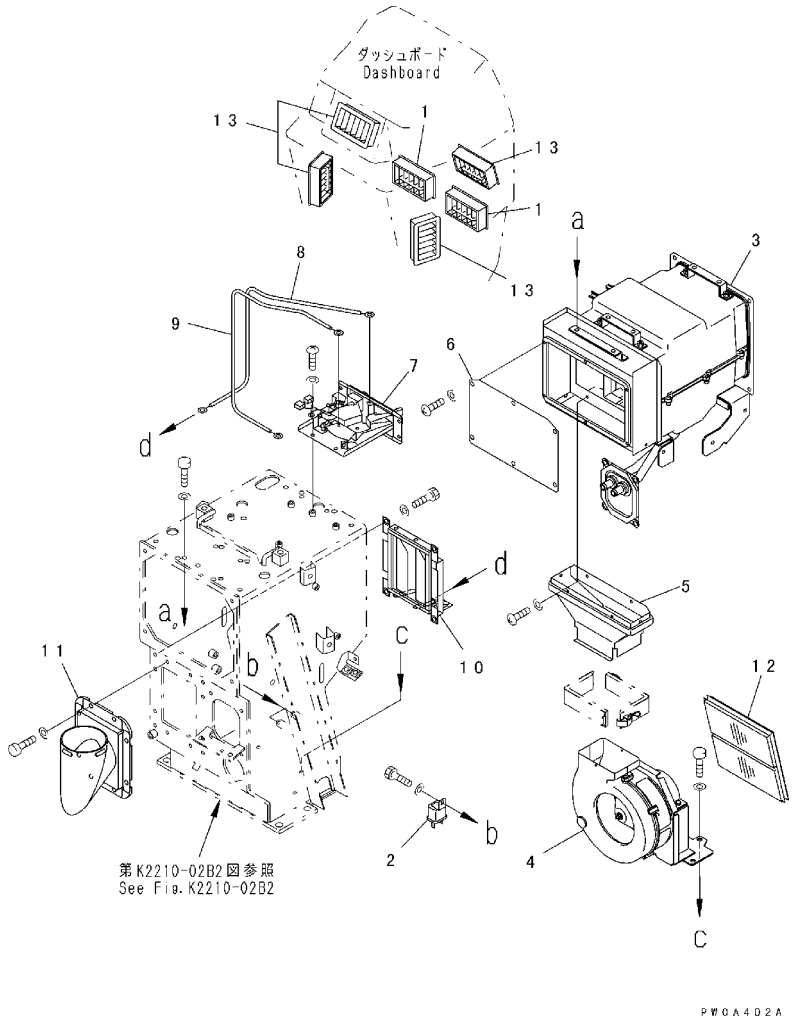

FIG. NO. : K2210-01B2

INDEX	PART NO.	DESCRIPTION	Q'TY	SERIAL NO.
1	17A-54-18270	GRILLE ASS'Y	4	B30001-
2	205-979-6460	RELAY ASS'Y	1	B30001-
3	(17A-911-7410)	UNIT ASS'Y	1	B30001-
4	(14X-911-7501)	BLOWER ASS'Y, (SEE FIG. K2210-53A1)	1	B30001-
5	14X-911-7611	DUCT	1	B30001-
6	14X-911-7760	COVER	1	B30001-
7	14X-911-7710	CONTROL ASS'Y	1	B30001-
8	14X-911-7720	CABLE	1	B30001-
9	14X-911-7730	CABLE	1	B30001-
10	14X-911-7620	DAMPER	1	B30001-
11	14X-911-7631	DUCT	1	B30001-
12	14X-911-7741	FILTER	1	B30001-
13	17A-54-18270	GRILLE ASS'Y	2	B30001-

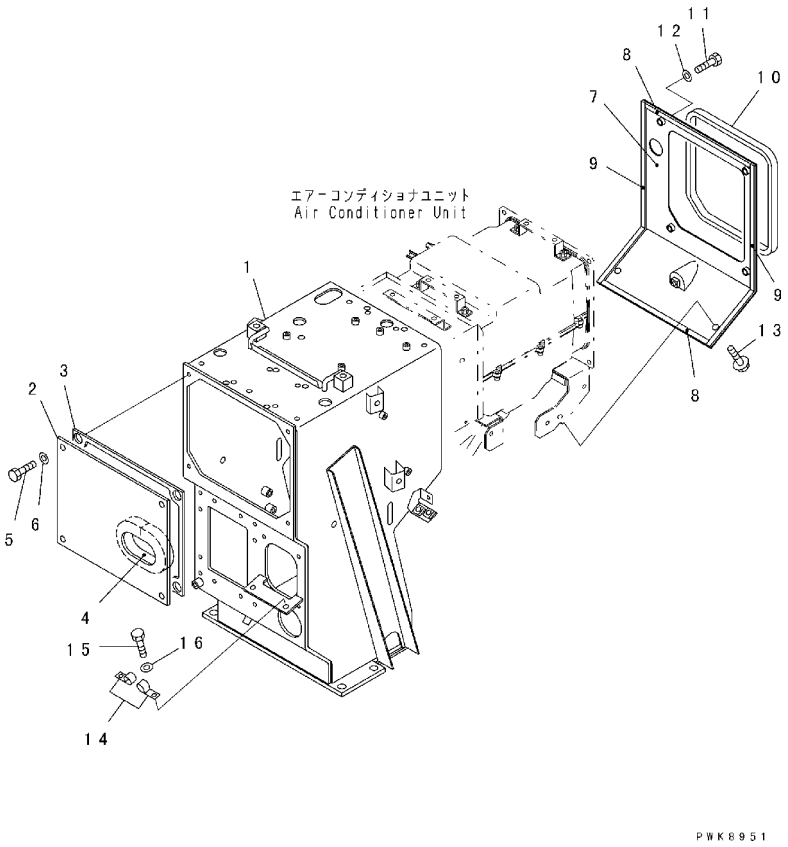

INDEX	PART NO.	DESCRIPTION	Q'TY	SERIAL NO.
1	134-X11-1310	BRACKET	1	B30001-
2	14X-911-8243	PLATE	1	B30001-
3	14X-911-8820	. SHEET	1	B30001-
4	14X-911-8950	. SHEET	1	B30001-
5	01010-80816	BOLT	4	B30001-
6	01643-30823	WASHER	4	B30001-
7	17A-911-7320	PLATE	1	B30001-
8	14X-911-8830	. SHEET	2	B30001-
9	14X-911-8840	. SHEET	2	B30001-
10	17A-911-7330	. SHEET	1	B30001-
11	01010-80825	BOLT	4	B30001-
12	01643-30823	WASHER	4	B30001-
13	01439-00820	BOLT	2	B30001-
14	04434-51610	CLIP	2	B30001-
15	01010-81020	BOLT	2	B30001-
16	01643-31032	WASHER	2	B30001-

FIG. K2210-02B2 DASHBOARD (HEATER BOX)

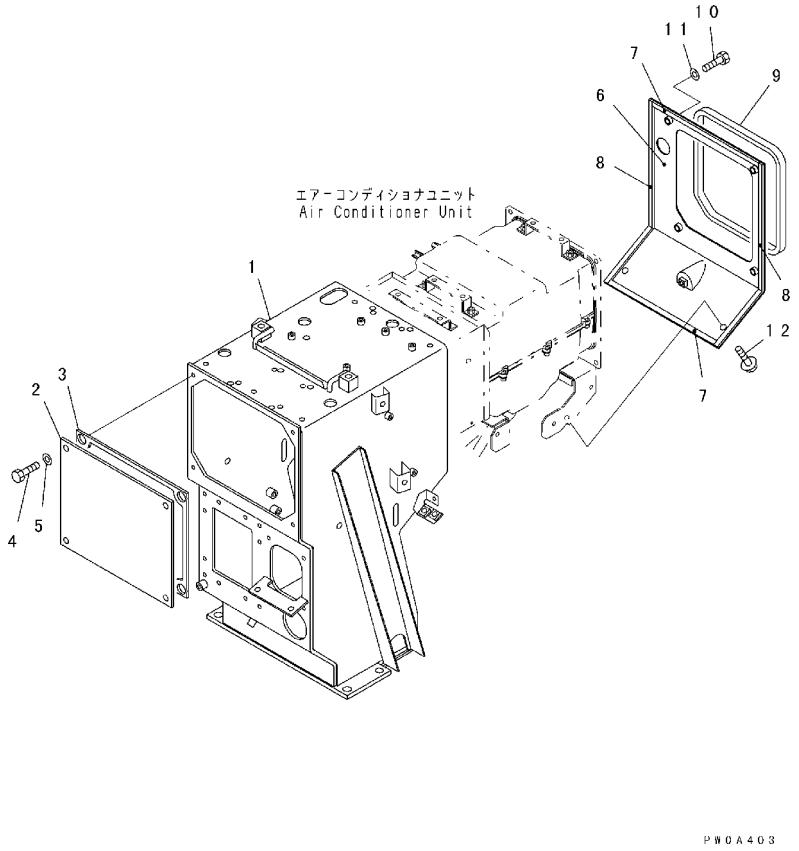

FIG. NO. : K2210-02B2

INDEX	PART NO.	DESCRIPTION	Q'TY	SERIAL NO.
1	134-X11-1310	BRACKET	1	B30001-
2	14X-911-8381	PLATE	1	B30001-
3	14X-911-8320	. SHEET	1	B30001-
4	01010-80816	BOLT	4	B30001-
5	01643-30823	WASHER	4	B30001-
6	14X-911-8261	PLATE	1	B30001-
7	14X-911-8830	. SHEET	2	B30001-
8	14X-911-8840	. SHEET	2	B30001-
9	14X-911-8850	. SHEET	1	B30001-
10	01010-80825	BOLT	4	B30001-
11	01643-30823	WASHER	4	B30001-
12	01439-00820	BOLT	2	B30001-

FIG. K2210-03B1 DASHBOARD (FILTER COVER) (FOR AIR CONDITIONER AND HEATER)

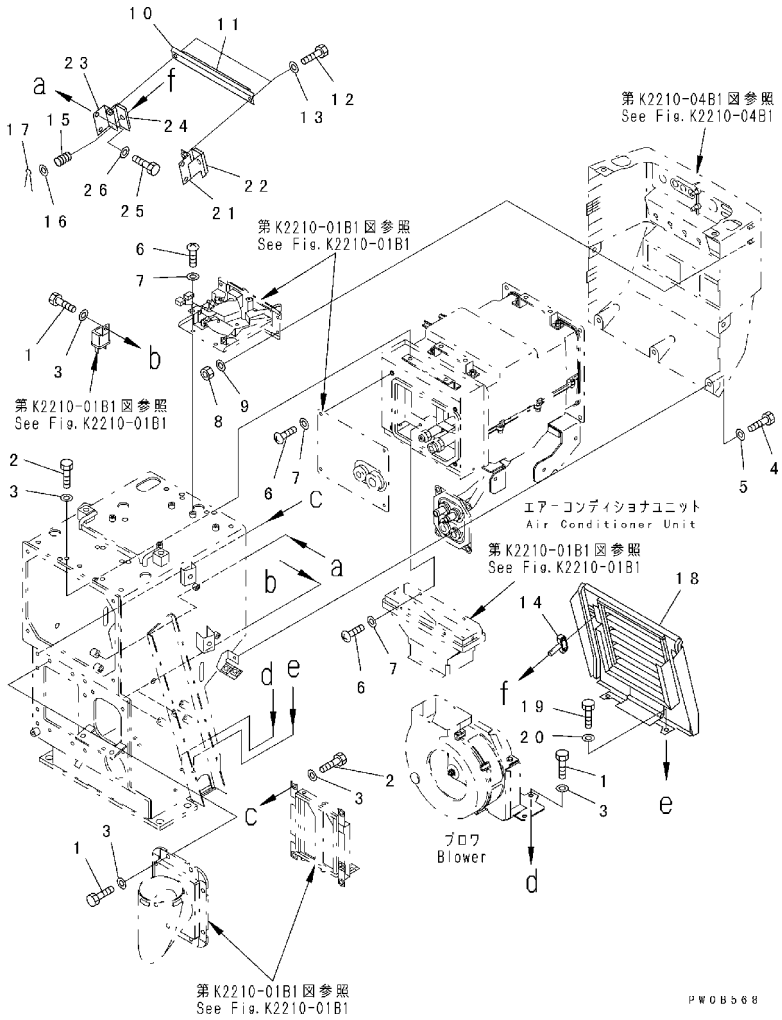

FIG. NO. : K2210-03B1

INDEX	PART NO.	DESCRIPTION	Q'TY	SERIAL NO.
1	01010-80816	BOLT	18	B30001-
2	01010-80820	BOLT	12	B30001-
3	01643-30823	WASHER	30	B30001-
4	01010-81020	BOLT	2	B30001-
5	01643-31032	WASHER	2	B30001-
6	01220-40610	SCREW	13	B30001-
7	01641-20608	WASHER	13	B30001-
8	01580-10605	NUT	4	B30001-
9	01641-20608	WASHER	4	B30001-
10	14X-911-8181	PLATE	1	B30001-
11	14X-911-8860	SHEET	1	B30001-
12	01010-80816	BOLT	2	B30001-
13	01643-30823	WASHER	2	B30001-
14	09459-11033	LOCK	2	B30001-
15	09459-01614	SPRING	2	B30001-
16	01642-21016	WASHER	2	B30001-
17	04050-13015	PIN	2	B30001-
18	14X-911-8143	COVER	1	B30001-
19	01010-80816	BOLT	2	B30001-
20	01643-30823	WASHER	2	B30001-
21	14X-911-8161	BRACKET, L. H.	1	B30001-
22	14X-911-8960	. SHEET	1	B30001-
23	14X-911-8171	BRACKET, R. H.	1	B30001-
24	14X-911-8960	. SHEET	1	B30001-
25	01010-80816	BOLT	4	B30001-
26	01643-30823	WASHER	4	B30001-

FIG. K2210-04B1 DASHBOARD (FOR AIR CONDITIONER AND HEATER)

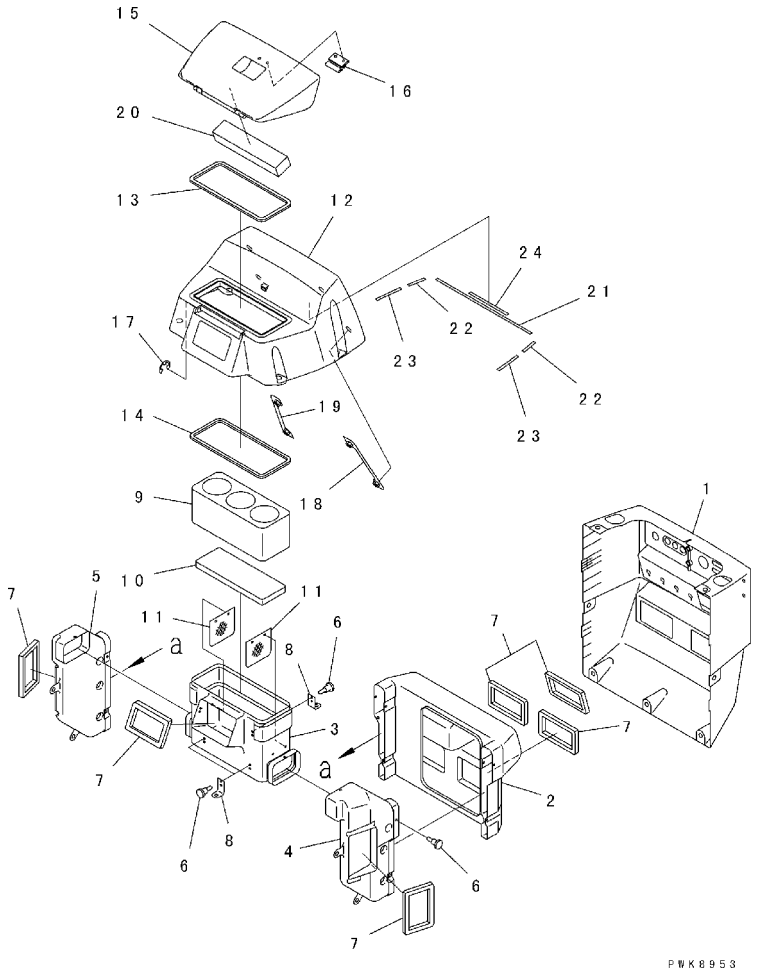

FIG. NO. : K2210-04B1

INDEX	PART NO.	DESCRIPTION	Q'TY	SERIAL NO.
1	134-54-68211	DASHBOARD ASS'Y	1	B30001-
	14X-54-18310	AIR DUCT ASS'Y	1	B30001-
2	14X-54-18320	. DUCT	1	B30001-
3	14X-54-18330	. DUCT	1	B30001-
4	14X-54-18340	. DUCT	1	B30001-
5	14X-54-18350	. DUCT	1	B30001-
6	14X-54-18360	. RIVET	24	B30001-
7	14X-54-18370	. SEAL	6	B30001-
8	14X-54-18390	. STAY	3	B30001-
9	14X-54-18410	. CUSHION	1	B30001-
10	14X-54-18420	. CUSHION	1	B30001-
11	14X-54-18460	NET	2	B30001-
	14X-54-18520	METER COVER ASS'Y	1	B30001-
12	14X-54-18510	. METER COVER	1	B30001-
13	14X-54-18571	. PACKING	1	B30001-
14	14X-54-18580	. SEAL	1	B30001-
15	14X-54-18530	. METER COVER CAP	1	B30001-
16	14X-54-18540	. LOCK ASS'Y	1	B30001-
17	14X-54-18551	. E-RING	1	B30001-
18	14X-54-19140	. PLATE, L. H.	1	B30001-
19	14X-54-19150	. PLATE, R. H.	1	B30001-
20	14X-54-18660	. CUSHION	1	B30001-
21	14X-54-18670	. FELT	1	B30001-
22	14X-54-18680	. FELT	2	B30001-
23	14X-54-18860	. FELT	2	B30001-
24	14X-54-18870	. FELT	1	B30001-

FIG. K2210-05B1 DASHBOARD (PANEL BOARD) (FOR AIR CONDITIONER AND HEATER)

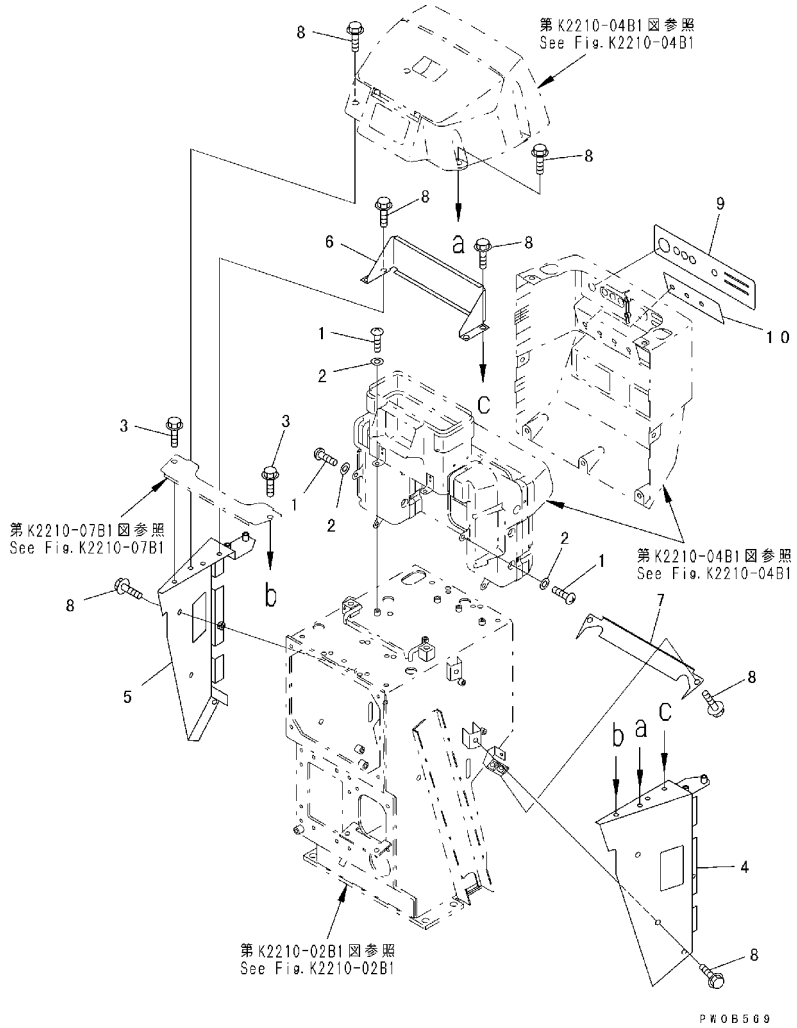

FIG. NO. : K2210-05B1

INDEX	PART NO.	DESCRIPTION	Q'TY	SERIAL NO.
1	01220-40610	SCREW	7	B30001-
2	01641-20608	WASHER	7	B30001-
3	01439-00814	BOLT	9	B30001-
4	14X-54-18610	COVER	1	B30001-
5	14X-54-18620	COVER	1	B30001-
6	14X-54-18630	COVER	1	B30001-
7	14X-54-18641	COVER	1	B30001-
8	01439-00814	BOLT	14	B30001-
9	134-54-68752	PANEL, (FOR AIR CONDITIONER)	1	B30001-
	134-54-68780	PANEL, (FOR HEATER)	1	B30001-
10	14X-54-18761	PANEL	1	B30001-

FIG. K2210-06B1 DASHBOARD (ACCESSORY) (FOR AIR CONDITIONER AND HEATER)

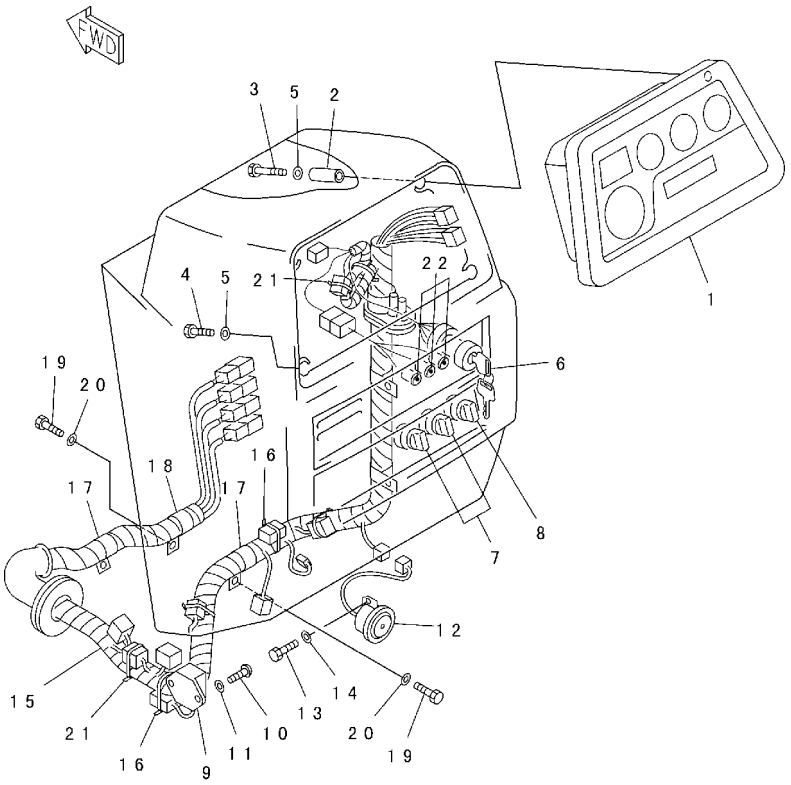

PJK8955

FIG. NO. : K2210-06B1

INDEX	PART NO.	DESCRIPTION	Q'TY	SERIAL NO.
1	(7831-68-1000)	PANEL ASS'Y, (SEE FIG.K2210-54A0)	1	B30001-
2	14X-06-12170	PIPE	2	B30001-
3	01010-80660	BOLT	2	B30001-
4	01010-80616	BOLT	2	B30001-
5	01643-30623	WASHER	4	B30001-
6	08086-10000	SWITCH	1	B30001-
	08086-10100	SWITCH, (FOR EU)	1	B30001-
7	14X-06-12160	SWITCH	2	B30001-
8	14X-06-12190	SWITCH	1	B30001-
9	14X-06-21550	TIMER, BI-METAL	1	B30001-
10	01220-40512	SCREW	2	B30001-
11	01641-20508	WASHER	2	B30001-
12	14X-06-22150	BUZZER ASS'Y	1	B30001-
13	01010-80612	BOLT	1	B30001-
14	01643-30623	WASHER	1	B30001-
15	124-06-64231	WIRING HARNESS	1	B30001-
16	08034-00519	BAND	4	B30001-
17	08035-03010	CLIP	4	B30001-
18	281-01-13180	CLIP	1	B30001-
19	01010-80816	BOLT	5	B30001-
20	01643-30823	WASHER	5	B30001-
21	08034-00519	BAND	2	B30001-
22	134-06-61611	LAMP ASS'Y	1	B30001-

FIG. K2210-07B1 DASHBOARD (MOUNT) (FOR AIR CONDITIONER AND HEATER)

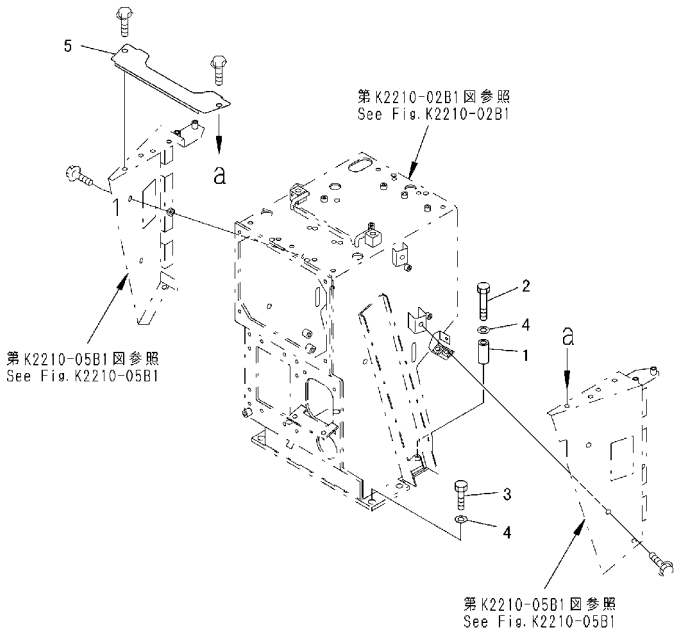

PW0B570

FIG. NO. : K2210-07B1

INDEX	PART NO.	DESCRIPTION	Q'TY	SERIAL NO.
1	195-979-5190	COLLAR	2	B30001-
2	01010-81285	BOLT	2	B30001-
3	01010-81235	BOLT	4	B30001-
4	01643-31232	WASHER	6	B30001-
5	14X-54-18650	COVER	1	B30001-

FIG. K2210-51B1 AIR CONDITIONER UNIT (EVAPORATOR AND RADIATOR)

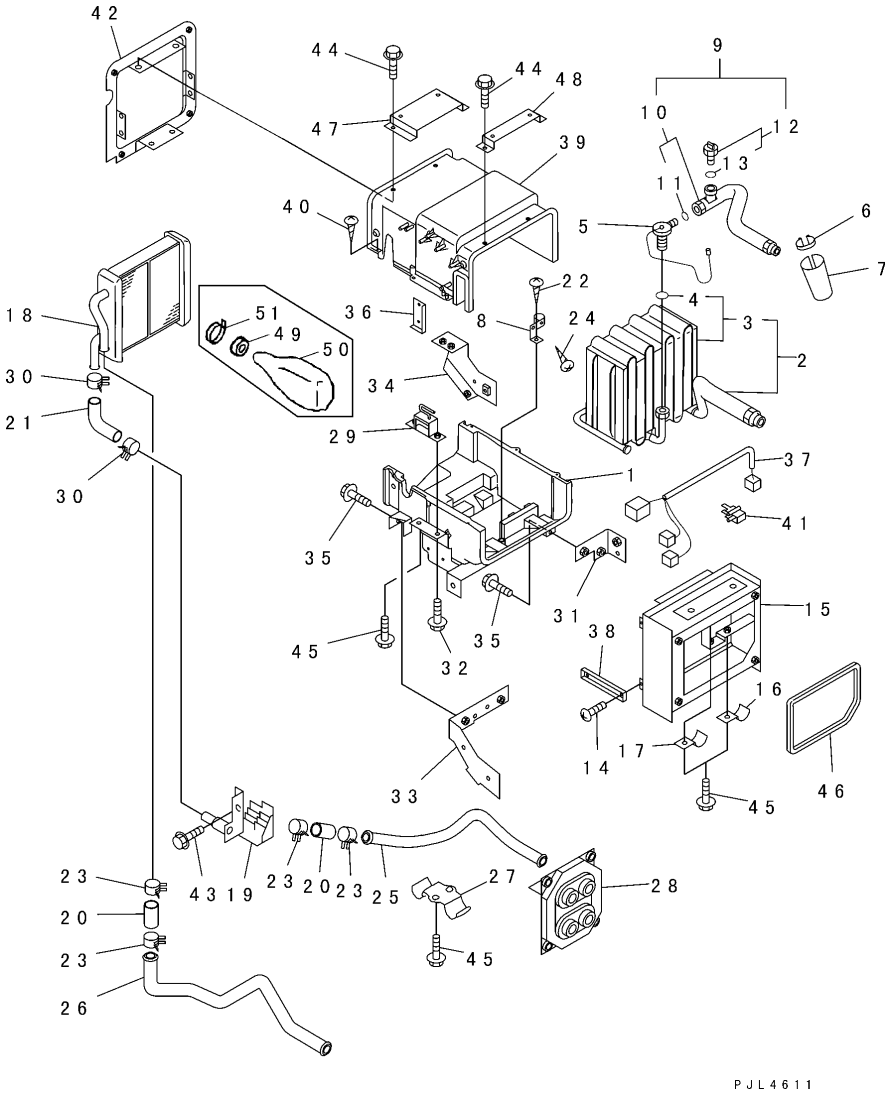

FIG. NO. : K2210-51B1

INDEX	PART NO.	DESCRIPTION	Q'TY	SERIAL NO.
	17A-911-7201	UNIT ASS'Y	1	B30171-
	17A-911-7200	UNIT ASS'Y	1	B30001-B30170
1	ND245420-7242	. CASE	1	B30001-
2	ND447600-6200	. EVAPORATOR ASS'Y	1	B30001-
3	ND447600-6240	. . EVAPORATOR	1	B30001-
4	ND949142-0020	. . . O-RING	1	B30001-
5	ND447500-0180	. VALVE	1	B30001-
6	ND145511-0040	. HOLDER	1	B30001-
7	ND146639-7250	. PACKING	1	B30001-
8	ND246680-2810	. CLAMP	1	B30001-
9	ND446870-9880	. TUBE	1	B30001-
10	ND446880-9140	. . TUBE	1	B30001-
11	ND949142-0010	. . . O-RING	1	B30001-
12	ND443440-0030	. . SWITCH	1	B30001-
13	ND949142-0040	. . . O-RING	1	B30001-
14	ND949001-2690	. SCREW	8	B30001-
15	ND245420-7250	. CASE	1	B30001-
16	ND146780-9270	. CLAMP	1	B30001-
17	ND146780-2610	. CLAMP	1	B30001-
18	ND116420-3970	. CORE	1	B30001-
19	ND113600-8321	. VALVE	1	B30001-
20	ND7052-200450	. HOSE	2	B30001-
21	ND017264-7040	. HOSE	1	B30001-
22	ND90930-05161	. SCREW	1	B30001-
23	ND949351-0720	. CLAMP	4	B30001-
24	ND90940-05121	. SCREW	1	B30001-
25	ND017451-0500	. PIPE	1	B30001-
26	ND017451-0510	. PIPE	1	B30001-
27	ND246781-0060	. CLAMP	1	B30001-
28	ND146640-6860	PLATE	1	B30001-
29	ND113550-0650	. THERMOSTAT	1	B30001-
30	ND949351-0860	. CLIP	2	B30001-
31	ND145460-9391	. BRACKET	1	B30001-
32	ND91370-04101	. SCREW	2	B30001-
33	ND245450-0620	. CASE	1	B30001-
34	ND245450-0630	. CASE	1	B30001-
35	ND91478-08161	. BOLT	6	B30001-
36	ND113622-0220	. COVER	1	B30001-
37	ND146421-9060	. WIRE	1	B30001-
38	ND146691-2790	. CLAMP	2	B30001-
39	ND245420-3551	. CASE	1	B30001-
40	ND949001-1730	. SCREW	6	B30001-

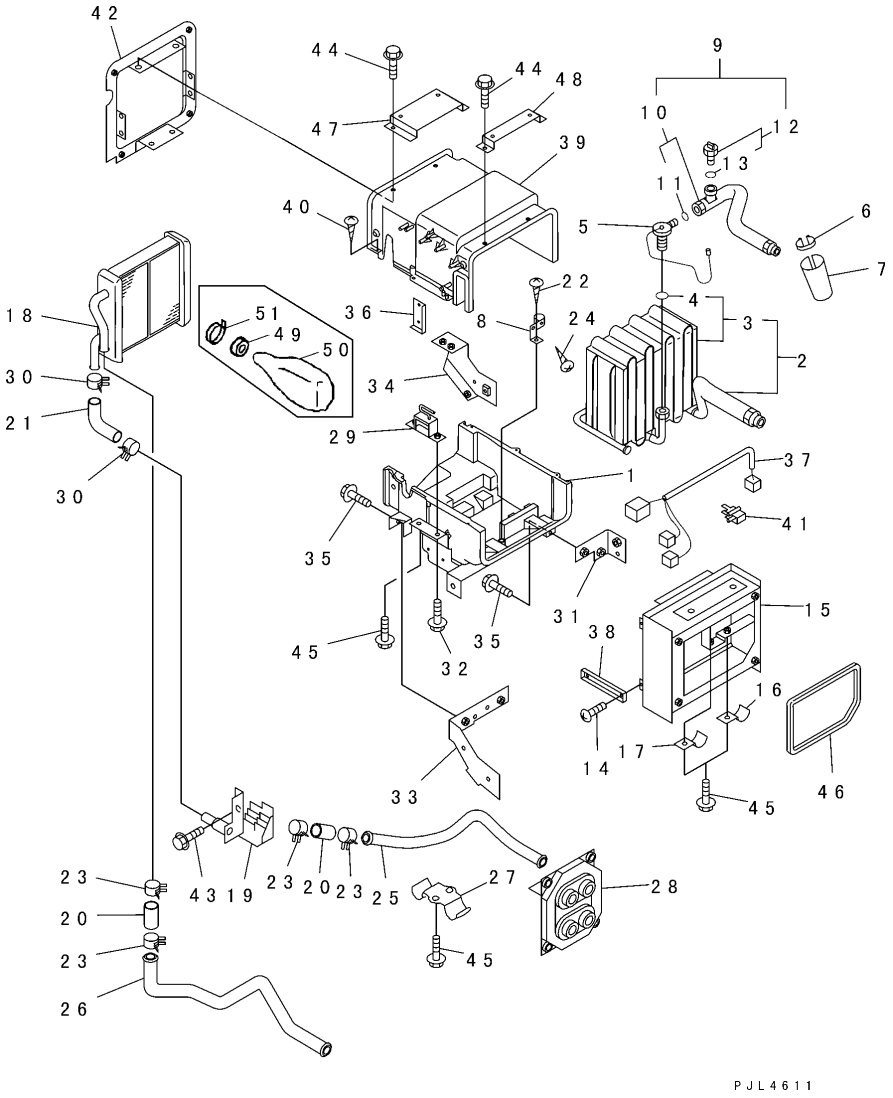

FIG. NO. : K2210-51B1

INDEX	PART NO.	DESCRIPTION	Q'TY	SERIAL NO.
41	ND146690-5360	. CLAMP	1	B30001-
42	ND245450-0640	. CASE	1	B30001-
43	ND91570-06101	. BOLT	2	B30001-
44	ND91570-06201	. BOLT	4	B30001-
45	ND91570-06141	. BOLT	6	B30001-
46	ND146668-4880	. PACKING	1	B30001-
47	ND145460-9400	. BRACKET	1	B30001-
48	ND145460-9410	. BRACKET	1	B30001-
49	195-911-8160	. SHEET	1	B30171-
50	195-911-8180	. COVER	1	B30171-
51	08034-20310	. BAND	1	B30171-

FIG. K2210-53A1 HEATER BLOWER (FOR AIR CONDITIONER OR HEATER)

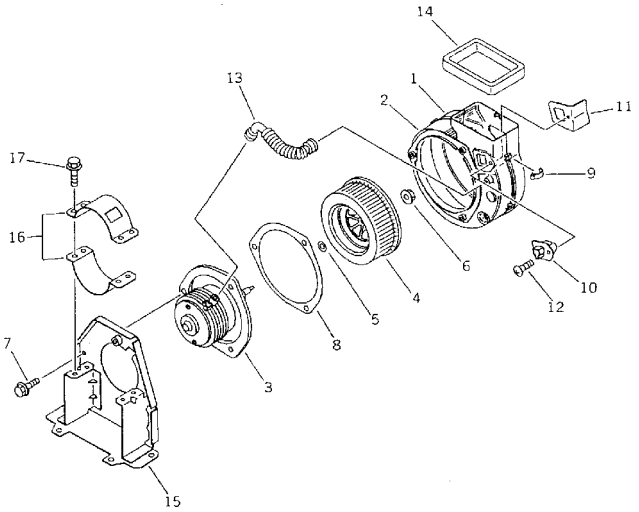

FIG. NO. : K2210-53A1

INDEX	PART NO.	DESCRIPTION	Q'TY	SERIAL NO.
		THE DENSO PART NUMBER IS THAT ND IS REMOVED FROM KOMATSU PART NUMBER LISTED BELOW.		
	14X-911-7501	BLOWER ASS'Y	1	B30001-
1	ND140240-0651	. CASE	1	B30001-
2	ND140240-1090	. CASE	1	B30001-
3	ND292500-0140	. MOTOR	1	B30001-
4	17M-911-3370	. FAN	1	B30001-
5	ND949011-7650	. WASHER	1	B30001-
6	ND949056-2230	. NUT	1	B30001-
7	ND949047-4120	. SCREW	3	B30001-
8	195-Z11-5560	. PACKING	1	B30001-
9	ND116632-0171	. SPRING	6	B30001-
10	ND146810-8810	. RESISTOR	1	B30001-
11	ND040055-2890	. PLATE	1	B30001-
12	ND90940-04121	. SCREW	1	B30001-
13	17M-911-3320	. PIPE	1	B30001-
14	ND040016-4780	. INSULATOR	1	B30001-
15	ND145460-8150	. BRACKET	1	B30001-
16	ND145461-7530	. BRACKET	2	B30001-
17	ND90100-06161	. BOLT	4	B30001-

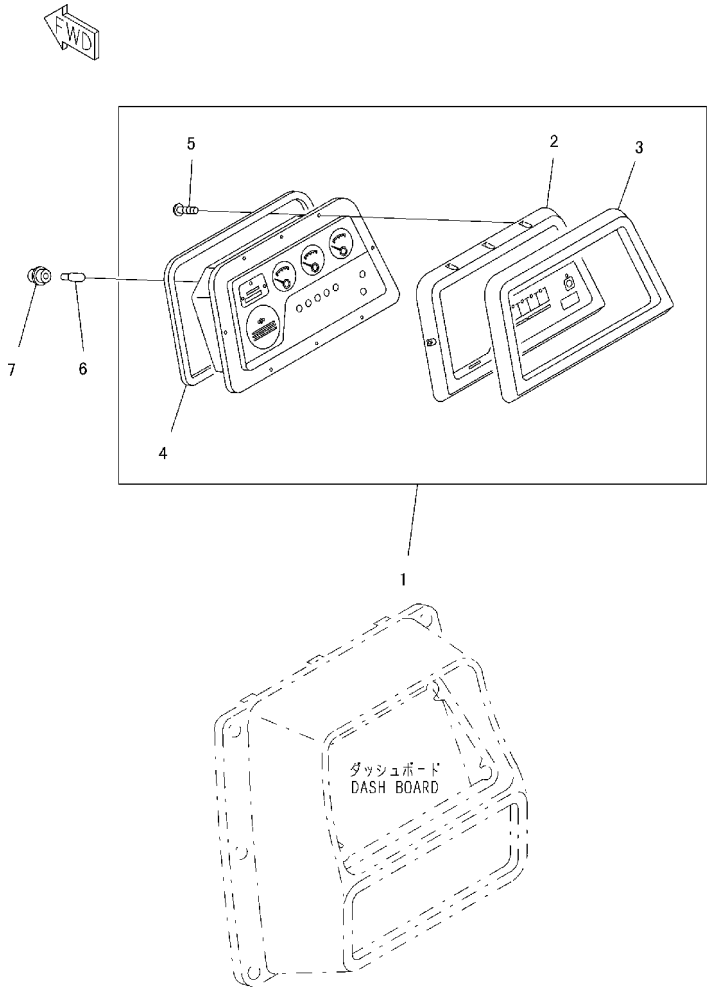

INDEX	PART NO.	DESCRIPTION	Q'TY	SERIAL NO.
1	7831-68-1100	MONITOR PANEL ASS'Y	1	B30001-
2	7831-68-1300	. PLATE	1	B30001-
3	7831-68-1400	. BEZEL	1	B30001-
4	7831-68-1510	. GASKET	1	B30001-
5	7831-68-1610	. SCREW	8	B30001-
6	7815-11-1010	BULB, 1. 4W	5	B30001-
7	7861-01-1320	SOCKET	5	B30001-

FIG. K2212-01A0 HIGH MOUNT FOOT REST

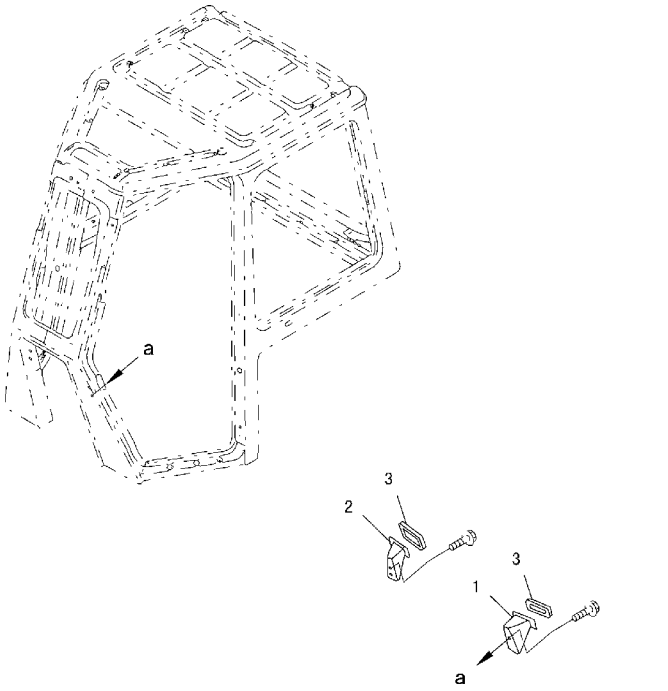

FIG. NO. : K2212-01A0

INDEX	PART NO.	DESCRIPTION	Q'TY	SERIAL NO.
1	14X-911-5711	BRACKET, L.H.	1	B30001-
2	14X-911-5721	BRACKET, R.H.	1	B30001-
3	203-43-56450	CAP, PEDAL	2	B30001-

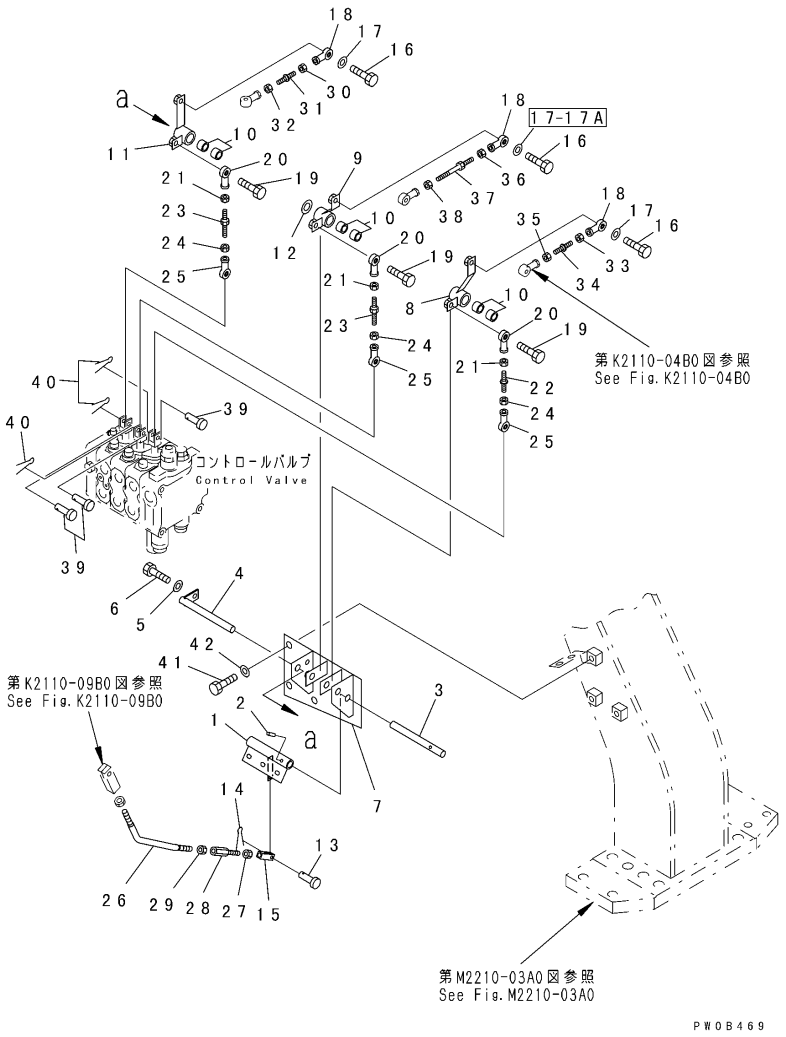

INDEX	PART NO.	DESCRIPTION	Q'TY	SERIAL NO.
1	124-43-64210	LEVER	1	B30001-
2	124-43-54270	PIN	1	B30001-
3	124-43-54222	PIN	1	B30001-
4	134-43-64230	PIN	1	B30001-
5	01643-50823	WASHER	1	B30001-
6	01010-80830	BOLT	1	B30001-
7	134-43-64510	BRACKET	1	B30001-
8	124-43-54182	LEVER	1	B30001-
9	124-43-54193	LEVER	1	B30001-
10	06123-01414	BEARING	6	B30001-
11	124-43-54142	LEVER	1	B30001-
12	134-43-64240	SHIM	3	B30001-
13	04205-10622	PIN	1	B30001-
	04205-10618	PIN	1	B30001-B30000
14	04050-11612	PIN	1	B30001-
15	124-43-54340	YOKE	1	B30001-
16	01010-80830	BOLT	3	B30001-
17	01643-30823	WASHER	2	B30223-
	01643-30823	WASHER	3	B30001-B30222
17A	04254-10823	SPACER	1	B30223-
18	04250-80847	END	3	B30001-
19	01010-80830	BOLT	3	B30001-
20	04250-80847	END	3	B30001-
21	01580-10806	NUT	3	B30001-
22	205-43-72920	BOLT	1	B30001-
23	581-43-11870	ROD	2	B30001-
24	01508-40805	NUT	3	B30001-
25	04250-90847	END	3	B30001-
26	134-43-64260	ROD	1	B30001-
27	01580-11008	NUT	1	B30001-
28	198-43-41940	ROD	1	B30001-
29	01508-41006	NUT	1	B30001-
30	01580-10806	NUT	1	B30001-
31	205-43-72920	BOLT	1	B30001-
32	01508-40805	NUT	1	B30001-
33	01580-10806	NUT	1	B30001-
34	205-43-72920	BOLT	1	B30001-
35	01508-40805	NUT	1	B30001-
36	01580-10806	NUT	1	B30001-
37	04248-30810	ROD	1	B30001-
38	01508-40805	NUT	1	B30001-
39	124-43-54390	PIN	3	B30001-
40	04050-12015	PIN	3	B30001-

FIG. K2241-01A0 BLADE CONTROL SYSTEM

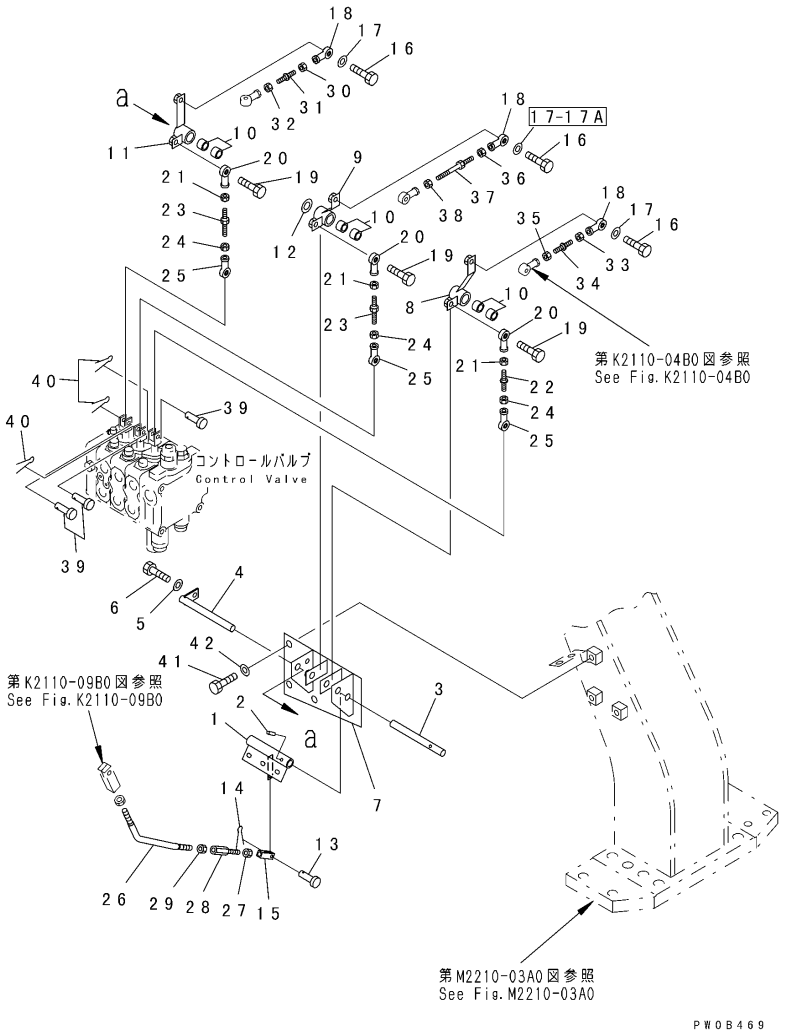

FIG. NO. : K2241-01A0

INDEX	PART NO.	DESCRIPTION	Q'TY	SERIAL NO.
41	01010-81220	BOLT	3	B30001-
42	01643-31232	WASHER	3	B30001-

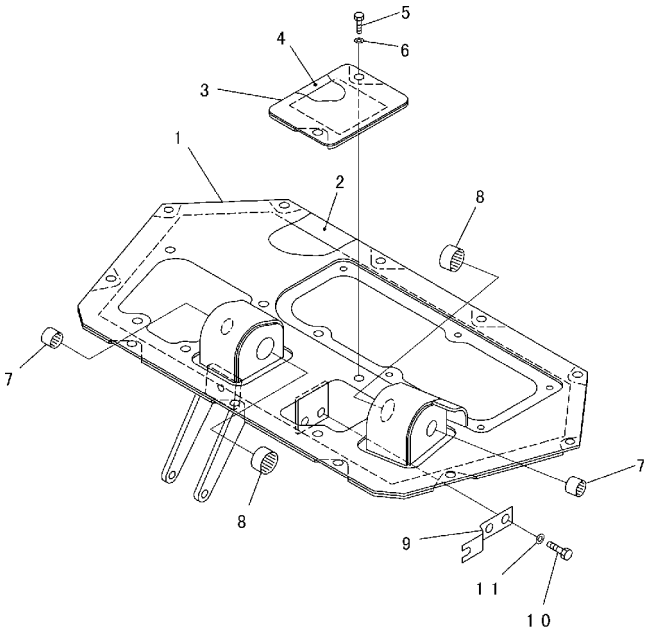

PW088686

INDEX	PART NO.	DESCRIPTION	Q'TY	SERIAL NO.
1	124-43-62311	FLOOR	1	B30001-
2	14X-43-12360	. SHEET	1	B30001-
3	14X-43-12350	COVER	1	B30001-
4	14X-43-12390	. SHEET	1	B30001-
5	01010-81230	BOLT	2	B30001-
6	01643-31232	WASHER	2	B30001-
7	06124-02020	BEARING	1	B30001-
8	06124-03020	BEARING	1	B30001-
9	134-43-68260	PLATE	1	B30001-
10	01010-81225	BOLT	2	B30001-
11	01643-31232	WASHER	2	B30001-

FIG. K2400-02A0 FLOOR (BRAKE PEDAL) (WITH DECELERATOR PEDAL)

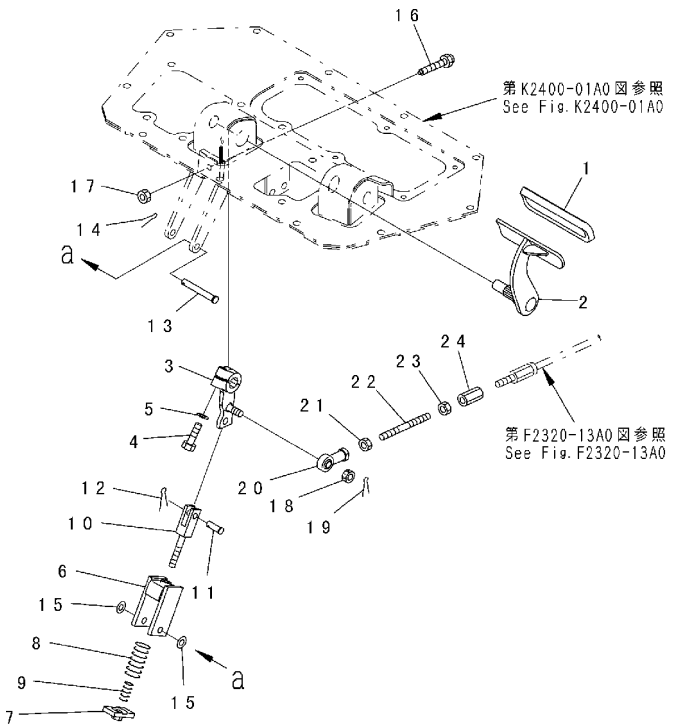

PW06687

FIG. NO. : K2400-02A0

INDEX	PART NO.	DESCRIPTION	Q'TY	SERIAL NO.
1	14X-43-12110	CAP	1	B30001-
2	134-43-62320	PEDAL	1	B30001-
3	124-43-63510	LEVER	1	B30001-
4	01010-81245	BOLT	1	B30001-
5	01643-51232	WASHER	1	B30001-
6	14X-43-12251	HOLDER	1	B30001-
7	14X-43-12260	PLATE	1	B30001-
8	700-84-11660	SPRING, (L= 68.9)	1	B30001-
9	205-43-51470	SPRING, (L= 47.9)	1	B30001-
10	14X-43-12270	ROD	1	B30001-
11	04205-11238	PIN	1	B30001-
12	04050-13022	PIN	1	B30001-
13	14X-43-11270	PIN	1	B30001-
14	04050-13022	PIN	1	B30001-
15	01641-21223	WASHER	2	B30001-
16	09311-41237	BUMPER	1	B30001-
17	01580-11210	NUT	1	B30001-
18	01593-31411	NUT	1	B30001-
19	04050-13022	PIN	1	B30001-
20	04250-81474	END	1	B30001-
21	01582-11411	NUT	1	B30001-
22	14X-43-12410	ROD	1	B30001-
23	01508-41408	NUT	1	B30001-
24	17A-43-24160	JOINT	1	B30001-

FIG. K2400-03A0 FLOOR (DECELERATOR PEDAL) (WITH DECELERATOR PEDAL)

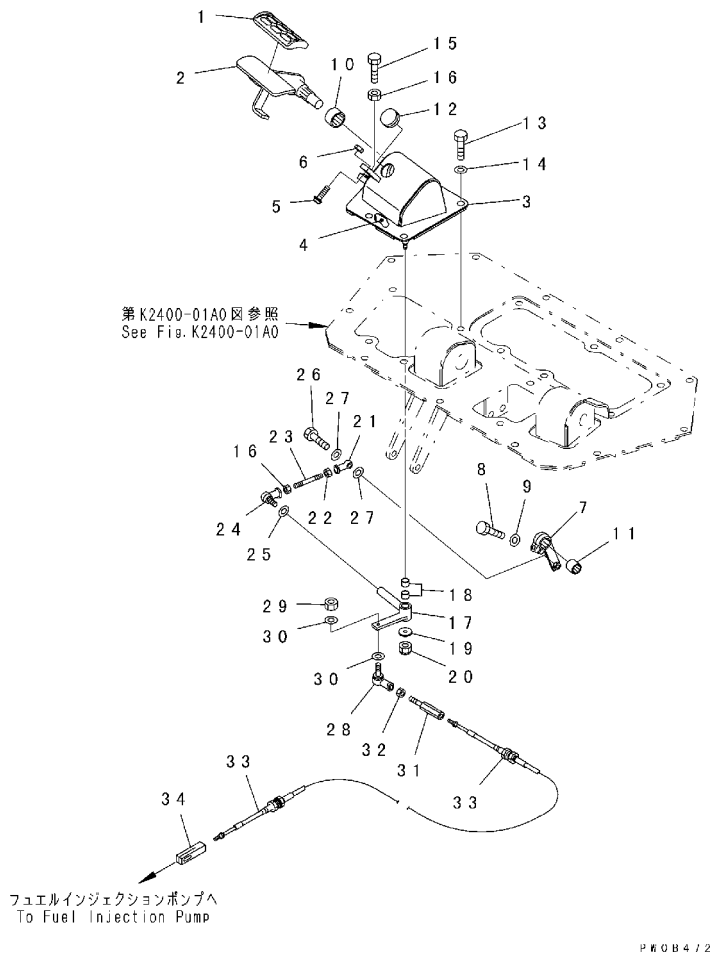

FIG. NO. : K2400-03A0

INDEX	PART NO.	DESCRIPTION	Q'TY	SERIAL NO.
1	14X-43-13760	CAP, PEDAL	1	B30001-
2	134-43-62431	PEDAL	1	B30001-
3	134-43-62421	BRACKET	1	B30001-
4	14X-43-12380	. SHEET	1	B30001-
5	09311-41237	BUMPER	1	B30001-
6	01580-11210	NUT	1	B30001-
7	124-43-55160	LEVER	1	B30001-
8	01010-80830	BOLT	1	B30001-
9	01643-30823	WASHER	1	B30001-
10	06124-03020	BEARING	1	B30001-
11	06124-02020	BEARING	1	B30001-
12	09415-02512	CAP	1	B30001-
13	01010-51230	BOLT	4	B30001-
14	01643-31232	WASHER	4	B30001-
15	01016-50830	BOLT	1	B30001-
16	01580-10806	NUT	2	B30001-
17	14X-43-13722	LEVER	1	B30001-
18	09350-01415	BUSHING	2	B30001-
19	113-43-23230	WASHER	1	B30001-
20	01598-00809	NUT	1	B30001-
21	04250-80847	END	1	B30001-
22	01580-10806	NUT	1	B30001-
23	04245-40805	ROD	1	B30001-
24	04256-40817	JOINT	1	B30001-
25	01643-30823	WASHER	1	B30001-
26	01010-80830	BOLT	1	B30001-
27	041256-50615	JOINT	1	B30001-
29	01580-10605	NUT	1	B30001-
30	01641-20608	WASHER	2	B30001-
31	14Z-43-12891	ROD	1	B30001-
32	01508-40603	NUT	1	B30001-
33	124-43-61730	CABLE	1	B30001-
34	14X-43-13790	JOINT	1	B30001-

FIG. K2400-04A0 FLOOR (INCHING PEDAL) (WITH DECELERATOR PEDAL)

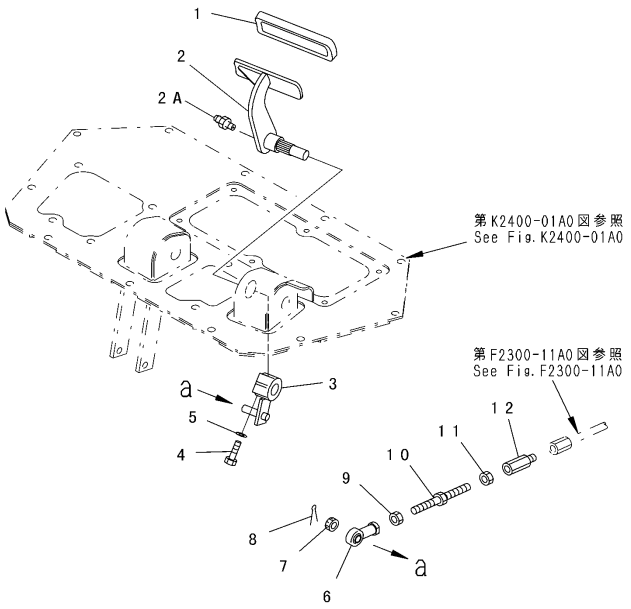

PW0A373

FIG. NO. : K2400-04A0

INDEX	PART NO.	DESCRIPTION	Q'TY	SERIAL NO.
1	14X-43-13760	CAP, PEDAL	1	B30001-
2	12G-43-51550	PEDAL	1	B30001-
2A	07020-00900	FITTING	1	B30001-
3	124-43-52631	LEVER	1	B30001-
4	01010-81245	BOLT	1	B30001-
5	01643-31232	WASHER	1	B30001-
6	04250-91474	END	1	B30001-
7	01593-31411	NUT	1	B30001-
8	04050-13022	PIN	1	B30001-
9	01508-41408	NUT	1	B30001-
10	04248-31415	ROD	1	B30001-
11	01582-11411	NUT	1	B30001-
12	17A-43-24170	JOINT	1	B30001-

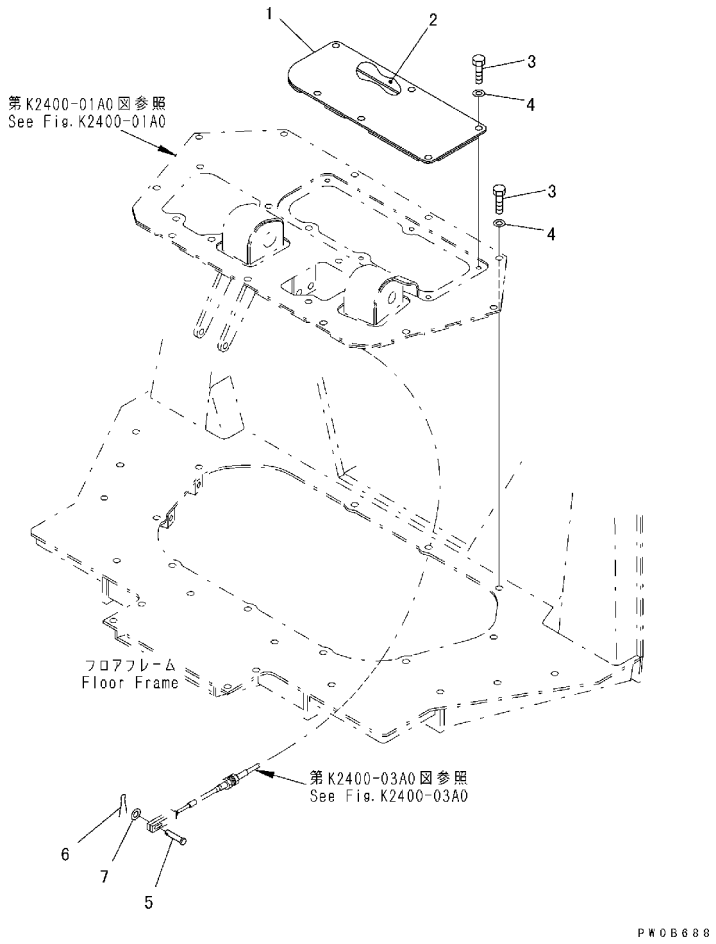

FIG. NO. : K2400-05A0

INDEX	PART NO.	DESCRIPTION	Q'TY	SERIAL NO.
1	134-43-62380	COVER	1	B30001-
2	134-43-62390	. SHEET	1	B30001-
3	01010-81230	BOLT	17	B30001-
4	01643-31232	WASHER	17	B30001-
5	04205-10625	PIN	1	B30001-
6	04050-11612	PIN	1	B30001-
7	01643-30623	WASHER	1	B30001-

FIG. K2500-01A0 ARM REST COVER (UPPER)

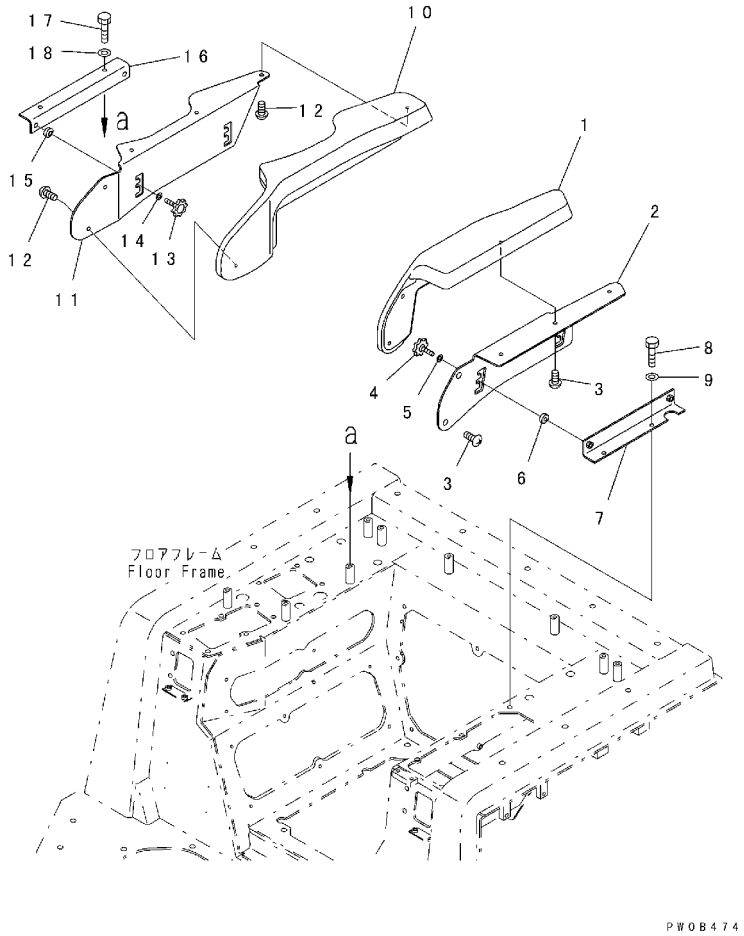

FIG. NO. : K2500-01A0

INDEX	PART NO.	DESCRIPTION	Q'TY	SERIAL NO.
1	134-54-66112	ARM REST, L.H.	1	B30001-
2	134-54-66132	PLATE, L. H.	1	B30187-
	134-54-66131	PLATE, L. H.	1	B30001-B30186
3	01236-40816	SCREW	5	B30001-
4	195-54-68760	KNOB	2	B30001-
5	01643-31032	WASHER	2	B30001-
6	134-54-66180	SPACER	2	B30001-
7	134-54-66152	BRACKET, L.H.	1	B30001-
8	01010-81030	BOLT	2	B30001-
9	01643-31032	WASHER	2	B30001-
10	19M-54-38570	ARM REST, R.H.	1	B30001-
11	19M-54-36470	PLATE, R.H.	1	B30001-
12	01236-40816	SCREW	5	B30001-
13	195-54-68760	KNOB	2	B30001-
14	01643-31032	WASHER	2	B30001-
15	134-54-66180	SPACER	2	B30001-
16	134-54-66161	BRACKET, R.H.	1	B30001-
17	01010-81025	BOLT	2	B30001-
18	01643-31032	WASHER	2	B30001-

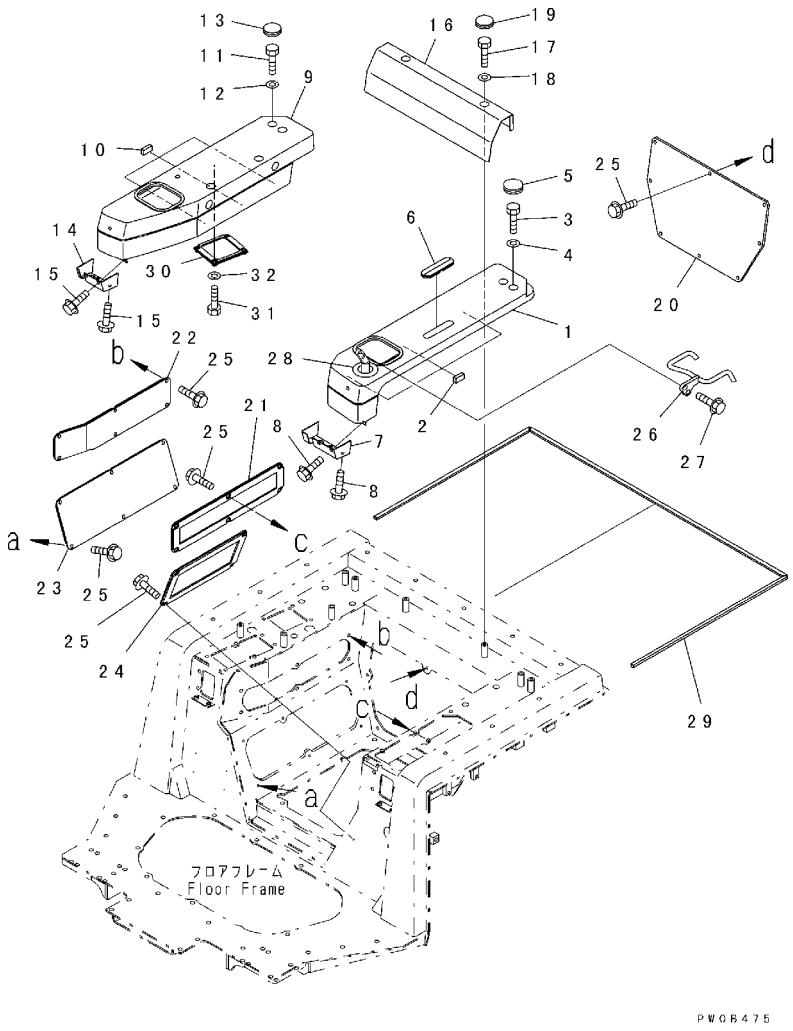

FIG. NO. : K2500-02A0

INDEX	PART NO.	DESCRIPTION	Q'TY	SERIAL NO.
1	134-54-68121	COVER, L. H.	1	B30001-
2	17A-54-16881	. SHEET	1	B30001-
3	01010-81020	BOLT	2	B30001-
4	01643-31032	WASHER	2	B30001-
5	09415-02512	CAP	2	B30001-
6	134-54-68161	GROMMET	1	B30001-
7	14X-54-16442	COVER, L. H.	1	B30001-
8	01439-00814	BOLT	4	B30001-
9	124-54-68130	COVER, R. H.	1	B30001-
10	17A-15-16881	. SHEET	3	B30001-
11	01010-81020	BOLT	2	B30001-
12	01643-31032	WASHER	2	B30001-
13	09415-02512	CAP	2	B30001-
14	14X-54-16452	COVER, R. H.	1	B30001-
15	01439-00814	BOLT	4	B30001-
16	14X-54-16481	COVER	1	B30001-
17	01010-81020	BOLT	2	B30001-
18	01643-31032	WASHER	2	B30001-
19	09415-02512	CAP	2	B30001-
20	124-54-64620	COVER	1	B30001-
21	134-54-65121	COVER	1	B30001-
	134-54-65140	. COVER	1	B30001-
22	14X-54-16143	COVER	1	B30001-
	14X-54-16183	. SEAL	1	B30001-
23	14X-54-16153	COVER	1	B30001-
	14X-54-16193	. SEAL	1	B30001-
24	14X-54-26410	COVER	1	B30001-
	14X-54-26380	. SEAL	1	B30001-
25	01439-00820	BOLT	32	B30001-
26	134-54-66211	HANDLE	1	B30001-
27	01439-01025	BOLT	2	B30001-
28	14X-54-16660	GROMMET	1	B30001-
29	14X-54-16230	SEAL	1	B30001-
30	14X-43-14180	SPACER	4	B30001-
	14X-54-16270	. SEAL	1	B30001-
31	01010-80825	BOLT	4	B30001-
32	01643-30823	WASHER	4	B30001-

FIG. K2500-02A2 ARM REST COVER (LOWER) (REGULATION OF EC INCLUSION)

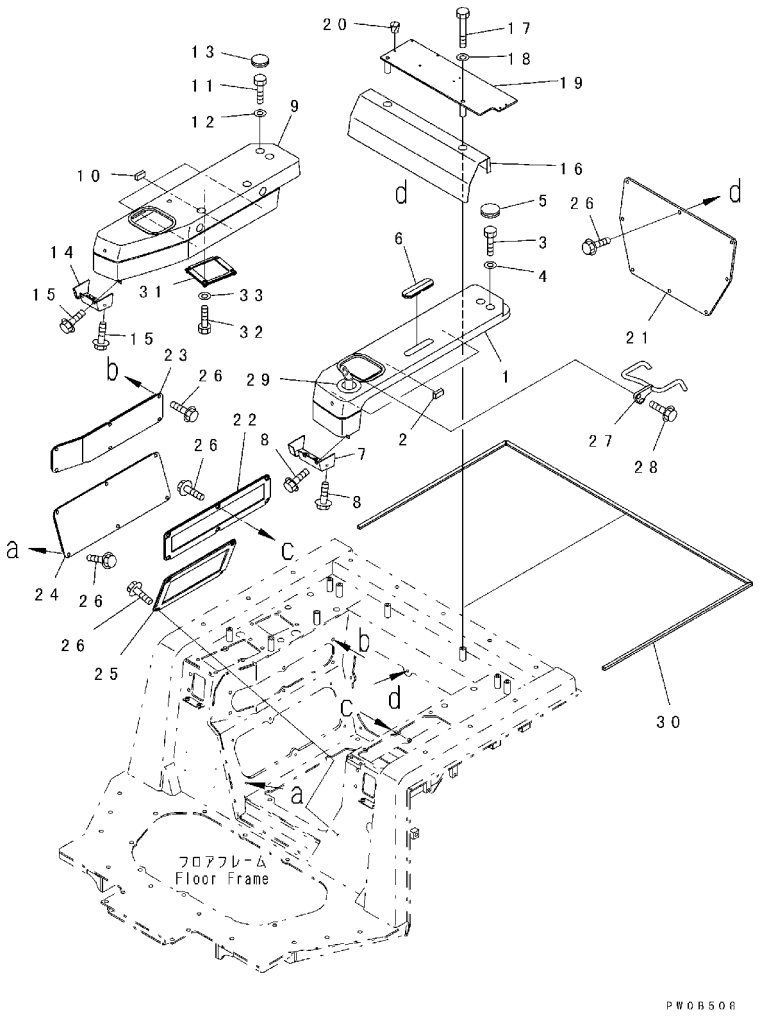

FIG. NO. : K2500-02A2

INDEX	PART NO.	DESCRIPTION	Q'TY	SERIAL NO.
1	134-54-68121	COVER, L. H.	1	B30001-
2	17A-54-16881	. SHEET	1	B30001-
3	01010-81020	BOLT	2	B30001-
4	01643-31032	WASHER	2	B30001-
5	09415-02512	CAP	2	B30001-
6	134-54-68161	GROMMET	1	B30001-
7	14X-54-16442	COVER, L. H.	1	B30001-
8	01439-00814	BOLT	4	B30001-
9	124-54-68130	COVER, R. H.	1	B30001-
10	17A-54-16881	. SHEET	1	B30001-
11	01010-81020	BOLT	2	B30001-
12	01643-31032	WASHER	2	B30001-
13	09415-02512	CAP	2	B30001-
14	14X-54-16452	COVER, R. H.	1	B30001-
15	01439-00814	BOLT	4	B30001-
16	14X-54-16481	COVER	1	B30001-
17	01010-81080	BOLT	2	B30001-
18	01643-31032	WASHER	2	B30001-
19	14X-A62-1690	BRACKET	1	B30001-
20	07049-00608	PLUG	8	B30001-
21	124-54-64620	COVER	1	B30001-
22	134-54-65121	COVER	1	B30001-
23	14X-54-16143	COVER	1	B30001-
24	14X-54-16153	COVER	1	B30001-
25	14X-54-26410	COVER	1	B30001-
26	01439-00820	BOLT	32	B30001-
27	134-54-66211	HANDLE	1	B30001-
28	01439-01025	BOLT	2	B30001-
29	14X-54-16660	GROMMET	1	B30001-
30	14X-54-16230	SEAL	1	B30001-
31	14X-43-14141	COVER	1	B30001-
32	01010-80825	BOLT	4	B30001-
33	01643-30823	WASHER	4	B30001-

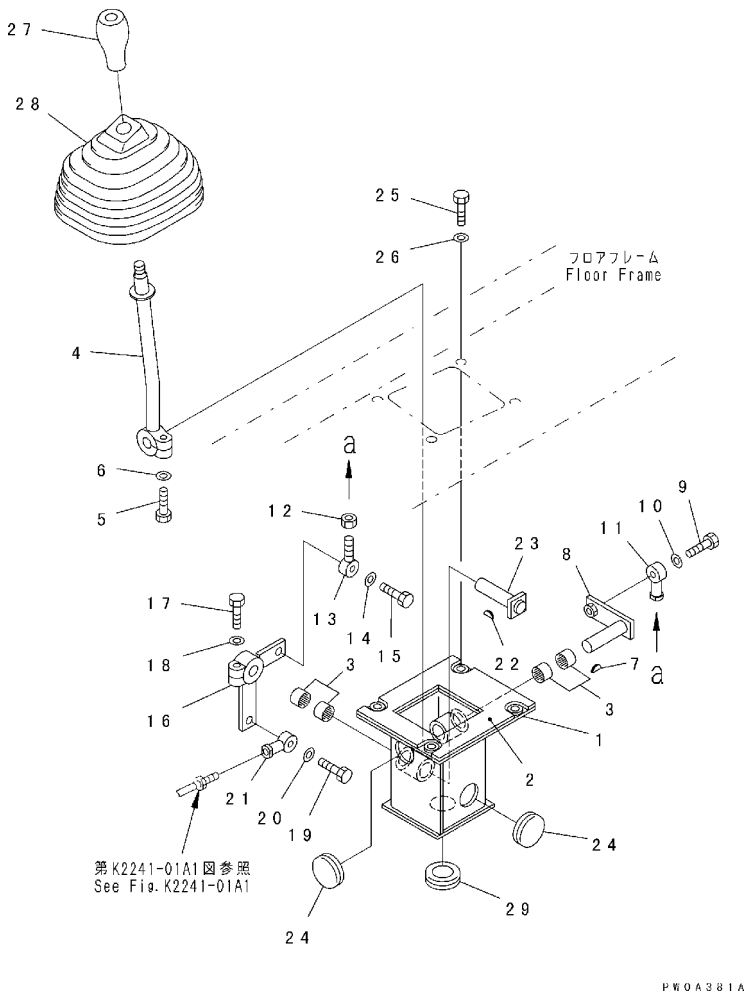

FIG. NO. : K2520-01A1

INDEX	PART NO.	DESCRIPTION	Q'TY	SERIAL NO.
1	124-78-54140	BRACKET	1	B30001-
2	124-78-54180	. SHEET	1	B30001-
3	06123-01414	BEARING	4	B30001-
4	124-78-54110	LEVER	1	B30001-
5	01010-80830	BOLT	1	B30001-
6	01643-30823	WASHER	1	B30001-
7	04010-00516	KEY	1	B30001-
8	124-78-54120	PIN	1	B30001-
9	01010-80830	BOLT	1	B30001-
10	01643-30823	WASHER	1	B30001-
11	04250-80847	END	1	B30001-
12	01580-10806	NUT	1	B30001-
13	04252-20853	END	1	B30001-
14	01643-30823	WASHER	1	B30001-
15	01010-80830	BOLT	1	B30001-
16	124-78-54130	LEVER	1	B30001-
17	01010-80830	BOLT	1	B30001-
18	01643-30823	WASHER	1	B30001-
19	01010-80830	BOLT	1	B30001-
20	01643-50830	WASHER	1	B30001-
21	04250-90847	END	1	B30001-
22	04010-00516	KEY	1	B30001-
23	124-78-54170	PIN	1	B30001-
24	09415-02512	CAP	2	B30001-
25	01010-80830	BOLT	4	B30001-
26	01643-30823	WASHER	4	B30001-
27	14Z-43-11310	KNOB	1	B30001-
28	14X-43-11320	BOOT	1	B30001-
29	09415-02512	CAP, (WITH CAB)	1	B30001-

FIG. K2910-01A0 WINDOW WASHER TANK

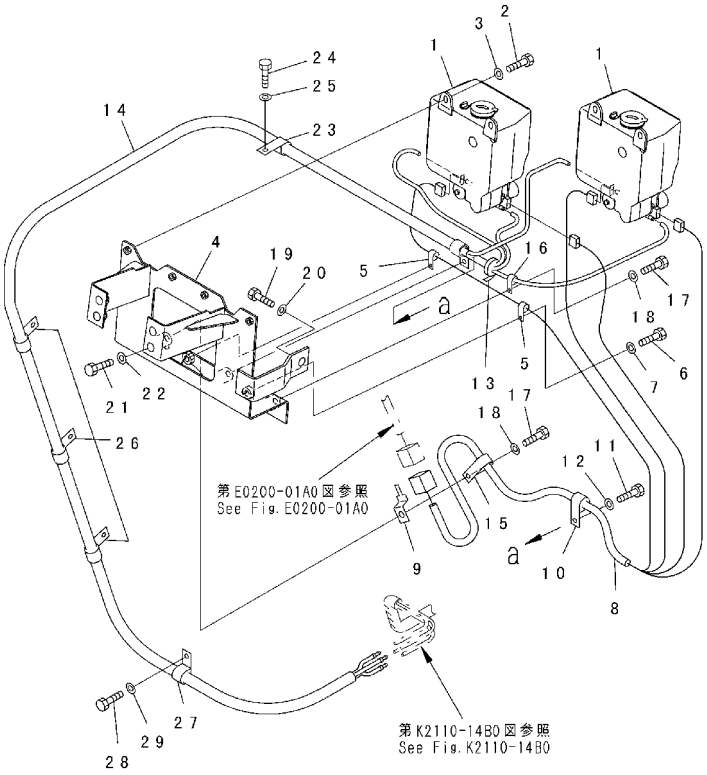

FIG. NO. : K2910-01A0

INDEX	PART NO.	DESCRIPTION	Q'TY	SERIAL NO.
1	14X-911-1160	WASHER TANK	2	B30001-
2	01010-80616	BOLT	4	B30001-
3	01643-30623	WASHER	4	B30001-
4	124-Z11-1340	BRACKET	1	B30001-
5	04434-51010	CLIP	2	B30001-
6	01010-81016	BOLT	2	B30001-
7	01643-31032	WASHER	2	B30001-
8	14X-06-14210	WIRING HARNESS	1	B30001-
9	08053-00910	CLIP	1	B30001-
10	04434-51210	CLIP	2	B30001-
11	01010-81016	BOLT	1	B30001-
12	01643-31032	WASHER	1	B30001-
13	08034-00519	BAND	1	B30001-
14	124-Z11-1330	HOSE ASS'Y	1	B30001-
15	04434-51410	CLIP	1	B30001-
16	04434-50810	CLIP	1	B30001-
17	01010-81016	BOLT	2	B30001-
18	01643-31032	WASHER	2	B30001-
19	01010-81220	BOLT	1	B30001-
20	01643-31232	WASHER	1	B30001-
21	01010-81225	BOLT	4	B30001-
22	01643-31232	WASHER	4	B30001-
23	04434-51910	CLIP	1	B30001-
24	01010-81016	BOLT	1	B30001-
25	01643-31032	WASHER	1	B30001-
26	04434-51910	CLIP	3	B30001-
27	04434-51910	CLIP	1	B30001-
28	01010-81016	BOLT	1	B30001-
29	01643-31032	WASHER	1	B30001-

GUARD

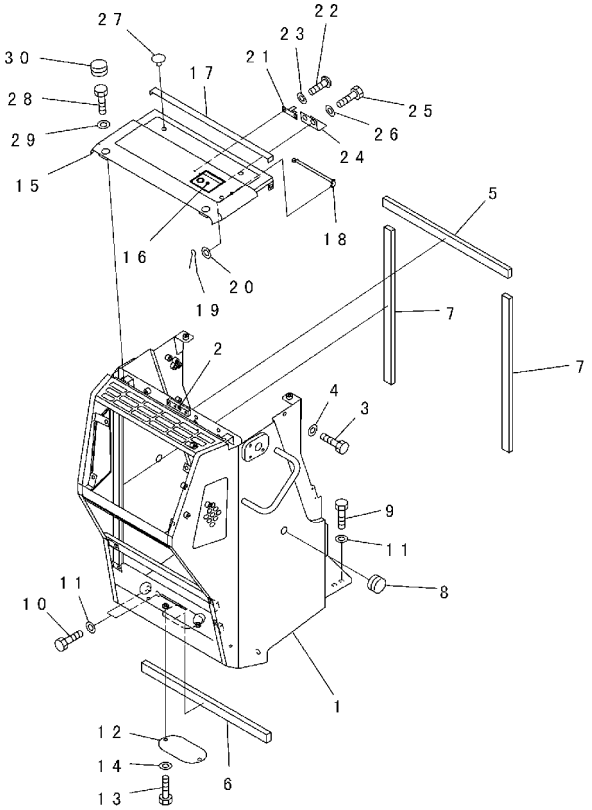

PWOB478

INDEX	PART NO.	DESCRIPTION	Q'TY	SERIAL NO.
1	124-54-61112	GUARD ASS'Y	1	B30001-
2	124-54-51350	PLATE	1	B30001-
3	01010-81225	BOLT	1	B30001-
4	01643-31232	WASHER	1	B30001-
5	124-54-61160	SHEET	1	B30001-
6	124-54-51410	SHEET	1	B30001-
7	124-54-61171	SHEET	2	B30222-
	124-54-61170	SHEET	2	B30001-B30221
8	09415-02512	CAP	1	B30001-
9	01010-81645	BOLT	4	B30001-
10	01010-81655	BOLT	4	B30001-
11	01643-31645	WASHER	8	B30001-
12	124-54-61230	COVER	1	B30001-
13	01010-81235	BOLT	2	B30001-
14	01643-31232	WASHER	2	B30001-
15	124-54-61151	COVER	1	B30001-
16	14X-54-12910	. LOCK	1	B30001-
17	124-54-51240	. SHEET	1	B30001-
18	124-54-51271	ROD	1	B30001-
19	04050-11612	PIN	1	B30001-
20	01643-30823	WASHER	1	B30001-
21	20B-54-12210	SPRING	1	B30001-
22	01220-40406	SCREW	2	B30001-
23	01641-20405	WASHER	2	B30001-
24	14X-54-12150	PLATE	1	B30001-
25	01010-81225	BOLT	2	B30001-
26	01643-31232	WASHER	2	B30001-
27	203-54-32260	STOPPER	2	B30001-
28	01010-81225	BOLT	4	B30001-
29	01643-31232	WASHER	4	B30001-
30	09415-02512	CAP	2	B30001-

FIG. M2110-01A1 RADIATOR GUARD (REGULATION OF EU DYNAMIC NOISE)

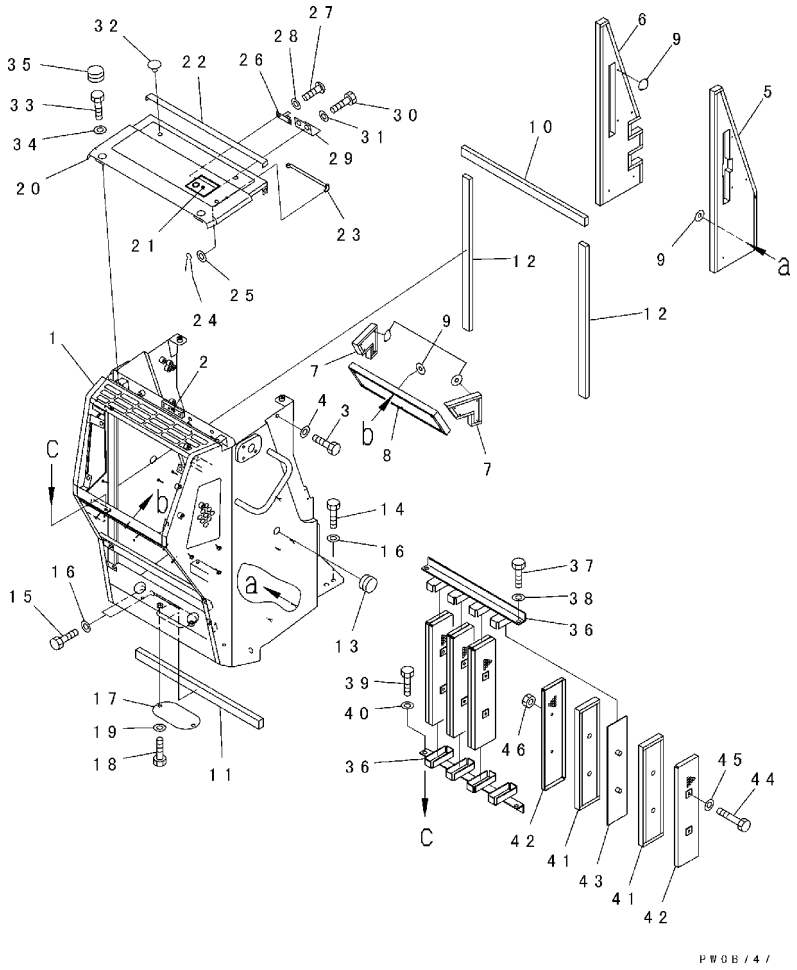

FIG. NO. : M2110-01A1

INDEX	PART NO.	DESCRIPTION	Q'TY	SERIAL NO.
1	124-C62-2111	GUARD ASS'Y	1	B30001-
2	124-54-51350	PLATE	1	B30001-
3	01010-81225	BOLT	1	B30001-
4	01643-31232	WASHER	1	B30001-
5	124-C62-3411	SHEET	1	B30001-
6	124-C62-3421	SHEET	1	B30001-
7	124-C62-3431	SHEET	2	B30001-
8	124-C62-3450	SHEET	1	B30001-
9	124-A62-1920	CAP	24	B30001-
10	124-54-61160	SHEET	1	B30001-
11	124-54-51410	SHEET	1	B30001-
12	124-54-61171	SHEET	2	B30222-
	124-54-61170	SHEET	2	B30001-B30221
13	09415-02512	CAP	1	B30001-
14	01010-81645	BOLT	4	B30001-
15	01010-81655	BOLT	4	B30001-
16	01643-31645	WASHER	8	B30001-
17	124-54-61230	COVER	1	B30001-
18	01010-81235	BOLT	2	B30001-
19	01643-31232	WASHER	2	B30001-
20	124-54-61151	COVER	1	B30001-
21	14X-54-12910	. LOCK	1	B30001-
22	124-54-51240	. SHEET	1	B30001-
23	124-54-51271	ROD	1	B30001-
24	04050-11612	PIN	1	B30001-
25	01643-30823	WASHER	1	B30001-
26	20B-54-12210	SPRING	1	B30001-
27	01220-40406	SCREW	2	B30001-
28	01641-20405	WASHER	2	B30001-
29	14X-54-12150	PLATE	1	B30001-
30	01010-81225	BOLT	2	B30001-
31	01643-31232	WASHER	2	B30001-
32	203-54-32260	STOPPER	2	B30001-
33	01010-81225	BOLT	4	B30001-
34	01643-31232	WASHER	4	B30001-
35	09415-02512	CAP	2	B30001-
36	124-A62-2211	BRACKET	2	B30001-
37	01010-81225	BOLT	2	B30001-
38	01643-31232	WASHER	2	B30001-
39	01010-81225	BOLT	2	B30001-
40	01643-31232	WASHER	2	B30001-
41	124-C62-2230	SHEET	8	B30001-

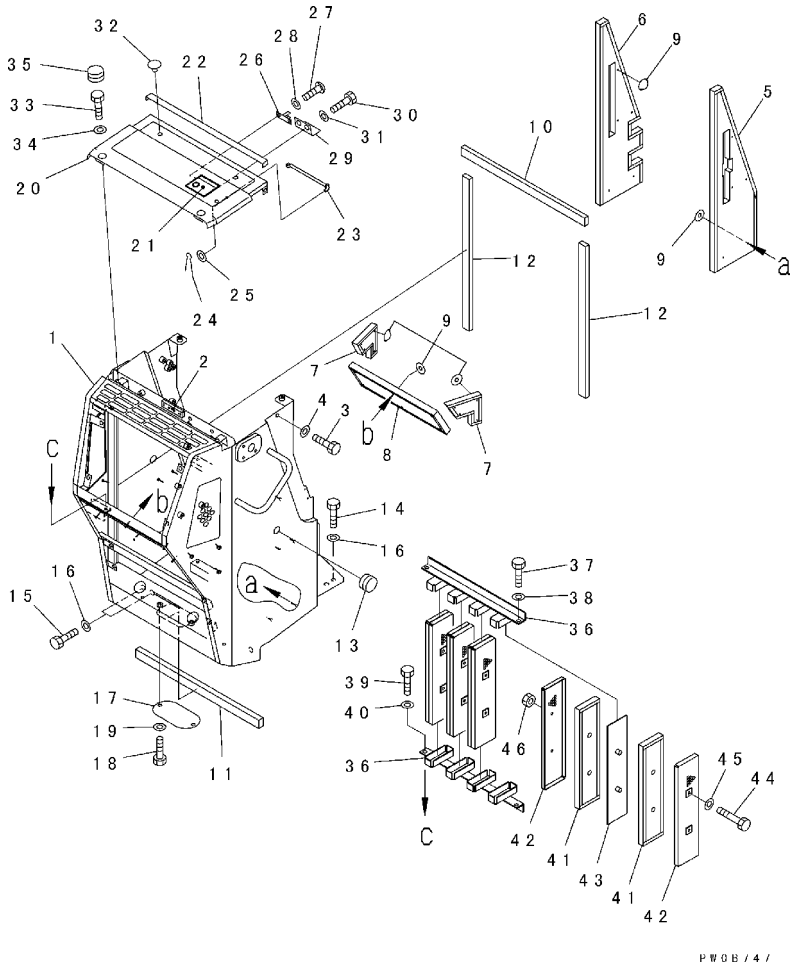

INDEX	PART NO.	DESCRIPTION	Q'TY	SERIAL NO.
42	124-A62-2240	COVER	8	B30001-
43	124-A62-2250	PLATE	4	B30001-
44	01010-81060	BOLT	8	B30001-
45	01643-31032	WASHER	8	B30001-
46	01580-11008	NUT	8	B30001-

FIG. M2120-01A0 RADIATOR MASK

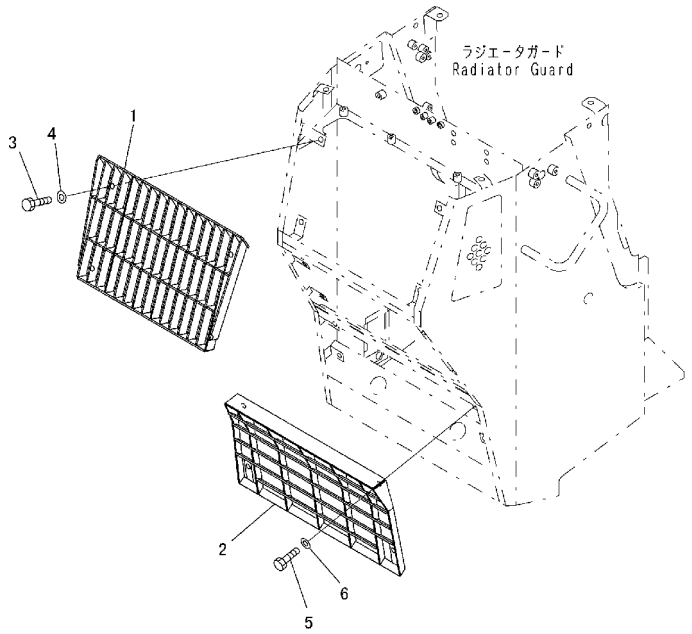

FIG. NO. : M2120-01A0

INDEX	PART NO.	DESCRIPTION	Q'TY	SERIAL NO.
1	124-54-61131	GRILLE	1	B30001-
2	124-54-61212	COVER	1	B30001-
3	01010-81235	BOLT	4	B30001-
4	01643-31232	WASHER	4	B30001-
5	01010-81235	BOLT	4	B30001-
6	01643-31232	WASHER	4	B30001-

FIG. M2120-01A1 RADIATOR MASK (REGULATION OF EU DYNAMIC NOISE)

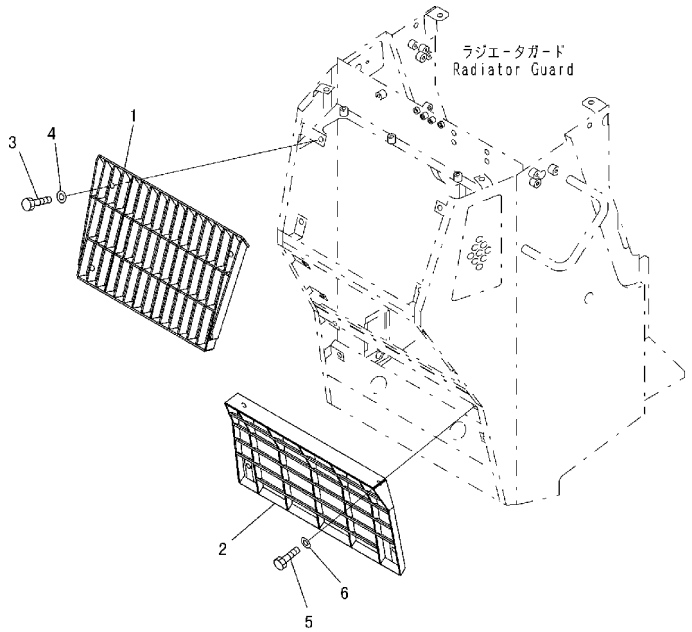

FIG. NO. : M2120-01A1

INDEX	PART NO.	DESCRIPTION	Q'TY	SERIAL NO.
1	124-C62-2630	GRILLE	1	B30001-
2	124-54-61212	COVER	1	B30001-
3	01010-81235	BOLT	4	B30001-
4	01643-31232	WASHER	4	B30001-
5	01010-81235	BOLT	4	B30001-
6	01643-31232	WASHER	4	B30001-

FIG. M2140-01A2 FRONT GUARD (ENGINE HOOD) (WITH CAB)

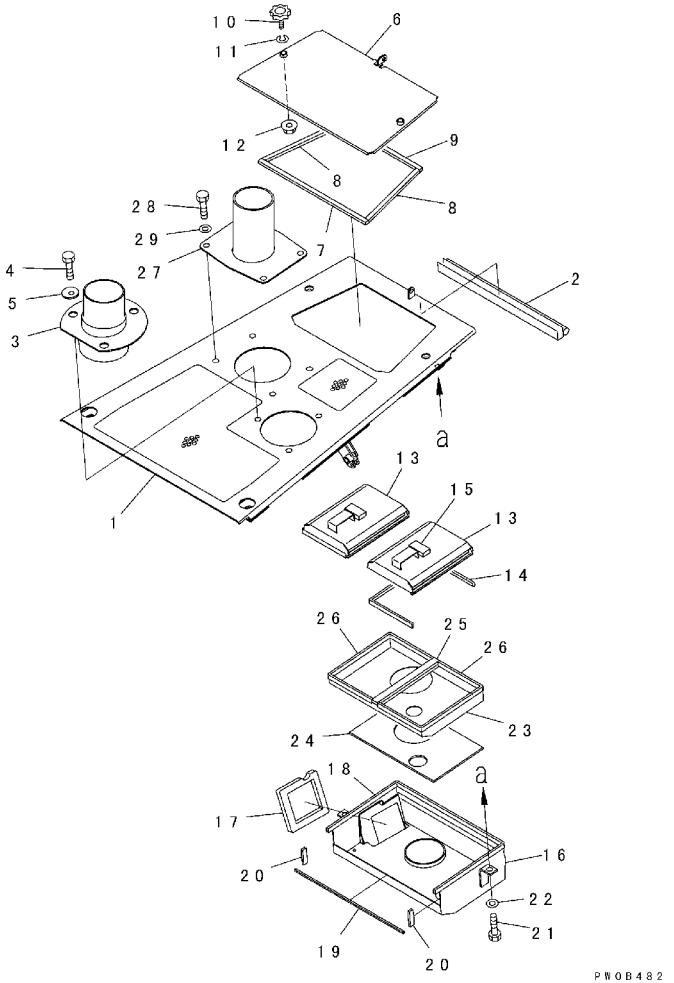

FIG. NO. : M2140-01A2

INDEX	PART NO.	DESCRIPTION	Q'TY	SERIAL NO.
1	124-54-62210	HOOD	1	B30001-
2	124-54-52460	SEAL	1	B30001-
3	124-54-52162	PIPE	1	B30001-
4	195-54-43210	BOLT	3	B30001-
5	124-54-52480	WASHER	3	B30001-
	124-Z11-1460	COVER ASS'Y	1	B30001-
6	124-Z11-1470	. COVER	1	B30001-
7	134-X11-1570	. SEAL	1	B30001-
8	134-X11-1580	. SEAL	2	B30001-
9	134-X11-1590	. SEAL	1	B30001-
10	195-54-68760	. KNOB	2	B30001-
11	01640-21016	. WASHER	2	B30001-
12	01594-01008	. NUT	2	B30001-
	134-X11-1611	COVER ASS'Y	2	B30001-
13	134-X11-1621	. COVER	2	B30001-
14	134-X11-1630	. SEAL	2	B30001-
15	14X-911-8520	. SEAL	2	B30001-
	124-Z11-1481	DUCT ASS'Y	1	B30001-
16	124-Z11-1491	. DUCT	1	B30001-
17	124-Z11-1540	. SEAL	1	B30001-
18	14X-911-8480	. SEAL	1	B30001-
19	14X-911-8490	. SEAL	1	B30001-
20	14X-911-8550	. SEAL	2	B30001-
21	01010-81220	BOLT	2	B30001-
22	01643-31232	WASHER	2	B30001-
	14X-911-8580	DUCT ASS'Y	1	B30001-
23	14X-911-8590	. DUCT	1	B30001-
24	14X-911-8610	. SEAL	1	B30001-
25	14X-911-8620	. SEAL	1	B30001-
26	14X-911-8630	. SEAL	2	B30001-
27	124-54-62230	PIPE	1	B30001-
28	01010-81225	BOLT	4	B30001-
29	01643-31232	WASHER	4	B30001-

FIG. M2140-01A3 FRONT GUARD (ENGINE HOOD) (WITH PRE CLEANER) (WITHOUT CAB)

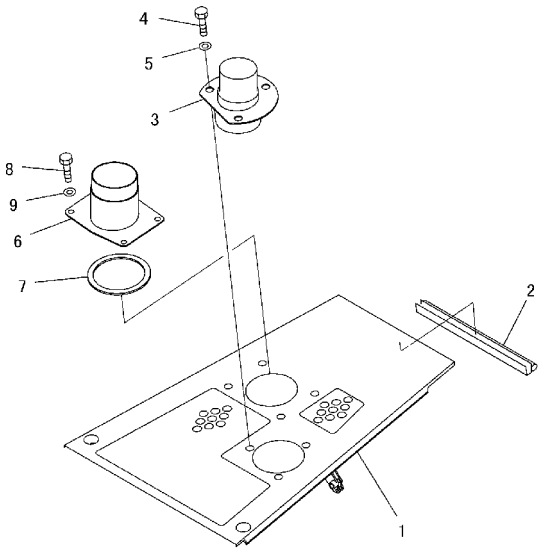

PW08483

FIG. NO. : M2140-01A3

INDEX	PART NO.	DESCRIPTION	Q'TY	SERIAL NO.
1	124-54-62581	HOOD	1	B30001-
2	124-54-52460	SEAL	1	B30001-
3	124-54-52162	PIPE	1	B30001-
4	195-54-43210	BOLT	3	B30001-
5	124-54-52480	WASHER	3	B30001-
6	124-54-62230	PIPE	1	B30001-
7	124-54-52240	. SEAL	1	B30001-
8	01010-81225	BOLT	4	B30001-
9	01643-31232	WASHER	4	B30001-

FIG. M2140-02A0 FRONT GUARD (ENGINE SIDE COVER, UPPER) (WITH PRE CLEANER) (WITH CAB)

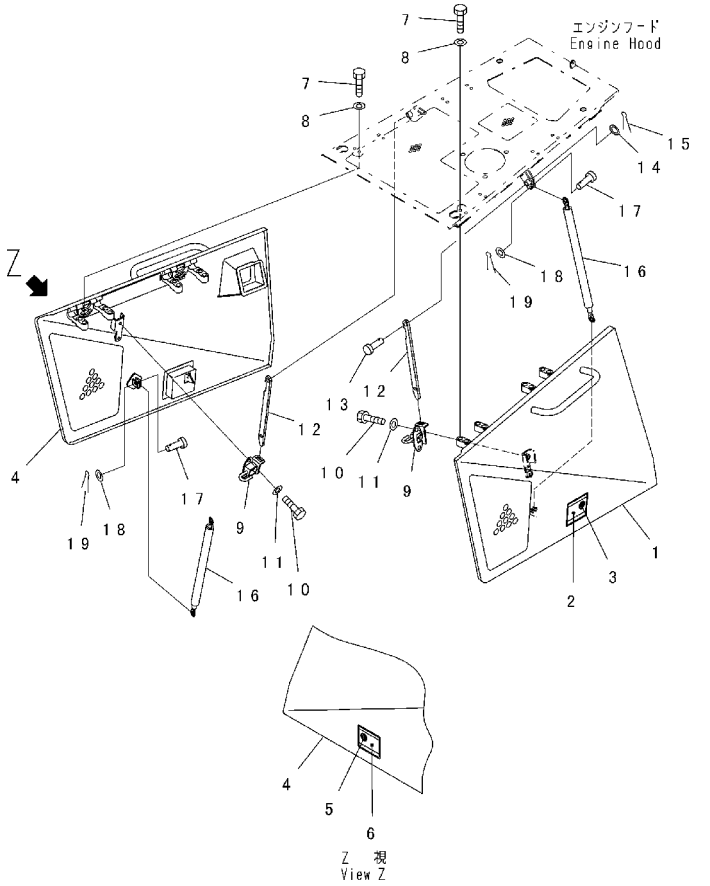

FIG. NO. : M2140-02A0

INDEX	PART NO.	DESCRIPTION	Q'TY	SERIAL NO.
1	124-54-62311	COVER, L. H.	1	B30001-
2	17A-54-14230	. LOCK	1	B30001-
3	421-54-11381	. . LOCK	1	B30001-
4	124-54-62321	COVER, R. H.	1	B30001-
5	17A-54-14230	. LOCK	1	B30001-
6	421-54-11381	. . LOCK	1	B30001-
7	01010-81050	BOLT	16	B30001-
8	01643-31032	WASHER	16	B30001-
9	134-54-62431	BRACKET	2	B30001-
10	01010-81020	BOLT	4	B30001-
11	01643-31032	WASHER	4	B30001-
12	124-54-62770	STAY	2	B30001-
13	135-43-33770	PIN	2	B30001-
14	205-54-53470	WASHER	2	B30001-
15	04050-13022	PIN	2	B30001-
16	14X-54-12780	DUMPER	2	B30001-
17	04205-10828	PIN	4	B30001-
18	01641-20812	WASHER	4	B30001-
19	04050-12015	PIN	4	B30001-

FIG. M2140-02A1 FRONT GUARD (ENGINE SIDE COVER, UPPER) (WITH PRE CLEANER) (WITHOUT CAB)

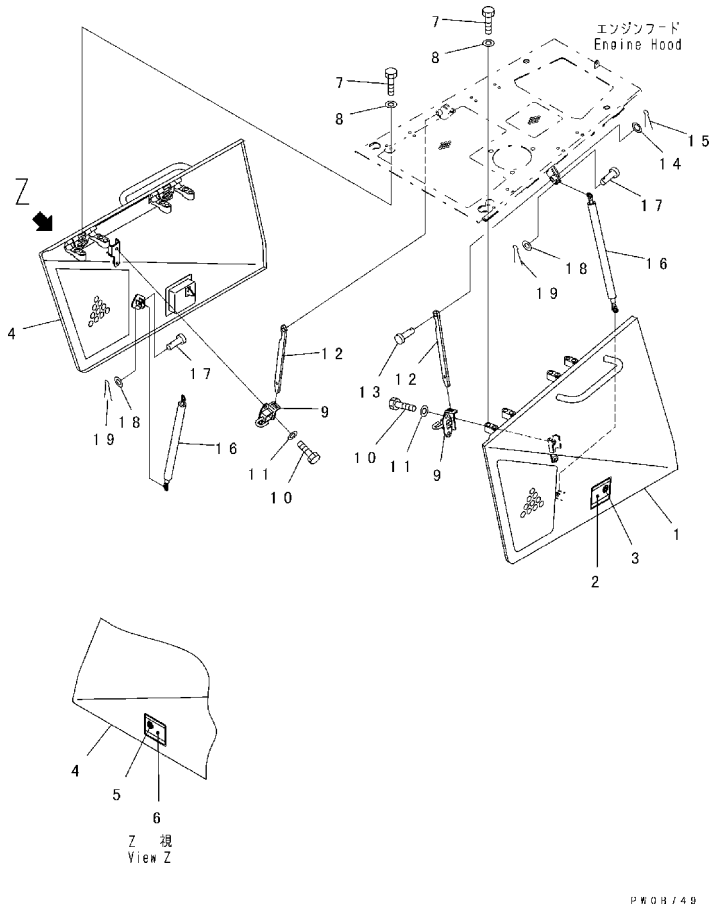

FIG. NO. : M2140-02A1

INDEX	PART NO.	DESCRIPTION	Q'TY	SERIAL NO.
1	124-54-62311	COVER, L. H.	1	B30001-
2	17A-54-14230	. LOCK	1	B30001-
3	421-54-11381	. . LOCK	1	B30001-
4	124-54-62621	COVER, R. H.	1	B30001-
5	17A-54-14230	. LOCK	1	B30001-
6	421-54-11381	. . LOCK	1	B30001-
7	01010-81050	BOLT	16	B30001-
8	01643-31032	WASHER	16	B30001-
9	134-54-62431	BRACKET	2	B30001-
10	01010-81020	BOLT	4	B30001-
11	01643-31032	WASHER	4	B30001-
12	124-54-62770	STAY	2	B30001-
13	135-43-33770	PIN	2	B30001-
14	205-54-53470	WASHER	2	B30001-
15	04050-13022	PIN	2	B30001-
16	14X-54-12780	DUMPER	2	B30001-
17	04205-10828	PIN	4	B30001-
18	01641-20812	WASHER	4	B30001-
19	04050-12015	PIN	4	B30001-

FIG. M2140-02A2 FRONT GUARD (ENGINE SIDE COVER, UPPER)
(REGULATION OF EU DYNAMIC NOISE)

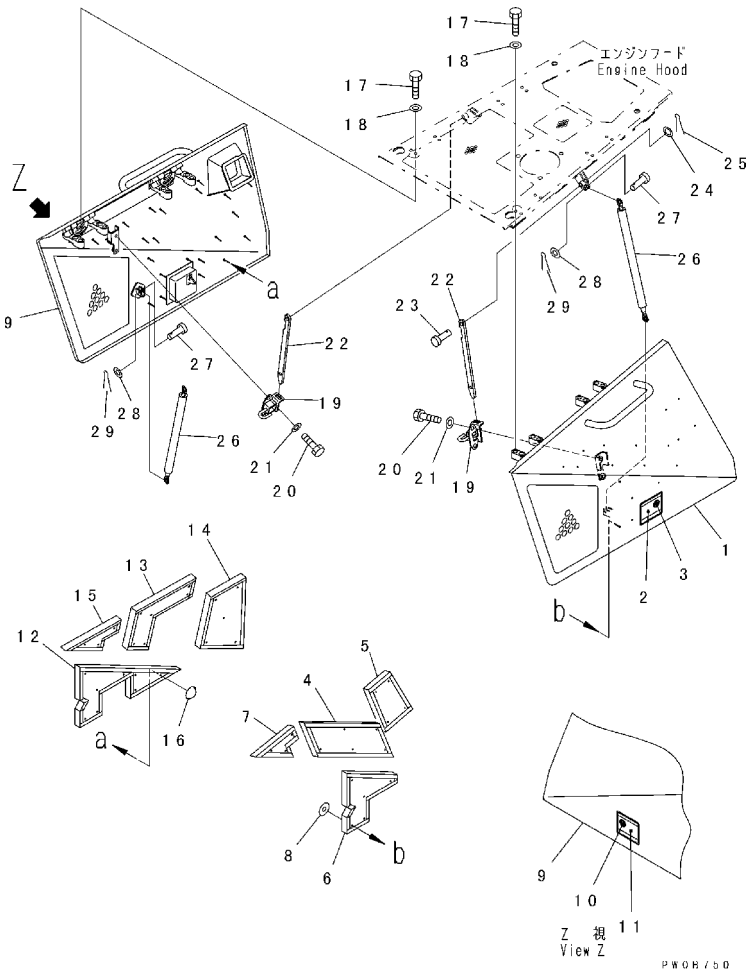

FIG. NO. : M2140-02A2

INDEX	PART NO.	DESCRIPTION	Q'TY	SERIAL NO.
1	124-C62-3211	COVER, L. H.	1	B30001-
2	17A-54-14230	. LOCK	1	B30001-
3	421-54-11381	. . LOCK	1	B30001-
4	124-C62-3310	SHEET	1	B30001-
5	124-C62-3320	SHEET	1	B30001-
6	124-C62-3360	SHEET	1	B30001-
7	124-C62-3460	SHEET	1	B30001-
8	124-A62-1920	CAP	18	B30001-
9	124-C62-3220	COVER, R. H.	1	B30001-
10	17A-54-14230	. LOCK	1	B30001-
11	421-54-11381	. . LOCK	1	B30001-
12	124-C62-3330	SHEET	1	B30001-
13	124-C62-3340	SHEET	1	B30001-
14	124-C62-3351	SHEET	1	B30001-
15	124-C62-3460	SHEET	1	B30001-
16	124-A62-1920	CAP	22	B30001-
17	01010-81050	BOLT	16	B30001-
18	01643-31032	WASHER	16	B30001-
19	134-54-62431	BRACKET	2	B30001-
20	01010-81020	BOLT	4	B30001-
21	01643-31032	WASHER	4	B30001-
22	124-54-62770	STAY	2	B30001-
23	135-43-33770	PIN	2	B30001-
24	205-54-53470	WASHER	2	B30001-
25	04050-13022	PIN	2	B30001-
26	14X-54-12780	DUMPER	2	B30001-
27	04205-10828	PIN	4	B30001-
28	01641-20812	WASHER	4	B30001-
29	04050-12015	PIN	4	B30001-

FIG. M2140-03A0 FRONT GUARD (ENGINE SIDE COVER, LOWER)
(WITH PRE CLEANER)

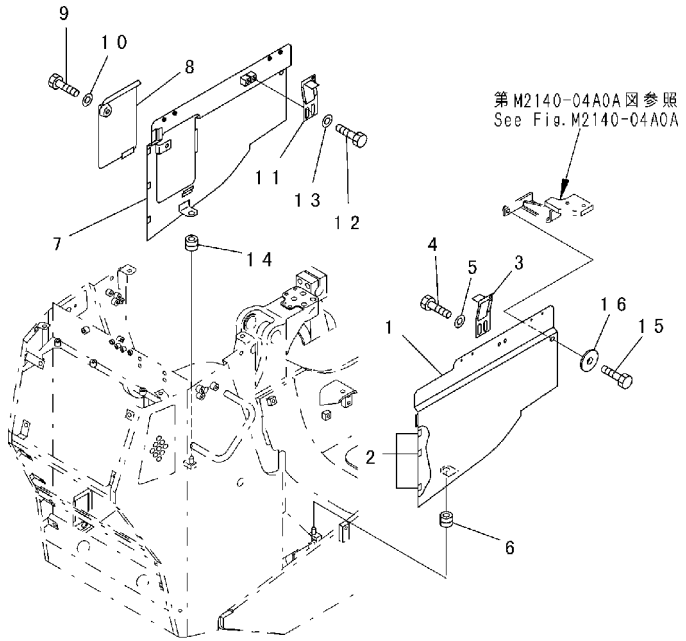

PW0B485

FIG. NO. : M2140-03A0

INDEX	PART NO.	DESCRIPTION	Q'TY	SERIAL NO.
1	124-54-52334	COVER, L. H.	1	B30001-
2	124-54-52550	. SHEET	3	B30001-
3	14X-54-13980	PLATE	1	B30001-
4	01010-81225	BOLT	2	B30001-
5	01643-31232	WASHER	2	B30001-
6	08037-01610	GROMMET	1	B30001-
7	124-54-52343	COVER	1	B30001-
8	124-54-52352	COVER	1	B30001-
9	01010-81225	BOLT	1	B30001-
10	01643-31232	WASHER	1	B30001-
11	14X-54-13980	PLATE	1	B30001-
12	01010-81225	BOLT	2	B30001-
13	01643-31232	WASHER	2	B30001-
14	08037-01610	GROMMET	1	B30001-
15	01010-81230	BOLT	2	B30001-
16	205-54-76410	COLLAR	2	B30001-

FIG. M2140-03A2 FRONT GUARD (ENGINE SIDE COVER, LOWER)
(REGULATION OF EU DYNAMIC NOISE)

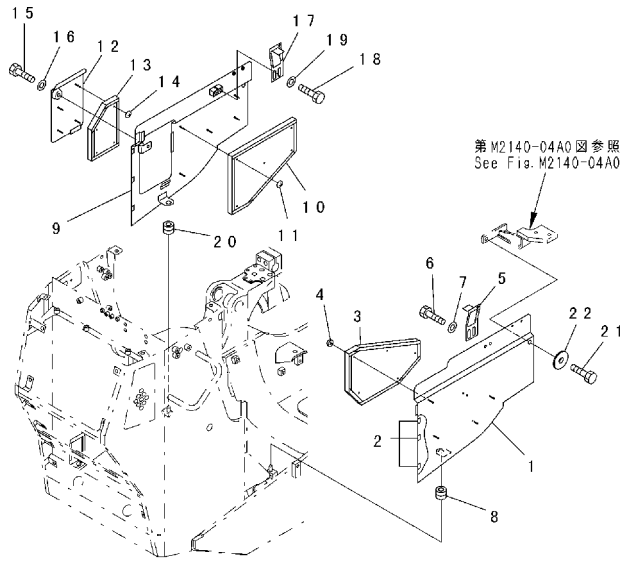

FIG. NO. : M2140-03A2

INDEX	PART NO.	DESCRIPTION	Q'TY	SERIAL NO.
1	124-A62-3230	COVER, L. H.	1	B30001-
2	124-54-52550	. SHEET	3	B30001-
3	124-C62-3370	SHEET	1	B30001-
4	124-A62-1920	CAP	5	B30001-
5	14X-54-13980	PLATE	1	B30001-
6	01010-81225	BOLT	2	B30001-
7	01643-31232	WASHER	2	B30001-
8	08037-01610	GROMMET	1	B30001-
9	124-A62-3240	COVER	1	B30001-
10	124-C62-3380	SHEET	1	B30001-
11	124-A62-1920	CAP	5	B30001-
12	124-A62-3251	COVER	1	B30001-
13	124-C62-3390	SHEET	1	B30001-
14	124-A62-1920	CAP	4	B30001-
15	01010-81225	BOLT	1	B30001-
16	01643-31232	WASHER	1	B30001-
17	14X-54-13980	PLATE	1	B30001-
18	01010-81225	BOLT	2	B30001-
19	01643-31232	WASHER	2	B30001-
20	08037-01610	GROMMET	1	B30001-
21	01010-81230	BOLT	2	B30001-
22	205-54-76410	COLLAR	2	B30001-

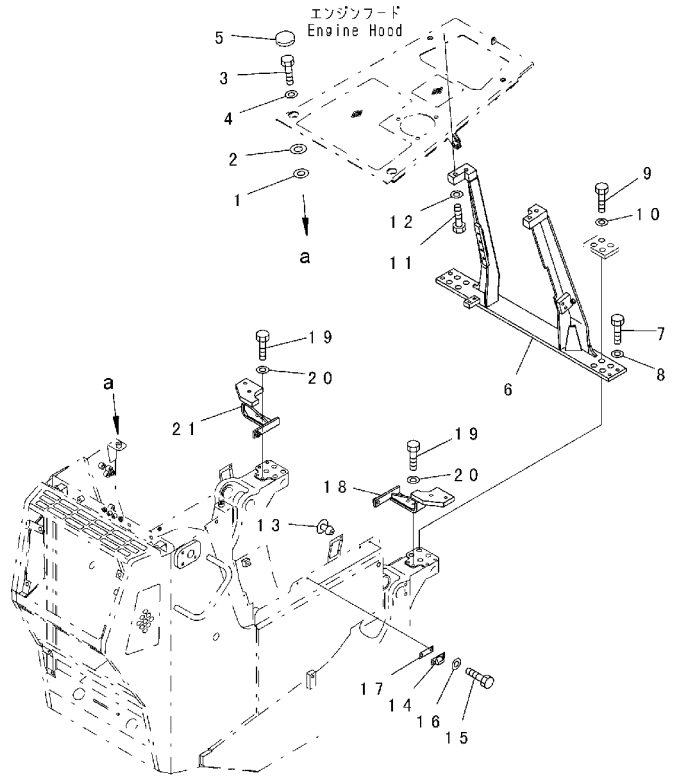

PW0B486

INDEX	PART NO.	DESCRIPTION	Q'TY	SERIAL NO.
1	124-54-52190	SPACER	2	B30001-
2	124-54-52180	SPACER	2	B30001-
3	01010-81230	BOLT	2	B30001-
4	124-54-26540	WASHER	2	B30001-
5	14X-54-18150	CAP	2	B30001-
6	124-54-62140	BRACKET	1	B30001-
7	01010-81235	BOLT	4	B30001-
8	01643-31232	WASHER	4	B30001-
9	01010-82095	BOLT	8	B30001-
10	01643-32060	WASHER	8	B30001-
11	01010-81255	BOLT	4	B30001-
12	01643-31232	WASHER	4	B30001-
13	14X-54-12960	STOPPER	2	B30001-
14	205-54-53550	DOVE TAIL	4	B30001-
15	01010-80620	BOLT	8	B30001-
16	01643-30623	WASHER	8	B30001-
17	11Y-54-11270	PLATE	4	B30192-
	560-22-14250	PLATE	4	B30001-B30191
18	124-54-52513	BRACKET, L. H.	1	B30001-
19	01010-81230	BOLT	4	B30001-
20	01643-31232	WASHER	4	B30001-
21	124-54-52542	BRACKET, R. H.	1	B30001-

FIG. M2140-05A2 FRONT GUARD (BOOT)

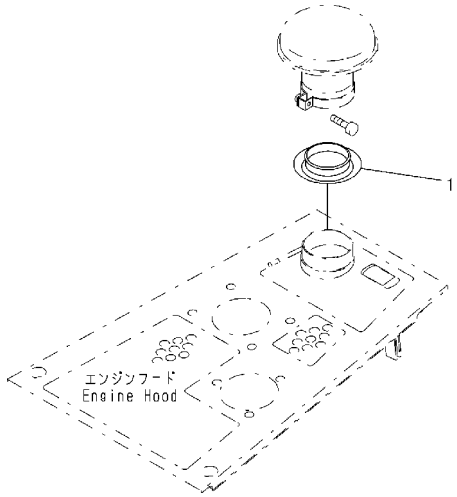

PW0A275

FIG. NO. : M2140-05A2

INDEX	PART NO.	DESCRIPTION	Q'TY	SERIAL NO.
1	124-54-52250	BOOT	1	B30001-

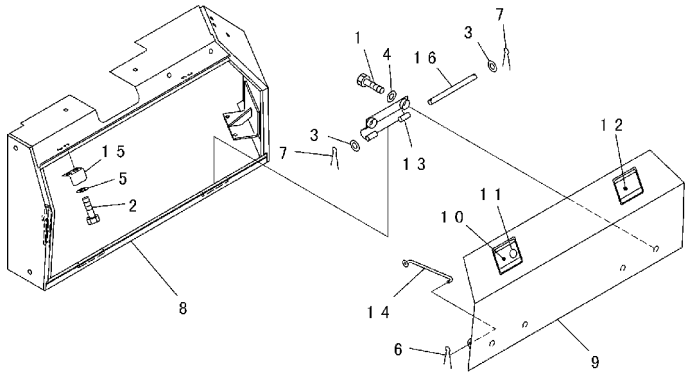

PW0B752

INDEX	PART NO.	DESCRIPTION	Q'TY	SERIAL NO.
	124-54-64101	COVER ASS'Y, L. H.	1	B30001-
1	01010-81020	. BOLT	4	B30001-
2	01010-81225	. BOLT	4	B30001-
3	01641-21016	. WASHER	4	B30001-
4	01643-31032	. WASHER	4	B30001-
5	01643-31232	. WASHER	4	B30001-
6	04050-12015	. PIN	1	B30001-
7	04050-13020	. PIN	4	B30001-
8	124-54-64180	. COVER, L. H.	1	B30001-
9	124-54-54121	. COVER	1	B30001-
10	17A-54-14230	. . LOCK (WELDED)	1	B30001-
11	421-54-11381	. . . LOCK	1	B30001-
12	17A-54-14240	. . LOCK (WELDED)	1	B30001-
13	124-54-54130	. HINGE	2	B30001-
14	124-54-54161	. HOOK	1	B30001-
15	17A-54-14160	. PLATE	2	B30001-
16	124-54-54170	. PIN	2	B30001-

FIG. M2210-01A1 REAR GUARD (BATTERY COVER) (REGULATION OF EU DYNAMIC NOISE)

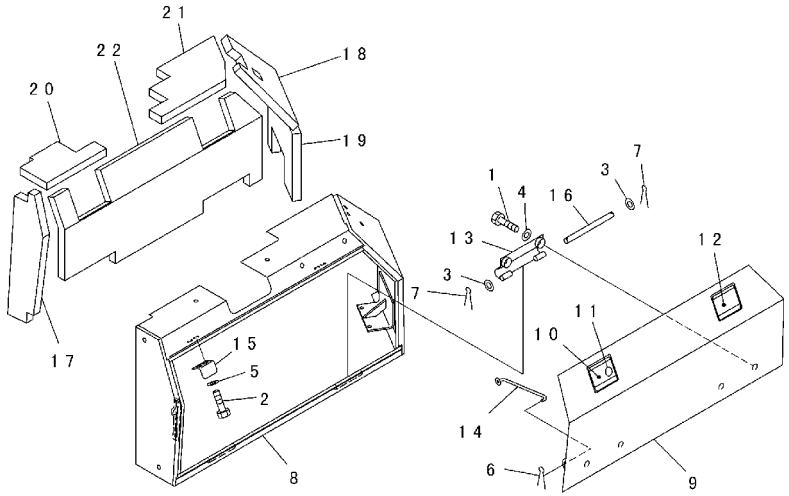

FIG. NO. : M2210-01A1

INDEX	PART NO.	DESCRIPTION	Q'TY	SERIAL NO.
	124-C62-3600	COVER ASS'Y, L. H.	1	B30001-
1	01010-81020	. BOLT	4	B30001-
2	01010-81225	. BOLT	4	B30001-
3	01641-21016	. WASHER	4	B30001-
4	01643-31032	. WASHER	4	B30001-
5	01643-31232	. WASHER	4	B30001-
6	04050-12015	. PIN	1	B30001-
7	04050-13020	. PIN	4	B30001-
8	124-54-64180	. COVER, L. H.	1	B30001-
9	124-54-54121	. COVER	1	B30001-
10	17A-54-14230	. . LOCK (WELDED)	1	B30001-
11	421-54-11381	. . . LOCK	1	B30001-
12	17A-54-14240	. . LOCK (WELDED)	1	B30001-
13	124-54-54130	. HINGE	2	B30001-
14	124-54-54161	. HOOK	1	B30001-
15	17A-54-14160	. PLATE	2	B30001-
16	124-54-54170	. PIN	2	B30001-
17	124-A62-3850	. ABSORBER	1	B30001-
18	124-A62-3860	. ABSORBER	1	B30001-
19	124-A62-3870	. ABSORBER	1	B30001-
20	124-A62-3880	. ABSORBER	1	B30001-
21	124-A62-3890	. ABSORBER	1	B30001-
22	124-A62-3910	. ABSORBER	1	B30001-

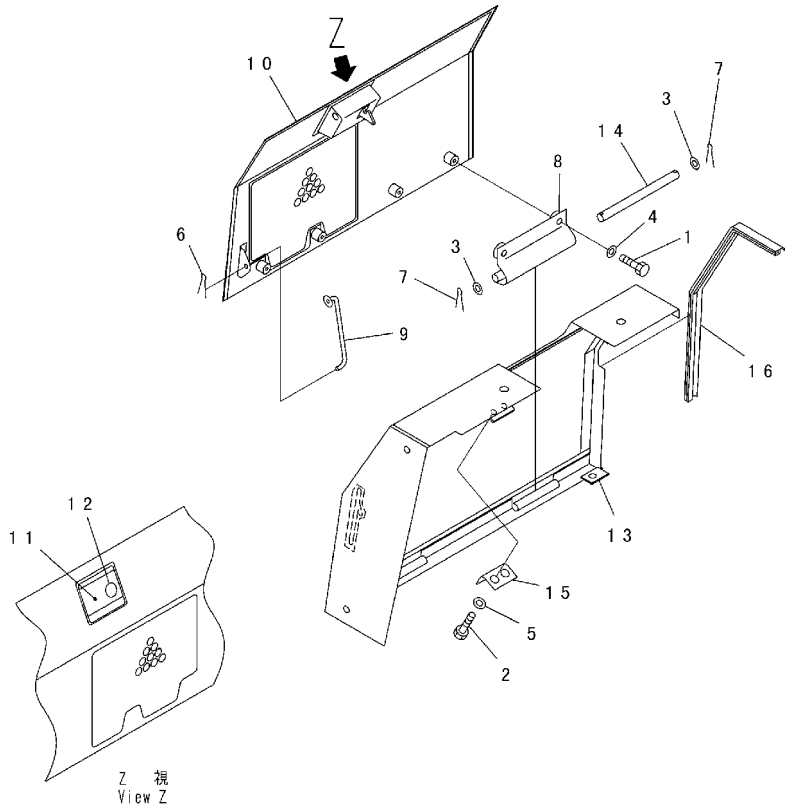

INDEX	PART NO.	DESCRIPTION	Q'TY	SERIAL NO.
	124-54-64300	COVER ASS'Y, R. H.	1	B30001-
1	01010-81020	. BOLT	4	B30001-
2	01010-81225	. BOLT	2	B30001-
3	01641-21016	. WASHER	4	B30001-
4	01643-31032	. WASHER	4	B30001-
5	01643-31232	. WASHER	2	B30001-
6	04050-12015	. PIN	1	B30001-
7	04050-13020	. PIN	4	B30001-
8	124-54-54130	. HINGE	2	B30001-
9	124-54-54161	. HOOK	1	B30001-
10	124-54-64320	. COVER, R. H.	1	B30001-
11	17A-54-14230	. . LOCK (WELDED)	1	B30001-
12	421-54-11381	. . . LOCK	1	B30001-
13	124-54-64210	. COVER	1	B30001-
14	124-54-54170	. PIN	2	B30001-
15	17A-54-14160	. PLATE	2	B30001-
16	124-54-64230	. SEAL	1	B30001-

FIG. M2210-02A1 REAR GUARD (FILTER COVER)

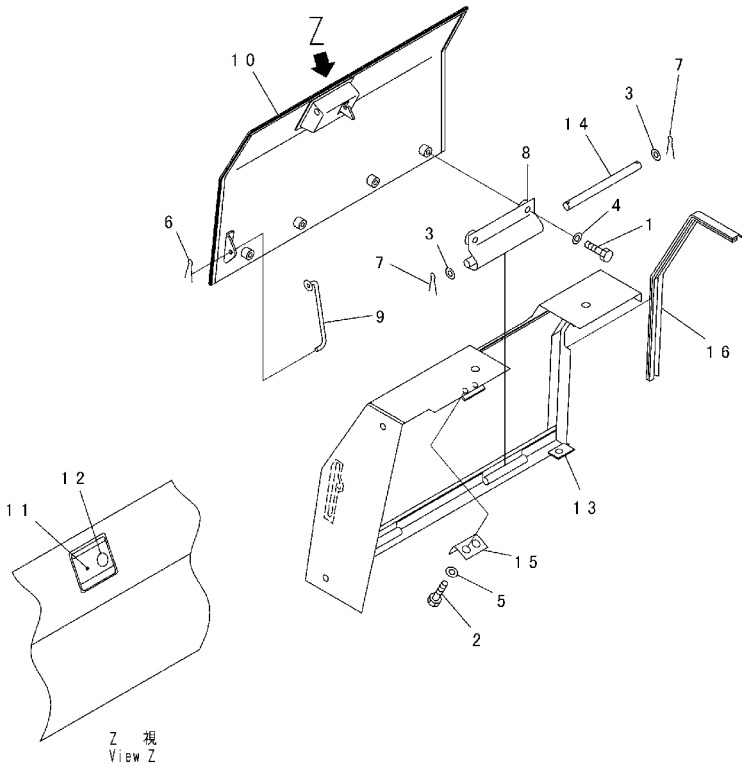

FIG. NO. : M2210-02A1

INDEX	PART NO.	DESCRIPTION	Q'TY	SERIAL NO.
	124-54-64200	COVER ASS'Y, R. H.	1	B30001-
1	01010-81020	. BOLT	4	B30001-
2	01010-81225	. BOLT	2	B30001-
3	01641-21016	. WASHER	4	B30001-
4	01643-31032	. WASHER	4	B30001-
5	01643-31232	. WASHER	2	B30001-
6	04050-12015	. PIN	1	B30001-
7	04050-13020	. PIN	4	B30001-
8	124-54-54130	. HINGE	2	B30001-
9	124-54-54161	. HOOK	1	B30001-
10	124-54-64220	. COVER, R. H.	1	B30001-
11	17A-54-14230	. . LOCK (WELDED)	1	B30001-
12	421-54-11381	. . . LOCK	1	B30001-
13	124-54-64210	. COVER	1	B30001-
14	124-54-54170	. PIN	2	B30001-
15	17A-54-14160	. PLATE	2	B30001-
16	124-54-64230	. SEAL	1	B30001-

FIG. M2210-02A2 REAR GUARD (FILTER COVER) (REGULATION OF EU DYNAMIC NOISE) (WITH HEATER)

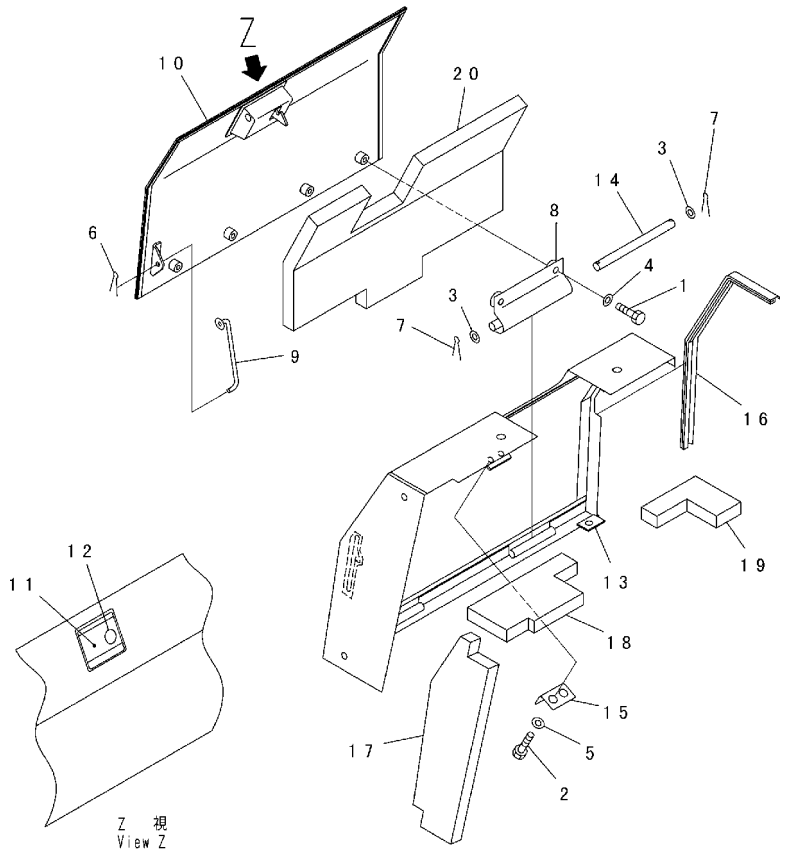

FIG. NO. : M2210-02A2

INDEX	PART NO.	DESCRIPTION	Q'TY	SERIAL NO.
	124-C62-3700	COVER ASS'Y, R. H.	1	B30001-
1	01010-81020	. BOLT	4	B30001-
2	01010-81225	. BOLT	2	B30001-
3	01641-21016	. WASHER	4	B30001-
4	01643-31032	. WASHER	4	B30001-
5	01643-31232	. WASHER	2	B30001-
6	04050-12015	. PIN	1	B30001-
7	04050-13020	. PIN	4	B30001-
8	124-54-54130	. HINGE	2	B30001-
9	124-54-54161	. HOOK	1	B30001-
10	124-54-64220	. COVER, R. H.	1	B30001-
11	17A-54-14230	. . LOCK (WELDED)	1	B30001-
12	421-54-11381	. . . LOCK	1	B30001-
13	124-54-64210	. COVER	1	B30001-
14	124-54-54170	. PIN	2	B30001-
15	17A-54-14160	. PLATE	2	B30001-
16	124-54-64230	. SEAL	1	B30001-
17	124-A62-3920	. ABSORBER	1	B30001-
18	124-A62-3930	. ABSORBER	1	B30001-
19	124-A62-3940	. ABSORBER	1	B30001-
20	124-C62-3950	. ABSORBER	1	B30001-

FIG. M2210-02A3 REAR GUARD (FILTER COVER) (REGULATION OF EU DYNAMIC NOISE) (WITH AIR CONDITIONER)

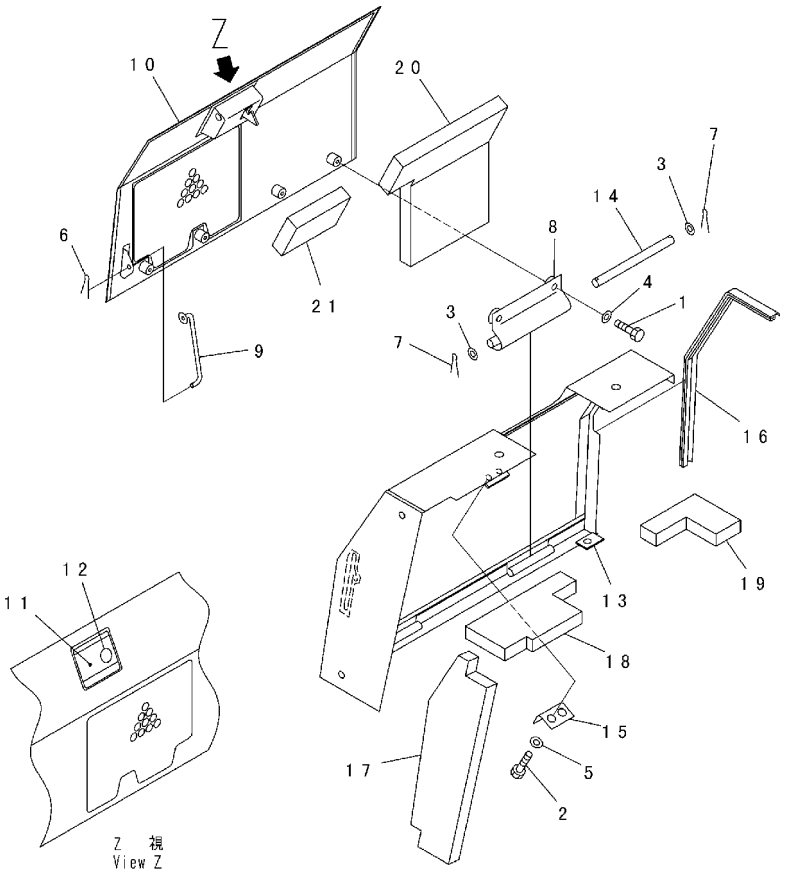

FIG. NO. : M2210-02A3

INDEX	PART NO.	DESCRIPTION	Q'TY	SERIAL NO.
	124-C62-3800	COVER ASS'Y, R. H.	1	B30001-
1	01010-81020	. BOLT	4	B30001-
2	01010-81225	. BOLT	2	B30001-
3	01641-21016	. WASHER	4	B30001-
4	01643-31032	. WASHER	4	B30001-
5	01643-31232	. WASHER	2	B30001-
6	04050-12015	. PIN	1	B30001-
7	04050-13020	. PIN	4	B30001-
8	124-54-54130	. HINGE	2	B30001-
9	124-54-54161	. HOOK	1	B30001-
10	124-54-64320	. COVER, R. H.	1	B30001-
11	17A-54-14230	. . LOCK (WELDED)	1	B30001-
12	421-54-11381	. . . LOCK	1	B30001-
13	124-54-64210	. COVER	1	B30001-
14	124-54-54170	. PIN	2	B30001-
15	17A-54-14160	. PLATE	2	B30001-
16	124-54-64230	. SEAL	1	B30001-
17	124-A62-3920	. ABSORBER	1	B30001-
18	124-A62-3930	. ABSORBER	1	B30001-
19	124-A62-3940	. ABSORBER	1	B30001-
20	124-C62-3960	. ABSORBER	1	B30001-
21	124-A62-3970	. ABSORBER	1	B30001-

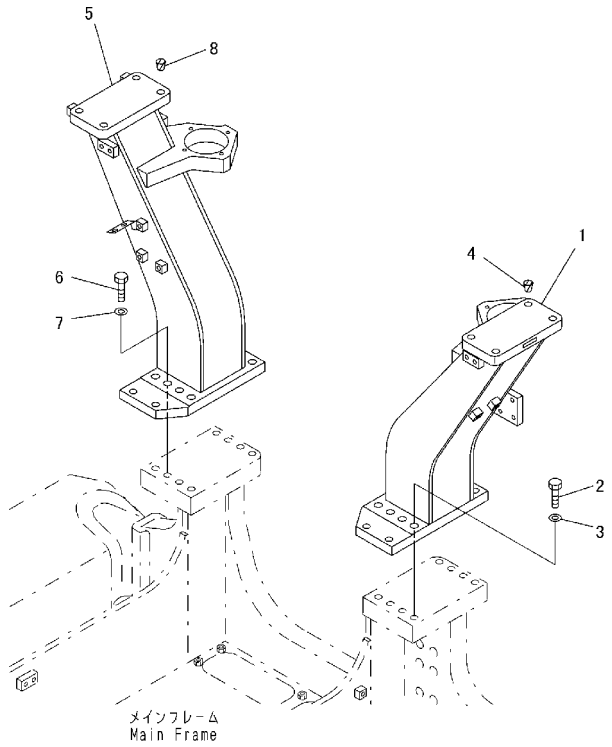

INDEX	PART NO.	DESCRIPTION	Q'TY	SERIAL NO.
1	124-978-5214	BRACKET, L. H.	1	B30001-
2	01010-82070	BOLT	8	B30001-
3	708-8F-11260	WASHER	8	B30001-
4	07049-02025	PLUG, (WITHOUT CANOPY)	4	B30001-
5	124-978-5224	BRACKET, R. H.	1	B30001-
6	01010-82070	BOLT	8	B30001-
7	708-8F-11260	WASHER	8	B30001-
8	07049-02025	PLUG, (WITHOUT CANOPY)	4	B30001-

FIG. M2210-04A0 REAR GUARD (FENDER)

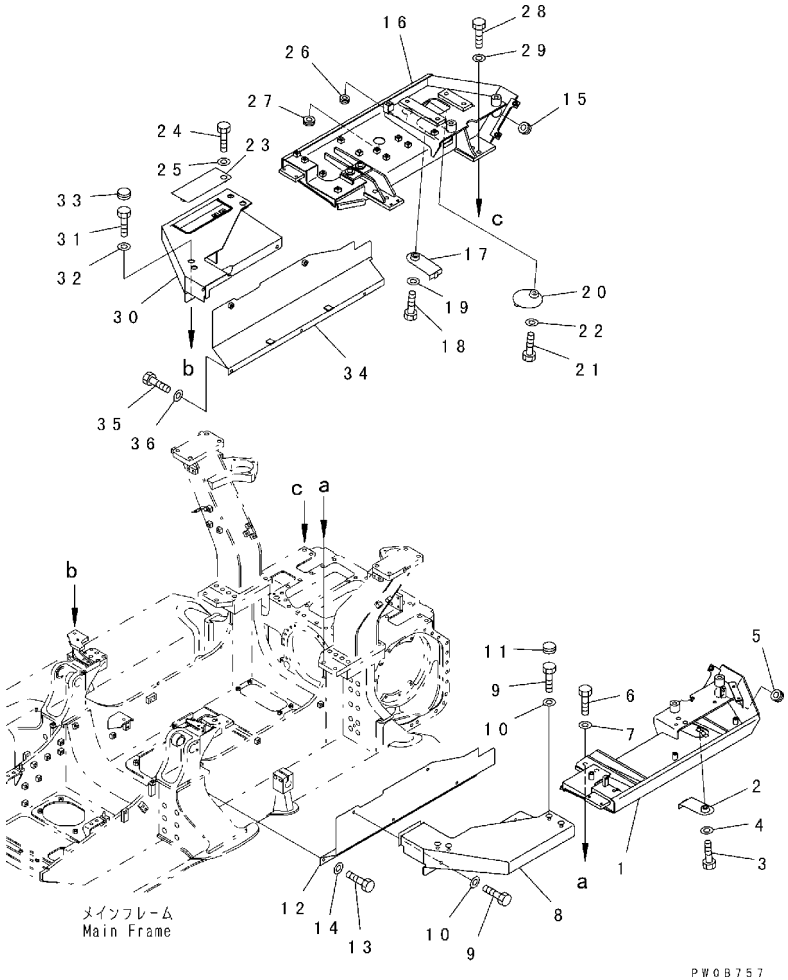

FIG. NO. : M2210-04A0

INDEX	PART NO.	DESCRIPTION	Q'TY	SERIAL NO.
1	124-54-63111	FENDER, L. H.	1	B30001-
2	124-54-53131	COVER	1	B30001-
3	01010-81225	BOLT	1	B30001-
4	01643-31232	WASHER	1	B30001-
5	09415-05022	CAP	1	B30001-
6	01010-82050	BOLT	4	B30001-
7	01643-32060	WASHER	4	B30001-
8	124-54-63140	STEP, L. H.	1	B30001-
9	01010-81225	BOLT	6	B30001-
10	01643-31232	WASHER	6	B30001-
11	09415-02512	CAP	4	B30001-
12	124-54-53223	COVER, L. H.	1	B30001-
13	01010-81220	BOLT	3	B30001-
14	01643-31232	WASHER	3	B30001-
15	09415-05022	CAP	1	B30001-
16	124-54-63121	FENDER, R. H.	1	B30001-
17	124-54-53131	COVER	1	B30001-
18	01010-81225	BOLT	1	B30001-
19	01643-31232	WASHER	1	B30001-
20	14X-54-13160	COVER	1	B30001-
21	01010-81225	BOLT	1	B30001-
22	01643-31232	WASHER	1	B30001-
23	14X-54-23130	COVER	1	B30001-
24	01010-81225	BOLT	1	B30001-
25	01643-31232	WASHER	1	B30001-
26	09415-03614	CAP	2	B30001-
27	09415-05016	CAP	1	B30001-
28	01010-82050	BOLT	4	B30001-
29	01643-32060	WASHER	4	B30001-
30	124-54-63151	STEP, R. H.	1	B30001-
31	01010-81225	BOLT	6	B30001-
32	01643-31232	WASHER	6	B30001-
33	09415-02512	CAP	4	B30001-
34	124-54-53233	COVER, R. H.	1	B30001-
35	01010-81220	BOLT	3	B30001-
36	01643-31232	WASHER	3	B30001-

FIG. M2210-04A1 REAR GUARD (FENDER) (REGULATION OF EU DYNAMIC NOISE)

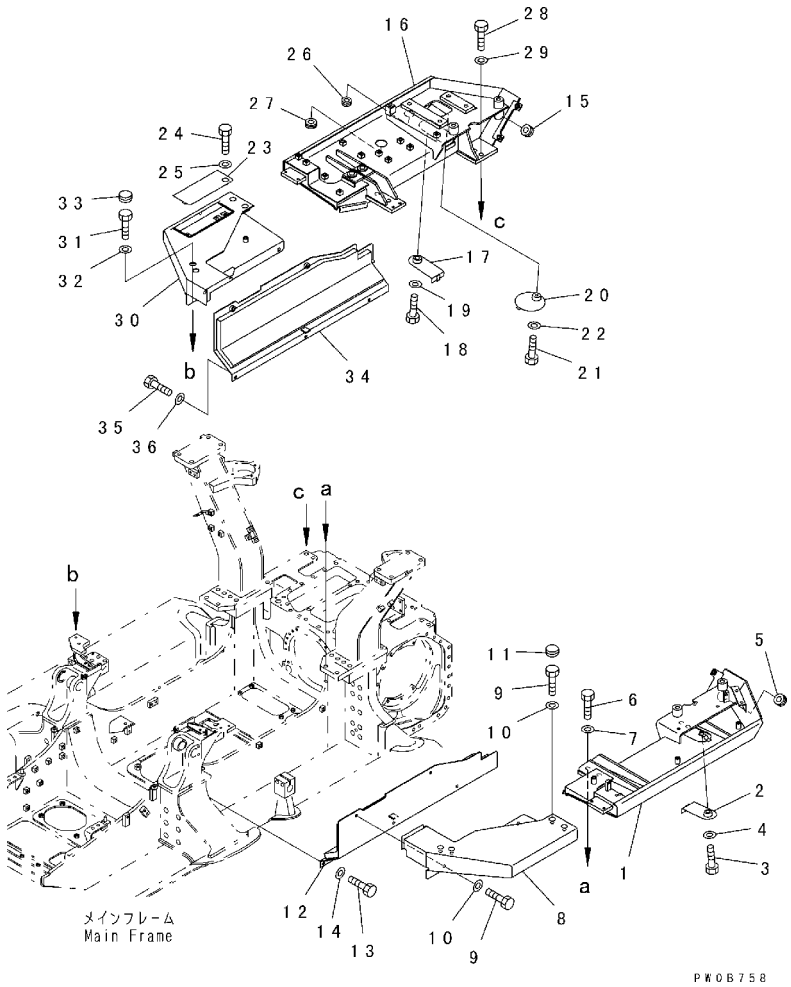

FIG. NO. : M2210-04A1

INDEX	PART NO.	DESCRIPTION	Q'TY	SERIAL NO.
1	124-54-63111	FENDER, L. H.	1	B30001-
2	124-54-53131	COVER	1	B30001-
3	01010-81225	BOLT	1	B30001-
4	01643-31232	WASHER	1	B30001-
5	09415-05022	CAP	1	B30001-
6	01010-82050	BOLT	4	B30001-
7	01643-32060	WASHER	4	B30001-
8	124-C62-3540	STEP, L. H.	1	B30001-
9	01010-81225	BOLT	6	B30001-
10	01643-31232	WASHER	6	B30001-
11	09415-02512	CAP	4	B30001-
12	124-A62-3520	COVER, L. H.	1	B30001-
13	01010-81220	BOLT	3	B30001-
14	01643-31232	WASHER	3	B30001-
15	09415-05022	CAP	1	B30001-
16	124-54-63121	FENDER, R. H.	1	B30001-
17	124-54-53131	COVER	1	B30001-
18	01010-81225	BOLT	1	B30001-
19	01643-31232	WASHER	1	B30001-
20	14X-54-13160	COVER	1	B30001-
21	01010-81225	BOLT	1	B30001-
22	01643-31232	WASHER	1	B30001-
23	14X-54-23130	COVER	1	B30001-
24	01010-81225	BOLT	1	B30001-
25	01643-31232	WASHER	1	B30001-
26	09415-03614	CAP	2	B30001-
27	09415-05016	CAP	1	B30001-
28	01010-82050	BOLT	4	B30001-
29	01643-32060	WASHER	4	B30001-
30	124-C62-3551	STEP, R. H.	1	B30001-
31	01010-81225	BOLT	6	B30001-
32	01643-31232	WASHER	6	B30001-
33	09415-02512	CAP	4	B30001-
34	124-A62-3530	COVER, R. H.	1	B30001-
35	01010-81220	BOLT	3	B30001-
36	01643-31232	WASHER	3	B30001-

FIG. M2210-05A0 REAR GUARD (HANDIE AND PLUG)

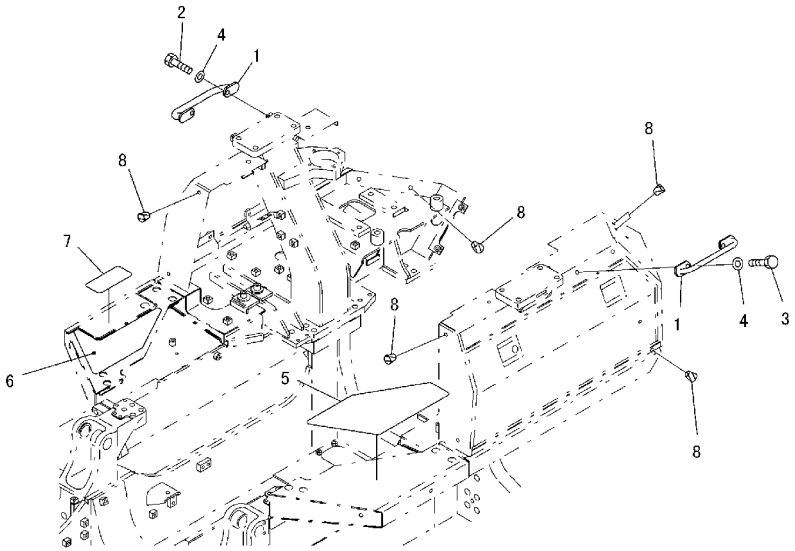

FIG. NO. : M2210-05A0

INDEX	PART NO.	DESCRIPTION	Q'TY	SERIAL NO.
1	124-54-63311	HANDRAIL	2	B30001-
2	01010-81230	BOLT	2	B30001-
3	01010-81235	BOLT	2	B30001-
4	01643-31232	WASHER	4	B30001-
5	14X-54-13811	SHEET	1	B30001-
6	124-54-53160	SHEET	1	B30001-
7	14X-54-13830	SHEET	1	B30001-
8	07049-01215	PLUG	8	B30001-

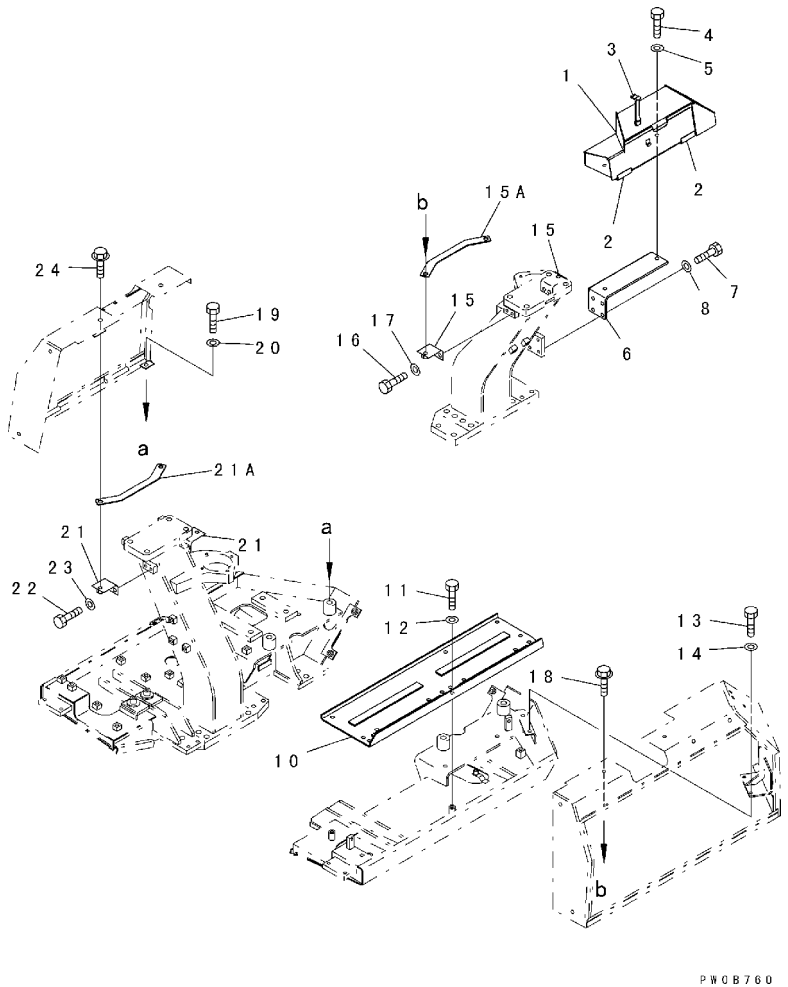

INDEX	PART NO.	DESCRIPTION	Q'TY	SERIAL NO.
1	134-54-64411	TOOL BOX ASS'Y	1	B30001-
2	09455-13016	. HINGE	2	B30001-
3	22W-54-11470	. BAND	1	B30001-
4	01010-81225	BOLT	2	B30001-
5	01643-31232	WASHER	2	B30001-
6	124-54-54442	BRACKET	1	B30001-
7	01010-81230	BOLT	3	B30001-
8	01643-31232	WASHER	3	B30001-
10	124-54-53280	PLATE	1	B30028-
	124-54-53173	PLATE	1	B30001-B30027
11	01010-81230	BOLT	6	B30001-
12	01643-31232	WASHER	6	B30001-
13	01010-81225	BOLT	3	B30001-
14	01643-31232	WASHER	3	B30001-
15A	124-54-64711	PLATE	1	B30001-
15	124-54-54151	BRACKET	2	B30001-
16	01010-81225	BOLT	4	B30001-
17	01643-31232	WASHER	4	B30001-
18	01439-01225	BOLT	2	B30001-
19	01010-81225	BOLT	2	B30001-
20	01643-31232	WASHER	2	B30001-
21A	124-54-64711	PLATE	1	B30001-
21	124-54-54151	BRACKET	2	B30001-
22	01010-81225	BOLT	4	B30001-
23	01643-31232	WASHER	4	B30001-
24	01439-01225	BOLT	2	B30001-

FIG. M2240-01A0 REAR COVER

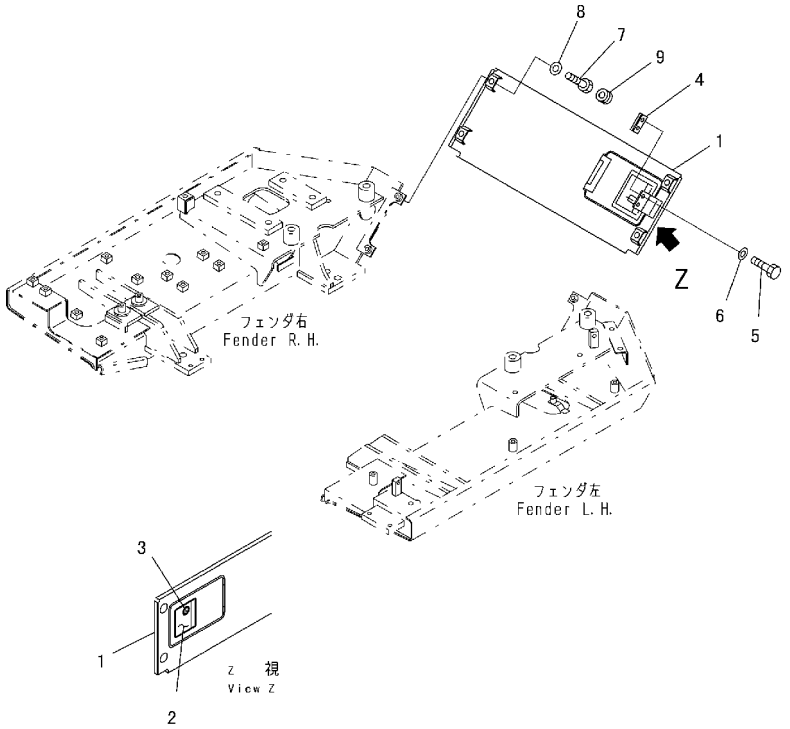

PKA7494

FIG. NO. : M2240-01A0

INDEX	PART NO.	DESCRIPTION	Q'TY	SERIAL NO.
1	124-54-53211	COVER	1	B30001-
2	14X-54-12910	. LOCK	1	B30001-
3	421-54-11381	. . LOCK	1	B30001-
4	09461-00014	PLATE	1	B30001-
5	01010-81020	BOLT	2	B30001-
6	01643-31032	WASHER	2	B30001-
7	01010-81235	BOLT	4	B30001-
8	01643-31232	WASHER	4	B30001-
9	09415-02512	CAP	4	B30001-

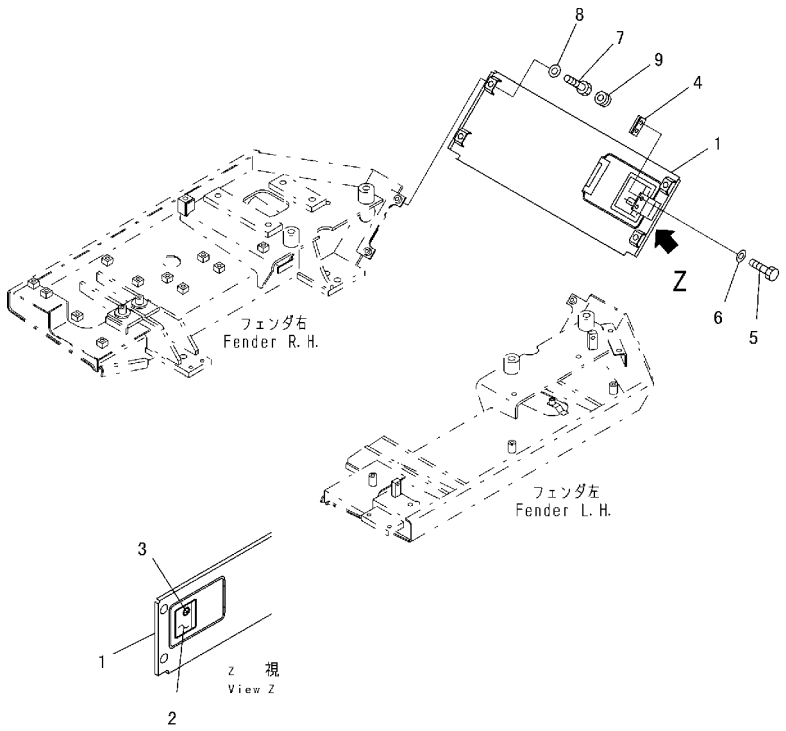

INDEX	PART NO.	DESCRIPTION	Q'TY	SERIAL NO.
1	124-A62-3510	COVER	1	B30001-
2	14X-54-12910	. LOCK	1	B30001-
3	421-54-11381	. . LOCK	1	B30001-
4	09461-00014	PLATE	1	B30001-
5	01010-81020	BOLT	2	B30001-
6	01643-31032	WASHER	2	B30001-
7	01010-81235	BOLT	4	B30001-
8	01643-31232	WASHER	4	B30001-
9	09415-02512	CAP	4	B30001-

FIG. M2811-01A0 UNDER GUARD

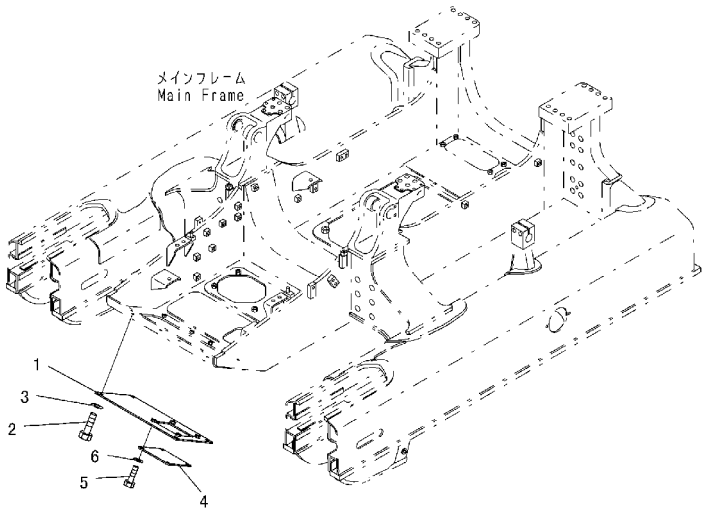

PW0B762

FIG. NO. : M2811-01A0

INDEX	PART NO.	DESCRIPTION	Q'TY	SERIAL NO.
1	124-21-61340	COVER	1	B30001-
2	01010-81635	BOLT	4	B30001-
3	01643-31645	WASHER	4	B30001-
4	124-21-61470	COVER	1	B30001-
5	01010-81230	BOLT	4	B30001-
6	01643-31232	WASHER	4	B30001-

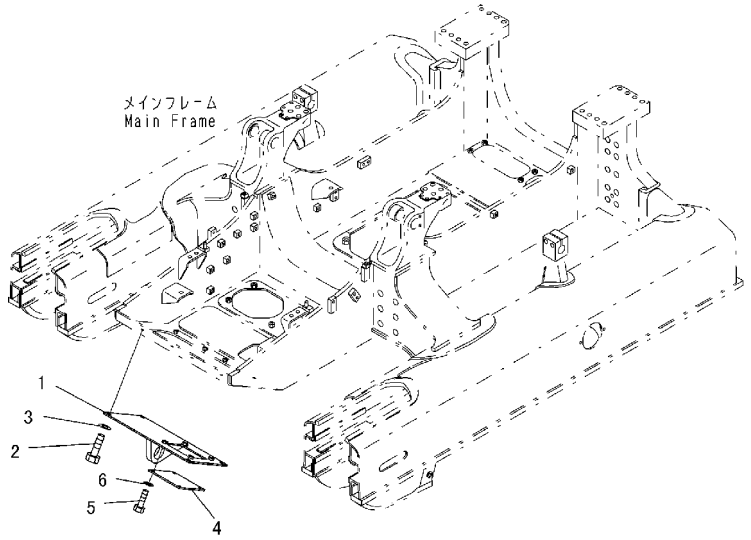

PW0B763

INDEX	PART NO.	DESCRIPTION	Q'TY	SERIAL NO.
1	124-944-6111	HOOK	1	B30001-
2	01010-81640	BOLT	8	B30001-
3	01643-31645	WASHER	8	B30001-
4	124-21-61470	COVER	1	B30001-
5	01010-81235	BOLT	4	B30001-
6	01643-31232	WASHER	4	B30001-

UNDER CARRIAGE

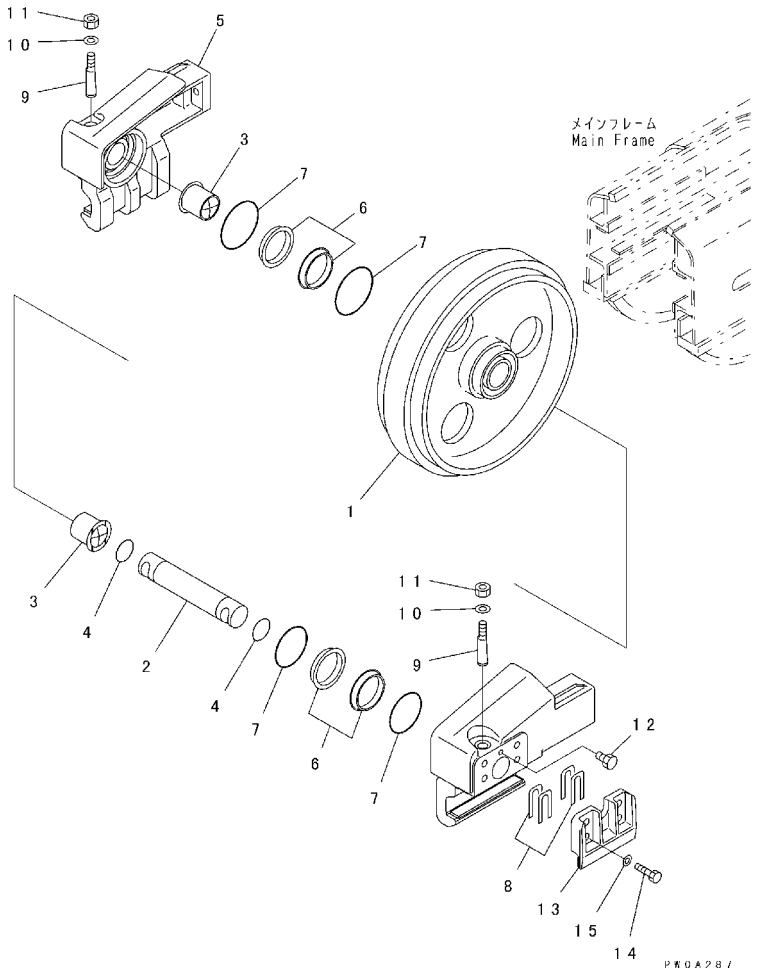

INDEX	PART NO.	DESCRIPTION	Q'TY	SERIAL NO.
	124-30-00105	IDLER ASS'Y	1	B30001-
1	124-30-51112	. IDLER	1	B30001-
2	124-30-51181	. SHAFT	1	B30001-
3	203-30-52190	. BUSHING	2	B30001-
4	07000-13048	. O-RING	2	B30001-
5	124-30-51642	. SUPPORT, L. H.	1	B30001-
	124-30-51652	. SUPPORT, R. H.	1	B30001-
	175-30-00702	. FLOATING SEAL ASS'Y	2	B30001-
6	175-30-00691	. . SEAL RING ASS'Y	1	B30001-
	☆	. . . RING	2	B30001-
7	175-30-00581	. . O-RING ASS'Y	1	B30001-
	☆	. . . O-RING	2	B30001-
8	125-30-21650	. SHIM	20	B30001-
9	130-30-13170	. BOLT	2	B30001-
10	01643-31645	. WASHER	2	B30001-
11	01582-11613	. NUT	2	B30001-
12	07052-31217	. PLUG	1	B30001-
13	124-30-51661	. GUIDE	2	B30001-
14	01010-81640	. BOLT	8	B30001-
15	01643-31645	. WASHER	8	B30001-

FIG. R0120-01A0 IDLER CUSHION

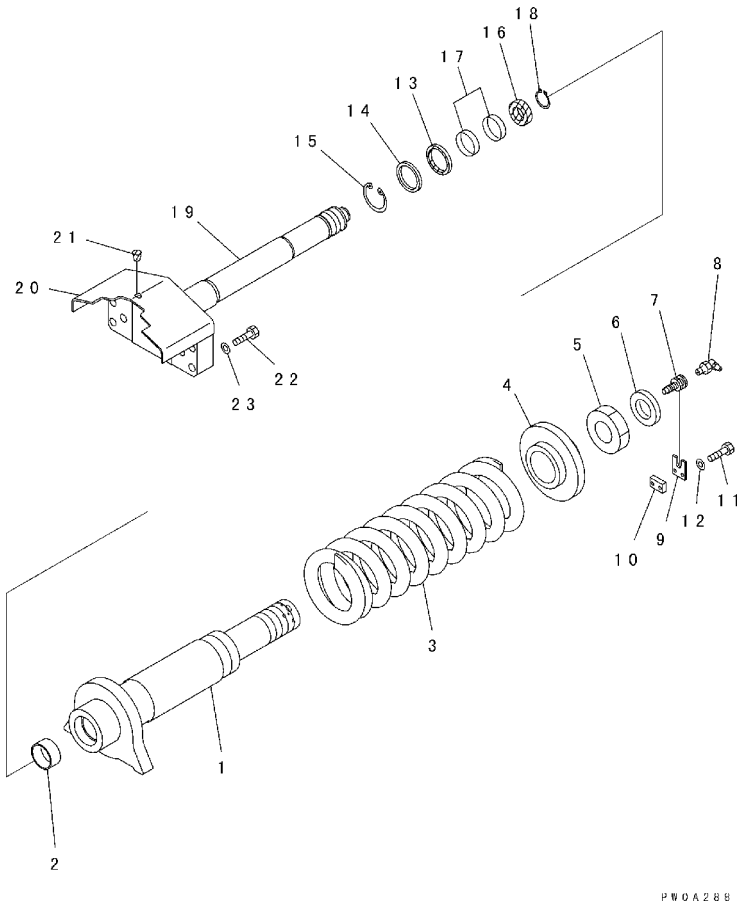

FIG. NO. : R0120-01A0

INDEX	PART NO.	DESCRIPTION	Q'TY	SERIAL NO.
1	124-30-54123	CYLINDER	2	B30001-
2	07177-06030	BUSHING	2	B30001-
3	21K-30-24142	SPRING	2	B30156-
	21K-30-24141	SPRING	2	B30001-B30155
4	21K-30-24130	PILOT	2	B30001-
5	124-30-54160	NUT	2	B30001-
6	124-30-54170	SPACER	4	B30001-
7	203-30-42260	VALVE	2	B30001-
8	07020-00675	FITTING	2	B30001-
9	124-30-54130	LOCK	2	B30001-
10	201-30-52280	SEAT	2	B30001-
11	01010-80830	BOLT	4	B30001-
12	01643-30823	WASHER	4	B30001-
13	144-30-14340	SEAL	2	B30001-
14	144-30-14350	SPACER	2	B30001-
15	04065-07525	RING	2	B30001-
16	09370-00060	U-PACKING	2	B30001-
17	07155-00615	RING	4	B30001-
18	04064-03515	RING	2	B30001-
19	124-30-54113	ROD	2	B30001-
20	124-30-54180	. COVER (WELDED)	1	B30001-
21	07049-01215	PLUG	2	B30001-
22	01010-81680	BOLT	12	B30001-
23	01643-31645	WASHER	12	B30001-

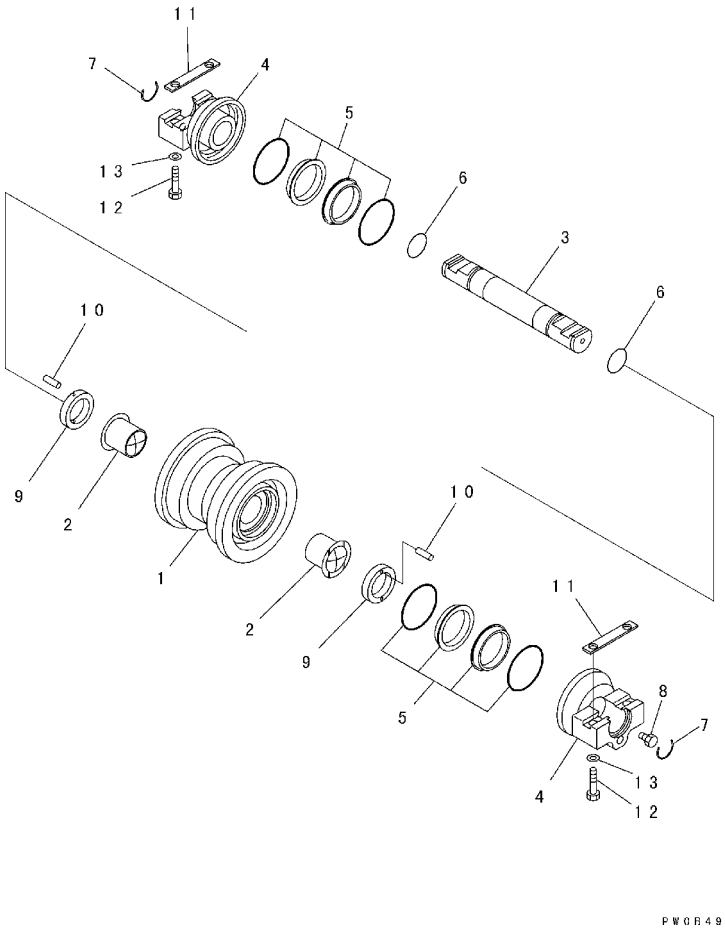

INDEX	PART NO.	DESCRIPTION	Q'TY	SERIAL NO.
	124-30-00202	TRACK ROLLER ASS'Y, S	8	B30001-
1	124-30-52511	. ROLLER, S	1	B30001-
2	124-30-52540	. BUSHING	2	B30001-
3	124-30-51143	. SHAFT	1	B30001-
4	124-30-52552	. COLLAR	2	B30001-
5	175-30-00900	. SEAL ASS'Y	2	B30001-
6	07000-03042	. O-RING	2	B30001-
7	124-30-51160	. LOCK	2	B30001-
8	07052-31217	. PLUG	1	B30001-
9	124-30-52571	. SPACER	2	B30001-
10	04020-00616	. PIN	4	B30001-
11	124-30-51150	KEY	16	B30001-
12	01010-81675	BOLT	56	B30001-
13	01643-31645	WASHER	56	B30001-

FIG. R0200-02A1 TRACK ROLLER (HD LINK) (DOUBLE GROUSER)

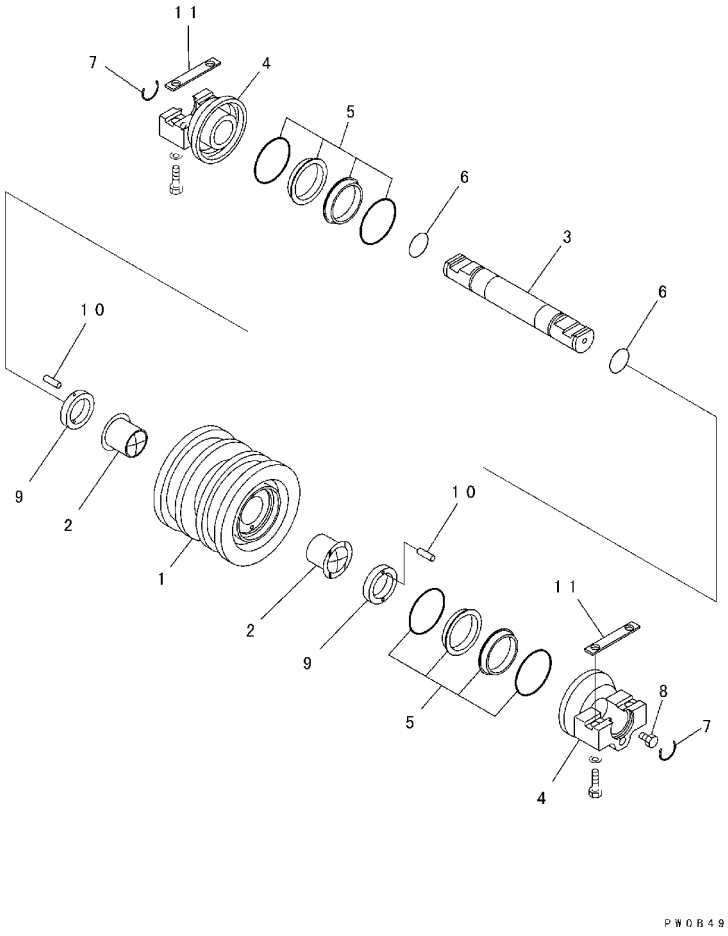

FIG. NO. : R0200-02A1

INDEX	PART NO.	DESCRIPTION	Q'TY	SERIAL NO.
	124-30-00212	TRACK ROLLER ASS'Y, S	6	B30001-
1	124-30-52521	. ROLLER, S	1	B30001-
2	124-30-52540	. BUSHING	2	B30001-
3	124-30-51143	. SHAFT	1	B30001-
4	124-30-52552	. COLLAR	2	B30001-
5	175-30-00900	. SEAL ASS'Y	2	B30001-
6	07000-03042	. O-RING	2	B30001-
7	124-30-51160	. LOCK	2	B30001-
8	07052-31217	. PLUG	1	B30001-
9	124-30-52571	. SPACER	2	B30001-
10	04020-00616	. PIN	4	B30001-
11	124-30-51150	KEY	12	B30001-

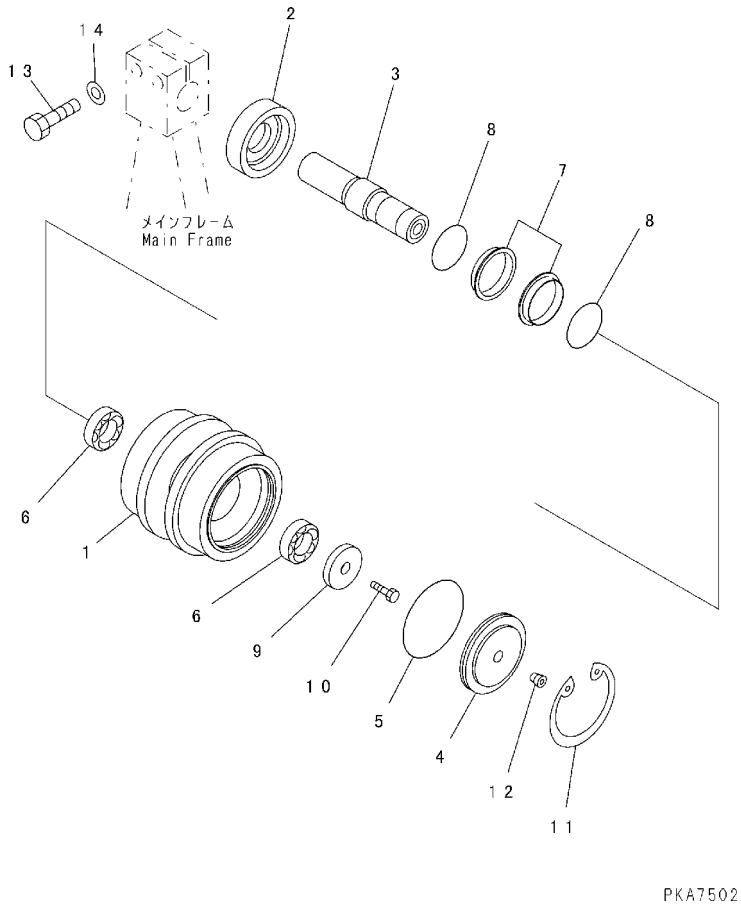

INDEX	PART NO.	DESCRIPTION	Q'TY	SERIAL NO.
	124-30-00132	CARRIER ROLLER ASS'Y	2	B30026-
	124-30-00131	CARRIER ROLLER ASS'Y	2	B30001-B30025
1	124-30-53111	. ROLLER	1	B30001-
	124-30-00170	. SHAFT ASS'Y	1	B30001-
2	124-30-53130	. . RING	1	B30001-
3	124-30-53121	. . SHAFT	1	B30026-
	124-30-53120	. . SHAFT	1	B30001-B30025
4	14X-30-15131	. COVER	1	B30001-
5	07000-12105	. O-RING	1	B30001-
6	06002-32008	. BEARING	2	B30001-
	140-30-00141	. FLOATING SEAL ASS'Y	1	B30001-
7	140-30-00401	. . SEAL RING ASS'Y	1	B30001-
	☆	. . . RING	2	B30001-
8	140-30-00411	. . O-RING ASS'Y	1	B30001-
	☆	. . . O-RING	2	B30001-
9	14X-30-15251	. HOLDER	1	B30001-
10	01010-81630	. BOLT	1	B30001-
11	04065-01154	. RING	1	B30001-
12	20Y-30-16330	. PLUG	1	B30026-
	2991-01-4160	. PLUG	1	B30001-B30025
13	01010-81670	BOLT	4	B30001-
14	01643-31645	WASHER	4	B30001-

FIG. R0500-01A6 TRACK SHOE (LUBRICATE TYPE) (SWAMP TYPE) (700MM WIDE) (HEAVY DUTY LINK)

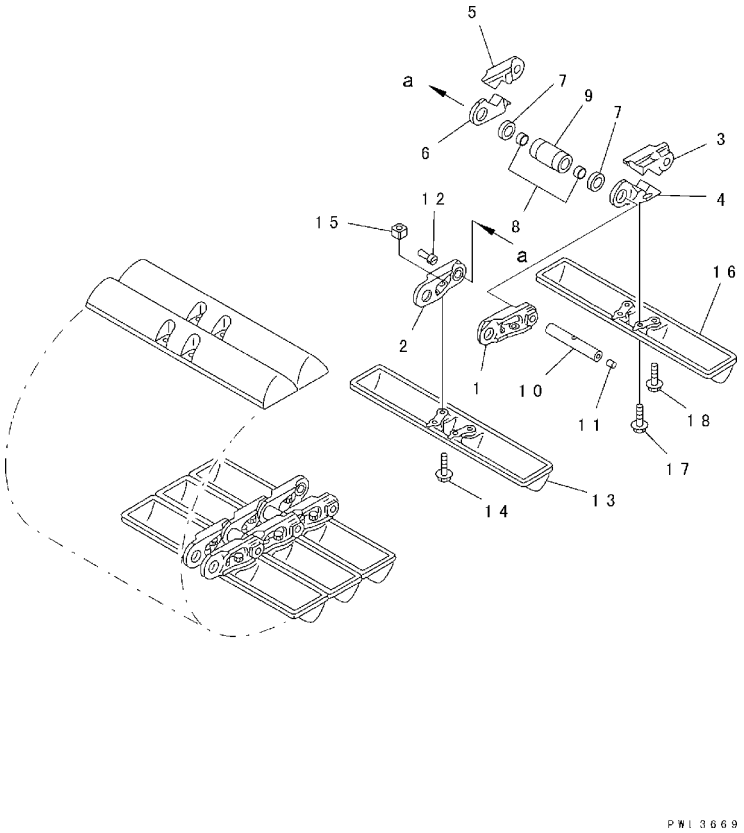

PWL3669

FIG. NO. : R0500-01A6

INDEX	PART NO.	DESCRIPTION	Q'TY	SERIAL NO.
	12G-32-01110	TRACK SHOE ASS'Y	1	B30001-
1	124-32-53120	. LINK, REGULAR, L. H.	86	B30001-
2	124-32-53130	. LINK, REGULAR, R. H.	86	B30001-
	124-32-08010	. MASTER LINK K. L. H.	2	B30001-
3	☆	. . LINK, MASTER, L. H. , PIN SIDE	2	B30001-
4	☆	. . LINK, MASTER, L. H. , BUSHING SIDE	2	B30001-
	124-32-08020	. MASTER LINK K. R. H.	2	B30001-
5	☆	. . LINK, MASTER, R. H. , PIN SIDE	2	B30001-
6	☆	. . LINK, MASTER, R. H. , BUSHING SIDE	2	B30001-
7	124-32-53160	. SEAL ASS'Y	176	B30001-
8	124-32-53190	. SPACER	176	B30001-
9	124-32-53140	. BUSHING	88	B30001-
10	124-32-53150	. PIN	88	B30001-
11	07059-11830	. PLUG, LARGE	88	B30001-
12	07059-20721	. PLUG, SMALL	88	B30001-
13	12G-32-51110	. SHOE, TRACK	86	B30001-
14	13F-32-21221	. BOLT, SHOE (Y0320-K2)	344	B30001-
15	124-32-53220	. NUT, SHOE (Y0320-K2)	344	B30001-
16	12G-32-51110	. SHOE, TRACK	2	B30001-
17	12G-32-53350	. BOLT, MASTER	4	B30001-
18	12G-32-53360	. BOLT, MASTER	4	B30001-

FIG. R0500-01A7 TRACK SHOE (LUBRICATE TYPE) (SINGLE GROUSER) (700MM WIDE) (HEAVY DUTY LINK)

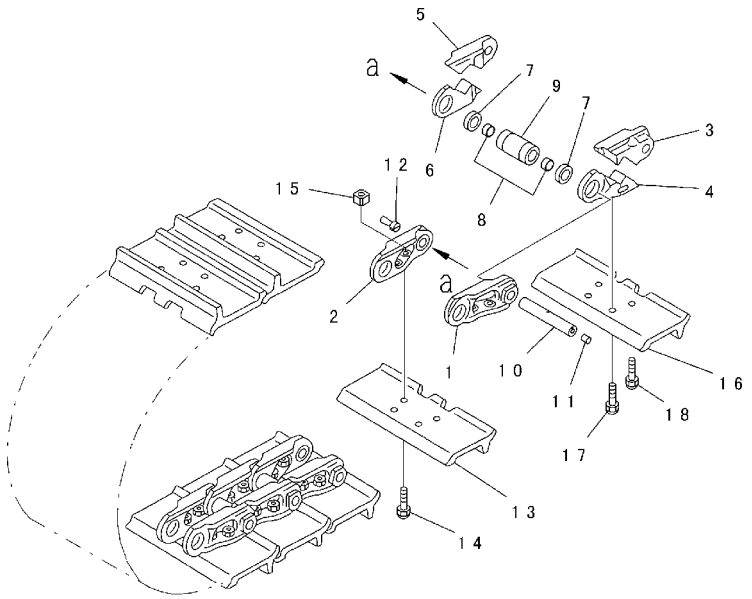

PWL360

FIG. NO. : R0500-01A7

INDEX	PART NO.	DESCRIPTION	Q'TY	SERIAL NO.
	12G-32-01120	TRACK SHOE ASS'Y	1	B30001-
1	124-32-53120	. LINK, REGULAR, L. H.	86	B30001-
2	124-32-53130	. LINK, REGULAR, R. H.	86	B30001-
	124-32-08010	. MASTER LINK K. L. H.	2	B30001-
3	☆	. . LINK, MASTER, L. H. , PIN SIDE	2	B30001-
4	☆	. . LINK, MASTER, L. H. , BUSHING SIDE	2	B30001-
	124-32-08020	. MASTER LINK K. R. H.	2	B30001-
5	☆	. . LINK, MASTER, R. H. , PIN SIDE	2	B30001-
6	☆	. . LINK, MASTER, R. H. , BUSHING SIDE	2	B30001-
7	124-32-53160	. SEAL ASS'Y	176	B30001-
8	124-32-53190	. SPACER	176	B30001-
9	124-32-53140	. BUSHING	88	B30001-
10	124-32-53150	. PIN	88	B30001-
11	07059-11830	. PLUG, LARGE	88	B30001-
12	07059-20721	. PLUG, SMALL	88	B30001-
13	12G-32-51310	. SHOE, TRACK	86	B30001-
14	205-32-51121	. BOLT, SHOE (Y0320-K1)	344	B30001-
15	124-32-53220	. NUT, SHOE (Y0320-K1)	344	B30001-
16	12G-32-51310	. SHOE, TRACK	2	B30001-
17	124-32-53350	. BOLT, MASTER	4	B30001-
18	124-32-53360	. BOLT, MASTER	4	B30001-

FIG. R0500-01A8 TRACK SHOE (LUBRICATE TYPE) (SINGLE GROUSER) (510MM WIDE) (HEAVY DUTY LINK)

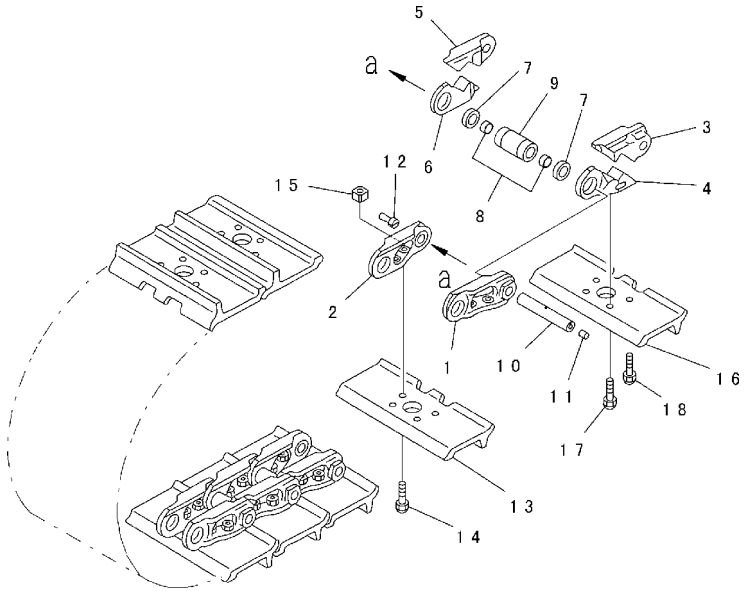

PWL36/1

FIG. NO. : R0500-01A8

INDEX	PART NO.	DESCRIPTION	Q'TY	SERIAL NO.
	12G-32-01130	TRACK SHOE ASS'Y	1	B30001-
1	124-32-53120	. LINK,REGULAR, L. H.	86	B30001-
2	124-32-53130	. LINK,REGULAR, R. H.	86	B30001-
	124-32-08010	. MASTER LINK K. L. H.	2	B30001-
3	☆	. . LINK, MASTER,L. H. , PIN SIDE	2	B30001-
4	☆	. . LINK, MASTER,L. H. , BUSHING SIDE	2	B30001-
	124-32-08020	. MASTER LINK K. R. H.	2	B30001-
5	☆	. . LINK, MASTER,R. H. , PIN SIDE	2	B30001-
6	☆	. . LINK, MASTER,R. H. , BUSHING SIDE	2	B30001-
7	124-32-53160	. SEAL ASS'Y	176	B30001-
8	124-32-53190	. SPACER	176	B30001-
9	124-32-53140	. BUSHING	88	B30001-
10	124-32-53150	. PIN	88	B30001-
11	07059-11830	. PLUG,LARGE	88	B30001-
12	07059-20721	. PLUG,SMALL	88	B30001-
13	124-32-51310	. SHOE,TRACK	86	B30001-
14	205-32-51121	. BOLT, SHOE (Y0320-K1)	344	B30001-
15	124-32-53220	. NUT,SHOE (Y0320-K1)	344	B30001-
16	124-32-51310	. SHOE,TRACK	2	B30001-
17	124-32-53350	. BOLT,MASTER	4	B30001-
18	124-32-53360	. BOLT,MASTER	4	B30001-

FIG. R0500-01B1 TRACK SHOE (LUBRICATE TYPE) (SINGLE GROUSER) (700MM WIDE) (HD LINK, AR BUSHING)

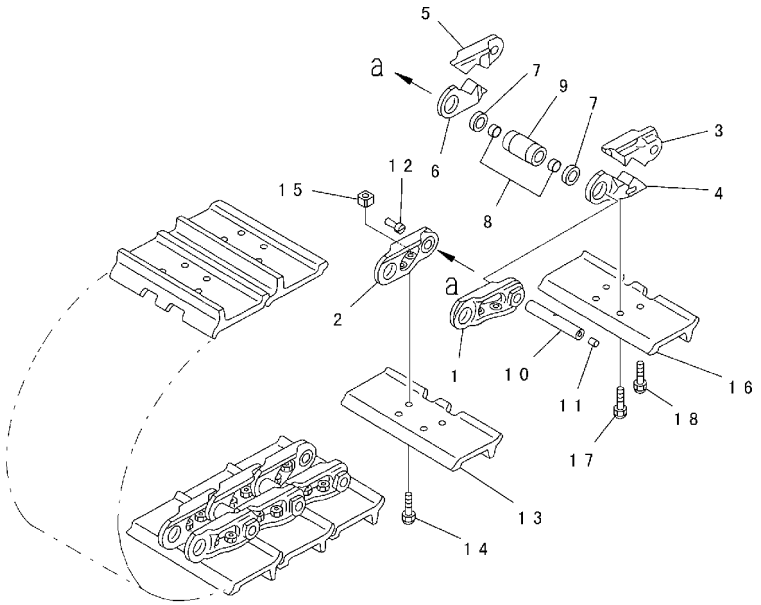

PWL3670

FIG. NO. : R0500-01B1

INDEX	PART NO.	DESCRIPTION	Q'TY	SERIAL NO.
	12G-32-04120	TRACK SHOE ASS'Y	1	B30001-
1	124-32-53120	. LINK, REGULAR, L. H.	86	B30001-
2	124-32-53130	. LINK, REGULAR, R. H.	86	B30001-
	124-32-08010	. MASTER LINK K. L. H.	2	B30001-
3	☆	. . LINK, MASTER, L. H. , PIN SIDE	1	B30001-
4	☆	. . LINK, MASTER, L. H. , BUSHING SIDE	1	B30001-
	124-32-08020	. MASTER LINK K. R. H.	2	B30001-
5	☆	. . LINK, MASTER, R. H. , PIN SIDE	1	B30001-
6	☆	. . LINK, MASTER, R. H. , BUSHING SIDE	1	B30001-
7	124-32-53160	. SEAL ASS'Y	176	B30001-
8	124-32-53190	. SPACER	176	B30001-
9	124-32-53240	. BUSHING	88	B30001-
10	124-32-53150	. PIN	88	B30001-
11	07059-11830	. PLUG, LARGE	88	B30001-
12	07059-20721	. PLUG, SMALL	88	B30001-
13	12G-32-51310	. SHOE, TRACK	86	B30001-
14	205-32-51121	. BOLT, SHOE (Y0320-K1)	344	B30001-
15	124-32-53220	. NUT, SHOE (Y0320-K1)	344	B30001-
16	12G-32-51310	. SHOE, TRACK	2	B30001-
17	124-32-53350	. BOLT, MASTER	4	B30001-
18	124-32-53360	. BOLT, MASTER	4	B30001-

FIG. R2200-01A2 ROLLER GUARD (FOR HD LINK)

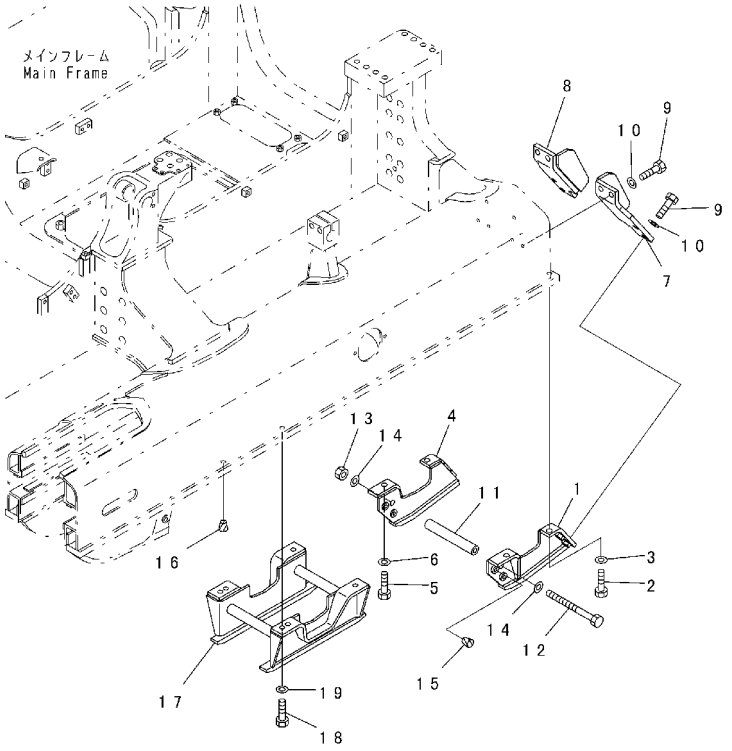

FIG. NO. : R2200-01A2

INDEX	PART NO.	DESCRIPTION	Q'TY	SERIAL NO.
1	12G-21-52151	BRACKET	2	B30001-
2	01010-81635	BOLT	4	B30001-
3	01643-31645	WASHER	4	B30001-
4	12G-21-52161	BRACKET	2	B30001-
5	01010-81635	BOLT	4	B30001-
6	01643-31645	WASHER	4	B30001-
7	12G-21-51182	GUARD	2	B30001-
8	12G-21-51192	GUARD	2	B30001-
9	01010-81645	BOLT	16	B30001-
10	01643-31645	WASHER	16	B30001-
11	12G-30-51531	COLLAR	2	B30001-
12	09205-26270	BOLT	2	B30001-
13	01580-11613	NUT	2	B30001-
14	01643-31645	WASHER	4	B30001-
15	07049-01215	PLUG	16	B30001-
16	07049-01620	PLUG	6	B30001-
17	12G-30-52611	GUARD	2	B30001-
18	01010-81635	BOLT	8	B30001-
19	01643-31645	WASHER	8	B30001-

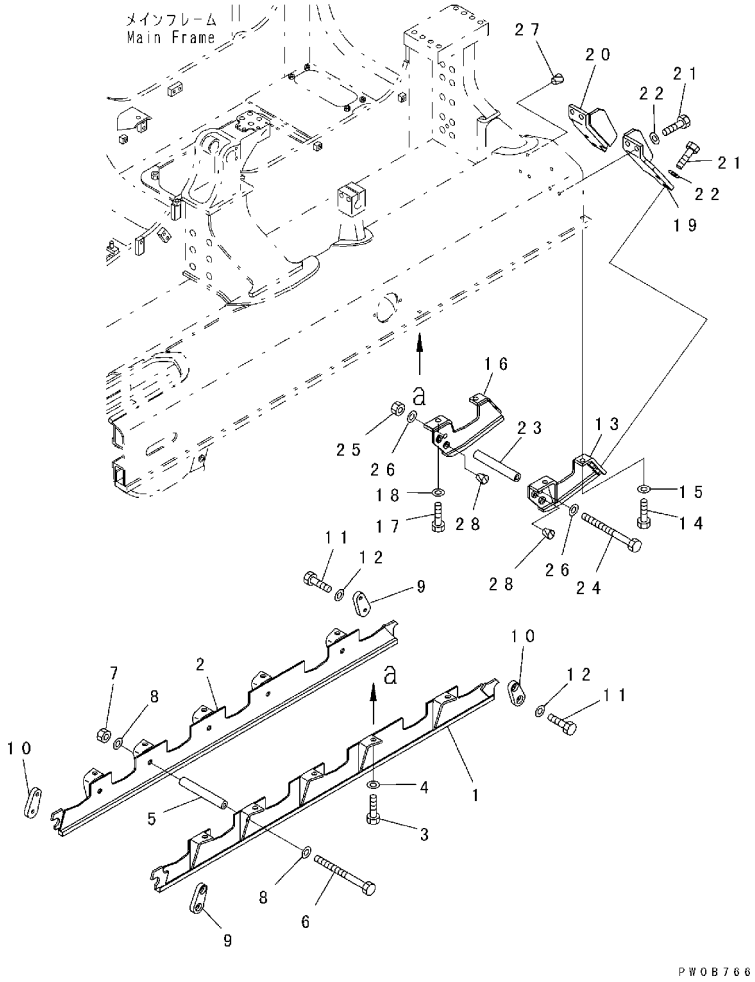

INDEX	PART NO.	DESCRIPTION	Q'TY	SERIAL NO.
1	12G-30-52511	GUARD	2	B30001-
2	12G-30-52521	GUARD	2	B30001-
3	01010-81640	BOLT	20	B30001-
4	01643-31645	WASHER	20	B30001-
5	12G-30-51530	COLLAR	10	B30001-
6	09205-26270	BOLT	10	B30001-
7	01580-11613	NUT	10	B30001-
8	01643-31645	WASHER	20	B30001-
9	134-30-61460	PLATE	4	B30001-
10	134-30-61460	PLATE	4	B30001-
11	01010-81230	BOLT	16	B30001-
12	01643-31232	WASHER	16	B30001-
13	12G-21-52151	BRACKET	2	B30001-
14	01010-81635	BOLT	4	B30001-
15	01643-31645	WASHER	4	B30001-
16	12G-21-52161	BRACKET	2	B30001-
17	01010-81635	BOLT	4	B30001-
18	01643-31645	WASHER	4	B30001-
19	12G-21-51182	GUARD	2	B30001-
20	12G-21-51192	GUARD	2	B30001-
21	01010-81645	BOLT	16	B30001-
22	01643-31645	WASHER	16	B30001-
23	12G-30-51531	COLLAR	2	B30001-
24	09205-26270	BOLT	2	B30001-
25	01580-11613	NUT	2	B30001-
26	01643-31645	WASHER	4	B30001-
27	07049-01215	PLUG	16	B30001-
28	07049-01620	PLUG	6	B30001-

WORK EQUIPMENT

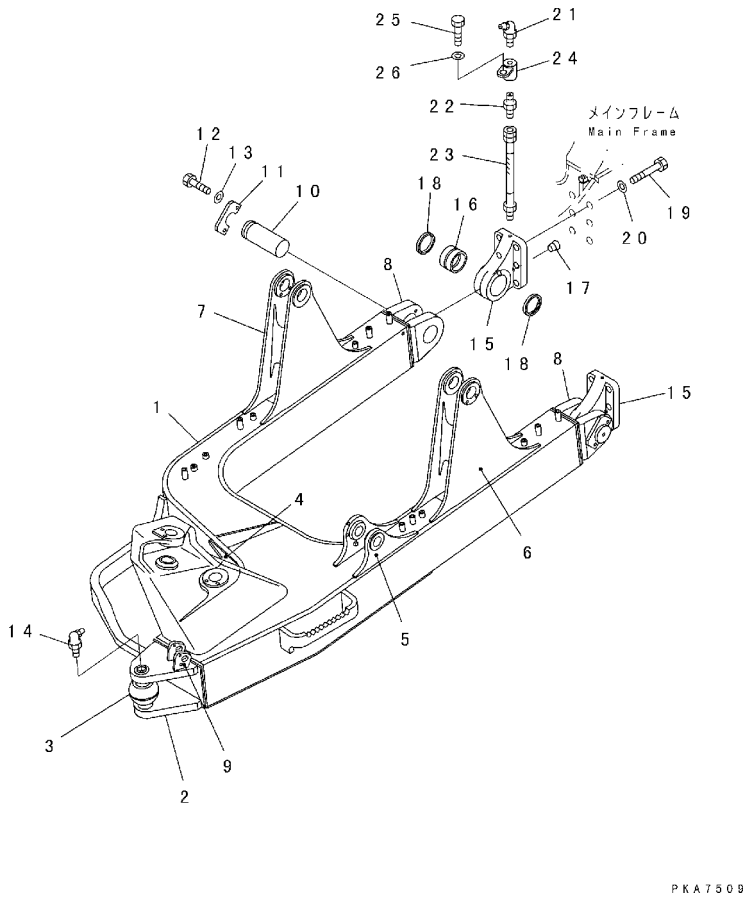

INDEX	PART NO.	DESCRIPTION	Q'TY	SERIAL NO.
1	124-72-61301	FRAME ASS'Y	1	B30001-
2	124-72-61650	. BRACKET (WELDED)	1	B30001-
3	124-72-61660	. . SHAFT (WELDED)	1	B30001-
4	124-72-51232	. BRACKET (WELDED)	1	B30001-
5	124-72-51262	. BRRCKET (WELDED)	1	B30001-
6	124-72-51273	. BRACKET, L. H. (WELDED)	1	B30001-
7	124-72-51283	. BRACKET, R. H. (WELDED)	1	B30001-
8	124-72-51292	. BRACKET (WELDED)	2	B30001-
9	124-72-51344	. BRACKET (WELDED)	1	B30001-
10	12F-72-41470	SHAFT	2	B30001-
11	12F-72-41480	PLATE	2	B30001-
12	01010-81230	BOLT	4	B30001-
13	01643-31232	WASHER	4	B30001-
14	07020-00675	FITTING	1	B30001-
	124-72-00011	BRACKET ASS'Y	2	B30001-
15	☆	. BRACKET	1	B30001-
16	12H-72-11380	. BUSHING	1	B30001-
17	07043-70108	. PLUG	1	B30001-
18	07145-00070	. SEAL	2	B30001-
19	208-01-11181	BOLT	12	B30001-
20	01643-32460	WASHER	12	B30001-
21	07020-00675	FITTING	2	B30001-
22	203-62-21740	NIPPLE	2	B30001-
23	11T-61-13710	HOSE	2	B30001-
24	12G-72-51120	SEAT	2	B30001-
25	01010-81020	BOLT	2	B30001-
26	01643-31032	WASHER	2	B30001-

FIG. T2115-01A0 LINK

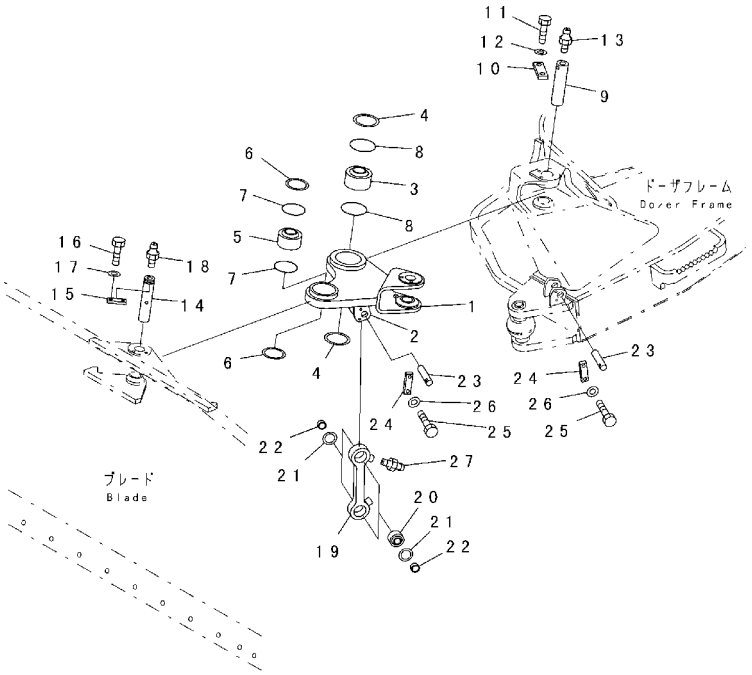

FIG. NO. : T2115-01A0

INDEX	PART NO.	DESCRIPTION	Q'TY	SERIAL NO.
1	124-72-51611	LINK	1	B30001-
2	124-72-51344	. BRACKET (WELDED)	1	B30001-
3	07137-04507	BUSHING	1	B30001-
4	04065-01030	RING	2	B30001-
5	124-72-51810	BUSHING	1	B30001-
6	04065-09030	RING	2	B30001-
7	07000-03040	O-RING	2	B30001-
8	07000-03045	O-RING	2	B30001-
9	124-72-51790	PIN	1	B30001-
10	04082-00212	LOCK	1	B30001-
11	01010-81225	BOLT	2	B30001-
12	01643-31232	WASHER	2	B30001-
13	07020-00000	FITTING	1	B30001-
14	124-72-51770	PIN	1	B30001-
15	04082-00212	LOCK	1	B30001-
16	01010-81225	BOLT	2	B30001-
17	01643-31232	WASHER	2	B30001-
18	07020-00000	FITTING	1	B30001-
19	124-72-51360	ROD	1	B30001-
20	124-72-51354	BUSHING	2	B30001-
21	04065-04718	RING	2	B30001-
22	124-72-51423	SPACER	4	B30001-
23	124-72-51540	PIN	2	B30001-
24	04082-00110	LOCK	2	B30001-
25	01010-81020	BOLT	4	B30001-
26	01643-31032	WASHER	4	B30001-
27	07020-00000	FITTING	4	B30001-

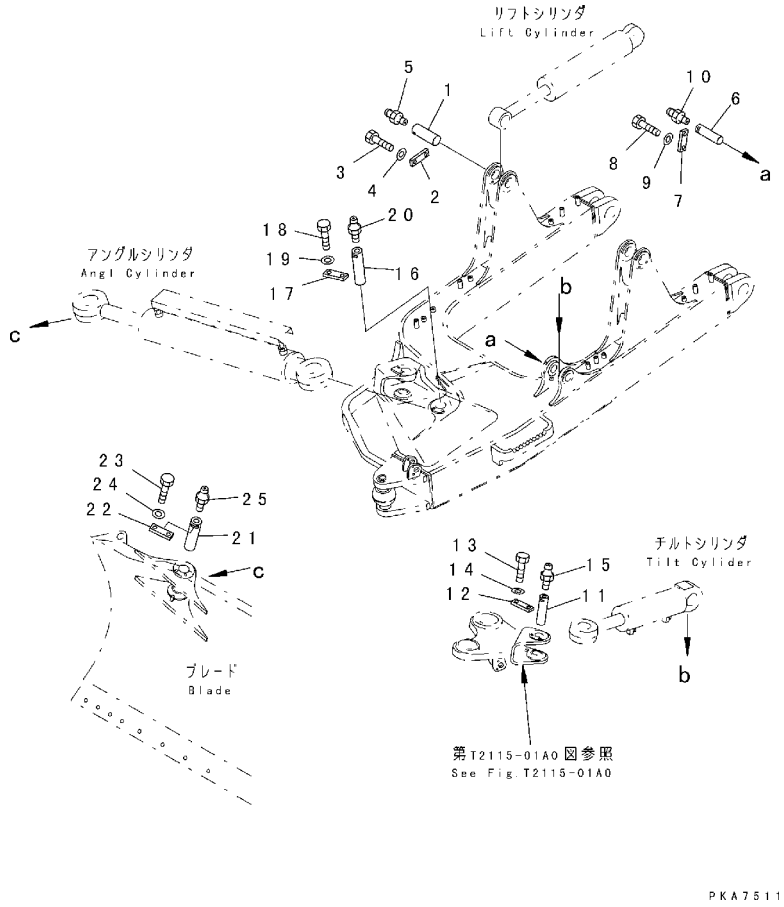

INDEX	PART NO.	DESCRIPTION	Q'TY	SERIAL NO.
1	09241-5A140	PIN	2	B30001-
2	04082-00212	LOCK	2	B30001-
3	01010-81225	BOLT	4	B30001-
4	01643-31232	WASHER	4	B30001-
5	07020-00000	FITTING	2	B30001-
6	12H-72-11581	PIN	1	B30001-
7	04082-00212	LOCK	1	B30001-
8	01010-81225	BOLT	2	B30001-
9	01643-31232	WASHER	2	B30001-
10	07020-00000	FITTING	1	B30001-
11	12H-72-11581	PIN	1	B30001-
12	04082-00212	LOCK	1	B30001-
13	01010-81225	BOLT	2	B30001-
14	01643-31232	WASHER	2	B30001-
15	07020-00000	FITTING	1	B30001-
16	09241-5A210	PIN	1	B30001-
17	04082-00212	LOCK	1	B30001-
18	01010-81225	BOLT	2	B30001-
19	01643-31232	WASHER	2	B30001-
20	07020-00000	FITTING	1	B30001-
21	09241-5A210	PIN	1	B30001-
22	04082-00212	LOCK	1	B30001-
23	01010-81225	BOLT	2	B30001-
24	01643-31232	WASHER	2	B30001-
25	07020-00000	FITTING	1	B30001-

FIG. T2120-01A0 BLADE (FOR POWER ANGLE POWER TILT DOZER)

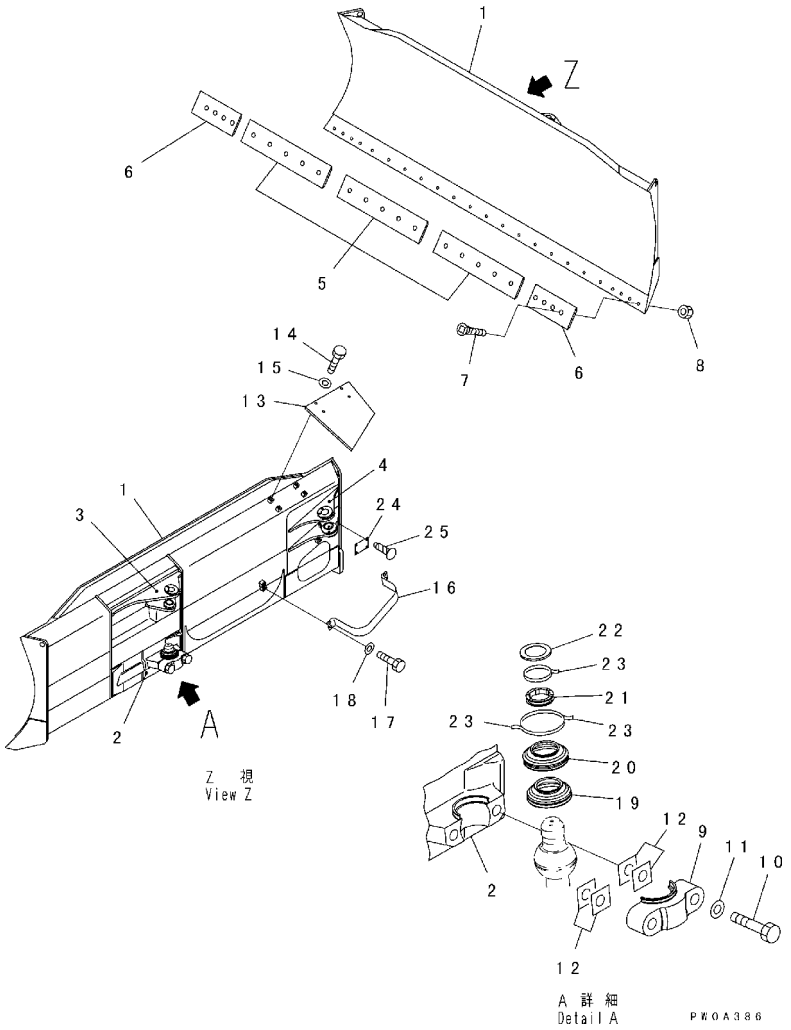

FIG. NO. : T2120-01A0

INDEX	PART NO.	DESCRIPTION	Q'TY	SERIAL NO.
1	124-72-61500	BLADE ASS'Y	1	B30001-
2	124-72-61190	. BRACKET (WELDED)	1	B30001-
3	124-72-51143	. BRACKET (WELDED)	1	B30001-
4	124-72-51132	. BRACKET (WELDED)	1	B30001-
5	12F-70-31251	EDGE	3	B30001-
6	11G-71-31170	BIT	2	B30001-
7	02090-11055	BOLT	23	B30001-
8	02290-11016	NUT	23	B30001-
9	124-72-51180	CAP	1	B30001-
10	01011-83010	BOLT	2	B30001-
11	01643-33080	WASHER	2	B30001-
12	124-72-61840	SHIM	8	B30001-
	124-72-61890	SHIM	6	B30001-
13	124-72-51480	COVER	1	B30001-
14	01010-81230	BOLT	4	B30001-
15	01643-31232	WASHER	4	B30001-
16	124-72-51490	PLATE	1	B30001-
17	01010-81635	BOLT	4	B30001-
18	01643-31645	WASHER	4	B30001-
19	124-72-51710	COVER	1	B30001-
20	124-72-51720	COVER	1	B30001-
21	124-72-51730	RETAINER	1	B30001-
22	124-72-51740	COVER	1	B30001-
23	08034-00536	BAND	3	B30001-
24	09601-60000	PLATE, NAME, (LIMITED SUPPLY)	1	B30001-
	09601-60050	PLATE, NAME, (LIMITED SUPPLY)	1	B30001-
25	04418-13060	SCREW	4	B30001-

FIG. T2120-01A1 BLADE (FOR POWER ANGLE POWER TILT DOZER) (WIDE TYPE)

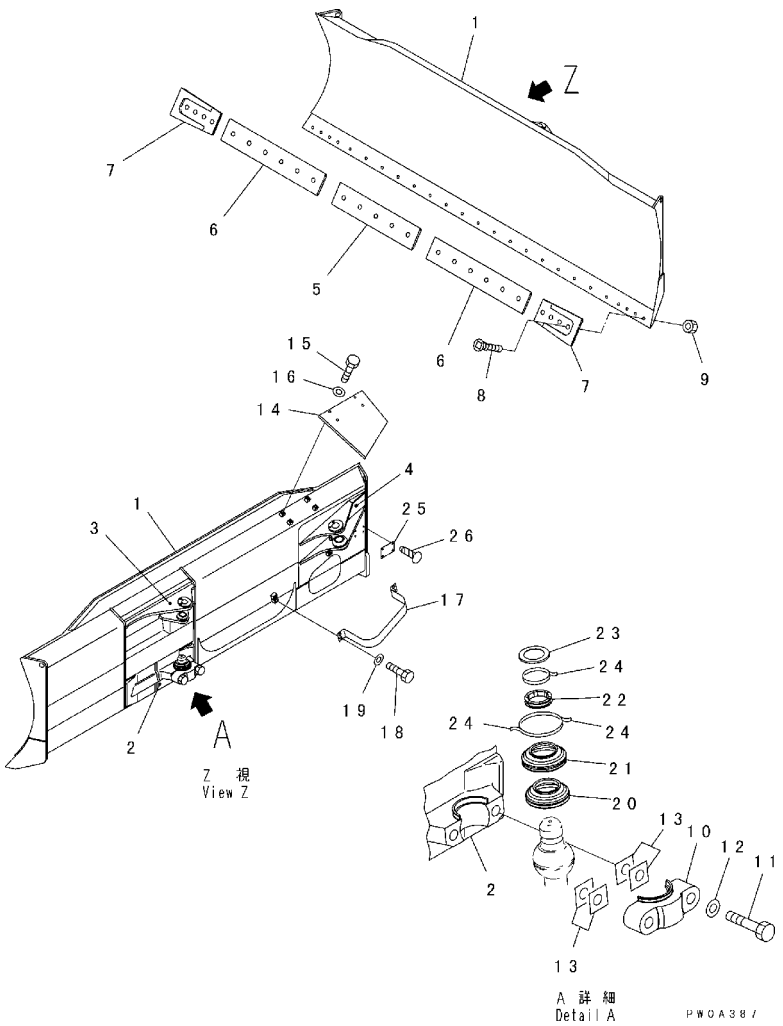

FIG. NO. : T2120-01A1

INDEX	PART NO.	DESCRIPTION	Q'TY	SERIAL NO.
1	124-72-62200	BLADE ASS'Y	1	B30001-
2	124-72-61190	. BRACKET (WELDED)	1	B30001-
3	124-72-51143	. BRACKET (WELDED)	1	B30001-
4	124-72-52131	. BRACKET (WELDED)	1	B30001-
5	12F-70-31251	EDGE	1	B30001-
6	12F-70-31261	EDGE	2	B30001-
7	11G-71-31170	BIT	2	B30001-
8	02090-11055	BOLT	25	B30001-
9	02290-11016	NUT	25	B30001-
10	124-72-51180	CAP	1	B30001-
11	01011-83010	BOLT	2	B30001-
12	01643-33080	WASHER	2	B30001-
13	124-72-61840	SHIM	8	B30001-
	124-72-61890	SHIM	6	B30001-
14	124-72-51480	COVER	1	B30001-
15	01010-81230	BOLT	4	B30001-
16	01643-31232	WASHER	4	B30001-
17	124-72-51490	PLATE	1	B30001-
18	01010-81635	BOLT	4	B30001-
19	01643-31645	WASHER	4	B30001-
20	124-72-51710	COVER	1	B30001-
21	124-72-51720	COVER	1	B30001-
22	124-72-51730	RETAINER	1	B30001-
23	124-72-51740	COVER	1	B30001-
24	08034-00536	BAND	3	B30001-
25	09601-60000	PLATE, NAME, (LIMITED SUPPLY)	1	B30001-
	09601-60050	PLATE, NAME, (LIMITED SUPPLY)	1	B30001-
26	04418-13060	SCREW	4	B30001-

FIG. T2121-01A0 BLADE END BIT (STRONG)

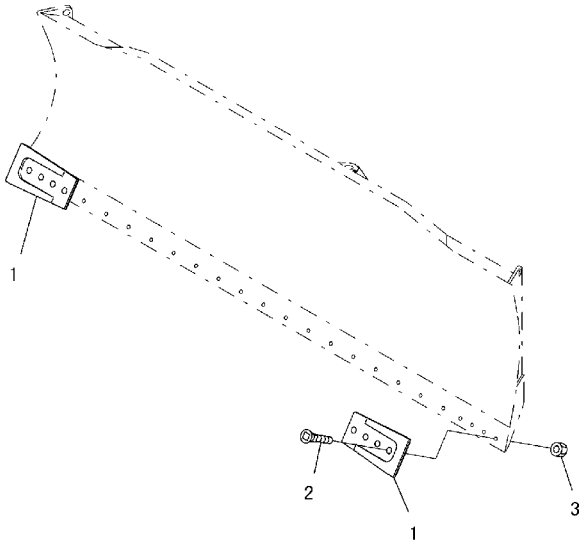

PKK2176

FIG. NO. : T2121-01A0

INDEX	PART NO.	DESCRIPTION	Q'TY	SERIAL NO.
1	120-70-31411	BIT, END	2	B30001-
2	02090-11055	BOLT	8	B30001-
3	02290-11016	NUT	8	B30001-

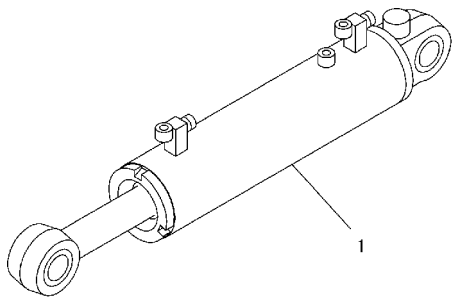

PKK0587

FIG. NO. : T2140-01A0

INDEX	PART NO.	DESCRIPTION	Q'TY	SERIAL NO.
1	(124-63-02201)	CYLINDER ASS'Y, (SEE FIG. Y1620-01A0)	2	B30001-

FIG. T2150-01A0 BLADE TILT CYLINDER

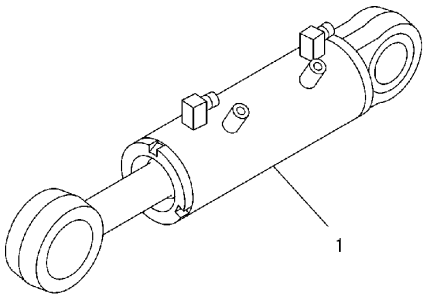

PKK0588

FIG. NO. : T2150-01A0

INDEX	PART NO.	DESCRIPTION	Q'TY	SERIAL NO.
1	(124-63-02221)	CYLINDER ASS'Y	1	B30001-

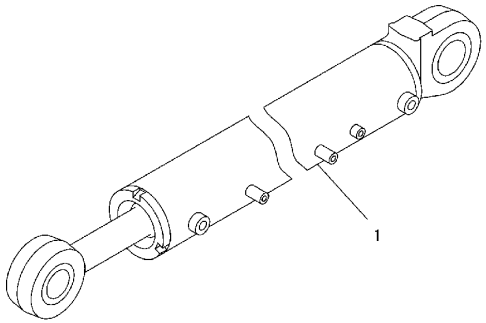

PKK0589

INDEX	PART NO.	DESCRIPTION	Q'TY	SERIAL NO.
1	(124-63-02210)	CYLINDER ASS'Y	1	B30001-
	(124-63-02230)	CYLINDER ASS'Y	1	B30001-

FIG. T2160-01A0 DOZER OIL LINE (ANGLE CYLINDER LINE)

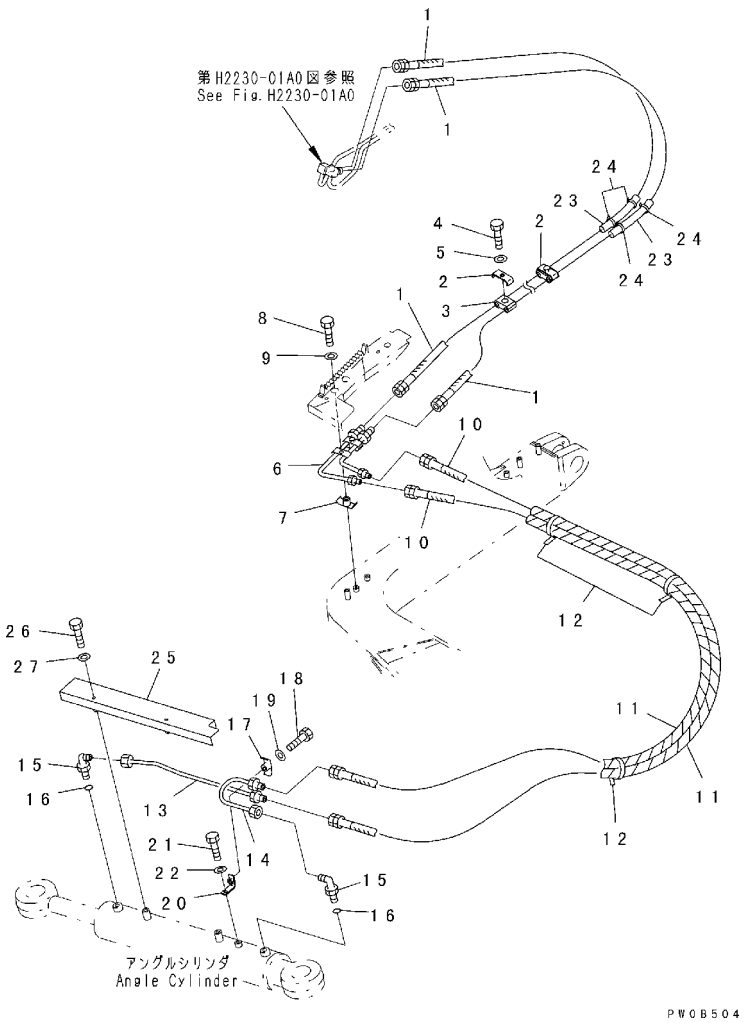

FIG. NO. : T2160-01A0

INDEX	PART NO.	DESCRIPTION	Q'TY	SERIAL NO.
1	124-62-61890	HOSE	2	B30001-
	08210-01803	. SPIRAL TUBE	2	B30001-
2	134-62-63451	PLATE	2	B30001-
3	134-62-63471	CUSHION	2	B30001-
4	01010-81220	BOLT	2	B30001-
5	01643-31232	WASHER	2	B30001-
6	124-62-61570	TUBE	1	B30001-
7	124-62-51920	CLIP	2	B30001-
8	01010-81040	BOLT	2	B30001-
9	01643-31032	WASHER	2	B30001-
10	10E-852-5460	HOSE	2	B30001-
11	08210-01810	SPIRAL TUBE	2	B30001-
12	08034-20519	BAND	4	B30048-
	08034-20519	BAND	3	B30001-B30047
13	124-62-61630	TUBE	1	B30001-
14	124-62-61640	TUBE	1	B30001-
15	07235-10315	ELBOW	2	B30001-
16	07002-12034	O-RING	2	B30001-
17	124-62-51920	CLIP	1	B30001-
18	01010-81240	BOLT	1	B30001-
19	01643-31232	WASHER	1	B30001-
20	124-62-51530	BRACKET	1	B30001-
21	01010-81225	BOLT	1	B30001-
22	01643-31232	WASHER	1	B30001-
23	07095-20318	CUSHION	2	B30048-
	07095-20523	CUSHION	2	B30001-B30047
24	08034-20519	BAND	4	B30001-
25	124-62-51821	COVER	1	B30001-
26	01010-81260	BOLT	2	B30001-
27	01643-31232	WASHER	2	B30001-

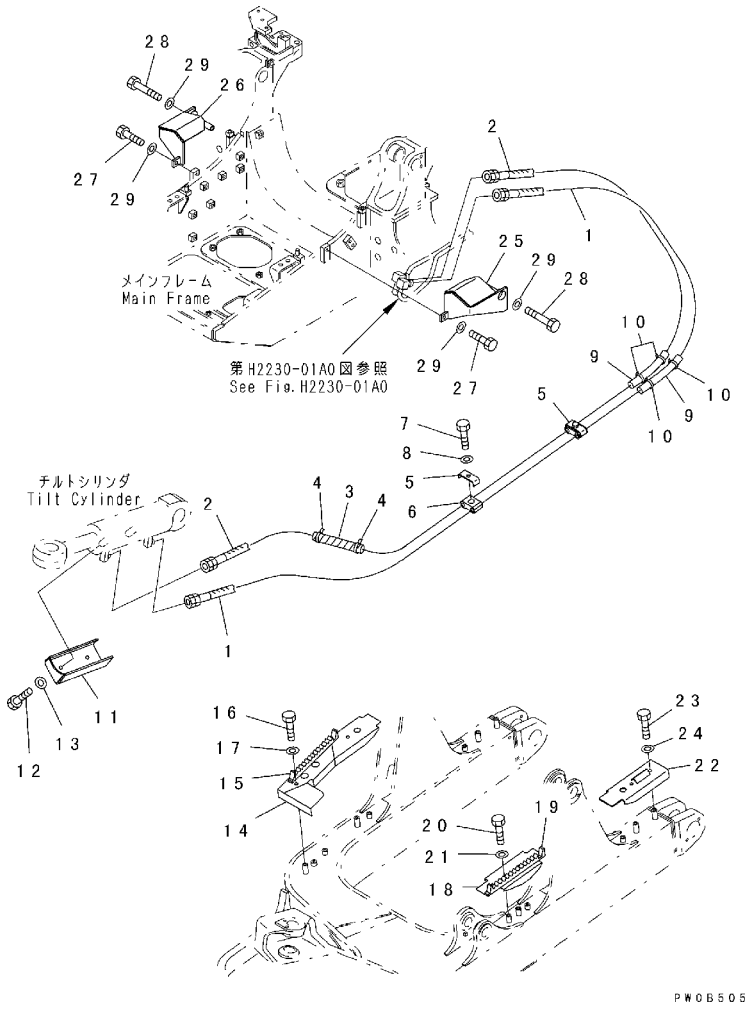

INDEX	PART NO.	DESCRIPTION	Q'TY	SERIAL NO.
1	124-62-61880	HOSE	1	B30001-
	08210-01803	. SPIRAL TUBE	2	B30001-
2	124-62-61850	HOSE	1	B30001-
	08210-01803	. SPIRAL TUBE	2	B30001-
3	08210-01803	SPIRAL TUBE	1	B30001-
4	08034-20519	BAND	3	B30048-
	08034-20519	BAND	2	B30001-B30047
5	134-62-63451	PLATE	2	B30001-
6	134-62-63471	CUSHION	2	B30001-
7	01010-81220	BOLT	2	B30001-
8	01643-31232	WASHER	2	B30001-
9	07095-20318	CUSHION	2	B30048-
	07095-20523	CUSHION	2	B30001-B30047
10	08034-20519	BAND	4	B30001-
11	124-62-51680	COVER	1	B30001-
12	01010-81225	BOLT	2	B30001-
13	01643-31232	WASHER	2	B30001-
14	124-62-61671	COVER ASS'Y	1	B30001-
15	124-62-51690	. PLATE	1	B30001-
16	01010-81020	BOLT	2	B30001-
17	01643-31032	WASHER	2	B30001-
18	124-62-61781	COVER	1	B30001-
19	124-62-51690	. PLATE	1	B30001-
20	01010-81020	BOLT	2	B30001-
21	01643-31032	WASHER	2	B30001-
22	124-62-61790	COVER	2	B30001-
23	01010-81020	BOLT	4	B30001-
24	01643-31032	WASHER	4	B30001-
25	124-62-51711	COVER	1	B30001-
26	124-62-51721	COVER	1	B30001-
27	01010-81230	BOLT	2	B30001-
28	01011-81235	BOLT	2	B30001-
29	01643-31232	WASHER	4	B30001-

FIG. T2160-03A0 DOZER OIL LINE (LIFT CYLINDER LINE)

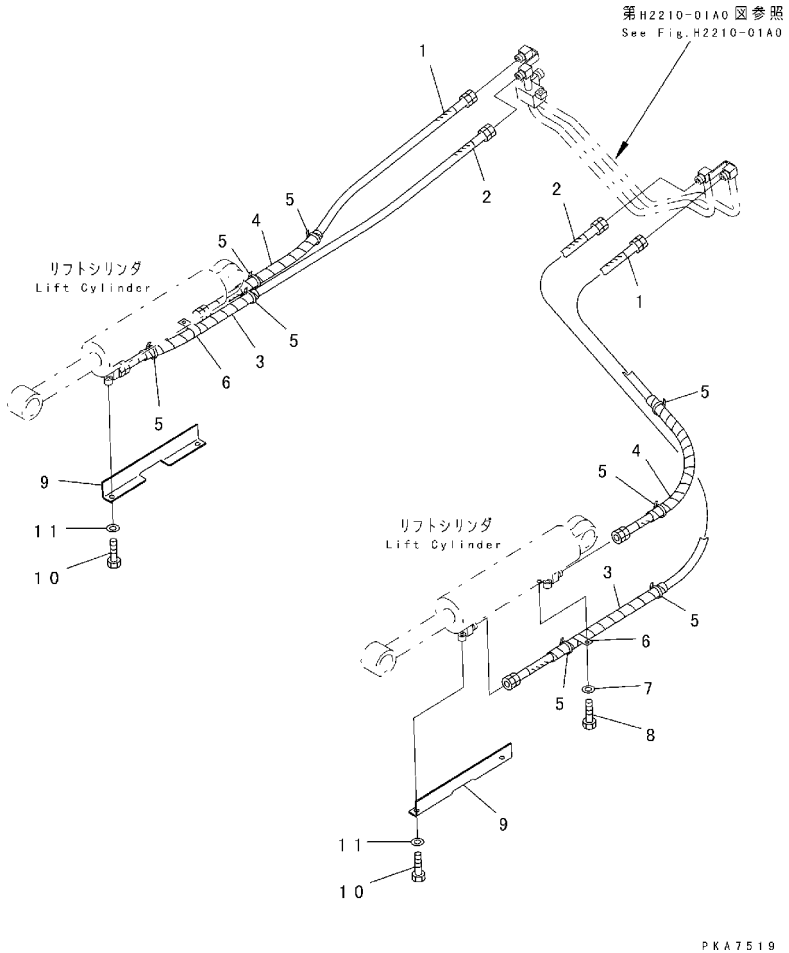

FIG. NO. : T2160-03A0

INDEX	PART NO.	DESCRIPTION	Q'TY	SERIAL NO.
1	07086-00406	HOSE	2	B30001-
2	07086-00409	HOSE	2	B30001-
3	08210-01807	SPIRAL TUBE	2	B30001-
4	08210-01803	SPIRAL TUBE	4	B30001-
5	08034-00519	BAND	8	B30001-
6	08036-02514	CLIP	2	B30001-
7	01643-31232	WASHER	2	B30001-
8	01010-81220	BOLT	2	B30001-
9	124-62-51651	COVER	2	B30001-
10	01010-81225	BOLT	4	B30001-
11	01643-31232	WASHER	4	B30001-

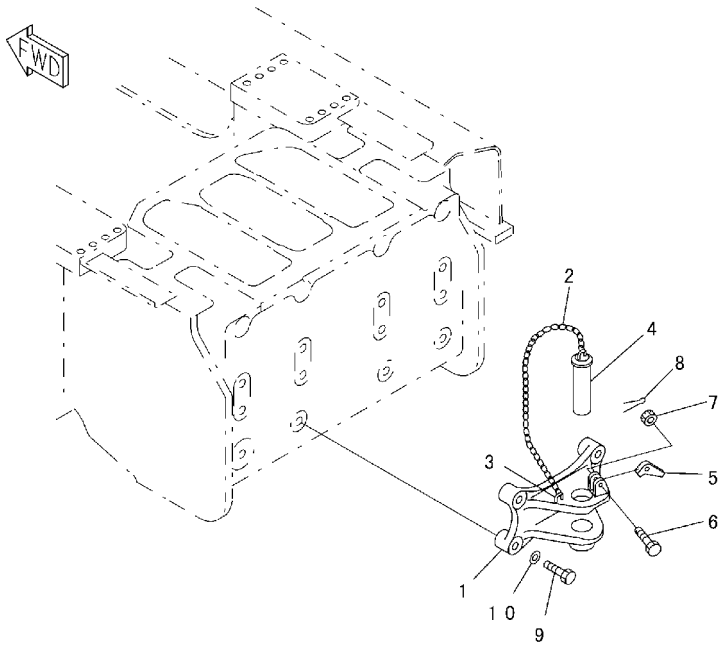

PKA7522

INDEX	PART NO.	DESCRIPTION	Q'TY	SERIAL NO.
	131-69-00211	HITCH ASS'Y	1	B30001-
	131-69-41101	. HITCH ASS'Y	1	B30001-
1	131-69-41111	. . BRACKET	1	B30001-
2	09245-04830	. . CHAIN	1	B30001-
3	09245-50060	. . HOOK (WELDED)	2	B30001-
4	130-69-11190	. . PIN	1	B30001-
5	09249-00016	. LATCH	1	B30001-
6	01012-51260	. BOLT	1	B30001-
7	01592-31215	. NUT	1	B30001-
8	04050-03020	. PIN	1	B30001-
9	01010-82490	BOLT	4	B30001-
10	01643-32460	WASHER	4	B30001-

FIG. T2810-01A1 HITCH (REGULATION OF EU DYNAMIC NOISE)

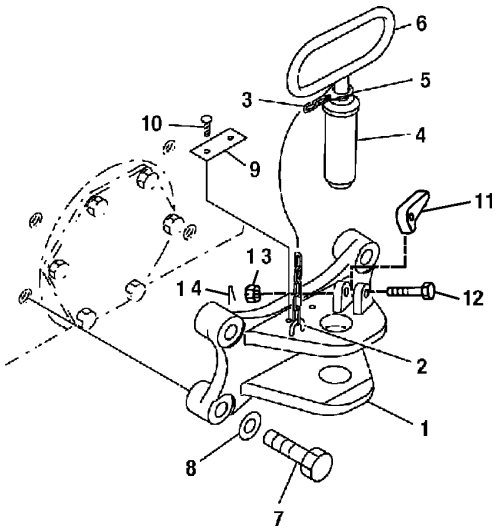

FIG. NO. : T2810-01A1

INDEX	PART NO.	DESCRIPTION	Q'TY	SERIAL NO.
	134-69-13130	HITCH ASS'Y	1	B30001-
1	131-69-41120	. BRACKET	1	B30001-
2	09245-50060	. HOOK (WELDED)	1	B30001-
3	09245-04830	. CHAIN	1	B30001-
4	130-69-11190	. PIN	1	B30001-
5	144-69-11230	. PLATE	1	B30001-
6	144-69-11210	. HANDLE (WELDED)	1	B30001-
7	01010-82490	BOLT	4	B30001-
8	01643-32460	WASHER	4	B30001-
9	09823-00000	PLATE, NAME	1	B30001-
10	04418-13060	SCREW	2	B30001-
11	09249-00016	LATCH	1	B30001-
12	01052-51260	BOLT	1	B30001-
13	01592-11215	NUT	1	B30001-
14	04050-13020	PIN	1	B30001-

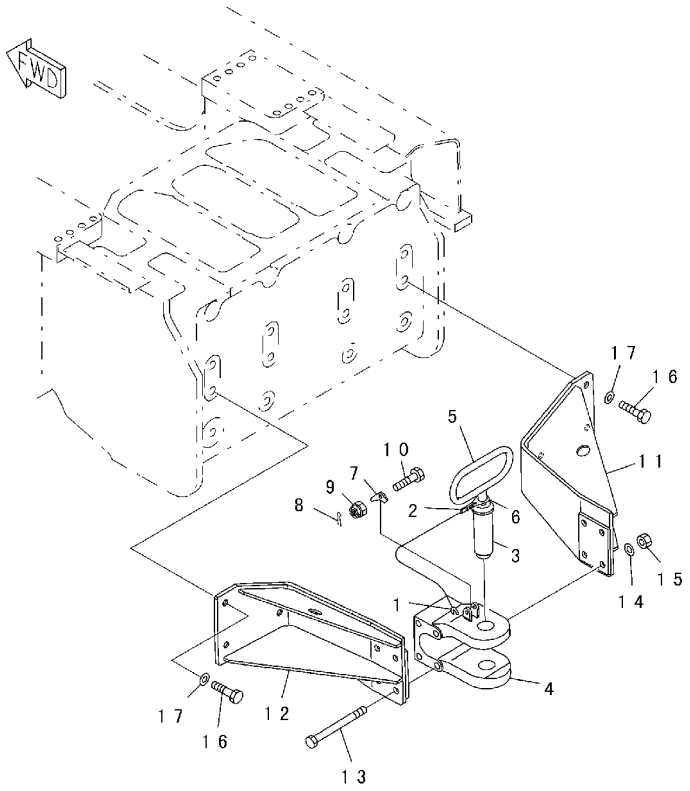

PLA7638

INDEX	PART NO.	DESCRIPTION	Q'TY	SERIAL NO.
	134-69-00020	DRAWBAR ASS'Y	1	B30001-
	144-69-11170	. DRAWBAR ASS'Y	1	B30001-
1	09245-50060	. . HOOK (WELDED)	1	B30001-
2	09245-04830	. . CHAIN	1	B30001-
3	09247-45180	. . PIN	1	B30001-
4	144-69-11130	. . DRAWBAR	1	B30001-
5	144-69-11210	. . HANDLE	1	B30001-
6	144-69-11230	. . PLATE	1	B30001-
7	09249-00016	. LATCH	1	B30001-
8	04050-03025	. PIN	1	B30001-
9	01592-31215	. NUT	1	B30001-
10	01012-51260	. BOLT	1	B30001-
11	134-69-13110	BRACKET, R. H.	1	B30001-
12	134-69-13120	BRACKET, L. H.	1	B30001-
13	144-69-11161	BOLT	4	B30001-
14	01643-32460	WASHER	4	B30001-
15	01580-12419	NUT	4	B30001-
16	01010-82480	BOLT	6	B30001-
17	01643-32460	WASHER	6	B30001-

MARKS AND PLATES

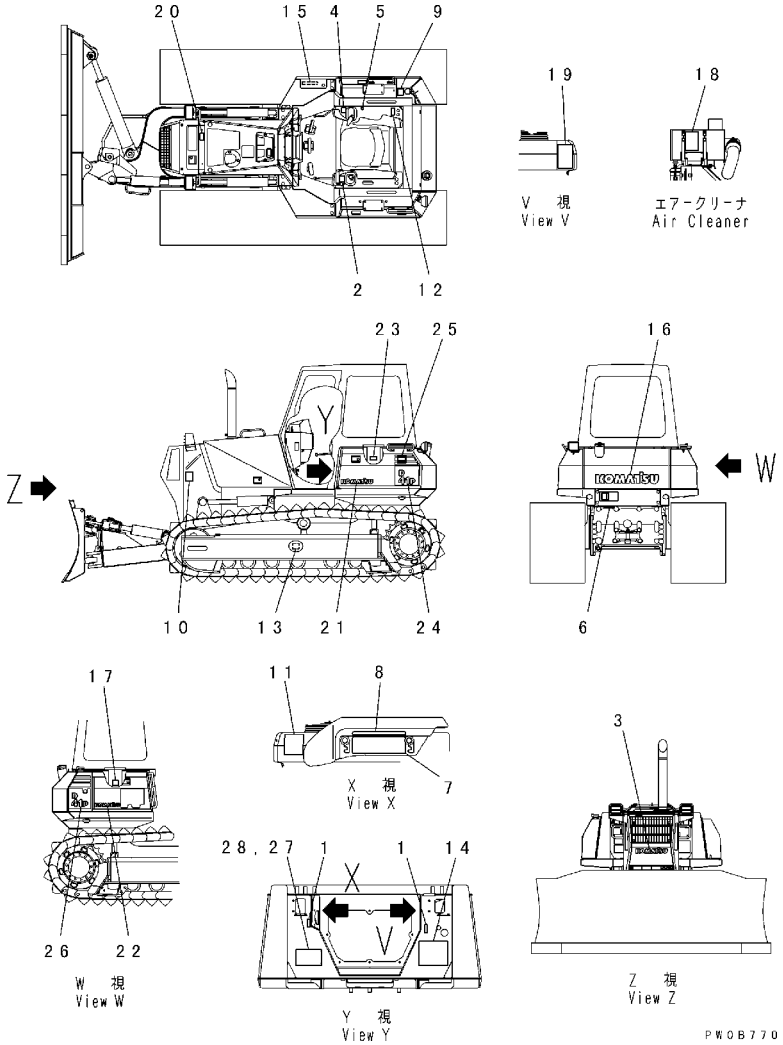

INDEX	PART NO.	DESCRIPTION	Q'TY	SERIAL NO.
1	14X-98-11170	PLATE, OPERATING, LOCK	2	B30001-
2	14X-98-11240	PLATE, OPERATING, STEERING LEVER (C AND B)	1	B30001-
3	09690-P0400	PLATE, MARK, KOMATSU, FRONT	1	B30001-
4	124-98-51140	PLATE, OPERATING, WORK EQUIPMENT LEVER	1	B30001-
5	17A-98-11180	PLATE, HORN	1	B30001-
6	09690-M0063	PLATE, MARK	1	B30001-
7	134-54-66190	PLATE, PROTECTION FILM	2	B30001-
8	134-54-66290	PLATE, PROTECTION FILM	2	B30001-
9	126-98-51141	PLATE, SAFETY, HYDRAULIC OIL TANK	1	B30230-
	09653-07001	PLATE, SAFETY, HYDRAULIC OIL TANK	1	B30001-B30229
10	124-98-51920	PLATE, CAUTION, SUPER ANGLE	1	B30001-
11	126-98-51161	PLATE, SAFETY, AFTER OPERATING	1	B30230-
	09654-37001	PLATE, SAFETY, AFTER OPERATING	1	B30001-B30229
12	09651-07001	PLATE, SAFETY, BEFORE OPERATING	1	B30001-
13	126-98-51171	PLATE, SAFETY, ADJUSTING TRACK SHOE	2	B30230-
	09657-07002	PLATE, SAFETY, ADJUSTING TRACK SHOE	2	B30001-B30229
14	124-98-62110	OIL CHART	1	B30001-
15	124-98-51860	PLATE, INSTRUCTION, PRESSURE TEST	1	B30001-
16	09690-P0800	PLATE, MARK, KOMATSU, REAR	1	B30001-
17	126-98-51190	PLATE, INSTRUCTION, POWER LINE OIL ELEMENT	1	B30001-
18	09637-50261	PLATE, INSTRUCTION, AIR CLEANER	1	B30230-
	09637-50263	PLATE, INSTRUCTION, AIR CLEANER	1	B30001-B30229
19	09802-17000	PLATE, SAFETY, SAFETY COMFIRM OF REAR	1	B30001-
20	126-98-51151	PLATE, SAFETY, RADIATOR	1	B30230-
	09668-07001	PLATE, SAFETY, RADIATOR	1	B30001-B30229
21	09690-P0400	PLATE, MARK, KOMATSU	1	B30001-
22	09690-P0315	PLATE, MARK, KOMATSU	1	B30001-
23	09808-07000	PLATE, SAFETY, BATTERY CABLE	1	B30001-
24	124-98-61611	PLATE, MARK, D41P	1	B30001-
25	124-98-61651	PLATE, MARK	1	B30001-
26	124-98-61621	PLATE, MARK, D41P	1	B30001-
27	09602-10050	PLATE, NAME, (LIMITED SUPPLY)	1	B30001-
28	04418-13060	SCREW	4	B30001-

FIG. U0100-01A1 MARKS AND PLATES (ENGLISH) (FOR U.S.A.)

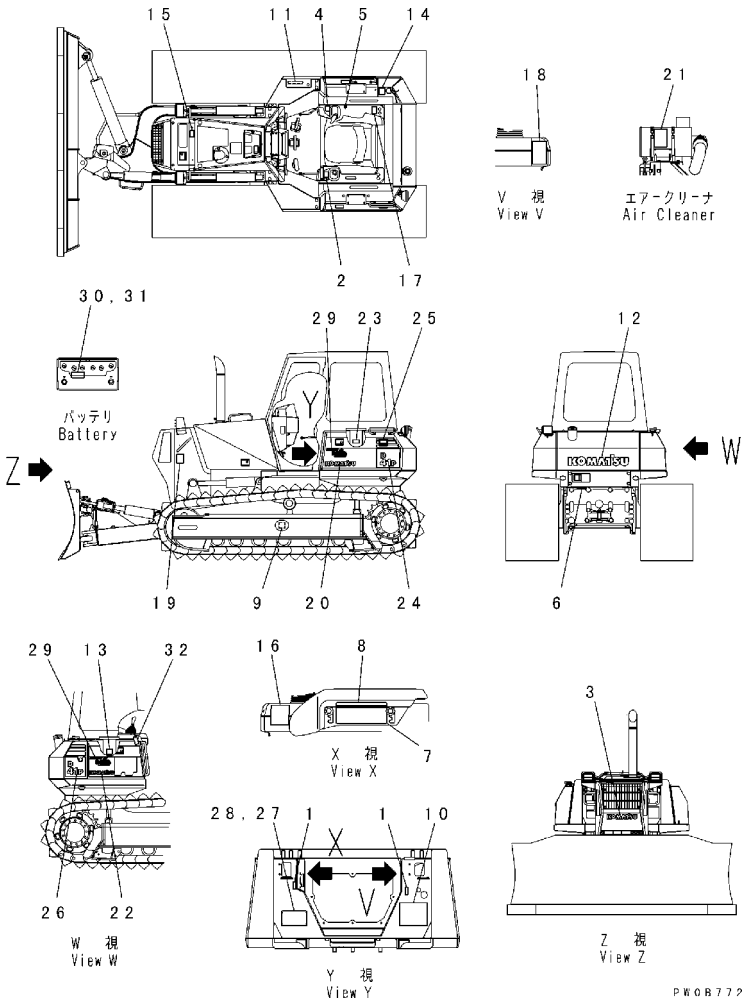

FIG. NO. : U0100-01A1

INDEX	PART NO.	DESCRIPTION	Q'TY	SERIAL NO.
1	14X-98-11170	PLATE, OPERATING, LOCK	2	B30001-
2	14X-98-11240	PLATE, OPERATING, STEERING LEVER (C AND B)	1	B30001-
3	09690-P0400	PLATE, MARK, KOMATSU, FRONT	1	B30001-
4	124-98-51140	PLATE, OPERATING, WORK EQUIPMENT LEVER	1	B30001-
5	17A-98-11180	PLATE, HORN	1	B30001-
6	09690-M0063	PLATE, MARK	1	B30001-
7	134-54-66190	PLATE, PROTECTION FILM	2	B30001-
8	134-54-66290	PLATE, PROTECTION FILM	2	B30001-
9	09657-03003	PLATE, SAFETY, ADJUSTING TRACK SHOE	2	B30001-
10	124-98-62110	OIL CHART	1	B30001-
11	124-98-51170	PLATE, PRESSURE TEST	1	B30001-
12	09690-P0800	PLATE, MARK, KOMATSU, REAR	1	B30001-
13	124-98-51290	PLATE, INSTRUCTION, POWER LINE OIL ELEMENT	1	B30001-
14	14X-98-11521	PLATE, SAFETY, HYDRAULIC OIL TANK	1	B30001-
	09653-03001	PLATE, SAFETY, HYDRAULIC OIL TANK	1	B30001-B30000
15	09668-03001	PLATE, SAFETY, RADIATOR	1	B30001-
16	09654-33001	PLATE, SAFETY, AFTER OPERATING	1	B30001-
17	09651-03001	PLATE, SAFETY, BEFORE OPERATION	1	B30001-
18	09802-13000	PLATE, SAFETY, SAFETY COMFIRM OF REAR	1	B30001-
19	124-98-51260	PLATE, CAUTION, SUPER ANGLE	1	B30001-
20	09690-P0400	PLATE, MARK, KOMATSU	1	B30001-
21	09637-30163	PLATE, INSTRUCTION, AIR CLEANER	1	B30001-
22	09690-P0315	PLATE, MARK, KOMATSU	1	B30001-
23	09808-03000	PLATE, SAFETY, BATTERY CABLE	1	B30001-
24	124-98-61611	PLATE, MARK, D41P	1	B30001-
25	124-98-61651	PLATE, MARK	1	B30001-
26	124-98-61621	PLATE, MARK, D41P	1	B30001-
27	09602-10050	PLATE, NAME, (LIMITED SUPPLY)	1	B30001-
28	04418-13060	SCREW	4	B30001-
29	14X-98-21880	PLATE, MARK, AVANCE BOSS	2	B30001-
30	09664-30082	PLATE, SAFETY	2	B30001-
31	09664-30070	PLATE, INSTRUCTION	2	B30001-
32	09963-03001	TAG	1	B30001-

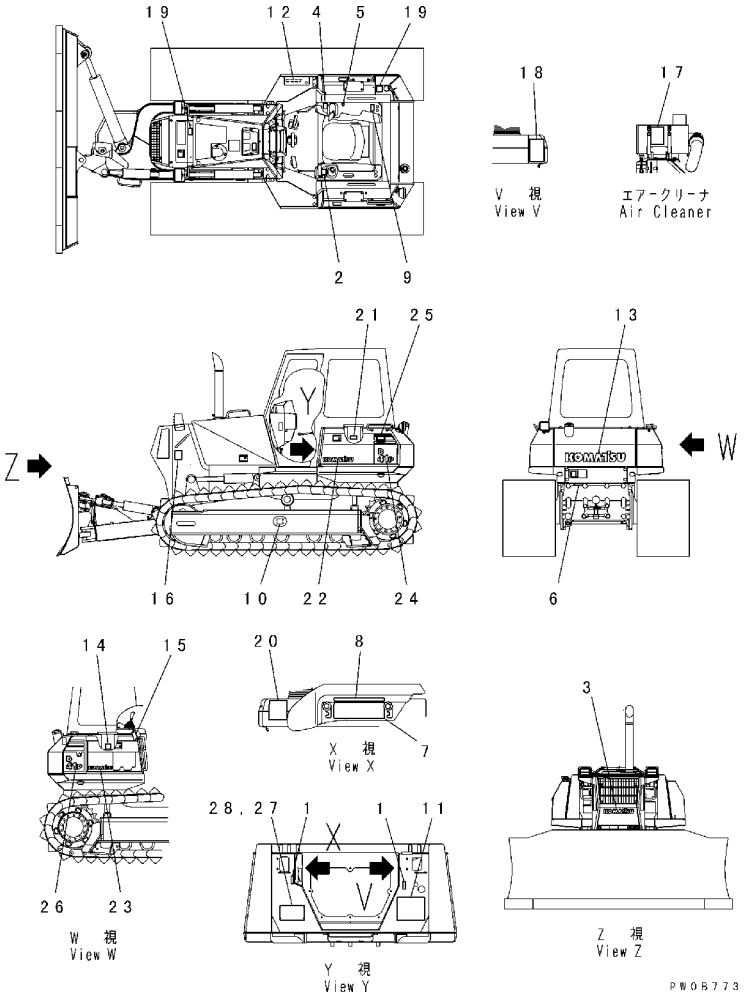

INDEX	PART NO.	DESCRIPTION	Q'TY	SERIAL NO.
1	14X-98-11170	PLATE, OPERATING, LOCK	2	B30001-
2	14X-98-11240	PLATE, OPERATING, STEERING LEVER (C AND B)	1	B30001-
3	09690-P0400	PLATE, MARK, KOMATSU, FRONT	1	B30001-
4	124-98-51140	PLATE, OPERATING, WORK EQUIPMENT LEVER	1	B30001-
5	17A-98-11180	PLATE, HORN	1	B30001-
6	09690-M0063	PLATE, MARK	1	B30001-
7	134-54-66190	PLATE, PROTECTION FILM	1	B30001-
8	134-54-66290	PLATE, PROTECTION FILM	1	B30001-
9	09651-A0481	PLATE, SAFETY, BEFORE OPERATING	1	B30001-
10	09657-A0881	PLATE, SAFETY, ADJUSTING TRACK SHOE	2	B30001-
11	124-98-62110	OIL CHART	1	B30001-
12	124-98-51170	PLATE, PRESSURE TEST	1	B30001-
13	09690-P0800	PLATE, MARK, KOMATSU, REAR	1	B30001-
14	124-98-51290	PLATE, INSTRUCTION, POWER LINE OIL ELEMENT	1	B30001-
15	09963-03001	TAG	1	B30001-
16	124-98-51260	PLATE, CAUTION, SUPER ANGLE	1	B30001-
17	09637-30163	PLATE, INSTRUCTION, AIR CLEANER	1	B30001-
18	09802-13000	PLATE, SAFETY, SAFETY COMFIRM OF REAR	1	B30001-
19	09653-A0481	PLATE, SAFETY, RADIATOR	2	B30001-
20	09654-B0481	, AFTER OPERATING	1	B30001-
21	09808-A0881	PLATE, SAFETY, BATTERY CABLE	1	B30001-
22	09690-P0400	PLATE, MARK, KOMATSU	1	B30001-
23	09690-P0315	PLATE, MARK, KOMATSU	1	B30001-
24	124-98-61611	PLATE, MARK, D41P	1	B30001-
25	124-98-61651	PLATE, MARK	1	B30001-
26	124-98-61621	PLATE, MARK, D41P	1	B30001-
27	09602-10050	PLATE, NAME, (LIMITED SUPPLY)	1	B30001-
28	04418-13060	SCREW	4	B30001-

FIG. U0100-01A3 MARKS AND PLATES (ITALIAN)

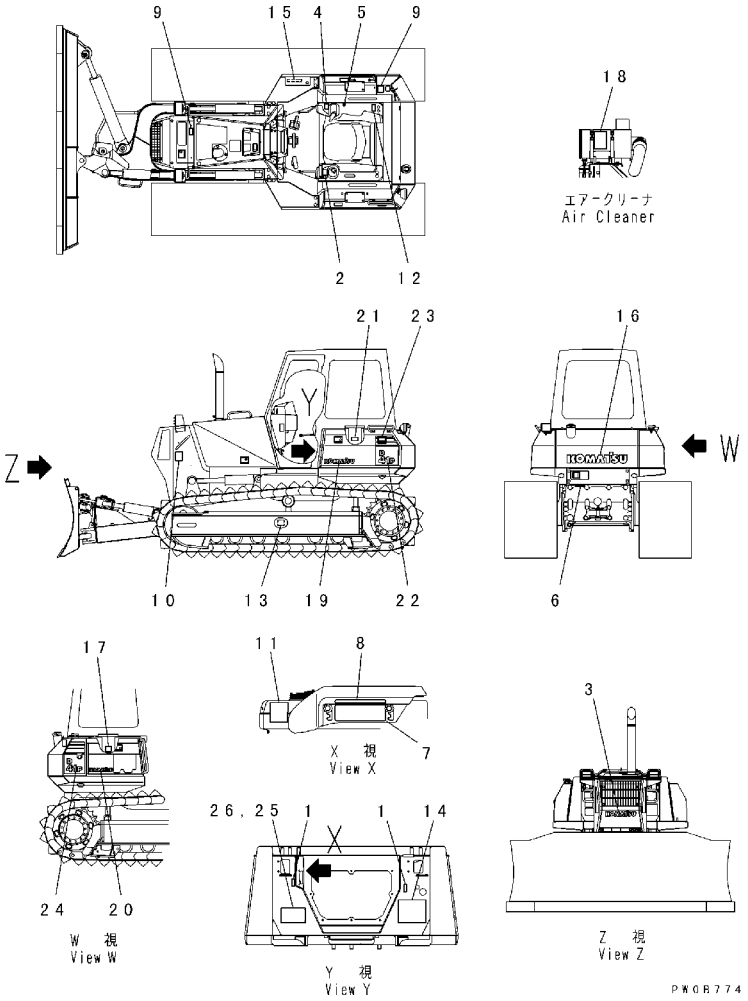

FIG. NO. : U0100-01A3

INDEX	PART NO.	DESCRIPTION	Q'TY	SERIAL NO.
1	14X-98-11170	PLATE, OPERATING, LOCK	2	B30001-
2	14X-98-11240	PLATE, OPERATING, STEERING LEVER (C AND B)	1	B30001-
3	09690-P0400	PLATE, MARK, KOMATSU, FRONT	1	B30001-
4	124-98-51140	PLATE, OPERATING, WORK EQUIPMENT LEVER	1	B30001-
5	17A-98-11180	PLATE, HORN	1	B30001-
6	09690-M0063	PLATE, MARK	1	B30001-
7	134-54-66190	PLATE, PROTECTION FILM	2	B30001-
8	134-54-66290	PLATE, PROTECTION FILM	2	B30001-
9	09653-A0481	PLATE, SAFETY, RADIATOR	2	B30001-
10	124-98-51360	PLATE, CAUTION, SUPER ANGLE	1	B30001-
11	09654-B0481	AFTER OPERATING	1	B30001-
12	09651-A0481	PLATE, SAFETY, BEFORE OPERATING	1	B30001-
13	09657-A0881	PLATE, SAFETY, ADJUSTING TRACK SHOE	2	B30001-
14	124-98-62110	OIL CHART	1	B30001-
15	124-98-51320	PLATE, PRESSURE TEST	1	B30001-
16	09690-P0800	PLATE, MARK, KOMATSU, REAR	1	B30001-
17	124-98-51330	PLATE, INSTRUCTION, POWER LINE OIL ELEMENT	1	B30001-
18	09637-40263	PLATE, INSTRUCTION, AIR CLEANER	1	B30001-
19	09690-P0400	PLATE, MARK, KOMATSU	1	B30001-
20	09690-P0315	PLATE, MARK, KOMATSU	1	B30001-
21	09808-A0881	PLATE, SAFETY, BATTERY CABLE	1	B30001-
22	124-98-61611	PLATE, MARK, D41P	1	B30001-
23	124-98-61651	PLATE, MARK	1	B30001-
24	124-98-61621	PLATE, MARK, D41P	1	B30001-
25	09602-10050	PLATE, NAME, (LIMITED SUPPLY)	1	B30001-
26	04418-13060	SCREW	4	B30001-

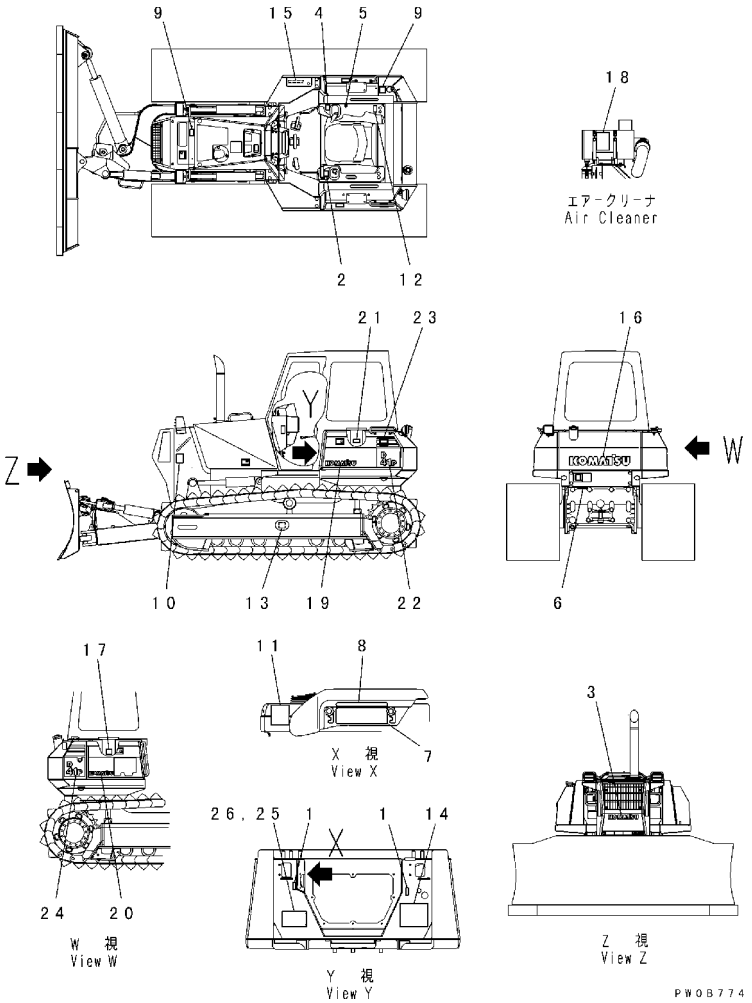

INDEX	PART NO.	DESCRIPTION	Q'TY	SERIAL NO.
1	14X-98-11170	PLATE, OPERATING, LOCK	2	B30001-
2	14X-98-11240	PLATE, OPERATING, STEERING LEVER (C AND B)	1	B30001-
3	09690-P0400	PLATE, MARK, KOMATSU, FRONT	1	B30001-
4	124-98-51140	PLATE, OPERATING, WORK EQUIPMENT LEVER	1	B30001-
5	17A-98-11180	PLATE, HORN	1	B30001-
6	09690-M0063	PLATE, MARK	1	B30001-
7	134-54-66190	PLATE, PROTECTION FILM	2	B30001-
8	134-54-66290	PLATE, PROTECTION FILM	2	B30001-
9	09653-A0481	PLATE, SAFETY, RADIATOR	2	B30001-
10	124-98-51460	PLATE, CAUTION, SUPER ANGLE	1	B30001-
11	09654-B0481	AFTER OPERATING	1	B30001-
12	09651-A0481	PLATE, SAFETY, BEFORE OPERATING	1	B30001-
13	09657-A0881	PLATE, SAFETY, ADJUSTING TRACK SHOE	2	B30001-
14	124-98-62110	OIL CHART	1	B30001-
15	124-98-51420	PLATE, PRESSURE TEST	1	B30001-
16	09690-P0800	PLATE, MARK, KOMATSU, REAR	1	B30001-
17	124-98-51430	PLATE, INSTRUCTION, POWER LINE OIL ELEMENT	1	B30001-
18	09637-30263	PLATE, INSTRUCTION, AIR CLEANER	1	B30001-
19	09690-P0400	PLATE, MARK, KOMATSU	1	B30001-
20	09690-P0315	PLATE, MARK, KOMATSU	1	B30001-
21	09808-A0881	PLATE, SAFETY, BATTERY CABLE	1	B30001-
22	124-98-61611	PLATE, MARK, D41P	1	B30001-
23	124-98-61651	PLATE, MARK	1	B30001-
24	124-98-61621	PLATE, MARK, D41P	1	B30001-
25	09602-10050	PLATE, NAME, (LIMITED SUPPLY)	1	B30001-
26	04418-13060	SCREW	4	B30001-

FIG. U0100-01A5 MARKS AND PLATES (SPANISH)

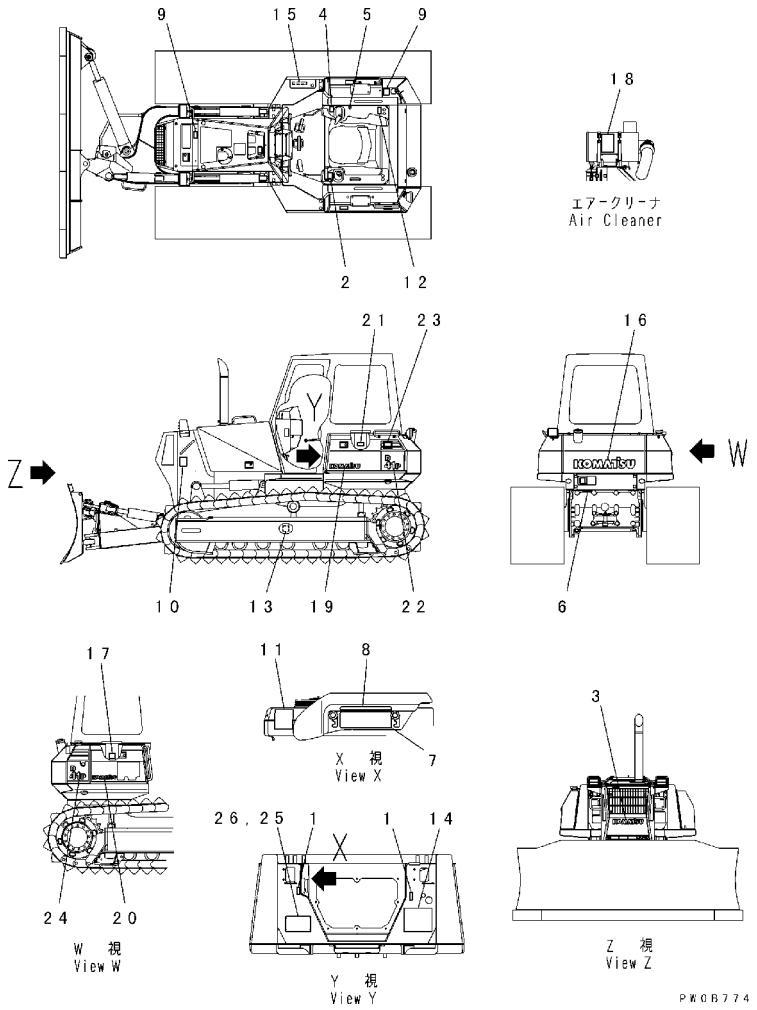

FIG. NO. : U0100-01A5

INDEX	PART NO.	DESCRIPTION	Q'TY	SERIAL NO.
1	14X-98-11170	PLATE, OPERATING, LOCK	2	B30001-
2	14X-98-11240	PLATE, OPERATING, STEERING LEVER (C AND B)	1	B30001-
3	09690-P0400	PLATE, MARK, KOMATSU, FRONT	1	B30001-
4	124-98-51140	PLATE, OPERATING, WORK EQUIPMENT LEVER	1	B30001-
5	17A-98-11180	PLATE, HORN	1	B30001-
6	09690-M0063	PLATE, MARK	1	B30001-
7	134-54-66190	PLATE, PROTECTION FILM	2	B30001-
8	134-54-66290	PLATE, PROTECTION FILM	2	B30001-
9	09653-A0481	PLATE, SAFETY, RADIATOR	2	B30001-
10	124-98-51560	PLATE, CAUTION, SUPER ANGLE	1	B30001-
11	09654-B0481	AFTER OPERATING	1	B30001-
12	09651-A0481	PLATE, SAFETY, BEFORE OPERATING	1	B30001-
13	09657-A0881	PLATE, SAFETY, ADJUSTING TRACK SHOE	2	B30001-
14	124-98-62110	OIL CHART	1	B30001-
15	124-98-51520	PLATE, PRESSURE TEST	1	B30001-
16	09690-P0800	PLATE, MARK, KOMATSU, REAR	1	B30001-
17	124-98-51530	PLATE, INSTRUCTION, POWER LINE OIL ELEMENT	1	B30001-
18	09637-70163	PLATE, INSTRUCTION, AIR CLEANER	1	B30001-
19	09690-P0400	PLATE, MARK, KOMATSU	1	B30001-
20	09690-P0315	PLATE, MARK, KOMATSU	1	B30001-
21	09808-A0881	PLATE, SAFETY, BATTERY CABLE	1	B30001-
22	124-98-61611	PLATE, MARK, D41P	1	B30001-
23	124-98-61651	PLATE, MARK	1	B30001-
24	124-98-61621	PLATE, MARK, D41P	1	B30001-
25	09602-10050	PLATE, NAME, (LIMITED SUPPLY)	1	B30001-
26	04418-13060	SCREW	4	B30001-

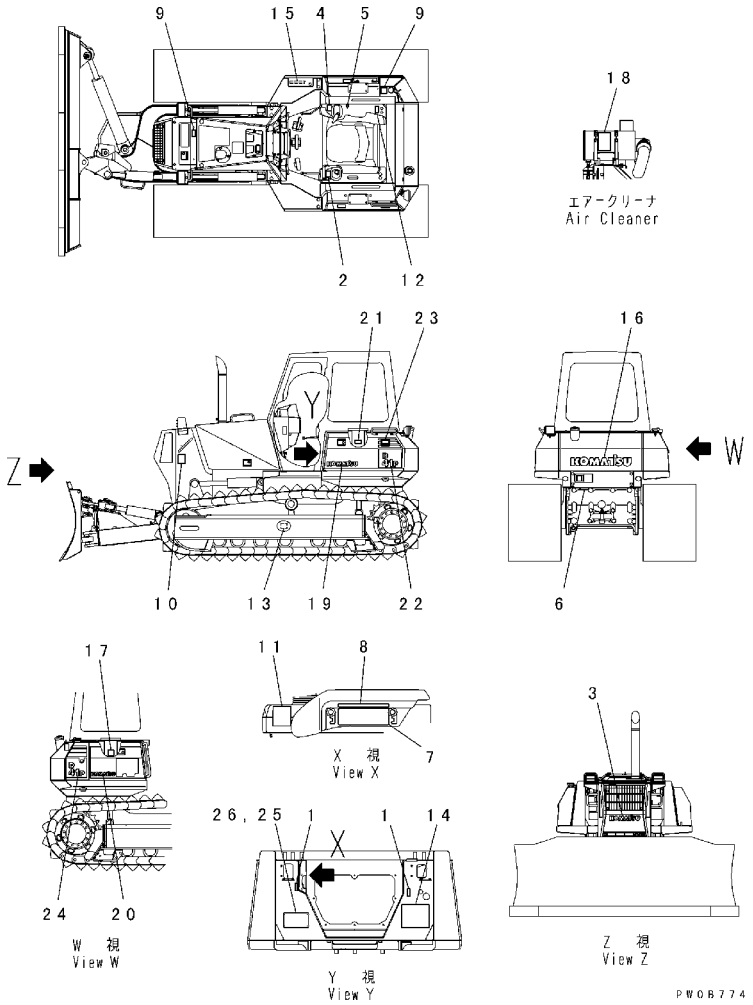

INDEX	PART NO.	DESCRIPTION	Q'TY	SERIAL NO.
1	14X-98-11170	PLATE, OPERATING, LOCK	2	B30001-
2	14X-98-11240	PLATE, OPERATING, STEERING LEVER (C AND B)	1	B30001-
3	09690-P0400	PLATE, MARK, KOMATSU, FRONT	1	B30001-
4	124-98-51140	PLATE, OPERATING, WORK EQUIPMENT LEVER	1	B30001-
5	17A-98-11180	PLATE, HORN	1	B30001-
6	09690-M0063	PLATE, MARK	1	B30001-
7	134-54-66190	PLATE, PROTECTION FILM	2	B30001-
8	134-54-66290	PLATE, PROTECTION FILM	2	B30001-
9	09653-A0481	PLATE, SAFETY, RADIATOR	2	B30001-
10	124-98-51760	PLATE, CAUTION, SUPER ANGLE	1	B30001-
11	09654-B0481	, AFTER OPERATING	1	B30001-
12	09651-A0481	PLATE, SAFETY, BEFORE OPERATING	1	B30001-
13	09657-A0881	PLATE, SAFETY, ADJUSTING TRACK SHOE	2	B30001-
14	124-98-62110	OIL CHART	1	B30001-
15	124-98-51720	PLATE, PRESSURE TEST	1	B30001-
16	09690-P0800	PLATE, MARK, KOMATSU, REAR	1	B30001-
17	124-98-51730	PLATE, INSTRUCTION, POWER LINE OIL ELEMENT	1	B30001-
18	09637-05163	PLATE, INSTRUCTION, AIR CLEANER	1	B30001-
19	09690-P0400	PLATE, MARK, KOMATSU	1	B30001-
20	09690-P0315	PLATE, MARK, KOMATSU	1	B30001-
21	09808-A0881	PLATE, SAFETY, BATTERY CABLE	1	B30001-
22	124-98-61611	PLATE, MARK, D41P	1	B30001-
23	124-98-61651	PLATE, MARK	1	B30001-
24	124-98-61621	PLATE, MARK, D41P	1	B30001-
25	09602-10050	PLATE, NAME, (LIMITED SUPPLY)	1	B30001-
26	04418-13060	SCREW	4	B30001-

FIG. U0100-01A7 MARKS AND PLATES (ENGLISH) (REGULATION OF EU DYNAMIC NOISE)

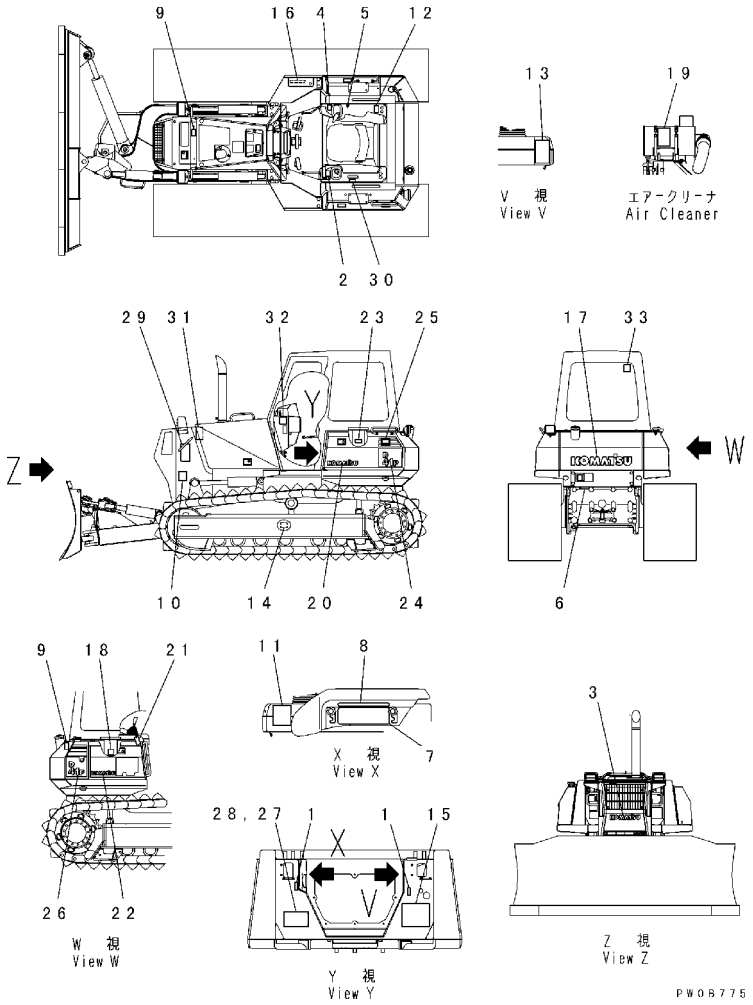

FIG. NO. : U0100-01A7

INDEX	PART NO.	DESCRIPTION	Q'TY	SERIAL NO.
1	14X-98-11170	PLATE, OPERATING, LOCK	2	B30001-
2	14X-98-11240	PLATE, OPERATING, STEERING LEVER (C AND B)	1	B30001-
3	09690-P0400	PLATE, MARK, KOMATSU, FRONT	1	B30001-
4	124-98-51140	PLATE, OPERATING, WORK EQUIPMENT LEVER	1	B30001-
5	17A-98-11180	PLATE, HORN	1	B30001-
6	09690-M0063	PLATE, MARK	1	B30001-
7	134-54-66190	PLATE, PROTECTION FILM	1	B30001-
8	134-54-66290	PLATE, PROTECTION FILM	1	B30001-
9	09653-A0481	PLATE, SAFETY, RADIATOR	2	B30001-
10	124-98-52160	PLATE, CAUTION, SUPER ANGLE	1	B30001-
11	09654-B0481	AFTER OPERATING	1	B30001-
12	09651-A0481	PLATE, SAFETY, BEFORE OPERATING	1	B30001-
13	09802-13000	PLATE, SAFETY, SAFETY COMFIRM OF REAR	1	B30001-
14	09657-A0881	PLATE, SAFETY, ADJUSTING TRACK SHOE	2	B30001-
15	124-98-62110	OIL CHART	1	B30001-
16	124-98-51170	PLATE, PRESSURE TEST	1	B30001-
17	09690-P0800	PLATE, MARK, KOMATSU, REAR	1	B30001-
18	124-98-51290	PLATE, INSTRUCTION, POWER LINE OIL ELEMENT	1	B30001-
19	09637-30163	PLATE, INSTRUCTION, AIR CLEANER	1	B30001-
20	09690-P0400	PLATE, MARK, KOMATSU	1	B30001-
21	09963-03001	TAG	1	B30001-
22	09690-P0315	PLATE, MARK, KOMATSU	1	B30001-
23	09808-A0881	PLATE, SAFETY, BATTERY CABLE	1	B30001-
24	124-98-61611	PLATE, MARK, D41P	1	B30001-
25	124-98-61651	PLATE, MARK	1	B30001-
26	124-98-61621	PLATE, MARK, D41P	1	B30001-
27	09602-00050	PLATE, NAME, (LIMITED SUPPLY)	1	B30001-
28	04418-13060	SCREW, D41P	4	B30001-
29	09806-B1201	PLATE, SAFETY, DANGER, KEEP AWAY	2	B30001-
30	362-54-17320	PLATE, OPERATING, FUEL LEVER	1	B30001-
31	09667-A0481	PLATE, SAFETY	2	B30001-
32	09696-40107	PLATE, AMBIENT NOISE INDICATION	1	B30108-
	09696-20108	PLATE, AMBIENT NOISE INDICATION	1	B30001-B30107
33	09696-50081	PLATE, NOISE INDICATION OF OPE. EARS	1	B30108-
	09696-30080	PLATE, NOISE INDICATION OF OPE. EARS	1	B30001-B30107

FIG. U0100-01A8 MARKS AND PLATES (GERMAN) (REGULATION OF EU DYNAMIC NOISE)

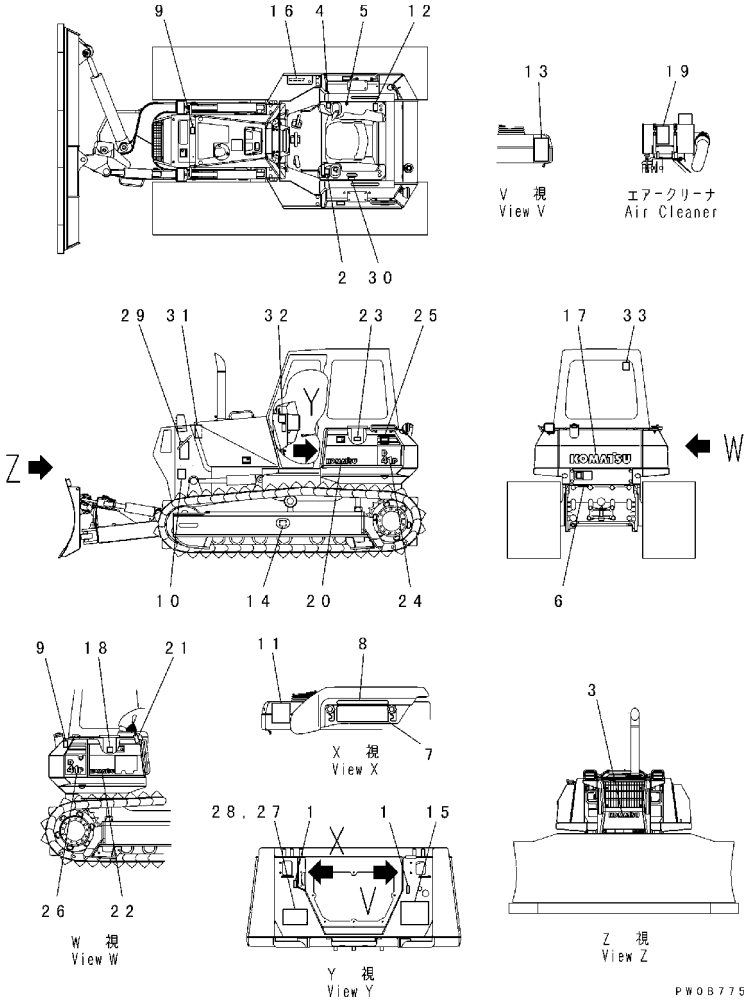

FIG. NO. : U0100-01A8

INDEX	PART NO.	DESCRIPTION	Q'TY	SERIAL NO.
1	14X-98-11170	PLATE, OPERATING, LOCK	2	B30001-
2	14X-98-11240	PLATE, OPERATING, STEERING LEVER (C AND B)	1	B30001-
3	09690-P0400	PLATE, MARK, KOMATSU, FRONT	1	B30001-
4	124-98-51140	PLATE, OPERATING, WORK EQUIPMENT LEVER	1	B30001-
5	17A-98-11180	PLATE, HORN	1	B30001-
6	09690-M0063	PLATE, MARK	1	B30001-
7	134-54-66190	PLATE, PROTECTION FILM	1	B30001-
8	134-54-66290	PLATE, PROTECTION FILM	1	B30001-
9	09653-A0481	PLATE, SAFETY, RADIATOR	2	B30001-
10	124-98-52160	PLATE, CAUTION, SUPER ANGLE	1	B30001-
11	09654-B0481	AFTER OPERATING	1	B30001-
12	09651-A0481	PLATE, SAFETY, BEFORE OPERATING	1	B30001-
13	09802-12000	PLATE, SAFETY, SAFETY COMFIRM OF REAR	1	B30001-
14	09657-A0881	PLATE, SAFETY, ADJUSTING TRACK SHOE	2	B30001-
15	124-98-62110	OIL CHART	1	B30001-
16	124-98-51220	PLATE, PRESSURE TEST	1	B30001-
17	09690-P0800	PLATE, MARK, KOMATSU, REAR	1	B30001-
18	124-98-51230	PLATE, INSTRUCTION, POWER LINE OIL ELEMENT	1	B30001-
19	09637-81163	PLATE, INSTRUCTION, AIR CLEANER	1	B30001-
20	09690-P0400	PLATE, MARK, KOMATSU	1	B30001-
21	09963-02001	TAG	1	B30001-
22	09690-P0315	PLATE, MARK, KOMATSU	1	B30001-
23	09808-A0881	PLATE, SAFETY, BATTERY CABLE	1	B30001-
24	124-98-61611	PLATE, MARK, D41P	1	B30001-
25	124-98-61651	PLATE, MARK	1	B30001-
26	124-98-61621	PLATE, MARK, D41P	1	B30001-
27	09602-00050	PLATE, NAME, (LIMITED SUPPLY)	1	B30001-
28	04418-13060	SCREW, D41P	4	B30001-
29	09806-B1201	PLATE, SAFETY, DANGER, KEEP AWAY	2	B30001-
30	362-54-17320	PLATE, OPERATING, FUEL LEVER	1	B30001-
31	09667-A0481	PLATE, SAFETY	2	B30001-
32	09696-40107	PLATE, AMBIENT NOISE INDICATION	1	B30108-
	09696-20108	PLATE, AMBIENT NOISE INDICATION	1	B30001-B30107
33	09696-50081	PLATE, NOISE INDICATION OF OPE. EARS	1	B30108-
	09696-30080	PLATE, NOISE INDICATION OF OPE. EARS	1	B30001-B30107

FIG. U0100-01A9 MARKS AND PLATES (ITALIAN) (REGULATION OF EU DYNAMIC NOISE)

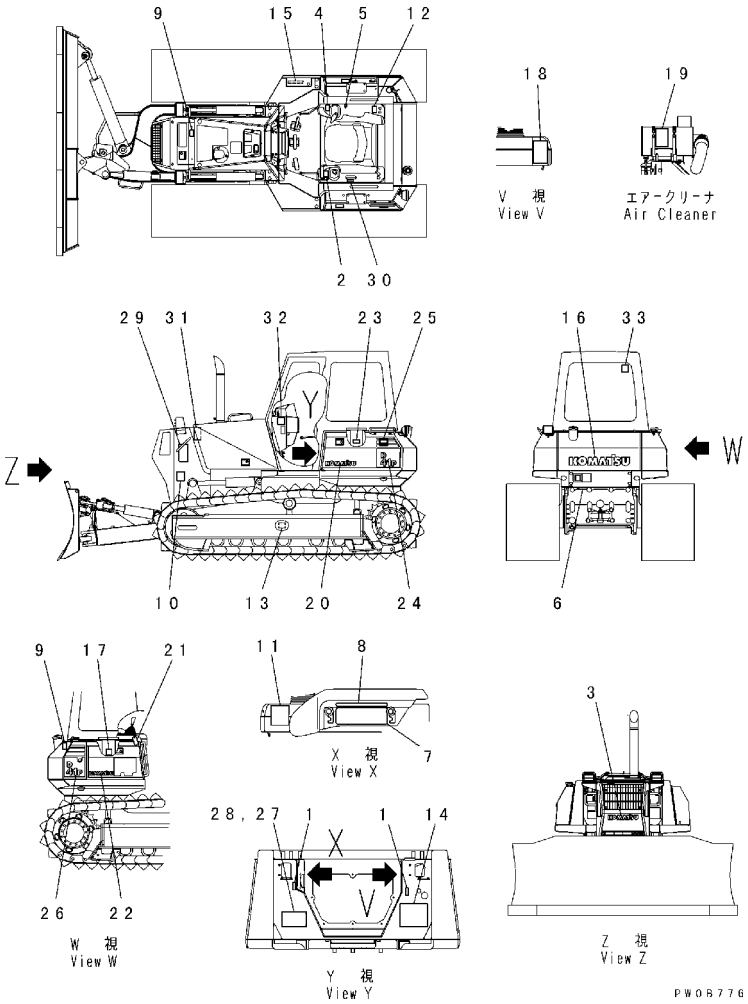

FIG. NO. : U0100-01A9

INDEX	PART NO.	DESCRIPTION	Q'TY	SERIAL NO.
1	14X-98-11170	PLATE, OPERATING, LOCK	2	B30001-
2	14X-98-11240	PLATE, OPERATING, STEERING LEVER (C AND B)	1	B30001-
3	09690-P0400	PLATE, MARK, KOMATSU, FRONT	1	B30001-
4	124-98-51140	PLATE, OPERATING, WORK EQUIPMENT LEVER	1	B30001-
5	17A-98-11180	PLATE, HORN	1	B30001-
6	09690-M0063	PLATE, MARK	1	B30001-
7	134-54-66190	PLATE, PROTECTION FILM	2	B30001-
8	134-54-66290	PLATE, PROTECTION FILM	2	B30001-
9	09653-A0481	PLATE, SAFETY, HYDRAULIC OIL TANK	2	B30001-
10	124-98-52160	PLATE, CAUTION, SUPER ANGLE	1	B30001-
11	09654-B0481	AFTER OPERATING	1	B30001-
12	09651-A0481	PLATE, SAFETY, BEFORE OPERATING	1	B30001-
13	09657-A0881	PLATE, SAFETY, ADJUSTING TRACK SHOE	2	B30001-
14	124-98-62110	OIL CHART	1	B30001-
15	124-98-51320	PLATE, PRESSURE TEST	1	B30001-
16	09690-P0800	PLATE, MARK, KOMATSU, REAR	1	B30001-
17	124-98-51330	PLATE, INSTRUCTION, POWER LINE OIL ELEMENT	1	B30001-
18	09802-16000	SAFETY COMFIRM OF REAR	1	B30001-
19	09637-40263	PLATE, INSTRUCTION, AIR CLEANER	1	B30001-
20	09690-P0400	PLATE, MARK, KOMATSU	1	B30001-
21	09963-06001		1	B30001-
22	09690-P0315	PLATE, MARK, KOMATSU	1	B30001-
23	09808-A0881	PLATE, SAFETY, BATTERY CABLE	1	B30001-
24	124-98-61611	PLATE, MARK, D41P	1	B30001-
25	124-98-61651	PLATE, MARK	1	B30001-
26	124-98-61621	PLATE, MARK, D41P	1	B30001-
27	09602-00050	PLATE, NAME, (LIMITED SUPPLY)	1	B30001-
28	04418-13060	SCREW, D41P	4	B30001-
29	09806-B1201	PLATE, SAFETY, DANGER, KEEP AWAY	2	B30001-
30	362-54-17320	PLATE, OPERATING, FUEL LEVER	1	B30001-
31	09667-A0481	PLATE, SAFETY	2	B30001-
32	09696-40107	PLATE, AMBIENT NOISE INDICATION	1	B30108-
	09696-20108	PLATE, AMBIENT NOISE INDICATION	1	B30001-B30107
33	09696-50081	PLATE, NOISE INDICATION OF OPE. EARS	1	B30108-
	09696-30080	PLATE, NOISE INDICATION OF OPE. EARS	1	B30001-B30107

FIG. U0100-01B0 MARKS AND PLATES (FRENCH) (REGULATION OF EU DYNAMIC NOISE)

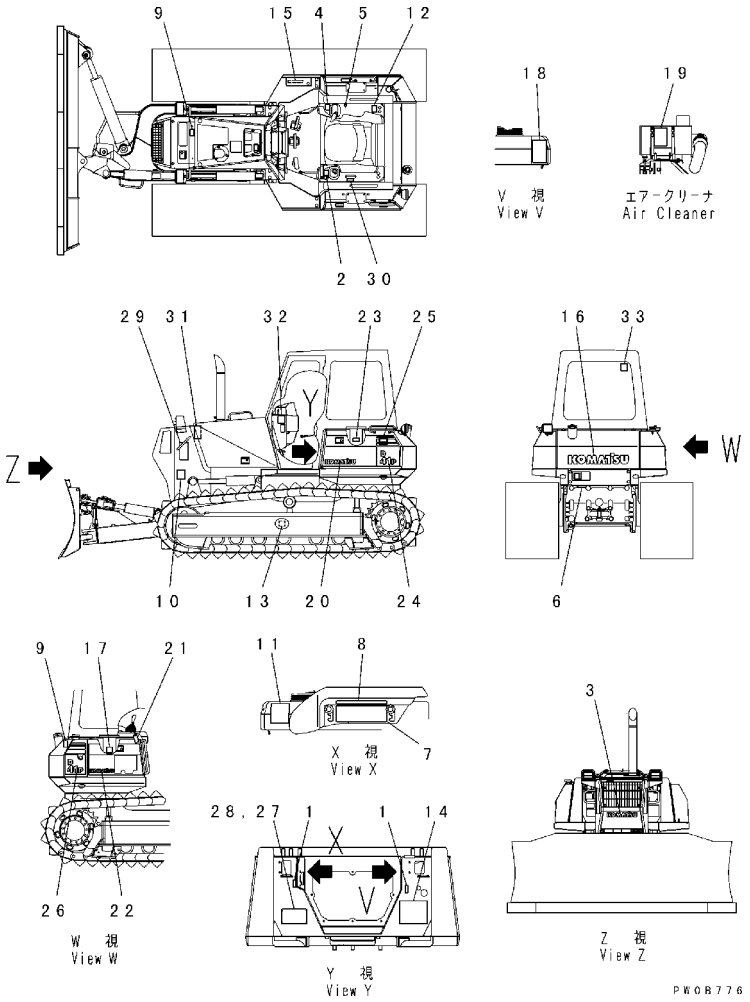

FIG. NO. : U0100-01B0

INDEX	PART NO.	DESCRIPTION	Q'TY	SERIAL NO.
1	14X-98-11170	PLATE, OPERATING, LOCK	2	B30001-
2	14X-98-11240	PLATE, OPERATING, STEERING LEVER (C AND B)	1	B30001-
3	09690-P0400	PLATE, MARK, KOMATSU, FRONT	1	B30001-
4	124-98-51140	PLATE, OPERATING, WORK EQUIPMENT LEVER	1	B30001-
5	17A-98-11180	PLATE, HORN	1	B30001-
6	09690-M0063	PLATE, MARK	1	B30001-
7	134-54-66190	PLATE, PROTECTION FILM	2	B30001-
8	134-54-66290	PLATE, PROTECTION FILM	2	B30001-
9	09653-A0481	PLATE, SAFETY, HYDRAULIC OIL TANK	2	B30001-
10	124-98-52160	PLATE, CAUTION, SUPER ANGLE	1	B30001-
11	09654-B0481	AFTER OPERATING	1	B30001-
12	09651-A0481	PLATE, SAFETY, BEFORE OPERATING	1	B30001-
13	09657-A0881	PLATE, SAFETY, ADJUSTING TRACK SHOE	2	B30001-
14	124-98-62110	OIL CHART	1	B30001-
15	124-98-51420	PLATE, PRESSURE TEST	1	B30001-
16	09690-P0800	PLATE, MARK, KOMATSU, REAR	1	B30001-
17	124-98-51430	PLATE, INSTRUCTION, POWER LINE OIL ELEMENT	1	B30001-
18	09802-15000	PLATE, SAFETY, SAFETY COMFIRM OF REAR	1	B30001-
19	09637-30263	PLATE, INSTRUCTION, AIR CLEANER	1	B30001-
20	09690-P0400	PLATE, MARK, KOMATSU	1	B30001-
21	09963-05001	TAG	1	B30001-
22	09690-P0315	PLATE, MARK, KOMATSU	1	B30001-
23	09808-A0881	PLATE, SAFETY, BATTERY CABLE	1	B30001-
24	124-98-61611	PLATE, MARK, D41P	1	B30001-
25	124-98-61651	PLATE, MARK	1	B30001-
26	124-98-61621	PLATE, MARK, D41P	1	B30001-
27	09602-00050	PLATE, NAME, (LIMITED SUPPLY)	1	B30001-
28	04418-13060	SCREW, D41P	4	B30001-
29	09806-B1201	PLATE, SAFETY, DANGER, KEEP AWAY	2	B30001-
30	362-54-17320	PLATE, OPERATING, FUEL LEVER	1	B30001-
31	09667-A0481	PLATE, SAFETY	2	B30001-
32	09696-40107	PLATE, AMBIENT NOISE INDICATION	1	B30108-
	09696-20108	PLATE, AMBIENT NOISE INDICATION	1	B30001-B30107
33	09696-50081	PLATE, NOISE INDICATION OF OPE. EARS	1	B30108-
	09696-30080	PLATE, NOISE INDICATION OF OPE. EARS	1	B30001-B30107

FIG. U0100-01B1 MARKS AND PLATES (SPANISH) (REGULATION OF EU DYNAMIC NOISE)

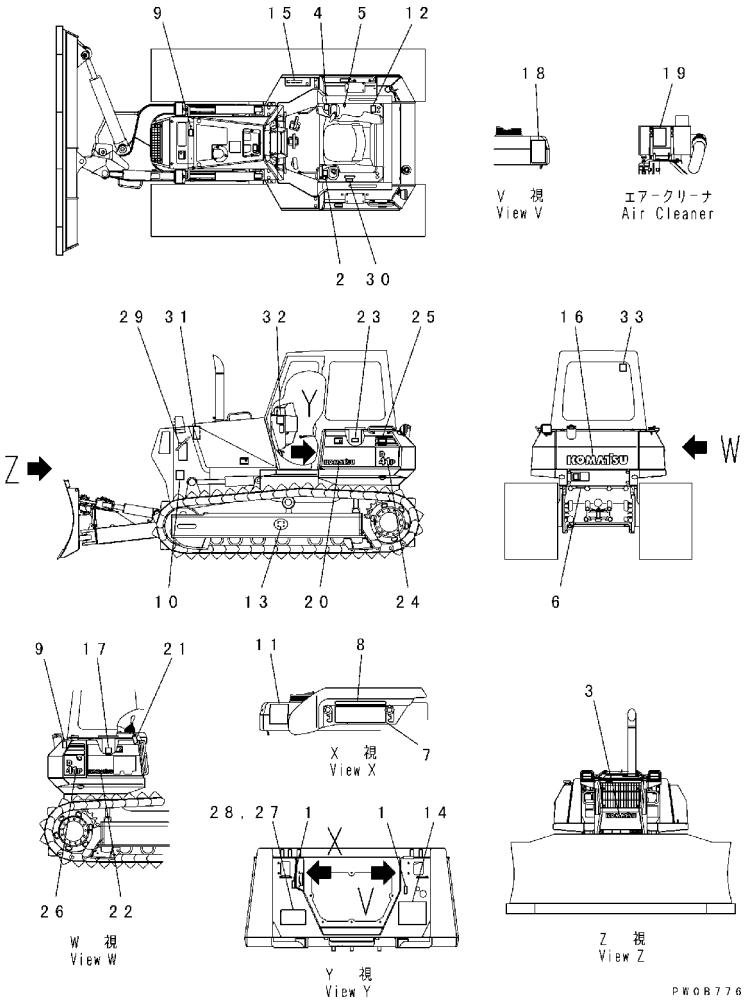

FIG. NO. : U0100-01B1

INDEX	PART NO.	DESCRIPTION	Q'TY	SERIAL NO.
1	14X-98-11170	PLATE, OPERATING, LOCK	2	B30001-
2	14X-98-11240	PLATE, OPERATING, STEERING LEVER (C AND B)	1	B30001-
3	09690-P0400	PLATE, MARK, KOMATSU, FRONT	1	B30001-
4	124-98-51140	PLATE, OPERATING, WORK EQUIPMENT LEVER	1	B30001-
5	17A-98-11180	PLATE, HORN	1	B30001-
6	09690-M0063	PLATE, MARK	1	B30001-
7	134-54-66190	PLATE, PROTECTION FILM	2	B30001-
8	134-54-66290	PLATE, PROTECTION FILM	2	B30001-
9	09653-A0481	PLATE, SAFETY, HYDRAULIC OIL TANK	2	B30001-
10	124-98-52160	PLATE, CAUTION, SUPER ANGLE	1	B30001-
11	09654-B0481	AFTER OPERATING	1	B30001-
12	09651-A0481	PLATE, SAFETY, BEFORE OPERATING	1	B30001-
13	09657-A0881	PLATE, SAFETY, ADJUSTING TRACK SHOE	2	B30001-
14	124-98-62110	OIL CHART	1	B30001-
15	124-98-51520	PLATE, PRESSURE TEST	1	B30001-
16	09690-P0800	PLATE, MARK, KOMATSU, REAR	1	B30001-
17	124-98-51530	PLATE, INSTRUCTION, POWER LINE OIL ELEMENT	1	B30001-
18	09802-11000	PLATE, SAFETY, SAFETY COMFIRM OF REAR	1	B30001-
19	09637-70163	PLATE, INSTRUCTION, AIR CLEANER	1	B30001-
20	09690-P0400	PLATE, MARK, KOMATSU	1	B30001-
21	09963-01001	TAG	1	B30001-
22	09690-P0315	PLATE, MARK, KOMATSU	1	B30001-
23	09808-A0881	PLATE, SAFETY, BATTERY CABLE	1	B30001-
24	124-98-61611	PLATE, MARK, D41P	1	B30001-
25	124-98-61651	PLATE, MARK	1	B30001-
26	124-98-61621	PLATE, MARK, D41P	1	B30001-
27	09602-00050	PLATE, NAME, (LIMITED SUPPLY)	1	B30001-
28	04418-13060	SCREW, D41P	4	B30001-
29	09806-B1201	PLATE, SAFETY, DANGER, KEEP AWAY	2	B30001-
30	362-54-17320	PLATE, OPERATING, FUEL LEVER	1	B30001-
31	09667-A0481	PLATE, SAFETY	2	B30001-
32	09696-40107	PLATE, AMBIENT NOISE INDICATION	1	B30108-
	09696-20108	PLATE, AMBIENT NOISE INDICATION	1	B30001-B30107
33	09696-50081	PLATE, NOISE INDICATION OF OPE. EARS	1	B30108-
	09696-30080	PLATE, NOISE INDICATION OF OPE. EARS	1	B30001-B30107

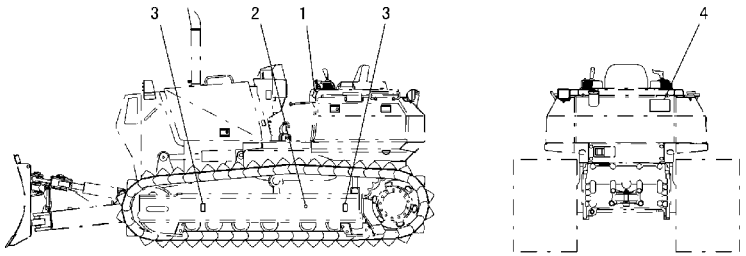

PDA7545

INDEX	PART NO.	DESCRIPTION	Q'TY	SERIAL NO.
1	126-98-51180	TABLE	1	B30001-
2	21U-98-31160	PLATE, MARK	2	B30026-
	09960-61012	PLATE, MARK	2	B30001-B30025
3	09960-01001	PLATE, MARK	4	B30026-
	09960-01001	PLATE, MARK	4	B30001-B30025
4	134-98-31370	PLATE, CAUTION	1	B30001-

FIG. U0520-01A0 ROPS PLATES

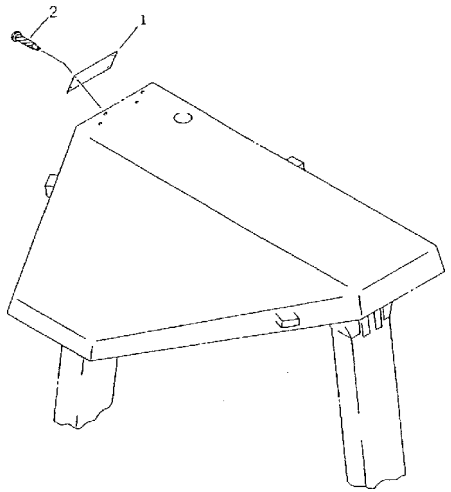

FIG. NO. : U0520-01A0

INDEX	PART NO.	DESCRIPTION	Q'TY	SERIAL NO.
1	124-98-52310	(ENGLISH) (LIMITED SUPPLY)	1	B30001-
	124-98-52320	(FOR USA) (LIMITED SUPPLY)	1	B30001-
	134-98-61550	(FRENCH) (LIMITED SUPPLY)	1	B30001-
	134-98-61520	(GERMAN) (LIMITED SUPPLY)	1	B30001-
	134-98-61510	(SPANISH) (LIMITED SUPPLY)	1	B30001-
	134-98-61450	(INDONESIAN) (LIMITED SUPPLY)	1	B30001-
2	04418-13060	SCREW	4	B30001-

ACCESSORY

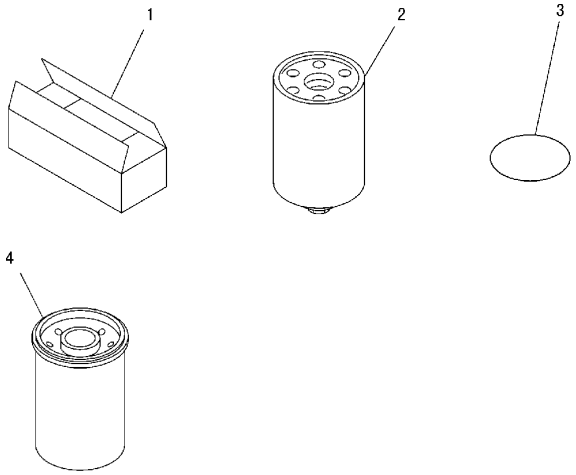

PWOA391

INDEX	PART NO.	DESCRIPTION	Q'TY	SERIAL NO.
1	09059-00800	BOX, SPARE PARTS	1	B30001-
2	23S-49-13122	CARTRIDGE	1	B30001-
3	23S-49-13132	. O-RING	1	B30001-
4	113-60-43321	CARTRIDGE	1	B30001-

FIG. V0100-01A2 SPARE PARTS (ENGINE) (REGULATION OF EU DYNAMIC NOISE)

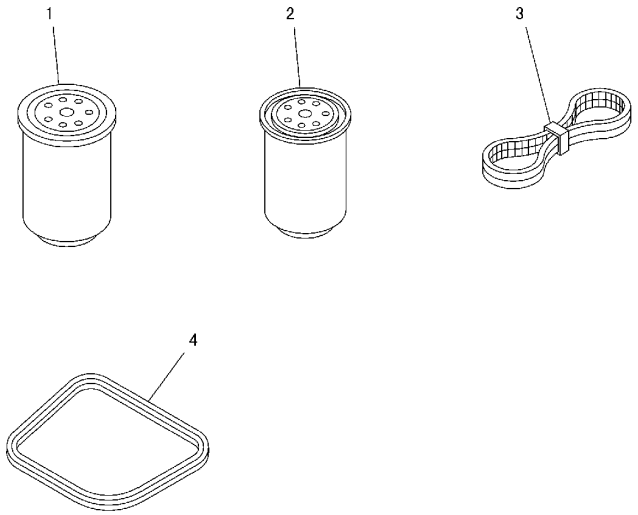

PW0A392

FIG. NO. : V0100-01A2

INDEX	PART NO.	DESCRIPTION	Q'TY	SERIAL NO.
1	6735-51-5141	CARTRIDGE	1	B30001-
2	6732-71-6111	CARTRIDGE	1	B30001-
3	6732-81-3510	BELT	1	B30001-
4	6732-11-8181	GASKET	6	B30001-

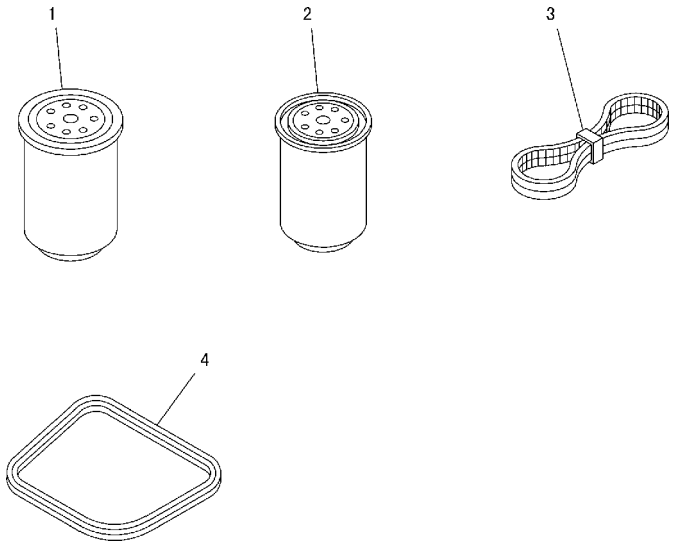

PW0A392

INDEX	PART NO.	DESCRIPTION	Q'TY	SERIAL NO.
1	6735-51-5141	CARTRIDGE	1	B30001-
2	6732-71-6111	CARTRIDGE	1	B30001-
3	6732-81-3330	BELT	1	B30001-
	6734-81-6410	BELT, (REVERSIBLE FAN)	1	B30001-
4	6732-11-8181	GASKET	6	B30001-

FIG. V0200-01A0 CAP AND OVERALL

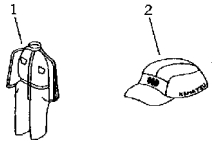

FIG. NO. : V0200-01A0

INDEX	PART NO.	DESCRIPTION	Q'TY	SERIAL NO.
1	09980-10550	OVERALL	1	B30001-
2	09982-10057	CAP	1	B30001-

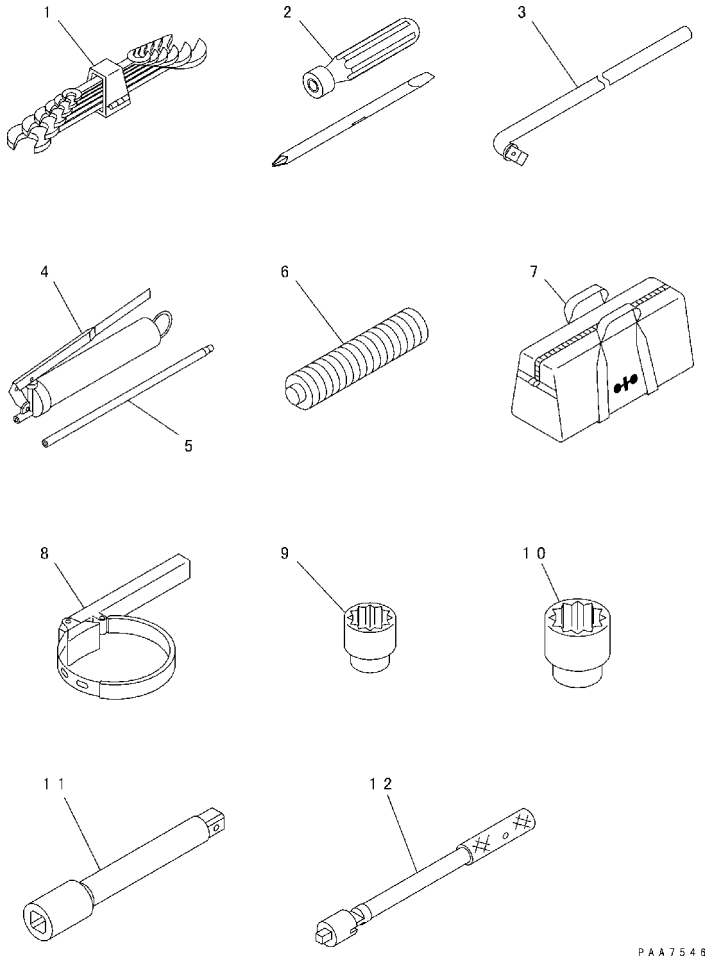

INDEX	PART NO.	DESCRIPTION	Q'TY	SERIAL NO.
1	09000-30006	WRENCH SET	1	B30001-
2	09033-00190	DRIVER	1	B30001-
3	09024-00300	HANDLE	1	B30001-
	07952-70002	GREASE PUMP ASS'Y	1	B30001-
4	07950-10450	. PUMP	1	B30001-
5	07951-21022	. NOZZLE	1	B30001-
6	07950-90403	CARTRIDGE	1	B30001-
7	09056-05513	BAG	1	B30001-
8	09019-08035	WRENCH	1	B30001-
9	09021-01725	SOCKET, 17MM	1	B30001-
10	09021-02436	SOCKET, 24MM	1	B30001-
11	09022-00150	EXTENSION	1	B30001-
12	09023-00300	HANDLE	1	B30001-

FIG. V0300-01A1 TOOL (WITH GREASE GUN HOLDER)

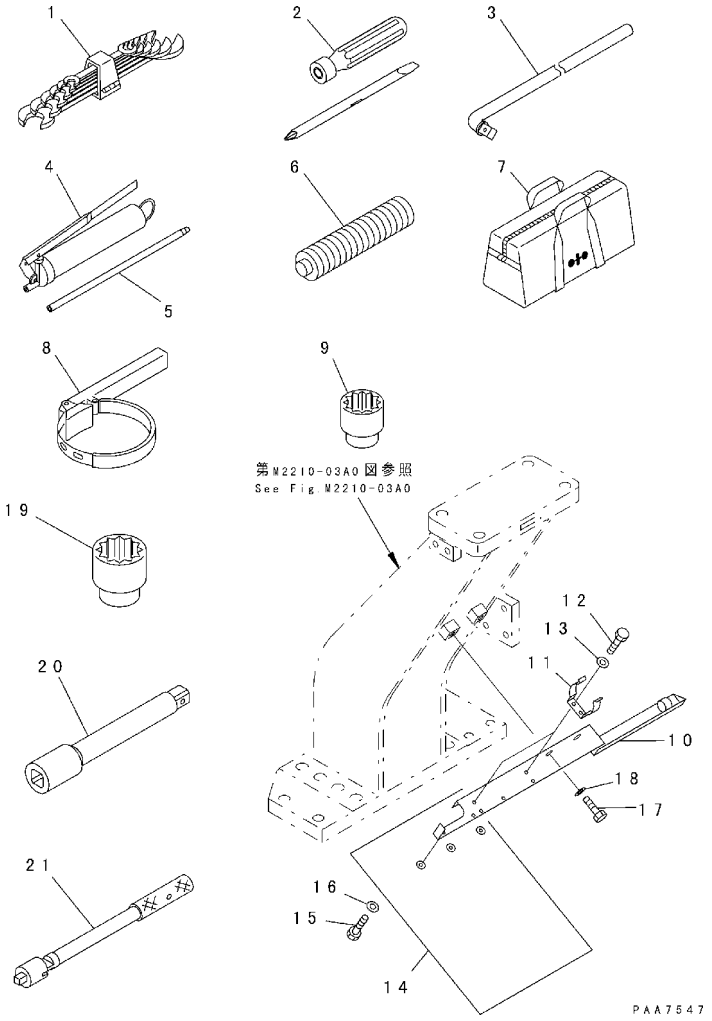

FIG. NO. : V0300-01A1

INDEX	PART NO.	DESCRIPTION	Q'TY	SERIAL NO.
1	09000-30006	WRENCH SET	1	B30001-
2	09033-00190	DRIVER	1	B30001-
3	09024-00300	HANDLE	1	B30001-
	07952-70002	GREASE PUMP ASS'Y	1	B30001-
4	07950-10450	. PUMP	1	B30001-
5	07951-21022	. NOZZLE	1	B30001-
6	07950-90403	CARTRIDGE	1	B30001-
7	09056-05513	BAG	1	B30001-
8	09019-08035	WRENCH	1	B30001-
9	09021-01725	SOCKET, 17MM	1	B30001-
10	124-54-54432	BRACKET	1	B30001-
11	203-54-63230	CLAMP	2	B30001-
12	01010-80610	BOLT	4	B30001-
13	01643-30623	WASHER	4	B30001-
14	124-54-54471	COVER	1	B30001-
15	01010-80616	BOLT	3	B30001-
16	01643-30623	WASHER	3	B30001-
17	01010-81225	BOLT	2	B30001-
18	01643-31232	WASHER	2	B30001-
19	09021-02436	SOCKET, 24MM	1	B30001-
20	09022-00150	EXTENSION	1	B30001-
21	09023-00300	HANDLE	1	B30001-

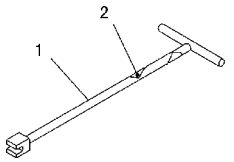

PVA2050

INDEX	PART NO.	DESCRIPTION	Q'TY	SERIAL NO.
1	144-03-16210	HANDLE	1	B30001-
2	144-03-16220	PLATE	1	B30001-

MISCELLANEOUS

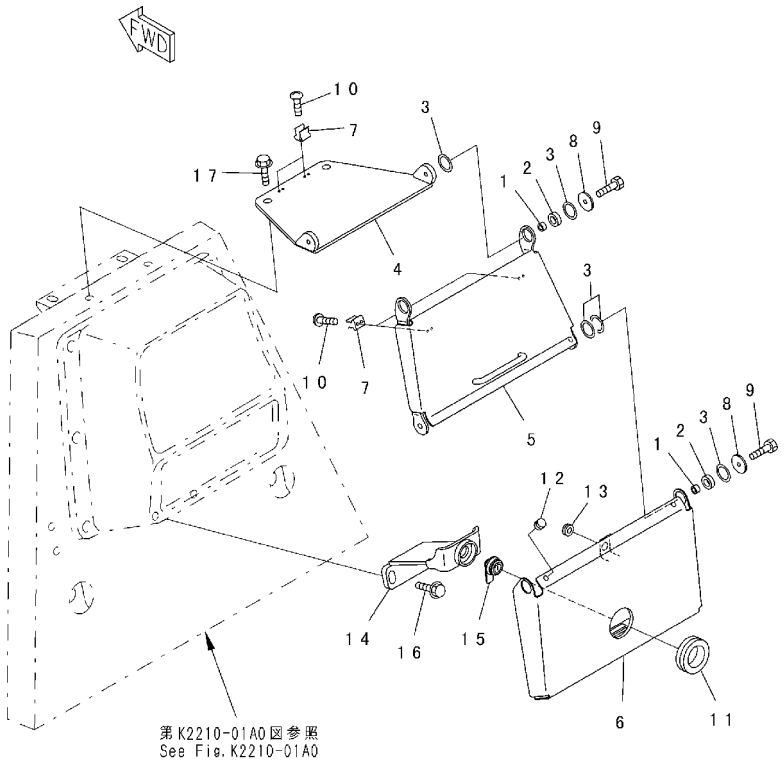

INDEX	PART NO.	DESCRIPTION	Q'TY	SERIAL NO.
	134-54-69111	COVER ASS'Y	1	B30001-
1	134-54-69190	. COLLAR	4	B30001-
2	134-54-69130	. COLLAR	4	B30001-
3	134-54-69140	. COLLAR	10	B30001-
4	134-54-69150	. COVER	1	B30001-
5	134-54-69160	. COVER	1	B30001-
6	134-54-69170	. COVER	1	B30001-
7	20R-54-11460	. SPRING	4	B30001-
8	154-54-22830	. WASHER	4	B30001-
9	01010-80825	. BOLT	4	B30001-
10	01220-40406	. SCREW	8	B30001-
11	08037-05016	GROMMET	1	B30001-
12	09415-00506	CAP	2	B30001-
13	09415-01008	CAP	1	B30001-
14	14X-54-18830	BRACKET	1	B30001-
15	205-60-71220	LOCK ASS'Y	1	B30001-
16	01439-01230	BOLT	2	B30001-
17	01439-01225	BOLT	2	B30001-

SERVICE KIT COMPONENT PARTS

K I T

詳細については次のページを参照して下さい。
See subsequent pages for details.

K 1	124 15 05310	トランスミッション サービス キット TRANSMISSION SERVICE KIT
K-2	124-15-05320	トランスミッション シフト バルブ サービス キット TRANSMISSION SHIFT VALVE SERVICE KIT
K-3	124-15-05330	トランスミッション プレッシャ バルブ サービス キット TRANSMISSION PRESSURE VALVE SERVICE KIT
K-4	707-98-32820	ブレード リフト シリンダ サービス キット BLADA LIFT CYLINDER SERVICE KIT
K-5	707-98-34590	ブレード チルト シリンダ サービス キット BLADA TILT CYLINDER SERVICE KIT
K-6	707-98-42420	ブレード アングル シリンダ サービス キット BLADE ANGLE CYLINDER SERVICE KIT
K-7	707-98-41130	リッパ シリンダ サービス キット RIPPER CYLINDER SERVICE KIT

PKX0065

INDEX	PART NO.	DESCRIPTION	Q'TY	SERIAL NO.
1	124-15-05310	SERVICE KIT, TRANSMISSION	1	B30001-
	113-15-29250	. RING	1	B30001-
	103-15-29270	. SEAL	1	B30001-
	103-15-29210	. SEAL	1	B30001-
	113-15-29220	. RING, SEAL	1	B30001-
	103-15-29210	. SEAL	1	B30001-
	113-15-29220	. RING, SEAL	1	B30001-
	113-15-29250	. RING	1	B30001-
	113-15-29261	. RING	1	B30001-
	113-15-29250	. RING	1	B30001-
	113-15-29220	. RING, SEAL	1	B30001-
	124-15-51820	. GASKET	1	B30001-
	07000-75165	. O-RING	1	B30001-
	07000-72070	. O-RING	2	B30001-
	07000-72060	. O-RING	1	B30001-
	07002-02434	. O-RING	1	B30001-
	07002-02434	. O-RING	1	B30001-
	07005-01212	. GASKET	1	B30001-
	07002-02434	. O-RING	1	B30001-
	07000-72010	. O-RING	4	B30001-
	07000-72012	. O-RING	4	B30001-
	07012-10090	. SEAL	1	B30001-
	07000-72105	. O-RING	1	B30001-
	07000-73032	. O-RING	1	B30001-
	07012-10075	. SEAL	1	B30001-
	07000-72145	. O-RING	1	B30001-
	07000-72130	. O-RING	1	B30001-
	124-15-05210	. SHIM ASS'Y	1	B30001-
	124-15-05220	. SHIM ASS'Y	1	B30001-
	07000-72018	. O-RING	2	B30001-
	07000-75305	. O-RING	1	B30001-
	07000-73035	. O-RING	1	B30001-
	07002-32434	. O-RING	1	B30001-
	07002-32034	. O-RING	1	B30001-
	07002-32034	. O-RING	1	B30001-
	07002-32034	. O-RING	2	B30001-
2	124-15-05320	SERVICE KIT, TRANSMISSION SHIFT VALVE	1	B30001-
	07002-01823	. O-RING	2	B30001-
	113-15-29110	. SEAL	1	B30001-
	124-15-49110	. SEAL	1	B30001-
	07002-01223	. O-RING	2	B30001-
	07002-01223	. O-RING	1	B30001-

FIG. NO. : Y0100-01A0

INDEX	PART NO.	DESCRIPTION	Q'TY	SERIAL NO.
	07002-03034	. O-RING	1	B30001-
	07000-72021	. O-RING	1	B30001-
	124-15-49110	. SEAL	1	B30001-
	104-15-36460	. SHIM, 0. 5MM	4	B30001-
	104-15-36470	. SHIM, 0. 2MM	6	B30001-
	07005-01012	. GASKET	4	B30001-
	124-15-55920	. GASKET	1	B30001-
3	124-15-05330	SERVICE KIT, TRANSMISSION PRESSURE VALVE	1	B30001-
	07000-73025	. O-RING	2	B30001-
	07000-72020	. O-RING	2	B30001-
	07000-73025	. O-RING	1	B30001-
	124-15-55140	. GASKET	1	B30001-
4	707-98-32820	SERVICE KIT, BLADE LIFT CYLINDER	2	B30001-
	07145-00050	. SEAL, DUST	2	B30001-
	707-51-50211	. PACKING	1	B30001-
	176-63-92240	. SEAL, DUST	1	B30001-
	07000-12100	. O-RING	1	B30001-
	707-35-52360	. RING, BACK-UP	1	B30001-
	07000-02105	. O-RING	1	B30001-
	07145-00050	. SEAL, DUST	2	B30001-
	707-44-10280	. RING, PISTON	1	B30001-
	707-39-10510	. RING, WEAR	1	B30001-
5	707-98-34590	SERVICE KIT, BLADE TILT CYLINDER	1	B30001-
	707-51-55211	. PACKING	1	B30001-
	07000-12105	. O-RING	1	B30001-
	07146-02106	. RING, BACK-UP	1	B30001-
	07000-02110	. O-RING	1	B30001-
	707-56-55510	. SEAL, DUST	1	B30001-
	07000-03040	. O-RING	4	B30001-
	707-44-11180	. RING, PISTON	1	B30001-
	07156-01112	. RING, WEAR	1	B30001-
6	707-98-42420	SERVICE KIT, BLADE ANGLE CYLINDER	1	B30001-
	707-51-65211	. PACKING	1	B30001-
	07146-02126	. RING, BACK-UP	1	B30001-
	07000-12125	. O-RING	1	B30001-
	07000-02130	. O-RING	1	B30001-
	144-63-92170	. SEAL, DUST	1	B30001-
	07000-03050	. O-RING	4	B30001-
	707-44-13070	. RING, PISTON	1	B30001-
	07156-01315	. RING, WEAR	1	B30001-
7	707-98-41130	SERVICE KIT, RIPPER CYLINDER	1	B30001-
	07145-00070	. SEAL, DUST	2	B30001-

FIG. NO. : Y0100-01A0

INDEX	PART NO.	DESCRIPTION	Q'TY	SERIAL NO.
	707-51-60211	. PACKING	1	B30001-
	07000-12125	. O-RING	1	B30001-
	111-63-81230	. RING, BACK-UP	1	B30001-
	141-63-93270	. SEAL, DUST	1	B30001-
	07145-00070	. SEAL, DUST	1	B30001-
	707-44-12180	. RING, PISTON	1	B30001-
	07155-01230	. RING, WEAR	1	B30001-
	07002-12434	. O-RING	2	B30001-

KIT 詳細については次のページを参照して下さい。
See subsequent pages for details.

K1 124-32-05000 シュー ボルト および ナット サービス キット 強化型リンク用
SHOE BOLT AND NUT SERVICE KIT, FOR HEAVY DUTY LINK

K2 12G-32-05000 シュー ボルト および ナット サービス キット
SHOE BOLT AND NUT SERVICE KIT,
湿地 および 強化型リンク用
FOR SWAMP AND HEAVY DUTY LINK

PW1A928

INDEX	PART NO.	DESCRIPTION	Q'TY	SERIAL NO.
K1	124-32-05000	SHOE BOLT AND NUT K.	1	B30001-
	205-32-51121	. BOLT, SHOE	50	B30001-
	124-32-53220	. NUT	50	B30001-
K2	12G-32-05000	SHOE BOLT AND NUT K.	1	B30001-
	13F-32-21221	. BOLT, SHOE	50	B30001-
	124-32-53220	. NUT	50	B30001-

FIG. Y0322-01A4 TRACK LINK (LUBRICATE TYPE) (FOR SWAMP TYPE) (HEAVY DUTY LINK) (SUPPLY PARTS)

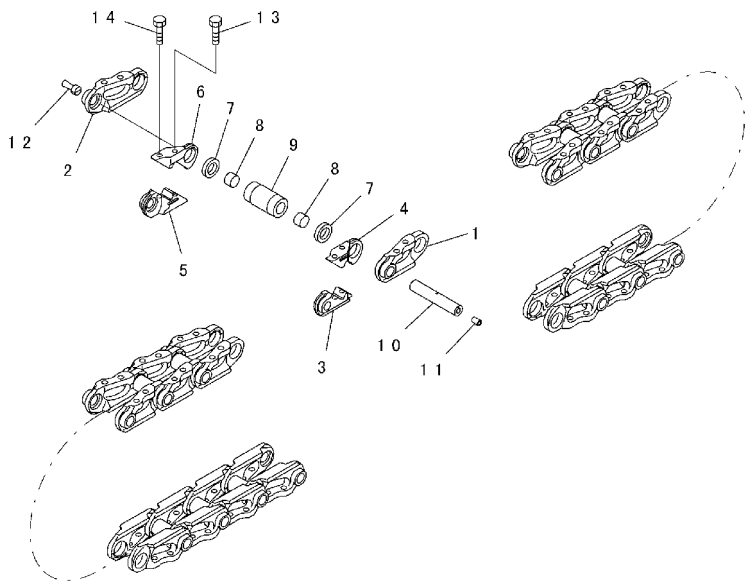

PWL3668

FIG. NO. : Y0322-01A4

INDEX	PART NO.	DESCRIPTION	Q'TY	SERIAL NO.
	12G-32-00030	TRACK LINK ASS'Y	1	B30001-
1	124-32-53120	. LINK, REGULAR, L. H.	86	B30001-
2	124-32-53130	. LINK, REGULAR, R. H.	86	B30001-
	124-32-08010	. MASTER LINK K. L. H.	2	B30001-
3	☆	. . LINK, MASTER, L. H. , PIN SIDE	2	B30001-
4	☆	. . LINK, MASTER, L. H. , BUSHING SIDE	2	B30001-
	124-32-08020	. MASTER LINK K. R. H.	2	B30001-
5	☆	. . LINK, MASTER, R. H. , PIN SIDE	2	B30001-
6	☆	. . LINK, MASTER, R. H. , BUSHING SIDE	2	B30001-
7	124-32-53160	. SEAL ASS'Y	176	B30001-
8	124-32-53190	. SPACER	176	B30001-
9	124-32-53140	. BUSHING	88	B30001-
10	124-32-53150	. PIN	88	B30001-
11	07059-11830	. PLUG, LARGE	88	B30001-
12	07059-20721	. PLUG, SMALL	88	B30001-
13	12G-32-53350	. BOLT, MASTER	4	B30001-
14	12G-32-53360	. BOLT, MASTER	4	B30001-

FIG. Y0322-01A5 TRACK LINK (LUBRICATE TYPE) (FOR SINGLE GROUSER) (HEAVY DUTY LINK) (SUPPLY PARTS)

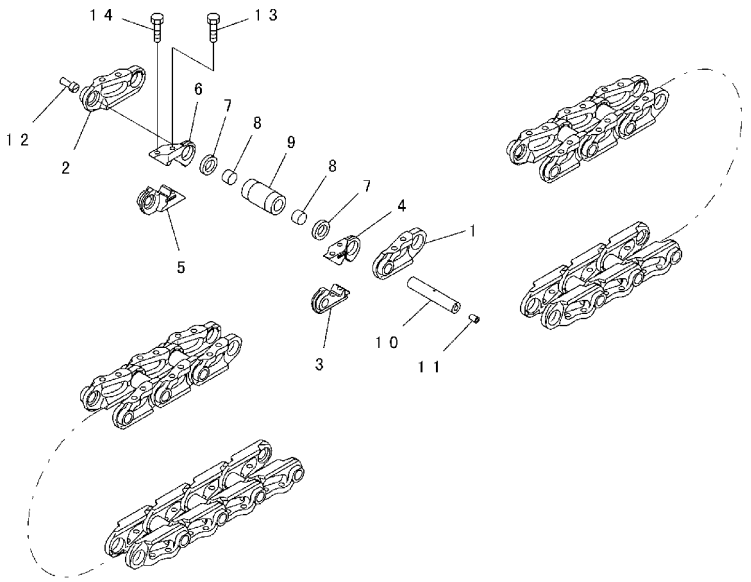

PW136G8

FIG. NO. : Y0322-01A5

INDEX	PART NO.	DESCRIPTION	Q'TY	SERIAL NO.
	12G-32-00040	TRACK LINK ASS'Y	1	B30001-
1	124-32-53120	. LINK, REGULAR, L. H.	86	B30001-
2	124-32-53130	. LINK, REGULAR, R. H.	86	B30001-
	124-32-08010	. MASTER LINK K. L. H.	2	B30001-
3	☆	. . LINK, MASTER, L. H. , PIN SIDE	2	B30001-
4	☆	. . LINK, MASTER, L. H. , BUSHING SIDE	2	B30001-
	124-32-08020	. MASTER LINK K. R. H.	2	B30001-
5	☆	. . LINK, MASTER, R. H. , PIN SIDE	2	B30001-
6	☆	. . LINK, MASTER, R. H. , BUSHING SIDE	2	B30001-
7	124-32-53160	. SEAL ASS'Y	176	B30001-
8	124-32-53190	. SPACER	176	B30001-
9	124-32-53140	. BUSHING	88	B30001-
10	124-32-53150	. PIN	88	B30001-
11	07059-11830	. PLUG, LARGE	88	B30001-
12	07059-20721	. PLUG, SMALL	88	B30001-
13	124-32-53350	. BOLT, MASTER	4	B30001-
14	124-32-53360	. BOLT, MASTER	4	B30001-

FIG. Y0322-01A7 TRACK SHOE (LUBRICATE TYPE) (HD LINK, AR BUSHING) (FOR SINGLE GROUSER) (SUPPLY PARTS)

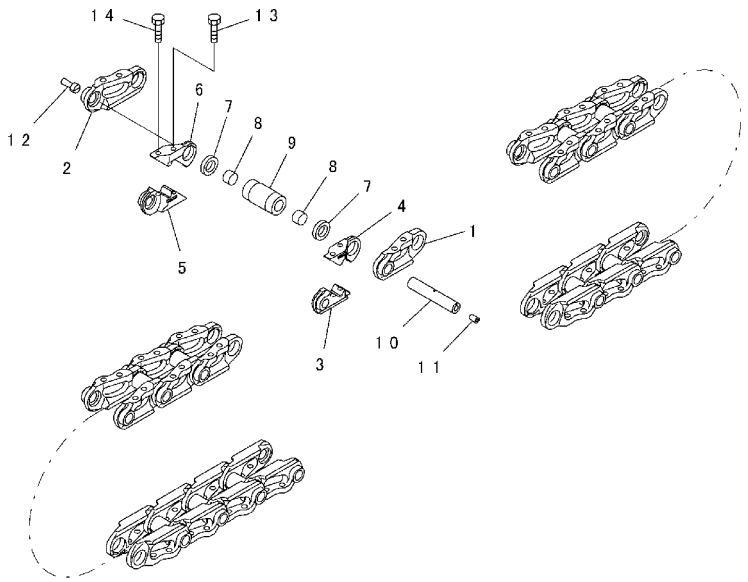

PW136G8

FIG. NO. : Y0322-01A7

INDEX	PART NO.	DESCRIPTION	Q'TY	SERIAL NO.
	12G-32-00060	TRACK LINK ASS'Y	1	B30001-
1	124-32-53120	. LINK, REGULAR, L. H.	86	B30001-
2	124-32-53130	. LINK, REGULAR, R. H.	86	B30001-
	124-32-08010	. MASTER LINK K. L. H.	2	B30001-
3	☆	. . LINK, MASTER, L. H. , PIN SIDE	1	B30001-
4	☆	. . LINK, MASTER, L. H. , BUSHING SIDE	1	B30001-
	124-32-08020	. MASTER LINK K. R. H.	2	B30001-
5	☆	. . LINK, MASTER, R. H. , PIN SIDE	1	B30001-
6	☆	. . LINK, MASTER, R. H. , BUSHING SIDE	1	B30001-
7	124-32-53160	. SEAL ASS'Y	176	B30001-
8	124-32-53190	. SPACER	176	B30001-
9	124-32-53240	. BUSHING	88	B30001-
10	124-32-53150	. PIN	88	B30001-
11	07059-11830	. PLUG, LARGE	88	B30001-
12	07059-20721	. PLUG, SMALL	88	B30001-
13	124-32-53350	. BOLT, MASTER	4	B30001-
14	124-32-53360	. BOLT, MASTER	4	B30001-

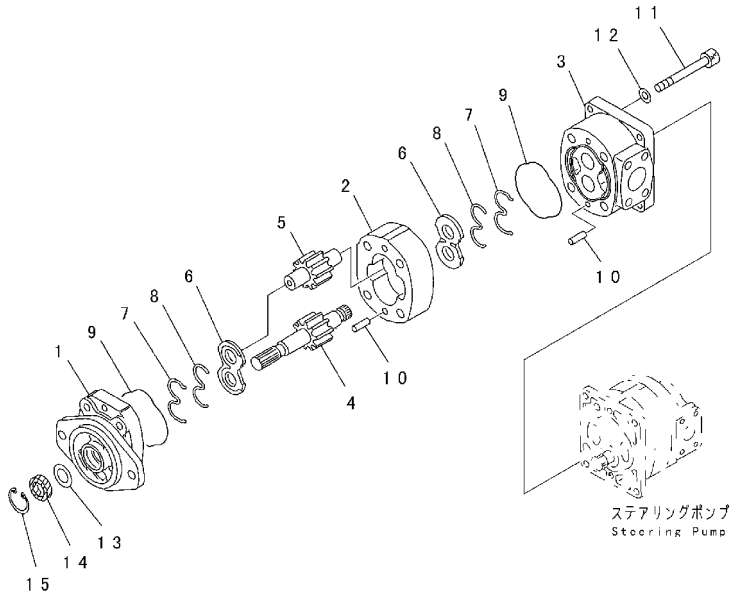

PEA7600

INDEX	PART NO.	DESCRIPTION	Q'TY	SERIAL NO.
	705-52-21070	PUMP ASS'Y	1	B30001-
		THIS ASSEMBLY CONSISTS OF ALL PARTS SHOWN IN FIGS. Y1600-01A1 AND Y1600-02A1.		
	705-12-31210	. PUMP ASS'Y, WORK EQUIPMENT (SAR(2)36)	1	B30001-
1	(★705-17-02022)	. . BRACKET ASS'Y	1	B30001-
	(★705-17-02353)	. . . BUSHING	2	B30001-
2	(★705-17-31010)	. . CASE, GEAR	1	B30001-
3	(★705-17-02221)	. . CARRIER ASS'Y	1	B30001-
	(★705-17-02353)	. . . BUSHING	2	B30001-
4	(★705-17-31430)	. . GEAR, DRIVE	1	B30001-
5	(★705-17-31510)	. . GEAR, DRIVEN	1	B30001-
6	705-17-02612	. . PLATE, SIDE	2	B30001-
7	705-17-02440	. . RING, BACK-UP	2	B30001-
8	705-17-02472	. . RING, SEAL	2	B30001-
9	705-17-02381	. . O-RING	2	B30001-
10	04020-01024	. . PIN, DOWEL	4	B30001-
11	705-17-02770	. . BOLT	4	B30001-
12	01643-51232	. . WASHER	4	B30001-
13	705-17-02870	. . PLATE	1	B30001-
14	705-17-02810	. . SEAL, OIL	1	B30001-
15	04065-04018	. . RING, SNAP	1	B30001-

FIG. Y1600-02A1 MAIN PUMP (FOR STEERING)

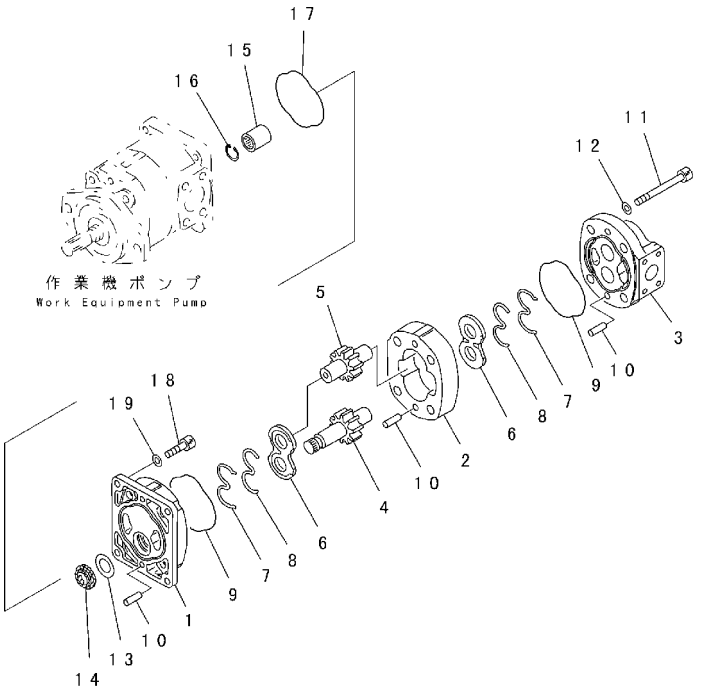

PEA7601

FIG. NO. : Y1600-02A1

INDEX	PART NO.	DESCRIPTION	Q'TY	SERIAL NO.
	(705-52-21070)	PUMP ASS'Y	1	B30001-
		THIS ASSEMBLY CONSISTS OF ALL PARTS SHOWN IN FIGS. Y1600-01A1 AND Y1600-02A1.		
	705-12-29630	. PUMP ASS'Y, STEERING (SAR(2)28)	1	B30001-
1	(★705-17-02540)	. . BRACKET	1	B30001-
	(★705-17-02353)	. . . BUSHING	2	B30001-
2	(★705-17-29012)	. . CASE, GEAR	1	B30001-
3	(★705-17-02122)	. . COVER ASS'Y	1	B30001-
	(★705-17-02353)	. . . BUSHING	2	B30001-
4	(★705-17-29452)	. . GEAR, DRIVE	1	B30001-
5	(★705-17-29512)	. . GEAR, DRIVEN	1	B30001-
6	705-17-02612	. . PLATE, SIDE	2	B30001-
7	705-17-02440	. . RING, BACK-UP	2	B30001-
8	705-17-02472	. . RING, SEAL	2	B30001-
9	705-17-02381	. . O-RING	2	B30001-
10	04020-01024	. . PIN, DOWEL	6	B30001-
11	705-17-02730	. . BOLT	4	B30001-
12	01643-51032	. . WASHER	4	B30001-
13	705-17-02870	. . PLATE	1	B30001-
14	705-17-02850	. . SEAL, OIL	1	B30001-
15	705-17-02310	. COUPLING	1	B30001-
16	04065-02012	. RING, SNAP	1	B30001-
17	705-17-02480	. O-RING	1	B30001-
18	705-17-02374	. BOLT	4	B30001-
19	01643-51032	. WASHER	4	B30001-

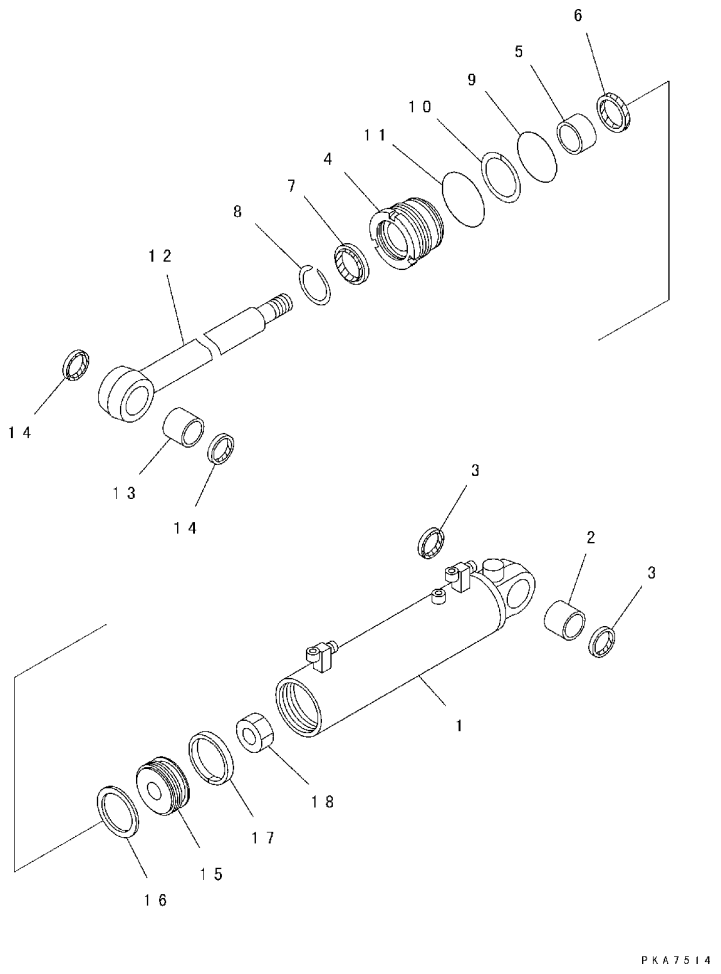

INDEX	PART NO.	DESCRIPTION	Q'TY	SERIAL NO.
	124-63-02201	CYLINDER ASS'Y	2	B30001-
1	124-63-63441	. CYLINDER	1	B30001-
2	07143-10505	. BUSHING	1	B30001-
3	07145-00050	. SEAL, DUST (K4)	2	B30001-
4	707-29-10420	. HEAD, CYLINDER	1	B30001-
5	07177-05030	. BUSHING	1	B30001-
6	707-51-50211	. PACKING, ROD (K4)	1	B30001-
7	176-63-92240	. SEAL, DUST (K4)	1	B30001-
8	07179-12062	. RING, SNAP	1	B30001-
9	07000-12100	. O-RING (K4)	1	B30001-
10	707-35-52360	. RING, BACK-UP (K4)	1	B30001-
11	07000-02105	. O-RING (K4)	1	B30001-
12	124-63-63421	. ROD, PISTON	1	B30001-
13	07143-10505	. BUSHING	1	B30001-
14	07145-00050	. SEAL, DUST (K4)	2	B30001-
15	707-36-10630	. PISTON	1	B30001-
16	707-44-10280	. RING, PISTON (K4)	1	B30001-
17	707-39-10510	. RING, WEAR (K4)	1	B30001-
18	01580-03629	. NUT	1	B30001-
	707-98-32820	SERVICE KIT	1	B30001-

FIG. Y1620-21A0 BLADE ANGLE CYLINDER (INNER PARTS)

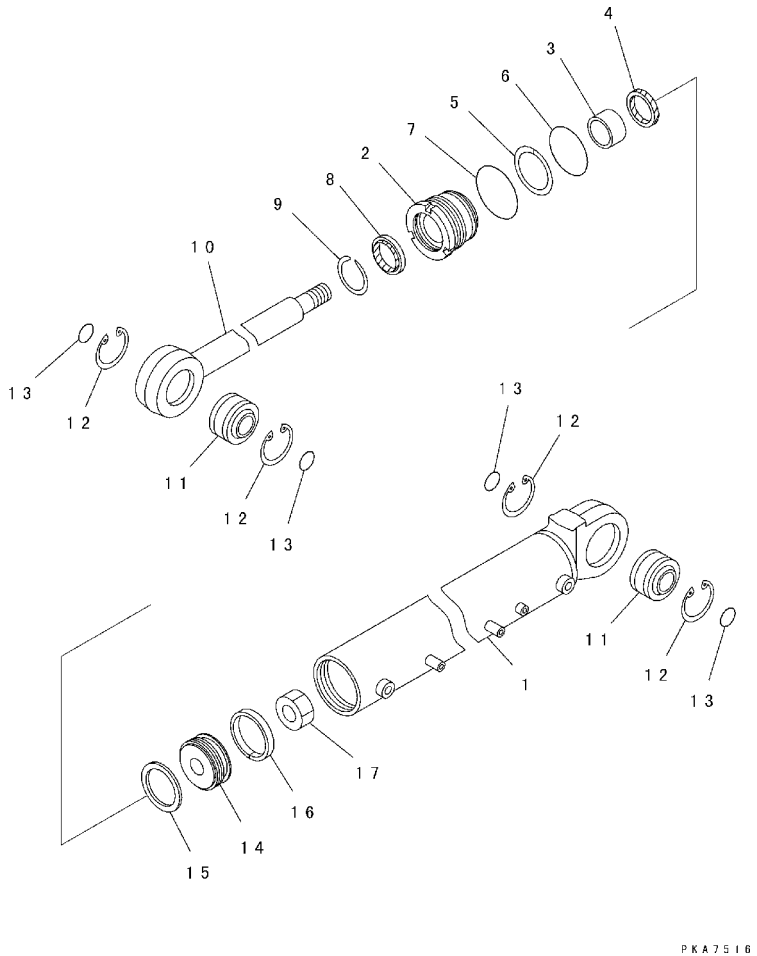

FIG. NO. : Y1620-21A0

INDEX	PART NO.	DESCRIPTION	Q'TY	SERIAL NO.
	124-63-02210	CYLINDER ASS'Y	1	B30001-
1	124-63-65540	. CYLINDER	1	B30001-
2	707-29-13730	. HEAD, CYLINDER	1	B30001-
3	707-52-10660	. BUSHING	1	B30001-
4	707-51-65211	. PACKING, ROD (K6)	1	B30001-
5	07146-02126	. RING, BACK-UP (K6)	1	B30001-
6	07000-12125	. O-RING (K6)	1	B30001-
7	07000-02130	. O-RING (K6)	1	B30001-
8	144-63-92170	. SEAL, DUST (K6)	1	B30001-
9	07179-12079	. RING, SNAP	1	B30001-
10	124-63-65520	. ROD, PISTON	1	B30001-
11	07137-05008	. BUSHING	2	B30001-
	07137-00060	. . SEAL, DUST	2	B30001-
12	04065-01104	. RING, SNAP	4	B30001-
13	07000-03050	. O-RING (K6)	4	B30001-
14	707-36-13140	. PISTON	1	B30001-
15	707-44-13070	. RING, PISTON (K6)	1	B30001-
16	07156-01315	. RING, WEAR (K6)	1	B30001-
17	07165-13941	. NUT	1	B30001-
	707-98-42420	SERVICE KIT	1	B30001-

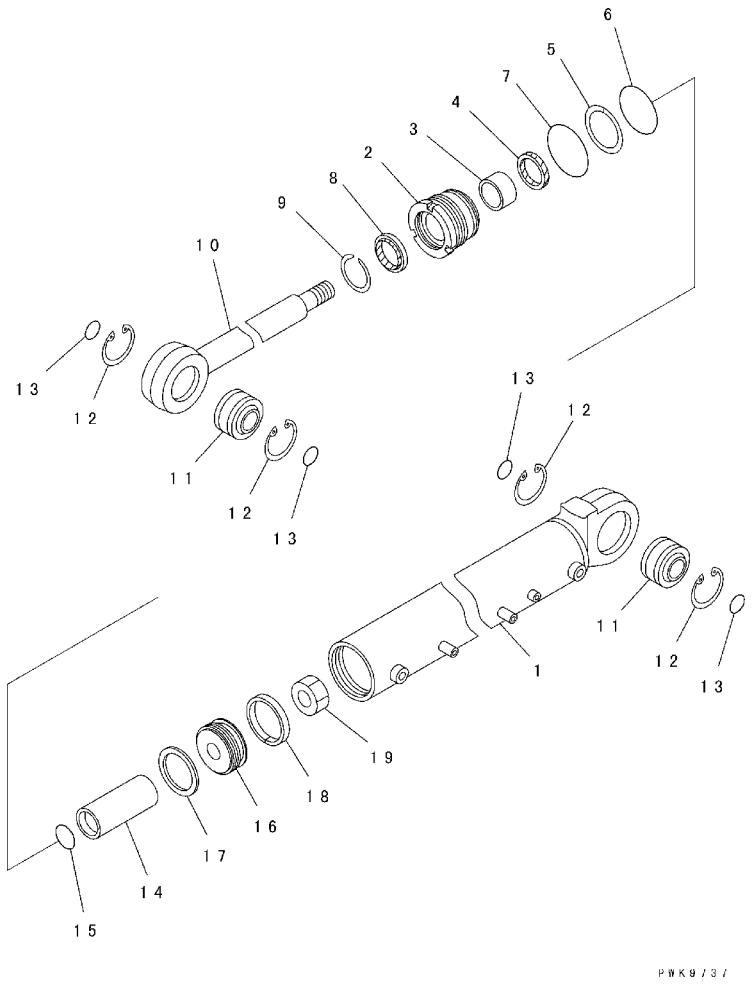

INDEX	PART NO.	DESCRIPTION	Q'TY	SERIAL NO.
	124-63-02230	CYLINDER ASS'Y	1	B30001-
1	124-63-65540	. CYLINDER	1	B30001-
2	707-29-13730	. HEAD, CYLINDER	1	B30001-
3	707-52-10660	. BUSHING	1	B30001-
4	707-51-65211	. PACKING, ROD (K6)	1	B30001-
5	07146-02126	. RING, BACK-UP (K6)	1	B30001-
6	07000-12125	. O-RING (K6)	1	B30001-
7	07000-02130	. O-RING (K6)	1	B30001-
8	144-63-92170	. SEAL, DUST (K6)	1	B30001-
9	07179-12079	. RING, SNAP	1	B30001-
10	124-63-65520	. ROD, PISTON	1	B30001-
11	07137-05008	. BUSHING	2	B30001-
	07137-00060	. . SEAL, DUST	2	B30001-
12	04065-01104	. RING, SNAP	4	B30001-
13	07000-03050	. O-RING (K6)	4	B30001-
14	707-81-65420	. COLLAR	1	B30001-
15	07000-02065	. O-RING	1	B30001-
16	707-36-13140	. PISTON	1	B30001-
17	707-44-13070	. RING, PISTON (K6)	1	B30001-
18	07156-01315	. RING, WEAR (K6)	1	B30001-
19	07165-13941	. NUT	1	B30001-
	707-98-42420	SERVICE KIT	1	B30001-

FIG. Y1620-31A0 BLADE TILT CYLINDER (INNER PARTS)

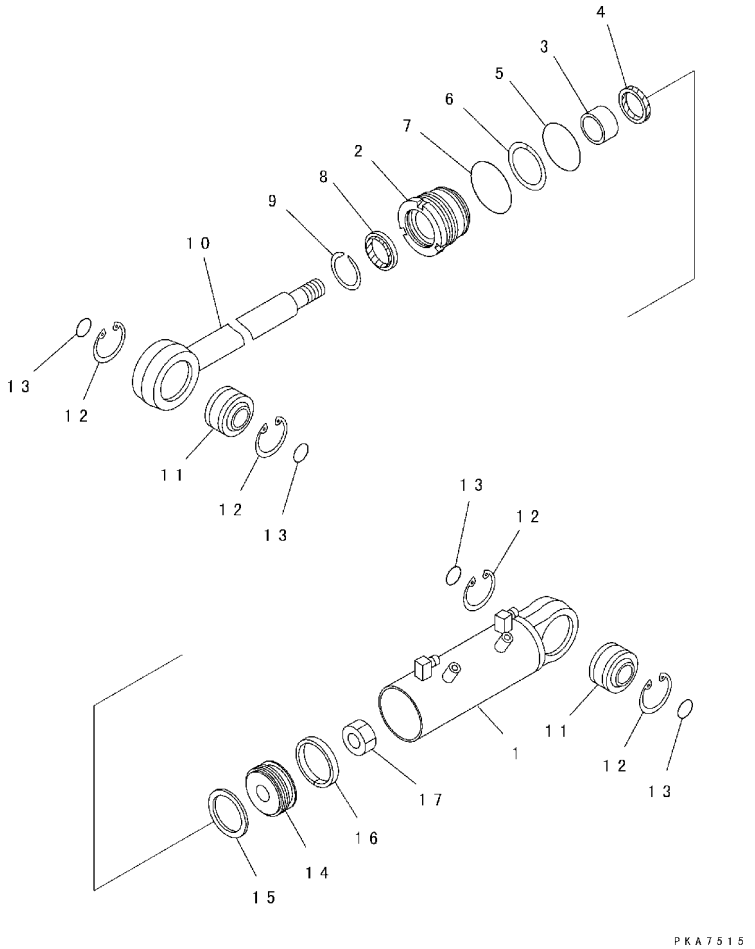

FIG. NO. : Y1620-31A0

INDEX	PART NO.	DESCRIPTION	Q'TY	SERIAL NO.
	124-63-02221	CYLINDER ASS'Y	1	B30001-
1	124-63-64641	. CYLINDER	1	B30001-
2	707-29-11730	. HEAD, CYLINDER	1	B30001-
3	07177-05530	. BUSHING	1	B30001-
4	707-51-55211	. PACKING, ROD (K5)	1	B30001-
5	07000-12105	. O-RING (K5)	1	B30001-
6	07146-02106	. RING, BACK-UP (K5)	1	B30001-
7	07000-02110	. O-RING (K5)	1	B30001-
8	707-56-55510	. SEAL, DUST (K5)	1	B30001-
9	07179-12069	. RING, SNAP	1	B30001-
10	124-63-64621	. ROD, PISTON	1	B30001-
11	07137-04006	. BUSHING	2	B30001-
	07137-00040	. . SEAL, DUST	2	B30001-
12	04065-09030	. RING, SNAP	4	B30001-
13	07000-03040	. O-RING (K5)	4	B30001-
14	707-36-11100	. PISTON	1	B30001-
15	707-44-11180	. RING, PISTON (K5)	1	B30001-
16	07156-01112	. RING, WEAR (K5)	1	B30001-
17	01580-03629	. NUT	1	B30001-
	707-98-34590	SERVICE KIT	1	B30001-

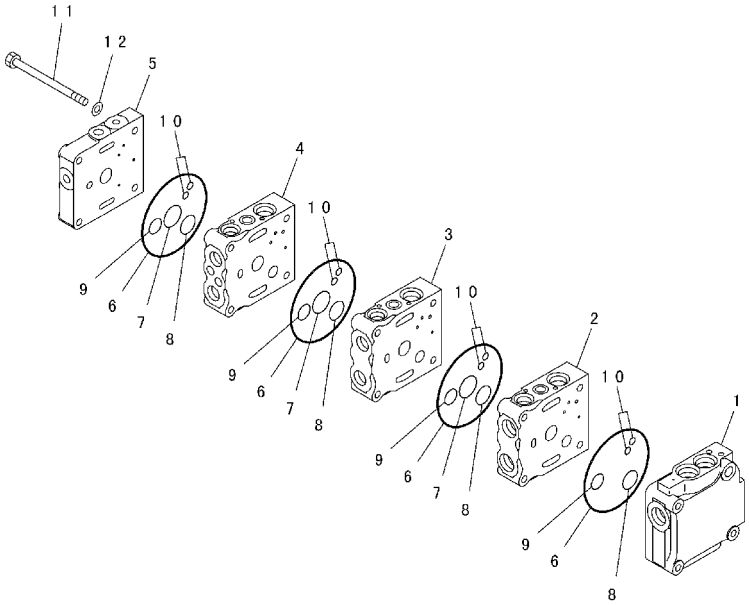

INDEX	PART NO.	DESCRIPTION	Q'TY	SERIAL NO.
	723-23-10303	VALVE ASS'Y	1	B30197-
	723-23-10302	VALVE ASS'Y	1	B30001-B30196
		THIS ASSEMBLY CONSISTS OF ALL PARTS SHOWN IN FIGS. Y1663-01A0 TO Y1663-04A0.		
1	☆	. BLOCK	1	B30001-
2	☆	. BLOCK, VALVE	1	B30001-
3	☆	. BLOCK, VALVE	1	B30001-
4	☆	. BLOCK, VALVE	1	B30001-
5	723-26-21710	. COVER	1	B30001-
6	07000-12120	. O-RING	4	B30001-
7	723-26-15830	. O-RING	3	B30001-
8	723-26-15840	. O-RING	4	B30001-
9	07000-12020	. O-RING	4	B30001-
10	07000-11008	. O-RING	8	B30001-
11	700-84-11172	. BOLT	4	B30001-
12	01643-31032	. WASHER	4	B30001-

FIG. Y1663-02A0 CONTROL VALVE (3-SPOOL) (2/4)

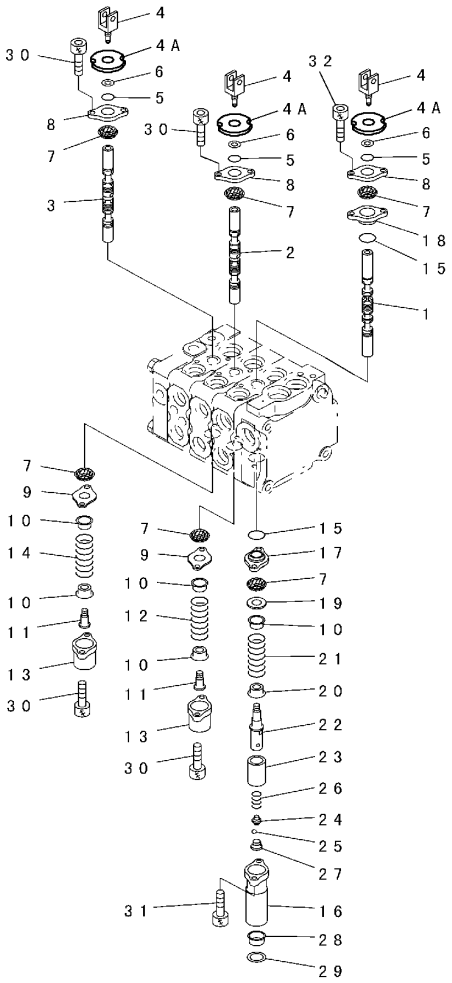

FIG. NO. : Y1663-02A0

INDEX	PART NO.	DESCRIPTION	Q'TY	SERIAL NO.
	(723-23-10303)	VALVE ASS'Y	1	B30197-
	(723-23-10302)	VALVE ASS'Y	1	B30001-B30196
		THIS ASSEMBLY CONSISTS OF ALL PARTS SHOWN IN FIGS. Y1663-01A0 TO Y1663-04A0.		
1	☆	. SPOOL	1	B30001-
2	☆	. SPOOL	1	B30001-
3	☆	. SPOOL	1	B30001-
4	723-26-15480	. PLUG	3	B30001-
4A	723-26-15880	. SEAL	3	B30197-
5	07000-11003	. O-RING	3	B30001-
6	07001-01003	. RING, BACK-UP	3	B30001-
7	709-25-11290	. SEAL	6	B30001-
8	723-26-15820	. PLATE	3	B30001-
9	723-26-15810	. PLATE	2	B30001-
10	700-22-11291	. RETAINER	5	B30001-
11	700-22-11321	. PLUG	2	B30001-
12	700-22-11311	. SPRING	1	B30001-
13	723-26-15420	. CASE	2	B30001-
14	723-26-14450	. SPRING	1	B30001-
15	700-80-61260	. O-RING	2	B30001-
16	723-26-15410	. CASE	1	B30001-
17	723-26-15770	. PLATE	1	B30001-
18	723-26-15780	. PLATE	1	B30001-
19	723-26-15790	. PLATE	1	B30001-
20	700-22-11520	. RETAINER	1	B30001-
21	700-22-11510	. SPRING	1	B30001-
22	700-22-12250	. PLUG	1	B30001-
23	700-22-12440	. DETENT	1	B30001-
24	700-22-12480	. GUIDE	1	B30001-
25	700-84-11730	. BALL	3	B30001-
26	723-26-14170	. SPRING	1	B30001-
27	700-21-11210	. PLUG	1	B30001-
28	700-22-12270	. PLUG	1	B30001-
29	700-22-11610	. RING	1	B30001-
30	01252-60616	. BOLT	8	B30001-
31	01252-60625	. BOLT	2	B30001-
32	01252-60620	. BOLT	2	B30001-

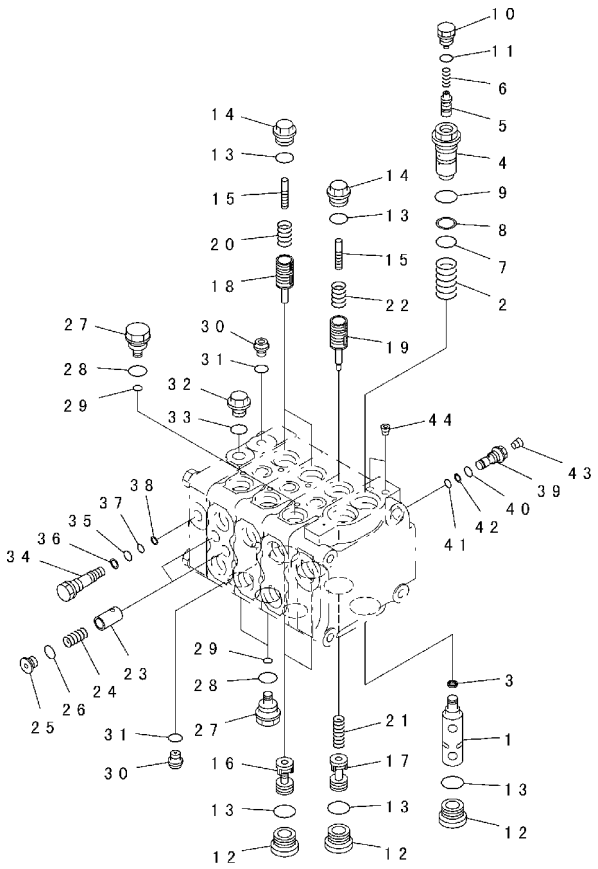

INDEX	PART NO.	DESCRIPTION	Q'TY	SERIAL NO.
	(723-23-10303)	VALVE ASS'Y	1	B30197-
	(723-23-10302)	VALVE ASS'Y	1	B30001-B30196
		THIS ASSEMBLY CONSISTS OF ALL PARTS SHOWN IN FIGS. Y1663-01A0 TO Y1663-04A0.		
1	☆	. SPOOL	1	B30001-
2	723-26-14180	. SPRING	1	B30001-
3	709-70-71610	. SEAL	1	B30001-
4	☆	. SLEEVE	1	B30001-
5	☆	. PISTON	1	B30001-
6	723-26-14190	. SPRING	1	B30001-
7	07000-12018	. O-RING	1	B30001-
8	07001-02018	. RING, BACK-UP	1	B30001-
9	07002-12434	. O-RING	1	B30001-
10	723-40-56130	. PLUG	1	B30001-
11	07002-11423	. O-RING	1	B30001-
12	723-26-15230	. PLUG	4	B30001-
13	07002-12434	. O-RING	7	B30001-
14	723-26-15370	. PLUG	3	B30001-
15	☆	. PISTON	3	B30001-
16	☆	. VALVE	2	B30001-
17	☆	. VALVE	1	B30001-
18	☆	. VALVE	2	B30001-
19	☆	. VALVE	1	B30001-
20	723-26-14230	. SPRING	2	B30001-
21	723-26-14220	. SPRING	1	B30001-
22	723-26-14240	. SPRING	1	B30001-
23	723-26-15210	. VALVE	2	B30001-
24	723-26-14150	. SPRING	2	B30001-
25	723-26-15220	. PLUG	2	B30001-
26	07002-11223	. O-RING	2	B30001-
27	723-26-15310	. PLUG	3	B30001-
28	07002-12034	. O-RING	3	B30001-
29	07000-11007	. O-RING	3	B30001-
30	708-8E-16160	. PLUG	2	B30001-
31	07002-11023	. O-RING	2	B30001-
32	706-73-71450	. PLUG	1	B30001-
33	07002-11423	. O-RING	1	B30001-
34	723-26-15190	. PLUG	1	B30001-
35	07000-11009	. O-RING	1	B30001-
36	07001-01009	. RING, BACK-UP	1	B30001-
37	07000-11007	. O-RING	1	B30001-
38	07001-01007	. RING, BACK-UP	1	B30001-

FIG. Y1663-03A0 CONTROL VALVE (3-SPOOL) (3/4)

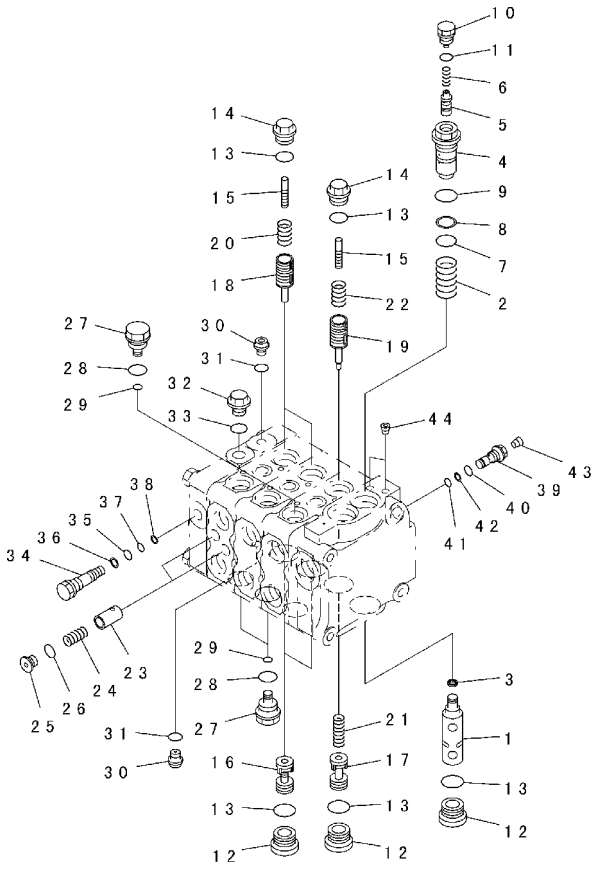

FIG. NO. : Y1663-03A0

INDEX	PART NO.	DESCRIPTION	Q'TY	SERIAL NO.
39	☆	. PLUG	1	B30001-
40	07002-11223	. O-RING	1	B30001-
41	07000-11007	. O-RING	1	B30001-
42	07001-01007	. RING, BACK-UP	1	B30001-
43	☆	. SCREW	1	B30001-
44	708-21-12541	. PLUG	2	B30001-

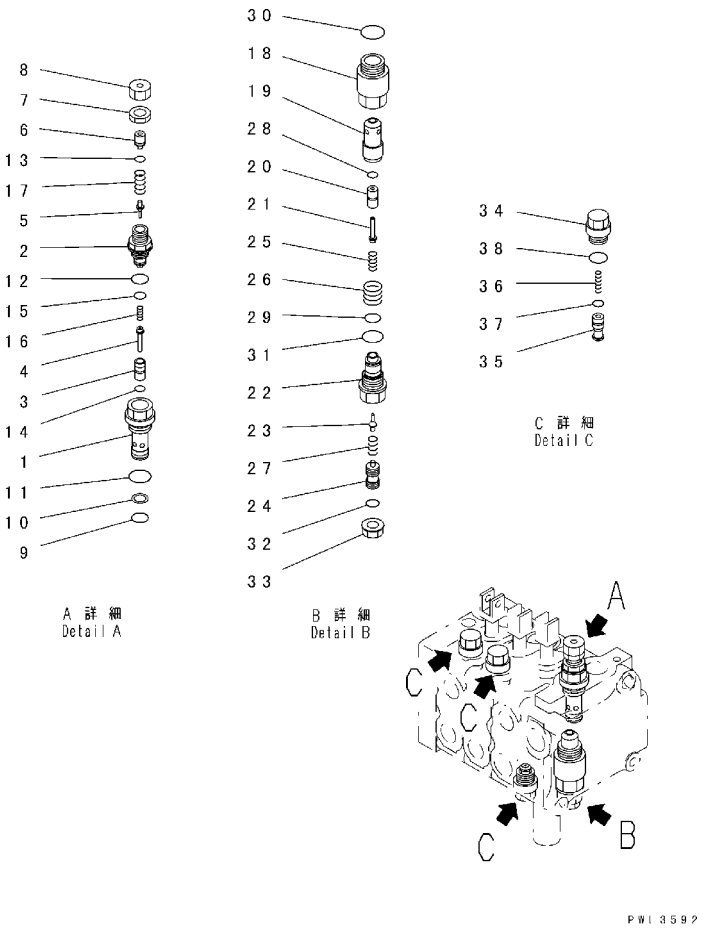

INDEX	PART NO.	DESCRIPTION	Q'TY	SERIAL NO.
	(723-23-10303)	VALVE ASS'Y	1	B30197-
	(723-23-10302)	VALVE ASS'Y	1	B30001-B30196
		THIS ASSEMBLY CONSISTS OF ALL PARTS SHOWN IN FIGS. Y1663-01A0 TO Y1663-04A0.		
	723-20-60300	. VALVE ASS'Y, RELIEF	1	B30001-
1	☆	. . SLEEVE	1	B30001-
2	☆	. . PLUG	1	B30001-
3	☆	. . POPPET	1	B30001-
4	☆	. . PISTON	1	B30001-
5	☆	. . POPPET	1	B30001-
6	☆	. . SPACER	1	B30001-
7	☆	. . NUT	1	B30001-
8	☆	. . NUT	1	B30001-
9	700-22-11410	. . O-RING	1	B30001-
10	700-80-64220	. . RING	1	B30001-
11	07002-02434	. . O-RING	1	B30001-
12	☆	. . O-RING	1	B30001-
13	☆	. . O-RING	1	B30001-
14	☆	. . SEAL	1	B30001-
15	☆	. . SEAL	1	B30001-
16	☆	. . SPRING	1	B30001-
17	☆	. . SPRING	1	B30001-
	709-70-74600	. VALVE ASS'Y, SUCTION AND SAFETY	1	B30001-
18	☆	. . SLEEVE	1	B30001-
19	☆	. . SLEEVE	1	B30001-
20	☆	. . POPPET	1	B30001-
21	☆	. . PISTON	1	B30001-
22	☆	. . PLUG	1	B30001-
23	☆	. . POPPET	1	B30001-
24	☆	. . SCREW	1	B30001-
25	☆	. . SPRING	1	B30001-
26	☆	. . SPRING	1	B30001-
27	☆	. . SPRING	1	B30001-
28	☆	. . SEAL	1	B30001-
29	☆	. . SEAL	1	B30001-
30	709-25-11390	. . O-RING	1	B30001-
31	☆	. . O-RING	1	B30001-
32	☆	. . O-RING	1	B30001-
33	☆	. . NUT	1	B30001-
	723-20-80100	. VALVE ASS'Y, SUCTION	3	B30001-
34	☆	. . SLEEVE	1	B30001-
35	☆	. . VALVE	1	B30001-

FIG. Y1663-04A0 CONTROL VALVE (3-SPOOL) (4/4)

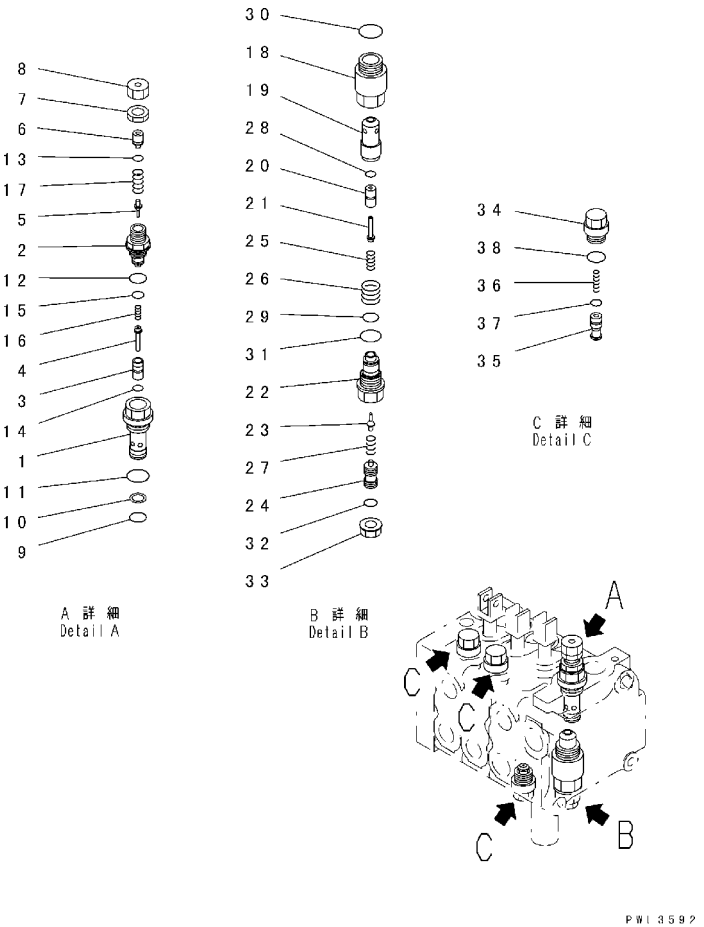

FIG. NO. : Y1663-04A0

INDEX	PART NO.	DESCRIPTION	Q'TY	SERIAL NO.
36	☆	. . SPRING	1	B30001-
37	☆	. . SEAL	1	B30001-
38	07002-12034	. . O-RING	1	B30001-

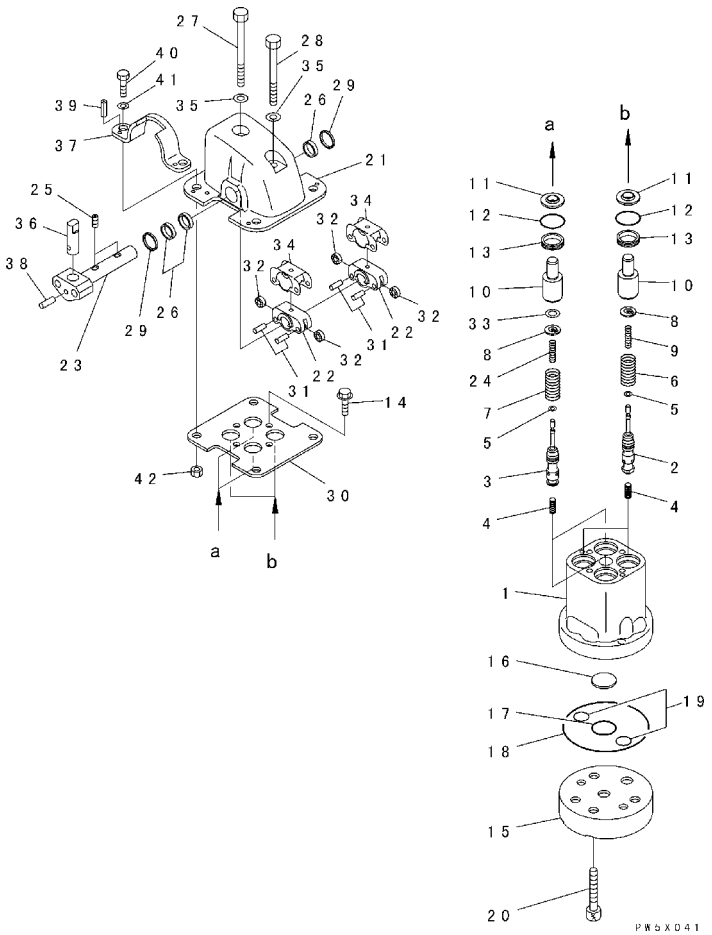

INDEX	PART NO.	DESCRIPTION	Q'TY	SERIAL NO.
	702-16-05013	PILOT VALVE	1	B30001-
1	☆	. BODY, VALVE	1	B30001-
2	☆	. VALVE	2	B30001-
3	☆	. VALVE	2	B30001-
4	702-16-55240	. PISTON	4	B30001-
5	702-16-51140	. SHIM, 0. 30MM	4	B30001-
6	702-16-53160	. SPRING	2	B30001-
7	702-16-53470	. SPRING	2	B30001-
8	702-16-53140	. RETAINER	4	B30001-
9	702-16-55371	. SPRING	2	B30001-
10	702-16-55360	. PISTON	4	B30001-
11	702-16-51270	. SEAL	4	B30001-
12	07000-12020	. O-RING	4	B30001-
13	702-16-54170	. COLLAR	4	B30001-
14	01435-00620	. BOLT	2	B30001-
15	702-16-53761	. COVER	1	B30001-
16	720-68-15240	. FILTER	1	B30001-
17	07000-12021	. O-RING	1	B30001-
18	702-16-53910	. O-RING	1	B30001-
19	702-16-53920	. O-RING	2	B30001-
20	01252-60835	. BOLT	2	B30001-
21	☆	. CASE	1	B30001-
22	☆	. LINK	2	B30001-
23	☆	. SHAFT	1	B30001-
24	702-16-55382	. SPRING	2	B30001-
25	☆	. SCREW	2	B30001-
26	☆	. BUSHING	3	B30001-
27	702-16-55260	. BOLT	1	B30001-
28	702-16-55270	. BOLT	1	B30001-
29	☆	. SCRAPER	2	B30001-
30	702-16-56740	. PLATE	1	B30001-
31	☆	. PIN	4	B30001-
32	☆	. BEARING	4	B30001-
33	702-16-55330	. SPACER, 0. 4MM	2	B30001-
	702-16-57370	. SPACER, 0. 2MM	2	B30001-
34	☆	. PLATE	2	B30001-
35	01643-30623	. WASHER	2	B30001-
36	☆	. PIN	1	B30001-
37	☆	. PLATE	1	B30001-
38	04025-00520	. PIN, SPRING	1	B30001-
39	☆	. PIN	2	B30001-
40	01010-80830	. BOLT	2	B30001-

FIG. Y1670-01A0 PPC VALVE

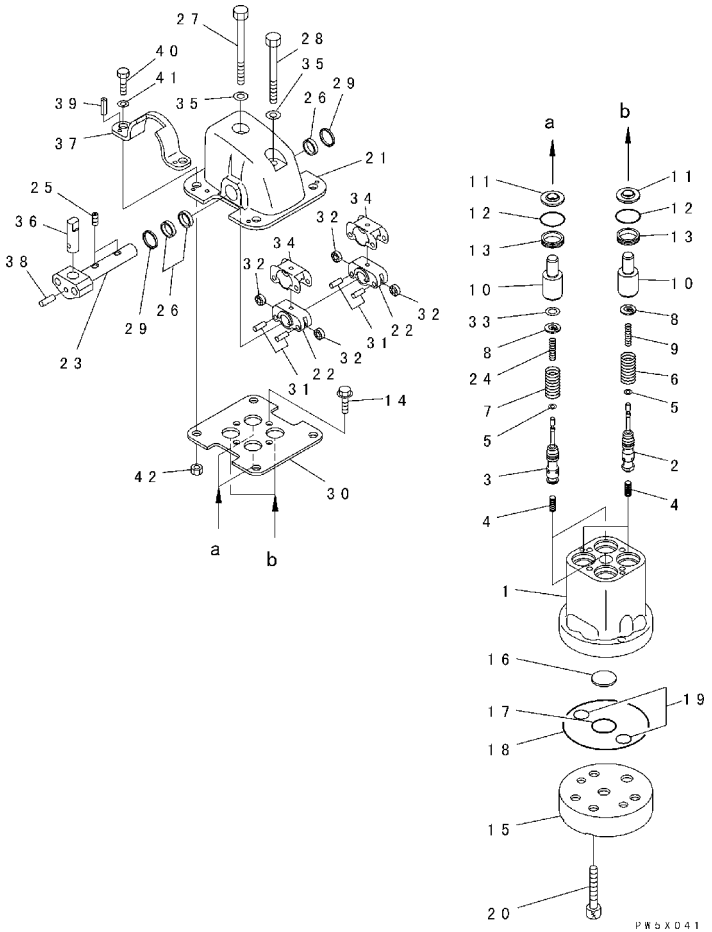

FIG. NO. : Y1670-01A0

INDEX	PART NO.	DESCRIPTION	Q'TY	SERIAL NO.
41	01640-20816	. WASHER	2	B30001-
42	01580-00806	. NUT	2	B30001-

NUMERICAL INDEX

PARTS Nº	FIG. Nº	INDEX
01010-51230	K2400-03A0	13
01010-61460	F2320-07A0	14
01010-61665	F2320-06A0	15
01010-80610	K2210-01A0	11
01010-80610	V0300-01A1	12
01010-80612	K2210-01A0	28
01010-80612	K2210-06B1	13
01010-80616	B0000-13A0	2
01010-80616	B0500-01A0	8
01010-80616	F2820-01A0	31
01010-80616	K2210-01A0	19
01010-80616	K2210-06B1	4
01010-80616	K2910-01A0	2
01010-80616	V0300-01A1	15
01010-80620	B0000-13A0	32
01010-80620	F2300-14A0	16
01010-80620	M2140-04A0	15
01010-80625	K0710-02A0	31
01010-80630	K0110-01A2	38
01010-80630	K0110-01A4	38
01010-80630	K0110-01A7	38
01010-80630	K0710-02A0	32
01010-80635	K0210-02A0	7
01010-80660	K2210-06B1	3
01010-80816	C0100-02A0	27
01010-80816	E0300-01A0	11
01010-80816	K0710-02A0	4
01010-80816	K0710-03A0	21
01010-80816	K0710-03A0	24
01010-80816	K0710-03A0	26
01010-80816	K2210-02B1	5
01010-80816	K2210-02B2	4
01010-80816	K2210-03B1	1
01010-80816	K2210-03B1	12
01010-80816	K2210-03B1	19
01010-80816	K2210-03B1	25
01010-80816	K2210-06B1	19
01010-80820	F2320-11A0	18
01010-80820	H0120-01A0	8
01010-80820	K2210-01A0	9
01010-80820	K2210-03B1	2
01010-80825	C0100-02A0	21
01010-80825	D0210-01A0	6
01010-80825	D0210-01A1	6
01010-80825	K0110-01A0	4
01010-80825	K0710-03A0	13
01010-80825	K2110-04B0	12
01010-80825	K2110-12B0	2
01010-80825	K2210-02B1	11
01010-80825	K2210-02B2	10

PARTS Nº	FIG. Nº	INDEX
01010-80825	K2500-02A0	31
01010-80825	K2500-02A2	32
01010-80825	W2112-01A0	9
01010-80830	F2820-01A0	8
01010-80830	F2820-01A0	33
01010-80830	K2110-03B0	16
01010-80830	K2110-03B0	20
01010-80830	K2110-03B0	22
01010-80830	K2110-03B0	33
01010-80830	K2110-04B0	4
01010-80830	K2110-04B0	8
01010-80830	K2110-04B0	10
01010-80830	K2110-04B0	12
01010-80830	K2110-04B0	16
01010-80830	K2110-04B0	22
01010-80830	K2110-05B0	13
01010-80830	K2110-05B0	18
01010-80830	K2110-05B0	33
01010-80830	K2110-06B0	16
01010-80830	K2110-06B0	20
01010-80830	K2110-06B0	34
01010-80830	K2110-07B0	4
01010-80830	K2110-07B0	10
01010-80830	K2110-07B0	15
01010-80830	K2110-09B0	7
01010-80830	K2110-09B0	14
01010-80830	K2110-10B0	6
01010-80830	K2241-01A0	6
01010-80830	K2241-01A0	16
01010-80830	K2241-01A0	19
01010-80830	K2400-03A0	8
01010-80830	K2400-03A0	26
01010-80830	K2520-01A1	5
01010-80830	K2520-01A1	9
01010-80830	K2520-01A1	15
01010-80830	K2520-01A1	17
01010-80830	K2520-01A1	19
01010-80830	K2520-01A1	25
01010-80830	R0120-01A0	11
01010-80830	Y1670-01A0	40
01010-80835	K2110-05B0	22
01010-80835	K2110-07B0	8
01010-80845	F2300-05A0	19
01010-80845	F2300-05A0	24
01010-80850	F2320-10A0	6
01010-80850	H2210-01A0	7
01010-80855	F2300-05A0	18
01010-80855	F2300-05A0	23
01010-80855	F2320-09A0	36
01010-80860	F2320-11A0	25

PARTS Nº	FIG. Nº	INDEX
01010-80875	F2320-01A0	9
01010-80875	F2320-10A0	7
01010-80875	F2320-11A0	24
01010-80890	K0710-03A0	2
01010-81016	B0000-13A0	4A
01010-81016	B0500-01A0	2
01010-81016	B0500-01A0	16
01010-81016	E0200-01A0	3
01010-81016	E0200-01A0	6
01010-81016	E0200-01A0	9
01010-81016	E0200-01A0	19
01010-81016	E0200-01A0	14A
01010-81016	E0200-01A0	7A
01010-81016	E0200-02A0	11
01010-81016	E0200-02A0	13
01010-81016	E0200-02A0	20
01010-81016	E0200-02A0	26
01010-81016	E0200-02A0	35
01010-81016	E0200-02A0	38
01010-81016	E0200-02A0	41
01010-81016	E0210-01A0	10
01010-81016	E0210-01A1	10
01010-81016	K0710-03A0	28
01010-81016	K2110-12B0	12
01010-81016	K2910-01A0	6
01010-81016	K2910-01A0	11
01010-81016	K2910-01A0	17
01010-81016	K2910-01A0	24
01010-81016	K2910-01A0	28
01010-81018	K2210-01A0	33
01010-81020	B0000-07A0	6
01010-81020	B0500-01A0	31
01010-81020	C0100-02A0	32
01010-81020	D0100-01A0	9
01010-81020	E0200-02A0	5
01010-81020	E0420-01A0	16
01010-81020	F2300-11A0	38
01010-81020	H0120-01A0	6
01010-81020	H2220-01A0	13
01010-81020	K0110-01A2	35
01010-81020	K0110-01A4	35
01010-81020	K0110-01A7	35
01010-81020	K0710-01A1	17
01010-81020	K0710-02A0	7
01010-81020	K0710-02A0	10
01010-81020	K0710-02A0	13
01010-81020	K0710-02A0	15
01010-81020	K0710-02A0	28
01010-81020	K0710-04A0	14
01010-81020	K0890-01A0	6

PARTS Nº	FIG. Nº	INDEX
01010-81020	K2100-13B0	5
01010-81020	K2100-13B0	8
01010-81020	K2100-13B0	20
01010-81020	K2100-13B0	24
01010-81020	K2100-13B0	32
01010-81020	K2100-13B0	36
01010-81020	K2100-13B0	40
01010-81020	K2100-14B0	5
01010-81020	K2110-08B0	26
01010-81020	K2110-12B0	5
01010-81020	K2110-12B0	12
01010-81020	K2110-12B0	15
01010-81020	K2210-02B1	15
01010-81020	K2210-03B1	4
01010-81020	K2500-02A0	3
01010-81020	K2500-02A0	11
01010-81020	K2500-02A0	17
01010-81020	K2500-02A2	3
01010-81020	K2500-02A2	11
01010-81020	M2140-02A0	10
01010-81020	M2140-02A1	10
01010-81020	M2140-02A2	20
01010-81020	M2210-01A0	1
01010-81020	M2210-01A1	1
01010-81020	M2210-02A0	1
01010-81020	M2210-02A1	1
01010-81020	M2210-02A2	1
01010-81020	M2210-02A3	1
01010-81020	M2240-01A0	5
01010-81020	M2240-01A2	5
01010-81020	T2110-01A0	25
01010-81020	T2115-01A0	25
01010-81020	T2160-02A0	16
01010-81020	T2160-02A0	20
01010-81020	T2160-02A0	23
01010-81025	B0600-01A0	16
01010-81025	F2300-11A0	12
01010-81025	F2300-11A0	26
01010-81025	F2300-12A0	12
01010-81025	F2320-08A0	15
01010-81025	F2320-13A0	8
01010-81025	F2320-13A0	15
01010-81025	F2380-01A0	14
01010-81025	F2380-02A0	14
01010-81025	F2730-01A0	7
01010-81025	H0310-01A0	26
01010-81025	H0310-02A0	10
01010-81025	H2220-01A0	16
01010-81025	H2230-01A0	8
01010-81025	K0110-01A2	7

PARTS Nº	FIG. Nº	INDEX
01010-81025	K0110-01A2	11
01010-81025	K0110-01A2	20
01010-81025	K0110-01A4	7
01010-81025	K0110-01A4	11
01010-81025	K0110-01A4	20
01010-81025	K0110-01A7	7
01010-81025	K0110-01A7	11
01010-81025	K0110-01A7	20
01010-81025	K0210-03A0	16
01010-81025	K0710-03A0	17
01010-81025	K2100-13B0	25
01010-81025	K2100-13B0	28
01010-81025	K2110-01B0	7
01010-81025	K2110-01B0	10
01010-81025	K2110-01B1	7
01010-81025	K2110-08B0	2
01010-81025	K2110-09B0	24
01010-81025	K2110-11B0	1
01010-81025	K2120-01A0	2
01010-81025	K2500-01A0	17
01010-81030	B0000-14A1	2
01010-81030	C0100-01A0	6
01010-81030	C0100-01A0	9
01010-81030	C0100-01A0	16
01010-81030	C0100-01A0	19
01010-81030	C0100-01A1	6
01010-81030	C0100-01A1	9
01010-81030	C0100-01A1	16
01010-81030	C0100-01A1	19
01010-81030	C0100-01A2	6
01010-81030	C0100-01A2	9
01010-81030	C0100-01A2	16
01010-81030	C0100-01A2	19
01010-81030	C0100-01A3	6
01010-81030	C0100-01A3	9
01010-81030	C0100-01A3	16
01010-81030	C0100-01A3	19
01010-81030	C0100-01A4	6
01010-81030	C0100-01A4	9
01010-81030	C0100-01A4	16
01010-81030	C0100-01A4	19
01010-81030	D0210-01A1	22
01010-81030	F2300-02A0	21
01010-81030	F2300-06A0	3
01010-81030	F2300-12A0	8
01010-81030	F2320-12A0	2
01010-81030	F2380-01A0	23
01010-81030	F2380-02A0	23
01010-81030	F2730-01A0	14
01010-81030	F2820-01A0	28

PARTS Nº	FIG. Nº	INDEX
01010-81030	H0310-01A0	4
01010-81030	K0110-01A2	22
01010-81030	K0110-01A4	22
01010-81030	K0110-01A7	22
01010-81030	K2110-07B0	1
01010-81030	K2110-07B0	12
01010-81030	K2110-08B0	5
01010-81030	K2500-01A0	8
01010-81035	B0000-13A0	5
01010-81035	B0600-01A0	10
01010-81035	C0100-02A0	13
01010-81035	C0100-02A0	17
01010-81035	E0420-01A0	8
01010-81035	F2300-16A0	10
01010-81035	K2110-07B0	21
01010-81040	B0000-14A0	4
01010-81040	B0000-14A1	2
01010-81040	B0000-14A1	4
01010-81040	F2300-02A0	1
01010-81040	F2300-05A0	6
01010-81040	F2300-05A0	14
01010-81040	T2160-01A0	8
01010-81050	K0890-01A0	2
01010-81050	K2110-02B0	10
01010-81050	K2110-08B0	7
01010-81050	K2110-13B0	28
01010-81050	M2140-02A0	7
01010-81050	M2140-02A1	7
01010-81050	M2140-02A2	17
01010-81055	F2730-02A0	9
01010-81060	C0100-02A0	9
01010-81060	M2110-01A1	44
01010-81075	F2300-13A0	13
01010-81080	F2300-06A0	29
01010-81080	K2500-02A2	17
01010-81095	F2300-07A0	39
01010-81220	B0500-01A0	5
01010-81220	B0500-01A0	29
01010-81220	C0100-02A0	24
01010-81220	D0200-01A0	11
01010-81220	D0210-01A1	15
01010-81220	E0200-02A0	21
01010-81220	E0200-02A0	28
01010-81220	E0200-02A0	31
01010-81220	E0300-01A0	7
01010-81220	E0320-01A0	5
01010-81220	F2300-07A0	28
01010-81220	F2300-08A0	19
01010-81220	F2300-10A0	29
01010-81220	F2300-12A0	17

PARTS Nº	FIG. Nº	INDEX
01010-81220	F2730-01A0	26
01010-81220	F2730-02A0	5
01010-81220	H0310-02A0	7
01010-81220	K0210-01A0	2
01010-81220	K0710-01A0	28
01010-81220	K0710-02A0	21
01010-81220	K0710-02A0	24
01010-81220	K0710-02A0	35
01010-81220	K2110-02B0	7
01010-81220	K2110-12B0	9
01010-81220	K2241-01A0	41
01010-81220	K2910-01A0	19
01010-81220	M2140-01A2	21
01010-81220	M2210-04A0	13
01010-81220	M2210-04A0	35
01010-81220	M2210-04A1	13
01010-81220	M2210-04A1	35
01010-81220	T2160-01A0	4
01010-81220	T2160-02A0	7
01010-81220	T2160-03A0	8
01010-81225	B0000-13A0	16
01010-81225	D0210-01A0	8
01010-81225	D0210-01A1	8
01010-81225	E0300-01A0	17
01010-81225	F2300-03A0	3
01010-81225	F2300-03A0	22
01010-81225	F2300-07A0	42
01010-81225	F2730-01A0	3
01010-81225	F2730-01A0	17
01010-81225	H0120-01A0	1
01010-81225	H2230-01A0	8
01010-81225	J2100-01A0	7
01010-81225	J2100-01A0	13
01010-81225	J2100-01A0	16
01010-81225	J2100-01A0	29
01010-81225	K0210-01A0	6
01010-81225	K0210-03A0	3
01010-81225	K0210-13A0	7
01010-81225	K0410-01A2	11
01010-81225	K0710-01A0	18
01010-81225	K0710-01A0	28
01010-81225	K0710-01A1	14
01010-81225	K0710-01A1	19
01010-81225	K0710-02A0	2
01010-81225	K0710-03A0	4
01010-81225	K0710-04A0	11
01010-81225	K0710-04A0	16
01010-81225	K0860-01A1	4
01010-81225	K2110-01B0	4
01010-81225	K2110-01B1	4

PARTS Nº	FIG. Nº	INDEX
01010-81225	K2210-01A0	3
01010-81225	K2400-01A0	10
01010-81225	K2910-01A0	21
01010-81225	M2110-01A0	3
01010-81225	M2110-01A0	25
01010-81225	M2110-01A0	28
01010-81225	M2110-01A1	3
01010-81225	M2110-01A1	30
01010-81225	M2110-01A1	33
01010-81225	M2110-01A1	37
01010-81225	M2110-01A1	39
01010-81225	M2140-01A2	28
01010-81225	M2140-01A3	8
01010-81225	M2140-03A0	4
01010-81225	M2140-03A0	9
01010-81225	M2140-03A0	12
01010-81225	M2140-03A2	6
01010-81225	M2140-03A2	15
01010-81225	M2140-03A2	18
01010-81225	M2210-01A0	2
01010-81225	M2210-01A1	2
01010-81225	M2210-02A0	2
01010-81225	M2210-02A1	2
01010-81225	M2210-02A2	2
01010-81225	M2210-02A3	2
01010-81225	M2210-04A0	3
01010-81225	M2210-04A0	9
01010-81225	M2210-04A0	18
01010-81225	M2210-04A0	21
01010-81225	M2210-04A0	24
01010-81225	M2210-04A0	31
01010-81225	M2210-04A1	3
01010-81225	M2210-04A1	9
01010-81225	M2210-04A1	18
01010-81225	M2210-04A1	21
01010-81225	M2210-04A1	24
01010-81225	M2210-04A1	31
01010-81225	M2210-06A0	4
01010-81225	M2210-06A0	13
01010-81225	M2210-06A0	16
01010-81225	M2210-06A0	19
01010-81225	M2210-06A0	22
01010-81225	T2115-01A0	11
01010-81225	T2115-01A0	16
01010-81225	T2115-02A0	3
01010-81225	T2115-02A0	8
01010-81225	T2115-02A0	13
01010-81225	T2115-02A0	18
01010-81225	T2115-02A0	23
01010-81225	T2160-01A0	21

PARTS Nº	FIG. Nº	INDEX
01010-81225	T2160-02A0	12
01010-81225	T2160-03A0	10
01010-81225	V0300-01A1	17
01010-81230	F2300-03A0	28
01010-81230	F2300-16A0	22
01010-81230	H2210-01A0	13
01010-81230	H2220-01A0	25
01010-81230	H2230-01A0	18
01010-81230	K0110-01A0	10
01010-81230	K0110-01A3	5
01010-81230	K0110-01A5	7
01010-81230	K0110-01A6	5
01010-81230	K0110-01A8	6
01010-81230	K0110-01A9	6
01010-81230	K0110-04A2	3
01010-81230	K0120-01A0	3
01010-81230	K0410-01A0	6
01010-81230	K0410-01A1	7
01010-81230	K0410-01A2	14
01010-81230	K2400-01A0	5
01010-81230	K2400-05A0	3
01010-81230	M2140-03A0	15
01010-81230	M2140-03A2	21
01010-81230	M2140-04A0	3
01010-81230	M2140-04A0	19
01010-81230	M2210-05A0	2
01010-81230	M2210-06A0	7
01010-81230	M2210-06A0	11
01010-81230	M2811-01A0	5
01010-81230	R2200-01A3	11
01010-81230	T2110-01A0	12
01010-81230	T2120-01A0	14
01010-81230	T2120-01A1	15
01010-81230	T2160-02A0	27
01010-81235	F2300-02A0	16
01010-81235	F2300-05A0	3
01010-81235	F2320-05A0	9
01010-81235	F2320-05A0	17
01010-81235	F2320-06A0	4
01010-81235	F2320-07A0	8
01010-81235	H0120-01A0	13
01010-81235	J2100-01A0	19
01010-81235	J2100-01A0	22
01010-81235	J2100-01A0	25
01010-81235	K0410-01A1	10
01010-81235	K2210-07B1	3
01010-81235	M2110-01A0	13
01010-81235	M2110-01A1	18
01010-81235	M2120-01A0	3
01010-81235	M2120-01A0	5

PARTS Nº	FIG. Nº	INDEX
01010-81235	M2120-01A1	3
01010-81235	M2120-01A1	5
01010-81235	M2140-04A0	7
01010-81235	M2210-05A0	3
01010-81235	M2240-01A0	7
01010-81235	M2240-01A2	7
01010-81235	M2811-01A1	5
01010-81240	B0000-09A0	3
01010-81240	B0000-09A0	7
01010-81240	T2160-01A0	18
01010-81245	F2300-07A0	2
01010-81245	F2300-09A0	3
01010-81245	F2300-09A0	14
01010-81245	F2300-10A0	2
01010-81245	F2300-10A0	12
01010-81245	F2300-11A0	14
01010-81245	F2320-05A0	25
01010-81245	F2320-06A0	17
01010-81245	F2320-08A0	8
01010-81245	H2220-01A0	19
01010-81245	H2230-01A0	11
01010-81245	K0210-13A0	2
01010-81245	K0710-03A0	7
01010-81245	K2110-06B0	10
01010-81245	K2400-02A0	4
01010-81245	K2400-04A0	4
01010-81250	K0710-01A0	19
01010-81255	M2140-04A0	11
01010-81260	F2300-17A0	1
01010-81260	T2160-01A0	26
01010-81265	H2210-01A0	15
01010-81265	K0210-13A0	1
01010-81280	F2300-13A0	16
01010-81285	K2210-07B1	2
01010-81290	F2300-14A0	22
01010-81290	K2210-01A0	2
01010-81460	C0100-02A0	15
01010-81630	RO300-01A0	10
01010-81635	J2100-01A0	10
01010-81635	M2811-01A0	2
01010-81635	R2200-01A2	2
01010-81635	R2200-01A2	5
01010-81635	R2200-01A2	18
01010-81635	R2200-01A3	14
01010-81635	R2200-01A3	17
01010-81635	T2120-01A0	17
01010-81635	T2120-01A1	18
01010-81640	M2811-01A1	2
01010-81640	R2200-01A3	3
01010-81640	RO110-01A0	14

PARTS Nº	FIG. Nº	INDEX
01010-81645	F2380-01A0	3
01010-81645	F2380-02A0	3
01010-81645	F2380-03A0	2
01010-81645	F2380-03A0	3
01010-81645	H0100-01A0	12
01010-81645	K2120-01A0	6
01010-81645	K2120-01A0	10
01010-81645	M2110-01A0	9
01010-81645	M2110-01A1	14
01010-81645	R2200-01A2	9
01010-81645	R2200-01A3	21
01010-81650	K0410-01A2	2
01010-81655	M2110-01A0	10
01010-81655	M2110-01A1	15
01010-81660	F2300-04A0	10
01010-81660	F2300-04A0	11
01010-81665	F2300-04A0	12
01010-81670	RO300-01A0	13
01010-81675	F2300-04A0	13
01010-81675	K2120-01A0	8
01010-81675	R0200-01A1	12
01010-81680	D0100-01A0	11
01010-81680	R0120-01A0	22
01010-82050	M2210-04A0	6
01010-82050	M2210-04A0	28
01010-82050	M2210-04A1	6
01010-82050	M2210-04A1	28
01010-82060	K0410-01A0	2
01010-82060	K0410-01A1	2
01010-82060	K0410-01A2	5
01010-82070	M2210-03A0	2
01010-82070	M2210-03A0	6
01010-82085	K0410-01A2	4
01010-82095	M2140-04A0	9
01010-82470	F2380-01A0	35
01010-82470	F2380-02A0	35
01010-82480	T2810-01A3	16
01010-82490	F2380-01A0	36
01010-82490	F2380-02A0	36
01010-82490	T2810-01A0	9
01010-82490	T2810-01A1	7
01010-82495	F2300-01A0	1
01010-B0820	K0110-01A3	2
01010-B0820	K0110-01A5	2
01010-B0820	K0110-01A6	2
01010-B0820	K0110-01A8	2
01010-B0820	K0110-01A9	2
01011-81000	E0420-01A0	2
01011-81235	F2300-06A0	12
01011-81235	T2160-02A0	28

PARTS Nº	FIG. Nº	INDEX
01011-81615	K2110-01B0	17
01011-81615	K2110-01B1	14
01011-81620	B0100-01A0	3
01011-81630	F2300-04A0	14
01011-82400	F2380-01A0	26
01011-82400	F2380-02A0	26
01011-83010	T2120-01A0	10
01011-83010	T2120-01A1	11
01012-51260	T2810-01A0	6
01012-51260	T2810-01A3	10
01016-50830	K2400-03A0	15
01016-51030	F2300-12A0	10
01016-51040	B0000-05A0	25
01016-51090	K0710-03A0	9
01016-51250	F2300-11A0	10
01023-10420	K0210-06A0	8
01023-10512	K0210-07A0	13
01023-10520	K0210-02A0	12
01023-10616	K0210-08A0	2
01023-20512	K0210-02A0	24
01023-20616	K0210-02A0	30
01023-20616	K0210-02A0	33
01023-20620	K0210-06A0	4
01052-51260	T2810-01A1	12
01144-31030	B0000-18A1	3
01220-40406	M2110-01A0	22
01220-40406	M2110-01A1	27
01220-40406	W2112-01A0	10
01220-40512	K2210-01A0	25
01220-40512	K2210-06B1	10
01220-40514	H0100-01A0	7
01220-40610	K2210-03B1	6
01220-40610	K2210-05B1	1
01220-40616	K0830-01A1	2
01220-40820	K0210-04A0	26
01220-40820	K0210-04A0	30
01220-70516	K0210-06A0	6
01236-40816	K2500-01A0	3
01236-40816	K2500-01A0	12
01240-00820	F2300-03A0	8
01252-40820	K2110-12B0	7
01252-41030	K2110-02B0	3
01252-60616	Y1663-02A0	30
01252-60620	Y1663-02A0	32
01252-60625	Y1663-02A0	31
01252-60835	Y1670-01A0	20
01252-70514	H0100-01A0	7
01322-40616	K0110-01A2	17
01322-40616	K0110-01A4	17
01322-40616	K0110-01A7	17

PARTS Nº	FIG. Nº	INDEX
01370-00408	K0210-07A0	16
01370-00416	K0210-09A0	2
01435-00614	B0000-01A0	2
01435-00620	Y1670-01A0	14
01435-00816	B0000-17A0	2
01435-00816	K0210-09A0	4
01435-00820	K0320-01A0	3
01435-00825	B0000-12A0	1
01435-00825	B0000-20A0	1
01435-00850	K0410-01A1	6
01435-00895	B0000-01A0	9
01435-01014	B0000-17A0	11
01435-01016	B0000-04A0	8
01435-01016	B0000-04A0	10
01435-01016	B0000-05A0	22
01435-01016	K0210-07A0	9
01435-01020	B0000-04A0	2
01435-01020	K0210-06A0	2
01435-01025	B0000-05A0	2
01435-01025	B0000-05A0	19
01435-01025	K0210-02A0	5
01435-01030	B0000-05A0	16
01435-01030	B0000-14A2	2
01435-01030	BO000-14A0	2
01435-01035	B0000-14A2	4
01435-01035	BO000-14A0	4
01435-01040	B0000-18A1	2
01435-01075	B0000-04A0	5
01435-01080	B0000-05A0	8
01435-01220	B0000-17A0	5
01435-01240	B0000-02A0	23
01435-20612	K0210-05A0	6
01435-20612	K0210-07A0	2
01435-20814	C0100-01A0	4
01435-20814	C0100-01A1	4
01435-20814	C0100-01A2	4
01435-20814	C0100-01A3	4
01435-20814	C0100-01A4	4
01435-21016	C0100-03A3	2
01435-30816	K0210-04A0	28
01435-30820	K0210-03A0	9
01435-30820	K0210-05A0	16
01435-31016	K0210-01A0	10
01435-40816	K0860-01A1	2
01436-01030	B0000-02A0	20
01436-01030	B0000-04A0	14
01436-01030	B0000-05A0	13
01439-00814	K2210-05B1	3
01439-00814	K2210-05B1	8
01439-00814	K2500-02A0	8
01439-00814	K2500-02A0	15
01439-00814	K2500-02A2	8
01439-00814	K2500-02A2	15
01439-00820	K2210-02B1	13
01439-00820	K2210-02B2	12
01439-00820	K2500-02A0	25
01439-00820	K2500-02A2	26
01439-01025	K2500-02A0	27
01439-01025	K2500-02A2	28
01439-01225	K0210-01A0	14
01439-01225	K2110-16B1	2
01439-01225	M2210-06A0	18
01439-01225	M2210-06A0	24
01439-01225	W2112-01A0	17
01439-01230	W2112-01A0	16
01508-20805	K2110-06B0	5
01508-40603	B0000-13A0	12
01508-40603	B0000-13A0	27
01508-40603	K2400-03A0	32
01508-40805	F2300-11A0	34
01508-40805	F2300-11A0	43
01508-40805	F2300-12A0	26
01508-40805	F2820-01A0	14
01508-40805	K2110-06B0	29
01508-40805	K2110-07B0	18
01508-40805	K2110-10B0	13
01508-40805	K2241-01A0	24
01508-40805	K2241-01A0	32
01508-40805	K2241-01A0	35
01508-40805	K2241-01A0	38
01508-41006	K2110-07B0	27
01508-41006	K2110-08B0	18
01508-41006	K2241-01A0	29
01508-41408	F2300-11A0	20
01508-41408	F2320-13A0	23
01508-41408	K2400-02A0	23
01508-41408	K2400-04A0	9
01580-00210	K0110-01A4	26
01580-00806	Y1670-01A0	42
01580-03629	Y1620-01A0	18
01580-03629	Y1620-31A0	17
01580-10504	B0000-01A0	6
01580-10605	B0000-13A0	8
01580-10605	B0000-13A0	11
01580-10605	B0000-13A0	23
01580-10605	K2210-03B1	8
01580-10605	K2400-03A0	29
01580-10806	F2300-11A0	41
01580-10806	F2300-12A0	24
01580-10806	F2320-09A0	11
01580-10806	F2320-09A0	19
01580-10806	F2820-01A0	7
01580-10806	F2820-01A0	11
01580-10806	F2820-01A0	15
01580-10806	K0710-01A0	25
01580-10806	K2110-03B0	14
01580-10806	K2110-03B0	25
01580-10806	K2110-03B0	28
01580-10806	K2110-05B0	27
01580-10806	K2110-06B0	4
01580-10806	K2110-06B0	25
01580-10806	K2110-07B0	19
01580-10806	K2110-09B0	16
01580-10806	K2110-10B0	11
01580-10806	K2241-01A0	21
01580-10806	K2241-01A0	30
01580-10806	K2241-01A0	33
01580-10806	K2241-01A0	36
01580-10806	K2400-03A0	16
01580-10806	K2400-03A0	22
01580-10806	K2520-01A1	12
01580-11008	B0000-05A0	9
01580-11008	E0210-01A0	3
01580-11008	E0210-01A1	3
01580-11008	F2300-12A0	11
01580-11008	K0210-03A0	6
01580-11008	K0710-03A0	10
01580-11008	K2110-02B0	11
01580-11008	K2241-01A0	27
01580-11008	M2110-01A1	46
01580-11210	F2300-11A0	11
01580-11210	K0110-01A0	6
01580-11210	K0110-01A2	26
01580-11210	K0110-01A2	40
01580-11210	K0110-01A4	40
01580-11210	K0110-01A7	26
01580-11210	K0210-03A0	19
01580-11210	K2400-02A0	17
01580-11210	K2400-03A0	6
01580-11613	R2200-01A2	13
01580-11613	R2200-01A3	7
01580-11613	R2200-01A3	25
01580-12419	T2810-01A3	15
01582-11008	K2110-02B0	6
01582-11008	K2110-08B0	14
01582-11008	K2110-08B0	20
01582-11411	E0300-01A0	2
01582-11411	E0300-01A0	14
01582-11411	E0310-01A0	3
01582-11411	E0310-02A0	3
01582-11411	E0320-01A0	2
01582-11411	F2300-11A0	23
01582-11411	F2320-13A0	20
01582-11411	K2400-02A0	21
01582-11411	K2400-04A0	11
01582-11613	RO110-01A0	11
01583-11006	K2110-09B0	29
01583-11408	F2300-09A0	11
01583-11408	F2300-10A0	10
01583-11408	F2300-10A0	20
01583-12414	F2300-16A0	13
01584-01008	B0000-18A1	4
01590-30809	F2300-11A0	35
01590-30809	F2300-11A0	45
01590-30809	F2300-12A0	20
01590-30809	F2300-12A0	27
01590-30809	K2110-05B0	32
01590-30809	K2110-06B0	12
01590-30809	K2110-06B0	26
01590-30809	K2110-10B0	15
01590-30809	K2110-11B0	3
01590-30809	K2110-11B0	7
01592-11215	T2810-01A1	13
01592-31215	T2810-01A0	7
01592-31215	T2810-01A3	9
01593-11008	K2110-07B0	24
01593-31411	F2300-11A0	18
01593-31411	F2320-13A0	18
01593-31411	K2400-02A0	18
01593-31411	K2400-04A0	7
01594-01008	M2140-01A2	12
01598-00608	F2820-01A0	24
01598-00809	B0000-13A0	21
01598-00809	F2820-01A0	5
01598-00809	H2220-01A0	23
01598-00809	H2230-01A0	16
01598-00809	K2110-09B0	23
01598-00809	K2400-03A0	20
01599-01011	F2300-05A0	30
01599-01011	F2300-07A0	6
01599-01011	H2220-01A0	11
01601-20513	H0100-01A0	8
01602-20619	K0210-02A0	8
01602-20619	K0830-01A1	3
01602-21030	K0110-01A2	8
01602-21030	K0110-01A2	12
01602-21030	K0110-01A2	23
01602-21030	K0110-01A2	36
01602-21030	K0110-01A4	8
01602-21030	K0110-01A4	12
01602-21030	K0110-01A4	23
01602-21030	K0110-01A4	36
01602-21030	K0110-01A7	8
01602-21030	K0110-01A7	12
01602-21030	K0110-01A7	23
01602-21030	K0110-01A7	36
01602-31236	K0110-01A2	27
01602-31236	K0110-01A4	27
01602-31236	K0110-01A7	27
01640-20610	F2820-01A0	25
01640-20816	Y1670-01A0	41
01640-21016	F2320-13A0	11
01640-21016	M2140-01A2	11
01640-21626	F2300-09A0	26
01641-20405	M2110-01A0	23
01641-20405	M2110-01A1	28
01641-20508	B0000-01A0	7
01641-20508	K2210-01A0	26
01641-20508	K2210-06B1	11
01641-20608	F2820-01A0	17
01641-20608	K0210-02A0	19
01641-20608	K0710-02A0	33
01641-20608	K2110-09B0	11
01641-20608	K2210-03B1	7
01641-20608	K2210-03B1	9
01641-20608	K2210-05B1	2
01641-20608	K2400-03A0	30
01641-20812	M2140-02A0	18
01641-20812	M2140-02A1	18
01641-20812	M2140-02A2	28
01641-21016	M2210-01A0	3
01641-21016	M2210-01A1	3
01641-21016	M2210-02A0	3
01641-21016	M2210-02A1	3
01641-21016	M2210-02A2	3
01641-21016	M2210-02A3	3
01641-21223	K2400-02A0	15
01642-21016	K2210-03B1	16
01643-10623	K0210-02A0	27
01643-30623	B0000-13A0	3
01643-30623	B0000-13A0	14
01643-30623	B0000-13A0	24
01643-30623	B0000-13A0	28
01643-30623	B0000-13A0	33
01643-30623	B0000-13A0	4B
01643-30623	B0500-01A0	9
01643-30623	F2300-11A0	9
01643-30623	F2300-14A0	17
01643-30623	F2820-01A0	32
01643-30623	F2820-01A0	36
01643-30623	K0110-01A2	39
01643-30623	K0110-01A4	39
01643-30623	K0110-01A7	39
01643-30623	K2110-08B0	10
01643-30623	K2210-01A0	12
01643-30623	K2210-01A0	20
01643-30623	K2210-01A0	29
01643-30623	K2210-06B1	5
01643-30623	K2210-06B1	14
01643-30623	K2400-05A0	7
01643-30623	K2910-01A0	3
01643-30623	M2140-04A0	16
01643-30623	V0300-01A1	13
01643-30623	V0300-01A1	16
01643-30623	Y1670-01A0	35
01643-30823	B0000-17A0	3
01643-30823	C0100-02A0	22
01643-30823	C0100-02A0	28
01643-30823	D0210-01A0	7
01643-30823	D0210-01A1	7
01643-30823	E0300-01A0	12
01643-30823	F2300-05A0	20
01643-30823	F2300-05A0	25
01643-30823	F2320-09A0	37
01643-30823	F2320-10A0	9
01643-30823	H0120-01A0	9
01643-30823	H2210-01A0	8
01643-30823	H2220-01A0	24
01643-30823	H2230-01A0	17
01643-30823	K0110-01A0	5
01643-30823	K0110-01A3	3
01643-30823	K0110-01A5	3
01643-30823	K0110-01A6	3
01643-30823	K0110-01A8	3
01643-30823	K0110-01A9	3
01643-30823	K0710-01A0	26
01643-30823	K0710-02A0	5
01643-30823	K0710-03A0	3
01643-30823	K0710-03A0	14
01643-30823	K0710-03A0	22
01643-30823	K0710-03A0	25
01643-30823	K0710-03A0	27
01643-30823	K2110-03B0	13
01643-30823	K2110-03B0	17
01643-30823	K2110-03B0	19
01643-30823	K2110-03B0	24
01643-30823	K2110-03B0	30
01643-30823	K2110-03B0	32
01643-30823	K2110-04B0	5

PARTS Nº	FIG. Nº	INDEX
01643-30823	K2110-04B0	7
01643-30823	K2110-04B0	11
01643-30823	K2110-04B0	18
01643-30823	K2110-04B0	23
01643-30823	K2110-05B0	14
01643-30823	K2110-05B0	19
01643-30823	K2110-05B0	28
01643-30823	K2110-05B0	34
01643-30823	K2110-06B0	6
01643-30823	K2110-06B0	17
01643-30823	K2110-06B0	21
01643-30823	K2110-06B0	35
01643-30823	K2110-07B0	5
01643-30823	K2110-07B0	9
01643-30823	K2110-07B0	11
01643-30823	K2110-09B0	8
01643-30823	K2110-09B0	15
01643-30823	K2110-10B0	7
01643-30823	K2110-10B0	10
01643-30823	K2110-12B0	3
01643-30823	K2210-01A0	10
01643-30823	K2210-02B1	6
01643-30823	K2210-02B1	12
01643-30823	K2210-02B2	5
01643-30823	K2210-02B2	11
01643-30823	K2210-03B1	3
01643-30823	K2210-03B1	13
01643-30823	K2210-03B1	20
01643-30823	K2210-03B1	26
01643-30823	K2210-06B1	20
01643-30823	K2241-01A0	17
01643-30823	K2400-03A0	9
01643-30823	K2400-03A0	25
01643-30823	K2500-02A0	32
01643-30823	K2500-02A2	33
01643-30823	K2520-01A1	6
01643-30823	K2520-01A1	10
01643-30823	K2520-01A1	14
01643-30823	K2520-01A1	18
01643-30823	K2520-01A1	26
01643-30823	M2110-01A0	20
01643-30823	M2110-01A1	25
01643-30823	R0120-01A0	12
01643-31032	B0000-02A0	21
01643-31032	B0000-02A0	24
01643-31032	B0000-04A0	3
01643-31032	B0000-04A0	6
01643-31032	B0000-04A0	9
01643-31032	B0000-04A0	11
01643-31032	B0000-04A0	15

PARTS Nº	FIG. Nº	INDEX
01643-31032	B0000-05A0	3
01643-31032	B0000-05A0	10
01643-31032	B0000-05A0	14
01643-31032	B0000-05A0	17
01643-31032	B0000-05A0	20
01643-31032	B0000-05A0	23
01643-31032	B0000-07A0	7
01643-31032	B0000-13A0	6
01643-31032	B0000-14A0	4A
01643-31032	B0000-14A1	5
01643-31032	B0000-17A0	12
01643-31032	B0500-01A0	3
01643-31032	B0500-01A0	17
01643-31032	B0500-01A0	32
01643-31032	B0600-01A0	11
01643-31032	B0600-01A0	17
01643-31032	C0100-01A0	7
01643-31032	C0100-01A0	10
01643-31032	C0100-01A0	17
01643-31032	C0100-01A0	20
01643-31032	C0100-01A1	7
01643-31032	C0100-01A1	10
01643-31032	C0100-01A1	17
01643-31032	C0100-01A1	20
01643-31032	C0100-01A2	7
01643-31032	C0100-01A2	10
01643-31032	C0100-01A2	17
01643-31032	C0100-01A2	20
01643-31032	C0100-01A3	7
01643-31032	C0100-01A3	10
01643-31032	C0100-01A3	17
01643-31032	C0100-01A3	20
01643-31032	C0100-01A4	7
01643-31032	C0100-01A4	10
01643-31032	C0100-01A4	17
01643-31032	C0100-01A4	20
01643-31032	C0100-02A0	10
01643-31032	C0100-02A0	14
01643-31032	C0100-02A0	18
01643-31032	C0100-02A0	33
01643-31032	D0100-01A0	10
01643-31032	D0210-01A1	23
01643-31032	E0200-01A0	4
01643-31032	E0200-01A0	7
01643-31032	E0200-01A0	10
01643-31032	E0200-01A0	20
01643-31032	E0200-01A0	14B
01643-31032	E0200-01A0	7B
01643-31032	E0200-02A0	6
01643-31032	E0200-02A0	12

PARTS Nº	FIG. Nº	INDEX
01643-31032	E0200-02A0	14
01643-31032	E0200-02A0	22
01643-31032	E0200-02A0	27
01643-31032	E0200-02A0	36
01643-31032	E0200-02A0	39
01643-31032	E0200-02A0	42
01643-31032	E0210-01A0	4
01643-31032	E0210-01A0	11
01643-31032	E0210-01A1	4
01643-31032	E0210-01A1	11
01643-31032	E0420-01A0	3
01643-31032	E0420-01A0	9
01643-31032	E0420-01A0	17
01643-31032	F2300-02A0	2
01643-31032	F2300-02A0	22
01643-31032	F2300-05A0	7
01643-31032	F2300-05A0	15
01643-31032	F2300-05A0	31
01643-31032	F2300-06A0	4
01643-31032	F2300-06A0	30
01643-31032	F2300-07A0	7
01643-31032	F2300-07A0	40
01643-31032	F2300-11A0	13
01643-31032	F2300-11A0	27
01643-31032	F2300-11A0	39
01643-31032	F2300-12A0	9
01643-31032	F2300-12A0	13
01643-31032	F2300-13A0	14
01643-31032	F2320-04A0	31
01643-31032	F2320-08A0	16
01643-31032	F2320-12A0	3
01643-31032	F2320-13A0	9
01643-31032	F2320-13A0	16
01643-31032	F2380-01A0	15
01643-31032	F2380-02A0	15
01643-31032	F2730-01A0	8
01643-31032	F2730-01A0	15
01643-31032	F2730-02A0	10
01643-31032	F2820-01A0	29
01643-31032	H0120-01A0	7
01643-31032	H0310-01A0	5
01643-31032	H0310-01A0	27
01643-31032	H0310-02A0	11
01643-31032	H2220-01A0	12
01643-31032	H2220-01A0	14
01643-31032	H2220-01A0	17
01643-31032	H2230-01A0	9
01643-31032	K0110-01A2	21
01643-31032	K0110-01A4	21
01643-31032	K0110-01A7	21

PARTS Nº	FIG. Nº	INDEX
01643-31032	K0210-03A0	7
01643-31032	K0210-03A0	17
01643-31032	K0710-01A1	18
01643-31032	K0710-02A0	8
01643-31032	K0710-02A0	11
01643-31032	K0710-02A0	14
01643-31032	K0710-02A0	16
01643-31032	K0710-02A0	29
01643-31032	K0710-03A0	18
01643-31032	K0710-03A0	29
01643-31032	K0710-04A0	15
01643-31032	K0890-01A0	3
01643-31032	K0890-01A0	7
01643-31032	K2100-13B0	6
01643-31032	K2100-13B0	9
01643-31032	K2100-13B0	21
01643-31032	K2100-13B0	26
01643-31032	K2100-13B0	29
01643-31032	K2100-13B0	33
01643-31032	K2100-13B0	37
01643-31032	K2100-13B0	41
01643-31032	K2100-14B0	6
01643-31032	K2110-01B0	8
01643-31032	K2110-01B0	11
01643-31032	K2110-01B1	8
01643-31032	K2110-02B0	4
01643-31032	K2110-07B0	2
01643-31032	K2110-07B0	13
01643-31032	K2110-07B0	22
01643-31032	K2110-08B0	3
01643-31032	K2110-08B0	6
01643-31032	K2110-08B0	27
01643-31032	K2110-09B0	25
01643-31032	K2110-11B0	2
01643-31032	K2110-12B0	6
01643-31032	K2110-12B0	13
01643-31032	K2110-12B0	16
01643-31032	K2120-01A0	3
01643-31032	K2210-01A0	34
01643-31032	K2210-02B1	16
01643-31032	K2210-03B1	5
01643-31032	K2500-01A0	5
01643-31032	K2500-01A0	9
01643-31032	K2500-01A0	14
01643-31032	K2500-01A0	18
01643-31032	K2500-02A0	4
01643-31032	K2500-02A0	12
01643-31032	K2500-02A0	18
01643-31032	K2500-02A2	4
01643-31032	K2500-02A2	12

PARTS Nº	FIG. Nº	INDEX
01643-31032	K2500-02A2	18
01643-31032	K2910-01A0	7
01643-31032	K2910-01A0	12
01643-31032	K2910-01A0	18
01643-31032	K2910-01A0	25
01643-31032	K2910-01A0	29
01643-31032	M2110-01A1	45
01643-31032	M2140-02A0	8
01643-31032	M2140-02A0	11
01643-31032	M2140-02A1	8
01643-31032	M2140-02A1	11
01643-31032	M2140-02A2	18
01643-31032	M2140-02A2	21
01643-31032	M2210-01A0	4
01643-31032	M2210-01A1	4
01643-31032	M2210-02A0	4
01643-31032	M2210-02A1	4
01643-31032	M2210-02A2	4
01643-31032	M2210-02A3	4
01643-31032	M2240-01A0	6
01643-31032	M2240-01A2	6
01643-31032	T2110-01A0	26
01643-31032	T2115-01A0	26
01643-31032	T2160-01A0	9
01643-31032	T2160-02A0	17
01643-31032	T2160-02A0	21
01643-31032	T2160-02A0	24
01643-31032	Y1663-01A0	12
01643-31232	B0000-09A0	4
01643-31232	B0000-09A0	8
01643-31232	B0000-13A0	17
01643-31232	B0000-17A0	6
01643-31232	B0500-01A0	6
01643-31232	B0500-01A0	30
01643-31232	C0100-02A0	25
01643-31232	D0200-01A0	12
01643-31232	D0210-01A0	9
01643-31232	D0210-01A1	9
01643-31232	D0210-01A1	16
01643-31232	E0200-02A0	23
01643-31232	E0200-02A0	29
01643-31232	E0200-02A0	32
01643-31232	E0300-01A0	8
01643-31232	E0300-01A0	18
01643-31232	E0320-01A0	6
01643-31232	F2300-02A0	17
01643-31232	F2300-03A0	4
01643-31232	F2300-03A0	23
01643-31232	F2300-03A0	29
01643-31232	F2300-05A0	4

PARTS Nº	FIG. Nº	INDEX
01643-31232	F2300-06A0	13
01643-31232	F2300-07A0	3
01643-31232	F2300-07A0	29
01643-31232	F2300-07A0	43
01643-31232	F2300-08A0	20
01643-31232	F2300-09A0	4
01643-31232	F2300-09A0	15
01643-31232	F2300-10A0	3
01643-31232	F2300-10A0	13
01643-31232	F2300-10A0	30
01643-31232	F2300-11A0	15
01643-31232	F2300-12A0	18
01643-31232	F2300-13A0	17
01643-31232	F2300-14A0	23
01643-31232	F2300-16A0	23
01643-31232	F2300-17A0	2
01643-31232	F2320-05A0	10
01643-31232	F2320-05A0	18
01643-31232	F2320-05A0	26
01643-31232	F2320-06A0	5
01643-31232	F2320-06A0	18
01643-31232	F2320-07A0	9
01643-31232	F2320-08A0	9
01643-31232	F2380-01A0	24
01643-31232	F2380-02A0	24
01643-31232	F2730-01A0	4
01643-31232	F2730-01A0	18
01643-31232	F2730-01A0	27
01643-31232	F2730-02A0	6
01643-31232	H0120-01A0	2
01643-31232	H0120-01A0	14
01643-31232	H0310-02A0	8
01643-31232	H2210-01A0	14
01643-31232	H2210-01A0	16
01643-31232	H2220-01A0	20
01643-31232	H2220-01A0	26
01643-31232	H2230-01A0	12
01643-31232	H2230-01A0	19
01643-31232	J2100-01A0	8
01643-31232	J2100-01A0	14
01643-31232	J2100-01A0	17
01643-31232	J2100-01A0	20
01643-31232	J2100-01A0	23
01643-31232	J2100-01A0	26
01643-31232	J2100-01A0	30
01643-31232	K0110-01A0	7
01643-31232	K0110-01A0	11
01643-31232	K0110-01A2	41
01643-31232	K0110-01A3	6
01643-31232	K0110-01A4	41

PARTS Nº	FIG. Nº	INDEX
01643-31232	K0110-01A5	8
01643-31232	K0110-01A6	6
01643-31232	K0110-01A7	41
01643-31232	K0110-01A8	7
01643-31232	K0110-01A9	7
01643-31232	K0110-04A2	4
01643-31232	K0120-01A0	4
01643-31232	K0210-01A0	3
01643-31232	K0210-01A0	7
01643-31232	K0210-02A0	10
01643-31232	K0210-03A0	4
01643-31232	K0210-13A0	8
01643-31232	K0410-01A0	7
01643-31232	K0410-01A1	8
01643-31232	K0410-01A2	12
01643-31232	K0410-01A2	15
01643-31232	K0710-01A0	20
01643-31232	K0710-01A0	29
01643-31232	K0710-01A1	15
01643-31232	K0710-01A1	20
01643-31232	K0710-02A0	3
01643-31232	K0710-02A0	22
01643-31232	K0710-02A0	25
01643-31232	K0710-02A0	36
01643-31232	K0710-03A0	5
01643-31232	K0710-03A0	8
01643-31232	K0710-04A0	12
01643-31232	K0710-04A0	17
01643-31232	K0860-01A1	5
01643-31232	K2110-01B0	5
01643-31232	K2110-01B1	5
01643-31232	K2110-02B0	8
01643-31232	K2110-06B0	11
01643-31232	K2110-12B0	10
01643-31232	K2210-01A0	4
01643-31232	K2210-07B1	4
01643-31232	K2241-01A0	42
01643-31232	K2400-01A0	6
01643-31232	K2400-01A0	11
01643-31232	K2400-03A0	14
01643-31232	K2400-04A0	5
01643-31232	K2400-05A0	4
01643-31232	K2910-01A0	20
01643-31232	K2910-01A0	22
01643-31232	M2110-01A0	4
01643-31232	M2110-01A0	14
01643-31232	M2110-01A0	26
01643-31232	M2110-01A0	29
01643-31232	M2110-01A1	4
01643-31232	M2110-01A1	19
01643-31232	M2110-01A1	31
01643-31232	M2110-01A1	34
01643-31232	M2110-01A1	38
01643-31232	M2110-01A1	40
01643-31232	M2120-01A0	4
01643-31232	M2120-01A0	6
01643-31232	M2120-01A1	4
01643-31232	M2120-01A1	6
01643-31232	M2140-01A2	22
01643-31232	M2140-01A2	29
01643-31232	M2140-01A3	9
01643-31232	M2140-03A0	5
01643-31232	M2140-03A0	10
01643-31232	M2140-03A0	13
01643-31232	M2140-03A2	7
01643-31232	M2140-03A2	16
01643-31232	M2140-03A2	19
01643-31232	M2140-04A0	8
01643-31232	M2140-04A0	12
01643-31232	M2140-04A0	20
01643-31232	M2210-01A0	5
01643-31232	M2210-01A1	5
01643-31232	M2210-02A0	5
01643-31232	M2210-02A1	5
01643-31232	M2210-02A2	5
01643-31232	M2210-02A3	5
01643-31232	M2210-04A0	4
01643-31232	M2210-04A0	10
01643-31232	M2210-04A0	14
01643-31232	M2210-04A0	19
01643-31232	M2210-04A0	22
01643-31232	M2210-04A0	25
01643-31232	M2210-04A0	32
01643-31232	M2210-04A0	36
01643-31232	M2210-04A1	4
01643-31232	M2210-04A1	10
01643-31232	M2210-04A1	14
01643-31232	M2210-04A1	19
01643-31232	M2210-04A1	22
01643-31232	M2210-04A1	25
01643-31232	M2210-04A1	32
01643-31232	M2210-04A1	36
01643-31232	M2210-05A0	4
01643-31232	M2210-06A0	5
01643-31232	M2210-06A0	8
01643-31232	M2210-06A0	12
01643-31232	M2210-06A0	14
01643-31232	M2210-06A0	17
01643-31232	M2210-06A0	20
01643-31232	M2210-06A0	23
01643-31232	M2240-01A0	8
01643-31232	M2240-01A2	8
01643-31232	M2811-01A0	6
01643-31232	M2811-01A1	6
01643-31232	R2200-01A3	12
01643-31232	T2110-01A0	13
01643-31232	T2115-01A0	12
01643-31232	T2115-01A0	17
01643-31232	T2115-02A0	4
01643-31232	T2115-02A0	9
01643-31232	T2115-02A0	14
01643-31232	T2115-02A0	19
01643-31232	T2115-02A0	24
01643-31232	T2120-01A0	15
01643-31232	T2120-01A1	16
01643-31232	T2160-01A0	5
01643-31232	T2160-01A0	19
01643-31232	T2160-01A0	22
01643-31232	T2160-01A0	27
01643-31232	T2160-02A0	8
01643-31232	T2160-02A0	13
01643-31232	T2160-02A0	29
01643-31232	T2160-03A0	7
01643-31232	T2160-03A0	11
01643-31232	V0300-01A1	18
01643-31445	C0100-02A0	16
01643-31445	E0300-01A0	3
01643-31445	E0300-01A0	15
01643-31445	E0310-01A0	4
01643-31445	E0310-02A0	4
01643-31445	E0320-01A0	3
01643-31445	F2300-12A0	7
01643-31445	F2320-07A0	15
01643-31445	F2320-13A0	7
01643-31645	D0100-01A0	12
01643-31645	F2300-04A0	15
01643-31645	F2300-09A0	9
01643-31645	F2300-09A0	25
01643-31645	F2300-10A0	8
01643-31645	F2300-10A0	18
01643-31645	F2300-10A0	24
01643-31645	F2300-10A0	34
01643-31645	F2320-06A0	16
01643-31645	F2380-01A0	4
01643-31645	F2380-02A0	4
01643-31645	F2380-03A0	4
01643-31645	H0100-01A0	13
01643-31645	J2100-01A0	11
01643-31645	K0410-01A2	3
01643-31645	K2110-01B0	18

PARTS Nº	FIG. Nº	INDEX
01643-31645	K2110-01B1	15
01643-31645	K2120-01A0	7
01643-31645	K2120-01A0	9
01643-31645	K2120-01A0	11
01643-31645	M2110-01A0	11
01643-31645	M2110-01A1	16
01643-31645	M2811-01A0	3
01643-31645	M2811-01A1	3
01643-31645	R0120-01A0	23
01643-31645	R0200-01A1	13
01643-31645	R2200-01A2	3
01643-31645	R2200-01A2	6
01643-31645	R2200-01A2	10
01643-31645	R2200-01A2	14
01643-31645	R2200-01A2	19
01643-31645	R2200-01A3	4
01643-31645	R2200-01A3	8
01643-31645	R2200-01A3	15
01643-31645	R2200-01A3	18
01643-31645	R2200-01A3	22
01643-31645	R2200-01A3	26
01643-31645	RO110-01A0	10
01643-31645	RO110-01A0	15
01643-31645	RO300-01A0	14
01643-31645	T2120-01A0	18
01643-31645	T2120-01A1	19
01643-32060	K0410-01A0	3
01643-32060	K0410-01A1	3
01643-32060	K0410-01A2	6
01643-32060	M2140-04A0	10
01643-32060	M2210-04A0	7
01643-32060	M2210-04A0	29
01643-32060	M2210-04A1	7
01643-32060	M2210-04A1	29
01643-32460	F2300-01A0	2
01643-32460	F2380-01A0	37
01643-32460	F2380-02A0	37
01643-32460	T2110-01A0	20
01643-32460	T2810-01A0	10
01643-32460	T2810-01A1	8
01643-32460	T2810-01A3	14
01643-32460	T2810-01A3	17
01643-33080	T2120-01A0	11
01643-33080	T2120-01A1	12
01643-50823	F2320-01A0	10
01643-50823	F2320-11A0	19
01643-50823	F2320-11A0	26
01643-50823	K2241-01A0	5
01643-50830	K2520-01A1	20
01643-51032	F2200-01A0	3
01643-51032	F2300-16A0	11
01643-51032	F2320-03A0	38
01643-51032	Y1600-02A1	12
01643-51032	Y1600-02A1	19
01643-51232	K2400-02A0	5
01643-51232	Y1600-01A1	12
02030-70744	K0160-01A1	7
02090-11055	T2120-01A0	7
02090-11055	T2120-01A1	8
02090-11055	T2121-01A0	2
02290-11016	T2120-01A0	8
02290-11016	T2120-01A1	9
02290-11016	T2121-01A0	3
04010-00516	K2110-03B0	6
04010-00516	K2110-03B0	10
04010-00516	K2110-04B0	2
04010-00516	K2110-04B0	14
04010-00516	K2110-05B0	12
04010-00516	K2110-05B0	17
04010-00516	K2110-06B0	18
04010-00516	K2110-06B0	22
04010-00516	K2110-09B0	5
04010-00516	K2110-10B0	3
04010-00516	K2520-01A1	7
04010-00516	K2520-01A1	22
04010-00519	K2110-06B0	33
04020-00616	R0200-01A1	10
04020-00616	R0200-02A1	10
04020-00820	F2300-13A0	15
04020-01024	F2320-01A0	12
04020-01024	F2320-02A0	11
04020-01024	F2320-02A0	22
04020-01024	Y1600-01A1	10
04020-01024	Y1600-02A1	10
04020-01638	F2300-01A0	3
04020-01638	F2300-04A0	16
04020-01638	F2380-01A0	8
04020-01638	F2380-02A0	8
04025-00316	F2300-14A0	5
04025-00432	K0110-01A2	33
04025-00432	K0110-01A4	33
04025-00432	K0110-01A7	33
04025-00520	K2110-03B0	8
04025-00520	K2110-05B0	24
04025-00520	Y1670-01A0	38
04050-03020	T2810-01A0	8
04050-03025	T2810-01A3	8
04050-11210	F2820-01A0	37
04050-11610	F2300-11A0	8
04050-11612	F2300-11A0	31
04050-11612	F2820-01A0	19
04050-11612	K0210-02A0	20
04050-11612	K0210-03A0	15
04050-11612	K2110-08B0	11
04050-11612	K2110-09B0	12
04050-11612	K2110-09B0	27
04050-11612	K2241-01A0	14
04050-11612	K2400-05A0	6
04050-11612	M2110-01A0	19
04050-11612	M2110-01A1	24
04050-12015	F2300-11A0	36
04050-12015	F2300-11A0	46
04050-12015	F2300-12A0	21
04050-12015	F2300-12A0	28
04050-12015	K2110-05B0	31
04050-12015	K2110-06B0	13
04050-12015	K2110-06B0	27
04050-12015	K2110-06B0	30
04050-12015	K2110-08B0	16
04050-12015	K2110-09B0	20
04050-12015	K2110-10B0	16
04050-12015	K2110-11B0	4
04050-12015	K2110-11B0	8
04050-12015	K2241-01A0	40
04050-12015	M2140-02A0	19
04050-12015	M2140-02A1	19
04050-12015	M2140-02A2	29
04050-12015	M2210-01A0	6
04050-12015	M2210-01A1	6
04050-12015	M2210-02A0	6
04050-12015	M2210-02A1	6
04050-12015	M2210-02A2	6
04050-12015	M2210-02A3	6
04050-12018	K2110-07B0	25
04050-13015	K0110-01A2	31
04050-13015	K0110-01A4	31
04050-13015	K0110-01A7	31
04050-13015	K2210-03B1	17
04050-13020	F2320-13A0	12
04050-13020	M2210-01A0	7
04050-13020	M2210-01A1	7
04050-13020	M2210-02A0	7
04050-13020	M2210-02A1	7
04050-13020	M2210-02A2	7
04050-13020	M2210-02A3	7
04050-13020	T2810-01A1	14
04050-13022	F2300-11A0	19
04050-13022	F2320-13A0	19
04050-13022	K2400-02A0	12
04050-13022	K2400-02A0	14

PARTS Nº	FIG. Nº	INDEX
04050-13022	K2400-02A0	19
04050-13022	K2400-04A0	8
04050-13022	M2140-02A0	15
04050-13022	M2140-02A1	15
04050-13022	M2140-02A2	25
04050-14025	K0110-01A2	32
04050-14025	K0110-01A4	32
04050-14025	K0110-01A7	32
04050-14028	F2300-09A0	8
04050-14028	F2300-09A0	19
04050-14028	F2300-09A0	24
04050-14028	F2300-10A0	7
04050-14028	F2300-10A0	17
04050-14028	F2300-10A0	23
04050-14028	F2300-10A0	33
04064-03215	F2320-03A0	33
04064-03215	F2320-04A0	20
04064-03515	F2300-03A0	19
04064-03515	F2320-03A0	31
04064-03515	F2320-07A0	2
04064-03515	R0120-01A0	18
04064-04518	B0600-01A0	4
04064-04819	F2320-03A0	8
04064-05020	F2320-05A0	14
04064-06020	F2300-03A0	26
04064-07525	F2320-04A0	29
04064-09030	F2300-02A0	27
04065-01030	T2115-01A0	4
04065-01054	F2320-04A0	28
04065-01104	F2300-03A0	25
04065-01104	Y1620-21A0	12
04065-01104	Y1620-21A1	12
04065-01154	RO300-01A0	11
04065-02012	Y1600-02A1	16
04065-04018	Y1600-01A1	15
04065-04718	T2115-01A0	21
04065-06220	F2320-03A0	30
04065-06220	F2320-04A0	18
04065-07525	R0120-01A0	15
04065-08530	B0600-01A0	5
04065-09030	F2320-01A0	16
04065-09030	F2320-05A0	15
04065-09030	K0110-01A2	6
04065-09030	K0110-01A4	6
04065-09030	K0110-01A7	6
04065-09030	T2115-01A0	6
04065-09030	Y1620-31A0	12
04070-00105	F2320-01A0	17
04071-00150	F2320-01A0	8
04077-00120	F2300-02A0	25
04077-00140	F2300-02A0	26
04080-04508	K0110-01A2	10
04080-04508	K0110-01A4	10
04080-04508	K0110-01A7	10
04082-00110	T2115-01A0	24
04082-00212	J2100-01A0	28
04082-00212	T2115-01A0	10
04082-00212	T2115-01A0	15
04082-00212	T2115-02A0	2
04082-00212	T2115-02A0	7
04082-00212	T2115-02A0	12
04082-00212	T2115-02A0	17
04082-00212	T2115-02A0	22
04205-10522	F2820-01A0	35
04205-10614	K0210-02A0	18
04205-10614	K0210-03A0	14
04205-10618	K2241-01A0	13
04205-10622	F2300-11A0	30
04205-10622	F2820-01A0	18
04205-10622	K0210-02A0	26
04205-10622	K2110-09B0	26
04205-10622	K22241-01A0	13
04205-10625	F2300-11A0	7
04205-10625	K2400-05A0	5
04205-10822	K2110-08B0	15
04205-10822	K2110-09B0	19
04205-10828	M2140-02A0	17
04205-10828	M2140-02A1	17
04205-10828	M2140-02A2	27
04205-11238	K2400-02A0	11
04205-11645	F2300-09A0	7
04205-11645	F2300-09A0	18
04205-11645	F2300-09A0	22
04205-11645	F2300-10A0	6
04205-11645	F2300-10A0	16
04205-11645	F2300-10A0	22
04205-11645	F2300-10A0	32
04205-11658	F2300-09A0	23
04210-20832	K2110-09B0	18
04245-40805	K2110-03B0	27
04245-40805	K2110-06B0	24
04245-40805	K2400-03A0	23
04245-40807	F2820-01A0	10
04248-30606	B0000-13A0	22
04248-30807	F2820-01A0	13
04248-30810	K2241-01A0	37
04248-30823	F2300-12A0	22
04248-30825	K2110-07B0	17
04248-31415	K2400-04A0	10
04248-31426	F2320-13A0	21
04248-31430	F2300-11A0	21
04250-80847	F2300-11A0	40
04250-80847	F2300-12A0	19
04250-80847	F2300-12A0	23
04250-80847	F2820-01A0	6
04250-80847	F2820-01A0	16
04250-80847	K2110-03B0	23
04250-80847	K2110-05B0	20
04250-80847	K2110-06B0	23
04250-80847	K2241-01A0	18
04250-80847	K2241-01A0	20
04250-80847	K2400-03A0	21
04250-80847	K2520-01A1	11
04250-81056	K2110-08B0	19
04250-81474	F2320-13A0	17
04250-81474	K2400-02A0	20
04250-90847	F2300-11A0	33
04250-90847	F2300-11A0	42
04250-90847	F2300-12A0	25
04250-90847	K2110-04B0	3
04250-90847	K2110-04B0	9
04250-90847	K2110-04B0	17
04250-90847	K2110-06B0	2
04250-90847	K2110-07B0	14
04250-90847	K2110-10B0	12
04250-90847	K2241-01A0	25
04250-90847	K2520-01A1	21
04250-91056	K2110-07B0	20
04250-91056	K2110-07B0	23
04250-91474	F2300-11A0	17
04250-91474	K2400-04A0	6
04252-20853	K2110-03B0	15
04252-20853	K2110-05B0	26
04252-20853	K2110-09B0	17
04252-20853	K2520-01A1	13
04252-30853	K2110-06B0	28
04254-10823	F2820-01A0	9
04254-10823	F2820-01A0	34
04254-10823	K2110-03B0	26
04254-10823	K2110-05B0	21
04254-10823	K2110-07B0	16
04254-10823	K2241-01A0	17
04254-10823	K2400-03A0	27
04254-11032	K2110-02B0	9
04256-40615	B0000-13A0	26
04256-40817	K2110-03B0	12
04256-40817	K2110-03B0	29
04256-40817	K2110-05B0	25
04256-40817	K2110-06B0	3
04256-40817	K2110-10B0	9

PARTS Nº	FIG. Nº	INDEX
04256-40817	K2400-03A0	24
04256-50615	B0000-13A0	10
04256-50615	B0000-13A0	30
04256-50615	K2400-03A0	28
04260-00635	F2320-01A0	7
04260-01270	F2320-06A0	6
04260-01587	F2300-06A0	24
04260-01587	F2300-14A0	28
04260-01587	F2300-16A0	19
04418-13060	F2320-06A0	22
04418-13060	T2120-01A0	25
04418-13060	T2120-01A1	26
04418-13060	T2810-01A1	10
04418-13060	U0100-01A0	28
04418-13060	U0100-01A1	28
04418-13060	U0100-01A2	28
04418-13060	U0100-01A3	26
04418-13060	U0100-01A4	26
04418-13060	U0100-01A5	26
04418-13060	U0100-01A6	26
04418-13060	U0100-01A7	28
04418-13060	U0100-01A8	28
04418-13060	U0100-01A9	28
04418-13060	U0100-01B0	28
04418-13060	U0100-01B1	28
04418-13060	U0520-01A0	2
04434-50810	E0200-02A0	3
04434-50810	K2110-08B0	24
04434-50810	K2910-01A0	16
04434-51010	E0200-01A0	5
04434-51010	E0200-01A0	16
04434-51010	E0200-01A0	17
04434-51010	K0710-03A0	19
04434-51010	K0710-03A0	23
04434-51010	K2100-13B0	35
04434-51010	K2100-13B0	39
04434-51010	K2910-01A0	5
04434-51012	E0320-01A0	7
04434-51210	K2910-01A0	10
04434-51410	B0500-01A0	1
04434-51410	B0500-01A0	15
04434-51410	E0200-01A0	2
04434-51410	E0200-01A0	16
04434-51410	F2300-11A0	37
04434-51410	K2100-13B0	19
04434-51410	K2910-01A0	15
04434-51412	B0500-01A0	4
04434-51510	K0710-02A0	37
04434-51510	K0710-03A0	16
04434-51512	F2300-07A0	33
04434-51610	K2110-08B0	25
04434-51610	K2210-02B1	14
04434-51612	D0210-01A1	14
04434-51810	K0710-03A0	20A
04434-51812	C0100-02A0	31
04434-51910	K0710-02A0	9
04434-51910	K2910-01A0	23
04434-51910	K2910-01A0	26
04434-51910	K2910-01A0	27
04434-51912	E0200-02A0	19
04434-51912	E0200-02A0	40
04434-52310	D0200-01A0	10
04434-52310	K2100-13B0	4
04434-52310	K2100-13B0	22
04434-52310	K2100-14B0	4
04434-52310	K2110-12B0	14
04434-52312	D0200-01A0	9B
04434-52312	E0200-02A0	10
04434-52312	E0200-02A0	15
04434-52312	K0710-02A0	12
04434-52512	E0200-02A0	33
04434-52512	F2300-08A0	21
04434-52712	E0200-02A0	18
04434-52712	F2300-08A0	18
04434-52712	F2730-01A0	25
04434-53212	E0200-02A0	8
04434-53212	K0710-02A0	17
04434-53212	K0710-02A0	27
04434-53411	K0710-01A1	16
04434-53411	K0710-04A0	13
04434-53412	D0200-01A0	8
04434-53412	F2300-07A0	27
04434-53412	K0710-04A0	13
04435-50810	E0420-01A0	11
04435-51010	B0500-01A0	22
04435-51912	K0710-02A0	34
04435-52110	K0710-03A0	20
04530-12222	K0210-01A0	4
06000-06007	F2320-03A0	29
06000-06207	B0600-01A0	14
06000-06209	B0600-01A0	6
06000-06915	F2320-04A0	27
06000-06921	F2320-01A0	5
06002-32008	RO300-01A0	6
06004-06210	K0110-01A2	5
06004-06210	K0110-01A4	5
06004-06210	K0110-01A7	5
06030-05210	F2320-05A0	13
06030-05211	F2320-07A0	4
06040-06018	F2300-02A0	28
06040-06212	F2300-03A0	24
06042-00210	F2320-01A0	15
06123-01414	B0000-13A0	19
06123-01414	F2300-11A0	4
06123-01414	F2300-12A0	5
06123-01414	F2320-13A0	6
06123-01414	F2820-01A0	3
06123-01414	K2110-03B0	21
06123-01414	K2110-04B0	20
06123-01414	K2110-05B0	2
06123-01414	K2110-05B0	8
06123-01414	K2241-01A0	10
06123-01414	K2520-01A1	3
06123-01614	K2110-05B0	4
06123-02018	K2110-06B0	8
06123-03018	F2300-10A0	27
06124-01416	K2110-05B0	3
06124-01416	K2110-11B0	9
06124-02020	K2110-09B0	2
06124-02020	K2110-10B0	8
06124-02020	K2400-01A0	7
06124-02020	K2400-03A0	11
06124-03020	K2400-01A0	8
06124-03020	K2400-03A0	10
06124-03520	K2110-05B0	5
07000-02060	F2300-07A0	38
07000-02065	Y1620-21A1	15
07000-02085	D0100-01A0	8
07000-02105	Y0100-01A0	4
07000-02105	Y1620-01A0	11
07000-02110	Y0100-01A0	5
07000-02110	Y1620-31A0	7
07000-02130	Y0100-01A0	6
07000-02130	Y1620-21A0	7
07000-02130	Y1620-21A1	7
07000-03025	H0120-01A0	4
07000-03032	H0310-01A0	25
07000-03040	T2115-01A0	7
07000-03040	Y0100-01A0	5
07000-03040	Y1620-31A0	13
07000-03042	R0200-01A1	6
07000-03042	R0200-02A1	6
07000-03045	T2115-01A0	8
07000-03050	Y0100-01A0	6
07000-03050	Y1620-21A0	13
07000-03050	Y1620-21A1	13
07000-05070	F2300-16A0	7
07000-11003	Y1663-02A0	5
07000-11007	Y1663-03A0	29
07000-11007	Y1663-03A0	37

PARTS Nº	FIG. Nº	INDEX
07000-11007	Y1663-03A0	41
07000-11008	Y1663-01A0	10
07000-11009	Y1663-03A0	35
07000-12018	F2300-07A0	45
07000-12018	Y1663-03A0	7
07000-12020	Y1663-01A0	9
07000-12020	Y1670-01A0	12
07000-12021	Y1670-01A0	17
07000-12100	Y0100-01A0	4
07000-12100	Y1620-01A0	9
07000-12105	RO300-01A0	5
07000-12105	Y0100-01A0	5
07000-12105	Y1620-31A0	5
07000-12120	Y1663-01A0	6
07000-12125	Y0100-01A0	6
07000-12125	Y0100-01A0	7
07000-12125	Y1620-21A0	6
07000-12125	Y1620-21A1	6
07000-13030	F2300-05A0	26
07000-13032	H0310-01A0	6
07000-13035	H2210-01A0	9
07000-13048	F2300-07A0	4
07000-13048	RO110-01A0	4
07000-15405	F2380-03A0	5
07000-72010	F2320-06A0	24
07000-72010	Y0100-01A0	1
07000-72012	F2320-06A0	25
07000-72012	Y0100-01A0	1
07000-72015	F2300-14A0	30
07000-72018	F2300-14A0	29
07000-72018	F2320-08A0	13
07000-72018	Y0100-01A0	1
07000-72020	F2320-11A0	16
07000-72020	Y0100-01A0	3
07000-72021	F2320-09A0	34
07000-72021	Y0100-01A0	2
07000-72060	F2320-05A0	24
07000-72060	Y0100-01A0	1
07000-72070	F2320-05A0	23
07000-72070	Y0100-01A0	1
07000-72105	F2300-05A0	2
07000-72105	F2320-07A0	7
07000-72105	Y0100-01A0	1
07000-72125	F2380-01A0	16
07000-72125	F2380-02A0	16
07000-72130	F2320-08A0	5
07000-72130	Y0100-01A0	1
07000-72145	F2320-08A0	4
07000-72145	Y0100-01A0	1
07000-73025	F2320-11A0	11
07000-73025	F2320-11A0	23
07000-73025	F2730-02A0	8
07000-73025	Y0100-01A0	3
07000-73025	Y0100-01A0	3
07000-73030	F2300-05A0	21
07000-73032	F2300-05A0	8
07000-73032	F2320-07A0	12
07000-73032	Y0100-01A0	1
07000-73035	F2300-06A0	5
07000-73035	F2320-12A0	4
07000-73035	Y0100-01A0	1
07000-73042	F2300-05A0	16
07000-75165	F2320-05A0	16
07000-75165	Y0100-01A0	1
07000-75305	F2300-17A0	3
07000-75305	F2320-08A0	14
07000-75305	Y0100-01A0	1
07000-A2055	F2300-13A0	12
07001-01003	Y1663-02A0	6
07001-01007	Y1663-03A0	38
07001-01007	Y1663-03A0	42
07001-01009	Y1663-03A0	36
07001-02018	Y1663-03A0	8
07001-05070	F2300-16A0	8
07002-01223	F2320-09A0	13
07002-01223	F2320-09A0	16
07002-01223	Y0100-01A0	2
07002-01223	Y0100-01A0	2
07002-01423	H0310-01A0	13
07002-01423	H0310-01A0	30
07002-01823	F2320-09A0	8
07002-01823	Y0100-01A0	2
07002-02034	F2300-16A0	16
07002-02034	F2300-16A0	18
07002-02034	F2300-16A0	21
07002-02034	F2320-06A0	9
07002-02434	F2320-06A0	2
07002-02434	F2320-06A0	20
07002-02434	Y0100-01A0	1
07002-02434	Y0100-01A0	1
07002-02434	Y0100-01A0	1
07002-02434	Y1663-04AO	11
07002-03034	F2320-09A0	32
07002-03034	Y0100-01A0	2
07002-03334	H0310-01A0	11
07002-03334	H0310-01A0	20
07002-03634	F2380-01A0	7
07002-03634	F2380-02A0	7
07002-11023	F2300-05A0	28
07002-11023	Y1663-03A0	31
07002-11223	Y1663-03A0	26
07002-11223	Y1663-03A0	40
07002-11423	Y1663-03A0	11
07002-11423	Y1663-03A0	33
07002-12034	H2220-01A0	3
07002-12034	H2230-01A0	3
07002-12034	T2160-01A0	16
07002-12034	Y1663-03A0	28
07002-12034	Y1663-04AO	38
07002-12434	H0310-01A0	9
07002-12434	H2210-01A0	3
07002-12434	Y0100-01A0	7
07002-12434	Y1663-03A0	9
07002-12434	Y1663-03A0	13
07002-14234	D0210-01A0	3
07002-14234	D0210-01A1	3
07002-21423	K2110-15B0	4
07002-21823	K2110-15B0	5
07002-22434	B0000-19A0	2
07002-31423	F2300-06A0	11
07002-31423	F2300-06A0	15
07002-31423	F2300-06A0	28
07002-32034	F2300-06A0	9
07002-32034	F2300-06A0	17
07002-32034	F2300-06A0	25
07002-32034	F2300-06A0	26
07002-32034	F2300-13A0	22
07002-32034	F2300-14A0	27
07002-32034	F2320-12A0	8
07002-32034	F2320-12A0	10
07002-32034	F2320-12A0	12
07002-32034	Y0100-01A0	1
07002-32034	Y0100-01A0	1
07002-32434	B0600-01A0	9
07002-32434	F2300-06A0	20
07002-32434	F2300-14A0	15
07002-32434	F2300-15A0	4
07002-32434	F2320-12A0	6
07002-32434	F2730-01A0	13
07002-32434	Y0100-01A0	1
07002-33034	F2300-14A0	11
07002-33634	F2300-04A0	5
07005-00812	D0210-51A1	3
07005-01012	F2320-10A0	5
07005-01012	Y0100-01A0	2
07005-01212	F2320-06A0	13
07005-01212	Y0100-01A0	1
07005-01412	D0210-01A1	21
07012-00038	F2300-04A0	7
07012-10065	B0600-01A0	7
07012-10075	F2320-08A0	2
07012-10075	Y0100-01A0	1
07012-10090	F2320-07A0	6
07012-10090	Y0100-01A0	1
07013-50075	F2380-01A0	17
07013-50075	F2380-02A0	17
07016-00407	F2300-13A0	4
07016-00457	F2300-13A0	8
07018-01405	F2320-04A0	26
07018-21155	F2320-01A0	14
07020-00000	J2100-01A0	31
07020-00000	T2115-01A0	13
07020-00000	T2115-01A0	18
07020-00000	T2115-01A0	27
07020-00000	T2115-02A0	5
07020-00000	T2115-02A0	10
07020-00000	T2115-02A0	15
07020-00000	T2115-02A0	20
07020-00000	T2115-02A0	25
07020-00675	R0120-01A0	8
07020-00675	T2110-01A0	14
07020-00675	T2110-01A0	21
07020-00900	T2140-04A0	2A
07030-00252	F2300-04A0	9
07030-00252	F2320-06A0	10
07040-11007	F2300-05A0	27
07041-13612	F2380-01A0	6
07041-13612	F2380-02A0	6
07042-00211	F2320-11A0	20
07042-20108	F2320-09A0	3
07042-20108	F2320-09A0	4
07042-70108	F2300-08A0	17
07042-70108	H0310-01A0	21
07042-70108	K2110-03B0	5
07042-70108	K2110-05B0	6
07042-70312	F2300-14A0	20
07042-70415	C0100-01A0	14
07042-70415	C0100-01A1	14
07042-70415	C0100-01A2	14
07042-70415	C0100-01A3	14
07042-70415	C0100-01A4	14
07042-80108	F2320-06A0	14
07043-00108	F2320-05A0	2
07043-00108	F2320-09A0	2
07043-00211	F2320-05A0	4
07043-00312	F2320-05A0	5
07043-70108	F2300-15A0	12
07043-70108	F2320-03A0	11
07043-70108	F2320-05A0	3
07043-70108	T2110-01A0	17
07043-70211	F2300-14A0	13
07043-70211	F2300-14A0	31
07043-70211	F2320-08A0	12
07043-70211	F2320-08A0	18
07043-70312	F2300-14A0	21
07044-12412	B0600-01A0	8
07044-13620	F2300-04A0	4
07044-13620	F2380-01A0	5
07044-13620	F2380-02A0	5
07046-15520	B0600-01A0	15
07049-00608	K2500-02A2	20
07049-01215	F2300-04A0	2
07049-01215	H0100-01A0	2
07049-01215	K2110-01B0	2
07049-01215	K2110-01B1	2
07049-01215	K2110-01B1	10
07049-01215	K2210-01A0	7
07049-01215	M2210-05A0	8
07049-01215	R0120-01A0	21
07049-01215	R2200-01A2	15
07049-01215	R2200-01A3	27
07049-01620	F2300-04A0	3
07049-01620	F2380-03A0	6
07049-01620	J2100-01A0	32
07049-01620	R2200-01A2	16
07049-01620	R2200-01A3	28
07049-02025	M2210-03A0	4
07049-02025	M2210-03A0	8
07052-31217	R0200-01A1	8
07052-31217	R0200-02A1	8
07052-31217	RO110-01A0	12
07058-00001	D0210-01A0	1
07058-00001	D0210-01A1	1
07059-11830	R0500-01A6	11
07059-11830	R0500-01A8	11
07059-11830	R0500-O1A7	11
07059-11830	RO500-01B1	11
07059-11830	Y0322-01A4	11
07059-11830	Y0322-01A5	11
07059-11830	Y0322-01A7	11
07059-20721	R0500-01A6	12
07059-20721	R0500-01A8	12
07059-20721	R0500-O1A7	12
07059-20721	RO500-01B1	12
07059-20721	Y0322-01A4	12
07059-20721	Y0322-01A5	12
07059-20721	Y0322-01A7	12
07086-00406	T2160-03A0	1
07086-00409	T2160-03A0	2
07094-30417	H2210-01A0	17
07095-00418	K0710-02A0	20
07095-00421	H2210-01A0	18
07095-20318	E0200-02A0	34
07095-20318	H2220-01A0	8
07095-20318	T2160-01A0	23
07095-20318	T2160-02A0	9
07095-20420	F2300-07A0	32
07095-20420	F2730-02A0	4
07095-20522	K0710-02A0	18
07095-20523	E0200-02A0	9
07095-20523	F2730-01A0	20
07095-20523	H0310-02A0	4
07095-20523	T2160-01A0	23
07095-20523	T2160-02A0	9
07095-20627	H0310-01A0	14
07102-20405	F2300-07A0	12
07102-20517	F2730-01A0	19
07102-20533	H0310-02A0	2
07137-00040	Y1620-31A0	11
07137-00060	Y1620-21A0	11
07137-00060	Y1620-21A1	11
07137-04006	Y1620-31A0	11
07137-04507	T2115-01A0	3
07137-05008	Y1620-21A0	11
07137-05008	Y1620-21A1	11
07143-10505	Y1620-01A0	2
07143-10505	Y1620-01A0	13
07145-00050	Y0100-01A0	4
07145-00050	Y0100-01A0	4
07145-00050	Y1620-01A0	3
07145-00050	Y1620-01A0	14
07145-00070	T2110-01A0	18
07145-00070	Y0100-01A0	7
07145-00070	Y0100-01A0	7
07146-02106	Y0100-01A0	5
07146-02106	Y1620-31A0	6
07146-02126	Y0100-01A0	6
07146-02126	Y1620-21A0	5
07146-02126	Y1620-21A1	5
07155-00615	R0120-01A0	17
07155-01230	Y0100-01A0	7
07156-01112	Y0100-01A0	5
07156-01112	Y1620-31A0	16
07156-01315	Y0100-01A0	6
07156-01315	Y1620-21A0	16
07156-01315	Y1620-21A1	18
07165-13941	Y1620-21A0	17
07165-13941	Y1620-21A1	19
07177-05030	Y1620-01A0	5

PARTS Nº	FIG. Nº	INDEX
07177-05530	Y1620-31A0	3
07177-06030	R0120-01A0	2
07179-12052	F2300-13A0	5
07179-12057	F2300-13A0	9
07179-12062	Y1620-01A0	8
07179-12069	Y1620-31A0	9
07179-12079	Y1620-21A0	9
07179-12079	Y1620-21A1	9
07179-12084	F2300-16A0	9
07185-003A2	F2300-07A0	46
07206-30710	F2320-10A0	4
07206-31014	D0210-01A1	20
07213-50710	F2320-10A0	3
07213-50710	F2320-11A0	21
07230-20210	F2300-06A0	27
07230-20315	H2220-01A0	1
07230-20315	H2230-01A0	1
07230-20422	F2300-16A0	20
07230-20522	F2730-01A0	12
07230-20628	H0310-01A0	8
07230-20628	H2210-01A0	1
07235-10210	H0310-01A0	12
07235-10315	F2300-06A0	8
07235-10315	F2300-06A0	21
07235-10315	F2320-12A0	7
07235-10315	T2160-01A0	15
07235-10422	F2300-06A0	6
07235-10522	F2300-06A0	18
07235-50315	F2300-13A0	18
07236-10210	F2300-06A0	10
07236-10210	F2300-06A0	27
07236-10210	H0310-01A0	29
07236-10315	F2300-06A0	7
07236-10422	F2320-12A0	11
07236-10522	F2300-06A0	19
07236-10522	F2320-12A0	5
07236-51034	H0310-01A0	19
07260-03214	F2300-05A0	9
07260-03214	H0310-01A0	1
07260-23211	F2730-01A0	10
07270-00890	H0100-01A0	10
07270-01035	D0100-01A0	14
07270-01525	C0100-01A0	12
07270-01525	C0100-01A1	12
07270-01525	C0100-01A2	12
07270-01525	C0100-01A3	12
07270-01525	C0100-01A4	12
07270-21550	B0000-19A0	4
07280-01920	C0100-01A0	13
07280-01920	C0100-01A1	13

PARTS Nº	FIG. Nº	INDEX
07280-01920	C0100-01A2	13
07280-01920	C0100-01A3	13
07280-01920	C0100-01A4	13
07281-00197	B0000-19A0	5
07281-00197	D0210-01A1	12
07283-21537	H2220-01A0	22
07283-21537	H2230-01A0	15
07283-22236	H2220-01A0	10
07283-22738	F2300-05A0	29
07283-23442	F2300-07A0	5
07285-00095	H0100-01A0	9
07285-00110	C0100-02A0	30
07285-00110	D0200-01A0	7
07285-00115	D0100-01A0	13
07288-01003	D0210-01A0	11
07288-01004	D0210-01A1	13
07289-00045	F2300-05A0	10
07289-00045	F2730-01A0	9
07289-00045	H0310-01A0	2
07289-00055	C0100-02A0	2
07289-00055	C0100-02A0	4
07289-00070	B0000-07A0	4
07289-00070	C0100-02A0	5
07336-50516	F2320-11A0	22
07372-21045	F2200-01A0	2
07700-40240	D0100-01A0	4
07730-50004	C0100-01A0	11
07730-50004	C0100-01A1	11
07730-50004	C0100-01A2	11
07730-50004	C0100-01A3	11
07730-50004	C0100-01A4	11
07950-10450	V0300-01A0	4
07950-10450	V0300-01A1	4
07950-90403	V0300-01A0	6
07950-90403	V0300-01A1	6
07951-21022	V0300-01A0	5
07951-21022	V0300-01A1	5
07952-70002	V0300-01A0	4
07952-70002	V0300-01A1	4
08000-00000	E0110-01A0	2
08000-00000	E0110-01A1	2
08000-00000	E0110-01A2	2
08000-00000	E0110-01A3	2
08000-00000	E0110-01A4	2
08000-00001	E0110-01A0	3
08000-00001	E0110-01A1	3
08000-00001	E0110-01A2	3
08000-00001	E0110-01A3	3
08000-00001	E0110-01A4	3
08000-32212	E0110-01A1	1

PARTS Nº	FIG. Nº	INDEX
08000-42207	E0110-01A2	1
08000-42212	E0110-01A4	1
08028-44040	E0210-01A0	8
08028-44040	E0210-01A1	8
08028-46050	B0500-01A0	28
08028-64015	E0210-01A1	5
08028-64025	E0210-01A0	5
08028-64025	E0210-01A1	5
08028-64030	E0210-01A0	12
08028-64030	E0210-01A1	12
08034-00414	E0200-01A0	15
08034-00414	E0420-01A0	6
08034-00414	E0420-01A0	14
08034-00414	F2300-11A0	28
08034-00519	B0000-17A0	13
08034-00519	E0200-01A0	12
08034-00519	K0710-02A0	30
08034-00519	K2210-01A0	35
08034-00519	K2210-01A0	37
08034-00519	K2210-06B1	16
08034-00519	K2210-06B1	21
08034-00519	K2910-01A0	13
08034-00519	T2160-03A0	5
08034-00536	F2300-07A0	31
08034-00536	F2300-08A0	12
08034-00536	F2730-01A0	21
08034-00536	F2730-02A0	11
08034-00536	H0310-01A0	15
08034-00536	H0310-02A0	3
08034-00536	T2120-01A0	23
08034-00536	T2120-01A1	24
08034-00823	D0200-01A0	5
08034-00823	D0200-01A0	13
08034-00823	F2300-07A0	34
08034-00823	F2300-12A0	16
08034-00823	H0310-01A0	18
08034-00823	H2230-01A0	13
08034-00823	K2100-14B0	3
08034-00834	F2300-07A0	30
08034-00834	H0310-01A0	16
08034-01204	F2300-12A0	14A
08034-20310	K2210-51B1	51
08034-20519	T2160-01A0	12
08034-20519	T2160-01A0	24
08034-20519	T2160-02A0	4
08034-20519	T2160-02A0	10
08035-03010	K2210-06B1	17
08036-00814	F2300-12A0	15
08036-01014	E0300-01A0	4
08036-01214	E0420-01A0	5

PARTS Nº	FIG. Nº	INDEX
08036-01214	E0420-01A0	13
08036-02514	T2160-03A0	6
08036-03014	K2210-01A0	32
08036-10810	C0100-02A0	26
08036-11214	E0310-01A0	7
08036-11214	E0310-02A0	7
08037-01610	M2140-03A0	6
08037-01610	M2140-03A0	14
08037-01610	M2140-03A2	8
08037-01610	M2140-03A2	20
08037-05016	K0410-01A0	5
08037-05016	W2112-01A0	11
08038-00035	E0200-02A0	7
08038-00035	E0210-01A0	7
08038-00035	E0210-01A1	7
08038-00035	K2100-13B0	2
08038-00519	B0000-01A0	4
08038-00519	B0000-17A0	9
08038-00519	B0500-01A0	7
08038-00519	B0500-01A0	20
08038-00519	B0500-01A0	23
08038-00519	K2100-13B0	3
08038-00525	B0500-01A0	19
08038-42511	E0210-01A0	13
08038-42511	E0210-01A0	14
08038-42511	E0210-01A1	13
08038-42511	E0210-01A1	14
08041-01000	K2100-13B0	14
08041-02000	K2100-13B0	13
08041-03000	K2100-13B0	12
08051-00801	K0210-07A0	21
08053-00910	E0200-01A0	8
08053-00910	E0200-01A0	11
08053-00910	E0200-02A0	24
08053-00910	E0200-02A0	37
08053-00910	K2110-12B0	11
08053-00910	K2910-01A0	9
08053-01510	B0000-06A0	3
08053-01510	B0000-17A0	10
08053-01510	B0500-01A0	18
08053-01510	E0420-01A0	10
08053-01510	K2100-13B0	31
08064-10000	K2100-13B0	34
08073-10505	B0000-11A0	1
08086-10000	K2210-01A0	21
08086-10000	K2210-06B1	6
08086-10100	K2210-06B1	6
08088-31000	K2110-12B0	1
08102-12403	K2210-01A0	36
08116-02410	K0210-06A0	7

PARTS Nº	FIG. Nº	INDEX
08141-02400	K0210-06A0	7
08160-72400	E0300-01A0	10
08193-20010	K2100-13B0	30
08193-21012	B0500-01A0	21
08193-21012	E0200-01A0	14
08193-21012	K0710-03A0	30
08193-21021	E0200-02A0	17
08193-21021	E0200-02A0	25
08210-00401	K0210-07A0	25
08210-01803	T2160-01A0	1
08210-01803	T2160-02A0	1
08210-01803	T2160-02A0	2
08210-01803	T2160-02A0	3
08210-01803	T2160-03A0	4
08210-01807	T2160-03A0	3
08210-01810	T2160-01A0	11
08670-02001	B0000-02A0	9
08912-00000	K0210-08A0	3
08912-50900	K0210-08A0	4
08913-02400	K0210-09A0	6
09000-30006	V0300-01A0	1
09000-30006	V0300-01A1	1
09019-08035	V0300-01A0	8
09019-08035	V0300-01A1	8
09021-01725	V0300-01A0	9
09021-01725	V0300-01A1	9
09021-02436	V0300-01A0	10
09021-02436	V0300-01A1	19
09022-00150	V0300-01A0	11
09022-00150	V0300-01A1	20
09023-00300	V0300-01A0	12
09023-00300	V0300-01A1	21
09024-00300	V0300-01A0	3
09024-00300	V0300-01A1	3
09033-00190	V0300-01A0	2
09033-00190	V0300-01A1	2
09056-05513	V0300-01A0	7
09056-05513	V0300-01A1	7
09059-00800	V0100-01A0	1
09205-26270	R2200-01A2	12
09205-26270	R2200-01A3	6
09205-26270	R2200-01A3	24
09241-5A140	J2100-01A0	27
09241-5A140	T2115-02A0	1
09241-5A210	T2115-02A0	16
09241-5A210	T2115-02A0	21
09245-04830	T2810-01A0	2
09245-04830	T2810-01A1	3
09245-04830	T2810-01A3	2
09245-50060	T2810-01A0	3

PARTS Nº	FIG. Nº	INDEX
09245-50060	T2810-01A1	2
09245-50060	T2810-01A3	1
09247-45180	T2810-01A3	3
09249-00016	T2810-01A0	5
09249-00016	T2810-01A1	11
09249-00016	T2810-01A3	7
09304-00835	K0110-01A2	34
09304-00835	K0110-01A4	34
09304-00835	K0110-01A7	34
09304-01240	K0110-01A2	19
09304-01240	K0110-01A4	19
09304-01240	K0110-01A7	19
09304-10835	K2110-09B0	3
09304-10835	K2110-10B0	1
09311-41237	K2400-02A0	16
09311-41237	K2400-03A0	5
09350-01415	K2400-03A0	18
09350-01420	K2110-09B0	21
09350-01615	K0110-01A2	16
09350-01615	K0110-01A4	16
09350-01615	K0110-01A7	16
09363-00850	F2320-09A0	12
09363-00850	F2320-09A0	20
09370-00060	R0120-01A0	16
09409-00001	K0160-01A0	2
09409-00001	K0160-01A1	3
09409-00002	K0160-01A0	3
09409-00002	K0160-01A1	4
09409-00003	K0160-01A0	4
09409-00003	K0160-01A1	5
09409-10001	K0160-01A0	1
09409-20000	K0160-01A1	2
09409-70000	K0160-01A1	1
09415-00506	W2112-01A0	12
09415-01008	K0210-06A0	18
09415-01008	K2210-01A0	8
09415-01008	W2112-01A0	13
09415-01610	K0210-03A0	20
09415-02512	K2110-01B0	12
09415-02512	K2110-04B0	21
09415-02512	K2400-03A0	12
09415-02512	K2500-02A0	5
09415-02512	K2500-02A0	13
09415-02512	K2500-02A0	19
09415-02512	K2500-02A2	5
09415-02512	K2500-02A2	13
09415-02512	K2520-01A1	24
09415-02512	K2520-01A1	29
09415-02512	M2110-01A0	8
09415-02512	M2110-01A0	30

PARTS Nº	FIG. Nº	INDEX
09415-02512	M2110-01A1	13
09415-02512	M2110-01A1	35
09415-02512	M2210-04A0	11
09415-02512	M2210-04A0	33
09415-02512	M2210-04A1	11
09415-02512	M2210-04A1	33
09415-02512	M2240-01A0	9
09415-02512	M2240-01A2	9
09415-03614	K2110-01B1	9
09415-03614	M2210-04A0	26
09415-03614	M2210-04A1	26
09415-05016	M2210-04A0	27
09415-05016	M2210-04A1	27
09415-05022	M2210-04A0	5
09415-05022	M2210-04A0	15
09415-05022	M2210-04A1	5
09415-05022	M2210-04A1	15
09453-00002	K0210-03A0	18
09455-13016	M2210-06A0	2
09459-01614	K2210-03B1	15
09459-11033	K2210-03B1	14
09461-00014	M2240-01A0	4
09461-00014	M2240-01A2	4
09463-00002	K2110-09B0	9
09463-00006	K2110-08B0	9
09463-00006	K2110-09B0	10
09479-02400	B0730-01A1	5
09479-02400	B0730-01A1	9
09479-02400	K0710-01A1	9
09479-02400	K0710-01A1	12
09479-02400	K0710-04A0	6
09479-02400	K0710-04A0	9
09482-10000	B0730-01A1	2
09485-01003	K0710-01A0	15
09485-01003	K0710-01A1	2
09495-00010	K0830-01A1	1
09601-60000	T2120-01A0	24
09601-60000	T2120-01A1	25
09601-60050	T2120-01A0	24
09601-60050	T2120-01A1	25
09602-00050	U0100-01A7	27
09602-00050	U0100-01A8	27
09602-00050	U0100-01A9	27
09602-00050	U0100-01B0	27
09602-00050	U0100-01B1	27
09602-10050	U0100-01A0	27
09602-10050	U0100-01A1	27
09602-10050	U0100-01A2	27
09602-10050	U0100-01A3	25
09602-10050	U0100-01A4	25
09602-10050	U0100-01A5	25
09602-10050	U0100-01A6	25
09608-05080	F2320-06A0	21
09637-05163	U0100-01A6	18
09637-30163	U0100-01A1	21
09637-30163	U0100-01A2	17
09637-30163	U0100-01A7	19
09637-30263	U0100-01A4	18
09637-30263	U0100-01B0	19
09637-40263	U0100-01A3	18
09637-40263	U0100-01A9	19
09637-50261	U0100-01A0	18
09637-50263	U0100-01A0	18
09637-70163	U0100-01A5	18
09637-70163	U0100-01B1	19
09637-81163	U0100-01A8	19
09651-03001	U0100-01A1	17
09651-07001	U0100-01A0	12
09651-A0481	U0100-01A2	9
09651-A0481	U0100-01A3	12
09651-A0481	U0100-01A4	12
09651-A0481	U0100-01A5	12
09651-A0481	U0100-01A6	12
09651-A0481	U0100-01A7	12
09651-A0481	U0100-01A8	12
09651-A0481	U0100-01A9	12
09651-A0481	U0100-01B0	12
09651-A0481	U0100-01B1	12
09653-03001	U0100-01A1	14
09653-07001	U0100-01A0	9
09653-A0481	U0100-01A2	19
09653-A0481	U0100-01A3	9
09653-A0481	U0100-01A4	9
09653-A0481	U0100-01A5	9
09653-A0481	U0100-01A6	9
09653-A0481	U0100-01A7	9
09653-A0481	U0100-01A8	9
09653-A0481	U0100-01A9	9
09653-A0481	U0100-01B0	9
09653-A0481	U0100-01B1	9
09654-33001	U0100-01A1	16
09654-37001	U0100-01A0	11
09654-B0481	U0100-01A2	20
09654-B0481	U0100-01A3	11
09654-B0481	U0100-01A4	11
09654-B0481	U0100-01A5	11
09654-B0481	U0100-01A6	11
09654-B0481	U0100-01A7	11
09654-B0481	U0100-01A8	11
09654-B0481	U0100-01A9	11
09654-B0481	U0100-01B0	11
09654-B0481	U0100-01B1	11
09657-03003	U0100-01A1	9
09657-07002	U0100-01A0	13
09657-A0881	U0100-01A2	10
09657-A0881	U0100-01A3	13
09657-A0881	U0100-01A4	13
09657-A0881	U0100-01A5	13
09657-A0881	U0100-01A6	13
09657-A0881	U0100-01A7	14
09657-A0881	U0100-01A8	14
09657-A0881	U0100-01A9	13
09657-A0881	U0100-01B0	13
09657-A0881	U0100-01B1	13
09664-30070	U0100-01A1	31
09664-30082	U0100-01A1	30
09667-A0481	U0100-01A7	31
09667-A0481	U0100-01A8	31
09667-A0481	U0100-01A9	31
09667-A0481	U0100-01B0	31
09667-A0481	U0100-01B1	31
09668-03001	U0100-01A1	15
09668-07001	U0100-01A0	20
09690-M0063	U0100-01A0	6
09690-M0063	U0100-01A1	6
09690-M0063	U0100-01A2	6
09690-M0063	U0100-01A3	6
09690-M0063	U0100-01A4	6
09690-M0063	U0100-01A5	6
09690-M0063	U0100-01A6	6
09690-M0063	U0100-01A7	6
09690-M0063	U0100-01A8	6
09690-M0063	U0100-01A9	6
09690-M0063	U0100-01B0	6
09690-M0063	U0100-01B1	6
09690-P0315	U0100-01A0	22
09690-P0315	U0100-01A1	22
09690-P0315	U0100-01A2	23
09690-P0315	U0100-01A3	20
09690-P0315	U0100-01A4	20
09690-P0315	U0100-01A5	20
09690-P0315	U0100-01A6	20
09690-P0315	U0100-01A7	22
09690-P0315	U0100-01A8	22
09690-P0315	U0100-01A9	22
09690-P0315	U0100-01B0	22
09690-P0315	U0100-01B1	22
09690-P0400	U0100-01A0	3
09690-P0400	U0100-01A0	21
09690-P0400	U0100-01A1	3

PARTS Nº	FIG. Nº	INDEX
09690-P0400	U0100-01A1	20
09690-P0400	U0100-01A2	3
09690-P0400	U0100-01A2	22
09690-P0400	U0100-01A3	3
09690-P0400	U0100-01A3	19
09690-P0400	U0100-01A4	3
09690-P0400	U0100-01A4	19
09690-P0400	U0100-01A5	3
09690-P0400	U0100-01A5	19
09690-P0400	U0100-01A6	3
09690-P0400	U0100-01A6	19
09690-P0400	U0100-01A7	3
09690-P0400	U0100-01A7	20
09690-P0400	U0100-01A8	3
09690-P0400	U0100-01A8	20
09690-P0400	U0100-01A9	3
09690-P0400	U0100-01A9	20
09690-P0400	U0100-01B0	3
09690-P0400	U0100-01B0	20
09690-P0400	U0100-01B1	3
09690-P0400	U0100-01B1	20
09690-P0800	U0100-01A0	16
09690-P0800	U0100-01A1	12
09690-P0800	U0100-01A2	13
09690-P0800	U0100-01A3	16
09690-P0800	U0100-01A4	16
09690-P0800	U0100-01A5	16
09690-P0800	U0100-01A6	16
09690-P0800	U0100-01A7	17
09690-P0800	U0100-01A8	17
09690-P0800	U0100-01A9	16
09690-P0800	U0100-01B0	16
09690-P0800	U0100-01B1	16
09696-20108	U0100-01A7	32
09696-20108	U0100-01A8	32
09696-20108	U0100-01A9	32
09696-20108	U0100-01B0	32
09696-20108	U0100-01B1	32
09696-30080	U0100-01A7	33
09696-30080	U0100-01A8	33
09696-30080	U0100-01A9	33
09696-30080	U0100-01B0	33
09696-30080	U0100-01B1	33
09696-40107	U0100-01A7	32
09696-40107	U0100-01A8	32
09696-40107	U0100-01A9	32
09696-40107	U0100-01B0	32
09696-40107	U0100-01B1	32
09696-50081	U0100-01A7	33
09696-50081	U0100-01A7	33
09696-50081	U0100-01A8	33
09696-50081	U0100-01A9	33
09696-50081	U0100-01B0	33
09696-50081	U0100-01B1	33
09802-11000	U0100-01B1	18
09802-12000	U0100-01A8	13
09802-13000	U0100-01A1	18
09802-13000	U0100-01A2	18
09802-13000	U0100-01A7	13
09802-15000	U0100-01B0	18
09802-16000	U0100-01A9	18
09802-17000	U0100-01A0	19
09806-B1201	U0100-01A7	29
09806-B1201	U0100-01A8	29
09806-B1201	U0100-01A9	29
09806-B1201	U0100-01B0	29
09806-B1201	U0100-01B1	29
09808-03000	U0100-01A1	23
09808-07000	U0100-01A0	23
09808-A0881	U0100-01A2	21
09808-A0881	U0100-01A3	21
09808-A0881	U0100-01A4	21
09808-A0881	U0100-01A5	21
09808-A0881	U0100-01A6	21
09808-A0881	U0100-01A7	23
09808-A0881	U0100-01A8	23
09808-A0881	U0100-01A9	23
09808-A0881	U0100-01B0	23
09808-A0881	U0100-01B1	23
09823-00000	T2810-01A1	9
09960-01001	U0400-01A0	3
09960-61012	U0400-01A0	2
09963-01001	U0100-01B1	21
09963-02001	U0100-01A8	21
09963-03001	U0100-01A1	32
09963-03001	U0100-01A2	15
09963-03001	U0100-01A7	21
09963-05001	U0100-01B0	21
09963-06001	U0100-01A9	21
09980-10550	V0200-01A0	1
09982-10057	V0200-01A0	2
102-10-46360	F2300-15A0	3
103-15-15450	F2300-15A0	5
103-15-15450	F2320-11A0	7
103-15-15460	F2300-15A0	7
103-15-15460	F2320-11A0	8
103-15-22730	F2320-02A0	19
103-15-22730	F2320-03A0	12
103-15-25350	F2320-11A0	17
103-15-25370	F2320-09A0	15
103-15-29210	F2320-02A0	20
103-15-29210	F2320-03A0	13
103-15-29210	Y0100-01A0	1
103-15-29210	Y0100-01A0	1
103-15-29270	F2320-01A0	4
103-15-29270	Y0100-01A0	1
103-43-21380	F2300-11A0	6
104-15-22930	F2320-02A0	13
104-15-25330	F2320-11A0	10
104-15-25340	F2320-11A0	15
104-15-35150	F2320-06A0	7
104-15-35170	F2320-09A0	23
104-15-36460	F2320-09A0	38
104-15-36460	Y0100-01A0	2
104-15-36470	F2320-09A0	39
104-15-36470	Y0100-01A0	2
104-15-36480	F2320-09A0	26
104-15-36490	F2320-09A0	27
104-890-5610	K0160-01A1	6
10E-852-5460	T2160-01A0	10
10S-43-13380	K2110-06B0	31
10S-43-16251	F2820-01A0	26
111-63-81230	Y0100-01A0	7
112-10-46180	F2300-15A0	10
112-10-46210	F2300-15A0	11
113-01-21120	B0100-01A0	2
113-03-21160	C0100-02A0	6
113-03-21170	C0100-02A0	7
113-03-21180	C0100-02A0	8
113-15-21241	F2320-04A0	30
113-15-21290	F2320-03A0	20
113-15-22640	F2320-02A0	14
113-15-22720	F2320-02A0	16
113-15-22720	F2320-03A0	5
113-15-22720	F2320-03A0	36
113-15-22720	F2320-04A0	5
113-15-22730	F2320-02A0	17
113-15-22730	F2320-03A0	6
113-15-22730	F2320-03A0	37
113-15-22730	F2320-04A0	6
113-15-22920	F2320-03A0	3
113-15-22930	F2320-04A0	2
113-15-25250	F2300-15A0	9
113-15-25260	F2320-11A0	12
113-15-25270	F2320-11A0	13
113-15-25481	F2320-09A0	7
113-15-25490	F2320-02A0	10
113-15-29110	F2300-14A0	10
113-15-29110	F2320-09A0	9
113-15-29110	Y0100-01A0	2

PARTS Nº	FIG. Nº	INDEX
113-15-29220	F2320-02A0	21
113-15-29220	F2320-03A0	14
113-15-29220	F2320-04A0	25
113-15-29220	Y0100-01A0	1
113-15-29220	Y0100-01A0	1
113-15-29220	Y0100-01A0	1
113-15-29240	F2320-03A0	28
113-15-29250	F2320-01A0	3
113-15-29250	F2320-03A0	16
113-15-29250	F2320-04A0	24
113-15-29250	Y0100-01A0	1
113-15-29250	Y0100-01A0	1
113-15-29250	Y0100-01A0	1
113-15-29261	F2320-03A0	17
113-15-29261	Y0100-01A0	1
113-15-29410	F2320-02A0	5
113-15-29510	F2320-03A0	2
113-15-32560	F2320-02A0	3
113-15-32560	F2320-03A0	22
113-15-32560	F2320-04A0	11
113-15-42910	F2320-03A0	40
113-15-42920	F2320-03A0	41
113-15-55450	F2320-09A0	6
113-43-11294	F2320-13A0	13
113-43-23230	B0000-13A0	20
113-43-23230	F2820-01A0	4
113-43-23230	K2110-09B0	22
113-43-23230	K2110-11B0	6
113-43-23230	K2400-03A0	19
113-60-43310	H0310-01A0	23
113-60-43321	H0310-01A0	22
113-60-43321	V0100-01A0	4
113-60-43330	H0310-01A0	24
114-03-48160	C0100-01A0	2
114-03-48160	C0100-01A1	2
114-03-48160	C0100-01A2	2
114-03-48160	C0100-01A3	2
114-03-48160	C0100-01A4	2
114-03-51490	C0100-02A0	20
114-03-51510	C0100-02A0	19
114-40-48481	K2110-15B0	2
114-57-41260	K0110-01A0	1
114-57-41271	K0110-01A0	2
114-57-41280	K0110-01A0	3
11G-71-31170	T2120-01A0	6
11G-71-31170	T2120-01A1	7
11T-61-13710	T2110-01A0	23
11Y-09-11140	D0200-01A0	6
11Y-09-11140	D0210-01A0	10
11Y-09-11140	D0210-01A1	10
11Y-54-11270	M2140-04A0	17
120-04-41130	D0100-01A0	5
120-70-31411	T2121-01A0	1
120-X11-1510	K0710-01A0	9
124-01-51151	B0000-02A0	18
124-01-51191	B0000-02A0	10
124-01-51222	B0000-05A0	4
124-01-51240	B0000-04A0	12
124-01-51293	B0000-05A0	21
124-01-51330	B0000-05A0	1
124-01-51350	B0000-05A0	5
124-01-51360	B0000-05A0	24
124-01-51390	B0000-13A0	4
124-01-51412	B0000-09A0	1
124-01-51421	B0000-09A0	2
124-01-51431	B0000-09A0	5
124-01-51442	B0000-09A0	6
124-01-51450	B0100-01A0	1
124-01-51510	B0000-14A0	3
124-01-51510	B0000-14A1	3
124-01-51540	BO000-14A0	5
124-01-51590	B0000-14A2	5
124-01-51630	B0000-07A0	1
124-01-51640	B0000-07A0	2
124-01-51711	B0000-04A0	1
124-01-51724	B0000-04A0	7
124-01-51744	B0000-22A0	1
124-01-51750	B0000-04A0	4
124-01-51825	B0000-01A0	8
124-01-51850	B0000-13A0	9
124-01-51860	B0000-13A0	31
124-01-51872	B0000-13A0	18
124-01-51880	B0000-13A0	15
124-01-51920	B0000-17A0	7
124-01-51930	B0000-17A0	8
124-01-51941	B0000-01A0	3
124-01-51950	B0000-01A0	5
124-01-52270	B0000-05A0	15
124-01-55120	A4180-A0A1	9
124-01-55160	A4180-A0A1	1
124-01-55180	A4180-A0A1	3
124-01-55251	A2250-A0A1	1
124-01-55260	A4180-A0A1	12
124-01-55270	A4180-A0A1	8
124-01-55290	A4180-A0A1	4
124-01-55380	A6010-A0A1	2
124-01-55430	A6010-A0A1	3
124-01-55440	A6010-A0A1	10
124-01-55450	A6010-A0A1	9
124-01-55480	A6010-A0A1	4
124-01-55490	A5080-A0A1	1
124-01-55510	A5080-A0A1	1
124-01-61100	B0000-02A0	1
124-01-61110	B0000-02A0	1
124-01-61121	B0000-02A0	11
124-01-61160	B0000-02A0	22
124-01-61230	B0000-05A0	11
124-01-61283	B0000-05A0	18
124-01-61390	B0000-13A0	4
124-01-61650	B0000-07A0	5
124-01-61911	B0000-17A0	4
124-03-51141	C0100-01A0	1
124-03-51141	C0100-01A1	1
124-03-51141	C0100-01A2	1
124-03-51141	C0100-01A3	1
124-03-51141	C0100-01A4	1
124-03-51212	C0100-02A0	1
124-03-51221	C0100-02A0	3
124-03-51410	C0100-03A3	1
124-03-61122	C0100-01A0	3
124-03-61122	C0100-01A1	3
124-03-61122	C0100-01A2	3
124-03-61122	C0100-01A3	3
124-03-61122	C0100-01A4	3
124-03-61132	C0100-01A0	15
124-03-61132	C0100-01A0	18
124-03-61132	C0100-01A1	15
124-03-61132	C0100-01A1	18
124-03-61132	C0100-01A3	15
124-03-61132	C0100-01A4	15
124-03-61152	C0100-01A2	18
124-03-61152	C0100-01A3	18
124-03-61152	C0100-01A4	18
124-03-61160	C0100-01A2	15
124-03-61230	C0100-02A0	23
124-03-61240	C0100-02A0	29
124-03-61522	C0100-01A0	5
124-03-61522	C0100-01A1	5
124-03-61522	C0100-01A3	5
124-03-61522	C0100-01A4	5
124-03-61532	C0100-01A0	8
124-03-61532	C0100-01A1	8
124-03-61532	C0100-01A3	8
124-03-61532	C0100-01A4	8
124-03-61590	C0100-02A0	11
124-03-61620	C0100-01A2	5
124-03-61630	C0100-01A2	8
124-04-51270	D0210-01A1	18
124-04-51290	D0210-01A1	11
124-04-51320	D0210-01A1	24

PARTS Nº	FIG. Nº	INDEX
124-04-61151	D0210-01A0	5
124-04-61160	D0100-01A0	1
124-04-61230	D0200-01A0	1
124-04-61241	D0200-01A0	2
124-04-61251	D0200-01A0	3
124-04-61310	D0210-01A1	5
124-06-51113	E0210-01A0	1
124-06-51140	E0210-01A1	1
124-06-51150	E0110-01A0	1
124-06-51160	E0110-01A0	1
124-06-51170	E0210-01A1	1
124-06-54111	E0300-01A0	16
124-06-54111	E0320-01A0	4
124-06-54240	K2100-13B0	18
124-06-54340	E0210-01A0	2
124-06-54340	E0210-01A1	2
124-06-54350	E0420-01A0	15
124-06-61390	E0200-02A0	2
124-06-61440	K2100-13B0	17
124-06-62120	K2110-12B0	4
124-06-64111	E0200-02A0	30
124-06-64132	B0500-01A0	10
124-06-64142	E0200-01A0	1
124-06-64151	E0200-01A0	13
124-06-64160	K2100-13B0	1
124-06-64172	K2100-13B0	10
124-06-64231	K2210-06B1	15
124-06-64251	K2210-01A0	30
124-06-64261	K2210-01A0	31
124-06-64320	B0000-17A0	1
124-12-51110	B0600-01A0	2
124-12-51132	B0600-01A0	3
124-12-51141	B0600-01A0	1
124-12-51151	F2200-01A0	1
124-15-00031	F2320-01A0	1
124-15-00031	F2320-02A0	1
124-15-00031	F2320-03A0	1
124-15-00031	F2320-04A0	1
124-15-00031	F2320-05A0	1
124-15-00031	F2320-06A0	1
124-15-00031	F2320-07A0	1
124-15-00031	F2320-08A0	1
124-15-00031	F2320-09A0	1
124-15-00031	F2320-10A0	1
124-15-00031	F2320-11A0	1
124-15-00031	F2320-12A0	1
124-15-00031	F2320-13A0	1
124-15-01010	F2320-02A0	6
124-15-01020	F2320-02A0	9
124-15-01030	F2320-03A0	9
124-15-01061	F2320-04A0	21
124-15-01070	F2320-05A0	1
124-15-01080	F2320-08A0	11
124-15-01091	F2320-08A0	17
124-15-01100	F2320-09A0	1
124-15-01110	F2320-11A0	1
124-15-05210	F2320-08A0	7
124-15-05210	F2320-08A0	10
124-15-05210	Y0100-01A0	1
124-15-05220	Y0100-01A0	1
124-15-05310	Y0100-01A0	1
124-15-05320	Y0100-01A0	2
124-15-05330	Y0100-01A0	3
124-15-42181	F2320-07A0	11
124-15-42190	F2320-07A0	13
124-15-45450	F2320-09A0	31
124-15-49110	F2320-09A0	10
124-15-49110	F2320-09A0	35
124-15-49110	Y0100-01A0	2
124-15-49110	Y0100-01A0	2
124-15-51151	F2320-02A0	18
124-15-51220	F2320-08A0	6
124-15-51231	F2320-08A0	1
124-15-51240	F2320-08A0	3
124-15-51251	F2320-08A0	21
124-15-51261	F2320-08A0	22
124-15-51270	F2320-08A0	23
124-15-51311	F2320-06A0	23
124-15-51610	F2320-06A0	19
124-15-51620	F2320-06A0	8
124-15-51630	F2320-06A0	1
124-15-51711	F2320-05A0	19
124-15-51720	F2320-05A0	21
124-15-51731	F2320-05A0	22
124-15-51740	F2320-05A0	20
124-15-51811	F2320-05A0	7
124-15-51820	F2320-05A0	8
124-15-51820	Y0100-01A0	1
124-15-51941	F2320-08A0	7
124-15-51941	F2320-08A0	10
124-15-51951	F2320-08A0	7
124-15-51951	F2320-08A0	10
124-15-52111	F2320-07A0	1
124-15-52140	F2320-07A0	10
124-15-52220	F2320-03A0	32
124-15-52230	F2320-03A0	7
124-15-52271	F2320-01A0	18
124-15-52312	F2320-04A0	10
124-15-52320	F2320-03A0	21
124-15-52331	F2320-02A0	2
124-15-52341	F2320-01A0	1
124-15-52381	F2320-01A0	13
124-15-52390	F2320-01A0	6
124-15-52420	F2320-03A0	23
124-15-52610	F2320-04A0	3
124-15-52620	F2320-04A0	1
124-15-52631	F2320-03A0	34
124-15-52640	F2320-03A0	1
124-15-52710	F2320-01A0	19
124-15-52710	F2320-02A0	15
124-15-52710	F2320-03A0	4
124-15-52710	F2320-03A0	35
124-15-52710	F2320-04A0	4
124-15-52730	F2320-04A0	23
124-15-52750	F2320-03A0	15
124-15-52770	F2320-01A0	2
124-15-52810	F2320-07A0	3
124-15-52820	F2320-05A0	12
124-15-52830	F2320-07A0	5
124-15-52840	F2320-05A0	11
124-15-52910	F2320-04A0	8
124-15-52920	F2320-04A0	9
124-15-52960	F2320-02A0	8
124-15-52960	F2320-03A0	27
124-15-52960	F2320-04A0	15
124-15-55110	F2320-11A0	1
124-15-55140	F2320-11A0	27
124-15-55140	Y0100-01A0	3
124-15-55210	F2320-11A0	6
124-15-55221	F2320-11A0	3
124-15-55230	F2320-09A0	33
124-15-55280	F2320-11A0	4
124-15-55290	F2320-11A0	5
124-15-55321	F2320-11A0	2
124-15-55380	F2320-09A0	14
124-15-55390	F2320-11A0	10A
124-15-55410	F2320-09A0	1
124-15-55510	F2320-09A0	18
124-15-55520	F2320-09A0	21
124-15-55530	F2320-09A0	24
124-15-55540	F2320-09A0	25
124-15-55610	F2320-10A0	1
124-15-55620	F2320-10A0	2
124-15-55920	F2320-10A0	8
124-15-55920	Y0100-01A0	2
124-15-59240	F2320-08A0	20
124-15-59410	F2320-04A0	13
124-15-59420	F2320-03A0	24
124-15-59430	F2320-04A0	17
124-21-51190	J2100-01A0	24

PARTS Nº	FIG. Nº	INDEX
124-21-51280	J2100-01A0	12
124-21-51290	J2100-01A0	15
124-21-51311	J2100-01A0	6
124-21-51323	J2100-01A0	9
124-21-51332	J2100-01A0	18
124-21-61340	M2811-01A0	1
124-21-61470	M2811-01A0	4
124-21-61470	M2811-01A1	4
124-22-51111	F2320-08A0	19
124-22-51120	F2300-02A0	3
124-22-51131	F2300-02A0	4
124-22-51140	F2300-02A0	5
124-22-51150	F2300-02A0	7
124-22-51160	F2300-02A0	8
124-22-51170	F2300-02A0	9
124-22-51180	F2300-02A0	10
124-22-51190	F2300-02A0	11
124-22-51211	F2300-02A0	12
124-22-51222	F2300-02A0	13
124-22-51232	F2300-02A0	14
124-22-51242	F2300-02A0	15
124-22-51251	F2300-03A0	5
124-22-51260	F2300-02A0	19
124-22-52111	F2300-02A0	23
124-22-52120	F2300-02A0	24
124-22-52130	F2300-03A0	1
124-22-52171	F2300-03A0	10
124-22-52211	F2300-03A0	15
124-22-52220	F2300-03A0	16
124-22-52230	F2300-03A0	17
124-22-52240	F2300-03A0	18
124-22-52250	F2300-03A0	11
124-22-52260	F2300-03A0	12
124-22-53121	F2300-03A0	20
124-22-53130	F2300-03A0	2
124-22-53242	F2300-03A0	21
124-22-53270	F2300-03A0	13
124-22-53270	F2300-03A0	14
124-22-53280	F2300-03A0	6
124-22-53280	F2300-03A0	7
124-22-53331	F2300-03A0	9
124-22-55117	F2300-04A0	1
124-22-55122	F2300-03A0	27
124-22-56115	F2300-04A0	6
124-27-51115	F2380-01A0	1
124-27-51125	F2380-02A0	1
124-27-51134	F2380-01A0	2
124-27-51162	F2380-01A0	13
124-27-51162	F2380-02A0	13
124-27-51172	F2380-01A0	22

PARTS Nº	FIG. Nº	INDEX
124-27-51172	F2380-02A0	22
124-27-51193	F2380-01A0	34
124-27-51193	F2380-02A0	34
124-27-51212	F2380-01A0	9
124-27-51212	F2380-02A0	9
124-27-51221	F2380-01A0	18
124-27-51221	F2380-02A0	18
124-27-51232	F2380-01A0	19
124-27-51232	F2380-02A0	19
124-27-51241	F2380-01A0	12
124-27-51241	F2380-02A0	12
124-27-51250	F2380-01A0	27
124-27-51250	F2380-02A0	27
124-27-51261	F2380-01A0	28
124-27-51261	F2380-02A0	28
124-27-51290	F2380-01A0	29
124-27-51290	F2380-02A0	29
124-27-51321	F2380-03A0	1
124-27-51412	F2380-01A0	10
124-27-51412	F2380-02A0	10
124-27-51420	F2380-01A0	11
124-27-51420	F2380-02A0	11
124-27-51431	F2380-01A0	20
124-27-51431	F2380-02A0	20
124-27-51441	F2380-01A0	21
124-27-51441	F2380-02A0	21
124-27-51522	F2380-02A0	2
124-30-00105	RO110-01A0	1
124-30-00131	RO300-01A0	1
124-30-00132	RO300-01A0	1
124-30-00170	RO300-01A0	2
124-30-00202	R0200-01A1	1
124-30-00212	R0200-02A1	1
124-30-51112	RO110-01A0	1
124-30-51143	R0200-01A1	3
124-30-51143	R0200-02A1	3
124-30-51150	R0200-01A1	11
124-30-51150	R0200-02A1	11
124-30-51160	R0200-01A1	7
124-30-51160	R0200-02A1	7
124-30-51181	RO110-01A0	2
124-30-51642	RO110-01A0	5
124-30-51652	RO110-01A0	5
124-30-51661	RO110-01A0	13
124-30-52511	R0200-01A1	1
124-30-52521	R0200-02A1	1
124-30-52540	R0200-01A1	2
124-30-52540	R0200-02A1	2
124-30-52552	R0200-01A1	4
124-30-52552	R0200-02A1	4

PARTS Nº	FIG. Nº	INDEX
124-30-52571	R0200-01A1	9
124-30-52571	R0200-02A1	9
124-30-53111	RO300-01A0	1
124-30-53120	RO300-01A0	3
124-30-53121	RO300-01A0	3
124-30-53130	RO300-01A0	2
124-30-54113	R0120-01A0	19
124-30-54123	R0120-01A0	1
124-30-54130	R0120-01A0	9
124-30-54160	R0120-01A0	5
124-30-54170	R0120-01A0	6
124-30-54180	R0120-01A0	20
124-32-05000	Y0320-01A0	K1
124-32-08010	R0500-01A6	3
124-32-08010	R0500-01A8	3
124-32-08010	R0500-O1A7	3
124-32-08010	RO500-01B1	3
124-32-08010	Y0322-01A4	3
124-32-08010	Y0322-01A5	3
124-32-08010	Y0322-01A7	3
124-32-08020	R0500-01A6	5
124-32-08020	R0500-01A8	5
124-32-08020	R0500-O1A7	5
124-32-08020	RO500-01B1	5
124-32-08020	Y0322-01A4	5
124-32-08020	Y0322-01A5	5
124-32-08020	Y0322-01A7	5
124-32-51310	R0500-01A8	13
124-32-51310	R0500-01A8	16
124-32-53120	R0500-01A6	1
124-32-53120	R0500-01A8	1
124-32-53120	R0500-O1A7	1
124-32-53120	RO500-01B1	1
124-32-53120	Y0322-01A4	1
124-32-53120	Y0322-01A5	1
124-32-53120	Y0322-01A7	1
124-32-53130	R0500-01A6	2
124-32-53130	R0500-01A8	2
124-32-53130	R0500-O1A7	2
124-32-53130	RO500-01B1	2
124-32-53130	Y0322-01A4	2
124-32-53130	Y0322-01A5	2
124-32-53130	Y0322-01A7	2
124-32-53140	R0500-01A6	9
124-32-53140	R0500-01A8	9
124-32-53140	R0500-O1A7	9
124-32-53140	Y0322-01A4	9
124-32-53140	Y0322-01A5	9
124-32-53150	R0500-01A6	10
124-32-53150	R0500-01A8	10

PARTS Nº	FIG. Nº	INDEX
124-32-53150	R0500-O1A7	10
124-32-53150	RO500-01B1	10
124-32-53150	Y0322-01A4	10
124-32-53150	Y0322-01A5	10
124-32-53150	Y0322-01A7	10
124-32-53160	R0500-01A6	7
124-32-53160	R0500-01A8	7
124-32-53160	R0500-O1A7	7
124-32-53160	RO500-01B1	7
124-32-53160	Y0322-01A4	7
124-32-53160	Y0322-01A5	7
124-32-53160	Y0322-01A7	7
124-32-53190	R0500-01A6	8
124-32-53190	R0500-01A8	8
124-32-53190	R0500-O1A7	8
124-32-53190	RO500-01B1	8
124-32-53190	Y0322-01A4	8
124-32-53190	Y0322-01A5	8
124-32-53190	Y0322-01A7	8
124-32-53220	R0500-01A6	15
124-32-53220	R0500-01A8	15
124-32-53220	R0500-O1A7	15
124-32-53220	RO500-01B1	15
124-32-53220	Y0320-01A0	1
124-32-53220	Y0320-01A0	2
124-32-53240	RO500-01B1	9
124-32-53240	Y0322-01A7	9
124-32-53350	R0500-01A8	17
124-32-53350	R0500-O1A7	17
124-32-53350	RO500-01B1	17
124-32-53350	Y0322-01A5	13
124-32-53350	Y0322-01A7	13
124-32-53360	R0500-01A8	18
124-32-53360	R0500-O1A7	18
124-32-53360	RO500-01B1	18
124-32-53360	Y0322-01A5	14
124-32-53360	Y0322-01A7	14
124-40-51114	F2300-13A0	1
124-40-51132	F2300-13A0	3
124-40-51222	F2300-13A0	7
124-40-51240	F2300-07A0	11
124-40-51260	F2300-07A0	13
124-40-51270	F2300-07A0	14
124-40-51281	F2300-07A0	15
124-40-51300	F2300-13A0	19
124-40-51310	F2300-07A0	20
124-40-51330	F2300-13A0	10
124-40-51350	F2300-13A0	6
124-40-51360	F2300-13A0	19
124-40-51370	F2300-13A0	20

PARTS Nº	FIG. Nº	INDEX
124-40-51380	F2300-13A0	21
124-40-51410	F2300-07A0	16
124-40-51420	F2300-07A0	18
124-40-51440	F2300-13A0	2
124-40-51450	F2300-13A0	11
124-40-61180	F2300-07A0	19
124-40-61211	F2300-07A0	8
124-40-61220	F2300-07A0	9
124-40-61231	F2300-07A0	10
124-40-61461	F2300-07A0	8A
124-43-00020	F2300-15A0	1
124-43-00031	F2300-14A0	1
124-43-51192	F2300-12A0	3
124-43-51211	F2300-12A0	2
124-43-51224	F2300-12A0	1
124-43-51272	K2110-10B0	4
124-43-51362	F2820-01A0	2
124-43-51383	F2820-01A0	30
124-43-51480	K2110-07B0	7
124-43-51610	K2110-05B0	9
124-43-51620	K2110-05B0	7
124-43-51631	K2110-05B0	29
124-43-52160	F2300-11A0	32
124-43-52240	F2300-11A0	25
124-43-52341	F2300-10A0	28
124-43-52411	F2300-09A0	10
124-43-52411	F2300-10A0	9
124-43-52411	F2300-10A0	19
124-43-52462	F2300-11A0	2
124-43-52470	F2300-11A0	3
124-43-52480	F2300-11A0	5
124-43-52510	F2320-13A0	10
124-43-52631	K2400-04A0	3
124-43-52653	F2320-13A0	1
124-43-52671	F2320-13A0	14
124-43-52684	F2320-13A0	2
124-43-52773	F2300-10A0	26
124-43-52784	F2300-09A0	21
124-43-52793	F2300-09A0	20
124-43-52822	F2300-10A0	11
124-43-52824	F2300-09A0	1
124-43-52832	F2300-10A0	1
124-43-52834	F2300-09A0	12
124-43-52864	F2300-09A0	5
124-43-52864	F2300-09A0	16
124-43-52911	F2300-10A0	21
124-43-52920	F2320-13A0	3
124-43-52931	F2320-13A0	4
124-43-52941	F2300-12A0	4
124-43-52950	F2300-12A0	6

PARTS Nº	FIG. Nº	INDEX
124-43-52950	F2320-13A0	5
124-43-52960	F2300-10A0	4
124-43-52960	F2300-10A0	14
124-43-52971	F2300-09A0	2
124-43-52971	F2300-09A0	13
124-43-53111	F2300-14A0	1
124-43-53121	F2300-14A0	3
124-43-53131	F2300-14A0	24
124-43-53140	F2300-14A0	25
124-43-53150	F2300-14A0	26
124-43-53160	F2300-15A0	1
124-43-53170	F2300-15A0	2
124-43-53180	F2300-15A0	8
124-43-53221	F2300-16A0	1
124-43-53230	F2300-16A0	2
124-43-53241	F2300-16A0	3
124-43-53252	F2300-16A0	4
124-43-53260	F2300-16A0	5
124-43-53270	F2300-14A0	2
124-43-53290	F2300-16A0	15
124-43-53350	F2300-16A0	14
124-43-53410	F2300-16A0	14A
124-43-53420	F2300-16A0	14B
124-43-53430	F2300-16A0	12
124-43-54110	K2110-03B0	1
124-43-54131	K2110-03B0	31
124-43-54142	K2241-01A0	11
124-43-54151	K2110-03B0	18
124-43-54162	K2110-04B0	15
124-43-54171	K2110-04B0	13
124-43-54182	K2241-01A0	8
124-43-54193	K2241-01A0	9
124-43-54222	K2241-01A0	3
124-43-54261	K2110-04B0	6
124-43-54270	K2241-01A0	2
124-43-54292	K2110-04B0	1
124-43-54340	K2110-09B0	28
124-43-54340	K2241-01A0	15
124-43-54390	K2241-01A0	39
124-43-54590	K2110-02B0	5
124-43-55151	F2300-10A0	31
124-43-55160	K2400-03A0	7
124-43-61130	K2110-05B0	16
124-43-61151	K2110-07B0	6
124-43-61180	F2300-11A0	24
124-43-61210	K2110-08B0	12
124-43-61270	K2110-07B0	3
124-43-61311	K2110-08B0	1
124-43-61330	F2820-01A0	27
124-43-61341	F2820-01A0	1

PARTS Nº	FIG. Nº	INDEX
124-43-61730	K2400-03A0	33
124-43-62311	K2400-01A0	1
124-43-62331	F2300-10A0	25
124-43-62420	F2300-11A0	1
124-43-63150	F2300-16A0	17
124-43-63210	F2300-16A0	1
124-43-63510	K2400-02A0	3
124-43-64210	K2241-01A0	1
124-43-64410	K2110-09B0	1
124-43-65120	K2110-09B0	4
124-43-65430	K2110-10B0	2
124-49-33161	F2300-06A0	22
124-49-51142	F2730-01A0	16
124-49-51192	F2320-12A0	1
124-49-51232	F2300-06A0	2
124-49-51281	F2730-02A0	1
124-49-51390	F2730-01A0	11
124-49-51430	F2300-06A0	23
124-49-51460	F2300-06A0	22
124-49-61111	F2300-05A0	5
124-49-61122	F2300-05A0	11
124-49-61131	F2300-05A0	17
124-49-61151	F2730-02A0	7
124-49-61170	F2730-01A0	1
124-49-61180	F2730-01A0	2
124-49-61210	F2730-01A0	5
124-49-61220	F2730-01A0	6
124-49-61290	F2730-02A0	2
124-49-61440	F2300-08A0	15
124-49-61480	F2300-08A0	10
124-49-61490	F2300-08A0	11
124-49-61510	F2300-08A0	1
124-49-61530	F2300-07A0	41
124-49-61541	F2300-08A0	2
124-49-61550	F2300-08A0	3
124-54-26540	K0210-13A0	3
124-54-26540	M2140-04A0	4
124-54-51240	M2110-01A0	17
124-54-51240	M2110-01A1	22
124-54-51271	M2110-01A0	18
124-54-51271	M2110-01A1	23
124-54-51350	M2110-01A0	2
124-54-51350	M2110-01A1	2
124-54-51410	M2110-01A0	6
124-54-51410	M2110-01A1	11
124-54-52162	M2140-01A2	3
124-54-52162	M2140-01A3	3
124-54-52180	M2140-04A0	2
124-54-52190	M2140-04A0	1
124-54-52240	M2140-01A3	7
124-54-52250	M2140-05A2	1
124-54-52334	M2140-03A0	1
124-54-52343	M2140-03A0	7
124-54-52352	M2140-03A0	8
124-54-52460	M2140-01A2	2
124-54-52460	M2140-01A3	2
124-54-52480	M2140-01A2	5
124-54-52480	M2140-01A3	5
124-54-52513	M2140-04A0	18
124-54-52542	M2140-04A0	21
124-54-52550	M2140-03A0	2
124-54-52550	M2140-03A2	2
124-54-53131	M2210-04A0	2
124-54-53131	M2210-04A0	17
124-54-53131	M2210-04A1	2
124-54-53131	M2210-04A1	17
124-54-53160	M2210-05A0	6
124-54-53173	M2210-06A0	10
124-54-53211	M2240-01A0	1
124-54-53223	M2210-04A0	12
124-54-53233	M2210-04A0	34
124-54-53280	M2210-06A0	10
124-54-53411	K2120-01A0	1
124-54-53433	K2120-01A0	4
124-54-53443	K2120-01A0	5
124-54-53450	K2110-01B0	14
124-54-53450	K2110-01B1	11
124-54-54121	M2210-01A0	9
124-54-54121	M2210-01A1	9
124-54-54130	M2210-01A0	13
124-54-54130	M2210-01A1	13
124-54-54130	M2210-02A0	8
124-54-54130	M2210-02A1	8
124-54-54130	M2210-02A2	8
124-54-54130	M2210-02A3	8
124-54-54151	M2210-06A0	15
124-54-54151	M2210-06A0	21
124-54-54161	M2210-01A0	14
124-54-54161	M2210-01A1	14
124-54-54161	M2210-02A0	9
124-54-54161	M2210-02A1	9
124-54-54161	M2210-02A2	9
124-54-54161	M2210-02A3	9
124-54-54170	M2210-01A0	16
124-54-54170	M2210-01A1	16
124-54-54170	M2210-02A0	14
124-54-54170	M2210-02A1	14
124-54-54170	M2210-02A2	14
124-54-54170	M2210-02A3	14
124-54-54432	V0300-01A1	10
124-54-54442	M2210-06A0	6
124-54-54471	V0300-01A1	14
124-54-61112	M2110-01A0	1
124-54-61131	M2120-01A0	1
124-54-61151	M2110-01A0	15
124-54-61151	M2110-01A1	20
124-54-61160	M2110-01A0	5
124-54-61160	M2110-01A1	10
124-54-61170	M2110-01A0	7
124-54-61170	M2110-01A1	12
124-54-61171	M2110-01A0	7
124-54-61171	M2110-01A1	12
124-54-61212	M2120-01A0	2
124-54-61212	M2120-01A1	2
124-54-61230	M2110-01A0	12
124-54-61230	M2110-01A1	17
124-54-62140	M2140-04A0	6
124-54-62210	M2140-01A2	1
124-54-62230	M2140-01A2	27
124-54-62230	M2140-01A3	6
124-54-62311	M2140-02A0	1
124-54-62311	M2140-02A1	1
124-54-62321	M2140-02A0	4
124-54-62581	M2140-01A3	1
124-54-62621	M2140-02A1	4
124-54-62770	M2140-02A0	12
124-54-62770	M2140-02A1	12
124-54-62770	M2140-02A2	22
124-54-63111	M2210-04A0	1
124-54-63111	M2210-04A1	1
124-54-63121	M2210-04A0	16
124-54-63121	M2210-04A1	16
124-54-63140	M2210-04A0	8
124-54-63151	M2210-04A0	30
124-54-63311	M2210-05A0	1
124-54-64101	M2210-01A0	1
124-54-64111	E0200-02A0	4
124-54-64180	M2210-01A0	8
124-54-64180	M2210-01A1	8
124-54-64200	M2210-02A1	1
124-54-64210	M2210-02A0	13
124-54-64210	M2210-02A1	13
124-54-64210	M2210-02A2	13
124-54-64210	M2210-02A3	13
124-54-64220	M2210-02A1	10
124-54-64220	M2210-02A2	10
124-54-64230	M2210-02A0	16
124-54-64230	M2210-02A1	16
124-54-64230	M2210-02A2	16
124-54-64230	M2210-02A3	16

PARTS Nº	FIG. Nº	INDEX
124-54-64300	M2210-02A0	1
124-54-64320	M2210-02A0	10
124-54-64320	M2210-02A3	10
124-54-64620	K2500-02A0	20
124-54-64620	K2500-02A2	21
124-54-64711	M2210-06A0	15A
124-54-64711	M2210-06A0	21A
124-54-68110	K2210-01A0	6
124-54-68130	K2500-02A0	9
124-54-68130	K2500-02A2	9
124-54-68141	K0310-01A0	1
124-54-68160	K0310-01A1	1
124-54-68171	K0310-01A0	2
124-54-68210	K2210-01A0	38
124-60-51121	H0120-01A0	10
124-60-51131	H0120-01A0	11
124-60-51142	H0120-01A0	12
124-60-51150	H0100-01A0	11
124-60-61110	H0100-01A0	1
124-62-51250	H0310-01A0	28
124-62-51263	H2210-01A0	11
124-62-51273	H2210-01A0	12
124-62-51321	H2210-01A0	4
124-62-51371	H2220-01A0	4
124-62-51382	H2230-01A0	4
124-62-51411	F2300-06A0	1
124-62-51430	H0310-01A0	7
124-62-51460	H0310-02A0	1
124-62-51530	T2160-01A0	20
124-62-51651	T2160-03A0	9
124-62-51680	T2160-02A0	11
124-62-51690	T2160-02A0	15
124-62-51690	T2160-02A0	19
124-62-51711	T2160-02A0	25
124-62-51721	T2160-02A0	26
124-62-51732	H2220-01A0	21
124-62-51742	H2230-01A0	14
124-62-51752	H0310-01A0	10
124-62-51760	H2220-01A0	9
124-62-51771	H2220-01A0	15
124-62-51771	H2230-01A0	7
124-62-51810	H0310-01A0	17
124-62-51821	T2160-01A0	25
124-62-51920	H2220-01A0	18
124-62-51920	H2230-01A0	10
124-62-51920	T2160-01A0	7
124-62-51920	T2160-01A0	17
124-62-61211	F2300-07A0	1
124-62-61220	F2300-05A0	22
124-62-61281	H2210-01A0	5
124-62-61360	H2210-01A0	6
124-62-61440	H0310-01A0	3
124-62-61491	H0310-02A0	9
124-62-61511	H2220-01A0	5
124-62-61521	H2220-01A0	6
124-62-61551	H2230-01A0	6
124-62-61561	H2230-01A0	5
124-62-61570	T2160-01A0	6
124-62-61630	T2160-01A0	13
124-62-61640	T2160-01A0	14
124-62-61671	T2160-02A0	14
124-62-61781	T2160-02A0	18
124-62-61790	T2160-02A0	22
124-62-61850	T2160-02A0	2
124-62-61880	T2160-02A0	1
124-62-61890	T2160-01A0	1
124-63-02201	T2140-01A0	1
124-63-02201	Y1620-01A0	1
124-63-02210	T2153-01A0	1
124-63-02210	Y1620-21A0	1
124-63-02221	T2150-01A0	1
124-63-02221	Y1620-31A0	1
124-63-02230	T2153-01A0	1
124-63-02230	Y1620-21A1	1
124-63-63421	Y1620-01A0	12
124-63-63441	Y1620-01A0	1
124-63-64621	Y1620-31A0	10
124-63-64641	Y1620-31A0	1
124-63-65520	Y1620-21A0	10
124-63-65520	Y1620-21A1	10
124-63-65540	Y1620-21A0	1
124-63-65540	Y1620-21A1	1
124-72-00011	T2110-01A0	15
124-72-51132	T2120-01A0	4
124-72-51143	T2120-01A0	3
124-72-51143	T2120-01A1	3
124-72-51180	T2120-01A0	9
124-72-51180	T2120-01A1	10
124-72-51232	T2110-01A0	4
124-72-51262	T2110-01A0	5
124-72-51273	T2110-01A0	6
124-72-51283	T2110-01A0	7
124-72-51292	T2110-01A0	8
124-72-51344	T2110-01A0	9
124-72-51344	T2115-01A0	2
124-72-51354	T2115-01A0	20
124-72-51360	T2115-01A0	19
124-72-51423	T2115-01A0	22
124-72-51480	T2120-01A0	13
124-72-51480	T2120-01A1	14
124-72-51490	T2120-01A0	16
124-72-51490	T2120-01A1	17
124-72-51540	T2115-01A0	23
124-72-51611	T2115-01A0	1
124-72-51710	T2120-01A0	19
124-72-51710	T2120-01A1	20
124-72-51720	T2120-01A0	20
124-72-51720	T2120-01A1	21
124-72-51730	T2120-01A0	21
124-72-51730	T2120-01A1	22
124-72-51740	T2120-01A0	22
124-72-51740	T2120-01A1	23
124-72-51770	T2115-01A0	14
124-72-51790	T2115-01A0	9
124-72-51810	T2115-01A0	5
124-72-52131	T2120-01A1	4
124-72-61190	T2120-01A0	2
124-72-61190	T2120-01A1	2
124-72-61301	T2110-01A0	1
124-72-61500	T2120-01A0	1
124-72-61650	T2110-01A0	2
124-72-61660	T2110-01A0	3
124-72-61840	T2120-01A0	12
124-72-61840	T2120-01A1	13
124-72-61890	T2120-01A0	12
124-72-61890	T2120-01A1	13
124-72-62200	T2120-01A1	1
124-78-54110	K2520-01A1	4
124-78-54120	K2520-01A1	8
124-78-54130	K2520-01A1	16
124-78-54140	K2520-01A1	1
124-78-54170	K2520-01A1	23
124-78-54180	K2520-01A1	2
124-906-5122	K0410-01A2	1
124-906-5130	K0410-01A2	13
124-906-5140	K0410-01A2	7
124-911-1221	K0710-01A0	21
124-911-1231	K0710-01A0	22
124-911-1241	K0710-01A0	23
124-911-1251	K0710-01A0	24
124-911-1290	K0710-01A1	13
124-911-1290	K0710-04A0	10
124-911-1314	K0710-03A0	1
124-911-1350	K0710-01A0	27
124-944-6111	M2811-01A1	1
124-978-5112	K0410-01A0	1
124-978-5112	K0410-01A1	1
124-978-5120	K0410-01A0	4
124-978-5214	M2210-03A0	1
124-978-5224	M2210-03A0	5

PARTS Nº	FIG. Nº	INDEX
124-98-51140	U0100-01A0	4
124-98-51140	U0100-01A1	4
124-98-51140	U0100-01A2	4
124-98-51140	U0100-01A3	4
124-98-51140	U0100-01A4	4
124-98-51140	U0100-01A5	4
124-98-51140	U0100-01A6	4
124-98-51140	U0100-01A7	4
124-98-51140	U0100-01A8	4
124-98-51140	U0100-01A9	4
124-98-51140	U0100-01B0	4
124-98-51140	U0100-01B1	4
124-98-51170	U0100-01A1	11
124-98-51170	U0100-01A2	12
124-98-51170	U0100-01A7	16
124-98-51220	U0100-01A8	16
124-98-51230	U0100-01A8	18
124-98-51260	U0100-01A1	19
124-98-51260	U0100-01A2	16
124-98-51290	U0100-01A1	13
124-98-51290	U0100-01A2	14
124-98-51290	U0100-01A7	18
124-98-51320	U0100-01A3	15
124-98-51320	U0100-01A9	15
124-98-51330	U0100-01A3	17
124-98-51330	U0100-01A9	17
124-98-51360	U0100-01A3	10
124-98-51420	U0100-01A4	15
124-98-51420	U0100-01B0	15
124-98-51430	U0100-01A4	17
124-98-51430	U0100-01B0	17
124-98-51460	U0100-01A4	10
124-98-51520	U0100-01A5	15
124-98-51520	U0100-01B1	15
124-98-51530	U0100-01A5	17
124-98-51530	U0100-01B1	17
124-98-51560	U0100-01A5	10
124-98-51720	U0100-01A6	15
124-98-51730	U0100-01A6	17
124-98-51760	U0100-01A6	10
124-98-51860	U0100-01A0	15
124-98-51920	U0100-01A0	10
124-98-52160	U0100-01A7	10
124-98-52160	U0100-01A8	10
124-98-52160	U0100-01A9	10
124-98-52160	U0100-01B0	10
124-98-52160	U0100-01B1	10
124-98-52310	U0520-01A0	1
124-98-52320	U0520-01A0	1
124-98-61611	U0100-01A0	24

PARTS Nº	FIG. Nº	INDEX
124-98-61611	U0100-01A1	24
124-98-61611	U0100-01A2	24
124-98-61611	U0100-01A3	22
124-98-61611	U0100-01A4	22
124-98-61611	U0100-01A5	22
124-98-61611	U0100-01A6	22
124-98-61611	U0100-01A7	24
124-98-61611	U0100-01A8	24
124-98-61611	U0100-01A9	24
124-98-61611	U0100-01B0	24
124-98-61611	U0100-01B1	24
124-98-61621	U0100-01A0	26
124-98-61621	U0100-01A1	26
124-98-61621	U0100-01A2	26
124-98-61621	U0100-01A3	24
124-98-61621	U0100-01A4	24
124-98-61621	U0100-01A5	24
124-98-61621	U0100-01A6	24
124-98-61621	U0100-01A7	26
124-98-61621	U0100-01A8	26
124-98-61621	U0100-01A9	26
124-98-61621	U0100-01B0	26
124-98-61621	U0100-01B1	26
124-98-61651	U0100-01A0	25
124-98-61651	U0100-01A1	25
124-98-61651	U0100-01A2	25
124-98-61651	U0100-01A3	23
124-98-61651	U0100-01A4	23
124-98-61651	U0100-01A5	23
124-98-61651	U0100-01A6	23
124-98-61651	U0100-01A7	25
124-98-61651	U0100-01A8	25
124-98-61651	U0100-01A9	25
124-98-61651	U0100-01B0	25
124-98-61651	U0100-01B1	25
124-98-62110	U0100-01A0	14
124-98-62110	U0100-01A1	10
124-98-62110	U0100-01A2	11
124-98-62110	U0100-01A3	14
124-98-62110	U0100-01A4	14
124-98-62110	U0100-01A5	14
124-98-62110	U0100-01A6	14
124-98-62110	U0100-01A7	15
124-98-62110	U0100-01A8	15
124-98-62110	U0100-01A9	14
124-98-62110	U0100-01B0	14
124-98-62110	U0100-01B1	14
124-A62-1920	K2210-01A0	40
124-A62-1920	M2110-01A1	9
124-A62-1920	M2140-02A2	8

PARTS Nº	FIG. Nº	INDEX
124-A62-1920	M2140-02A2	16
124-A62-1920	M2140-03A2	4
124-A62-1920	M2140-03A2	11
124-A62-1920	M2140-03A2	14
124-A62-2211	M2110-01A1	36
124-A62-2240	M2110-01A1	42
124-A62-2250	M2110-01A1	43
124-A62-3230	M2140-03A2	1
124-A62-3240	M2140-03A2	9
124-A62-3251	M2140-03A2	12
124-A62-3510	M2240-01A2	1
124-A62-3520	M2210-04A1	12
124-A62-3530	M2210-04A1	34
124-A62-3850	M2210-01A1	17
124-A62-3860	M2210-01A1	18
124-A62-3870	M2210-01A1	19
124-A62-3880	M2210-01A1	20
124-A62-3890	M2210-01A1	21
124-A62-3910	M2210-01A1	22
124-A62-3920	M2210-02A2	17
124-A62-3920	M2210-02A3	17
124-A62-3930	M2210-02A2	18
124-A62-3930	M2210-02A3	18
124-A62-3940	M2210-02A2	19
124-A62-3940	M2210-02A3	19
124-A62-3970	M2210-02A3	21
124-C62-2111	M2110-01A1	1
124-C62-2230	M2110-01A1	41
124-C62-2630	M2120-01A1	1
124-C62-3211	M2140-02A2	1
124-C62-3220	M2140-02A2	9
124-C62-3310	M2140-02A2	4
124-C62-3320	M2140-02A2	5
124-C62-3330	M2140-02A2	12
124-C62-3340	M2140-02A2	13
124-C62-3351	M2140-02A2	14
124-C62-3360	M2140-02A2	6
124-C62-3370	M2140-03A2	3
124-C62-3380	M2140-03A2	10
124-C62-3390	M2140-03A2	13
124-C62-3411	M2110-01A1	5
124-C62-3421	M2110-01A1	6
124-C62-3431	M2110-01A1	7
124-C62-3450	M2110-01A1	8
124-C62-3460	M2140-02A2	7
124-C62-3460	M2140-02A2	15
124-C62-3540	M2210-04A1	8
124-C62-3551	M2210-04A1	30
124-C62-3600	M2210-01A1	1
124-C62-3700	M2210-02A2	1

PARTS Nº	FIG. Nº	INDEX
124-C62-3800	M2210-02A3	1
124-C62-3950	M2210-02A2	20
124-C62-3960	M2210-02A3	20
124-Z11-1111	K0710-01A0	4
124-Z11-1131	K0710-01A0	10
124-Z11-1141	K0710-01A0	2
124-Z11-1150	K0710-02A0	1
124-Z11-1170	B0730-01A1	6
124-Z11-1170	K0710-01A1	6
124-Z11-1170	K0710-04A0	3
124-Z11-1191	K0710-01A0	5
124-Z11-1211	K0710-01A0	17
124-Z11-1321	K0710-03A0	12
124-Z11-1330	K2910-01A0	14
124-Z11-1340	K2910-01A0	4
124-Z11-1360	K0710-03A0	6
124-Z11-1391	K0710-01A1	7
124-Z11-1391	K0710-04A0	4
124-Z11-1441	K0710-01A1	8
124-Z11-1441	K0710-04A0	5
124-Z11-1460	M2140-01A2	6
124-Z11-1470	M2140-01A2	6
124-Z11-1481	M2140-01A2	16
124-Z11-1491	M2140-01A2	16
124-Z11-1530	B0730-01A1	1
124-Z11-1530	K0710-01A1	5
124-Z11-1530	K0710-04A0	2
124-Z11-1540	M2140-01A2	17
124-Z11-1550	K0710-02A0	6
124-Z11-1620	K0710-01A0	6
124-Z11-1640	K0710-01A0	7
124-Z11-1710	K0710-03A0	15
124-Z11-1720	K0710-03A0	11
124-Z11-1730	K2210-01B1	7
124-Z78-5150	K0410-01A1	4
124-Z78-5160	K0410-01A1	12
124-Z78-5170	K0410-01A1	13
124-Z78-5181	K0410-01A1	5
125-15-11230	F2320-03A0	43
125-15-11230	F2320-04A0	22
125-15-15290	F2300-15A0	6
125-15-15290	F2320-09A0	30
125-15-15290	F2320-11A0	9
125-15-22780	F2320-05A0	6
125-15-32750	F2320-01A0	20
125-30-21650	RO110-01A0	8
126-98-51141	U0100-01A0	9
126-98-51151	U0100-01A0	20
126-98-51161	U0100-01A0	11
126-98-51171	U0100-01A0	13

PARTS Nº	FIG. Nº	INDEX
126-98-51180	U0400-01A0	1
126-98-51190	U0100-01A0	17
12F-14-11290	B0600-01A0	18
12F-62-41180	H2210-01A0	10
12F-70-31251	T2120-01A0	5
12F-70-31251	T2120-01A1	5
12F-70-31261	T2120-01A1	6
12F-72-41470	T2110-01A0	10
12F-72-41480	T2110-01A0	11
12G-15-01040	F2320-03A0	25
12G-15-01050	F2320-03A0	42
12G-15-52130	F2320-04A0	16
12G-15-52210	F2320-04A0	19
12G-15-52410	F2320-04A0	12
12G-15-52510	F2320-04A0	14
12G-21-51171	J2100-01A0	5
12G-21-51182	R2200-01A2	7
12G-21-51182	R2200-01A3	19
12G-21-51192	R2200-01A2	8
12G-21-51192	R2200-01A3	20
12G-21-51B41	J2100-01A0	2
12G-21-52131	J2100-01A0	3
12G-21-52141	J2100-01A0	4
12G-21-52151	R2200-01A2	1
12G-21-52151	R2200-01A3	13
12G-21-52161	R2200-01A2	4
12G-21-52161	R2200-01A3	16
12G-21-62100	J2100-01A0	1
12G-27-00030	F2380-01A0	1
12G-27-00040	F2380-02A0	1
12G-27-52350	F2380-01A0	33
12G-27-52350	F2380-02A0	33
12G-30-51530	R2200-01A3	5
12G-30-51531	R2200-01A2	11
12G-30-51531	R2200-01A3	23
12G-30-52511	R2200-01A3	1
12G-30-52521	R2200-01A3	2
12G-30-52611	R2200-01A2	17
12G-32-00030	Y0322-01A4	1
12G-32-00040	Y0322-01A5	1
12G-32-00060	Y0322-01A7	1
12G-32-01110	R0500-01A6	1
12G-32-01120	R0500-O1A7	1
12G-32-01130	R0500-01A8	1
12G-32-04120	RO500-01B1	1
12G-32-05000	Y0320-01A0	K2
12G-32-51110	R0500-01A6	13
12G-32-51110	R0500-01A6	16
12G-32-51310	R0500-O1A7	13
12G-32-51310	R0500-O1A7	16

PARTS Nº	FIG. Nº	INDEX
12G-32-51310	RO500-01B1	13
12G-32-51310	RO500-01B1	16
12G-32-53350	R0500-01A6	17
12G-32-53350	Y0322-01A4	13
12G-32-53360	R0500-01A6	18
12G-32-53360	Y0322-01A4	14
12G-43-51550	K2400-04A0	2
12G-72-51120	T2110-01A0	24
12H-72-11380	T2110-01A0	16
12H-72-11581	T2115-02A0	6
12H-72-11581	T2115-02A0	11
130-30-13170	RO110-01A0	9
130-69-11190	T2810-01A0	4
130-69-11190	T2810-01A1	4
131-43-58210	F2820-01A0	12
131-69-00211	T2810-01A0	1
131-69-41101	T2810-01A0	1
131-69-41111	T2810-01A0	1
131-69-41120	T2810-01A1	1
134-01-61830	B0000-19A0	1
134-01-61840	B0000-19A0	3
134-03-61410	C0100-02A0	34
134-03-61410	K0710-01A0	3
134-04-61180	D0100-01A0	2
134-04-61290	D0200-01A0	9
134-06-61320	K2110-12B0	8
134-06-61611	K2210-01A0	36
134-06-61611	K2210-06B1	22
134-30-61460	R2200-01A3	9
134-30-61460	R2200-01A3	10
134-43-61211	K2110-08B0	12
134-43-61220	K2110-06B0	14
134-43-61230	K2110-06B0	9
134-43-61282	K2110-06B0	7
134-43-61331	K2110-05B0	1
134-43-61340	K2110-08B0	8
134-43-61420	K2110-05B0	10
134-43-62320	K2400-02A0	2
134-43-62380	K2400-05A0	1
134-43-62390	K2400-05A0	2
134-43-62421	K2400-03A0	3
134-43-62431	K2400-03A0	2
134-43-64230	K2241-01A0	4
134-43-64240	K2241-01A0	12
134-43-64260	K2241-01A0	26
134-43-64310	K2110-04B0	19
134-43-64320	K2110-03B0	4
134-43-64342	K2110-09B0	13
134-43-64360	K2110-03B0	11
134-43-64370	K2110-03B0	9

PARTS Nº	FIG. Nº	INDEX
134-43-64510	K2241-01A0	7
134-43-66172	K2110-06B0	32
134-43-66210	K2110-02B0	2
134-43-66241	K2110-06B0	36
134-43-68240	F2820-01A0	22
134-43-68251	K2110-02B0	1
134-43-68260	K2400-01A0	9
134-43-68270	F2820-01A0	23
134-49-61760	K2110-15B0	3
134-49-61770	F2300-07A0	35
134-49-61780	F2300-07A0	35
134-49-61790	F2300-07A0	36
134-49-61850	F2300-07A0	17
134-49-61860	F2300-07A0	37
134-54-61661	K2210-01A0	17
134-54-61711	E0300-01A0	5
134-54-61721	E0300-01A0	6
134-54-62431	M2140-02A0	9
134-54-62431	M2140-02A1	9
134-54-62431	M2140-02A2	19
134-54-64411	M2210-06A0	1
134-54-65121	K2500-02A0	21
134-54-65121	K2500-02A2	22
134-54-65140	K2500-02A0	21
134-54-66112	K2500-01A0	1
134-54-66131	K2500-01A0	2
134-54-66132	K2500-01A0	2
134-54-66152	K2500-01A0	7
134-54-66161	K2500-01A0	16
134-54-66180	K2500-01A0	6
134-54-66180	K2500-01A0	15
134-54-66190	U0100-01A0	7
134-54-66190	U0100-01A1	7
134-54-66190	U0100-01A2	7
134-54-66190	U0100-01A3	7
134-54-66190	U0100-01A4	7
134-54-66190	U0100-01A5	7
134-54-66190	U0100-01A6	7
134-54-66190	U0100-01A7	7
134-54-66190	U0100-01A8	7
134-54-66190	U0100-01A9	7
134-54-66190	U0100-01B0	7
134-54-66190	U0100-01B1	7
134-54-66211	K2500-02A0	26
134-54-66211	K2500-02A2	27
134-54-66290	U0100-01A0	8
134-54-66290	U0100-01A1	8
134-54-66290	U0100-01A2	8
134-54-66290	U0100-01A3	8
134-54-66290	U0100-01A4	8

PARTS Nº	FIG. Nº	INDEX
134-54-66290	U0100-01A5	8
134-54-66290	U0100-01A6	8
134-54-66290	U0100-01A7	8
134-54-66290	U0100-01A8	8
134-54-66290	U0100-01A9	8
134-54-66290	U0100-01B0	8
134-54-66290	U0100-01B1	8
134-54-68121	K2500-02A0	1
134-54-68121	K2500-02A2	1
134-54-68161	K2500-02A0	6
134-54-68161	K2500-02A2	6
134-54-68180	K2210-01A0	39
134-54-68211	K2210-04B1	1
134-54-68752	K2210-05B1	9
134-54-68780	K2210-05B1	9
134-54-69111	W2112-01A0	1
134-54-69120	K2210-01A0	13
134-54-69121	K2210-01A0	13
134-54-69130	W2112-01A0	2
134-54-69140	W2112-01A0	3
134-54-69150	W2112-01A0	4
134-54-69160	W2112-01A0	5
134-54-69170	W2112-01A0	6
134-54-69190	W2112-01A0	1
134-57-61111	K0110-04A2	1
134-57-61120	K0110-01A3	4
134-57-61120	K0110-01A5	6
134-57-61120	K0110-01A6	4
134-57-61120	K0110-01A8	5
134-57-61120	K0110-01A9	5
134-57-61131	K0110-04A2	2
134-57-61150	K0110-01A3	3A
134-57-61150	K0110-01A5	5
134-57-61150	K0110-01A6	3A
134-57-61150	K0110-01A8	4
134-57-61150	K0110-01A9	4
134-57-61200	K0110-01A5	1
134-57-61200	K0110-01A6	1
134-57-61300	K0110-01A3	1
134-62-63451	T2160-01A0	2
134-62-63451	T2160-02A0	5
134-62-63471	T2160-01A0	3
134-62-63471	T2160-02A0	6
134-69-00020	T2810-01A3	1
134-69-13110	T2810-01A3	11
134-69-13120	T2810-01A3	12
134-69-13130	T2810-01A1	1
134-98-31370	U0400-01A0	4
134-98-61450	U0520-01A0	1
134-98-61510	U0520-01A0	1

PARTS Nº	FIG. Nº	INDEX
134-98-61520	U0520-01A0	1
134-98-61550	U0520-01A0	1
134-X11-1310	K2210-02B1	1
134-X11-1310	K2210-02B2	1
134-X11-1390	K2210-01B1	7
134-X11-1570	M2140-01A2	7
134-X11-1580	M2140-01A2	8
134-X11-1590	M2140-01A2	9
134-X11-1611	M2140-01A2	13
134-X11-1621	M2140-01A2	13
134-X11-1630	M2140-01A2	14
134-X11-1910	K0890-01A0	1
134-X11-1920	K0860-01A1	3
135-03-12110	C0100-02A0	12
135-06-34260	K2110-01B0	13
135-43-15821	F2820-01A0	21
135-43-33770	M2140-02A0	13
135-43-33770	M2140-02A1	13
135-43-33770	M2140-02A2	23
13F-32-21221	R0500-01A6	14
13F-32-21221	Y0320-01A0	2
140-30-00141	RO300-01A0	7
140-30-00401	RO300-01A0	7
140-30-00411	RO300-01A0	8
141-63-93270	Y0100-01A0	7
144-03-16210	V0301-01A0	1
144-03-16220	V0301-01A0	2
144-30-14340	R0120-01A0	13
144-30-14350	R0120-01A0	14
144-63-92170	Y0100-01A0	6
144-63-92170	Y1620-21A0	8
144-63-92170	Y1620-21A1	8
144-63-95170	F2300-16A0	6
144-69-11130	T2810-01A3	4
144-69-11161	T2810-01A3	13
144-69-11170	T2810-01A3	1
144-69-11210	T2810-01A1	6
144-69-11210	T2810-01A3	5
144-69-11230	T2810-01A1	5
144-69-11230	T2810-01A3	6
144-874-6960	K0710-02A0	19
144-A74-1460	H0310-02A0	6
144-Y11-1851	K0710-01A0	1
144-Z79-2840	B0730-01A1	4
144-Z79-2840	B0730-01A1	8
145-14-11320	F2320-02A0	7
145-14-11320	F2320-03A0	10
145-14-11320	F2320-03A0	26
14X-06-11120	E0310-01A0	2
14X-06-11120	E0310-02A0	2

PARTS Nº	FIG. Nº	INDEX
14X-06-11130	E0420-01A0	1
14X-06-12120	E0420-01A0	7
14X-06-12160	K2210-01A0	22
14X-06-12160	K2210-06B1	7
14X-06-12170	K2210-06B1	2
14X-06-12190	K2210-01A0	23
14X-06-12190	K2210-06B1	8
14X-06-12260	E0210-01A0	9
14X-06-12260	E0210-01A1	9
14X-06-14210	K2910-01A0	8
14X-06-14390	K2100-13B0	7
14X-06-14460	E0420-01A0	12
14X-06-21120	E0300-01A0	1
14X-06-21120	E0300-01A0	13
14X-06-21120	E0320-01A0	1
14X-06-21550	K2210-01A0	24
14X-06-21550	K2210-06B1	9
14X-06-21710	K2100-13B0	38
14X-06-22120	K2110-08B0	4
14X-06-22150	K2210-01A0	27
14X-06-22150	K2210-06B1	12
14X-06-24430	E0420-01A0	4
14X-27-00100	F2380-01A0	30
14X-27-00100	F2380-02A0	30
14X-27-00110	F2380-01A0	30
14X-27-00110	F2380-02A0	30
14X-27-00120	F2380-01A0	31
14X-27-00120	F2380-02A0	31
14X-30-15131	RO300-01A0	4
14X-30-15251	RO300-01A0	9
14X-43-11270	K2400-02A0	13
14X-43-11320	K2110-03B0	3
14X-43-11320	K2110-08B0	23
14X-43-11320	K2520-01A1	28
14X-43-12110	K2400-02A0	1
14X-43-12251	K2400-02A0	6
14X-43-12260	K2400-02A0	7
14X-43-12270	K2400-02A0	10
14X-43-12350	K2400-01A0	3
14X-43-12360	K2400-01A0	2
14X-43-12380	K2400-03A0	4
14X-43-12390	K2400-01A0	4
14X-43-12410	K2400-02A0	22
14X-43-13330	F2820-01A0	20
14X-43-13722	K2400-03A0	17
14X-43-13760	K2400-03A0	1
14X-43-13760	K2400-04A0	1
14X-43-13790	K2400-03A0	34
14X-43-14141	K2500-02A2	31
14X-43-14180	K2500-02A0	30

PARTS Nº	FIG. Nº	INDEX
14X-43-14340	K2110-09B0	1
14X-43-15740	K2110-06B0	15
14X-54-12150	M2110-01A0	24
14X-54-12150	M2110-01A1	29
14X-54-12780	M2140-02A0	16
14X-54-12780	M2140-02A1	16
14X-54-12780	M2140-02A2	26
14X-54-12910	M2110-01A0	16
14X-54-12910	M2110-01A1	21
14X-54-12910	M2240-01A0	2
14X-54-12910	M2240-01A2	2
14X-54-12940	K2210-01A0	5
14X-54-12960	M2140-04A0	13
14X-54-13160	M2210-04A0	20
14X-54-13160	M2210-04A1	20
14X-54-13811	M2210-05A0	5
14X-54-13830	M2210-05A0	7
14X-54-13980	M2140-03A0	3
14X-54-13980	M2140-03A0	11
14X-54-13980	M2140-03A2	5
14X-54-13980	M2140-03A2	17
14X-54-16143	K2500-02A0	22
14X-54-16143	K2500-02A2	23
14X-54-16153	K2500-02A0	23
14X-54-16153	K2500-02A2	24
14X-54-16183	K2500-02A0	22
14X-54-16193	K2500-02A0	23
14X-54-16230	K2500-02A0	29
14X-54-16230	K2500-02A2	30
14X-54-16270	K2500-02A0	30
14X-54-16442	K2500-02A0	7
14X-54-16442	K2500-02A2	7
14X-54-16452	K2500-02A0	14
14X-54-16452	K2500-02A2	14
14X-54-16481	K2500-02A0	16
14X-54-16481	K2500-02A2	16
14X-54-16641	K2110-01B0	6
14X-54-16641	K2110-01B1	6
14X-54-16660	K2500-02A0	28
14X-54-16660	K2500-02A2	29
14X-54-16670	K2110-16B1	1
14X-54-18150	K0210-13A0	4
14X-54-18150	K2210-01A0	1
14X-54-18150	M2140-04A0	5
14X-54-18310	K2210-04B1	1
14X-54-18320	K2210-04B1	2
14X-54-18330	K2210-04B1	3
14X-54-18340	K2210-04B1	4
14X-54-18350	K2210-04B1	5
14X-54-18360	K2210-04B1	6

PARTS Nº	FIG. Nº	INDEX
14X-54-18370	K2210-04B1	7
14X-54-18390	K2210-04B1	8
14X-54-18410	K2210-04B1	9
14X-54-18420	K2210-04B1	10
14X-54-18460	K2210-04B1	11
14X-54-18510	K2210-04B1	12
14X-54-18520	K2210-04B1	12
14X-54-18530	K2210-04B1	15
14X-54-18540	K2210-04B1	16
14X-54-18551	K2210-04B1	17
14X-54-18571	K2210-04B1	13
14X-54-18580	K2210-04B1	14
14X-54-18610	K2210-05B1	4
14X-54-18620	K2210-05B1	5
14X-54-18630	K2210-05B1	6
14X-54-18641	K2210-05B1	7
14X-54-18650	K2210-07B1	5
14X-54-18660	K2210-04B1	20
14X-54-18670	K2210-04B1	21
14X-54-18680	K2210-04B1	22
14X-54-18761	K2210-05B1	10
14X-54-18830	W2112-01A0	14
14X-54-18860	K2210-04B1	23
14X-54-18870	K2210-04B1	24
14X-54-19120	K2210-01A0	14
14X-54-19130	K2210-01A0	15
14X-54-19140	K2210-04B1	18
14X-54-19150	K2210-04B1	19
14X-54-19170	K2210-01A0	16
14X-54-23130	M2210-04A0	23
14X-54-23130	M2210-04A1	23
14X-54-25190	K2110-01B0	3
14X-54-25190	K2110-01B1	3
14X-54-25513	K2110-01B0	1
14X-54-25513	K2110-01B1	1
14X-54-25515	K2110-01B0	1
14X-54-25515	K2110-01B1	1
14X-54-26380	K2500-02A0	24
14X-54-26410	K2500-02A0	24
14X-54-26410	K2500-02A2	25
14X-57-11113	K0110-01A0	8
14X-57-11113	K0120-01A0	1
14X-57-11380	K0110-01A0	9
14X-57-11380	K0120-01A0	2
14X-57-21100	K0110-01A9	1
14X-57-21200	K0110-01A8	1
14X-60-11130	H0100-01A0	4
14X-60-12120	H0120-01A0	3
14X-906-1130	K0410-01A2	9
14X-906-1220	K0410-01A2	10

PARTS Nº	FIG. Nº	INDEX
14X-911-0070	K0210-01A0	1
14X-911-0070	K0210-02A0	1
14X-911-0070	K0210-03A0	1
14X-911-0070	K0210-04A0	1
14X-911-0070	K0210-05A0	1
14X-911-0070	K0210-06A0	1
14X-911-0070	K0210-07A0	1
14X-911-0070	K0210-08A0	1
14X-911-0070	K0210-09A0	1
14X-911-0070	K0210-12A0	1
14X-911-1114	K0210-01A0	1
14X-911-1120	K2100-14B0	1
14X-911-1130	K0210-07A0	22
14X-911-1140	K0210-07A0	23
14X-911-1150	K0210-07A0	24
14X-911-1160	K2910-01A0	1
14X-911-1323	K0210-02A0	1
14X-911-1330	K0210-02A0	4
14X-911-1390	K0210-02A0	2
14X-911-1423	K0210-02A0	1
14X-911-1510	K0210-03A0	11
14X-911-1520	K0210-03A0	11
14X-911-1522	K0210-03A0	2
14X-911-1540	K0210-02A0	21
14X-911-1540	K0210-03A0	10
14X-911-1610	K0210-03A0	12
14X-911-1620	K0210-03A0	13
14X-911-1631	K0210-02A0	9
14X-911-1643	K0210-02A0	17
14X-911-1653	K0210-02A0	17
14X-911-1690	K0210-02A0	31
14X-911-1712	K0210-02A0	23
14X-911-1721	K0210-02A0	13
14X-911-1761	K0210-02A0	32
14X-911-1770	K0210-05A0	20
14X-911-1780	K0210-02A0	25
14X-911-1812	K0210-03A0	1
14X-911-1832	K0210-03A0	8
14X-911-1911	K0210-03A0	11
14X-911-1921	K0210-03A0	5
14X-911-1932	K0210-03A0	21
14X-911-1941	K0210-02A0	16
14X-911-1951	K0210-02A0	16
14X-911-1990	K0210-03A0	13
14X-911-2113	K0210-04A0	7
14X-911-2211	K0210-04A0	1
14X-911-2221	K0210-04A0	5
14X-911-2241	K0210-04A0	3
14X-911-2291	K0210-04A0	2
14X-911-2311	K0210-04A0	4
14X-911-2321	K0210-04A0	6
14X-911-2341	K0210-02A0	28
14X-911-2350	K0210-04A0	24
14X-911-2521	K0210-13A0	6
14X-911-2541	K0210-01A0	8
14X-911-2551	K0210-01A0	9
14X-911-2613	K0210-04A0	7
14X-911-3111	K0210-07A0	1
14X-911-3120	K0210-07A0	5
14X-911-3130	K0210-07A0	5
14X-911-3141	K0210-07A0	10
14X-911-3210	K0210-07A0	3
14X-911-3221	K0210-07A0	6
14X-911-3241	K0210-07A0	11
14X-911-3310	K0210-07A0	4
14X-911-3321	K0210-07A0	7
14X-911-3330	K0210-07A0	12
14X-911-3411	K0210-07A0	8
14X-911-3421	K0210-07A0	8
14X-911-3431	K0210-05A0	18
14X-911-3441	K0210-05A0	19
14X-911-3531	K0210-07A0	18
14X-911-3541	K0210-07A0	18
14X-911-3560	K0210-07A0	15
14X-911-3570	K0210-07A0	17
14X-911-3611	K0210-07A0	19
14X-911-3621	K0210-07A0	20
14X-911-3710	E0310-01A0	8
14X-911-3710	E0310-02A0	8
14X-911-4121	K0210-06A0	3
14X-911-4141	K0210-06A0	5
14X-911-4251	K0210-06A0	1
14X-911-4280	K0210-06A0	17
14X-911-4341	K0210-08A0	1
14X-911-4513	K0210-06A0	9
14X-911-4521	K0210-06A0	15
14X-911-4541	K0210-06A0	13
14X-911-4551	K0210-06A0	14
14X-911-5141	K0210-05A0	9
14X-911-5151	K0210-05A0	10
14X-911-5181	K0210-05A0	11
14X-911-5191	K0210-05A0	12
14X-911-5211	K0210-05A0	13
14X-911-5222	K0210-05A0	14
14X-911-5231	K0210-05A0	15
14X-911-5310	K0210-02A0	3
14X-911-5310	K0210-05A0	4
14X-911-5412	K0210-05A0	21
14X-911-5422	K0210-05A0	22
14X-911-5430	K0210-05A0	23
14X-911-5521	K0210-04A0	27
14X-911-5531	K0210-12A0	2
14X-911-5540	K0210-05A0	8
14X-911-5631	K0210-05A0	1
14X-911-5641	K0210-05A0	2
14X-911-5651	K0210-05A0	3
14X-911-5661	K0210-05A0	5
14X-911-5671	K0210-01A0	5
14X-911-5711	K0210-01A0	11
14X-911-5711	K2212-01A0	1
14X-911-5721	K0210-01A0	12
14X-911-5721	K2212-01A0	2
14X-911-5831	K0210-02A0	29
14X-911-5911	K0210-13A0	5
14X-911-6131	K0320-01A0	2
14X-911-6140	K0320-01A0	1
14X-911-6161	K0210-09A0	3
14X-911-6180	K0860-01A0	1
14X-911-6180	K0860-01A1	1
14X-911-6241	E0310-01A0	1
14X-911-6241	E0310-02A0	1
14X-911-6271	K0330-01A0	1
14X-911-6281	K0330-01A0	2
14X-911-6291	K0330-01A0	3
14X-911-6321	E0310-01A0	5
14X-911-6331	E0310-02A0	5
14X-911-6520	K0210-12A0	1
14X-911-7501	K2210-01B1	4
14X-911-7501	K2210-01B2	4
14X-911-7501	K2210-53A1	1
14X-911-7611	K2210-01B2	5
14X-911-7620	K2210-01B1	12
14X-911-7620	K2210-01B2	10
14X-911-7631	K2210-01B1	13
14X-911-7631	K2210-01B2	11
14X-911-7650	K2210-01B1	14
14X-911-7660	K2210-01B1	15
14X-911-7670	K0710-01A0	16
14X-911-7670	K0710-01A1	3
14X-911-7690	K2210-01B1	8
14X-911-7701	K2210-01B1	9
14X-911-7710	K2210-01B2	7
14X-911-7720	K2210-01B1	10
14X-911-7720	K2210-01B2	8
14X-911-7730	K2210-01B2	9
14X-911-7741	K2210-01B1	16
14X-911-7741	K2210-01B2	12
14X-911-7750	K0710-01A0	14
14X-911-7750	K0710-01A1	1
14X-911-7760	K2210-01B2	6

PARTS Nº	FIG. Nº	INDEX
14X-911-8143	K2210-03B1	18
14X-911-8161	K2210-03B1	21
14X-911-8171	K2210-03B1	23
14X-911-8181	K2210-03B1	10
14X-911-8243	K2210-02B1	2
14X-911-8261	K2210-02B2	6
14X-911-8320	K2210-02B2	3
14X-911-8381	K2210-02B2	2
14X-911-8480	M2140-01A2	18
14X-911-8490	M2140-01A2	19
14X-911-8520	M2140-01A2	15
14X-911-8550	M2140-01A2	20
14X-911-8580	M2140-01A2	23
14X-911-8590	M2140-01A2	23
14X-911-8610	M2140-01A2	24
14X-911-8620	M2140-01A2	25
14X-911-8630	M2140-01A2	26
14X-911-8820	K2210-02B1	3
14X-911-8830	K2210-02B1	8
14X-911-8830	K2210-02B2	7
14X-911-8840	K2210-02B1	9
14X-911-8840	K2210-02B2	8
14X-911-8850	K2210-02B2	9
14X-911-8860	K2210-03B1	11
14X-911-8950	K2210-02B1	4
14X-911-8960	K2210-03B1	22
14X-911-8960	K2210-03B1	24
14X-978-1172	K0410-01A1	9
14X-978-1620	K0410-01A1	11
14X-978-1660	K0410-01A1	14
14X-98-11170	U0100-01A0	1
14X-98-11170	U0100-01A1	1
14X-98-11170	U0100-01A2	1
14X-98-11170	U0100-01A3	1
14X-98-11170	U0100-01A4	1
14X-98-11170	U0100-01A5	1
14X-98-11170	U0100-01A6	1
14X-98-11170	U0100-01A7	1
14X-98-11170	U0100-01A8	1
14X-98-11170	U0100-01A9	1
14X-98-11170	U0100-01B0	1
14X-98-11170	U0100-01B1	1
14X-98-11240	U0100-01A0	2
14X-98-11240	U0100-01A1	2
14X-98-11240	U0100-01A2	2
14X-98-11240	U0100-01A3	2
14X-98-11240	U0100-01A4	2
14X-98-11240	U0100-01A5	2
14X-98-11240	U0100-01A6	2
14X-98-11240	U0100-01A7	2
14X-98-11240	U0100-01A8	2
14X-98-11240	U0100-01A9	2
14X-98-11240	U0100-01B0	2
14X-98-11240	U0100-01B1	2
14X-98-11521	U0100-01A1	14
14X-98-21880	U0100-01A1	29
14X-A62-1690	K2500-02A2	19
14X-Z06-1110	K0410-01A2	8
14Y-22-14180	F2300-02A0	18
14Y-30-11277	J2100-01A0	21
14Z-40-11220	F2300-14A0	18
14Z-40-11320	F2300-14A0	4
14Z-40-11330	F2300-14A0	6
14Z-40-11340	F2300-14A0	7
14Z-40-11350	F2300-14A0	9
14Z-40-11360	F2300-14A0	19
14Z-40-11371	F2300-14A0	8
14Z-43-11170	K2110-07B0	26
14Z-43-11310	K2110-17B0	1
14Z-43-11310	K2520-01A1	27
14Z-43-11751	K2110-10B0	5
14Z-43-12891	K2400-03A0	31
14Z-43-13180	K2110-05B0	1
14Z-43-21751	K2110-10B0	5
14Z-43-21940	K2110-10B0	5
154-04-12531	D0210-01A0	2
154-04-12531	D0210-01A1	2
154-21-11830	F2300-04A0	8
154-44-12460	K0110-01A2	18
154-44-12460	K0110-01A4	18
154-44-12460	K0110-01A7	18
154-54-22830	W2112-01A0	8
155-57-12320	K0110-01A2	24
155-57-12320	K0110-01A4	24
155-57-12320	K0110-01A7	24
155-57-12330	K0110-01A2	25
155-57-12330	K0110-01A4	25
155-57-12330	K0110-01A7	25
170-21-11190	F2320-06A0	11
170-33-13330	F2300-09A0	6
170-33-13330	F2300-09A0	17
170-33-13330	F2300-10A0	5
170-33-13330	F2300-10A0	15
175-30-00581	RO110-01A0	7
175-30-00691	RO110-01A0	6
175-30-00702	RO110-01A0	6
175-30-00900	R0200-01A1	5
175-30-00900	R0200-02A1	5
175-33-24650	F2300-11A0	16
175-54-34170	B0000-05A0	3A
176-06-42170	K0210-02A0	22
176-63-92240	Y0100-01A0	4
176-63-92240	Y1620-01A0	7
176-911-4180	K0710-02A0	23
17A-15-16881	K2500-02A0	10
17A-43-24160	F2320-13A0	22
17A-43-24160	K2400-02A0	24
17A-43-24170	F2300-11A0	22
17A-43-24170	K2400-04A0	12
17A-43-25131	K2110-05B0	15
17A-43-25140	K2110-05B0	23
17A-43-25151	K2110-03B0	7
17A-43-25151	K2110-05B0	11
17A-43-25171	K2110-05B0	30
17A-43-25271	K2110-06B0	19
17A-43-25410	K2110-01B0	9
17A-43-25460	K2110-09B0	6
17A-43-25531	K2110-11B0	5
17A-43-25682	K2110-08B0	21
17A-54-14160	M2210-01A0	15
17A-54-14160	M2210-01A1	15
17A-54-14160	M2210-02A0	15
17A-54-14160	M2210-02A1	15
17A-54-14160	M2210-02A2	15
17A-54-14160	M2210-02A3	15
17A-54-14230	M2140-02A0	2
17A-54-14230	M2140-02A0	5
17A-54-14230	M2140-02A1	2
17A-54-14230	M2140-02A1	5
17A-54-14230	M2140-02A2	2
17A-54-14230	M2140-02A2	10
17A-54-14230	M2210-01A0	10
17A-54-14230	M2210-01A1	10
17A-54-14230	M2210-02A0	11
17A-54-14230	M2210-02A1	11
17A-54-14230	M2210-02A2	11
17A-54-14230	M2210-02A3	11
17A-54-14240	M2210-01A0	12
17A-54-14240	M2210-01A1	12
17A-54-16821	K2110-01B0	15
17A-54-16821	K2110-01B1	12
17A-54-16841	K2110-01B0	16
17A-54-16841	K2110-01B1	13
17A-54-16881	K2500-02A0	2
17A-54-16881	K2500-02A2	2
17A-54-16881	K2500-02A2	10
17A-54-18270	K2210-01B1	1
17A-54-18270	K2210-01B1	17
17A-54-18270	K2210-01B2	1
17A-54-18270	K2210-01B2	13

PARTS Nº	FIG. Nº	INDEX
17A-57-21170	K0110-01A5	4
17A-57-21170	K0110-01A7	42
17A-911-1671	K0710-01A0	11
17A-911-1920	K0890-01A0	4
17A-911-1930	K0890-01A0	5
17A-911-7200	K2210-01B1	3
17A-911-7200	K2210-51B1	1
17A-911-7201	K2210-01B1	3
17A-911-7201	K2210-51B1	1
17A-911-7310	K2210-01B1	5
17A-911-7320	K2210-02B1	7
17A-911-7330	K2210-02B1	10
17A-911-7340	K2210-01B1	11
17A-911-7350	K2210-01B1	6
17A-911-7410	K2210-01B2	3
17A-98-11180	U0100-01A0	5
17A-98-11180	U0100-01A1	5
17A-98-11180	U0100-01A2	5
17A-98-11180	U0100-01A3	5
17A-98-11180	U0100-01A4	5
17A-98-11180	U0100-01A5	5
17A-98-11180	U0100-01A6	5
17A-98-11180	U0100-01A7	5
17A-98-11180	U0100-01A8	5
17A-98-11180	U0100-01A9	5
17A-98-11180	U0100-01B0	5
17A-98-11180	U0100-01B1	5
17M-911-3320	K2210-53A1	13
17M-911-3370	K2210-53A1	4
195-01-16140	K2110-13B0	27
195-15-15261	F2320-03A0	19
195-30-36190	F2380-01A0	25
195-30-36190	F2380-02A0	25
195-40-31540	F2300-14A0	14
195-54-43210	M2140-01A2	4
195-54-43210	M2140-01A3	4
195-54-68760	K2500-01A0	4
195-54-68760	K2500-01A0	13
195-54-68760	M2140-01A2	10
195-57-11100	K0110-01A2	3
195-57-11100	K0110-01A4	3
195-57-11100	K0110-01A7	3
195-57-11740	K0110-01A2	3
195-57-11740	K0110-01A4	3
195-57-11740	K0110-01A7	3
195-57-11750	K0110-01A2	9
195-57-11750	K0110-01A4	9
195-57-11750	K0110-01A7	9
195-57-11760	K0110-01A2	4
195-57-11760	K0110-01A4	4

PARTS Nº	FIG. Nº	INDEX
195-57-11760	K0110-01A7	4
195-57-11770	K0110-01A2	14
195-57-11770	K0110-01A4	14
195-57-11770	K0110-01A7	14
195-57-11780	K0110-01A2	13
195-57-11780	K0110-01A4	13
195-57-11780	K0110-01A7	13
195-57-11790	K0110-01A2	15
195-57-11790	K0110-01A4	15
195-57-11790	K0110-01A7	15
195-57-21181	K0110-01A2	24
195-57-21181	K0110-01A4	24
195-57-21181	K0110-01A7	24
195-57-21190	K0110-01A2	30
195-57-21190	K0110-01A4	30
195-57-21190	K0110-01A7	30
195-57-21211	K0110-01A2	28
195-57-21211	K0110-01A4	28
195-57-21211	K0110-01A7	28
195-57-21221	K0110-01A2	29
195-57-21221	K0110-01A4	29
195-57-21221	K0110-01A7	29
195-57-41720	K0110-01A2	2
195-57-41720	K0110-01A4	2
195-57-41720	K0110-01A7	2
195-57-41760	K0110-01A2	37
195-57-41760	K0110-01A4	37
195-57-41760	K0110-01A7	37
195-57-43510	K0110-01A2	1
195-57-43510	K0110-01A7	1
195-57-43610	K0110-01A4	1
195-57-45501	K0110-01A2	1
195-57-45501	K0110-01A7	1
195-57-45601	K0110-01A4	1
195-911-8160	K2210-51B1	49
195-911-8180	K2210-51B1	50
195-979-4390	K0710-01A1	10
195-979-4390	K0710-04A0	7
195-979-4841	B0730-01A1	3
195-979-4841	B0730-01A1	7
195-979-4841	K0710-01A1	11
195-979-4841	K0710-04A0	8
195-979-5190	B0000-02A0	19
195-979-5190	B0000-04A0	13
195-979-5190	B0000-05A0	12
195-979-5190	K2210-07B1	1
195-979-8590	K2100-14B0	2
195-Z11-4510	K0210-02A0	6
195-Z11-4520	K0210-02A0	6
195-Z11-5560	K2210-53A1	8

PARTS Nº	FIG. Nº	INDEX
198-43-18170	K2110-08B0	13
198-43-41940	K2110-08B0	17
198-43-41940	K2241-01A0	28
198-61-14180	F2730-02A0	3
198-61-14180	H2220-01A0	7
198-911-7340	K0890-01A0	8
198-Z11-2260	K0210-04A0	6A
198-Z11-3710	K0210-02A0	11
19M-54-36470	K2500-01A0	11
19M-54-38570	K2500-01A0	10
201-30-52280	R0120-01A0	10
201-60-12171	H0100-01A0	5
201-62-15340	H2220-01A0	2
201-62-15340	H2230-01A0	2
201-62-71810	H2210-01A0	2
202-62-21430	F2300-08A0	13
203-01-51120	B0600-01A0	12
203-04-31230	D0200-01A0	4
203-06-51150	E0110-01A3	1
203-30-42260	R0120-01A0	7
203-30-52190	RO110-01A0	3
203-43-56450	K0210-01A0	13
203-43-56450	K2212-01A0	3
203-54-32260	M2110-01A0	27
203-54-32260	M2110-01A1	32
203-54-63230	V0300-01A1	11
203-62-21740	F2300-08A0	16
203-62-21740	T2110-01A0	22
203-62-57910	F2300-07A0	21
203-62-57910	F2300-08A0	4
203-62-57920	F2300-07A0	22
203-62-57920	F2300-08A0	5
203-62-57930	F2300-07A0	23
203-62-57930	F2300-08A0	6
203-62-57940	F2300-07A0	24
203-62-57940	F2300-08A0	7
203-62-57950	F2300-07A0	25
203-62-57950	F2300-08A0	8
203-62-57960	F2300-07A0	26
203-62-57960	F2300-08A0	9
203-70-56570	F2300-08A0	14
205-06-61220	K0210-07A0	14
205-06-71480	K0210-06A0	10
205-32-51121	R0500-01A8	14
205-32-51121	R0500-O1A7	14
205-32-51121	RO500-01B1	14
205-32-51121	Y0320-01A0	1
205-43-51470	K2400-02A0	9
205-43-72890	F2300-11A0	29
205-43-72920	K2110-06B0	1

PARTS Nº	FIG. Nº	INDEX
205-43-72920	K2241-01A0	22
205-43-72920	K2241-01A0	31
205-43-72920	K2241-01A0	34
205-54-51250	K0210-09A0	1
205-54-53470	M2140-02A0	14
205-54-53470	M2140-02A1	14
205-54-53470	M2140-02A2	24
205-54-53550	M2140-04A0	14
205-54-76410	M2140-03A0	16
205-54-76410	M2140-03A2	22
205-60-51460	H0100-01A0	6
205-60-71220	W2112-01A0	15
205-979-6460	K0710-01A0	8
205-979-6460	K2210-01B1	2
205-979-6460	K2210-01B2	2
208-01-11181	T2110-01A0	19
20B-54-12210	M2110-01A0	21
20B-54-12210	M2110-01A1	26
20D-68-11670	D0100-01A0	6
20G-54-13420	K0210-09A0	5
20N-60-11142	H0100-01A0	3
20N-60-11143	H0100-01A0	3
20N-60-11181	H0100-01A0	3
20R-54-11460	W2112-01A0	7
20T-06-71410	K0210-06A0	16
20T-06-71560	K2100-13B0	16
20T-06-81230	K2100-13B0	15
20T-43-71190	K2110-03B0	2
20T-43-71190	K2110-08B0	22
20T-62-56510	F2300-06A0	16
20U-62-11760	H0310-02A0	5
20Y-04-21580	D0100-01A0	6C
20Y-30-16330	R0300-01A0	12
20Y-54-13180	K0210-04A0	23
20Y-54-14360	K0210-03A0	2
20Y-54-18690	K0210-05A0	7
20Y-54-18690	K0210-05A0	17
20Y-60-21340	H0100-01A0	6
20Y-60-21470	H0100-01A0	4
20Y-970-1731	F2300-06A0	14
20Y-979-3120	K0710-01A0	12
21J-06-11570	E0210-01A0	6
21J-06-11570	E0210-01A1	6
21K-30-24130	R0120-01A0	4
21K-30-24141	R0120-01A0	3
21K-30-24142	R0120-01A0	3
21U-98-31150	U0400-01A0	3
21U-98-31160	U0400-01A0	2
21W-54-14690	E0310-01A0	6
21W-54-14690	E0310-02A0	6

PARTS Nº	FIG. Nº	INDEX
21W-62-11290	F2320-12A0	9
21X-06-31530	B0500-01A0	10
21X-06-31530	K2100-13B0	11
22U-04-21200	D0100-01A0	6A
22U-04-21210	D0100-01A0	6A
22U-04-21220	D0100-01A0	6B
22U-04-21231	D0100-01A0	3
22U-06-11270	B0500-01A0	10
22W-06-13160	K0210-06A0	12
22W-15-21290	F2320-01A0	11
22W-54-11470	M2210-06A0	3
22W-75-18880	F2320-09A0	28
22W-75-18890	F2320-09A0	29
23A-15-12910	F2320-01A0	21
23E-15-11270	F2320-02A0	12
23E-15-12241	F2320-02A0	1
23E-15-12441	F2320-02A0	4
23S-06-14990	K0210-02A0	14
23S-12-11330	B0600-01A0	13
23S-49-13103	F2730-01A0	22
23S-49-13110	F2730-01A0	22
23S-49-13122	F2730-01A0	23
23S-49-13122	V0100-01A0	2
23S-49-13132	F2730-01A0	24
23S-49-13132	V0100-01A0	3
281-01-13180	K2210-06B1	18
283-06-16190	K0210-06A0	11
287-15-15360	F2320-03A0	18
287-43-13270	E0300-01A0	9
2991-01-4160	RO300-01A0	12
361-54-21150	K0210-04A0	25
361-54-21150	K0210-04A0	29
362-06-21140	K0210-02A0	15
362-15-12810	F2320-03A0	39
362-15-12810	F2320-04A0	7
362-43-34150	F2300-12A0	14
362-54-17320	U0100-01A7	30
362-54-17320	U0100-01A8	30
362-54-17320	U0100-01A9	30
362-54-17320	U0100-01B0	30
362-54-17320	U0100-01B1	30
363-15-15340	F2320-09A0	17
363-15-15470	F2320-09A0	5
363-15-15530	F2320-09A0	22
415-06-22100	E0420-01A0	1
417-03-10230	C0100-02A0	19
419-15-14710	F2300-07A0	44
419-15-18230	F2320-06A0	3
421-07-11550	D0200-01A0	9A
421-54-11381	M2140-02A0	3

PARTS Nº	FIG. Nº	INDEX
421-54-11381	M2140-02A0	6
421-54-11381	M2140-02A1	3
421-54-11381	M2140-02A1	6
421-54-11381	M2140-02A2	3
421-54-11381	M2140-02A2	11
421-54-11381	M2210-01A0	11
421-54-11381	M2210-01A1	11
421-54-11381	M2210-02A0	12
421-54-11381	M2210-02A1	12
421-54-11381	M2210-02A2	12
421-54-11381	M2210-02A3	12
421-54-11381	M2240-01A0	3
421-54-11381	M2240-01A2	3
423-15-19431	F2300-02A0	6
42C-07-11210	K0710-01A0	13
42C-07-11210	K0710-51A0	1
560-22-14250	M2140-04A0	17
565-06-13212	B0000-06A0	2
565-62-11270	F2300-14A0	12
566-07-41440	K0710-02A0	26
566-35-42430	H0120-01A0	5
567-07-15221	K0710-01A1	4
567-07-15221	K0710-04A0	1
569-13-46620	F2320-06A0	12
569-15-36480	F2320-11A0	14
581-43-11870	F2300-11A0	44
581-43-11870	K2110-10B0	14
581-43-11870	K2241-01A0	23
581-95-19870	K2100-13B0	27
600-181-2130	B0000-03A0	2
600-181-2630	B0000-03A0	1
600-181-3850	B0000-03A1	1
600-181-6590	B0000-02A0	8
600-181-6740	B0000-02A0	2
600-181-6820	B0000-02A0	2
600-181-6840	B0000-02A0	4
600-181-6850	B0000-02A0	3
600-181-7511	B0000-02A0	7
600-181-9671	B0000-02A0	6
600-311-9490	D0210-51A1	7
600-311-9700	D0210-01A1	17
600-311-9732	D0210-51A1	1
600-311-9760	D0210-51A1	5
600-311-9912	D0210-51A1	1
600-311-9921	D0210-51A1	4
600-311-9931	D0210-51A1	11
600-311-9941	D0210-51A1	8
600-311-9950	D0210-51A1	6
600-311-9961	D0210-51A1	9
600-311-9971	D0210-51A1	10

PARTS Nº	FIG. Nº	INDEX
600-411-1120	B0000-21A0	1
600-614-2581	B0000-14A1	1
600-623-8580	B0000-14A2	1
600-623-8580	BO000-14A0	1
600-815-2170	B0000-01A0	1
600-815-7550	B0000-13A0	1
600-863-5110	B0000-18A1	1
600-863-5110	B0000-18A2	1
6110-23-6490	B0000-20A0	3
6110-73-6231	D0210-51A1	2
6110-83-7590	B0000-03A0	4
6130-12-8610	B0000-07A0	3
6131-11-4520	B0000-02A0	14
6150-51-5480	K2100-13B0	23
6152-12-4490	B0000-02A0	13
6204-71-5730	D0210-01A1	19
6204-81-9640	B0000-13A0	7
6205-11-5960	B0000-05A0	7
6207-11-5380	B0000-05A0	6
6212-11-4840	B0000-02A0	12
6212-61-6950	D0210-01A0	4
6212-61-6950	D0210-01A1	4
6215-81-9710	B0000-11A0	3
6301-11-4630	B0000-20A0	2
6643-11-4620	B0000-02A0	15
6643-11-4630	B0000-02A0	16
6643-11-4641	B0000-02A0	17
6672-82-7510	B0000-03A0	3
6672-82-7550	B0000-03A0	1
6731-21-1210	A2010-A0A1	9
6731-21-1260	A2010-A0A1	4
6731-21-3250	A4050-A0A1	13
6731-21-6231	A2210-A0A1	11
6731-21-8610	A2310-A0A1	5
6731-21-8620	A2310-A0A1	5
6731-26-8310	A2310-A0A1	5
6731-26-8410	A2310-A0A1	5
6731-27-8310	A2310-A0A1	5
6731-28-8310	A2310-A0A1	5
6731-28-8410	A2310-A0A1	5
6731-29-8310	A2310-A0A1	5
6731-38-2210	A2350-A0A1	5
6731-41-5270	A2410-A0A1	4
6731-41-5270	A2410-A0A1	8
6731-51-1111	A3010-A0A1	1
6731-51-8150	A1530-A0A1	15
6731-51-8170	A1530-A0A1	3
6731-51-8190	A1530-A0A1	6
6731-51-8220	A1530-A0A1	4
6731-61-1370	A5010-A0A1	3
6731-61-2151	A3310-A0A1	2
6731-61-4141	A5080-A0A1	4
6731-71-3111	A4050-A0A1	12
6731-71-3350	A4050-A0A1	7
6731-71-5860	A4050-A0A1	4
6731-71-5880	A4180-A0A1	10
6731-71-6550	A4170-A0A1	4
6731-81-6360	A5080-A0A1	1
6732-11-1170	A1010-A0A1	17
6732-11-1180	A1010-A0A1	16
6732-11-1610	A1010-A0A1	13
6732-11-1620	A1010-A0A1	14
6732-11-1640	A2410-A0A1	14
6732-11-1720	A1050-A0A1	2
6732-11-1910	A1010-A0A1	4
6732-11-1910	A1310-A0A1	12
6732-11-1910	A2010-A0A1	13
6732-11-1910	A5030-A0A1	1
6732-11-1920	A1010-A0A1	12
6732-11-1920	A2010-A0A1	19
6732-11-1920	A2210-A0A1	1
6732-11-1920	A5030-A0A1	2
6732-11-1930	A1010-A0A1	3
6732-11-1930	A3310-A0A1	4
6732-11-4150	A1310-A0A1	13
6732-11-4160	A1310-A0A1	10
6732-11-4811	A1310-A0A1	2
6732-11-8130	A1110-A0A1	2
6732-11-8150	A1110-A0A1	7
6732-11-8160	A1110-A0A1	4
6732-11-8181	A1110-A0A1	5
6732-11-8181	V0100-01A2	4
6732-11-8181	V0100-01A3	4
6732-11-8210	A1110-A0A1	6
6732-11-8620	A111V-A0A1	2
6732-21-1190	A2010-A0A1	10
6732-21-1310	A2210-A0A1	12
6732-21-1411	A2010-A0A1	2
6732-21-1611	A2010-A0A1	3
6732-21-1810	A2010-A0A1	7
6732-21-1820	A2010-A0A1	6
6732-21-1910	A2010-A0A1	8
6732-21-1910	A2010-A0A1	16
6732-21-1930	A2010-A0A1	23
6732-21-1960	A2010-A0A1	14
6732-21-3120	A2010-A0A1	22
6732-21-3120	A2060-A0A1	3
6732-21-3120	A4030-A0A1	26
6732-21-3140	A2040-A0A1	8
6732-21-3150	A2040-A0A1	9
6732-21-3160	A2040-A0A1	10
6732-21-3180	A2040-A0A1	6
6732-21-3190	A2040-A0A1	18
6732-21-3220	A2040-A0A1	19
6732-21-3511	A2040-A0A1	13
6732-21-3811	A2040-A0A1	1
6732-21-3870	A2040-A0A1	7
6732-21-3880	A2040-A0A1	5
6732-21-4130	A2210-A0A1	6
6732-21-4150	A2210-A0A1	8
6732-21-4160	A2210-A0A1	9
6732-21-4170	A2210-A0A1	13
6732-21-4180	A2210-A0A1	14
6732-21-4200	A2210-A0A1	11
6732-21-4220	A2210-A0A1	10
6732-21-5160	A2110-A0A1	6
6732-21-5160	A4170-A0A1	1
6732-21-5160	A5080-A0A1	3
6732-21-5160	A6010-A0A1	5
6732-21-5180	A2110-A0A1	7
6732-21-5190	A2110-A0A1	3
6732-21-5210	A2110-A0A1	2
6732-21-5530	A2010-A0A1	17
6732-21-5660	A2110-A0A1	8
6732-21-6120	A2010-A0A1	12
6732-21-6130	A2010-A0A1	11
6732-21-6140	A2010-A0A1	9
6732-21-6150	A2310-A0A1	3
6732-21-6160	A2010-A0A1	18
6732-21-6160	A2070-A0A1	1
6732-21-6280	A2060-A0A1	4
6732-21-6280	A4030-A0A1	25
6732-21-7350	A111V-A0A1	7
6732-21-8180	A2310-A0A1	5
6732-21-9310	A2040-A0A1	16
6732-31-2300	A2350-A0A1	6
6732-31-2420	A2350-A0A1	7
6732-31-2420	A2350-A0A1	7
6732-31-2420	A2350-A0A1	7
6732-31-3111	A2350-A0A1	1
6732-31-3131	A2350-A0A1	3
6732-31-3310	A2350-A0A1	2
6732-31-3410	A2350-A0A1	4
6732-31-4120	A2250-A0A1	5
6732-31-4140	A2250-A0A1	4
6732-31-4180	A2250-A0A1	3
6732-31-8120	A2330-A0A1	2
6732-38-2300	A2350-A0A1	6
6732-39-2300	A2350-A0A1	6
6732-41-1220	A2510-A0A1	5

PARTS Nº	FIG. Nº	INDEX
6732-41-1231	A2510-A0A1	3
6732-41-1260	A2510-A0A1	4
6732-41-1280	A2510-A0A1	2
6732-41-2110	A2510-A0A1	6
6732-41-3111	A2410-A0A1	15
6732-41-4430	A1010-A0A1	9
6732-41-4510	A1010-A0A1	10
6732-41-4520	A1010-A0A1	6
6732-41-4520	A1010-A0A1	8
6732-41-4540	A1010-A0A1	11
6732-41-5120	A2410-A0A1	1
6732-41-5130	A2410-A0A1	2
6732-41-5160	A2410-A0A1	11
6732-41-5170	A2410-A0A1	12
6732-41-5180	A2410-A0A1	13
6732-41-5200	A2410-A0A1	3
6732-41-5210	A2410-A0A1	3
6732-41-5400	A2410-A0A1	7
6732-41-5410	A2410-A0A1	7
6732-41-5440	A2410-A0A1	6
6732-41-5440	A2410-A0A1	10
6732-41-6210	A2110-B0A1	6
6732-51-4420	A3310-A0A1	10
6732-51-4431	A3310-A0A1	8
6732-51-5130	A111V-A0A1	8
6732-51-5130	A2040-A0A1	17
6732-61-1610	A1730-A0A1	5
6732-61-1610	A1730-A0A1	5
6732-61-2311	A3310-A0A1	12
6732-61-3130	A5060-A0A1	8
6732-61-3140	A4050-A0A1	10
6732-61-3220	A5060-A0A1	1
6732-61-3320	A5060-A0A1	1
6732-61-3410	A5060-A0A1	5
6732-61-3420	A5060-A0A1	4
6732-61-3430	A5060-A0A1	6
6732-61-3440	A5060-A0A1	3
6732-61-3450	A5060-A0A1	2
6732-61-3610	B0000-14A2	3
6732-61-3610	BO000-14A0	3
6732-61-3770	A5060-A0A1	8
6732-61-4120	A5080-A0A1	5
6732-61-4220	A5080-A0A1	2
6732-61-6120	A5030-A0A1	4
6732-61-6130	A5030-A0A1	5
6732-61-6140	A1730-A0A1	3
6732-61-6140	A3310-A0A1	1
6732-61-6180	A1730-A0A1	2
6732-61-6420	A1730-A0A1	6
6732-61-6420	A1730-A0A1	6
6732-71-3220	A1530-A0A1	2
6732-71-3220	A4050-A0A1	9
6732-71-3220	A6010-A0A1	6
6732-71-5620	A4180-A0A1	11
6732-71-5690	A4030-A0A1	23
6732-71-5890	A4030-A0A1	24
6732-71-6111	A4180-A0A1	5
6732-71-6111	V0100-01A2	2
6732-71-6111	V0100-01A3	2
6732-71-6230	A4030-A0A1	20
6732-71-6240	A4030-A0A1	21
6732-71-6510	A4180-A0A1	7
6732-71-6520	A4170-A0A1	2
6732-71-6540	A4170-A0A1	3
6732-71-6650	A4180-A0A1	2
6732-81-3170	B0000-11A0	2
6732-81-3330	A5080-A0A1	6
6732-81-3330	V0100-01A3	3
6732-81-3510	A5080-A0A1	6
6732-81-3510	V0100-01A2	3
6732-81-5120	A1310-A0A1	3
6732-81-8220	A1530-A0A1	16
6732-81-8810	A1530-A0A1	11
6732-81-8820	A1530-A0A1	12
6732-81-8830	A1530-A0A1	13
6732-91-1550	A5060-A0A1	10
6733-21-5521	A2110-A0A1	9
6734-21-5110	A2110-A0A1	1
6734-21-5320	A2110-B0A1	4
6734-21-5570	A2110-A0A1	5
6734-21-6210	A2060-A0A1	1
6734-21-8610	A6010-A0A1	8
6734-61-3610	A5060-A0A1	8
6734-71-5310	A2350-A0A1	27
6734-71-5520	A4030-A0A1	14
6734-71-5530	A4030-A0A1	5
6734-71-5710	A4030-A0A1	6
6734-71-5720	A4030-A0A1	7
6734-71-5720	A4030-A0A1	17
6734-71-5740	A4030-A0A1	9
6734-71-6550	A4050-A0A1	8
6734-81-6410	A5080-A0A1	6
6734-81-6410	V0100-01A3	3
6735-01-8110	A1530-A0A1	14
6735-01-8110	A1530-B0A1	1
6735-11-1102	A1010-A0A1	1
6735-11-1821	A1010-A0A1	15
6735-11-1830	A1010-A0A1	16
6735-11-1910	A1730-A0A1	4
6735-11-3110	A4210-A0A1	1
6735-11-4110	A1310-A0A1	1
6735-11-4150	A1310-A0A1	5
6735-11-4340	A1310-A0A1	11
6735-11-4420	A1310-A0A1	9
6735-11-4811	A1310-A0A1	8
6735-11-5210	A1310-A0A1	6
6735-11-8110	A1110-A0A1	1
6735-11-8120	A1110-A0A1	3
6735-19-1820	A1010-A0A1	15
6735-21-1910	A2010-A0A1	20
6735-21-1940	A2010-A0A1	21
6735-21-3122	A2040-A0A1	2
6735-21-3140	A2040-A0A1	12
6735-21-3180	A2040-A0A1	6
6735-21-4120	A2210-A0A1	4
6735-21-4150	A2210-A0A1	2
6735-21-4160	A2210-A0A1	3
6735-21-4170	A2210-A0A1	2
6735-21-4190	A2210-A0A1	15
6735-21-4230	A2210-A0A1	16
6735-21-4250	A2210-A0A1	17
6735-21-4280	A2210-A0A1	5
6735-21-5530	A2010-A0A1	15
6735-21-5670	A2110-A0A1	11
6735-21-5690	A2110-B0A1	2
6735-21-5720	A2110-B0A1	1
6735-21-6261	A2060-A0A1	2
6735-21-7260	A111V-A0A1	9
6735-21-7270	A111V-A0A1	1
6735-21-7290	A111V-A0A1	4
6735-21-8100	A2310-A0A1	5
6735-31-2110	A2350-A0A1	5
6735-31-2140	A2350-A0A1	5
6735-31-8110	A2330-A0A1	1
6735-38-2120	A2350-A0A1	5
6735-38-2130	A2350-A0A1	5
6735-39-2210	A2350-A0A1	5
6735-41-1111	A2510-A0A1	1
6735-41-5550	A2410-A0A1	5
6735-41-5550	A2410-A0A1	9
6735-51-1120	A3010-A0A1	2
6735-51-4110	A111V-A0A1	6
6735-51-5141	A3310-A0A1	13
6735-51-5141	V0100-01A2	1
6735-51-5141	V0100-01A3	1
6735-51-8130	A1530-A0A1	9
6735-51-8160	A1530-A0A1	5
6735-61-1102	A5010-A0A1	1
6735-61-2110	A3310-A0A1	7
6735-61-2140	A3310-A0A1	9

PARTS Nº	FIG. Nº	INDEX
6735-61-2160	A3310-A0A1	11
6735-61-2190	A3310-A0A1	3
6735-61-2260	A3310-A0A1	5
6735-61-3170	A5060-A0A1	9
6735-61-3810	A5060-A0A1	7
6735-61-6110	A5030-A0A1	3
6735-61-6410	A1730-A0A1	1
6735-71-1560	A4010-A0A1	1
6735-71-3110	A4050-A0A1	11
6735-71-3740	A4050-A0A1	3
6735-71-3760	A4050-A0A1	2
6735-71-5220	A4050-A0A1	6
6735-71-5260	A4050-A0A1	1
6735-71-5310	A4030-A0A1	1
6735-71-5320	A4030-A0A1	2
6735-71-5330	A4030-A0A1	3
6735-71-5340	A4030-A0A1	10
6735-71-5350	A4030-A0A1	11
6735-71-5360	A4030-A0A1	12
6735-71-5390	A4030-A0A1	19
6735-71-5550	A4030-A0A1	18
6735-71-5770	A4030-A0A1	22
6735-71-5820	A4030-A0A1	13
6735-71-5830	A4030-A0A1	8
6735-71-5840	A4030-A0A1	15
6735-71-5860	A4030-A0A1	16
6735-71-5990	A4030-A0A1	4
6735-81-3120	A1730-A0A1	5
6735-81-6110	A6010-A0A1	1
6735-81-6190	A6010-A0A1	7
6735-81-8100	A1530-B0A1	1
6735-81-8110	A1530-B0A1	1
6735-81-8360	A1530-A0A1	1
6735-81-8420	A1530-B0A1	18
6736-11-1150	A1010-A0A1	2
6736-11-1910	A1050-A0A1	1
6736-11-5820	A1310-A0A1	7
6736-18-1310	A1010-A0A1	20
6736-19-1310	A1010-A0A1	18
6736-19-1410	A1010-A0A1	19
6736-21-1270	A2010-A0A1	2
6736-21-1810	A2010-A0A1	5
6736-21-3210	A2040-A0A1	3
6736-21-3220	A2040-A0A1	4
6736-21-3310	A2040-A0A1	12
6736-21-3380	A2040-A0A1	15
6736-21-5310	A2110-A0A1	4
6736-21-5310	A2110-B0A1	5
6736-23-5630	A2110-A0A1	10
6736-26-8100	A2310-A0A1	5
6736-27-8100	A2310-A0A1	5
6736-28-8100	A2310-A0A1	5
6736-29-1410	A2010-A0A1	3
6736-29-1420	A2010-A0A1	3
6736-29-2110	A2010-A0A1	24
6736-29-8100	A2310-A0A1	5
6736-31-1100	A2310-A0A1	2
6736-31-1211	A2310-A0A1	2
6736-31-2420	A2350-A0A1	8
6736-39-1120	A2310-A0A1	8
6736-39-1220	A2310-A0A1	7
6736-41-4110	A1010-A0A1	5
6736-41-4210	A1010-A0A1	6
6736-41-5110	A2410-A0A1	1
6736-51-8140	A1530-A0A1	7
6736-51-8140	A1530-B0A1	28
6736-51-8710	A1530-A0A1	8
6736-51-8710	A1530-B0A1	27
6736-51-8730	A1530-A0A1	10
6736-51-8740	A1530-A0A1	7
6736-61-1202	A5010-A0A1	1
6736-61-1520	A5010-A0A1	2
6736-61-5110	A111V-A0A1	3
6736-61-5170	A3310-A0A1	5
6736-61-5180	A3310-A0A1	6
6736-71-5781	A4170-A0A1	5
6736-81-1810	A1310-A0A1	4
6736-81-4820	A6210-A0A1	3
6736-81-6170	A4050-A0A1	5
6736-81-8210	A1530-B0A1	1
6736-81-8220	A1530-B0A1	2
6736-81-8230	A1530-B0A1	3
6736-81-8250	A1530-B0A1	4
6736-81-8260	A1530-B0A1	5
6736-81-8270	A1530-B0A1	6
6736-81-8280	A1530-B0A1	7
6736-81-8310	A1530-B0A1	8
6736-81-8320	A1530-B0A1	9
6736-81-8330	A1530-B0A1	10
6736-81-8340	A1530-B0A1	11
6736-81-8350	A1530-B0A1	12
6736-81-8360	A1530-B0A1	13
6736-81-8370	A1530-B0A1	14
6736-81-8380	A1530-B0A1	15
6736-81-8390	A1530-B0A1	16
6736-81-8410	A1530-B0A1	17
6736-81-8430	A1530-B0A1	19
6736-81-8440	A1530-B0A1	20
6736-81-8450	A1530-B0A1	21
6736-81-8460	A1530-B0A1	22
6736-81-8470	A1530-B0A1	23
6736-81-8480	A1530-B0A1	24
6736-81-8490	A1530-B0A1	25
6736-81-8510	A1530-B0A1	26
6737-32-3101	A2350-A0A1	1
6742-01-0540	A2040-A0A1	14
6742-01-5157	A4180-A0A1	6
6742-01-5158	A2210-A0A1	7
6742-01-5320	A2110-B0A1	3
6742-01-5380	A111V-A0A1	5
700-21-11210	Y1663-02A0	27
700-22-11291	Y1663-02A0	10
700-22-11311	Y1663-02A0	12
700-22-11321	Y1663-02A0	11
700-22-11410	Y1663-04AO	9
700-22-11510	Y1663-02A0	21
700-22-11520	Y1663-02A0	20
700-22-11610	Y1663-02A0	29
700-22-12250	Y1663-02A0	22
700-22-12270	Y1663-02A0	28
700-22-12440	Y1663-02A0	23
700-22-12480	Y1663-02A0	24
700-80-61260	Y1663-02A0	15
700-80-64220	Y1663-04AO	10
700-84-11172	Y1663-01A0	11
700-84-11660	K2400-02A0	8
700-84-11730	Y1663-02A0	25
702-16-05013	K2110-15B0	1
702-16-05013	Y1670-01A0	1
702-16-51140	Y1670-01A0	5
702-16-51270	Y1670-01A0	11
702-16-53140	Y1670-01A0	8
702-16-53160	Y1670-01A0	6
702-16-53470	Y1670-01A0	7
702-16-53761	Y1670-01A0	15
702-16-53910	Y1670-01A0	18
702-16-53920	Y1670-01A0	19
702-16-54170	Y1670-01A0	13
702-16-55240	Y1670-01A0	4
702-16-55260	Y1670-01A0	27
702-16-55270	Y1670-01A0	28
702-16-55330	Y1670-01A0	33
702-16-55360	Y1670-01A0	10
702-16-55371	Y1670-01A0	9
702-16-55382	Y1670-01A0	24
702-16-56740	Y1670-01A0	30
702-16-57370	Y1670-01A0	33
705-12-29630	Y1600-02A1	1
705-12-31210	Y1600-01A1	1
705-17-02022	Y1600-01A1	1

PARTS Nº	FIG. Nº	INDEX
705-17-02122	Y1600-02A1	3
705-17-02221	Y1600-01A1	3
705-17-02310	Y1600-02A1	15
705-17-02353	Y1600-01A1	1
705-17-02353	Y1600-01A1	3
705-17-02353	Y1600-02A1	1
705-17-02353	Y1600-02A1	3
705-17-02374	Y1600-02A1	18
705-17-02381	Y1600-01A1	9
705-17-02381	Y1600-02A1	9
705-17-02440	Y1600-01A1	7
705-17-02440	Y1600-02A1	7
705-17-02472	Y1600-01A1	8
705-17-02472	Y1600-02A1	8
705-17-02480	Y1600-02A1	17
705-17-02540	Y1600-02A1	1
705-17-02612	Y1600-01A1	6
705-17-02612	Y1600-02A1	6
705-17-02730	Y1600-02A1	11
705-17-02770	Y1600-01A1	11
705-17-02810	Y1600-01A1	14
705-17-02850	Y1600-02A1	14
705-17-02870	Y1600-01A1	13
705-17-02870	Y1600-02A1	13
705-17-29012	Y1600-02A1	2
705-17-29452	Y1600-02A1	4
705-17-29512	Y1600-02A1	5
705-17-31010	Y1600-01A1	2
705-17-31430	Y1600-01A1	4
705-17-31510	Y1600-01A1	5
705-52-21070	F2300-05A0	1
705-52-21070	Y1600-01A1	1
705-52-21070	Y1600-02A1	1
706-73-71450	Y1663-03A0	32
707-29-10420	Y1620-01A0	4
707-29-11730	Y1620-31A0	2
707-29-13730	Y1620-21A0	2
707-29-13730	Y1620-21A1	2
707-35-52360	Y0100-01A0	4
707-35-52360	Y1620-01A0	10
707-36-10630	Y1620-01A0	15
707-36-11100	Y1620-31A0	14
707-36-13140	Y1620-21A0	14
707-36-13140	Y1620-21A1	16
707-39-10510	Y0100-01A0	4
707-39-10510	Y1620-01A0	17
707-44-10280	Y0100-01A0	4
707-44-10280	Y1620-01A0	16
707-44-11180	Y0100-01A0	5
707-44-11180	Y1620-31A0	15
707-44-12180	Y0100-01A0	7
707-44-13070	Y0100-01A0	6
707-44-13070	Y1620-21A0	15
707-44-13070	Y1620-21A1	17
707-51-50211	Y0100-01A0	4
707-51-50211	Y1620-01A0	6
707-51-55211	Y0100-01A0	5
707-51-55211	Y1620-31A0	4
707-51-60211	Y0100-01A0	7
707-51-65211	Y0100-01A0	6
707-51-65211	Y1620-21A0	4
707-51-65211	Y1620-21A1	4
707-52-10660	Y1620-21A0	3
707-52-10660	Y1620-21A1	3
707-56-55510	Y0100-01A0	5
707-56-55510	Y1620-31A0	8
707-81-65420	Y1620-21A1	14
707-98-32820	Y0100-01A0	4
707-98-32820	Y1620-01A0	K
707-98-34590	Y0100-01A0	5
707-98-34590	Y1620-31A0	K
707-98-41130	Y0100-01A0	7
707-98-42420	Y0100-01A0	6
707-98-42420	Y1620-21A0	K
707-98-42420	Y1620-21A1	K
708-18-12140	F2380-01A0	32
708-18-12140	F2380-02A0	32
708-21-12541	Y1663-03A0	44
708-8E-16160	Y1663-03A0	30
708-8F-11260	M2210-03A0	3
708-8F-11260	M2210-03A0	7
709-25-11290	Y1663-02A0	7
709-25-11390	Y1663-04AO	30
709-70-71610	Y1663-03A0	3
709-70-74600	Y1663-04AO	18
714-12-19520	F2300-02A0	20
720-68-15240	Y1670-01A0	16
723-20-60300	Y1663-04AO	1
723-20-80100	Y1663-04AO	34
723-23-10302	H0120-01A0	15
723-23-10302	Y1663-01A0	1
723-23-10302	Y1663-02A0	1
723-23-10302	Y1663-03A0	1
723-23-10302	Y1663-04AO	1
723-23-10303	H0120-01A0	15
723-23-10303	Y1663-01A0	1
723-23-10303	Y1663-02A0	1
723-23-10303	Y1663-03A0	1
723-23-10303	Y1663-04AO	1
723-26-14150	Y1663-03A0	24
723-26-14170	Y1663-02A0	26
723-26-14180	Y1663-03A0	2
723-26-14190	Y1663-03A0	6
723-26-14220	Y1663-03A0	21
723-26-14230	Y1663-03A0	20
723-26-14240	Y1663-03A0	22
723-26-14450	Y1663-02A0	14
723-26-15190	Y1663-03A0	34
723-26-15210	Y1663-03A0	23
723-26-15220	Y1663-03A0	25
723-26-15230	Y1663-03A0	12
723-26-15310	Y1663-03A0	27
723-26-15370	Y1663-03A0	14
723-26-15410	Y1663-02A0	16
723-26-15420	Y1663-02A0	13
723-26-15480	Y1663-02A0	4
723-26-15770	Y1663-02A0	17
723-26-15780	Y1663-02A0	18
723-26-15790	Y1663-02A0	19
723-26-15810	Y1663-02A0	9
723-26-15820	Y1663-02A0	8
723-26-15830	Y1663-01A0	7
723-26-15840	Y1663-01A0	8
723-26-15880	Y1663-02A0	4A
723-26-21710	Y1663-01A0	5
723-40-56130	Y1663-03A0	10
7815-11-1010	K2210-54A0	6
7831-68-1000	K2210-01A0	18
7831-68-1000	K2210-06B1	1
7831-68-1100	K2210-54A0	1
7831-68-1300	K2210-54A0	2
7831-68-1400	K2210-54A0	3
7831-68-1510	K2210-54A0	4
7831-68-1610	K2210-54A0	5
7861-01-1320	K2210-54A0	7
7861-93-3320	B0000-06A0	1
7861-93-3320	E0200-02A0	1
7861-93-4940	D0100-01A0	7
ND017264-7040	K2210-51B1	21
ND017451-0500	K2210-51B1	25
ND017451-0510	K2210-51B1	26
ND028062-0130	B0000-18A2	29
ND028062-5790	B0000-18A2	43
ND028063-0030	B0000-18A2	28
ND028065-0250	B0000-18A2	20
ND028099-3270	B0000-18A2	5
ND028099-5090	B0000-18A2	13
ND028099-5100	B0000-18A2	14
ND028100-5410	B0000-18A2	1
ND028200-5250	B0000-18A2	2

PARTS Nº	FIG. Nº	INDEX
ND028300-6551	B0000-18A2	5
ND028300-6751	B0000-18A2	6
ND028306-0070	B0000-18A2	27
ND028327-0171	B0000-18A2	35
ND028371-3200	B0000-18A2	38
ND028371-3210	B0000-18A2	26
ND028381-0071	B0000-18A2	10
ND028501-7711	B0000-18A2	23
ND028510-0880	B0000-18A2	21
ND028520-0011	B0000-18A2	22
ND028530-1090	B0000-18A2	40
ND028530-1100	B0000-18A2	41
ND028901-0361	B0000-18A2	37
ND040016-4780	K2210-53A1	14
ND040055-2890	K2210-53A1	11
ND047310-7240	K0710-51A0	3
ND047350-7130	K0710-51A0	4
ND047372-0660	K0710-51A0	7
ND053404-0240	B0000-18A2	16
ND053480-7560	B0000-18A2	18
ND053505-0290	B0000-18A2	17
ND053660-0443	B0000-18A2	15
ND113550-0650	K2210-51B1	29
ND113600-8321	K2210-51B1	19
ND113622-0220	K2210-51B1	36
ND116420-3970	K2210-51B1	18
ND116632-0171	K2210-53A1	9
ND128401-5621	B0000-18A2	11
ND140240-0651	K2210-53A1	1
ND140240-1090	K2210-53A1	2
ND145460-8150	K2210-53A1	15
ND145460-9391	K2210-51B1	31
ND145460-9400	K2210-51B1	47
ND145460-9410	K2210-51B1	48
ND145461-7530	K2210-53A1	16
ND145511-0040	K2210-51B1	6
ND146421-9060	K2210-51B1	37
ND146639-7250	K2210-51B1	7
ND146640-6860	K2210-51B1	28
ND146668-4880	K2210-51B1	46
ND146690-5360	K2210-51B1	41
ND146691-2790	K2210-51B1	38
ND146691-4470	K0710-51A0	15
ND146780-2610	K2210-51B1	17
ND146780-9270	K2210-51B1	16
ND146810-8810	K2210-53A1	10
ND153400-2600	B0000-18A2	12
ND245420-3551	K2210-51B1	39
ND245420-7242	K2210-51B1	1
ND245420-7250	K2210-51B1	15
ND245450-0620	K2210-51B1	33
ND245450-0630	K2210-51B1	34
ND245450-0640	K2210-51B1	42
ND246680-2810	K2210-51B1	8
ND246781-0060	K2210-51B1	27
ND292500-0140	K2210-53A1	3
ND443440-0030	K2210-51B1	12
ND446870-9880	K2210-51B1	9
ND446880-9140	K2210-51B1	10
ND447200-0240	K0710-51A0	1
ND447300-1440	K0710-51A0	2
ND447410-0020	K0710-51A0	5
ND447500-0180	K2210-51B1	5
ND447600-6200	K2210-51B1	2
ND447600-6240	K2210-51B1	3
ND7052-200450	K2210-51B1	20
ND90100-06161	K2210-53A1	17
ND90170-10061	B0000-18A2	44
ND90200-06241	B0000-18A2	46
ND90258-10001	B0000-18A2	36
ND90801-10050	B0000-18A2	31
ND90801-20470	B0000-18A2	45
ND90930-05161	K2210-51B1	22
ND90940-04121	K2210-53A1	12
ND90940-05121	K2210-51B1	24
ND91310-05081	K0710-51A0	14
ND91370-04101	K2210-51B1	32
ND91478-08161	K2210-51B1	35
ND91570-06101	K2210-51B1	43
ND91570-06141	K2210-51B1	45
ND91570-06201	K2210-51B1	44
ND949001-1730	K2210-51B1	40
ND949001-2690	K2210-51B1	14
ND949006-4720	B0000-18A2	33
ND949007-6530	B0000-18A2	39
ND949007-6850	B0000-18A2	42
ND949011-7650	K2210-53A1	5
ND949013-7480	K0710-51A0	10
ND949013-7500	K0710-51A0	11
ND949013-7510	K0710-51A0	12
ND949042-3680	B0000-18A2	30
ND949042-3690	B0000-18A2	32
ND949047-2950	K0710-51A0	6
ND949047-4120	K2210-53A1	7
ND949047-4440	B0000-18A2	19
ND949048-0430	K0710-51A0	13
ND949056-2230	K2210-53A1	6
ND949056-4480	B0000-18A2	34
ND949070-0640	K0710-51A0	9
ND949070-0831	K0710-51A0	8
ND949100-1920	B0000-18A2	8
ND949100-3161	B0000-18A2	3
ND949100-3540	B0000-18A2	4
ND949100-4500	B0000-18A2	7
ND949100-5290	B0000-18A2	3
ND949120-0240	B0000-18A2	24
ND949142-0010	K2210-51B1	11
ND949142-0020	K2210-51B1	4
ND949142-0040	K2210-51B1	13
ND949170-4040	B0000-18A2	9
ND949170-4070	B0000-18A2	25
ND949351-0720	K2210-51B1	23
ND949351-0860	K2210-51B1	30

For future use, write your Komatsu machine and distributor information below:

Machine Serial Number:

Engine Serial Number:

Date Delivered:

Komatsu Distributor Name:

Address:

Phone Number:

Fax Number:

E-mail Address:

© All Right Reserved. April 14, 2004

Komatsu and its logo are the registered name and trademark of Komatsu Ltd., Japan