RUTHZIL TRATOR COMERCIAL DE PEÇAS LTDA 11 970836812 ROLANDO CITRANGULO

CATERPILLAR®

SEBP1767-03
December 1993

Parts Manual

D4C & D4C LGP Tractors
Power Shift

1RJ1-99999 (MACHINE)
2CJ1-99999 (MACHINE)
45V69350-99999 (ENGINE)
2RE1-99999 (TRANSMISSION)
3BE1-99999 (TRANSMISSION)
2YH1-99999 (BULLDOZER)
4GH1-99999 (BULLDOZER)
84U1-99999 (RIPPER)
9FA1-99999 (WINCH)

Powered by 3204 Engine

CATERPILLAR®

SEBP1767-03
December 1993

D4C & D4C LGP Tractors
Power Shift

1RJ1-99999 (MACHINE)
2CJ1-99999 (MACHINE)
45V69350-99999 (ENGINE)
2RE1-99999 (TRANSMISSION)
3BE1-99999 (TRANSMISSION)
2YH1-99999 (BULLDOZER)
4GH1-99999 (BULLDOZER)
84U1-99999 (RIPPER)
9FA1-99999 (WINCH)

© 1993 Caterpillar
All Rights Reserved
TECHNICAL INFORMATION DIVISION
MARKETING SUPPORT SERVICES

MACHINE IDENTIFICATION
Caterpillar machines are identified with SERIAL NUMBERS and/or PRODUCT IDENTIFICATION NUMBERS (PIN). These numbers are assigned to the chassis and to the engine. The chassis and the engine also carry ARRANGEMENT NUMBERS and in some cases MODIFICATION NUMBERS. These numbers are shown on the SERIAL NUMBER or PIN plates and on the MASTER PLATE in the operator's compartment.

Caterpillar dealers need all of these numbers to determine which components were included on the machine when it was assembled at the factory. This permits accurate identification of replacement part numbers.

ORDERING PARTS
Quality Caterpillar Replacement parts are available from Caterpillar dealers throughout the world. Their parts inventories are up to date and include all parts normally required to protect your investment in Caterpillar machines. Some dealers may offer repair kits, exchange components, or remanufactured parts to allow selection of the most effective repair alternative for a specific situation. When ordering parts, your order should specify the quantity, part number, part name, and the serial number. If in doubt about the part number, please provide your dealer with a complete description of the needed item.

HOW TO USE THE PARTS BOOK
Caterpillar Parts Books include illustrations of the groups or assemblies which make up the machine. These illustrations show the standard components and many of the attachments for each machine.

The alphabetical index located in the front part of the book should be used to determine the page number on which specific illustrations are shown. Reference to those pages will identify each of the individual serviceable parts. A numerical index listing each part number and the corresponding page number (s) appears in the back of the book.

Captions
The caption under each illustration identifies the part number and name of the group or assembly shown. Part numbers of groups are shown for reference purposes. Your Caterpillar dealer can assist you in identifying the availability of a complete group. If more than one illustration is included for any group, the caption identifies the specific machine serial numbers to which each illustration applies. In some cases it is not possible to determine the specific machine serial numbers to which different illustrations are applicable. In those cases the caption identifies the illustration as "TYPE 1", "TYPE 2", etc. Reference to the actual group or assembly is necessary in those cases to determine which illustration should be used. Captions provide additional information such as page numbers where illustrations of sub assemblies are shown, information regarding quantities used and other information intended to assist the user in determining parts needs.

Abbreviations and Symbols
O.D. Outside diameter
I.D. Inside diameter
A Not Part of This Group
B Use as Required
C Indicates Change
D Order by the Meter
E Order by the Centimeter
F Not Shown
G Order by the Inch
I See Hose Fabrication Guide
M Metric Part (Including Fasteners)
R Remfg Part May Be Available
X Major Component Exchange
Y Separate Illustration
Z Not Serviced Separately

Illustration Reference Letters
When necessary, illustrations contain reference letters (A, B, C etc.) that are intended to track lines and harnesses from one point to another. They are also used to show where to reconnect illustrations that have been separated.

Ref No
The numbers shown in this column refer to the numbers shown within the illustration. To identify any item within the illustration, first determine its reference number, then refer to the same number in the Ref. No. column for information about that part.

Part Number
These are numbers which are used to identify parts.

Qty
The quantities shown in this column indicate the total number of that item used in the group covered by the illustration.

Part Name
Information in this column provides the name of the part as well as additional information such as size, which further aids in the identification of the part.

Indented Part Names
Within each illustration is a parts list identifying each serviceable part in the illustration. When a part name is indented in this list, it means that serviceable item is a part of the serviceable item under which it is indented.

NOTE:
Continuing improvement and advancement of product design may cause changes to your machine which may not be included in this publication. Each publication is reviewed and revised, as required, to update and include these changes in later editions.

Whenever a question arises regarding your Caterpillar product, or this publication, please consult your Caterpillar dealer for the latest available information.

IDENTIFICATION DE LA MACHINE

Toutes les machines Caterpillar portent un NUMÉRO DE SÉRIE et un NUMÉRO D'IDENTIFICATION (PIN). Ces numéros s'appliquent au châssis et au moteur. Le châssis et le moteur peuvent également recevoir des NUMÉROS DE VERSION et, dans certains cas, de MODIFICATION. Ces numéros figurent sur les plaques de série ou d'identification et sur la plaque signalétique principale qui se trouve dans le poste de conduite.

Les concessionnaires Caterpillar doivent connaître tous ces numéros pour savoir quels composants ont été employés lors du montage en usine et trouver plus facilement le numéro des pièces de rechange.

COMMANDE DE PIÈCES

Les concessionnaires Caterpillar fournissent dans le monde entier des pièces de rechange de qualité Caterpillar. Leurs stocks de pièces sont constamment réapprovisionnés et comptent toutes les pièces nécessaires pour assurer la bonne marche de votre machine Caterpillar. Certains concessionnaires proposent également des kits de réparation, des échanges standard ou des pièces rénovées, ce qui permet de choisir la solution la plus économique dans une situation donnée. Lors des commandes de pièces, mentionner la quantité, le numéro et la désignation des pièces ainsi que le numéro de série. En cas de doute sur le numéro de pièce, fournir au concessionnaire une description complète de la pièce en question.

UTILISATION DU CATALOGUE DE PIÈCES

Les Catalogues de pièces Caterpillar comportent des illustrations des groupes ou ensembles qui composent la machine. Ces illustrations représentent les composants standard et nombre des accessoires disponibles.

Au début du catalogue figure un index alphabétique qui renvoie aux pages et illustrations correspondantes. Toutes les pièces du moteur avec leur numéro figurent dans ces pages.

Légendes

Chaque illustration comporte une légende comprenant le numéro de pièce et la désignation du groupe ou celle de l'ensemble. Les numéros de groupe sont donnés à titre de référence. Pour savoir si un groupe complet peut être commandé, s'adresser au concessionnaire. Si à un groupe donné correspondent plusieurs illustrations, la légende indiquera le numéro de série de chaque machine spécifique. Parfois, il n'est pas possible de savoir à quels numéros de série spécifiques de la machine se rapportent les différentes illustrations. Dans ce cas, les légendes comportent la mention "Type 1", "Type 2", etc. Pour déterminer quelles illustrations utiliser, il faudra connaître la référence du groupe ou de l'ensemble correspondant. Les légendes indiquent également les numéros de page des plans des sous-ensembles, les quantités utilisées et autres renseignements destinés à aider l'utilisateur à déterminer quelles sont les pièces nécessaires.

Abréviations et symboles

O.D.	Diamètre extérieur
I.D.	Diamètre intérieur
A	Ne fait pas partie de ce groupe
B	Utiliser selon besoin
C	Modification
D	Commander par mètre
E	Commander par centimètre
F	Non représenté
G	Commander par pouce
I	Voir "Hose Fabrication Guide"
M	Pièce métrique (y compris fixations)
R	Pièce rénovée éventuellement disponible
X	Echange standard
Y	Illustration séparée
Z	Non fourni séparément

Lettres de référence des illustrations

Quand il est nécessaire, les illustrations comportent des lettres de référence (A, B, C, etc.) pour montrer le trajet des lignes et faisceaux de câbles d'un point à l'autre. Elles sont utilisées également pour indiquer où relier les illustrations séparées auparavant.

Ref No (No de réf.)

Les numéros figurant dans cette colonne renvoient aux numéros utilisés dans l'illustration. Pour identifier une pièce quelconque dans l'illustration, déterminer en premier son numéro de référence, puis rechercher les renseignements sur cette pièce dans la colonne de numéro de référence.

Part Number (No de pièce)

Ces numéros identifient les pièces.

Qty (Quantité)

Les quantités qui figurent dans cette colonne indiquent le nombre de la pièce concernée utilisé.

Part Name (Désignation de la pièce)

Les renseignements figurant dans cette colonne indiquent le nom de la pièce ainsi que des renseignements supplémentaires telles par exemple les dimensions, complétant l'identification de la pièce concernée.

Désignations de pièces en retrait

Chaque illustration comporte la liste des pièces qui la constituent et que l'on peut se procurer. Lorsqu'une désignation de pièce est en retrait, cela veut dire que l'article en regard fait partie de l'ensemble sous lequel il figure.

NOTA:

En raison du progrès technique et des améliorations continuelles apportées au matériel, votre machine comporte peut-être des modifications qui n'apparaissent pas dans la présente publication. Les éditions ultérieures seront revues et corrigées en conséquence.

En cas de doute sur un détail de votre machine Caterpillar ou sur le texte de la présente publication, adressez-vous à votre concessionnaire Caterpillar.

MAQUINAS

Las máquinas Caterpillar se identifican con NUMEROS DE SERIE y/o NUMEROS DE IDENTIFICACION DEL PRODUCTO (PIN). Estos números son asignados al chasis y al motor, respectivamente. El chasis y el motor tienen también NUMEROS DE DISPOSICION, y en algunos casos, NUMEROS DE MODIFICACION. Estos números están en la placa del número de serie del motor o en la placa principal en la cabina del operador.

Los distribuidores Caterpillar necesitan estos números para determinar con qué componentes se armó la máquina en la fábrica. Esto permite una identificación exacta de los números de pieza de repuesto.

COMO PEDIR REPUESTOS

Piezas de repuesto Caterpillar de calidad están disponibles de los distribuidores Caterpillar en todo el mundo. Sus existencias actualizadas incluyen todas las piezas normalmente requeridas para proteger su inversión en máquinas Caterpillar. Algunos distribuidores pueden tener juegos de reparación, componentes de intercambio o piezas remanufacturadas, para permitir la selección de la mejor alternativa de reparación de un caso en particular. Al pedir piezas de repuesto, especifique en su pedido la cantidad, el número de pieza, el nombre de la pieza y el número de serie. Si tiene duda del número de pieza, déle al distribuidor una descripción completa de la misma.

COMO USAR ESTE CATALOGO

Los Catálogos de Piezas Caterpillar tienen ilustraciones de los grupos o conjuntos que componen la máquina. Estas ilustraciones muestran los componentes estándar y muchos de los accesorios disponibles para la máquina.

Se debe utilizar el índice alfabético al frente de este catálogo para determinar el número de página donde se encuentran ilustraciones específicas. Dichas páginas identifican las piezas utilizables.

Títulos

El título debajo de cada ilustración identifica el número de pieza y el nombre del grupo o del conjunto indicado. Los números de pieza de grupos se muestran para referencia. Su distribuidor Caterpillar puede ayudarle a identificar la disponibilidad de un grupo completo. Si se incluye más de una ilustración de cualquier grupo, el título identifica números de serie de las máquinas correspondientes a cada ilustración. En algunos casos no es posible determinar los números de serie de las máquinas correspondientes a las diferentes ilustraciones. En esos casos, el título identifica la ilustración como "Tipo 1", "Tipo 2", etc. Es necesario referirse al grupo o conjunto en sí para determinar cuál ilustración se debe utilizar. Los títulos proveen información adicional: los números de las páginas en que aparecen las ilustraciones de los subconjuntos, las cantidades utilizadas y demás información para ayudar al usuario a determinar las piezas necesarias.

Abreviaturas y símbolos

O.D.	Diámetro exterior
I.D.	Diámetro interior
A	No es pieza de este grupo
B	Utilizado según la demanda
C	Indica cambio
D	Se pide por metro
E	Se pide por centímetro
F	No se muestra
G	Se pide por pulgada
I	Ver "Hose Fabrication Guide"
M	Pieza métrica (Incluso tornillería)
R	Puede estar disponible como pieza remanufacturada
X	Puede ser posible el intercambio de Componentes Principales
Y	Ilustración separada
Z	No se suministra por separado

Letras de referencia de ilustraciones

Las ilustraciones contienen algunas veces letras de referencia (A, B, C, etc.) cuyo propósito es seguir el trayecto de líneas y mazos de cables de un punto a otro. También se utilizan para mostrar dónde volver a unir ilustraciones que se habían separado.

No. de Referencia

Los números en esta columna se refieren a los números en la ilustración. Para obtener información acerca de una pieza en la ilustración, determine primero el número de referencia y después refiérase al mismo número en la columna "No. de Referencia".

No. de Pieza

Estos números se utilizan para identificar piezas.

Cantidad

Las cantidades en esta columna indican el número de esa(s) pieza(s) utilizada(s).

Nombre de Pieza

La información en esta columna proporciona el nombre de la pieza, tamaño y cualesquiera otra información que ayude a identificar la pieza misma.

Nombres de Pieza sangrados

En cada ilustración hay una lista de piezas que identifica las piezas utilizables en la ilustración. Cuando el nombre de una pieza está sangrado en esta lista, significa que esta pieza forma parte de la pieza utilizable inmediatamente arriba.

NOTA:

Las continuas mejoras y adelantos en diseño podrían originar cambios a su máquina que no se incluyan en esta publicación. Cada publicación es analizada y revisada para actualizar e incluir estos cambios en ediciones subsecuentes.

Cuando tenga alguna pregunta acerca de su producto Caterpillar o de esta publicación, consulte al distribuidor Caterpillar para obtener la información más reciente.

IDENTIFICAÇAO DA MÁQUINA

As máquinas Caterpillar são identificadas pelos NÚMEROS DE SÉRIE e/ou NÚMERO DE IDENTIFICAÇÃO DO PRODUTO (PIN). Esses números são atribuídos ao chassí e ao motor. O chassí e o motor recebem, também, NÚMEROS DE ARRANJO e, em alguns casos, NÚMEROS DE MODIFICAÇÃO. Esses números aparecem nas placas de NÚMERO DE SÉRIE ou PIN e na PLACA MESTRE no compartimento do operador.

Os revendedores Caterpillar necessitam desses números para determinar quais componentes foram incluídas na máquina durante a montagem na fábrica. Isso permite uma identificação precisa dos números de peça de reposição.

COMO OBTER PEÇAS

As Peças de Reposição de Qualidade Caterpillar estão disponíveis nos revendedores Caterpillar no mundo inteiro. Seus estoques de peças são atualizados e incluem todas as peças normalmente necessárias para proteger seu investimento nas máquinas Caterpillar. Alguns revendedores podem ter peças de troca/remanufaturadas disponíveis, como uma opção. Ao fazer um pedido de peças, especifique a quantidade, o número e o nome da peça, o número de série ou PIN, o número de arranjo e quaisquer números de modificação da máquina a que as peças se destinam. Se houver dúvidas quanto ao número de série, forneça ao seu revendedor uma descrição completa do item necessário.

COMO USAR O CATÁLOGO DE PEÇAS

Os Catálogos de Peças Caterpillar incluem ilustrações dos grupos ou conjuntos que compõem a máquina. Essas ilustrações mostram os componentes padrão e muitos dos acessórios disponíveis para a máquina.

O índice alfabético, no início do catálogo, deve ser usado para determinar o número da página em que se encontra determinada ilustração. Consultando tais páginas, você identificará cada uma das peças disponíveis, individualmente. Existe no fim do livro um índice numérico de cada número de peça e o(s) número(s) correspondente(s) da(s) página(s).

Legendas

A legenda de cada ilustração identifica o número da peça e o nome do grupo ou do conjunto mostrado. Os números de peças para grupos são indicados para fins de referência. O seu Revendedor Caterpillar pode fornecer assistência para identificar a disponibilidade de um grupo completo. Se for incluída mais de uma ilustração para qualquer grupo, a legenda indicará os números de série da máquina específica a que cada ilustração se aplica. Em alguns casos, não é possível determinar os números de série da máquina específica a que as diferentes ilustrações se aplicam. Em tais casos, a legenda identifica a ilustração como "Tipo 1", "Tipo 2", etc. Será, então, necessário referir-se ao conjunto ou grupo real para determinar qual ilustração deverá ser usada. As legendas fornecem informações adicionais, tais como: números das páginas onde são mostradas as ilustrações de subconjuntos, informações referentes às quantidades usadas e outras informações que se destinam a auxiliar o usuário a determinar as peças necessárias.

Abreviaturas e Símbolos

O.D.	"Outside Diameter" (Diâmetro Externo)
I.D.	"Inside Diameter" (Diâmetro Interno)
A	Não faz parte deste grupo
B	Use conforme necessário
C	Indica modificação
D	Vendido por metro
E	Vendido por centímetro
F	Não mostrado
G	Vendido por polegada
I	Veja o "Guia de Fabricação de Mangueiras" (Hose Fabrication Guide)
M	Peça métrica (inclusive fixadores)
R	Peça remanufaturada. Pode estar disponível. Consulte o seu Revendedor Caterpillar
X	Intercambio de componentes principais pode estar disponível. Consulte o seu Revendedor Cat
Y	Ilustração separada
Z	Não disponível separadamente

Letras de Referência nas Ilustrações

Quando necessário, as ilustrações contêm letras de referência (A, B, C, etc.) que são utilizados para seguir tubulações e cabos elétricos de um ponto para um outro. Também foram utilizados para indicar onde se pode reconectar as ilustrações que foram separadas.

Ref No (Número de Refêrencia)

Os números indicados nesta coluna se referem aos números mostrados na ilustração. Para identificar qualquer item dentro da ilustração, primeiro determine seu No. de Ref., então refere ao mesmo número na coluna para informação referente à peça.

Part Number (Número de Peça)

Tais números são usados para identificar as peças.

Qty (Quantidade)

As quantidades indicadas nesta coluna indicam o número de uma determinada peça utilizada.

Part Name (Nome de Peça)

A informação contida nesta coluna proporciona o nome da peça tanto quanto informação adicional tal como a dimensão, que ajuda identificar a peça.

Nomes de Peças Desalinhados

Cada ilustração apresenta uma lista de peças que identifica cada peça disponível na ilustração. Quando um nome de peça está desalinhado na lista, significa que tal item é disponível e faz parte do item disponível anterior.

Nota: Os contínuos aperfeiçoamentos e avanços no projeto do produto podem ocasionar modificações em sua máquina, que ainda não estejam incluídas nesta publicação. Cada publicação é revisada e corrigida, conforme necessário, para atualizar e incluir essas modificações nas edições mais recentes.

Sempre que surgir uma questão concernente ao seu produto Caterpillar ou a esta publicação, consulte o seu revendedor Caterpillar quanto às mais recentes informações disponíveis.

GERÄTEKENNZEICHNUNG

Cat-Geräte sind mit SERIAL NUMBERS und/oder PRODUCT IDENTIFICATION NUMBER (PIN) (Serien-Nr. und/oder Produktidentifizierungs-Nr.) gekennzeichnet. Diese Nummern dienen zur Kennzeichnung des Laufwerks und des Motors. Am Laufwerk und am Motor befinden sich außerdem ARRANGEMENT NUMBERS (Ausrüstungsnummern) sowie in einigen Fällen auch MODIFICATION NUMBERS (Änderungsnummern). Sie befinden sich auf den Typen- oder PIN-Schildern sowie auf dem HAUPTSCHILD im Fahrerhaus.

Die Cat-Händler benötigen alle genannten Nummern, um feststellen zu können, welche Baugruppen bei der Montage des Geräts im Werk eingebaut wurden. Nur mit Hilfe dieser Angaben lassen sich die Bestellnummern der benötigten Ersatzteile genau bestimmen.

BESTELLEN VON ERSATZTEILEN

Original-Cat-Ersatzteile können bei den Cat-Händlern überall auf der Welt bestellt werden. Ihre umfangreichen Lager enthalten normalerweise alle Teile, die Sie für Ihr Cat-Gerät benötigen. Einige Händler bieten Reparatursätze, Austausch- oder werküberholte Teile an, so daß Sie die Auswahl unter verschiedenen Reparaturmöglichkeiten treffen können. Ihre Bestellung muß folgende Angaben enthalten: Anzahl der benötigten Teile, Bestellnummer, Bezeichnung des Teils; Serien-Nr., Ausrüstungs-Nr. und Änderungs-Nr. des Geräts, für das die Teile benötigt werden. Wenn Sie Zweifel hinsichtlich der richtigen Bestell-Nr. haben, geben Sie dem Händler eine möglichst genaue Beschreibung des benötigten Teils.

HINWEISE ZUR BENUTZUNG DES PARTS BOOKS

Die Cat-Parts Books enthalten Zeichnungen der Gruppen oder Teile des Geräts. Gezeigt werden die Standardteile sowie verschiedenes Zubehör für die Geräte.

Anhand des Index vorn im Buch können Sie die Nummer der Seite heraussuchen, auf der sich die von Ihnen gesuchte Abbildung befindet. Beim Aufschlagen der betreffenden Seite können dann alle gesuchten Teile identifiziert werden. Hinten im Buch befindet sich ein numerischer Index, mit allen Bestell-Nr. und dem Hinweis auf die Seite, auf der sich die entsprechenden Zeichnungen befinden.

Bildunterschriften

Die Zeilen unter jeder Abbildung enthalten die Bestell-Nr. der gezeigten Baugruppen. Die Nummer wird nur als Referenz aufgeführt. Ihr Cat-Händler kann Ihnen sagen, ob eine Gruppe komplett lieferbar ist. Wenn für eine Gruppe mehrere Zeichnungen vorhanden sind, enthalten die Zeilen unter den Zeichnungen die Seriennummern, denen jede Zeichnung entspricht. In einigen Fällen ist es nicht möglich, die Serien-Nr. anzugeben, auf die sich die Zeichnungen beziehen. In diesem Fall wird lediglich "Typ 1", "Typ 2" usw. angegeben. Hier ist ein Hinweis auf die Baugruppe erforderlich, um anzuzeigen, welche Abbildung verwendet werden muß. Die Zeilen unter den Abbildungen enthalten ferner Angaben über die Seiten, auf denen sich Zeichnungen von Unterbaugruppen und Anzahl der benötigten Teile sowie andere Angaben befinden, die es dem Benutzer des Buchs erleichtern, die gewünschten Teile zu identifizieren.

Abkürzungen und Symbole

O.D.	Außendurchmesser
I.D.	Innendurchmesser
A	kein Teil dieser Gruppe
B	nach Bedarf verwenden
C	Hinweis auf eine Änderung
D	in Meter-Länge bestellen
E	in Zentimeter-Länge bestellen
F	nicht gezeigt
G	in Zoll-Länge bestellen
I	Siehe "Hose Fabrication Guide"
M	metrisches Teil (einschl. Befestigungsteilen)
R	werküberholtes Teil unter Umständen lieferbar
X	Austauschteil
Y	separate Abbildung
Z	nicht einzeln erhältlich

Referenzbuchstaben

Falls erforderlich sind in den Zeichnungen Referenzbuchstaben enthalten (z.B. A, B, C, usw.), die Leitungen und Kabelbäume von einem Punkt zum andern verfolgen. Außerdem geben sie die Stelle an, an der getrennte Zeichnungen fortgesetzt werden.

Ref No (Referenz-Nr.)

Die in dieser Spalte aufgeführten Nummern beziehen sich auf die in der Zeichnung befindlichen Nummern. Zum Identifizieren eines Teils in der Zeichnung zuerst dessen Referenz-Nr. feststellen und diese dann in der Spalte "Ref No" aufsuchen, um weitere Angaben zum gesuchten Teil zu erhalten.

Part Number (Bestell-Nr.)

Anhand dieser Nummern lassen sich die Teile identifizieren.

Qty (Anzahl)

Die Zahlen in dieser Spalte geben an, wieviele der entsprechenden Teile benötigt werden.

Part Name (Bezeichnung)

In dieser Spalte wird die Bezeichung der betreffenden Teile zusammen mit zusätzlichen Informationen angegeben, z.B. Größe, die das Identifizieren erleichtern.

Eingerückte Bezeichnungen

In der zu jeder Abbildung gehörenden Ersatzteilliste sind manche Bezeichnungen eingerückt. Dadurch wird angezeigt, daß das entsprechende Teil zu dem gehört, unter dessen Bezeichnung es eingerückt ist.

ANMERKUNG:

Ständig vorgenommene Verbesserungen und Weiterentwicklungen an Ihrem Gerät können Änderungen verursachen, die in der vorliegenden Ausgabe noch nicht berücksichtigt sind. Sie werden jedoch in später folgenden Ausgaben erscheinen.

Fragen zu Ihrem Cat-Gerät oder diesem Ersatzteilbuch beantwortet Ihr Cat-Händler.

MAINTENANCE PARTS

DESCRIPTION	PART NO.	QTY	WHERE USED	PAGE NO.
BATTERY-12V	9G4231	1	BATTERY GP	62
	9G4232	1	BATTERY & WIRING GP	59
		1	BATTERY & WIRING GP	61.01
BREATHER	9G5127	1	CASE & PARTS GP	75
		1	FILLER GP-POWER TRAIN OIL	97
		1	FILLER GP-POWER TRAIN OIL	97.01
		2	CASE GP-STEERING CLUTCH	99
		2	CASE GP-STEERING CLUTCH	99.01
		1	VALVE GP-BREAKER RELIEF	134
		1	CASE & COVERS GP	174
CAP-FILLER	7H1447	1	TANK & FILTER GP-HYDRAULIC	131
CAP-FUEL TANK	1P8680	1	CAP GP-PROTECTION	43
CAP-OIL FILLER	9L8439	1	COVER GP-VALVE MECHANISM	18
ELEMENT	1U2093	1	TANK & FILTER GP-HYDRAULIC	131
ELEMENT AS	7N7957	1	HEATER GP-JACKET WATER	35
ELEMENT-FILTER	2P5834	1	FILTER GP-TRANSMISSION	98
	7M1674	1	LINES GP-AIR	40
	9M9740	1	TANK & FILTER GP-HYDRAULIC	131
FILTER	5G1913	1	PRESSURIZER GP	194.12
FILTER AS-FUEL	1P2299	1	FILTER GP-FUEL	44
FILTER-TANK CAP	5S7657	1	CAP GP-PROTECTION	43
FUSE (10 AMP)	3K8782	1	HORN GP-ELECTRIC	58.04
FUSE (30 AMP)	8M8947	2	WIRING GP-CAB	69.04
INSERT-FUEL FILTER	4N3294	1	FILTER GP-FUEL	44
		1	FILTER GP-FUEL	45
KEY	8H5306	1	BATTERY & WIRING GP	61
		1	BATTERY & WIRING GP	61.03
		1	GAUGE GP	200.02
LAMP	8L9801	2	BATTERY & WIRING GP	61
		2	BATTERY & WIRING GP	61.03
		2	GAUGE GP	200.02
LAMP-MINIATURE	1S4168	1	WIRING GP-CAB	69.04
REGULATOR-TEMPERATURE	4P6616	1	LINES GP-WATER	36
SEAL-O-RING	8H7521	1	TRANSFER CASE & GEAR GP	73.02
		1	GEAR & CLUTCH GP	179

MAINTENANCE PARTS

DESCRIPTION	PART NO.	QTY	WHERE USED	PAGE NO.
SEAT BELT GP	8Y4037	1	SEAT & SUPPORT GP	199.02-.02
		1	SEAT & SUPPORT GP	199.05
THERMOSTAT AS	4N0236	1		36
VALVE AS-PRESSURE RELIEF	5S1218	1	VALVE GP-BREAKER RELIEF	134

REMANUFACTURED COMPONENTS

As an option when making repairs consider Caterpillar Remanufactured Components. Components that are available through the Caterpillar Remanufactured Program are identified three ways in the parts book:

- with the letter R in the note field of the parts list
- with an R* at the beginning of the first line of the caption
- with an *R at the end of the first line of the caption

Typical components included in the Remanufacturing Program include:

ALTERNATORS
CONNECTING RODS
CRANKSHAFTS - UNDERSIZE
CRANKSHAFTS - UPGRADE TO NEW
CYLINDER HEADS
ELECTRONIC CONTROL MODULES (ECM)
ELECTRONIC SENSORS
FUEL INJECTORS
FUEL NOZZLES
FUEL PUMPS
GOVERNORS
OIL PUMPS
PISTONS
SHORT BLOCKS
STARTERS
TURBOCHARGERS - COMPLETE
TURBOCHARGER CARTRIDGES
WATER PUMPS

Caterpillar Remanufactured engines for many engine arrangements are also available.

MAJOR COMPONENT EXCHANGE

As an option when making repairs consider Caterpillar Major Component Exchange Program. Components included in this program are noted in the parts book with an *X at the end of the first line of the caption.

Typical components include:

ENGINES
SHORT BLOCKS
TRANSMISSIONS
TORQUE CONVERTERS
STEERING BRAKE AND CLUTCH

Check with your local Caterpillar Dealer for the availability of Remanufactured Components and Major Component Exchanges.

SUPPLEMENTAL COOLANT ADDITIVE ELEMENTS

... Conveniently prevents corrosion, cavitation and erosion in cooling system

Customer Benefits:

Protects against cavitation, foam, corrosion, and scale build-up
• Provides measured coolant conditioner

Description:

Supplemental coolant additive is now available in spin-on type elements for all diesel engines except 3500 and 3600 engines (use liquid only). The elements contain a dry corrosion inhibitor which dissolves in the coolant. The inhibitor protects against cavitation, corrosion, foam and scale, reducing and eliminating pitting of cylinder liner surfaces and cylinder blocks. This protection extends the life of cylinder liners, blocks and water pumps.

Two types of coolant additive elements are available, a precharge element and maintenance element. These elements contain a premeasured amount of inhibitor, which is distributed into the cooling system. When correctly used, the precharge element will keep the cooling system inhibitor at an acceptable level during the first maintenance interval after the system is filled with new coolant. Use precharge element only when not using Caterpillar Antifreeze, which contains conditioner. The maintenance element is used to keep the inhibitor at the correct level in the system after the first (precharge) maintenance interval. The test kit (8T5296) should be used to evaluate the concentration of the Caterpillar Supplemental Coolant Additive at each oil change. Normal coolant additive elements should be changed at every oil change interval, but periodic adjustments may be required for over or under additive concentration. The entire coolant system should be drained and flushed every two years or 3000 hours of operation.

Note: The coolant additive elements can be used with any ethylene or propylene glycol type antifreeze which meet ASTM D4985 Specification or have similar low additives which allow supplemental additive use.

Parts Needed:

Cooling System Capacity Gallons	Liters	Base Assembly	Valve Assembly	Precharge Element	Maintenance Element	Maintenance Period (Hrs)
6-8	22-32	9N3668(1)	9N3666(2)	9N6123(1)	9N3717(1)	500
9-12	33-47	9N3668(1)	9N3666(2)	9N6123(1)	9N3718(1)	500
* 9-12	33-47	9Y3205(1)	9N3666(1)	7E6013(1)	7E6014(1)	250
13-16	48-62	9N3668(1)	9N3666(2)	9N3366(1)	9N3717(1)	250
17-22	63-85	9N3668(1)	9N3666(2)	9N3367(1)	9N3368(1)	250
22-30	86-115	9N3668(1)	9N3666(2)	9N3367(1)	9N3718(1)	250
31-43	116-165	9N3668(2)	9N3666(2)	9N3367(2)	9N3368(2)	250
or						
31-43	116-165	9N3668(1)	9N3666(2)	1W5518(1)	9N6123(1)	250
44-65	166-247	9N3668(2)	9N3666(2)	1W5518(2)	9N3718(1)	250

* 3176 Engines Only

INDEX

Name	Page
A	
ADAPTER GP-SPROCKET	96.01
AIR CLEANER GP	39
	40
AIR LINES	40
ALARM-BACK-UP	70
ALTERNATOR GP-CHARGING	62
	63
	63.01
	63.02
ANGLING CYLINDER	139
ANGLING CYLINDER LINES	145
B	
BATTERY & WIRING GP	59
BATTERY GP	62
BATTERY-12V	59
	61.01
	62
BELT-SEAT	204
BIT & CUTTING EDGE GP	161
BLADE GP-ANGLING	158
	160
BLOWER FAN	30
BRAKE GP-STEERING	100.08
	100.14
	100.16.02
BREATHER	75
	97
	97.01
	99
	99.01
	134
	174
BREATHER GP	26
BRUSH GUARD	109
BULLDOZER AR	157
C	
C-FRAME GP	160.03
	160.05
CAB GP	194.02
CAB GP-MOUNTING	194.14
CAMSHAFT AS	55
CAMSHAFT GP-SINGLE	11
CAP GP-PROTECTION	43
CAP-FILLER	131
CAP-FUEL TANK	43
CAP-OIL FILLER	18
CASE & COVERS GP	174
CASE & PARTS GP	74
CASE GP-STEERING CLUTCH	98.02
CIRCUIT BREAKER AS	61
	61.03
	200.03
CLEANER BAR GP	112
CLUTCH GP-STEERING	100.02
CONTROL GP-DECELERATOR	78
CONTROL GP-GOVERNOR	58
	58.02
CONTROL GP-HYDRAULIC HAND	133
	134
	135
	136
	137
CONTROL GP-STEERING	100.03
CONTROL GP-STEERING CLUTCH	100.04
CONTROL GP-TOWING WINCH	168
	169
	186
CONTROL GP-TRANSMISSION	76
CONTROL GP-TRANSMISSION HYD	80
CONTROL GP-WINCH	170
	185
CONVERSION AR-WINCH	166
CONVERSION GP-WINCH	183
	184
COOLER GP-ENGINE OIL	33
	34
COUNTERWEIGHT GP-FRONT	104
COUNTERWEIGHT GP-IDLER	127.01
	127.02
COVER GP-PROTECTION	133
COVER GP-REAR	69
COVER GP-VALVE MECHANISM	18
COVERS GP-SHIPPING	177
CRANKSHAFT GP	9
CRANKSHAFT PULLEY	10
CYLINDER AS (ETHER)	71
CYLINDER BLOCK AS	7
	8
CYLINDER BLOCK GP	6
CYLINDER GP-ANGLING	139
CYLINDER GP-LIFT	138
CYLINDER GP-RIPPER	141
CYLINDER GP-TILT	140
CYLINDER HEAD AS	15
	16
	16.01
	16.02
CYLINDER HEAD GP	13
	14
D	
DASH GP	106.04
	196
DECELERATOR CONTROL	78
DOOR GP-LH	194.06
DOOR GP-RH	194.08
DRAWBAR GP	114
DRAWBAR GP-SWINGING	113

INDEX

Name	Page
DRIVE AR-WINCH	189
	190
DRIVE GP-FAN	22
DRIVE GP-POWER TAKE-OFF	91
DRIVE GP-PUMP	85
DRIVE GP-WINCH	171
E	
EDGE GP-CUTTING	159
ELECTRIC HORN	58.04
ELEMENT	131
ELEMENT AS	35
ELEMENT-FILTER	40
	98
	131
ENGINE AR	2
	4
ETHER STARTING AID	71
EXHAUST MANIFOLD	37
EXTENSION GP-EXHAUST	39
	39.01
F	
FAN DRIVE	22
FAN GP-BLOWER	30
FAN GP-SUCTION	31
FILLER GP-POWER TRAIN OIL	97
FILTER	194.12
FILTER AS-FUEL	44
	45
FILTER GP-FUEL	44
	45
FILTER GP-OIL	25
FILTER GP-TRANSMISSION	98
FILTER-HYDRAULIC	131
FILTER-MAGNETIC	75
FILTER-TANK CAP	43
FINAL DRIVE GP	92
	94
FIREWALL GP	106.02
	106.03
FLYWHEEL GP	18
FLYWHEEL HOUSING	19
FRAME GP	101
FRAME GP-TRACK ROLLER	117
FRONT COUNTERWEIGHT	104
FRONT GEAR	20
FRONT HOUSING	21
FRONT IDLER	124
FUEL FILTER	44
FUEL INJECTION LINES	47
FUEL INJECTION PUMP	49
	53
FUEL LINES	46
FUEL PRIMING PUMP	57
FUEL TANK	42
FUEL TANK PROTECTION CAP	43
FUEL TRANSFER PUMP	55
FUMES DISPOSAL GP	26
FUSE (10 AMP)	58.04
FUSE (30 AMP)	69.04
G	
GAUGE AS-AMMETER	200.04
GAUGE GP	197
	200.02
GAUGE GP-OIL LEVEL (DIPSTICK)	25
	25.01
GEAR & CLUTCH GP	178
GEAR GP-BEVEL	82
GEAR GP-FRONT	20
GOV & FUEL INJ PUMP GP	49
GOVERNOR CONTROL	58
GOVERNOR GP	50
GUARD & HOOD	106
GUARD GP-BOTTOM	107
GUARD GP-BRUSH	109
	165.02
GUARD GP-RADIATOR	108.01
GUARD GP-RADIATOR HINGED	108
GUARD GP-RECOIL MECHANISM	118
	119
GUARD GP-TRACK ROLLER	120
GUARD GP-VANDALISM	200
	200.01
H	
HEATER GP-CAB	195.01
HEATER GP-JACKET WATER	34
	35
HOOD & GUARD GP	106
	106.01
HOOK GP-FRONT PULL	110
HORN GP-ELECTRIC	58.04
HOUSING GP-FLYWHEEL	19
HOUSING GP-FRONT	21
HYDRAULIC AR-3 VALVE	130
HYDRAULIC AR-4 VALVE	130
I	
IDLER & BEARING AS	129
IDLER GP-FRONT	122
	124
INDICATOR (AIR FILTER SERVICE)	200.02
INDICATOR (AIR FILTER)	197
INSERT-FUEL FILTER	44
	45
INSERT-INTAKE	16.01
INSERT-SEAT EXHAUST	15
	16.01

INDEX

Name	Page
J	
JACKET WATER HEATER	34
K	
KEY	61
	61.03
	200.02
KIT-BEARING	65.02
KIT-METER SERVICE	61
	61.03
	200.02
KIT-PCV BREATHER	27
KIT-PUMP REBUILD	32
KIT-SEAT ADJUSTER	202
KIT-SHOCK ABSORBER	202
	203.01
KIT-STARTER PIN	65.02
KIT-STARTER SEAL	65.02
L	
LAMP	61
	61.03
	200.02
LAMP GP	68
LAMP-FLOOD	67
	68
LAMP-MINIATURE	69.04
LANYARD	199
	199.02
	199.02.02
	199.03
	199.04
	199.05
	203
LIFT CYLINDER LINES	146
LIFTING GP	24
LIGHTING GP-3 LAMP	67
LINES GP-AIR	40
LINES GP-ANGLE CYLINDER	144
	145
LINES GP-FUEL	46
LINES GP-FUEL INJECTION	47
	48
LINES GP-LIFT CYLINDER	146
LINES GP-POWER TRAIN OIL	96
LINES GP-PUMP	142
LINES GP-REAR	143
LINES GP-RIPPER	149
LINES GP-TILT CYLINDER	147
	148
LINES GP-TORQUE CONV COOLER	71.05
LINES GP-WATER	36
LINES GP-WINCH	182
LINK AS-TRACK	128

Name	Page
M	
MANIFOLD GP	175
	187
MANIFOLD GP-EXHAUST	37
MOUNTING GP-CAB	194.14
MOUNTING GP-RIPPER	163
MOUNTING GP-ROPS	195
MOUNTING GP-TRUNNION	161
	162
MOUNTING GP-WINCH	167
MUFFLER GP	38
O	
OIL FILTER	25
OIL LEVEL GAUGE (DIPSTICK)	25
	25.01
OIL PAN	24
OIL PUMP-ENGINE	28
P	
PADLOCK GP	43
	133
	200
	200.01
PAN GP-OIL	24
PISTON	11
PISTON & ROD GP	11
PISTON GP	12
PLANETARY GP	86
PRESCREENER GP	41
PRESSURIZER GP	194.11
PRESSURIZER GP-CAB	194.10
PROTECTION COVER	133
PULL HOOK-FRONT	110
PULLEY GP-CRANKSHAFT	10
PUMP & LINES GP	172
	172.02
	191
	192
PUMP GP-FUEL INJECTION	53
	54
PUMP GP-FUEL PRIMING	57
PUMP GP-FUEL TRANSFER	55
	56
PUMP GP-GEAR	84
	150
	151
	173
	193
PUMP GP-OIL-WITHOUT HOUSING	28
PUMP GP-WATER	32
PUMP LINES	142

INDEX

Name	Page
R	
RADIATOR GP	29
	30
RADIATOR GUARD	108
	108.01
REAR COVER	69
RECOIL SPRING	121
REGULATOR-TEMPERATURE	36
RIPPER AR	162
RIPPER GP	163
ROLLER GP-TRACK	120
	121
ROLLER GP-TRACK CARRIER	126
ROLLOVER AR	194.01
ROPS AR	194
ROPS AR-OPEN	194
ROPS GP	196
S	
SEAL & BUSHING GP	129
SEAL-O-RING	73.02
	179
SEAT & SUPPORT GP	198
	199.03
SEAT BELT GP	199.02.02
	199.05
	204
SEAT GP	202
SEGMENT GP-SPROCKET	96.01
SLEEVE	199
	199.02
	199.02.02
	199.03
	199.04
	199.05
	203
SPIDER & BEARING GP	83.01
SPRING GP-RECOIL	121
SPROCKET SEGMENT	96.01
STARTING AID GP-ETHER	71
STARTING MOTOR GP-ELECTRIC	64
	65
	65.01
	65.02
STEERING AR	98.01
STEERING BRAKE	100.08
	100.16.02
STEERING CLUTCH	100.02
STEERING CLUTCH CASE	98.02
STEERING CONTROL	100.03
SUCTION FAN	31
SUPPORT GP-ENGINE & TMSN	23
SUPPORT GP-UNDERCARRIAGE	115
	116
SUPPRESSION GP	110
SUSPENSION AS-SEAT	203.01
SWEEP GP	111
SWITCH (LIMIT)	71
	71.00.01
SWITCH AS	58.04
	69.04
	194.13
SWITCH AS (OIL PRESSURE)	59
	61.01
SWITCH AS (TRANSMISSION)	70
SWITCH AS-ROCKER (STARTING AID)	71.00.01
SWITCH AS-12 VOLT	65
	65.01
	66
SWITCH GP	66
T	
TANK & FILTER GP-HYDRAULIC	131
TANK GP-FUEL	42
TANK GP-HYDRAULIC	132
THERMOSTAT AS	36
TILT CYLINDER	140
TILT CYLINDER LINES	148
TOOTH GP	164
TORQUE CONTROL GP	54
TORQUE CONVERTER GP	71.01
	71.03
TRACK CARRIER ROLLER	126
TRACK CLEANER BAR	112
TRACK GP	126
	127
	127.01
TRACK ROLLER	120
	121
TRACK ROLLER FRAME	117
TRANSFER CASE & GEAR GP	73.01
TRANSMISSION AR	72
TRUNNION MOUNTING	161
	162
U	
UNDERCARRIAGE SUPPORT	116
UNIVERSAL JOINT GP	91
V	
VALVE & MOUNTING GP	151
	152
VALVE AS-PRESSURE RELIEF	134
VALVE COVER	18
VALVE GP	80
	99.03
	100
	175
	187
VALVE GP-BANK-3	152
VALVE GP-BANK-4	153

INDEX

Name	Page
VALVE GP-BREAKER RELIEF	134
VALVE GP-CHECK	153
VALVE GP-CONTROL	154
	155
	156
VALVE GP-RELIEF	154
	156
VALVE GP-SELECTOR & PRESS CONT	81.01
	176
	188
VALVE MECHANISM GP	17
VALVE-EXHAUST	14
VANDALISM GUARD	200

W

WARNING GP-BACK-UP	70
WASHER GP-WINDSHIELD	199.06
WATER LINES	36
WATER PUMP	32
WINCH AR	164
	165
	165.01
	165.02
WINCH AR-TOWING	165
WIPER GP	199.06
WIRING GP-CAB	69.03

French

INDEX ALPHABETIQUE

Designation	Page
A	
ADAPTATEUR DE BARBOTIN (ASS)	96.01
ALTERNATEUR DE CHARGE (ASS)	62
	63
	63.01
	63.02
AMORCAGE DE CARBURANT - POMPE	57
AMPEREMETRE (ENS)	200.04
AMPOULE	61
	61.03
	200.02
ARBRE A CAMES (ENS)	55
ARBRE A CAMES - SIMPLE (ASS)	11
ARCEAUX DE DEBARDAGE (ASS)	111
AUXILIAIRE DE DEMARRAGE A L'ETHER (ASS)	71
AVERTISSEUR DE RECUL	70
AVERTISSEUR DE RECUL (ASS)	70
B	
BARBOTIN - SEGMENT	96.01
BARRE D'ATTELAGE (ASS)	114
BARRE D'ATTELAGE OSCILLANTE (ASS)	113
BARRE DECROTTEUSE	112
BATI (ASS)	101
BATI EN C (ASS)	160.03
	160.05
BATTERIE (ASS)	62
BATTERIE (12 V)	59
	61.01
	62
BATTERIE ET CABLAGE	59
BLINDAGE INFERIEUR (ASS)	107
BLOC-CYLINDRES (ASS)	6
BLOC-CYLINDRES (ENS)	7
	8
BOITE DE VITESSES (VERSION)	72
BOITIER D'EMBRAYAGE DE DIRECTION (ASS)	98.02
BOUCHON DE GOULOTTE DE REMPLISSAGE	131
BOUCHON DE GOULOTTE DE REMPLISSAGE D'HUILE	18
BOUCHON DE RESERVOIR DE CARBURANT	43
BUTEE ELASTIQUE (ASS)	54
C	
CABINE (ASS)	194.02
CABLAGE DE CABINE (ASS)	69.03
CACHE-SOUPAPES	18
CACHE-SOUPAPES (ASS)	18
CADENAS (ASS)	43
	133
	200
	200.01

Designation	Page
CANALIS. DE REFROIDISSEMENT DU CONV. DE COUPLE	71.05
CANALISATIONS AR (ASS)	143
CANALISATIONS D'AIR	40
CANALISATIONS D'AIR (ASS)	40
CANALISATIONS D'EAU (ASS)	36
CANALISATIONS D'HUILE DE TRANSMISSION (ASS)	96
CANALISATIONS D'INJECTION DE CARBURANT (ASS)	47
	48
CANALISATIONS DE CARBURANT (ASS)	46
CANALISATIONS DE POMPE	142
CANALISATIONS DE POMPE (ASS)	142
CANALISATIONS DE TREUIL (ASS)	182
CANALISATIONS DE VERIN D'INCLINAISON	148
CANALISATIONS DE VERIN DE LEVAGE (ASS)	146
CANALISATIONS DU RIPPER (ASS)	149
CANALISATIONS DU VERIN D'INCLINAISON (ASS)	147
	148
CANALISATIONS DU VERIN D'ORIENTATION	145
CAPOT ET PROTECTION (ASS)	106
	106.01
CARBURANT - CANALISATIONS	46
CARBURANT - FILTRE	44
CARBURANT - POMPE D'ALIMENTATION	55
CARTER AV (ASS)	21
CARTER AVANT	21
CARTER D'EMBRAYAGE DE DIRECTION	98.02
CARTER D'HUILE	24
CARTER DE VOLANT	19
CARTER DE VOLANT (ASS)	19
CARTER ET COUVERCLES (ASS)	174
CARTER ET PIECES	74
CEINTURE DE SECURITE	199.02.02
	199.05
	204
CHAINES (ASS)	126
	127
	127.01
CHAINES - BARRE DECROTTEUSE	112
CHAPEAU DE PROTECTION DU RESERVOIR DE CARBURANT	43
CHASSIS PORTEUR (ASS)	117
CHASSIS PORTEURS	117
CHAUFFAGE DE CABINE (ASS)	195.01
CLAPET (ASS)	80
	99.03
	100
	175
	187
CLAPET DE DECHARGE (ASS)	154
	156
CLAPET DE DECHARGE DE PRESSION	134

INDEX ALPHABETIQUE

Designation	Page
CLAPET DE DECHARGE HYDRAULIQUE (ASS)	134
CLAPET DE RETENUE (ENS)	153
CLAVETTE	61
	61.03
	200.02
CLOISON PARE-FEU (ASS)	106.02
	106.03
COLLECTEUR (ASS)	175
	187
COLLECTEUR D'ECHAPPEMENT (ASS)	37
COMMANDE D'EMBRAYAGE DE DIRECTION (ASS)	100.04
COMMANDE DE BOITE DE VITESSES (ASS)	76
COMMANDE DE DECELERATEUR (ASS)	78
COMMANDE DE DIRECTION	100.03
COMMANDE DE DIRECTION (ASS)	100.03
COMMANDE DE REGULATEUR (ASS)	58
	58.02
COMMANDE DE TREUIL (ASS)	170
	185
COMMANDE DE TREUIL DE REMORQUAGE (ASS)	168
	169
	186
COMMANDE HYDRAULIQUE DE BOITE (ASS)	80
COMMANDE HYDRAULIQUE MANUELLE (ASS)	133
	134
	135
	136
	137
CONSOLE (ASS)	106.04
	196
CONTACTEUR (ENS)	58.04
	69.04
	194.13
CONTACTEUR - BOITE (ENS)	70
CONTACTEUR - LIMITEUR	71
	71.00.01
CONTACTEUR - 12 V (ENS)	65
	65.01
	66
CONTREPOIDS AV	104
CONTREPOIDS AV (ASS)	104
CONTREPOIDS DE ROUE AV (ASS)	127.01
	127.02
CONVERTISSEUR DE COUPLE (ASS)	71.01
	71.03
CORDON POUR LITTERATURE	199
	199.02
	199.02.02
	199.03
	199.04
	199.05
	203
COURONNE CONIQUE (ASS)	82
COUVERCLE AR DE CABLAGE D'ECLAIRAGE - CABINE	69
COUVERCLE AR DE CABLAGE D'ECLAIRAGE - CABINE (ASS	69
COUVERCLE DE PROTECTION	133
COUVERCLE DE PROTECTION (ASS)	43
COUVERCLES D'EXPEDITION (ASS)	177
CROCHET DE HALAGE AV (ASS)	110
CROISILLON ET ROULEMENT	83.01
CULASSE (ASS)	13
	14
CULASSE (ENS)	15
	16
	16.01
	16.02
CULBUTERIE (ASS)	17
CYLINDRE - ETHER (ENS)	71

D

DECELERATEUR - COMMANDE	78
DEMARRAGE A L'ETHER	71
DEMARREUR ELECTRIQUE (ASS)	64
	65
	65.01
	65.02
DENT (ASS)	164
DIRECTION (ENS)	98.01
DIRECTION - EMBRAYAGE	100.02
DISJONCTEUR (ENS)	61
	61.03
	200.03
DISPOSITIF D'EVACUATION DES VAPEURS DE CARTER	26
DISTRIBUTEUR (ASS)	154
	155
	156
DISTRIBUTEUR QUADRUPLE CORPS	153
DISTRIBUTEUR QUADRUPLE CORPS (VERSION)	130
DISTRIBUTEUR TRIPLE CORPS	130
	152

E

EAU - CANALISATIONS	36
EAU DES CHEMISES - RECHAUFFEUR (ASS)	34
	35
ECHAPPEMENT - COLLECTEUR	37
ECLAIRAGE - 3 LAMPES (ASS)	67
ECRAN MAGNETIQUE	75
ELEMENT	131
ELEMENT (ENS)	35
ELEMENT DE FILTRE	40
	98
	131

INDEX ALPHABETIQUE

Designation	Page
EMBOUT ET LAME DE COUPE (ASS)	161
EMBRAYAGE DE DIRECTION (ASS)	100.02
ENGRENAGE ET EMBRAYAGE (ASS)	178
ENGRENAGES DE TRANSFERT ET CARTER (ASS)	73.01
ENTRAINEMENT DE POMPE (ASS)	85
ENTRAINEMENT DE PRISE DE FORCE (ASS)	91
ENTRAINEMENT DE TREUIL (ASS)	171
ENTRAINEMENT DE TREUIL (VERSION)	189
	190
ENTRAINEMENT DE VENTILATEUR (ASS)	22
ESSUIE-GLACE (ASS)	199.06

F

FILTRE	194.12
FILTRE A AIR (ASS)	39
	40
FILTRE A CARBURANT (ASS)	44
	45
FILTRE A CARBURANT (ENS)	44
	45
FILTRE A HUILE	25
FILTRE A HUILE (ASS)	25
FILTRE A HUILE DE BOITE (ASS)	98
FILTRE DU BOUCHON DU RESERVOIR	43
FILTRE HYDRAULIQUE	131
FREIN DE DIRECTION	100.08
	100.14
	100.16.02
FUSIBLE - 10 A	58.04
FUSIBLE - 30 A	69.04

G

GALET INFERIEUR	120
	121
GALET INFERIEUR (ASS)	120
	121
GALET SUPERIEUR	126
GALET SUPERIEUR (ASS)	126
GOULOTTE DE REMPLISSAGE D'HUILE DE TRANSMISSION	97
GROUPE D'INSONORISATION	110
GROUPE DE TRANSFORMATION DE TREUIL	183
	184

H

HALAGE AV - CROCHET	110
HUILE MOTEUR - CARTER (ASS)	24
HUILE MOTEUR - JAUGE (BAIONNETTE)	25
	25.01
HUILE MOTEUR - POMPE	28

Designation	Page

I

INDICATEUR DE COLMATAGE (FILTRE A AIR)	197
INDICATEUR DE COLMATAGE DU FILTRE A AIR	200.02
INDICATEURS (ASS)	197
	200.02
INJECTION DE CARBURANT - CANALISATIONS	47
INTERCALAIRE DE FILTRE A CARBURANT	44
	45
INTERRUPTEUR (ASS)	66
INTERRUPTEUR D'AUXILIAIRE DE DEMARRAGE (ENS)	71.00.01

J

JAUGE D'HUILE MOTEUR (BAIONNETTE) (ASS)	25
	25.01
JOINT ET BAGUE	129
JOINT TORIQUE	73.02
	179
JOINT UNIVERSEL (ASS)	91

K

KIT D'AMORTISSEUR	202
	203.01
KIT D'AXE - DEMARREUR ELECTRIQUE	65.02
KIT DE COMPTEUR D'ENTRETIEN	61
	61.03
	200.02
KIT DE COUSSINETS	65.02
KIT DE JOINT DE DEMARREUR	65.02
KIT DE RECYCLEUR	27
KIT DE REGLAGE DE SIEGE	202
KIT DE RENOVATION DE LA POMPE A EAU	32
KLAXON ELECTRIQUE	58.04
KLAXON ELECTRIQUE (ASS)	58.04

L

LAME DE COUPE (ASS)	159
LAME ORIENTABLE (ASS)	158
	160
LAMPE - AMPOULE MINIATURE	69.04
LAVE-GLACE DE PARE-BRISE (ASS)	199.06

M

MAILLON DE CHAINE (ENS)	128
MANCHON	199
	199.02
	199.02.02
	199.03

INDEX ALPHABETIQUE

Designation	Page
	199.04
	199.05
	203
MANOCONTACT D'HUILE (ENS)	59
	61.01
MONTAGE DE CABINE (ASS)	194.14
MONTAGE DE RIPPER (ASS)	163
MONTAGE DE TOURILLON	161
	162
MONTAGE DE TOURILLON (ASS)	161
	162
MONTAGE DE TREUIL (ASS)	167
MONTAGE DU TOIT ROPS (ASS)	195
MOTEUR (VERSION)	2
	4

O

OEILLETONS DE LEVAGE MOTEUR (ASS)	24

P

PARE-BROUSSAILLES	109
PARE-BROUSSAILLES (ASS)	109
	165.02
PHARE	67
	68
PIGNONNERIE AV	20
PIGNONNERIE AV (ASS)	20
PISTON	11
PISTON (ASS)	12
PISTON ET BIELLE (ASS)	11
POMPE - CANALISATIONS (ASS)	172
	172.02
	191
	192
POMPE A EAU	32
POMPE A EAU (ASS)	32
POMPE A ENGRENAGES (ASS)	84
	150
	151
	173
	193
POMPE A HUILE - SANS CARTER (ASS)	28
POMPE D'ALIMENTATION EN CARBURANT (ASS)	55
	56
POMPE D'AMORCAGE DE CARBURANT (ASS)	57
POMPE D'INJECTION DE CARBURANT	49
	53
POMPE D'INJECTION DE CARBURANT (ASS)	53
	54
PORTIERE DROITE (ASS)	194.08
PORTIERE GAUCHE (ASS)	194.06
POULIE DE VILEBREQUIN	10
PROTECTION - COUVERCLE (ASS)	133
PROTECTION ANTI-VANDALISME	200
PROTECTION ANTI-VANDALISME (ASS)	200
	200.01
PROTECTION DU MECANISME AMORTISSEUR (ASS)	118
	119
PROTECTION ET CAPOT	106
PROTEGE-GALETS (ASS)	120
PROTEGE-RADIATEUR	108
	108.01
PROTEGE-RADIATEUR (ASS)	108.01
PROTEGE-RADIATEUR A CHARNIERES (ASS)	108

R

RADIATEUR (ASS)	29
	30
RALLONGE D'ECHAPPEMENT (ASS)	39
	39.01
RECHAUFFEUR D'EAU DES CHEMISES	34
REDUCTEURS LATERAUX (ASS)	92
	94
REFROIDISSEUR D'HUILE MOTEUR (ASS)	33
	34
REGULATEUR (ASS)	50
REGULATEUR - COMMANDE	58
REGULATEUR ET POMPE D'INJECTION DE CARB. (ASS)	49
RENIFLARD	75
	97
	97.01
	99
	99.01
	134
	174
RENIFLARD (ASS)	26
RESERVOIR DE CARBURANT	42
RESERVOIR DE CARBURANT (ASS)	42
RESERVOIR HYDRAULIQUE (ASS)	132
RESERVOIR HYDRAULIQUE ET FILTRE (ASS)	131
RESSORT AMORTISSEUR	121
RESSORT AMORTISSEUR (ASS)	121
RIPPER (ASS)	163
RIPPER (VERSION)	162
ROPS (VERSION)	194
ROPS OUVERTE (VERSION)	194
ROUE AV	124
ROUE AV (ASS)	122
	124
ROUE AV ET COUSSINETS (ENS)	129

INDEX ALPHABETIQUE

Designation	Page
S	
SEGMENT DE BARBOTIN (ASS)	96.01
SIEGE (ASS)	202
SIEGE AVEC SUPPORT (ASS)	198
	199.03
SIEGE AVEC SUSPENSION (ENS)	203.01
SIEGE RAPPORTE D'ADMISSION	16.01
SIEGE RAPPORTE D'ECHAPPEMENT	15
	16.01
SILENCIEUX (ASS)	38
SOUPAPE D'ECHAPPEMENT	14
SOUPAPE ET MONTAGE (ASS)	151
	152
SOUPAPE SELECTRICE ET REGULATRICE DE PRESSION	81.01
	176
	188
SUPPORT DE MOTEUR ET BOITE (ASS)	23
SUPPORT DE TRAIN DE ROULEMENT (ASS)	115
	116
SURPRESSEUR (ASS)	194.11
SURPRESSEUR DE CABINE (ASS)	194.10
T	
TAMIS DE PREFILTRE (ASS)	41
TEMOINS (ASS)	68
THERMOSTAT	36
THERMOSTAT (ENS)	36
TOIT ROPS (ASS)	196
TOIT ROPS (ENS)	194.01
TRAIN DE ROULEMENT - SUPPORT	116
TRAINS PLANETAIRES (ASS)	86
TREUIL COMPLET (ENS)	164
	165
	165.01
	165.02
TREUIL DE REMORQUAGE (ENS)	165
V	
VENTILATEUR - ENTRAINEMENT	22
VENTILATEUR ASPIRANT	31
VENTILATEUR ASPIRANT (ASS)	31
VENTILATEUR SOUFFLANT	30
VENTILATEUR SOUFFLANT (ASS)	30
VERIN D'INCLINAISON	140
VERIN D'INCLINAISON (ASS)	140
VERIN D'ORIENTATION	139
VERIN D'ORIENTATION (ASS)	139
VERIN D'ORIENTATION - CANALISATIONS (ASS)	144
	145
VERIN DE LEVAGE (ASS)	138
VERIN DE LEVAGE - CANALISATIONS	146
VERIN DE RIPPER (ASS)	141
VERSION DE BULLDOZER	157
VERSION DE TRANSFORMATION DE TREUIL	166
VILEBREQUIN (ASS)	9
VILEBREQUIN - POULIE (ASS)	10
VOLANT MOTEUR (ASS)	18

INDICE

Designacao	Pagina
A	
ADAPTADOR DA RODA MOTRIZ	96.01
AGUA DO MOTOR - AQUECEDOR	34
AGUA DO MOTOR - BOMBA	32
AGUA DO MOTOR - TUBOS	36
ALARME DE MARCHA A RE	70
ALTERNADOR DE CORRENTE	62
	63
	63.01
	63.02
AMPERIMETRO	200.04
ANGULAGEM - CILINDRO	139
AQUECEDOR DA CABINE	195.01
AQUECEDOR DE AGUA DO MOTOR	34
	35
AR - TUBOS	40
ARMACAO "C"	160.03
	160.05
ARMACAO DOS ROLETES DE ESTEIRA	117
ARRANJO HIDRAULICO - 3 VALVULAS	130
ARRANJO HIDRAULICO - 4 VALVULAS	130
ARRANQUE AUXILIAR COM ETER	71
ARREFECEDOR DE OLEO DO MOTOR	33
	34
ASSENTO	202
ASSENTO E SUPORTE	198
	199.03
AUXILIO DE PARTIDA A ETER	71
B	
BARRA DE TRACAO	114
BARRA DE TRACAO OSCILANTE	113
BARRA LIMPADORA DAS ESTEIRAS	112
BARRAS DE PROTECAO DO CAPO	111
BATERIA	62
BATERIA - 12 V	59
	61.01
	62
BATERIA E CABOS/FIOS ELETRICOS	59
BLOCO DO MOTOR	6
	7
	8
BOCAL DE ENCHIMENTO DE OLEO DA TRANSMISSAO	97
BOMBA DE AGUA DO MOTOR	32
BOMBA DE ENGRENAGENS	84
	150
	151
	173
	193
BOMBA DE ESCORVA DO COMBUSTIVEL	57
BOMBA DE INJECAO DO COMBUSTIVEL	53
	54
BOMBA DE OLEO - SEM CAIXA	28
BOMBA DE TRANSFERENCIA DO COMBUSTIVEL	55
	56
BOMBA E TUBOS	142
	172
	172.02
	191
	192
BORDA CORTANTE	159
BUZINA ELETRICA	58.04
C	
CABECOTE DO MOTOR	13
	14
	15
	16
	16.01
	16.02
CABINE	194.02
CABOS/FIOS ELETRICOS - CABINE	69.03
CADEADO	43
	133
	200
	200.01
CAIXA DA EMBREAGEM DE DIRECAO	98.02
CAIXA DA ENGRENAGEM DE TRANSFERENCIA	73.01
CAIXA DIANTEIRA	21
CAIXA DO VOLANTE DO MOTOR	19
CANTO E BORDA CORTANTE	161
CAPO E PROTETOR	106
	106.01
CARCACA DA CAIXA DE MUDANCAS E COMPONENTES	74
CARCACA DA VALVULA; GR DE VALVULA	80
	99.03
	100
	175
	187
CARCACA E TAMPAS DO GUINCHO	174
CARTER DO OLEO DO MOTOR	24
CHASSI	101
CHAVE	61
	61.03
	200.02
CILINDRO DE ANGULAGEM	139
CILINDRO DE ANGULAGEM - TUBOS	145
CILINDRO DE ETER	71
CILINDRO DE INCLINACAO	140
CILINDRO DE INCLINACAO - TUBOS	148
CILINDRO DE LEVANTAMENTO	138
CILINDRO DE LEVANTAMENTO - TUBOS	146
CILINDRO DO RIPER	141
CINTO DE SEGURANCA	199.02.02
	199.05
	204

INDICE

Designacao	Pagina
COLETOR	175
	187
COLETOR DE ESCAPE	37
COMANDO DA BOMBA	85
COMANDO DO GUINCHO	171
COMANDO DO VENTILADOR	22
COMANDO FINAL	92
	94
COMBUSTIVEL - BOMBA DE ESCORVA	57
COMBUSTIVEL - BOMBA DE INJECAO	49
	53
COMBUSTIVEL - BOMBA DE TRANSFERENCIA	55
COMBUSTIVEL - FILTRO	44
COMBUSTIVEL - TANQUE	42
COMBUSTIVEL - TUBOS	46
COMBUSTIVEL - TUBOS DE INJECAO	47
CONTRAPESO - DIANTEIRO	104
CONTRAPESO - RODA-GUIA	127.01
	127.02
CONTROLE DA TRANSMISSAO	76
CONTROLE DAS EMBREAGENS DE DIRECAO	100.04
CONTROLE DE DIRECAO	100.03
CONTROLE DO DECELERADOR	78
CONTROLE DO GOVERNADOR	58
	58.02
CONTROLE DO GUINCHO	170
	185
CONTROLE DO GUINCHO DE REBOQUE	168
	169
	186
CONTROLE HIDRAULICO DAS MARCHAS	80
CONTROLE HIDRAULICO MANUAL	133
	134
	135
	136
	137
CONVERSAO DO GUINCHO	166
CONVERSOR DE TORQUE	71.01
	71.03
CORDAO PARA LITERATURA	199
	199.02
	199.02.02
	199.03
	199.04
	199.05
	203
COROA	82
CRUZETA E MANCAL	83.01

D

DECELERADOR - CONTROLE	78
DENTE	164
DESMATAMENTO - PROTETOR	109
	165.02
DIRECAO	98.01
	100.03
DIRECAO - EMBREAGEM	100.02
DIRECAO - FREIOS	100.08
	100.16.02
DISJUNTOR ELETRICO AUTOMATICO	61
	61.03
	200.03

E

EIXO-COMANDO DE VALVULAS	55
EIXO-COMANDO DE VALVULAS, SINGELO	11
ELEMENTO	35
	131
ELEMENTO - FILTRANTE	40
	98
	131
ELIMINACAO DE VAPORES DO CARTER	26
ELO DA ESTEIRA	128
EMBREAGEM DE DIRECAO	100.02
EMBREAGEM DE DIRECAO - CAIXA	98.02
ENGRENAGEM E EMBREAGEM DO GUINCHO	178
ENGRENAGENS DE DISTRIBUICAO	20
ENGRENAGENS PLANETARIAS	86
ESCAPE - COLETOR	37
ESTEIRA	126
	127
	127.01
ESTEIRA - ROLETE	120
	121
ESTEIRA - ROLETE SUPERIOR	126
ESTEIRAS - ARMACAO DOS ROLETES	117
ESTEIRAS - BARRA LIMPADORA	112
ESTRUTURA ROPS	194
	194.01
ESTRUTURA ROPS ABERTA	194
EXTENSAO DO TUBO DE ESCAPE	39
	39.01

F

FILTRO	194.12
FILTRO - COMBUSTIVEL	44
	45
FILTRO - MAGNETICO	75
FILTRO - OLEO	25
FILTRO - OLEO DA TRANSMISSAO	98
FILTRO - OLEO HIDRAULICO	131
FILTRO - TAMPA DO TANQUE DE COMBUSTIVEL	43
FREIO - DIRECAO	100.08
	100.14
	100.16.02
FUSIVEL - 10 A	58.04
FUSIVEL - 30 A	69.04

INDICE

Designacao	Pagina

G

GANCHO DIANTEIRO	110
GOVERNADOR	50
GOVERNADOR - CONTROLE	58
GOVERNADOR E BOMBA DE INJECAO DO COMBUSTIVEL	49
GR. DE CONVERSAO - GUINCHO	183
	184
GR. DE VALVULAS - 3	152
GR. DE VALVULAS - 4	153
GRUPO PARA REDUCAO DE BARULHO	110
GUINCHO	164
	165
	165.01
	165.02
GUINCHO - COMANDO	189
	190
GUINCHO DE REBOQUE	165

I

ILUMINACAO - 3 LAMPADAS	67
INCLINACAO - CILINDRO	140
INDICADOR - LIMPEZA DO FILTRO DE AR	197
	200.02
INDICADOR - NIVEL DO OLEO DO MOTOR (VARETA)	25
	25.01
INDICADOR/MANOMETRO	197
	200.02
INSERTO - ADMISSAO	16.01
INSERTO - FILTRO DE COMBUSTIVEL	44
	45
INSERTO - SEDE DA VALVULA DE ESCAPE	15
	16.01
INTERRUPTOR	58.04
	69.04
	194.13
INTERRUPTOR - BALANCIM - AUXILIAR DE PARTIDA	71.00.01
INTERRUPTOR - ELETRICO	66
INTERRUPTOR - LIMITADOR	71
	71.00.01
INTERRUPTOR - PRESSAO DO OLEO	59
	61.01
INTERRUPTOR - TRANSMISSAO	70
INTERRUPTOR - 12 V	65
	65.01
	66

Designacao	Pagina

J

JOGO DE ACONDICIONAMENTO DA BOMBA D'AGUA	32
JOGO DE AJUSTADOR DE ASSENTO	202
JOGO DE AMORTECEDOR DE CHOQUES	202
	203.01
JOGO DE MANCAL	65.02
JOGO DE MARCADOR DE HORAS DE SERVICO	61
	61.03
	200.02
JOGO DE PINO DO MOTOR DE ARRANQUE	65.02
JOGO DE RESPIRO - VALVULA DE VENTILACAO POSITIVA	27
JOGO DE RETENTOR DO MOTOR DE ARRANQUE	65.02
JUNTA UNIVERSAL	91

L

LAMINA ANGULAVEL	158
	160
LAMINA BULLDOZER	157
LAMPADA	61
	61.03
	68
	200.02
LAMPADA - FAROL	67
	68
LAMPADA - MINIATURA	69.04
LAVADOR DE PARA-BRISA	199.06
LEVANTAMENTO DO MOTOR	24
LIMPADOR DE PARA-BRISA	199.06
LUVA MANGA CAMISA	199
	199.02
	199.02.02
	199.03
	199.04
	199.05
	203

M

MECANISMO DAS VALVULAS	17
MECANISMO DAS VALVULAS - TAMPA	18
MMRCHA A RE - ALARME	70
MOLA DE CONTROLE DO TORQUE	54
MOLA TENSORA	121
MONTAGEM - CABINE	194.14
MONTAGEM - ESTRUTURA ROPS	195
MONTAGEM - GUINCHO	167
MONTAGEM - MUNHAO	161
	162
MONTAGEM - RIPER	163
MOTOR	2
	4

INDICE

Designacao	Pagina
MOTOR ELETRICO DE ARRANQUE	64
	65
	65.01
	65.02
MUNHAO - MONTAGEM	161
	162

O

OLEO - FILTRO	25
OLEO DO MOTOR - BOMBA	28
OLEO DO MOTOR - CARTER	24

P

PAINEL DE INSTRUMENTOS	106.04
	196
PAINEL TRASEIRO DO MOTOR	106.02
	106.03
PISTAO	11
	12
PISTAO E BIELA	11
POLIA DO VIRABREQUIM	10
PORTA - LADO DIREITO	194.08
PORTA - LADO ESQUERDO	194.06
PRE-PURIFICADOR COM TELA	41
PRESSURIZADOR / VENTILADOR DA CABINE	194.10
	194.11
PROTETOR - DESMATAMENTO	109
PROTETOR - INFERIOR	107
PROTETOR - RADIADOR	108.01
PROTETOR - RADIADOR, COM DOBRADICAS	108
PROTETOR - ROLETES DA ESTEIRA	120
PROTETOR - VANDALISMO	200
	200.01
PROTETOR E CAPO	106
PURIFICADOR DE AR	39
	40

R

RADIADOR	29
	30
RADIADOR - PROTETOR	108
	108.01
REGULADOR DE TEMPERATURA/TERMOSTATO	36
RESPIRO	26
	75
	97
	97.01
	99
	99.01
	134
	174
RETENTOR DE ANEL-O	73.02
	179
RETENTOR E BUCHA	129
RIPER	162
	163
RODA MOTRIZ - SEGMENTO	96.01
RODA-GUIA	122
	124
RODA-GUIA E MANCAL	129
ROLETE DE ESTEIRA	120
	121
ROLETE SUPERIOR DE ESTEIRA	126
ROPS	196

S

SEGMENTO DA RODA MOTRIZ	96.01
SILENCIADOR DO ESCAPAMENTO	38
SUCCAO - VENTILADOR	31
SUPORTE - MOTOR E TRANSMISSAO	23
SUPORTE DAS ARMACOES DOS ROLETES	116
SUPORTE DO MATERIAL RODANTE	115
	116
SUSPENSAO DO ASSENTO	203.01

T

TAMPA - BOCAL DE ENCHIMENTO	131
TAMPA - BOCAL DE ENCHIMENTO DE OLEO	18
TAMPA - MECANISMO DAS VALVULAS	18
TAMPA - PROTECAO	43
	133
TAMPA - PROTECAO DO TANQUE DE COMBUSTIVEL	43
TAMPA - TANQUE DE COMBUSTIVEL	43
TAMPA - TENSORES DAS ESTEIRAS	118
	119
TAMPA - TRASEIRA	69
TAMPAS - EMBARQUE	177
TANQUE DE COMBUSTIVEL	42
TANQUE HIDRAULICO	132
TANQUE HIDRAULICO E FILTRO	131
TERMOSTATO	36
TOMADA DE FORCA - COMANDO	91
TRANSMISSAO	72
TUBOS - AGUA	36
TUBOS - AR	40
TUBOS - ARREFECEDOR DO CONVERSOR DE TORQUE	71.05
TUBOS - BOMBA	142
TUBOS - CILINDRO DE ANGULAGEM	144
	145
TUBOS - CILINDRO DE INCLINACAO	147
	148
TUBOS - CILINDRO DE LEVANTAMENTO	146
TUBOS - COMBUSTIVEL	46
TUBOS - GUINCHO	182

INDICE

Designacao	Pagina
TUBOS - INJECAO DO COMBUSTIVEL	47
	48
TUBOS - OLEO DA TRANSMISSAO	96
TUBOS - RIPER	149
TUBOS - TRASEIROS	143

V

VALVULA DE ALIVIO	154
	156
VALVULA DE ALIVIO DE PRESSAO	134
VALVULA DE CONTROLE	154
	155
	156
VALVULA DE ESCAPE	14
VALVULA DE RETENCAO	153
VALVULA DISJUNTORA	134
VALVULA E MONTAGEM	151
	152
VALVULA SELETORA E CONTROLE DE PRESSAO	81.01
	176
	188
VANDALISMO - PROTETOR	200
VARETA DE NIVEL DO OLEO	25
	25.01
VENTILADOR - COMANDO	22
VENTILADOR DE SOPRO	30
VENTILADOR DE SUCCAO	31
VIRABREQUIM	9
VIRABREQUIM - POLIA	10
VOLANTE DO MOTOR	18
VOLANTE DO MOTOR - CAIXA	19

INDICE

Nombre	Pagina
A	
ACEITE - FILTRO DE	25
ACEITE - INDICADOR (VARILLA) DE NIVEL DE	25
	25.01
ADAPTADOR DE RUEDA MOTRIZ (GR)	96.01
AGUA - BOMBA DE	32
AGUA - TUBERIAS DE	36
AGUA DE LAS CAMISAS - CALENTADOR DEL (GR)	34
	35
AIRE - TUBERIAS DE (GR)	40
ALARMA DE RETROCESO	70
AMPERIMETRO (CONJ)	200.04
ANILLO TORICO	73.02
	179
ARBOL DE LEVAS (CONJ)	55
ARBOL DE LEVAS SENCILLO (GR)	11
ARRANQUE CON ETER - AYUDA DE	71
ASIENTO (GR)	202
ASIENTO CON SUSPENSION (CONJ)	203.01
ASIENTO Y SOPORTE (GR)	198
	199.03
AYUDA DE ARRANQUE CON ETER	71
B	
BARRA DE TIRO (GR)	114
BARRA DE TIRO ORIENTABLE (GR)	113
BARRA LIMPIADORA (GR)	112
BASTIDOR (GR)	101
BASTIDOR DE RODILLOS INFERIORES	117
BASTIDOR DE RODILLOS INFERIORES (GR)	117
BASTIDOR EN C (GR)	160.03
	160.05
BATERIA (GR)	62
BATERIA DE 12 V	59
	61.01
	62
BATERIA Y CABLES (GR)	59
BLOQUE MOTOR (CONJ)	7
	8
BLOQUE MOTOR (GR)	6
BOCINA ELECTRICA	58.04
BOCINA ELECTRICA (GR)	58.04
BOMBA - TUBERIAS DE (GR)	142
BOMBA DE ACEITE SIN CAJA (GR)	28
BOMBA DE AGUA (GR)	32
BOMBA DE CEBADO DE COMBUSTIBLE (GR)	57
BOMBA DE ENGRANAJES (GR)	84
	150
	151
	173
	193
BOMBA DE INYECCION DE COMBUSTIBLE (GR)	53
	54
BOMBA DE TRANSFERENCIA DE COMBUSTIBLE (GR)	55
	56
BOMBA Y TUBERIAS (GR)	172
	172.02
	191
	192
BOMBILLA MINIATURA	69.04
C	
CABINA (GR)	194.02
CABLES DE LA CABINA (GR)	69.03
CADENA - BARRA LIMPIADORA	112
CADENAS (GR)	126
	127
	127.01
CADENAS - RODILLO INFERIOR DE (GR)	120
	121
CADENAS - RODILLO SUPERIOR DE (GR)	126
CAJA DE VOLANTE	19
CAJA DEL EMBRAGUE DE DIRECCION (GR)	98.02
CAJA DELANTERA	21
CAJA DELANTERA (GR)	21
CAJA Y ENGRANAJES DE TRANSFERENCIA (GR)	73.01
CAJA Y PIEZAS (GR)	74
CAJA Y TAPAS (GR)	174
CALEFACCION DE LA CABINA (GR)	195.01
CALENTADOR DEL AGUA DE LAS CAMISAS	34
CANCAMO DE LEVANTAMIENTO DEL MOTOR (GR)	24
CANDADO (GR)	43
	133
	200
	200.01
CANTONERA Y CUCHILLA (GR)	161
CAPO Y PROTECTOR (GR)	106
	106.01
CARGA - ALTERNADOR DE (GR)	62
	63
	63.01
	63.02
CARTER - COLECTOR DEL (GR)	24
CEBADO DE COMBUSTIBLE - BOMBA DE	57
CIGUENAL (GR)	9
CIGUENAL - POLEA DE (GR)	10
CILINDRO DE DESGARRADOR (GR)	141
CILINDRO DE ETER (CONJ)	71
CILINDRO DE HOJA TOPADORA ORIENTABLE - TUBERIAS	144
	145
CILINDRO DE INCLINACION HORIZONTAL	140
CILINDRO DE LEVANTAMIENTO (GR)	138

INDICE

Nombre	Pagina
CILINDRO DE LEVANTAMIENTO - TUBERIAS DEL	146
CILINDRO DE ORIENTACION	139
CINTURON DE SEGURIDAD	204
COLECTOR DEL CARTER	24
COMBUSTIBLE - BOMBA DE INYECCION DE	49
	53
COMBUSTIBLE - FILTRO DE	44
COMBUSTIBLE - TANQUE DE (GR)	42
COMBUSTIBLE - TUBERIAS DE	46
COMBUSTIBLE - TUBERIAS DE INYECCION DE	47
CONSOLA (GR)	106.04
	196
CONTRAPESO DE RUEDA GUIA (GR)	127.01
	127.02
CONTRAPESO DELANTERO	104
CONTRAPESO DELANTERO (GR)	104
CONTROL DE DIRECCION	100.03
CONTROL DE DIRECCION (GR)	100.03
CONTROL DE LA TRANSMISION (GR)	76
CONTROL DE PAR (GR)	54
CONTROL DE REGULADOR (GR)	58
	58.02
CONTROL DE REMOLQUE DEL MALACATE (GR)	168
	169
	186
CONTROL DEL DECELERADOR	78
CONTROL DEL DECELERADOR (GR)	78
CONTROL DEL EMBRAGUE DE DIRECCION (GR)	100.04
CONTROL DEL MALACATE (GR)	170
	185
CONTROL HIDRAULICO DE LA TRANSMISION (GR)	80
CONTROL HIDRAULICO MANUAL (GR)	133
	134
	135
	136
	137
CONVERSION DEL MALACATE (CONFIG)	166
CONVERTIDOR DE PAR (GR)	71.01
	71.03
CORONA (GR)	82
CRUCETA Y COJINETE (GR)	83.01
CUBIERTA POSTERIOR DE CABLES DE LUCES (CABINA)	69
CUBIERTA PROTECTORA (GR)	133
CUCHILLA (GR)	159
CULATA DE CILINDROS (CONJ)	15
	16
	16.01
	16.02
CULATA DE CILINDROS (GR)	13
	14

D

Nombre	Pagina
DESGARRADOR (CONFIG)	162
DESGARRADOR (GR)	163
DIENTE (GR)	164
DIRECCION (CONFIG)	98.01
DIRECCION - CAJA DE EMBRAGUE DE	98.02
DIRECCION - EMBRAGUE DE	100.02
DIRECCION - FRENO DE	100.08
	100.16.02
DISYUNTOR DE CIRCUITO (CONJ)	61
	61.03
	200.03

E

ELEMENTO	131
ELEMENTO (CONJ)	35
ELEMENTO DE FILTRO	40
	98
	131
EMBRAGUE DE DIRECCION (GR)	100.02
EMBRAGUE Y ENGRANAJE (GR)	178
ENCASTRE DE FILTRO DE COMBUSTIBLE	44
	45
ENFRIADOR DE ACEITE DEL MOTOR (GR)	33
	34
ENGRANAJE DELANTERO	20
ENGRANAJE DELANTERO (GR)	20
ESCAPE - MULTIPLE DE	37
ESCAPE DE GASES (GR)	26
ESLABON DE CADENA (CONJ)	128
ESTRUCTURA ROPS (CONFIG)	194
	194.01
ESTRUCTURA ROPS (GR)	196
ESTRUCTURA ROPS ABIERTA	194
EXTENSION DEL ESCAPE (GR)	39
	39.01

F

FILTRO	194.12
FILTRO DE ACEITE (GR)	25
FILTRO DE AIRE (GR)	39
	40
FILTRO DE COMBUSTIBLE (CONJ)	44
	45
FILTRO DE COMBUSTIBLE (GR)	44
	45
FILTRO DE LA TAPA DEL TANQUE	43
FILTRO DE LA TRANSMISION (GR)	98
FILTRO HIDRAULICO	131
FILTRO MAGNETICO	75
FRENO DE DIRECCION (GR)	100.08
	100.14
	100.16.02
FUSIBLE DE 10 A	58.04

INDICE

Nombre	Pagina
FUSIBLE DE 30 A	69.04

G

GANCHO DE TIRO DELANTERO (GR)	110
GRUPO DE CONVERSION DEL MALACATE	183
	184
GRUPO DE INDICADORES	197
	200.02
GRUPO DE MONTAJE DE LA CABINA	194.14
GRUPO DE MONTAJE DEL DESGARRADOR	163
GRUPO DE VALVULAS	80
	99.03
	100
	175
	187

H

HOJA ORIENTABLE (GR)	158
	160
HOJA TOPADORA (CONFIG)	157

I

IMPULSOR DE VENTILADOR (GR)	22
INCLINACION HORIZONTAL - CILINDRO DE (GR)	140
INDICADOR DE SERVICIO DEL FILTRO DE AIRE	200.02
INDICADOR DEL FILTRO DE AIRE	197
INDICADOR DEL NIVEL DE ACEITE (VARILLA) (GR)	25
	25.01
INSERTO DE ADMISION	16.01
INSERTO DE ESCAPE	15
	16.01
INSONORIZACION (GR)	110
INTERRUPTOR (CONJ)	58.04
	69.04
	194.13
INTERRUPTOR (GR)	66
INTERRUPTOR DE LA AYUDA DE ARRANQUE (CONJ)	71.00.01
INTERRUPTOR DE LA TRANSMISION (CONJ)	70
INTERRUPTOR DE PRESION DE ACEITE (CONJ)	59
	61.01
INTERRUPTOR DE 12 V (CONJ)	65
	65.01
	66
INTERRUPTOR DEL GRUPO DE ALARMA DE RETROCESO	71
	71.00.01

Nombre	Pagina

J

JUEGO DE AJUSTE DEL ASIENTO	202
JUEGO DE AMORTIGUADOR	202
	203.01
JUEGO DE COJINETES	65.02
JUEGO DE LA VALVULA DEL RESPIRADERO DEL CARTER	27
JUEGO DE MEDIDOR DE SERVICIO	61
	61.03
	200.02
JUEGO DE PASADOR (MOTOR DE ARRANQUE ELECTRICO)	65.02
JUEGO DE RECONSTRUCCION DE LA BOMBA	32
JUEGO DE SELLOS DEL MOTOR DE ARRANQUE	65.02
JUNTA UNIVERSAL (GR)	91

L

LAMPARA	61
	61.03
	200.02
LAMPARA DE REFLECTOR	67
	68
LAMPARAS (GR)	68
LAVAPARABRISAS (GR)	199.06
LIMPIADOR (GR)	199.06
LLAVE	61
	61.03
	200.02
LUCES - GRUPO DE 3 LAMPARAS	67

M

MALACATE (CONFIG)	164
	165
	165.01
	165.02
MALACATE - REMOLQUE (CONFIG)	165
MALEZA - PROTECTOR (GR)	109
	165.02
MAMPARA ANTITERMICA (GR)	106.02
	106.03
MANDO DE BOMBA (GR)	85
MANDO DE LA TOMA DE FUERZA (GR)	91
MANDO DEL MALACATE (CONFIG)	189
	190
MANDO DEL MALACATE (GR)	171
MANDO FINAL (GR)	92
	94
MANGUITO	199
	199.02
	199.02.02
	199.03
	199.04
	199.05

INDICE

Nombre	Pagina
	203
MECANISMO DE VALVULAS (GR)	17
MONTAJE DE LA CABINA (GR)	194.14
MONTAJE DE LA ESTRUCTURA ROPS (GR) ..	195
MONTAJE DEL MALACATE (GR)	167
MONTAJE DEL MUNON (GR)	161
	162
MOTOR (CONFIG)	2
	4
MOTOR - BOMBA DE ACEITE DEL	28
MOTOR DE ARRANQUE ELECTRICO (GR)	64
	65
	65.01
	65.02
MULTIPLE (GR)	175
	187
MULTIPLE DE ESCAPE (GR)	37
MUNON - MONTAJE DEL	161
	162

O

ORIENTACION - CILINDRO DE (GR)	139

P

PISTON	11
PISTON (GR)	12
PISTON Y BIELA (GR)	11
PLANETARIOS (GR)	86
POLEA DE CIGUENAL	10
PRESURIZADOR (GR)	194.11
PRESURIZADOR DE LA CABINA (GR)	194.10
PROTECTOR CONTRA EL VANDALISMO (GR).....	200
	200.01
PROTECTOR CONTRA LA MALEZA	109
PROTECTOR DE RODILLOS INFERIORES (GR).....	120
PROTECTOR DEL RADIADOR	108
	108.01
PROTECTOR DEL RADIADOR (GR)	108.01
PROTECTOR DEL RADIADOR CON CHARNELA (GR)	108
PROTECTOR DEL RESORTE TENSOR (GR)	118
	119
PROTECTOR INFERIOR (GR)	107
PROTECTOR Y CAPO	106
PROTECTORES CONTRA RAMAS (GR)	111
PROTECTORES DE EMBARQUE (GR)	177
PUERTA DERECHA (GR)	194.08
PUERTA IZQUIERDA (GR)	194.06

R

RADIADOR (GR)	29
	30
REGULADOR (GR)	50
REGULADOR - CONTROL DEL	58
REGULADOR DE TEMPERATURA (TERMOSTATO).....	36
REGULADOR Y BOMBA DE INYECCION DE COMBUSTIBLE	49
REJILLA DE ANTEFILTRO (GR)	41
RESORTE TENSOR	121
RESORTE TENSOR (GR)	121
RESPIRADERO	75
	97
	97.01
	99
	99.01
	134
	174
RESPIRADERO (GR)	26
RETROCESO - ALARMA DE (GR)	70
RODILLO SUPERIOR DE CADENAS	126
RODILLOS INFERIORES	120
	121
RUEDA GUIA DELANTERA	124
RUEDA GUIA DELANTERA (GR)	122
	124
RUEDA GUIA Y COJINETE	129
RUEDA MOTRIZ - SEGMENTO DE	96.01

S

SEGMENTO DE RUEDA MOTRIZ (GR)	96.01
SEGURIDAD - CINTURON DE (GR) ..	199.02.02
	199.05
	204
SELLO Y BUJE (GR)	129
SILENCIADOR (GR)	38
SOPLADOR - VENTILADOR (GR)	30
SOPORTE DEL MOTOR Y LA TRANSMISION (GR).....	23
SOPORTE DEL TREN DE RODAJE (GR)	115
	116
SUCCION - VENTILADOR DE (GR)	31
SUJETADOR DEL MANUAL DE LA MAQUINA ..	199
	199.02
	199.02.02
	199.03
	199.04
	199.05
	203

INDICE

Nombre Pagina

T

TANQUE DE COMBUSTIBLE 42
TANQUE HIDRAULICO (GR) 132
TANQUE Y FILTRO HIDRAULICOS (GR) 131
TAPA DE LLENADO 131
TAPA DE VALVULAS 18
TAPA DEL MECANISMO DE VALVULAS (GR)..... 18
TAPA DEL TANQUE DE COMBUSTIBLE 43
TAPA DEL TUBO DE LLENADO DE ACEITE .. 18
TAPA PROTECTORA 133
TAPA PROTECTORA (GR) 43
TAPA PROTECTORA DEL TANQUE DE COMBUSTIBLE 43
TERMOSTATO (CONJ) 36
TIRO DELANTERO - GANCHO DE 110
TRANSFERENCIA DE COMBUSTIBLE - BOMBA DE..... 55
TRANSMISION (CONFIG) 72
TREN DE RODAJE - SOPORTE DEL 116
TUBERIAS DE ACEITE DEL TREN DE FUERZA (GR) 96
TUBERIAS DE AIRE 40
TUBERIAS DE BOMBA 142
TUBERIAS DE COMBUSTIBLE (GR) 46
TUBERIAS DE INYECCION DE COMBUSTIBLE (GR)..... 47
48
TUBERIAS DEL AGUA (GR) 36
TUBERIAS DEL CILINDRO DE HOJA TOPADORA ORIENTABLE 145
TUBERIAS DEL CILINDRO DE INCLINACION 148
TUBERIAS DEL CILINDRO DE INCLINACION (GR)..... 147
148
TUBERIAS DEL CILINDRO DE LEVANTAMIENTO 146
TUBERIAS DEL DESGARRADOR (GR) 149
TUBERIAS DEL ENFRIADOR DEL CONVERTIDOR DE PAR..... 71.05
TUBERIAS DEL MALACATE (GR) 182
TUBERIAS POSTERIORES (GR) 143
TUBO DE LLENADO DE ACEITE DE LA TRANSMISION (GR)..... 97

V

VALVULA DE ALIVIO (GR) 154
156
VALVULA DE ALIVIO - DESCONEXION (GR)..... 134
VALVULA DE ALIVIO DE PRESION (CONJ)..... 134
VALVULA DE CONTROL (GR) 154
155
156
VALVULA DE ESCAPE 14
VALVULA DE RETENCION (GR) 153
VALVULA HIDRAULICA DE 3 VIAS (CONFIG)..... 130
VALVULA HIDRAULICA DE 4 VIAS (CONFIG)..... 130
VALVULA SELECTORA Y DE CONTROL DE PRESION (GR)..... 81.01
176
188
VALVULA Y MONTAJE (GR) 151
152
VALVULAS HIDRAULICAS - GRUPO DE 3 152
VALVULAS HIDRAULICAS - GRUPO DE 4 153
VANDALISMO - PROTECTOR CONTRA EL 200
VENTILADOR - MANDO DE 22
VENTILADOR DE SUCCION 31
VENTILADOR SOPLADOR 30
VOLANTE (GR) 18
VOLANTE - CAJA DE (GR) 19

INHALTSVERZEICHNIS

Bezeichnung	Seite
A	
ABSTREIFBALKEN	112
AETHERSTARTHILFE	71
AETHERZYLINDER	71
AMPEREMETER	200.04
ANLASSERRITZEL-EINBAUSATZ	65.02
ANLASSMOTOR, ELEKTR.	64
	65
	65.01
	65.02
ANTRIEBSRADADAPTER	96.01
ANTRIEBSRADSEGMENT	96.01
ANZEIGENSATZ	197
	200.02
ARBEITSLEUCHTE	67
	68
ARMATURENBRETT	106.04
	196
AUFREISSER	163
AUFREISSER - TEILLISTE	162
AUFREISSERAUFHAENGUNG	163
AUFREISSERZAHN	164
AUFREISSERZYLINDER	141
AUSLASSVENTIL	14
AUSLASSVENTILEINSAETZE	15
	16.01
AUSPUFFKRUEMMER	37
AUSPUFFROHRVERLAENGERUNG	39
	39.01
B	
BATTERIE	62
BATTERIE - 12 V	59
	61.01
	62
BATTERIE UND VERDRAHTUNG	59
BEGRENZERSCHALTER	71
	71.00.01
BELEUCHTUNGSANLAGE - 3 LEUCHTEN	67
C	
C-RAHMEN	160.03
	160.05
D	
DICHTUNG UND BUCHSE	129
DREHMOMENTWANDLER	71.01
	71.03
DREHSTROMLICHTMASCHINE	62
	63
	63.01
	63.02
DRUCKLUEFTER	30
DRUCKLUFTLEITUNGEN	40
E	
ECK- UND SCHNEIDMESSER	161
EINFUELLSTUTZENKAPPE	131
EINLASSVENTILEINSAETZE	16.01
ENTDUNSTER	26
ENTLUEFTER	26
	75
	97
	97.01
	99
	99.01
	134
	174
ENTLUEFTER - KURBELGEHAEUSE-EXPLOSIONSKAPPE	27
F	
FAHRERHAUS	194.02
FAHRERHAUS-ANBAUSATZ	194.14
FAHRERHAUSANBAUSATZ	194.14
FAHRERHAUSBELUEFTUNG	194.10
	194.11
FAHRERHAUSHEIZUNG	195.01
FAHRERHAUSTUER (LINKS)	194.06
FAHRERHAUSTUER (RECHTS)	194.08
FAHRERHAUSVERDRAHTUNG	69.03
FAHRERSITZ	202
FAHRERSITZFEDERUNG	203.01
FAHRERSITZUNTERBAU	198
	199.03
FEUERSCHUTZWAND	106.02
	106.03
FILTER	194.12
FILTERELEMENT	35
	40
	98
	131
FRONTZUGHAKEN	110
G	
GASREDUZIERGESTAENGE	78
GEGENGEWICHT, VORNE	104
GETRIEBE	72
GETRIEBEGEHAEUSE UND TEILE	74
GETRIEBEHYDRAULIK	80
GETRIEBEOELFUELLSTUTZEN	97
GETRIEBESCHMIERFILTER	98
GETRIEBESTEUERUNG	76

INHALTSVERZEICHNIS

Bezeichnung	Seite
H	
HAUPTSCHALTER	66
HAUPTSCHALTER - GETRIEBE	70
HUBOESE	24
HUBZYLINDER	138
HUBZYLINDERLEITUNGEN	146
HUPE, ELEKTR.	58.04
HYDRAULIKANORDNUNG (3-VENTIL-HYDRAULIK)	130
HYDRAULIKANORDNUNG (4-VENTIL-HYDRAULIK)	130
HYDRAULIKHANDSTEUERUNG	133
	134
	135
	136
	137
HYDRAULIKPUMPE UND -LEITUNGEN	142
HYDRAULIKTANK	132
HYDRAULIKTANK UND SCHMIERFILTER	131
HYDRAULIKTANKFILTERELEMENT	131
K	
KETTENGLIEDER	128
KETTENSPANNERVERKLEIDUNG	118
	119
KETTENSPANNFEDER	121
KIPPSCHALTER (AETHER-STARTHILFE)	71.00.01
KOLBEN	11
	12
KRAFTSTOFFEINSPRITZLEITUNGEN	47
	48
KRAFTSTOFFEINSPRITZPUMPE	49
	53
	54
KRAFTSTOFFENTLUEFTUNGSPUMPE	57
KRAFTSTOFFILTER	44
	45
KRAFTSTOFFILTEREINSATZ	44
	45
KRAFTSTOFFLEITUNGEN	46
KRAFTSTOFFOERDERPUMPE	55
	56
KRAFTSTOFFTANK	42
KRAFTSTOFFTANKKAPPE	43
KREUZGELENK	91
KREUZGELENK UND LAGER	83.01
KRUEMMER	175
	187
KUEHLERNETZ	29
	30
KUEHLERSCHUTZ	108
	108.01
KUEHLERSCHUTZ (MIT SCHARNIEREN)	108
KUEHLWASSERLEITUNGEN	36
KUEHLWASSERPUMPE	32
KUEHLWASSERPUMPEN-REGENERIERSATZ	32

Bezeichnung	Seite
KURBELWELLE	9
KURBELWELLEN-RIEMENSCHEIBE	10
L	
LAGERSATZ	65.02
LAUFROLLE	120
	121
LAUFROLLENSCHUTZ	120
LAUFWERKS-QUERTRAEGER	116
LAUFWERKSKETTE	126
	127
	127.01
LAUFWERKSRAHMEN	117
LAUFWERKSRAHMEN-AUFHAENGUNG	115
	116
LEITRAD	122
	124
LEITRAD UND LAGER	129
LEITRADGEGENGEWICHT	127.01
	127.02
LEITUNGEN, AUFREISSER	149
LEITUNGEN, HINTEN	143
LENKBETAETIGUNG	100.03
LENKBREMSE	100.08
	100.14
	100.16.02
LENKKUPPLUNG	100.02
LENKKUPPLUNGSGEHAEUSE	98.02
LENKKUPPLUNGSGEHAEUSE UND DECKEL	98.02
LENKKUPPLUNGSSTEUERUNG	100.04
LENKUNG	98.01
LEUCHTE	61
	61.03
	200.02
LITERATURABLAGE	199
	199.02
	199.02.02
	199.03
	199.04
	199.05
	203
LUEFTERANTRIEB	22
LUFTFILTER-WARTUNGSANZEIGE	197
	200.02
LUFTREINIGER	39
	40
M	
MAGNETFILTER	75
MANSCHETTE	199
	199.02
	199.02.02
	199.03
	199.04
	199.05
	203

INHALTSVERZEICHNIS

Bezeichnung	Seite
MINIATURLEUCHTE	69.04
MONTAGEZAPFEN	161
	162
MOTOR- UND GETRIEBEAUFHAENGUNG	23
MOTORAUSFUEHRUNG	2
	4
MOTORBLOCK	6
	7
	8
MOTORHAUBE UND VERKLEIDUNG	106
	106.01
MOTOROELKUEHLER	33
	34
MOTORSEITENVERKLEIDUNG	109
	165.02
N	
NEIGEZYLINDER	140
NEIGEZYLINDERLEITUNGEN	147
	148
NOCKENWELLE	55
NOCKENWELLE (MOTOR)	11
O	
O-RING-DICHTUNG	73.02
	179
OELDRUCKSCHALTER	59
	61.01
OELFUELLSTUTZENKAPPE	18
OELLEITUNGEN (KRAFTUEBERTRAGUNG)	96
OELMESSSTAB	25
	25.01
OELWANNE	24
P	
PANZERWANNE	107
PLANETENSATZ	86
PLANIEREINRICHTUNG	157
PLANIERSCHILD-MONTAGEZAPFEN	161
	162
PLEUELSTANGE UND KOLBEN	11
PUMPE UND LEITUNGEN	172
	172.02
	191
	192
PUMPENANTRIEB	85
PUMPENLEITUNGEN	142
R	
REGLER	50
REGLER UND KRAFTSTOFFEINSPRITZPUMPE	49
REGLERSTEUERUNG	58
	58.02

Bezeichnung	Seite
RUECKFAHRWARNHORN	70
RUECKSCHLAGVENTIL (GEGEN VAKUUM)	134
S	
SAUGLUEFTER	31
SCHALLDAEMPFENDE VERKLEIDUNG	110
SCHALLDAEMPFER	38
SCHALT- UND DRUCKSTEUERUNG	81.01
	176
	188
SCHALTER	58.04
	69.04
	194.13
SCHEIBENWASCHANLAGE	199.06
SCHEIBENWISCHER	199.06
SCHEINWERFER	68
SCHLUESSEL	61
	61.03
	200.02
SCHMIERFILTER	25
SCHMIERPUMPE	28
SCHMIERPUMPE OHNE GEHAEUSE	28
SCHNEIDMESSER	159
SCHUTZABDECKEN	133
SCHUTZBUEGEL	111
SCHUTZKAPPE	43
SCHUTZVERKLEIDUNG	200
	200.01
SCHWENKSCHILD	158
	160
SCHWENKSCHILDZYLINDER	139
SCHWENKZUGBALKEN	113
SCHWENKZYLINDERLEITUNGEN	144
	145
SCHWUNGSCHEIBE	18
SCHWUNGSCHEIBENGEHAEUSE	19
SEILWINDE - TEILLISTE	164
	165
	165.01
	165.02
SEILWINDENANTRIEB	171
	189
	190
SEILWINDENAUFHAENGUNG	167
SEITENANTRIEB	92
	94
SICHERHEITSGURT	199.02.02
	199.05
	204
SICHERUNG (10 A)	58.04
SICHERUNG (30 A)	69.04
SITZVERSTELLER	202
SPERRVENTIL	153
STARTERDICHTUNGS-EINBAUSATZ	65.02
STARTSCHALTER - 12 V	65
	65.01
	66

INHALTSVERZEICHNIS

Bezeichnung	Seite
STEINAUSSTOSSER	112
STEUERVENTIL	154
	155
	156
STIRNRAD	20
STIRNRADGEHAEUSE	21
STOSSDAEMPFER-REPARATURSATZ	202
	203.01

T

TANKKAPPE	43
TELLERRAD	82
TEMPERATURREGLER	36
THERMOSTAT	36
TRAGROLLE	126
TRAGROLLEN	126

U

UEBERDRUCKVENTIL	134
	154
	156
UEBERROLL-SCHUTZDACHAUFLAGER	195
UEBERROLLSCHUTZ	194
	194.01
	196
UEBERROLLSCHUTZDACH	194
UMLAUFKUEHLWASSERHEIZUNG	34
	35
UNTERBRECHER	61
	61.03
	200.03

V

VENTILAUFHAENGUNG	151
	152
VENTILDECKEL	18
VENTILSATZ	80
	99.03
	100
	175
	187
VENTILSATZ (3-VENTIL)	152
VENTILSATZ (4-VENTIL)	153
VENTILSTEUERUNG	17
VERKLEIDUNG, HINTEN	69
VERSANDDECKEL	177
VORABSCHEIDER	41
VORDERRAHMEN	101
VORGELEGE UND -GEHAEUSE	73.01
VORHANGSCHLOSS	43
	133
	200
	200.01

Bezeichnung	Seite

W

WANDLEROELKUEHLERLEITUNGEN	71.05
WARTUNGSMESSER-EINBAUSATZ	61
	61.03
	200.02
WINDEN-OELLEITUNGEN	182
WINDEN-UMBAUSATZ	166
	183
	184
WINDENGEHAEUSE UND -DECKEL	174
WINDENKUPPLUNG UND ANTRIEB	178
WINDENSTEUERUNG	170
	185

Z

ZAHNRADPUMPE	84
	150
	151
	173
	193
ZAHNSTANGENANSCHLAG	54
ZAPFWELLENANTRIEB	91
ZUGHAKEN	114
ZUGWINDE	165
ZUGWINDENSTEUERUNG	168
	169
	186
ZYLINDERKOPF	13
	14
	15
	16
	16.01
	16.02

ENGINE ARRANGEMENT

1	1W4263	ALTERNATOR GP	62
1	6N3382	BREATHER GP	26
1	6N2393	CAMSHAFT GP-SINGLE	11
1	7C7744	COOLER GP-ENGINE OIL	33
1	2W7486	COVER GP-VALVE MECHANISM	18
1	7W3926	CRANKSHAFT GP	9
1	1W4326	CYLINDER BLOCK GP	6
1	6N2467	CYLINDER HEAD GP	13
1	7N5141	DRIVE GP-FAN	22
1	7E3734	FILTER GP-FUEL	45
1	1N3224	FILTER GP-OIL	25
1	7N6937	FLYWHEEL GP	18
1	9Y1898	FUMES DISPOSAL GP	26
1	1WO367	GAUGE GP-OIL LEVEL	25
1	1W1355	GEAR GP-FRONT	20
1	7WO189	GOVERNOR & FUEL INJECTION PUMP GP	49
1	7N6344	HOUSING GP-FLYWHEEL	19
1	2W4384	HOUSING GP-FRONT	21
1	1W5554	LIFTING GP-ENGINE	24
1	1W5O54	LINES GP-AIR	40
1	1W1354	LINES GP-FUEL INJECTION	47
1	4NO188	LINES GP-WATER	36

511033 P

7E6635 ENGINE AR-PART 1 OF 2
Engine S/N 45V84093-Up

ENGINE ARRANGEMENT

1	7N4971	MANIFOLD GP-EXHAUST	37
1	6N8370	PAN GP-OIL	24
1	7N5138	PULLEY GP-CRANKSHAFT	10
1	2W4403	PUMP GP-FUEL TRANSFER	55
1	2W6697	PUMP GP-OIL-WITHOUT HOUSING	28
1	4N0660	PUMP GP-WATER	32
4	8N4079	ROD & PISTON GP	11
1	4N0190	STARTING MOTOR GP-ELECTRIC	64
1	1W5720	VALVE MECHANISM GP	17

GASKET KITS

8T6732 CENTRAL & LOWER STRCTURE
8T6731 FRONT STRUCTURE
7X7658 FUEL SYSTEM
7X7697 OIL COOLER & LINES
8C3792 REAR STRUCTURE
7X2846 SINGLE CYLINDER HEAD

511033 P

7E6635 ENGINE AR-PART 2 OF 2
Engine S/N 45V84093-Up

ENGINE ARRANGEMENT

1	1W4263	ALTERNATOR GP	62
1	6N3382	BREATHER GP	26
1	6N2393	CAMSHAFT GP-SINGLE	11
1	7C7744	COOLER GP-ENGINE OIL	33
1	2W7486	COVER GP-VALVE MECHANISM	18
1	7W3926	CRANKSHAFT GP	9
1	1W4326	CYLINDER BLOCK GP	6
1	6N2467	CYLINDER HEAD GP	13
1	7N5141	DRIVE GP-FAN	22
1	9Y1897	FILTER GP-FUEL S/N 45V69350-84090	44
1	7E3734	FILTER GP-FUEL S/N 45V84091-UP	45
1	1N3224	FILTER GP-OIL	25
1	7N6937	FLYWHEEL GP	18
1	9Y1898	FUMES DISPOSAL GP	26
1	1WO367	GAUGE GP-OIL LEVEL	25
1	1W1355	GEAR GP-FRONT	20
1	7WO189	GOVERNOR & FUEL INJECTION PUMP GP	49
1	7N6344	HOUSING GP-FLYWHEEL	19
1	2W4384	HOUSING GP-FRONT	21
1	1W5554	LIFTING GP-ENGINE	24
1	1W5054	LINES GP-AIR	40
1	1W1354	LINES GP-FUEL INJECTION	47
1	4NO188	LINES GP-WATER	36

451395 P

9Y0792 ENGINE AR-PART 1 OF 2
Engine S/N 45V69350-Up

ENGINE ARRANGEMENT

1	7N4971	MANIFOLD GP-EXHAUST	37
1	6N8370	PAN GP-OIL	24
1	7N5138	PULLEY GP-CRANKSHAFT	10
1	2W4403	PUMP GP-FUEL TRANSFER	55
1	2W6697	PUMP GP-OIL-WITHOUT HOUSING	28
1	4N0660	PUMP GP-WATER	32
4	8N4079	ROD & PISTON GP	11
1	4N0190	STARTING MOTOR GP-ELECTRIC	64
1	1W5720	VALVE MECHANISM GP	17

GASKET KITS AVAILABLE

8T6732 CENTRAL & LOWER STRCTURE
8T6731 FRONT STRUCTURE
8T6734 FUEL SYSTEM
7X7697 OIL COOLER & LINES
7X7707 REAR STRUCTURE

451395 P

9Y0792 ENGINE AR-PART 2 OF 2
Engine S/N 45V69350-Up

BASIC ENGINE

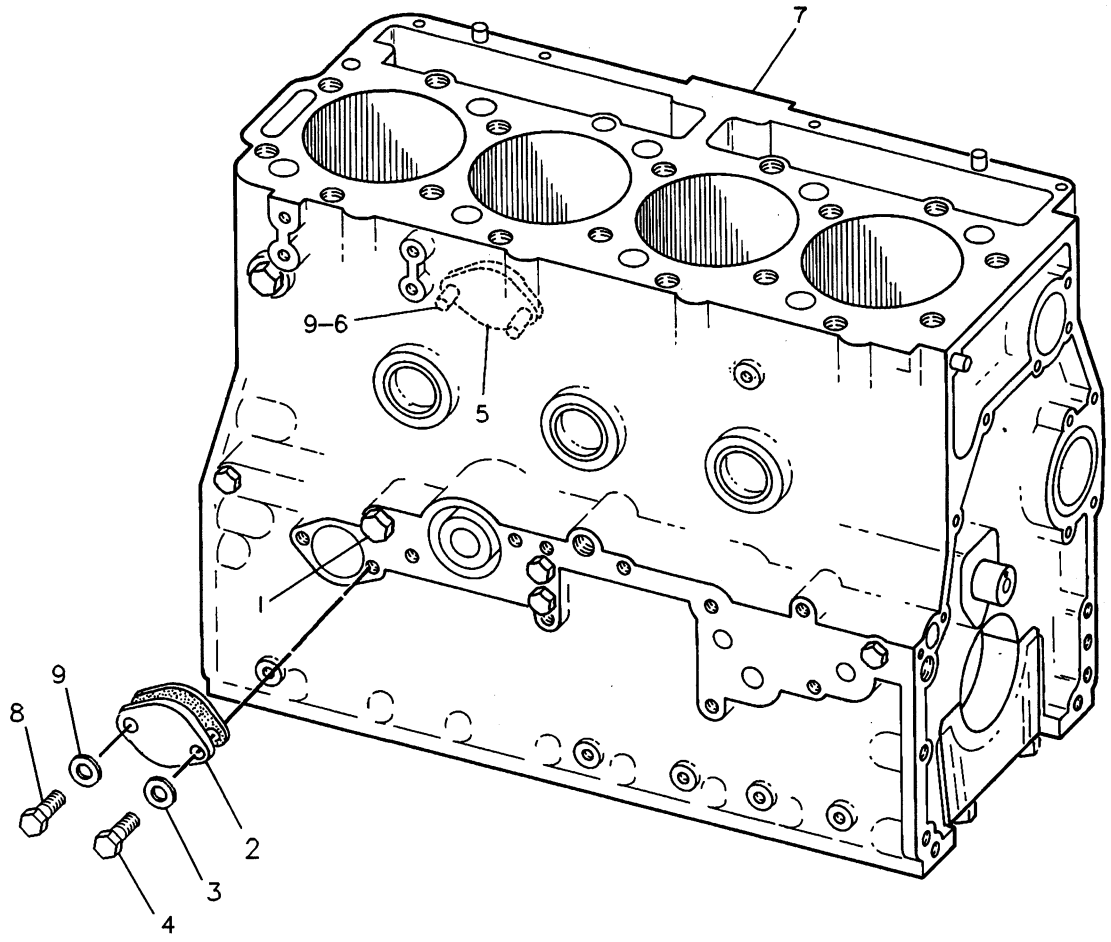

NOTE	REF NO	PART NUMBER	QTY	PART NAME	NOTE	REF NO	PART NUMBER	QTY	PART NAME
	1	9S4185	1	PLUG-O-RING					
		3K0360	1	SEAL-O-RING					
	2	4N0996	1	COVER					
		4N0699	1	GASKET					
	3	5M2894	1	WASHER					
	4	0S1594	1	BOLT					
B	5	2P2772	1	COVER					
B		4N0933	1	GASKET					
B	6	0L1351	2	BOLT					
Y	7	1W4327	1	CYLINDER BLOCK AS					
B	8	0S1594	1	BOLT					
B	9	5M2894	3	WASHER					

B-USE AS REQUIRED
Y-SEPARATE ILLUSTRATION

R-498544 EP

1201 **1W4326 CYLINDER BLOCK GP**
1W4327-Page 7

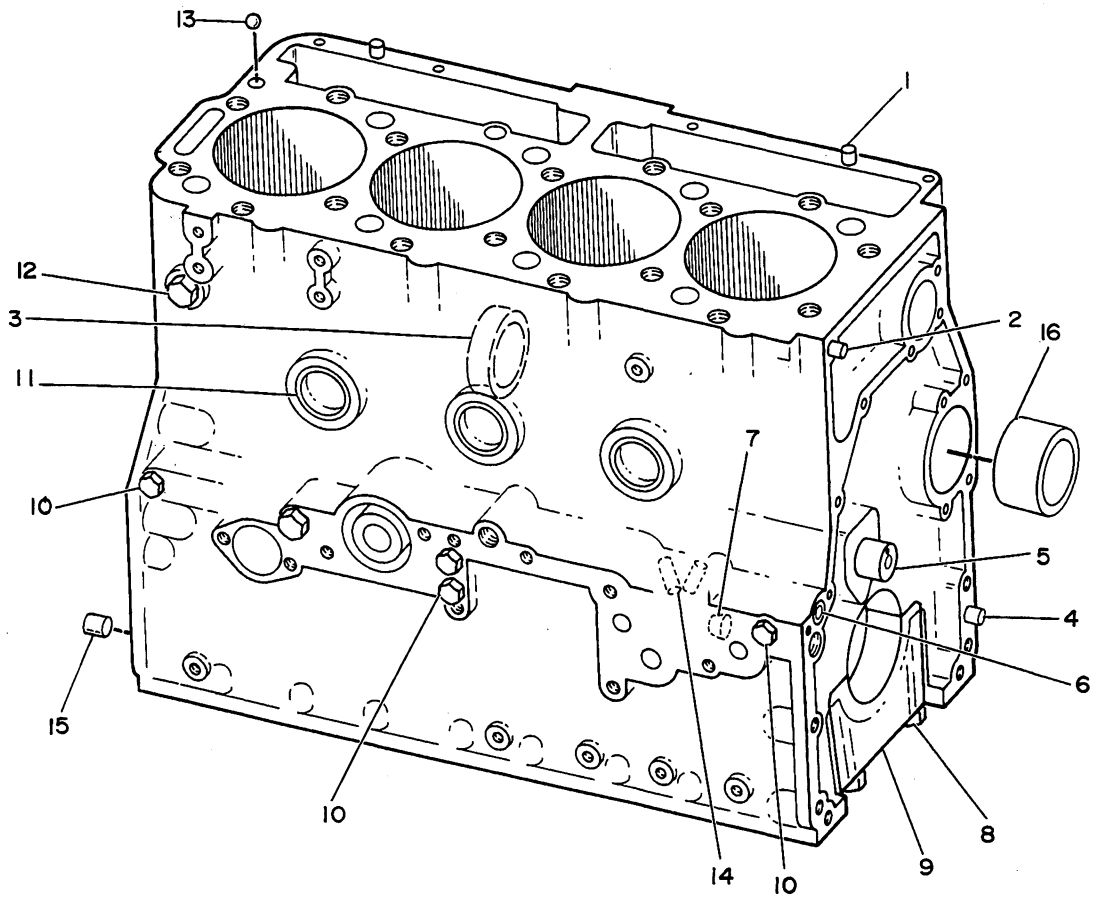

NOTE	REF NO	PART NUMBER	QTY	PART NAME	NOTE	REF NO	PART NUMBER	QTY	PART NAME
	1	9L8002	2	DOWEL-HOLLOW					
	2	1M3735	1	DOWEL					
	3	9N5246	2	BEARING-CAMSHAFT					
	4	1A2223	1	DOWEL					
	5	4N0098	1	SHAFT-FUEL PUMP IDLER					
	6	4N0952	2	PLUG-CUP					
	7	4B4845	1	PLUG					
	8	8S4740	10	BOLT					
	9	6N8146	5	CAP-CRANKSHAFT BEARING					
	10	5M6214	6	PLUG-PIPE					
	11	3H5552	3	PLUG-CUP					
	12	3J5390	1	PLUG					
	13	4B9782	1	BALL					
	14	7M4593	4	PLUG					
	15	3F0957	2	DOWEL					
C	16	1W5920	1	BEARING-CAMSHAFT					

C-CHANGE FROM PREVIOUS TYPE

B-491931 EP

1W4327 CYLINDER BLOCK AS

Field Replacement Order 2W7902 Cylinder Block As-Page 8 & 2W7901 Block Kit
Part Of 1W4326 Cylinder Block

BASIC ENGINE

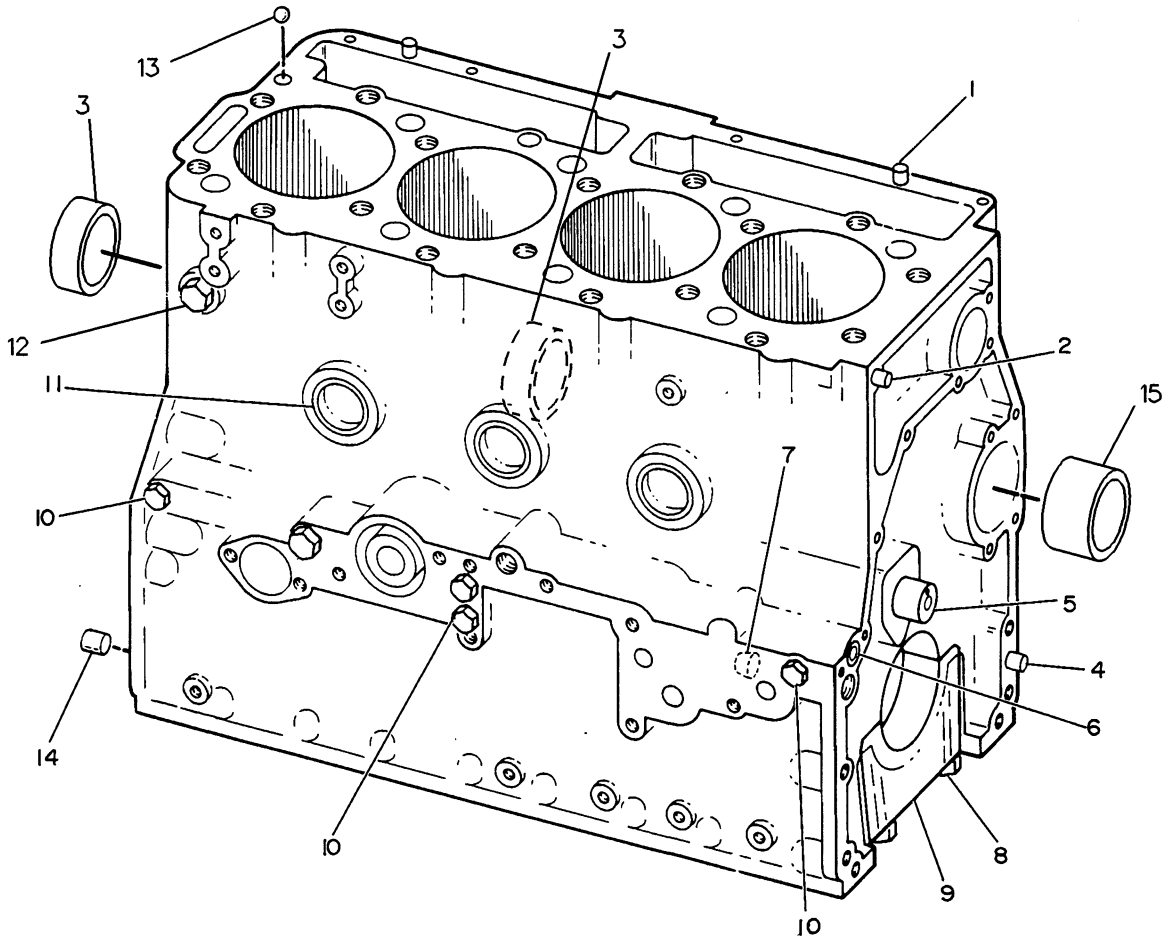

NOTE	REF NO	PART NUMBER	QTY	PART NAME	NOTE	REF NO	PART NUMBER	QTY	PART NAME
	1	9L8002	2	DOWEL-HOLLOW					
	2	1M3735	1	DOWEL					
C	3	9N5246	2	BEARING-CAMSHAFT					
	4	1A2223	1	DOWEL					
	5	4N0098	1	SHAFT-FUEL PUMP IDLER					
	6	4N0952	2	PLUG-CUP					
	7	4B4845	1	PLUG					
	8	8S4740	10	BOLT					
	9	6N8146	5	CAP-CRANKSHAFT BEARING					
	10	5M6214	6	PLUG-PIPE					
	11	3H5552	3	PLUG-CUP					
	12	3J5390	1	PLUG					
	13	4B9782	1	BALL					
	14	3F0957	2	DOWEL					
	15	1W5920	1	BEARING-CAMSHAFT					

C-CHANGE FROM PREVIOUS TYPE

R-498476 EP

1201 **2W7902 CYLINDER BLOCK AS**

Field Replacement For 1W4327-Page 7 When Used With 2W7901 Block Kit

BASIC ENGINE

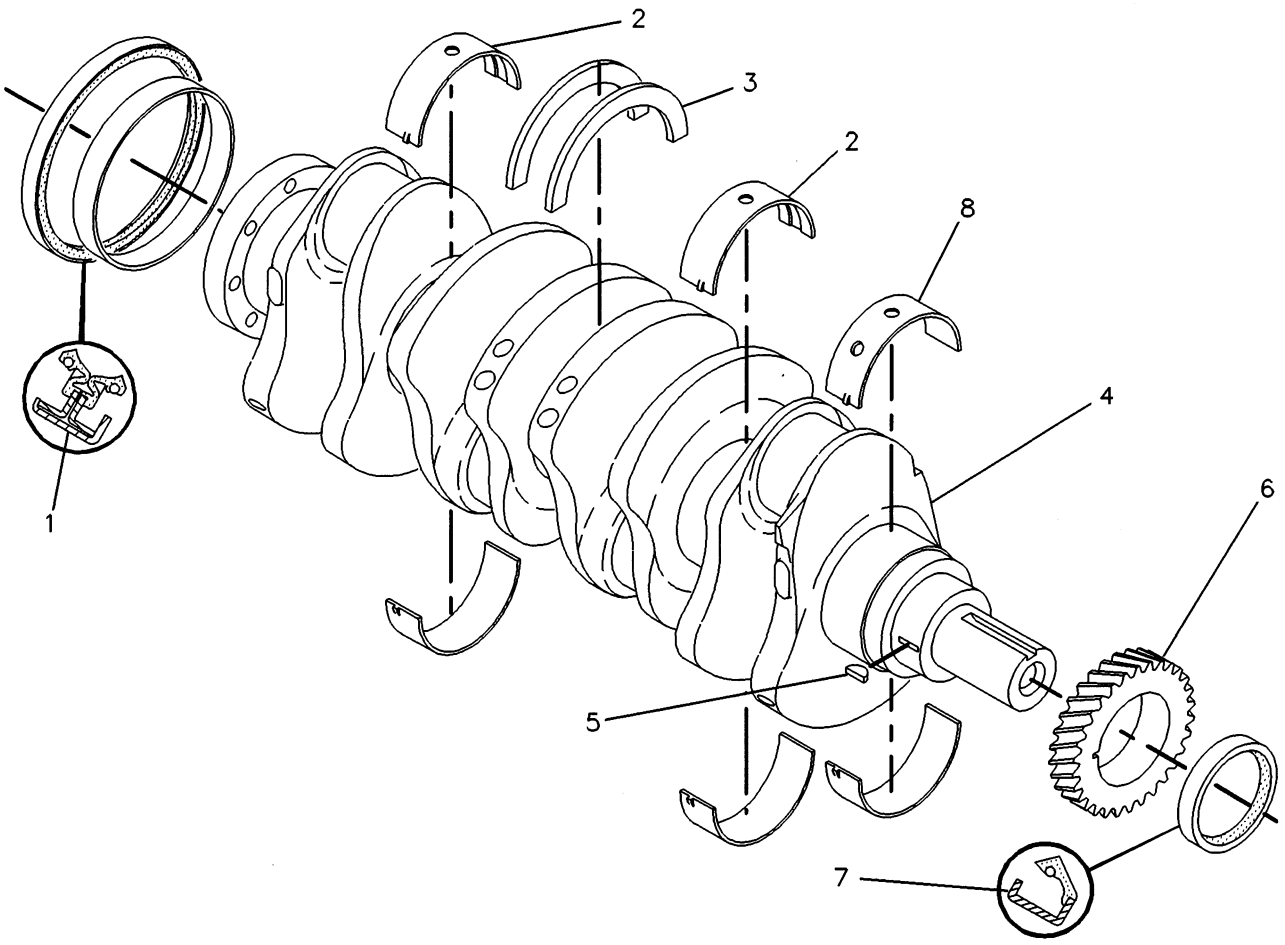

NOTE	REF NO	PART NUMBER	QTY	PART NAME	NOTE	REF NO	PART NUMBER	QTY	PART NAME
	1	7W3202	1	SEAL GP-CRANKSHAFT					
	2	1W0311	2	BEARING-MAIN					
	3	7N9342	2	PLATE-THRUST					
R	4	1W9771	1	CRANKSHAFT AS					
	5	5H2671	1	KEY-WOODRUFF					
	6	1W9812	1	GEAR (40 TEETH)					
	7	9L7735	1	SEAL-LIP TYPE					
	8	1W0312	3	BEARING-MAIN					

R-REMFG PART MAY BE AVAILABLE

F-500210 EP

1202 **7W3926 CRANKSHAFT GP**

CYLINDER BLOCK NOT REBORED

CRANKSHAFT GROUND FOR
UNDERSIZE BEARING I.D. OF:

3	1W1661	.25MM
3	1W1662	.51MM
3	1W1663	1.27MM
2	1W1655	.25MM
2	1W1656	.51MM
2	1W1657	1.27MM

CYLINDER BLOCK REBORED (.25MM)
(BEARING OVERSIZE O.D.)

CRANKSHAFT GROUND FOR
UNDERSIZE BEARING I.D. OF:

3	1W1664	O STANDARD
3	1W1665	.51MM
3	1W1666	1.27MM
2	1W1658	O STANDARD
2	1W1659	.51MM
2	1W1660	1.27MM

O.D.--OUTSIDE DIAMETER
I.D.--INSIDE DIAMETER

CRANKSHAFT BEARING REPLACEMENTS

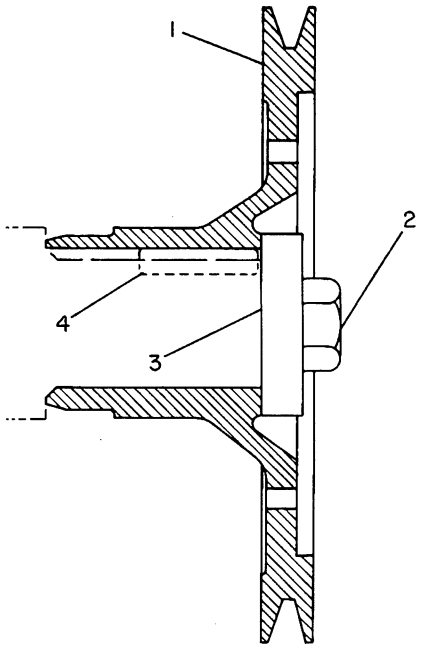

NOTE	REF NO	PART NUMBER	QTY	PART NAME
	1	8N4130	1	PULLEY-CRANKSHAFT
	2	9S1362	1	BOLT
	3	9L8339	1	WASHER-CLAMP
	4	5L1475	1	KEY

B-223233 EP

1205 **7N5138 PULLEY GP-CRANKSHAFT**

BASIC ENGINE

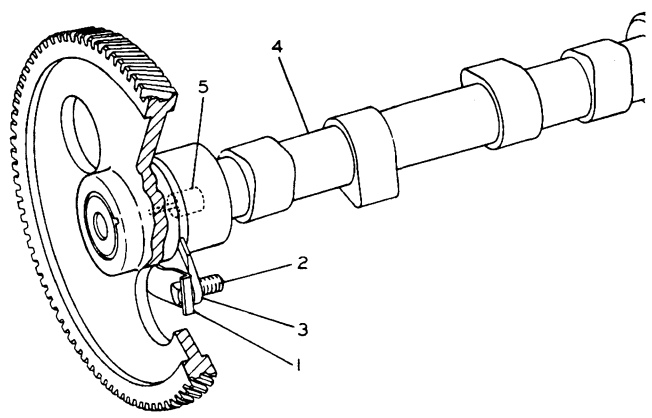

NOTE	REF NO	PART NUMBER	QTY	PART NAME
	1	8S1491	1	LOCK
	2	0S0509	2	BOLT
	3	7S2204	1	WASHER-THRUST
	4	9Y3353	1	KIT-CAMSHAFT
		9N5786	8	LIFTER-VALVE
		1B8712	1	KEY-WOODRUFF
	5	4N5201	1	STUD

B-464744 EP

1210 **6N2393 CAMSHAFT GP-SINGLE**

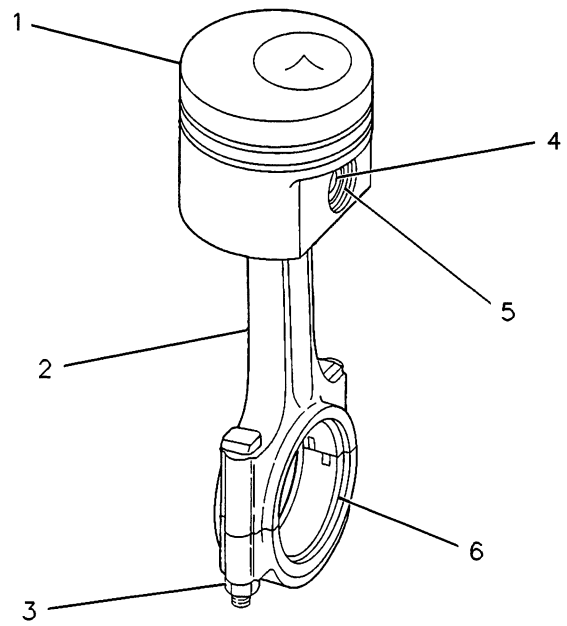

NOTE	REF NO	PART NUMBER	QTY	PART NAME
CY	1	2W8419	1	PISTON GP (STANDARD)
	2	8N3753	1	ROD AS-CONNECTING
		9N5082	1	BEARING-CONNECTING ROD
	3	9N3832	2	BOLT-CONNECTING ROD
		9L7669	2	NUT-CONNECTING ROD
	4	7N9803	1	PIN-PISTON
	5	8N7294	2	RETAINER-PIN
	6	8N6308	1	BEARING-CONNECTING ROD (STANDARD)
A		1W3906	1	BEARING-CONNECTING ROD (1.27MM US)
A		1N3821	1	BEARING-ROD (.254MM US)
A		1N3822	1	BEARING-ROD (.510MM US)

A-NOT PART OF THIS GROUP
C-CHANGE FROM PREVIOUS TYPE
Y-SEPARATE ILLUSTRATION

R-498491 EP

1225 **8N4079 ROD & PISTON GP-4 REQUIRED**

2W8419-Page 12

BASIC ENGINE

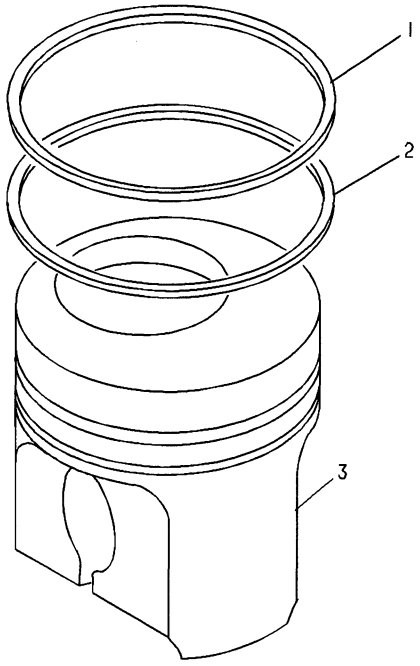

NOTE	REF NO	PART NUMBER	QTY	PART NAME
	1	9L6233	1	RING-PISTON-TOP (COMPRESSION)
	2	2W8045	1	RING AS-PISTON (OIL)
C	3	7C1146	1	BODY AS-PISTON
				THE FOLLOWING REPL GP IS AVAILABLE:
AF		2W8265	1	RING GP-PISTON (INCLUDES COMPLETE SET OF STANDARD RINGS FOR ONE PISTON)

A-NOT PART OF THIS GROUP
C-CHANGE FROM PREVIOUS TYPE
F-NOT SHOWN

A-498497 EP

1214

2W8419 PISTON GP

Part Of 8N4079 Rod & Piston

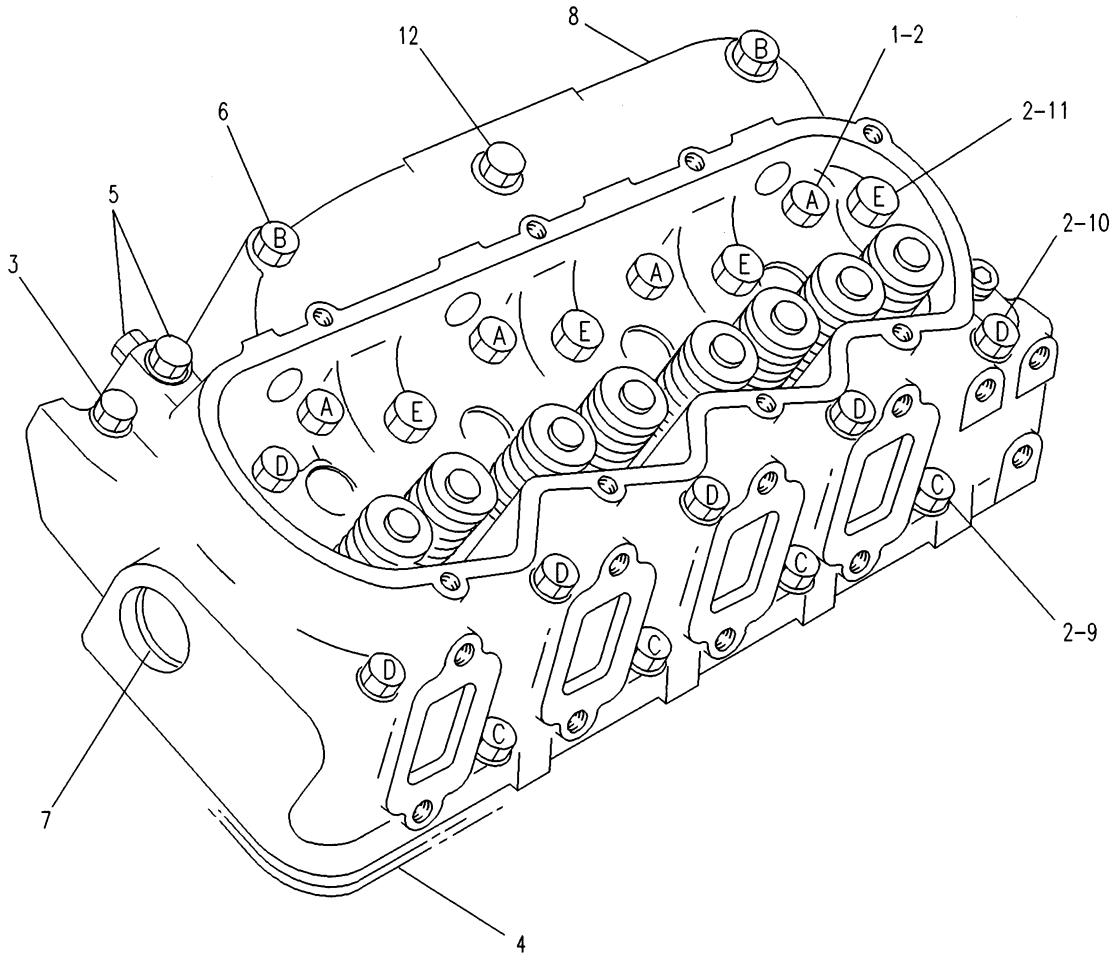

NOTE	REF NO	PART NUMBER	QTY	PART NAME	NOTE	REF NO	PART NUMBER	QTY	PART NAME
C	1	4Y5852	4	BOLT-SPECIAL (7.62CM LG) (LOCATION A)					
	2	3H7654	18	WASHER					
	3	0S1571	1	BOLT (3/8-16X1.75IN)					
	4	7W2059	1	GASKET-CYLINDER HEAD					
C	5	5M6213	2	PLUG					
	6	5B9603	2	BOLT (3/8-16X5IN) (LOCATION B)					
	7	9L7657	1	PLUG-CUP					
CYR	8	7W9392	1	CYLINDER HEAD GP					
C	9	4Y5851	4	BOLT-SPECIAL (5.71CM LG) (LOCATION C)					
C	10	4Y5853	6	BOLT-SPECIAL (12CM LG) (LOCATION D)					
C	11	4Y5854	4	BOLT-SPECIAL (13.97CM LG) (LOCATION E)					
	12	1A5964	1	BOLT					

C-CHANGE FROM PREVIOUS TYPE
R-REMFG PART MAY BE AVAILABLE
Y-SEPARATE ILLUSTRATION

F-549169 EP

1100 **6N2467 CYLINDER HEAD GP*R**
7W9392-Page 14

BASIC ENGINE

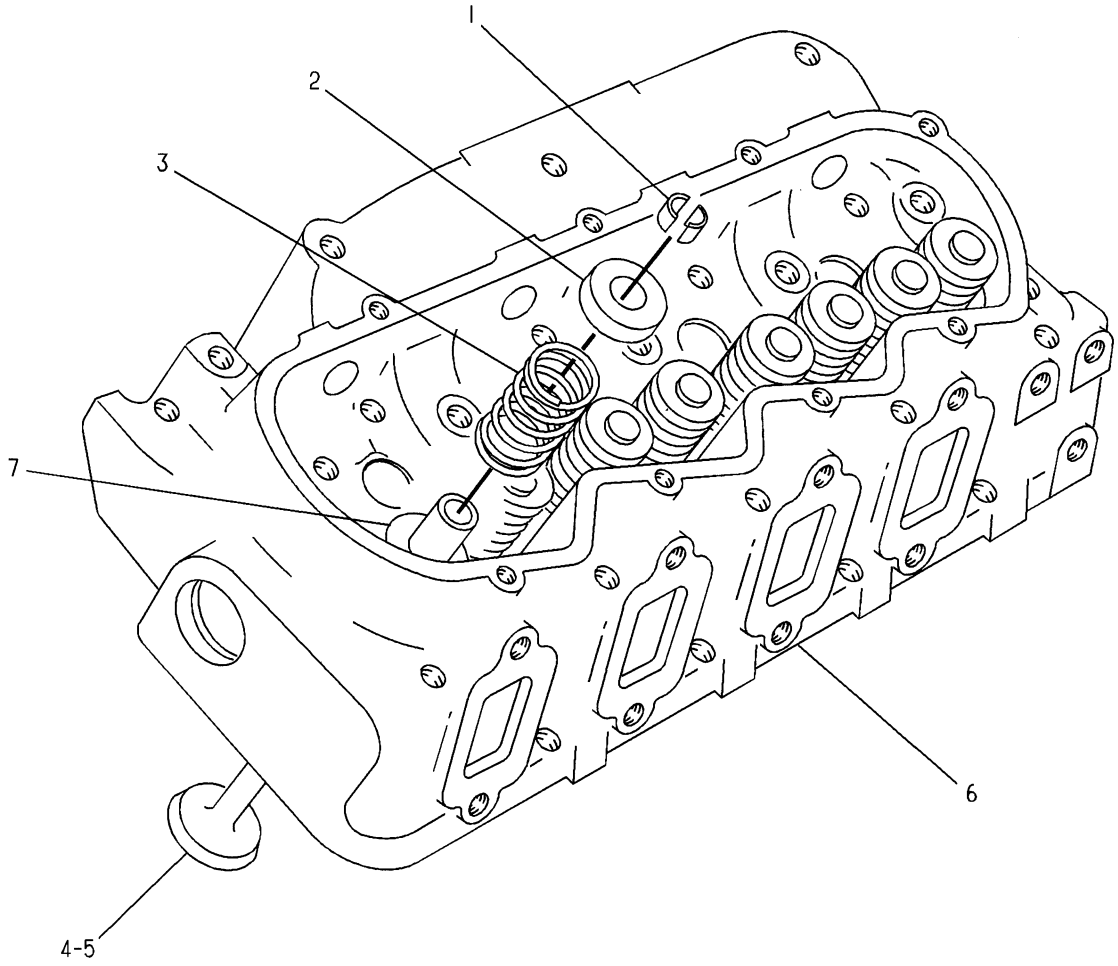

NOTE	REF NO	PART NUMBER	QTY	PART NAME	NOTE	REF NO	PART NUMBER	QTY	PART NAME
	1	2A4429	16	LOCK-RETAINER					
	2	1W4260	8	RETAINER-SPRING					
	3	1W4259	8	SPRING-VALVE					
	4	9L7683	4	VALVE-EXHAUST					
	5	8N5645	4	VALVE-INLET					
YC	6	7W9390	1	CYLINDER HEAD AS					
	7	1W9897	8	WASHER-SPRING SEAT					

C-CHANGE FROM PREVIOUS TYPE
Y-SEPARATE ILLUSTRATION

A-405587 EP

1100

7W9392 CYLINDER HEAD GP*R

7W9390-Page 15

Part Of 6N2467 Cylinder Head

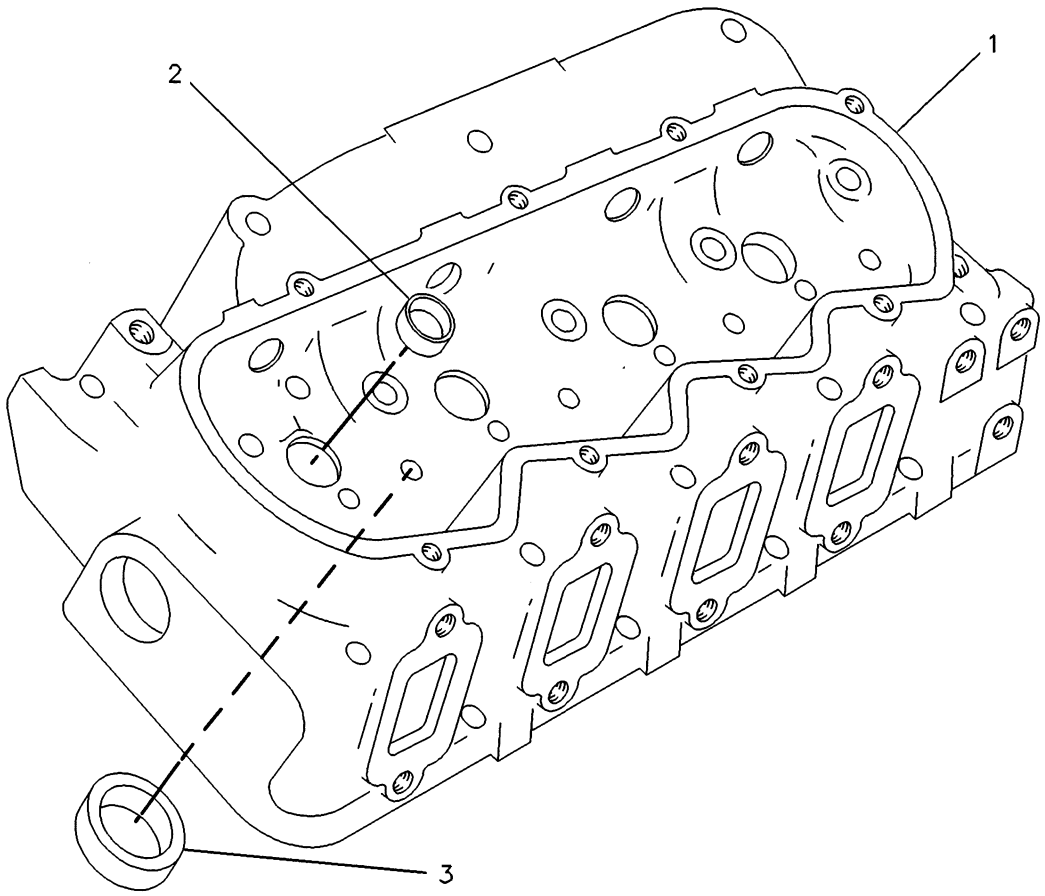

NOTE	REF NO	PART NUMBER	QTY	PART NAME	NOTE	REF NO	PART NUMBER	QTY	PART NAME
Z	1		1	CYLINDER HEAD					
	2	8M5860	4	PLUG-CUP					
	3	9N2837	4	INSERT-SEAT EXHAUST					

Z-NOT SERVICED SEPARATELY

F-405588 EP

1103

7W9390 CYLINDER HEAD AS

Part Of 7W9392 Cylinder Head

Field Replacement Order 7C2320-Page 16 Or 7C3805-Page 16.02

BASIC ENGINE

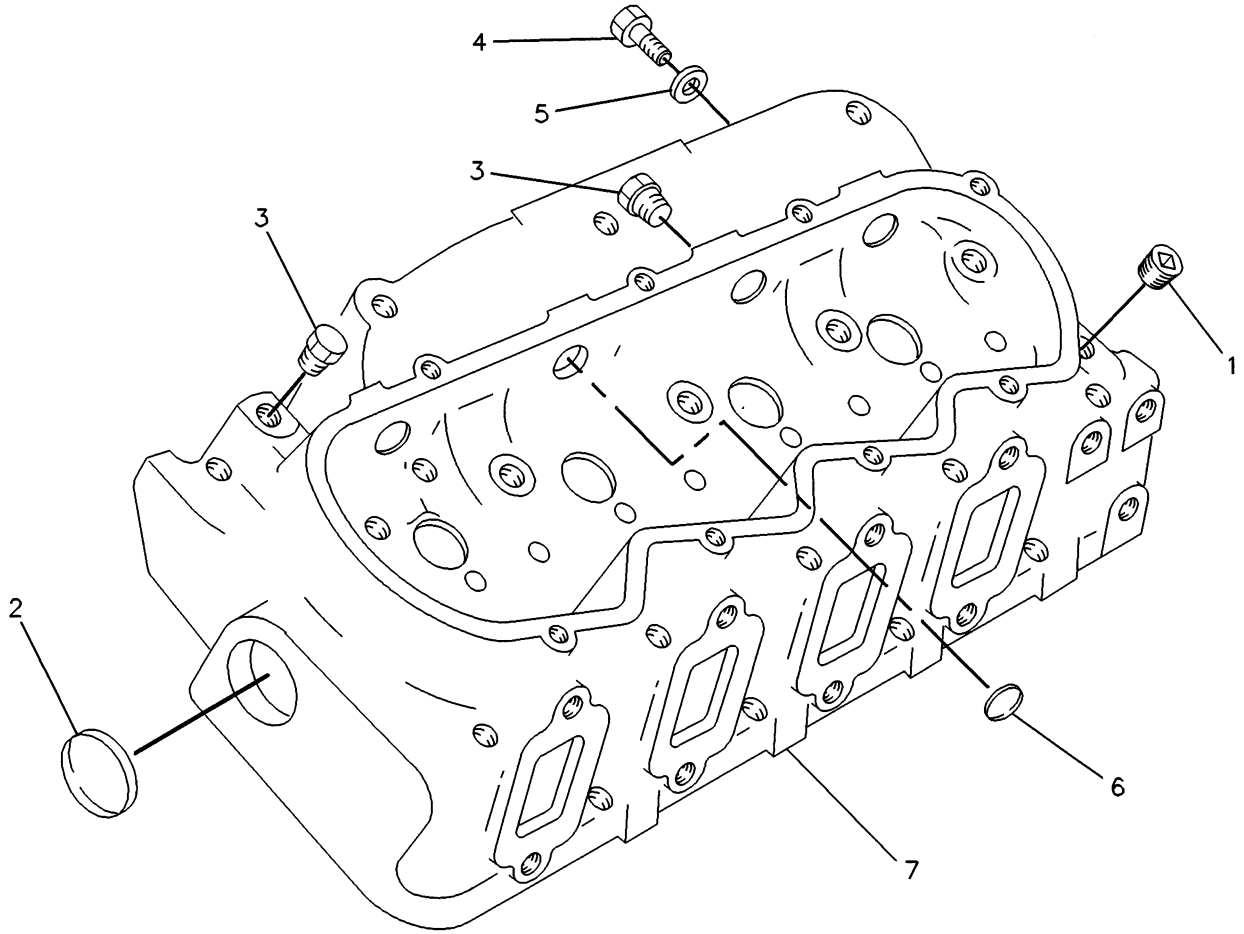

NOTE	REF NO	PART NUMBER	QTY	PART NAME	NOTE	REF NO	PART NUMBER	QTY	PART NAME
	1	2B0858	1	PLUG-PIPE					
	2	9L7657	1	PLUG-CUP					
	3	5M6213	2	PLUG					
	4	6H1717	2	BOLT					
	5	5P8245	2	WASHER					
	6	8F6575	4	PLUG-CUP					
Y	7	7C2296	1	CYLINDER HEAD AS					

Y-SEPARATE ILLUSTRATION

F-474668 EP

1101 **7C2320 CYLINDER HEAD AS-SERVICE*R**

7C2296-Page 16.01

Field Replacement For 7W9390-Page 15

BASIC ENGINE

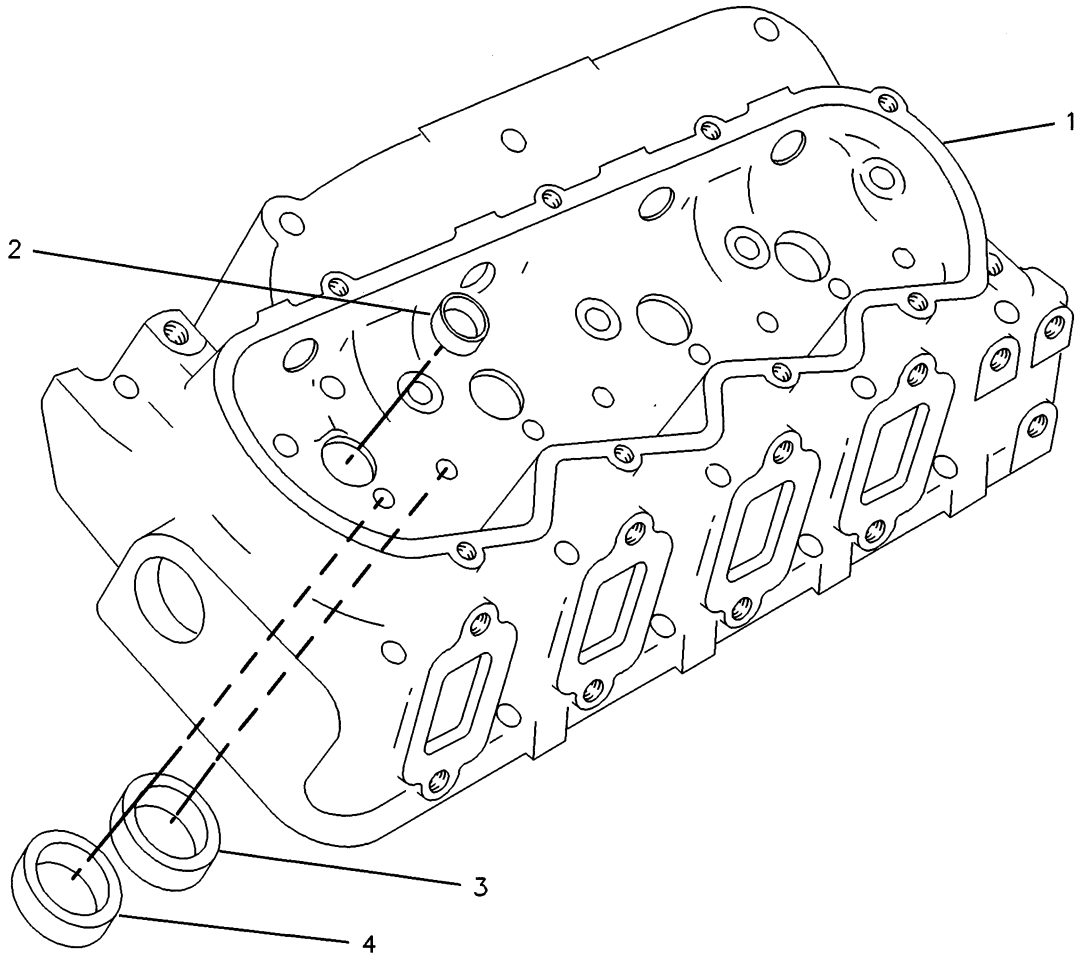

NOTE	REF NO	PART NUMBER	QTY	PART NAME	NOTE	REF NO	PART NUMBER	QTY	PART NAME
Z	1		1	HEAD					
	2	8M5860	4	PLUG-CUP					
	3	9N2837	4	INSERT-SEAT EXHAUST					
	4	2N8943	4	INSERT-INTAKE					

Z-NOT SERVICED SEPARATELY

F-474667 EP

1101

7C2296 CYLINDER HEAD AS

Part Of 7C2320 & 7C3805 Cylinder Head

BASIC ENGINE

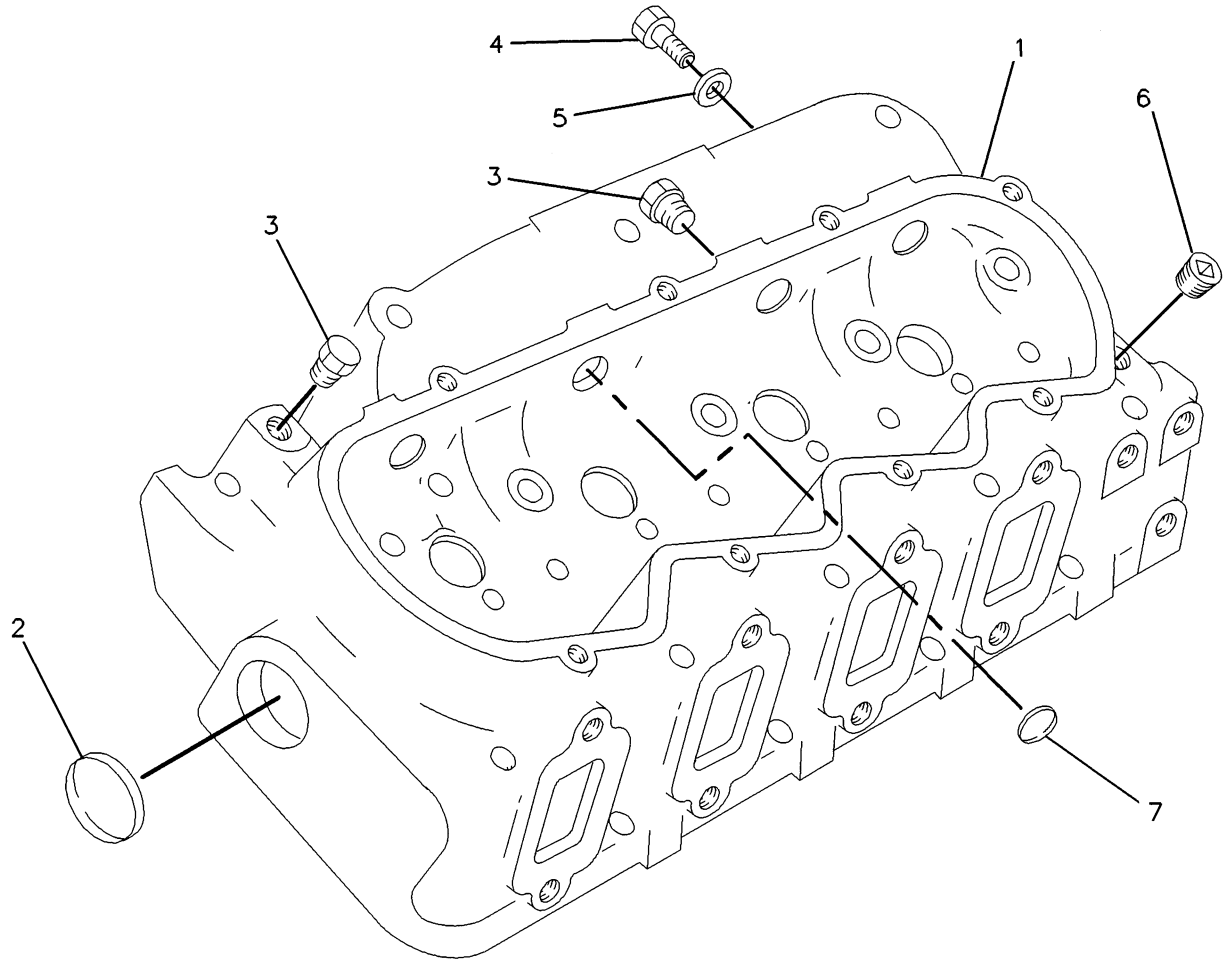

NOTE	REF NO	PART NUMBER	QTY	PART NAME	NOTE	REF NO	PART NUMBER	QTY	PART NAME
Y	1	7C2296	1	CYLINDER HEAD AS					
	2	9L7657	1	PLUG-CUP					
	3	5M6213	2	PLUG					
	4	6H1717	2	BOLT					
	5	5P8245	2	WASHER					
	6	2B0858	1	PLUG-PIPE					
	7	8F6575	4	PLUG-CUP					

Y-SEPARATE ILLUSTRATION

F-474831 EP

1101

7C3805 CYLINDER HEAD AS*R

7C2296-Page 16.01

Field Replacement For 7W9390-Page 15

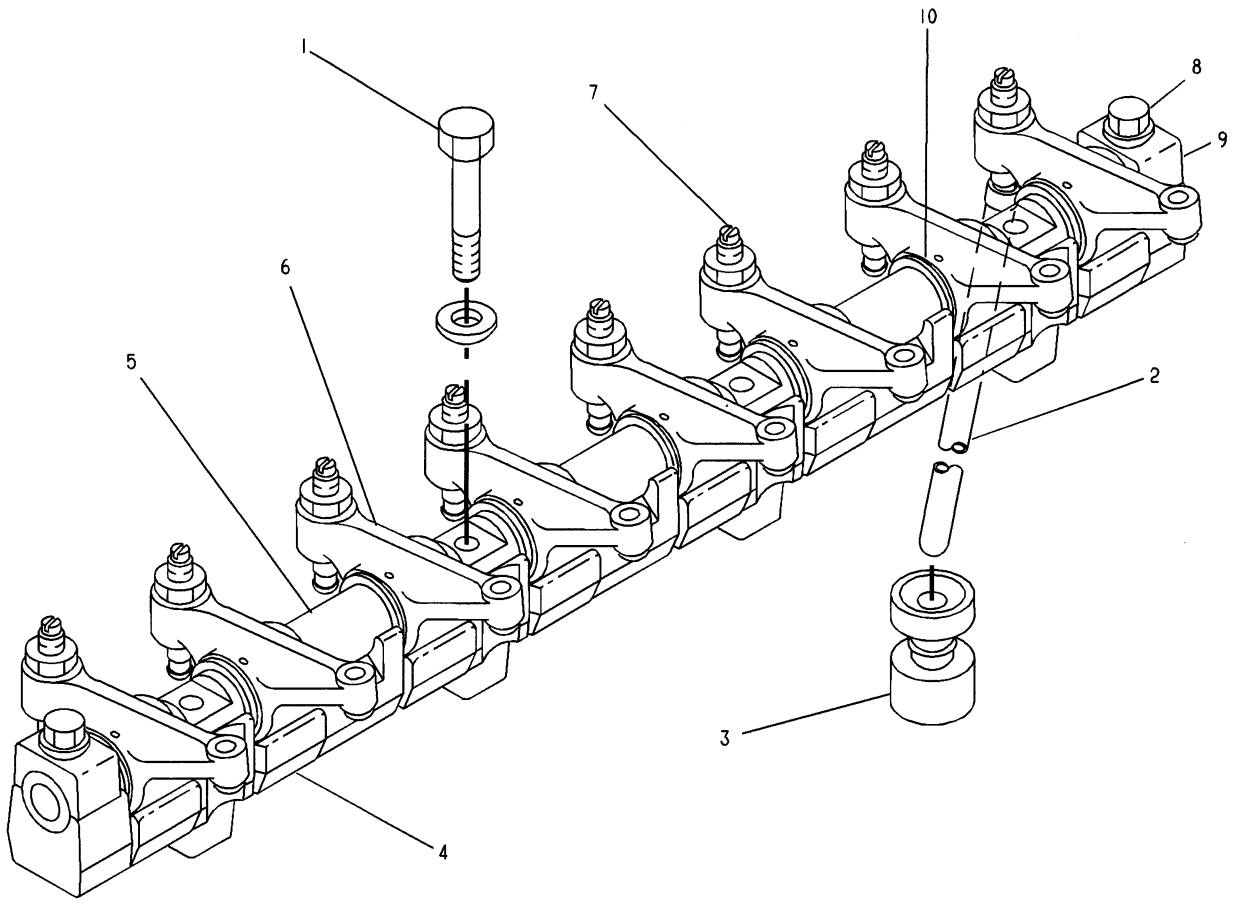

NOTE	REF NO	PART NUMBER	QTY	PART NAME	NOTE	REF NO	PART NUMBER	QTY	PART NAME
	1	1D4540	4	BOLT					
		9M1974	4	WASHER-HARD					
	2	9L8623	8	ROD-VALVE PUSH					
	3	9N5786	8	LIFTER-VALVE					
C	4	1W5718	1	BRACKET-SHAFT					
C	5	9L9315	1	SHAFT AS-ARM					
C	6	2W8271	8	ROCKER ARM AS					
C	7	5S5917	8	SCREW-ROCKER ADJUSTING					
C		3S2713	8	NUT-FULL					
C	8	2B2694	2	BOLT					
C		9M1974	2	WASHER-HARD					
C	9	9L8076	2	WASHER-ARM SHAFT					
C	10	2W6047	8	WASHER					

C-CHANGE FROM PREVIOUS TYPE

A-483102 EP

1102 1W5720 VALVE MECHANISM GP

BASIC ENGINE

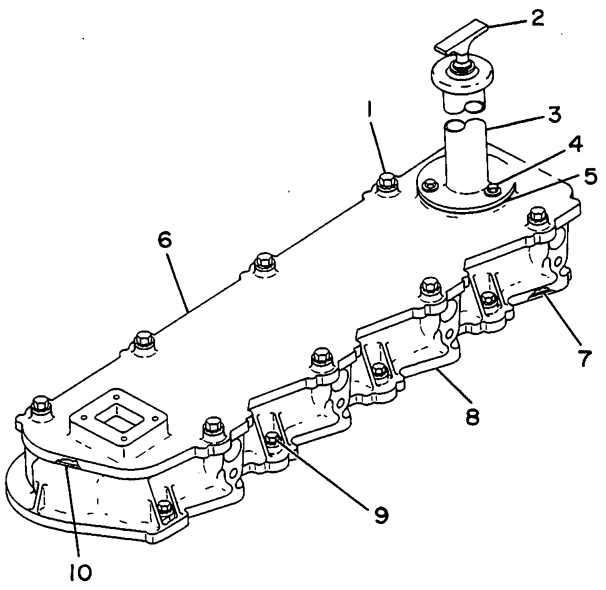

NOTE	REF NO	PART NUMBER	QTY	PART NAME
	1	9L8402	8	BOLT
	2	9L8439	1	CAP-OIL FILLER
	3	6N7405	1	TUBE AS-OIL FILLER
	4	0S1616	3	BOLT
		5P0537	3	WASHER
	5	6N7402	1	GASKET
	6	1W8521	1	COVER-ARM BASE
	7	9L7490	1	GASKET-COVER
	8	1W1523	1	BASE-ARM COVER
	9	9L8925	8	BOLT
	10	1W0939	1	GASKET-COVER

B-323301 EP

1107 **2W7486 COVER GP-VALVE MECHANISM**

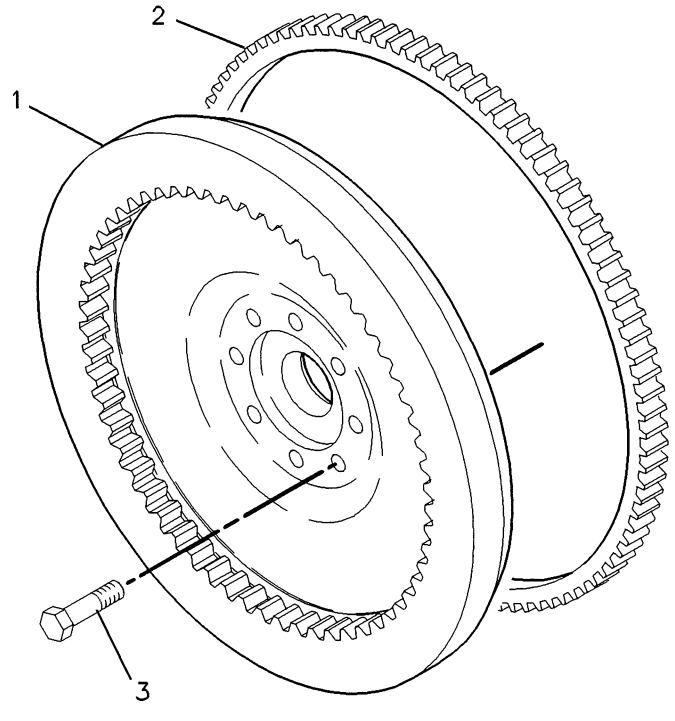

NOTE	REF NO	PART NUMBER	QTY	PART NAME
	1	6N0406	1	FLYWHEEL AS
	2	2N1599	1	GEAR (126 TEETH)
	3	0T0489	8	BOLT 5.08MM(2IN)LONG

F-513329 EP

1156 **7N6937 FLYWHEEL GP**

BASIC ENGINE

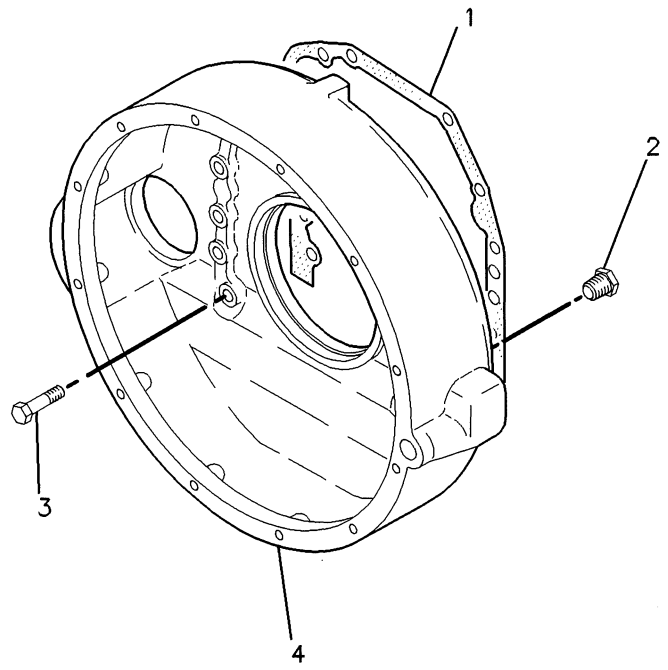

NOTE	REF NO	PART NUMBER	QTY	PART NAME
	1	7N5425	1	GASKET-FLYWHEEL HOUSING
	2	5M6213	1	PLUG
	3	OTO319	12	BOLT
	4	7W2323	1	HOUSING-FLYWHEEL

F-512275 EP

1157 **7N6344 HOUSING GP-FLYWHEEL**

BASIC ENGINE

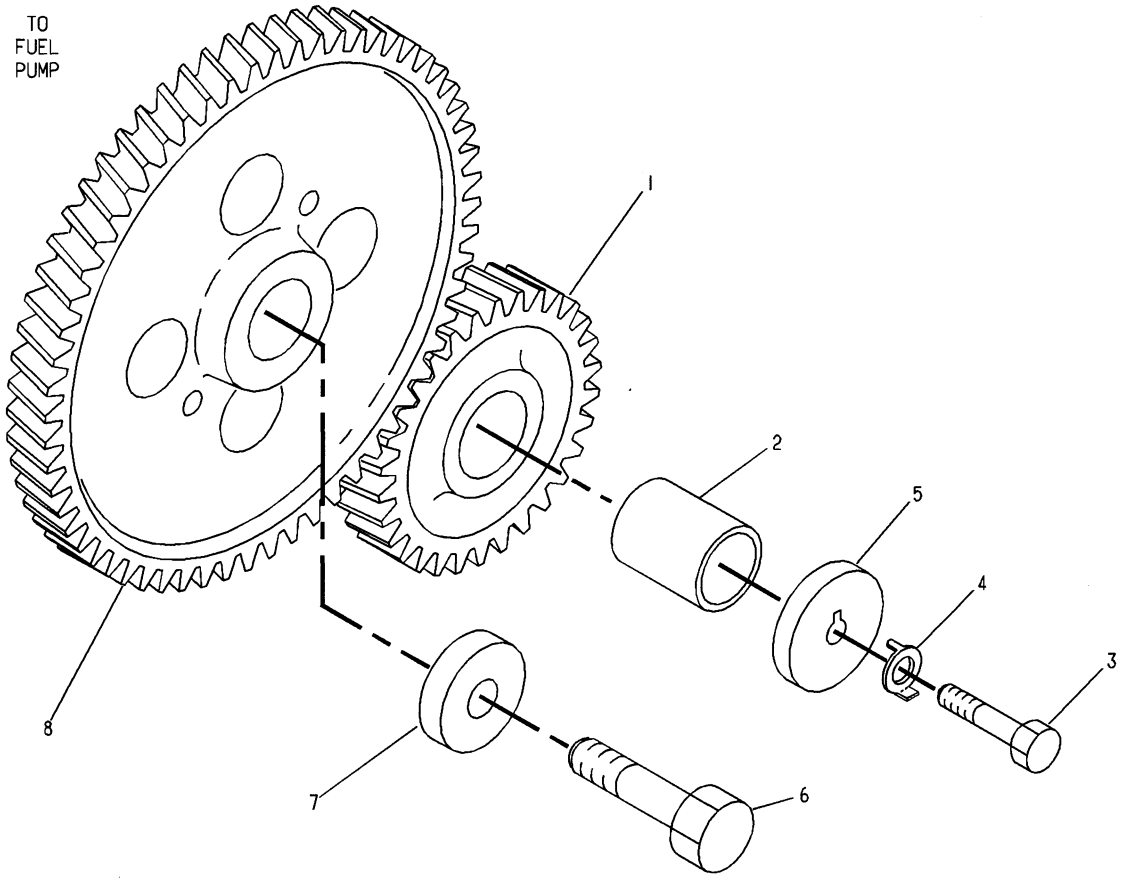

NOTE	REF NO	PART NUMBER	QTY	PART NAME
	1	7N6311	1	GEAR AS-FUEL PUMP IDLER (33 TEETH)
	2	4N0201	1	BEARING-SLEEVE
	3	0S1617	1	BOLT
	4	4N0200	1	LOCK
	5	4N0199	1	WASHER
	6	1A1135	1	BOLT
	7	7N2994	1	WASHER
	8	7W0508	1	GEAR-FUEL PUMP DRIVE (80 TEETH)

A-483099 EP

1206 1W1355 GEAR GP-FRONT

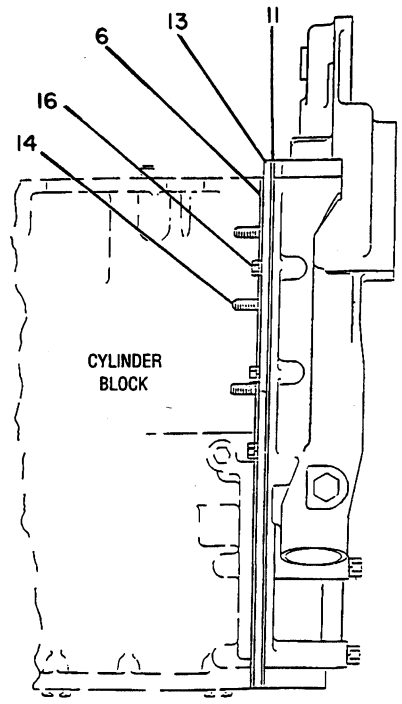

SIDE VIEW

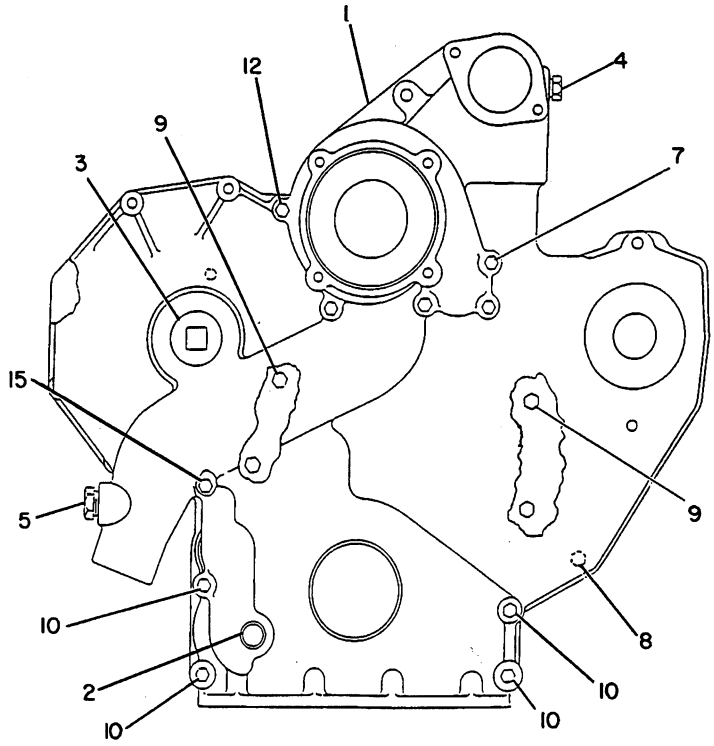

FRONT VIEW

NOTE	REF NO	PART NUMBER	QTY	PART NAME	NOTE	REF NO	PART NUMBER	QTY	PART NAME
	1	2W4383	1	HOUSING AS-GEAR					
	2	9N0243	1	SHAFT-OIL PUMP					
		9L8636	1	BEARING-SLEEVE					
	3	2W7660	1	PLUG					
	4	3J5390	1	PLUG					
	5	3J5389	1	PLUG					
	6	1W1110	1	GASKET-FRONT PLATE					
	7	8S9191	4	BOLT					
C	8	2B2695	6	BOLT					
C		9M1974	6	WASHER-HARD					
	9	0L1351	4	BOLT					
		3V2431	4	WASHER					
	10	9F2491	4	BOLT					
	11	1W4334	1	GASKET-GEAR COVER					
	12	1A5964	1	BOLT					
	13	1W4265	1	PLATE AS-HOUSING					
	14	6H0192	3	STUD					
	15	0S1608	1	BOLT					
CB	16	2B2695	2	BOLT					
CB		9M1974	2	WASHER-HARD					

B-USE AS REQUIRED
C-CHANGE FROM PREVIOUS TYPE

B-351360 EP

1151 **2W4384 HOUSING GP-FRONT**

BASIC ENGINE

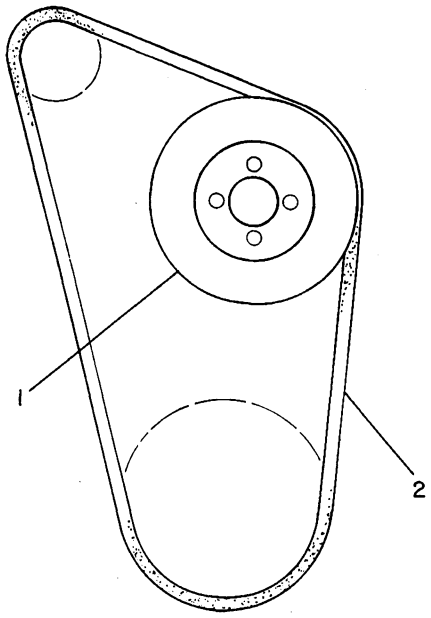

NOTE	REF NO	PART NUMBER	QTY	PART NAME
	1	7N4422	1	PULLEY-FAN
	2	8N2818	1	V-BELT

B-223236 EP

1359 **7N5141 DRIVE GP-FAN**

BASIC ENGINE

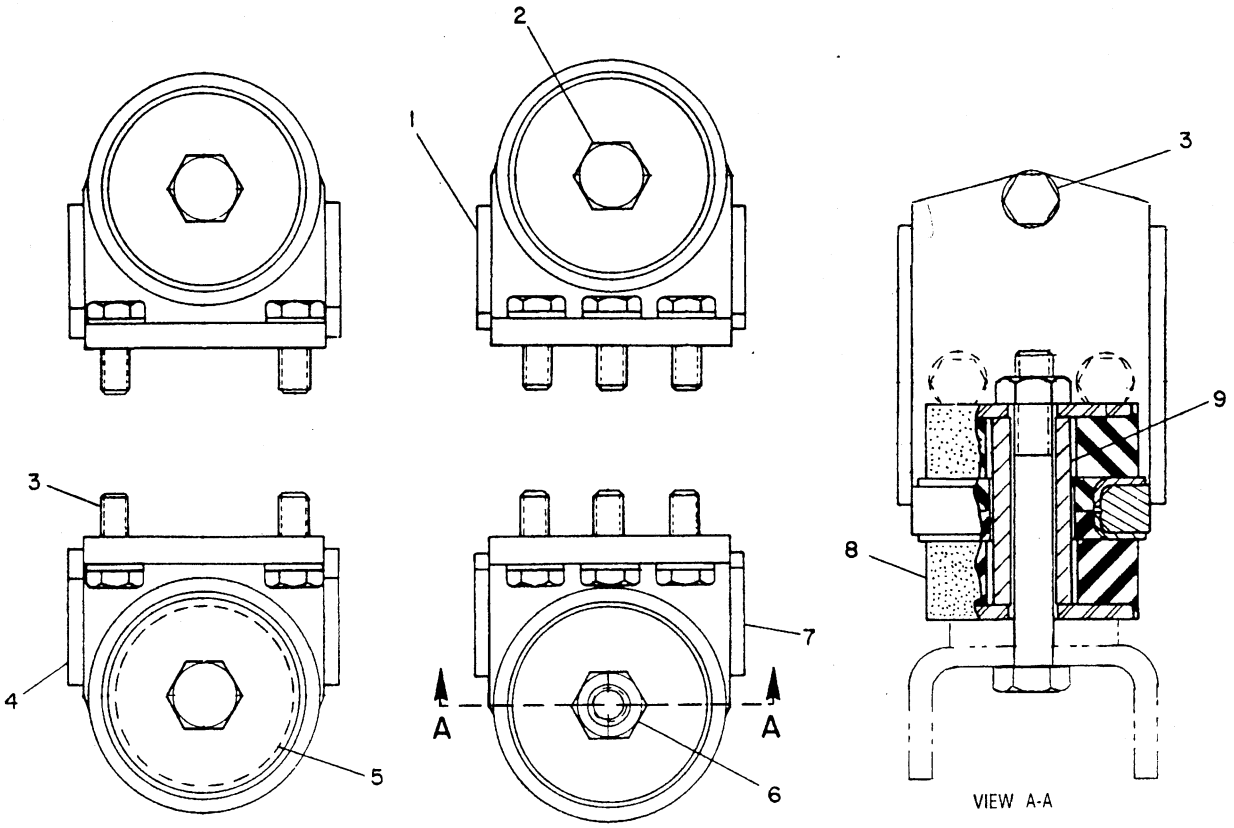

NOTE	REF NO	PART NUMBER	QTY	PART NAME	NOTE	REF NO	PART NUMBER	QTY	PART NAME
	1	4N3896	1	SUPPORT AS-ENGINE					
	2	0S1627	3	BOLT					
	3	7B3235	14	BOLT					
		5P8245	14	WASHER					
	4	4N3891	2	SUPPORT AS					
	5	640047	2	WASHER-RETAINING					
	6	6V8199	1	BOLT					
		2J3506	1	NUT-FULL					
	7	8N4612	1	SUPPORT AS-ENGINE					
	8	4N8204	4	MOUNT AS (EACH INCLUDES)					
		4N8203	2	MOUNT-RESILIENT					
	9	4N4539	4	SLEEVE					

B-402201 EP

1153 7C7743 SUPPORT GP-ENGINE & TRANSMISSION

BASIC ENGINE

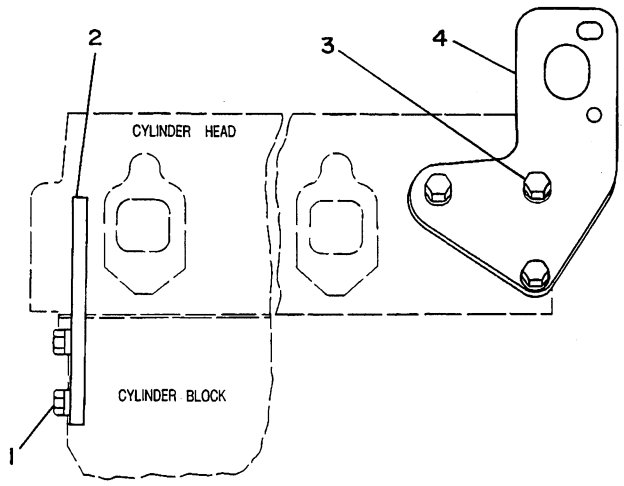

NOTE	REF NO	PART NUMBER	QTY	PART NAME
	1	0S1594	4	BOLT
		5M2894	4	WASHER
	2	4N0228	1	PLATE-EYE
C	3	0T0320	1	BOLT
C		4S9191	1	WASHER
	4	1W5553	1	PLATE-LIFTING EYE

C-CHANGE FROM PREVIOUS TYPE

B-319920 EP

1122 **1W5554 LIFTING GP-ENGINE**

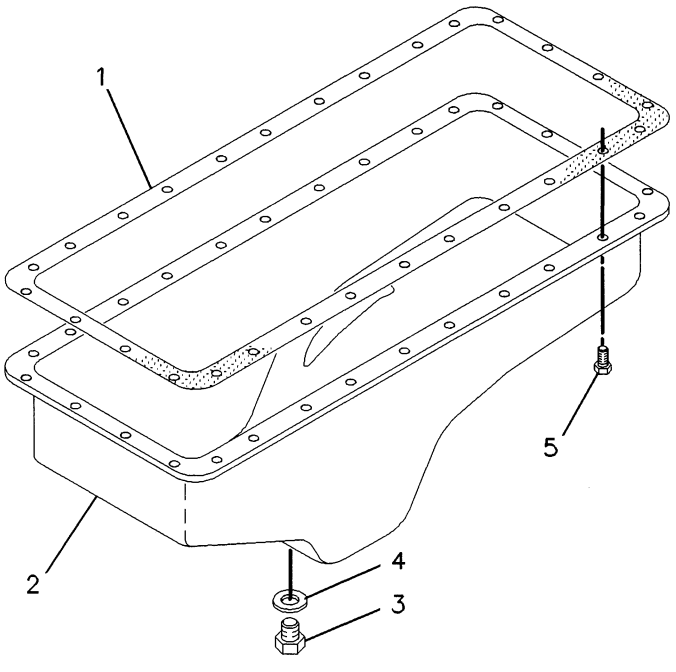

NOTE	REF NO	PART NUMBER	QTY	PART NAME
	1	9L8016	1	GASKET-OIL PAN
	2	6N8910	1	PAN AS-OIL
	3	9L9653	1	PLUG
	4	3B1925	1	WASHER
	5	9L9178	28	BOLT

F-512297 EP

1302 **6N8370 PAN GP-OIL**

LUBRICATION SYSTEM

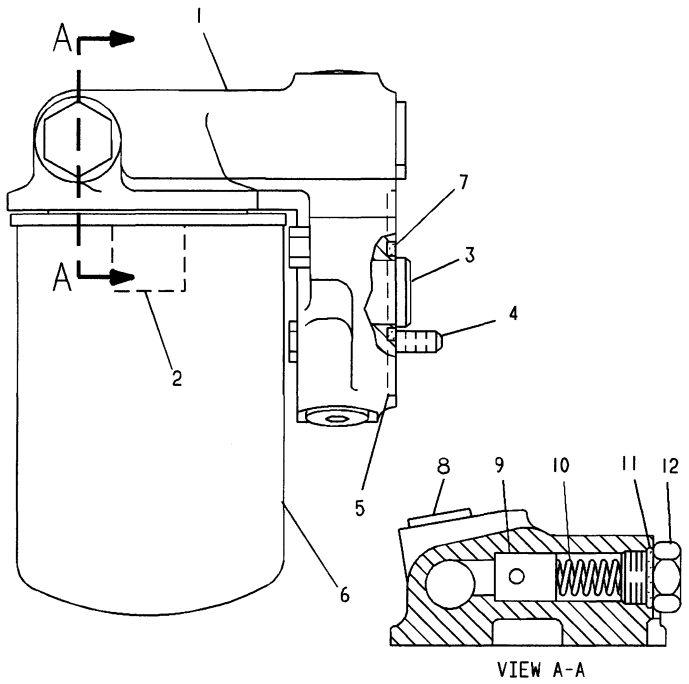

NOTE	REF NO	PART NUMBER	QTY	PART NAME
	1	1N4426	1	BASE AS-OIL FILTER
	2	2P2537	1	STUD-HOLLOW
	3	1W5121	1	GUIDE-OIL FILTER BASE
	4	0S1571	2	BOLT
	5	6J2244	1	SEAL-O-RING
	6	1R0713	1	FILTER AS-OIL
	7	5P7530	1	SEAL-O-RING
	8	9S8005	4	PLUG-O-RING
	9	1N4424	1	VALVE-BYPASS
	10	1N4425	1	SPRING
	11	3K0360	5	SEAL-O-RING
	12	1N4423	1	PLUG

A-512517 EP

1318 **1N3224 FILTER GP-OIL**

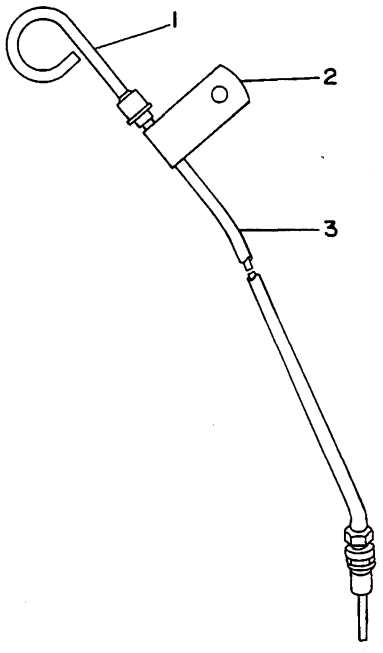

NOTE	REF NO	PART NUMBER	QTY	PART NAME
	1	4N0234	1	GAUGE AS-LEVEL
	2	7B9919	1	CLIP
	3	1W3626	1	TUBE AS-OIL LEVEL

B-301975 EP

1326 **1W0367 GAUGE GP-OIL LEVEL (DIPSTICK)**
Engine S/N 45V69350-77809

LUBRICATION SYSTEM

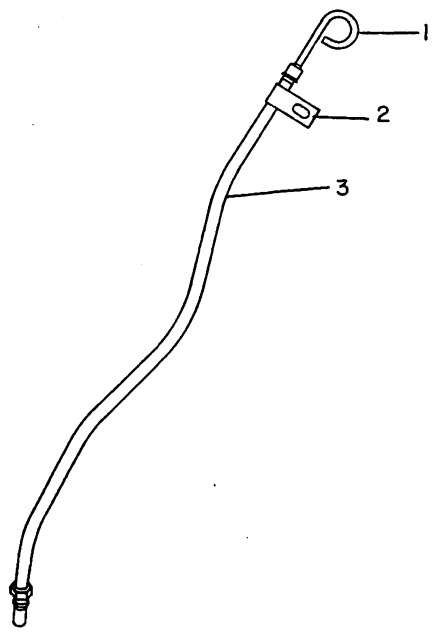

NOTE	REF NO	PART NUMBER	QTY	PART NAME
C	1	5G4337	1	GAUGE AS-OIL LEVEL
C	2	7H7055	1	CLIP
C	3	5G4333	1	TUBE AS (OIL LEVEL)
		8F8997	1	NUT-FITTING

C-CHANGE FROM PREVIOUS TYPE

M-498585 EP

1326 **1W0367 GAUGE GP-OIL LEVEL (DIPSTICK)**
Engine S/N 45V77810-Up

MEMORANDA

LUBRICATION SYSTEM

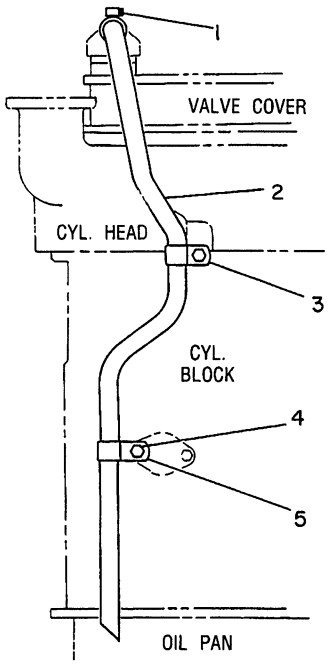

NOTE	REF NO	PART NUMBER	QTY	PART NAME
	1	2S3440	1	CLAMP-HOSE
	2	7C9354	1	TUBE
	3	5K0461	1	CLIP
	4	1A2029	1	BOLT
		5M2894	1	WASHER
	5	9L2403	1	CLIP

B-451374 EP

1317 **9Y1898 FUMES DISPOSAL GP**

Field Replacement Order 7W0332-Page 27

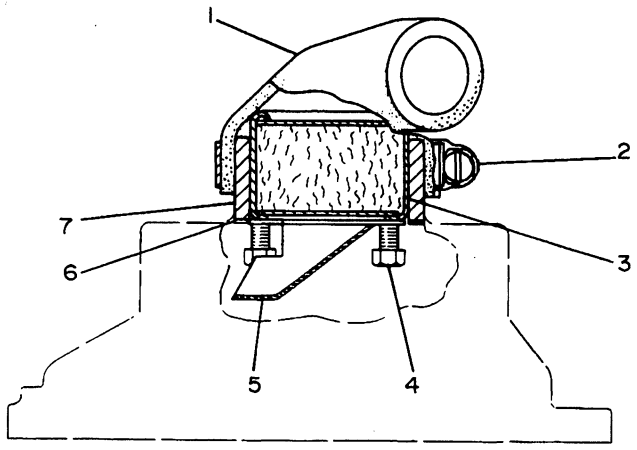

NOTE	REF NO	PART NUMBER	QTY	PART NAME
	1	4N0489	1	BOOT-DISPOSAL
	2	9M0164	1	CLAMP-HOSE
	3	4N0490	1	ELEMENT-BREATHER
	4	5M6755	4	SCREW-MACHINE
	5	4N0491	1	BAFFLE-BREATHER
	6	9L8786	1	GASKET
	7	4N0492	1	PIPE-BREATHER

B-216643 EP

1317 **6N3382 BREATHER GP**

Field Replacement Order 7W0332-Page 27

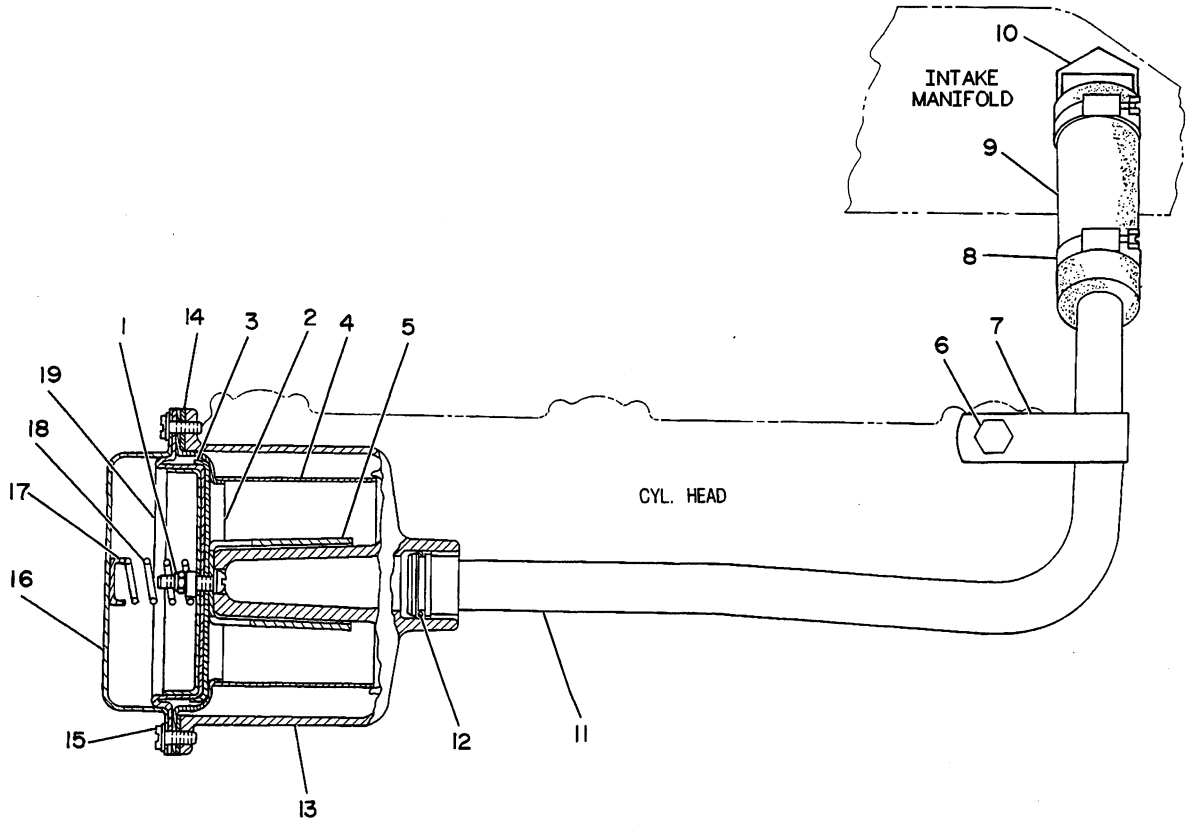

NOTE	REF NO	PART NUMBER	QTY	PART NAME	NOTE	REF NO	PART NUMBER	QTY	PART NAME
	1	4B1233	1	SCREW		18	8M7742	1	SPRING
		310249	1	NUT-SELF LOCKING		19	9L8731	1	PISTON
		2R1714	1	SPACER-SLEEVE					
		4B4274	1	WASHER					
	2	9L7873	1	DIAPHRAGM					
	3	9L8735	1	PLATE-RETAINER					
	4	7C6351	1	SLEEVE-VALVE					
	5	9L9004	1	SLEEVE					
	6	4B3388	1	BOLT					
		9M1974	1	WASHER-HARD					
	7	6K6355	1	CLIP					
	8	2S3440	2	CLAMP-HOSE					
	9	8J8749	1	HOSE					
	10	337394	1	ELBOW					
		3D2824	1	SEAL-O-RING					
	11	2W7687	1	TUBE AS					
	12	5P6718	1	SEAL-O-RING					
	13	2W2318	1	HOUSING-VALVE					
		9L8786	2	GASKET					
		7W6139	1	SPACER					
		7M9910	4	SCREW-MACHINE					
	14	9L8837	1	GASKET					
	15	9M5520	7	SCREW-TAPPING					
		3B4502	7	LOCKWASHER					
	16	9L9066	1	COVER AS					
	17	7M5839	1	PLUG-CUP					

R-498672 EP

7W0332 KIT-PCV BREATHER

Field Replacement For 6N3382 & 9Y1898-Page 26

LUBRICATION SYSTEM

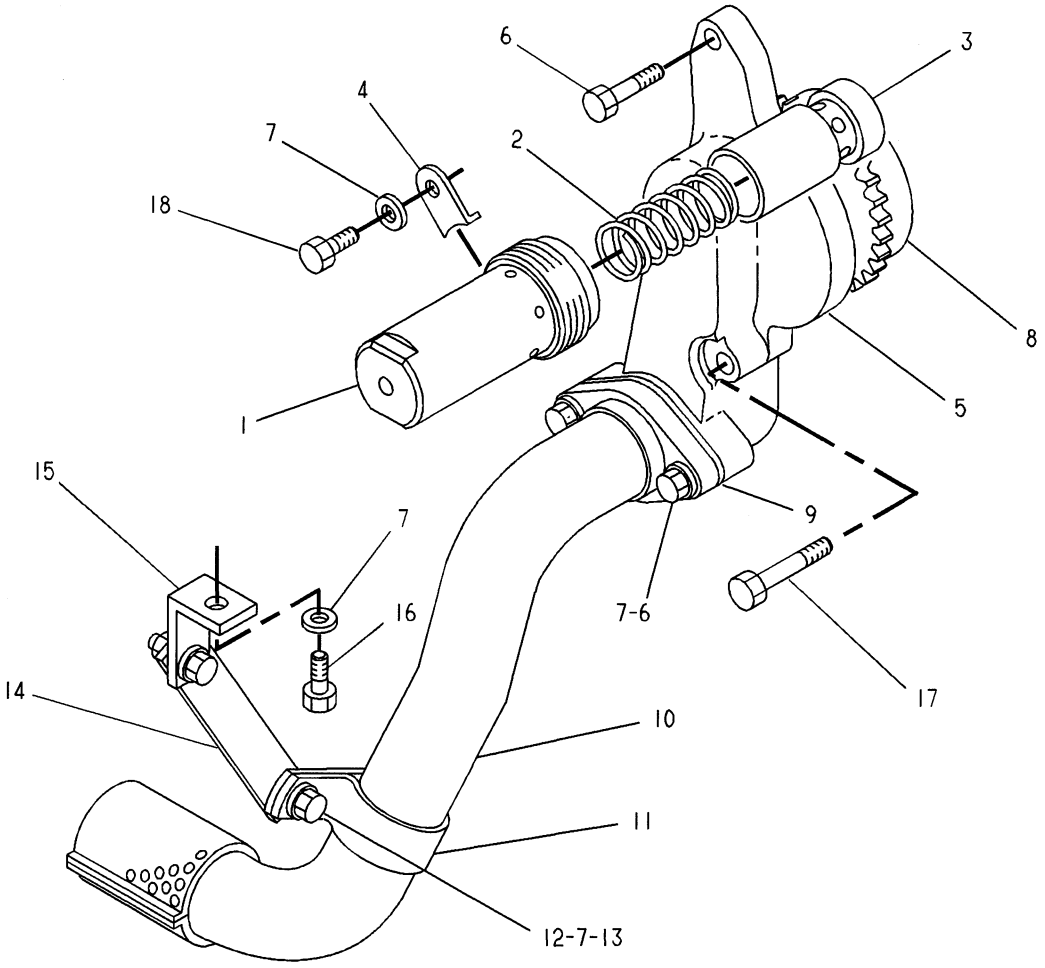

NOTE	REF NO	PART NUMBER	QTY	PART NAME	NOTE	REF NO	PART NUMBER	QTY	PART NAME
C	1	7W0239	1	GUIDE-RELIEF VALVE					
	2	1W9860	1	SPRING					
	3	1N3165	1	PLUNGER-RELIEF VALVE					
C	4	1W4704	1	RETAINER					
	5	1N3940	1	COVER-OIL PUMP					
	6	0S1618	4	BOLT					
	7	9M1974	8	WASHER-HARD					
	8	4N0094	1	ROTOR AS-PUMP					
	9	1N3943	1	GASKET					
	10	2W6698	1	TUBE AS					
	11	2S2053	1	CLIP					
	12	2B2695	2	BOLT					
	13	5S0003	2	NUT-FULL					
	14	2W9613	1	PLATE					
	15	9M7649	1	BRACKET-SUPPORT					
	16	0S1617	1	BOLT					
	17	1A9579	1	BOLT					
	18	2H3755	1	BOLT					

C-CHANGE FROM PREVIOUS TYPE

A-459809 EP

1304 **2W6697 PUMP GP-OIL**
Without Housing

COOLING SYSTEM

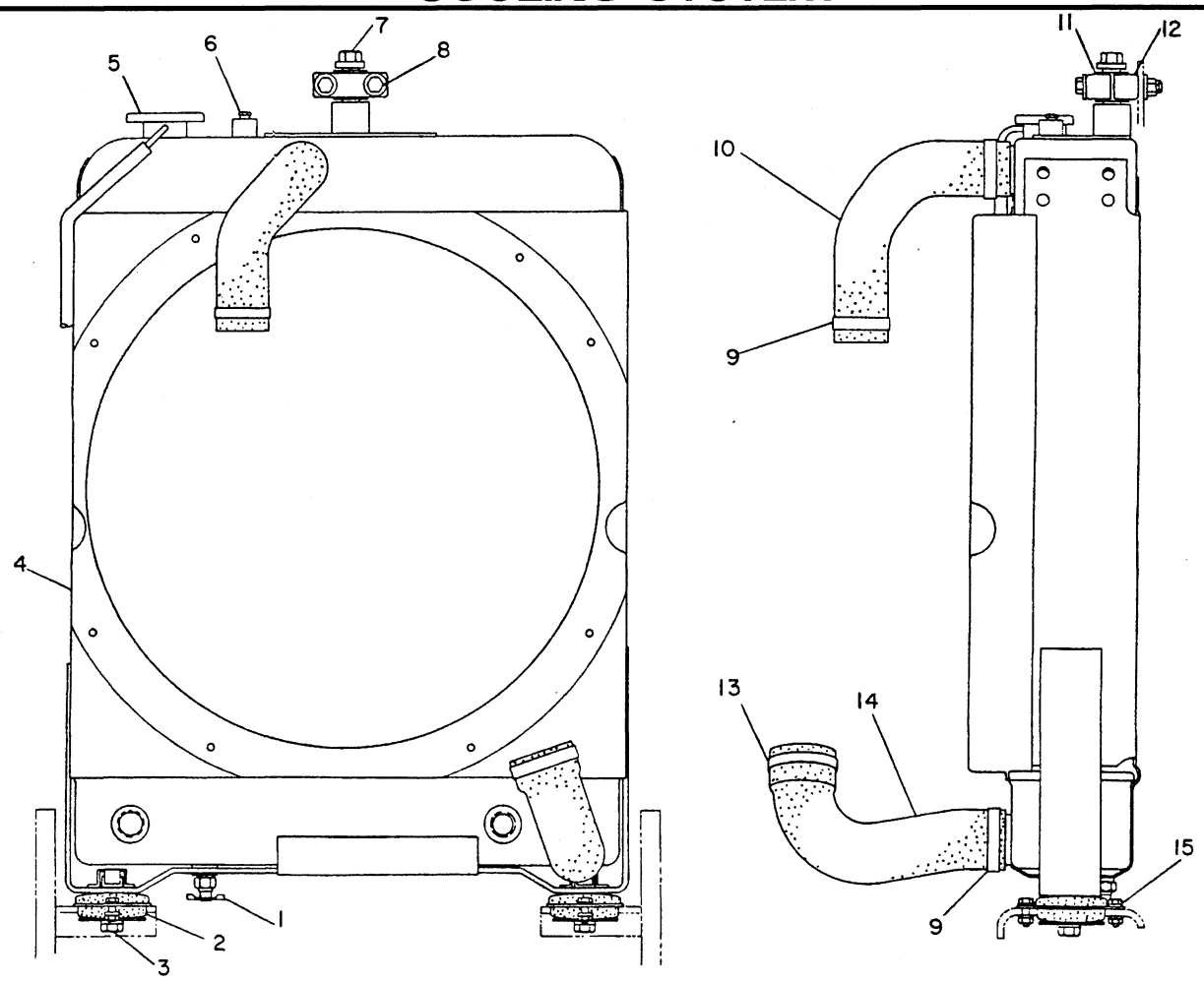

NOTE	REF NO	PART NUMBER	QTY	PART NAME	NOTE	REF NO	PART NUMBER	QTY	PART NAME
	1	1P7297	1	VALVE-DRAIN					
	2	8S9378	2	MOUNT-RUBBER					
	3	8T4835	2	BOLT					
		1B4287	2	WASHER (4.7MM THK)					
		8T4223	2	WASHER-HARD (3MM THK)					
Y	4	7C7741	1	RADIATOR GP					
	5	321464	1	CAP					
	6	5M6214	1	PLUG-PIPE					
	7	7X0325	1	BOLT					
		5P1076	1	WASHER-HARD					
	8	8T7008	2	BOLT					
		8T4896	4	WASHER-HARD					
		6V8801	2	NUT					
	9	5P0597	3	CLAMP					
	10	8N3246	1	HOSE-RADIATOR INLET					
	11	3H8726	1	MOUNT AS					
	12	1M6298	2	CLAMP-MOUNTING					
	13	5P4868	1	CLAMP					
	14	4N2226	1	HOSE-RADIATOR OUTLET					
	15	4M6425	4	BOLT					
		8T4224	8	WASHER-HARD					
		6V8189	4	NUT					

Y-SEPARATE ILLUSTRATION

B-495806 EP

1353 **7C7740 RADIATOR GP**

7C7741-Page 30

Provides A Higher Ambient Cooling Package

COOLING SYSTEM

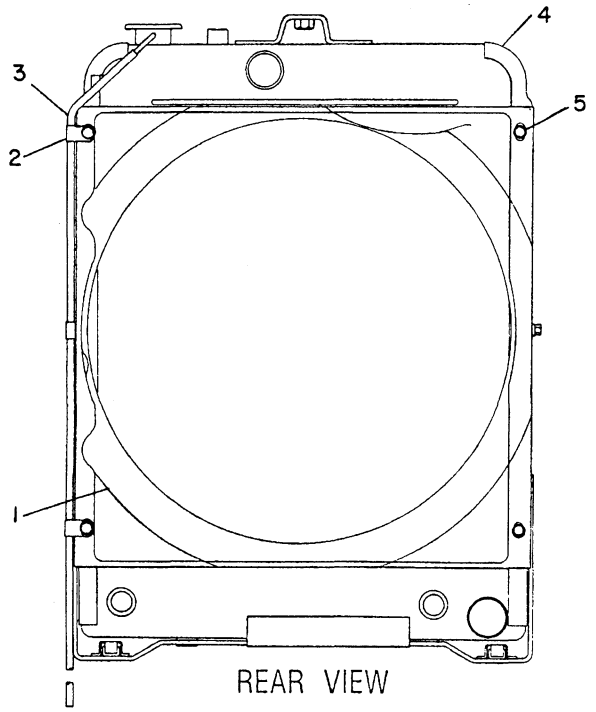

NOTE	REF NO	PART NUMBER	QTY	PART NAME
	1	8N3290	1	SHIELD AS-RADIATOR
		4K9097	10	NUT-WELD
	2	9S1310	3	CLIP
BD	3	5P5635		TUBE
C	4	9Y0791	1	RADIATOR AS
	5	0T0102	6	BOLT
		5M2894	6	WASHER

B-USE AS REQUIRED
C-CHANGE FROM PREVIOUS TYPE
D-ORDER BY THE METER

B-454061 EP

1353 **7C7741 RADIATOR GP**
Part Of 7C7740 Radiator

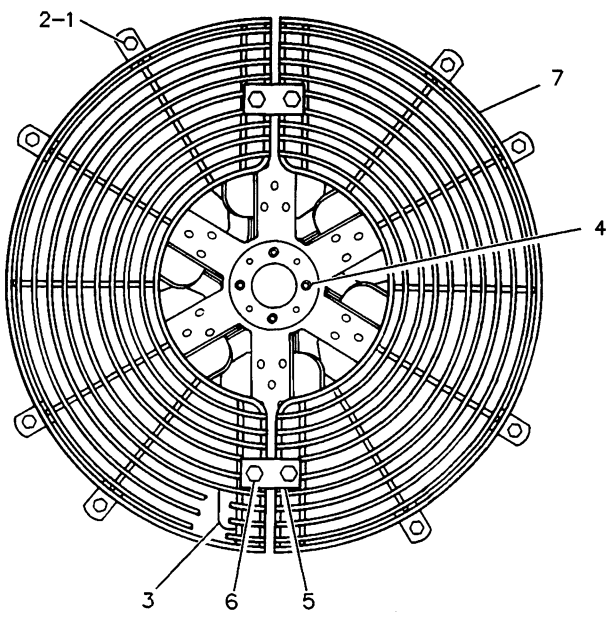

NOTE	REF NO	PART NUMBER	QTY	PART NAME
	1	8T9043	8	BOLT
	2	7X0579	8	WASHER-HARD
	3	6I1363	1	SPIDER AS-FAN
	4	8T8911	4	BOLT
		8T4224	4	WASHER-HARD
	5	6D2428	2	PLATE
	6	5S7379	4	BOLT
		8T4896	4	WASHER-HARD
	7	3Y9867	2	GUARD AS-FAN

R-524363 EP

1356 **7N9989 FAN GP-BLOWER**

COOLING SYSTEM

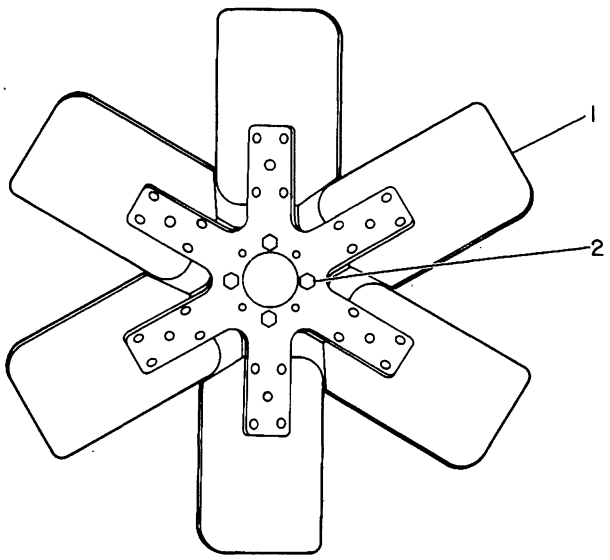

NOTE	REF NO	PART NUMBER	QTY	PART NAME
	1	6I1364	1	SPIDER AS-FAN
C	2	4M6424	4	BOLT

C-CHANGE FROM PREVIOUS TYPE

B-555548 EP

1356 **4N2220 FAN GP-SUCTION-6 BLADE**

508MM (20IN) Suction Fan

An Attachment

COOLING SYSTEM

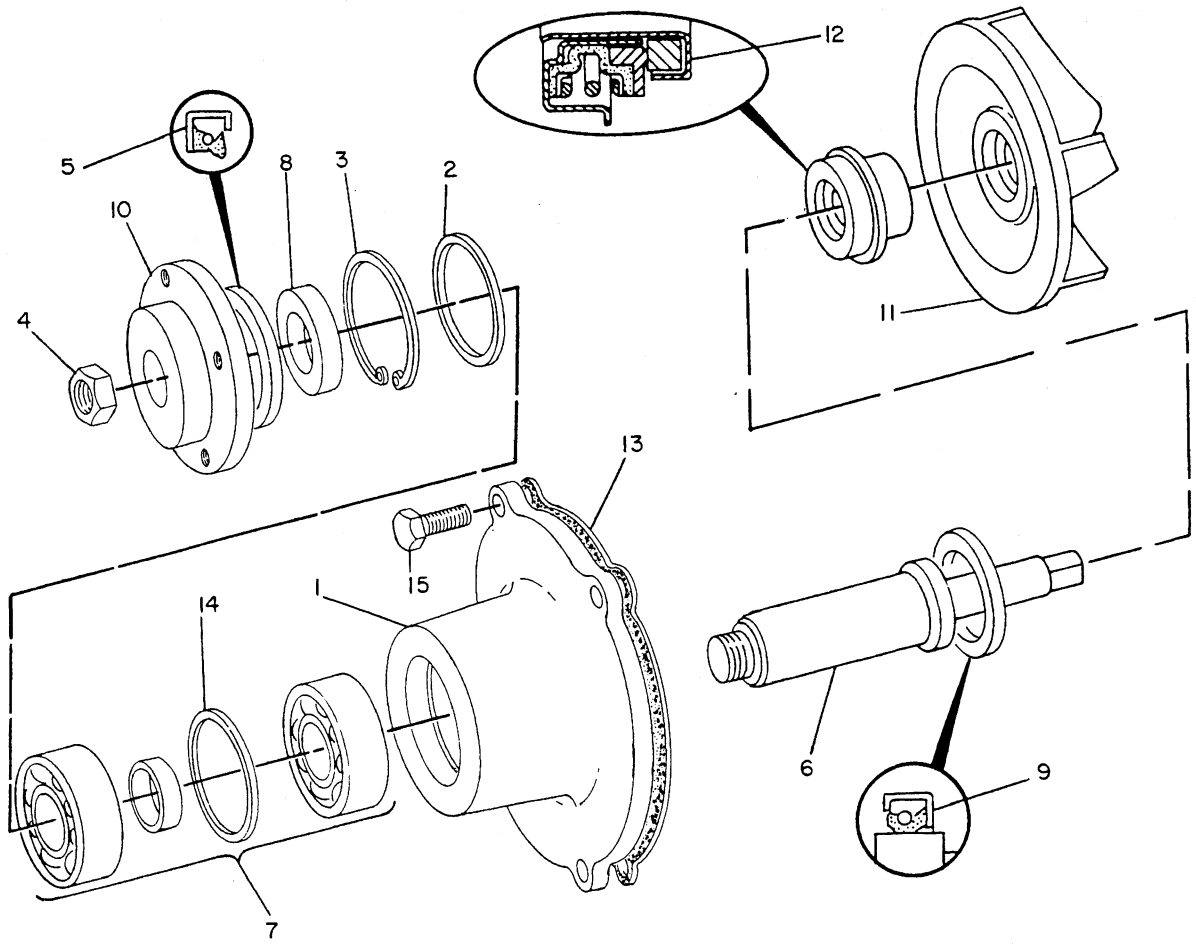

NOTE	REF NO	PART NUMBER	QTY	PART NAME	NOTE	REF NO	PART NUMBER	QTY	PART NAME
	1	2W1223	1	PUMP GP-WATER					
J	2	1W5648	1	SPACER					
J	3	6V0506	1	RING-RETAINING					
J	4	6V5019	1	NUT-JAM					
J	5	6V5014	1	SEAL-LIP TYPE					
J	6	1W5646	1	SHAFT-WATER PUMP					
J	7	6V5118	1	BEARING AS-ROLLER					
J	8	1W5647	1	SPACER					
J	9	6V6917	1	SEAL-LIP TYPE					
	10	4W2323	1	ADAPTER-FAN					
	11	2W3535	1	IMPELLER-PUMP					
J	12	2W0712	1	SEAL AS-PUMP					
J	13	4N0659	1	GASKET-PUMP					
CJ	14	1W5649	1	SPACER					
	15	0S1594	4	BOLT					
				THE FOLLOWING REPAIR KIT IS AVAILABLE:					
		6V6896	1	KIT-PUMP REBUILD (INCL PARTS MARKED J)					

C-CHANGE FROM PREVIOUS TYPE

B-452237 EP

1361 **4N0660 PUMP GP-WATER**

COOLING SYSTEM

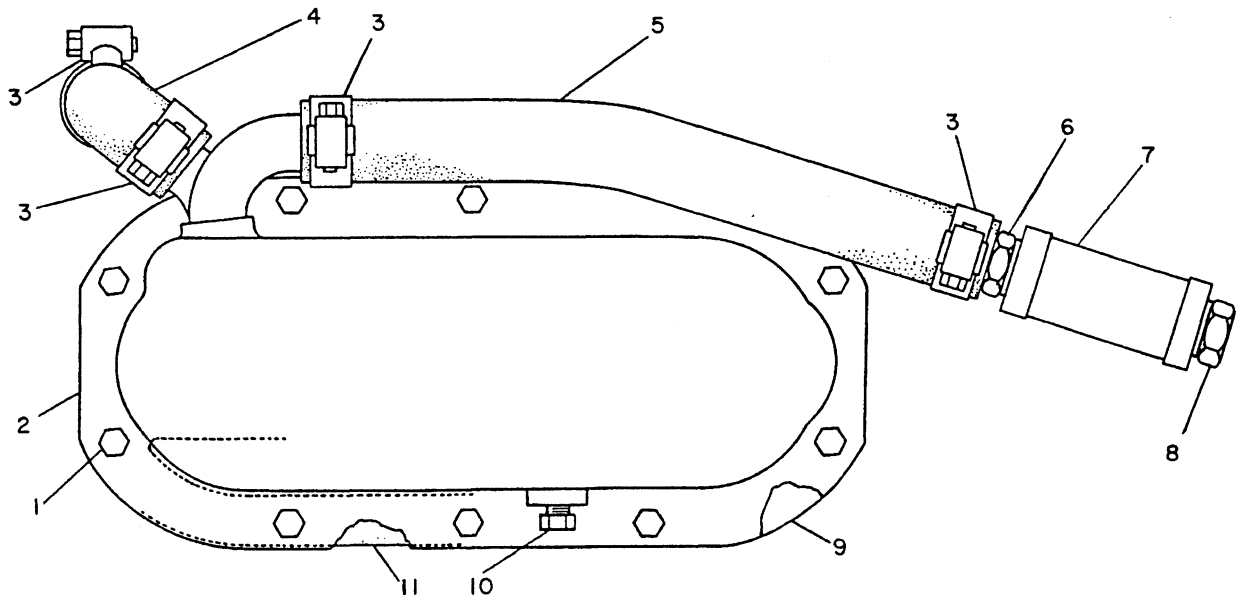

NOTE	REF NO	PART NUMBER	QTY	PART NAME	NOTE	REF NO	PART NUMBER	QTY	PART NAME
	1	1T0414	10	BOLT-12 POINT HEAD					
		9M1974	10	WASHER-HARD					
	2	1W1146	1	COVER AS-OIL COOLER					
		7C2230	1	GASKET-COVER					
	3	2S3440	4	CLAMP-HOSE					
	4	1W1140	1	HOSE-ENGINE OIL COOLER					
		5L2849	1	PIPE-NIPPLE					
	5	7C7745	1	HOSE-ENGINE OIL COOLER					
	6	1H9779	1	CONNECTOR-HOSE					
	7	332177	1	TEE-PIPE					
	8	3J5389	1	PLUG					
Y	9	9N5659	1	COOLER GP-ENGINE OIL					
	10	5M6214	1	PLUG-PIPE					
	11	7C1651	1	GASKET-OIL COOLER					

Y-SEPARATE ILLUSTRATION

B-402370 EP

1378 **7C7744 COOLER GP-ENGINE OIL**
9N5659-Page 34

COOLING SYSTEM

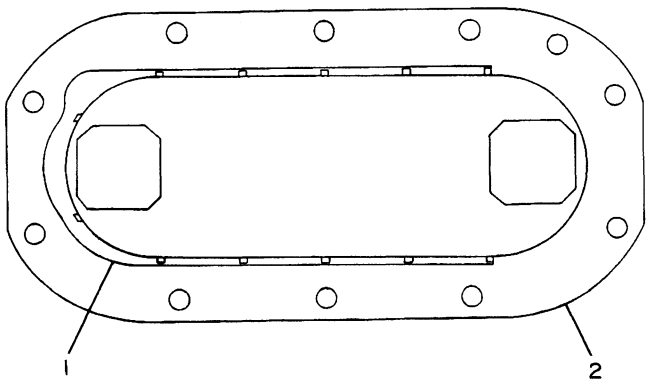

NOTE	REF NO	PART NUMBER	QTY	PART NAME
	1	9L5981	1	DIVIDER-CORE
	2	9N5233	1	CORE AS-OIL COOLER

NOTE: DIVIDER TO BE MOUNTED BETWEEN FIFTH AND SIXTH PLATES

B-231733 EP

1378 **9N5659 COOLER GP-ENGINE OIL**

Part Of 7C7744 Cooler-Engine Oil

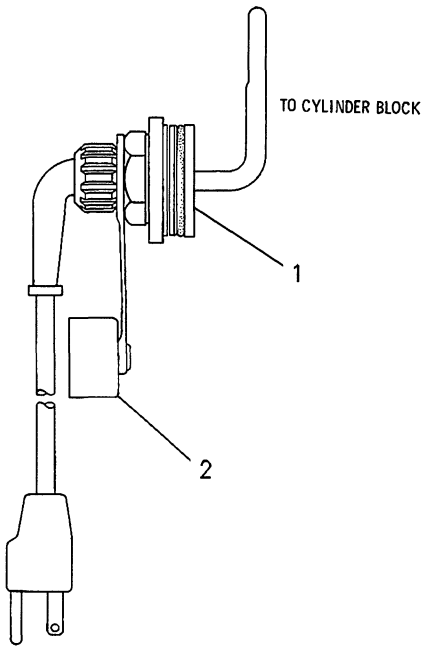

NOTE	REF NO	PART NUMBER	QTY	PART NAME
Y	1	6N9125	1	HEATER GP-JACKET WATER
	2	6N1604	1	CAP AS-DUST

Y-SEPARATE ILLUSTRATION

R-546012 EP

1383 **6N9739 HEATER GP-JACKET WATER (750 WATT, 120 VOLT)**

6N9125-Page 35

An Attachment

COOLING SYSTEM

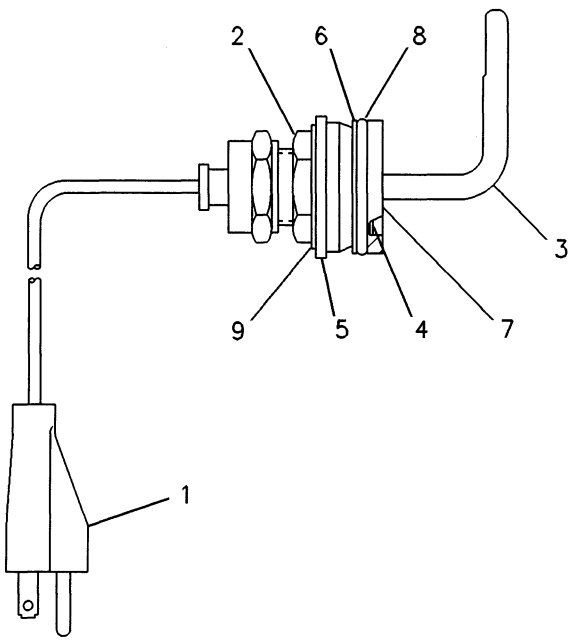

NOTE	REF NO	PART NUMBER	QTY	PART NAME
	1	9N5253	1	CORD AS-HEATER
	2	2R1980	1	NUT-PLAIN HEX
	3	7N7957	1	ELEMENT AS
	4	6N9121	1	GASKET
	5	6N9123	1	PLATE-CLAMP
	6	6N9122	1	RING-SPLIT
	7	6N9119	1	ADAPTER
	8	4F7952	1	SEAL-O-RING
	9	2H3924	1	LOCKWASHER

F-546001 EP

1383 **6N9125 HEATER GP-JACKET WATER (750 WATT, 120 VOLT)**
Part Of 6N9739 Heater-Jacket Water
An Attachment

COOLING SYSTEM

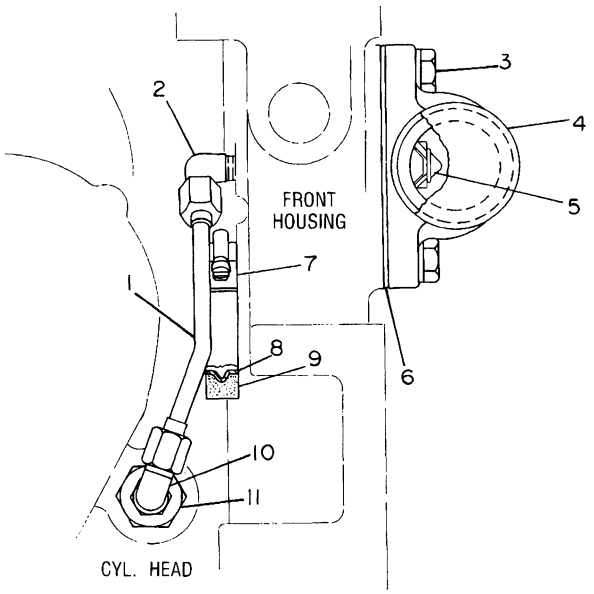

TOP VIEW

NOTE	REF NO	PART NUMBER	QTY	PART NAME
C	1	1N3799	1	TUBE AS
C	2	2N1287	1	ELBOW-FLARED
	3	4B3388	2	BOLT
		9M1974	2	WASHER-HARD
	4	7NO691	1	ELBOW-WATER REGULATING
	5	4NO236	1	THERMOSTAT AS
	6	4NO237	1	GASKET
	7	1W4724	1	CLAMP-HOSE
	8	7N4637	1	FERRULE
	9	7N4636	1	SEAL
C	10	7K9197	1	ELBOW
C	11	19440	1	CONNECTOR-FLARED

C-CHANGE FROM PREVIOUS TYPE

B-466917 EP

1380 **4N0188 LINES GP-WATER**
Type 1

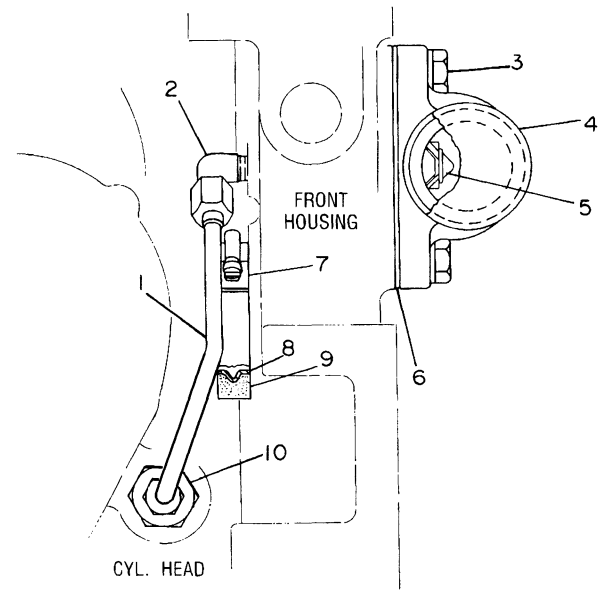

TOP VIEW

NOTE	REF NO	PART NUMBER	QTY	PART NAME
C	1	9Y1542	1	TUBE AS
	2	2N1287	1	ELBOW-FLARED
	3	4B3388	2	BOLT (5/16-18X1.125IN)
		9M1974	2	WASHER-HARD (2MM THK)
	4	7NO691	1	ELBOW-WATER REGULATING
C	5	4P6616	1	REGULATOR-TEMPERATURE
C	6	4P6617	1	GASKET
	7	1W4724	1	CLAMP-HOSE
	8	7N4637	1	FERRULE
	9	7N4636	1	SEAL
	10	19440	1	CONNECTOR-FLARED

C-CHANGE FROM PREVIOUS TYPE

R-515235 EP

1380 **4N0188 LINES GP-WATER**
Type 2

AIR INLET AND EXHAUST SYSTEM

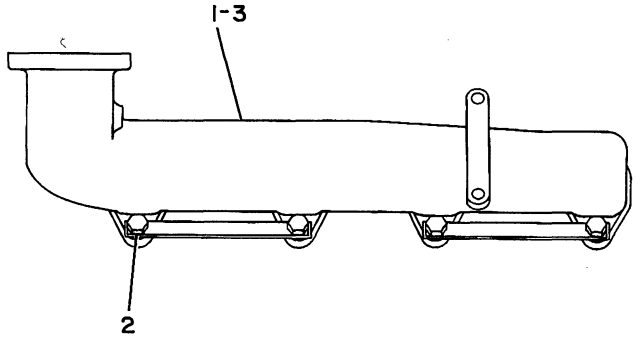

NOTE	REF NO	PART NUMBER	QTY	PART NAME
C	1	8N9236	1	MANIFOLD-EXHAUST
C	2	OS1571	8	BOLT
		4NO196	4	LOCK
	3	9L8027	1	GASKET-EXHAUST MANIFOLD

C-CHANGE FROM PREVIOUS TYPE

B-234894 EP

1059 **7N4971 MANIFOLD GP-EXHAUST**

AIR INLET AND EXHAUST SYSTEM

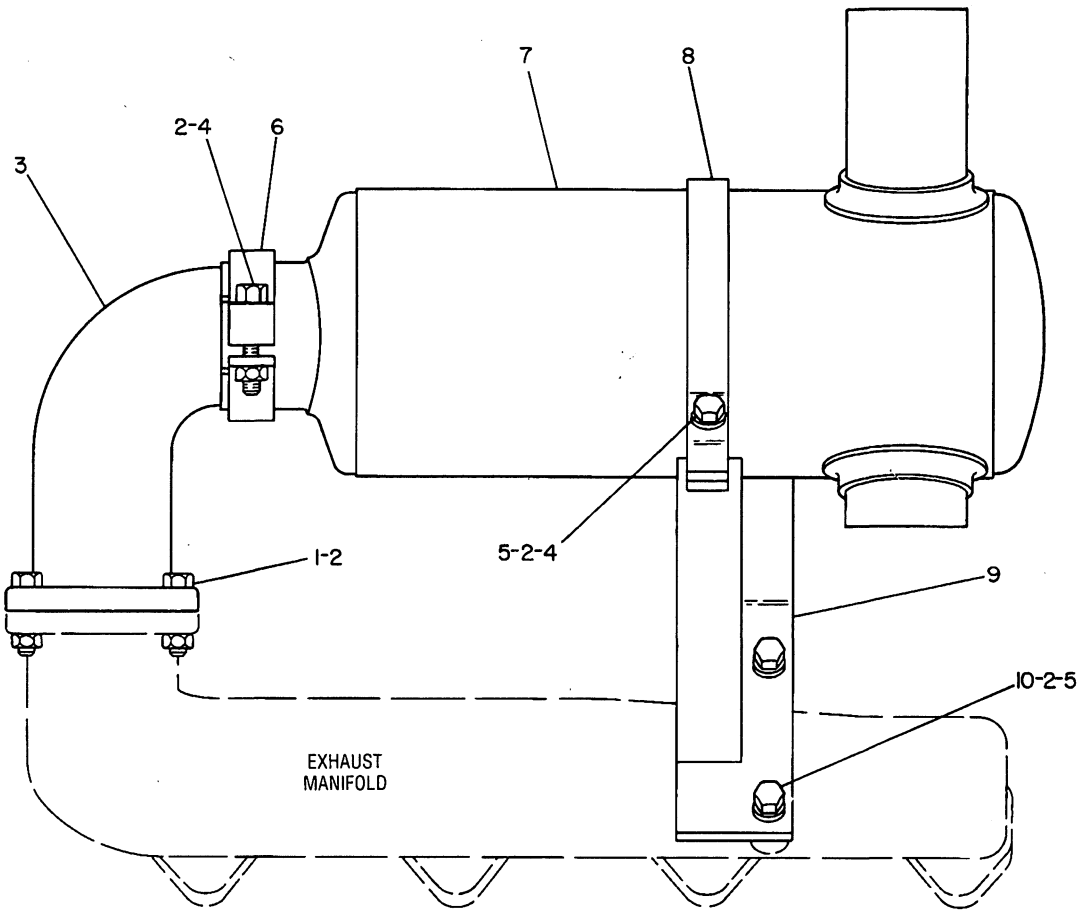

NOTE	REF NO	PART NUMBER	QTY	PART NAME	NOTE	REF NO	PART NUMBER	QTY	PART NAME
	1	0S1591	4	BOLT					
	2	1B5355	9	NUT-FULL					
	3	4N0219	1	ELBOW-OUTLET					
	4	0S1590	3	BOLT					
C	5	5M2894	6	WASHER					
	6	2F5152	1	CLAMP					
	7	7N4674	1	MUFFLER AS					
	8	7N4516	1	STRAP-MUFFLER					
	9	7N4529	1	SUPPORT AS					
	10	8M2295	2	BOLT					

C-CHANGE FROM PREVIOUS TYPE

B-175999 EP

1062 7N4970 MUFFLER GP

AIR INLET AND EXHAUST SYSTEM

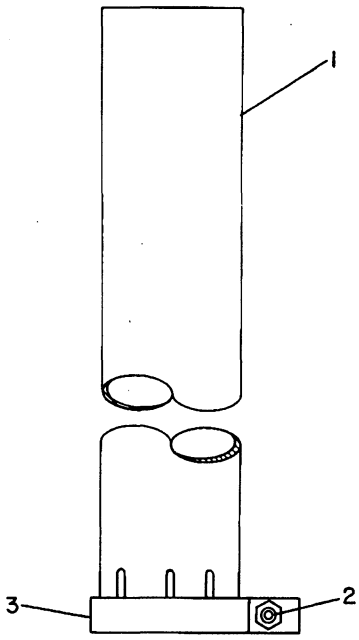

NOTE	REF NO	PART NUMBER	QTY	PART NAME
	1	4N6639	1	PIPE-EXHAUST EXTENSION
	2	0S1571	1	BOLT
		1B5355	1	NUT-FULL
	3	3H8604	1	CLAMP

B-118154 EP

1061

4N0312 EXHAUST EXTENSION GP
S/N 1RJ1-767 & 2CJ1-290

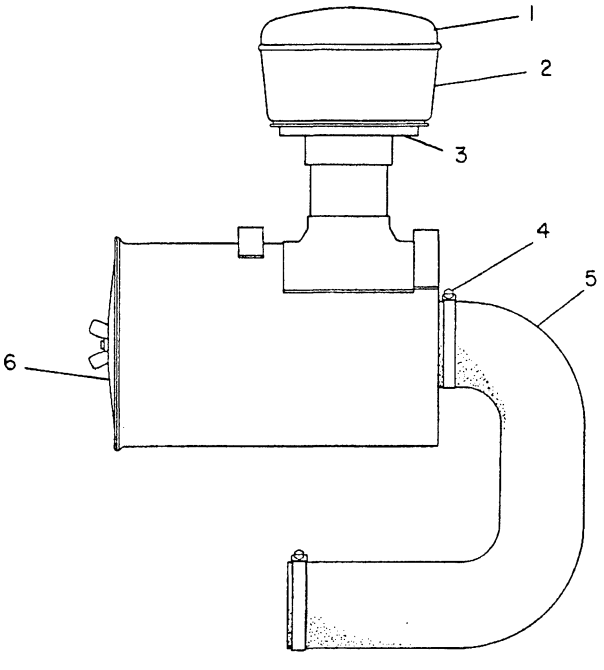

NOTE	REF NO	PART NUMBER	QTY	PART NAME
	1	8H2021	1	PRECLEANER
		9M9440	1	COVER AS
	2	8H2023	1	BODY
	3	1S5159	1	SLEEVE AS
		1S5161	1	BOLT
	4	8T6675	2	CLAMP-HOSE
	5	7C7453	1	HOSE-AIR CLEANER
Y	6	7W8764	1	AIR CLEANER GP

Y-SEPARATE ILLUSTRATION

B-450763 EP

1051

7W8765 AIR CLEANER GP
7W8764-Page 40

AIR INLET AND EXHAUST SYSTEM

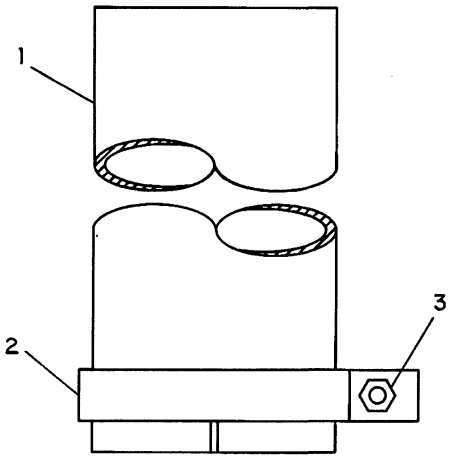

NOTE	REF NO	PART NUMBER	QTY	PART NAME
	1	5M5856	1	PIPE-EXTENSION
C	2	7N0810	1	CLAMP
C	3	9S8752	1	NUT-FULL
		5M2894	2	WASHER
C		0S1619	1	BOLT

C-CHANGE FROM PREVIOUS TYPE

V-495549 EP

1061

7E0831 EXHAUST EXTENSION GP
S/N 1RJ768-Up & 2CJ291-Up

MEMORANDA

AIR INLET AND EXHAUST SYSTEM

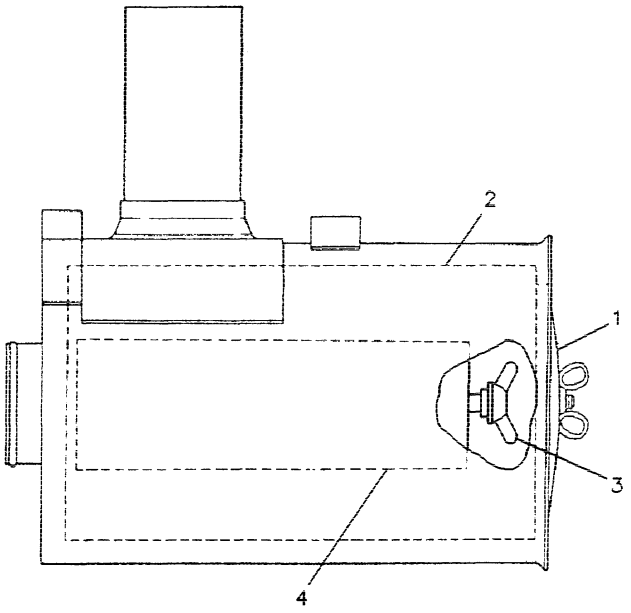

NOTE	REF NO	PART NUMBER	QTY	PART NAME
	1	4N0289	1	COVER AS-AIR CLEANER
	2	4N0326	1	ELEMENT AS-PRIMARY
	3	6N7675	2	NUT AS-WING
	4	4N0313	1	ELEMENT AS-SECONDARY

B-450764 EP

1051 **7W8764 AIR CLEANER GP**

Part Of 7W8765 Air Cleaner

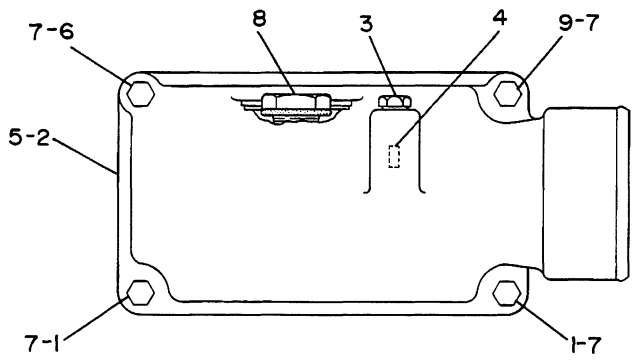

NOTE	REF NO	PART NUMBER	QTY	PART NAME
	1	0S1588	2	BOLT
	2	1W5053	1	PIPE AS-INLET
	3	5M6213	1	PLUG
	4	7M1674	1	ELEMENT-FILTER
	5	9L7630	1	GASKET-AIR INLET
	6	0S1590	1	BOLT
	7	5M2894	4	WASHER
	8	9S4183	1	PLUG
		3D2824	1	SEAL-O-RING
	9	0L1352	1	BOLT

B-322498 EP

1058 **1W5054 LINES GP-AIR**

AIR INLET AND EXHAUST SYSTEM

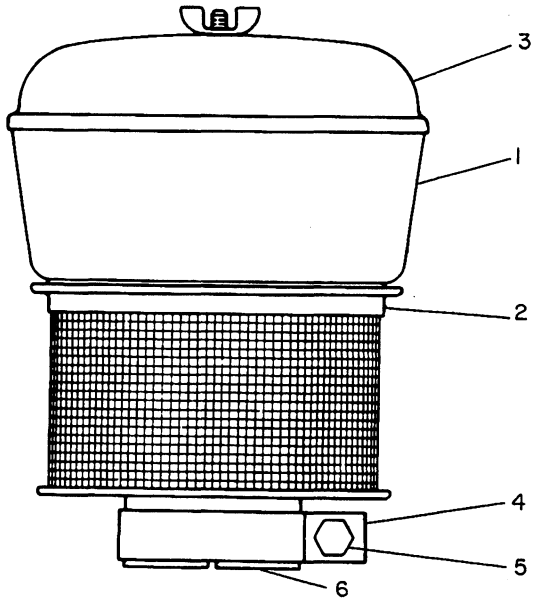

NOTE	REF NO	PART NUMBER	QTY	PART NAME
	1	5M2736	1	PRESCREENER AS
		8H2023	1	BODY
C	2	2S0062	1	SLEEVE AS
	3	9M9440	1	COVER AS
	4	2F5152	1	CLAMP
	5	3B1915	1	BOLT
		1D4717	1	NUT
	6	5M0899	1	PIPE AS-EXTENSION

C-CHANGE FROM PREVIOUS TYPE

V-475662 EP

1055 **5M2735 PRESCREENER GP**
An Attachment

FUEL SYSTEM AND GOVERNOR

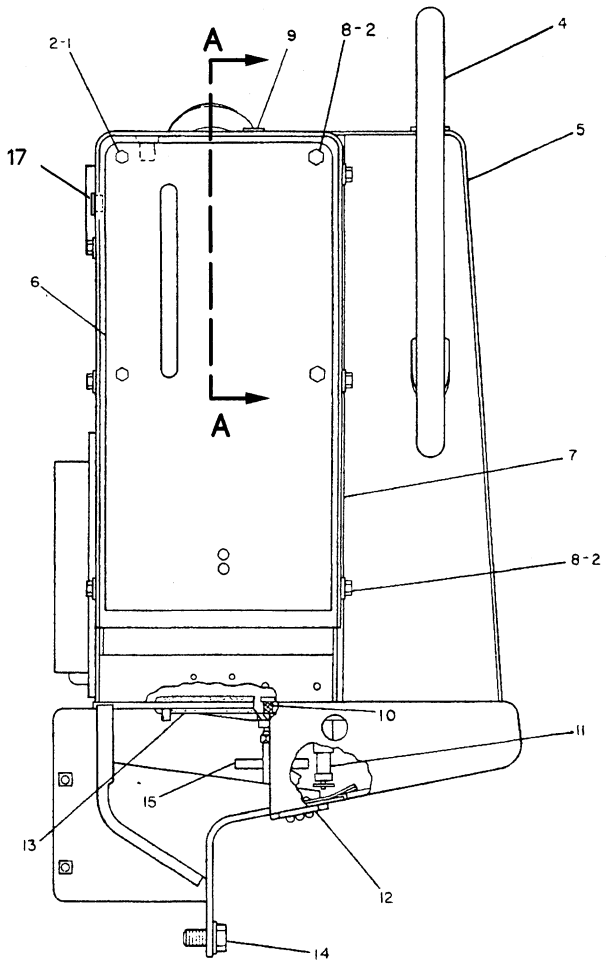

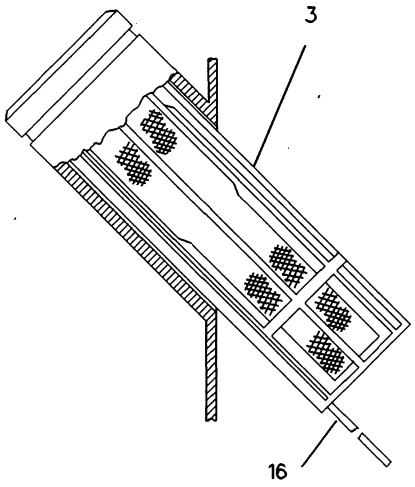

SECTION A-A

NOTE	REF NO	PART NUMBER	QTY	PART NAME	NOTE	REF NO	PART NUMBER	QTY	PART NAME
	1	8T2502	1	BOLT					
	2	8T4896	10	WASHER-HARD					
	3	9P7121	1	STRAINER-FUEL TANK					
	4	5G2496	1	GRAB HANDLE					
		5P2566	2	BOLT					
		5P1076	2	WASHER-HARD					
	5	8Y1099	1	TANK AS					
	6	5G1673	1	COVER AS					
		4B4319	2	RIVET					
		5G1672	1	SPRING					
	7	6S9852	1	COVER AS					
		9F2978	6	NUT-WELD (3/8-16 THD)					
		9F6445	4	NUT (1/4-20 THD)					
	8	5M3062	9	BOLT					
	9	4H3001	1	PLUG-BUTTON					
	10	5G4109	1	SCREEN-SUMP					
	11	6D0238	1	VALVE AS					
	12	5G0855	1	COVER AS					
		4B4322	4	RIVET					
BD	13	5P5816		SEAL					
	14	8T9393	3	BOLT					
		8T4122	3	WASHER					
	15	6V5710	1	VALVE-BALL (DRAIN)					
	16	8Y1102	1	PLUNGER					
	17	924924	1	PLUG-BUTTON					

B-USE AS REQUIRED
D-ORDER BY THE METER

R-483221 EP

1273 **8Y0217 TANK GP-FUEL**

FUEL SYSTEM AND GOVERNOR

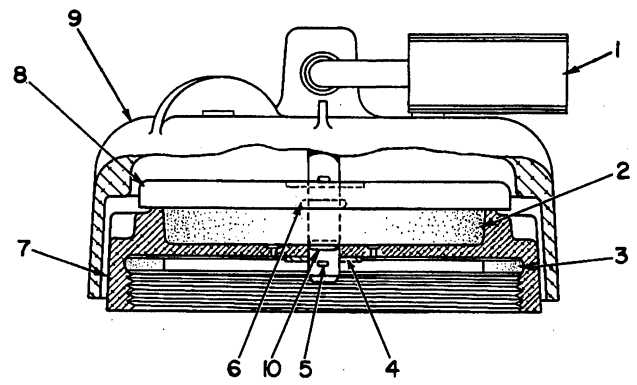

NOTE	REF NO	PART NUMBER	QTY	PART NAME
	1	5P8502	1	PADLOCK GP
A		5P8500	2	KEY
A		6V5874	1	COVER
	2	5S7657	1	FILTER-TANK CAP
C	3	7T2037	1	GASKET
	4	4J1105	2	SHIM (.031 IN THK)
	5	3B4615	2	PIN-COTTER
	6	5F9144	1	SEAL-O-RING
	7	1P8680	1	CAP-FUEL TANK
	8	5S7646	1	LID-TANK CAP
	9	8P0668	1	COVER AS-TANK CAP
	10	8F9538	1	SEAL-O-RING

A-NOT PART OF THIS GROUP
C-CHANGE FROM PREVIOUS TYPE

B-339574 EP

7315 **5G3612 CAP GP-FUEL TANK PROTECTION**

FUEL SYSTEM AND GOVERNOR

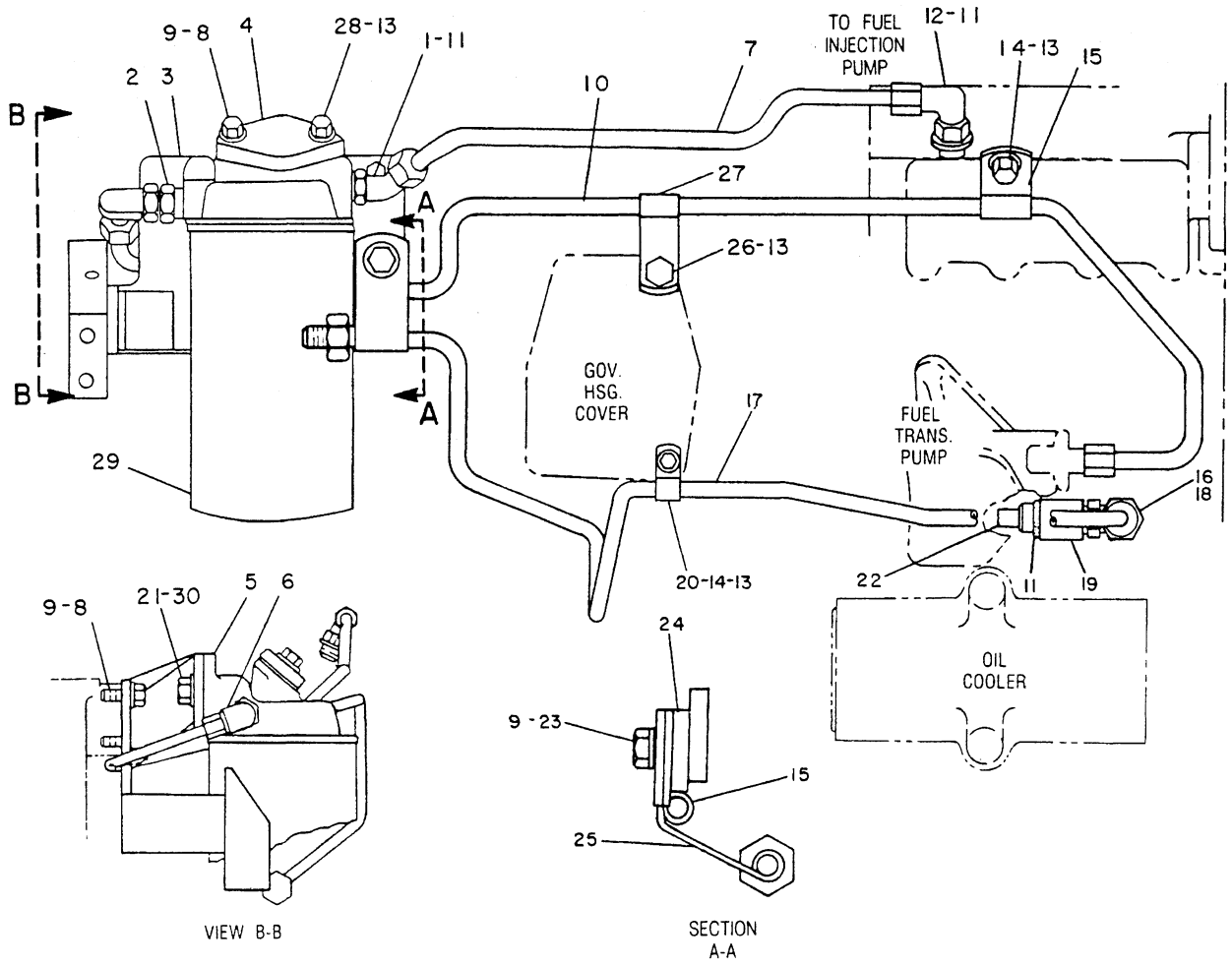

NOTE	REF NO	PART NUMBER	QTY	PART NAME	NOTE	REF NO	PART NUMBER	QTY	PART NAME
	1	3O7941	1	ELBOW		25	3Y2348	1	CLIP
	2	4S6399	1	CONNECTOR		26	9F6580	1	BOLT
	3	9Y1905	1	BRACKET AS		27	4K8179	1	CLIP
	4	8N3573	1	COVER		28	OS1615	1	BOLT
		1PO436	1	GASKET		29	1P2299	1	FILTER AS-FUEL
	5	4N3295	1	BASE AS-FUEL FILTER		30	5M2894	2	WASHER
		4N3294	1	INSERT-FUEL FILTER					
	6	7K9197	1	ELBOW					
	7	9Y1902	1	TUBE AS					
	8	2B2695	4	BOLT					
	9	9M1974	5	WASHER-HARD					
	10	9Y1903	1	TUBE AS					
	11	3J1907	3	SEAL-O-RING					
	12	7J4026	1	ELBOW					
	13	5PO537	4	WASHER					
	14	OS1616	2	BOLT					
	15	2B2404	2	CLIP					
	16	3O7946	1	ELBOW					
	17	7W3185	1	TUBE AS					
	18	3J7354	1	SEAL-O-RING					
	19	2W7672	1	ADAPTER					
	20	1A5350	1	CLIP					
	21	OL1351	2	BOLT					
	22	2W7671	1	SCREEN AS					
	23	4B3388	1	BOLT					
	24	8M7145	1	WASHER					

B-472583 EP

1261 **9Y1897 FILTER GP-FUEL**
Engine S/N 45V69350-84092

FUEL SYSTEM AND GOVERNOR

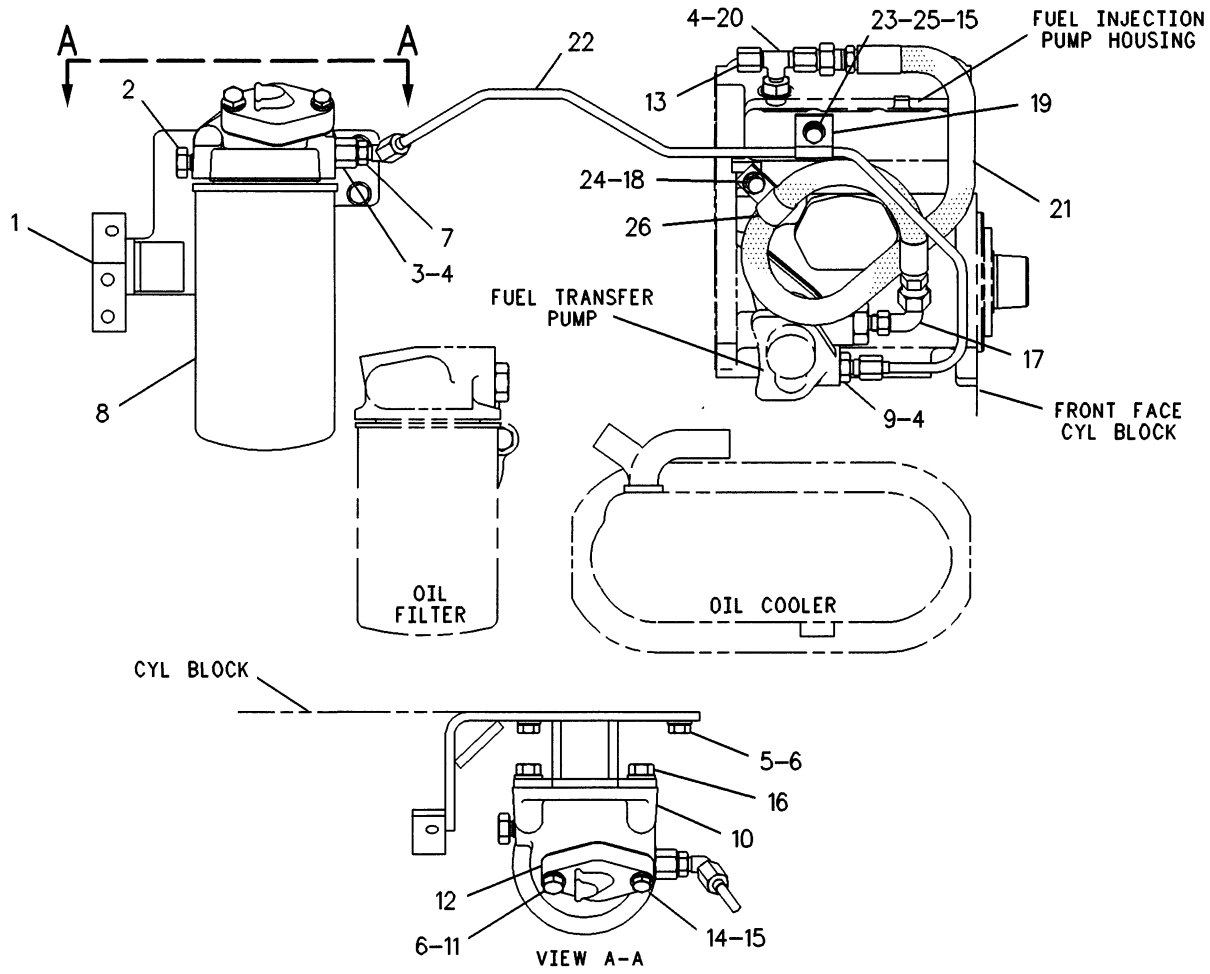

NOTE	REF NO	PART NUMBER	QTY	PART NAME	NOTE	REF NO	PART NUMBER	QTY	PART NAME
	1	9Y1905	1	BRACKET AS	C	23	2A5546	1	BOLT
	2	4S6399	1	CONNECTOR	C	24	5P4115	1	WASHER
	3	5P9617	1	ADAPTER	C	25	5G2003	1	SPACER
	4	3J1907	3	SEAL-O-RING	C	26	4K8864	1	CLIP
	5	2B2695	4	BOLT					
	6	9M1974	5	WASHER-HARD					
	7	3O7941	1	ELBOW					
		3J7354	1	SEAL-O-RING					
C	8	1RO74O	1	FILTER AS-FUEL					
	9	2P1314	1	CONNECTOR					
	10	4P5722	1	BASE AS-FILTER					
		4N3294	1	INSERT-FUEL FILTER					
	11	1B279O	1	BOLT					
	12	6N4414	1	COVER-FILTER BASE					
		1PO436	1	GASKET					
C	13	8S495O	1	CAP					
	14	7B2742	1	BOLT					
	15	5PO537	2	WASHER					
	16	OL1351	2	BOLT					
		5M2894	2	WASHER					
C	17	6K9194	1	ELBOW					
	18	OS1616	1	BOLT					
	19	1A535O	1	CLIP					
C	20	3O7955	1	TEE-FLARED					
CI	21	3N7156	1	HOSE AS					
C	22	4Y7465	1	TUBE AS-INLET					

C-CHANGE FROM PREVIOUS TYPE
I-SEE HOSE FABRICATION GUIDE

F-555440 EP

1261 **7E3734 FILTER GP-FUEL**
Engine S/N 45V84091-Up

FUEL SYSTEM AND GOVERNOR

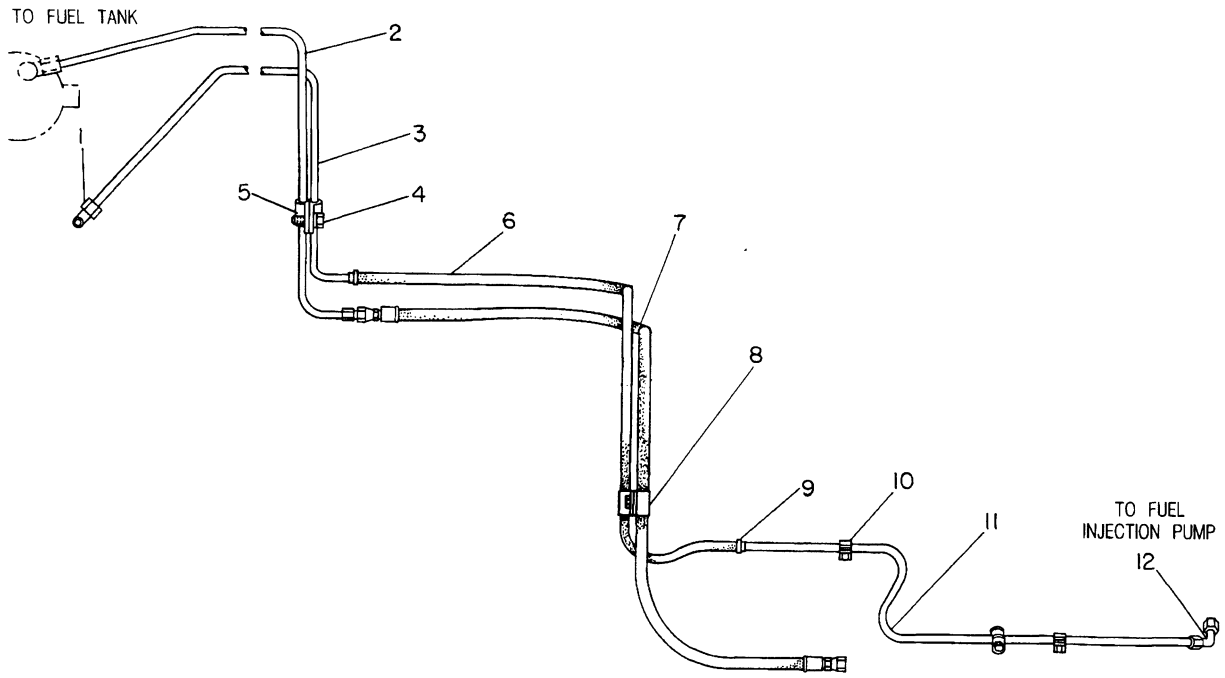

NOTE	REF NO	PART NUMBER	QTY	PART NAME	NOTE	REF NO	PART NUMBER	QTY	PART NAME
	1	2N1287	1	ELBOW-FLARED					
	2	5G1042	1	TUBE AS					
	3	5G4584	1	TUBE AS					
	4	5P8167	1	BOLT					
		8T4896	1	WASHER-HARD					
	5	2B2404	2	CLIP					
E	6	5P6442		HOSE (100CM)					
I	7	5G1786	1	HOSE AS					
	8	8F1179	2	CLIP					
	9	1P4278	2	CLAMP					
C	10	1W9168	3	CLAMP					
C		1W9169	3	CLAMP (THREADED)					
C		5P4939	3	SCREW AS-MACHINE					
C	11	8Y1725	1	TUBE AS					
	12	3O7946	1	ELBOW					
		3J7354	1	SEAL-O-RING					

C-CHANGE FROM PREVIOUS TYPE
E-ORDER BY THE CENTIMETER
I-SEE HOSE FABRICATION GUIDE

B-492773 EP

1274 **5G4583 LINES GP-FUEL**

FUEL SYSTEM AND GOVERNOR

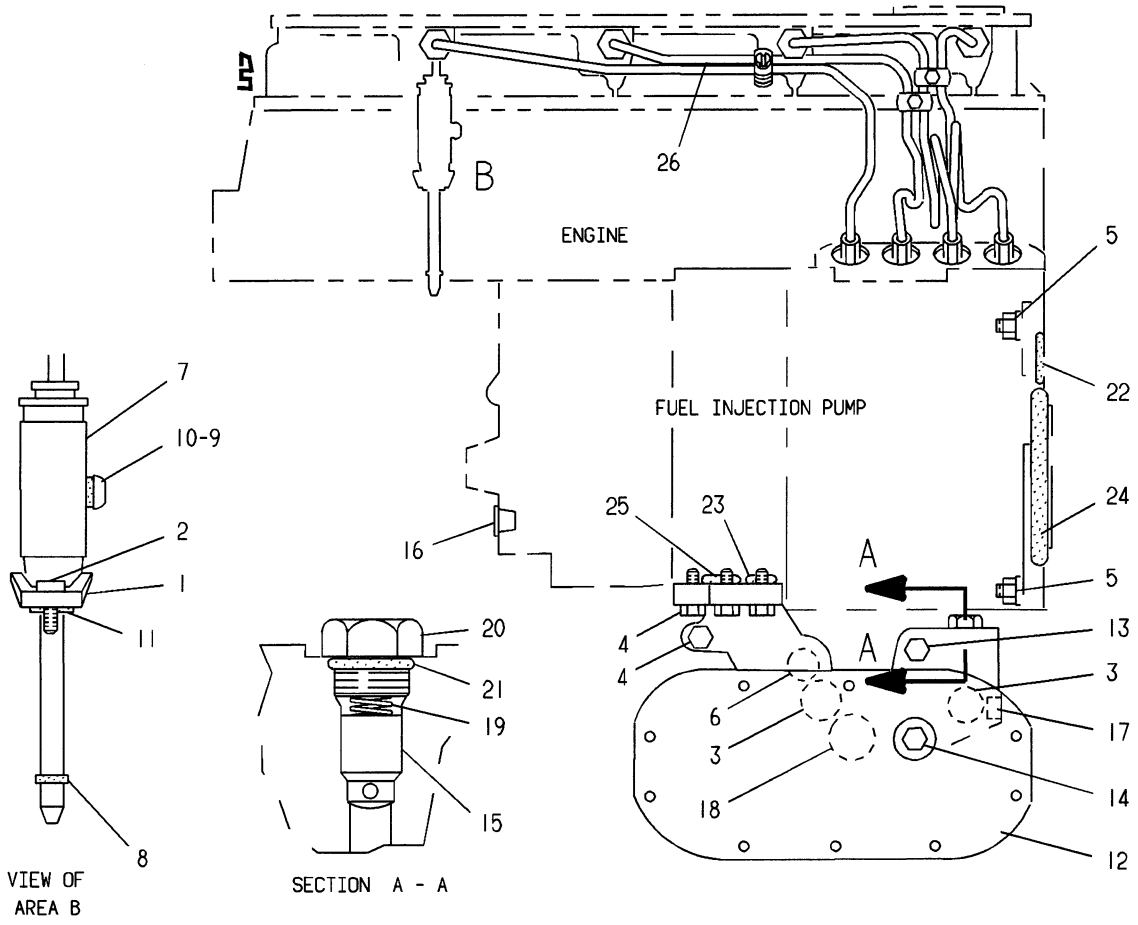

NOTE	REF NO	PART NUMBER	QTY	PART NAME
	1	8N5132	4	CLAMP-NOZZLE
	2	1T0416	4	BOLT
	3	3P1156	2	SEAL-O-RING
	4	0S1594	4	BOLT
	5	3S2713	3	NUT-FULL
	6	5P5598	1	SEAL-O-RING
R	7	4W7015	4	NOZZLE AS
				(EACH INCLUDES)
		1H1023	1	SEAL-O-RING
	8	9L9098	1	SEAL-CARBON STOP
	9	8T0659	1	WASHER-SEALING
	10	2W1230	1	SCREW-BUTTON HEAD
	11	4W6060	1	WASHER
	12	1W7492	1	SUPPORT-COOLER
	13	0L2070	1	BOLT
	14	0L1143	1	BOLT
	15	1W4927	1	VALVE-BYPASS
	16	1N3980	1	PLUG
	17	7M7410	1	PLUG
	18	3P1155	1	SEAL-O-RING
	19	9L9188	1	SPRING-VALVE
	20	5P8196	1	PLUG-O-RING
	21	2M9780	1	SEAL-O-RING
	22	6V6921	1	SEAL-RING
	23	5F7054	1	SEAL-O-RING
	24	2H3934	1	SEAL
	25	2H3932	1	SEAL
Y	26	7N0042	1	LINES GP-FUEL INJECTION

R-REMFG PART MAY BE AVAILABLE
Y-SEPARATE ILLUSTRATION

C-463643 EP

1252 **1W1354 LINES GP-FUEL INJECTION**
7N0042-Page 48

FUEL SYSTEM AND GOVERNOR

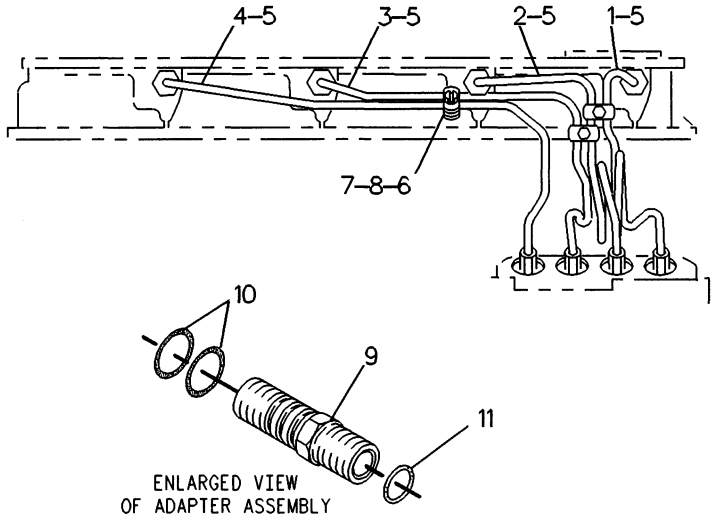

ENLARGED VIEW
OF ADAPTER ASSEMBLY

NOTE	REF NO	PART NUMBER	QTY	PART NAME
	1	1W7121	1	LINE AS-FUEL INJ (NO. 1)
	2	1W7122	1	LINE AS-FUEL INJ (NO. 2)
	3	1W7123	1	LINE AS-FUEL INJ (NO. 3)
	4	1W7124	1	LINE AS-FUEL INJ (NO. 4) (EA LINE AS INCL)
	5	8L2779	1	SEAL-O-RING
	6	1W9168	3	CLAMP
	7	5P4939	3	SCREW AS-MACHINE
	8	1W9169	3	CLAMP (THREADED)
	9	1WO942	4	ADAPTER AS-FUEL INJ (EACH INCLUDES)
C	10	3PO647	2	SEAL-O-RING
	11	1H1023	8	SEAL-O-RING

C-CHANGE FROM PREVIOUS TYPE

F-499668 EP

1252 **7N0042 LINES GP-FUEL INJECTION**

Part Of 1W1354 Lines-Fuel Injection

FUEL SYSTEM AND GOVERNOR

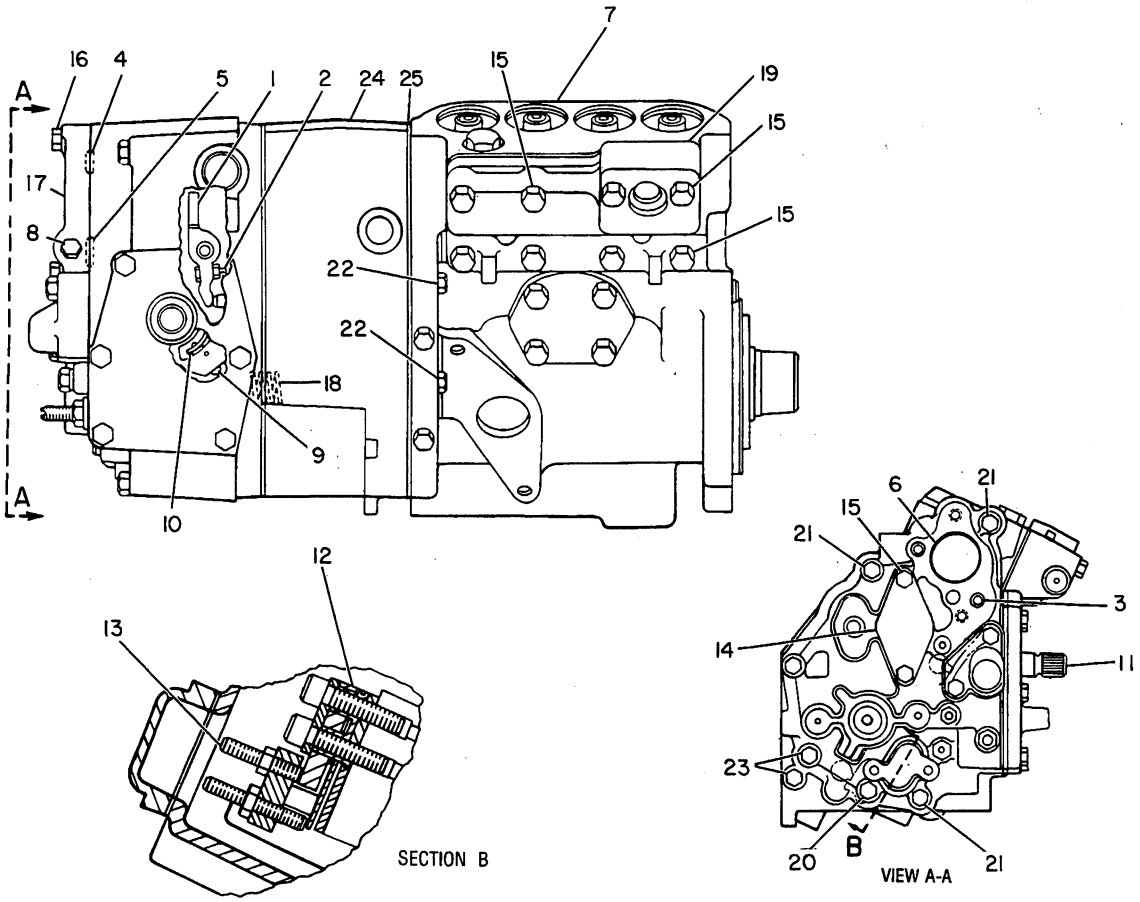

NOTE	REF NO	PART NUMBER	QTY	PART NAME	NOTE	REF NO	PART NUMBER	QTY	PART NAME
	1	4W5734	1	LEVER AS		21	4N1761	4	BOLT
	2	6V6835	1	SETSCREW-SOCKET		22	6B4198	2	BOLT
C		8L5832	1	NUT-HEX		23	8F8178	2	BOLT
	3	5P6620	1	SEAL-O-RING	Y	24	1W8730	1	GOVERNOR GP
	4	8J8343	1	SEAL-O-RING		25	7N8768	1	GASKET
	5	335879	1	SEAL-O-RING					
	6	8M8515	1	SEAL-O-RING					
Y	7	2W0263	1	PUMP GP-FUEL INJECTION					
	8	9S4180	1	PLUG-O-RING					
		4J7533	1	SEAL-O-RING					
	9	7N2176	1	PIN-DETENT					
		7N1052	1	DOWEL					
	10	7W0735	1	SPRING-DETENT					
	11	8N3088	1	SHAFT AS-THROTTLE					
Y	12	4W5063	1	TORQUE CONTROL GP					
C	13	5H6552	1	SETSCREW-SOCKET					
		4B2049	1	NUT					
	14	2W5448	1	COVER					
C		7E6785	1	GASKET					
	15	4F7957	10	BOLT					
C	16	0S1616	2	BOLT					
	17	8N3799	1	COVER-FUEL RATIO					
	18	8S0232	1	SPRING-GOVERNOR					
	19	4W7008	1	COVER AS-GALLERY					
		7N3104	1	GASKET-BASE					
	20	2S7383	1	BOLT					

C-CHANGE FROM PREVIOUS TYPE
Y-SEPARATE ILLUSTRATION

B-495536 EP

1286 **7W0189 GOVERNOR & FUEL INJECTION PUMP GP**

1W8730-Page 50, 2W0263-Page 53, 4W5063-Page 54

FUEL SYSTEM AND GOVERNOR

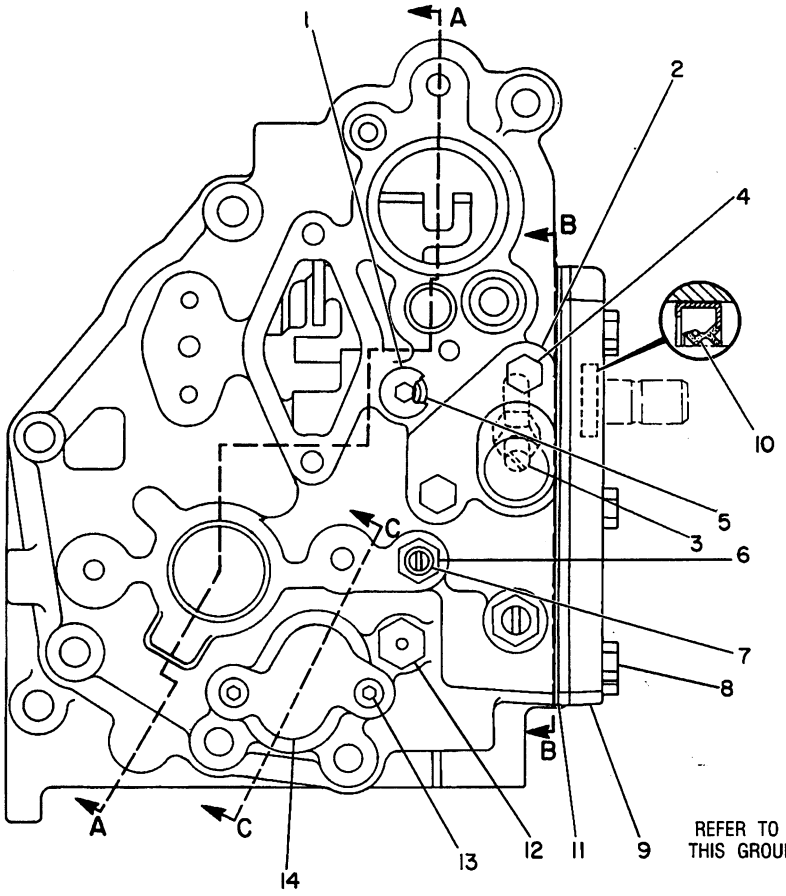

REFER TO ALL ILLUSTRATIONS OF THIS GROUP FOR AUXILIARY VIEWS

NOTE	REF NO	PART NUMBER	QTY	PART NAME	NOTE	REF NO	PART NUMBER	QTY	PART NAME
C	1	1W6523	1	PLUG-O-RING					
C	2	8N3259	1	COVER-HIGH IDLE					
C		6I2003	1	GASKET					
C	3	7N2594	1	SETSCREW-SLOTTED					
C		7N8775	1	NUT-HIGH IDLE					
C	4	5P6945	2	BOLT					
C		5P0537	2	WASHER					
C	5	3J7354	1	SEAL-O-RING					
C	6	4N5485	1	BODY-VALVE					
C		5F9144	1	SEAL-O-RING					
C	7	4N5484	1	VALVE-NEEDLE					
C		6H9691	1	SEAL-O-RING					
C	8	0S1616	6	BOLT					
C	9	1W7867	1	COVER-CONTROL					
C	10	8T2604	1	SEAL-LIP TYPE					
C	11	7N8779	1	GASKET-COVER					
C	12	3P0009	1	INSULATOR-STUD					
C	13	1P2497	2	BOLT-HEAD					
C		8T0328	2	WASHER-HARD					
C	14	8N3258	1	COVER-LOAD STOP					
C		6I2004	1	GASKET					

C-CHANGE FROM PREVIOUS TYPE

B-524334 EP

1264 **1W8730 GOVERNOR GP-PART 1 OF 3**

Part Of 7W0189 Governor & Fuel Injection Pump

FUEL SYSTEM AND GOVERNOR

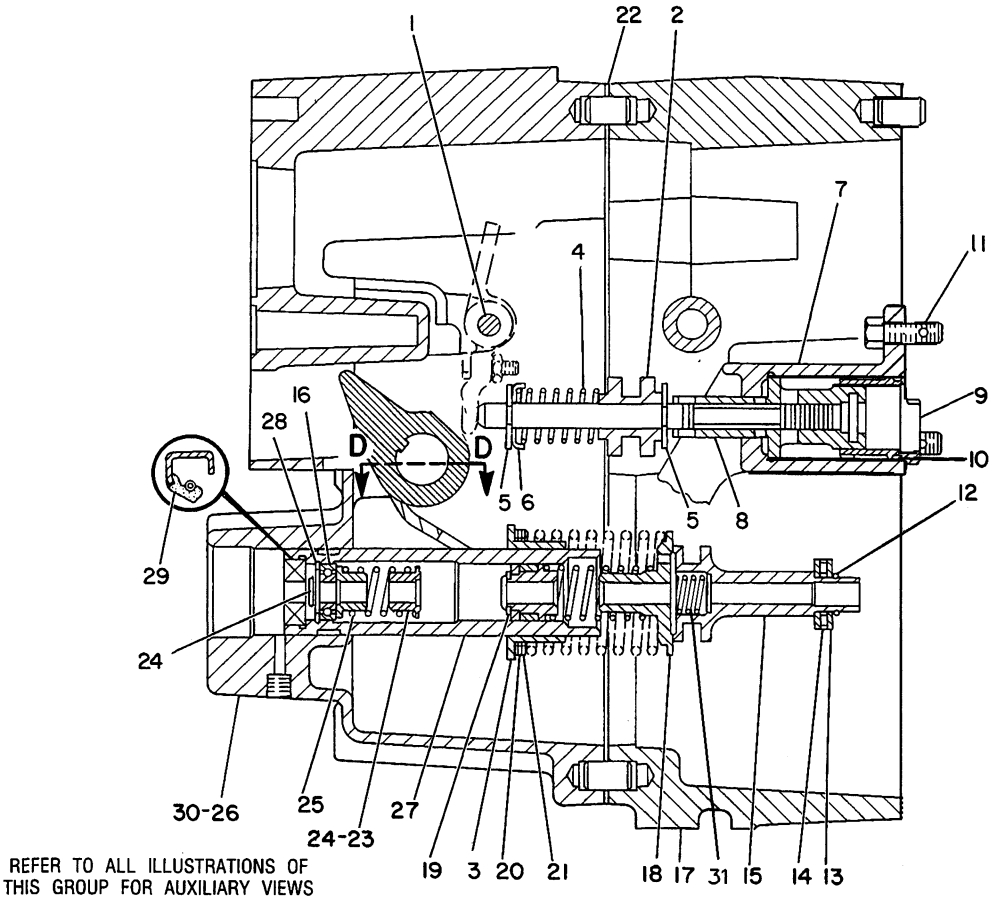

REFER TO ALL ILLUSTRATIONS OF THIS GROUP FOR AUXILIARY VIEWS

NOTE	REF NO	PART NUMBER	QTY	PART NAME
	1	7N8785	1	SHAFT-PIVOT
	2	1N3800	1	SLEEVE-RACK CONTROL
	3	6N3504	1	SEAT-GOVERNOR SPRING
	4	2W2216	1	SPRING-LINK
	5	2M7819	2	RING-RETAINING
	6	1N3802	1	SEAT-SPRING
	7	8N2507	1	PISTON AS-SERVO
		8N2505	1	VALVE-GOVERNOR SERVO
		7C0791	1	CYLINDER AS
		7N7271	1	LEVER-CONTROL
		3G3835	1	PIN
	8	1W4098	1	PISTON-GOVERNOR SERVO
	9	7W0250	1	SLEEVE
	10	5P9757	1	SEAL-O-RING
	11	310216	3	BOLT
	12	4N2953	1	RING-LOCK
	13	7E4892	2	RACE-BEARING-THRUST
	14	7M7219	1	BEARING-THRUST
	15	4W6868	1	RISER-GOVERNOR
	16	4N0432	1	BALL BEARING
	17	8N2495	1	HOUSING AS-GOVERNOR
		8S6814	4	PIN (12.7MM LG)
		4F6024	2	PIN (8MM LG)
	18	8N2503	1	DASHPOT AS-GOVERNOR
		4N6408	1	PISTON AS
		4N6407	1	SPOOL-DASHPOT
		4N6406	1	RING-SPACER
	19	4N6404	1	RING-RETAINING
	20	2P9556	1	WASHER
	21	2N0828	2	WASHER (SPRING)
C	22	8N2496	1	GASKET-GOVERNOR HOUSING
C	23	7N7270	2	SLEEVE-SPRING
C	24	7N8821	2	RING-RETAINING
C	25	3K5733	1	SPRING
C	26	8N2501	1	HOUSING AS-GOVERNOR
C		7E5346	1	VALVE AS
C	27	8N2499	1	GUIDE-SPRING
C	28	3D8317	1	RING-RETAINING
C	29	4N0260	1	SEAL-LIP TYPE
C	30	2F2290	1	PLUG-CORE
	31	7N7267	1	SPRING

C-CHANGE FROM PREVIOUS TYPE

R-491965 EP

1264 **1W8730 GOVERNOR GP-PART 2 OF 3**

Part Of 7W0189 Governor & Fuel Injection Pump

FUEL SYSTEM AND GOVERNOR

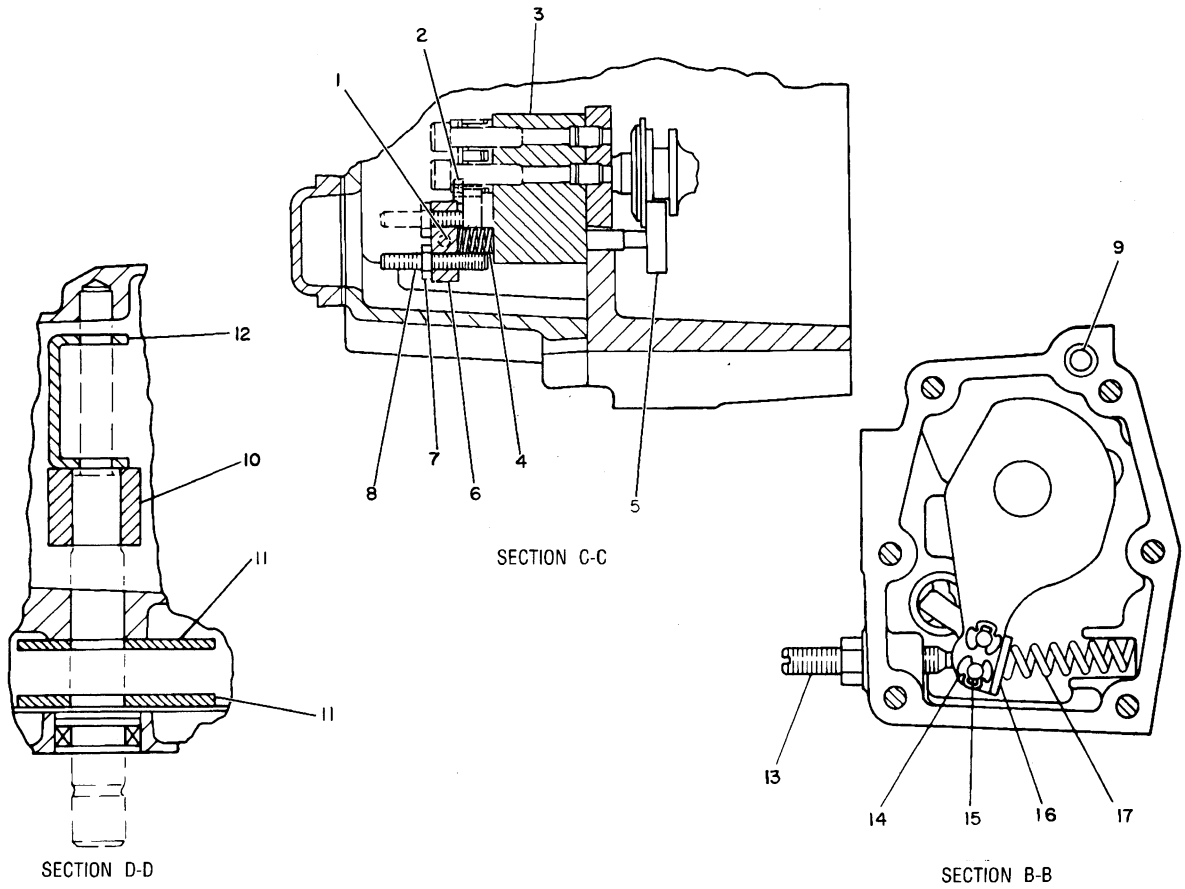

NOTE	REF NO	PART NUMBER	QTY	PART NAME
	1	6D3897	1	BOLT
	2	6L5897	2	BOLT
	3	2W6104	1	BLOCK AS-STOP
		2W6103	1	DOWEL
	4	1W4243	1	SPRING-BUMPER
	5	2W5161	1	BOLT-LOAD STOP
	6	8N3256	1	COLLAR-LOAD STOP
C	7	8L5832	1	NUT-HEX
	8	5H6552	1	SETSCREW-SOCKET (31.75MM LG)
				-OR-
C		9Y4701	1	SETSCREW-SOCKET (34.92MM LG)
	9	7N8821	1	RING-RETAINING
	10	8N3168	1	LEVER-THROTTLE
	11	2W9305	2	PLATE-THROTTLE
	12	2W6102	1	LEVER-SPRING SEAT
	13	7N2594	1	SETSCREW-SLOTTED
		7W4272	1	NUT-SEALING
	14	7N2171	4	RING-RETAINING
	15	7N2172	2	PIN
	16	8N3087	1	STOP-IDLE DETENT
	17	2W7400	1	SPRING

C-CHANGE FROM PREVIOUS TYPE

B-461174 EP

1264 **1W8730 GOVERNOR GP-PART 3 OF 3**

Part Of 7W0189 Governor & Fuel Injection Pump

FUEL SYSTEM AND GOVERNOR

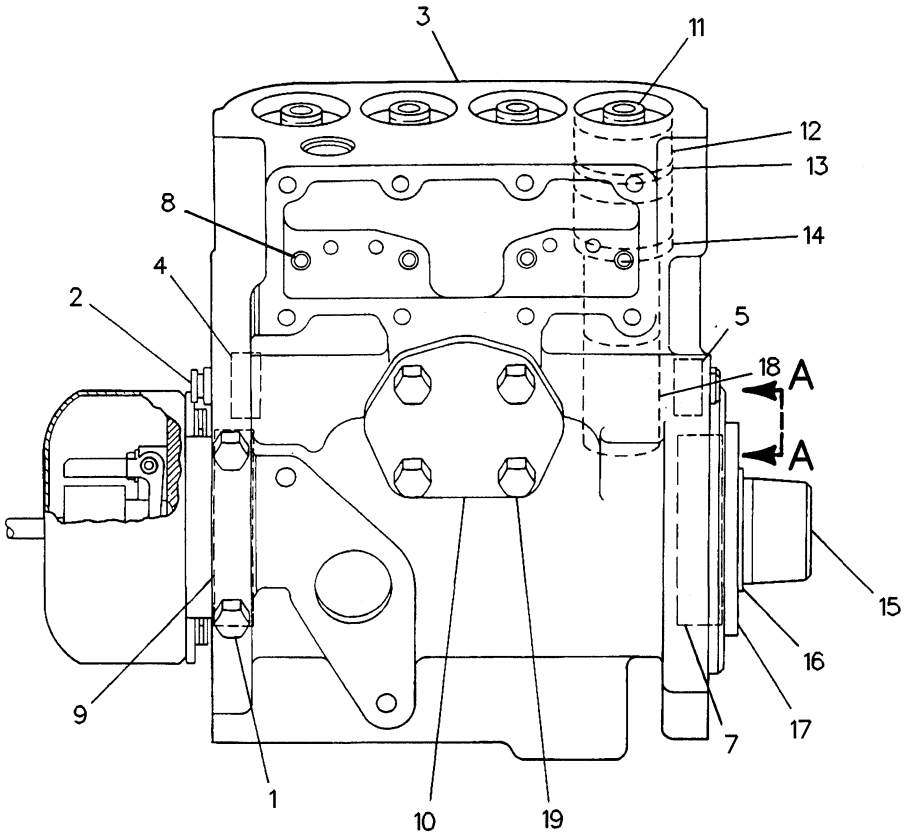

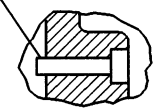

VIEW A-A

NOTE	REF NO	PART NUMBER	QTY	PART NAME	NOTE	REF NO	PART NUMBER	QTY	PART NAME
	1	9S4180	2	PLUG-O-RING					
		4J7533	2	SEAL-O-RING					
	2	1W3485	1	RACK-REGULATOR					
	3	1W3486	1	HOUSING AS-FUEL PUMP					
	4	1S1953	1	BEARING-RACK					
	5	1W3285	1	BEARING-RACK					
	6	4P8480	4	PIN-PUMP GUIDE					
	7	7N7970	1	BEARING-SLEEVE					
	8	7N7969	4	DOWEL					
	9	8N2518	1	BEARING-SLEEVE					
	10	7N1047	1	COVER-TIMING					
		7N1046	1	GASKET-COVER					
Y	11	1W6539	4	PUMP GP-FUEL INJECTION					
	12	8N5117	4	BUSHING					
	13	7E4846	4	SEAL-O-RING					
	14	4W6869	4	SPACER-FUEL PUMP					
Y	15	2W0262	1	CAMSHAFT AS					
C	16	7N8421	1	RING-RETAINING					
	17	8N2487	1	WASHER-THRUST					
	18	8N2489	4	LIFTER AS					
	19	0S1615	4	BOLT					

C-CHANGE FROM PREVIOUS TYPE
Y-SEPARATE ILLUSTRATION

R-520312 EP

1251

2W0263 PUMP GP-FUEL INJECTION

1W6539-Page 54, 2W0262-Page 55

Part Of 7W0189 Governor & Fuel Injection Pump

FUEL SYSTEM AND GOVERNOR

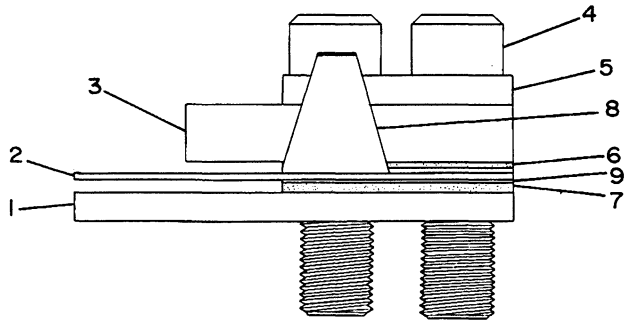

NOTE	REF NO	PART NUMBER	QTY	PART NAME
	1	8N7735	1	BAR-STOP
	2	8N7518	1	SPRING-TORQUE (.711 MM THK)
	3	7N7282	1	BAR-LOAD STOP
	4	8H0707	2	BOLT
	5	8M9062	1	RETAINER-SPRING
	6	2P2685	1	SPACER (.635 MM THK)
	7	1P6452	1	INSULATOR
	8	8N3090	1	CONTACT-LOADSTOP
	9	9L9347	1	SHIM-TORQUE SPRING

B-319333 EP

1257 **4W5063 TORQUE CONTROL GP**

Type 1

Part Of 7W0189 Governor & Fuel Injection Pump

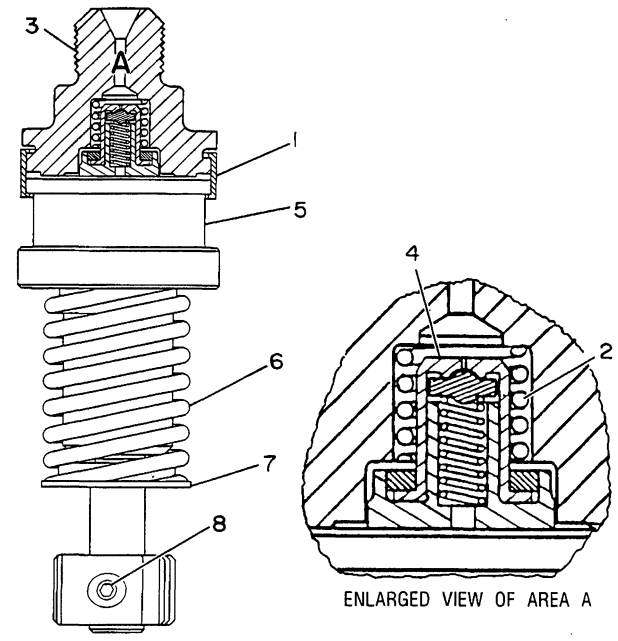

ENLARGED VIEW OF AREA A

NOTE	REF NO	PART NUMBER	QTY	PART NAME
	1	7W1927	1	RING-RETAINER
	2	8N1415	1	SPRING-CHECK
	3	1W9171	1	BONNET-VALVE
	4	1W6987	1	VALVE AS-CHECK
	5	1W6541	1	PLUNGER AS
	6	7N1067	1	SPRING-LIFTER
	7	7W2808	1	WASHER-RETAINER
	8	8H9299	1	SCREW-PLUNGER GEAR (11.1MM LG)
				-OR-
C		7C5278	1	BOLT-GEAR (12.1MM LG)

C-CHANGE FROM PREVIOUS TYPE

B-466949 EP

1251 **1W6539 PUMP GP-FUEL INJECTION**

Part Of 2W0263 Pump-Fuel Injection

FUEL SYSTEM AND GOVERNOR

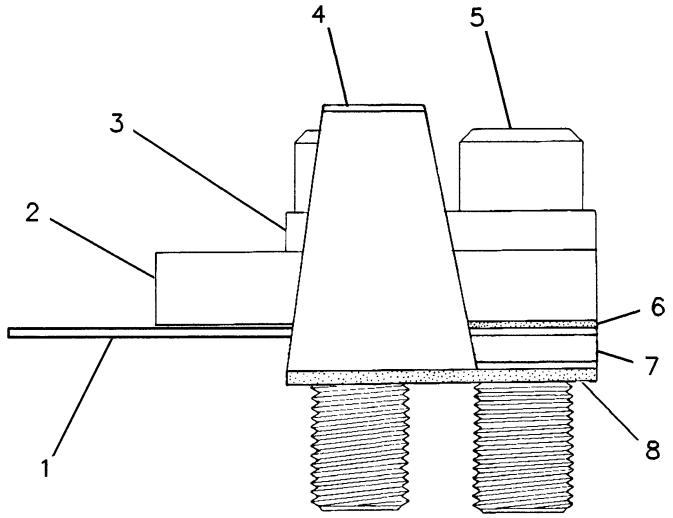

NOTE	REF NO	PART NUMBER	QTY	PART NAME
	1	8N7518	1	SPRING-TORQUE (.711 MM THK)
C	2	2W7234	1	BAR-LOAD STOP
	3	8M9062	1	RETAINER-SPRING
C	4	7W5700	1	CONTACT
C	5	6L5897	2	BOLT
	6	2P2685	1	SPACER (.635 MM THK)
	7	7N1796	1	SPACER (15.494 MM THK)
	8	1P6452	1	INSULATOR

C-CHANGE FROM PREVIOUS TYPE

R-491973 EP

1257 **4W5063 TORQUE CONTROL GP**

Type 2

Part Of 7W0189 Governor & Fuel Injection Pump

MEMORANDA

FUEL SYSTEM AND GOVERNOR

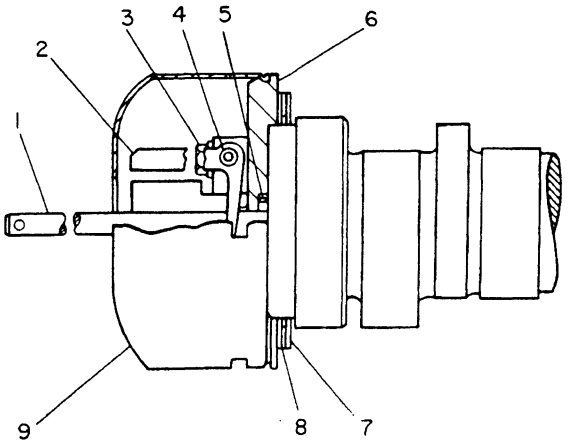

NOTE	REF NO	PART NUMBER	QTY	PART NAME
	1	8N2510	1	SHAFT-WT CARRIER
	2	7N7264	4	WEIGHT-GOVERNOR
	3	9Y7037	4	BOLT
	4	1S5440	4	DOWEL
	5	4N9019	1	DOWEL
	6	8N2511	1	CARRIER-WEIGHT
	7	7N7166	2	RACE-BEARING-THRUST
	8	7L3326	1	BEARING-THRUST
	9	7N7265	1	SHIELD-WT CARRIAGE

B-465759 EP

1101

2W0262 CAMSHAFT AS
21 Degrees-Governor
Part Of 2W0263 Pump-Fuel Injection

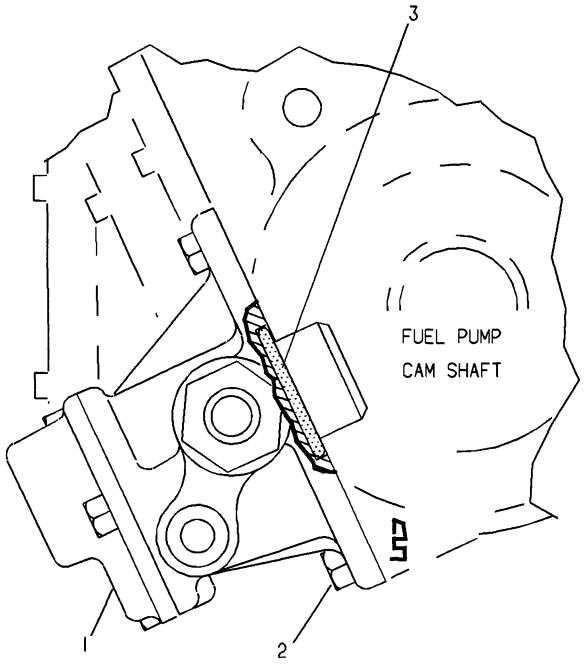

NOTE	REF NO	PART NUMBER	QTY	PART NAME
Y	1	1W0568	1	PUMP GP-FUEL TRANSFER
	2	0S1615	2	BOLT
	3	4J8997	1	SEAL

Y-SEPARATE ILLUSTRATION

A-306971 EP

1256

2W4403 PUMP GP-FUEL TRANSFER
1W0568-Page 56

FUEL SYSTEM AND GOVERNOR

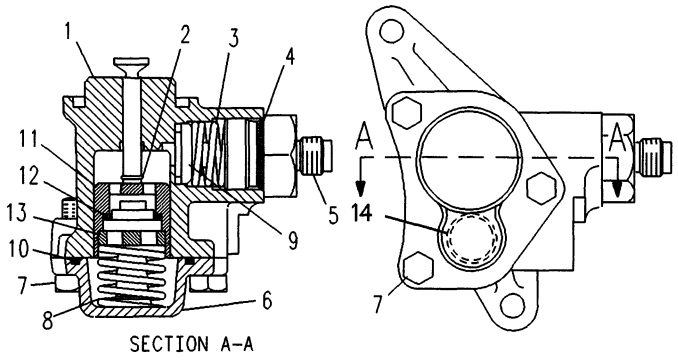

NOTE	REF NO	PART NUMBER	QTY	PART NAME
	1	2W7307	1	HOUSING AS
	2	1W0565	1	RING-RETAINING
	3	7W2324	1	SPRING-RETAINING
	4	2M9780	1	SEAL-O-RING
	5	3O8195	1	CONNECTOR-FLARED
	6	1W0057	1	COVER-TRANSFER PUMP
C	7	2A0762	3	BOLT
	8	7W1407	1	SPRING-PUMP
C	9	7E2985	3	VALVE AS
	10	3P1979	1	SEAL-O-RING
	11	7N6817	1	PISTON-LARGE
C	12	6I3185	2	SPACER
	13	7N9960	1	PLATE-PUSH
	14	8L2746	1	SEAL-O-RING

C-CHANGE FROM PREVIOUS TYPE

F-534782 EP

1256 **1W0568 PUMP GP-FUEL TRANSFER**

Part Of 2W4403 Pump-Fuel Transfer

FUEL SYSTEM AND GOVERNOR

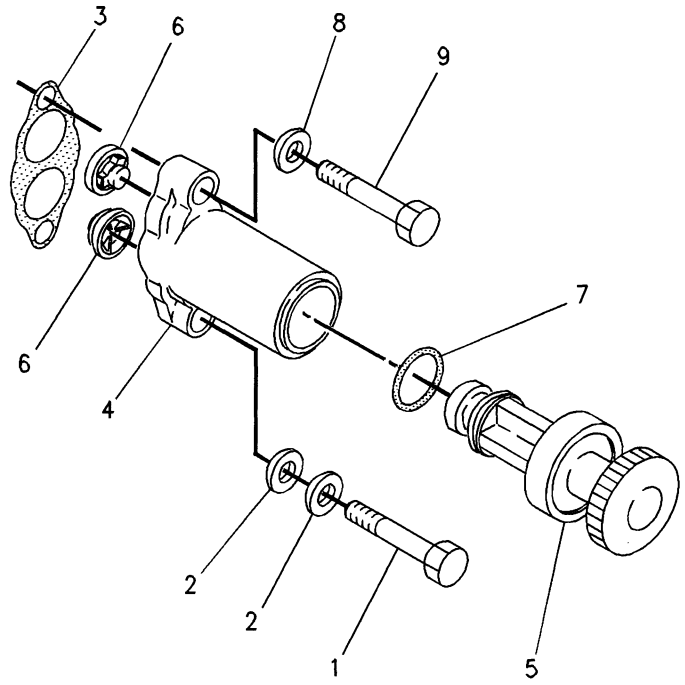

NOTE	REF NO	PART NUMBER	QTY	PART NAME
	1	1H5514	1	BOLT (5/16-18X1.625IN)
				-OR-
		1B2790	1	BOLT (5/16-18X1.375IN)
B	2	9M1974	2	WASHER-HARD
	3	1P0436	1	GASKET
C	4	1052508	1	PUMP AS-FUEL PRIMING
Z	5			PLUNGER AS
	6	7E5346	2	VALVE AS
	7	7F8607	1	SEAL-O-RING
	8	5P0537	1	WASHER
	9	9F7022	1	BOLT (1/4-20X1.5IN)
				-OR-
		7B2742	1	BOLT (1/4-20X1.25IN)

B-USE AS REQUIRED
C-CHANGE FROM PREVIOUS TYPE
Z-NOT SERVICED SEPARATELY

F-562867 EP

1258 **4N4314 PUMP GP-FUEL PRIMING**
An Attachment

FUEL SYSTEM AND GOVERNOR

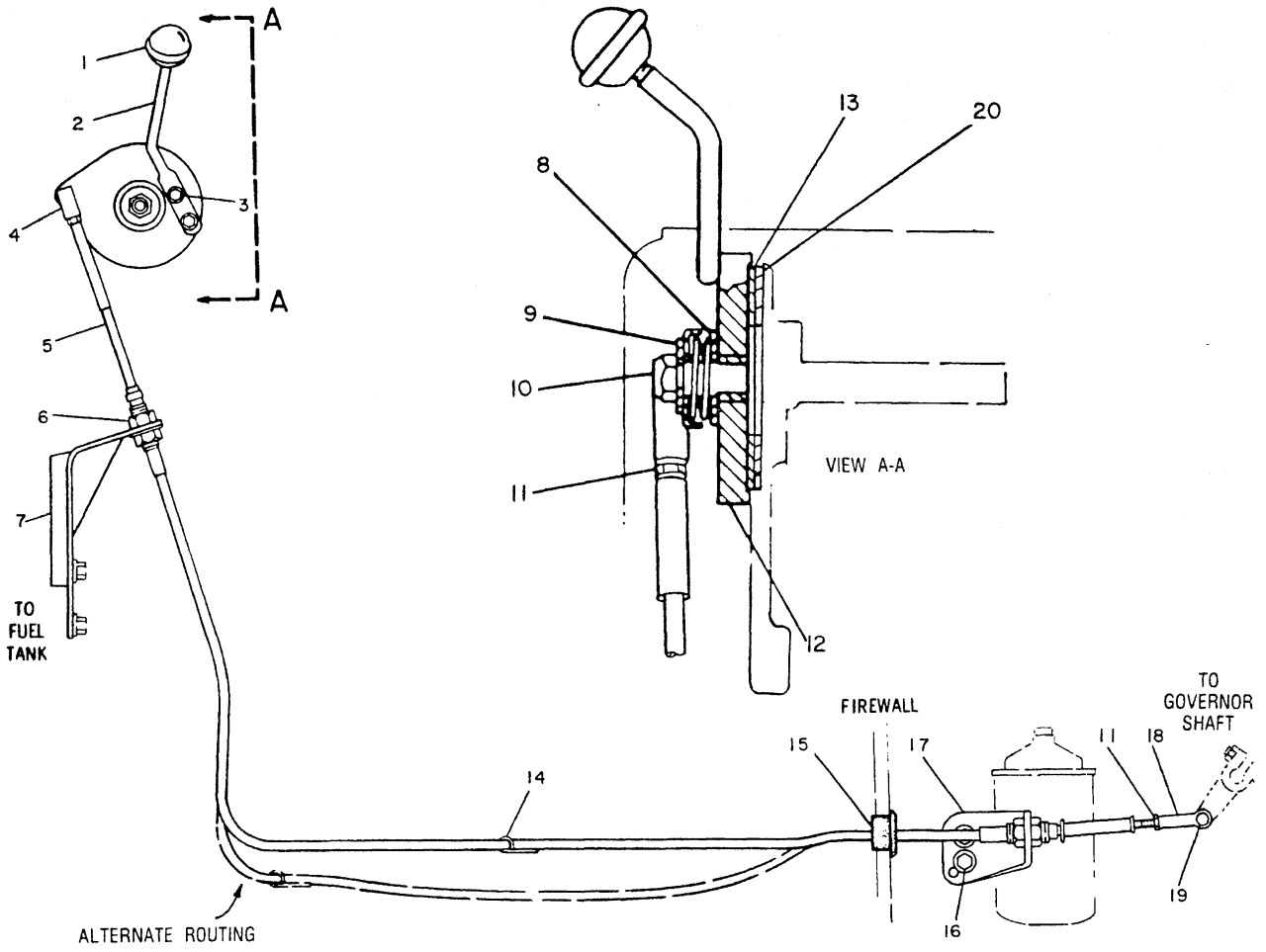

NOTE	REF NO	PART NUMBER	QTY	PART NAME	NOTE	REF NO	PART NUMBER	QTY	PART NAME
	1	7F8092	1	KNOB (SPEED CONTROL)		20	5B2551	1	DISC-FRICTION
	2	5G0865	1	ROD					
C	3	8T4224	2	WASHER-HARD					
C		7X0491	2	BOLT					
	4	6S7940	1	JOINT AS-BALL					
	5	5G2315	1	CABLE GP					
	6	9S1354	4	NUT					
		6F0253	2	LOCKWASHER					
	7	5G1142	1	BRACKET AS					
	8	6S3859	1	WASHER					
	9	5D0998	8	SPRING-DISC					
		6S3900	1	SEAT					
C		8T4223	1	WASHER-HARD					
	10	2K0564	1	LOCKNUT					
	11	9M1311	2	NUT-JAM					
	12	6S8959	1	PLATE AS					
		9M4256	1	BEARING					
	13	8Y1677	1	PLATE					
	14	9M9840	1	CLIP					
	15	6V1883	1	GROMMET					
C	16	5S7379	2	BOLT					
		5P1075	2	WASHER-HARD					
	17	5G4946	1	BRACKET					
	18	2M4036	1	END-ROD					
	19	2A4133	1	PIN					
		3B4607	1	COTTER					

C-CHANGE FROM PREVIOUS TYPE

B-458774 EP

1265 **8Y1150 CONTROL GP-GOVERNOR**
Type 1

FUEL SYSTEM AND GOVERNOR

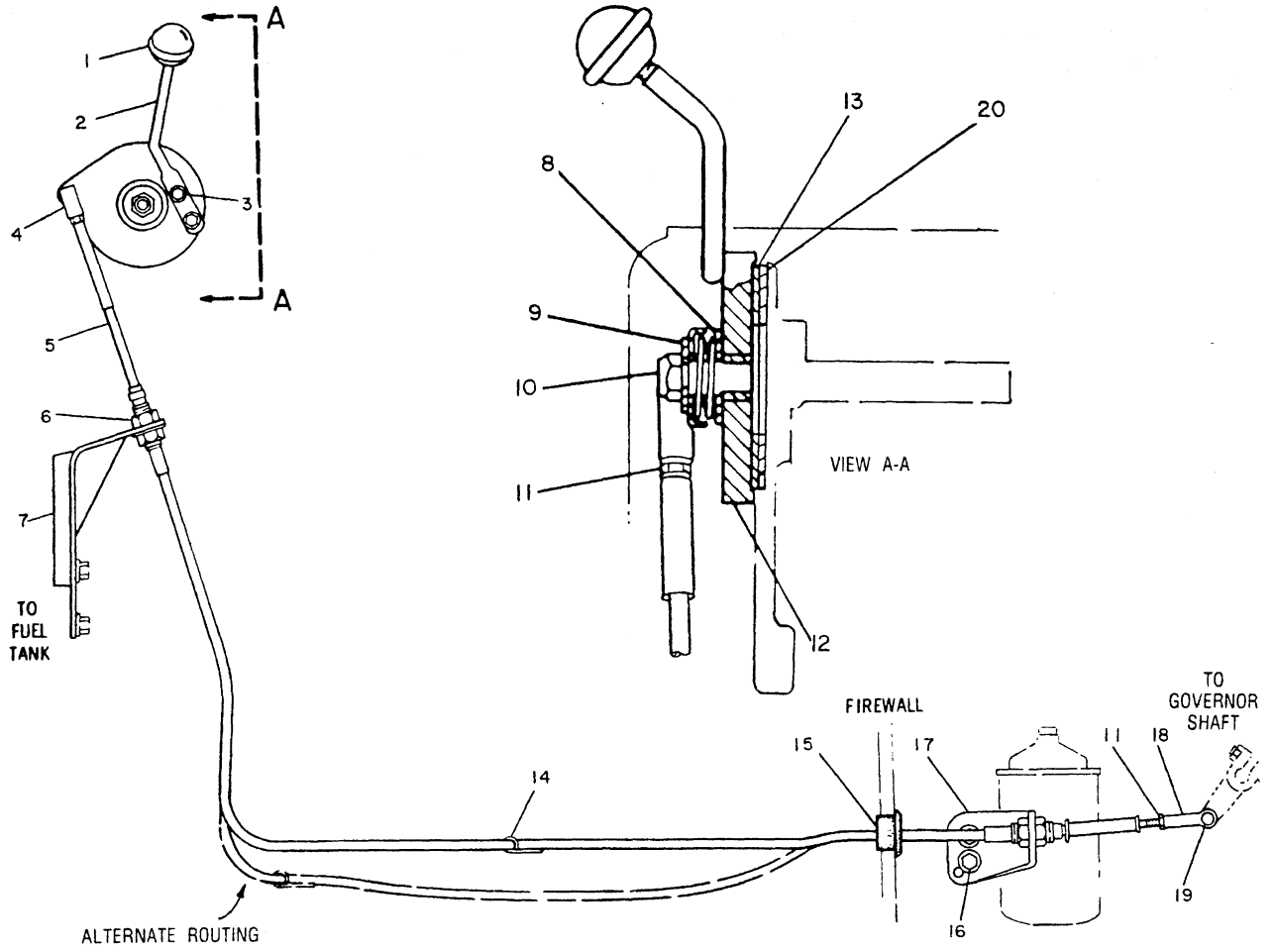

NOTE	REF NO	PART NUMBER	QTY	PART NAME	NOTE	REF NO	PART NUMBER	QTY	PART NAME
C	1	6W8349	1	KNOB		20	5B2551	1	DISC-FRICTION
C	2	8Y2968	1	ROD					
	3	8T4224	2	WASHER-HARD					
		7X0491	2	BOLT					
	4	6S7940	1	JOINT AS-BALL					
	5	5G2315	1	CABLE GP					
	6	9S1354	4	NUT					
		6F0253	2	LOCKWASHER					
	7	5G1142	1	BRACKET AS					
	8	6S3859	1	WASHER					
	9	5D0998	8	SPRING-DISC					
		6S3900	1	SEAT					
		8T4223	1	WASHER-HARD					
	10	2K0564	1	LOCKNUT					
	11	9M1311	2	NUT-JAM					
	12	6S8959	1	PLATE AS					
		9M4256	1	BEARING					
	13	8Y1677	1	PLATE					
	14	9M9840	1	CLIP					
	15	6V1883	1	GROMMET					
	16	5S7379	2	BOLT					
		5P1075	2	WASHER-HARD					
	17	5G4946	1	BRACKET					
	18	2M4036	1	END-ROD					
	19	2A4133	1	PIN					
		3B4607	1	COTTER					

C-CHANGE FROM PREVIOUS TYPE

B-484416 EP

1265 **8Y1150 CONTROL GP-GOVERNOR**
Type 2

FUEL SYSTEM AND GOVERNOR

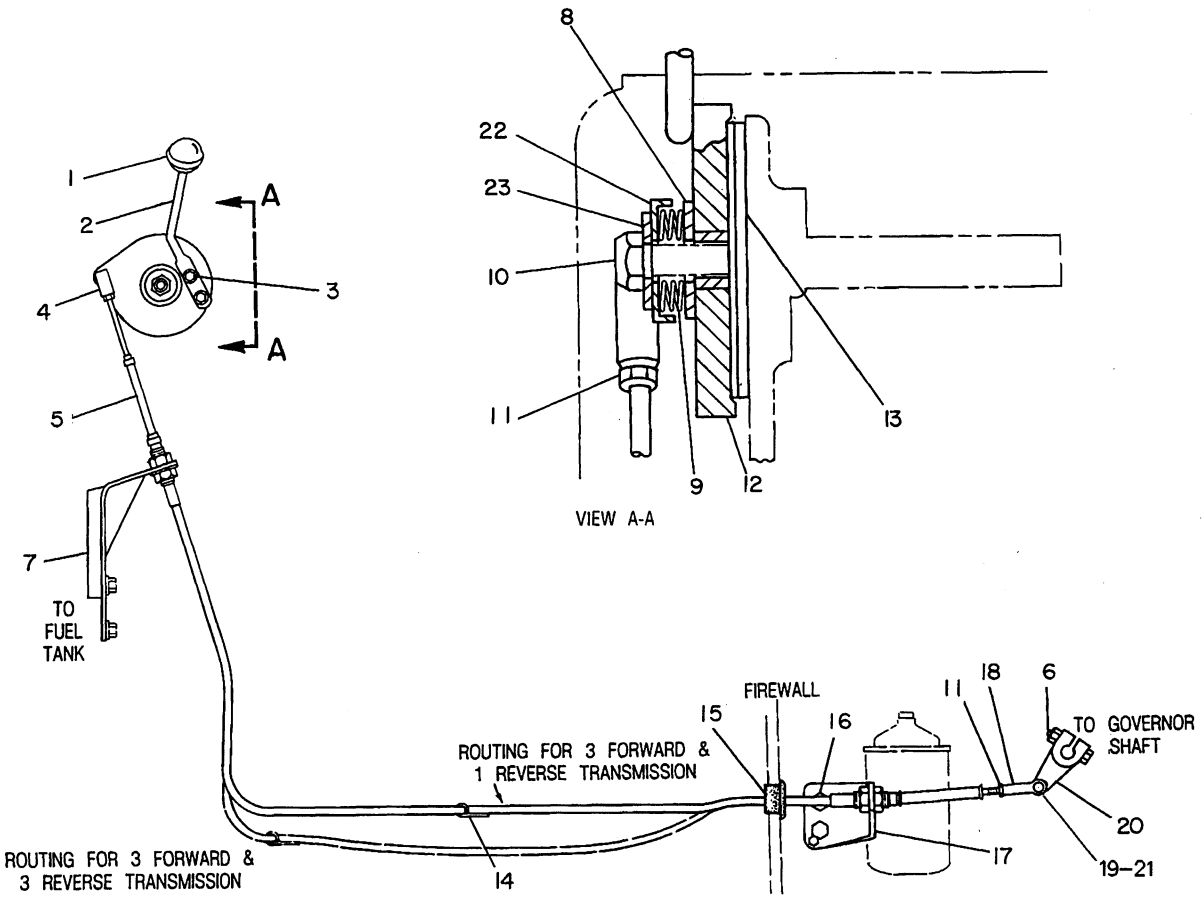

NOTE	REF NO	PART NUMBER	QTY	PART NAME	NOTE	REF NO	PART NUMBER	QTY	PART NAME
C	1	6W8349	1	KNOB	C	21	4B4276	2	WASHER
C	2	8Y2968	1	ROD		22	6S3900	1	SEAT
	3	7X0491	2	BOLT		23	8T4223	1	WASHER-HARD
		8T4224	2	WASHER-HARD					
	4	6S7940	1	JOINT AS-BALL					
	5	5G2315	1	CABLE GP					
		6T8460	1	SEAL-UMBRELLA					
	6	4L9337	1	BOLT					
		6V8801	1	NUT					
	7	5G1142	1	BRACKET AS					
	8	6S3859	1	WASHER					
	9	5D0998	8	SPRING-DISC					
	10	2M2570	1	LOCKNUT					
	11	9M1311	2	NUT-JAM					
	12	6S8959	1	PLATE AS					
		9M4256	1	BEARING					
	13	6Y7966	1	DISC-FRICTION					
	14	9M9840	1	CLIP					
	15	6V1883	1	GROMMET					
	16	5S7379	2	BOLT					
		5P1075	2	WASHER-HARD					
	17	5G4946	1	BRACKET					
C	18	8Y2796	1	END					
	19	2A4133	1	PIN					
		3B4607	1	COTTER					
	20	5G4944	1	LEVER					

C-CHANGE FROM PREVIOUS TYPE

R-492769 EP

1265 **6S8967 CONTROL GP-GOVERNOR**

Part Of 8Y1769 Rop Ar-Enclosure
An Attachment

MEMORANDA

STARTING AND ELECTRICAL SYSTEM

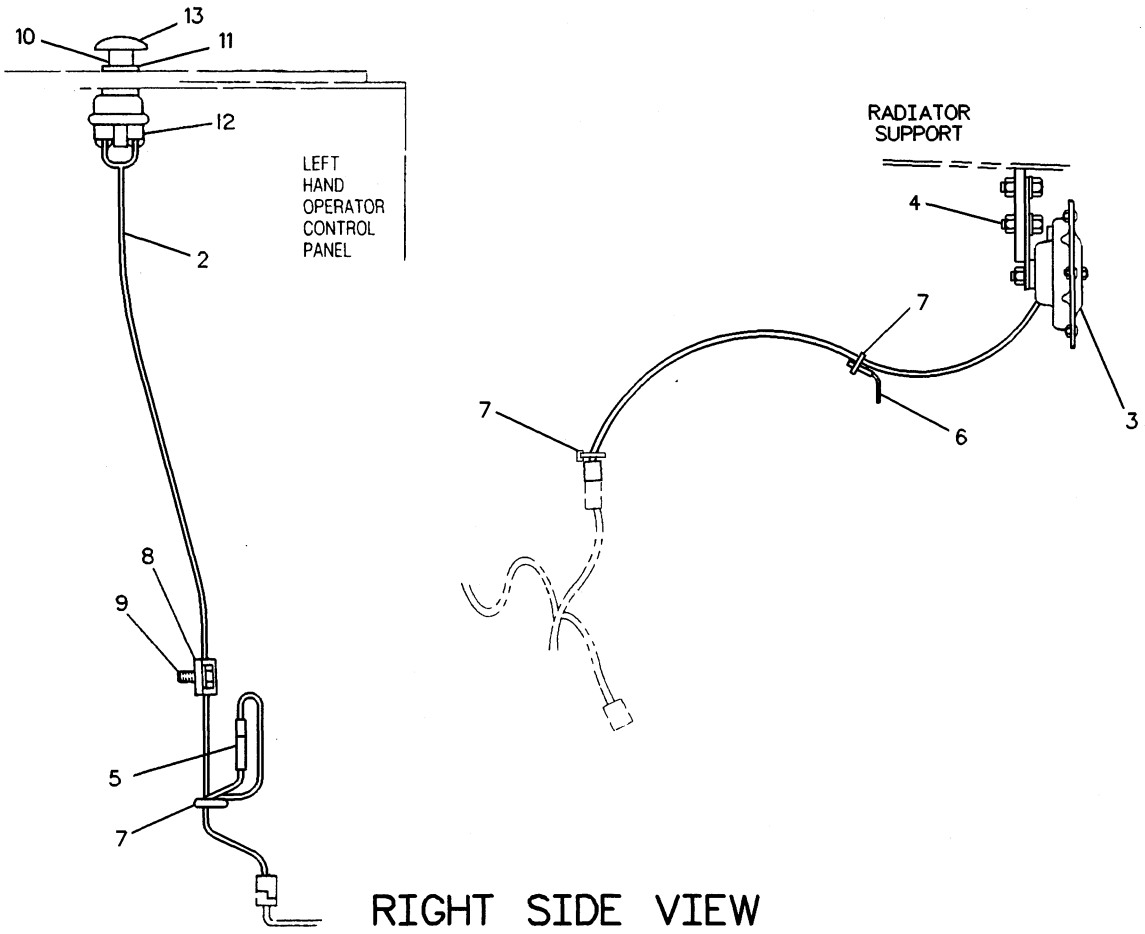

RIGHT SIDE VIEW

NOTE	REF NO	PART NUMBER	QTY	PART NAME	NOTE	REF NO	PART NUMBER	QTY	PART NAME
	1	5G1811	1	WIRE AS					
	2	8Y6769	1	HARNESS AS					
	3	6S7339	1	HORN AS					
	4	0S1615	2	BOLT					
B		9S8750	2	NUT-FULL					
		5P4115	2	WASHER					
	5	3K8782	1	FUSE (10 AMP)					
	6	4P8134	1	CLIP					
	7	3S2093	3	STRAP-CABLE					
	8	8M2772	1	CLIP					
	9	0S0509	1	BOLT					
		5M2894	1	WASHER					
	10	3T2357	1	SWITCH AS					
		7T6184	1	BOOT-SWITCH					
	11	6V8370	1	NUT-HEX					
		2H3922	1	LOCKWASHER					
	12	6V8363	2	SCREW					
		8F1434	2	LOCKWASHER					
	13	7T9515	1	KNOB-HORN					
		5L7200	1	SCREW					
		3B4501	1	LOCKWASHER					

B-USE AS REQUIRED

R-534629 EP

7402 **8Y1562 HORN GP-ELECTRIC**

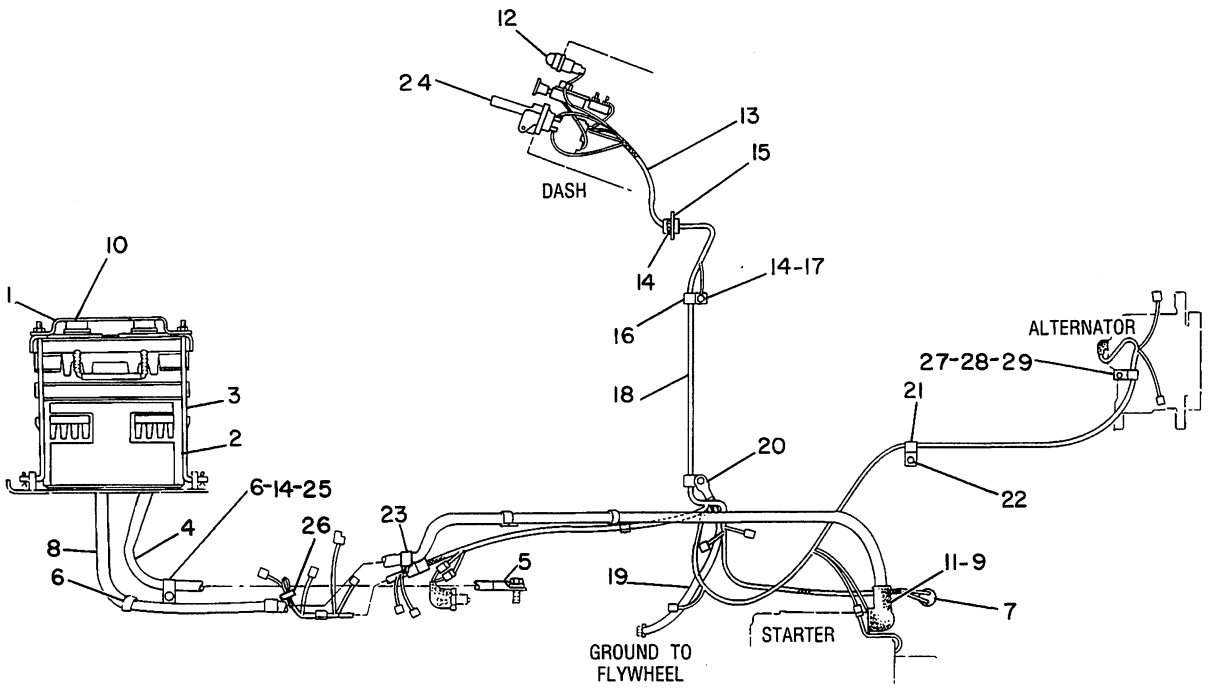

NOTE	REF NO	PART NUMBER	QTY	PART NAME	NOTE	REF NO	PART NUMBER	QTY	PART NAME
	1	4K6697	1	HOLD-DOWN AS-BATTERY		12	9G3058	2	CAP-SHIELD
C	2	9G4232	1	BATTERY-12V		13	5G3901	1	HARNESS AS
C		7N0060	6	VENT AS		14	0T0102	5	BOLT
	3	6K4355	4	ROD		15	5G1728	1	PLATE
		1B4330	4	NUT		16	9M8406	2	CLIP
		5P4115	4	WASHER	C	17	4B4278	2	WASHER
		3B4607	4	COTTER		18	5G0227	1	HARNESS AS
C	4	8V4321	1	CABLE AS		19	4M3136	1	CABLE AS
E		5P0746		CABLE (0 GA) (105CM)LG	E		5P0746		CABLE (0 GA) (45.7CM)LG
C		3S6050	1	TERMINAL AS (NEG)	C	20	3O1707	2	TERMINAL
		1M6119	1	BOLT	C	21	4D7794	1	CLIP
		1M6120	1	NUT		22	2H3755	1	BOLT
C		7N5274	1	COVER			4B4277	1	WASHER
C	5	3O1707	1	TERMINAL	B	23	4K0640	1	CLIP-WIRE
	6	1H5165	2	CLIP-WIRE	C	24	8Y1035	1	GUARD
	7	6N2466	1	SWITCH AS (OIL PRESSURE)	C	25	5P1075	1	WASHER-HARD
	8	4D6489	1	CABLE AS	C	26	3S2093	1	STRAP-CABLE
E		5P0746		CABLE (0 GA) (233.5CM)LG	C	27	5P1076	1	WASHER-HARD
					C	28	0S1620	1	BOLT
C		8C5917	1	TERMINAL AS (POS)	C	29	7N3718	1	CLIP
		1M6119	1	BOLT					
		1M6120	1	NUT					
C	9	3O1707	1	TERMINAL					
	10	5G1324	1	COVER-TERMINAL					
	11	5A4252	1	CAP					

B-USE AS REQUIRED
C-CHANGE FROM PREVIOUS TYPE
E-ORDER BY THE CENTIMETER

B-459784 EP

1408 **5G0237 BATTERY & WIRING GP-PART 1 OF 3**
S/N 1RJ1-579 & 2CJ1-201

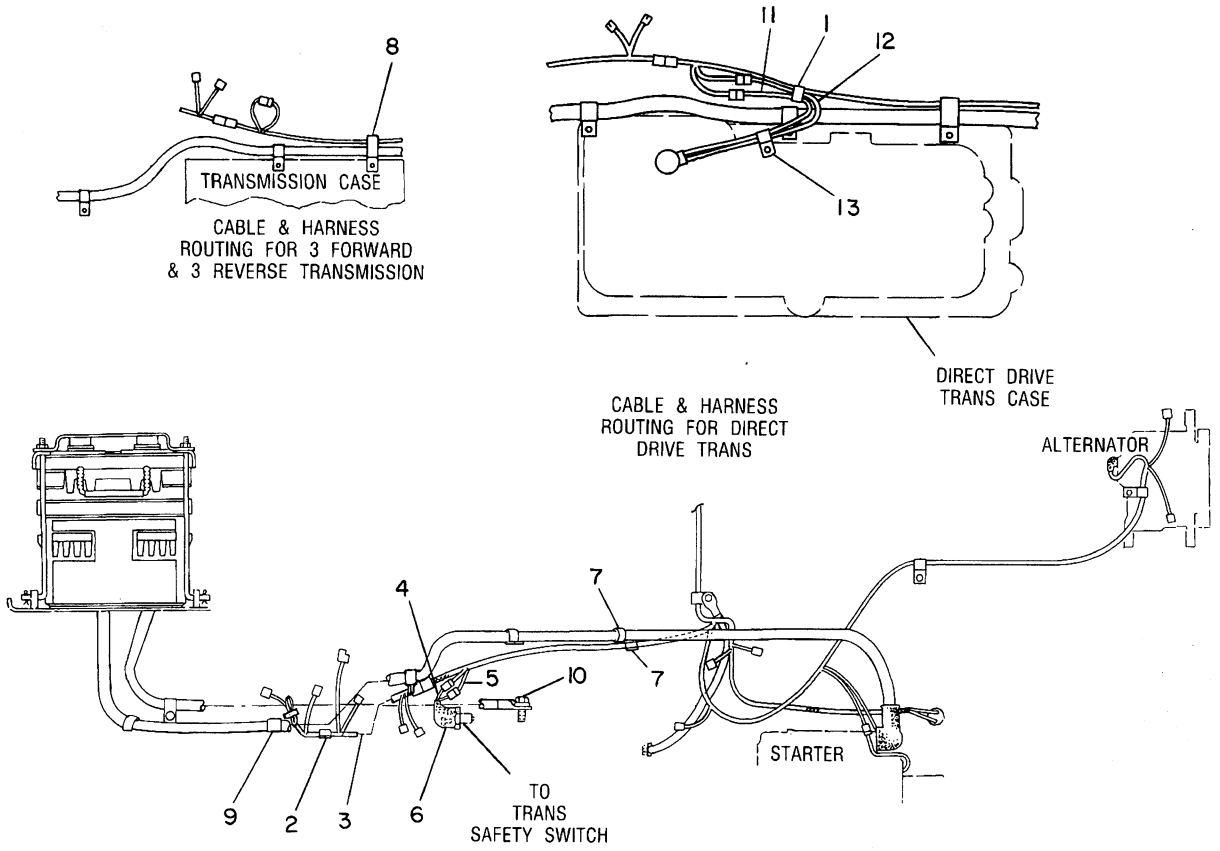

NOTE	REF NO	PART NUMBER	QTY	PART NAME	NOTE	REF NO	PART NUMBER	QTY	PART NAME
C	1	3S2093	1	STRAP-CABLE					
	2	5K3294	1	CLIP					
	3	5G1704	1	HARNESS AS					
B	4	5G1799	1	WIRE AS					
B	5	5G1798	1	WIRE AS					
B	6	1P4194	1	BOOT					
B	7	8M2770	3	CLIP					
B	8	9M4995	1	CLIP					
	9	1H5165	1	CLIP-WIRE					
	10	0S0509	1	BOLT					
		5P1075	1	WASHER-HARD					
BC	11	5G4926	1	WIRE AS					
BC	12	5G4924	1	WIRE AS					
C	13	8M2772	1	CLIP					

B-USE AS REQUIRED
C-CHANGE FROM PREVIOUS TYPE

B-459785 EP

1408 **5G0237 BATTERY & WIRING GP-PART 2 OF 3**
S/N 1RJ1-579 & 2CJ1-201

STARTING AND ELECTRICAL SYSTEM

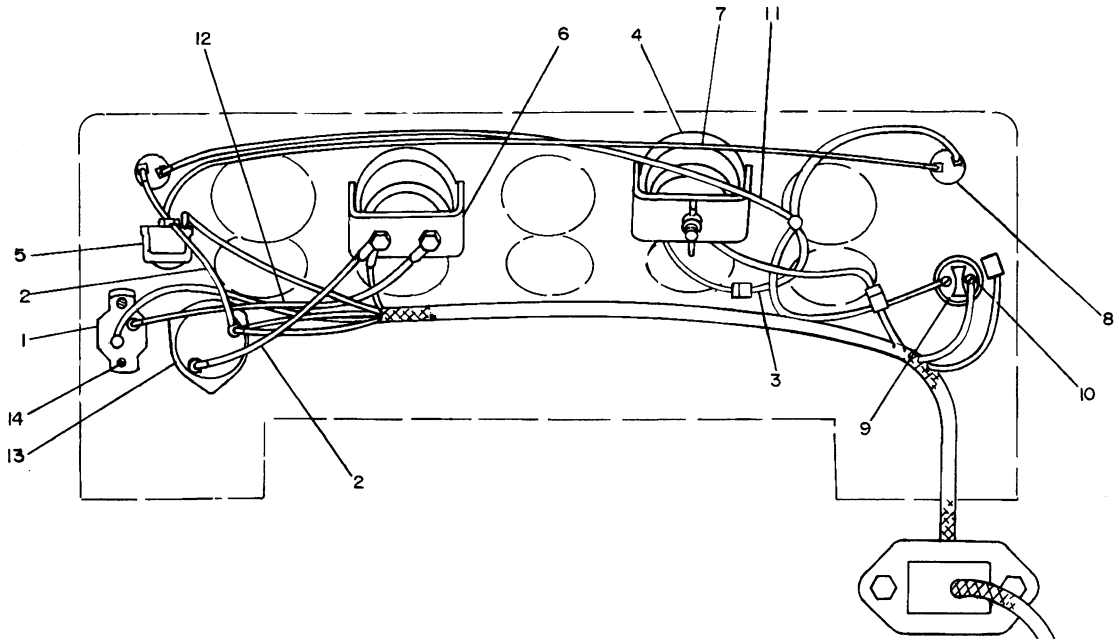

NOTE	REF NO	PART NUMBER	QTY	PART NAME
	1	4N5844	1	CIRCUIT BREAKER AS
		6V8378	2	NUT
		8F1434	2	LOCKWASHER
	2	6S6831	2	WIRE AS
	3	7N9826	1	WIRE AS
	4	9W1493	1	KIT-METER SERVICE
	5	6S2950	1	SWITCH (PULL-LIGHT)
	6	8M7892	1	GAUGE AS-AMMETER
		6V3507	1	SEAL-RECTANGULAR
	7	5G0862	1	WIRE AS
	8	9G3057	2	BASE AS-LIGHT (EACH INCLUDES)
		6V8372	1	NUT-HEX
		2H3924	1	LOCKWASHER
		6V8361	2	SCREW-MACHINE
		8L9801	2	LAMP
	9	3T3947	1	SWITCH AS -START
		5L7200	1	SCREW
		3B4501	1	LOCKWASHER (SMALL)
		7T9518	1	KNOB-START
		6V8370	1	NUT-HEX
		2H3922	1	LOCKWASHER (LARGE)
		7T6184	1	BOOT-SWITCH
	10	6V8363	2	SCREW
		8F1434	2	LOCKWASHER
	11	5G0863	1	WIRE AS
	12	5G1705	1	WIRE AS
	13	3T6129	1	SWITCH AS-DISCONNECT
		8H5306	1	KEY
	14	5M6668	2	SCREW-MACHINE

B-459786 EP

1408 **5G0237 BATTERY & WIRING GP-PART 3 OF 3**

S/N 1RJ1-579 & 2CJ1-201

STARTING AND ELECTRICAL SYSTEM

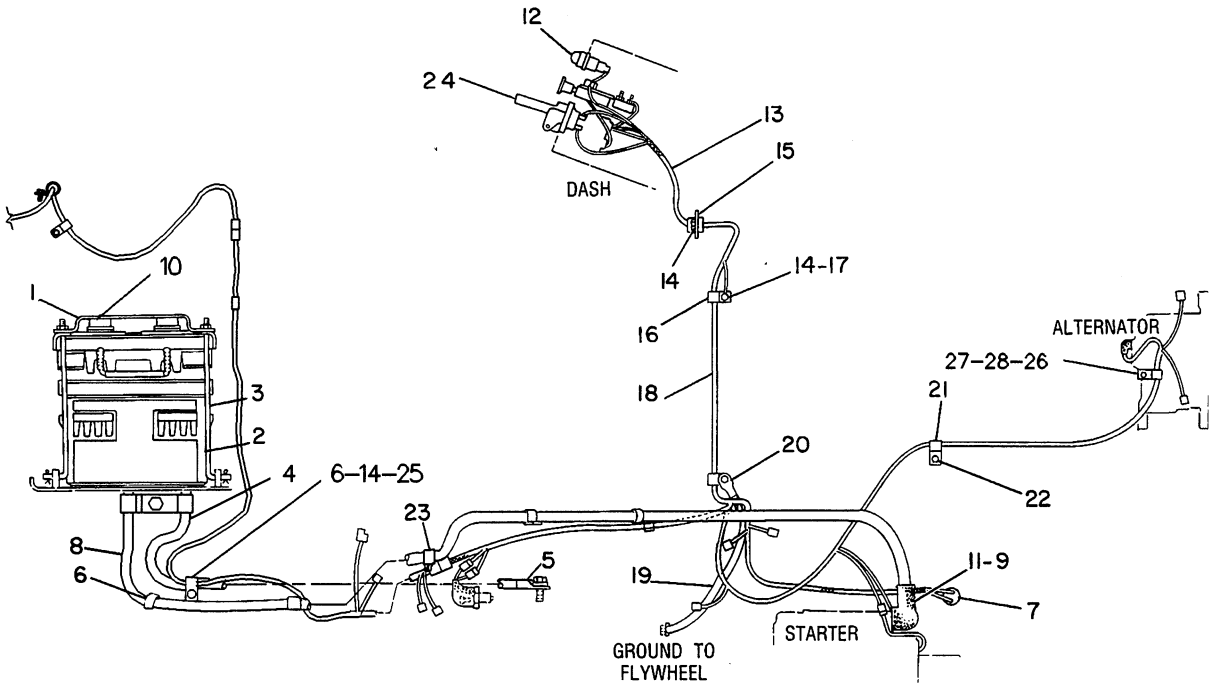

NOTE	REF NO	PART NUMBER	QTY	PART NAME
	1	4K6697	1	HOLD-DOWN AS-BATTERY
	2	9G4232	1	BATTERY-12V
		7N0060	6	VENT AS
	3	6K4355	4	ROD
		6V8185	4	NUT
		8T4205	4	WASHER-HARD
		3B4607	4	COTTER
	4	8V4321	1	CABLE AS
E		5P0746		CABLE (O GA)(105CM)
		3S6050	1	TERMINAL AS (NEG)
		1M6119	1	BOLT
		1M6120	1	NUT
		7N5274	1	COVER
	5	3O1707	1	TERMINAL
	6	1H5165	2	CLIP-WIRE
	7	6N2466	1	SWITCH AS (OIL PRESSURE)
	8	4D6489	1	CABLE AS
E		5P0760		CABLE (O GA)(233.6CM)
		8C5917	1	TERMINAL AS (POS)
		1M6119	1	BOLT
		1M6120	1	NUT
	9	3O1707	1	TERMINAL
	10	5G1324	1	COVER-TERMINAL
	11	5A4252	1	CAP
	12	9G3058	2	CAP-SHIELD
	13	5G3901	1	HARNESS AS
	14	5P8167	5	BOLT
	15	5G1728	1	PLATE
	16	9M8406	2	CLIP
	17	6V8801	2	NUT
	18	5G0227	1	HARNESS AS
	19	4M3136	1	CABLE AS
E		5P0746		CABLE (O GA)(45.7CM)
	20	3O1707	2	TERMINAL
	21	4D7794	1	CLIP
	22	5K0906	1	BOLT
		6V8189	1	NUT
B	23	4K0640	1	CLIP-WIRE
	24	8Y1035	1	GUARD
	25	5P1075	1	WASHER-HARD
	26	7N3718	1	CLIP
	27	5P1076	1	WASHER-HARD
	28	8T9383	1	BOLT

B-USE AS REQUIRED
E-ORDER BY THE CENTIMETER

R-492300 EP

1408 **5G0237 BATTERY & WIRING GP-PAGE 1 OF 3**
S/N 1RJ580-Up & 2CJ202-Up

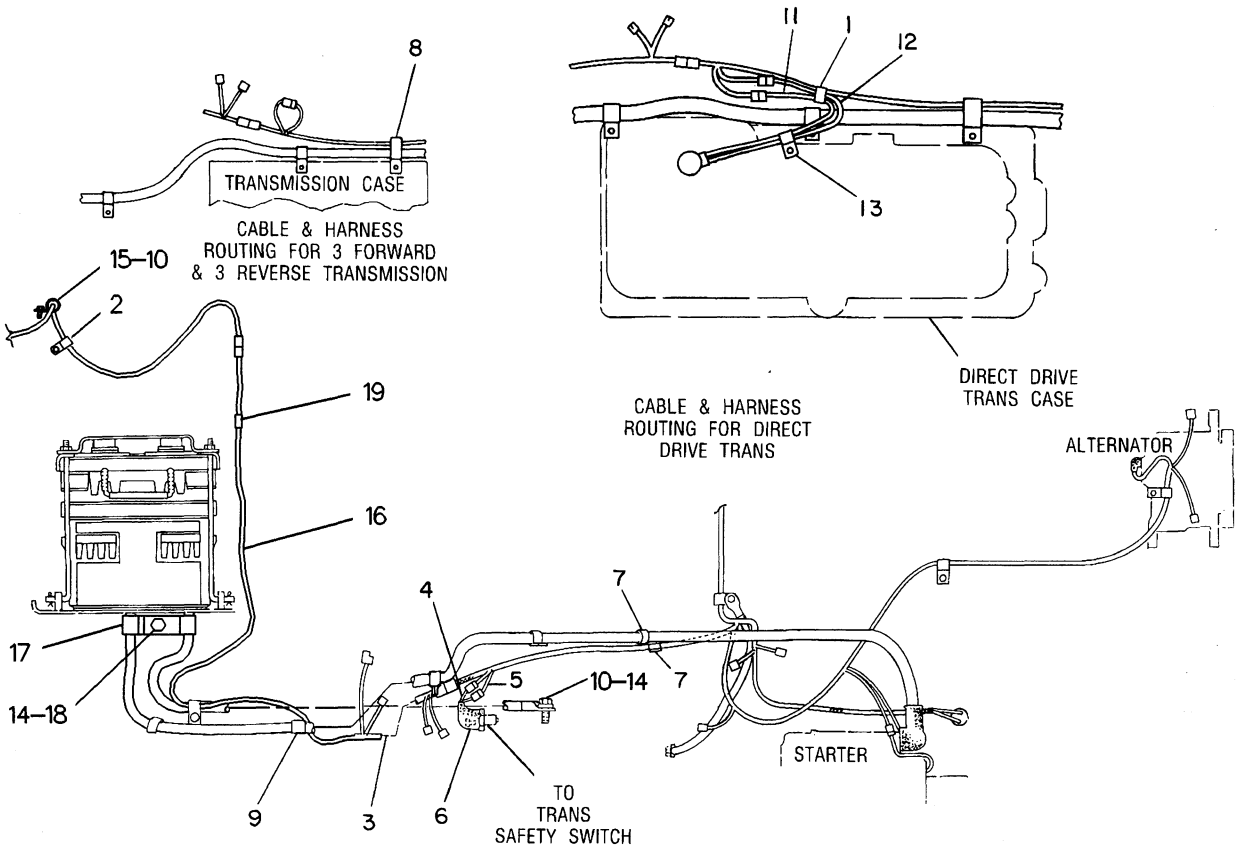

NOTE	REF NO	PART NUMBER	QTY	PART NAME	NOTE	REF NO	PART NUMBER	QTY	PART NAME
	1	3S2093	1	STRAP-CABLE					
	2	5K3294	1	CLIP					
C	3	8Y2282	1	HARNESS AS					
B	4	5G1799	1	WIRE AS					
B	5	5G1798	1	WIRE AS					
B	6	1P4194	1	BOOT					
B	7	5K3294	3	CLIP					
B	8	9M4995	1	CLIP					
	9	1H5165	1	CLIP-WIRE					
	10	5M3062	2	BOLT					
B	11	5G4926	1	WIRE AS					
B	12	5G4924	1	WIRE AS					
	13	8M2772	1	CLIP					
	14	5P1075	2	WASHER-HARD					
	15	4D7794	1	CLIP					
	16	8Y2283	1	HARNESS AS					
	17	4S1936	2	CLIP					
	18	5P8167	1	BOLT					
	19	4D9517	1	CLIP					

B-USE AS REQUIRED
C-CHANGE FROM PREVIOUS TYPE

R-492301 EP

1408 **5G0237 BATTERY & WIRING GP-PART 2 OF 3**
S/N 1RJ580-Up & 2CJ202-Up

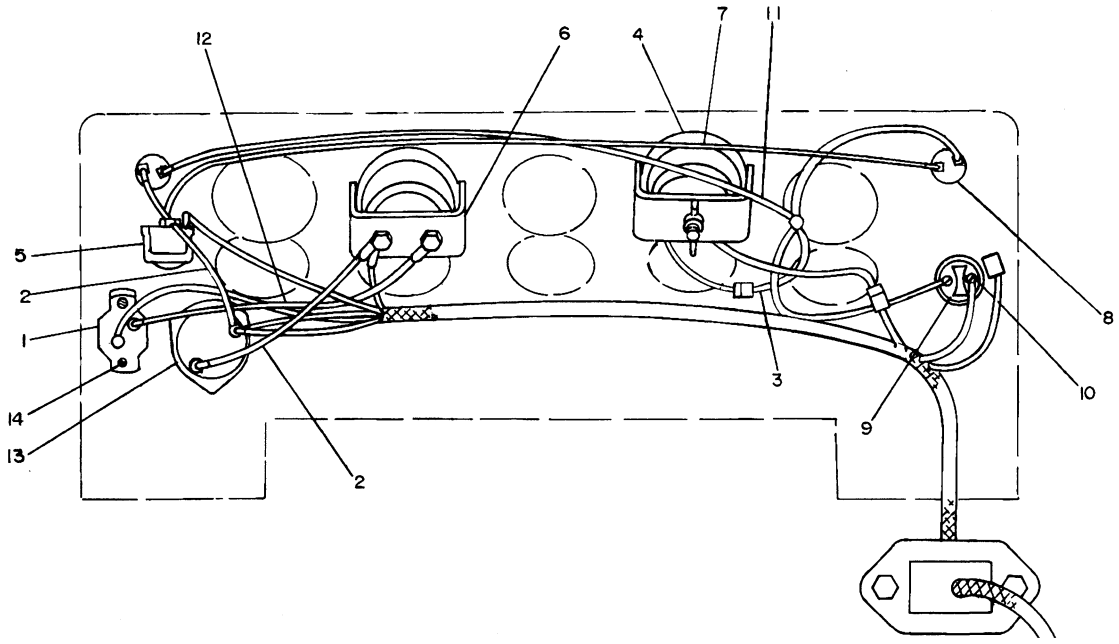

NOTE	REF NO	PART NUMBER	QTY	PART NAME
	1	4N5844	1	CIRCUIT BREAKER AS
		6V8378	2	NUT
		8F1434	2	LOCKWASHER
	2	6S6831	2	WIRE AS
	3	7N9826	1	WIRE AS
	4	9W1493	1	KIT-METER SERVICE
	5	6S2950	1	SWITCH (PULL-LIGHT)
	6	8M7892	1	GAUGE AS-AMMETER
		6V3507	1	SEAL-RECTANGULAR
	7	5G0862	1	WIRE AS
	8	9G3057	2	BASE AS-LIGHT (EACH INCLUDES)
		6V8372	1	NUT-HEX
		2H3924	1	LOCKWASHER
		6V8361	2	SCREW-MACHINE
		8L9801	2	LAMP
	9	3T3947	1	SWITCH AS -START
		5L7200	1	SCREW
		3B4501	1	LOCKWASHER (SMALL)
		7T9518	1	KNOB-START
		6V8370	1	NUT-HEX
		2H3922	1	LOCKWASHER (LARGE)
		7T6184	1	BOOT-SWITCH
	10	6V8363	2	SCREW
		8F1434	2	LOCKWASHER
	11	5G0863	1	WIRE AS
	12	5G1705	1	WIRE AS
	13	3T6129	1	SWITCH AS-DISCONNECT
		8H5306	1	KEY
	14	5M6668	2	SCREW-MACHINE

B-489202 EP

1408 **5G0237 BATTERY & WIRING GP-PART 3 OF 3**
S/N 1RJ580-Up & 2CJ202-Up

MEMORANDA

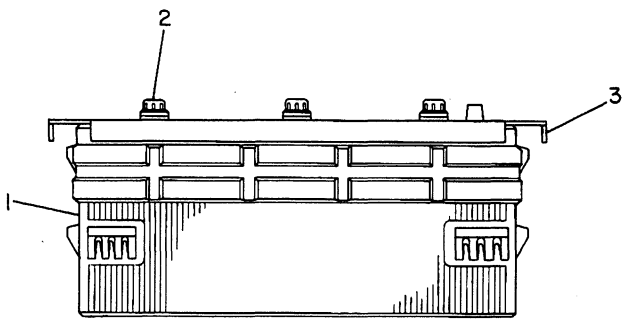

NOTE	REF NO	PART NUMBER	QTY	PART NAME
	1	9G4231	1	BATTERY-12V
	2	7N0060	6	VENT AS
	3	6S4126	1	FRAME AS

B-498642 EP

1401

6S3548 BATTERY GP
Heavy Duty
An Attachment

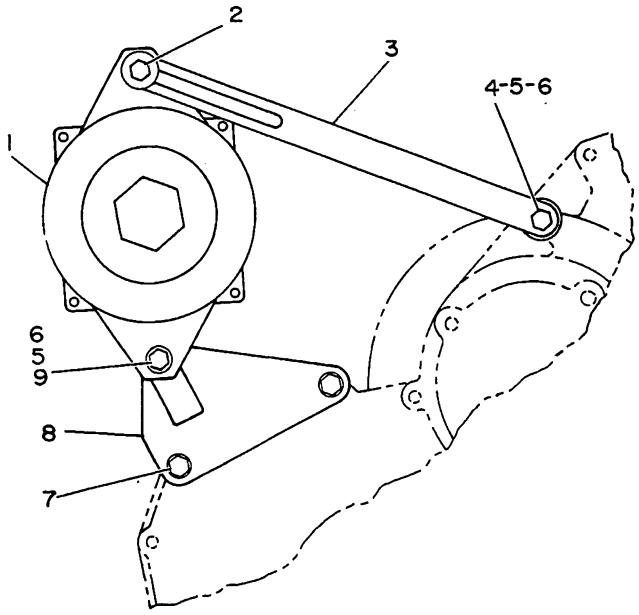

NOTE	REF NO	PART NUMBER	QTY	PART NAME
Y	1	7N4784	1	ALTERNATOR GP-CHARGING
	2	0S1618	1	BOLT
		9N0869	1	WASHER
	3	8N2819	1	STRAP
	4	0L2070	1	BOLT
		2S9503	1	SPACER
	5	9S8752	2	NUT-FULL
	6	5M2894	4	WASHER
	7	1F5842	2	BOLT
		9M1974	2	WASHER-HARD
	8	1W4264	1	SUPPORT AS-ALTERNATOR
		7N9070	2	SPACER
	9	1A5964	1	BOLT

Y-SEPARATE ILLUSTRATION

B-323342 EP

1405

1W4263 ALTERNATOR GP
12 Volt, 40 Ampere
7N4784-Page 63

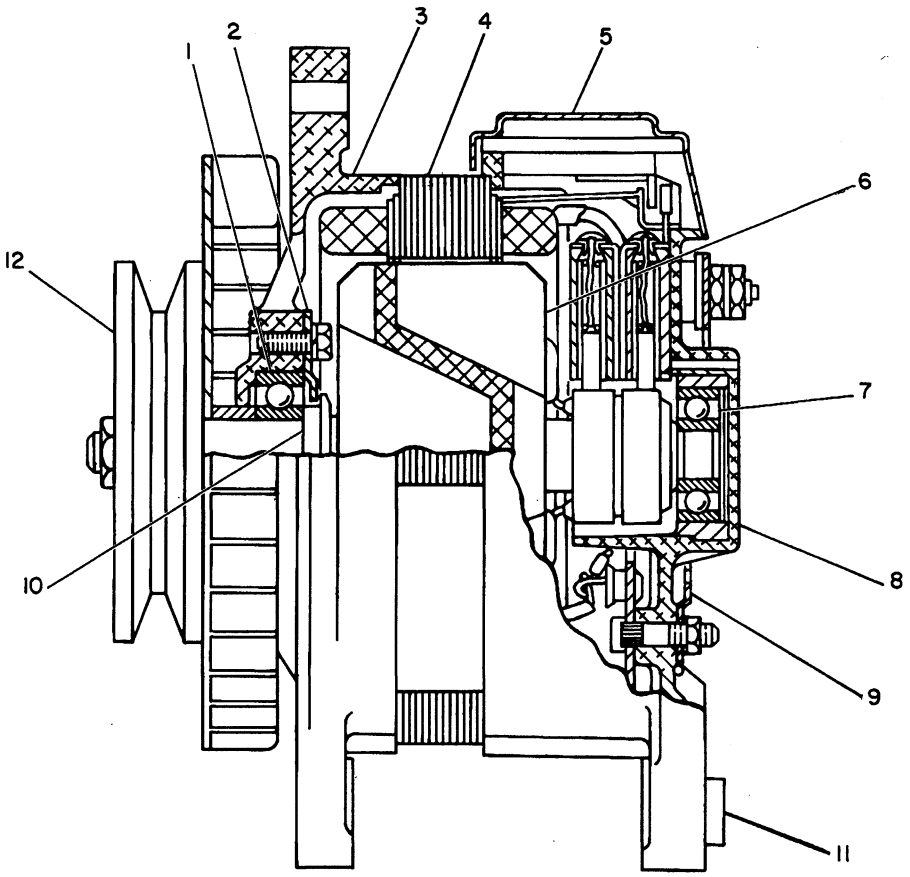

NOTE	REF NO	PART NUMBER	QTY	PART NAME	NOTE	REF NO	PART NUMBER	QTY	PART NAME
	1	2P8099	1	BALL BEARING					
	2	4N5902	1	COVER					
	3	7N5965	1	FRAME-DRIVE END					
	4	7N5964	1	STATOR AS					
	5	7N5961	1	REGULATOR AS					
	6	9X1361	1	ROTOR AS					
	7	7F8660	1	BALL BEARING					
	8	7N5966	1	FRAME AS-ALTERNATOR					
	9	7N5962	1	COVER-REAR					
	10	4N6980	1	SPACER					
	11	3T0572	1	BUSHING					
C	12	9W1488	1	PULLEY					
				THE FOLLOWING REPAIR KITS ARE AVAILABLE:					
		7N5969	1	KIT-INSULATOR					
		7N5968	1	KIT-HARDWARE (INCLUDES SCREW AS, REGULATOR COVER, NUTS, WASHERS & LOCKWASHERS)					
		9G5191	1	KIT-ALTERNATOR DRIVE (INCLUDES FAN, PULLEY, COLLAR, NUT, SPACER & LOCKWASHER)					
		3T0573	1	KIT-ALTERNATOR BRUSH					

C-CHANGE FROM PREVIOUS TYPE

B-491985 EP

1405

7N4784 ALTERNATOR GP
12 Volt, 40 Ampere
Part Of 1W4263 Alternator

			PAGE
1	8N2268	ALTERNATOR GP.....	63.02
1	9SO173	BREAKER AS	
2	8F1434	LOCKWASHER	
2	6V8378	NUT	

106686 P

1405

8N2822 ALTERNATOR GP
12 Volt-75 Ampere
Part Of 5G0001 Rollover Ar
An Attachment

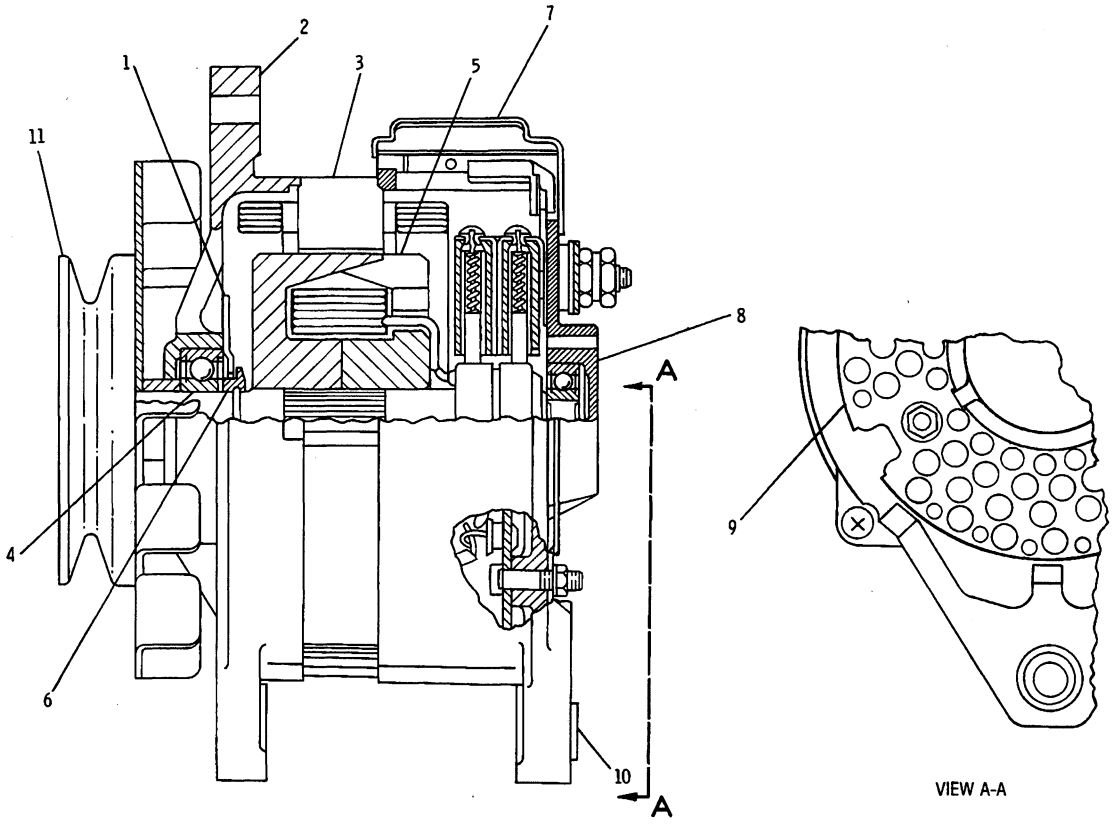

NOTE	REF NO	PART NUMBER	QTY	PART NAME
	1	4N5902	1	COVER
	2	9G5188	1	FRAME-DRIVE END
	3	9G5189	1	STATOR AS
	4	5P0841	1	BALL BEARING
	5	9X1362	1	ROTOR AS
	6	4N6980	1	SPACER
	7	7N5961	1	REGULATOR AS
	8	9G5187	1	FRAME AS
	9	3Y3887	1	COVER (REAR)
C	10	3T0572	1	BUSHING
C	11	9W1488	1	PULLEY
				THE FOLLOWING REPAIR KITS ARE AVAILABLE:
		9G5192	1	KIT-ALTERNATOR DRIVE (INCLUDES FAN, PULLEY, NUT, COLLAR, LOCKWASHER AND SPACER)
		9G5194	1	KIT-INSULATOR (INCLUDES 14 INSULATORS)
		9G5193	1	KIT-HARDWARE (INCLUDES SCREWS, NUTS, WASHERS AND COVER)
C		3T0574	1	KIT-BRUSH (INCLUDES BRUSHES AND SPRINGS)

C-CHANGE FROM PREVIOUS TYPE

B-492774 EP

1405 **8N2268 ALTERNATOR GP**

12 Volt, 75 Ampere
Part Of 8N2822 Alternator Group
An Attachment

STARTING AND ELECTRICAL SYSTEM

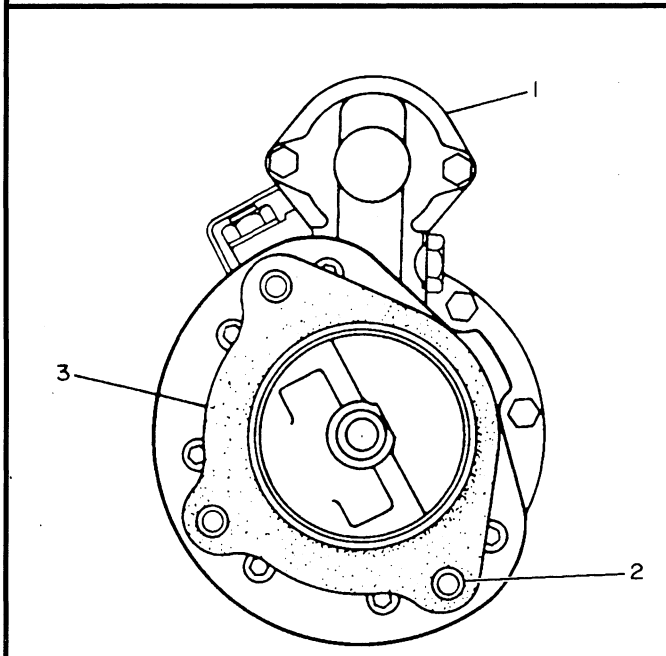

NOTE	REF NO	PART NUMBER	QTY	PART NAME
CY	1	4N0241	1	STARTING MOTOR GP-ELECTRIC
C	2	0S1588	3	BOLT
		3B4506	3	LOCKWASHER
	3	3K3257	1	GASKET

C-CHANGE FROM PREVIOUS TYPE
Y-SEPARATE ILLUSTRATION

B-146006 EP

1453 **4N0190 STARTING MOTOR GP-ELECTRIC**
12 Volt
Engine S/N 45V69350-75311
4N0241-Page 65

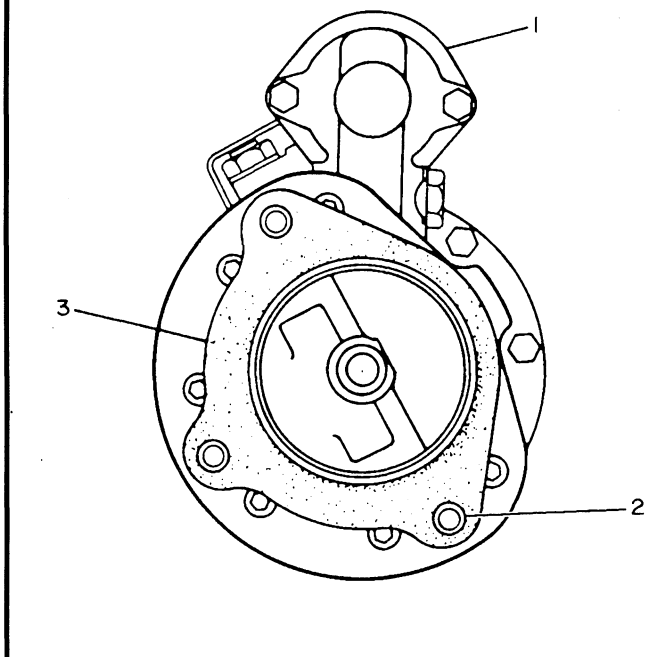

NOTE	REF NO	PART NUMBER	QTY	PART NAME
CY	1	9X0354	1	STARTING MOTOR GP-ELECTRIC
	2	0S1588	3	BOLT
		3B4506	3	LOCKWASHER
	3	3K3257	1	GASKET

C-CHANGE FROM PREVIOUS TYPE
Y-SEPARATE ILLUSTRATION

B-474841 EP

1453 **4N0190 STARTING MOTOR GP-ELECTRIC**
12 Volt
Engine S/N 45V75312-Up
9X0354-Page 65.01

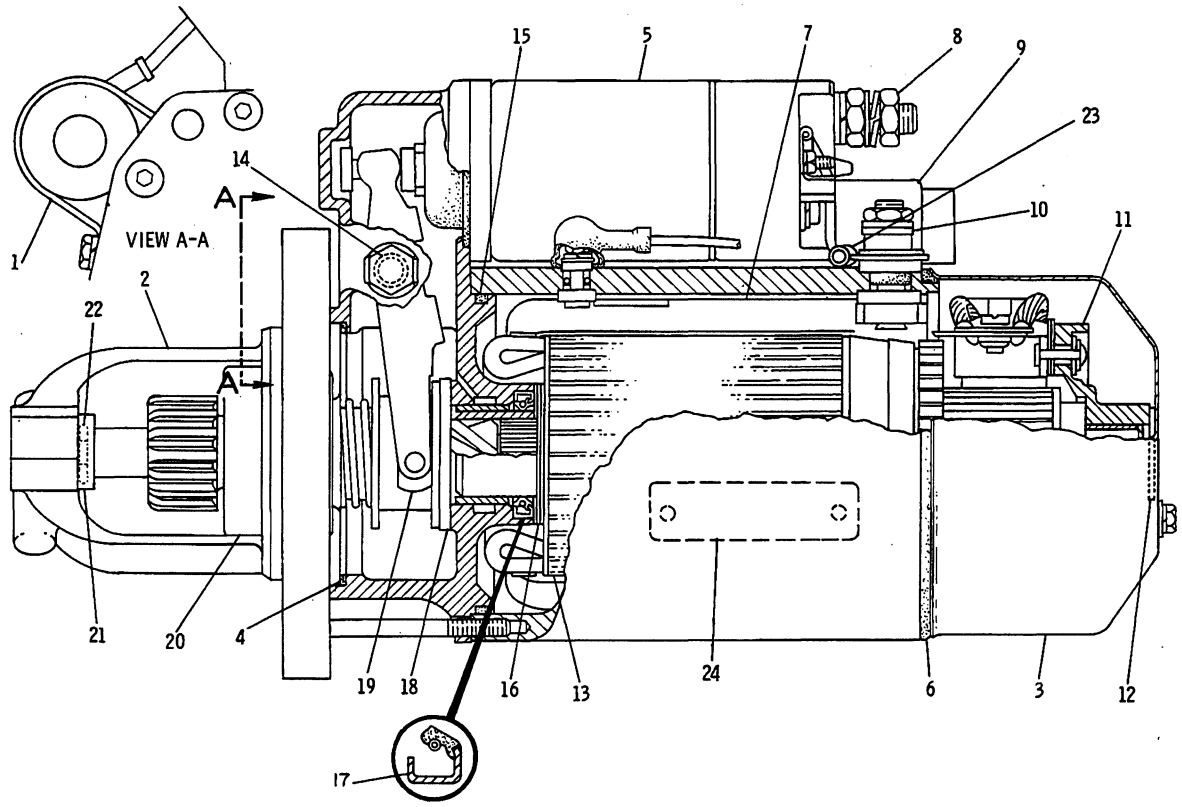

NOTE	REF NO	PART NUMBER	QTY	PART NAME
Y	1	8N0410	1	SWITCH GP
	2	4N7473	1	HOUSING AS
	3	4N7472	1	COVER-STARTER
	4	4N7475	1	SEAL
CY	5	9G5517	1	SWITCH AS-12 VOLT
	6	2J8163	1	SEAL-O-RING
	7	4N7530	4	SHOE-POLE
	8	6H8346	2	NUT-MACH SCREW
		3B4506	2	LOCKWASHER
C	9	9G5390	1	COVER-INSULATING
	10	4N7476	1	CONNECTOR
	11	4N7477	1	PLATE AS-BRUSH
	12	4N7474	1	GASKET
	13	4N6940	1	ARMATURE & DRIVE AS
		4N6942	1	ARMATURE AS
	14	6M5062	1	SEAL-O-RING
	15	7M9909	1	SEAL-O-RING
	16	4N7525	1	WASHER
	17	4N7527	1	SEAL-OIL
	18	4N7524	1	WASHER
	19	4N6941	1	LEVER AS-DRIVE
	20	4N7523	1	CLUTCH AS
	21	4N7522	1	COLLAR-PINION
	22	4N7521	1	RING-LOCK
C	23	9G5389	1	COVER
C	24	3T5962	1	PLATE-IDENTIFICATION
		2H3880	2	SCREW-DRIVE
				THE FOLLOWING REPAIR KITS ARE AVAILABLE:
		4N7548	1	KIT-THRUST WASHER (ARMATURE)
		4N7549	1	KIT-INSULATOR
		4N7550	1	KIT-TERMINAL STUD (INCL STUD, WASHER, SEAL AND BUSHING)
		4N7551	1	KIT-CORE CONTACT (INCL SPRING, INSULATOR, STUD, CONTACT, STRAP, NUT)
		4N7552	1	KIT-BEARING
		4N7553	1	KIT-FIELD COIL (INCL COIL, BOLT, SCREW, WASHER, SEAL)
		4N7554	1	KIT-BRUSH (INCL BRUSH, PLATE, SEAL, GASKET, AND SCREW AS)
		4N7555	1	KIT-SEAL (INCL SEALS, BOOT, AND GASKET)
		4N7565	1	KIT-HARDWARE

C-CHANGE FROM PREVIOUS TYPE
Y-SEPARATE ILLUSTRATION

B-475463 EP

1453 **4N0241 STARTING MOTOR GP-ELECTRIC**
12 Volt
Engine S/N 45V69350-75311
8N0410 & 9G5517-Page 66
Part Of 4N0190 Starting Motor-Electric

STARTING AND ELECTRICAL SYSTEM

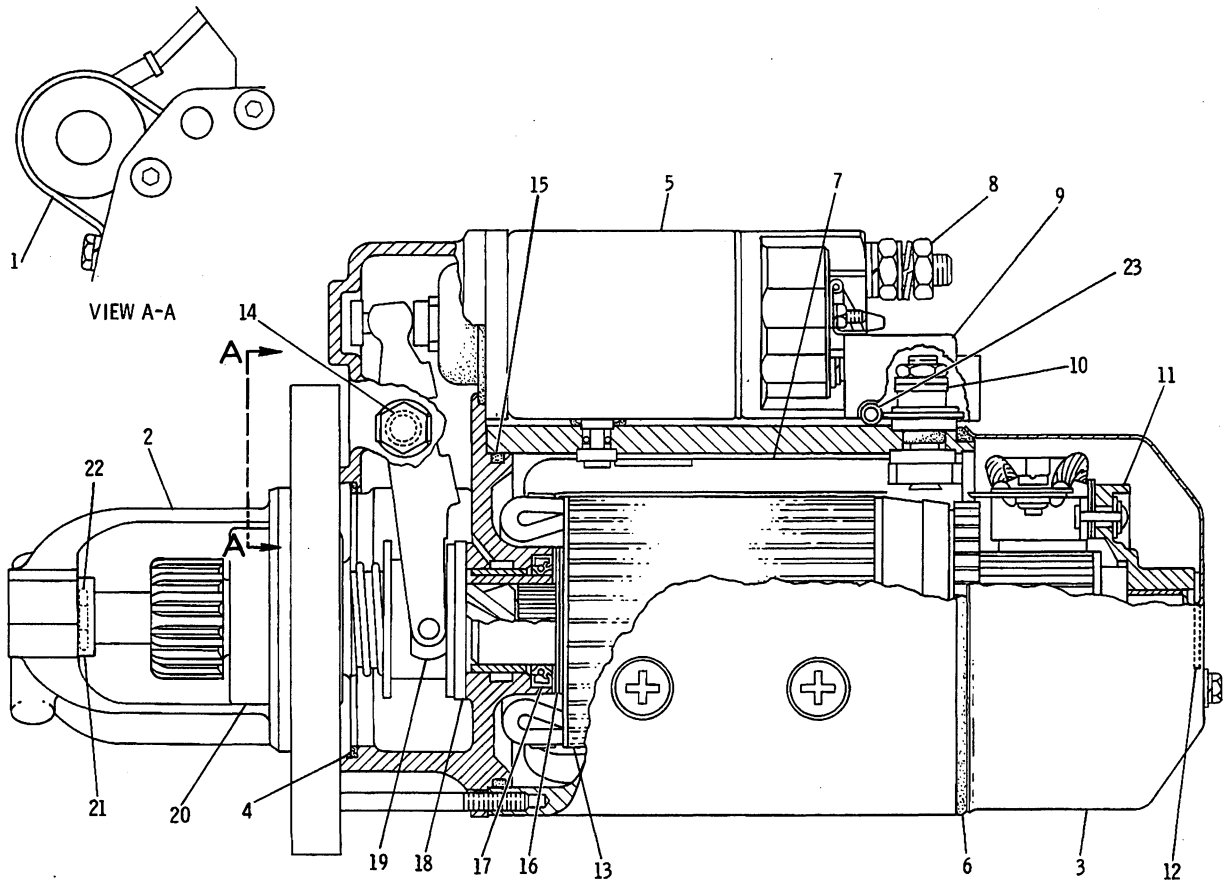

NOTE	REF NO	PART NUMBER	QTY	PART NAME	NOTE	REF NO	PART NUMBER	QTY	PART NAME
Y	1	8N0410	1	SWITCH GP					THE FOLLOWING REPAIR
	2	4N7473	1	HOUSING AS					KITS ARE AVAILABLE:
	3	4N7472	1	COVER-STARTER			4N7548	1	KIT-THRUST WASHER
	4	4N7475	1	SEAL					(INCL 2 WASHERS)
Y	5	9G5517	1	SWITCH AS-12 VOLT			4N7549	1	KIT-INSULATOR
	6	2J8163	1	SEAL-O-RING				1	(INCL 4 BUSHINGS)
	7	4N7530	4	SHOE-POLE			4N7550	1	KIT-TERMINAL STUD
	8	1B2578	2	NUT					(INCL STUD, WASHER,
		9F5644	2	LOCKWASHER					SEAL & BUSHING)
	9	9G5390	1	COVER-INSULATING			4N7551	1	KIT-CORE CONTACT
	10	4N7476	1	CONNECTOR					(INCL SPRING, INSUL,
	11	4N7477	1	PLATE AS-BRUSH					STUD, CONTACT, STRAP,
	12	4N7474	1	GASKET					& NUT)
	13	9X0338	1	ARMATURE & DRIVE AS			4N7552	1	KIT-BEARING
		9X0337	1	ARMATURE AS					(INCL 3 BEARINGS)
	14	6M5062	1	SEAL-O-RING			4N7553	1	KIT-FIELD COIL
	15	7M9909	1	SEAL-O-RING					(INCL COIL, BOLT, SCREW,
	16	4N7525	1	WASHER					WASHER, BUSHING & SEAL)
	17	4N7527	1	SEAL-OIL			4N7554	1	KIT-BRUSH
	18	4N7524	1	WASHER					(INCL BRUSH, PLATE,SEAL
	19	4N6941	1	LEVER AS-DRIVE					GASKET & SCREW AS)
	20	4N7523	1	CLUTCH AS			4N7555	1	KIT-SEAL
	21	4N7522	1	COLLAR-PINION					(INCL SEALS,BOOT,
	22	4N7521	1	RING-LOCK					& GASKET)
	23	9G5389	1	COVER			4N7565	1	KIT-HARDWARE
									(INCL HARDWARE)

Y-SEPARATE ILLUSTRATION

B-474850 EP

1453

9X0354 STARTING MOTOR GP-ELECTRIC
12 Volt. Engine S/N 45V75312-Up
9G5517 & 8N0410-Page 66
Part Of 4N0190 Starting Motor-Electric
Field Replacement Order 3E1865-Page 65.02

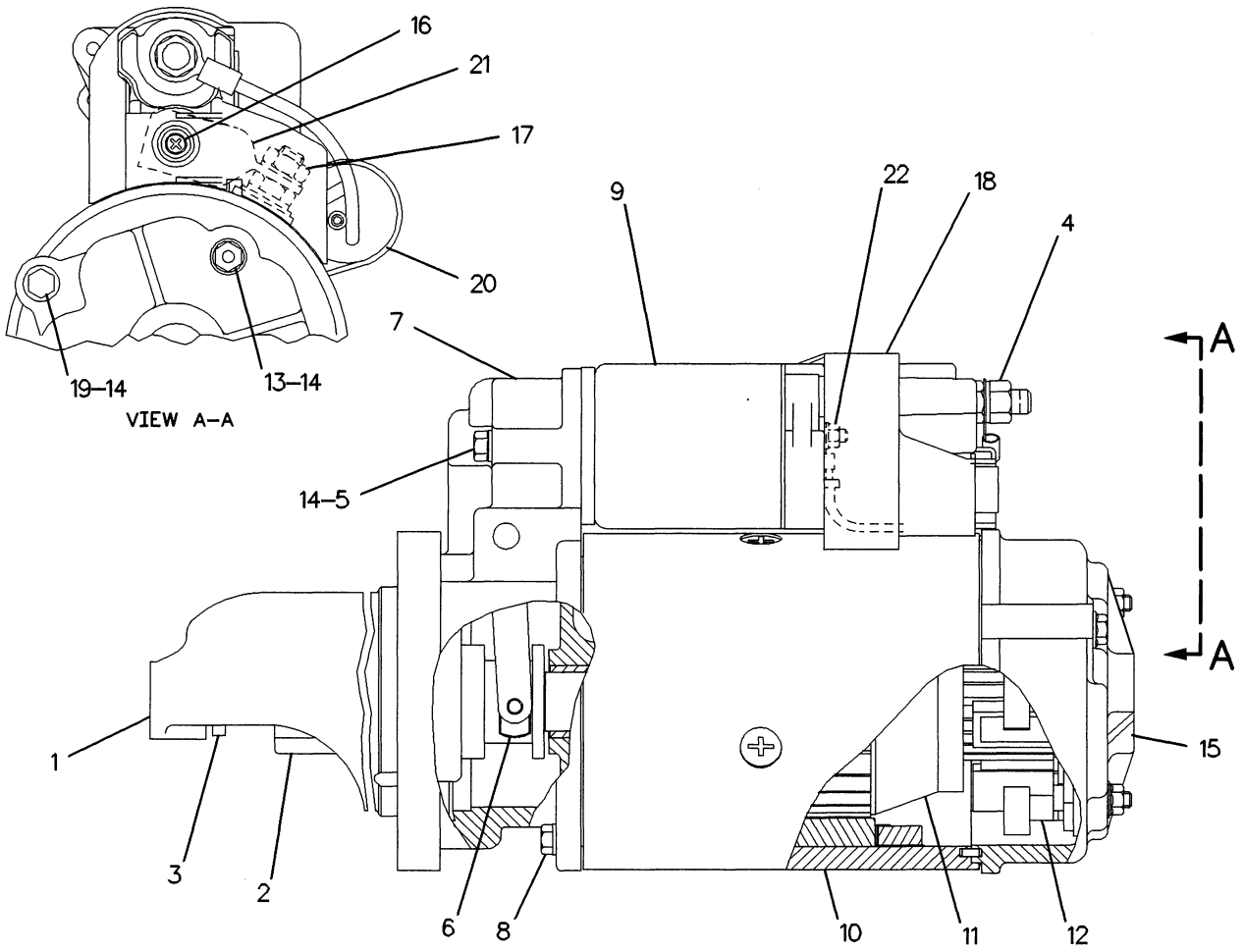

NOTE	REF NO	PART NUMBER	QTY	PART NAME
	1	3E3579	1	HOUSING AS
	2	3E3568	1	DRIVE AS
	3	3E0141	1	STOP-STARTER
		4N7521	1	RING-LOCK
	4	6V8801	1	NUT
		7X0608	1	WASHER-HARD
M	5	2W9499	2	BOLT
	6	3E0140	1	LEVER AS-STARTER
	7	3E3578	1	HOUSING AS
M	8	2W9509	4	BOLT
		6V8824	4	WASHER-HARD
	9	3E3574	1	SOLENOID AS
	10	3E3570	1	HOUSING AS
	11	3E3571	1	ARMATURE AS
	12	3E3572	1	HOLDER AS
M	13	5C2890	2	NUT
	14	8T4205	6	WASHER-HARD
	15	3E3576	1	HOUSING AS
M	16	6V5210	1	SCREW-MACHINE
		9B7233	1	LOCKWASHER
M	17	8T4133	1	NUT
		8T4121	1	WASHER
	18	3E3573	1	COVER AS-STARTER
M	19	6V8211	2	BOLT
	20	3E3577	1	RELAY AS
	21	3E3647	1	CONNECTOR

NOTE	REF NO	PART NUMBER	QTY	PART NAME
M	22	5C2874	1	NUT
		8F1434	1	LOCKWASHER
				(FOLLOWING REPAIR KITS ARE AVAILABLE)
		3E0127	1	KIT-BEARING (INCLUDES SEAL,BUSHING & BEARING AS.)
		3E3615	1	KIT-BRUSH (INCLUDES O-RINGS,SCREW, SPRING & BRUSH)
		3E0130	1	KIT-STARTER SEAL
		3E0145	1	KIT-STARTER PIN

M-METRIC PART

F-511978 EP

1453 **3E1865 STARTING MOTOR GP-ELECTRIC**

12 Volt

Field Replacement For 9X0354-Page 65.01

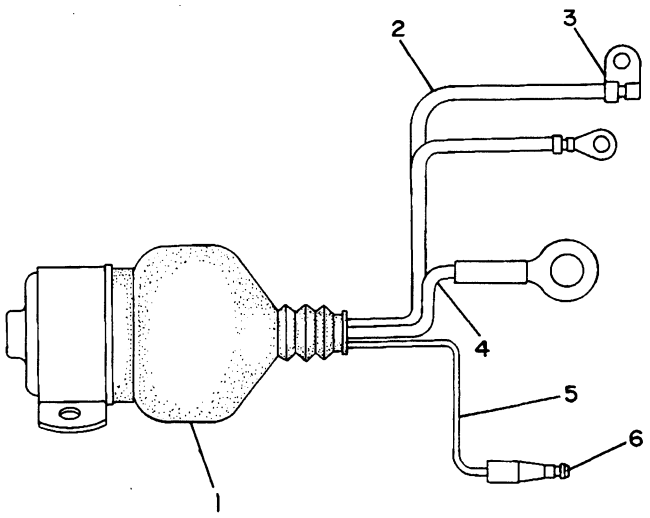

NOTE	REF NO	PART NUMBER	QTY	PART NAME
	1	8N0412	1	BOOT
C	2	3T2216	1	WIRE AS
D		5P5622		WIRE (.4M)
		9F3965	1	TERMINAL (6.35MM SCREW)
	3	5M8412	1	CLIP-TERMINAL
C	4	3T2217	1	WIRE AS
D		5P5622		WIRE (.2M)
		2L8067	1	TERMINAL (6.35MM SCREW)
		2L8069	1	TERMINAL (9.52MM SCREW)
C	5	3T2218	1	WIRE AS
D		5P5624		WIRE (.13M)
		2L8066	1	TERMINAL (4.83MM SCREW)
	6	5P5610	1	CONNECTOR

C-CHANGE FROM PREVIOUS TYPE
D-ORDER BY THE METER

B-234381 EP

1416

8N0410 SWITCH GP

Part Of 4N0241 & 9X0354 Starting Motor-Electric

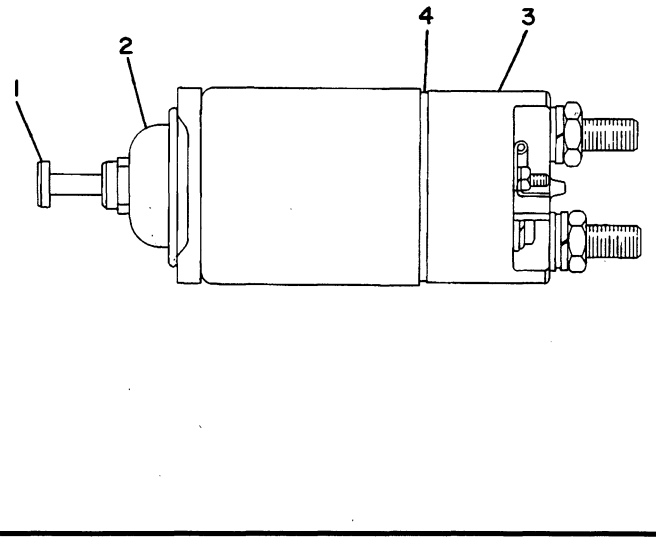

NOTE	REF NO	PART NUMBER	QTY	PART NAME
	1	6N4105	1	CORE AS
	2	4N7528	1	BOOT
	3	9G5387	1	COVER AS
	4	9G5388	1	GASKET

B-230500 EP

1416

9G5517 SWITCH AS

12 Volt

Part Of 4N0241 & 9X0354 Starting Motor-Electric

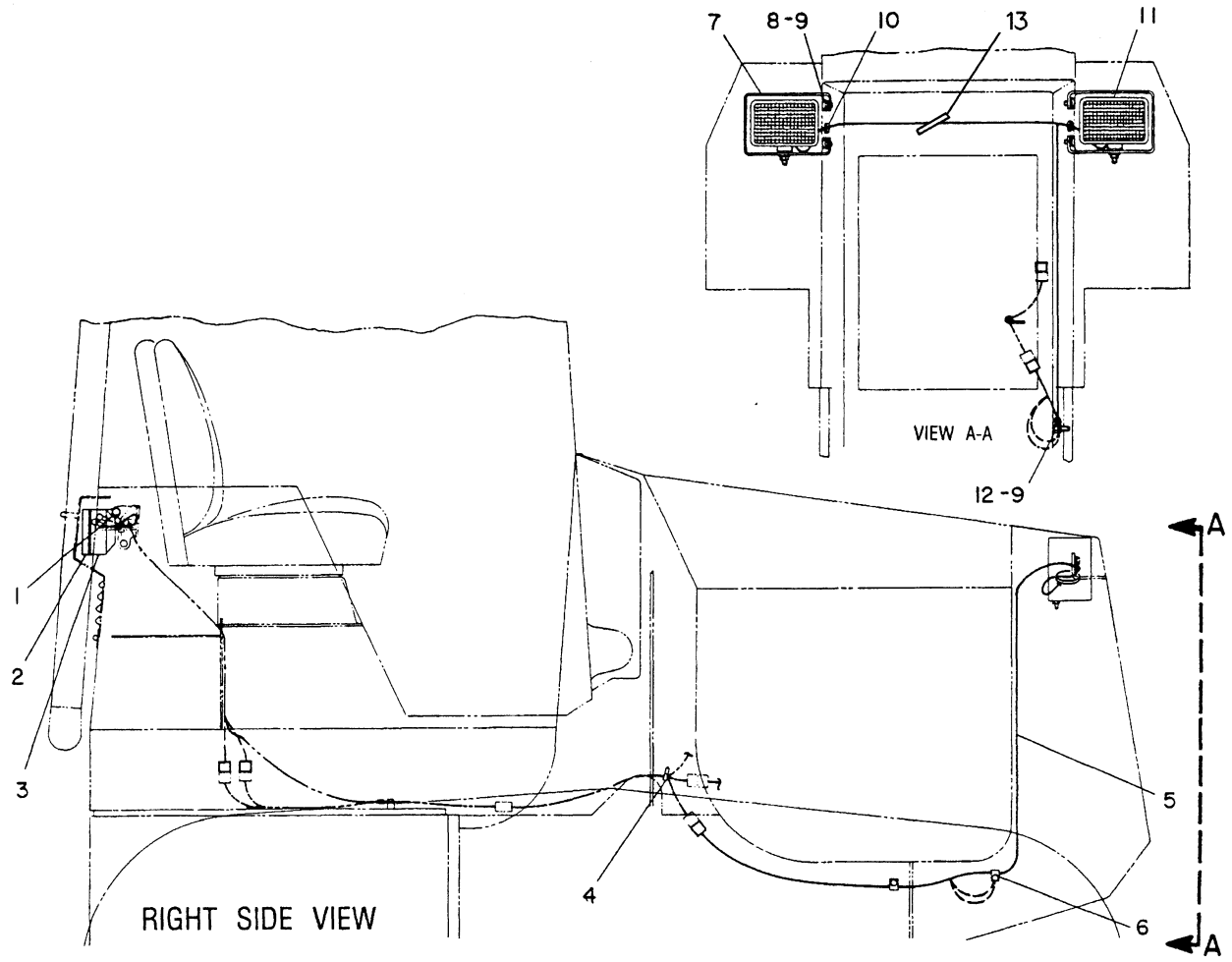

NOTE	REF NO	PART NUMBER	QTY	PART NAME	NOTE	REF NO	PART NUMBER	QTY	PART NAME
	1	1D4538	1	BOLT					
		3F9556	1	LOCKWASHER					
	2	6T7157	1	LAMP-FLOOD					
	3	6T7159	1	BODY AS-LAMP					
		5P2955	1	BOLT					
		3F9556	1	LOCKWASHER					
		5P8245	1	WASHER					
		6V8189	1	NUT (SMALL)					
		3H3680	1	NUT-JAM (LARGE)					
	4	3S2093	2	STRAP-CABLE					
	5	8Y1215	1	HARNESS AS					
	6	8M2772	2	CLIP					
	7	8Y1214	2	GUARD					
	8	0S1594	8	BOLT					
	9	5M2894	10	WASHER					
	10	8P8540	2	GROMMET					
Y	11	6T7160	2	LAMP GP					
	12	0T0102	2	BOLT					
	13	6K0806	1	STRAP-CABLE					

Y-SEPARATE ILLUSTRATION

R-478419 EP

1429 **8Y1213 LIGHTING GP-3 LAMP**

6T7160-Page 68

An Attachment

STARTING AND ELECTRICAL SYSTEM

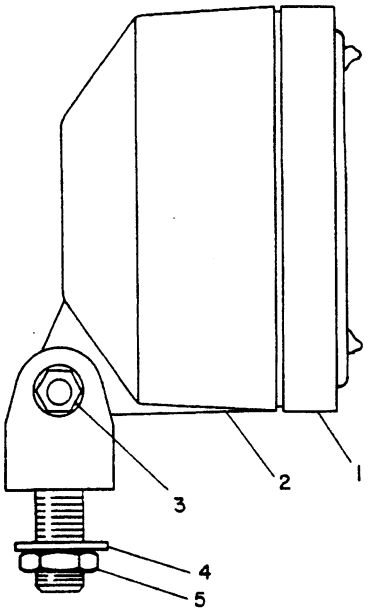

NOTE	REF NO	PART NUMBER	QTY	PART NAME
	1	6T7157	1	LAMP-FLOOD
	2	6T7159	1	BODY AS-LAMP
	3	5P2955	1	BOLT
		6V8189	1	NUT
		3F9556	1	LOCKWASHER
	4	5P8245	1	WASHER
	5	3H3680	1	NUT-JAM

B-344852 EP

1434

6T7160 LAMP GP
Part Of 8Y1213 Lighting
An Attachment

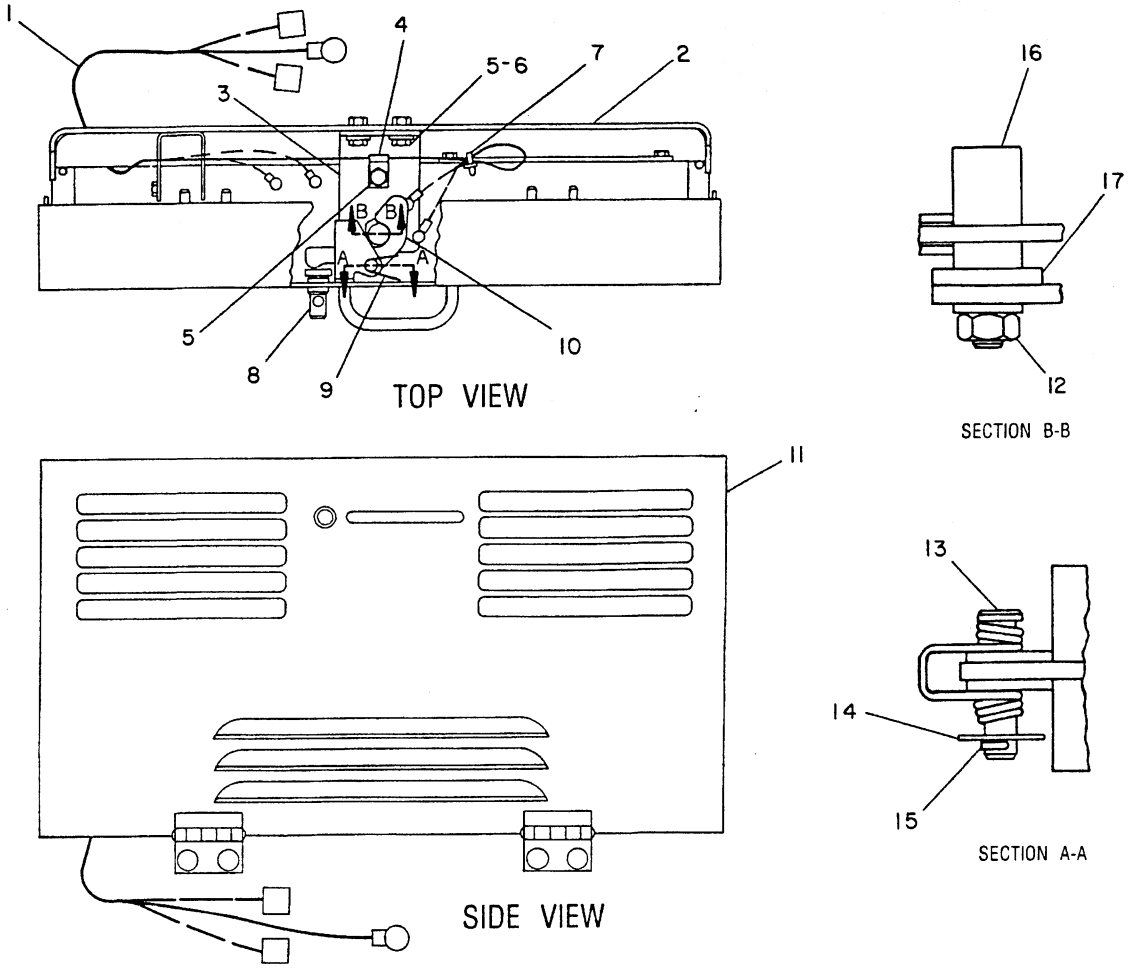

NOTE	REF NO	PART NUMBER	QTY	PART NAME
	1	8Y1216	1	HARNESS AS
	2	8Y1228	1	PLATE AS
		9F2978	2	NUT-WELD 9.53MM(.375IN)THD
		4K9097	1	NUT-WELD 7.95MM(.313IN)THD
		9F6445	2	NUT 6.35MM(.25IN)THD
	3	8Y1227	1	BRACKET AS
		9F2978	1	NUT-WELD 9.53MM(.375IN)THD
	4	8M2772	1	CLIP
	5	0S0509	3	BOLT
	6	5P1075	2	WASHER-HARD
	7	3S2093	1	STRAP-CABLE
	8	9V0450	1	PIN
	9	8G0873	1	SPRING
	10	7P7975	1	LATCH
	11	8Y1224	1	COVER AS
		3D9143	2	HINGE-BUTT
		8D5476	4	STUD-WELD
		9V0453	1	BUSHING
M	12	8T4133	1	NUT
	13	1S4244	1	PIN
	14	2V9166	1	WASHER
	15	3B4615	1	PIN-COTTER
	16	8C3671	1	STRIKER-LATCH
	17	6V5839	1	WASHER

M-METRIC PART

M-451068 EP

7267 **8Y1223 COVER GP-REAR**

Type 1. Used With Lighting Gp-3 Lamp & Warning Gp-Backup
Also Part Of 8Y1177 Seat & Support Gp
An Attachment

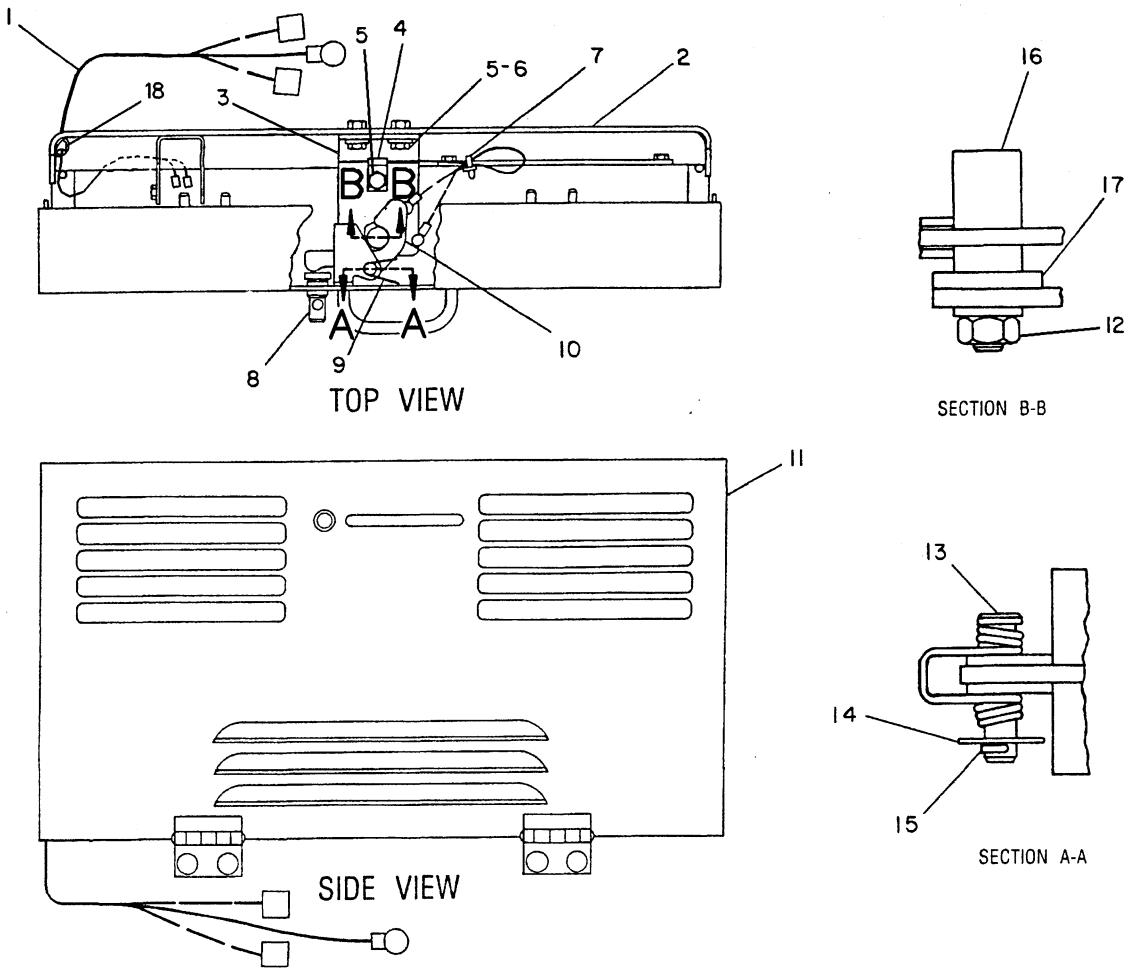

NOTE	REF NO	PART NUMBER	QTY	PART NAME
C	1	8Y2283	1	HARNESS AS
	2	8Y1228	1	PLATE AS
		9F2978	2	NUT-WELD 9.53MM(.375IN)THD
		4K9097	1	NUT-WELD 7.95MM(.313IN)THD
		9F6445	2	NUT 6.35MM(.25IN)THD
	3	8Y1227	1	BRACKET AS
		9F2978	1	NUT-WELD 9.53MM(.375IN)THD
	4	8M2772	1	CLIP
	5	0S0509	3	BOLT
	6	5P1075	2	WASHER-HARD
	7	3S2093	1	STRAP-CABLE
	8	9V0450	1	PIN
	9	8G0873	1	SPRING
	10	7P7975	1	LATCH
	11	8Y1224	1	COVER AS
		3D9143	2	HINGE-BUTT
		8D5476	4	STUD-WELD
		9V0453	1	BUSHING
M	12	8T4133	1	NUT
	13	1S4244	1	PIN
	14	2V9166	1	WASHER
	15	3B4615	1	PIN-COTTER
	16	8C3671	1	STRIKER-LATCH
	17	6V5839	1	WASHER
C	18	5K3294	1	CLIP

C-CHANGE FROM PREVIOUS TYPE
M-METRIC PART

R-479922 EP

7267 **8Y1223 COVER GP-REAR**

Type 2. Used With Lighting Gp-3 Lamp & Warning Gp-Backup
Also Part Of 8Y1177 Seat & Support Gp
An Attachment

MEMORANDA

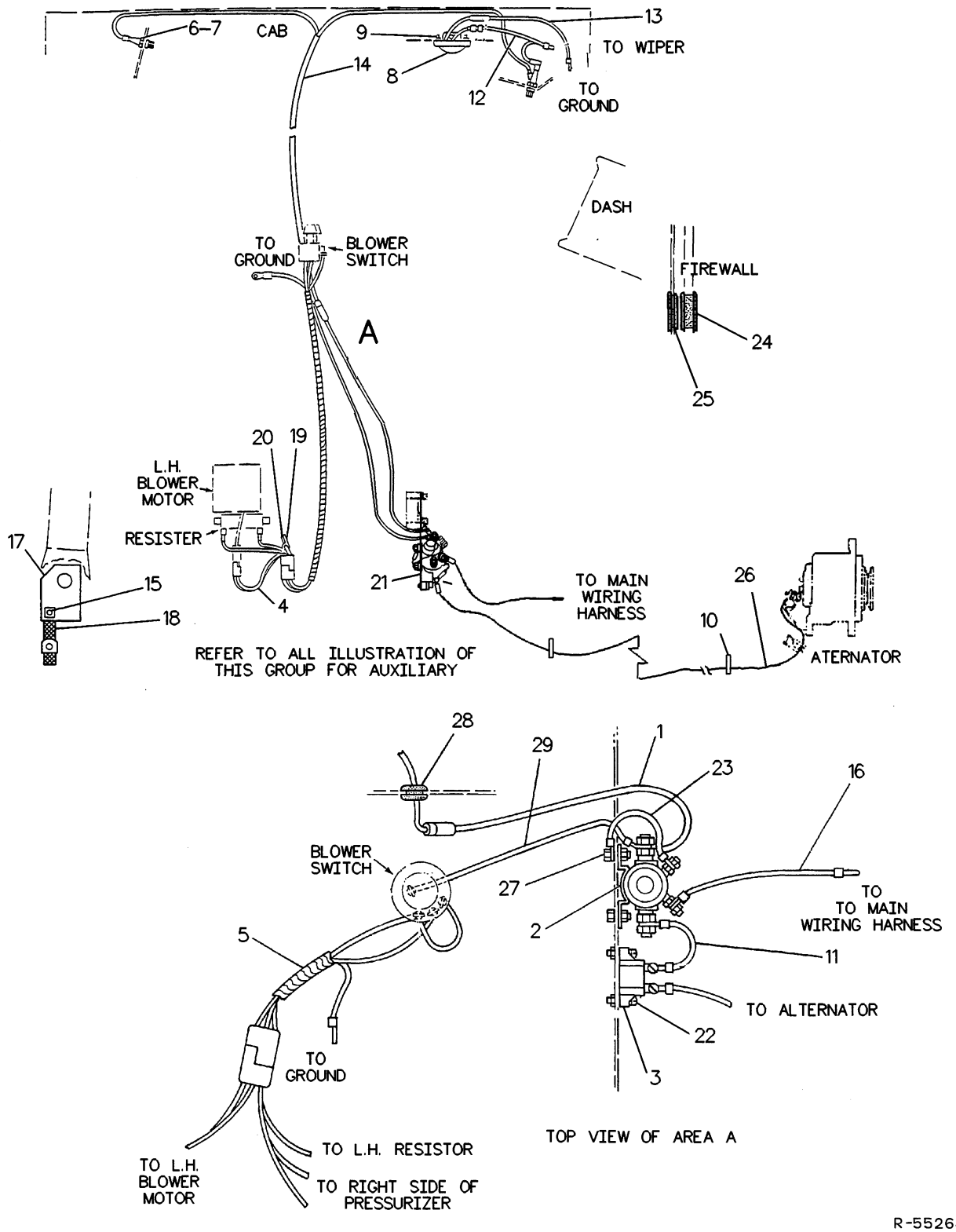

R-552640 EP

1408

5G0457 WIRING GP-CAB

Part Of 5G0001 Rollover Ar
An Attachment

STARTING AND ELECTRICAL SYSTEM

NOTE	REF NO	PART NUMBER	QTY	PART NAME
	1	8Y7051	1	WIRE AS
	2	4L3913	1	SWITCH AS
		9B7233	2	LOCKWASHER (4.27MM ID)
		6V8377	2	NUT (8-32 THD)
		6V8186	2	NUT-FULL (5/16-24 THD)
		3F9556	2	LOCKWASHER (8.4MM ID)
	3	8D7265	1	CRCT BREAKER AS
		6V8376	2	SCREW-MACHINE
		9B7233	2	LOCKWASHER
	4	5G0301	1	HARNESS AS
	5	5G0314	1	HARNESS AS
	6	4K5122	2	HOLDER AS-FUSE (EACH INCLUDES)
C		6T8115	1	NUT
		7N2867	1	CAP-FUSE HOLDER
	7	8M8947	2	FUSE (30 AMP)
C	8	4M3601	1	LAMP GP-DOME
		1S4168	1	LAMP-MINIATURE
		5P4571	1	TERMINAL (BLADE)
		4S1988	1	TERMINAL
		7T0020	1	LENS
	9	4B2049	3	NUT
		9F5599	3	LOCKWASHER
		4B1237	3	SCREW-MACHINE
	10	3S2093	3	STRAP-CABLE
	11	5G2014	1	WIRE AS
	12	5G0486	1	WIRE AS
	13	5G0485	1	WIRE AS
	14	5G2067	1	WIRE AS
	15	0L1351	2	BOLT
C		5P1075	2	WASHER-HARD
	16	5G2065	1	WIRE AS
	17	5G0511	1	PLATE AS
	18	1S2342	1	STRAP AS-GROUND
	19	8M2771	1	CLIP
	20	4B4863	1	WASHER
	21	8Y7053	1	BRACKET
	22	5M6668	2	SCREW-MACHINE
	23	6G0511	1	WIRE AS
	24	5G1997	1	GROMMET
	25	3H2900	1	GROMMET
	26	8Y7052	1	WIRE AS
	27	2A0762	2	BOLT
C		9S8750	2	NUT-FULL
		5P4115	2	WASHER
	28	4V5091	1	GROMMET
	29	5G2015	1	WIRE AS

C-CHANGE FROM PREVIOUS TYPE

552641 EP

5G0457 WIRING GP-CAB
Part Of 5G0001 Rollover Ar
An Attachment

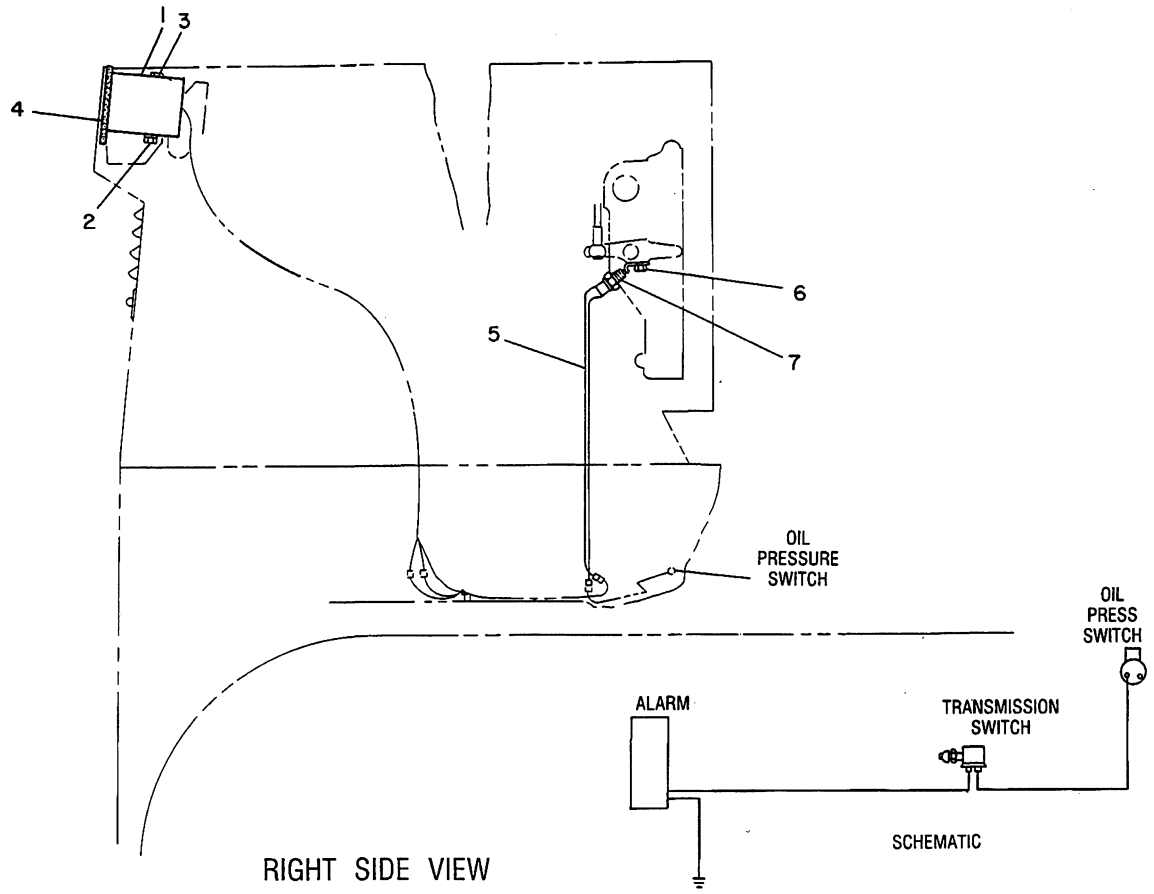

NOTE	REF NO	PART NUMBER	QTY	PART NAME	NOTE	REF NO	PART NUMBER	QTY	PART NAME
	1	3T1815	1	ALARM-BACK-UP					
	2	7X0267	2	BOLT					
		7X0579	2	WASHER-HARD					
	3	8Y1859	2	NUT					
	4	8Y1234	1	SEAL					
	5	5G1677	2	WIRE AS					
	6	5S7382	1	BOLT					
		5P1075	1	WASHER-HARD					
		5G2171	1	PLATE					
	7	9P9520	1	SWITCH AS (TRANSMISSION)					

B-492789 EP

7406 **8Y1144 WARNING GP-BACKUP**
Use With Cover Gp-Rear
An Attachment

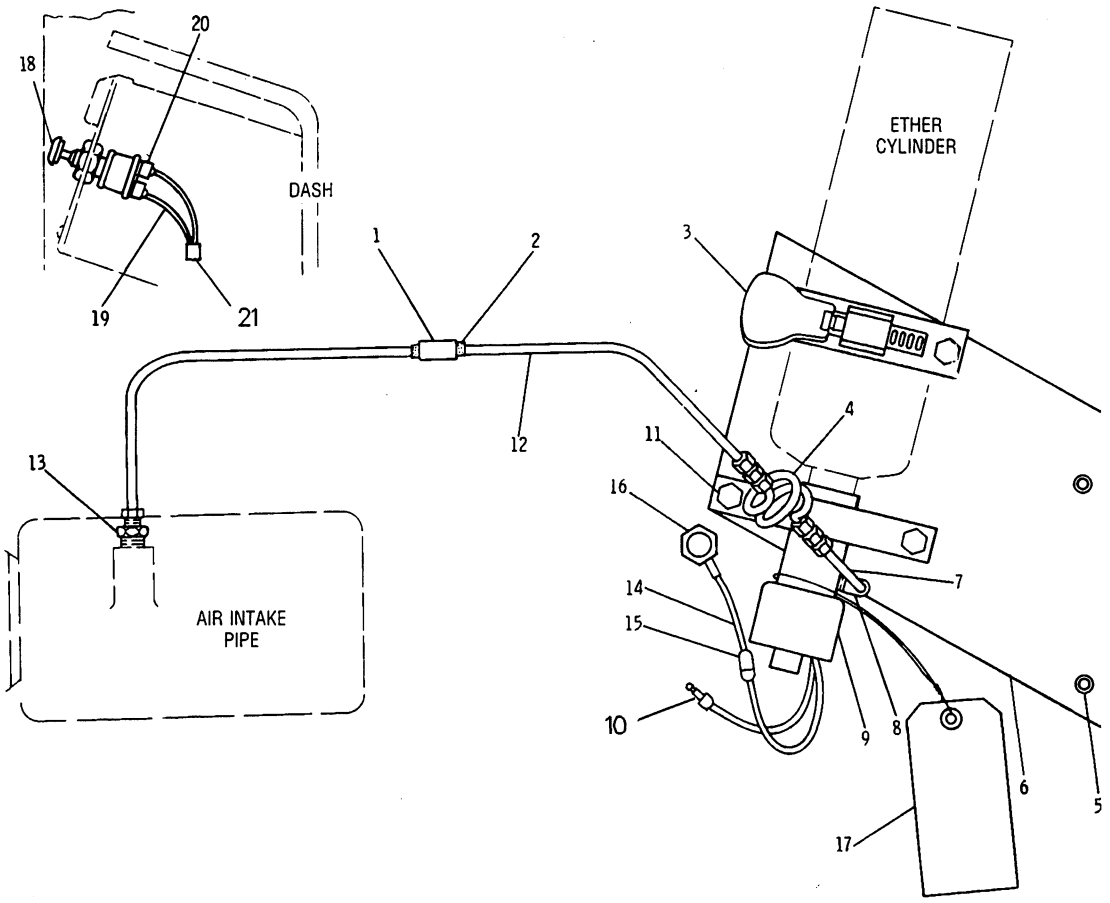

NOTE	REF NO	PART NUMBER	QTY	PART NAME	NOTE	REF NO	PART NUMBER	QTY	PART NAME
	1	8M2772	1	CLIP	C	20	2L8075	2	TERMINAL
	2	3D5102	1	GROMMET	C	21	7N9737	1	HOUSING-PLUG
	3	7N2059	1	CLAMP AS-CYLINDER			7N7780	1	PIN-CONNECTOR
	4	7N0140	1	TUBE AS-COIL			7N7779	1	SOCKET
	5	5M3062	2	BOLT					
		8T4896	2	WASHER-HARD	A		7N0296	1	CYLINDER AS (ETHER)
	6	5G2480	1	PLATE					
	7	5G0659	1	TUBE					
	8	5P6315	1	ELBOW-FLARELESS					
		5P6313	1	NUT-FLARELESS					
		5P6314	1	SLEEVE-FLARELESS					
	9	6N7673	1	VALVE AS-START					
		7N9801	1	GASKET					
	10	5P5610	2	CONNECTOR					
	11	8T5391	4	BOLT					
		8T4224	4	WASHER-HARD					
	12	5G0660	1	TUBE					
	13	6N7672	1	ATOMIZER AS					
	14	5G0663	1	WIRE AS					
D		5P5629		WIRE (14GA)(.1M)					
		2L8075	1	TERMINAL					
	15	6N9587	1	CONNECTOR					
	16	6N5899	1	SWITCH (LIMIT)					
C	17	2V1713	1	TAG (INSTRUCTION)					
C	18	3T0306	1	SWITCH-STARTING AID					
CD	19	5P5624		WIRE (14 GA)(.16M)					

A-NOT PART OF THIS GROUP
C-CHANGE FROM PREVIOUS TYPE
D-ORDER BY THE METER

R-506904 EP

1456 **5G2541 STARTING AID GP-ETHER**
Type 1-An Attachment

STARTING AND ELECTRICAL SYSTEM

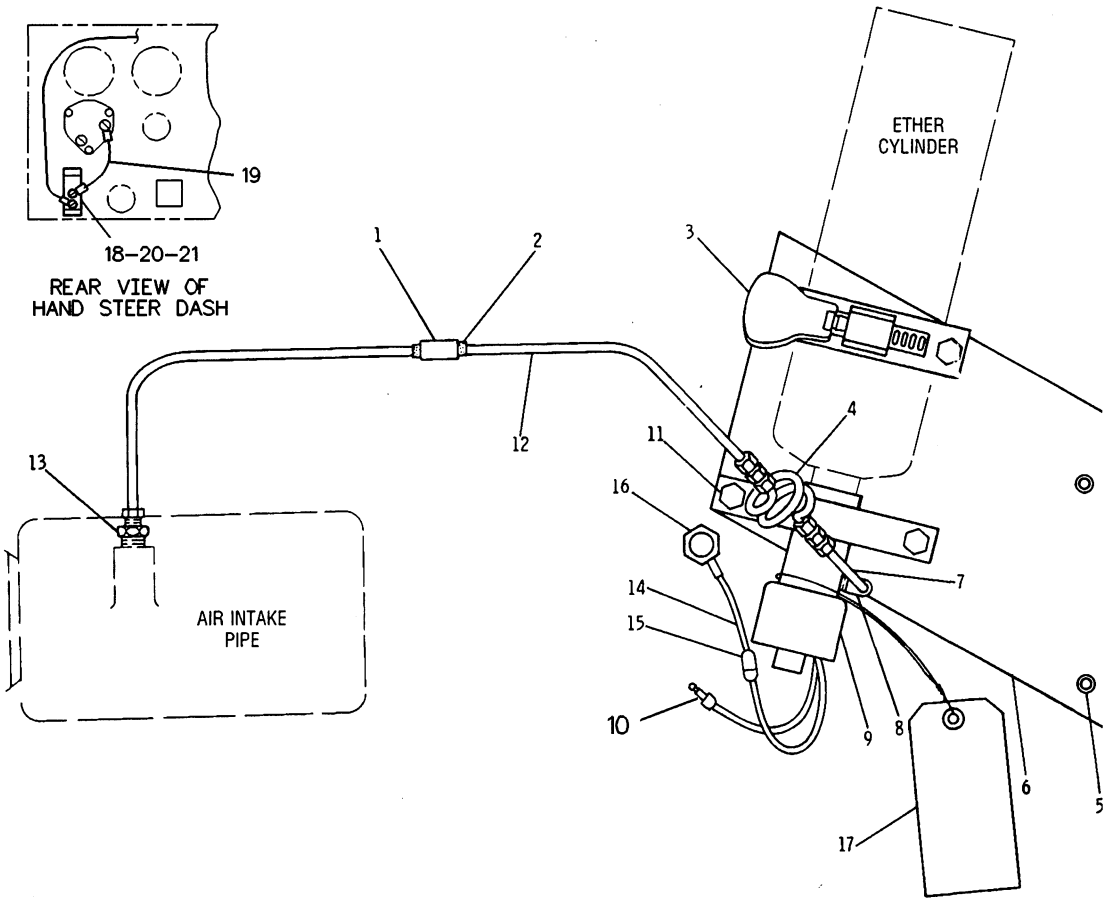

NOTE	REF NO	PART NUMBER	QTY	PART NAME	NOTE	REF NO	PART NUMBER	QTY	PART NAME
	1	8M2772	1	CLIP		17	2V1713	1	TAG (INSTRUCTION)
	2	3D5102	1	GROMMET	C	18	6T6066	1	SWITCH AS-ROCKER (STARTING AID)
	3	7N2059	1	CLAMP AS-CYLINDER					
	4	7N0140	1	TUBE AS-COIL	C		3L8187	2	LOCKWASHER
	5	5M3062	2	BOLT	C		6V8374	2	SCREW-MACHINE
		8T4896	2	WASHER-HARD	C	19	8G7280	1	WIRE AS
	6	5G2480	1	PLATE	C	20	6T6329	1	BEZEL-ROCKER SWITCH
	7	5G0659	1	TUBE	C	21	6V8927	2	BOLT-SOCKET HEAD
	8	5P6315	1	ELBOW-FLARELESS					
		5P6313	1	NUT-FLARELESS					
		5P6314	1	SLEEVE-FLARELESS					
	9	6N7673	1	VALVE AS-START					
		7N9801	1	GASKET					
	10	5P5610	2	CONNECTOR					
	11	8T5391	4	BOLT					
		8T4224	4	WASHER-HARD					
	12	5G0660	1	TUBE					
	13	6N7672	1	ATOMIZER AS					
	14	5G0663	1	WIRE AS					
D		5P5629		WIRE (14GA)(.1M)					
		2L8075	1	TERMINAL					
	15	6N9587	1	CONNECTOR					
	16	6N5899	1	SWITCH (LIMIT)					

C-CHANGE FROM PREVIOUS TYPE
D-ORDER BY THE METER

R-524643 EP

1456 **5G2541 STARTING AID GP-ETHER**
Type 2-An Attachment

MEMORANDA

POWER TRAIN-POWER TRANSMISSION UNIT

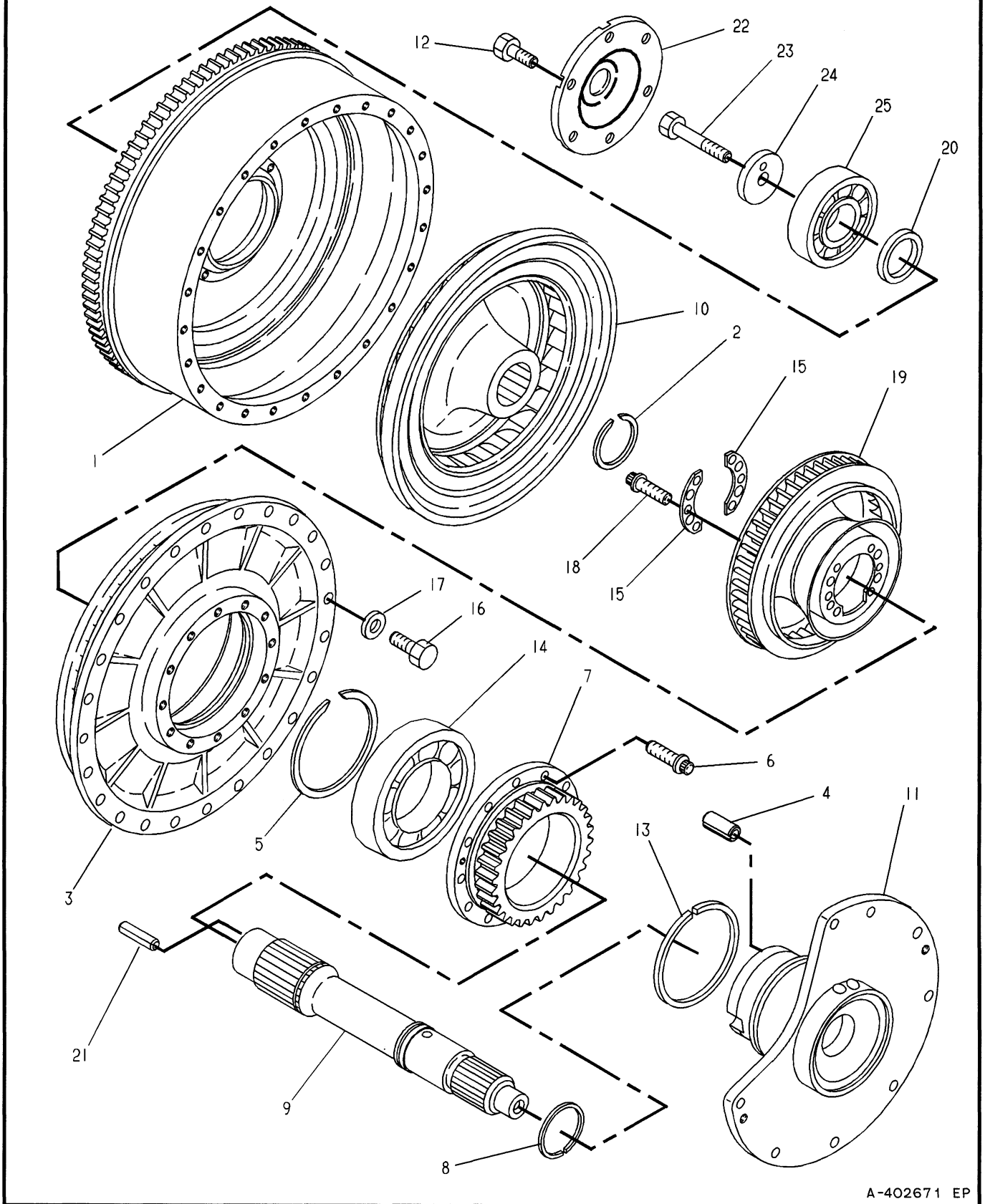

3101

1T1786 TORQUE CONVERTER GP
Transmission S/N 2RE1-Up
Part Of 9W9483 Transmission Ar

POWER TRAIN-POWER TRANSMISSION UNIT

NOTE	REF NO	PART NUMBER	QTY	PART NAME
	1	1T0085	1	HOUSING-ROTATING
	2	1T0034	1	RING-LOCK
	3	1T1446	1	IMPELLER-CONVERTER
	4	4H1440	4	PIN-SPRING
	5	5K9064	1	RING-RETAINING
	6	1T0414	6	BOLT-12 POINT HEAD
	7	1T1396	1	GEAR-DRIVE (35 TEETH)
	8	1T1230	1	RING-SEAL
	9	1T1393	1	SHAFT-OUTPUT
	10	1T0079	1	WHEEL-TURBINE
	11	1T1397	1	CARRIER-STATOR
	12	1T0446	6	BOLT-SPECIAL HEAD
	13	1T1401	1	RING-SEAL
	14	1T0334	1	BALL BEARING
	15	1T0092	2	PLATE-CLAMP
	16	2B2695	18	BOLT
	17	1T0738	18	WASHER
	18	1T0416	6	BOLT
	19	1T0538	1	STATOR AS-CONVERTER
	20	1T0286	1	SPACER
	21	7M5130	1	PIN
	22	1T1392	1	COVER
	23	0S1584	1	BOLT
	24	1T0537	1	RETAINER
	25	6H3957	1	BALL BEARING

403493 EP

3101 **1T1786 TORQUE CONVERTER GP**

Transmission S/N 2RE1-Up

Part Of 9W9483 Transmission Ar

POWER TRAIN-POWER TRANSMISSION UNIT

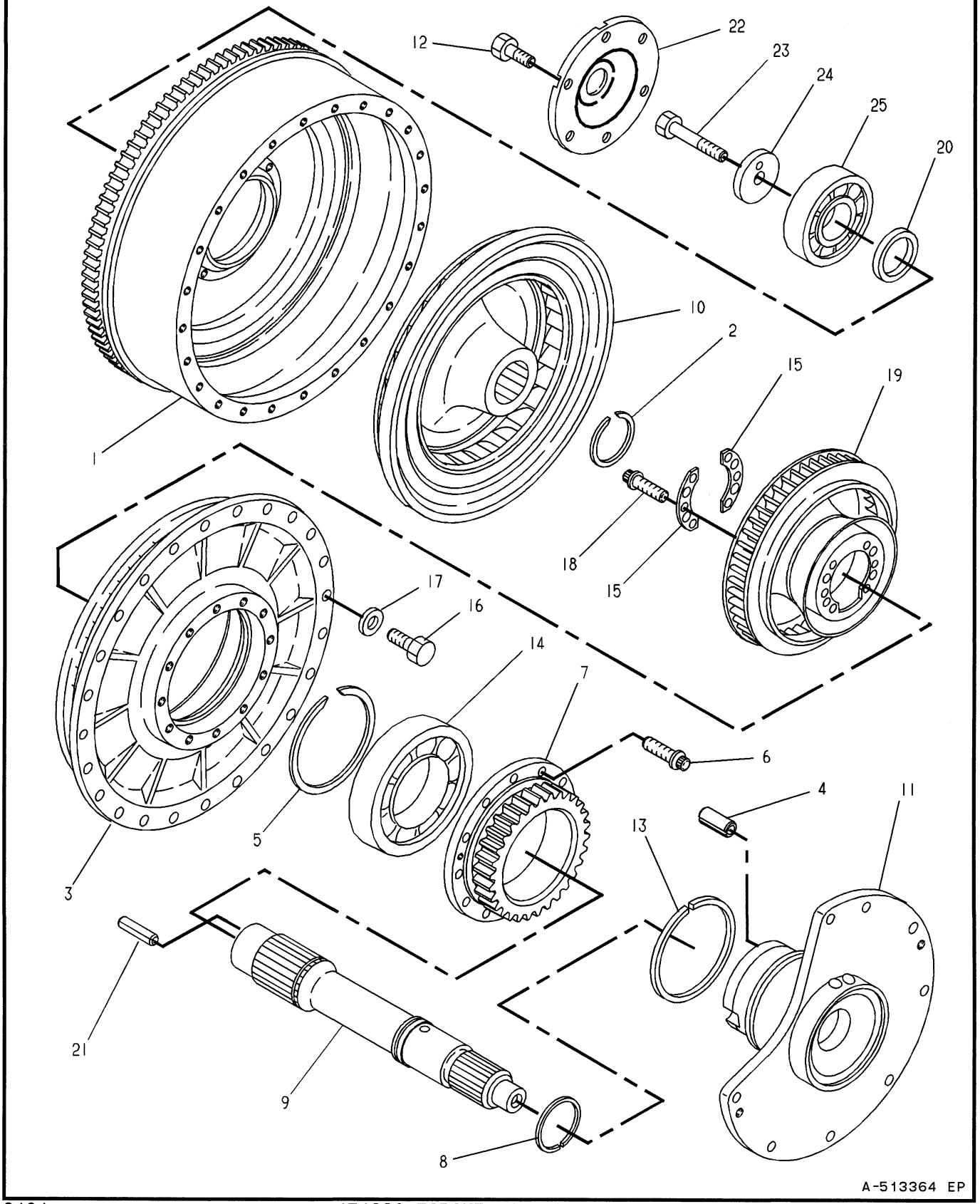

3101

1T1390 TORQUE CONVERTER GP
Transmission S/N 3BE1-Up
Part Of 9W9484 Transmission Ar

POWER TRAIN-POWER TRANSMISSION UNIT

NOTE	REF NO	PART NUMBER	QTY	PART NAME	NOTE	REF NO	PART NUMBER	QTY	PART NAME
	1	1T0085	1	HOUSING-ROTATING					
	2	1T0034	1	RING-LOCK					
	3	1T1398	1	IMPELLER-CONVERTER					
	4	4H1440	4	PIN-SPRING					
	5	5K9064	1	RING-RETAINING					
	6	1T0414	6	BOLT-12 POINT HEAD					
	7	1T1396	1	GEAR-DRIVE (35 TEETH)					
	8	1T1230	1	RING-SEAL					
	9	1T1393	1	SHAFT-OUTPUT					
	10	1T0079	1	WHEEL-TURBINE					
	11	1T1397	1	CARRIER-STATOR					
	12	1T0446	6	BOLT-SPECIAL HEAD					
	13	1T1401	1	RING-SEAL					
	14	1T0334	1	BALL BEARING					
	15	1T0092	2	PLATE-CLAMP					
	16	2B2695	18	BOLT					
	17	1T0738	18	WASHER					
	18	1T0416	6	BOLT					
	19	1T0080	1	STATOR AS-CONVERTER					
	20	1T0286	1	SPACER					
	21	7M5130	1	PIN					
	22	1T1392	1	COVER					
	23	0S1584	1	BOLT					
	24	1T0537	1	RETAINER					
	25	6H3957	1	BALL BEARING					

513421 EP

3101

1T1390 TORQUE CONVERTER GP
Transmission S/N 3BE1-Up
Part Of 9W9484 Transmission Ar

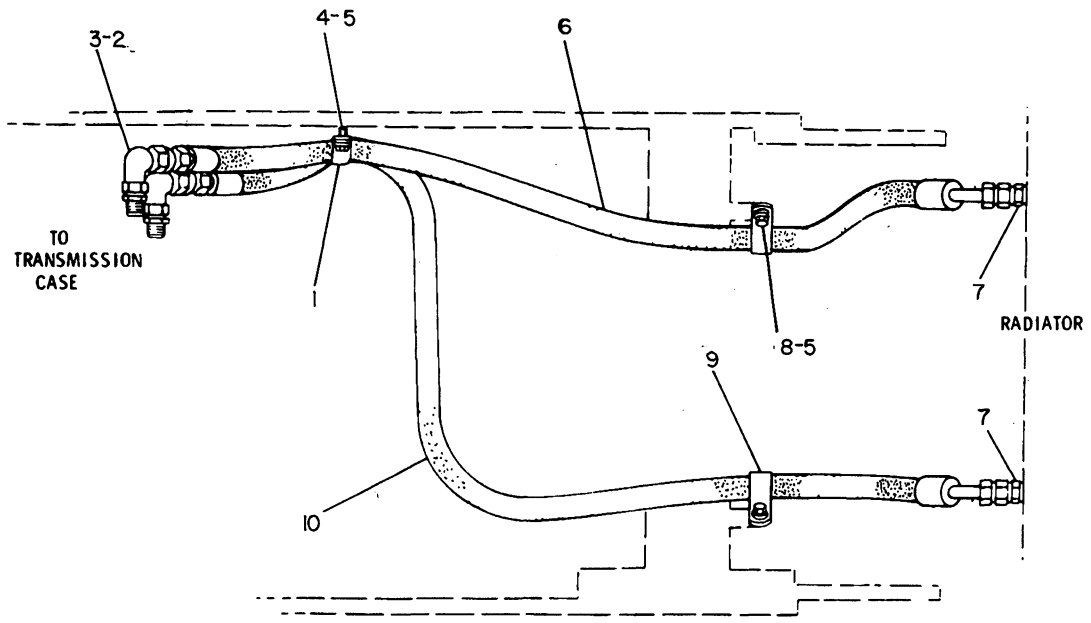

NOTE	REF NO	PART NUMBER	QTY	PART NAME	NOTE	REF NO	PART NUMBER	QTY	PART NAME
	1	7L7304	1	CLIP					
	2	2M9780	2	SEAL-O-RING					
C	3	3R9704	2	ELBOW-SWIVEL					
C		308196	2	CONNECTOR					
	4	5S7379	1	BOLT					
	5	5P1075	3	WASHER-HARD					
	6	6S8843	1	HOSE AS					
	7	4S6678	2	CONNECTOR					
	8	5M3062	2	BOLT					
	9	2L2685	2	CLIP					
	10	6S8842	1	HOSE AS					

C-CHANGE FROM PREVIOUS TYPE

B-525636 EP

3103 5G1378 LINES GP-TORQUE CONVERTER COOLER

MEMORANDA

			PAGE
1	9P6238	CASE & PARTS GP	74
1	9W9496	CONTROL GP-TRANSMISSION HYD	80
1	9P4540	DRIVE GP-PUMP	85
1	9W9486	PLANETARY GP-TRANSMISSION	86
1	9P7240	PUMP GP-GEAR	84
1	1T1786	TORQUE CONVERTER GP	71.01
1	9W9485	TRANSFER CASE & GEAR GP	73.01

GASKET KITS AVAILABLE

6V2224 PARTS & CASE
6V2218 PLANETARY
8T2472 HYDRAULIC CONTROL
6V2219 TRANSMISSION FILTER
6V2221 TRANSFER GEAR

402488 P

9W9483 TRANSMISSION AR
Transmission S/N 2RE1-Up

			PAGE
1	9P6238	CASE & PARTS GP	74
1	9W9496	CONTROL GP-TRANSMISSION HYD	80
1	9P4540	DRIVE GP-PUMP	85
1	9W9486	PLANETARY GP-TRANSMISSION	86
1	9P7240	PUMP GP-GEAR	84
1	1T1390	TORQUE CONVERTER GP	71.03
1	9W9485	TRANSFER CASE & GEAR GP	73.01

GASKET KITS AVAILABLE

6V2224 PARTS & CASE
6V2218 PLANETARY
8T2472 HYDRAULIC CONTROL
6V2219 TRANSMISSION FILTER
6V2221 TRANSFER GEAR

402494 P

9W9484 TRANSMISSION AR
Transmission S/N 3BE1-Up

MEMORANDA

POWER TRAIN-POWER TRANSMISSION UNIT

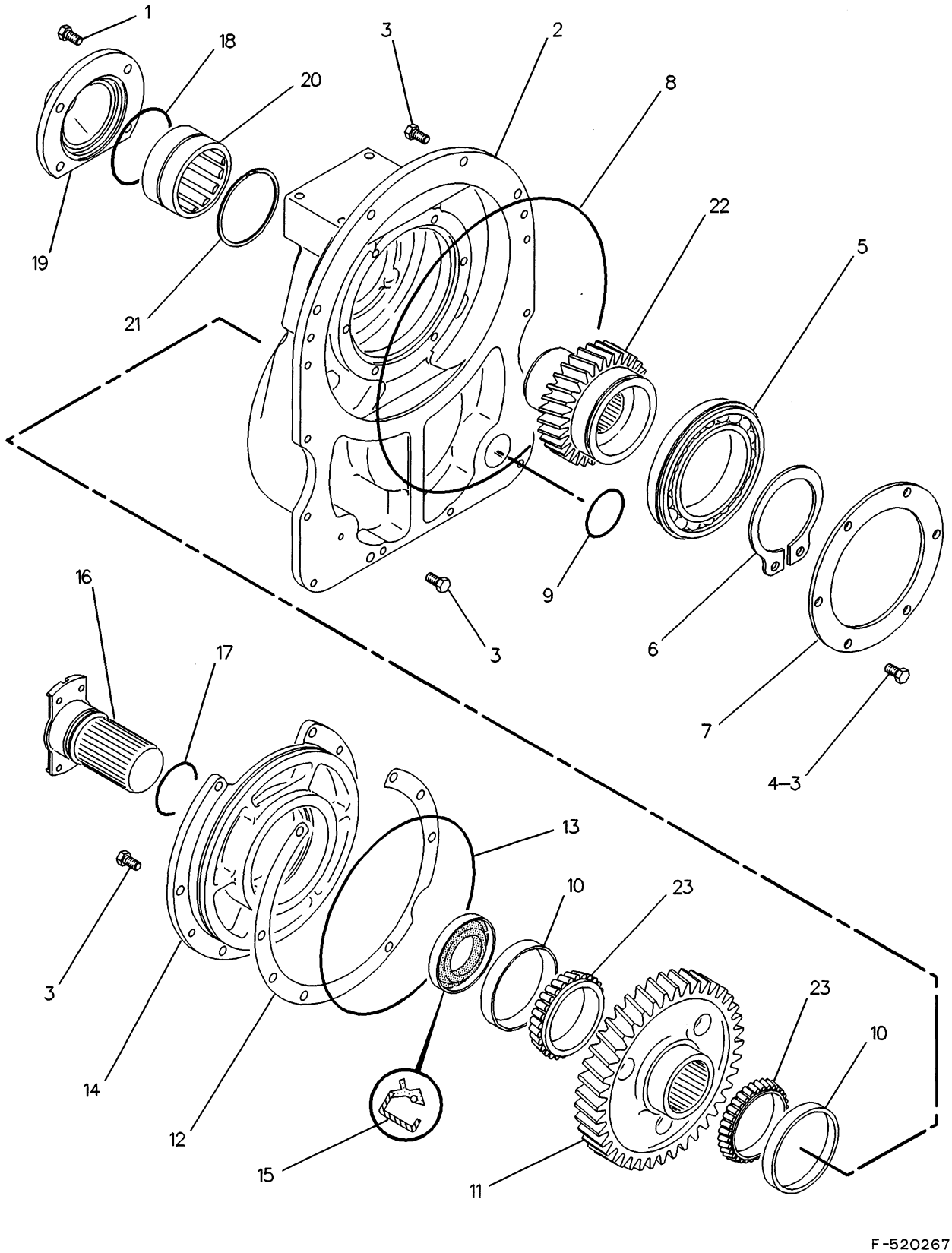

3159 **9W9485 TRANSFER CASE & GEAR GP**

Without Pinion
Transmission S/N 2RE1-Up, 3BE1-Up
Part Of 9W9483, 9W9484 Transmission Ars

POWER TRAIN-POWER TRANSMISSION UNIT

NOTE	REF NO	PART NUMBER	QTY	PART NAME
	1	0L1351	4	BOLT
	2	9P6278	1	CASE-TRANSFER
	3	0S1594	26	BOLT
	4	5M2894	6	WASHER
	5	9N1542	1	BALL BEARING
	6	5P3414	1	RING-RETAINING
	7	6P3290	1	PLATE-RETAINER
	8	2M1309	1	SEAL-O-RING
	9	8M4436	2	SEAL-O-RING
	10	9S7949	2	CUP-ROLLER BEARING
	11	9P5767	1	GEAR (46 TEETH)
B	12	6P0679	1	SHIM PACK 1.57MM(.062IN)THK
	13	4K6804	1	SEAL-O-RING
	14	9P6282	1	CAGE-BEARING
C	15	8C5168	1	SEAL-LIP TYPE
	16	6T9830	1	YOKE
	17	7F8268	1	SEAL-O-RING
	18	8H7521	1	SEAL-O-RING
	19	9P6281	1	CAGE-BEARING
	20	5P8353	1	BEARING-ROLLER
	21	1K6986	1	RING-RETAINING
	22	9P6283	1	GEAR (26 TEETH)
	23	9S7950	2	CONE-ROLLER BEARING

NOTE	REF NO	PART NUMBER	QTY	PART NAME

B-USE AS REQUIRED
C-CHANGE FROM PREVIOUS TYPE

520268 EP

3159 **9W9485 TRANSFER CASE & GEAR GP**

Without Pinion
Transmission S/N 2RE1-Up, 3BE1-Up
Part Of 9W9483, 9W9484 Transmission Ars

POWER TRAIN-POWER TRANSMISSION UNIT

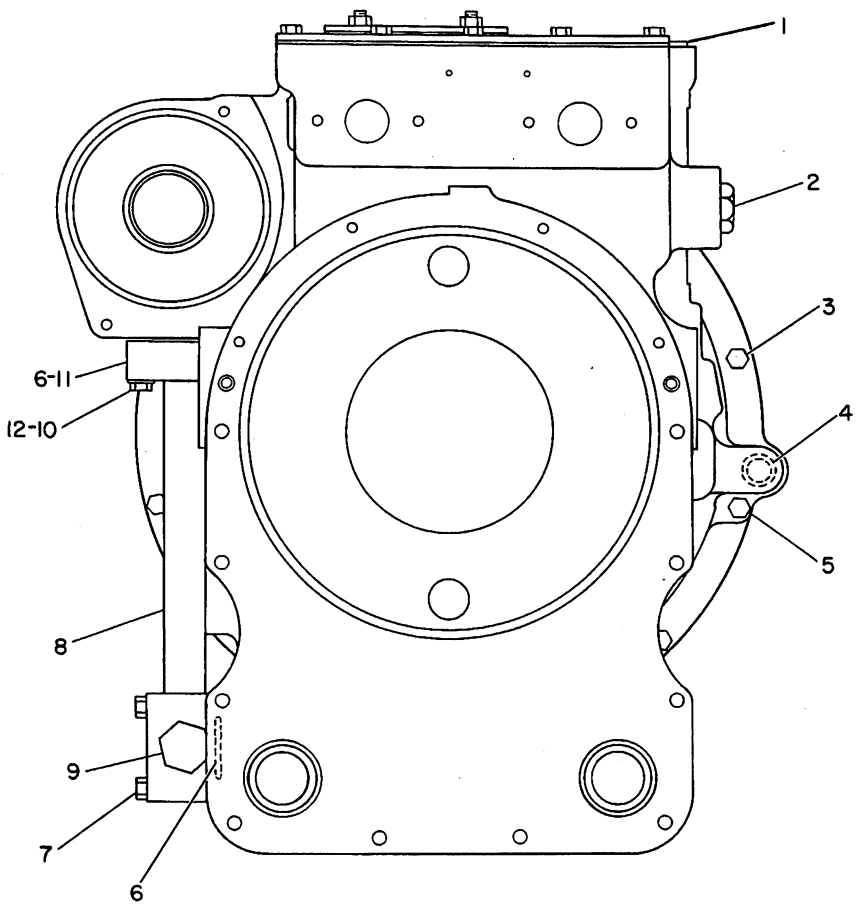

NOTE	REF NO	PART NUMBER	QTY	PART NAME	NOTE	REF NO	PART NUMBER	QTY	PART NAME
	1	9S8004	2	PLUG-O-RING					
		3J1907	2	SEAL-O-RING					
	2	9S4183	1	PLUG (O-RING)					
		3D2824	1	SEAL-O-RING					
	3	0S1594	11	BOLT					
	4	3H0107	1	SEAL-O-RING					
	5	8S9191	1	BOLT					
	6	1P3704	2	SEAL-RECTANGULAR					
	7	1D4703	4	BOLT					
	8	9P7025	1	TUBE AS					
	9	9S4188	1	PLUG-O-RING					
		4K1388	1	SEAL-O-RING					
C	10	5P7972	4	BOLT-12 POINT HEAD					
	11	1P5761	2	FLANGE-HALF					
	12	5P8244	4	WASHER					

C-CHANGE FROM PREVIOUS TYPE

B-519086 EP

3188 **9P6238 CASE & PARTS GP-PART 1 OF 2**

Transmission S/N 2RE1-Up, 3BE1-Up

Part Of 9W9483 & 9W9484 Transmission Ars

POWER TRAIN-POWER TRANSMISSION UNIT

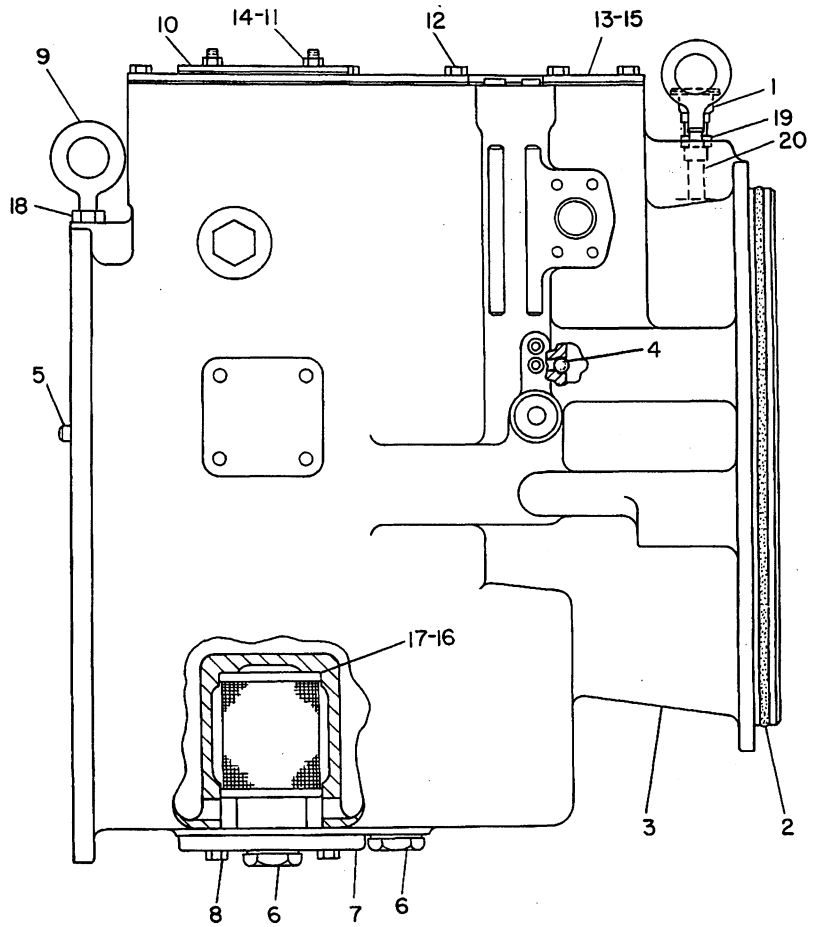

NOTE	REF NO	PART NUMBER	QTY	PART NAME	NOTE	REF NO	PART NUMBER	QTY	PART NAME
C	1	9G5127	1	BREATHER					
	2	2M3340	1	SEAL-O-RING					
	3	7G7650	1	CASE AS-TMSN					
	4	4B9880	3	BALL					
	5	5B5812	2	DOWEL					
	6	4T2069	2	PLUG-DRAIN					
		2H3932	2	SEAL					
	7	8P9441	1	COVER					
		2H4145	1	SEAL-O-RING					
	8	0S1594	4	BOLT					
	9	1P7407	2	EYEBOLT					
	10	1M9633	1	COVER					
		1M9634	1	GASKET					
	11	1D4717	4	NUT (FULL)					
	12	0S0509	18	BOLT					
	13	7G4118	1	COVER AS-TRANSMISSION					
	14	7M7794	4	STUD-WELD					
	15	9G5866	1	GASKET-COVER					
	16	8S9129	1	FILTER-MAGNETIC					
	17	8S9130	1	SCREEN-SUCTION					
	18	1D5117	2	NUT-JAM					
C	19	8S7169	1	COUPLING					
C	20	3B7262	1	NIPPLE-PIPE					

C-CHANGE FROM PREVIOUS TYPE

B-485647 EP

3188 **9P6238 CASE & PARTS GP-PART 2 OF 2**

Transmission S/N 2RE1-Up, 3BE1-Up

Part Of 9W9483 & 9W9484 Transmission Ars

POWER TRAIN-POWER TRANSMISSION UNIT

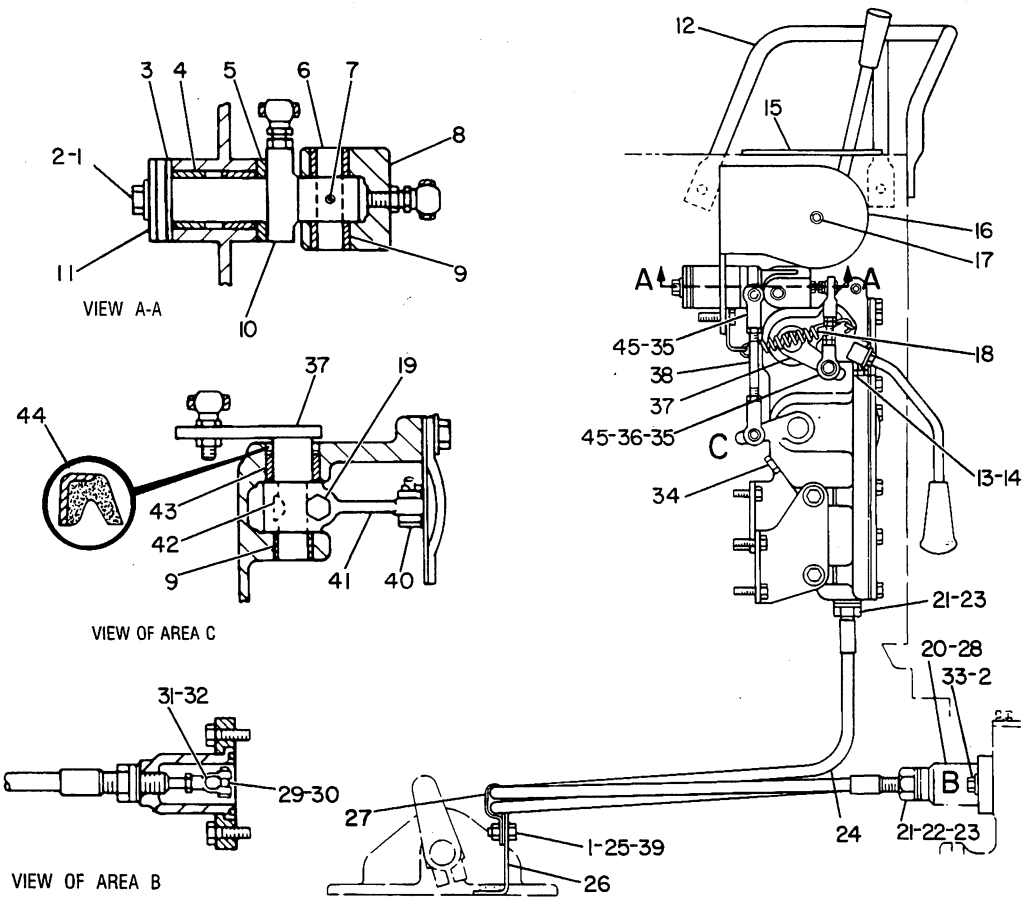

NOTE	REF NO	PART NUMBER	QTY	PART NAME	NOTE	REF NO	PART NUMBER	QTY	PART NAME
	1	OL1351	2	BOLT		25	1B2578	1	NUT
	2	5M2894	5	WASHER		26	5G1671	1	BRACKET
	3	6D6187	1	SHIM		27	2Y1834	1	CLIP
		6D6189	3	SHIM		28	4F7952	2	SEAL-O-RING
	4	9S2836	2	BEARING-SLEEVE		29	8D5295	2	PIN
	5	5P8250	2	WASHER		30	8D5294	2	RING
	6	5G1158	1	SHAFT		31	9D5506	2	ROD END
	7	2K8467	1	PIN-SPRING		32	6F0612	2	NUT-JAM
	8	5G1181	1	LEVER		33	0S1594	4	BOLT
	9	5G0400	2	BEARING		34	9S4684	1	PLUG-O-RING
	10	5G1157	1	YOKE			3J1907	1	SEAL-O-RING
	11	2B6010	1	WASHER		35	9K8757	4	ROD END-BEARING
	12	5G5742	1	GUARD		36	3N7824	1	ROD
	13	8S7271	1	SETSCREW-POINT			9M1974	3	WASHER-HARD
	14	5B3180	1	NUT		37	5G1092	1	LEVER AS
	15	5G3407	1	PLATE		38	3N2843	1	ROD
		4B1280	4	SCREW-MACHINE		39	5P1075	1	WASHER-HARD
	16	5G1106	1	BRACKET AS		40	6J2256	1	PIN
	17	4K4658	1	STUD			3B4610	1	COTTER
	18	5G1099	1	SPRING		41	5G1253	1	LEVER
	19	0S1588	1	BOLT		42	1B8704	1	KEY-WOODRUFF
	20	5G5741	2	HOUSING		43	5G1061	1	BEARING
	21	9S1354	6	NUT		44	1K9060	1	SEAL-LIP TYPE
	22	1V6341	2	SEAL		45	1A8285	8	NUT-JAM
	23	5P8247	6	WASHER-HARD					
	24	5G1150	2	CABLE AS					

B-344708 EP

5G1060 CONTROL GP-TRANSMISSION-PART 1 OF 2
S/N 1RJ1-364 & 2CJ1-148

POWER TRAIN-POWER TRANSMISSION UNIT

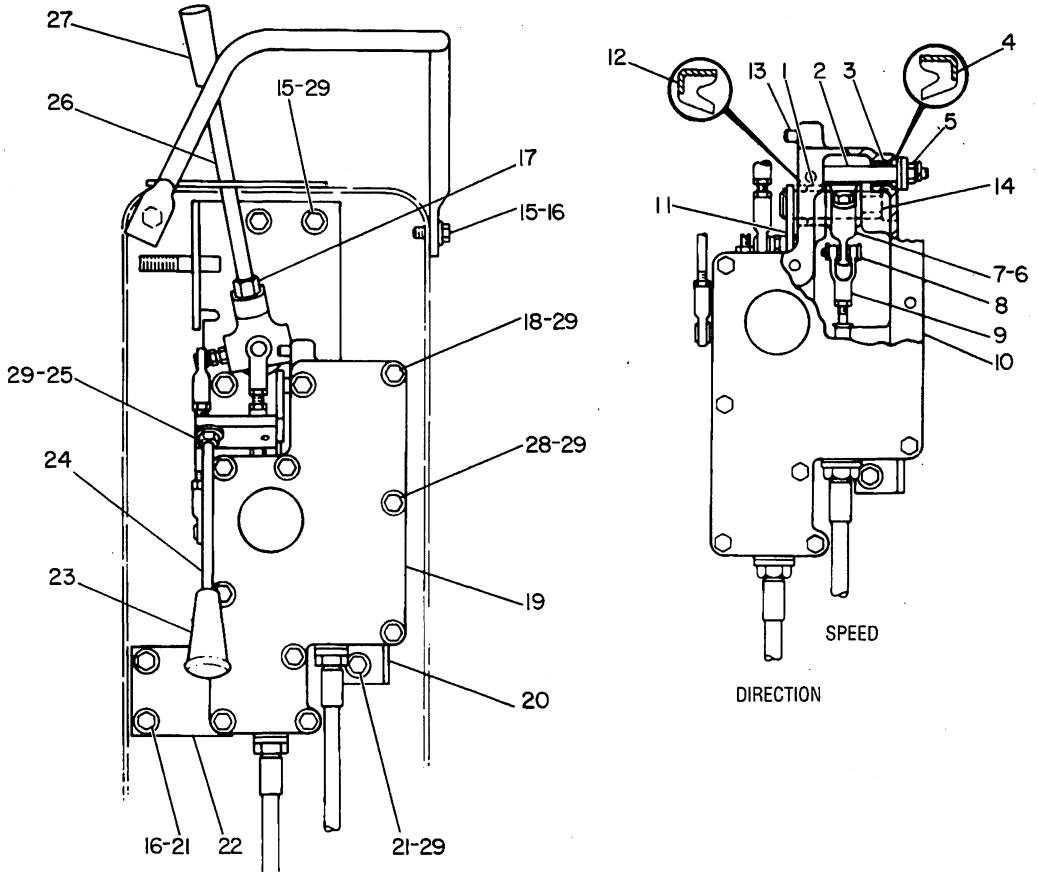

NOTE	REF NO	PART NUMBER	QTY	PART NAME	NOTE	REF NO	PART NUMBER	QTY	PART NAME
	1	5G1061	1	BEARING		20	5G2251	1	BRACKET
	2	5G1137	1	LEVER AS		21	1A2029	8	BOLT
	3	9H2400	2	BEARING		22	5G2252	1	BRACKET
	4	9L8660	2	SEAL-LIP TYPE		23	2M8908	1	KNOB
	5	2L6267	1	LOCKNUT		24	5G1107	1	LEVER
		3L9689	1	WASHER		25	1B2578	2	NUT
		5P8245	2	WASHER		26	5G1120	1	ROD
	6	0S1588	1	BOLT		27	7M0706	1	KNOB (GEARSHIFT)
	7	5G1253	1	LEVER		28	0T0102	1	BOLT
		1B8704	1	KEY-WOODRUFF		29	5M2894	19	WASHER
	8	6J2256	1	PIN					
		3B4610	1	COTTER					
	9	5G5743	2	ROD END					
		6F0612	2	NUT-JAM					
	10	5G1031	1	HOUSING					
		4K8603	1	PLUG-CUP					
	11	5G1092	1	LEVER AS					
	12	1K9060	1	SEAL-LIP TYPE					
	13	5B5821	1	PIN-DOWEL					
	14	5G0400	2	BEARING					
	15	0S1594	5	BOLT					
	16	5P1075	6	WASHER-HARD					
	17	1D5117	1	NUT-JAM					
	18	0L1351	9	BOLT					
	19	5G1034	1	COVER					
B		7M7260		LIQUID GASKET					

B-USE AS REQUIRED

B-344709 EP

5G1060 CONTROL GP-TRANSMISSION-PART 2 OF 2
S/N 1RJ1-364 & 2CJ1-148

POWER TRAIN-POWER TRANSMISSION UNIT

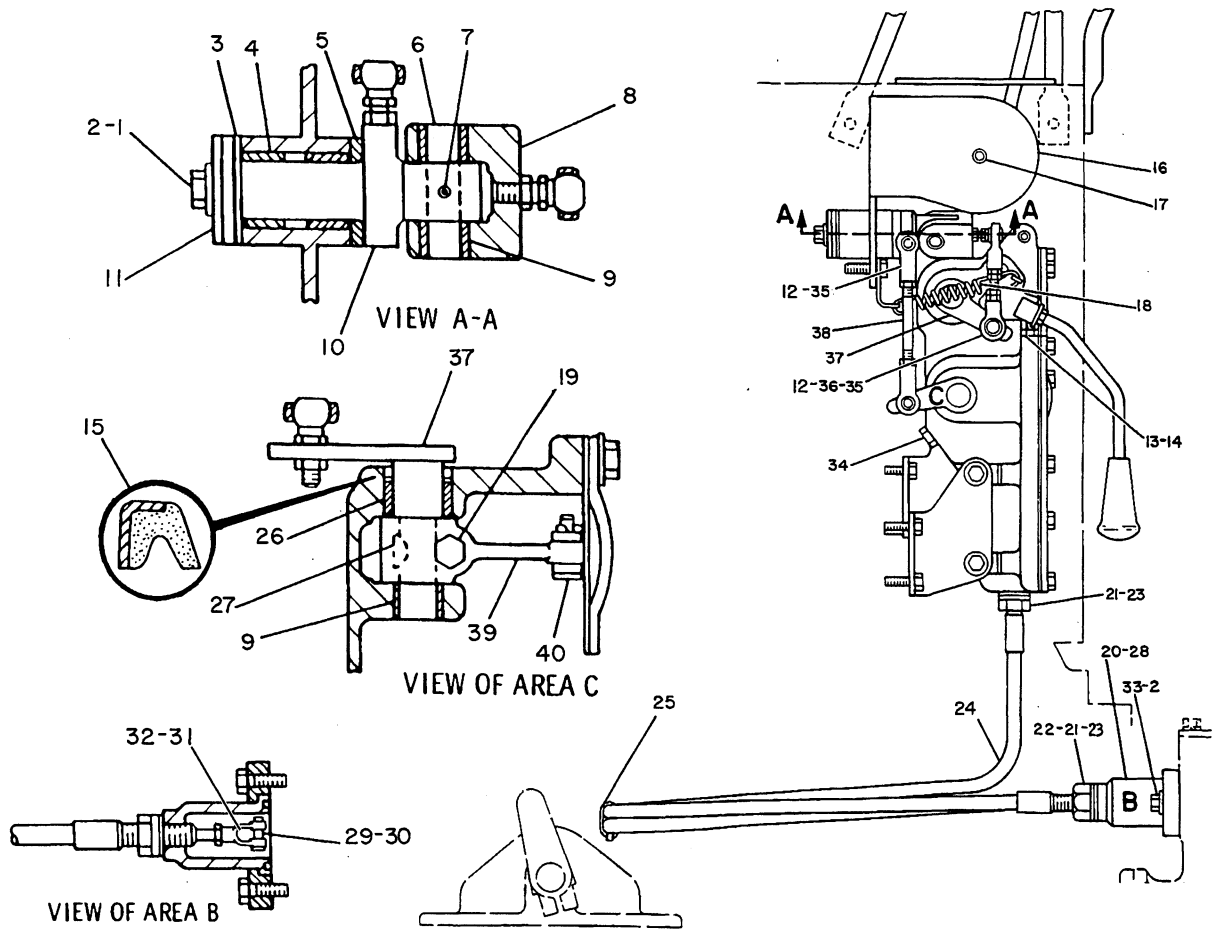

NOTE	REF NO	PART NUMBER	QTY	PART NAME	NOTE	REF NO	PART NUMBER	QTY	PART NAME
C	1	5S7379	1	BOLT		26	5G1061	1	BEARING
	2	8T4896	5	WASHER-HARD		27	1B8704	1	KEY-WOODRUFF
	3	6D6187	1	SHIM		28	4F7952	2	SEAL-O-RING
		6D6189	3	SHIM		29	8D5295	2	PIN
	4	9S2836	2	BEARING-SLEEVE		30	8D5294	2	RING
	5	8T5361	2	WASHER		31	9D5506	2	ROD END
	6	5G1158	1	SHAFT		32	6F0612	2	NUT-JAM
	7	2K8467	1	PIN-SPRING		33	4L6454	4	BOLT
	8	5G1181	1	LEVER		34	9S4684	1	PLUG-O-RING
	9	5G0400	2	BEARING			3J1907	1	SEAL-O-RING
	10	5G1157	1	YOKE		35	9K8757	4	ROD END-BEARING
	11	2B6010	1	WASHER		36	3N7824	1	ROD
	12	4F2294	8	NUT			9M1974	3	WASHER-HARD
	13	8S7271	1	SETSCREW-POINT		37	5G1092	1	LEVER AS
	14	5B3180	1	NUT		38	3N2843	1	ROD
	15	1K9060	1	SEAL-LIP TYPE		39	5G1253	1	LEVER
	16	5G1106	1	BRACKET AS		40	6J2256	1	PIN
	17	4K4658	1	STUD			3B4610	1	COTTER
	18	8Y4844	1	SPRING					
	19	9B7237	1	BOLT					
	20	5G5741	2	HOUSING					
	21	9S1354	6	NUT					
	22	1V6341	2	SEAL					
	23	8T4122	6	WASHER					
C	24	8C5604	2	CABLE AS					
C	25	3S2093	1	STRAP-CABLE					

C-CHANGE FROM PREVIOUS TYPE

B-492792 EP

5G1060 CONTROL GP-TRANSMISSION-PART 1 OF 2
S/N 1RJ365-Up & 2CJ149-Up

POWER TRAIN-POWER TRANSMISSION UNIT

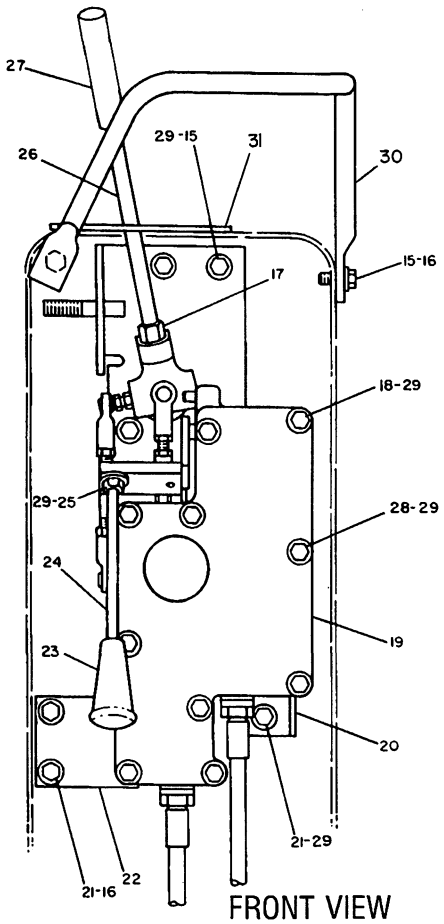

FRONT VIEW

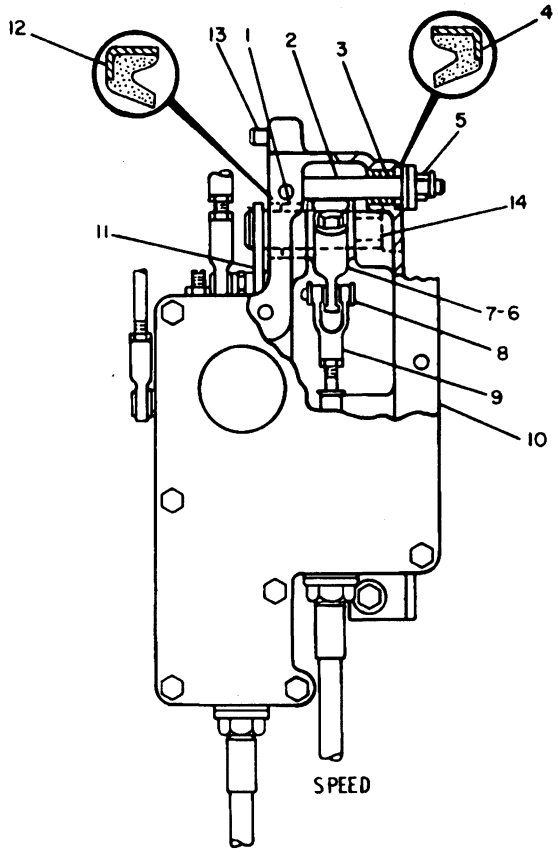

DIRECTION

NOTE	REF NO	PART NUMBER	QTY	PART NAME	NOTE	REF NO	PART NUMBER	QTY	PART NAME
	1	5G1061	1	BEARING		20	5G2251	1	BRACKET
	2	5G1137	1	LEVER AS		21	8T2502	8	BOLT
	3	9H2400	2	BEARING		22	5G2252	1	BRACKET
	4	9L8660	2	SEAL-LIP TYPE		23	2M8908	1	KNOB
	5	2L6267	1	LOCKNUT		24	5G1107	1	LEVER
		3L9689	1	WASHER		25	1B2578	2	NUT
		8T4223	2	WASHER-HARD	C	26	8Y1340	1	LEVER
	6	9B7237	1	BOLT	C	27	5G5726	1	KNOB
	7	5G1253	1	LEVER		28	5P8167	1	BOLT
		1B8704	1	KEY-WOODRUFF		29	8T4896	19	WASHER-HARD
	8	6J2256	1	PIN	C	30	8Y1858	1	GUARD AS
		3B4610	1	COTTER		31	5G3407	1	PLATE
	9	5G5743	2	ROD END			4B1280	4	SCREW-MACHINE
		6F0612	2	NUT-JAM					
	10	5G1031	1	HOUSING					
		4K8603	1	PLUG-CUP					
	11	5G1092	1	LEVER AS					
	12	1K9060	1	SEAL-LIP TYPE					
	13	5B5821	1	PIN-DOWEL					
	14	5G0400	2	BEARING					
C	15	4L6454	6	BOLT					
C	16	5P1075	7	WASHER-HARD					
	17	1D5117	1	NUT-JAM					
	18	5S7379	9	BOLT					
	19	5G1034	1	COVER					
B		7M7260		LIQUID GASKET					

B-USE AS REQUIRED
C-CHANGE FROM PREVIOUS TYPE

B-492793 EP

5G1060 CONTROL GP-TRANSMISSION-PART 2 OF 2
S/N 1RJ365-Up & 2CJ149-Up

POWER TRAIN-POWER TRANSMISSION UNIT

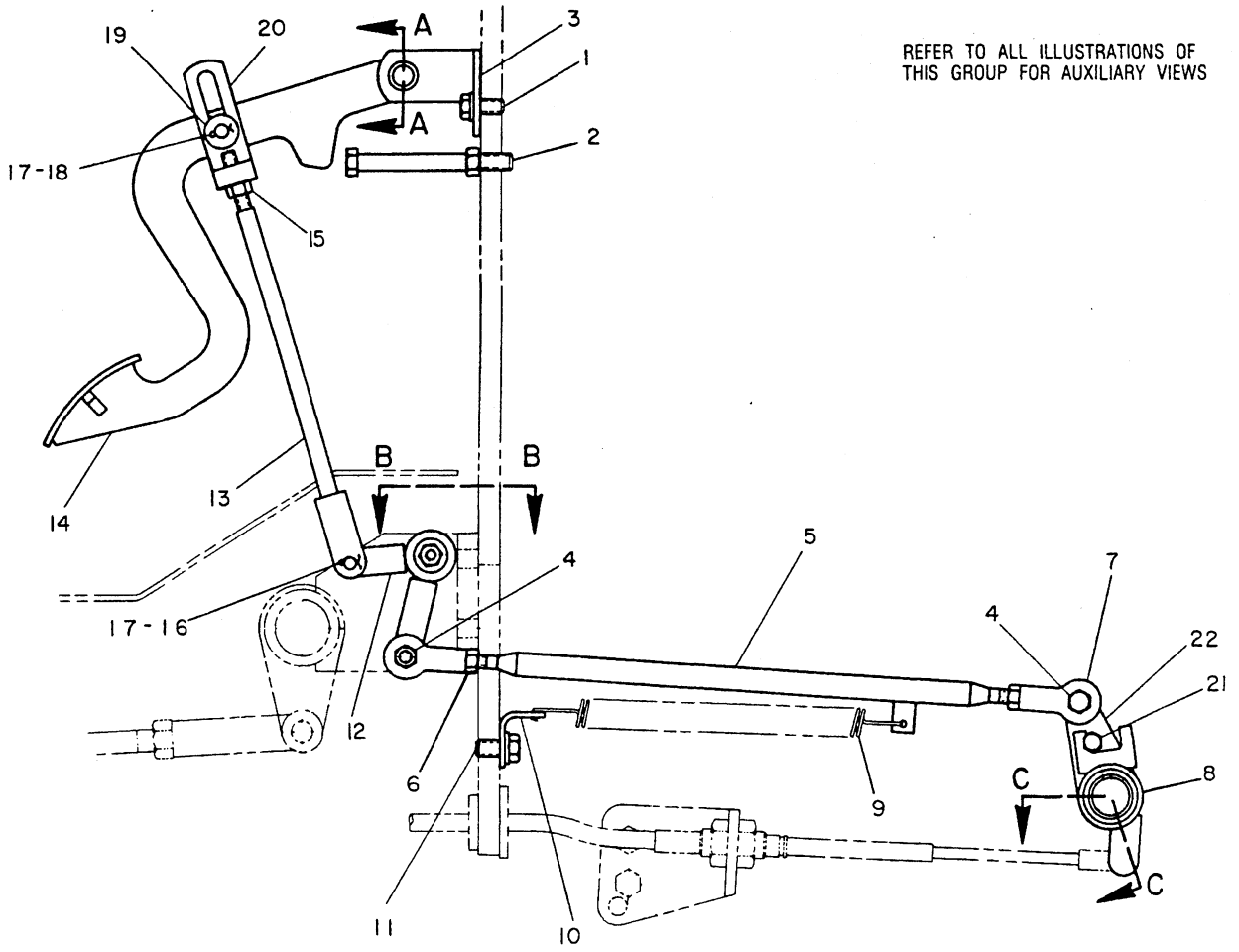

NOTE	REF NO	PART NUMBER	QTY	PART NAME	NOTE	REF NO	PART NUMBER	QTY	PART NAME
	1	4M0061	2	BOLT					
		8T4224	2	WASHER-HARD					
	2	7X0290	1	BOLT					
		6V8801	1	NUT					
	3	8Y0117	1	PLATE AS					
	4	314630	2	BOLT-SELF LOCKING					
	5	8Y0100	1	ROD AS					
	6	9S8751	2	NUT-FULL					
	7	7H3641	2	ROD END-BEARING					
	8	8Y0111	1	LEVER AS					
	9	5N5291	1	SPRING-GOVERNOR					
	10	8Y0098	1	ANGLE					
	11	5M3062	1	BOLT					
		8T4896	1	WASHER-HARD					
	12	8Y0094	1	BELLCRANK AS					
	13	8Y1820	1	ROD AS					
	14	8Y0090	1	PEDAL AS					
	15	9S8751	4	NUT-FULL					
	16	1A2457	1	PIN-CLEVIS					
	17	3B4607	2	COTTER					
	18	7B9323	1	PIN					
	19	5P4116	4	WASHER					
	20	8Y0106	1	END AS-ROD					
	21	2A4382	1	BOLT-GROUND BODY					
	22	8Y0108	1	LEVER AS					

M-453166 EP

1276 **8Y0115 CONTROL GP-DECELERATOR-PART 1 OF 2**
S/N 1RJ1-986 & 2CJ1-391

POWER TRAIN-POWER TRANSMISSION UNIT

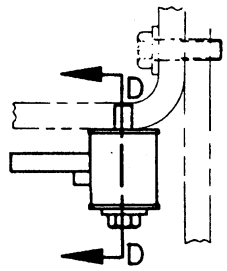

VIEW B-B

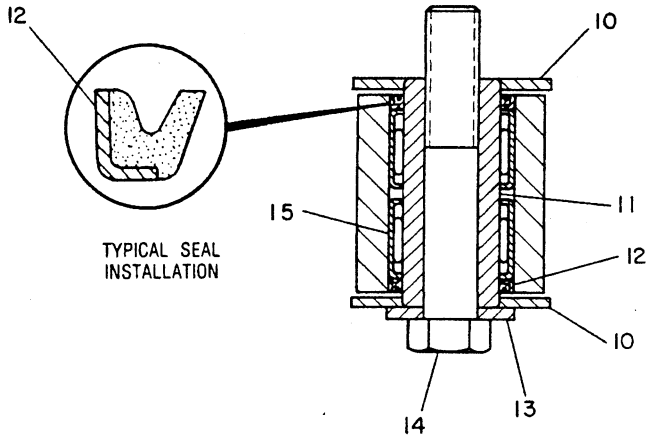

TYPICAL SEAL INSTALLATION

SECTION D-D

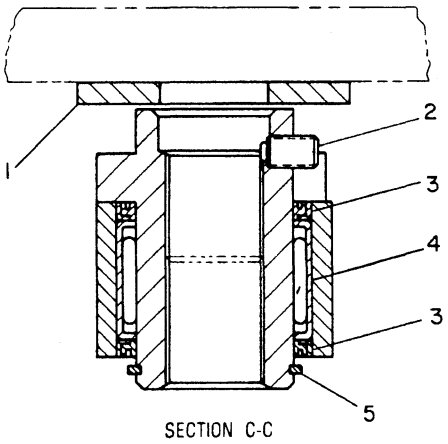

SECTION C-C

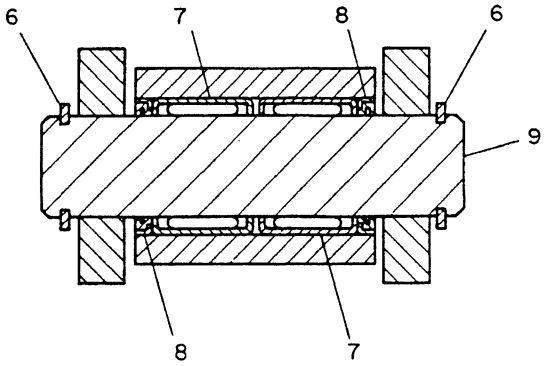

SECTION A-A

NOTE	REF NO	PART NUMBER	QTY	PART NAME	NOTE	REF NO	PART NUMBER	QTY	PART NAME
	1	4B5275	1	WASHER-SCREW					
	2	4B6060	1	SETSCREW-SOCKET					
	3	8T1174	2	SEAL-LIP TYPE					
	4	8T1178	1	BEARING-ROLLER					
	5	6H6109	1	RING-SNAP					
	6	5P6261	2	RING-RETAINING					
	7	8T1176	2	BEARING-ROLLER					
	8	8T1172	2	SEAL-LIP TYPE					
	9	8YO102	1	SHAFT					
	10	1A4790	2	WASHER					
	11	8YO107	1	SHAFT					
	12	8TO741	2	SEAL-LIP TYPE					
	13	5P4116	1	WASHER					
	14	8T8911	1	BOLT					
	15	8TO798	2	BEARING-ROLLER					

M-453167 EP

1276 **8YO115 CONTROL GP-DECELERATOR-PART 2 OF 2**
S/N 1RJ1-986 & 2CJ1-391

POWER TRAIN-POWER TRANSMISSION UNIT

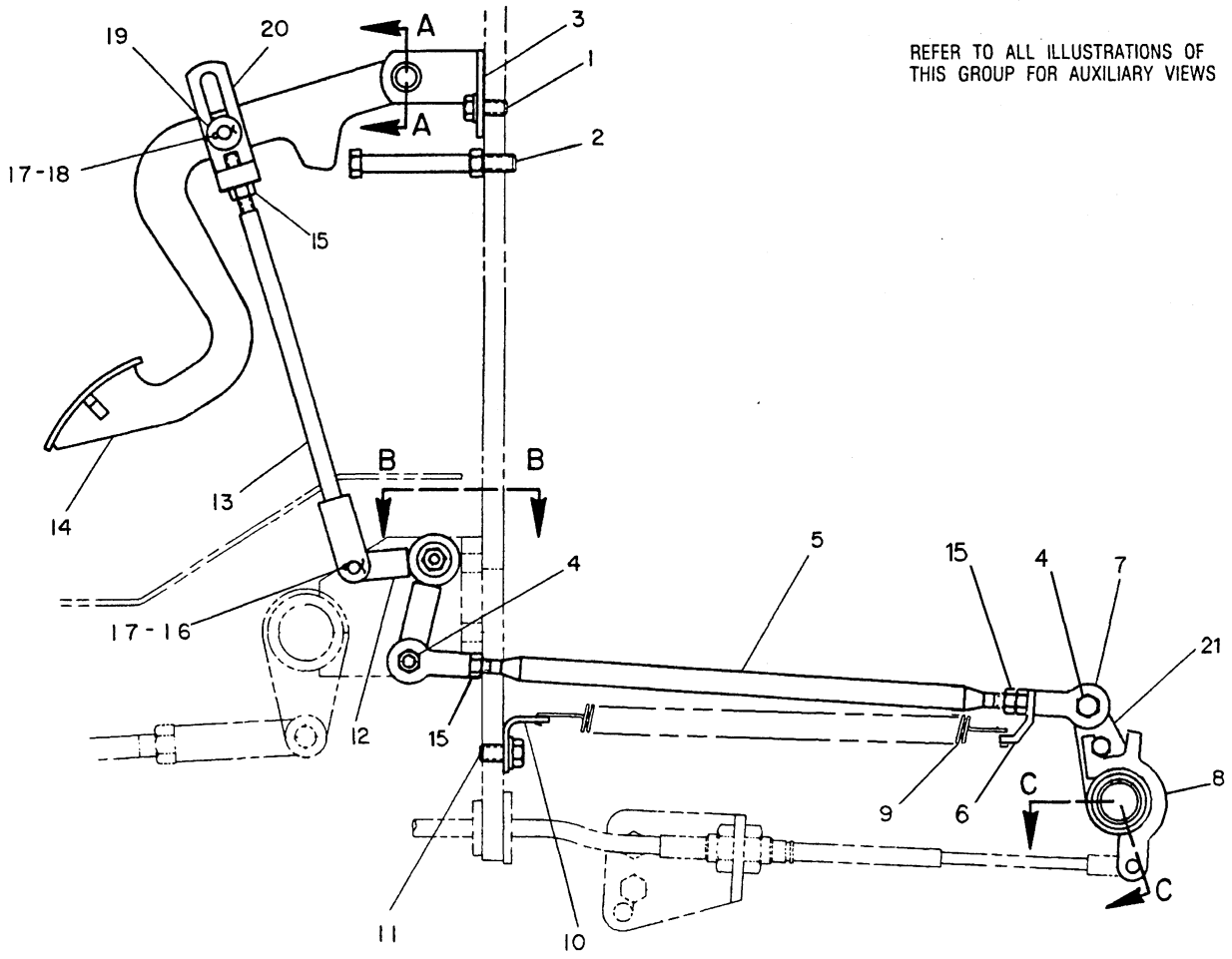

NOTE	REF NO	PART NUMBER	QTY	PART NAME	NOTE	REF NO	PART NUMBER	QTY	PART NAME
	1	4M0061	2	BOLT					
		8T4224	2	WASHER-HARD					
C	2	8T5390	1	BOLT					
		6V8801	1	NUT					
	3	8Y0117	1	PLATE AS					
	4	314630	2	BOLT-SELF LOCKING					
C	5	8Y1767	1	ROD					
C	6	8Y3959	1	CLIP					
C	7	7H3641	2	ROD END-BEARING					
	8	8Y0111	1	LEVER AS					
C	9	8Y3958	1	SPRING					
	10	8Y0098	1	ANGLE					
	11	5M3062	1	BOLT					
		8T4896	1	WASHER-HARD					
	12	8Y6114	1	LEVER AS					
	13	8Y1820	1	ROD AS					
	14	8Y0090	1	PEDAL AS					
C	15	6V8186	4	NUT-FULL					
	16	1A2457	1	PIN-CLEVIS					
	17	3B4607	2	COTTER					
	18	7B9323	1	PIN					
	19	5P4116	4	WASHER					
	20	8Y0106	1	END AS-ROD					
C	21	8Y1964	1	LEVER AS					

C-CHANGE FROM PREVIOUS TYPE

R-512022 EP

1276 **8Y0115 CONTROL GP-DECELERATOR-PART 1 OF 2**
S/N 1RJ987-Up & 2CJ392-Up

POWER TRAIN-POWER TRANSMISSION UNIT

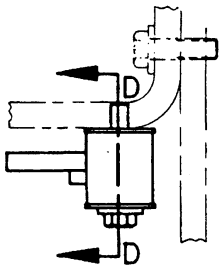

VIEW B-B

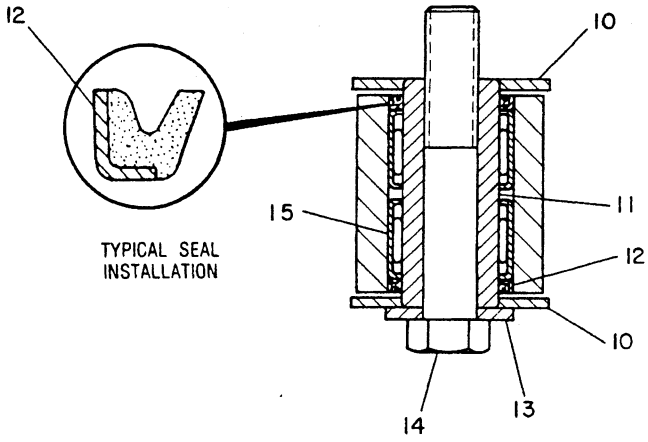

TYPICAL SEAL INSTALLATION

SECTION D-D

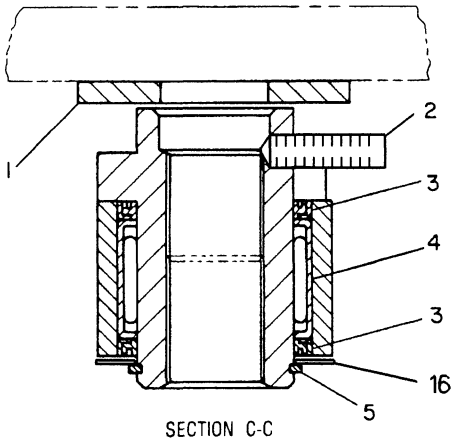

SECTION C-C

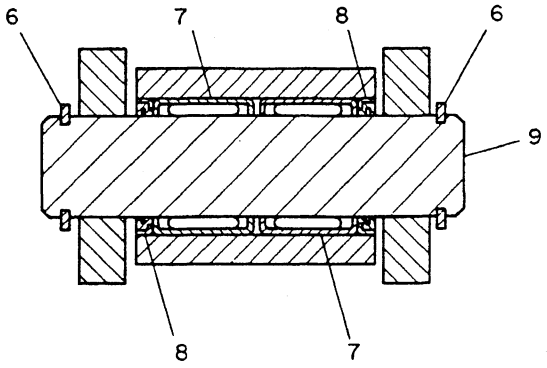

SECTION A-A

NOTE	REF NO	PART NUMBER	QTY	PART NAME	NOTE	REF NO	PART NUMBER	QTY	PART NAME
	1	4B5275	1	WASHER-SCREW					
C	2	8C3996	1	SETSCREW-SOCKET					
	3	8T1174	2	SEAL-LIP TYPE					
	4	8T1178	1	BEARING-ROLLER					
	5	6H6109	1	RING-SNAP					
	6	5P6261	2	RING-RETAINING					
	7	8T1176	2	BEARING-ROLLER					
	8	8T1172	2	SEAL-LIP TYPE					
	9	8Y0102	1	SHAFT					
	10	1A4790	2	WASHER					
	11	8Y0107	1	SHAFT					
	12	8T0741	2	SEAL-LIP TYPE					
	13	5P4116	1	WASHER					
	14	8T8911	1	BOLT					
	15	8T0798	2	BEARING-ROLLER					
C	16	6N2957	1	WASHER					

C-CHANGE FROM PREVIOUS TYPE

R-482006 EP

1276 **8Y0115 CONTROL GP-DECELERATOR-PART 2 OF 2**
S/N 1RJ987-Up & 2CJ392-Up

POWER TRAIN-POWER TRANSMISSION UNIT

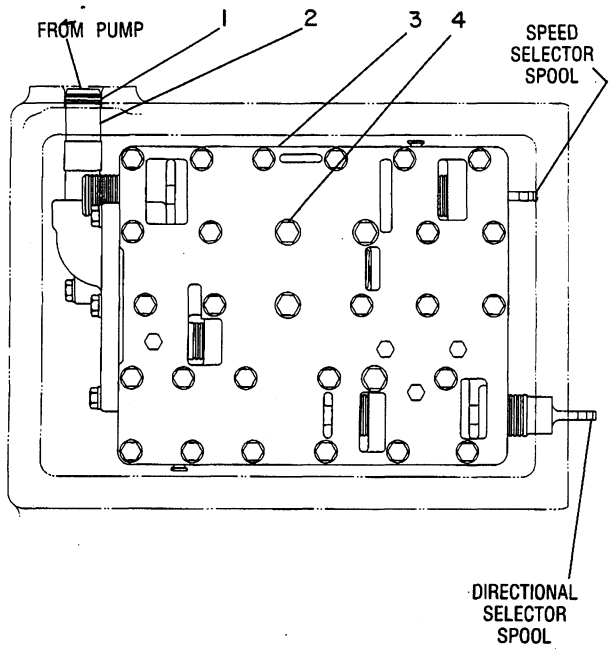

NOTE	REF NO	PART NUMBER	QTY	PART NAME
	1	8M4389	2	SEAL-O-RING
	2	3S9933	1	SLEEVE
Y	3	9W9495	1	VALVE GP
	4	5F4899	4	BOLT
		5M2894	4	WASHER

Y-SEPARATE ILLUSTRATION

B-402693 EP

3167

9W9496 CONTROL GP-TRANSMISSION HYDRAULIC
Transmission S/N 2RE1-Up, 3BE1-Up
9W9495-Page 80
Part Of 9W9483 & 9W9484 Transmission Ars

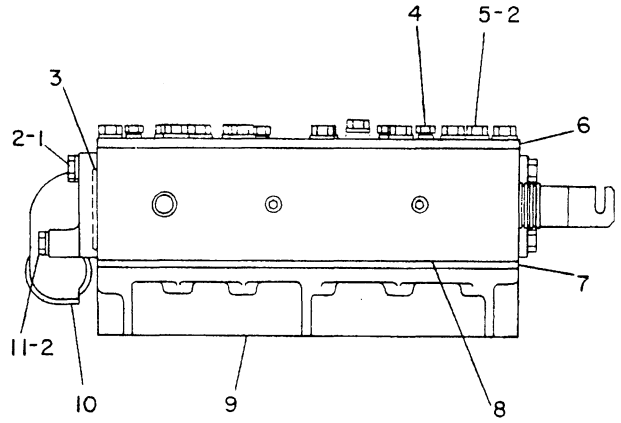

NOTE	REF NO	PART NUMBER	QTY	PART NAME
	1	0S1618	3	BOLT
	2	9M1974	30	WASHER-HARD
	3	2J1826	2	SEAL-O-RING
	4	5M6214	4	PLUG-PIPE
	5	4B0831	26	BOLT
	6	9P5928	1	PLATE-TOP
	7	9G8551	1	PLATE
Y	8	9W9494	1	VALVE GP-SELECTOR & PRESS CONT
	9	6T8710	1	MANIFOLD-BOTTOM
	10	9P5768	1	MANIFOLD-INLET
	11	1B9575	1	BOLT

Y-SEPARATE ILLUSTRATION

B-495937 EP

3152

9W9495 VALVE GP
Transmission S/N 2RE1-Up, 3BE1-Up
9W9494-Page 81.01
Part Of 9W9496 Control-Transmission Hydraulic

MEMORANDA

POWER TRAIN–POWER TRANSMISSION UNIT

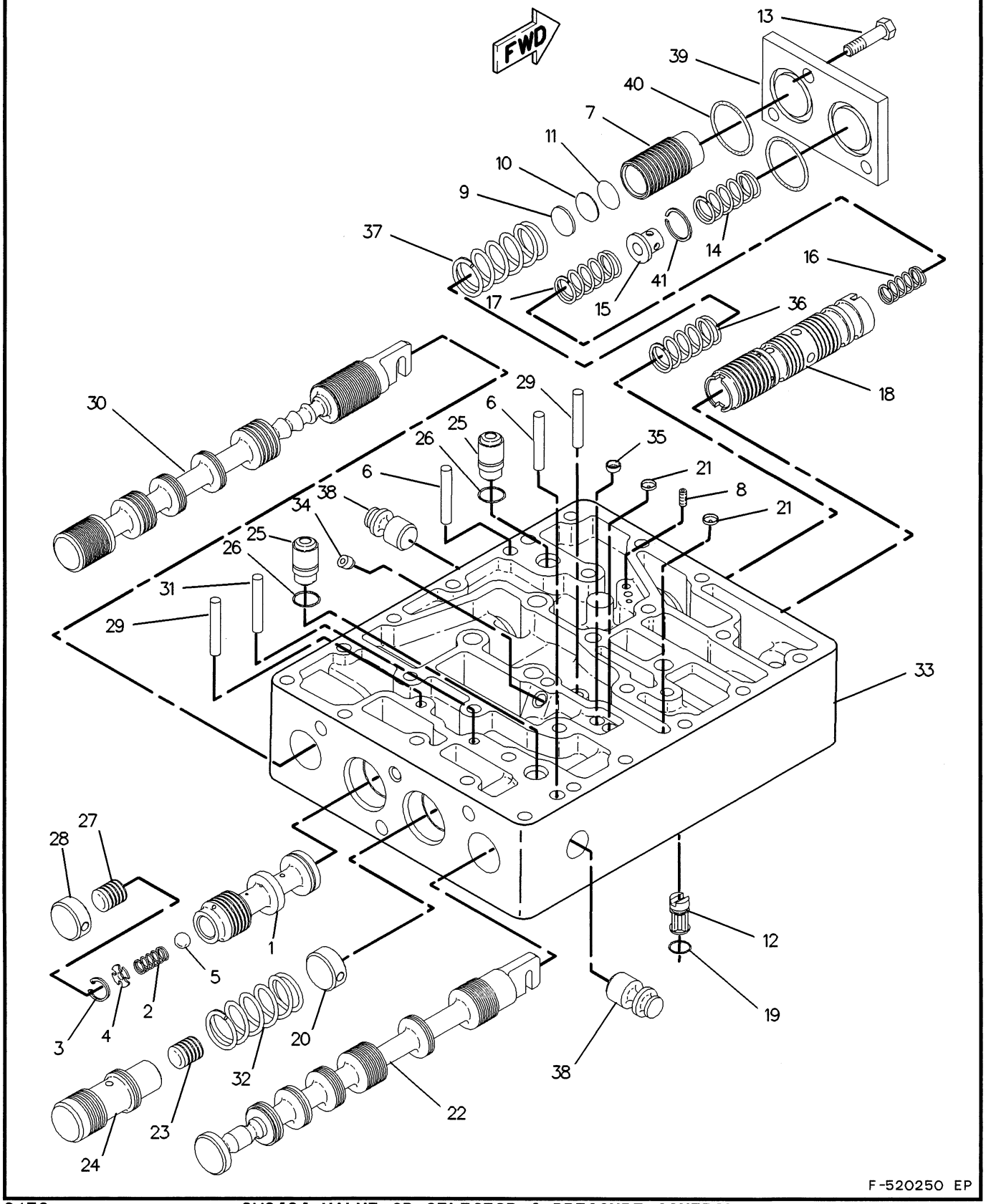

3152 **9W9494 VALVE GP-SELECTOR & PRESSURE CONTROL**
Transmission S/N 2RE1-Up, 3BE1-Up
Part Of 9W9495 Valve

POWER TRAIN-POWER TRANSMISSION UNIT

NOTE	REF NO	PART NUMBER	QTY	PART NAME
	1	9W5567	1	SPOOL AS-RELIEF
	2	4M2381	1	SPRING
	3	3D8317	1	RING-RETAINING
	4	8M1013	1	RETAINER
	5	4B9880	1	BALL
	6	1J5353	2	PIN-SPRING
	7	6P4939	1	PISTON-LOAD
	8	2H2995	2	SETSCREW
	9	5M9622	1	SPACER (1.57MM THK)
	10	5M9623	1	SPACER (.91MM THK)
	11	5M9624	3	SPACER (.25MM THK)
	12	9W9830	1	ORIFICE-SCREEN
	13	2B2695	3	BOLT
	14	6P9785	1	SPRING
	15	6P9786	1	RETAINER
	16	6P9783	1	SPRING (INNER)
	17	6P9784	1	SPRING (OUTER)
	18	7G9563	1	SPOOL
	19	5H8853	1	SEAL
	20	2S4872	1	STOP
	21	2A3746	2	PLUG-CUP
	22	8P9286	1	SPOOL-DIR SELECTOR
	23	5S7816	1	SLUG
	24	6P4943	1	SPOOL-RATIO
	25	7S4607	4	DETENT AS
	26	1P8116	4	SEAL-O-RING
	27	9W5568	1	SLUG
	28	6P4940	1	STOP
	29	2S0696	2	DOWEL
	30	8P9287	1	SPOOL-SPEED SELECTOR
	31	8P6321	1	DOWEL
	32	6P4978	1	SPRING
	33	7G9567	1	BODY AS
	34	3T8269	1	PLUG-ORIFICE
	35	8P9296	1	ORIFICE-PLUG
	36	9P3041	1	SPRING (INNER)
	37	7G4842	1	SPRING (OUTER)
	38	6P4971	2	STOP
	39	6P4938	1	COVER
	40	8T7258	2	SEAL-O-RING
	41	3P8485	1	RING-RETAINING

520251 EP

3152 **9W9494 VALVE GP-SELECTOR & PRESSURE CONTROL**

Transmission S/N 2RE1-Up, 3BE1-Up

Part Of 9W9495 Valve

POWER TRAIN-POWER TRANSMISSION UNIT

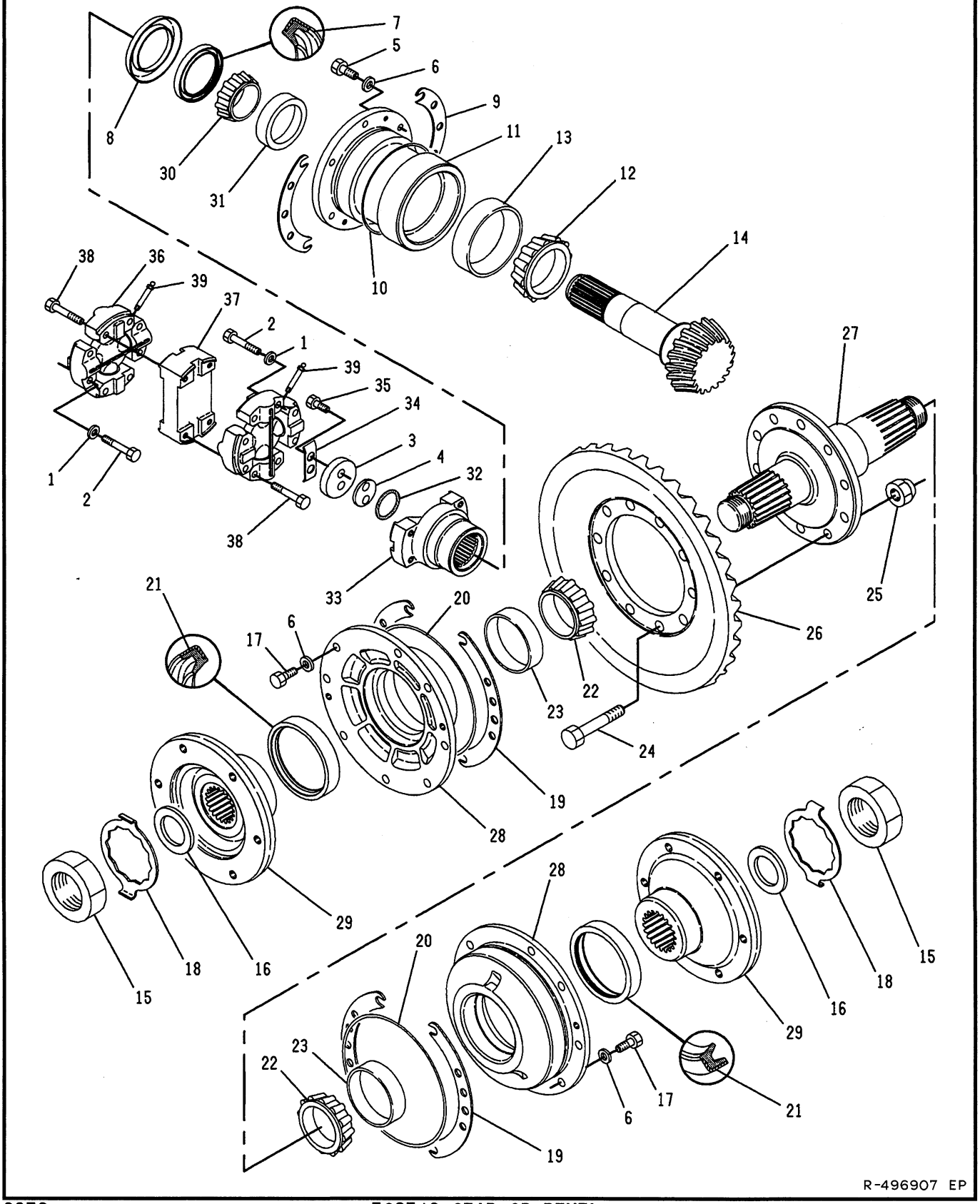

R-496907 EP

3256 **5G8713 GEAR GP-BEVEL**

POWER TRAIN-POWER TRANSMISSION UNIT

NOTE	REF NO	PART NUMBER	QTY	PART NAME
	1	3V2431	8	WASHER
	2	OL0478	8	BOLT
	3	2K1722	1	WASHER-RETAINER
B	4	6S3161	1	SHIM PACK
				(INCL 13 SHIMS)
	5	9B7237	6	BOLT
	6	8T4896	22	WASHER-HARD
	7	9H6079	1	SEAL-LIP TYPE
	8	6S4181	1	GUARD-DIRT
B	9	6S3160	2	SHIM PACK
				(EA INCL 13 SHIMS)
	10	5F3106	1	SEAL-O-RING
	11	5G4721	1	HOUSING
	12	3L9410	1	CONE-ROLLER BEARING
	13	3L9409	1	CUP-ROLLER BEARING
	14	5G4722	1	SHAFT-BEVEL (13 TEETH)
	15	OL2341	2	NUT-SPL
	16	5G0695	2	SEAL
	17	8T2502	16	BOLT
	18	6S6614	2	LOCK-NUT
B	19	6S3159	4	SHIM PACK
				(EA INCL 12 SHIMS)
	20	2K2939	2	SEAL-O-RING
	21	4L9822	2	SEAL-LIP TYPE
	22	7J8893	2	CONE-ROLLER BEARING
	23	7J8894	2	CUP-ROLLER BEARING
	24	OS1584	10	BOLT
	25	2K0564	10	LOCKNUT
	26	5G4723	1	GEAR-BEVEL (47 TEETH)
	27	6S3116	1	SHAFT-BEVEL GEAR
	28	6S3181	2	CAGE-BEARING
	29	6S3249	2	COUPLING-STEERING CLUTCH
	30	7K8877	1	CONE-BEARING
	31	7K8876	1	CUP-BEARING
	32	4F7389	1	SEAL-O-RING
	33	6S5978	1	YOKE-UNIVERSAL JOINT
	34	OT0329	1	LOCK-NUT
	35	7X0467	2	BOLT
	36	6S6040	1	SHAFT AS-DRIVE
Y		5T8739	2	SPIDER & BEARING GP
	37	6S9242	1	PLATE
	38	OL0478	8	BOLT
	39	8D0538	2	FITTING

B-USE AS REQUIRED
Y-SEPARATE ILLUSTRATION

549802 EP

3256 **5G8713 GEAR GP-BEVEL**
5T8739-Page 83.01

POWER TRAIN-POWER TRANSMISSION UNIT

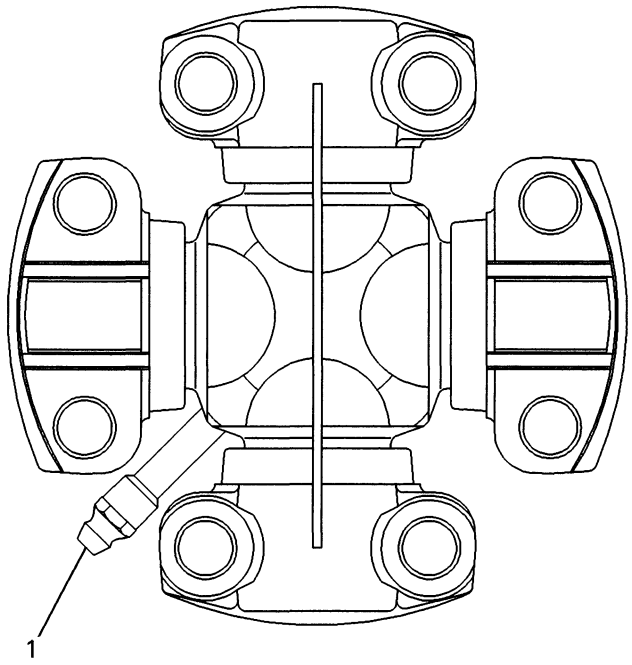

NOTE	REF NO	PART NUMBER	QTY	PART NAME
	1	8D0538	1	FITTING

F-524043 EP

3251 **5T8739 SPIDER & BEARING GP**

Part Of 5G8713 Gear-Bevel

MEMORANDA

POWER TRAIN-POWER TRANSMISSION UNIT

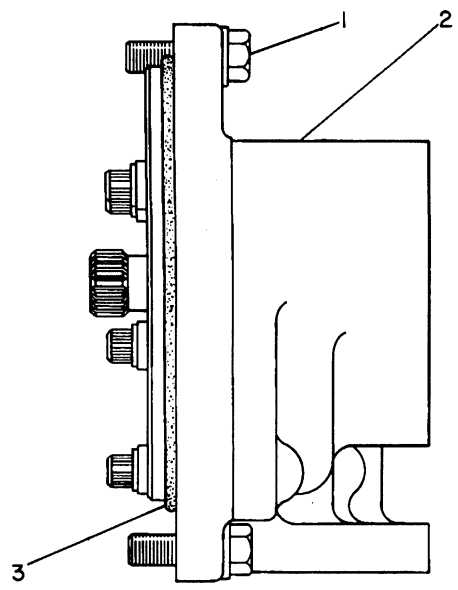

NOTE	REF NO	PART NUMBER	QTY	PART NAME
	1	0S1588	2	BOLT
		5M2894	2	WASHER
Y	2	9P7239	1	PUMP GP-GEAR
	3	2P1692	1	SEAL-O-RING

Y-SEPARATE ILLUSTRATION

B-223201 EP

3153

9P7240 PUMP GP-GEAR
Transmission S/N 2RE1-Up, 3BE1-Up
9P7239-Page 84
Part Of 9W9483 & 9W9484 Transmission Ars

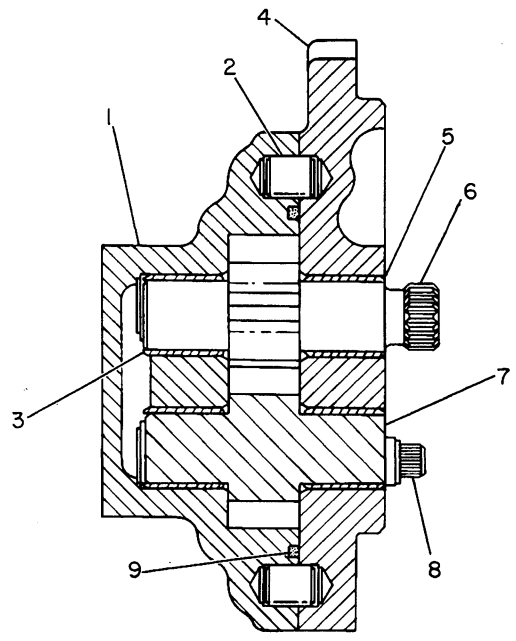

NOTE	REF NO	PART NUMBER	QTY	PART NAME
	1	9P7470	1	BODY AS-OIL PUMP
	2	8M8489	2	DOWEL
	3	2S7923	2	BEARING-SLEEVE
	4	9P7471	1	COVER AS-OIL PUMP
	5	2S7923	2	BEARING-SLEEVE
	6	9P7473	1	GEAR AS-OIL PUMP (10 TEETH)
	7	9P7474	1	GEAR AS-OIL PUMP (10 TEETH)
	8	3S1307	4	BOLT-12 POINT HEAD
		8M3175	4	WASHER-HARD
	9	4M0189	1	SEAL-O-RING

B-223202 EP

3153

9P7239 PUMP GP-GEAR
Transmission S/N 2RE1-Up, 3BE1-Up
Part Of 9P7240 Pump-Gear

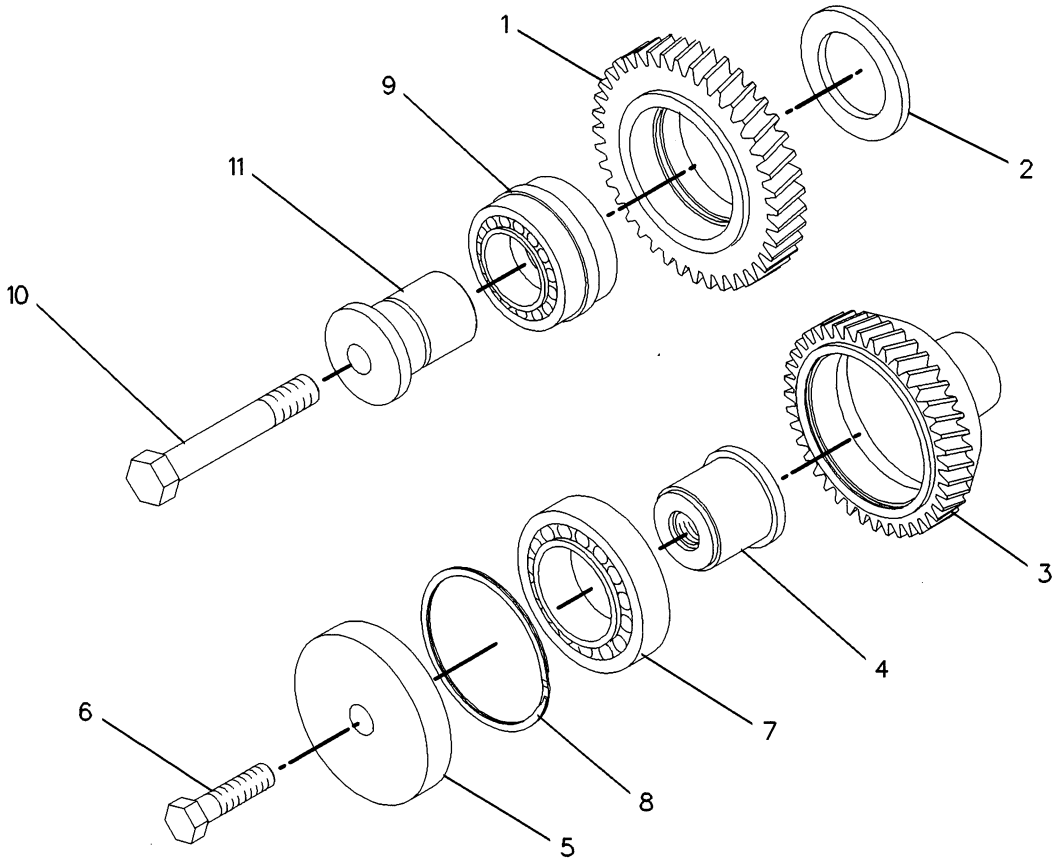

NOTE	REF NO	PART NUMBER	QTY	PART NAME	NOTE	REF NO	PART NUMBER	QTY	PART NAME
	1	9P8613	1	GEAR-IDLER (37 TEETH)					
	2	9P8611	1	SPACER					
	3	7G0860	1	GEAR-PUMP DRIVE (35 TEETH)					
	4	9P8612	1	SHAFT					
	5	4S5824	1	RETAINER					
	6	9S1366	1	BOLT (1/2-13X2.5IN)					
	7	1T0043	1	BALL BEARING					
	8	3J8903	1	RING-RETAINING					
	9	300058	1	BEARING AS-ROLLER					
	10	1B2886	1	BOLT (1/2-13X3.75IN)					
	11	9P8610	1	SHAFT-IDLER					

F-513449 EP

3108 **9P4540 DRIVE GP-PUMP**

Transmission S/N 2RE1-Up, 3BE1-Up
Part Of 9W9483 & 9W9484 Transmission Ars

POWER TRAIN-POWER TRANSMISSION UNIT

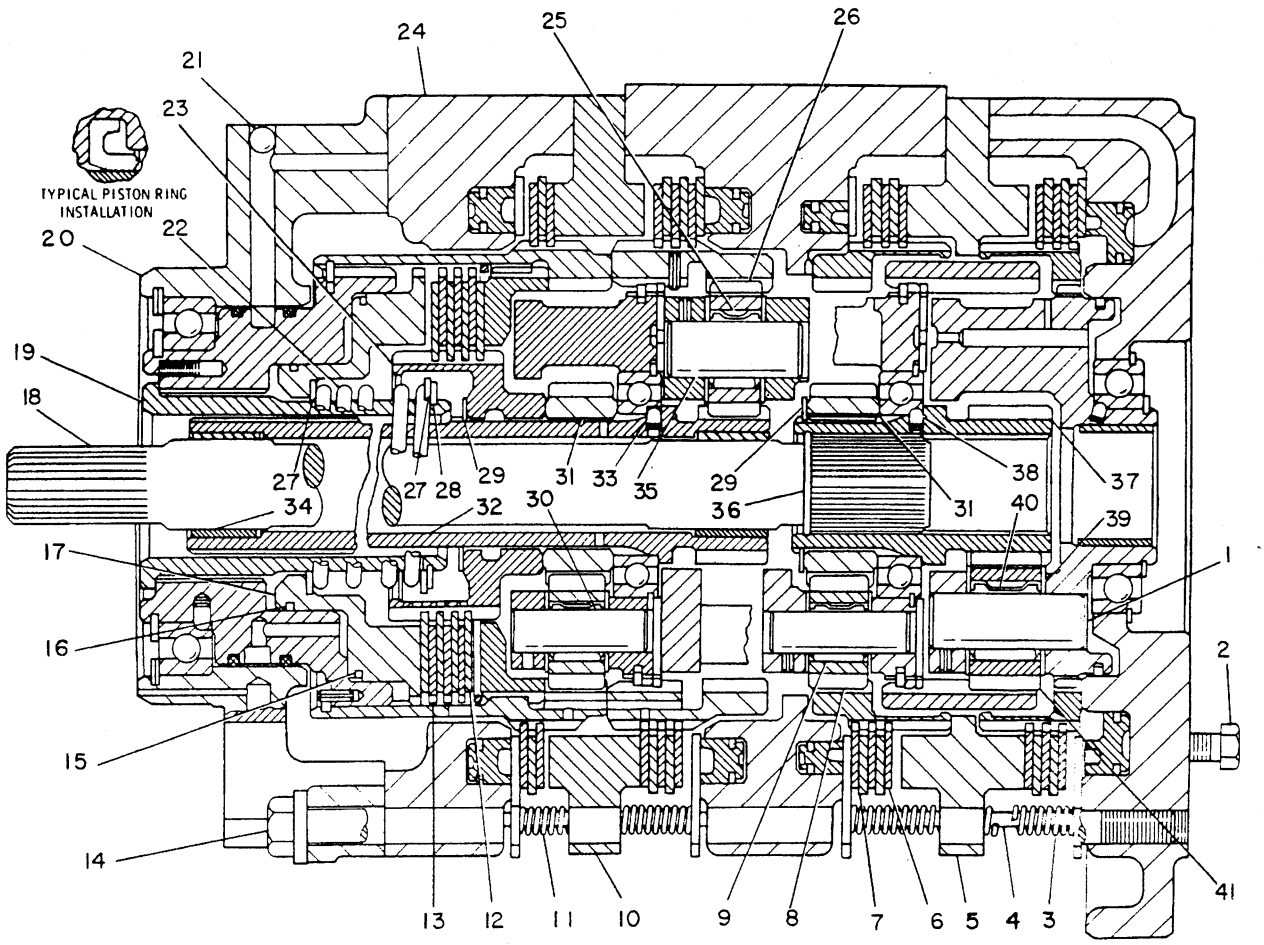

NOTE	REF NO	PART NUMBER	QTY	PART NAME	NOTE	REF NO	PART NUMBER	QTY	PART NAME
	1	6P3733	3	SHAFT-PLANETARY		24	7G7606	1	HOUSING AS-CLUTCH
	2	OS1594	8	BOLT			4B9782	1	BALL
	3	6P3859	3	SPRING		25	5M2055	3	BEARING-CAGED
	4	9P0073	3	ROD		26	7G2480	3	GEAR (20 TEETH)
	5	9P7103	1	PLATE		27	9S6012	2	SPACER
	6	6T8686	11	DISC-FRICTION		28	616711	1	RING-RETAINING
	7	9P7101	11	PLATE-CLUTCH		29	1K6995	2	RING-LOCK
	8	6P2234	9	GEAR (16 TEETH)		30	6P3735	9	SHAFT-PLANETARY
	9	6V2753	9	BEARING		31	6P2623	2	GEAR-SUN (32 TEETH)
	10	7G7617	1	PLATE		32	9P7090	1	SHAFT AS-OUTPUT
	11	7J5938	3	SPRING		33	8S3426	1	DOWEL
	12	6T8687	4	DISC-FRICTION		34	9G7197	2	BEARING-SLEEVE
	13	9P6903	3	PLATE		35	6P3732	3	SHAFT-PLANETARY
	14	5P7613	6	BOLT		36	1A6931	1	RETAINER-GUIDE
		2M0849	6	WASHER		37	8P8417	1	GEAR AS
	15	9P1332	1	RING-SEAL		38	8S3426	1	DOWEL
	16	5P3114	1	SEAL-O-RING (SMALL)		39	9W3141	12	DISC-THRUST
		9P1331	1	SEAL-RING (LARGE)		40	5P3131	3	BEARING AS-ROLLER
	17	7G7614	1	PISTON-CLUTCH		41	6P2233	3	GEAR-PLANET (20 TEETH)
	18	7G7619	1	SHAFT					
	19	3T8219	1	COUPLING					
	20	7G7604	1	MANIFOLD AS					
	21	4B9782	2	BALL					
	22	6P3860	1	SPRING					
	23	7G7616	1	HUB-CLUTCH					

B-402675 EP

3160

9W9486 PLANETARY GP-TRANSMISSION-PART 1 OF 2

Transmission S/N 2RE1-2271, 3BE1-757

Part Of 9W9483, 9W9484 Transmission Ars

POWER TRAIN-POWER TRANSMISSION UNIT

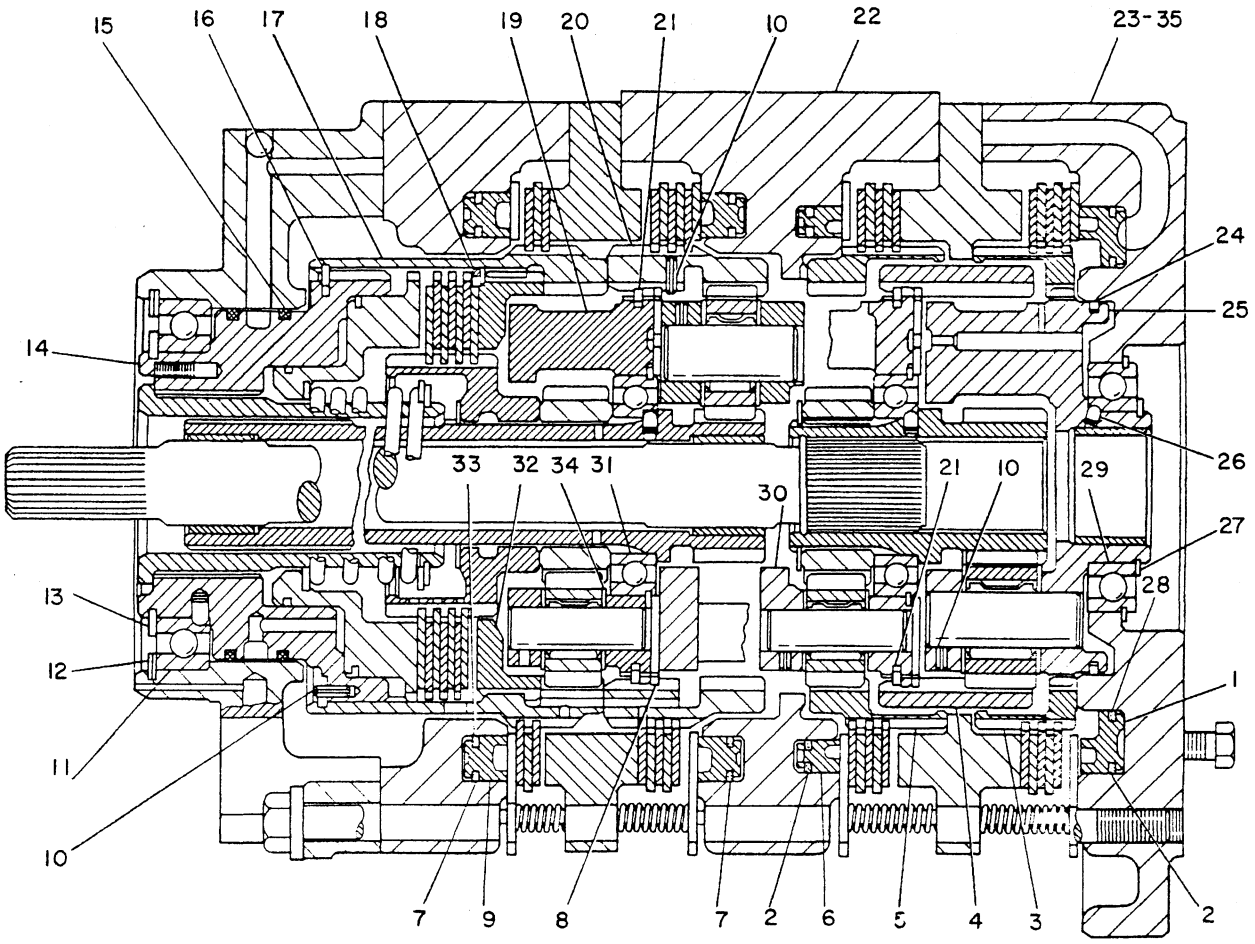

NOTE	REF NO	PART NUMBER	QTY	PART NAME
	1	9P6799	1	PISTON-CLUTCH
	2	7G1222	2	RING-SEAL
	3	6P2474	1	GEAR-RING (64 TEETH)
	4	7G7612	1	GEAR-RING (64 TEETH)
	5	6P2473	1	GEAR-RING (64 TEETH)
	6	7G1223	1	PISTON-CLUTCH
	7	9P6798	2	RING-SEAL
	8	6P3843	2	PLATE-RETAINING
	9	3T6792	2	PISTON-CLUTCH
	10	1T0099	17	PIN-SPRING
	11	4S8538	1	BALL BEARING-SPL
	12	2S0613	1	RING-RETAINING
	13	5P3119	1	RING-RETAINING
	14	9W1439	1	HOUSING AS-CLUTCH
		4S8537	1	DOWEL
	15	9P7118	2	RING-SEAL
	16	6V0938	1	RING-RETAINING
	17	7G7611	1	GEAR-RING (64 TEETH)
	18	6P3964	1	RING-LOCK
	19	6P0748	1	CARRIER-PLANETARY
	20	7G7610	1	GEAR-RING (64 TEETH)
	21	7G7154	2	RING-LOCK
	22	7G7609	1	HOUSING-CLUTCH
	23	7G7608	1	HOUSING-CLUTCH
	24	6F0156	1	RING-METAL SEAL

NOTE	REF NO	PART NUMBER	QTY	PART NAME
	25	6P3169	1	CARRIER AS
		9M6937	1	BEARING-SLEEVE
	26	8S3426	1	DOWEL
	27	4K4284	1	RING-RETAINING
	28	7G1221	1	RING-SEAL
	29	5P3133	1	BALL BEARING-SPL
	30	9W3907	1	CARRIER-PLANETARY
	31	5P3134	2	BALL BEARING-SPL
	32	7G7613	1	PLATE
	33	9P6797	3	RING-SEAL
	34	9W6045	18	DISC-THRUST
	35	0S1625	2	BOLT
		5P8247	2	WASHER-HARD

B-496629 EP

3160 **9W9486 PLANETARY GP-TRANSMISSION-PART 2 OF 2**

Transmission S/N 2RE1-2271, 3BE1-757

Part Of 9W9483, 9W9484 Transmission Ars

POWER TRAIN-POWER TRANSMISSION UNIT

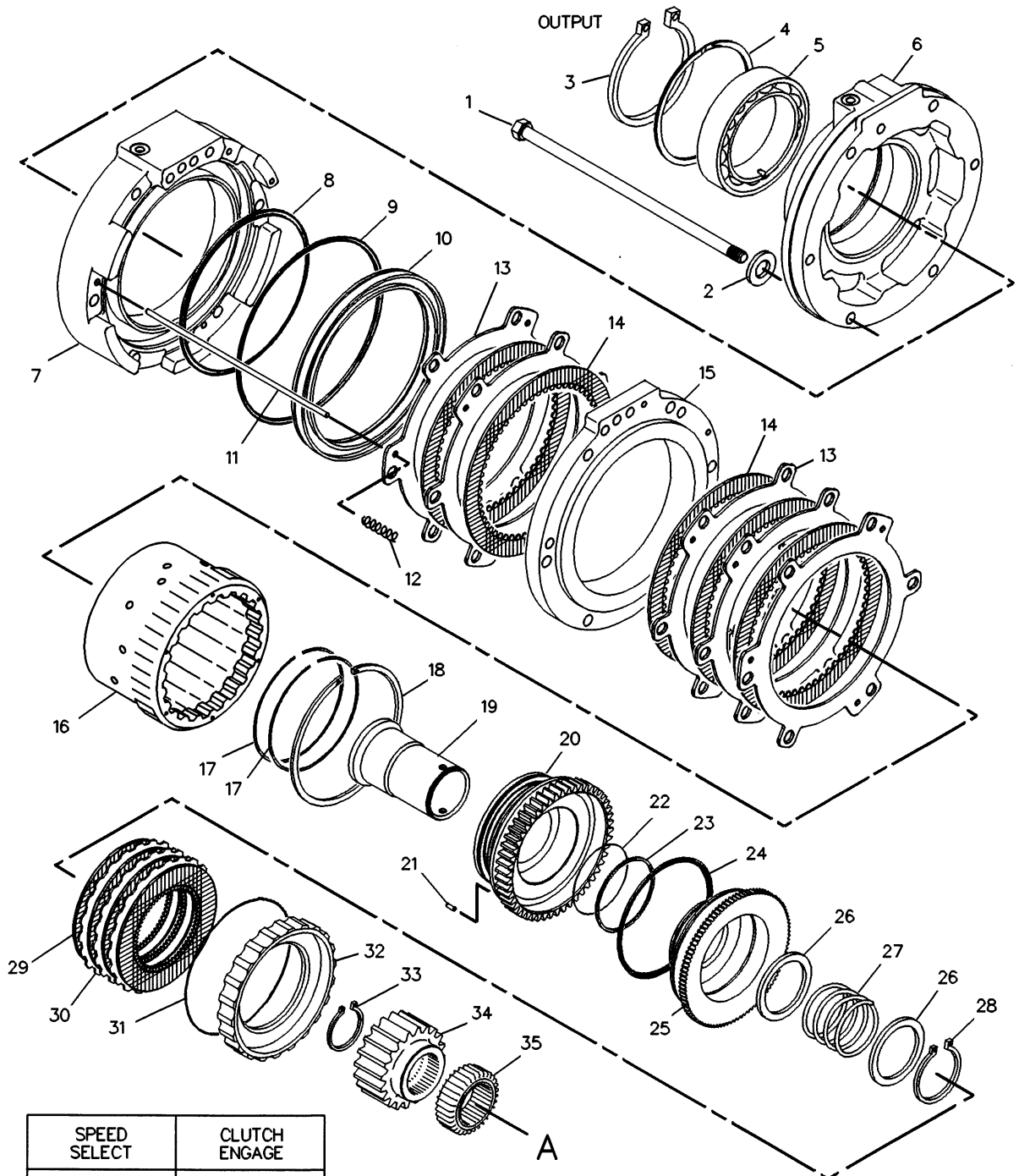

SPEED SELECT	CLUTCH ENGAGE
1–FORWARD	4
2–FORWARD	2
3–FORWARD	1
REVERSE	3

F-520533 EP

3160

9W9486 PLANETARY GP-TRANSMISSION-PART 1 OF 2

Transmission S/N 2RE2272-Up, 3BE758-Up
Part Of 9W9483, 9W9484 Transmission Ars

POWER TRAIN-POWER TRANSMISSION UNIT

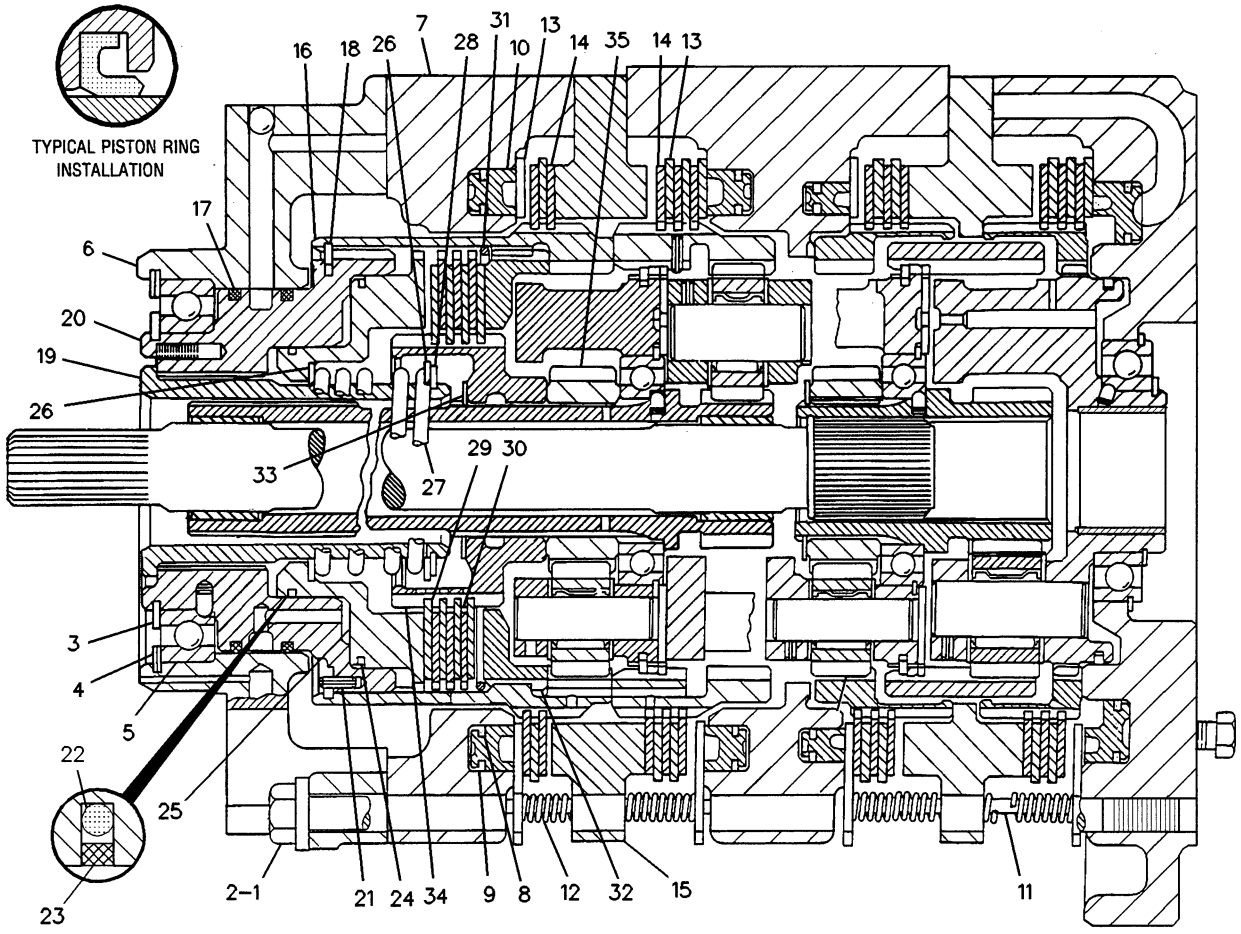

NOTE	REF NO	PART NUMBER	QTY	PART NAME
	1	5P7613	6	BOLT
	2	2M0849	6	WASHER
	3	5P3119	1	RING-RETAINING
	4	2S0613	1	RING-RETAINING
	5	4S8538	1	BALL BEARING-SPL
	6	7G7604	1	MANIFOLD AS
		4B9782	2	BALL
	7	8E9807	1	HOUSING AS-CLUTCH
		4B9783	1	BALL
	8	9P6797	1	RING-SEAL
	9	9P6798	1	RING-SEAL
	10	9P6800	1	PISTON-CLUTCH
	11	9P0073	3	ROD
	12	7J5938	3	SPRING
	13	9P7101	5	PLATE-CLUTCH
	14	6Y7935	5	DISC-FRICTION
	15	7G7617	1	PLATE
	16	7G7611	1	GEAR-RING (64 TEETH)
	17	9P7118	2	RING-SEAL
	18	6V0938	1	RING-RETAINING
	19	3T8219	1	COUPLING
	20	7T9989	1	HOUSING AS-CLUTCH
		4S8537	1	DOWEL
	21	1T0099	1	PIN-SPRING
	22	5P3114	1	SEAL-O-RING
	23	9P1331	1	SEAL-RING
	24	9P1332	1	RING-SEAL
	25	7G7614	1	PISTON-CLUTCH
	26	9S6012	2	SPACER
	27	6P3860	1	SPRING
	28	616711	1	RING-RETAINING
	29	6Y7934	4	DISC-FRICTION
	30	9P6903	3	PLATE
	31	6P3964	1	RING-LOCK
	32	7G7613	1	PLATE
	33	1K6995	1	RING-LOCK
	34	7G7616	1	HUB-CLUTCH
	35	6P2623	1	GEAR-SUN (32 TEETH)

R-524192 EP

3160 **9W9486 PLANETARY GP-TRANSMISSION-PART 1 OF 2**

Transmission S/N 2RE2272-Up, 3BE758-Up

Part Of 9W9483, 9W9484 Transmission Ars

POWER TRAIN-POWER TRANSMISSION UNIT

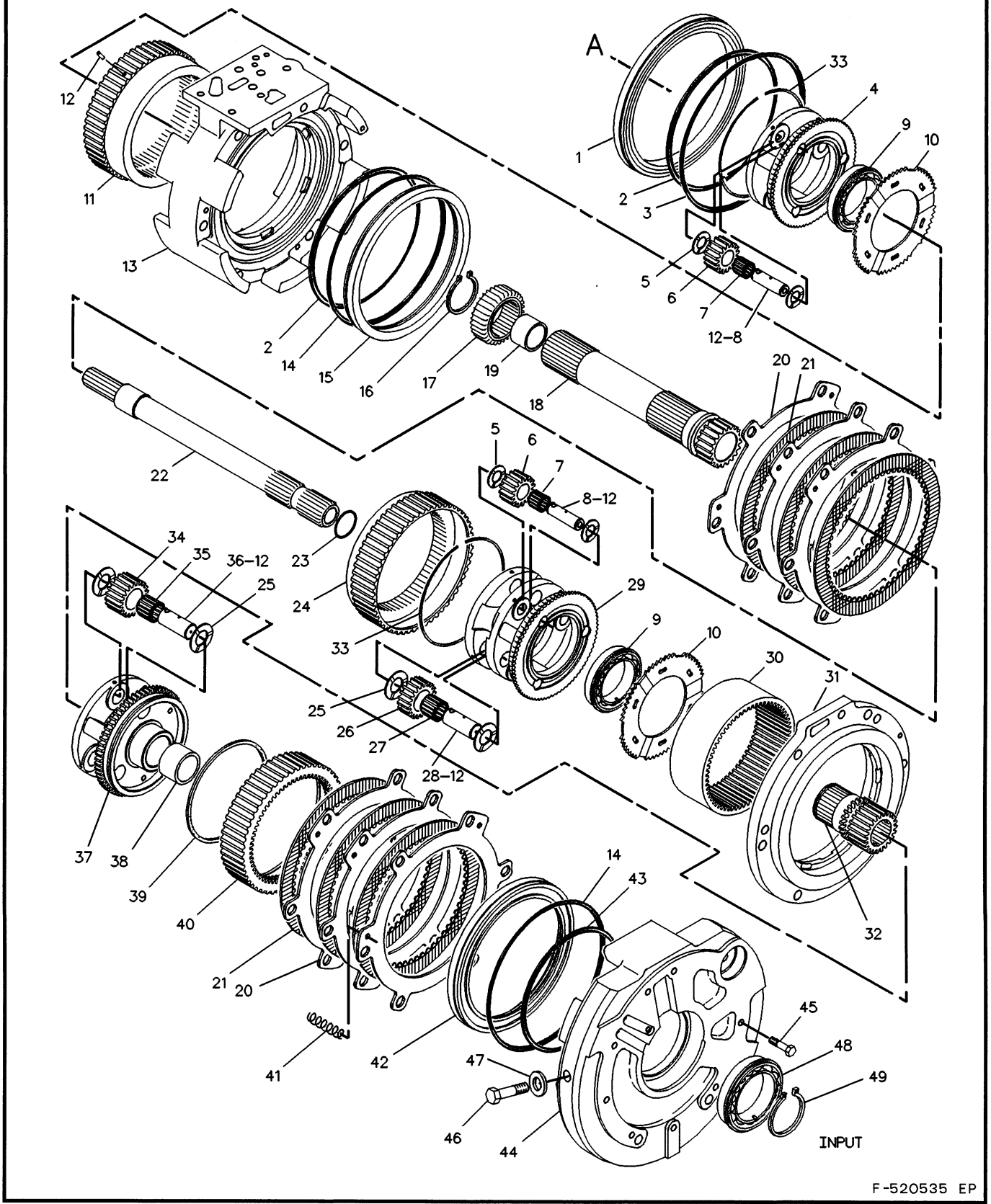

3160 **9W9486 PLANETARY GP-TRANSMISSION-PART 2 OF 2**

Transmission S/N 2RE2272-Up, 3BE758-Up
Part Of 9W9483, 9W9484 Transmission Ars

POWER TRAIN-POWER TRANSMISSION UNIT

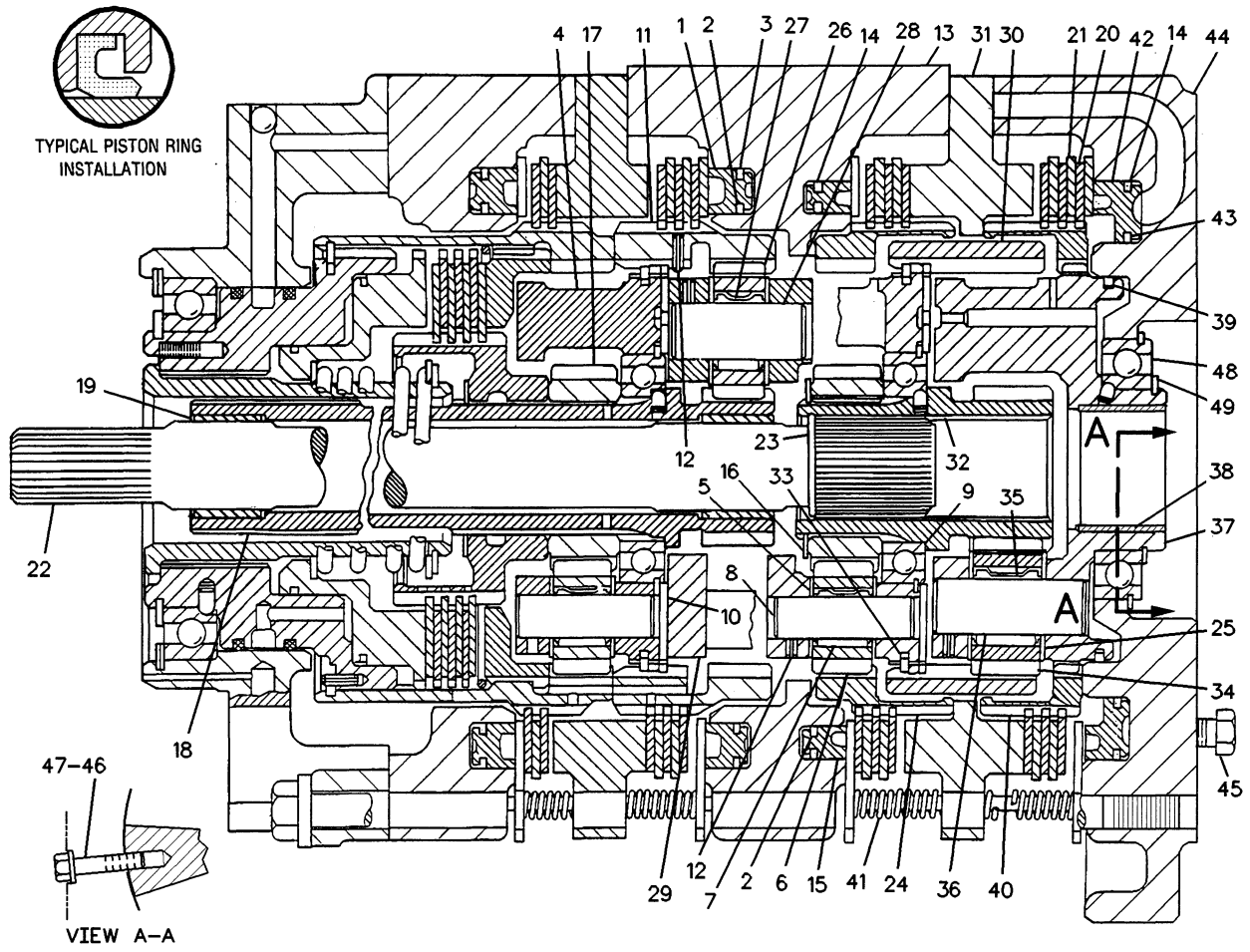

NOTE	REF NO	PART NUMBER	QTY	PART NAME	NOTE	REF NO	PART NUMBER	QTY	PART NAME
	1	9P6800	1	PISTON-CLUTCH		26	7G2480	3	GEAR (20 TEETH)
	2	9P6797	2	RING-SEAL		27	5M2055	3	BEARING-CAGED
	3	9P6798	1	RING-SEAL		28	6P3732	3	SHAFT-PLANETARY
	4	6P0748	1	CARRIER-PLANETARY		29	8E4590	1	CARRIER-PLANETARY
	5	9W6045	18	DISC-THRUST		30	7G7612	1	GEAR-RING (64 TEETH)
	6	6P2234	9	GEAR (16 TEETH)		31	9P7103	1	PLATE
	7	8E5284	9	BEARING		32	8P8417	1	GEAR AS (23 TEETH)
	8	6P3735	9	SHAFT-PLANETARY			8S3426	1	DOWEL
	9	5P3134	2	BALL BEARING-SPL		33	7G7154	2	RING-LOCK
	10	6Y8655	2	PLATE		34	6P2233	3	GEAR-PLANET (20 TEETH)
	11	7G7610	1	GEAR-RING (64 TEETH)		35	5P3131	3	BEARING AS-ROLLER
	12	1T0099	16	PIN-SPRING		36	6P3733	3	SHAFT-PLANETARY
	13	7G7609	1	HOUSING-CLUTCH		37	8E4589	1	CARRIER AS
	14	7G1222	2	RING-SEAL			8S3426	1	DOWEL
	15	7G1223	1	PISTON-CLUTCH		38	9M6937	1	BEARING-SLEEVE
	16	1K6995	1	RING-LOCK		39	6F0156	1	RING-METAL SEAL
	17	6P2623	1	GEAR-SUN (32 TEETH)		40	6P2474	1	GEAR-RING (64 TEETH)
	18	9P7090	1	SHAFT AS-OUTPUT		41	6P3859	3	SPRING
		8S3426	1	DOWEL		42	9P6799	1	PISTON-CLUTCH
	19	9G7197	1	BEARING-SLEEVE		43	7G1221	1	RING-SEAL
	20	9P7101	6	PLATE-CLUTCH		44	7G7608	1	HOUSING-CLUTCH
	21	6Y7935	6	DISC-FRICTION		45	0S1594	8	BOLT
	22	7G7619	1	SHAFT		46	0S1625	2	BOLT
	23	1A6931	1	RETAINER-GUIDE		47	5P8247	2	WASHER-HARD
	24	6P2473	1	GEAR-RING (64 TEETH)		48	5P3133	1	BALL BEARING-SPL
	25	9W3141	12	DISC-THRUST		49	4K4284	1	RING-RETAINING

R-524193 EP

3160 **9W9486 PLANETARY GP-TRANSMISSION-PART 2 OF 2**

Transmission S/N 2RE2272-Up, 3BE758-Up

Part Of 9W9483, 9W9484 Transmission Ars

MEMORANDA

POWER TRAIN-POWER TRANSMISSION UNIT

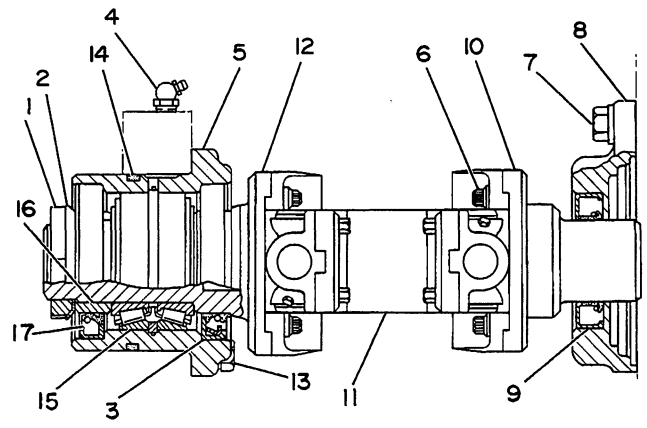

NOTE	REF NO	PART NUMBER	QTY	PART NAME
	1	2H3777	1	NUT-LOCK
	2	5F8916	1	LOCK-NUT
C	3	6B5333	1	SEAL-LIP TYPE
	4	3J7283	1	FITTING
	5	6S6775	1	CAGE-BEARING
	6	5D8269	8	BOLT-12 POINT HEAD
	7	4L6454	4	BOLT
		8T4896	4	WASHER-HARD
	8	5G1821	1	CAGE-BEARING
	9	3H1397	1	SEAL-LIP TYPE
	10	5G2225	1	YOKE AS
Y	11	5G1823	1	UNIVERSAL JOINT GP
	12	6S6772	1	YOKE AS
	13	9B7237	4	BOLT
	14	1H7339	1	SEAL-O-RING
	15	5J9348	1	BEARING AS-ROLLER
C	16	5G5546	1	SPACER
C	17	1K7983	1	SEAL-LIP TYPE

C-CHANGE FROM PREVIOUS TYPE
Y-SEPARATE ILLUSTRATION

R-492805 EP

3107 **5G1818 DRIVE GP-POWER TAKE-OFF**

5G1823-Page 91
Also Part Of 5G2752 & 8Y2452 Drive Ar-Winch
An Attachment

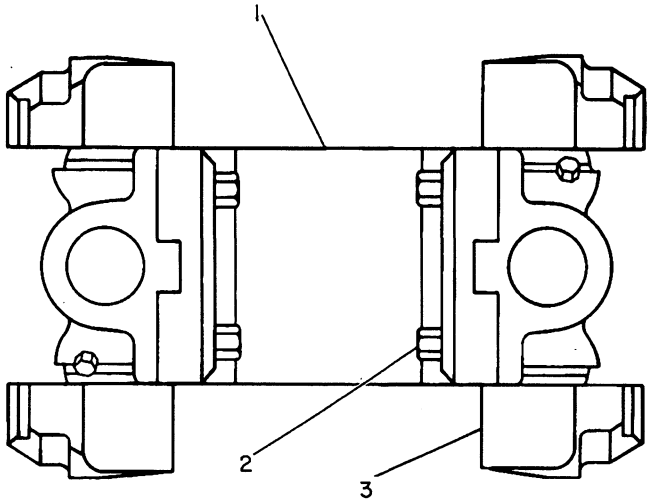

NOTE	REF NO	PART NUMBER	QTY	PART NAME
	1	5G1820	1	YOKE AS-COUPLING
	2	1A2343	8	BOLT
	3	6S6902	2	SPIDER & BEARING AS

B-173155 EP

3251 **5G1823 JOINT GP-UNIVERSAL**

Part Of 5G1818 Drive-Power Take-Off
An Attachment

POWER TRAIN-POWER TRANSMISSION UNIT

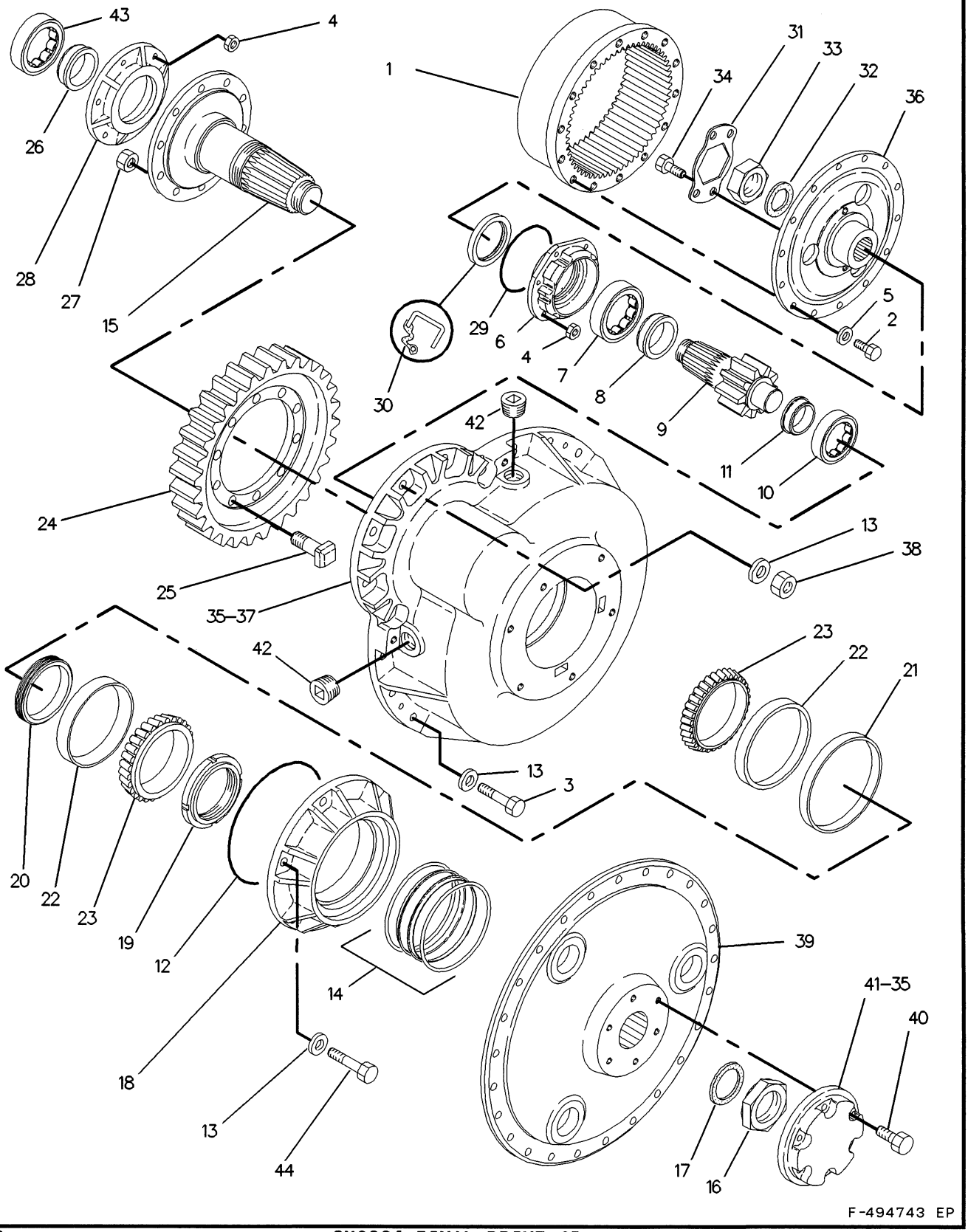

4050 **8Y0234 FINAL DRIVE GP**
S/N 1RJ1-Up

POWER TRAIN-POWER TRANSMISSION UNIT

NOTE	REF NO	PART NUMBER	QTY	PART NAME
	1	7K8237	2	DRUM
	2	6H1717	28	BOLT
	3	0S1585	16	BOLT
	4	4J8265	24	NUT
	5	5P8245	28	WASHER
	6	6S6521	2	CAGE-BEARING
	7	5K8591	2	BEARING-OUTER
	8	3B3969	2	RACE-BEARING-INNER
	9	5G5846	2	PINION (9 TEETH)
	10	3K5595	2	BEARING-OUTER
	11	3K5596	2	RACE-BEARING
	12	1H8278	2	SEAL-O-RING
	13	7X0584	2	WASHER-HARD
	14	9W7228	2	SEAL GP-DUO-CONE
	15	5G0319	2	SHAFT
	16	9B2962	2	NUT
	17	6S4535	2	GASKET
	18	6S3192	2	RETAINER
	19	6S4531	2	LOCKNUT
	20	5P7208	2	SPACER-CONE
	21	2P8387	2	SPACER-CUP
	22	1P3934	4	CUP-ROLLER BEARING
	23	1P3935	4	CONE-ROLLER BEARING
	24	5G5847	2	GEAR (50 TEETH)
	25	3K3815	20	BOLT-SPECIAL HEAD
	26	3B3967	2	RACE-ROLLER BEARING
	27	7H3607	20	NUT
	28	6S3194	2	CAGE-BEARING
	29	2H3935	2	SEAL-O-RING
	30	4L9822	2	SEAL-LIP TYPE
	31	5V0659	2	LOCK-NUT
	32	5G0695	2	SEAL
	33	2J5815	2	NUT-SPECIAL
	34	1H9456	4	BOLT
B	35	6V6640		SEALANT
	36	7K8238	2	FLANGE
	37	6S3204	2	COVER-FINAL DRIVE
	38	6V8188	24	NUT
	39	8Y6559	2	HUB
	40	5S7382	12	BOLT
	41	6S6816	2	LOCK-NUT
	42	1B5174	4	PLUG-PIPE
	43	6S2905	2	BEARING-OUTER
	44	5P2566	12	BOLT

B-USE AS REQUIRED

518709 EP

4050 **8Y0234 FINAL DRIVE GP**
S/N 1RJ1-Up

POWER TRAIN-POWER TRANSMISSION UNIT

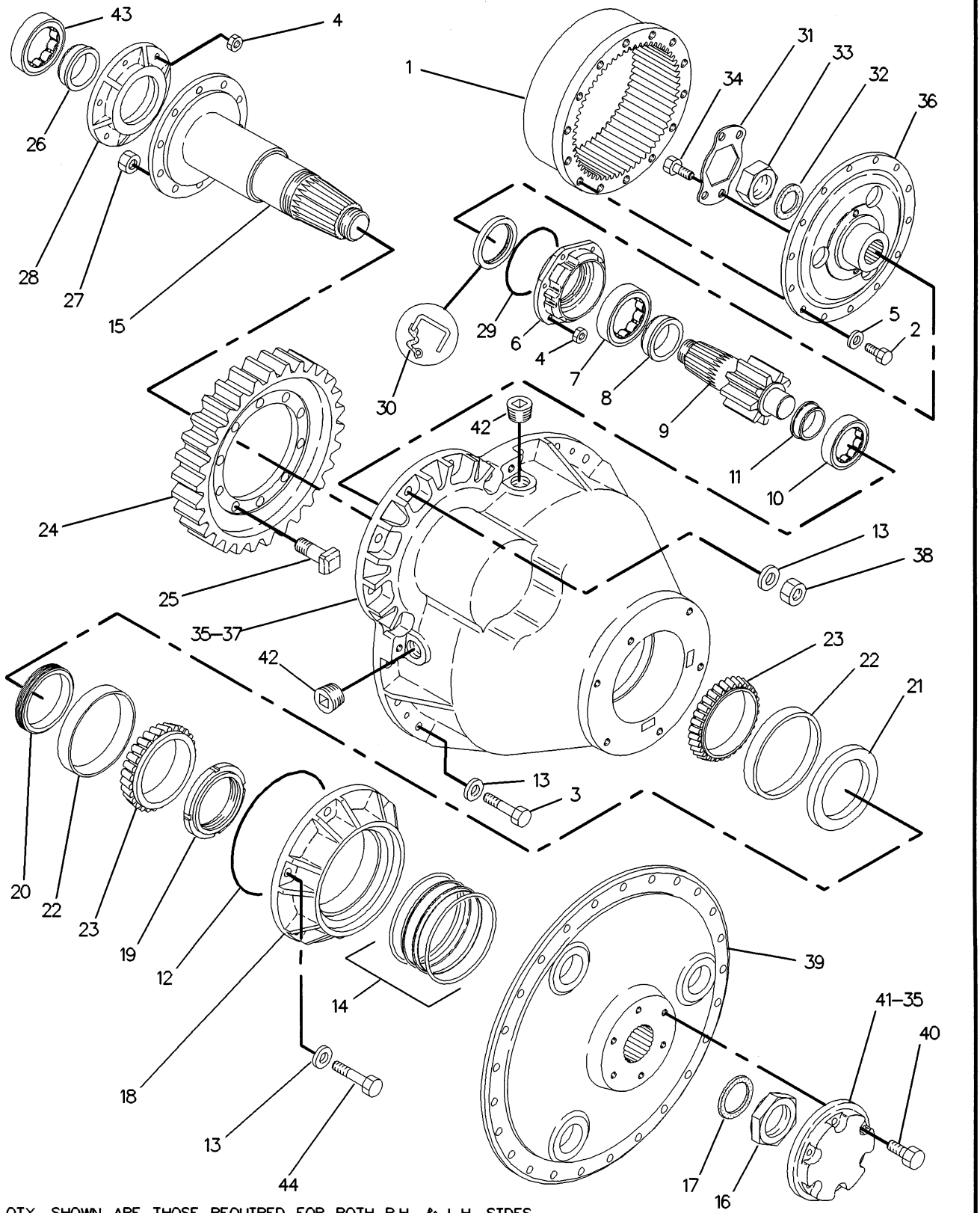

QTY. SHOWN ARE THOSE REQUIRED FOR BOTH R.H. & L.H. SIDES

F-508630 EP

4050 **8Y0235 FINAL DRIVE GP**
S/N 2CJ1-Up

POWER TRAIN-POWER TRANSMISSION UNIT

NOTE	REF NO	PART NUMBER	QTY	PART NAME
	1	7K8237	2	DRUM
	2	6H1717	28	BOLT
	3	0S1585	16	BOLT
	4	4J8265	24	NUT
	5	5P8245	28	WASHER
	6	6S6521	2	CAGE-BEARING
	7	5K8591	2	BEARING-OUTER
	8	3B3969	2	RACE-BEARING-INNER
	9	5G5846	2	PINION (9 TEETH)
	10	3K5595	2	BEARING-OUTER
	11	3K5596	2	RACE-BEARING
	12	1H8278	2	SEAL-O-RING
	13	7X0584	52	WASHER-HARD
	14	9W7228	2	SEAL GP-DUO-CONE
	15	5G0317	2	SHAFT
	16	9B2962	2	NUT
	17	6S4535	2	GASKET
	18	6S3192	2	RETAINER
	19	6S4531	2	LOCKNUT
	20	5P7208	2	SPACER-CONE
	21	2P8387	2	SPACER-CUP
	22	1P3934	4	CUP-ROLLER BEARING
	23	1P3935	4	CONE-ROLLER BEARING
	24	5G5847	2	GEAR (50 TEETH)
	25	3K3815	20	BOLT-SPECIAL HEAD
	26	3B3967	2	RACE-ROLLER BEARING
	27	7H3607	20	NUT
	28	6S3194	2	CAGE-BEARING
	29	2H3935	2	SEAL-O-RING
	30	4L9822	2	SEAL-LIP TYPE
	31	5V0659	2	LOCK-NUT
	32	5G0695	2	SEAL
	33	2J5815	2	NUT-SPECIAL
	34	1H9456	4	BOLT
B	35	6V6640		SEALANT
	36	7K8238	2	FLANGE
	37	6S3792	2	COVER-FINAL DRIVE
	38	6V8188	24	NUT
	39	8Y6559	2	HUB
	40	5S7382	12	BOLT
	41	6S6816	2	LOCK-NUT
	42	1B5174	4	PLUG-PIPE
	43	6S2905	2	BEARING-OUTER
	44	5P2566	12	BOLT

B-USE AS REQUIRED

518656 EP

4050 **8Y0235 FINAL DRIVE GP**
S/N 2CJ1-Up

POWER TRAIN-POWER TRANSMISSION UNIT

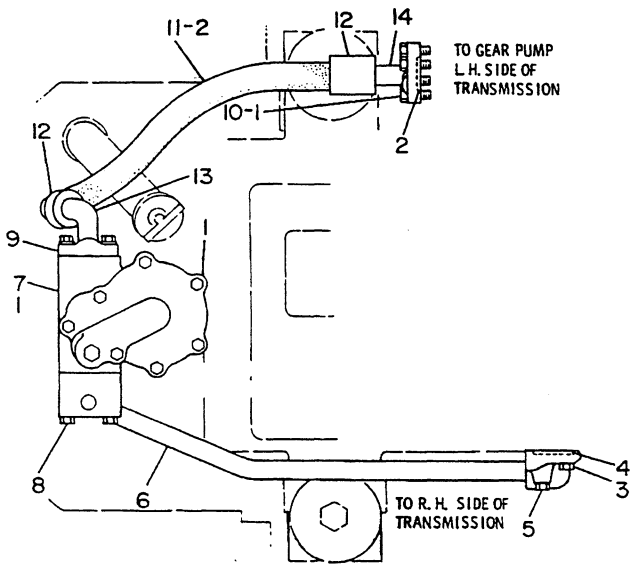

NOTE	REF NO	PART NUMBER	QTY	PART NAME
C	1	0S1588	12	BOLT
	2	8M4988	3	SEAL-O-RING
C	3	0S1594	2	BOLT
	4	8M4987	1	SEAL-O-RING
	5	0S1590	2	BOLT
	6	5G1146	1	TUBE AS
Y	7	9P6277	1	FILTER GP-TRANSMISSION
C	8	0L1143	4	BOLT
C	9	1P4576	4	FLANGE
C	10	5M2894	8	WASHER
C	11	5S9267	1	HOSE AS
G		9S0247		HOSE 75CM(29.52IN)
	12	3S7166	2	SLEEVE
	13	3S8363	1	STEM AS (90 DEG)
	14	3S7165	1	STEM AS (STRAIGHT)

C-CHANGE FROM PREVIOUS TYPE
G-ORDER BY THE INCH
Y-SEPARATE ILLUSTRATION

B-174679 EP

3016

5G0905 LINES GP-POWERTRAIN OIL
S/N 1RJ1-222 & 2CJ1-130
9P6277-Page 98

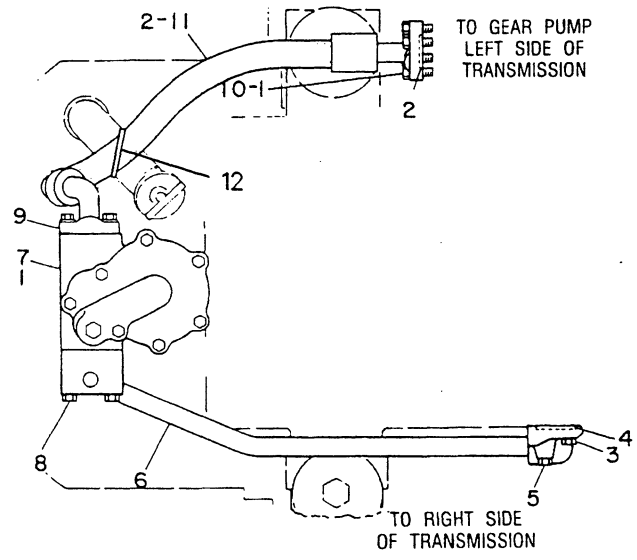

NOTE	REF NO	PART NUMBER	QTY	PART NAME
	1	9B7237	12	BOLT
	2	8M4988	3	SEAL-O-RING
	3	4L6454	2	BOLT
	4	8M4987	1	SEAL-O-RING
	5	8T2501	2	BOLT
C	6	8Y4232	1	TUBE AS
Y	7	9P6277	1	FILTER GP-TRANSMISSION
	8	4L6459	4	BOLT
	9	1P4576	4	FLANGE
	10	8T4896	8	WASHER-HARD
C	11	8Y5216	1	HOSE AS
	12	6K0806	1	STRAP-CABLE

C-CHANGE FROM PREVIOUS TYPE
Y-SEPARATE ILLUSTRATION

R-492796 E

3016

5G0905 LINES GP-POWERTRAIN OIL
S/N 1RJ223-Up & 2CJ131-Up
9P6277-Page 98

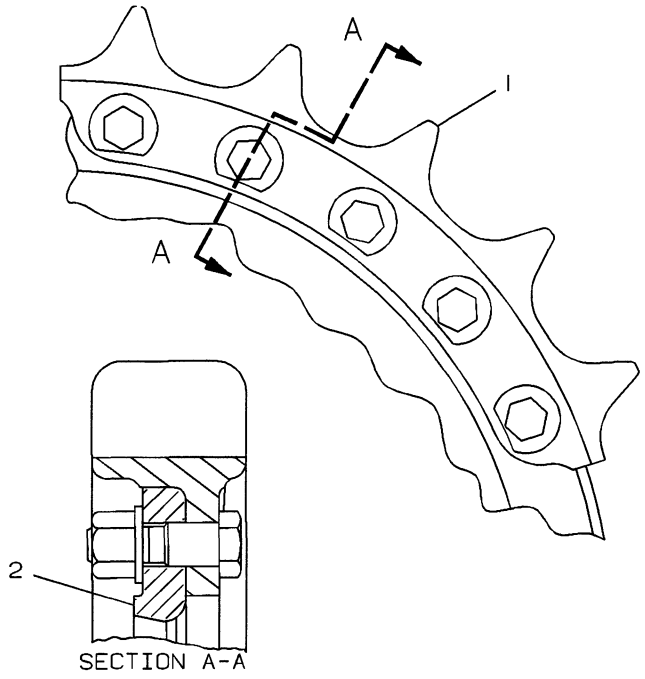

NOTE	REF NO	PART NUMBER	QTY	PART NAME
Y	1	6Y2047	1	SEGMENT GP-SPROCKET
	2	6Y5499	1	ADAPTER-SPROCKET

Y-SEPARATE ILLUSTRATION

C-470734 EP

4163 **6Y5504 ADAPTER GP-SPROCKET**
Field Installation
6Y2047-Page 96.01

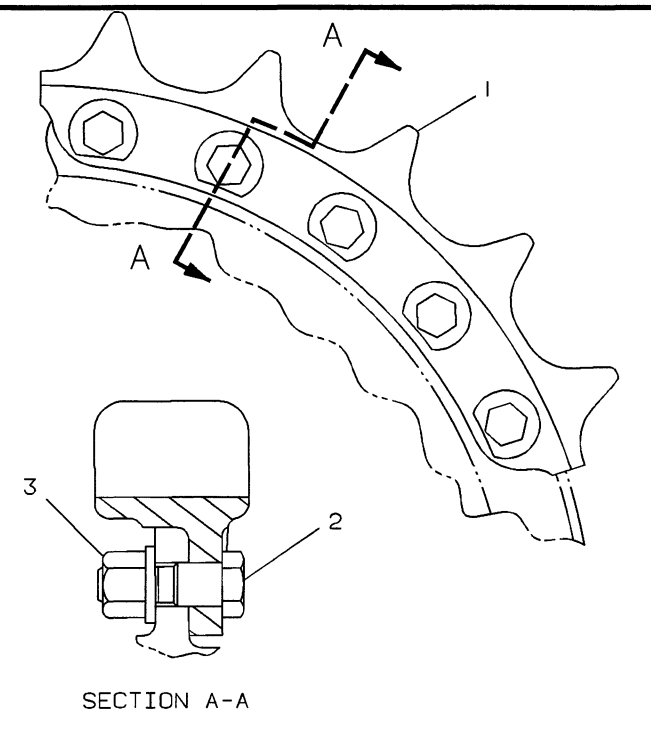

NOTE	REF NO	PART NUMBER	QTY	PART NAME
	1	9W9266	5	SEGMENT-SPROCKET
	2	9W9265	25	BOLT-SPROCKET
	3	8H5724	25	NUT
		5P8245	25	WASHER

C-450746 EP

4155 **6Y2047 SEGMENT GP-SPROCKET-2 REQUIRED**
Also Part Of 6Y5504 Adapter Gp-Sprocket

MEMORANDA

POWER TRAIN-POWER TRANSMISSION UNIT

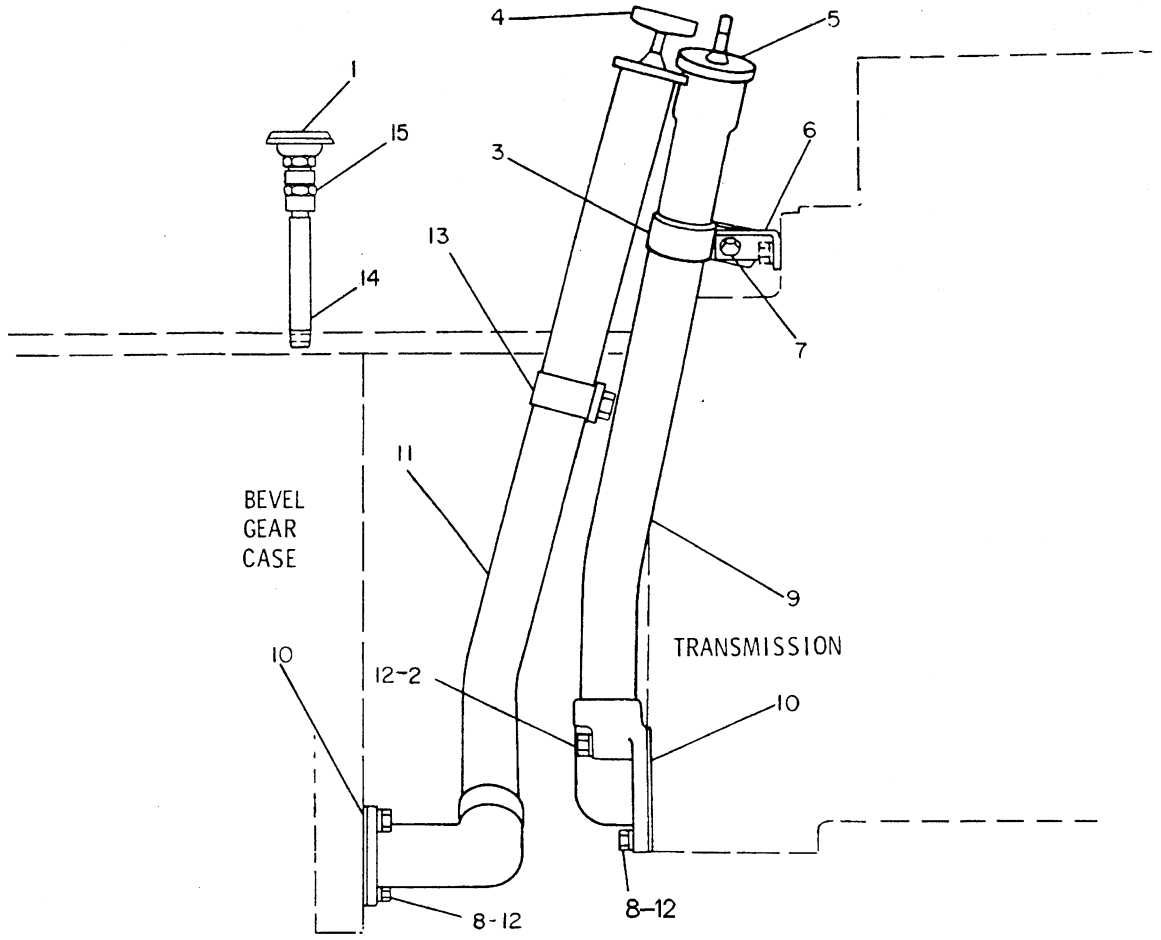

NOTE	REF NO	PART NUMBER	QTY	PART NAME	NOTE	REF NO	PART NUMBER	QTY	PART NAME
C	1	9G5127	1	BREATHER	C	15	8S7169	1	COUPLING
	2	0L1143	1	BOLT					
	3	5L4504	1	CLIP					
	4	5G1727	1	GAUGE AS-OIL LEVEL (BEVEL GEAR CASE)					
	5	5G1702	1	GAUGE AS-OIL LEVEL (TRANSMISSION)					
	6	2P0911	1	ANGLE					
	7	0L1351	1	BOLT					
		1D4717	1	NUT					
		5M2894	1	WASHER					
	8	1A2029	3	BOLT					
	9	5G1700	1	TUBE AS					
	10	4H2719	2	GASKET					
	11	5G1723	1	TUBE AS					
	12	5P1075	4	WASHER-HARD					
	13	7K6699	1	CLIP					
		0S1595	1	BOLT (1/2-13X1.25IN)					
		1D4719	1	NUT					
		5P1076	1	WASHER-HARD					
				-OR-					
C		5L4504	1	CLIP					
C		0S1594	1	BOLT (3/8-16X1IN)					
C		1D4717	1	NUT					
C		5P1075	1	WASHER-HARD					
C	14	3B7273	1	NIPPLE-PIPE					

C-CHANGE FROM PREVIOUS TYPE

R-451126 EP

3005 **5G1239 FILLER GP-POWER TRAIN OIL**

Type 1

POWER TRAIN-POWER TRANSMISSION UNIT

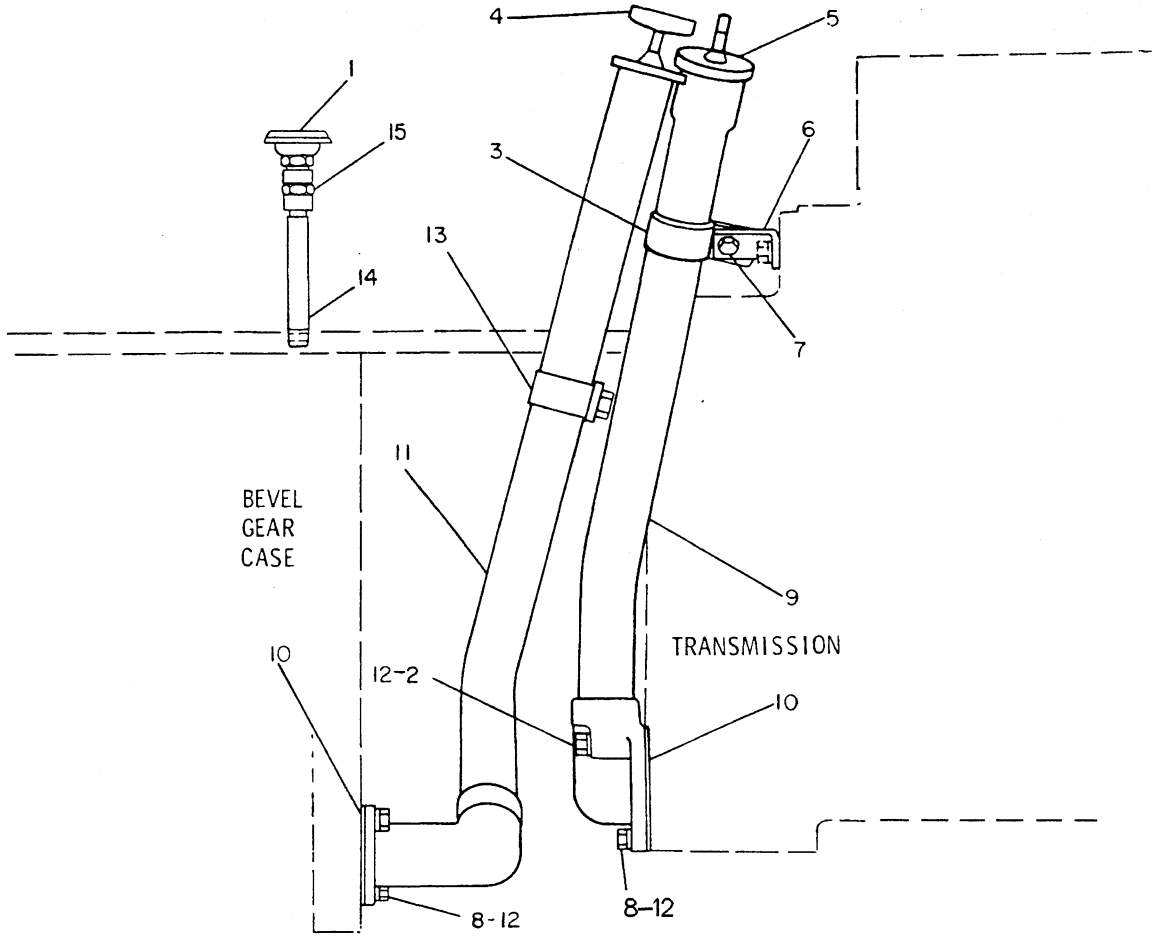

NOTE	REF NO	PART NUMBER	QTY	PART NAME	NOTE	REF NO	PART NUMBER	QTY	PART NAME
	1	9G5127	1	BREATHER					
	2	4L6459	1	BOLT					
	3	5L4504	1	CLIP					
	4	5G1727	1	GAUGE AS-OIL LEVEL (BEVEL GEAR CASE)					
C	5	8Y0832	1	GAUGE AS-OIL LEVEL (TRANSMISSION)					
C	6	8Y3760	1	ANGLE					
	7	5S7379	1	BOLT					
		6V8801	1	NUT					
		8T4896	1	WASHER-HARD					
	8	8T2502	3	BOLT					
C	9	8Y4001	1	TUBE AS					
	10	4H2719	2	GASKET					
	11	5G1723	1	TUBE AS					
	12	5P1075	4	WASHER-HARD					
	13	5L4504	1	CLIP					
		4L6454	1	BOLT (3/8-16X1IN)					
		1D4717	1	NUT					
		5P1075	1	WASHER-HARD					
	14	3B7273	1	NIPPLE-PIPE					
	15	8S7169	1	COUPLING					

C-CHANGE FROM PREVIOUS TYPE

R-498720 EP

3005 **5G1239 FILLER GP-POWER TRAIN OIL**
Type 2

MEMORANDA

POWER TRAIN-POWER TRANSMISSION UNIT

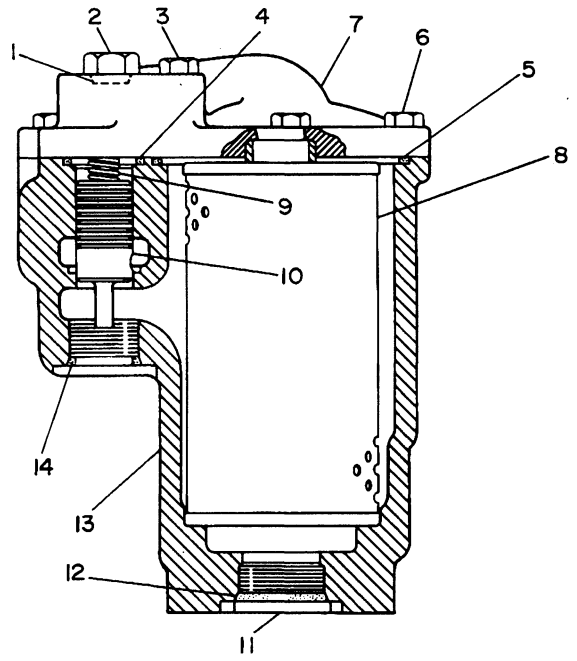

NOTE	REF NO	PART NUMBER	QTY	PART NAME
	1	3J1907	1	SEAL-O-RING
	2	9S4191	1	PLUG-O-RING
	3	1C2251	1	BOLT
	4	8M4988	2	SEAL-O-RING
	5	5K1770	1	SEAL-O-RING
	6	0S1594	6	BOLT
	7	9P6276	1	COVER AS-FILTER
	8	2P5834	1	ELEMENT-FILTER
	9	9M1986	1	SPRING
	10	3T0688	1	SPOOL
	11	9S9334	1	PLUG
	12	7M8485	1	SEAL-O-RING
	13	9P6431	1	HOUSING-TMSN FILTER
	14	3D2824	1	SEAL-O-RING

B-492808 EP

3179 **9P6277 FILTER GP-TRANSMISSION**

Part Of 5G0905 Lines-Powertrain Oil

STEERING CLUTCHES AND BRAKES

			PAGE
1	8Y2316	BRAKE GP-STEERING	100.16.02
1	8Y2319	DASH GP	106.04
1	8Y2318	FIREWALL GP	106.03
1	8Y2320	GAUGE GP	200.02
1	8Y2322	GUARD GP-VANDALISM	200.01

472379 P

4101

8Y2312 STEERING AR

Hand, Wet Brake, Power Shift Transmission
For Use On Vehicles With No ROPS Or Open ROPS
An Attachment

STEERING CLUTCHES AND BRAKES

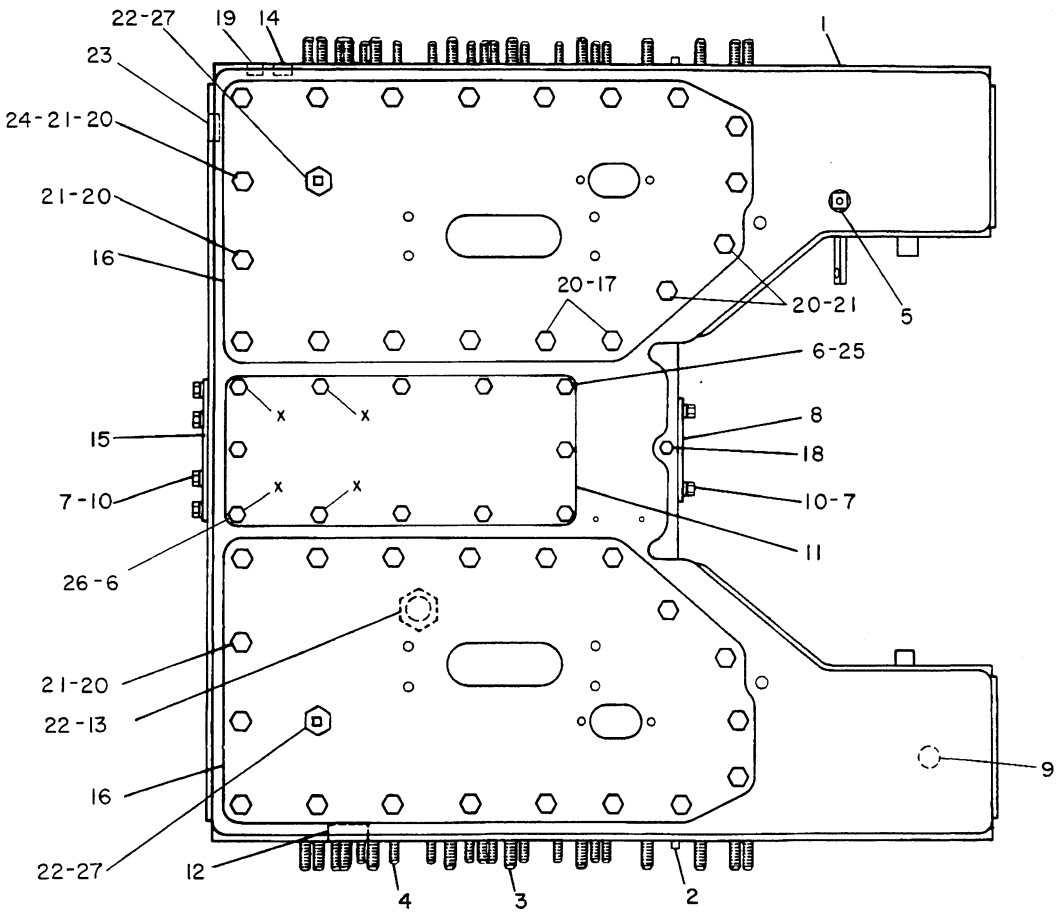

NOTE	REF NO	PART NUMBER	QTY	PART NAME
	1	5G6104	1	CASE AS-STEERING CLUTCH
	2	9F2049	4	DOWEL
	3	3D0490	24	STUD-TAPERLOCK
	4	3D2871	24	STUD
	5	9G0028	1	BOSS AS
		4K2543	1	BOSS
		8S1783	1	PLATE-GROUND
	6	0S1591	12	BOLT
	7	5P1075	10	WASHER-HARD
	8	6S3265	1	COVER-FRONT PTO
	9	4K8603	2	PLUG-CUP
	10	0S0509	10	BOLT
	11	5G9899	1	COVER
	12	1B5170	2	PLUG-PIPE
	13	8M3837	5	PLUG
	14	6S8224	6	PLUG-PROTECTIVE
	15	6S3266	1	COVER-REAR PTO
	16	5G6112	2	COVER
	17	5P8245	2	WASHER 3MM(.12IN)THK
	18	5M6214	1	PLUG-PIPE
	19	7H3171	2	PLUG-PIPE
	20	0S1587	38	BOLT
	21	5P1076	36	WASHER-HARD 4MM(.16IN)THK
	22	6K5551	7	GASKET
	23	3Y8439	14	PLUG-PROTECTIVE
	24	1B4264	30	COLLAR
	25	8M9124	8	WASHER
	26	5P1075	4	WASHER-HARD (MARKED X)
	27	6B5262	2	PLUG-DRAIN

B-461246 EP

4117 **5G6103 CASE GP-STEERING CLUTCH**
Type 1-S/N 1RJ1-786,2CJ1-296

STEERING CLUTCHES AND BRAKES

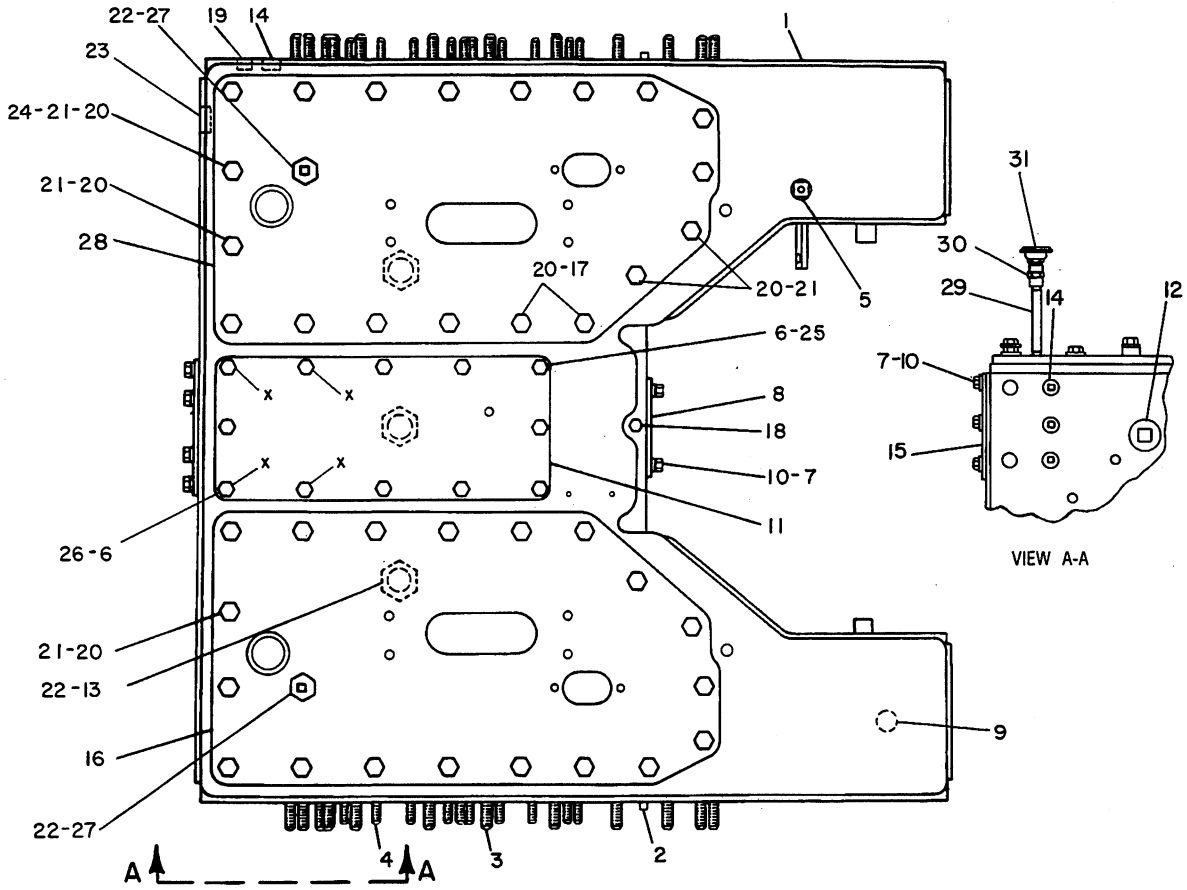

NOTE	REF NO	PART NUMBER	QTY	PART NAME	NOTE	REF NO	PART NUMBER	QTY	PART NAME
	1	5G6104	1	CASE AS-STEERING CLUTCH		24	1B4264	30	COLLAR
	2	9F2049	4	DOWEL		25	8M9124	8	WASHER
	3	3D0490	24	STUD-TAPERLOCK		26	5P1075	4	WASHER-HARD (MARKED X)
	4	3D2871	24	STUD		27	6B5262	2	PLUG-DRAIN
	5	9G0028	1	BOSS AS	C	28	8Y1702	1	COVER AS
		4K2543	1	BOSS	C	29	3B7273	2	NIPPLE-PIPE
		8S1783	1	PLATE-GROUND	C	30	8S7169	2	COUPLING
	6	0S1591	12	BOLT	C	31	9G5127	2	BREATHER
	7	5P1075	10	WASHER-HARD					
	8	6S3265	1	COVER-FRONT PTO					
	9	4K8603	2	PLUG-CUP					
	10	0S0509	10	BOLT					
	11	5G9899	1	COVER					
	12	1B5170	2	PLUG-PIPE					
	13	8M3837	5	PLUG					
	14	6S8224	6	PLUG-PROTECTIVE					
	15	6S3266	1	COVER-REAR PTO					
C	16	8Y1700	1	COVER AS					
	17	5P8245	2	WASHER 3MM(.12IN)THK					
	18	5M6214	1	PLUG-PIPE					
	19	7H3171	2	PLUG-PIPE					
	20	0S1587	38	BOLT					
	21	5P1076	36	WASHER-HARD 4MM(.16IN)THK					
	22	6K5551	7	GASKET					
	23	3Y8439	14	PLUG-PROTECTIVE					

C-CHANGE FROM PREVIOUS TYPE

V-471522 EP

4117 **5G6103 CASE GP-STEERING CLUTCH**
Type 2-S/N 1RJ1-786,2CJ1-296

STEERING CLUTCHES AND BRAKES

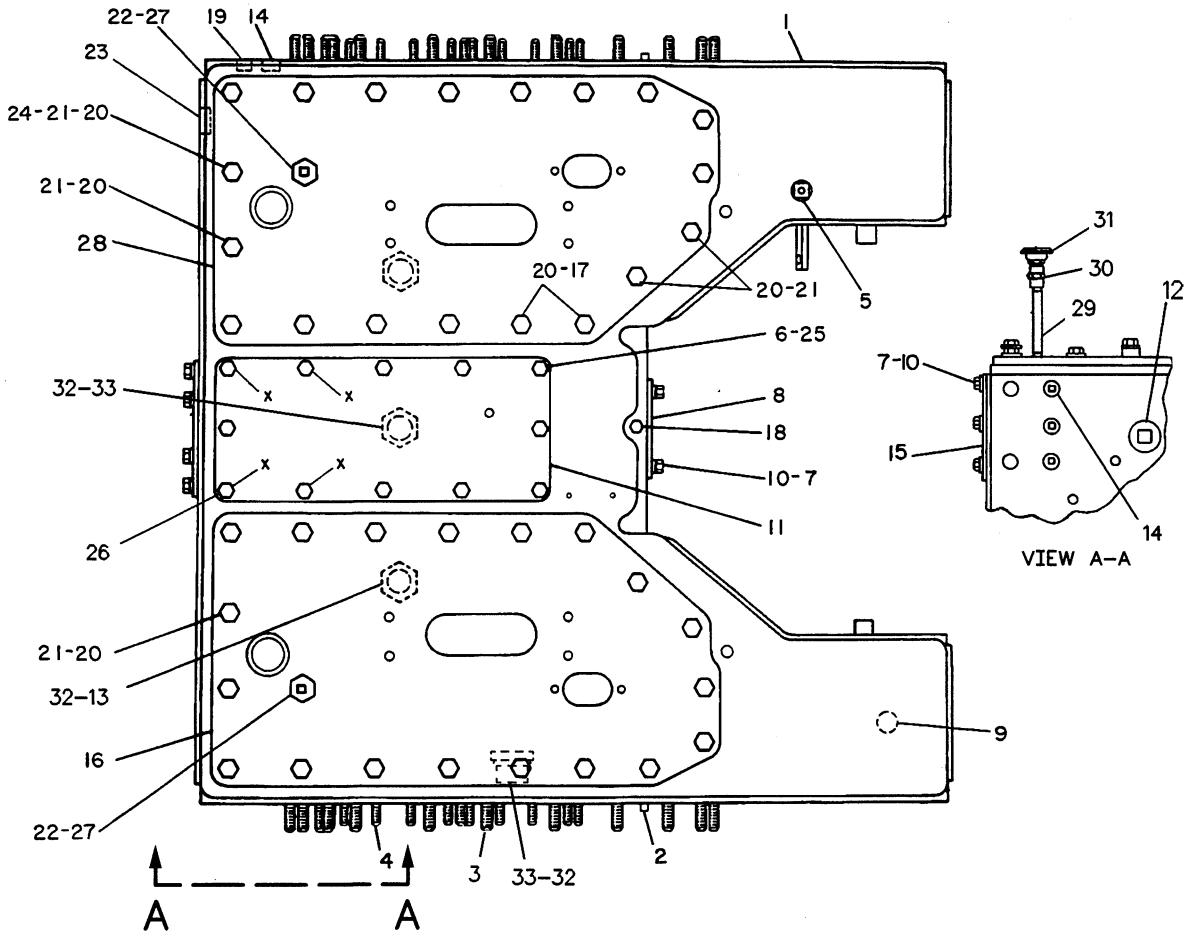

NOTE	REF NO	PART NUMBER	QTY	PART NAME	NOTE	REF NO	PART NUMBER	QTY	PART NAME
	1	5G6104	1	CASE AS-STEERING CLUTCH	C	25	7X0732	8	WASHER-HARD
	2	9F2049	4	DOWEL		26	5P1075	4	WASHER-HARD (MARKED X)
	3	3D0490	24	STUD-TAPERLOCK		27	6B5262	2	PLUG-DRAIN
	4	3D2871	24	STUD		28	8Y1702	1	COVER AS
	5	9G0028	1	BOSS AS		29	3B7273	2	NIPPLE-PIPE
		4K2543	1	BOSS		30	8S7169	2	COUPLING
		8S1783	1	PLATE-GROUND		31	9G5127	2	BREATHER
C	6	4L9337	12	BOLT	C	32	2S4078	5	SEAL-O-RING
	7	5P1075	10	WASHER-HARD	C	33	6V0439	3	PLUG
	8	6S3265	1	COVER-FRONT PTO					
	9	4K8603	2	PLUG-CUP					
C	10	5M3062	10	BOLT					
	11	5G9899	1	COVER					
	12	1B5170	2	PLUG-PIPE					
C	13	6V0440	2	PLUG-O RING					
	14	6S8224	6	PLUG-PROTECTIVE					
	15	6S3266	1	COVER-REAR PTO					
	16	8Y1700	1	COVER AS					
C	17	8T4223	2	WASHER-HARD					
	18	5M6214	1	PLUG-PIPE					
	19	7H3171	2	PLUG-PIPE					
C	20	8T8919	38	BOLT					
	21	5P1076	36	WASHER-HARD					
C	22	6K5551	2	GASKET					
	23	3Y8439	14	PLUG-PROTECTIVE					
	24	1B4264	30	COLLAR					

C-CHANGE FROM PREVIOUS TYPE

R-496914 EP

5G6103 CASE GP-STEERING CLUTCH
S/N 1RJ787-Up & 2CJ297-Up

MEMORANDA

STEERING CLUTCHES AND BRAKES

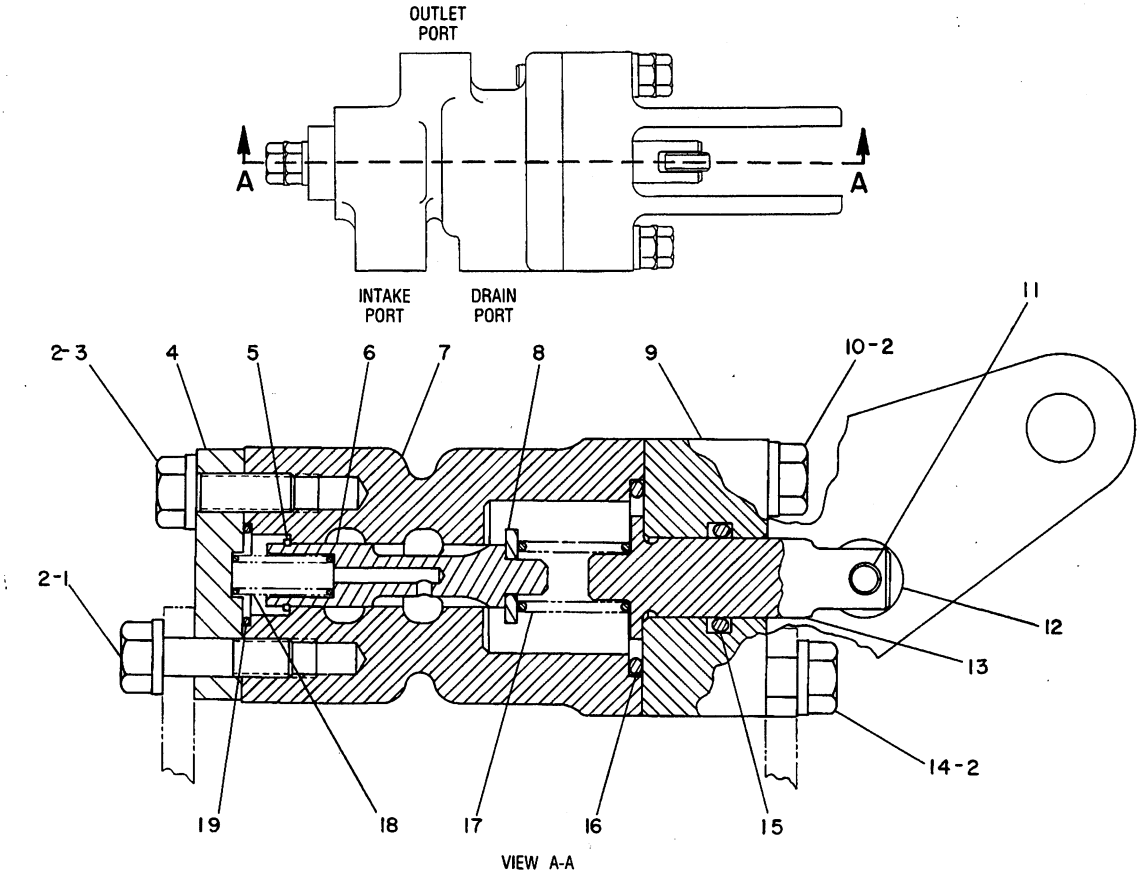

NOTE	REF NO	PART NUMBER	QTY	PART NAME	NOTE	REF NO	PART NUMBER	QTY	PART NAME
	1	6H0187	1	BOLT					
	2	9M1974	6	WASHER-HARD					
	3	4B9883	1	BOLT					
	4	5G1452	1	COVER					
	5	1H5549	1	RING-SNAP					
	6	5G0216	1	SPOOL					
	7	5G0179	1	BODY-VALVE					
	8	5G0830	1	SPACER					
	9	5G8122	1	COVER AS					
		6H3956	1	PIN					
	10	5D4184	2	BOLT					
	11	0S0130	1	PIN					
	12	6V8247	1	BALL BEARING					
	13	5G8124	1	STEM					
	14	1H5403	2	BOLT					
	15	2J0157	1	SEAL-O-RING					
	16	4F7391	1	SEAL-O-RING					
	17	9D7884	1	SPRING					
	18	2P4547	1	SPRING					
	19	2P2975	1	SEAL-O-RING					

B-402002 EP

5G8120 VALVE GP
S/N 1RJ1-1409, 2CJ1-591
Part Of 8Y1542 Control-Steering Clutch
For Field Replacement See NPR

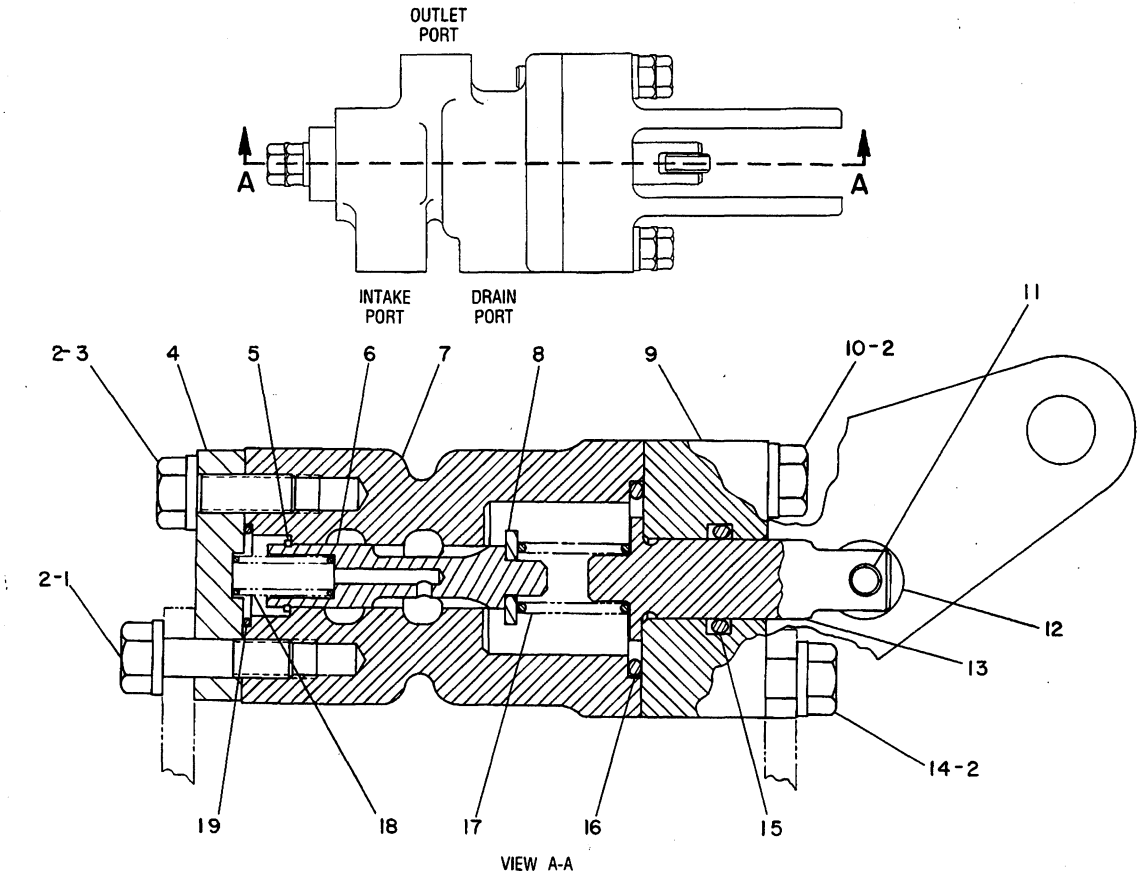

NOTE	REF NO	PART NUMBER	QTY	PART NAME	NOTE	REF NO	PART NUMBER	QTY	PART NAME
	1	6H0187	1	BOLT					
	2	9M1974	6	WASHER-HARD					
	3	4B9883	1	BOLT					
	4	5G1452	1	COVER					
	5	1H5549	1	RING-SNAP					
	6	5G0216	1	SPOOL					
	7	5G0179	1	BODY-VALVE					
	8	5G0830	1	SPACER					
	9	5G8122	1	COVER AS					
		6H3956	1	PIN					
	10	5D4184	2	BOLT					
	11	0S0130	1	PIN					
	12	6V8247	1	BALL BEARING					
	13	8Y5339	1	STEM					
	14	1H5403	2	BOLT					
	15	2J0157	1	SEAL-O-RING					
	16	4F7391	1	SEAL-O-RING					
	17	9D7884	1	SPRING					
	18	2P4547	1	SPRING					
	19	2P2975	1	SEAL-O-RING					

B-499863 EP

5G8120 VALVE GP

S/N 1RJ1410-Up, 2CJ592-Up
Part Of 8Y1542 Control-Steering Clutch
For Field Replacement See NPR

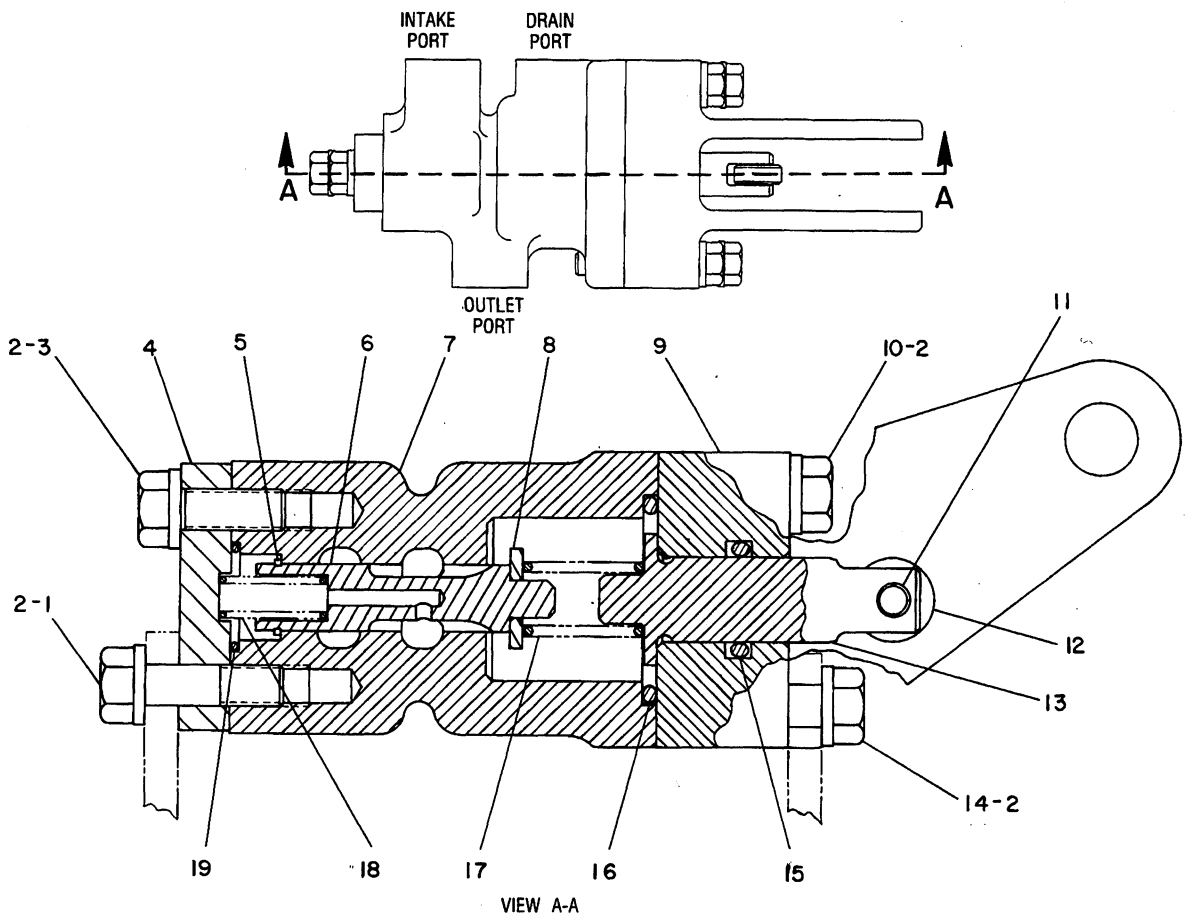

VIEW A-A

NOTE	REF NO	PART NUMBER	QTY	PART NAME	NOTE	REF NO	PART NUMBER	QTY	PART NAME
	1	6H0187	1	BOLT					
	2	9M1974	6	WASHER-HARD					
	3	4B9883	1	BOLT					
	4	5G1452	1	COVER					
	5	1H5549	1	RING-SNAP					
	6	5G0216	1	SPOOL					
	7	5G0179	1	BODY-VALVE					
	8	5G0830	1	SPACER					
	9	5G8122	1	COVER AS					
		6H3956	1	PIN					
	10	5D4184	2	BOLT					
	11	0S0130	1	PIN					
	12	6V8247	1	BALL BEARING					
	13	5G8124	1	STEM					
	14	1H5403	2	BOLT					
	15	2J0157	1	SEAL-O-RING					
	16	4F7391	1	SEAL-O-RING					
	17	9D7884	1	SPRING					
	18	2P4547	1	SPRING					
	19	2P2975	1	SEAL-O-RING					

B-402003 EP

4102

5G8121 VALVE GP

S/N 1RJ1-1409, 2CJ1-591

Part Of 8Y1542 Control-Steering Clutch

For Field Replacement See NPR

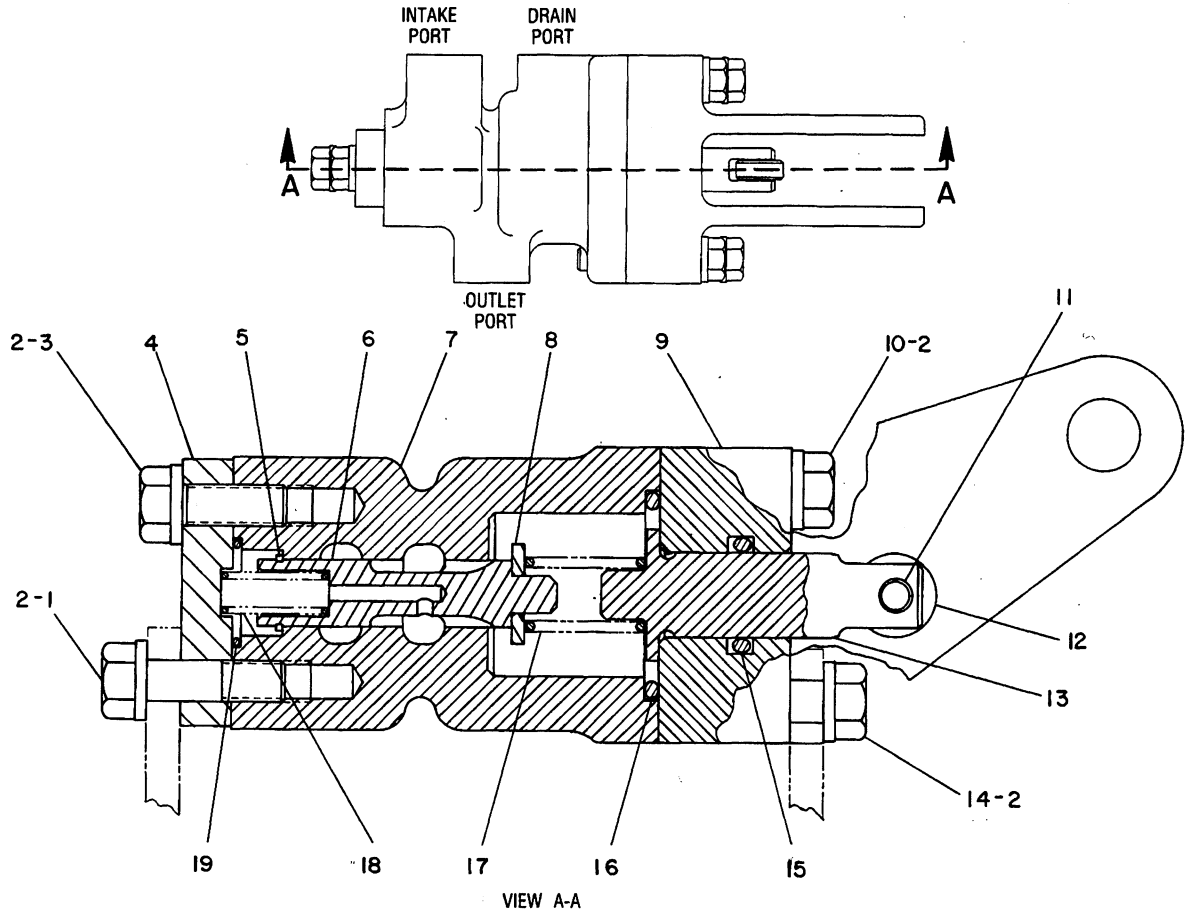

NOTE	REF NO	PART NUMBER	QTY	PART NAME	NOTE	REF NO	PART NUMBER	QTY	PART NAME
	1	6H0187	1	BOLT					
	2	9M1974	6	WASHER-HARD					
	3	4B9883	1	BOLT					
	4	5G1452	1	COVER					
	5	1H5549	1	RING-SNAP					
	6	5G0216	1	SPOOL					
	7	5G0179	1	BODY-VALVE					
	8	5G0830	1	SPACER					
	9	5G8122	1	COVER AS					
		6H3956	1	PIN					
	10	5D4184	2	BOLT					
	11	0S0130	1	PIN					
	12	6V8247	1	BALL BEARING					
	13	8Y5339	1	STEM					
	14	1H5403	2	BOLT					
	15	2J0157	1	SEAL-O-RING					
	16	4F7391	1	SEAL-O-RING					
	17	9D7884	1	SPRING					
	18	2P4547	1	SPRING					
	19	2P2975	1	SEAL-O-RING					

B-499914 EP

4102 **5G8121 VALVE GP**

S/N 1RJ1410-Up, 2CJ592-Up
Part Of 8Y1542 Control-Steering Clutch
For Field Replacement See NPR

STEERING CLUTCHES AND BRAKES

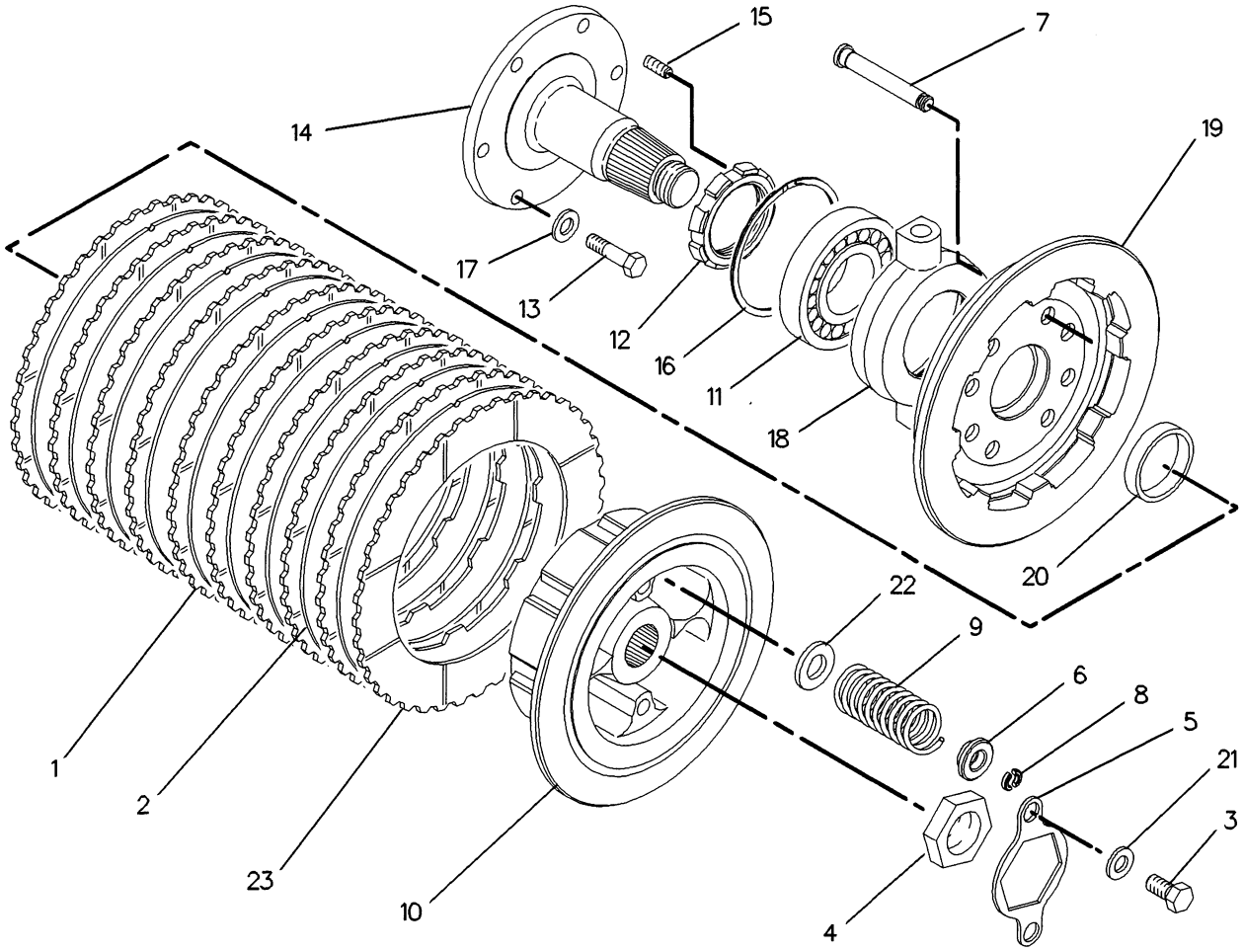

NOTE	REF NO	PART NUMBER	QTY	PART NAME	NOTE	REF NO	PART NUMBER	QTY	PART NAME
	1	6Y7914	18	DISC-FRICTION					
	2	5K8616	18	DISC-STEER CLUTCH DRIVE					QUANTITIES SHOWN ARE
	3	5C6266	4	BOLT					THOSE REQUIRED FOR
	4	0L2341	2	NUT-SPL					BOTH LH & RH SIDES
	5	3B5524	2	LOCK-NUT					
	6	2B9020	16	RETAINER-SPRING					
	7	2B8759	16	STUD-SPRING					
	8	2B9018	32	LOCK-RETAINER					
	9	6S3414	16	SPRING					
	10	5G8708	2	DRUM					
	11	7B7515	2	BALL BEARING					
	12	3V0002	2	NUT-RETAINING					
	13	8T8917	12	BOLT					
	14	6S3397	2	SHAFT-STEERING CLUTCH					
	15	1O2571	4	SETSCREW-SOCKET					
	16	1H7478	2	RING-RETAINING					
	17	8T4223	12	WASHER-HARD					
	18	6S3399	2	CAGE-RELEASE BEARING					
	19	2M1086	2	PLATE AS-PRESSURE (EACH INCLUDES)					
	20	6H3569	1	BUSHING					
	21	7X0591	4	WASHER-HARD					
	22	7X0515	16	WASHER					
	23	5V0593	2	DISC AS-CLUTCH					

F-524282 EP

4101 **5G8725 CLUTCH GP-STEERING**

STEERING CLUTCHES AND BRAKES

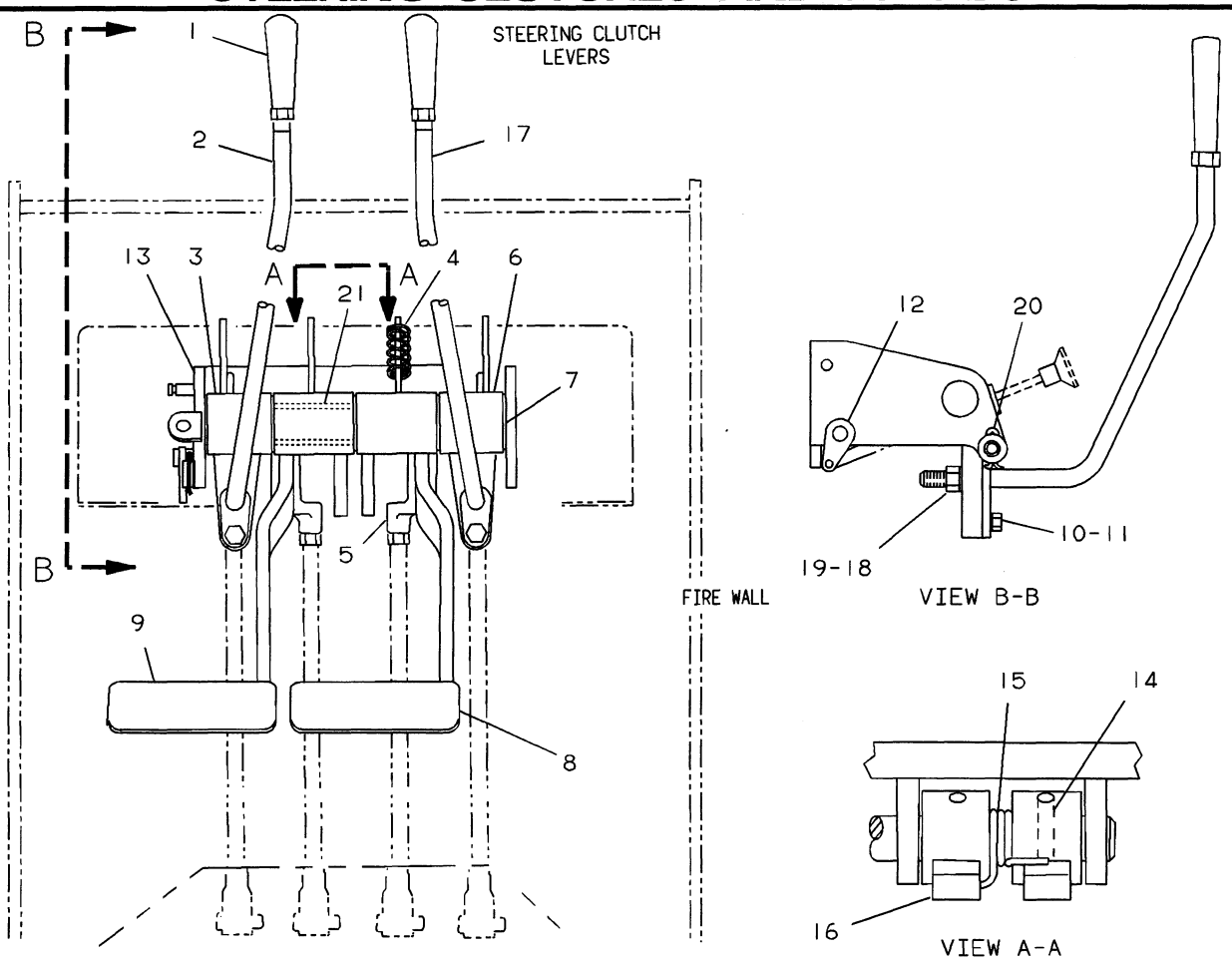

NOTE	REF NO	PART NUMBER	QTY	PART NAME	NOTE	REF NO	PART NUMBER	QTY	PART NAME
	1	OL0829	2	HANDLE					
	2	5G3856	1	ROD AS (L.H.)					
	3	5G3107	1	LEVER AS					
	4	5G1684	1	SPRING					
	5	6S6793	2	ROD END					
	6	5G3103	1	LEVER AS					
B	7	5G0026	5	WASHER					
	8	5G3090	1	PEDAL AS (BRAKE)					
	9	5G3086	1	PEDAL AS (BRAKE)					
	10	3H5841	2	BOLT					
	11	5M2894	2	WASHER					
	12	5G3095	1	SHAFT AS					
	13	5G3094	1	BRACKET AS					
	14	9F7882	2	PIN-SPRING					
	15	5G3097	1	SPRING					
	16	5G0015	2	PAWL AS					
	17	5G3098	1	ROD AS (R.H.)					
	18	4K0367	2	NUT					
	19	5P8247	2	WASHER-HARD					
	20	3B4618	1	COTTER					
	21	9S9302	1	BEARING-ROLLER					

B-USE AS REQUIRED

C-454233 EP

4122 **8Y0270 CONTROL GP-STEERING-DECELERATOR**

Replaced By 8Y2314-Page 98.01

An Attachment

STEERING CLUTCHES AND BRAKES

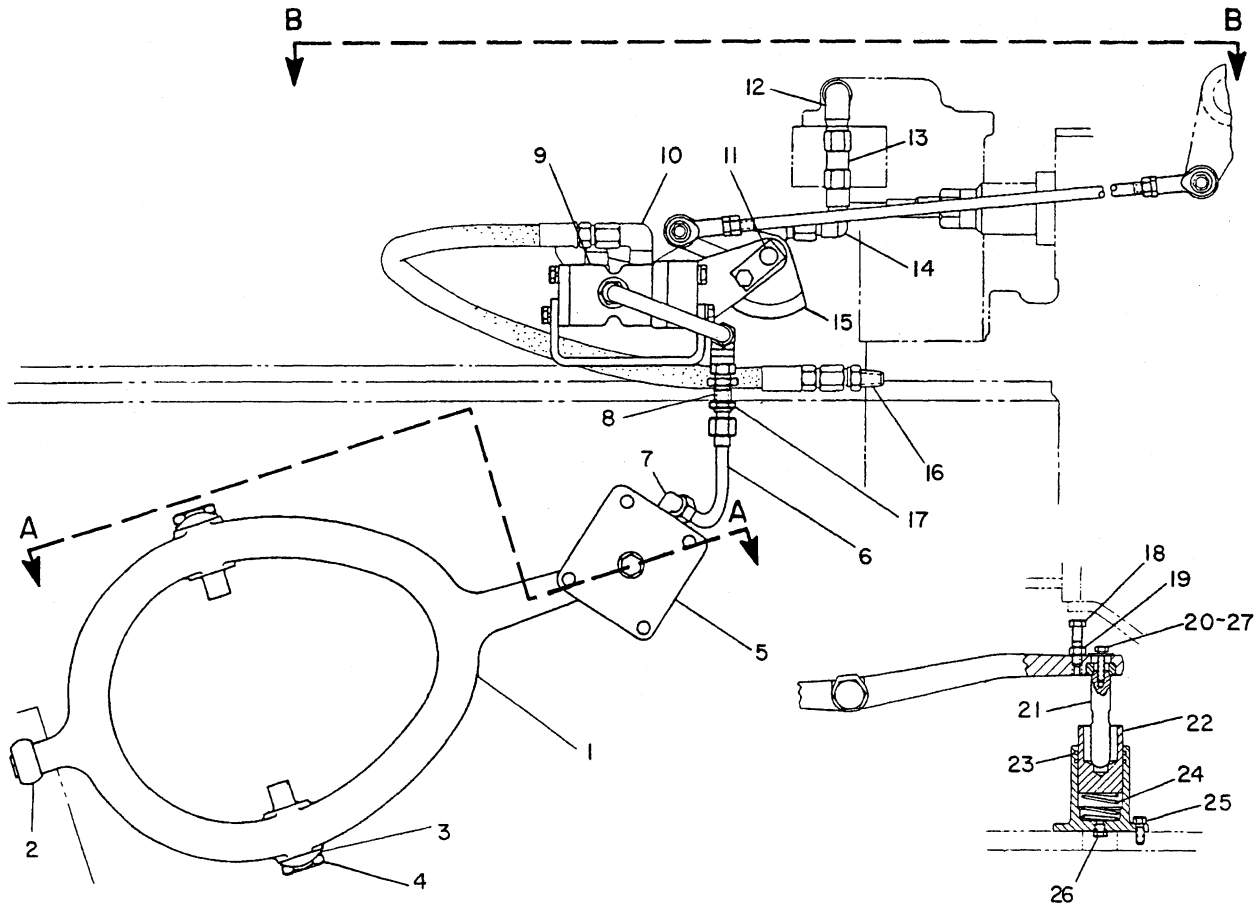

REFER TO ALL ILLUSTRATIONS OF THIS GROUP FOR AUXILIARY VIEWS

SECTION A-A

NOTE	REF NO	PART NUMBER	QTY	PART NAME	NOTE	REF NO	PART NUMBER	QTY	PART NAME
	1	5G8736	2	YOKE AS		23	6S3479	4	RING
				(EACH INCLUDES)			1H8720	4	SEAL-O-RING
		1M1723	1	INSERT-RELEASE YOKE		24	8J6785	2	SPRING
	2	1A7657	1	BALL		25	OS1588	8	BOLT
	3	OTO355	4	LOCK-CLUTCH SCREW		26	9S4182	2	PLUG
	4	7K8915	4	SCREW			3J7354	2	SEAL-O-RING
	5	5G6279	2	CYLINDER		27	6N8863	2	WASHER
	6	5GO705	2	TUBE AS					
	7	307947	2	ELBOW					
		3J1907	2	SEAL-O-RING					
	8	2P1278	2	UNION-BULKHEAD					
		4H6145	2	GASKET					
Y	9	5G8121	1	VALVE GP					
	10	6K9194	1	ELBOW					
	11	5GO274	2	SHAFT AS					
	12	4B6067	2	ELBOW-STREET					
	13	6S4097	1	VALVE					
	14	2N8037	1	ELBOW					
	15	5GO273	2	CAM					
	16	8L3282	1	CONNECTOR-FLARED					
	17	2P1279	2	LOCKNUT					
	18	682121	2	BOLT					
	19	1F7958	2	NUT-FULL					
	20	6V4414	2	BOLT-SELF LOCKING					
	21	5G6951	2	PIN					
	22	6S3480	2	PISTON					

Y-SEPARATE ILLUSTRATION

B-451888 EP

4106 **8Y1542 CONTROL GP-STEERING CLUTCH-PART 1 OF 2**

Type 1

5G8121-Page 100

STEERING CLUTCHES AND BRAKES

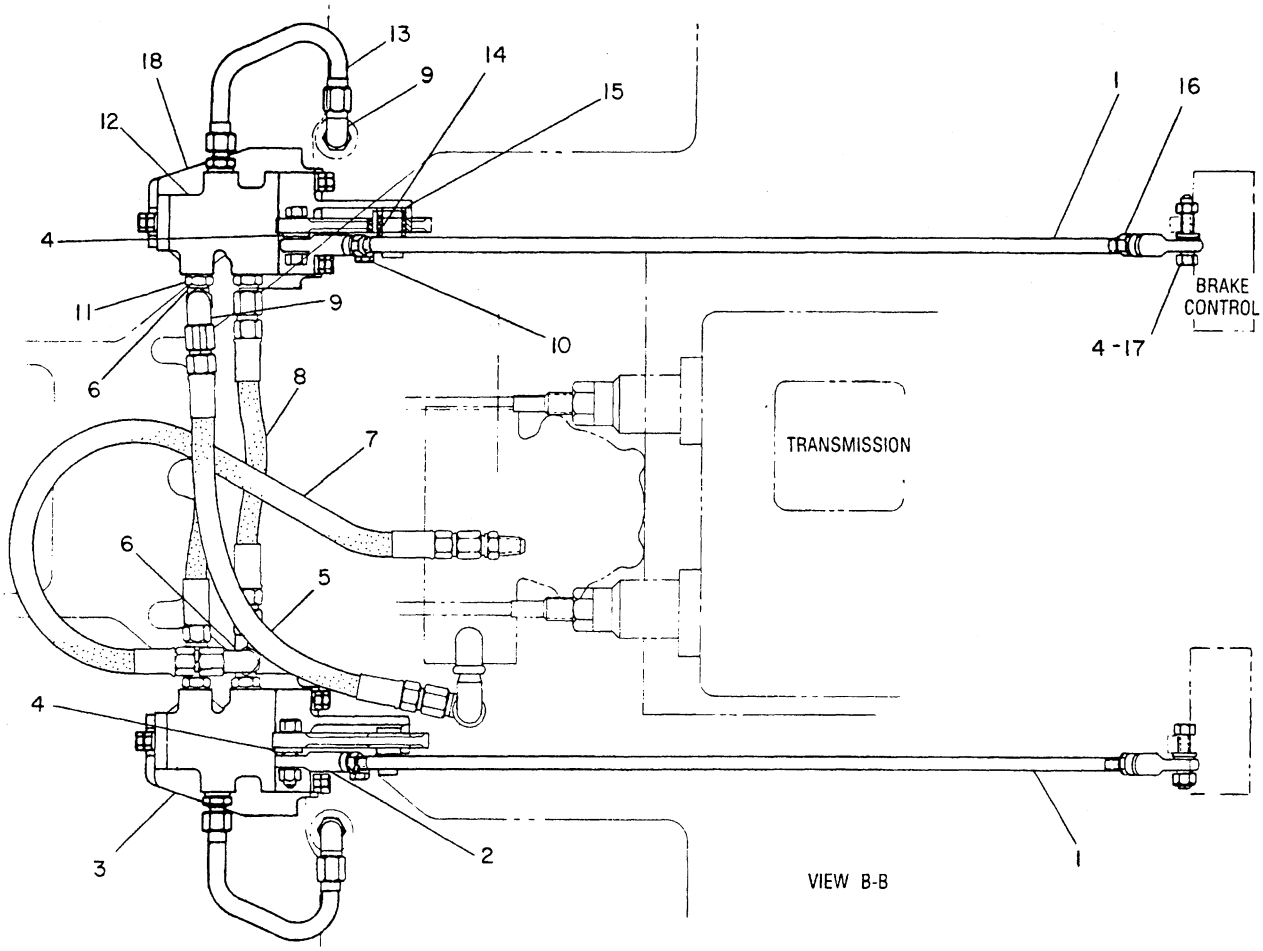

NOTE	REF NO	PART NUMBER	QTY	PART NAME	NOTE	REF NO	PART NUMBER	QTY	PART NAME
	1	5G4927	2	ROD					
	2	4D4064	4	ROD END					
	3	8Y1354	1	BRACKET AS					
		1F0748	1	NUT					
	4	5P1075	4	WASHER-HARD					
	5	5G2718	1	HOSE AS					
	6	6M6853	2	TEE-O-RING					
	7	3V8848	1	HOSE AS					
	8	5G0868	2	HOSE AS					
	9	6K9194	3	ELBOW					
	10	2F2093	2	BOLT					
		9M1974	2	WASHER-HARD					
	11	2R6806	4	CONNECTOR					
		3J1907	6	SEAL-O-RING					
Y	12	5G8120	1	VALVE GP					
	13	5G0398	2	TUBE AS					
	14	9S4775	2	BEARING-ROLLER					
	15	4B5059	4	WASHER					
	16	1B4203	4	NUT-FULL					
	17	0S1591	4	BOLT					
		1D4717	4	NUT					
	18	8Y1352	1	BRACKET AS					
		1F0748	1	NUT					

Y-SEPARATE ILLUSTRATION

B-451889 EP

4106 **8Y1542 CONTROL GP-STEERING CLUTCH-PART 2 OF 2**

Type 1

5G8120-Page 99.03

STEERING CLUTCHES AND BRAKES

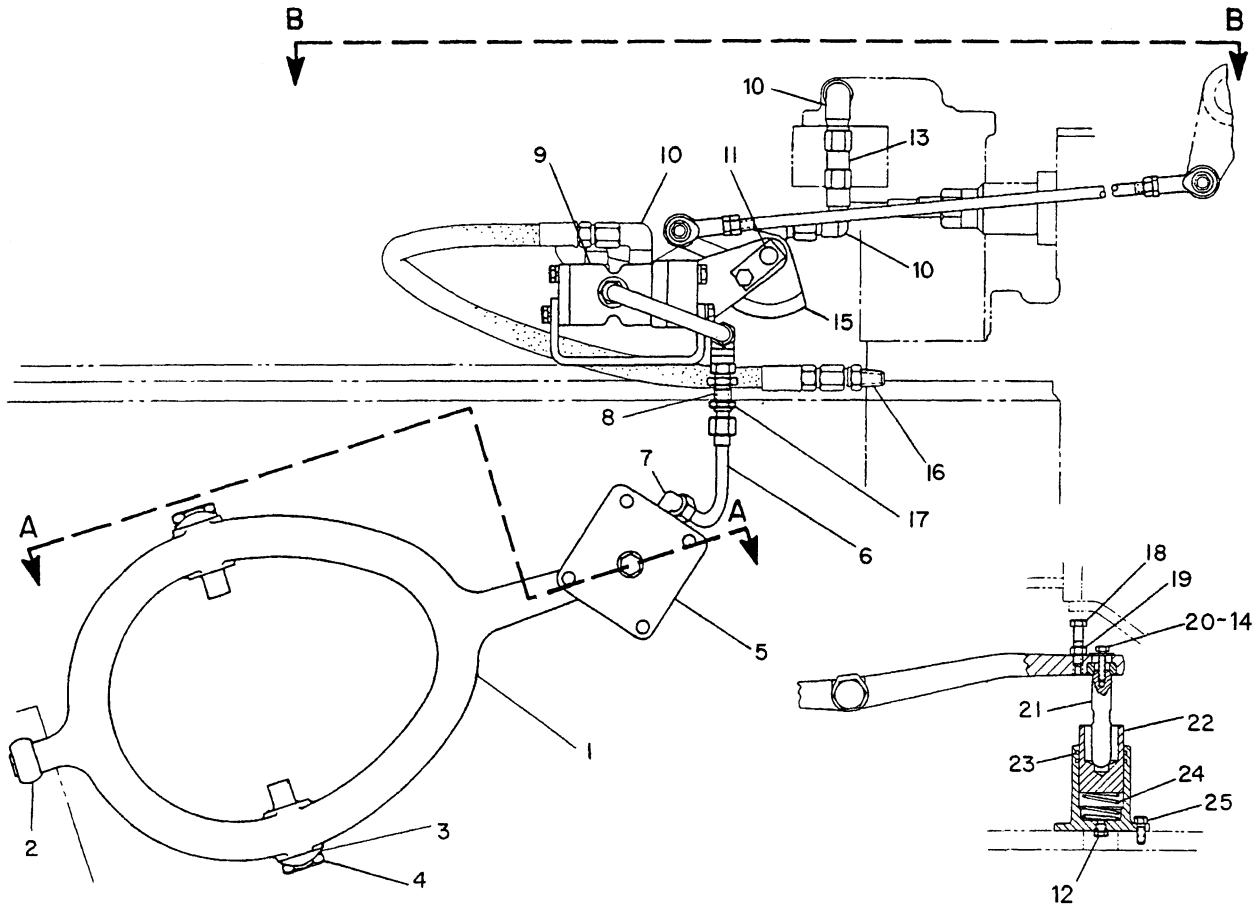

REFER TO ALL ILLUSTRATIONS OF THIS GROUP FOR AUXILIARY VIEWS

SECTION A-A

NOTE	REF NO	PART NUMBER	QTY	PART NAME	NOTE	REF NO	PART NUMBER	QTY	PART NAME
	1	5G8736	2	YOKE AS		22	6S3480	2	PISTON
				(EACH INCLUDES)		23	6S3479	4	RING
		1M1723	1	INSERT-RELEASE YOKE			1H8720	4	SEAL-O-RING
	2	1A7657	1	BALL		24	8J6785	2	SPRING
	3	0T0355	4	LOCK-CLUTCH SCREW	C	25	9B7237	8	BOLT
	4	7K8915	4	SCREW					
	5	5G6279	2	CYLINDER					
	6	5G0705	2	TUBE AS					
	7	3O7947	2	ELBOW					
		3J1907	2	SEAL-O-RING					
	8	2P1278	2	UNION-BULKHEAD					
		4H6145	2	GASKET					
Y	9	5G8121	1	VALVE GP					
C	10	6K9194	3	ELBOW					
	11	5G0274	2	SHAFT AS					
	12	9S4182	2	PLUG					
		3J7354	2	SEAL-O-RING					
	13	6S4097	1	VALVE					
C	14	7X0578	2	WASHER-HARD					
	15	5G0273	2	CAM					
	16	8L3282	1	CONNECTOR-FLARED					
	17	2P1279	2	LOCKNUT					
	18	682121	2	BOLT					
C	19	6V8188	2	NUT					
	20	6V4414	2	BOLT-SELF LOCKING					
	21	5G6951	2	PIN					

C-CHANGE FROM PREVIOUS TYPE
Y-SEPARATE ILLUSTRATION

R-487976 EP

4106 **8Y1542 CONTROL GP-STEERING CLUTCH-PART 1 OF 2**

Type 2

5G8121-Page 100

STEERING CLUTCHES AND BRAKES

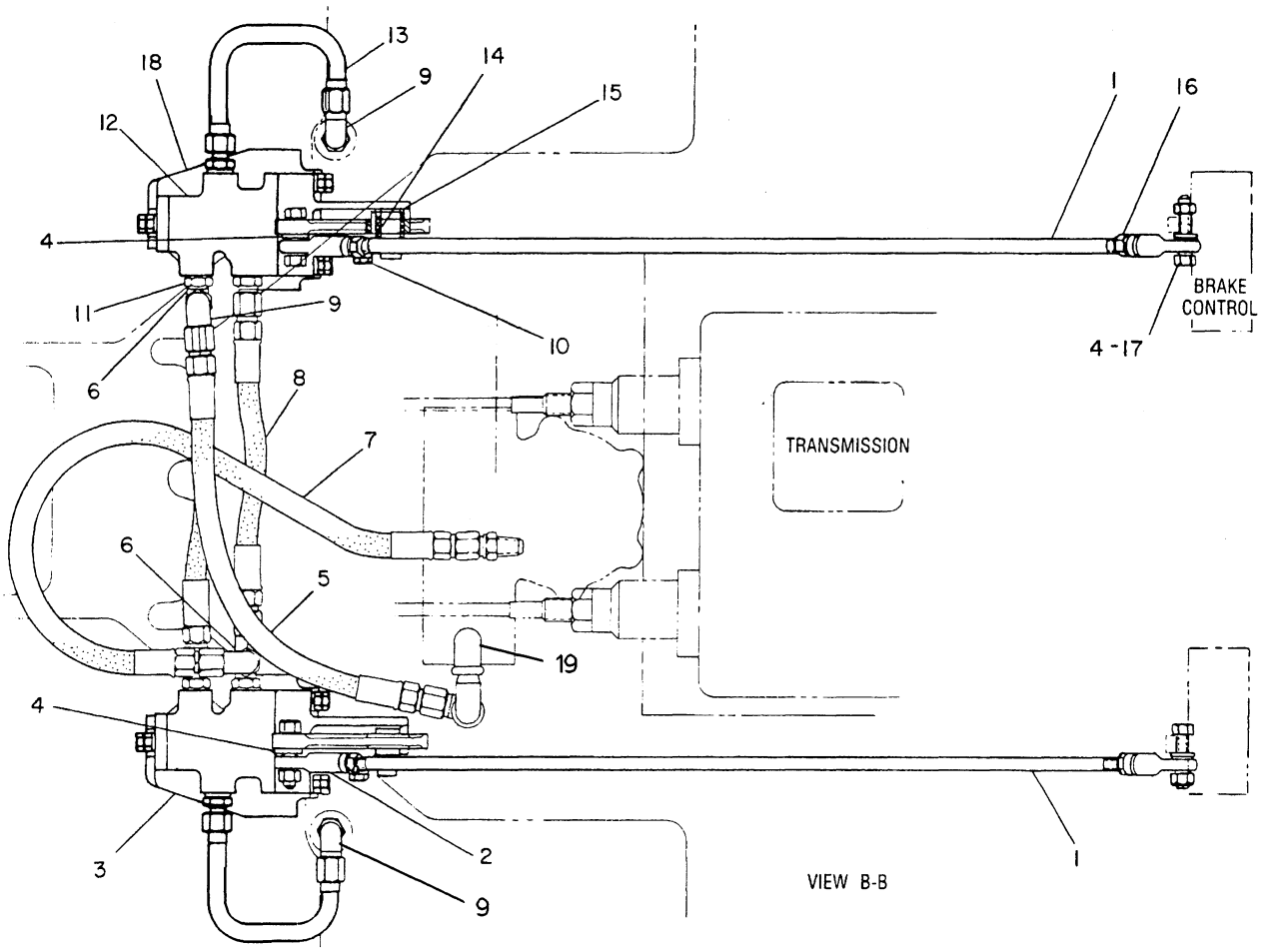

NOTE	REF NO	PART NUMBER	QTY	PART NAME	NOTE	REF NO	PART NUMBER	QTY	PART NAME
	1	5G4927	2	ROD					
	2	4D4064	4	ROD END					
	3	8Y1354	1	BRACKET AS					
		1F0748	1	NUT					
	4	5P1075	4	WASHER-HARD					
I	5	5G2718	1	HOSE AS					
	6	6M6853	2	TEE-O-RING					
I	7	3V8848	1	HOSE AS					
I	8	5G0868	2	HOSE AS					
	9	6K9194	3	ELBOW					
C	10	7X2648	2	BOLT					
		8T4224	2	WASHER-HARD					
	11	2R6806	4	CONNECTOR					
		3J1907	6	SEAL-O-RING					
Y	12	5G8120	1	VALVE GP					
C	13	8Y2223	2	TUBE AS					
	14	9S4775	2	BEARING-ROLLER					
	15	4B5059	4	WASHER					
C	16	6V8183	4	NUT-FULL					
C	17	4L9337	4	BOLT					
C		6V8801	4	NUT					
	18	8Y1352	1	BRACKET AS					
		1F0748	1	NUT					
C	19	86817	1	ELBOW					

C-CHANGE FROM PREVIOUS TYPE
I-SEE HOSE FABRICATION GUIDE
Y-SEPARATE ILLUSTRATION

R-487977 EP

4106 8Y1542 CONTROL GP-STEERING CLUTCH-PART 2 OF 2

Type 2

5G8120-Page 99.03

STEERING CLUTCHES AND BRAKES

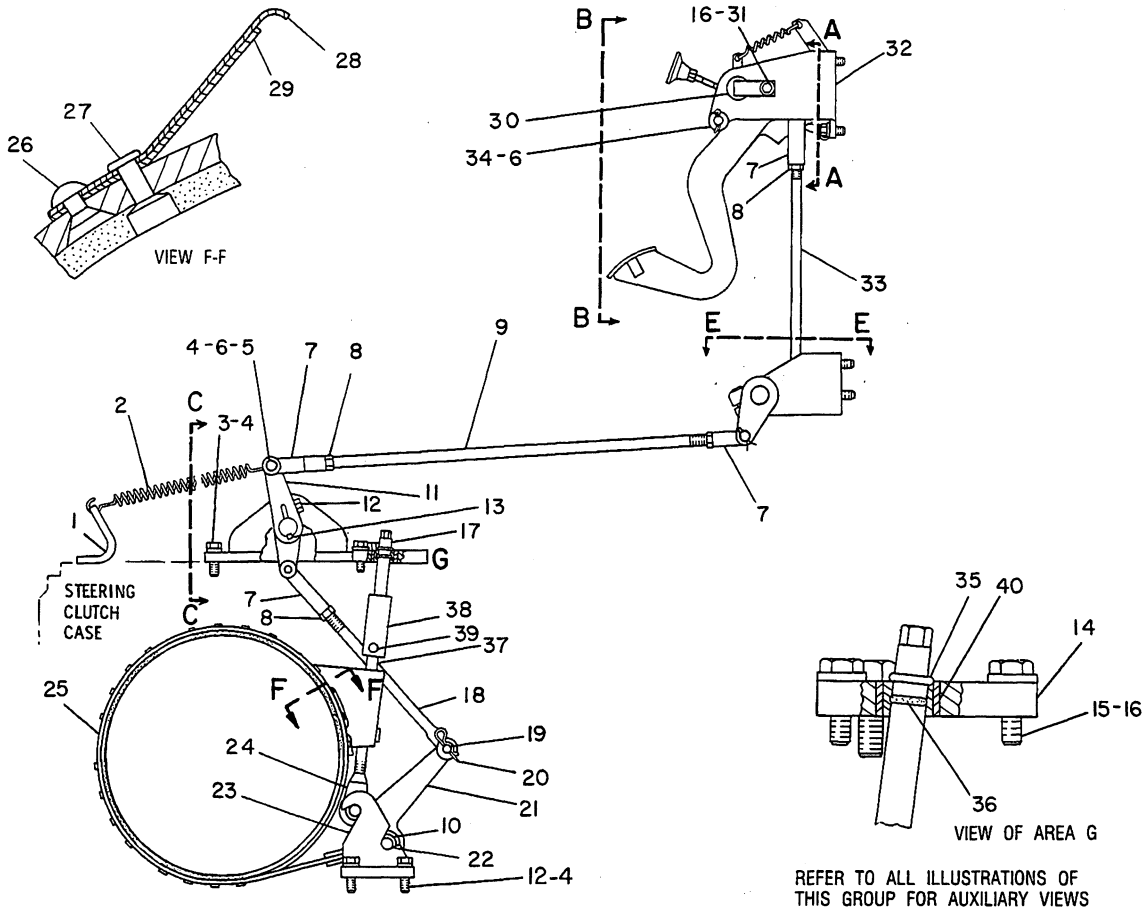

NOTE	REF NO	PART NUMBER	QTY	PART NAME	NOTE	REF NO	PART NUMBER	QTY	PART NAME
	1	6S9477	2	PLATE		24	7H3788	2	FORK-BRK BAND ADJUSTABLE
	2	9H6700	2	SPRING		25	4V2239	2	LINING & BAND AS
	3	OS1595	8	BOLT					(EACH INCLUDES)
	4	5P8245	18	WASHER			4V2244	6	LINING-BRAKE (INNER)
	5	3H1977	2	PIN-CLEVIS			4V2245	8	LINING-BRAKE (OUTER)
	6	3B4617	4	COTTER (PIN)			7B5062	49	RIVET
	7	6F7010	10	END-ROD		26	5B2934	1	RIVET-HEAD
	8	6B6684	8	NUT-FULL		27	7B5068	1	RIVET
	9	5G0371	2	ROD		28	3B0614	1	SPRING-ADJ SCREW
	10	6F0944	4	COLLAR		29	3B0613	1	SPRING-ADJ SCREW
	11	5G6125	2	LEVER		30	6S9983	1	SHAFT AS
	12	OS1585	10	BOLT		31	OS0509	1	BOLT
	13	1B8736	2	KEY-WOODRUFF		32	5G3155	1	BRACKET AS
	14	8Y1086	2	COVER			5G0213	1	PIN
		5G1274	2	GASKET			5G3156	1	PLATE
	15	OS1588	4	BOLT		33	4K1347	4	ROD-CONTROL
	16	5P1075	5	WASHER-HARD		34	1K4703	2	WASHER
	17	8Y1241	2	BAR AS		35	8F4610	2	RING-RETAINING
				(EACH INCLUDES)		36	8L2777	2	SEAL-O-RING
		8H9189	1	DOWEL		37	8Y1084	2	BAR
	18	4H9098	2	ROD		38	8Y1085	2	SLEEVE
	19	5G1492	2	PIN		39	9F7022	2	BOLT
	20	6S6646	2	PIN			2D6235	2	LOCKNUT
	21	6S3725	2	LEVER-BRAKE BAND		40	6Y2745	2	BEARING
	22	6S3447	4	PIN					
	23	5G6126	2	ANCHOR AS-BRAKE					

B-467457 EP

4111 **8Y1588 BRAKE GP-STEERING-PART 1 OF 3**

Type 1

STEERING CLUTCHES AND BRAKES

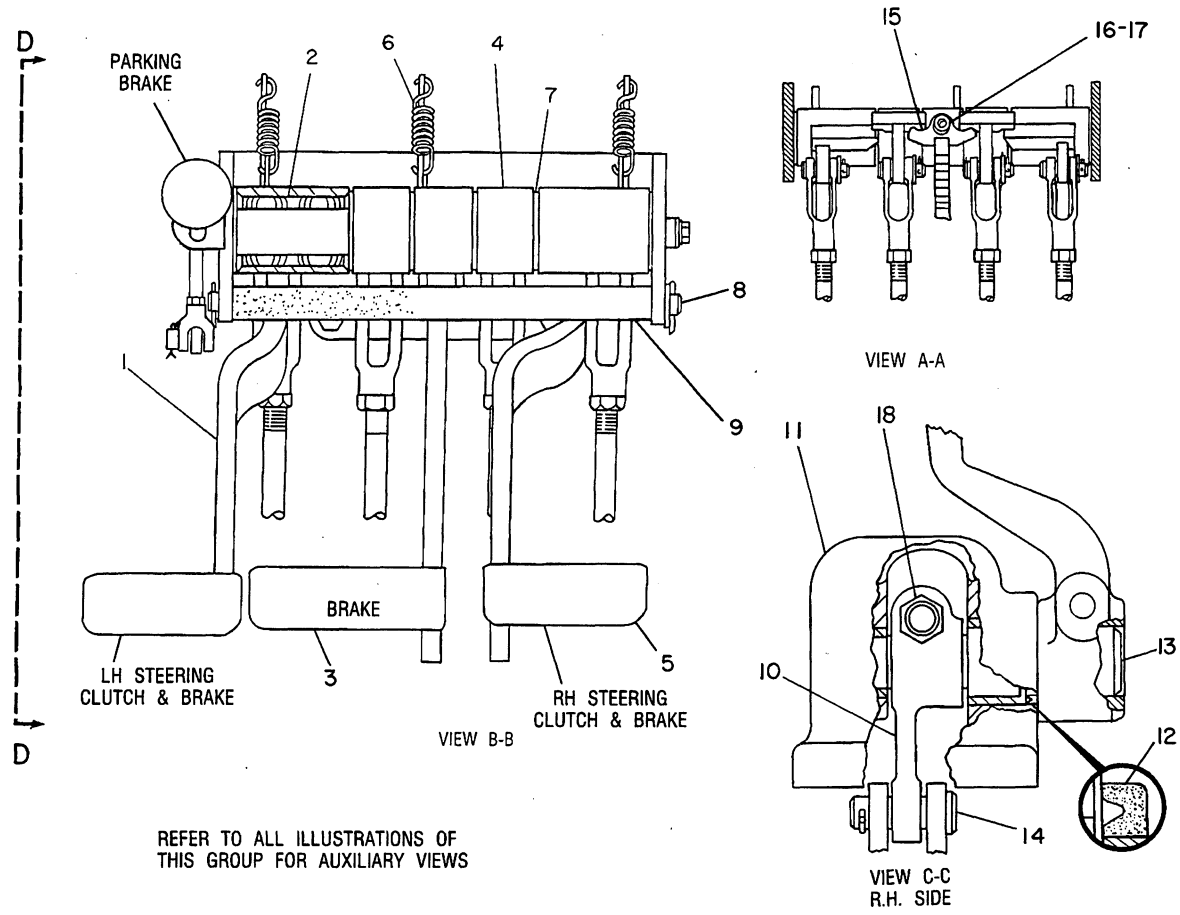

REFER TO ALL ILLUSTRATIONS OF THIS GROUP FOR AUXILIARY VIEWS

NOTE	REF NO	PART NUMBER	QTY	PART NAME	NOTE	REF NO	PART NUMBER	QTY	PART NAME
	1	8Y1888	1	PEDAL AS		17	3H1977	1	PIN-CLEVIS
	2	9S9302	7	BEARING-ROLLER		18	0S1591	2	BOLT
	3	8Y1889	1	PEDAL AS			9S8752	2	NUT-FULL
		3H9269	1	SPACER					
		5J0253	1	SPACER					
		6S9943	1	BOSS					
	4	6S9941	2	LEVER					
	5	8Y1890	1	PEDAL AS					
	6	8Y1827	3	SPRING					
B	7	7K0898	6	WASHER					
	8	5G3183	1	ROD					
E	9	5P1505		HOSE 27CM (10.63IN)					
	10	2A2485	2	LEVER-SHAFT ROD					
		1B8706	2	KEY-WOODRUFF					
	11	5G6128	2	HOUSING AS					
				(EACH INCLUDES)					
		4K8603	1	PLUG-CUP					
		8H8175	1	BEARING (SMALL)					
		5G7945	1	BEARING (LARGE)					
	12	8F5340	1	SEAL-LIP TYPE					
	13	8Y1081	1	SHAFT-RH					
		8Y1082	1	SHAFT-LH					
	14	5G1492	2	PIN					
		6S6646	2	PIN					
	15	6S9976	1	BLOCK					
	16	3K4897	1	PIN-SPRING					

B-USE AS REQUIRED
E-ORDER BY THE CENTIMETER

B-466225 EP

4111 **8Y1588 BRAKE GP-STEERING-PART 2 OF 3**
Type 1

STEERING CLUTCHES AND BRAKES

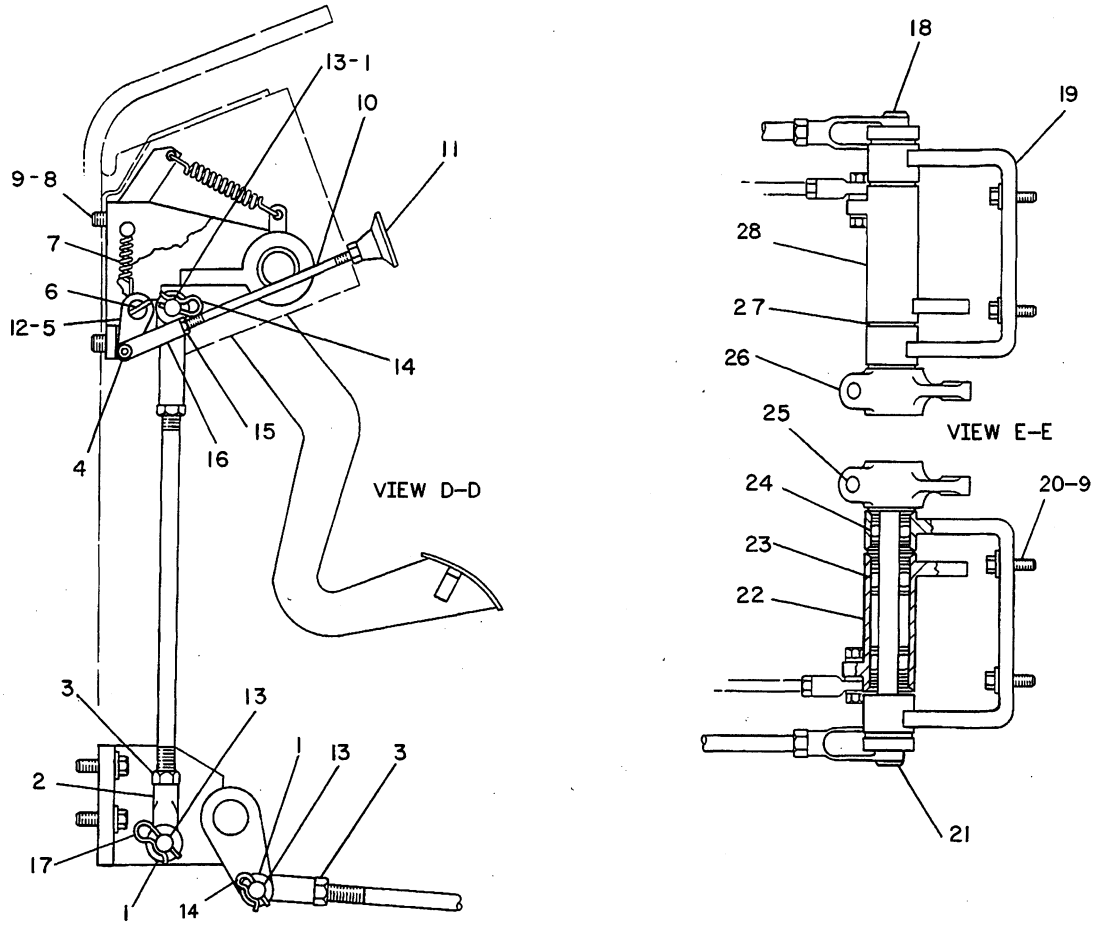

NOTE	REF NO	PART NUMBER	QTY	PART NAME	NOTE	REF NO	PART NUMBER	QTY	PART NAME
	1	5P8245	10	WASHER		25	OS1585	2	BOLT
	2	2M8340	4	END-ROD		26	5G3159	2	LEVER
	3	6B6684	6	NUT-FULL			1B8714	2	KEY-WOODRUFF
	4	3B4607	1	COTTER		27	7K0897	8	WASHER
		4B3057	1	PIN-CLEVIS		28	5G3160	1	BELLCRANK
		5P0537	1	WASHER					
	5	5G0773	1	SHAFT AS					
	6	9F7882	1	PIN-SPRING					
	7	5G0210	1	SPRING					
	8	OS1594	4	BOLT					
	9	5P1075	12	WASHER-HARD					
	10	5G0766	1	ROD					
	11	5G1696	1	KNOB					
	12	5G0015	1	PAWL AS					
	13	8B1419	10	PIN-CLEVIS					
	14	3B4617	4	COTTER					
	15	9M1311	2	NUT-JAM					
	16	8B3768	1	ROD END-YOKE					
	17	6S6646	6	PIN					
	18	5G2076	1	SHAFT AS-LH					
	19	5G5723	2	BRACKET AS					
	20	OS1588	8	BOLT					
	21	5G2075	1	SHAFT AS-RH					
	22	5G3161	1	BELLCRANK					
	23	6K8088	4	BEARING-ROLLER					
	24	9S6465	4	BEARING-ROLLER					

R-492414 EP

4111 **8Y1588 BRAKE GP-STEERING-PART 3 OF 3**

Type 1

STEERING CLUTCHES AND BRAKES

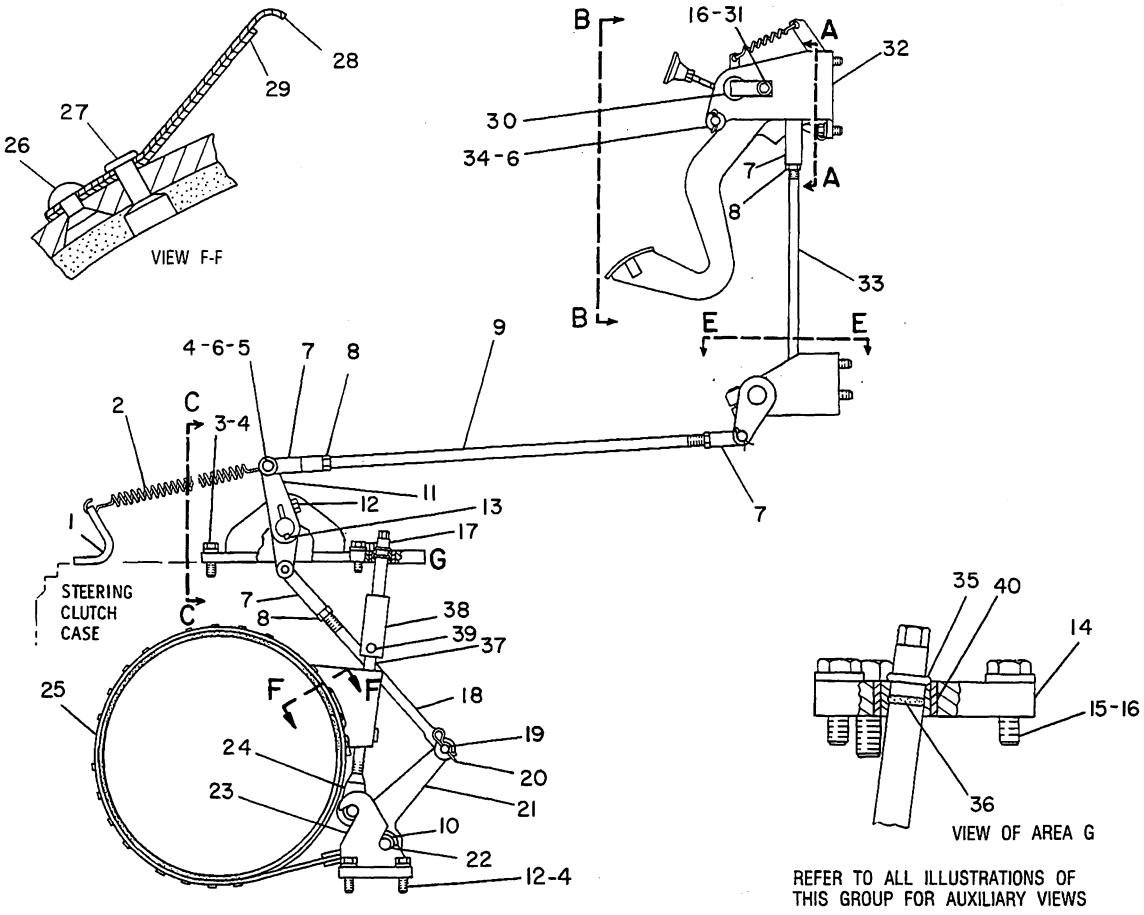

NOTE	REF NO	PART NUMBER	QTY	PART NAME	NOTE	REF NO	PART NUMBER	QTY	PART NAME
	1	6S9477	2	PLATE		25	8Y3783	2	LINING & BAND AS (EACH INCLUDES)
	2	9H6700	2	SPRING			4V2244	6	LINING-BRAKE
	3	8T8917	8	BOLT			4V2245	8	LINING-BRAKE
	4	8T4223	18	WASHER-HARD			7B5062	49	RIVET
	5	3H1977	2	PIN-CLEVIS		26	6B3057	1	RIVET
	6	3B4617	4	COTTER (PIN)		27	7B5068	1	RIVET
	7	6F7010	10	END-ROD		28	3B0614	1	SPRING-ADJ SCREW
	8	9S5585	8	NUT-FULL		29	3B0613	1	SPRING-ADJ SCREW
	9	5G0371	2	ROD		30	6S9983	1	SHAFT AS
	10	6F0944	4	COLLAR		31	5M3062	1	BOLT
	11	5G6125	2	LEVER		32	5G3155	1	BRACKET AS
	12	5P2566	10	BOLT			5G0213	1	PIN
	13	1B8736	2	KEY-WOODRUFF			5G3156	1	PLATE
C	14	8Y1998	2	COVER		33	4K1347	4	ROD-CONTROL
	15	9B7237	4	BOLT		34	1K4703	2	WASHER
	16	5P1075	5	WASHER-HARD		35	2L8509	2	RING-LOCK
	17	8Y1241	2	BAR AS (EACH INCLUDES)	C	36	8L2777	2	SEAL-O-RING
		8H9189	1	DOWEL	C	37	8Y1996	2	BAR
	18	4H9098	2	ROD	C	38	8Y1997	2	SLEEVE
	19	5G1492	2	PIN		39	4M5282	2	BOLT
	20	6S6646	2	PIN			2D6235	2	LOCKNUT
	21	6S3725	2	LEVER-BRAKE BAND		40	6Y2745	2	BEARING
	22	6S3447	4	PIN					
	23	5G6126	2	ANCHOR AS-BRAKE					
	24	7H3788	2	FORK-BRK BAND ADJUSTABLE					

C-CHANGE FROM PREVIOUS TYPE

B-492412 EP

4111 **8Y1588 BRAKE GP-STEERING-PART 1 OF 3**

Type 2

STEERING CLUTCHES AND BRAKES

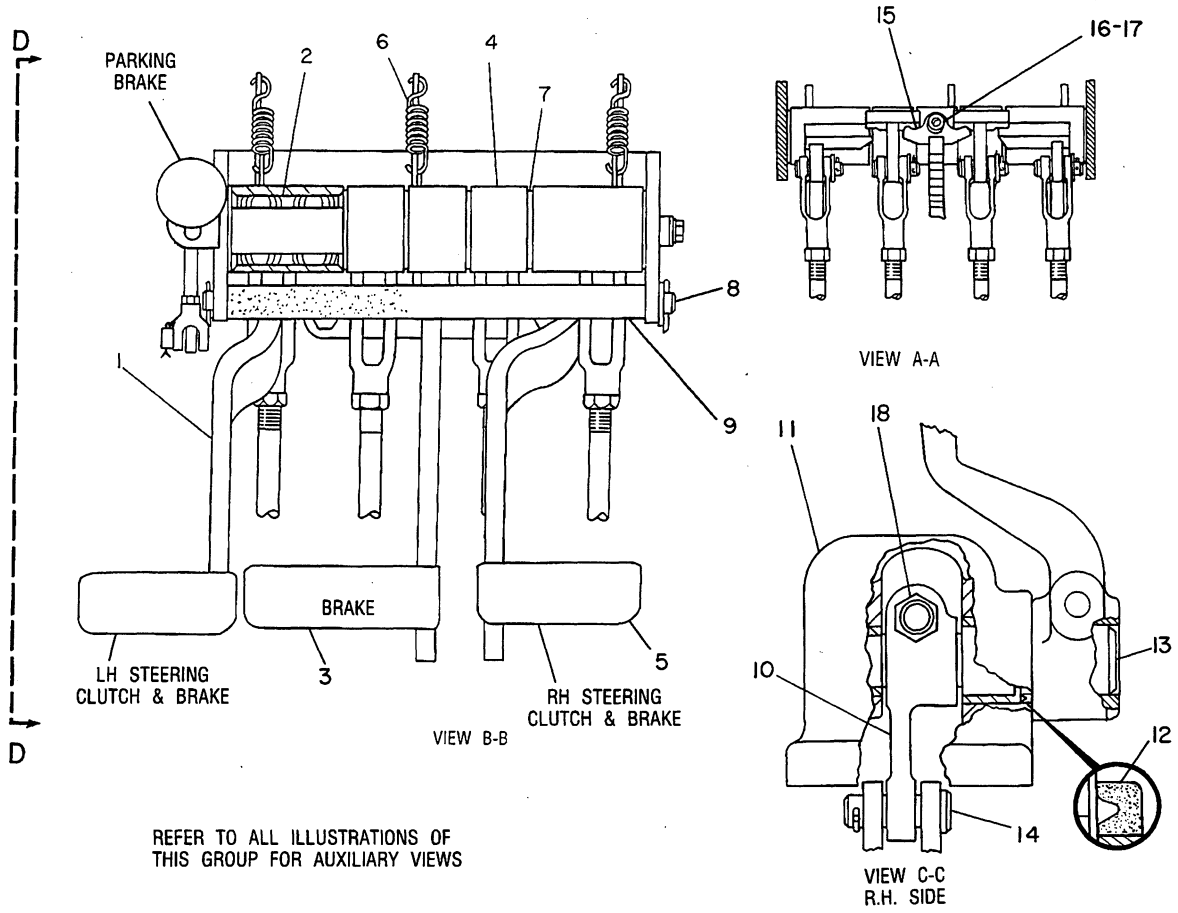

REFER TO ALL ILLUSTRATIONS OF THIS GROUP FOR AUXILIARY VIEWS

NOTE	REF NO	PART NUMBER	QTY	PART NAME	NOTE	REF NO	PART NUMBER	QTY	PART NAME
	1	8Y1888	1	PEDAL AS	C		6S6646	2	PIN
	2	9S9302	7	BEARING-ROLLER		15	6S9976	1	BLOCK
	3	8Y1889	1	PEDAL AS		16	3K4897	1	PIN-SPRING
		3H9269	1	SPACER		17	3H1977	1	PIN-CLEVIS
				17.5MM(.69IN)THK		18	4L9337	2	BOLT
		5J0253	1	SPACER			6V8801	2	NUT
				8.64M(.34IN)THK					
		6S9943	1	BOSS					
	4	6S9941	2	LEVER					
	5	8Y1890	1	PEDAL AS					
	6	8Y4581	3	SPRING					
B	7	9X6274	6	WASHER					
B		9X6273	6	WASHER					
	8	5G3183	1	ROD					
E	9	5P1505		HOSE 27CM (10.63IN)					
	10	2A2485	2	LEVER-SHAFT ROD					
		1B8706	2	KEY-WOODRUFF					
	11	5G6128	2	HOUSING AS					
				(EACH INCLUDES)					
		4K8603	1	PLUG-CUP					
		8H8175	1	BEARING (SMALL)					
		5G7945	1	BEARING (LARGE)					
	12	8F5340	1	SEAL-LIP TYPE					
	13	8Y1081	1	SHAFT-RH					
		8Y1082	1	SHAFT-LH					
	14	5G1492	2	PIN					

B-USE AS REQUIRED
C-CHANGE FROM PREVIOUS TYPE
E-ORDER BY THE CENTIMETER

B-492413 EP

4111 8Y1588 BRAKE GP-STEERING-PART 2 OF 3
Type 2

STEERING CLUTCHES AND BRAKES

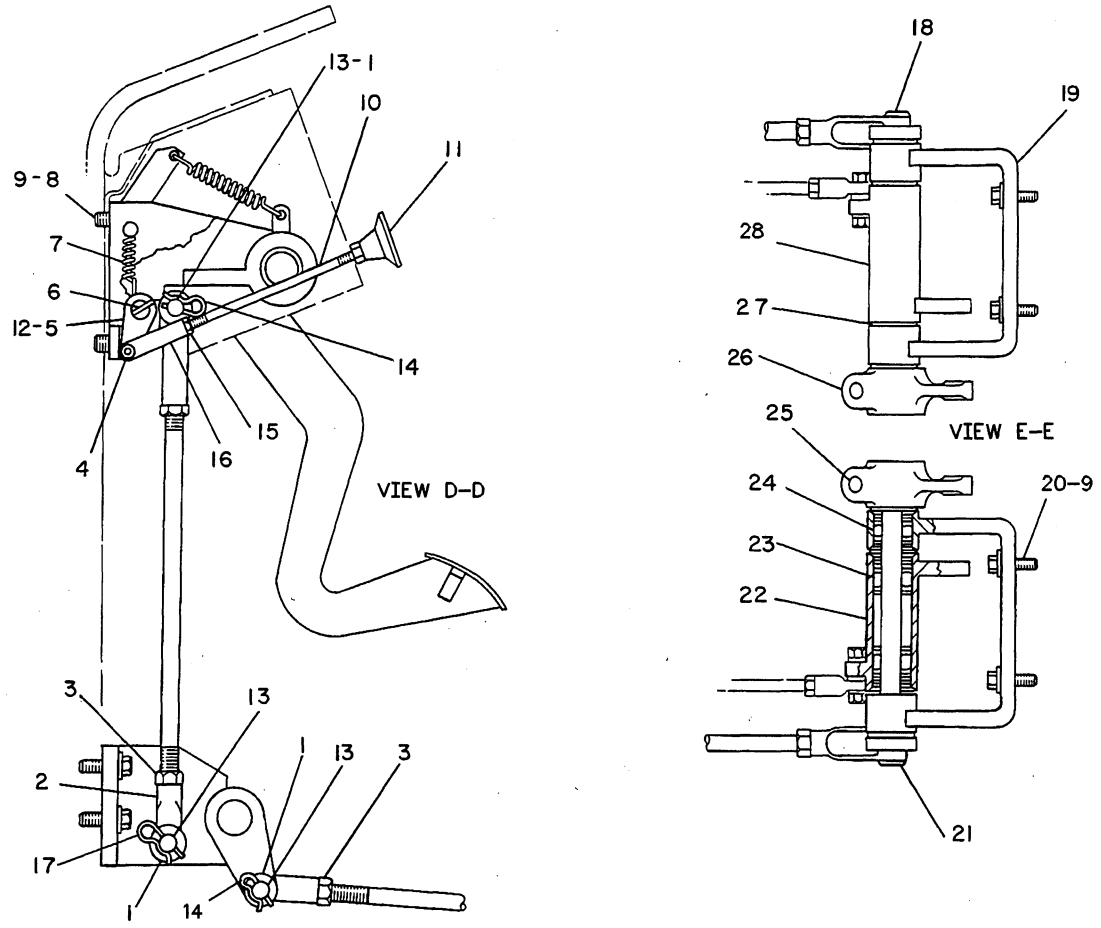

NOTE	REF NO	PART NUMBER	QTY	PART NAME	NOTE	REF NO	PART NUMBER	QTY	PART NAME
	1	5P8245	10	WASHER		25	OS1585	2	BOLT
	2	2M8340	4	END-ROD		26	5G3159	2	LEVER
	3	6B6684	6	NUT-FULL			1B8714	2	KEY-WOODRUFF
	4	3B4607	1	COTTER		27	7K0897	8	WASHER
		4B3057	1	PIN-CLEVIS		28	5G3160	1	BELLCRANK
		5P0537	1	WASHER					
	5	5G0773	1	SHAFT AS					
	6	9F7882	1	PIN-SPRING					
	7	5G0210	1	SPRING					
	8	OS1594	4	BOLT					
	9	5P1075	12	WASHER-HARD					
	10	5G0766	1	ROD					
	11	5G1696	1	KNOB					
	12	5G0015	1	PAWL AS					
	13	8B1419	10	PIN-CLEVIS					
	14	3B4617	4	COTTER					
	15	9M1311	2	NUT-JAM					
	16	8B3768	1	ROD END-YOKE					
	17	6S6646	6	PIN					
	18	5G2076	1	SHAFT AS-LH					
	19	5G5723	2	BRACKET AS					
	20	OS1588	8	BOLT					
	21	5G2075	1	SHAFT AS-RH					
	22	5G3161	1	BELLCRANK					
	23	6K8088	4	BEARING-ROLLER					
	24	9S6465	4	BEARING-ROLLER					

R-492414 EP

4111 **8Y1588 BRAKE GP-STEERING-PART 3 OF 3**

Type 2

STEERING CLUTCHES AND BRAKES

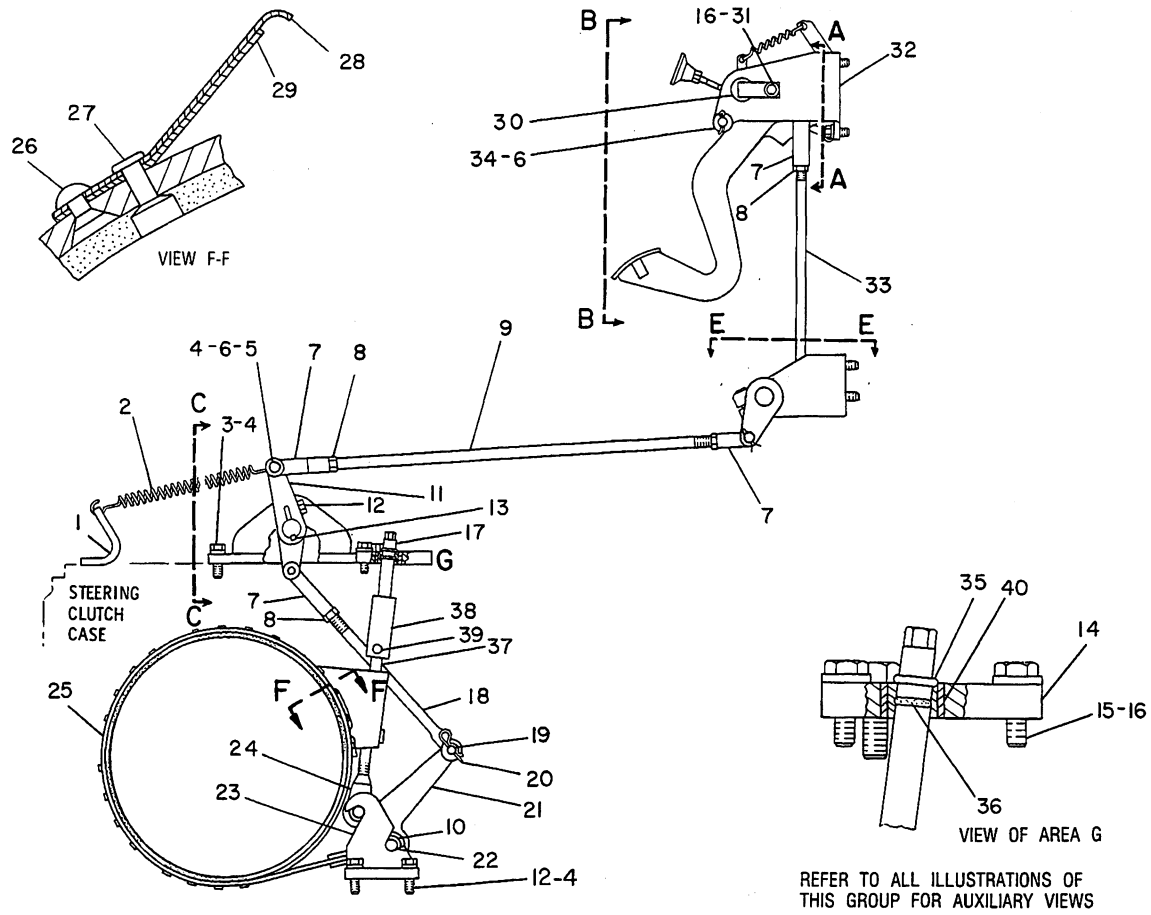

NOTE	REF NO	PART NUMBER	QTY	PART NAME	NOTE	REF NO	PART NUMBER	QTY	PART NAME
	1	6S9477	2	PLATE	R	25	8Y3783	2	LINING & BAND AS
	2	9H6700	2	SPRING					(EACH INCLUDES)
	3	8T8917	8	BOLT			8Y3781	6	LINING-BRAKE (INNER)
	4	8T4223	18	WASHER-HARD			8Y3782	8	LINING-BRAKE (OUTER)
	5	3H1977	2	PIN-CLEVIS			7B5062	49	RIVET
	6	3B4617	4	COTTER		26	5B2934	1	RIVET-HEAD
	7	6F7010	10	END-ROD		27	7B5068	1	RIVET
	8	9S5585	8	NUT-FULL		28	3B0614	1	SPRING-ADJ SCREW
	9	5G0371	2	ROD		29	3B0613	1	SPRING-ADJ SCREW
	10	6F0944	4	COLLAR		30	6S9983	1	SHAFT AS
	11	5G6125	2	LEVER		31	5M3062	1	BOLT
	12	5P2566	10	BOLT		32	5G3155	1	BRACKET AS
	13	1B8736	2	KEY-WOODRUFF			5G0213	1	PIN
C	14	8Y1998	2	COVER			5G3156	1	PLATE
	15	9B7237	4	BOLT		33	4K1347	4	ROD-CONTROL
	16	5P1075	5	WASHER-HARD		34	1K4703	2	WASHER
	17	8Y1241	2	BAR AS	C	35	2L8509	2	RING-LOCK
				(EACH INCLUDES)		36	8L2777	2	SEAL-O-RING
		8H9189	1	DOWEL	C	37	8Y1996	2	BAR
	18	4H9098	2	ROD	C	38	8Y1997	2	SLEEVE
	19	5G1492	2	PIN		39	4M5282	2	BOLT
	20	6S6646	2	PIN			2D6235	2	LOCKNUT
	21	6S3725	2	LEVER-BRAKE BAND		40	6Y2745	2	BEARING
	22	6S3447	4	PIN					
	23	5G6126	2	ANCHOR AS-BRAKE					
	24	7H3788	2	FORK-BRK BAND ADJUSTABLE					

C-CHANGE FROM PREVIOUS TYPE
R-REMFG PART MAY BE AVAILABLE

B-503992 EP

4111 **8Y1087 BRAKE GP-STEERING-PART 1 OF 3**

Part Of 8Y1769 Rop Ar-Enclosed
An Attachment

STEERING CLUTCHES AND BRAKES

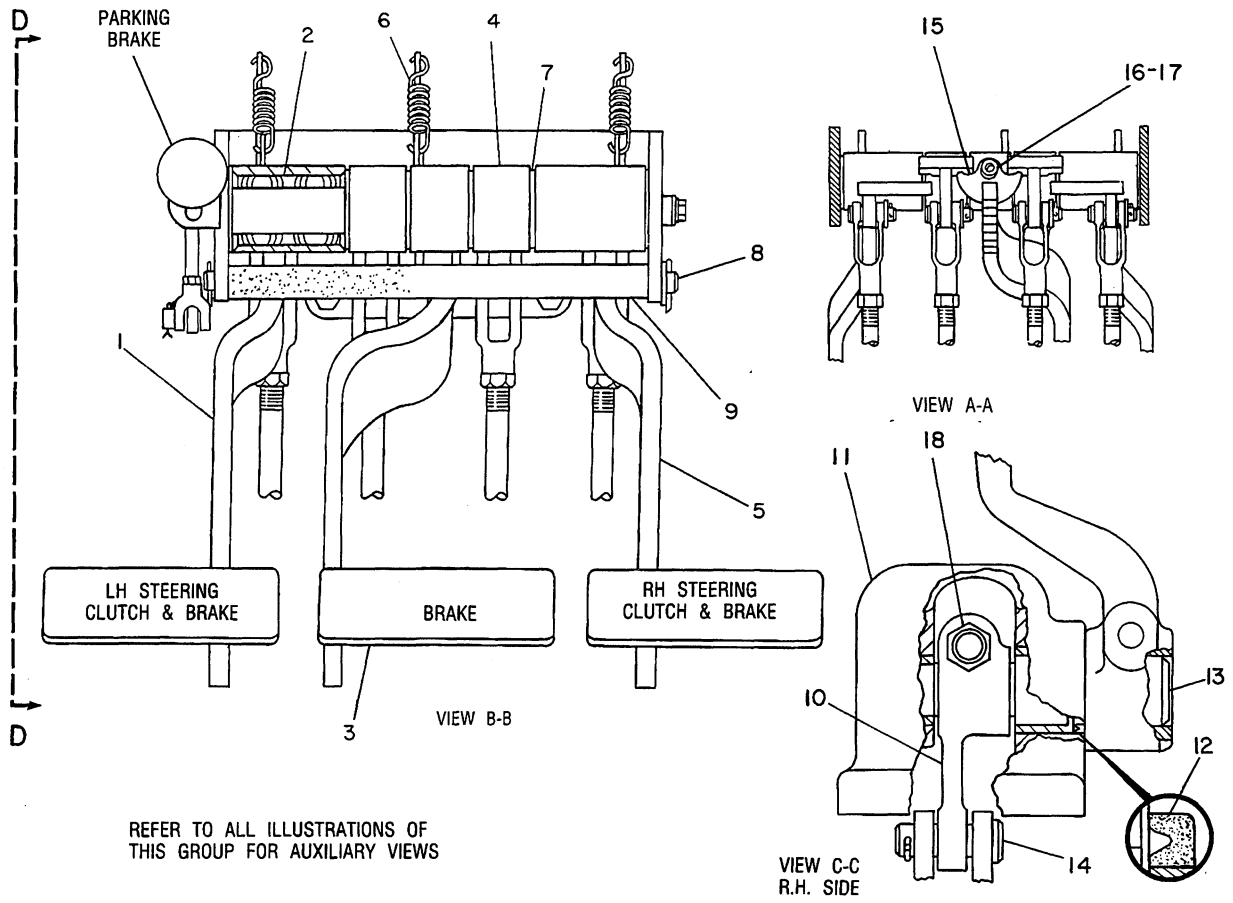

REFER TO ALL ILLUSTRATIONS OF THIS GROUP FOR AUXILIARY VIEWS

NOTE	REF NO	PART NUMBER	QTY	PART NAME
	1	8Y1892	1	PEDAL AS
	2	9S9302	7	BEARING-ROLLER
	3	8Y1891	1	PEDAL AS
		3H9269	1	SPACER
		5J0253	1	SPACER
		6S9943	1	BOSS
	4	6S9941	2	LEVER
	5	8Y1893	1	PEDAL AS
	6	8Y4581	3	SPRING
B	7	9X6274	6	WASHER (THICK)
B		9X6273	6	WASHER (THIN)
	8	5G3183	1	ROD
E	9	5P1505		HOSE 27CM (10.63IN)
	10	2A2485	2	LEVER-SHAFT ROD
		1B8706	2	KEY-WOODRUFF
	11	5G6128	2	HOUSING AS
				(EACH INCLUDES)
		4K8603	1	PLUG-CUP
		8H8175	1	BEARING (SMALL)
		5G7945	1	BEARING (LARGE)
	12	8F5340	1	SEAL-LIP TYPE
	13	8Y1081	1	SHAFT-RH
		8Y1082	1	SHAFT-LH
	14	5G1492	2	PIN
		6S6646	2	PIN
	15	6S9976	1	BLOCK
	16	3K4897	1	PIN-SPRING
	17	3H1977	1	PIN-CLEVIS
	18	4L9337	2	BOLT
		6V8801	2	NUT

B-USE AS REQUIRED
E-ORDER BY THE CENTIMETER

B-503993 EP

4111 **8Y1087 BRAKE GP-STEERING-PART 2 OF 3**
Part Of 8Y1769 Rop Ar-Enclosed
An Attachment

STEERING CLUTCHES AND BRAKES

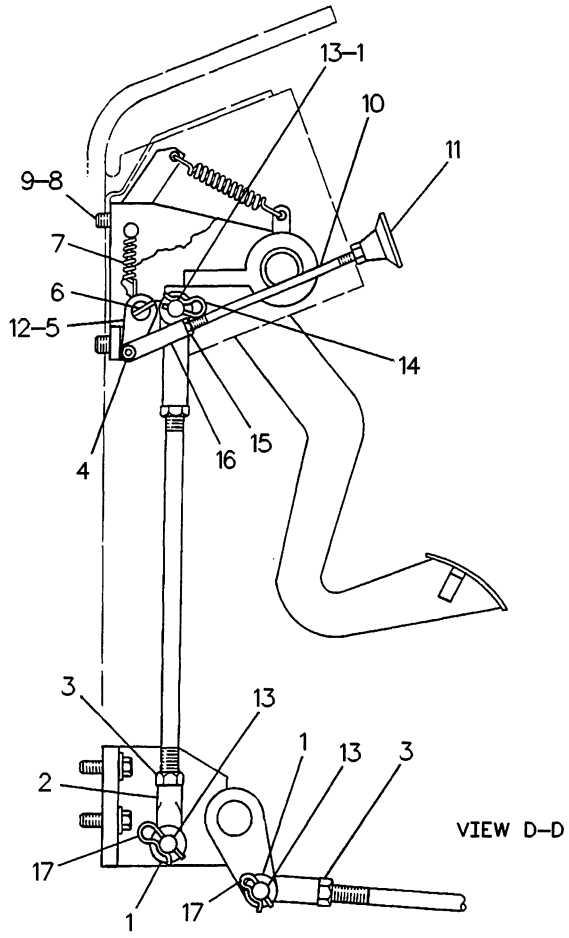

VIEW D-D

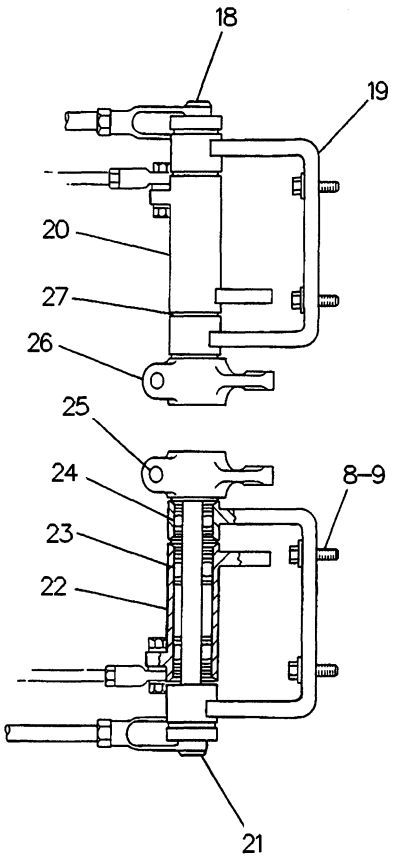

VIEW E-E

NOTE	REF NO	PART NUMBER	QTY	PART NAME	NOTE	REF NO	PART NUMBER	QTY	PART NAME
	1	8T4223	10	WASHER-HARD		25	5P2566	2	BOLT
	2	2M8340	4	END-ROD		26	5G6427	2	LEVER
	3	9S5585	6	NUT-FULL			1B8714	2	KEY-WOODRUFF
	4	3B4607	1	COTTER		27	7K0897	8	WASHER
		4B3057	1	PIN-CLEVIS					
		8T4205	1	WASHER-HARD					
	5	5G0773	1	SHAFT AS					
	6	9F7882	1	PIN-SPRING					
	7	5G0210	1	SPRING					
	8	9B7237	12	BOLT					
	9	5P1075	12	WASHER-HARD					
	10	5G0766	1	ROD					
	11	5G1696	1	KNOB					
	12	5G0015	1	PAWL AS					
	13	8B1419	10	PIN-CLEVIS					
	14	3B4617	4	COTTER					
	15	9M1311	2	NUT-JAM					
	16	8B3768	1	ROD END-YOKE					
	17	6S6646	6	PIN					
	18	5G2076	1	SHAFT AS-LH					
	19	5G5723	2	BRACKET AS					
	20	5G3160	1	BELLCRANK					
	21	5G2075	1	SHAFT AS-RH					
	22	5G3161	1	BELLCRANK					
	23	6K8088	4	BEARING-ROLLER					
	24	9S6465	4	BEARING-ROLLER					

R-503994 EP

4111 **8Y1087 BRAKE GP-STEERING-PART 3 OF 3**

Part Of 8Y1769 Rop Ar-Enclosed
An Attachment

MEMORANDA

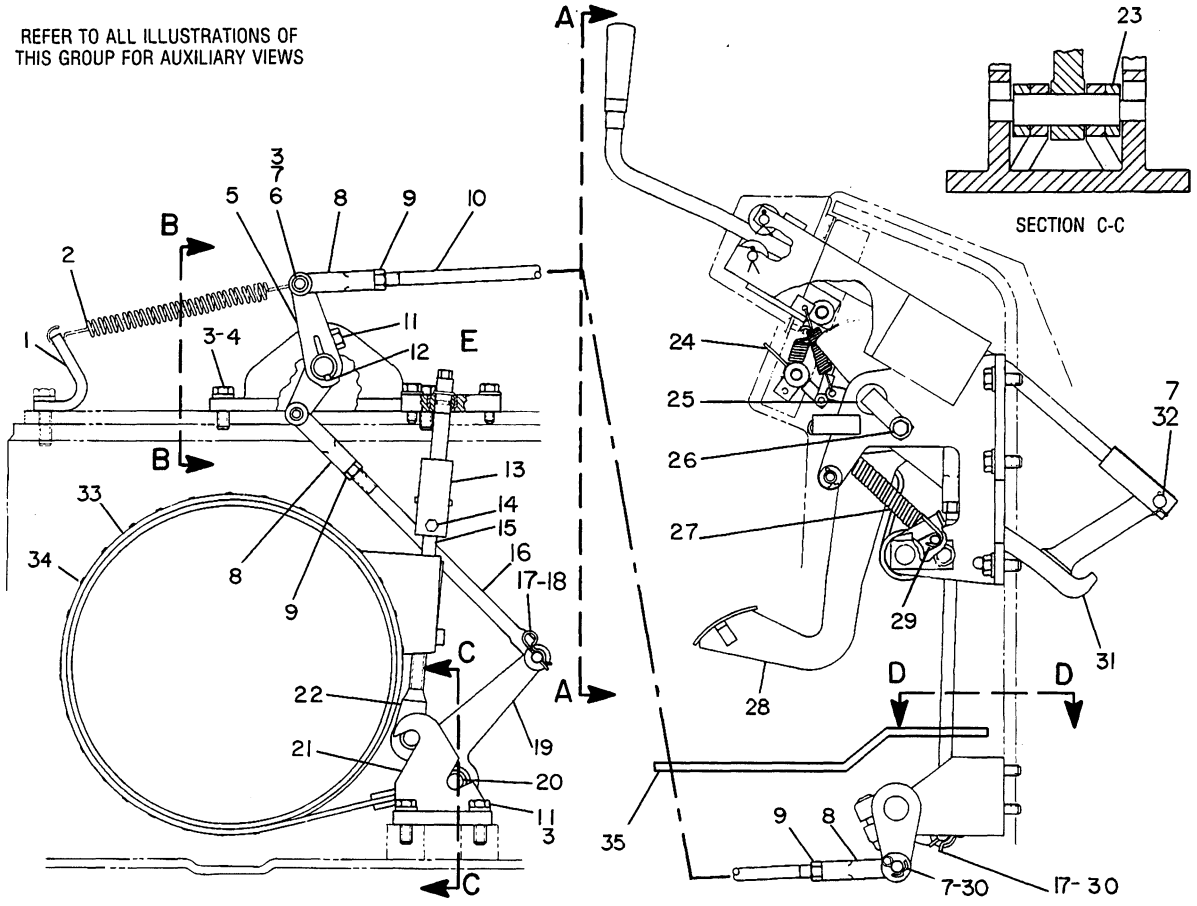

R-507184 EP

4111 **8Y2316 BRAKE GP-STEERING-HAND-PART 1 OF 4**

Part Of 8Y2312 Steering Ar

An Attachment

STEERING CLUTCHES AND BRAKES

NOTE	REF NO	PART NUMBER	QTY	PART NAME
	1	6S9477	2	PLATE
	2	9H6700	2	SPRING
	3	8T4223	18	WASHER-HARD
	4	8T8917	8	BOLT
	5	5G6125	2	LEVER
	6	3H1977	2	PIN-CLEVIS
	7	3B4617	6	COTTER
	8	6F7010	6	END-ROD
	9	9S5585	6	NUT-FULL
	10	5G0371	2	ROD
	11	5P2566	10	BOLT
	12	1B8736	2	KEY-WOODRUFF
	13	8Y1997	2	SLEEVE
	14	4M5282	2	BOLT
		2D6235	2	LOCKNUT
	15	8Y1996	2	BAR
	16	4H9098	2	ROD
	17	6S6646	6	PIN
	18	5G1492	2	PIN
	19	6S3725	2	LEVER-BRAKE BAND
	20	6S3447	4	PIN
	21	5G6126	2	ANCHOR AS-BRAKE
	22	7H3788	2	FORK-BRK BAND ADJUSTABLE
	23	6F0944	4	COLLAR
	24	8Y2377	1	LEVER AS
	25	6S9983	1	SHAFT AS
	26	5M3062	1	BOLT
		5P1075	1	WASHER-HARD
	27	8Y3231	2	SPRING
	28	8Y2355	1	PEDAL AS
		3H9269	1	SPACER (17.5 MM THK)
		5J0253	1	SPACER (8.6 MM THK)
		6S9943	1	BOSS
	29	310216	2	BOLT
	30	8B1419	6	PIN-CLEVIS
	31	8Y3252	1	CAM (L.H.)
		8Y3253	1	CAM (R.H.)
	32	2B2938	2	PIN-CLEVIS
R	33	8Y3783	2	LINING & BAND AS (EACH INCLUDES)
		3B0613	1	SPRING-ADJ SCREW (INNER)
		3B0614	1	SPRING-ADJ SCREW (OUTER)
		6B3057	1	RIVET (STEEL)
		7B5068	1	RIVET (BRASS)
		8Y3781	6	LINING-BRAKE (SHORT)
		8Y3782	8	LINING-BRAKE (LONG)
	34	7B5062	49	RIVET
	35	5G0121	1	PLATE

R-REMFG PART MAY BE AVAILABLE

501870 EP

4111 **8Y2316 BRAKE GP-STEERING-HAND-PART 1 OF 4**

Part Of 8Y2312 Steering Ar

An Attachment

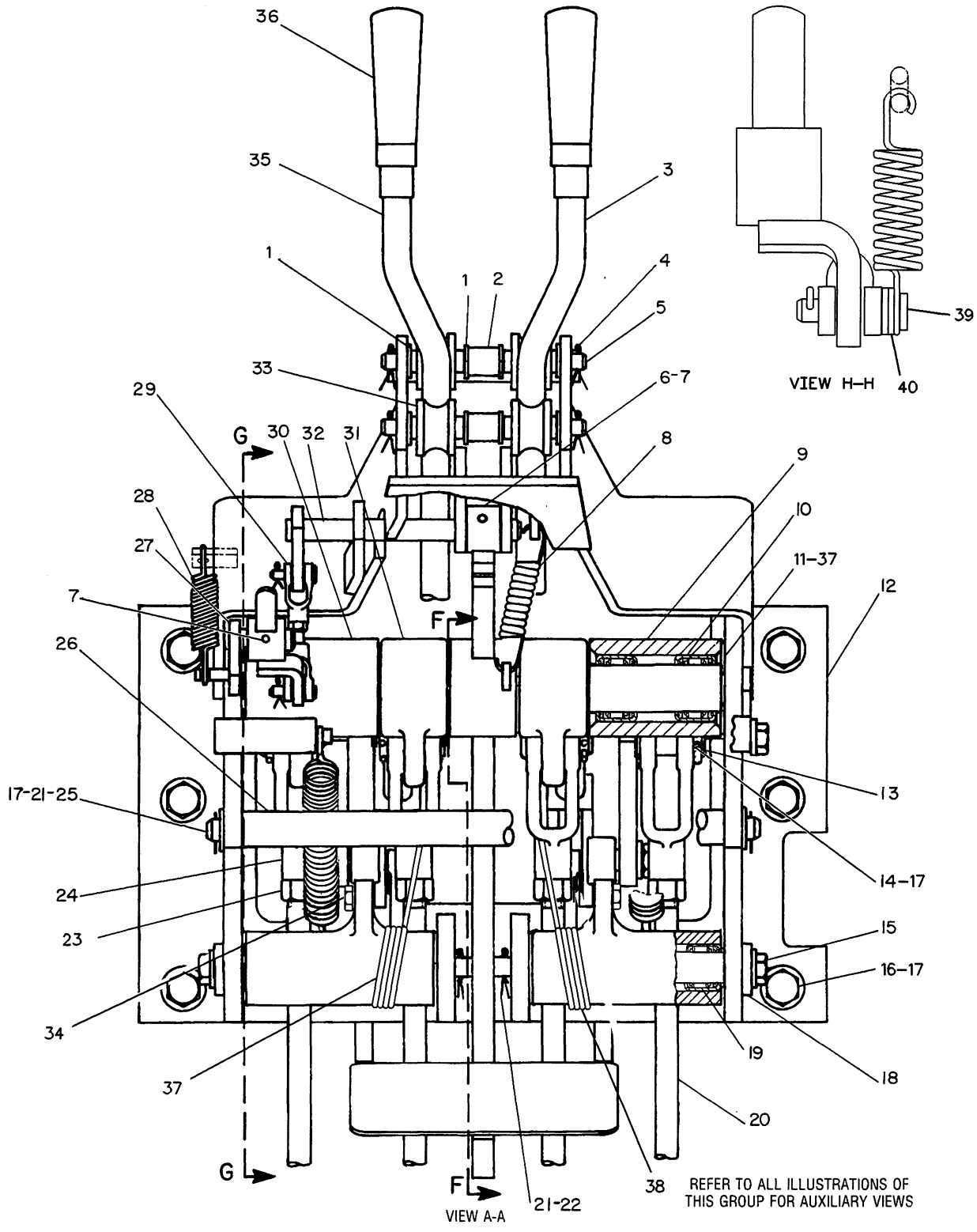

4111 **8Y2316 BRAKE GP-STEERING-HAND-PART 2 OF 4**

Part Of 8Y2312 Steering Ar
An Attachment

STEERING CLUTCHES AND BRAKES

NOTE	REF NO	PART NUMBER	QTY	PART NAME
B	1	5B9628	8	WASHER
	2	5G5432	2	SPACER
	3	8Y3046	1	ROD AS (R.H.)
	4	3B4615	4	PIN-COTTER
	5	8Y2376	2	SHAFT
	6	5G0015	1	PAWL AS
	7	9F7882	2	PIN-SPRING
	8	8Y4581	1	SPRING
	9	8Y2369	1	LEVER AS-LH
	10	9S9302	7	BEARING-ROLLER
B	11	7K0898	6	WASHER
	12	8Y2344	1	BRACKET AS
	13	8B1419	4	PIN-CLEVIS
	14	6S6646	4	PIN
	15	5M3062	2	BOLT
		5P1075	2	WASHER-HARD
	16	8T8917	7	BOLT
	17	8T4223	13	WASHER-HARD
	18	8Y2359	2	SHAFT AS
	19	6D5974	4	BEARING-ROLLER
	20	4K1347	4	ROD-CONTROL
	21	3B4617	4	COTTER
	22	8Y2342	1	ROD
	23	9S5585	4	NUT-FULL
	24	6F7010	4	END-ROD
	25	5G3183	1	ROD
E	26	5P1505		HOSE (27CM)
	27	8Y5499	1	SHAFT AS
	28	4H3521	1	SPRING
	29	2M4036	2	END-ROD
		8Y2952	1	ROD
	30	8Y2372	1	LEVER AS-RH
	31	8Y6536	2	LEVER
	32	8Y2365	1	SHAFT AS
	33	1P2878	4	ROLLER
	34	310216	2	BOLT
	35	8Y3047	1	ROD AS-LH
	36	0L0829	2	HANDLE
	37	8Y5678	1	SPRING-LH
	38	8Y5679	1	SPRING-RH
	39	4B3057	1	PIN-CLEVIS
	40	8T0334	2	WASHER-HARD

B-USE AS REQUIRED
E-ORDER BY THE CENTIMETER

533758 EP

4111 **8Y2316 BRAKE GP-STEERING-HAND-PART 2 OF 4**

Part Of 8Y2312 Steering Ar

An Attachment

STEERING CLUTCHES AND BRAKES

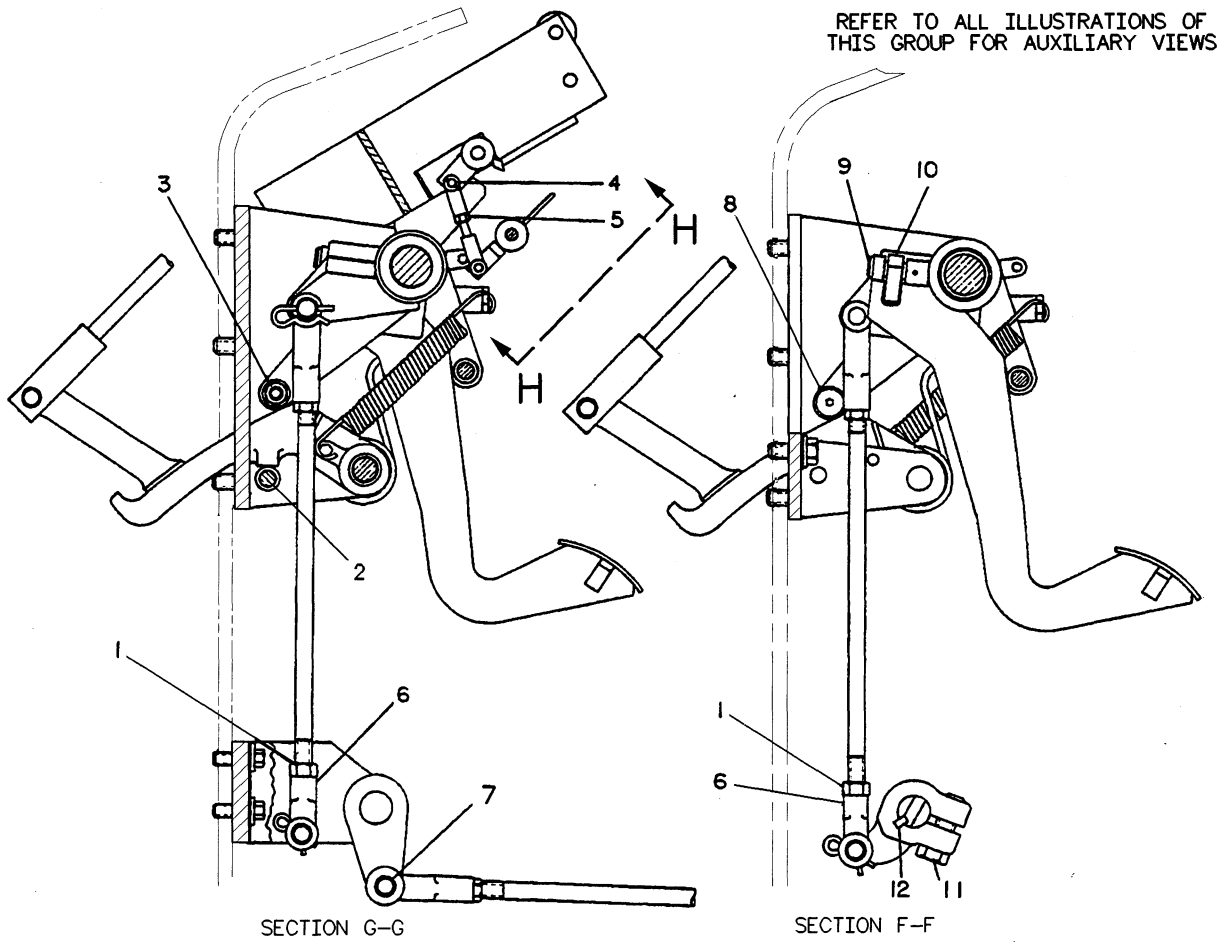

NOTE	REF NO	PART NUMBER	QTY	PART NAME	NOTE	REF NO	PART NUMBER	QTY	PART NAME
	1	9S5585	4	NUT-FULL					
E	2	9SO671		HOSE (2OCM)					
	3	4D6432	2	LOCKNUT					
		8T536O	2	WASHER					
	4	6J2256	1	PIN (CLEVIS)					
		6V9197	2	PIN-LOCK					
	5	5L4426	1	NUT-FULL					
	6	2M834O	4	END-ROD					
	7	8B1419	4	PIN-CLEVIS					
	8	3J5397	2	ROLLER-CAMSHAFT					
	9	3K4897	1	PIN-SPRING					
		3H1977	1	PIN-CLEVIS					
	1O	6S9976	1	BLOCK					
	11	5P2566	1	BOLT					
	12	1B8714	2	KEY-WOODRUFF					

E-ORDER BY THE CENTIMETER

R-523234 EP

4111 **8Y2316 BRAKE GP-STEERING-HAND-PART 3 OF 4**

Part Of 8Y2312 Steering Ar

An Attachment

STEERING CLUTCHES AND BRAKES

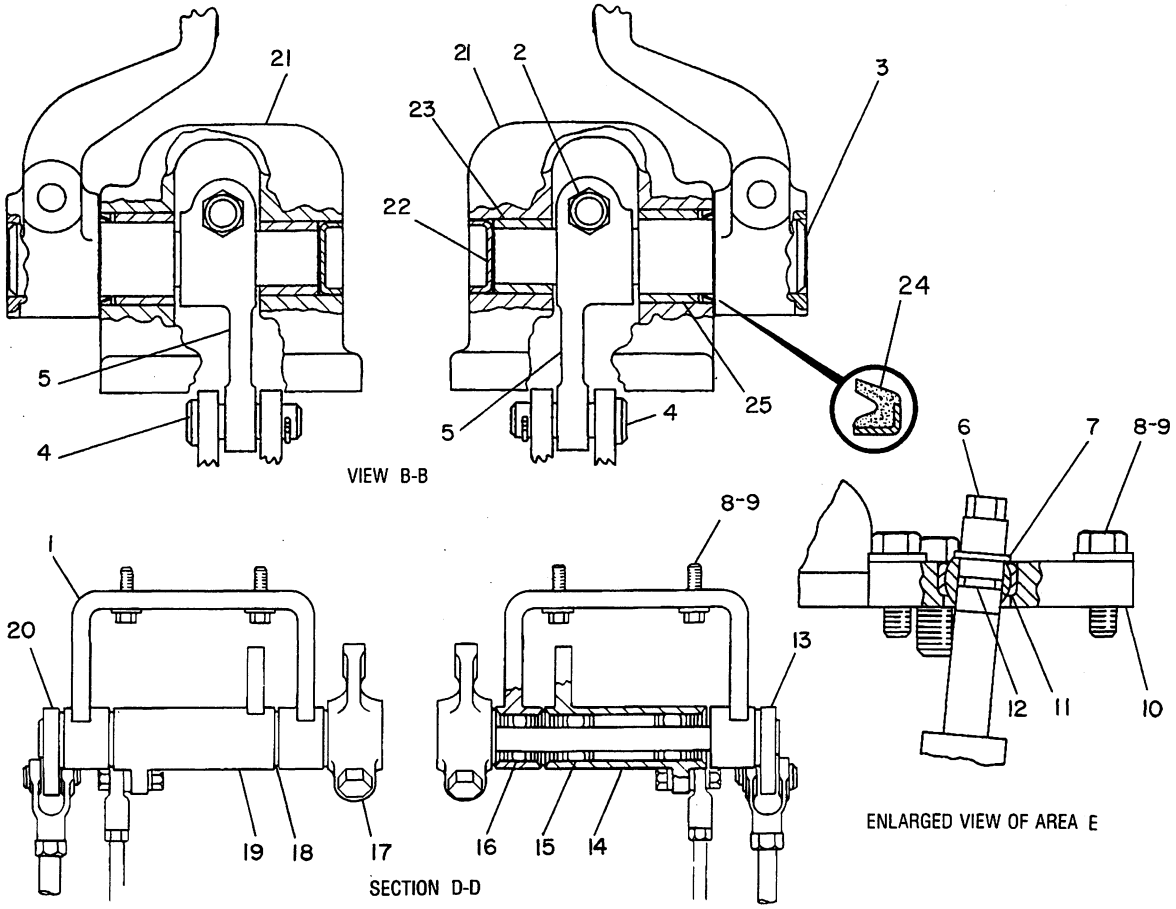

NOTE	REF NO	PART NUMBER	QTY	PART NAME	NOTE	REF NO	PART NUMBER	QTY	PART NAME
B	1	5B9628	8	WASHER	E	26	5P1505		HOSE (27CM)
	2	5G5432	2	SPACER		27	8Y5499	1	SHAFT AS
	3	8Y3046	1	ROD AS (R.H.)		28	4H3521	1	SPRING
	4	3B4615	4	PIN-COTTER		29	2M4036	2	END-ROD
	5	8Y2376	2	SHAFT			8Y2952	1	ROD
	6	5G0015	1	PAWL AS		30	8Y2372	1	LEVER AS-RH
	7	9F7882	2	PIN-SPRING		31	8Y6536	2	LEVER
	8	8Y4581	1	SPRING		32	8Y2365	1	SHAFT AS
	9	8Y2369	1	LEVER AS-LH		33	1P2878	4	ROLLER
	10	9S9302	7	BEARING-ROLLER		34	310216	2	BOLT
B	11	7K0898	6	WASHER		35	8Y3047	1	ROD AS-LH
	12	8Y2344	1	BRACKET AS		36	0L0829	2	HANDLE
	13	8B1419	4	PIN-CLEVIS		37	8Y5678	1	SPRING-LH
	14	6S6646	4	PIN		38	8Y5679	1	SPRING-RH
	15	5M3062	2	BOLT		39	4B3057	1	PIN-CLEVIS
		5P1075	2	WASHER-HARD		40	8T0334	2	WASHER-HARD
	16	8T8917	7	BOLT					
	17	8T4223	13	WASHER-HARD					
	18	8Y2359	2	SHAFT AS					
	19	6D5974	4	BEARING-ROLLER					
	20	4K1347	4	ROD-CONTROL					
	21	3B4617	4	COTTER					
	22	8Y2342	1	ROD					
	23	9S5585	4	NUT-FULL					
	24	6F7010	4	END-ROD					
	25	5G3183	1	ROD					

B-USE AS REQUIRED
E-ORDER BY THE CENTIMETER

R-533759 EP

4111 **8Y2316 BRAKE GP-STEERING-HAND-PART 4 OF 4**

Part Of 8Y2312 Steering Ar
An Attachment

MEMORANDA

CHASSIS AND UNDERCARRIAGE

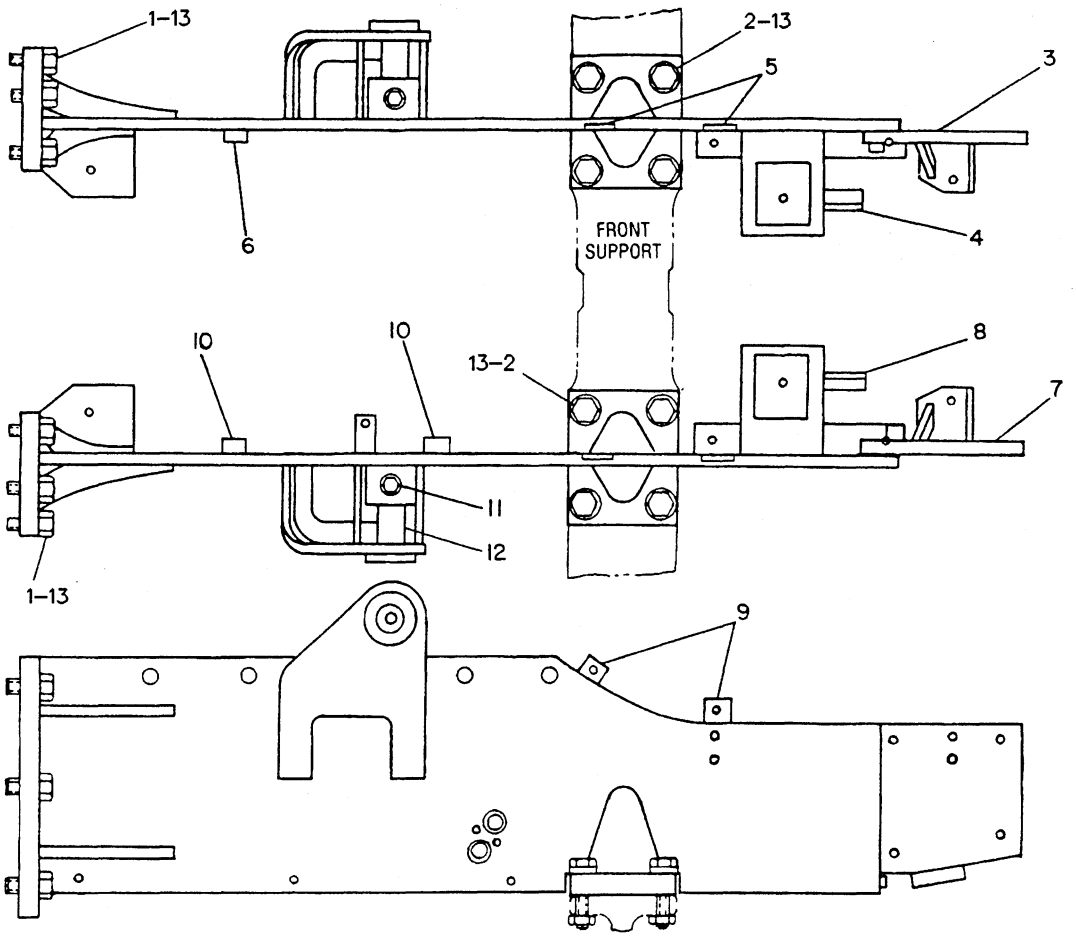

NOTE	REF NO	PART NUMBER	QTY	PART NAME	NOTE	REF NO	PART NUMBER	QTY	PART NAME
	1	8T9399	12	BOLT					
	2	7X0369	8	BOLT					
		6V8182	8	NUT					
	3	6S9871	1	FRAME AS					
	4	2H8382	1	LUG					
	5	5G4318	2	LUG					
	6	4D9376	1	BOSS					
	7	5G8710	1	FRAME AS					
	8	2H8382	1	LUG					
	9	5G4318	2	LUG					
	10	4D9376	2	BOSS					
	11	7X0328	2	BOLT					
		2H3788	2	NUT-SELF LOCKING					
	12	6S5984	2	PIN					
	13	7X0519	20	WASHER-HARD					

R-491897 EP

7051 **5G8709 FRAME GP**

MEMORANDA

MEMORANDA

CHASSIS AND UNDERCARRIAGE

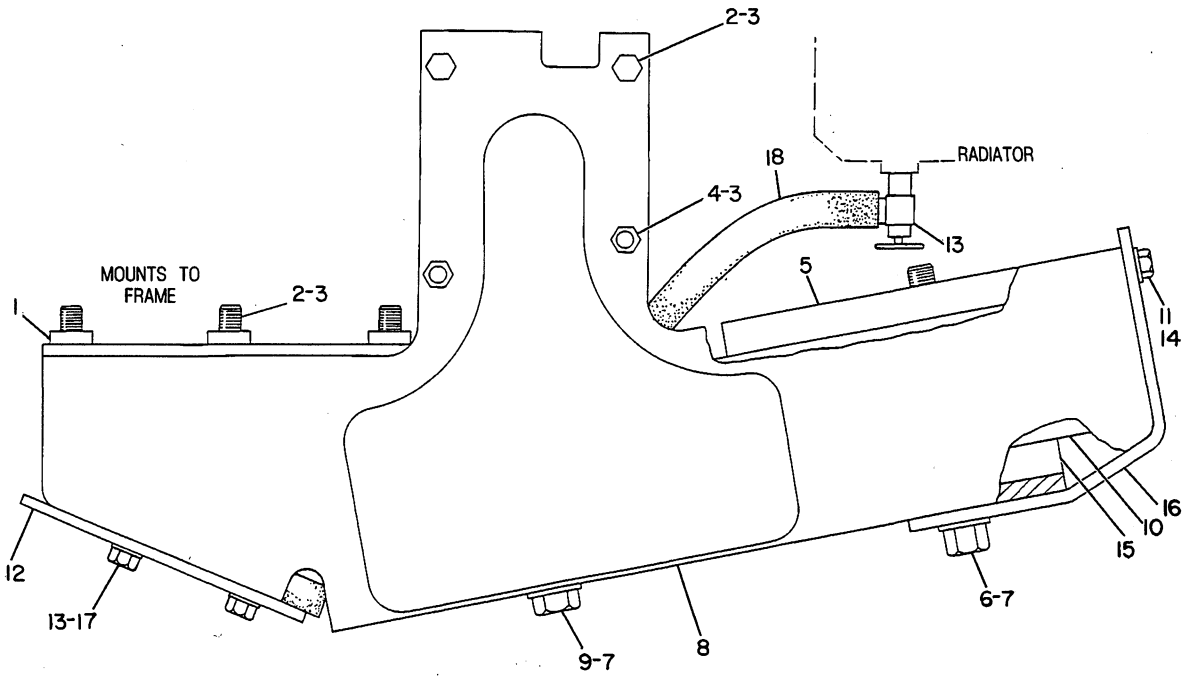

NOTE	REF NO	PART NUMBER	QTY	PART NAME	NOTE	REF NO	PART NUMBER	QTY	PART NAME
	1	1B4264	6	COLLAR					
	2	8T8919	10	BOLT					
C	3	8T4223	14	WASHER-HARD					
	4	9X8278	4	BOLT					
C		6V8188	4	NUT					
	5	6S9341	2	PLATE					
C	6	8T9313	2	BOLT					
C	7	7X0564	4	WASHER-HARD					
	8	5G0439	1	BRACKET AS (RH)					
		5G0440	1	BRACKET AS (LH)					
				(EA BRACKET AS INCL)					
		9F2978	2	NUT-WELD					
C	9	7X0374	2	BOLT					
	10	6S9342	7	PLATE					
C	11	5M3062	2	BOLT					
	12	6S9347	1	GUARD					
	13	8F8151	1	COCK-SHUT-OFF					
C	14	8T4896	6	WASHER-HARD					
	15	5G0425	2	PLATE					
	16	5G0436	1	COVER					
C	17	5S7382	4	BOLT					
E	18	5P0767		HOSE 75CM(29.52IN)					

C-CHANGE FROM PREVIOUS TYPE
E-ORDER BY THE CENTIMETER

B-498610 EP

7056 **5G0441 COUNTERWEIGHT GP-FRONT**

386KG (850LBS)
Cannot Be Used With 6S3864 Hook Gp-Front Pull
Or 6S6044 Lines Gp-Front Hydraulic-An Attachment

MEMORANDA

CHASSIS AND UNDERCARRIAGE

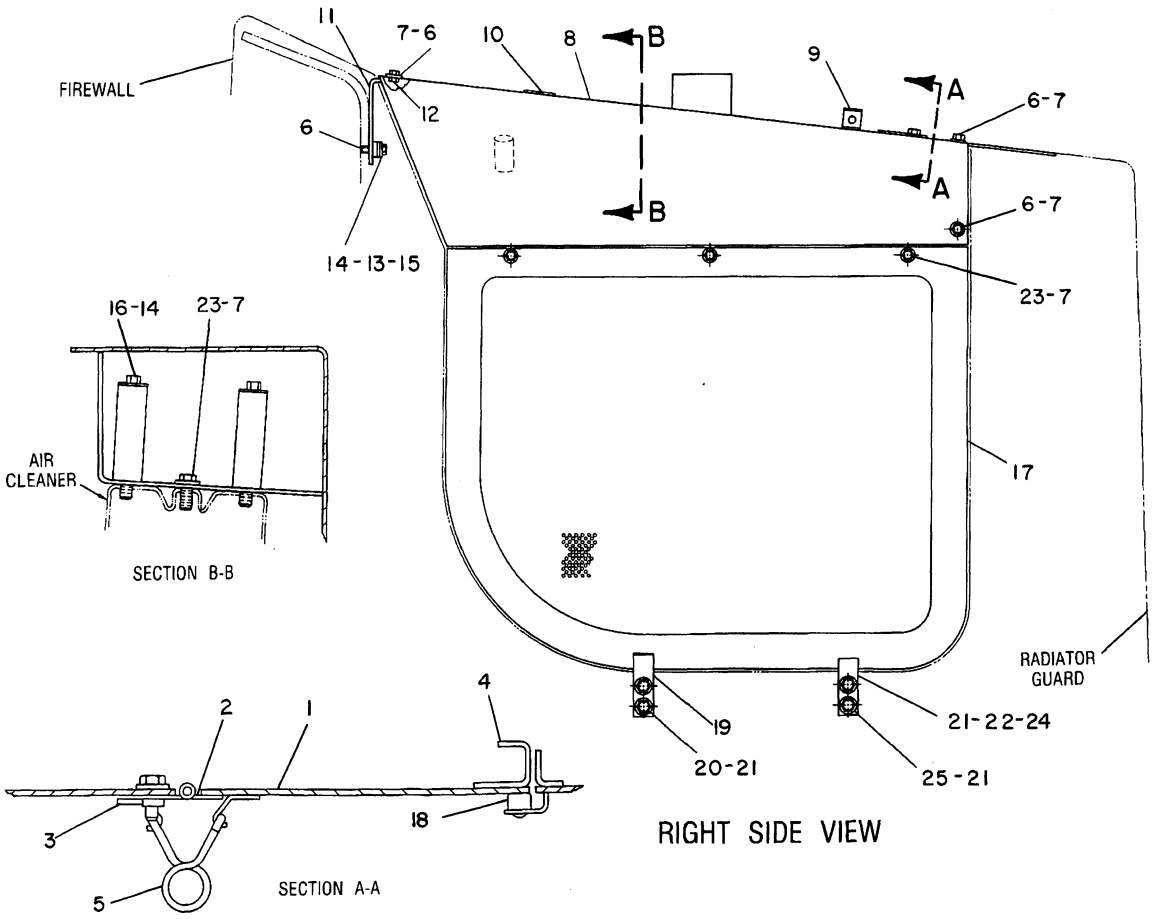

NOTE	REF NO	PART NUMBER	QTY	PART NAME	NOTE	REF NO	PART NUMBER	QTY	PART NAME
	1	8Y0819	1	DOOR AS		24	5G4911	2	PLATE
		9F2978	2	NUT-WELD	C	25	8C4436	4	BOLT
	2	3K7427	2	HINGE					
	3	4K8501	4	CLIP					
	4	6S6649	1	PLATE					
	5	1K8850	2	SPRING					
C	6	4L6454	13	BOLT					
	7	5P1075	16	WASHER-HARD					
	8	8Y0810	1	HOOD AS					
		9F2978	6	NUT-WELD					
	9	6S6652	1	PLATE					
C	10	924924	2	PLUG-BUTTON					
	11	8Y0821	1	SUPPORT AS					
	12	9F2978	2	NUT-WELD					
	13	5G2878	4	WASHER (RUBBER)					
C	14	7X0772	6	WASHER-HARD (STEEL)					
	15	3H2137	4	LUG					
C	16	8T9378	2	BOLT					
	17	5G4012	1	PANEL AS (RH)					
		5G4013	1	PANEL AS (LH)					
	18	9M5617	3	GROMMET					
	19	8Y2954	2	SPRING					
C	20	5P2228	4	BOLT					
C	21	8T4223	12	WASHER-HARD					
	22	5G4909	2	SPRING					
C	23	5M3062	7	BOLT					

C-CHANGE FROM PREVIOUS TYPE

B-493034 EP

7251 **8Y0216 HOOD & GUARD GP**

S/N 1RJ1-526 & 2CJ1-170

CHASSIS AND UNDERCARRIAGE

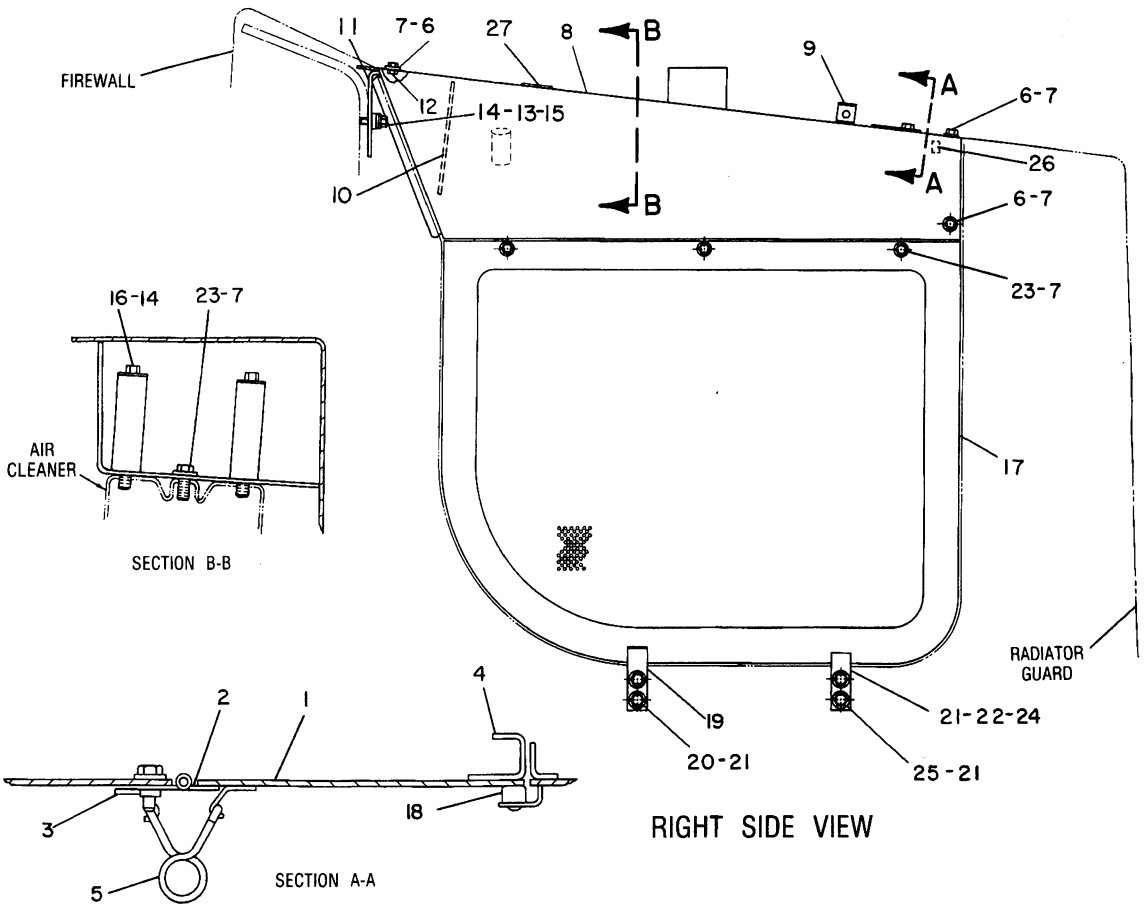

NOTE	REF NO	PART NUMBER	QTY	PART NAME
	1	8YO819	1	DOOR AS
		9F2978	2	NUT-WELD
	2	3K7427	2	HINGE
	3	4K8501	4	CLIP
	4	6S6649	1	PLATE
	5	1K8850	2	SPRING
	6	4L6454	13	BOLT
	7	5P1075	16	WASHER-HARD
	8	8YO810	1	HOOD AS
		9F2978	6	NUT-WELD
	9	6S6652	1	PLATE
	10	8Y2323	2	PLATE
	11	8Y2378	1	SUPPORT AS (RH)
		8Y2379	1	SUPPORT AS (LH)
				(EA SUPPORT AS INCLS)
	12	9F2978	2	NUT-WELD
	13	5G2878	4	WASHER (RUBBER)
	14	7XO772	6	WASHER-HARD (STEEL)
	15	3H2137	4	LUG
	16	8T9378	2	BOLT
	17	5G4012	1	PANEL AS (RH)
		5G4013	1	PANEL AS (LH)
	18	9M5617	3	GROMMET
	19	8Y2954	2	SPRING
	20	5P2228	4	BOLT
	21	8T4223	12	WASHER-HARD
	22	5G4909	2	SPRING
	23	5M3062	7	BOLT
	24	5G4911	2	PLATE
	25	8C4436	4	BOLT
BE	26	9X2092		STRIP-EDGING
	27	924924	2	PLUG-BUTTON

B-USE AS REQUIRED
E-ORDER BY THE CENTIMETER

V-472039 EP

7251 **8Y2309 HOOD & GUARD GP**

Type 1-S/N 1RJ527-Up & 2CJ171-Up

CHASSIS AND UNDERCARRIAGE

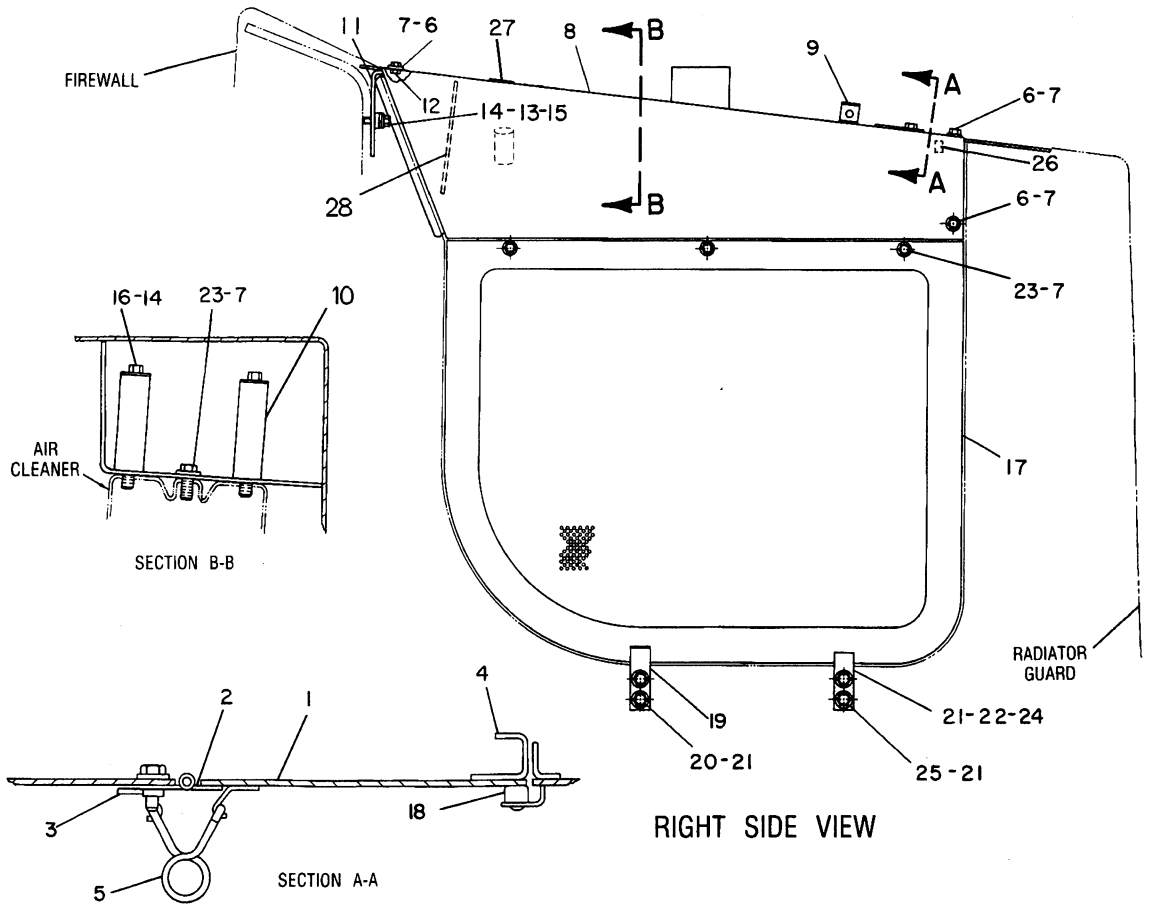

NOTE	REF NO	PART NUMBER	QTY	PART NAME
	1	8Y0819	1	DOOR AS
		9F2978	2	NUT-WELD
	2	3K7427	2	HINGE
	3	4K8501	4	CLIP
	4	6S6649	1	PLATE
	5	1K8850	2	SPRING
	6	4L6454	13	BOLT
	7	5P1075	16	WASHER-HARD
C	8	8Y3537	1	HOOD AS
		9F2978	6	NUT-WELD
	9	6S6652	1	PLATE
C	10	6F3468	2	PIPE
	11	8Y2378	1	SUPPORT AS (RH)
		8Y2379	1	SUPPORT AS (LH)
				(EA SUPPORT AS INCLS)
	12	9F2978	2	NUT-WELD
	13	5G2878	4	WASHER (RUBBER)
	14	7X0772	6	WASHER-HARD (STEEL)
	15	3H2137	4	LUG
	16	8T9378	2	BOLT
	17	5G4012	1	PANEL AS (RH)
		5G4013	1	PANEL AS (LH)
	18	9M5617	3	GROMMET
	19	8Y2954	2	SPRING
	20	5P2228	4	BOLT
	21	8T4223	12	WASHER-HARD
	22	5G4909	2	SPRING
	23	5M3062	7	BOLT
	24	5G4911	2	PLATE
	25	8C4436	4	BOLT
BE	26	9X2092		STRIP-EDGING
	27	924924	2	PLUG-BUTTON
	28	8Y2323	2	PLATE

B-USE AS REQUIRED
C-CHANGE FROM PREVIOUS TYPE
E-ORDER BY THE CENTIMETER

R-490841 EP

7251 **8Y2309 HOOD & GUARD GP**

Type 2-S/N 1RJ527-Up,2CJ171-Up

MEMORANDA

CHASSIS AND UNDERCARRIAGE

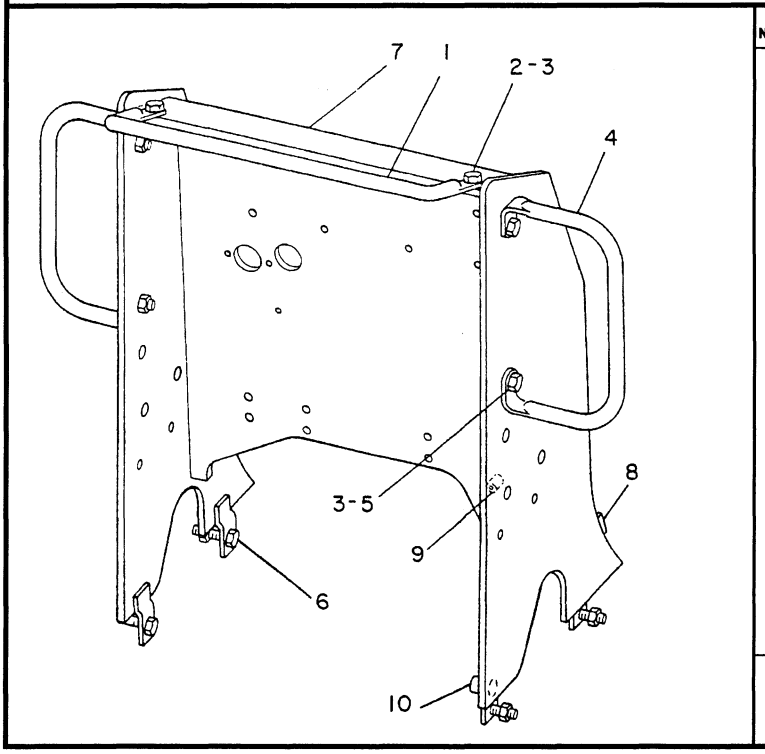

NOTE	REF NO	PART NUMBER	QTY	PART NAME
	1	6S4397	1	GRAB IRON
	2	0S1620	2	BOLT
	3	5P8245	6	WASHER
	4	6S8011	2	GRAB IRON
	5	0S1621	4	BOLT
	6	0L1178	4	BOLT
		5P8248	8	WASHER-HARD
		2J3506	4	NUT-FULL
	7	8Y1565	1	FIREWALL AS
	8	5H6106	2	LUG
	9	8F9836	3	LUG
	10	6J1323	1	LUG

B-452889 EP

7262 **8Y1564 FIREWALL GP**
S/N 1RJ1-526 & 2CJ1-170

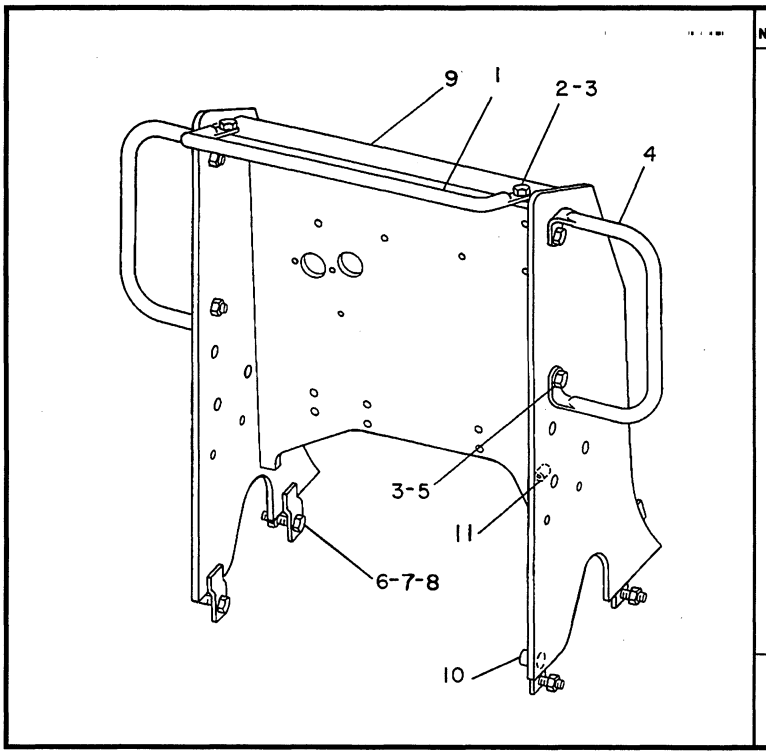

NOTE	REF NO	PART NUMBER	QTY	PART NAME
	1	6S4397	1	GRAB IRON (LARGE)
	2	8T9383	2	BOLT
	3	8T4223	6	WASHER-HARD
	4	6S8011	2	GRAB IRON (SMALL)
	5	5P2228	4	BOLT
	6	7X0366	4	BOLT
	7	8T4994	8	WASHER
	8	6V8182	4	NUT
	9	8Y2325	1	FIREWALL AS
	10	6J1323	1	LUG
	11	8F9836	3	LUG

B-472054 EP

7262 **8Y2324 FIREWALL GP**
S/N 1RJ527-Up & 2CJ171-Up

CHASSIS AND UNDERCARRIAGE

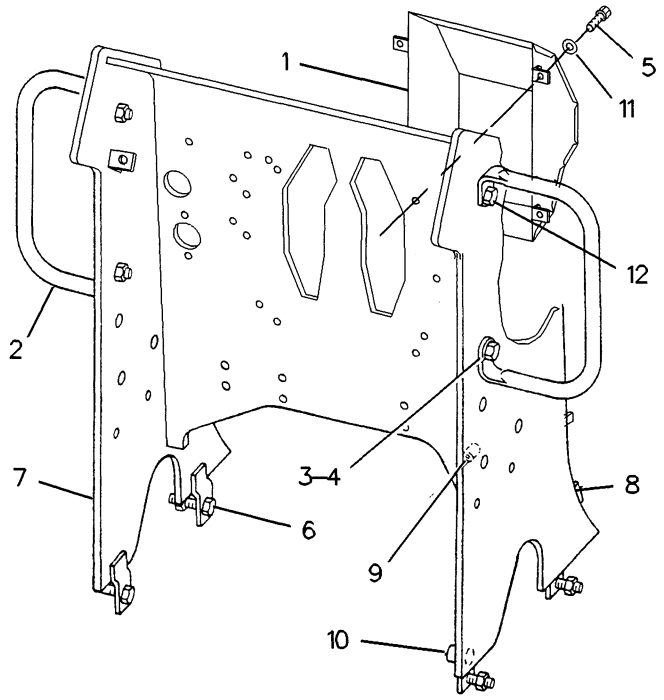

NOTE	REF NO	PART NUMBER	QTY	PART NAME
	1	8Y2382	1	COVER AS
	2	6S8011	2	GRAB IRON
	3	5P2228	2	BOLT
	4	8T4223	2	WASHER-HARD
	5	5P8167	4	BOLT
	6	7X0366	4	BOLT
		8T4994	8	WASHER
		6V8182	4	NUT
	7	8Y2328	1	FIREWALL AS
	8	5H6106	2	LUG (34MM)LG
	9	8F9836	3	LUG (19MM)LG
	10	6J1323	1	LUG (54MM)LG
	11	8T4896	4	WASHER-HARD
	12	8T2502	2	BOLT
		5P1075	2	WASHER-HARD

R-472314 EP

7262

8Y2318 FIREWALL GP
Part Of 8Y2312 Steering Ar
An Attachment

CHASSIS AND UNDERCARRIAGE

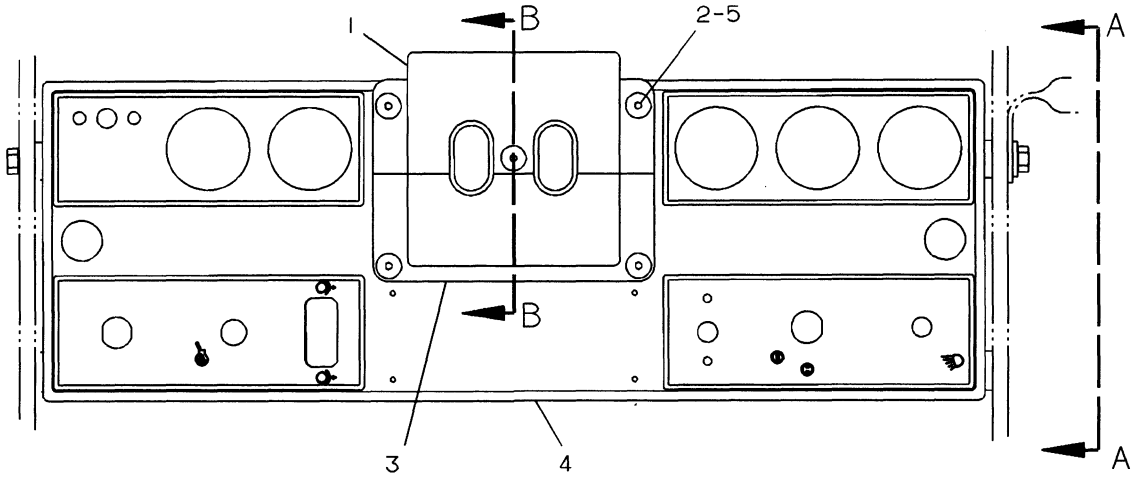

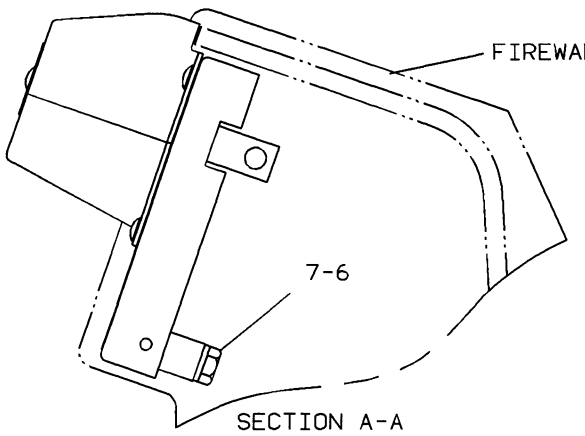

SECTION A-A

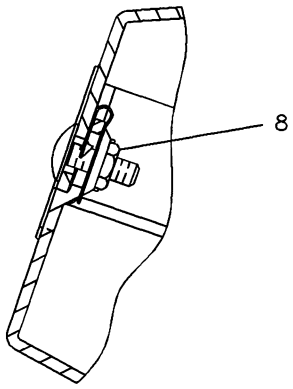

SECTION B-B

NOTE	REF NO	PART NUMBER	QTY	PART NAME	NOTE	REF NO	PART NUMBER	QTY	PART NAME
	1	8Y2330	1	COVER					
	2	4V6981	5	SCREW-BUTTON HEAD					
	3	8Y2331	1	COVER					
	4	8Y2332	1	PANEL AS					
	5	9F6445	4	NUT					
	6	9F2978	4	NUT-WELD					
	7	0S0509	2	BOLT					
		5P1075	2	WASHER-HARD					
	8	8K4112	1	NUT-RETAINER					

C-472315 EP

7314

8Y2319 DASH GP
Part Of 8Y2312 Steering Ar
An Attachment

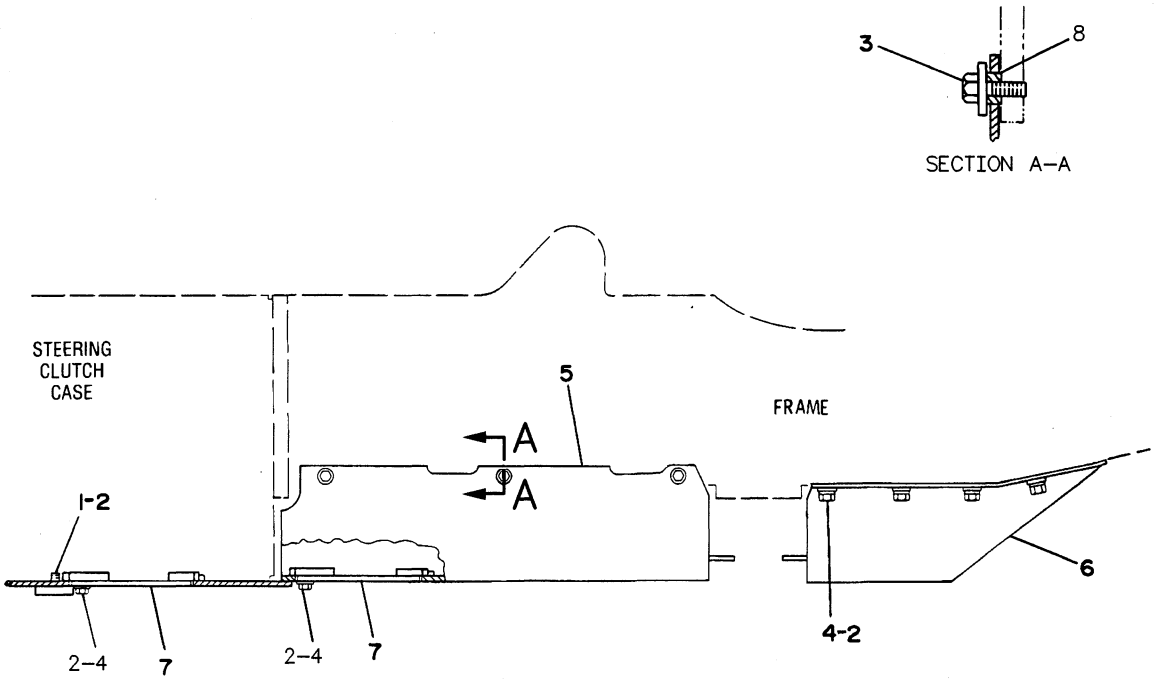

NOTE	REF NO	PART NUMBER	QTY	PART NAME	NOTE	REF NO	PART NUMBER	QTY	PART NAME
	1	5P2566	2	BOLT					
C	2	5P1076	14	WASHER-HARD					
C	3	8C4436	6	BOLT					
C		7X0618	6	WASHER-HARD					
C	4	8T9384	12	BOLT					
	5	5G1175	1	GUARD AS					
	6	5G0842	1	GUARD AS					
	7	5G1159	2	COVER AS					
C	8	2J8239	6	ADAPTER					

C-CHANGE FROM PREVIOUS TYPE

R-529444 EP

7153 **5G1185 GUARD GP-BOTTOM**

CHASSIS AND UNDERCARRIAGE

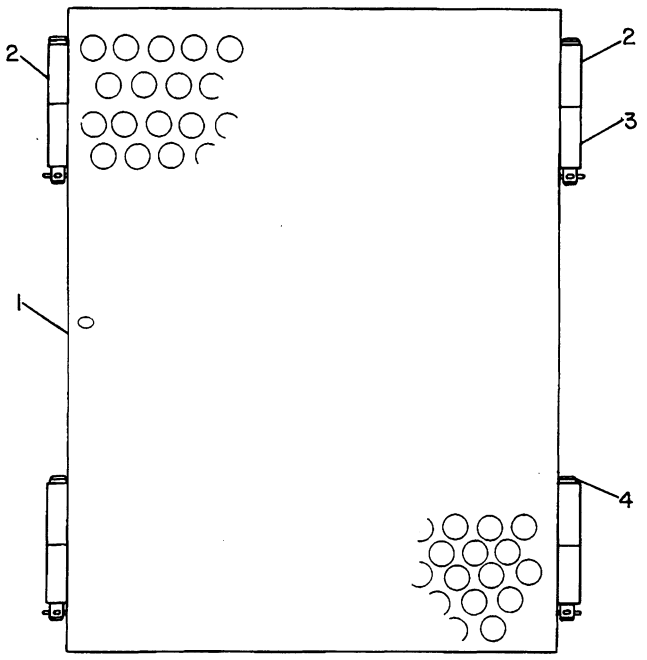

NOTE	REF NO	PART NUMBER	QTY	PART NAME
	1	6S8316	1	GUARD AS
	2	3D8197	4	SPACER
	3	3D8197	4	SPACER
	4	1J2329	4	PIN
		3B4615	4	PIN-COTTER

B-492757 EP

7155 **6S8323 GUARD GP-RADIATOR HINGED**
Heavy Duty
An Attachment

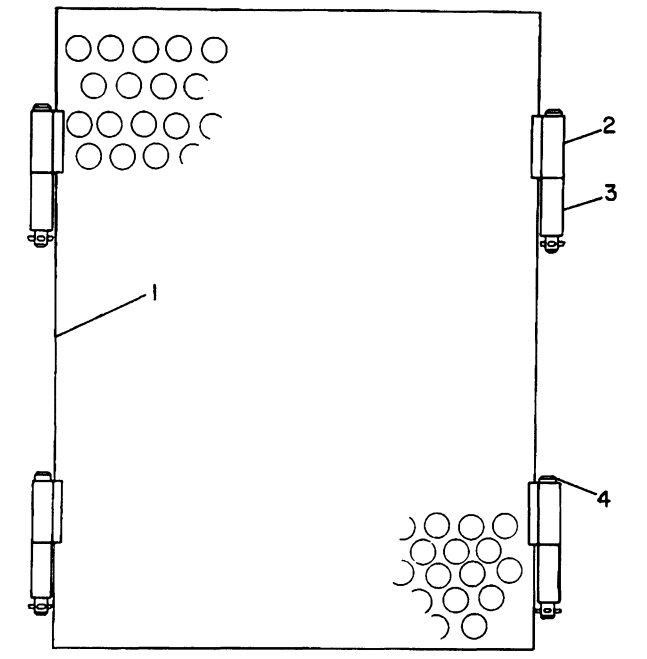

NOTE	REF NO	PART NUMBER	QTY	PART NAME
	1	6S3347	1	GUARD AS
C		5G1125	1	GUARD-RADIATOR
	2	6S7127	4	HINGE
	3	3D8197	4	SPACER
	4	1J2329	4	PIN
		3B4627	4	COTTER

C-CHANGE FROM PREVIOUS TYPE

B-223327 EP

7155 **6S6166 GUARD GP-RADIATOR HINGED**
An Attachment

CHASSIS AND UNDERCARRIAGE

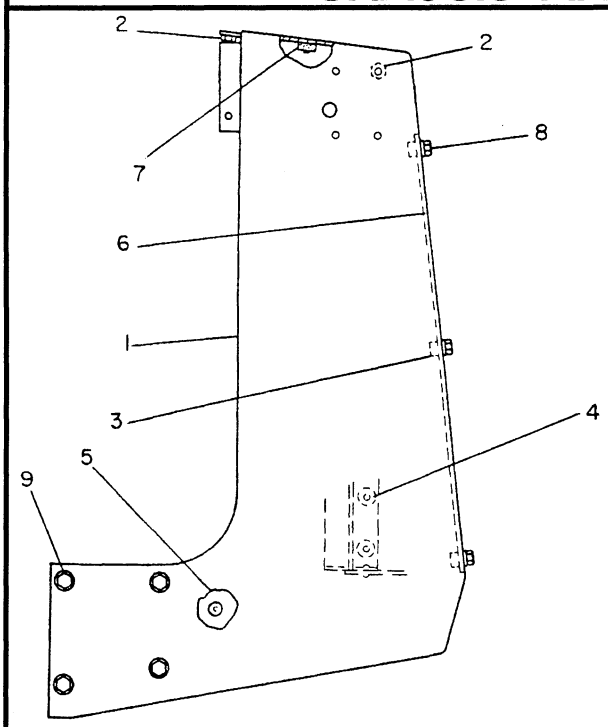

NOTE	REF NO	PART NUMBER	QTY	PART NAME
	1	8Y0744	1	GUARD AS-RADIATOR
	2	9F2978	13	NUT-WELD
	3	5H6106	6	LUG
	4	6S6657	32	WASHER
		339412	32	RIVET
	5	4D9376	1	BOSS
	6	6S4011	1	GUARD-RADIATOR
	7	9M5617	1	GROMMET
	8	4L6454	6	BOLT
		5P1075	6	WASHER-HARD
	9	8T8917	8	BOLT
		5P1076	8	WASHER-HARD

B-493026 EP

7155 **8Y0743 GUARD GP-RADIATOR**
S/N 1RJ1-Up

MEMORANDA

CHASSIS AND UNDERCARRIAGE

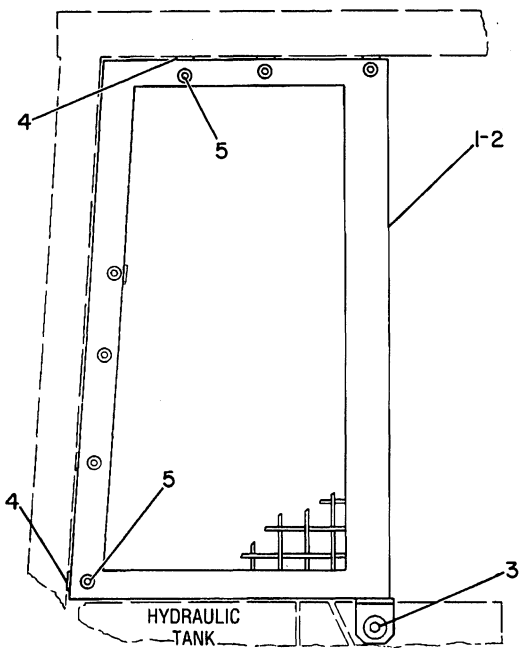

NOTE	REF NO	PART NUMBER	QTY	PART NAME
	1	8Y3613	1	GUARD AS (RH)
	2	8Y3612	1	GUARD AS (LH)
	3	8T4835	2	BOLT
		7X0590	2	WASHER-HARD
		8D3786	2	MOUNTING
		8D5382	2	BOSS
	4	8P2812	12	PLATE
	5	4L6454	12	BOLT
		5P1075	12	WASHER-HARD

B-492282 EP

7158 **5G2342 GUARD GP-BRUSH-SIDE**
For Use With Open ROPS With Sweep
An Attachment

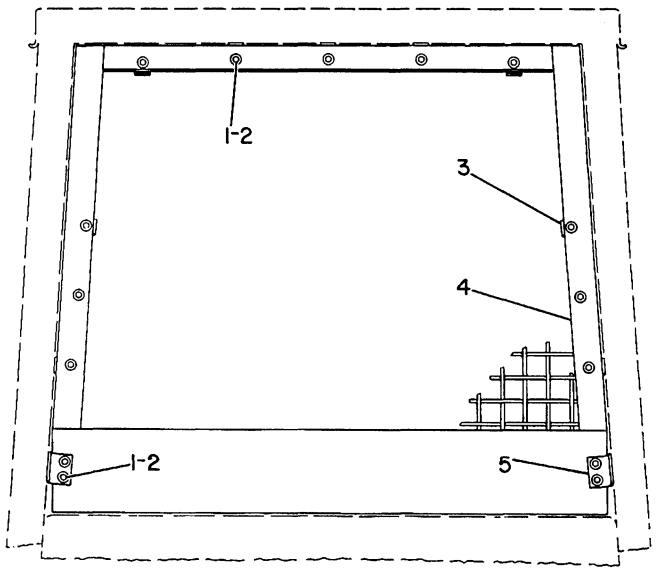

NOTE	REF NO	PART NUMBER	QTY	PART NAME
	1	4L6454	13	BOLT
	2	5P1075	13	WASHER-HARD
	3	8P2812	11	PLATE
	4	8Y3610	1	GUARD AS
	5	5G2339	2	BRACKET

B-492298 EP

7158 **5G2327 GUARD GP-BRUSH**
Rear
For Use With Open ROPS
An Attachment

CHASSIS AND UNDERCARRIAGE

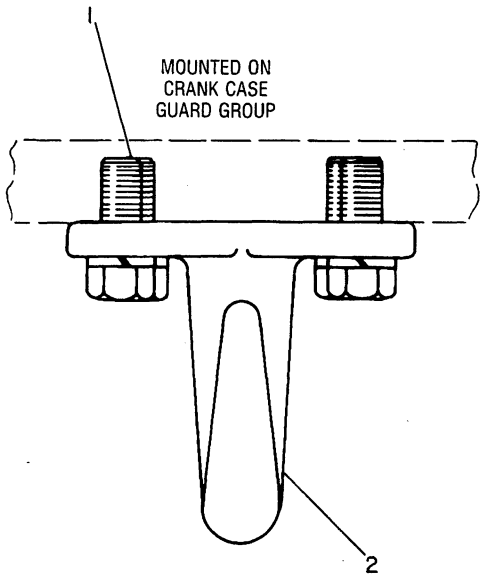

NOTE	REF NO	PART NUMBER	QTY	PART NAME
	1	7X0366	4	BOLT
		8T4994	4	WASHER
	2	5K8907	1	HOOK-FRONT PULL

B-493029 EP

7103 **6S3864 HOOK GP-FRONT PULL**

Cannot Be Used With 5G0441 Front Counterweight Gp
An Attachment

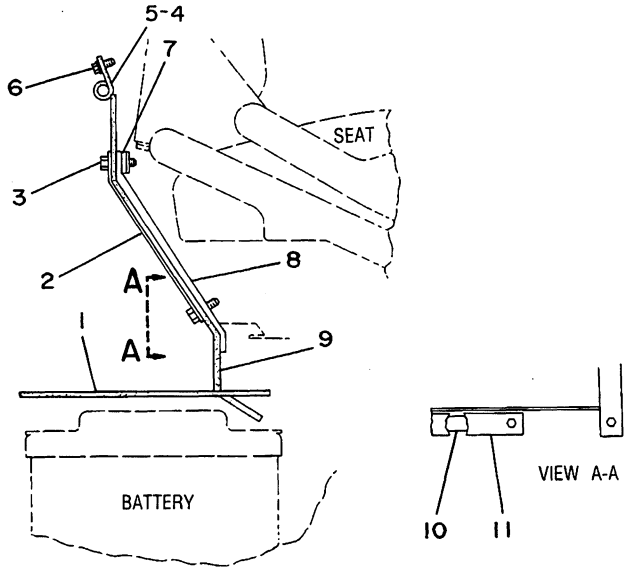

NOTE	REF NO	PART NUMBER	QTY	PART NAME
	1	5G3574	1	MAT
	2	5G3958	2	PLATE
	3	OS1618	7	BOLT
	4	5G3448	2	SEAL
	5	5G3451	2	STRIP
	6	2A0762	6	BOLT
	7	9H8396	2	LUG
	8	5G3951	2	PLATE
	9	5G3576	1	BAFFLE
	10	5G3811	1	STRIP
	11	5G3950	1	STRIP

B-475836 EP

7329 **5G3575 SUPPRESSION GP-SOUND**

An Attachment

CHASSIS AND UNDERCARRIAGE

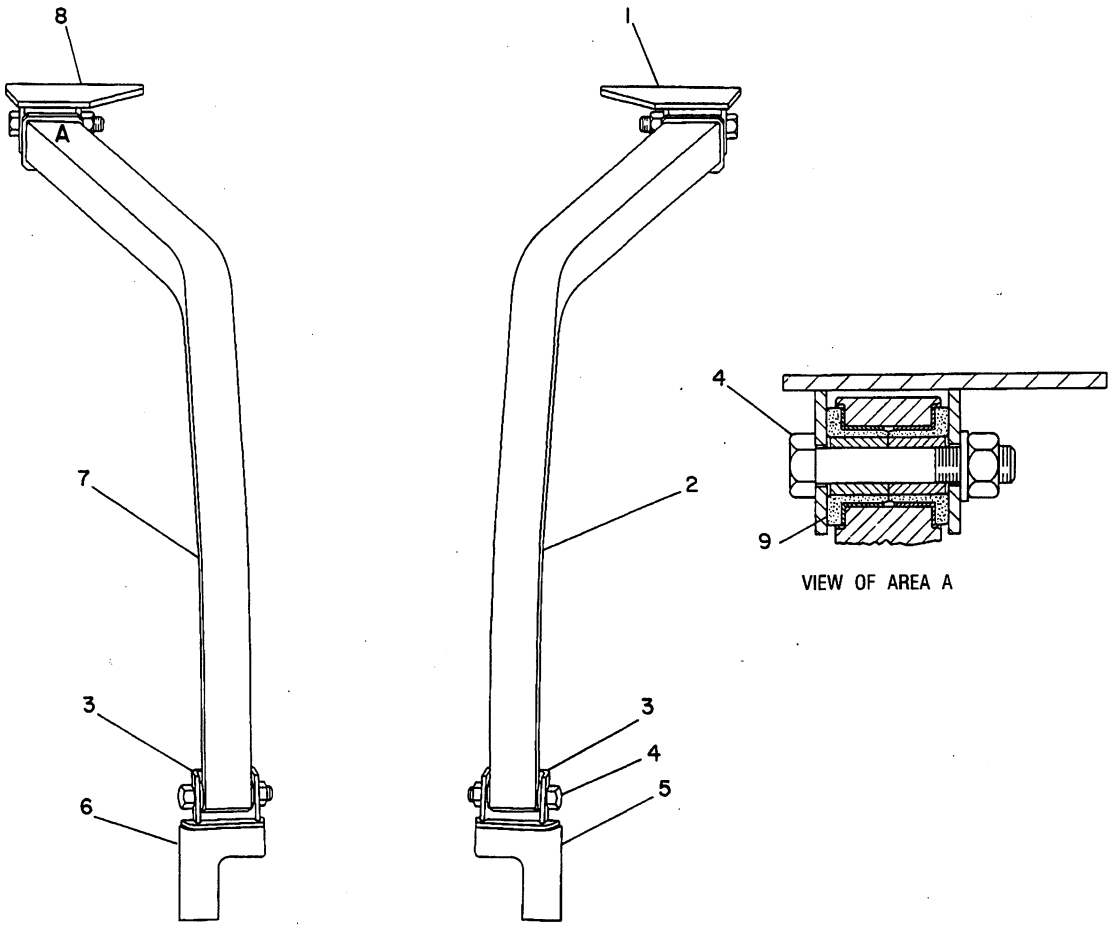

NOTE	REF NO	PART NUMBER	QTY	PART NAME	NOTE	REF NO	PART NUMBER	QTY	PART NAME
	1	5G2297	1	BRACKET AS					
	2	5G2298	1	SWEEP AS					
		9F3721	2	PLATE					
	3	8YO873	2	BRACKET					
	4	7XO443	4	BOLT					
		6V8190	4	NUT					
		8T5361	4	WASHER					
	5	8YO880	1	PLATE					
	6	8YO877	1	PLATE					
	7	5G2299	1	SWEEP AS					
		9F3721	2	PLATE					
	8	5G2249	1	BRACKET AS					
	9	8P2575	4	BUSHING					

B-493036 EP

7162 **8Y0872 SWEEP GP**

For Use With ROPS

An Attachment

CHASSIS AND UNDERCARRIAGE

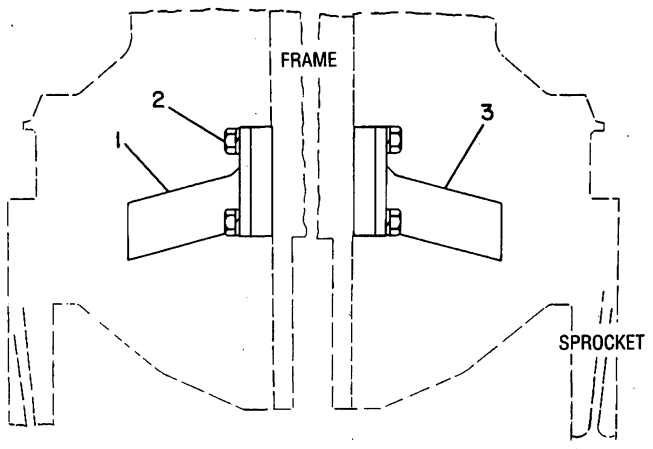

NOTE	REF NO	PART NUMBER	QTY	PART NAME
C	1	3Y5452	1	BAR AS-LH
	2	8T9393	6	BOLT
		8T4122	6	WASHER
C	3	3Y5451	1	BAR AS-RH

C-CHANGE FROM PREVIOUS TYPE

B-493070 EP

7160 **6S9359 CLEANER BAR GP-TRACK**
An Attachment

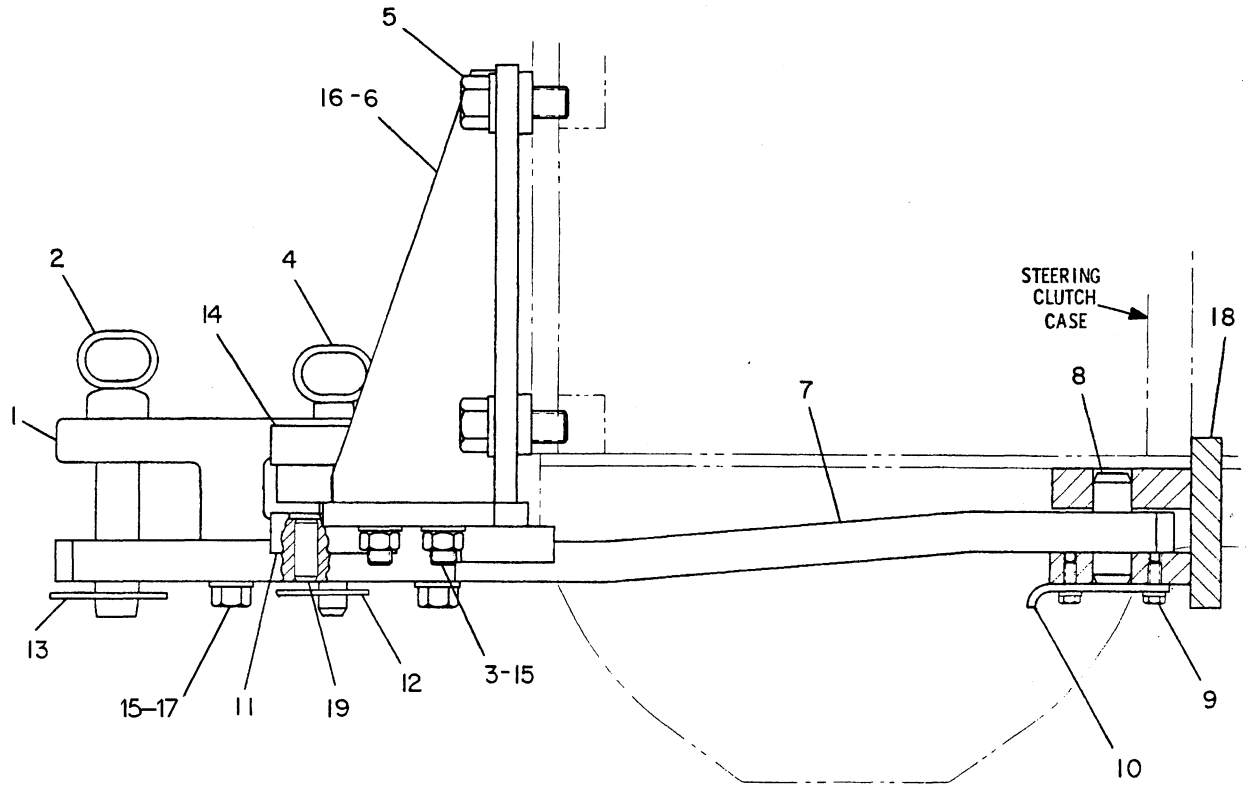

NOTE	REF NO	PART NUMBER	QTY	PART NAME	NOTE	REF NO	PART NUMBER	QTY	PART NAME
C	1	6K0131	1	BRACKET-DRAWBAR					
C	2	5G6276	1	PIN AS					
C	3	7X0369	4	BOLT					
C		6V8182	4	NUT					
C	4	5G6277	1	PIN AS					
C	5	7X0404	6	BOLT					
C		8T5361	6	WASHER					
C	6	5G6273	1	BRACKET AS (LH)					
C	7	5G6275	1	DRAWBAR					
	8	6S6806	1	PIN					
	9	8T2502	2	BOLT					
		8T4896	2	WASHER-HARD					
	10	6S6805	1	PLATE					
C	11	6K1346	2	SHOE-WEAR					
	12	3J1770	1	PIN-LOCK					
	13	5P8837	1	PIN					
C	14	5G6274	1	BAR					
C	15	8T4994	12	WASHER					
C	16	5G6270	1	BRACKET AS (RH)					
C	17	6K1304	4	BOLT-LOCKING (3/4-10X2.5IN)					
BC	18	6S6801	1	BRACKET AS					
C	19	2A0309	2	DOWEL					

B-USE AS REQUIRED
C-CHANGE FROM PREVIOUS TYPE

R-500256 EP

7119 **5G5317 DRAWBAR GP-SWINGING**
Field Installation

CHASSIS AND UNDERCARRIAGE

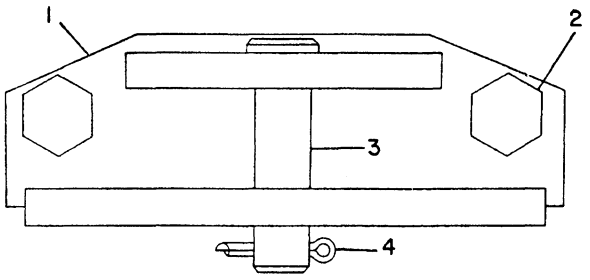

NOTE	REF NO	PART NUMBER	QTY	PART NAME
	1	5G0780	1	DRAWBAR AS
	2	7X0402	2	BOLT
	3	5G0792	1	PIN
	4	3B4646	1	COTTER
				-OR-
C		5P8837	1	PIN

C-CHANGE FROM PREVIOUS TYPE

B-493044 EP

7105 **5G0779 DRAWBAR GP**

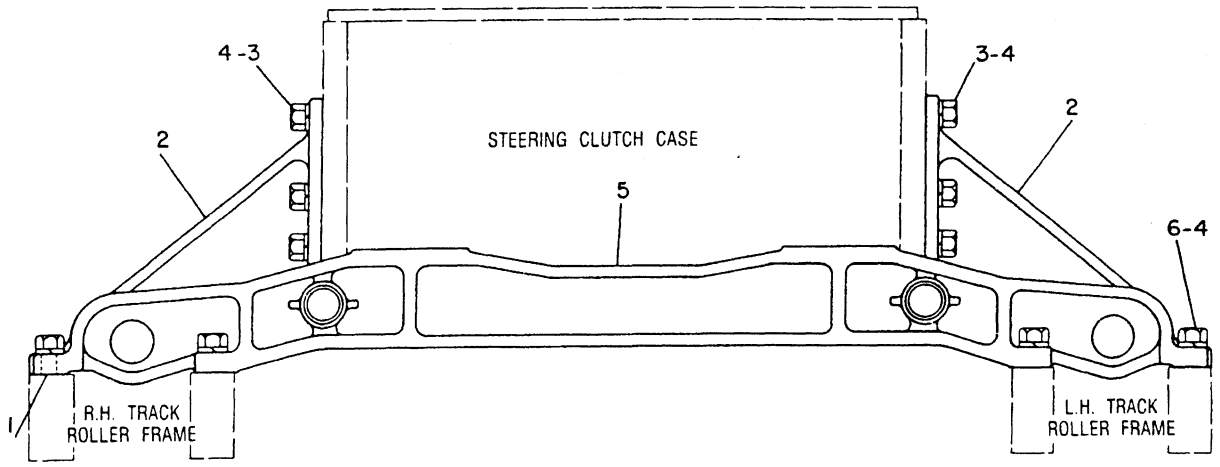

NOTE	REF NO	PART NUMBER	QTY	PART NAME	NOTE	REF NO	PART NUMBER	QTY	PART NAME
	1	6K8987	4	DOWEL					
	2	6S9114	2	SUPPORT (MOUNTED ON STEERING CLUTCH CASE)					
	3	7X0366	16	BOLT					
C	4	8T4994	36	WASHER					
	5	6S9125	1	SUPPORT					
	6	8T8924	20	BOLT					

C-CHANGE FROM PREVIOUS TYPE

B-494441 EP

4151 **5G0378 SUPPORT GP-UNDERCARRIAGE**
S/N 1RJ1-Up

CHASSIS AND UNDERCARRIAGE

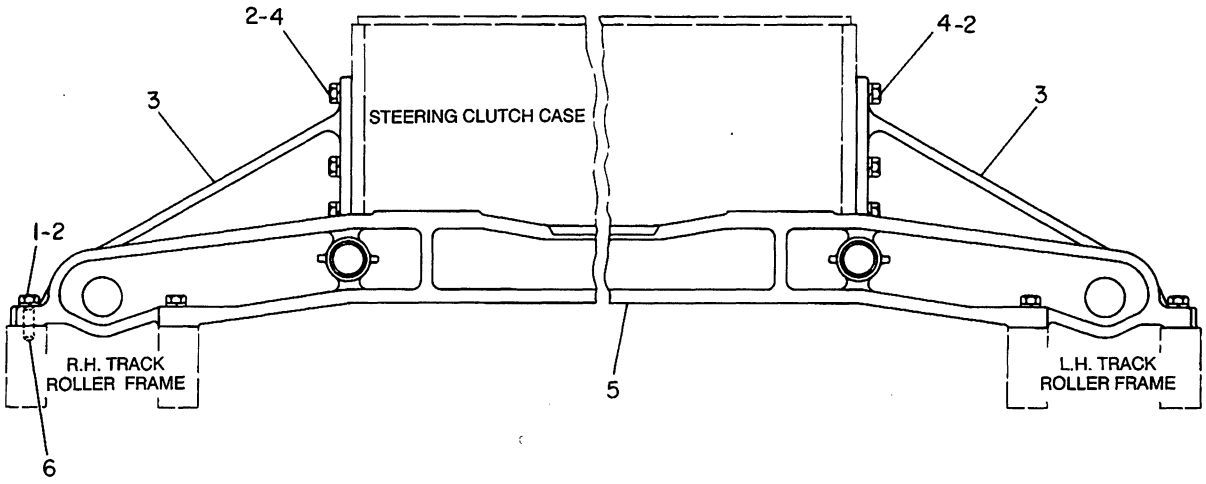

NOTE	REF NO	PART NUMBER	QTY	PART NAME	NOTE	REF NO	PART NUMBER	QTY	PART NAME
	1	8T8924	20	BOLT					
	2	8T4994	36	WASHER					
	3	6S9644	2	SUPPORT					
	4	7X0366	16	BOLT					
	5	6S9647	1	SUPPORT					
	6	6K8987	4	DOWEL					

B-493041 EP

4151 **5G0379 SUPPORT GP-UNDERCARRIAGE**
S/N 2CJ1-Up

CHASSIS AND UNDERCARRIAGE

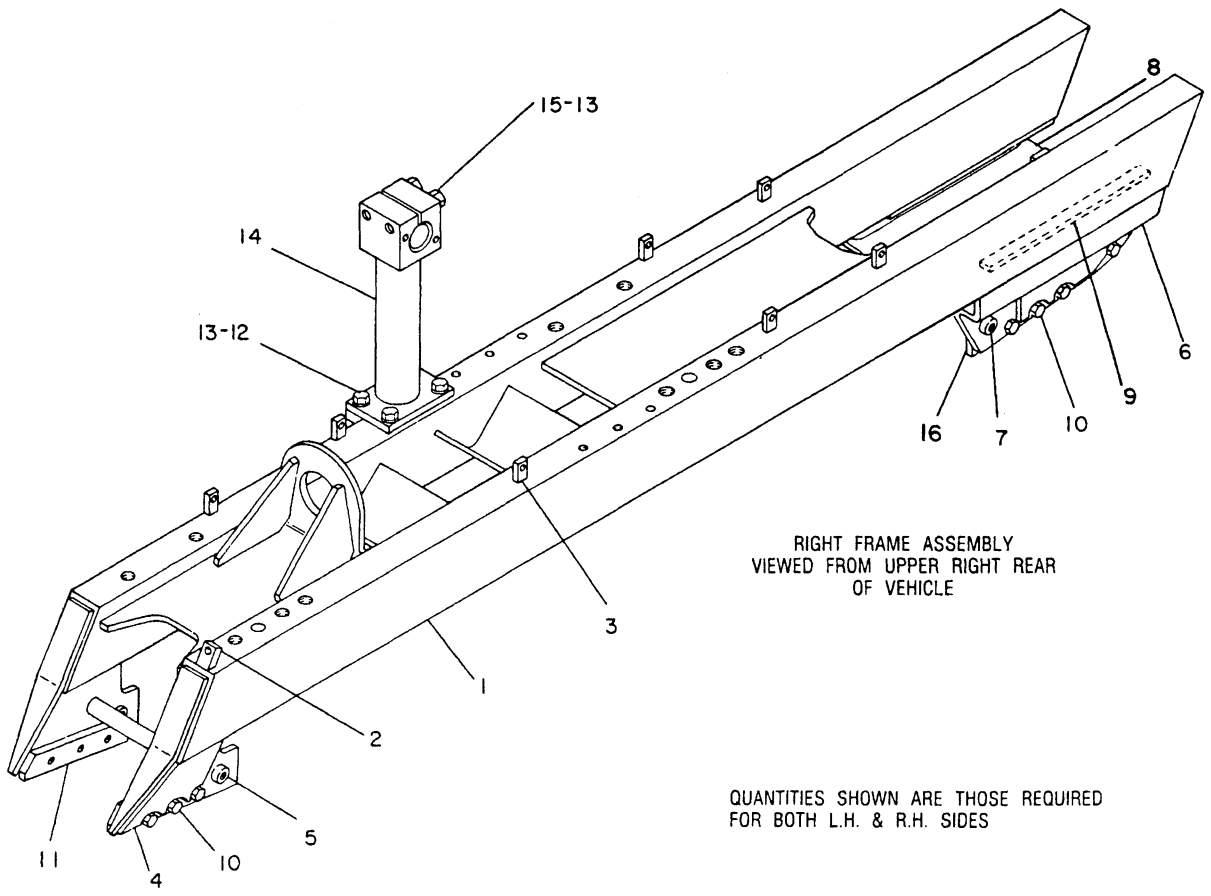

RIGHT FRAME ASSEMBLY
VIEWED FROM UPPER RIGHT REAR
OF VEHICLE

QUANTITIES SHOWN ARE THOSE REQUIRED
FOR BOTH L.H. & R.H. SIDES

NOTE	REF NO	PART NUMBER	QTY	PART NAME	NOTE	REF NO	PART NUMBER	QTY	PART NAME
	1	8Y1280	1	FRAME AS-ROLLER-RH					
		8Y1304	1	FRAME AS-ROLLER-LH (EA FRAME AS INCL)					
	2	6S9598	1	PLATE					
	3	4B5440	7	PLATE-SCREW					
	4	8Y1022	1	GUARD AS					
	5	1P1413	2	BOSS					
	6	8Y1020	1	GUARD AS					
	7	1P1413	1	BOSS					
	8	8Y1021	1	GUARD AS					
		1P1413	1	BOSS					
C	9	6S3442	2	STRIP-WEAR					
	10	6K5718	28	BOLT-LOCKING					
		5P8245	28	WASHER					
	11	8Y1012	4	PLATE					
	12	7B3235	8	BOLT					
	13	3B4508	12	LOCKWASHER					
	14	6S9235	2	BRACKET AS-TRACK ROLLER					
	15	0S1623	4	BOLT					
	16	8Y1004	4	PLATE					

C-CHANGE FROM PREVIOUS TYPE

B-457232 EP

4151 **8Y1026 FRAME GP-TRACK ROLLER**
Type 1

CHASSIS AND UNDERCARRIAGE

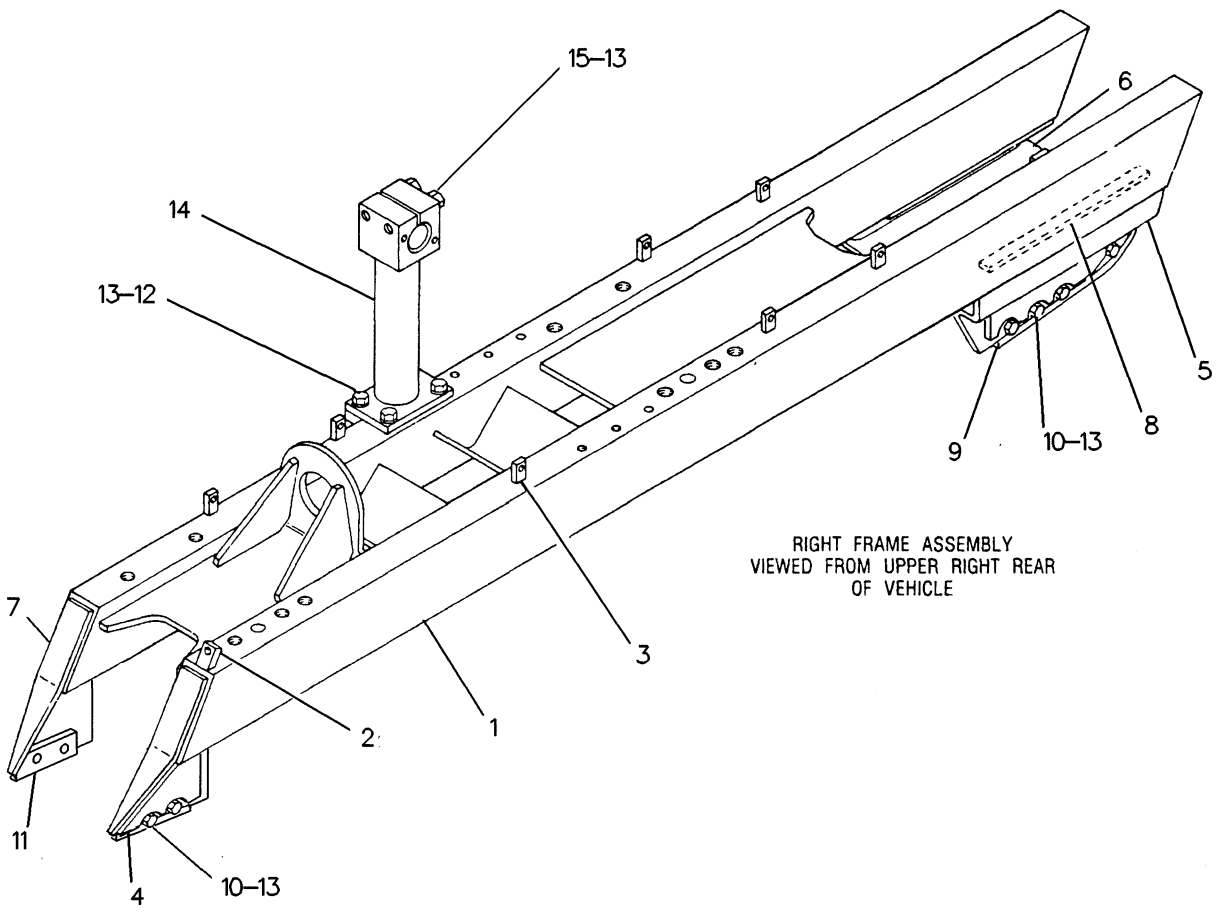

RIGHT FRAME ASSEMBLY
VIEWED FROM UPPER RIGHT REAR
OF VEHICLE

NOTE	REF NO	PART NUMBER	QTY	PART NAME
	1	8Y3429	1	FRAME AS-TRACK ROLLER (RH)
		8Y3430	1	FRAME AS-TRACK ROLLER (LH)
				(EA FRAME AS INCL)
	2	6S9598	1	PLATE
	3	4B5440	7	PLATE-SCREW
	4	8Y3044	1	GUARD AS (LH INNER/RH OUTER)
	5	8Y2754	1	GUARD AS-GUIDING (LH INNER/RH OUTER)
	6	8Y2758	1	GUARD AS-GUIDING (RH INNER/LH OUTER)
	7	8Y3045	1	GUARD AS (RH INNER/LH OUTER)
	8	6S3442	2	STRIP-WEAR
	9	8Y3633	4	STRIP
	10	6K5718	24	BOLT-LOCKING
	11	8Y3632	4	STRIP
	12	8C4436	8	BOLT (1/2-13X1.375IN)
				-OR-
		8T8919	8	BOLT (1/2-13X1.75IN)
	13	8T4223	36	WASHER-HARD
	14	6S9235	2	BRACKET AS-TRACK ROLLER
	15	7X0325	4	BOLT

QUANTITIES SHOWN ARE THOSE REQUIRED FOR BOTH LH AND RH SIDES

R-537532 EP

4151 **8Y1026 FRAME GP-TRACK ROLLER**
Type 2

MEMORANDA

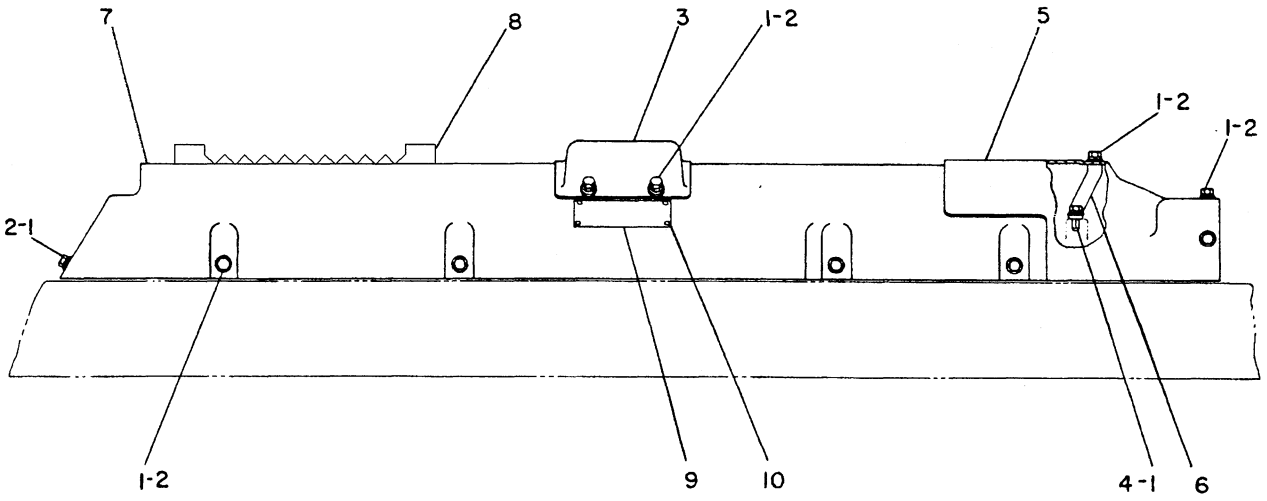

NOTE	REF NO	PART NUMBER	QTY	PART NAME
	1	5S7379	34	BOLT
	2	5P1075	30	WASHER-HARD
	3	6S3747	2	COVER
	4	8T4896	4	WASHER-HARD
	5	6S3800	1	GUARD-LH
		6S3799	1	GUARD-RH
	6	6S6741	2	BRACKET AS
	7	5G8706	1	GUARD AS (LH)
		5G8707	1	GUARD AS (RH)
				(EA GUARD AS INCL)
	8	8Y1854	1	STEP
		9F2978	2	NUT-WELD
	9	5P9441	1	PLATE-WARNING
	10	7B3028	4	SCREW-DRIVE

R-495917 EP

7173 **5G8703 GUARD GP-RECOIL**

S/N 1RJ1-Up

CHASSIS AND UNDERCARRIAGE

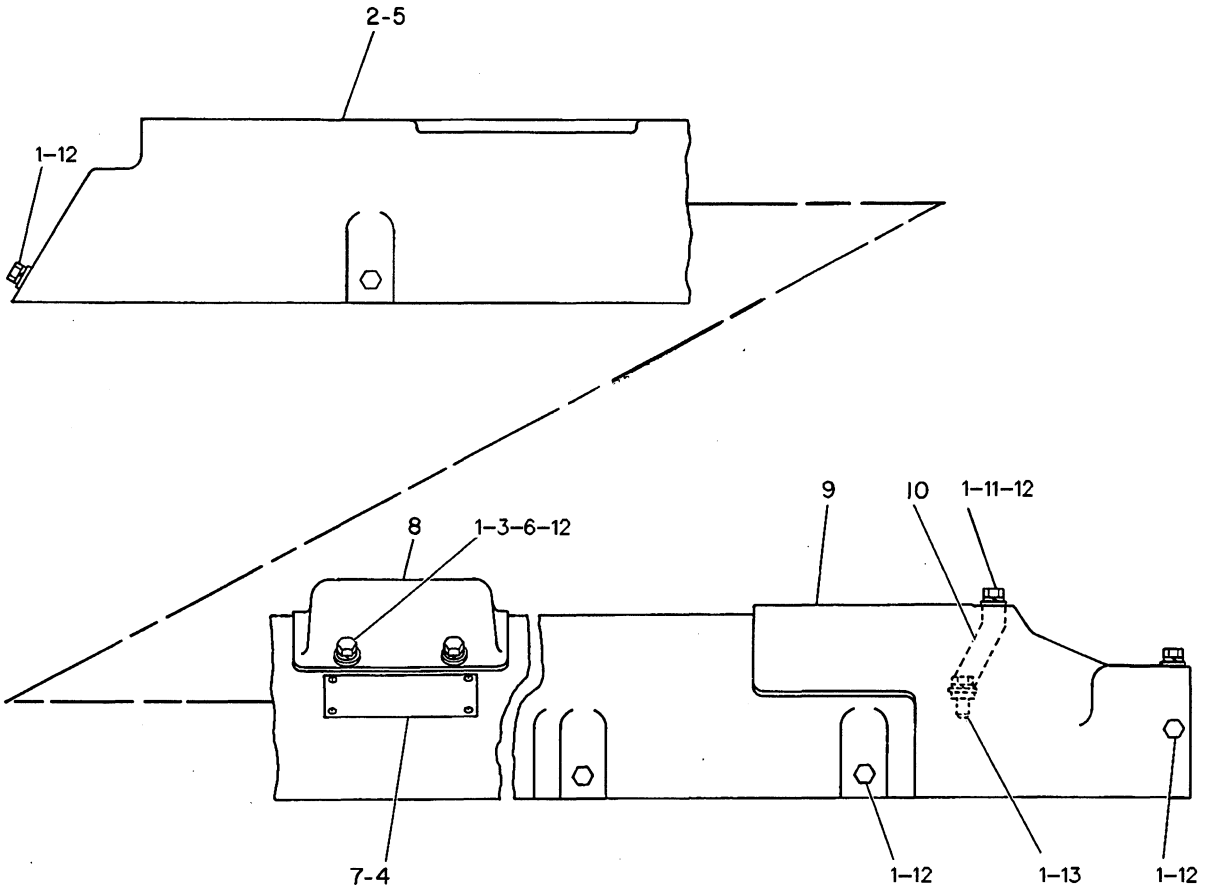

NOTE	REF NO	PART NUMBER	QTY	PART NAME
	1	5S7379	34	BOLT
	2	5G0602	1	GUARD AS-RH
	3	9F2978	2	NUT-WELD
C	4	5P9441	1	PLATE-WARNING
		7B3028	4	SCREW-DRIVE
	5	5G0603	1	GUARD AS-LH
	6	9F2978	2	NUT-WELD
C	7	5P9441	1	PLATE-WARNING
		7B3028	4	SCREW-DRIVE
	8	6S3747	2	COVER
	9	6S3799	1	GUARD-RH
		6S3800	1	GUARD-LH
	10	6S6741	2	BRACKET AS (EACH INCLUDES)
	11	9F2978	1	NUT-WELD
	12	5P1075	30	WASHER-HARD
	13	8T4896	4	WASHER-HARD
				QUANTITIES SHOWN ARE THOSE REQUIRED FOR BOTH LH AND RH SIDES

C-CHANGE FROM PREVIOUS TYPE

R-507027 EP

7173 **5G0381 GUARD GP-RECOIL MECHANISM**
S/N 2CJ1-Up

CHASSIS AND UNDERCARRIAGE

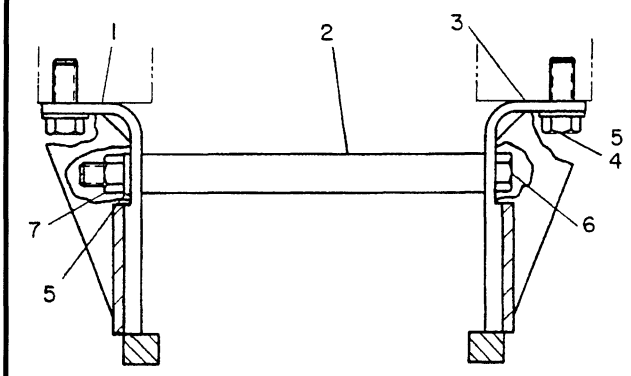

SECTION A-A

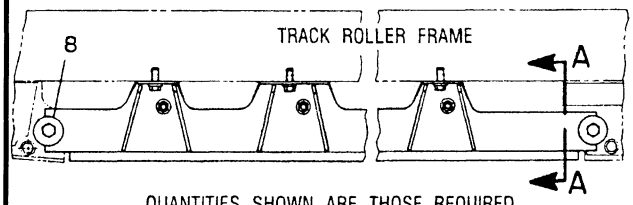

QUANTITIES SHOWN ARE THOSE REQUIRED FOR BOTH L.H. & R.H. SIDES

NOTE	REF NO	PART NUMBER	QTY	PART NAME
	1	8Y1285	2	GUARD AS
	2	8Y1009	10	PIPE
	3	8Y1282	2	GUARD AS
	4	0S1595	20	BOLT
	5	5P8245	30	WASHER
	6	6M9613	10	BOLT
	7	1F7958	10	NUT-FULL
	8	5P4045	8	BOLT-LOCKING
		2V0936	8	WASHER

M-451647 EP

7152 **8Y0268 GUARD GP-TRACK ROLLER**

Type 1

An Attachment

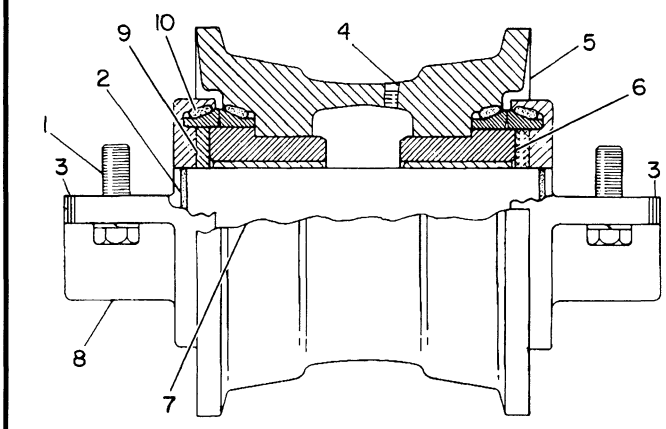

NOTE	REF NO	PART NUMBER	QTY	PART NAME
	1	0S1585	4	BOLT
		2M0849	4	WASHER
	2	7D9749	2	SEAL-O-RING
	3	6S3172	2	RING
	4	9F2247	1	PLUG
C	5	6S7038	1	RIM AS
	6	6S3495	2	BEARING AS (EACH INCLUDES)
		6S8233	1	BEARING
	7	6S3171	1	SHAFT
	8	3T4283	2	COLLAR
	9	6S7715	2	WASHER-THRUST
R	10	6S3285	2	SEAL GP-DUO-CONE (EACH INCLUDES)
		6S3284	2	RING-SEALING -OR-
A		5P0373	2	SEAL GP (EACH INCLUDES)
		3N3095	2	RING-SEALING (FOR EXTREME TEMPERATURES)

A-NOT PART OF THIS GROUP
C-CHANGE FROM PREVIOUS TYPE
R-REMFG PART MAY BE AVAILABLE

B-353553 EP

4180 **3T4352 ROLLER GP-SINGLE FLANGE-8 REQUIRED**

CHASSIS AND UNDERCARRIAGE

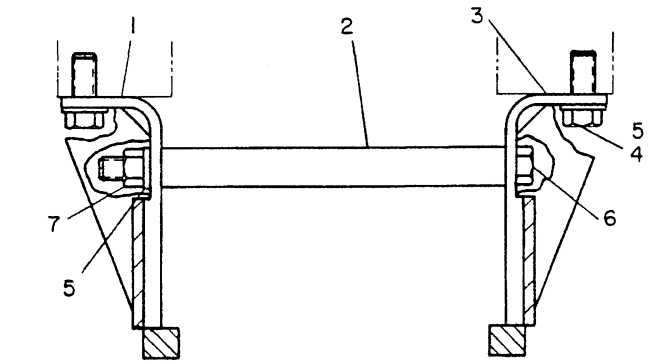

SECTION A-A

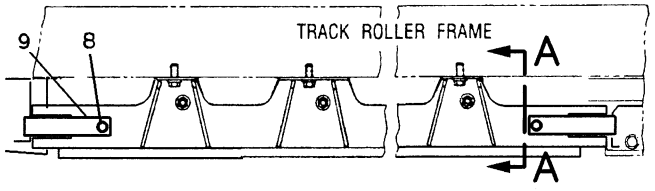

QUANTITIES SHOWN ARE THOSE REQUIRED
FOR BOTH L.H. & R.H. SIDES

NOTE	REF NO	PART NUMBER	QTY	PART NAME
C	1	8Y3438	2	GUARD AS
	2	8Y1009	10	PIPE
C	3	8Y3437	2	GUARD AS
C	4	8T8917	20	BOLT
C	5	8T4223	30	WASHER-HARD
C	6	7X0471	10	BOLT
C	7	6V8188	10	NUT
C	8	4L6454	8	BOLT
C		8T4896	8	WASHER-HARD
C	9	8Y3413	8	TAB

C-CHANGE FROM PREVIOUS TYPE

R-481426 EP

7152 **8Y0268 GUARD GP-TRACK ROLLER**

Type 2

An Attachment

MEMORANDA

CHASSIS AND UNDERCARRIAGE

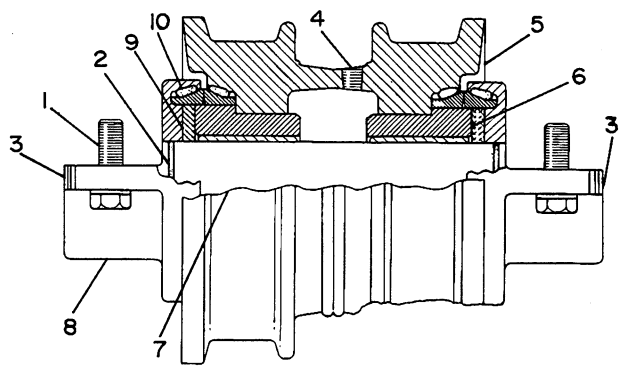

NOTE	REF NO	PART NUMBER	QTY	PART NAME
	1	0S1585	4	BOLT
		2M0849	4	WASHER
	2	7D9749	2	SEAL-O-RING
	3	6S3172	2	RING
	4	9F2247	1	PLUG
	5	6S7040	1	RIM AS-ROLLER
	6	6S3495	2	BEARING AS
				(EACH INCLUDES)
		6S8233	1	BEARING
	7	6S3171	1	SHAFT
	8	3T4283	2	COLLAR
	9	6S7715	2	WASHER-THRUST
R	10	6S3285	2	SEAL GP-DUO-CONE
				(EACH INCLUDES)
		6S3284	2	RING-SEALING
				-OR-
A		5P0373	2	SEAL GP
				(EACH INCLUDES)
		3N3095	2	RING-SEALING
				(FOR EXTREME
				TEMPERATURES)

A-NOT PART OF THIS GROUP
R-REMFG PART MAY BE AVAILABLE

B-235348 EP

4180 **3T4353 ROLLER GP-DOUBLE FLANGE-4 REQUIRED**

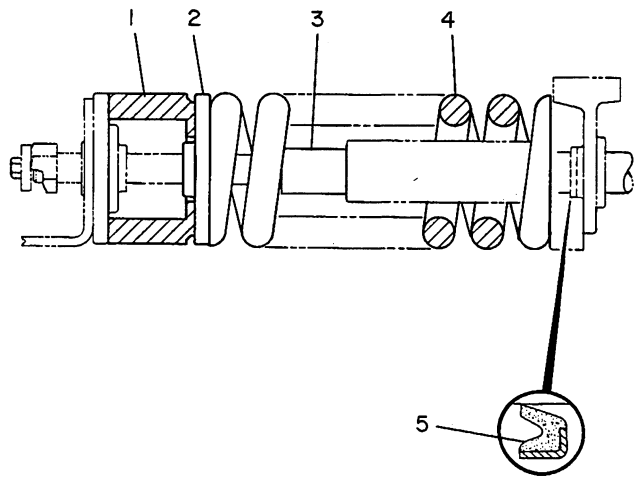

NOTE	REF NO	PART NUMBER	QTY	PART NAME
	1	8Y2715	1	TUBE AS
	2	2V9025	1	PILOT-RECOIL SPRING
	3	8Y2736	1	PIPE
	4	8Y2735	1	SPRING
	5	9X7277	1	SEAL AS

M-495066 EP

4158 **8Y2911 SPRING GP-RECOIL**
Field Installation

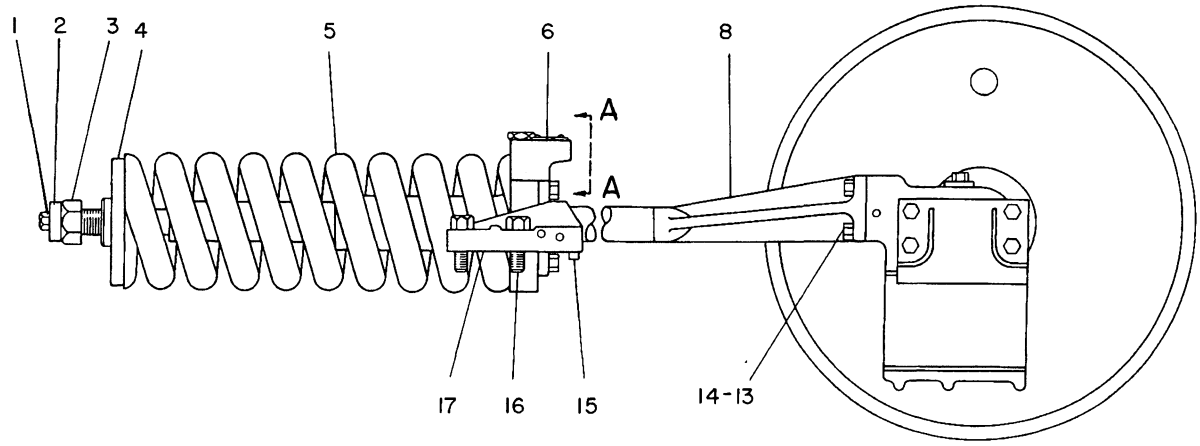

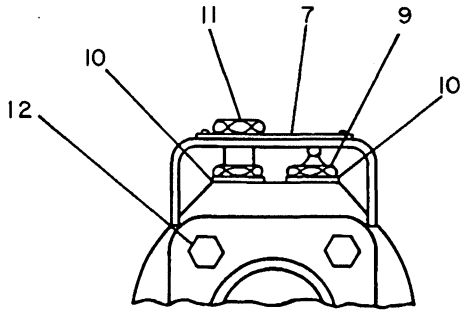

VIEW A-A

QUANTITIES SHOWN ARE THOSE REQUIRED FOR BOTH L.H. & R.H. SIDES

NOTE	REF NO	PART NUMBER	QTY	PART NAME
	1	0S1595	2	BOLT
	2	1B1067	2	WASHER
	3	1B4210	2	NUT-FULL
	4	2V9025	2	PILOT-RECOIL SPRING
	5	5K2754	2	SPRING-RECOIL
	6	6S8952	2	HEAD GP
				(EACH INCLUDES)
	7	5P9446	1	PLATE-WARNING
		7B3028	4	SCREW-DRIVE
	8	6S7399	2	YOKE AS-IDLER
	9	2S5925	2	VALVE
	10	5M6708	4	WASHER
	11	2S5926	2	VALVE
	12	0S1566	8	BOLT
	13	0S1585	8	BOLT
	14	63801	8	WASHER
	15	9H4105	4	PIN-DOWEL
	16	8S9092	8	BOLT
	17	2V7524	2	STOP-RECOIL SPRING (R.H. OUTER-L.H. INNER)
		2V7525	2	STOP-RECOIL SPRING (R.H. INNER-L.H. OUTER)

B-463641 EP

4159 **5G8729 IDLER GP-FRONT-PART 1 OF 2**

S/N 1RJ1-635

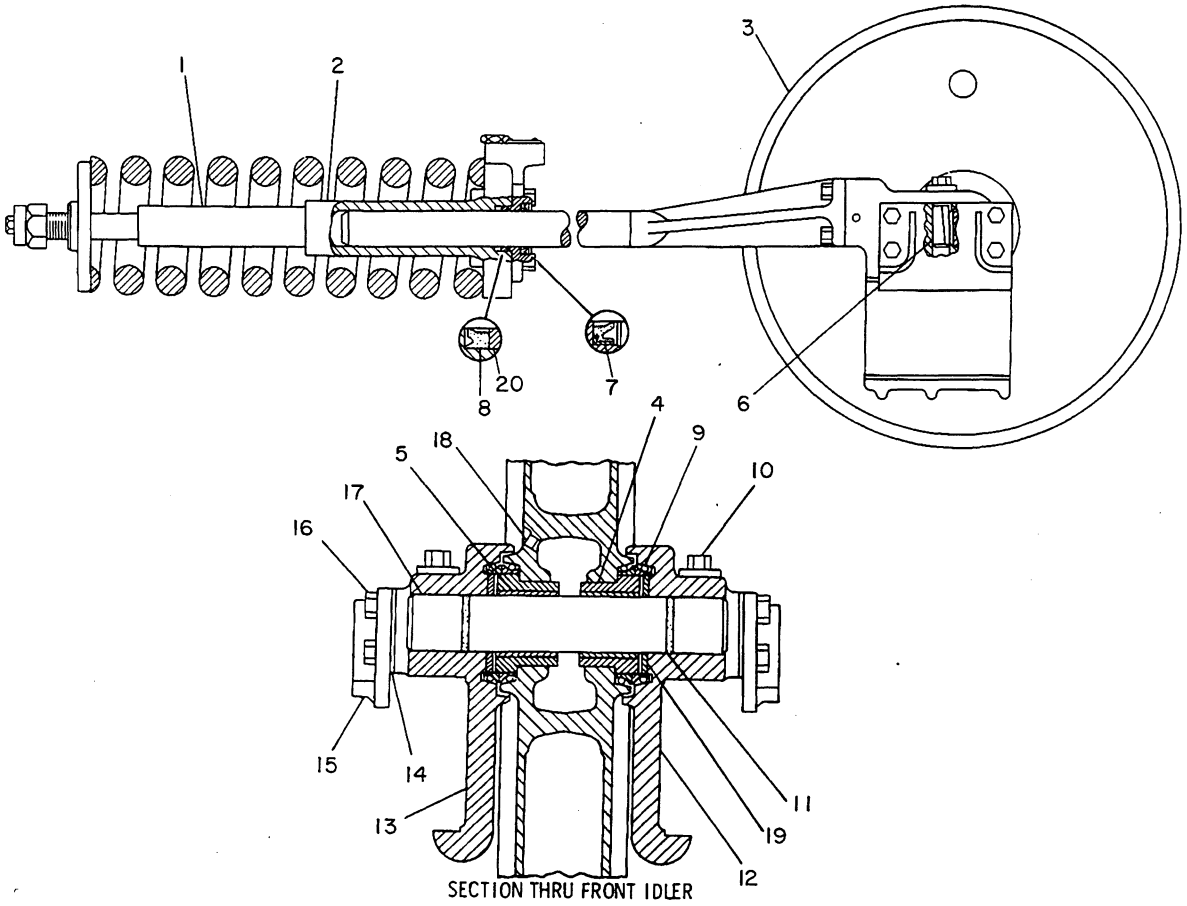

SECTION THRU FRONT IDLER

NOTE	REF NO	PART NUMBER	QTY	PART NAME	NOTE	REF NO	PART NUMBER	QTY	PART NAME
	1	6S9694	2	PIPE		20	6S8797	2	BEARING
	2	6S3360	2	CYLINDER AS					
C	3	6Y1369	2	IDLER AS					
	4	6S3495	4	BEARING AS (EACH INCLUDES)					
	5	6S8233	1	BEARING					
	6	5M5000	4	LOCK-PIN					
	7	4J8980	2	SEAL-LIP TYPE					
	8	5J8175	2	SEAL-U-CUP					
R	9	6S3285	4	SEAL GP-DUO-CONE (EACH INCLUDES)					
		6S3284	2	RING-SEALING					
	10	0T0768	4	BOLT					
		7B0462	4	WASHER					
	11	1H9696	4	SEAL-O-RING					
	12	6S3453	2	BEARING-IDLER (R.H. INNER-L.H. OUTER)					
	13	6S3451	2	BEARING-IDLER (R.H. OUTER-L.H. INNER)					
B	14	6S3286	16	SHIM 1.5MM(.06 IN)THK					
	15	6S7220	4	PLATE AS					
	16	0S1585	16	BOLT					
		63801	16	WASHER					
	17	6S3697	2	SHAFT					
	18	9F2247	2	PLUG					
	19	6S7715	4	WASHER-THRUST					

B-USE AS REQUIRED
C-CHANGE FROM PREVIOUS TYPE
R-REMFG PART MAY BE AVAILABLE

B-463642 EP

4159 **5G8729 IDLER GP-FRONT-PART 2 OF 2**
S/N 1RJ1-635

CHASSIS AND UNDERCARRIAGE

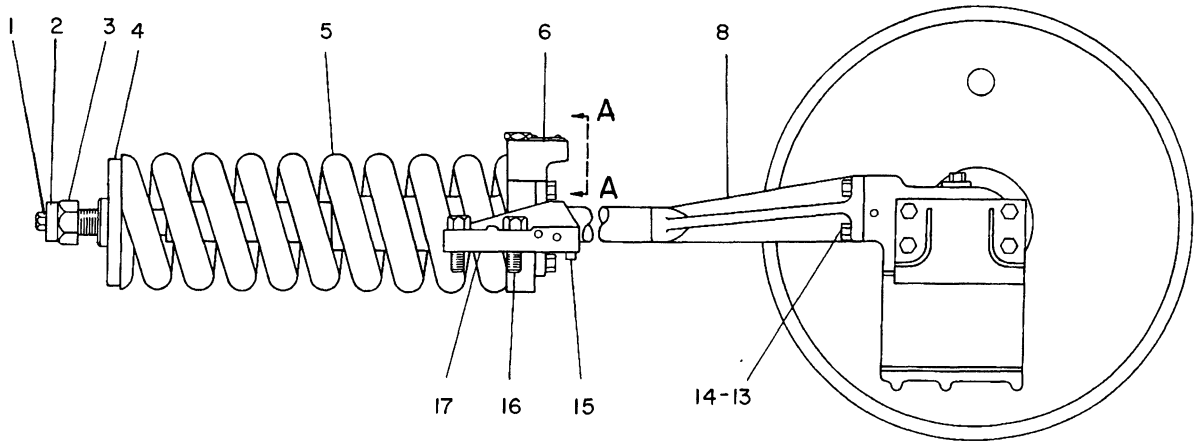

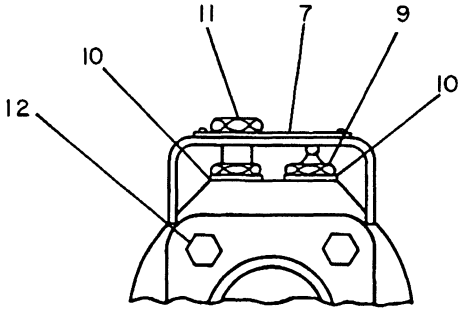

VIEW A-A

NOTE	REF NO	PART NUMBER	QTY	PART NAME
C	1	8T8917	2	BOLT
	2	1B1067	2	WASHER
C	3	7X0451	2	NUT-FULL
	4	2V9025	2	PILOT-RECOIL SPRING
C	5	8Y2735	2	SPRING
	6	6S8952	2	HEAD GP
				(EACH INCLUDES)
	7	5P9446	1	PLATE-WARNING
		7B3028	4	SCREW-DRIVE
	8	6S7399	2	YOKE AS-IDLER
	9	2S5925	2	VALVE
	10	5M6708	4	WASHER
	11	2S5926	2	VALVE
C	12	8T9393	8	BOLT
C	13	5P2566	8	BOLT
C	14	7X0584	8	WASHER-HARD
	15	9H4105	4	PIN-DOWEL
C	16	7X0347	8	BOLT
C		8T4122	8	WASHER
	17	2V7524	2	STOP-RECOIL SPRING (R.H. OUTER-L.H. INNER)
		2V7525	2	STOP-RECOIL SPRING (R.H. INNER-L.H. OUTER)

QUANTITIES SHOWN ARE THOSE REQUIRED FOR BOTH LH AND RH SIDES

C-CHANGE FROM PREVIOUS TYPE

R-481913 EP

4159 **5G8729 IDLER GP-FRONT-PART 1 OF 2**
S/N 1RJ636-1057

CHASSIS AND UNDERCARRIAGE

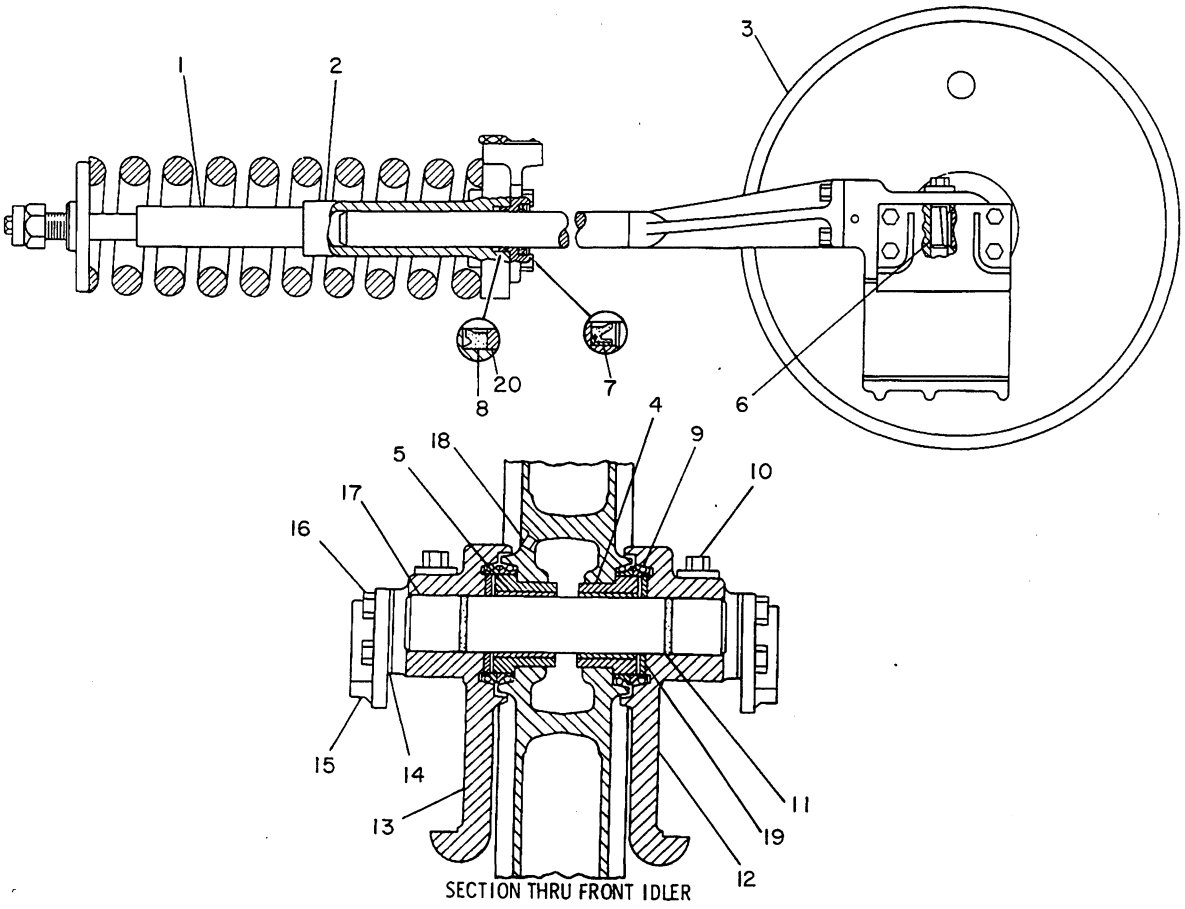

SECTION THRU FRONT IDLER

NOTE	REF NO	PART NUMBER	QTY	PART NAME	NOTE	REF NO	PART NUMBER	QTY	PART NAME
C	1	8Y2736	2	PIPE		20	6S8797	2	BEARING
C	2	8Y2733	2	CYLINDER AS					
	3	6Y1369	2	IDLER AS					
	4	6S3495	4	BEARING AS					
				(EACH INCLUDES)					
	5	6S8233	1	BEARING					
	6	5M5000	4	LOCK-PIN					
	7	4J8980	2	SEAL-LIP TYPE					
C	8	8C9151	2	SEAL AS					
R	9	6S3285	4	SEAL GP-DUO-CONE					
				(EACH INCLUDES)					
		6S3284	2	RING-SEALING					
C	10	8C6877	4	BOLT					
C		7X0618	4	WASHER-HARD					
	11	1H9696	4	SEAL-O-RING					
	12	6S3453	2	BEARING-IDLER					
				(RH INNER-LH OUTER)					
	13	6S3451	2	BEARING-IDLER					
				(RH OUTER-LH INNER)					
B	14	6S3286	16	SHIM 1.5MM(.06 IN)THK					
	15	6S7220	4	PLATE AS					
C	16	5P2566	16	BOLT					
C		7X0584	16	WASHER-HARD					
	17	6S3697	2	SHAFT					
	18	9F2247	2	PLUG					
	19	6S7715	4	WASHER-THRUST					

B-USE AS REQUIRED
C-CHANGE FROM PREVIOUS TYPE
R-REMFG PART MAY BE AVAILABLE

B-481914 EP

4159 **5G8729 IDLER GP-FRONT-PART 2 OF 2**
S/N 1RJ636-1057

CHASSIS AND UNDERCARRIAGE

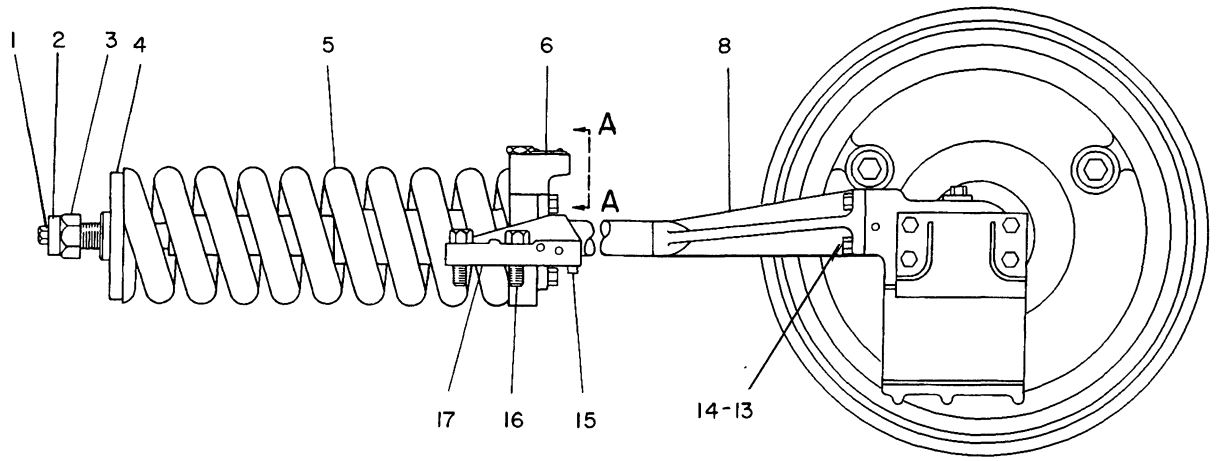

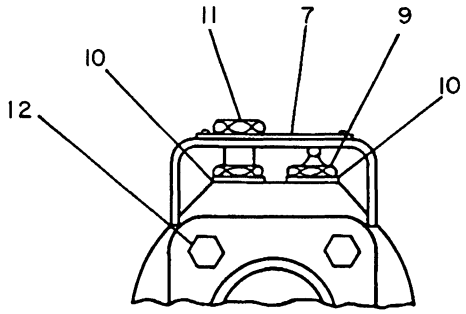

VIEW A-A

NOTE	REF NO	PART NUMBER	QTY	PART NAME	NOTE	REF NO	PART NUMBER	QTY	PART NAME
	1	8T8917	2	BOLT					
	2	1B1067	2	WASHER					QUANTITIES SHOWN ARE
	3	7X0451	2	NUT-FULL					THOSE REQUIRED FOR
	4	2V9025	2	PILOT-RECOIL SPRING					BOTH LH AND RH SIDES
	5	8Y2735	2	SPRING					
	6	6S8952	2	HEAD GP					
				(EACH INCLUDES)					
	7	5P9446	1	PLATE-WARNING					
		7B3028	4	SCREW-DRIVE					
	8	6S7399	2	YOKE AS-IDLER					
	9	2S5925	2	VALVE					
	10	5M6708	4	WASHER					
	11	2S5926	2	VALVE					
	12	8T9393	8	BOLT					
	13	5P2566	8	BOLT					
	14	7X0584	8	WASHER-HARD					
	15	9H4105	4	PIN-DOWEL					
	16	7X0347	8	BOLT					
C		7X0588	8	WASHER-HARD					
	17	2V7524	2	STOP-RECOIL SPRING (RH OUTER-LH INNER)					
		2V7525	2	STOP-RECOIL SPRING (RH INNER-LH OUTER)					

C-CHANGE FROM PREVIOUS TYPE

R-487196 EP

4159 **5G8729 IDLER GP-FRONT-PART 1 OF 2**

S/N 1RJ1058-Up

CHASSIS AND UNDERCARRIAGE

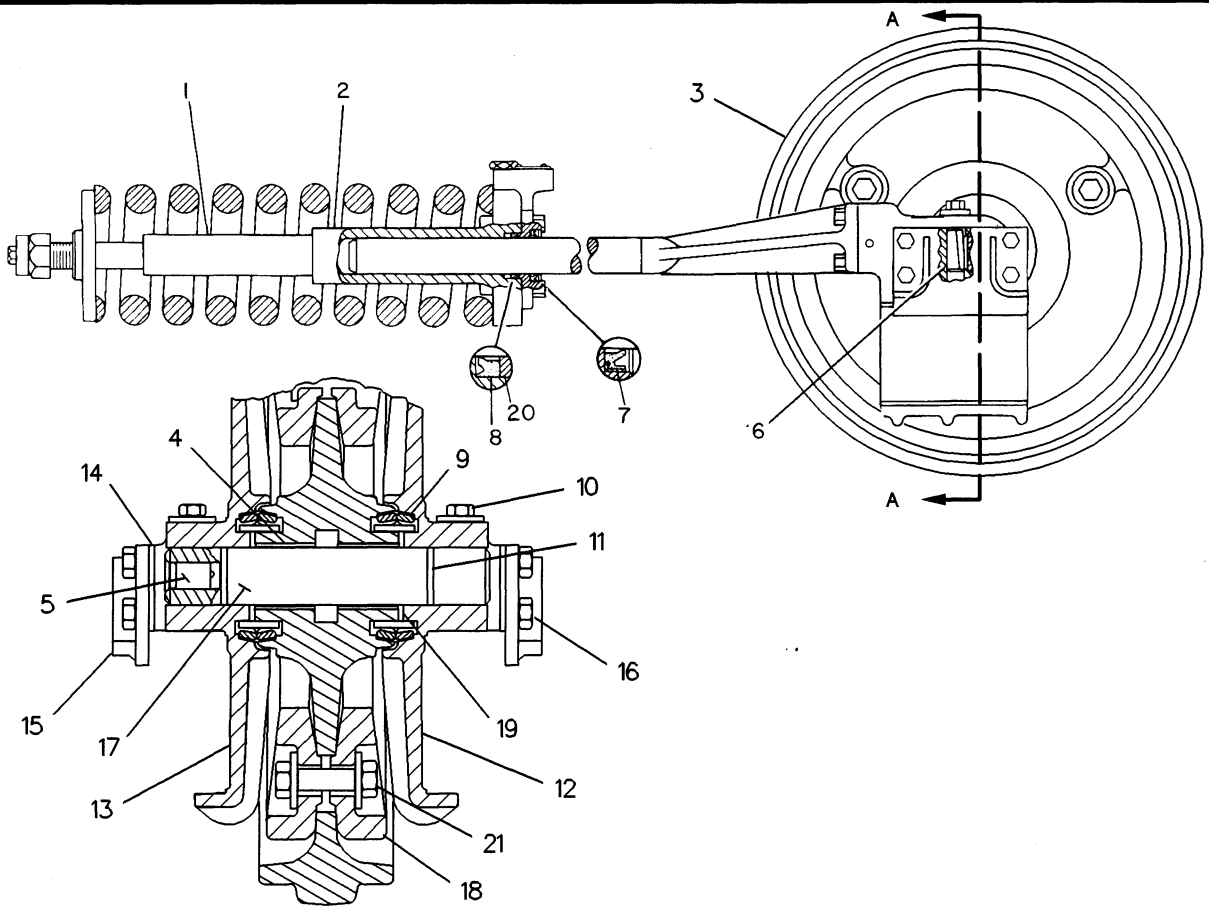

SECTION A-A

NOTE	REF NO	PART NUMBER	QTY	PART NAME	NOTE	REF NO	PART NUMBER	QTY	PART NAME
	1	8Y2736	2	PIPE	C	19	6Y2110	4	WASHER-THRUST
	2	8Y2733	2	CYLINDER AS		20	6S8797	2	BEARING
C	3	8E7342	2	IDLER & BEARING AS	C	21	7X0349	6	BOLT
				(EACH INCLUDES)	C		7X0583	12	WASHER-HARD
	4	6Y4744	2	BEARING-SLEEVE	C		7X0448	6	NUT
	5	6Y0473	2	PLUG-CLEAR					
C		7G4332	2	STOPPER-RUBBER	BF		8C3698		OIL
	6	5M5000	4	LOCK-PIN					
	7	4J8980	2	SEAL-LIP TYPE					QUANTITIES SHOWN ARE
	8	9X7277	2	SEAL AS					THOSE REQUIRED FOR
RC	9	1M8746	4	SEAL GP-DUO-CONE					BOTH LH AND RH SIDES
				(EACH INCLUDES)					
		8H2265	2	RING					
	10	8C6877	4	BOLT					
		7X0618	4	WASHER-HARD					
	11	1H9696	4	SEAL-O-RING					
C	12	8Y1698	2	BEARING					
				(RH INNER-LH OUTER)					
C	13	8Y1697	2	BEARING					
				(RH OUTER-LH INNER)					
B	14	6S3286	16	SHIM (1.5MM THK)					
	15	6S7220	4	PLATE AS					
	16	5P2566	16	BOLT					
		7X0584	16	WASHER-HARD					
C	17	8E7343	2	SHAFT-TRACK IDLER					
C	18	8Y1817	4	COUNTERWEIGHT					

B-USE AS REQUIRED
C-CHANGE FROM PREVIOUS TYPE
F-NOT SHOWN

R-REMFG PART MAY BE AVAILABLE

R-511834 EP

4159 **5G8729 IDLER GP-FRONT-PART 2 OF 2**
S/N 1RJ1058-Up

CHASSIS AND UNDERCARRIAGE

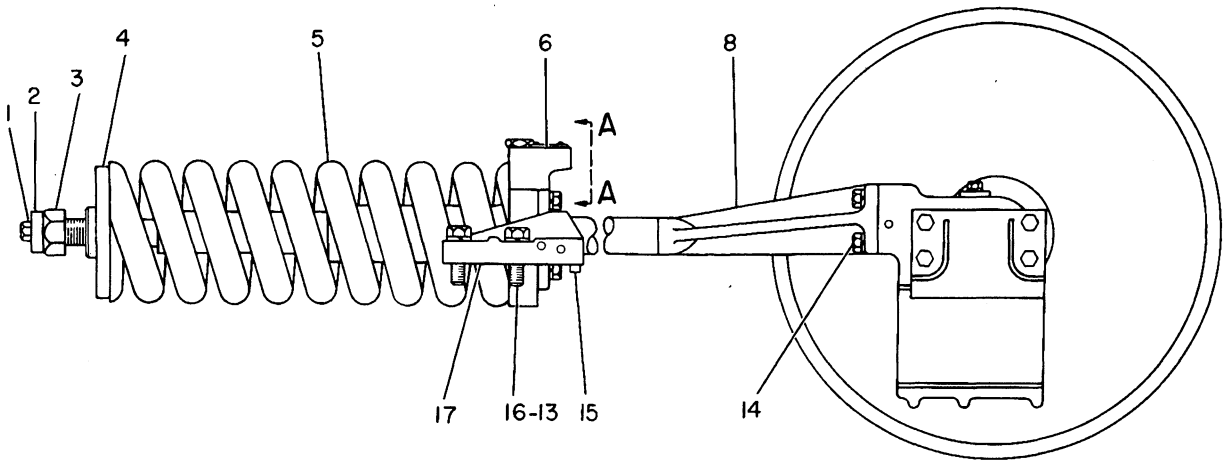

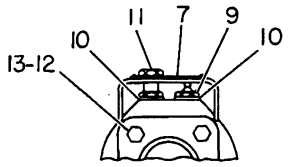

VIEW A-A

NOTE	REF NO	PART NUMBER	QTY	PART NAME	NOTE	REF NO	PART NUMBER	QTY	PART NAME
	1	0S1595	2	BOLT					
	2	1B1067	2	WASHER					
	3	1B4210	2	NUT-FULL					
C	4	2V9025	2	PILOT-RECOIL SPRING					
	5	5K2754	2	SPRING-RECOIL					
C	6	6S8952	2	HEAD GP					
C	7	5P9446	1	PLATE-WARNING					
		7B3028	4	SCREW-DRIVE					
	8	6S7399	2	YOKE AS-IDLER					
	9	2S5925	2	VALVE					
	10	5M6708	4	WASHER					
	11	2S5926	2	VALVE					
	12	0S1566	8	BOLT					
	13	3B4510	16	LOCKWASHER					
	14	0S1585	8	BOLT					
		3B4508	8	LOCKWASHER					
	15	9H4105	4	PIN-DOWEL					
	16	8S9092	8	BOLT					
C	17	2V7524	2	STOP-RECOIL SPRING (RH OUTER-LH INNER)					
C		2V7525	2	STOP-RECOIL SPRING (RH INNER-LH OUTER)					

C-CHANGE FROM PREVIOUS TYPE

B-223551 EP

4159 **6S7272 IDLER GP-FRONT-PART 1 OF 2**
S/N 2CJ1-125

CHASSIS AND UNDERCARRIAGE

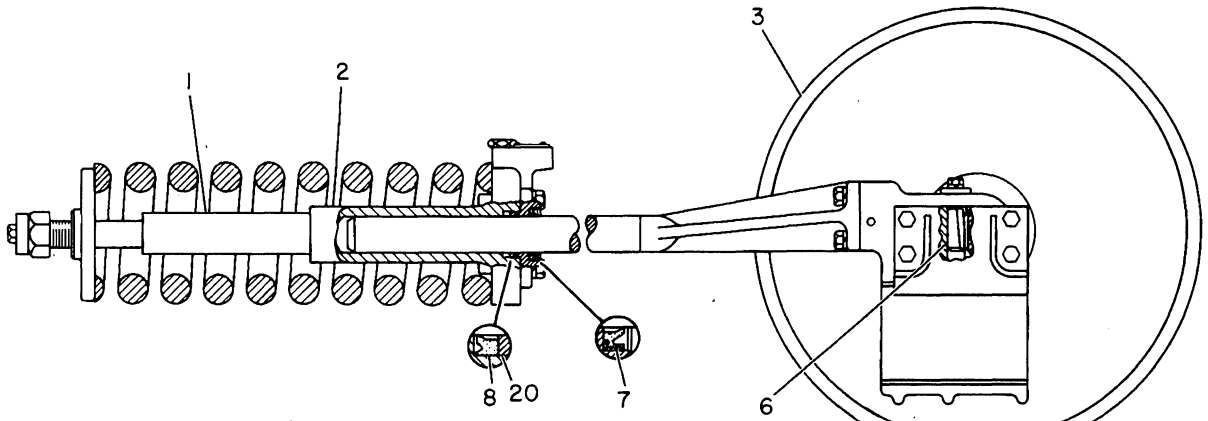

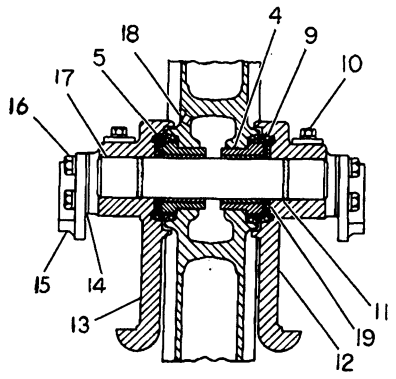

SECTION THRU FRONT IDLER

NOTE	REF NO	PART NUMBER	QTY	PART NAME
C	1	6S9694	2	PIPE
	2	6S3360	2	CYLINDER AS
C	3	6S9367	2	IDLER AS
C	4	6S3495	2	BEARING AS
	5	6S8233	1	BEARING
	6	5M5000	4	LOCK-PIN
	7	4J8980	2	SEAL-LIP TYPE
	8	5J8175	2	SEAL-U-CUP
R	9	6S3285	4	SEAL GP-DUO-CONE
		6S3284	2	RING-SEALING
A		5P0373	4	SEAL GP
		3N3095	2	RING-SEALING (PROVIDES EXTREME TEMPERATURE RESISTANT RING)
C	10	0T0768	4	BOLT
		3B4507	4	LOCKWASHER
		7B0462	4	WASHER
	11	1H9696	4	SEAL-O-RING
	12	6S3453	2	BEARING-IDLER (RH INNER-LH OUTER)
	13	6S3451	2	BEARING-IDLER (RH OUTER-LH INNER)
	14	6S3286	16	SHIM
	15	6S7220	4	PLATE AS
	16	0S1585	16	BOLT
		3B4508	16	LOCKWASHER
	17	6S3697	2	SHAFT
	18	9F2247	2	PLUG
	19	6S7715	4	WASHER-THRUST
C	20	6S8797	2	BEARING

A-NOT PART OF THIS GROUP
C-CHANGE FROM PREVIOUS TYPE
R-REMFG PART MAY BE AVAILABLE

B-165884 EP

4159 **6S7272 IDLER GP-FRONT-PART 2 OF 2**
S/N 2CJ1-125

CHASSIS AND UNDERCARRIAGE

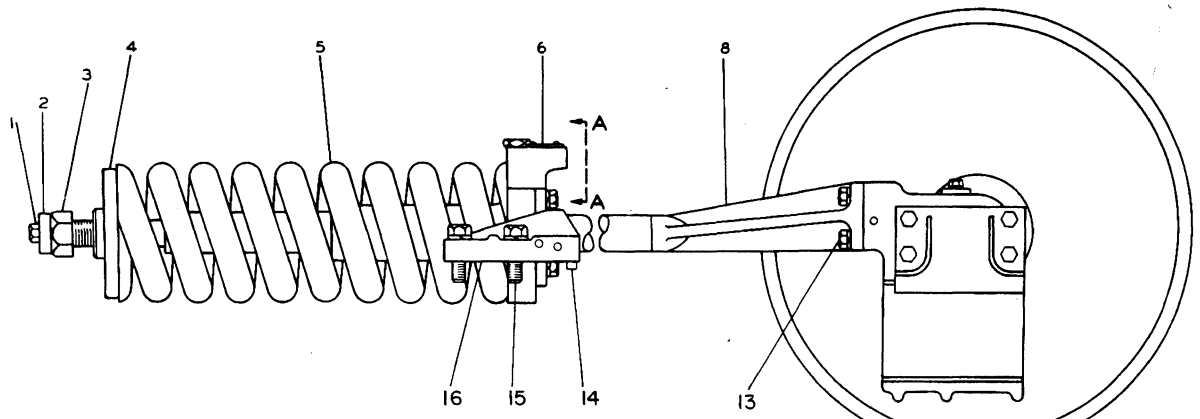

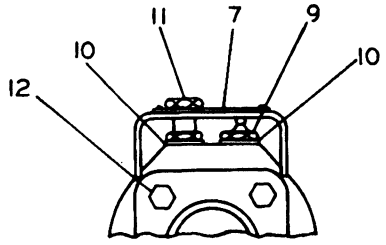

VIEW A-A

QUANTITIES SHOWN ARE THOSE REQUIRED FOR BOTH L.H. & R.H. SIDES

NOTE	REF NO	PART NUMBER	QTY	PART NAME	NOTE	REF NO	PART NUMBER	QTY	PART NAME
	1	0S1595	2	BOLT					
	2	1B1067	2	WASHER					
	3	1B4210	2	NUT-FULL					
	4	2V9025	2	PILOT-RECOIL SPRING					
	5	5K2754	2	SPRING-RECOIL					
	6	6S8952	2	HEAD GP					
	7	5P9446	1	PLATE-WARNING					
		7B3028	4	SCREW-DRIVE					
	8	6S7399	2	YOKE AS-IDLER					
	9	2S5925	2	VALVE					
	10	5M6708	4	WASHER					
	11	2S5926	2	VALVE					
	12	0S1566	8	BOLT					
	13	0S1585	8	BOLT					
C		63801	8	WASHER					
	14	9H4105	4	PIN-DOWEL					
	15	8S9092	8	BOLT					
	16	2V7524	2	STOP-RECOIL SPRING					
		2V7525	2	STOP-RECOIL SPRING					

C-CHANGE FROM PREVIOUS TYPE

B-462365 EP

4159 **6S7272 IDLER GP-FRONT-PART 1 OF 2**

Type 1. S/N 2CJ126-429

CHASSIS AND UNDERCARRIAGE

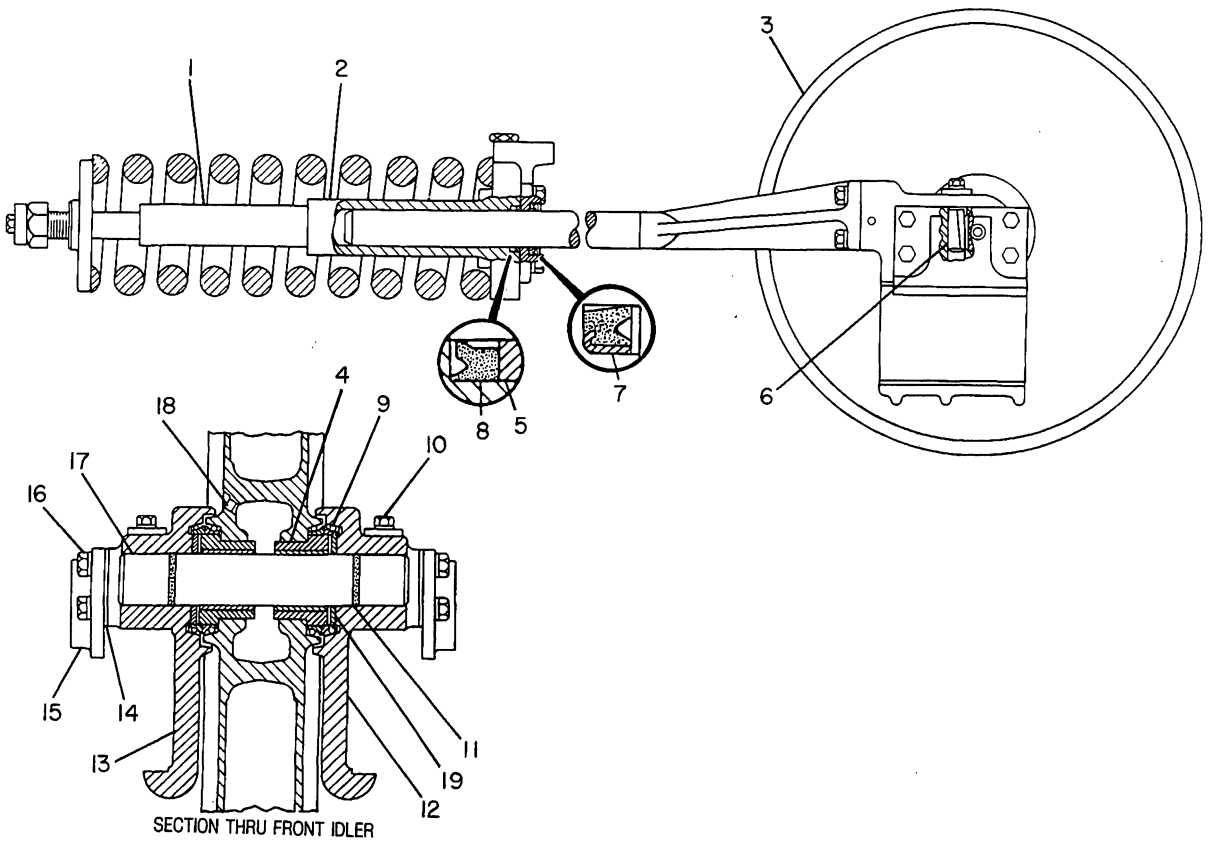

NOTE	REF NO	PART NUMBER	QTY	PART NAME
	1	6S9694	2	PIPE
	2	6S3360	2	CYLINDER AS
C	3	6Y1318	2	IDLER AS
C	4	6S3495	4	BEARING AS
				(EACH INCLUDES)
		6Y4744	1	BEARING-SLEEVE
	5	6S8797	2	BEARING
	6	5M5000	4	LOCK-PIN
	7	4J8980	2	SEAL-LIP TYPE
	8	5J8175	2	SEAL-U-CUP
	9	6S3285	4	SEAL GP-DUO-CONE
		6S3284	2	RING-SEALING
				-OR-
		5P0373	4	SEAL GP
		3N3095	2	RING-SEALING
				(PROVIDES HIGH TEMP RESISTANT RING)
	10	0T0768	4	BOLT
		7B0462	4	WASHER
	11	1H9696	4	SEAL-O-RING
	12	6S3453	2	BEARING-IDLER
	13	6S3451	2	BEARING-IDLER
	14	6S3286	16	SHIM 1.524MM(.060IN)THK
	15	6S7220	4	PLATE AS
	16	0S1585	16	BOLT
	17	6S3697	2	SHAFT
	18	9F2247	2	PLUG
	19	6S7715	4	WASHER-THRUST

QUANTITIES SHOWN ARE THOSE REQUIRED FOR BOTH LH & RH SIDES

C-CHANGE FROM PREVIOUS TYPE

B-462366 EP

4159 **6S7272 IDLER GP-FRONT-PART 2 OF 2**

Type 1. S/N 2CJ126-429

CHASSIS AND UNDERCARRIAGE

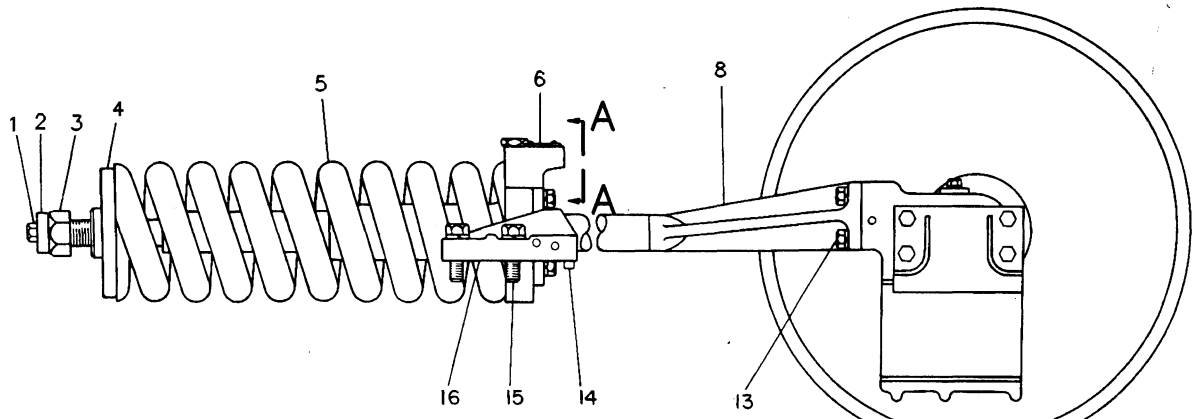

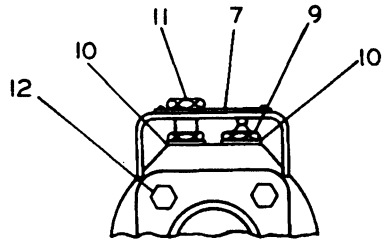

VIEW A-A

NOTE	REF NO	PART NUMBER	QTY	PART NAME	NOTE	REF NO	PART NUMBER	QTY	PART NAME
C	1	8T8917	2	BOLT					
	2	1B1067	2	WASHER					
C	3	7X0451	2	NUT-FULL					
	4	2V9025	2	PILOT-RECOIL SPRING					
C	5	8Y2735	2	SPRING					
	6	6S8952	2	HEAD GP					
	7	5P9446	1	PLATE-WARNING					
		7B3028	4	SCREW-DRIVE					
	8	6S7399	2	YOKE AS-IDLER					
	9	2S5925	2	VALVE					
	10	5M6708	4	WASHER					
	11	2S5926	2	VALVE					
C	12	8T9393	8	BOLT					
C	13	5P2566	8	BOLT					
C		7X0584	8	WASHER-HARD					
	14	9H4105	4	PIN-DOWEL					
C	15	7X0347	8	BOLT					
C		8T4122	8	WASHER					
	16	2V7524	2	STOP-RECOIL SPRING					
		2V7525	2	STOP-RECOIL SPRING					
				QUANTITIES SHOWN ARE THOSE REQUIRED FOR BOTH LH AND RH SIDES					

C-CHANGE FROM PREVIOUS TYPE

R-482499 EP

4159 **6S7272 IDLER GP-FRONT-PART 1 OF 2**

Type 2. S/N 2CJ126-429

CHASSIS AND UNDERCARRIAGE

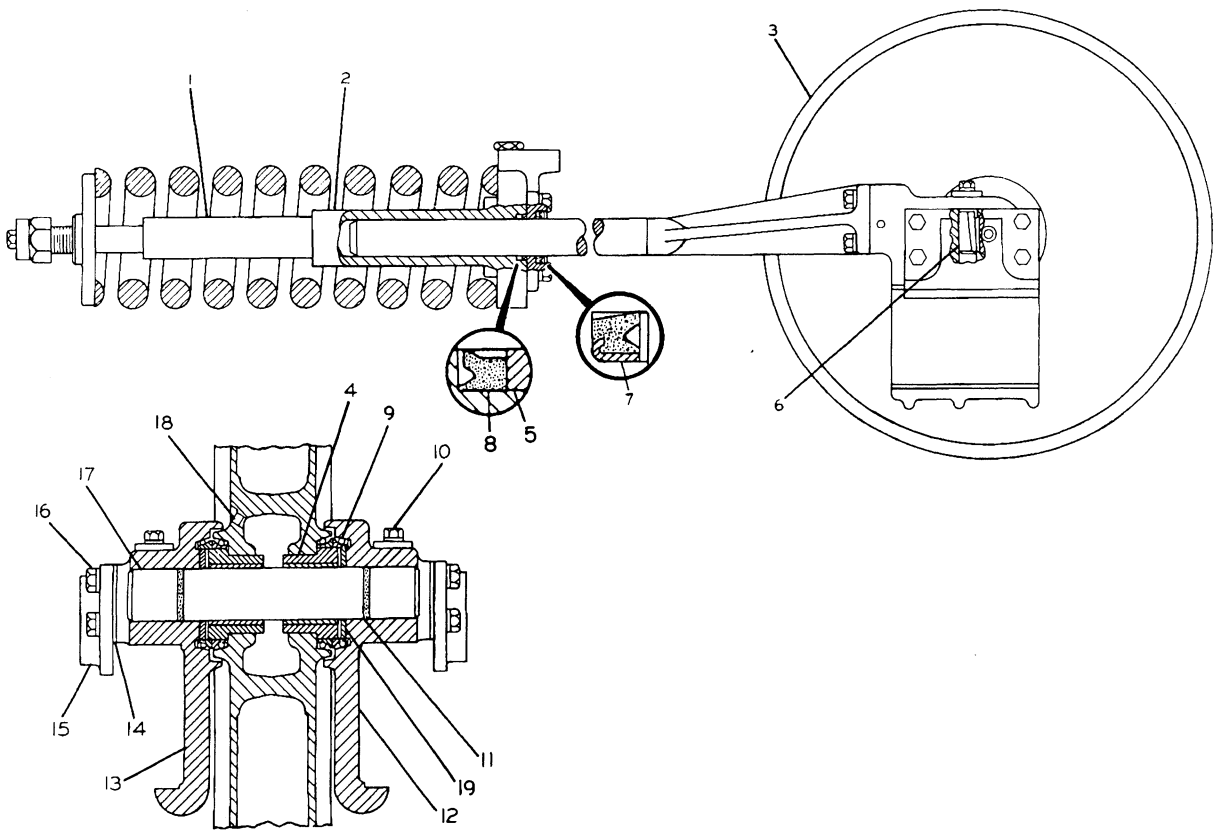

SECTION THRU FRONT IDLER

NOTE	REF NO	PART NUMBER	QTY	PART NAME	NOTE	REF NO	PART NUMBER	QTY	PART NAME
C	1	8Y2736	2	PIPE		17	6S3697	2	SHAFT
C	2	8Y2733	2	CYLINDER AS		18	9F2247	2	PLUG
	3	6Y1318	2	IDLER AS		19	6S7715	4	WASHER-THRUST
	4	6S3495	4	BEARING AS (EACH INCLUDES)					QUANTITIES SHOWN ARE
		6Y4744	1	BEARING-SLEEVE					THOSE REQUIRED FOR
	5	6S8797	2	BEARING					BOTH LH AND RH SIDES
	6	5M5000	4	LOCK-PIN					
	7	4J8980	2	SEAL-LIP TYPE					
C	8	8C9151	2	SEAL AS					
R	9	6S3285	4	SEAL GP-DUO-CONE					
		6S3284	2	RING-SEALING					
				-OR-					
		5P0373	4	SEAL GP					
		3N3095	2	RING-SEALING (PROVIDES HIGH TEMP RESISTANT RING)					
C	10	8C6877	4	BOLT					
C		7X0618	4	WASHER-HARD					
	11	1H9696	4	SEAL-O-RING					
	12	6S3453	2	BEARING-IDLER					
	13	6S3451	2	BEARING-IDLER					
B	14	6S3286	16	SHIM 1.524MM(.060IN)THK					
	15	6S7220	4	PLATE AS					
C	16	5P2566	16	BOLT					
C		7X0584	16	WASHER-HARD					

B-USE AS REQUIRED
C-CHANGE FROM PREVIOUS TYPE
R-REMFG PART MAY BE AVAILABLE

R-482500 EP

4159 **6S7272 IDLER GP-FRONT-PART 2 OF 2**
Type 2. S/N 2CJ126-429

CHASSIS AND UNDERCARRIAGE

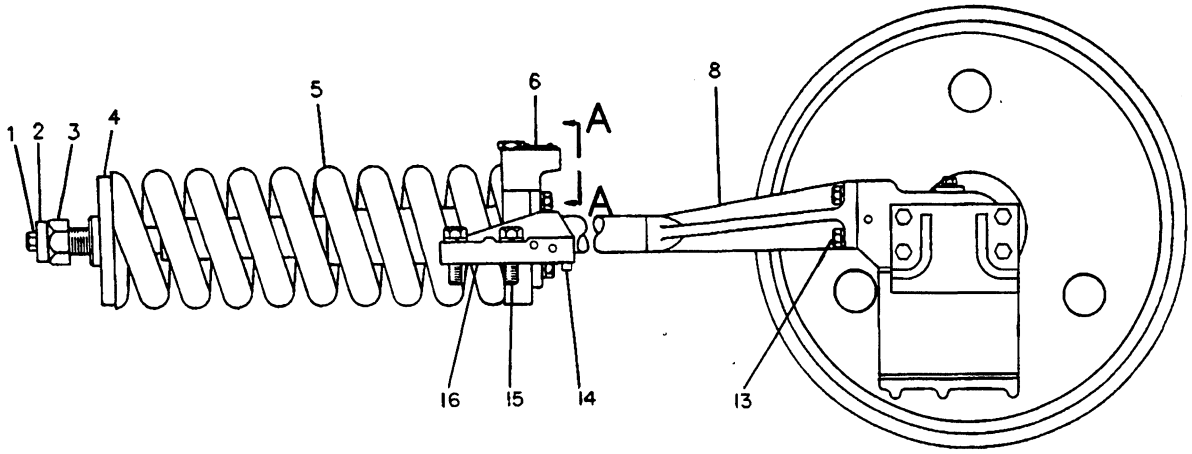

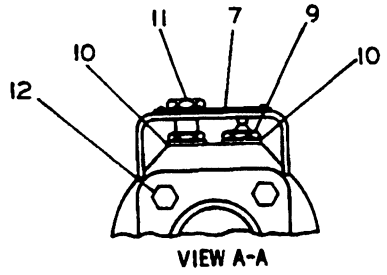

VIEW A-A

NOTE	REF NO	PART NUMBER	QTY	PART NAME
	1	8T8917	2	BOLT
	2	1B1067	2	WASHER
	3	7X0451	2	NUT-FULL
	4	2V9025	2	PILOT-RECOIL SPRING
	5	8Y2735	2	SPRING
	6	6S8952	2	HEAD GP
				(EACH INCLUDES)
	7	5P9446	1	PLATE-WARNING
		7B3028	4	SCREW-DRIVE
	8	6S7399	2	YOKE AS-IDLER
	9	2S5925	2	VALVE
	10	5M6708	4	WASHER
	11	2S5926	2	VALVE
	12	8T9393	8	BOLT
	13	5P2566	8	BOLT
		7X0584	8	WASHER-HARD
	14	9H4105	4	PIN-DOWEL
	15	7X0347	8	BOLT
C		7X0588	8	WASHER-HARD
	16	2V7524	2	STOP-RECOIL SPRING (RH OUTER-LH INNER)
		2V7525	2	STOP-RECOIL SPRING (RH INNER-LH OUTER)

NOTE	REF NO	PART NUMBER	QTY	PART NAME
				QUANTITIES SHOWN ARE THOSE REQUIRED FOR BOTH LH AND RH SIDES

C-CHANGE FROM PREVIOUS TYPE

B-487199 EP

4159 **6S7272 IDLER GP-FRONT-PART 1 OF 2**
S/N 2CJ430-Up

CHASSIS AND UNDERCARRIAGE

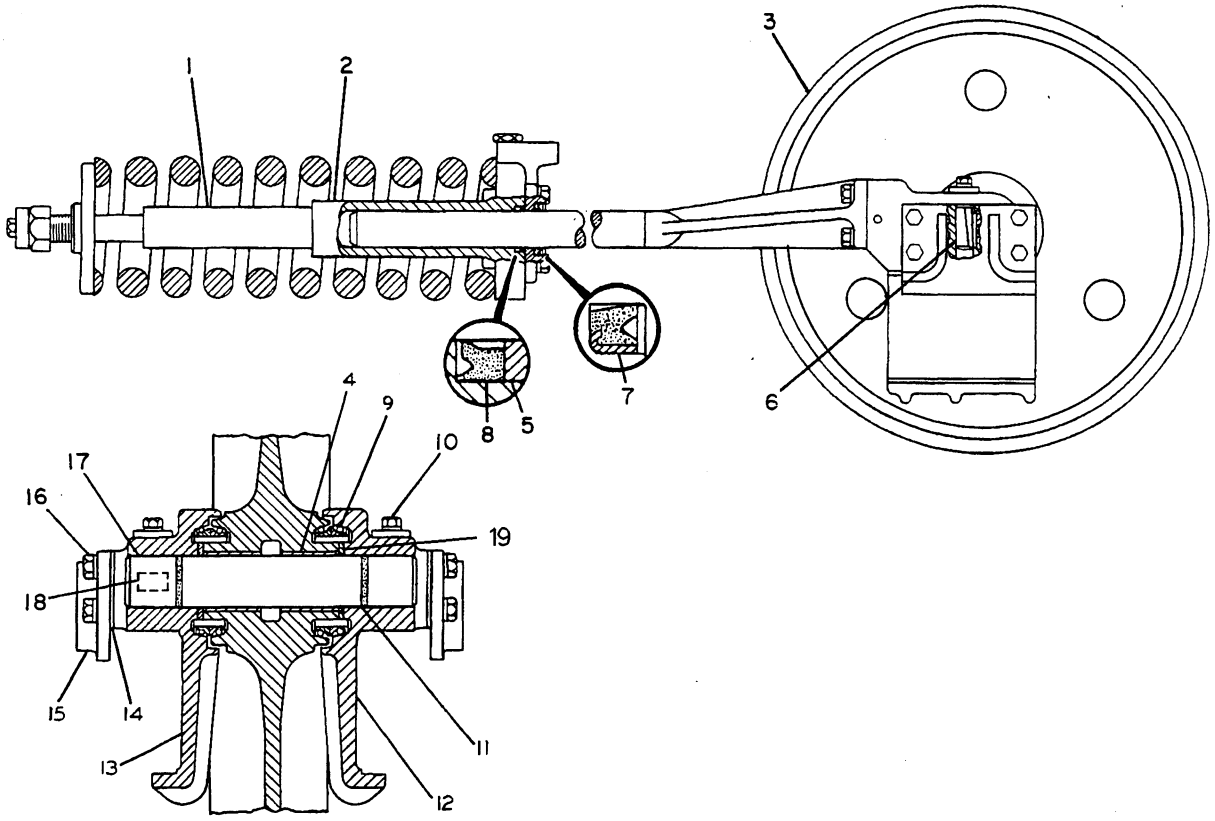

SECTION THRU FRONT IDLER

NOTE	REF NO	PART NUMBER	QTY	PART NAME
	1	8Y2736	2	PIPE
	2	8Y2733	2	CYLINDER AS
C	3	8E7342	2	IDLER & BEARING AS (EACH INCLUDES)
	4	6Y4744	2	BEARING-SLEEVE
	5	6S8797	2	BEARING
	6	5M5000	4	LOCK-PIN
	7	4J8980	2	SEAL-LIP TYPE
	8	9X7277	2	SEAL AS
RC	9	1M8746	4	SEAL GP-DUO-CONE (EACH INCLUDES)
		8H2265	2	RING
				-OR-
A		5P0373	4	SEAL GP (EACH INCLUDES)
		3N3095	2	RING-SEALING (PROVIDES HIGH TEMP RESISTANT RING)
	10	8C6877	4	BOLT
		7X0618	4	WASHER-HARD
	11	1H9696	4	SEAL-O-RING
C	12	8Y1698	2	BEARING (RH INNER-LH OUTER)
C	13	8Y1697	2	BEARING (RH OUTER-LH INNER)
B	14	6S3286	16	SHIM (1.5MM THK)
	15	6S7220	4	PLATE AS
	16	5P2566	16	BOLT
		7X0584	16	WASHER-HARD
C	17	8E7343	2	SHAFT-TRACK IDLER
C	18	6Y0473	2	PLUG-CLEAR
C		7G4332	2	STOPPER-RUBBER
C	19	6Y2110	4	WASHER-THRUST
BF		8C3698		OIL
				QUANTITIES SHOWN ARE THOSE REQUIRED FOR BOTH LH AND RH SIDES

A-NOT PART OF THIS GROUP
B-USE AS REQUIRED
C-CHANGE FROM PREVIOUS TYPE
F-NOT SHOWN
R-REMFG PART MAY BE AVAILABLE

B-511828 EP

4159 **6S7272 IDLER GP-FRONT-PART 2 OF 2**
S/N 2CJ430-Up

CHASSIS AND UNDERCARRIAGE

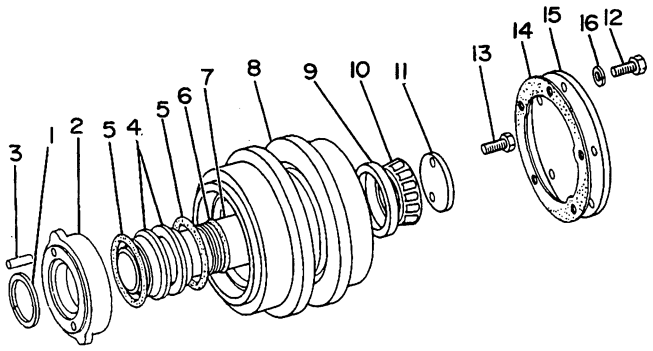

NOTE	REF NO	PART NUMBER	QTY	PART NAME
	1	1M7914	1	RING-RETAINING
	2	1M7918	1	COLLAR AS-END
	3	1M4291	2	DOWEL
R	4	2M2858	1	SEAL GP-DUO-CONE
	5	1M3097	2	RING-SEALING
	6	1H9696	1	SEAL-O-RING
	7	6K9861	1	SHAFT-ROLLER
	8	6S3691	1	ROLLER-TRACK CARRIER
	9	1M8736	2	CUP-ROLLER BEARING
	10	1M8735	2	CONE-ROLLER BEARING
	11	6K9860	1	PLATE-RETAINER
	12	0L1351	5	BOLT
C	13	6V4791	2	BOLT
	14	4H9628	1	GASKET
	15	4H9527	1	COVER
	16	3B4506	5	LOCKWASHER

C-CHANGE FROM PREVIOUS TYPE
R-REMFG PART MAY BE AVAILABLE

B-341565 EP

4154 **6S3609 ROLLER GP-TRACK CARRIER-2 REQUIRED**

1 6Y1510 LINK AS-TRACK..... 128

152 4K7038 BOLT-TRACK

4 5A3187 BOLT-TRACK

152 7K2017 NUT

38 6Y1381 SHOE-TRACK

1 6Y1382 SHOE-TRACK MASTER

533569 P

4170 **6Y1674 TRACK GP-2 REQUIRED**
405MM (15.94IN) Grouser Shoe-Sealed & Lubricated
S/N 1RJ1-Up

			PAGE
1	6Y1510	LINK AS-TRACK.....	128
4	5A3187	BOLT-TRACK (9/16-18 X 3 IN)	
152	4K7038	BOLT-TRACK (9/16-18 X 1.625)	
152	7K2017	NUT	
38	6Y1385	SHOE-TRACK	
1	6Y1386	SHOE-TRACK MASTER	

531890 P

4170 **6Y1675 TRACK GP-2 REQUIRED**
635MM (25IN) Grouser Shoe-Sealed & Lubricated
S/N 2CJ1-Up

			PAGE
1	6Y1512	LINK AS-TRACK.....	128
		-OR-	
1	6Y1510	LINK AS-TRACK.....	128
78	4K7038	BOLT-TRACK	
76	5A3187	BOLT-TRACK	
2	5P4683	BOLT-TRACK	
152	7K2017	NUT	
38	6S9115	SHOE-LGP	
1	6S9102	SHOE-LGP MASTER	

513510 P

4170 **6Y1679 TRACK GP-2 REQUIRED**
635MM (25IN) Self-Cleaning Shoe-Sealed & Lubricated
S/N 2CJ1-Up
An Attachment

			PAGE
1	6Y1510	LINK AS-TRACK.....	128
152	4K7038	BOLT-TRACK	
152	7K2017	NUT	
38	9N4501	SHOE-TRACK	
1	9N4502	SHOE-TRACK MASTER	
4	5A3187	BOLT-TRACK	

517455 P

4170 **9N4200 TRACK GP-2 REQUIRED**
405MM (16 In) Grouser Shoe-Sealed & Lubricated-Extreme Service
S/N 1RJ1-Up
An Attachment

			PAGE
2	6Y1368	IDLER & BEARING AS.....	129

497798 P

4159 **6S8902 COUNTERWEIGHT GP-IDLER**
Type 1
An Attachment

CHASSIS AND UNDERCARRIAGE

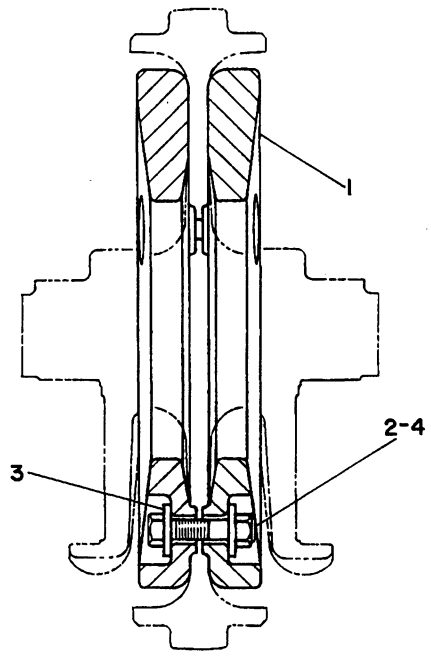

NOTE	REF NO	PART NUMBER	QTY	PART NAME
	1	8Y1817	4	COUNTERWEIGHT
	2	7X0349	6	BOLT
	3	7X0583	12	WASHER-HARD
	4	7X0448	6	NUT

B-497799 EP

4159 **6S8902 COUNTERWEIGHT GP-IDLER**

Type 2

An Attachment

CHASSIS AND UNDERCARRIAGE

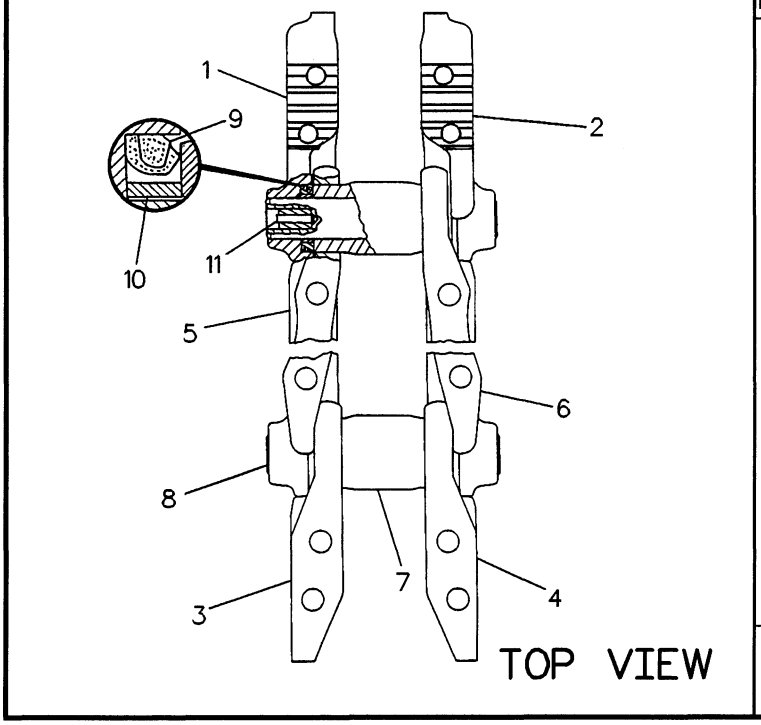

NOTE	REF NO	PART NUMBER	QTY	PART NAME
	1	6YO937	1	LINK-PIN END-RH
	2	6YO938	1	LINK-PIN END-LH
	3	6YO939	1	LINK-BUSHING END (RH)
	4	6YO940	1	LINK-BUSHING END (LH)
	5	6YO935	38	LINK-TRACK-RH
	6	6YO936	38	LINK-TRACK-LH
	7	6YO650	39	BUSHING-TRACK
	8	6S9055	39	PIN-TRACK
	9	6T4206	78	SEAL AS
	10	6S9049	78	RING-THRUST
	11	6YO473	39	PLUG-CLEAR
		5G2247	39	STOPPER-RUBBER

R-507631 EP

4169 **6Y1510 LINK AS-TRACK**

Sealed & Lubricated
Part Of 6Y1674, 6Y1675, 6Y1679, 9N4200 Tracks
Also An Attachment

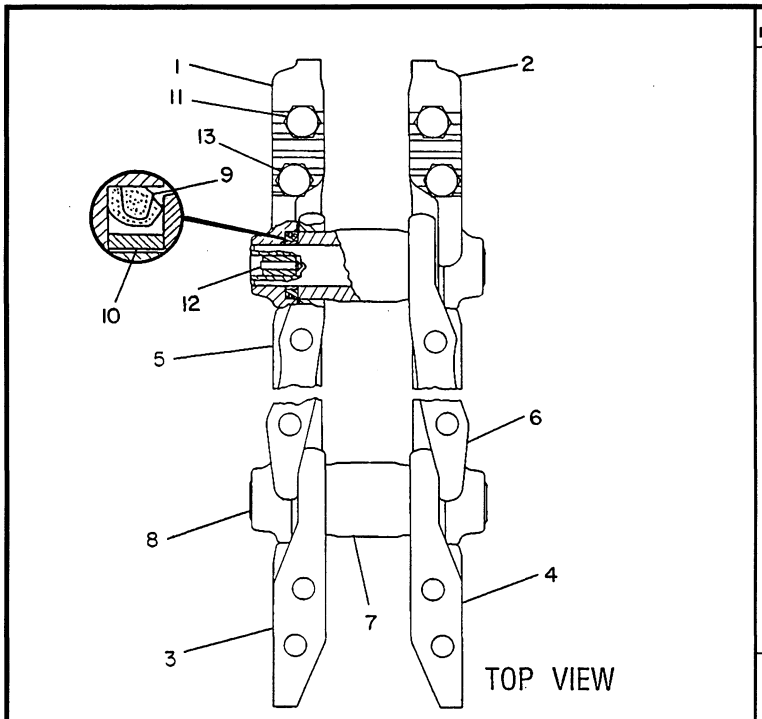

NOTE	REF NO	PART NUMBER	QTY	PART NAME
	1	6YO937	1	LINK-PIN END-RH
	2	6YO938	1	LINK-PIN END-LH
	3	6YO939	1	LINK-BUSHING END (RH)
	4	6YO940	1	LINK-BUSHING END (LH)
	5	6YO935	38	LINK-TRACK-RH
	6	6YO936	38	LINK-TRACK-LH
	7	6YO650	39	BUSHING-TRACK
	8	6S9055	39	PIN-TRACK
	9	6T4206	78	SEAL AS
	10	6S9049	78	RING-THRUST
	11	5A3187	2	BOLT-TRACK
	12	6YO473	39	PLUG-CLEAR
		5G2247	39	STOPPER-RUBBER
	13	5P4683	2	BOLT-TRACK

M-451909 EP

4169 **6Y1512 LINK AS-TRACK**

Sealed & Lubricated. S/N 2CJ1-Up
Part Of 6Y1679 Track
An Attachment

1	6Y1369	IDLER AS
2	6S3495	BEARING AS
		EACH INCLUDES
1	6S8233	BEARING

452528 P

4159 **6Y1368 IDLER & BEARING AS**
Counterweight
Part Of 6S8902 Counterweight-Idler
An Attachment

37	6YO65O	BUSHING-TRACK
37	6YO473	PLUG-CLEAR
74	6T42O6	SEAL AS
37	5G2247	STOPPER-RUBBER

477050 P

4175 **6Y3882 SEAL & BUSHING GP-TRACK**
Field Installation

		PAGE
1	8YO242 CONTROL GP-HYDRAULIC HAND	133
1	8YO247 LINES GP	142
1	8J4512 PUMP GP-GEAR	150
1	8YO241 VALVE & MOUNTING GP	151

451651 P

8YO240 HYDRAULIC AR-3 VALVE
An Attachment

		PAGE
1	8YO245 CONTROL GP-HYDRAULIC HAND	134
1	8YO247 LINES GP-PUMP	142
1	8YO246 LINES GP-REAR ATTACHMENT	143
1	8J4512 PUMP GP-GEAR	150
1	8YO244 VALVE & MOUNTING GP	152

451650 P

8YO243 HYDRAULIC AR-4 VALVE
S/N 1RJ1-Up
An Attachment

HYDRAULIC SYSTEM

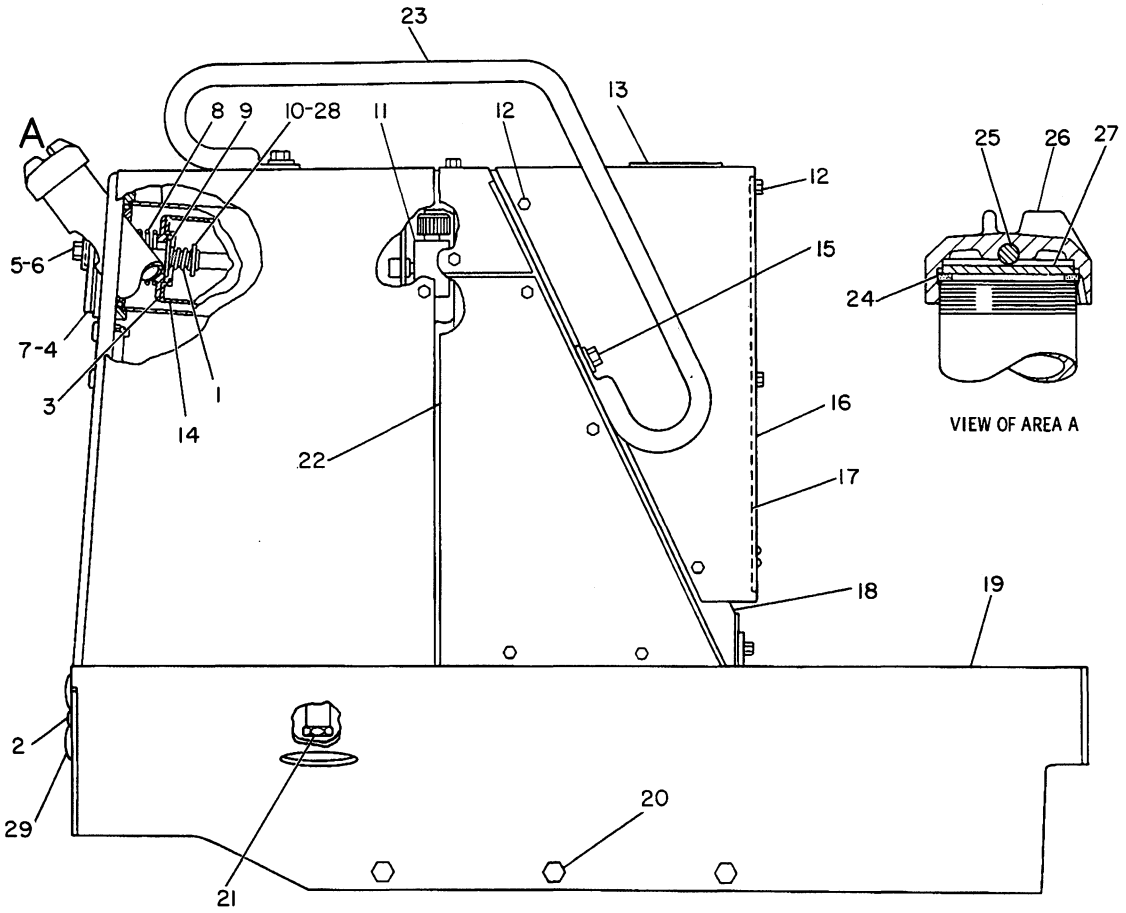

NOTE	REF NO	PART NUMBER	QTY	PART NAME
	1	5J3719	1	SPRING
C	2	6K9593	3	PLUG-BUTTON
	3	6S9979	1	RETAINER
	4	5G1470	1	COVER
	5	4J5267	1	SEAL
	6	5G0435	1	BOLT AS
	7	4H9105	1	SEAL-O-RING
	8	1H5803	1	SPRING-GOVERNOR
C	9	5G6417	1	SPACER
	10	8T4994	1	WASHER
Y	11	6S4767	1	VALVE GP-BREAKER RELIEF
	12	5M3062	24	BOLT
		5P1075	24	WASHER-HARD
	13	5G0477	1	PLUG
	14	9M9740	1	ELEMENT-FILTER (DISPOSABLE)
				- OR -
CA		1U2093	1	ELEMENT (FOR USE W/FIRE RESISTANT HYD SYS)
	15	5P2566	2	BOLT
		5P1076	2	WASHER-HARD (HARD)
	16	5G0123	1	COVER AS
	17	5G1674	1	COVER AS
C		5G1672	1	SPRING
C		4B4319	2	RIVET
	18	5G0174	1	COVER AS
Y	19	5G0013	1	TANK GP-HYDRAULIC
	20	8T9393	3	BOLT
		8T4122	3	WASHER
	21	9S4190	1	PLUG-O-RING
		2M9780	1	SEAL-O-RING
	22	5G1643	1	PLATE AS
	23	5G2496	1	GRAB HANDLE
	24	9H6454	1	GASKET
	25	4B9782	1	BALL
	26	7H1447	1	CAP-FILLER
	27	6H5139	1	PLATE-PRESSURE
	28	2J6356	1	RING-RETAINING
C	29	4F8711	2	PLUG (BUTTON)

A-NOT PART OF THIS GROUP
C-CHANGE FROM PREVIOUS TYPE
Y-SEPARATE ILLUSTRATION

R-493071 EP

5056 **5G0099 TANK & FILTER GP-HYDRAULIC**

5G0013-Page 132, 6S4767-Page 134

HYDRAULIC SYSTEM

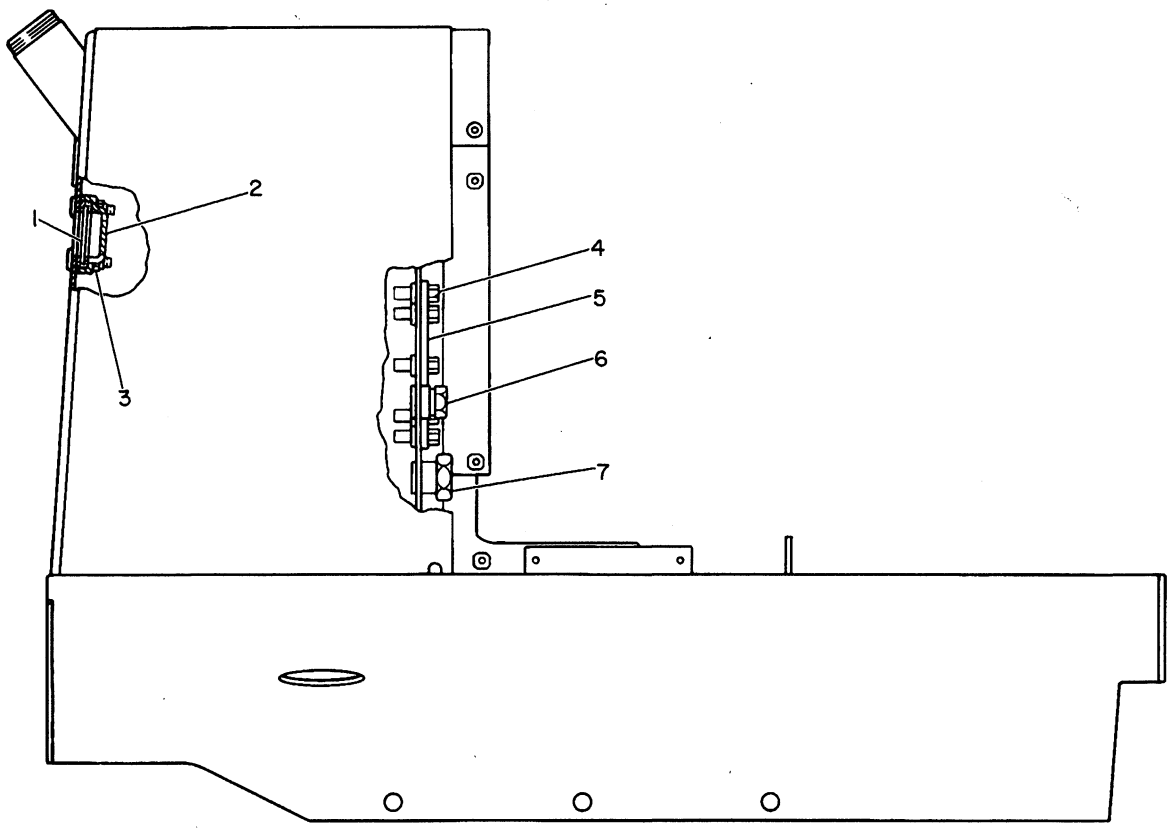

NOTE	REF NO	PART NUMBER	QTY	PART NAME
	1	8Y4842	1	GLASS-OIL LEVEL
		4Y2292	1	GROMMET
	2	8J6913	1	RETAINER-GLASS
	3	4J8265	4	NUT
	4	0S1594	8	BOLT
		5P1075	8	WASHER-HARD
	5	6S6439	1	COVER
		6S6514	1	GASKET
	6	4J4382	1	PLUG-PIPE
C	7	9S4191	1	PLUG-O-RING
		3J1907	1	SEAL-O-RING

C-CHANGE FROM PREVIOUS TYPE

B-493073 EP

5G0013 TANK GP-HYDRAULIC

Part Of 5G0099 Tank & Filter-Hydraulic

HYDRAULIC SYSTEM

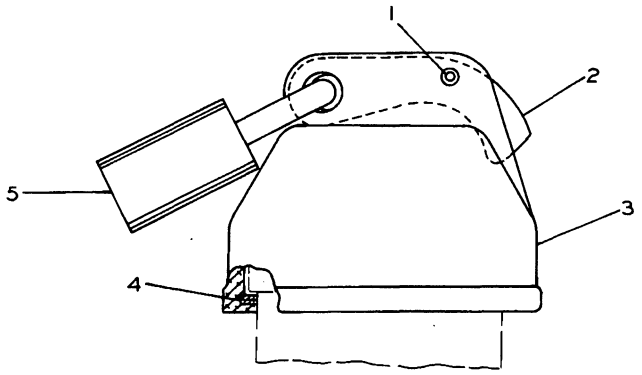

NOTE	REF NO	PART NUMBER	QTY	PART NAME
	1	1L5072	1	DOWEL
	2	9M7394	1	LEVER
	3	5D1911	1	COVER-HYDRAULIC CAP
	4	2J7761	1	RING-RETAINING
	5	5P8502	1	PADLOCK GP
A		5P8500	2	KEY
A		6V5874	1	COVER

A-NOT PART OF THIS GROUP

B-519475 EP

5056 **9G9288 COVER GP-PROTECTION**
Hydraulic Tank Cap

PAGE

1 8YO637 CONTROL GP-HYDRAULIC HAND..... 136

1 8YO638 CONTROL GP-HYDRAULIC HAND..... 137

1 6S3991 FILM-INSTRUCTION

451718 P

5063 **8Y0242 CONTROL GP-HYDRAULIC HAND**
Part Of 8Y0240 Hydraulic Ar
An Attachment

PAGE

1 8YO639 CONTROL GP-HYDRAULIC HAND..... 135

1 8YO637 CONTROL GP-HYDRAULIC HAND..... 136

1 8YO638 CONTROL GP-HYDRAULIC HAND..... 137

1 6S3991 FILM-INSTRUCTION

451683 P

5063

8Y0245 CONTROL GP-HYDRAULIC HAND
S/N 1RJ1-Up
Part Of 8Y0243 Hydraulic Ar
An Attachment

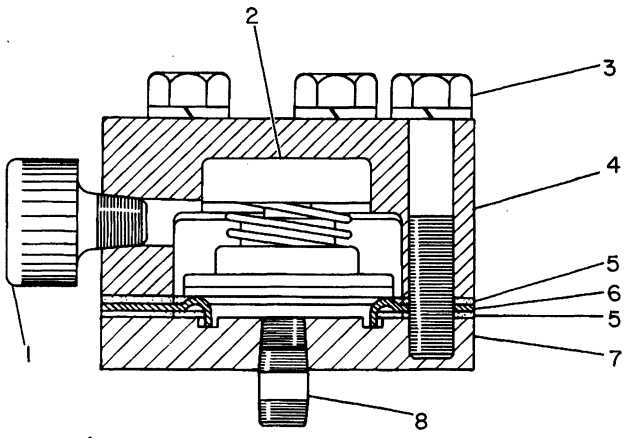

NOTE	REF NO	PART NUMBER	QTY	PART NAME
	1	9G5127	1	BREATHER
	2	5S1218	1	VALVE AS-PRESSURE RELIEF
	3	2B2694	3	BOLT
		3B4505	3	LOCKWASHER
	4	6S4768	1	COVER
	5	6S4795	2	GASKET
	6	7S4252	1	PLATE-PRESSURE VALVE
	7	6S4769	1	PLATE
	8	3B7738	1	NIPPLE

B-493092 EP

5076

6S4767 VALVE GP-BREAKER RELIEF
Part Of 5G0099 Tank & Filter-Hydraulic

HYDRAULIC SYSTEM

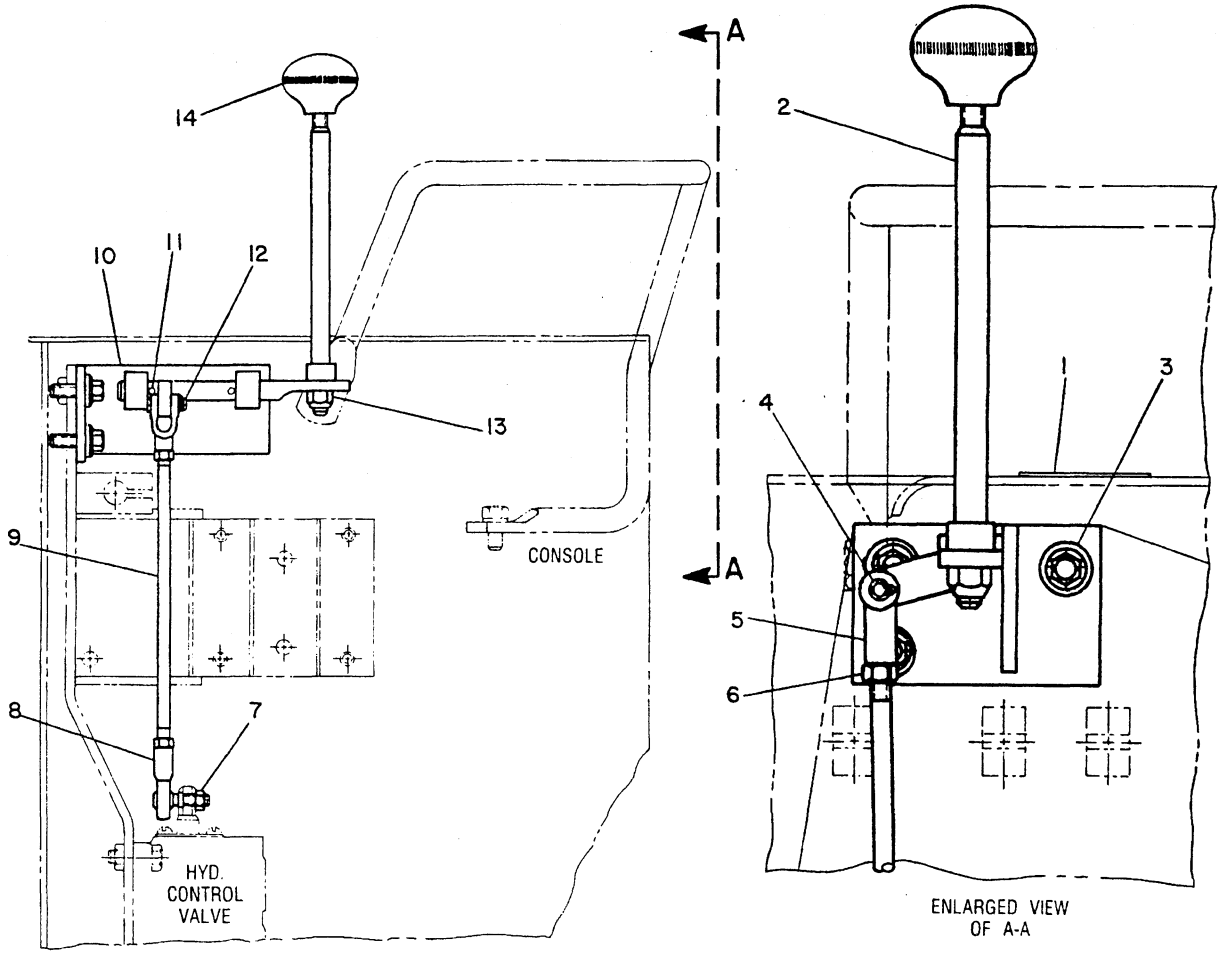

NOTE	REF NO	PART NUMBER	QTY	PART NAME	NOTE	REF NO	PART NUMBER	QTY	PART NAME
	1	6S4084	1	FILM-INSTRUCTION					
	2	8Y0698	1	LEVER AS (RIPPER)					
		1B6182	1	SPACER					
	3	4L6454	3	BOLT					
		5P1075	2	WASHER-HARD					
	4	3B4610	1	COTTER					
	5	3D9609	1	END-ROD					
	6	4F2294	2	NUT					
	7	3D8752	1	LOCKNUT					
	8	9K8757	1	ROD END-BEARING					
	9	8Y0559	1	ROD					
	10	5G1825	1	LEVER AS					
	11	4H8380	2	PIN-SPRING					
	12	8K1255	1	PIN					
	13	2L6267	1	LOCKNUT					
	14	0L1170	1	HANDLE-LEVER					

M-564821 EP

5063 **8Y0639 CONTROL GP-HYDRAULIC HAND**

Ripper. S/N 1RJ1-Up
Part Of 8Y0245 Control-Hydraulic Hand
An Attachment

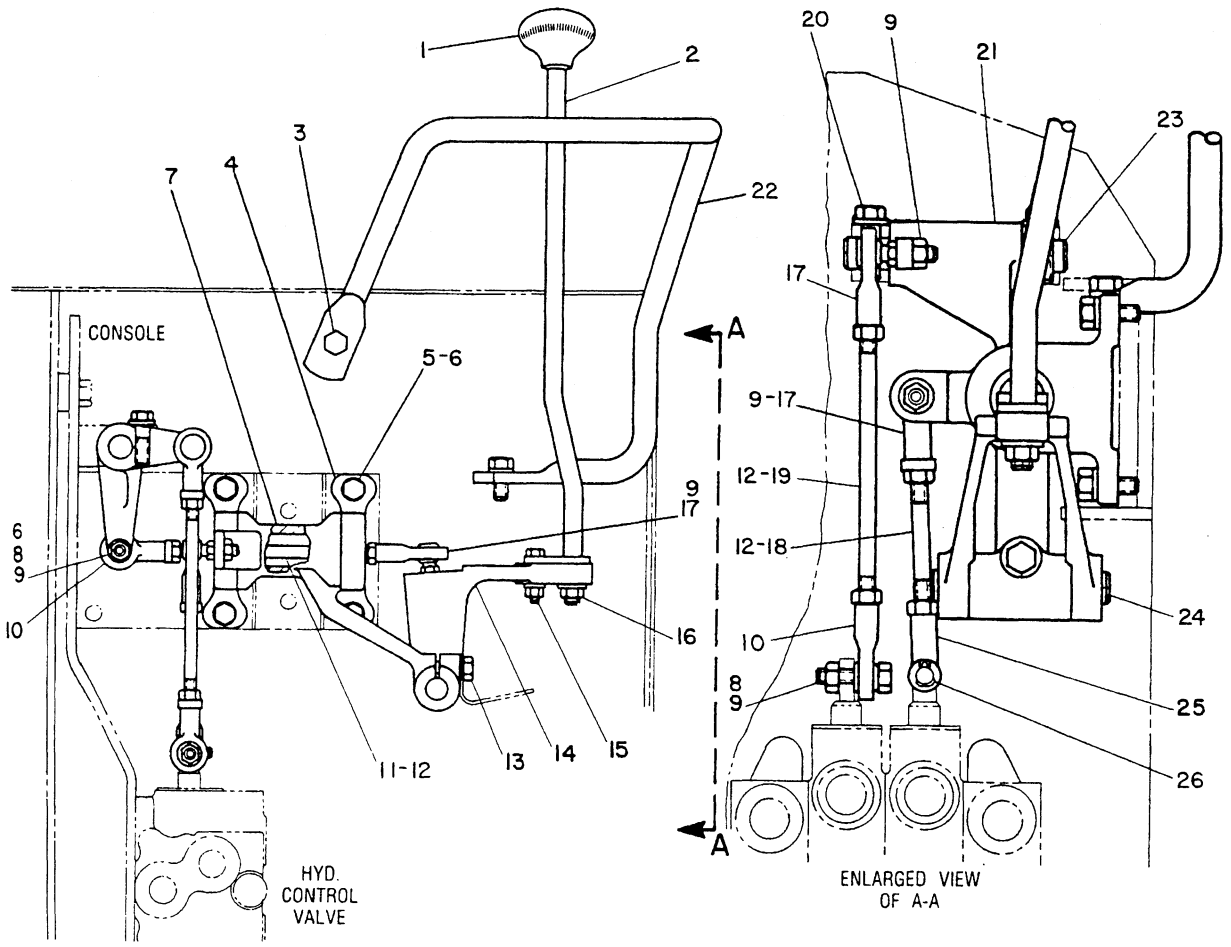

NOTE	REF NO	PART NUMBER	QTY	PART NAME
	1	0L1170	1	HANDLE-LEVER (BLADE TILT)
	2	8Y0482	1	ROD AS
	3	0S1594	2	BOLT
		5P1075	2	WASHER-HARD
	4	6S4789	2	SUPPORT AS (EACH INCLUDES)
		6K3030	1	BEARING-SLEEVE
	5	2B2695	4	BOLT
	6	9M1974	5	WASHER-HARD
	7	6S4792	1	LEVER
	8	6H0187	2	BOLT
	9	3D8752	5	LOCKNUT
	10	7H3641	2	ROD END-BEARING
	11	5M5479	1	ROD
	12	9S8751	6	NUT-FULL
	13	3B1915	1	BOLT
	14	5G3138	1	LEVER AS
		5G0400	2	BEARING
	15	7B2742	1	BOLT
		5P0537	1	WASHER
		2D6235	1	LOCKNUT
	16	2K0564	1	LOCKNUT
		5P8245	1	WASHER
	17	9K8757	3	ROD END-BEARING
	18	2H2292	1	ROD-ADJUSTABLE LINK
	19	1W1180	1	ROD
	20	1A2029	2	BOLT
		5M2894	2	WASHER
	21	5G0419	1	LEVER AS
		5G0400	2	BEARING
	22	5G0284	1	GUARD
	23	5G0278	1	SHAFT
	24	5G0399	1	SHAFT
	25	3D9609	1	END-ROD
	26	1A2457	1	PIN-CLEVIS
		3B4609	1	PIN-COTTER

M-451698 EP

5063

8Y0637 CONTROL GP-HYDRAULIC HAND

Type 1

Part Of 8Y0242 & 8Y0245 Control-Hydraulic Hand

An Attachment

HYDRAULIC SYSTEM

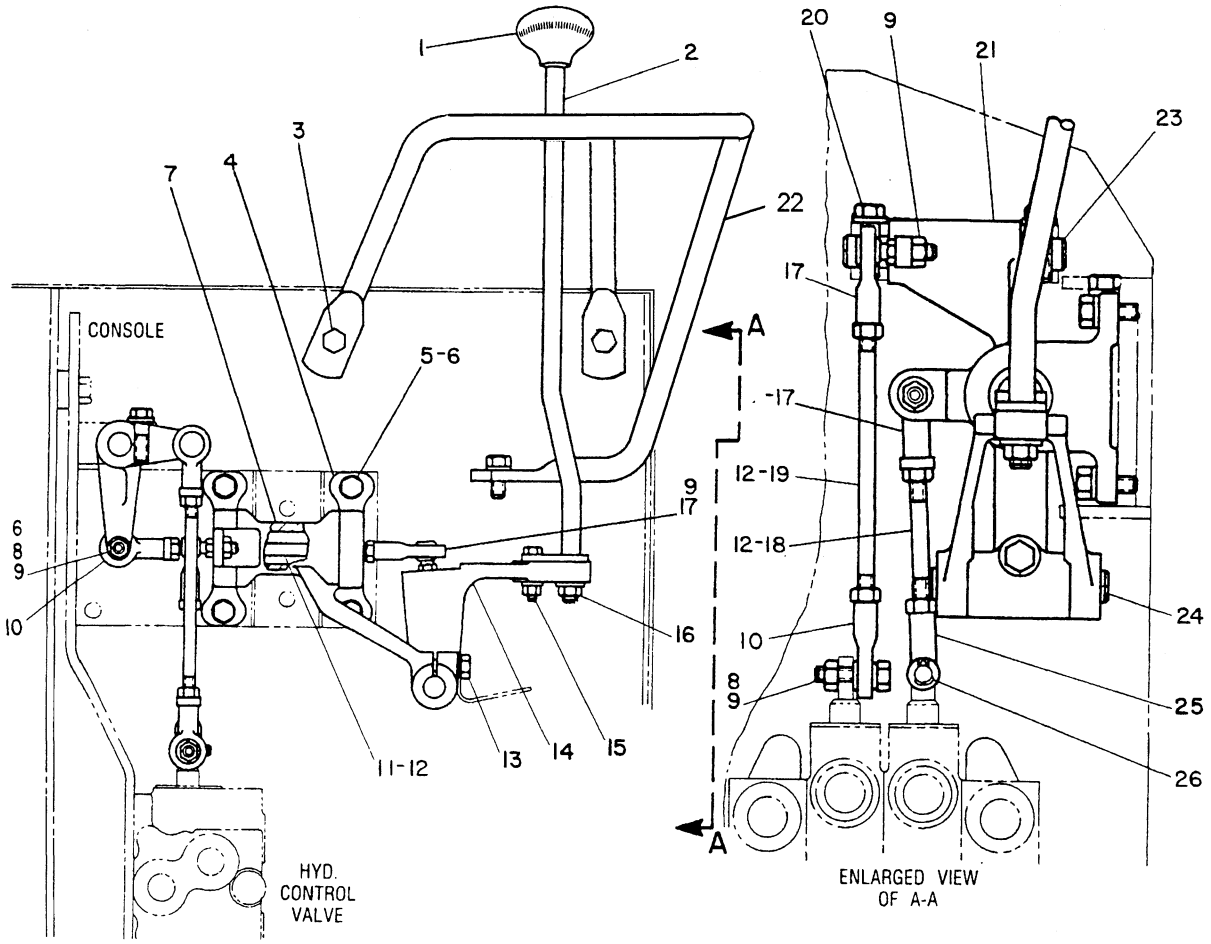

NOTE	REF NO	PART NUMBER	QTY	PART NAME	NOTE	REF NO	PART NUMBER	QTY	PART NAME
	1	OL1170	1	HANDLE-LEVER (BLADE TILT)		19	1W1180	1	ROD
						20	1A2029	2	BOLT
	2	8Y0482	1	ROD AS			5M2894	2	WASHER
C	3	0S1594	3	BOLT		21	5G0419	1	LEVER AS
C		5P1075	3	WASHER-HARD			5G0400	2	BEARING
	4	6S4789	2	SUPPORT AS	C	22	8Y1856	1	GUARD AS
				(EACH INCLUDES)		23	5G0278	1	SHAFT
		6K3030	1	BEARING-SLEEVE		24	5G0399	1	SHAFT
	5	2B2695	4	BOLT		25	3D9609	1	END-ROD
	6	9M1974	5	WASHER-HARD		26	1A2457	1	PIN-CLEVIS
	7	6S4792	1	LEVER			3B4609	1	PIN-COTTER
	8	6H0187	2	BOLT					
	9	3D8752	5	LOCKNUT					
	10	7H3641	2	ROD END-BEARING					
	11	5M5479	1	ROD					
	12	9S8751	6	NUT-FULL					
	13	3B1915	1	BOLT					
	14	5G3138	1	LEVER AS					
		5G0400	2	BEARING					
	15	7B2742	1	BOLT					
		5P0537	1	WASHER					
		2D6235	1	LOCKNUT					
C	16	2L6267	1	LOCKNUT					
		5P8245	1	WASHER					
	17	9K8757	3	ROD END-BEARING					
	18	2H2292	1	ROD-ADJUSTABLE LINK					

C-CHANGE FROM PREVIOUS TYPE

R-472437 EP

5063 **8Y0637 CONTROL GP-HYDRAULIC HAND**

Type 2

Part Of 8Y0242 & 8Y0245 Control-Hydraulic Hand

An Attachment

MEMORANDA

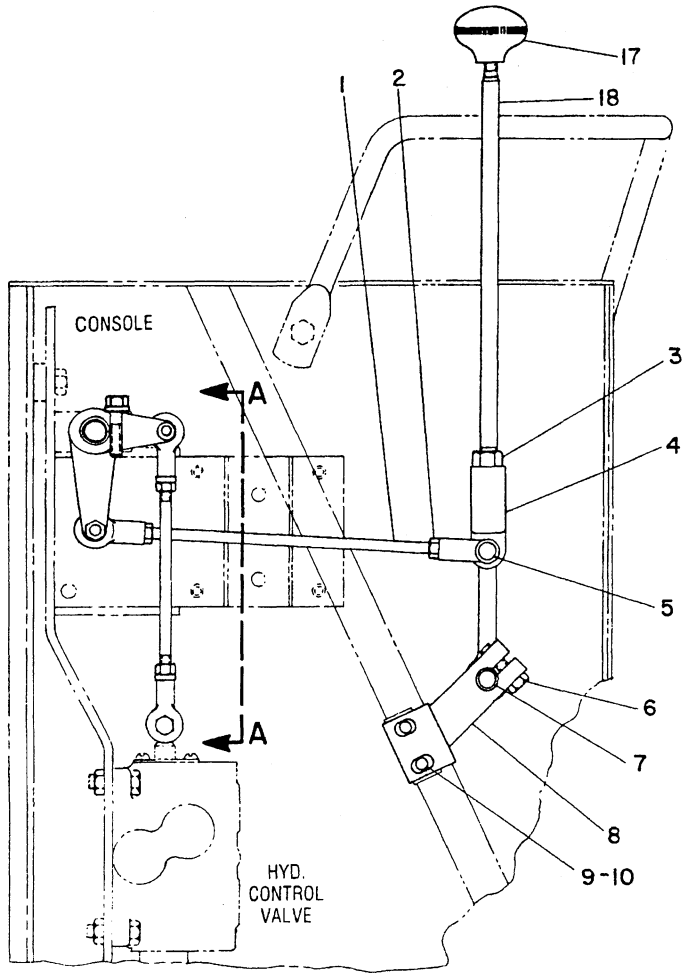

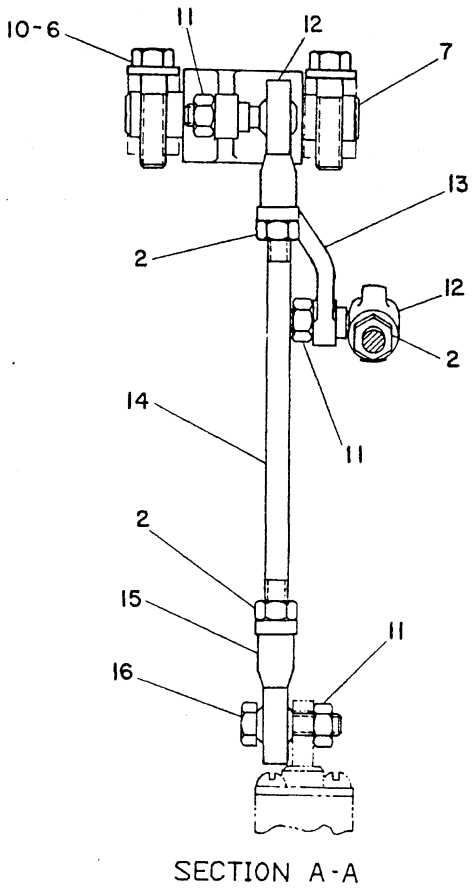

SECTION A-A

NOTE	REF NO	PART NUMBER	QTY	PART NAME	NOTE	REF NO	PART NUMBER	QTY	PART NAME
	1	9L0274	1	ROD-ADJUSTING					
	2	9S8751	4	NUT-FULL					
	3	6B6684	1	NUT-FULL					
	4	5G0423	1	LEVER AS					
		5G0400	2	BEARING					
	5	4J2701	1	END-ROD					
		1J4384	1	PIN-CLEVIS					
		3B4615	1	PIN-COTTER					
	6	0S1588	4	BOLT					
	7	5G0399	2	SHAFT					
	8	5G0325	1	BRACKET AS					
	9	4F4879	4	BOLT					
	10	5M2894	6	WASHER					
	11	3D8752	3	LOCKNUT					
	12	9K8757	2	ROD END-BEARING					
	13	5G0420	1	LEVER AS					
		5G0400	2	BEARING					
	14	1W1180	1	ROD					
	15	7H3641	1	ROD END-BEARING					
	16	4B3388	1	BOLT					
	17	0L1170	1	HANDLE-LEVER					
	18	8Y0483	1	LEVER (BLADE TILT)					

M-451699 EP

5063 **8Y0638 CONTROL GP-HYDRAULIC HAND**

Part Of 8Y0242 & 8Y0245 Control-Hydraulic Hand
An Attachment

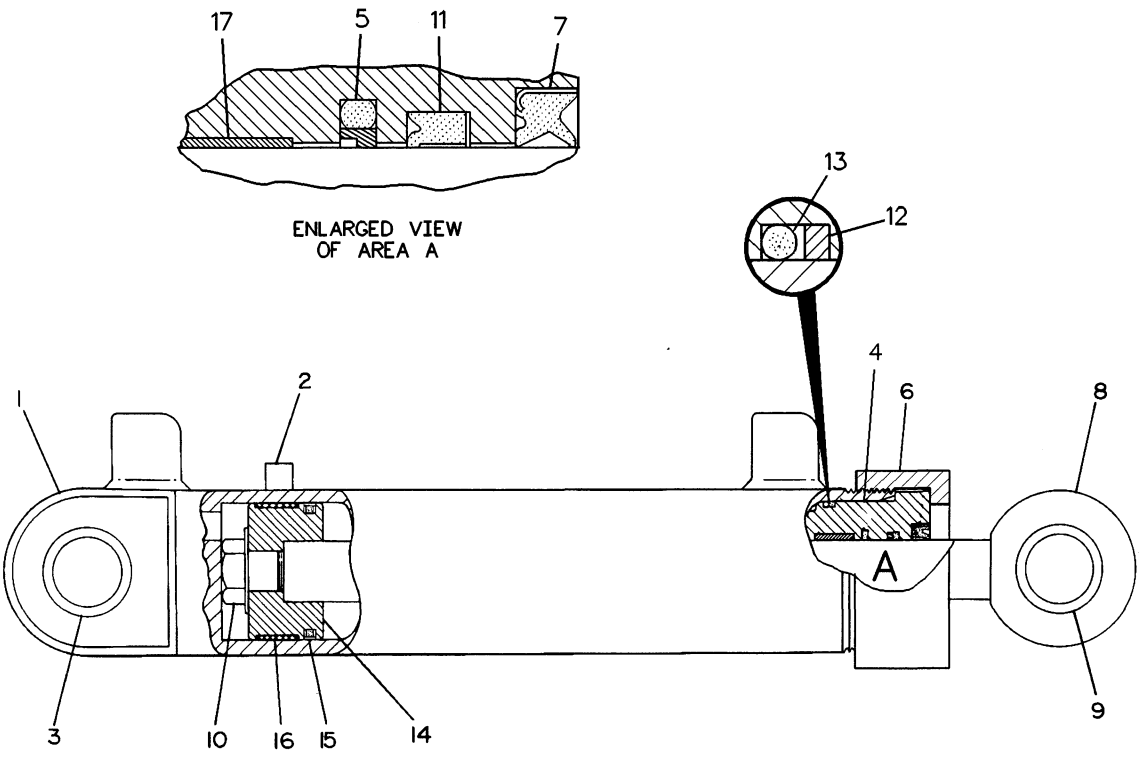

NOTE	REF NO	PART NUMBER	QTY	PART NAME	NOTE	REF NO	PART NUMBER	QTY	PART NAME
R	1	7J9222	1	CYLINDER AS					
	2	8F9836	1	LUG					
	3	8J4504	1	BEARING					
	4	9T7346	1	HEAD					
J	5	8C9122	1	SEAL AS					
	6	7J9887	1	CROWN					
J	7	8C9131	1	SEAL-LIP TYPE					
R	8	7J9227	1	ROD AS-PISTON					
	9	8J4504	1	BEARING					
	10	7J5639	1	BOLT-SELF LOCKING					
		8J7415	1	WASHER-HARD					
J	11	5J8150	1	SEAL-U-CUP					
J	12	4J9224	1	RING-BACK-UP					
J	13	2H3931	1	SEAL-O-RING					
	14	7J9886	1	PISTON					
J	15	4T8054	1	SEAL AS					
J	16	7J9885	1	RING-WEAR					
	17	4T6780	1	RING-WEAR					
				THE FOLLOWING REPAIR KIT IS AVAILABLE:					
C		7X2752	1	KIT-HYD CYLINDER SEAL (INCL PARTS MARKED J)					

C-CHANGE FROM PREVIOUS TYPE
R-REMFG PART MAY BE AVAILABLE

R-523314 EP

5102

7J9223 CYLINDER GP-LIFT-(CHG 1-9)-2 REQUIRED
88.9MM (3.50IN) Bore X 351.7MM (13.85IN) Stroke
Bulldozer S/N 2YH1-Up, 4GH1-Up
Part Of 6Y2824 & 6Y2825 Bulldozer Ars
An Attachment

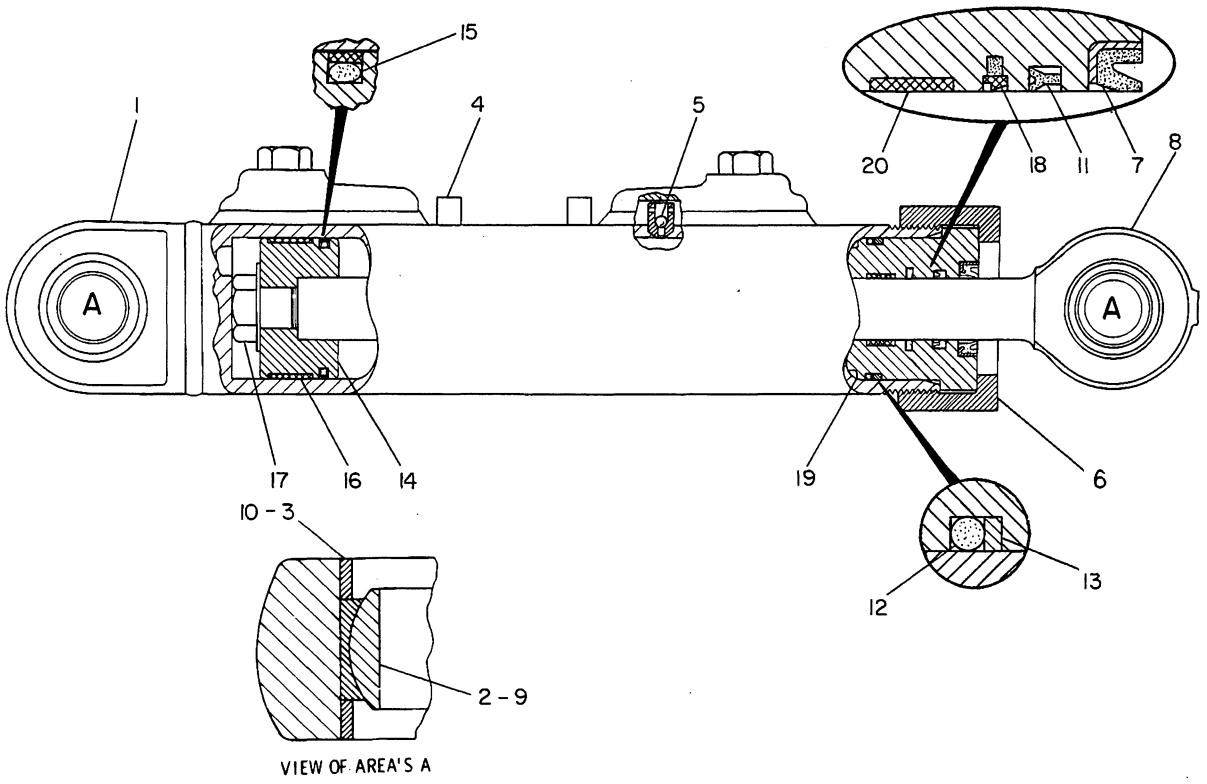

NOTE	REF NO	PART NUMBER	QTY	PART NAME	NOTE	REF NO	PART NUMBER	QTY	PART NAME
R	1	9J8760	1	CYLINDER AS					
	2	4D0298	1	BEARING					
	3	3Y2768	2	RING					
	4	3S5275	2	BLOCK					
	5	2D6642	2	BALL					
	6	7J9887	1	CROWN					
J	7	8C9131	1	SEAL-LIP TYPE					
R	8	4T8052	1	ROD AS					
	9	6V8105	1	BEARING-ALIGNING					
	10	9J9818	2	RING					
J	11	5J8150	1	SEAL-U-CUP					
J	12	2H3931	1	SEAL-O-RING					
J	13	4J9224	1	RING-BACK-UP					
	14	7J9886	1	PISTON					
JC	15	4T8054	1	SEAL AS					
J	16	7J9885	1	RING-WEAR					
	17	7J5639	1	BOLT-SELF LOCKING					
		3K5234	1	WASHER-HARD					
J	18	8C9122	1	SEAL AS					
	19	9T7346	1	HEAD					
	20	4T6780	1	RING-WEAR					
				THE FOLLOWING REPAIR KIT IS AVAILABLE:					
C		7X2752	1	KIT-HYD CYLINDER SEAL (INCL PARTS MARKED J)					

C-CHANGE FROM PREVIOUS TYPE
R-REMFG PART MAY BE AVAILABLE

R-523322 EP

5101 **9J8698 CYLINDER GP-ANGLING-(CHG 1-4)-2 REQUIRED**
88.9MM (3.50IN) Bore X 351.7MM (13.85IN) Stroke
Bulldozer S/N 2YH1-Up, 4GH1-Up
Part Of 6Y2824 & 6Y2825 Bulldozer Ars
An Attachment

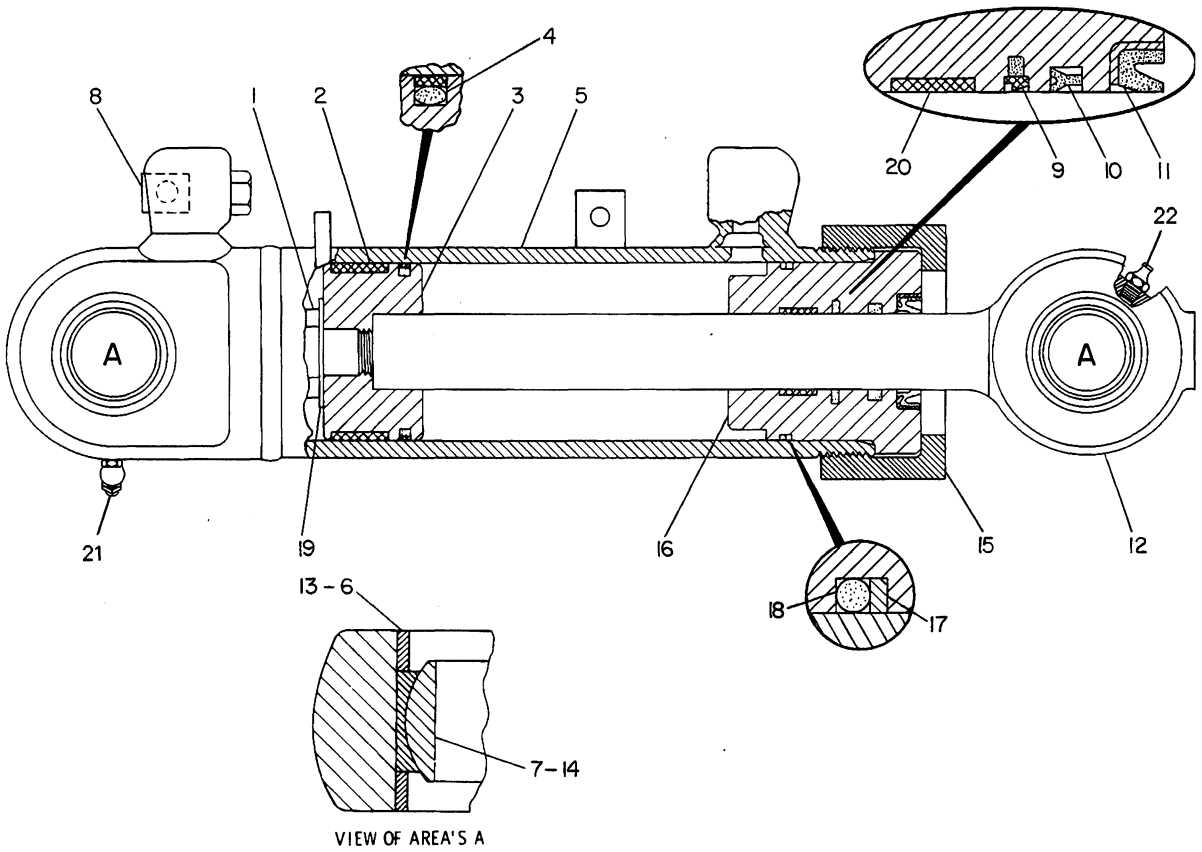

VIEW OF AREA'S A

NOTE	REF NO	PART NUMBER	QTY	PART NAME	NOTE	REF NO	PART NUMBER	QTY	PART NAME
	1	7J5639	1	BOLT-SELF LOCKING					
	2	7J9885	1	RING-WEAR					
	3	7J9886	1	PISTON					
	4	5J7013	1	SEAL AS					
R	5	9J9294	1	CYLINDER AS					
	6	3Y2768	2	RING					
	7	4D0298	1	BEARING					
	8	5B8855	1	PLATE-SCREW					
	9	8C9122	1	SEAL AS					
	10	5J8150	1	SEAL-U-CUP					
	11	8C9131	1	SEAL-LIP TYPE					
R	12	8J0090	1	ROD AS-PISTON					
	13	3Y2768	2	RING					
	14	4D0298	1	BEARING					
	15	7J9887	1	CROWN					
	16	9T7346	1	HEAD					
	17	4J9224	1	RING-BACK-UP					
	18	2H3931	1	SEAL-O-RING					
	19	8J7415	1	WASHER-HARD					
	20	4T6780	1	RING-WEAR					
	21	3B8486	1	FITTING					
	22	3B8489	1	FITTING-GREASE					

R-REMFG PART MAY BE AVAILABLE

R-495657 EP

5104

9J8674 CYLINDER GP-TILT-(CHG 0-4)
88.9MM (3.50IN) Bore X 152.4MM (6IN) Stroke
Bulldozer S/N 2YH1-Up, 4GH1-Up
Part Of 6Y2824 & 6Y2825 Bulldozer Ars
An Attachment

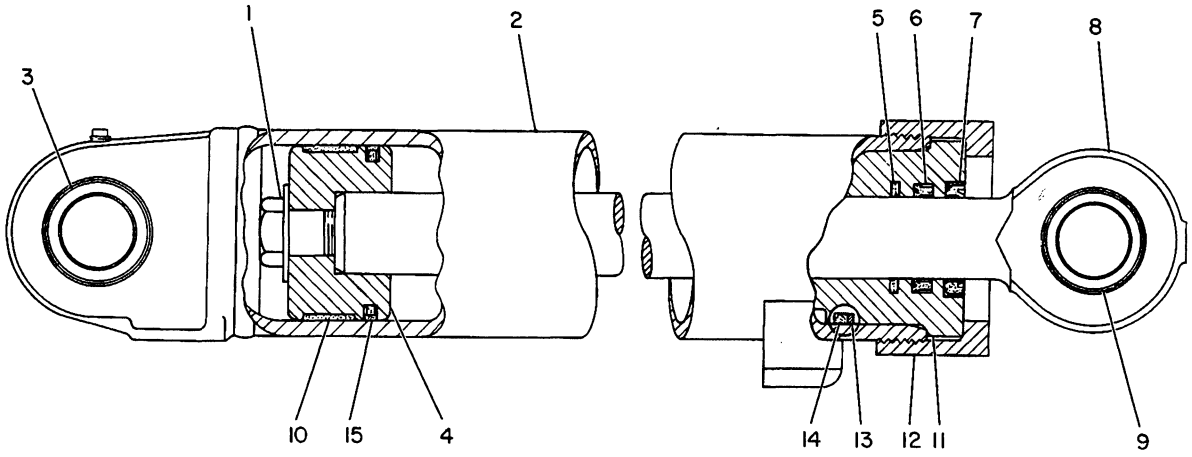

NOTE	REF NO	PART NUMBER	QTY	PART NAME	NOTE	REF NO	PART NUMBER	QTY	PART NAME
	1	7J5639	1	BOLT-SELF LOCKING					
		8J7415	1	WASHER-HARD					
	2	7J9765	1	CYLINDER AS					
	3	2K0227	1	BEARING-SLEEVE					
	4	7J6469	1	PISTON					
J	5	6J6917	1	SEAL-RING					
J	6	5J8200	1	SEAL-U-CUP					
J	7	1K6981	1	SEAL-LIP TYPE					
	8	7J9917	1	ROD AS					
	9	2K0227	1	BEARING-SLEEVE					
J	10	6J2797	1	RING-WEAR					
	11	7J6462	1	HEAD					
	12	7J6461	1	CROWN					
J	13	2K6830	1	RING-BACK-UP					
J	14	1H8128	1	SEAL-O-RING					
	15	5J5402	1	SEAL AS					
J		5J5400	1	SEAL					
				THE FOLLOWING REPAIR KIT IS AVAILABLE:					
C		8T1370	1	KIT-SEAL (INCL PARTS MARKED J)					

C-CHANGE FROM PREVIOUS TYPE

B-403764 EP

5352 **7J9920 CYLINDER GP-RIPPER-(CHG 6,7)**

101.6 MM (4 In) Bore X 203 MM (8 In) Stroke
Type 1-Ripper S/N 84U1-Up
Part Of 9J9005 Ripper
An Attachment

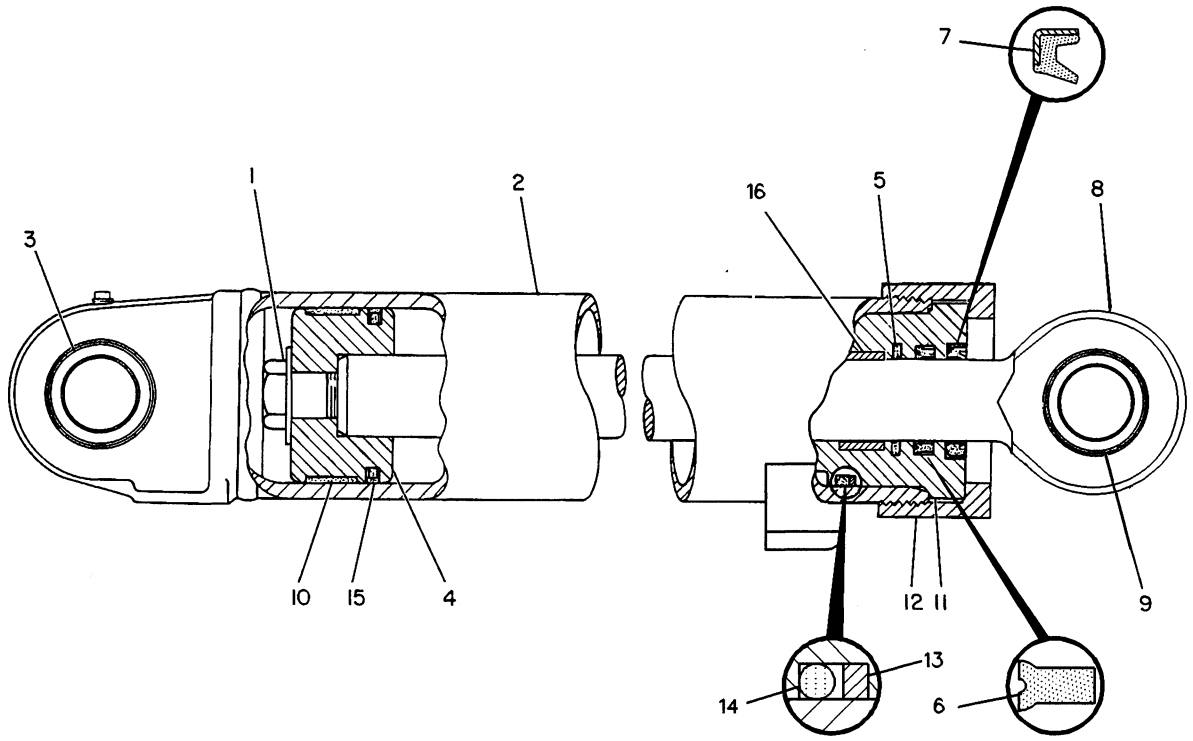

NOTE	REF NO	PART NUMBER	QTY	PART NAME	NOTE	REF NO	PART NUMBER	QTY	PART NAME
	1	7J5639	1	BOLT-SELF LOCKING					
		8J7415	1	WASHER-HARD					
	2	7J9765	1	CYLINDER AS					
	3	2K0227	1	BEARING-SLEEVE					
	4	7J6469	1	PISTON					
J	5	6J6917	1	SEAL-RING					
J	6	5J8200	1	SEAL-U-CUP					
J	7	1K6981	1	SEAL-LIP TYPE					
	8	7J9917	1	ROD AS					
	9	2K0227	1	BEARING-SLEEVE					
J	10	6J2797	1	RING-WEAR					
C	11	9T9258	1	HEAD					
	12	7J6461	1	CROWN					
J	13	2K6830	1	RING-BACK-UP					
J	14	1H8128	1	SEAL-O-RING					
	15	5J5402	1	SEAL AS					
C	16	4T5613	1	RING-WEAR					
				THE FOLLOWING REPAIR KIT IS AVAILABLE:					
		8T1370	1	KIT-SEAL (INCL PARTS MARKED J)					

C-CHANGE FROM PREVIOUS TYPE

R-523321 EP

5352 **7J9920 CYLINDER GP-RIPPER-(CHG 8)**

101.6 MM (4 In) Bore X 203 MM (8 In) Stroke
Type 2-Ripper S/N 84U1-Up
Part Of 9J9005 Ripper
An Attachment

MEMORANDA

HYDRAULIC SYSTEM

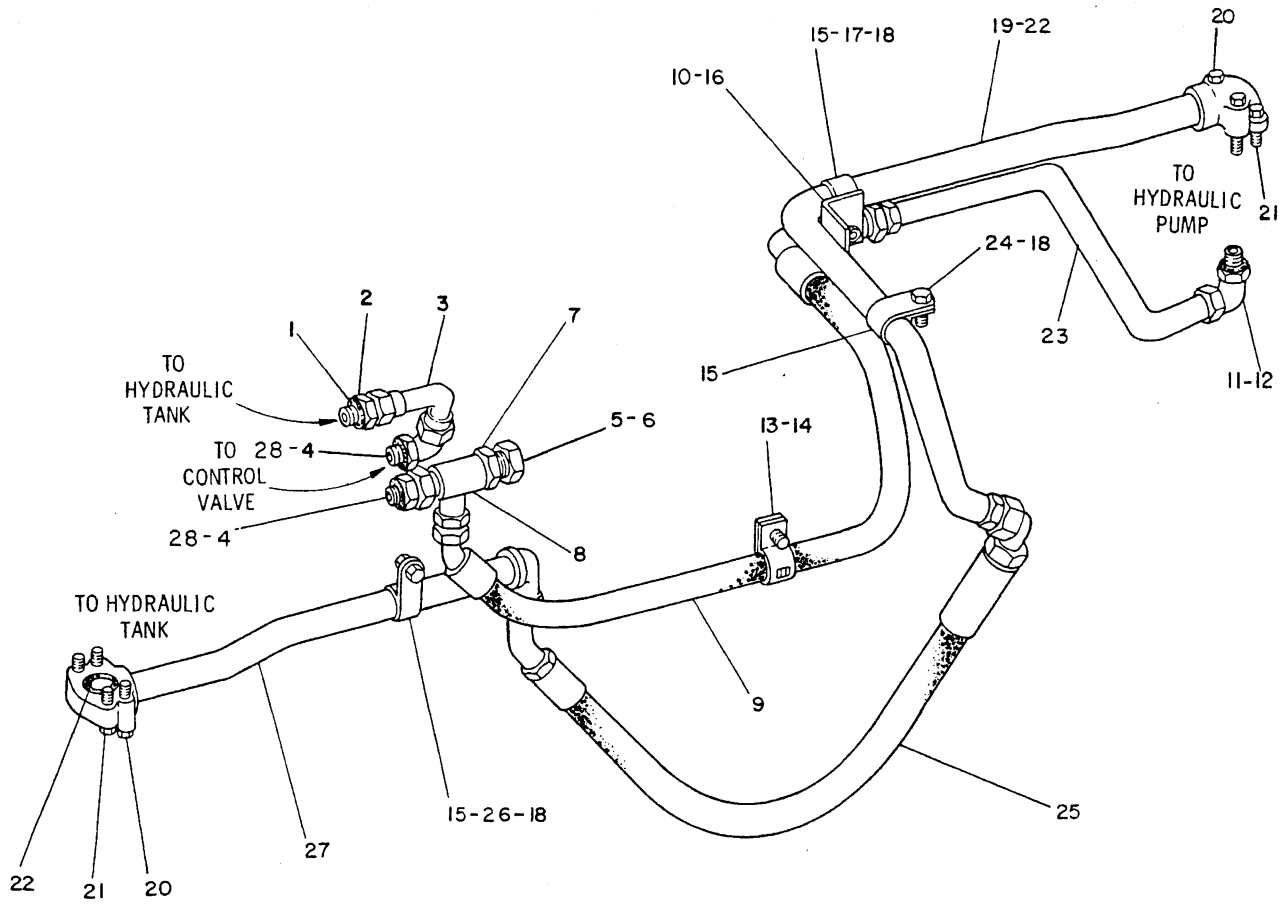

NOTE	REF NO	PART NUMBER	QTY	PART NAME	NOTE	REF NO	PART NUMBER	QTY	PART NAME
	1	7M8485	1	SEAL-O-RING		23	5G1479	1	TUBE AS
	2	307935	1	CONNECTOR-FLARED		24	0T0102	1	BOLT
	3	8Y1518	1	TUBE AS		25	5G1001	1	HOSE AS
	4	314140	2	CONNECTOR		26	0L1351	1	BOLT
	5	9S8896	1	CAP			1D4717	1	NUT
	6	676684	1	REDUCER-FLARED		27	5G0446	1	TUBE AS
	7	1P0043	1	NUT-FLARED		28	2M9780	2	SEAL-O-RING
	8	5P2242	1	TEE-SWIVEL					
	9	5G1004	1	HOSE AS					
	10	0S1588	2	BOLT					
		8M7145	2	WASHER					
	11	3D2824	1	SEAL-O-RING					
	12	88381	1	ELBOW					
	13	5P7465	1	CLIP (TAB)					
		5P7464	1	CLIP (SLOT)					
	14	6H1717	1	BOLT					
		5P8245	1	WASHER					
	15	6S8050	3	CLIP (LARGE)					
	16	5G1750	1	PLATE AS					
	17	6L3351	1	CLIP-TUBE (SMALL)					
		0S1594	1	BOLT					
	18	5P1075	3	WASHER-HARD					
	19	5G1003	1	TUBE AS					
	20	1D4703	4	BOLT					
	21	0T0768	4	BOLT					
	22	4J0522	2	SEAL					

B-453371 EP

5057 **8Y0247 LINES GP-PUMP**

Type 1

Part Of 8Y240 & 8Y243 Hydraulic Ars

An Attachment

HYDRAULIC SYSTEM

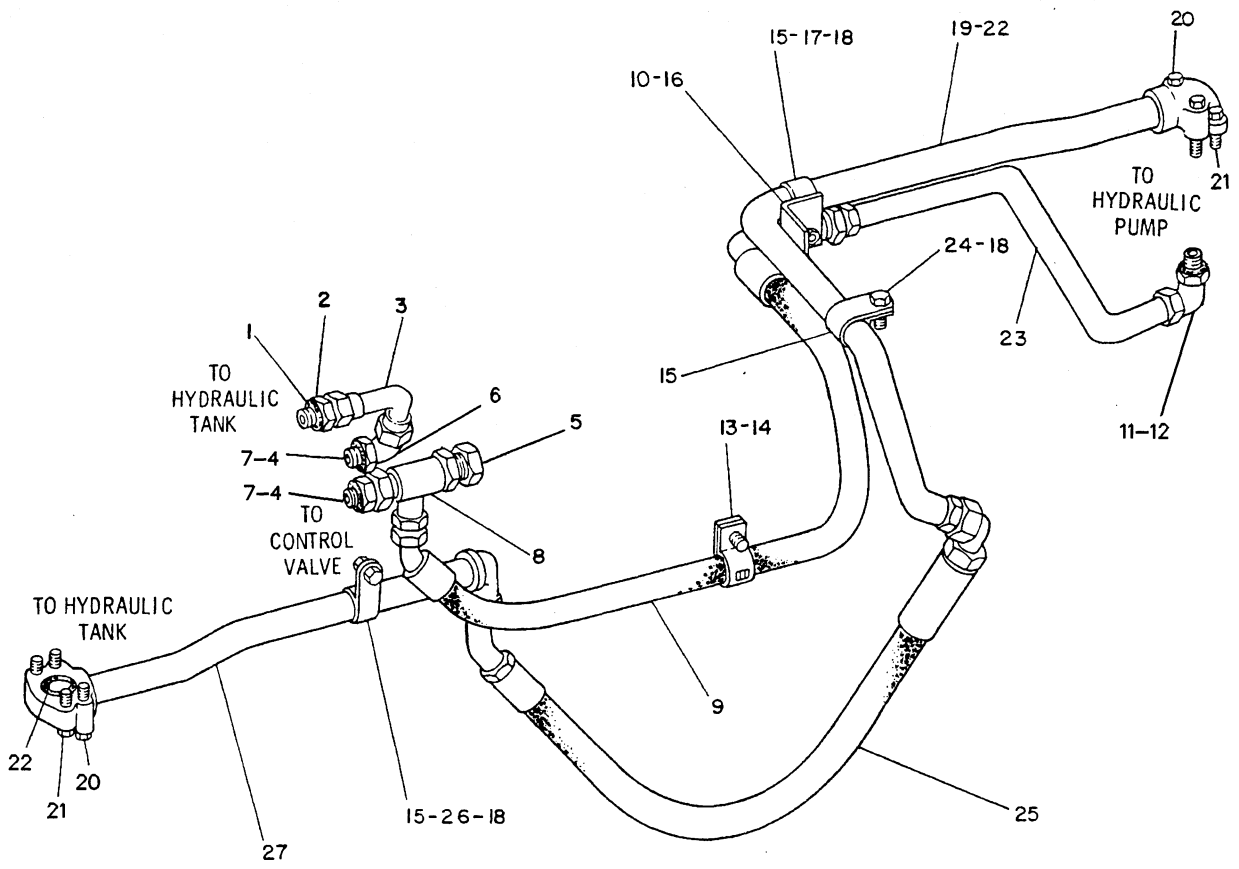

NOTE	REF NO	PART NUMBER	QTY	PART NAME	NOTE	REF NO	PART NUMBER	QTY	PART NAME
	1	7M8485	1	SEAL-O-RING		22	4J0522	2	SEAL
C	2	4S6680	1	CONNECTOR-FLARED	C	23	8Y2415	1	TUBE AS
C	3	8Y2414	1	TUBE AS	C	24	5P8167	1	BOLT
C	4	308196	2	CONNECTOR		25	5G1001	1	HOSE AS
	5	9S8896	1	CAP	C	26	5S7379	1	BOLT
C	6	3R9704	1	ELBOW-SWIVEL	C		6V8801	1	NUT
	7	2M9780	2	SEAL-O-RING		27	5G0446	1	TUBE AS
C	8	7D0978	1	TEE					
CI	9	8Y2413	1	HOSE AS					
C	10	9B7237	2	BOLT					
C		7X0503	2	WASHER-HARD					
	11	3D2824	1	SEAL-O-RING					
C	12	307950	1	ELBOW					
C	13	8S0023	1	CLIP (SLOT)					
C		8S0024	1	CLIP (TAB)					
C	14	5C6565	1	BOLT					
C		8T4223	1	WASHER-HARD					
	15	6S8050	3	CLIP (LARGE)					
C	16	8Y2411	1	PLATE AS					
		9F2978	2	NUT-WELD					
C	17	8C8582	1	CLIP (SMALL)					
C		4L6454	1	BOLT					
	18	5P1075	3	WASHER-HARD					
	19	5G1003	1	TUBE AS					
C	20	7X0312	4	BOLT					
C	21	8C6877	4	BOLT					

C-CHANGE FROM PREVIOUS TYPE
I-SEE HOSE FABRICATION GUIDE

R-488159 EP

5057 **8Y0247 LINES GP-PUMP**

Type 2
Part Of 8Y240 & 8Y243 Hydraulic Ars
An Attachment

MEMORANDA

HYDRAULIC SYSTEM

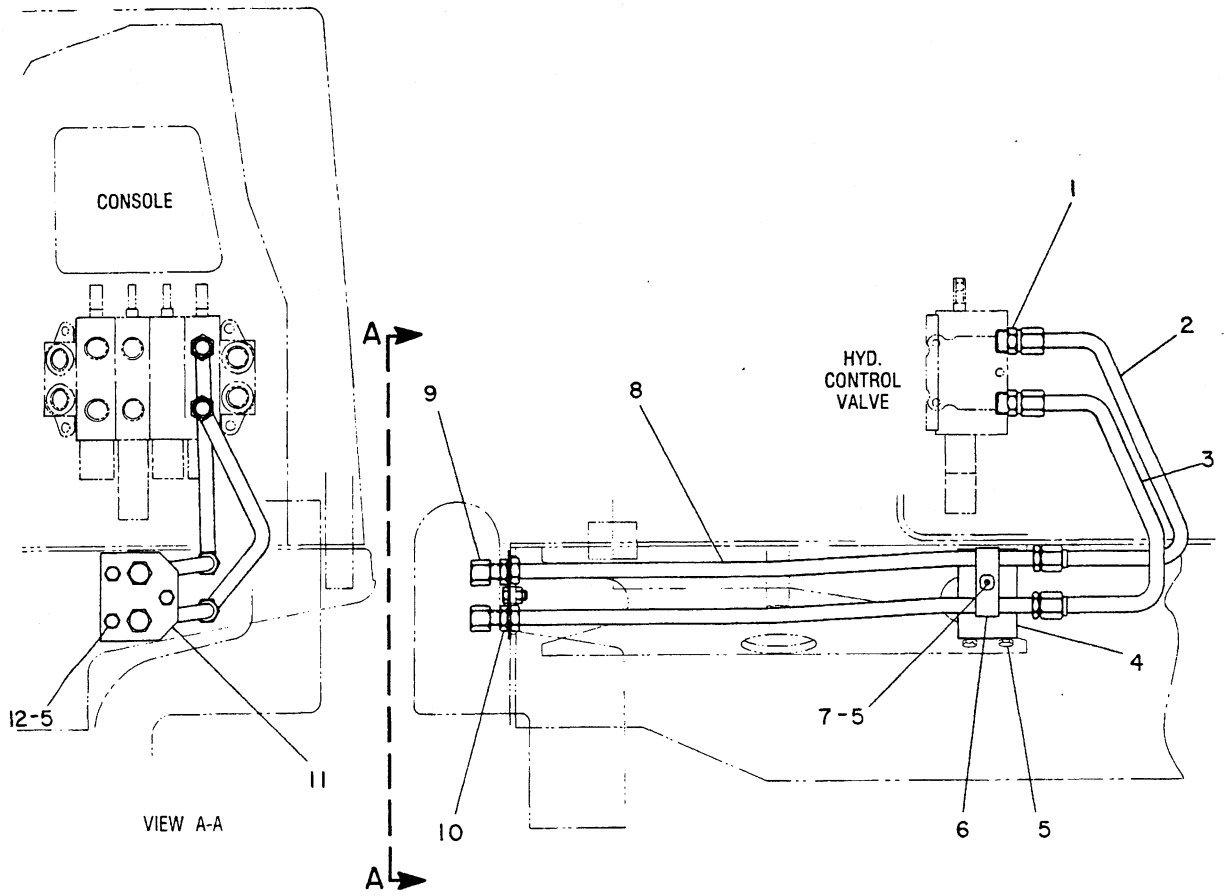

NOTE	REF NO	PART NUMBER	QTY	PART NAME	NOTE	REF NO	PART NUMBER	QTY	PART NAME
	1	9M4584	2	CONNECTOR-FLARED					
		2M9780	2	SEAL-O-RING					
	2	8Y1501	1	TUBE AS					
	3	8Y1502	1	TUBE AS					
	4	5G2090	1	BRACKET AS					
		9F2978	2	NUT-WELD					
	5	5M3062	6	BOLT					
	6	6S7378	1	CLAMP AS					
		6S7374	1	CLAMP					
		9F2978	1	NUT-WELD					
	7	5P1075	1	WASHER-HARD					
	8	5G0933	2	TUBE AS					
	9	6J7366	2	CAP-FLARED					
	10	7F2060	2	LOCKNUT					
	11	6S4340	1	PLATE					
	12	6V8801	3	NUT					

M-564823 EP

5057 **8Y0246 LINES GP-REAR ATTACHMENT**

S/N 1RJ1-Up

Part Of 8Y0243 Hydraulic Ar

An Attachment

HYDRAULIC SYSTEM

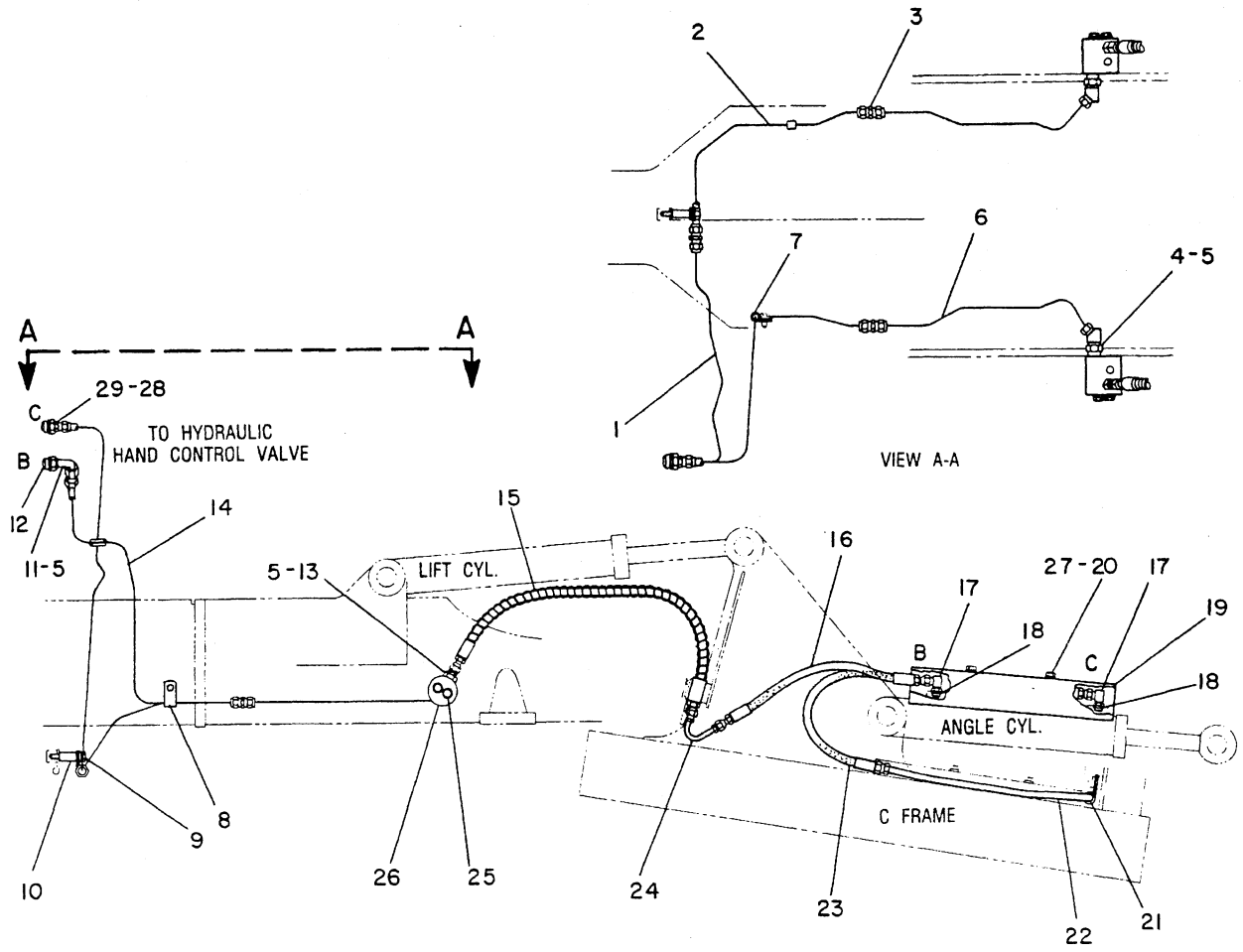

NOTE	REF NO	PART NUMBER	QTY	PART NAME
	1	8Y1510	1	TUBE AS
	2	5G1056	1	TUBE AS
	3	7K4129	3	UNION-FLARED
	4	307942	2	ELBOW
	5	3J1907	5	SEAL-O-RING
	6	5G1058	2	TUBE AS
	7	1F7567	1	CLIP
	8	8S8820	1	CLIP
	9	8T9389	1	BOLT
		8T4223	1	WASHER-HARD
		5M1198	1	CLIP
	10	5G2246	1	SPACER
	11	2P7214	1	ELBOW
	12	5P1404	2	ADAPTER-O-RING
	13	2R6806	2	CONNECTOR
	14	8Y1511	1	TUBE AS
	15	5G0682	2	HOSE AS
	16	6S4710	2	HOSE AS
	17	54362	4	ELBOW
	18	3K0360	4	SEAL-O-RING
	19	6S8021	2	GUARD AS
				(EACH INCLUDES)
		3S3158	2	PIPE
	20	7X0326	4	BOLT
	21	7M2220	1	CLIP
	22	6S8038	1	TUBE AS
	23	6S8040	2	HOSE AS
	24	6S4728	2	TUBE AS
	25	8T9391	4	BOLT
	26	6S4709	2	BLOCK AS
	27	5P1076	4	WASHER-HARD
	28	2M9780	2	SEAL-O-RING
	29	308194	2	CONNECTOR-FLARED

B-555913 EP

5057 **8Y0261 LINES GP-ANGLE CYLINDER**

Bulldozer S/N 2YH1-Up
Part Of 6Y2824 Bulldozer Ar
An Attachment

HYDRAULIC SYSTEM

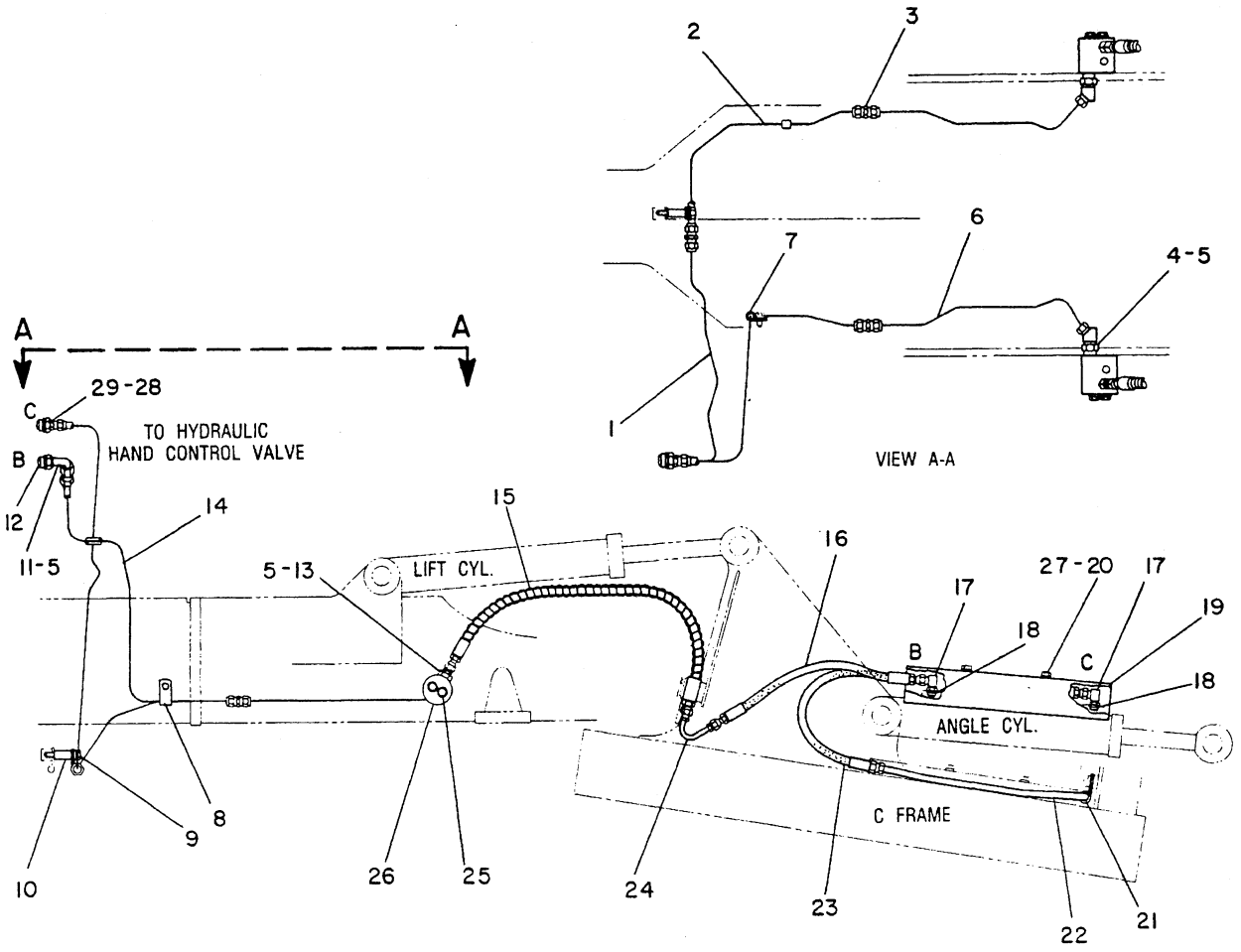

NOTE	REF NO	PART NUMBER	QTY	PART NAME
	1	8Y1510	1	TUBE AS
	2	5G1056	1	TUBE AS
	3	7K4129	3	UNION-FLARED
	4	307942	2	ELBOW
	5	3J1907	5	SEAL-O-RING
	6	5G1058	2	TUBE AS
	7	1F7567	1	CLIP
	8	8S8820	1	CLIP
	9	8T9389	1	BOLT
		8T4223	1	WASHER-HARD
		5M1198	1	CLIP
	10	5G2246	1	SPACER
	11	2P7214	1	ELBOW
	12	5P1404	2	ADAPTER-O-RING
	13	2R6806	2	CONNECTOR
	14	8Y1511	1	TUBE AS
I	15	5G0682	2	HOSE AS
I	16	5G0683	2	HOSE AS
	17	54362	4	ELBOW
	18	3K0360	4	SEAL-O-RING
	19	6S8021	2	GUARD AS
				(EACH INCLUDES)
		3S3158	2	PIPE
	20	7X0326	4	BOLT
	21	7M2220	1	CLIP
	22	6S8038	1	TUBE AS

NOTE	REF NO	PART NUMBER	QTY	PART NAME
	23	6S8040	2	HOSE AS
	24	6S4728	2	TUBE AS
	25	8T9391	4	BOLT
	26	6S4709	2	BLOCK AS
	27	5P1076	4	WASHER-HARD
	28	2M9780	2	SEAL-O-RING
	29	308194	2	CONNECTOR-FLARED

I-SEE HOSE FABRICATION GUIDE

B-555914 EP

5057 **8Y0257 LINES GP-ANGLE CYLINDER**

Bulldozer S/N 4GH1-Up
Part Of 6Y2825 Bulldozer Ar
An Attachment

HYDRAULIC SYSTEM

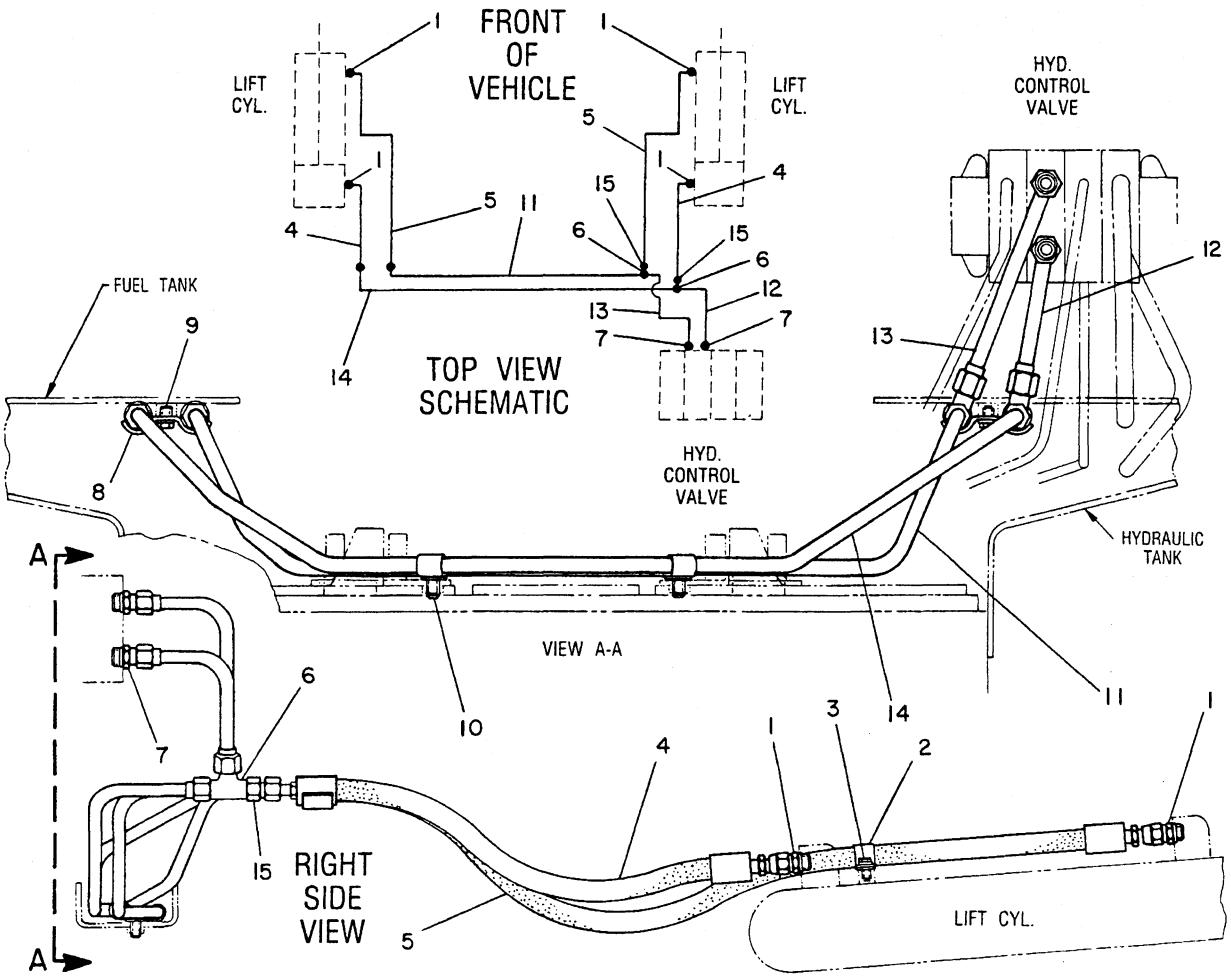

NOTE	REF NO	PART NUMBER	QTY	PART NAME	NOTE	REF NO	PART NUMBER	QTY	PART NAME
	1	8M0505	4	CONNECTOR					
		3K0360	4	SEAL-O-RING					
	2	6S4734	2	CLIP					
	3	0S0509	2	BOLT					
		5P1075	2	WASHER-HARD					
I	4	687366	2	HOSE AS					
I	5	5G1791	2	HOSE AS					
	6	38581	2	TEE-UNION					
	7	9M4584	2	CONNECTOR-FLARED					
		2M9780	2	SEAL-O-RING					
	8	1K5845	2	CLAMP-HOSE					
	9	0T0102	2	BOLT					
		3V2431	2	WASHER					
	10	0S1621	2	BOLT					
		5P8245	2	WASHER					
		2B3243	4	CLIP					
	11	8Y1658	1	TUBE AS					
	12	8Y1656	1	TUBE AS					
	13	8Y1655	1	TUBE AS					
	14	8Y1657	1	TUBE AS					
	15	5P8228	2	REDUCER-FLARED					

I-SEE HOSE FABRICATION GUIDE

M-451605 EP

5057

8Y0258 LINES GP-LIFT CYLINDER

Bulldozer S/N 2YH1-Up, 4GH1-Up. Type 1
Part Of 6Y2824 & 6Y2825 Bulldozer Ars
An Attachment

HYDRAULIC SYSTEM

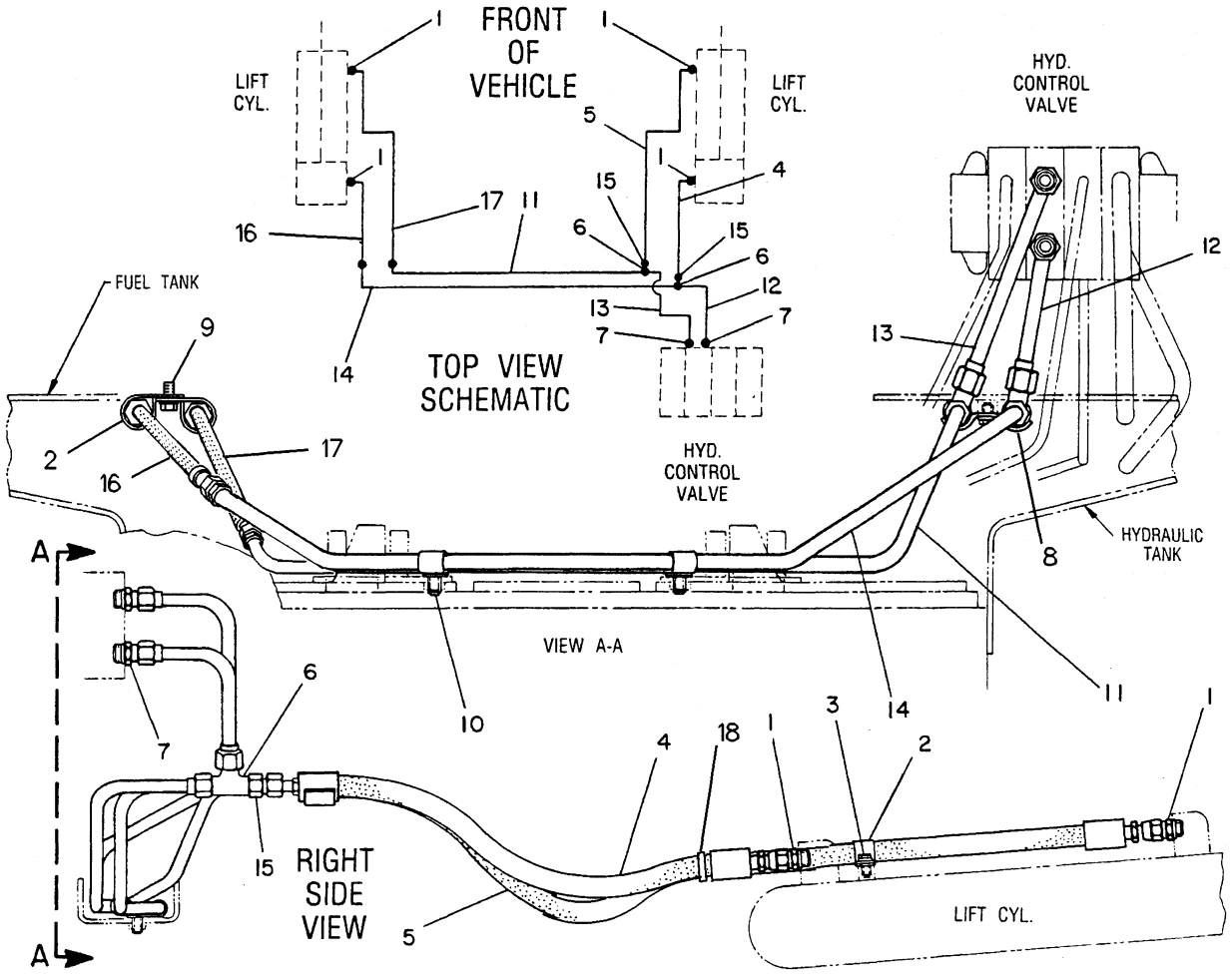

NOTE	REF NO	PART NUMBER	QTY	PART NAME	NOTE	REF NO	PART NUMBER	QTY	PART NAME
	1	8M0505	4	CONNECTOR					
		3K0360	4	SEAL-O-RING					
C	2	6S4734	2	CLIP					
C	3	5M3062	2	BOLT					
		5P1075	2	WASHER-HARD					
CI	4	687366	1	HOSE AS					
CI	5	5G1791	1	HOSE AS					
	6	38581	2	TEE-UNION					
	7	9M4584	2	CONNECTOR-FLARED					
		2M9780	2	SEAL-O-RING					
C	8	1K5845	1	CLAMP-HOSE					
C	9	5P8167	2	BOLT					
		3V2431	2	WASHER					
C	10	5P2228	2	BOLT					
C		8T4223	2	WASHER-HARD					
		2B3243	4	CLIP					
C	11	8Y2222	1	TUBE AS					
	12	8Y1656	1	TUBE AS					
	13	8Y1655	1	TUBE AS					
C	14	8Y2221	1	TUBE AS					
	15	5P8228	2	REDUCER-FLARED					
CI	16	8Y2537	1	HOSE AS					
CI	17	8Y2536	1	HOSE AS					
	18	7K1181	2	STRAP-CABLE					

C-CHANGE FROM PREVIOUS TYPE
I-SEE HOSE FABRICATION GUIDE

R-504067 EP

5057 **8Y0258 LINES GP-LIFT CYLINDER**

Bulldozer S/N 2YH1-Up, 4GH1-Up. Type 2
Part Of 6Y2824 & 6Y2825 Bulldozer Ars
An Attachment

MEMORANDA

HYDRAULIC SYSTEM

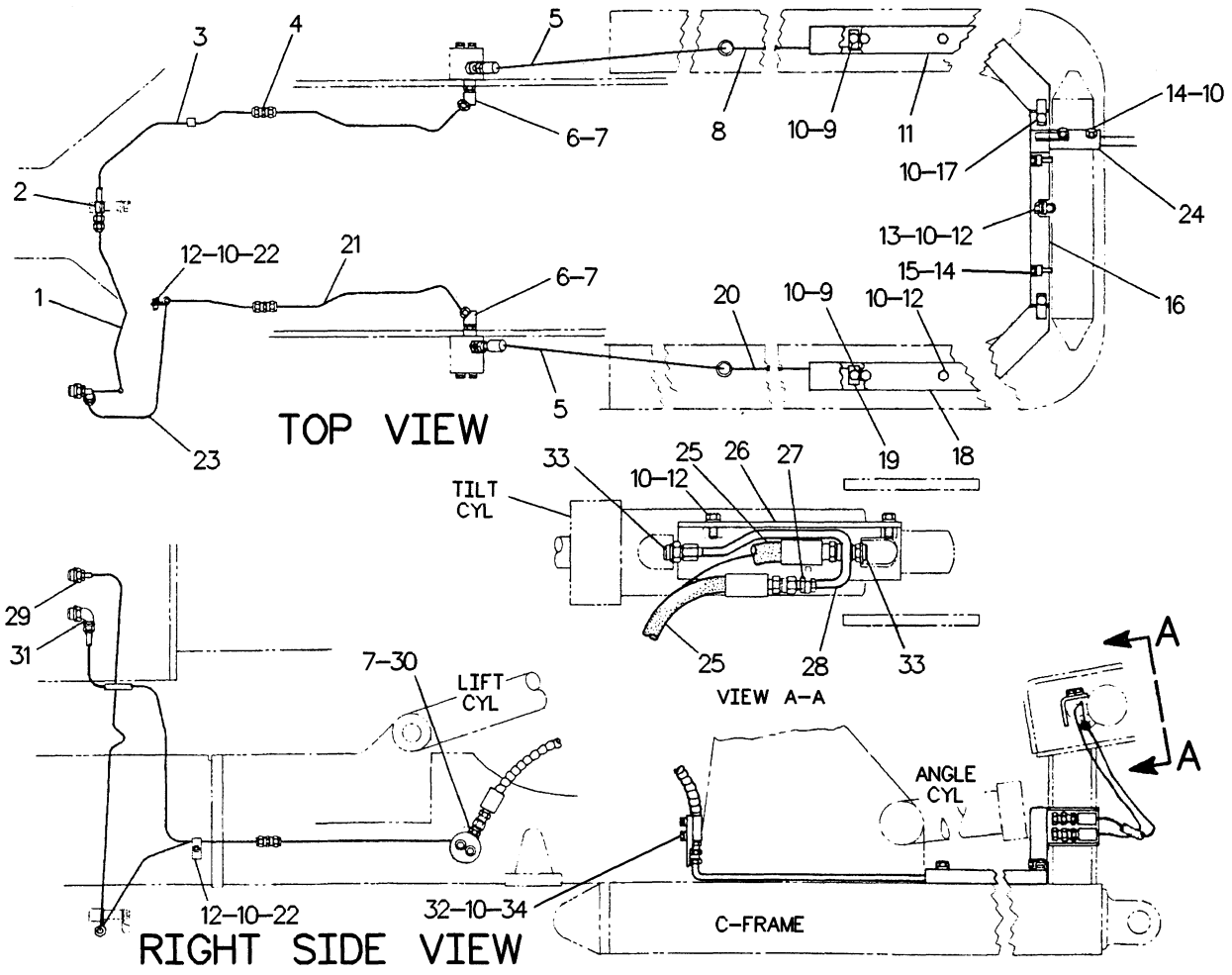

NOTE	REF NO	PART NUMBER	QTY	PART NAME	NOTE	REF NO	PART NUMBER	QTY	PART NAME
	1	8Y1569	1	TUBE AS		26	6S9052	1	GUARD
	2	5M1198	1	CLIP		27	2P1279	1	LOCKNUT
	3	5G1052	1	TUBE AS		28	6S9054	1	TUBE AS
	4	7K4129	2	UNION-FLARED		29	308194	2	CONNECTOR-FLARED
I	5	5G0682	2	HOSE AS			2M9780	2	SEAL-O-RING
	6	307942	2	ELBOW		30	2R6806	2	CONNECTOR
	7	3J1907	4	SEAL-O-RING		31	6K9194	1	ELBOW
	8	5G8715	1	TUBE AS		32	6S8236	2	PLATE
	9	5P8167	2	BOLT		33	308188	2	CONNECTOR-FLARED
	10	5P1075	19	WASHER-HARD			3K0360	2	SEAL-O-RING
	11	5G0678	1	GUARD AS		34	8T2501	4	BOLT
	12	5M3062	9	BOLT					
	13	7B1597	1	CLIP					
	14	4L6454	4	BOLT					
	15	7X0608	2	WASHER-HARD					
	16	6S8015	1	GUARD AS					
		9F2978	2	NUT-WELD					
	17	5S7379	2	BOLT					
	18	5G0677	1	GUARD AS					
	19	6S8031	2	CLIP					
	20	5G8716	1	TUBE AS					
	21	5G1053	2	TUBE AS					
	22	8S8820	2	CLIP					
	23	8Y1568	1	TUBE AS					
	24	6S6477	1	GUARD					
I	25	2V0156	2	HOSE AS					

I-SEE HOSE FABRICATION GUIDE

R-505310 EP

5057 **8Y0262 LINES GP-TILT CYLINDER**

Bulldozer S/N 2YH1-Up
Part Of 6Y2824 Bulldozer Ar
An Attachment

HYDRAULIC SYSTEM

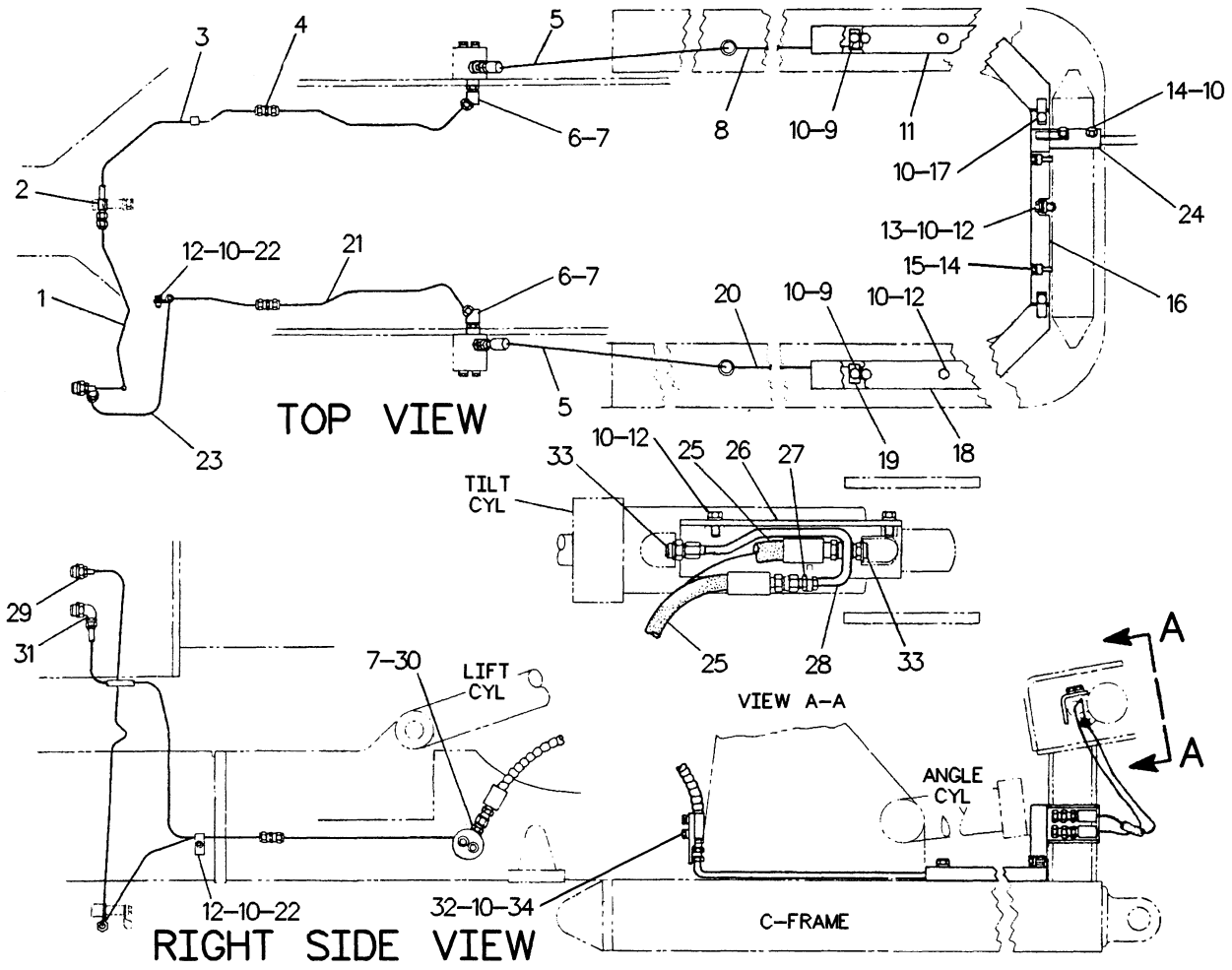

NOTE	REF NO	PART NUMBER	QTY	PART NAME	NOTE	REF NO	PART NUMBER	QTY	PART NAME
	1	8Y1569	1	TUBE AS		26	6S9052	1	GUARD
	2	5M1198	1	CLIP		27	2P1279	1	LOCKNUT
	3	5G1052	1	TUBE AS		28	6S9054	1	TUBE AS
	4	7K4129	2	UNION-FLARED		29	308194	2	CONNECTOR-FLARED
I	5	5GO682	2	HOSE AS			2M9780	2	SEAL-O-RING
	6	307942	2	ELBOW		30	2R6806	2	CONNECTOR
	7	3J1907	4	SEAL-O-RING		31	6K9194	1	ELBOW
	8	5GO119	1	TUBE AS		32	6S8236	2	PLATE
	9	5P8167	2	BOLT		33	308188	2	CONNECTOR-FLARED
	10	5P1075	19	WASHER-HARD			3K0360	2	SEAL-O-RING
	11	5GO678	1	GUARD AS		34	8T2501	4	BOLT
	12	5M3062	9	BOLT					
	13	7B1597	1	CLIP					
	14	4L6454	4	BOLT					
	15	7X0608	2	WASHER-HARD					
	16	6S8015	1	GUARD AS					
		9F2978	2	NUT-WELD					
	17	5S7379	2	BOLT					
	18	5GO677	1	GUARD AS					
	19	6S8031	2	CLIP					
	20	5GO299	1	TUBE AS					
	21	5G1053	2	TUBE AS					
	22	8S8820	2	CLIP					
	23	8Y1568	1	TUBE AS					
	24	6S6477	1	GUARD					
I	25	2VO156	2	HOSE AS					

I-SEE HOSE FABRICATION GUIDE

R-505300 EP

5057 **8Y0260 LINES GP-TILT CYLINDER**

Bulldozer S/N 4GH1-Up
Part Of 6Y2825 Bulldozer Ar
An Attachment

HYDRAULIC SYSTEM

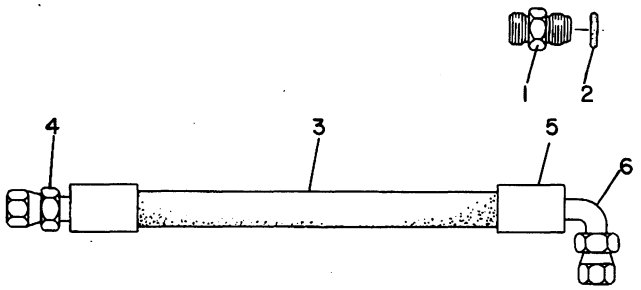

NOTE	REF NO	PART NUMBER	QTY	PART NAME
	1	9M4584	2	CONNECTOR-FLARED
	2	2M9780	2	SEAL-O-RING
CI	3	8K6720	2	HOSE AS
				(EACH INCLUDES)
G		9S0671		HOSE (22.44IN)
	4	8S4064	1	COUPLING AS (STRAIGHT)
	5	3S8606	2	SLEEVE
	6	1P4899	1	COUPLING AS (90 DEG)

C-CHANGE FROM PREVIOUS TYPE
G-ORDER BY THE INCH
I-SEE HOSE FABRICATION GUIDE

B-176272 EP

5057

6S3559 LINES GP-RIPPER
Ripper S/N 84U1-Up
Part Of 9J9005 Ripper Ar
An Attachment

HYDRAULIC SYSTEM

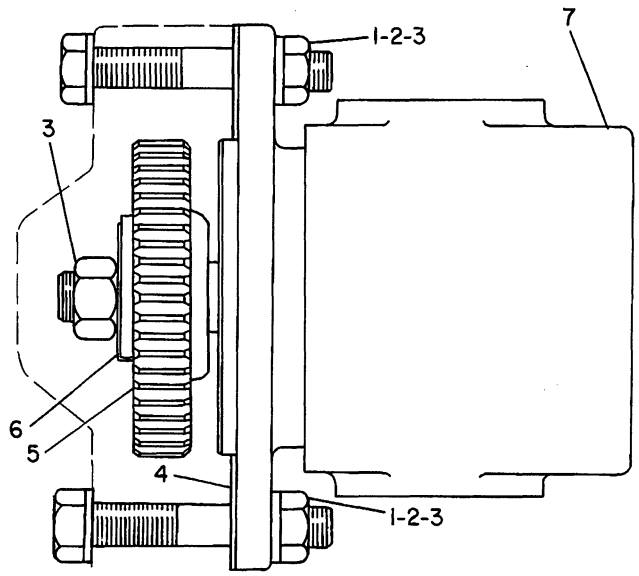

NOTE	REF NO	PART NUMBER	QTY	PART NAME
	1	1D5117	1	NUT-JAM
		0L1329	1	BOLT (69.85MM LG)
				-OR-
C		1D4719	1	NUT (FULL)
C		0V0375	1	BOLT (82.55MM LG)
C	2	2M0849	4	WASHER
	3	5D3183	1	NUT-FULL
	4	7J8114	1	GASKET
	5	8J4511	1	GEAR-HYDRAULIC PUMP (36 TEETH)
	6	7B3770	1	LOCK-NUT
	7	8J8809	1	PUMP GP-GEAR
Y		8J4513	1	PUMP GP-GEAR
				-OR-
CY		3G5385	1	PUMP GP-GEAR

C-CHANGE FROM PREVIOUS TYPE
Y-SEPARATE ILLUSTRATION

B-498588 EP

5073

8J4512 PUMP GP-GEAR-SINGLE SECTION
8J4513-Page 150, 3G5385-Page 151
Part Of 8Y0240 & 8Y0243 Hydraulic Ars
An Attachment

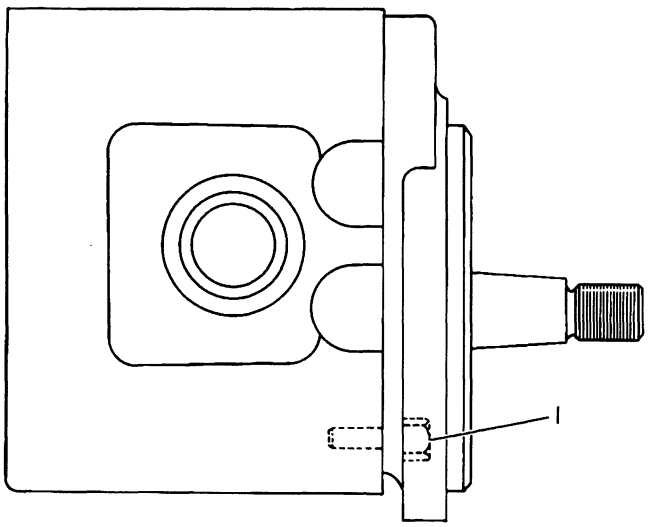

NOTE	REF NO	PART NUMBER	QTY	PART NAME
	1	5L4183	8	BOLT-SOCKET HEAD
				THE FOLLOWING REPAIR IS AVAILABLE:
		8J0420	1	KIT-SEAL (INCLUDES SEALS AND RINGS)

B-116881 EP

5073

8J4513 PUMP GP-GEAR
Part Of 8J4512 Pump-Gear
An Attachment

HYDRAULIC SYSTEM

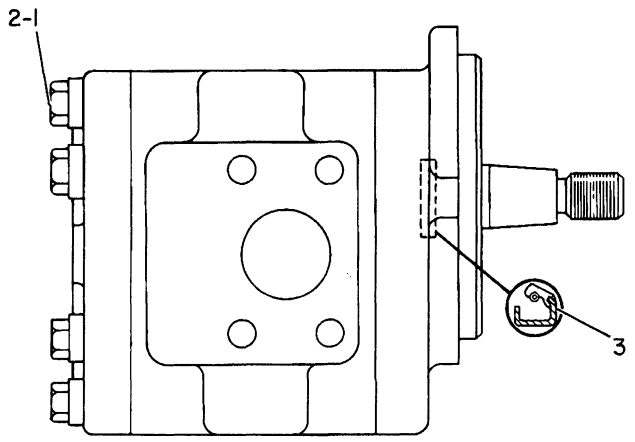

NOTE	REF NO	PART NUMBER	QTY	PART NAME
	1	8S9191	8	BOLT
	2	5M2894	8	WASHER
	3	3G5083	1	SEAL-LIP TYPE
				THE FOLLOWING REPAIR KIT IS AVAILABLE:
		3G5858	1	KIT-SEAL (INCLUDES SEAL, GASKET AND STRIP)

B-217306 EP

5073 **3G5385 PUMP GP-GEAR**
Part Of 8J4512 Pump-Gear
An Attachment

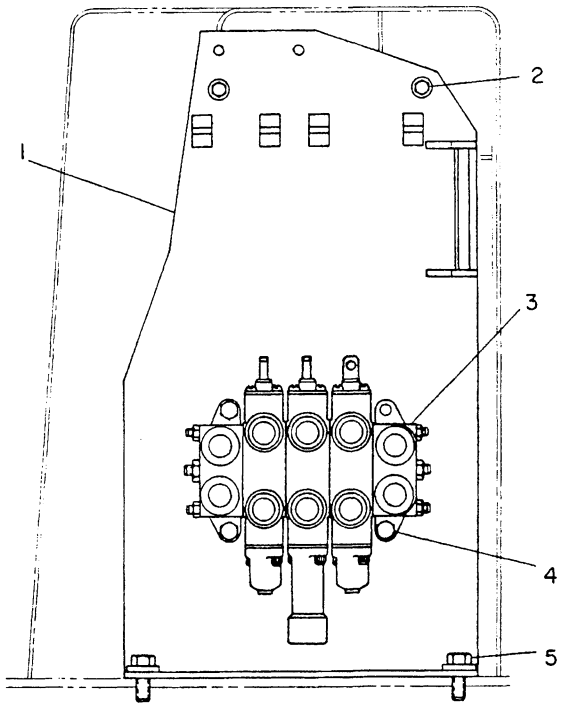

NOTE	REF NO	PART NUMBER	QTY	PART NAME
	1	8Y0720	1	BRACKET AS
		9F2978	9	NUT-WELD
	2	5M3062	2	BOLT
		5P1075	2	WASHER-HARD
Y	3	9T7249	1	VALVE GP-BANK-3
	4	8T2502	3	BOLT
	5	8T8917	4	BOLT
		5P1076	4	WASHER-HARD

Y-SEPARATE ILLUSTRATION

B-555940 EP

5054 **8Y0241 VALVE & MOUNTING GP**
Angle, Hoist, Ripper-9T7249-Page 152
Part Of 8Y0240 Hydraulic Ar
An Attachment

HYDRAULIC SYSTEM

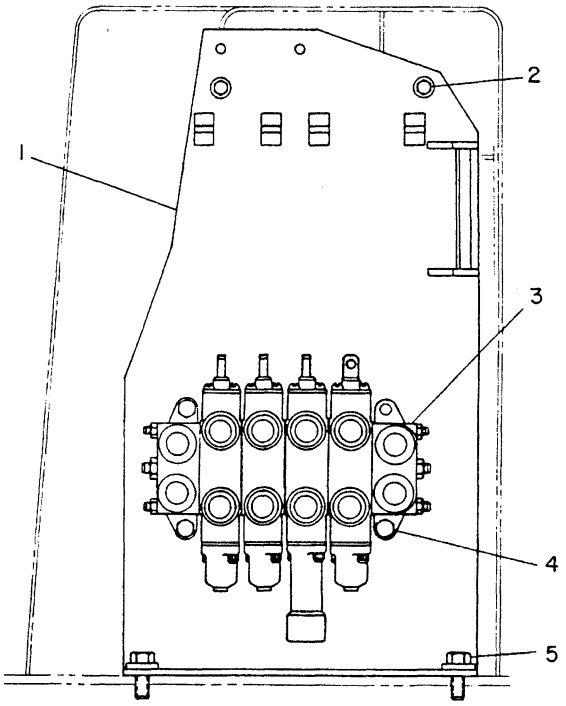

NOTE	REF NO	PART NUMBER	QTY	PART NAME
	1	8Y0720	1	BRACKET AS
		9F2978	9	NUT-WELD
	2	5M3062	2	BOLT
		5P1075	2	WASHER-HARD
Y	3	9T7250	1	VALVE GP-BANK-4
	4	8T2502	3	BOLT
	5	8T8917	4	BOLT
		5P1076	4	WASHER-HARD

Y-SEPARATE ILLUSTRATION

M-555941 EP

5054 **8Y0244 VALVE & MOUNTING GP**

Angle, Hoist, Ripper, Tilt-S/N 1RJ1-Up
9T7250-Page 153
Part Of 8Y0243 Hydraulic Ar. An Attachment

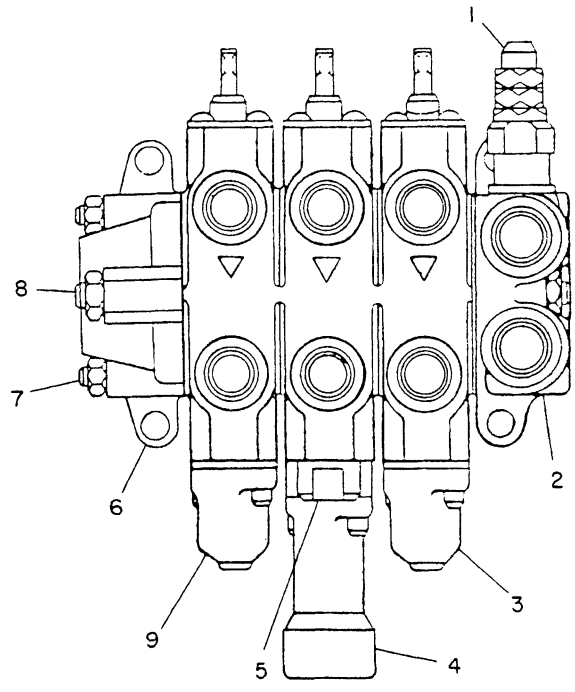

NOTE	REF NO	PART NUMBER	QTY	PART NAME
Y	1	9T7638	1	VALVE GP-RELIEF (PILOT OPERATED)
	2	9T0578	1	MANIFOLD
Y	3	9T7642	1	VALVE GP-CONTROL (TILT)
Y	4	9T7651	1	VALVE GP-CONTROL (HOIST)
Y	5	9T7634	1	VALVE GP-CHECK
	6	9T7628	1	HOUSING-OUTLET
	7	906028	2	ROD
		6V8189	4	NUT
	8	906029	1	ROD
		6V8183	2	NUT-FULL
Y	9	9T7642	1	VALVE GP-CONTROL (ANGLE)

Y-SEPARATE ILLUSTRATION

B-533921 EP

5051 **9T7249 VALVE GP-BANK-3**

Angle, Hoist, Tilt
9T7634-Page 153, 9T7638, 9T7642-Page 154, 9T7651-Page 155
Part Of 8Y0241 Valve & Mounting-An Attachment

HYDRAULIC SYSTEM

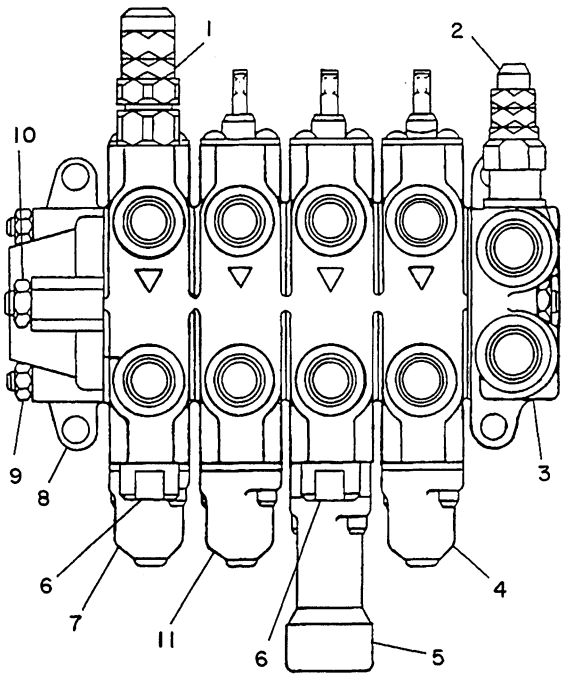

NOTE	REF NO	PART NUMBER	QTY	PART NAME
Y	1	9T7639	1	VALVE GP-RELIEF (DIRECT OPERATED)
Y	2	9T7638	1	VALVE GP-RELIEF (PILOT OPERATED)
	3	9T0578	1	MANIFOLD
Y	4	9T7642	1	VALVE GP-CONTROL (TILT)
Y	5	9T7651	1	VALVE GP-CONTROL (HOIST)
Y	6	9T7634	2	VALVE GP-CHECK
Y	7	9T7641	1	VALVE GP-CONTROL (RIPPER)
	8	9T7628	1	HOUSING-OUTLET
	9	6V8189	2	NUT
		9O6025	2	ROD
	10	6V8183	2	NUT-FULL
		9O6026	1	ROD
Y	11	9T7642	1	VALVE GP-CONTROL (ANGLE)

Y-SEPARATE ILLUSTRATION

M-451662 EP

5051 **9T7250 VALVE GP-BANK-4**

Angle, Hoist, Ripper Tilt-S/N 1RJ1-Up-9T7634-Page 153, 9T7638, 9T7642-Page 154, 9T7639, 9T7641-Page 156, 9T7651-Page 155
Part Of 8Y0244 Valve & Mounting-An Attachment

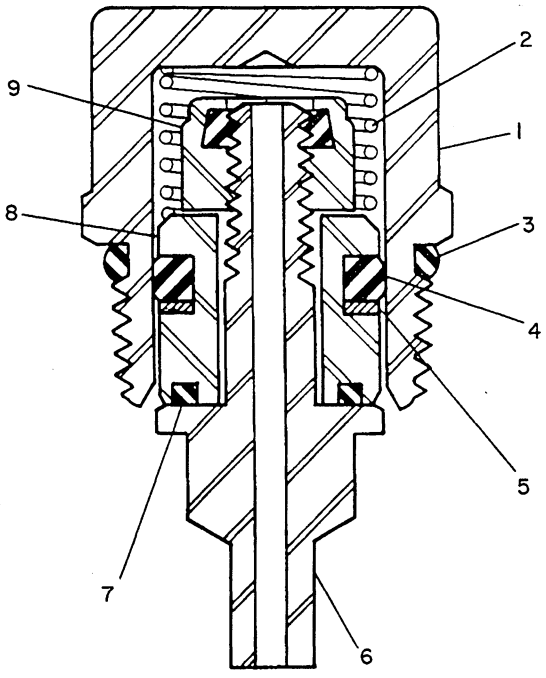

NOTE	REF NO	PART NUMBER	QTY	PART NAME
	1	9T7631	1	PLUG
	2	9T7633	1	SPRING
	3	336027	1	SEAL-O-RING
	4	8L2777	1	SEAL-O-RING
	5	9T7630	1	RING-BACK-UP
	6	9T7629	1	POPPET
	7	8L2779	1	SEAL-O-RING
	8	9T7632	1	SPACER
	9	7H8909	1	LOCKNUT

M-451663 EP

5067 **9T7634 VALVE GP-CHECK**

Part Of 9T7249 & 9T7250 Valve
An Attachment

HYDRAULIC SYSTEM

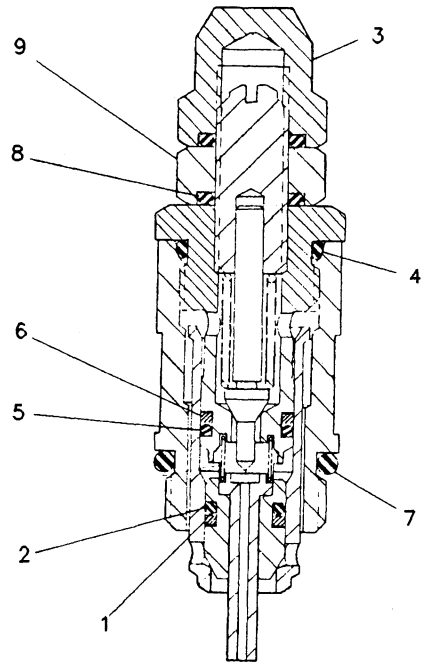

NOTE	REF NO	PART NUMBER	QTY	PART NAME
	1	9T7635	1	RING-BACK-UP
	2	617538	1	SEAL-O-RING
	3	395069	1	NUT
	4	336028	1	SEAL-O-RING
	5	8L2779	1	SEAL-O-RING
	6	306121	1	RING-BACK-UP
	7	336027	1	SEAL-O-RING
	8	335879	2	SEAL-O-RING
	9	395070	1	NUT
				THE FOLLOWING REPAIR KIT IS AVAILABLE:
		9T8959	1	KIT-SERVICE (INCLUDES SPRINGS, SEALS,& RINGS)

R-485657 EP

5069

9T7638 VALVE GP-RELIEF
Pilot Operated
Part Of 9T7249 & 9T7250 Valve
An Attachment

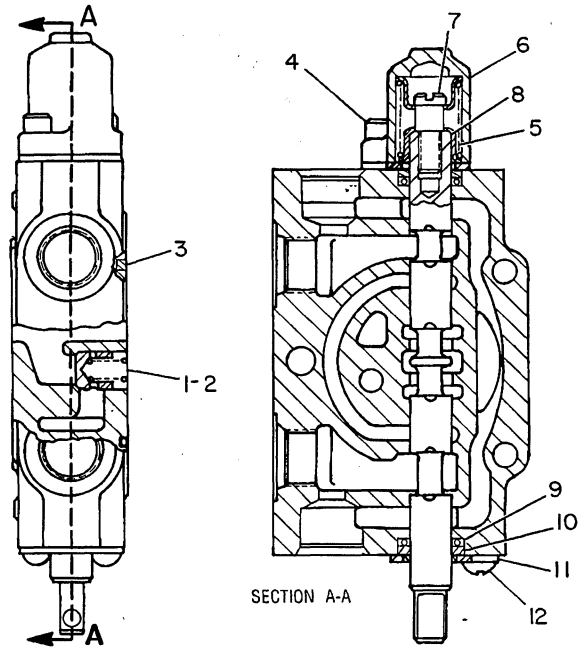

NOTE	REF NO	PART NUMBER	QTY	PART NAME
	1	9T0553	1	VALVE
	2	9T0546	1	SPRING
	3	4J0527	1	SEAL-O-RING
	4	8H3127	2	BOLT
	5	9T7640	1	SPRING
	6	906032	1	CAP
	7	9T2099	1	SCREW
	8	9T2098	2	RETAINER
	9	6F4855	2	SEAL-O-RING
	10	9T0556	2	SEAL
	11	9T0550	2	PLATE
	12	8F5758	2	SCREW

B-452143 EP

5123

9T7642 VALVE GP-CONTROL
Angle & Tilt
Part Of 9T7249, 9T7250 Valves
An Attachment

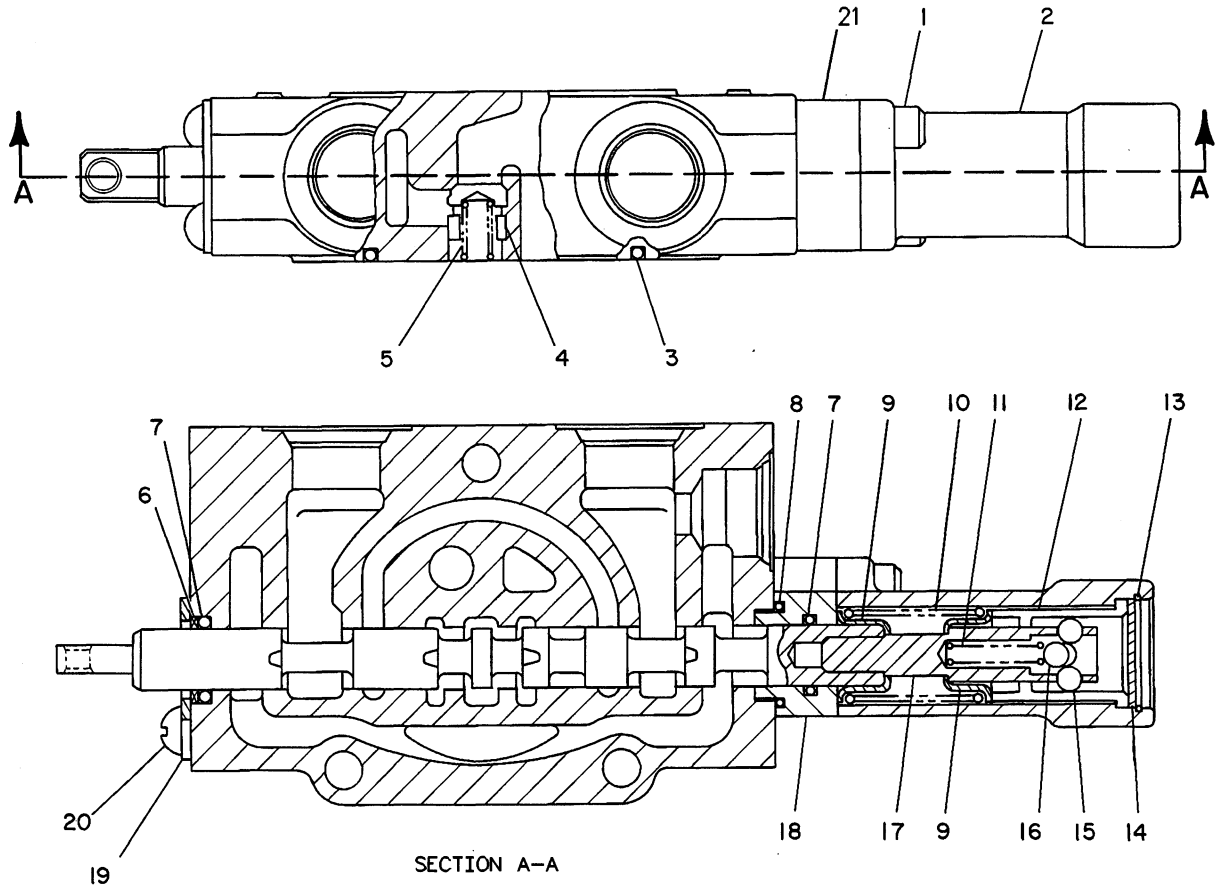

SECTION A-A

NOTE	REF NO	PART NUMBER	QTY	PART NAME	NOTE	REF NO	PART NUMBER	QTY	PART NAME
	1	4L7124	2	BOLT					
	2	9T7648	1	CAP-SPOOL					
	3	4J0527	1	SEAL-O-RING					
	4	9T0553	1	VALVE					
	5	9T0546	1	SPRING					
	6	9T0556	1	SEAL					
	7	6F4855	2	SEAL-O-RING					
	8	2M9780	1	SEAL-O-RING					
	9	9T2098	2	RETAINER					
	10	9T7650	1	SPRING					
	11	9T7649	1	SPRING					
	12	9T7647	1	SLEEVE-DETENT					
	13	9T7643	1	RING					
	14	9T7644	1	SPACER					
	15	5H1472	4	BALL					
	16	9M5590	1	BALL					
	17	9T7646	1	END-DETENT					
	18	6E4189	1	SPACER-SPOOL					
	19	9T0550	1	PLATE					
	20	8F5758	2	SCREW					
	21	6E4190	2	SPACER					

R-555991 EP

5136

9T7651 VALVE GP-CONTROL
Hoist
Part Of 9T7249, 9T7250 Valves
An Attachment

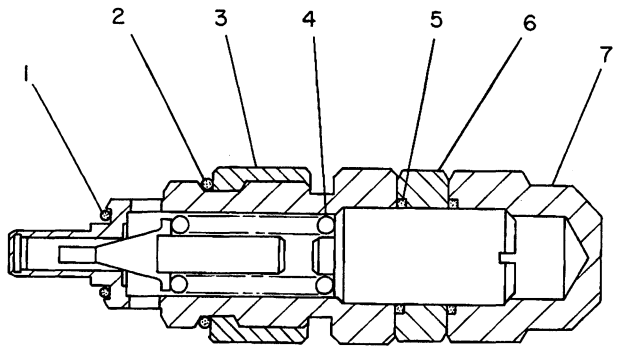

NOTE	REF NO	PART NUMBER	QTY	PART NAME
	1	8L2779	1	SEAL-O-RING
	2	336027	1	SEAL-O-RING
	3	9T6613	1	NUT
	4	9T6614	1	SPRING
	5	336043	2	SEAL-O-RING
	6	9T6611	1	NUT
	7	9T6612	1	NUT-CAP

M-451668 EP

5069 **9T7639 VALVE GP-RELIEF**
Direct Operated-S/N 1RJ1-Up
Part Of 9T7250 Valve
An Attachment

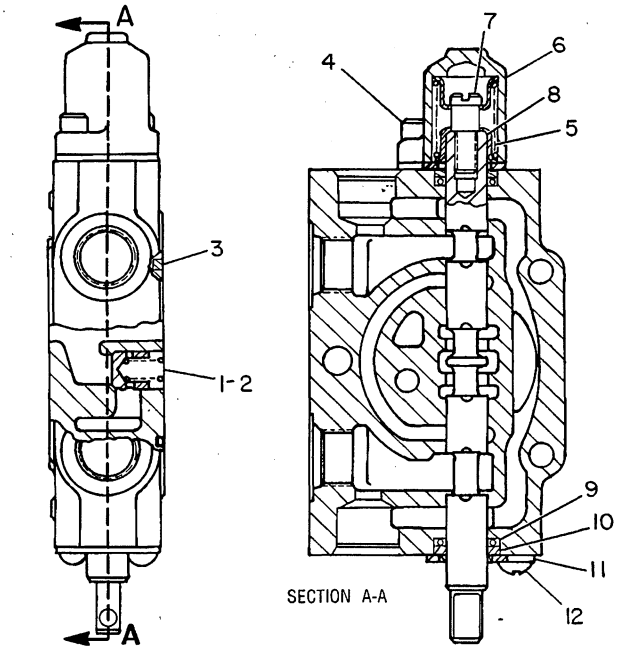

NOTE	REF NO	PART NUMBER	QTY	PART NAME
	1	9T0553	1	VALVE
	2	9T0546	1	SPRING
	3	4J0527	1	SEAL-O-RING
	4	8H3127	2	BOLT
	5	9T7640	1	SPRING
	6	906032	1	CAP
	7	9T2099	1	SCREW
	8	9T2098	2	RETAINER
	9	6F4855	2	SEAL-O-RING
	10	9T0556	2	SEAL
	11	9T0550	2	PLATE
	12	8F5758	2	SCREW

B-452146 EP

5351 **9T7641 VALVE GP-RIPPER CONTROL**
S/N 1RJ1-Up
Part Of 9T7250 Valve
An Attachment

			PAGE
1	9W9580	BLADE GP-ANGLING	158
2	7J9223	CYLINDER GP-LIFT	138
2	9J8698	CYLINDER GP-ANGLING	139
1	9J8674	CYLINDER GP-TILT	140
1	9W9579	C-FRAME GP	160.05
1	8YO261	LINES GP-ANGLE CYLINDER	144
1	8YO258	LINES GP-LIFT CYLINDER	146
1	8YO262	LINES GP-TILT CYLINDER	147
1	5GO269	MOUNTING GP-TRUNNION	161

451602 P

6Y2824 BULLDOZER AR
Power Angle & Tilt
Bulldozer S/N 2YH1-Up
An Attachment

			PAGE
1	9W9589	BLADE GP-ANGLING	160
2	7J9223	CYLINDER GP-LIFT	138
2	9J8698	CYLINDER GP-ANGLING	139
1	9J8674	CYLINDER GP-TILT	140
1	3G3440	C-FRAME GP	160.03
1	8YO257	LINES GP-ANGLE CYLINDER	145
1	8YO258	LINES GP-LIFT CYLINDER	146
1	8YO260	LINES GP-TILT CYLINDER	148
1	5GO269	MOUNTING GP-TRUNNION	161

451911 P

6Y2825 BULLDOZER AR
Power Angle & Tilt-LGP
Bulldozer S/N 4GH1-Up
An Attachment

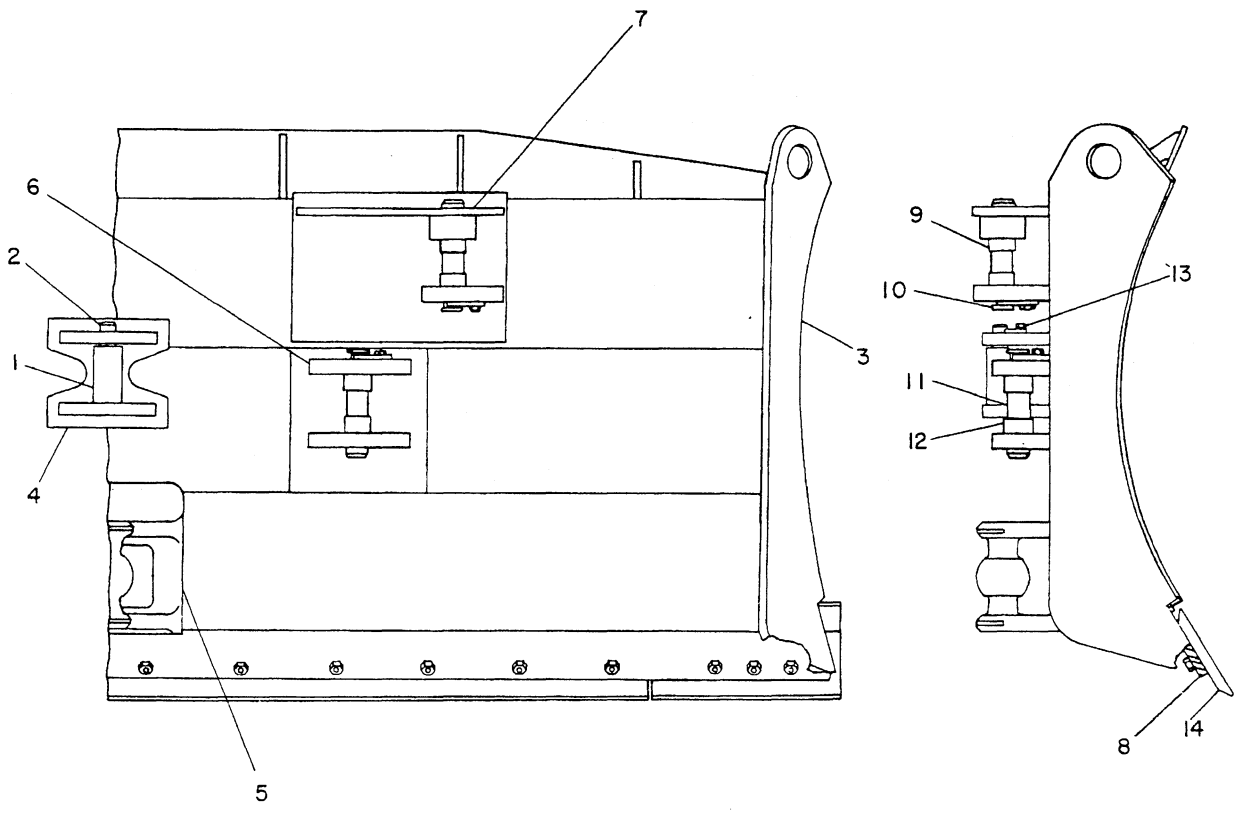

NOTE	REF NO	PART NUMBER	QTY	PART NAME	NOTE	REF NO	PART NUMBER	QTY	PART NAME
	1	6S9051	1	BUSHING					
	2	7K8229	1	SHAFT					
	3	9W9588	1	BLADE AS					
	4	9W7475	1	PLATE AS					
	5	8J3989	1	BRACKET AS					
		7J5131	1	TRUNNION					
	6	1U2947	2	BRACKET AS					
	7	4T3413	1	BRACKET AS					
	8	8J0913	1	SUPPORT-EDGE					
	9	8J3344	2	SPACER					
	10	8J0729	3	RETAINER					
		1A2029	3	BOLT					
	11	3G3005	3	PIN					
	12	9J9004	4	SPACER					
	13	0L1351	1	BOLT					
		5M2894	1	WASHER					
		9B3429	1	LUG					
Y	14	8J7146	1	EDGE GP-CUTTING					

Y-SEPARATE ILLUSTRATION

B-403465 EP

6052

9W9580 BLADE GP-ANGLING
Type 1. Bulldozer S/N 2YH1-Up
8J7146-Page 159
Part Of 6Y2824 Bulldozer Ar
An Attachment

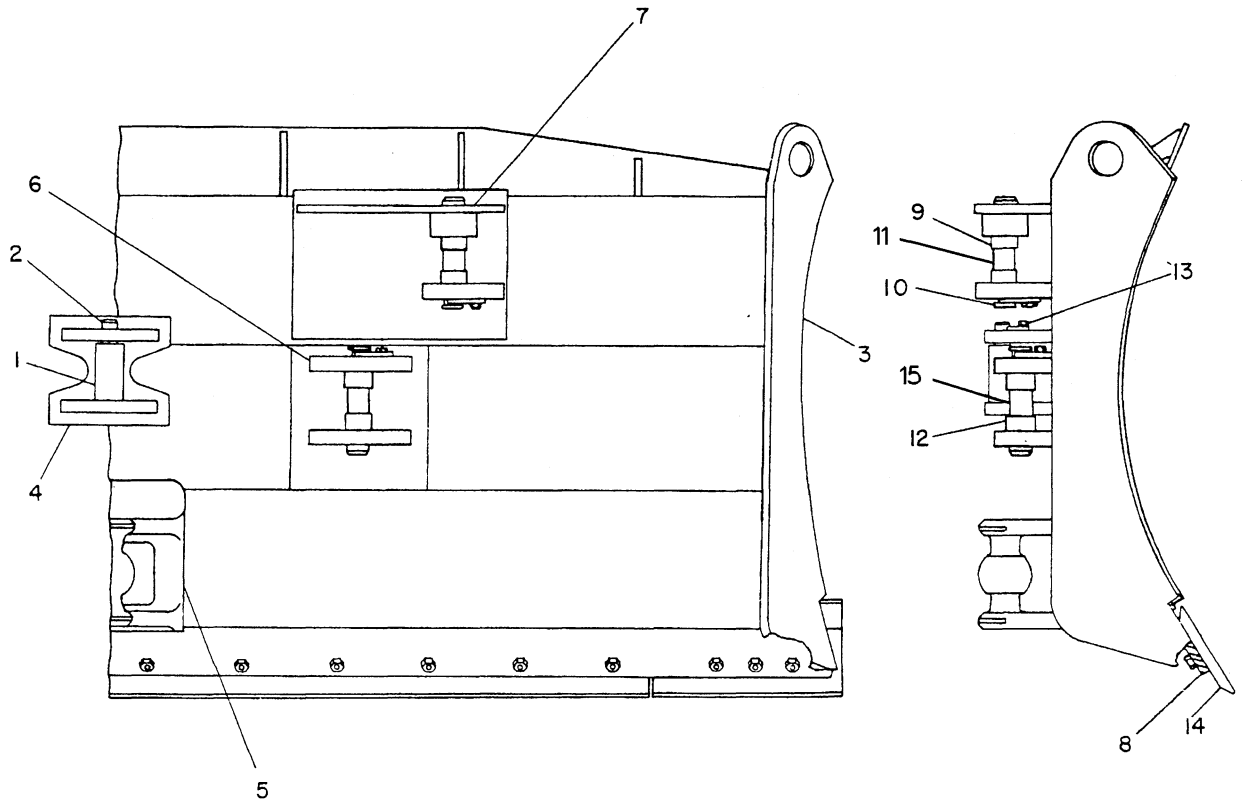

NOTE	REF NO	PART NUMBER	QTY	PART NAME	NOTE	REF NO	PART NUMBER	QTY	PART NAME
	1	6S9051	1	BUSHING					
C	2	6Y1967	1	PIN AS					
	3	9W9588	1	BLADE AS					
	4	9W7475	1	PLATE AS					
	5	8J3989	1	BRACKET AS					
		7J5131	1	TRUNNION					
	6	1U2947	2	BRACKET AS					
	7	4T3413	1	BRACKET AS					
	8	8J0913	1	SUPPORT-EDGE					
	9	8J3344	2	SPACER					
	10	8J0729	3	RETAINER					
		1A2029	3	BOLT					
C	11	3G3005	1	PIN					
	12	9J9004	4	SPACER					
C	13	0S1594	1	BOLT					
C		8M7145	1	WASHER					
C		8D5898	1	SPACER					
Y	14	8J7146	1	EDGE GP-CUTTING					
C	15	6Y1421	2	PIN					

C-CHANGE FROM PREVIOUS TYPE
Y-SEPARATE ILLUSTRATION

R-487233 EP

6052

9W9580 BLADE GP-ANGLING
Type 2. Bulldozer S/N 2YH1-Up
8J7146-Page 159
Part Of 6Y2824 Bulldozer Ar
An Attachment

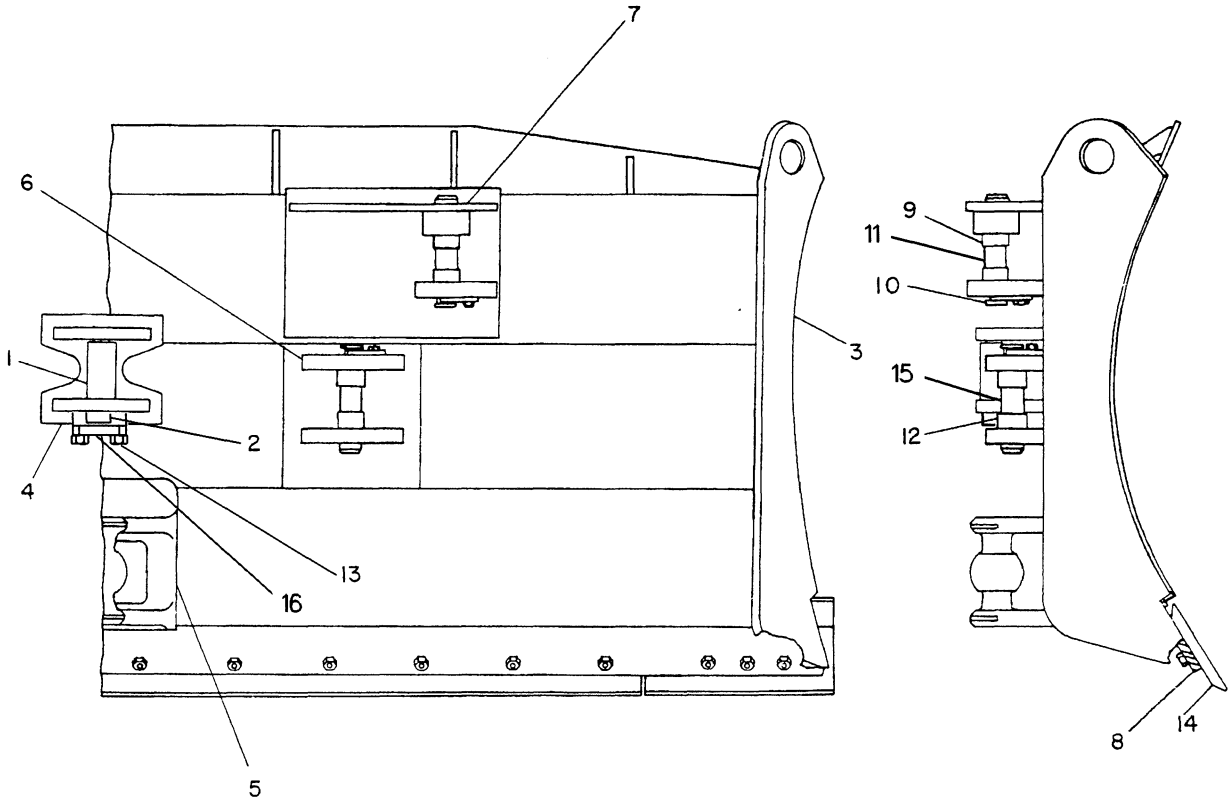

NOTE	REF NO	PART NUMBER	QTY	PART NAME	NOTE	REF NO	PART NUMBER	QTY	PART NAME
	1	6S9051	1	BUSHING					
C	2	8E4709	1	PIN AS					
	3	9W9588	1	BLADE AS					
C	4	8E4736	1	PLATE AS					
	5	8J3989	1	BRACKET AS					
		7J5131	1	TRUNNION					
	6	1U2947	2	BRACKET AS					
	7	4T3413	1	BRACKET AS					
	8	8J0913	1	SUPPORT-EDGE					
	9	8J3344	2	SPACER					
	10	8J0729	3	RETAINER					
		1A2029	3	BOLT					
	11	3G3005	1	PIN					
	12	9J9004	4	SPACER					
C	13	7X0346	1	BOLT					
Y	14	8J7146	1	EDGE GP-CUTTING					
	15	6Y1421	2	PIN					
C	16	8E4711	1	PLATE					

C-CHANGE FROM PREVIOUS TYPE
Y-SEPARATE ILLUSTRATION

R-501850 EP

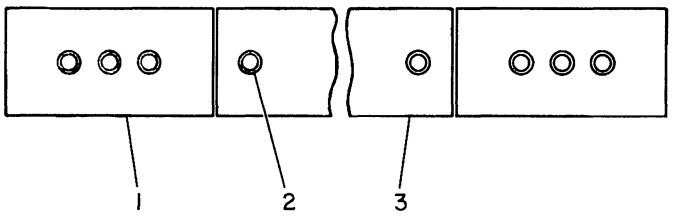

NOTE	REF NO	PART NUMBER	QTY	PART NAME
	1	4T6229	2	BIT-END
C	2	3F5108	18	BOLT-PLOW
		4K0367	18	NUT
C		5P8247	18	WASHER-HARD
	3	4T6230	2	EDGE-CUTTING

C-CHANGE FROM PREVIOUS TYPE

B-555969 EP

6801 **8J7146 EDGE GP-CUTTING**

Bulldozer S/N 2YH1-Up
Part Of 9W9580 Blade-Angling
An Attachment

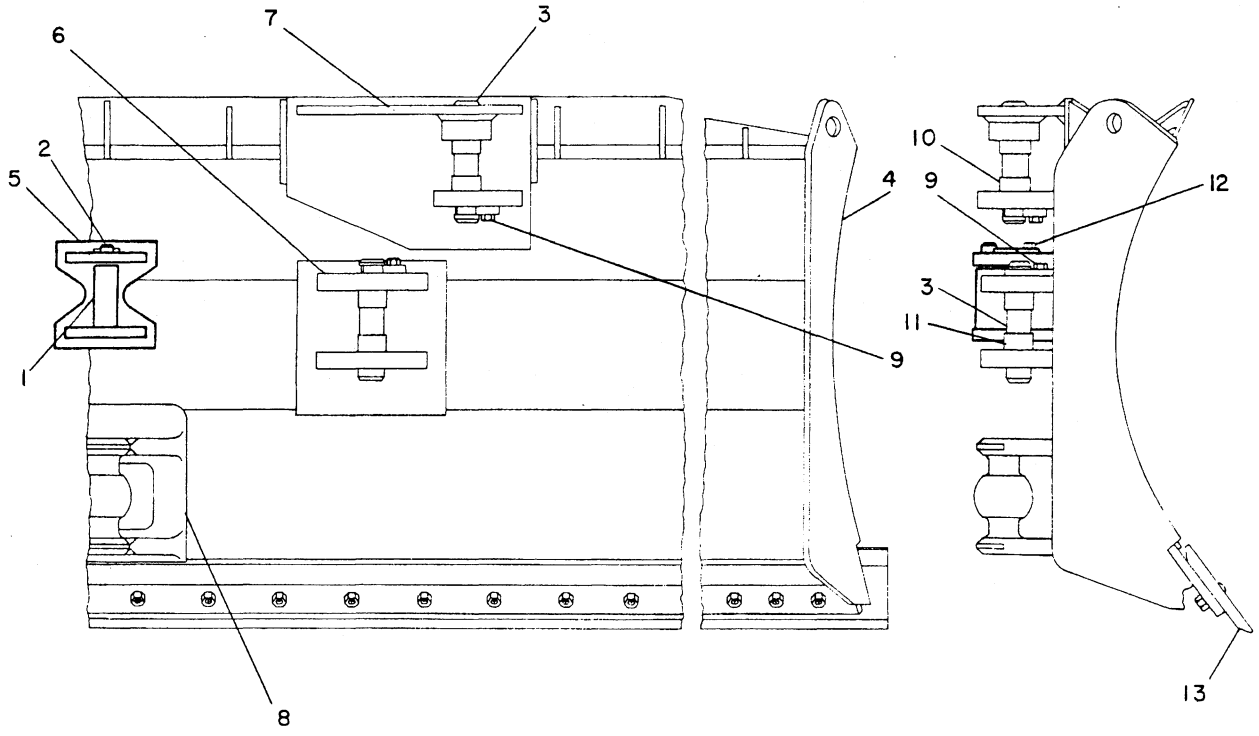

NOTE	REF NO	PART NUMBER	QTY	PART NAME	NOTE	REF NO	PART NUMBER	QTY	PART NAME
	1	6S9051	1	BUSHING					
	2	7K8229	1	SHAFT					
	3	3G3005	3	PIN					
	4	9W9590	1	BLADE AS					
		8J0899	1	PLATE-END-RH					
		8J0900	1	PLATE-END-LH					
	5	9W7475	1	PLATE AS					
	6	1U2947	2	BRACKET AS					
	7	1U2950	1	BRACKET AS					
	8	8J3989	1	BRACKET AS					
		7J5131	1	TRUNNION					
	9	1A2029	3	BOLT					
		8J0729	3	RETAINER					
	10	8J3344	2	SPACER					
	11	9J9004	4	SPACER					
	12	0L1351	1	BOLT					
		5M2894	1	WASHER					
		9B3429	1	LUG					
Y	13	3G3353	1	BIT & CUTTING EDGE GP					

Y-SEPARATE ILLUSTRATION

B-403480 EP

6052

9W9589 BLADE GP-ANGLING

Type 1. Bulldozer S/N 4GH1-Up
3G3353-Page 161
Part Of 6Y2825 Bulldozer Ar
An Attachment

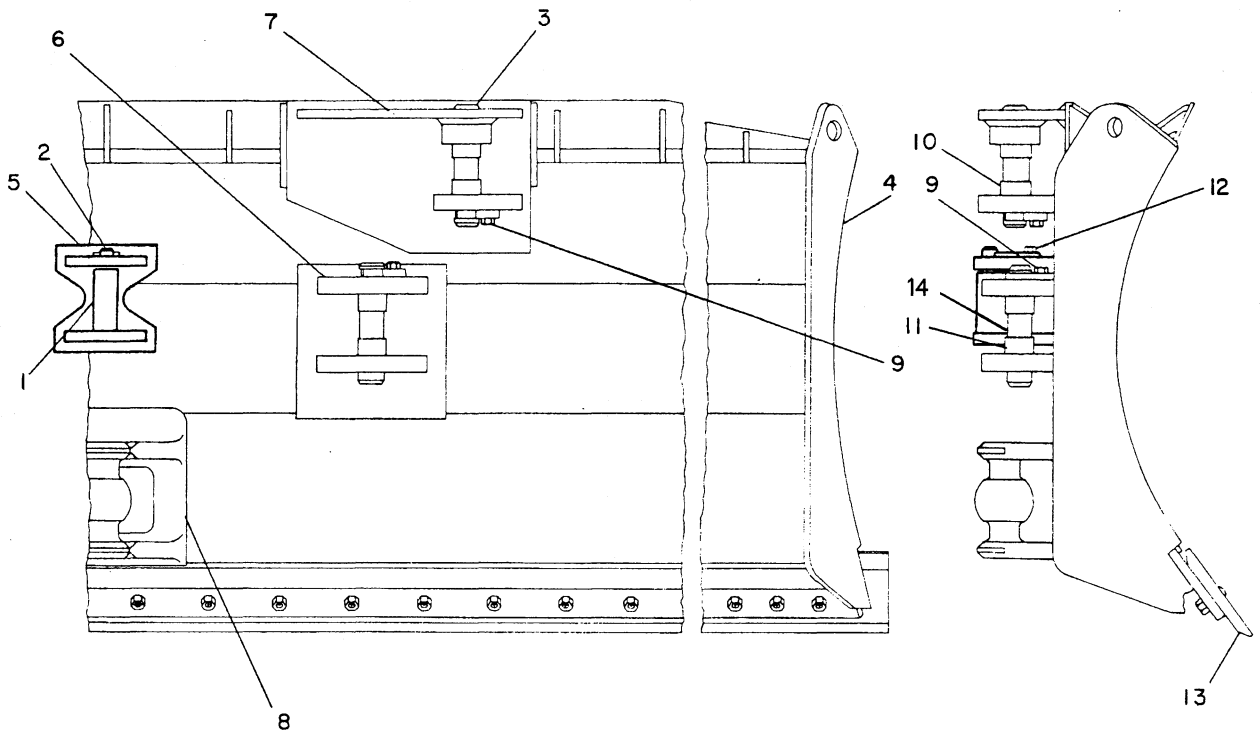

NOTE	REF NO	PART NUMBER	QTY	PART NAME	NOTE	REF NO	PART NUMBER	QTY	PART NAME
	1	6S9051	1	BUSHING					
C	2	6Y1967	1	PIN AS					
C	3	3G3005	1	PIN					
	4	9W9590	1	BLADE AS					
		8J0899	1	PLATE-END-RH					
		8J0900	1	PLATE-END-LH					
	5	9W7475	1	PLATE AS					
	6	1U2947	2	BRACKET AS					
	7	1U2950	1	BRACKET AS					
	8	8J3989	1	BRACKET AS					
		7J5131	1	TRUNNION					
	9	1A2029	3	BOLT					
		8J0729	3	RETAINER					
	10	8J3344	2	SPACER					
	11	9J9004	4	SPACER					
C	12	0S1594	1	BOLT					
C		8M7145	1	WASHER					
C		8D5898	1	SPACER					
Y	13	3G3353	1	BIT & CUTTING EDGE GP					
C	14	6Y1421	2	PIN					

C-CHANGE FROM PREVIOUS TYPE
Y-SEPARATE ILLUSTRATION

R-487213 EP

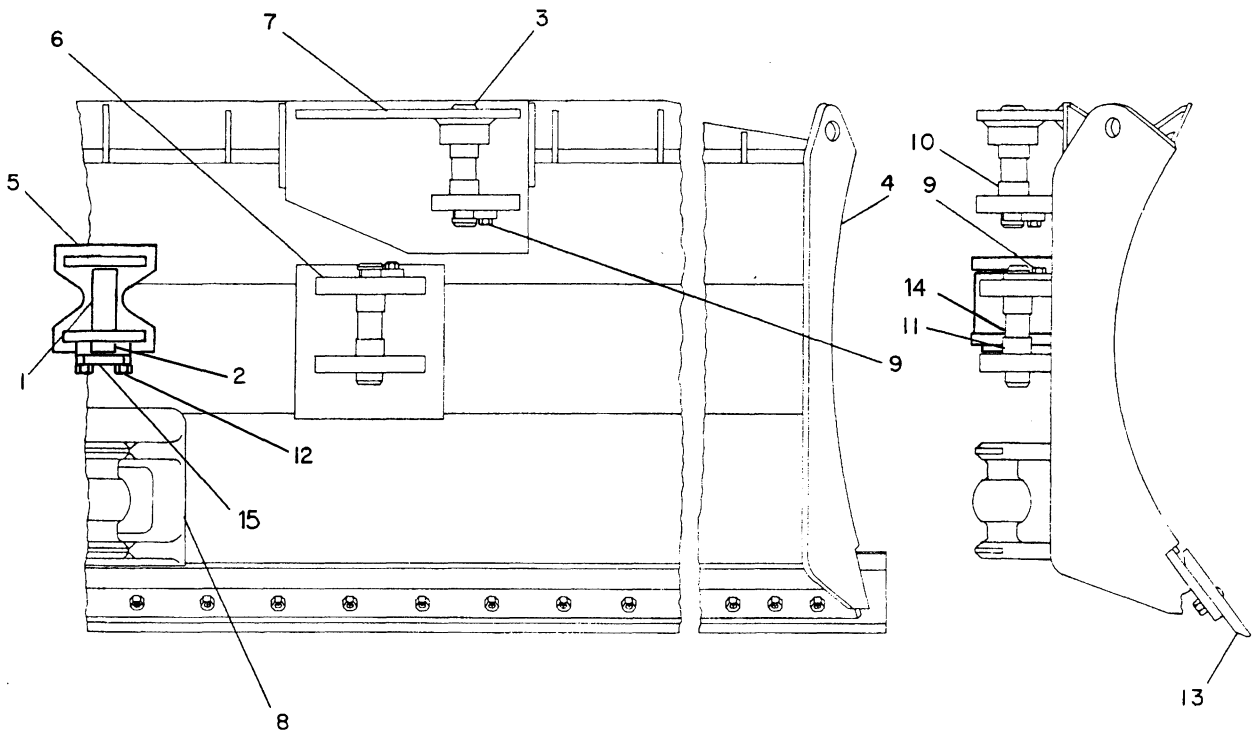

NOTE	REF NO	PART NUMBER	QTY	PART NAME	NOTE	REF NO	PART NUMBER	QTY	PART NAME
	1	6S9051	1	BUSHING					
C	2	8E4709	1	PIN AS					
	3	3G3005	1	PIN					
	4	9W9590	1	BLADE AS					
		8J0899	1	PLATE-END-RH					
		8J0900	1	PLATE-END-LH					
C	5	8E4736	1	PLATE AS					
	6	1U2947	2	BRACKET AS					
	7	1U2950	1	BRACKET AS					
	8	8J3989	1	BRACKET AS					
		7J5131	1	TRUNNION					
	9	1A2029	3	BOLT					
		8J0729	3	RETAINER					
	10	8J3344	2	SPACER					
	11	9J9004	4	SPACER					
C	12	7X0346	1	BOLT					
Y	13	3G3353	1	BIT & CUTTING EDGE GP					
	14	6Y1421	2	PIN					
C	15	8E4711	1	PLATE					

C-CHANGE FROM PREVIOUS TYPE
Y-SEPARATE ILLUSTRATION

R-501837 EP

9W9589 BLADE GP-ANGLING
Type 3. Bulldozer S/N 4GH1-Up
3G3353-Page 161
Part Of 6Y2825 Bulldozer Ar
An Attachment

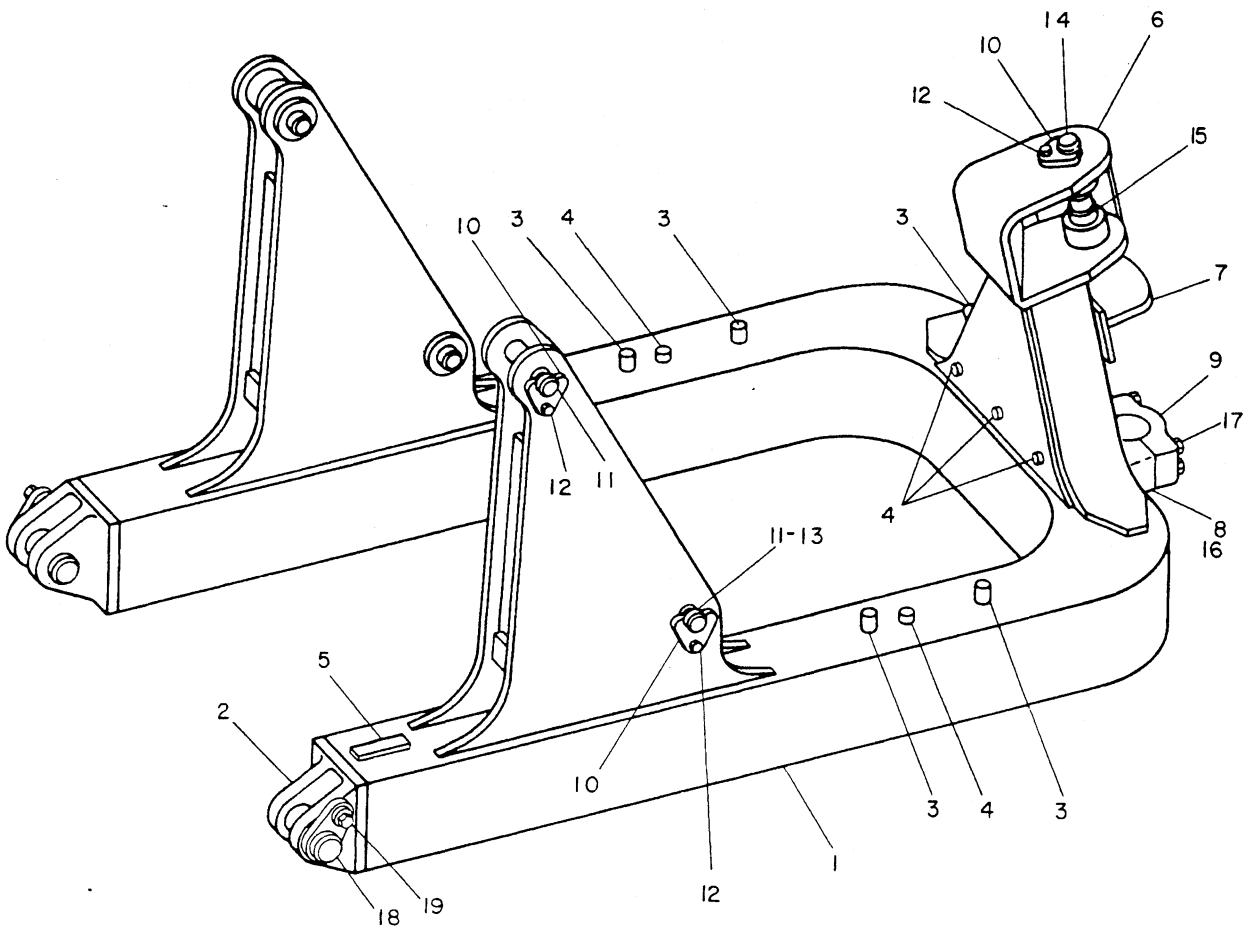

NOTE	REF NO	PART NUMBER	QTY	PART NAME	NOTE	REF NO	PART NUMBER	QTY	PART NAME
	1	9W9583	1	C-FRAME AS					
	2	8J3443	1	BEARING					
	3	6M4016	6	LUG					
	4	4D9376	5	BOSS					
	5	8P9770	1	PLATE					
	6	8J3372	1	BRACKET AS					
	7	9W7476	1	PLATE AS					
	8	3G2573	1	BRACKET AS					
		3G2572	1	BRACKET					
	9	3G2569	1	CAP-BEARING					
	10	8J0729	5	RETAINER					
	11	8J0927	4	PIN					
	12	1A2029	5	BOLT					
	13	8J3349	1	SPACER					
	14	8J0928	1	PIN					
	15	8J3344	2	SPACER					
B	16	3G2585	8	SHIM					
	17	1D4634	4	BOLT					
	18	9W3120	2	PIN AS					
	19	7B3235	2	BOLT					
		5P1076	2	WASHER-HARD (SMALL)					
		1B8074	2	WASHER (LARGE)					

B-USE AS REQUIRED

B-403474 EP

6063 **9W9579 C-FRAME GP-POWER ANGLING**

Type 1-Bulldozer S/N 2YH1-Up
Part Of 6Y2824 Bulldozer Ar
An Attachment

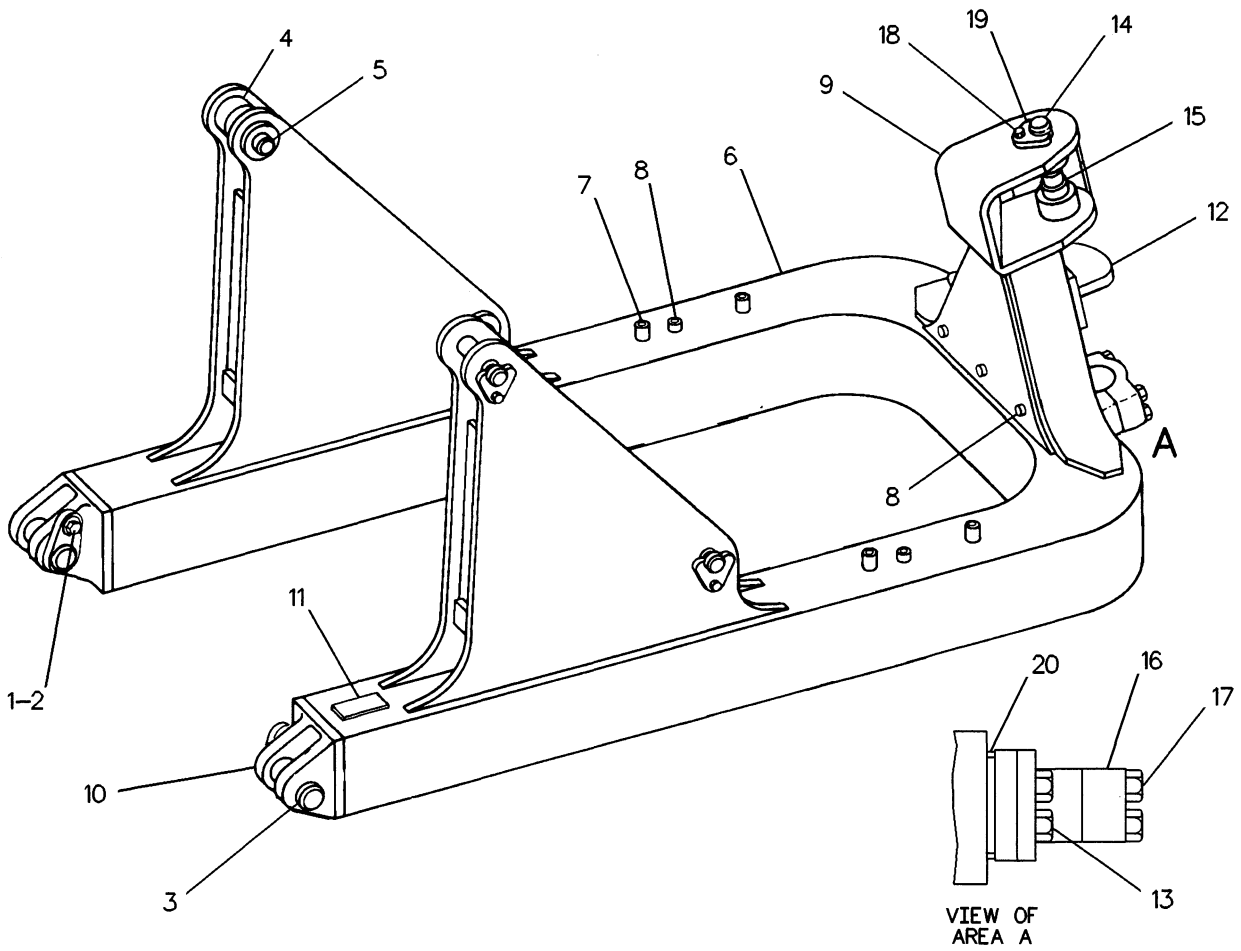

NOTE	REF NO	PART NUMBER	QTY	PART NAME	NOTE	REF NO	PART NUMBER	QTY	PART NAME
	1	5P1076	4	WASHER-HARD (4MM THK)					
C		8E4072	4	SPACER (16MM THK)					
C	2	5P2566	4	BOLT					
C	3	8E4026	2	PIN AS					
	4	8J3349	4	SPACER					
	5	8J0927	4	PIN					
	6	9W9583	1	C-FRAME AS					
	7	6M4016	6	LUG					
	8	4D9376	5	BOSS					
	9	8J3372	1	BRACKET AS					
	10	8J3443	2	BEARING					
	11	8P9770	1	PLATE					
C	12	8E5099	1	PLATE AS					
C	13	8J1148	4	BOLT					
	14	8J0928	1	PIN					
	15	8J3344	2	SPACER					
	16	3G2569	1	CAP-BEARING					
BC		8E5702	26	SHIM (0.8MM THK)					
	17	1D4634	4	BOLT					
	18	1A2029	5	BOLT					
	19	8J0729	5	RETAINER					
BC	20	8E3308	2	SPACER (25MM THK)					
BC		8E3315	2	SPACER (12MM THK)					

B-USE AS REQUIRED
C-CHANGE FROM PREVIOUS TYPE

R-551068 EP

6063 **9W9579 C-FRAME GP-POWER ANGLING**
Type 2-Bulldozer S/N 2YH1-Up
Part Of 6Y2824 Bulldozer Ar
An Attachment

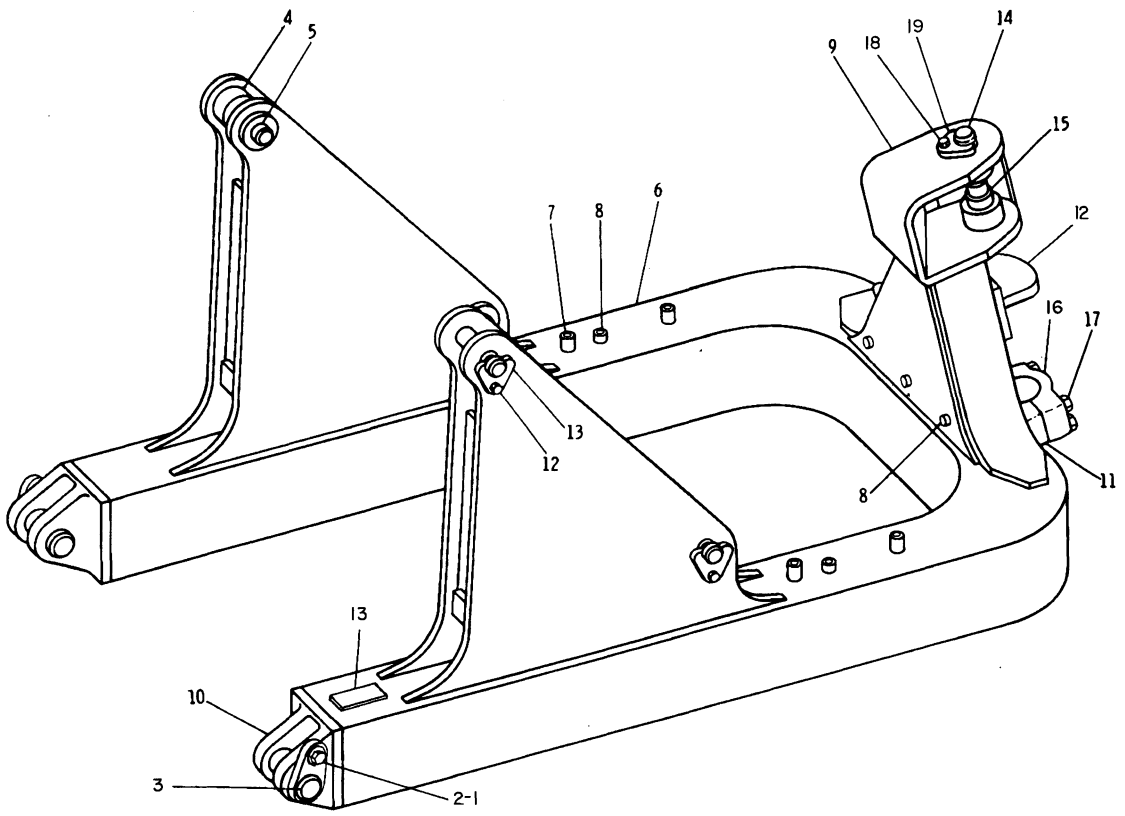

VIEW FROM
UPPER RIGHT REAR
OF VEHICLE

NOTE	REF NO	PART NUMBER	QTY	PART NAME
	1	5P1076	2	WASHER-HARD 4MM(.157IN)THK
		1B8074	2	WASHER 9.53MM(.375IN)THK
	2	7B3235	2	BOLT
	3	9W3120	2	PIN AS
	4	8J3349	4	SPACER
	5	8J0927	4	PIN
	6	3G4028	1	FRAME AS
	7	6M4016	6	LUG
	8	4D9376	5	BOSS
	9	8J3372	1	BRACKET AS
	10	8J3443	2	BEARING
	11	3G2573	1	BRACKET AS
		8J9162	1	STOP
		3G2569	1	CAP-BEARING
	12	9W7476	1	PLATE AS
	13	8P9770	1	PLATE
	14	8J0928	1	PIN
	15	8J3344	2	SPACER
	16	3G2569	1	CAP-BEARING
B		3G2585	8	SHIM
	17	1D4634	4	BOLT
	18	1A2029	5	BOLT
	19	8J0729	5	RETAINER

B-USE AS REQUIRED

B-465027 EP

6063 **3G3440 C-FRAME GP-POWER ANGLING**
Type 1-Bulldozer S/N 4GH1-Up
Part Of 6Y2825 Bulldozer Ar
An Attachment

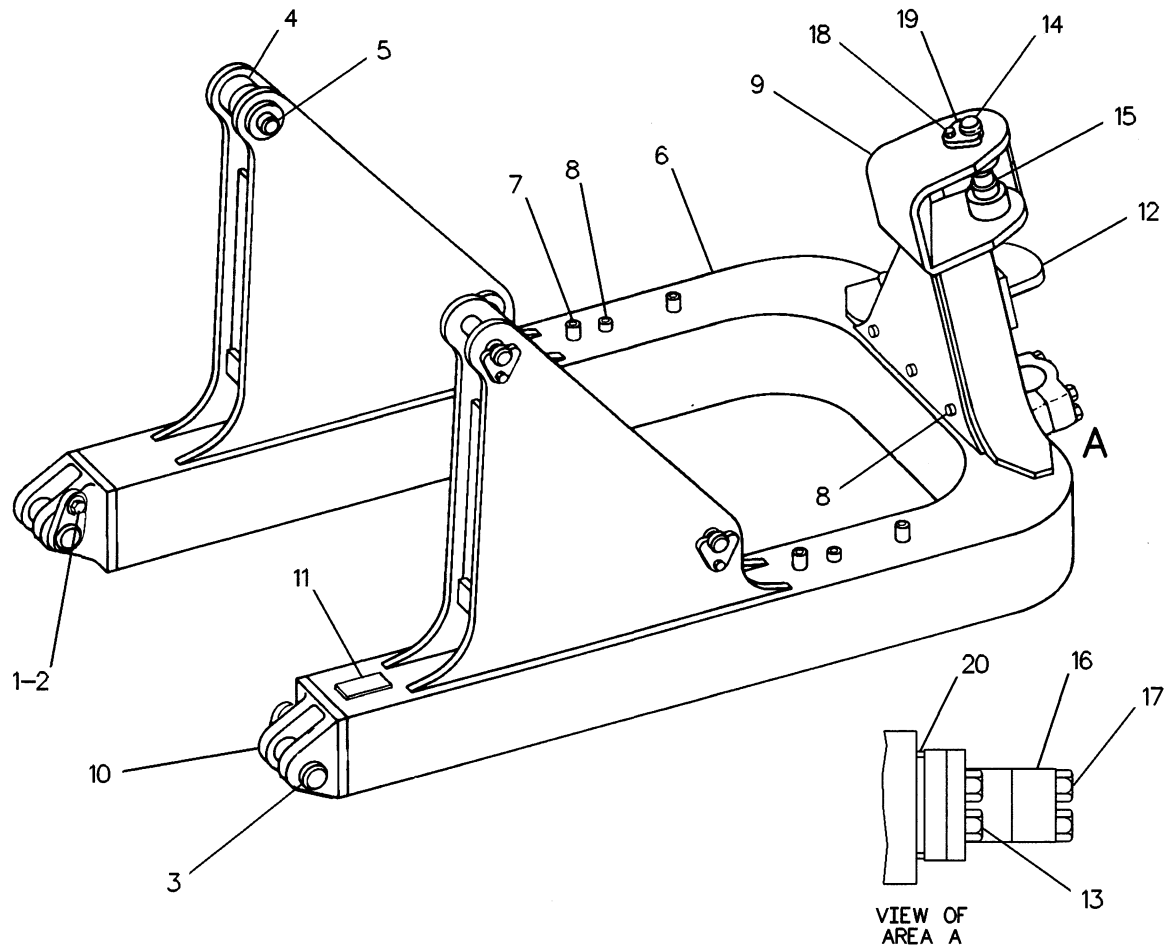

NOTE	REF NO	PART NUMBER	QTY	PART NAME	NOTE	REF NO	PART NUMBER	QTY	PART NAME
C	1	5P1076	4	WASHER-HARD (4MM THK)					
C		8E4072	4	SPACER (16MM THK)					
C	2	5P2566	4	BOLT					
C	3	8E4026	2	PIN AS					
	4	8J3349	4	SPACER					
	5	8J0927	4	PIN					
	6	3G4028	1	FRAME AS					
	7	6M4016	6	LUG					
	8	4D9376	5	BOSS					
	9	8J3372	1	BRACKET AS					
	10	8J3443	2	BEARING					
	11	8P9770	1	PLATE					
C	12	8E5099	1	PLATE AS					
C	13	8J1148	4	BOLT					
	14	8J0928	1	PIN					
	15	8J3344	2	SPACER					
	16	3G2569	1	CAP-BEARING					
B		8E5702	26	SHIM (0.8MM THK)					
	17	1D4634	4	BOLT					
	18	1A2029	5	BOLT					
	19	8J0729	5	RETAINER					
BC	20	8E3308	2	SPACER (25MM THK)					
BC		8E3315	2	SPACER (12MM THK)					

B-USE AS REQUIRED
C-CHANGE FROM PREVIOUS TYPE

R-551057 EP

6063 **3G3440 C-FRAME GP-POWER ANGLING**
Type 2-Bulldozer S/N 4GH1-Up
Part Of 6Y2825 Bulldozer Ar
An Attachment

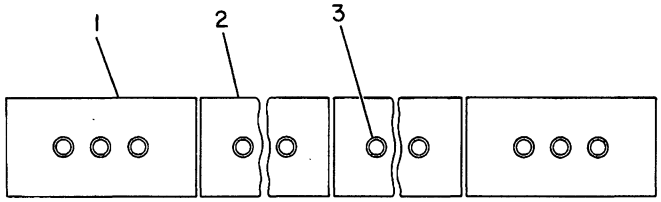

NOTE	REF NO	PART NUMBER	QTY	PART NAME
	1	4T6229	2	BIT-END
	2	4T6232	2	EDGE-CUTTING
	3	3F5108	22	BOLT-PLOW
		4K0367	22	NUT
		5P8247	22	WASHER-HARD

B-555979 EP

6801 **3G3353 CUTTING EDGE & BIT GP**
Bulldozer S/N 4GH1-Up
Part Of 9W9589 Blade-Angling
An Attachment

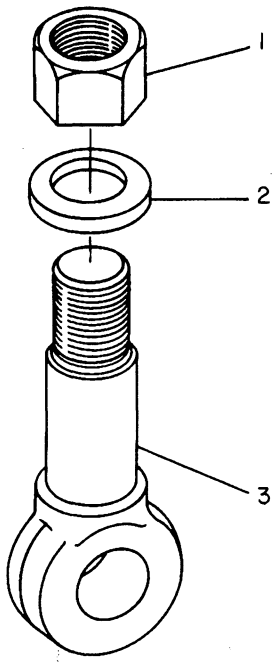

NOTE	REF NO	PART NUMBER	QTY	PART NAME
	1	1B7413	2	NUT-FULL
	2	3S6162	2	WASHER-HARD
	3	6S9666	2	BOLT-EYE

B-163676 EP

6069 **5G0269 MOUNTING GP-TRUNNION**
Type 1. Bulldozer S/N 2YH1-Up, 4GH1-Up
Part Of 6Y2824, 6Y2825 Bulldozer Ars
An Attachment

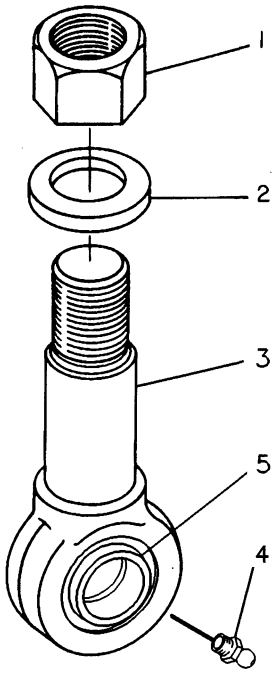

NOTE	REF NO	PART NUMBER	QTY	PART NAME
C	1	9X2521	2	NUT-FULL
C	2	7X0601	2	WASHER-HARD
C	3	8E4025	2	BOLT-EYE
C	4	3B8489	2	FITTING-GREASE
C	5	9M1328	2	BEARING

C-CHANGE FROM PREVIOUS TYPE

R-495662 EP

6069

5G0269 MOUNTING GP-TRUNNION
Type 2. Bulldozer S/N 2YH1-Up, 4GH1-Up
Part Of 6Y2824, 6Y2825 Bulldozer Ars
An Attachment

PAGE

1 7J9920 CYLINDER GP-RIPPER..... 141

1 6S3559 LINES GP-RIPPER..... 149

1 8J3334 RIPPER GP..... 163

1 8J3294 MOUNTING GP-RIPPER..... 163

1 2P3817 FILM-RIPPER

1 8T7516 PLATE-SERIAL NUMBER

2 7B3028 SCREW-DRIVE

104456 P

9J9005 RIPPER AR
Ripper S/N 84U1-Up
An Attachment

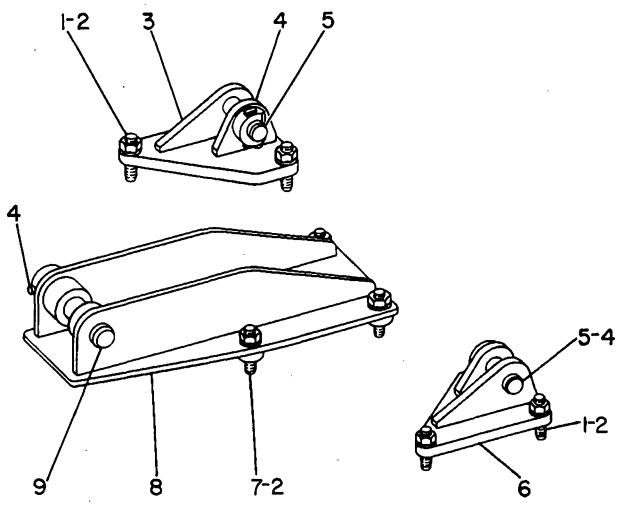

NOTE	REF NO	PART NUMBER	QTY	PART NAME
	1	5D3118	6	STUD-TAPERLOCK
	2	6V8190	10	NUT
		7X0529	10	WASHER-HARD
	3	8J3281	1	PLATE AS-RH
	4	1J6748	3	PIN
		3B4627	3	COTTER (PIN)
	5	8J3285	2	PIN
	6	8J3282	1	PLATE AS-LH
	7	9M5854	4	STUD-TAPERLOCK
	8	8J3286	1	PLATE AS
	9	4F2042	1	PIN

B-496012 EP

6324 **8J3294 MOUNTING GP-RIPPER**
Ripper S/N 84U1-Up
Part Of 9J9005 Ripper Ar
An Attachment

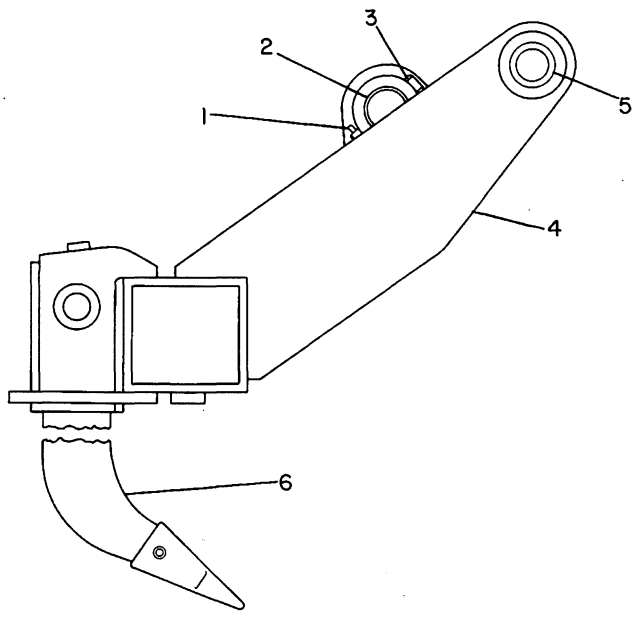

NOTE	REF NO	PART NUMBER	QTY	PART NAME
	1	3B4627	1	COTTER
	2	8J3326	1	PIN
	3	1J6748	1	PIN
	4	8J3329	1	CARRIAGE AS
	5	8J3328	2	BEARING-SLEEVE
Y	6	8J5313	3	TOOTH GP

Y-SEPARATE ILLUSTRATION

B-118066 EP

6312 **8J3334 RIPPER GP**
Ripper S/N 84U1-Up
8J5313-Page 164
Part Of 9J9005 Ripper Ar. An Attachment

IMPLEMENTS

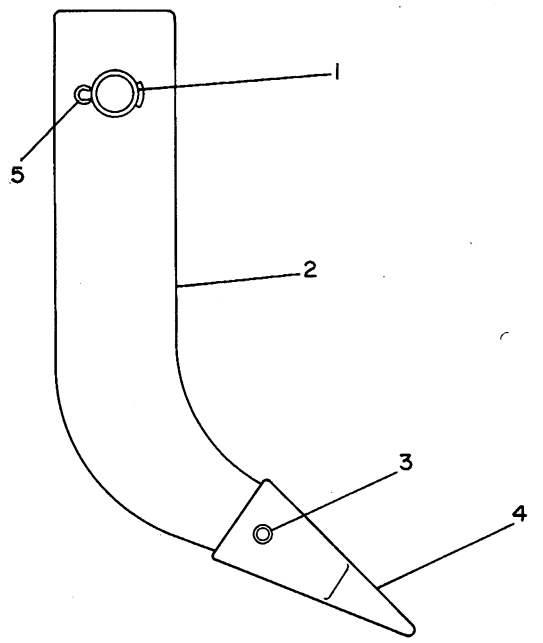

NOTE	REF NO	PART NUMBER	QTY	PART NAME
C	1	6B5464	1	PIN
	2	8J5299	1	SHANK-RIPPER
	3	9W7112	1	PIN-G.E.T.
		4T0001	1	RETAINER
	4	1U3201	1	TIP-SHORT
C	5	3B4632	2	COTTER

C-CHANGE FROM PREVIOUS TYPE

B-494940 EP

6822

8J5313 TOOTH GP
Ripper S/N 84U1-Up-Part Of 8J3334 Ripper
Also An Attachment
Note: When Used With 9J9005 Ripper To Convert To A 4 Or 5 Tip Ripper

PAGE

1 5G2636 CONTROL GP-TOWING WINCH..... 168

1 7G9470 DRIVE GP-WINCH..... 171

1 7G9423 MOUNTING GP-WINCH..... 167

1 5G3774 PUMP & LINES GP..... 172

1 6Y2055 WINCH AR-TOWING..... 165

451595 P

6Y2218 WINCH AR-OPEN ROPS
Winch S/N 9FA1-Up
Replaced By 6Y5351-Page 165.01
An Attachment

			PAGE
1	5G4331	CONTROL GP-TOWING WINCH	169
1	7G9470	DRIVE GP-WINCH	171
1	7G9423	MOUNTING GP-WINCH	167
1	5G3774	PUMP & LINES GP	172
1	6Y2055	WINCH AR-TOWING	165

451601 P

6Y2465 WINCH AR-WITH CAB
Winch S/N 9FA1-Up
Replaced By 6Y5350-Page 165.01
An Attachment

			PAGE
1	6Y1467	CASE & COVERS GP	174
1	6Y2048	CONTROL GP-WINCH	170
1	7G9447	COVERS GP-SHIPPING	177
1	6Y1906	GEAR & CLUTCH GP	178
1	6Y2111	LINES GP-WINCH	182
1	6V0527	PLATE-SERIAL NO.	
4	4B4158	SCREW-DRIVE	

451576 P

6Y2055 WINCH AR-TOWING
Winch S/N 9FA1-Up
Part Of 6Y2218, 6Y2465, 6Y5350, 6Y5351 Winch Ars
An Attachment

		PAGE
1	5G4331 CONTROL GP-TOWING WINCH	169
1	7G9470 DRIVE GP-WINCH	171
1	8Y2410 LINES & PUMP GP-WINCH	172.02
1	7G9423 MOUNTING GP-WINCH	167
1	6Y2055 WINCH AR-TOWING	165

475954 P

6Y5350 WINCH AR-WITH CAB
Type 1-Winch S/N 9FA1-Up
An Attachment

		PAGE
1	5G2636 CONTROL GP-TOWING WINCH	168
1	7G9470 DRIVE GP-WINCH	171
1	8Y2410 LINES & PUMP GP-WINCH	172.02
1	7G9423 MOUNTING GP-WINCH	167
1	6Y2055 WINCH AR-TOWING	165

475968 P

6Y5351 WINCH AR-OPEN ROPS
Winch S/N 9FA1-Up
An Attachment

			PAGE
1	5G2636	CONTROL GP-TOWING WINCH	168
1	7G9470	DRIVE GP-WINCH	171
1	8Y2410	LINES & PUMP GP-WINCH	172.02
1	7G9423	MOUNTING GP-WINCH	167
1	6Y2055	WINCH AR-TOWING	165
1	8Y6570	GUARD GP-BRUSH	165.02

529868 P

6Y5350 WINCH AR-WITH CAB
Type 2-Winch S/N 9FA1-Up
An Attachment

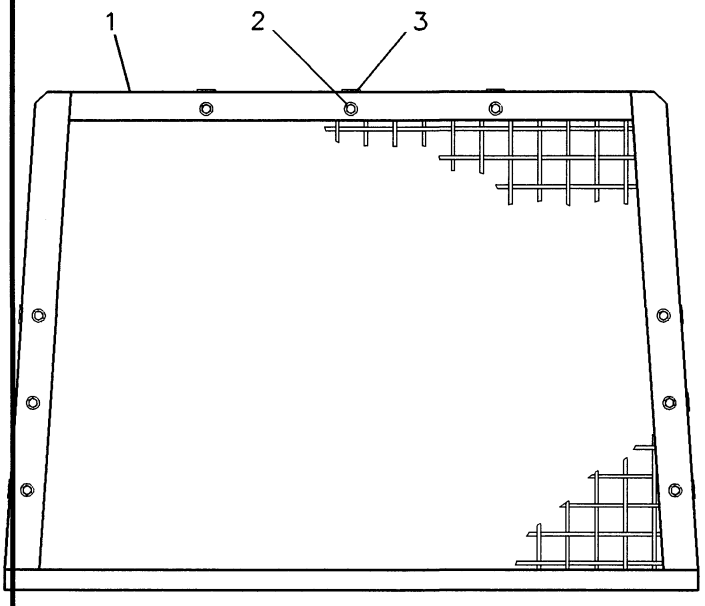

NOTE	REF NO	PART NUMBER	QTY	PART NAME
	1	8Y6600	1	GUARD AS
	2	4L6454	9	BOLT
		5P1075	9	WASHER-HARD
	3	8P2812	9	PLATE

F-516321 EP

7158

8Y6570 GUARD GP-BRUSH
Winch S/N 9FA1-Up
Part Of 6Y5350 Winch Ar
An Attachment

			PAGE
1	6Y1959	CONVERSION GP-WINCH.....	184
1	5G3938	CONTROL GP-TOWING WINCH.....	186
5	OS1619	BOLT	
1	3T998O	COVER AS	

451779 P

6Y2175 CONVERSION AR-WINCH
With Cab--Directional
An Attachment

			PAGE
1	5G3938	CONTROL GP-TOWING WINCH.....	186
1	6Y1959	CONVERSION GP-WINCH.....	184
5	OS1619	BOLT	
2	1A5183	BOLT	
1	3T998O	COVER AS	
1	5G5691	PLATE AS	

451789 P

6Y2176 CONVERSION AR-WINCH
Open ROPS--Directional
An Attachment

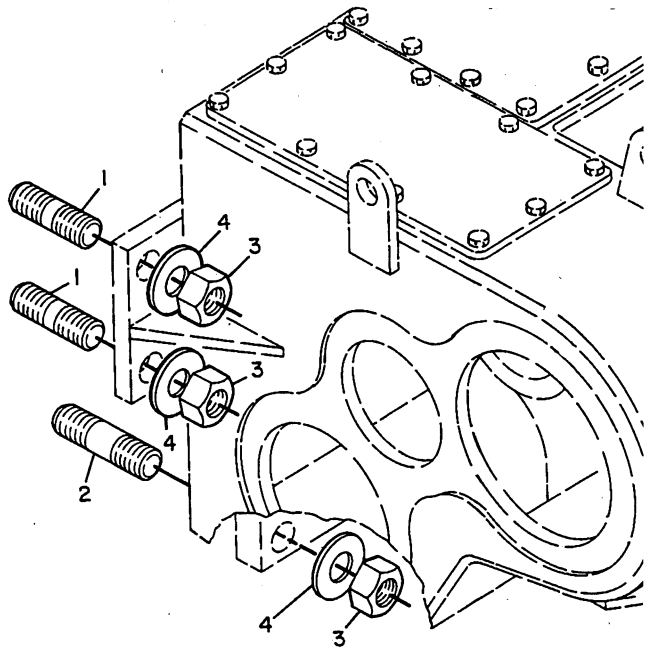

NOTE	REF NO	PART NUMBER	QTY	PART NAME
	1	2S3390	4	STUD-TAPERLOCK
	2	5D3118	2	STUD-TAPERLOCK
	3	1B4333	6	NUT
	4	5P8250	6	WASHER

B-304139 EP

5163

7G9423 MOUNTING GP-WINCH

Winch S/N 9FA1-Up

Part Of 6Y2218, 6Y2465, 6Y5350, 6Y5351 Winch Ars

An Attachment

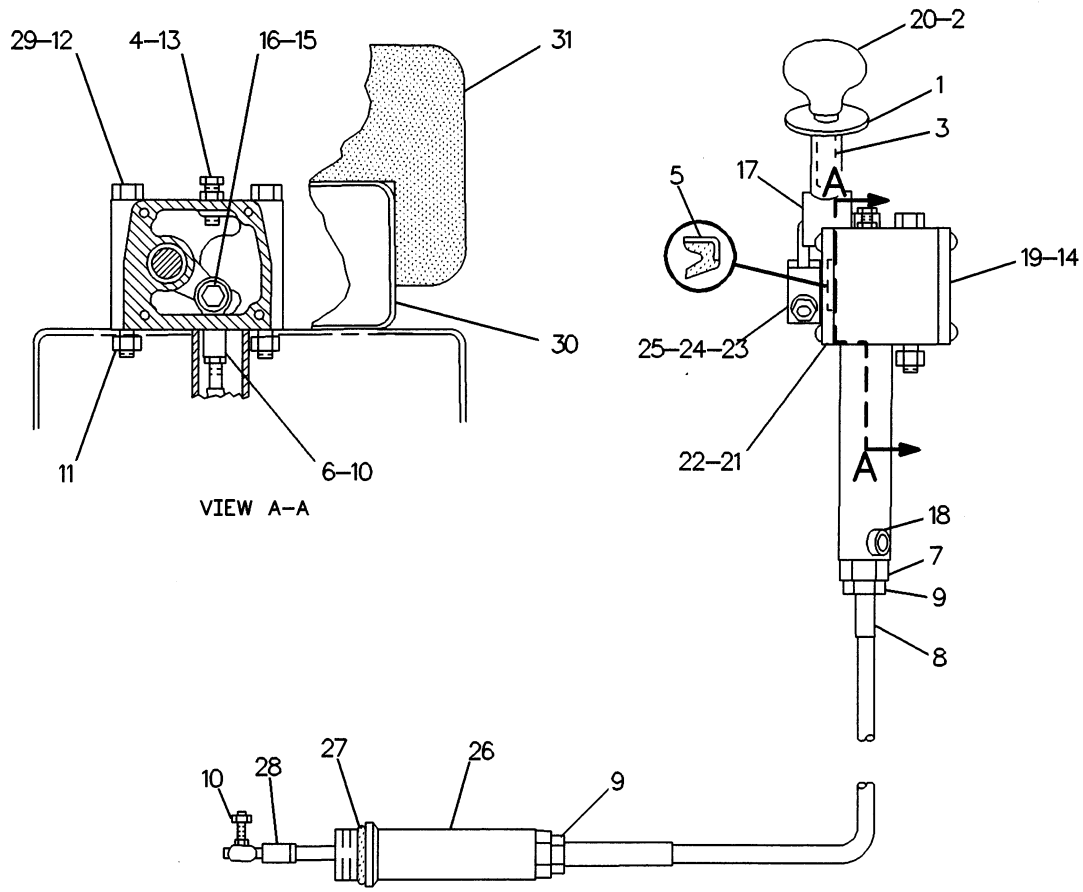

NOTE	REF NO	PART NUMBER	QTY	PART NAME	NOTE	REF NO	PART NUMBER	QTY	PART NAME
	1	5G4312	1	LOCK AS		27	7M8485	1	SEAL-O-RING
	2	6H7127	1	LUG		28	8S7048	1	ROD END-BEARING
	3	6J1948	1	SPRING		29	8T4896	2	WASHER-HARD
	4	1B4427	1	NUT-JAM		30	8Y5109	1	PLATE
	5	6V1604	1	SEAL-LIP TYPE		31	9C4136	1	CUSHION AS
	6	6L7751	1	ROD END-BEARING					
	7	5G3832	1	NUT					
	8	9P9422	1	CABLE AS					
	9	9S1354	2	NUT					
	10	6F0612	2	NUT-JAM					
	11	9F2978	1	NUT-WELD					
	12	8T8915	2	BOLT					
	13	1H3337	1	BOLT					
	14	5G3929	1	HOUSING AS					
	15	8T4205	1	WASHER-HARD					
	16	4M5281	1	BOLT					
	17	5G3837	1	LEVER AS					
	18	5L4719	1	SCREW-SET					
	19	5G3836	1	COVER					
	20	0L1170	1	HANDLE-LEVER					
	21	5G3833	1	COVER AS					
	22	1S7443	8	SCREW-MACHINE					
	23	5G3168	1	LEVER AS					
	24	9B7237	1	BOLT					
	25	6V8801	1	NUT					
	26	5G2648	1	HOUSING					

F-492241 EP

5161

5G2636 CONTROL GP-TOWING WINCH
Open ROPS
S/N 9FA1-Up
Part Of 6Y2218, 6Y5351, 6Y5350 Winch Ars
An Attachment

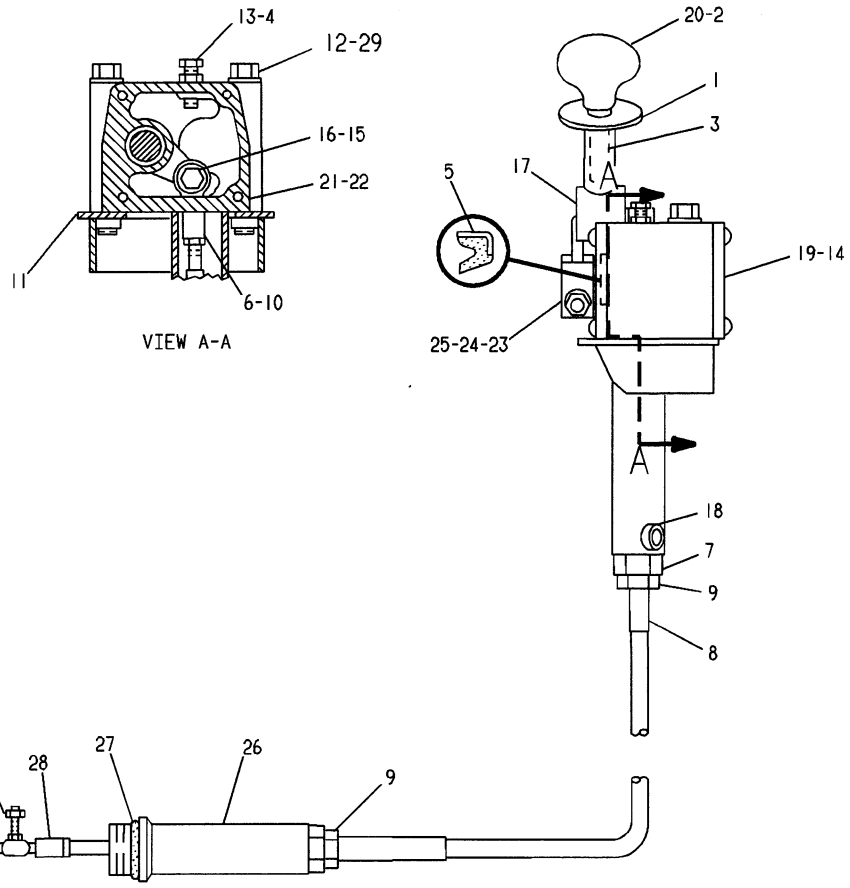

NOTE	REF NO	PART NUMBER	QTY	PART NAME	NOTE	REF NO	PART NUMBER	QTY	PART NAME
	1	5G4312	1	LOCK AS		27	7M8485	1	SEAL-O-RING
	2	6H7127	1	LUG		28	8S7048	1	ROD END-BEARING
	3	6J1948	1	SPRING		29	8T4896	2	WASHER-HARD
	4	1B4427	1	NUT-JAM					
	5	6V1604	1	SEAL-LIP TYPE					
	6	6L7751	1	ROD END-BEARING					
	7	5G3832	1	NUT					
	8	9P9422	1	CABLE AS					
	9	9S1354	2	NUT					
	10	6F0612	2	NUT-JAM					
	11	5G3840	2	MOUNTING AS					
	12	8T8915	2	BOLT					
	13	1H3337	1	BOLT					
	14	5G3929	1	HOUSING AS					
C	15	5P4115	1	WASHER					
	16	0S1615	1	BOLT					
	17	5G3837	1	LEVER AS					
	18	5L4719	1	SCREW-SET					
	19	5G3836	1	COVER					
	20	0L1170	1	HANDLE-LEVER					
	21	5G3833	1	COVER AS					
	22	1S7443	8	SCREW-MACHINE					
	23	5G3168	1	LEVER AS					
	24	9B7237	1	BOLT					
	25	6V8801	1	NUT					
	26	5G2648	1	HOUSING					

C-CHANGE FROM PREVIOUS TYPE

A-494989 EP

5161

5G4331 CONTROL GP-TOWING WINCH
Cab Equipped
Winch S/N 9FA1-Up
Part Of 6Y2465, 6Y5350 Winch Ars
An Attachment

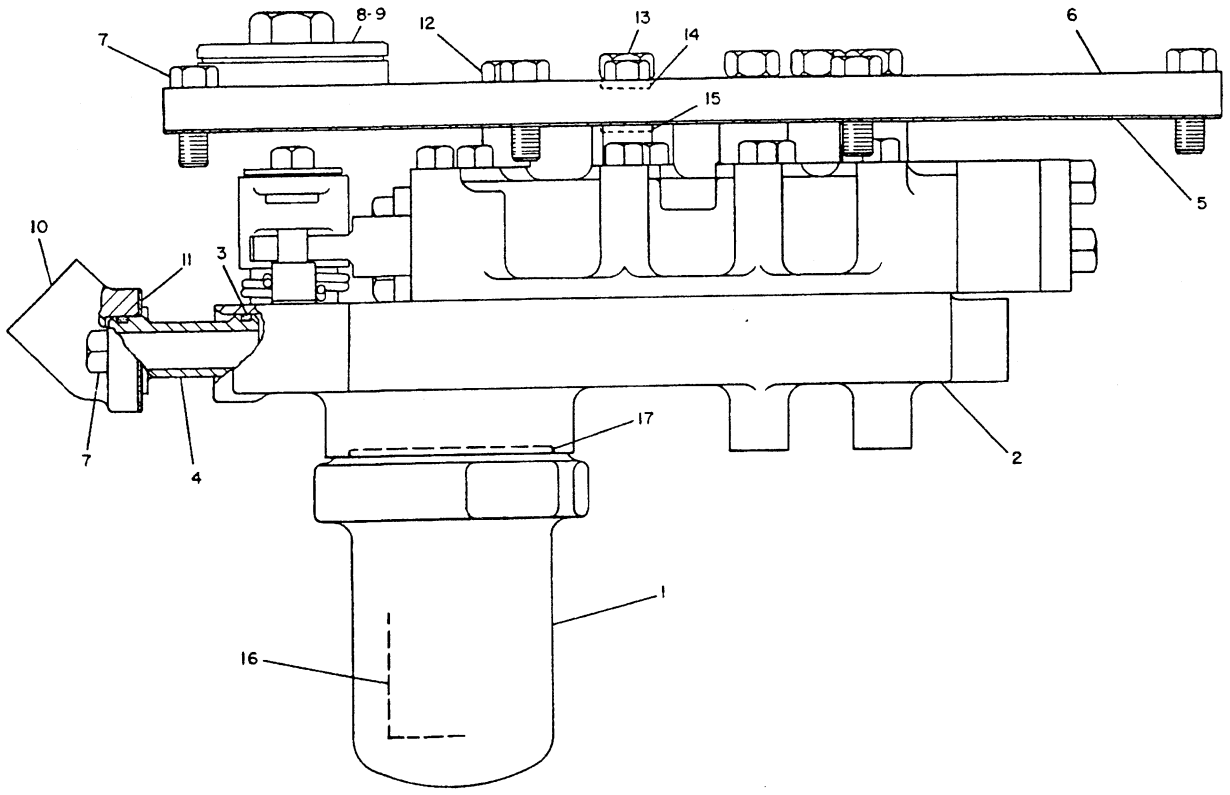

NOTE	REF NO	PART NUMBER	QTY	PART NAME	NOTE	REF NO	PART NUMBER	QTY	PART NAME
	1	7G6805	1	HOUSING-FILTER					
Y	2	7G6861	1	VALVE GP					
	3	8M4438	2	SEAL-O-RING					
	4	9P7919	1	SLEEVE					
	5	6Y1441	1	GASKET					
	6	6Y1439	1	COVER AS					
	7	0S1594	12	BOLT					
	8	5H7110	1	PLUG-DRAIN					
	9	0L1124	1	GASKET-PLUG					
	10	9P5580	1	ELBOW					
	11	9P7918	1	GASKET					
	12	1F5842	3	BOLT					
	13	3K8460	4	PLUG					
	14	1J9671	4	SEAL-O-RING					
	15	8F9206	4	SEAL-O-RING					
	16	7T1184	1	SCREEN AS-FILTER					
		5F1678	1	SEAL-O-RING					
	17	304606	1	SEAL-O-RING					

Y-SEPARATE ILLUSTRATION

B-451623 EP

IMPLEMENTS

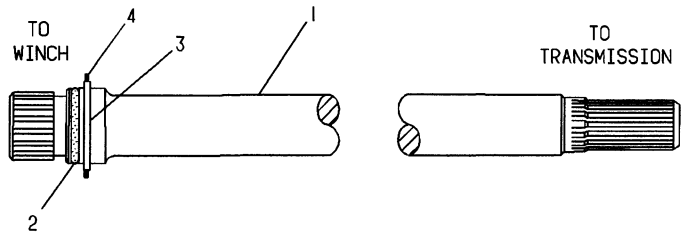

NOTE	REF NO	PART NUMBER	QTY	PART NAME
	1	7G9121	1	SHAFT
	2	2S4663	1	SEAL-O-RING
	3	8M3561	1	PIN
	4	1H8397	1	RING-RETAINING

A-304141 EP

5163 **7G9470 DRIVE GP-WINCH**

Winch S/N 9FA1-Up
Part Of 6Y2218, 6Y2465, 6Y5350, 6Y5351 Winch Ars
An Attachment

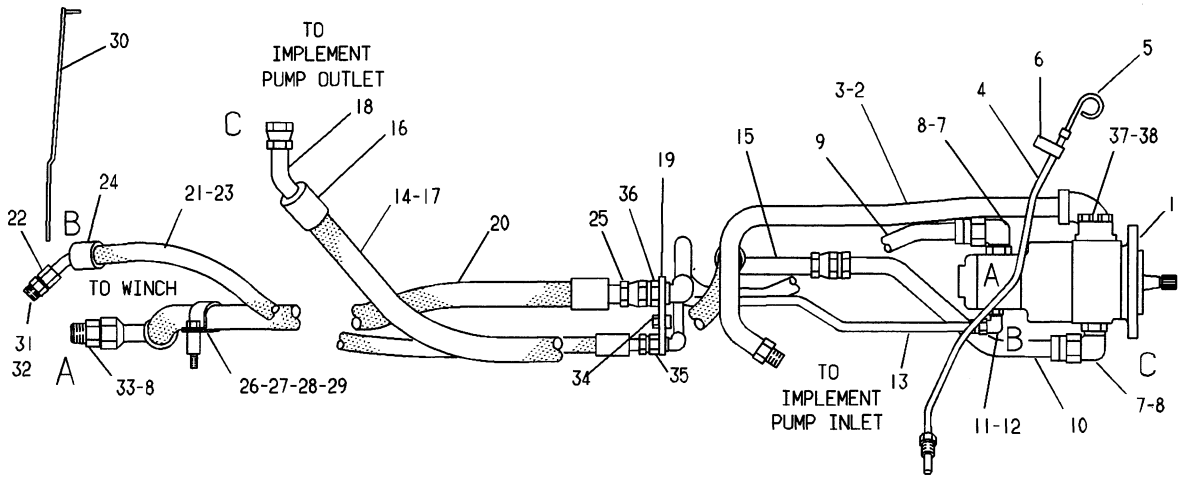

NOTE	REF NO	PART NUMBER	QTY	PART NAME	NOTE	REF NO	PART NUMBER	QTY	PART NAME
Y	1	1U0414	1	PUMP GP-GEAR		27	7S8921	1	CLIP (TAB)
	2	5G4336	1	TUBE AS		28	1A5822	1	BOLT
	3	4J0522	1	SEAL		29	2J1020	1	SPACER
	4	5G4333	1	TUBE AS		30	5G4315	1	PLATE
	5	5G4337	1	GAUGE AS-OIL LEVEL		31	9M4584	1	CONNECTOR-FLARED
	6	7H7055	1	CLIP		32	2M9780	1	SEAL-O-RING
	7	307951	2	ELBOW-FLARED		33	7D5318	1	CONNECTOR-FLARED
	8	7M8485	3	SEAL-O-RING		34	0S1571	2	BOLT
	9	5G3754	1	TUBE AS		35	7F2050	1	LOCKNUT
	10	5G4335	1	TUBE AS		36	2P1286	1	LOCKNUT-BULKHEAD
	11	307948	1	ELBOW		37	0T0319	4	BOLT
	12	3K0360	1	SEAL-O-RING		38	4S9191	4	WASHER
	13	5G4334	1	TUBE AS					
	14	5G4622	1	HOSE AS					
	15	2P1411	1	STEM AS-COLLET					
	16	3S7252	2	SLEEVE					
G	17	8S9355		HOSE (50.79IN)					
	18	2P1409	1	STEM AS					
	19	5G3758	1	PLATE AS					
	20	5G3757	1	HOSE AS					
	21	5G4332	1	HOSE AS					
	22	9S9725	1	COUPLING AS					
E	23	9S0671		HOSE 125CM(49.2IN)					
	24	3S8606	2	SLEEVE					
	25	8S4055	1	COUPLING AS					
	26	7S8920	1	CLIP (SLOT)					

E-ORDER BY THE CENTIMETER
G-ORDER BY THE INCH
Y-SEPARATE ILLUSTRATION

A-469403 EP

5179

5G3774 PUMP & LINES GP
Type 1-Winch S/N 9FA1-Up
1U0414-Page 173
Part Of 6Y2218, 6Y2465 Winch Ars
An Attachment

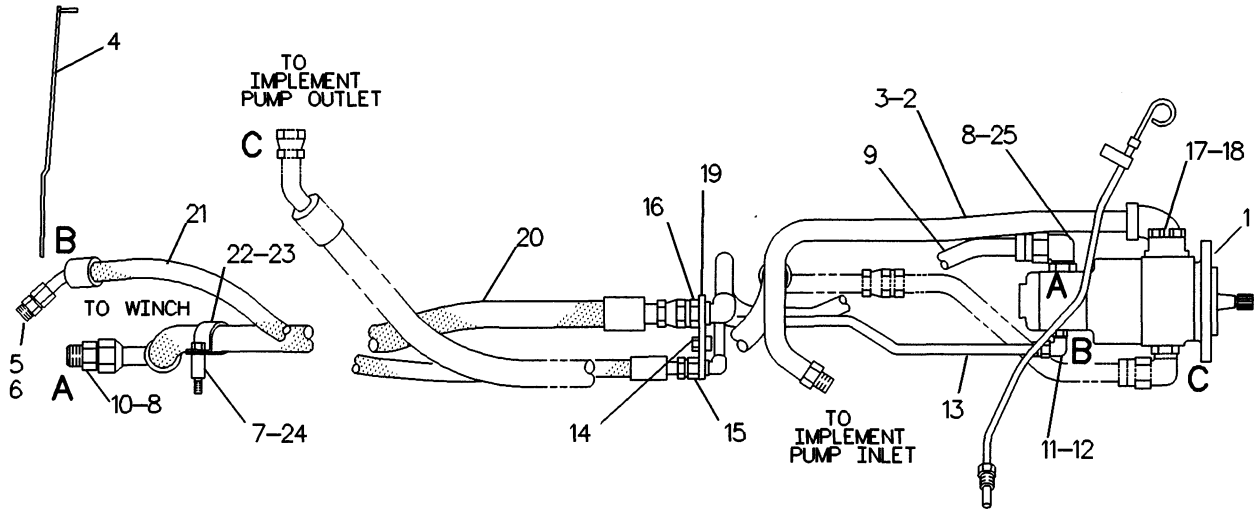

NOTE	REF NO	PART NUMBER	QTY	PART NAME	NOTE	REF NO	PART NUMBER	QTY	PART NAME
Y	1	1U0414	1	PUMP GP-GEAR					
	2	5G4336	1	TUBE AS					
	3	4J0522	1	SEAL					
	4	5G4315	1	PLATE					
	5	9M4584	1	CONNECTOR-FLARED					
	6	2M9780	1	SEAL-O-RING					
	7	2J1020	1	SPACER					
C	8	7M8485	2	SEAL-O-RING					
	9	5G3754	1	TUBE AS					
	10	7D5318	1	CONNECTOR-FLARED					
	11	3O7948	1	ELBOW					
	12	3K0360	1	SEAL-O-RING					
	13	5G4334	1	TUBE AS					
C	14	5S7383	2	BOLT					
	15	7F2050	1	LOCKNUT					
	16	2P1286	1	LOCKNUT-BULKHEAD					
C	17	7X0310	4	BOLT					
C	18	7X0507	4	WASHER-HARD					
	19	5G3758	1	PLATE AS					
	20	5G3757	1	HOSE AS					
I	21	5G4332	1	HOSE AS					
	22	7S8920	1	CLIP (SLOT)					
	23	7S8921	1	CLIP (TAB)					
C	24	8T9389	1	BOLT					
	25	3O7951	1	ELBOW-FLARED					

C-CHANGE FROM PREVIOUS TYPE
I-SEE HOSE FABRICATION GUIDE
Y-SEPARATE ILLUSTRATION

F-519331 EP

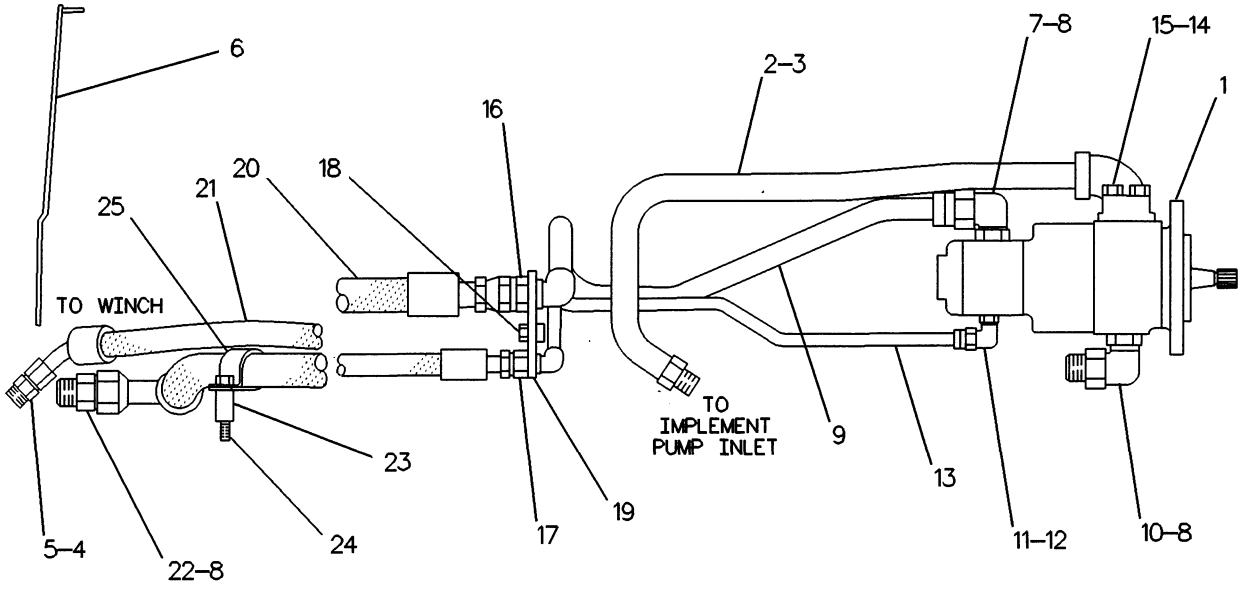

NOTE	REF NO	PART NUMBER	QTY	PART NAME	NOTE	REF NO	PART NUMBER	QTY	PART NAME
Y	1	1U0414	1	PUMP GP-GEAR					
	2	5G4336	1	TUBE AS					
	3	4J0522	1	SEAL					
	4	9M4584	1	CONNECTOR-FLARED					
	5	2M9780	1	SEAL-O-RING					
	6	5G4315	1	PLATE					
	7	3O7951	1	ELBOW-FLARED					
	8	7M8485	3	SEAL-O-RING					
	9	5G3754	1	TUBE AS					
	10	5P3466	1	ELBOW-O-RING					
	11	3O7948	1	ELBOW					
	12	3K0360	1	SEAL-O-RING					
	13	5G4334	1	TUBE AS					
	14	7X0507	4	WASHER-HARD					
	15	7X0310	4	BOLT					
	16	2P1286	1	LOCKNUT-BULKHEAD					
	17	7F2050	1	LOCKNUT					
	18	5S7383	2	BOLT					
	19	5G3758	1	PLATE AS					
	20	5G3757	1	HOSE AS					
I	21	5G4332	1	HOSE AS					
	22	7D5318	1	CONNECTOR-FLARED					
	23	2J1020	1	SPACER					
	24	8T9389	1	BOLT					
	25	7S8920	1	CLIP (SLOT)					
		7S8921	1	CLIP (TAB)					

I-SEE HOSE FABRICATION GUIDE
Y-SEPARATE ILLUSTRATION

F-475939 EP

8Y2410 LINES & PUMP GP
Type 1. Winch S/N 9FA1-Up
1U0414-Page 173
Part Of 6Y5350, 6Y5351 Winch Ars
An Attachment

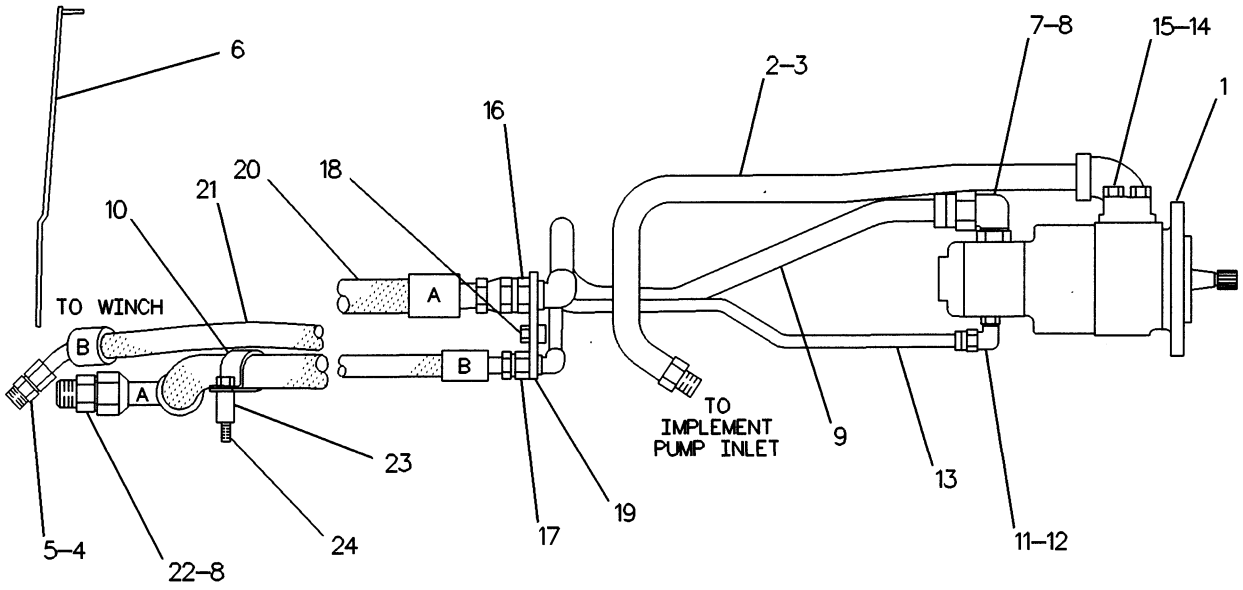

NOTE	REF NO	PART NUMBER	QTY	PART NAME	NOTE	REF NO	PART NUMBER	QTY	PART NAME
CY	1	6E1413	1	PUMP GP-GEAR					
	2	5G4336	1	TUBE AS					
	3	4J0522	1	SEAL					
	4	9M4584	1	CONNECTOR-FLARED					
	5	2M9780	1	SEAL-O-RING					
	6	5G4315	1	PLATE					
	7	3O7951	1	ELBOW-FLARED					
C	8	7M8485	2	SEAL-O-RING					
C	9	8Y6788	1	TUBE AS					
	10	7S8920	1	CLIP (SLOT)					
		7S8921	1	CLIP (TAB)					
	11	3O7948	1	ELBOW					
	12	3K0360	1	SEAL-O-RING					
C	13	8Y6789	1	TUBE AS					
	14	7X0507	4	WASHER-HARD					
	15	7X0310	4	BOLT					
	16	2P1286	1	LOCKNUT-BULKHEAD					
	17	7F2050	1	LOCKNUT					
	18	5S7383	2	BOLT					
	19	5G3758	1	PLATE AS					
	20	5G3757	1	HOSE AS					
I	21	5G4332	1	HOSE AS					
	22	7D5318	1	CONNECTOR-FLARED					
	23	2J1020	1	SPACER					
	24	8T9389	1	BOLT					

C-CHANGE FROM PREVIOUS TYPE
I-SEE HOSE FABRICATION GUIDE
Y-SEPARATE ILLUSTRATION

F-533922 EP

8Y2410 LINES & PUMP GP
Type 2. Winch S/N 9FA1-Up
6E1413-Page 173
Part Of 6Y5350, 6Y5351 Winch Ars
An Attachment

MEMORANDA

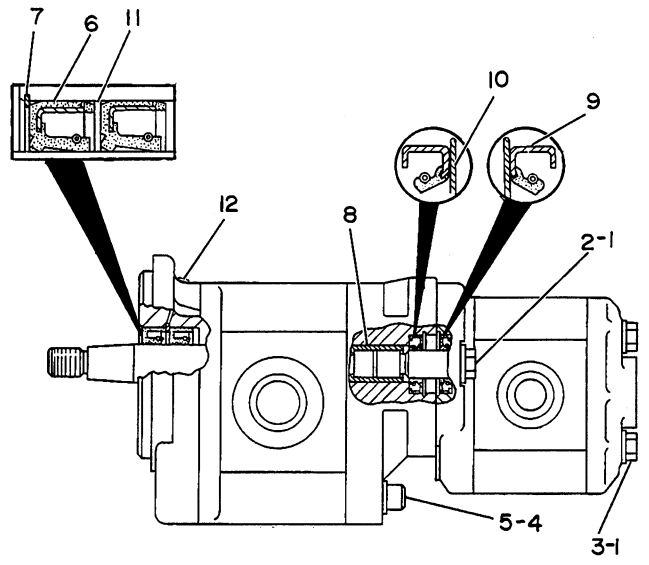

NOTE	REF NO	PART NUMBER	QTY	PART NAME
	1	5M2894	6	WASHER
M	2	6V1820	2	BOLT
M	3	6V1819	4	BOLT
	4	328175	8	WASHER
C	5	3G5071	8	BOLT-SOCKET HEAD
	6	3G5083	2	SEAL-LIP TYPE
C	7	9T0836	1	RING-RETAINING
	8	3G9170	1	COUPLING
	9	7X4773	2	SEAL-LIP TYPE
C	10	9T0835	2	RING-RETAINING
C	11	4T9876	1	SPACER
C	12	3G7242	1	PLUG
				THE FOLLOWING REPAIR KITS ARE AVAILABLE:
		1U0550	1	KIT-SEAL (INCLUDES SEALS, GASKETS & STRIPS)
		1U0551	1	KIT-REAR SECTION
		1U0552	1	KIT-FRONT SECTION

C-CHANGE FROM PREVIOUS TYPE
M-METRIC PART

B-493131 EP

5164 **1U0414 PUMP GP-GEAR**
Winch S/N 9FA1-Up
Part Of 5G3774, 8Y2410 Lines & Pump Gp
An Attachment

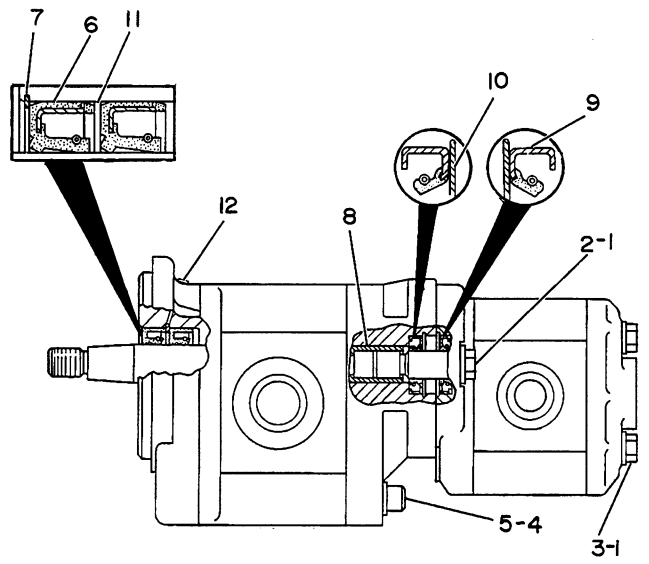

NOTE	REF NO	PART NUMBER	QTY	PART NAME
	1	5M2894	6	WASHER
M	2	6V1820	2	BOLT
M	3	6V1819	4	BOLT
	4	328175	8	WASHER
	5	3B7614	8	BOLT
	6	3G5083	2	SEAL-LIP TYPE
	7	9T0836	1	RING-RETAINING
	8	3G9170	1	COUPLING
	9	7X4773	2	SEAL-LIP TYPE
	10	9T0835	2	RING-RETAINING
	11	4T9876	1	SPACER
	12	3G7242	1	PLUG
				THE FOLLOWING REPAIR KITS ARE AVAILABLE:
		1U0550	1	KIT-SEAL (INCLUDES SEALS, GASKETS & STRIPS)
		1U0551	1	KIT-REAR SECTION

M-METRIC PART

B-517693 EP

5062 **6E1413 PUMP GP-GEAR**
Winch S/N 9FA1-Up
Part Of 8Y2410 Lines & Pump
An Attachment

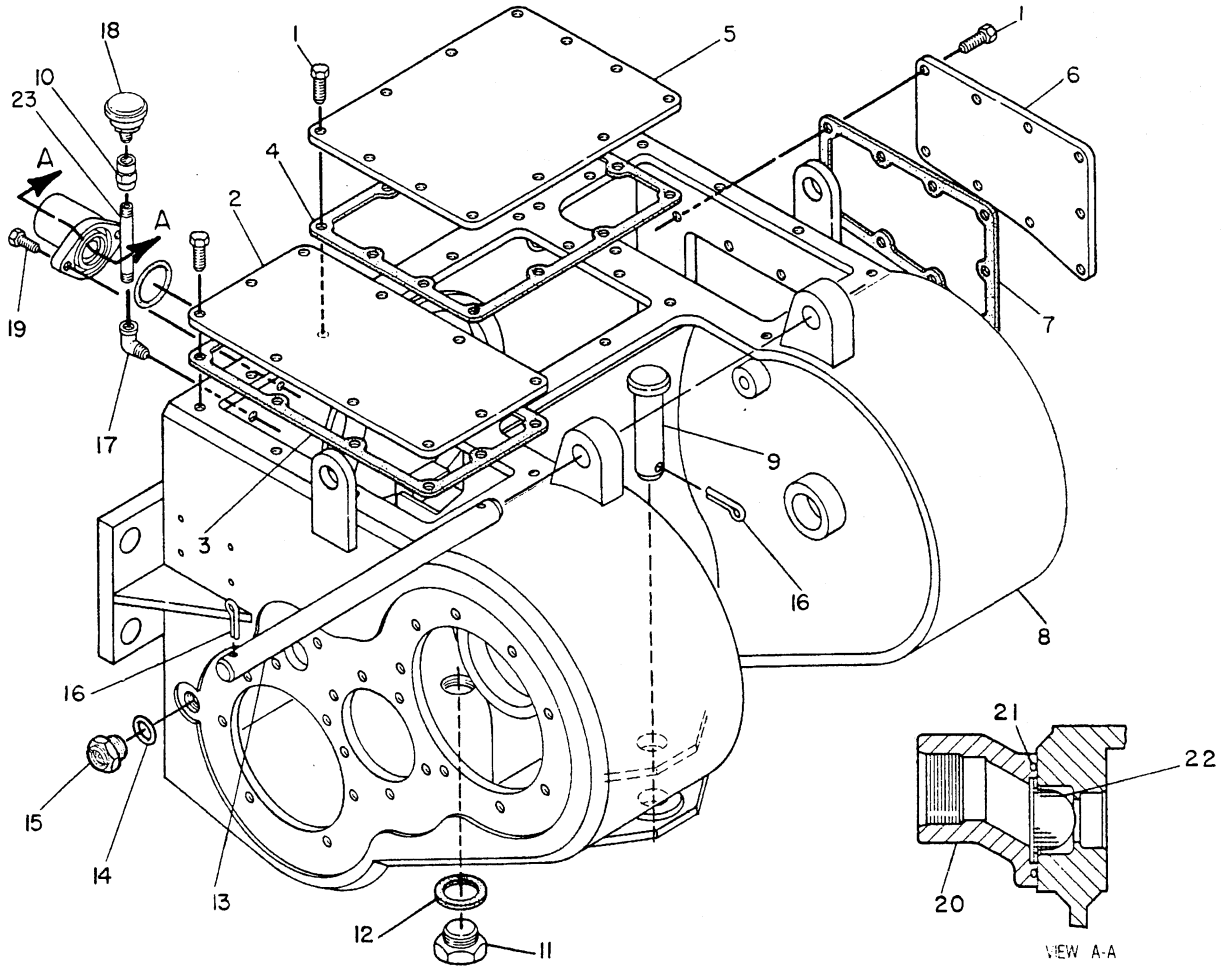

NOTE	REF NO	PART NUMBER	QTY	PART NAME	NOTE	REF NO	PART NUMBER	QTY	PART NAME
	1	OL1351	31	BOLT					
	2	6Y1459	1	COVER					
	3	6Y1441	1	GASKET					
	4	7G7510	1	GASKET					
	5	7G7509	1	COVER					
	6	7G7511	1	COVER					
	7	7G7512	1	GASKET					
	8	6Y1466	1	CASE AS					
		5H9513	1	BUSHING					
	9	3F8345	1	PIN-CABLE SOCKET					
	10	8S7169	1	COUPLING					
	11	2D8390	1	PLUG-MAGNETIC					
	12	6F4868	1	GASKET					
	13	7G8303	1	SHAFT					
	14	7M8485	1	SEAL-O-RING					
	15	9Y9236	1	BODY AS-GAUGE					
	16	3B4639	3	COTTER					
	17	3B6773	1	ELBOW					
	18	9G5127	1	BREATHER					
	19	OS1594	2	BOLT					
	20	7G8307	1	FLANGE					
	21	7D8048	1	SEAL-O-RING					
	22	9P0217	1	SCREEN AS					
	23	1V2750	1	NIPPLE-PIPE					

B-495419 EP

5163

6Y1467 CASE & COVERS GP
Winch S/N 9FA1-Up
Part Of 6Y2055 Winch Ar
An Attachment

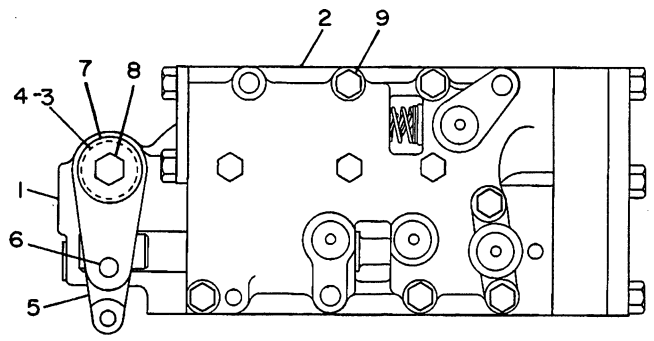

NOTE	REF NO	PART NUMBER	QTY	PART NAME
Y	1	7G6800	1	MANIFOLD GP
Y	2	7G6799	1	VALVE GP-SELECTOR & PRESS CONT
	3	2V8282	1	SPRING
	4	7G6814	1	SLEEVE
	5	7G6807	1	LEVER
	6	7G6816	1	PIN
	7	6N8863	1	WASHER
	8	0L2070	1	BOLT
	9	1D4538	9	BOLT

Y-SEPARATE ILLUSTRATION

B-304130 EP

5163 **7G6861 VALVE GP**

Winch S/N 9FA1-Up

7G6800-Page 175, 7G6799-Page 176

Part Of 6Y2048 Control-Winch. An Attachment

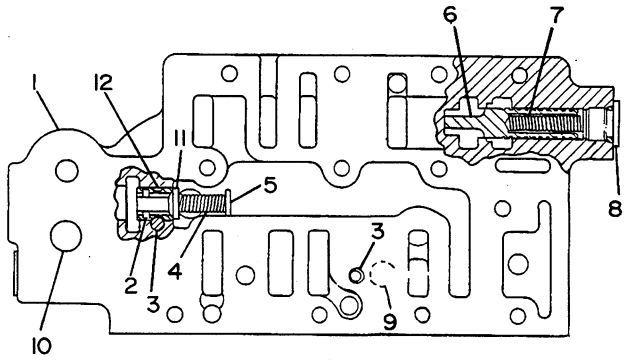

NOTE	REF NO	PART NUMBER	QTY	PART NAME
	1	7G6860	1	MANIFOLD
C	2	5B9504	1	PIN
	3	3F7514	2	PIN
C	4	3N6233	1	SPRING
C	5	6T7034	1	PIN-VALVE SPRING
	6	7G6812	1	SPOOL-BYPASS
	7	5S9606	1	SPRING
	8	9S8004	2	PLUG-O-RING
		3J1907	2	SEAL-O-RING
	9	4B9783	1	BALL
	10	7G6816	1	PIN
	11	7G6809	1	VALVE-BYPASS
	12	7G6810	1	COLLAR

C-CHANGE FROM PREVIOUS TYPE

B-335675 EP

5264 **7G6800 MANIFOLD GP**

Filter Base & Pressure Control

Winch S/N 9FA1-Up

Part Of 7G6861 Valve. An Attachment

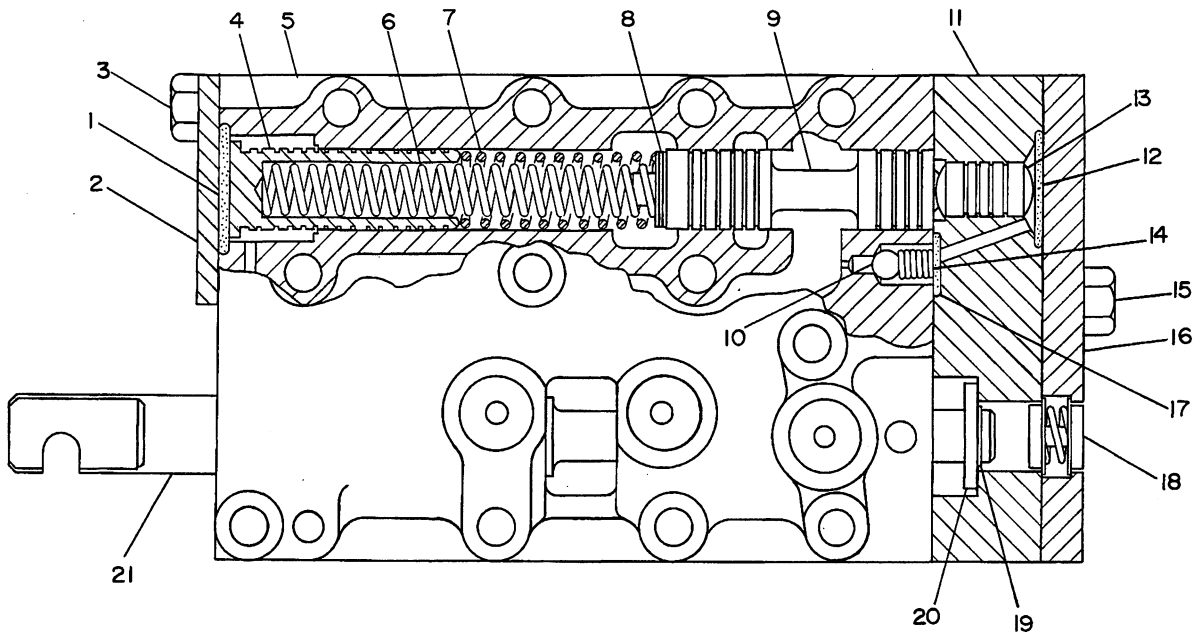

NOTE	REF NO	PART NUMBER	QTY	PART NAME	NOTE	REF NO	PART NUMBER	QTY	PART NAME
	1	8M4431	1	SEAL					
	2	1S7106	1	COVER					
	3	0S1617	2	BOLT					
	4	7G6813	1	PISTON-LOAD					
	5	7G6802	1	BODY-SELECTOR VALVE					
	6	5J9605	1	SPRING (INNER)					
	7	4J4790	1	SPRING (OUTER)					
BC	8	9G3733	2	SHIM (.25MM THK)					
BC		9G3732	2	SHIM (.80MM THK)					
C	9	6T6901	1	SPOOL-RELIEF					
	10	4B9880	1	BALL					
	11	7G6804	1	BODY-VALVE					
	12	4D9986	1	SEAL-O-RING					
	13	5M2504	1	SLUG					
	14	4M2381	1	SPRING					
	15	2B2694	3	BOLT					
	16	7G3820	1	PLATE					
	17	8M5127	1	SEAL-O-RING					
	18	9M6193	1	SPRING AS					
	19	3K9042	1	RING-RETAINING					
	20	5H4276	1	SPACER					
	21	7G6811	1	SPOOL-SELECTOR					

B-USE AS REQUIRED
C-CHANGE FROM PREVIOUS TYPE

B-309019 EP

3152 **7G6799 VALVE GP-SELECTOR & PRESSURE CONTROL**
Winch S/N 9FA1-Up
Part Of 7G6861 Valve
An Attachment

2	0S0509	BOLT
1	3T9885	COVER-SHIPPING
2	9S4181	PLUG-O-RING
1	9S8006	PLUG-O-RING
1	2M9780	SEAL
2	7M8485	SEAL

304110 P

7315 **7G9447 COVERS GP-SHIPPING**

Winch S/N 9FA1-Up
Part Of 6Y2055 Winch Ar
An Attachment

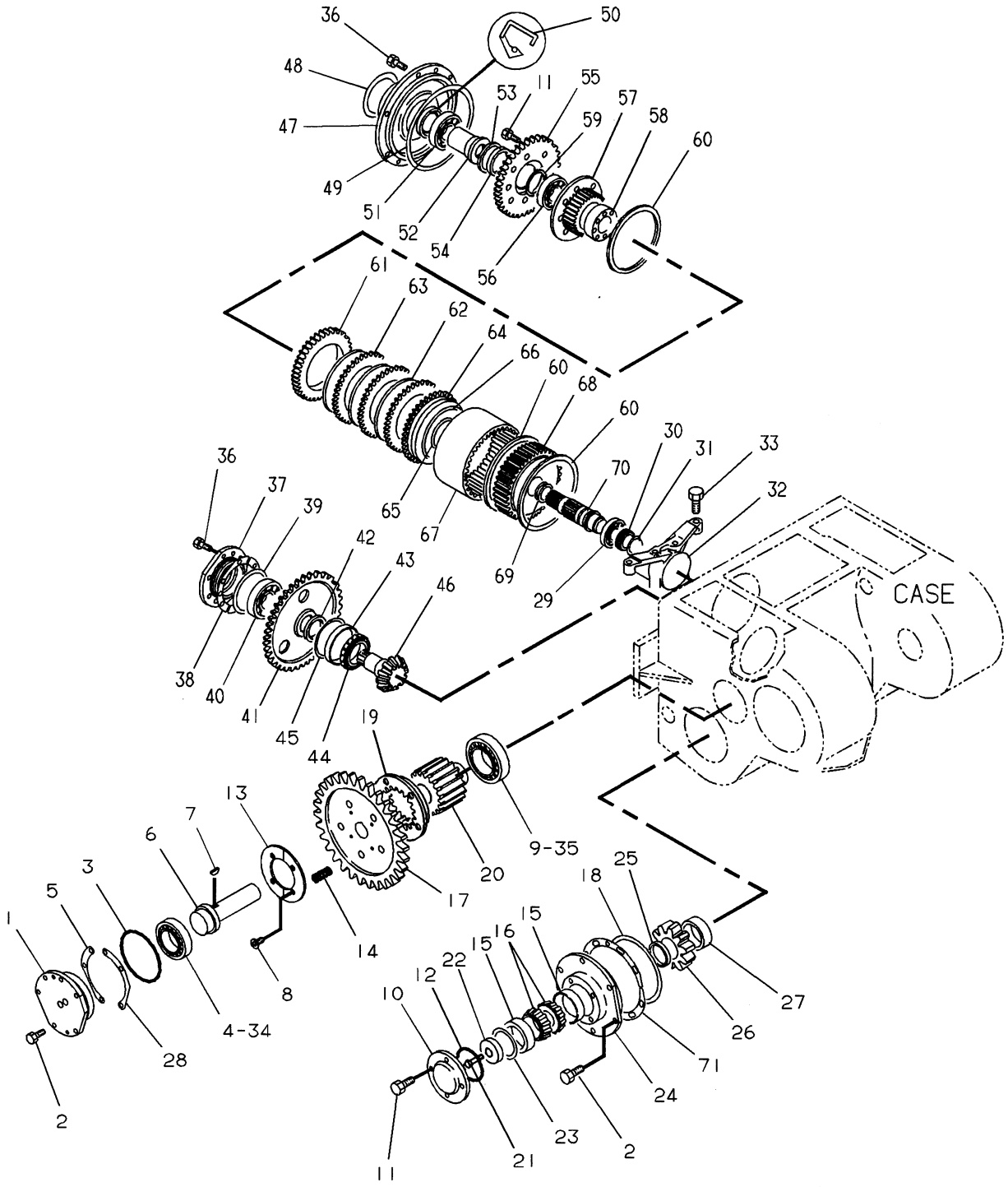

F-539473 EP

5167

6Y1906 GEAR & CLUTCH GP-PART 1 OF 2
Winch S/N 9FA1-Up
Part Of 6Y2055 Winch Ar
An Attachment

IMPLEMENTS

NOTE	REF NO	PART NUMBER	QTY	PART NAME
	1	7T9939	1	CAGE
	2	1A2029	12	BOLT
	3	5H6734	1	SEAL-O-RING
	4	2J6362	1	BEARING-RACE & ROLLER
	5	7T9997	1	SHIM-PACK (11 SHIMS)
	6	7T9938	1	SHAFT
	7	1B8709	1	KEY-WOODRUFF
	8	OS1614	4	BOLT
	9	5K8591	1	BEARING-OUTER
	10	8E1051	1	CAGE
	11	OL1351	12	BOLT
	12	9M7539	1	SEAL
	13	7T9996	2	RETAINER
	14	6YO755	5	SPRING
	15	6V2200	2	CUP-ROLLER BEARING
	16	37501	2	CONE-BEARING
	17	9WO077	1	GEAR (29 TEETH)
	18	8F8733	1	SEAL-O-RING
	19	6Y2689	1	COUPLER
	20	9WO075	1	GEAR (10 TEETH)
	21	8S9092	1	BOLT
	22	8E1050	1	PLATE
	23	9W4193	1	SHIM-PACK (9 SHIMS)
	24	7T9940	1	CAGE
	25	7T9943	1	SPACER
	26	7T9945	1	GEAR (10 TEETH)
	27	7T9944	1	SPACER
	28	7T9998	1	SHIM-PACK (11 SHIMS)
	29	6VO958	1	BALL BEARING
	30	5SO969	1	CARRIER-RING
	31	2K5957	1	RING-SEALING
	32	7G9467	1	CAGE
	33	OTO573	2	BOLT
	34	2J6361	1	RACE-BEARING
	35	3B3969	1	RACE-BEARING-INNER
	36	OS1594	12	BOLT
	37	7G6540	1	CAGE-BEARING
B	38	7G6235	1	SHIM PACK (6 SHIMS)
	39	8H7521	1	SEAL-O-RING
	40	3L1425	1	BALL BEARING
	41	7G6236	1	GEAR (47 TEETH)
	42	7G6267	1	SPACER
	43	2D6420	1	RACE-ROLLER BEARING
	44	7M1154	1	BEARING
	45	1H8142	1	RING-RETAINING
	46	8E1441	1	PINION-BEVEL (13 TEETH)
	47	7G6227	1	CAGE
	48	7M9909	1	SEAL-O-RING
	49	3JO634	1	SEAL-O-RING
	50	9H2258	1	SEAL-LIP TYPE
	51	7F2742	1	BALL BEARING
	52	7G6229	1	COUPLING
	53	3S6875	1	RING-RETAINING
	54	7G6226	1	SPACER
	55	7G4978	1	GEAR (28 TEETH)
	56	8H9789	1	BALL BEARING
	57	7G4975	1	HUB
	58	8E6904	1	RETAINER
B	59	91133	4	SHIM
	60	2K5965	3	RING-RETAINING
	61	7G4976	1	PLATE
	62	6T8687	3	DISC-FRICTION
	63	9P6903	3	PLATE
	64	7G4973	1	PISTON
	65	2H6184	1	SEAL-O-RING
	66	5F3106	1	SEAL-O-RING
	67	8E1071	1	HOUSING
	68	8E6903	1	MANIFOLD
	69	1S9799	2	SEAL-O-RING
	70	7G6233	1	SHAFT AS
B	71	7G6248	3	SHIM PACK (9 SHIMS)

B-USE AS REQUIRED

539474 EP

5167 **6Y1906 GEAR & CLUTCH GP-PART 1 OF 2**

Winch S/N 9FA1-Up

Part Of 6Y2055 Winch Ar

An Attachment

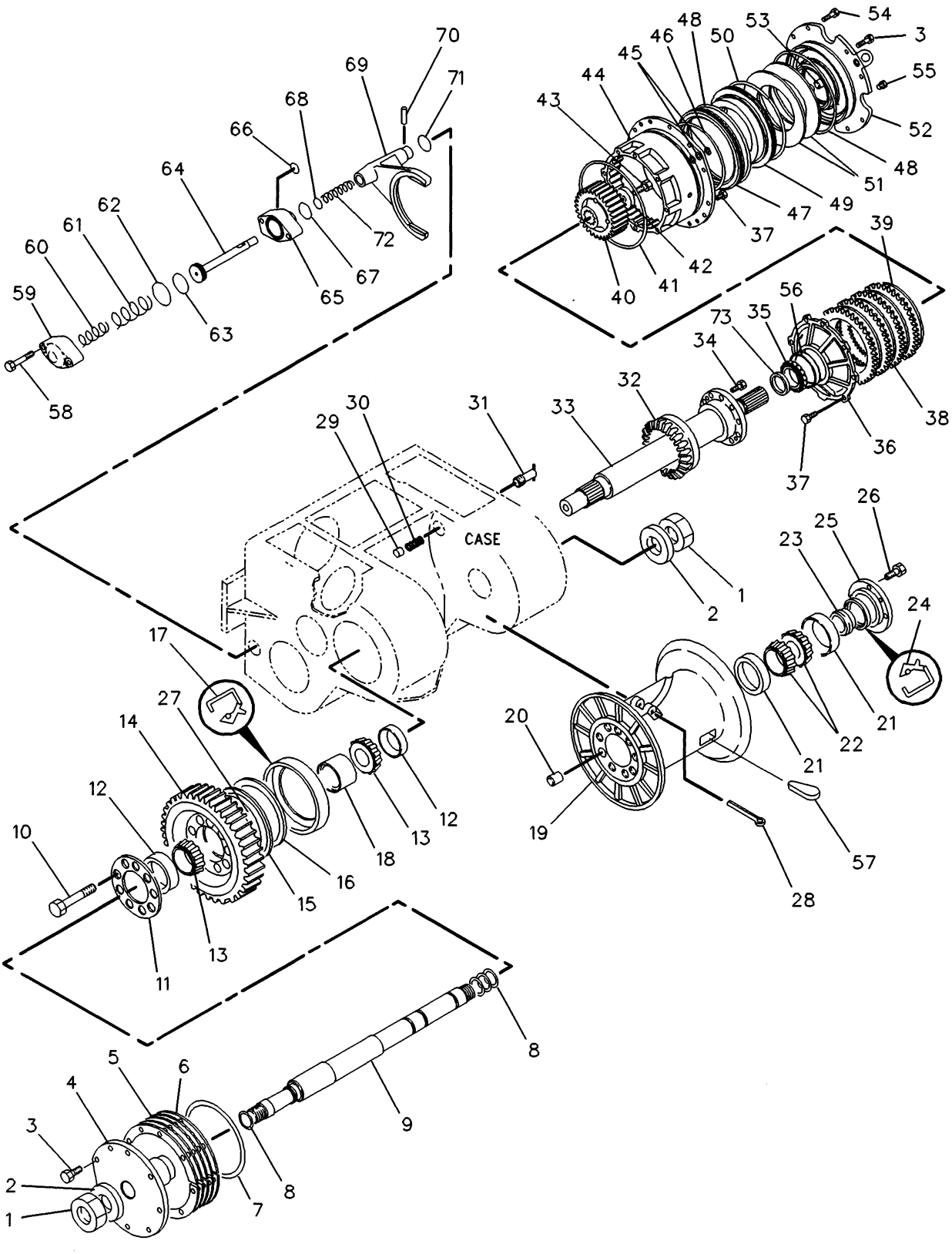

5167 **6Y1906 GEAR & CLUTCH GP-PART 2 OF 2**

Winch S/N 9FA1-Up
Part Of 6Y2055 Winch Ar
An Attachment

IMPLEMENTS

NOTE	REF NO	PART NUMBER	QTY	PART NAME
	1	3B1250	2	NUT
	2	9K2129	2	SPACER
	3	1A2029	10	BOLT (LONG)
	4	8E2915	1	SUPPORT
B	5	7G6228	1	SHIM PACK (5 SHIMS)
B	6	7G6317	1	SHIM PACK (5 SHIMS)
	7	4H6520	1	SEAL-O-RING
	8	4F7952	4	SEAL-O-RING
	9	8E8281	1	SHAFT AS
	10	1D4615	8	BOLT
	11	7G5419	1	RING
	12	5P7606	2	CUP-ROLLER BEARING
	13	5P7605	2	CONE-ROLLER BEARING
	14	8E1046	1	GEAR (31 TEETH)
	15	2V9404	1	RING-RETAINING
	16	7G6320	1	RING
	17	9X4620	1	SEAL-LIP TYPE
	18	3T9193	1	SPACER
	19	6Y1904	1	DRUM AS
	20	358128	1	PIN-DIFF MOUNTING
	21	4D8648	2	CUP-ROLLER BRG
	22	649056	2	CONE-BEARING
	23	8E1047	1	SLEEVE
	24	6V4427	1	SEAL-LIP TYPE
	25	8E1052	1	RETAINER
	26	0L1351	4	BOLT
	27	67640	1	SEAL
	28	3B5302	1	COTTER
	29	7G7489	1	PLUG
	30	4D7637	1	SPRING
	31	7G8071	1	BAR AS
	32	8E1440	1	GEAR-BEVEL (27 TEETH)
	33	8E1054	1	SHAFT
	34	0S1595	10	BOLT
	35	6B0132	1	BEARING-INNER
	36	7G6250	1	SUPPORT
	37	0S1594	12	BOLT
	38	6P7968	4	PLATE-CLUTCH
	39	3T9960	4	DISC-FRICTION
	40	7G6260	1	HUB
	41	8F5900	1	SEAL-O-RING
	42	7G6259	1	PLATE
	43	0L1732	1	BOLT
	44	7G6251	1	HUB
	45	5H6005	2	SEAL-O-RING
	46	9F1399	1	SEAL-O-RING
	47	7G6252	1	CARRIER
	48	9M9545	2	SEAL-O-RING
	49	7G6255	1	PISTON
	50	1J2176	1	SEAL-O-RING
	51	3P5024	2	SPRING-DISC
	52	7G6232	1	CAGE AS
		4B9783	1	BALL
	53	6N7266	2	SHAFT-PUMP IDLER
	54	3B1915	6	BOLT (SHORT)
	55	5M6213	1	PLUG
	56	6B0133	1	RACE-BEARING
	57	6T8307	1	WEDGE
	58	0L1352	2	BOLT
	59	8E0625	1	COVER
	60	7G6713	1	SPRING-MAIN
	61	9W1503	1	SPRING
	62	3D2898	1	SEAL-O-RING
	63	4F7391	1	SEAL-O-RING
	64	9W0035	1	SHAFT
	65	3T7340	1	HOUSING AS
		2D6642	1	BALL
	66	6V5759	1	SEAL-O-RING
	67	4F9029	1	SEAL
	68	2J0157	1	SEAL-O-RING
	69	8E2993	1	FORK
	70	9W4192	1	PIN
	71	6K8162	1	RING-RETAINING
	72	9C4555	1	SPRING
	73	8E3561	1	SPACER

B-USE AS REQUIRED

539476 EP

5167 **6Y1906 GEAR & CLUTCH GP-PART 2 OF 2**

Winch S/N 9FA1-Up

Part Of 6Y2055 Winch Ar

An Attachment

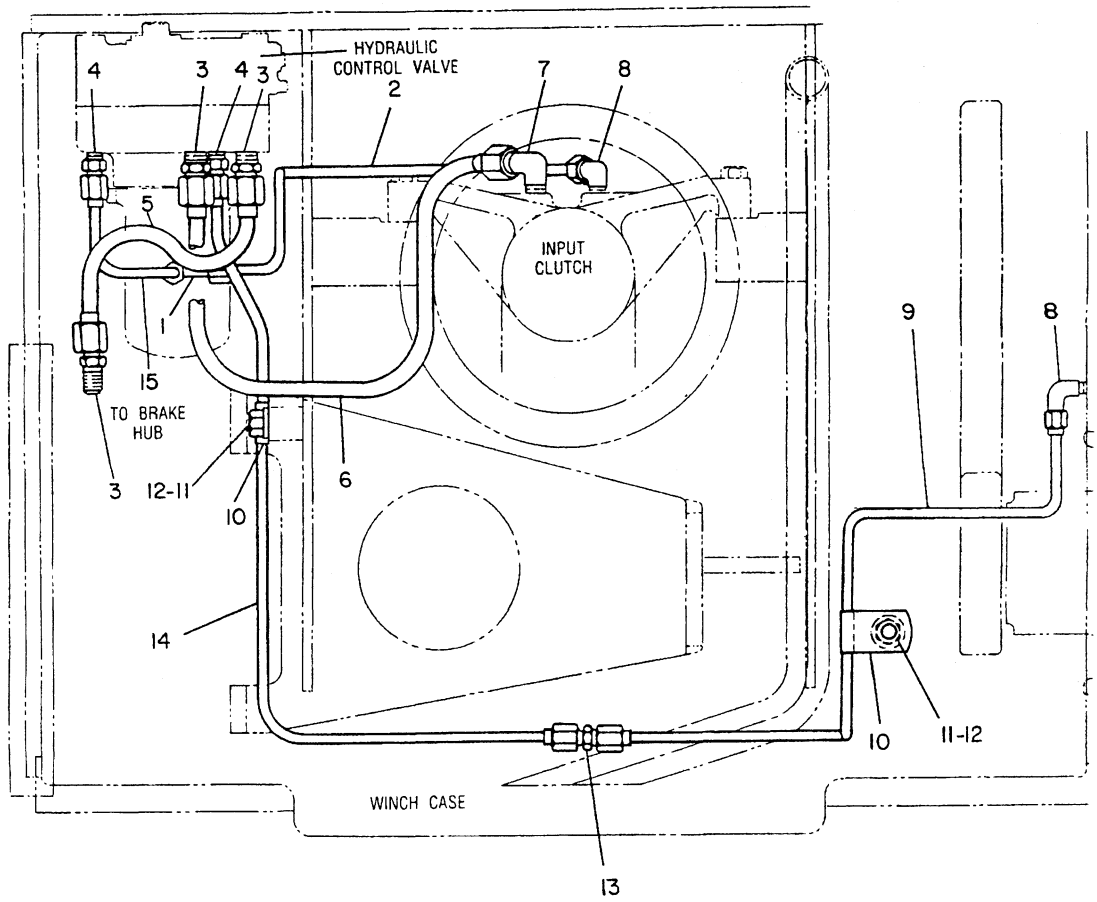

NOTE	REF NO	PART NUMBER	QTY	PART NAME	NOTE	REF NO	PART NUMBER	QTY	PART NAME
	1	9S7695	1	TEE					
	2	6Y2154	1	TUBE AS					
	3	321267	3	CONNECTOR-FLARED					
	4	8L6557	2	CONNECTOR					
	5	7G9027	1	TUBE AS					
	6	7G9022	1	TUBE AS					
	7	321268	1	ELBOW					
	8	2N1287	2	ELBOW-FLARED					
	9	6Y2153	1	TUBE AS					
	10	0L2072	2	CLIP					
	11	0S0509	2	BOLT					
	12	5M2894	2	WASHER					
	13	3J7355	1	UNION-FLARED					
	14	7G9026	1	TUBE AS					
	15	6Y2155	1	TUBE AS					

B-451617 EP

5163

6Y2111 LINES GP-WINCH
Winch S/N 9FA1-Up
Part Of 6Y2055 Winch Ar
An Attachment

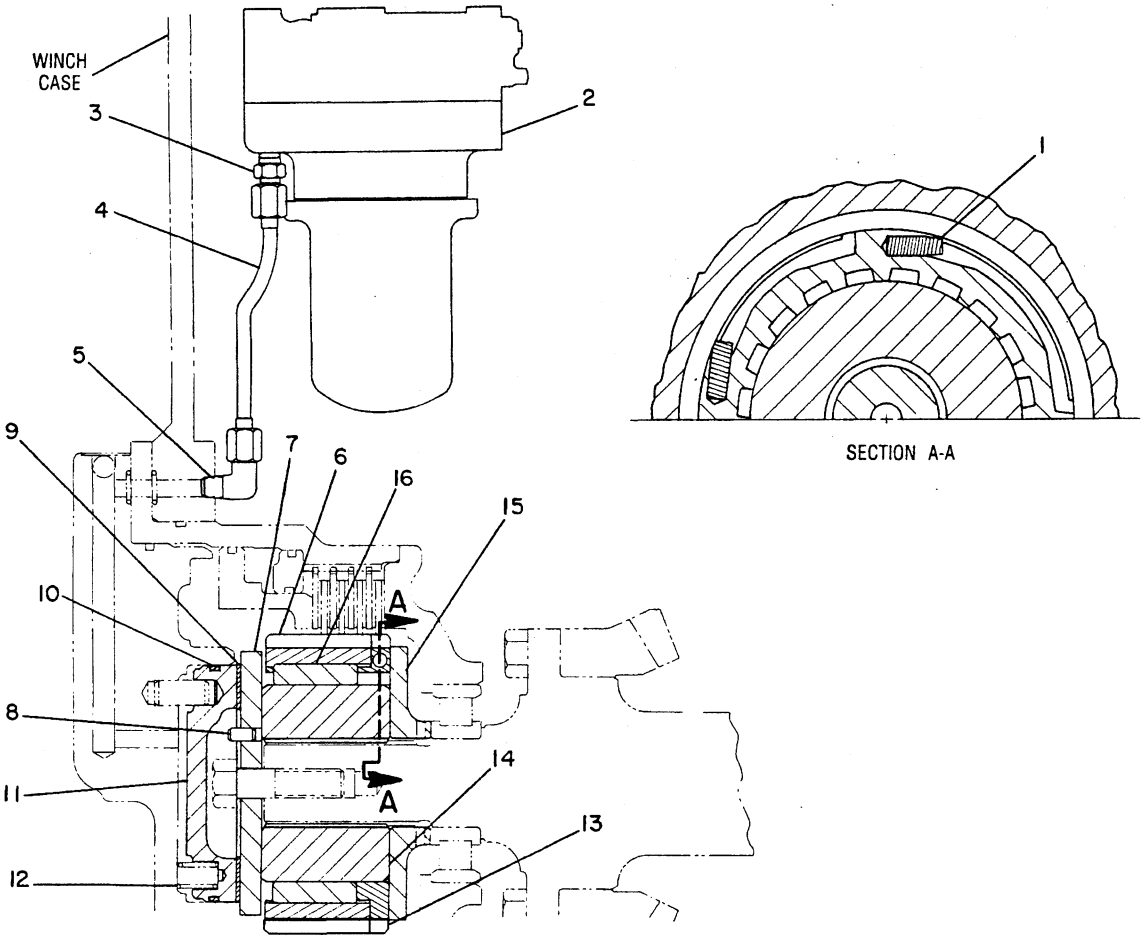

NOTE	REF NO	PART NUMBER	QTY	PART NAME	NOTE	REF NO	PART NUMBER	QTY	PART NAME
	1	6T8487	4	SPRING					
Y	2	6Y2216	1	CONTROL GP-WINCH					
	3	8L6557	1	CONNECTOR					
	4	7G9023	1	TUBE AS					
	5	2N1287	1	ELBOW-FLARED					
	6	6T8313	1	CAM					
	7	7G9548	1	PLATE AS					
	8	2A3348	1	DOWEL					
	9	6Y7913	1	DISC					
	10	9M9936	1	SEAL-O-RING					
	11	7G6231	1	PISTON					
	12	686642	4	SPRING-CASE					
	13	6T8314	1	CAGE-FREEWHEEL					
	14	7G6257	1	HUB					
	15	7G6249	1	RETAINER					
	16	8E0636	20	ROLLER-FREEWHEEL					

Y-SEPARATE ILLUSTRATION

M-502344 EP

5165 **6Y2217 CONVERSION GP-WINCH**

Anti-Fallback

6Y2216-Page 185

An Attachment

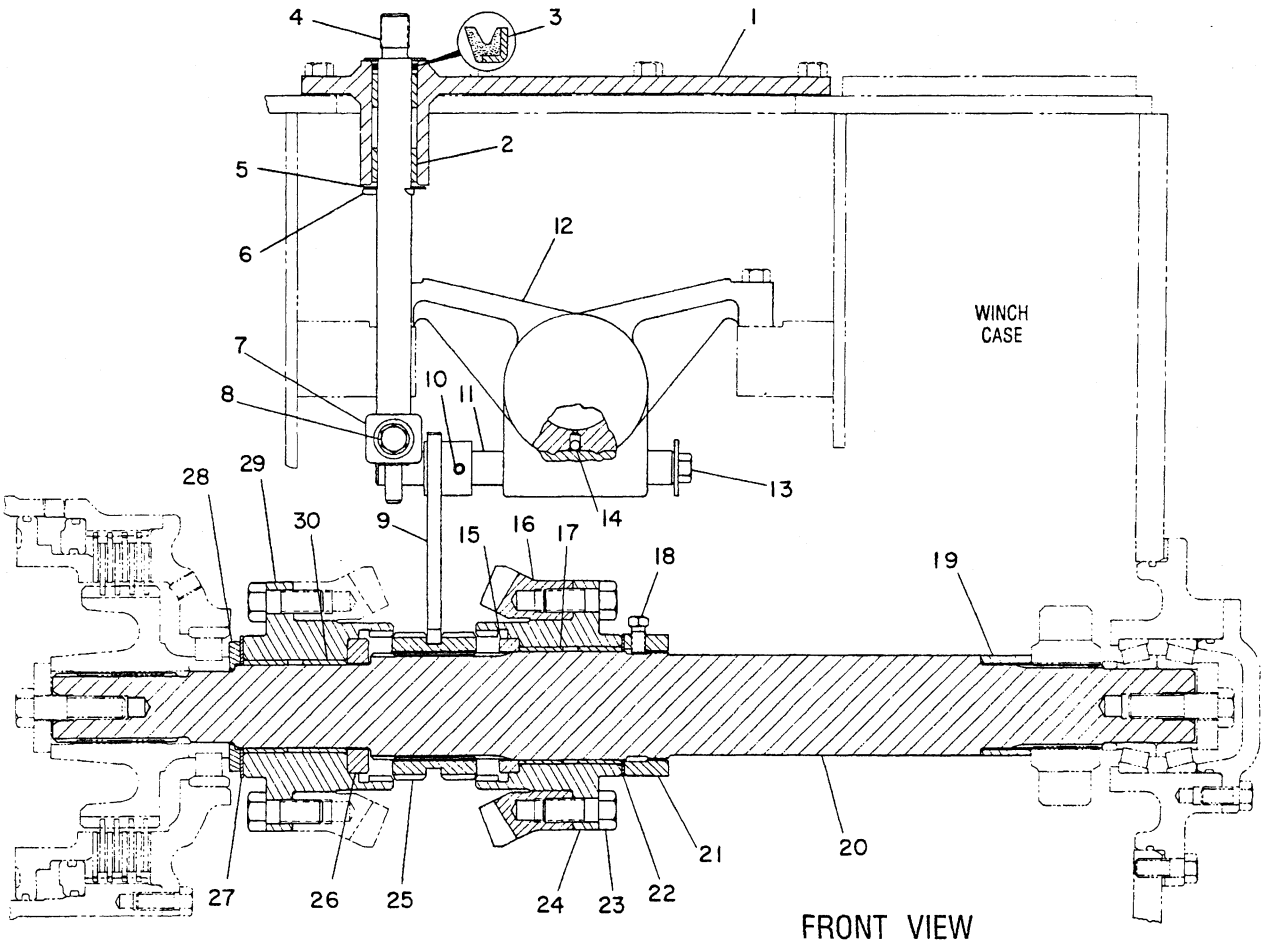

NOTE	REF NO	PART NUMBER	QTY	PART NAME	NOTE	REF NO	PART NUMBER	QTY	PART NAME
	1	9G0918	1	COVER AS		21	9W5297	1	NUT-LOCK
		9G0917	1	COVER AS		22	6Y1956	1	WASHER-THRUST
	2	8H8175	2	BEARING		23	0S1595	20	BOLT
	3	8F7702	1	SEAL-LIP TYPE		24	9G5400	1	HUB
	4	9G0915	1	SHAFT		25	3T9714	1	COLLAR
	5	4H1394	2	WASHER		26	7G6243	1	SPACER
	6	3B4617	1	COTTER		27	4V5234	1	WASHER-THRUST
	7	7S8494	1	LEVER AS		28	7G6230	1	SPACER
		7S6930	1	LEVER		29	7G6240	1	HUB
		7S8489	1	DOWEL		30	7G6241	2	BEARING-SLEEVE
	8	0S1571	1	BOLT					
		5M2894	1	WASHER					
	9	9G0913	1	SHAFT AS					
		9G0911	1	FORK AS					
	10	7J2546	1	PISTON					
	11	9G0914	1	SHAFT					
	12	7G6266	1	CAGE					
	13	0S0509	1	BOLT					
		2D6416	1	WASHER					
	14	2D6642	1	BALL					
	15	9G5414	1	SPACER					
	16	7G6239	1	GEAR (25 TEETH)					
	17	9G5399	2	BEARING-SLEEVE					
	18	4B3571	3	SETSCREW-SQUARE HEAD					
	19	6Y1958	1	SPACER					
	20	6Y1957	1	SHAFT					

M-492227 EP

5165 **6Y1959 CONVERSION GP-WINCH**

Power Out

Part Of 6Y2175 & 6Y2176 Conversion Ars-Winch

An Attachment

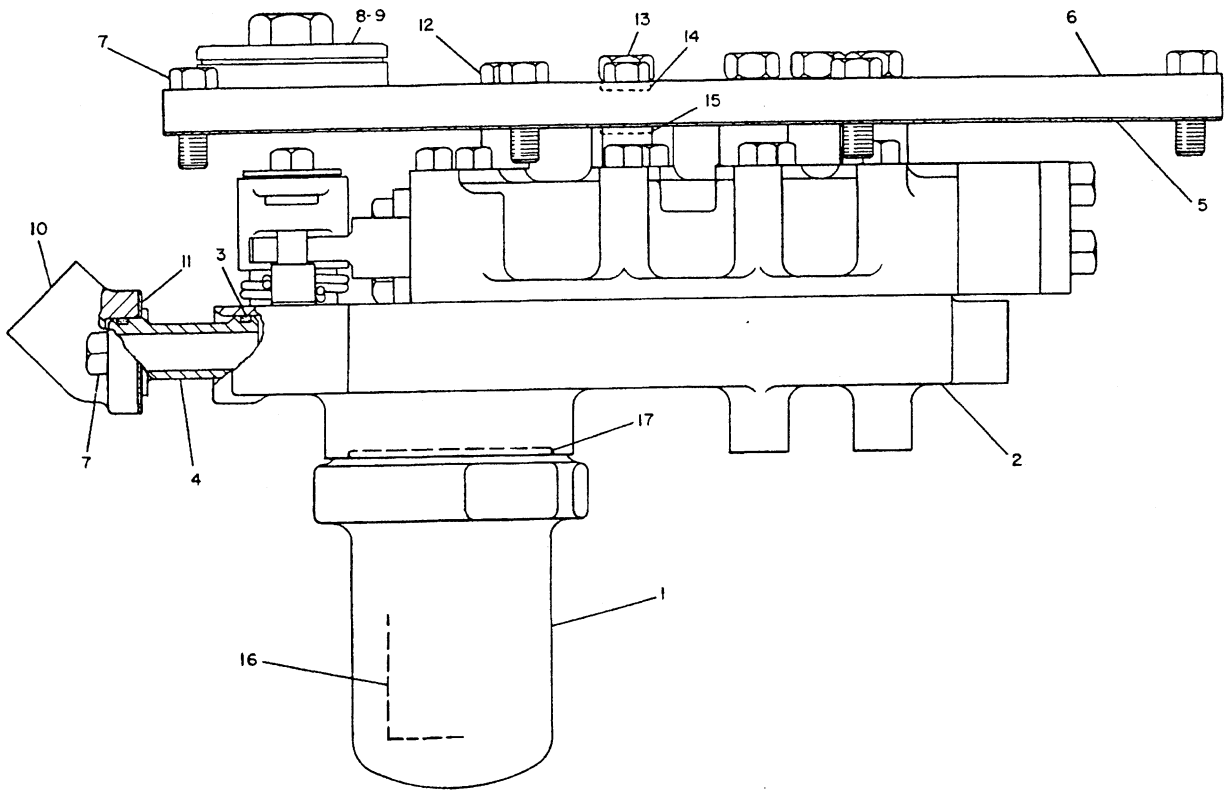

NOTE	REF NO	PART NUMBER	QTY	PART NAME	NOTE	REF NO	PART NUMBER	QTY	PART NAME
	1	7G6805	1	HOUSING-FILTER					
Y	2	6T2289	1	VALVE GP					
	3	8M4438	2	SEAL-O-RING					
	4	9P7919	1	SLEEVE					
	5	6Y1441	1	GASKET					
	6	6Y1439	1	COVER AS					
	7	OS1594	12	BOLT					
	8	5H7110	1	PLUG-DRAIN					
	9	OL1124	1	GASKET-PLUG					
	10	9P5580	1	ELBOW					
	11	9P7918	1	GASKET					
	12	1F5842	3	BOLT					
	13	3K8460	4	PLUG					
	14	1J9671	4	SEAL-O-RING					
	15	8F9206	4	SEAL-O-RING					
	16	7T1184	1	SCREEN AS-FILTER					
		5F1678	1	SEAL-O-RING					
	17	304606	1	SEAL-O-RING					

Y-SEPARATE ILLUSTRATION

B-451890 EP

5163 **6Y2216 CONTROL GP-WINCH**

6T2289-Page 187

Part Of 6Y2217 Conversion-Winch

An Attachment

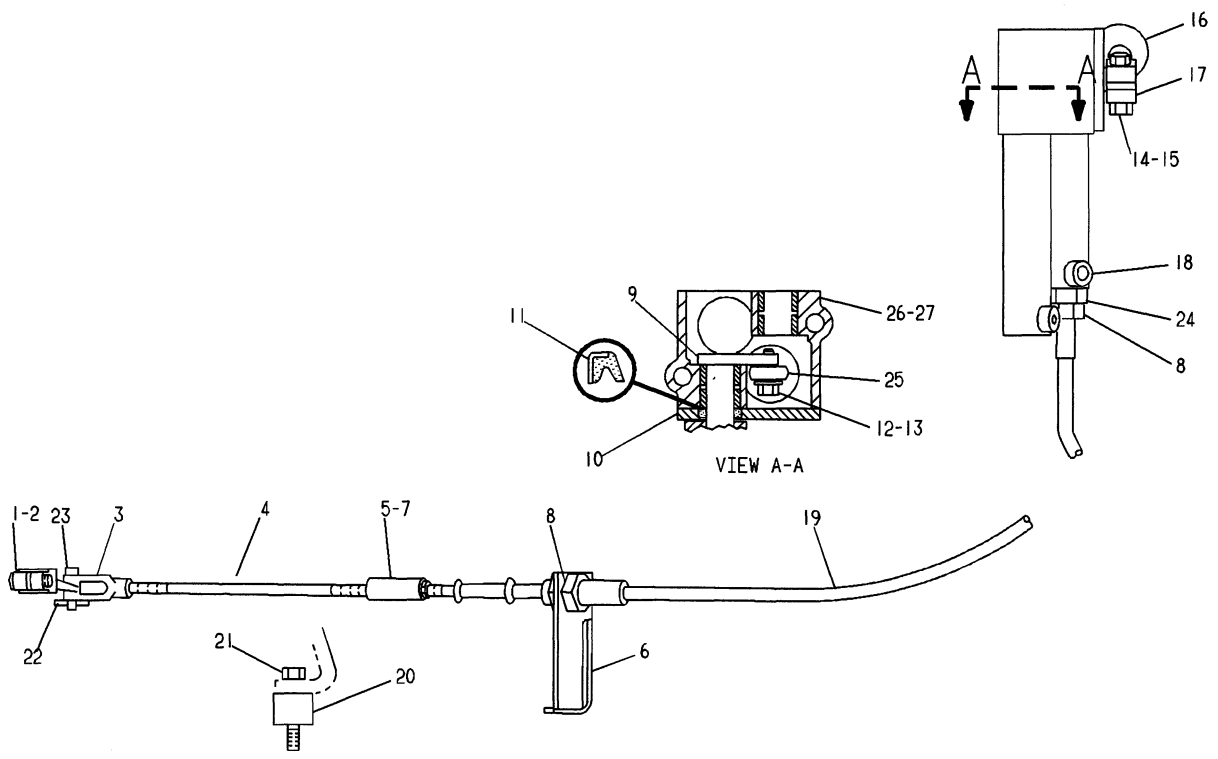

NOTE	REF NO	PART NUMBER	QTY	PART NAME	NOTE	REF NO	PART NUMBER	QTY	PART NAME
	1	8T8909	1	BOLT		26	5G3828	1	HOUSING AS
	2	5F2708	1	LEVER-GOVERNOR CONTROL		27	3K3534	4	BEARING-SLEEVE
	3	8B3768	1	ROD END-YOKE					
	4	7L5861	1	ROD-SHAFT GOVERNOR					
	5	7P9311	1	CONNECTOR					
	6	5G3937	1	SUPPORT					
	7	6F0612	2	NUT-JAM					
	8	9S1354	3	NUT					
	9	5G3848	1	LEVER AS					
	10	5G3834	1	COVER					
	11	6V1604	1	SEAL-LIP TYPE					
	12	4M5281	1	BOLT					
	13	8T4205	1	WASHER-HARD					
	14	9B7237	1	BOLT					
	15	6V8801	1	NUT					
	16	6D0679	1	KNOB					
	17	5G3847	1	LEVER AS					
	18	5L4719	1	SCREW-SET					
	19	7G4746	1	CABLE AS					
	20	1D5875	1	SPACER					
	21	8T9389	1	BOLT					
	22	3B4609	1	PIN-COTTER					
	23	9S1303	1	PIN					
	24	5G3832	1	NUT					
	25	6L7751	1	ROD END-BEARING					

A-494945 EP

5161

5G3938 CONTROL GP-TOWING WINCH

Directional

Part Of 6Y2175 & 6Y2176 Conversion Ars

An Attachment

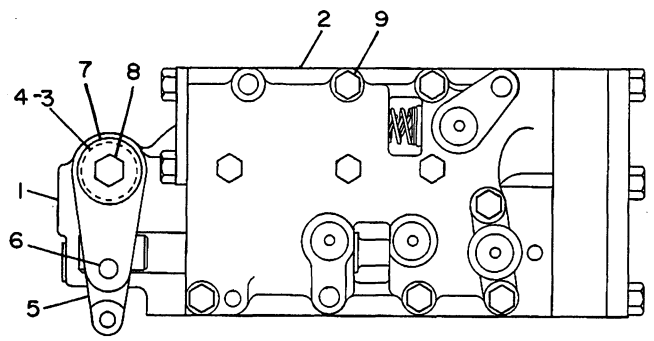

NOTE	REF NO	PART NUMBER	QTY	PART NAME
Y	1	6T2288	1	MANIFOLD GP
Y	2	6T2287	1	VALVE GP-SELECTOR & PRESS CONT
	3	2V8282	1	SPRING
	4	7G6814	1	SLEEVE
	5	7G6807	1	LEVER
	6	7G6816	1	PIN
	7	6N8863	1	WASHER
	8	0L2070	1	BOLT
	9	1D4538	9	BOLT

Y-SEPARATE ILLUSTRATION

B-304234 EP

5163 **6T2289 VALVE GP**

6T2287-Page 188 & 6T2288-Page 187
Part Of 6Y2216 Control-Winch
An Attachment

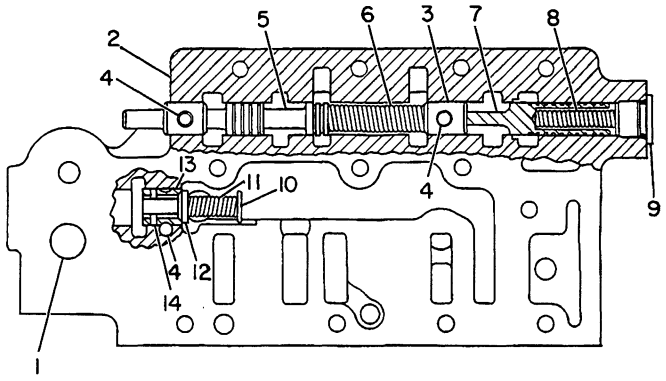

NOTE	REF NO	PART NUMBER	QTY	PART NAME
	1	7G6816	1	PIN
	2	6T2292	1	MANIFOLD
	3	7G6815	2	STOP
	4	3F7514	3	PIN
	5	6P7174	1	SPOOL
	6	7L8695	1	SPRING (LINK)
	7	7G6812	1	SPOOL-BYPASS
	8	5S9606	1	SPRING
	9	9S8004	1	PLUG-O-RING
		3J1907	1	SEAL-O-RING
C	10	6T7034	1	PIN-VALVE SPRING
C	11	3N6233	1	SPRING
	12	7G6809	1	VALVE-BYPASS
	13	7G6810	1	COLLAR
C	14	5B9504	1	PIN

C-CHANGE FROM PREVIOUS TYPE

B-403407 EP

5264 **6T2288 MANIFOLD GP**

Filter Base & Pressure Control
Part Of 6T2289 Valve
An Attachment

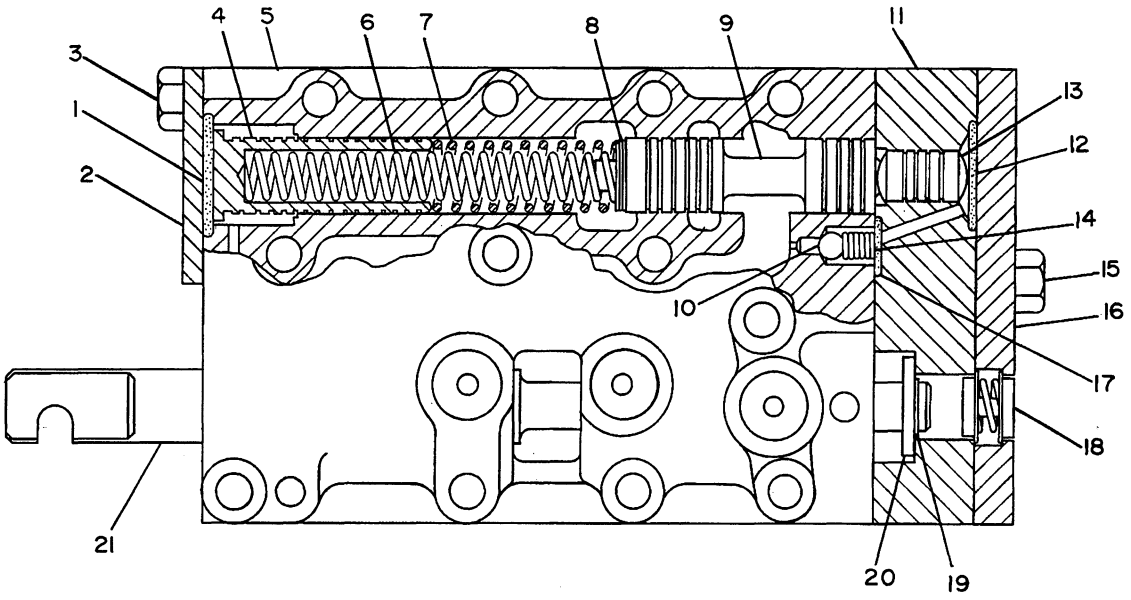

NOTE	REF NO	PART NUMBER	QTY	PART NAME	NOTE	REF NO	PART NUMBER	QTY	PART NAME
	1	8M4431	1	SEAL					
	2	1S7106	1	COVER					
	3	0S1617	2	BOLT					
	4	7G6813	1	PISTON-LOAD					
	5	7G6802	1	BODY-SELECTOR VALVE					
	6	5J9605	1	SPRING (INNER)					
	7	4J4790	1	SPRING (OUTER)					
B	8	9G3732	2	SHIM (.787MM THK)					
B		9G3733	2	SHIM (.254MM THK)					
C	9	6T6901	1	SPOOL-RELIEF					
	10	4B9880	1	BALL					
	11	7G6804	1	BODY-VALVE					
	12	4D9986	1	SEAL-O-RING					
	13	5M2504	1	SLUG					
	14	4M2381	1	SPRING					
	15	2B2694	3	BOLT					
	16	7G3820	1	PLATE					
	17	8M5127	1	SEAL-O-RING					
	18	9M6193	1	SPRING AS					
	19	3K9042	1	RING-RETAINING					
	20	5H4276	1	SPACER					
	21	6T2294	1	SPOOL-SELECTOR					

B-USE AS REQUIRED
C-CHANGE FROM PREVIOUS TYPE

B-328279 EP

5163 **6T2287 VALVE GP-SELECTOR & PRESSURE CONTROL**
Part Of 6T2289 Valve
An Attachment

PAGE

1 5G1818 DRIVE GP-POWER TAKE-OFF..... 91
1 5G2865 PUMP & LINES GP..... 192

106440 P

5G2752 DRIVE AR-WINCH
An Attachment

PAGE

1 5G1818 DRIVE GP-POWER TAKE-OFF..... 91

1 8Y2451 LINES & PUMP GP..... 191

483019 P

8Y2452 DRIVE AR-WINCH
An Attachment

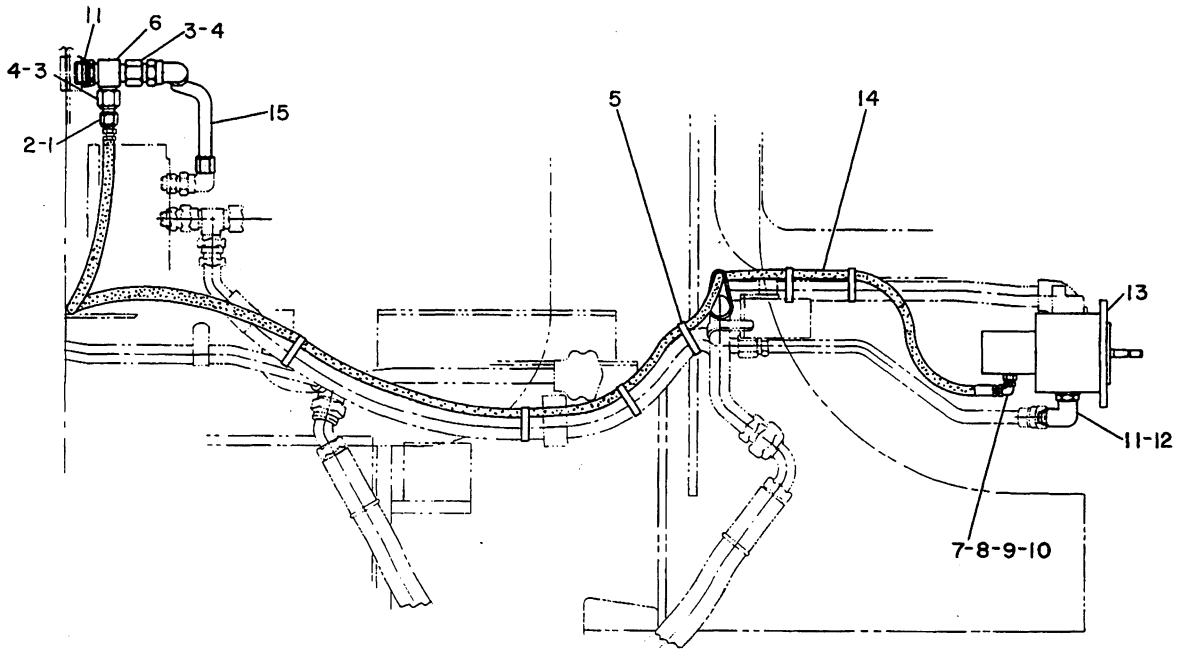

NOTE	REF NO	PART NUMBER	QTY	PART NAME	NOTE	REF NO	PART NUMBER	QTY	PART NAME
	1	8M0744	1	NUT-FLARED					
	2	618268	1	REDUCER-FLARED					
	3	1P0043	2	NUT-FLARED					
	4	676684	2	REDUCER-FLARED					
	5	7K1181	5	STRAP-CABLE					
	6	3O7960	1	TEE-FLARED					
	7	3J7354	1	SEAL-O-RING (8.92MM ID)					
	8	3P1932	1	ADAPTER					
	9	3K0360	1	SEAL-O-RING (16.36MM ID)					
	10	3O7946	1	ELBOW					
	11	7M8485	2	SEAL-O-RING					
	12	8V3181	1	ELBOW					
Y	13	3G5046	1	PUMP GP-GEAR					
I	14	3J7314	1	HOSE AS					
	15	8Y2409	1	TUBE AS					

I-SEE HOSE FABRICATION GUIDE
Y-SEPARATE ILLUSTRATION

M-483029 EP

5057

8Y2451 LINES & PUMP GP
3G5046-Page 193
Part Of 8Y2452 Drive Ar-Winch
An Attachment

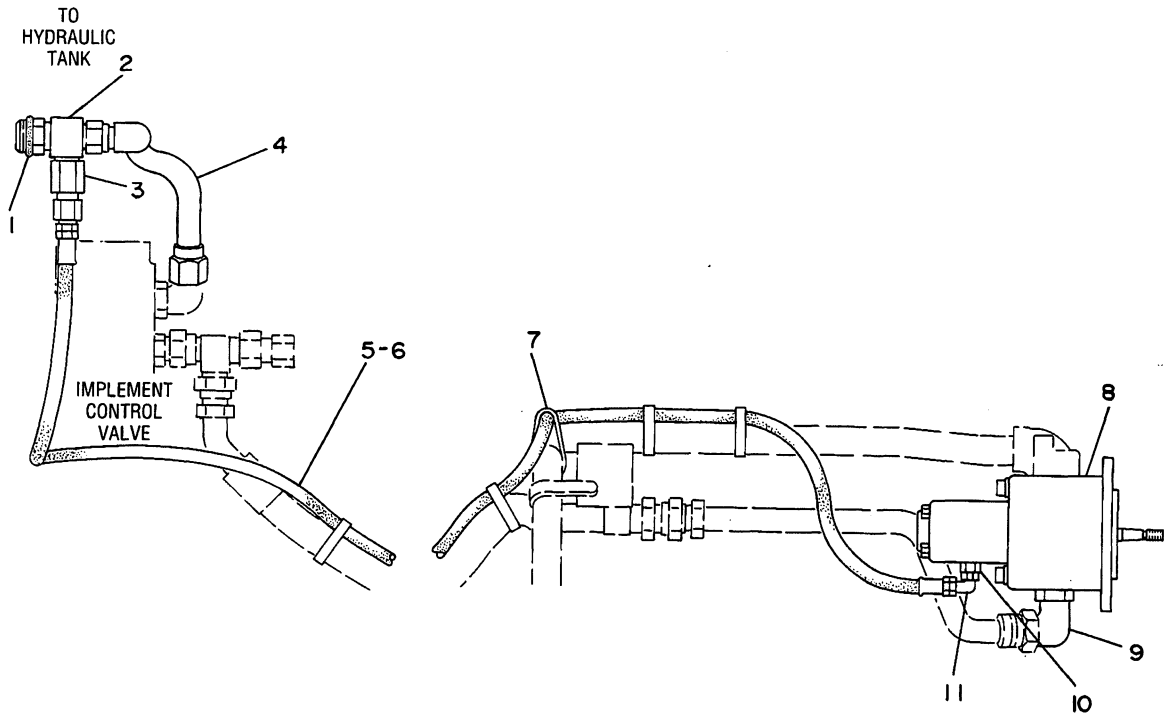

NOTE	REF NO	PART NUMBER	QTY	PART NAME	NOTE	REF NO	PART NUMBER	QTY	PART NAME
	1	3D2824	1	SEAL-O-RING					
	2	307960	1	TEE-FLARED					
	3	1P0043	1	NUT-FLARED					
		676684	1	REDUCER-FLARED					
	4	5G1348	1	TUBE AS					
	5	3J7314	1	HOSE AS					
	6	8M0744	1	NUT-FLARED					
		618268	1	REDUCER-FLARED					
C	7	7K1181	7	STRAP-CABLE					
Y	8	3G5046	1	PUMP GP-GEAR					
	9	307951	1	ELBOW-FLARED					
		7M8485	1	SEAL-O-RING					
	10	3P1932	1	ADAPTER					
		3K0360	1	SEAL-O-RING					
	11	307946	1	ELBOW					
		3J7354	1	SEAL-O-RING					

C-CHANGE FROM PREVIOUS TYPE
Y-SEPARATE ILLUSTRATION

B-234988 EP

5057

5G2865 LINES & PUMP GP
3G5046-Page 193
Part Of 5G2752 Drive Ar-Winch
An Attachment

IMPLEMENTS

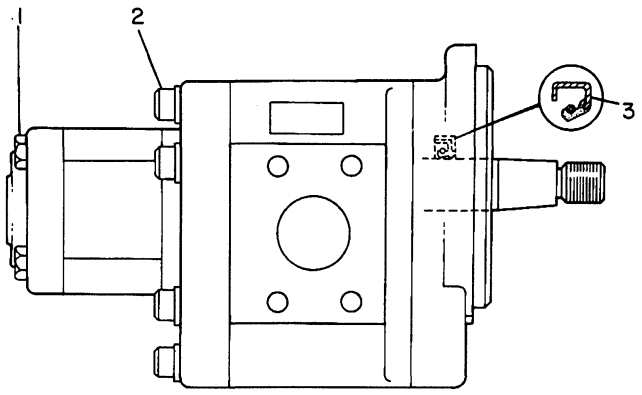

NOTE	REF NO	PART NUMBER	QTY	PART NAME
	1	5P8347	4	BOLT
	2	3G5071	8	BOLT-SOCKET HEAD
		5M2894	8	WASHER
	3	3G5083	1	SEAL-LIP TYPE
				THE FOLLOWING REPAIR KITS ARE AVAILABLE:
		3G5045	1	KIT-SECTION (REAR PUMP)
		3G5044	1	KIT-SECTION (FRONT PUMP)
		3G5057	1	KIT-SEAL (INCL SEAL, GASKETS AND STRIP)

B-167287 EP

5073 **3G5046 PUMP GP-GEAR**

Part Of 5G2865 & 8Y2451 Lines & Pump
An Attachment

			PAGE
1	5GO521	MOUNTING GP-ROPS	195
1	5GO673	ROPS GP	196

451744 P

8Y1147 ROPS AR-OPEN
An Attachment

			PAGE
1	8Y1087	BRAKE GP-STEERING	100.14
1	6S8967	CONTROL GP-GOVERNOR	58.02
1	5GO537	HEATER GP-CAB	195.01
1	5G2294	MOUNTING GP-CAB	194.14
		-OR-	
1	5G2293	MOUNTING GP-CAB	194.14
1	5GOOO1	ROLLOVER AR	194.01

492780 P

8Y1769 ROPS AR-ENCLOSED
Cannot Be Used With Decelerator Control
An Attachment

CAB, GAUGES AND ACCESSORIES

			PAGE
1	8N2822	ALTERNATOR GP	63.01
1	6S9800	CAB GP	194.02
1	5G2002	PRESSURIZER GP-CAB	194.10
1	8Y1177	SEAT & SUPPORT GP	199.03
1	5G0049	WASHER GP-WINDSHIELD	199.05
1	5G0974	WIPER GP	199.06
1	5G0457	WIRING GP-CAB	69.03

459308 P

7325

5G0001 ROLLOVER AR
Modular Cab
Part Of 8Y1769 ROPS Ar-Enclosed
An Attachment

CAB, GAUGES AND ACCESSORIES

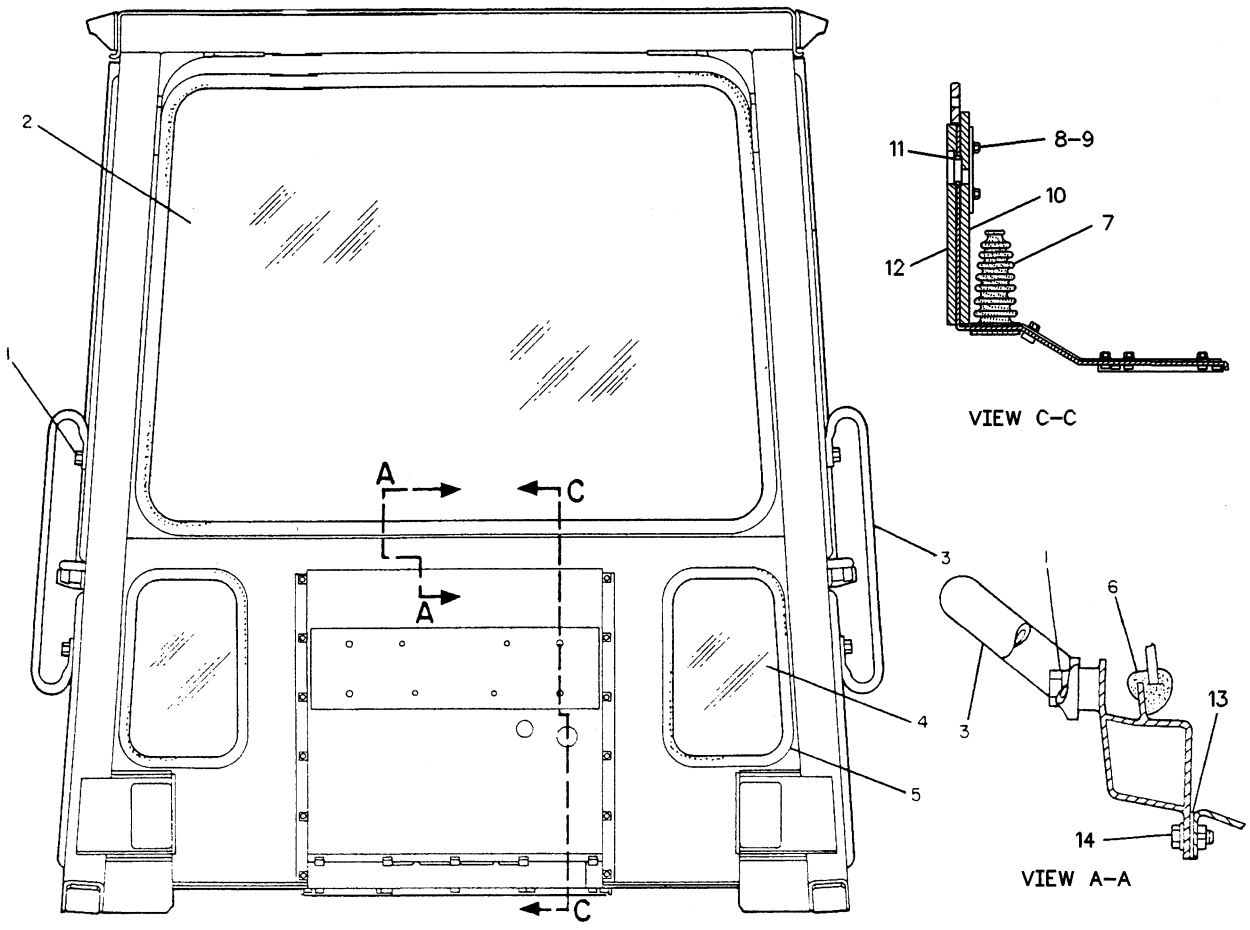

NOTE	REF NO	PART NUMBER	QTY	PART NAME	NOTE	REF NO	PART NUMBER	QTY	PART NAME
	1	8T9383	6	BOLT					
		8T4223	6	WASHER-HARD					
	2	6S9736	1	GLASS					
	3	5G1132	3	GRAB HANDLE					
	4	6S9823	2	GLASS					
BD	5	5P5971		SEAL					
BD	6	5P5768		SEAL					
	7	5G0867	4	BOOT					
	8	8T9371	5	BOLT					
	9	314433	5	WASHER					
	10	8Y6162	1	LINER-DASH WALL					
BD	11	6V5738		TRIM-EDGE					
	12	8Y6156	1	LINER-DASH WALL					
	13	6S9966	1	GASKET					
		6S9965	2	GASKET					
	14	4M0061	17	BOLT					
		8T4224	17	WASHER-HARD					

B-USE AS REQUIRED
D-ORDER BY THE METER

R-519345 EP

CAB, GAUGES AND ACCESSORIES

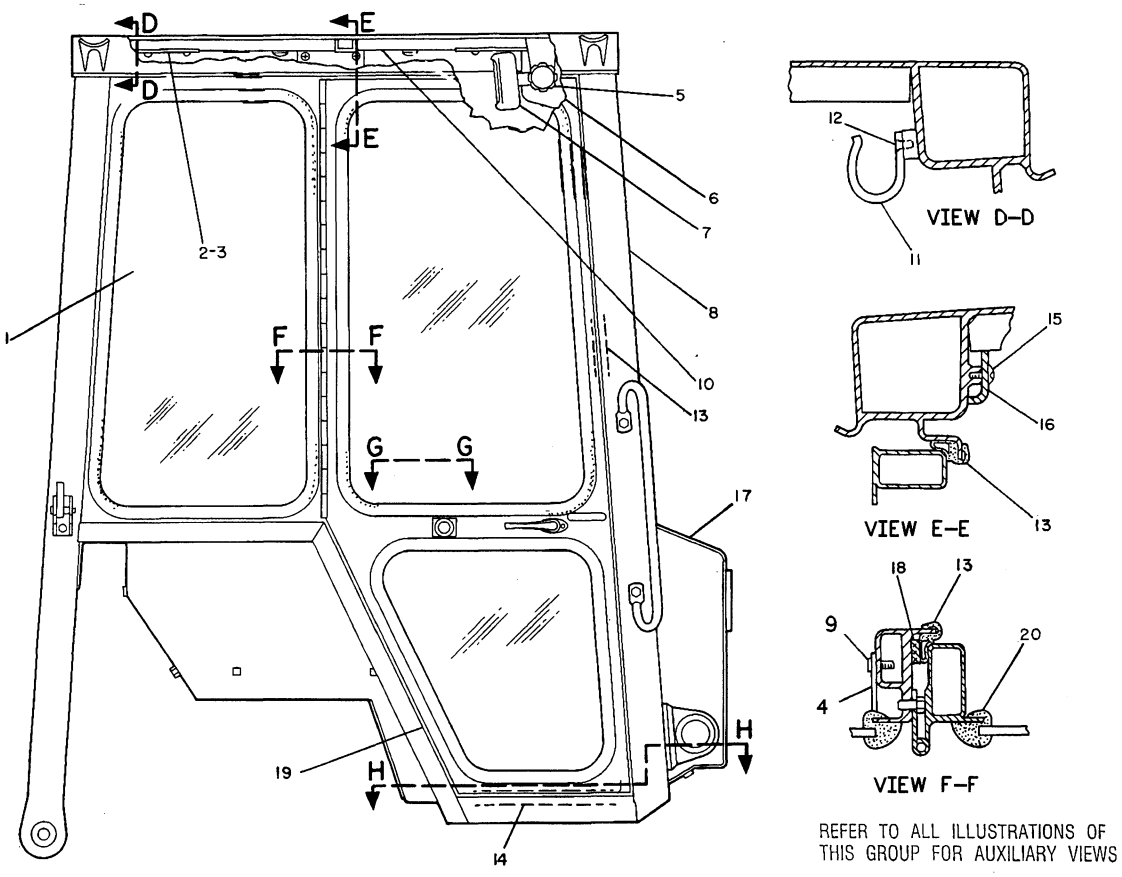

REFER TO ALL ILLUSTRATIONS OF THIS GROUP FOR AUXILIARY VIEWS

NOTE	REF NO	PART NUMBER	QTY	PART NAME	NOTE	REF NO	PART NUMBER	QTY	PART NAME
	1	6S9819	2	GLASS	Y	19	5G0200	1	DOOR GP-RH
	2	5G0920	1	GUARD-WIPER MOTOR	Y		5G0190	1	DOOR GP-LH
	3	5P7921	10	SCREW-WASHER HEAD	BD	20	5P5768		SEAL
		8T4205	10	WASHER-HARD					
	4	5G2053	2	STRIP					
	5	6D6812	2	KNOB AS					
		8T4896	2	WASHER-HARD					
		5D0998	2	SPRING-DISC					
		1D4677	2	BOLT-ROUND HEAD					
	6	6S9858	1	GUARD-WIPER MOTOR					
	7	5P6875	1	MIRROR					
	8	6S9801	1	CAB AS					
C		7X0937	1	PLATE-ROPS/FOPS					
		7B3028	4	SCREW-DRIVE					
	9	4M8474	8	SCREW-TAPPING					
	10	8Y6141	1	HEADLINER					
	11	6P8431	1	HOOK					
	12	4B1273	2	SCREW-MACHINE					
BD	13	5P7483		SEAL					
	14	6S9844	1	MAT					
	15	5P2669	6	SCREW-MACHINE					
	16	5G2069	1	COVER (R.H.)					
		5G2068	1	COVER (L.H.)					
	17	6S9768	1	DASH AS					
		4K9097	36	NUT-WELD					
	18	6S9880	2	STRIP					

B-USE AS REQUIRED
C-CHANGE FROM PREVIOUS TYPE
D-ORDER BY THE METER

Y-SEPARATE ILLUSTRATION

R-550758 EP

7301

6S9800 CAB GP-PART 2 OF 4
5G0190-Page 194.06 & 5G0200-Page 194.08
Part Of 5G0001 Rollover Ar
An Attachment

CAB, GAUGES AND ACCESSORIES

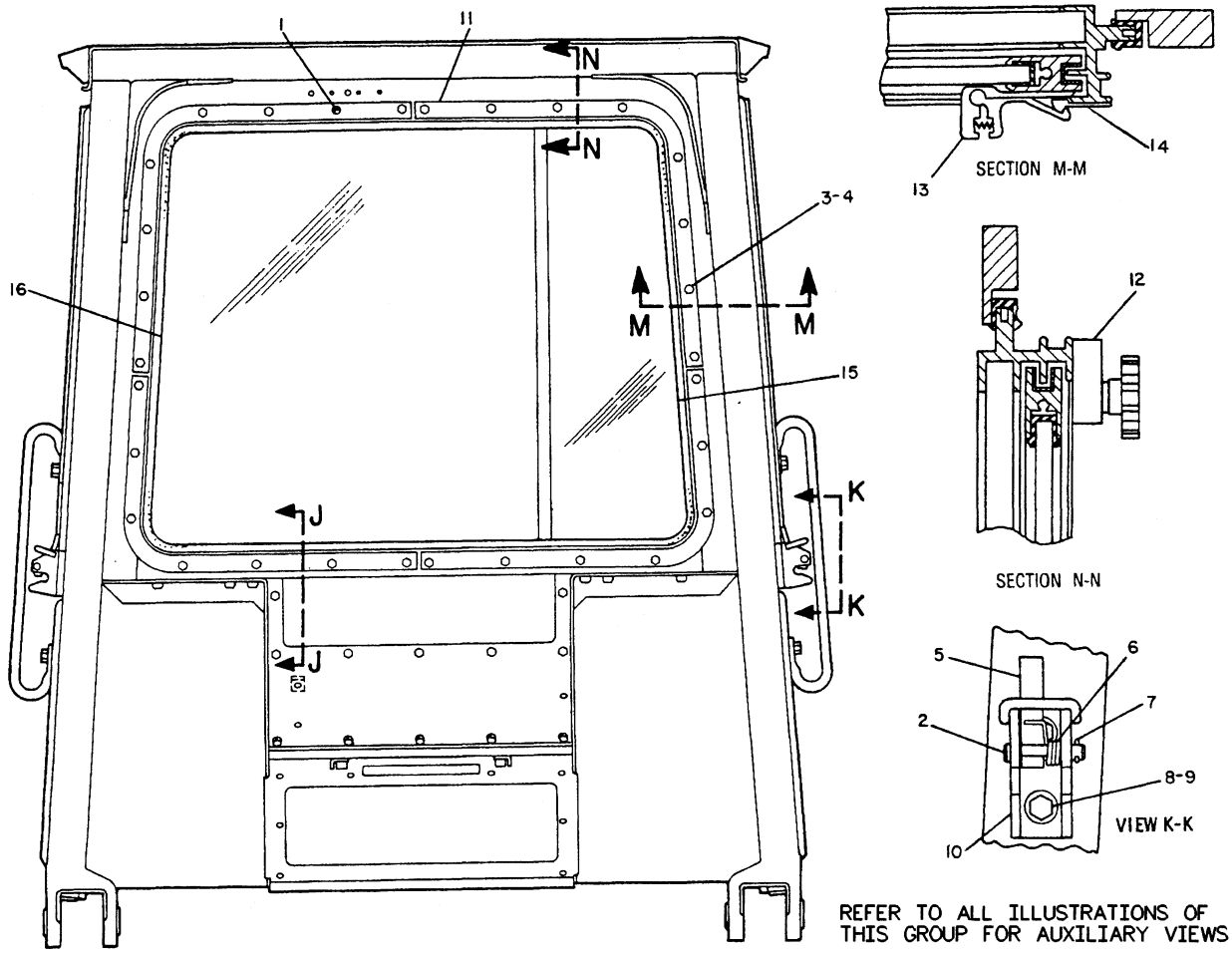

NOTE	REF NO	PART NUMBER	QTY	PART NAME	NOTE	REF NO	PART NUMBER	QTY	PART NAME
	1	3K7754	1	SCREW-MACHINE					
	2	1A8827	2	PIN					
	3	4M6425	29	BOLT					
	4	5P4116	29	WASHER					
	5	5G1956	2	LATCH AS					
	6	5G1953	2	SPRING					
	7	3B4615	2	PIN-COTTER					
	8	5M3062	4	BOLT					
	9	5P1075	4	WASHER-HARD					
	10	5G2313	2	PLATE AS					
	11	5G2010	1	WINDOW AS					
C	12	3V3196	1	LOCK AS-WINDOW					
C	13	8T3847	1	LOCK AS-WINDOW					
C	14	8T3846	1	STRIKER-LATCH					
C	15	5G6046	1	GLASS					
C	16	5G6045	1	GLASS					

C-CHANGE FROM PREVIOUS TYPE

R-519346 EP

CAB, GAUGES AND ACCESSORIES

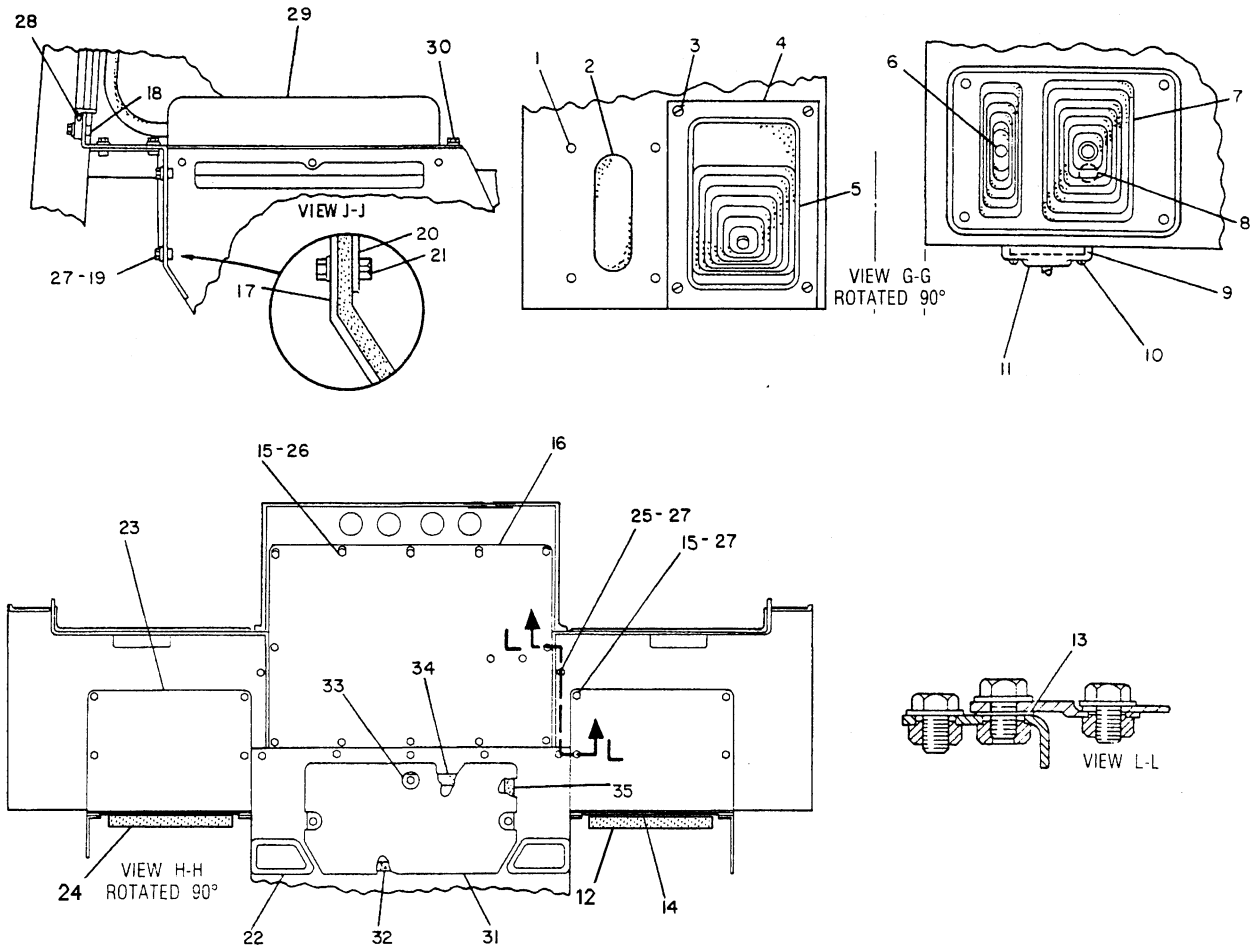

NOTE	REF NO	PART NUMBER	QTY	PART NAME
	1	6K1756	4	PLUG
	2	5G0477	1	PLUG
	3	5M5845	4	SCREW
	4	5G0429	1	PLATE
	5	5G0431	1	BOOT
	6	8Y5199	1	LEVER AS
	7	5G2285	1	BOOT
	8	6S9724	1	SLEEVE
	9	6S9728	1	SLIDE 126MM(5 IN.)LG
		6S9729	1	SLIDE 171MM(6.7 IN.)LG
		6S9730	1	SLIDE 216MM(8.5 IN.)LG
		6S9731	1	SLIDE 260MM(10 IN.)LG
		6S9732	2	SLIDE 294MM(11.6 IN.)LG
	10	4B1257	4	SCREW-MACHINE
	11	5G1013	1	COVER
	12	8Y6153	1	LINER-CONSOLE-RH
	13	6S9964	2	GASKET (SHORT)
		6S9963	1	GASKET (LONG)
	14	5G4717	1	COVER
	15	8T5391	41	BOLT
	16	8Y4320	1	COVER
	17	5G2074	1	PANEL AS
BD		5P5923		SEAL
	18	4K9097	2	NUT-WELD
	19	4M0061	18	BOLT
	20	5G2009	1	PANEL AS
BD		5P5923		SEAL
	21	4K9097	15	NUT-WELD (WELD)
	22	5G2317	2	GASKET
	23	5G4716	1	COVER AS
		9F6445	4	NUT
	24	8Y6154	1	LINER-CONSOLE-LH
	25	5K0906	7	BOLT
	26	8T4224	13	WASHER-HARD
	27	5P4116	53	WASHER
BD	28	5P9205		SEAL
	29	6S4624	2	ARMREST
	30	5M3062	4	BOLT
		5P1075	4	WASHER-HARD
	31	6S9832	1	COVER AS
		5G0899	1	MAT
	32	5G0901	1	GASKET
	33	5G0881	3	SCREW
		5G0891	3	RETAINER-RING
		4B4277	3	WASHER
	34	6S9834	1	GASKET
	35	6S9833	2	GASKET

B-USE AS REQUIRED
D-ORDER BY THE METER

R-499557 EP

7301 **6S9800 CAB GP-PART 4 OF 4**

Part Of 5G0001 Rollover Ar
An Attachment

CAB, GAUGES AND ACCESSORIES

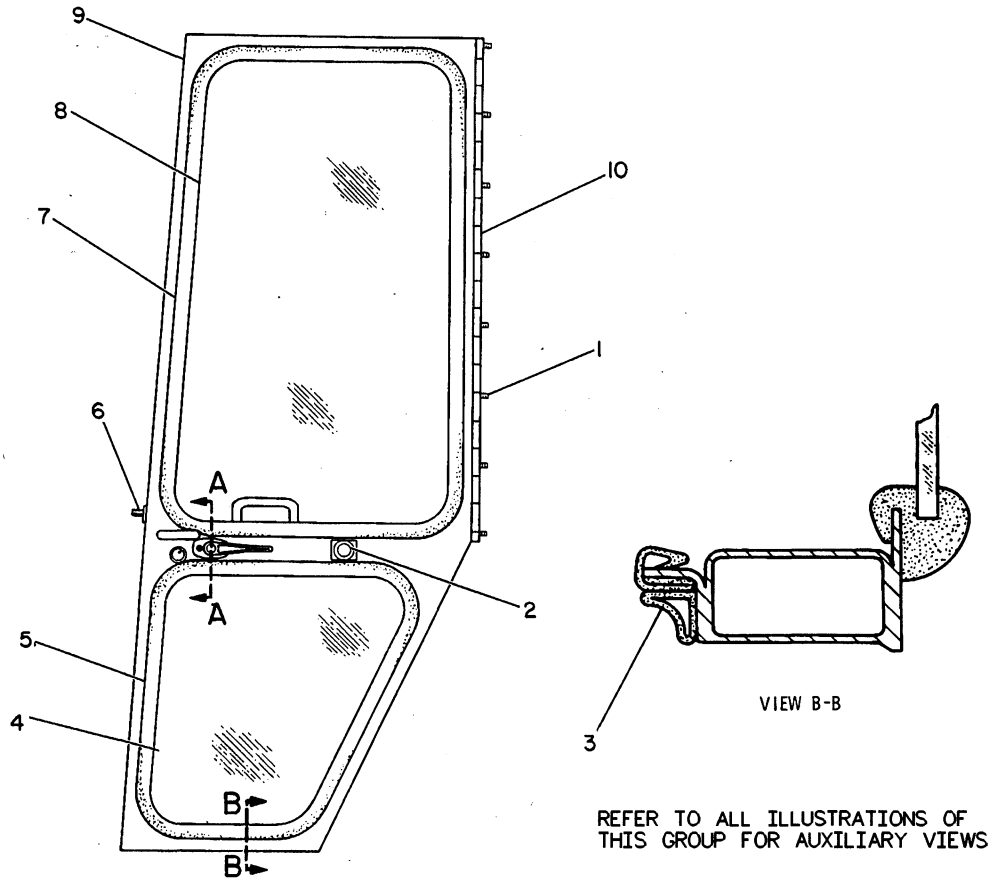

REFER TO ALL ILLUSTRATIONS OF THIS GROUP FOR AUXILIARY VIEWS

NOTE	REF NO	PART NUMBER	QTY	PART NAME	NOTE	REF NO	PART NUMBER	QTY	PART NAME
	1	6S9884	8	BOLT					
	2	5G8751	1	TUBE AS					
C		9S8751	1	NUT-FULL					
D	3	5P7483		SEAL (.35M)					
	4	6S9818	1	GLASS					
D	5	5P5768		SEAL (1.67M)					
	6	6V1155	1	STRIKER AS					
D	7	5P5768		SEAL (2.54M)					
	8	6S9817	1	GLASS-DOOR					
	9	6S8978	1	DOOR AS					
		9F6445	1	NUT					
	10	6S9906	1	HINGE					

C-CHANGE FROM PREVIOUS TYPE
D-ORDER BY THE METER

R-519347 EP

7308 **5G0190 DOOR GP-LH-PART 1 OF 2**
Part Of 6S9800 Cab
An Attachment

CAB, GAUGES AND ACCESSORIES

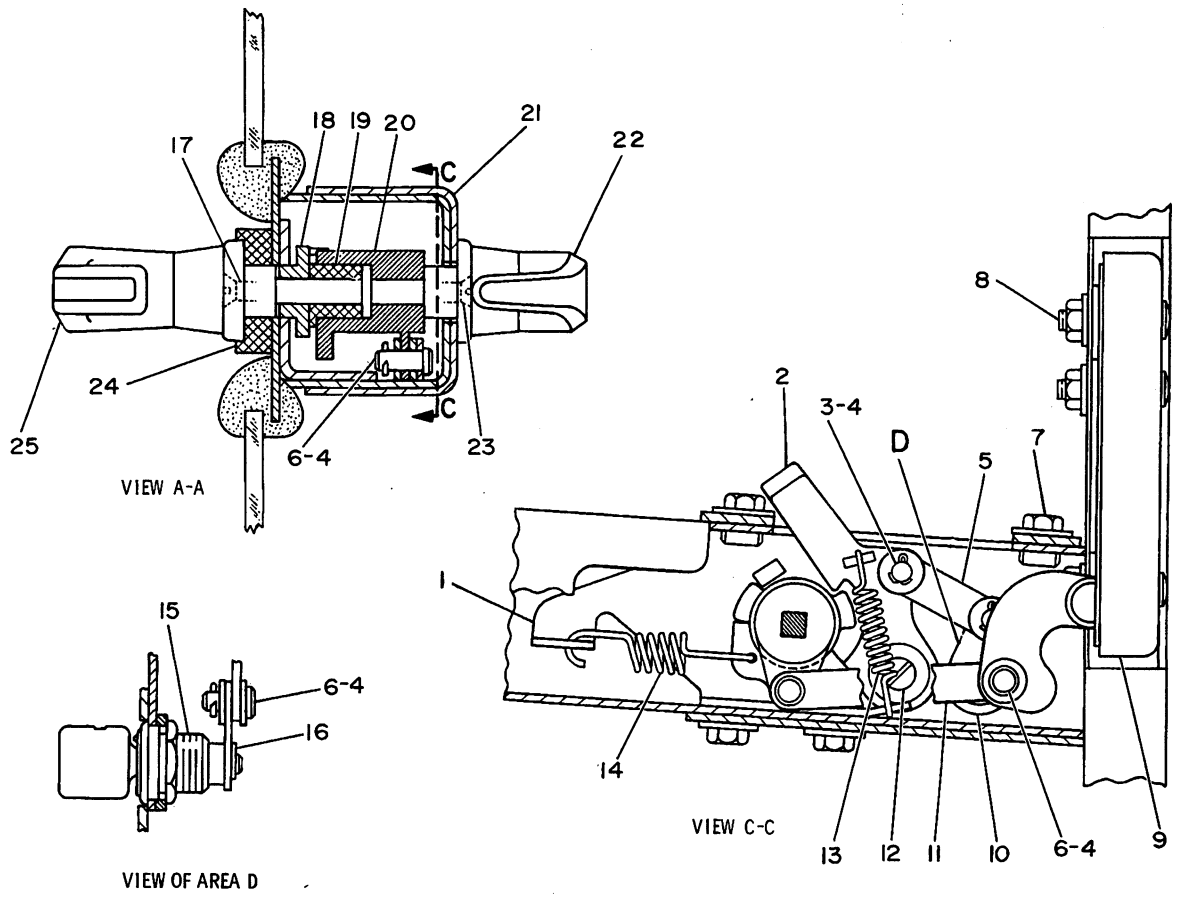

NOTE	REF NO	PART NUMBER	QTY	PART NAME
	1	5G2062	1	PLATE AS
	2	5G2316	1	LEVER AS
		7M7659	1	BEARING-SLEEVE
	3	4B3057	1	PIN-CLEVIS
		5G2003	1	SPACER
	4	3B4604	4	PIN-COTTER
		4B4674	8	WASHER
	5	5G1922	1	LINK
	6	1B8098	3	PIN
	7	0S1614	1	BOLT
		5P4115	1	WASHER
	8	5G0799	3	SCREW
C		9S8750	3	NUT-FULL
C		5P4115	3	WASHER
	9	6V3354	1	LATCH AS-DOOR
		5G0798	1	SPACER
	10	5G2052	1	LINK
	11	5G1925	1	LINK
	12	9D3868	1	SCREW
		4D2303	1	WASHER
	13	1A3540	1	SPRING
	14	2G3765	1	SPRING
J	15	5P8503	1	LOCK AS-CYLINDER
	16	2M7819	1	RING-RETAINING
	17	7F7615	1	SCREW-MACHINE
	18	5G1919	1	RING-LOCK
	19	5G0811	1	BUSHING
	20	5G1935	1	RING-LATCH
	21	6S9747	1	COVER AS
	22	6V0543	1	HANDLE AS-INSIDE
	23	134337	2	SCREW
	24	5G0813	1	SPACER
	25	5G2324	1	HANDLE AS

J-5P8500 KEY REQUIRED
C-CHANGE FROM PREVIOUS TYPE

B-475779 EP

7308 **5G0190 DOOR GP-LH-PART 2 OF 2**

Part Of 6S9800 Cab
An Attachment

CAB, GAUGES AND ACCESSORIES

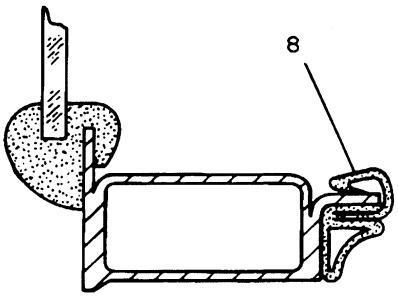

VIEW B-B

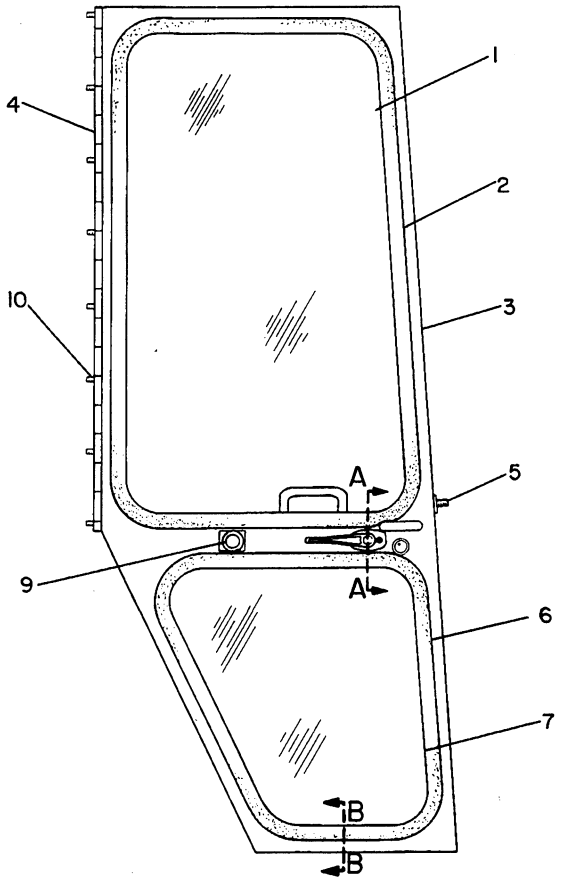

REFER TO ALL ILLUSTRATIONS OF
THIS GROUP FOR AUXILIARY VIEWS

NOTE	REF NO	PART NUMBER	QTY	PART NAME	NOTE	REF NO	PART NUMBER	QTY	PART NAME
	1	6S9817	1	GLASS-DOOR					
D	2	5P5768		SEAL (2.54M)					
	3	6S8969	1	DOOR AS					
		9F6445	2	NUT					
	4	6S9906	1	HINGE					
	5	6V1155	1	STRIKER AS					
D	6	5P5768		SEAL (1.67M)					
	7	6S9818	1	GLASS					
D	8	5P7483		SEAL (.35M)					
	9	5G0817	1	BUMPER-CONICAL					
		9S8751	1	NUT-FULL					
	10	6S9884	8	BOLT					

D-ORDER BY THE METER

B-496109 EP

7308 **5G0200 DOOR GP-RH-PART 1 OF 2**

Part Of 6S9800 Cab
An Attachment

CAB, GAUGES AND ACCESSORIES

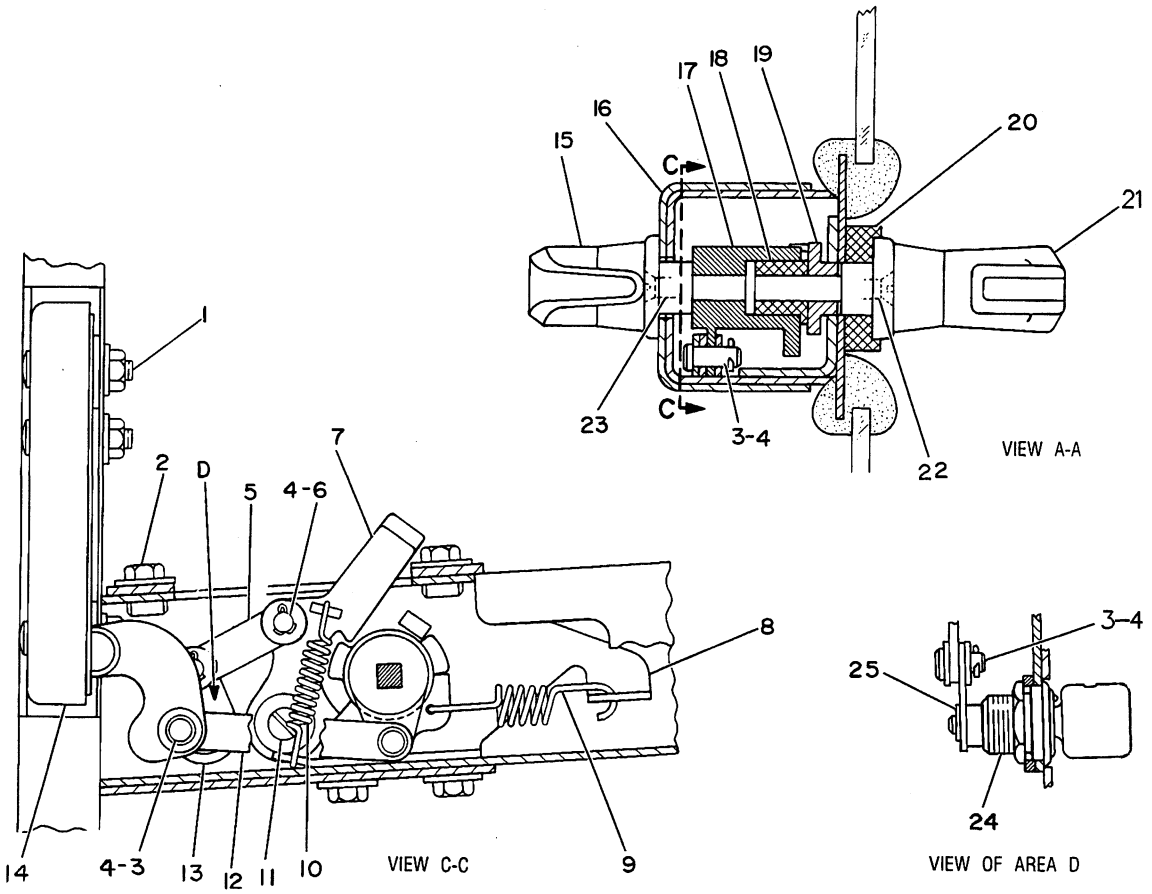

NOTE	REF NO	PART NUMBER	QTY	PART NAME	NOTE	REF NO	PART NUMBER	QTY	PART NAME
	1	5G0799	3	SCREW		19	5G1919	1	RING-LOCK
		9S8750	3	NUT-FULL		20	5G0813	1	SPACER
		5P4115	3	WASHER		21	5G2324	1	HANDLE AS
	2	0S1614	4	BOLT		22	7F7615	2	SCREW-MACHINE
		5P4115	4	WASHER		23	134337	2	SCREW
	3	1B8098	3	PIN	J	24	5P8503	1	LOCK AS-CYLINDER
	4	3B4604	4	PIN-COTTER		25	2M7819	1	RING-RETAINING
		4B4674	8	WASHER					
	5	5G1922	1	LINK					
	6	4B3057	1	PIN-CLEVIS					
		5G2003	1	SPACER					
	7	5G2311	1	LEVER AS					
		7M7659	1	BEARING-SLEEVE					
	8	5G1939	1	PLATE AS					
	9	2G3765	1	SPRING					
	10	1A3540	1	SPRING					
	11	9D3868	1	SCREW					
		4D2303	1	WASHER					
	12	5G1925	1	LINK					
	13	5G2052	1	LINK					
C	14	6V3353	1	LATCH AS-DOOR					
		5G0798	1	SPACER					
	15	6V0543	1	HANDLE AS-INSIDE					
	16	6S9748	1	COVER AS					
	17	5G2051	1	RING-LATCH					
	18	5G0811	1	BUSHING					

J-5P8500 KEY IS REQUIRED
C-CHANGE FROM PREVIOUS TYPE

R-497867 EP

7308 **5G0200 DOOR GP-RH-PART 2 OF 2**

Part Of 6S9800 Cab

An Attachment

CAB, GAUGES AND ACCESSORIES

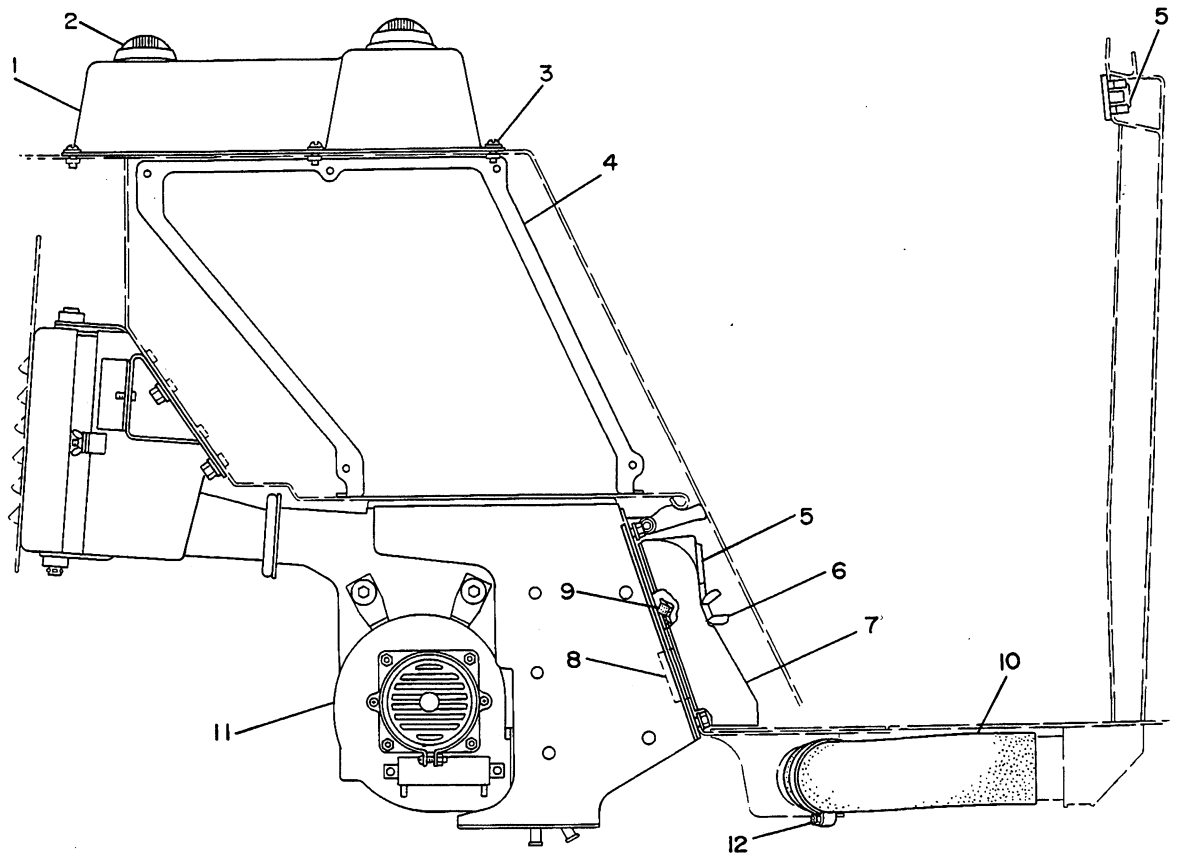

NOTE	REF NO	PART NUMBER	QTY	PART NAME	NOTE	REF NO	PART NUMBER	QTY	PART NAME
	1	5G1994	1	DUCT-AIR (RH)					
		5G1892	1	DUCT-AIR (LH)					
	2	5G1993	6	DIFFUSER AS-BALL					
	3	4S4465	26	SCREW-TRUSS HEAD					
		4B4276	26	WASHER					
	4	5G4341	1	DUCT (RH)					
		5G4342	1	DUCT (LH)					
	5	7P4749	6	LOUVER AS					
	6	5G2320	2	WINGNUT AS					
	7	5G1765	1	DUCT AS-AIR					
		5G0149	1	INSULATION					
BD	8	6V1359		SEAL					
BD	9	5P5944		TRIM					
BE	10	5P1473		HOSE					
Y	11	5G2055	1	PRESSURIZER GP					
	12	2J6540	2	CLAMP					

B-USE AS REQUIRED
D-ORDER BY THE METER
E-ORDER BY THE CENTIMETER

Y-SEPARATE ILLUSTRATION

B-344525 EP

7311

5G2002 PRESSURIZER GP-CAB
5G2055-Page 194.11
Part Of 5G0001 Rollover Ar
An Attachment

CAB, GAUGES AND ACCESSORIES

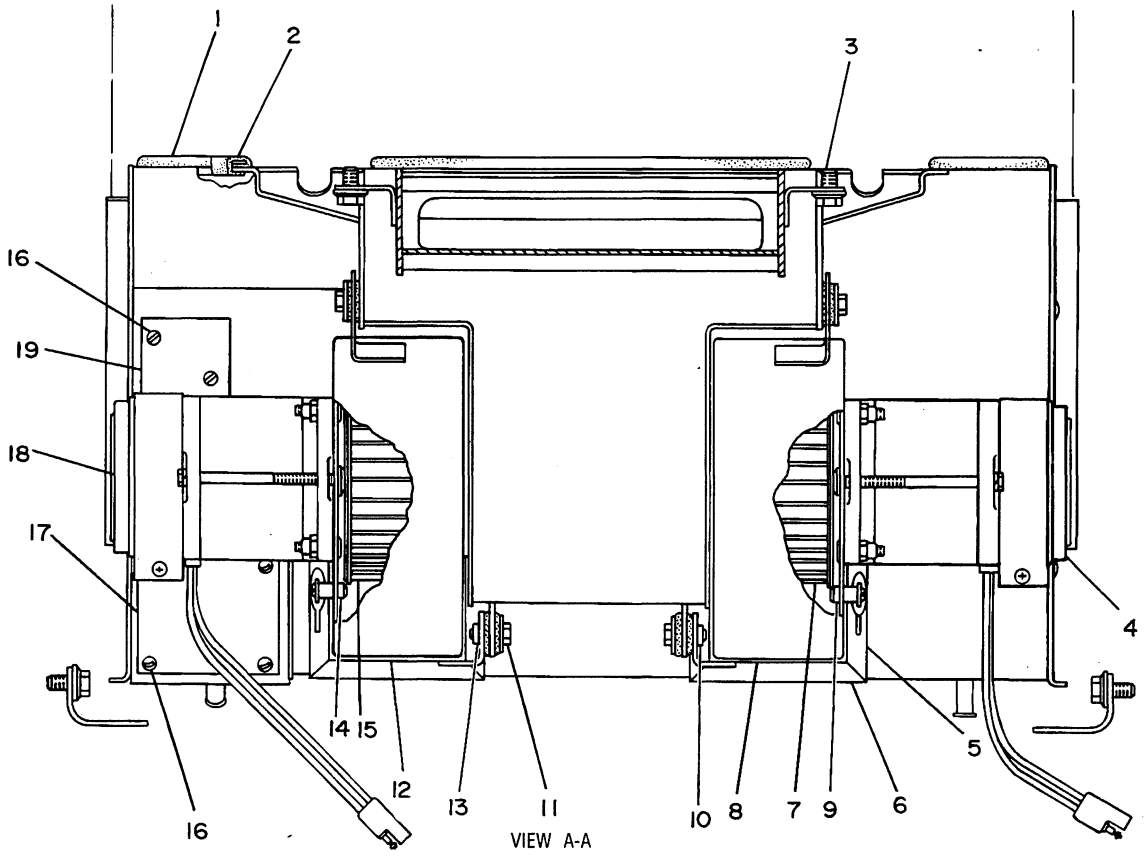

NOTE	REF NO	PART NUMBER	QTY	PART NAME
BD	1	6V0487		SEAL
BD	2	6V0487		SEAL
	3	0T0102	2	BOLT
		5P1075	2	WASHER-HARD
	4	5G1841	1	MOTOR AS-12 VALVE
BD	5	5P7502		SEAL
BD	6	5P7502		SEAL
C	7	3V0255	1	BLOWER AS
		3B9191	1	SETSCREW-SOCKET
	8	5G1851	1	HOUSING AS
C		9S2544	3	SCREW-HEX HEAD
	9	6D4299	2	NUT-WELD
	10	9F6445	1	NUT
	11	0S1615	6	BOLT
		5K6046	8	WASHER
		5G2308	6	SPACER
		8K1433	6	GROMMET
	12	5G1845	1	HOUSING AS
C		9S2544	3	SCREW-HEX HEAD
	13	9F6445	1	NUT
	14	6D4299	2	NUT-WELD
C	15	3V0254	1	BLOWER AS
		3B9191	1	SETSCREW-SOCKET
	16	4M8474	6	SCREW-TAPPING
	17	5G1858	1	COVER AS
BD		5P5945		SEAL
	18	5G1842	1	MOTOR AS-12 VALVE
	19	5G0493	1	COVER AS
BD		5P5922		SEAL

B-USE AS REQUIRED
C-CHANGE FROM PREVIOUS TYPE
D-ORDER BY THE METER

B-332105 EP

7311 **5G2055 PRESSURIZER GP-PART 1 OF 3**
Part Of 5G2002 Pressurizer-Cab
An Attachment

CAB, GAUGES AND ACCESSORIES

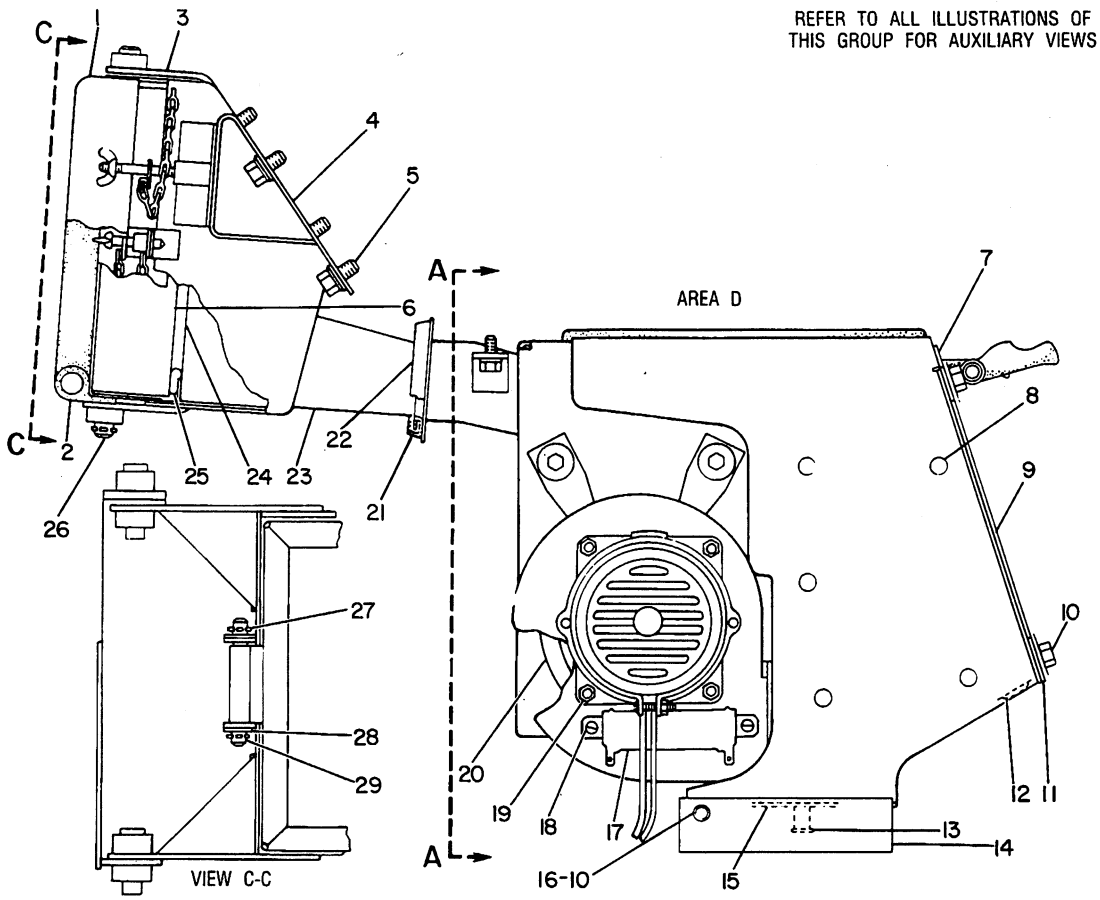

NOTE	REF NO	PART NUMBER	QTY	PART NAME	NOTE	REF NO	PART NUMBER	QTY	PART NAME
	1	5G1890	1	TRAY AS		26	0S0175	2	PIN-CLEVIS
D	2	6V0486		SEAL (1.2M)	C		3B4617	2	COTTER
	3	5G1914	1	BRACKET AS	C	27	3B4615	2	PIN-COTTER
	4	5G1916	1	BRACKET AS	C	28	4B4278	2	WASHER
	5	2H3755	4	BOLT	C	29	5G2854	1	PIN
		5P4116	4	WASHER					
	6	5G1913	1	FILTER					
D	7	5P5922		SEAL (.6M)					
	8	7L6479	10	PLUG-BUTTON					
D	9	5P5672		SEAL (.01M)					
	10	0L1351	8	BOLT					
D	11	5P5663		SEAL (.6M)					
	12	6K6361	1	BUTTON-PLUG					
	13	1J0245	2	PLUG-PROTECTIVE					
	14	6S9955	2	ANGLE					
	15	5G1860	1	HOUSING AS					
	16	5P1075	4	WASHER-HARD					
	17	5G1949	2	RESISTOR					
	18	4B1232	4	SCREW-MACHINE					
	19	5K9214	8	NUT					
	20	5G1889	4	SEAL					
D	21	6V0488		SEAL (.08M)					
D	22	6V0488		SEAL (.3M)					
	23	5G1895	1	HOUSING AS					
D	24	6V0488		SEAL (.4M)					
D	25	6V0488		SEAL (32M)					

C-CHANGE FROM PREVIOUS TYPE
D-ORDER BY THE METER

B-172871 EP

7311 **5G2055 PRESSURIZER GP-PART 2 OF 3**

Part Of 5G2002 Pressurizer-Cab
An Attachment

CAB, GAUGES AND ACCESSORIES

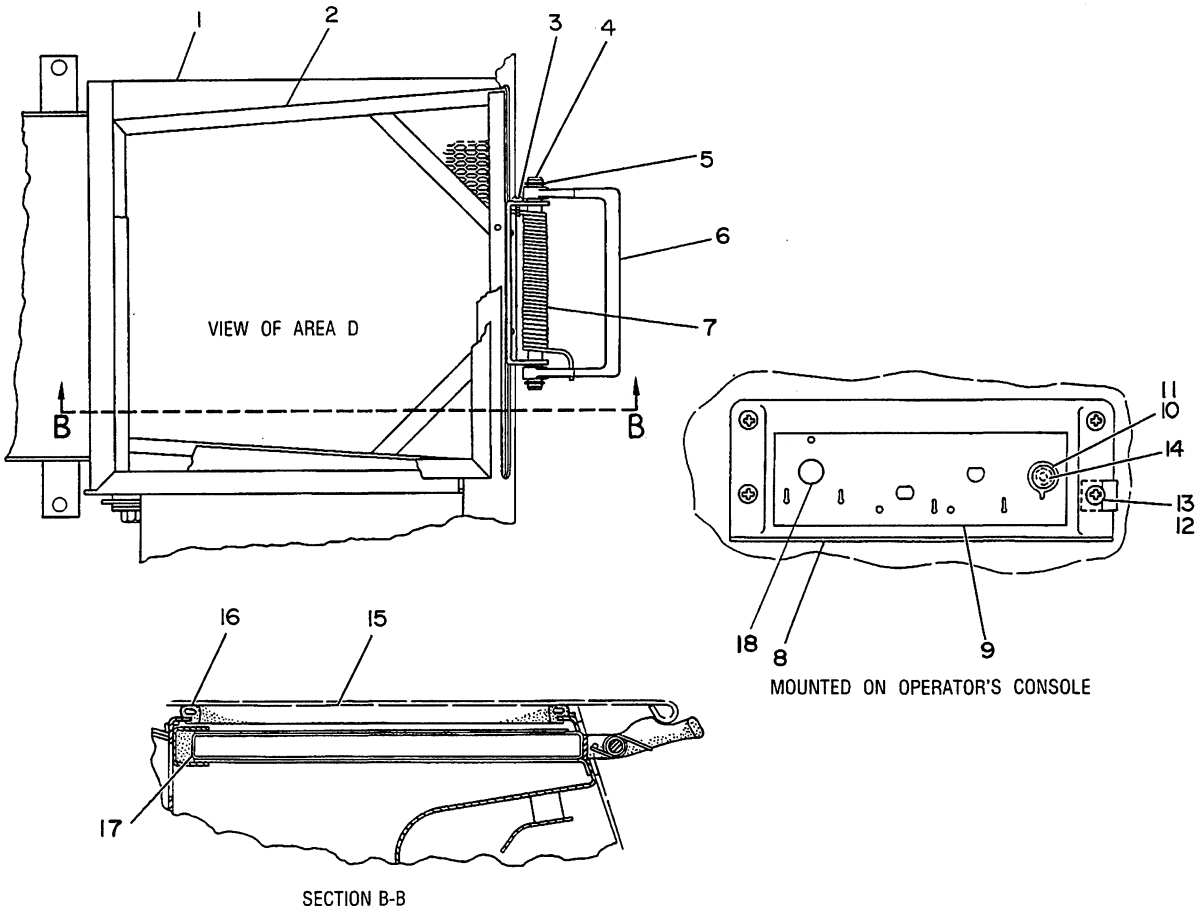

NOTE	REF NO	PART NUMBER	QTY	PART NAME	NOTE	REF NO	PART NUMBER	QTY	PART NAME
	1	5G1886	2	SEAL					
	2	5G1827	1	FILTER AS					
	3	4B1221	1	SCREW-MACHINE					
	4	5G1829	1	SHAFT					
	5	2H3429	2	RING-RETAINING					
	6	5G1835	1	HANDLE					
	7	5G1839	1	SPRING					
	8	5G2415	1	PANEL (MOUNTED ON OPERATOR'S CONSOLE)					
	9	5G0230	1	PLATE					
	10	2V0099	1	KNOB					
	11	6P3236	1	SWITCH AS					
		6V8362	5	SCREW-MACHINE					
		9B7233	5	LOCKWASHER					
	12	8K4112	4	NUT-RETAINER					
	13	5P2669	4	SCREW-MACHINE					
C	14	2P4339	1	NUT-JAM					
BD	15	6V0487		SEAL					
BD	16	6V0487		SEAL					
BD	17	5P7036		SEAL					
C	18	4H3001	1	PLUG-BUTTON					

B-USE AS REQUIRED
C-CHANGE FROM PREVIOUS TYPE
D-ORDER BY THE METER

B-332106 EP

7311

5G2055 PRESSURIZER GP-PART 3 OF 3
Part Of 5G2002 Pressurizer-Cab
An Attachment

CAB, GAUGES AND ACCESSORIES

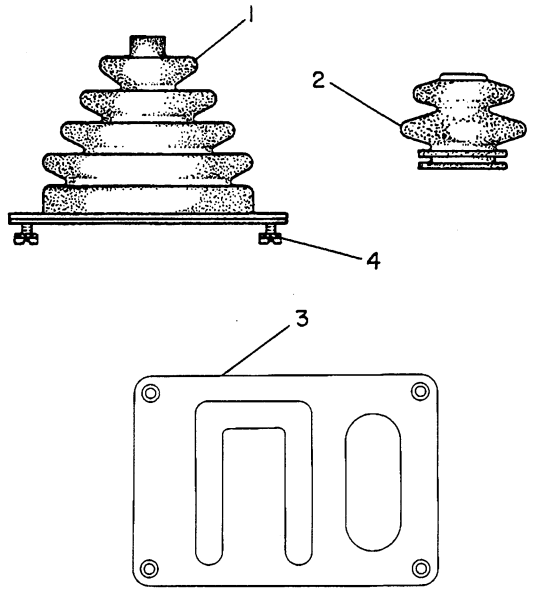

NOTE	REF NO	PART NUMBER	QTY	PART NAME
B	1	5GO475	1	BOOT AS
B	2	5GO432	1	BOOT
	3	5G2288	1	COVER
	4	2N3479	4	SCREW
		9F8125	4	LOCKWASHER
BF		4B1281	4	SCREW-MACHINE
YF		5GO521	1	MOUNTING GP-ROPS

B-USE AS REQUIRED
F-NOT SHOWN
Y-SEPARATE ILLUSTRATION

V-482430 EP

7335 **5G2293 MOUNTING GP-CAB**

5GO521-Page 195
Part Of 8Y1769 ROPS Ar-Enclosed
Replaced By 5G2294-Page 194.14, An Attachment

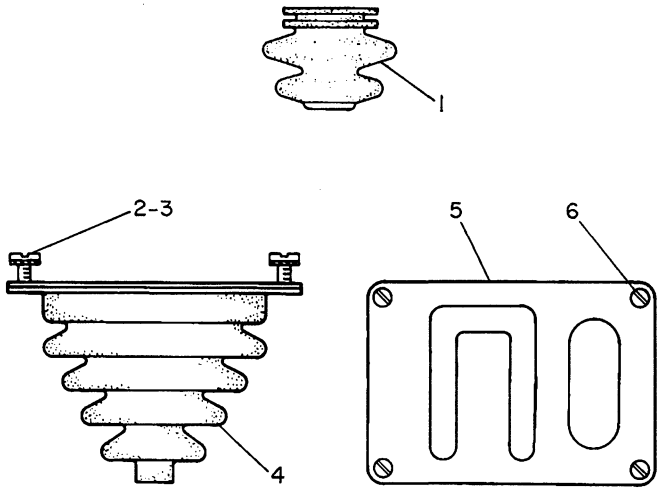

NOTE	REF NO	PART NUMBER	QTY	PART NAME
B	1	5GO432	1	BOOT
	2	2N3479	4	SCREW
	3	9F8125	4	LOCKWASHER
B	4	5GO475	1	BOOT AS
	5	5G2288	1	COVER
	6	4B1281	4	SCREW-MACHINE
YF		5GO521	1	MOUNTING GP-ROPS

B-USE AS REQUIRED
F-NOT SHOWN
Y-SEPARATE ILLUSTRATION

B-487171 EP

7266 **5G2294 CAB GP-MOUNTING**

5GO521-Page 195
Part Of 8Y1769 ROPS Ar-Enclosed
An Attachment

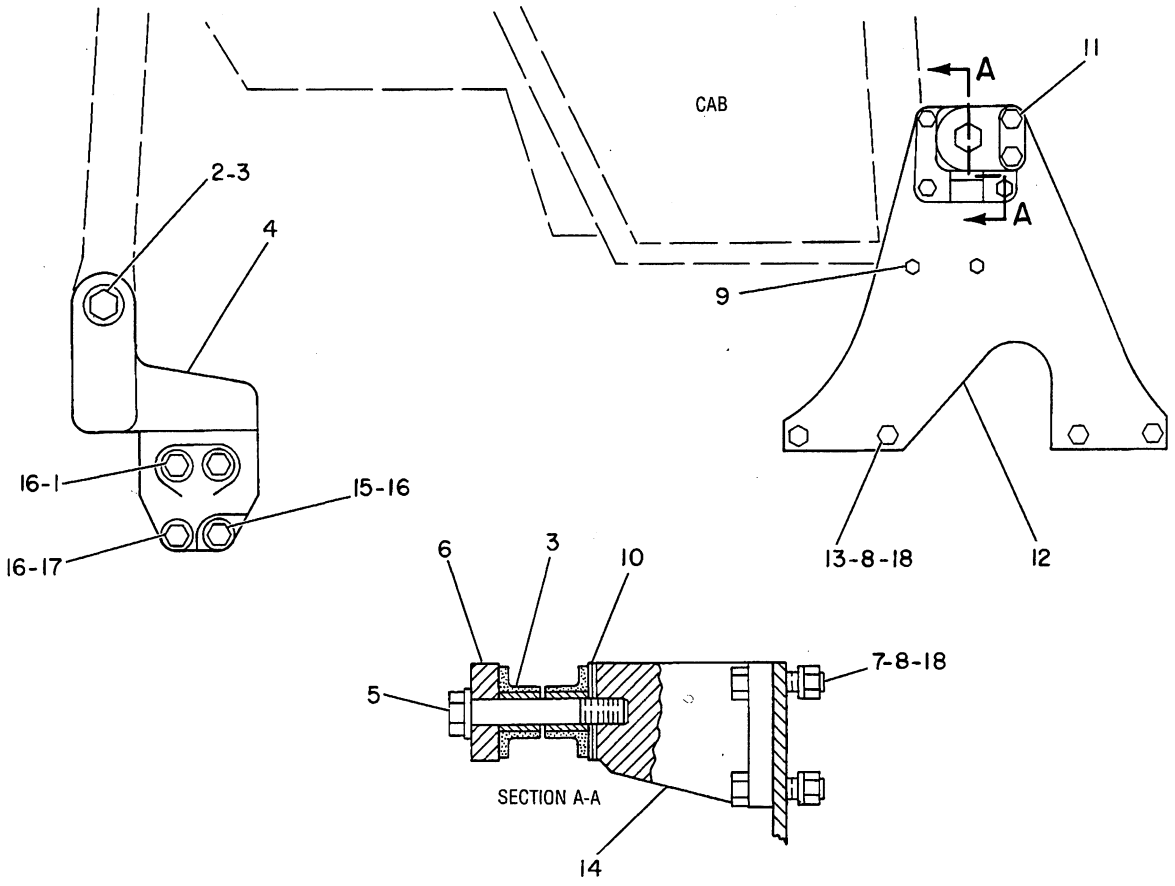

NOTE	REF NO	PART NUMBER	QTY	PART NAME	NOTE	REF NO	PART NUMBER	QTY	PART NAME
	1	1D4630	4	BOLT					
	2	5F9338	2	BOLT					
C		2J3507	2	NUT-FULL					
	3	8P2575	8	BUSHING					
	4	6S9723	1	BRACKET (RH)					
		6S9737	1	BRACKET (LH)					
	5	5B5473	2	BOLT					
C		3K5234	2	WASHER-HARD					
	6	5G0450	2	CAP					
	7	1D4608	8	BOLT					
C	8	2J3506	12	NUT-FULL					
	9	0S1587	4	BOLT					
B	10	6S9814	6	SHIM (2.5MM THK)					
	11	1D4616	4	BOLT					
	12	5G0178	2	PLATE					
C	13	1A8063	8	BOLT					
	14	5G0517	1	BRACKET AS (RH)					
		5G0518	1	BRACKET AS (LH)					
	15	0S1973	2	BOLT					
	16	9H1031	8	WASHER-HARD					
	17	1D4627	2	BOLT					
C	18	5P8248	12	WASHER-HARD					

B-USE AS REQUIRED
C-CHANGE FROM PREVIOUS TYPE

B-341392 EP

7266 **5G0521 MOUNTING GP-ROPS**

Also Part Of 8Y1147 ROPS Ar, 5G2293, 5G2294 Mounting An Attachment

CAB, GAUGES AND ACCESSORIES

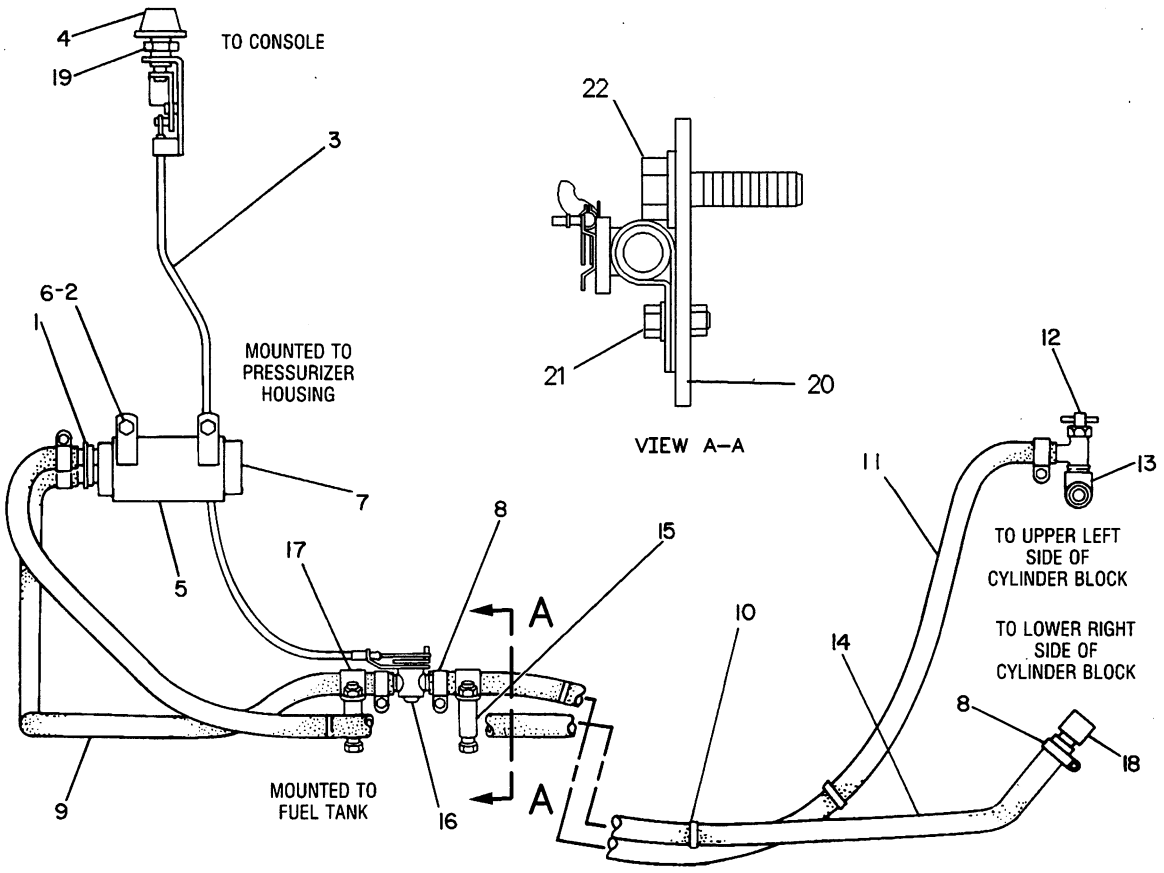

NOTE	REF NO	PART NUMBER	QTY	PART NAME
	1	5G0127	1	COVER AS
BD		5P5922		SEAL (.045M)
	2	5S7349	4	BOLT
		8T4205	4	WASHER-HARD
	3	5G2416	1	CABLE AS-FLOW
	4	2V0099	1	KNOB
	5	5G1920	1	BRACKET AS (RH)
		5G1923	1	BRACKET AS (LH)
				(EACH INCLUDES)
	6	9F6445	2	NUT
	7	5G0592	1	COIL-HEATER
	8	5D1026	6	CLAMP-HOSE
CE	9	5P0767		HOSE (130CM)
C	10	6K0806	6	STRAP-CABLE
E	11	5P0767		HOSE (190CM)
C	12	8F8151	1	COCK-SHUT-OFF
	13	6B7639	1	TEE-SERVICE
E	14	5P0767		HOSE (290CM)
B	15	3H4656	2	SPACER
	16	8S0932	1	VALVE-CONTROL
	17	4D6672	2	CLIP
B		4L6459	2	BOLT
		6V8801	2	NUT
		5P1075	2	WASHER-HARD
C	18	323631	1	ELBOW
C	19	2P4339	1	NUT-JAM

NOTE	REF NO	PART NUMBER	QTY	PART NAME
B	20	8Y7515	1	PLATE
B	21	5M3062	2	BOLT
B	22	5P2566	1	BOLT
B		8T4223	1	WASHER-HARD

B-USE AS REQUIRED
C-CHANGE FROM PREVIOUS TYPE
D-ORDER BY THE METER
E-ORDER BY THE CENTIMETER

R-534114 EP

7304 **5G0537 HEATER GP-CAB**

Part Of 8Y1769 ROPS Ar-Enclosed
An Attachment

MEMORANDA

CAB, GAUGES AND ACCESSORIES

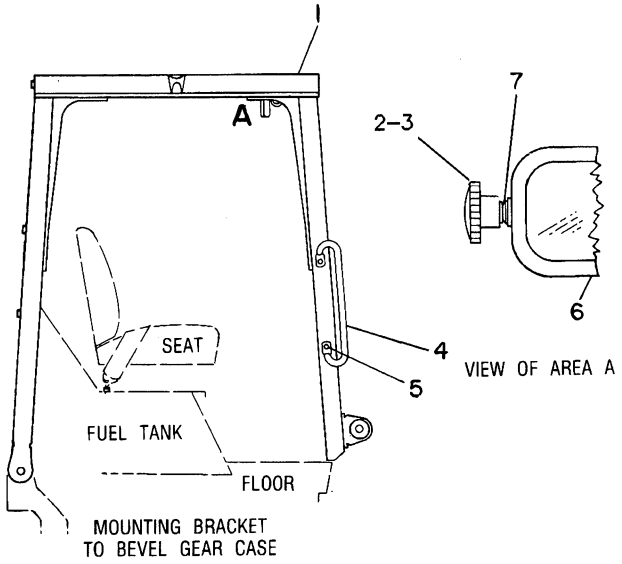

NOTE	REF NO	PART NUMBER	QTY	PART NAME
	1	5G6520	1	ROLLOVER AS
C		7X0937	1	PLATE-ROPS/FOPS
C		7B3028	4	SCREW-DRIVE
	2	1D4677	2	BOLT-ROUND HEAD
	3	6D6812	2	KNOB AS
	4	5G1132	2	GRAB HANDLE
	5	8T9383	4	BOLT
		5P1076	4	WASHER-HARD
	6	5P6875	1	MIRROR
	7	5P1075	4	WASHER-HARD

C-CHANGE FROM PREVIOUS TYPE

R-495465 EP

7323 **5G0673 ROPS GP**

Part Of 8Y1147 ROPS Ar
An Attachment

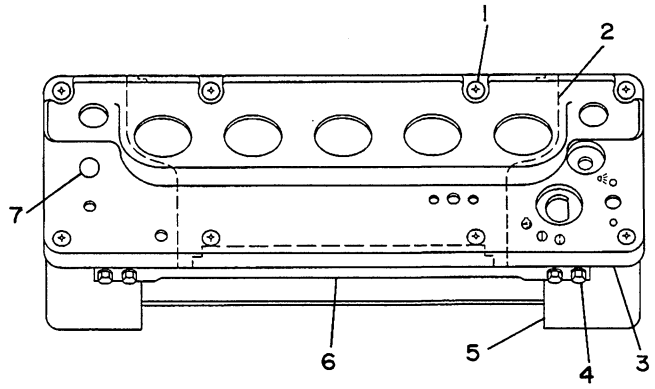

NOTE	REF NO	PART NUMBER	QTY	PART NAME
	1	9M1758	8	SCREW-TRUSS HEAD
	2	5G3861	1	GUARD
C	3	5G3900	1	PANEL-DASH
	4	5K0906	4	BOLT
		8T4224	4	WASHER-HARD
	5	5G0338	1	PLATE AS
	6	5G1690	1	PLATE AS
C	7	2M4009	1	PLUG-BUTTON

C-CHANGE FROM PREVIOUS TYPE

B-513763 EP

7314 **5G1020 DASH GP**

CAB, GAUGES AND ACCESSORIES

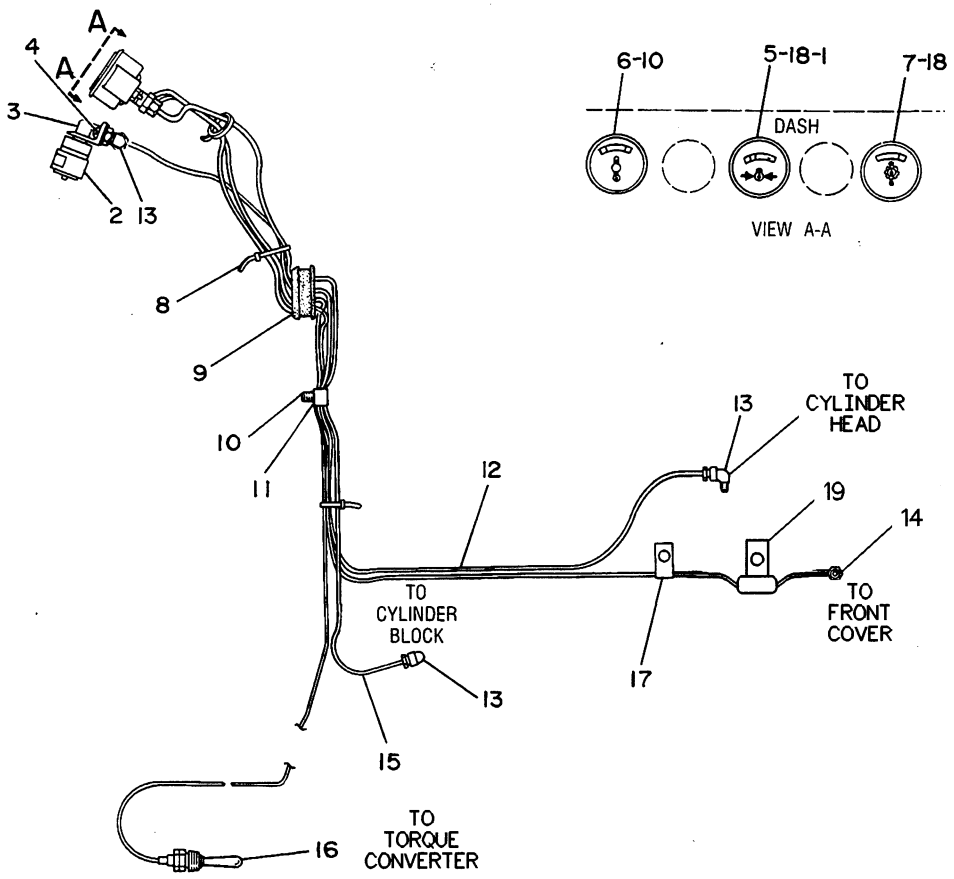

NOTE	REF NO	PART NUMBER	QTY	PART NAME	NOTE	REF NO	PART NUMBER	QTY	PART NAME
	1	5P2949	1	CONNECTOR-TUBE					
	2	7S0687	1	INDICATOR (AIR FILTER)					
	3	1P6886	1	ADAPTER					
	4	9M1758	2	SCREW-TRUSS HEAD					
		6V8185	2	NUT					
		8T4205	2	WASHER-HARD					
C	5	1W0705	1	INDICATOR (OIL PRESSURE)					
C	6	1W5928	1	INDICATOR (WATER TEMPERATURE)					
C	7	1W0701	1	INDICATOR (OIL TEMPERATURE)					
	8	3S2093	3	STRAP-CABLE					
	9	5G1997	1	GROMMET					
	10	5P8167	1	BOLT					
		8T4896	1	WASHER-HARD					
	11	8M2770	1	CLIP					
D	12	5P5630		TUBE 1.43M(56.11IN)					
	13	5P6315	3	ELBOW-FLARELESS					
		5P6313	3	NUT-FLARELESS					
		5P6314	3	SLEEVE-FLARELESS					
C	14	6H6699	1	ADAPTER					
D	15	5P5630		TUBE 1M(39.38IN)					
	16	1S0666	1	ADAPTER					
	17	8M2772	2	CLIP					
C	18	6V3507	3	SEAL-RECTANGULAR					
	19	4D8948	1	CLIP					

C-CHANGE FROM PREVIOUS TYPE
D-ORDER BY THE METER

R-513764 EP

7455 **5G0142 GAUGE GP**

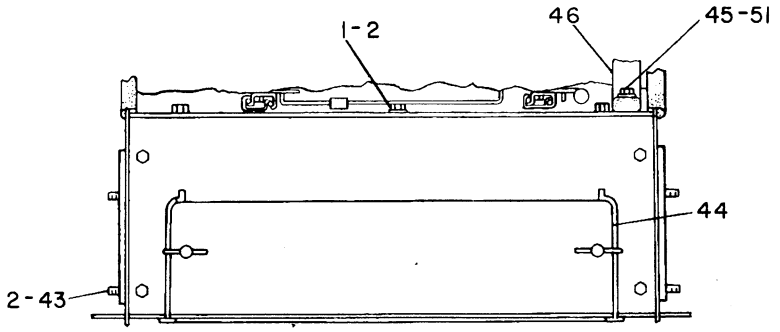

VIEW A-A

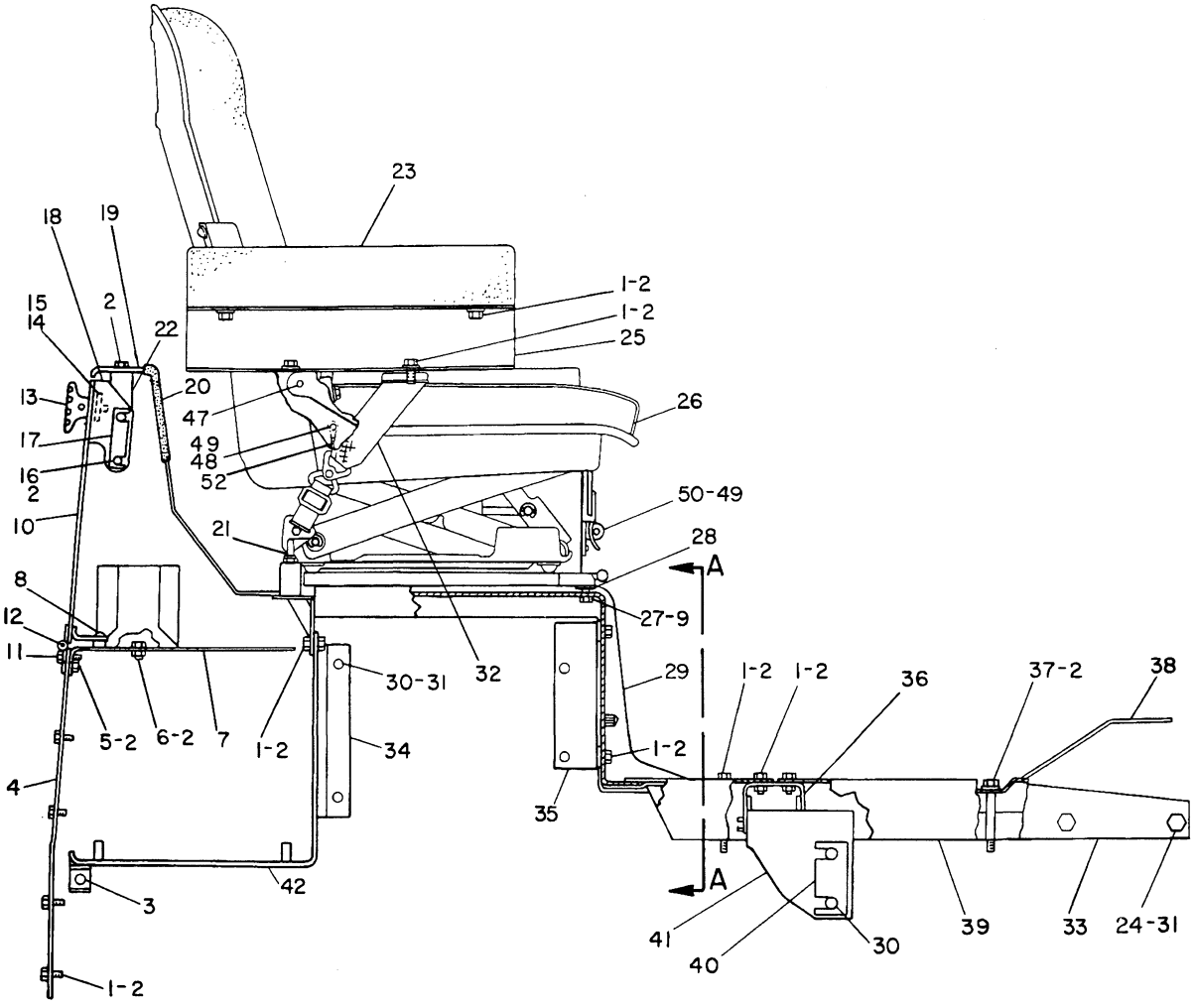

RIGHT SIDE VIEW

B-460033 EP

7312 **8Y0266 SEAT & SUPPORT GP**
S/N 1RJ1-986 & 2CJ1-391

CAB, GAUGES AND ACCESSORIES

NOTE	REF NO	PART NUMBER	QTY	PART NAME
	1	5M3062	42	BOLT
	2	5P1075	60	WASHER-HARD
	3	6V4432	2	BOLT
		8T4223	2	WASHER-HARD
B		6S9996	2	SHIM 1.0MM(.039IN)THK
B		6S9995	1	SHIM 1.6MM(.062IN)THK
	4	8Y1242	1	PLATE
	5	6V8801	4	NUT
	6	5P8167	2	BOLT
	7	6S9827	1	PLATE AS
	8	9M5617	2	GROMMET
	9	5P4116	4	WASHER
	10	5G0140	1	COVER AS
	11	8D5476	4	STUD-WELD
	12	3D9143	2	HINGE-BUTT
	13	7S2043	1	KNOB AS
		2D4295	1	KNOB
		3H6660	1	PIN-SPRING
		7S2042	1	STUD
	14	9S8230	1	PLATE AS
	15	4H1641	1	PIN-SPRING
	16	4L6454	4	BOLT
B	17	5G1272	5	SHIM .80MM(.031IN)THK
B		5G2326	2	SHIM 1.5MM(.059IN)THK
	18	5G0010	1	PLATE AS
		8F5240	1	STAPLE
	19	5G0129	1	PLATE
BD	20	5P9205		SEAL
	21	8S0933	2	EYEBOLT
		6V8184	2	NUT-FULL
	22	5G1722	2	PLATE AS
				EACH INCLUDES:
		9F2978	1	NUT-WELD
		5G1713	1	PLATE
	23	8Y0780	2	CUSHION AS
	24	5P2566	4	BOLT
		6V8188	4	NUT
	25	8Y0781	2	PLATE
Y	26	6S7596	1	SEAT GP
	27	6V8189	4	NUT
	28	7X0579	4	WASHER-HARD
	29	5G0132	1	SUPPORT AS
		9F2978	7	NUT-WELD
	30	8T8917	8	BOLT
	31	5P1076	8	WASHER-HARD
Y	32	7V9507	1	SEAT BELT GP
	33	5G0941	1	PLATE AS-RH
		5G0942	1	PLATE AS-LH
B	34	5G0003	2	SHIM 1.0MM(.039IN)THK
B		5G0002	1	SHIM 1.6MM(.062IN)THK
	35	5G0083	1	PLATE (L.H.)
		5G0082	1	PLATE (R.H.)
	36	5G0934	1	PLATE AS
		9F2978	1	NUT-WELD
	37	7X0290	4	BOLT
	38	5G0121	1	PLATE
	39	5G6187	1	PLATE AS-LH
		1V7801	2	SPACER
		5G6181	1	PLATE AS-RH
		1V7801	2	SPACER
B	40	6S9998	2	SHIM 1.0MM(.039IN)THK
B		6S9997	1	SHIM 2.0MM(.079IN)THK
	41	5G0932	1	PLATE AS
	42	6S9925	1	BOX AS
		9F2978	4	NUT-WELD
	43	8T2502	4	BOLT
	44	5G0053	1	PLATE AS
		2V0520	2	STRIP
		5G1174	2	LATCH AS
	45	9B7237	2	BOLT
		8T4896	2	WASHER-HARD
	46	5G2437	1	COMPARTMENT AS
	47	6K3273	2	RIVET-POP
		6K3274	2	PLATE-RIVET
	48	9M5733	1	RIVET-POP
	49	4F2320	5	WASHER
	50	9F6595	1	CATCH
		9M5732	4	RIVET-POP
		9F6596	1	HOOK
	51	1K5888	2	SPACER
	52	5P7957	1	LANYARD
A		5P7958	1	SLEEVE

A-NOT PART OF THIS GROUP
B-USE AS REQUIRED
D-ORDER BY THE METER
Y-SEPARATE ILLUSTRATION

460034 EP

7312 **8Y0266 SEAT & SUPPORT GP**
S/N 1RJ1-986 & 2CJ1-391
6S7596-Page 202 & 7V9507-Page 204

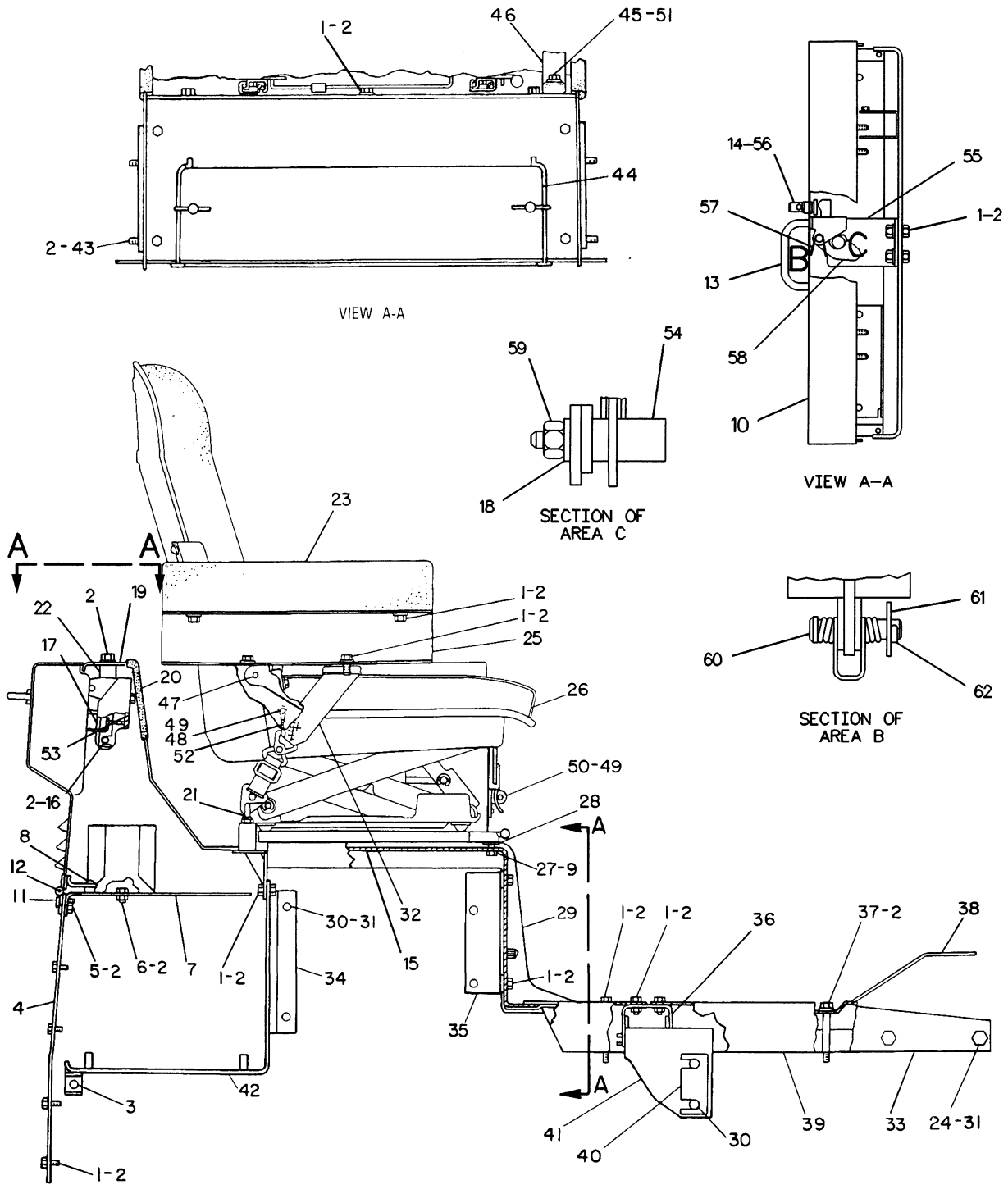

RIGHT SIDE VIEW

R-486446 EP

7312

8Y0266 SEAT & SUPPORT GP

Type 1. S/N 1RJ987-Up & 2CJ392-Up

CAB, GAUGES AND ACCESSORIES

NOTE	REF NO	PART NUMBER	QTY	PART NAME
C	1	5M3062	44	BOLT
C	2	5P1075	62	WASHER-HARD
	3	6V4432	2	BOLT
		8T4223	2	WASHER-HARD
B		6S9996	2	SHIM 1.0MM(.039IN)THK
B		6S9995	1	SHIM 1.6MM(.062IN)THK
	4	8Y1242	1	PLATE
	5	6V8801	4	NUT
	6	5P8167	2	BOLT
	7	6S9827	1	PLATE AS
	8	9M5617	2	GROMMET
	9	5P4116	4	WASHER
C	10	8Y1224	1	COVER AS
	11	8D5476	4	STUD-WELD
	12	3D9143	2	HINGE-BUTT
	13	8G0871	1	HANDLE
	14	9V0453	1	BUSHING
C	15	8Y2980	1	PLATE
	16	4L6454	4	BOLT
B	17	5G1272	5	SHIM .80MM(.031IN)THK
B		5G2326	2	SHIM 1.5MM(.059IN)THK
C	18	6V5839	1	WASHER
	19	5G0129	1	PLATE
BD	20	5P9205		SEAL
	21	8S0933	2	EYEBOLT
		6V8184	2	NUT-FULL
	22	5G1722	2	PLATE AS
				EACH INCLUDES:
		9F2978	1	NUT-WELD
		5G1713	1	PLATE
	23	8Y0780	2	CUSHION AS
	24	5P2566	4	BOLT
		6V8188	4	NUT
	25	8Y3193	2	PLATE AS
Y	26	6S7596	1	SEAT GP
	27	6V8189	4	NUT
	28	7X0579	4	WASHER-HARD
	29	5G0132	1	SUPPORT AS
		9F2978	7	NUT-WELD
	30	8T8917	8	BOLT
	31	5P1076	8	WASHER-HARD
Y	32	7V9507	1	SEAT BELT GP
	33	5G0941	1	PLATE AS-RH
		5G0942	1	PLATE AS-LH
B	34	5G0003	2	SHIM 1.0MM(.039IN)THK
B		5G0002	1	SHIM 1.6MM(.062IN)THK
	35	5G0083	1	PLATE (L.H.)
		5G0082	1	PLATE (R.H.)
	36	5G0934	1	PLATE AS
		9F2978	1	NUT-WELD
	37	7X0290	4	BOLT
	38	5G0121	1	PLATE
	39	5G6187	1	PLATE AS-LH
		1V7801	2	SPACER
		5G6181	1	PLATE AS-RH
		1V7801	2	SPACER
B	40	6S9998	2	SHIM 1.0MM(.039IN)THK
B		6S9997	1	SHIM 2.0MM(.079IN)THK
	41	5G0932	1	PLATE AS
	42	6S9925	1	BOX AS
		9F2978	4	NUT-WELD
	43	8T2502	4	BOLT
	44	5G0053	1	PLATE AS
		2V0520	2	STRIP
		5G1174	2	LATCH AS
	45	9B7237	2	BOLT
		8T4896	2	WASHER-HARD
	46	5G2437	1	COMPARTMENT AS
	47	6K3273	2	RIVET-POP
		6K3274	2	PLATE-RIVET
	48	9M5733	1	RIVET-POP
	49	4F2320	5	WASHER
	50	9F6595	1	CATCH
		9M5732	4	RIVET-POP
		9F6596	1	HOOK
	51	1K5888	2	SPACER
	52	5P7957	1	LANYARD
A		5P7958	1	SLEEVE
	53	8Y3547	1	PLATE AS
		9F2978	2	NUT-WELD (3/8-16 THD)
		4K9097	1	NUT-WELD (5/16-18 THD)
	54	8C3671	1	STRIKER-LATCH
	55	8Y1227	1	BRACKET AS
		9F2978	1	NUT-WELD
C	56	9V0450	1	PIN
C	57	8G0873	1	SPRING
C	58	7P7975	1	LATCH
C	59	8T4133	1	NUT
C	60	1S4244	1	PIN
	61	2V9166	1	WASHER
	62	3B4615	1	PIN-COTTER

A-NOT PART OF THIS GROUP
B-USE AS REQUIRED
C-CHANGE FROM PREVIOUS TYPE
D-ORDER BY THE METER
Y-SEPARATE ILLUSTRATION

486447 EP

7312 **8Y0266 SEAT & SUPPORT GP**

Type 1. S/N 1RJ987-Up & 2CJ392-Up

6S7596-Page 202 & 7V9507-Page 204

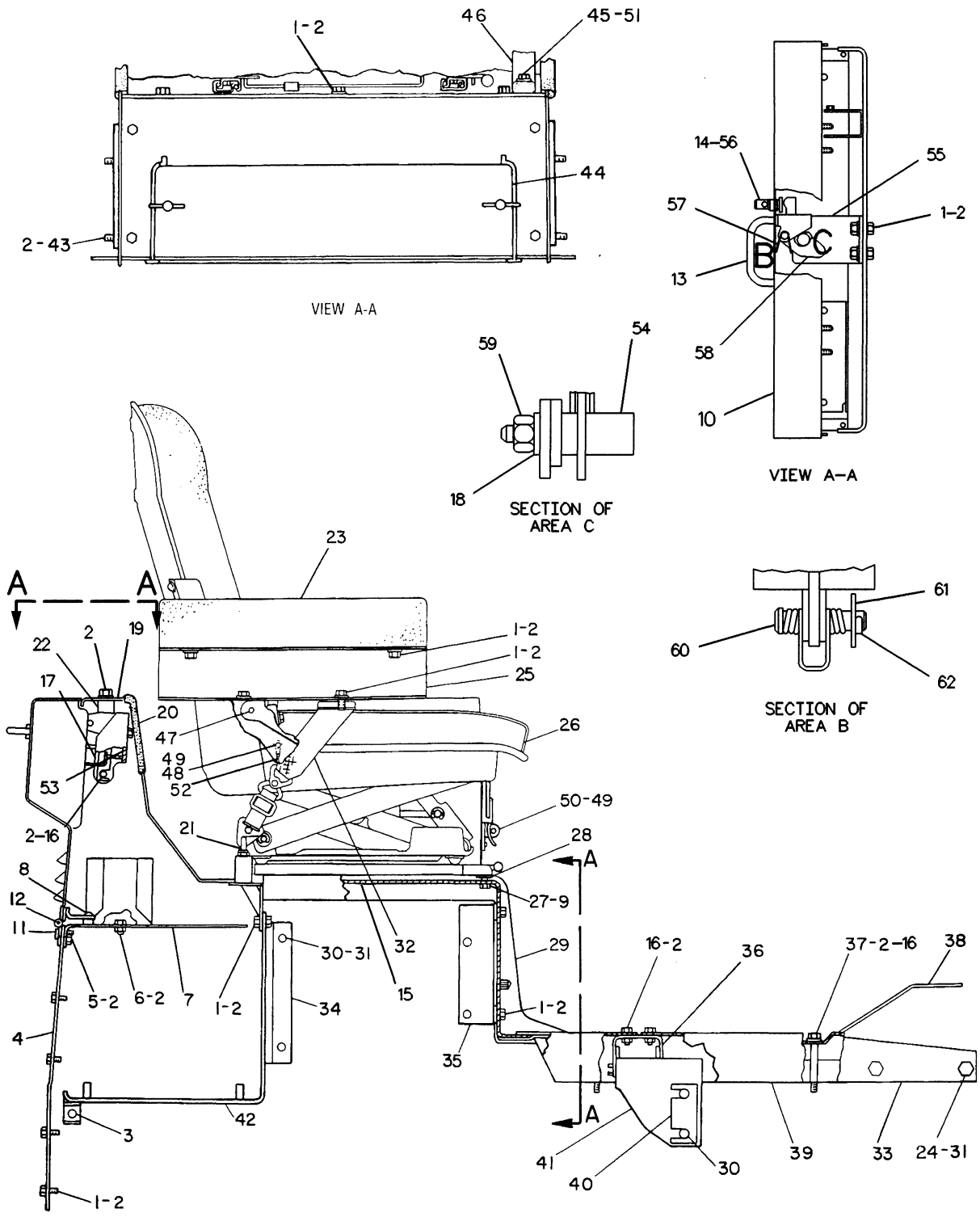

RIGHT SIDE VIEW

R-501874 EP

CAB, GAUGES AND ACCESSORIES

NOTE	REF NO	PART NUMBER	QTY	PART NAME
C	1	5M3062	36	BOLT
C	2	5P1075	62	WASHER-HARD
	3	6V4432	2	BOLT
		8T4223	2	WASHER-HARD
B		6S9996	2	SHIM 1.0MM(.039IN)THK
B		6S9995	1	SHIM 1.6MM(.062IN)THK
	4	8Y1242	1	PLATE
	5	6V8801	4	NUT
	6	5P8167	2	BOLT
	7	6S9827	1	PLATE AS
	8	9M5617	2	GROMMET
	9	5P4116	4	WASHER
C	10	8Y1224	1	COVER AS
	11	8D5476	4	STUD-WELD
	12	3D9143	2	HINGE-BUTT
	13	8G0871	1	HANDLE
	14	9V0453	1	BUSHING
C	15	8Y2980	1	PLATE
	16	4L6454	12	BOLT
B	17	5G1272	5	SHIM .80MM(.031IN)THK
B		5G2326	2	SHIM 1.5MM(.059IN)THK
	18	8T4121	1	WASHER
	19	5G0129	1	PLATE
BD	20	5P9205		SEAL
	21	8S0933	2	EYEBOLT
		6V8184	2	NUT-FULL
	22	5G1722	2	PLATE AS
				EACH INCLUDES:
		9F2978	1	NUT-WELD
		5G1713	1	PLATE
	23	8Y0780	2	CUSHION AS
	24	5P2566	4	BOLT
		6V8188	4	NUT
	25	8Y4966	2	PLATE AS
Y	26	6S7596	1	SEAT GP
	27	6V8189	4	NUT
	28	7X0579	4	WASHER-HARD
	29	5G0132	1	SUPPORT AS
		9F2978	7	NUT-WELD
	30	8T8917	8	BOLT
	31	5P1076	8	WASHER-HARD
Y	32	8Y4037	1	SEAT BELT GP
	33	5G0941	1	PLATE AS-RH
		5G0942	1	PLATE AS-LH
B	34	5G0003	2	SHIM 1.0MM(.039IN)THK
B		5G0002	1	SHIM 1.6MM(.062IN)THK
	35	5G0083	1	PLATE (L.H.)
		5G0082	1	PLATE (R.H.)
	36	5G0934	1	PLATE AS
		9F2978	1	NUT-WELD
	37	7X0290	4	BOLT
	38	5G0121	1	PLATE
	39	5G6187	1	PLATE AS-LH
		1V7801	2	SPACER
		5G6181	1	PLATE AS-RH
		1V7801	2	SPACER
B	40	6S9998	2	SHIM 1.0MM(.039IN)THK
B		6S9997	1	SHIM 2.0MM(.079IN)THK
	41	5G0932	1	PLATE AS
	42	6S9925	1	BOX AS
		9F2978	4	NUT-WELD
	43	8T2502	4	BOLT
	44	5G0053	1	PLATE AS
		2V0520	2	STRIP
		5G1174	2	LATCH AS
	45	9B7237	2	BOLT
		8T4896	2	WASHER-HARD
	46	5G2437	1	COMPARTMENT AS
	47	6K3273	2	RIVET-POP
		6K3274	2	PLATE-RIVET
	48	9M5733	1	RIVET-POP
	49	4F2320	5	WASHER
	50	9F6595	1	CATCH
		9M5732	4	RIVET-POP
		9F6596	1	HOOK
	51	1K5888	2	SPACER
	52	5P7957	1	LANYARD
A		5P7958	1	SLEEVE
	53	8Y3547	1	PLATE AS
		9F2978	2	NUT-WELD (3/8-16 THD)
		4K9097	1	NUT-WELD (5/16-18 THD)
	54	8C3671	1	STRIKER-LATCH
	55	8Y1227	1	BRACKET AS
		9F2978	1	NUT-WELD
C	56	9V0450	1	PIN
C	57	8G0873	1	SPRING
C	58	7P7975	1	LATCH
C	59	8T4133	1	NUT
C	60	1S4244	1	PIN
	61	2V9166	1	WASHER
	62	3B4615	1	PIN-COTTER

A-NOT PART OF THIS GROUP
B-USE AS REQUIRED
C-CHANGE FROM PREVIOUS TYPE
D-ORDER BY THE METER
Y-SEPARATE ILLUSTRATION

501875 EP

CAB, GAUGES AND ACCESSORIES

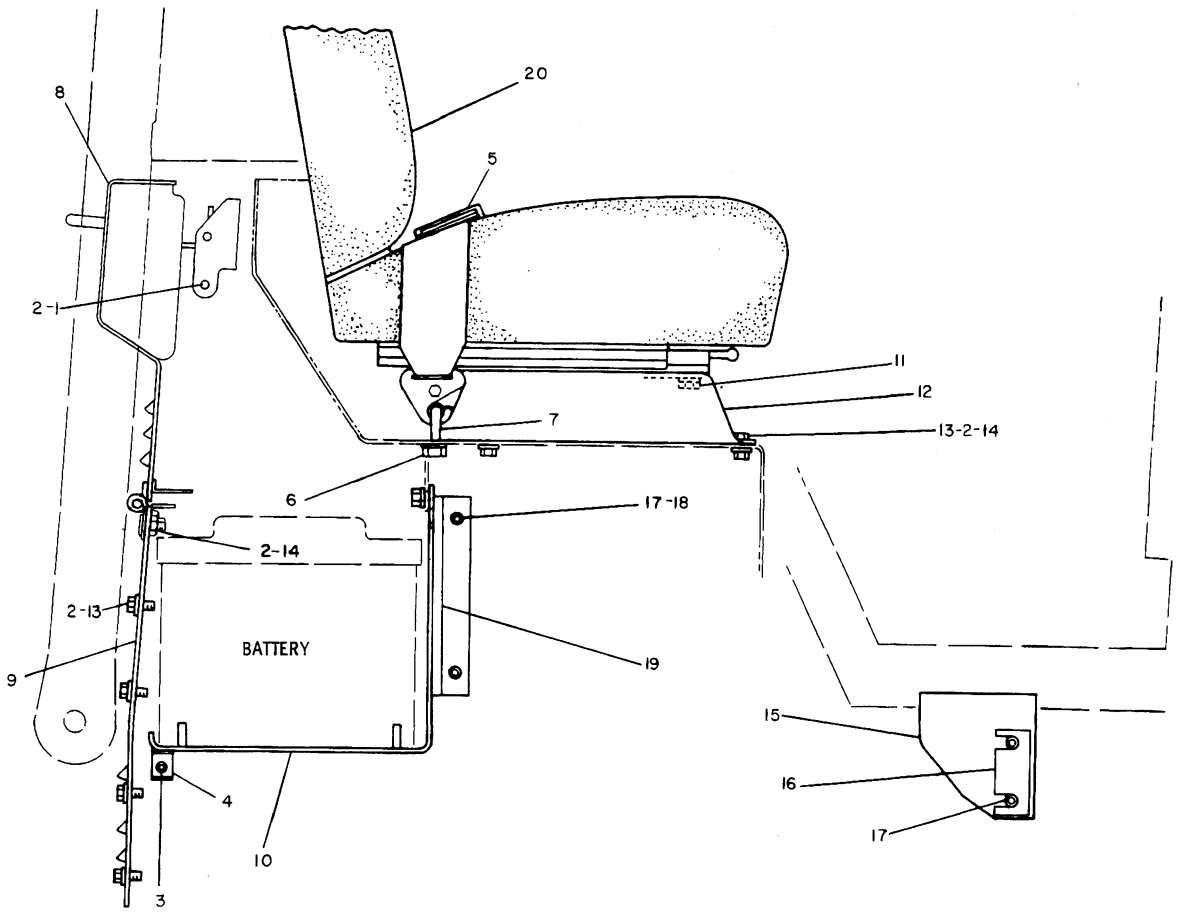

NOTE	REF NO	PART NUMBER	QTY	PART NAME	NOTE	REF NO	PART NUMBER	QTY	PART NAME
	1	0S1594	4	BOLT	J	20	6S4655	1	SEAT AS
	2	5P1075	22	WASHER-HARD			5P7957	1	LANYARD
B	3	6S9996	2	SHIM 1.0MM(.039IN)THK	A		5P7958	1	SLEEVE
B		6S9995	1	SHIM 1.6MM(.062IN)THK					
	4	0S1573	2	BOLT					THE FOLLOWING REPAIR
		5P8245	2	WASHER					KIT IS AVAILABLE:
Y	5	7V9507	1	SEAT BELT GP	J		8D9023	1	KIT-SLIDE RAIL
	6	8S0934	2	LOCKNUT-FLANGE					
	7	8S0933	2	EYEBOLT					
Y	8	8Y1223	1	COVER GP-REAR					
	9	8Y1242	1	PLATE					
	10	6S9925	1	BOX AS					
		9F2978	4	NUT-WELD					
	11	5S0003	4	NUT-FULL					
		5P4116	4	WASHER					
	12	6S4747	1	CHANNEL (R.H.)					
		6S4748	1	CHANNEL (L.H.)					
	13	0S0509	14	BOLT					
	14	9S8752	8	NUT-FULL					
	15	5G0932	1	PLATE AS					
B	16	6S9998	2	SHIM 1.0MM(.039IN)THK					
B		6S9997	1	SHIM 2.0MM(.079IN)THK					
	17	0S1595	8	BOLT					
	18	5P1076	4	WASHER-HARD					
B	19	5G0003	2	SHIM 1.0MM(.039IN)THK					
B		5G0002	1	SHIM 1.6MM(.062IN)THK					

A-NOT PART OF THIS GROUP
B-USE AS REQUIRED
Y-SEPARATE ILLUSTRATION

V-459337 EP

7312

8Y1177 SEAT & SUPPORT GP
Type 1. 8Y1223-Page 69, 7V9507-Page 204
Part Of 5G0001 Rollover Ar
An Attachment

CAB, GAUGES AND ACCESSORIES

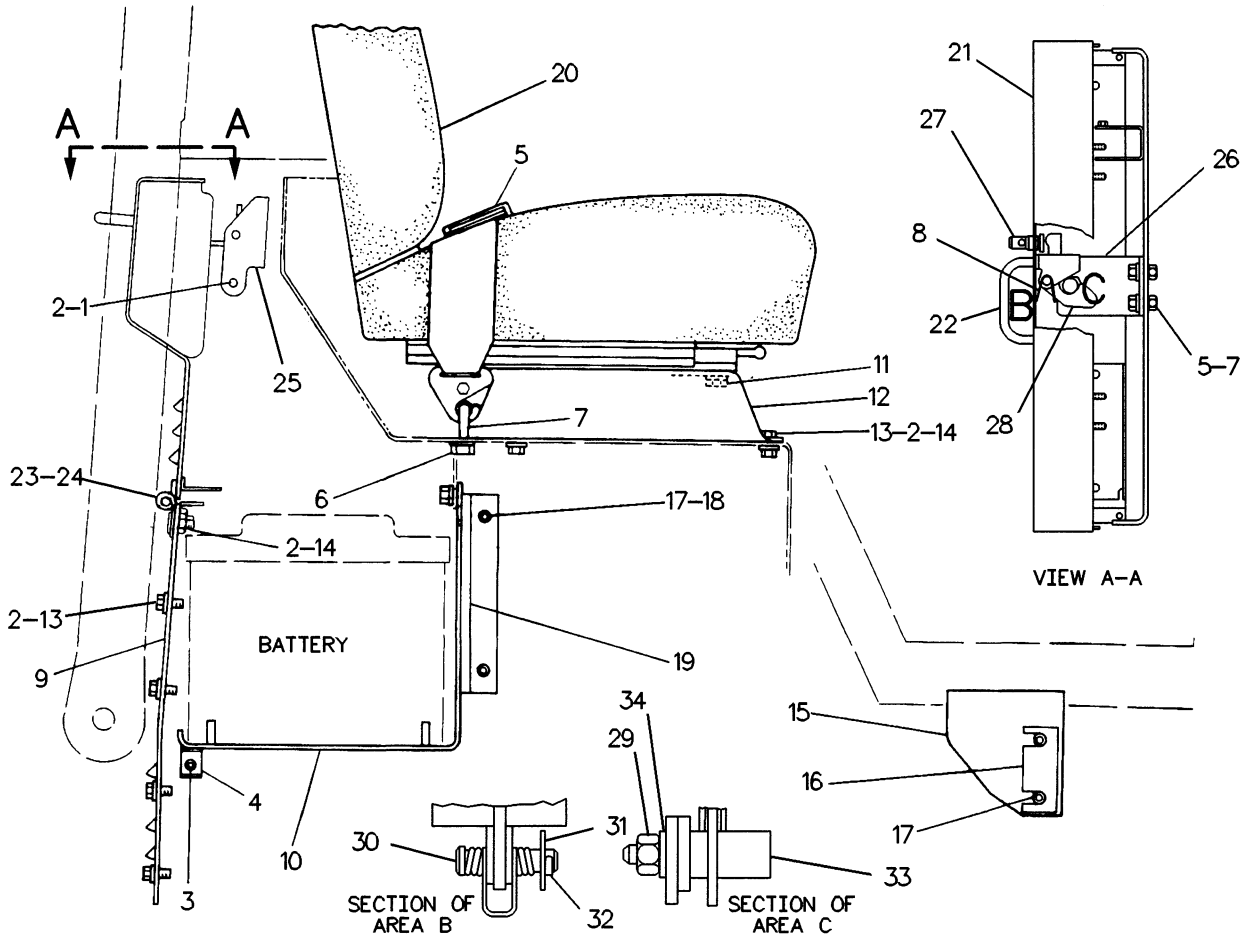

NOTE	REF NO	PART NUMBER	QTY	PART NAME
C	1	4L6454	4	BOLT
C	2	5P1075	24	WASHER-HARD
B	3	6S9996	2	SHIM 1.0MM(.039IN)THK
B		6S9995	1	SHIM 1.6MM(.062IN)THK
C	4	6V4432	2	BOLT
C		8T4223	2	WASHER-HARD
Y	5	7V9507	1	SEAT BELT GP
	6	8S0934	2	LOCKNUT-FLANGE
	7	8S0933	2	EYEBOLT
C	8	8G0873	1	SPRING
	9	8Y1242	1	PLATE
	10	6S9925	1	BOX AS
		9F2978	4	NUT-WELD
C	11	6V8189	4	NUT
		5P4116	4	WASHER
	12	6S4747	1	CHANNEL (R.H.)
		6S4748	1	CHANNEL (L.H.)
C	13	5M3062	16	BOLT
C	14	6V8801	8	NUT
	15	5G0932	1	PLATE AS
B	16	6S9998	2	SHIM 1.0MM(.039IN)THK
B		6S9997	1	SHIM 2.0MM(.079IN)THK
C	17	8T8917	8	BOLT
	18	5P1076	4	WASHER-HARD
B	19	5G0003	2	SHIM 1.0MM(.039IN)THK
B		5G0002	1	SHIM 1.6MM(.062IN)THK
J	20	6S4655	1	SEAT AS
		5P7957	1	LANYARD
A		5P7958	1	SLEEVE
C	21	8Y1224	1	COVER AS
		9V0453	1	BUSHING
	22	8G0871	1	HANDLE
	23	8D5476	4	STUD-WELD
	24	3D9143	2	HINGE-BUTT
C	25	8Y1228	1	PLATE AS
		9F2978	2	NUT-WELD (3/8-16 THD)
		4K9097	1	NUT-WELD (5/16-18 THD)
C	26	8Y1227	1	BRACKET AS
		9F2978	1	NUT-WELD
C	27	9V0450	1	PIN
C	28	7P7975	1	LATCH
M	29	8T4133	1	NUT
C	30	1S4244	1	PIN
	31	2V9166	1	WASHER
C	32	3B4615	1	PIN-COTTER
	33	8C3671	1	STRIKER-LATCH
	34	6V5839	1	WASHER
				THE FOLLOWING REPAIR KIT IS AVAILABLE:
J		8D9023	1	KIT-SLIDE RAIL

A-NOT PART OF THIS GROUP
B-USE AS REQUIRED
C-CHANGE FROM PREVIOUS TYPE
M-METRIC PART
Y-SEPARATE ILLUSTRATION

R-494809 EP

7312 **8Y1177 SEAT & SUPPORT GP**

Type 2. 7V9507-Page 204
Part Of 5G0001 Rollover Ar
An Attachment

CAB, GAUGES AND ACCESSORIES

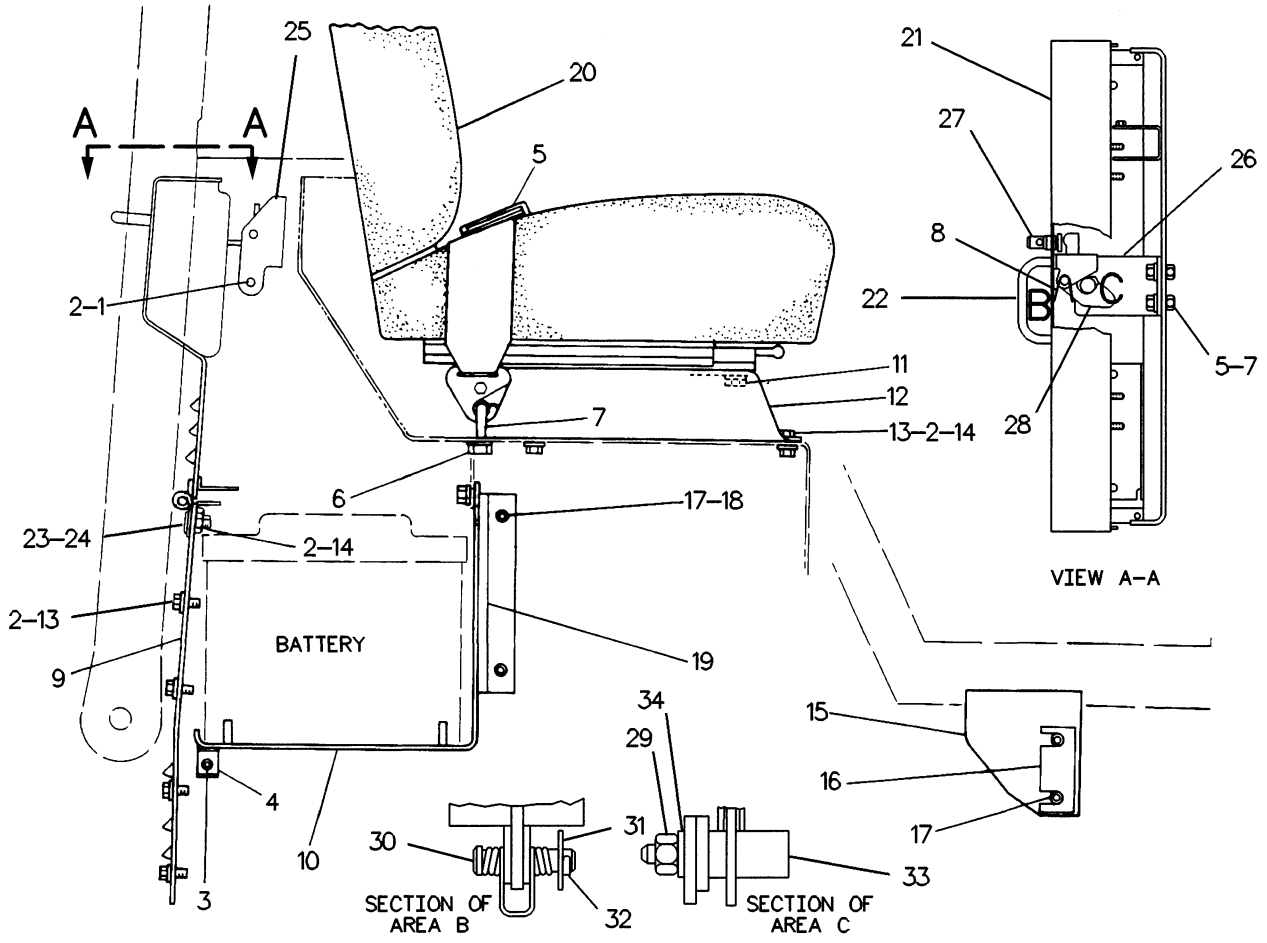

NOTE	REF NO	PART NUMBER	QTY	PART NAME
	1	4L6454	4	BOLT
	2	5P1075	24	WASHER-HARD
B	3	6S9996	2	SHIM 1.0MM(.039IN)THK
B		6S9995	1	SHIM 1.6MM(.062IN)THK
	4	6V4432	2	BOLT
		8T4223	2	WASHER-HARD
CY	5	8Y4037	1	SEAT BELT GP
	6	8S0934	2	LOCKNUT-FLANGE
	7	8S0933	2	EYEBOLT
	8	8G0873	1	SPRING
	9	8Y1242	1	PLATE
	10	6S9925	1	BOX AS
		9F2978	4	NUT-WELD
	11	6V8189	4	NUT
		5P4116	4	WASHER
	12	6S4747	1	CHANNEL (RH)
		6S4748	1	CHANNEL (LH)
	13	5M3062	16	BOLT
	14	6V8801	8	NUT
	15	5G0932	1	PLATE AS
B	16	6S9998	2	SHIM 1.0MM(.039IN)THK
B		6S9997	1	SHIM 2.0MM(.079IN)THK
	17	8T8917	8	BOLT
	18	5P1076	4	WASHER-HARD
B	19	5G0003	2	SHIM 1.0MM(.039IN)THK
B		5G0002	1	SHIM 1.6MM(.062IN)THK

NOTE	REF NO	PART NUMBER	QTY	PART NAME
J	20	6S4655	1	SEAT AS
		5P7957	1	LANYARD
A		5P7958	1	SLEEVE
	21	8Y1224	1	COVER AS
		9V0453	1	BUSHING
	22	8G0871	1	HANDLE
	23	8D5476	4	STUD-WELD
	24	3D9143	2	HINGE-BUTT
	25	8Y1228	1	PLATE AS
		9F2978	2	NUT-WELD (3/8-16THD)
		4K9097	1	NUT-WELD (5/16-18THD)
	26	8Y1227	1	BRACKET AS
		9F2978	1	NUT-WELD
	27	9V0450	1	PIN
	28	7P7975	1	LATCH
M	29	8T4133	1	NUT
	30	1S4244	1	PIN
	31	2V9166	1	WASHER
	32	3B4615	1	PIN-COTTER
	33	8C3671	1	STRIKER-LATCH
C	34	8T4121	1	WASHER
				THE FOLLOWING REPAIR
				KIT IS AVAILABLE:
J		8D9023	1	KIT-SLIDE RAIL
				(INCL WIRE &
				RH&LH ADJUSTERS)

A-NOT PART OF THIS GROUP
B-USE AS REQUIRED
C-CHANGE FROM PREVIOUS TYPE

M-METRIC PART
Y-SEPARATE ILLUSTRATION

R-497002 EP

7312 **8Y1177 SEAT & SUPPORT GP**

Type 3-8Y4037-Page 204
Part Of 5G0001 Rollover Ar
An Attachment

CAB, GAUGES AND ACCESSORIES

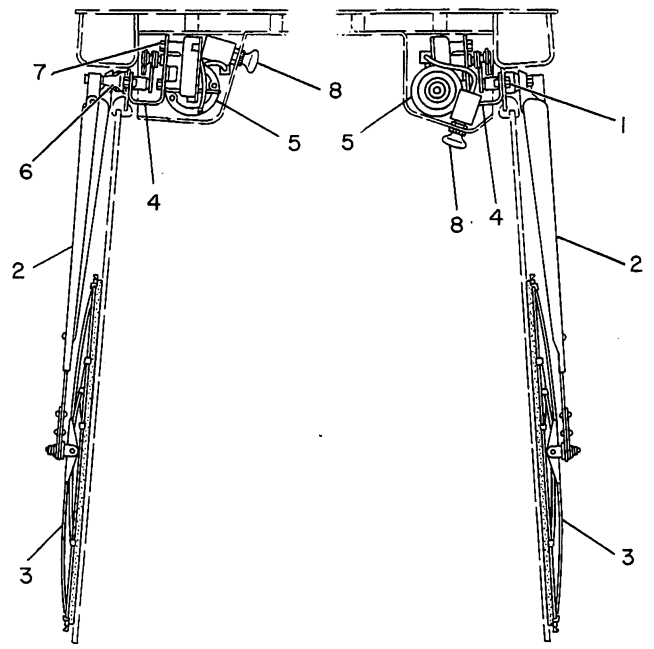

NOTE	REF NO	PART NUMBER	QTY	PART NAME
	1	0S1615	4	BOLT
		1B4330	4	NUT
C		3B4504	4	LOCKWASHER
	2	6S6898	2	ARM AS-WIPER
	3	6S6897	2	BLADE AS
C	4	6S7680	2	WIPER AS
				(EACH INCLUDES)
	5	6S7672	1	MOTOR AS-WIPER
		3Y1888	1	RECEPTACLE
		3Y1892	4	TERMINAL
C	6	3T3452	1	LINK AS-WIPER
CM	7	6V4298	3	BOLT
	8	6S6919	2	SWITCH-WIPER
				(EACH INCLUDES)
		3P3413	1	SHELL-MALE
		3P3410	1	TERMINAL-FEMALE
		3Y1889	1	RECEPTACLE
		3Y1893	4	TERMINAL

C-CHANGE FROM PREVIOUS TYPE
M-METRIC PART

B-475753 EP

7305 **5G0974 WIPER GP**
Part Of 5G0001 Rollover Ar
An Attachment

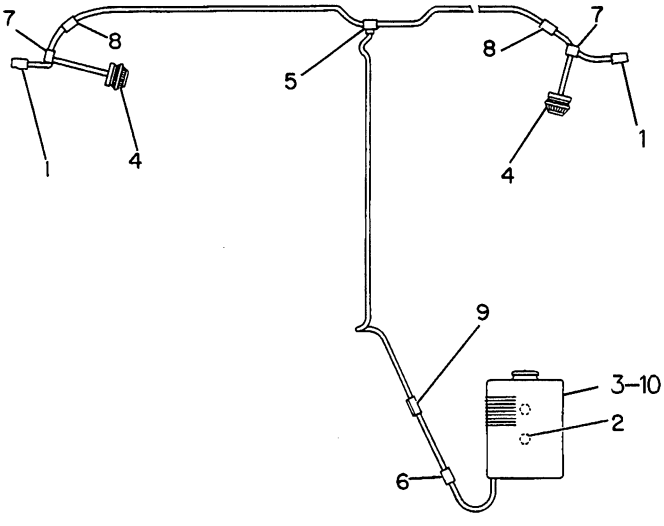

NOTE	REF NO	PART NUMBER	QTY	PART NAME
	1	8T7587	2	NOZZLE AS
		5P4116	2	WASHER
	2	2A0762	2	BOLT
		5P4115	2	WASHER
	3	5G0048	1	TANK & PUMP AS
C	4	5G4343	2	PUMP AS
C	5	5G0951	1	TEE
C	6	5G5863	1	REDUCER
C	7	5G5865	2	VALVE
C	8	5G5864	2	VALVE
C	9	8K6211	1	CLIP
	10	8Y4028	1	BRACKET

C-CHANGE FROM PREVIOUS TYPE

R-493538 EP

7306 **5G0049 WASHER GP-WINDSHIELD**
Part Of 5G0001 Rollover Ar
An Attachment

CAB, GAUGES AND ACCESSORIES

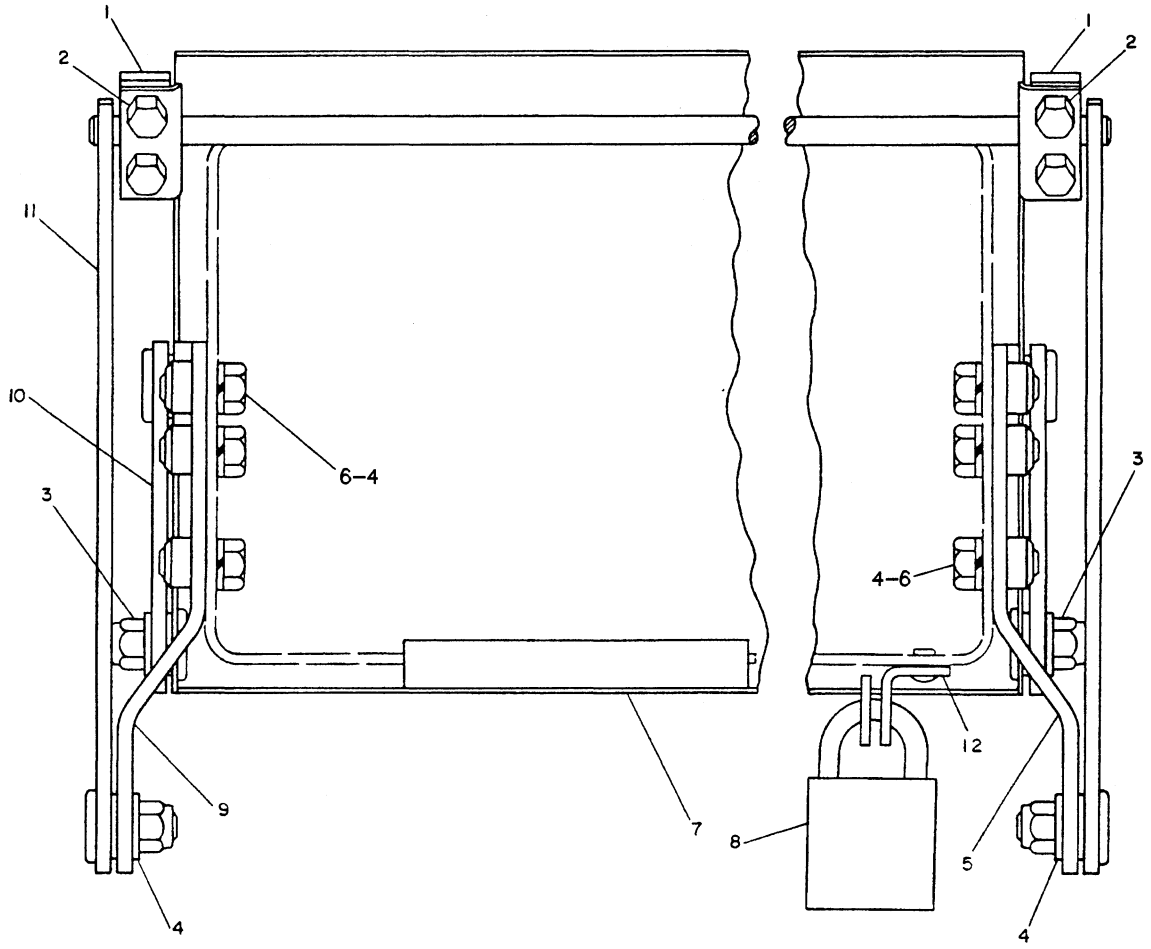

NOTE	REF NO	PART NUMBER	QTY	PART NAME	NOTE	REF NO	PART NUMBER	QTY	PART NAME
	1	5G0962	2	BLOCK					
		5G0963	2	BLOCK (TAPPED)					
	2	4M5281	4	BOLT					
		8T4205	4	WASHER-HARD					
	3	2K4973	6	LOCKNUT					
		5G0979	10	BUSHING					
	4	8T4896	8	WASHER-HARD					
	5	5G0981	1	BRACKET AS					
		9F2978	3	NUT-WELD					
	6	5M3062	6	BOLT					
	7	5G0961	1	COVER AS					
	8	5P8502	1	PADLOCK GP					
A		5P8500	2	KEY					
A		6V5874	1	COVER					
	9	5G0978	1	BRACKET AS					
		9F2978	3	NUT-WELD					
	10	5G0968	2	ARM AS					
				(EACH INCLUDES)					
		9D4439	1	STUD-WELD					
	11	5G0966	1	ARM AS					
		9D4439	2	STUD-WELD					
	12	5G2244	1	PLATE					
		9M5733	2	RIVET-POP					

A-NOT PART OF THIS GROUP

R-491929 EP

7315 **8Y1356 GUARD GP-VANDALISM**

CAB, GAUGES AND ACCESSORIES

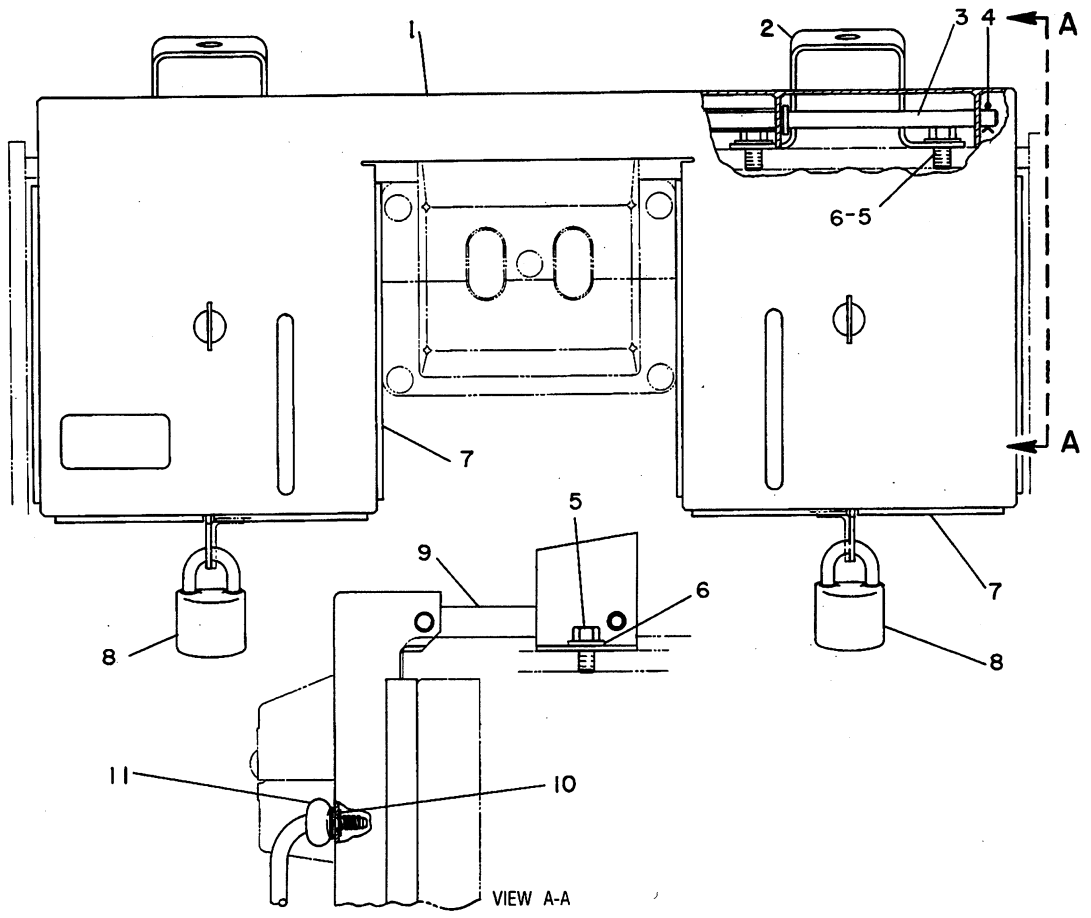

NOTE	REF NO	PART NUMBER	QTY	PART NAME	NOTE	REF NO	PART NUMBER	QTY	PART NAME
	1	8Y2941	1	GUARD AS					
	2	8Y2943	2	BRACKET AS					
	3	8Y3536	1	ROD					
	4	3B4617	2	COTTER					
	5	5M3062	4	BOLT					
	6	5P1075	4	WASHER-HARD					
BD	7	6V5399		SEAL					
	8	5P8502	2	PADLOCK GP					
				(EACH INCLUDES)					
A		5P8500	2	KEY					
A		6V5874	1	COVER					
	9	8Y2942	1	LINK AS					
	10	2R2376	2	WASHER					
	11	3W3465	2	SCREW					

A-NOT PART OF THIS GROUP
B-USE AS REQUIRED
D-ORDER BY THE METER

M-472321 EP

7315 **8Y2322 GUARD GP-VANDALISM**
Part Of 8Y2312 Steering Ar
An Attachment

CAB, GAUGES AND ACCESSORIES

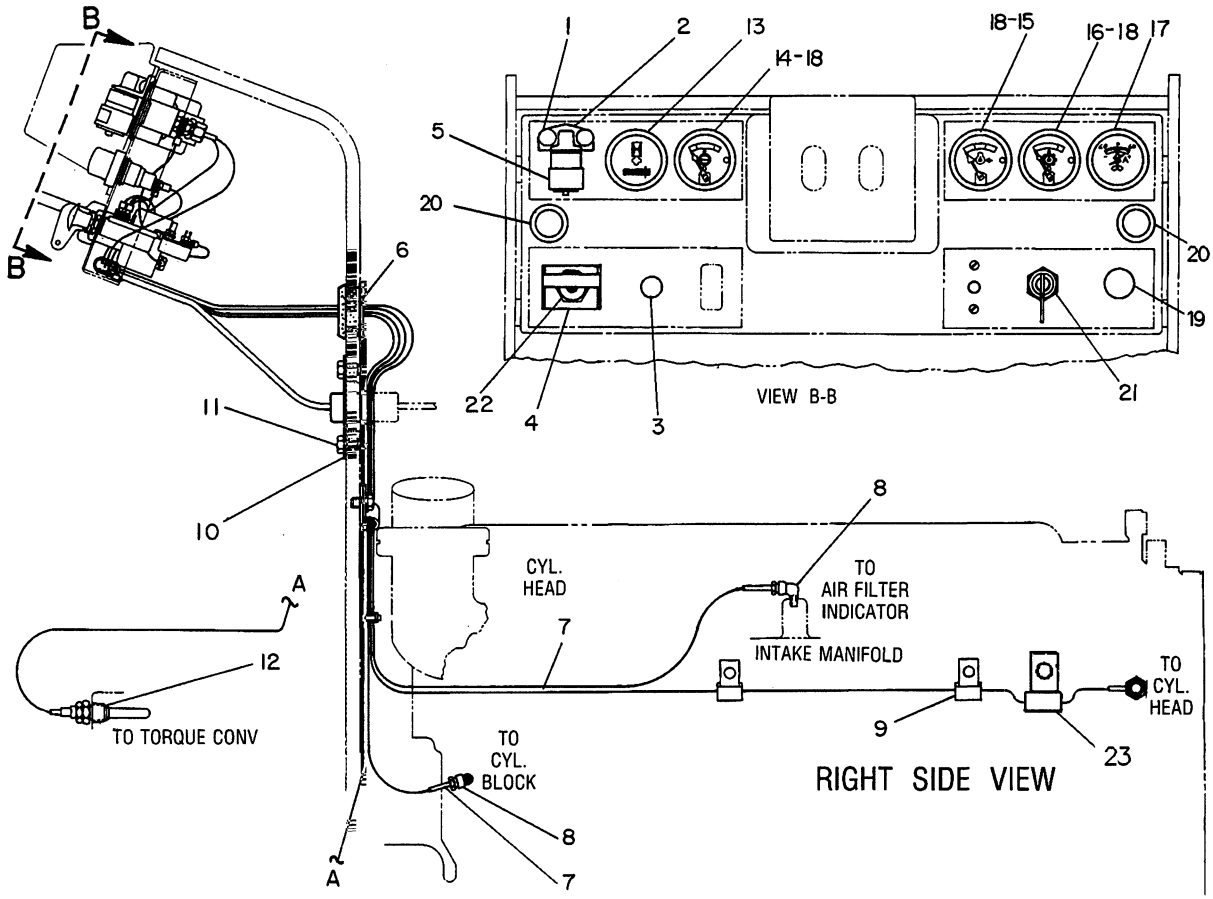

NOTE	REF NO	PART NUMBER	QTY	PART NAME
	1	4V6981	2	SCREW-BUTTON HEAD
		4B4276	2	WASHER
		1B4330	2	NUT
	2	1P6886	1	ADAPTER
	3	2M4009	1	PLUG-BUTTON
	4	8Y1035	1	GUARD
	5	7S0687	1	INDICATOR
				(AIR FILTER SERVICE)
	6	5G1997	1	GROMMET
D	7	5P5630		TUBE (1.43 M)
	8	5P6315	2	ELBOW-FLARELESS
		5P6313	2	NUT-FLARELESS
		5P6314	2	SLEEVE-FLARELESS
	9	8M2772	2	CLIP
	10	5G1728	1	PLATE
	11	5P8167	2	BOLT
	12	1S0666	1	ADAPTER
	13	9W1493	1	KIT-METER SERVICE
				(INCL FILM & WIRE AS)
	14	1W5928	1	INDICATOR (WATER TEMP)
	15	1W0705	1	INDICATOR
				(ENG OIL PRESSURE)
	16	1W0701	1	INDICATOR (OIL TEMP)
Y	17	8M7892	1	GAUGE AS-AMMETER (60A)
	18	6V3507	3	SEAL-RECTANGULAR
	19	6S2950	1	SWITCH (FRT-REAR FLOOD)
	20	9G3057	2	BASE AS-LIGHT
				(EACH INCLUDES)
		2H3924	1	LOCKWASHER
		6V8361	2	SCREW-MACHINE
		6V8372	1	NUT-HEX
		8L9801	2	LAMP
		9G3058	2	CAP-SHIELD
	21	3T6129	1	SWITCH AS-DISCONNECT
		8H5306	1	KEY
	22	3T3947	1	SWITCH AS (START)
		2H3922	1	LOCKWASHER (MTG)
		3B4501	1	LOCKWASHER (KNOB)
		5L7200	1	SCREW (KNOB)
		6V8363	2	SCREW (TERMINAL)
		6V8370	1	NUT-HEX (MTG)
		7T6184	1	BOOT-SWITCH
		7T9518	1	KNOB-START
		8F1434	2	LOCKWASHER (TERMINAL)
	23	4D8948	1	CLIP

D-ORDER BY THE METER
Y-SEPARATE ILLUSTRATION

R-533153 EP

7450 **8Y2320 GAUGE GP-PART 1 OF 2**

8M7892-Page 200.04-Part Of 8Y2312 Steering Ar
An Attachment

CAB, GAUGES AND ACCESSORIES

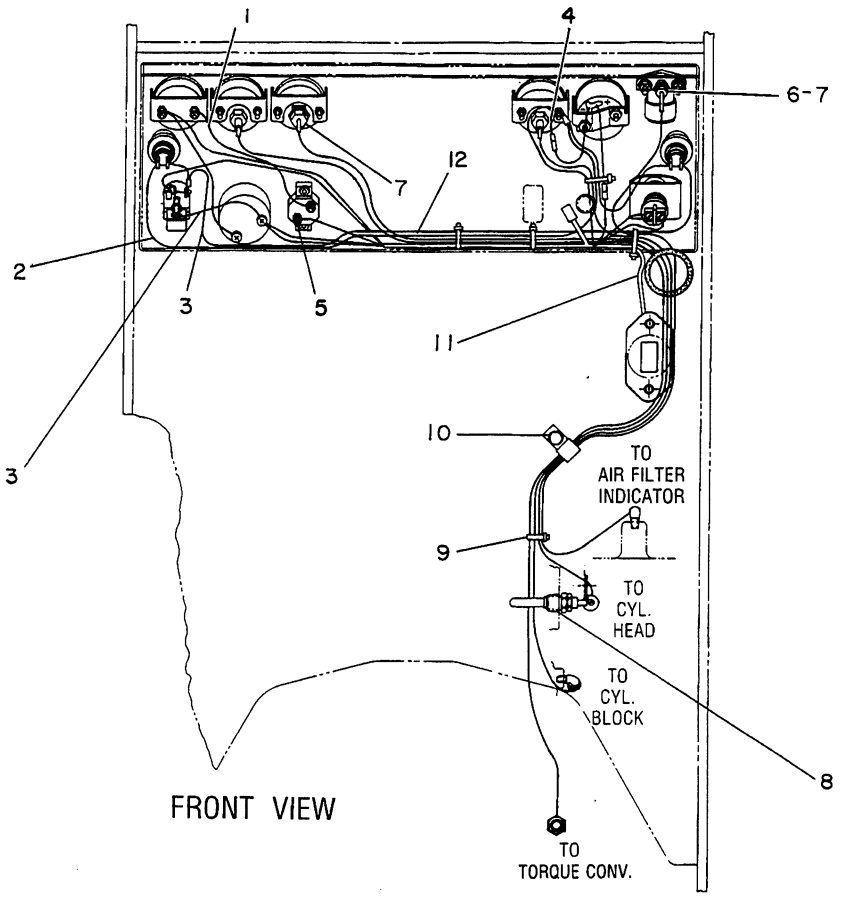

NOTE	REF NO	PART NUMBER	QTY	PART NAME	NOTE	REF NO	PART NUMBER	QTY	PART NAME
	1	5G1705	1	WIRE AS					
	2	8Y2336	1	WIRE AS					
	3	6S6831	2	WIRE AS					
	4	7N9826	1	WIRE AS					
	5	4N5844	1	CIRCUIT BREAKER AS					
		6V8378	2	NUT					
		8F1434	2	LOCKWASHER					
		5M6668	2	SCREW-MACHINE					
	6	5K5068	1	NIPPLE					
	7	5P2949	2	CONNECTOR-TUBE					
	8	6H6699	1	ADAPTER					
	9	3S2093	5	STRAP-CABLE					
	10	5P8167	1	BOLT					
		8T4896	1	WASHER-HARD					
		8M2770	1	CLIP					
	11	8Y2334	1	HARNESS AS					
	12	8Y2335	1	WIRE AS					

M-472353 EP

7450 **8Y2320 GAUGE GP-PART 2 OF 2**

Part Of 8Y2312 Steering Ar

An Attachment

CAB, GAUGES AND ACCESSORIES

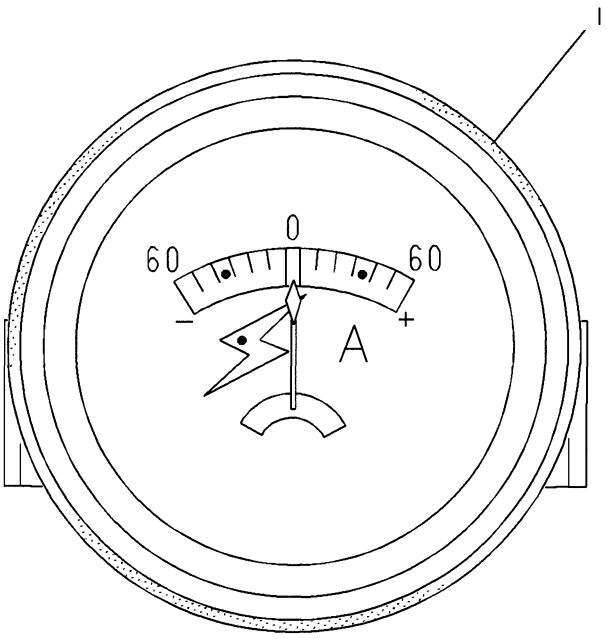

NOTE	REF NO	PART NUMBER	QTY	PART NAME
	1	6V3507	1	SEAL-RECTANGULAR

A-316997 EP

7467

8M7892 GAUGE AS-AMMETER
Part Of 8Y2320 Gauge

MEMORANDA

CAB, GAUGES AND ACCESSORIES

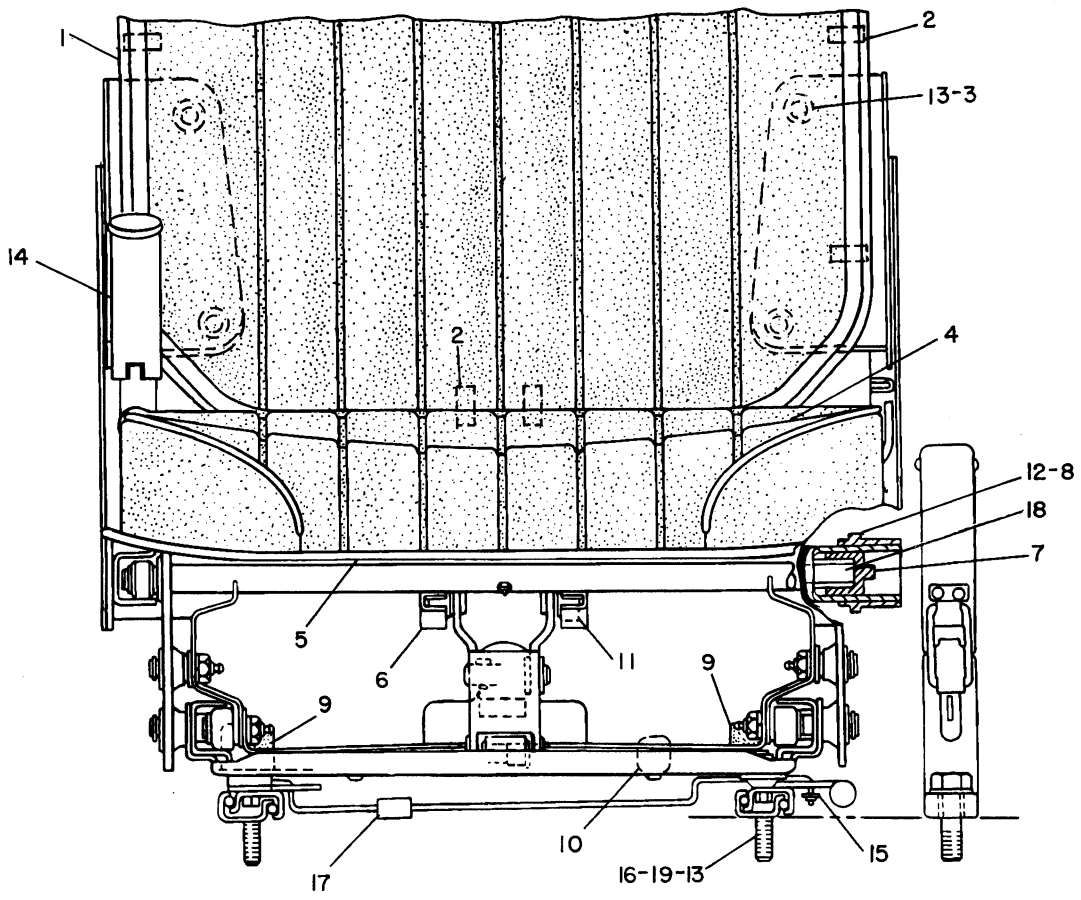

NOTE	REF NO	PART NUMBER	QTY	PART NAME
	1	8S0168	1	CUSHION AS-BACK
	2	9C4230	11	CLIP
	3	4K9097	4	NUT-WELD
	4	7S7791	1	CUSHION AS-SEAT
	5	9C4240	1	PAN AS
		9C4241	1	PAN
		9C4243	1	PLATE
C		4M0061	4	BOLT (WELDED)
	6	9C4242	1	BRACKET
	7	7S7805	1	RETAINER-TOOTH-BAR
	8	7S7799	2	FITTING-HYDRAULIC
	9	7V5138	2	BUMPER
		314155	2	LOCKNUT
		3K4910	2	SCREW-MACHINE
	10	7S7789	2	BUMPER
	11	7S7793	2	BEARING-ROLLER
	12	8S4345	1	BEARING-HOUSING (RH)
		8S4346	1	BEARING-HOUSING (LH)
	13	4B1328	8	SCREW-MACHINE
	14	5G5690	1	LEVER AS
	15	5V0525	1	CLIP
	16	6V8189	4	NUT
	17	3V0268	1	CLIP
	18	7S9305	1	BAR SET-TORSION
	19	8T4224	8	WASHER-HARD

NOTE	REF NO	PART NUMBER	QTY	PART NAME
				THE FOLLOWING REPAIR KITS ARE AVAILABLE:
		8K7223	1	KIT-SEAT ADJUSTER (INCL 2 ADJUSTER AS & LATCH WIRE)
		7S4339	1	KIT-SHOCK ABSORBER (INCL SHAFT & SHOCK ABSORBER AS)

C-CHANGE FROM PREVIOUS TYPE

B-497612 EP

7312 **6S7596 SEAT GP-PART 1 OF 2**

Part Of 8Y0266 Seat & Support

CAB, GAUGES AND ACCESSORIES

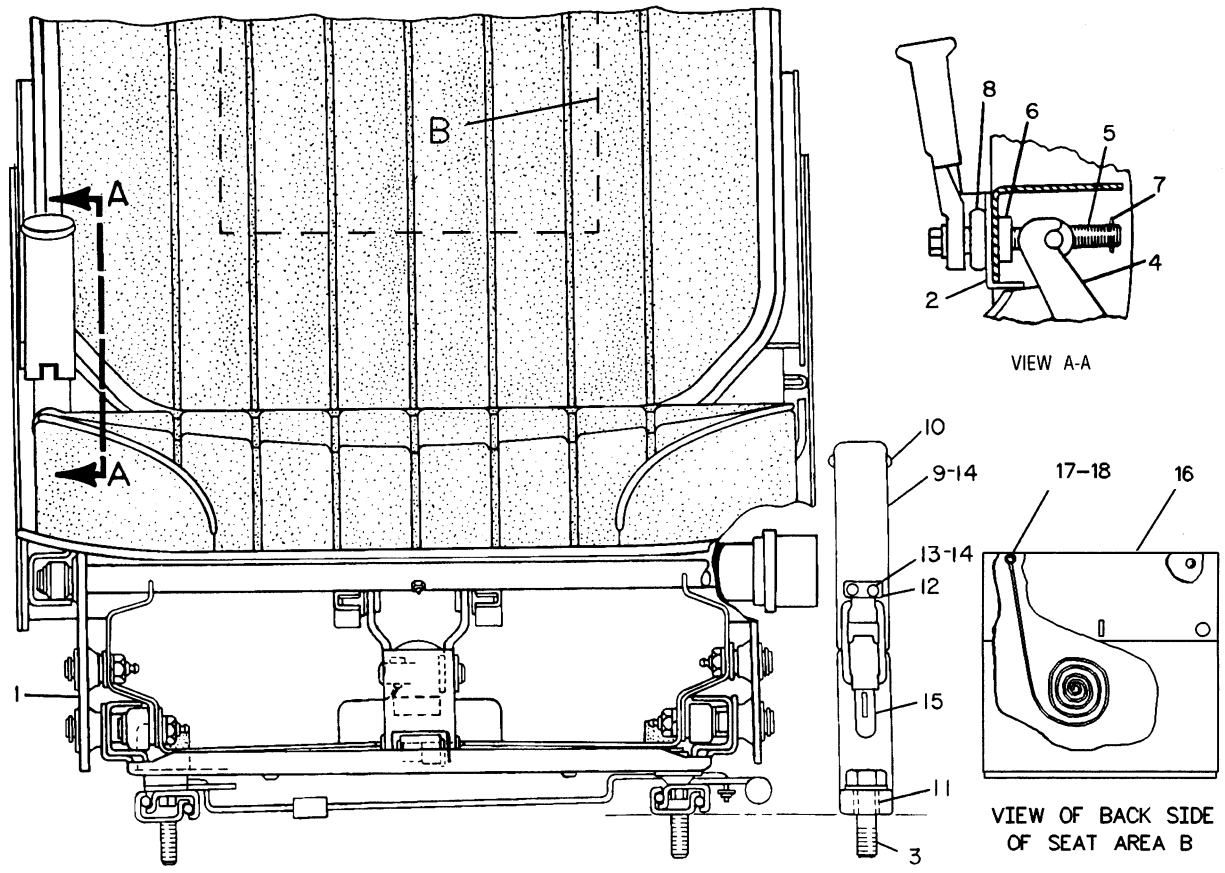

NOTE	REF NO	PART NUMBER	QTY	PART NAME	NOTE	REF NO	PART NUMBER	QTY	PART NAME
Y	1	2V7961	1	SUSPENSION AS-SEAT					
	2	8V5135	1	BRACKET-STOP					
	3	9B7237	2	BOLT					
		8T4896	2	WASHER-HARD					
	4	7S7804	1	YOKE-ADJUSTER					
	5	7S7801	1	PIN-ADJUSTER					
	6	7S7800	1	WASHER					
	7	3K4897	1	PIN-SPRING					
	8	7S9391	1	BEARING-THRUST					
	9	5G2437	1	COMPARTMENT AS					
		5P7957	1	LANYARD					
		5P7958	1	SLEEVE					
		9M5733	1	RIVET-POP					
	10	6K3273	2	RIVET-POP					
		6K3274	2	PLATE-RIVET					
	11	1K5888	2	SPACER					
	12	9F6596	1	HOOK					
	13	9M5732	4	RIVET-POP					
	14	4F2320	5	WASHER					
	15	9F6595	1	CATCH					
	16	6W3309	1	HOLDER					
	17	8T7565	7	RIVET-POP					
	18	5P7957	1	LANYARD					
A		5P7958	1	SLEEVE					

A-NOT PART OF THIS GROUP
Y-SEPARATE ILLUSTRATION

R-497613 EP

7312 **6S7596 SEAT GP-PART 2 OF 2**

2V7961-Page 203.01

Part Of 8Y0266 Seat & Support

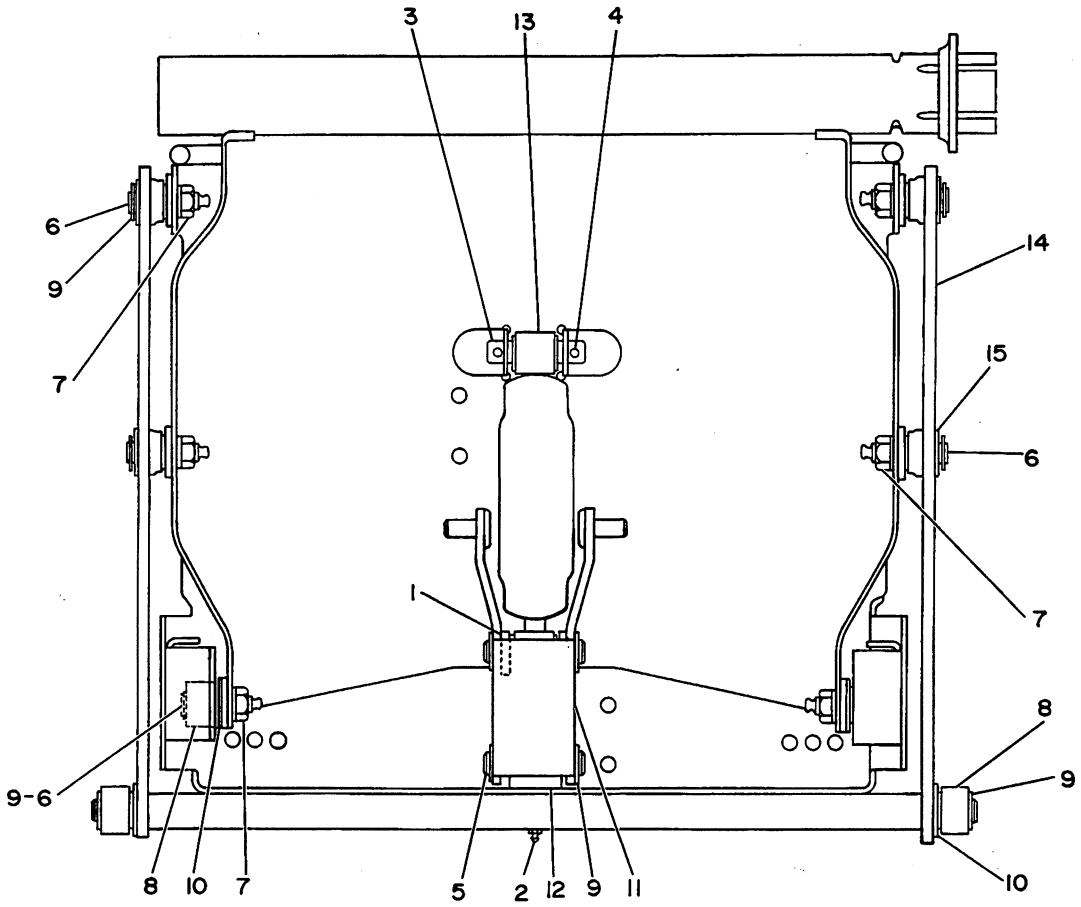

NOTE	REF NO	PART NUMBER	QTY	PART NAME	NOTE	REF NO	PART NUMBER	QTY	PART NAME
	1	7S9885	2	WASHER					
	2	7S9868	1	FITTING-LUBRICATION					
	3	7S9871	1	SHAFT-HINGE					
	4	6H3956	2	PIN					
	5	7S9870	1	SHAFT-HINGE					
	6	7S9867	6	STUD					
	7	3N3182	6	LOCKNUT-SPECIAL					
	8	7S9866	4	BEARING AS					
	9	7S5757	10	RING-RETAINING					
	10	7S9884	4	WASHER					
	11	7S9873	1	BRACKET AS-LEVER					
	12	7S9869	2	BEARING-FLANGED					
C	13	3K4787	4	BEARING-SLEEVE					
C	14	8V3605	1	LEVER AS-OUTER					
	15	8V3607	4	BEARING-FLANGED					
				THE FOLLOWING REPAIR KIT IS AVAILABLE:					
		7S4339	1	KIT-SHOCK ABSORBER (INCLUDES SHOCK ABSORBER AS AND SHAFT)					

C-CHANGE FROM PREVIOUS TYPE

B-497648 EP

7324 **2V7961 SUSPENSION AS-SEAT**
Part Of 6S7596 Seat

MEMORANDA

CAB, GAUGES AND ACCESSORIES

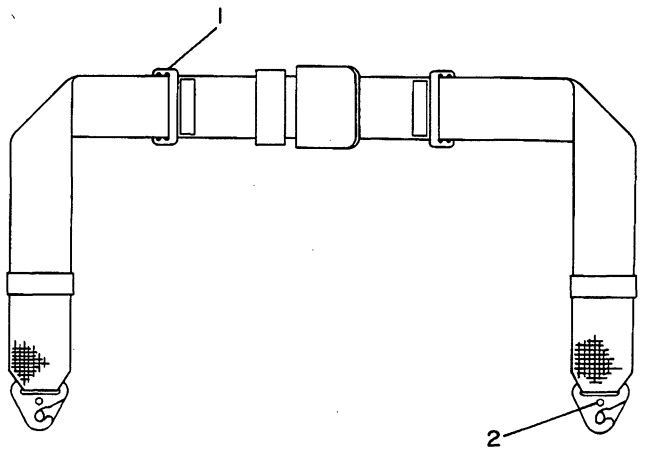

NOTE	REF NO	PART NUMBER	QTY	PART NAME
	1	7V2253	2	SLIDE
C	2	5M6755	2	SCREW-MACHINE
C		310249	2	NUT-SELF LOCKING

C-CHANGE FROM PREVIOUS TYPE

B-306117 EP

7327 **7V9507 BELT GP-SEAT**

Part Of 8Y0266, 8Y1177 Seat & Support

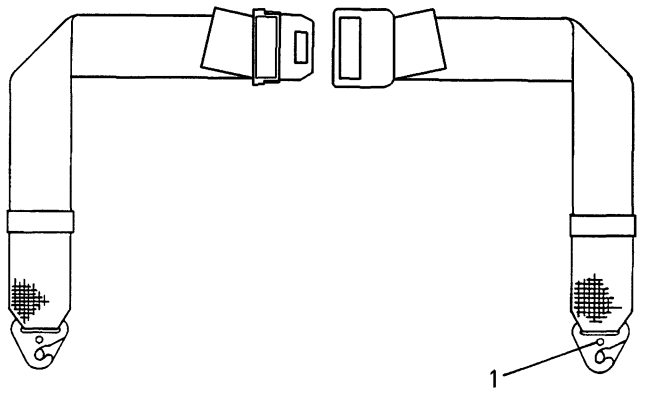

NOTE	REF NO	PART NUMBER	QTY	PART NAME
	1	5M6755	2	SCREW-MACHINE
		310249	2	NUT-SELF LOCKING

R-485368 EP

7327 **8Y4037 SEAT BELT GP**

Part Of 8Y0266, 8Y1177 Supports-Seat

1	3E1779	PLATE-EEC CERTIFICATION ADJACENT TO ROPS/FOPS PLATE
2	8C0606	PLATE-CORPORATE SYMBOL
1	9X1878	PLATE-IDENTIFICATION NO. ON OUTSIDE OF L.H. PLATE OF FIREWALL
1	3N3790	PLATE-SERIAL NO. TOP REAR CORNER ON LH SIDE OF BLOCK
1	9L6531	PLATE-INFORMATION ON TOP OF VALVE COVER AS FAR FORWARD AS POSSIBLE, OR ON L.H. SIDE ENGINE BLOCK DIRECTTLY BENEATH AIR INLET ELBOW & BESIDE CASE BLOCK PART NO. TOWARD FRONT OF ENGINE
1	5P9446	PLATE-WARNING ON RECOIL CYLINDER HEAD AS.
1	5P9441	PLATE-WARNING BELOW HYD. TRACK ADJUSTER ACCESS DOOR
1	9X1883	PLATE-INFORMATIO NO. ON OUTSIDE OF R.H. PLATE OF FIREWALL AS.
1	5P9466	PLATE-WARNING CENTERED ON LOWER PANEL OF DASH
10	7B3028	SCREW-DRIVE
2	4B4158	SCREW-DRIVE
4	337291	RIVET-POP
4	5S7337	WASHER

NAME PLATES & FILMS-PART 1 OF 2

4 1P2807 FILM-SYMBOL
ON TRACK ROLLER FRAME, BETWEEN FRONT IDLER & FRONT ROLLER AND BETWEEN REAR SPROCKET & LAST ROLLER. (2 EA. SIDE)

1 6V7614 FILM-IDENTIFICATION
ON OIL FILTER

1 6V8293 FILM-IDENTIFICATION
ON FUEL FILTER

5 7X7644 FILM-TIE DOWN
4-ON TRACK ROLLER FRAME, BETWEEN FRONT IDLER & FRONT ROLLER AND BETWEEN REAR SPROCKET AND LAST ROLLER. (2 EA. SIDE)
1-ABOVE RETRIEVAL HITCH

1 9X2822 FILM-STRIPE-CATERPILLAR
CENTERED OVER FRONT GRILLE

1 9X6088 FILM-STRIPE-CAT
LOWER REAR LH SIDE OF ROPS

2 9X6089 FILM-STRIPE-CAT
LOWER REAR RH SIDE OF ROPS

1 9X6090 FILM-STRIPE-CATERPILLAR
CENTERED, LOWER REAR OF ROPS

2 9X6094 FILM-LGP
EA. SIDE OF HOOD IN FRONT OF ROPS

2 9X6095 FILM-D4C
EA. SIDE OF HOOD BESIDE RADIATOR

NAME PLATES & FILMS-PART 2 OF 2

PART NUMBER INDEX

Number	Page
0	
OL0478	83
OL0829	100.03
	100.19
	100.21
OL1124	170
	185
OL1143	47
	96
	97
OL1170	135
	136
	136.01
	137
	168
	169
OL1178	106.02
OL1329	150
OL1351	6
	21
	44
	45
	69.04
	73.02
	76
	77
	97
	126
	142
	158
	160
	174
	179
	181
	194.12
OL1352	40
	181
OL1732	181
OL2070	47
	62
	175
	187
OL2072	182
OL2341	83
	100.02
OS0130	99.03
	99.04
	100
	100.01
OS0175	194.12
OS0509	11
	58.04
	60
	69
	69.01
	75
	98.02
	99
	100.08
	106.04
	146
	177
	182
	184
	199.03
OS1566	122
	124
	125.01
OS1571	13
	25
	37
	39
	172
	184
OS1573	199.03
OS1584	71.02
	71.04
	83
OS1585	93
	95
	100.08
	100.10
	100.13
	120
	121
	122
	123
	124
	125
	125.01
	125.02
OS1587	98.02
	99
	195
OS1588	40
	64
	76
	77
	84
	96
	100.04
	100.08
	100.10
	100.13
	137
	142
OS1590	38
	40
	96
OS1591	38
	98.02
	99
	100.05
	100.09
OS1594	6
	24
	32
	47
	67
	73.02
	74
	75
	76
	77
	86
	89
	96
	97
	98
	100.10
	100.13
	132
	136
	136.01
	142
	158.01
	160.01
	170
	174
	179
	181
	185
	199.03
OS1595	97
	100.08
	120
	122
	124
	125.01
	181
	184
	199.03
OS1608	21
OS1614	179
	194.07
	194.09
OS1615	44
	53
	55
	58.04
	169
	194.11
	199.06
OS1616	18
	44
	45
	49
	50
OS1617	20
	28
	176
	188
OS1618	28
	62
	80
	110
OS1619	39.01
	166
OS1620	59
	106.02
OS1621	106.02
	146
OS1623	117
OS1625	87
	89
OS1627	23
OS1973	195
OT0102	30
	59
	67
	77
	142
	146
	194.11
OT0319	19
	172
OT0320	24
OT0329	83
OT0355	100.04
	100.06
OT0489	18
OT0573	179
OT0768	123
	125
	125.02
	142
OV0375	150
1	
1A1135	20
1A2029	26
	77
	97
	136
	136.01
	158
	158.01
	158.02
	160
	160.01
	160.02
	160.03
	160.04
	160.05
	160.06

PART NUMBER INDEX

Number	Page	Number	Page	Number	Page	Number	Page
	179	1B5170	98.02	1D5117	75	1J5353	81.02
	181		99		77	1J6748	163
1A2223	7		99.01		77.02	1J9671	170
	8	1B5174	93		150		185
1A2343	91		95	1D5875	186	1K4703	100.08
1A2457	78	1B5355	38	1F0748	100.05		100.11
	79.01		39		100.07		100.14
	136	1B6182	135	1F5842	62	1K5845	146
	136.01	1B7413	161		170		146.01
1A3540	194.07	1B8074	160.03		185	1K5888	199
	194.09		160.05	1F7567	144		199.02
1A4790	79	1B8098	194.07		145		199.02.02
	79.02		194.09	1F7958	100.04		203
1A5183	166	1B8704	76		120	1K6981	141
1A5350	44		77	1H1023	47		141.01
	45		77.01		48	1K6986	73.02
1A5822	172		77.02	1H3337	168	1K6995	86
1A5964	13	1B8706	100.09		169		87.02
	21		100.12	1H5165	59		89
	62		100.15		60	1K7983	91
1A6931	86	1B8709	179		61.01	1K8850	106
	89	1B8712	11		61.02		106.01
1A7657	100.04	1B8714	100.10	1H5403	99.03		106.01.01
	100.06		100.13		99.04	1K9060	76
1A8063	195		100.16		100		77
1A8285	76		100.20		100.01		77.01
1A8827	194.04	1B8736	100.08	1H5514	57		77.02
1A9579	28		100.11	1H5549	99.03	1L5072	133
1B1067	122		100.14		99.04	1M1723	100.04
	123.01		100.17		100		100.06
	123.03	1B9575	80		100.01	1M3097	126
	124	1C2251	98	1H5803	131	1M3735	7
	125.01	1D4538	67	1H7339	91		8
	125.03		175	1H7478	100.02	1M4291	126
	125.05		187	1H8128	141	1M6119	59
1B2578	65.01	1D4540	17		141.01		61.01
	76	1D4608	195	1H8142	179	1M6120	59
	77	1D4615	181	1H8278	93		61.01
	77.02	1D4616	195		95	1M6298	29
1B2790	45	1D4627	195	1H8397	171	1M7914	126
	57	1D4630	195	1H8720	100.04	1M7918	126
1B2886	85	1D4634	160.03		100.06	1M8735	126
1B4203	100.05		160.04	1H9456	93	1M8736	126
1B4210	122		160.05		95	1M8746	123.04
	124		160.06	1H9696	123		125.06
	125.01	1D4677	194.03		123.02	1M9633	75
1B4264	98.02		196		123.04	1M9634	75
	99	1D4703	74		125	1N3165	28
	99.01		142		125.02	1N3224	2
	104	1D4717	41		125.04		4
1B4287	29		75		125.06		25
1B4330	59		97		126	1N3799	36
	199.06		97.01	1H9779	33	1N3800	51
	200.02		100.05	1J0245	194.12	1N3802	51
1B4333	167		142	1J2176	181	1N3821	11
1B4427	168	1D4719	97	1J2329	108	1N3822	11
	169		150	1J4384	137	1N3940	28

PART NUMBER INDEX

Number	Page	Number	Page	Number	Page	Number	Page
1N3943	28	1S9799	179	1U0552	173	1W1665	10
1N3980	47	1T0034	71.02	1U2093	131	1W1666	10
1N4423	25		71.04	1U2947	158	1W3285	53
1N4424	25	1T0043	85		158.01	1W3485	53
1N4425	25	1T0079	71.02		158.02	1W3486	53
1N4426	25		71.04		160	1W3626	25
1P0043	142	1T0080	71.04		160.01	1W3906	11
	191	1T0085	71.02		160.02	1W4098	51
	192		71.04	1U2950	160	1W4243	52
1P0436	44	1T0092	71.02		160.01	1W4259	14
	45		71.04		160.02	1W4260	14
	57	1T0099	87	1U3201	164	1W4263	2
1P1413	117		87.02	1V2750	174		4
1P2299	44		89	1V6341	76		62
1P2497	50	1T0286	71.02		77.01	1W4264	62
1P2807	206		71.04	1V7801	199	1W4265	21
1P2878	100.19	1T0334	71.02		199.02	1W4326	2
	100.21		71.04		199.02.02		4
1P3704	74	1T0414	33	1W0057	56		6
1P3934	93		71.02	1W0311	9	1W4327	6
	95		71.04	1W0312	9		7
1P3935	93	1T0416	47	1W0367	2	1W4334	21
	95		71.02		4	1W4704	28
1P4194	60		71.04		25	1W4724	36
	61.02	1T0446	71.02		25.01	1W4927	47
1P4278	46		71.04	1W0565	56	1W5053	40
1P4576	96	1T0537	71.02	1W0568	55	1W5054	2
1P4899	149		71.04		56		4
1P5761	74	1T0538	71.02	1W0701	197		40
1P6452	54	1T0738	71.02		200.02	1W5121	25
	54.01		71.04	1W0705	197	1W5553	24
1P6886	197	1T1230	71.02		200.02	1W5554	2
	200.02		71.04	1W0939	18		4
1P7297	29	1T1390	71.03	1W0942	48		24
1P7407	75		71.04	1W1110	21	1W5646	32
1P8116	81.02		72	1W1140	33	1W5647	32
1P8680	43	1T1392	71.02	1W1146	33	1W5648	32
1R0713	25		71.04	1W1180	136	1W5649	32
1R0740	45	1T1393	71.02		136.01	1W5718	17
1S0666	197		71.04		137	1W5720	3
	200.02	1T1396	71.02	1W1354	2		5
1S1953	53		71.04		4		17
1S2342	69.04	1T1397	71.02		47	1W5920	7
1S4168	69.04		71.04	1W1355	2		8
1S4244	69	1T1398	71.04		4	1W5928	197
	69.01	1T1401	71.02		20		200.02
	199.02		71.04	1W1523	18	1W6523	50
	199.02.02	1T1446	71.02	1W1655	10	1W6539	53
	199.04	1T1786	71.01	1W1656	10		54
	199.05		71.02	1W1657	10	1W6541	54
1S5159	39		72	1W1658	10	1W6987	54
1S5161	39	1U0414	172	1W1659	10	1W7121	48
1S5440	55		172.01	1W1660	10	1W7122	48
1S7106	176		172.02	1W1661	10	1W7123	48
	188		173	1W1662	10	1W7124	48
1S7443	168	1U0550	173	1W1663	10	1W7492	47
	169	1U0551	173	1W1664	10	1W7867	50

PART NUMBER INDEX

Number	Page	Number	Page	Number	Page	Number	Page
1W8521	18	2B9020	100.02		172.03		100.19
1W8730	49	2D4295	199	2J1826	80		100.21
	50	2D6235	100.08	2J3506	23	2M7819	51
	51		100.11		106.02		194.07
	52		100.14		195		194.09
1W9168	46		100.17	2J3507	195	2M8340	100.10
	48		136	2J5815	93		100.13
1W9169	46		136.01		95		100.16
	48	2D6416	184	2J6356	131		100.20
1W9171	54	2D6420	179	2J6361	179	2M8908	77
1W9771	9	2D6642	139	2J6362	179		77.02
1W9812	9		181	2J6540	194.10	2M9780	47
1W9860	28		184	2J7761	133		56
1W9897	14	2D8390	174	2J8163	65		71.05
		2F2093	100.05		65.01		131
2		2F2290	51	2J8239	107		142
		2F5152	38	2K0227	141		142.01
2A0309	113		41		141.01		143
2A0762	56	2G3765	194.07	2K0564	58		144
	69.04		194.09		58.01		145
	110	2H2292	136		83		146
	199.06		136.01		136		146.01
2A2485	100.09	2H2995	81.02	2K1722	83		147
	100.12	2H3429	194.13	2K2939	83		148
	100.15	2H3755	28	2K4973	200		149
2A3348	183		59	2K5957	179		155
2A3746	81.02		194.12	2K5965	179		172
2A4133	58	2H3777	91	2K6830	141		172.01
	58.01	2H3788	101		141.01		172.02
	58.02	2H3880	65	2K8467	76		172.03
2A4382	78	2H3922	58.04		77.01		177
2A4429	14		61	2L2685	71.05	2N0828	51
2A5546	45		61.03	2L6267	77	2N1287	36
2B0858	16		200.02		77.02		46
	16.02	2H3924	35		135		182
2B2404	44		61		136.01		183
	46		61.03	2L8066	66	2N1599	18
2B2694	17		200.02	2L8067	66	2N3479	194.14
	134	2H3931	138	2L8069	66	2N8037	100.04
	176		139	2L8075	71	2N8943	16.01
	188		140		71.00.01	2P0911	97
2B2695	21	2H3932	47	2L8509	100.11	2P1278	100.04
	28		75		100.14		100.06
	44	2H3934	47	2M0849	86	2P1279	100.04
	45	2H3935	93		87.02		100.06
	71.02		95		120		147
	71.04	2H4145	75		121		148
	81.02	2H6184	179		150	2P1286	172
	136	2H8382	101	2M1086	100.02		172.01
	136.01	2J0157	99.03	2M1309	73.02		172.02
2B2938	100.17		99.04	2M2570	58.02		172.03
2B3243	146		100	2M2858	126	2P1314	45
	146.01		100.01	2M3340	75	2P1409	172
2B6010	76		181	2M4009	196	2P1411	172
	77.01	2J1020	172		200.02	2P1692	84
2B8759	100.02		172.01	2M4036	58	2P2537	25
2B9018	100.02		172.02		58.01	2P2685	54

PART NUMBER INDEX

Number	Page
	54.01
2P2772	6
2P2975	99.03
	99.04
	100
	100.01
2P3817	162
2P4339	194.13
	195.01
2P4547	99.03
	99.04
	100
	100.01
2P5834	98
2P7214	144
	145
2P8099	63
2P8387	93
	95
2P9556	51
2R1714	27
2R1980	35
2R2376	200.01
2R6806	100.05
	100.07
	144
	145
	147
	148
2S0062	41
2S0613	87
	87.02
2S0696	81.02
2S2053	28
2S3390	167
2S3440	26
	27
	33
2S4078	99.01
2S4663	171
2S4872	81.02
2S5925	122
	123.01
	123.03
	124
	125.01
	125.03
	125.05
2S5926	122
	123.01
	123.03
	124
	125.01
	125.03
	125.05
2S7383	49
2S7923	84
2S9503	62
2V0099	194.13
	195.01
2V0156	147
	148
2V0520	199
	199.02
	199.02.02
2V0936	120
2V1713	71
	71.00.01
2V7524	122
	123.01
	123.03
	124
	125.01
	125.03
	125.05
2V7525	122
	123.01
	123.03
	124
	125.01
	125.03
	125.05
2V7961	203
	203.01
2V8282	175
	187
2V9025	121
	122
	123.01
	123.03
	124
	125.01
	125.03
	125.05
2V9166	69
	69.01
	199.02
	199.02.02
	199.04
	199.05
2V9404	181
2W0262	53
	55
2W0263	49
	53
2W0712	32
2W1223	32
2W1230	47
2W2216	51
2W2318	27
2W3535	32
2W4383	21
2W4384	2
	4
	21
2W4403	3
	5
	55
2W5161	52
2W5448	49
2W6047	17
2W6102	52
2W6103	52
2W6104	52
2W6697	3
	5
	28
2W6698	28
2W7234	54.01
2W7307	56
2W7400	52
2W7486	2
	4
	18
2W7660	21
2W7671	44
2W7672	44
2W7687	27
2W7902	8
2W8045	12
2W8265	12
2W8271	17
2W8419	11
	12
2W9305	52
2W9499	65.02
2W9509	65.02
2W9613	28
2Y1834	76
3B0613	100.08
	100.11
	100.14
	100.17
3B0614	100.08
	100.11
	100.14
	100.17
3B1250	181
3B1915	41
	136
	136.01
	181
3B1925	24
3B3967	93
	95
3B3969	93
	95
	179
3B4501	58.04
	61
	61.03
	200.02
3B4502	27
3B4504	199.06
3B4505	134
3B4506	64
	65
	126
3B4507	125
3B4508	117
	124
	125
3B4510	124
3B4604	194.07
	194.09
3B4607	58
	58.01
	58.02
	59
	61.01
	78
	79.01
	100.10
	100.13
	100.16
3B4609	136
	136.01
	186
3B4610	76
	77
	77.01
	77.02
	135
3B4615	43
	69
	69.01
	100.19
	100.21
	108
	137
	194.04
	194.12
	199.02
	199.02.02
	199.04
	199.05
3B4617	100.08
	100.10
	100.11
	100.13
	100.14
	100.16
	100.17
	100.19
	100.21

3

PART NUMBER INDEX

Number	Page	Number	Page	Number	Page	Number	Page
	184	3E0130	65.02		193		175
	194.12	3E0140	65.02	3G5057	193		187
	200.01	3E0141	65.02	3G5071	173	3J5389	21
3B4618	100.03	3E0145	65.02		193		33
3B4627	108	3E1779	205	3G5083	151	3J5390	7
	163	3E1865	65.02		173		8
3B4632	164	3E3568	65.02		193		21
3B4639	174	3E3570	65.02	3G5385	150	3J5397	100.20
3B4646	114	3E3571	65.02		151	3J7283	91
3B5302	181	3E3572	65.02	3G5858	151	3J7314	191
3B5524	100.02	3E3573	65.02	3G7242	173		192
3B6773	174	3E3574	65.02	3G9170	173	3J7354	44
3B7262	75	3E3576	65.02	3H0107	74		45
3B7273	97	3E3577	65.02	3H1397	91		46
	97.01	3E3578	65.02	3H1977	100.08		50
	99	3E3579	65.02		100.09		100.04
	99.01	3E3615	65.02		100.11		100.06
3B7614	173	3E3647	65.02		100.12		191
3B7738	134	3F0957	7		100.14		192
3B8486	140		8		100.15	3J7355	182
3B8489	140	3F5108	159		100.17	3J8903	85
	162		161		100.20	3K0360	6
3B9191	194.11	3F7514	175	3H2137	106		25
3D0490	98.02		187		106.01		144
	99	3F8345	174		106.01.01		145
	99.01	3F9556	67	3H2900	69.04		146
3D2824	27		68	3H3680	67		146.01
	40		69.04		68		147
	74	3G2569	160.03	3H4656	195.01		148
	98		160.04	3H5552	7		172
	142		160.05		8		172.01
	142.01		160.06	3H5841	100.03		172.02
	192	3G2572	160.03	3H6660	199		172.03
3D2871	98.02	3G2573	160.03	3H7654	13		191
	99		160.05	3H8604	39		192
	99.01	3G2585	160.03	3H8726	29	3K3257	64
3D2898	181		160.05	3H9269	100.09	3K3534	186
3D5102	71	3G3005	158		100.12	3K3815	93
	71.00.01		158.01		100.15		95
3D8197	108		158.02		100.17	3K4787	203.01
3D8317	51		160	3J0634	179	3K4897	100.09
	81.02		160.01	3J1770	113		100.12
3D8752	135		160.02	3J1907	44		100.15
	136	3G3353	160		45		100.20
	136.01		160.01		74		203
	137		160.02		76	3K4910	202
3D9143	69		161		77.01	3K5234	139
	69.01	3G3440	157		98		195
	199		160.05		100.04	3K5595	93
	199.02		160.06		100.05		95
	199.02.02	3G3835	51		100.06	3K5596	93
	199.04	3G4028	160.05		100.07		95
	199.05		160.06		132	3K5733	51
3D9609	135	3G5044	193		144	3K7427	106
	136	3G5045	193		145		106.01
	136.01	3G5046	191		147		106.01.01
3E0127	65.02		192		148	3K7754	194.04

PART NUMBER INDEX

Number	Page	Number	Page	Number	Page	Number	Page
3K8460	170		61.01	3Y1892	199.06	4B4863	69.04
	185	3S6162	161	3Y1893	199.06	4B5059	100.05
3K8782	58.04	3S6875	179	3Y2348	44		100.07
3K9042	176	3S7165	96	3Y2768	139	4B5275	79
	188	3S7166	96		140		79.02
3L1425	179	3S7252	172	3Y3887	63.02	4B5440	117
3L8187	71.00.01	3S8363	96	3Y5451	112		117.01
3L9409	83	3S8606	149	3Y5452	112	4B6060	79
3L9410	83		172	3Y8439	98.02	4B6067	100.04
3L9689	77	3S9933	80		99	4B9782	7
	77.02	3T0306	71		99.01		8
3N2843	76	3T0572	63	3Y9867	30		86
	77.01		63.02				87.02
3N3095	120	3T0573	63		4		131
	121	3T0574	63.02			4B9783	87.02
	125	3T0688	98	4B0831	80		175
	125.02	3T1815	70	4B1221	194.13		181
	125.04	3T2216	66	4B1232	194.12	4B9880	75
	125.06	3T2217	66	4B1233	27		81.02
3N3182	203.01	3T2218	66	4B1237	69.04		176
3N3790	205	3T2357	58.04	4B1257	194.05		188
3N6233	175	3T3452	199.06	4B1273	194.03	4B9883	99.03
	187	3T3947	61	4B1280	76		99.04
3N7156	45		61.03		77.02		100
3N7824	76		200.02	4B1281	194.14		100.01
	77.01	3T4283	120	4B1328	202	4D0298	139
3P0009	50		121	4B2049	49		140
3P0647	48	3T4352	120		69.04	4D2303	194.07
3P1155	47	3T4353	121	4B3057	100.10		194.09
3P1156	47	3T5962	65		100.13	4D4064	100.05
3P1932	191	3T6129	61		100.16		100.07
	192		61.03		100.19	4D6432	100.20
3P1979	56		200.02		100.21	4D6489	59
3P3410	199.06	3T6792	87		194.07		61.01
3P3413	199.06	3T7340	181		194.09	4D6672	195.01
3P5024	181	3T8219	86	4B3388	27	4D7637	181
3P8485	81.02		87.02		36	4D7794	59
3R9704	71.05	3T8269	81.02		44		61.01
	142.01	3T9193	181		137		61.02
3S1307	84	3T9714	184	4B3571	184	4D8648	181
3S2093	58.04	3T9885	177	4B4158	165	4D8948	197
	59	3T9960	181		205		200.02
	60	3T9980	166	4B4274	27	4D9376	101
	61.02	3V0002	100.02	4B4276	58.02		108.01
	67	3V0254	194.11		194.10		160.03
	69	3V0255	194.11		200.02		160.04
	69.01	3V0268	202	4B4277	59		160.05
	69.04	3V2431	21		194.05		160.06
	77.01		83	4B4278	59	4D9517	61.02
	197		146		194.12	4D9986	176
	200.03		146.01	4B4319	42		188
3S2713	17	3V3196	194.04		131	4F2042	163
	47	3V8848	100.05	4B4322	42	4F2294	77.01
3S3158	144		100.07	4B4674	194.07		135
	145	3W3465	200.01		194.09	4F2320	199
3S5275	139	3Y1888	199.06	4B4845	7		199.02
3S6050	59	3Y1889	199.06		8		199.02.02

PART NUMBER INDEX

Number	Page	Number	Page	Number	Page	Number	Page
	203	4J8980	123		199.05	4M8474	194.03
4F4879	137		123.02		202		194.11
4F6024	51		123.04	4L3913	69.04	4N0094	28
4F7389	83		125	4L6454	77.01	4N0098	7
4F7391	99.03		125.02		77.02		8
	99.04		125.04		91	4N0188	2
	100		125.06		96		4
	100.01	4J8997	55		97.01		36
	181	4J9224	138		106	4N0190	3
4F7952	35		139		106.01		5
	76		140		106.01.01		64
	77.01	4K0367	100.03		108.01	4N0196	37
	181		159		109	4N0199	20
4F7957	49		161		120.01	4N0200	20
4F8711	131	4K0640	59		135	4N0201	20
4F9029	181		61.01		142.01	4N0219	38
4H1394	184	4K1347	100.08		147	4N0228	24
4H1440	71.02		100.11		148	4N0234	25
	71.04		100.14		165.02	4N0236	36
4H1641	199		100.19		199	4N0237	36
4H2719	97		100.21		199.02	4N0241	64
	97.01	4K1388	74		199.02.02		65
4H3001	42	4K2543	98.02		199.04	4N0260	51
	194.13		99		199.05	4N0289	40
4H3521	100.19		99.01	4L6459	96	4N0312	39
	100.21	4K4284	87		97.01	4N0313	40
4H6145	100.04		89		195.01	4N0326	40
	100.06	4K4658	76	4L7124	155	4N0432	51
4H6520	181		77.01	4L9337	58.02	4N0489	26
4H8380	135	4K5122	69.04		99.01	4N0490	26
4H9098	100.08	4K6697	59		100.07	4N0491	26
	100.11		61.01		100.12	4N0492	26
	100.14	4K6804	73.02		100.15	4N0659	32
	100.17	4K7038	126	4L9822	83	4N0660	3
4H9105	131		127		93		5
4H9527	126		127.01		95		32
4H9628	126	4K8179	44	4M0061	78	4N0699	6
4J0522	142	4K8501	106		79.01	4N0933	6
	142.01		106.01		194.02	4N0952	7
	172		106.01.01		194.05		8
	172.01	4K8603	77		202	4N0996	6
	172.02		77.02	4M0189	84	4N1761	49
	172.03		98.02	4M2381	81.02	4N2220	31
4J0527	154		99		176	4N2226	29
	155		99.01		188	4N2953	51
	156		100.09	4M3136	59	4N3294	44
4J1105	43		100.12		61.01		45
4J2701	137		100.15	4M3601	69.04	4N3295	44
4J4382	132	4K8864	45	4M5281	168	4N3891	23
4J4790	176	4K9097	30		186	4N3896	23
	188		69		200	4N4314	57
4J5267	131		69.01	4M5282	100.11	4N4539	23
4J7533	49		194.03		100.14	4N5201	11
	53		194.05		100.17	4N5484	50
4J8265	93		199.02	4M6424	31	4N5485	50
	95		199.02.02	4M6425	29	4N5844	61
	132		199.04		194.04		61.03

PART NUMBER INDEX

Number	Page	Number	Page	Number	Page	Number	Page
	200.03		65.01	4W6868	51		179
4N5902	63	4N7565	65	4W6869	53	5F4899	80
	63.02		65.01	4W7008	49	5F7054	47
4N6404	51	4N8203	23	4W7015	47	5F8916	91
4N6406	51	4N8204	23	4Y2292	132	5F9144	43
4N6407	51	4N9019	55	4Y5851	13		50
4N6408	51	4P5722	45	4Y5852	13	5F9338	195
4N6639	39	4P6616	36	4Y5853	13	5G0001	194
4N6940	65	4P6617	36	4Y5854	13		194.01
4N6941	65	4P8134	58.04	4Y7465	45	5G0002	199
	65.01	4P8480	53				199.02
4N6942	65	4S1936	61.02	**5**			199.02.02
4N6980	63	4S1988	69.04				199.03
	63.02	4S4465	194.10	5A3187	126		199.04
4N7472	65	4S5824	85		127		199.05
	65.01	4S6399	44		127.01	5G0003	199
4N7473	65		45		128		199.02
	65.01	4S6678	71.05	5A4252	59		199.02.02
4N7474	65	4S6680	142.01		61.01		199.03
	65.01	4S8537	87	5B2551	58		199.04
4N7475	65		87.02		58.01		199.05
	65.01	4S8538	87	5B2934	100.08	5G0010	199
4N7476	65		87.02		100.14	5G0013	131
	65.01	4S9191	24	5B3180	76		132
4N7477	65		172		77.01	5G0015	100.03
	65.01	4T0001	164	5B5473	195		100.10
4N7521	65	4T2069	75	5B5812	75		100.13
	65.01	4T3413	158	5B5821	77		100.16
	65.02		158.01		77.02		100.19
4N7522	65		158.02	5B8855	140		100.21
	65.01	4T5613	141.01	5B9504	175	5G0026	100.03
4N7523	65	4T6229	159		187	5G0048	199.06
	65.01		161	5B9603	13	5G0049	194.01
4N7524	65	4T6230	159	5B9628	100.19		199.06
	65.01	4T6232	161		100.21	5G0053	199
4N7525	65	4T6780	138	5C2874	65.02		199.02
	65.01		139	5C2890	65.02		199.02.02
4N7527	65		140	5C6266	100.02	5G0082	199
	65.01	4T8052	139	5C6565	142.01		199.02
4N7528	66	4T8054	138	5D0998	58		199.02.02
4N7530	65		139		58.01	5G0083	199
	65.01	4T9876	173		58.02		199.02
4N7548	65	4V2239	100.08		194.03		199.02.02
	65.01	4V2244	100.08	5D1026	195.01	5G0099	131
4N7549	65		100.11	5D1911	133	5G0119	148
	65.01	4V2245	100.08	5D3118	163	5G0121	100.17
4N7550	65		100.11		167		199
	65.01	4V5091	69.04	5D3183	150		199.02
4N7551	65	4V5234	184	5D4184	99.03		199.02.02
	65.01	4V6981	106.04		99.04	5G0123	131
4N7552	65		200.02		100	5G0127	195.01
	65.01	4W2323	32		100.01	5G0129	199
4N7553	65	4W5063	49	5D8269	91		199.02
	65.01		54	5F1678	170		199.02.02
4N7554	65		54.01		185	5G0132	199
	65.01	4W5734	49	5F2708	186		199.02
4N7555	65	4W6060	47	5F3106	83		199.02.02

PART NUMBER INDEX

Number	Page	Number	Page	Number	Page	Number	Page
5G0140	199	5G0381	119		148	5G0933	143
5G0142	197	5G0398	100.05	5G0678	147	5G0934	199
5G0149	194.10	5G0399	136		148		199.02
5G0174	131		136.01	5G0682	144		199.02.02
5G0178	195		137		145	5G0941	199
5G0179	99.03	5G0400	76		147		199.02
	99.04		77		148		199.02.02
	100		77.01	5G0683	145	5G0942	199
	100.01		77.02	5G0695	83		199.02
5G0190	194.03		136		93		199.02.02
	194.06		136.01		95	5G0951	199.06
	194.07		137	5G0705	100.04	5G0961	200
5G0200	194.03	5G0419	136		100.06	5G0962	200
	194.08		136.01	5G0766	100.10	5G0963	200
	194.09	5G0420	137		100.13	5G0966	200
5G0210	100.10	5G0423	137		100.16	5G0968	200
	100.13	5G0425	104	5G0773	100.10	5G0974	194.01
	100.16	5G0429	194.05		100.13		199.06
5G0213	100.08	5G0431	194.05		100.16	5G0978	200
	100.11	5G0432	194.14	5G0779	114	5G0979	200
	100.14	5G0435	131	5G0780	114	5G0981	200
5G0216	99.03	5G0436	104	5G0792	114	5G1001	142
	99.04	5G0439	104	5G0798	194.07		142.01
	100	5G0440	104		194.09	5G1003	142
	100.01	5G0441	104	5G0799	194.07		142.01
5G0227	59	5G0446	142		194.09	5G1004	142
	61.01		142.01	5G0811	194.07	5G1013	194.05
5G0230	194.13	5G0450	195		194.09	5G1020	196
5G0237	59	5G0457	69.03	5G0813	194.07	5G1031	77
	60		69.04		194.09		77.02
	61		194.01	5G0817	194.08	5G1034	77
	61.01	5G0475	194.14	5G0830	99.03		77.02
	61.02	5G0477	131		99.04	5G1042	46
	61.03		194.05		100	5G1052	147
5G0269	157	5G0485	69.04		100.01		148
	161	5G0486	69.04	5G0842	107	5G1053	147
	162	5G0493	194.11	5G0855	42		148
5G0273	100.04	5G0511	69.04	5G0862	61	5G1056	144
	100.06	5G0517	195		61.03		145
5G0274	100.04	5G0518	195	5G0863	61	5G1058	144
	100.06	5G0521	194		61.03		145
5G0278	136		194.14	5G0865	58	5G1060	76
	136.01		195	5G0867	194.02		77
5G0284	136	5G0537	194	5G0868	100.05		77.01
5G0299	148		195.01		100.07		77.02
5G0301	69.04	5G0592	195.01	5G0881	194.05	5G1061	76
5G0314	69.04	5G0602	119	5G0891	194.05		77
5G0317	95	5G0603	119	5G0899	194.05		77.01
5G0319	93	5G0659	71	5G0901	194.05		77.02
5G0325	137		71.00.01	5G0905	96	5G1092	76
5G0338	196	5G0660	71	5G0920	194.03		77
5G0371	100.08		71.00.01	5G0932	199		77.01
	100.11	5G0663	71		199.02		77.02
	100.14		71.00.01		199.02.02	5G1099	76
	100.17	5G0673	194		199.03	5G1106	76
5G0378	115		196		199.04		77.01
5G0379	116	5G0677	147		199.05	5G1107	77

PART NUMBER INDEX

Number	Page	Number	Page	Number	Page	Number	Page
	77.02	5G1677	70	5G1913	194.12		129
5G1120	77	5G1684	100.03	5G1914	194.12	5G2249	111
5G1125	108	5G1690	196	5G1916	194.12	5G2251	77
5G1132	194.02	5G1696	100.10	5G1919	194.07		77.02
	196		100.13		194.09	5G2252	77
5G1137	77		100.16	5G1920	195.01		77.02
	77.02	5G1700	97	5G1922	194.07	5G2285	194.05
5G1142	58	5G1702	97		194.09	5G2288	194.14
	58.01	5G1704	60	5G1923	195.01	5G2293	194
	58.02	5G1705	61	5G1925	194.07		194.14
5G1146	96		61.03		194.09	5G2294	194
5G1150	76		200.03	5G1935	194.07		194.14
5G1157	76	5G1713	199	5G1939	194.09	5G2297	111
	77.01		199.02	5G1949	194.12	5G2298	111
5G1158	76		199.02.02	5G1953	194.04	5G2299	111
	77.01	5G1722	199	5G1956	194.04	5G2308	194.11
5G1159	107		199.02	5G1993	194.10	5G2311	194.09
5G1174	199		199.02.02	5G1994	194.10	5G2313	194.04
	199.02	5G1723	97	5G1997	69.04	5G2315	58
	199.02.02		97.01		197		58.01
5G1175	107	5G1727	97		200.02		58.02
5G1181	76		97.01	5G2002	194.01	5G2316	194.07
	77.01	5G1728	59		194.10	5G2317	194.05
5G1185	107		61.01	5G2003	45	5G2320	194.10
5G1239	97		200.02		194.07	5G2324	194.07
	97.01	5G1750	142		194.09		194.09
5G1253	76	5G1765	194.10	5G2009	194.05	5G2326	199
	77	5G1786	46	5G2010	194.04		199.02
	77.01	5G1791	146	5G2014	69.04		199.02.02
	77.02		146.01	5G2015	69.04	5G2327	109
5G1272	199	5G1798	60	5G2051	194.09	5G2339	109
	199.02		61.02	5G2052	194.07	5G2342	109
	199.02.02	5G1799	60		194.09	5G2415	194.13
5G1274	100.08		61.02	5G2053	194.03	5G2416	195.01
5G1324	59	5G1811	58.04	5G2055	194.10	5G2437	199
	61.01	5G1818	91		194.11		199.02
5G1348	192		189		194.12		199.02.02
5G1378	71.05		190		194.13		203
5G1452	99.03	5G1820	91	5G2062	194.07	5G2480	71
	99.04	5G1821	91	5G2065	69.04		71.00.01
	100	5G1823	91	5G2067	69.04	5G2496	42
	100.01	5G1825	135	5G2068	194.03		131
5G1470	131	5G1827	194.13	5G2069	194.03	5G2541	71
5G1479	142	5G1829	194.13	5G2074	194.05		71.00.01
5G1492	100.08	5G1835	194.13	5G2075	100.10	5G2636	164
	100.09	5G1839	194.13		100.13		165.01
	100.11	5G1841	194.11		100.16		165.02
	100.12	5G1842	194.11	5G2076	100.10		168
	100.14	5G1845	194.11		100.13	5G2648	168
	100.15	5G1851	194.11		100.16		169
	100.17	5G1858	194.11	5G2090	143	5G2718	100.05
5G1643	131	5G1860	194.12	5G2171	70		100.07
5G1671	76	5G1886	194.13	5G2225	91	5G2752	189
5G1672	42	5G1889	194.12	5G2244	200	5G2854	194.12
	131	5G1890	194.12	5G2246	144	5G2865	189
5G1673	42	5G1892	194.10		145		192
5G1674	131	5G1895	194.12	5G2247	128	5G2878	106

PART NUMBER INDEX

Number	Page	Number	Page	Number	Page	Number	Page
	106.01	5G3828	186		172.03	5G6104	98.02
	106.01.01	5G3832	168	5G4337	25.01		99
5G3086	100.03		169		172		99.01
5G3090	100.03		186	5G4341	194.10	5G6112	98.02
5G3094	100.03	5G3833	168	5G4342	194.10	5G6125	100.08
5G3095	100.03		169	5G4343	199.06		100.11
5G3097	100.03	5G3834	186	5G4583	46		100.14
5G3098	100.03	5G3836	168	5G4584	46		100.17
5G3103	100.03		169	5G4622	172	5G6126	100.08
5G3107	100.03	5G3837	168	5G4716	194.05		100.11
5G3138	136		169	5G4717	194.05		100.14
	136.01	5G3840	169	5G4721	83		100.17
5G3155	100.08	5G3847	186	5G4722	83	5G6128	100.09
	100.11	5G3848	186	5G4723	83		100.12
	100.14	5G3856	100.03	5G4909	106		100.15
5G3156	100.08	5G3861	196		106.01	5G6181	199
	100.11	5G3900	196		106.01.01		199.02
	100.14	5G3901	59	5G4911	106		199.02.02
5G3159	100.10		61.01		106.01	5G6187	199
	100.13	5G3929	168		106.01.01		199.02
5G3160	100.10		169	5G4924	60		199.02.02
	100.13	5G3937	186		61.02	5G6270	113
	100.16	5G3938	166	5G4926	60	5G6273	113
5G3161	100.10		186		61.02	5G6274	113
	100.13	5G3950	110	5G4927	100.05	5G6275	113
	100.16	5G3951	110		100.07	5G6276	113
5G3168	168	5G3958	110	5G4944	58.02	5G6277	113
	169	5G4012	106	5G4946	58	5G6279	100.04
5G3183	100.09		106.01		58.01		100.06
	100.12		106.01.01		58.02	5G6417	131
	100.15	5G4013	106	5G5317	113	5G6427	100.16
	100.19		106.01	5G5432	100.19	5G6520	196
	100.21		106.01.01		100.21	5G6951	100.04
5G3407	76	5G4109	42	5G5546	91		100.06
	77.02	5G4312	168	5G5690	202	5G7945	100.09
5G3448	110		169	5G5691	166		100.12
5G3451	110	5G4315	172	5G5723	100.10		100.15
5G3574	110		172.01		100.13	5G8120	99.03
5G3575	110		172.02		100.16		99.04
5G3576	110		172.03	5G5726	77.02		100.05
5G3612	43	5G4318	101	5G5741	76		100.07
5G3754	172	5G4331	165		77.01	5G8121	100
	172.01		165.01	5G5742	76		100.01
	172.02		169	5G5743	77		100.04
5G3757	172	5G4332	172		77.02		100.06
	172.01		172.01	5G5846	93	5G8122	99.03
	172.02		172.02		95		99.04
	172.03		172.03	5G5847	93		100
5G3758	172	5G4333	25.01		95		100.01
	172.01		172	5G5863	199.06	5G8124	99.03
	172.02	5G4334	172	5G5864	199.06		100
	172.03		172.01	5G5865	199.06	5G8703	118
5G3774	164		172.02	5G6045	194.04	5G8706	118
	165	5G4335	172	5G6046	194.04	5G8707	118
	172	5G4336	172	5G6103	98.02	5G8708	100.02
	172.01		172.01		99	5G8709	101
5G3811	110		172.02		99.01	5G8710	101

PART NUMBER INDEX

Number	Page
5G8713	82
	83
5G8715	147
5G8716	147
5G8725	100.02
5G8729	122
	123
	123.01
	123.02
	123.03
	123.04
5G8736	100.04
	100.06
5G8751	194.06
5G9899	98.02
	99
	99.01
5H1472	155
5H2671	9
5H4276	176
	188
5H6005	181
5H6106	106.02
	106.03
	108.01
5H6552	49
	52
5H6734	179
5H7110	170
	185
5H8853	81.02
5H9513	174
5J0253	100.09
	100.12
	100.15
	100.17
5J3719	131
5J5400	141
5J5402	141
	141.01
5J7013	140
5J8150	138
	139
	140
5J8175	123
	125
	125.02
5J8200	141
	141.01
5J9348	91
5J9605	176
	188
5K0461	26
5K0906	61.01
	194.05
	196
5K1770	98
5K2754	122
	124
	125.01
5K3294	60
	61.02
	69.01
5K5068	200.03
5K6046	194.11
5K8591	93
	95
	179
5K8616	100.02
5K8907	110
5K9064	71.02
	71.04
5K9214	194.12
5L1475	10
5L2849	33
5L4183	150
5L4426	100.20
5L4504	97
	97.01
5L4719	168
	169
	186
5L7200	58.04
	61
	61.03
	200.02
5M0899	41
5M1198	144
	145
	147
	148
5M2055	86
	89
5M2504	176
	188
5M2735	41
5M2736	41
5M2894	6
	24
	26
	30
	38
	39.01
	40
	44
	45
	58.04
	62
	67
	73.02
	76
	77
	80
	84
	96
	97
	100.03
	136
	136.01
	137
	151
	158
	160
	173
	182
	184
	193
5M3062	42
	61.02
	71
	71.00.01
	71.05
	78
	79.01
	99.01
	100.11
	100.14
	100.17
	100.19
	100.21
	104
	106
	106.01
	106.01.01
	131
	143
	146.01
	147
	148
	151
	152
	194.04
	194.05
	195.01
	199
	199.02
	199.02.02
	199.04
	199.05
	200
	200.01
5M5000	123
	123.02
	123.04
	125
	125.02
	125.04
	125.06
	136
5M5479	136
	136.01
5M5845	194.05
5M5856	39.01
5M6213	13
	16
	16.02
	19
	40
	181
5M6214	7
	8
	29
	33
	80
	98.02
	99
	99.01
5M6668	61
	61.03
	69.04
	200.03
5M6708	122
	123.01
	123.03
	124
	125.01
	125.03
	125.05
5M6755	26
	204
5M8412	66
5M9622	81.02
5M9623	81.02
5M9624	81.02
5N5291	78
5P0373	120
	121
	125
	125.02
	125.04
	125.06
5P0537	18
	44
	45
	50
	57
	100.10
	100.13
	136
	136.01
5P0597	29
5P0746	59
	61.01
5P0760	61.01
5P0767	104
	195.01
5P0841	63.02
5P1075	58
	58.01

PART NUMBER INDEX

Number	Page	Number	Page	Number	Page	Number	Page
	58.02		195.01		100.20		199.06
	59		196		107	5P4571	69.04
	60		199		123.01	5P4683	127
	61.01		199.02		123.02		128
	61.02		199.02.02		123.03	5P4868	29
	69		199.03		123.04	5P4939	46
	69.01		199.04		125.03		48
	69.04		199.05		125.04	5P5598	47
	70		200.01		125.05	5P5610	66
	71.05	5P1076	29		125.06		71
	76		42		131		71.00.01
	77		59		160.04	5P5622	66
	77.02		61.01		160.06	5P5624	66
	97		97		195.01		71
	97.01		98.02		199	5P5629	71
	98.02		99		199.02		71.00.01
	99		99.01		199.02.02	5P5630	197
	99.01		107	5P2669	194.03		200.02
	100.05		108.01		194.13	5P5635	30
	100.07		131	5P2949	197	5P5663	194.12
	100.08		144		200.03	5P5672	194.12
	100.10		145	5P2955	67	5P5768	194.02
	100.11		151		68		194.03
	100.13		152	5P3114	86		194.06
	100.14		160.03		87.02		194.08
	100.16		160.04	5P3119	87	5P5816	42
	100.17		160.05		87.02	5P5922	194.11
	100.19		160.06	5P3131	86		194.12
	100.21		196		89		195.01
	106		199	5P3133	87	5P5923	194.05
	106.01		199.02		89	5P5944	194.10
	106.01.01		199.02.02	5P3134	87	5P5945	194.11
	106.03		199.03		89	5P5971	194.02
	106.04		199.04	5P3414	73.02	5P6261	79
	108.01		199.05	5P3466	172.02		79.02
	109	5P1404	144	5P4045	120	5P6313	71
	118		145	5P4115	45		71.00.01
	119	5P1473	194.10		58.04		197
	131	5P1505	100.09		59		200.02
	132		100.12		69.04	5P6314	71
	135		100.15		169		71.00.01
	136		100.19		194.07		197
	136.01		100.21		194.09		200.02
	142	5P2228	106		199.06	5P6315	71
	142.01		106.01	5P4116	78		71.00.01
	143		106.01.01		79		197
	146		106.02		79.01		200.02
	146.01		106.03		79.02	5P6442	46
	147		146.01		194.04	5P6620	49
	148	5P2242	142		194.05	5P6718	27
	151	5P2566	42		194.12	5P6875	194.03
	152		93		199		196
	165.02		95		199.02	5P6945	50
	194.04		100.11		199.02.02	5P7036	194.13
	194.05		100.14		199.03	5P7208	93
	194.11		100.16		199.04		95
	194.12		100.17		199.05	5P7464	142

PART NUMBER INDEX

Number	Page	Number	Page	Number	Page	Number	Page
5P7465	142		100.10	5S7337	205	6D5974	100.19
5P7483	194.03		100.13	5S7349	195.01		100.21
	194.06		106.02	5S7379	30	6D6187	76
	194.08		117		58		77.01
5P7502	194.11		120		58.01	6D6189	76
5P7530	25		136		58.02		77.01
5P7605	181		136.01		71.05	6D6812	194.03
5P7606	181		142		77.01		196
5P7613	86		146		77.02	6E1413	172.03
	87.02		199.03		97.01		173
5P7921	194.03	5P8247	76		118	6E4189	155
5P7957	199		87		119	6E4190	155
	199.02		89		142.01	6F0156	87
	199.02.02		100.03		147		89
	199.03		159		148	6F0253	58
	199.04		161	5S7382	70		58.01
	199.05	5P8248	106.02		93	6F0612	76
	203		195		95		77
5P7958	199	5P8250	76		104		77.01
	199.02		167	5S7383	172.01		77.02
	199.02.02	5P8347	193		172.02		168
	199.03	5P8353	73.02		172.03		169
	199.04	5P8500	43	5S7646	43		186
	199.05		133	5S7657	43	6F0944	100.08
	203		200	5S7816	81.02		100.11
5P7972	74		200.01	5S9267	96		100.14
5P8167	46	5P8502	43	5S9606	175		100.17
	61.01		133		187	6F3468	106.01.01
	61.02		200	5T8739	83	6F4855	154
	77.02		200.01		83.01		155
	106.03	5P8503	194.07	5V0525	202		156
	142.01		194.09	5V0593	100.02	6F4868	174
	146.01	5P8837	113	5V0659	93	6F7010	100.08
	147		114		95		100.11
	148	5P9205	194.05				100.14
	197		199		6		100.17
	199		199.02				100.19
	199.02		199.02.02	6B0132	181		100.21
	199.02.02	5P9441	118	6B0133	181	6G0511	69.04
	200.02		119	6B3057	100.11	6H0187	99.03
	200.03		205		100.17		99.04
5P8196	47	5P9446	122	6B4198	49		100
5P8228	146		123.01	6B5262	98.02		100.01
	146.01		123.03		99		136
5P8244	74		124		99.01		136.01
5P8245	16		125.01	6B5333	91	6H0192	21
	16.02		125.03	6B5464	164	6H1717	16
	23		125.05	6B6684	100.08		16.02
	67		205		100.10		93
	68	5P9466	205		100.13		95
	77	5P9617	45		137		142
	93	5P9757	51	6B7639	195.01	6H3569	100.02
	95	5S0003	28	6D0238	42	6H3956	99.03
	96.01		199.03	6D0679	186		99.04
	98.02	5S0969	179	6D2428	30		100
	99	5S1218	134	6D3897	52		100.01
	100.08	5S5917	17	6D4299	194.11		203.01

PART NUMBER INDEX

Number	Page	Number	Page	Number	Page	Number	Page
6H3957	71.02	6K8088	100.10	6N7675	40	6P8431	194.03
	71.04		100.13	6N8146	7	6P9783	81.02
6H5139	131		100.16		8	6P9784	81.02
6H6109	79	6K8162	181	6N8370	3	6P9785	81.02
	79.02	6K8987	115		5	6P9786	81.02
6H6699	197		116		24	6S2905	93
	200.03	6K9194	45	6N8863	100.04		95
6H7127	168		100.04		175	6S2950	61
	169		100.05		187		61.03
6H8346	65		100.06	6N8910	24		200.02
6H9691	50		100.07	6N9119	35	6S3116	83
6I1363	30		147	6N9121	35	6S3159	83
6I1364	31		148	6N9122	35	6S3160	83
6I2003	50	6K9593	131	6N9123	35	6S3161	83
6I2004	50	6K9860	126	6N9125	34	6S3171	120
6I3185	56	6K9861	126		35		121
6J1323	106.02	6L3351	142	6N9587	71	6S3172	120
	106.03	6L5897	52		71.00.01		121
6J1948	168		54.01	6N9739	34	6S3181	83
	169	6L7751	168	6P0679	73.02	6S3192	93
6J2244	25		169	6P0748	87		95
6J2256	76		186		89	6S3194	93
	77	6M4016	160.03	6P2233	86		95
	77.01		160.04		89	6S3204	93
	77.02		160.05	6P2234	86	6S3249	83
	100.20		160.06		89	6S3265	98.02
6J2797	141	6M5062	65	6P2473	87		99
	141.01		65.01		89		99.01
6J6917	141	6M6853	100.05	6P2474	87	6S3266	98.02
	141.01		100.07		89		99
6J7366	143	6M9613	120	6P2623	86		99.01
6K0131	113	6N0406	18		87.02	6S3284	120
6K0806	67	6N1604	34		89		121
	96	6N2393	2	6P3169	87		123
	195.01		4	6P3236	194.13		123.02
6K1304	113		11	6P3290	73.02		125
6K1346	113	6N2466	59	6P3732	86		125.02
6K1756	194.05		61.01		89		125.04
6K3030	136	6N2467	2	6P3733	86	6S3285	120
	136.01		4		89		121
6K3273	199		13	6P3735	86		123
	199.02	6N2957	79.02		89		123.02
	199.02.02	6N3382	2	6P3843	87		125
	203		4	6P3859	86		125.02
6K3274	199		26		89		125.04
	199.02	6N3504	51	6P3860	86	6S3286	123
	199.02.02	6N4105	66		87.02		123.02
	203	6N4414	45	6P3964	87		123.04
6K4355	59	6N5899	71		87.02		125
	61.01		71.00.01	6P4938	81.02		125.02
6K5551	98.02	6N7266	181	6P4939	81.02		125.04
	99	6N7402	18	6P4940	81.02		125.06
	99.01	6N7405	18	6P4943	81.02	6S3347	108
6K5718	117	6N7672	71	6P4971	81.02	6S3360	123
	117.01		71.00.01	6P4978	81.02		125
6K6355	27	6N7673	71	6P7174	187		125.02
6K6361	194.12		71.00.01	6P7968	181	6S3397	100.02

PART NUMBER INDEX

Number	Page	Number	Page	Number	Page	Number	Page
6S3399	100.02		58.02		100.13		125.03
6S3414	100.02	6S3991	133		100.14		125.05
6S3442	117		134		100.15	6S7596	199
	117.01	6S4011	108.01		100.16		199.02
6S3447	100.08	6S4084	135		100.17		199.02.02
	100.11	6S4097	100.04		100.19		202
	100.14		100.06		100.21		203
	100.17	6S4126	62	6S6649	106	6S7672	199.06
6S3451	123	6S4181	83		106.01	6S7680	199.06
	123.02	6S4340	143		106.01.01	6S7715	120
	125	6S4397	106.02	6S6652	106		121
	125.02	6S4531	93		106.01		123
	125.04		95		106.01.01		123.02
6S3453	123	6S4535	93	6S6657	108.01		125
	123.02		95	6S6741	118		125.02
	125	6S4624	194.05		119		125.04
	125.02	6S4655	199.03	6S6772	91	6S7940	58
	125.04		199.04	6S6775	91		58.01
6S3479	100.04		199.05	6S6793	100.03		58.02
	100.06	6S4709	144	6S6801	113	6S8011	106.02
6S3480	100.04		145	6S6805	113		106.03
	100.06	6S4710	144	6S6806	113	6S8015	147
6S3495	120	6S4728	144	6S6816	93		148
	121		145		95	6S8021	144
	123	6S4734	146	6S6831	61		145
	123.02		146.01		61.03	6S8031	147
	125	6S4747	199.03		200.03		148
	125.02		199.04	6S6897	199.06	6S8038	144
	125.04		199.05	6S6898	199.06		145
	129	6S4748	199.03	6S6902	91	6S8040	144
6S3548	62		199.04	6S6919	199.06		145
6S3559	149		199.05	6S7038	120	6S8050	142
	162	6S4767	131	6S7040	121		142.01
6S3609	126		134	6S7127	108	6S8224	98.02
6S3691	126	6S4768	134	6S7220	123		99
6S3697	123	6S4769	134		123.02		99.01
	123.02	6S4789	136		123.04	6S8233	120
	125		136.01		125		121
	125.02	6S4792	136		125.02		123
	125.04		136.01		125.04		123.02
6S3725	100.08	6S4795	134		125.06		125
	100.11	6S5978	83	6S7272	124		129
	100.14	6S5984	101		125	6S8236	147
	100.17	6S6040	83		125.01		148
6S3747	118	6S6166	108		125.02	6S8316	108
	119	6S6439	132		125.03	6S8323	108
6S3792	95	6S6477	147		125.04	6S8797	123
6S3799	118		148		125.05		123.02
	119	6S6514	132		125.06		123.04
6S3800	118	6S6521	93	6S7339	58.04		125
	119		95	6S7374	143		125.02
6S3859	58	6S6614	83	6S7378	143		125.04
	58.01	6S6646	100.08	6S7399	122		125.06
	58.02		100.09		123.01	6S8842	71.05
6S3864	110		100.10		123.03	6S8843	71.05
6S3900	58		100.11		124	6S8902	127.01
	58.01		100.12		125.01		127.02

PART NUMBER INDEX

Number	Page
6S8952	122
	123.01
	123.03
	124
	125.01
	125.03
	125.05
6S8959	58
	58.01
	58.02
6S8967	58.02
	194
6S8969	194.08
6S8978	194.06
6S9049	128
6S9051	158
	158.01
	158.02
	160
	160.01
	160.02
6S9052	147
	148
6S9054	147
	148
6S9055	128
6S9102	127
6S9114	115
6S9115	127
6S9125	115
6S9235	117
	117.01
6S9242	83
6S9341	104
6S9342	104
6S9347	104
6S9359	112
6S9367	125
6S9477	100.08
	100.11
	100.14
	100.17
6S9598	117
	117.01
6S9644	116
6S9647	116
6S9666	161
6S9694	123
	125
	125.02
6S9723	195
6S9724	194.05
6S9728	194.05
6S9729	194.05
6S9730	194.05
6S9731	194.05
6S9732	194.05
6S9736	194.02
6S9737	195
6S9747	194.07
6S9748	194.09
6S9768	194.03
6S9800	194.01
	194.02
	194.03
	194.04
	194.05
6S9801	194.03
6S9814	195
6S9817	194.06
	194.08
6S9818	194.06
	194.08
6S9819	194.03
6S9823	194.02
6S9827	199
	199.02
	199.02.02
6S9832	194.05
6S9833	194.05
6S9834	194.05
6S9844	194.03
6S9852	42
6S9858	194.03
6S9871	101
6S9880	194.03
6S9884	194.06
	194.08
6S9906	194.06
	194.08
6S9925	199
	199.02
	199.02.02
	199.03
	199.04
	199.05
	199.12
6S9941	100.09
	100.12
	100.15
6S9943	100.09
	100.12
	100.15
6S9955	194.12
6S9963	194.05
6S9964	194.05
6S9965	194.02
6S9966	194.02
6S9976	100.09
	100.12
	100.15
	100.20
6S9979	131
6S9983	100.08
	100.11
	100.14
	100.17
6S9995	199
	199.02
	199.02.02
	199.03
	199.04
	199.05
6S9996	199
	199.02
	199.02.02
	199.03
	199.04
	199.05
6S9997	199
	199.02
	199.02.02
	199.03
	199.04
	199.05
6S9998	199
	199.02
	199.02.02
	199.03
	199.04
	199.05
6T2287	187
	188
6T2288	187
6T2289	185
	187
6T2292	187
6T2294	188
6T4206	128
	129
6T6066	71.00.01
6T6329	71.00.01
6T6901	176
	188
6T7034	175
	187
6T7157	67
	68
6T7159	67
	68
6T7160	67
	68
6T8115	69.04
6T8307	181
6T8313	183
6T8314	183
6T8460	58.02
6T8487	183
6T8686	86
6T8687	86
	179
6T8710	80
6T9830	73.02
6V0439	99.01
6V0440	99.01
6V0486	194.12
6V0487	194.11
	194.13
6V0488	194.12
6V0506	32
6V0527	165
6V0543	194.07
	194.09
6V0938	87
	87.02
6V0958	179
6V1155	194.06
	194.08
6V1359	194.10
6V1604	168
	169
	186
6V1819	173
6V1820	173
6V1883	58
	58.01
	58.02
6V2200	179
6V2218	72
6V2219	72
6V2221	72
6V2224	72
6V2753	86
6V3353	194.09
6V3354	194.07
6V3507	61
	61.03
	197
	200.02
	200.04
6V4298	199.06
6V4414	100.04
	100.06
6V4427	181
6V4432	199
	199.02
	199.02.02
	199.04
	199.05
6V4791	126
6V5014	32
6V5019	32
6V5118	32
6V5210	65.02
6V5399	200.01
6V5710	42
6V5738	194.02
6V5759	181

PART NUMBER INDEX

Number	Page	Number	Page	Number	Page	Number	Page
6V5839	69		100.01	6Y0755	179		165
	69.01	6V8293	206	6Y0935	128		165.01
	199.02	6V8361	61	6Y0936	128		165.02
	199.04		61.03	6Y0937	128	6Y2110	123.04
6V5874	43		200.02	6Y0938	128		125.06
	133	6V8362	194.13	6Y0939	128	6Y2111	165
	200	6V8363	58.04	6Y0940	128		182
	200.01		61	6Y1318	125.02	6Y2153	182
6V6640	93		61.03		125.04	6Y2154	182
	95		200.02	6Y1368	127.01	6Y2155	182
6V6835	49	6V8370	58.04		129	6Y2175	166
6V6896	32		61	6Y1369	123	6Y2176	166
6V6917	32		61.03		123.02	6Y2216	183
6V6921	47		200.02		129		185
6V7614	206	6V8372	61	6Y1381	126	6Y2217	183
6V8105	139		61.03	6Y1382	126	6Y2218	164
6V8182	101		200.02	6Y1385	127	6Y2465	165
	106.02	6V8374	71.00.01	6Y1386	127	6Y2689	179
	106.03	6V8376	69.04	6Y1421	158.01	6Y2745	100.08
	113	6V8377	69.04		158.02		100.11
6V8183	100.07	6V8378	61		160.01		100.14
	152		61.03		160.02	6Y2824	157
	153		63.01	6Y1439	170	6Y2825	157
6V8184	199		200.03		185	6Y3882	129
	199.02	6V8801	29	6Y1441	170	6Y4744	123.04
	199.02.02		58.02		174		125.02
6V8185	61.01		61.01		185		125.04
	197		65.02	6Y1459	174		125.06
6V8186	69.04		78	6Y1466	174	6Y5350	165.01
	79.01		79.01	6Y1467	165		165.02
6V8188	93		97.01		174	6Y5351	165.01
	95		100.07	6Y1510	126	6Y5499	96.01
	100.06		100.12		127	6Y5504	96.01
	104		100.15		127.01	6Y7913	183
	120.01		142.01		128	6Y7914	100.02
	199		143	6Y1512	127	6Y7934	87.02
	199.02		168		128	6Y7935	87.02
	199.02.02		169	6Y1674	126		89
6V8189	29		186	6Y1675	127	6Y7966	58.02
	61.01		195.01	6Y1679	127	6Y8655	89
	67		199	6Y1904	181		
	68		199.02	6Y1906	165		
	152		199.02.02		178		
	153		199.04		179	7B0462	123
	199		199.05		180		125
	199.02	6V8824	65.02		181		125.02
	199.02.02	6V8927	71.00.01	6Y1956	184	7B1597	147
	199.04	6V9197	100.20	6Y1957	184		148
	199.05	6W3309	203	6Y1958	184	7B2742	45
	202	6W8349	58.01	6Y1959	166		57
6V8190	111		58.02		184		136
	163	6Y0473	123.04	6Y1967	158.01		136.01
6V8199	23		125.06		160.01	7B3028	118
6V8211	65.02		128	6Y2047	96.01		119
6V8247	99.03		129	6Y2048	165		122
	99.04	6Y0650	128		170		123.01
	100		129	6Y2055	164		123.03

PART NUMBER INDEX

Number	Page	Number	Page	Number	Page	Number	Page
	124		4	7G6249	183		89
	125.01		45	7G6250	181	7G7611	87
	125.03	7E4846	53	7G6251	181		87.02
	125.05	7E4892	51	7G6252	181	7G7612	87
	162	7E5346	51	7G6255	181		89
	194.03		57	7G6257	183	7G7613	87
	196	7E6635	2	7G6259	181		87.02
	205		3	7G6260	181	7G7614	86
7B3235	23	7E6785	49	7G6266	184		87.02
	117	7F2050	172	7G6267	179	7G7616	86
	160.03		172.01	7G6317	181		87.02
	160.05		172.02	7G6320	181	7G7617	86
7B3770	150		172.03	7G6540	179		87.02
7B5062	100.08	7F2060	143	7G6713	181	7G7619	86
	100.11	7F2742	179	7G6799	175		89
	100.14	7F7615	194.07		176	7G7650	75
	100.17		194.09	7G6800	175	7G8071	181
7B5068	100.08	7F8092	58	7G6802	176	7G8303	174
	100.11	7F8268	73.02		188	7G8307	174
	100.14	7F8607	57	7G6804	176	7G9022	182
	100.17	7F8660	63		188	7G9023	183
7B7515	100.02	7G0860	85	7G6805	170	7G9026	182
7B9323	78	7G1221	87		185	7G9027	182
	79.01		89	7G6807	175	7G9121	171
7B9919	25	7G1222	87		187	7G9423	164
7C0791	51		89	7G6809	175		165
7C1146	12	7G1223	87		187		165.01
7C1651	33		89	7G6810	175		165.02
7C2230	33	7G2480	86		187		167
7C2296	16		89	7G6811	176	7G9447	165
	16.01	7G3820	176	7G6812	175		177
	16.02		188		187	7G9467	179
7C2320	16	7G4118	75	7G6813	176	7G9470	164
7C3805	16.02	7G4332	123.04		188		165
7C5278	54		125.06	7G6814	175		165.01
7C6351	27	7G4746	186		187		165.02
7C7453	39	7G4842	81.02	7G6815	187		171
7C7740	29	7G4973	179	7G6816	175	7G9548	183
7C7741	29	7G4975	179		187	7G9563	81.02
	30	7G4976	179	7G6860	175	7G9567	81.02
7C7743	23	7G4978	179	7G6861	170	7H1447	131
7C7744	2	7G5419	181		175	7H3171	98.02
	4	7G6226	179	7G7154	87		99
	33	7G6227	179		89		99.01
7C7745	33	7G6228	181	7G7489	181	7H3607	93
7C9354	26	7G6229	179	7G7509	174		95
7D0978	142.01	7G6230	184	7G7510	174	7H3641	78
7D5318	172	7G6231	183	7G7511	174		79.01
	172.01	7G6232	181	7G7512	174		136
	172.02	7G6233	179	7G7604	86		136.01
	172.03	7G6235	179		87.02		137
7D8048	174	7G6236	179	7G7606	86	7H3788	100.08
7D9749	120	7G6239	184	7G7608	87		100.11
	121	7G6240	184		89		100.14
7E0831	39.01	7G6241	184	7G7609	87		100.17
7E2985	56	7G6243	184		89	7H7055	25.01
7E3734	2	7G6248	179	7G7610	87		172

PART NUMBER INDEX

Number	Page	Number	Page	Number	Page	Number	Page
7H8909	153		145		61.01	7N6817	56
7J2546	184		147		62	7N6937	2
7J4026	44		148	7N0140	71		4
7J5131	158	7K6699	97		71.00.01		18
	158.01	7K8229	158	7N0296	71	7N7166	55
	158.02		160	7N0691	36	7N7264	55
	160	7K8237	93	7N0810	39.01	7N7265	55
	160.01		95	7N1046	53	7N7267	51
	160.02	7K8238	93	7N1047	53	7N7270	51
7J5639	138		95	7N1052	49	7N7271	51
	139	7K8876	83	7N1067	54	7N7282	54
	140	7K8877	83	7N1796	54.01	7N7779	71
	141	7K8915	100.04	7N2059	71	7N7780	71
	141.01		100.06		71.00.01	7N7957	35
7J5938	86	7K9197	36	7N2171	52	7N7969	53
	87.02		44	7N2172	52	7N7970	53
7J6461	141	7L3326	55	7N2176	49	7N8421	53
	141.01	7L5861	186	7N2594	50	7N8768	49
7J6462	141	7L6479	194.12		52	7N8775	50
7J6469	141	7L7304	71.05	7N2867	69.04	7N8779	50
	141.01	7L8695	187	7N2994	20	7N8785	51
7J8114	150	7M0706	77	7N3104	49	7N8821	51
7J8893	83	7M1154	179	7N3718	59		52
7J8894	83	7M1674	40		61.01	7N9070	62
7J9222	138	7M2220	144	7N4422	22	7N9342	9
7J9223	138		145	7N4516	38	7N9737	71
	157	7M4593	7	7N4529	38	7N9801	71
7J9227	138	7M5130	71.02	7N4636	36		71.00.01
7J9765	141		71.04	7N4637	36	7N9803	11
	141.01	7M5839	27	7N4674	38	7N9826	61
7J9885	138	7M7219	51	7N4784	62		61.03
	139	7M7260	77		63		200.03
	140		77.02	7N4970	38	7N9960	56
7J9886	138	7M7410	47	7N4971	3	7N9989	30
	139	7M7659	194.07		5	7P4749	194.10
	140		194.09		37	7P7975	69
7J9887	138	7M7794	75	7N5138	3		69.01
	139	7M8485	98		5		199.02
	140		142		10		199.02.02
7J9917	141		142.01	7N5141	2		199.04
	141.01		168		4		199.05
7J9920	141		169		22	7P9311	186
	141.01		172	7N5274	59	7S0687	197
	162		172.01		61.01		200.02
7K0897	100.10		172.02	7N5425	19	7S2042	199
	100.13		172.03	7N5961	63	7S2043	199
	100.16		174		63.02	7S2204	11
7K0898	100.09		177	7N5962	63	7S4252	134
	100.19		191	7N5964	63	7S4339	202
	100.21		192	7N5965	63		203.01
7K1181	146.01	7M9909	65	7N5966	63	7S4607	81.02
	191		65.01	7N5968	63	7S5757	203.01
	192		179	7N5969	63	7S6930	184
7K2017	126	7M9910	27	7N6311	20	7S7789	202
	127	7N0042	47	7N6344	2	7S7791	202
	127.01		48		4	7S7793	202
7K4129	144	7N0060	59		19	7S7799	202

PART NUMBER INDEX

Number	Page	Number	Page	Number	Page	Number	Page
7S7800	203	7W0239	28	7X0404	113		196
7S7801	203	7W0250	51	7X0443	111	7X2648	100.07
7S7804	203	7W0332	27	7X0448	123.04	7X2752	138
7S7805	202	7W0508	20		127.02		139
7S8489	184	7W0735	49	7X0451	123.01	7X2846	3
7S8494	184	7W1407	56		123.03	7X4773	173
7S8920	172	7W1927	54		125.03	7X7644	206
	172.01	7W2059	13		125.05	7X7658	3
	172.02	7W2323	19	7X0467	83	7X7697	3
	172.03	7W2324	56	7X0471	120.01		5
7S8921	172	7W2808	54	7X0491	58	7X7707	5
	172.01	7W3185	44		58.01		
	172.02	7W3202	9		58.02	**8**	
	172.03	7W3926	2	7X0503	142.01		
7S9305	202		4	7X0507	172.01	8B1419	100.10
7S9391	203		9		172.02		100.13
7S9866	203.01	7W4272	52		172.03		100.16
7S9867	203.01	7W5700	54.01	7X0515	100.02		100.17
7S9868	203.01	7W6139	27	7X0519	101		100.19
7S9869	203.01	7W8764	39	7X0529	163		100.20
7S9870	203.01		40	7X0564	104		100.21
7S9871	203.01	7W8765	39	7X0578	100.06	8B3768	100.10
7S9873	203.01	7W9390	14	7X0579	30		100.13
7S9884	203.01		15		70		100.16
7S9885	203.01	7W9392	13		199		186
7T0020	69.04		14		199.02	8C0606	205
7T1184	170	7X0267	70		199.02.02	8C3671	69
	185	7X0290	78	7X0583	123.04		69.01
7T2037	43		199		127.02		199.02
7T6184	58.04		199.02	7X0584	93		199.02.02
	61		199.02.02		95		199.04
	61.03	7X0310	172.01		123.01		199.05
	200.02		172.02		123.02	8C3698	123.04
7T9515	58.04		172.03		123.03		125.06
7T9518	61	7X0312	142.01		123.04	8C3792	3
	61.03	7X0325	29		125.03	8C3996	79.02
	200.02		117.01		125.04	8C4436	106
7T9938	179	7X0326	144		125.05		106.01
7T9939	179		145		125.06		106.01.01
7T9940	179	7X0328	101	7X0588	123.03		107
7T9943	179	7X0346	158.02		125.05		117.01
7T9944	179		160.02	7X0590	109	8C5168	73.02
7T9945	179	7X0347	123.01	7X0591	100.02	8C5604	77.01
7T9989	87.02		123.03	7X0601	162	8C5917	59
7T9996	179		125.03	7X0608	65.02		61.01
7T9997	179		125.05		147	8C6877	123.02
7T9998	179	7X0349	123.04		148		123.04
7V2253	204		127.02	7X0618	107		125.04
7V5138	202	7X0366	106.02		123.02		125.06
7V9507	199		106.03		123.04		142.01
	199.02		110		125.04	8C8582	142.01
	199.03		115		125.06	8C9122	138
	199.04		116	7X0732	99.01		139
	204	7X0369	101	7X0772	106		140
7W0189	2		113		106.01	8C9131	138
	4	7X0374	104		106.01.01		139
	49	7X0402	114	7X0937	194.03		140

PART NUMBER INDEX

Number	Page	Number	Page	Number	Page	Number	Page
8C9151	123.02	8E5702	160.04		125.06	8J3329	163
	125.04		160.06	8H3127	154	8J3334	162
8D0538	83	8E6903	179		156		163
	83.01	8E6904	179	8H5306	61	8J3344	158
8D3786	109	8E7342	123.04		61.03		158.01
8D5294	76		125.06		200.02		158.02
	77.01	8E7343	123.04	8H5724	96.01		160
8D5295	76		125.06	8H7521	73.02		160.01
	77.01	8E8281	181		179		160.02
8D5382	109	8E9807	87.02	8H8175	100.09		160.03
8D5476	69	8F1179	46		100.12		160.04
	69.01	8F1434	58.04		100.15		160.05
	199		61		184		160.06
	199.02		61.03	8H9189	100.08	8J3349	160.03
	199.02.02		63.01		100.11		160.04
	199.04		65.02		100.14		160.05
	199.05		200.02	8H9299	54		160.06
8D5898	158.01		200.03	8H9789	179	8J3372	160.03
	160.01	8F4610	100.08	8J0090	140		160.04
8D7265	69.04	8F5240	199	8J0420	150		160.05
8D9023	199.03	8F5340	100.09	8J0729	158		160.06
	199.04		100.12		158.01	8J3443	160.03
	199.05		100.15		158.02		160.04
8E0625	181	8F5758	154		160		160.05
8E0636	183		155		160.01		160.06
8E1046	181		156		160.02	8J3989	158
8E1047	181	8F5900	181		160.03		158.01
8E1050	179	8F6575	16		160.04		158.02
8E1051	179		16.02		160.05		160
8E1052	181	8F7702	184		160.06		160.01
8E1054	181	8F8151	104	8J0899	160		160.02
8E1071	179		195.01		160.01	8J4504	138
8E1440	181	8F8178	49		160.02	8J4511	150
8E1441	179	8F8733	179	8J0900	160	8J4512	130
8E2915	181	8F8997	25.01		160.01		150
8E2993	181	8F9206	170		160.02	8J4513	150
8E3308	160.04		185	8J0913	158	8J5299	164
	160.06	8F9538	43		158.01	8J5313	163
8E3315	160.04	8F9836	106.02		158.02		164
	160.06		106.03	8J0927	160.03	8J6785	100.04
8E3561	181		138		160.04		100.06
8E4025	162	8G0871	199.02		160.05	8J6913	132
8E4026	160.04		199.02.02		160.06	8J7146	158
	160.06		199.04	8J0928	160.03		158.01
8E4072	160.04		199.05		160.04		158.02
	160.06	8G0873	69		160.05		159
8E4589	89		69.01		160.06	8J7415	138
8E4590	89		199.02	8J1148	160.04		140
8E4709	158.02		199.02.02		160.06		141
	160.02		199.04	8J3281	163		141.01
8E4711	158.02		199.05	8J3282	163	8J8343	49
	160.02	8G7280	71.00.01	8J3285	163	8J8749	27
8E4736	158.02	8H0707	54	8J3286	163	8J8809	150
	160.02	8H2021	39	8J3294	162	8J9162	160.05
8E5099	160.04	8H2023	39		163	8K1255	135
	160.06		41	8J3326	163	8K1433	194.11
8E5284	89	8H2265	123.04	8J3328	163	8K4112	106.04

PART NUMBER INDEX

Number	Page	Number	Page	Number	Page	Number	Page
	194.13	8M5860	15	8N4612	23		169
8K6211	199.06		16.01	8N5117	53	8S7169	75
8K6720	149	8M7145	44	8N5132	47		97
8K7223	202		142	8N5645	14		97.01
8L2746	56		158.01	8N6308	11		99
8L2777	100.08		160.01	8N7294	11		99.01
	100.11	8M7742	27	8N7518	54		174
	100.14	8M7892	61		54.01	8S7271	76
	153		61.03	8N7735	54		77.01
8L2779	48		200.02	8N9236	37	8S8820	144
	153		200.04	8P0668	43		145
	154	8M8489	84	8P2575	111		147
	156	8M8515	49		195		148
8L3282	100.04	8M8947	69.04	8P2812	109	8S9092	122
	100.06	8M9062	54		165.02		124
8L5832	49		54.01	8P6321	81.02		125.01
	52	8M9124	98.02	8P8417	86		179
8L6557	182		99		89	8S9129	75
	183	8N0410	65	8P8540	67	8S9130	75
8L9801	61		65.01	8P9286	81.02	8S9191	21
	61.03		66	8P9287	81.02		74
	200.02	8N0412	66	8P9296	81.02		151
8M0505	146	8N1415	54	8P9441	75	8S9355	172
	146.01	8N2268	63.01	8P9770	160.03	8S9378	29
8M0744	191		63.02		160.04	8T0328	50
	192	8N2487	53		160.05	8T0334	100.19
8M1013	81.02	8N2489	53		160.06		100.21
8M2295	38	8N2495	51	8S0023	142.01	8T0659	47
8M2770	60	8N2496	51	8S0024	142.01	8T0741	79
	197	8N2499	51	8S0168	202		79.02
	200.03	8N2501	51	8S0232	49	8T0798	79
8M2771	69.04	8N2503	51	8S0932	195.01		79.02
8M2772	58.04	8N2505	51	8S0933	199	8T1172	79
	60	8N2507	51		199.02		79.02
	61.02	8N2510	55		199.02.02	8T1174	79
	67	8N2511	55		199.03		79.02
	69	8N2518	53		199.04	8T1176	79
	69.01	8N2818	22		199.05		79.02
	71	8N2819	62	8S0934	199.03	8T1178	79
	71.00.01	8N2822	63.01		199.04		79.02
	197		194.01		199.05	8T1370	141
	200.02	8N3087	52	8S1491	11		141.01
8M3175	84	8N3088	49	8S1783	98.02	8T2472	72
8M3561	171	8N3090	54		99	8T2501	96
8M3837	98.02	8N3168	52		99.01		147
	99	8N3246	29	8S3426	86		148
8M4389	80	8N3256	52		87	8T2502	42
8M4431	176	8N3258	50		89		77.02
	188	8N3259	50	8S4055	172		83
8M4436	73.02	8N3290	30	8S4064	149		97.01
8M4438	170	8N3573	44	8S4345	202		106.03
	185	8N3753	11	8S4346	202		113
8M4987	96	8N3799	49	8S4740	7		151
8M4988	96	8N4079	3		8		152
	98		5	8S4950	45		199
8M5127	176		11	8S6814	51		199.02
	188	8N4130	10	8S7048	168		199.02.02

PART NUMBER INDEX

Number	Page	Number	Page	Number	Page	Number	Page
8T2604	50		199.02.02	8T5361	77.01		196
8T3846	194.04		199.04		111	8T9384	107
8T3847	194.04		199.05		113	8T9389	144
8T4121	65.02	8T4224	29	8T5390	79.01		145
	199.02.02		30	8T5391	71		172.01
	199.05		58		71.00.01		172.02
8T4122	42		58.01		194.05		172.03
	77.01		58.02	8T6675	39		186
	112		71	8T6731	3	8T9391	144
	123.01		71.00.01		5		145
	125.03		78	8T6732	3	8T9393	42
	131		79.01		5		112
8T4133	65.02		100.07	8T6734	5		123.01
	69		194.02	8T7008	29		123.03
	69.01		194.05	8T7258	81.02		125.03
	199.02		196	8T7516	162		125.05
	199.02.02		202	8T7565	203		131
	199.04	8T4835	29	8T7587	199.06	8T9399	101
	199.05		109	8T8909	186	8V3181	191
8T4205	61.01	8T4896	29	8T8911	30	8V3605	203.01
	65.02		30		79	8V3607	203.01
	100.16		42		79.02	8V4321	59
	168		46	8T8915	168		61.01
	186		71		169	8V5135	203
	194.03		71.00.01	8T8917	100.02	8Y0090	78
	195.01		77.01		100.11		79.01
	197		77.02		100.14	8Y0094	78
	200		78		100.17	8Y0098	78
8T4223	29		79.01		100.19		79.01
	58		83		100.21	8Y0100	78
	58.01		91		108.01	8Y0102	79
	58.02		96		120.01		79.02
	77.02		97.01		123.01	8Y0106	78
	99.01		104		123.03		79.01
	100.02		106.03		125.03	8Y0107	79
	100.11		113		125.05		79.02
	100.14		118		151	8Y0108	78
	100.16		119		152	8Y0111	78
	100.17		120.01		199		79.01
	100.19		168		199.02	8Y0115	78
	100.21		169		199.02.02		79
	104		194.03		199.04		79.01
	106		197		199.05		79.02
	106.01		199	8T8919	99.01	8Y0117	78
	106.01.01		199.02		104		79.01
	106.02		199.02.02		117.01	8Y0216	106
	106.03		200	8T8924	115	8Y0217	42
	117.01		200.03		116	8Y0234	92
	120.01		203	8T9043	30		93
	142.01	8T4994	106.02	8T9313	104	8Y0235	94
	144		106.03	8T9371	194.02		95
	145		110	8T9378	106	8Y0240	130
	146.01		113		106.01	8Y0241	130
	194.02		115		106.01.01		151
	195.01		116	8T9383	61.01	8Y0242	130
	199		131		106.02		133
	199.02	8T5360	100.20		194.02	8Y0243	130

PART NUMBER INDEX

Number	Page	Number	Page	Number	Page	Number	Page
8Y0244	130	8Y0832	97.01		199.04		58.01
	152	8Y0872	111		199.05	8Y1697	123.04
8Y0245	130	8Y0873	111	8Y1228	69		125.06
	134	8Y0877	111		69.01	8Y1698	123.04
8Y0246	130	8Y0880	111		199.04		125.06
	143	8Y1004	117		199.05	8Y1700	99
8Y0247	130	8Y1009	120	8Y1234	70		99.01
	142		120.01	8Y1241	100.08	8Y1702	99
	142.01	8Y1012	117		100.11		99.01
8Y0257	145	8Y1020	117		100.14	8Y1725	46
	157	8Y1021	117	8Y1242	199	8Y1767	79.01
8Y0258	146	8Y1022	117		199.02	8Y1769	194
	146.01	8Y1026	117		199.02.02	8Y1817	123.04
	157		117.01		199.03		127.02
8Y0260	148	8Y1035	59		199.04	8Y1820	78
	157		61.01		199.05		79.01
8Y0261	144		200.02	8Y1280	117	8Y1827	100.09
	157	8Y1081	100.09	8Y1282	120	8Y1854	118
8Y0262	147		100.12	8Y1285	120	8Y1856	136.01
	157		100.15	8Y1304	117	8Y1858	77.02
8Y0266	198	8Y1082	100.09	8Y1340	77.02	8Y1859	70
	199		100.12	8Y1352	100.05	8Y1888	100.09
	199.01		100.15		100.07		100.12
	199.02	8Y1084	100.08	8Y1354	100.05	8Y1889	100.09
	199.02.01	8Y1085	100.08		100.07		100.12
	199.02.02	8Y1086	100.08	8Y1356	200	8Y1890	100.09
8Y0268	120	8Y1087	100.14	8Y1501	143		100.12
	120.01		100.15	8Y1502	143	8Y1891	100.15
8Y0270	100.03		100.16	8Y1510	144	8Y1892	100.15
8Y0482	136		194		145	8Y1893	100.15
	136.01	8Y1099	42	8Y1511	144	8Y1964	79.01
8Y0483	137	8Y1102	42		145	8Y1996	100.11
8Y0559	135	8Y1144	70	8Y1518	142		100.14
8Y0637	133	8Y1147	194	8Y1542	100.04		100.17
	134	8Y1150	58		100.05	8Y1997	100.11
	136		58.01		100.06		100.14
	136.01	8Y1177	194.01		100.07		100.17
8Y0638	133		199.03	8Y1562	58.04	8Y1998	100.11
	134		199.04	8Y1564	106.02		100.14
	137		199.05	8Y1565	106.02	8Y2221	146.01
8Y0639	134	8Y1213	67	8Y1568	147	8Y2222	146.01
	135	8Y1214	67		148	8Y2223	100.07
8Y0698	135	8Y1215	67	8Y1569	147	8Y2282	61.02
8Y0720	151	8Y1216	69		148	8Y2283	61.02
	152	8Y1223	69	8Y1588	100.08		69.01
8Y0743	108.01		69.01		100.09	8Y2309	106.01
8Y0744	108.01		199.03		100.10		106.01.01
8Y0780	199	8Y1224	69		100.11	8Y2312	98.01
	199.02		69.01		100.12	8Y2316	98.01
	199.02.02		199.02		100.13		100.16.02
8Y0781	199		199.02.02	8Y1655	146		100.17
8Y0810	106		199.04		146.01		100.18
	106.01		199.05	8Y1656	146		100.19
8Y0819	106	8Y1227	69		146.01		100.20
	106.01		69.01	8Y1657	146		100.21
	106.01.01		199.02	8Y1658	146	8Y2318	98.01
8Y0821	106		199.02.02	8Y1677	58		106.03

PART NUMBER INDEX

Number	Page
8Y2319	98.01
	106.04
8Y2320	98.01
	200.02
	200.03
8Y2322	98.01
	200.01
8Y2323	106.01
	106.01.01
8Y2324	106.02
8Y2325	106.02
8Y2328	106.03
8Y2330	106.04
8Y2331	106.04
8Y2332	106.04
8Y2334	200.03
8Y2335	200.03
8Y2336	200.03
8Y2342	100.19
	100.21
8Y2344	100.19
	100.21
8Y2355	100.17
8Y2359	100.19
	100.21
8Y2365	100.19
	100.21
8Y2369	100.19
	100.21
8Y2372	100.19
	100.21
8Y2376	100.19
	100.21
8Y2377	100.17
8Y2378	106.01
	106.01.01
8Y2379	106.01
	106.01.01
8Y2382	106.03
8Y2409	191
8Y2410	165.01
	165.02
	172.02
	172.03
8Y2411	142.01
8Y2413	142.01
8Y2414	142.01
8Y2415	142.01
8Y2451	190
	191
8Y2452	190
8Y2536	146.01
8Y2537	146.01
8Y2715	121
8Y2733	123.02
	123.04
	125.04
	125.06
8Y2735	121
	123.01
	123.03
	125.03
	125.05
8Y2736	121
	123.02
	123.04
	125.04
	125.06
8Y2754	117.01
8Y2758	117.01
8Y2796	58.02
8Y2911	121
8Y2941	200.01
8Y2942	200.01
8Y2943	200.01
8Y2952	100.19
	100.21
8Y2954	106
	106.01
	106.01.01
8Y2968	58.01
	58.02
8Y2980	199.02
	199.02.02
8Y3044	117.01
8Y3045	117.01
8Y3046	100.19
	100.21
8Y3047	100.19
	100.21
8Y3193	199.02
8Y3231	100.17
8Y3252	100.17
8Y3253	100.17
8Y3413	120.01
8Y3429	117.01
8Y3430	117.01
8Y3437	120.01
8Y3438	120.01
8Y3536	200.01
	106.01.01
8Y3547	199.02
	199.02.02
8Y3610	109
8Y3612	109
8Y3613	109
8Y3632	117.01
8Y3633	117.01
8Y3760	97.01
8Y3781	100.14
	100.17
8Y3782	100.14
	100.17
8Y3783	100.11
	100.14
	100.17
8Y3958	79.01
8Y3959	79.01
8Y4001	97.01
8Y4028	199.06
8Y4037	199.02.02
	199.05
	204
8Y4232	96
8Y4320	194.05
8Y4581	100.12
	100.15
	100.19
	100.21
8Y4842	132
8Y4844	77.01
8Y4966	199.02.02
8Y5109	168
8Y5199	194.05
8Y5216	96
8Y5339	99.04
	100.01
8Y5499	100.19
	100.21
8Y5678	100.19
	100.21
8Y5679	100.19
	100.21
8Y6114	79.01
8Y6141	194.03
8Y6153	194.05
8Y6154	194.05
8Y6156	194.02
8Y6162	194.02
8Y6536	100.19
	100.21
8Y6559	93
	95
8Y6570	165.02
8Y6600	165.02
8Y6769	58.04
8Y6788	172.03
8Y6789	172.03
8Y7051	69.04
8Y7052	69.04
8Y7053	69.04
8Y7515	195.01
	9
9B2962	93
	95
9B3429	158
	160
9B7233	65.02
	69.04
	100.14
	100.17
9B7237	77.01
	77.02
	83
	91
	96
	100.06
	100.11
	100.14
	100.16
	142.01
	168
	169
	186
	199
	199.02
	199.02.02
	203
9C4136	168
9C4230	202
9C4240	202
9C4241	202
9C4242	202
9C4243	202
9C4555	181
9D3868	194.07
	194.09
9D4439	200
9D5506	76
	77.01
9D7884	99.03
	99.04
	100
	100.01
9F1399	181
9F2049	98.02
	99
	99.01
9F2247	120
	121
	123
	123.02
	125
	125.02
	125.04
9F2491	21
9F2978	42
	69
	69.01
	104
	106
	106.01
	106.01.01
	106.04
	108.01
	118
	119

PART NUMBER INDEX

Number	Page	Number	Page	Number	Page	Number	Page
	142.01	9G3058	59		100.17	9L9098	47
	143		61.01	9H8396	110	9L9178	24
	147		200.02	9J8674	140	9L9188	47
	148	9G3732	176		157	9L9315	17
	151		188	9J8698	139	9L9347	54
	152	9G3733	176		157	9L9653	24
	168		188	9J8760	139	9MO164	26
	199	9G4231	62	9J9004	158	9M1311	58
	199.02	9G4232	59		158.01		58.01
	199.02.02		61.01		158.02		58.02
	199.03	9G5127	75		160		100.10
	199.04		97		160.01		100.13
	199.05		97.01		160.02		100.16
	200		99	9J9005	162	9M1328	162
9F3721	111		99.01	9J9294	140	9M1758	196
9F3965	66		134	9J9818	139		197
9F5599	69.04		174	9K2129	181	9M1974	17
9F5644	65.01	9G5187	63.02	9K8757	76		21
9F6445	42	9G5188	63.02		77.01		27
	69	9G5189	63.02		135		28
	69.01	9G5191	63		136		33
	106.04	9G5192	63.02		136.01		36
	194.05	9G5193	63.02		137		44
	194.06	9G5194	63.02	9LO274	137		45
	194.08	9G5387	66	9L2403	26		57
	194.11	9G5388	66	9L5981	34		62
	195.01	9G5389	65	9L6233	12		76
9F6580	44		65.01	9L6531	205		77.01
9F6595	199	9G5390	65	9L7490	18		80
	199.02		65.01	9L7630	40		99.03
	199.02.02	9G5399	184	9L7657	13		99.04
	203	9G5400	184		16		100
9F6596	199	9G5414	184		16.02		100.01
	199.02	9G5517	65	9L7669	11		100.05
	199.02.02		65.01	9L7683	14		136
	203		66	9L7735	9		136.01
9F7022	57	9G5866	75	9L7873	27	9M1986	98
	100.08	9G7197	86	9L8002	7	9M4256	58
9F7882	100.03		89		8		58.01
	100.10	9G8551	80	9L8016	24		58.02
	100.13	9G9288	133	9L8027	37	9M4584	143
	100.16	9H1031	195	9L8076	17		146
	100.19	9H2258	179	9L8339	10		146.01
	100.21	9H2400	77	9L8402	18		149
9F8125	194.14		77.02	9L8439	18		172
9G0028	98.02	9H4105	122	9L8623	17		172.01
	99		123.01	9L8636	21		172.02
	99.01		123.03	9L8660	77		172.03
9G0911	184		124		77.02	9M4995	60
9G0913	184		125.01	9L8731	27		61.02
9G0914	184		125.03	9L8735	27	9M5520	27
9G0915	184		125.05	9L8786	26	9M5590	155
9G0917	184	9H6079	83		27	9M5617	106
9G0918	184	9H6454	131	9L8837	27		106.01
9G3057	61	9H6700	100.08	9L8925	18		106.01.01
	61.03		100.11	9L9004	27		108.01
	200.02		100.14	9L9066	27		199

PART NUMBER INDEX

Number	Page	Number	Page	Number	Page	Number	Page
	199.02	9P5580	170	9P9520	70	9S8750	58.04
	199.02.02		185	9S0173	63.01		69.04
9M5732	199	9P5767	73.02	9S0247	96		194.07
	199.02	9P5768	80	9S0671	100.20		194.09
	199.02.02	9P5928	80		149	9S8751	78
	203	9P6238	72		172		136
9M5733	199		74	9S1303	186		136.01
	199.02		75	9S1310	30		137
	199.02.02	9P6276	98	9S1354	58		194.06
	200	9P6277	96		58.01		194.08
	203		98		76	9S8752	39.01
9M5854	163	9P6278	73.02		77.01		62
9M6193	176	9P6281	73.02		168		100.09
	188	9P6282	73.02		169		199.03
9M6937	87	9P6283	73.02		186	9S8896	142
	89	9P6431	98	9S1362	10		142.01
9M7394	133	9P6797	87	9S1366	85	9S9302	100.03
9M7539	179		87.02	9S2544	194.11		100.09
9M7649	28		89	9S2836	76		100.12
9M8406	59	9P6798	87		77.01		100.15
	61.01		87.02	9S4180	49		100.19
9M9440	39		89		53		100.21
	41	9P6799	87	9S4181	177	9S9334	98
9M9545	181		89	9S4182	100.04	9S9725	172
9M9740	131	9P6800	87.02		100.06	9T0546	154
9M9840	58		89	9S4183	40		155
	58.01	9P6903	86		74		156
	58.02		87.02	9S4185	6	9T0550	154
9M9936	183		179	9S4188	74		155
9N0243	21	9P7025	74	9S4190	131		156
9N0869	62	9P7090	86	9S4191	98	9T0553	154
9N1542	73.02		89		132		155
9N2837	15	9P7101	86	9S4684	76		156
	16.01		87.02		77.01	9T0556	154
9N3832	11		89	9S4775	100.05		155
9N4200	127.01	9P7103	86		100.07		156
9N4501	127.01		89	9S5585	100.11	9T0578	152
9N4502	127.01	9P7118	87		100.14		153
9N5082	11		87.02		100.16	9T0835	173
9N5233	34	9P7121	42		100.17	9T0836	173
9N5246	7	9P7239	84		100.19	9T2098	154
	8	9P7240	72		100.20		155
9N5253	35		84		100.21		156
9N5659	33	9P7470	84	9S6012	86	9T2099	154
	34	9P7471	84		87.02		156
9N5786	11	9P7473	84	9S6465	100.10	9T6611	156
	17	9P7474	84		100.13	9T6612	156
9P0073	86	9P7918	170		100.16	9T6613	156
	87.02		185	9S7695	182	9T6614	156
9P0217	174	9P7919	170	9S7949	73.02	9T7249	151
9P1331	86		185	9S7950	73.02		152
	87.02	9P8610	85	9S8004	74	9T7250	152
9P1332	86	9P8611	85		175		153
	87.02	9P8612	85		187	9T7346	138
9P3041	81.02	9P8613	85	9S8005	25		139
9P4540	72	9P9422	168	9S8006	177		140
	85		169	9S8230	199	9T7628	152

PART NUMBER INDEX

Number	Page
	153
9T7629	153
9T7630	153
9T7631	153
9T7632	153
9T7633	153
9T7634	152
	153
9T7635	154
9T7638	152
	153
	154
9T7639	153
	156
9T7640	154
	156
9T7641	153
	156
9T7642	152
	153
	154
9T7643	155
9T7644	155
9T7646	155
9T7647	155
9T7648	155
9T7649	155
9T7650	155
9T7651	152
	153
	155
9T8959	154
9T9258	141.01
9V0450	69
	69.01
	199.02
	199.02.02
	199.04
	199.05
9V0453	69
	69.01
	199.02
	199.02.02
	199.04
	199.05
9W0035	181
9W0075	179
9W0077	179
9W1439	87
9W1488	63
	63.02
9W1493	61
	61.03
	200.02
9W1503	181
9W3120	160.03
	160.05
9W3141	86
	89
9W3907	87
9W4192	181
9W4193	179
9W5297	184
9W5567	81.02
9W5568	81.02
9W6045	87
	89
9W7112	164
9W7228	93
	95
9W7475	158
	158.01
	160
	160.01
9W7476	160.03
	160.05
9W9265	96.01
9W9266	96.01
9W9483	72
9W9484	72
9W9485	72
	73.01
	73.02
9W9486	72
	86
	87
	87.01
	87.02
	88
	89
9W9494	80
	81.01
	81.02
9W9495	80
9W9496	72
	80
9W9579	157
	160.03
	160.04
9W9580	157
	158
	158.01
	158.02
9W9583	160.03
	160.04
9W9588	158
	158.01
	158.02
9W9589	157
	160
	160.01
	160.02
9W9590	160
	160.01
	160.02
9W9830	81.02
9X0337	65.01
9X0338	65.01
9X0354	64
	65.01
9X1361	63
9X1362	63.02
9X1878	205
9X1883	205
9X2092	106.01
	106.01.01
9X2521	162
9X2822	206
9X4620	181
9X6088	206
9X6089	206
9X6090	206
9X6094	206
9X6095	206
9X6273	100.12
	100.15
9X6274	100.12
	100.15
9X7277	121
	123.04
	125.06
9X8278	104
9Y0791	30
9Y0792	4
	5
9Y1542	36
9Y1897	4
	44
9Y1898	2
	4
	26
9Y1902	44
9Y1903	44
9Y1905	44
	45
9Y3353	11
9Y4701	52
9Y7037	55
9Y9236	174
1	
102571	100.02
1052508	57
134337	194.07
	194.09
19440	36
3	
300058	85
301707	59
	61.01
304606	170
	185
306121	154
307935	142
307941	44
	45
307942	144
	145
	147
	148
307946	44
	46
	191
	192
307947	100.04
	100.06
307948	172
	172.01
	172.02
	172.03
307950	142.01
307951	172
	172.01
	172.02
	172.03
	192
307955	45
307960	191
	192
308188	147
	148
308194	144
	145
	147
	148
308195	56
308196	71.05
	142.01
310216	51
	100.17
	100.19
	100.21
310249	27
	204
314140	142
314155	202
314433	194.02
314630	78
	79.01
321267	182
321268	182
321464	29

PART NUMBER INDEX

Number	Page
323631	195.01
328175	173
332177	33
335879	49
	154
336027	153
	154
	156
336028	154
336043	156
337291	205
337394	27
339412	108.01
358128	181
37501	179
38581	146
	146.01
395069	154
395070	154

5

54362	144
	145

6

616711	86
	87.02
617538	154
618268	191
	192
63801	122
	123
	125.01
640047	23
649056	181
67640	181
676684	142
	191
	192
682121	100.04
	100.06
686642	183
687366	146
	146.01

8

86817	100.07
88381	142

9

906025	153
906026	153
906028	152
906029	152
906032	154
	156
91133	179
924924	42
	106
	106.01
	106.01.01

Printed in U.S.A.