RUTHZIL TRATOR COMERCIAL DE PEÇAS LTDA 11 97083-6812 ROLANDO

CATERPILLAR®

XMBP9740-00
Pub. 01/11/1979
Upd. 08/10/2001

NOVEMBRO 1979

D4D

Parts Manual

D4D TRACTOR DIRECT DRIVE 3304 ENGINE

S/N 65J1474 -Up

GENERAL INFORMATION

1. MACHINE IDENTIFICATION

Caterpillar machines are identified by Product Identification Numbers (PIN). Some components included in a machine may be identified by Serial Numbers (S/N). Typical components that will be serialized include engines, transmissions, bulldozers, and rippers. The machine and engine are further identified by arrangement numbers and in some cases modification numbers. These numbers are shown on the product identification plate(s) and on the master plate in the operator's compartment.

Caterpillar dealers need all of these numbers to determine accurate parts identification.

SIS ***New Feature***

Effective First Quarter 2001 the Caterpillar Product Identification Number (PIN) will change from 8 to 17 characters. In an effort to provide uniform equipment identification, Caterpillar and other construction equipment manufacturers are moving to comply with the latest version of the product identification numbering standard. Non-road machine PINs are defined by ISO 10261. The new PIN format will apply to all Caterpillar machines and generator sets. The PIN plates and frame marking will display the 17 character PIN. The new format will look like the following:

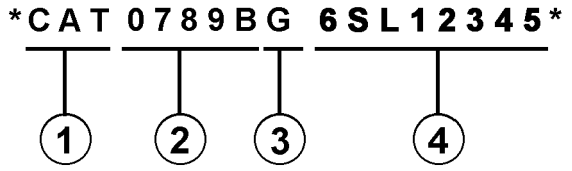

Where:

1. Caterpillar's World Manufacturing Code (characters 1-3)

2. Machine Descriptor (characters 4-8)

3. Check Character (character 9)

4. Machine Indicator Section (MIS) or Product Sequence Number (characters 10-17). These were previously referred to as the Serial Number.

Machines and generator sets produced before First Quarter 2001 will maintain their 8 character PIN format.

Components such as engines, transmissions, axles, etc. and work tools will continue to use an 8 character Serial Number (S/N).

2. ORDERING PARTS

⚠ WARNING

When replacement parts are required for this product Caterpillar recommends using Caterpillar replacement parts or parts with equivalent specifications including, but not limited to, physical dimensions, type, strength and material.

Failure to heed this warning can lead to premature failures, product damage, personal injury or death.

Quality Caterpillar replacement parts are available from Caterpillar dealers throughout the world. Their parts inventories are up to date and include all parts normally required to protect your investment in Caterpillar machines. Dealers may offer repair kits or remanufactured parts to allow selection of the most effective repair alternative for a particular situation. When ordering parts, your order should specify the quantity, part number, part name, and the serial number/product identification number of the machine for which the parts are needed.

3. PARTS MANUAL ORGANIZATION

Product information in this manual is presented as "information elements" that represent all of the components for the specific model. Engine Arrangement and Seat Group are examples of information elements. The information elements are organized alphabetically by part name and secondarily by part number within each major section of the manual.

4. TABLE OF CONTENTS

SIS ***New Feature***

A table of contents (TOC) is found at the beginning of the manual. The TOC lists each section of the manual with a complete list of all information elements organized as they appear in the manual. Page numbers are provided for quick reference to detailed parts identification illustrations and serviceable consist lists.

5. MAINTENANCE PARTS INDEX

The Maintenance Parts Index, located near the beginning of the manual, references most frequently used maintenance part numbers, providing description, quantity, usage and page number. This information is organized alphabetically by part description.

6. INDEX

The index located near the front of the manual is an alphabetical listing of all information elements included in the manual. Page numbers are provided for quick reference to detailed parts identification illustrations and serviceable consist lists.

7. PART NUMBER INDEX

A numerical index listing all part numbers and the corresponding page number(s) appears at the back of the manual.

8. CAPTIONS

Captions located at the top of each page of an information element identify the part number and part name along with additional descriptive information. PIN and S/N information found in each caption should be used to select correct information for a specific machine. Field replacement options, identification of optional attachment components, and where used ("part of") information is also provided.

SIS ***New Feature***

The first line of a caption is shown in larger type font to indicate the beginning of an information element. Captions for additional pages that may be required to illustrate an information element will be shown in standard type font and will include the term *(contd.)* .

9. NON-SERVICED PARTS

SIS ***New Feature***

In some instances it is necessary to display non-serviced parts that are a link to a lower level serviceable consist lists. These non-serviced part numbers are shown in *italic* type indicating that they are not available.

10. PARTS LIST REFERENCE NUMBERS

SIS ***New Feature***

Numbers shown in the Ref No column correspond to numbers used in the associated graphic(s). An alphabetic suffix may be added to a reference number to identify lower level consist items. Numbers shown in the Graphic Ref column refer to the graphic number identifier displayed in the lower left corner of each illustration. The Graphic Ref number may be used in combination with the item Ref No to determine the correct part number. There may be intentional omission of a Ref No in a consist list as information is updated to reflect the latest serviceable part numbers.

11. INDENTED PART NAMES

When a part name is indented in a parts list, it is part of (included in) the group or assembly under which it is indented.

12. ILLUSTRATION REFERENCE LETTERS

When necessary, illustrations contain reference letters (A, B, C etc.) that are intended to track lines and harnesses from one point to another. They are also used to show where to reconnect illustrations that have been separated.

13. ABBREVIATIONS AND SYMBOLS

O.D. – Outside Diameter
I.D. – Inside Diameter
A – Not Part Of This Group
B – Use As Required
C – Change From Previous Type
D – Order By The Meter
E – Order By The Centimeter
F – Not Shown
G – Order By The Inch
I – See Hose Fabrication Guide
M – Metric Part
R – Remfg Part May Be Available
Y – Separate Illustration
Z – Not Serviced Separately

NOTE:

Continuing improvement and advancement of product design may cause changes to your machine which may not be included in this publication. Whenever a question arises regarding your Caterpillar product or this publication, please consult your Caterpillar dealer for the latest available information.

FRAME AND BODY

8E-3299 PLATFORM GP-CAB

PIN 38K1-09999

SMCS-7253 100090751

NOTE	REF NO	GRAPHIC REF	PART NUMBER	QTY	PART NAME (1 2 3 4 5 6 PRODUCT LEVEL)	SEE PAGE
	1	1	3T-3953	1	PLATE AS	
	2	1	5B-2992	25	BOLT (3/8-16X.750IN)	
	3	1	5P-1075	41	WASHER-HARD (3MM THK)	
	4	1	9P-1444	2	SUPPORT AS-FOOT	
	5	1	9P-2229	19	BOLT (1/2-13X1IN)	
		1	5P-[illegible]4	19	WASHER-HARD (4MM THK)	
	6	1	9E-9136	1	COVER AS-LH	
		1	9F-2979	6	NUT-WELD (3/8-16 THD)	
		1	1P-0188	1	CLIP	
	7	1	7S-3411	4	COVER	
	8	1	6J-0488	18	SCREW-HEAD (3/8-16X.875IN)	
	9	1	[illegible]-4474	1	COVER	
		1	9E-9[illegible]7		GASKET	
	10	1	9E-3249	1	[illegible]	
		1	9E-3250	1	GASKET	
	11	1	3T-3935	1	HANDHOLD	
	12	1	9E-9078	1	COVER AS	
		1	9F-2979	8	NUT-WELD (3/8-16 THD)	
		1	9E-9079	1	GASKET	
	13	1	7T-0131	1	FLOORPLATE AS	
		1	1F-0748	4	NUT-WELD (1/2-13 THD)	
	14	1	7Y-9087	1	PLUG-BUTTON	
	15	1	7T-0136	1	PLATE AS	
		1	9F-2979	6	NUT-WELD (3/8-16 THD)	
	16	1	7T-9096	1	COVER	
		1	7T-9779	1	GASKET	
	17	1	3T-3981	1	PLATE AS	
	18	1	6T-9364	4	BOLT (1/4-20X.625IN)	
M		1	6T-4205	4	WASHER-HARD (2MM THK)	
	19	1	6L-9484	1	FLOOR MAT	
	20	1	9E-9946	1	MODULE AS-OPERATOR	
	21	1	3T-3934	1	HANDHOLD	
	22	1	9P-8571	2	PLUG	
	23	2	6T-9364	4	BOLT (1/4-20X.625IN)	
M		2	6T-4205	4	WASHER-HARD (2MM THK)	
	24	2	5B-3062	17	BOLT (3/8-16X.750IN)	
	26	2	5P-1075	21	WASHER-HARD (3MM THK)	
	26	2	7T-9126	1	SEAL	
	27	2	7X-9378	2	BOLT (3/4-10X5IN)	
		2	7X-0662	2	WASHER-HARD (5MM THK)	
	28	2	3T-3462	2	PLATE	
	29	2	3T-5290	1	PLATE AS	
		2	7S-0028	8	SPACER	
	30	2	3T-5281	1	SEAL	
	31	2	7S-9017	1	GASKET	
	32	2	7S-9016	1	COVER AS	
		2	2R-2276	2	WASHER	
		2	6P-9028	2	SCREW-KNURLED	
	33	2	9W-3429	1	COVER	
	34	2	9E-9697	1	COVER	
	35	2	9D-3031	8	SCREW-SOCKET HEAD	
	36	2	9W-3142	8	MOUNTING	
	37	2	9W-9027	2	PLATE	
	38	2	7X-0390	2	BOLT (7/8-9X5IN)	
		2	7X-0672	2	WASHER-HARD	
	39	2	4L-9454	4	BOLT (3/8-16X1.0IN)	
	40	2	3T-4788	1	COVER	

FRAME AND BODY

8E-3299 PLATFORM GP-CAB (contd.)

100090751

NOTE	REF NO	GRAPHIC REF	PART NUMBER	QTY	PART NAME (1 2 3 4 5 6 PRODUCT LEVEL)	SEE PAGE
	41	2	8E-3515	1	COVER	
	42	2	7T-0134	1	PLATE	
	43	2	7T-0139	1	GASKET	
	44	2	7S-9724	1	GASKET	
	45	2	7S-9723	1	COVER	
	46	2	6V-1969	2	PLUG-BUTTON	

M-METRIC PART

FRAME AND BODY

8E-3299 PLATFORM GP-CAB (contd.)

100090751

TOP VIEW

GRAPHIC #1 g00036729

FRAME AND BODY

8E-3299 PLATFORM GP-CAB (contd.)

100090751

SECTION A-A VIEW D-D SECTION G-G

SECTION B-B VIEW E-E SECTION H-H

SECTION C-C SECTION F-F SECTION J-J

GRAPHIC #2 g00105874

TABLE OF CONTENTS

PART NUMBER	PART NAME	PAGE
	BASIC ENGINE	
	CYLINDER BLOCK (2P6540 N/S)	1
	CYLINDER BLOCK (2P6540 N/S)	2
2P8774	CYLINDER BLOCK ASSEMBLY	3
	CYLINDER BLOCK COVERS (2P6495 N/S)	4
	CYLINDER BLOCK COVERS (2P6495 N/S)	5
	CRANKSHAFT (2P6216 N/S)	6
4N7692	CRANKSHAFT ASSEMBLY--Field Replacement	7
	CRANKSHAFT SEAL (2P6225 N/S)	8
	GASKET KITS	9
	CONNECTING ROD AND PISTON (4N4028 N/S)-- 4 Required	10
	CAMSHAFT (2P6201 N/S)	11
	BALANCER (5S6425 N/S)	12
	VALVE MECHANISM (2P6524 N/S)	13
	VALVE MECHANISM COVER (2P6514 N/S)	14
	CYLINDER HEAD (2P6274 N/S)	15
	CYLINDER HEAD (2P6274 N/S)	16
4N7444	CYLINDER HEAD ASSEMBLY	17
6N8875	CYLINDER HEAD ASSEMBLY	18
	CYLINDER HEAD FASTENER (2P6544 N/S)	19
	ENGINE LIFTING (1P3840 N/S)	20
	ENGINE LIFTING PLATE (6N8326 N/S)	21
	FRONT HOUSING (2P6153 N/S)	22
	FRONT HOUSING (2P9641 N/S)	23
	FRONT HOUSING (7N3999 N/S)	24
	FRONT HOUSING FASTENER (2P6498 N/S)	25
	FRONT HOUSING FASTENER (2P6498 N/S)	26
	FRONT HOUSING FASTENER (2P6498 N/S)	27
	FRONT HOUSING COVER (4N6508 N/S)	28
	FRONT HOUSING COVER (4N6508 N/S)	29
	FRONT GEAR (2P6211 N/S)-- Timing	30
	FRONT GEAR (2P9642 N/S)-- Timing	31
	TRUNNION (2P6246 N/S)	32
	CRANKSHAFT HUB (2P8598 N/S)	33
	PULLEY (2P8603 N/S)	34
	ENGINE SUPPORT (2P7753 N/S)	35
	ENGINE SUPPORT (2P7753 N/S)	36
	FAN DRIVE (2P7831 N/S)	37
	FLYWHEEL HOUSING (2P6813 N/S)	38
	FLYWHEEL (7S7878 N/S)	39
	OIL PAN (2P6155 N/S)	40
	OIL PAN FASTENER (2P6189 N/S)	41
	OIL PAN FASTENER (2P6189 N/S)	42
	OIL LEVEL GAUGE (2P6491 N/S)	43
	LUBRICATION SYSTEM	
	ENGINE OIL PUMP (2P1784 N/S)	44
2P1785	GEAR PUMP GROUP	45
2P1785	GEAR PUMP GROUP	46
	OIL LINES (2P6513 N/S)	47
	OIL LINES (2P6513 N/S)	48
	OIL FILTER (2P6525 N/S)	49
2P7843	FIELD CONVERSION FILTER GROUP	50
	OIL FILLER (2P6855 N/S)	51
2P6854	OIL FILLER PROTECTION GROUP	52
	FUMES DISPOSAL (2P7446 N/S)	53
	FUMES DISPOSAL (4N3325 N/S)	54
	FUMES DISPOSAL	55
	BREATHER (1P4244 N/S)	56
	COOLING SYSTEM	
	RADIATOR (2P8182 N/S)--Part 1 of 2	57

TABLE OF CONTENTS

PART NUMBER	PART NAME	PAGE
	RADIATOR (2P8182 N/S)--Part 2 of 2	58
	RADIATOR (2P8182 N/S)--Part 1 of 2	59
	RADIATOR (2P8182 N/S)-- Part 2 of 2	60
2S6096	RADIATOR CAP PROTECTION GROUP	61
2P4642	SAND BLAST GRID GROUP	62
	BLOWER FAN AND GUARD(2P4602 N/S)	63
7S548	SUCTION FAN GROUP	64
1P8493	REVERSIBLE FAN GROUP	65
	WATER LINES (2P6188 N/S)	66
2P661	WATER PUMP GROUP	67
2P661	WATER PUMP GROUP	68
	HOUSING AND REGULATOR (2P8164 N/S)	69
	HOUSING AND REGULATOR (2P8164 N/S)	70
	WATER LINES (2P7741 N/S)--Pipe	71
	WATER LINES (2P7740 N/S)--Elbow	72
	WATER LINES (2P7740 N/S)--Elbow	73

AIR INLET AND EXHAUST SYSTEM

	AIR CLEANER (1P6429 N/S)	74
5M2734	PRESCREENER GROUP	75
5A9962	PRECLEANER ASSEMBLY	76
6K8159	PRECLEANER GUARD GROUP	77
5A8035	PRECLEANER RAIN PROTECTION COVER GROUP	78
1V2150	AIR CLEANER AND EXHAUST PIPE EXTENSION GROUP	79
	AIR LINES (2P6840 N/S)	80
	EXHAUST MANIFOLD (2P6570 N/S)	81
	EXHAUST MANIFOLD FASTENER (2P6533 N/S)	82
	EXHAUST MANIFOLD FASTENER (4N9585 N/S)	83
	EXHAUST MANIFOLD FASTENER (2P6533 N/S)	84
	EXHAUST PIPE (3P138 N/S)	85
	MUFFLER (7S7116 N/S)	86

FUEL SYSTEM

	GOVERNOR CONTROL (6K3012 N/S)	87
	GOVERNOR CONTROL (1V484 N/S)	88
	GOVERNOR CONTROL (1V484 N/S)	89
	GOVERNOR CONTROL (4V2271 N/S)	90
	GOVERNOR CONTROL	91
	FUEL SYSTEM AND BATTERY BOX (9K1273 N/S)--Part 1 of 2	92
	FUEL SYSTEM AND BATTERY BOX (9K1273 N/S)--Part 2 of 2	93
	FUEL SYSTEM AND BATTERY BOX (1V482 N/S)--Part 1 of 2	94
	FUEL SYSTEM AND BATTERY BOX (1V482 N/S)--Part 2 of 2	95
	FUEL SYSTEM AND BATTERY BOX (1V482 N/S)--Part 1 of 2	96
	FUEL SYSTEM AND BATTERY BOX (1V482 N/S)--Part 2 of 2	97
	FUEL SYSTEM AND BATTERY BOX (1V482 N/S)--Part 1 of 2	98
	FUEL SYSTEM AND BATTERY BOX (1V482 N/S)--Part 2 of 2	99
	FUEL SYSTEM AND BATTERY BOX (1V482 N/S)--Part 1 of 2	100
	FUEL SYSTEM AND BATTERY BOX (1V482 N/S)--Part 2 of 2	101
	FUEL SYSTEM AND BATTERY BOX (1V482 N/S)--Part 1 of 2	102
	FUEL SYSTEM AND BATTERY BOX (1V482 N/S)--Part 2 of 2	103
	FUEL SYSTEM AND BATTERY BOX (1V482 N/S)--Part 1 of 2	104
	FUEL SYSTEM AND BATTERY BOX (1V482 N/S)--Part 2 of 2	105
	FUEL SYSTEM AND BATTERY BOX (4V2282 N/S)--Part 1 of 2	106
	FUEL SYSTEM AND BATTERY BOX (4V2282 N/S)--Part 2 of 2	107
	FUEL SYSTEM AND BATTERY BOX--Part 1 of 3	108
	FUEL SYSTEM AND BATTERY BOX--Part 2 of 3	109
	FUEL SYSTEM AND BATTERY BOX--Part 3 of 3	110
1P8678	FUEL TANK PROTECTION CAP GROUP	111
	PRIMARY FUEL FILTER (1P6835 N/S)	112
	FUEL FILTER (2P7714 N/S)	113
	FUEL FILTER (4N3303 N/S)	114
	FUEL FILTER (7N3869 N/S)	115
	FUEL FILTER	116

TABLE OF CONTENTS

PART NUMBER	PART NAME	PAGE
	FUEL PRIMING PUMP (2P7716 N/S)	117
	FUEL PRIMING PUMP (4N3287 N/S)	118
	FUEL PRIMING PUMP (7N4809 N/S)	119
	FUEL PRIMING PUMP	120
9H2256	FUEL PRIMING PUMP GROUP	121
	FUEL TRANSFER PUMP (7S4429 N/S)	122
4N4864	FUEL TRANSFER PUMP GROUP	123
	FUEL TRANSFER PUMP	124
	FUEL TRANSFER PUMP COVER (7N4077 N/S)	125
	WATER SEPARATOR (3Y4724 N/S)	126
	WATER SEPARATOR (3Y4724 N/S)	127
	ACCESSORY DRIVE (2P7705 N/S)	128
	ACCESSORY DRIVE (2P7705 N/S)	129
	ACCESSORY DRIVE (7N3890 N/S)	130
	ACCESSORY DRIVE (7N3889 N/S)	131
	ACCESSORY DRIVE AND PRIMARY FUEL FILTER	132
	GOVERNOR AND FUEL INJECTION PUMP (7S9334 N/S)	133
	GOVERNOR COVER (4N4510 N/S)	134
	GOVERNOR AND FUEL INJECTION PUMP (6N277 N/S)	135
	GOVERNOR AND FUEL INJECTION PUMP (7N3873 N/S)	136
	GOVERNOR AND FUEL INJECTION PUMP	137
6N2476	GOVERNOR AND FUEL INJECTION PUMP GROUP--Field Replacement	138
	GOVERNOR AND FUEL INJECTION PUMP (6N2477 N/S)	139
4N6116	GOVERNOR AND FUEL INJECTION PUMP GROUP (With Dash Pot)--Field Replacem	140
	GOVERNOR AND FUEL INJECTION PUMP (4N6115 N/S)	141
7S9332	GOVERNOR GROUP--Part 1 of 2	142
7S9332	GOVERNOR GROUP--Part 2 of 2	143
7S8831	FUEL PUMP HOUSING GROUP	144
	GOVERNOR AND FUEL INJECTION PUMP (4N1834 N/S)--Part 1 of 3	145
	GOVERNOR AND FUEL INJECTION PUMP (4N1834 N/S)--Part 2 of 3	146
	GOVERNOR AND FUEL INJECTION PUMP (4N1834 N/S)--Part 3 of 3	147
7N3870	GOVERNOR GROUP--Part 1 of 2	148
7N3870	GOVERNOR GROUP--Part 2 of 2	149
3N3387	FUEL INJECTION PUMP GROUP--Part 1 of 2	150
3N3387	FUEL INJECTION PUMP GROUP--Part 2 of 2	151
7S9333	GOVERNOR GROUP--Part 1 of 2	152
7S9333	GOVERNOR GROUP--Part 2 of 2	153
	GOVERNOR AND FUEL INJECTION PUMP (6N5356 N/S)--Part 1 of 3	154
	GOVERNOR AND FUEL INJECTION PUMP (6N5356 N/S)--Part 2 of 3	155
	GOVERNOR AND FUEL INJECTION PUMP (6N5356 N/S)--Part 3 of 3	156
	TORQUE CONTROL (9S3312 N/S)	157
	TORQUE CONTROL (6N2505 N/S)	158
	TORQUE CONTROL (2S9519 N/S)	159
	TORQUE CONTROL	160
	TORQUE CONTROL (6N509 N/S)	161
	SERVICE METER (9S5141 N/S)	162
	FUEL INJECTION LINES (2P7461 N/S)	163
	FUEL INJECTION LINES (4N3374 N/S)	164
	FUEL INJECTION LINES (4N3374 N/S)	165
	FUEL INJECTION LINES (7N4549 N/S)	166
	FUEL INJECTION LINES	167
	FIELD CONVERSION ARRANGEMENT--Scroll Fuel System	168

ELECTRICAL AND STARTING SYSTEM

	GLOW PLUG (5S8500 N/S)	169
	GLOW PLUG (5S8500 N/S)	170
	ELECTRIC STARTING MOTOR (7S3622 N/S)	171
5A6522	MOTOR ASSEMBLY--Part 1 of 2	172
5A6522	MOTOR ASSEMBLY--Part 2 of 2	173
5A6522	MOTOR ASSEMBLY--Part 1 of 2	174
5A6522	MOTOR ASSEMBLY--Part 2 of 2	175
	CHARGING ALTERNATOR (3Y1325 N/S)--24Volt, 20Ampere	176

TABLE OF CONTENTS

PART NUMBER	PART NAME	PAGE
	CHARGING ALTERNATOR (3Y1325 N/S)--24Volt, 20Ampere	177
	CHARGING ALTERNATOR (3Y4141 N/S)--24Volt, 20Ampere	178
3Y1329	ALTERNATOR AND WIRING GROUP--24Volt, 35Ampere	179
5A8908	ALTERNATOR ASSEMBLY--Part 1 of 2	180
5A8908	ALTERNATOR ASSEMBLY--Part 2 of 2	181
3Y546	ALTERNATOR ASSEMBLY	182
3Y1261	REAR BRACKET ASSEMBLY	183
	BATTERY AND WIRING (3Y490 N/S)--Part 1 of 2	184
	BATTERY AND WIRING (3Y490 N/S)--Part 2 of 2	185
	BATTERY AND WIRING (3Y490 N/S)--Part 1 of 2	186
	BATTERY AND WIRING (3Y490 N/S)--Part 2 of 2	187
	BATTERY AND WIRING (3Y490 N/S)--Part 1 of 2	188
	BATTERY AND WIRING (3Y490 N/S)--Part 2 of 2	189
	BATTERY AND WIRING (3Y490 N/S)--Part 1 of 2	190
	BATTERY AND WIRING (3Y490 N/S)--Part 2 of 2	191
	BATTERY AND WIRING (3Y490 N/S)--Wiring Diagram	192
	BATTERY AND WIRING (3Y490 N/S)--Wiring Diagram	193
7H7290	DISCONNECT SWITCH ASSEMBLY	194
8S7713	HEAT AND START SWITCH ASSEMBLY	195
3Y491	HARNESS ASSEMBLY	196
3Y2943	HARNESS ASSEMBLY	197
3Y5842	HARNESS ASSEMBLY	198
5A6716	ROAD LIGHTING GROUP	199
6K7839	LIGHTING SYSTEM GROUP--4 Lamp--Part 1 of 2	200
6K7839	LIGHTING SYSTEM GROUP--4 Lamp--Part 2 of 2	201
6K8800	LIGHTING SYSTEM GROUP--2 Lamp--Part 1 of 2	202
6K8800	LIGHTING SYSTEM GROUP--2 Lamp--Part 2 of 2	203
5A3692	ROAD LIGHTING GROUP--Type 1--Part 1 of 2	204
5A3692	ROAD LIGHTING GROUP--Type 1--Part 2 of 2	205
5A3692	ROAD LIGHTING GROUP--Type 2--Part 1 of 3	206
5A3692	ROAD LIGHTING GROUP--Type 2--Part 2 of 3	207
5A3692	ROAD LIGHTING GROUP--Type 2--Part 3 of 3	208
5A3692	ROAD LIGHTING GROUP--Wiring Diagram--Type 1	209
5A3692	ROAD LIGHTING GROUP--Wiring Diagram--Type 2	210
1M1882	FLOOD LAMP ASSEMBLY	211
5A3847	HEAD LAMP ASSEMBLY	212
5A3808	LICENCE LAMP ASSEMBLY	213
3Y2046	TURN SIGNAL LAMP ASSEMBLY	214
7M7147	STOP AND TAIL LAMP ASSEMBLY	215
3Y1735	PARKING AND TURN SIGNAL LAMP ASSEMBLY	216
3Y1735	PARKING AND TURN SIGNAL LAMP ASSEMBLY	217
5A4922	BACK-UP LAMP ASSEMBLY	218
5A6545	LAMP GUARD GROUP	219
3Y3325	HARNESS ASSEMBLY	220
3Y3326	HARNESS ASSEMBLY	221

POWER TRAIN

	FLYWHEEL CLUTCH (4K5034 N/S)--Part 1 of 4	222
	FLYWHEEL CLUTCH (4K5034 N/S)--Part 2 of 4	223
	FLYWHEEL CLUTCH (4K5034 N/S)--Part 3 of 4	224
	FLYWHEEL CLUTCH (4K5034 N/S)--Part 4 of 4	225
	FLYWHEEL CLUTCH (4K5034 N/S)--Part 1 of 4	226
	FLYWHEEL CLUTCH (4K5034 N/S)--Part 2 of 4	227
	FLYWHEEL CLUTCH (4K5034 N/S)--Part 3 of 4	228
	FLYWHEEL CLUTCH (4K5034 N/S)--Part 4 of 4	229
7S7602	FLYWHEEL CLUTCH PUMP GROUP	230
5K5008	DRIVE SHAFT ASSEMBLY	231
	FLYWHEEL CLUTCH CONTROL (5A3013 N/S)	232
	TRANSMISSION CASE AND COVERS (4K5032 N/S)	233
	TRANSMISSION CASE AND COVERS (4K5032 N/S)	234
	GEARSHIFT CONTROL (4K5029 N/S)--Part 1 of 2	235
	GEARSHIFT CONTROL (4K5029 N/S)--Part 2 of 2	236

TABLE OF CONTENTS

PART NUMBER	PART NAME	PAGE
	GEARSHIFT CONTROL (4K5029 N/S)--Part 1 of 3	237
	GEARSHIFT CONTROL (4K5029 N/S)--Part 2 of 3	238
	GEARSHIFT CONTROL (4K5029 N/S)--Part 3 of 3	239
	TRANSMISSION (4K5035 N/S)--Part 1 of 2	240
	TRANSMISSION (4K5035 N/S)--Part 2 of 2	241
	FINAL DRIVE (6K4665 N/S)--Part 1 of 2	242
	FINAL DRIVE (6K4665 N/S)--Part 2 of 2	243
	FINAL DRIVE (6K4665 N/S)--Part 1 of 2	244
	FINAL DRIVE (6K4665 N/S)--Part 2 of 2	245
	FINAL DRIVE MISCELLANEOUS PARTS (5K8851 N/S)--Part 1 of 2	246
	FINAL DRIVE MISCELLANEOUS PARTS (5K8851 N/S)--Part 2 of 2	247

FRAME AND BODY

	MAIN FRAME (9K8480 N/S) Effective with Serial No. 65J1474~65J1697	248
	MAIN FRAME (6K5866 N/S)	249
	CRANKCASE GUARD (9K217 N/S)	250
	FENDER (9K1779 N/S)	251
	FENDER (9K1779 N/S)	252
5K1282	HITCH GROUP	253
6K1351	SWINGING DRAWBAR GROUP	254
9K8513	SWINGING DRAWBAR GROUP	255
6P1107	SWINGING DRAWBAR GROUP	256
9H5806	FIXED DRAWBAR GROUP--Type 1	257
9H5806	FIXED DRAWBAR GROUP--Type 2	258
	HOOD AND DASH (3Y865 N/S)	259
	HOOD AND DASH (3Y2085 N/S)	260
	HOOD AND DASH (3Y2085 N/S)	261
	HOOD AND DASH (3Y2085 N/S)	262
3Y4170	ENGINE SIDE GUARD GROUP	263
4K6914	BRUSH GUARD GROUP	264
1V1921	VANDALISM GUARD GROUP--Dash	265
	RADIATOR GUARD (9K1409 N/S)	266
9K2712	RADIATOR GUARD GROUP--Heavy Duty	267
9K2711	RADIATOR HINGED GUARD GROUP	268
6K4438	FRONT PULL HOOK GROUP	269
6K4396	FRONT BUMPER GROUP	270
	EQUALIZER SPRING (4K5207 N/S)	271
	TRACK ROLLER FRAME (4K5210 N/S)	272
	TRACK ROLLER FRAME (4K5210 N/S)	273
7K3303	TRACK ROLLER FRAME GROUP--With Guiding Guard	274
5K7248	TRACK ROLLER DIRT GUARD GROUP	275
1M6286	TRACK ROLLER DIRT GUARD GROUP	276
1M8549	TRACK ROLLER DIRT GUARD GROUP--Heavy Duty--Type 1	277
1M8549	TRACK ROLLER DIRT GUARD GROUP--Heavy Duty--Type 2	278
	FRONT IDLER (5A3009 N/S)--Part 1 of 2	279
	FRONT IDLER (5A3009 N/S)--Part 2 of 2	280
	FRONT IDLER (5A3009 N/S)--Part 1 of 2	281
	FRONT IDLER (5A3009 N/S)--Part 2 of 2	282
	FRONT IDLER (5A3009 N/S)--Part 1 of 2	283
	FRONT IDLER (5A3009 N/S)--Part 2 of 2	284
	FRONT IDLER (5A3009 N/S)--Part 1 of 2	285
	FRONT IDLER (5A3009 N/S)--Part 2 of 2	286
	TRACK ROLLER FRAME GUARD (4K5211 N/S)	287
6K9879	TRACK CARRIER ROLLER GROUP--2 Required	288
6K9880	TRACK CARRIER ROLLER GROUP--2 Required	289
7K8095	TRACK ROLLER GROUP--Single Flange--4 Required	290
7K8096	TRACK ROLLER GROUP--Double Flange--6 Required	291
7K2073	TRACK GROUP--406mm Single Grouser Shoe--2 Required	292
2V2276	TRACK GROUP--406mm Single Grouser Shoe--2 Required	293
7K2072	TRACK GROUP--330mm Single Grouser Shoe--2 Required	294
2V2273	TRACK GROUP--330mm Single Grouser Shoe--2 Required	295
1V4624	TRACK GROUP--406mm Single Grouser Shoe--2 Required	296

TABLE OF CONTENTS

PART NUMBER	PART NAME	PAGE
3Y3476	TRACK GROUP--406mm Double Grouser Shoe--2 Required	297
5A6912	TRACK GROUP--406mm Tripple Grouser Shoe--2 Required	298
3Y4350	TRACK GROUP--406mm Tripple Grouser Shoe--2 Required	299
3Y3318	TRACK GROUP--406mm Snow & Ice Shoe--2 Required	300
3Y3461	TRACK GROUP--406mm Snow & Ice Shoe--2 Required	301
7K2074	TRACK GROUP--457mm Single Grouser Shoe--2 Required	302
2V2281	TRACK GROUP--457mm Single Grouser Shoe--2 Required	303
7K2075	TRACK GROUP--508mm Single Grouser Shoe--2 Required	304
2V2286	TRACK GROUP--508mm Single Grouser Shoe--2 Required	305

STEERING SYSTEM

	STEERING CLUTCH CONTROL (4K5028 N/S)--Part 1 of 2	306
	STEERING CLUTCH CONTROL (4K5028 N/S)--Part 2 of 2	307
	STEERING CLUTCH CONTROL (4K5028 N/S)--Part 1 of 2	308
	STEERING CLUTCH CONTROL (4K5028 N/S)--Part 2 of 2	309
	STEERING CLUTCH (9K325 N/S)	310
	STEERING CLUTCH (9K325 N/S)	311
	STEERING CLUTCH (9K325 N/S)	312
	STEERING CLUTCH (3Y1583 N/S)--Type 1	313
	STEERING CLUTCH (3Y1583 N/S)--Type 2	314
	STEERING CLUTCH (3Y1583 N/S)--Type 3	315
	BRAKES (4K5027 N/S)	316
3Y892	BRAKE GROUP--Type 1	317
3Y892	BRAKE GROUP--Type 2	318
3Y1582	OIL STEERING CLUTCHES MODIFICATION ARRANGEMENT	319
	STEERING CLUTCH CASE AND COVERS (6K4664 N/S)--Part 1 of 2	320
	STEERING CLUTCH CASE AND COVERS (6K4664 N/S)--Part 2 of 2	321
3Y885	STEERING CLUTCH CASE AND COVERS GROUP--Part 1 of 2	322
3Y885	STEERING CLUTCH CASE AND COVERS GROUP--Part 2 of 2	323

WORK TOOLS

	SEAT CUSHION (4K5595 N/S)	324
	GAUGES (6K5766 N/S)	325
	GAUGES (1V496 N/S)	326
	GAUGES (1V1496 N/S)	327
	GAUGES (4V2281 N/S)	328
	GAUGES	329
	GAUGES	330
	ELECTRIC SERVICE METER (9K9241 N/S)	331
	ELECTRIC SERVICE METER (3Y4176 N/S)	332
	ELECTRIC SERVICE METER (3Y4176 N/S)	333
3Y1990	HORN GROUP	334
3Y1956	HARNESS ASSEMBLY	335
	HYDRAULIC TANK CAP PROTECTION COVER (5D1910 N/S)	336
	ROLL-OVER PROTECTIVE SYSTEM MOUNTING (3V3621 N/S)	337
	ROLL-OVER PROTECTIVE SYSTEM MOUNTING (3Y4566 N/S)	338
3Y1342	CANOPY GROUP	339
	CANOPY (3Y3424 N/S)	340

SERVICE EQUIPMENT AND SUPPLIES

9S7977	TOOL GROUP--Type 1	341
9S7977	TOOL GROUP--Type 2	342
8F9866	GREASE GUN GROUP	343
	NAME PLATES AND FILMS (3Y1658 N/S)	344
	NAME PLATES AND FILMS	345
	NAME PLATES AND FILMS	346

CYLINDER BLOCK (2P6540 N/S)

Effective with Serial No. 43V1~43V6120, 43V6123
2P8774 Block Assembly parts are shown on Page 7

Key: R - REMFG PART MAY BE AVAILABLE, Y - SEPARATE ILLUSTRATION

SMCS

NOTE	REF NO	GRAPHIC REF	PART NUMBER	QTY	PART NAME 1 2 3 4 5 6 (PRODUCT LEVEL)	LINK PAGE
	1		8M-9307	1	PLUG	
			6F-7062	1	GASKET	
	2		7H-3171	1	PLUG	
	3		5S-6670	12	SEAL	
	4		2P-8889	4	LINER	
	5		5M-6214	1	PLUG	
RY	6		2P-8774	1	BLOCK ASSEM.	P0003
					(Separate Illustration)	

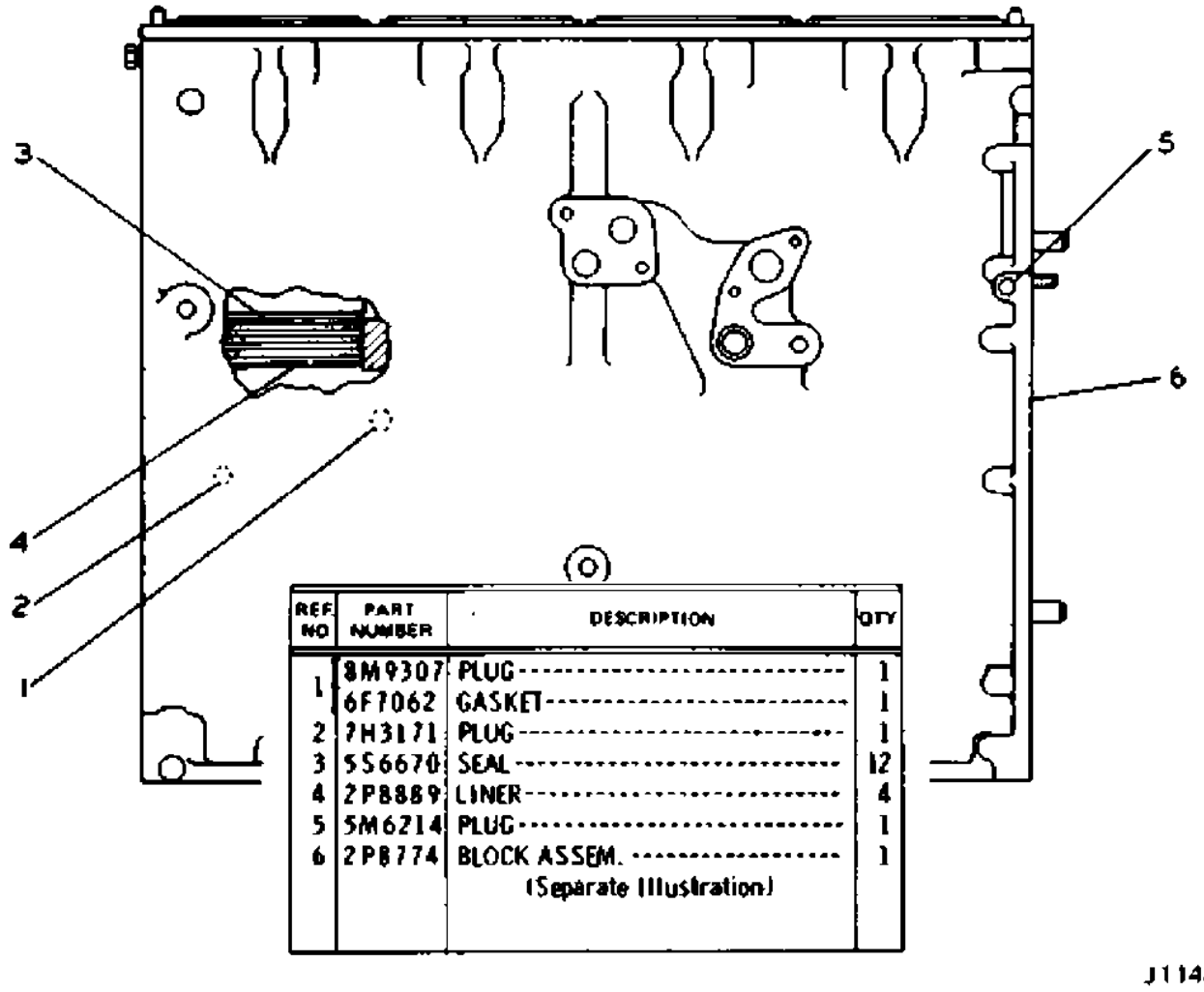

GRAPHIC #1

j11434e

CYLINDER BLOCK (2P6540 N/S)

Effective with Serial No. 43V6121, 43V6122, 43V6124~43V11876
2P8774 Block Assembly parts are shown on
Page 7

Key: Y - Separate Illustration

SMCS

NOTE	REF NO	GRAPHIC REF	PART NUMBER	QTY	PART NAME 1 2 3 4 5 6 (PRODUCT LEVEL)	LINK PAGE
	1		8M-9307	1	PLUG	
			6F-7062	1	GASKET	
	2		7H-3171	1	PLUG	
	3		5S-6670	12	SEAL	
	4		2P-8889	4	LINER	
	5		5M-6214	1	PLUG	
Y	6		2P-8774	1	BLOCK ASSEM.	P0003
					(Separate Illustration)	
C	7		9L-5854	4	BAND	

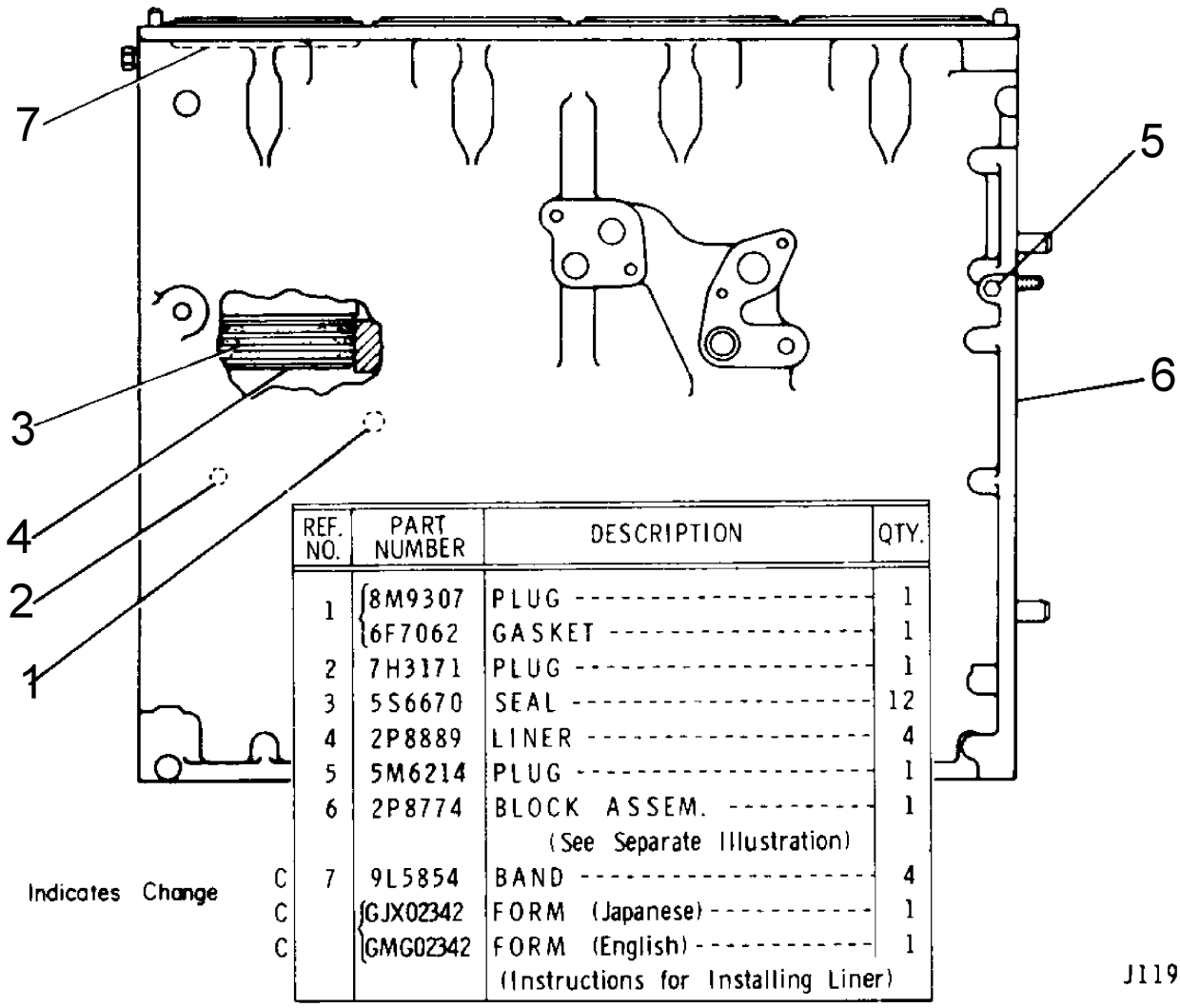

REF. NO.		PART NUMBER	DESCRIPTION	QTY.
1		8M9307	PLUG	1
		6F7062	GASKET	1
2		7H3171	PLUG	1
3		5S6670	SEAL	12
4		2P8889	LINER	4
5		5M6214	PLUG	1
6		2P8774	BLOCK ASSEM. (See Separate Illustration)	1
7	C	9L5854	BAND	4
	C	GJX02342	FORM (Japanese)	1
	C	GMG02342	FORM (English) (Instructions for Installing Liner)	1

C Indicates Change

J11958E

GRAPHIC #1

j11958e

2P8774 CYLINDER BLOCK ASSEMBLY

Effective with Serial No. 43V1~43V11876
Part of Cylinder Block

Key:

SMCS

NOTE	REF NO	GRAPHIC REF	PART NUMBER	QTY	PART NAME 1 2 3 4 5 6 (PRODUCT LEVEL)	LINK PAGE
	1		5M-6213	1	PLUG	
	2		8B-1312	2	DOWEL	
	3		5B-7652	2	DOWEL	
	4		4B-5387	3	PLUG	
	5		3S-8313	2	PLUG	
	6		8B-6349	2	DOWEL	
	7		5S-8462	1	STUD	
	8		9M-5477	1	BEARING	
	9		1H-0974	1	DOWEL	
	10		1P-2717	5	CAP	
	11		7S-3224	10	BOLT	
	12		2S-5658	10	WASHER	
	13		8S-0835	1	DOWEL	
	14		5S-6420	2	BEARING	
	15		4B-9782	5	BALL	
	16		5S-6419	4	BEARING	
	17		2A-3798	2	DOWEL	
	18		7M-4046	2	BEARING	

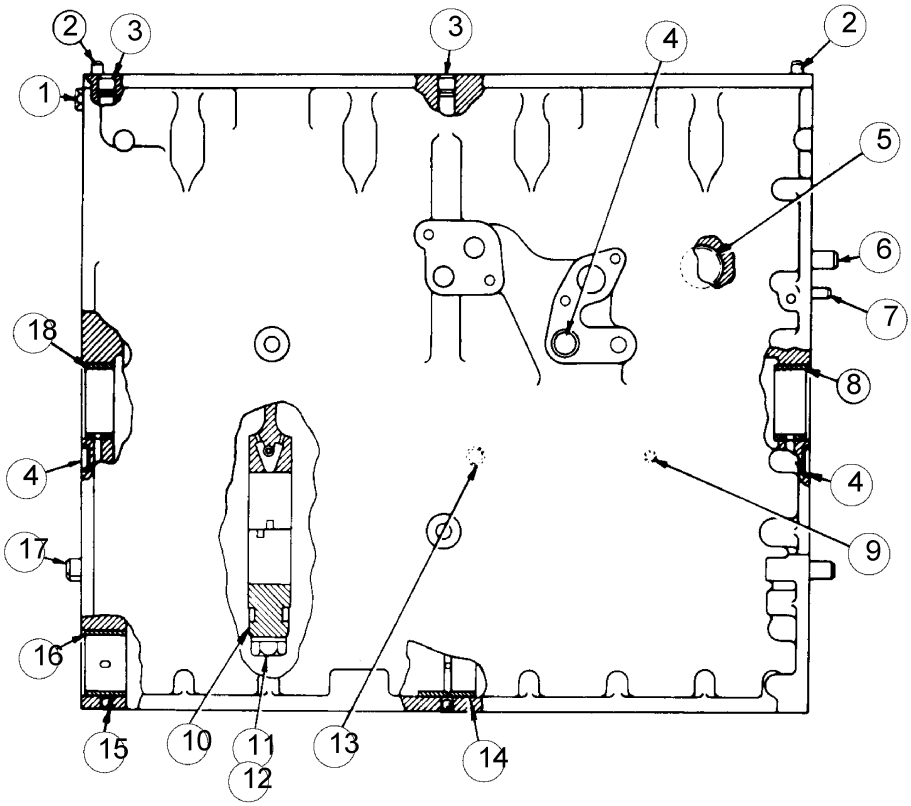

REF. NO.	PART NUMBER	DESCRIPTION	QTY.
1	5M6213	PLUG	1
2	8B1312	DOWEL	2
3	5B7652	DOWEL	2
4	4B5387	PLUG	3
5	3S8313	PLUG	2
6	8B6349	DOWEL	2
7	5S8462	STUD	1
8	9M5477	BEARING	1
9	1H974	DOWEL	1
10	1P2717	CAP	5
11	7S3224	BOLT	10
12	2S5658	WASHER	10
13	8S835	DOWEL	1
14	5S6420	BEARING	2
15	4B9782	BALL	5
16	5S6419	BEARING	4
17	2A3798	DOWEL	2
18	7M4046	BEARING	2

Note: The Following Instruction is Available
' GMG00633 FORM (English) 1
' GJX00633 FORM (Japanese) 1

J12158E

GRAPHIC #1

j12158e

CYLINDER BLOCK COVERS (2P6495 N/S)

Effective with Serial No. 43V1~43V2462

Key:

SMCS

NOTE	REF NO	GRAPHIC REF	PART NUMBER	QTY	PART NAME 1 2 3 4 5 6 (PRODUCT LEVEL)	LINK PAGE
	1		2P-3200	10	BOLT	
	2		5S-8054	1	COVER	
			5S-8055	1	GASKET	
	3		4B-5387	1	PLUG	
	4		2A-3798	2	DOWEL	
	5		8S-0876	1	COVER	
			8S-0877	1	GASKET	
	6		2P-3201	2	BOLT	
	7		5M-1903	1	COVER	
			4M-2250	1	GASKET	
	8		0S-0509	1	BOLT	

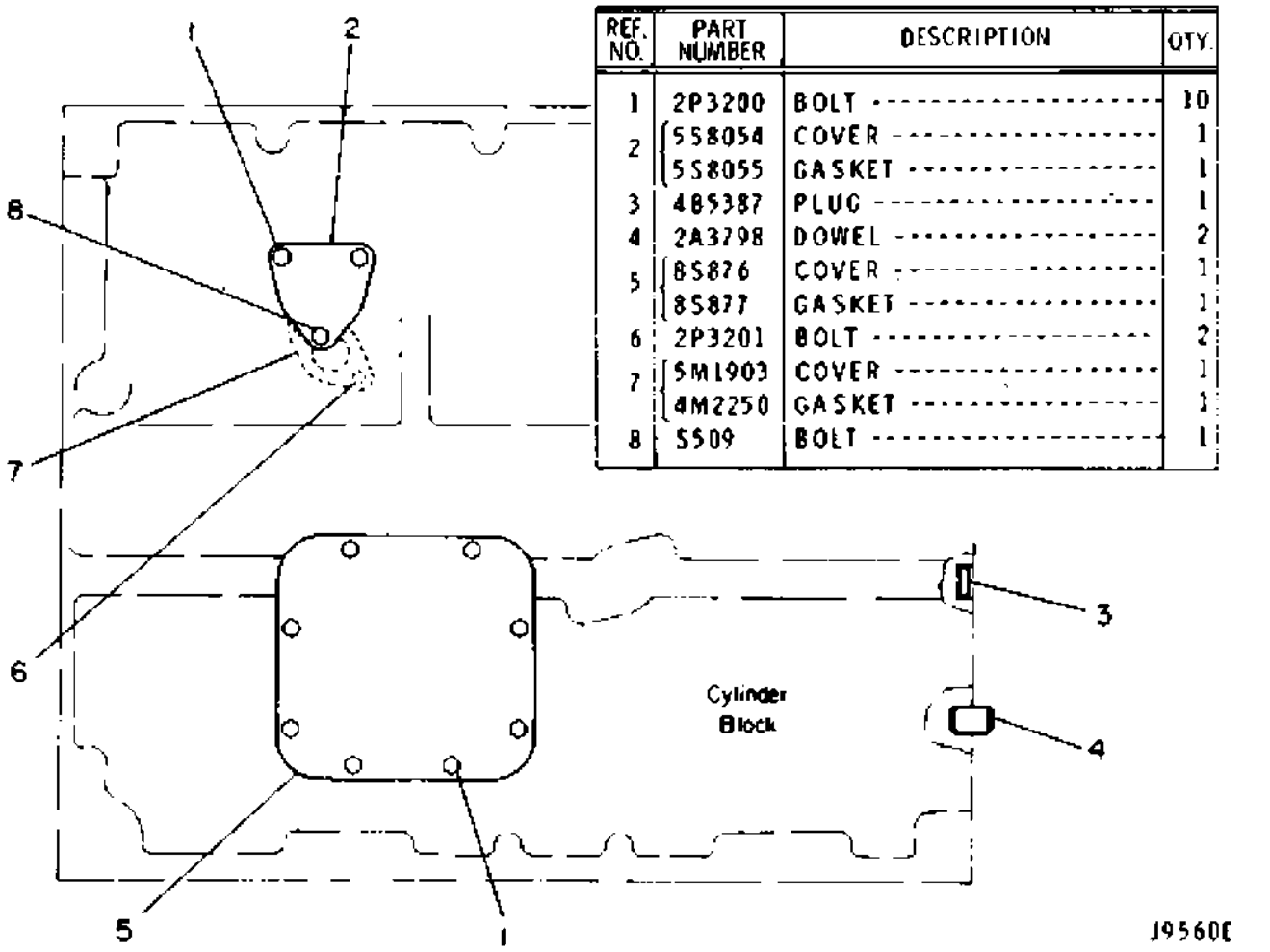

GRAPHIC #1

j9560e

CYLINDER BLOCK COVERS (2P6495 N/S)

Effective with Serial No. 43V2463~43V11876

Key:

SMCS

NOTE	REF NO	GRAPHIC REF	PART NUMBER	QTY	PART NAME 1 2 3 4 5 6 (PRODUCT LEVEL)	LINK PAGE
	1		2P-3200	10	BOLT	
	2		8L-8662	1	COVER	
			5S-8055	1	GASKET	
	3		4B-5387	1	PLUG	
	4		2A-3798	2	DOWEL	
	5		8S-0876	1	COVER	
			8S-0877	1	GASKET	
	6		2P-3201	2	BOLT	
	7		5M-1903	1	COVER	
			4M-2250	1	GASKET	
	8		1H-8296	1	SCREW (FLAT HEAD)	

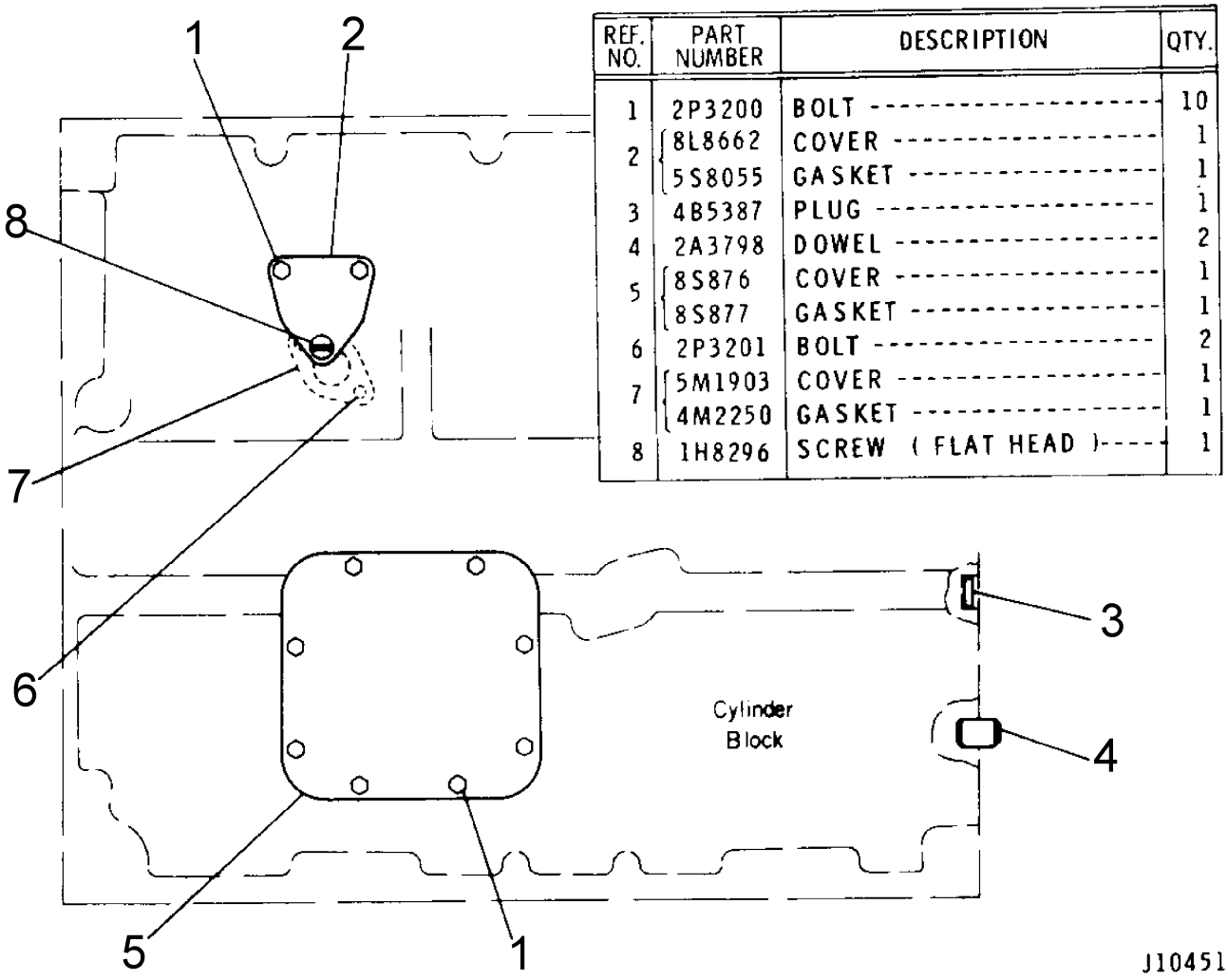

REF. NO.	PART NUMBER	DESCRIPTION	QTY.
1	2P3200	BOLT	10
2	8L8662	COVER	1
	5S8055	GASKET	1
3	4B5387	PLUG	1
4	2A3798	DOWEL	2
5	8S876	COVER	1
	8S877	GASKET	1
6	2P3201	BOLT	2
7	5M1903	COVER	1
	4M2250	GASKET	1
8	1H8296	SCREW (FLAT HEAD)	1

GRAPHIC #1

j10451e

CRANKSHAFT (2P6216 N/S)

Effective with Serial No. 43V1~43V11876
Note: For Field Replacement of Crankshaft order
4N7692 shown below and 5S6296 & 9S3038
Seal each 1

Key: H - THE FOLLOWING PARTS IS UNDERSIZE BEARING FOR 3S9730 BEARING:4S8881 BEARING (0.25mm UNDERSIZE) 4S8883 BEARING (0.51mm UNDERSIZE) 4S8885 BEARING (0.76mm UNDERSIZE)

SMCS

NOTE	REF NO	GRAPHIC REF	PART NUMBER	QTY	PART NAME 1 2 3 4 5 6 (PRODUCT LEVEL)	LINK PAGE
	1		2P-0716	2	PLATE	
	2		NOTSERV	1	CRANKSHAFT	
	3		9F-2247	4	PLUG	
H	4		3S-9730	5	BEARING	

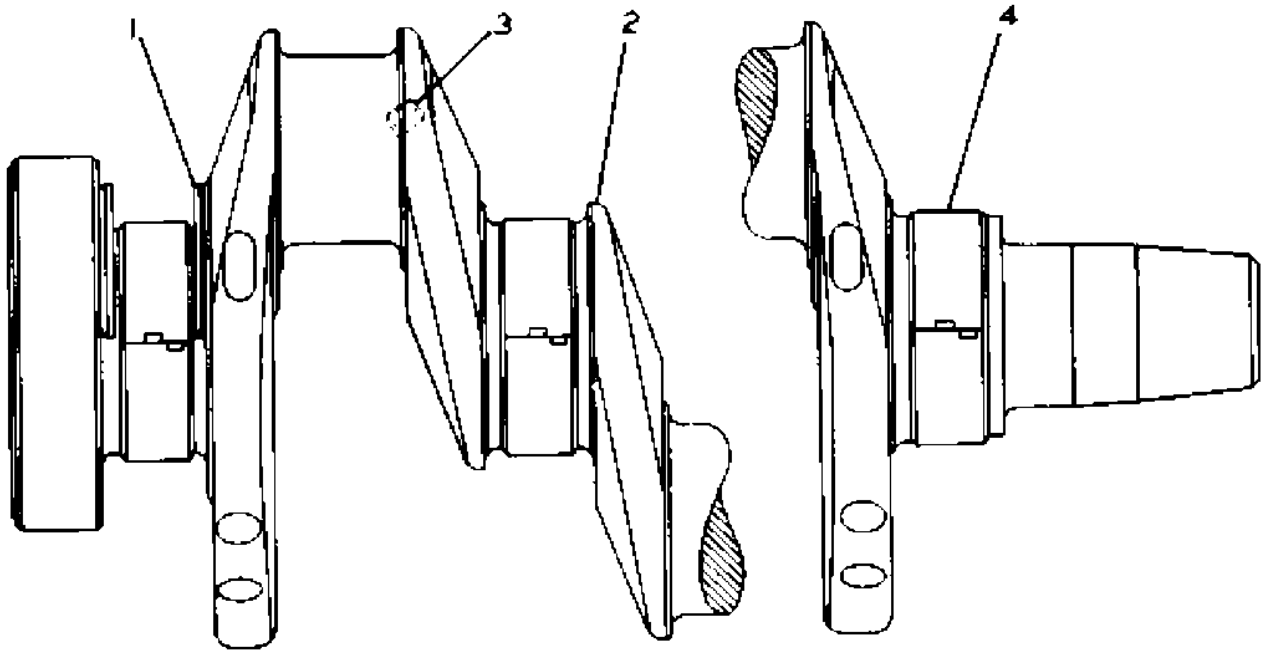

REF. NO.	PART NUMBER	DESCRIPTION	QTY.
1	2P716	PLATE	2
2	Not Serv.	CRANKSHAFT	1
3	9F2247	PLUG	4
▲ 4	3S9730	BEARING	5

▲THE FOLLOWING PARTS IS UNDERSIZE BEARING FOR 3S9730 BEARING
4S8881 BEARING(0.25mm UNDERSIZE)
4S8883 BEARING(0.51mm UNDERSIZE)
4S8885 BEARING(0.76mm UNDERSIZE)

J12559E

GRAPHIC #1

j12559e

4N7692 CRANKSHAFT ASSEMBLY--Field Replacement

Key:

SMCS

NOTE	REF NO	GRAPHIC REF	PART NUMBER	QTY	PART NAME 1 2 3 4 5 6 (PRODUCT LEVEL)	LINK PAGE
	1		2P-3858	1	SLEEVE	
	2		9F-2247	4	PLUG	
	3		4M-9933	1	GEAR	
	4		5H-2671	1	KEY	
	5		2P-3859	1	SLEEVE	

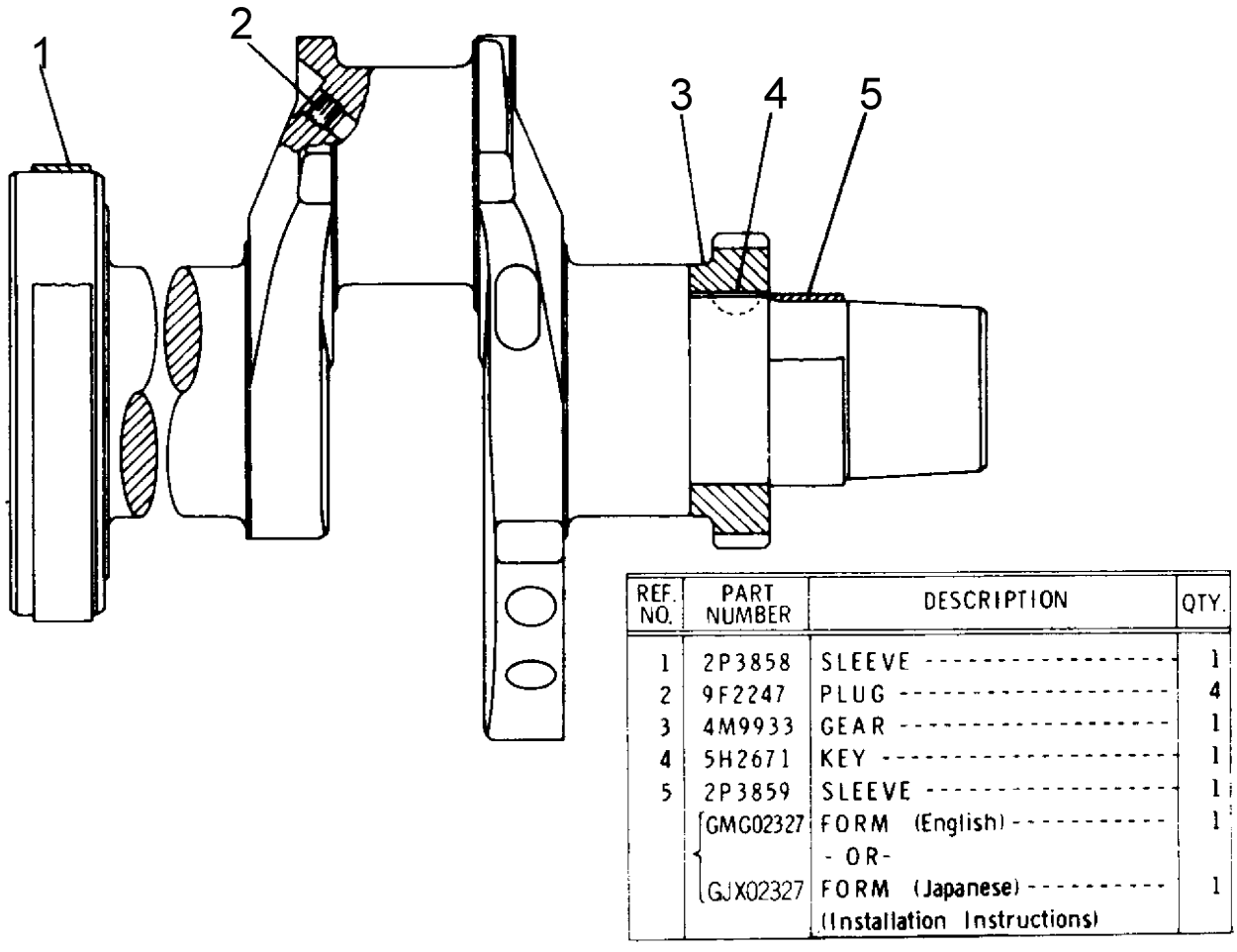

REF. NO.	PART NUMBER	DESCRIPTION	QTY.
1	2P3858	SLEEVE	1
2	9F2247	PLUG	4
3	4M9933	GEAR	1
4	5H2671	KEY	1
5	2P3859	SLEEVE	1
	GMG02327	FORM (English)	1
		- OR-	
	GJX02327	FORM (Japanese) (Installation Instructions)	1

J10872E

GRAPHIC #1

j10872e

CRANKSHAFT SEAL (2P6225 N/S)

Effective with Serial No. 43V1~43V11876

Key:

SMCS

NOTE	REF NO	GRAPHIC REF	PART NUMBER	QTY	PART NAME 1 2 3 4 5 6 (PRODUCT LEVEL)	LINK PAGE
	1		7S-3103	1	SEAL	
	2		5S-9021	1	SEAL	

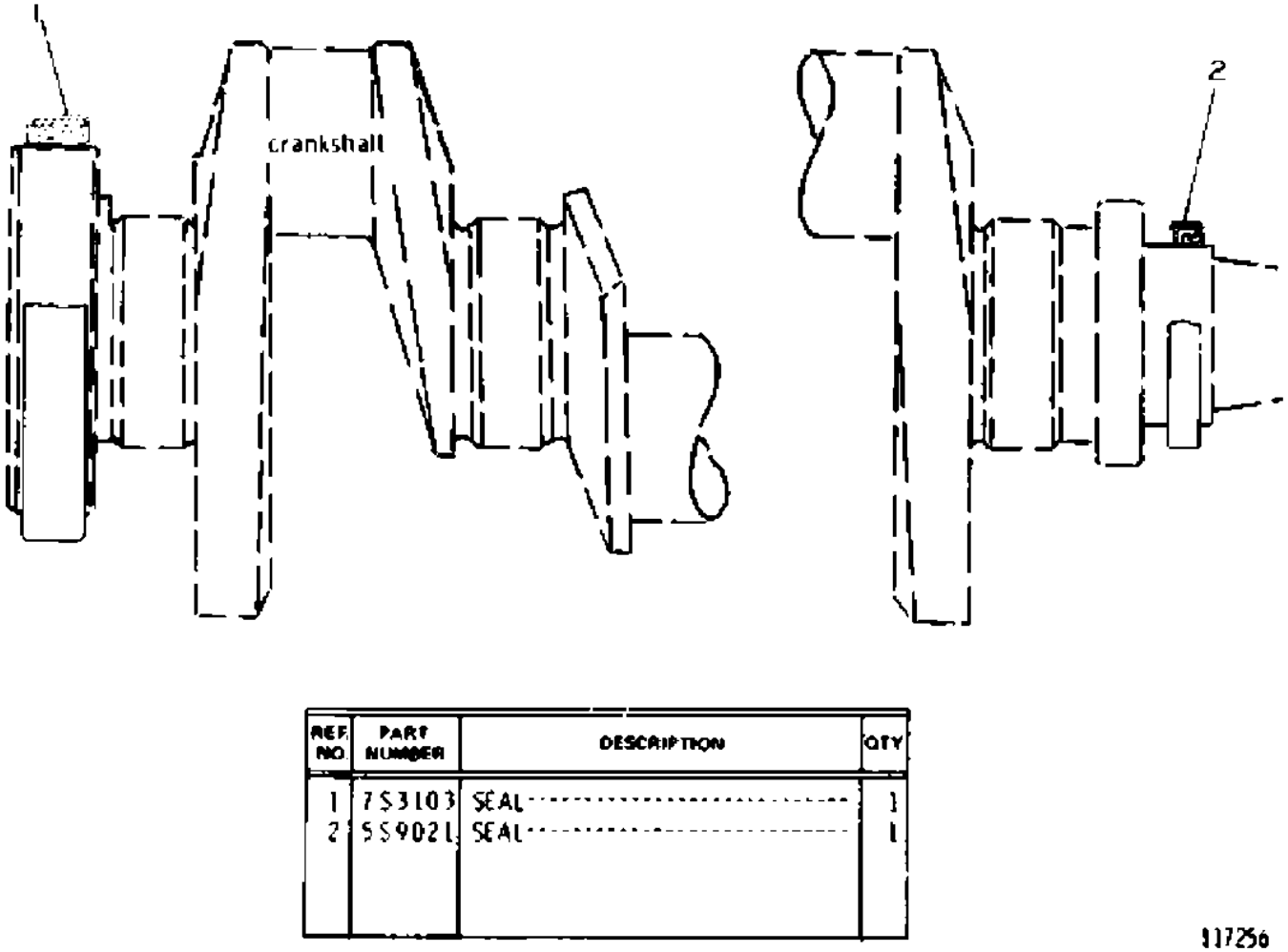

GRAPHIC #1

c117256

GASKET KITS

Effective with Serial No. 43V1~43V2247

Key:

SMCS

NOTE	REF NO	GRAPHIC REF	PART NUMBER	QTY	PART NAME 1 2 3 4 5 6 (PRODUCT LEVEL)	LINK PAGE
			5P-2007			
					DIESEL ENGINE-BASIC	
			5P-1999			
					DIESEL ENGINE-SUPPLEMENT	
			5P-2006			
					VALVE GRINDING	
			5P-1937			
					WATER PUMP	

CONNECTING ROD AND PISTON (4N4028 N/S)-- 4 Required

Effective with Serial No. 43V1~43V11876

Key:

SMCS

NOTE	REF NO	GRAPHIC REF	PART NUMBER	QTY	PART NAME 1 2 3 4 5 6 (PRODUCT LEVEL)	LINK PAGE
	1		4N-4029	1	PISTON GROUP	
	2		7S-8378	1	RING (Top)	
	3		5S-6750	1	RING (Intermediate)	
	4		9S-7788	1	RING (Oil)	
	5		7M-7821	1	BEARING (Standard)	
			2S-0502	1	BEARING (0.25mm Undersize)	
			2S-0503	1	BEARING (0.51mm Undersize)	
			7M-7826	1	BEARING (0.76mm Undersize)	
	6		5S-6360	1	ROD ASSEM.	
			7S-9347	1	BEARING	
	7		1P-9956	2	BOLT	
	8		5S-6348	2	NUT	
	9		9H-4016	1	PIN	
	10		9H-4015	2	RETAINER	
			7S-9404	1	RING GROUP	

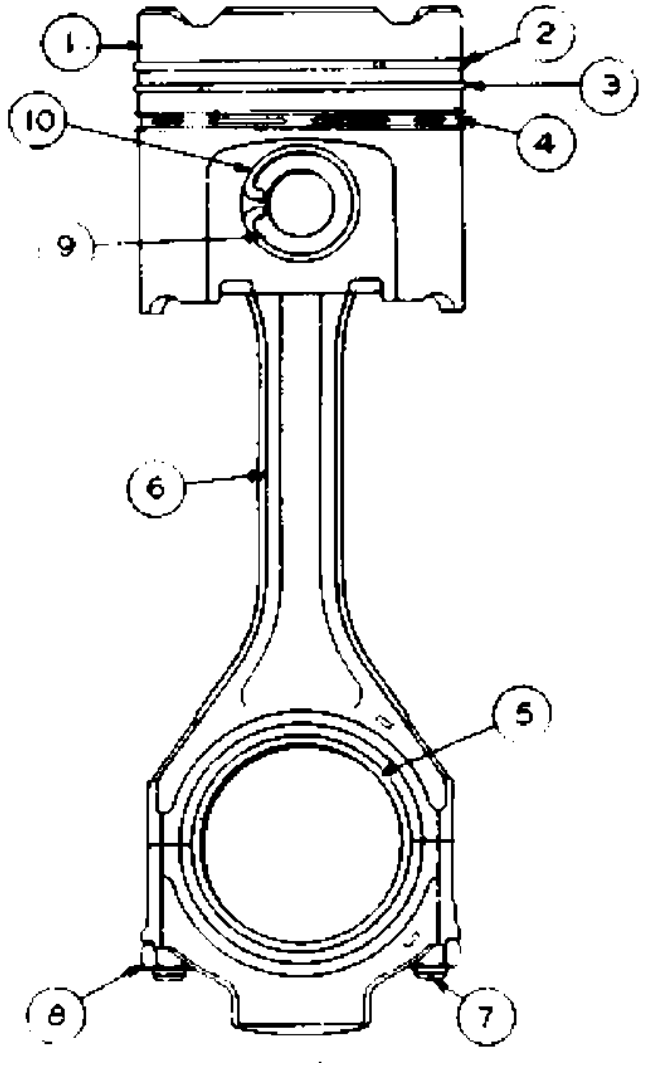

REF NO	PART NUMBER	DESCRIPTION	QTY
1	4N4029	PISTON GROUP	1
2	7S8378	RING (Top)	1
3	5S6750	RING (Intermediate)	1
4	9S7788	RING (Oil)	1
5	7M7821	BEARING (Standard)	1
	2S502	BEARING (0.25mm Undersize)	1
	2S503	BEARING (0.51mm Undersize)	1
	7M7826	BEARING (0.76mm Undersize)	1
6	5S6360	ROD ASSEM.	1
	7S9347	BEARING	1
7	1P9956	BOLT	2
8	5S6348	NUT	2
9	9H4016	PIN	1
10	9H4015	RETAINER	2
	7S9404	RING GROUP (Consists of complete set of Rings for one Piston)	1

j9093e

GRAPHIC #1

CAMSHAFT (2P6201 N/S)

Effective with Serial No. 43V1~43V11876

Key:

SMCS

NOTE	REF NO	GRAPHIC REF	PART NUMBER	QTY	PART NAME 1 2 3 4 5 6 (PRODUCT LEVEL)	LINK PAGE
	1		5S-3971	1	CAMSHAFT	
	2		7S-2204	1	WASHER	
	3		8S-1491	1	LOCK	
	4		0S-0509	2	BOLT	

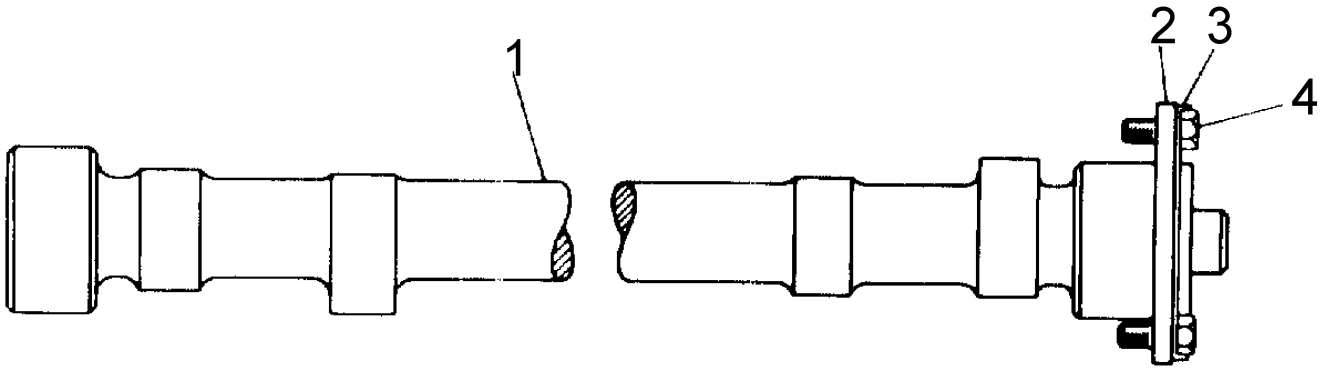

REF. NO.	PART NUMBER	DESCRIPTION	QTY
1	5S3971	CAMSHAFT----------	1
2	7S2204	WASHER----------	1
3	8S1491	LOCK----------	1
4	S509	BOLT----------	2

117197

GRAPHIC #1

c117197

BALANCER (5S6425 N/S)

Effective with Serial No. 43V1~43V11876

Key:

SMCS

NOTE	REF NO	GRAPHIC REF	PART NUMBER	QTY	PART NAME 1 2 3 4 5 6 (PRODUCT LEVEL)	LINK PAGE
			1N-8354	2	LOCK	
			0S-1594	4	BOLT	
			8S-0743	1	SHAFT	
					(Right Hand-20 Teeth)	
			8S-0744	1	SHAFT	
					(Left Hand-20 Teeth)	
			4S-6417	2	PLATE	

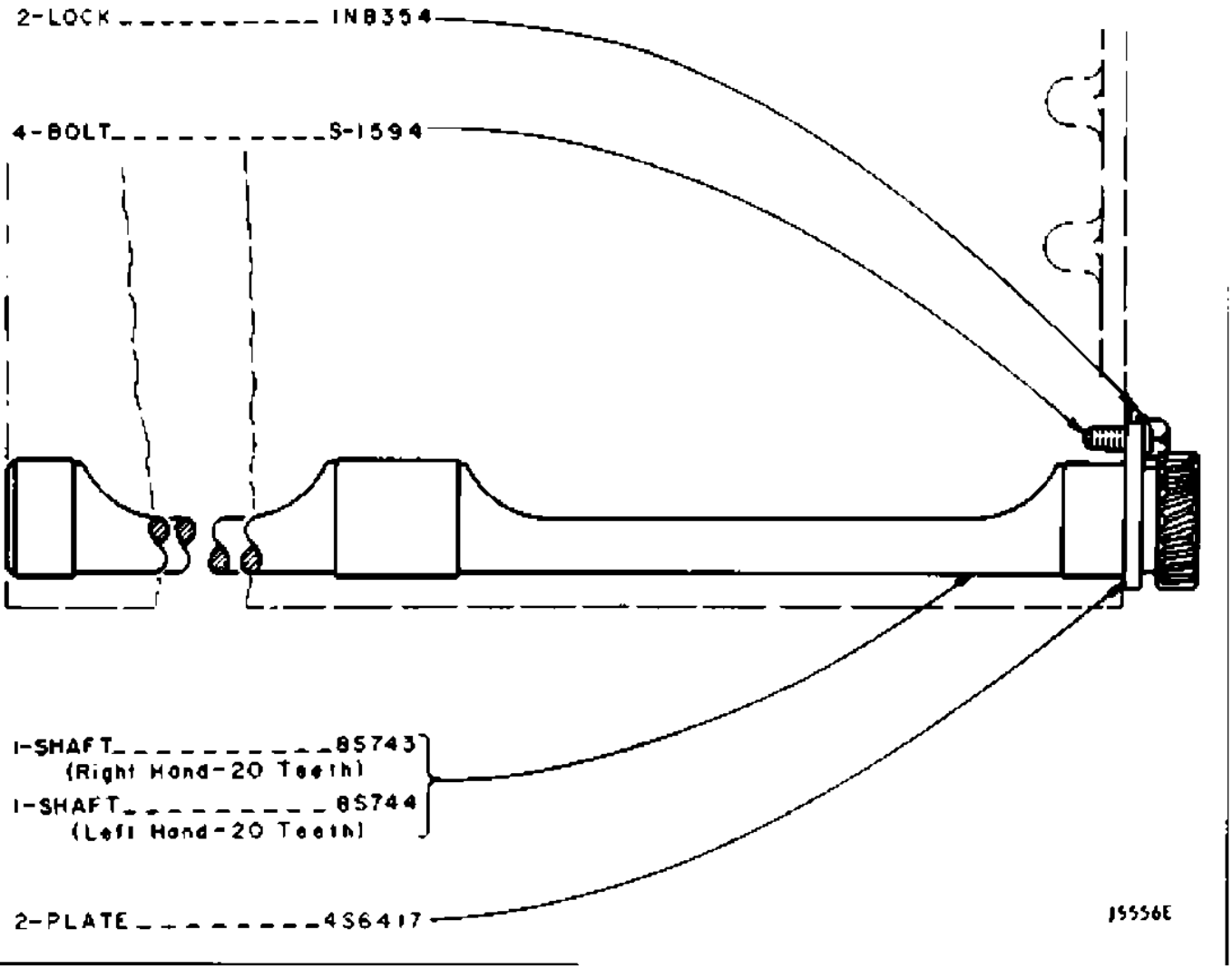

GRAPHIC #1

j5556e

VALVE MECHANISM (2P6524 N/S)

Effective with Serial No. 43V1~43V11876

Key:

SMCS

NOTE	REF NO	GRAPHIC REF	PART NUMBER	QTY	PART NAME 1 2 3 4 5 6 (PRODUCT LEVEL)	LINK PAGE
	1		2P-3189	1	SHAFT ASSEM.	
			0L-1026	2	PLUG	
	2		5S-5879	1	BRACKET	
			5M-4606	1	DOWEL	
	3		4B-4910	3	SPRING	
	4		9H-1110	8	WASHER	
	5		5S-5878	2	BRACKET	
	6		5S-6855	4	ARM ASSEM. (Exheust)	
			4F-0443	1	BEARING	
	7		5S-6854	4	ARM ASSEM. (Intake)	
			4F-0443	1	BEARING	
	8		8S-1499	1	BRACKET ASSEM.	
			1L-5072	1	DOWEL	
	9		9M-9886	2	WASHER	
			9H-1112	2	SPRING	
	10		1B-4203	8	NUT	
	11		5S-5917	8	SCREW	
	12		5S-5918	8	ROD	
	13		7S-3161	8	LIFTER	
	14		9H-1113	2	RING	

VALVE MECHANISM (2P6524 N/S)

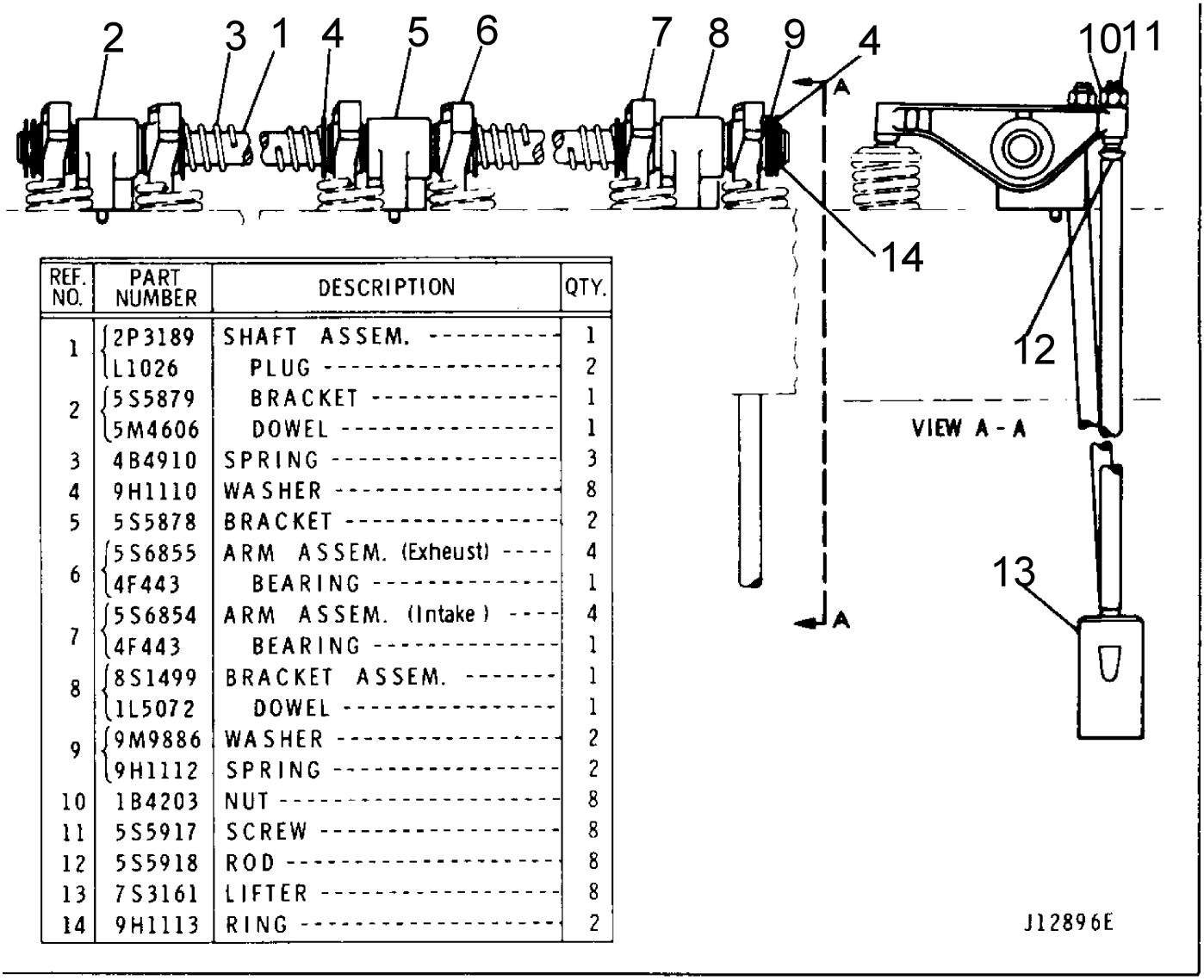

REF. NO.	PART NUMBER	DESCRIPTION	QTY.
1	2P3189	SHAFT ASSEM.	1
	L1026	PLUG	2
2	5S5879	BRACKET	1
	5M4606	DOWEL	1
3	4B4910	SPRING	3
4	9H1110	WASHER	8
5	5S5878	BRACKET	2
6	5S6855	ARM ASSEM. (Exheust)	4
	4F443	BEARING	1
7	5S6854	ARM ASSEM. (Intake)	4
	4F443	BEARING	1
8	8S1499	BRACKET ASSEM.	1
	1L5072	DOWEL	1
9	9M9886	WASHER	2
	9H1112	SPRING	2
10	1B4203	NUT	8
11	5S5917	SCREW	8
12	5S5918	ROD	8
13	7S3161	LIFTER	8
14	9H1113	RING	2

GRAPHIC #1 j12896e

VALVE MECHANISM COVER (2P6514 N/S)

Effective with Serial No. 43V1~43V11876

Key:

SMCS

NOTE	REF NO	GRAPHIC REF	PART NUMBER	QTY	PART NAME 1 2 3 4 5 6 (PRODUCT LEVEL)	LINK PAGE
	1		5S-4538	1	COVER ASSEM.	
	2		8S-1606	1	GASKET	
	3		0S-1617	11	BOLT	
			3B-4505	11	LOCKWASHER	

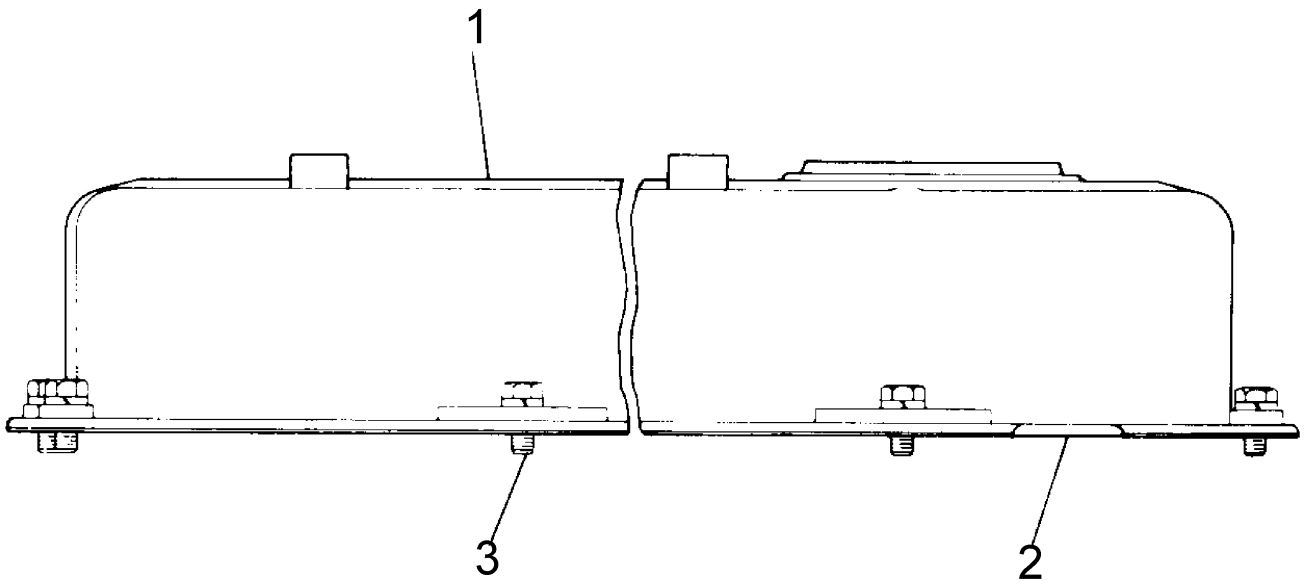

REF. NO.	PART NUMBER	DESCRIPTION	QTY.
1	5S4538	COVER ASSEM.	1
2	8S1606	GASKET	1
3	0S1617	BOLT	11
	3B4505	LOCKWASHER	11

J9098E

GRAPHIC #1

j9098e

CYLINDER HEAD (2P6274 N/S)

Effective with Serial No. 43V1~43V10751
4N7444 Head Assembly parts are shown on Page 16

Key: Y - SEPARATE ILLUSTRATION

SMCS

NOTE	REF NO	GRAPHIC REF	PART NUMBER	QTY	PART NAME 1 2 3 4 5 6 (PRODUCT LEVEL)	LINK PAGE
	1		5S-5912	8	RETAINER	
	2		5S-6449	4	VALVE (Exhaust)	
	3		2A-4429	16	LOCK	
	4		7S-7144	8	SPRING	
	5		5S-6795	4	CHAMBER ASSEM.	
			7S-3206	4	SEAL	
			2S-8966	4	KIT	
	6		5S-6452	4	VALVE (Intake)	
Y	7		4N-7444	1	HEAD ASSEM.	P0017
					(See Separate Illustration)	
	8		5S-6277	1	GASKET	
	9		5S-4598	8	BUSHING	

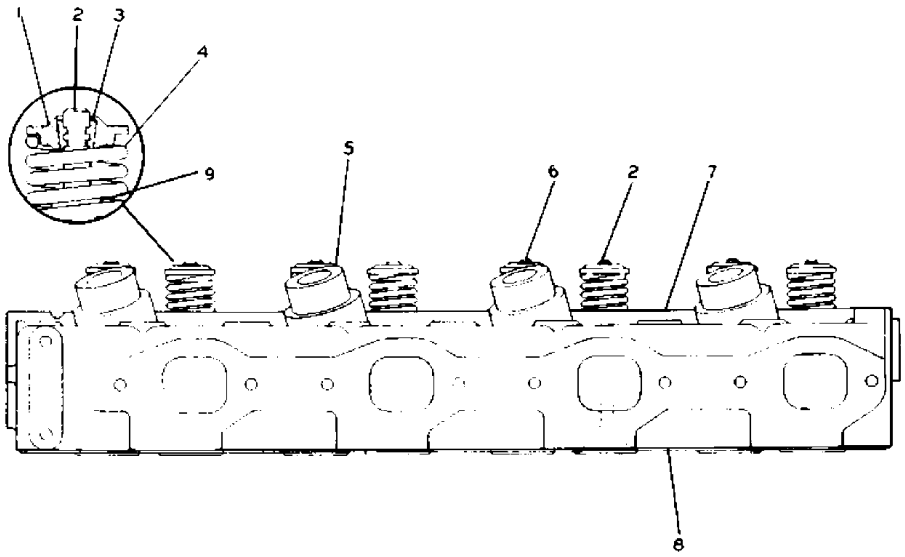

REF. NO.	PART NUMBER	DESCRIPTION	QTY.
1	5S5912	RETAINER	8
2	5S6449	VALVE (Exhaust)	4
3	2A4429	LOCK	16
4	7S7144	SPRING	8
5	5S6795	CHAMBER ASSEM.	4
	7S3206	SEAL	4
	2S8966	KIT	4
6	5S6452	VALVE (Intake)	4
7	4N7444	HEAD ASSEM. (See Separate Illustration)	1
8	5S6277	GASKET	1
9	5S4598	BUSHING	8

J9094E

GRAPHIC #1

j9094e

CYLINDER HEAD (2P6274 N/S)

Effective with Serial No. 43V10752~43V11876
6N8875 Head Assembly parts are shown on Page 16

Key: R - REMFG PART MAY BE AVAILABLE, Y - SEPARATE ILLUSTRATION

SMCS

NOTE	REF NO	GRAPHIC REF	PART NUMBER	QTY	PART NAME 1 2 3 4 5 6 (PRODUCT LEVEL)	LINK PAGE
	1		5S-5912	8	RETAINER	
	2		5S-6449	4	VALVE (Exhaust)	
	3		2A-4429	16	LOCK	
	4		7S-7144	8	SPRING	
	5		5S-6795	4	CHAMBER ASSEM.	
			7S-3206	4	SEAL	
			2S-8966	4	KIT (Gasket)	
	6		5S-6452	4	VALVE (Intake)	
RY	7		6N-8875	1	HEAD ASSEM.	P0018
	R		0R-0821	1	HEAD AS-CYLINDER	
	R		0R-2674	1	HEAD GP-CYL -A	
					(See Separate Illustration)	
	8		5S-6277	1	GASKET	

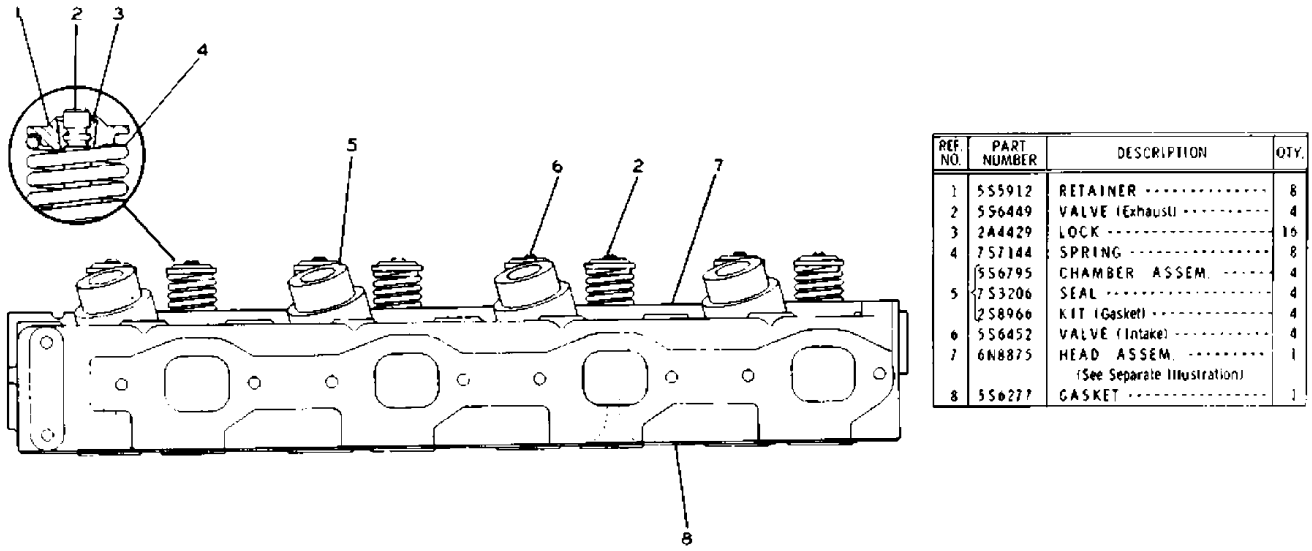

REF. NO.	PART NUMBER	DESCRIPTION	QTY.
1	5S5912	RETAINER	8
2	5S6449	VALVE (Exhaust)	4
3	2A4429	LOCK	16
4	7S7144	SPRING	8
	5S6795	CHAMBER ASSEM.	4
5	7S3206	SEAL	4
	2S8966	KIT (Gasket)	4
6	5S6452	VALVE (Intake)	4
7	6N8875	HEAD ASSEM.	1
		(See Separate Illustration)	
8	5S6277	GASKET	1

J16216E

GRAPHIC #1

j16216e

4N7444 CYLINDER HEAD ASSEMBLY

Effective with Serial No. 43V1~43V10751
Part of Cylinder Head

Key:

SMCS

NOTE	REF NO	GRAPHIC REF	PART NUMBER	QTY	PART NAME 1 2 3 4 5 6 (PRODUCT LEVEL)	LINK PAGE
	1		1S-3062	12	DIRECTOR	
	2		3B-0623	4	PLUG	
	3		3J-5389	3	PLUG	
	4		3S-8313	6	PLUG	
	5		2P-1262	8	GUIDE	
	6		NOTSERV	1	HEAD	
	7		5S-7221	4	INSERT (Exhaust)	
	8		5S-7218	4	INSERT (Intake)	

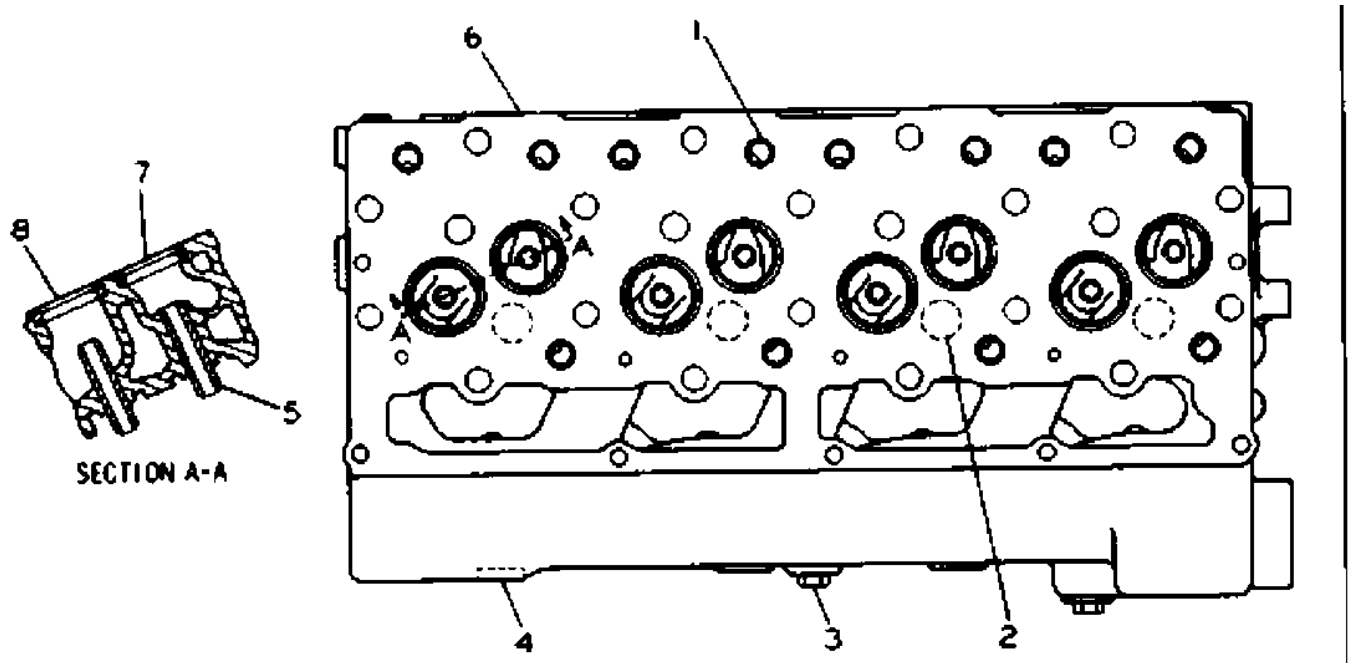

REF. NO.	PART NUMBER	DESCRIPTION	QTY
1	1S3062	DIRECTOR	12
2	3B623	PLUG	4
3	3J5389	PLUG	3
4	3S8313	PLUG	6
5	2P1262	GUIDE	8

REF. NO.	PART NUMBER	DESCRIPTION	QTY.
6	Not Serv.	HEAD	1
7	5S7221	INSERT (Exhaust)	4
8	5S7218	INSERT (Intake)	4

J9096E

GRAPHIC #1

j9096e

6N8875 CYLINDER HEAD ASSEMBLY

Effective with Serial No. 43V10752~43V11876
Part of Cylinder Head

Key:

SMCS

NOTE	REF NO	GRAPHIC REF	PART NUMBER	QTY	PART NAME 1 2 3 4 5 6 (PRODUCT LEVEL)	LINK PAGE
	1		1S-3062	12	DIRECTOR	
	2		3B-0623	4	PLUG	
	3		2B-0858	3	PLUG	
	4		3S-8313	6	PLUG	
	5		2P-1262	8	GUIDE	
	6		NOTSERV	1	HEAD	
	7		5S-7221	4	INSERT (Exhaust)	
	8		5S-7218	4	INSERT (Intake)	

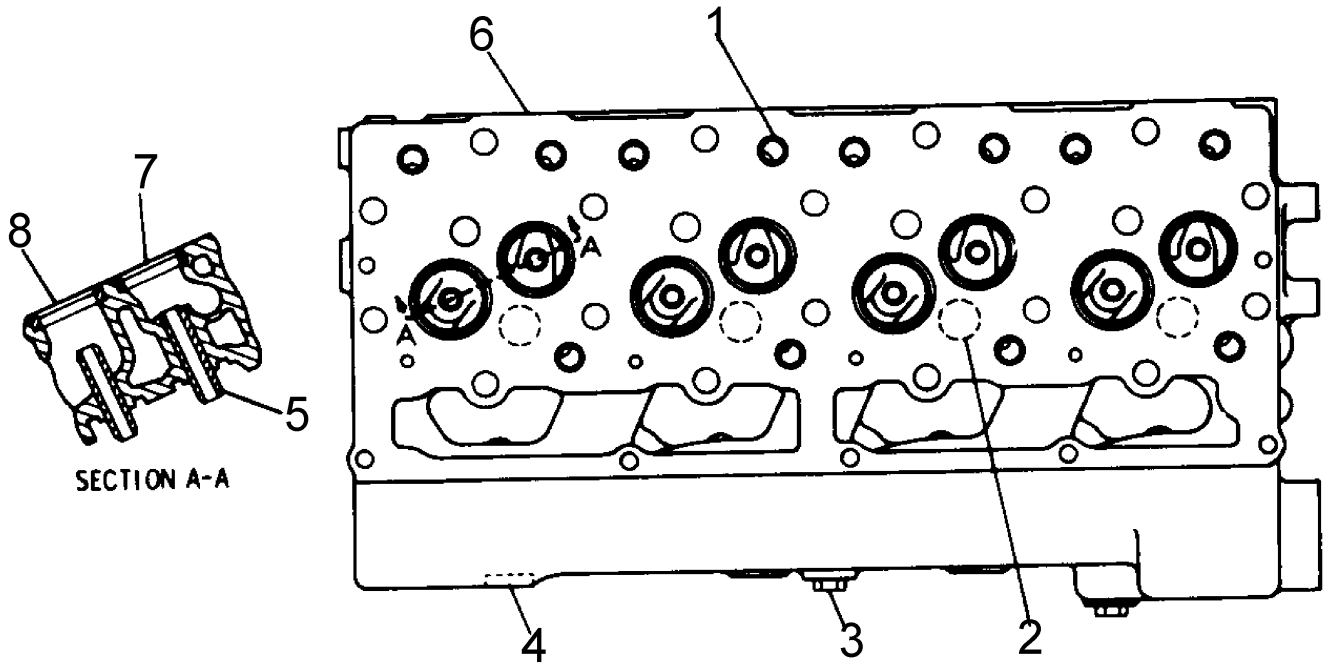

REF. NO.	PART NUMBER	DESCRIPTION	QTY.
1	1S3062	DIRECTOR	12
2	3B623	PLUG	4
3	2B858	PLUG	3
4	3S8313	PLUG	6
5	2P1262	GUIDE	8

REF. NO.	PART NUMBER	DESCRIPTION	QTY.
6	Not Serv.	HEAD	1
7	5S7221	INSERT (Exhaust)	4
8	5S7218	INSERT (Intake)	4

J14288E

GRAPHIC #1

CYLINDER HEAD FASTENER (2P6544 N/S)

Effective with Serial No. 43V1~43V11876

Key:

SMCS

NOTE	REF NO	GRAPHIC REF	PART NUMBER	QTY	PART NAME 1 2 3 4 5 6 (PRODUCT LEVEL)	LINK PAGE
	1		1A-5183	5	BOLT	
			5B-3850	5	WASHER	
	2		1B-7709	4	BOLT (Location X)	
	3		2S-0736	18	WASHER	
	4		1D-4595	14	BOLT	

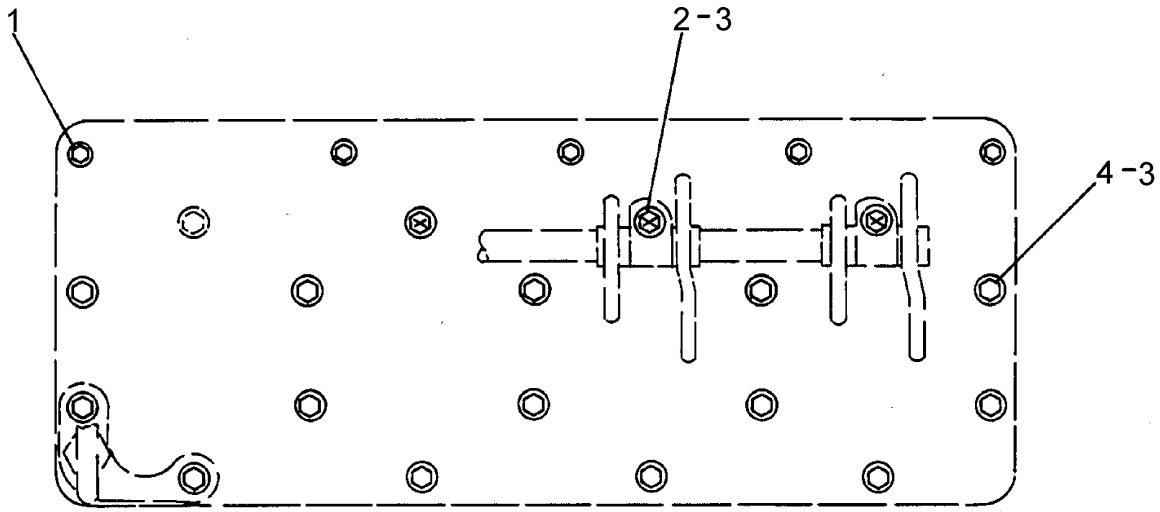

REF. NO.	PART NUMBER	DESCRIPTION	QTY.
1	1A5183	BOLT----------	5
	5B3850	WASHER----------	5
2	1B7709	BOLT-------(Location X)----------	4
3	2S736	WASHER----------	18
4	1D4595	BOLT----------	14

117252

GRAPHIC #1

c117252

ENGINE LIFTING (1P3840 N/S)

Effective with Serial No. 43V1~43V10751

Key:

SMCS

NOTE	REF NO	GRAPHIC REF	PART NUMBER	QTY	PART NAME 1 2 3 4 5 6 (PRODUCT LEVEL)	LINK PAGE
	1		5L-4544	2	EYE	

REF. NO.	PART NUMBER	DESCRIPTION	QTY
1	5L4544	EYE	2

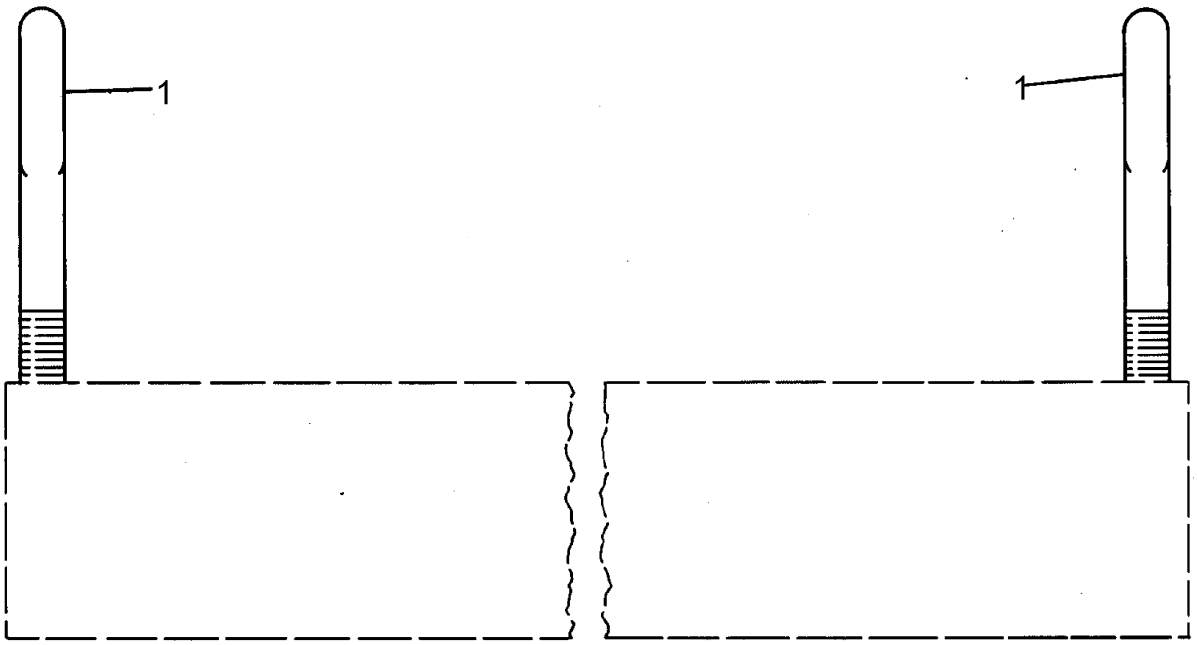

112542

GRAPHIC #1

c112542

ENGINE LIFTING PLATE (6N8326 N/S)

Effective with Serial No. 43V10752~43V11876

Key:

SMCS

NOTE	REF NO	GRAPHIC REF	PART NUMBER	QTY	PART NAME 1 2 3 4 5 6 (PRODUCT LEVEL)	LINK PAGE
	1		0S-1595	4	BOLT	
			2M-0849	4	WASHER	
	2		6N-7650	2	PLATE	

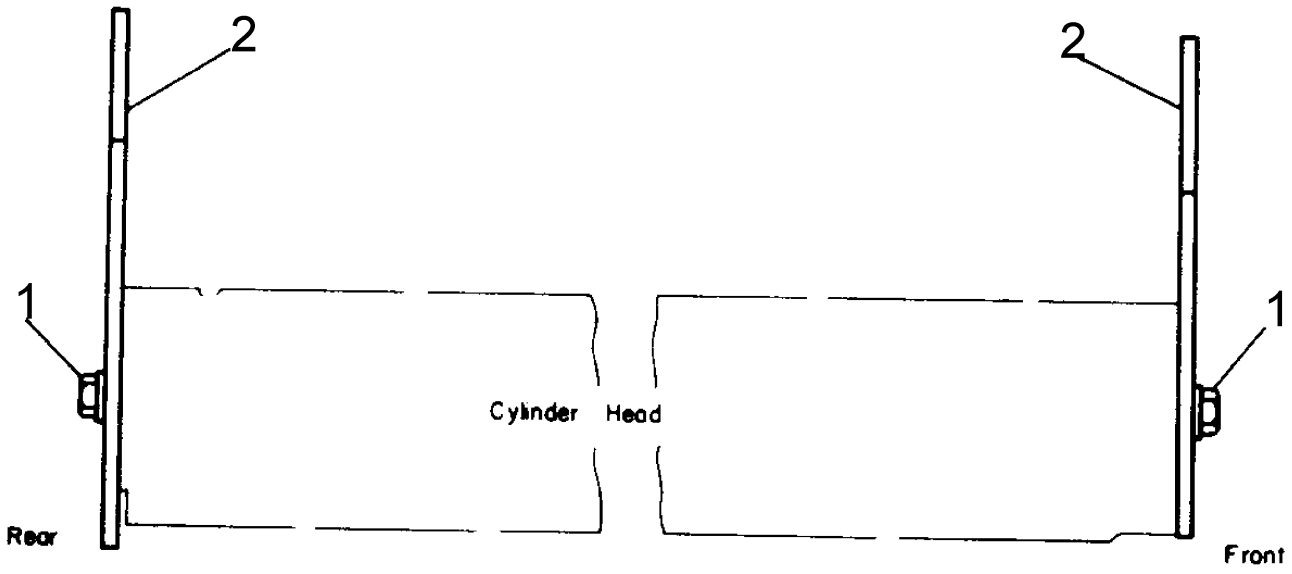

REF. NO.	PART NUMBER	DESCRIPTION	QTY.
1	1S1595	BOLT	4
	2M849	WASHER	4
2	6N7650	PLATE	2

J14194E

GRAPHIC #1

j14194e

FRONT HOUSING (2P6153 N/S)

Effective with Serial No. 43V1~43V2247

Key:

SMCS

NOTE	REF NO	GRAPHIC REF	PART NUMBER	QTY	PART NAME 1 2 3 4 5 6 (PRODUCT LEVEL)	LINK PAGE
	1		1P-9971	1	PLATE	
			2P-1273	1	GASKET	
	2		1P-9968	1	HOUSING ASSEM.	
	3		2S-0042	6	STUD	
	4		2P-1274	1	GASKET	

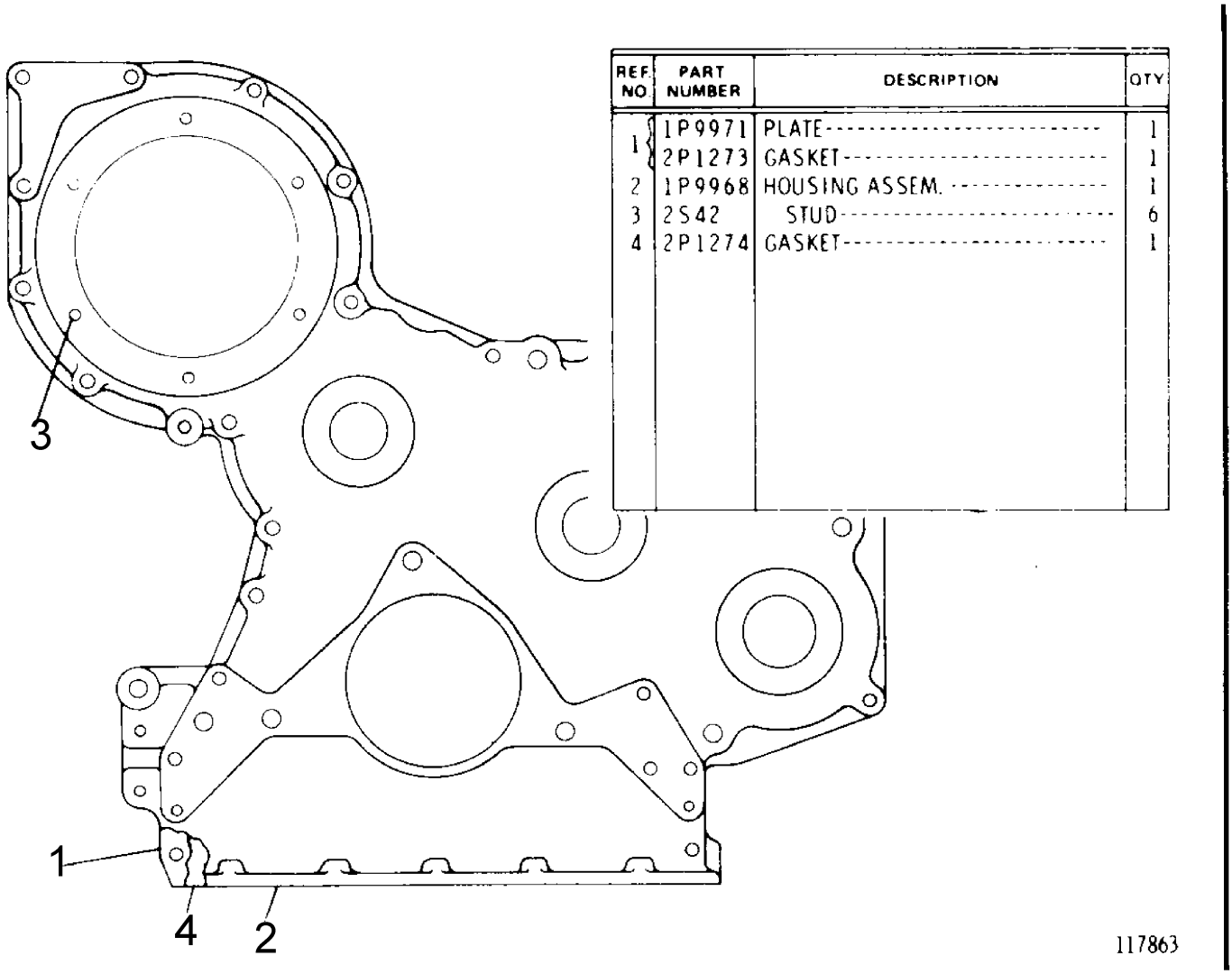

GRAPHIC #1

c117863

FRONT HOUSING (2P9641 N/S)

Effective with Serial No. 43V2248~43V10505

Key:

SMCS

NOTE	REF NO	GRAPHIC REF	PART NUMBER	QTY	PART NAME 1 2 3 4 5 6 (PRODUCT LEVEL)	LINK PAGE
	1		2P-1273	1	GASKET	
	2		1P-8568	1	PLATE ASSEM.	
	3		4M-8743	3	STUD	
	4		2P-1274	1	GASKET	
	5		1P-9968	1	HOUSING ASSEM.	
	6		2S-0042	6	STUD	

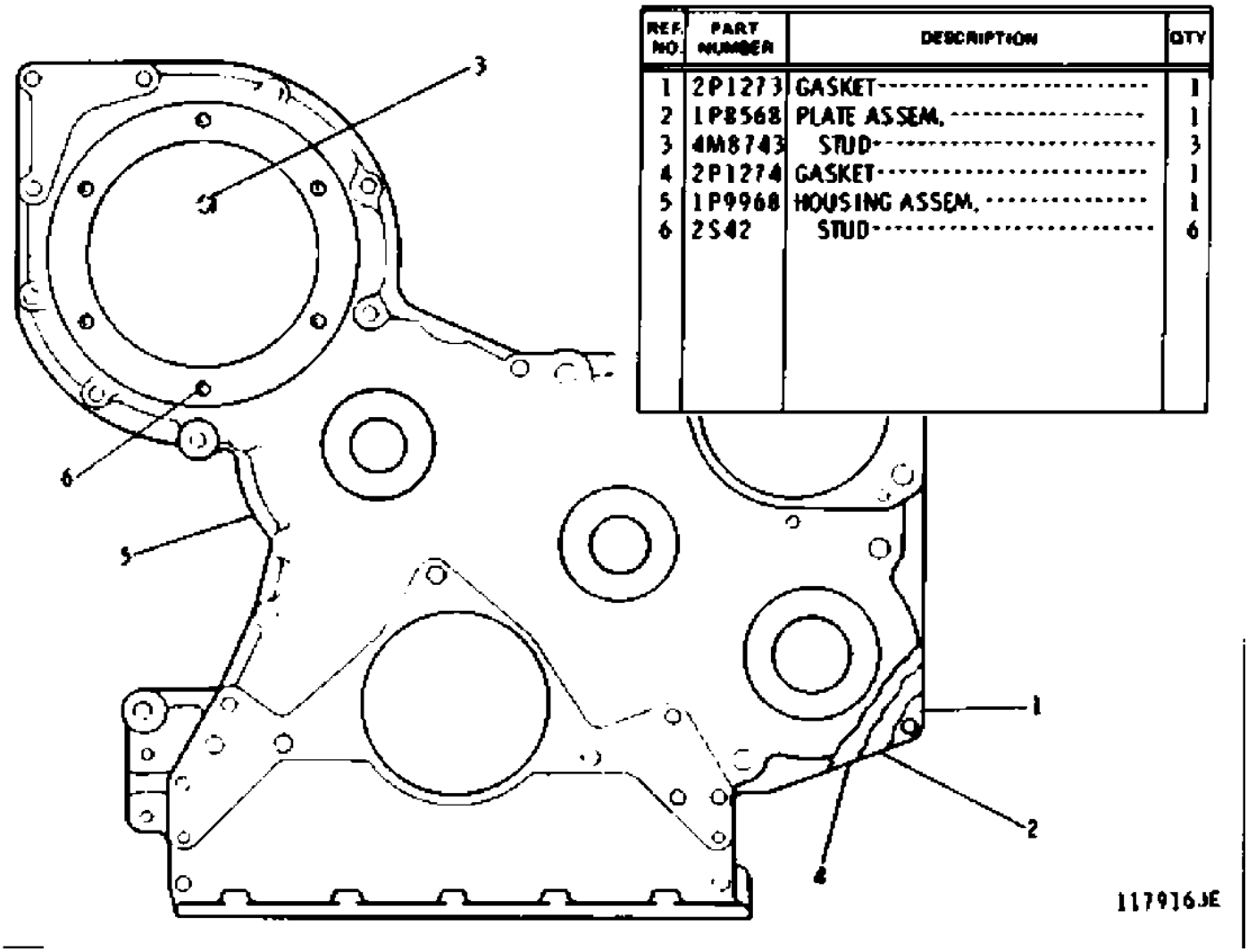

GRAPHIC #1

c927448

FRONT HOUSING (7N3999 N/S)

Effective with Serial No. 43V10506~43V11876

Key:

SMCS

NOTE	REF NO	GRAPHIC REF	PART NUMBER	QTY	PART NAME 1 2 3 4 5 6 (PRODUCT LEVEL)	LINK PAGE
	1		2P-1273	1	GASKET	
	2		6N-9061	1	PLATE	
	3		6H-0192	2	STUD	
	4		2P-1274	1	GASKET	
	5		6N-8056	1	HOUSING ASSEM.	
	6		2S-0042	6	STUD	

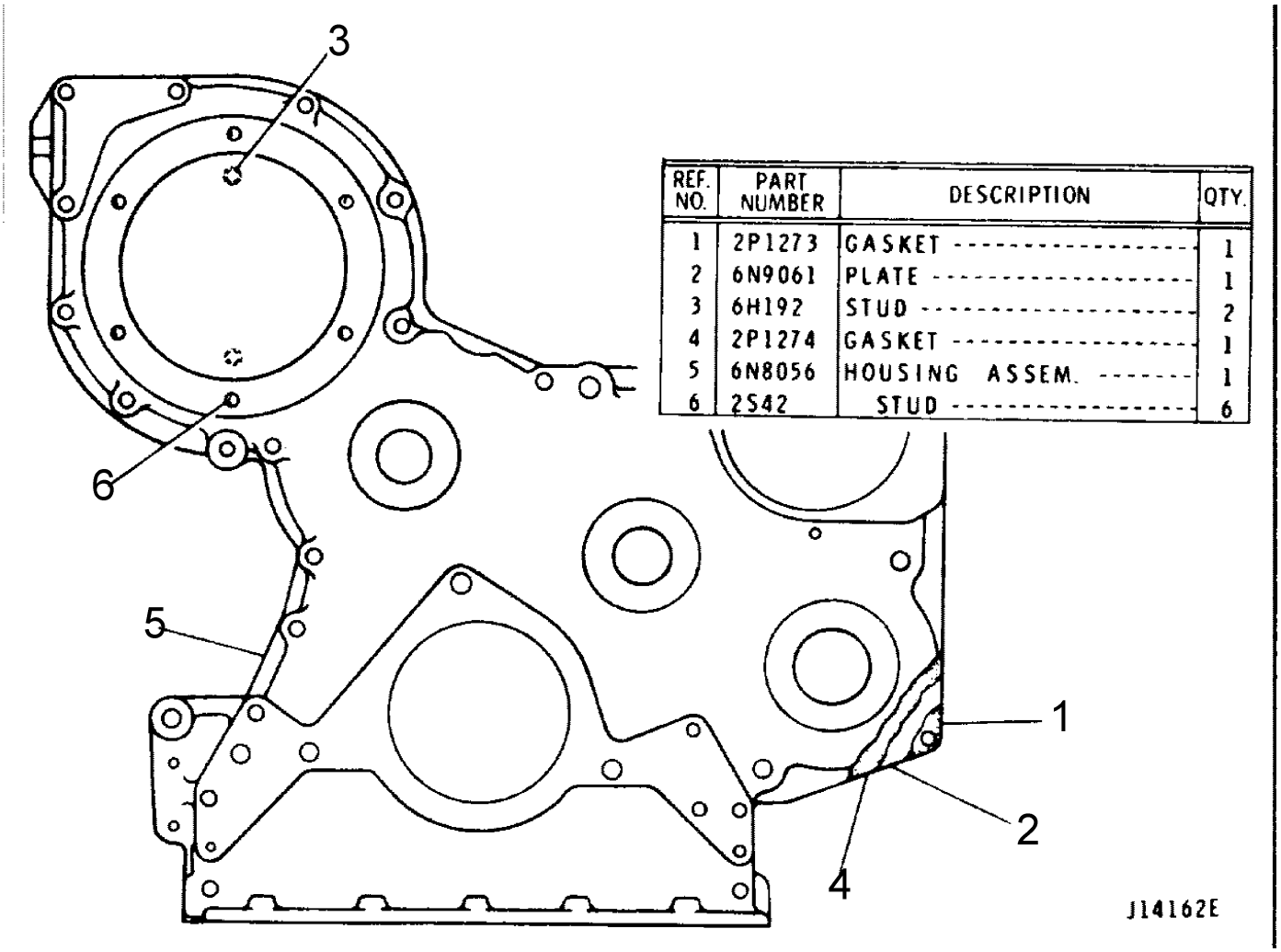

REF. NO.	PART NUMBER	DESCRIPTION	QTY.
1	2P1273	GASKET	1
2	6N9061	PLATE	1
3	6H192	STUD	2
4	2P1274	GASKET	1
5	6N8056	HOUSING ASSEM.	1
6	2S42	STUD	6

GRAPHIC #1 j14162e

FRONT HOUSING FASTENER (2P6498 N/S)

Effective with Serial No. 43V1~43V1049

Key:

SMCS

NOTE	REF NO	GRAPHIC REF	PART NUMBER	QTY	PART NAME 1 2 3 4 5 6 (PRODUCT LEVEL)	LINK PAGE
	1		2P-3208	3	BOLT (64mm Long)	
	2		2P-3207	17	BOLT (57mm Long)	
	3		2P-3201	6	BOLT (25mm Long - Location A)	
	4		2P-3205	2	BOLT (44mm Long)	
	5		2P-3261	7	NUT	
					(Use as Required)	

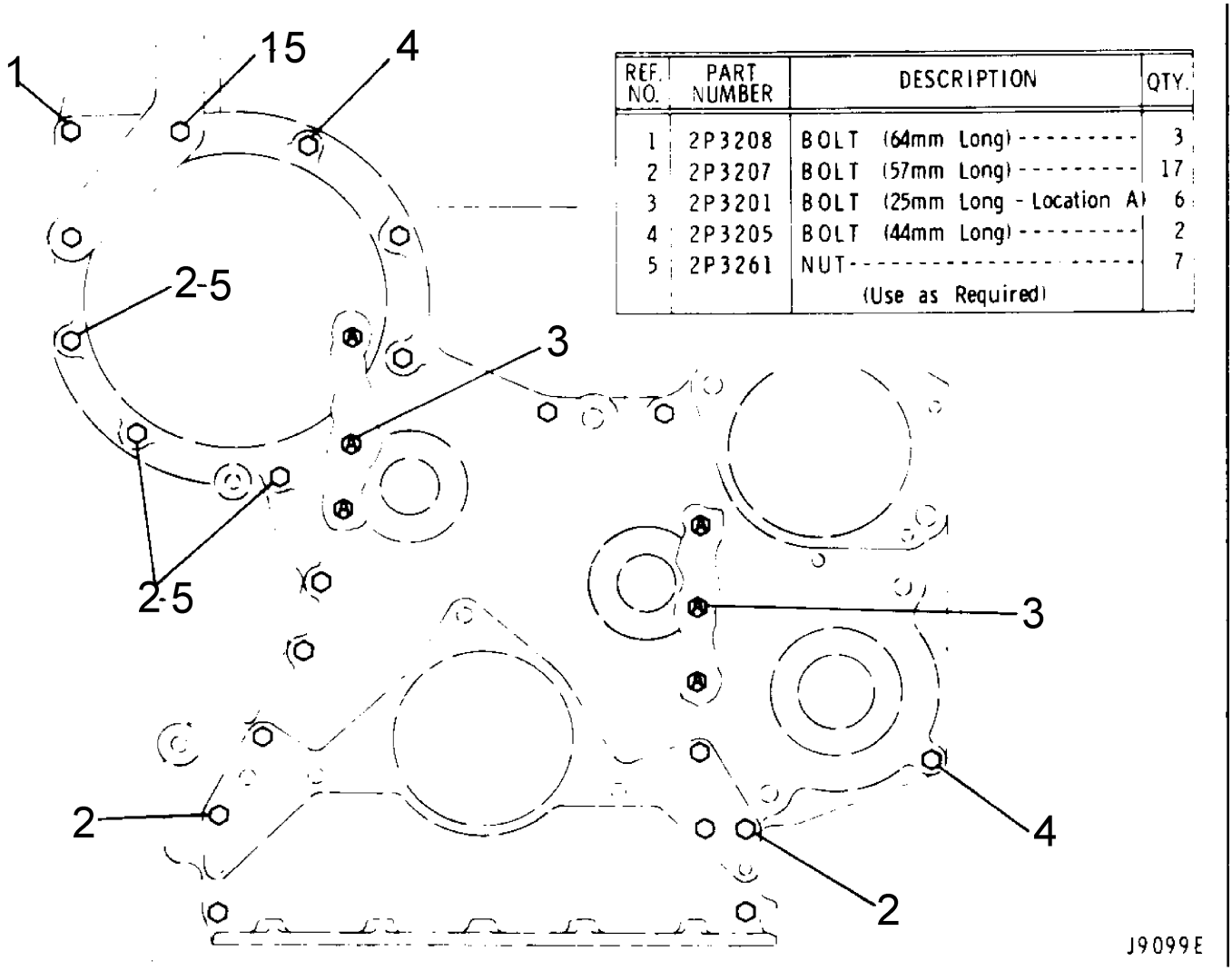

REF. NO.	PART NUMBER	DESCRIPTION	QTY.
1	2P3208	BOLT (64mm Long)	3
2	2P3207	BOLT (57mm Long)	17
3	2P3201	BOLT (25mm Long - Location A)	6
4	2P3205	BOLT (44mm Long)	2
5	2P3261	NUT	7
		(Use as Required)	

GRAPHIC #1

j9099e

FRONT HOUSING FASTENER (2P6498 N/S)

Effective with Serial No. 43V1050~43V8814

Key:

SMCS

NOTE	REF NO	GRAPHIC REF	PART NUMBER	QTY	PART NAME 1 2 3 4 5 6 (PRODUCT LEVEL)	LINK PAGE
	1		0T-0573	3	BOLT (70mm Long X Mark)	
	2		5M-2894	7	WASHER	
			1D-4717	7	NUT	
	3		0S-1571	2	BOLT (44mm Long)	
	4		9S-3187	1	LOCK	
	5		0S-1594	6	BOLT (25.5mm Long)	
	6		9S-3188	1	LOCK	
	7		0L-1143	4	BOLT (64mm Long Y Mark)	
	8		0L-2070	12	BOLT (57mm Long Z Mark)	

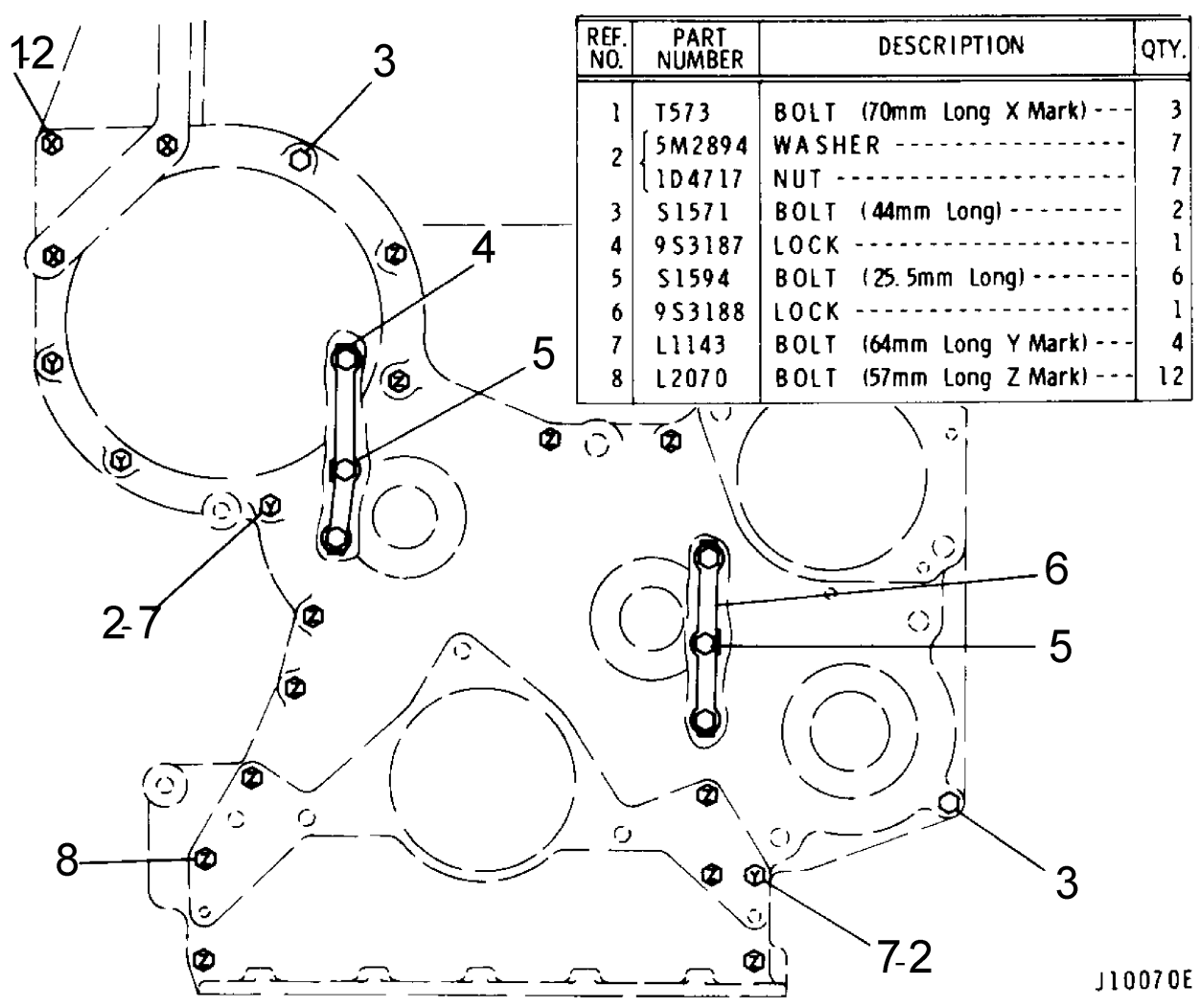

GRAPHIC #1

j10070e

FRONT HOUSING FASTENER (2P6498 N/S)

Effective with Serial No. 43V8815~43V11876

Key: C - Indicates Change

SMCS

NOTE	REF NO	GRAPHIC REF	PART NUMBER	QTY	PART NAME 1 2 3 4 5 6 (PRODUCT LEVEL)	LINK PAGE
C	1		0L-1143	6	BOLT (64mm Long X Mark)	
	2		5M-2894	7	WASHER	
			1D-4717	7	NUT	
C	3		1C-2251	2	BOLT (47.5mm Long)	
	4		9S-3187	1	LOCK	
	5		0S-1594	6	BOLT (25.5mm Long)	
	6		9S-3188	1	LOCK	
C	7		0L-2070	13	BOLT (57mm Long Z Mark)	

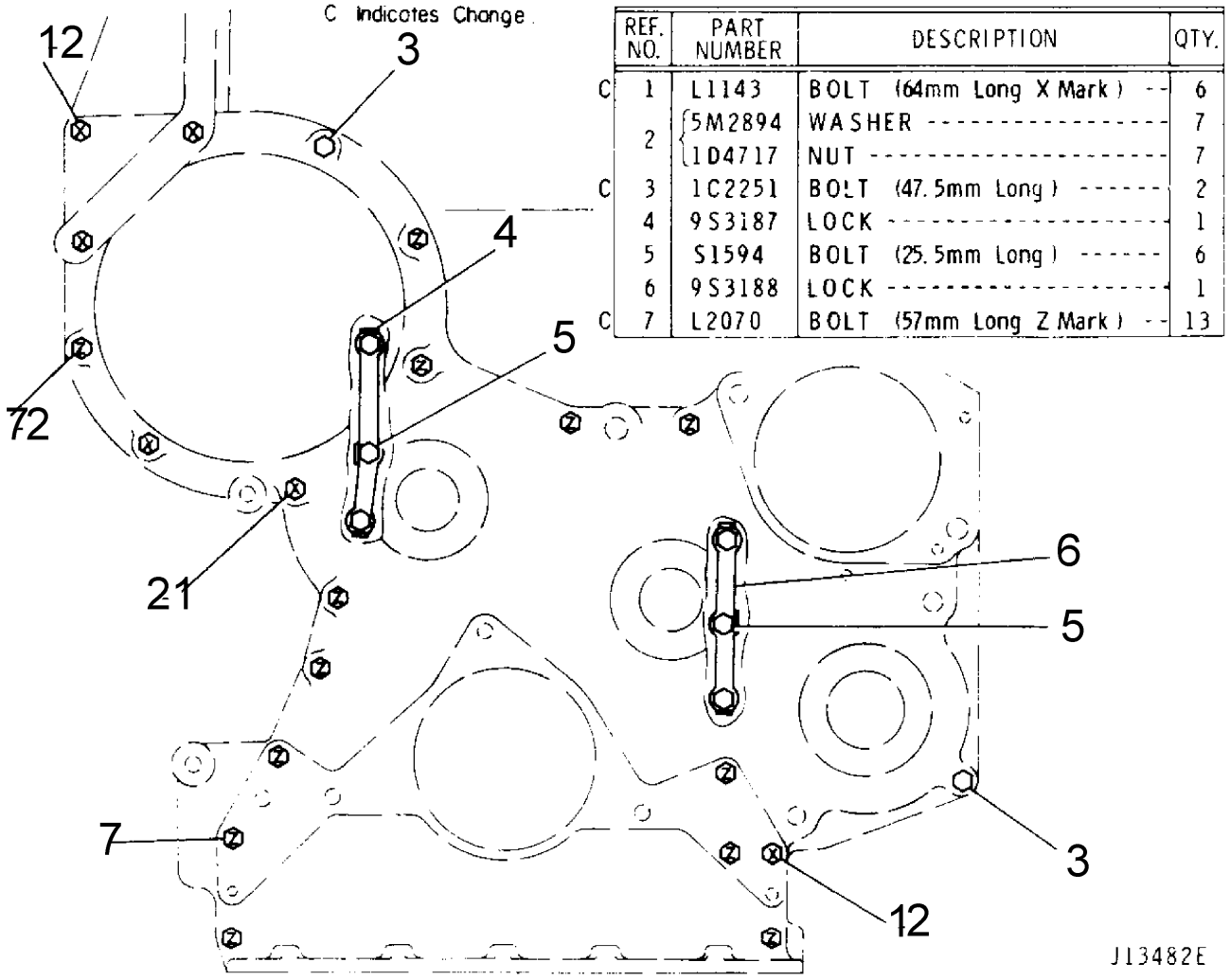

GRAPHIC #1

j13482e

FRONT HOUSING COVER (4N6508 N/S)

Effective with Serial No. 43V1~43V4194

Key:

SMCS

NOTE	REF NO	GRAPHIC REF	PART NUMBER	QTY	PART NAME 1 2 3 4 5 6 (PRODUCT LEVEL)	LINK PAGE
	1		1B-4203	6	NUT	
	2		5M-2894	6	WASHER	
	3		2P-8701	1	COVER	
	4		2P-8702	1	GASKET	
	5		8J-2608	1	ADAPTER	
	6		2P-0220	1	GASKET	
	7		2P-3205	2	BOLT	
	8		5F-3106	2	SEAL	
	9		0S-1625	2	BOLT	
	10		2J-5245	1	BOLT	
	11		5M-0596	1	COVER	
	12		0S-1566	2	BOLT	

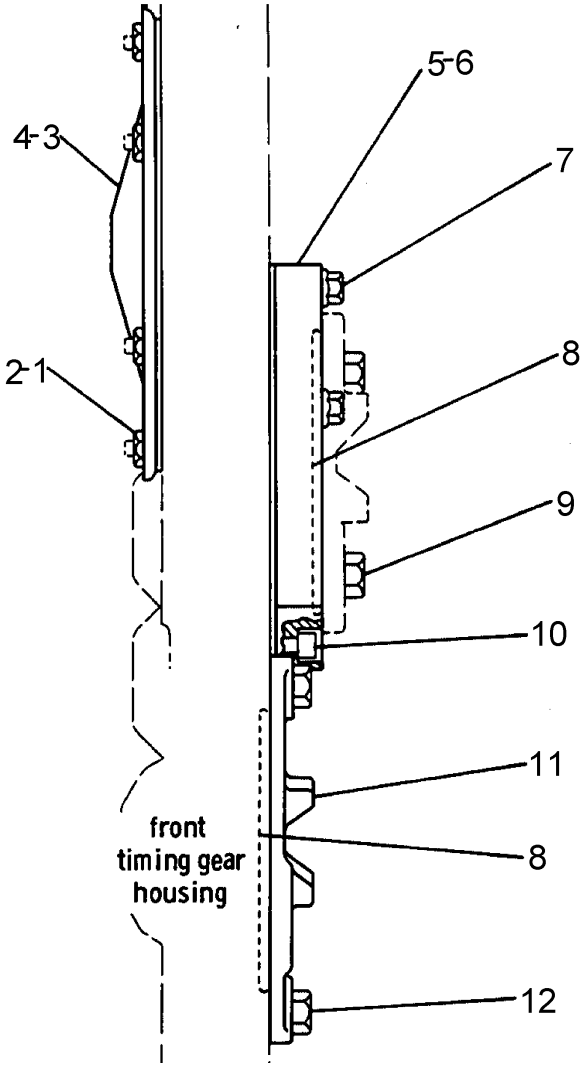

REF. NO.	PART NUMBER	DESCRIPTION	QTY
1	1B4203	NUT	6
2	5M2894	WASHER	6
3	2P8701	COVER	1
4	2P8702	GASKET	1
5	8J2608	ADAPTER	1
6	2P220	GASKET	1
7	2P3205	BOLT	2
8	5F3106	SEAL	2
9	S1625	BOLT	2
10	2J5245	BOLT	1
11	5M596	COVER	1
12	S1566	BOLT	2

117914

GRAPHIC #1

c117914

FRONT HOUSING COVER (4N6508 N/S)

Effective with Serial No. 43V4195~43V11876

Key:

SMCS

NOTE	REF NO	GRAPHIC REF	PART NUMBER	QTY	PART NAME 1 2 3 4 5 6 (PRODUCT LEVEL)	LINK PAGE
	1		1B-4203	6	NUT	
	2		5M-2894	6	WASHER	
	3		2P-8701	1	COVER	
	4		2P-8702	1	GASKET	
	5		6N-0595	1	ADAPTER	
	6		2P-0220	1	GASKET	
	7		2P-3205	2	BOLT	
	8		5F-3106	1	SEAL	
	9		6N-0444	1	TUBE ASSEM.	
	10		4B-8756	2	NUT	
	11		2J-5245	1	BOLT	
	12		6N-0462	1	COVER	
	13		0S-1566	2	BOLT	
	14		5K-9243	1	ELBOW	
	15		5K-9241	1	ELBOW	

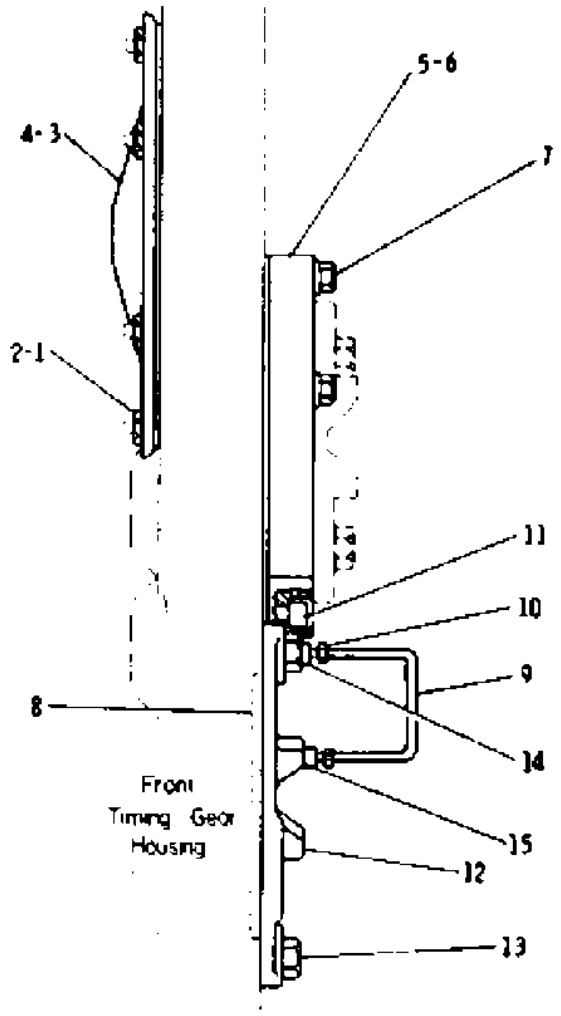

REF NO.	PART NUMBER	DESCRIPTION	QTY.
1	1B4203	NUT	6
2	5M2894	WASHER	6
3	2P8701	COVER	1
4	2P8702	GASKET	1
5	6N595	ADAPTER	1
6	2P220	GASKET	1
7	2P3205	BOLT	2
8	5F3106	SEAL	1
9	6N444	TUBE ASSEM.	1
10	4B8756	NUT	2
11	2J5245	BOLT	1
12	6N462	COVER	1
13	0S1566	BOLT	2
14	5K9243	ELBOW	1
15	5K9241	ELBOW	1

J11248E

GRAPHIC #1

j11248e

FRONT GEAR (2P6211 N/S)-- Timing

Effective with Serial No. 43V1~43V2247

Key:

SMCS

NOTE	REF NO	GRAPHIC REF	PART NUMBER	QTY	PART NAME 1 2 3 4 5 6 (PRODUCT LEVEL)	LINK PAGE
	1		9S-1313	1	NUT	
			7S-9847	1	WASHER	
	2		5S-7614	1	GEAR (80 Teeth)	
	3		0L-1351	2	BOLT	
	4		5S-7660	1	GEAR ASSEM (57 Teeth)	
			5S-7630	1	BEARING	
	5		5B-9079	1	NUT	
			5S-7611	1	LOCK	
	6		5S-3804	1	GEAR (80 Teeth)	
	7		2P-1172	1	GEAR ASSEM (60 Teeth)	
			2P-1168	1	BEARING	
	8		4M-9933	1	GEAR (40 Teeth)	
			5H-2671	1	KEY	
	9		0S-1748	4	BOLT	
			5M-2894	4	WASHER	
	10		2H-3755	2	BOLT	
	11		5S-7612	1	PLATE	
	12		5S-7608	1	SHAFT	

FRONT GEAR (2P6211 N/S)-- Timing

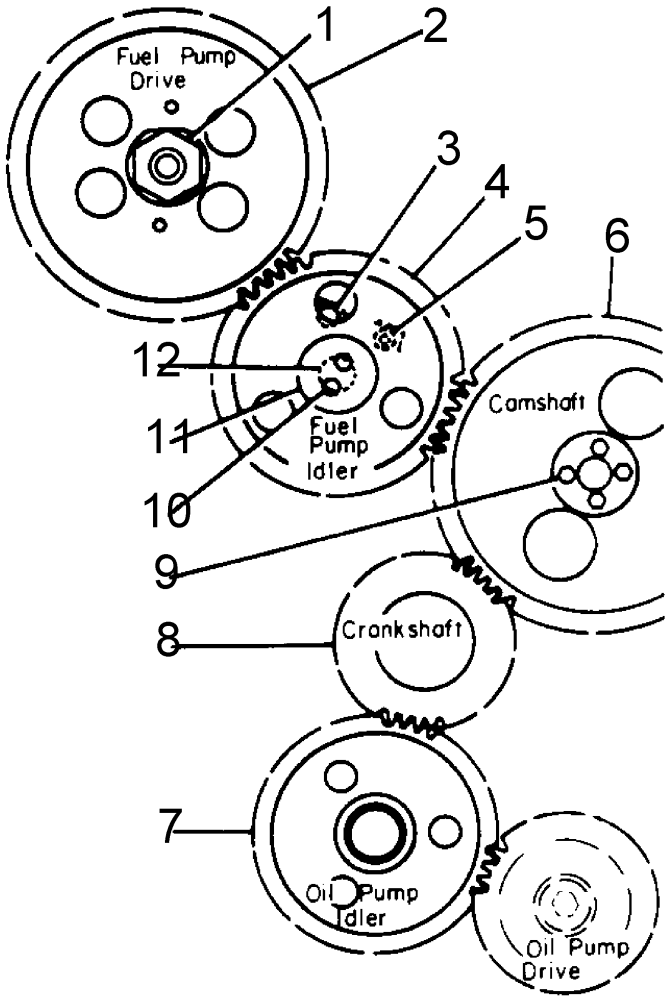

REF. NO.	PART NUMBER	DESCRIPTION	QTY.
1	9S1313	NUT	1
	7S9847	WASHER	1
2	5S7614	GEAR (80 Teeth)	1
3	L1351	BOLT	2
4	5S7660	GEAR ASSEM (57 Teeth)	1
	5S7630	BEARING	1
5	5B9079	NUT	1
	5S7611	LOCK	1
6	5S3804	GEAR (80 Teeth)	1
7	2P1172	GEAR ASSEM (60 Teeth)	1
	2P1168	BEARING	1
8	4M9933	GEAR (40 Teeth)	1
	5H2671	KEY	1
9	S1748	BOLT	4
	5M2894	WASHER	4
10	2H3755	BOLT	2
11	5S7612	PLATE	1
12	5S7608	SHAFT	1

J15914E

GRAPHIC #1

j15914e

FRONT GEAR (2P9642 N/S)-- Timing

Effective with Serial No. 43V2248~43V11876

Key:

SMCS

NOTE	REF NO	GRAPHIC REF	PART NUMBER	QTY	PART NAME 1 2 3 4 5 6 (PRODUCT LEVEL)	LINK PAGE
	1		0S-1603	1	BOLT	
			4N-3371	1	WASHER	
	2		4N-3330	1	GEAR (80 Teeth)	
	3		0L-1351	2	BOLT	
	4		5S-7660	1	GEAR ASSEM (57 Teeth)	
			5S-7630	1	BEARING	
	5		5B-9079	1	NUT	
			5S-7611	1	LOCK	
	6		5S-3804	1	GEAR (80 Teeth)	
	7		2P-1172	1	GEAR ASSEM (60 Teeth)	
			2P-1168	1	BEARING	
	8		4M-9933	1	GEAR (40 Teeth)	
			5H-2671	1	KEY	
	9		0S-1748	4	BOLT	
	10		2H-3755	2	BOLT	
	11		5S-7612	1	PLATE	
	12		5S-7608	1	SHAFT	

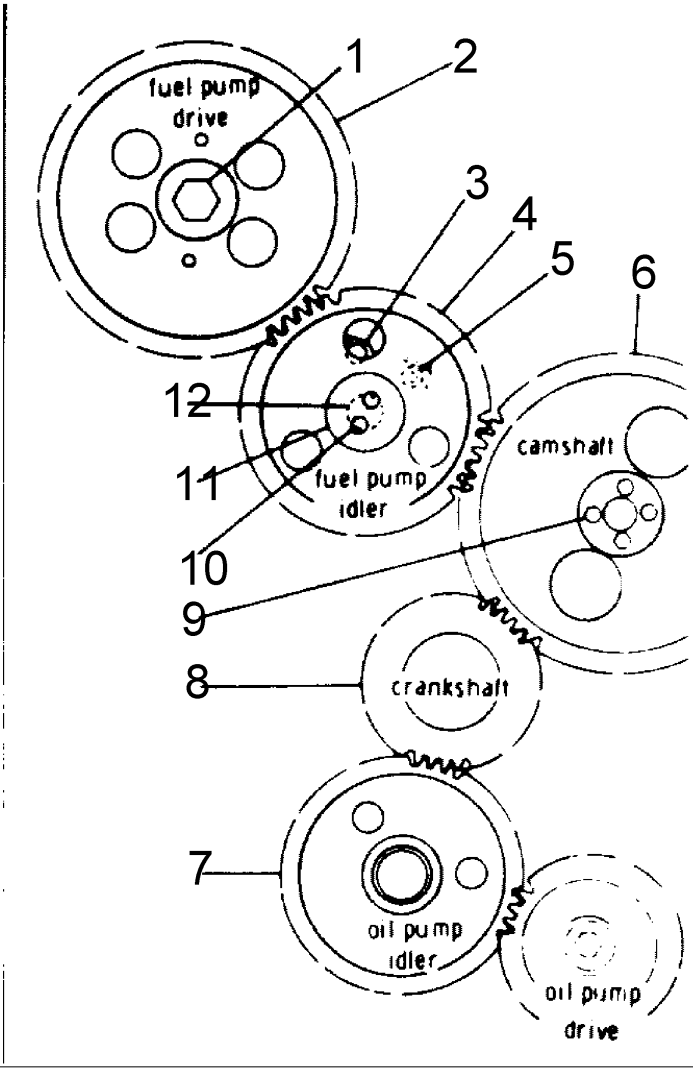

REF. NO.	PART NUMBER	DESCRIPTION	QTY.
1	1603	BOLT	1
	4N3371	WASHER	1
2	4N3330	GEAR (80 Teeth)	1
3	1351	BOLT	2
4	5S7660	GEAR ASSEM (57 Teeth)	1
	5S7630	BEARING	1
5	5B9079	NUT	1
	5S7611	LOCK	1
6	5S3804	GEAR (80 Teeth)	1
7	2P1172	GEAR ASSEM (60 Teeth)	1
	2P1168	BEARING	1
8	4M9933	GEAR (40 Teeth)	1
	5H2671	KEY	1
9	1748	BOLT	4
10	2H3755	BOLT	2
11	5S7612	PLATE	1
12	5S7608	SHAFT	1

J15913E

FRONT GEAR (2P9642 N/S)-- Timing

GRAPHIC #1

j15913e

TRUNNION (2P6246 N/S)

Effective with Serial No. 43V1~43V11876

Key:

SMCS

NOTE	REF NO	GRAPHIC REF	PART NUMBER	QTY	PART NAME 1 2 3 4 5 6 (PRODUCT LEVEL)	LINK PAGE
	1		4N-7004	1	TRUNNION	
	2		2P-1487	1	RING	
	3		2P-1488	1	ADAPTER ASSEM.	
	4		1F-0748	4	NUT (Weld)	
	5		0L-1329	3	BOLT	
	6		2P-1692	1	SEAL	

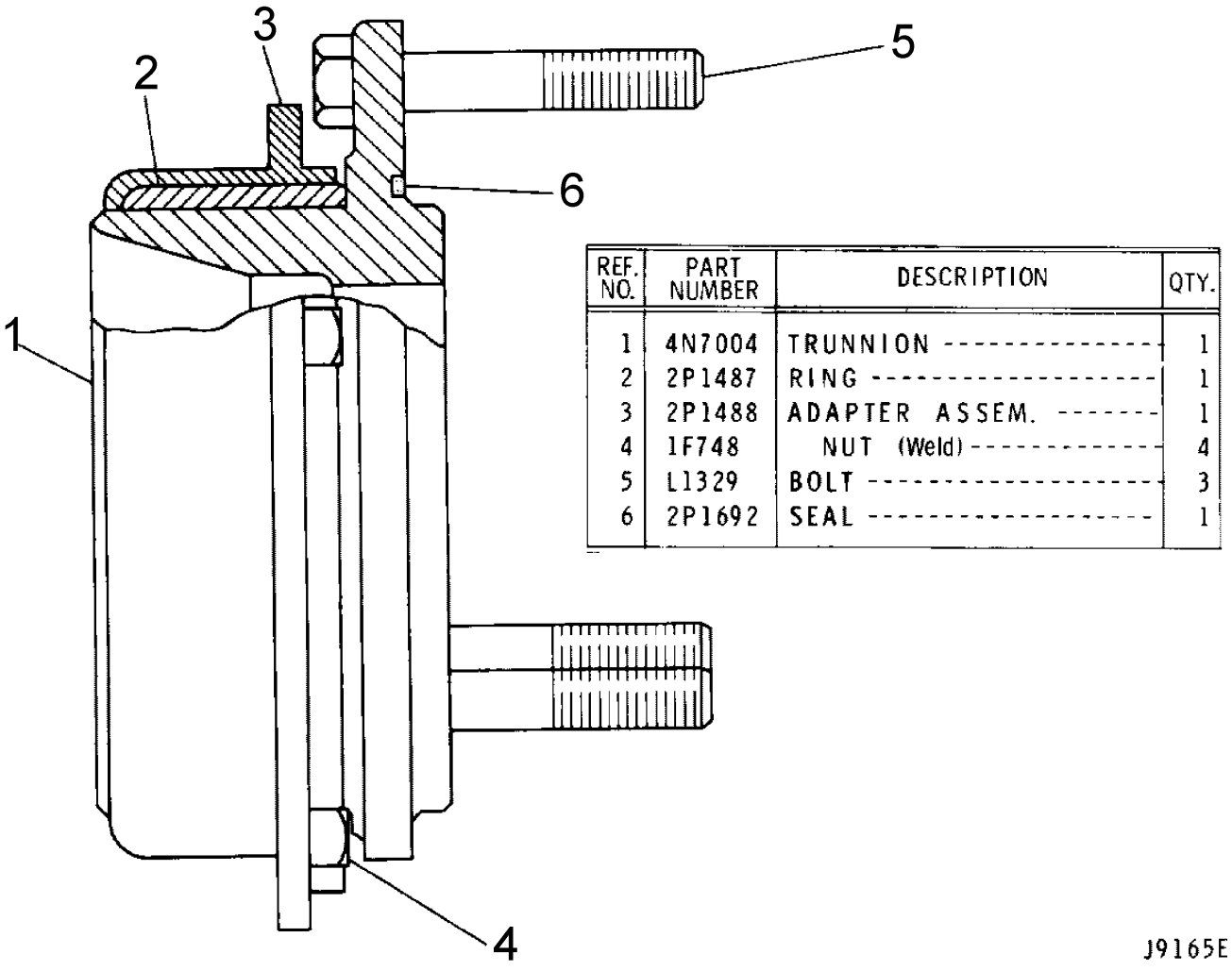

REF. NO.	PART NUMBER	DESCRIPTION	QTY.
1	4N7004	TRUNNION	1
2	2P1487	RING	1
3	2P1488	ADAPTER ASSEM.	1
4	1F748	NUT (Weld)	4
5	L1329	BOLT	3
6	2P1692	SEAL	1

GRAPHIC #1

j9165e

CRANKSHAFT HUB (2P8598 N/S)

Effective with Serial No. 43V1~43V11876

Key:

SMCS

NOTE	REF NO	GRAPHIC REF	PART NUMBER	QTY	PART NAME 1 2 3 4 5 6 (PRODUCT LEVEL)	LINK PAGE
	1		2P-1818	1	HUB	
	2		7B-5163	1	BOLT	
	3		5S-9948	1	WASHER	

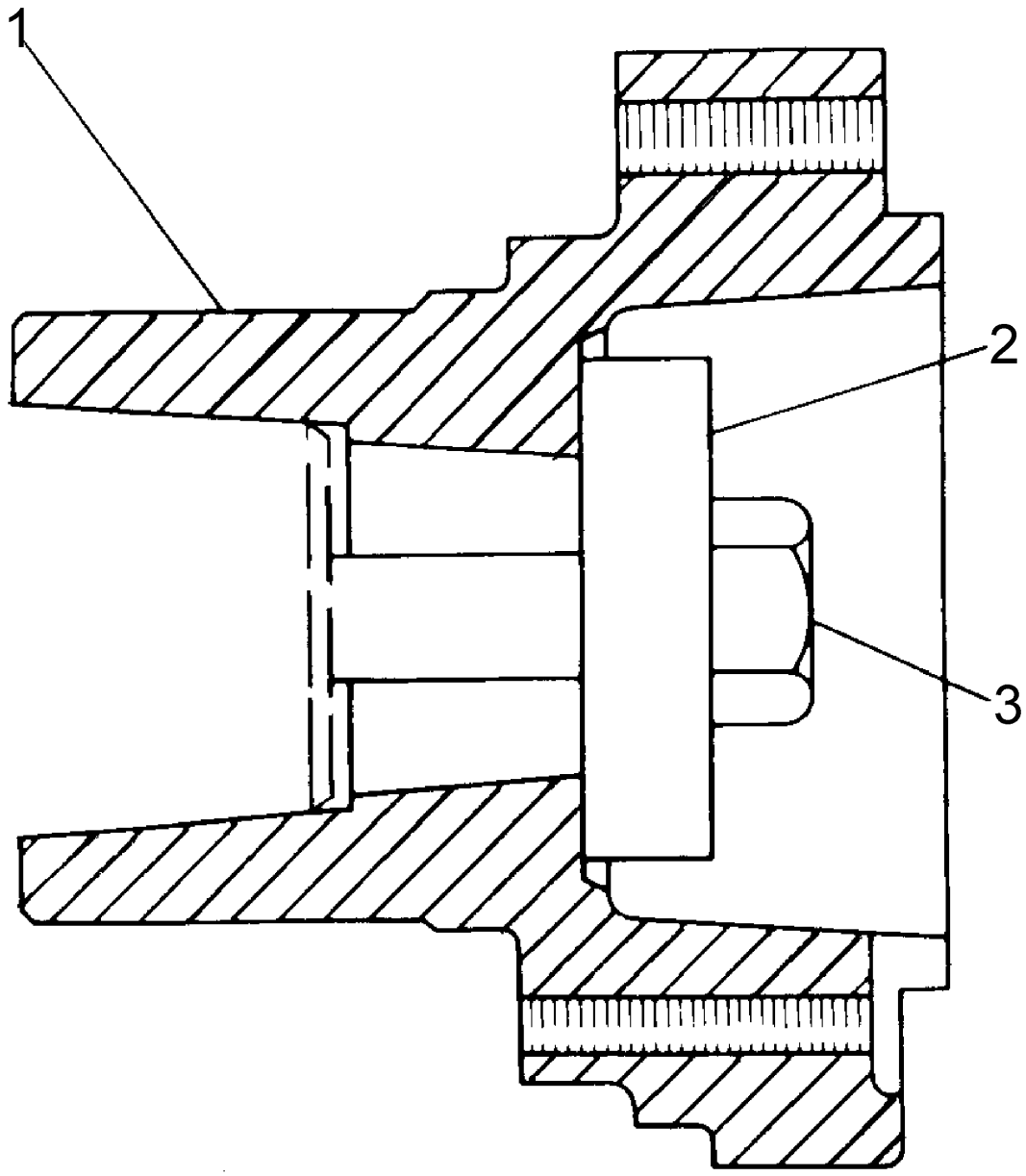

GRAPHIC #1

c117253

PULLEY (2P8603 N/S)

Effective with Serial No. 43V1~43V11876

Key:

SMCS

NOTE	REF NO	GRAPHIC REF	PART NUMBER	QTY	PART NAME 1 2 3 4 5 6 (PRODUCT LEVEL)	LINK PAGE
	1		2P-6128	1	PULLEY	
	2		2P-3209	6	BOLT	
	3		2P-3261	6	NUT	
	4		2P-6193	1	ADAPTER	
	5		9F-4446	1	SEAL	
	6		2P-2696	1	VEE BELT SET (2 belts)	
	7		9S-6129	1	PULLEY	
	8		2P-6127	1	PULLEY	
	9		2P-3201	6	BOLT	
	10		8S-4183	1	STRAP	
	11		0S-1585	1	BOLT	
	12		8M-4791	2	WASHER	
	13		2S-6735	1	SPACER	
	14		0S-1595	1	BOLT	

PULLEY (2P8603 N/S)

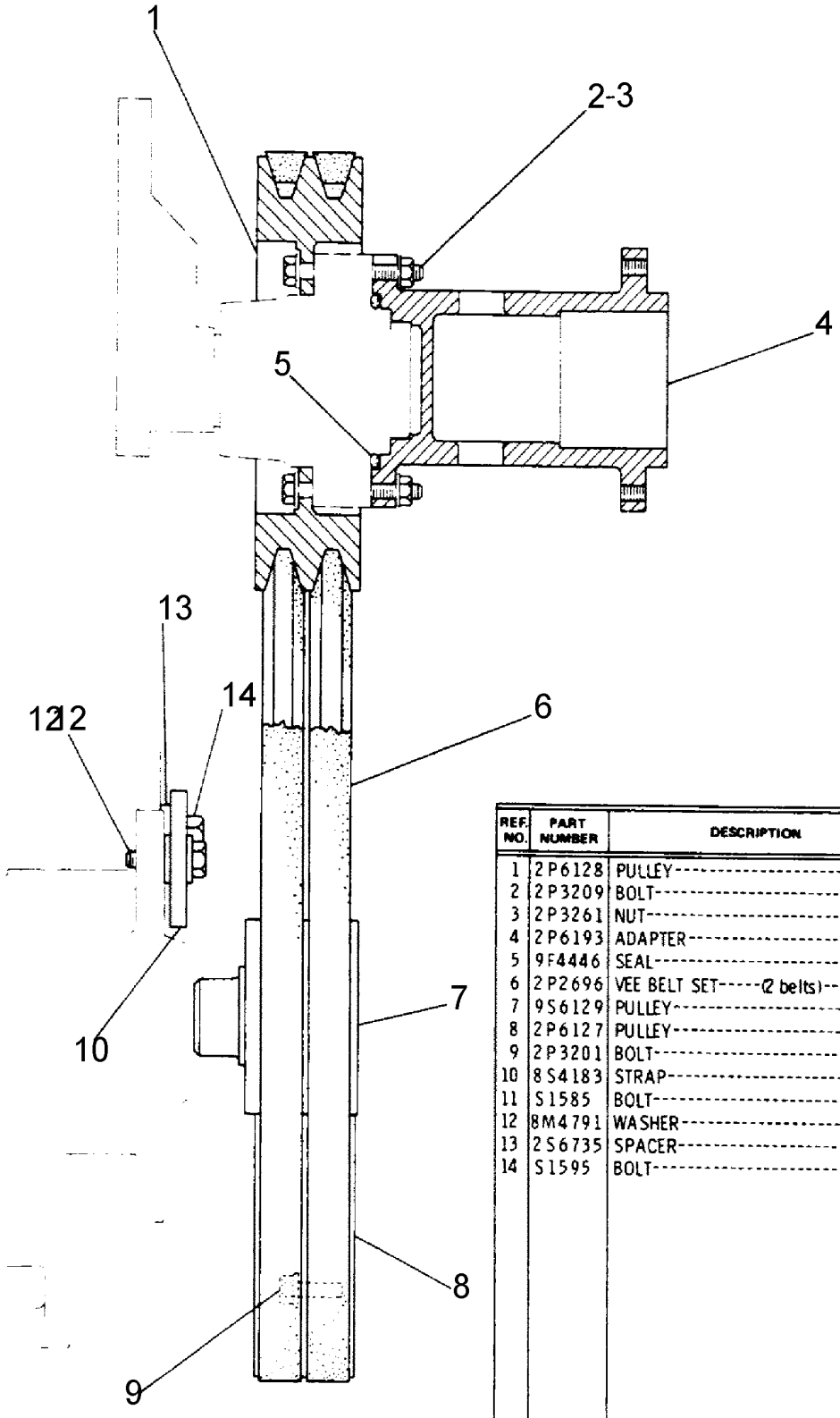

REF. NO.	PART NUMBER	DESCRIPTION	QTY
1	2P6128	PULLEY	1
2	2P3209	BOLT	6
3	2P3261	NUT	6
4	2P6193	ADAPTER	1
5	9F4446	SEAL	1
6	2P2696	VEE BELT SET-----(2 belts)	1
7	9S6129	PULLEY	1
8	2P6127	PULLEY	1
9	2P3201	BOLT	6
10	8S4183	STRAP	1
11	S1585	BOLT	1
12	8M4791	WASHER	2
13	2S6735	SPACER	1
14	S1595	BOLT	1

117176

GRAPHIC #1

c117176

ENGINE SUPPORT (2P7753 N/S)

Effective with Serial No. 43V1~43V9584

Key:

SMCS

NOTE	REF NO	GRAPHIC REF	PART NUMBER	QTY	PART NAME 1 2 3 4 5 6 (PRODUCT LEVEL)	LINK PAGE
	1		2P-1466	1	SUPPORT ASSEM.	
	2		0S-1595	4	BOLT	

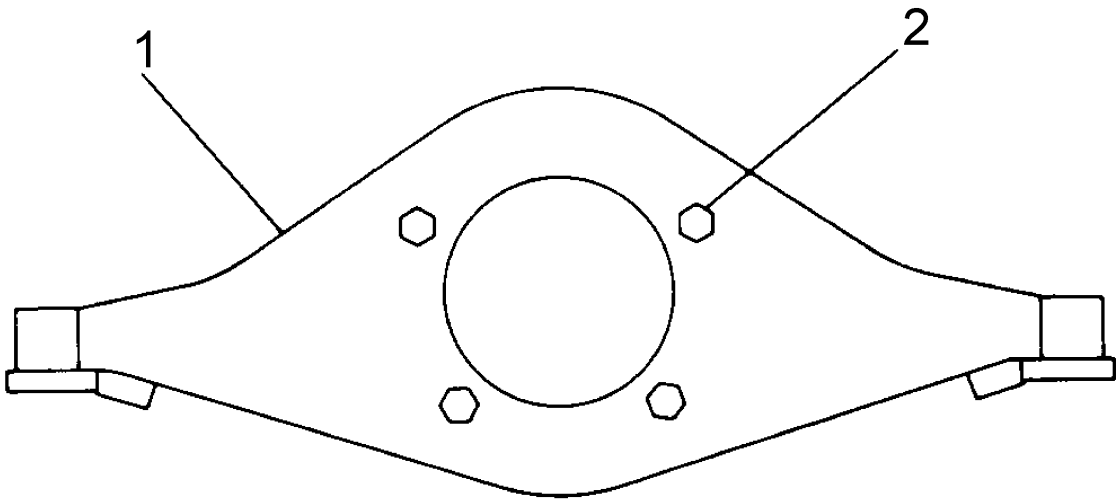

REF. NO.	PART NUMBER	DESCRIPTION	QTY
1	2P1466	SUPPORT ASSEM.	1
2	S1595	BOLT	4

117184

GRAPHIC #1

c117184

ENGINE SUPPORT (2P7753 N/S)

Effective with Serial No. 43V9585~43V11876

Key: C - INDICATES CHANGE

SMCS

NOTE	REF NO	GRAPHIC REF	PART NUMBER	QTY	PART NAME 1 2 3 4 5 6 (PRODUCT LEVEL)	LINK PAGE
	1		2P-1466	1	SUPPORT ASSEM.	
C	2		0S-1585	4	BOLT	
C	3		2M-0849	4	WASHER	

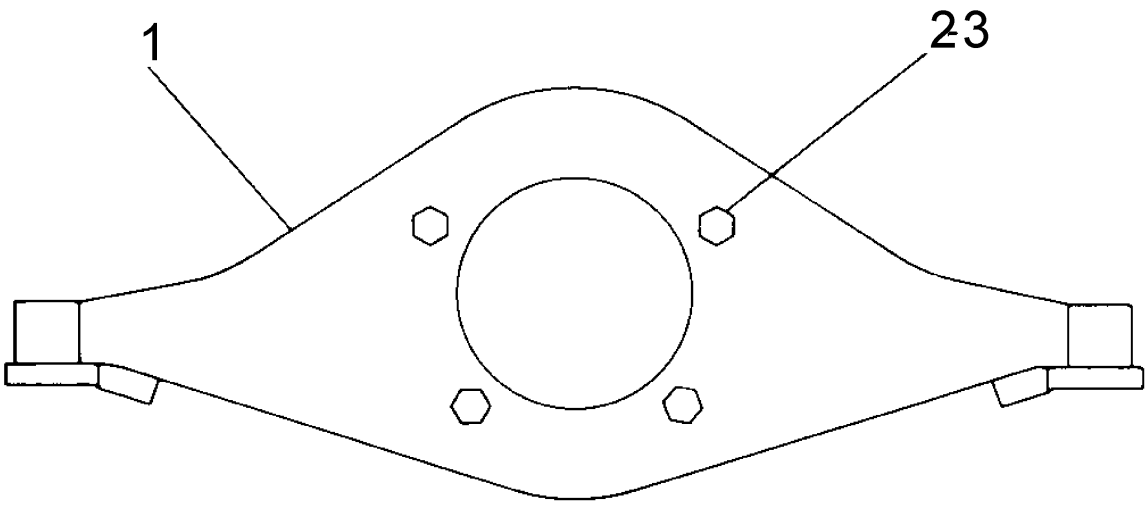

	REF. NO.	PART NUMBER	DESCRIPTION	QTY
	1	2P1466	SUPPORT ASSEM.	1
C	2	S1585	BOLT	4
C	3	2M849	WASHER	4

C Indicates Change.

J13549E

GRAPHIC #1

j13549e

FAN DRIVE (2P7831 N/S)

Effective with Serial No. 43V1~43V11876

Key:

SMCS

NOTE	REF NO	GRAPHIC REF	PART NUMBER	QTY	PART NAME 1 2 3 4 5 6 (PRODUCT LEVEL)	LINK PAGE
	1		1P-9945	1	BRACKET ASSEM	
	2		3B-8489	1	FITTING	
	3		5S-9062	1	SPACER	
	4		8H-9789	1	BEARING	
	5		2P-2243	1	SPACER	
	6		2P-1757	1	HUB	
	7		5S-7264	1	WASHER	
	8		1H-5403	2	BOLT	
			2F-6156	1	LOCK	
	9		3L-1425	1	BEARING	
	10		5S-2106	1	SEAL	
	11		0S-1587	4	BOLT	
			2M-0849	4	WASHER	

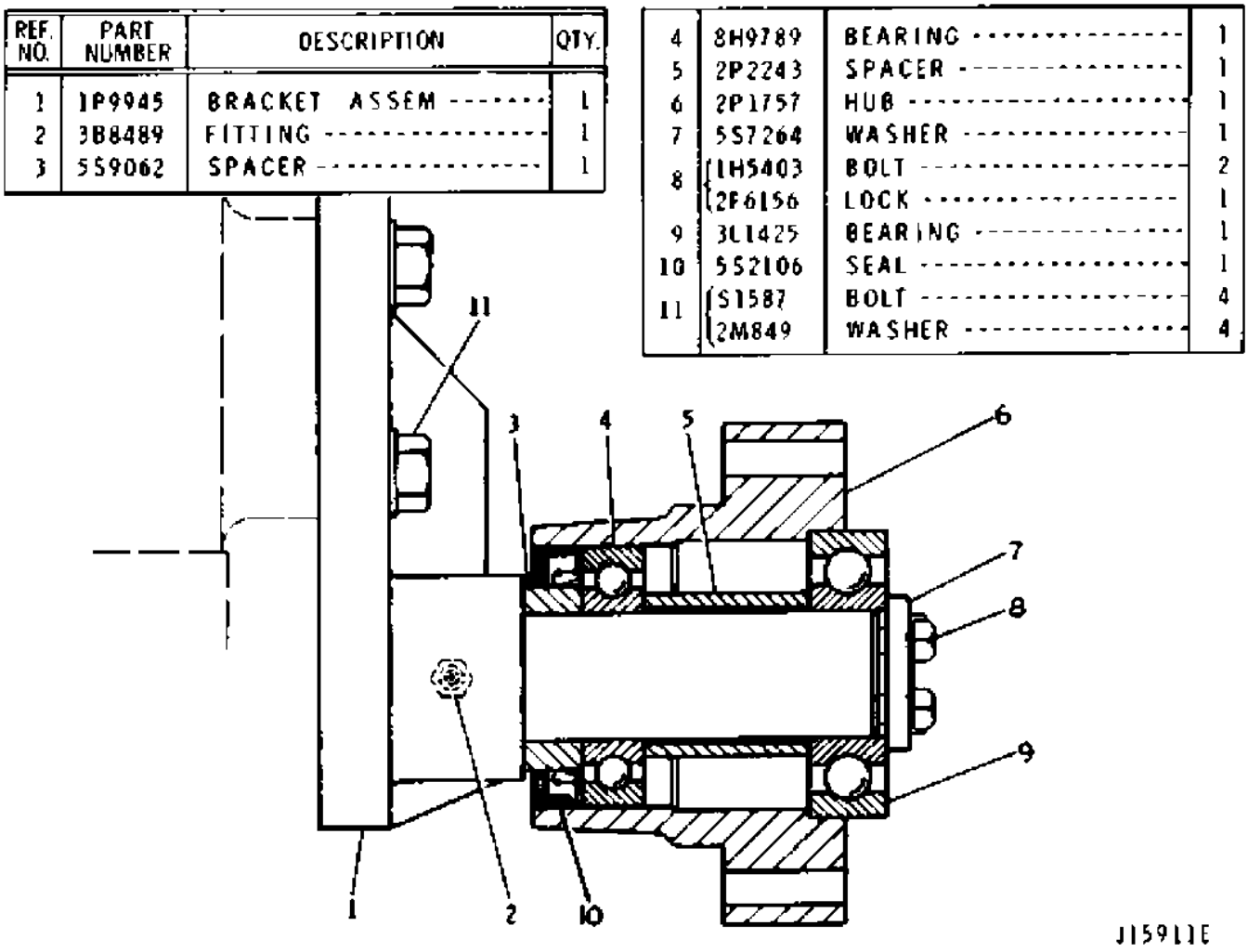

GRAPHIC #1

j15911e

FLYWHEEL HOUSING (2P6813 N/S)

Effective with Serial No. 43V1~43V11876

Key:

SMCS

NOTE	REF NO	GRAPHIC REF	PART NUMBER	QTY	PART NAME 1 2 3 4 5 6 (PRODUCT LEVEL)	LINK PAGE
	1		5M-6213	2	PLUG	
	2		9H-5921	1	GASKET	
	3		1A-1460	13	BOLT	
	4		5B-5946	1	PLUG	
			2B-5721	1	GASKET	
	5		7S-5426	1	HOUSING	
	6		8S-5820	1	BREATHER	

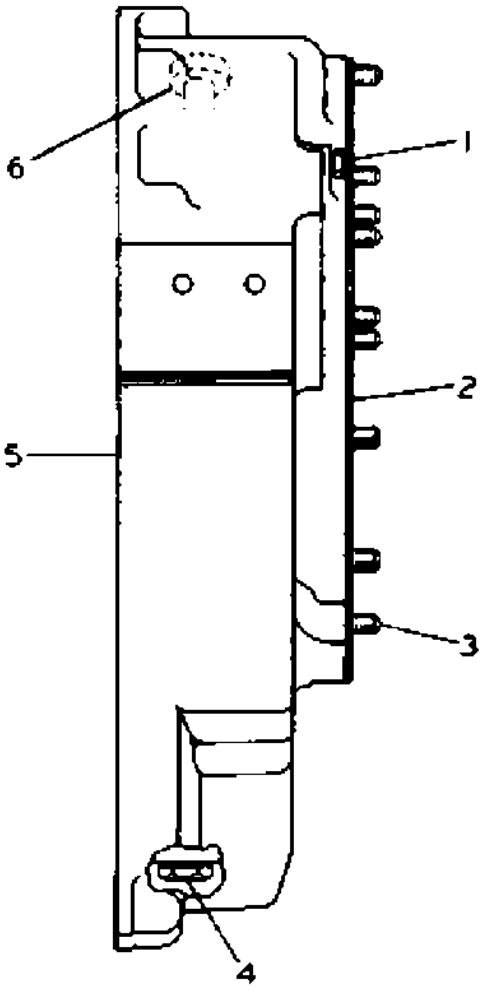

REF NO.	PART NUMBER	DESCRIPTION	QTY
1	5M6213	PLUG	2
2	9H5921	GASKET	1
3	1A1460	BOLT	13
4	5B5946	PLUG	1
	2B5721	GASKET	1
5	7S5426	HOUSING	1
6	8S5820	BREATHER	1

144241JE

GRAPHIC #1

c927449

FLYWHEEL (7S7878 N/S)

Effective with Serial No. 43V1~43V11876

Key:

SMCS

NOTE	REF NO	GRAPHIC REF	PART NUMBER	QTY	PART NAME 1 2 3 4 5 6 (PRODUCT LEVEL)	LINK PAGE
	1		8S-8193	1	FLYWHEEL ASSEM.	
	2		2S-7037	1	GEAR (156 Teeth)	
					(Part of 8S8193 Flywheel Assem.)	
	3		0S-1565	9	BOLT	

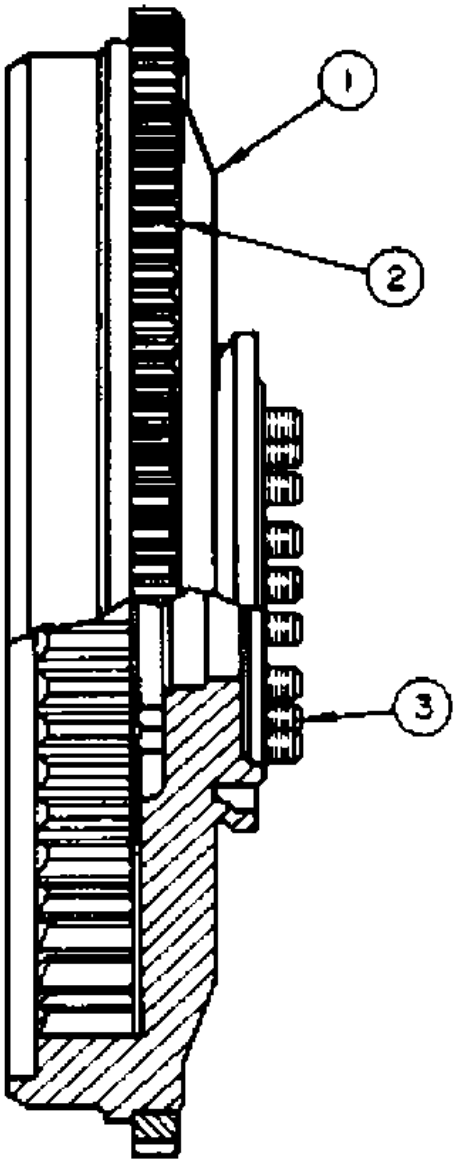

REF. NO.	PART NUMBER	DESCRIPTION	QTY.
1	8S8193	FLYWHEEL ASSEM. -------	1
2	2S7037	GEAR (156 Teeth) ---------	1
		(Part of 8S8193 Flywheel Assem.)	
3	S-1565	BOLT -------------------	9

J692BE

GRAPHIC #1

j6928e

OIL PAN (2P6155 N/S)

Effective with Serial No. 43V1~43V11876

Key:

SMCS

NOTE	REF NO	GRAPHIC REF	PART NUMBER	QTY	PART NAME 1 2 3 4 5 6 (PRODUCT LEVEL)	LINK PAGE
	1		2P-2351	1	PLATE ASSEM.	
	2		5S-6045	1	GASKET	
	3		8S-1963	1	GASKET	
	4		2P-7828	1	PAN	
	5		4B-7739	1	PLUG	

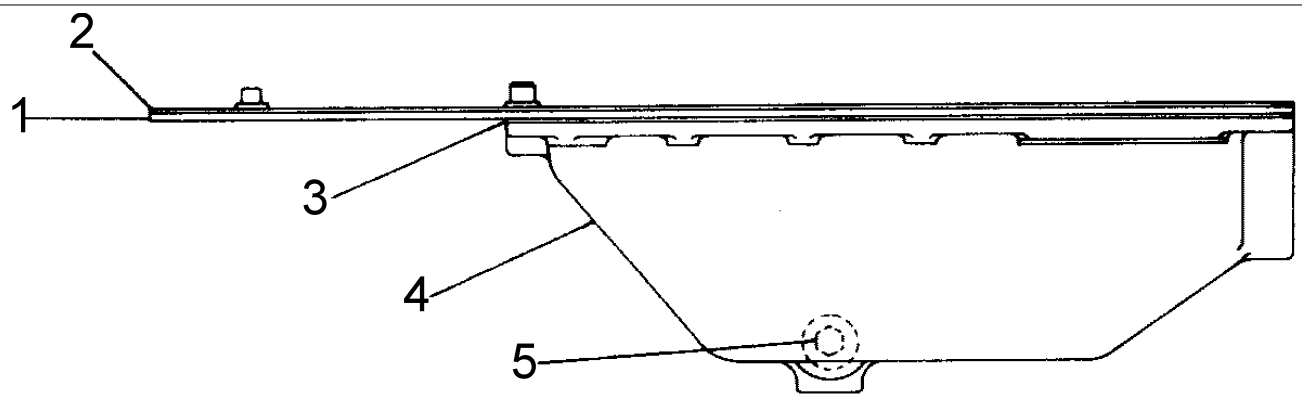

REF. NO.	PART NUMBER	DESCRIPTION	QTY
1	2P2351	PLATE ASSEM.	1
2	5S6045	GASKET	1
3	8S1963	GASKET	1
4	2P7828	PAN	1
5	4B7739	PLUG	1

117331

GRAPHIC #1

c117331

OIL PAN FASTENER (2P6189 N/S)

Effective with Serial No. 43V1~43V8946

Key:

SMCS

NOTE	REF NO	GRAPHIC REF	PART NUMBER	QTY	PART NAME 1 2 3 4 5 6 (PRODUCT LEVEL)	LINK PAGE
	1		2P-3200	12	BOLT (17mm)	
	2		2P-3204	17	BOLT (34mm)	
	3		2P-3213	5	BOLT (100mm)	
	4		2P-1301	2	BOLT (73mm)	

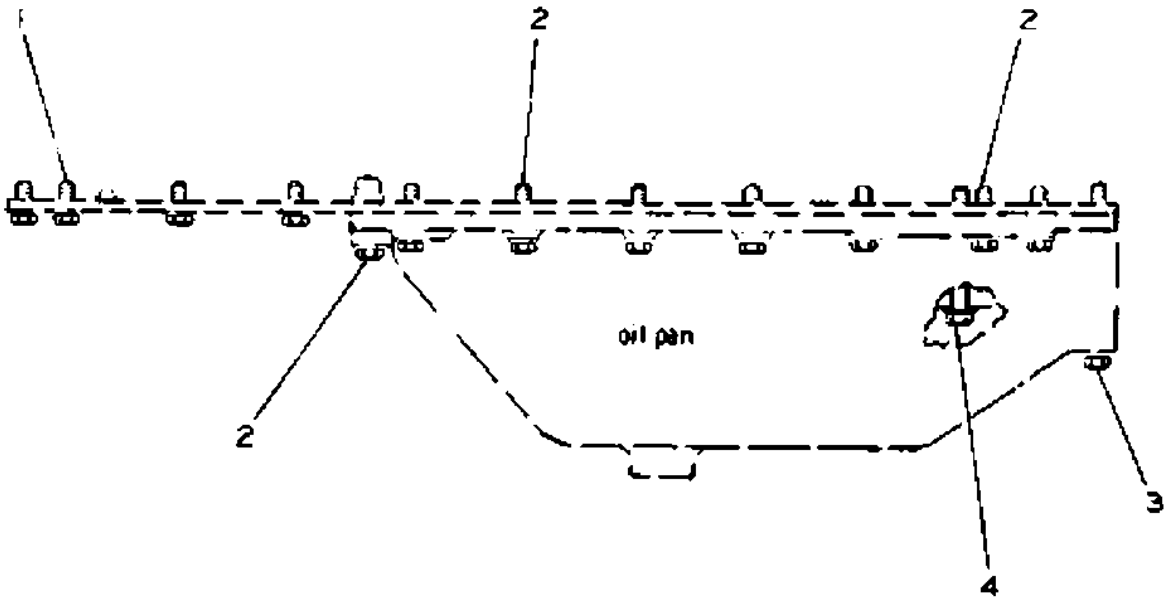

REF. NO.	PART NUMBER	DESCRIPTION	QTY.
1	2P3200	BOLT (17mm)	12
2	2P3204	BOLT (34mm)	17

REF. NO.	PART NUMBER	DESCRIPTION	QTY.
3	2P3213	BOLT (100mm)	5
4	2P1301	BOLT (73mm)	2

J9105E

GRAPHIC #1

OIL PAN FASTENER (2P6189 N/S)

Effective with Serial No. 43V8947~43V11876

Key:

SMCS

NOTE	REF NO	GRAPHIC REF	PART NUMBER	QTY	PART NAME 1 2 3 4 5 6 (PRODUCT LEVEL)	LINK PAGE
	1		0S-1594	12	BOLT (25.5mm Long)	
	2		5M-2894	36	WASHER	
	3		0S-1591	17	BOLT (38.0mm Long)	
	4		0L-1352	2	BOLT (82.5mm Long)	
	5		1A-5183	5	BOLT (120.5mm Long)	

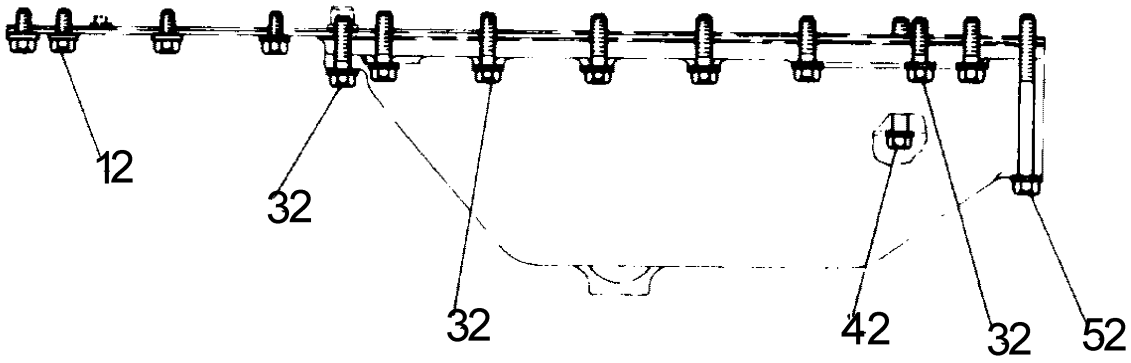

REF. NO.	PART NUMBER	DESCRIPTION	QTY.
1	S1594	BOLT (25.5mm Long)	12
2	5M2894	WASHER	36
3	S1591	BOLT (38.0mm Long)	17

REF. NO.	PART NUMBER	DESCRIPTION	QTY.
4	L1352	BOLT (82.5mm Long)	2
5	1A5183	BOLT (120.5mm Long)	5

J13297E

GRAPHIC #1

j13297e

OIL LEVEL GAUGE (2P6491 N/S)

Effective with Serial No. 43V1~43V11876

Key:

SMCS

NOTE	REF NO	GRAPHIC REF	PART NUMBER	QTY	PART NAME 1 2 3 4 5 6 (PRODUCT LEVEL)	LINK PAGE
	1		5A-6295	1	GAUGE ASSEM. (For Japan)	
			5S-8115	1	GAUGE ASSEM. (For Outside Japan)	
	2		2P-2547	1	TUBE ASSEM.	
	3		8S-1326	1	FITTING	
			8F-8998	1	NUT	
	4		5K-9243	2	ELBOW	
	5		2P-2697	1	TUBE ASSEM.	

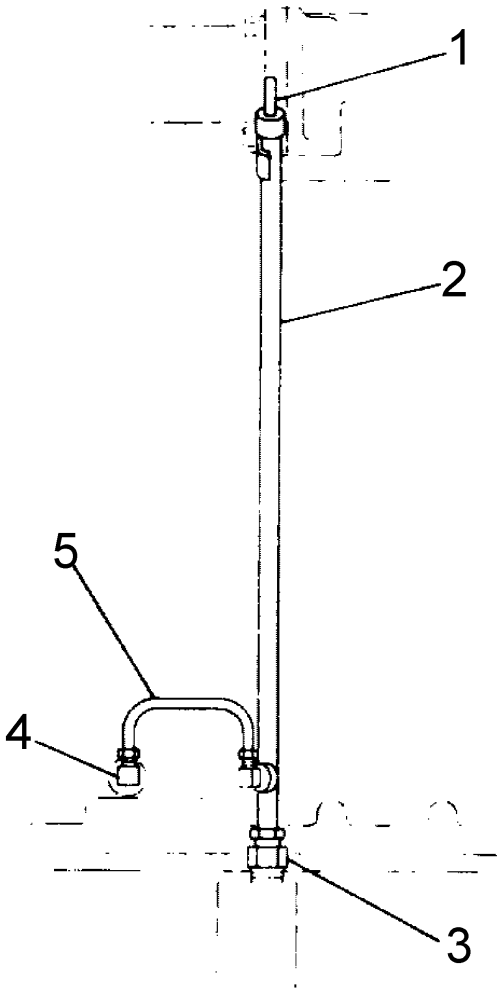

REF. NO.	PART NUMBER	DESCRIPTION	QTY.
1	5A6295	GAUGE ASSEM. (For Japan)	1
	5S8115	GAUGE ASSEM. (For Outside Japan)	1
2	2P2547	TUBE ASSEM.	1
3	8S1326	FITTING	1
	8F8998	NUT	1
4	5K9243	ELBOW	2
5	2P2697	TUBE ASSEM.	1

J9107E

GRAPHIC #1

j9107e

ENGINE OIL PUMP (2P1784 N/S)

Effective with Serial No. 43V1~43V11876
2P1785 Gear Pump Group parts are shown on
Pages 32 and 33

Key: R - REMFG PART MAY BE AVAILABLE, Y - SEPARATE ILLUSTRATION

SMCS

NOTE	REF NO	GRAPHIC REF	PART NUMBER	QTY	PART NAME 1 2 3 4 5 6 (PRODUCT LEVEL)	LINK PAGE
	1		1A-2029	2	BOLT	
			7H-1861	2	LOCK	
	2		8S-0497	1	GEAR (40 Teeth)	
			8M-5599	1	KEY	
	3		0S-1590	4	BOLT	
	4		1P-7346	1	WASHER	
	5		0S-1619	1	BOLT	
	6		4N-5353	1	ELBOW	
RY	7		2P-1785	1	PUMP GROUP	P0045
					(See Separate Illustration)	
	8		0T-0329	1	LOCK	
	9		2P-8746	1	GASKET	

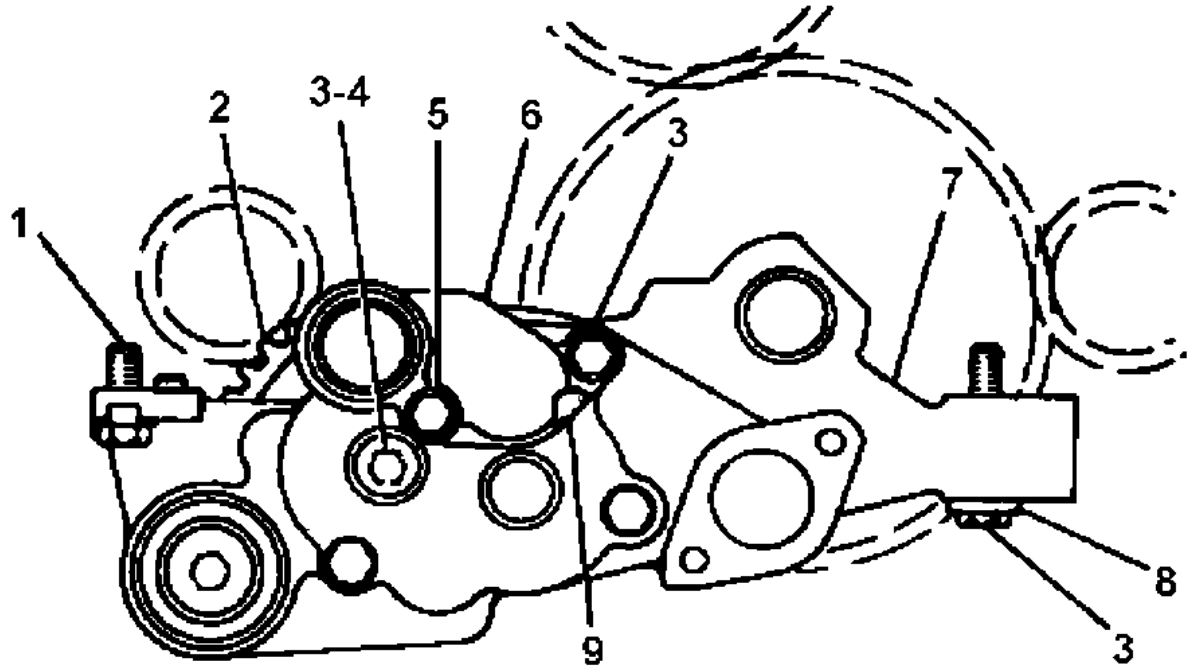

GRAPHIC #1 j15909e

2P1785 GEAR PUMP GROUP

Effective with Serial No. 43V1~43V11294
Part of Engine Oil Pump

Key:

SMCS

NOTE	REF NO	GRAPHIC REF	PART NUMBER	QTY	PART NAME 1 2 3 4 5 6 (PRODUCT LEVEL)	LINK PAGE
	1		2P-0685	1	BODY ASSEM.	
	2		2P-1170	1	SHAFT ASSEM.	
	3		6F-7172	1	DOWEL	
	4		4B-9880	1	BALL	
	5		1F-1006	1	DOWEL	
	6		1M-3735	2	DOWEL	
	7		8S-6511	2	BEARING	
	8		4N-8385	1	VALVE ASSEM.	
	9		1B-9575	1	BOLT	
	10		4N-3732	1	COVER	
	11		8S-0491	2	GEAR (8 Teeth)	
	12		2P-3211	3	BOLT	
	13		2P-6244	1	SHAFT ASSEM.	
	14		2P-6245	1	SHAFT ASSEM.	
	15		4N-4055	1	BODY ASSEM.	
	16		8S-6511	2	BEARING	
	17		1B-8709	1	KEY	
	18		2P-1781	1	SPACER	

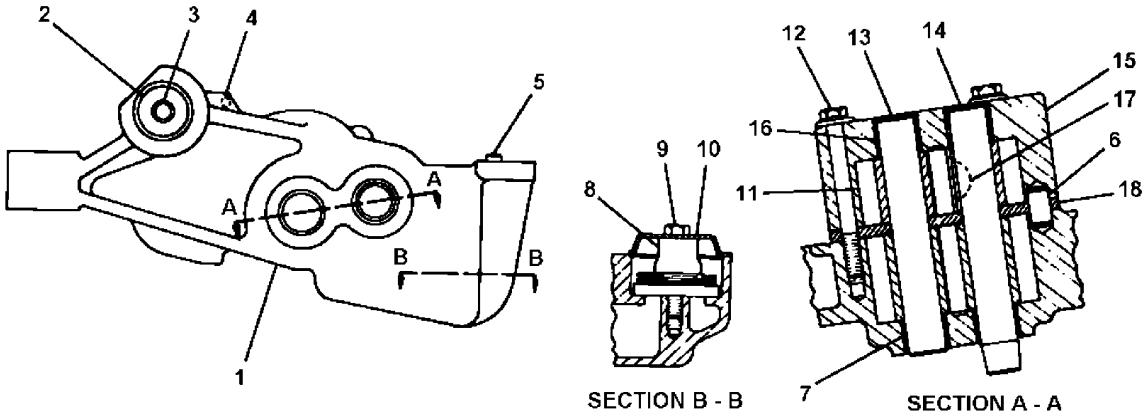

GRAPHIC #1

j9109e

2P1785 GEAR PUMP GROUP

Effective with Serial No. 43V11295~43V11876
Part of Engine Oil Pump

Key: C - INDICATES CHANGE

SMCS

NOTE	REF NO	GRAPHIC REF	PART NUMBER	QTY	PART NAME 1 2 3 4 5 6 (PRODUCT LEVEL)	LINK PAGE
	1		2P-0685	1	BODY ASSEM	
	2		2P-1170	1	SHAFT ASSEM	
C	3		4B-9782	1	BALL	
	4		4B-9880	1	BALL	
	5		1F-1006	1	DOWEL	
	6		1M-3735	2	DOWEL	
	7		8S-6511	2	BEARING	
	8		4N-8385	1	VALVE ASSEM	
C	9		2B-2694	1	BOLT	
C			9M-1974	1	WASHER	
	10		4N-3732	1	COVER	
C	11		6N-1036	2	GEAR (8 teeth)	
C	12		2M-3403	1	BOLT	
C			5M-2894	1	WASHER	
C	13		8S-0493	1	SHAFT ASSEM	
	14		2P-6245	1	SHAFT ASSEM	
	15		4N-4055	1	BODY ASSEM	
	16		8S-6511	2	BEARING	
	17		1B-8709	1	KEY	
	18		2P-1781	1	SPACER	
C	19		0T-0065	2	BOLT	

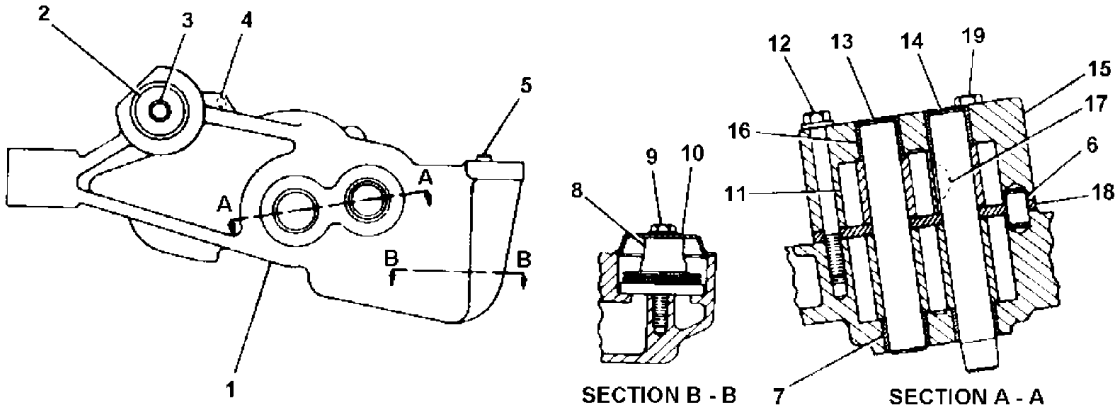

GRAPHIC #1

j14794e

OIL LINES (2P6513 N/S)

Effective with Serial No. 43V1~43V10505

Key:

SMCS

NOTE	REF NO	GRAPHIC REF	PART NUMBER	QTY	PART NAME 1 2 3 4 5 6 (PRODUCT LEVEL)	LINK PAGE
	1		2P-3203	1	BOLT	
	2		2M-5407	1	GASKET	
	3		9H-6067	3	SEAL	
	4		7S-3919	1	CLIP (77mm Long)	
			7S-3916	1	CLIP (63mm Long)	
	6		2P-3201	3	BOLT	
	7		2P-2519	1	TUBE ASSEM.	
	8		2P-2460	1	TUBE ASSEM.	
	9		7F-7590	1	GASKET	
	10		0T-0102	1	BOLT	
			0L-0364	1	LOCK	
	11		7M-4593	4	PLUG	
	12		2P-0744	1	TUBE ASSEM.	
	13		2P-1776	1	BELL ASSEM.	
	14		0S-1594	2	BOLT	
			8S-8874	1	LOCK	
	15		8M-0904	1	GASKET	
	16		2P-3207	1	BOLT	
	17		4B-4278	1	WASHER	

OIL LINES (2P6513 N/S)

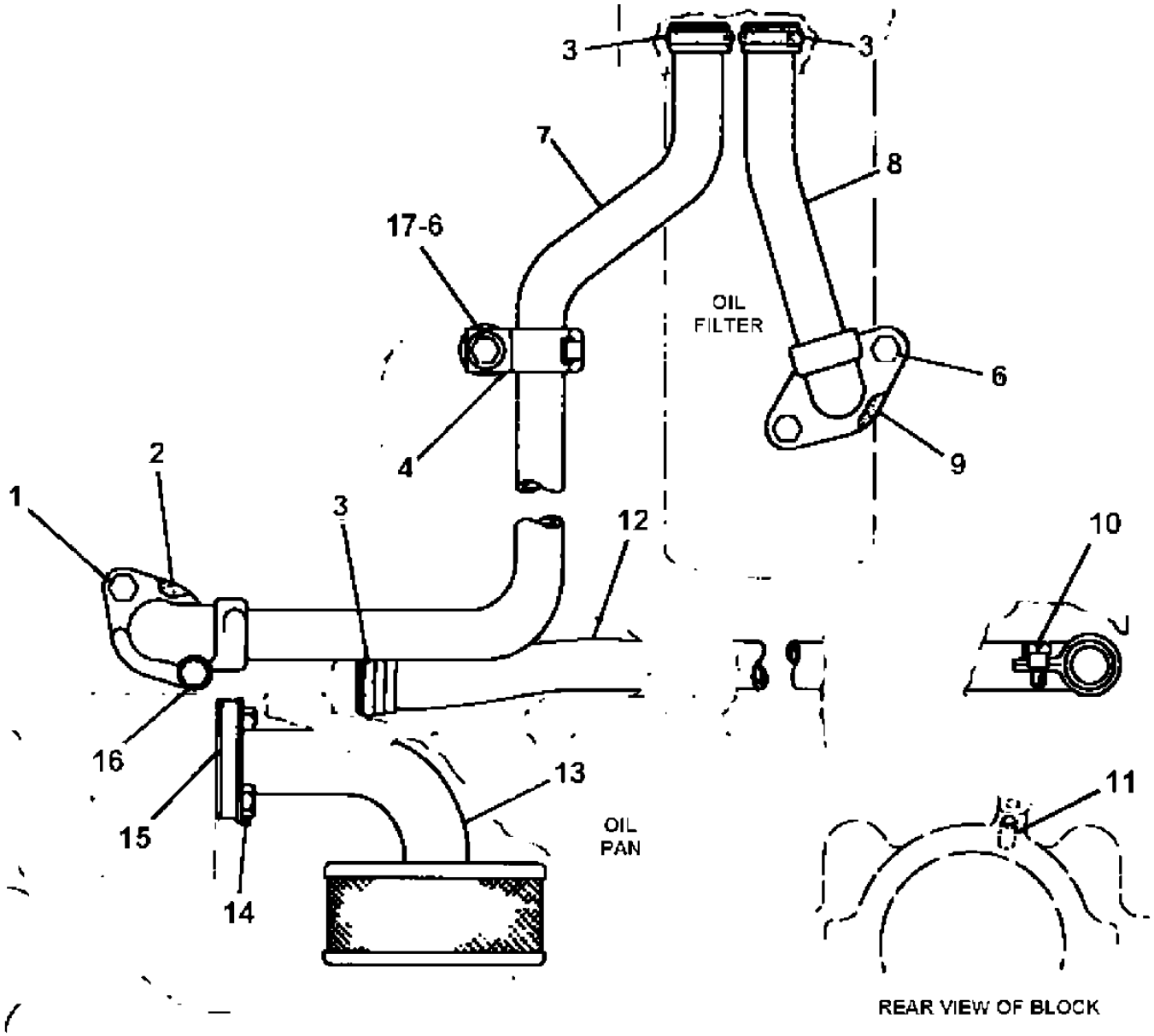

GRAPHIC #1

j9110e

OIL LINES (2P6513 N/S)

Effective with Serial No. 43V10506~43V11876

Key: C - INDICATES CHANGE

SMCS

NOTE	REF NO	GRAPHIC REF	PART NUMBER	QTY	PART NAME 1 2 3 4 5 6 (PRODUCT LEVEL)	LINK PAGE
C	1		1A-2029	1	BOLT (28.6mm Long)	
	2		2M-5407	1	GASKET	
C	3		9M-4849	3	SEAL	
C	4		4L-3641	1	CLIP	
C	5		6N-9164	1	TUBE ASSEM.	
	6		2P-2460	1	TUBE ASSEM.	
C	7		0S-1594	3	BOLT (25.4mm Long)	
	8		7F-7590	1	GASKET	
C	9		0S-1571	1	BOLT (44.4mm Long)	
C			5M-2894	1	WASHER	
C	10		6H-7127	1	LUG	
	11		0T-0102	1	BOLT	
			0L-0364	1	LOCK	
	12		7M-4593	4	PLUG	
	13		2P-0744	1	TUBE ASSEM.	
	14		2P-1776	1	BELL ASSEM.	
	15		8S-8874	1	LOCK	
	16		8M-0904	1	GASKET	
C	17		0L-2070	1	BOLT (57.2mm Long)	
C	18		5M-6213	1	PLUG	

OIL LINES (2P6513 N/S)

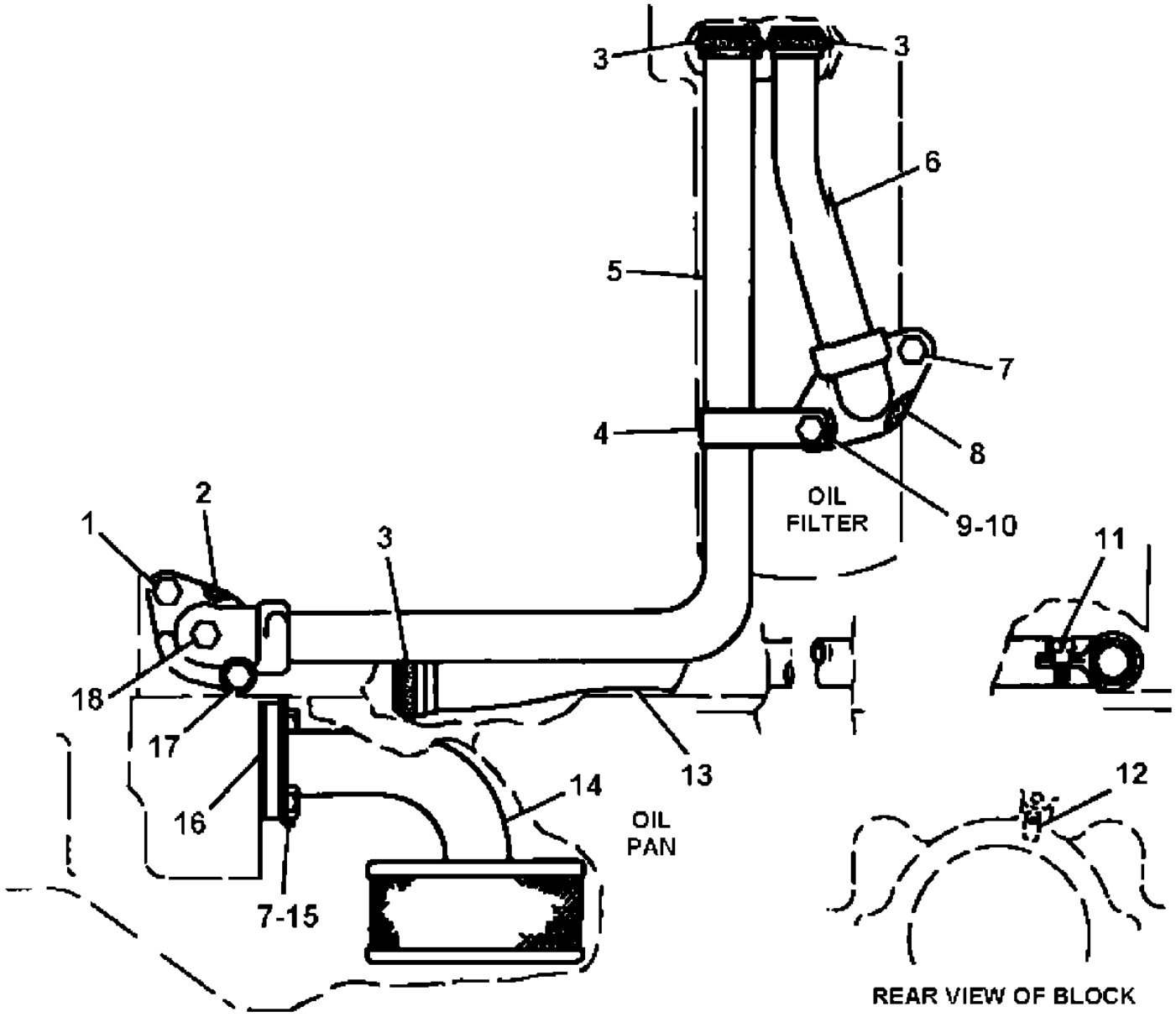

GRAPHIC #1

j14385e

OIL FILTER (2P6525 N/S)

Effective with Serial No. 43V1~43V11876

Key:

SMCS

NOTE	REF NO	GRAPHIC REF	PART NUMBER	QTY	PART NAME 1 2 3 4 5 6 (PRODUCT LEVEL)	LINK PAGE
	1		0S-1618	4	BOLT	
	2		9M-1974	8	WASHER	
	3		2P-0682	1	BASE ASSEM.	
			3L-1850	1	PLUG (1/2" Thread)	
	4		1B-5174	3	PLUG (3/4" Thread)	
	5		4N-8207	2	GASKET	
	6		8M-3182	1	SPRING	
	7		9M-0853	1	PLUNGER	
	8		6B-0830	2	COVER	
	9		2P-2537	1	STUD	
	10		2P-4004	1	FILTER ASSEM. (For Outside Japan)	
			3Y-0900	1	FILTER ASSEM. (For Japan)	
	11		1D-4540	1	BOLT (62mm Long)	
	12		1A-9579	3	BOLT (34mm Long)	

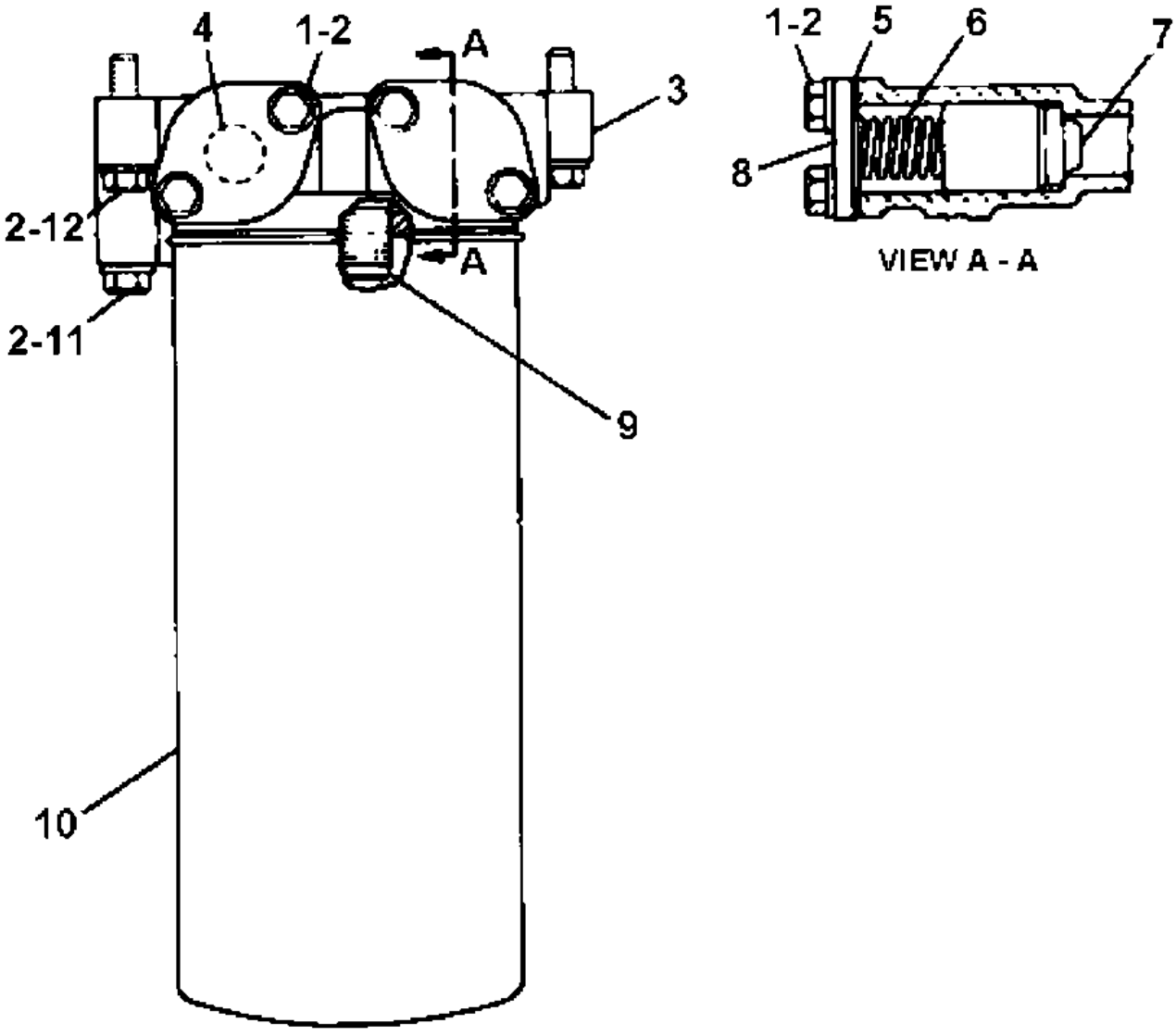

GRAPHIC #1

2P7843 FIELD CONVERSION FILTER GROUP

AN ATTACHMENT

Key:

SMCS

NOTE	REF NO	GRAPHIC REF	PART NUMBER	QTY	PART NAME 1 2 3 4 5 6 (PRODUCT LEVEL)	LINK PAGE
	1		5S-6051	2	GASKET	
	2		7S-6636	1	SCREW	
	3		1K-0505	1	WASHER	
	4		9S-1770	1	BASE ASSEM.	
	5		1B-5174	2	PLUG	
	6		3L-1850	1	PLUG	
	7		3H-4970	1	SEAL	
	8		3B-1915	5	BOLT	
	9		4B-4278	4	WASHER	
	10		3B-4506	8	LOCKWASHER	
	11		1D-4717	4	NUT	
	12		7S-6744	1	GASKET	
	13		0S-1588	2	BOLT	
	14		0S-1618	2	BOLT	
	15		3B-4505	2	LOCKWASHER	
	16		6B-0830	1	COVER	
	17		8M-3182	1	SPRING	
	18		9M-0853	1	PLUNGER	
	19		0S-1571	1	BOLT	
	20		2J-6356	1	RING	
	21		7S-6746	1	SPRING	
	22		6F-7062	1	WASHER	
	23		8M-9307	1	PLUG	
	24		7S-6745	1	RETAINER	
	25		5S-0484	1	ELEMENT	
	26		5S-7128	1	CASE ASSEM.	
	27		9H-6067	2	SEAL	
	28		5H-9899	1	RING	
	29		2M-8691	1	GASKET	

2P7843 FIELD CONVERSION FILTER GROUP

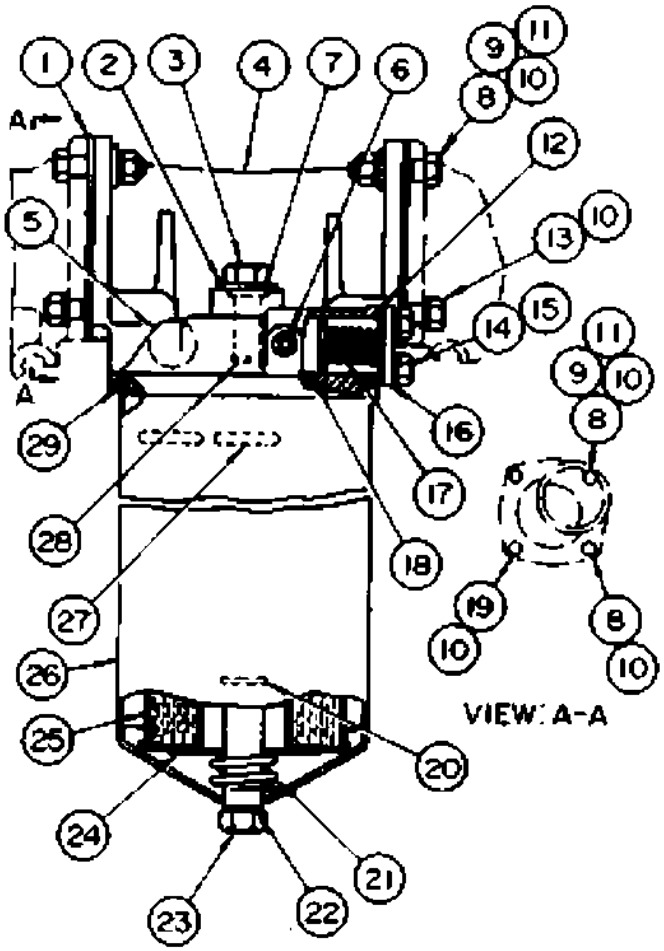

REF. NO.	PART NUMBER	DESCRIPTION	QTY.
1	5S6051	GASKET	2
2	7S6636	SCREW	1
3	1K505	WASHER	1
4	9S1770	BASE ASSEM.	1
5	1B5174	PLUG	2
6	3L1850	PLUG	1
7	3H4970	SEAL	1
8	3B1915	BOLT	5
9	4B4278	WASHER	4
10	3B4506	LOCKWASHER	8
11	1D4717	NUT	4
12	7S6744	GASKET	1
13	S-1588	BOLT	2
14	S-1618	BOLT	2
15	3B4505	LOCKWASHER	2
16	6B830	COVER	1
17	8M3182	SPRING	1
18	9M853	PLUNGER	1
19	S-1571	BOLT	1
20	2J6356	RING	1
21	7S6746	SPRING	1
22	6F7062	WASHER	1
23	8M9307	PLUG	1
24	7S6745	RETAINER	1
25	5S484	ELEMENT	1
26	5S7128	CASE ASSEM.	1
27	9H6067	SEAL	2
28	5H9899	RING	1
29	2M8691	GASKET	1

J8055E

GRAPHIC #1

j8055e

OIL FILLER (2P6855 N/S)

Effective with Serial No. 43V1~43V11876

Key:

SMCS

NOTE	REF NO	GRAPHIC REF	PART NUMBER	QTY	PART NAME 1 2 3 4 5 6 (PRODUCT LEVEL)	LINK PAGE
	1		2P-2720	1	GASKET	
	2		1A-2029	2	BOLT	
			5M-2894	2	WASHER	
	3		2P-2719	1	PIPE	
	4		6N-2985	1	CAP ASSEM.	
	5		9M-5732	1	RIVET	
			2A-3211	1	WASHER	

REF. NO.	PART NUMBER	DESCRIPTION	QTY.
1	2P2720	GASKET	1
2	1A2029	BOLT	2
	5M2894	WASHER	2
3	2P2719	PIPE	1
4	6N2985	CAP ASSEM.	1
5	9M5732	RIVET	1
	2A3211	WASHER	1

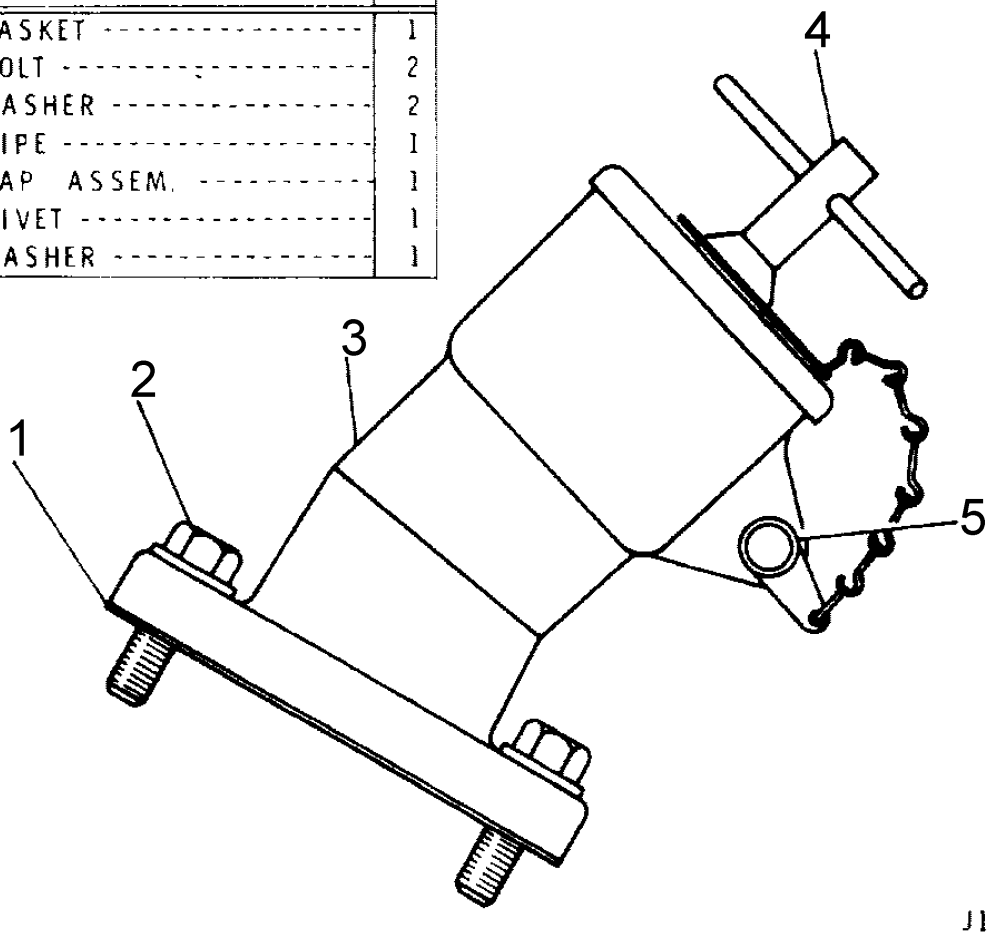

GRAPHIC #1

j16278e

2P6854 OIL FILLER PROTECTION GROUP

AN ATTACHMENT

Key: H - Not part of Oil Filler Group 2

SMCS

NOTE	REF NO	GRAPHIC REF	PART NUMBER	QTY	PART NAME 1 2 3 4 5 6 (PRODUCT LEVEL)	LINK PAGE
	1		8S-4212	1	RIVET	
	2		2P-2717	1	HASP	
	3		N0TSERV	1	PADLOCK	
H			8M-0439	1	KEY	
	4		2P-2718	1	CAP ASSEM.	
	5		2P-2719	1	PIPE	
	6		2P-3201	2	BOLT	
	7		2P-2720	1	GASKET	

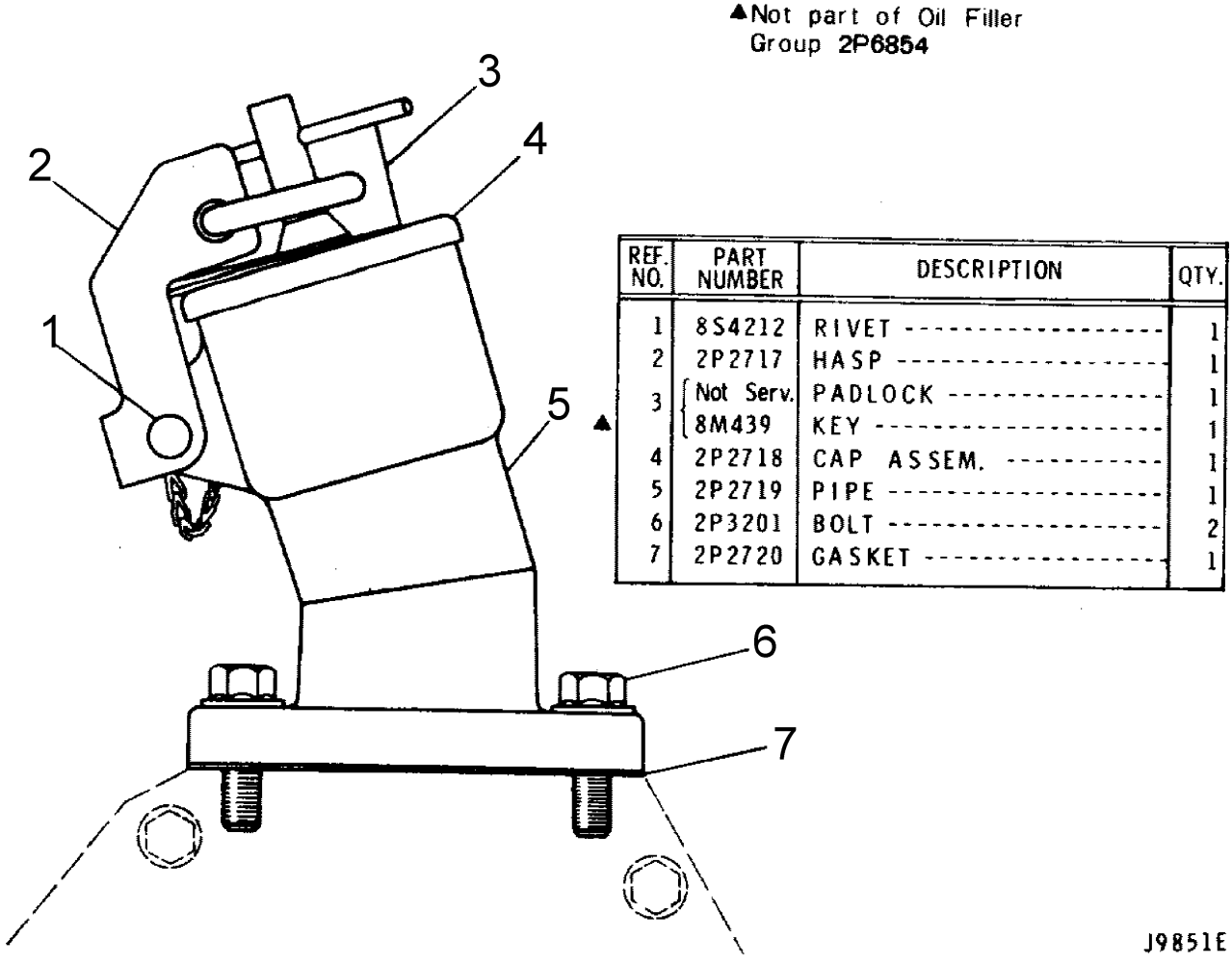

GRAPHIC #1

j9851e

FUMES DISPOSAL (2P7446 N/S)

Effective with Serial No. 43V1~43V2247, 43V9337~43V9351, 43V9807, 43V9810, 43V9811, 43V9818~43V11876

Key:

SMCS

NOTE	REF NO	GRAPHIC REF	PART NUMBER	QTY	PART NAME 1 2 3 4 5 6 (PRODUCT LEVEL)	LINK PAGE
	1		9M-2904	2	CLAMP	
	2		2P-7445	1	HOSE	
	3		9S-3705	1	TUBE ASSEM.	
	4		1D-4716	1	NUT	
			9M-1974	1	WASHER	

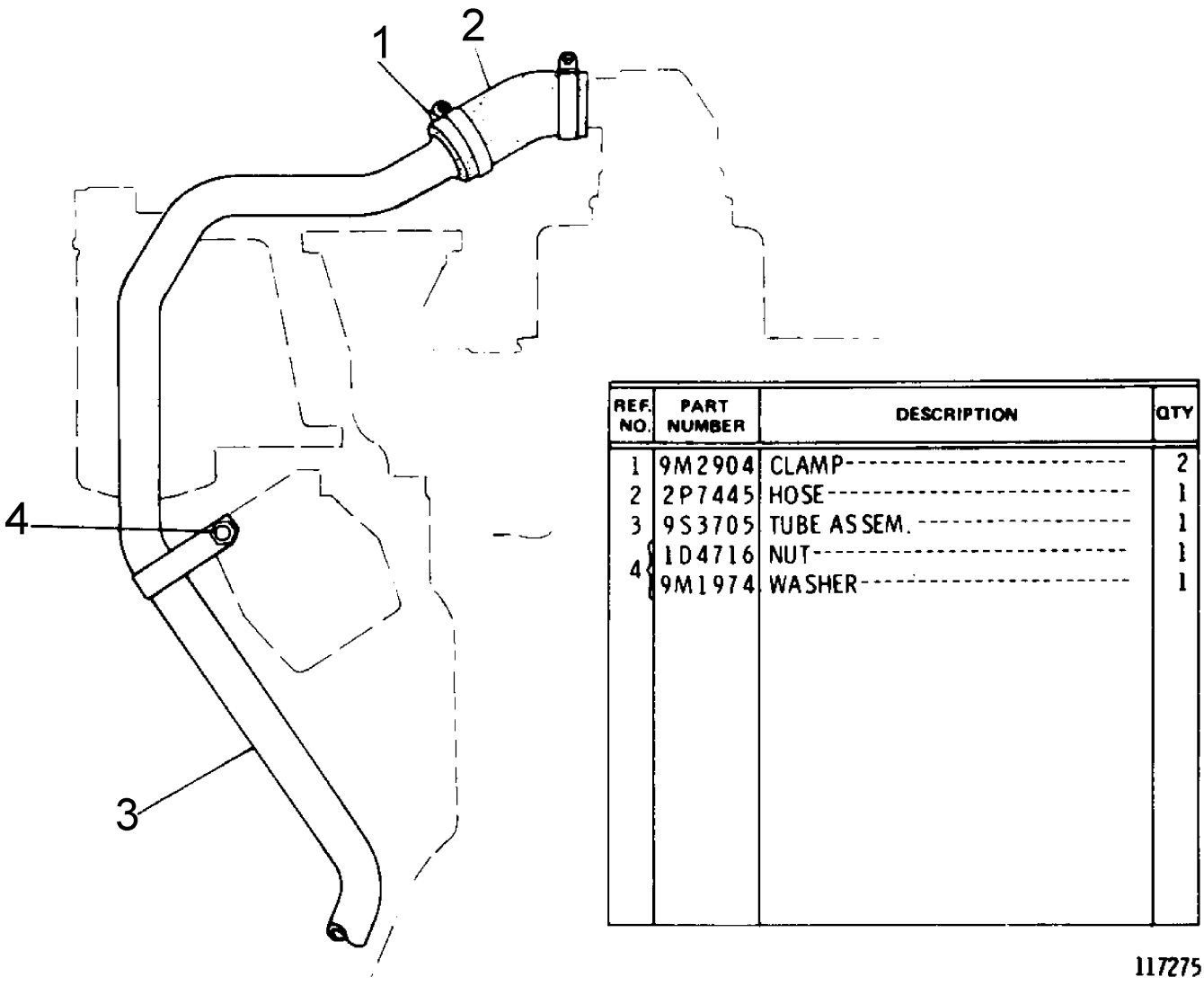

GRAPHIC #1

c117275

FUMES DISPOSAL (4N3325 N/S)

Effective with Serial No. 43V2248~43V9336, 43V9352~43V9806, 43V9808, 43V9809, 43V9812~43V9817

Key:

SMCS

NOTE	REF NO	GRAPHIC REF	PART NUMBER	QTY	PART NAME 1 2 3 4 5 6 (PRODUCT LEVEL)	LINK PAGE
	1		4N-3326	1	HOSE	
	2		9M-2904	2	CLAMP	
	3		8M-8788	1	CLIP	
	4		4N-3328	1	TUBE	
	5		0T-0386	1	CLIP (small)	
			6N-1369	1	CLIP (large)	
			0L-1351	1	BOLT	
			1D-4717	1	NUT	
			5M-2894	2	WASHER	

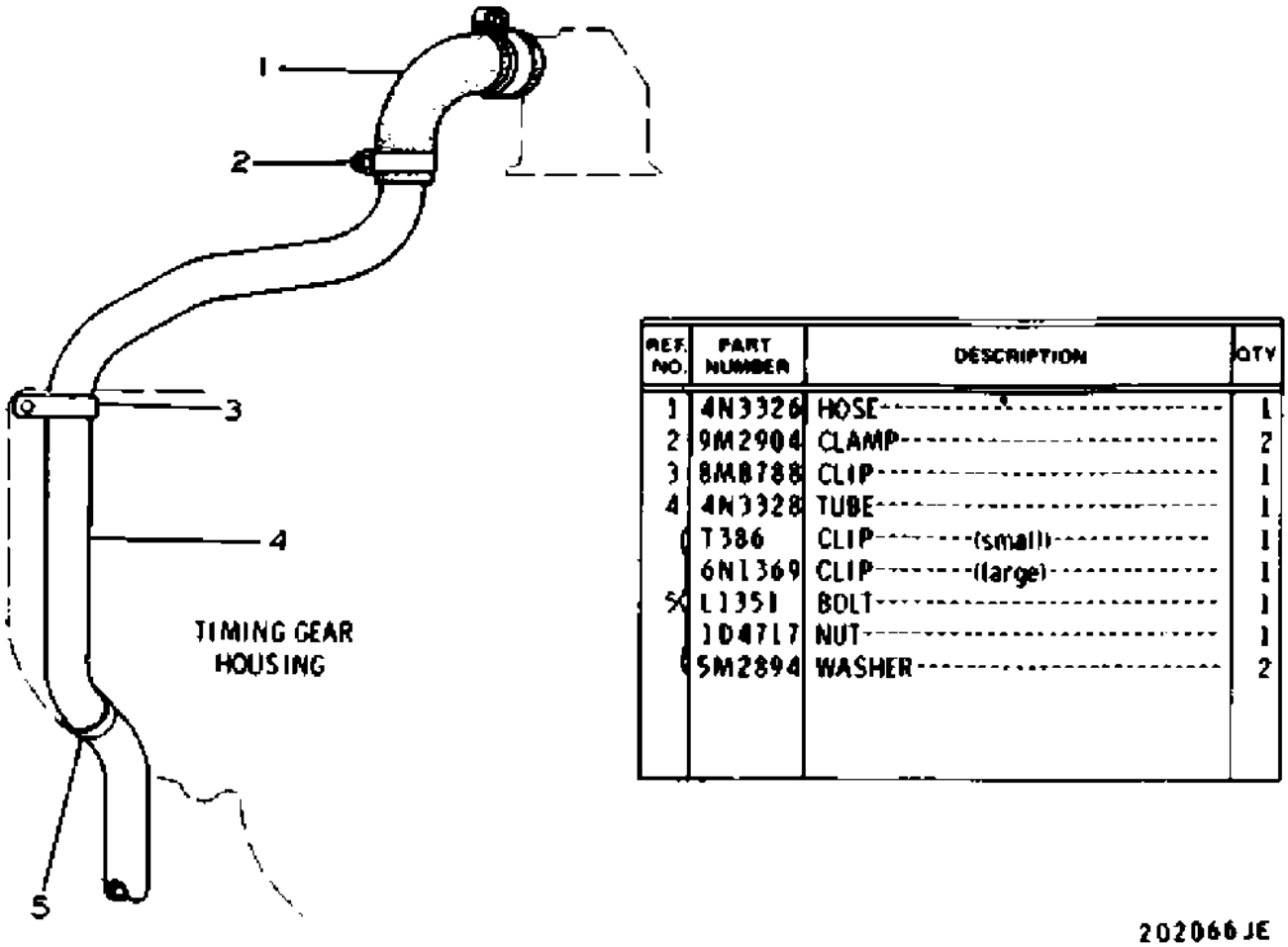

GRAPHIC #1

c927450

FUMES DISPOSAL

Effective with Serial No. 43V2248~43V9336, 43V9352~43V9806, 43V9808, 43V9809, 43V9812~43V9817
Part of Field Conversion Arrangement listed on Page
131
For Japan
AN ATTACHMENT

Key:

SMCS

NOTE	REF NO	GRAPHIC REF	PART NUMBER	QTY	PART NAME 1 2 3 4 5 6 (PRODUCT LEVEL)	LINK PAGE
	1		9M-2904	2	CLAMP	
	2		2P-7445	1	HOSE	
	3		9S-3705	1	TUBE ASSEM.	
	4		1D-4716	1	NUT	
			9M-1974	1	WASHER	

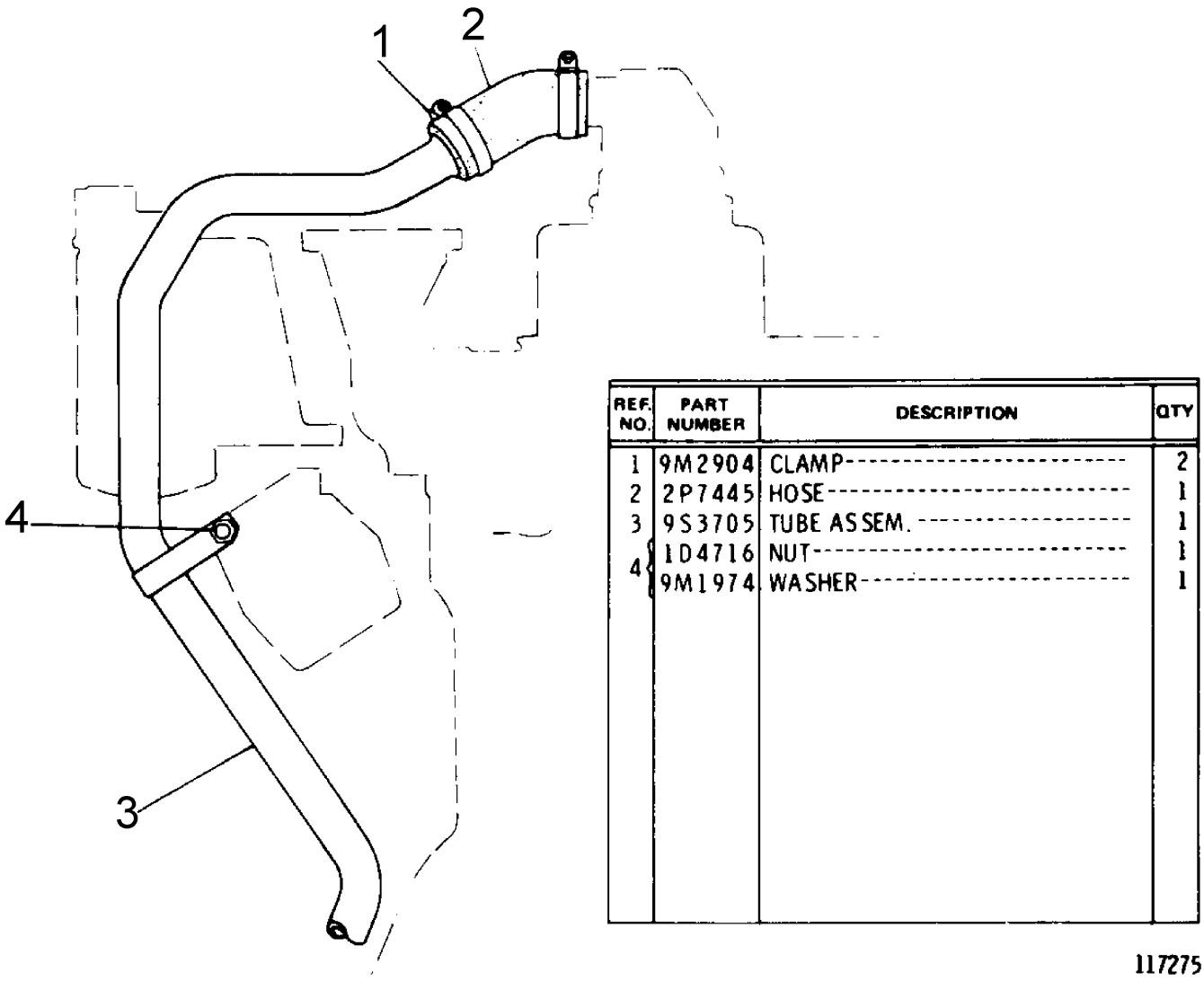

GRAPHIC #1

c117275

BREATHER (1P4244 N/S)

Effective with Serial No. 43V1~43V11876

Key:

SMCS

NOTE	REF NO	GRAPHIC REF	PART NUMBER	QTY	PART NAME 1 2 3 4 5 6 (PRODUCT LEVEL)	LINK PAGE
	1		3H-3243	1	BOLT	
	2		4K-9890	1	WASHER	
	3		8S-0248	1	BREATHER ASSEM.	
	5		6L-5359	1	SEAL	

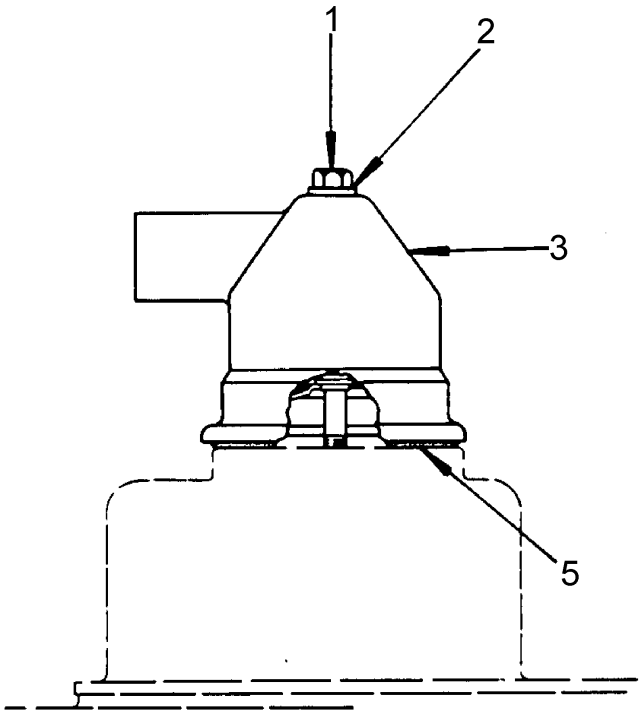

REF. NO.	PART NUMBER	DESCRIPTION	QTY
1	3H3243	BOLT	1
2	4K9890	WASHER	1
3	8S248	BREATHER ASSEM.	1
5	6L5359	SEAL	1

204118

GRAPHIC #1

c204118

RADIATOR (2P8182 N/S)--Part 1 of 2

Effective with Serial No. 65J1474~65J2081
Note: Cooling System Inhibitor is shown on Page 287

Key:

SMCS

NOTE	REF NO	GRAPHIC REF	PART NUMBER	QTY	PART NAME 1 2 3 4 5 6 (PRODUCT LEVEL)	LINK PAGE
	1		3S-9565	2	STRIP	
	2		1A-2029	27	BOLT	
	3		3B-4506	61	LOCKWASHER	
	4		1P-1399	3	STRIP ASSEM.	
			9F-2978	6	NUT (Weld)	
	5		2P-3247	1	SHIELD	
	6		2P-3246	1	SHIELD	
	7		0L-1351	22	BOLT	
	8		2P-3755	1	BRACKET ASSEM.	
	9		9F-2978	2	NUT (Weld)	
	10		4B-4278	4	WASHER	
	11		2P-3753	1	BAFFLE ASSEM.	
	12		6B-4594	10	RIVET	
	13		0L-2070	4	BOLT	
			1D-4717	4	NUT	
	14		7S-4117	1	STRIP	
	15		0S-0509	4	BOLT	
	16		8F-8151	1	COCK	
	17		2P-3754	1	BRACKET ASSEM.	
	18		9F-2978	2	NUT (Weld)	
	19		2P-3244	1	SHIELD	
	20		1P-1397	1	BAFFLE ASSEM.	
			9F-2978	6	NUT (Weld)	
			6B-4594	8	RIVET	
	21		2P-3245	1	SHIELD	
	22		1P-1380	1	BAFFLE ASSEM.	
			9F-2978	4	NUT (Weld)	
			6B-4594	2	RIVET	
	23		5S-6353	2	BLOCK	
	24		8S-9191	4	BOLT	
	25		0S-1595	2	BOLT	
			3B-4508	2	LOCKWASHER	
	26		5S-6138	2	STRIP	
	27		2P-3248	3	BAFFLE	

RADIATOR (2P8182 N/S)--Part 1 of 2

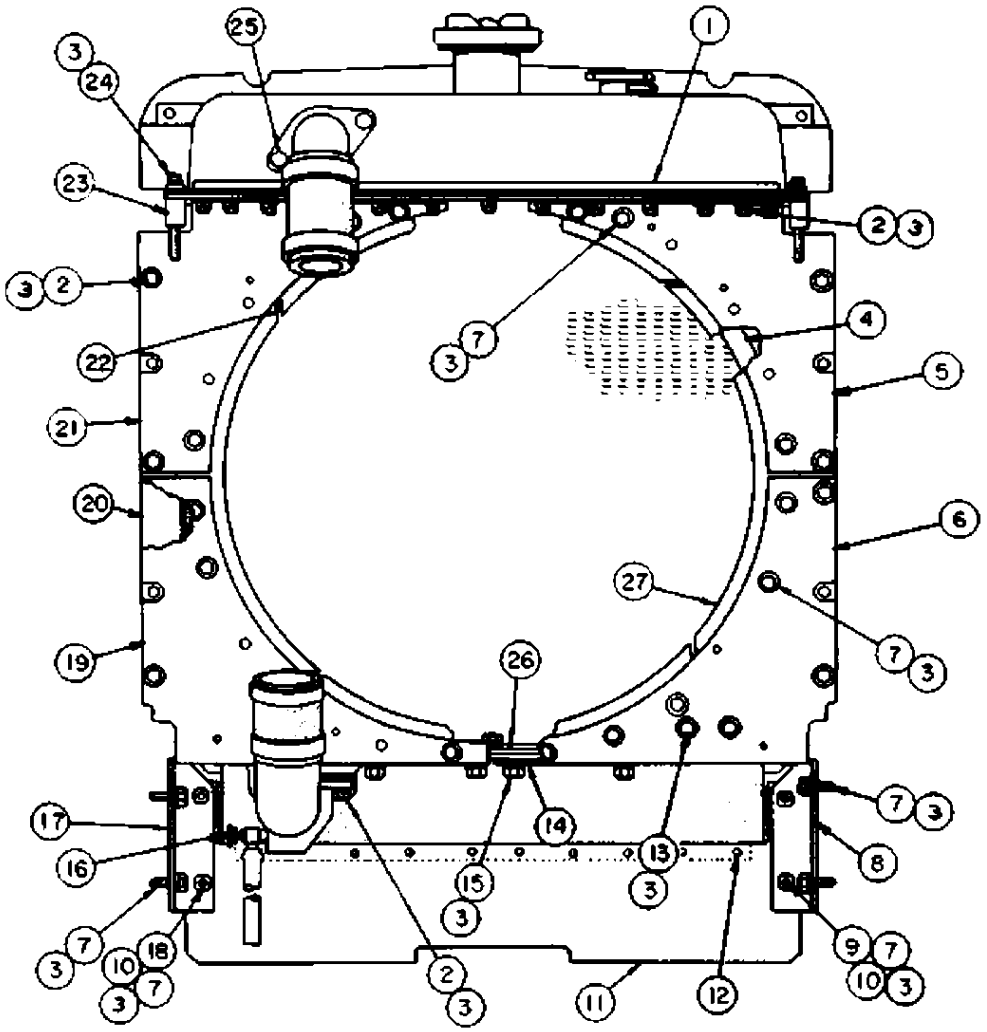

REF. NO.	PART NUMBER	DESCRIPTION	QTY.
1	3S9565	STRIP	2
2	1A2029	BOLT	27
3	3B4506	LOCKWASHER	61
4	1P1399	STRIP ASSEM.	3
	9F2978	NUT (Weld)	6
5	2P3247	SHIELD	1
6	2P3246	SHIELD	1
7	LL351	BOLT	22
8	2P3755	BRACKET ASSEM.	1
9	9F2978	NUT (Weld)	2
10	4B4278	WASHER	4
11	2P3753	BAFFLE ASSEM.	1
12	6B4594	RIVET	10
13	L2070	BOLT	4
	104717	NUT	4
14	7S4117	STRIP	1
15	S509	BOLT	4

REF. NO.	PART NUMBER	DESCRIPTION	QTY.
16	8F8151	COCK	1
17	2P3754	BRACKET ASSEM.	1
18	9F2978	NUT (Weld)	2
19	2P3244	SHIELD	1
20	1P1397	BAFFLE ASSEM.	1
	9F2978	NUT (Weld)	6
	6B4594	RIVET	8
21	2P3245	SHIELD	1
22	1P1380	BAFFLE ASSEM.	1
	9F2978	NUT (Weld)	4
	6B4594	RIVET	2
23	5S6353	BLOCK	2
24	8S9191	BOLT	4
25	S1595	BOLT	2
	3B4508	LOCKWASHER	2
26	5S6138	STRIP	2
27	2P3248	BAFFLE	3

J9399E

GRAPHIC #1

j9399e

RADIATOR (2P8182 N/S)--Part 2 of 2

Effective with Serial No. 65J1474~65J2081

Key: H - ORDER BY THE CM

SMCS

NOTE	REF NO	GRAPHIC REF	PART NUMBER	QTY	PART NAME 1 2 3 4 5 6 (PRODUCT LEVEL)	LINK PAGE
	1		7S-7809	1	CAP ASSEM.	
	2		2S-5200	1	GASKET ASSEM.	
	3		6H-9144	1	RING	
	4		2S-2846	1	RETAINER	
	6		2P-3156	1	BAFFLE ASSEM.	
	7		6B-4594	13	RIVET	
	8		5S-8077	1	TANK ASSEM.	
			5M-6214	1	PLUG	
	9		1S-0286	1	STUD	
	10		0S-1591	19	BOLT (38mm Long)	
	11		3B-4506	64	LOCKWASHER	
	12		5S-6142	1	PLATE ASSEM.	
	13		5S-6287	1	GASKET	
	14		3B-1915	13	BOLT (35mm Long)	
	15		2P-4648	1	CORE ASSEM.	
	16		1P-1398	1	BAFFLE ASSEM.	
			9F-2978	6	NUT (Weld)	
	17		6B-4594	8	RIVET	
	18		1A-2029	32	BOLT	
	19		5S-6415	2	STRIP	
	20		5S-4593	1	TANK	
	21		5S-7979	1	GASKET	
	22		9M-6606	1	GASKET	
	23		2P-6165	1	ELBOW	
H	24		2S-6658		HOSE 11cm	
	25		8H-2063	2	CLAMP	
	26		5H-4744	2	SPACER	
	27		9M-8867	2	CLAMP	
	28		3H-8726	2	BLOCK	
	29		0L-1329	2	BOLT	
	30		3B-4508	2	LOCKWASHER	
	31		4B-4280	2	WASHER	
	32		5S-6138	2	STRIP	
	33		5S-6288	1	GASKET	
	34		5S-7996	2	STRIP	
	35		5H-4454	2	CLAMP	
	36		2S-0884	1	HOSE	
	37		7S-2203	1	ELBOW	
	38		1M-7830	1	GASKET	
	39		2S-3080	1	CAP ASSEM. (Pressure Relief)	
H	40		5P-0767		HOSE 46cm	

RADIATOR (2P8182 N/S)--Part 2 of 2

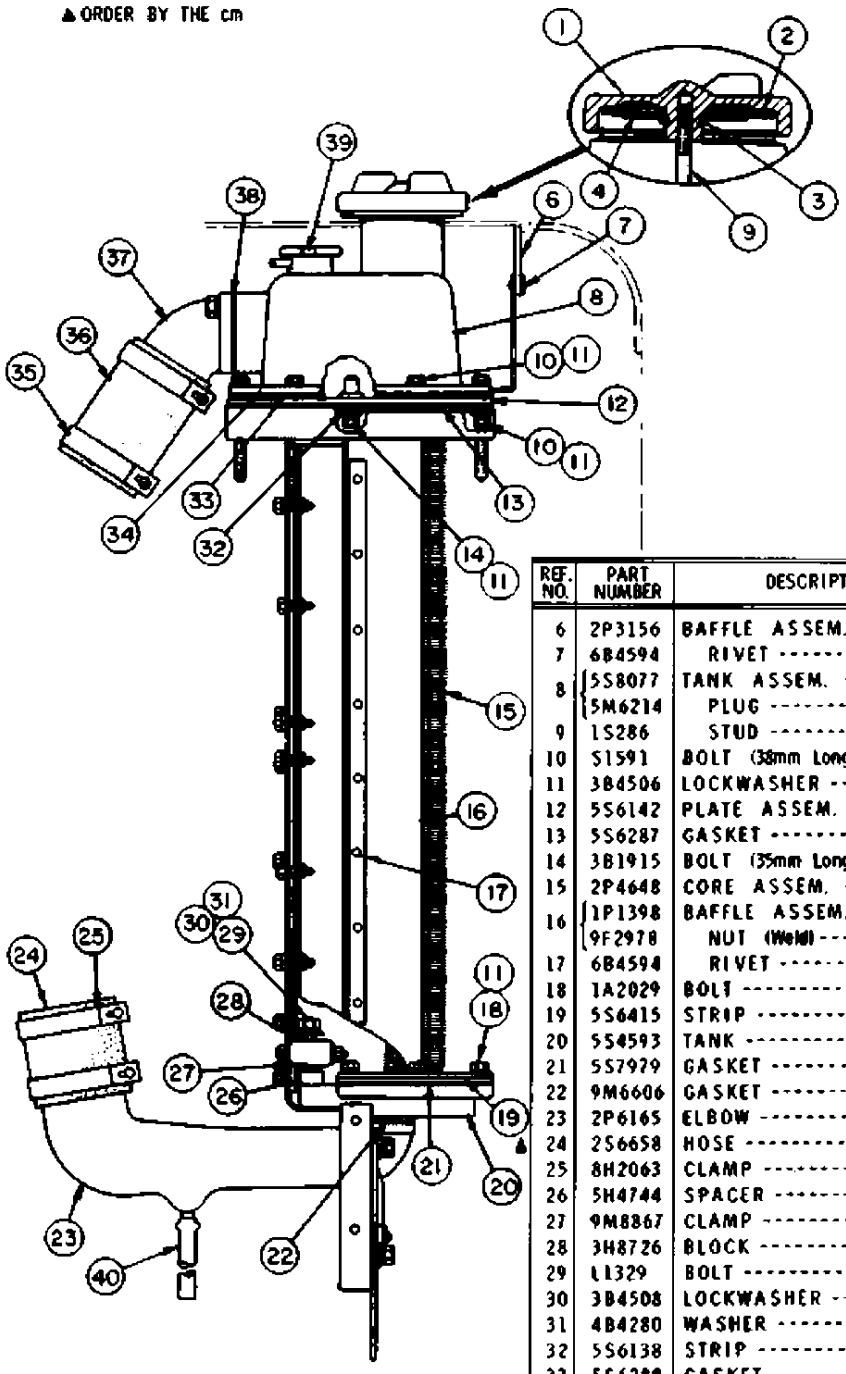

REF. NO.	PART NUMBER	DESCRIPTION	QTY.
1	7S7809	CAP ASSEM.	1
2	2S5200	GASKET ASSEM.	1
3	6H9144	RING	1
4	2S2846	RETAINER	1

REF. NO.	PART NUMBER	DESCRIPTION	QTY.
6	2P3156	BAFFLE ASSEM.	1
7	6B4594	RIVET	13
8	5S8077	TANK ASSEM.	1
	5M6214	PLUG	1
9	1S286	STUD	1
10	S1591	BOLT (38mm Long)	19
11	3B4506	LOCKWASHER	64
12	5S6142	PLATE ASSEM.	1
13	5S6287	GASKET	1
14	3B1915	BOLT (35mm Long)	13
15	2P4648	CORE ASSEM.	1
16	1P1398	BAFFLE ASSEM.	1
	9F2978	NUT (Weld)	6
17	6B4594	RIVET	8
18	1A2029	BOLT	32
19	5S6415	STRIP	2
20	5S4593	TANK	1
21	5S7979	GASKET	1
22	9M6606	GASKET	1
23	2P6165	ELBOW	1
24	2S6658	HOSE - 11cm	
25	8H2063	CLAMP	2
26	5H4744	SPACER	2
27	9M8867	CLAMP	2
28	3H8726	BLOCK	2
29	L1329	BOLT	2
30	3B4508	LOCKWASHER	2
31	4B4280	WASHER	2
32	5S6138	STRIP	2
33	5S6288	GASKET	1
34	5S7996	STRIP	2
35	5H4454	CLAMP	2
36	2S884	HOSE	1
37	7S2203	ELBOW	1
38	1M7830	GASKET	1
39	2S3080	CAP ASSEM. (Pressure Relief)	1
▲40	5P767	HOSE - 46cm	

GRAPHIC #1

RADIATOR (2P8182 N/S)--Part 1 of 2

Effective with Serial No. 65J2082-Up
Note: Cooling System Inhibitor is shown on Page 287

Key: C - INDICATES CHANGE

SMCS

NOTE	REF NO	GRAPHIC REF	PART NUMBER	QTY	PART NAME 1 2 3 4 5 6 (PRODUCT LEVEL)	LINK PAGE
	1		3S-9565	2	STRIP	
	2		1A-2029	27	BOLT	
C	3		3B-4506	57	LOCKWASHER	
	4		1P-1399	3	STRIP ASSEM.	
			9F-2978	6	NUT (Weld)	
	5		2P-3247	1	SHIELD	
	6		2P-3246	1	SHIELD	
	7		0L-1351	22	BOLT	
	8		2P-3755	1	BRACKET ASSEM.	
	9		9F-2978	2	NUT (Weld)	
	10		4B-4278	4	WASHER	
	11		2P-3753	1	BAFFLE ASSEM.	
	12		6B-4594	10	RIVET	
C	13		0S-1571	4	BOLT	
C			5M-2894	4	NUT	
	14		7S-4117	1	STRIP	
	15		0S-0509	4	BOLT	
	16		8F-8151	1	COCK	
	17		2P-3754	1	BRACKET ASSEM.	
	18		9F-2978	2	NUT (Weld)	
	19		2P-3244	1	SHIELD	
	20		1P-1397	1	BAFFLE ASSEM.	
			9F-2978	6	NUT (Weld)	
			6B-4594	8	RIVET	
	21		2P-3245	1	SHIELD	
	22		1P-1380	1	BAFFLE ASSEM.	
			9F-2978	4	NUT (Weld)	
			6B-4594	2	RIVET	
	23		5S-6353	2	BLOCK	
	24		8S-9191	4	BOLT	
	25		0S-1595	2	BOLT	
			3B-4508	2	LOCKWASHER	
	26		5S-6138	2	STRIP	
	27		2P-3248	3	BAFFLE	

RADIATOR (2P8182 N/S)--Part 1 of 2

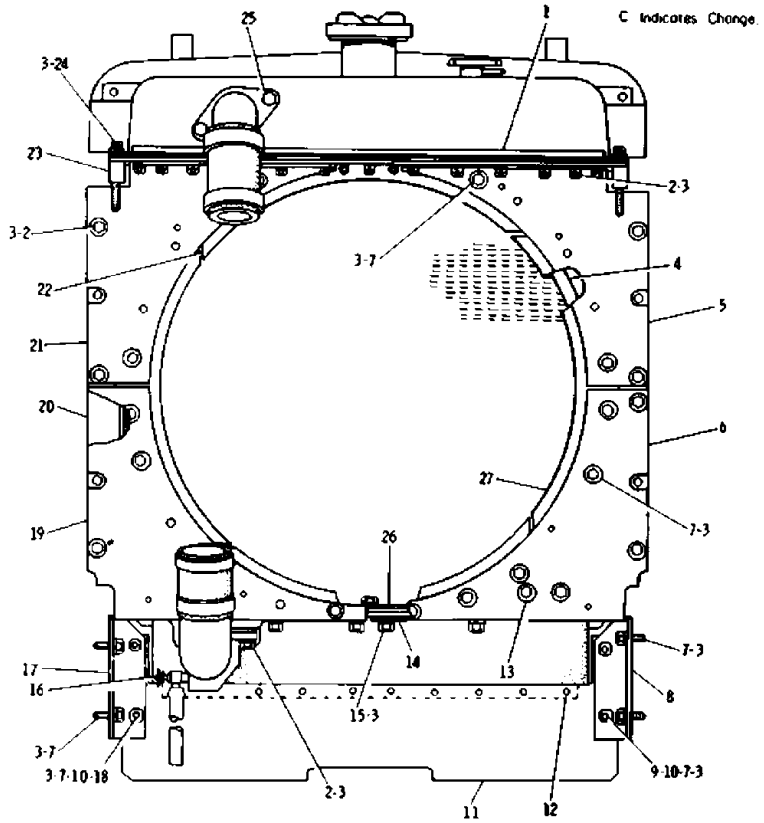

	REF. NO.	PART NUMBER	DESCRIPTION	QTY.
	1	3S9565	STRIP	2
	2	1A2029	BOLT	27
C	3	3B4506	LOCKWASHER	57
	4	1P1399	STRIP ASSEM.	3
		9F2978	NUT (Weld)	6
	5	2P3247	SHIELD	1
	6	2P3246	SHIELD	1
	7	L1351	BOLT	22
	8	2P3755	BRACKET ASSEM.	1
	9	9F2978	NUT (Weld)	2
	10	4B4278	WASHER	4
	11	2P3753	BAFFLE ASSEM.	1
	12	6B4594	RIVET	10
C	13	S1571	BOLT	4
C		5M2894	NUT	4
	14	7S4117	STRIP	1
	15	S589	BOLT	4
	16	8F8151	COCK	1
	17	2P3754	BRACKET ASSEM.	1
	18	9F2978	NUT (Weld)	2
	19	2P3244	SHIELD	1
	20	1P1397	BAFFLE ASSEM.	1
		9F2978	NUT (Weld)	6
		6B4594	RIVET	8
	21	2P3245	SHIELD	1
	22	1P1380	BAFFLE ASSEM.	1
		9F2978	NUT (Weld)	4
		6B4594	RIVET	2
	23	5S6353	BLOCK	2
	24	8S9191	BOLT	4
	25	S1595	BOLT	2
		3B4508	LOCKWASHER	2
	26	5S6138	STRIP	2
	27	2P3248	BAFFLE	3

J14943E

GRAPHIC #1 j14943e

RADIATOR (2P8182 N/S)-- Part 2 of 2

Effective with Serial No. 65J2082-Up

Key: C - INDICATES CHANGE, H - ORDER BY THE CM

SMCS

NOTE	REF NO	GRAPHIC REF	PART NUMBER	QTY	PART NAME 1 2 3 4 5 6 (PRODUCT LEVEL)	LINK PAGE
	1		7S-7809	1	CAP ASSEM.	
C			7S-7807	1	INSERT	
C	2		2P-3230	1	GASKET ASSEM.	
C	3		9S-9979	1	RING	
	4		2S-2846	1	RETAINER	
	5		2P-3156	1	BAFFLE ASSEM.	
	6		6B-4594	13	RIVET	
C	7		6N-8750	1	TANK ASSEM.	
			5M-6214	1	PLUG	
	8		1S-0286	1	STUD	
	9		1S-5304	2	LUG	
	10		0S-1591	19	BOLT (38mm Long)	
	11		3B-4506	64	LOCKWASHER	
	12		5S-6142	1	PLATE ASSEM.	
C	13		6N-4978	1	GASKET	
	14		3B-1915	13	BOLT (35mm Long)	
	15		2P-4648	1	CORE ASSEM.	
	16		1P-1398	1	BAFFLE ASSEM.	
			9F-2978	6	NUT (Weld)	
	17		6B-4594	8	RIVET	
	18		1A-2029	32	BOLT	
	19		5S-6415	2	STRIP	
	20		5S-4593	1	TANK	
C	21		6N-4980	1	GASKET	
	22		9M-6606	1	GASKET	
	23		2P-6165	1	ELBOW	
H	24		2S-6658		HOSE 11cm	
C	25		5P-4868	2	CLAMP	
	26		5H-4744	2	SPACER	
C	27		7N-4684	2	CLAMP	
	28		3H-8726	2	BLOCK	
	29		0L-1329	2	BOLT	
	30		3B-4508	2	LOCKWASHER	
	31		4B-4280	2	WASHER	
	32		5S-6138	2	STRIP	
C	33		6N-4979	1	GASKET	
	34		5S-7996	2	STRIP	
C	35		5P-0598	2	CLAMP	
	36		2S-0884	1	HOSE	
	37		7S-2203	1	ELBOW	
	38		1M-7830	1	GASKET	
	39		2S-3080	1	CAP ASSEM.[(PRESSURE RELIEF)	
H	40		5P-0767		HOSE 46cm	

RADIATOR (2P8182 N/S)-- Part 2 of 2

C Indicates Change
▲ORDER BY THE cm

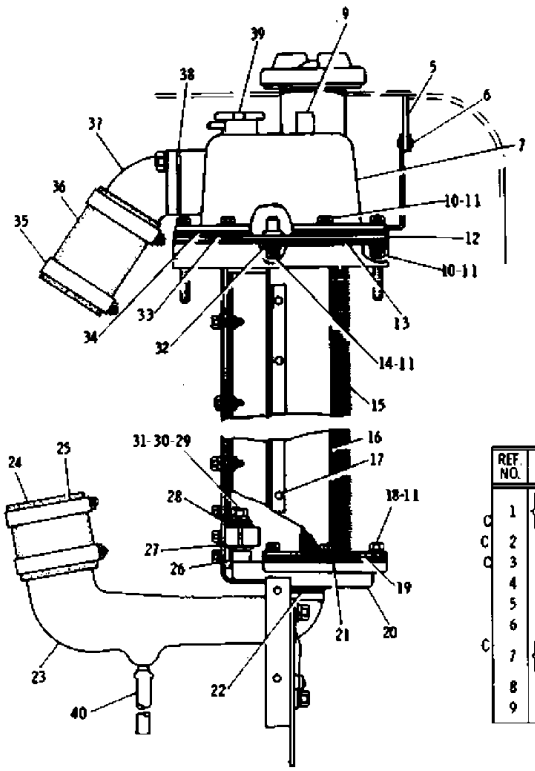

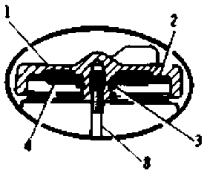

VIEW OF CAP AREA

REF. NO.	PART NUMBER	DESCRIPTION	QTY.
1	7S7809	CAP ASSEM.	1
C	7S7807	INSERT	1
C 2	2P3230	GASKET ASSEM.	1
C 3	9S9979	RING	1
4	2S2846	RETAINER	1
5	2P3156	BAFFLE ASSEM.	1
6	6B4594	RIVET	13
C 7	6N8750	TANK ASSEM.	1
	5M6214	PLUG	1
8	1S286	STUD	1
9	1S5304	LUG	2

REF. NO.	PART NUMBER	DESCRIPTION	QTY.
10	1S1591	BOLT (38mm Long)	19
11	3B4506	LOCKWASHER	64
12	5S6142	PLATE ASSEM.	1
C 13	6N4978	GASKET	1
14	3B1915	BOLT (35mm Long)	13
15	2P4648	CORE ASSEM.	1
16	1P1398	BAFFLE ASSEM.	1
	9F2978	NUT (Weld)	6
17	6B4594	RIVET	8
18	1A2029	BOLT	32
19	5S6415	STRIP	2
20	5S4593	TANK	1
C 21	6N4980	GASKET	1
22	9M6606	GASKET	1
23	2P6165	ELBOW	1
▲ 24	2S6658	HOSE 11cm	
C 25	5P4868	CLAMP	2
26	5H4744	SPACER	2
C 27	7N4684	CLAMP	2
28	3M8726	BLOCK	2
29	1L1329	BOLT	2
30	3B4508	LOCKWASHER	2
31	4B4280	WASHER	2
32	5S6138	STRIP	2
C 33	6N4979	GASKET	1
34	5S7996	STRIP	2
C 35	5P598	CLAMP	2
36	2S884	HOSE	1
37	7S2203	ELBOW	1
38	1M7830	GASKET	1
39	2S3080	CAP ASSEM. (Presure Relief)	1
▲ 40	5P767	HOSE 46cm	

J14944E

GRAPHIC #1

j14944e

2S6096 RADIATOR CAP PROTECTION GROUP

AN ATTACHMENT

Key: H - NOT PART OF COVER GROUP

SMCS

NOTE	REF NO	GRAPHIC REF	PART NUMBER	QTY	PART NAME 1 2 3 4 5 6 (PRODUCT LEVEL)	LINK PAGE
			2S-6097	1	TANG	
			NOTSERVICED	1	PADLOCK	
H			8M-0439	1	KEY	
			1M-8649	1	RING	
			2S-5200	1	GASKET	
			9S-9979	1	RING	
			2S-6098	1	COVER	
			2S-2846	1	RETAINER	
			2S-6099	1	CAP	

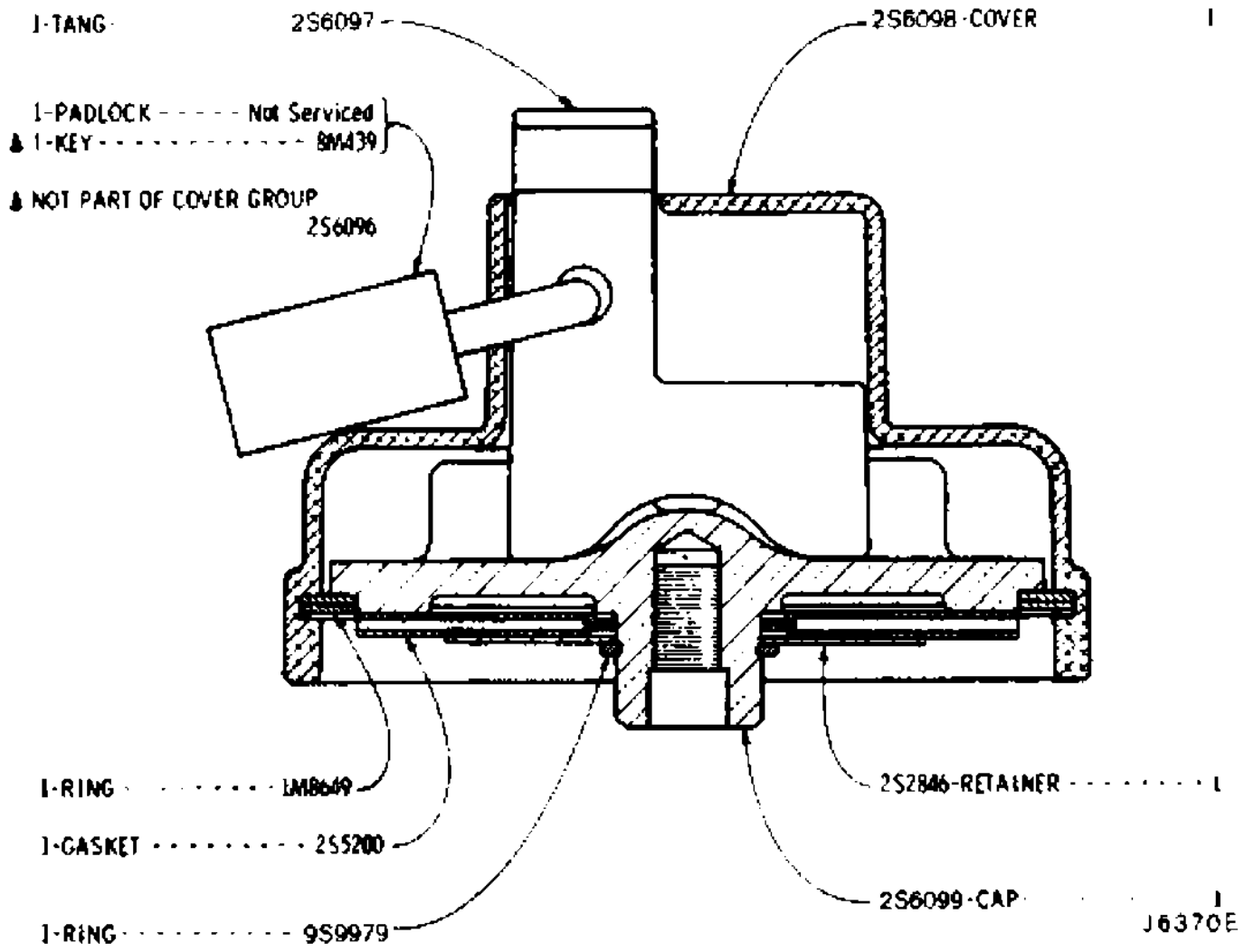

GRAPHIC #1

j6370e

2P4642 SAND BLAST GRID GROUP

AN ATTACHMENT

Key:

SMCS

NOTE	REF NO	GRAPHIC REF	PART NUMBER	QTY	PART NAME 1 2 3 4 5 6 (PRODUCT LEVEL)	LINK PAGE
	1		0S-1594	3	BOLT	
	2		3B-4506	3	LOCKWASHER	
	3		2P-4639	1	SUPPORT	
	4		0L-1351	8	BOLT	
			4B-4278	8	WASHER	
	5		3B-4506	8	LOCKWASHER	
	6		2P-4640	1	SUPPORT	

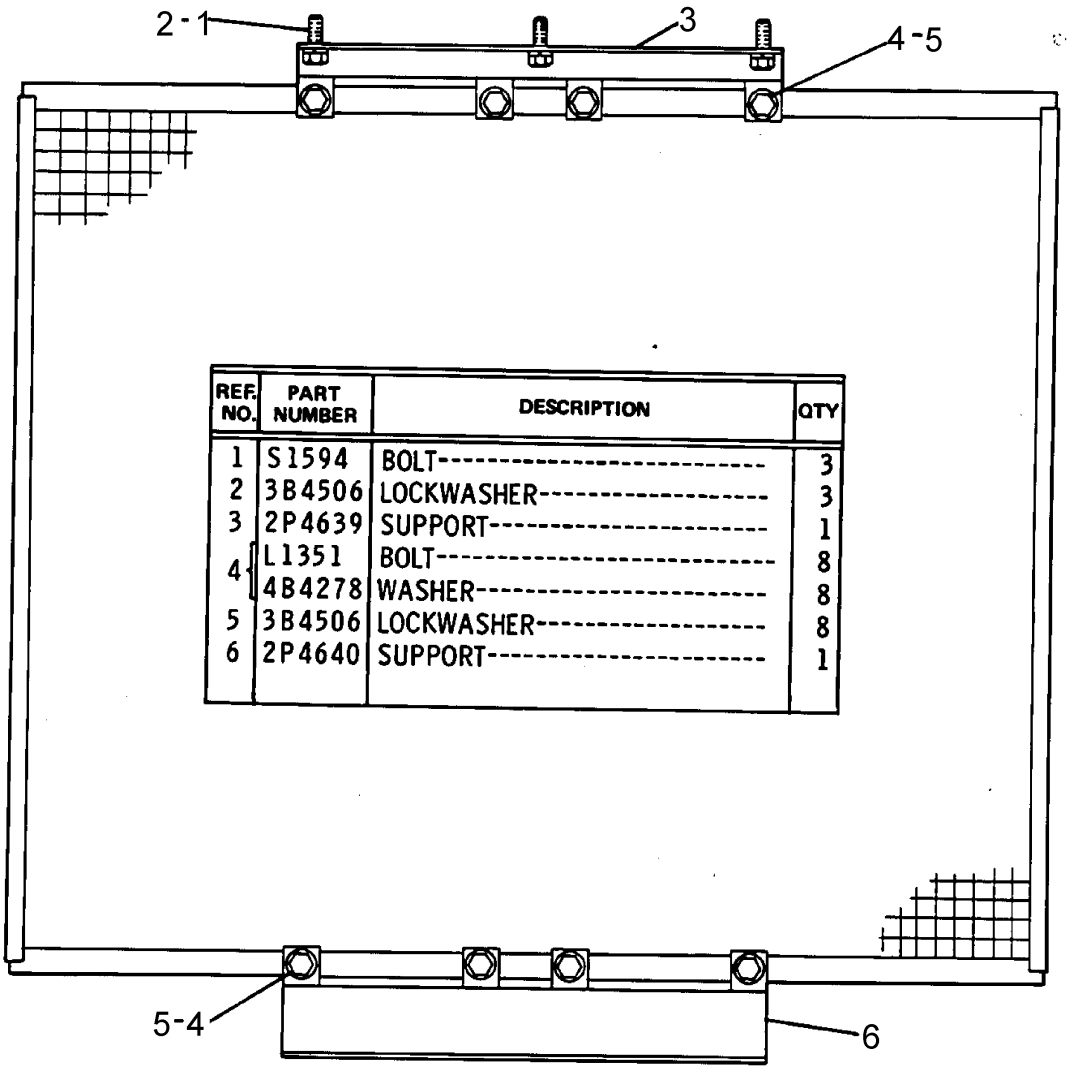

REF. NO.	PART NUMBER	DESCRIPTION	QTY
1	S1594	BOLT	3
2	3B4506	LOCKWASHER	3
3	2P4639	SUPPORT	1
4	L1351	BOLT	8
	4B4278	WASHER	8
5	3B4506	LOCKWASHER	8
6	2P4640	SUPPORT	1

GRAPHIC #1

c200333

BLOWER FAN AND GUARD(2P4602 N/S)

Effective with Serial No. 65J1474-Up

Key:

SMCS

NOTE	REF NO	GRAPHIC REF	PART NUMBER	QTY	PART NAME 1 2 3 4 5 6 (PRODUCT LEVEL)	LINK PAGE
	1		2P-4333	1	GUARD ASSEM.	
	2		2P-4331	1	GUARD ASSEM.	
	3		2P-4332	1	GUARD ASSEM.	
	4		0S-0509	1	BOLT	
	5		3B-4506	17	LOCKWASHER	
	6		0S-1588	10	BOLT	
	7		4B-4278	10	WASHER	
	8		7S-0542	1	SPIDER ASSEM.	
	9		1A-2029	6	BOLT	

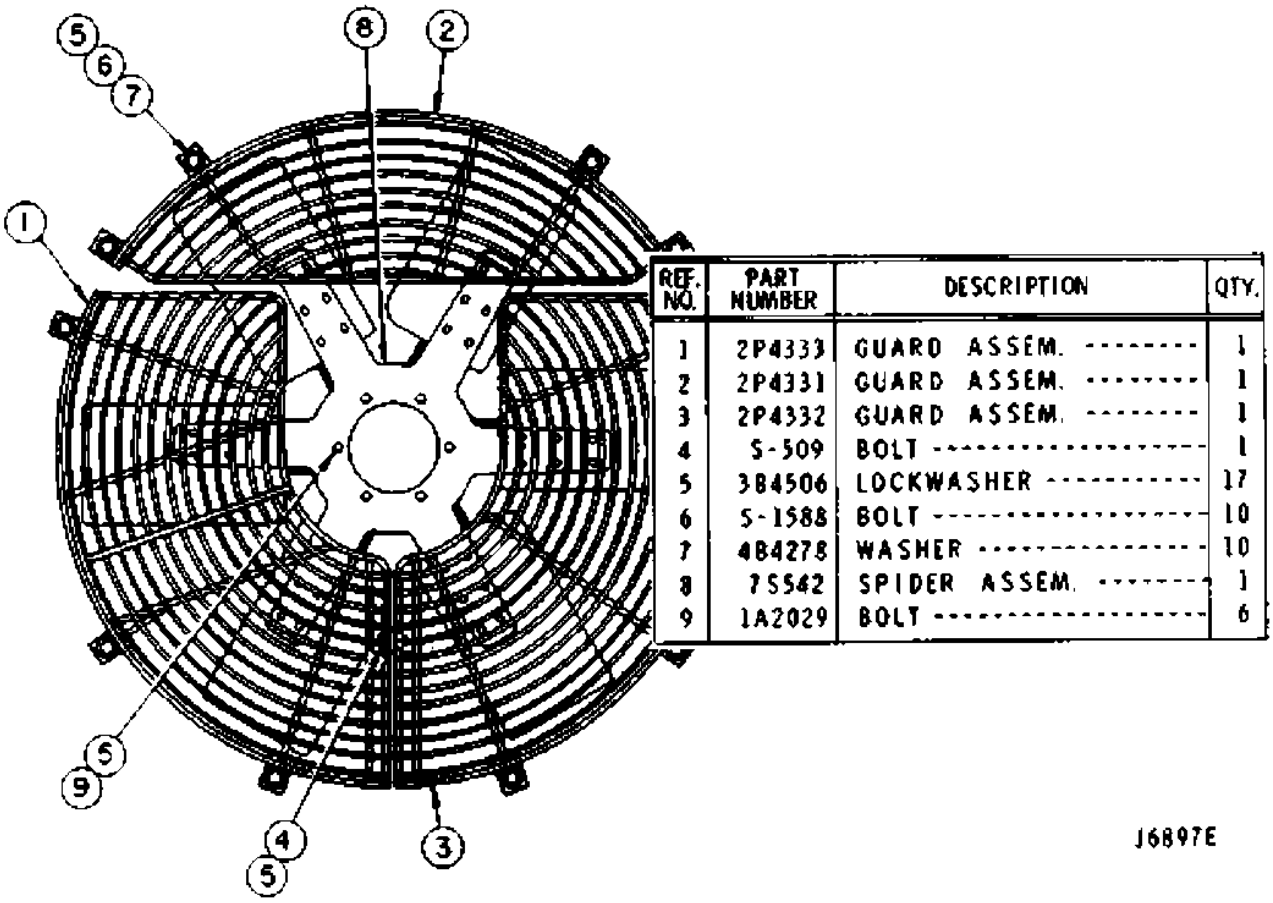

REF. NO.	PART NUMBER	DESCRIPTION	QTY.
1	2P4333	GUARD ASSEM.	1
2	2P4331	GUARD ASSEM.	1
3	2P4332	GUARD ASSEM.	1
4	S-509	BOLT	1
5	3B4506	LOCKWASHER	17
6	S-1588	BOLT	10
7	4B4278	WASHER	10
8	7S542	SPIDER ASSEM.	1
9	1A2029	BOLT	6

GRAPHIC #1

j6897e

7S548 SUCTION FAN GROUP

AN ATTACHMENT

Key:

SMCS

NOTE	REF NO	GRAPHIC REF	PART NUMBER	QTY	PART NAME 1 2 3 4 5 6 (PRODUCT LEVEL)	LINK PAGE

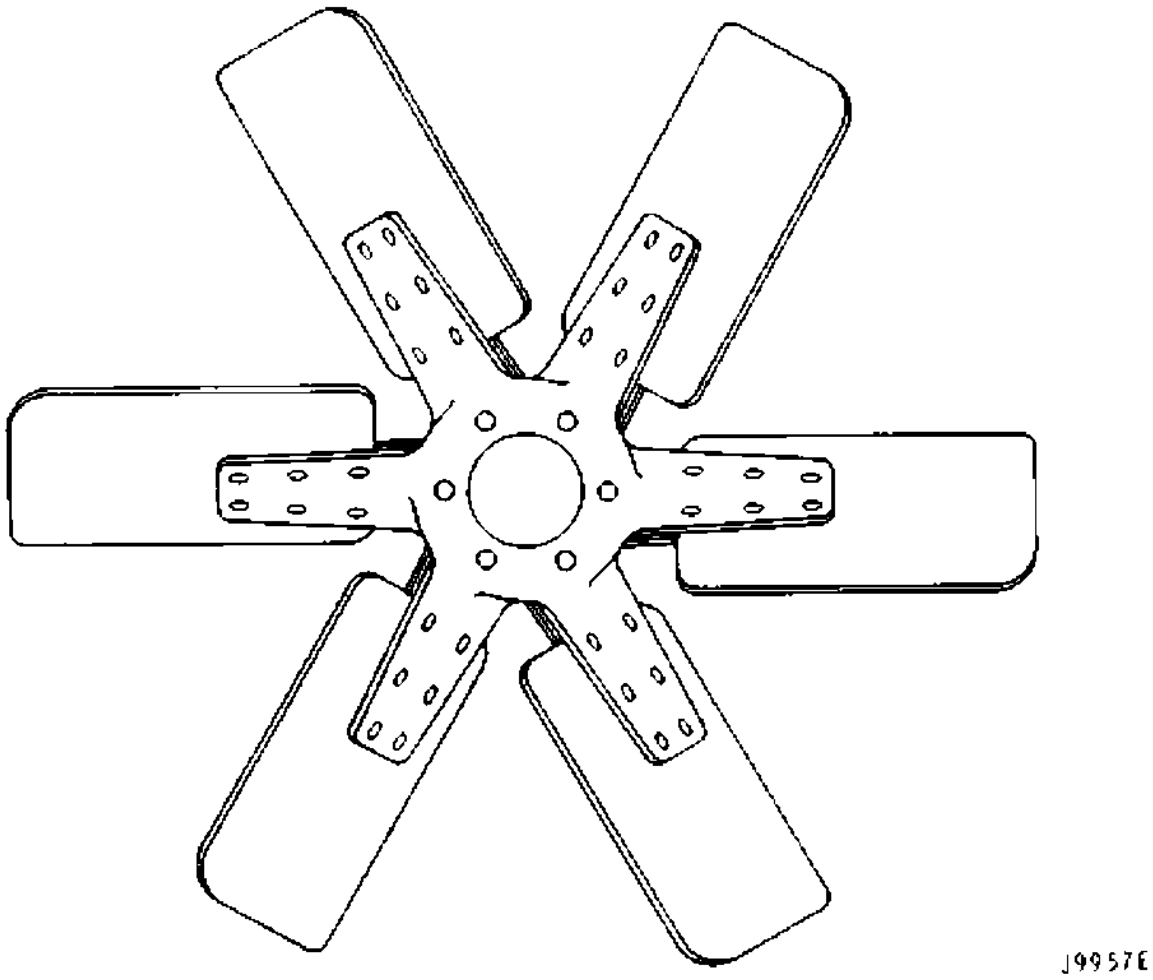

GRAPHIC #1

j9957e

1P8493 REVERSIBLE FAN GROUP

AN ATTACHMENT

Key:

SMCS

NOTE	REF NO	GRAPHIC REF	PART NUMBER	QTY	PART NAME 1 2 3 4 5 6 (PRODUCT LEVEL)	LINK PAGE

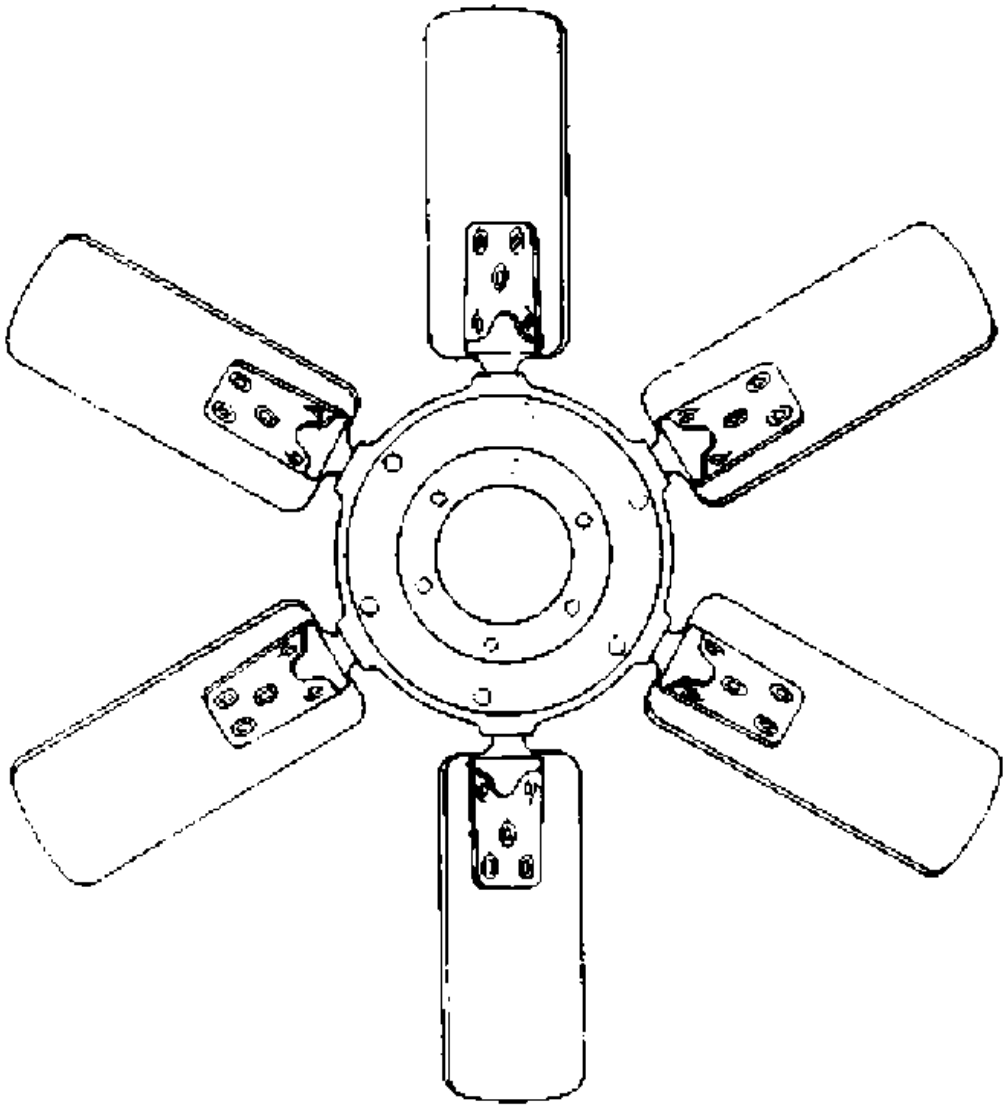

GRAPHIC #1

j7884e

WATER LINES (2P6188 N/S)

Effective with Serial No. 43V1~43V11876

Key: H - ORDER BY THE CENTIMETER

SMCS

NOTE	REF NO	GRAPHIC REF	PART NUMBER	QTY	PART NAME 1 2 3 4 5 6 (PRODUCT LEVEL)	LINK PAGE
	1		0S-1590	1	BOLT	
	2		2P-6132	1	GASKET	
	3		5A-7514	2	CLAMP	
	4		2P-2511	1	PIPE	
	5		0S-1588	2	BOLT	
H	6		2S-6656		HOSE 7.6cm	
	7		2P-6117	1	ELBOW	
	8		2P-0406	1	GASKET	
	9		5M-6213	2	PLUG	
	10		0S-1619	1	BOLT	
	11		1B-5174	3	PLUG	
	12		0T-0065	1	BOLT	

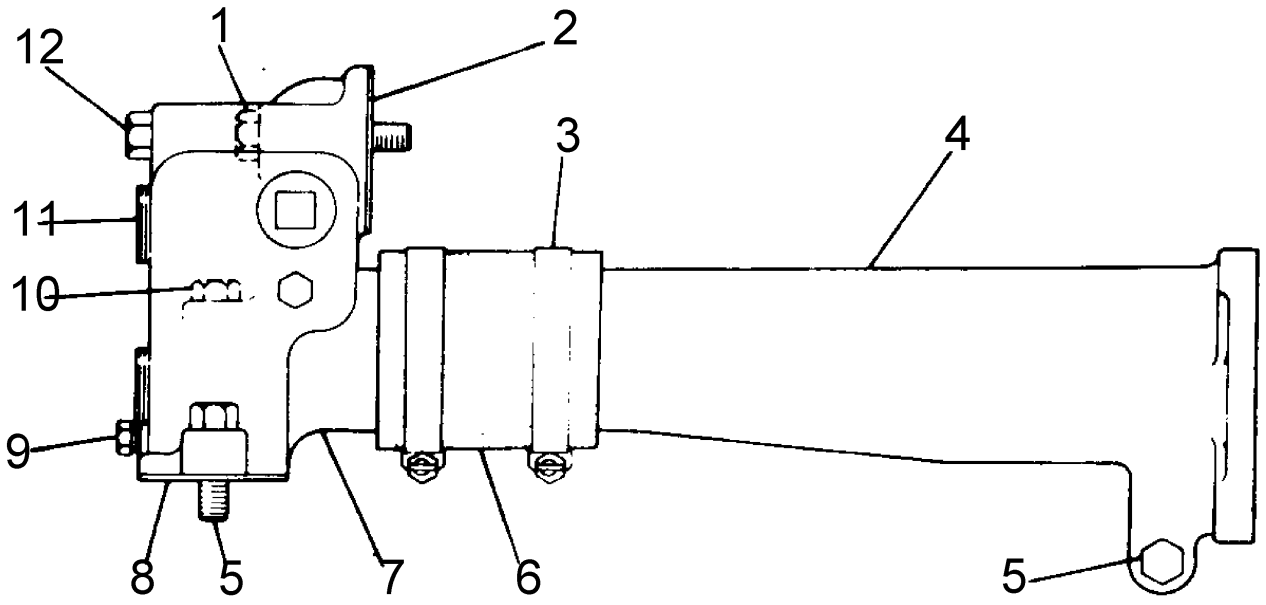

REF. NO.	PART NUMBER	DESCRIPTION	QTY.
1	S1590	BOLT	1
2	2P6132	GASKET	1
3	5A7514	CLAMP	2
4	2P2511	PIPE	1
5	S1588	BOLT	2
▲ 6	2S6656	HOSE 7.6cm	
7	2P6117	ELBOW	1

REF. NO.	PART NUMBER	DESCRIPTION	QTY.
8	2P406	GASKET	1
9	5M6213	PLUG	2
10	S1619	BOLT	1
11	1B5174	PLUG	3
12	T65	BOLT	1

▲ORDER BY THE CENTIMETER

J15456E

GRAPHIC #1

j15456e

2P661 WATER PUMP GROUP

Effective with Serial No. 43V1~43V9113

Key:

SMCS

NOTE	REF NO	GRAPHIC REF	PART NUMBER	QTY	PART NAME 1 2 3 4 5 6 (PRODUCT LEVEL)	LINK PAGE
	1		2P-3200	2	BOLT	
	2		2P-0405	1	GASKET	
	3		1N-9176	1	SEAL ASSEM.	
	4		8S-7762	1	RING	
	5		8S-8821	1	SEAL	
	6		8H-9520	1	SEAL	
	7		1K-6985	1	RETAINER	
	8		1T-0720	1	BOLT	
			3B-4506	1	LOCKWASHER	
	9		6H-3957	2	BEARING	
	10		2P-0659	1	GEAR ASSEM. (40 Teeth)	
	11		2L-5893	2	PIN	
	12		5F-3106	1	SEAL	
	13		5M-6213	1	PLUG	
	14		2P-0671	1	HOUSING	
	15		8S-9191	2	BOLT	
			5M-2894	2	WASHER	
	16		2P-0404	1	COVER	
	17		1P-9952	1	IMPELLER	
	18		4L-6454	1	BOLT	
			9M-6527	1	WASHER	
	19		1P-9929	1	SHAFT	

2P661 WATER PUMP GROUP

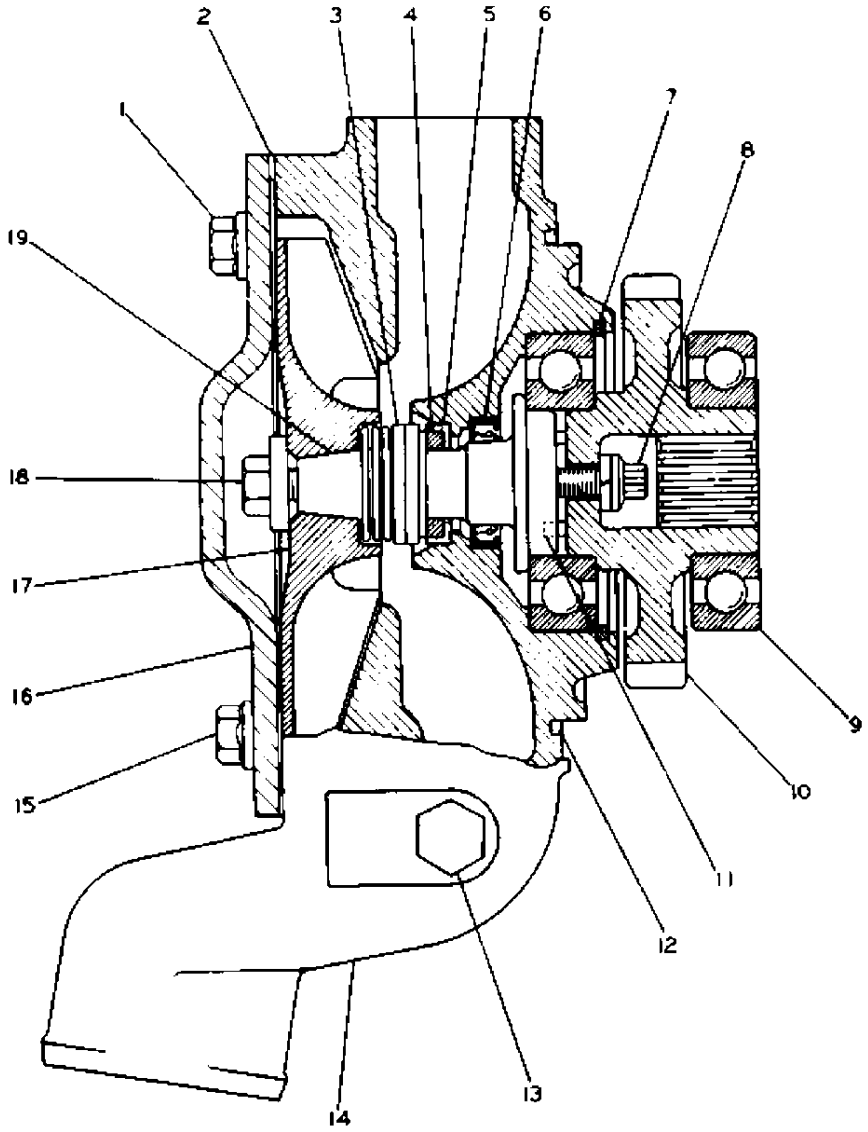

REF. NO.	PART NUMBER	DESCRIPTION	QTY.
1	2P3200	BOLT	2
2	2P405	GASKET	1
3	1N9176	SEAL ASSEM.	1
4	8S7762	RING	1
5	8S8821	SEAL	1
6	8H9520	SEAL	1
7	1K6985	RETAINER	1
8	1T720	BOLT	1
	3B4506	LOCKWASHER	1
9	6H3957	BEARING	2
10	2P659	GEAR ASSEM. (40 Teeth)	1
11	2L5893	PIN	2

REF. NO.	PART NUMBER	DESCRIPTION	QTY.
12	5F3106	SEAL	1
13	5M6213	PLUG	1
14	2P671	HOUSING	1
15	8S9191	BOLT	2
	5M2894	WASHER	2
16	2P404	COVER	1
17	1P9952	IMPELLER	1
18	4L6454	BOLT	1
	9M6527	WASHER	1
19	1P9929	SHAFT	1

J9115E

GRAPHIC #1

j9115e

2P661 WATER PUMP GROUP

Effective with Serial No. 43V9114~43V11876

Key: C - INDICATES CHANGE

SMCS

NOTE	REF NO	GRAPHIC REF	PART NUMBER	QTY	PART NAME 1 2 3 4 5 6 (PRODUCT LEVEL)	LINK PAGE
C	1		0L-1351	2	BOLT	
CH	2		6N-8190	1	GASKET	
CH	3		4N-6556	1	SEAL ASSEM	
H	4		8S-7762	1	RING	
H	5		8S-8821	1	SEAL	
H	6		8H-9520	1	SEAL	
	7		1K-6985	1	RETAINER	
C	8		5P-0076	1	BOLT	
			3B-4506	1	LOCKWASHER	
	9		6H-3957	2	BEARING	
	10		2P-0659	1	GEAR ASSEM (40 Teeth)	
	11		2L-5893	2	PIN	
H	12		5F-3106	1	SEAL	
	13		5M-6213	1	PLUG	
C	14		6N-8413	1	HOUSING	
	15		8S-9191	2	BOLT	
C	16		5M-2894	4	WASHER	
	17		2P-0404	1	COVER	
	18		1P-9952	1	IMPELLER	
	19		4L-6454	1	BOLT	
			9M-6527	1	WASHER	
	20		1P-9929	1	SHAFT	
					The Following Kit is Available	
			5P-1937	1	GASKET KIT	
					Consists of Parts Marked h and 1 - 2P406 GASKET (PART OF	

2P661 WATER PUMP GROUP

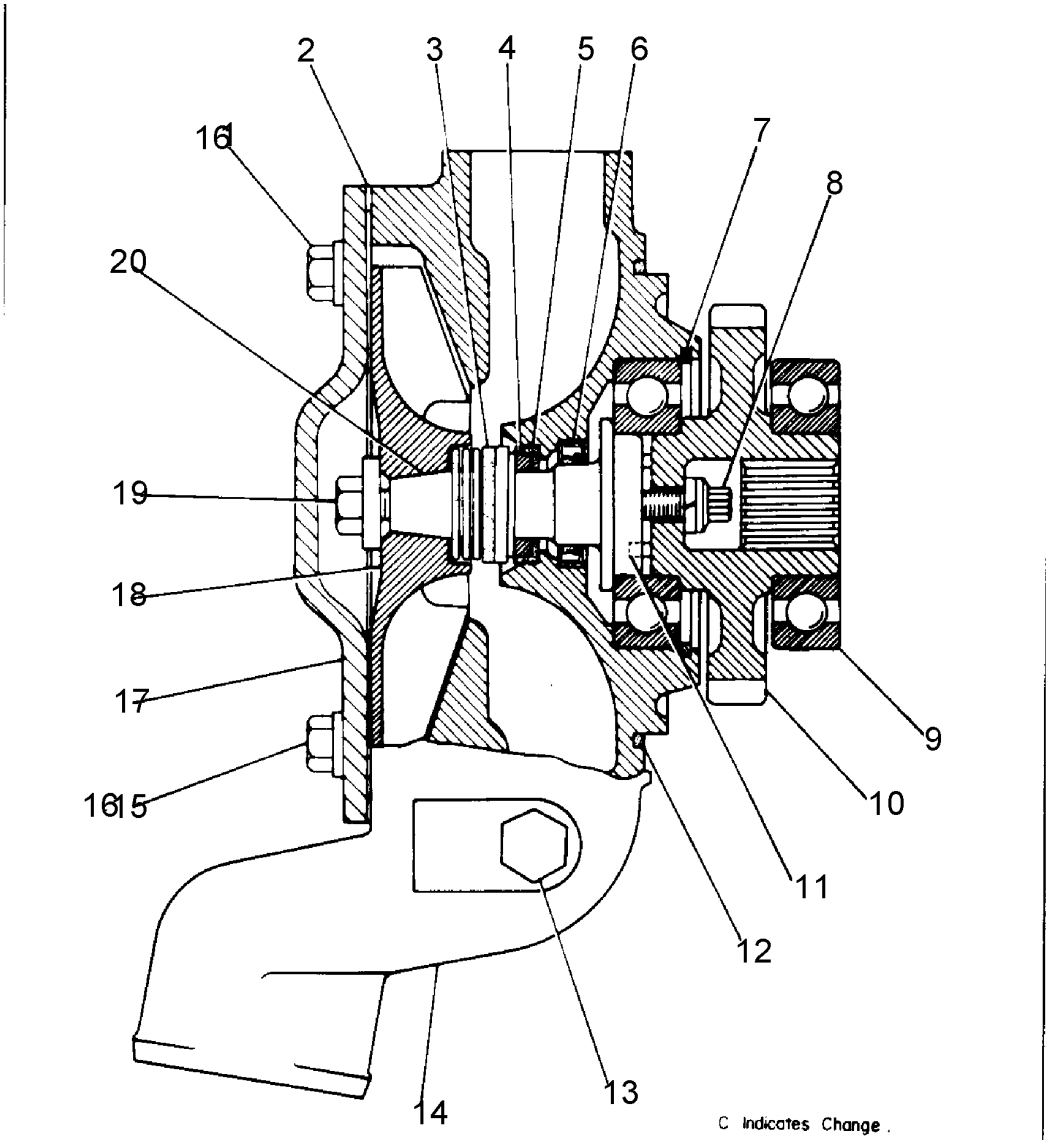

C Indicates Change.

	REF. NO.	PART NUMBER	DESCRIPTION	QTY.
C	1	L1351	BOLT	2
C▲	2	6N8190	GASKET	1
C▲	3	4N6556	SEAL ASSEM	1
▲	4	8S7762	RING	1
▲	5	8S8821	SEAL	1
▲	6	8H9520	SEAL	1
	7	1K6985	RETAINER	1
C	8	5P76	BOLT	1
		3B4506	LOCKWASHER	1
	9	6H3957	BEARING	2
	10	2P659	GEAR ASSEM (40 Teeth)	1
	11	2L5893	PIN	2
▲	12	5F3106	SEAL	1
	13	5M6213	PLUG	1

	REF. NO.	PART NUMBER	DESCRIPTION	QTY.
C	14	6N8413	HOUSING	1
	15	8S9191	BOLT	2
C	16	5M2894	WASHER	4
	17	2P404	COVER	1
	18	1P9952	IMPELLER	1
	19	4L6454	BOLT	1
		9M6527	WASHER	1
	20	1P9929	SHAFT	1

The Following Kit is Available
5P1937 - GASKET KIT ---------- 1
Consists of Parts Marked ▲ and 1 - 2P406 Gasket (Part of Water Line)

J15032E

GRAPHIC #1

j15032e

HOUSING AND REGULATOR (2P8164 N/S)

Effective with Serial No. 43V1~43V9584

Key:

SMCS

NOTE	REF NO	GRAPHIC REF	PART NUMBER	QTY	PART NAME 1 2 3 4 5 6 (PRODUCT LEVEL)	LINK PAGE
	1		2P-7719	1	ELBOW	
	2		2P-3209	1	BOLT (70mm Long)	
			2P-1301	1	BOLT (83mm Long)	
	3		2P-3203	2	BOLT (32mm Long)	
	4		2P-2715	1	GASKET	
	5		2P-3768	1	REGULATOR	

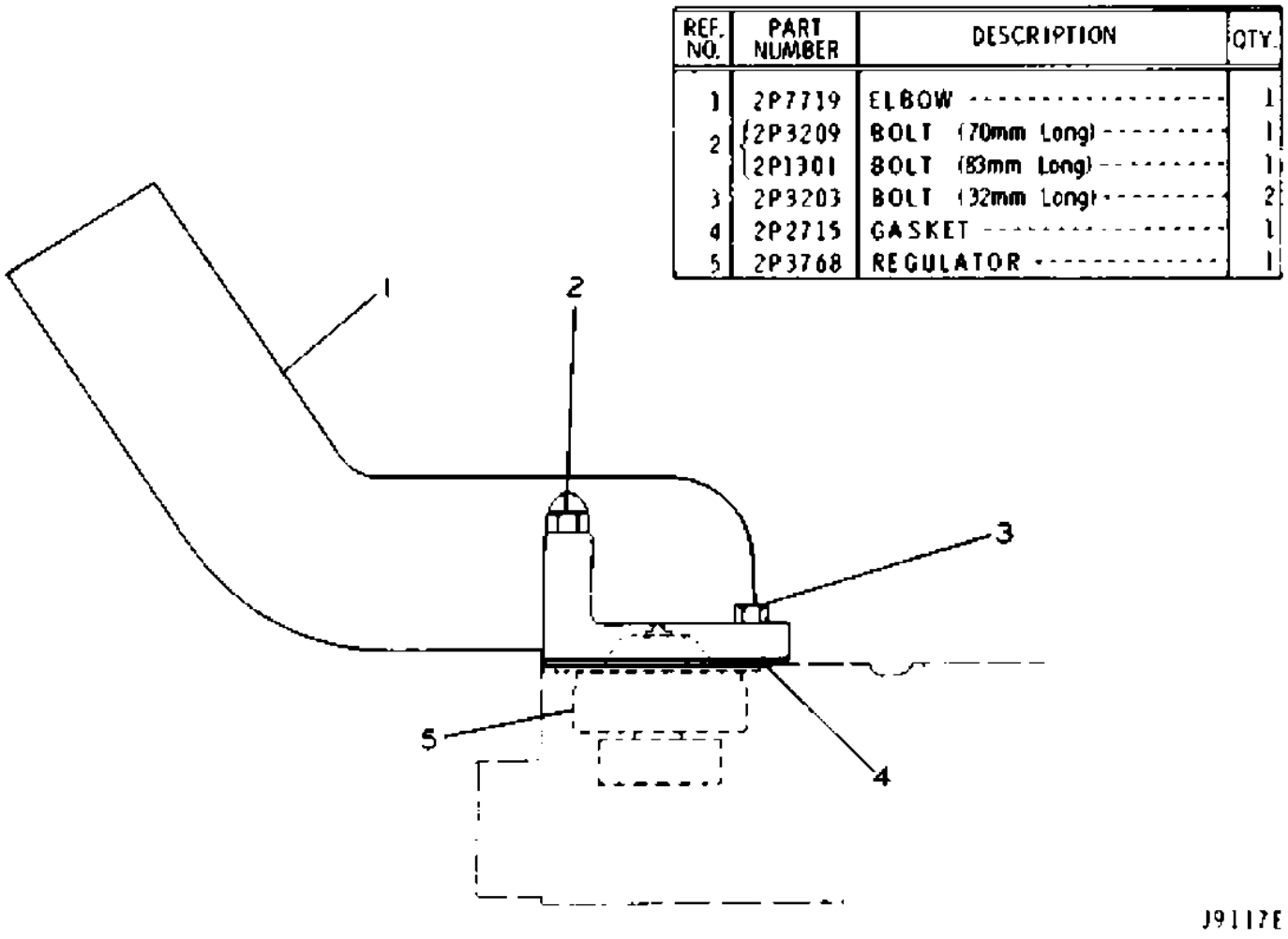

GRAPHIC #1

j9117e

HOUSING AND REGULATOR (2P8164 N/S)

Effective with Serial No. 43V9585~43V11876

Key: C - INDICATES CHANGE

SMCS

NOTE	REF NO	GRAPHIC REF	PART NUMBER	QTY	PART NAME 1 2 3 4 5 6 (PRODUCT LEVEL)	LINK PAGE
	1		2P-7719	1	ELBOW	
C	2		0T-0573	1	BOLT (70mm Long)	
C			0L-1352	1	BOLT (82.5mm Long)	
C	3		0S-1588	2	BOLT (31.5mm Long)	
	4		2P-2715	1	GASKET	
C	5		7N-0208	1	REGULATOR	

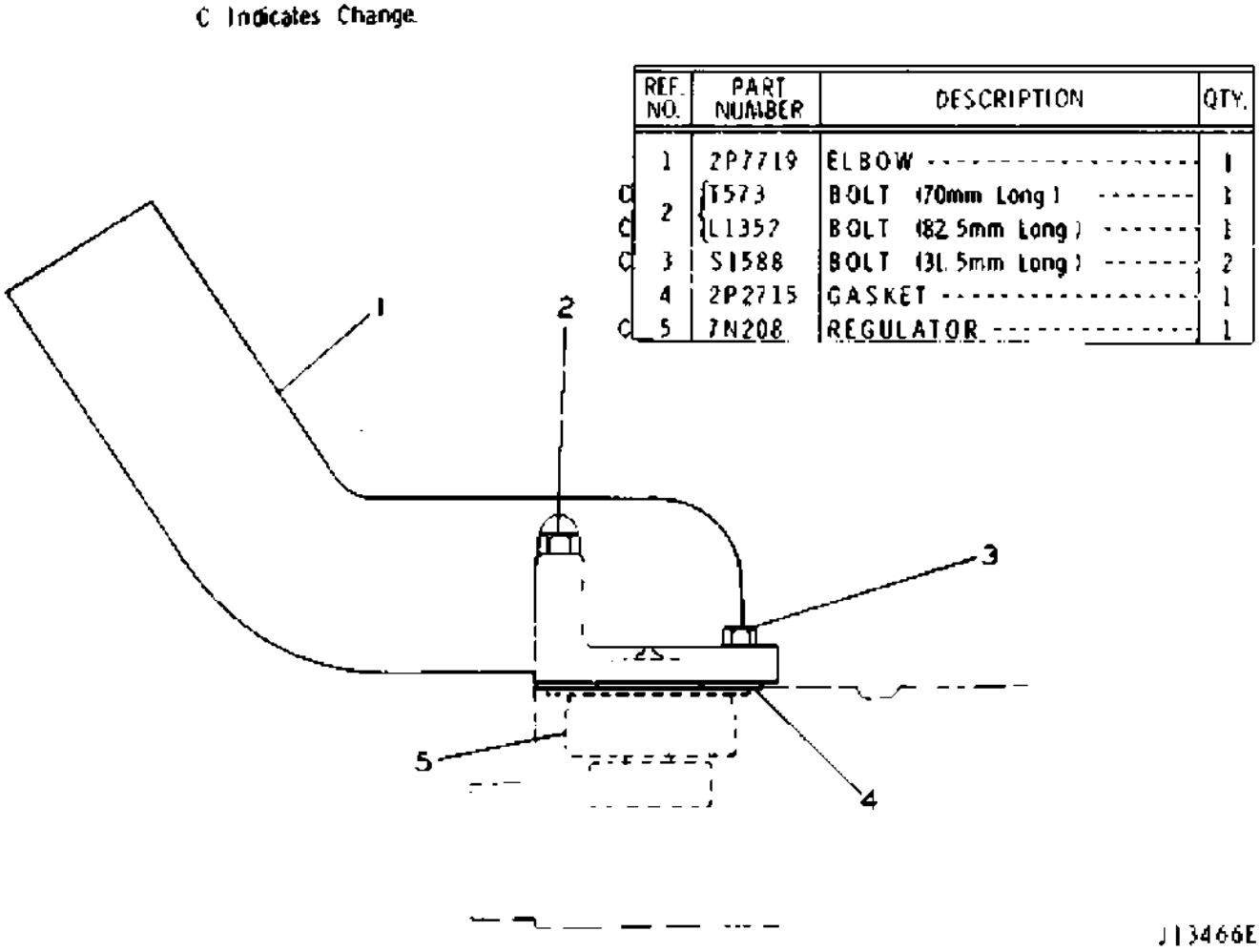

GRAPHIC #1

j13466e

WATER LINES (2P7741 N/S)--Pipe

Effective with Serial No. 43V1~43V11876

Key:

SMCS

NOTE	REF NO	GRAPHIC REF	PART NUMBER	QTY	PART NAME 1 2 3 4 5 6 (PRODUCT LEVEL)	LINK PAGE
	1		2P-3202	6	BOLT	
	2		9S-3206	1	PIPE	
	3		5S-6051	2	GASKET	
	4		2P-3207	1	BOLT	
	5		1T-0765	1	BOLT	

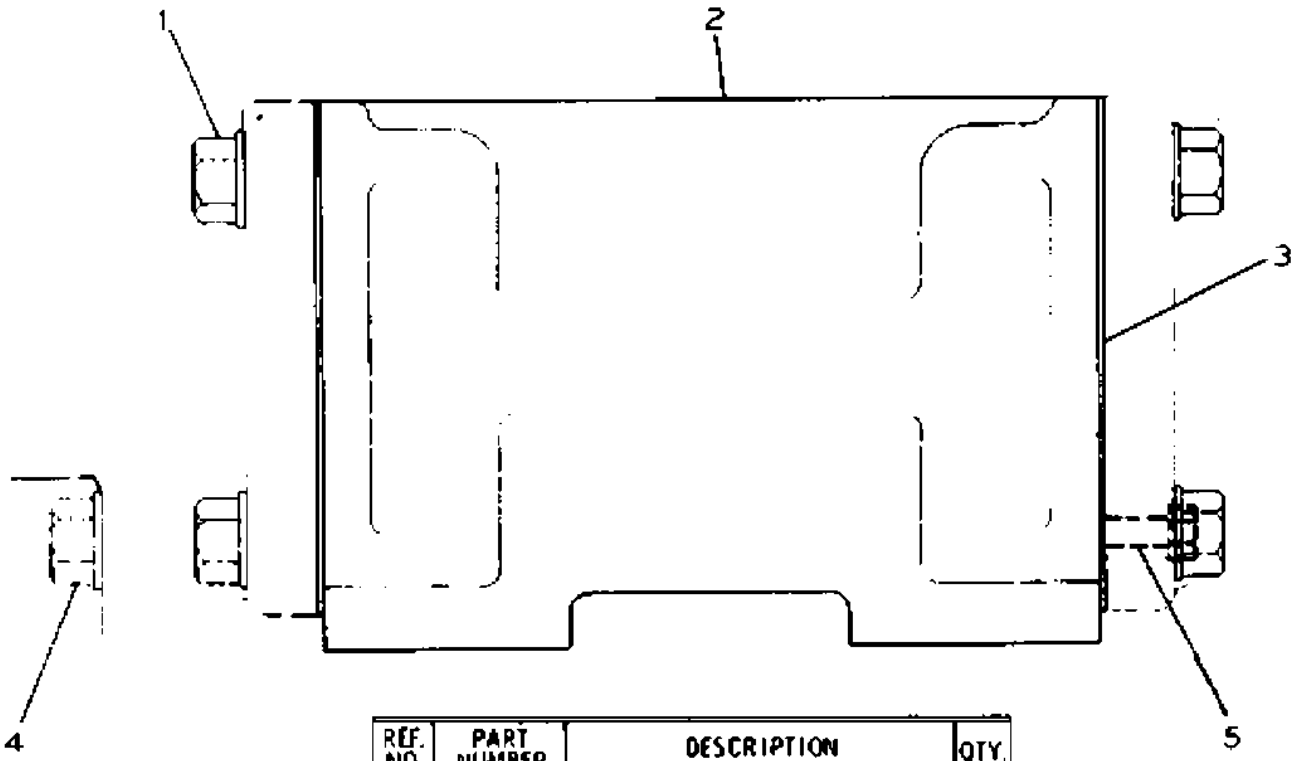

REF. NO.	PART NUMBER	DESCRIPTION	QTY.
1	2P3202	BOLT	6
2	9S3206	PIPE	1
3	5S6051	GASKET	2
4	2P3207	BOLT	1
5	1T765	BOLT	1

J9121E

GRAPHIC #1

j9121e

WATER LINES (2P7740 N/S)--Elbow

Effective with Serial No. 43V1~43V5678

Key:

SMCS

NOTE	REF NO	GRAPHIC REF	PART NUMBER	QTY	PART NAME 1 2 3 4 5 6 (PRODUCT LEVEL)	LINK PAGE
	1		3B-0551	1	PLUG	
	2		2P-1301	1	BOLT	
	3		2P-2677	1	ELBOW	
	4		3J-5390	1	PLUG	
	5		1B-5174	1	PLUG	
	6		2P-2516	1	GASKET	
	7		2P-3204	1	BOLT	

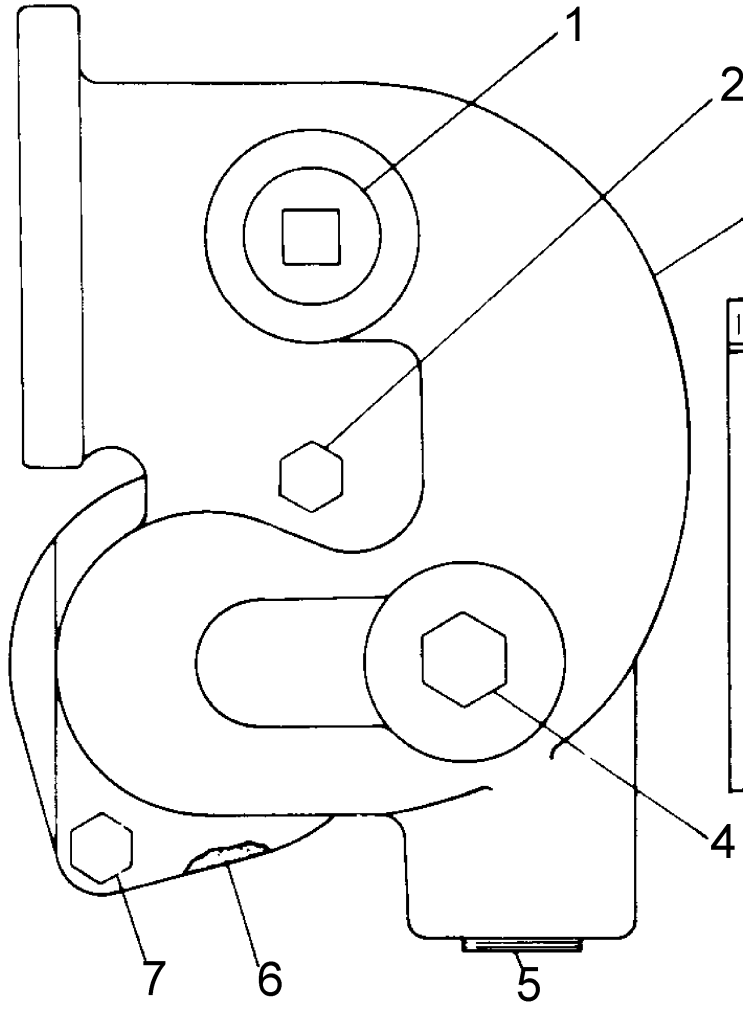

ITEM	PART Nº	DESCRIPTION	QTY.
1	3B551	PLUG	1
2	2P1301	BOLT	1
3	2P2677	ELBOW	1
4	3J5390	PLUG	1
5	1B5174	PLUG	1
6	2P2516	GASKET	1
7	2P3204	BOLT	1

117347

GRAPHIC #1

c117347

WATER LINES (2P7740 N/S)--Elbow

Effective with Serial No. 43V5679~43V11876

Key:

SMCS

NOTE	REF NO	GRAPHIC REF	PART NUMBER	QTY	PART NAME 1 2 3 4 5 6 (PRODUCT LEVEL)	LINK PAGE
C	1		0S-1617	2	BOLT	
C			9M-1974	2	WASHER	
C	2		4N-3840	1	COVER	
C			4N-3841	1	GASKET	
C	3		0L-1352	1	BOLT	
	4		3B-0551	1	PLUG	
C	5		6N-0122	1	ELBOW	
	6		3J-5390	1	PLUG	
	7		1B-5174	1	PLUG	
	8		2P-2516	1	GASKET	
C	9		0S-1591	1	BOLT	

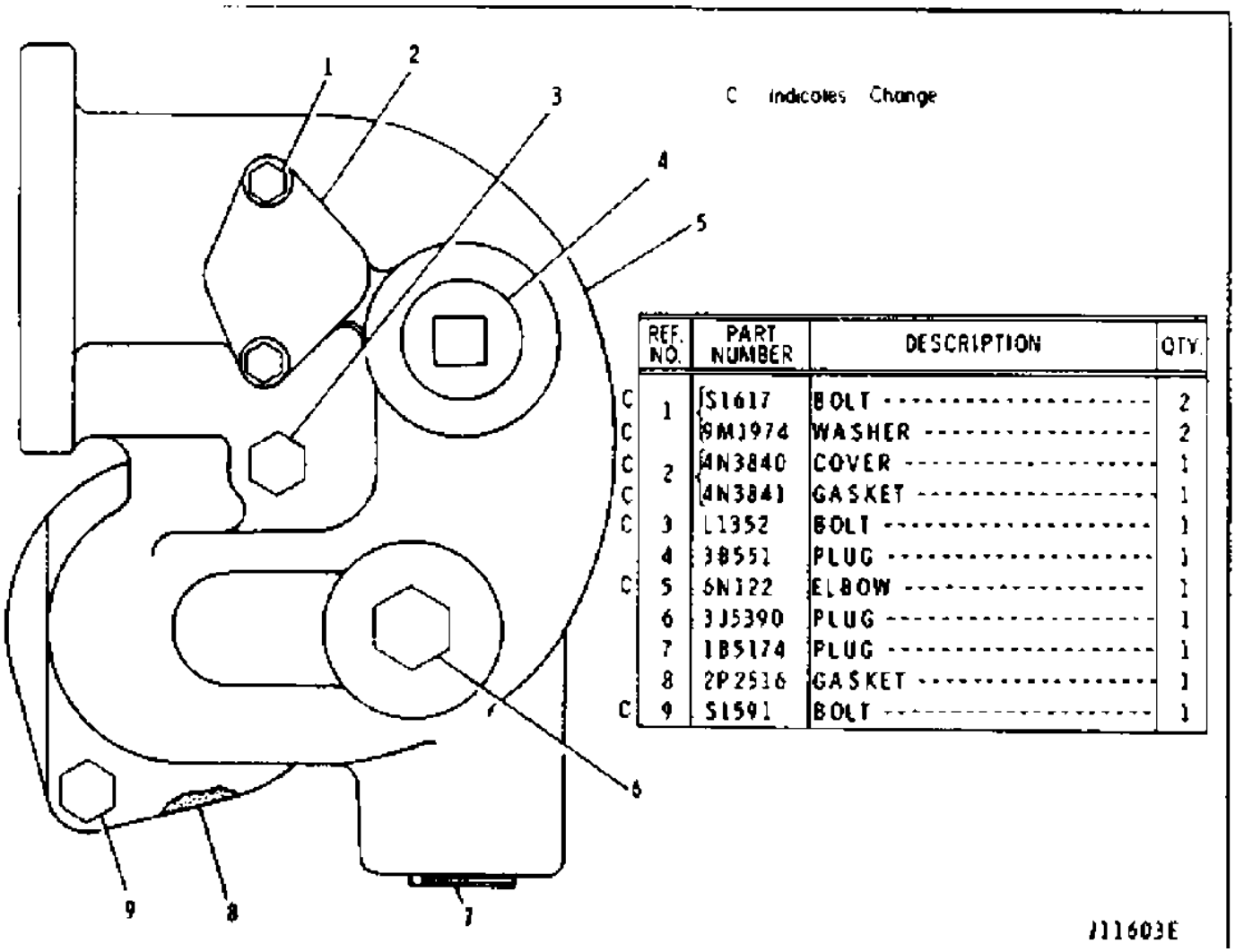

GRAPHIC #1

j11603e

AIR CLEANER (1P6429 N/S)

Effective with Serial No. 65J1474-Up

Key:

SMCS

NOTE	REF NO	GRAPHIC REF	PART NUMBER	QTY	PART NAME 1 2 3 4 5 6 (PRODUCT LEVEL)	LINK PAGE
			4M-0310	1	PRECLEANER	
	1		9M-9439	1	COVER ASSEM.	
	2		5A-4259	1	BODY	
	3		4N-8945	1	BASE ASSEM.	
			1S-5163	1	BOLT	
			2S-1289	1	AIR CLEANER ASSEM.	
	4		4M-8047	1	ELEMENT (Primary)	
	5		2S-1285	1	ELEMENT (Secondary)	
			4M-1485	1	GASKET (Inner)	
	6		9M-4894	1	CUP ASSEM.	
	7		9M-8511	1	GASKET	
	8		9M-3695	2	ROD ASSEM.	
	9		1D-4717	6	NUT	
			3B-4506	6	LOCKWASHER	
	10		4M-1485	1	GASKET (Outer)	

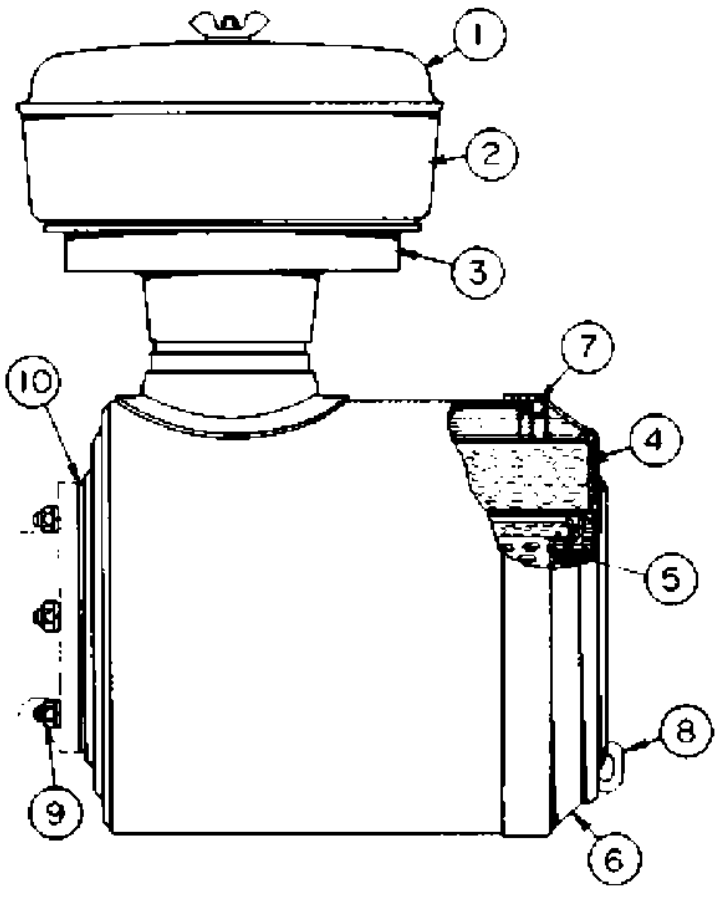

REF. NO.	PART NUMBER	DESCRIPTION	QTY.
	4M310	PRECLEANER	1
		Consists of:	
1	9M9439	COVER ASSEM.	1
2	5A4259	BODY	1
3	4N8945	BASE ASSEM.	1
	1S5163	BOLT	1
	2S1289	AIR CLEANER ASSEM.	1
		Consists of:	
4	4M8047	ELEMENT (Primary)	1
5	2S1285	ELEMENT (Secondary)	1
	4M1485	GASKET (Inner)	1
6	9M4894	CUP ASSEM.	1
7	9M8511	GASKET	1
8	9M3695	ROD ASSEM.	2
9	1D4717	NUT	6
	3B4506	LOCKWASHER	6
10	4M1485	GASKET (Outer)	1

j9586e

GRAPHIC #1

5M2734 PRESCREENER GROUP

AN ATTACHMENT

Key:

SMCS

NOTE	REF NO	GRAPHIC REF	PART NUMBER	QTY	PART NAME 1 2 3 4 5 6 (PRODUCT LEVEL)	LINK PAGE
			5M-2737	1	PRESCREENER ASSEM.	
			9M-9439	1	COVER ASSEM.	
			5A-4259	1	BODY	
			7M-8726	1	SLEEVE ASSEM.	
			5M-0880	1	PIPE ASSEM.	
					(EXTENSION)	
			3B-1915	1	BOLT	
			1D-4717	1	NUT	
			4F-4974	1	CLAMP	

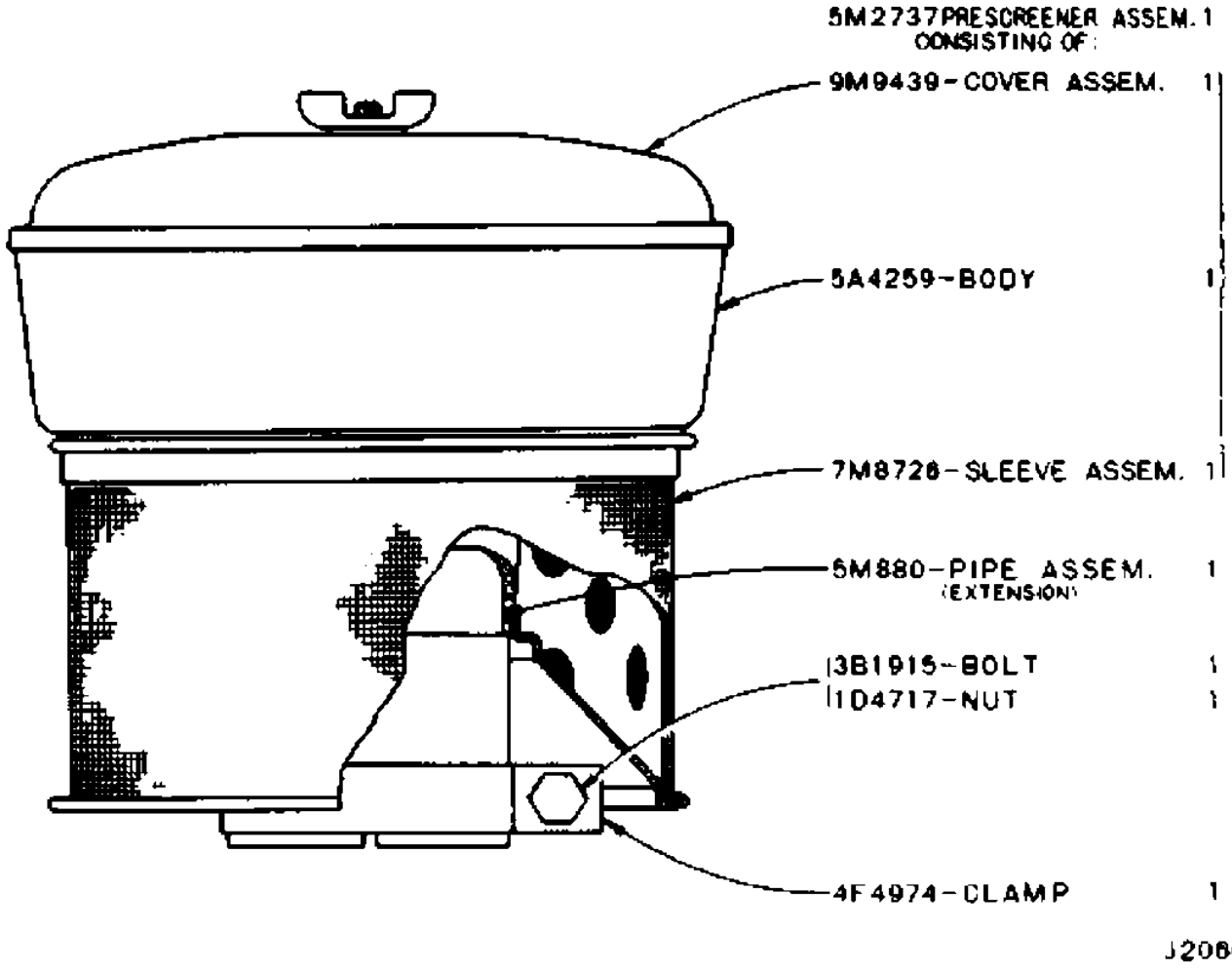

GRAPHIC #1

j2066e

5A9962 PRECLEANER ASSEMBLY

AN ATTACHMENT

Key:

SMCS

NOTE	REF NO	GRAPHIC REF	PART NUMBER	QTY	PART NAME 1 2 3 4 5 6 (PRODUCT LEVEL)	LINK PAGE
	1		9M-9439	1	COVER ASSEM.	
	2		5A-4259	1	BODY	
	3		5A-9584	1	SLEEVE ASSEM.	
	4		4N-8945	1	BASE ASSEM.	
	5		1S-5163	1	BOLT	

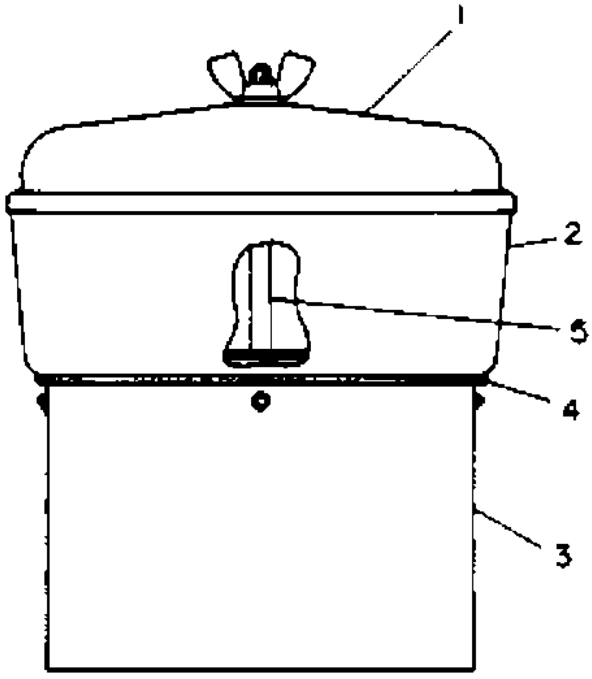

REF. NO.	PART NUMBER	DESCRIPTION	QTY.
1	9M9439	COVER ASSEM.	1
2	5A4259	BODY	1
3	5A9584	SLEEVE ASSEM.	1
4	4N8945	BASE ASSEM.	1
5	1S5163	BOLT	1

J9675E

GRAPHIC #1

j9675e

6K8159 PRECLEANER GUARD GROUP

AN ATTACHMENT

Key:

SMCS

NOTE	REF NO	GRAPHIC REF	PART NUMBER	QTY	PART NAME 1 2 3 4 5 6 (PRODUCT LEVEL)	LINK PAGE
	1		6K-8156	1	GUARD ASSEM.	
	2		0S-0509	6	BOLT	
	3		1D-4717	6	NUT	
	4		3B-4506	6	LOCKWASHER	

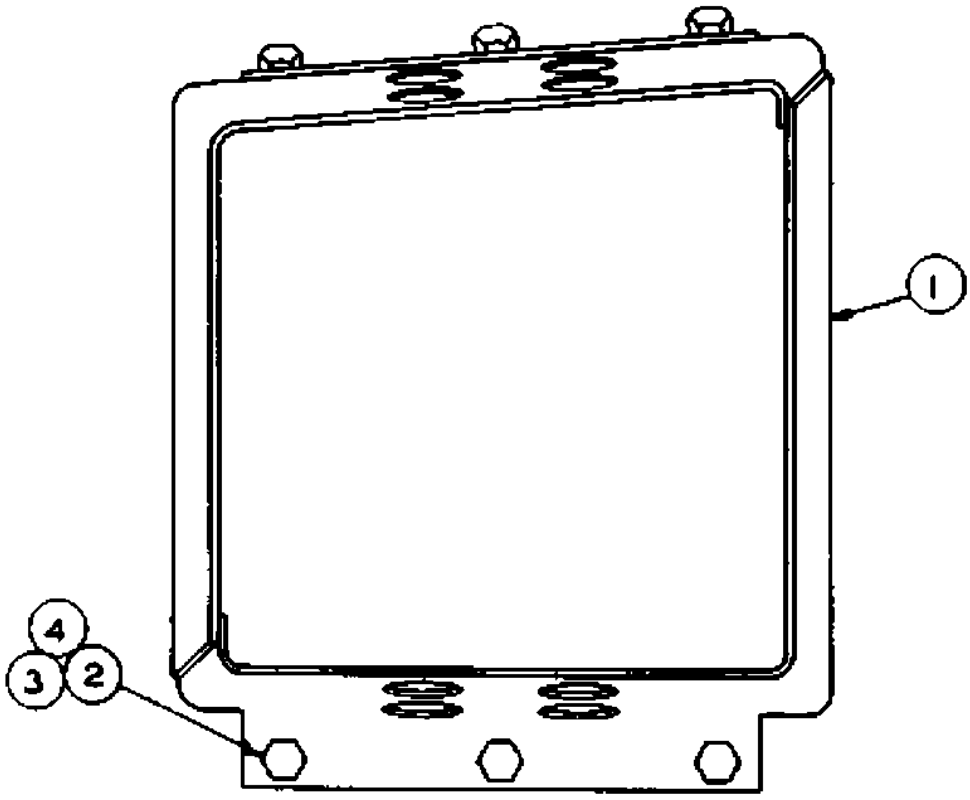

REF NO.	PART NUMBER	DESCRIPTION	QTY
1	6K8156	GUARD ASSEM.	1
2	S-509	BOLT	6

REF NO	PART NUMBER	DESCRIPTION	QTY
3	1D4717	NUT	6
4	3B4506	LOCKWASHER	6

102710JE

GRAPHIC #1

c927451

5A8035 PRECLEANER RAIN PROTECTION COVER GROUP

AN ATTACHMENT

Key:

SMCS

NOTE	REF NO	GRAPHIC REF	PART NUMBER	QTY	PART NAME 1 2 3 4 5 6 (PRODUCT LEVEL)	LINK PAGE

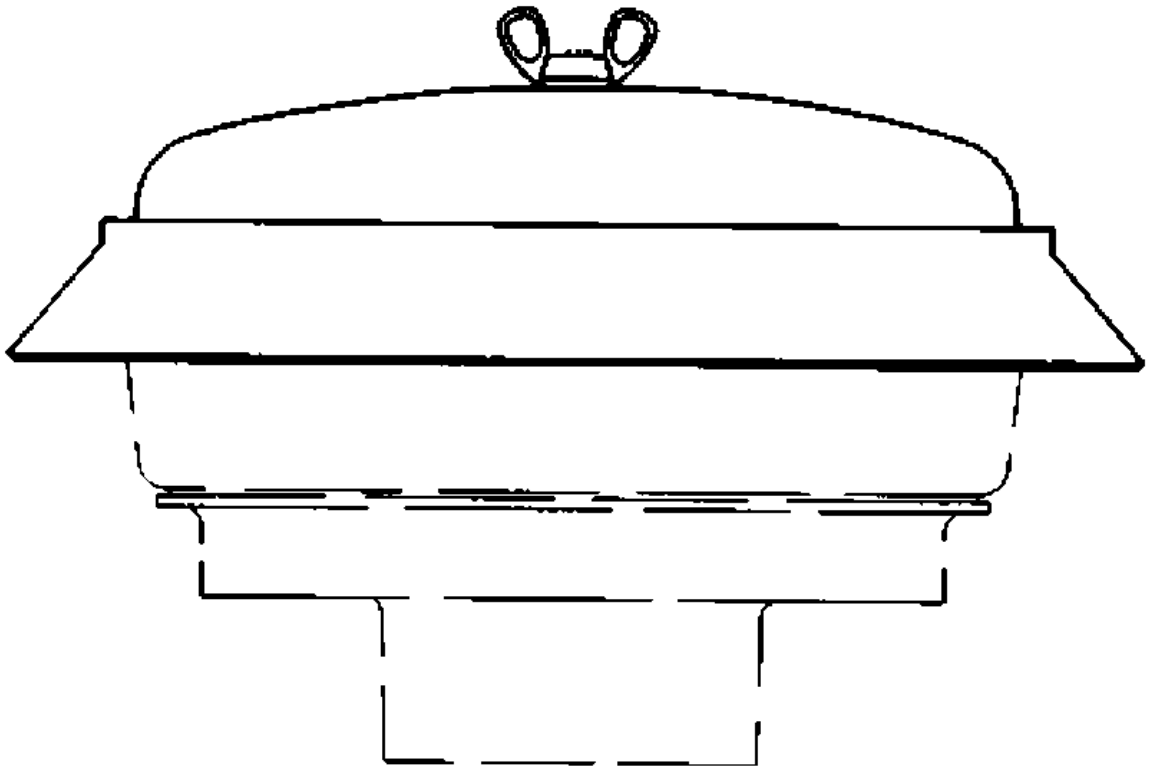

J12638E

GRAPHIC #1

j12638e

1V2150 AIR CLEANER AND EXHAUST PIPE EXTENSION GROUP

AN ATTACHMENT

Key:

SMCS

NOTE	REF NO	GRAPHIC REF	PART NUMBER	QTY	PART NAME 1 2 3 4 5 6 (PRODUCT LEVEL)	LINK PAGE
	1		1M-2007	2	PLATE	
	2		0S-1588	6	BOLT	
	3		3B-4506	9	LOCKWASHER	
	4		1D-4717	6	NUT	
	5		9K-8114	1	BRACE ASSEM.	
	6		1B-5355	3	NUT	
	7		5A-8598	1	CLAMP	
	8		0S-1591	1	BOLT	
	9		9K-8116	1	PIPE	
	10		1V-2147	1	BAR	
	11		1F-1342	1	EXTENSION	
	12		6K-8974	1	CLAMP ASSEM.	
	13		1A-2029	2	BOLT	
	14		7F-3943	2	END	
	15		1B-4205	2	NUT	
	16		9K-8113	1	BRACE ASSEM.	
	17		6L-3930	1	HOSE	
	18		5P-1717	2	CLAMP	

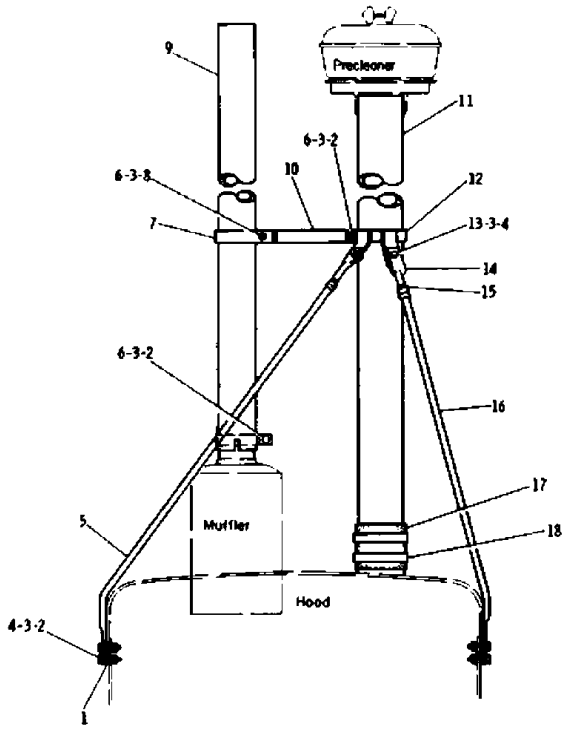

REF. NO.	PART NUMBER	DESCRIPTION	QTY.
1	1M2007	PLATE	2
2	S1588	BOLT	6
3	3B4506	LOCKWASHER	9
4	1D4717	NUT	6
5	9K8114	BRACE ASSEM.	1
6	1B5355	NUT	3
7	5A8598	CLAMP	1
8	S1591	BOLT	1
9	9K8116	PIPE	1
10	1V2147	BAR	1
11	1F1342	EXTENSION	1
12	6K8974	CLAMP ASSEM.	1
13	1A2029	BOLT	2
14	7F3943	END	2
15	1B4205	NUT	2
16	9K8113	BRACE ASSEM.	1
17	6L3930	HOSE	1
18	5P1717	CLAMP	2

J12641E

GRAPHIC #1

j12641e

AIR LINES (2P6840 N/S)

Effective with Serial No. 43V1~43V11876

Key:

SMCS

NOTE	REF NO	GRAPHIC REF	PART NUMBER	QTY	PART NAME 1 2 3 4 5 6 (PRODUCT LEVEL)	LINK PAGE
	1		7S-2243	1	PIPE AS	
	2		7M-1674	1	ELEMENT-FILTER	
	3		2P-3202	4	BOLT-WASHER HEAD	
	4		5S-6735	1	GASKET	

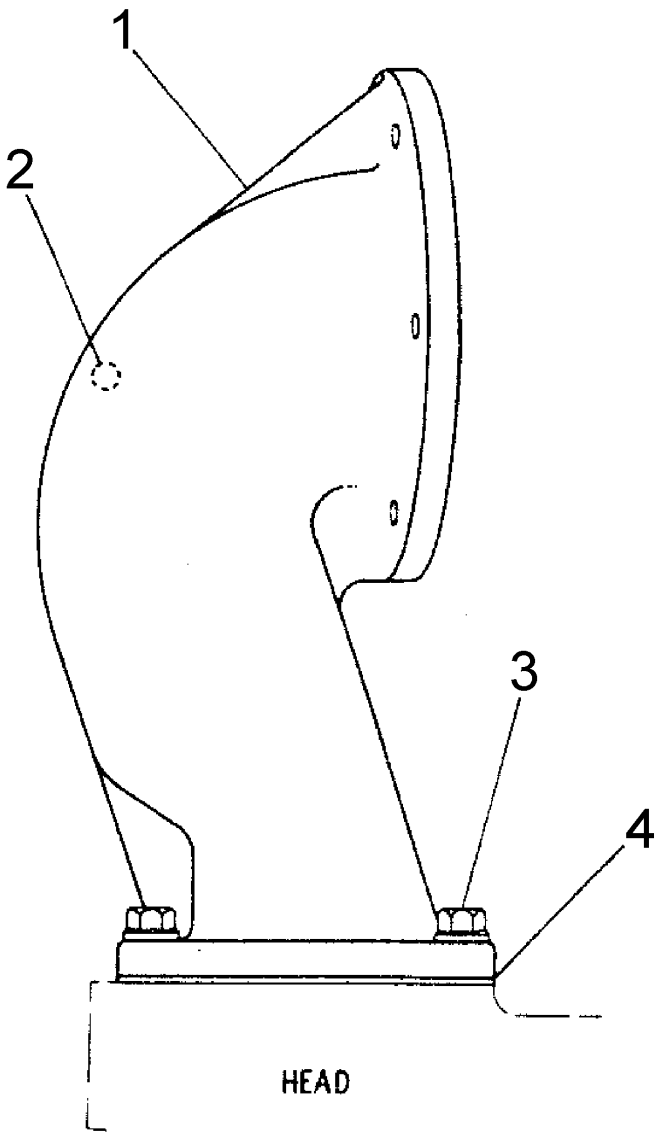

GRAPHIC #1

c117190

EXHAUST MANIFOLD (2P6570 N/S)

Effective with Serial No. 43V1~43V11876

Key:

SMCS

NOTE	REF NO	GRAPHIC REF	PART NUMBER	QTY	PART NAME 1 2 3 4 5 6 (PRODUCT LEVEL)	LINK PAGE
	1		9S-2356	1	MANIFOLD-EXHAUST	
	2		8S-8258	4	GASKET	

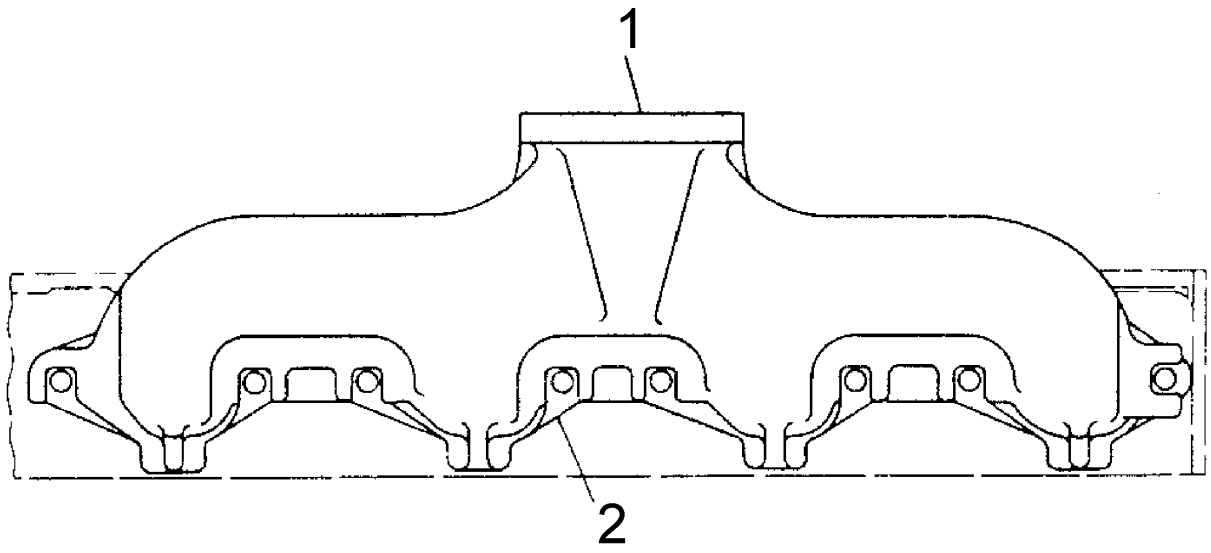

GRAPHIC #1

c117198

EXHAUST MANIFOLD FASTENER (2P6533 N/S)

Effective with Serial No. 43V1~43V2247

Key:

SMCS

NOTE	REF NO	GRAPHIC REF	PART NUMBER	QTY	PART NAME 1 2 3 4 5 6 (PRODUCT LEVEL)	LINK PAGE
	1		1B-5355	8	NUT	
			8M-7145	8	WASHER	
	2		7S-6719	5	STUD	
	3		3M-0496	2	STUD	
	4		8M-1871	1	STUD	

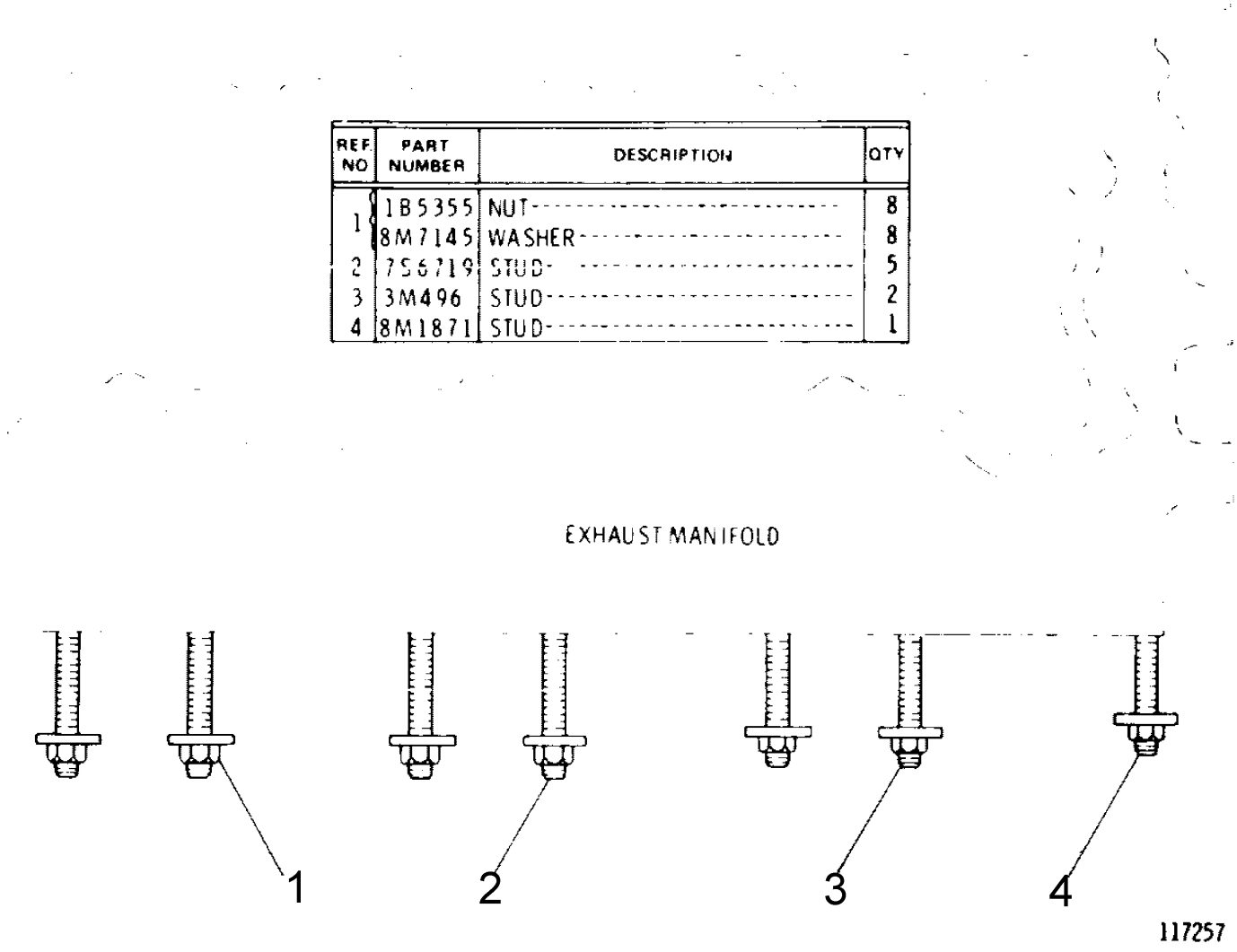

GRAPHIC #1

c117257

EXHAUST MANIFOLD FASTENER (4N9585 N/S)

Effective with Serial No. 43V2248~43V10505

Key:

SMCS

NOTE	REF NO	GRAPHIC REF	PART NUMBER	QTY	PART NAME 1 2 3 4 5 6 (PRODUCT LEVEL)	LINK PAGE
	1		1M-7643	1	SPACER	
	2		2M-2488	2	STUD	
			5M-2894	2	WASHER	
	3		7S-6719	4	STUD	
	4		1B-5355	8	NUT	
			8M-7145	8	WASHER	
	5		4N-9587	1	SHIELD	
	6		3M-0496	2	STUD	
	7		1B-4971	1	SPACER	

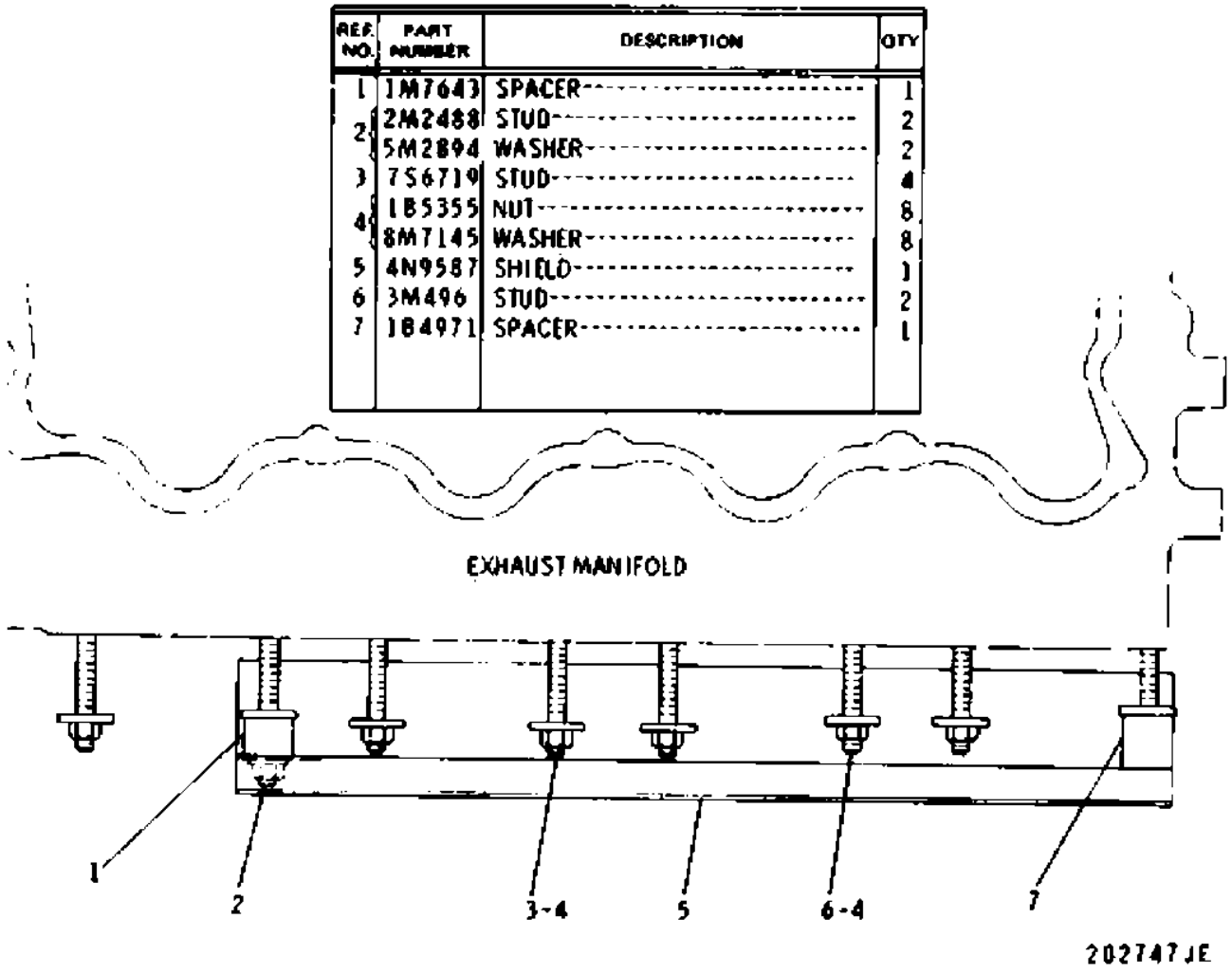

GRAPHIC #1

c927452

EXHAUST MANIFOLD FASTENER (2P6533 N/S)

Effective with Serial No. 43V10506~43V11876

Key:

SMCS

NOTE	REF NO	GRAPHIC REF	PART NUMBER	QTY	PART NAME 1 2 3 4 5 6 (PRODUCT LEVEL)	LINK PAGE
	1		1B-5355	8	NUT	
	2		7S-6719	7	STUD	
	3		8M-1871	1	STUD	
	4		9M-6527	1	WASHER	
	5		8M-7145	7	WASHER	

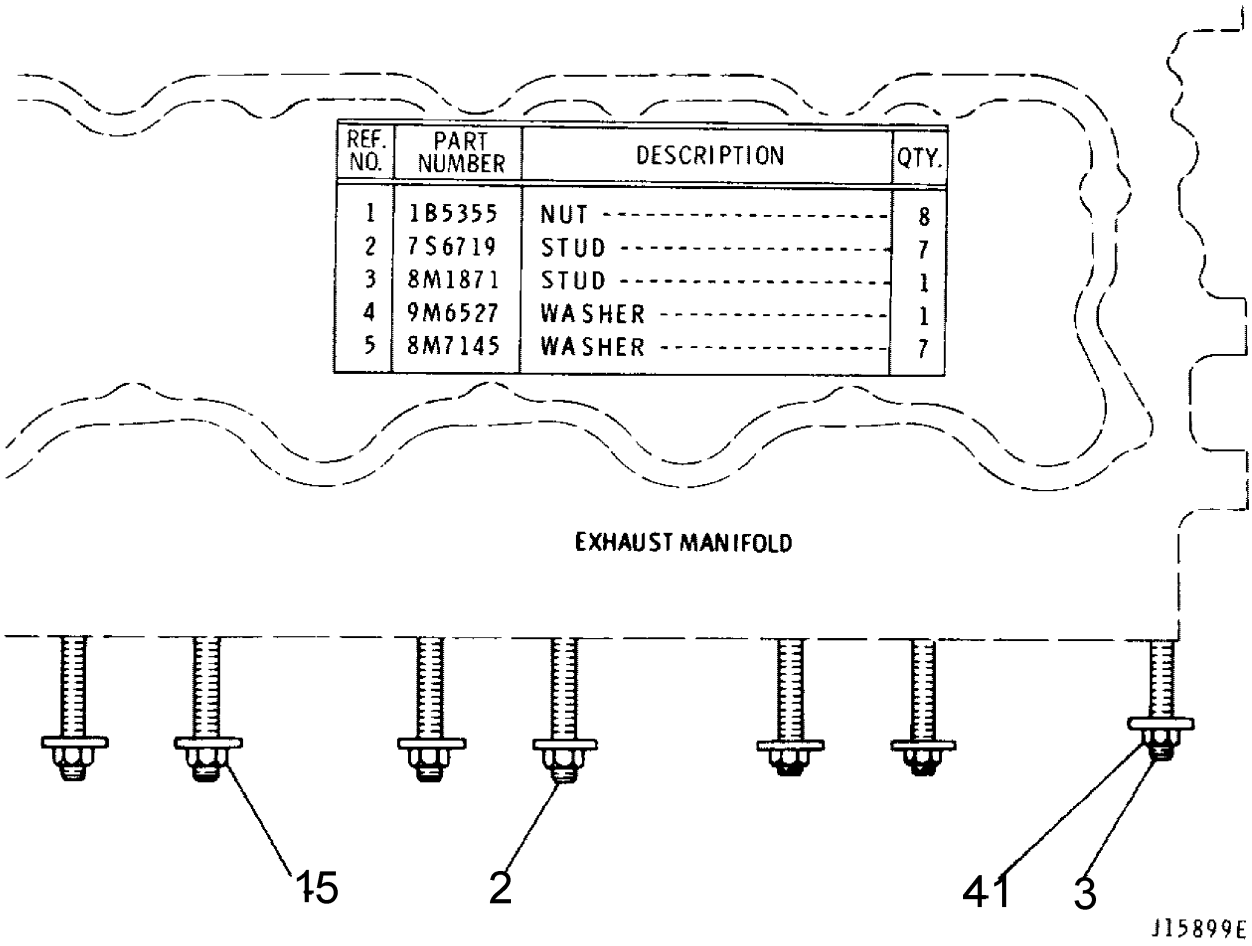

GRAPHIC #1

j15899e

EXHAUST PIPE (3P138 N/S)

Effective with Serial No. 43V1~43V11876

Key:

SMCS

NOTE	REF NO	GRAPHIC REF	PART NUMBER	QTY	PART NAME 1 2 3 4 5 6 (PRODUCT LEVEL)	LINK PAGE
	1		2P-8938	1	ELBOW	
	2		2P-3204	4	BOLT	
			1B-5355	4	NUT	

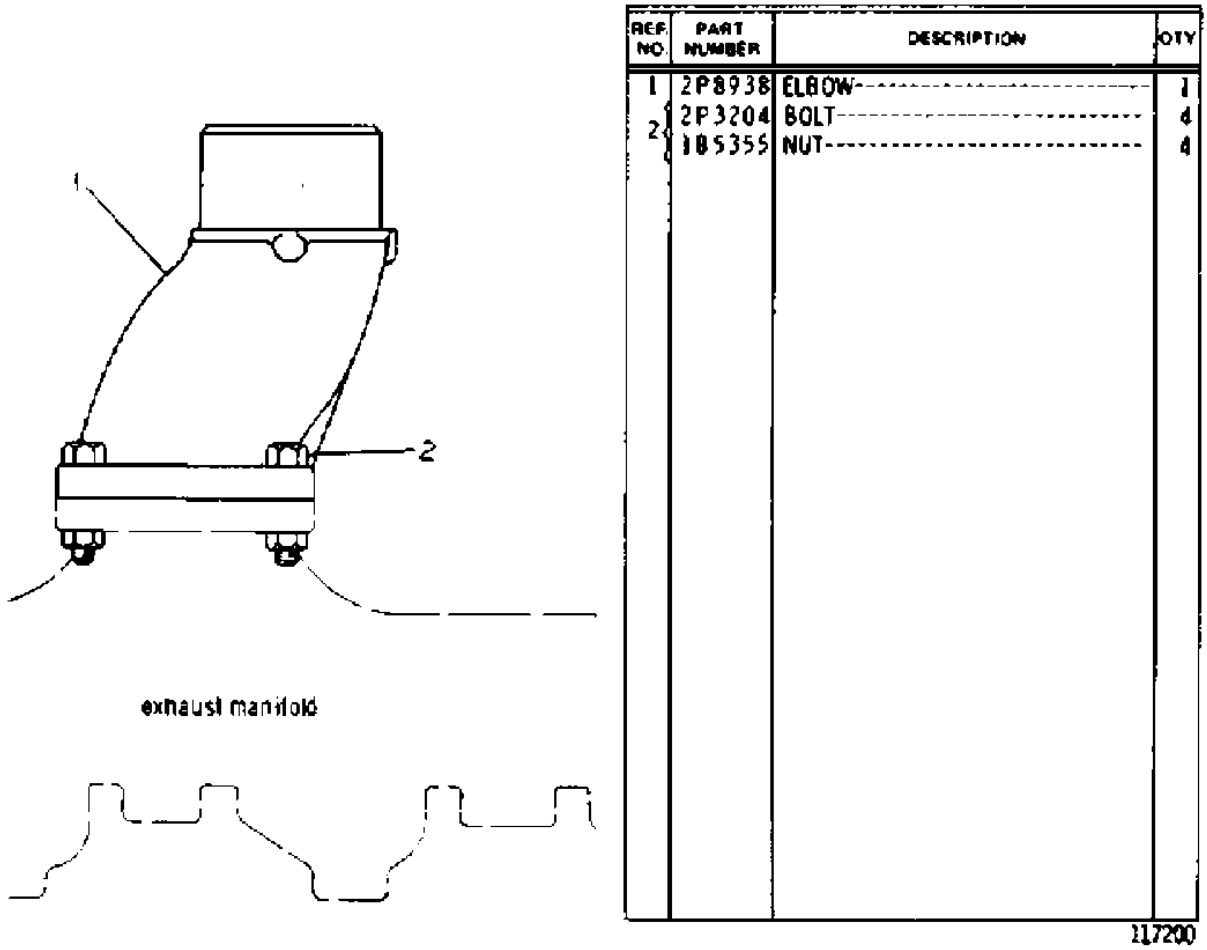

GRAPHIC #1

c117200

MUFFLER (7S7116 N/S)

Effective with Serial No. 65J1474-Up

Key:

SMCS

NOTE	REF NO	GRAPHIC REF	PART NUMBER	QTY	PART NAME 1 2 3 4 5 6 (PRODUCT LEVEL)	LINK PAGE
			3Y-1081	1	PIPE	
			5A-8598	1	CLAMP	
			3K-3124	1	MUFFLER	
			5A-8597	1	CLAMP	
			0T-0768	2	BOLT	
			1B-5356	2	NUT	
			3B-4507	2	LOCKWASHER	

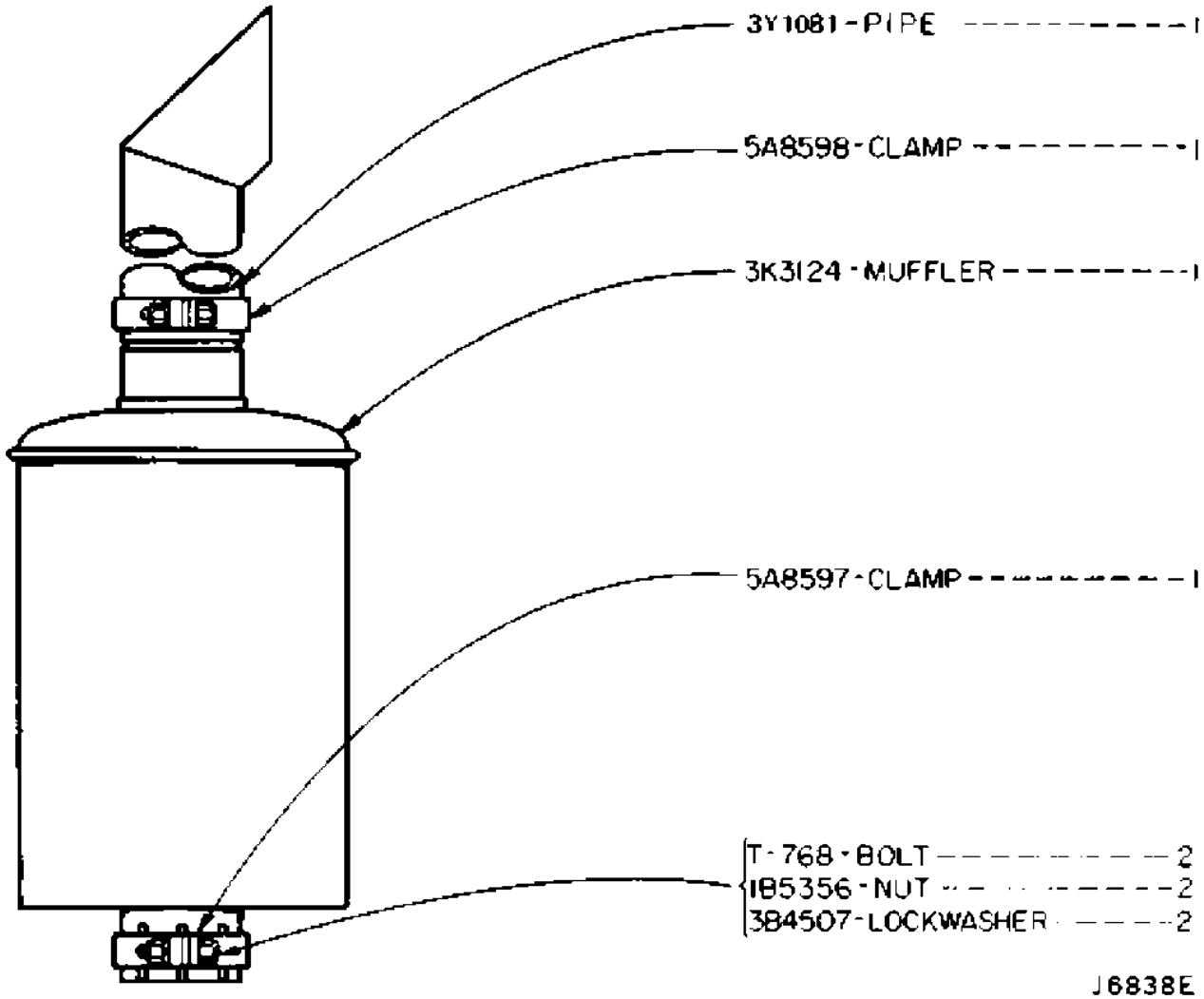

GRAPHIC #1

j6838e

GOVERNOR CONTROL (6K3012 N/S)

Effective with Serial No. 65J1474~65J1590

Key:

SMCS

NOTE	REF NO	GRAPHIC REF	PART NUMBER	QTY	PART NAME 1 2 3 4 5 6 (PRODUCT LEVEL)	LINK PAGE
			7F-8092	1	KNOB	
			1J-4384	1	PIN	
			3B-4615	1	COTTERPIN	
			6K-2980	1	ROD	
			1A-2209	1	BOLT	
			1B-4203	1	NUT	
			1J-4384	1	PIN	
			3B-4615	1	COTTER PIN	
			2M-2326	1	LEVER	
			1B-8702	1	KEY	
			2M-2327	1	SHAFT	
			1A-9252	1	END	
			2M-2328	1	LEVER	
			1B-8702	1	KEY	
			0S-1594	1	BOLT	
			5A-9252	1	LEVER	
			1B-8704	1	KEY	
			1A-2029	1	BOLT	
			1B-4203	1	NUT	

GOVERNOR CONTROL (6K3012 N/S)

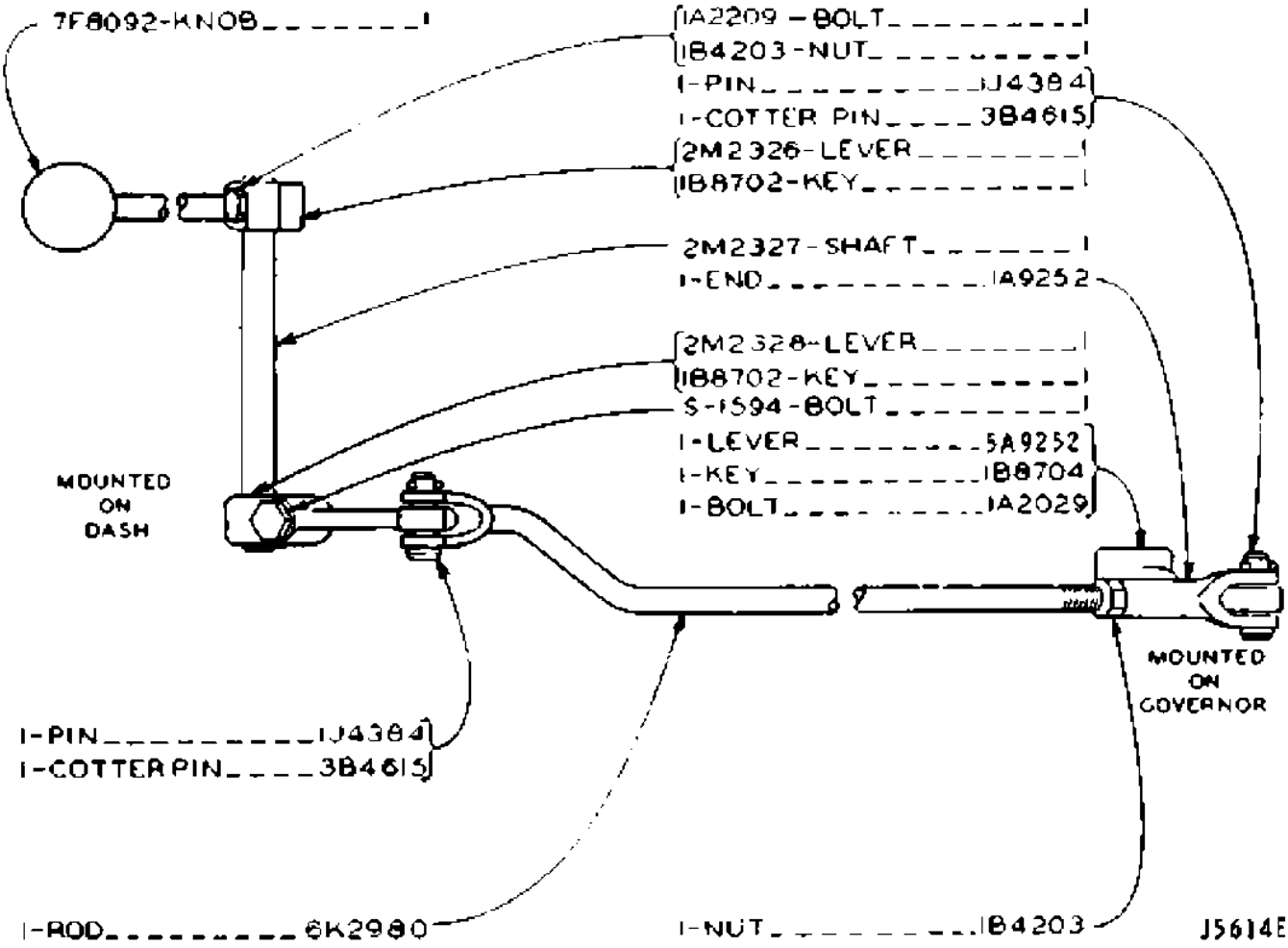

GRAPHIC #1

j5614e

GOVERNOR CONTROL (1V484 N/S)

Effective with Serial No. 65J1591~65J1839

Key:

SMCS

NOTE	REF NO	GRAPHIC REF	PART NUMBER	QTY	PART NAME 1 2 3 4 5 6 (PRODUCT LEVEL)	LINK PAGE
	1		7F-8092	1	KNOB	
	2		1V-1399	1	LEVER	
	3		8H-9182	2	ROLLER	
	4		8H-9186	2	SPRING	
	5		0S-1594	1	BOLT	
	6		2M-2328	1	LEVER	
			1B-8702	1	KEY	
	7		1B-0676	2	PIN	
			3B-4615	2	COTTER PIN	
	8		1V-1798	1	ROD ASSEM.	
	9		1B-4203	1	NUT	
	10		1F-5403	1	END	
	11		1V-0026	1	LEVER	
	12		1B-7182	1	BOLT	
	13		5H-7152	1	SPRING	
	14		8B-2377	3	BOLT	
	15		3B-4504	4	LOCKWASHER	
	16		3B-1915	1	BOLT	
			1D-4717	1	NUT	
	17		1V-1729	1	SHAFT ASSEM.	
	18		1B-8704	1	KEY	
	19		9F-7022	1	BOLT	
	20		8H-9180	2	SEAL	
	21		7M-2167	1	RING	
	22		7M-6955	1	GASKET	
	23		1V-1734	1	SHAFT ASSEM.	
	24		1V-1732	1	SUPPORT ASSEM.	
	25		5H-7179	2	BUSHING	

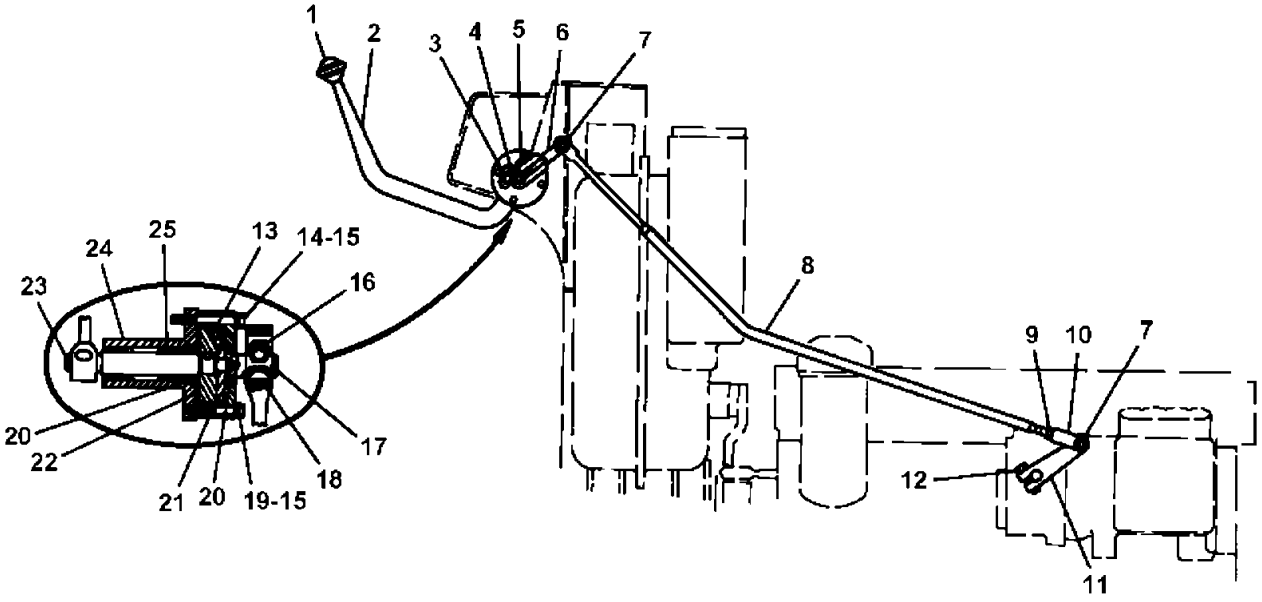

GRAPHIC #1

j10385e

GOVERNOR CONTROL (1V484 N/S)

Effective with Serial No. 65J1840~65J2005, 65J2011~65J2034, 65J2038~65J2042

Key: C - INDICATES CHANGE

SMCS

NOTE	REF NO	GRAPHIC REF	PART NUMBER	QTY	PART NAME 1 2 3 4 5 6 (PRODUCT LEVEL)	LINK PAGE
	1		7F-8092	1	KNOB	
C	2		3Y-3445	1	LEVER	
	3		8H-9182	2	ROLLER	
	4		8H-9186	2	SPRING	
	5		0S-1594	1	BOLT	
	6		2M-2328	1	LEVER	
			1B-8702	1	KEY	
	7		1B-0676	2	PIN	
			3B-4615	2	COTTER PIN	
	8		1V-1798	1	ROD ASSEM.	
	9		1B-4203	1	NUT	
	10		1F-5403	1	END	
	11		1V-0026	1	LEVER	
	12		1B-7182	1	BOLT	
	13		5H-7152	1	SPRING	
	14		8B-2377	3	BOLT	
	15		3B-4504	4	LOCKWASHER	
	16		3B-1915	1	BOLT	
			1D-4717	1	NUT	
	17		1V-1729	1	SHAFT ASSEM.	
	18		1B-8704	1	KEY	
	19		9F-7022	1	BOLT	
	20		8H-9180	2	SEAL	
	21		7M-2167	1	RING	
C	22		9S-2308	1	GASKET	
	23		1V-1734	1	SHAFT ASSEM.	
	24		1V-1732	1	SUPPORT ASSEM.	
	25		5H-7179	2	BUSHING	
C	26		9S-2309	1	WASHER	

GOVERNOR CONTROL (1V484 N/S)

C Indicates Change.

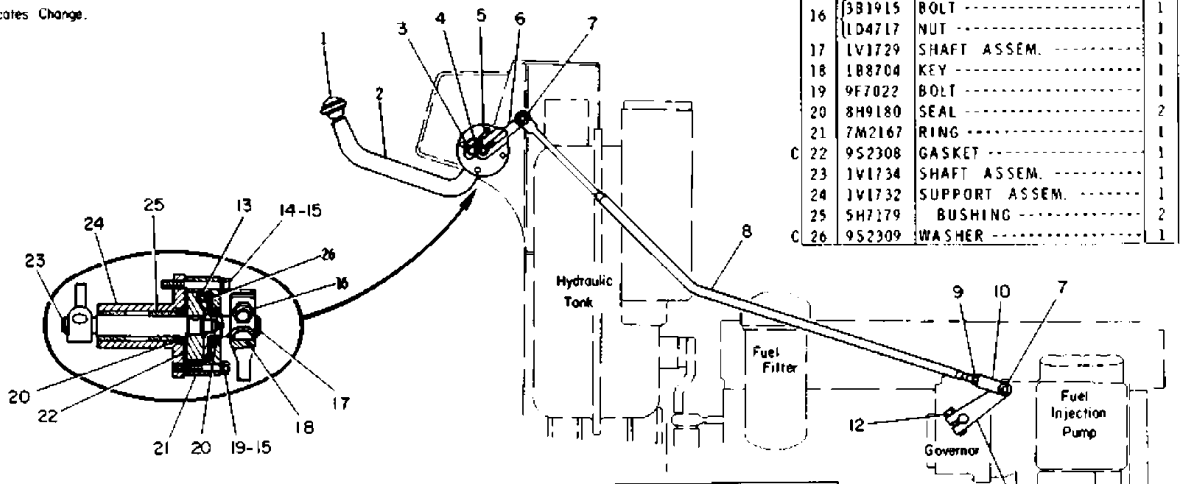

REF. NO.	PART NUMBER	DESCRIPTION	QTY.
16	3B1915	BOLT	1
	LD4717	NUT	1
17	1V1729	SHAFT ASSEM.	1
18	1B8704	KEY	1
19	9F7022	BOLT	1
20	8H9180	SEAL	2
21	7M2167	RING	1
C 22	9S2308	GASKET	1
23	1V1734	SHAFT ASSEM.	1
24	1V1732	SUPPORT ASSEM.	1
25	5H7179	BUSHING	2
C 26	9S2309	WASHER	1

REF. NO.	PART NUMBER	DESCRIPTION	QTY.
1	7F8092	KNOB	1
C 2	3Y3445	LEVER	1
3	8H9182	ROLLER	2
4	8H9186	SPRING	2
5	S1594	BOLT	1
6	2M2328	LEVER	1
	1B8702	KEY	1

REF. NO.	PART NUMBER	DESCRIPTION	QTY.
7	1B676	PIN	2
	3B4615	COTTER PIN	2
8	1V1798	ROD ASSEM.	1
9	1B4203	NUT	1
10	1F5403	END	1
11	1V26	LEVER	1
12	1B7182	BOLT	1
13	5H7152	SPRING	1
14	8B2377	BOLT	3
15	3B4504	LOCKWASHER	4

GRAPHIC #1

j13247e

GOVERNOR CONTROL (4V2271 N/S)

Effective with Serial No. 65J2006~65J2010, 65J2035~65J2037, 65J2043-Up

Key:

SMCS

NOTE	REF NO	GRAPHIC REF	PART NUMBER	QTY	PART NAME 1 2 3 4 5 6 (PRODUCT LEVEL)	LINK PAGE
	1		7F-8092	1	KNOB	
	2		3Y-3445	1	LEVER	
	3		1B-8704	2	KEY	
	4		3B-1915	1	BOLT	
			1D-4717	1	NUT	
	5		0S-1594	1	BOLT	
	6		2M-2328	1	LEVER	
			1B-8702	1	KEY	
	7		1B-0676	2	PIN	
			3B-4615	2	COTTER PIN	
	8		4V-2313	1	ROD	
	9		1B-4203	1	NUT	
	10		1A-9252	1	END	
	11		5A-9252	1	LEVER	
	12		1A-2029	1	BOLT	
	13		9S-1354	1	NUT	
	14		9K-6540	4	WASHER	
	15		2V-6878	2	DISC	
	16		2H-0694	2	BEARING	
	17		2V-6877	1	RETAINER	
	18		2V-6876	1	DISC	
	19		2V-6880	1	SHAFT ASSEM.	
	20		8B-2377	3	BOLT	
	21		1B-7904	3	SPACER	
	22		3B-4504	3	LOCKWASHER	
	23		2V-6879	1	DRIVER	
	24		2V-6875	3	DISC	
	25		7K-5008	1	WASHER	
	26		7M-6101	1	WASHER	

GOVERNOR CONTROL (4V2271 N/S)

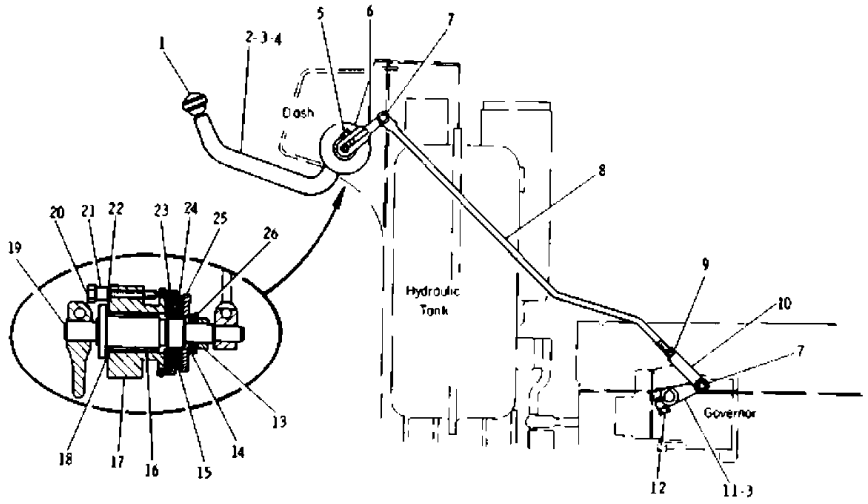

REF. NO.	PART NUMBER	DESCRIPTION	QTY.
1	7F8092	KNOB	1
2	3Y3445	LEVER	1
3	1B8704	KEY	2
4	3B1915	BOLT	1
	1D0717	NUT	1
5	S1594	BOLT	1
6	2M2328	LEVER	1
	1B8702	KEY	1
7	1B676	PIN	2
	3B4615	COTTER PIN	2
8	4V2313	ROD	1
9	1B4203	NUT	1
10	1A9252	END	1
11	5A9252	LEVER	1
12	1A2029	BOLT	1
13	9S1354	NUT	1
14	9K6540	WASHER	4
15	2V6878	DISC	2
16	2H694	BEARING	2
17	2V6877	RETAINER	1
18	2V6876	DISC	1
19	2V6880	SHAFT ASSEM.	1
20	8B2377	BOLT	3
21	1B7904	SPACER	3
22	3B4504	LOCKWASHER	3
23	2V6879	DRIVER	1
24	2V6875	DISC	3
25	7K5008	WASHER	1
26	7M6201	WASHER	1

J14224E

GRAPHIC #1 j14224e

GOVERNOR CONTROL

Effective with Serial No. 65J1591~65J2005, 65J2011~65J2034, 65J2038~65J2042
Part of Field Conversion Arrangement listed on Page 131
For Japan
AN ATTACHMENT

Key:

SMCS

NOTE	REF NO	GRAPHIC REF	PART NUMBER	QTY	PART NAME 1 2 3 4 5 6 (PRODUCT LEVEL)	LINK PAGE
	1		7F-8092	1	KNOB	
	2		1A-2209	1	BOLT	
	3		1B-4203	2	NUT	
	4		2M-2326	1	LEVER	
	5		1B-8702	2	KEY	
	6		2M-2327	1	SHAFT	
	7		0S-1594	1	BOLT	
	8		2M-2328	1	LEVER	
	9		1B-0676	2	PIN	
			3B-4615	2	COTTER PIN	
	10		6K-2980	1	ROD	
	11		5A-9252	1	LEVER	
			1B-8704	1	KEY	
	12		1A-2029	1	BOLT	
	13		1A-9252	1	END	

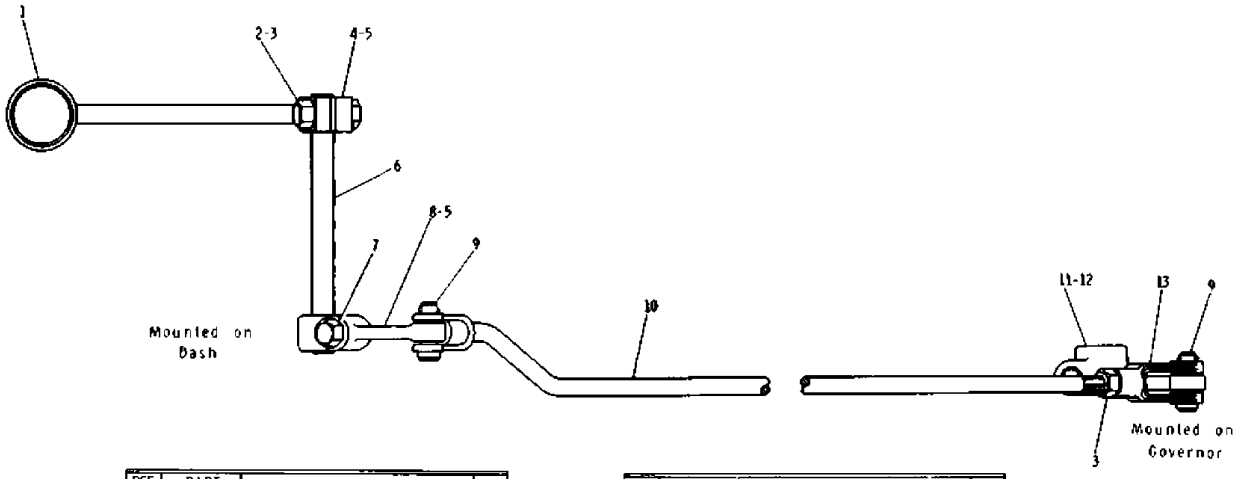

REF. NO.	PART NUMBER	DESCRIPTION	QTY.
1	7F8092	KNOB	1
2	1A2209	BOLT	1
3	1B4203	NUT	2
4	2M2326	LEVER	1
5	1B8702	KEY	2
6	2M2327	SHAFT	1
7	S1594	BOLT	1
8	2M2328	LEVER	1

REF. NO.	PART NUMBER	DESCRIPTION	QTY.
9	1B676	PIN	2
	3B4615	COTTER PIN	2
10	6K2980	ROD	1
11	5A9252	LEVER	1
	1B8704	KEY	1
12	1A2029	BOLT	1
13	1A9252	END	1

J16784E

GRAPHIC #1

j16784e

FUEL SYSTEM AND BATTERY BOX (9K1273 N/S)--Part 1 of 2

Effective with Serial No. 65J1474~65J1590

Key: C - INDICATES CHANGE.

SMCS

NOTE	REF NO	GRAPHIC REF	PART NUMBER	QTY	PART NAME 1 2 3 4 5 6 (PRODUCT LEVEL)	LINK PAGE
	1		9K-1274	1	TANK ASSEM.	
			8K-8597	1	TANK ASSEM.	
	2		1F-2417	1	BOSS	
	3		5A-8157	1	FITTING	
	4		8H-3496	1	FITTING	
	5		4B-7305	2	BUTTON	
	6		4B-7337	2	BLOCK	
	7		6K-0619	2	LUG	
	8		3K-3235	2	GRAB IRON	
	9		6K-4671	1	BOX ASSEM. (L.H.)	
	10		9S-1352	1	PIN	
	11		4K-5721	1	BRACE	
	12		9M-0685	3	LATCH ASSEM.	
			4B-4306	6	RIVET	
	13		9F-2978	5	NUT (Weld)	
	14		1F-0748	1	NUT (Weld)	
	15		6K-7151	2	BRACKET ASSEM.	
	16		1M-1427	1	BOSS	
	17		3Y-0606	2	VALVE ASSEM.	
	18		1H-2854	1	FITTING	
			4H-2497	1	NUT	
			4H-2496	1	SLEEVE	
	19		5M-0999	1	FITTING	
	20		0S-1594	2	BOLT	
			1D-4717	2	NUT	
	21		3B-4506	4	LOCKWASHER	
	22		8B-6127	4	CLIP	
	23		8H-2907	1	FITTING	
			4H-2497	2	NUT	
			4H-2496	2	SLEEVE	
	24		0L-1351	2	BOLT	
C	25		4S-8457		TUBE 151cm	
	26		5K-0739	1	TUBE	
	27		6H-1717	2	BOLT	
			3B-4508	2	LOCKWASHER	
			4B-4280	2	WASHER	
	28		6K-2413	1	BOX ASSEM. (R.H.)	
	29		9M-0685	1	LATCH ASSEM.	
			4B-4306	2	RIVET	
	30		9F-2978	5	NUT (Weld)	
	31		4K-5721	1	BRACE	
	32		9S-1352	1	PIN	
	33		1F-0748	3	NUT (Weld)	
	34		5A-8900	1	SCREEN	

FUEL SYSTEM AND BATTERY BOX (9K1273 N/S)--Part 1 of 2

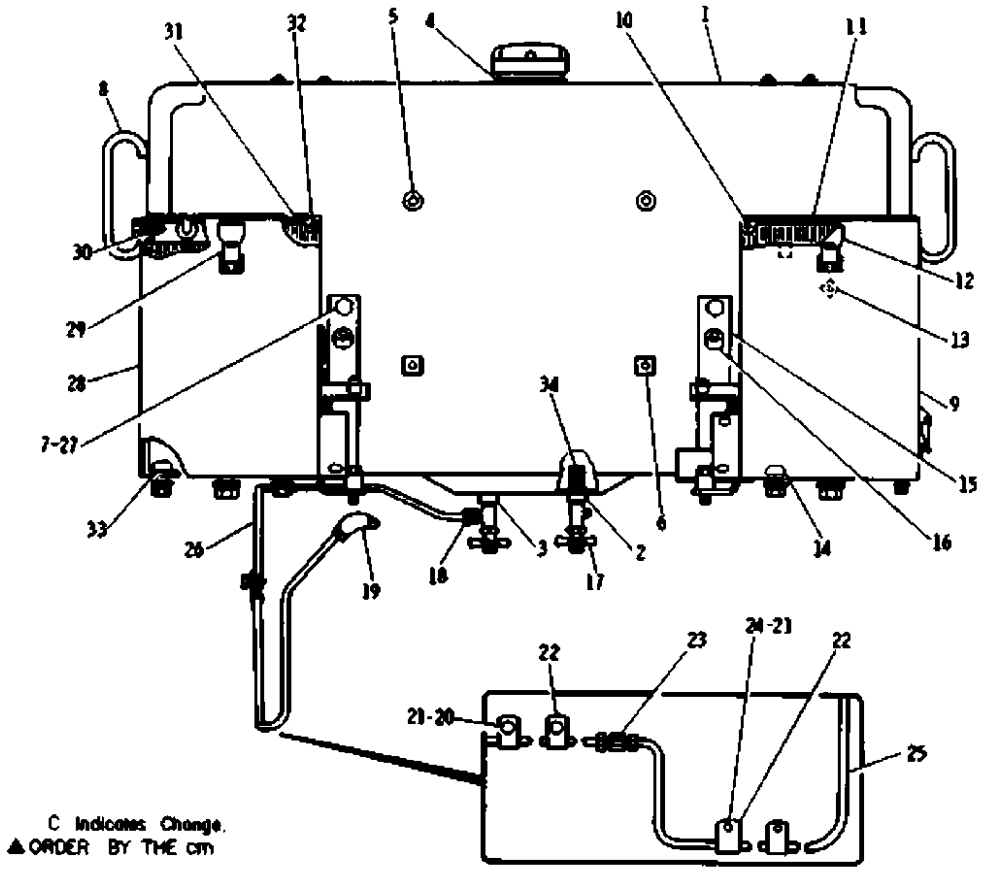

C Indicates Change.
▲ORDER BY THE cm

REF. NO.	PART NUMBER	DESCRIPTION	QTY.
1	9K1274	TANK ASSEM.	1
	8K8597	TANK ASSEM.	1
2	1F2417	BOSS	1
3	5A8157	FITTING	1
4	8H3496	FITTING	1
5	4B7305	BUTTON	2
6	4B7337	BLOCK	2
7	6K619	LUG	2
8	3K3235	GRAB IRON	2
9	6K4671	BOX ASSEM. (L.H.)	1
10	9S1352	PIN	1
11	4K5721	BRACE	1
12	9M685	LATCH ASSEM.	3
	4B4306	RIVET	6
13	9F2978	NUT (Weld)	5
14	1F748	NUT (Weld)	1
15	6K7151	BRACKET ASSEM.	2
16	1M1427	BOSS	1
17	3Y606	VALVE ASSEM.	2
18	1H2854	FITTING	1
	4H2497	NUT	1
	4H2496	SLEEVE	1
19	5M999	FITTING	1

REF. NO.	PART NUMBER	DESCRIPTION	QTY.
20	S1594	BOLT	2
	1D4717	NUT	2
21	3B4506	LOCKWASHER	4
22	8B6127	CLIP	4
23	8H2907	FITTING	1
	4H2497	NUT	2
	4H2496	SLEEVE	2
24	L1351	BOLT	2
C 25	4S8457	TUBE 151cm	
26	5K739	TUBE	1
27	6H1717	BOLT	2
	3B4508	LOCKWASHER	2
	4B4280	WASHER	2
28	6K2413	BOX ASSEM. (R.H.)	1
29	9M685	LATCH ASSEM.	1
	4B4306	RIVET	2
30	9F2978	NUT (Weld)	5
31	4K5721	BRACE	1
32	9S1352	PIN	1
33	1F748	NUT (Weld)	3
34	5A8900	SCREEN	1

J12549E

GRAPHIC #1

j12549e

FUEL SYSTEM AND BATTERY BOX (9K1273 N/S)--Part 2 of 2

Effective with Serial No. 65J1474~65J1590

Key:

SMCS

NOTE	REF NO	GRAPHIC REF	PART NUMBER	QTY	PART NAME 1 2 3 4 5 6 (PRODUCT LEVEL)	LINK PAGE
	1		4B-5441	1	CAP ASSEM.	
	2		3H-8389	1	SCREW	
	3		2A-1763	1	GASKET	
	4		4B-5423	1	GASKET	
	5		4B-5949	2	ELEMENT	
	6		7B-2002	1	WASHER	
	7		3F-4134	1	BAFFLE	
	8		5B-7267	8	CORK	
	9		3Y-0857	1	PLUNGER (Liter Scale)	
			1M-1682	1	PLUNGER (Percentage Scale)	
	10		8H-3497	1	RING	
	11		8H-3498	1	STRAINER ASSEM.	
	12		5A-9112	1	RID ASSEM. (L.H.)	
	13		5K-4138	1	HOOK	
	14		6K-2404	1	DOOR ASSEM.	
	15		6K-0485	2	HOOK	
			8F-8551	2	HINGE	
	16		0S-1594	4	BOLT	
			1D-4717	4	NUT	
	17		3B-4506	8	LOCKWASHER	
	18		4B-4278	4	WASHER	
	19		0S-1587	2	BOLT	
	20		1K-4649	2	SPACER	
	21		4K-5744	1	SUPPORT ASSEM. (L.H.)	
	22		0S-0509	4	BOLT	
	23		4K-5743	1	SUPPORT ASSEM. (R.H.)	
	24		0S-1589	6	BOLT (44.5mm Long)	
			3B-4510	6	LOCKWASHER	
			9H-3457	6	WASHER	
	25		0S-1595	4	BOLT	
			3B-4508	4	LOCKWASHER	
			0V-0531	4	WASHER	
	26		3H-2900	4	GROMMET	
	27		3F-1240	4	GROMMET	
	28		2H-6232	2	BOLT & LOCKWASHER ASSEM.	
	29		5A-9111	1	RID ASSEM. (R.H.)	
	30		5K-4138	1	HOOK	

FUEL SYSTEM AND BATTERY BOX (9K1273 N/S)--Part 2 of 2

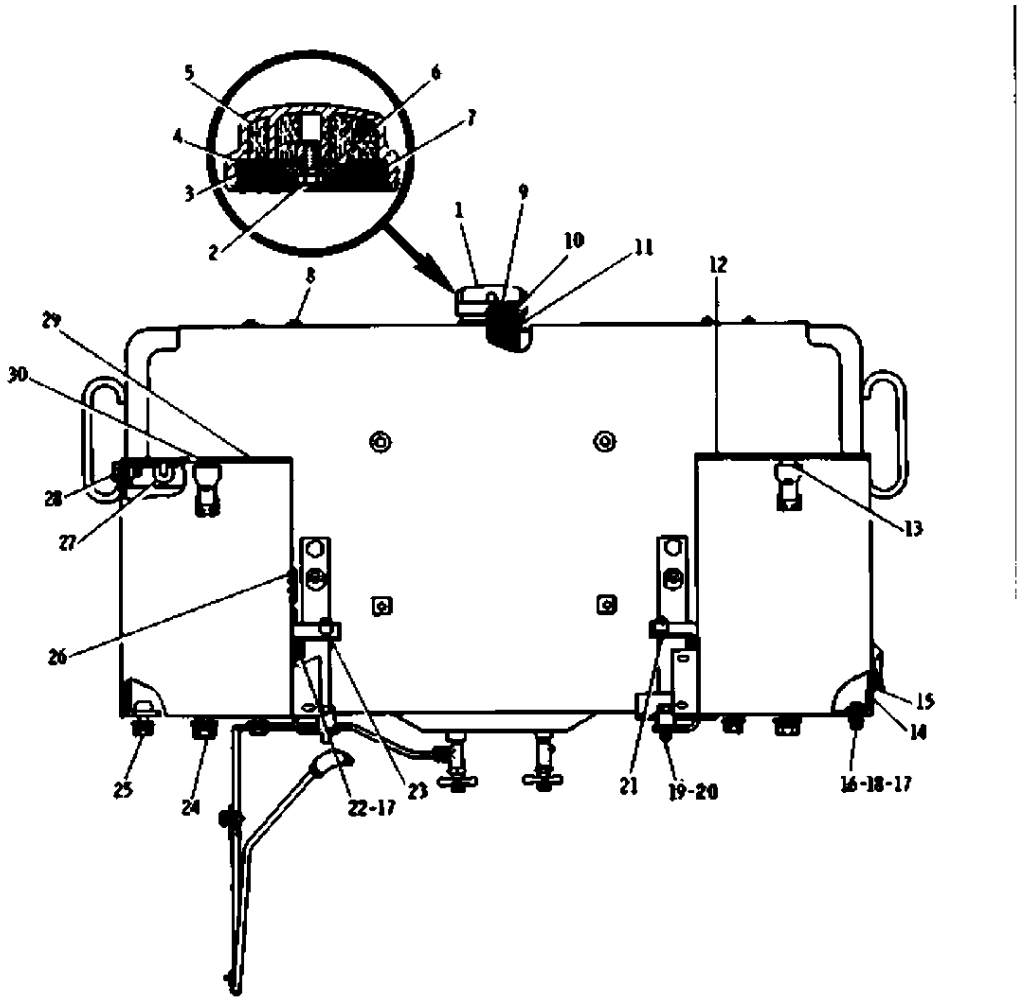

REF. NO.	PART NUMBER	DESCRIPTION	QTY.
1	4B5441	CAP ASSEM.	1
2	3H8389	SCREW	1
3	2A1763	GASKET	1
4	4B5423	GASKET	1
5	4B5949	ELEMENT	2
6	7B2002	WASHER	1
7	3F4134	BAFFLE	1
8	5B7267	CORK	8
9	3Y857	PLUNGER (Liter Scale)	1
	1M1682	PLUNGER (Percentage Scale)	1
10	8H3497	RING	1
11	8H3498	STRAINER ASSEM.	1
12	5A9112	RID ASSEM. (L.H.)	1
13	5K4138	HOOK	1
14	6K2404	DOOR ASSEM.	1
15	6K485	HOOK	2
	8F8551	HINGE	2
16	S1594	BOLT	4
	1D4717	NUT	4
17	3B4506	LOCKWASHER	8

REF. NO.	PART NUMBER	DESCRIPTION	QTY.
18	4B4278	WASHER	4
19	S1587	BOLT	2
20	1K4649	SPACER	2
21	4K5744	SUPPORT ASSEM. (L.H.)	1
22	S509	BOLT	4
23	4K5743	SUPPORT ASSEM. (R.H.)	1
24	S1589	BOLT (44.5mm Long)	6
	3B4510	LOCKWASHER	6
	9H3457	WASHER	6
25	S1595	BOLT	4
	3B4508	LOCKWASHER	4
	V531	WASHER	4
26	3H2900	GROMMET	4
27	3F1240	GROMMET	4
28	2H6232	BOLT & LOCKWASHER ASSEM.	2
29	5A9111	RID ASSEM. (R.H.)	1
30	5K4138	HOOK	1

J12394E

GRAPHIC #1

FUEL SYSTEM AND BATTERY BOX (1V482 N/S)--Part 1 of 2

Effective with Serial No. 65J1591~65J1807
For Japan

Key: H - ORDER BY THE CM

SMCS

NOTE	REF NO	GRAPHIC REF	PART NUMBER	QTY	PART NAME 1 2 3 4 5 6 (PRODUCT LEVEL)	LINK PAGE
	1		9K-1274	1	TANK ASSEM.	
			8K-8597	1	TANK ASSEM.	
	2		1F-2417	1	BOSS	
	3		5A-8157	1	FITTING	
	4		8H-3496	1	FITTING	
	5		4B-7305	2	BUTTON	
	6		4B-7337	2	BLOCK	
	7		6K-0619	2	LUG	
	8		3K-3235	2	GRAB IRON	
	9		6K-4671	1	BOX ASSEM. (L.H.)	
	10		9S-1352	1	PIN	
	11		4K-5721	1	BRACE	
	12		9M-0685	3	LATCH ASSEM.	
			4B-4306	6	RIVET	
	13		9F-2978	5	NUT (Weld)	
	14		1F-0748	1	NUT (Weld)	
	15		6K-7151	2	BRACKET ASSEM.	
	16		1M-1427	1	BOSS	
	17		3Y-0606	2	VALVE ASSEM.	
	18		5K-9246	1	CONNECTOR	
	19		5K-9235	1	ELBOW	
	20		0S-1594	2	BOLT	
			1D-4717	2	NUT	
	21		3B-4506	2	LOCKWASHER	
	22		8B-6127	2	CLIP	
H	23		5P-0767		HOSE 13cm	
	24		4D-6988	1	CLIP	
	25		4F-7957	1	BOLT	
			4B-4276	1	WASHER	
H	26		5P-1442		HOSE 150cm	
	27		3S-2093	1	STRAP	
	28		4S-1936	1	CLIP	
	29		1D-5117	1	NUT	
	30		3B-4508	3	LOCKWASHER	
	31		1V-3546	2	COUPLING	
	32		7K-1456	1	UNION	
	33		1V-0400	1	TUBE ASSEM.	
	34		6H-1717	2	BOLT	
			4B-4280	2	WASHER	
	35		6K-2413	1	BOX ASSEM. (R.H.)	
	36		9M-0685	1	LATCH ASSEM.	
			4B-4306	2	RIVET	
	37		9F-2978	5	NUT (Weld)	
	38		4K-5721	1	BRACE	
	39		9S-1352	1	PIN	
	40		1F-0748	3	NUT (Weld)	
	41		5A-8900	1	SCREEN	

FUEL SYSTEM AND BATTERY BOX (1V482 N/S)--Part 1 of 2

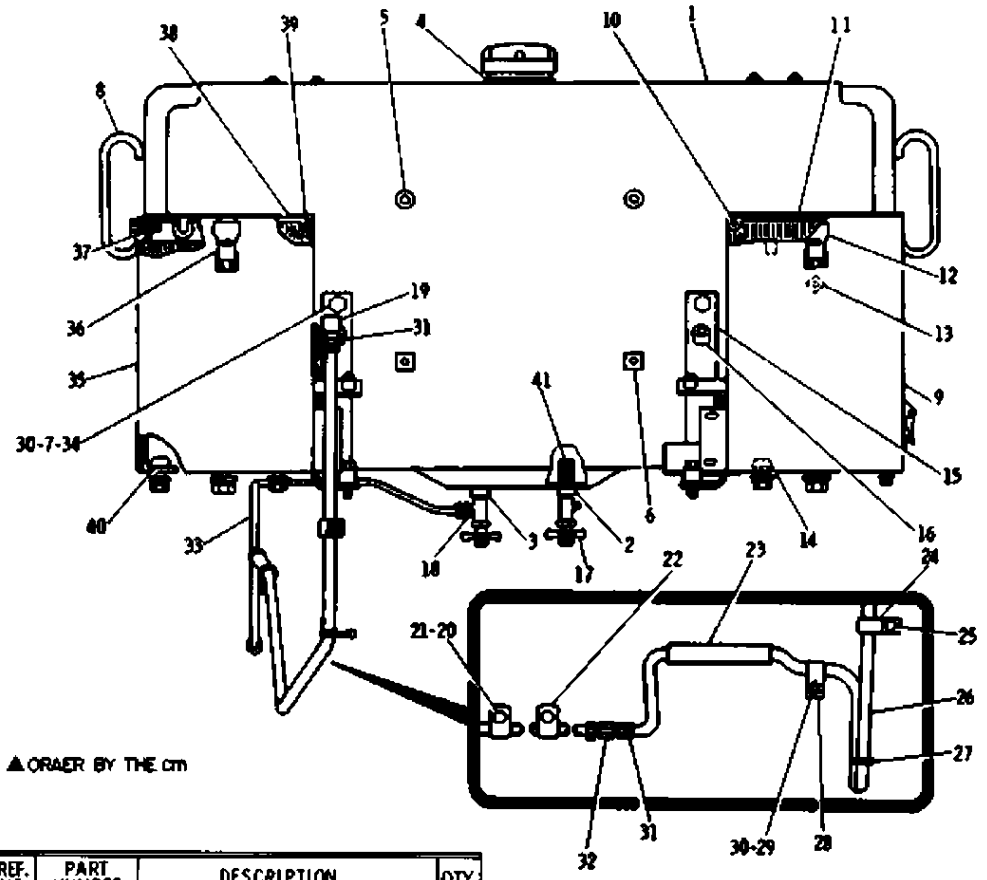

REF. NO.	PART NUMBER	DESCRIPTION	QTY.
1	9K1274	TANK ASSEM.	1
	8K8597	TANK ASSEM.	1
2	1F2417	BOSS	1
3	5A8157	FITTING	1
4	8H3496	FITTING	1
5	4B7305	BUTTON	2
6	4B7337	BLOCK	2
7	6K619	LUG	2
8	3K3235	GRAB IRON	2
9	6K4671	BOX ASSEM. (L.H.)	1
10	9S1352	PIN	1
11	4K5721	BRACE	1
12	9M685	LATCH ASSEM.	3
	4B4306	RIVET	6
13	9F2978	NUT (Weld)	5
14	1F748	NUT (Weld)	1
15	6K7151	BRACKET ASSEM.	2
16	1M1427	BOSS	1
17	3Y606	VALVE ASSEM.	2
18	5K9246	CONNECTOR	1
19	5K9235	ELBOW	1
20	S1594	BOLT	2
	1D4717	NUT	2
21	3B4506	LOCKWASHER	2
22	8B6127	CLIP	2

REF. NO.	PART NUMBER	DESCRIPTION	QTY.
▲ 23	5P767	HOSE ---------- 13cm	
24	4D6988	CLIP	1
25	4F7957	BOLT	1
	4B4276	WASHER	1
▲ 26	5P1442	HOSE ---------- 150cm	
27	3S2093	STRAP	1
28	4S1936	CLIP	1
29	1D5117	NUT	1
30	3B4508	LOCKWASHER	3
31	1V3546	COUPLING	2
32	7K1456	UNION	1
33	1V400	TUBE ASSEM.	1
34	6H1717	BOLT	2
	4B4280	WASHER	2
35	6K2413	BOX ASSEM. (R.H.)	1
36	9M685	LATCH ASSEM.	1
	4B4306	RIVET	2
37	9F2978	NUT (Weld)	5
38	4K5721	BRACE	1
39	9S1352	PIN	1
40	1F748	NUT (Weld)	3
41	5A8900	SCREEN	1

J12636E

GRAPHIC #1

j12636e

FUEL SYSTEM AND BATTERY BOX (1V482 N/S)--Part 2 of 2

Effective with Serial No. 65J1591~65J1807
For Japan

Key:

SMCS

NOTE	REF NO	GRAPHIC REF	PART NUMBER	QTY	PART NAME 1 2 3 4 5 6 (PRODUCT LEVEL)	LINK PAGE
	1		4B-5441	1	CAP ASSEM.	
	2		3H-8389	1	SCREW	
	3		2A-1763	1	GASKET	
	4		4B-5423	1	GASKET	
	5		4B-5949	2	ELEMENT	
	6		7B-2002	1	WASHER	
	7		3F-4134	1	BAFFLE	
	8		5B-7267	8	CORK	
	9		3Y-0857	1	PLUNGER (Liter Scale)	
			1M-1682	1	PLUNGER (Percentage Scale)	
	10		8H-3497	1	RING	
	11		8H-3498	1	STRAINER ASSEM.	
	12		5A-9112	1	LID ASSEM. (L.H.)	
	13		5K-4138	1	HOOK	
	14		6K-2404	1	DOOR ASSEM.	
	15		6K-0485	2	HOOK	
			8F-8551	2	HINGE	
	16		0S-1594	4	BOLT	
			1D-4717	4	NUT	
	17		3B-4506	10	LOCKWASHER	
	18		4B-4278	4	WASHER	
	19		0S-1587	2	BOLT	
	20		1K-4649	2	SPACER	
	21		4K-5744	1	SUPPORT ASSEM. (L.H.)	
	22		0S-0509	4	BOLT	
	23		4K-5743	1	SUPPORT ASSEM. (R.H.)	
	24		0S-1589	6	BOLT (44.5mm Long)	
			3B-4510	6	LOCKWASHER	
			9H-3457	6	WASHER	
	25		0S-1595	4	BOLT	
			3B-4508	4	LOCKWASHER	
			0V-0531	4	WASHER	
	26		3H-2900	4	GROMMET	
	27		3F-1240	4	GROMMET	
	28		0S-1588	2	BOLT	
	29		5A-9111	1	LID ASSEM. (R.H.)	
	30		5K-4138	1	HOOK	

FUEL SYSTEM AND BATTERY BOX (1V482 N/S)--Part 2 of 2

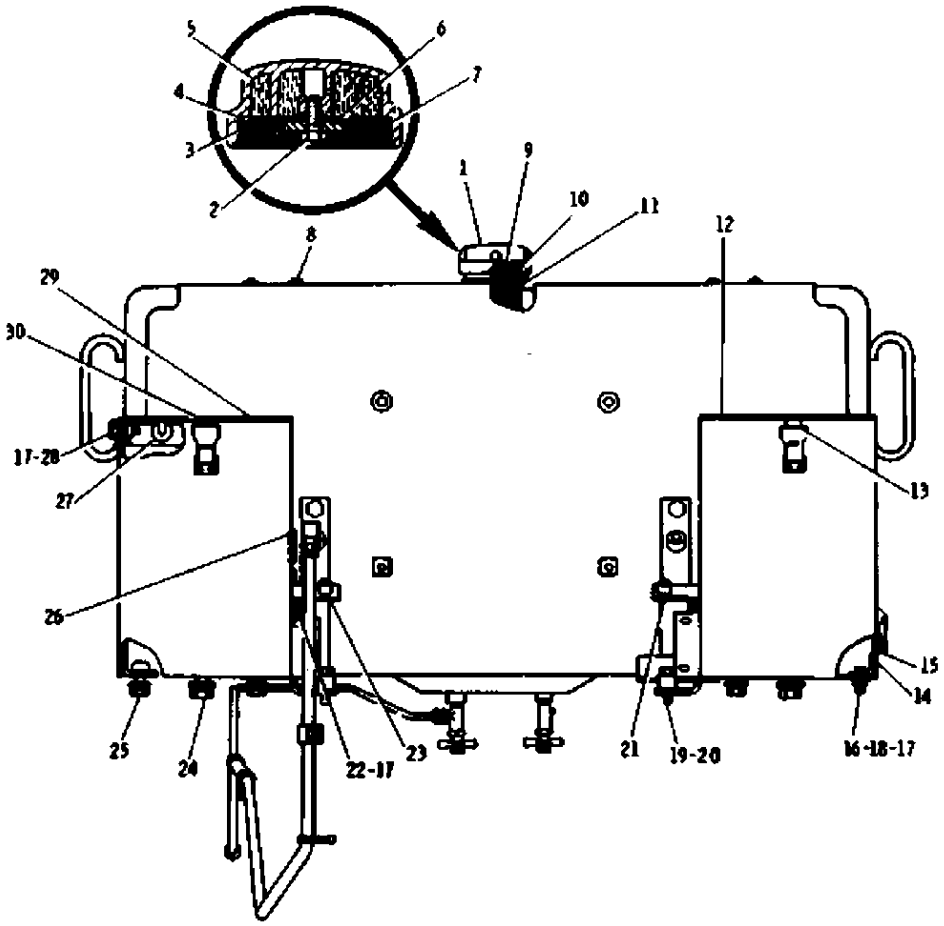

REF. NO.	PART NUMBER	DESCRIPTION	QTY.
1	4B5441	CAP ASSEM.	1
2	3H8389	SCREW	1
3	2A1763	GASKET	1
4	4B5423	GASKET	1
5	4B5949	ELEMENT	2
6	7B2002	WASHER	1
7	3F4134	BAFFLE	1
8	5B7267	CORK	8
9	3Y857	PLUNGER (Liter Scale)	1
	1M1682	PLUNGER (Percentage Scale)	1
10	8H3497	RING	1
11	8H3498	STRAINER ASSEM.	1
12	5A9112	LID ASSEM. (L.H.)	1
13	5K4138	HOOK	1
14	6K2404	DOOR ASSEM.	1
15	6K485	HOOK	2
	8F8551	HINGE	2
16	S1594	BOLT	4
	1D4717	NUT	4
17	3B4506	LOCKWASHER	10

REF. NO.	PART NUMBER	DESCRIPTION	QTY.
18	4B4278	WASHER	4
19	S1587	BOLT	2
20	1K4649	SPACER	2
21	4K5744	SUPPORT ASSEM. (L.H.)	1
22	S509	BOLT	4
23	4K5743	SUPPORT ASSEM. (R.H.)	1
24	S1589	BOLT (44.5mm Long)	6
	3B4510	LOCKWASHER	6
	9H3457	WASHER	6
25	S1595	BOLT	4
	3B4508	LOCKWASHER	4
	V531	WASHER	4
26	3H2900	GROMMET	4
27	3F1240	GROMMET	4
28	S1588	BOLT	2
29	5A9111	LID ASSEM. (R.H.)	1
30	5K4138	HOOK	1

J12637E

FUEL SYSTEM AND BATTERY BOX (1V482 N/S)--Part 1 of 2

Effective with Serial No. 65J1591~65J1807
For outside Japan

Key:

SMCS

NOTE	REF NO	GRAPHIC REF	PART NUMBER	QTY	PART NAME 1 2 3 4 5 6 (PRODUCT LEVEL)	LINK PAGE
			9K-1274	1	TANK ASSEM.	
	1		8K-8597	1	TANK ASSEM.	
	2		1F-2417	1	BOSS	
	3		5A-8157	1	FITTING	
	4		8H-3496	1	FITTING	
	5		3K-3235	2	HANDLE	
	6		4B-7305	2	BUTTON	
	7		6K-0619	2	LUG	
	8		4B-7337	2	BLOCK	
	9		6K-4671	1	BOX ASSEM. (L.H.)	
	10		1F-0748	1	NUT (Weld)	
	11		9S-1352	1	PIN	
	12		4K-5721	1	BRACE	
	13		9M-0685	3	LATCH ASSEM.	
			4B-4306	6	RIVET	
	14		9F-2978	5	NUT (Weld)	
	15		3Y-0606	2	VALVE ASSEM.	
	16		5K-9246	1	CONNECTOR	
	17		0S-1594	2	BOLT	
			1D-4717	2	NUT	
	18		3B-4506	3	LOCKWASHER	
	19		8B-6127	3	CLIP	
	20		1V-0400	1	TUBE ASSEM.	
	21		0L-1351	1	BOLT	
	22		7K-1456	1	UNION	
	23		6K-2413	1	BOX ASSEM. (R.H.)	
	24		9M-0685	1	LATCH ASSEM.	
			4B-4306	2	RIVET	
	25		9F-2978	5	NUT (Weld)	
	26		4K-5721	1	BRACE	
	27		9S-1352	1	PIN	
	28		1F-0748	3	NUT (Weld)	
	29		6H-1717	2	BOLT	
			3B-4508	2	LOCKWASHER	
	30		4B-4280	2	WASHER	
	31		6K-7151	2	BRACKET ASSEM.	
	32		1M-1427	1	BOSS	
	33		5K-9235	1	ELBOW	
	34		3Y-1937	1	TUBE ASSEM.	
	35		5A-8900	1	SCREEN	

FUEL SYSTEM AND BATTERY BOX (1V482 N/S)--Part 1 of 2

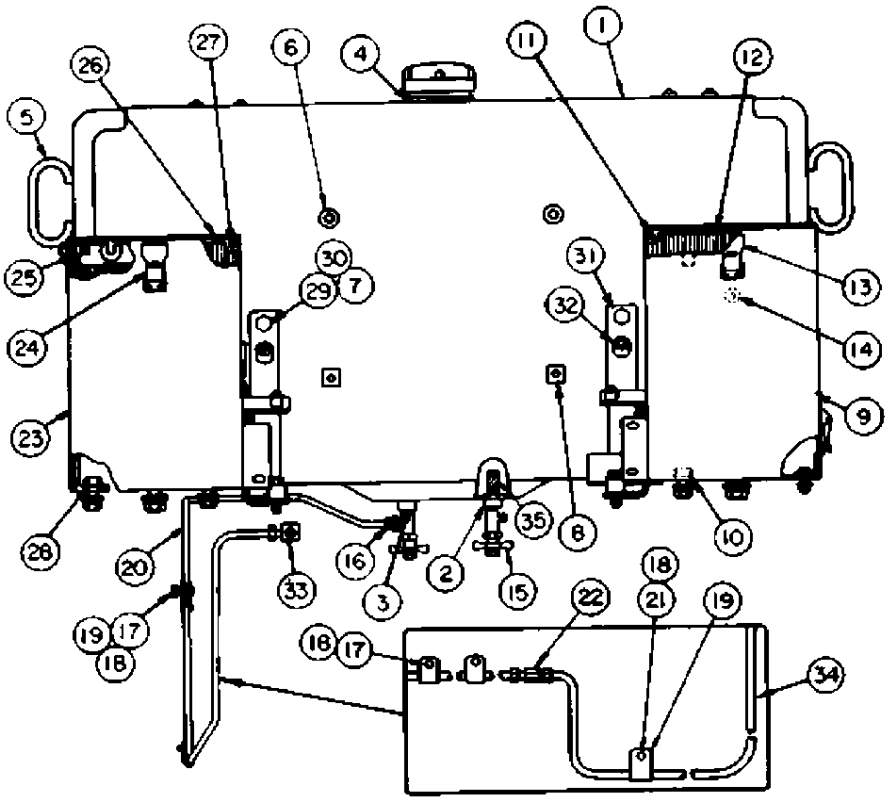

REF. NO.	PART NUMBER	DESCRIPTION	QTY.
	9K1274	TANK ASSEM.	1
		Consists of:	
1	8K8597	TANK ASSEM.	1
2	1F2417	BOSS	1
3	5A8157	FITTING	1
4	8H3496	FITTING	1
5	3K3235	HANDLE	2
6	4B7305	BUTTON	2
7	6K619	LUG	2
8	4B7337	BLOCK	2
9	6K4671	BOX ASSEM. (L.H.)	1
10	1F748	NUT (Weld)	1
11	9S1352	PIN	1
12	4K5721	BRACE	1
13	9M685	LATCH ASSEM.	3
	4B4306	RIVET	6
14	9F2978	NUT (Weld)	5
15	3Y606	VALVE ASSEM.	2
16	5K9246	CONNECTOR	1
17	S1594	BOLT	2
	104717	NUT	2

REF. NO.	PART NUMBER	DESCRIPTION	QTY.
18	3B4506	LOCKWASHER	3
19	8B6127	CLIP	3
20	1V400	TUBE ASSEM.	1
21	L1351	BOLT	1
22	7K1456	UNION	1
23	6K2413	BOX ASSEM. (R.H.)	1
24	9M685	LATCH ASSEM.	1
	4B4306	RIVET	2
25	9F2978	NUT (Weld)	5
26	4K5721	BRACE	1
27	9S1352	PIN	1
28	1F748	NUT (Weld)	3
29	6H1717	BOLT	2
	3B4508	LOCKWASHER	2
30	4B4280	WASHER	2
31	6K7151	BRACKET ASSEM.	2
32	1M1427	BOSS	1
33	5K9235	ELBOW	1
34	3Y1937	TUBE ASSEM.	1
35	5A8900	SCREEN	1

J10381E

GRAPHIC #1

j10381e

FUEL SYSTEM AND BATTERY BOX (1V482 N/S)--Part 2 of 2

Effective with Serial No. 65J1591~65J1807
For outside Japan

Key:

SMCS

NOTE	REF NO	GRAPHIC REF	PART NUMBER	QTY	PART NAME 1 2 3 4 5 6 (PRODUCT LEVEL)	LINK PAGE
	1		4B-5441	1	CAP ASSEM.	
	2		3H-8389	1	SCREW	
	3		2A-1763	1	GASKET	
	4		4B-5423	1	GASKET	
	5		4B-5949	2	ELEMENT	
	6		7B-2002	1	WASHER	
	7		3F-4134	1	BAFFLE	
	8		5B-7267	8	CORK	
	9		3Y-0857	1	PLUNGER	
	10		8H-3497	1	RING	
	11		8H-3498	1	STRAINER ASSEM.	
	12		5A-9112	1	LID ASSEM. (L.H.)	
	13		5K-4138	1	HOOK	
	14		6K-2404	1	DOOR ASSEM.	
	15		6K-0485	2	HOOK	
			3Y-0533	2	HINGE	
	16		0S-1594	4	BOLT	
			1D-4717	4	NUT	
	17		3B-4506	10	LOCKWASHER	
	18		4B-4278	4	WASHER	
	19		0S-1587	2	BOLT	
	20		1K-4649	2	SPACER	
	21		4K-5744	1	SUPPORT ASSEM. (L.H.)	
	22		0S-0509	4	BOLT	
	23		4K-5743	1	SUPPORT ASSEM. (R.H.)	
	24		0S-1589	6	BOLT (38mm Long)	
			3B-4510	6	LOCKWASHER	
			9H-3457	6	WASHER	
	25		0S-1595	4	BOLT (32mm Long)	
			3B-4508	4	LOCKWASHER	
			0V-0531	4	WASHER	
	26		3H-2900	4	GROMMET	
	27		3F-1240	4	GROMMET	
	28		0S-1588	2	BOLT	
	29		5A-9111	1	LID ASSEM. (R.H.)	
	30		5K-4138	1	HOOK	

FUEL SYSTEM AND BATTERY BOX (1V482 N/S)--Part 2 of 2

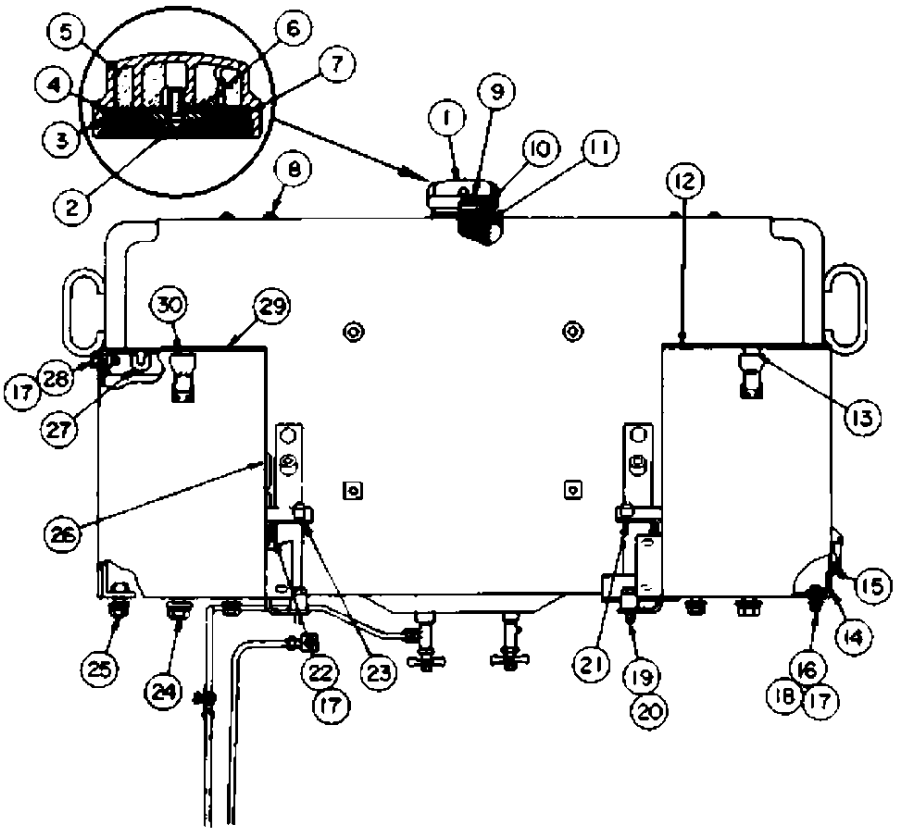

REF. NO.	PART NUMBER	DESCRIPTION	QTY.
1	4B5441	CAP ASSEM.	1
2	3H8389	SCREW	1
3	2A1763	GASKET	1
4	4B5423	GASKET	1
5	4B5949	ELEMENT	2
6	7B2002	WASHER	1
7	3F4134	BAFFLE	1
8	5B7267	CORK	8
9	3Y857	PLUNGER	1
10	8H3497	RING	1
11	8H3498	STRAINER ASSEM.	1
12	5A9112	LID ASSEM. (L.H.)	1
13	5K4138	HOOK	1
14	6K2404	DOOR ASSEM.	1
15	6K485	HOOK	2
	3Y533	HINGE	2
16	S1594	BOLT	4
	1D4717	NUT	4

REF. NO.	PART NUMBER	DESCRIPTION	QTY.
17	3B4506	LOCKWASHER	10
18	4B4278	WASHER	4
19	S1587	BOLT	2
20	1K4649	SPACER	2
21	4K5744	SUPPORT ASSEM. (L.H.)	1
22	S509	BOLT	4
23	4K5743	SUPPORT ASSEM. (R.H.)	1
24	S1589	BOLT (38mm Long)	6
	3B4510	LOCKWASHER	6
	9H3457	WASHER	6
25	S1595	BOLT (32mm Long)	4
	3B4508	LOCKWASHER	4
	V531	WASHER	4
26	3H2900	GROMMET	4
27	3F1240	GROMMET	4
28	S1588	BOLT	2
29	5A9111	LID ASSEM. (R.H.)	1
30	5K4136	HOOK	1

J10382E

GRAPHIC #1

FUEL SYSTEM AND BATTERY BOX (1V482 N/S)--Part 1 of 2

Effective with Serial No. 65J1808~65J1876
For Japan

Key: C - INDICATES CHANGE, H - ORAER BY THE CM

SMCS

NOTE	REF NO	GRAPHIC REF	PART NUMBER	QTY	PART NAME 1 2 3 4 5 6 (PRODUCT LEVEL)	LINK PAGE
	1		9K-1274	1	TANK ASSEM.	
			8K-8597	1	TANK ASSEM.	
	2		1F-2417	1	BOSS	
	3		5A-8157	1	FITTING	
	4		8H-3496	1	FITTING	
	5		4B-7305	2	BUTTON	
	6		4B-7337	2	BLOCK	
	7		6K-0619	2	LUG	
	8		3K-3235	2	GRAB IRON	
	9		6K-4671	1	BOX ASSEM. (L.H.)	
	10		9S-1352	1	PIN	
	11		4K-5721	1	BRACE	
	12		9M-0685	3	LATCH ASSEM.	
			4B-4306	6	RIVET	
	13		9F-2978	5	NUT (Weld)	
	14		1F-0748	1	NUT (Weld)	
	15		6K-7151	2	BRACKET ASSEM.	
	16		1M-1427	1	BOSS	
	17		3Y-0606	2	VALVE ASSEM.	
	18		5K-9246	1	CONNECTER	
	19		5K-9235	1	ELBOW	
	20		0S-1594	2	BOLT	
			1D-4717	2	NUT	
	21		3B-4506	2	LOCKWASHER	
	22		8B-6127	2	CLIP	
H	23		5P-0767		HOSE 13cm	
	24		4D-6988	1	CLIP	
	25		4F-7957	1	BOLT	
			4B-4276	1	WASHER	
H	26		5P-1442		HOSE 150cm	
	27		3S-2093	1	STRAP	
	28		4S-1936	1	CLIP	
	29		1D-5117	1	NUT	
	30		3B-4508	3	LOCKWASHER	
	31		1V-3546	2	COUPLING	
	32		7K-1456	1	UNION	
	33		1V-0400	1	TUBE ASSEM.	
	34		6H-1717	2	BOLT	
			4B-4280	2	WASHER	
C	35		1V-6993	1	BOX ASSEM. (R.H.)	
	36		9M-0685	1	LATCH ASSEM.	
			4B-4306	2	RIVET	
	37		9F-2978	15	NUT (Weld)	
	38		1V-7900	1	BRACE ASSEM.	
			9F-2978	1	NUT (Weld)	
	39		9S-1352	1	PIN	
	40		1F-0748	3	NUT (Weld)	
	41		5A-8900	1	SCREEN	

FUEL SYSTEM AND BATTERY BOX (1V482 N/S)--Part 1 of 2

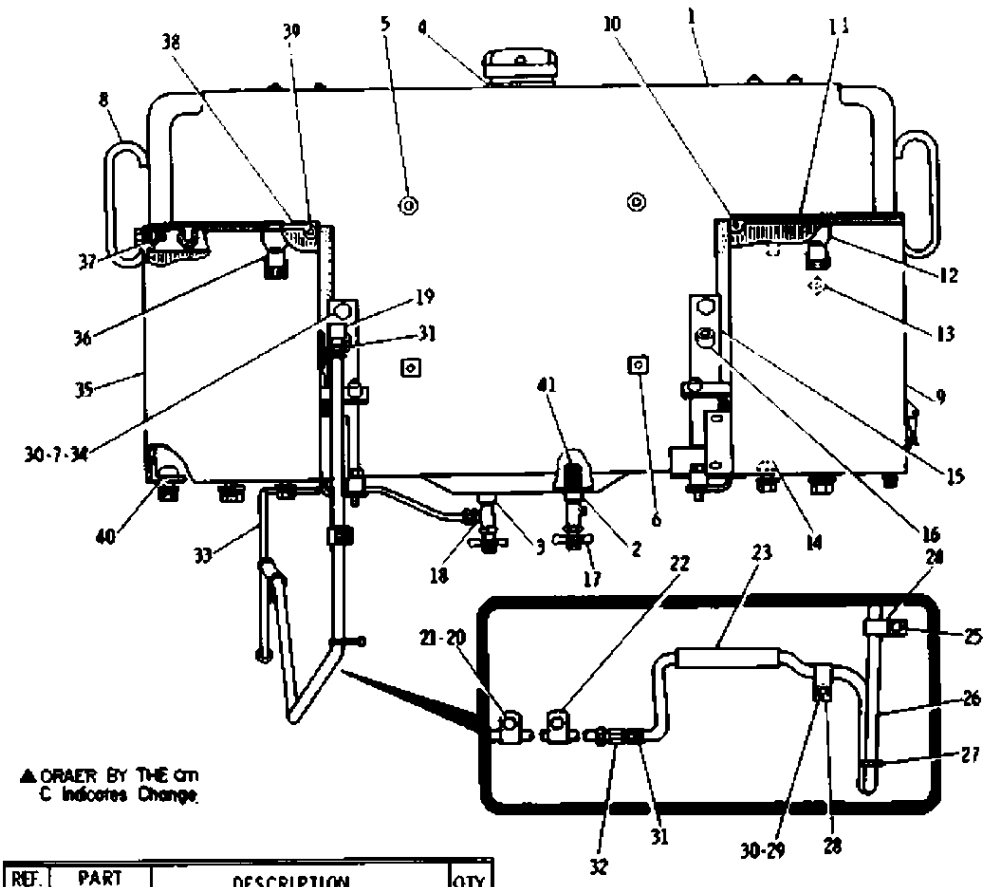

▲ ORDER BY THIS dm
C Indicates Change

REF. NO.	PART NUMBER	DESCRIPTION	QTY.
1	9K1274	TANK ASSEM.	1
	8K8597	TANK ASSEM.	1
2	1F2417	BOSS	1
3	5A8157	FITTING	1
4	8H3496	FITTING	1
5	4B7305	BUTTON	2
6	4B7337	BLOCK	2
7	6K619	LUG	2
8	3K3235	GRAB IRON	2
9	6K4671	BOX ASSEM. (L.H.)	1
10	9S1352	PIN	1
11	4K5721	BRACE	1
12	9M685	LATCH ASSEM.	3
	4B4306	RIVET	6
13	9F2978	NUT (Weld)	5
14	1F748	NUT (Weld)	1
15	6K7151	BRACKET ASSEM.	2
16	1M1427	BOSS	1
17	3Y606	VALVE ASSEM.	2
18	5K9246	CONNECTER	1
19	5K9235	ELBOW	1
20	S1594	BOLT	2
	1D4717	NUT	2
21	3B4506	LOCKWASHER	2
22	8B6127	CLIP	2

REF. NO.	PART NUMBER	DESCRIPTION	QTY.
▲ 23	5P767	HOSE 13cm	
24	4D6988	CLIP	1
25	4F7957	BOLT	1
	4B4276	WASHER	1
▲ 26	5P1442	HOSE 150cm	
27	3S2093	STRAP	1
28	4S1936	CLIP	1
29	1D5117	NUT	1
30	3B4508	LOCKWASHER	3
31	1V3546	COUPLING	2
32	7K1456	UNION	1
33	1V400	TUBE ASSEM.	1
34	6H1717	BOLT	2
	4B4280	WASHER	2
C 35	1V6993	BOX ASSEM. (R.H.)	1
36	9M685	LATCH ASSEM.	1
	4B4306	RIVET	2
37	9F2978	NUT (Weld)	15
38	1V7900	BRACE ASSEM.	1
	9F2978	NUT (Weld)	1
39	9S1352	PIN	1
40	1F748	NUT (Weld)	3
41	5A8900	SCREEN	1

J12695E

GRAPHIC #1

j12695e

FUEL SYSTEM AND BATTERY BOX (1V482 N/S)--Part 2 of 2

Effective with Serial No. 65J1808~65J1876
For Japan

Key: C - INDICATES CHANGE, H - ORDER BY THE DM

SMCS

NOTE	REF NO	GRAPHIC REF	PART NUMBER	QTY	PART NAME 1 2 3 4 5 6 (PRODUCT LEVEL)	LINK PAGE
	1		4B-5441	1	CAP ASSEM.	
	2		3H-8389	1	SCREW	
	3		2A-1763	1	GASKET	
	4		4B-5423	1	GASKET	
	5		4B-5949	2	ELEMENT	
	6		7B-2002	1	WASHER	
	7		3F-4134	1	BAFFLE	
	8		5B-7267	8	CORK	
	9		3Y-0857	1	PLUNGER (Liter Scale)	
			1M-1682	1	PLUNGER (Percentage Scale)	
	10		8H-3497	1	RING	
	11		8H-3498	1	STRAINER ASSEM.	
	12		5A-9112	1	LID ASSEM. (L.H.)	
	13		5K-4138	1	HOOK	
	14		6K-2404	1	DOOR ASSEM.	
	15		6K-0485	2	HOOK	
			8F-8551	2	HINGE	
	16		0S-1594	4	BOLT	
			1D-4717	4	NUT	
	17		3B-4506	10	LOCKWASHER	
	18		4B-4278	4	WASHER	
	19		0S-1587	2	BOLT	
	20		1K-4649	2	SPACER	
	21		4K-5744	1	SUPPORT ASSEM. (L.H.)	
	22		0S-0509	4	BOLT	
	23		4K-5743	1	SUPPORT ASSEM. (R.H.)	
	24		0S-1589	6	BOLT (44.5mm Long)	
			3B-4510	6	LOCKWASHER	
			9H-3457	6	WASHER	
	25		0S-1595	4	BOLT	
			3B-4508	4	LOCKWASHER	
			0V-0531	4	WASHER	
C	26		3H-2900	6	GROMMET	
	27		3F-1240	4	GROMMET	
	28		0S-1588	2	BOLT	
C	29		3Y-1882	1	LID ASSEM. (R.H.)	
	30		5K-4138	1	HOOK	
HC	31		5P-0801		SEAL 33dm	
HC	32		5P-2668		SEAL 8dm	

FUEL SYSTEM AND BATTERY BOX (1V482 N/S)--Part 2 of 2

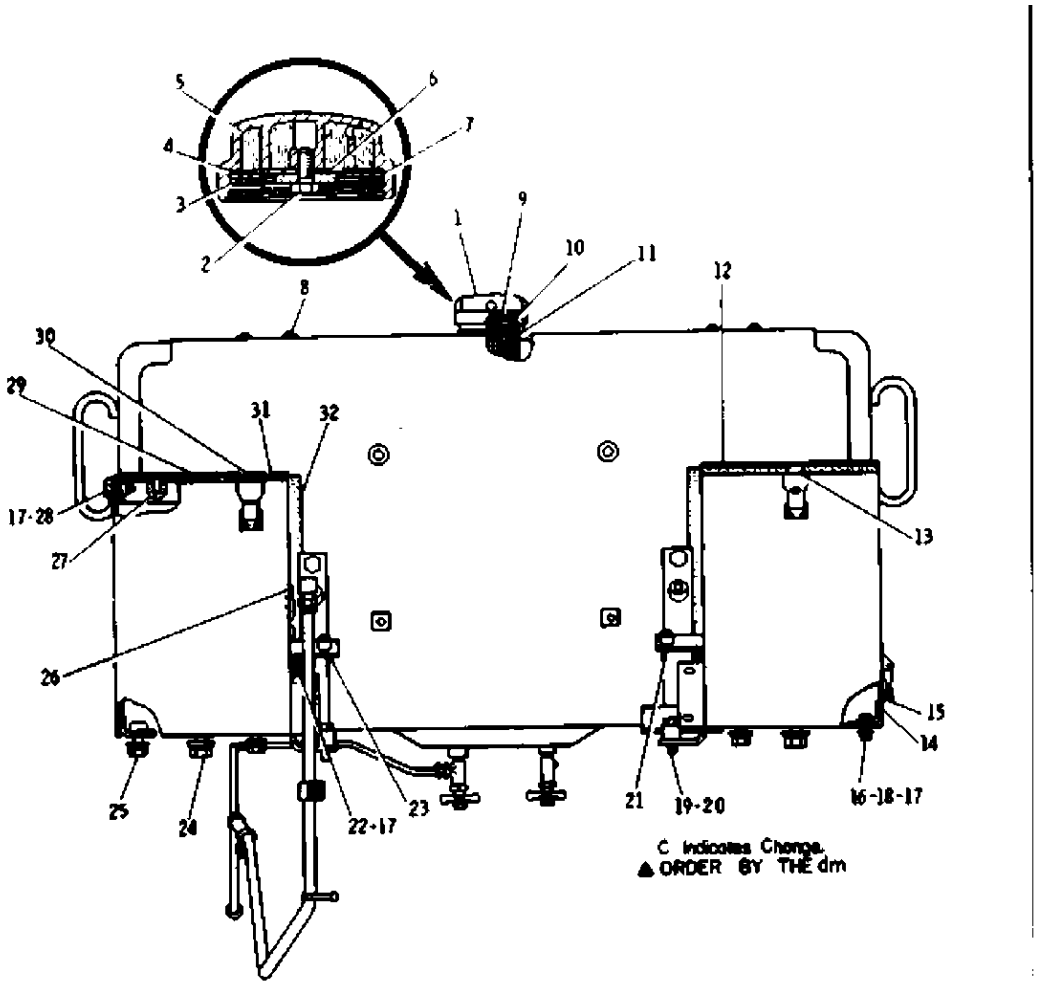

REF. NO.	PART NUMBER	DESCRIPTION	QTY.
1	4B5441	CAP ASSEM.	1
2	3M8389	SCREW	1
3	2A1763	GASKET	1
4	4B5423	GASKET	1
5	4B5949	ELEMENT	2
6	7B2002	WASHER	1
7	3F4134	BAFFLE	1
8	5B7267	CORK	8
9	3Y857	PLUNGER (Liter Scale)	1
	1M1682	PLUNGER (Percentage Scale)	1
10	8H3497	RING	1
11	8H3498	STRAINER ASSEM.	1
12	5A9112	LID ASSEM. (L.H.)	1
13	5K4138	HOOK	1
14	6K2404	DOOR ASSEM.	1
15	6K485	HOOK	2
	8F8551	HINGE	2
16	S1594	BOLT	4
	1D4717	NUT	4
17	3B4506	LOCKWASHER	10
18	4B4278	WASHER	4
19	S1587	BOLT	2
20	1K4649	SPACER	2

	REF. NO.	PART NUMBER	DESCRIPTION	QTY.
	21	4K5744	SUPPORT ASSEM. (L.H.)	1
	22	S509	BOLT	4
	23	4K5743	SUPPORT ASSEM. (R.H.)	1
	24	S1589	BOLT (44.5mm Long)	6
		3B4510	LOCKWASHER	6
		9H3457	WASHER	6
	25	S1595	BOLT	4
		3B4508	LOCKWASHER	4
		V531	WASHER	4
C	26	3H2900	GROMMET	6
	27	3F1240	GROMMET	4
	28	S1588	BOLT	2
C	29	3Y1882	LID ASSEM. (R.H.)	1
	30	5K4138	HOOK	1
▲C	31	5P801	SEAL ---33dm	
▲C	32	5P2668	SEAL ---8dm	

J12696E

FUEL SYSTEM AND BATTERY BOX (1V482 N/S)--Part 1 of 2

Effective with Serial No. 65J1808~65J1876
For outside Japan

Key: C - INDICATES CHANGE

SMCS

NOTE	REF NO	GRAPHIC REF	PART NUMBER	QTY	PART NAME 1 2 3 4 5 6 (PRODUCT LEVEL)	LINK PAGE
	1		9K-1274	1	TANK ASSEM.	
			8K-8597	1	TANK ASSEM.	
	2		1F-2417	1	BOSS	
	3		5A-8157	1	FITTING	
	4		8H-3496	1	FITTING	
	5		4B-7305	2	BUTTON	
	6		4B-7337	2	BLOCK	
	7		6K-0619	2	LUG	
	8		3K-3235	2	GRAB IRON	
	9		6K-4671	1	BOX ASSEM. (L.H.)	
	10		9S-1352	1	PIN	
	11		1V-7900	1	BRACE ASSEM.	
			9F-2978	1	NUT (Weld)	
	12		9M-0685	3	LATCH ASSEM.	
			4B-4306	6	RIVET	
	13		9F-2978	11	NUT (Weld)	
	14		1F-0748	1	NUT (Weld)	
	15		9F-6445	2	NUT (Weld)	
	16		6K-7151	2	BRACKET ASSEM.	
	17		1M-1427	1	BOSS	
	18		3Y-0606	2	VALVE ASSEM.	
	19		5K-9246	1	CONNECTOR	
	20		5K-9235	1	ELBOW	
	21		0S-1594	2	BOLT	
			1D-4717	2	NUT	
	22		3B-4506	3	LOCKWASHER	
	23		7K-1456	1	UNION	
	24		3Y-1937	1	TUBE ASSEM.	
	25		2K-8851	2	NUT	
	26		0L-1351	1	BOLT	
	27		8B-6127	3	CLIP	
	28		1V-0400	1	TUBE ASSEM.	
	29		2K-8851	2	NUT	
	30		6H-1717	2	BOLT	
			4B-4280	2	WASHER	
			3B-4508	2	LOCKWASHER	
C	31		1V-6993	1	BOX ASSEM. (R.H.)	
	32		9M-0685	1	LATCH ASSEM.	
			4B-4306	2	RIVET	
	33		9F-2978	13	NUT (Weld)	
	34		1V-7900	1	BRACE ASSEM.	
			9F-2978	1	NUT (Weld)	
	35		9S-1352	1	PIN	
	36		1F-0748	3	NUT (Weld)	
	37		9F-6445	2	NUT (Weld)	
	38		5A-8900	1	SCREEN	

FUEL SYSTEM AND BATTERY BOX (1V482 N/S)--Part 1 of 2

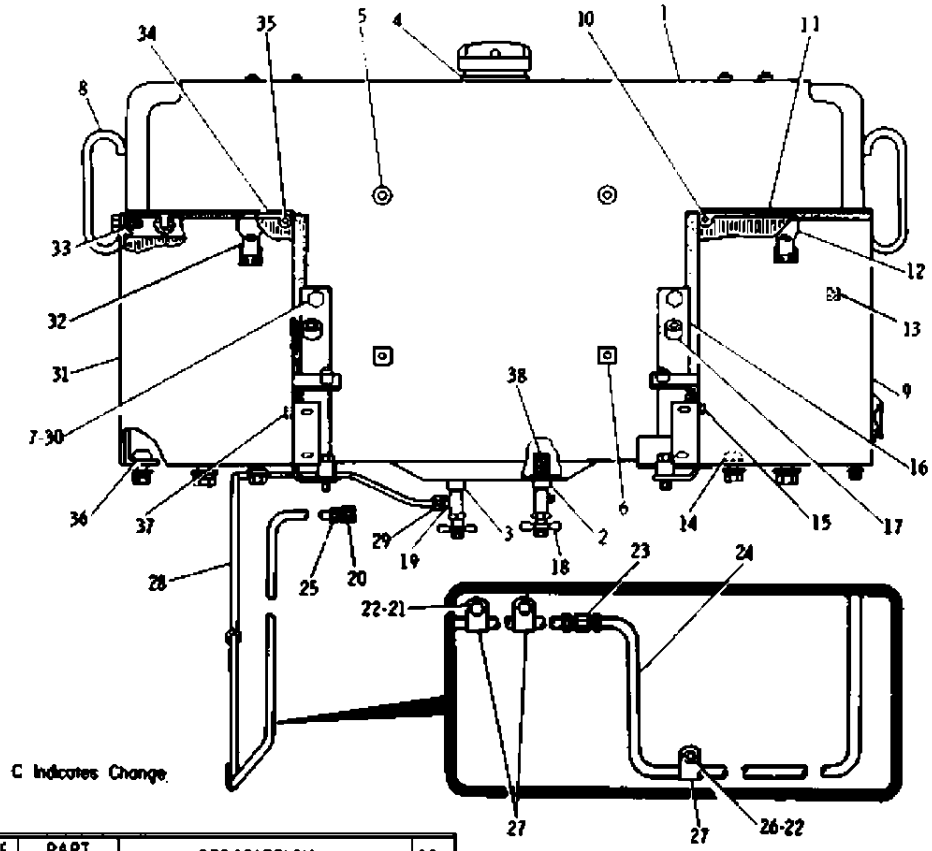

C Indicates Change

REF. NO.	PART NUMBER	DESCRIPTION	QTY.
1	9K1274	TANK ASSEM.	1
	8K8597	TANK ASSEM.	1
2	1F2417	BOSS	1
3	5A8157	FITTING	1
4	8H3496	FITTING	1
5	4B7305	BUTTON	2
6	4B7337	BLOCK	2
7	6K619	LUG	2
8	3K3235	GRAB IRON	2
9	6K4671	BOX ASSEM. (L.H.)	1
10	9S1352	PIN	1
11	1V7900	BRACE ASSEM.	1
	9F2978	NUT (Weld)	1
12	9M685	LATCH ASSEM.	3
	4B4306	RIVET	6
13	9F2978	NUT (Weld)	11
14	1F748	NUT (Weld)	1
15	9F6445	NUT (Weld)	2
16	6K7151	BRACKET ASSEM.	2
17	1M1427	BOSS	1
18	3Y606	VALVE ASSEM.	2
19	5K9246	CONNECTOR	1
20	5K9235	ELBOW	1
21	S1594	BOLT	2
	1D4717	NUT	2

REF. NO.	PART NUMBER	DESCRIPTION	QTY.
22	3B4506	LOCKWASHER	3
23	7K1456	UNION	1
24	3Y1937	TUBE ASSEM.	1
25	2K8851	NUT	2
26	L1351	BOLT	1
27	8B6127	CLIP	3
28	1V400	TUBE ASSEM.	1
29	2K8851	NUT	2
30	6H1717	BOLT	2
	4B4280	WASHER	2
	3B4508	LOCKWASHER	2
C 31	1V6993	BOX ASSEM. (R.H.)	1
32	9M685	LATCH ASSEM.	1
	4B4306	RIVET	2
33	9F2978	NUT (Weld)	13
34	1V7900	BRACE ASSEM.	1
	9F2978	NUT (Weld)	1
35	9S1352	PIN	1
36	1F748	NUT (Weld)	3
37	9F6445	NUT (Weld)	2
38	5A8900	SCREEN	1

J12985E

GRAPHIC #1

j12985e

FUEL SYSTEM AND BATTERY BOX (1V482 N/S)--Part 2 of 2

Effective with Serial No. 65J1808~65J1876
For outside Japan

Key: C - INDICATES CHANGE., H - ORDER BY THE DM

SMCS

NOTE	REF NO	GRAPHIC REF	PART NUMBER	QTY	PART NAME 1 2 3 4 5 6 (PRODUCT LEVEL)	LINK PAGE
	1		4B-5441	1	CAP ASSEM.	
	2		3H-8389	1	SCREW	
	3		2A-1763	1	GASKET	
	4		4B-5423	1	GASKET	
	5		4B-5949	2	ELEMENT	
	6		7B-2002	1	WASHER	
	7		3F-4134	1	BAFFLE	
	8		5B-7267	8	CORK	
	9		3Y-0857	1	PLUNGER (Liter Scale)	
			1M-1682	1	PLUNGER (Percentage Scale)	
	10		8H-3497	1	RING	
	11		8H-3498	1	STRAINER ASSEM.	
	12		5A-9112	1	LID ASSEM. (L.H.)	
	13		5K-4138	1	HOOK	
	14		6K-2404	1	DOOR ASSEM.	
	15		6K-0485	2	HOOK	
			3Y-0533	2	HINGE	
	16		0S-1594	4	BOLT	
			1D-4717	4	NUT	
	17		3B-4506	10	LOCKWASHER	
	18		4B-4278	4	WASHER	
	19		0S-1587	2	BOLT	
	20		1K-4649	2	SPACER	
	21		4K-5744	1	SUPPORT ASSEM. (L.H.)	
	22		0S-0509	4	BOLT	
	23		4K-5743	1	SUPPORT ASSEM. (R.H.)	
	24		0S-1589	6	BOLT (44.5mm Long)	
			3B-4510	6	LOCKWASHER	
			9H-3457	6	WASHER	
	25		0S-1595	4	BOLT	
			3B-4508	4	LOCKWASHER	
			0V-0531	4	WASHER	
	26		3H-2900	4	GROMMET	
	27		3F-1240	4	GROMMET	
	28		0S-1588	2	BOLT	
C	29		3Y-1882	1	LID ASSEM. (R.H.)	
	30		5K-4138	1	HOOK	
HC	31		5P-0801		SEAL 33dm	
HC	32		5P-2668		SEAL 8dm	

FUEL SYSTEM AND BATTERY BOX (1V482 N/S)--Part 2 of 2

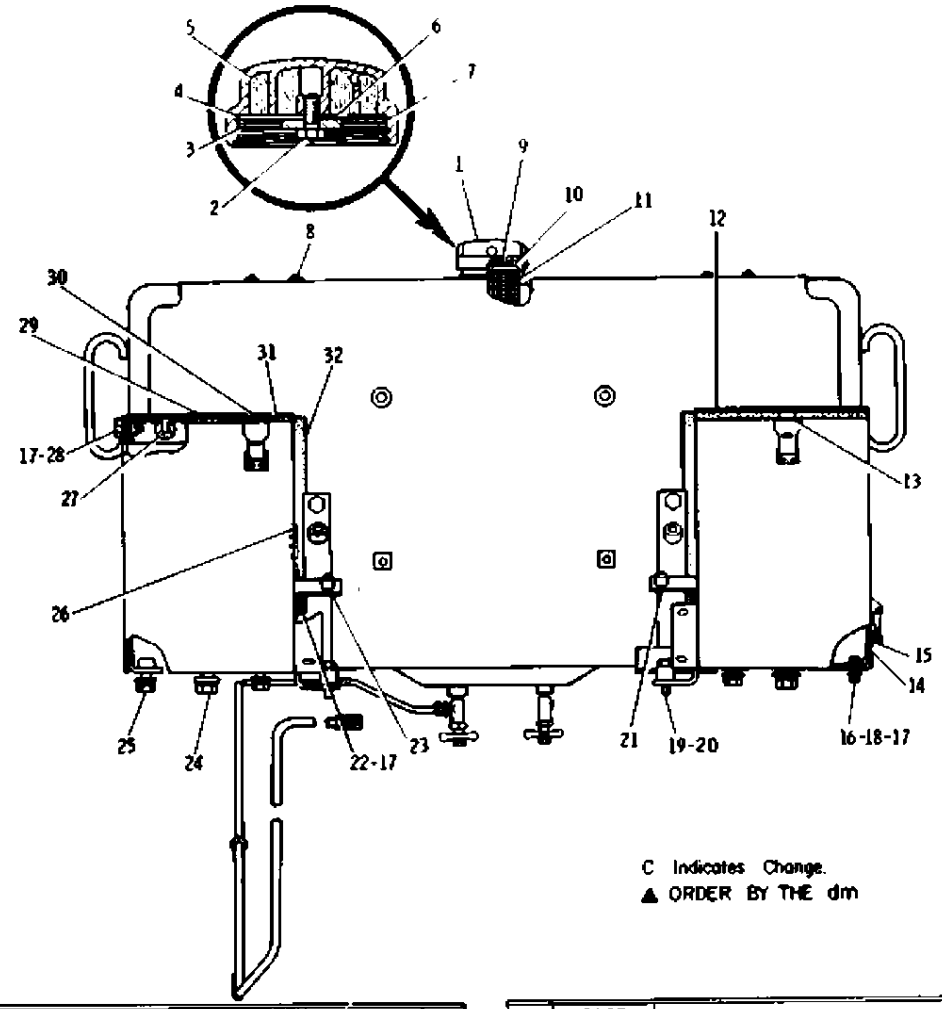

C Indicates Change.
▲ ORDER BY THE dm

REF. NO.	PART NUMBER	DESCRIPTION	QTY.
1	4B5441	CAP ASSEM.	1
2	3H8389	SCREW	1
3	2A1763	GASKET	1
4	4B5423	GASKET	1
5	4B5949	ELEMENT	2
6	7B2002	WASHER	1
7	3F4134	BAFFLE	1
8	5B7267	CORK	8
9	3Y857	PLUNGER (Liter Scale)	1
	1M1682	PLUNGER (Percentage Scale)	1
10	8H3497	RING	1
11	8H3498	STRAINER ASSEM.	1
12	5A9112	LID ASSEM. (L.H.)	1
13	5K4138	HOOK	1
14	6K2404	DOOR ASSEM.	1
15	6K485	HOOK	2
	3Y533	HINGE	2
16	S1594	BOLT	4
	104717	NUT	4
17	3B4506	LOCKWASHER	10
18	4B4278	WASHER	4
19	S1587	BOLT	2

	REF. NO.	PART NUMBER	DESCRIPTION	QTY.
	20	1K4649	SPACER	2
	21	4K5744	SUPPORT ASSEM. (L.H.)	1
	22	S509	BOLT	4
	23	4K5743	SUPPORT ASSEM. (R.H.)	1
	24	S1589	BOLT (44.5mm Long)	6
		3B4510	LOCKWASHER	6
		9H3457	WASHER	6
	25	S1595	BOLT	4
		3B4508	LOCKWASHER	4
		V531	WASHER	4
	26	3H2900	GROMMET	4
	27	3F1240	GROMMET	4
	28	S1588	BOLT	2
C	29	3Y1882	LID ASSEM. (R.H.)	1
	30	5K4138	HOOK	1
▲C	31	5P801	SEAL 33dm	
▲C	32	5P2668	SEAL 8dm	

J12986E

FUEL SYSTEM AND BATTERY BOX (1V482 N/S)--Part 1 of 2

Effective with Serial No. 65J1877~65J2001

Key: C - INDICATES CHANGE., H - ORDER BY THE CM

SMCS

NOTE	REF NO	GRAPHIC REF	PART NUMBER	QTY	PART NAME 1 2 3 4 5 6 (PRODUCT LEVEL)	LINK PAGE
	1		9K-1274	1	TANK ASSEM.	
			8K-8597	1	TANK ASSEM.	
	2		1F-2417	1	BOSS	
	3		5A-8157	1	FITTING	
	4		8H-3496	1	FITTING	
	5		4B-7305	2	BUTTON	
	6		4B-7337	2	BLOCK	
	7		6K-0619	2	LUG	
	8		3K-3235	2	GRAB IRON	
	9		6K-4671	1	BOX ASSEM. (L.H.)	
	10		9S-1352	1	PIN	
	11		4K-5721	1	BRACE	
	12		9M-0685	3	LATCH ASSEM.	
			4B-4306	6	RIVET	
	13		9F-2978	5	NUT (Weld)	
	14		1F-0748	1	NUT (Weld)	
	15		6K-7151	2	BRACKET ASSEM.	
	16		1M-1427	1	BOSS	
C	17		3Y-4364	2	VALVE ASSEM.	
	18		5K-9246	1	CONNECTER	
	19		5K-9235	1	ELBOW	
	20		0S-1594	2	BOLT	
			1D-4717	2	NUT	
	21		3B-4506	2	LOCKWASHER	
	22		8B-6127	2	CLIP	
H	23		5P-0767		HOSE 13cm	
	24		4D-6988	1	CLIP	
	25		4F-7957	1	BOLT	
			4B-4276	1	WASHER	
H	26		5P-1442		HOSE 150cm	
	27		3S-2093	1	STRAP	
	28		4S-1936	1	CLIP	
	29		1D-5117	1	NUT	
	30		3B-4508	3	LOCKWASHER	
	31		1V-3546	2	COUPLING	
	32		7K-1456	1	UNION	
	33		1V-0400	1	TUBE ASSEM.	
	34		6H-1717	2	BOLT	
			4B-4280	2	WASHER	
	35		1V-6993	1	BOX ASSEM. (R.H.)	
	36		9M-0685	1	LATCH ASSEM.	
			4B-4306	2	RIVET	
	37		9F-2978	15	NUT (Weld)	
	38		1V-7900	1	BRACE ASSEM.	
			9F-2978	1	NUT (Weld)	
	39		9S-1352	1	PIN	
	40		1F-0748	3	NUT (Weld)	
	41		5A-8900	1	SCREEN	

FUEL SYSTEM AND BATTERY BOX (1V482 N/S)--Part 1 of 2

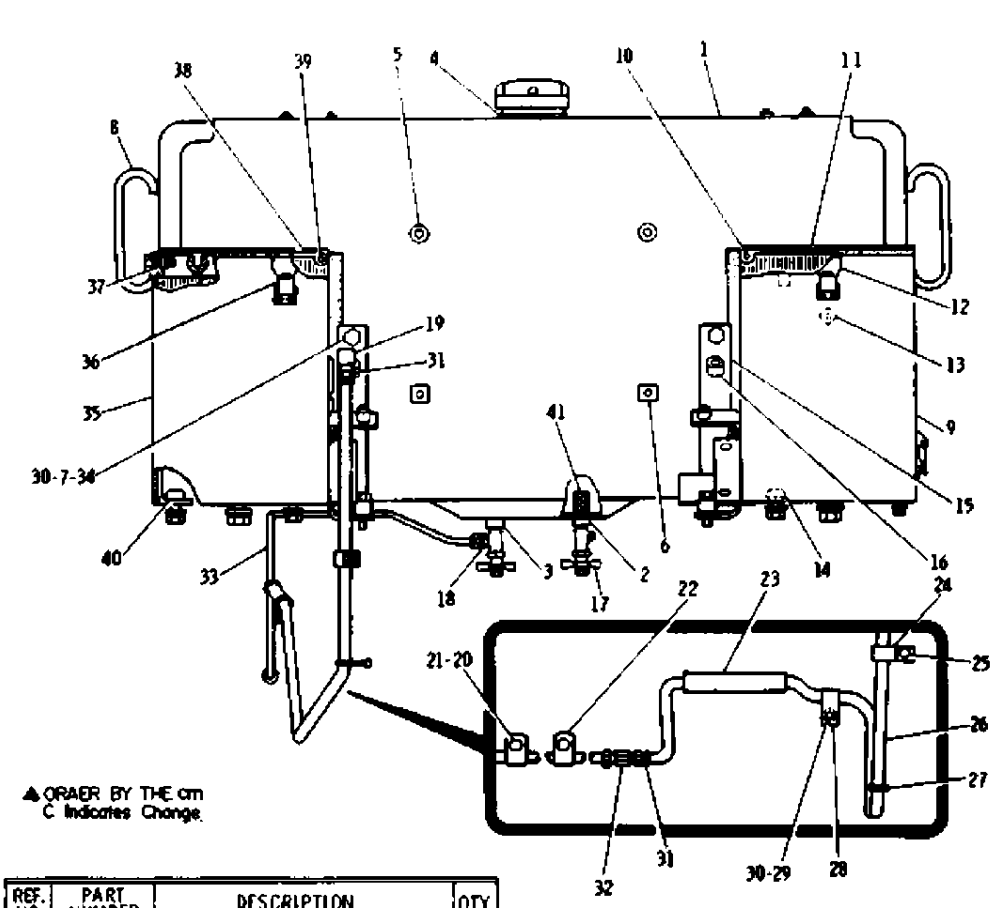

▲ ORDER BY THE cm
C Indicates Change

REF. NO.	PART NUMBER	DESCRIPTION	QTY.
1	9K1274	TANK ASSEM.	1
	8K8597	TANK ASSEM.	1
2	1F2417	BOSS	1
3	5A8157	FITTING	1
4	8H3496	FITTING	1
5	4B7305	BUTTON	2
6	4B7337	BLOCK	2
7	6K619	LUG	2
8	3K3235	GRAB IRON	2
9	6K4671	BOX ASSEM. (L.H.)	1
10	9S1352	PIN	1
11	4K5721	BRACE	1
12	9M685	LATCH ASSEM.	3
	4B4306	RIVET	6
13	9F2978	NUT (Weld)	5
14	1F748	NUT (Weld)	1
15	6K7151	BRACKET ASSEM.	2
16	1M1427	BOSS	1
C 17	3Y4364	VALVE ASSEM.	2
18	5K9246	CONNECTER	1
19	5K9235	ELBOW	1
20	S1594	BOLT	2
	1D4717	NUT	2
21	3B4506	LOCKWASHER	2
22	8B6127	CLIP	2

REF. NO.	PART NUMBER	DESCRIPTION	QTY.
▲ 23	5P767	HOSE ---------- 13cm	
24	4D6988	CLIP	1
25	4F7957	BOLT	1
	4B4276	WASHER	1
▲ 26	5P1442	HOSE ---------- 150cm	
27	3S2093	STRAP	1
28	4S1936	CLIP	1
29	1D5117	NUT	1
30	3B4508	LOCKWASHER	3
31	1V3546	COUPLING	2
32	7K1456	UNION	1
33	1V400	TUBE ASSEM.	1
34	6H1717	BOLT	2
	4B4280	WASHER	2
35	1V6993	BOX ASSEM. (R.H.)	1
36	9M685	LATCH ASSEM.	1
	4B4306	RIVET	2
37	9F2978	NUT (Weld)	15
38	1V7900	BRACE ASSEM.	1
	9F2978	NUT (Weld)	1
39	9S1352	PIN	1
40	1F748	NUT (Weld)	3
41	5A8900	SCREEN	1

J12717E

GRAPHIC #1

j12717e

FUEL SYSTEM AND BATTERY BOX (1V482 N/S)--Part 2 of 2

Effective with Serial No. 65J1877~65J2001

Key: C - INDICATES CHANGE, H - ORDER BY THE DM

SMCS

NOTE	REF NO	GRAPHIC REF	PART NUMBER	QTY	PART NAME 1 2 3 4 5 6 (PRODUCT LEVEL)	LINK PAGE
	1		4B-5441	1	CAP ASSEM.	
	2		3H-8389	1	SCREW	
	3		2A-1763	1	GASKET	
	4		4B-5423	1	GASKET	
	5		4B-5949	2	ELEMENT	
	6		7B-2002	1	WASHER	
	7		3F-4134	1	BAFFLE	
	8		5B-7267	8	CORK	
	9		3Y-0857	1	PLUNGER (Liter Scale)	
			1M-1682	1	PLUNGER (Percentage Scale)	
	10		8H-3497	1	RING	
	11		8H-3498	1	STRAINER ASSEM.	
	12		5A-9112	1	LID ASSEM. (L.H.)	
	13		5K-4138	1	HOOK	
	14		6K-2404	1	DOOR ASSEM.	
	15		6K-0485	2	HOOK	
			8F-8551	2	HINGE	
	16		0S-1594	4	BOLT	
			1D-4717	4	NUT	
	17		3B-4506	10	LOCKWASHER	
	18		4B-4278	4	WASHER	
	19		0S-1587	2	BOLT	
	20		1K-4649	2	SPACER	
	21		4K-5744	1	SUPPORT ASSEM. (L.H.)	
	22		0S-0509	4	BOLT	
	23		4K-5743	1	SUPPORT ASSEM. (R.H.)	
	24		0S-1589	6	BOLT (44.5mm Long)	
			3B-4510	6	LOCKWASHER	
			9H-3457	6	WASHER	
	25		0S-1595	4	BOLT	
			3B-4508	4	LOCKWASHER	
			0V-0531	4	WASHER	
C	26		3H-2900	6	GROMMET	
	27		3F-1240	4	GROMMET	
	28		0S-1588	2	BOLT	
C	29		3Y-1882	1	LID ASSEM. (R.H.)	
	30		5K-4138	1	HOOK	
HC	31		5P-0801		SEAL 33dm	
HC	32		5P-2668		SEAL 8dm	

FUEL SYSTEM AND BATTERY BOX (1V482 N/S)--Part 2 of 2

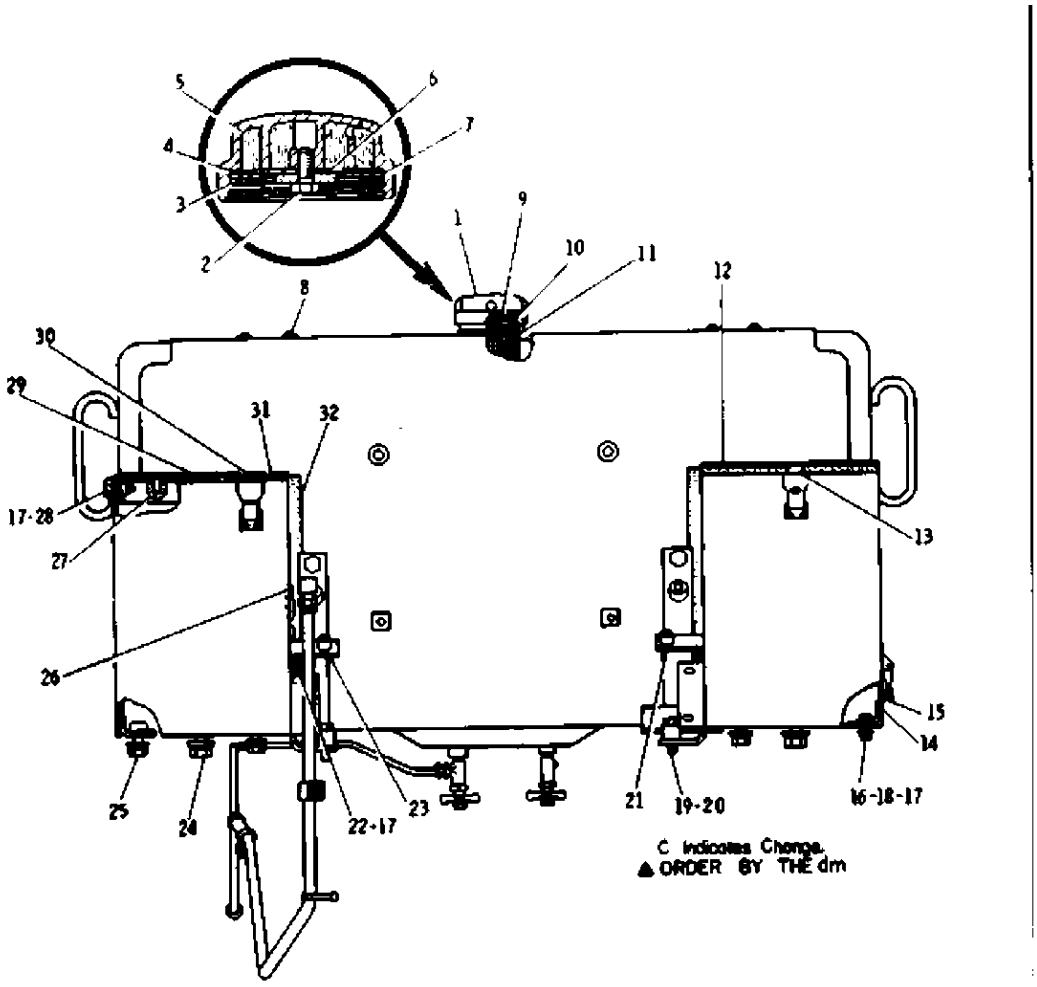

REF. NO.	PART NUMBER	DESCRIPTION	QTY.
1	4B5441	CAP ASSEM.	1
2	3M8389	SCREW	1
3	2A1763	GASKET	1
4	4B5423	GASKET	1
5	4B5949	ELEMENT	2
6	7B2002	WASHER	1
7	3F4134	BAFFLE	1
8	5B7267	CORK	8
9	3Y857	PLUNGER (Liter Scale)	1
	1M1682	PLUNGER (Percentage Scale)	1
10	8H3497	RING	1
11	8H3498	STRAINER ASSEM.	1
12	5A9112	LID ASSEM. (L.H.)	1
13	5K4138	HOOK	1
14	6K2404	DOOR ASSEM.	1
15	6K485	HOOK	2
	8F8551	HINGE	2
16	S1594	BOLT	4
	1D4717	NUT	4
17	3B4506	LOCKWASHER	10
18	4B4278	WASHER	4
19	S1587	BOLT	2
20	1K4649	SPACER	2

	REF. NO.	PART NUMBER	DESCRIPTION	QTY.
	21	4K5744	SUPPORT ASSEM. (L.H.)	1
	22	S509	BOLT	4
	23	4K5743	SUPPORT ASSEM. (R.H.)	1
	24	S1589	BOLT (44.5mm Long)	6
		3B4510	LOCKWASHER	6
		9H3457	WASHER	6
	25	S1595	BOLT	4
		3B4508	LOCKWASHER	4
		V531	WASHER	4
C	26	3H2900	GROMMET	6
	27	3F1240	GROMMET	4
	28	S1588	BOLT	2
C	29	3Y1882	LID ASSEM. (R.H.)	1
	30	5K4138	HOOK	1
▲C	31	5P801	SEAL ---33dm	
▲C	32	5P2668	SEAL ---8dm	

J12696E

FUEL SYSTEM AND BATTERY BOX (1V482 N/S)--Part 1 of 2

Effective with Serial No. 65J2002~65J2005, 65J2011~65J2034, 65J2038~65J2042

Key: C - INDICATES CHANGE

SMCS

NOTE	REF NO	GRAPHIC REF	PART NUMBER	QTY	PART NAME 1 2 3 4 5 6 (PRODUCT LEVEL)	LINK PAGE
C	1		3Y-5243	1	TANK ASSEM.	
	2		4B-7337	2	BLOCK	
	3		1F-2417	1	BOSS	
	4		3V-6225	1	FITTING	
	5		6K-0619	2	LUG	
	6		3K-3235	2	GRAB IRON	
	7		8H-3496	1	FITTING	
	8		4B-7305	2	BUTTON	
	9		6K-4671	1	BOX ASSEM. (L.H.)	
	10		9S-1352	1	PIN	
	11		1V-7900	1	BRACE ASSEM.	
			9F-2978	1	NUT (Weld)	
	12		9M-0685	3	LATCH ASSEM.	
			4B-4306	6	RIVET	
	13		9F-2978	11	NUT (Weld)	
	14		1F-0748	1	NUT (Weld)	
	15		9F-6445	2	NUT (Weld)	
	16		6K-7151	2	BRACKET ASSEM.	
	17		1M-1427	1	BOSS	
	18		3Y-4364	2	VALVE ASSEM.	
	19		5K-9246	1	CONNECTOR	
	20		0S-1594	2	BOLT	
			1D-4717	2	NUT	
	21		3B-4506	2	LOCKWASHER	
	22		8B-6127	2	CLIP	
C	23		2V-9792	1	HOSE	
C	24		4S-4456	1	CLIP	
	25		4F-7957	1	BOLT	
			4B-4276	1	WASHER	
H	26		5P-1520		HOSE 150cm	
	27		3S-2093	1	STRAP	
	28		4S-1936	1	CLIP	
	29		1D-5117	1	NUT	
	30		3B-4508	3	LOCKWASHER	
	31		1V-3546	2	COUPLING	
	32		7K-1456	1	UNION	
	33		1V-0400	1	TUBE ASSEM.	
	34		6H-1717	2	BOLT	
			4B-4280	2	WASHER	
	35		1V-6993	1	BOX ASSEM. (R.H.)	
	36		9M-0685	1	LATCH ASSEM.	
			4B-4306	2	RIVET	
	37		9F-2978	13	NUT (Weld)	
	38		1V-7900	1	BRACE ASSEM.	
			9F-2978	1	NUT (Weld)	
	39		9S-1352	1	PIN	
	40		1F-0748	2	NUT (Weld)	
	41		9F-6445	2	NUT (Weld)	
	42		5K-9235	1	ELBOW	

FUEL SYSTEM AND BATTERY BOX (1V482 N/S)--Part 1 of 2

43 5A-8900 1 SCREEN

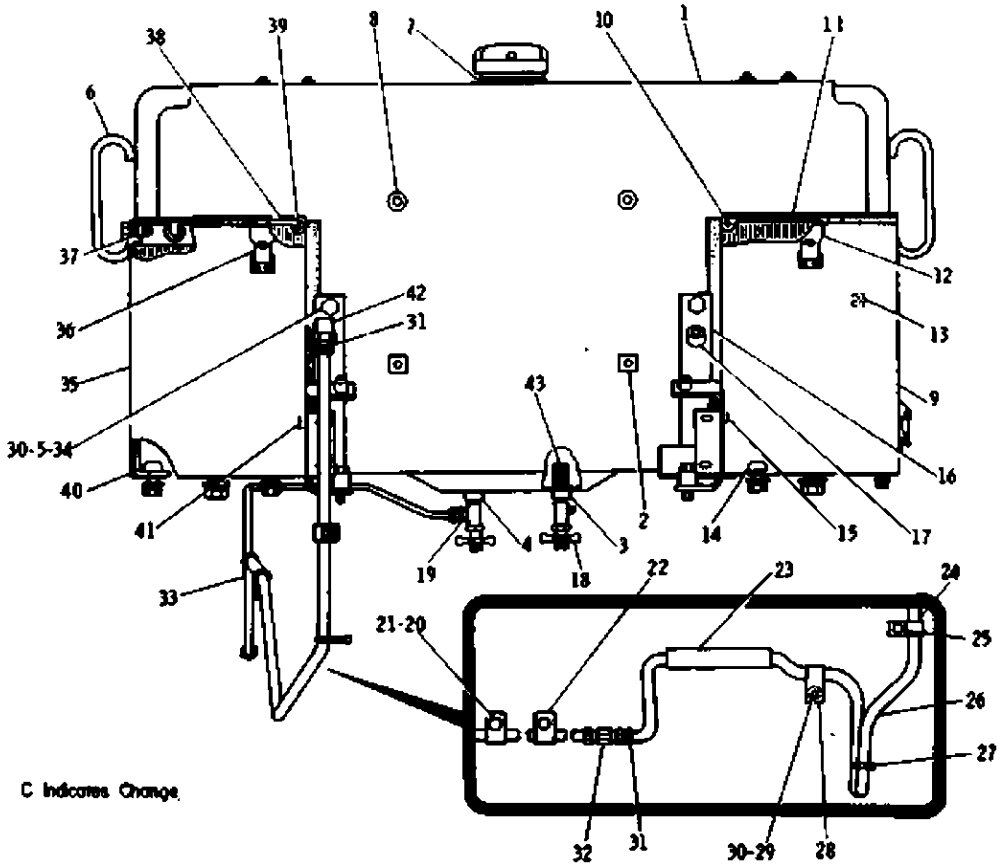

REF. NO.	PART NUMBER	DESCRIPTION	QTY.
C 1	3Y5243	TANK ASSEM.	1
2	4B7337	BLOCK	2
3	1F2417	BOSS	1
4	3V6225	FITTING	1
5	6K619	LUG	2
6	3K3235	GRAB IRON	2
7	8H3496	FITTING	1
8	4B7305	BUTTON	2
9	6K4671	BOX ASSEM. (L.H.)	1
10	9S1352	PIN	1
11	1V7900	BRACE ASSEM.	1
	9F2978	NUT (Weld)	1
12	9M685	LATCH ASSEM.	3
	4B4306	RIVET	6
13	9F2978	NUT (Weld)	11
14	1F748	NUT (Weld)	1
15	9F6445	NUT (Weld)	2
16	6K7151	BRACKET ASSEM.	2
17	1M1427	BOSS	1
18	3Y4364	VALVE ASSEM.	2
19	5K9246	CONNECTOR	1
20	S1594	BOLT	2
	1D4717	NUT	2
21	3B4506	LOCKWASHER	2
22	8B6127	CLIP	2

REF. NO.	PART NUMBER	DESCRIPTION	QTY.
C 23	2V9792	HOSE	1
C 24	4S4456	CLIP	1
25	4F7957	BOLT	1
	4B4276	WASHER	1
▲ 26	5P1520	HOSE ---------- 150cm	
27	3S2093	STRAP	1
28	4S1936	CLIP	1
29	1D5117	NUT	1
30	3B4508	LOCKWASHER	3
31	1V3546	COUPLING	2
32	7K1456	UNION	1
33	1V400	TUBE ASSEM.	1
34	6H1717	BOLT	2
	4B4280	WASHER	2
35	1V6993	BOX ASSEM. (R.H.)	1
36	9M685	LATCH ASSEM.	1
	4B4306	RIVET	2
37	9F2978	NUT (Weld)	13
38	1V7900	BRACE ASSEM.	1
	9F2978	NUT (Weld)	1
39	9S1352	PIN	1
40	1F748	NUT (Weld)	2
41	9F6445	NUT (Weld)	2
42	5K9235	ELBOW	1
43	5A8900	SCREEN	1

J13427E

GRAPHIC #1

j13427e

FUEL SYSTEM AND BATTERY BOX (1V482 N/S)--Part 2 of 2

Effective with Serial No. 65J2002~65J2005, 65J2011~65J2034, 65J2038~65J2042

Key: C - INDICATES CHANGE., H - ORDER BY THE DM

SMCS

NOTE	REF NO	GRAPHIC REF	PART NUMBER	QTY	PART NAME 1 2 3 4 5 6 (PRODUCT LEVEL)	LINK PAGE
	1		4B-5441	1	CAP ASSEM.	
	2		3H-8389	1	SCREW	
	3		2A-1763	1	GASKET	
	4		4B-5423	1	GASKET	
	5		4B-5949	2	ELEMENT	
	6		7B-2002	1	WASHER	
	7		3F-4134	1	BAFFLE	
	8		5B-7267	8	CORK	
	9		3Y-0857	1	PLUNGER (Liter Scale)	
			1M-1682	1	PLUNGER (Percentage Scale)	
	10		8H-3497	1	RING	
	11		8H-3498	1	STRAINER ASSEM.	
	12		5A-9112	1	LID ASSEM. (L.H.)	
	13		5K-4138	1	HOOK	
	14		6K-2404	1	DOOR ASSEM.	
	15		6K-0485	2	HOOK	
			3Y-0533	2	HINGE	
	16		0S-1594	4	BOLT	
			1D-4717	4	NUT	
	17		3B-4506	10	LOCKWASHER	
	18		4B-4278	4	WASHER	
	19		0S-1587	2	BOLT	
	20		1K-4649	2	SPACER	
	21		4K-5744	1	SUPPORT ASSEM. (L.H.)	
	22		0S-0509	4	BOLT	
	23		4K-5743	1	SUPPORT ASSEM. (R.H.)	
	24		0S-1589	6	BOLT (44.5mm Long)	
			3B-4510	6	LOCKWASHER	
			9H-3457	6	WASHER	
	25		0S-1595	4	BOLT	
			3B-4508	4	LOCKWASHER	
			0V-0531	4	WASHER	
	26		3H-2900	6	GROMMET	
	27		3F-1240	4	GROMMET	
	28		0S-1588	2	BOLT	
	29		3Y-1882	1	LID ASSEM. (R.H.)	
	30		5K-4138	1	HOOK	
H	31		5P-0801		SEAL 33dm	
H	32		5P-2668		SEAL 8dm	

FUEL SYSTEM AND BATTERY BOX (1V482 N/S)--Part 2 of 2

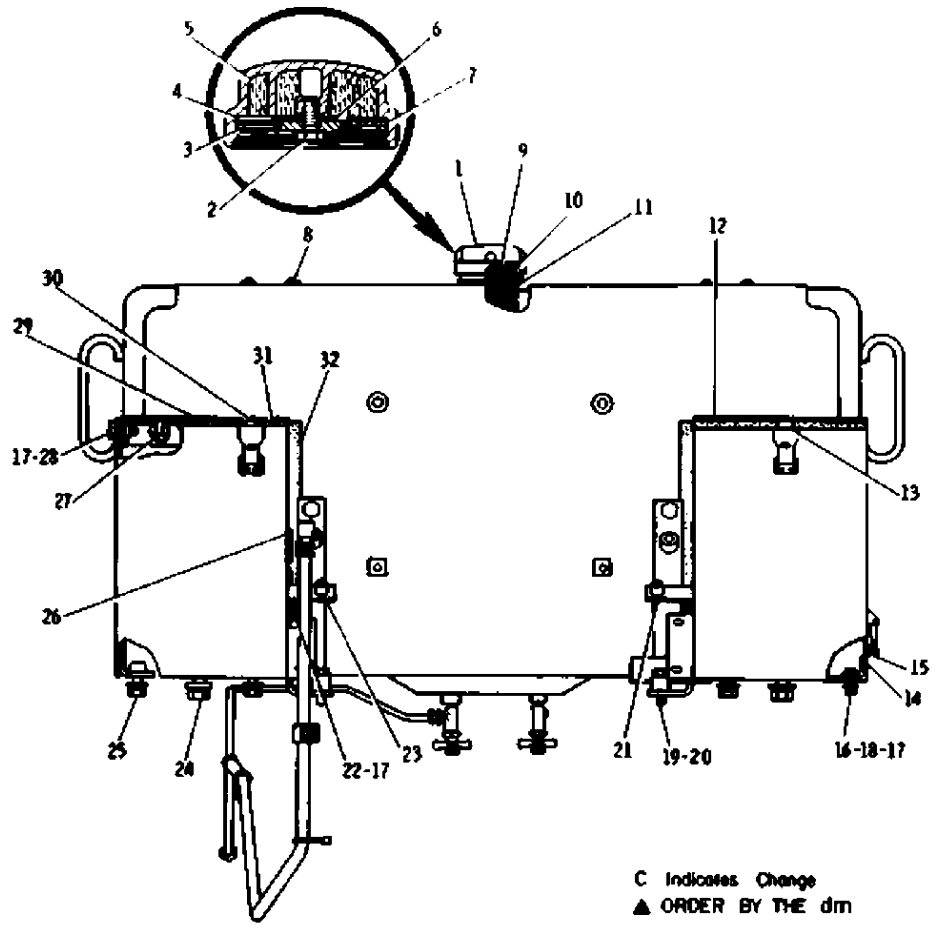

C Indicates Change
▲ ORDER BY THE dm

REF. NO.	PART NUMBER	DESCRIPTION	QTY.
1	4B5441	CAP ASSEM.	1
2	3H8389	SCREW	1
3	2A1763	GASKET	1
4	4B5423	GASKET	1
5	4B5949	ELEMENT	2
6	7B2002	WASHER	1
7	3F4134	BAFFLE	1
8	5B7267	CORK	8
9	3Y857	PLUNGER (Liter Scale)	1
	1M1682	PLUNGER (Percentage Scale)	1
10	8H3497	RING	1
11	8H3498	STRAINER ASSEM.	1
12	5A9112	LID ASSEM. (L.H.)	1
13	5K4138	HOOK	1
14	6K2404	DOOR ASSEM.	1
15	6K485	HOOK	2
	3Y533	HINGE	2
16	S1594	BOLT	4
	1D4717	NUT	4
17	3B4506	LOCKWASHER	10
18	4B4278	WASHER	4
19	S1587	BOLT	2

REF. NO.	PART NUMBER	DESCRIPTION	QTY.	
20	1K4649	SPACER	2	
21	4K5744	SUPPORT ASSEM. (L.H.)	1	
22	S509	BOLT	4	
23	4K5743	SUPPORT ASSEM. (R.H.)	1	
24	S1589	BOLT (44.5mm Long)	6	
	3B4510	LOCKWASHER	6	
	9H3457	WASHER	6	
25	S1595	BOLT	4	
	3B4508	LOCKWASHER	4	
	V531	WASHER	4	
26	3H2900	GROMMET	6	
27	3F1240	GROMMET	4	
28	S1588	BOLT	2	
29	3Y1882	LID ASSEM. (R.H.)	1	
30	5K4138	HOOK	1	
31	5P801	SEAL 33dm		▲
32	5P2668	SEAL 8dm		▲

J13428E

FUEL SYSTEM AND BATTERY BOX (4V2282 N/S)--Part 1 of 2

Effective with Serial No. 65J2006~65J2010, 65J2035~65J2037, 65J2043-UP

Key: H - ORDER BY THE M OR CM

SMCS

NOTE	REF NO	GRAPHIC REF	PART NUMBER	QTY	PART NAME 1 2 3 4 5 6 (PRODUCT LEVEL)	LINK PAGE
	1		3Y-5243	1	TANK ASSEM.	
	2		4B-7337	2	BLOCK	
	3		1F-2417	1	FITTING	
	4		3V-6225	1	BOSS	
	5		6K-0619	2	LUG	
	6		3K-3235	2	GRAB IRON	
	7		8H-3496	1	FITTING	
	8		4B-7305	2	BUTTON	
	9		6K-2414	1	BOX ASSEM. (L.H.)	
	10		9S-1352	1	PIN	
	11		1V-7900	1	BRACE ASSEM.	
			9F-2978	1	NUT (Weld)	
	12		9M-0685	4	LATCH ASSEM.	
			4B-4306	8	RIVET	
	13		9F-2978	11	NUT (Weld)	
	14		1F-0748	1	NUT (Weld)	
	15		9F-6445	2	NUT (Weld)	
	16		6K-7151	2	BRACKET ASSEM.	
	17		1M-1427	1	BOSS	
H	18		5P-6006		TUBE 0.2m	
	19		5A-6930	1	FITTING	
	20		5P-7486	1	VALVE	
	21		3B-7739	1	NIPPLE	
			003-8747	1	ELBOW	
	22		3Y-4364	1	VALVE ASSEM.	
	23		5K-9246	1	CONNECTOR	
	24		8B-6127	4	CLIP	
	25		0S-1594	2	BOLT	
	26		1D-4717	2	NUT	
	27		3V-3308	4	WASHER	
	28		7K-1456	2	UNION	
	29		0S-0509	2	BOLT	
	30		4V-2308	1	TUBE ASSEM.	
			2K-8851	2	NUT	
H	31		5P-1520		HOSE 35cm	
	32		1V-3546	2	COUPLING	
	33		1V-0400	1	TUBE ASSEM.	
			2K-8851	2	NUT	
	34		5K-9235	1	ELBOW	
	35		1V-6993	1	BOX ASSEM. (R.H.)	
	36		9M-0685	1	LATCH ASSEM.	
			4B-4306	2	RIVET	
	37		9F-2978	13	NUT (Weld)	
	38		1V-7900	1	BRACKET ASSEM.	
			9F-2978	1	NUT (Weld)	
	39		9S-1352	1	PIN	
	40		1F-0748	2	NUT (Weld)	
	41		9F-6445	2	NUT (Weld)	
	42		6H-1717	2	BOLT	

FUEL SYSTEM AND BATTERY BOX (4V2282 N/S)--Part 1 of 2

		4B-4280	2	WASHER
	43	3B-4508	2	LOCKWASHER

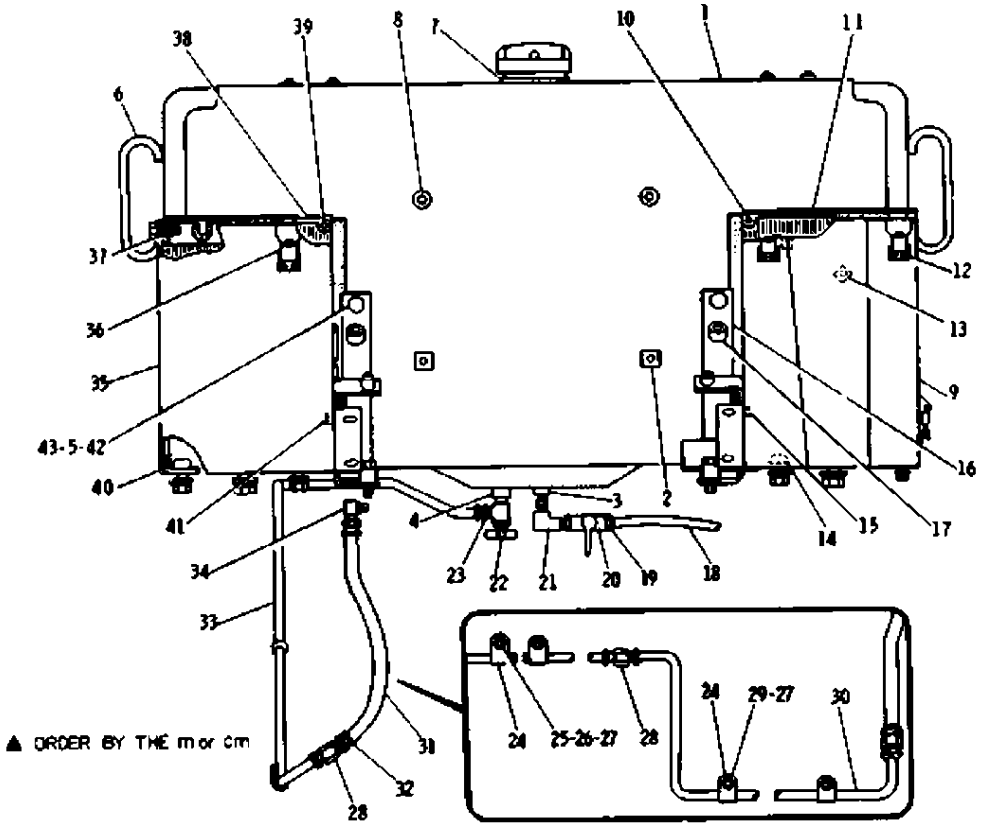

REF. NO.	PART NUMBER	DESCRIPTION	QTY.
1	3Y5243	TANK ASSEM.	1
2	4B7337	BLOCK	2
3	1F2417	FITTING	1
4	3V6225	BOSS	1
5	6K619	LUG	2
6	3K3235	GRAB IRON	2
7	8H3496	FITTING	1
8	4B7305	BUTTON	2
9	6K2414	BOX ASSEM. (L.H.)	1
10	9S1352	PIN	1
11	1V7900	BRACE ASSEM.	1
	9F2978	NUT (Weld)	1
12	9M685	LATCH ASSEM.	4
	4B4306	RIVET	8
13	9F2978	NUT (Weld)	11
14	1F748	NUT (Weld)	1
15	9F6445	NUT (Weld)	2
16	6K7151	BRACKET ASSEM.	2
17	1M1427	BOSS	1
▲ 18	5P6086	TUBE 0.2m	
19	5A6930	FITTING	1
20	5P7486	VALVE	1
21	3B7739	NIPPLE	1
	038747	ELBOW	1
22	3Y4364	VALVE ASSEM.	1
23	5K9246	CONNECTOR	1

REF. NO.	PART NUMBER	DESCRIPTION	QTY.
24	8B6127	CLIP	4
25	S1594	BOLT	2
26	1D4717	NUT	2
27	3V3308	WASHER	4
28	7K1456	UNION	2
29	S509	BOLT	2
30	4V2308	TUBE ASSEM.	1
	2K8851	NUT	2
▲ 31	5P1520	HOSE 35cm	
32	1V3546	COUPLING	2
33	1V400	TUBE ASSEM.	1
	2K8851	NUT	2
34	5K9235	ELBOW	1
35	1V6993	BOX ASSEM. (R.H.)	1
36	9M685	LATCH ASSEM.	1
	4B4306	RIVET	2
37	9F2978	NUT (Weld)	13
38	1V7900	BRACKET ASSEM.	1
	9F2978	NUT (Weld)	1
39	9S1352	PIN	1
40	1F748	NUT (Weld)	2
41	9F6445	NUT (Weld)	2
42	6H1717	BOLT	2
	4B4280	WASHER	2
43	3B4508	LOCKWASHER	2

J14209E

GRAPHIC #1

j14209e

FUEL SYSTEM AND BATTERY BOX (4V2282 N/S)--Part 2 of 2

Effective with Serial No. 65J2006~65J2010, 65J2035~65J2037, 65J2043-UP

Key: H - ORDER BY THE M

SMCS

NOTE	REF NO	GRAPHIC REF	PART NUMBER	QTY	PART NAME 1 2 3 4 5 6 (PRODUCT LEVEL)	LINK PAGE
	1		4B-5441	1	CAP ASSEM. (For Outside Japan)	
			3Y-5192	1	CAP ASSEM. (For Japan)	
	2		3H-8389	1	SCREW	
	3		2A-1763	1	GASKET	
	4		4B-5423	1	GASKET	
	5		4B-5949	2	ELEMENT	
	6		7B-2002	1	WASHER	
	7		3F-4134	1	BAFFLE	
	8		5B-7267	8	CORK	
	9		3V-9851	1	PLUNGER (Percentage Scale)	
			3Y-5185	1	PLUNGER (Liter Scale)	
	10		8H-3497	1	RING	
	11		8H-3498	1	STRAINER ASSEM.	
	12		5A-8756	1	LID ASSEM. (L.H.)	
	13		5K-4138	2	HOOK	
	14		6K-2404	1	DOOR ASSEM.	
	15		6K-0485	2	HOOK	
			3Y-0533	2	HINGE	
	16		0S-1594	4	BOLT	
			1D-4717	4	NUT	
	17		3B-4506	10	LOCKWASHER	
	18		4B-4278	4	WASHER	
	19		0S-1587	2	BOLT	
	20		1K-4649	2	SPACER	
	21		4K-5744	1	SUPPORT ASSEM. (L.H.)	
	22		0S-0509	4	BOLT	
	23		4K-5743	1	SUPPORT ASSEM. (R.H.)	
	24		0S-1589	6	BOLT	
			3B-4510	6	LOCKWASHER	
			9H-3457	6	WASHER	
	25		0S-1595	4	BOLT	
			3B-4508	4	LOCKWASHER	
			0V-0531	4	WASHER	
	26		3H-2900	6	GROMMET	
	27		3F-1240	4	GROMMET	
	28		0S-1588	2	BOLT	
	29		3Y-1882	1	LID ASSEM. (R.H.)	
	30		5K-4138	1	HOOK	
H	31		5P-5923		SEAL 3.3m	
H	32		5P-5669		SEAL 0.8m	
	33		1L-6377	1	PLUG	

FUEL SYSTEM AND BATTERY BOX (4V2282 N/S)--Part 2 of 2

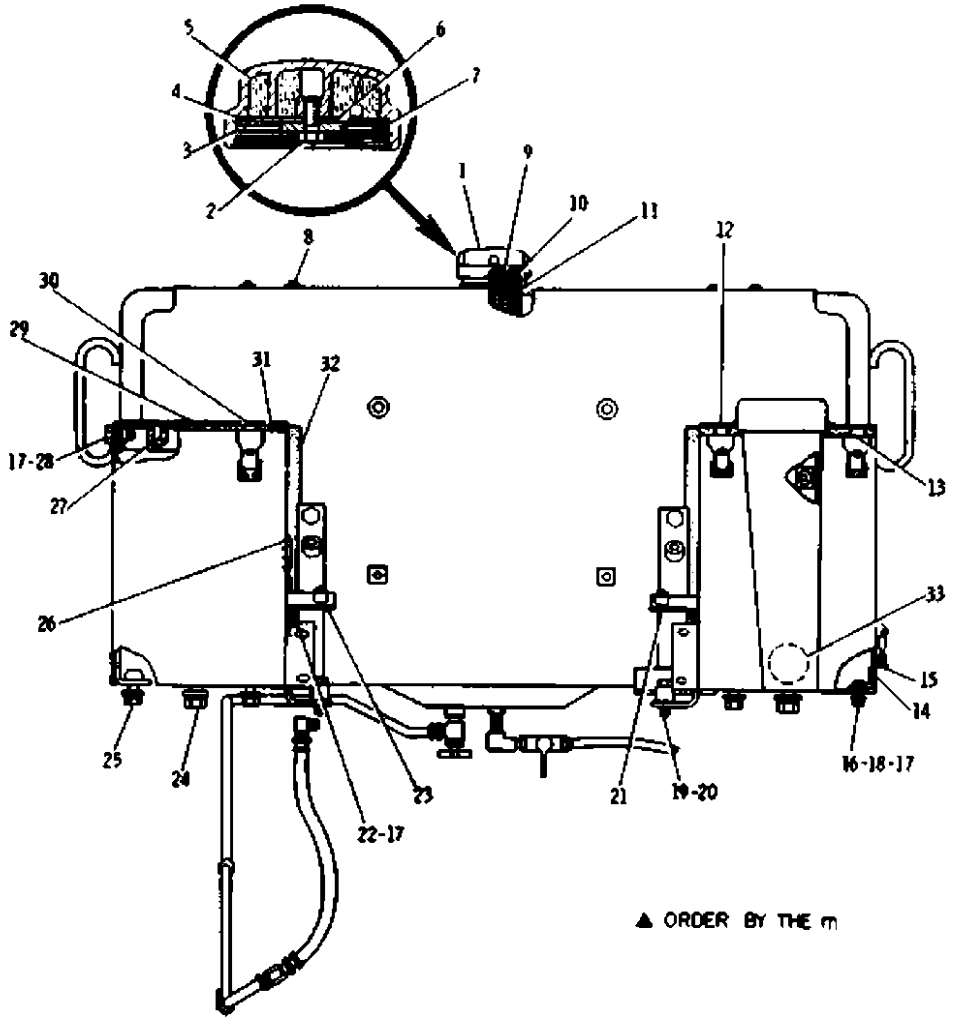

REF. NO.	PART NUMBER	DESCRIPTION	QTY.
1	4B5441	CAP ASSEM. (For Outside Japan)	1
	3Y5192	CAP ASSEM. (For Japan)	1
2	3H8389	SCREW	1
3	2A1763	GASKET	1
4	4B5423	GASKET	1
5	4B5949	ELEMENT	2
6	7B2002	WASHER	1
7	3F4134	BAFFLE	1
8	5B7267	CORK	8
9	3V9851	PLUNGER (Percentage Scale)	1
	3Y5185	PLUNGER (Liter Scale)	1
10	8H3497	RING	1
11	8H3498	STRAINER ASSEM.	1
12	5A8756	LID ASSEM. (L.H.)	1
13	5K4138	HOOK	2
14	6K2404	DOOR ASSEM.	1
15	6K485	HOOK	2
	3Y533	HINGE	2
16	S1594	BOLT	4
	1D4717	NUT	4
17	3B4506	LOCKWASHER	10

REF. NO.	PART NUMBER	DESCRIPTION	QTY.
18	4B4278	WASHER	4
19	S1587	BOLT	2
20	1K4649	SPACER	2
21	4K5744	SUPPORT ASSEM. (L.H.)	1
22	S509	BOLT	4
23	4K5743	SUPPORT ASSEM. (R.H.)	1
	S1589	BOLT	6
24	3B4510	LOCKWASHER	6
	9H3457	WASHER	6
	S1595	BOLT	4
25	3B4508	LOCKWASHER	4
	V531	WASHER	4
26	3H2900	GROMMET	6
27	3F1240	GROMMET	4
28	S1588	BOLT	2
29	3Y1882	LID ASSEM. (R.H.)	1
30	5K4138	HOOK	1
▲ 31	5P5923	SEAL 3.3m	
▲ 32	5P5669	SEAL 0.8m	
33	1L6377	PLUG	1

J14210E

GRAPHIC #1

j14210e

FUEL SYSTEM AND BATTERY BOX--Part 1 of 3

Effective with Serial No. 65J1591~65J2005, 65J2011~65J2034, 65J2038~65J2042
Part of Field Conversion Arrangement listed on Page 131
For Japan
AN ATTACHMENT

Key: H - ORDER BY THE CM

SMCS

NOTE	REF NO	GRAPHIC REF	PART NUMBER	QTY	PART NAME 1 2 3 4 5 6 (PRODUCT LEVEL)	LINK PAGE
	1		3Y-5243	1	TANK ASSEM.	
	2		4B-7337	2	BLOCK	
	3		1F-2417	1	BOSS	
	4		3V-6225	1	FITTING	
	5		6K-0619	2	LUG	
	6		3K-3235	2	GRAB IRON	
	7		3H-3496	1	FITTING	
	8		4B-7305	2	BUTTON	
	9		6K-4671	1	BOX ASSEM. (L.H.)	
	10		9S-1352	1	PIN	
	11		1V-7900	1	BRACE ASSEM.	
			9F-2978	1	NUT (Weld)	
	12		9M-0685	3	LATCH ASSEM.	
			4B-4306	6	RIVET	
	13		9F-2978	11	NUT (Weld)	
	14		1F-0748	1	NUT (Weld)	
	15		9F-6445	2	NUT (Weld)	
	16		6K-7151	2	BRACKET ASSEM.	
	17		1M-1427	1	BOSS	
	18		3Y-4364	2	VALVE ASSEM.	
	19		5K-9246	1	CONNECTOR	
	20		0S-1594	2	BOLT	
			1D-4717	2	NUT	
	21		3B-4506	2	LOCKWASHER	
	22		8B-6127	2	CLIP	
	23		2V-9792	1	HOSE	
	24		4S-4456	1	CLIP	
	25		4F-7957	1	BOLT	
			4B-4276	1	WASHER	
H	26		5P-1442		HOSE 150cm	
	27		3S-2093	1	STRAP	
	28		4S-1936	1	CLIP	
	29		1D-5117	1	NUT	
	30		3B-4508	3	LOCKWASHER	
	31		1V-3546	2	COUPLING	
	32		7K-1456	1	UNION	
	33		1V-0400	1	TUBE ASSEM.	
	34		6H-1717	2	BOLT	
			4B-4280	2	WASHER	
	35		1V-6993	1	BOX ASSEM. (R.H.)	
	36		9M-0685	1	LATCH ASSEM.	
			4B-4306	2	RIVET	
	37		9F-2978	13	NUT (Weld)	
	38		1V-7900	1	BRACE ASSEM.	
			9F-2978	1	NUT (Weld)	
	39		9S-1352	1	PIN	
	40		1F-0748	2	NUT (Weld)	

FUEL SYSTEM AND BATTERY BOX--Part 1 of 3

41	9F-6445	2	NUT (Weld)
43	5A-8900	1	SCREEN

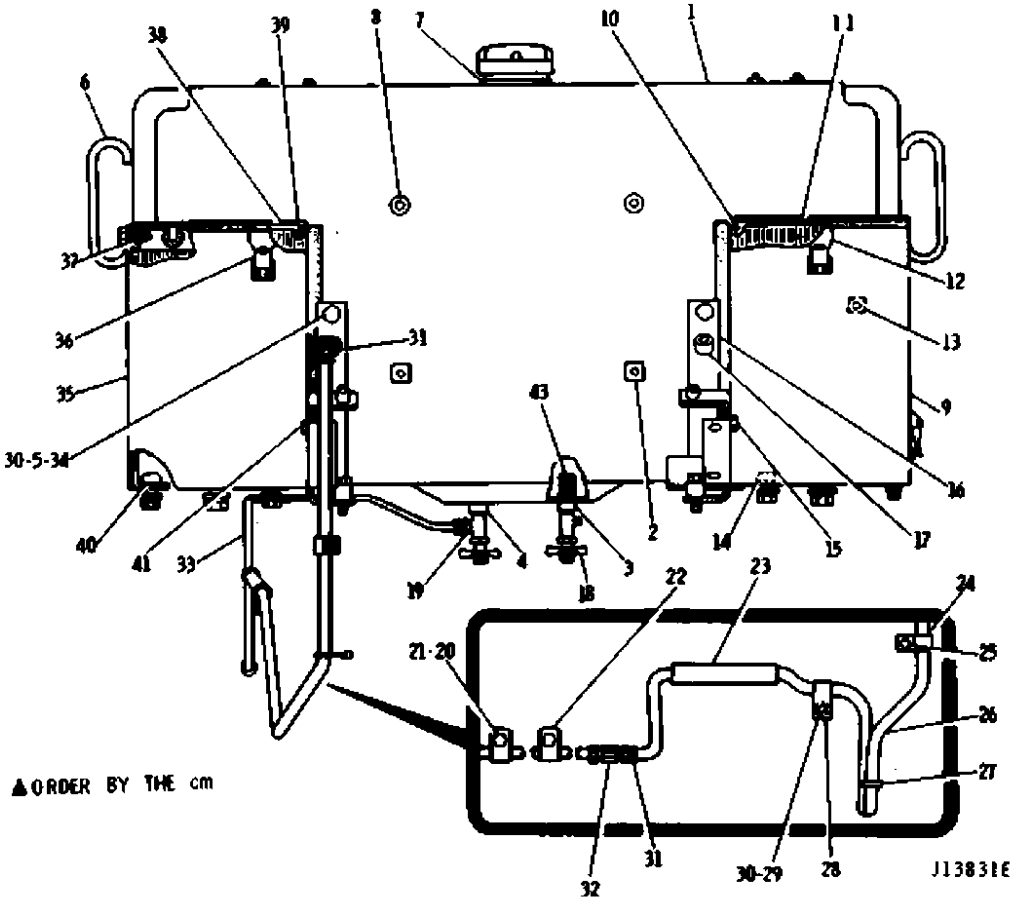

REF. NO.	PART NUMBER	DESCRIPTION	QTY.
1	3Y5243	TANK ASSEM.	1
2	4B7337	BLOCK	2
3	1F2417	BOSS	1
4	3V6225	FITTING	1
5	6K619	LUG	2
6	3K3235	GRAB IRON	2
7	3H3496	FITTING	1
8	4B7305	BUTTON	2
9	6K4671	BOX ASSEM. (L.H.)	1
10	9S1352	PIN	1
11	1V7900	BRACE ASSEM.	1
	9F2978	NUT (Weld)	1
12	9M685	LATCH ASSEM.	3
	4B4306	RIVET	6
13	9F2978	NUT (Weld)	11
14	1F748	NUT (Weld)	1
15	9F6445	NUT (Weld)	2
16	6K7151	BRACKET ASSEM.	2
17	1M1427	BOSS	1
18	3Y4364	VALVE ASSEM.	2
19	5K9246	CONNECTOR	1
20	S1594	BOLT	2
	1D4717	NUT	2
21	3B4506	LOCKWASHER	2
22	8B6127	CLIP	2

REF. NO.	PART NUMBER	DESCRIPTION	QTY.
23	2V9792	HOSE	1
24	4S4456	CLIP	1
25	4F7957	BOLT	1
	4B4276	WASHER	1
▲ 26	5P1442	HOSE 150cm	
27	3S2093	STRAP	1
28	4S1936	CLIP	1
29	1D5117	NUT	1
30	3B4508	LOCKWASHER	3
31	1V3546	COUPLING	2
32	7K1456	UNION	1
33	1V400	TUBE ASSEM.	1
34	6H1717	BOLT	2
	4B4280	WASHER	2
35	1V6993	BOX ASSEM. (R.H.)	1
36	9M685	LATCH ASSEM.	1
	4B4306	RIVET	2
37	9F2978	NUT (Weld)	13
38	1V7900	BRACE ASSEM.	1
	9F2978	NUT (Weld)	1
39	9S1352	PIN	1
40	1F748	NUT (Weld)	2
41	9F6445	NUT (Weld)	2
43	5A8900	SCREEN	1

GRAPHIC #1

j13831e

FUEL SYSTEM AND BATTERY BOX--Part 2 of 3

Effective with Serial No. 65J1591~65J2005, 65J2011~65J2034, 65J2038~65J2042
Part of Field Conversion Arrangement listed on
Page 131
For Japan
AN ATTACHMENT

Key: H - ORDER BY THE DM

SMCS

NOTE	REF NO	GRAPHIC REF	PART NUMBER	QTY	PART NAME 1 2 3 4 5 6 (PRODUCT LEVEL)	LINK PAGE
	1		4B-5441	1	CAP ASSEM.	
	2		3H-8389	1	SCREW	
	3		2A-1763	1	GASKET	
	4		4B-5423	1	GASKET	
	5		4B-5949	2	ELEMENT	
	6		7B-2002	1	WASHER	
	7		3F-4134	1	BAFFLE	
	8		5B-7267	8	CORK	
	9		3Y-0857	1	PLUNGER (Liter Scale)	
			1M-1682	1	PLUNGER (Percentage Scale)	
	10		8H-3497	1	RING	
	11		8H-3498	1	STRAINER ASSEM.	
	12		5A-9112	1	LID ASSEM. (L.H.)	
	13		5K-4138	1	HOOK	
	14		6K-2404	1	DOOR ASSEM.	
	15		6K-0485	2	HOOK	
			3Y-0533	2	HINGE	
	16		0S-1594	4	BOLT	
			1D-4717	4	NUT	
	17		3B-4506	10	LOCKWASHER	
	18		4B-4278	4	WASHER	
	19		0S-1587	2	BOLT	
	20		1K-4649	2	SPACER	
	21		4K-5744	1	SUPPORT ASSEM. (L.H.)	
	22		0S-0509	4	BOLT	
	23		4K-5743	1	SUPPORT ASSEM. (R.H.)	
	24		0S-1589	6	BOLT (44.5mm Long)	
			3B-4510	6	LOCKWASHER	
			9H-3457	6	WASHER	
	25		0S-1595	4	BOLT	
			3B-4508	4	LOCKWASHER	
			0V-0531	4	WASHER	
	26		3H-2900	6	GROMMET	
	27		3F-1240	4	GROMMET	
	28		0S-1588	2	BOLT	
	29		3Y-1882	1	LID ASSEM. (R.H.)	
	30		5K-4138	1	HOOK	
H	31		5P-0801		SEAL 33dm	
H	32		5P-2668		SEAL 8dm	

FUEL SYSTEM AND BATTERY BOX--Part 2 of 3

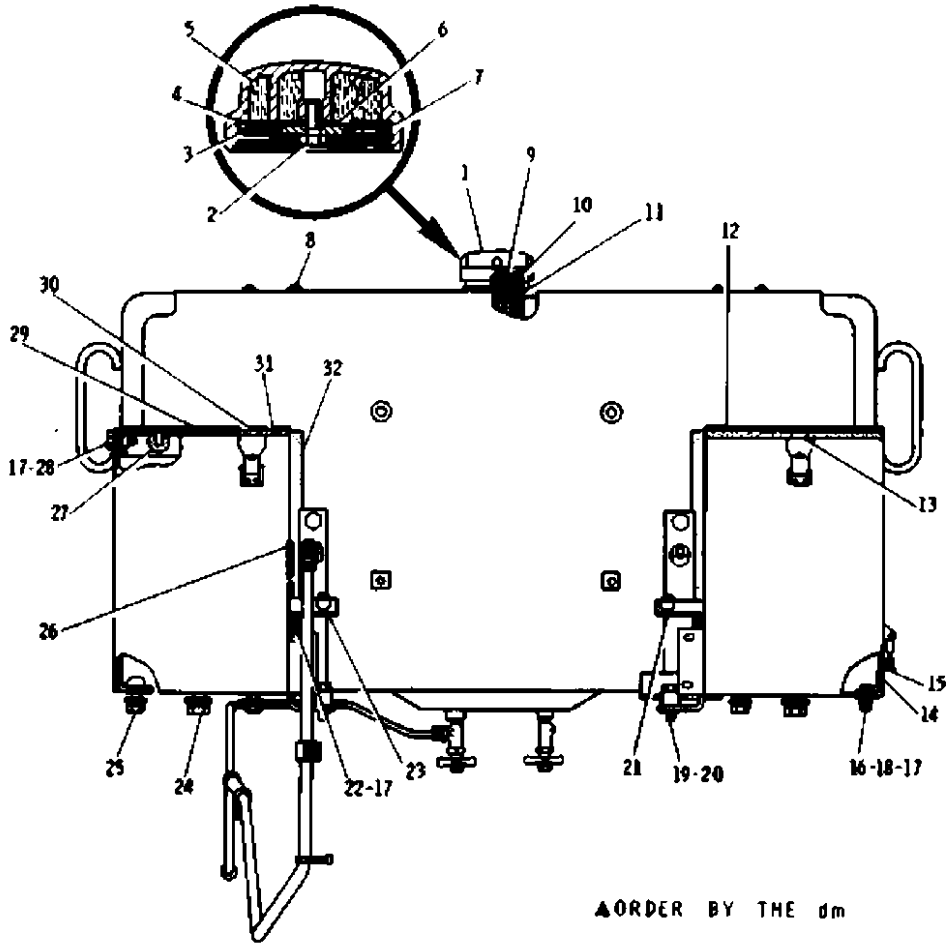

▲ORDER BY THE dm

REF. NO.	PART NUMBER	DESCRIPTION	QTY.
1	4B5441	CAP ASSEM.	1
2	3H8389	SCREW	1
3	2A1763	GASKET	1
4	4B5423	GASKET	1
5	4B5949	ELEMENT	2
6	7B2002	WASHER	1
7	3F4134	BAFFLE	1
8	5B7267	CORK	8
9	3Y857	PLUNGER (Liter Scale)	1
	1M1682	PLUNGER (Percentage Scale)	1
10	8H3497	RING	1
11	8H3498	STRAINER ASSEM.	1
12	5A9112	LID ASSEM. (L.H.)	1
13	5K4138	HOOK	1
14	6K2404	DOOR ASSEM.	1
15	6K485	HOOK	2
	3Y533	HINGE	2
16	S1594	BOLT	4
	104717	NUT	4
17	3B4506	LOCKWASHER	10
18	4B4278	WASHER	4
19	S1587	BOLT	2

REF. NO.	PART NUMBER	DESCRIPTION	QTY.
20	1K4649	SPACER	2
21	4K5744	SUPPORT ASSEM. (L.H.)	1
22	S509	BOLT	4
23	4K5743	SUPPORT ASSEM. (R.H.)	1
24	S1589	BOLT (44.5mm Long)	6
	3B4510	LOCKWASHER	6
	9H3457	WASHER	6
25	S1595	BOLT	4
	3B4508	LOCKWASHER	4
	V531	WASHER	4
26	3H2900	GROMMET	6
27	3F1240	GROMMET	4
28	S1588	BOLT	2
29	3Y1882	LID ASSEM. (R.H.)	1
30	5K4138	HOOK	1
▲ 31	5P801	SEAL 33dm	
▲ 32	5P2668	SEAL 8dm	

J13832E

GRAPHIC #1

j13832e

FUEL SYSTEM AND BATTERY BOX--Part 3 of 3

Effective with Serial No. 65J1591~65J2005, 65J2011~65J2034, 65J2038~65J2042
Part of Field Conversion Arrangement listed on Page 131
For Japan
AN ATTACHMENT

Key: H - ORDER BY THE CM

SMCS

NOTE	REF NO	GRAPHIC REF	PART NUMBER	QTY	PART NAME 1 2 3 4 5 6 (PRODUCT LEVEL)	LINK PAGE
	1		6K-8076	1	CONNECTOR	
	2		0S-1590	1	BOLT	
			3B-4506	1	LOCKWASHER	
			1D-4717	1	NUT	
	3		7B-1597	1	CLIP	
			2B-0941	1	SPACER	
H	4		5P-1200		TUBE (9.52mm O.D. DIA. Copper)80cm	
	5		3B-8999	1	FITTING	
			8F-8997	1	NUT	
	6		3B-8996	1	FITTING	
			8F-8997	1	NUT	

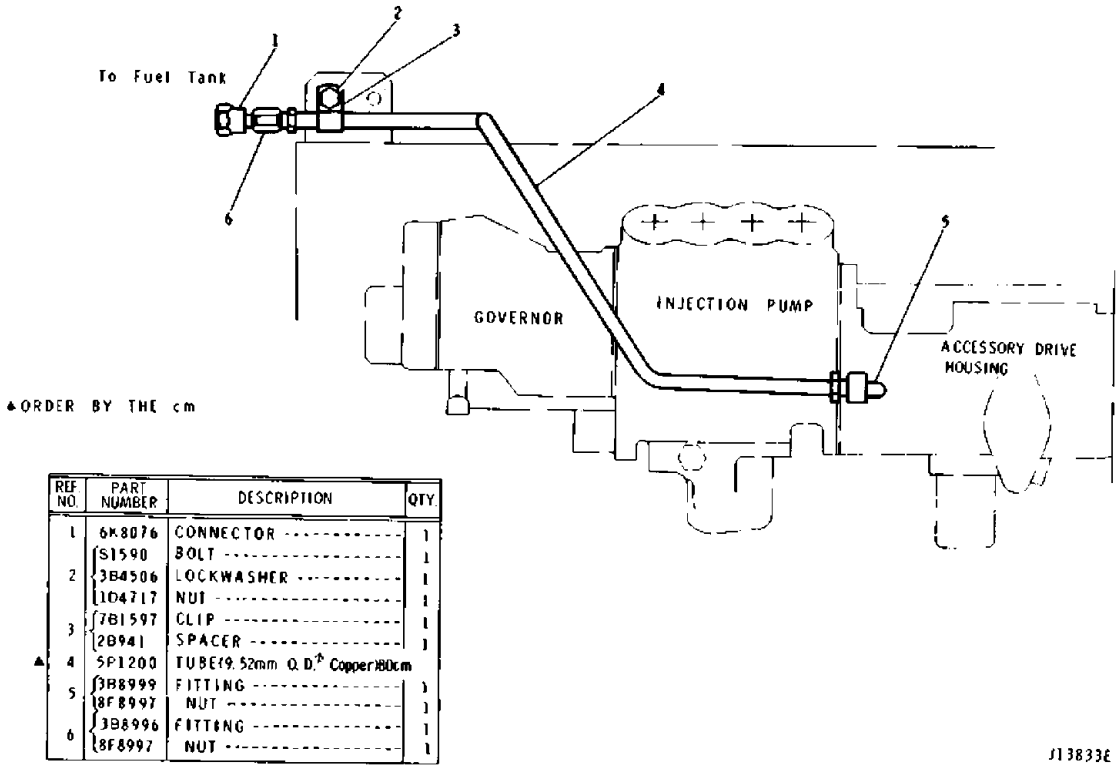

REF NO.	PART NUMBER	DESCRIPTION	QTY.
1	6K8076	CONNECTOR	1
2	1S1590	BOLT	1
	3B4506	LOCKWASHER	1
	1D4717	NUT	1
3	7B1597	CLIP	1
	2B941	SPACER	1
▲ 4	5P1200	TUBE(9.52mm O.D.) Copper)80cm	
5	3B8999	FITTING	1
	8F8997	NUT	1
6	3B8996	FITTING	1
	8F8997	NUT	1

GRAPHIC #1 j13833e

1P8678 FUEL TANK PROTECTION CAP GROUP

AN ATTACHMENT

Key:

SMCS

NOTE	REF NO	GRAPHIC REF	PART NUMBER	QTY	PART NAME 1 2 3 4 5 6 (PRODUCT LEVEL)	LINK PAGE
	1		NOTSERV	1	PADLOCK	
			8M-0439	2	KEY (Not Shown)	
	2		5S-7657	1	FILTTER	
	3		2A-1763	1	GASKET	
	4		4J-1105	2	SHIM	
	5		3B-4609	2	COTTER PIN	
			5F-9144	1	SEAL	
	7		1P-8680	1	CAP	
	8		5S-7646	1	LID	
	9		8P-0668	1	COVER ASSEM.	
	10		4B-4310	2	RIVER	
	11		8F-9538	1	SEAL	

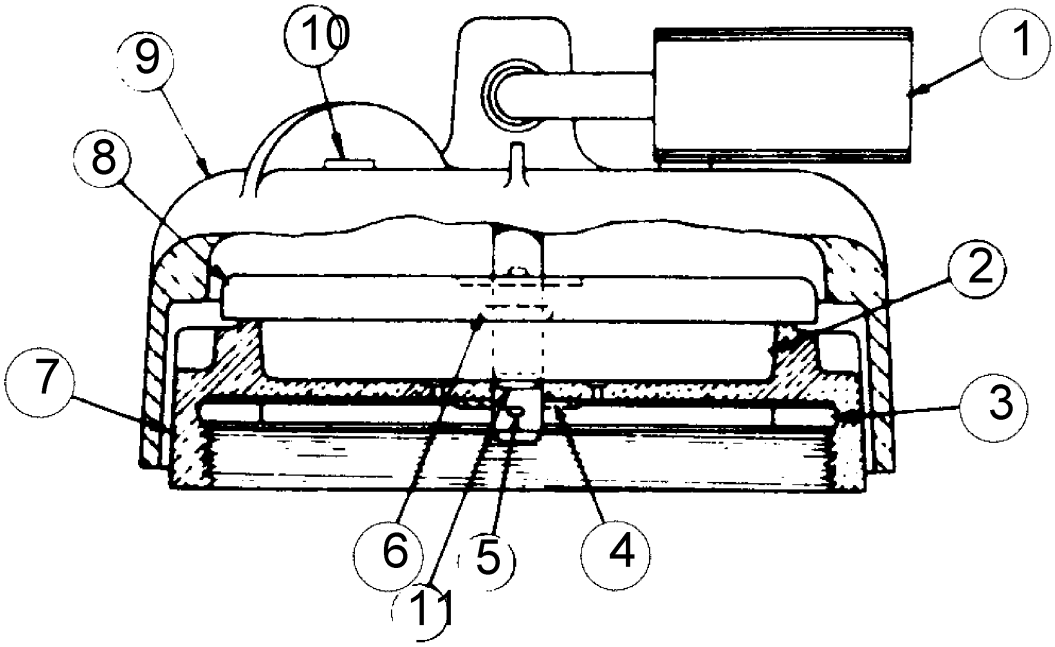

Not part of 1P8678 Cap Group

REF. NO.	PART NUMBER	DESCRIPTION	QTY.
1	Not Serv.	PADLOCK	1
	8M439	KEY (Not Shown)	2
2	5S7657	FILTTER	1
3	2A1763	GASKET	1
4	4J1105	SHIM	2
5	3B4609	COTTER PIN	2

REF. NO.	PART NUMBER	DESCRIPTION	QTY.
	5F9144	SEAL	1
7	1P8680	CAP	1
8	5S7646	LID	1
9	8P668	COVER ASSEM.	1
10	4B4310	RIVET	2
11	8F9538	SEAL	1

J15220E

GRAPHIC #1

PRIMARY FUEL FILTER (1P6835 N/S)

Effective with Serial No. 43V1~43V2247, 43V9337~43V9351, 43V9807, 43V9810, 43V9811, 43V9818~43V11876

Key:

SMCS

NOTE	REF NO	GRAPHIC REF	PART NUMBER	QTY	PART NAME 1 2 3 4 5 6 (PRODUCT LEVEL)	LINK PAGE
	1		9H-2770	1	GASKET	
	2		3Y-0902	1	BAIL ASSEM.	
	3		9H-2769	1	BOWL	
	4		5S-7645	1	ELEMENT ASSEM.	

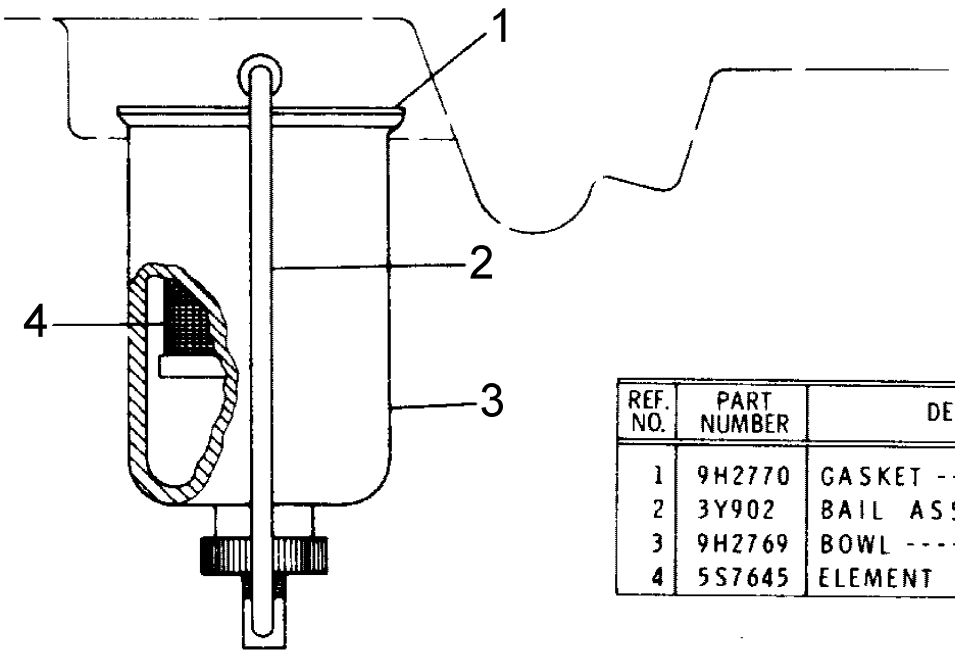

REF. NO.	PART NUMBER	DESCRIPTION	QTY.
1	9H2770	GASKET	1
2	3Y902	BAIL ASSEM.	1
3	9H2769	BOWL	1
4	5S7645	ELEMENT ASSEM.	1

J9123E

GRAPHIC #1

j9123e

FUEL FILTER (2P7714 N/S)

Effective with Serial No. 43V1~43V2247

Key:

SMCS

NOTE	REF NO	GRAPHIC REF	PART NUMBER	QTY	PART NAME 1 2 3 4 5 6 (PRODUCT LEVEL)	LINK PAGE
	1		2A-1927	1	NEEDLE ASSEM.	
	2		7F-3901	1	SEAT	
	3		5S-9565	1	BASE ASSEM.	
	4		1H-9722	1	PLUG	
	5		9S-4167	1	STUD	
	6		8F-7242	3	WASHER	
	7		1B-9575	3	BOLT	
	8		5S-9060	1	GASKET	
	9		5S-6333	1	ADAPTER	
	10		9F-2247	1	PLUG	
	11		5M-6214	3	PLUG	
	12		5A-6717	1	FILTER ASSEM. (For Japan)	
			1P-2299	1	FILTER ASSEM. (For Outside Japan)	
	13		5S-9020	1	GASKET	
	14		2P-7713	1	ADAPTER	
	15		9H-4557	2	SEAL	
	16		4B-3388	2	BOLT (28mm Long)	
	17		1D-4538	3	BOLT (55mm Long)	
	18		9M-1974	5	WASHER	

FUEL FILTER (2P7714 N/S)

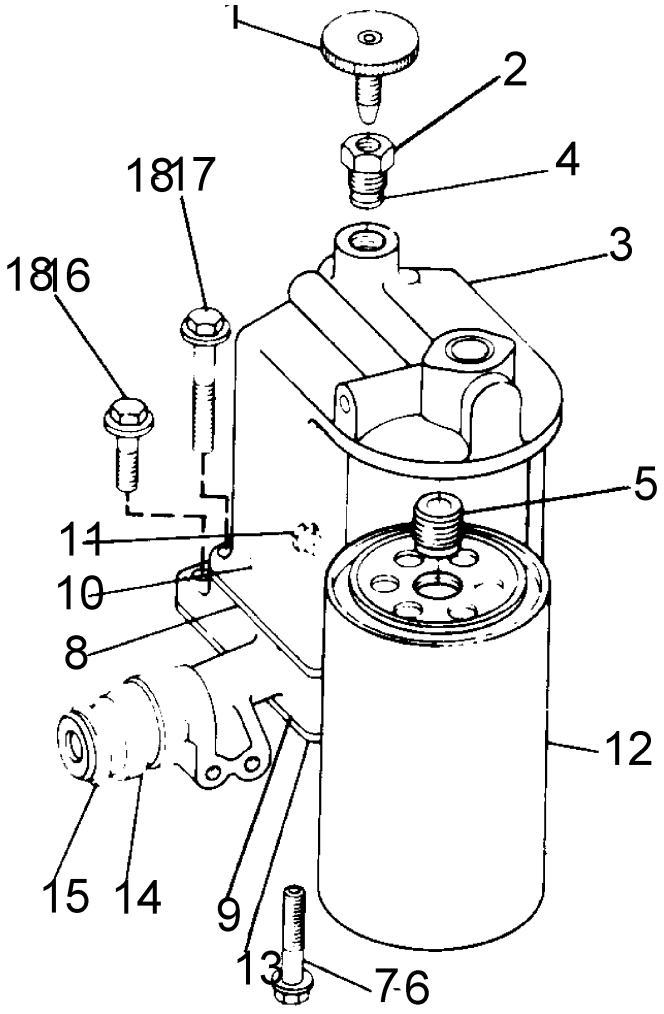

REF. NO.	PART NUMBER	DESCRIPTION	QTY.
1	2A1927	NEEDLE ASSEM.	1
2	7F3901	SEAT	1
3	5S9565	BASE ASSEM.	1
4	1H9722	PLUG	1
5	9S4167	STUD	1
6	8F7242	WASHER	3
7	1B9575	BOLT	3
8	5S9060	GASKET	1
9	5S6333	ADAPTER	1
10	9F2247	PLUG	1
11	5M6214	PLUG	3
12	5A6717	FILTER ASSEM. (For Japan)	1
	1P2299	FILTER ASSEM. (For Outside Japan)	1
13	5S9020	GASKET	1
14	2P7713	ADAPTER	1
15	9H4557	SEAL	2
16	4B3388	BOLT (28mm Long)	2
17	1D4538	BOLT (55mm Long)	3
18	9M1974	WASHER	5

J9124F

GRAPHIC #1

j9124e

FUEL FILTER (4N3303 N/S)

Effective with Serial No. 43V2248~43V9336, 43V9352~43V9806, 43V9808, 43V9809, 43V9812~43V9817

Key:

SMCS

NOTE	REF NO	GRAPHIC REF	PART NUMBER	QTY	PART NAME 1 2 3 4 5 6 (PRODUCT LEVEL)	LINK PAGE
	1		4N-3302	1	BASE ASSEM.	
			4N-3296	1	SPRING	
			4N-3297	1	DISC	
			4N-3298	1	SEAL	
	2		1P-2299	1	FILTER ASSEM. (English)	
					- OR -	
			5A-6717	1	FILTER ASSEM. (Japanese)	
	3		2P-3205	2	BOLT	
	4		4N-3299	1	SUPPORT	
	5		2P-3202	2	BOLT	

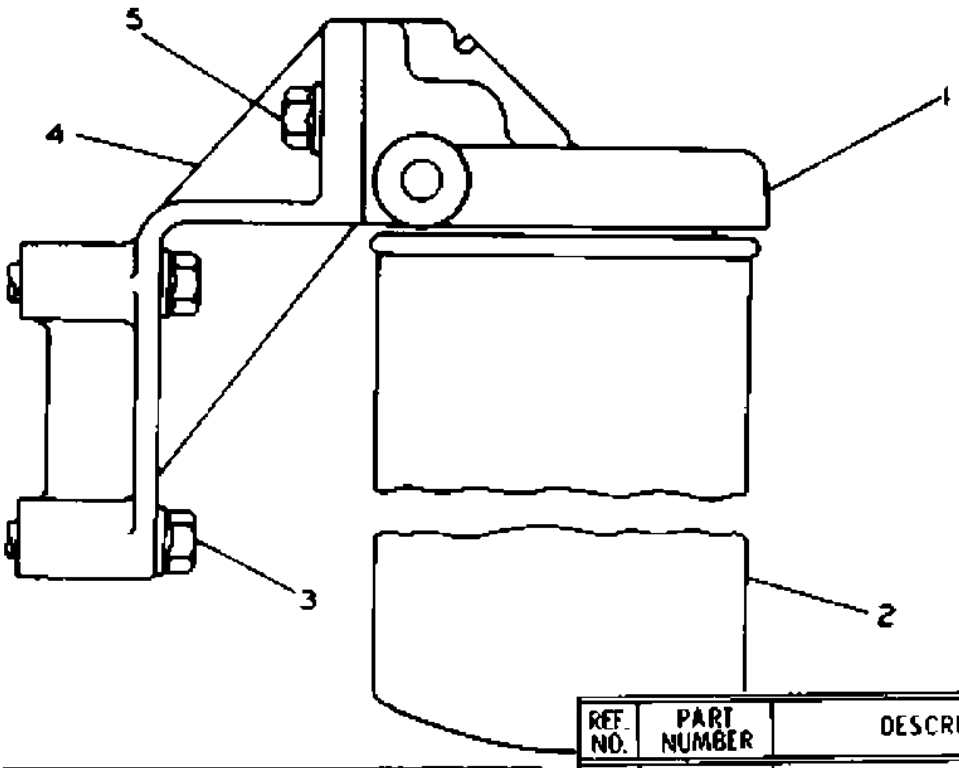

J10358E

REF. NO.	PART NUMBER	DESCRIPTION	QTY.
1	4N3302	BASE ASSEM.	1
	4N3296	SPRING	1
	4N3297	DISC	1
	4N3298	SEAL	1

REF. NO.	PART NUMBER	DESCRIPTION	QTY.
2	1P2299	FILTER ASSEM. (English)	1
		- OR -	
	5A6717	FILTER ASSEM. (Japanese)	1
3	2P3205	BOLT	2
4	4N3299	SUPPORT	1
5	2P3202	BOLT	2

GRAPHIC #1

j10358e

FUEL FILTER (7N3869 N/S)

Effective with Serial No. 43V9337~43V9351, 43V9807, 43V9810, 43V9811, 43V9818~43V11876

Key:

SMCS

NOTE	REF NO	GRAPHIC REF	PART NUMBER	QTY	PART NAME 1 2 3 4 5 6 (PRODUCT LEVEL)	LINK PAGE
	1		7F-3901	1	SEAT	
	2		2A-1927	1	NEEDLE ASSEM.	
	3		5M-6214	1	PLUG	
	4		7N-3882	1	BASE ASSEM.	
	5		1H-9722	1	PLUG	
	6		9S-4167	1	STUD	
	7		5S-9060	1	GASKET	
	8		5M-6214	1	PLUG	
	9		9F-2247	2	PLUG	
	10		5S-6333	1	ADAPTER	
	11		1B-9575	3	BOLT	
			9M-1974	3	WASHER	
	12		1D-4538	3	BOLT	
	13		9M-1974	5	WASHER	
	14		4B-3388	2	BOLT	
	15		7N-4634	1	GASKET	
	16		2P-7713	1	ADAPTER	
			9H-4557	2	SEAL	
	17		5A-6717	1	FILTER ASSEM. (For Japan)	
			1P-2299	1	FILTER ASSEM. (For Outside Japan)	

FUEL FILTER (7N3869 N/S)

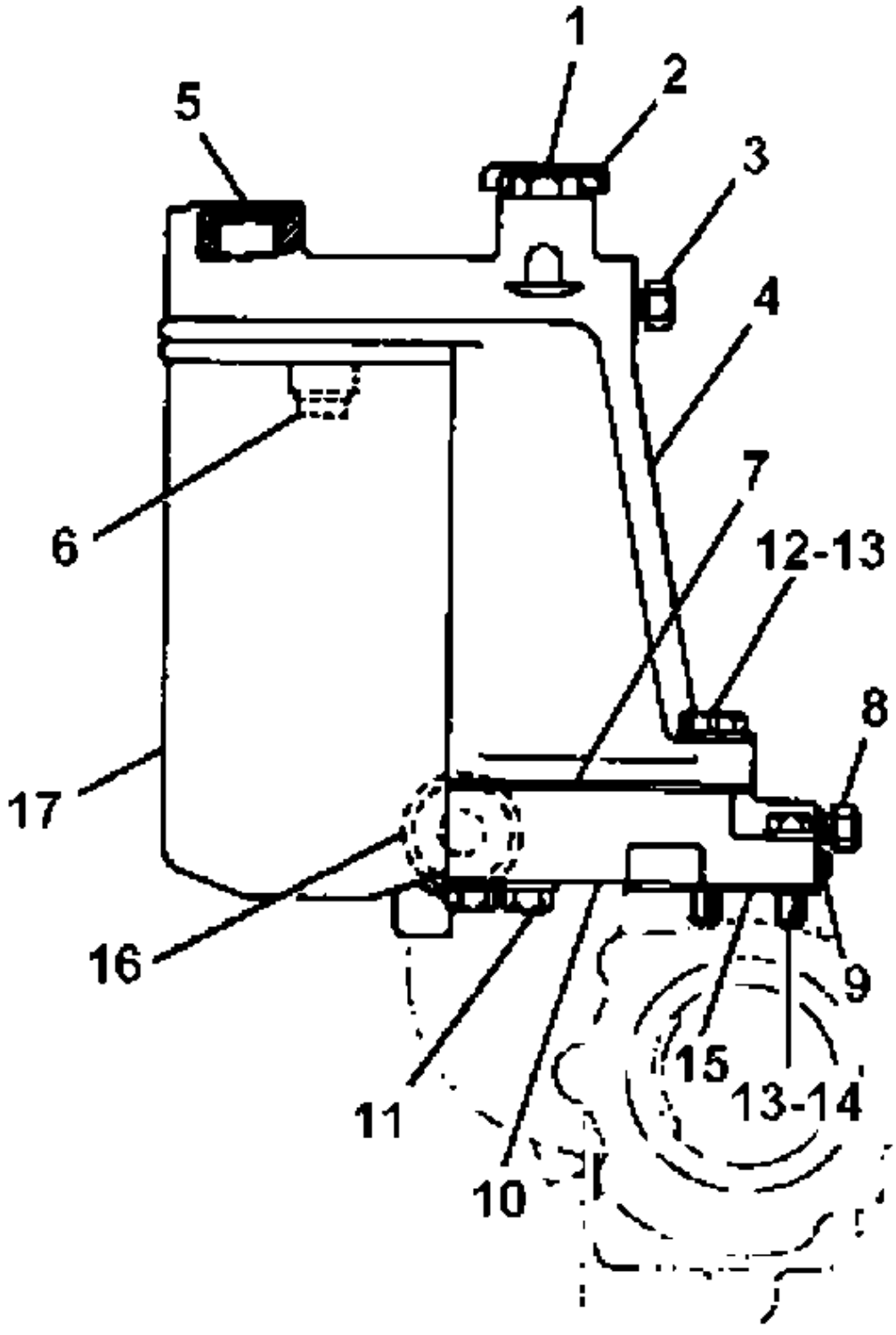

GRAPHIC #1

j14118e

FUEL FILTER

Effective with Serial No. 43V2248~43V9336, 43V9352~43V9806, 43V9808, 43V9809, 43V9812~43V9817
Part of Field Conversion Arrangement listed on Page
131
For Japan
AN ATTACHMENT

Key:

SMCS

NOTE	REF NO	GRAPHIC REF	PART NUMBER	QTY	PART NAME 1 2 3 4 5 6 (PRODUCT LEVEL)	LINK PAGE
	1		2A-1927	1	NEEDLE ASSEM.	
	2		7F-3901	1	SEAT	
	3		5S-9565	1	BASE ASSEM.	
	4		1H-9722	1	PLUG	
	5		9S-4167	1	STUD	
	6		8F-7242	3	WASHER	
	7		1B-9575	3	BOLT	
	8		5S-9060	1	GASKET	
	9		5S-6333	1	ADAPTER	
	10		9F-2247	1	PLUG	
	11		5M-6214	3	PLUG	
	12		5A-6717	1	FILTER ASSEM. (For Japan)	
			1P-2299	1	FILTER ASSEM. (For Outside Japan)	
	13		5S-9020	1	GASKET	
	14		2P-7713	1	ADAPTER	
	15		9H-4557	2	SEAL	
	16		4B-3388	2	BOLT (28mm Long)	
	17		1D-4538	3	BOLT (55mm Long)	
	18		9M-1974	5	WASHER	

FUEL FILTER

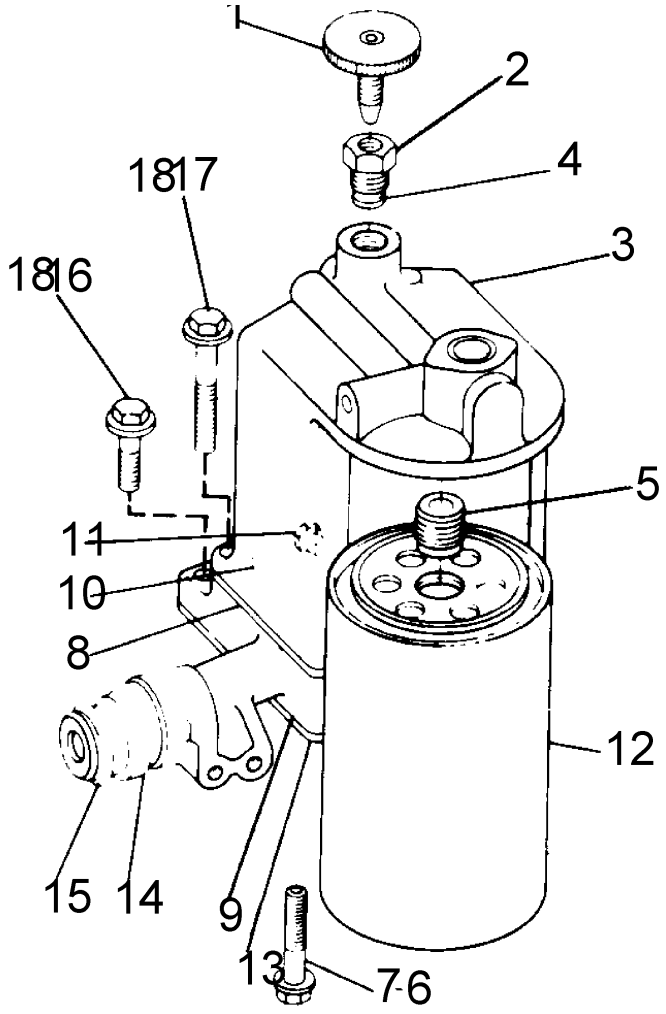

REF. NO.	PART NUMBER	DESCRIPTION	QTY.
1	2A1927	NEEDLE ASSEM.	1
2	7F3901	SEAT	1
3	5S9565	BASE ASSEM.	1
4	1H9722	PLUG	1
5	9S4167	STUD	1
6	8F7242	WASHER	3
7	1B9575	BOLT	3
8	5S9060	GASKET	1
9	5S6333	ADAPTER	1
10	9F2247	PLUG	1
11	5M6214	PLUG	3
12	5A6717	FILTER ASSEM. (For Japan)	1
	1P2299	FILTER ASSEM. (For Outside Japan)	1
13	5S9020	GASKET	1
14	2P7713	ADAPTER	1
15	9H4557	SEAL	2
16	4B3388	BOLT (28mm Long)	2
17	1D4538	BOLT (55mm Long)	3
18	9M1974	WASHER	5

J9124F

GRAPHIC #1

j9124e

FUEL PRIMING PUMP (2P7716 N/S)

Effective with Serial No. 43V1~43V2247
9H2256 Pump Group parts are shown on Page 90

Key: Y - SEPARATE ILLUSTRATION

SMCS

NOTE	REF NO	GRAPHIC REF	PART NUMBER	QTY	PART NAME 1 2 3 4 5 6 (PRODUCT LEVEL)	LINK PAGE
Y	1		9H-2256	1	PUMP GROUP	P0121
					(See Separate Illustration)	
	2		8S-0210	1	TUBE ASSEM.	
	3		3B-8998	2	FITTING	
	4		1F-1344	1	NUT	
	5		4M-5317	1	BUSHING	
	6		5K-9243	2	FITTING	
	7		2P-7715	1	TUBE ASSEM.	
	8		2B-2695	2	BOLT	
			9M-1974	2	WASHER	
	9		7S-0644	1	BRACKET	

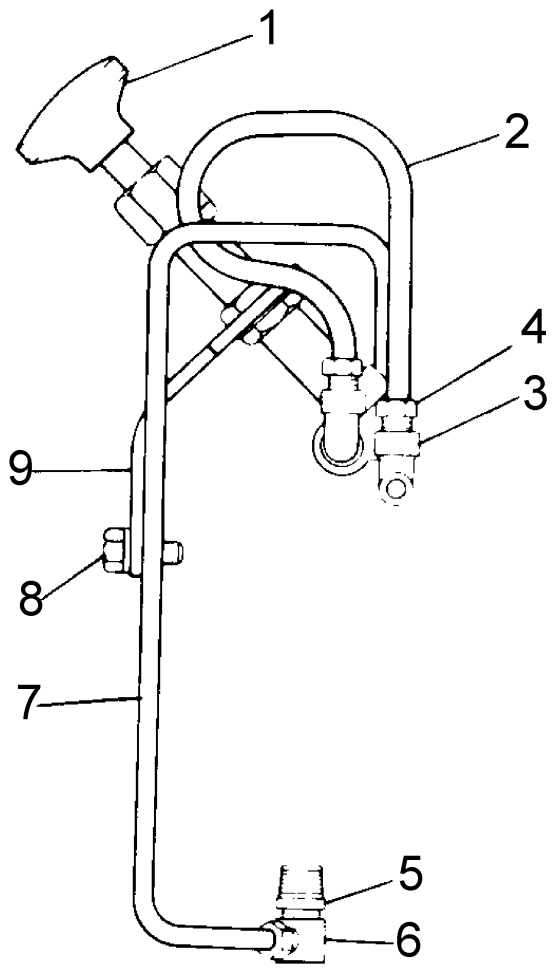

REF. NO.	PART NUMBER	DESCRIPTION	QTY.
1	9H2256	PUMP GROUP	1
		(See Separate Illustration)	
2	8S210	TUBE ASSEM.	1
3	3B8998	FITTING	2
4	1F1344	NUT	1
5	4M5317	BUSHING	1
6	5K9243	FITTING	2
7	2P7715	TUBE ASSEM.	1
8	2B2695	BOLT	2
	9M1974	WASHER	2
9	7S644	BRACKET	1

J9414E

GRAPHIC #1

j9414e

FUEL PRIMING PUMP (4N3287 N/S)

Effective with Serial No. 43V2248~43V9336, 43V9352~43V9806, 43V9808, 43V9809, 43V9812~43V9817

Key:

SMCS

NOTE	REF NO	GRAPHIC REF	PART NUMBER	QTY	PART NAME 1 2 3 4 5 6 (PRODUCT LEVEL)	LINK PAGE
	1		1P-0436	1	GASKET	
	2		1B-7182	1	BOLT (31.75mm Long)	
			9M-1974	1	WASHER (7.95mm Diameter)	
	3		9F-6580	1	BOLT (28.58mm Long)	
			5P-0537	1	WASHER (6.35mm Diameter)	
	4		4N-2511	1	PUMP ASSEM.	
			1P-2298	2	VALVE ASSEM.	

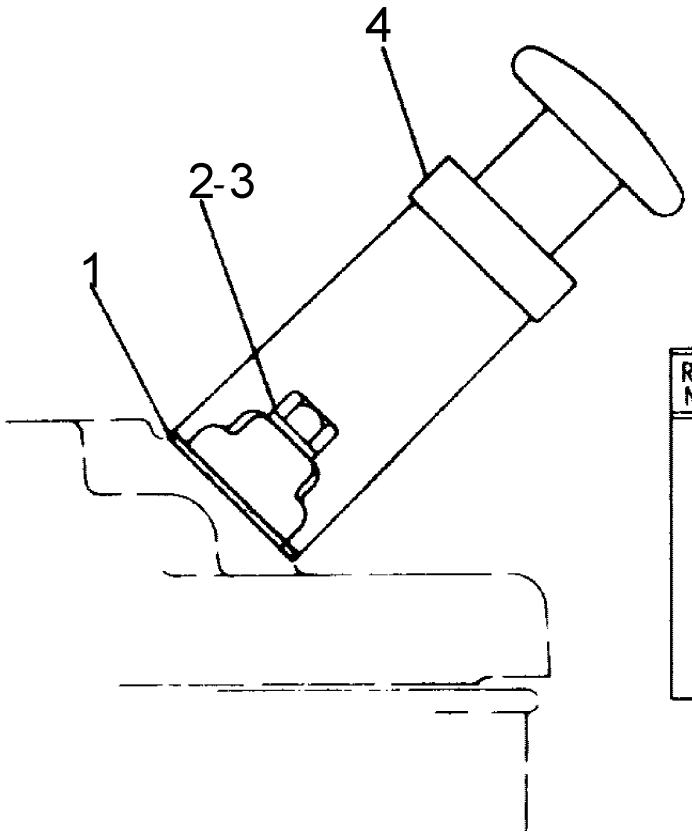

REF. NO.	PART NUMBER	DESCRIPTION	QTY.
1	1P436	GASKET	1
2	1B7182	BOLT (31.75mm Long)	1
	9M1974	WASHER (7.95mm Diameter)	1
3	9F6580	BOLT (28.58mm Long)	1
	5P537	WASHER (6.35mm Diameter)	1
4	4N2511	PUMP ASSEM.	1
	1P2298	VALVE ASSEM.	2

J10357E

GRAPHIC #1

j10357e

FUEL PRIMING PUMP (7N4809 N/S)

Effective with Serial No. 43V9337~43V9351, 43V9807, 43V9810, 43V9811, 43V9818~43V11876
9H2256 Pump Group parts are shown on Page 90

Key: Y - SEPARATE ILLUSTRATION

SMCS

NOTE	REF NO	GRAPHIC REF	PART NUMBER	QTY	PART NAME 1 2 3 4 5 6 (PRODUCT LEVEL)	LINK PAGE
Y	1		9H-2256	1	PUMP GROUP (Fuel Priming)	P0121
					(See Separate Illustration)	
	2		3Y-7635	1	BRACKET	
	3		2B-2695	2	BOLT	
	4		9M-1974	2	WASHER	
	5		7N-4807	1	TUBE ASSEM.	
			4B-8756	2	NUT	
	6		4M-5317	1	BUSHING	
	7		6N-1005	1	TUBE ASSEM.	
			4B-8756	2	NUT	
	8		5K-9243	4	ELBOW	

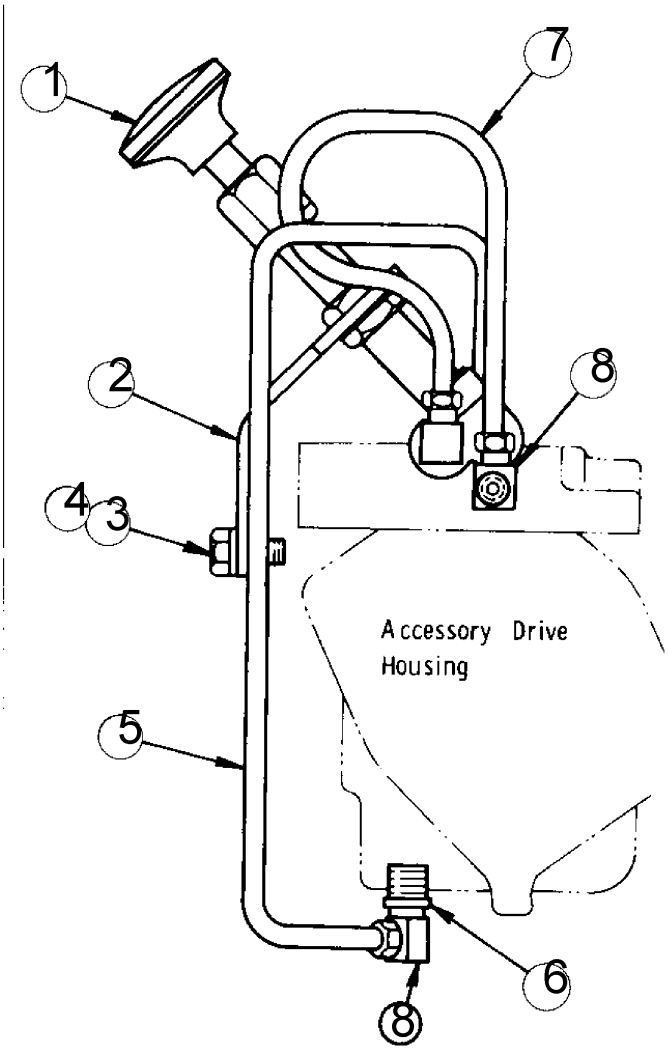

REF. NO.	PART NUMBER	DESCRIPTION	QTY.
1	9H2256	PUMP GROUP (Fuel Priming) (See Separate Illustration)	1
2	3Y7635	BRACKET	1
3	2B2695	BOLT	2
4	9M1974	WASHER	2
5	7N4807	TUBE ASSEM.	1
	4B8756	NUT	2
6	4M5317	BUSHING	1
7	6N1005	TUBE ASSEM.	1
	4B8756	NUT	2
8	5K9243	ELBOW	4

J17910E

GRAPHIC #1

j17910e

FUEL PRIMING PUMP

Effective with Serial No. 43V2248~43V9336, 43V9352~43V9806, 43V9808, 43V9809, 43V9812~43V9817
Part of Field Conversion Arrangement listed on Page
131
9H2256 Pump Group parts are shown on Page 90
For Japan
AN ATTACHMENT

Key: Y - SEPARATE ILLUSTRATION

SMCS

NOTE	REF NO	GRAPHIC REF	PART NUMBER	QTY	PART NAME 1 2 3 4 5 6 (PRODUCT LEVEL)	LINK PAGE
Y	1		9H-2256	1	PUMP GROUP	P0121
					(See Separate Illustration)	
	2		8S-0210	1	TUBE ASSEM.	
	3		3B-8998	2	FITTING	
	4		1F-1344	1	NUT	
	5		4M-5317	1	BUSHING	
	6		5K-9243	2	FITTING	
	7		2P-7715	1	TUBE ASSEM.	
	8		2B-2695	2	BOLT	
			9M-1974	2	WASHER	
	9		7S-0644	1	BRACKET	

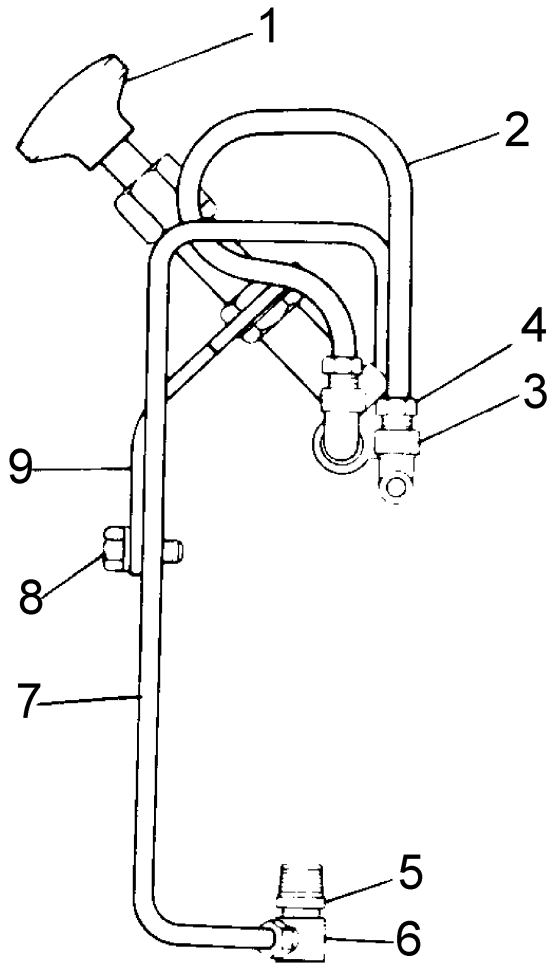

REF. NO.	PART NUMBER	DESCRIPTION	QTY.
1	9H2256	PUMP GROUP	1
		(See Separate Illustration)	
2	8S210	TUBE ASSEM.	1
3	3B8998	FITTING	2
4	1F1344	NUT	1
5	4M5317	BUSHING	1
6	5K9243	FITTING	2
7	2P7715	TUBE ASSEM.	1
8	2B2695	BOLT	2
	9M1974	WASHER	2
9	7S644	BRACKET	1

J9414E

GRAPHIC #1

9H2256 FUEL PRIMING PUMP GROUP

Part of Fuel Priming Pump

Key:

SMCS

NOTE	REF NO	GRAPHIC REF	PART NUMBER	QTY	PART NAME 1 2 3 4 5 6 (PRODUCT LEVEL)	LINK PAGE
			2S-8145	1	SEAL	
			1M-6781	3	NUT	
			1H-1023	2	RING	
			1M-6718	2	BALL	

9H2256 FUEL PRIMING PUMP GROUP

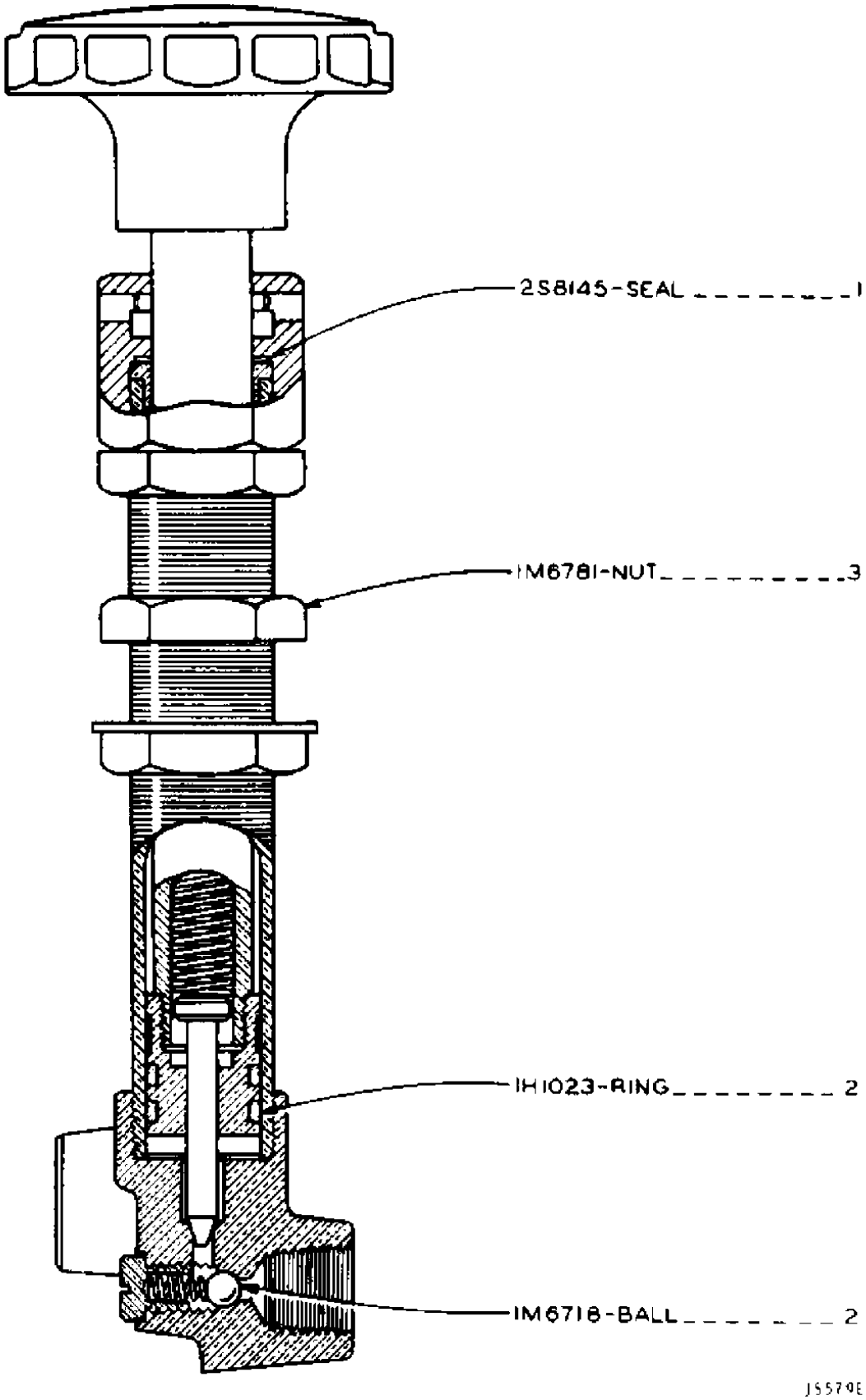

GRAPHIC #1

j5579e

FUEL TRANSFER PUMP (7S4429 N/S)

Effective with Serial No. 43V1~43V2247, 43V9337~43V9351, 43V9807, 43V9810, 43V9811, 43V9818~43V11876
4N4864 Pump Group parts are shown below

Key: Y - SEPARATE ILLUSTRATION

SMCS

NOTE	REF NO	GRAPHIC REF	PART NUMBER	QTY	PART NAME 1 2 3 4 5 6 (PRODUCT LEVEL)	LINK PAGE
Y	1		4N-4864	1	PUMP GROUP	P0123
					(See Separate Illustration)	
	2		7S-2374	1	GASKET	
	3		4B-3388	2	BOLT	
			3B-4505	2	LOCKWASHER	

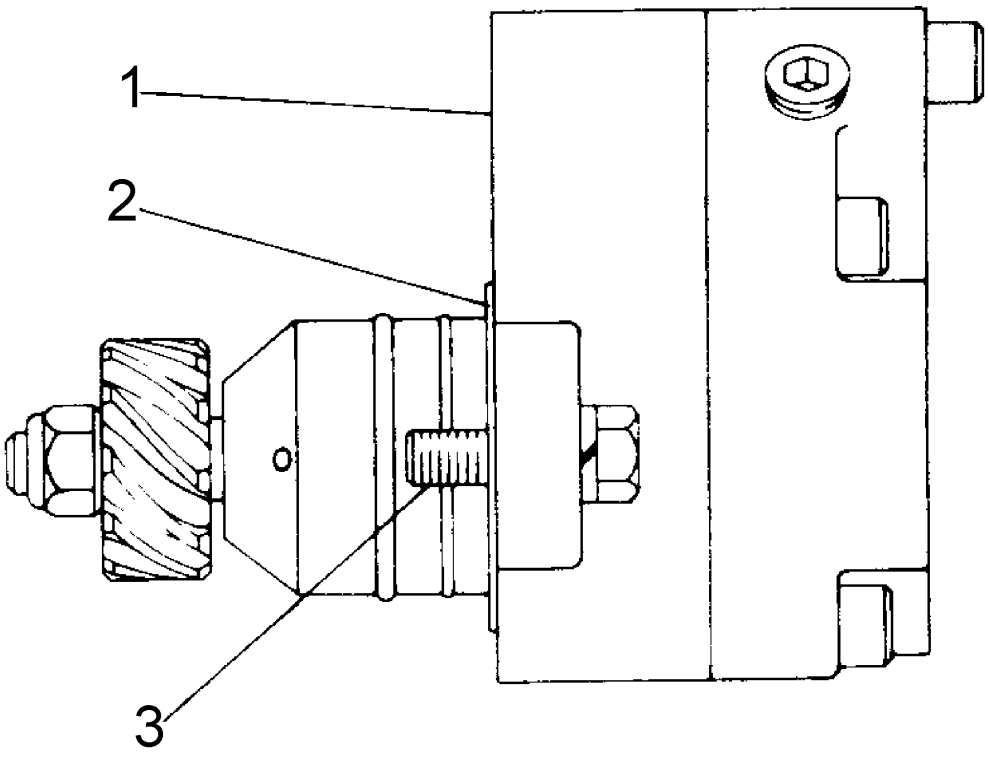

REF. NO.	PART NUMBER	DESCRIPTION	QTY.
1	4N4864	PUMP GROUP ---------- (See Separate Illustration)	1
2	7S2374	GASKET ----------	1
3	4B3388	BOLT ----------	2
	3B4505	LOCKWASHER ----------	2

J9126E

GRAPHIC #1

j9126e

4N4864 FUEL TRANSFER PUMP GROUP

Effective with Serial No. 43V1~43V2247, 43V9337~43V9351, 43V9807, 43V9810, 43V9811, 43V9818~43V11876
Part of Fuel Transfer Pump

Key:

SMCS

NOTE	REF NO	GRAPHIC REF	PART NUMBER	QTY	PART NAME 1 2 3 4 5 6 (PRODUCT LEVEL)	LINK PAGE
	1		9F-6641	4	SCREW	
	2		4N-4863	1	COVER ASSEM.	
	3		7S-4433	2	FERRULE	
	4		7H-3171	1	PLUG	
	5		4N-4249	1	SEAL	
	6		7S-4434	1	BODY ASSEM.	
	7		8F-6058	1	BEARING	
	8		2S-6838	1	SHAFT	
	9		7S-2374	1	GASKET	
	10		3H-1489	1	KEY	
	11		2F-8616	1	NUT	
	12		8H-9806	1	GEAR (11 Teeth-Drive)	
	13		4N-4865	1	CAGE ASSEM.	
	14		4N-4248	2	SEAL	
	15		8F-6058	1	BEARING	
	16		7S-4439	1	RING	
	17		6J-2419	2	SEAL	
	18		8S-4368	1	GEAR (10 Teeth - Idler)	
	19		NS		USE GASKET SOLUTION	
	20		7S-6701	2	SCREW	
	21		4N-4870	1	SHAFT ASSEM. (10 Teeth Drive)	
	22		8M-0874	1	PLUNGER ASSEM.	
	23		8M-3210	1	SPRING	
	24		7S-4440	1	BOLT	
	25		2A-1913	1	GASKET	

4N4864 FUEL TRANSFER PUMP GROUP

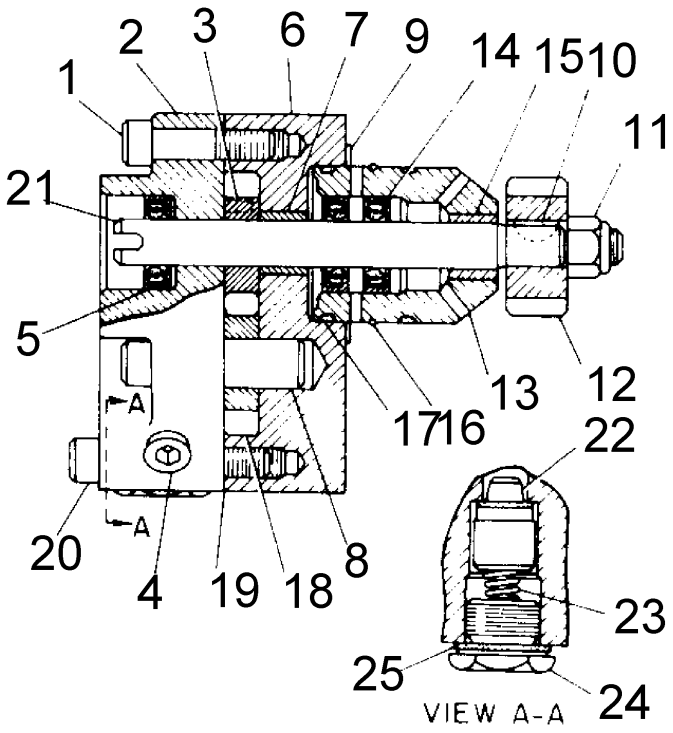

REF. NO.	PART NUMBER	DESCRIPTION	QTY.
1	9F6641	SCREW	4
2	4N4863	COVER ASSEM.	1
3	7S4433	FERRULE	2
4	7H3171	PLUG	1
5	4N4249	SEAL	1
6	7S4434	BODY ASSEM.	1
7	8F6058	BEARING	1
8	2S6838	SHAFT	1
9	7S2374	GASKET	1
10	3H1489	KEY	1
11	2F8616	NUT	1
12	8H9806	GEAR (11 Teeth - Drive)	1
13	4N4865	CAGE ASSEM.	1
14	4N4248	SEAL	2
15	8F6058	BEARING	1
16	7S4439	RING	1
17	6J2419	SEAL	2
18	8S4368	GEAR (10 Teeth - Idler)	1
19		USE GASKET SOLUTION	
20	7S6701	SCREW	2
21	4N4870	SHAFT ASSEM. (10 Teeth Drive)	1
22	8M1874	PLUNGER ASSEM.	1
23	8M3210	SPRING	1
24	7S4440	BOLT	1
25	2A1913	GASKET	1

J10354E

GRAPHIC #1

j10354e

FUEL TRANSFER PUMP

Effective with Serial No. 43V2248~43V9336, 43V9352~43V9806, 43V9808, 43V9809, 43V9812~43V9817
Part of Field Conversion Arrangement listed on Page 131
For Japan
AN ATTACHMENT

Key:

SMCS

NOTE	REF NO	GRAPHIC REF	PART NUMBER	QTY	PART NAME 1 2 3 4 5 6 (PRODUCT LEVEL)	LINK PAGE
	1		2F-8616	1	NUT	
	2		8H-9806	1	GEAR	
	3		4N-4865	1	CAGE ASSEM.	
	4		8F-6058	1	BEARING	
	5		4N-4248	2	SEAL	
	6		6J-2419	2	SEAL	
	7		7S-4439	1	RING	
	8		8S-4368	1	GEAR (Idler - 10 Teeth)	
	9		7M-7260		USE GASKET SOLUTION	
	10		7S-6701	2	SCREW (44.5mm Long)	
	11		9F-5975	2	BOLT	
			9M-1974	2	WASHER	
	12		9S-3033	1	CLAMP	
	13		7N-4076	1	COVER	
	14		9S-3032	1	CLAMP	
	15		4M-8303	1	SEAL	
	16		9F-6641	4	SCREW (32mm Long)	
	17		4N-4863	1	COVER ASSEM.	
	18		7S-4433	2	FERRULE	
	19		7H-3171	1	PLUG	
	20		4N-4249	1	SEAL	
	21		7S-4434	1	BODY ASSEM.	
	22		8F-6058	1	BEARING	
	23		4N-3944	1	SHAFT	
	24		7S-2374	1	GASKET	
	25		3H-1489	1	KEY	
	26		8M-0874	1	PLUNGER ASSEM.	
	27		8M-3210	1	SPRING	
	28		7S-4440	1	BOLT	
	29		4N-7465	1	GASKET	
	30		4N-4870	1	SHAFT ASSEM.	

FUEL TRANSFER PUMP

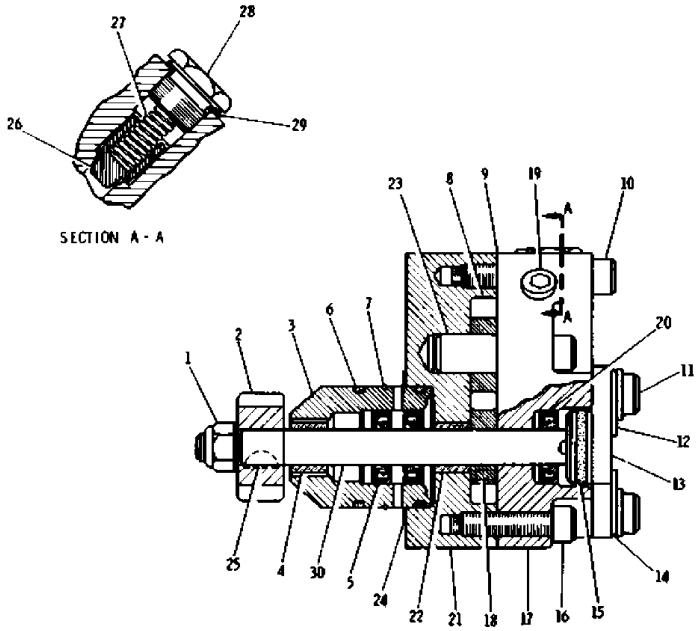

REF. NO.	PART NUMBER	DESCRIPTION	QTY.
1	2F8616	NUT	1
2	8H9806	GEAR	1
3	4N4865	CAGE ASSEM.	1
4	8F6058	BEARING	1
5	4N4248	SEAL	2
6	6J2419	SEAL	2
7	7S4439	RING	1
8	8S4368	GEAR (Idler - 10 Teeth)	1
9	7M7260	USE GASKET SOLUTION	
10	7S6701	SCREW (44.5mm Long)	2
11	9F5975	BOLT	2
	9M1974	WASHER	2
12	9S3033	CLAMP	1
13	7N4076	COVER	1
14	9S3032	CLAMP	1
15	4M8303	SEAL	1
16	9F6641	SCREW (32mm Long)	4
17	4N4863	COVER ASSEM.	1
18	7S4433	FERRULE	2
19	7H3171	PLUG	1
20	4N4249	SEAL	1
21	7S4434	BODY ASSEM.	1
22	8F6058	BEARING	1
23	4N3944	SHAFT	1
24	7S2374	GASKET	1
25	3H1489	KEY	1
26	8M874	PLUNGER ASSEM.	1
27	8M3210	SPRING	1
28	7S4440	BOLT	1
29	4N7465	GASKET	1
30	4N4870	SHAFT ASSEM.	1

J13845E

GRAPHIC #1

j13845e

FUEL TRANSFER PUMP COVER (7N4077 N/S)

Effective with Serial No. 43V9337~43V9351, 43V9807, 43V9810, 43V9811, 43V9818~43V11876

Key:

SMCS

NOTE	REF NO	GRAPHIC REF	PART NUMBER	QTY	PART NAME 1 2 3 4 5 6 (PRODUCT LEVEL)	LINK PAGE
	1		9F-5975	2	BOLT	
			9M-1974	2	WASHER	
	2		4M-8303	1	SEAL	
	3		7N-4076	1	COVER	
	4		9S-3032	1	CLAMP	
	5		9S-3033	1	CLAMP	

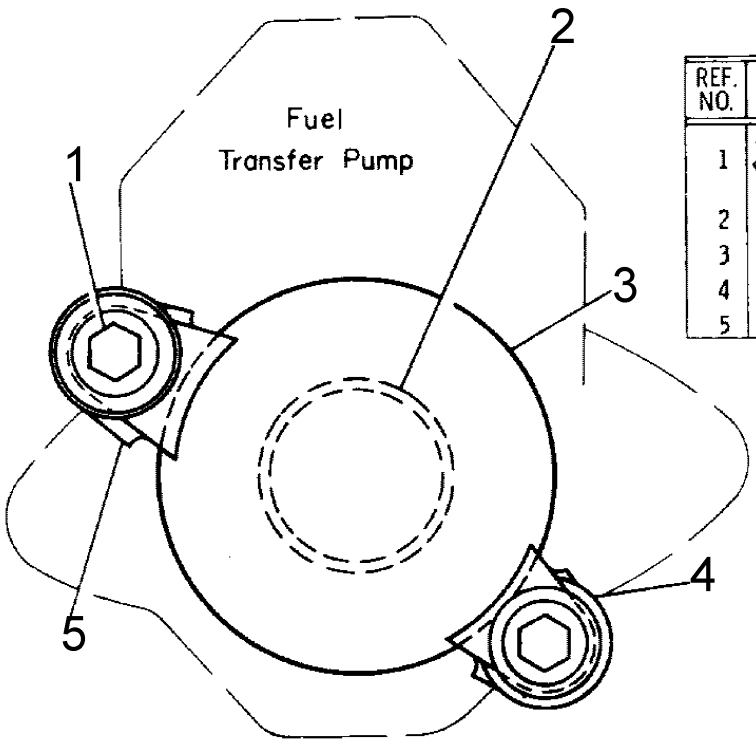

REF. NO.	PART NUMBER	DESCRIPTION	QTY.
1	9F5975	BOLT	2
	9M1974	WASHER	2
2	4M8303	SEAL	1
3	7N4076	COVER	1
4	9S3032	CLAMP	1
5	9S3033	CLAMP	1

J14143E

GRAPHIC #1

j14143e

WATER SEPARATOR (3Y4724 N/S)

Effective with Serial No. 43V2248~43V9336, 43V9352~43V9806, 43V9808, 43V9809, 43V9812~43V9817
For Japan

Key: H - ORDER BY THE CM

SMCS

NOTE	REF NO	GRAPHIC REF	PART NUMBER	QTY	PART NAME 1 2 3 4 5 6 (PRODUCT LEVEL)	LINK PAGE
	1		1H-4857	2	FITTING	
			4H-2497	1	NUT	
			4H-2496	1	SLEEVE	
	2		3Y-4723	1	TUBE	
	3		2P-4173	2	COCK	
	4		5M-6213	1	PLUG	
	5		3Y-4497	1	BRACKET	
	6		2N-1287	1	ELBOW	
	7		0S-1616	3	BOLT	
H	8		5P-1442		HOSE 60cm	
	9		3S-5096	1	CLAMP	
	10		0S-0509	2	BOLT	
			5M-2894	2	WASHER	
	11		6N-7624	1	BASE	
	12		6N-7617	1	ELEMENT	
	13		6N-7618	1	CLAMP	

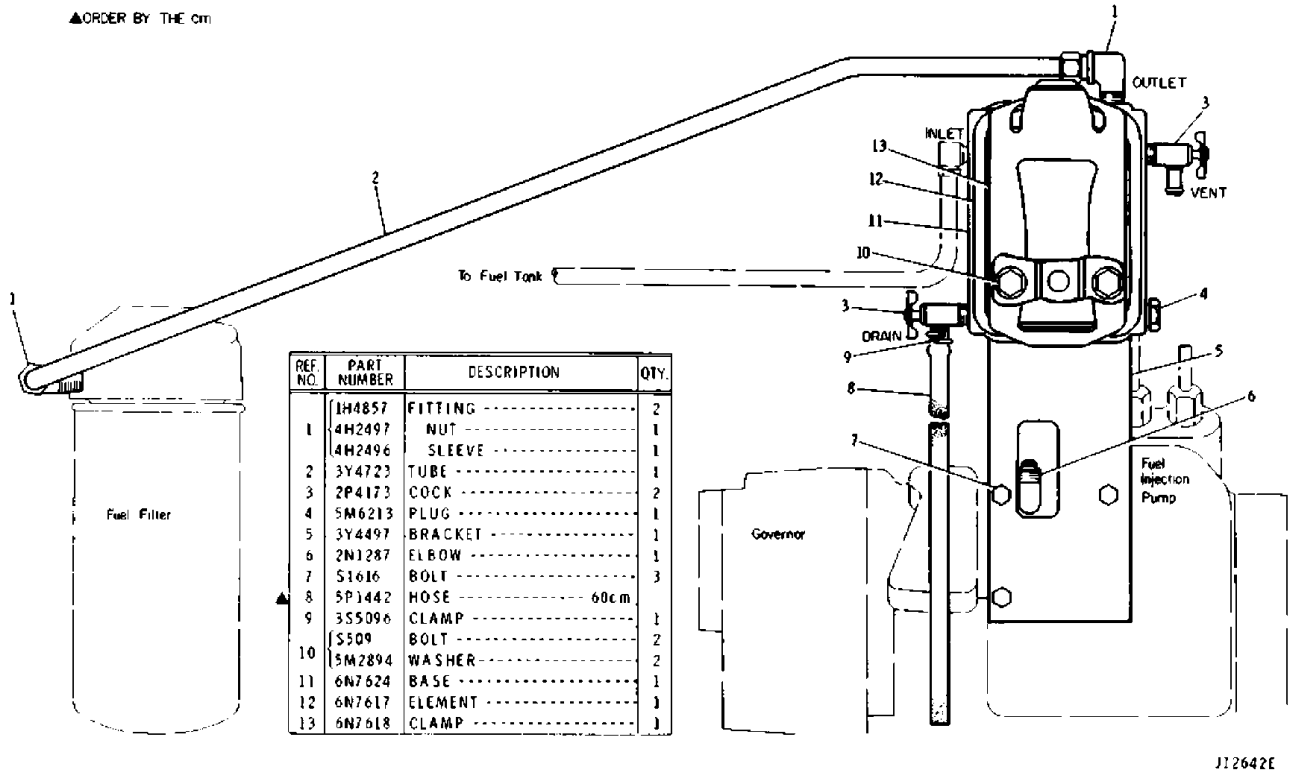

REF NO	PART NUMBER	DESCRIPTION	QTY
1	1H4857	FITTING	2
	4H2497	NUT	1
	4H2496	SLEEVE	1
2	3Y4723	TUBE	1
3	2P4173	COCK	2
4	5M6213	PLUG	1
5	3Y4497	BRACKET	1
6	2N1287	ELBOW	1
7	S1616	BOLT	3
▲ 8	5P1442	HOSE 60cm	
9	3S5096	CLAMP	1
10	S509	BOLT	2
	5M2894	WASHER	2
11	6N7624	BASE	1
12	6N7617	ELEMENT	1
13	6N7618	CLAMP	1

GRAPHIC #1 j12642e

WATER SEPARATOR (3Y4724 N/S)

Effective with Serial No. 43V8246~43V9336, 43V9352~43V9806, 43V9808, 43V9809, 43V9812~43V9817
For outside Japan

Key: H - ORDER BY THE CM

SMCS

NOTE	REF NO	GRAPHIC REF	PART NUMBER	QTY	PART NAME 1 2 3 4 5 6 (PRODUCT LEVEL)	LINK PAGE
	1		1H-4857	2	FITTING	
			4H-2497	1	NUT	
			4H-2496	1	SLEEVE	
	2		3Y-4723	1	TUBE	
	3		2P-4173	2	COCK	
	4		5M-6213	1	PLUG	
	5		3Y-4497	1	BRACKET	
	6		2N-1287	1	ELBOW	
	7		0S-1616	3	BOLT	
H	8		5P-1442		HOSE 60cm	
	9		3S-5096	1	CLAMP	
	10		0S-0509	2	BOLT	
			5M-2894	2	WASHER	
	11		6N-7624	1	BASE	
	12		6N-7617	1	ELEMENT	
	13		6N-7618	1	CLAMP	

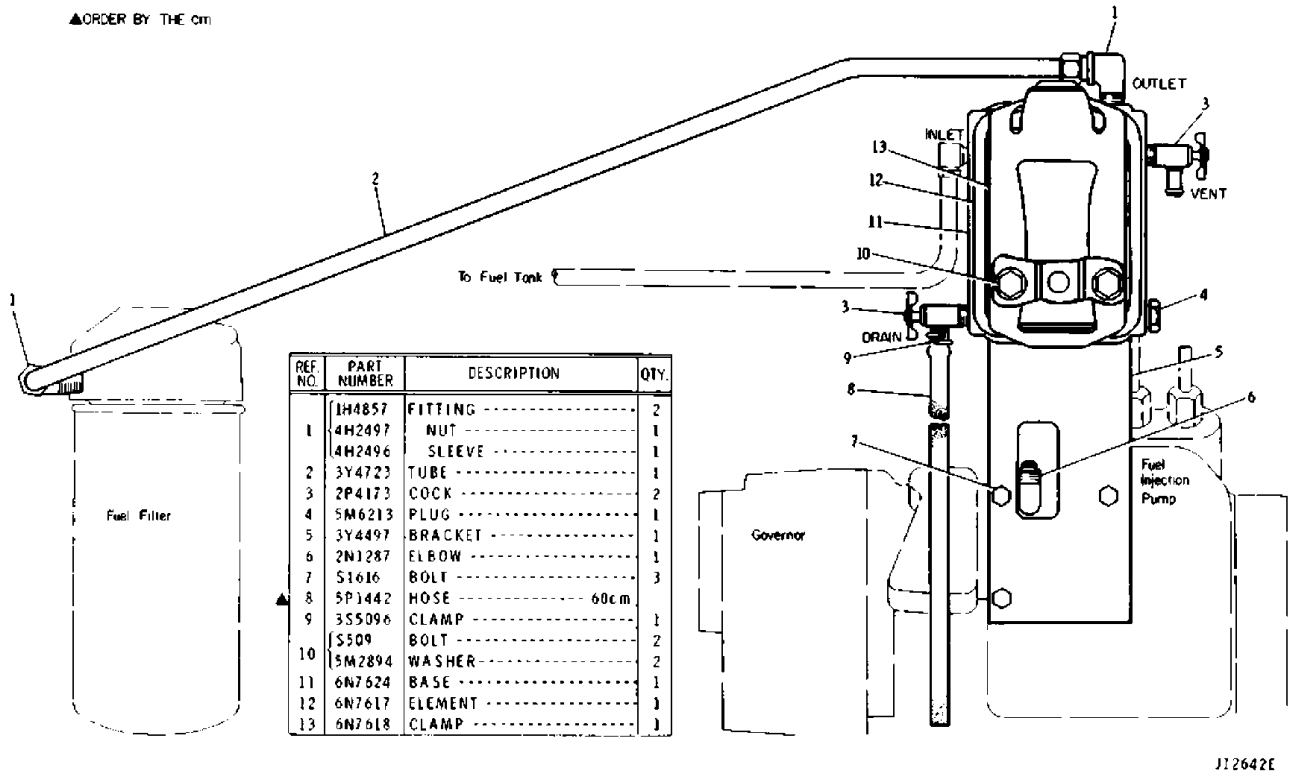

REF NO	PART NUMBER	DESCRIPTION	QTY
1	1H4857	FITTING	2
	4H2497	NUT	1
	4H2496	SLEEVE	1
2	3Y4723	TUBE	1
3	2P4173	COCK	2
4	5M6213	PLUG	1
5	3Y4497	BRACKET	1
6	2N1287	ELBOW	1
7	S1616	BOLT	3
▲ 8	5P1442	HOSE 60cm	
9	3S5096	CLAMP	1
10	S509	BOLT	2
	5M2894	WASHER	2
11	6N7624	BASE	1
12	6N7617	ELEMENT	1
13	6N7618	CLAMP	1

GRAPHIC #1 j12642e

ACCESSORY DRIVE (2P7705 N/S)

Effective with Serial No. 43V1~43V2235

Key:

SMCS

NOTE	REF NO	GRAPHIC REF	PART NUMBER	QTY	PART NAME 1 2 3 4 5 6 (PRODUCT LEVEL)	LINK PAGE
	1		1B-9575	2	BOLT	
	2		8H-9220	1	GASKET	
	3		2P-7704	1	HOUSING ASSEM.	
	4		9F-2247	1	PLUG	
	5		2H-1190	2	DOWEL	
	6		5M-6214	2	PLUG	
	7		2A-3348	1	DOWEL	
	8		8H-9788	1	GASKET	
	9		8H-9787	1	COVER	
	10		2H-3755	2	BOLT	
	11		8H-9364	1	GASKET	
	12		7S-5047	1	SHAFT	
	13		2P-3201	4	BOLT	
	14		5S-3828	1	SLEEVE	
	15		8H-9718	1	RETAINER	
	16		8H-9789	1	BEARING	
	17		0S-1618	3	BOLT	
	18		9L-2796	1	BOLT	

ACCESSORY DRIVE (2P7705 N/S)

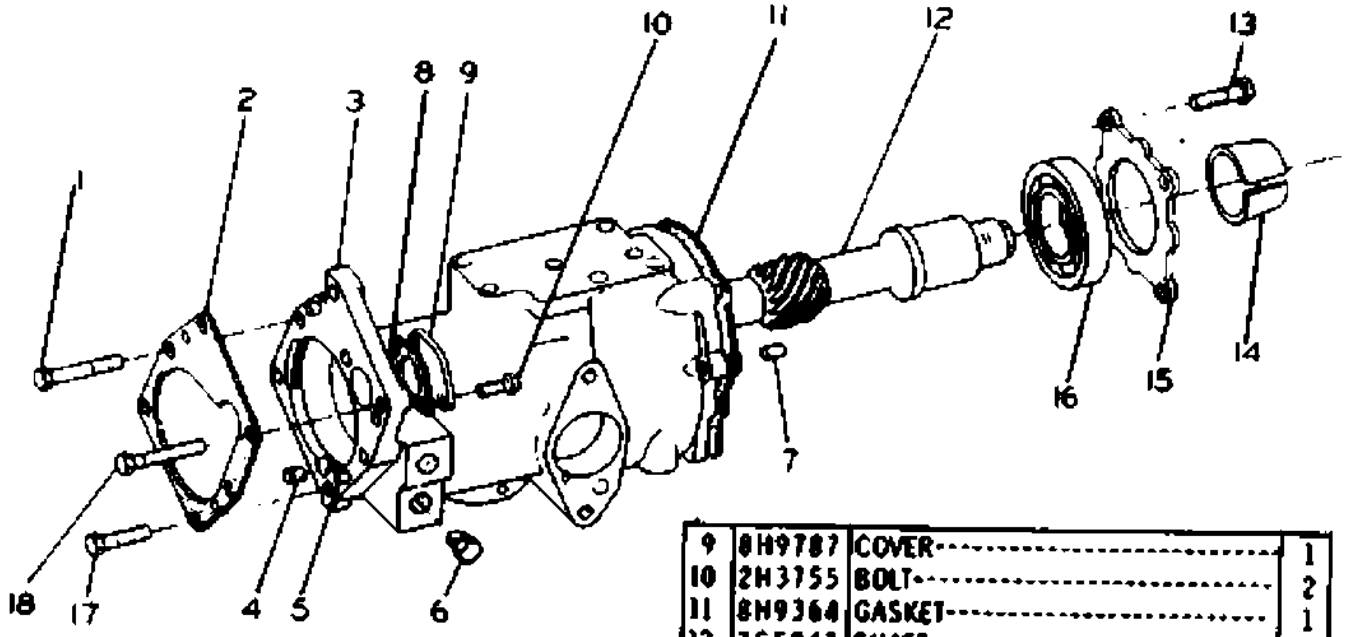

REF. NO.	PART NUMBER	DESCRIPTION	QTY
1	1B9575	BOLT	2
2	8H9220	GASKET	1
3	2P7704	HOUSING ASSEM.	1
4	9F2247	PLUG	1
5	2N1190	DOWEL	2
6	5M6214	PLUG	2
7	2A3348	DOWEL	1
8	8H9788	GASKET	1
9	8H9787	COVER	1
10	2H3755	BOLT	2
11	8H9364	GASKET	1
12	7S5047	SHAFT	1
13	2P3201	BOLT	4
14	5S3828	SLEEVE	1
15	8H9718	RETAINER	1
16	8H9789	BEARING	1
17	S1618	BOLT	3
18	9L2796	BOLT	1

117201JE

GRAPHIC #1

c927453

ACCESSORY DRIVE (2P7705 N/S)

Effective with Serial No. 43V2236~43V2247

Key:

SMCS

NOTE	REF NO	GRAPHIC REF	PART NUMBER	QTY	PART NAME 1 2 3 4 5 6 (PRODUCT LEVEL)	LINK PAGE
	1		1B-9575	2	BOLT (44mm Long)	
	2		8H-9220	1	GASKET	
	3		2P-7704	1	HOUSING ASSEM.	
	4		9F-2247	1	PLUG	
	5		2H-1190	2	DOWEL	
	6		5M-6214	2	PLUG	
	7		2A-3348	1	DOWEL	
	8		8H-9788	1	GASKET	
	9		8H-9787	1	COVER	
	10		2H-3755	2	BOLT	
	11		8H-9364	1	GASKET	
	12		7S-5047	1	SHAFT	
	13		5M-2894	4	WASHER	
	14		0S-1594	4	BOLT	
	15		5S-3828	1	SLEEVE	
	16		8H-9718	1	RETAINER	
	17		8H-9789	1	BEARING	
	18		0S-1618	3	BOLT (25mm Long)	
	19		9L-2796	1	BOLT (44.5mm Long)	

ACCESSORY DRIVE (2P7705 N/S)

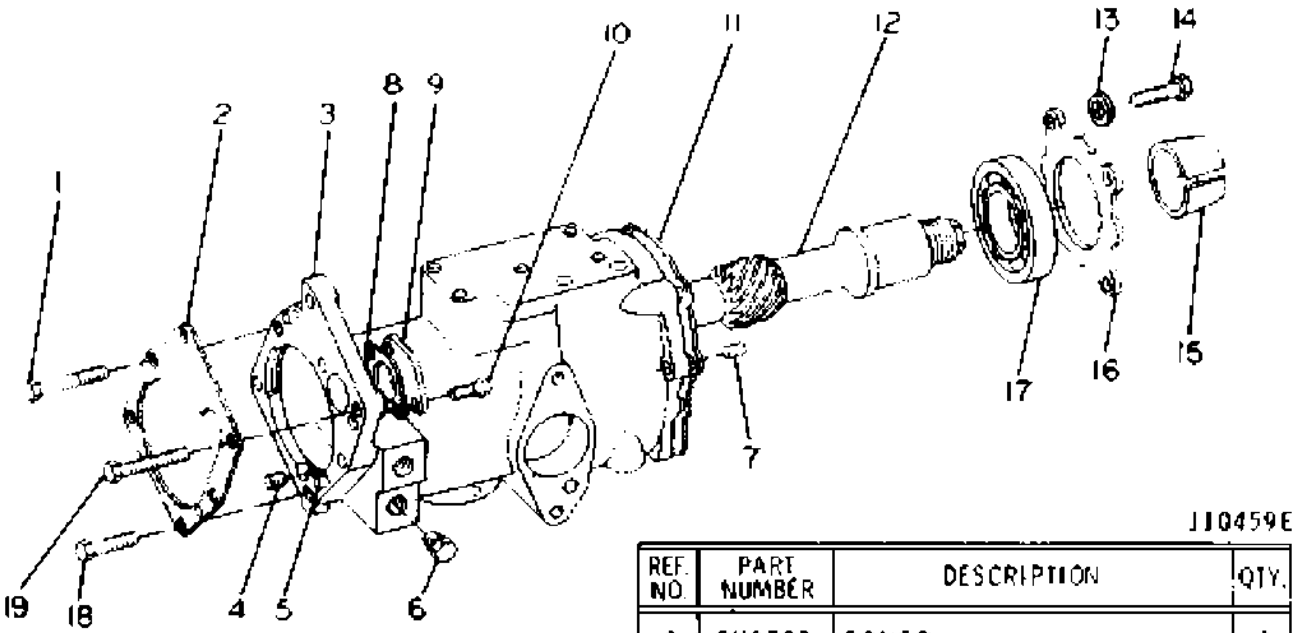

J10459E

REF. NO.	PART NUMBER	DESCRIPTION	QTY.
1	1B9575	BOLT (44mm Long)	2
2	8H9220	GASKET	1
3	2P7704	HOUSING ASSEM.	1
4	9F2247	PLUG	1
5	2H1190	DOWEL	2
6	5M6214	PLUG	2
7	2A3348	DOWEL	1
8	8H9788	GASKET	1

REF. NO.	PART NUMBER	DESCRIPTION	QTY.
9	8H9787	COVER	1
10	2H3755	BOLT	2
11	8H9364	GASKET	1
12	7S5047	SHAFT	1
13	5M2894	WASHER	4
14	S1594	BOLT	4
15	5S3828	SLEEVE	1
16	8H9718	RETAINER	1
17	8H9789	BEARING	1
18	S1618	BOLT (25mm Long)	3
19	9L2796	BOLT (44.5mm Long)	1

GRAPHIC #1

j10459e

ACCESSORY DRIVE (7N3890 N/S)

Effective with Serial No. 43V9337~43V9351, 43V9807, 43V9810, 43V9811, 43V9818~43V11321

Key:

SMCS

NOTE	REF NO	GRAPHIC REF	PART NUMBER	QTY	PART NAME 1 2 3 4 5 6 (PRODUCT LEVEL)	LINK PAGE
	1		9L-2796	1	BOLT	
	2		1B-9575	2	BOLT	
	3		0S-1618	3	BOLT	
	4		8H-9220	1	GASKET	
	5		8H-9788	1	GASKET	
	6		8H-9787	1	COVER	
	7		2H-3755	2	BOLT	
	8		7N-4171	1	HOUSING ASSEM.	
	9		2H-1190	2	DOWEL	
	10		9F-2247	1	PLUG	
	11		5M-6214	2	PLUG	
	12		7N-3626	1	SHAFT	
	13		1B-4203	2	NUT	
	14		2H-3934	1	SEAL	
	15		8J-0484	1	RING	
	16		4L-9825	1	BEARING	
	17		2L-6965	1	RING	
	18		0L-1143	1	BOLT	
			1D-4717	1	NUT	
	19		8F-7219	1	SEAL (4.47 degrees I.D.)	
	20		1J-9671	1	SEAL (10.52 degrees I.D.)	

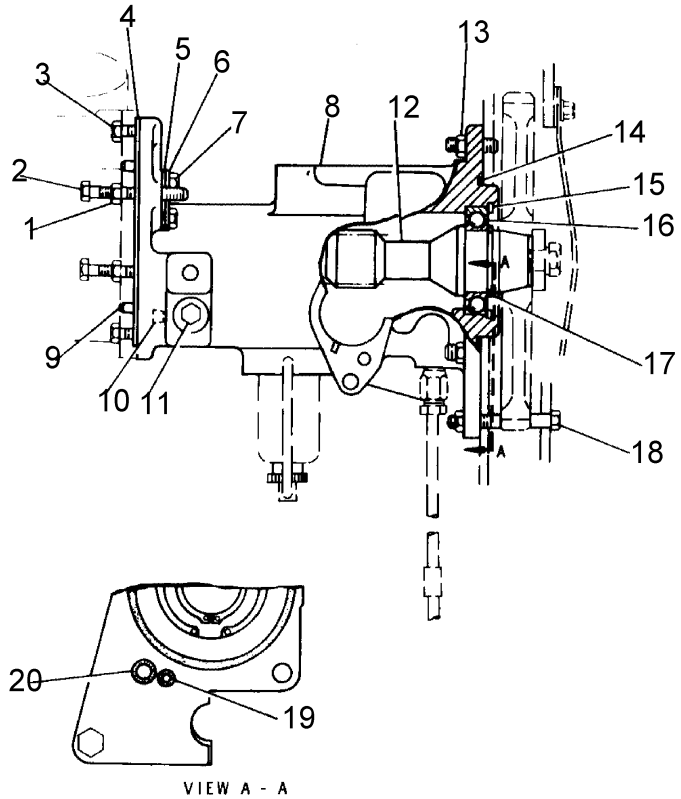

REF. NO.	PART NUMBER	DESCRIPTION	QTY.
1	9L2796	BOLT	1
2	1B9575	BOLT	2
3	S1618	BOLT	3
4	8H9220	GASKET	1
5	8H9788	GASKET	1
6	8H9787	COVER	1
7	2H3755	BOLT	2
8	7N4171	HOUSING ASSEM.	1
9	2H1190	DOWEL	2
10	9F2247	PLUG	1
11	5M6214	PLUG	2
12	7N3626	SHAFT	1
13	1B4203	NUT	2
14	2H3934	SEAL	1
15	8J484	RING	1
16	4L9825	BEARING	1
17	2L6965	RING	1
18	0L1143	BOLT	1
	1D4717	NUT	1
19	8F7219	SEAL (4.47$^{\Phi}$ I. D.)	1
20	1J9671	SEAL (10.52$^{\Phi}$ I. D.)	1

J13787E

GRAPHIC #1

ACCESSORY DRIVE (7N3889 N/S)

Effective with Serial No. 43V11322~43V11876

Key:

SMCS

NOTE	REF NO	GRAPHIC REF	PART NUMBER	QTY	PART NAME 1 2 3 4 5 6 (PRODUCT LEVEL)	LINK PAGE
	1		9L-2796	1	BOLT	
	2		1B-9575	2	BOLT	
	3		0S-1618	3	BOLT	
	4		8H-9220	1	GASKET	
	5		8H-9788	1	GASKET	
	6		8H-9787	1	COVER	
	7		2H-3755	2	BOLT	
	8		7N-4664	1	HOUSING ASSEM.	
	9		2H-1190	2	DOWEL	
	10		9F-2247	3	PLUG	
	11		5M-6214	2	PLUG	
	12		7N-3626	1	SHAFT	
	13		1B-4203	2	NUT	
	14		2H-3934	1	SEAL	
	15		8J-0484	1	RING	
	16		4L-9825	1	BEARING	
	17		2L-6965	1	RING	
	18		0T-0573	1	BOLT	
			1D-4717	1	NUT	
	19		8F-7219	1	SEAL	
	20		1J-9671	1	SEAL	

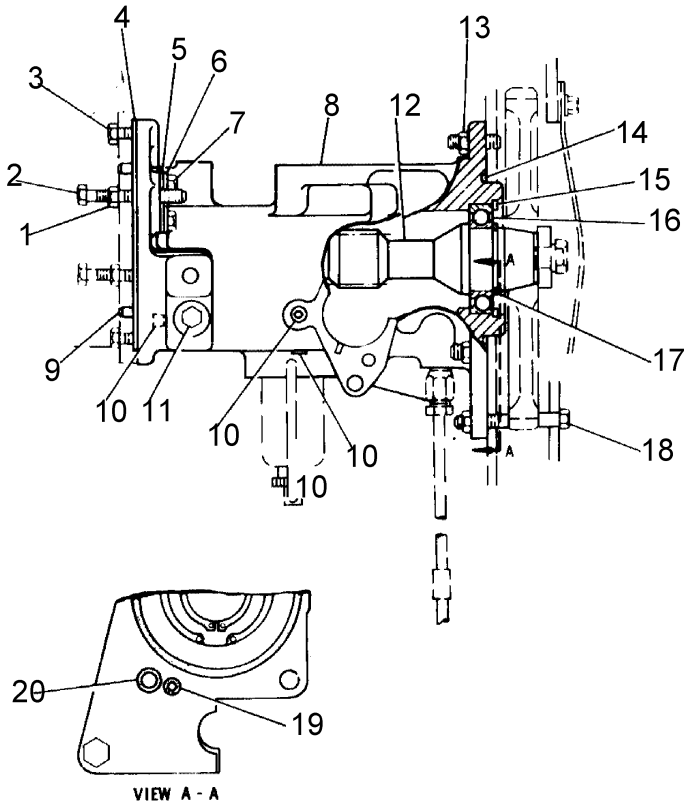

REF. NO.	PART NUMBER	DESCRIPTION	QTY.
1	9L2796	BOLT	1
2	1B9575	BOLT	2
3	S1618	BOLT	3
4	8H9220	GASKET	1
5	8H9788	GASKET	1
6	8H9787	COVER	1
7	2H3755	BOLT	2
8	7N4664	HOUSING ASSEM.	1
9	2H1190	DOWEL	2
10	9F2247	PLUG	3
11	5M6214	PLUG	2
12	7N3626	SHAFT	1
13	1B4203	NUT	2
14	2H3934	SEAL	1
15	8J484	RING	1
16	4L9825	BEARING	1
17	2L6965	RING	1
18	T573	BOLT	1
	1D4717	NUT	1
19	8F7219	SEAL	1
20	1J9671	SEAL	1

J15897E

GRAPHIC #1

ACCESSORY DRIVE AND PRIMARY FUEL FILTER

Effective with Serial No. 43V2248~43V9336, 43V9352~43V9806, 43V9808, 43V9809, 43V9812~43V9817
Part of Field Conversion Arrangement listed on Page 131
For Japan
AN ATTACHMENT

Key:

SMCS

NOTE	REF NO	GRAPHIC REF	PART NUMBER	QTY	PART NAME 1 2 3 4 5 6 (PRODUCT LEVEL)	LINK PAGE
	1		9L-2796	1	BOLT	
	2		1B-9575	2	BOLT	
	3		0S-1618	3	BOLT	
	4		8H-9220	1	GASKET	
	5		8H-9788	1	GASKET	
	6		8H-9787	1	COVER	
	7		2H-3755	2	BOLT	
	8		7N-4171	1	HOUSING ASSEM.	
	9		2H-1190	2	DOWEL	
	10		9F-2247	1	PLUG	
	11		5M-6214	2	PLUG	
	12		7N-3626	1	SHAFT	
	13		6H-0192	2	STUD	
	14		1B-4203	2	NUT	
	15		4N-3330	1	GEAR (80 Teeth)	
	16		6N-7887	1	GASKET	
	17		2H-3934	1	SEAL	
	18		8J-0484	1	RING	
	19		4L-9825	1	BEARING	
	20		0S-1603	1	BOLT	
	21		4N-3371	1	WASHER	
	22		2L-6965	1	RING	
	23		0L-1143	1	BOLT	
			1D-4717	1	NUT	
	24		5S-7223	1	TUBE	
	25		9S-1350	1	CLIP	
			0S-0509	1	BOLT	
			5M-2894	1	WASHER	
	26		3B-8996	1	FITTING	
	27		4B-3388	2	BOLT	
			3B-4505	2	LOCKWASHER	
	28		7S-2374	1	GASKET	
	29		9H-2769	1	BOWL	
	30		3Y-0902	1	BAIL ASSEM.	
	31		5S-7645	1	ELEMENT ASSEM.	
	32		9H-2770	1	GASKET	
	33		1J-9671	1	SEAL (10.52 I. D.)	
	34		8F-7219	1	SEAL (4.47 I. D.)	

ACCESSORY DRIVE AND PRIMARY FUEL FILTER

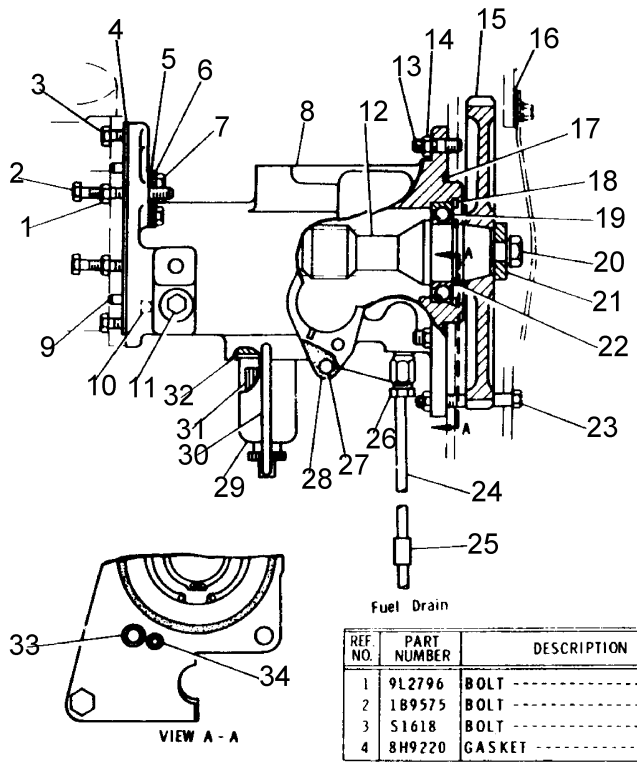

REF. NO.	PART NUMBER	DESCRIPTION	QTY.
1	9L2796	BOLT	1
2	1B9575	BOLT	2
3	S1618	BOLT	3
4	8H9220	GASKET	1

REF. NO.	PART NUMBER	DESCRIPTION	QTY.
5	8H9788	GASKET	1
6	8H9787	COVER	1
7	2H3755	BOLT	2
8	7N4171	HOUSING ASSEM.	1
9	2H1190	DOWEL	2
10	9F2247	PLUG	1
11	5M6214	PLUG	2
12	7N3626	SHAFT	1
13	6H192	STUD	2
14	1B4203	NUT	2
15	4N3330	GEAR (80 Teeth)	1
16	6N7887	GASKET	1
17	2H3934	SEAL	1
18	8J484	RING	1
19	4L9825	BEARING	1
20	S1603	BOLT	1
21	4N3371	WASHER	1
22	2L6965	RING	1
23	L1143	BOLT	1
	1D4717	NUT	1
24	5S7223	TUBE	1
25	9S1350	CLIP	1
	S509	BOLT	1
	5M2894	WASHER	1
26	3B8996	FITTING	1
27	4B3388	BOLT	2
	3B4505	LOCKWASHER	2
28	7S2374	GASKET	1
29	9H2769	BOWL	1
30	3Y902	BAIL ASSEM.	1
31	5S7645	ELEMENT ASSEM.	1
32	9H2770	GASKET	1
33	1J9671	SEAL (10.52Φ I. D.)	1
34	8F7219	SEAL (4.47Φ I. D.)	1

J13819E

GRAPHIC #1

j13819e

GOVERNOR AND FUEL INJECTION PUMP (7S9334 N/S)

Effective with Serial No. 43V1~43V2247
7S9332 Governor Group and 7S8831 Pump Housing
Group parts are shown on Pages 108 and 110

Key: Y - SEPARATE ILLUSTRATION

SMCS

NOTE	REF NO	GRAPHIC REF	PART NUMBER	QTY	PART NAME 1 2 3 4 5 6 (PRODUCT LEVEL)	LINK PAGE
Y	1		7S-9332	1	GOVERNOR GROUP	P0142
					(See Separate Illustration)	
	2		9M-3160	1	SPRING	
	3		7L-0552	1	GASKET	
	4		0S-1618	3	BOLT	
	5		3B-4505	5	LOCKWASHER	
Y	6		7S-8831	1	FUEL PUMP HOUSING GROUP	P0144
					(See Separate Illustration)	
	7		1B-9575	2	BOLT	

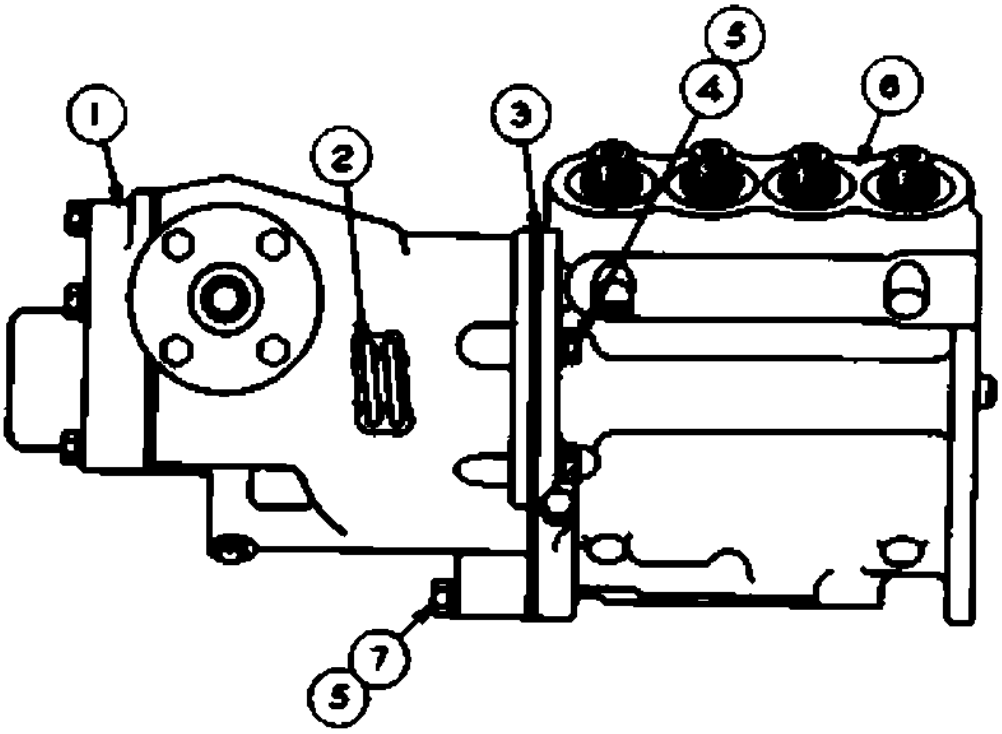

REF NO	PART NUMBER	DESCRIPTION	QTY
1	7S9332	GOVERNOR GROUP----------	1
		(See Separate Illustration)	
2	9M3160	SPRING----------	1
3	7L552	GASKET----------	1
4	S-1618	BOLT----------	3

REF NO	PART NUMBER	DESCRIPTION	QTY
5	3B4505	LOCKWASHER----------	5
6	7S8831	FUEL PUMP HOUSING GROUP----------	1
		(See Separate Illustration)	
7	1B9575	BOLT----------	2

102908JE

GRAPHIC #1

c927454

GOVERNOR COVER (4N4510 N/S)

Effective with Serial No. 43V2248~43V9336, 43V9352~43V9806, 43V9808, 43V9809, 43V9812~43V9817

Key:

SMCS

NOTE	REF NO	GRAPHIC REF	PART NUMBER	QTY	PART NAME 1 2 3 4 5 6 (PRODUCT LEVEL)	LINK PAGE
	1		2S-7905	1	PLUG	
	2		4N-4508	1	COVER	
			4N-4509	1	GASKET	
	3		0S-1615	2	BOLT	

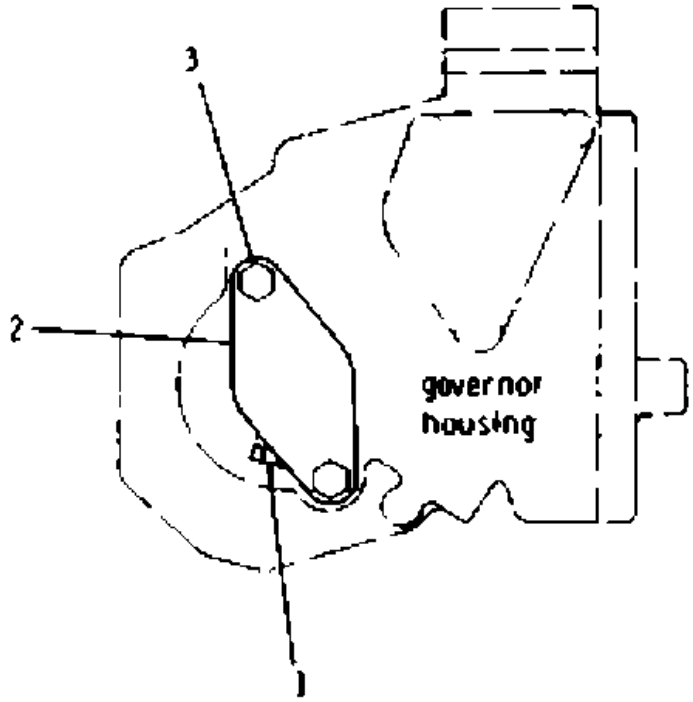

REF NO.	PART NUMBER	DESCRIPTION	QTY
1	2S7905	PLUG	1
2	4N4508	COVER	1
	4N4509	GASKET	1
3	S1615	BOLT	2

144197JE

GRAPHIC #1

c927455

GOVERNOR AND FUEL INJECTION PUMP (6N277 N/S)

Effective with Serial No. 43V2248~43V9336, 43V9352~43V9806, 43V9808, 43V9809, 43V9812~43V9817
Governor & Fuel Pump and Torque Control parts are shown on Pages 111 and 123
Note: Governor and Fuel Injection Pump replaced by 6N2476 or 4N6116 listed on
Pa

Key: Y - SEPARATE ILLUSTRATION

SMCS

NOTE	REF NO	GRAPHIC REF	PART NUMBER	QTY	PART NAME 1 2 3 4 5 6 (PRODUCT LEVEL)	LINK PAGE
	1		4N-0053	1	COVER	
	2		0S-1616	1	BOLT (25.4mm Long)	
			8S-4710	2	BOLT (101.6mm Long)	
	3		4N-0159	1	GASKET	
	4		2A-0762	2	BOLT	
	5		4N-4320	1	SHAFT ASSEM.	
	6		6N-0242	1	COVER	
			4N-0403	1	GASKET	
	7		4N-0443	1	PIN	
Y	8		NOTSERV	1	GOVERNOR AND FUEL PUMP	
					(See Separate Illustration)	
	9		6D-0238	1	VALVE ASSEM.	
	10		4N-9338	1	COVER	
			4N-9056	1	GASKET	
	11		9S-4180	1	PLUG	
			4J-7533	1	SEAL	
	12		0S-1615	8	BOLT	
	13		4N-4225	1	SPRING	
Y	14		NOTSERV	1	TORQUE CONTROL	
					(See Separate Illustration)	
	15		9L-5914	1	WASHER	
	16		4N-8179	1	PIN	
	17		4N-0444	2	SPACER	
	18		4N-4366	1	SPRING	

GOVERNOR AND FUEL INJECTION PUMP (6N277 N/S)

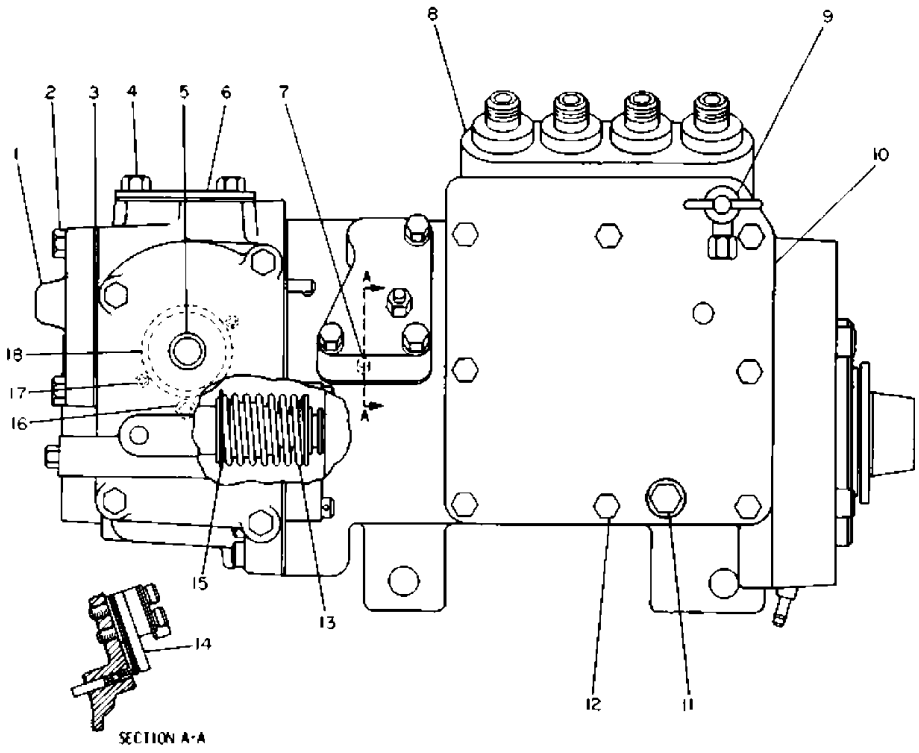

REF. NO.	PART NUMBER	DESCRIPTION	QTY.
1	4N53	COVER	1
2	S1616	BOLT (25.4mm Long)	1
	8S4710	BOLT (101.6mm Long)	2
3	4N159	GASKET	1
4	2A762	BOLT	2
5	4N4320	SHAFT ASSEM.	1
6	6N242	COVER	1
	4N403	GASKET	1
7	4N443	PIN	1
8	Not Serv.	GOVERNOR AND FUEL PUMP (See Separate Illustration)	1
9	6D238	VALVE ASSEM.	1
10	4N9338	COVER	1
	4N9056	GASKET	1
11	9S4180	PLUG	1
	4J7533	SEAL	1
12	S1615	BOLT	8
13	4N4225	SPRING	1
14	Not Serv.	TORQUE CONTROL (See Separate Illustration)	1
15	9L5914	WASHER	1
16	4N8179	PIN	1
17	4N444	SPACER	2
18	4N4366	SPRING	1

J10401E

GRAPHIC #1 j10401e

GOVERNOR AND FUEL INJECTION PUMP (7N3873 N/S)

Effective with Serial No. 43V9337~43V9351, 43V9807, 43V9810, 43V9811, 43V9818~43V11876
7N3870 Governor Group and 3N3387 Pump Group
parts are shown on Pages 114 and 116

Key: Y - SEPARATE ILLUSTRATION

SMCS

NOTE	REF NO	GRAPHIC REF	PART NUMBER	QTY	PART NAME 1 2 3 4 5 6 (PRODUCT LEVEL)	LINK PAGE
Y			7N-3870	1	GOVERNOR GROUP	P0148
					(See Separate Illustration)	
			2N-0828	1	WASHER	
			9M-3160	1	SPRING	
			7L-0552	1	GASKET	
Y			3N-3387	1	FUEL INJECTION PUMP GROUP	P0150
					(See Separate Illustration)	
			0S-1618	3	BOLT	
			9M-1974	3	WASHER	
			1B-9575	2	BOLT	
			9M-1974	2	WASHER	

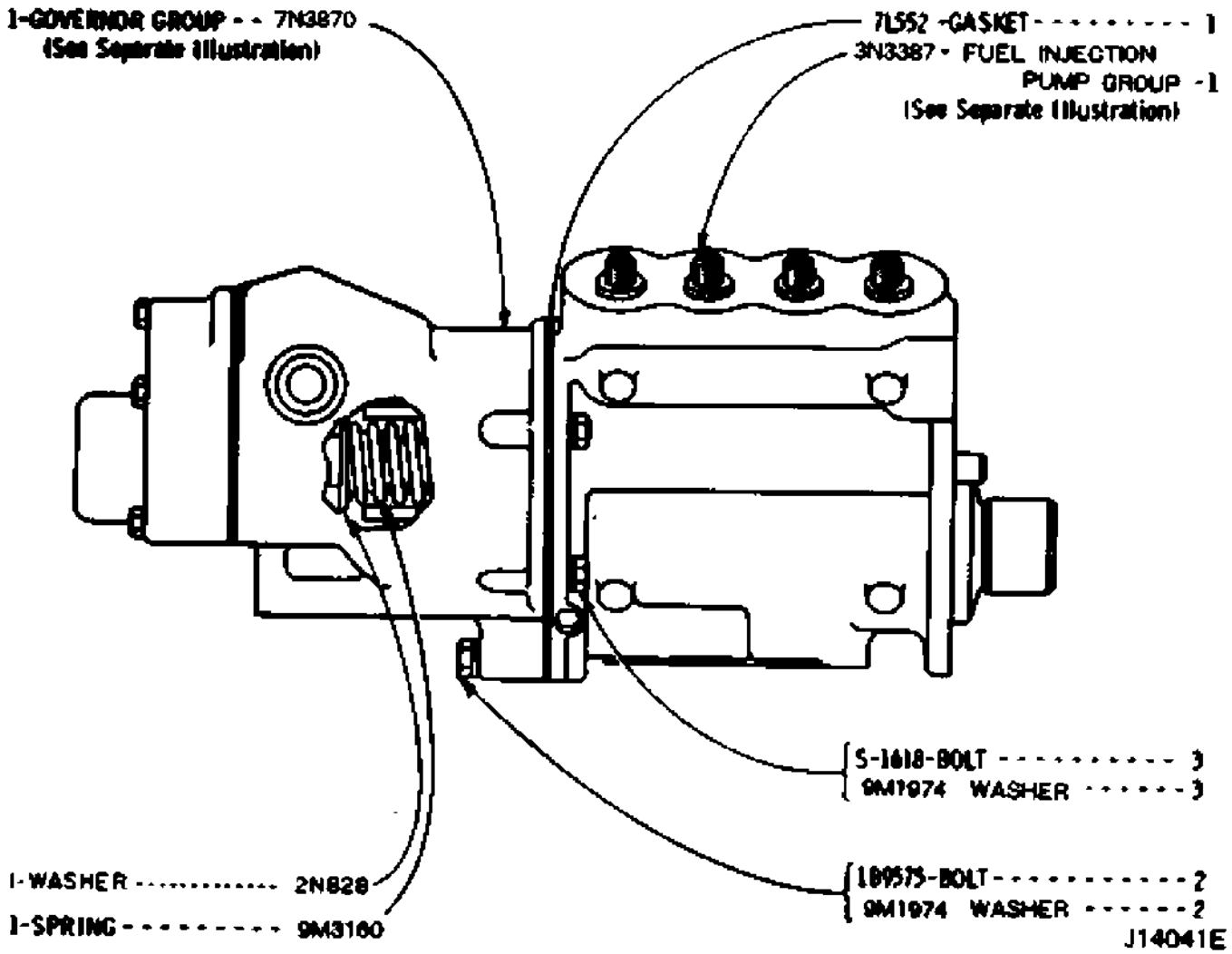

GRAPHIC #1

j14041e

GOVERNOR AND FUEL INJECTION PUMP

Effective with Serial No. 43V2248~43V9336, 43V9352~43V9806, 43V9808, 43V9809, 43V9812~43V9817
Part of Field Conversion Arrangement listed on Page 131
3N3387 Pump Group and 7S9333 Governor Group
parts are shown on Pages 116 and 118
For Japan
AN ATTAC

Key: Y - SEPARATE ILLUSTRATION

SMCS

NOTE	REF NO	GRAPHIC REF	PART NUMBER	QTY	PART NAME 1 2 3 4 5 6 (PRODUCT LEVEL)	LINK PAGE
Y	1		7S-9333	1	GOVERNOR GROUP	P0152
					(See Separate Illustration)	
	2		9M-3160	1	SPRING	
	3		7L-0552	1	GASKET	
	4		0S-1618	3	BOLT	
	5		3B-4505	5	LOCKWASHER	
Y	6		3N-3387	1	FUEL INJECTION PUMP	P0150
					(See Separate Illustration)	
	7		1B-9575	2	BOLT	

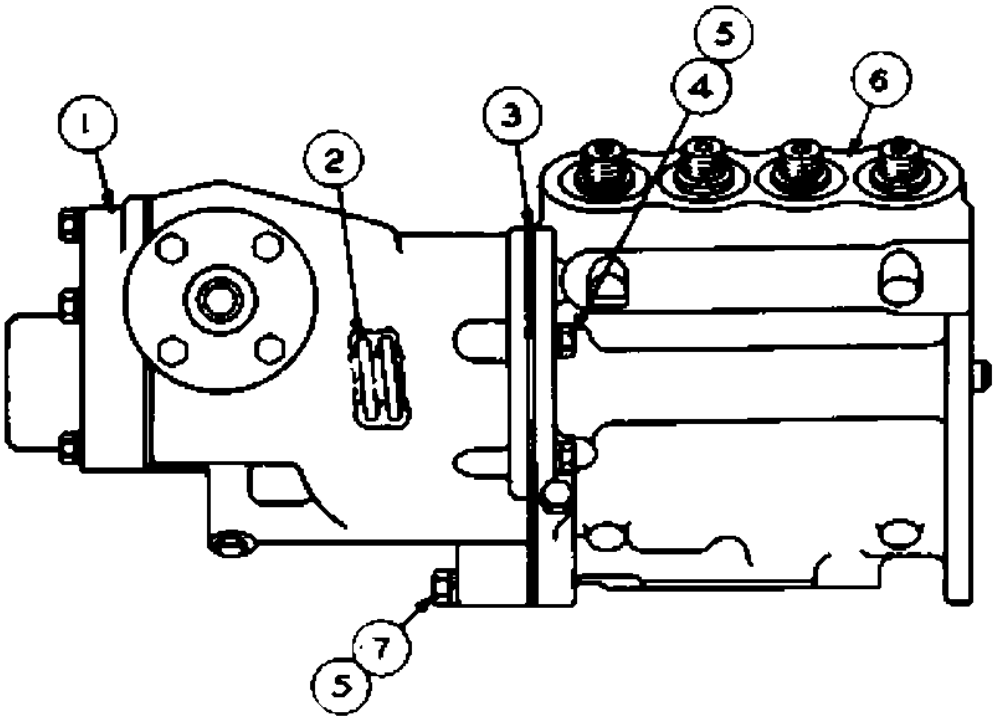

REF NO	PART NUMBER	DESCRIPTION	QTY
1	7S9333	GOVERNOR GROUP	1
		(See Separate Illustration)	
2	9M3160	SPRING	1
3	7L552	GASKET	1
4	S-1618	BOLT	3

REF NO	PART NUMBER	DESCRIPTION	QTY
5	3B4505	LOCKWASHER	5
6	3N3387	FUEL INJECTION PUMP	1
		(See Separate Illustration)	
7	1B9575	BOLT	2

J13796 E

GRAPHIC #1 j13796e

6N2476 GOVERNOR AND FUEL INJECTION PUMP GROUP--Field

Effective with Serial No. 43V2248~43V9336, 43V9352~43V9806, 43V9808, 43V9809, 43V9812~43V9817

Key: Y - SEPARATE ILLUSTRATION

SMCS

NOTE	REF NO	GRAPHIC REF	PART NUMBER	QTY	PART NAME 1 2 3 4 5 6 (PRODUCT LEVEL)	LINK PAGE
Y			NOTSERV	1		
					(See Separate Illustration)	
			2H-3934	1		
			4L-6458	1		
			4L-7124	1		
			6L-5773	1		
					GASKET	
			8L-8601	6		
					SPACER (0.05mm)	
			9L-3625	1		
					TORQUE SPRING (0.56mm)	
			9L-3626	1		
					SPACER (0.41mm)	
			9L-5176	1		
					TORQUE SPRING (0.61mm)	
			9L-6483	1		
					TORQUE SPRING (0.51mm)	
			9L-7235	3		
					SHIM (0.99mm)	
			9L-9347	2		
					SHIM (0.51mm)	
			5M-6214	1		
			8M-9064	1		
					SHIM (1.65mm)	
			9M-1311	1		
			4N-0049	1		
					GASKET	
			4N-0159	1		
					GASKET	
			4N-0402	1		
					GASKET	
			4N-0443	1		
			4N-0508	1		
					GASKET	
			4N-0594	1		
					GASKET	
			4N-3881	1		
					SCREW	
			4N-3882	1		
					CONTACT	
			4N-3883	1		
					STOP BAR	
			4N-3884	1		
					WASHER	
			4N-4227	1		
					GOVERNOR SPRING (49.18mm)	
			4N-4228	1		
					GOVERNOR SPRING (48.96mm)	
			4N-7777	3		

6N2476 GOVERNOR AND FUEL INJECTION PUMP GROUP--Field

		SPACER (0.25mm)
4N-9056	1	
		GASKET
4N-9098	1	
		SPACER (5.08mm)
4N-9337	1	
		GASKET
6N-0269	1	
		PIN ASSEM
6N-2504	1	
		SPACER (0.12mm)
6N-2843	1	
		GASKET
1P-0436	1	
		GASKET
1P-6452	2	
		INSULATOR
1P-6453	1	
		STOP BAR
2P-0726	1	
		SPRING
5P-3431	1	
9S-8597	1	
		SPRING

GOVERNOR AND FUEL INJECTION PUMP (6N2477 N/S)

Part of 6N2476 Governor and Fuel Injection Pump Group
Governor and Fuel Pump parts are shown on Page 111

Key: Y - SEPARATE ILLUSTRATION

SMCS

NOTE	REF NO	GRAPHIC REF	PART NUMBER	QTY	PART NAME 1 2 3 4 5 6 (PRODUCT LEVEL)	LINK PAGE
	1		4N-0053	1	COVER	
	2		0S-1616	1	BOLT 1 in. (2.54 cm) long	
			8S-4710	2	BOLT 4 in. (10.16 cm) long	
	3		4N-0159	1	GASKET	
	4		4N-4320	1	SHAFT ASSEM.	
Y	6		NOTSERV	1	GOVERNOR AND FUEL PUMP	
					(Separate Illustration)	
	7		9L-5914	1	WASHER	
	8		4N-9338	1	COVER	
			4N-9056	1	GASKET	
	9		9S-4180	1	PLUG	
			4J-7533	1	SEAL	
	10		0S-1615	8	BOLT	
	11		6D-0238	1	VALVE ASSEM.	
	12		4N-4366	1	SPRING	
	13		6N-0242	1	COVER	
			4N-0403	1	GASKET	
	14		2A-0762	2	BOLT	
	15		4N-8179	1	PIN	
	16		4N-0444	2	SPACER	
	17		4N-4225	1	SPRING	

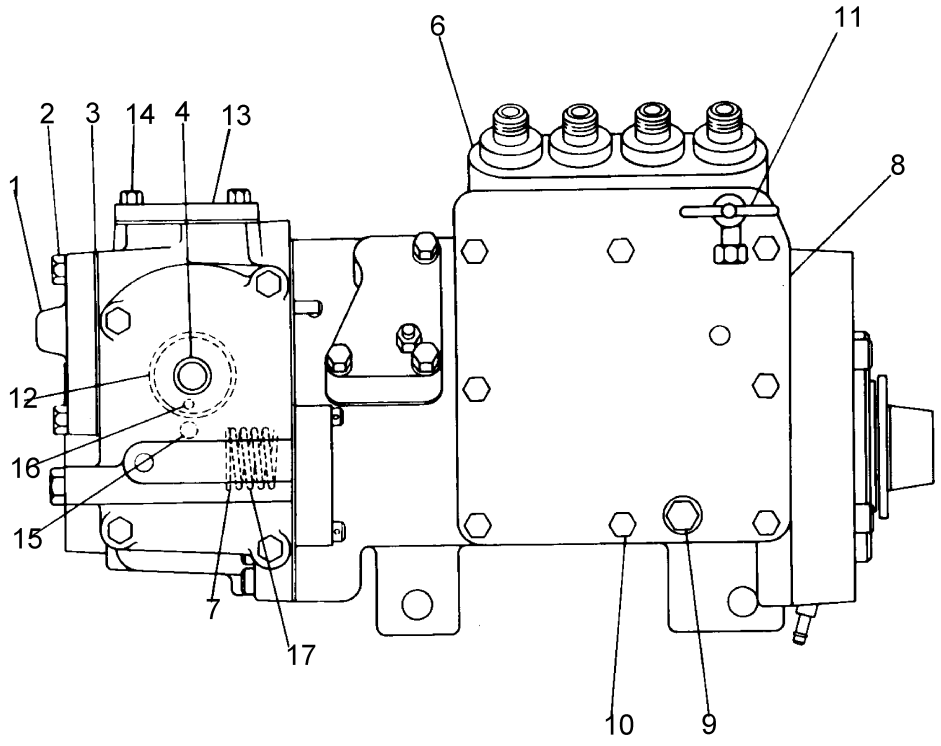

REF. NO.	PART NUMBER	DESCRIPTION	QTY
1	4N53	COVER	1
2	S1616	BOLT--1 in. (2.54 cm) long	1
	8S4710	BOLT--4 in. (10.16 cm) long	2
3	4N159	GASKET	1
4	4N4320	SHAFT ASSEM.	1
6	Not Serv	GOVERNOR AND FUEL PUMP (Separate Illustration)	1
7	9L5914	WASHER	1
8	4N9338	COVER	1
	4N9056	GASKET	1
9	9S4180	PLUG	1
	4J7533	SEAL	1
10	S1615	BOLT	8
11	6D238	VALVE ASSEM.	1
12	4N4366	SPRING	1
13	6N242	COVER	1
	4N403	GASKET	1
14	2A762	BOLT	2
15	4N8179	PIN	1
16	4N444	SPACER	2
17	4N4225	SPRING	1

151310

GRAPHIC #1 c151310

4N6116 GOVERNOR AND FUEL INJECTION PUMP GROUP (With Dash Pot)--

Effective with Serial No. 43V2248~43V9336, 43V9352~43V9806, 43V9808, 43V9809, 43V9812~43V9817

Key: Y - SEPARATE ILLUSTRATION

SMCS

NOTE	REF NO	GRAPHIC REF	PART NUMBER	QTY	PART NAME 1 2 3 4 5 6 (PRODUCT LEVEL)	LINK PAGE
Y			NOTSERV	1		
			4N-4227	1		
					GOVERNOR SPRING	
			4N-4228	1		
					GOVERNOR SPRING	
			4N-4224	1		
					GOVERNOR SPRING	
			2P-0726	1		
					SPRING	
			9S-8597	1		
					SPRING	
			5M-6214	1		
			NOTSERV	1		
			4N-0049	1		
					GASKET	
			4N-0159	1		
					GASKET	
			4N-9056	1		
					GASKET	
			1P-0436	1		
					GASKET	
			4N-0402	1		
					GASKET	
			4N-0594	1		
					GASKET	
			4N-0508	1		
					GASKET	
			4N-9337	1		
					GASKET	
			6L-5773	1		
					GASKET	
			2H-3934	1		
			9L-3625	1		
					SPRING	
			9L-3626	1		
					SPACER	
			9L-5176	1		
					SPRING	
			1P-6453	1		
			9L-6483	1		
					SPRING	
			9L-7235	3		
			4N-7777	3		
					SPACER	
			8L-8601	6		
					SPACER	
			4N-9098	1		
					SPACER	
			9L-9347	2		

4N6116 GOVERNOR AND FUEL INJECTION PUMP GROUP (With Dash Pot)--

6N-2504	1	
		SPACER
6N-2843	1	
		GASKET

GOVERNOR AND FUEL INJECTION PUMP (4N6115 N/S)

Part of 4N6116 Governor and Fuel Injection Pump Group
Governor & Fuel Pump and Torque Control parts are shown on Pages 120 and 125

Key: Y - SEPARATE ILLUSTRATION

SMCS

NOTE	REF NO	GRAPHIC REF	PART NUMBER	QTY	PART NAME 1 2 3 4 5 6 (PRODUCT LEVEL)	LINK PAGE
	1		4N-0053	1	COVER	
	2		0S-1616	1	BOLT (25.4mm Long)	
			8S-4710	2	BOLT (101.6mm Long)	
	3		4N-0159	1	GASKET	
	4		4N-4320	1	SHAFT ASSEM.	
	5		4N-0443	1	PIN	
Y	6		NOTSERV	1	GOVERNOR & FUEL PUMP	
					(See Separate Illustration)	
	7		6D-0238	1	VALVE ASSEM.	
	8		4N-9338	1	COVER	
			4N-9056	1	GASKET	
	9		9S-4180	1	PLUG	
	10		4J-7533	1	SEAL	
	11		0S-1615	8	BOLT	
	12		4N-4225	1	SPRING	
Y	13		NOTSERV	1	TORQUE CONTROL	
					(See Separate Illustration)	
	14		4N-8179	1	PIN	
	15		4N-0444	2	SPACER	
	16		4N-4366	1	SPRING	

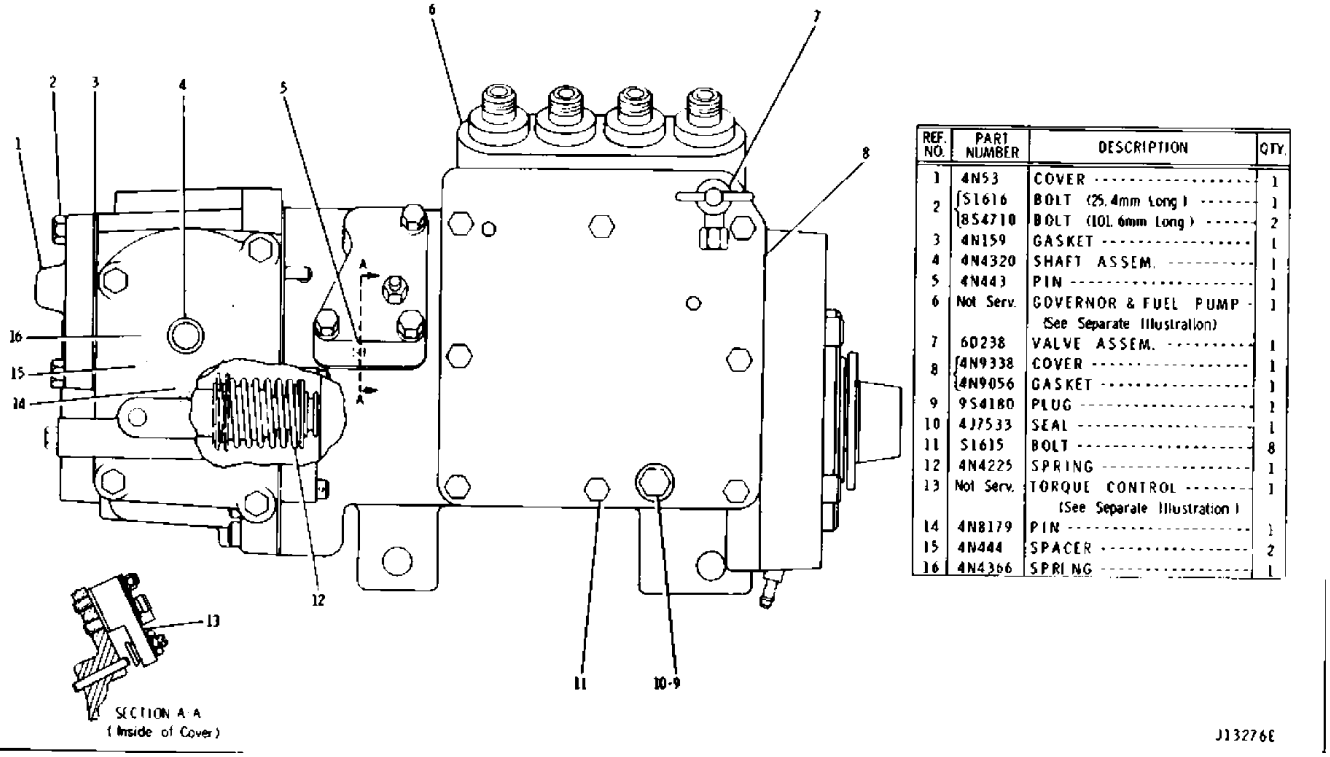

REF. NO.	PART NUMBER	DESCRIPTION	QTY.
1	4N53	COVER	1
2	1S1616	BOLT (25.4mm Long)	1
	8S4710	BOLT (101.6mm Long)	2
3	4N159	GASKET	1
4	4N4320	SHAFT ASSEM.	1
5	4N443	PIN	1
6	Not Serv.	GOVERNOR & FUEL PUMP (See Separate Illustration)	1
7	6D238	VALVE ASSEM.	1
8	4N9338	COVER	1
	4N9056	GASKET	1
9	9S4180	PLUG	1
10	4J7533	SEAL	1
11	1S1615	BOLT	8
12	4N4225	SPRING	1
13	Not Serv.	TORQUE CONTROL (See Separate Illustration)	1
14	4N8179	PIN	1
15	4N444	SPACER	2
16	4N4366	SPRING	1

GRAPHIC #1

j13276e

7S9332 GOVERNOR GROUP--Part 1 of 2

Part of Governor and Fuel Injection Pump shown on Page 100

Key: C - INDICATES CHANGE FROM PREVIOUS

SMCS

NOTE	REF NO	GRAPHIC REF	PART NUMBER	QTY	PART NAME 1 2 3 4 5 6 (PRODUCT LEVEL)	LINK PAGE
	1		9M-4690	1	PLUG	
	2		1S-9312	1	SPRING	
C	3		2P-8763	1	GASKET	
	4		9M-1216	1	PLUNGER	
	5		1B-2790	3	BOLT	
	6		8S-8950	1	SCREW	
	7		5S-1221	1	SPRING	
	8		7S-8828	1	COVER ASSEM.	
			4S-8513	1	GASKET	
	9		9S-1726	1	HOUSING ASSEM.	
			8M-8403	1	GUIDE	
			8S-0134	1	BEARING	
			4F-4585	1	PLUG	
	10		2S-7905	1	PLUG	
					(Parts of 9S1726 Housing Assem.)	
	11		7S-9331	1	SCREW	
	12		3S-3005	1	SHAFT ASSEM.	
			2S-6079	1	KEY	
					(Part of 3S3005 Shaft Assem.)	
	13		7M-2167	1	RING	
	14		9S-4671	1	SEAL	
	15		3S-2898	1	SHAFT ASSEM.	
	16		9S-2309	1	WASHER	
	17		9S-2308	1	GASKET	
	18		8H-9182	1	ROLLER	
	19		8H-9186	2	SPRING	
	20		2A-5546	4	BOLT	
	21		6H-5636	2	BOLT	

7S9332 GOVERNOR GROUP--Part 1 of 2

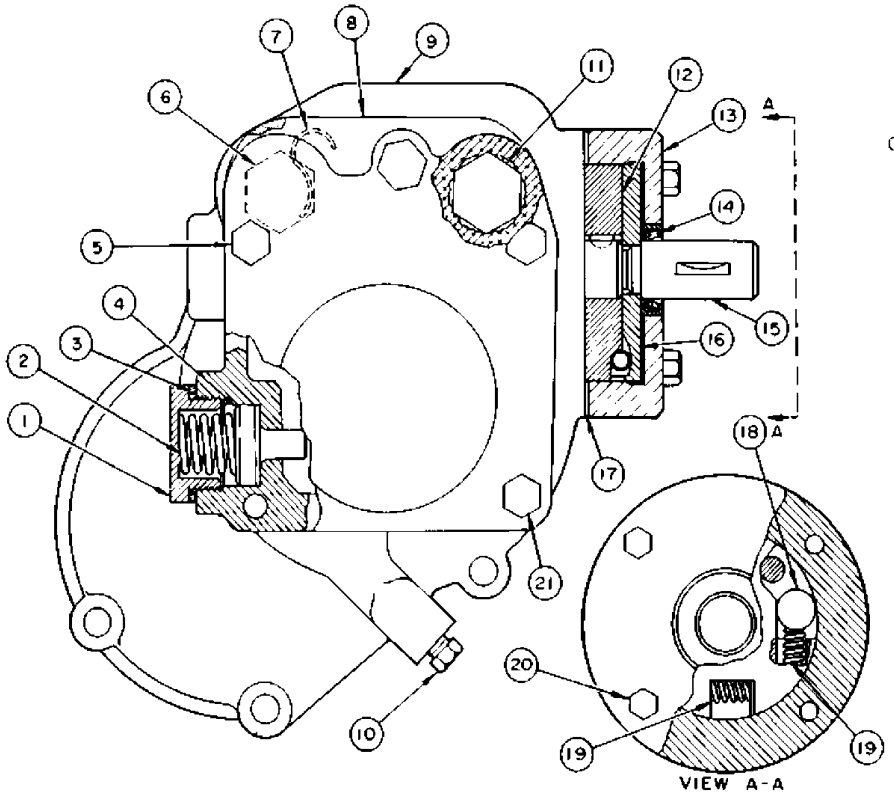

	REF. NO.	PART NUMBER	DESCRIPTION	QTY.
	1	9M4690	PLUG	1
	2	1S9312	SPRING	1
C	3	2P8763	GASKET	1
	4	9M1216	PLUNGER	1
	5	1B2790	BOLT	3
	6	8S8950	SCREW	1
	7	5S1221	SPRING	1
	8	7S8828	COVER ASSEM.	1
		4S8513	GASKET	1
	9	9S1726	HOUSING ASSEM.	1
		8M8403	GUIDE	1
		8S134	BEARING	1
		4F4585	PLUG	1
	10	2S7905	PLUG	1
			(Parts of 9S1726 Housing Assem.)	
	11	7S9331	SCREW	1
	12	3S3005	SHAFT ASSEM.	1
		2S6079	KEY	1
			(Part of 3S3005 Shaft Assem.)	
	13	7M2167	RING	1
	14	9S4671	SEAL	1
	15	3S2898	SHAFT ASSEM.	1
	16	9S2309	WASHER	1
	17	9S2308	GASKET	1
	18	8H9182	ROLLER	1
	19	8H9186	SPRING	2
	20	2A5546	BOLT	4
	21	6H5636	BOLT	2

C INDICATES CHANGE FROM PREVIOUS TYPE

J8447E

GRAPHIC #1

j8447e

7S9332 GOVERNOR GROUP--Part 2 of 2

Part of Governor and Fuel Injection Pump shown on Page 100

Key:

SMCS

NOTE	REF NO	GRAPHIC REF	PART NUMBER	QTY	PART NAME 1 2 3 4 5 6 (PRODUCT LEVEL)	LINK PAGE
	1		9S-4466	1	LEVER ASSEM.	
	2		9M-9788	1	PLUNGER	
	3		5H-1351	1	PIN	
	4		7M-7316	1	SPRING	
	5		1S-4741	1	CYLINDER	
	6		7S-8447	1	PISTON ASSEM.	
	7		8M-8997	1	SEAL	
	8		7L-8777	1	SLEEVE	
	9		0S-1615	3	BOLT	
	10		9M-6293	1	LOCK	
	11		3K-0810	1	RING	
	12		7M-7193	2	RACE	
	13		7M-7219	1	BEARING	
	14		8M-8993	1	RING	
	15		2S-0008	1	SEAT	
	16		3S-9639	1	SEAT ASSEM.	
	17		8H-9181	1	SPRING	
	18		2S-7235	1	SPRING	
	19		9M-4704	1	SCREW	
	20		8L-4154	1	COLLAR	
	21		2S-7289	1	COLLAR	
	22		8L-4155	1	SCREW	
	23		5S-9607	1	NUT	
	24		8M-8739	1	BOLT	
	25		9S-4673	1	BAND ASSEM.	
	26		9S-4468	1	BOLT	
			2F-4159	1	LOCK	
	27		9M-6302	2	WASHER	
	28		9M-6303	1	SPRING	
	29		8M-8726	1	DOWEL	
	30		2S-0007	1	SLEEVE	
	31		5S-5060	1	WEIGHT ASSEM.	
	32		1S-5440	2	DOWEL	
	33		7B-8105	1	LOCK	

7S9332 GOVERNOR GROUP--Part 2 of 2

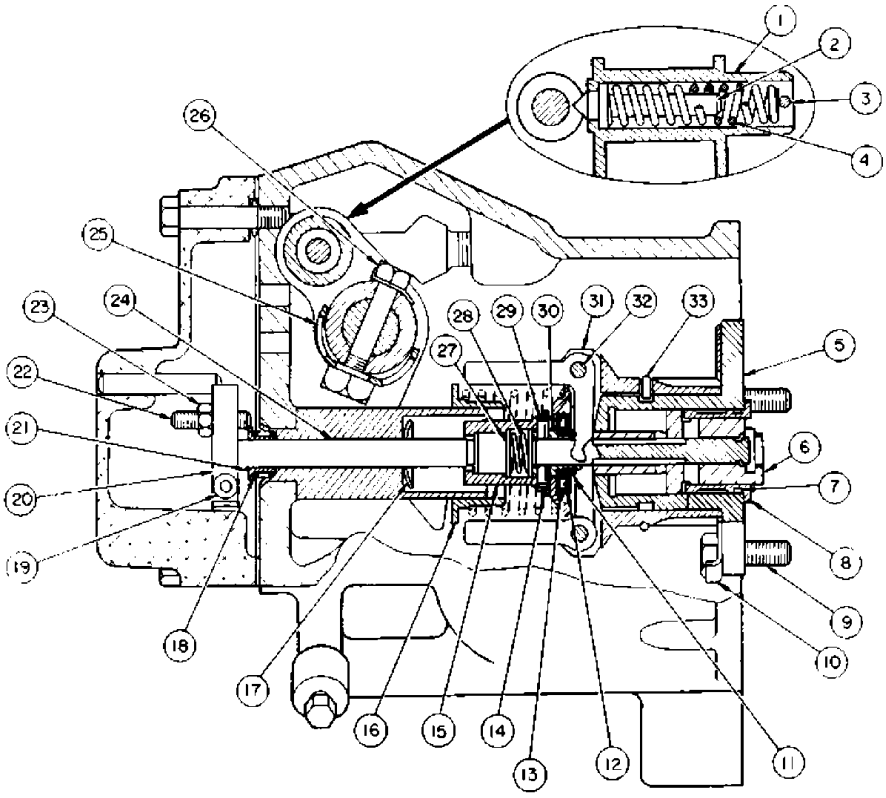

REF. NO.	PART NUMBER	DESCRIPTION	QTY.
1	9S4466	LEVER ASSEM.	1
2	9M9788	PLUNGER	1
3	5H1351	PIN	1
4	7M7316	SPRING	1
5	1S4741	CYLINDER	1
6	7S8447	PISTON ASSEM.	1
7	8M8997	SEAL	1
8	7L8777	SLEEVE	1
9	S1615	BOLT	3
10	9M6293	LOCK	1
11	3K810	RING	1
12	7M7193	RACE	2
13	7M7219	BEARING	1
14	8M8993	RING	1
15	2S8	SEAT	1
16	3S9639	SEAT ASSEM.	1
17	8H9181	SPRING	1
18	2S7235	SPRING	1
19	9M4704	SCREW	1
20	8L4154	COLLAR	1
21	2S7289	COLLAR	1
22	8L4155	SCREW	1
23	5S9607	NUT	1
24	8M8739	BOLT	1
25	9S4673	BAND ASSEM.	1
26	9S4468	BOLT	1
	2F4159	LOCK	1
27	9M6302	WASHER	2
28	9M6303	SPRING	1
29	8M8726	DOWEL	1
30	2S7	SLEEVE	1
31	5S5060	WEIGHT ASSEM.	1
32	1S5440	DOWEL	2
33	7B8105	LOCK	1

J11925E

GRAPHIC #1

j11925e

7S8831 FUEL PUMP HOUSING GROUP

Part of Governor and Fuel Injection Pump shown on Page 100

Key:

SMCS

NOTE	REF NO	GRAPHIC REF	PART NUMBER	QTY	PART NAME 1 2 3 4 5 6 (PRODUCT LEVEL)	LINK PAGE
			4M-0411	4	BONNET	
			8H-9204	4	WASHER	
			2M-4314	4	BUSHING	
			9B-1363	4	SPRING	
			9H-5746	4	CHECK	
			1M-3506	4	RING	
			9H-5797	4	PLUNGER AND BARREL ASSEM.	
			1S-0206	4	SPRING	
			9H-5729	4	WASHER	
			3S-9735	4	LIFTER ASSEM.	
			4M-1474	2	PIN	
			4F-6024	2	DOWEL	
			1S-1953	1	BEARING	
					(Parts of Housing Assem. 7S8830)	
			8H-9208	1	DOWEL	
					(Part of Gear Assem. 5S5058)	
			1S-0214	1	SPRING	
			2S-7905	1	PLUG	
					(Part of Housing Assem. 7S8830)	
			0L-0472	1	BOLT	
			2H-3504	1	LOCK	
			8H-9208	1	DOWEL	
					(Part of Camshaft Assem. 8H9207)	
			7M-5940	1	PLATE	
			5S-5058	1	GEAR ASSEM.	
					(66 Teeth)	
			2A-3746	1	PLUG	
			2M-8604	1	BEARING	
			3D-4603	1	PLUG	
					(Parts of Housing Assem. 7S8830)	
			1M-1077	4	SEAL	
			8M-3020	4	DOWEL	
			8M-3019	4	DOWEL	
					(Parts of Housing Assem. 7S8830)	
			2M-4208	4	SPACER (4.42mm Thick)	
			2M-4209	4	SPACER (4.52mm Thick)	
			2M-4210	4	SPACER (4.62mm Thick)	
			2M-4211	4	SPACER (4.72mm Thick)	
			2M-4212	4	SPACER (4.82mm Thick)	
			5M-2691	4	SPACER (4.92mm Thick)	
			5M-2697	4	SPACER (4.32mm Thick)	
			5S-7189	4	SPACER (5.03mm Thick)	
					(Use as required)	
			9H-1296	1	BEARING	
					(Part of Housing Assem. 7S8830)	
			2S-0825	1	RACK	
			8H-9302	1	BEARING	
					(Part of Housing Assem. 7S8830)	
			1M-0690	1	SLEEVE	

7S8831 FUEL PUMP HOUSING GROUP

(Part of Camshaft Assem. 8H9207)

8H-9207	1	CAMSHAFT ASSEM.
7S-8830	1	HOUSING ASSEM.

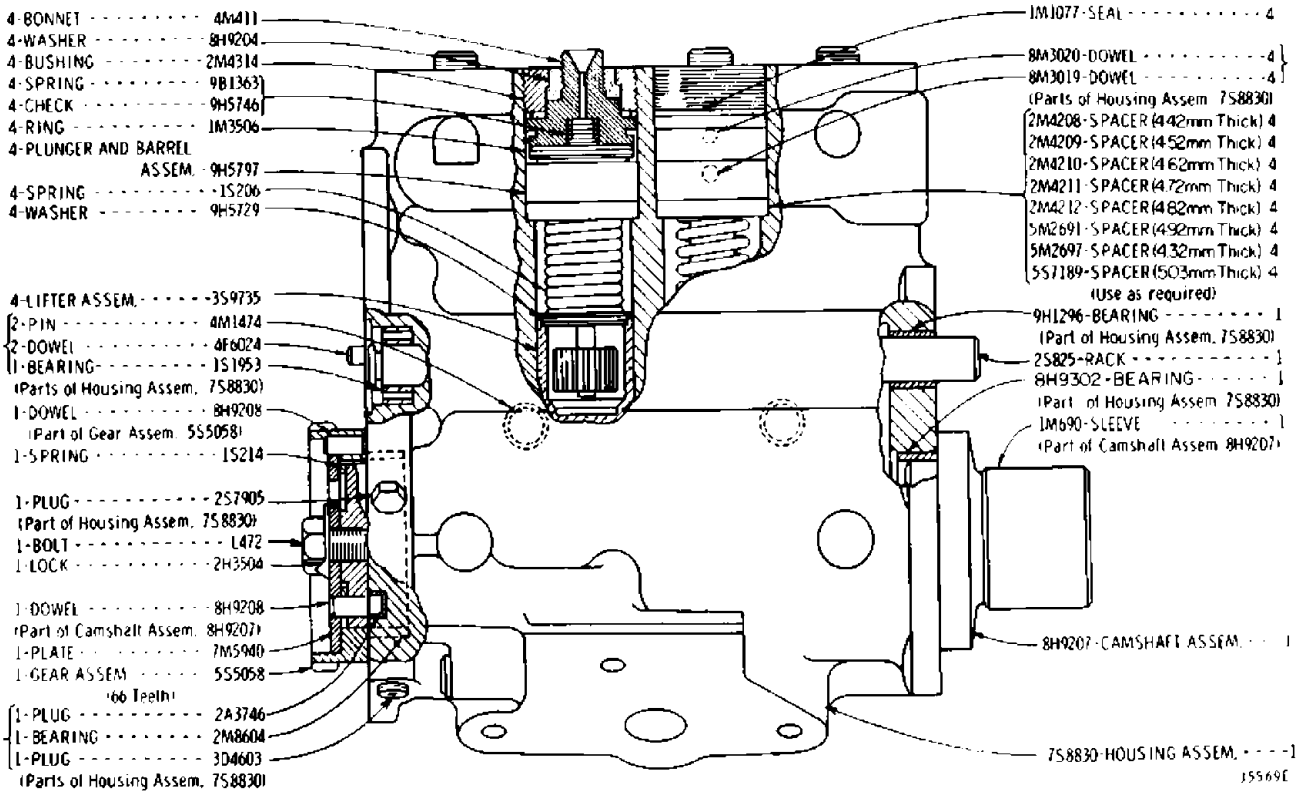

GRAPHIC #1 j5569e

GOVERNOR AND FUEL INJECTION PUMP (4N1834 N/S)--Part 1 of 3

Part of Governor and Fuel Injection Pump shown on Pages 101 and 105

Key:

SMCS

NOTE	REF NO	GRAPHIC REF	PART NUMBER	QTY	PART NAME 1 2 3 4 5 6 (PRODUCT LEVEL)	LINK PAGE
	1		4N-1767	1	VALVE	
	2		4N-0605	1	SPRING	
	3		4N-1591	1	COVER ASSEM.	
	4		6N-0412	1	MACHINE SCREW	
			4B-2042	1	NUT	
			3B-4501	1	LOCKWASHER	
			1P-7326	1	WASHER (1.5mm Thick)	
			8F-1326	1	WASHER (0.8mm Thick)	
	5		2M-5471	2	BOLT	
	6		6N-1346	1	HOUSING ASSEM.	
	7		6N-0343	1	STUD	
	8		4N-2333	1	PIN	
	9		4N-1826	1	DOWEL	
			2D-6392	1	SEAL	
	10		4N-2334	4	PIN	
	11		1P-2298	1	VALVE ASSEM.	
	12		5J-5314	4	BOLT	
	13		1P-4001	1	FITTING	
	14		2P-3200	1	BOLT	
			1J-9671	1	SEAL	
	15		4N-0054	1	SCREW	
			5B-3180	1	NUT	
	16		1P-2497	2	BOLT	
	17		4N-0009	1	COVER	
			4N-0049	1	GASKET	
	18		1P-9925	2	BOLT (57mm Long)	
	19		2S-4652	1	WASHER	
	20		4N-0594	1	GASKET	
	21		0S-1616	6	BOLT (25mm Long)	
	22		2A-4781	1	BOLT (70mm Long)	
			3B-8695	1	BOLT (89mm Long)	
	23		9S-8632	1	SPRING	
	24		4N-0116	1	GUIDE	
	25		4N-6430	1	PIN	

GOVERNOR AND FUEL INJECTION PUMP (4N1834 N/S)--Part 1 of 3

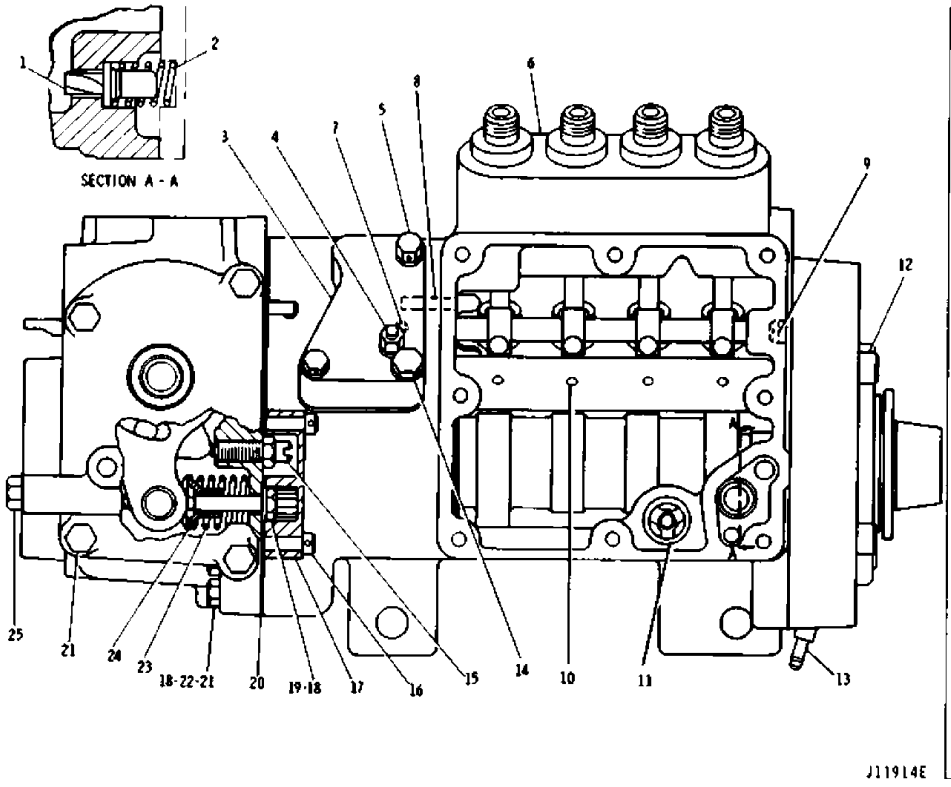

REF. NO.	PART NUMBER	DESCRIPTION	QTY.
1	4N1767	VALVE	1
2	4N605	SPRING	1
3	4N1591	COVER ASSEM.	1
4	6N412	MACHINE SCREW	1
	4B2042	NUT	1
	3B4501	LOCKWASHER	1
	1P7326	WASHER (1.5mm Thick)	1
	8F1326	WASHER (0.8mm Thick)	1
5	2M5471	BOLT	2
6	6N1346	HOUSING ASSEM.	1
7	6N343	STUD	1
8	4N2333	PIN	1
9	4N1826	DOWEL	1
	2D6392	SEAL	1
10	4N2334	PIN	4
11	1P2298	VALVE ASSEM.	1
12	5J5314	BOLT	4
13	1P4001	FITTING	1
14	2P3200	BOLT	1
	1J9671	SEAL	1
15	4N54	SCREW	1
	5B3180	NUT	1
16	1P2497	BOLT	2
17	4N9	COVER	1
	4N49	GASKET	1
18	1P9925	BOLT (57mm Long)	2
19	2S4652	WASHER	1
20	4N594	GASKET	1
21	S1616	BOLT (25mm Long)	6
22	2A4781	BOLT (70mm Long)	1
	3B8695	BOLT (89mm Long)	1
23	9S8632	SPRING	1
24	4N116	GUIDE	1
25	4N6430	PIN	1

GRAPHIC #1 j11914e

GOVERNOR AND FUEL INJECTION PUMP (4N1834 N/S)--Part 2 of 3

Part of Governor and Fuel Injection Pump shown on Pages 101 and 105

Key:

SMCS

NOTE	REF NO	GRAPHIC REF	PART NUMBER	QTY	PART NAME 1 2 3 4 5 6 (PRODUCT LEVEL)	LINK PAGE
	1		4N-1178	1	HOUSING ASSEM.	
	2		4N-2333	1	PIN	
	3		8S-6814	2	DOWEL	
	4		5M-6214	1	PLUG	
	5		4N-0260	2	SEAL	
	6		4N-1665	1	BEARING	
	7		4N-2786	1	SEAL	
	8		4N-1723	1	SHIELD	
	9		4N-0425	3	WEIGHT	
	10		4N-2927	2	RACE	
	11		4N-0511	3	DOWEL	
	12		4N-0446	1	CARRIER	
	13		4N-4312	1	CAMSHAFT	
	14		4N-2955	3	BOLT	
	15		4N-2953	1	RING	
	16		4N-2401	1	BEARING	
	17		4N-0434	1	RISER	
	18		4N-9018	1	SHAFT	
	19		4N-9019	1	DOWEL	
	20		4N-0507	1	SHAFT ASSEM.	
	21		5M-6509	1	SEAL	
	22		4N-0406	1	GEAR (10 Teeth)	
	23		4N-1131	1	BODY ASSEM.	
	24		8H-9804	1	SHAFT	
	25		4N-0636	1	SEAL	
	26		4N-1584	1	SEAL	
	27		8S-6814	1	DOWEL	
	28		4N-2954	1	SLEEVE	
	29		4N-3779	1	KEY	
	30		4N-0429	1	GEAR (15 Teeth)	
	31		4N-0527	1	SPRING	
	32		4N-0435	1	SEAT	
	33		4N-0436	1	SEAT	
	34		4N-0927	1	SHAFT ASSEM.	

GOVERNOR AND FUEL INJECTION PUMP (4N1834 N/S)--Part 2 of 3

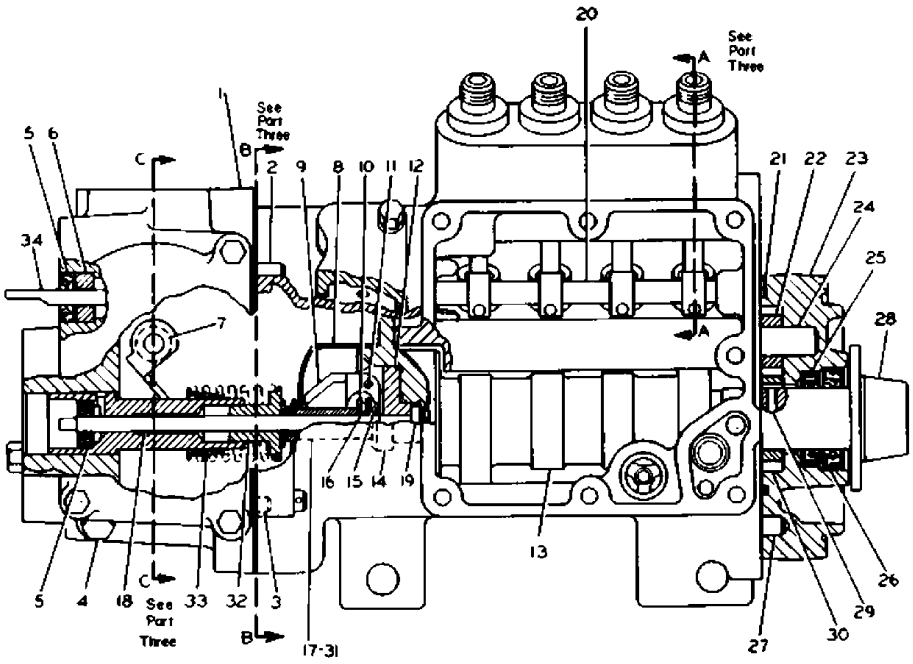

REF. NO.	PART NUMBER	DESCRIPTION	QTY.
1	4N1178	HOUSING ASSEM.	1
2	4N2333	PIN	1
3	8S6814	DOWEL	2
4	5M6214	PLUG	1
5	4N260	SEAL	2
6	4N1665	BEARING	1
7	4N2786	SEAL	1
8	4N1723	SHIELD	1
9	4N425	WEIGHT	3
10	4N2927	RACE	2
11	4N511	DOWEL	3
12	4N446	CARRIER	1
13	4N4312	CAMSHAFT	1
14	4N2955	BOLT	3
15	4N2953	RING	1
16	4N2401	BEARING	1
17	4N434	RISER	1
18	4N9018	SHAFT	1
19	4N9019	DOWEL	1
20	4N507	SHAFT ASSEM.	1
21	5M6509	SEAL	1
22	4N406	GEAR (10 Teeth)	1
23	4N1131	BODY ASSEM	1
24	8H9804	SHAFT	1
25	4N636	SEAL	1
26	4N1584	SEAL	1
27	8S6814	DOWEL	1
28	4N2954	SLEEVE	1
29	4N3779	KEY	1
30	4N429	GEAR (15 Teeth)	1
31	4N527	SPRING	1
32	4N435	SEAT	1
33	4N436	SEAT	1
34	4N927	SHAFT ASSEM.	1

J11915E

GRAPHIC #1 j11915e

GOVERNOR AND FUEL INJECTION PUMP (4N1834 N/S)--Part 3 of 3

Part of Governor and Fuel Injection Pump shown on Pages 101 and 105

Key:

SMCS

NOTE	REF NO	GRAPHIC REF	PART NUMBER	QTY	PART NAME 1 2 3 4 5 6 (PRODUCT LEVEL)	LINK PAGE
	1		2N-2658	4	SCREW	
	2		4N-1763	4	LEVER	
	3		4N-0209	4	BONNET	
	4		4N-0218	4	BUSHING	
	5		4N-2655	4	VALVE	
			9L-9424	4	SPRING	
	6		4N-0224	4	RING	
	7		4N-1765	4	PLUNGER & BARREL ASSEM.	
	8		4N-4318	4	SPRING	
	9		4N-2728	4	WASHER	
	10		4N-1750	4	LIFTER	
			4N-2685	4	ROLLER	
	11		4N-0528	1	SHAFT	
	12		4N-2677	1	LEVER ASSEM.	
	13		2M-7819	1	RING	
	14		4N-0508	1	GASKET	
	15		3H-0442	1	SEAL	
	16		4N-0523	1	DOWEL	
			2D-6392	1	SEAL	
	17		4N-0445	1	LEVER	
	18		4N-1881	1	LEVER	
	19		4N-0448	1	LEVER ASSEM.	
	20		8F-5368	1	WASHER	
	21		4N-0687	1	COVER ASSEM.	
	22		4N-2786	1	SEAL	
	23		4N-0613	2	PLATE	
	24		4N-0402	1	GASKET	
	25		9S-8601	1	PIN	

GOVERNOR AND FUEL INJECTION PUMP (4N1834 N/S)--Part 3 of 3

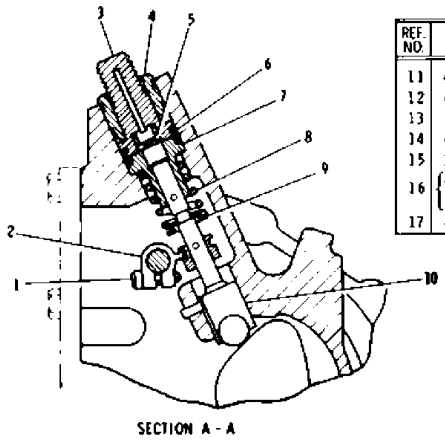

SECTION A - A

REF. NO.	PART NUMBER	DESCRIPTION	QTY.
1	2N2658	SCREW	4
2	4N1763	LEVER	4
3	4N209	BONNET	4
4	4N218	BUSHING	4
5	4N2655	VALVE	4
	9L9424	SPRING	4
6	4N224	RING	4
7	4N1765	PLUNGER & BARREL ASSEM.	4
8	4N4318	SPRING	4
9	4N2728	WASHER	4
10	4N1750	LIFTER	4
	4N2685	ROLLER	4

REF. NO.	PART NUMBER	DESCRIPTION	QTY.
11	4N528	SHAFT	1
12	4N2677	LEVER ASSEM.	1
13	2M7819	RING	1
14	4N508	GASKET	1
15	3H442	SEAL	1
16	4N523	DOWEL	1
	2D6392	SEAL	1
17	4N445	LEVER	1

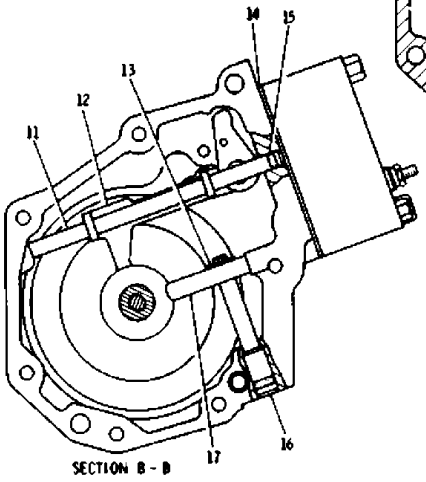

SECTION B - B

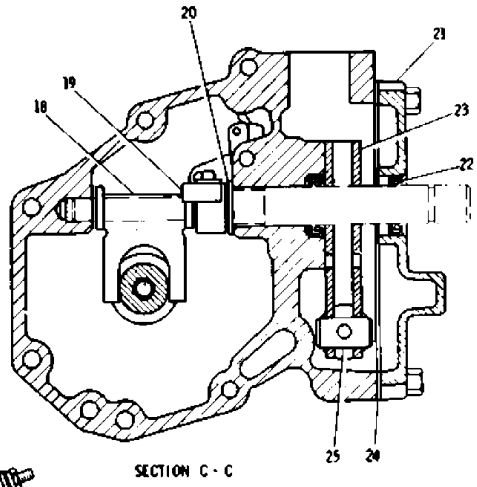

SECTION C - C

REF. NO.	PART NUMBER	DESCRIPTION	QTY
18	4N1881	LEVER	1
19	4N448	LEVER ASSEM.	1
20	8F5368	WASHER	1
21	4N687	COVER ASSEM.	1
22	4N2786	SEAL	1
23	4N613	PLATE	2
24	4N402	GASKET	1
25	9S8601	PIN	1

J11916E

GRAPHIC #1

j11916e

7N3870 GOVERNOR GROUP--Part 1 of 2

Part of Governor and Fuel Injection Pump shown on
Page 102

Key:

SMCS

NOTE	REF NO	GRAPHIC REF	PART NUMBER	QTY	PART NAME 1 2 3 4 5 6 (PRODUCT LEVEL)	LINK PAGE
	1		9S-1735	1	HOUSING ASSEM.	
			8M-8403	1	GUIDE	
	2		9S-0798	1	BEARING	
	3		9S-4671	1	SEAL	
	4		8S-0134	1	BEARING	
	5		5S-1221	1	SPRING	
	6		7S-0933	1	SCREW (High Idle)	
	7		9M-4789	1	SHAFT	
	8		6H-5636	2	BOLT (Drilled)	
	9		8S-8950	1	SCREW (Low Idle)	
	10		1B-2790	3	BOLT (Plain)	

7N3870 GOVERNOR GROUP--Part 1 of 2

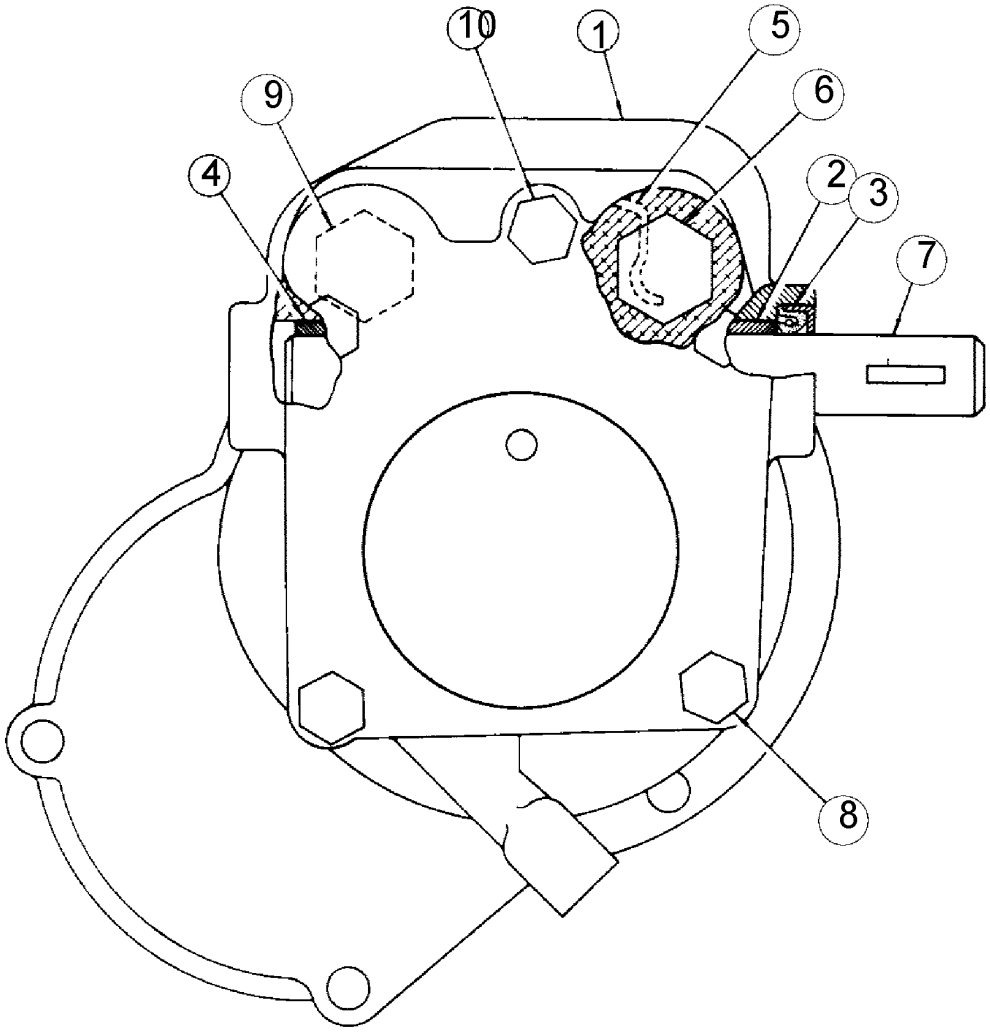

REF. NO.	PART NUMBER	DESCRIPTION	QTY.
1	9S1735	HOUSING ASSEM.	1
	8M8403	GUIDE	1
2	9S798	BEARING	1
3	9S4671	SEAL	1
4	8S134	BEARING	1

REF. NO.	PART NUMBER	DESCRIPTION	QTY.
5	5S1221	SPRING	1
6	7S9331	SCREW (High Idle)	1
7	9M4789	SHAFT	1
8	6H5636	BOLT (Drilled)	2
9	8S8950	SCREW (Low Idle)	1
10	1B2790	BOLT (Plain)	3

J14551E

GRAPHIC #1

j14551e

7N3870 GOVERNOR GROUP--Part 2 of 2

Part of Governor and Fuel Injection Pump shown on
Page 102

Key:

SMCS

NOTE	REF NO	GRAPHIC REF	PART NUMBER	QTY	PART NAME 1 2 3 4 5 6 (PRODUCT LEVEL)	LINK PAGE
	1		8L-4154	1	COLLAR	
	2		4S-8513	1	GASKET	
	3		9S-4468	1	BOLT	
			2F-4159	1	LOCK	
	4		9S-4673	1	BAND ASSEM.	
	5		9S-4466	1	LEVER ASSEM.	
	6		9M-9788	1	PLUNGER	
	7		5S-9635	1	SPRING	
	8		5H-1351	1	PIN	
	9		7B-8105	1	LOCK	
	10		7L-8777	1	SLEEVE	
	11		7S-8447	1	PISTON ASSEM.	
	12		8M-8997	1	SEAL	
	13		9M-6293	1	LOCK	
	14		0S-1615	3	BOLT	
	15		1S-4741	1	CYLINDER	
	16		3K-0810	1	RING	
	17		7M-7219	1	BEARING	
	18		7M-7193	2	RACE	
	19		2S-0007	1	SLEEVE	
	20		2P-8630	1	DOWEL	
	21		4N-3887	1	RING	
	22		6N-8629	1	SEAT	
	23		2N-0479	1	WEIGHT ASSEM.	
	24		1S-5440	2	DOWEL	
	25		9M-6303	1	SPRING	
	26		9M-6302	2	WASHER	
	27		9M-4704	1	SCREW	
	28		6N-3504	1	SEAT	
	29		8H-9181	1	SPRING	
	30		8M-8739	1	BOLT	
	31		1B-4201	1	NUT	
	32		8L-4155	1	SCREW	
	33		7S-8828	1	COVER ASSEM.	
	34		2S-7235	1	SPRING	
	35		2S-7289	1	COLLAR	

7N3870 GOVERNOR GROUP--Part 2 of 2

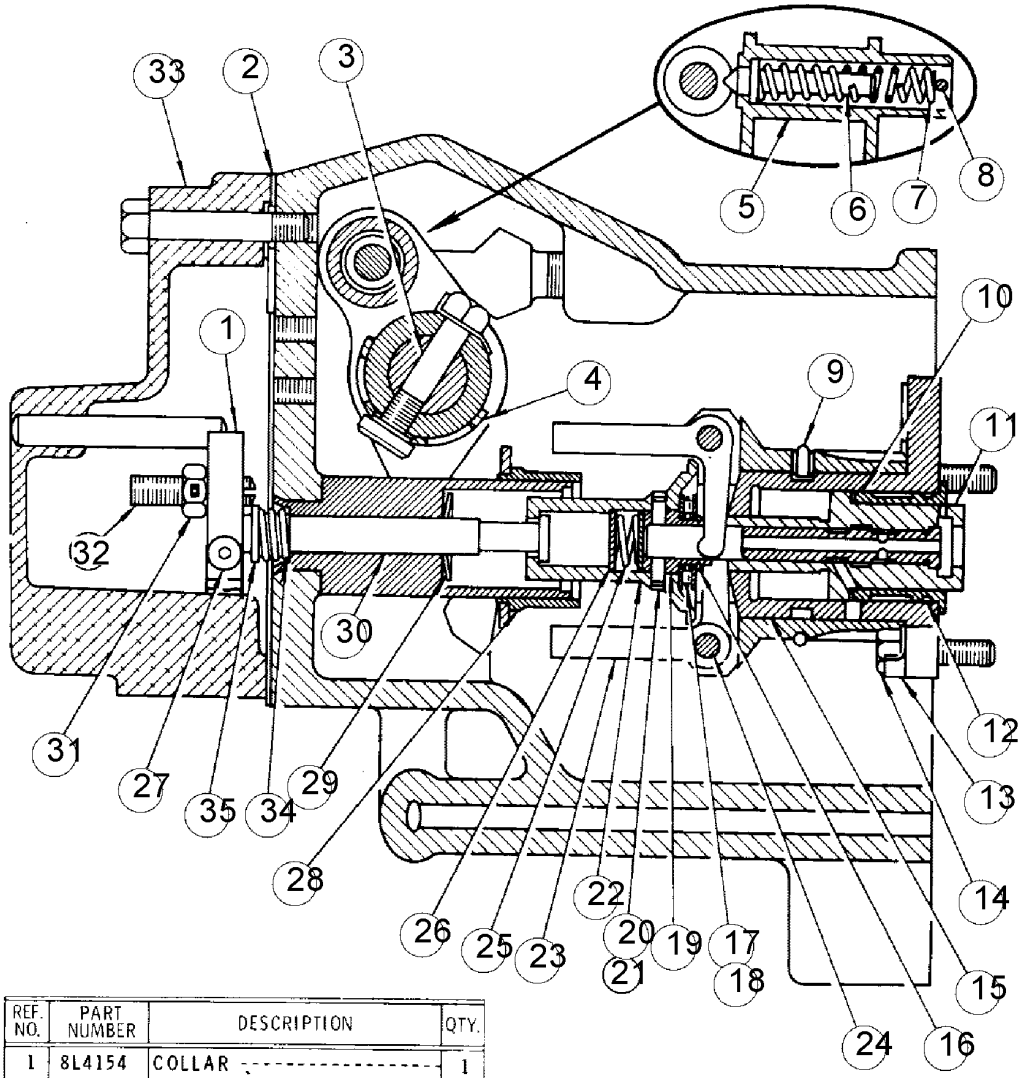

REF. NO.	PART NUMBER	DESCRIPTION	QTY.
1	8L4154	COLLAR	1
2	4S8513	GASKET	1
3	9S4468	BOLT	1
	2F4159	LOCK	1
4	9S4673	BAND ASSEM.	1
5	9S4466	LEVER ASSEM.	1
6	9M9788	PLUNGER	1
7	5S9635	SPRING	1
8	5H1351	PIN	1
9	7B8105	LOCK	1
10	7L8777	SLEEVE	1
11	7S8447	PISTON ASSEM.	1
12	8M8997	SEAL	1
13	9M6293	LOCK	1
14	S1615	BOLT	3
15	1S4741	CYLINDER	1
16	3K810	RING	1
17	7M7219	BEARING	1
18	7M7193	RACE	2
19	2S7	SLEEVE	1
20	2P8630	DOWEL	1
21	4N3887	RING	1

REF. NO.	PART NUMBER	DESCRIPTION	QTY.
22	6N8629	SEAT	1
23	2N479	WEIGHT ASSEM.	1
24	1S5440	DOWEL	2
25	9M6303	SPRING	1
26	9M6302	WASHER	2
27	9M4704	SCREW	1
28	6N3504	SEAT	1
29	8H9181	SPRING	1
30	8M8739	BOLT	1
31	1B4201	NUT	1
32	8L4155	SCREW	1
33	7S8828	COVER ASSEM.	1
34	2S7235	SPRING	1
35	2S7289	COLLAR	1

J14135E

GRAPHIC #1

j14135e

3N3387 FUEL INJECTION PUMP GROUP--Part 1 of 2

Part of Governor and Fuel Injection Pump shown on Pages 102 and 103

Key:

SMCS

NOTE	REF NO	GRAPHIC REF	PART NUMBER	QTY	PART NAME 1 2 3 4 5 6 (PRODUCT LEVEL)	LINK PAGE
	1		4M-0411	4	BONNET	
	2		9B-1363	4	SPRING	
			9H-5746	4	CHECK	
	3		3N-3386	1	HOUSING ASSEM.	
	4		1P-0234	4	DOWEL	
			1P-0232	4	BOWL	
	5		9S-4160	1	BEARING	
	6		9H-1284	1	BEARING	
	7		3D-4603	1	PLUG	
	8		2M-8604	1	BEARING	
	9		2A-3746	1	PLUG	
	10		2S-7905	1	PLUG	
	11		4M-1474	2	PIN	
	12		4F-6024	2	DOWEL	
	13		1S-1953	1	BEARING	
	14		5S-5058	1	GEAR ASSEM. (66 Teeth)	
	15		8H-9208	1	DOWEL	
	16		1S-0214	1	SPRING	
	17		9H-5797	4	PLUNGER & BARREL ASSEM.	

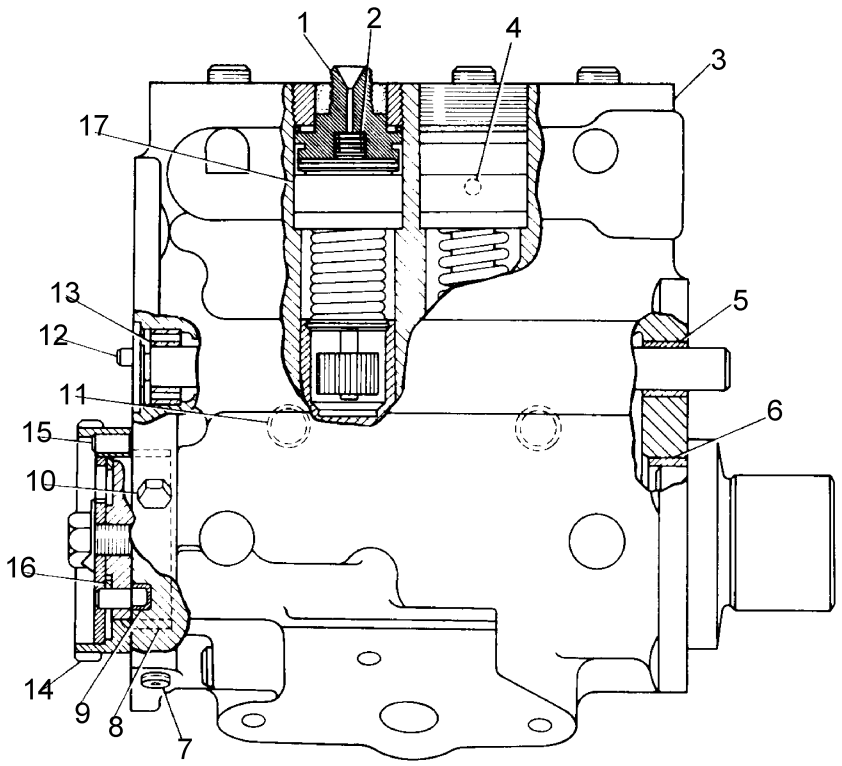

REF. NO.	PART NUMBER	DESCRIPTION	QTY.
1	4M411	BONNET	4
2	9B1363	SPRING	4
	9H5746	CHECK	4
3	3N3386	HOUSING ASSEM.	1
4	1P234	DOWEL	4
	1P232	BOWL	4
5	9S4160	BEARING	1
6	9H1284	BEARING	1
7	3D4603	PLUG	1
8	2M8604	BEARING	1
9	2A3746	PLUG	1
10	2S7905	PLUG	1
11	4M1474	PIN	2
12	4F6024	DOWEL	2
13	1S1953	BEARING	1
14	5S5058	GEAR ASSEM. (66 Teeth)	1
15	8H9208	DOWEL	1
16	1S214	SPRING	1
17	9H5797	PLUNGER & BARREL ASSEM.	4

I13907E

GRAPHIC #1

j13907e

3N3387 FUEL INJECTION PUMP GROUP--Part 2 of 2

Part of Governor and Fuel Injection Pump shown on Pages 102 and 103

Key:

SMCS

NOTE	REF NO	GRAPHIC REF	PART NUMBER	QTY	PART NAME 1 2 3 4 5 6 (PRODUCT LEVEL)	LINK PAGE
	1		1M-3506	4	RING	
	2		8H-9204	4	WASHER	
	3		2M-4314	4	BUSHING	
	4		1M-1077	4	SEAL	
	5		2M-4208	4	SPACER (4.42mm Thick)	
			2M-4209	4	SPACER (4.52mm Thick)	
			2M-4210	4	SPACER (4.62mm Thick)	
			2M-4211	4	SPACER (4.72mm Thick)	
			2M-4212	4	SPACER (4.82mm Thick)	
			5M-2691	4	SPACER (4.92mm Thick)	
			5M-2697	4	SPACER (4.32mm Thick)	
			5S-7189	4	SPACER (5.03mm Thick)	
					: Use as Required	
	6		3N-3385	1	RACK	
	7		8H-9207	1	CAMSHAFT ASSEM.	
	8		1M-0690	1	SLEEVE	
	9		8H-9208	1	DOWEL	
	10		7M-5940	1	PLATE	
	11		0L-0472	1	BOLT	
	12		2H-3504	1	LOCK	
	13		3S-9735	4	LIFTER ASSEM.	
	14		9H-5729	4	WASHER	
	15		1S-0206	4	SPRING	

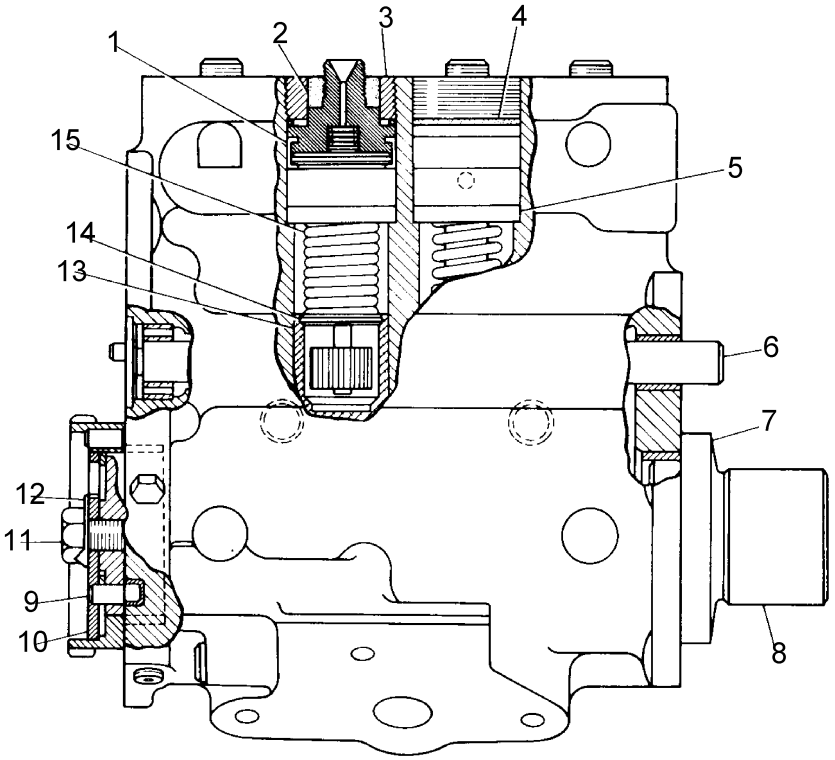

REF. NO.	PART NUMBER	DESCRIPTION	QTY.
1	1M3506	RING	4
2	8H9204	WASHER	4
3	2M4314	BUSHING	4
4	1M1077	SEAL	4
5	2M4208	SPACER (4.42mm Thick)	4
	2M4209	SPACER (4.52mm Thick)	4
	2M4210	SPACER (4.62mm Thick)	4
	2M4211	SPACER (4.72mm Thick)	4
	2M4212	SPACER (4.82mm Thick)	4
	5M2691	SPACER (4.92mm Thick)	4
	5M2697	SPACER (4.32mm Thick)	4
	5S7189	SPACER (5.03mm Thick)	4
		: Use as Required	1
6	3N3385	RACK	1
7	8H9207	CAMSHAFT ASSEM.	1
8	1M690	SLEEVE	1
9	8H9208	DOWEL	1
10	7M5940	PLATE	1
11	L472	BOLT	1
12	2H3504	LOCK	1
13	3S9735	LIFTER ASSEM.	4
14	9H5729	WASHER	4
15	1S206	SPRING	4

J13908E

3N3387 FUEL INJECTION PUMP GROUP--Part 2 of 2

GRAPHIC #1 j13908e

7S9333 GOVERNOR GROUP--Part 1 of 2

Part of Governor and Fuel Injection Pump shown on
Page 103

Key:

SMCS

NOTE	REF NO	GRAPHIC REF	PART NUMBER	QTY	PART NAME 1 2 3 4 5 6 (PRODUCT LEVEL)	LINK PAGE
	1		9S-1735	1	HOUSING ASSEM.	
			8M-8403	1	GUIDE	
	2		9S-0798	1	BEARING	
	3		9S-4671	1	SEAL	
	4		2S-7905	1	PLUG	
	6		8S-0134	1	BEARING	
	7		5S-1221	1	SPRING	
	8		7S-9331	1	SCREW (High Idle)	
	9		9M-4789	1	SHAFT	
	10		6H-5636	2	BOLT (Drilled)	
	11		9M-1216	1	PLUNGER	
	12		2P-8763	1	GASKET	
	13		9M-4690	1	PLUG	
	14		1S-9312	1	SPRING	
	15		8S-8950	1	SCREW (Low Idle)	
	16		1B-2790	3	BOLT (Plain)	

7S9333 GOVERNOR GROUP--Part 1 of 2

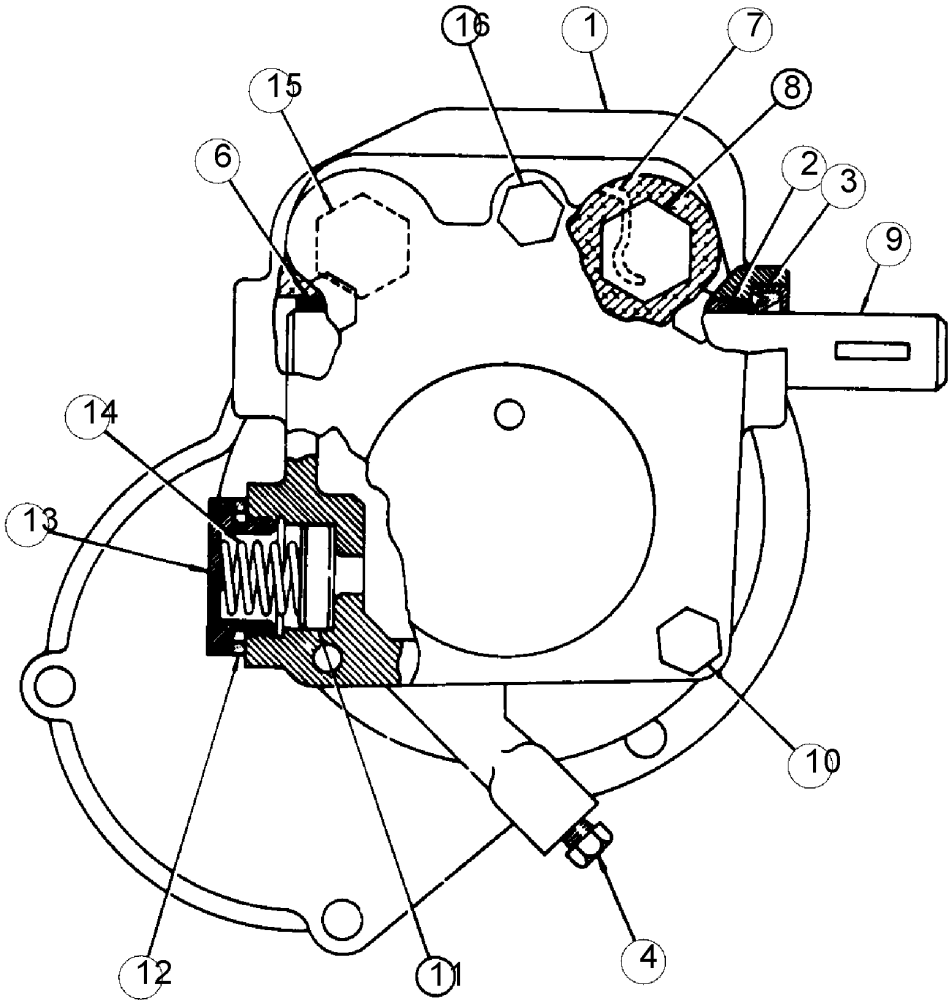

REF. NO.	PART NUMBER	DESCRIPTION	QTY.
1	9S1735	HOUSING ASSEM.	1
	8M8403	GUIDE	1
2	9S798	BEARING	1
3	9S4671	SEAL	1
4	2S7905	PLUG	1
6	8S134	BEARING	1
7	5S1221	SPRING	1

REF. NO.	PART NUMBER	DESCRIPTION	QTY.
8	7S9331	SCREW (High Idle)	1
9	9M4789	SHAFT	1
10	6H5636	BOLT (Drilled)	2
11	9M1216	PLUNGER	1
12	2P8763	GASKET	1
13	9M4690	PLUG	1
14	1S9312	SPRING	1
15	8S8950	SCREW (Low Idle)	1
16	1B2790	BOLT (Plain)	3

J14553E

GRAPHIC #1

j14553e

7S9333 GOVERNOR GROUP--Part 2 of 2

Part of Governor and Fuel Injection Pump shown on
Page 103

Key:

SMCS

NOTE	REF NO	GRAPHIC REF	PART NUMBER	QTY	PART NAME 1 2 3 4 5 6 (PRODUCT LEVEL)	LINK PAGE
	1		8L-4154	1	COLLAR	
	2		4S-8513	1	GASKET	
	3		9S-4468	1	BOLT	
			2F-4159	1	LOCK	
	4		9S-4673	1	BAND ASSEM.	
	5		9S-4466	1	LEVER ASSEM.	
	6		9M-9788	1	PLUNGER	
	7		7M-7316	1	SPRING	
	8		5H-1351	1	PIN	
	9		7B-8105	1	LOCK	
	10		7L-8777	1	SLEEVE	
	11		7S-8447	1	PISTON ASSEM.	
	12		8M-8997	1	SEAL	
	13		9M-6293	1	LOCK	
	14		0S-1615	3	BOLT	
	15		1S-4741	1	CYLINDER	
	16		3K-0810	1	RING	
	17		7M-7219	1	BEARING	
	18		7M-7193	2	RACE	
	19		2S-0007	1	SLEEVE	
	20		8M-8726	1	DOWEL	
	21		8M-8993	1	RING	
	22		2S-0008	1	SEAT	
	23		5S-5060	1	WEIGHT ASSEM.	
	24		1S-5440	2	DOWEL	
	25		9M-6303	1	SPRING	
	26		9M-6302	2	WASHER	
	27		9M-4704	1	SCREW	
	28		3S-9639	1	SEAT ASSEM.	
	29		8H-9181	1	SPRING	
	30		8M-8739	1	BOLT	
	31		5S-9607	1	NUT	
	32		8L-4155	1	SCREW	
	33		7S-8828	1	COVER ASSEM.	
	35		2S-7235	1	SPRING	
	36		2S-7289	1	COLLAR	

7S9333 GOVERNOR GROUP--Part 2 of 2

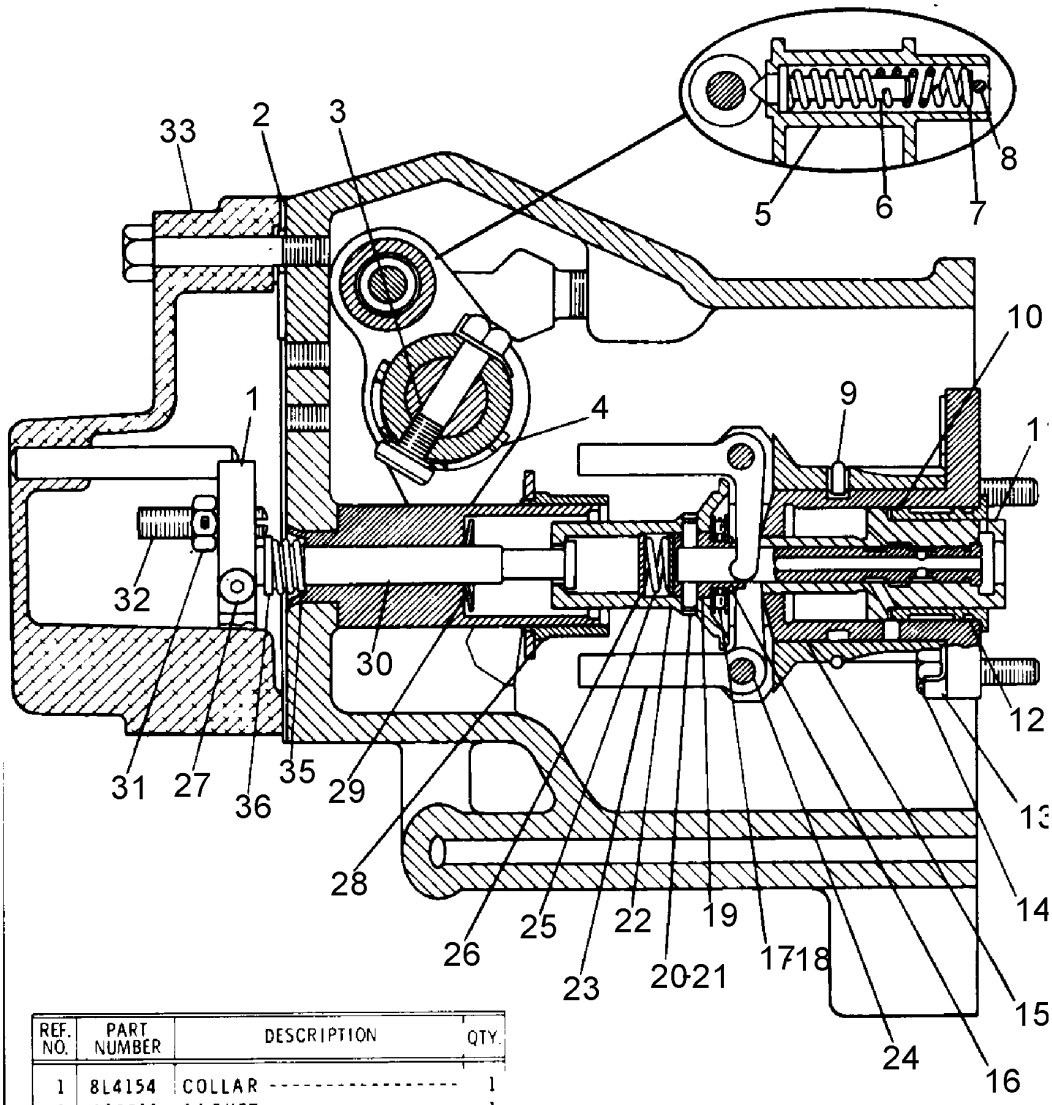

REF. NO.	PART NUMBER	DESCRIPTION	QTY.
1	8L4154	COLLAR	1
2	4S8513	GASKET	1
3	9S4468	BOLT	1
	2F4159	LOCK	1
4	9S4673	BAND ASSEM.	1
5	9S4466	LEVER ASSEM.	1
6	9M9788	PLUNGER	1
7	7M7316	SPRING	1
8	5H1351	PIN	1
9	7B8105	LOCK	1
10	7L8777	SLEEVE	1
11	7S8447	PISTON ASSEM.	1
12	8M8997	SEAL	1
13	9M6293	LOCK	1
14	S1615	BOLT	3
15	1S4741	CYLINDER	1
16	3K810	RING	1
17	7M7219	BEARING	1
18	7M7193	RACE	2
19	2S7	SLEEVE	1
20	8M8726	DOWEL	1
21	8M8993	RING	1

REF. NO.	PART NUMBER	DESCRIPTION	QTY.
22	2S8	SEAT	1
23	5S5060	WEIGHT ASSEM.	1
24	1S5440	DOWEL	2
25	9M6303	SPRING	1
26	9M6302	WASHER	2
27	9M4704	SCREW	1
28	3S9639	SEAT ASSEM.	1
29	8H9181	SPRING	1
30	8M8739	BOLT	1
31	5S9607	NUT	1
32	8L4155	SCREW	1
33	7S8828	COVER ASSEM.	1
35	2S7235	SPRING	1
36	2S7289	COLLAR	1

J14046E

GRAPHIC #1

j14046e

GOVERNOR AND FUEL INJECTION PUMP (6N5356 N/S)--Part 1 of 3

Part of Governor and Fuel Injection Pump shown on Page 107

Key:

SMCS

NOTE	REF NO	GRAPHIC REF	PART NUMBER	QTY	PART NAME 1 2 3 4 5 6 (PRODUCT LEVEL)	LINK PAGE
	1		4N-1767	1	VALVE	
	2		4N-0605	1	SPRING	
	3		4N-1591	1	COVER ASSEM.	
	4		6N-0412	1	MACHINE SCREW	
			4B-2042	1	NUT	
			3B-4501	1	LOCKWASHER	
			1P-7326	1	WASHER (1.5mm Thick)	
			8F-1326	1	WASHER (0.8mm Thick)	
	5		2M-5471	2	BOLT	
	6		6N-1346	1	HOUSING ASSEM.	
	7		6N-0343	1	STUD	
	8		4N-2333	1	PIN	
	9		4N-1826	1	DOWEL	
			2D-6392	1	SEAL	
	10		4N-2334	4	PIN	
	11		1P-2298	1	VALVE ASSEM.	
	12		5J-5314	4	BOLT	
	13		1P-4001	1	FITTING	
	14		2P-3200	1	BOLT	
			1J-9671	1	SEAL	
	15		4N-0054	1	SCREW	
			5B-3180	1	NUT	
	16		1P-2497	2	BOLT	
	17		4N-0009	1	COVER	
			4N-0049	1	GASKET	
	18		1P-9925	2	BOLT (57mm Long)	
	19		2S-4652	1	WASHER	
	20		4N-0594	1	GASKET	
	21		0S-1616	6	BOLT (25mm Long)	
	22		2A-4781	1	BOLT (70mm Long)	
			3B-8695	1	BOLT (89mm Long)	
	23		9S-8632	1	SPRING	
	24		4N-0116	1	GUIDE	
	25		4N-6430	1	PIN	

GOVERNOR AND FUEL INJECTION PUMP (6N5356 N/S)--Part 1 of 3

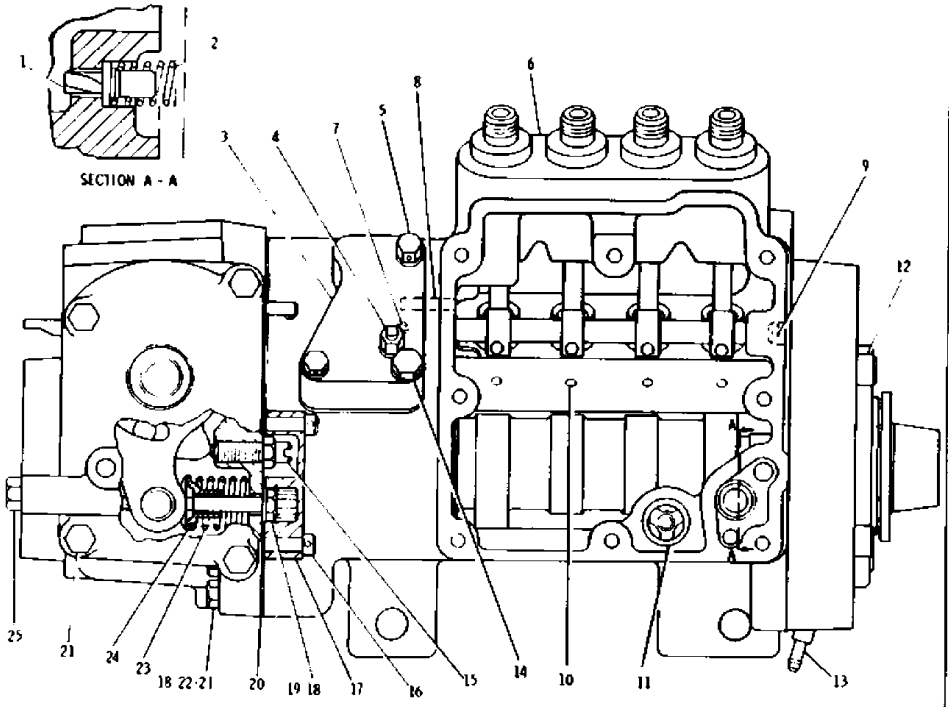

REF. NO.	PART NUMBER	DESCRIPTION	QTY.
1	4N1767	VALVE	1
2	4N605	SPRING	1
3	4N1591	COVER ASSEM.	1
4	6N412	MACHINE SCREW	1
	4B2042	NUT	1
	3B4501	LOCKWASHER	1
	1P7326	WASHER (1.5mm Thick)	1
	8F1326	WASHER (0.8mm Thick)	1
5	2M5471	BOLT	2
6	6N1346	HOUSING ASSEM.	1
7	6N343	STUD	1
8	4N2333	PIN	1
9	4N1826	DOWEL	1
	2D6392	SEAL	1
10	4N2334	PIN	4
11	1P2298	VALVE ASSEM.	1
12	5J5314	BOLT	4
13	1P4001	FITTING	1
14	2P3200	BOLT	1
	1J9671	SEAL	1
15	4N54	SCREW	1
	5B3180	NUT	1
16	1P2497	BOLT	2
17	4N9	COVER	1
	4N49	GASKET	1
18	1P9925	BOLT (57mm Long)	2
19	2S4652	WASHER	1
20	4N594	GASKET	1
21	S1616	BOLT (25mm Long)	6
22	2A4781	BOLT (70mm Long)	1
	3B8695	BOLT (89mm Long)	1
23	9S8632	SPRING	1
24	4N116	GUIDE	1
25	4N6430	PIN	1

J13225E

GRAPHIC #1

j13225e

GOVERNOR AND FUEL INJECTION PUMP (6N5356 N/S)--Part 2 of 3

Part of Governor and Fuel Injection Pump shown on Page 107

Key:

SMCS

NOTE	REF NO	GRAPHIC REF	PART NUMBER	QTY	PART NAME 1 2 3 4 5 6 (PRODUCT LEVEL)	LINK PAGE
	1		6N-5324	1	HOUSING ASSEM.	
	2		4N-2333	1	PIN	
	3		8S-6814	2	DOWEL	
	4		4N-5050	1	PLUG	
	5		4N-0260	2	SEAL	
	6		6N-2578	1	BEARING	
	7		4N-2786	1	SEAL	
	8		4N-1723	1	SHIELD	
	9		4N-0425	3	WEIGHT	
	10		4N-2927	2	RACE	
	11		4N-0511	3	DOWEL	
	12		4N-0446	1	CARRIER	
	13		6N-6567	1	CAMSHAFT	
	14		4N-2955	3	BOLT	
	15		4N-2953	1	RING	
	16		4N-2401	1	BEARING	
	17		4N-0434	1	RISER	
	18		4N-9018	1	SHAFT	
	19		4N-9019	1	DOWEL	
	20		4N-0507	1	SHAFT ASSEM.	
	21		5M-6509	1	SEAL	
	22		4N-0406	1	GEAR (10 Teeth)	
	23		4N-1131	1	BODY ASSEM.	
	24		8H-9804	1	SHAFT	
	25		4N-0636	1	SEAL	
	26		4N-1584	1	SEAL	
	27		8S-6814	1	DOWEL	
	28		4N-2954	1	SLEEVE	
	29		4N-3779	1	KEY	
	30		4N-0429	1	GEAR (15 Teeth)	
	31		4N-0527	1	SPRING	
	32		6N-4655	1	DASHPOT ASSEM.	
	33		6N-7451	1	SEAT	
	34		4N-0927	1	SHAFT ASSEM.	
	35		6N-2956	1	WASHER	
	36		6N-2957	2	WASHER	

GOVERNOR AND FUEL INJECTION PUMP (6N5356 N/S)--Part 2 of 3

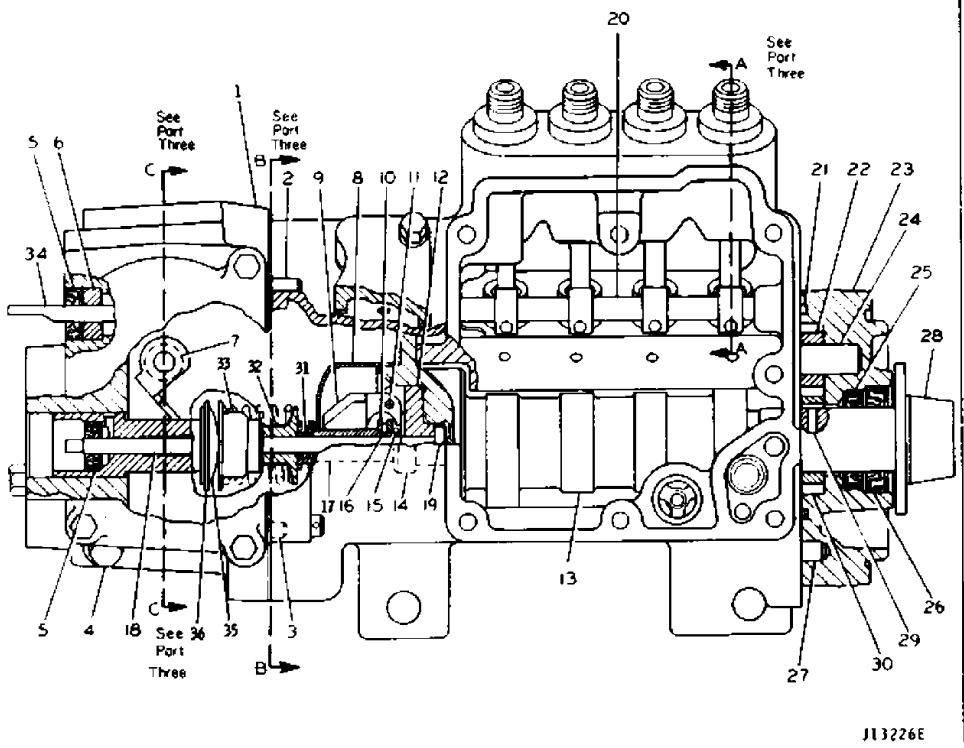

REF. NO.	PART NUMBER	DESCRIPTION	QTY.
1	6N5324	HOUSING ASSEM.	1
2	4N2333	PIN	1
3	8S6814	DOWEL	2
4	4N5050	PLUG	1
5	4N260	SEAL	2
6	6N2578	BEARING	1
7	4N2786	SEAL	1
8	4N1723	SHIELD	1
9	4N425	WEIGHT	3
10	4N2927	RACE	2
11	4N511	DOWEL	3
12	4N446	CARRIER	1
13	6N6567	CAMSHAFT	1
14	4N2955	BOLT	3
15	4N2953	RING	1
16	4N2401	BEARING	1
17	4N434	RISER	1
18	4N9018	SHAFT	1
19	4N9019	DOWEL	1
20	4N507	SHAFT ASSEM.	1
21	5M6509	SEAL	1
22	4N406	GEAR (10 Teeth)	1
23	4N1131	BODY ASSEM.	1
24	8H9804	SHAFT	1
25	4N636	SEAL	1
26	4N1584	SEAL	1
27	8S6814	DOWEL	1
28	4N2954	SLEEVE	1
29	4N3779	KEY	1
30	4N429	GEAR (15 Teeth)	1
31	4N527	SPRING	1
32	6N4655	DASHPOT ASSEM.	1
33	6N7451	SEAT	1
34	4N927	SHAFT ASSEM.	1
35	6N2956	WASHER	1
36	6N2957	WASHER	2

GRAPHIC #1 j13226e

GOVERNOR AND FUEL INJECTION PUMP (6N5356 N/S)--Part 3 of 3

Part of Governor and Fuel Injection Pump shown on Page 107

Key:

SMCS

NOTE	REF NO	GRAPHIC REF	PART NUMBER	QTY	PART NAME 1 2 3 4 5 6 (PRODUCT LEVEL)	LINK PAGE
	1		2N-2658	4	SCREW	
	2		4N-1763	4	LEVER	
	3		4N-0209	4	BONNET	
	4		4N-0218	4	BUSHING	
	5		4N-2655	4	VALVE	
			9L-9424	4	SPRING	
	6		4N-0224	4	RING	
	7		4N-1765	4	PLUNGER & BARREL ASSEM.	
	8		4N-4318	4	SPRING	
	9		4N-2728	4	WASHER	
	10		4N-1750	4	LIFTER	
			4N-2685	4	ROLLER	
	11		4N-0528	1	SHAFT	
	12		4N-2677	1	LEVER ASSEM.	
	13		2M-7819	1	RING	
	14		4N-0508	1	GASKET	
	15		3H-0442	1	SEAL	
	16		4N-0523	1	DOWEL	
			2D-6392	1	SEAL	
	17		4N-0445	1	LEVER	
	18		4N-1881	1	LEVER	
	19		4N-0448	1	LEVER ASSEM.	
	20		8F-5368	1	WASHER	
	21		4N-0687	1	COVER ASSEM.	
	22		4N-2786	1	SEAL	
	23		6N-5482	2	PLATE	
	24		4N-0402	1	GASKET	
	25		9S-8601	1	PIN	
	26		4N-0223	4	SEAL	

GOVERNOR AND FUEL INJECTION PUMP (6N5356 N/S)--Part 3 of 3

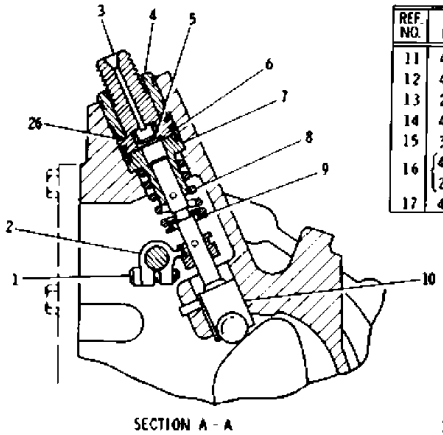

SECTION A - A

REF. NO.	PART NUMBER	DESCRIPTION	QTY.
1	2N2658	SCREW	4
2	4N1763	LEVER	4
3	4N209	BONNET	4
4	4N218	BUSHING	4
5	4N2655	VALVE	4
	9L9424	SPRING	4
6	4N224	RING	4
7	4N1765	PLUNGER & BARREL ASSEM.	4
8	4N4318	SPRING	4
9	4N2728	WASHER	4
10	4N1750	LIFTER	4
	4N2685	ROLLER	4

REF. NO.	PART NUMBER	DESCRIPTION	QTY.
11	4N528	SHAFT	1
12	4N2677	LEVER ASSEM.	1
13	2M7819	RING	1
14	4N508	GASKET	1
15	3H442	SEAL	1
16	4N523	DOWEL	1
	2D6392	SEAL	1
17	4N445	LEVER	1

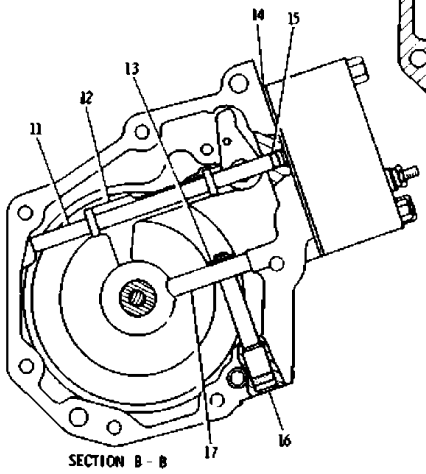

SECTION B - B

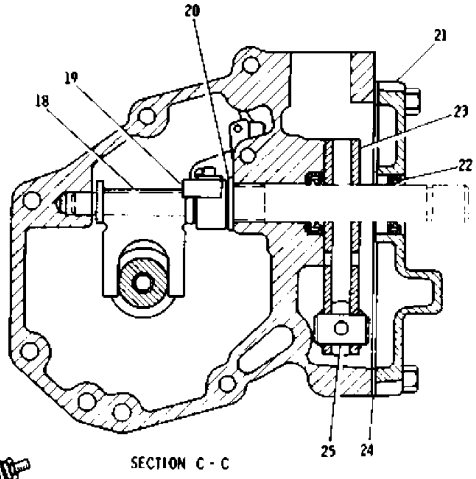

SECTION C - C

REF. NO.	PART NUMBER	DESCRIPTION	QTY.
18	4N1881	LEVER	1
19	4N448	LEVER ASSEM.	1
20	8F5368	WASHER	1
21	4N687	COVER ASSEM.	1
22	4N2786	SEAL	1
23	6N5482	PLATE	2
24	4N402	GASKET	1
25	9S8601	PIN	1
26	4N223	SEAL	4

J13227E

GRAPHIC #1

j13227e

TORQUE CONTROL (9S3312 N/S)

Effective with Serial No. 43V1~43V2247

Key:

SMCS

NOTE	REF NO	GRAPHIC REF	PART NUMBER	QTY	PART NAME 1 2 3 4 5 6 (PRODUCT LEVEL)	LINK PAGE
	1		3Y-0405	2	BOLT	
	2		9M-6292	1	LOCK	
	3		8M-9062	1	RETAINER	
	4		1P-6452	1	INSULATOR	
	5		8S-4317	1	CONTACT	
	6		1P-6453	1	BAR	
	7		1P-9958	1	INSULATOR	

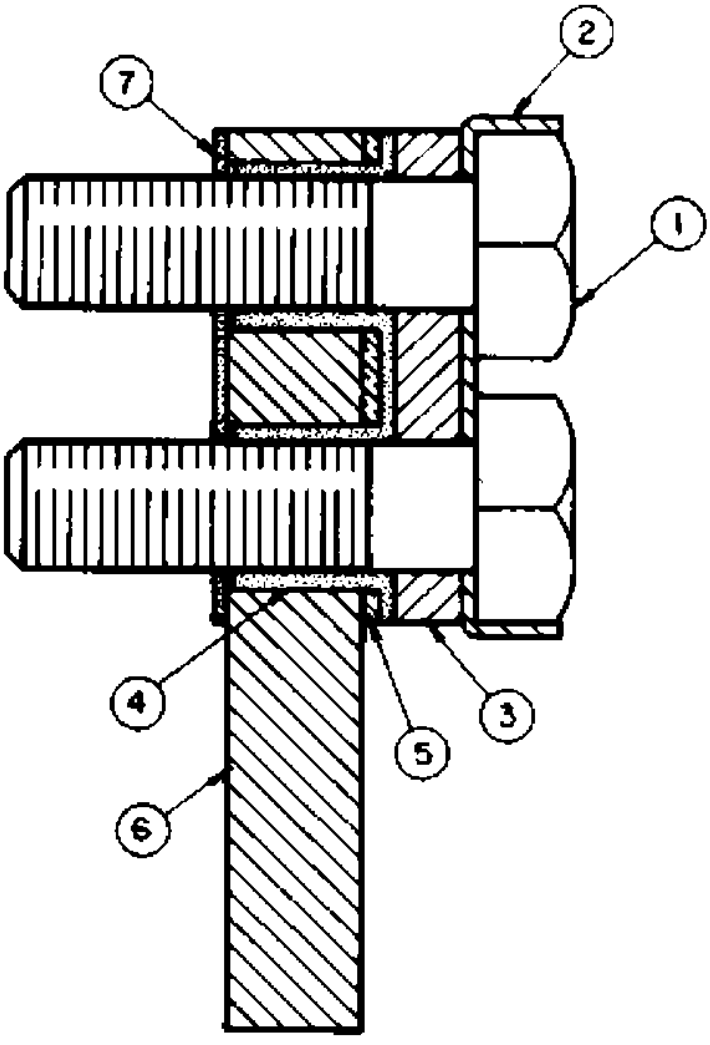

REF NO.	PART NUMBER	DESCRIPTION	QTY.
1	3Y405	BOLT	2
2	9M6292	LOCK	1
3	8M9062	RETAINER	1
4	1P6452	INSULATOR	1
5	8S4317	CONTACT	1
6	1P6453	BAR	1
7	1P9958	INSULATOR	1

J5861E

GRAPHIC #1

j5861e

TORQUE CONTROL (6N2505 N/S)

Effective with Serial No. 43V2248~43V9336, 43V9352~43V9806, 43V9808, 43V9809, 43V9812~43V9817
Part of Governor and Fuel Injection Pump shown on
Page 101

Key:

SMCS

NOTE	REF NO	GRAPHIC REF	PART NUMBER	QTY	PART NAME 1 2 3 4 5 6 (PRODUCT LEVEL)	LINK PAGE
	1		4L-6458	1	NUT	
	2		4L-7124	1	BOLT	
	3		8M-9064	1	SHIM (1.651mm Thick)	
	4		1P-6452	2	INSULATOR	
	5		4N-3882	1	CONTACT	
	6		9L-7235	3	SHIM (0.991mm Thick)	
	7		4N-7777	2	SPACER (0.254mm Thick)	
	8		4N-9098	1	SPACER (5.08mm Thick)	
	9		1P-6453	1	BAR	
	10		9L-5176	1	SPRING (0.610mm Thick)	
	11		9L-9347	1	SHIM (0.508mm Thick)	
	12		8L-8601	6	SPACER (0.05mm Thick)	
	13		6N-2504	1	SPACER (0.127mm Thick)	

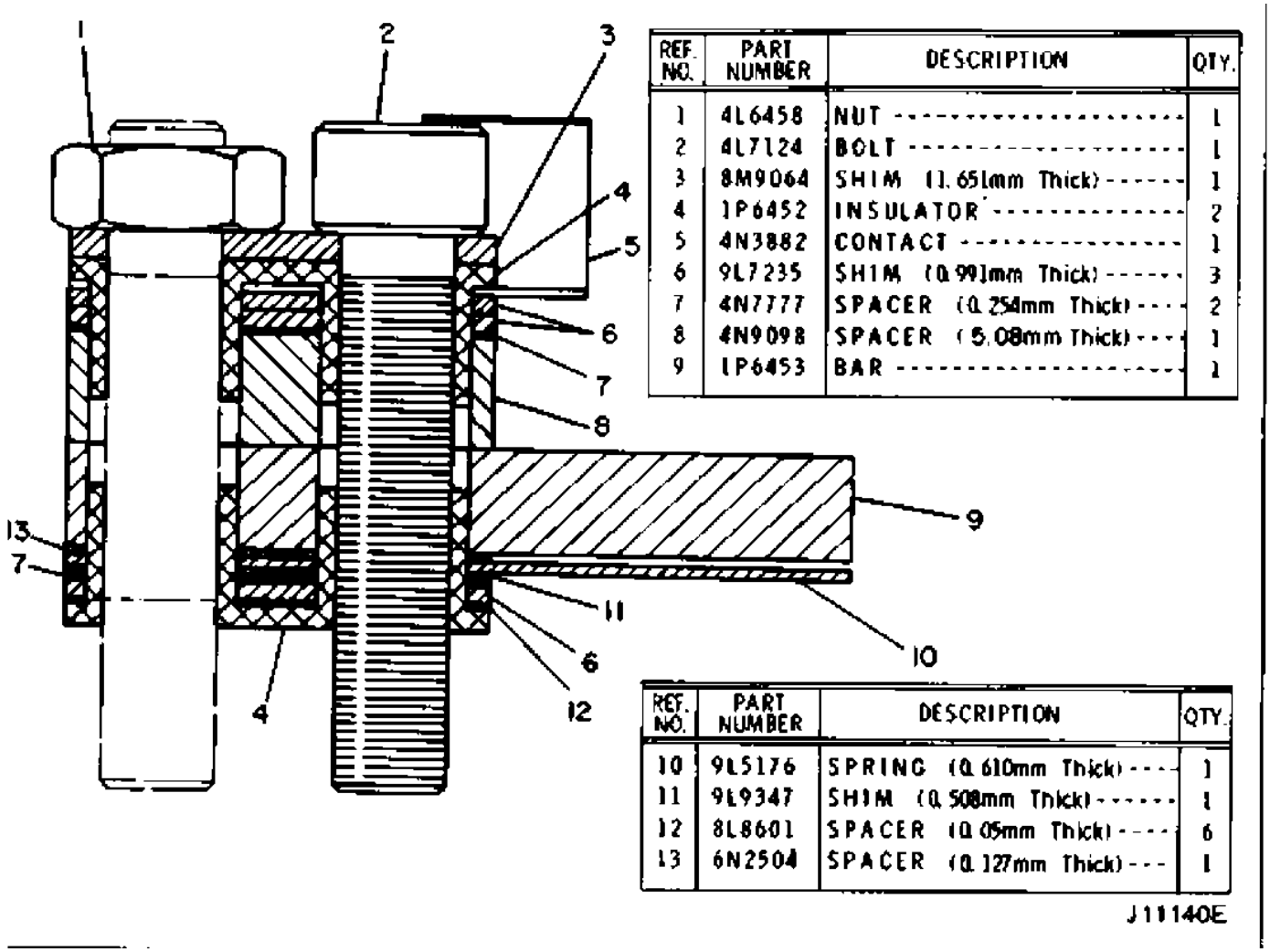

REF. NO.	PART NUMBER	DESCRIPTION	QTY.
1	4L6458	NUT	1
2	4L7124	BOLT	1
3	8M9064	SHIM (1.651mm Thick)	1
4	1P6452	INSULATOR	2
5	4N3882	CONTACT	1
6	9L7235	SHIM (0.991mm Thick)	3
7	4N7777	SPACER (0.254mm Thick)	2
8	4N9098	SPACER (5.08mm Thick)	1
9	1P6453	BAR	1

REF. NO.	PART NUMBER	DESCRIPTION	QTY.
10	9L5176	SPRING (0.610mm Thick)	1
11	9L9347	SHIM (0.508mm Thick)	1
12	8L8601	SPACER (0.05mm Thick)	6
13	6N2504	SPACER (0.127mm Thick)	1

J11140E

GRAPHIC #1

j11140e

TORQUE CONTROL (2S9519 N/S)

Effective with Serial No. 43V9337~43V9351, 43V9807, 43V9810, 43V9811, 43V9818~43V11876

Key:

SMCS

NOTE	REF NO	GRAPHIC REF	PART NUMBER	QTY	PART NAME 1 2 3 4 5 6 (PRODUCT LEVEL)	LINK PAGE
	1		1P-9958	1	INSULATOR	
	2		9L-7235	1	SHIM (1.016mm Thick)	
	3		3S-0602	1	RETAINER	
	4		8S-4317	1	CONTACT (0.45mm Thick)	
	5		9M-6292	1	LOCK	
	6		3Y-0405	2	BOLT	
	7		8M-9062	1	RETAINER	
	8		1P-6452	1	INSULATOR	
	9		2S-7391	1	BAR	

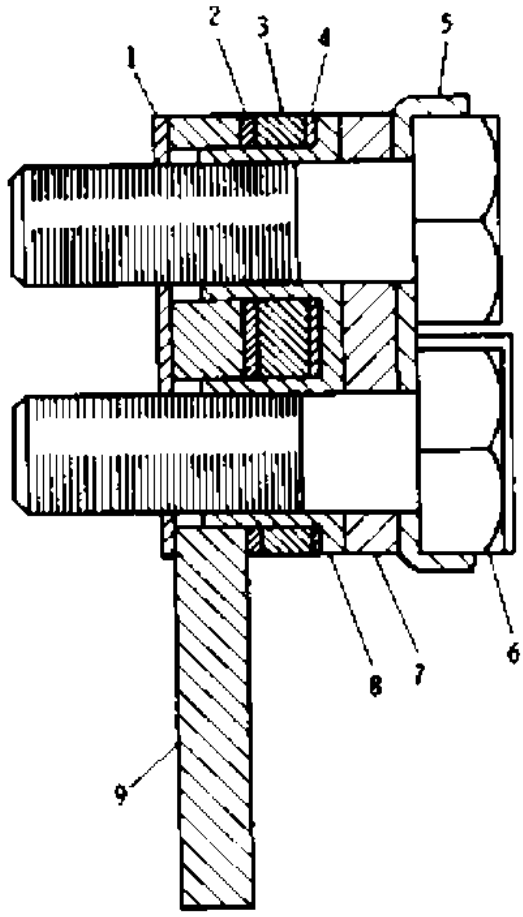

REF NO.	PART NUMBER	DESCRIPTION	QTY.
1	1P9958	INSULATOR	1
2	9L7235	SHIM (1.016mm Thick)	1
3	3S602	RETAINER	1
4	8S4317	CONTACT (0.45mm Thick)	1
5	9M6292	LOCK	1
6	3Y405	BOLT	2
7	8M9062	RETAINER	1
8	1P6452	INSULATOR	1
9	2S7391	BAR	1

J14140E

GRAPHIC #1

j14140e

TORQUE CONTROL

Effective with Serial No. 43V2248~43V9336, 43V9352~43V9806, 43V9808, 43V9809, 43V9812~43V9817
Part of Field Conversion Arrangement listed on
Page 131
For Japan
AN ATTACHMENT

Key:

SMCS

NOTE	REF NO	GRAPHIC REF	PART NUMBER	QTY	PART NAME 1 2 3 4 5 6 (PRODUCT LEVEL)	LINK PAGE
	1		3Y-0405	2	BOLT	
	2		9M-6292	1	LOCK	
	3		8M-9062	1	RETAINER	
	4		1P-6452	1	INSULATOR	
	5		8S-4317	1	CONTACT	
	6		1P-6453	1	BAR	
	7		1P-9958	1	INSULATOR	

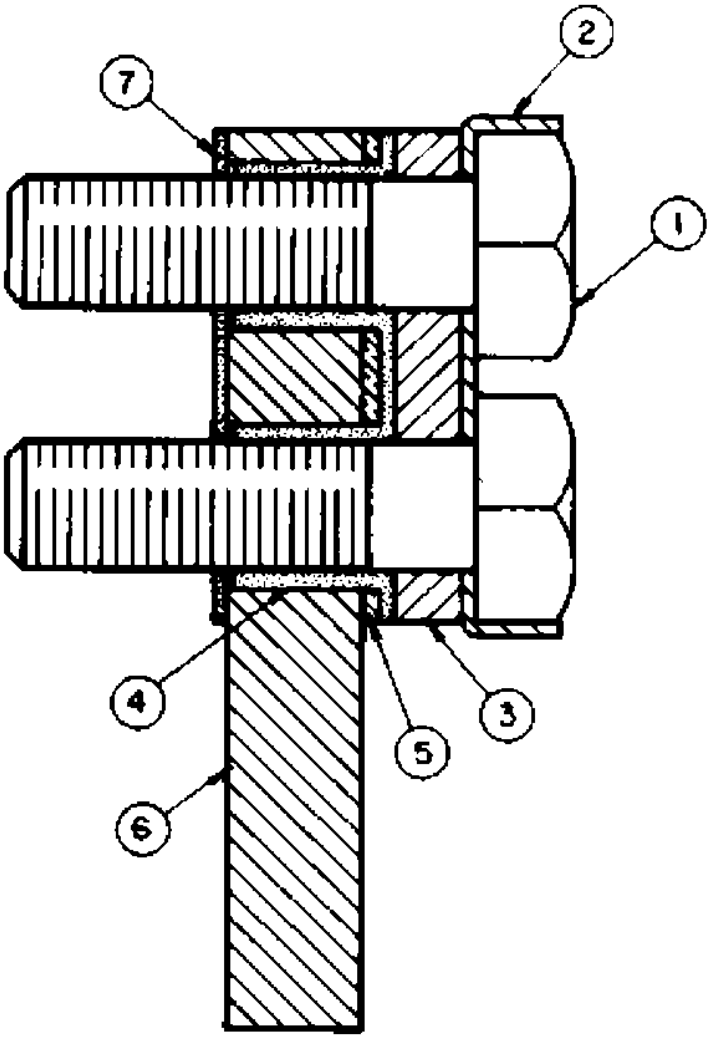

REF NO.	PART NUMBER	DESCRIPTION	QTY.
1	3Y405	BOLT	2
2	9M6292	LOCK	1
3	8M9062	RETAINER	1
4	1P6452	INSULATOR	1
5	8S4317	CONTACT	1
6	1P6453	BAR	1
7	1P9958	INSULATOR	1

J5861E

GRAPHIC #1

j5861e

TORQUE CONTROL (6N509 N/S)

Part of Governor and Fuel Injection Pump shown on
Page 107

Key:

SMCS

NOTE	REF NO	GRAPHIC REF	PART NUMBER	QTY	PART NAME 1 2 3 4 5 6 (PRODUCT LEVEL)	LINK PAGE
	1		1P-6452	2	INSULATOR	
	2		8M-9064	1	SHIM	
	3		4L-7124	1	BOLT	
	4		4N-3882	1	CONTACT	
	5		4N-3881	1	SCREW	
	6		9M-1311	1	NUT	
	7		4N-3884	1	WASHER	
	8		4N-3883	1	BAR	
	9		4L-6458	1	NUT	

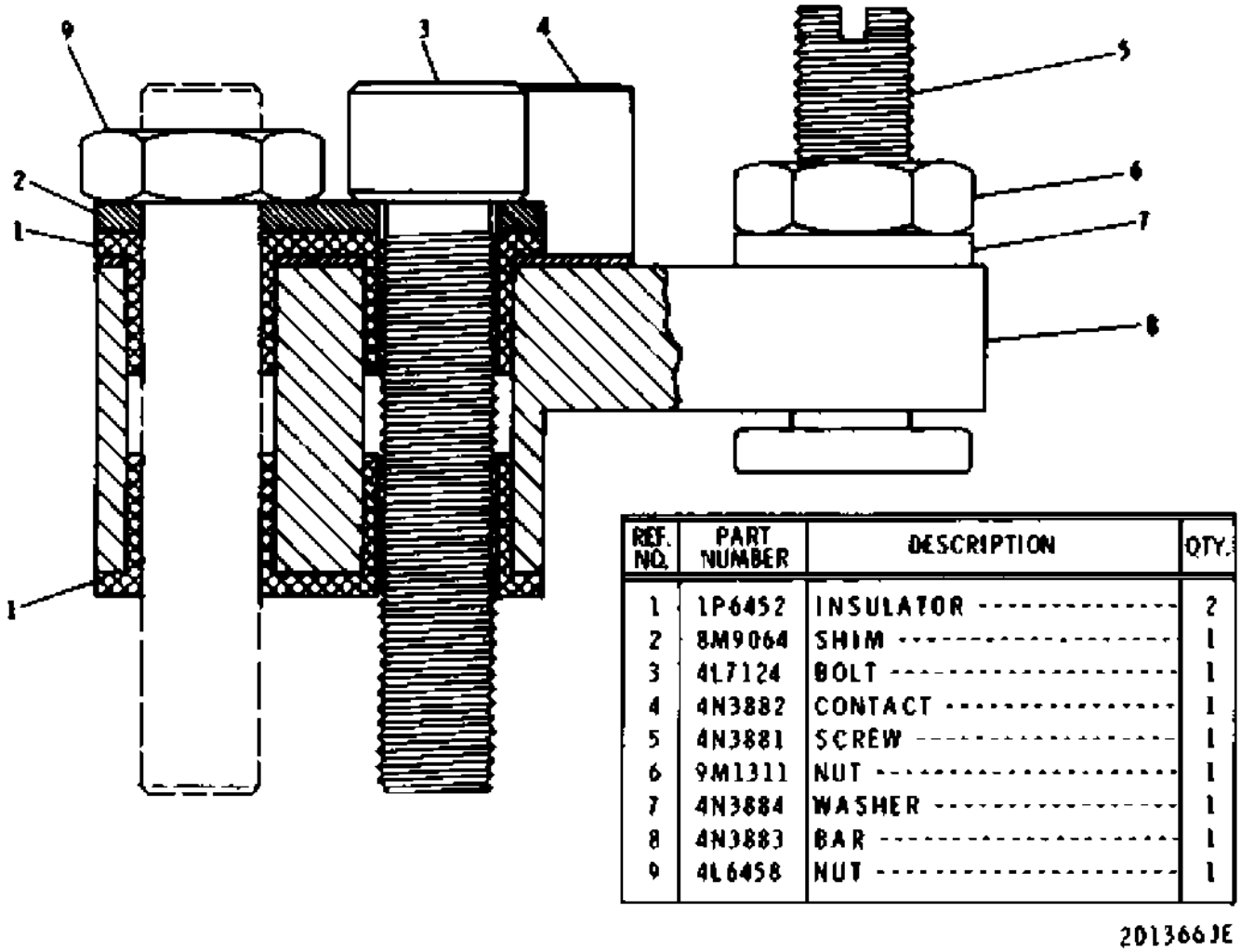

REF. NO.	PART NUMBER	DESCRIPTION	QTY.
1	1P6452	INSULATOR	2
2	8M9064	SHIM	1
3	4L7124	BOLT	1
4	4N3882	CONTACT	1
5	4N3881	SCREW	1
6	9M1311	NUT	1
7	4N3884	WASHER	1
8	4N3883	BAR	1
9	4L6458	NUT	1

201366JE

GRAPHIC #1

c927456

SERVICE METER (9S5141 N/S)

Effective with Serial No. 43V1~43V2247
Note : Electric Service Meter is shown on Page 270

Key:

SMCS

NOTE	REF NO	GRAPHIC REF	PART NUMBER	QTY	PART NAME 1 2 3 4 5 6 (PRODUCT LEVEL)	LINK PAGE
	1		4M-8303	1	SEAL	
	2		9S-3033	1	CLAMP	
	3		1T-0416	2	BOLT	
	4		3F-9556	2	LOCKWASHER	
	5		1A-6240	1	WASHER	
	6		9S-5123	1	SERVICE METER GROUP	
H	7		NOTSERV	4	SCREW	
H	8		NOTSERV	1	WINDOW	
H	9		NOTSERV	1	GASKET	
					(Parts of 9S5123 Service Meter Group)	
	10		8F-7242	1	WASHER	
	11		9S-3032	1	CLAMP	

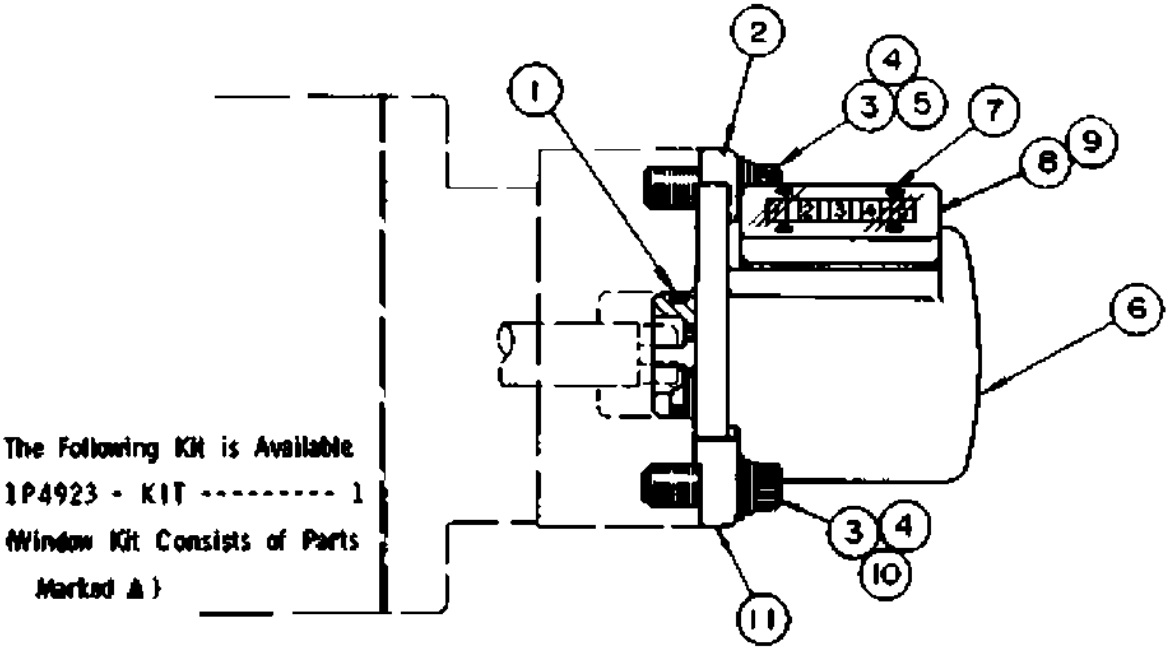

REF. NO.	PART NUMBER	DESCRIPTION	QTY.
1	4M8303	SEAL ----------	1
2	9S3033	CLAMP ----------	1
3	1T416	BOLT ----------	2
4	3F9556	LOCKWASHER ----------	2
5	1A6240	WASHER ----------	1

	REF. NO.	PART NUMBER	DESCRIPTION	QTY.
	6	9S5123	SERVICE METER GROUP -	1
▲	7	Not Serv.	(SCREW ----------	4
▲	8	Not Serv.	WINDOW ----------	1
▲	9	Not Serv.	GASKET ----------	1
		(Parts of 9S5123 Service Meter Group)		
	10	8F7242	WASHER ----------	1
	11	9S3032	CLAMP ----------	1

J7165E

GRAPHIC #1

j7165e

FUEL INJECTION LINES (2P7461 N/S)

Effective with Serial No. 43V1~43V2247

Key:

SMCS

NOTE	REF NO	GRAPHIC REF	PART NUMBER	QTY	PART NAME 1 2 3 4 5 6 (PRODUCT LEVEL)	LINK PAGE
	1		8L-5664	1	LINE ASSEM. (No. 4)	
	2		8L-5663	1	LINE ASSEM. (No. 3)	
	3		8L-5662	1	LINE ASSEM. (No. 2)	
	4		8L-5661	1	LINE ASSEM. (No. 1)	
	5		8M-1584	4	VALVE SERVICE GROUP	
	6		6F-1069	1	SEAL ASSEM.	
	7		5B-3718	1	SEAL	
	8		8S-2389	4	BODY	
	9		5H-7225	4	NUT	
	10		1P-9328	1	FITTING	
	11		2P-1287	1	BOLT	
			9S-1350	1	CLIP	
	12		5S-7223	1	TUBE	
	13		2P-3201	1	BOLT (25.4mm Long)	
	14		8F-3469	1	SEAL	
	15		2H-3932	2	SEAL	
	16		2P-3202	1	BOLT (28.6mm Long)	
	17		3N-3694	1	BRACKET	
	18		7F-8607	1	SEAL	
	19		0S-1573	1	BOLT (102mm Long)	
	20		2P-3204	1	BOLT (38.1mm Long)	
	21		3J-5389	1	PLUG	
	22		3B-7730	1	ELBOW	

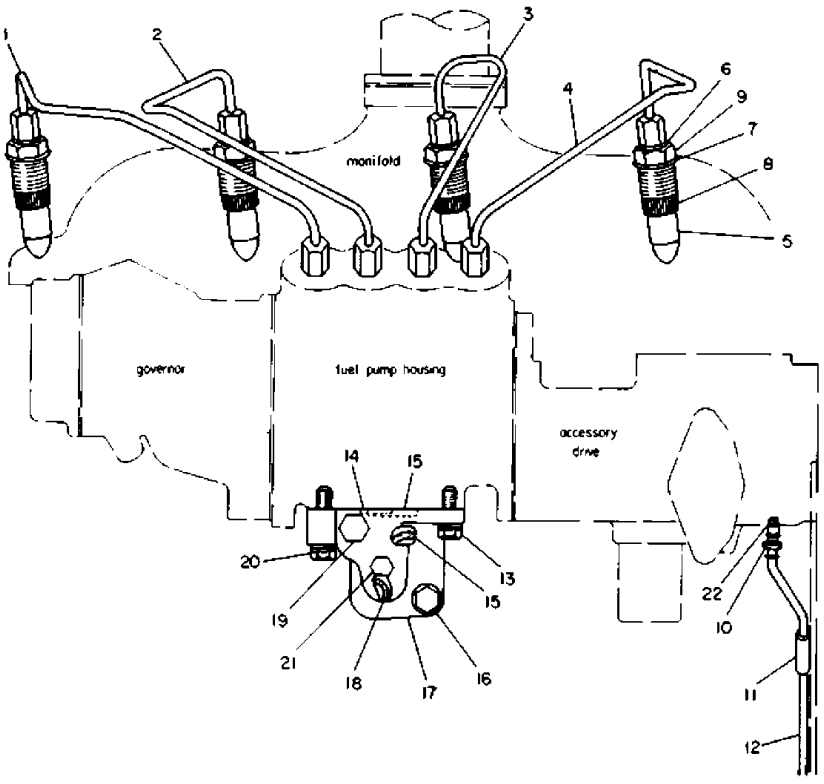

REF. NO.	PART NUMBER	DESCRIPTION	QTY.
1	8L5664	LINE ASSEM. (No. 4)	1
2	8L5663	LINE ASSEM. (No. 3)	1
3	8L5662	LINE ASSEM. (No. 2)	1
4	8L5661	LINE ASSEM. (No. 1)	1
5	8M1584	VALVE SERVICE GROUP	4
6	6F1069	SEAL ASSEM.	1
7	5B3718	SEAL	1
8	8S2389	BODY	4
9	5H7225	NUT	4
10	1P9328	FITTING	1
11	2P1287	BOLT	1
	9S1350	CLIP	1
12	5S7223	TUBE	1
13	2P3201	BOLT (25.4mm Long)	1
14	8F3469	SEAL	1
15	2H3932	SEAL	2
16	2P3202	BOLT (28.6mm Long)	1
17	3N3694	BRACKET	1
18	7F8607	SEAL	1
19	51573	BOLT (102mm Long)	1
20	2P3204	BOLT (38.1mm Long)	1
21	3J5389	PLUG	1
22	3B7730	ELBOW	1

J9167E

GRAPHIC #1

FUEL INJECTION LINES (4N3374 N/S)

Effective with Serial No. 43V2248~43V3373

Key: H - ORDER BY THE DM

SMCS

NOTE	REF NO	GRAPHIC REF	PART NUMBER	QTY	PART NAME 1 2 3 4 5 6 (PRODUCT LEVEL)	LINK PAGE
	1		4N-3284	1	LINE ASSEM. (No. 4)	
	2		4N-3283	1	LINE ASSEM. (No. 3)	
	3		4N-3282	1	LINE ASSEM. (No. 2)	
	4		4N-3281	1	LINE ASSEM. (No. 1)	
	5		1B-2790	4	BOLT	
			3B-4505	4	LOCKWASHER	
	6		8S-3996	2	CLAMP	
	7		8S-4216	4	DAMPER	
	8		8S-3997	2	CLAMP	
	9		1B-4203	3	NUT	
	10		5M-6214	2	PLUG	
H	11		5P-0756		TUBE 6dm	
	12		1A-5350	1	CLIP	
	13		2H-3934	1	SEAL	
H	14		5P-0756		TUBE 4.5dm	
	15		8M-2772	2	CLIP	
	16		0T-0102	1	BOLT	
	17		5M-2894	2	WASHER	
	18		8M-5248	1	SEAL	
	19		0S-1619	1	BOLT	
	20		2P-3850	1	ADAPTER	
	21		8M-5253	1	SEAL	
	22		3J-5390	1	PLUG	
	23		7B-3235	1	BOLT	
			2M-0849	1	WASHER	
	24		3J-1907	2	SEAL	
	25		2R-6806	1	CONNECTOR	
	26		6F-8868	2	CLAMP	
	27		0S-1615	1	BOLT	
			1B-4330	1	NUT	
			3B-4504	1	LOCKWASHER	
	28		4N-3551	1	TUBE ASSEM.	
	29		030-7942	1	ELBOW	
	30		8M-1584	4	FUEL VALVE SERVICE GROUP	
	31		5B-3718	1	SEAL	
	32		6F-1069	1	SEAL ASSEM.	
	33		8S-2389	4	BODY	
	34		5H-7225	4	NUT	

FUEL INJECTION LINES (4N3374 N/S)

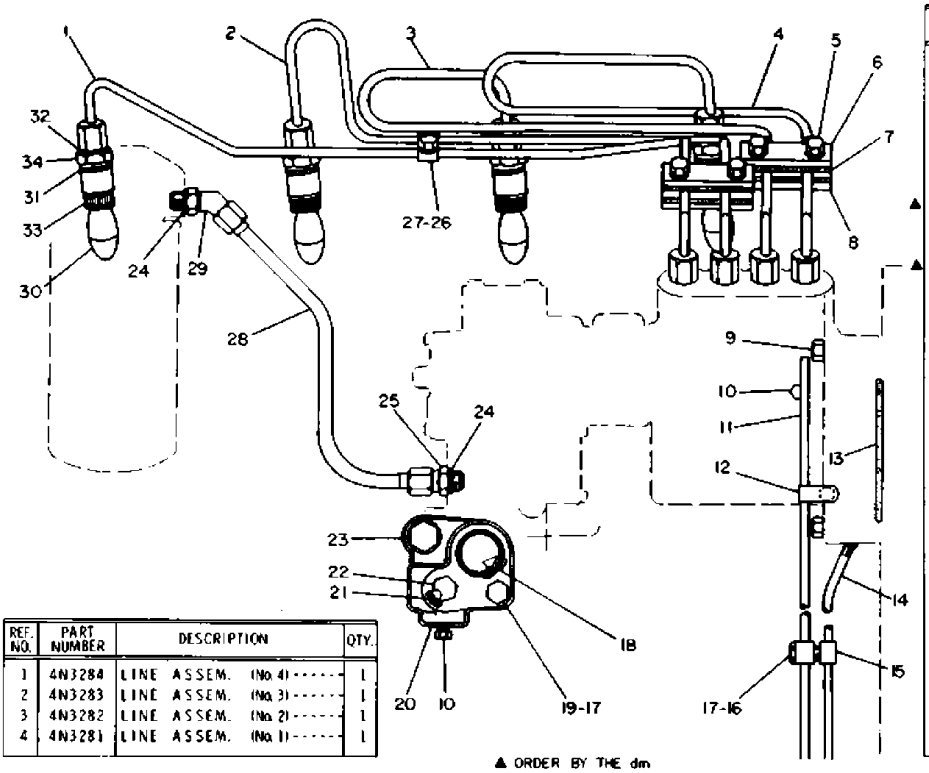

REF. NO.	PART NUMBER	DESCRIPTION	QTY.
1	4N3284	LINE ASSEM. (No. 4)	1
2	4N3283	LINE ASSEM. (No. 3)	1
3	4N3282	LINE ASSEM. (No. 2)	1
4	4N3281	LINE ASSEM. (No. 1)	1

▲ ORDER BY THE dm

REF. NO.	PART NUMBER	DESCRIPTION	QTY.
5	182790	BOLT	4
	384505	LOCKWASHER	4
6	8S3996	CLAMP	2
7	8S4216	DAMPER	4
8	8S3997	CLAMP	2
9	184203	NUT	3
10	5M6214	PLUG	2
▲ 11	5P756	TUBE 6dm	
12	1A5350	CLIP	1
13	2H3934	SEAL	1
▲ 14	5P756	TUBE 4.5dm	
15	8M2772	CLIP	2
16	T102	BOLT	1
17	5M2894	WASHER	2
18	8M5248	SEAL	1
19	S1619	BOLT	1
20	2P3850	ADAPTER	1
21	8M5253	SEAL	1
22	3J5390	PLUG	1
23	7B3235	BOLT	1
	2M849	WASHER	1
24	3J1907	SEAL	2
25	2R6806	CONNECTOR	1
26	6F8868	CLAMP	2
27	S1615	BOLT	1
	184330	NUT	1
	384504	LOCKWASHER	1
28	4N3551	TUBE ASSEM.	1
29	307942	ELBOW	1
30	8M1584	FUEL VALVE SERVICE GROUP	4
31	5B3718	SEAL	1
32	6F1069	SEAL ASSEM.	1
33	8S2389	BODY	4
34	5H7225	NUT	4

J10359E

GRAPHIC #1 j10359e

FUEL INJECTION LINES (4N3374 N/S)

Effective with Serial No. 43V3374~43V9336, 43V9352~43V9806, 43V9808, 43V9809, 43V9812~43V9817

Key: H - ORDER BY THE DM

SMCS

NOTE	REF NO	GRAPHIC REF	PART NUMBER	QTY	PART NAME 1 2 3 4 5 6 (PRODUCT LEVEL)	LINK PAGE
	1		4N-3284	1	LINE ASSEM. (No. 4)	
	2		4N-3283	1	LINE ASSEM. (No. 3)	
	3		4N-3282	1	LINE ASSEM. (No. 2)	
	4		4N-3281	1	LINE ASSEM. (No. 1)	
	5		1B-2790	4	BOLT	
			3B-4505	4	LOCKWASHER	
	6		8S-3996	2	CLAMP	
	7		8S-4216	4	DAMPER	
	8		8S-3997	2	CLAMP	
	9		1B-4203	3	NUT	
	10		5M-6214	2	PLUG	
H	11		5P-0756		TUBE 5.6dm	
	12		1A-5350	1	CLIP	
	13		2H-3934	1	SEAL	
H	14		5P-0756		TUBE 4.1dm	
	15		8M-2772	2	CLIP	
	16		0T-0102	1	BOLT	
	17		5M-2894	2	WASHER	
	18		8M-5248	1	SEAL	
	19		0L-1352	1	BOLT	
	20		2P-3850	1	ADAPTER	
	21		8M-5253	1	SEAL	
	22		3J-5390	1	PLUG	
	23		7B-3235	1	BOLT	
			2M-0849	1	WASHER	
	24		3J-1907	2	SEAL	
	25		2R-6806	1	CONNECTOR	
	26		6F-8868	2	CLAMP	
	27		0S-1615	1	BOLT	
			1B-4330	1	NUT	
			3B-4504	1	LOCKWASHER	
	28		4N-3551	1	TUBE ASSEM.	
	29		030-7942	1	ELBOW	
	30		8M-1584	4	FUEL VALVE GROUP (Service)	
	31		5B-3718	1	SEAL	
	32		6F-1069	1	SEAL ASSEM.	
	33		8S-2389	4	BODY	
	34		5H-7225	4	NUT	
	35		2A-5546	2	BOLT	
			5P-0537	2	WASHER	
	36		6N-3760	1	BRACKET	

FUEL INJECTION LINES (4N3374 N/S)

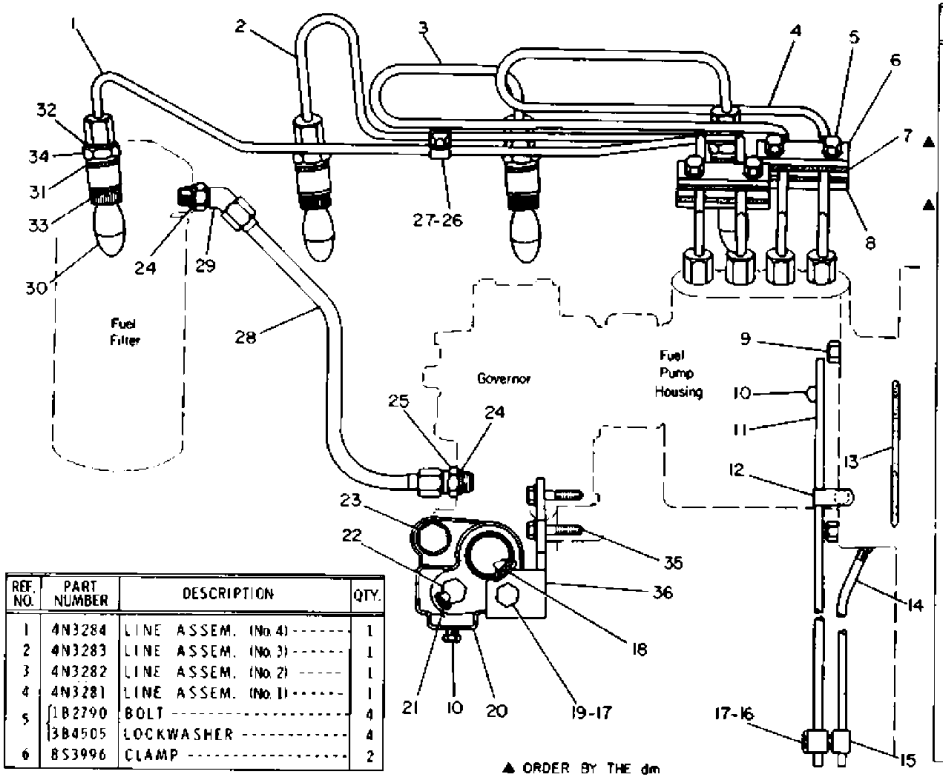

REF. NO.	PART NUMBER	DESCRIPTION	QTY.
1	4N3284	LINE ASSEM. (No. 4)	1
2	4N3283	LINE ASSEM. (No. 3)	1
3	4N3282	LINE ASSEM. (No. 2)	1
4	4N3281	LINE ASSEM. (No. 1)	1
5	1B2790	BOLT	4
	3B4505	LOCKWASHER	4
6	8S3996	CLAMP	2

REF. NO.	PART NUMBER	DESCRIPTION	QTY.
7	8S4216	DAMPER	4
8	8S3997	CLAMP	2
9	1B4203	NUT	3
10	5M6214	PLUG	2
11	5P756	TUBE 5.6dm	
12	1A5350	CLIP	1
13	2H3934	SEAL	1
▲ 14	5P756	TUBE 4.1dm	
15	8M2772	CLIP	2
16	T102	BOLT	1
17	5M2894	WASHER	2
18	8M5248	SEAL	1
19	L1352	BOLT	1
20	2P3850	ADAPTER	1
21	8M5253	SEAL	1
22	3J5390	PLUG	1
23	7B3235	BOLT	1
	2M849	WASHER	1
24	3J1907	SEAL	2
25	2R6806	CONNECTOR	1
26	6F8868	CLAMP	2
	S1615	BOLT	1
27	1B4330	NUT	1
	3B4504	LOCKWASHER	1
28	4N3551	TUBE ASSEM.	1
29	307942	ELBOW	1
30	8M1584	FUEL VALVE GROUP (Service)	4
31	5B3718	SEAL	1
32	6F1069	SEAL ASSEM.	1
33	8S2389	BODY	4
34	5H7225	NUT	4
35	2A5546	BOLT	2
	5P537	WASHER	2
36	6N3760	BRACKET	1

J11214E

GRAPHIC #1 j11214e

FUEL INJECTION LINES (7N4549 N/S)

Effective with Serial No. 43V9337~43V9351, 43V9807, 43V9810, 43V9811, 43V9818~43V11876

Key: H - ORDER BY THE M

SMCS

NOTE	REF NO	GRAPHIC REF	PART NUMBER	QTY	PART NAME 1 2 3 4 5 6 (PRODUCT LEVEL)	LINK PAGE
	1		8L-5664	1	LINE ASSEM. (No. 4)	
	2		8L-5663	1	LINE ASSEM. (No. 3)	
	3		7N-3872	1	LINE ASSEM. (No. 2)	
	4		8L-5661	1	LINE ASSEM. (No. 1)	
	5		8M-1584	4	VALVE SERVICE GROUP	
	6		6F-1069	1	SEAL ASSEM.	
	7		5B-3718	1	SEAL	
	8		8S-2389	4	BODY	
	9		5H-7225	4	NUT	
	10		5M-2894	2	WASHER	
	11		9S-1350	1	CLIP	
H	12		5P-6007		TUBE 0.45m	
	13		0S-1594	1	BOLT (25.5mm Long)	
	14		8F-3469	1	SEAL	
	15		2H-3932	2	SEAL	
	16		0S-1588	1	BOLT (31.5mm Long)	
	17		3N-3694	1	BRACKET	
	18		7F-8607	1	SEAL	
	19		0S-1573	1	BOLT (102mm Long)	
	20		0S-1591	1	BOLT (38mm Long)	
	21		1P-9328	1	FITTING	
	22		3J-5389	1	PLUG	

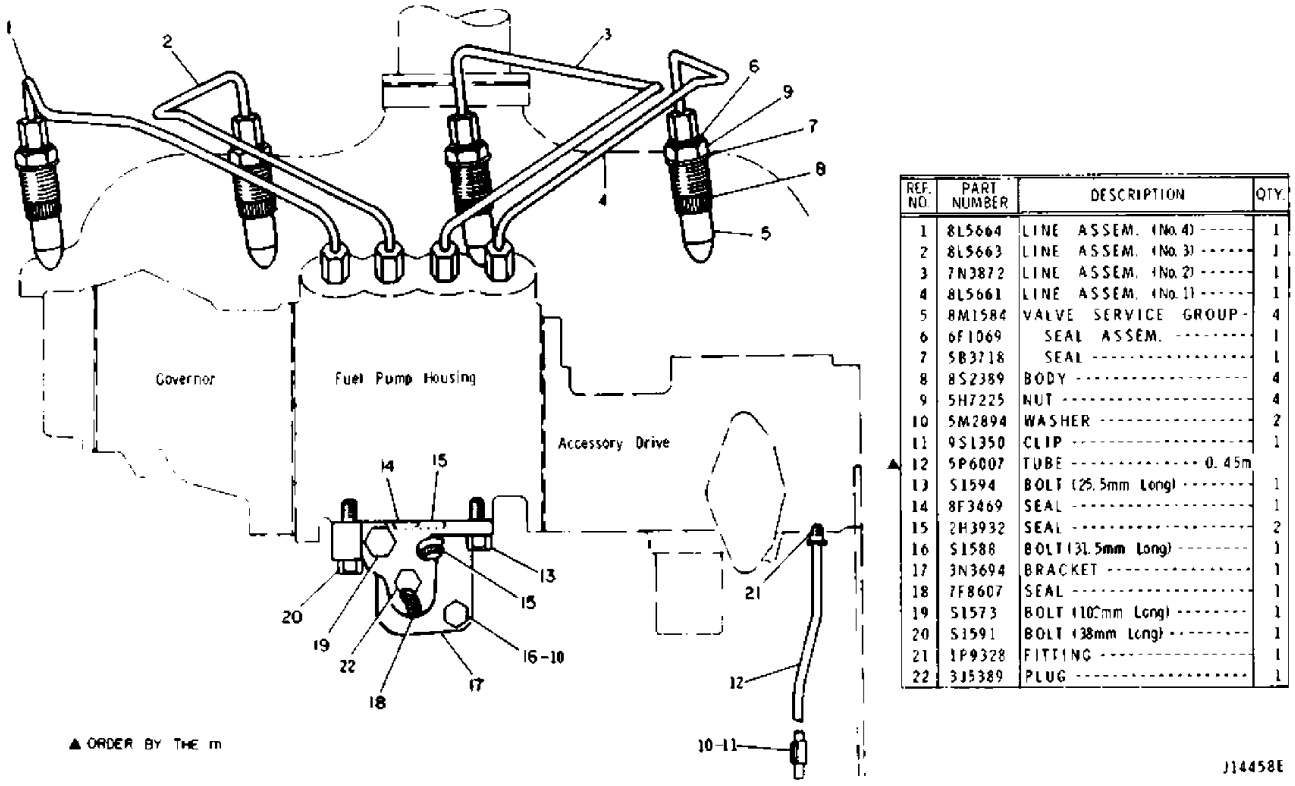

REF. NO.	PART NUMBER	DESCRIPTION	QTY.
1	8L5664	LINE ASSEM. (No. 4)	1
2	8L5663	LINE ASSEM. (No. 3)	1
3	7N3872	LINE ASSEM. (No. 2)	1
4	8L5661	LINE ASSEM. (No. 1)	1
5	8M1584	VALVE SERVICE GROUP	4
6	6F1069	SEAL ASSEM.	1
7	5B3718	SEAL	1
8	8S2389	BODY	4
9	5H7225	NUT	4
10	5M2894	WASHER	2
11	9S1350	CLIP	1
▲ 12	5P6007	TUBE 0.45m	
13	S1594	BOLT (25.5mm Long)	1
14	8F3469	SEAL	1
15	2H3932	SEAL	2
16	S1588	BOLT (31.5mm Long)	1
17	3N3694	BRACKET	1
18	7F8607	SEAL	1
19	S1573	BOLT (102mm Long)	1
20	S1591	BOLT (38mm Long)	1
21	1P9328	FITTING	1
22	3J5389	PLUG	1

GRAPHIC #1

j14458e

FUEL INJECTION LINES

Effective with Serial No. 43V2248~43V9336, 43V9352~43V9806, 43V9808, 43V9809, 43V9812~43V9817
Part of Field Conversion Arrangement listed on Page 131
For Japan
AN ATTACHMENT

Key:

SMCS

NOTE	REF NO	GRAPHIC REF	PART NUMBER	QTY	PART NAME 1 2 3 4 5 6 (PRODUCT LEVEL)	LINK PAGE
	1		8L-5664	1	LINE ASSEM. (No. 4)	
	2		8L-5663	1	LINE ASSEM. (No. 3)	
	3		8L-5662	1	LINE ASSEM. (No. 2)	
	4		8L-5661	1	LINE ASSEM. (No. 1)	
	5		8M-1584	4	VALVE SERVICE GROUP	
	6		6F-1069	1	SEAL ASSEM.	
	7		5B-3718	1	SEAL	
	8		8S-2389	4	BODY	
	9		5H-7225	4	NUT	
	13		2P-3201	1	BOLT (25.4mm Long)	
	14		8F-3469	1	SEAL	
	15		2H-3932	2	SEAL	
	16		2P-3202	1	BOLT (28.6mm Long)	
	17		3N-3694	1	BRACKET	
	18		7F-8607	1	SEAL	
	19		0S-1573	1	BOLT (102mm Long)	
	20		2P-3204	1	BOLT (38.1mm Long)	
	21		3J-5389	1	PLUG	

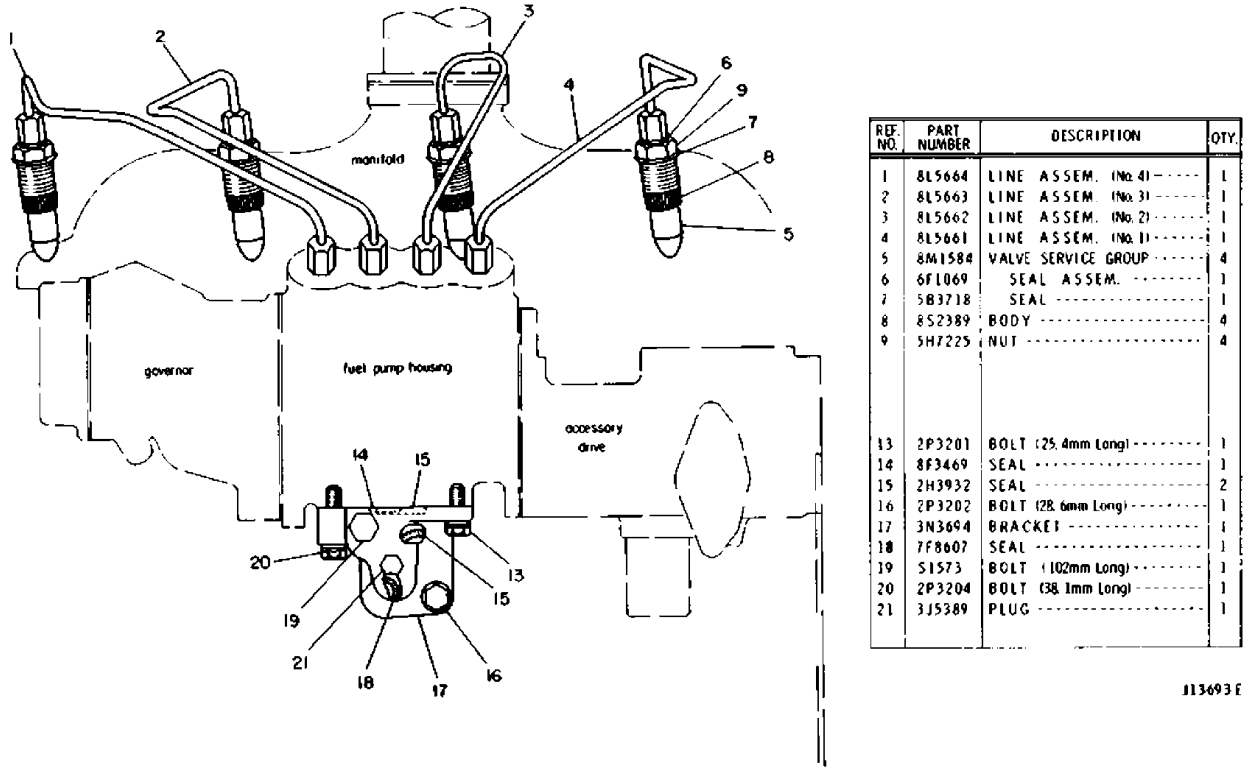

REF. NO.	PART NUMBER	DESCRIPTION	QTY.
1	8L5664	LINE ASSEM. (No. 4)	1
2	8L5663	LINE ASSEM. (No. 3)	1
3	8L5662	LINE ASSEM. (No. 2)	1
4	8L5661	LINE ASSEM. (No. 1)	1
5	8M1584	VALVE SERVICE GROUP	4
6	6F1069	SEAL ASSEM.	1
7	5B3718	SEAL	1
8	8S2389	BODY	4
9	5H7225	NUT	4
13	2P3201	BOLT (25.4mm Long)	1
14	8F3469	SEAL	1
15	2H3932	SEAL	2
16	2P3202	BOLT (28.6mm Long)	1
17	3N3694	BRACKET	1
18	7F8607	SEAL	1
19	0S1573	BOLT (102mm Long)	1
20	2P3204	BOLT (38.1mm Long)	1
21	3J5389	PLUG	1

J13693E

GRAPHIC #1

j13693e

FIELD CONVERSION ARRANGEMENT--Scroll Fuel System

Effective with Vehicle Serial No. 65J1591~65J2005, 65J2011~65J2034, 65J2038~65J2042
(Effective with Engine Serial No. 43V2248~43V9336, 43V9352~43V9806, 43V9808, 43V9809, 43V9812~43V9817)
For Japan
AN ATTACHMENT

Key: Y - SEPARATE ILLUSTRATION

SMCS

NOTE	REF NO	GRAPHIC REF	PART NUMBER	QTY	PART NAME 1 2 3 4 5 6 (PRODUCT LEVEL)	LINK PAGE

GLOW PLUG (5S8500 N/S)

Effective with Serial No. 43V1~43V11304

Key:

SMCS

NOTE	REF NO	GRAPHIC REF	PART NUMBER	QTY	PART NAME 1 2 3 4 5 6 (PRODUCT LEVEL)	LINK PAGE
	1		2H-3755	2	BOLT	
			3B-4505	2	LOCKWASHER	
			4B-4277	2	WASHER	
	2		5S-8480	1	LEAD ASSEM.	
	3		3S-9624	4	GLOW PLUG	

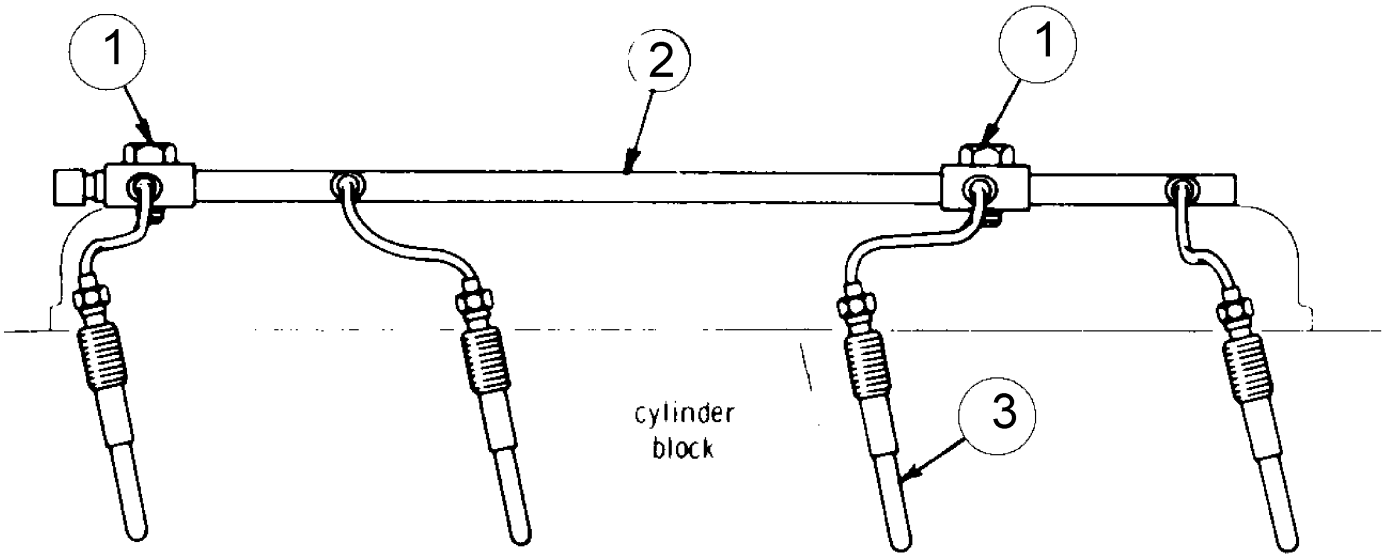

REF NO	PART NUMBER	DESCRIPTION	QTY
1	2H3755	BOLT	2
	3B4505	LOCKWASHER	2
	4B4277	WASHER	2
2	5S8480	LEAD ASSEM.	1
3	3S9624	GLOW PLUG	4

J2596E

GRAPHIC #1

j2596e

GLOW PLUG (5S8500 N/S)

Effective with Serial No. 43V11305~43V11876

Key:

SMCS

NOTE	REF NO	GRAPHIC REF	PART NUMBER	QTY	PART NAME 1 2 3 4 5 6 (PRODUCT LEVEL)	LINK PAGE
	1		2H-3755	2	BOLT	
			9M-1974	2	WASHER	
	2		4N-7491	1	LEAD ASSEM.	
	3		4N-0360	4	GLOW PLUG	

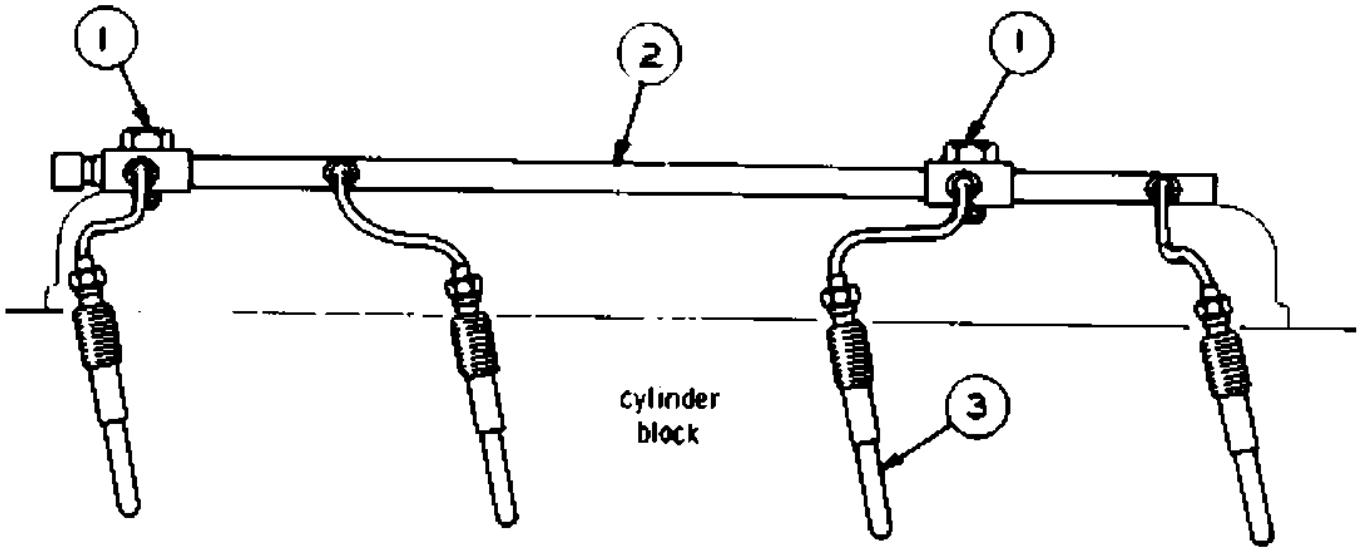

REF. NO.	PART NUMBER	DESCRIPTION	QTY.
1	2H3755	BOLT	2
	9M1974	WASHER	2
2	4N7491	LEAD ASSEM.	1
3	4N360	GLOW PLUG	4

J14748E

GRAPHIC #1

j14748e

ELECTRIC STARTING MOTOR (7S3622 N/S)

Effective with Serial No. 65J1474-UP
5A6522 Motor Assembly parts are shown on Pages 134 and 136

Key: Y - SEPARATE ILLUSTRATION

SMCS

NOTE	REF NO	GRAPHIC REF	PART NUMBER	QTY	PART NAME 1 2 3 4 5 6 (PRODUCT LEVEL)	LINK PAGE
	1		4H-7869	1	GASKET	
Y	2		5A-6522	1	MOTOR ASSEM.	P0172
					(See Separate Illustration)	
	3		9F-4337	1	WIRE ASSEM.	
	4		9F-3068	1	TERMINAL	
	5		9F-5509	2	INSULATOR	
	6		7F-8032	1	TERMINAL	
	7		7J-8902	3	BOLT	
			8D-5054	3	WASHER	

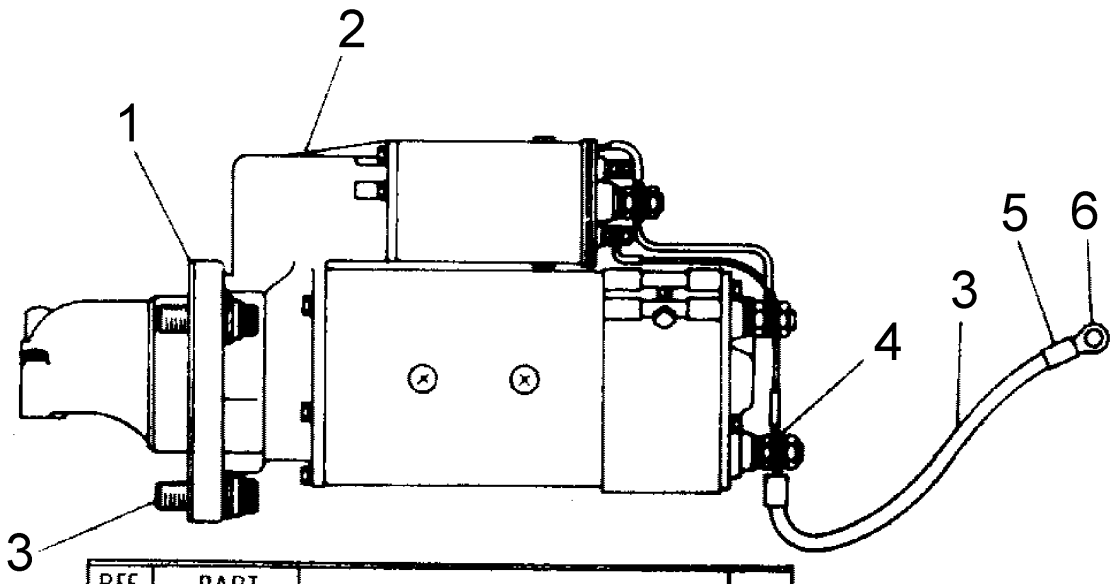

REF NO.	PART NUMBER	DESCRIPTION	QTY.
1	4H7869	GASKET	1
2	5A6522	MOTOR ASSEM.	1
		(See Separate Illustration)	
3	9F4337	WIRE ASSEM.	1
4	9F3068	TERMINAL	1
5	9F5509	INSULATOR	2
6	7F8032	TERMINAL	1
7	7J8902	BOLT	3
	8D5054	WASHER	3

J15924E

GRAPHIC #1

j15924e

5A6522 MOTOR ASSEMBLY--Part 1 of 2

Effective with Serial No. 65J1474~65J1990
Part of Electric Starting Motor

Key:

SMCS

NOTE	REF NO	GRAPHIC REF	PART NUMBER	QTY	PART NAME 1 2 3 4 5 6 (PRODUCT LEVEL)	LINK PAGE
	1		5A-6515	4	MACHINE SCREW (HEX HEAD)	
	2		5A-4630	10	LOCKWASHER	
	3		5A-6516	6	MACHINE SCREW (HEX HEAD)	
	4		5A-7171	2	MACHINE SCREW (HEX HEAD)	
	5		5A-4629	7	LOCKWASHER	
	6		5A-7170	1	SWITCH ASSEM.	
	7		5A-3475	1	KEY (WOODRUFF)	
	8		5A-7760	1	FRONT BRACKET ASSEM.	
	9		5A-3565	1	BUSHING	
					(Ream the Bore After Pressed in)	
	10		5A-7162	1	SET SCREW	
	11		5A-6498	1	SET SCREW	
					(Part of 5A7760 Assem.)	
	12		5A-3606	1	RING	
	13		5A-3605	1	PINION STOPPER	
	14		5A-3604	6	BOLT (HEX. SOCKET HEAD)	
	15		5A-3600	5	MACHINE SCREW (HEX. HEAD)	
	16		5A-7169	8	MACHINE SCREW	
	17		5A-6517	2	MACHINE SCREW	
	18		5A-5788	10	LOCKWASHER	
	19		5A-4691	2	WASHER	
	20		5A-5820	8	BRUSH ASSEM.	
	21		5A-6517	8	SCREW	
			5A-7160	1	REAR BRACKET BRUSH HOLDER ASSEM.	
					Consisting of: (REF. NO. 22 to 37 inclusive)	
	22		5A-3545	1	INSULATOR	
	23		5A-3547	2	SEAL	
	24		5A-3544	2	INSULATOR	
	25		5A-6501	1	BOLT (TERMINAL)	
	26		5A-7161	1	REAR BRACKET ASSEM.	
			5A-7162	1	SET SCREW (8mm Dia)	
	27		5A-9291	1	BUSHING	
					(Ream the Bore After Pressed in)	
	28		5A-6498	1	SET SCREW	
					(Part of 5A7161 Assem.)	
	29		5A-3550	4	NUT	
	30		5A-5871	4	LOCKWASHER	
			5A-7164	4	WASHER	
	31		5A-3546	1	INSULATOR	
	32		5A-7163	1	BRUSH HOLDER ASSEM.	
	33		5A-3769	4	SPRING	
					(Part of 5A7163 Assem.)	
	34		5A-6500	2	MACHINE SCREW	
	35		5A-4630	3	LOCKWASHER	
	36		5A-4632	3	WASHER	
	37		5A-6503	1	MACHINE SCREW	

5A6522 MOTOR ASSEMBLY--Part 1 of 2

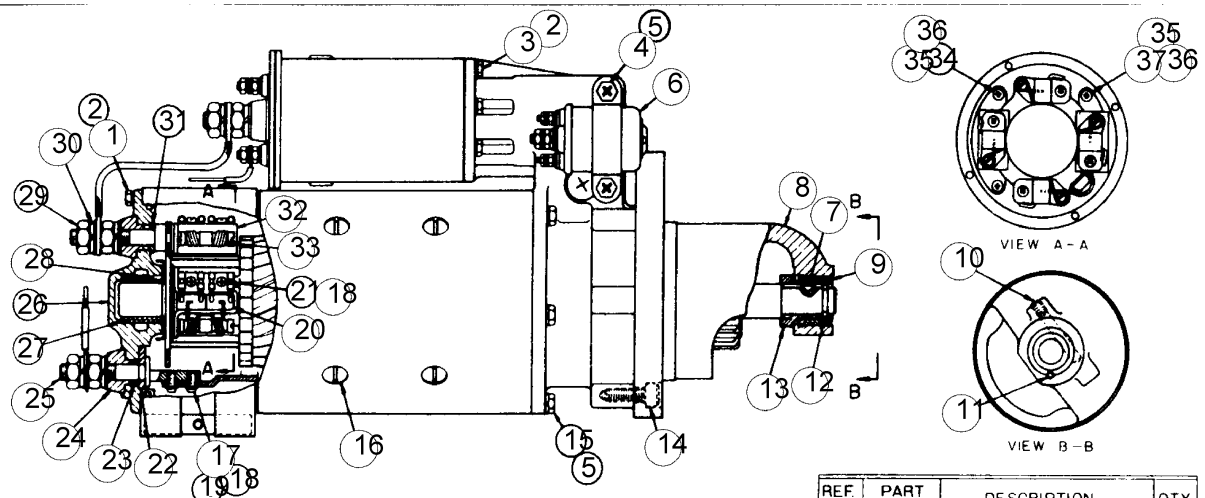

REF. NO.	PART NUMBER	DESCRIPTION	QTY.
1	5A6515	MACHINE SCREW (HEX HEAD)	4
2	5A4630	LOCKWASHER	10
3	5A6516	MACHINE SCREW (HEX HEAD)	6
4	5A7171	MACHINE SCREW (HEX HEAD)	2
5	5A4629	LOCKWASHER	7
6	5A7170	SWITCH ASSEM	1
7	5A3475	KEY (WOODRUFF)	1
8	5A7760	FRONT BRACKET ASSEM	1
9	5A3565	BUSHING (Ream the Bore After Pressed in)	1
10	5A7162	SET SCREW	1
11	5A6498	SET SCREW (Part of 5A7760 Assem.)	1
12	5A3606	RING	1
13	5A3605	PINION STOPPER	1

REF. NO.	PART NUMBER	DESCRIPTION	QTY.
14	5A3604	BOLT (HEX SOCKET HEAD)	6
15	5A3600	MACHINE SCREW (HEX HEAD)	5
16	5A7169	MACHINE SCREW	8
17	5A6517	MACHINE SCREW	2
18	5A5788	LOCKWASHER	10
19	5A4691	WASHER	2
20	5A5820	BRUSH ASSEM	8
21	5A6517	SCREW	8
	5A7160	REAR BRACKET BRUSH HOLDER ASSEM	1
	Consisting of (REF.NO. 22 to 37 inclusive)		
22	5A3545	INSULATOR	1
23	5A3547	SEAL	2
24	5A3544	INSULATOR	2
25	5A6501	BOLT (TERMINAL)	1

REF. NO.	PART NUMBER	DESCRIPTION	QTY.
26	5A7161	REAR BRACKET ASSEM.	1
	5A7162	SET SCREW (8mm Dia)	1
27	5A9291	BUSHING (Ream the Bore After Pressed in)	1
28	5A6498	SET SCREW (Part of 5A7161 Assem.)	1
29	5A3550	NUT	4
30	5A5871	LOCKWASHER	4
	5A7164	WASHER	4
31	5A3546	INSULATOR	1
32	5A7163	BRUSH HOLDER ASSEM.	1
33	5A3769	SPRING (Part of 5A7163 Assem.)	4
34	5A6500	MACHINE SCREW	2
35	5A4630	LOCKWASHER	3
36	5A4632	WASHER	3
37	5A6503	MACHINE SCREW	1

J7529E

GRAPHIC #1 j7529e

5A6522 MOTOR ASSEMBLY--Part 2 of 2

Effective with Serial No. 65J1474~65J1990
Part of Electric Starting Motor

Key:

SMCS

NOTE	REF NO	GRAPHIC REF	PART NUMBER	QTY	PART NAME 1 2 3 4 5 6 (PRODUCT LEVEL)	LINK PAGE
	1		5A-7179	1	LEAD ASSEM.	
	2		5A-6511	1	CONNECTOR	
	3		5A-7166	1	SWITCH ASSEM.	
	4		5A-7168	1	TERMINAL ASSEM.	
	5		5A-7167	1	CONNECTOR ASSEM.	
					(Part of 5a7166 Switch Assem.)	
	6		5A-3621	1	PLUNGER	
	7		5A-3619	1	BOOT ASSEM.	
	8		5A-3618	1	SPRING	
	9		5A-3617	1	RETAINER	
	10		5A-3616	1	SCREW	
	11		5A-3608	2	CONNECTOR PLATE	
	12		5A-3589	1	LEVER ASSEM.	
	13		5A-7172	2	PIN	
	14		5A-7173	2	COTTER PIN	
	15		5A-7176	1	SCREW	
	16		5A-7175	1	GASKET	
	17		5A-7174	1	PIN	
	18		5A-5713	1	CLUTCH ASSEM. (12 Teeth)	
	19		5A-3603	1	SEAL	
	20		5A-7759	1	BRACKET ASSEM.	
			5A-7162	1	SCREW (8mm Dia)	
	21		5A-9290	1	BUSHING	
			5A-6498	1	SCREW (3mm Dia)	
					(Part of 5A7759 Bracket Assem)	
	22		5A-3599	1	SEAL	
	23		5A-3598	1	SEAL	
	24		5A-3602	2	WASHER (0.25 mm Thick)	
	25		5A-3601	1	WASHER (3.0 mm Thick)	
	26		5A-5791	1	AMATURE ASSEM.	
	27		5A-3591	4	POLE	
	28		5A-3593	1	FIELD COIL ASSEM.	
	29		5A-6124	1	BAND ASSEM.	
	30		5A-6125	1	PIN (With Hole)	
	31		5A-6126	1	PIN (With Thread)	
	32		5A-3624	1	MACHINE SCREW	
	33		5A-4629	1	LOCKWASHER	
	34		5A-3599	1	SEAL	
	35		5A-3595	1	WASHER	
	36		5A-3594	1	WASHER (Insulator)	

5A6522 MOTOR ASSEMBLY--Part 2 of 2

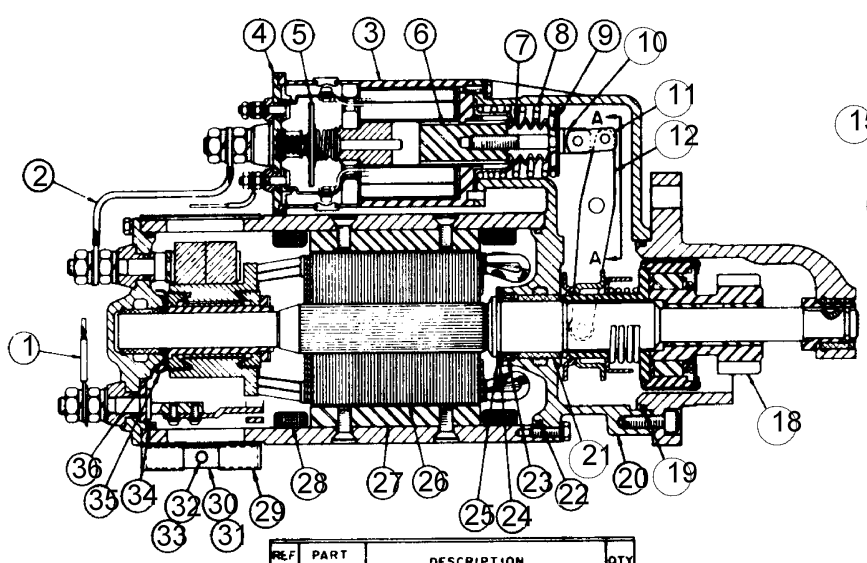

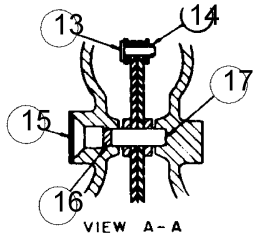

3Y4699 Gromet Set Kiteis available for 5A7166 Switch Assembly

REF NO	PART NUMBER	DESCRIPTION	QTY
1	5A7179	LEAD ASSEM	1
2	5A6511	CONNECTOR	1
3	5A7166	SWITCH ASSEM	1
4	5A7168	{TERMINAL ASSEM.	1
5	5A7167	{CONNECTOR ASSEM. (Part of 5A7166 Switch Assem.)	1
6	5A3621	PLUNGER	1
7	5A3619	BOOT ASSEM.	1
8	5A3618	SPRING	1
9	5A3617	RETAINER	1
10	5A3616	SCREW	1
11	5A3608	CONNECTOR PLATE	2
12	5A3589	LEVER ASSEM	1

REF NO	PART NUMBER	DESCRIPTION	QTY
13	5A7172	PIN	2
14	5A7173	COTTER PIN	2
15	5A7176	SCREW	1
16	5A7175	GASKET	1
17	5A7174	PIN	1
18	5A5713	CLUTCH ASSEM.(12 Teeth)	1
19	5A3603	SEAL	1
20	5A7759	BRACKET ASSEM.	1
21	5A7162	{SCREW (8mm Dia)	1
	5A9290	{BUSHING	1
	5A6498	{SCREW (3mm Dia) (Part of 5A7759 Bracket Assem.)	1
22	5A3599	SEAL	1
23	5A3598	SEAL	1
24	5A3602	WASHER (0.25mm Thick)	2
25	5A3601	WASHER (3.0mm Thick)	1
26	5A5791	AMATURE ASSEM	1
27	5A3591	POLE	4
28	5A3593	FIELD COIL ASSEM.	1
29	5A6124	BAND ASSEM.	1
30	5A6125	PIN (With Hole)	1
31	5A6126	PIN (With Thread)	1
32	5A3624	MACHINE SCREW	1
33	5A4629	LOCKWASHER	1
34	5A3599	SEAL	1
35	5A3595	WASHER	1
36	5A3594	WASHER (Insulator)	1

J12951E

GRAPHIC #1 j12951e

5A6522 MOTOR ASSEMBLY--Part 1 of 2

Effective with Serial No. 65J1991-UP
Part of Electric Starting Motor

Key: C - INDICATES CHANGE

SMCS

NOTE	REF NO	GRAPHIC REF	PART NUMBER	QTY	PART NAME 1 2 3 4 5 6 (PRODUCT LEVEL)	LINK PAGE
	1		5A-6515	4	MACHINE SCREW (Hex. Head)	
	2		5A-4630	10	LOCKWASHER	
C	3		3Y-3067	8	SCREW ASSEM.	
C	4		3Y-4431	1	SCREW ASSEM.	
	5		5A-6516	6	MACHINE SCREW (Hex. Head)	
	6		5A-7171	2	MACHINE SCREW (Hex. Head)	
	7		5A-4629	7	LOCKWASHER	
C	8		3Y-4423	1	SWITCH ASSEM.	
	9		5A-7760	1	FRONT BRACKET ASSEM.	
	10		5A-3565	1	BUSHING	
	11		5A-7162	1	SET SCREW	
	12		5A-6498	1	SET SCREW	
	13		5A-3475	1	KEY (Woodruff)	
	14		5A-3606	1	RING	
	15		5A-3605	1	PINION STOPPER	
	16		5A-3604	6	BOLT (Hex. Socket Head)	
	17		5A-3600	5	MACHINE SCREW (Hex. Head)	
C	18		3Y-3070	8	MACHINE SCREW	
C	19		3Y-3068	2	SCREW ASSEM.	
	20		5A-5820	8	BRUSH ASSEM.	
	21		5A-7160	1	REAR BRACKET BRUSH HOLDER ASSEM.	
			5A-7161	1	REAR BRACKET ASSEM.	
			5A-7162	1	SET SCREW (8mm Dia)	
	22		5A-9291	1	BUSHING	
	23		5A-6498	1	SET SCREW	
C	24		3Y-2881	4	NUT	
	25		5A-5871	4	LOCKWASHER	
			5A-7164	4	WASHER	
C	26		3Y-1022	1	INSULATOR	
C	27		3Y-2879	1	BRUSH HOLDER ASSEM.	
	28		5A-3769	4	SPRING	
	29		5A-3545	1	INSULATOR	
	30		5A-3547	2	SEAL	
	31		5A-3544	2	INSULATOR	
C	32		3Y-2880	1	BOLT (Terminal)	
C	33		3Y-3904	2	SCREW ASSEM.	
	34		5A-4632	3	WASHER	
C	35		3Y-3903	1	SCREW ASSEM.	

5A6522 MOTOR ASSEMBLY--Part 1 of 2

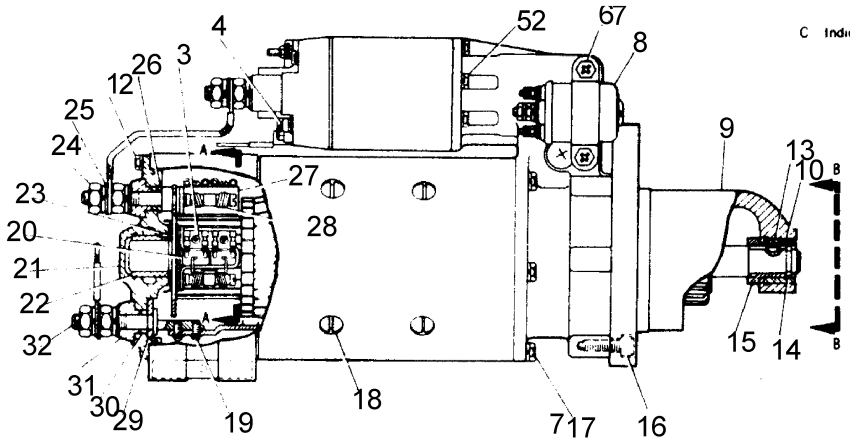

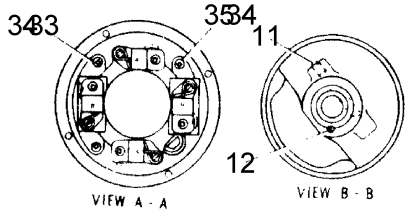

C Indicates Change

	REF. NO.	PART NUMBER	DESCRIPTION	QTY.
	7	5A4629	LOCKWASHER	7
C	8	3Y4423	SWITCH ASSEM.	1
	9	5A7760	FRONT BRACKET ASSEM.	1
	10	5A3565	BUSHING	1
	11	5A7162	SET SCREW	1
	12	5A6498	SET SCREW	1
	13	5A3475	KEY (Woodruff)	1
	14	5A3606	RING	1
	15	5A3605	PINION STOPPER	1
	16	5A3604	BOLT (Hex. Socket Head)	6
	17	5A3600	MACHINE SCREW (Hex. Head)	5
C	18	3Y3070	MACHINE SCREW	8
C	19	3Y3068	SCREW ASSEM.	2
	20	5A5820	BRUSH ASSEM.	8
	21	5A7160	REAR BRACKET BRUSH HOLDER ASSEM.	1
		5A7161	REAR BRACKET ASSEM.	1
		5A7162	SET SCREW(8mm Dia)	1
	22	5A9291	BUSHING	1
	23	5A6498	SET SCREW	1
C	24	3Y2881	NUT	4
	25	5A5871	LOCKWASHER	4
		5A7164	WASHER	4
C	26	3Y1022	INSULATOR	1
C	27	3Y2879	BRUSH HOLDER ASSEM.	1
	28	5A3769	SPRING	4
	29	5A3545	INSULATOR	1
	30	5A3547	SEAL	2
	31	5A3544	INSULATOR	2
C	32	3Y2880	BOLT (Terminal)	1
C	33	3Y3904	SCREW ASSEM.	2
	34	5A4632	WASHER	3
C	35	3Y3903	SCREW ASSEM.	1

J13100E

REF. NO.	PART NUMBER	DESCRIPTION	QTY.
1	5A6515	MACHINE SCREW (Hex. Head)	4
2	5A4630	LOCKWASHER	10
C 3	3Y3067	SCREW ASSEM.	8
C 4	3Y4431	SCREW ASSEM.	1
5	5A6516	MACHINE SCREW (Hex. Head)	6
6	5A7171	MACHINE SCREW (Hex. Head)	2

GRAPHIC #1

j13100e

5A6522 MOTOR ASSEMBLY--Part 2 of 2

Effective with Serial No. 65J1991-UP
Part of Electric Starting Motor

Key: C - INDICATES CHANGE

SMCS

NOTE	REF NO	GRAPHIC REF	PART NUMBER	QTY	PART NAME 1 2 3 4 5 6 (PRODUCT LEVEL)	LINK PAGE
	1		5A-7179	1	LEAD ASSEM.	
C	2		3Y-4168	1	CONNECTOR	
C	3		3Y-4424	1	SWITCH ASSEM.	
C	4		3Y-4426	1	TERMINAL ASSEM.	
C	5		3Y-4425	1	CONTACT ASSEM.	
	6		5A-3621	1	PLUNGER	
	7		5A-3619	1	BOOT ASSEM.	
	8		5A-3618	1	SPRING	
	9		5A-3617	1	RETAINER	
	10		5A-3616	1	SCREW	
	11		5A-3608	2	CONNECTOR PLATE	
	12		5A-3589	1	LEVER ASSEM.	
	13		5A-7172	2	PIN	
	14		5A-7173	2	COTTER PIN	
	15		5A-7176	1	SCREW	
	16		5A-7175	1	GASKET	
	17		5A-7174	1	PIN	
	18		5A-5713	1	CLUTCH ASSEM. (12 Teeth)	
	19		5A-3603	1	SEAL	
	20		5A-7759	1	BRACKET ASSEM.	
			5A-7162	1	SCREW (8mm Dia)	
	21		5A-9290	1	BUSHING	
			5A-6498	1	SCREW (3mm Dia)	
	22		5A-3599	2	SEAL	
	23		5A-3598	1	SEAL	
	24		5A-3602	2	WASHER (0.25mm Thick)	
	25		5A-3601	1	WASHER (3.0mm Thick)	
	26		5A-5791	1	ARMATURE ASSEM.	
	27		5A-3591	4	POLE	
	28		5A-3593	1	FIELD COIL ASSEM.	
	29		5A-6124	1	BAND ASSEM.	
	30		5A-6125	1	PIN (With Hole)	
	31		5A-6126	1	PIN (With Thread)	
	32		3Y-3069	1	MACHINE SCREW	
	33		5A-3595	1	WASHER	
	34		5A-3594	1	WASHER (Insulator)	

5A6522 MOTOR ASSEMBLY--Part 2 of 2

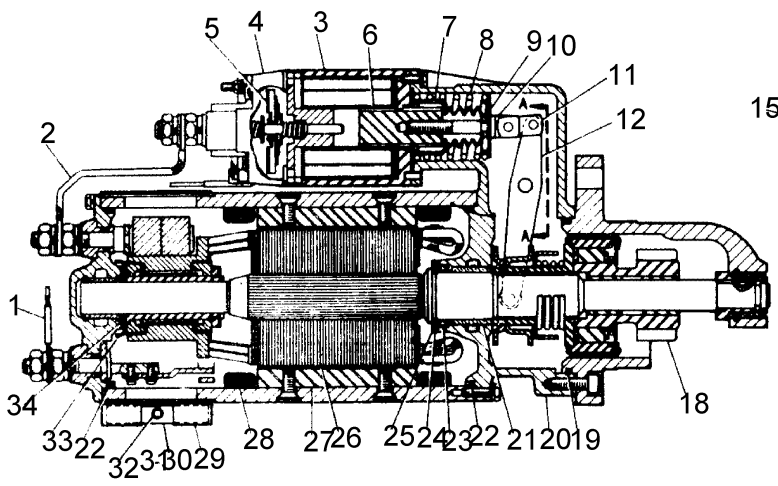

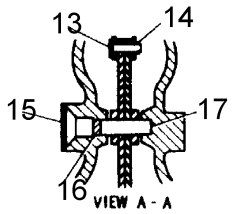

C Indicates Change.

	REF. NO.	PART NUMBER	DESCRIPTION	QTY.
	1	5A7179	LEAD ASSEM.	1
C	2	3Y4168	CONNECTOR	1
C	3	3Y4424	SWITCH ASSEM.	1
C	4	3Y4426	TERMINAL ASSEM.	1
C	5	3Y4425	CONTACT ASSEM.	1
	6	5A3621	PLUNGER	1
	7	5A3619	BOOT ASSEM.	1
	8	5A3618	SPRING	1

REF. NO.	PART NUMBER	DESCRIPTION	QTY.
9	5A3617	RETAINER	1
10	5A3616	SCREW	1
11	5A3608	CONNECTOR PLATE	2
12	5A3589	LEVER ASSEM.	1
13	5A7172	PIN	2
14	5A7173	COTTER PIN	2
15	5A7176	SCREW	1
16	5A7175	GASKET	1

REF. NO.	PART NUMBER	DESCRIPTION	QTY.
17	5A7174	PIN	1
18	5A5713	CLUTCH ASSEM. (12 Teeth)	1
19	5A3603	SEAL	1
20	5A7759	BRACKET ASSEM.	1
	5A7162	SCREW (8mm Dia)	1
21	5A9290	BUSHING	1
	5A6498	SCREW (3mm Dia)	1
22	5A3599	SEAL	2
23	5A3598	SEAL	1
24	5A3602	WASHER (0.25mm Thick)	2
25	5A3601	WASHER (3.0mm Thick)	1
26	5A5791	ARMATURE ASSEM.	1
27	5A3591	POLE	4
28	5A3593	FIELD COIL ASSEM.	1
29	5A6124	BAND ASSEM.	1
30	5A6125	PIN (With Hole)	1
31	5A6126	PIN (With Thread)	1
32	3Y3069	MACHINE SCREW	1
33	5A3595	WASHER	1
34	5A3594	WASHER (Insulator)	1

J13101E

GRAPHIC #1

j13101e

CHARGING ALTERNATOR (3Y1325 N/S)--24Volt, 20Ampere

Effective with Serial No. 65J1474~65J1876
5A8908 Alternator Assembly parts are shown on
Page 140

Key: Y - SEPARATE ILLUSTRATION

SMCS

NOTE	REF NO	GRAPHIC REF	PART NUMBER	QTY	PART NAME 1 2 3 4 5 6 (PRODUCT LEVEL)	LINK PAGE
	1		5A-8909	1	WIRE ASSEM.	
	2		5A-3646	1	TERMINAL	
	3		2L-8076	1	TERMINAL	
	4		9S-4029	1	WIRE ASSEM.	
	5		2L-8076	2	TERMINAL	
	6		4D-4785	1	SWITCH ASSEM.	
	7		3B-8822	1	ELBOW	
	8		9S-4146	1	WIRE ASSEM.	
			6B-2759	1	TERMINAL	
			1F-7240	1	TERMINAL	
Y	9		5A-8908	1	ALTERNATOR ASSEM.	P0180
					(See Separate Illustration)	
	10		9S-1240	1	NUT ASSEM.	
	11		7S-6723	1	BRACKET	
	12		2P-3205	1	BOLT (44.5mm Long)	
	13		2P-3210	1	BOLT (76.2mm Long)	
	14		1D-4574	1	BOLT (152.0mm Long)	
			8M-4791	1	WASHER	

CHARGING ALTERNATOR (3Y1325 N/S)--24Volt, 20Ampere

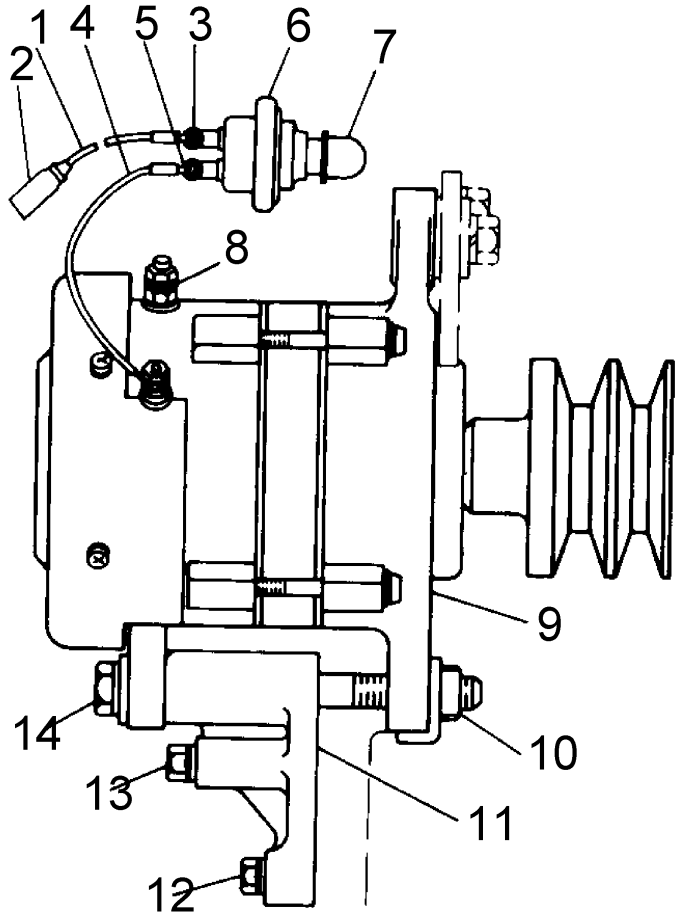

REF. NO.	PART NUMBER	DESCRIPTION	QTY.
1	5A8909	WIRE ASSEM.	1
2	5A3646	TERMINAL	1
3	2L8076	TERMINAL	1
4	9S4029	WIRE ASSEM.	1
5	2L8076	TERMINAL	2
6	4D4785	SWITCH ASSEM.	1
7	3B8822	ELBOW	1
8	9S4146	WIRE ASSEM.	1
	6B2759	TERMINAL	1
	1F7240	TERMINAL	1
9	5A8908	ALTERNATOR ASSEM. (See Separate Illustration)	1
10	9S1240	NUT ASSEM.	1
11	7S6723	BRACKET	1
12	2P3205	BOLT (44.5mm Long)	1
13	2P3210	BOLT (76.2mm Long)	1
14	1D4574	BOLT (152.0mm Long)	1
	8M4791	WASHER	1

J9172E

GRAPHIC #1

j9172e

CHARGING ALTERNATOR (3Y1325 N/S)--24Volt, 20Ampere

Effective with Serial No. 65J1877~65J1961
5A8908 Alternator Assembly parts are shown on
Page 140

Key: Y - SEPARATE ILLUSTRATION

SMCS

NOTE	REF NO	GRAPHIC REF	PART NUMBER	QTY	PART NAME 1 2 3 4 5 6 (PRODUCT LEVEL)	LINK PAGE
	1		5A-8909	1	WIRE ASSEM.	
	2		5A-3646	1	TERMINAL	
	3		2L-8076	1	TERMINAL	
	4		9S-4029	1	WIRE ASSEM.	
	5		2L-8076	2	TERMINAL	
C	6		2N-7744	1	SWITCH	
	7		3B-8822	1	ELBOW	
	8		9S-4146	1	WIRE ASSEM.	
C			2L-8069	1	TERMINAL	
C			2L-8066	1	TERMINAL	
Y	9		5A-8908	1	ALTERNATOR ASSEM.	P0180
					(See Separate Illustration)	
	10		9S-1240	1	NUT ASSEM.	
	11		7S-6723	1	BRACKET	
C	12		0S-1571	1	BOLT (44.5mm Long)	
C	13		0S-1619	1	BOLT (76mm Long)	
	14		1D-4574	1	BOLT (152mm Long)	
			8M-4791	1	WASHER	

CHARGING ALTERNATOR (3Y1325 N/S)--24Volt, 20Ampere

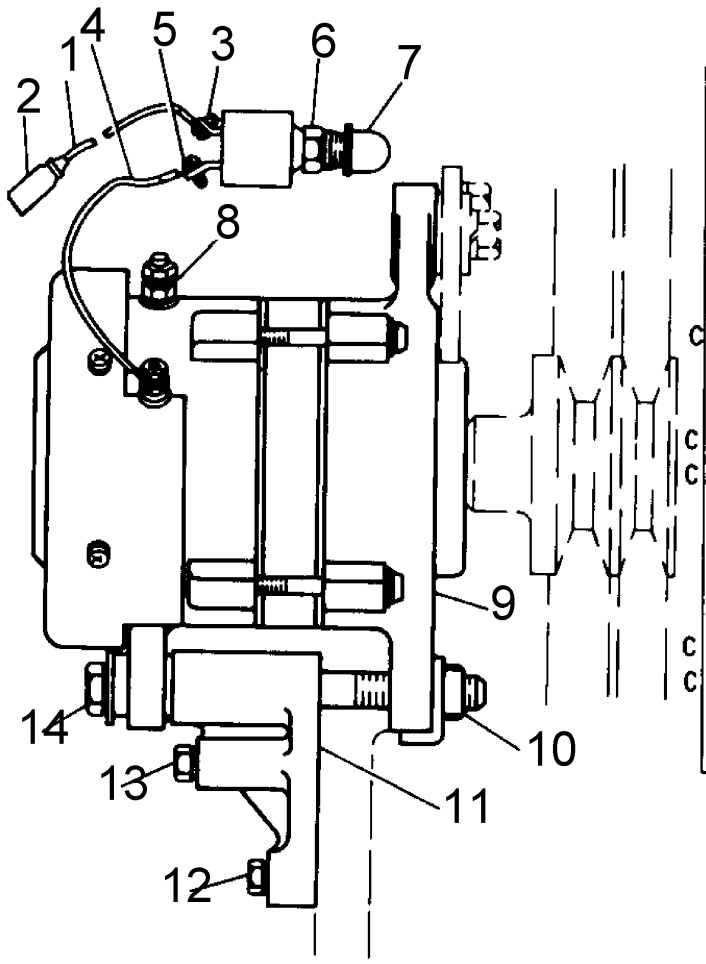

	REF. NO.	PART NUMBER	DESCRIPTION	QTY.
	1	5A8909	WIRE ASSEM.	1
	2	5A3646	TERMINAL	1
	3	2L8076	TERMINAL	1
	4	9S4029	WIRE ASSEM.	1
	5	2L8076	TERMINAL	2
C	6	2N7744	SWITCH	1
	7	3B8822	ELBOW	1
	8	9S4146	WIRE ASSEM.	1
C		2L8069	TERMINAL	1
C		2L8066	TERMINAL	1
	9	5A8908	ALTERNATOR ASSEM. (See Separate Illustration)	1
	10	9S1240	NUT ASSEM.	1
	11	7S6723	BRACKET	1
C	12	S1571	BOLT (44.5mm Long)	1
C	13	S1619	BOLT (76mm Long)	1
	14	1D4574	BOLT (152mm Long)	1
		8M4791	WASHER	1

J11972E

GRAPHIC #1

j11972e

CHARGING ALTERNATOR (3Y4141 N/S)--24Volt, 20Ampere

Effective with Serial No. 65J1962-UP
5A8908 Alternator Assembly parts are shown on
Page 140

Key: Y - SEPARATE ILLUSTRATION

SMCS

NOTE	REF NO	GRAPHIC REF	PART NUMBER	QTY	PART NAME 1 2 3 4 5 6 (PRODUCT LEVEL)	LINK PAGE
	1		5A-8909	1	WIRE ASSEM.	
	2		5A-3646	1	TERMINAL	
	3		2L-8076	1	TERMINAL	
	4		9S-4029	1	WIRE ASSEM.	
	5		2L-8076	2	TERMINAL	
	6		2N-7744	1	SWITCH (Pressure)	
	7		3B-8822	1	ELBOW	
	8		9S-4146	1	WIRE ASSEM.	
			2L-8069	1	TERMINAL	
			2L-8066	1	TERMINAL	
	9		8S-4183	1	STRAP	
	10		0S-1585	2	BOLT	
	11		2S-6735	1	SPACER	
	12		8M-4791	3	WASHER	
	13		9S-6129	1	PULLEY	
Y	14		5A-8908	1	ALTERNATOR ASSEM.	P0180
					(See Separate Illustration)	
	15		9S-1240	1	NUT ASSEM.	
	16		7S-6723	1	BRACKET	
	17		0S-1571	1	BOLT (44.5mm Long)	
	18		0S-1619	1	BOLT (76mm Long)	
	19		1D-4574	1	BOLT (152mm Long)	

CHARGING ALTERNATOR (3Y4141 N/S)--24Volt, 20Ampere

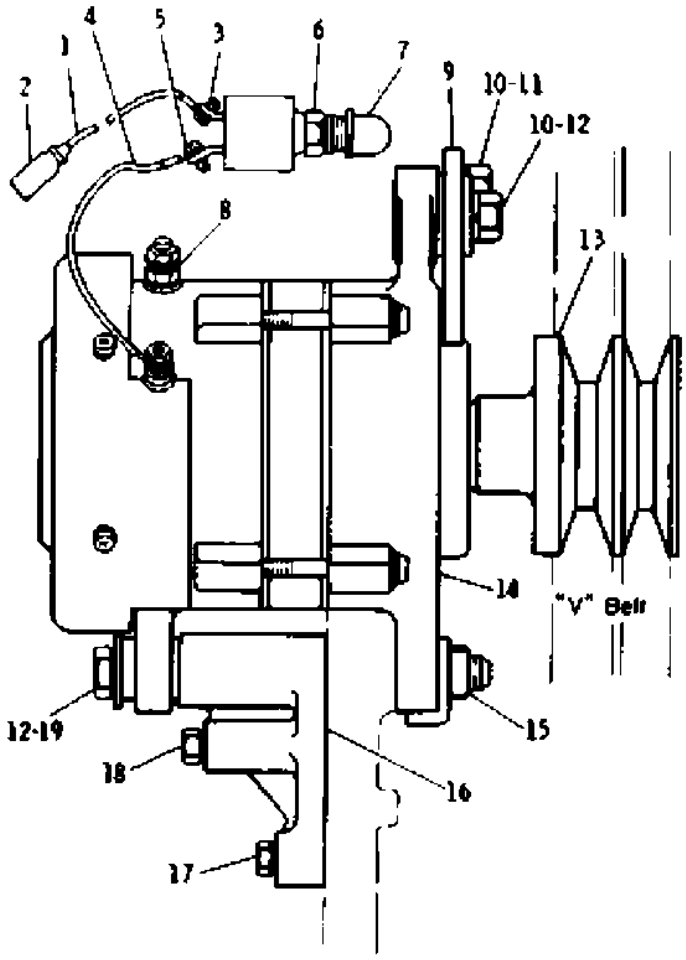

REF. NO.	PART NUMBER	DESCRIPTION	QTY
1	5A8909	WIRE ASSEM.	1
2	5A3646	TERMINAL	1
3	2L8076	TERMINAL	1
4	9S4029	WIRE ASSEM.	1
5	2L8076	TERMINAL	2
6	2N7744	SWITCH (Pressure)	1
7	3B8822	ELBOW	1
8	9S4146	WIRE ASSEM.	1
	2L8069	TERMINAL	1
	2L8066	TERMINAL	1
9	8S4183	STRAP	1
10	S1585	BOLT	2
11	2S6735	SPACER	1
12	8M4791	WASHER	3
13	9S6129	PULLEY	1
14	5A8908	ALTERNATOR ASSEM. (See Sepalate Illustration)	1
15	9S1240	NUT ASSEM.	1
16	7S6723	BRACKET	1
17	S1571	BOLT (44.5mm Long)	1
18	S1619	BOLT (76mm Long)	1
19	1D4574	BOLT (152mm Long)	1

J13012E

GRAPHIC #1 j13012e

3Y1329 ALTERNATOR AND WIRING GROUP--24Volt, 35Ampere

AN ATTACHMENT

Key: Y - SEPARATE ILLUSTRATION

SMCS

NOTE	REF NO	GRAPHIC REF	PART NUMBER	QTY	PART NAME 1 2 3 4 5 6 (PRODUCT LEVEL)	LINK PAGE
Y			3Y-0546	1		
					ALTERNATOR ASSEM.	
					(See Separate Illustration)	
			3Y-1012	1		
					PULLEY	
			3Y-0646	1		
					REGULATOR ASSEM.	
			4B-4276	4		
					WASHER	

5A8908 ALTERNATOR ASSEMBLY--Part 1 of 2

Effective with Serial No. 65J1474-UP
Part of Charging Alternator

Key:

SMCS

NOTE	REF NO	GRAPHIC REF	PART NUMBER	QTY	PART NAME 1 2 3 4 5 6 (PRODUCT LEVEL)	LINK PAGE
	1		5A-9356	2	MACHINE SCREW	
	2		5A-4630	6	LOCKWASHER	
	3		5A-9357	1	BRUSH STUD ASSEM.	
			5A-9365	1	BOLT	
	4		5A-6540	2	NUT	
			5A-4636	2	LOCKWASHER	
	5		5A-9352	1	GASKET	
	6		5A-9338	1	ROTOR ASSEM.	
	7		5A-9339	1	BEARING	
	8		5A-9342	2	SEAL (Lip Type)	
	9		5A-9345	1	STATOR ASSEM.	
	10		5A-9346	2	GASKET	
	11		5A-6503	4	MACHINE SCREW	
	12		5A-9347	1	FAN ASSEM.	
	13		5A-9349	1	BEARING	
	14		5A-9350	1	SEAL (Lip Type)	
	15		3Y-1222	1	NUT	
			3Y-1223	1	WASHER	
			5A-9351	1	LOCKWASHER	
	16		3Y-1455	1	SPACER	
	17		3Y-1454	2	SPACER	
	18		3Y-2434	1	NUT	
			5A-9340	1	LOCKWASHER	
			3Y-1221	1	WASHER	
	19		5A-9341	1	KEY	
	20		3Y-6479	1	RETAINER	
	21		3Y-6478	4	SCREW	
			5A-4629	4	LOCKWASHER	

5A8908 ALTERNATOR ASSEMBLY--Part 1 of 2

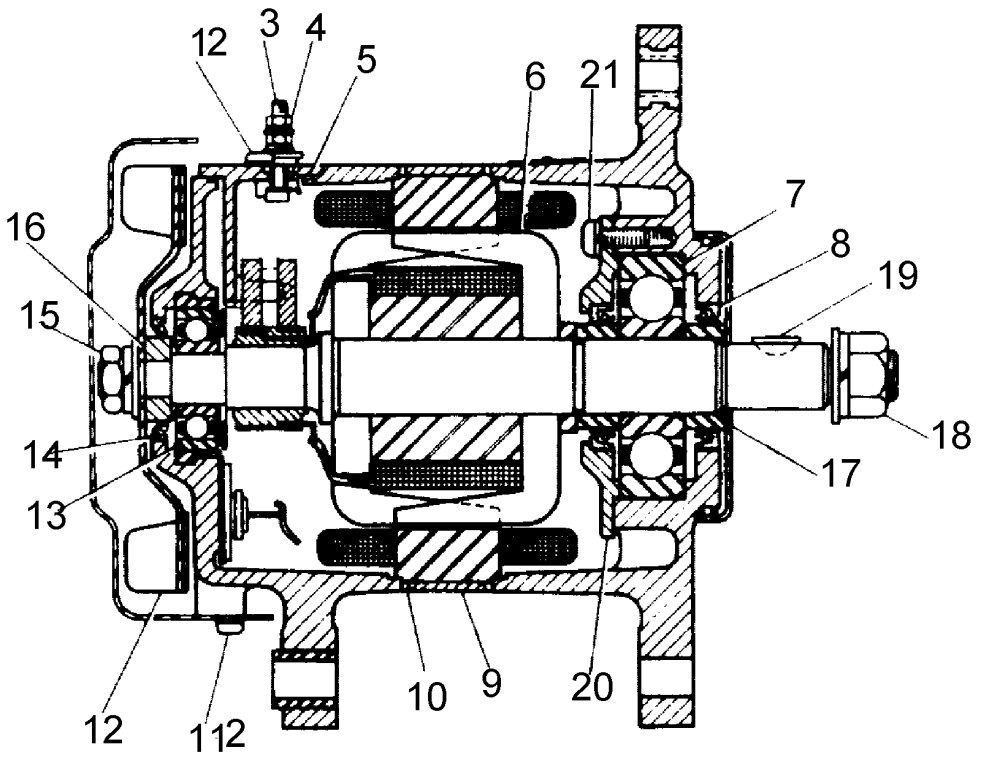

The Following Kit are Available.
3Y4698 BRUSH & BRUSH SPRING KIT ---- 1
(Includes Brush & Brush Spring)

REF. NO.	PART NUMBER	DESCRIPTION	QTY.
1	5A9356	MACHINE SCREW	2
2	5A4630	LOCKWASHER	6
3	5A9357	BRUSH STUD ASSEM.	1
	5A9365	BOLT	1
4	5A6540	NUT	2
	5A4636	LOCKWASHER	2
5	5A9352	GASKET	1
6	5A9338	ROTOR ASSEM.	1
7	5A9339	BEARING	1
8	5A9342	SEAL (Lip Type)	2
9	5A9345	STATOR ASSEM.	1
10	5A9346	GASKET	2
11	5A6503	MACHINE SCREW	4

REF. NO.	PART NUMBER	DESCRIPTION	QTY.
12	5A9347	FAN ASSEM.	1
13	5A9349	BEARING	1
14	5A9350	SEAL (Lip Type)	1
15	3Y1222	NUT	1
	3Y1223	WASHER	1
	5A9351	LOCKWASHER	1
16	3Y1455	SPACER	1
17	3Y1454	SPACER	2
18	3Y2434	NUT	1
	5A9340	LOCKWASHER	1
	3Y1221	WASHER	1
19	5A9341	KEY	1
20	3Y6479	RETAINER	1
21	3Y6478	SCREW	4
	5A4629	LOCKWASHER	4

J15851E

GRAPHIC #1

j15851e

5A8908 ALTERNATOR ASSEMBLY--Part 2 of 2

Effective with Serial No. 65J1474-UP
Part of Charging Alternatar

Key:

SMCS

NOTE	REF NO	GRAPHIC REF	PART NUMBER	QTY	PART NAME 1 2 3 4 5 6 (PRODUCT LEVEL)	LINK PAGE
	1		5A-9348	1	COVER	
	2		5A-9343	1	FRONT BRACKET ASSEM.	
	3		5A-9354	4	MACHINE SCREW	
			5A-4629	4	LOCKWASHER	
			5A-9355	4	WASHER	
	4		5A-9344	1	BAFFLE	
	5		3Y-3112	1	REAR BRACKET ASSEM.	
	6		5A-9363	1	TERMINAL ASSEM.	
			5A-9365	1	BOLT	
	7		5A-9364	1	LEAD ASSEM.	
	8		5A-9368	1	BUSH (Rubber)	
	9		5A-6540	2	NUT	
	10		5A-4630	2	LOCKWASHER	
			5A-9361	2	WASHER	
	11		5A-9369	1	WASHER	
	12		5A-3447	1	WASHER	
	13		5A-9367	1	INSULATOR (Bush)	
	14		5A-9366	1	INSULATOR	
	15		5A-9362	1	TERMINAL ASSEM.	
			5A-9365	1	BOLT	
	16		5A-9361	1	WASHER	
	17		5A-4630	2	LOCKWASHER	
	18		5A-6540	2	NUT	
	19		5A-9373	1	WASHER	
	20		5A-9368	1	BUSH (Rubber)	
	21		3Y-4701	3	DIODE (-)	
	22		5A-9359	1	INSULATOR	
	23		5A-9358	1	HEAT SINK ASSEM.	
	24		3Y-4700	3	DIODE (+)	
	25		5A-9360	3	INSULATOR	
	26		5A-9361	3	WASHER	
			5A-9356	3	MACHINE SCREW	
			5A-4630	3	LOCKWASHER	

5A8908 ALTERNATOR ASSEMBLY--Part 2 of 2

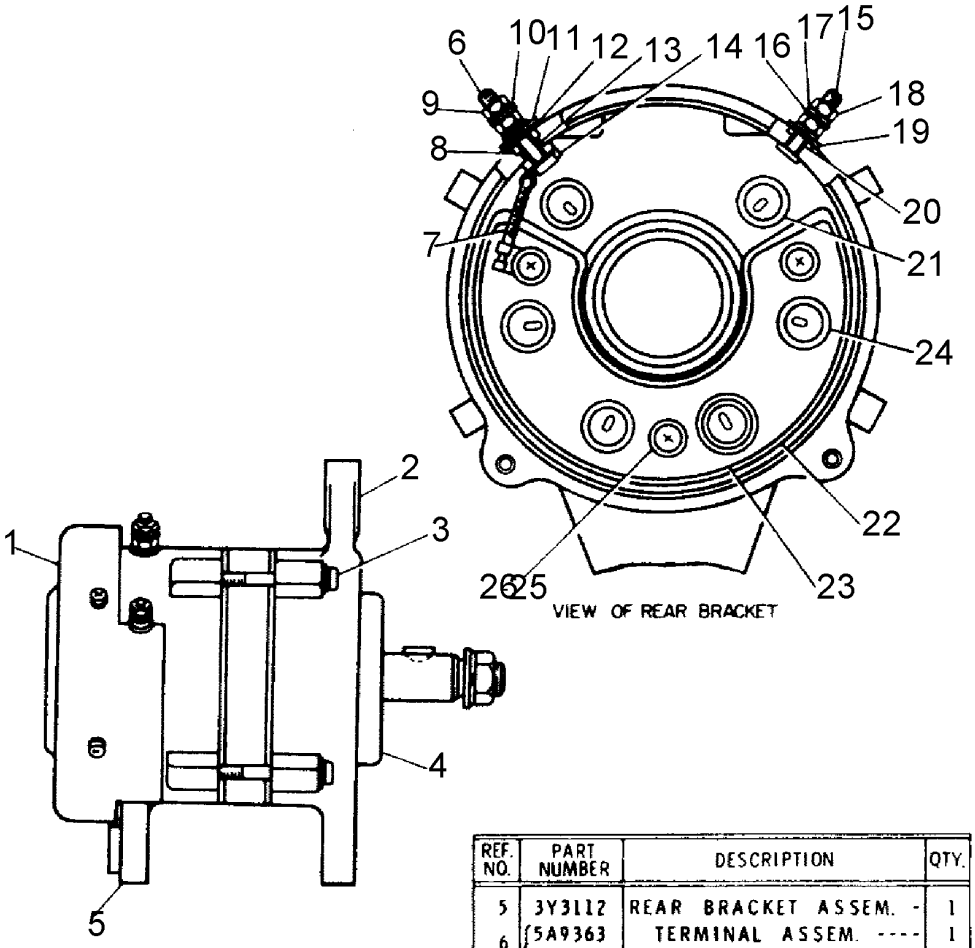

REF. NO.	PART NUMBER	DESCRIPTION	QTY.
1	5A9348	COVER	1
2	5A9343	FRONT BRACKET ASSEM.	1
3	5A9354	MACHINE SCREW	4
	5A4629	LOCKWASHER	4
	5A9355	WASHER	4
4	5A9344	BAFFLE	1

REF. NO.	PART NUMBER	DESCRIPTION	QTY.
5	3Y3112	REAR BRACKET ASSEM.	1
6	5A9363	TERMINAL ASSEM.	1
	5A9365	BOLT	1
7	5A9364	LEAD ASSEM.	1
8	5A9368	BUSH (Rubber)	1
9	5A6540	NUT	2
10	5A4630	LOCKWASHER	2
	5A9361	WASHER	2
11	5A9369	WASHER	1
12	5A3447	WASHER	1
13	5A9367	INSULATOR (Bush)	1
14	5A9366	INSULATOR	1
15	5A9362	TERMINAL ASSEM.	1
	5A9365	BOLT	1
16	5A9361	WASHER	1
17	5A4630	LOCKWASHER	2
18	5A6540	NUT	2
19	5A9373	WASHER	1
20	5A9368	BUSH (Rubber)	1
21	3Y4701	DIODE (-)	3
22	5A9359	INSULATOR	1
23	5A9358	HEAT SINK ASSEM.	1
24	3Y4700	DIODE (+)	3
25	5A9360	INSULATOR	3
26	5A9361	WASHER	3
	5A9356	MACHINE SCREW	3
	5A4630	LOCKWASHER	3

J13107E

3Y546 ALTERNATOR ASSEMBLY

Part of 3Y1329 Alternator and Wiring Group
3Y1261 Rear Bracket Assembly parts are shown on Page 143
AN ATTACHMENT

Key: Y - SEPARATE ILLUSTRATION

SMCS

NOTE	REF NO	GRAPHIC REF	PART NUMBER	QTY	PART NAME 1 2 3 4 5 6 (PRODUCT LEVEL)	LINK PAGE
	1		3Y-1260	1	COVER	
	2		3Y-1258	1	BEARING	
	3		3Y-1257	1	RETAINER	
	4		3Y-1259	1	FAN	
	5		3Y-1256	2	BRUSH ASSEM.	
	6		3Y-1255	1	ROTOR ASSEM.	
	7		3Y-1254	1	STATOR ASSEM.	
	8		3Y-1253	1	GASKET	
	9		3Y-1252	1	RETAINER	
	10		3Y-1249	4	BOLT	
	11		3Y-1250	4	LOCKWASHER	
	12		3Y-1251	4	WASHER	
	13		3Y-1248	1	BEARING	
	14		3Y-1247	1	KEY	
	15		3Y-1245	1	NUT	
	16		3Y-1246	1	LOCKWASHER	
	17		3Y-1244	1	FRONT BRACKET ASSEM.	
	18		3Y-1242	3	BOLT	
	19		3Y-1243	3	LOCKWASHER	
Y	20		3Y-1261	1	REAR BRACKET ASSEM.	P0183
					(See Separate Illustration)	
	21		3Y-1277	1	COVER	
	22		3Y-1276	1	GASKET	

3Y546 ALTERNATOR ASSEMBLY

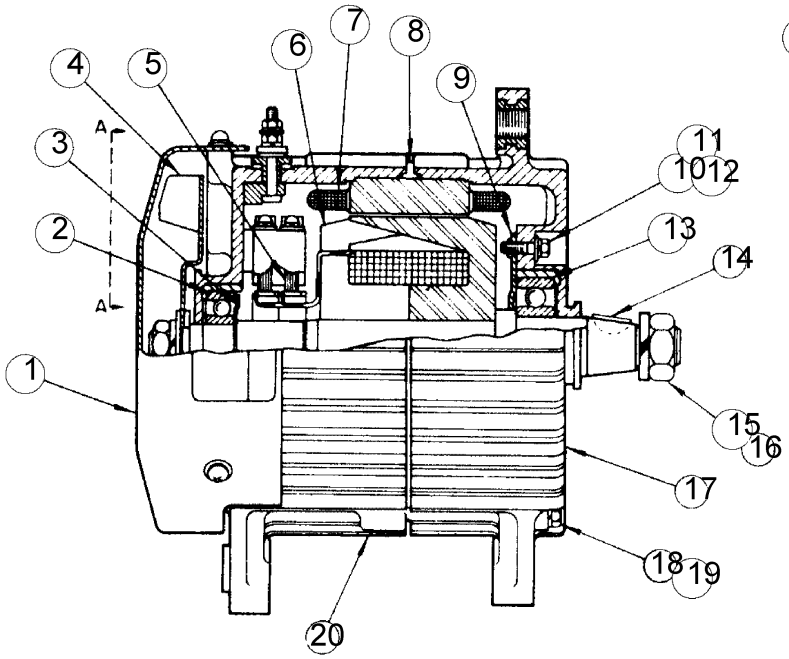

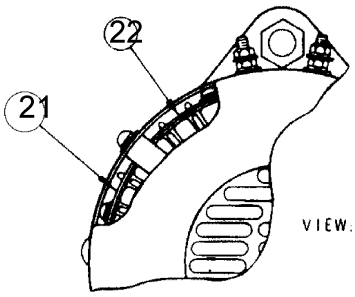

REF. NO.	PART NUMBER	DESCRIPTION	QTY.
1	3Y1260	COVER	1
2	3Y1258	BEARING	1
3	3Y1257	RETAINER	1
4	3Y1259	FAN	1
5	3Y1256	BRUSH ASSEM.	2
6	3Y1255	ROTOR ASSEM.	1
7	3Y1254	STATOR ASSEM.	1
8	3Y1253	GASKET	1
9	3Y1252	RETAINER	1
10	3Y1249	BOLT	4
11	3Y1250	LOCKWASHER	4
12	3Y1251	WASHER	4
13	3Y1248	BEARING	1
14	3Y1247	KEY	1
15	3Y1245	NUT	1
16	3Y1246	LOCKWASHER	1
17	3Y1244	FRONT BRACKET ASSEM.	1
18	3Y1242	BOLT	3
19	3Y1243	LOCKWASHER	3
20	3Y1261	REAR BRACKET ASSEM. (See Separate Illustration)	1
21	3Y1277	COVER	1
22	3Y1276	GASKET	1

J7061E

GRAPHIC #1

j7061e

3Y1261 REAR BRACKET ASSEMBLY

Part of 3Y546 Alternator Assembly
AN ATTACHMENT

Key:

SMCS

NOTE	REF NO	GRAPHIC REF	PART NUMBER	QTY	PART NAME 1 2 3 4 5 6 (PRODUCT LEVEL)	LINK PAGE
	1		3Y-1269	3	BUSH	
			3Y-1274	3	WASHER	
	2		3Y-1266	4	INSULATOR	
			3Y-1267	5	COLLER	
			3Y-1268	4	BOLT	
			3Y-1251	4	WASHER	
			3Y-1275	8	NUT	
	3		3Y-1272	2	WIRE ASSEM.	
	4		3Y-1263	1	BRUSH HOLDER	
	5		3Y-1271	1	WIRE ASSEM.	
	6		3Y-1273	3	WIRE ASSEM.	
	7		3Y-1265	1	RECTIFIER ASSEM.	
	8		3Y-1264	1	RECTIFIER ASSEM.	
	9		3Y-1270	1	WIRE ASSEM.	

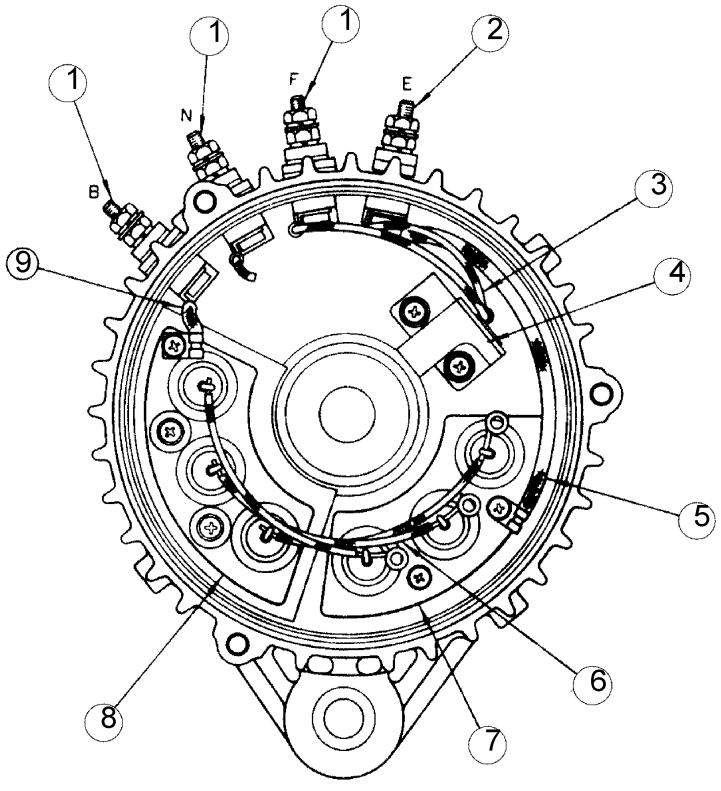

REF. NO.	PART NUMBER	DESCRIPTION	QTY.
1	3Y1269	BUSH	3
	3Y1274	WASHER	3
	3Y1266	INSULATOR	4
	3Y1267	COLLER	5
2	3Y1268	BOLT	4
	3Y1251	WASHER	4
	3Y1275	NUT	8
3	3Y1272	WIRE ASSEM.	2
4	3Y1263	BRUSH HOLDER	1
5	3Y1271	WIRE ASSEM.	1
6	3Y1273	WIRE ASSEM.	3
7	3Y1265	RECTIFIER ASSEM.	1
8	3Y1264	RECTIFIER ASSEM.	1
9	3Y1270	WIRE ASSEM.	1

J7062E

GRAPHIC #1

j7062e

BATTERY AND WIRING (3Y490 N/S)--Part 1 of 2

Effective with Serial No. 65J1474~65J1590
3Y491 Harness Assembly parts are shown on Page 155

Key: Y - SEPARATE ILLUSTRATION

SMCS

NOTE	REF NO	GRAPHIC REF	PART NUMBER	QTY	PART NAME 1 2 3 4 5 6 (PRODUCT LEVEL)	LINK PAGE
	1		6B-2366	1	CONNECTOR	
	2		5F-5990	2	CLIP	
	3		4K-5803	2	TIE	
Y	4		3Y-0491	1	HARNESS ASSEM.	
					(See Separate Illustration)	
	5		3S-3945	1	WIRE ASSEM.	
			1F-7240	2	TERMINAL	
					(Part of 3S3945 Wire Assem.)	
	8		4S-9261	2	BATTERY	
	9		4K-3087	2	MAT	
	10		4D-3946	1	CABLE ASSEM.	
	11		2M-0913	1	TERMINAL (Disconnect Switch)	
	12		5A-4150	1	TERMINAL ASSEM. (-)	
					(Parts of 4D3946 Cable Assem.)	
	13		1M-6119	1	BOLT	
			1M-6120	1	NUT	
					(Parts of 5A4150 Terminal Assem.)	
	14		4K-6689	1	CABLE ASSEM.	
	15		5A-4150	1	TERMINAL ASSEM. (-)	
	16		5A-4149	1	TERMINAL ASSEM. (+)	
					(Parts of 4K6689 Cable Assem.)	
	17		1M-6119	2	BOLT	
			1M-6120	2	NUT	
					(1 Each in 5A4149 and 5A4150 Terminal Assem.)	
	18		4K-6697	2	HOLD DOWN ASSEM.	
	19		4K-5715	8	BOLT	
			1B-4330	8	NUT	
			4B-4276	16	WASHER	
			3B-4605	8	COTTER PIN	
			3B-4504	8	LOCKWASHER	
	20		8K-6880	1	WIRE ASSEM.	
	21		1F-7240	1	TERMINAL	
			3M-6018	1	TERMINAL	
			2R-1033	1	WASHER	
			2R-1034	1	SHELL	
					(Parts of 8K6880 Wire Assem.)	

BATTERY AND WIRING (3Y490 N/S)--Part 1 of 2

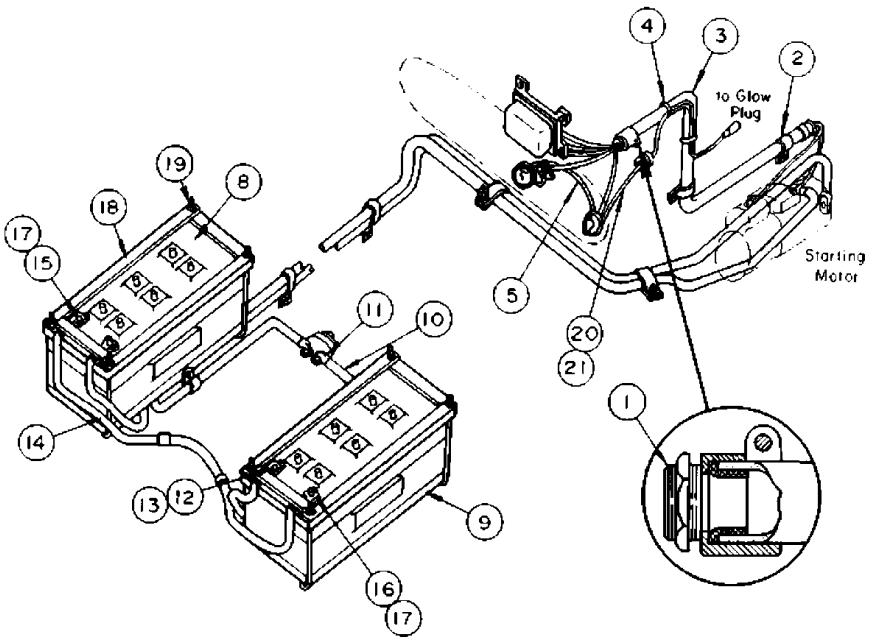

REF NO.	PART NUMBER	DESCRIPTION	QTY
1	5B2366	CONNECTOR	1
2	5F5990	CLIP	2
3	4K5803	TIE	2
4	3Y491	HARNESS ASSEM.	1
		(See Separate Illustration)	
5	3S3945	WIRE ASSEM.	1
	1F7240	TERMINAL	2
		(Part of 3S3945 Wire Assem.)	
8	4S9261	BATTERY	2
9	4K3087	MAT	2
10	4D3946	CABLE ASSEM.	1
11	2M913	TERMINAL (Disconnect Switch)	1
12	5A4150	TERMINAL ASSEM. (-)	1
		(Parts of 4D3946 Cable Assem.)	
13	1M6119	BOLT	1
	1M6120	NUT	1
		(Parts of 5A4150 Terminal Assem.)	
14	4K6689	CABLE ASSEM.	1
15	5A4150	TERMINAL ASSEM. (-)	1
16	5A4149	TERMINAL ASSEM. (+)	1
		(Parts of 4K6689 Cable Assem.)	
17	1M6119	BOLT	2
	1M6120	NUT	2
		(Each in 5A4149 and 5A4150 Terminal Assem.)	
18	4K6697	HOLD DOWN ASSEM.	2
	4K5715	BOLT	8
	1B4330	NUT	8
19	4B4276	WASHER	16
	3B4605	COTTER PIN	8
	3B4504	LOCKWASHER	8
20	8K6880	WIRE ASSEM.	1
21	1F7240	TERMINAL	1
	3M6018	TERMINAL	1
	2R1033	WASHER	1
	2R1034	SHELL	1
		(Parts of 8K6880 Wire Assem.)	

J6425E

GRAPHIC #1

j6425e

BATTERY AND WIRING (3Y490 N/S)--Part 2 of 2

Effective with Serial No. 65J1474~65J1590
7H7290 Switch Assembly parts are shown on Page 154

Key: Y - SEPARATE ILLUSTRATION

SMCS

NOTE	REF NO	GRAPHIC REF	PART NUMBER	QTY	PART NAME 1 2 3 4 5 6 (PRODUCT LEVEL)	LINK PAGE
Y	1		7H-7290	1	SWITCH ASSEM. (Disconnect)	P0194
					(See Separate Illustration)	
	3		5A-3111	1	PLATE (Instruction)	
Y	4		8S-7713	1	SWITCH ASSEM. (Heat & Start)	P0195
			8F-3437	1	LEVER	
			5L-7200	1	SCREW	
			3B-4501	1	LOCKWASHER	
	5		7F-6429	1	AMMETER	
	6		5M-2555	1	CIRCUIT BREAKER	
			5M-6668	2	SCREW	
			8H-0878	2	LOCKWASHER	
	7		5A-9131	1	REGULATOR	
	8		7B-2742	4	BOLT	
			3B-4504	4	LOCKWASHER	
	9		3Y-0489	1	HARNESS ASSEM.	
	10		5A-3647	3	TERMINAL	
	11		5K-4694	1	CABLE ASSEM.	
	12		2M-0912	1	TERMINAL (Starting Motor)	
	13		2M-0913	1	TERMINAL (Disconnect Switch)	
	14		7K-2045	1	CABLE ASSEM.	
	15		2M-0912	1	TERMINAL	
	16		5A-4149	1	TERMINAL ASSEM. (+)	
	17		1M-6119	1	BOLT	
			1M-6120	1	NUT	
	18		5S-8580	1	WIRE ASSEM.	
			1F-7240	2	TERMINAL	
	19		4D-6466	4	CLIP	
	20		0S-1594	4	BOLT	
			1D-4717	4	NUT	
	21		3B-4506	5	LOCKWASHER	
	22		4D-6988	2	CLIP	
	23		0S-1621	2	BOLT	
			1D-4719	2	NUT	
			3B-4508	2	LOCKWASHER	
	24		9M-8406	3	CLIP	
	25		0S-0509	1	BOLT	
	26		5A-5437	2	CAP	
	27		5A-5436	2	CAP	
	28		2D-9535	1	GROMMET	

BATTERY AND WIRING (3Y490 N/S)--Part 2 of 2

REF. NO.	PART NUMBER	DESCRIPTION	QTY.
1	7H7290	SWITCH ASSEM. (Disconnect) (See Separate Illustration)	1
3	5A3111	PLATE (Instruction)	1
4	8S7713	SWITCH ASSEM. (Heat & Start)	1
	8F3437	LEVER	1
	5L7200	SCREW	1
	3B4501	LOCKWASHER	1
	GMG00698	FORM (English)	1
	GJX00698	FORM (Japanese)	1

REF. NO.	PART NUMBER	DESCRIPTION	QTY.
5	7F6429	AMMETER	1
	5M2555	CIRCUIT BREAKER	1
6	5M6668	SCREW	2
	8H878	LOCKWASHER	2
7	5A9131	REGULATOR	1
8	7B2742	BOLT	4
	3B4504	LOCKWASHER	4
9	3Y489	HARNESS ASSEM.	1
10	5A3647	TERMINAL	3
11	5K4694	CABLE ASSEM.	1
12	2M912	TERMINAL (Starting Motor)	1
13	2M913	TERMINAL (Disconnect Switch)	1
14	7K2045	CABLE ASSEM.	1
15	2M912	TERMINAL	1
16	5A4149	TERMINAL ASSEM.	1
17	1M6119	BOLT	1
	1M6120	NUT	1
18	5S8580	WIRE ASSEM.	1
	1F7240	TERMINAL	2
19	4D6466	CLIP	4
20	S-1594	BOLT	4
	1D4717	NUT	4
21	3B4506	LOCKWASHER	5
22	4D6988	CLIP	2
23	S-1621	BOLT	2
	1D4719	NUT	2
	3B4508	LOCKWASHER	2
24	9M8406	CLIP	3
25	S-509	BOLT	1
26	5A5437	CAP	2
27	5A5436	CAP	2
28	2D9535	GROMMET	1

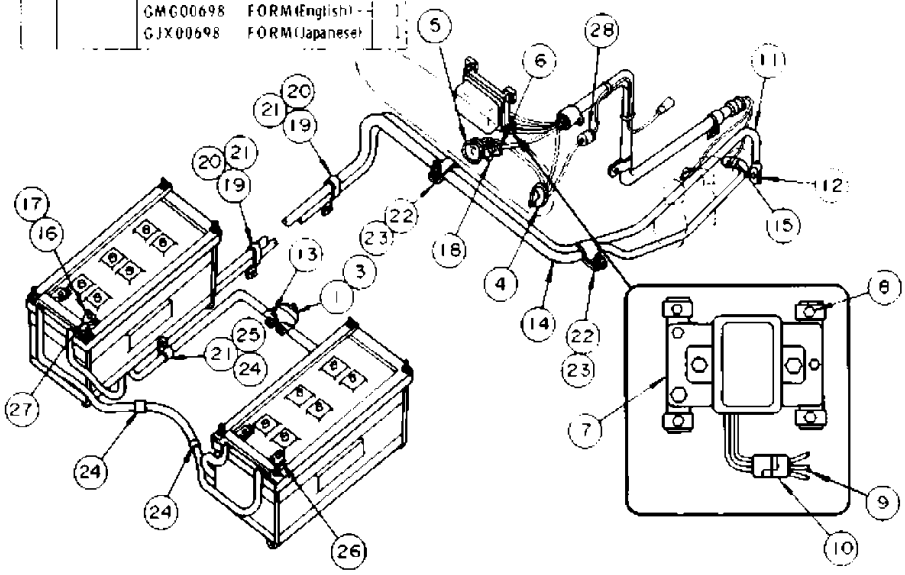

GRAPHIC #1

j12025e

BATTERY AND WIRING (3Y490 N/S)--Part 1 of 2

Effective with Serial No. 65J1591~65J1933
3Y2943 Harness Assembly parts are shown on Page 155

Key: Y - SEPARATE ILLUSTRATION

SMCS

NOTE	REF NO	GRAPHIC REF	PART NUMBER	QTY	PART NAME 1 2 3 4 5 6 (PRODUCT LEVEL)	LINK PAGE
	1		6B-2366	1	CONNECTOR	
	2		5F-5990	2	CLIP	
	3		4K-5803	2	TIE	
Y	4		3Y-2943	1	HARNESS ASSEM.	P0197
					(See Separate Illustration)	
	5		1V-1738	1	WIRE ASSEM.	
			1F-7240	2	TERMINAL	
	6		4S-9261	2	BATTERY	
			5S-8405	6	PLUG (Screw in Type)	
					- OR -	
			7S-5041	6	PLUG (Push in Type)	
	7		4K-3087	2	MAT	
	8		4D-3946	1	CABLE ASSEM.	
	9		2M-0913	1	TERMINAL (Disconnect Switch)	
	10		5A-4150	1	TERMINAL ASSEM. (-)	
	11		1M-6119	1	BOLT	
			1M-6120	1	NUT	
	12		4K-6689	1	CABLE ASSEM.	
	13		5A-4150	1	TERMINAL ASSEM. (-)	
	14		1M-6119	1	BOLT	
			1M-6120	1	NUT	
	15		5A-4149	1	TERMINAL ASSEM. (+)	
	16		1M-6119	1	BOLT	
			1M-6120	1	NUT	
	17		4K-6697	2	HOLD DOWN ASSEM.	
	18		4K-5715	8	BOLT	
			1B-4330	8	NUT	
			4B-4276	16	WASHER	
			3B-4604	8	COTTER PIN	
			3B-4504	8	LOCKWASHER	
	19		8K-6880	1	WIRE ASSEM.	
	20		1F-7240	1	TERMINAL	
			3B-6018	1	TERMINAL	
			3M-6533	1	WASHER	
			3M-6547	1	SHELL	

BATTERY AND WIRING (3Y490 N/S)--Part 1 of 2

REF. NO.	PART NUMBER	DESCRIPTION	QTY.
1	6B2366	CONNECTOR	1
2	5F5990	CLIP	2
3	4K5803	TIE	2
4	3Y2943	HARNESS ASSEM. (See Separate Illustration)	1

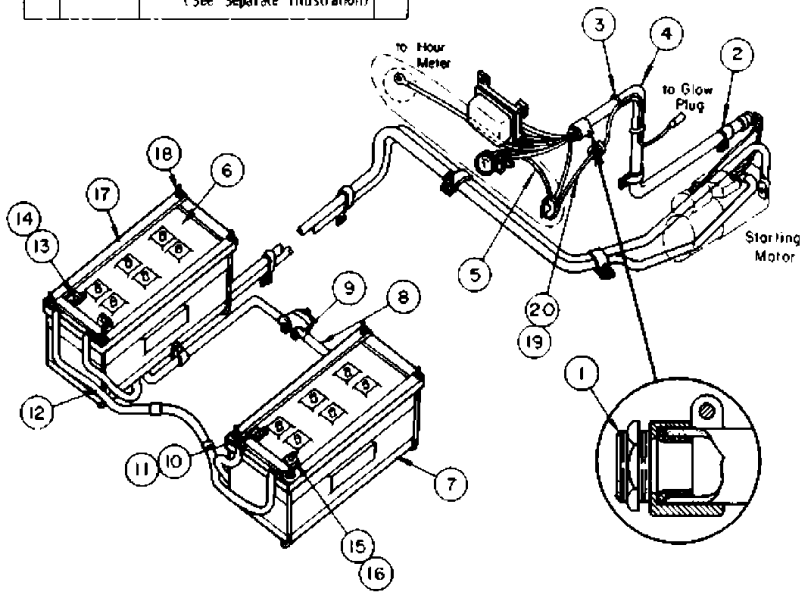

REF. NO.	PART NUMBER	DESCRIPTION	QTY.
5	1V1738	WIRE ASSEM.	1
	1F7240	TERMINAL	2
	4S9261	BATTERY	2
6	5S8405	PLUG (Screw In Type)	6
		- OR -	
	7S5041	PLUG (Push In Type)	6
7	4K3087	MAT	2
8	4D3946	CABLE ASSEM.	1
9	2M913	TERMINAL (Disconnect Switch)	1
10	5A4150	TERMINAL ASSEM. (-)	1
11	1M6119	BOLT	1
	1M6120	NUT	1
12	4K6689	CABLE ASSEM.	1
13	5A4150	TERMINAL ASSEM. (-)	1
14	1M6119	BOLT	1
	1M6120	NUT	1
15	5A4149	TERMINAL ASSEM. (+)	1
16	1M6119	BOLT	1
	1M6120	NUT	1
17	4K6697	HOLD DOWN ASSEM.	2
	4K5715	BOLT	8
	1B4330	NUT	8
18	4B4276	WASHER	16
	3B4604	COTTER PIN	8
	3B4504	LOCKWASHER	8
19	8K6880	WIRE ASSEM.	1
20	1F7240	TERMINAL	1
	3B6018	TERMINAL	1
	3M6533	WASHER	1
	3M6547	SHELL	1

J10391E

GRAPHIC #1

j10391e

BATTERY AND WIRING (3Y490 N/S)--Part 2 of 2

Effective with Serial No. 65J1591~65J1933
7H7290 and 8S7713 Switch Assembly parts are shown on Page 154

Key: Y - SEPARATE ILLUSTRATION

SMCS

NOTE	REF NO	GRAPHIC REF	PART NUMBER	QTY	PART NAME 1 2 3 4 5 6 (PRODUCT LEVEL)	LINK PAGE
Y	1		7H-7290	1	SWITCH ASSEM. (Disconnect Switch)	P0194
					(See Separate Illustration)	
	2		9S-1366	1	BOLT	
	3		5A-3111	1	PLATE	
Y	4		8S-7713	1	SWITCH ASSEM. (Heat - Start)	P0195
					(See Separate Illustration)	
	5		8M-7892	1	AMMETER	
	6		5M-2555	1	CIRCUIT BREAKER	
			5M-6668	2	SCREW	
			8H-0878	2	LOCKWASHER	
	7		5A-9131	1	REGULATOR	
	8		7B-2742	4	BOLT	
			3B-4504	4	LOCKWASHER	
	9		3Y-0489	1	HARNESS ASSEM.	
	10		5A-3647	3	TERMINAL	
	11		5K-4694	1	CABLE ASSEM.	
	12		2M-0912	1	TERMINAL (Starting Motor)	
	13		2M-0913	1	TERMINAL (Disconnect Switch)	
	14		7K-2045	1	CABLE ASSEM.	
	15		2M-0912	1	TERMINAL	
	16		5A-4149	1	TERMINAL ASSEM. (+)	
	17		1M-6119	1	BOLT	
			1M-6120	1	NUT	
	18		5S-8580	1	WIRE ASSEM.	
			1F-7240	2	TERMINAL	
	19		4D-6466	4	CLIP	
	20		0S-1594	4	BOLT	
			1D-4717	4	NUT	
	21		3B-4506	5	LOCKWASHER	
	22		4D-6988	2	CLIP	
	23		1D-4719	2	NUT	
			3B-4508	2	LOCKWASHER	
	24		9M-8406	3	CLIP	
	25		0S-0509	1	BOLT	
	26		5A-5437	2	CAP	
	27		5A-5436	2	CAP	
	28		2D-9535	1	GROMMET	
	29		0S-1621	1	BOLT	

BATTERY AND WIRING (3Y490 N/S)--Part 2 of 2

REF. NO.	PART NUMBER	DESCRIPTION	QTY.
1	7H7290	SWITCH ASSEM. (Disconnect Switch) (See Separate Illustration)	1
2	9S1366	BOLT	1
3	5A3111	PLATE	1
4	8S7713	SWITCH ASSEM. (Heat - Start) (See Separate Illustration)	1

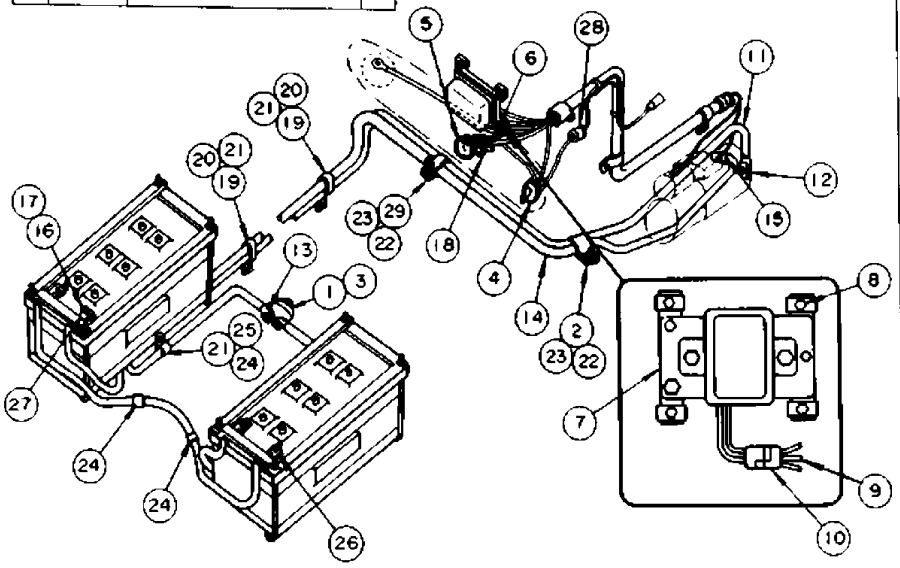

REF. NO.	PART NUMBER	DESCRIPTION	QTY.
5	8M7892	AMMETER	1
	5M2555	CIRCUIT BREAKER	1
6	5M6668	SCREW	2
	8H878	LOCKWASHER	2
7	5A9131	REGULATOR	1
8	7B2742	BOLT	4
	3B4504	LOCKWASHER	4
9	3Y489	HARNESS ASSEM.	1
10	5A3647	TERMINAL	3
11	5K4694	CABLE ASSEM.	1
12	2M912	TERMINAL (Starting Motor)	1
13	2M913	TERMINAL (Disconnect Switch)	1
14	7K2045	CABLE ASSEM.	1
15	2M912	TERMINAL	1
16	5A4149	TERMINAL ASSEM. (+)	1
17	1M6119	BOLT	1
	1M6120	NUT	1
18	5S8580	WIRE ASSEM.	1
	1F7240	TERMINAL	2
19	4D6466	CLIP	4
20	5L594	BOLT	4
	1D4717	NUT	4
21	3B4506	LOCKWASHER	5
22	4D6988	CLIP	2
23	1D4719	NUT	2
	3B4508	LOCKWASHER	2
24	9M8406	CLIP	3
25	5509	BOLT	1
26	5A5437	CAP	2
27	5A5436	CAP	2
28	2D9535	GROMMET	1
29	51621	BOLT	1

J12601E

GRAPHIC #1 j12601e

BATTERY AND WIRING (3Y490 N/S)--Part 1 of 2

Effective with Serial No. 65J1934~65J2054
3Y2943 Harness Assembly parts are shown on Page 155

Key: C - INDICATES CHANGE, Y - SEPARATE ILLUSTRATION

SMCS

NOTE	REF NO	GRAPHIC REF	PART NUMBER	QTY	PART NAME 1 2 3 4 5 6 (PRODUCT LEVEL)	LINK PAGE
	1		6B-2366	1	CONNECTOR	
	2		5F-5990	2	CLIP	
	3		3S-2093	2	STRAP	
Y	4		3Y-2943	1	HARNESS ASSEM.	P0197
					(See Separate Illustration)	
	5		1V-1738	1	WIRE ASSEM.	
			1F-7240	2	TERMINAL	
	6		4S-9261	2	BATTERY	
			5S-8405	6	PLUG (Screw Type)	
					- OR -	
			7S-5041	6	PLUG (Push Type)	
	7		4K-3087	2	MAT	
	8		4D-3946	1	CABLE ASSEM.	
	9		2M-0913	1	TERMINAL (To Disconnect Switch)	
	10		5A-4150	1	TERMINAL ASSEM. (-)	
	11		1M-6119	1	BOLT	
			1M-6120	1	NUT	
C	12		8M-5263	1	CABLE ASSEM.	
	13		3D-2098	2	TERMINAL ASSEM.	
	14		1M-6119	1	BOLT	
			1M-6120	1	NUT	
C	17		2V-6491	2	HOLD DOWN ASSEM.	
	18		4K-5715	8	BOLT	
			1B-4330	8	NUT	
			4B-4276	16	WASHER	
			3B-4605	8	COTTER PIN	
			3B-4504	8	LOCKWASHER	
	19		8K-6880	1	WIRE ASSEM.	
	20		1F-7240	1	TERMINAL	
			3M-6018	1	TERMINAL	
			3M-6533	1	WASHER	
			3M-6547	1	SHELL	

BATTERY AND WIRING (3Y490 N/S)--Part 1 of 2

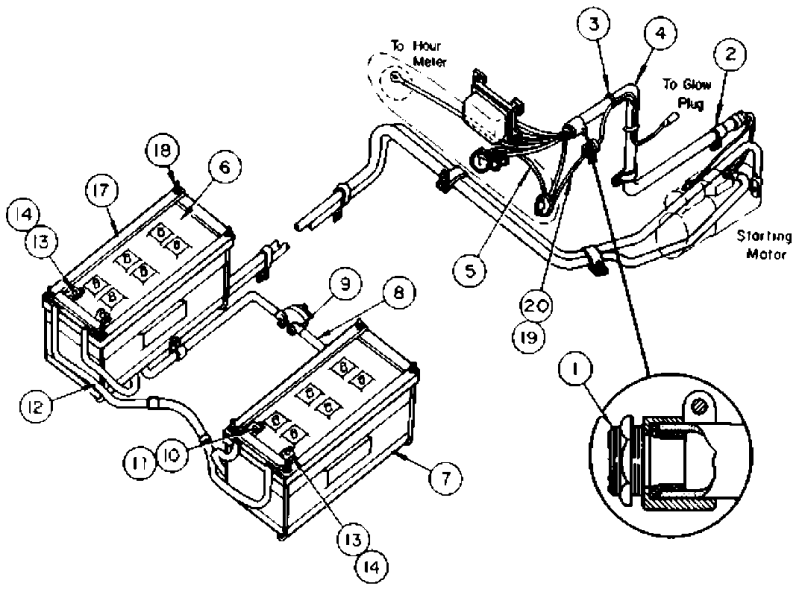

	REF. NO.	PART NUMBER	DESCRIPTION	QTY.
	1	6B2366	CONNECTOR	1
	2	5F5990	CLIP	2
	3	352093	STRAP	2
	4	3Y2943	HARNESS ASSEM. (See Separate Illustration)	1
	5	1V1738	WIRE ASSEM.	1
		1F7240	TERMINAL	2
	6	4S9261	BATTERY	2
		5S8405	PLUG (Screw Type)	6
			-OR-	
		7S5041	PLUG (Push Type)	6
	7	4K3087	MAT	2
	8	4D3946	CABLE ASSEM.	1
	9	2M913	TERMINAL (To Disconnect Switch)	1
	10	5A4150	TERMINAL ASSEM. (-)	1
	11	1M6119	BOLT	1
		1M6120	NUT	1
C	12	8M5263	CABLE ASSEM.	1
	13	3D2098	TERMINAL ASSEM.	2
	14	1M6119	BOLT	1
		1M6120	NUT	1
C	17	2V6491	HOLD DOWN ASSEM.	2
		4K5715	BOLT	8
		1B4330	NUT	8
	18	4B4276	WASHER	16
		3B4605	COTTER PIN	8
		3B4504	LOCKWASHER	8
	19	8K6880	WIRE ASSEM.	1
		1F7240	TERMINAL	1
	20	3M6018	TERMINAL	1
		3M6533	WASHER	1
		3M6547	SHELL	1

J12639E

GRAPHIC #1

j12639e

BATTERY AND WIRING (3Y490 N/S)--Part 2 of 2

Effective with Serial No. 65J1934~65J2054
7H7290 and 8S7713 Switch Assembly parts are shown on Page 154

Key: C - INDICATES CHANGE, Y - SEPARATE ILLUSTRATION

SMCS

NOTE	REF NO	GRAPHIC REF	PART NUMBER	QTY	PART NAME 1 2 3 4 5 6 (PRODUCT LEVEL)	LINK PAGE
Y	1		7H-7290	1	SWITCH ASSEM. (Disconnect Switch)	P0194
					(See Separate Illustration)	
C	2		0S-1621	2	BOLT	
	3		5A-3111	1	PLATE (Japanese)	
			8H-8648	1	PLATE (English)	
Y	4		8S-7713	1	SWITCH ASSEM. (Heat Start)	P0195
					(See Separate Illustration)	
	5		8M-7892	1	AMMETER	
	6		5M-2555	1	CIRCUIT BREAKER	
			5M-6668	2	SCREW	
			8H-0878	2	LOCKWASHER	
	7		5A-9131	1	REGULATOR	
	8		7B-2742	4	BOLT	
			3B-4504	4	LOCKWASHER	
	9		3Y-0489	1	HARNESS ASSEM.	
	10		5A-3647	3	TERMINAL	
					(To Pressure Switch & Alternator E.F. Terminal)	
	11		5K-4694	1	CABLE ASSEM.	
	12		2M-0912	1	TERMINAL (To Starting Motor)	
	13		2M-0913	1	TERMINAL (To Disconnect Switch)	
	14		7K-2045	1	CABLE ASSEM.	
	15		2M-0912	1	TERMINAL (To Starting Motor)	
	16		5A-4149	1	TERMINAL ASSEM. (+)	
	17		1M-6119	1	BOLT	
			1M-6120	1	NUT	
	18		5S-8580	1	WIRE ASSEM.	
			1F-7240	2	TERMINAL	
	19		4D-6466	4	CLIP	
	20		0S-1594	4	BOLT	
			1D-4717	4	NUT	
	21		3B-4506	5	LOCKWASHER	
	22		4D-6988	2	CLIP	
	23		3B-4508	2	LOCKWASHER	
	24		9M-8406	3	CLIP	
	25		0S-0509	1	BOLT	
C	26		6K-8180	1	GROMMET	
	27		1D-4719	2	NUT	

BATTERY AND WIRING (3Y490 N/S)--Part 2 of 2

REF. NO.	PART NUMBER	DESCRIPTION	QTY.
1	7H7290	SWITCH ASSEM. (Disconnect Switch) (See Separate Illustration)	1
C 2	S1621	BOLT	2
3	5A3111	PLATE (Japanese)	1
	8H8648	PLATE (English)	1

C Indicates Change

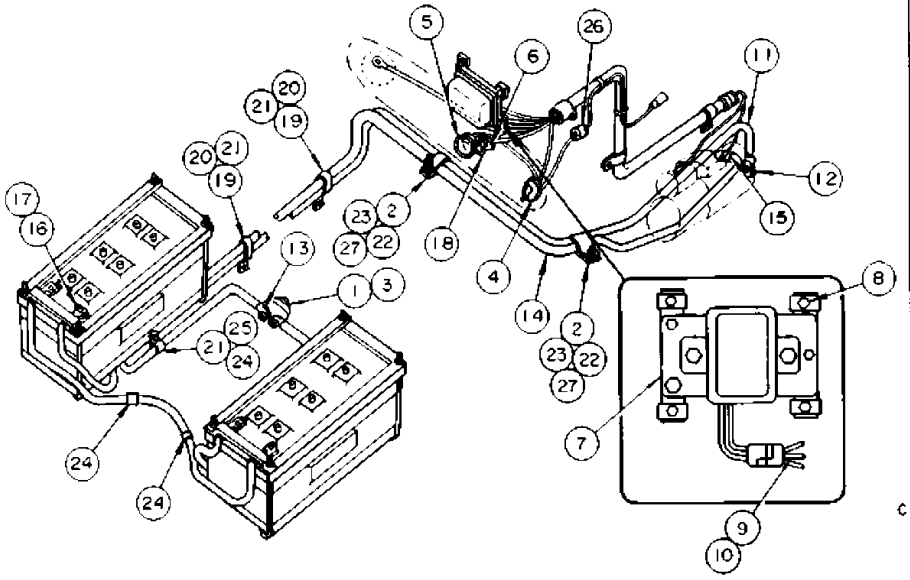

REF. NO.	PART NUMBER	DESCRIPTION	QTY.
4	8S7713	SWITCH ASSEM. (Heat Start) (See Separate Illustration)	1
5	8M7892	AMMETER	1
	5M2555	CIRCUIT BREAKER	1
6	5M6668	SCREW	2
	8H878	LOCKWASHER	2
7	5A9131	REGULATOR	1
8	7B2742	BOLT	4
	3B4504	LOCKWASHER	4
9	3Y489	HARNESS ASSEM.	1
10	5A3647	TERMINAL (To Pressure Switch & Alternator E.F. Terminal)	3
11	5K4694	CABLE ASSEM.	1
12	2M912	TERMINAL (To Starting Motor)	1
13	2M913	TERMINAL (To Disconnect Switch)	1
14	7K2045	CABLE ASSEM.	1
15	2M912	TERMINAL (To Starting Motor)	1
16	5A4149	TERMINAL ASSEM. (+)	1
17	1M6119	BOLT	1
	1M6120	NUT	1
18	5S8580	WIRE ASSEM.	1
	1F7240	TERMINAL	2
19	4D6466	CLIP	4
20	S1594	BOLT	4
	1D4717	NUT	4
21	3B4506	LOCKWASHER	5
22	4D6988	CLIP	2
23	3B4508	LOCKWASHER	2
24	9M8406	CLIP	3
25	S509	BOLT	1
C 26	6K8180	GROMMET	1
27	1D4719	NUT	2

J12640E

GRAPHIC #1 j12640e

BATTERY AND WIRING (3Y490 N/S)--Part 1 of 2

Effective with Serial No. 65J2055-UP
3Y5842 Harness Assembly parts are shown on Page 156

Key: C - INDICATES CHANGE, Y - SEPARATE ILLUSTRATION

SMCS

NOTE	REF NO	GRAPHIC REF	PART NUMBER	QTY	PART NAME 1 2 3 4 5 6 (PRODUCT LEVEL)	LINK PAGE
	1		6B-2366	1	CONNECTOR	
	2		5F-5990	2	CLIP	
	3		3S-2093	2	STRAP	
YC	4		3Y-5842	1	HARNESS ASSEM.	P0198
					(See Separate Illustration)	
	5		1V-1738	1	WIRE ASSEM.	
			1F-7240	2	TERMINAL	
	6		4S-9261	2	BATTERY	
			5S-8405	6	PLUG (Screw Type)	
					-OR-	
			7S-5041	6	PLUG (Push Type)	
	7		4K-3087	2	MAT	
	8		4D-3946	1	CABLE ASSEM.	
	9		2M-0913	1	TERMINAL (To Disconnect Switch)	
	10		5A-4150	1	TERMINAL ASSEM. (-)	
	11		1M-6119	1	BOLT	
			1M-6120	1	NUT	
	12		8M-5263	1	CABLE ASSEM.	
	13		3D-2098	2	TERMINAL ASSEM.	
	14		1M-6119	1	BOLT	
			1M-6120	1	NUT	
	17		2V-6491	2	HOLD DOWN ASSEM.	
	18		4K-5715	8	BOLT	
			1B-4330	8	NUT	
			4B-4276	16	WASHER	
			3B-4605	8	COTTER PIN	
			3B-4504	8	LOCKWASHER	
	19		8K-6880	1	WIRE ASSEM.	
	20		1F-7240	1	TERMINAL	
			3M-6018	1	TERMINAL	
			3M-6533	1	WASHER	
			3M-6547	1	SHELL	

BATTERY AND WIRING (3Y490 N/S)--Part 1 of 2

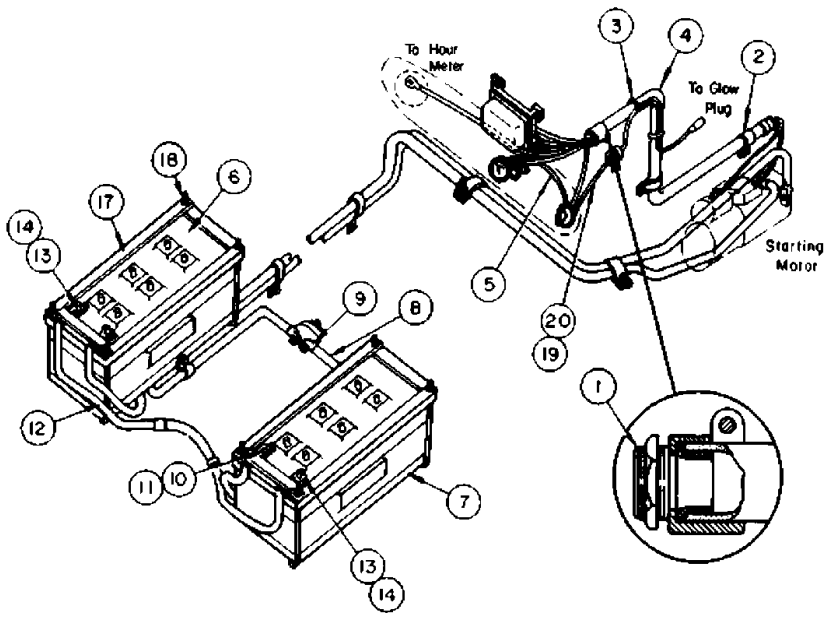

REF. NO.	PART NUMBER	DESCRIPTION	QTY.
1	6B2366	CONNECTOR	1
2	5F5990	CLIP	2
3	3S2093	STRAP	2
C 4	3Y5842	HARNESS ASSEM. (See Separate Illustration)	1
5	1VL738	WIRE ASSEM.	1
	1F7240	TERMINAL	2
6	4S9261	BATTERY	2
	5S8405	PLUG (Screw Type)	6
		-OR-	
	7S5041	PLUG (Push Type)	6
7	4K3087	MAT	2
8	4D3946	CABLE ASSEM.	1
9	2M913	TERMINAL (To Disconnect Switch)	1
10	5A4150	TERMINAL ASSEM. (-)	1
11	1M6119	BOLT	1
	1M6120	NUT	1
12	8M5263	CABLE ASSEM.	1
13	3D2098	TERMINAL ASSEM.	2
14	1M6119	BOLT	1
	1M6120	NUT	1
17	2V6491	HOLD DOWN ASSEM.	2
	4K5715	BOLT	8
	1B4330	NUT	8
18	4B4276	WASHER	16
	3B4605	COTTER PIN	8
	3B4504	LOCKWASHER	8
19	8K6880	WIRE ASSEM.	1
20	1F7240	TERMINAL	1
	3M6018	TERMINAL	1
	3M6533	WASHER	1
	3M6547	SHELL	1

J14329E

GRAPHIC #1

j14329e

BATTERY AND WIRING (3Y490 N/S)--Part 2 of 2

Effective with Serial No. 65J2055-UP
7H7290 and 8S7713 Switch Assembly parts are shown on Page 154

Key: C - INDICATES CHANGE, Y - SEPARATE ILLUSTRATION

SMCS

NOTE	REF NO	GRAPHIC REF	PART NUMBER	QTY	PART NAME 1 2 3 4 5 6 (PRODUCT LEVEL)	LINK PAGE
Y	1		7H-7290	1	SWITCH ASSEM. (Disconnect Switch)	P0194
					(See Separate Illustration)	
C	2		0S-1621	2	BOLT	
	3		5A-3111	1	PLATE (Japanese)	
			8H-8648	1	PLATE (English)	
Y	4		8S-7713	1	SWITCH ASSEM. (Heat Start)	P0195
					(See Separate Illustration)	
	5		8M-7892	1	AMMETER	
	6		5M-2555	1	CIRCUIT BREAKER	
			5M-6668	2	SCREW	
			8H-0878	2	LOCKWASHER	
	7		5A-9131	1	REGULATOR	
	8		7B-2742	4	BOLT	
			3B-4504	4	LOCKWASHER	
	9		3Y-0489	1	HARNESS ASSEM.	
	10		5A-3647	3	TERMINAL	
					(To Pressure Switch & Alternator E.F. Terminal)	
	11		5K-4694	1	CABLE ASSEM.	
	12		2M-0912	1	TERMINAL (To Starting Motor)	
	13		2M-0913	1	TERMINAL (To Disconnect Switch)	
	14		7K-2045	1	CABLE ASSEM.	
	15		2M-0912	1	TERMINAL (To Starting Motor)	
	16		5A-4149	1	TERMINAL ASSEM. (+)	
	17		1M-6119	1	BOLT	
			1M-6120	1	NUT	
	18		5S-8580	1	WIRE ASSEM.	
			1F-7240	2	TERMINAL	
	19		4D-6466	4	CLIP	
	20		0S-1594	4	BOLT	
			1D-4717	4	NUT	
	21		3B-4506	5	LOCKWASHER	
	22		4D-6988	2	CLIP	
	23		3B-4508	2	LOCKWASHER	
	24		9M-8406	3	CLIP	
	25		0S-0509	1	BOLT	
C	26		6K-8180	1	GROMMET	
	27		1D-4719	2	NUT	

BATTERY AND WIRING (3Y490 N/S)--Part 2 of 2

REF. NO.	PART NUMBER	DESCRIPTION	QTY.
1	7H7290	SWITCH ASSEM. (Disconnect Switch) (See Separate Illustration)	1
C 2	S1621	BOLT	2
3	5A3111	PLATE (Japanese)	1
	8H8648	PLATE (English)	1

C Indicates Change

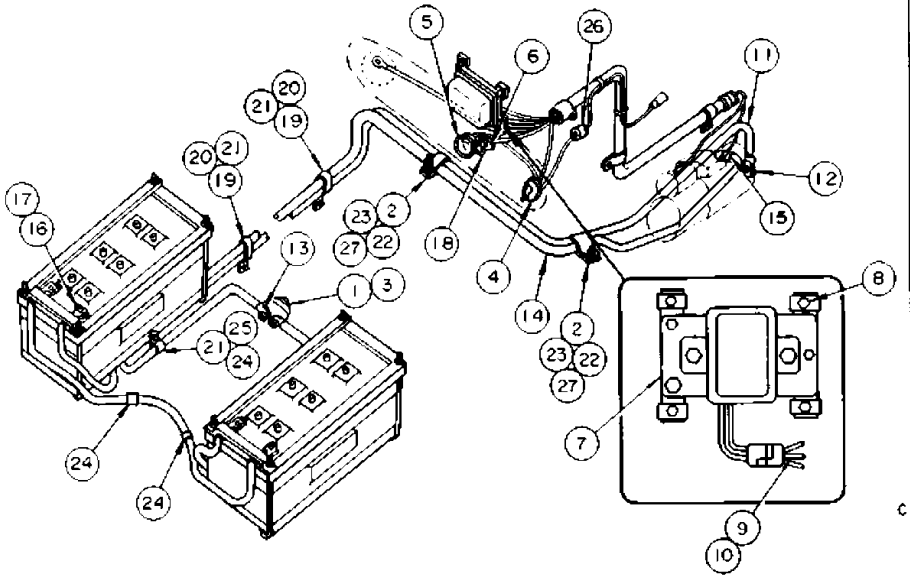

REF. NO.	PART NUMBER	DESCRIPTION	QTY.
4	8S7713	SWITCH ASSEM. (Heat Start) (See Separate Illustration)	1
5	8M7892	AMMETER	1
	5M2555	CIRCUIT BREAKER	1
6	5M6668	SCREW	2
	8H878	LOCKWASHER	2
7	5A9131	REGULATOR	1
8	7B2742	BOLT	4
	3B4504	LOCKWASHER	4
9	3Y489	HARNESS ASSEM.	1
10	5A3647	TERMINAL (To Pressure Switch & Alternator E.F. Terminal)	3
11	5K4694	CABLE ASSEM.	1
12	2M912	TERMINAL (To Starting Motor)	1
13	2M913	TERMINAL (To Disconnect Switch)	1
14	7K2045	CABLE ASSEM.	1
15	2M912	TERMINAL (To Starting Motor)	1
16	5A4149	TERMINAL ASSEM. (+)	1
17	1M6119	BOLT	1
	1M6120	NUT	1
18	5S8580	WIRE ASSEM.	1
	1F7240	TERMINAL	2
19	4D6466	CLIP	4
20	S1594	BOLT	4
	1D4717	NUT	4
21	3B4506	LOCKWASHER	5
22	4D6988	CLIP	2
23	3B4508	LOCKWASHER	2
24	9M8406	CLIP	3
25	S509	BOLT	1
C 26	6K8180	GROMMET	1
27	1D4719	NUT	2

J12640E

GRAPHIC #1 j12640e

BATTERY AND WIRING (3Y490 N/S)--Wiring Diagram

Effective with Serial No. 65J1474~65J1590

Key:

SMCS

NOTE	REF NO	GRAPHIC REF	PART NUMBER	QTY	PART NAME 1 2 3 4 5 6 (PRODUCT LEVEL)	LINK PAGE

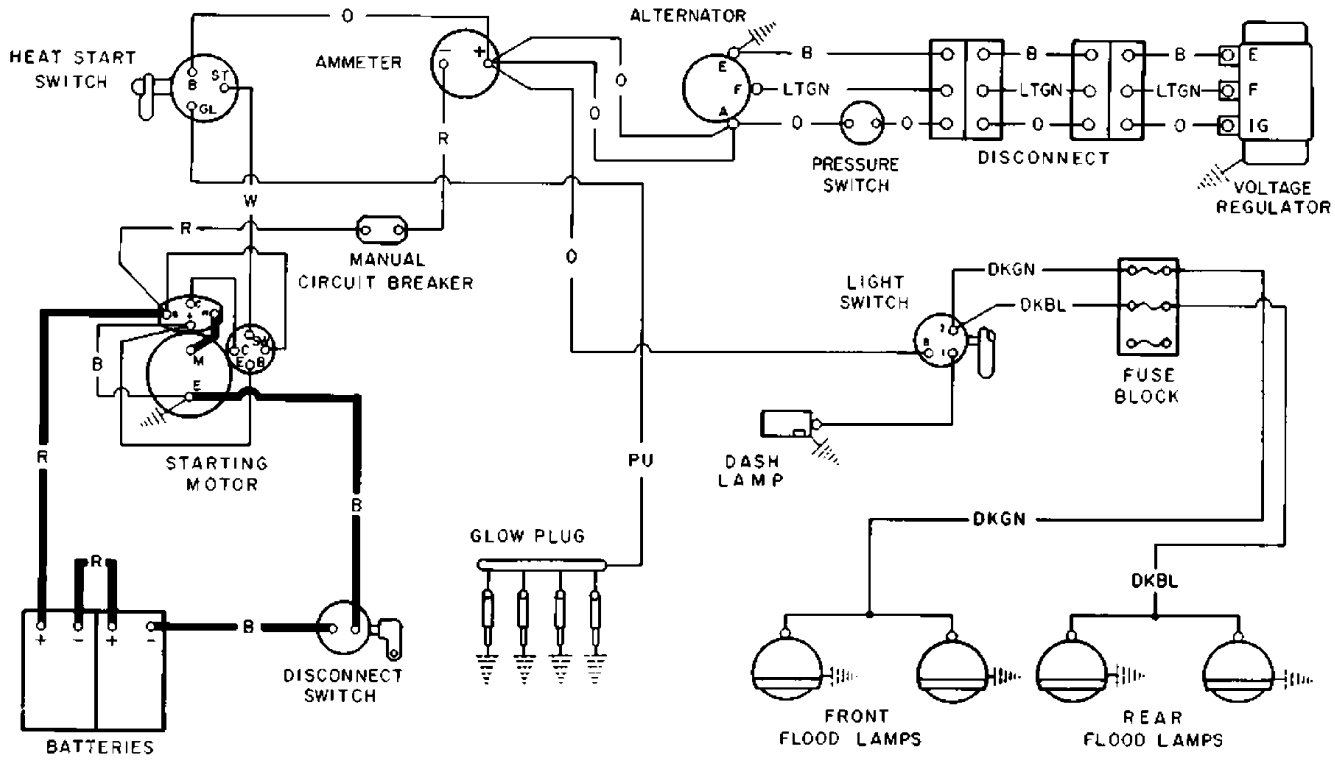

GRAPHIC #1

j6464e

BATTERY AND WIRING (3Y490 N/S)--Wiring Diagram

Effective with Serial No. 65J1591-UP

Key:

SMCS

NOTE	REF NO	GRAPHIC REF	PART NUMBER	QTY	PART NAME 1 2 3 4 5 6 (PRODUCT LEVEL)	LINK PAGE

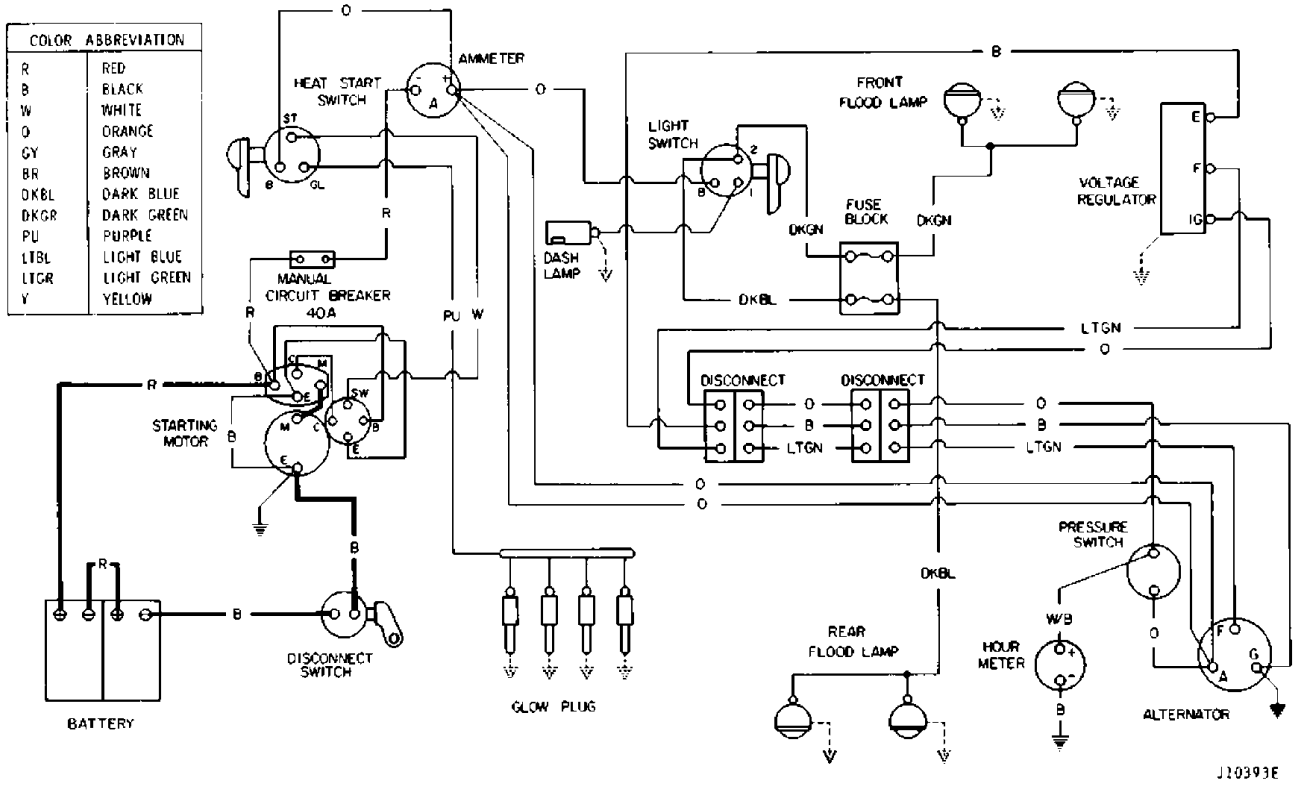

GRAPHIC #1 j10393e

7H7290 DISCONNECT SWITCH ASSEMBLY

Effective with Serial No. 65J1474-UP
Part of Battery and Wiring

Key:

SMCS

NOTE	REF NO	GRAPHIC REF	PART NUMBER	QTY	PART NAME 1 2 3 4 5 6 (PRODUCT LEVEL)	LINK PAGE
			8H-5303	1	NUT	
			6F-7045	4	NUT	
			7F-7259	4	LOCKWASHER	
			2H-3922	1	LOCKWASHER	
			8H-5306	1	KEY	

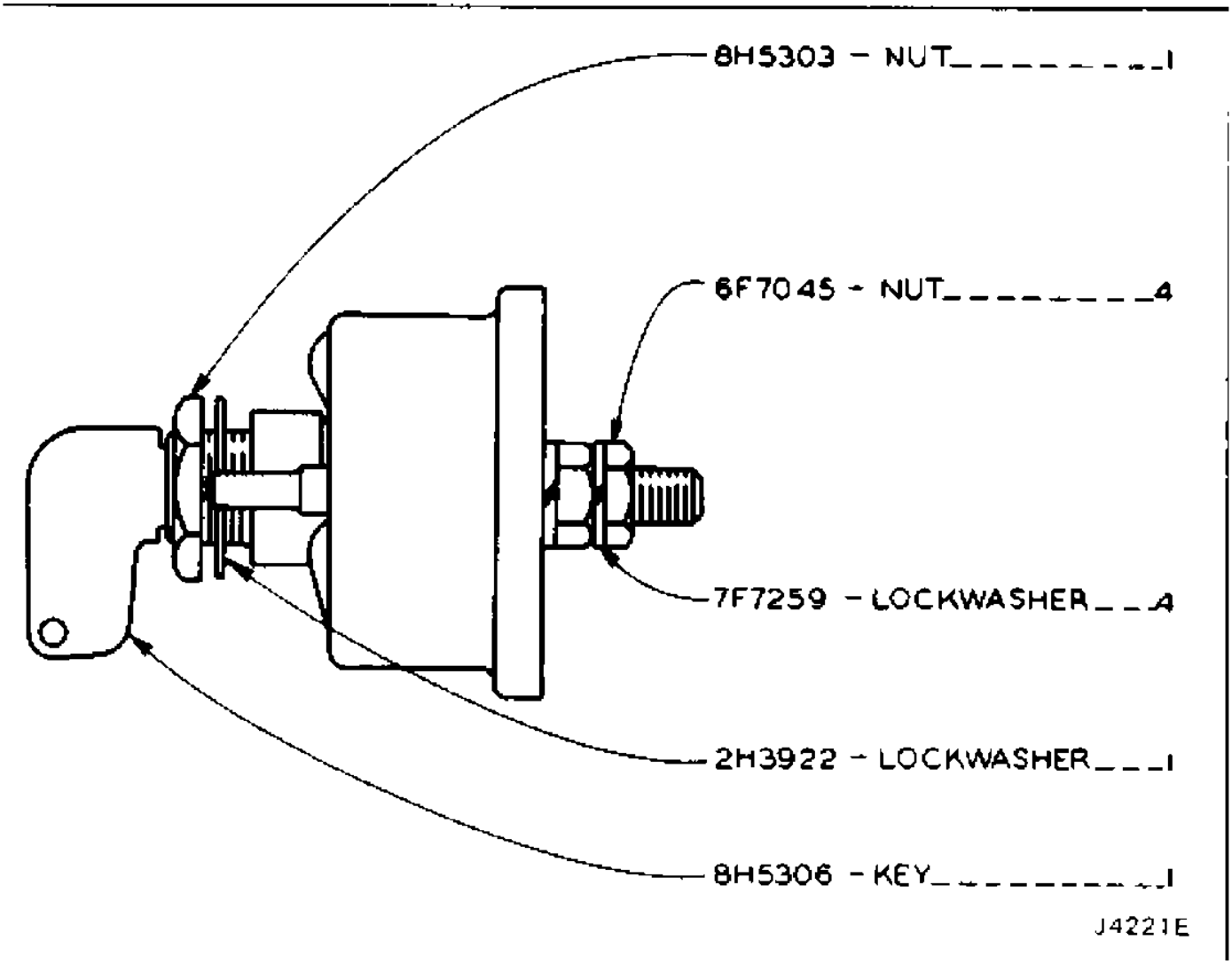

GRAPHIC #1

j4221e

8S7713 HEAT AND START SWITCH ASSEMBLY

Effective with Serial No. 65J1591-UP
Part of Battery and Wiring

Key:

SMCS

NOTE	REF NO	GRAPHIC REF	PART NUMBER	QTY	PART NAME 1 2 3 4 5 6 (PRODUCT LEVEL)	LINK PAGE
	1		8F-3437	1	LEVER	
	2		5L-7200	1	SCREW	
	3		3B-4501	1	LOCKWASHER	

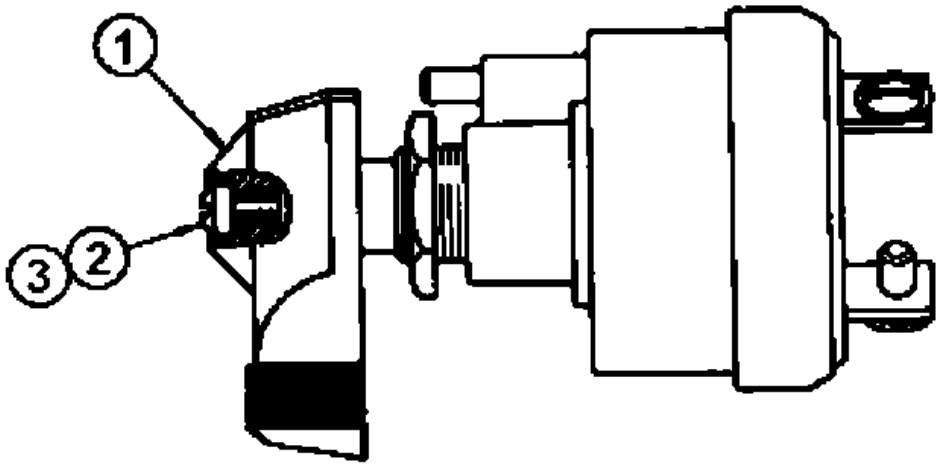

GRAPHIC #1

j8005e

3Y491 HARNESS ASSEMBLY

Effective with Serial No. 65J1474~65J1590
Part of Battery and Wiring

Key:

SMCS

NOTE	REF NO	GRAPHIC REF	PART NUMBER	QTY	PART NAME 1 2 3 4 5 6 (PRODUCT LEVEL)	LINK PAGE
	1		7K-9186	2	FERRULE	
	2		2L-8058	1	TERMINAL	
	3		4K-6494	1	TERMINAL	
	4		2L-8071	1	TERMINAL	
	5		4K-6495	2	TERMINAL	
	6		5K-0786	1	TERMINAL	
	7		5A-3646	3	TERMINAL	
	8		2L-8076	2	TERMINAL	
	9		5A-3647	1	TERMINAL	

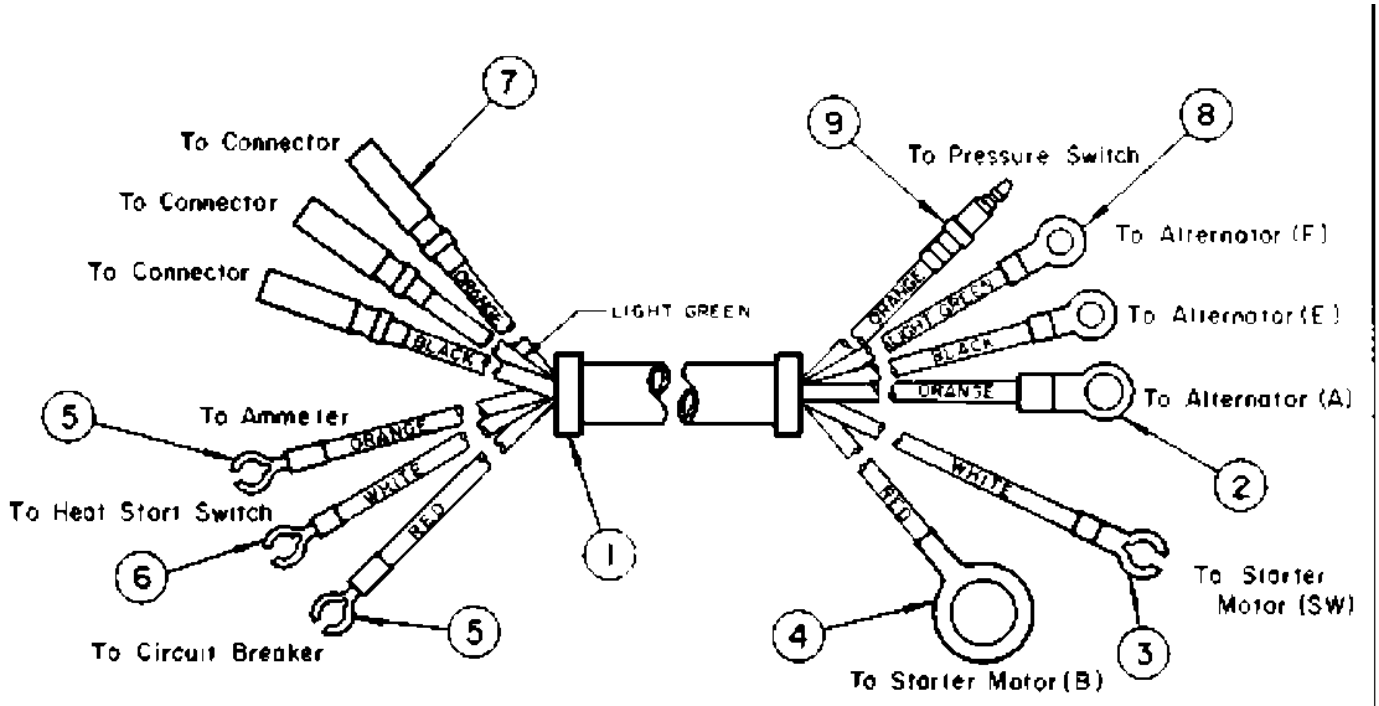

REF NO	PART NUMBER	DESCRIPTION	QTY
1	7K9186	FERRULE	2
2	2L8058	TERMINAL	1
3	4K6494	TERMINAL	1
4	2L8071	TERMINAL	1
5	4K6495	TERMINAL	2

REF NO	PART NUMBER	DESCRIPTION	QTY
6	5K786	TERMINAL	1
7	5A3646	TERMINAL	3
8	2L8076	TERMINAL	2
9	5A3647	TERMINAL	1

J6459E

GRAPHIC #1

j6459e

3Y2943 HARNESS ASSEMBLY

Effective with Serial No. 65J1591~65J2054
Part of Battery and Wiring

Key:

SMCS

NOTE	REF NO	GRAPHIC REF	PART NUMBER	QTY	PART NAME 1 2 3 4 5 6 (PRODUCT LEVEL)	LINK PAGE
	1		5A-3646	3	TERMINAL	
	2		5A-3647	1	TERMINAL	
	3		2L-8076	2	TERMINAL	
	4		2L-8058	1	TERMINAL	
	5		4K-6494	1	TERMINAL	
	6		2L-8071	1	TERMINAL	
	7		7K-9186	2	FERRULE	
	8		2D-8781	1	TERMINAL	
	9		5K-0786	1	TERMINAL	
	10		4K-6495	2	TERMINAL	

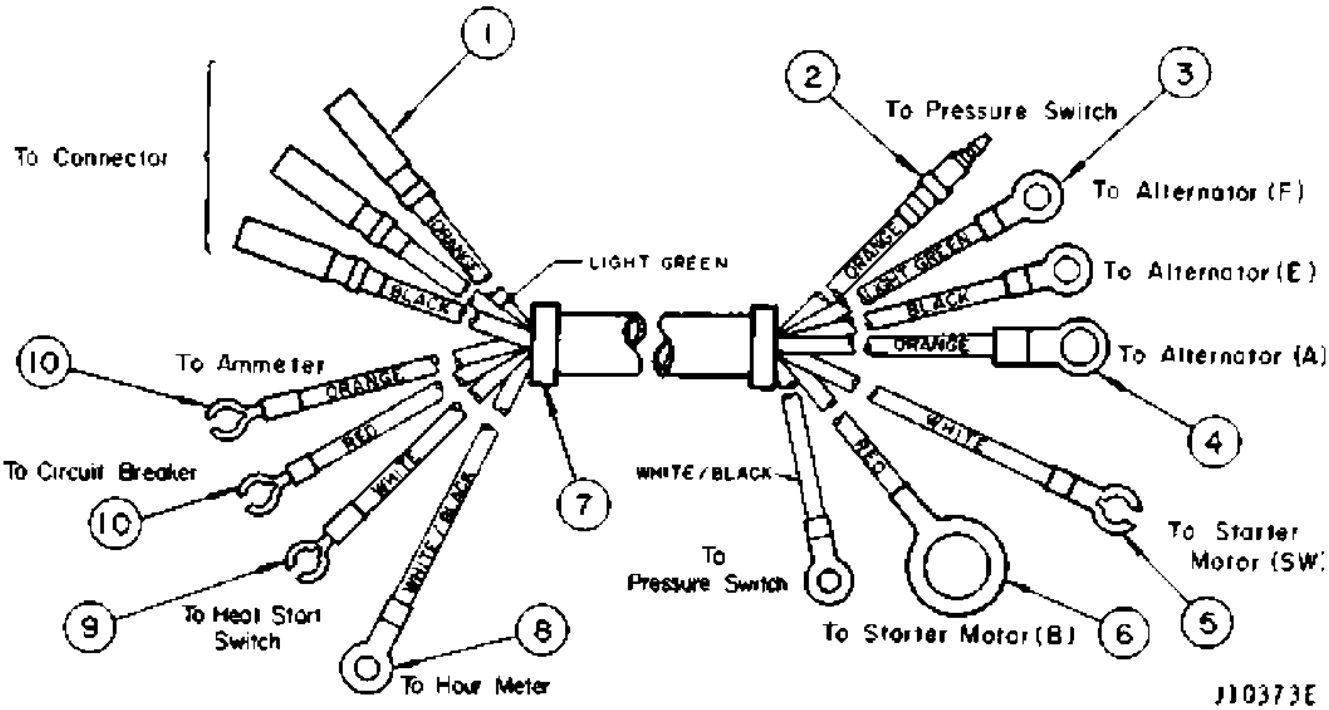

REF. NO.	PART NUMBER	DESCRIPTION	QTY.
1	5A3646	TERMINAL	3
2	5A3647	TERMINAL	1
3	2L8076	TERMINAL	2
4	2L8058	TERMINAL	1
5	4K6494	TERMINAL	1

REF. NO.	PART NUMBER	DESCRIPTION	QTY.
6	2L8071	TERMINAL	1
7	7K9186	FERRULE	2
8	2D8781	TERMINAL	1
9	5K786	TERMINAL	1
10	4K6495	TERMINAL	2

GRAPHIC #1

j10373e

3Y5842 HARNESS ASSEMBLY

Effective with Serial No. 65J2055-UP
Part of Battery and Wiring

Key:

SMCS

NOTE	REF NO	GRAPHIC REF	PART NUMBER	QTY	PART NAME 1 2 3 4 5 6 (PRODUCT LEVEL)	LINK PAGE
	1		5A-3646	3	TERMINAL	
	2		5A-3647	1	TERMINAL	
	3		2L-8076	3	TERMINAL	
	4		2L-8058	1	TERMINAL	
	5		4K-6494	1	TERMINAL	
	6		2L-8071	1	TERMINAL	
	7		7K-9186	2	FERRURE	
	8		5P-4571	1	TERMINAL	
	9		5K-0786	1	TERMINAL	
	10		4K-6495	2	TERMINAL	

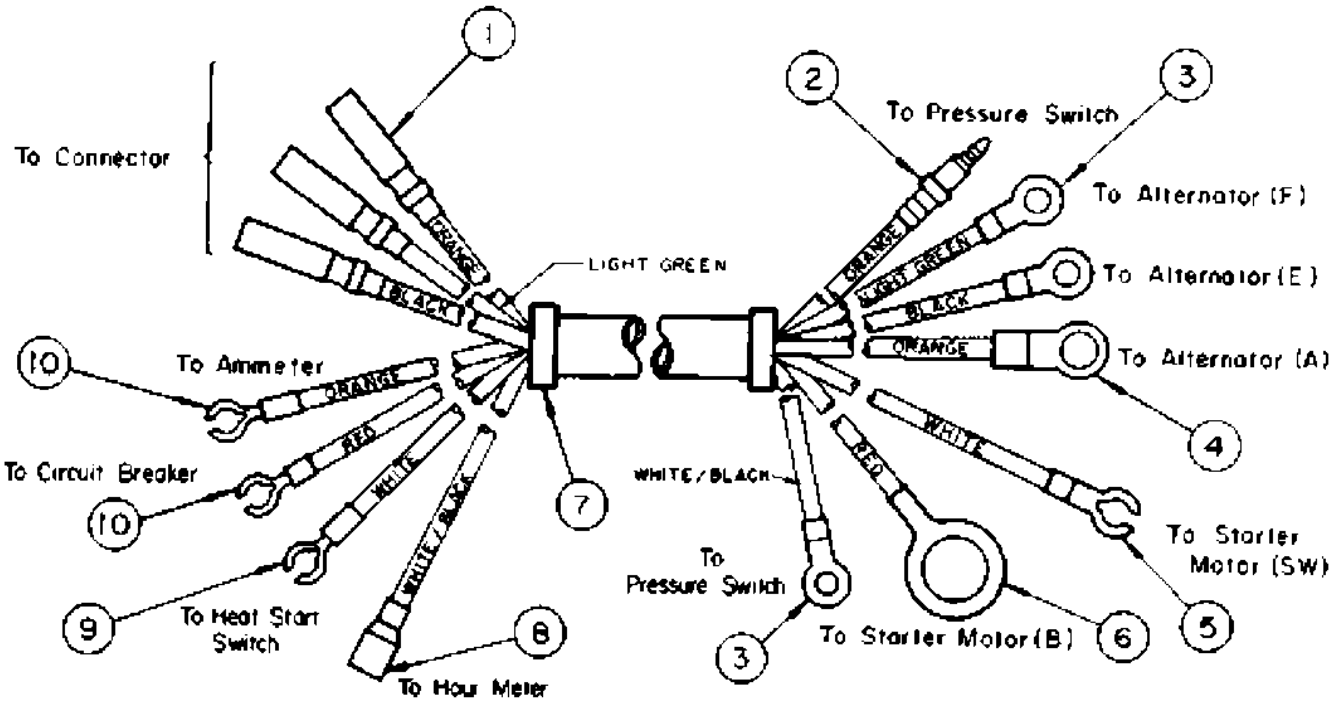

REF. NO.	PART NUMBER	DESCRIPTION	QTY.
1	5A3646	TERMINAL	3
2	5A3647	TERMINAL	1
3	2L8076	TERMINAL	3
4	2L8058	TERMINAL	1
5	4K6494	TERMINAL	1

REF. NO.	PART NUMBER	DESCRIPTION	QTY.
6	2L8071	TERMINAL	1
7	7K9186	FERRURE	2
8	5P4571	TERMINAL	1
9	5K786	TERMINAL	1
10	4K6495	TERMINAL	2

J14431E

GRAPHIC #1

j14431e

5A6716 ROAD LIGHTING GROUP

AN ATTACHMENT

Key: Y - SEPARATE ILLUSTRATION

SMCS

NOTE	REF NO	GRAPHIC REF	PART NUMBER	QTY	PART NAME 1 2 3 4 5 6 (PRODUCT LEVEL)	LINK PAGE
Y			6K-7839	1		P0200
					LIGHTING GROUP--4 LAMP	
Y			5A-3692	1		P0204
					ROAD LIGHTING GROUP--BASIC	
			5A-4450	1		
					SWITCH ASSEMBLY	
					However, it is necessary to exclude parts as shown below so	
			4B-1219	1		
					MACHINE SCREW	
			9B-1117	1		
					LOCKWASHER	
			4B-2041	1		
Y			1M-1882	2		P0211
					LAMP ASSEMBLY	
			4K-8932	1		
			4K-5128	1		
					HOLDER	
			0S-1614	2		
			3B-4504	2		
					LOCKWASHER	
			4B-4276	2		
					WASHER	
			7S-6402	1		
					SWITCH ASSEMBLY	
			1L-6931	1		
					MACHINE SCREW ASSEMBLY	
			4K-5122	3		
					HOLDER	
			8M-8948	1		
			2M-4009	1		
					BUTTON	
			0L-1351	1		
			4H-4641	1		

6K7839 LIGHTING SYSTEM GROUP--4 Lamp--Part 1 of 2

Part of 5A6716 Road Lighting Group
AN ATTACHMENT

Key:

SMCS

NOTE	REF NO	GRAPHIC REF	PART NUMBER	QTY	PART NAME 1 2 3 4 5 6 (PRODUCT LEVEL)	LINK PAGE
	1		0S-0509	2	BOLT	
			1D-4717	2	NUT	
			3B-4506	2	LOCKWASHER	
	2		8M-2772	4	CLIP	
	3		9K-1808	1	WIRE ASSEM. (To Rear Left Lamp)	
			4S-8761		TUBE (965mm Long)	
	4		2D-8781	1	TERMINAL	
	5		5K-0483	1	TERMINAL	
					(Parts of 9K1808 Wire Assem.)	
	6		3S-2093	5	TIE	
	7		9K-1748	1	WIRE ASSEM.	
	8		5K-0484	1	TERMINAL	
	11		4K-8229	1	TERMINAL	
					(Parts of 9K1748 Wire Assem.)	
	12		4K-8938	1	PLATE	
	13		4K-8932	1	BOX	
	14		1L-6931	1	MACHINE SCREW ASSEM.	
	15		4K-5122	3	HOLDER	
	16		8M-8948	4	FUSE	
	17		2A-0762	2	BOLT	
			3B-4504	2	LOCKWASHER	
			4B-4276	2	WASHER	
	18		4K-5128	1	HOLDER	
	19		4B-1219	1	MACHINE SCREW	
			4B-2041	1	NUT	
			9B-1117	1	LOCKWASHER	
	20		9K-1809	1	WIRE ASSEM. (To Rear Right Lamp)	
			4S-8761		TUBE (1321mm Long)	
	21		2D-8781	1	TERMINAL	
	22		5K-0483	1	TERMINAL	
	23		5K-0484	1	TERMINAL	
					(Parts of 9K1809 Wire Assem.)	

6K7839 LIGHTING SYSTEM GROUP--4 Lamp--Part 1 of 2

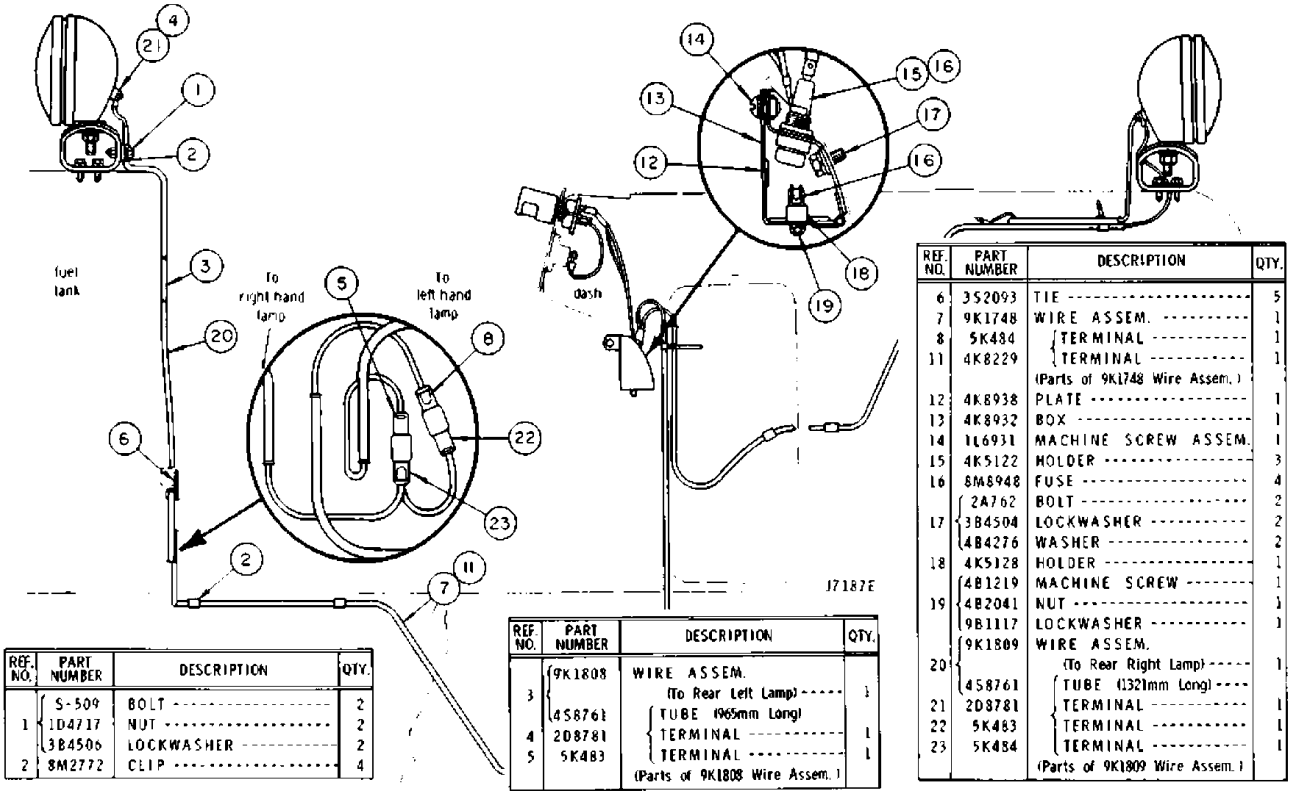

REF. NO.	PART NUMBER	DESCRIPTION	QTY.
1	S-509	BOLT	2
	1D4717	NUT	2
	3B4506	LOCKWASHER	2
2	8M2772	CLIP	4

REF. NO.	PART NUMBER	DESCRIPTION	QTY.
3	9K1808	WIRE ASSEM. (To Rear Left Lamp)	1
	4S8761	TUBE (965mm Long)	
4	2D8781	TERMINAL	1
5	5K483	TERMINAL	1
		(Parts of 9K1808 Wire Assem.)	

REF. NO.	PART NUMBER	DESCRIPTION	QTY.
6	3S2093	TIE	5
7	9K1748	WIRE ASSEM.	1
8	5K484	TERMINAL	1
11	4K8229	TERMINAL	1
		(Parts of 9K1748 Wire Assem.)	
12	4K8938	PLATE	1
13	4K8932	BOX	1
14	1L6931	MACHINE SCREW ASSEM.	1
15	4K5122	HOLDER	3
16	8M8948	FUSE	4
17	2A762	BOLT	2
	3B4504	LOCKWASHER	2
	4B4276	WASHER	2
18	4K5128	HOLDER	1
19	4B1219	MACHINE SCREW	1
	4B2041	NUT	1
	9B1117	LOCKWASHER	1
20	9K1809	WIRE ASSEM. (To Rear Right Lamp)	1
	4S8761	TUBE (1321mm Long)	
21	2D8781	TERMINAL	1
22	5K483	TERMINAL	1
23	5K484	TERMINAL	1
		(Parts of 9K1809 Wire Assem.)	

GRAPHIC #1 j7187e

6K7839 LIGHTING SYSTEM GROUP--4 Lamp--Part 2 of 2

Part of 5A6716 Road Lighting Group
1M1882 Lamp Assembly parts are shown on Page 169
AN ATTACHMENT

Key: Y - SEPARATE ILLUSTRATION

SMCS

NOTE	REF NO	GRAPHIC REF	PART NUMBER	QTY	PART NAME 1 2 3 4 5 6 (PRODUCT LEVEL)	LINK PAGE
Y	1		1M-1882	4	LAMP	P0211
					(See Separate Illustration)	
	2		5D-3183	4	NUT	
			5D-3184	4	LOCKWASHER	
			2B-8352	8	WASHER	
	3		1S-1888	4	BRACKET	
	4		0S-0509	16	BOLT	
	5		3B-4506	16	LOCKWASHER	
	6		3S-2093	4	TIE	
	8		4K-8860	1	WIRE ASSEM. (Front)	
	9		2D-8781	1	TERMINAL (Switch)	
			2D-3981	1	INSULATOR	
	10		4K-8229	1	TERMINAL	
					(Parts of 4K8860 Wire Assem.)	
	11		3S-3945	1	WIRE ASSEM.	
	12		1F-7240	2	TERMINAL	
					(Part of 3S3945 Wire Assem.)	
	13		5A-3112	1	LAMP ASSEM.	
			3H-2691	1	BULB	
					(Part of 5A3112 Lamp Assem.)	
	14		7S-6402	1	SWITCH ASSEM.	
			7S-5432	1	KNOB	
					(Part of 7S6402 Switch Assem.)	
	15		4K-8875	1	WIRE ASSEM. (Rear)	
	16		4K-8229	1	TERMINAL	
	17		2D-8781	1	TERMINAL (Switch)	
			2D-3981	1	INSULATOR	
					(Parts of 4K8875 Wire Assem.)	
	19		6K-5844	1	WIRE ASSEM.	
	20		2D-8781	1	TERMINAL	
	21		4K-8229	1	TERMINAL	
					(Parts of 6K5844 Wire Assem.)	
	22		6K-5843	1	WIRE ASSEM.	
			5K-4936		TUBE (711mm Long)	
	23		2D-8781	2	TERMINAL	
					(Parts of 6K5843 Wire Assem.)	
	24		7K-1181	1	TIE	
	25		6K-0806	1	TIE	

6K7839 LIGHTING SYSTEM GROUP--4 Lamp--Part 2 of 2

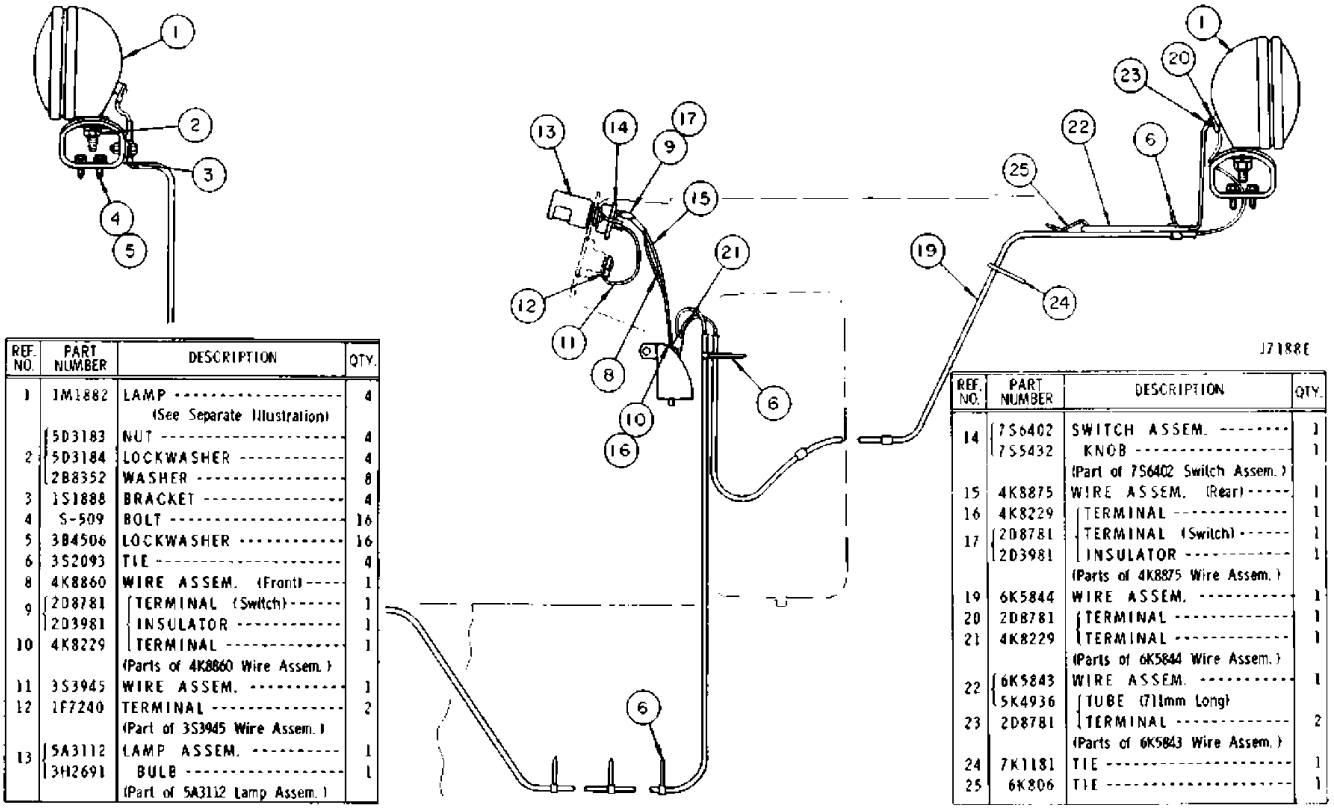

REF. NO.	PART NUMBER	DESCRIPTION	QTY.
1	1M1882	LAMP ---------- (See Separate Illustration)	4
2	5D3183	NUT ----------	4
	5D3184	LOCKWASHER ----------	4
	2B8352	WASHER ----------	8
3	1S1888	BRACKET ----------	4
4	S-509	BOLT ----------	16
5	3B4506	LOCKWASHER ----------	16
6	3S2093	TIE ----------	4
8	4K8860	WIRE ASSEM. (Front) ----	1
9	2D8781	TERMINAL (Switch) ------	1
	2D3981	INSULATOR ----------	1
10	4K8229	TERMINAL ----------	1
		(Parts of 4K8860 Wire Assem.)	
11	3S3945	WIRE ASSEM. ----------	1
12	1F7240	TERMINAL ----------	2
		(Part of 3S3945 Wire Assem.)	
13	5A3112	LAMP ASSEM. ----------	1
	3H2691	BULB ----------	1
		(Part of 5A3112 Lamp Assem.)	

REF. NO.	PART NUMBER	DESCRIPTION	QTY.
14	7S6402	SWITCH ASSEM. --------	1
	7S5432	KNOB ----------	1
		(Part of 7S6402 Switch Assem.)	
15	4K8875	WIRE ASSEM. (Rear) -----	1
16	4K8229	TERMINAL ----------	1
17	2D8781	TERMINAL (Switch) ------	1
	2D3981	INSULATOR ----------	1
		(Parts of 4K8875 Wire Assem.)	
19	6K5844	WIRE ASSEM. ----------	1
20	2D8781	TERMINAL ----------	1
21	4K8229	TERMINAL ----------	1
		(Parts of 6K5844 Wire Assem.)	
22	6K5843	WIRE ASSEM. ----------	1
	5K4936	TUBE (711mm Long)	
23	2D8781	TERMINAL ----------	2
		(Parts of 6K5843 Wire Assem.)	
24	7K1181	TIE ----------	1
25	6K806	TIE ----------	1

GRAPHIC #1

j7188e

6K8800 LIGHTING SYSTEM GROUP--2 Lamp--Part 1 of 2

AN ATTACHMENT

Key:

SMCS

NOTE	REF NO	GRAPHIC REF	PART NUMBER	QTY	PART NAME 1 2 3 4 5 6 (PRODUCT LEVEL)	LINK PAGE
	1		0S-0509	1	BOLT	
			3B-4506	1	LOCKWASHER	
			1D-4717	1	NUT	
	2		8M-2772	3	CLIP	
	3		9K-1808	1	WIRE ASSEM.	
			4S-8761		TUBE (965mm Long)	
	4		2D-8781	1	TERMINAL	
	5		5K-0483	1	TERMINAL	
					(Parts of 9K1808 Wire Assem.)	
	6		3S-2093	2	TIE	
	7		9K-1748	1	WIRE ASSEM.	
			4S-8761		TUBE (2388mm Long)	
	8		5K-0484	1	TERMINAL	
	9		4K-8229	1	TERMINAL	
					(Parts of 9K1748 Wire Assem.)	
	10		4K-8938	1	PLATE	
	11		4K-8932	1	BOX	
	12		1L-6931	1	MACHINE SCREW ASSEM.	
	13		4K-5122	3	HOLDER	
	14		8M-8948	4	FUSE	
	15		2A-0762	2	BOLT	
			3B-4504	2	LOCKWASHER	
			4B-4276	2	WASHER	
	16		4K-5128	1	HOLDER	
	17		4B-1219	1	MACHINE SCREW	
			9B-1117	1	LOCKWASHER	
			4B-2041	1	NUT	

6K8800 LIGHTING SYSTEM GROUP--2 Lamp--Part 1 of 2

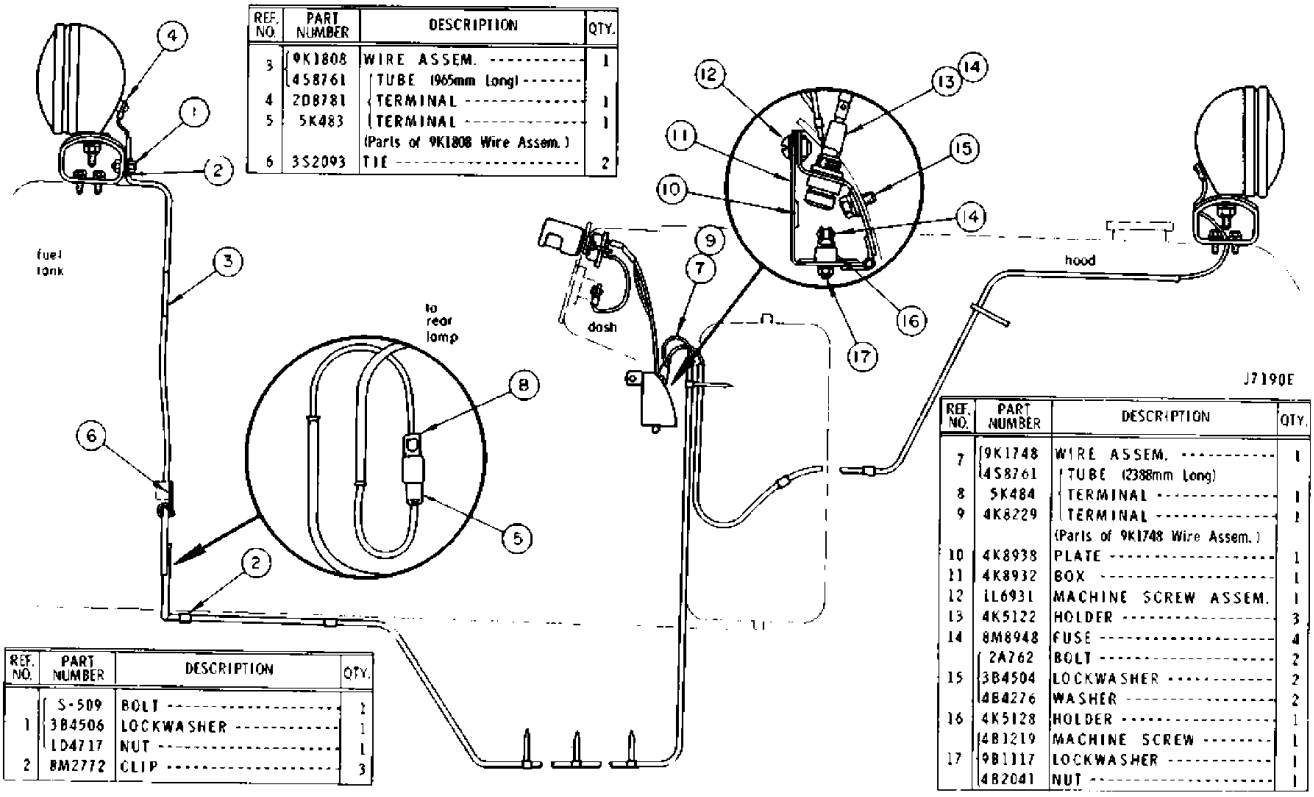

REF. NO.	PART NUMBER	DESCRIPTION	QTY.
3	9K1808	WIRE ASSEM.	1
	4S8761	TUBE 1965mm Long	
4	2D8781	TERMINAL	1
5	5K483	TERMINAL	1
		(Parts of 9K1808 Wire Assem.)	
6	3S2093	TIE	2

REF. NO.	PART NUMBER	DESCRIPTION	QTY.
	S-509	BOLT	2
1	3B4506	LOCKWASHER	1
	LD4717	NUT	1
2	8M2772	CLIP	3

REF. NO.	PART NUMBER	DESCRIPTION	QTY.
7	9K1748	WIRE ASSEM.	1
	4S8761	TUBE 2388mm Long	
8	5K484	TERMINAL	1
9	4K8229	TERMINAL	1
		(Parts of 9K1748 Wire Assem.)	
10	4K8938	PLATE	1
11	4K8932	BOX	1
12	1L6931	MACHINE SCREW ASSEM.	1
13	4K5122	HOLDER	3
14	8M8948	FUSE	4
	2A762	BOLT	2
15	3B4504	LOCKWASHER	2
	4B4276	WASHER	2
16	4K5128	HOLDER	1
	4B1219	MACHINE SCREW	1
17	9B1117	LOCKWASHER	1
	4B2041	NUT	1

GRAPHIC #1

j7190e

6K8800 LIGHTING SYSTEM GROUP--2 Lamp--Part 2 of 2

1M1882 Lamp Assembly parts are shown on Page 169
AN ATTACHMENT

Key: Y - SEPARATE ILLUSTRATION

SMCS

NOTE	REF NO	GRAPHIC REF	PART NUMBER	QTY	PART NAME 1 2 3 4 5 6 (PRODUCT LEVEL)	LINK PAGE
Y	1		1M-1882	2	LAMP ASSEM.	P0211
					(See Separate Illustration)	
	2		5D-3183	2	NUT	
			5D-3184	2	LOCKWASHER	
			2B-8352	2	WASHER	
	3		1S-1888	2	BRACKET	
	4		0S-0509	8	BOLT	
	5		3B-4506	8	LOCKWASHER	
	6		3S-2093	4	TIE	
	7		4K-8860	1	WIRE ASSEM. (Front)	
	8		2D-8781	1	TERMINAL (Switch)	
			2D-3981	1	INSULATOR	
	9		4K-8229	1	TERMINAL	
					(Parts of 4K8860 Wire Assem.)	
	10		3S-3945	1	WIRE ASSEM.	
	11		1F-7240	2	TERMINAL	
					(Part of 3S3945 Wire Assem.)	
	12		5A-3112	1	LAMP ASSEM.	
			3H-2691	1	BULB	
					(Part of 5A3112 Lamp Assem.)	
	13		7S-6402	1	SWITCH ASSEM.	
			7S-5432	1	KNOB	
					(Part of 7S6402 Switch Assem.)	
	14		4K-8875	1	WIRE ASSEM. (Rear)	
	15		4K-8229	1	TERMINAL	
	16		2D-8781	1	TERMINAL (Switch)	
			2D-3981	1	INSULATOR	
					(Part of 4K8875 Wire Assem.)	
	17		1F-7567	2	CLIP	
	18		6K-5844	1	WIRE ASSEM.	
	19		2D-8781	1	TERMINAL	
	20		4K-8229	1	TERMINAL	
					(Parts of 6K5844 Wire Assem.)	
	21		7K-1181	1	TIE	

6K8800 LIGHTING SYSTEM GROUP--2 Lamp--Part 2 of 2

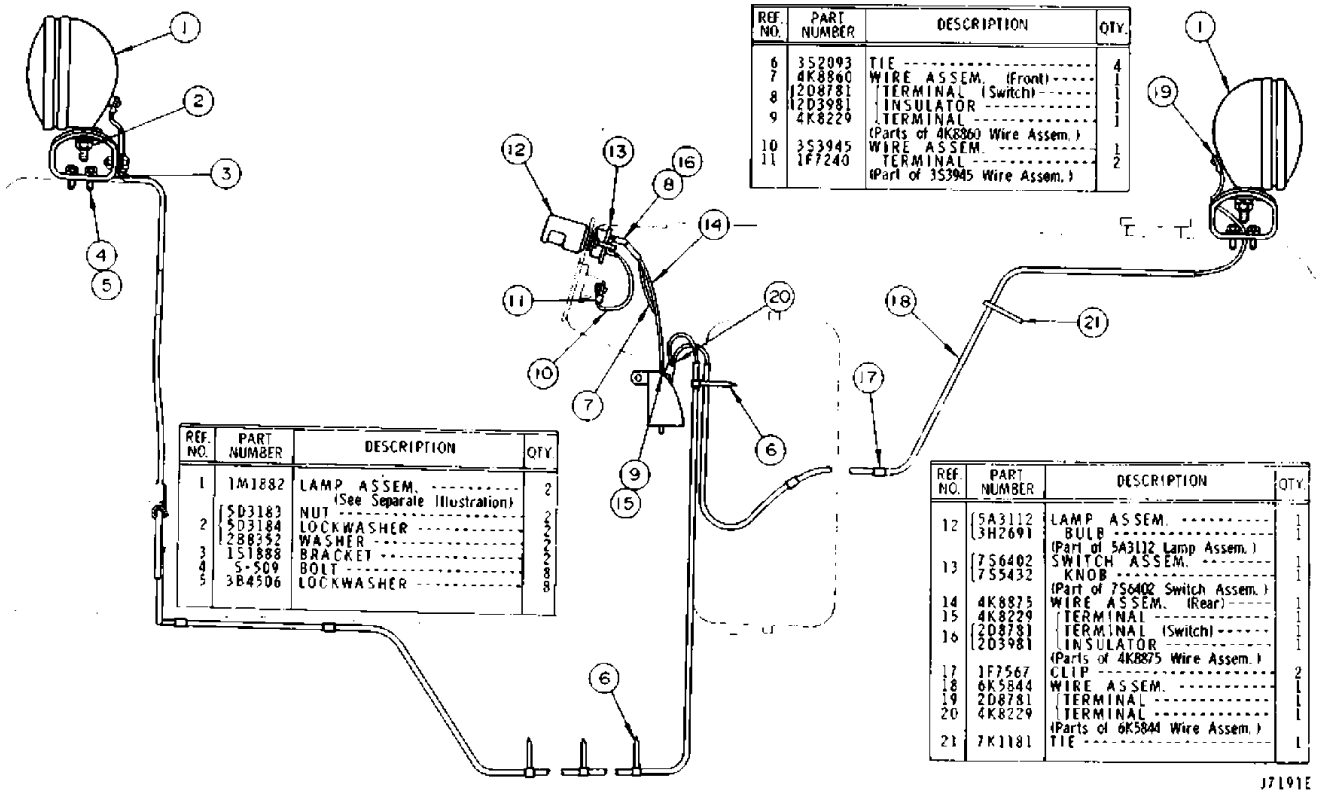

REF. NO.	PART NUMBER	DESCRIPTION	QTY.
1	1M1882	LAMP ASSEM. (See Separate Illustration)	2
2	5D3183	NUT	2
	5D3184	LOCKWASHER	2
	288352	WASHER	2
3	151888	BRACKET	2
4	S-509	BOLT	8
5	3B4506	LOCKWASHER	8

REF. NO.	PART NUMBER	DESCRIPTION	QTY.
6	352093	TIE	4
7	4K8860	WIRE ASSEM. (Front)	1
8	2D8781	TERMINAL (Switch)	1
	2D3981	INSULATOR	1
9	4K8229	TERMINAL	1
		(Parts of 4K8860 Wire Assem.)	
10	353945	WIRE ASSEM.	1
11	1F7240	TERMINAL	2
		(Part of 353945 Wire Assem.)	

REF. NO.	PART NUMBER	DESCRIPTION	QTY.
12	5A3112	LAMP ASSEM.	1
	3H2691	BULB	1
		(Part of 5A3112 Lamp Assem.)	
13	7S6402	SWITCH ASSEM.	1
	7S5432	KNOB	1
		(Part of 7S6402 Switch Assem.)	
14	4K8875	WIRE ASSEM. (Rear)	1
15	4K8229	TERMINAL	1
16	2D8781	TERMINAL (Switch)	1
	2D3981	INSULATOR	1
		(Parts of 4K8875 Wire Assem.)	
17	1F7567	CLIP	2
18	6K5844	WIRE ASSEM.	1
19	2D8781	TERMINAL	1
20	4K8229	TERMINAL	1
		(Parts of 6K5844 Wire Assem.)	
21	7K1181	TIE	1

GRAPHIC #1

j7191e

5A3692 ROAD LIGHTING GROUP--Type 1--Part 1 of 2

Part of 5A6716 Road Lighting Group
5A3808 Lamp Assembly parts are shown on Page 170
AN ATTACHMENT

Key: Y - SEPARATE ILLUSTRATION

SMCS

NOTE	REF NO	GRAPHIC REF	PART NUMBER	QTY	PART NAME 1 2 3 4 5 6 (PRODUCT LEVEL)	LINK PAGE
	1		0S-1595	4	BOLT	
	2		3B-4508	4	LOCKWASHER	
	3		1D-4719	4	NUT	
	4		5A-8494	1	TAIL AND STOP LAMP ASSEM.	
	5		5A-9121	1	BULB	
	6		5A-9122	1	BULB	
					(Parts of 5A8494 Tail and Stop Lamp Assem.)	
	7		5A-8628	1	BRACKET	
	8		5A-3650	1	HARNESS (Left Hand)	
	9		5A-5377	1	HOOK	
	10		3B-4504	3	LOCKWASHER	
	11		1B-4201	1	NUT	
	12		5A-6625	1	CHAIN (450mm Long)	
	13		5A-5376	2	BRACKET	
	14		5A-5375	2	BRACKET	
	15		2B-2695	4	BOLT	
	16		3B-4505	6	LOCKWASHER	
	17		4B-5270	4	WASHER	
	18		1D-4716	4	NUT	
	19		1S-6329	2	TIE	
	20		0L-2072	2	CLIP	
	21		5A-0762	2	BOLT	
	22		0S-0509	6	BOLT	
	23		3B-4506	6	LOCKWASHER	
	24		5A-3654	1	HARNESS	
	25		5A-3809	1	HORN	
	26		5A-3659	1	HARNESS	
	27		0S-1594	1	BOLT	
	28		5A-3981	1	BRACKET ASSEM.	
	29		0S-1618	2	BOLT	
	30		5A-3673	4	CLIP	
	31		5A-3644	1	HARNESS	
	32		5A-8627	1	BRACKET	
	33		5A-3412	1	NUMBER PLATE ASSEM.	
Y	34		5A-3808	1	LICENSE LAMP	P0213
					(See Separate Illustration)	
	35		5A-3666	1	WIRE ASSEM.	
	36		5A-3652	1	HARNESS (Right Hand)	
	37		5A-5382	1	PIN	
	38		5A-5373	1	HARNESS	

5A3692 ROAD LIGHTING GROUP--Type 1--Part 1 of 2

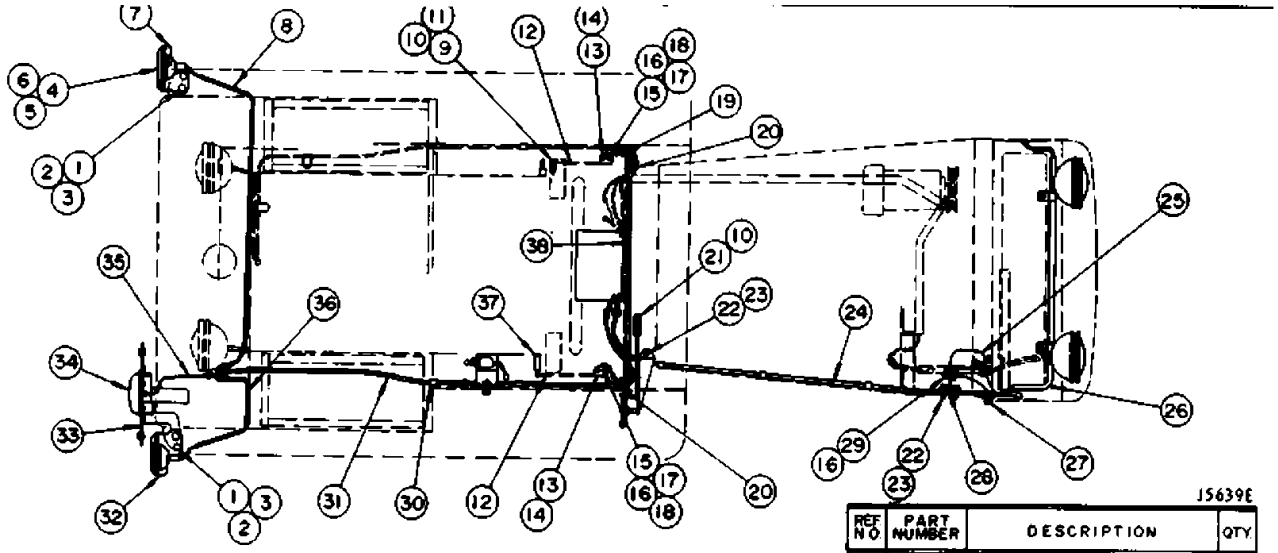

J5639E

REF NO.	PART NUMBER	DESCRIPTION	QTY.
1	S-1595	BOLT	4
2	384508	LOCKWASHER	4
3	ID4719	NUT	4
4	5A8494	TAIL AND STOP LAMP ASSEM.	1
5	5A9121	BULB	1
6	5A9122	BULB	1
	(Parts of 5A8494 Tail and Stop Lamp Assem.)		
7	5A8628	BRACKET	1
8	5A3650	HARNESS - (Left Hand)	1
9	5A5377	HOOK	1
10	384504	LOCKWASHER	3
11	IB4201	NUT	1

REF NO	PART NUMBER	DESCRIPTION	QTY.
12	5A6625	CHAIN - (450mm Long)	1
13	5A5376	BRACKET	2
14	5A5375	BRACKET	2
15	282695	BOLT	4
16	384505	LOCKWASHER	6
17	485270	WASHER	4
18	ID4716	NUT	4
19	IS6329	TIE	2
20	L-2072	CLIP	2
21	5A762	BOLT	2
22	S-509	BOLT	6
23	384506	LOCKWASHER	6

REF NO.	PART NUMBER	DESCRIPTION	QTY.
24	5A3654	HARNESS	1
25	5A3809	HORN	1
26	5A3659	HARNESS	1
27	S-1594	BOLT	1
28	5A3981	BRACKET ASSEM.	1
29	S-1618	BOLT	2
30	5A3673	CLIP	4
31	5A3644	HARNESS	1
32	5A8627	BRACKET	1
33	5A3412	NUMBER PLATE ASSEM.	1
34	5A3808	LICENSE LAMP (See Separate Illustration)	1
35	5A3666	WIRE ASSEM.	1
36	5A3652	HARNESS - (Right Hand)	1
37	5A5382	PIN	1
38	5A5373	HARNESS	1

GRAPHIC #1

j5639e

5A3692 ROAD LIGHTING GROUP--Type 1--Part 2 of 2

Part of 5A6716 Road Lighting Group
5A3847 Lamp Assembly parts are shown on Page 169
AN ATTACHMENT

Key: Y - SEPARATE ILLUSTRATION

SMCS

NOTE	REF NO	GRAPHIC REF	PART NUMBER	QTY	PART NAME 1 2 3 4 5 6 (PRODUCT LEVEL)	LINK PAGE
	1		5A-4923	1	SWITCH	
	2		5A-4525	1	BOX ASSEM.	
	3		5A-4450	1	SWITCH ASSEM.	
	4		1D-4716	1	NUT	
	5		3B-4505	1	LOCKWASHER	
	6		2H-3755	1	BOLT	
	7		5A-3817	1	REAR VIEW MIRROR	
	8		5A-3674	4	CLIP	
	9		3B-4506	8	LOCKWASHER	
	10		4F-4879	2	BOLT	
Y	11		5A-3847	2	LAMP ASSEM.	P0212
					(See Separate Illustration)	
	12		5A-4311	2	CLIP	
	13		2A-0762	2	BOLT	
	14		3B-4504	6	LOCKWASHER	
	15		4B-4276	4	WASHER	
	16		4B-1311	6	MACHINE SCREW	
	17		3B-4502	6	LOCKWASHER	
	18		1S-6329	3	TIE	
	19		0S-1614	2	BOLT	
	20		0S-1615	2	BOLT	
	21		5A-8624	1	BRACKET ASSEM.	
	22		9F-6445	4	NUT	
					(Part of 5A8624 Bracket Assem.)	
	23		5A-8625	1	BRACKET	
	24		5A-8622	1	HARNESS ASSEM.	
	25		5A-3642	3	TERMINAL	
	26		5A-3664	1	TERMINAL	
					(Parts of 5A8622 Harness Assem.)	
	27		0S-0509	2	BOLT	
	28		1D-4717	2	NUT	
	29		5A-8629	1	BRACKET ASSEM.	
	30		9F-2978	4	NUT	
					(Part of 5A8629 Bracket Assem.)	
	31		0L-1351	4	BOLT	
Y	32		5A-4922	1	LAMP ASSEM.	P0218
	33		5A-4496	1	BULB	
	34		5A-4921	1	LENS	
					(Parts of 5A4922 Lamp Assem.)	
	35		5A-4863	1	GUARD	
	36		5A-3671	1	WIRE ASSEM.	
	37		5A-3672	1	WIRE ASSEM.	
	38		5A-3669	1	WIRE ASSEM.	
	39		5A-3662	1	HARNESS	
	40		5A-3665	1	WIRE ASSEM.	
	41		5A-4902	1	PILOT LAMP	

5A3692 ROAD LIGHTING GROUP--Type 1--Part 2 of 2

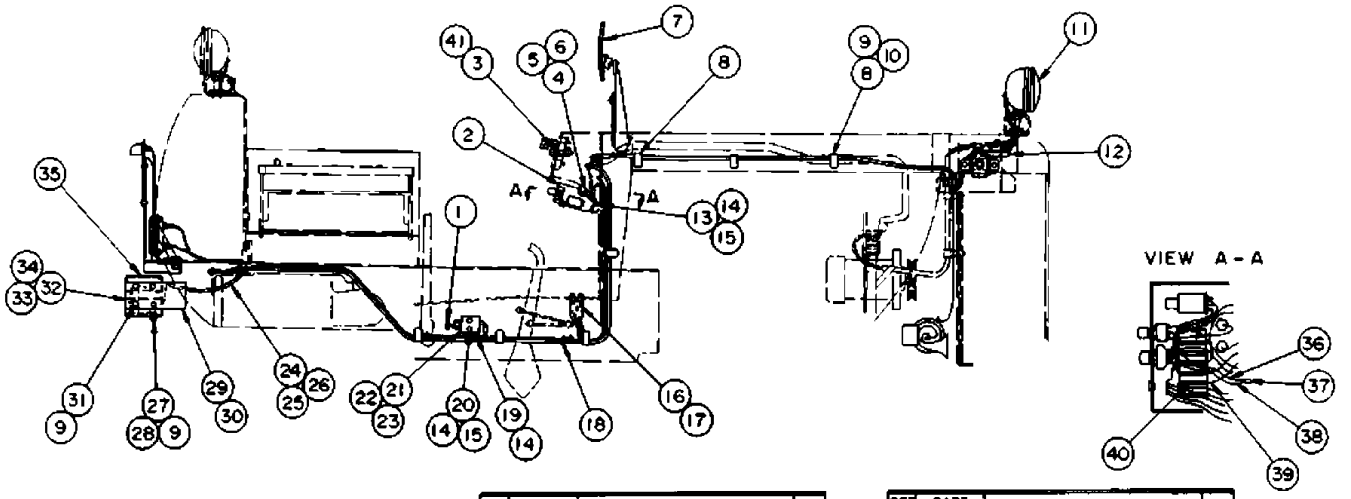

REF NO.	PART NUMBER	DESCRIPTION	QTY.
1	5A4923	SWITCH	1
2	5A4525	BOX ASSEM.	1
3	5A4450	SWITCH ASSEM	1
4	1D4716	NUT	1
5	3B4505	LOCKWASHER	1
6	2H3755	BOLT	1
7	5A3817	REAR VIEW MIRROR	1
8	5A3674	CLIP	4
9	3B4506	LOCKWASHER	8
10	4F4879	BOLT	2
11	5A3847	LAMP ASSEM.	2
		(See Separate Illustration)	
12	5A4311	CLIP	2
13	2A762	BOLT	2
14	3B4504	LOCKWASHER	6

REF NO.	PART NUMBER	DESCRIPTION	QTY.
15	4B4276	WASHER	4
16	4B1311	MACHINE SCREW	6
17	3B4502	LOCKWASHER	6
18	1S6329	TIE	3
19	S-1614	BOLT	2
20	S-1615	BOLT	2
21	5A8624	BRACKET ASSEM.	1
22	9F6445	NUT	4
		(Part of 5A8624 Bracket Assem.)	
23	5A8625	BRACKET	1
24	5A8622	HARNESS ASSEM.	1
25	5A3642	TERMINAL	3
26	5A3664	TERMINAL	1
		(Parts of 5A8622 Harness Assem.)	
27	S-509	BOLT	2
28	1D4717	NUT	2

REF NO.	PART NUMBER	DESCRIPTION	QTY.
29	5A8629	BRACKET ASSEM.	1
30	9F2978	NUT	4
		(Part of 5A8629 Bracket Assem.)	
31	L-1351	BOLT	4
32	5A4922	LAMP ASSEM.	1
33	5A4496	BULB	1
34	5A4921	LENS	1
		(Parts of 5A4922 Lamp Assem.)	
35	5A4863	GUARD	1
36	5A3671	WIRE ASSEM.	1
37	5A3672	WIRE ASSEM.	1
38	5A3669	WIRE ASSEM.	1
39	5A3662	HARNESS	1
40	5A3665	WIRE ASSEM.	1
41	5A4902	PILOT LAMP	1

GRAPHIC #1

j5640e

5A3692 ROAD LIGHTING GROUP--Type 2--Part 1 of 3

Part of 5A6716 Road Lighting Group
5A3808 Lamp Assembly and 3Y3325, 3Y3326 Harness Assembly parts are shown on
Pages 170 and 173
AN ATTACHMENT

Key: Y - SEPARATE ILLUSTRATION

SMCS

NOTE	REF NO	GRAPHIC REF	PART NUMBER	QTY	PART NAME 1 2 3 4 5 6 (PRODUCT LEVEL)	LINK PAGE
Y	1		5A-3808	1	LICENSE LAMP	P0213
					(See Separate Illustration)	
	2		3Y-3302	1	NUMBER PLATE ASSEM.	
	3		3Y-3300	1	GUARD ASSEM. (L.H.)	
	4		0S-1595	4	BOLT	
			3B-4508	4	LOCKWASHER	
			1D-4719	4	NUT	
	5		5A-5377	1	HOOK	
			1B-4201	1	NUT	
	6		3B-4504	3	LOCKWASHER	
	7		5A-5376	2	BRACKET	
			5A-5375	2	STOP LAMP SWITCH	
	8		2B-2695	4	BOLT	
	9		3B-4504	4	LOCKWASHER	
	10		4B-5270	4	WASHER	
	11		1D-4716	4	NUT	
	12		3S-2093	2	TIE	
	13		0L-2072	2	CLIP	
	14		5A-5373	1	HARNESS WIRING	
			5A-3664	4	TERMINAL (To Brake Lamp Switch)	
			2D-3981	4	INSULATOR	
	15		2A-0762	2	BOLT	
	16		0S-0509	2	BOLT	
	17		3B-4506	2	LOCKWASHER	
	18		3Y-3312	1	HARNESS ASSEM.	
			2L-8076	2	TERMINAL (To Front Lamp)	
			5A-3646	3	TERMINAL (To Turn Signal Lamp & Dimmer Switch)	
			5A-3645	2	TERMINAL (To Turn Signal Switch)	
	19		0S-1594	1	BOLT	
	20		5A-5382	1	PIN	
	21		5A-3673	4	CLIP	
Y	22		3Y-3325	1	HARNESS ASSEM.	P0220
					(See Separate Illustration)	
Y	23		3Y-3326	1	HARNESS ASSEM.	P0221
					(See Separate Illustration)	
	24		3Y-3299	1	GUARD ASSEM. (R.H.)	

5A3692 ROAD LIGHTING GROUP--Type 2--Part 1 of 3

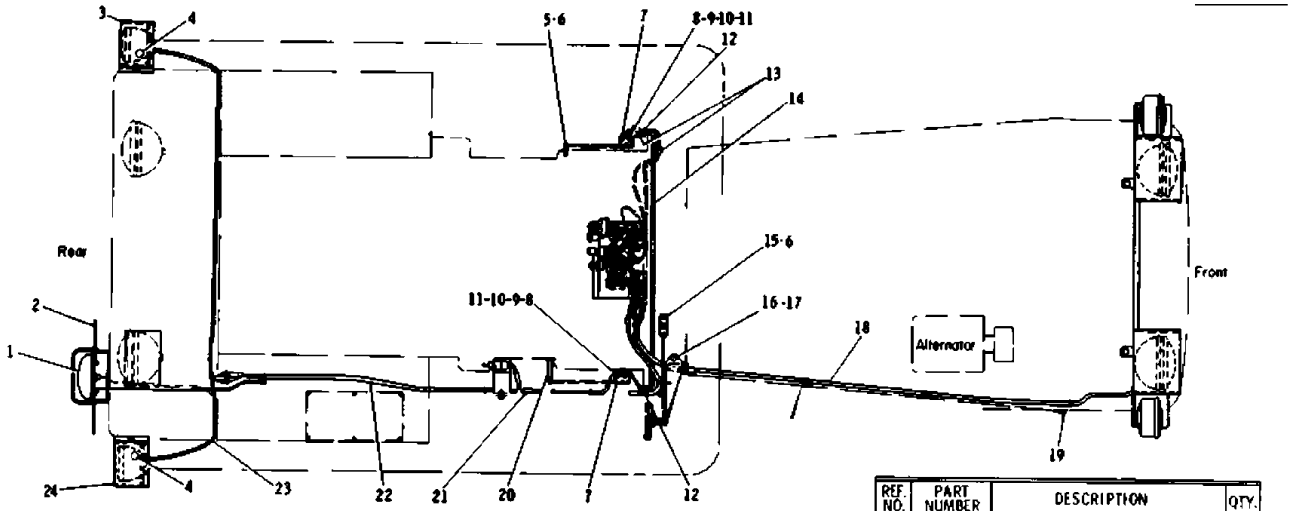

REF. NO.	PART NUMBER	DESCRIPTION	QTY.
1	5A3808	LICENSE LAMP (See Separate Illustration)	1
2	3Y3302	NUMBER PLATE ASSEM.	1
3	3Y3300	GUARD ASSEM. (L.H.)	1
4	S1595	BOLT	4
	3B4508	LOCKWASHER	4
	1D4719	NUT	4
5	5A5377	HOOK	1
	1B4201	NUT	1
6	3B4504	LOCKWASHER	3
7	5A5376	BRACKET	2
	5A5375	STOP LAMP SWITCH	2

REF. NO.	PART NUMBER	DESCRIPTION	QTY.
8	2B2695	BOLT	4
9	3B4504	LOCKWASHER	4
10	4B5270	WASHER	4
11	1D4716	NUT	4
12	3S2093	TIE	2
13	L2072	CLIP	2
14	5A5373	HARNESS WIRING	1
	5A3664	TERMINAL (To Brake Lamp Switch)	4
	2D3981	INSULATOR	4
15	2A762	BOLT	2
16	S509	BOLT	2
17	3B4506	LOCKWASHER	2

REF. NO.	PART NUMBER	DESCRIPTION	QTY.
	3Y3312	HARNESS ASSEM.	1
	2L8076	TERMINAL (To Front Lamp)	2
18	5A3646	TERMINAL (To Turn Signal Lamp & Dimmer Switch)	3
	5A3645	TERMINAL (To Turn Signal Switch)	2
19	S1594	BOLT	1
20	5A5382	PIN	1
21	5A3673	CLIP	4
22	3Y3325	HARNESS ASSEM. (See Separate Illustration)	1
23	3Y3326	HARNESS ASSEM. (See Separate Illustration)	1
24	3Y3299	GUARD ASSEM. (R.H.)	1

J10835E

GRAPHIC #1

j10835e

5A3692 ROAD LIGHTING GROUP--Type 2--Part 2 of 3

Part of 5A6716 Road Lighting Group
Head Lamp, 3Y2046, 7M7147, 3Y1735, 3Y1736 and 5A4922 Lamp Assembly parts
are shown on Pages 169 thru 172
AN ATTACHMENT

Key: Y - SEPARATE ILLUSTRATION

SMCS

NOTE	REF NO	GRAPHIC REF	PART NUMBER	QTY	PART NAME 1 2 3 4 5 6 (PRODUCT LEVEL)	LINK PAGE
Y	1		7M-7147	2	TAIL & STOP LAMP ASSEM.	P0215
					(See Separate Illustration)	
Y	2		3Y-2046	2	TURN SIGNAL LAMP ASSEM.	P0214
					(See Separate Illustration)	
	3		3Y-3005	2	PLATE	
	4		3Y-1758	1	SWITCH	
	5		3Y-3298	1	FILM	
	6		5A-4450	1	SWITCH	
	7		2H-3755	1	BOLT	
	8		3B-4505	1	LOCKWASHER	
	9		1D-4716	1	NUT	
	10		5A-3817	1	REAR VIEW MIRROR	
	11		5A-3674	4	CLIP	
	12		4F-4879	2	BOLT	
	13		3B-4506	8	LOCKWASHER	
	14		3Y-3305	1	GUARD ASSEM. (R.H.)	
			3Y-3306	1	GUARD ASSEM. (L.H.)	
Y	15		NOTSERV	2	LAMP	
					(See Separate Illustration)	
Y	16		3Y-1735	1	PARKING & TURN SIGNAL LAMP ASSEM. (R.H.)	P0216
Y			3Y-1736	1	PARKING & TURN SIGNAL LAMP ASSEM. (L.H.)	
					(See Separate Illustration)	
	17		5A-4311	2	CLIP	
	18		2A-0762	2	BOLT	
	19		3B-4504	6	LOCKWASHER	
	20		4B-4276	4	WASHER	
	21		4B-1311	6	MACHINE SCREW	
			3B-4502	6	LOCKWASHER	
	22		3S-2093	3	TIE	
	23		0S-1614	2	BOLT	
	24		0S-1615	2	BOLT	
	25		5A-8625	1	BRACKET	
	26		5A-8624	1	BRACKET ASSEM.	
			9F-6445	4	NUT (Weld)	
	27		5A-8622	1	HARNESS ASSEM.	
			5A-3646	3	TERMINAL (To Back Up Lamp & Switch)	
			5A-3664	1	TERMINAL (To Stop Lamp Switch)	
	28		0S-0509	2	BOLT	
	29		1D-4717	2	NUT	
	30		5A-4863	1	GUARD	
	31		0T-0102	4	BOLT	
Y	32		5A-4922	1	BACK UP LAMP ASSEM.	P0218
					(See Separate Illustration)	

5A3692 ROAD LIGHTING GROUP--Type 2--Part 2 of 3

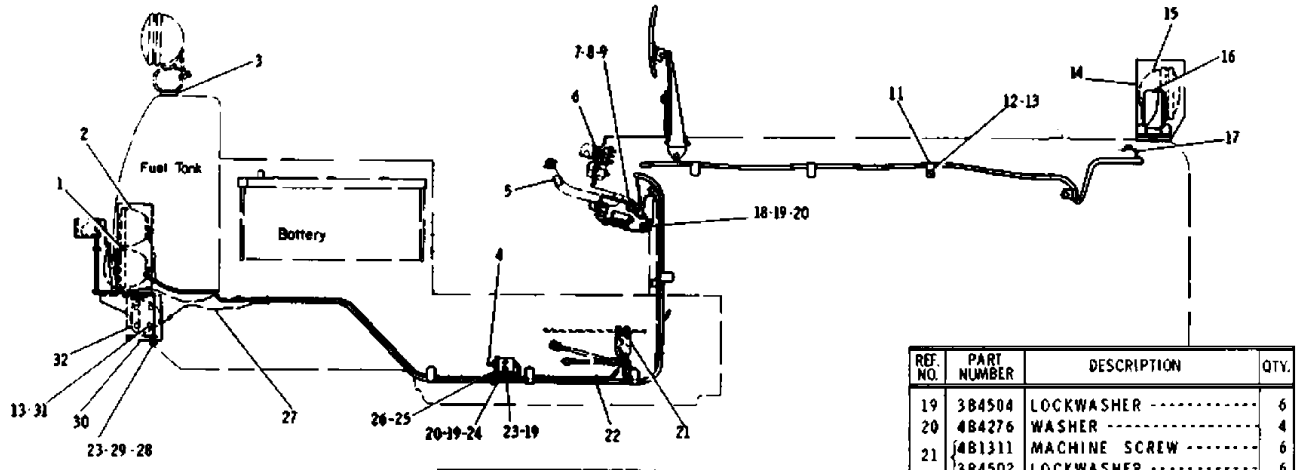

REF. NO.	PART NUMBER	DESCRIPTION	QTY.
1	7M7147	TAIL & STOP LAMP ASSEM. --- (See Separate Illustration)	2
2	3Y2046	TURN SIGNAL LAMP ASSEM. --- (See Separate Illustration)	2
3	3Y3005	PLATE	2
4	3Y1758	SWITCH	1
5	3Y3298	FILM	1
6	5A4450	SWITCH	1
7	2H3755	BOLT	1
8	3B4505	LOCKWASHER	1
9	1D4716	NUT	1
10	5A3817	REAR VIEW MIRROR	1

REF. NO.	PART NUMBER	DESCRIPTION	QTY.
11	5A3674	CLIP	4
12	4F4879	BOLT	2
13	3B4506	LOCKWASHER	8
14	3Y3305	GUARD ASSEM. (R.H.)	1
	3Y3306	GUARD ASSEM. (L.H.)	1
15	Not Serv.	LAMP (See Separate Illustration)	2
16	3Y2735	PARKING & TURN SIGNAL LAMP ASSEM. (R.H.)	1
	3Y1736	PARKING & TURN SIGNAL LAMP ASSEM. (L.H.) (See Separate Illustration)	1
17	5A4311	CLIP	2
18	2A762	BOLT	2

REF. NO.	PART NUMBER	DESCRIPTION	QTY.
19	3B4504	LOCKWASHER	6
20	4B4276	WASHER	4
21	4B1311	MACHINE SCREW	6
	3B4502	LOCKWASHER	6
22	3S2093	TIE	3
23	S1614	BOLT	2
24	S1615	BOLT	2
25	5A8625	BRACKET	1
26	5A8624	BRACKET ASSEM.	1
	9F6445	NUT (Weld)	4
27	5A8622	HARNESS ASSEM.	1
	5A3646	TERMINAL (To Back Up Lamp & Switch) ---	3
	5A3664	TERMINAL(To Stop Lamp Switch)	1
28	S509	BOLT	2
29	1D4717	NUT	2
30	5A4863	GUARD	1
31	T102	BOLT	4
32	5A4922	BACK UP LAMP ASSEM. (See Separate Illustration)	1

J10836E

GRAPHIC #1

j10836e

5A3692 ROAD LIGHTING GROUP--Type 2--Part 3 of 3

Part of 5A6716 Road Lighting Group
AN ATTACHMENT

Key:

SMCS

NOTE	REF NO	GRAPHIC REF	PART NUMBER	QTY	PART NAME 1 2 3 4 5 6 (PRODUCT LEVEL)	LINK PAGE
	1		5A-4168	1	DIMMER SWITCH	
	2		3Y-1918	1	TURN SIGNAL SWITCH	
	3		5A-3815	1	FUSE BLOCK	
	4		3Y-1523	1	PILOT LAMP ASSEM.	
			5A-4916	1	BULB	
	5		3Y-3308	1	BOX ASSEM.	
			3Y-3311	1	PLATE	
			5A-3834	1	PIN	
	6		0S-1614	2	BOLT	
			3B-4504	2	LOCKWASHER	
			9F-6445	2	NUT (Weld)	
	7		5A-4502	2	GROMMET	
	8		1C-0569	1	BOLT	
			3B-4505	1	LOCKWASHER	
			1D-4716	1	NUT	
	9		5A-3814	1	FLASHER UNIT	
	10		5A-3670	1	WIRE ASSEM.	
	11		4K-5121	2	TERMINAL	
	12		5A-3668	1	WIRE ASSEM.	
	13		5A-3646	1	TERMINAL	
	14		4K-5121	1	TERMINAL	
	15		5A-4292	1	WIRE ASSEM.	
	16		5A-3646	1	TERMINAL	
	17		4K-8229	1	TERMINAL	
	18		4K-5128	1	HOLDER	
	19		8M-8948	4	FUSE	
	20		4B-1219	1	MACHINE SCREW	
			9B-1117	1	LOCKWASHER	
			4B-2041	1	NUT	
	21		4K-5122	3	HOLDER	
	22		3Y-3313	1	WIRE ASSEM.	
	23		5A-3646	1	TERMINAL	
	24		5A-4482	1	TERMINAL	
	25		5A-4291	1	WIRE ASSEM.	
	26		5K-0483	1	TERMINAL	
	27		5A-3646	1	TERMINAL	
	28		3Y-3278	1	HARNESS ASSEM.	
	29		5A-4482	2	TERMINAL (To Light Switch)	
	30		4K-5121	3	TERMINAL (To Fuse Block)	
	31		5A-3837	5	FUSE	
	32		5L-4507	4	MACHINE SCREW	
			3B-4502	4	LOCKWASHER	
			6H-9542	4	NUT	

5A3692 ROAD LIGHTING GROUP--Type 2--Part 3 of 3

REF. NO.	PART NUMBER	DESCRIPTION	QTY.
1	5A4168	DIMMER SWITCH	1
2	3Y1918	TURN SIGNAL SWITCH	1
3	5A3815	FUSE BLOCK	1
4	3Y1523	PILOT LAMP ASSEM.	1
	5A4916	BULB	1

REF. NO.	PART NUMBER	DESCRIPTION	QTY.
5	3Y3308	BOX ASSEM.	1
	3Y3311	PLATE	1
	5A3834	PIN	1
6	S1614	BOLT	2
	3B4504	LOCKWASHER	2
	9F6445	NUT (Weld)	2
7	5A4502	GROMMET	2

REF. NO.	PART NUMBER	DESCRIPTION	QTY.
8	1C569	BOLT	1
	3B4505	LOCKWASHER	1
	104716	NUT	1
9	5A3814	FLASHER UNIT	1
10	5A3670	WIRE ASSEM.	1
11	4K5121	TERMINAL	2
12	5A3668	WIRE ASSEM.	1
13	5A3646	TERMINAL	1
14	4K5121	TERMINAL	1
15	5A4292	WIRE ASSEM.	1
16	5A3646	TERMINAL	1
17	4K8229	TERMINAL	1
18	4K5128	HOLDER	1
19	8M8948	FUSE	4
20	4B1219	MACHINE SCREW	1
	9B1117	LOCKWASHER	1
	4B2041	NUT	1
21	4K5122	HOLDER	3
22	3Y3313	WIRE ASSEM.	1
23	5A3646	TERMINAL	1
24	5A4482	TERMINAL	1
25	5A4291	WIRE ASSEM.	1
26	5K483	TERMINAL	1
27	5A3646	TERMINAL	1
28	3Y3278	HARNESS ASSEM.	1
29	5A4482	TERMINAL (To Light Switch)	2
30	4K5121	TERMINAL (To Fuse Block)	3
31	5A3837	FUSE	5
32	5L4507	MACHINE SCREW	4
	3B4502	LOCKWASHER	4
	6H9542	NUT	4

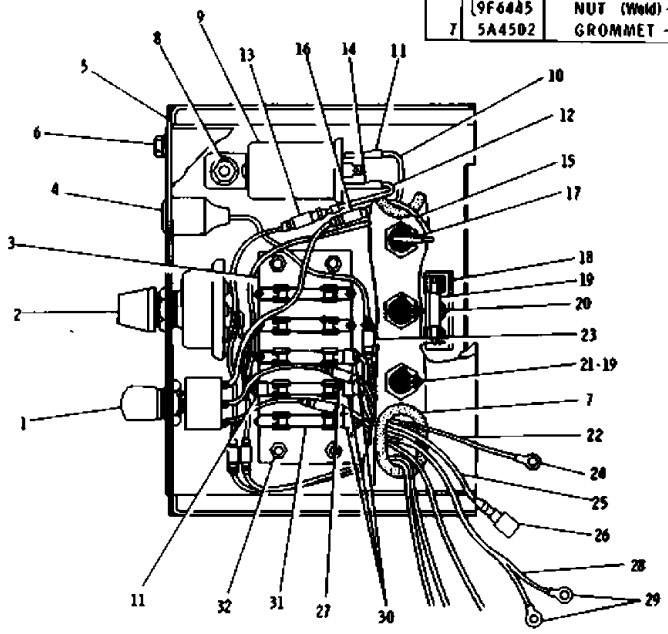

J10837E

GRAPHIC #1

j10837e

5A3692 ROAD LIGHTING GROUP--Wiring Diagram--Type 1

AN ATTACHMENT

Key:

SMCS

NOTE	REF NO	GRAPHIC REF	PART NUMBER	QTY	PART NAME 1 2 3 4 5 6 (PRODUCT LEVEL)	LINK PAGE

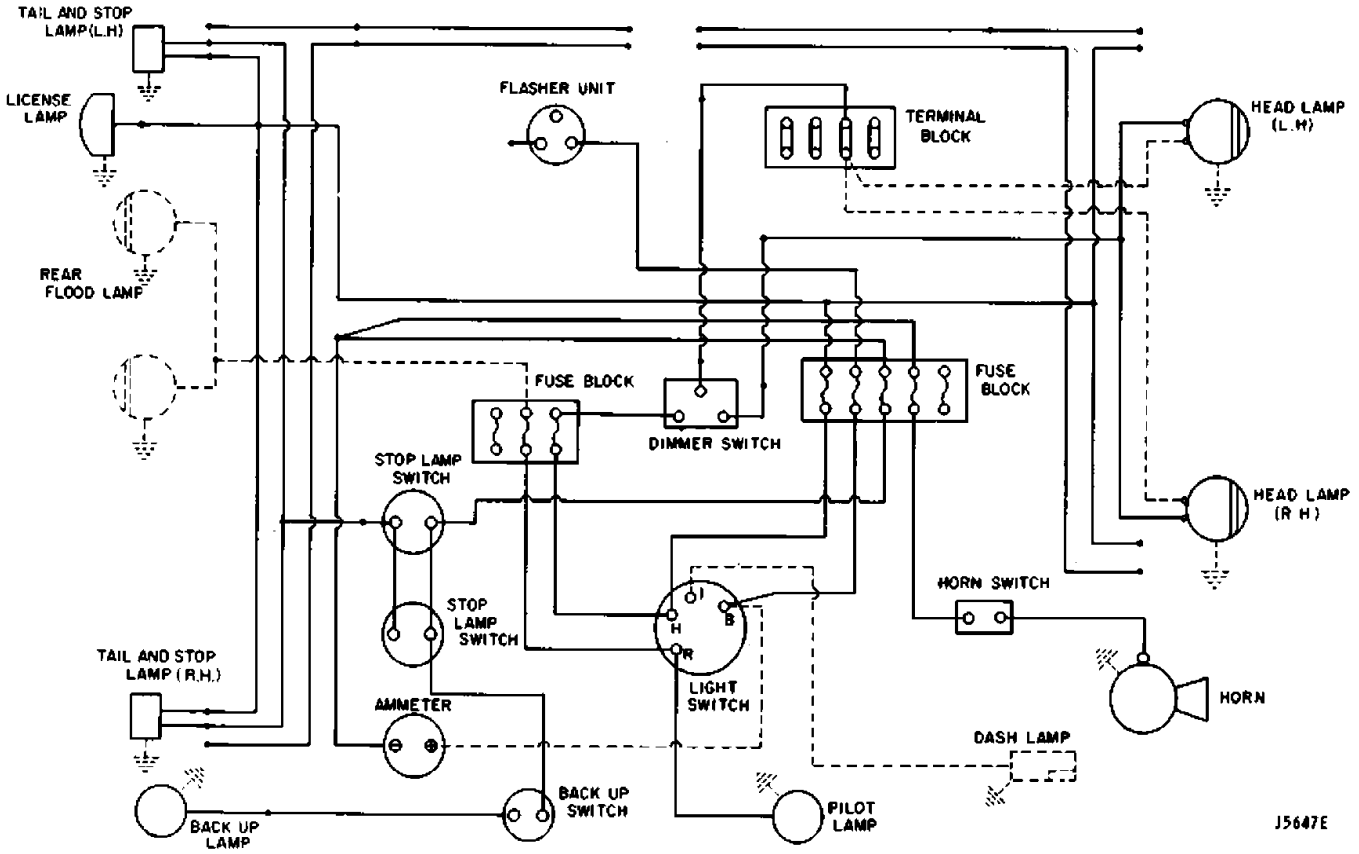

GRAPHIC #1

j5647e

5A3692 ROAD LIGHTING GROUP--Wiring Diagram--Type 2

AN ATTACHMENT

Key:

SMCS

NOTE	REF NO	GRAPHIC REF	PART NUMBER	QTY	PART NAME 1 2 3 4 5 6 (PRODUCT LEVEL)	LINK PAGE

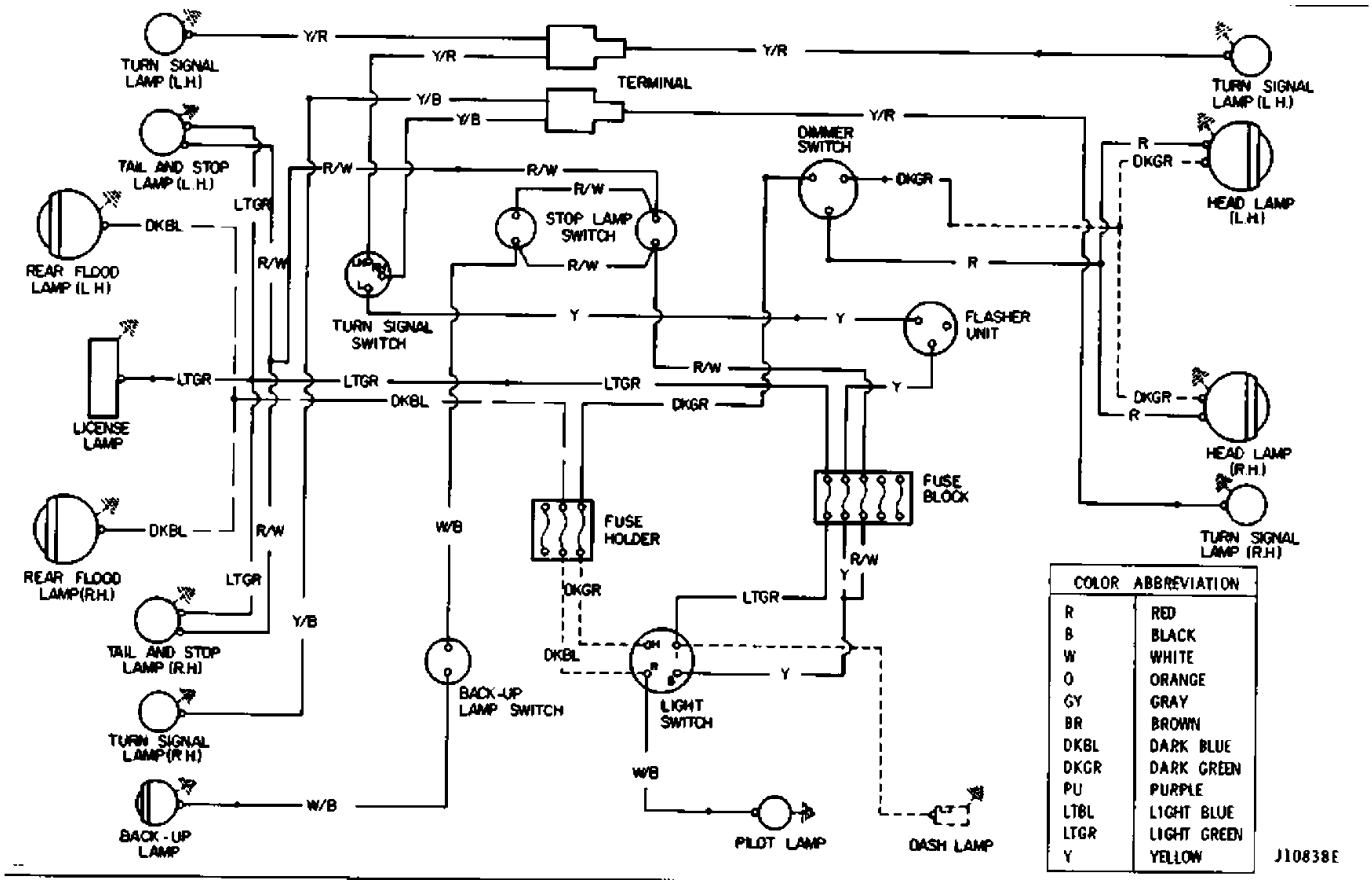

GRAPHIC #1

j10838e

1M1882 FLOOD LAMP ASSEMBLY

Part of 6K7839 and 6K8800 Lighting System
Group
Only separate parts Serviced
AN ATTACHMENT

Key:

SMCS

NOTE	REF NO	GRAPHIC REF	PART NUMBER	QTY	PART NAME 1 2 3 4 5 6 (PRODUCT LEVEL)	LINK PAGE
	1		1M-5898	1	SEALED UNIT	
	2		2P-2541	1	BODY ASSEM.	
	3		2M-5284	2	MOLDING	
			5M-6668	2	SCREW	
	4		2M-5282	1	RING	
					(Installation Instruction)	

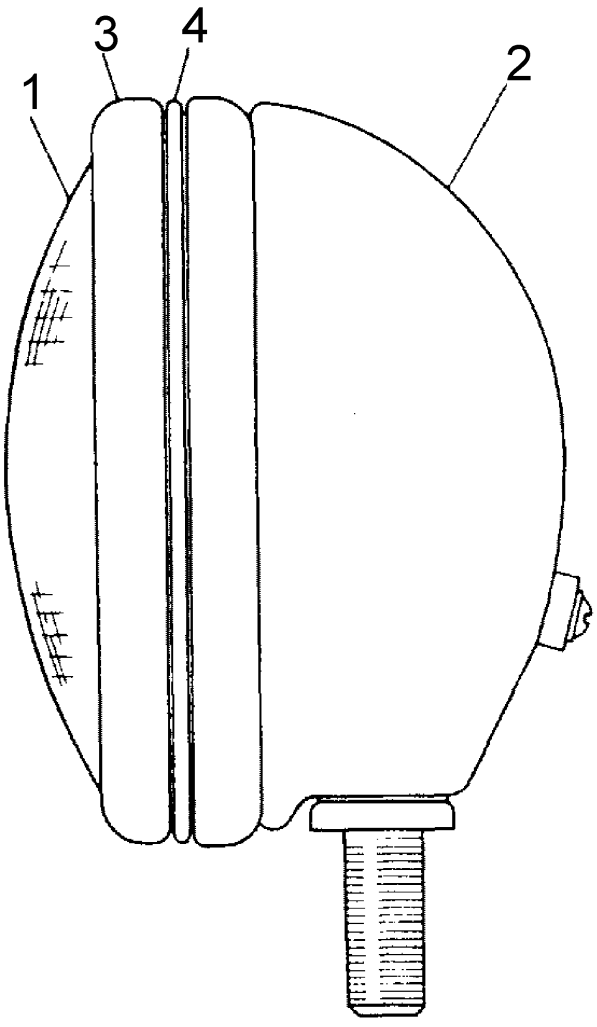

REF. NO.	PART NUMBER	DESCRIPTION	QTY.
1	1M5898	SEALED UNIT	1
2	2P2541	BODY ASSEM.	1
3	2M5284	MOLDING	2
	5M6668	SCREW	2
4	2M5282	RING	1
	FMO35430	FORM (English)	1
	FJX35430	FORM (Japanese)	1
		(Installation Instruction)	

J12468E

GRAPHIC #1

j12468e

5A3847 HEAD LAMP ASSEMBLY

Part of 5A3692 Road Lighting Group
Only separate parts Serviced
AN ATTACHMENT

Key:

SMCS

NOTE	REF NO	GRAPHIC REF	PART NUMBER	QTY	PART NAME 1 2 3 4 5 6 (PRODUCT LEVEL)	LINK PAGE
	1		5A-3806	1	SEALED UNIT	
	2		4N-7139	1	BODY ASSEM.	
	3		4N-7140	2	MOLDING ASSEM	
			5M-6668	2	SCREW	
	4		4N-7141	1	RING	

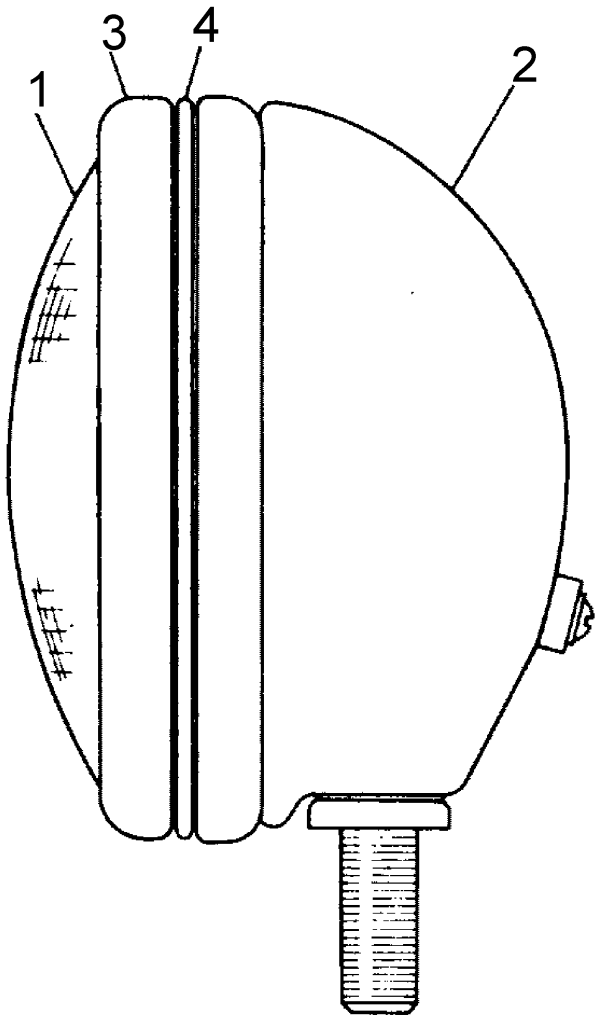

REF. NO.	PART NUMBER	DESCRIPTION	QTY.
1	5A3806	SEALED UNIT	1
2	4N7139	BODY ASSEM.	1
3	4N7140	MOLDING ASSEM	2
	5M6668	SCREW	2
4	4N7141	RING	1
	FMO35430	FORM (English)	1
	FJX35430	FORM (Japanese) (Installation Instruction)	1

J14489E

GRAPHIC #1

j14489e

5A3808 LICENCE LAMP ASSEMBLY

Part of 5A3692 Road Lighting Group
AN ATTACHMENT

Key:

SMCS

NOTE	REF NO	GRAPHIC REF	PART NUMBER	QTY	PART NAME 1 2 3 4 5 6 (PRODUCT LEVEL)	LINK PAGE
			3H-2691	1	BULB	
			5A-4493	1	GLASS	

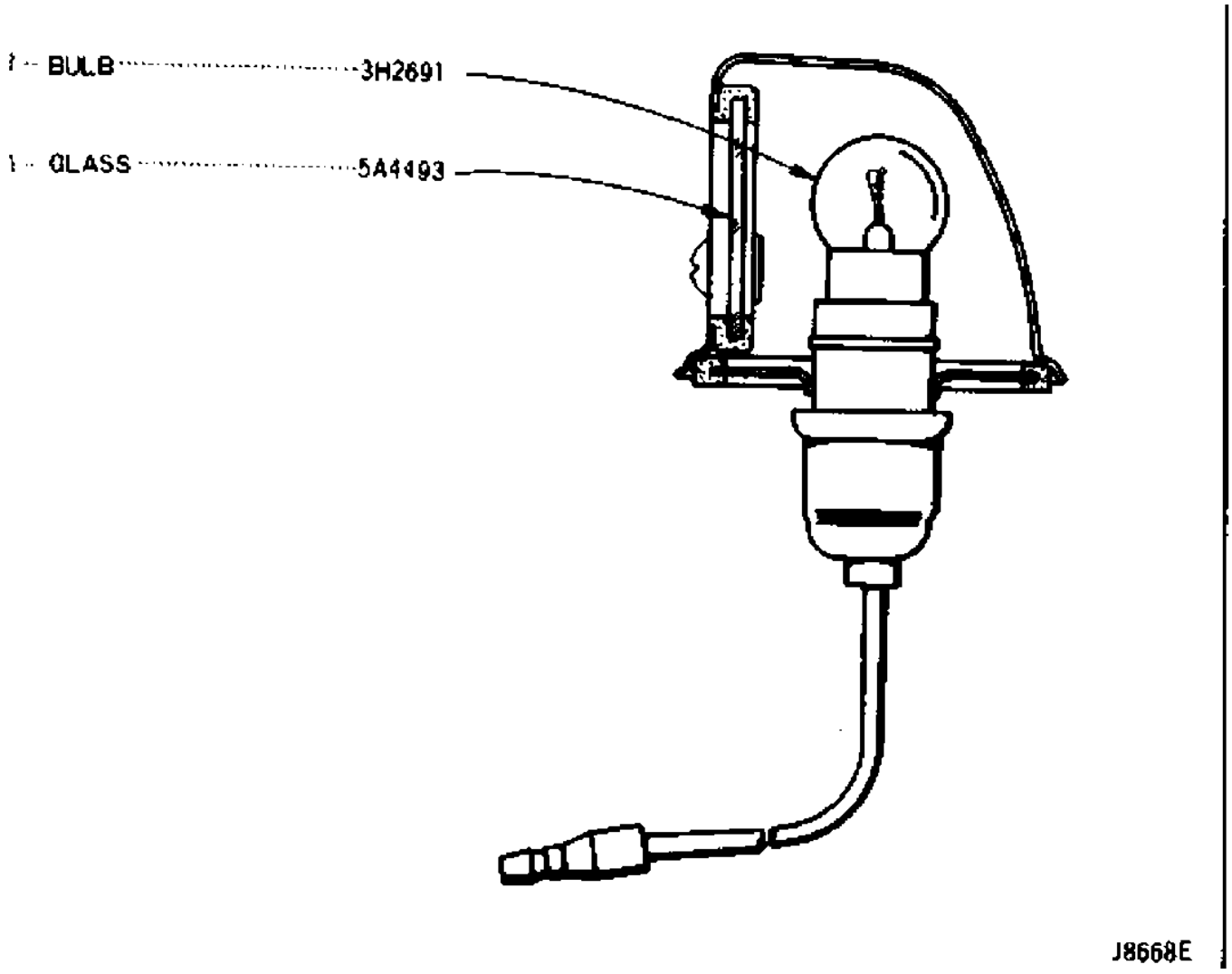

GRAPHIC #1

j8668e

3Y2046 TURN SIGNAL LAMP ASSEMBLY

Part of 5A3692 Road Lighting Group
AN ATTACHMENT

Key:

SMCS

NOTE	REF NO	GRAPHIC REF	PART NUMBER	QTY	PART NAME 1 2 3 4 5 6 (PRODUCT LEVEL)	LINK PAGE
	1		6S-7141	1	LENS ASSEM.	
	2		7H-2976	1	BULB	
	3		6S-7142	1	BASE	

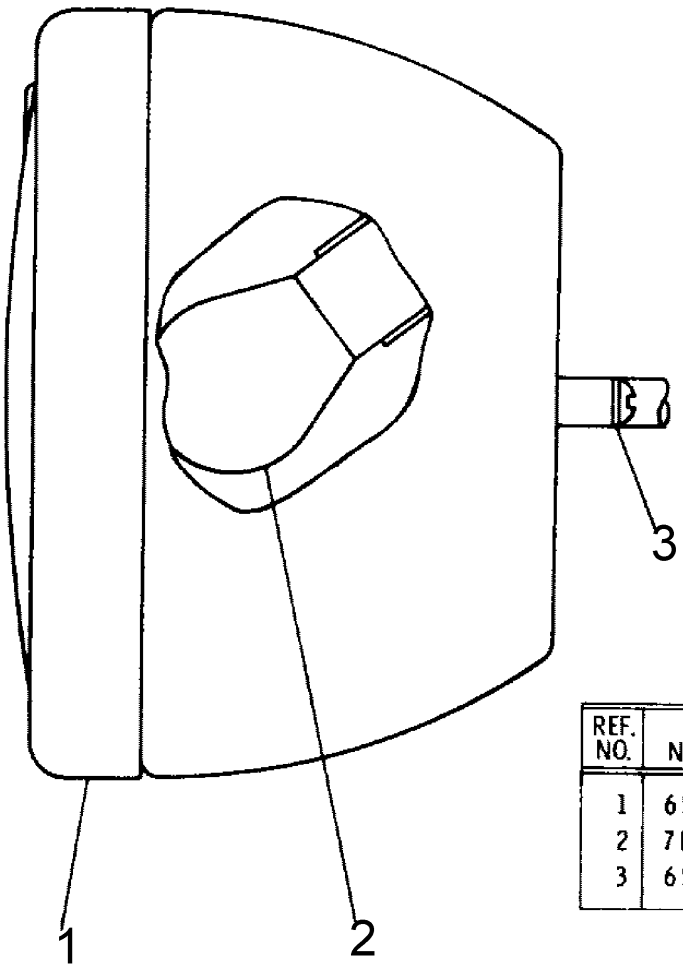

REF. NO.	PART NUMBER	DESCRIPTION	QTY.
1	6S7141	LENS ASSEM.	1
2	7H2976	BULB	1
3	6S7142	BASE	1

J9458E

GRAPHIC #1

j9458e

7M7147 STOP AND TAIL LAMP ASSEMBLY

Part of 5A3692 Road Lighting Group
AN ATTACHMENT

Key:

SMCS

NOTE	REF NO	GRAPHIC REF	PART NUMBER	QTY	PART NAME 1 2 3 4 5 6 (PRODUCT LEVEL)	LINK PAGE
			8M-1241	1	SOCKET AND PLATE ASSEM.	
			2D-1959	1	BULB	
			7H-2976	1	BULB	
			5A-4890	1	DOOR ASSEM.	

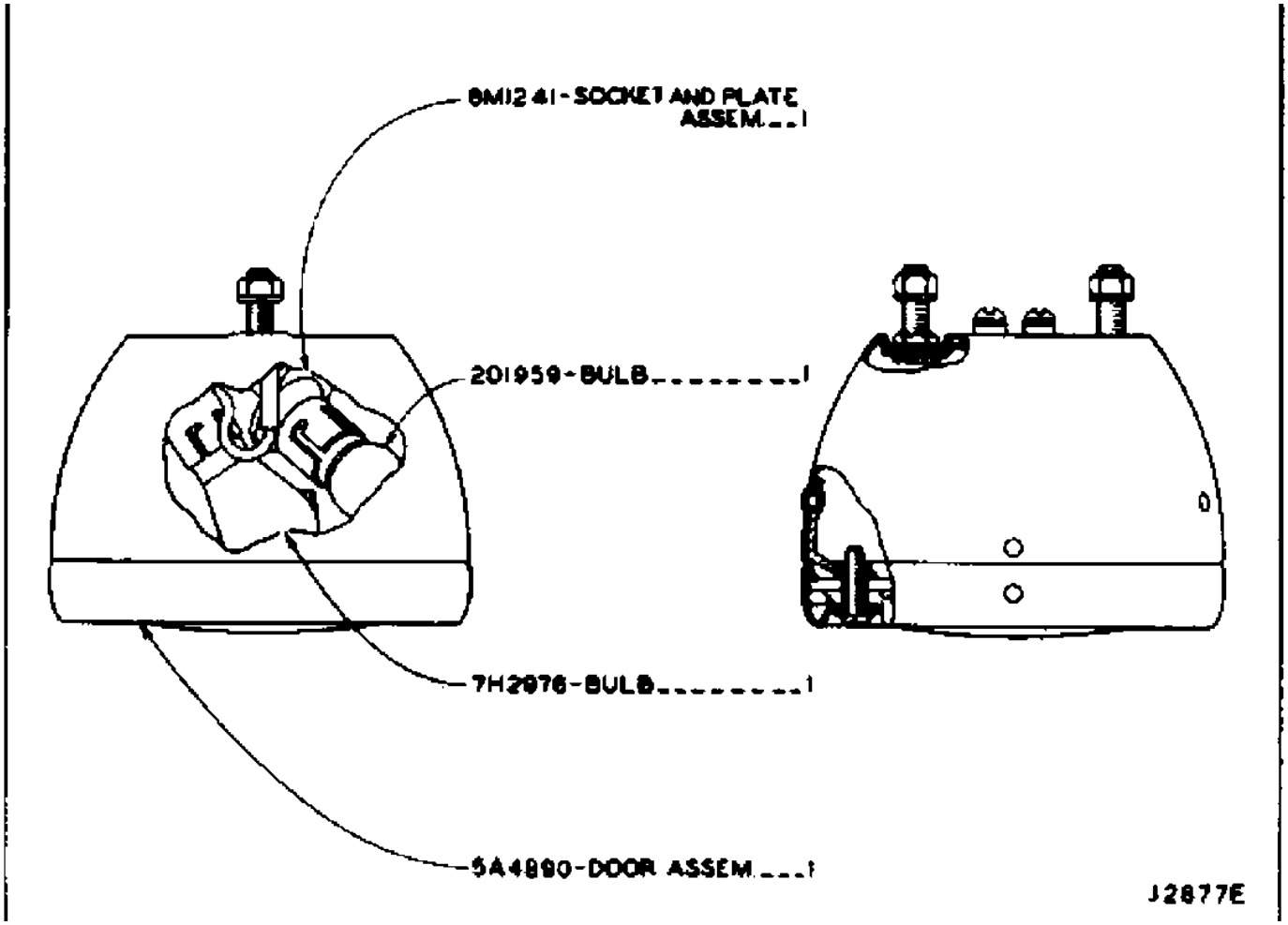

GRAPHIC #1

j2877e

3Y1735 PARKING AND TURN SIGNAL LAMP ASSEMBLY

3Y1736 PARKING AND TURN SIGNAL LAMP ASSEMBLY
Part of 5A3692 Road Lighting Group
AN ATTACHMENT

Key:

SMCS

NOTE	REF NO	GRAPHIC REF	PART NUMBER	QTY	PART NAME 1 2 3 4 5 6 (PRODUCT LEVEL)	LINK PAGE
	1		5A-9528	1	LENS	
	2		5A-9122	1	BULB	
	3		7H-2976	1	BULB	

3Y1735 PARKING AND TURN SIGNAL LAMP ASSEMBLY

3Y1736 PARKING AND TURN SIGNAL LAMP ASSEMBLY
Part of 5A3692 Road Lighting Group
AN ATTACHMENT

Key:

SMCS

NOTE	REF NO	GRAPHIC REF	PART NUMBER	QTY	PART NAME 1 2 3 4 5 6 (PRODUCT LEVEL)	LINK PAGE
	1		5A-9528	1	LENS	
	2		5A-9122	1	BULB	
	3		7H-2976	1	BULB	

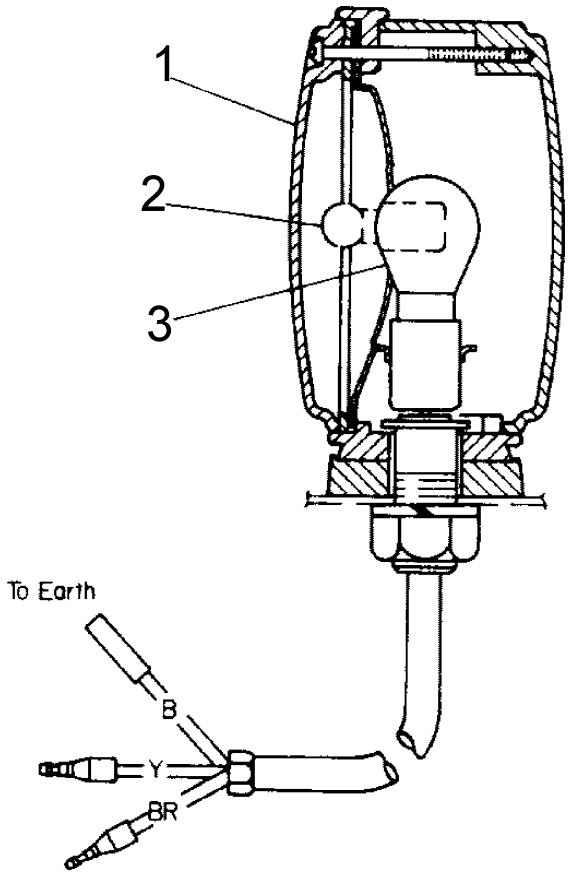

REF. NO.	PART NUMBER	DESCRIPTION	QTY.
1	5A9528	LENS	1
2	5A9122	BULB	1
3	7H2976	BULB	1

J9564E

GRAPHIC #1

j9564e

5A4922 BACK-UP LAMP ASSEMBLY

Part of 5A3692 Road Lighting Group
AN ATTACHMENT

Key:

SMCS

NOTE	REF NO	GRAPHIC REF	PART NUMBER	QTY	PART NAME 1 2 3 4 5 6 (PRODUCT LEVEL)	LINK PAGE
	1		5A-4921	1	LENS	
	2		7H-2976	1	BULB	

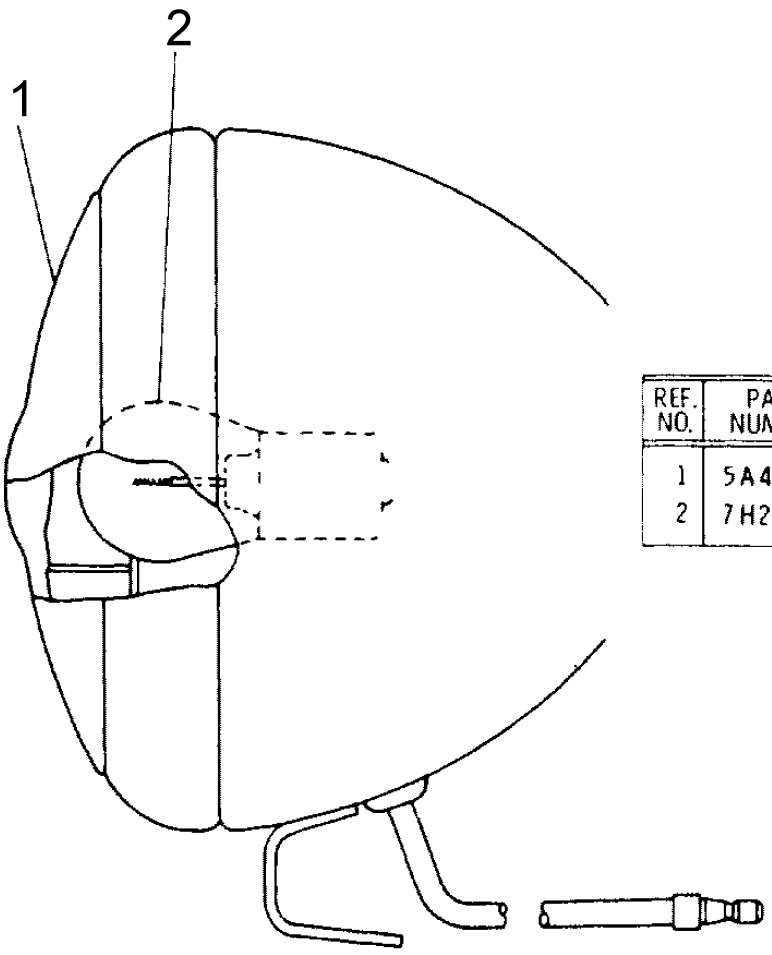

REF. NO.	PART NUMBER	DESCRIPTION	QTY.
1	5A4921	LENS	1
2	7H2976	BULB	1

J15516E

GRAPHIC #1

j15516e

5A6545 LAMP GUARD GROUP

AN ATTACHMENT

Key:

SMCS

NOTE	REF NO	GRAPHIC REF	PART NUMBER	QTY	PART NAME 1 2 3 4 5 6 (PRODUCT LEVEL)	LINK PAGE
			3Y-0624	2	GUARD ASSEM	
			1A-4784	8	WASHER	

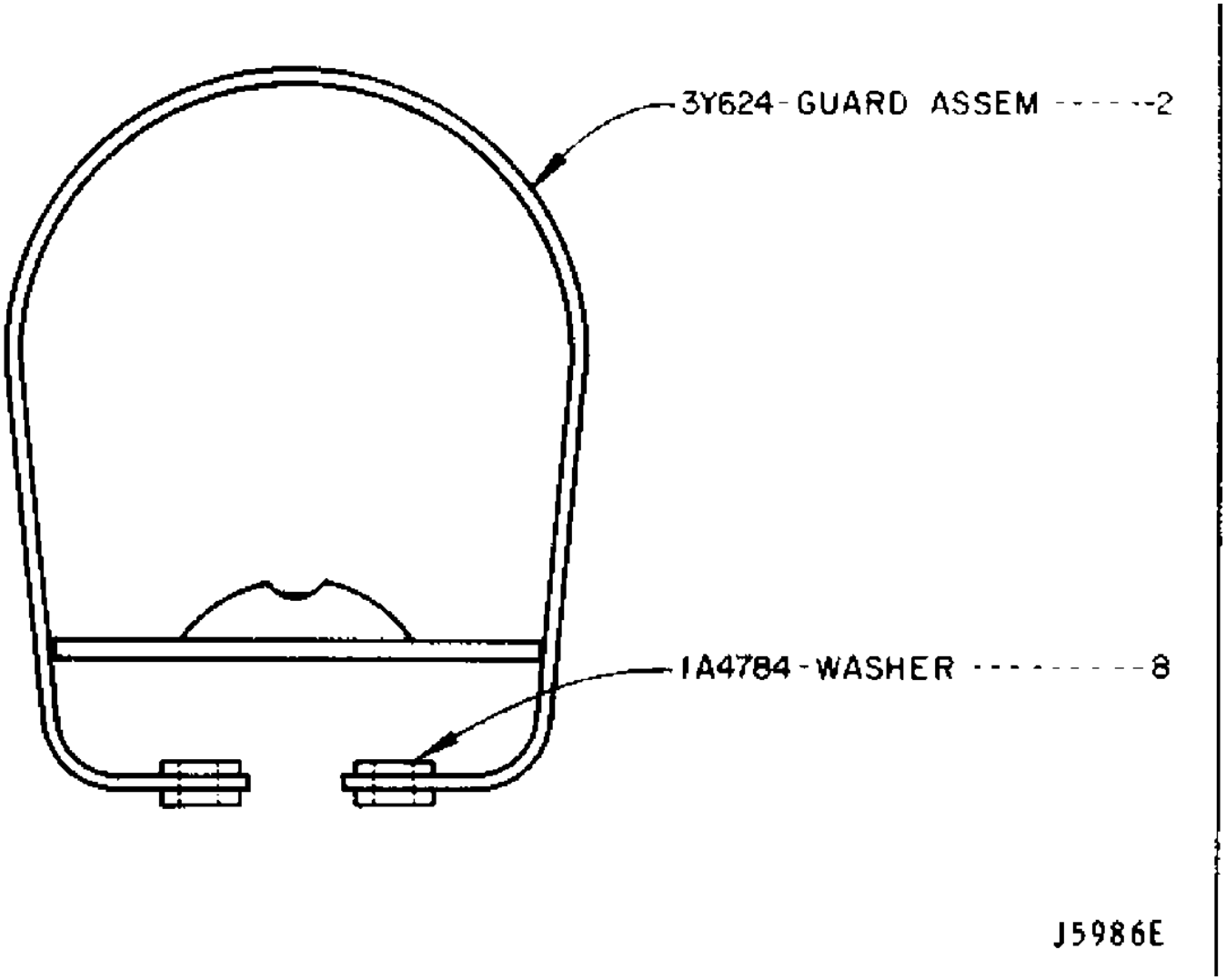

GRAPHIC #1

j5986e

3Y3325 HARNESS ASSEMBLY

Part of 5A3692 Road Lighting Group
AN ATTACHMENT

Key:

SMCS

NOTE	REF NO	GRAPHIC REF	PART NUMBER	QTY	PART NAME 1 2 3 4 5 6 (PRODUCT LEVEL)	LINK PAGE
	1		5A-3646	4	TERMINAL	
	2		5A-3664	2	TERMINAL	
	3		5A-3647	2	TERMINAL	
	4		4K-5121	2	TERMINAL	

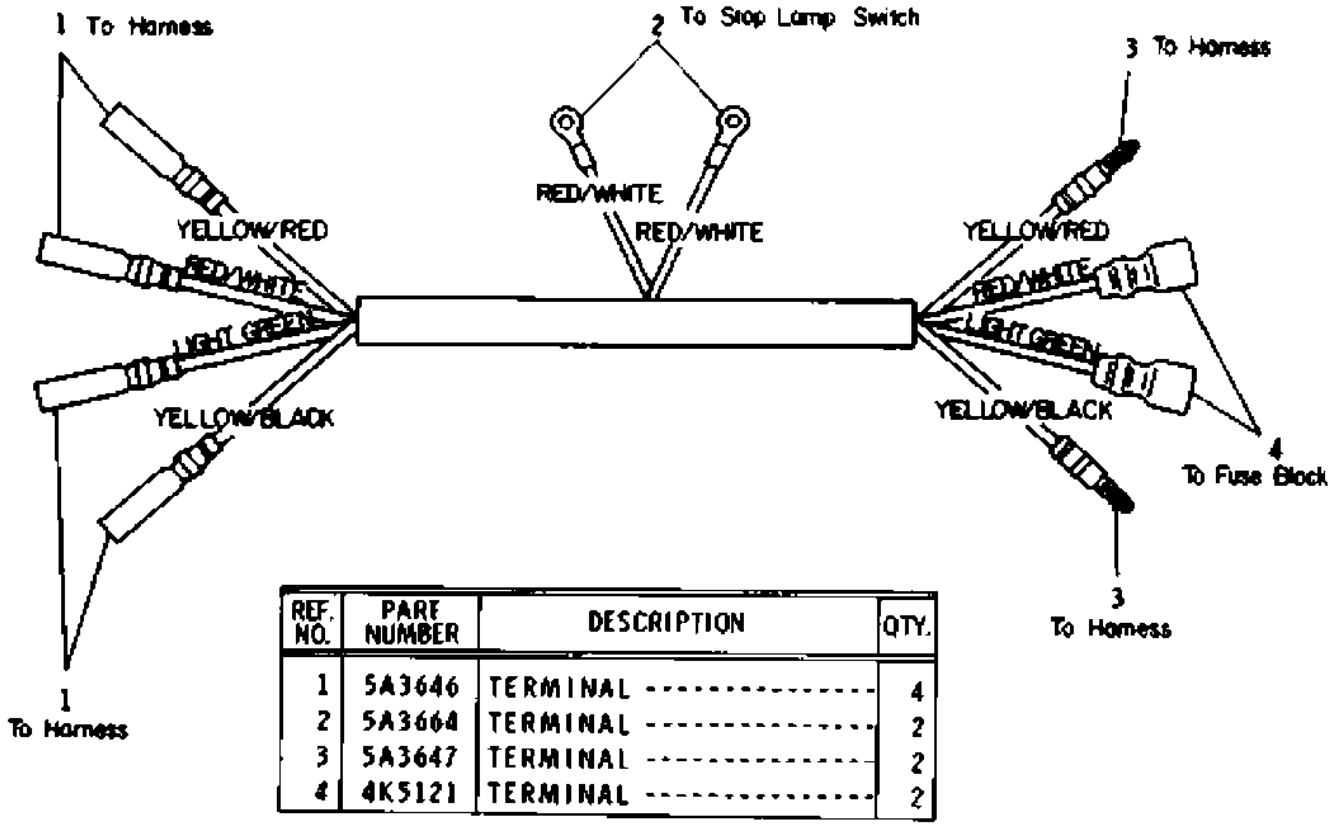

REF. NO.	PART NUMBER	DESCRIPTION	QTY.
1	5A3646	TERMINAL	4
2	5A3664	TERMINAL	2
3	5A3647	TERMINAL	2
4	4K5121	TERMINAL	2

J11162E

GRAPHIC #1

j11162e

3Y3326 HARNESS ASSEMBLY

Part of 5A3692 Road Lighting Group
AN ATTACHMENT

Key:

SMCS

NOTE	REF NO	GRAPHIC REF	PART NUMBER	QTY	PART NAME 1 2 3 4 5 6 (PRODUCT LEVEL)	LINK PAGE
	1		2L-8075	6	TERMINAL	
	2		5A-3647	4	TERMINAL	
	3		5A-3646	1	TERMINAL	

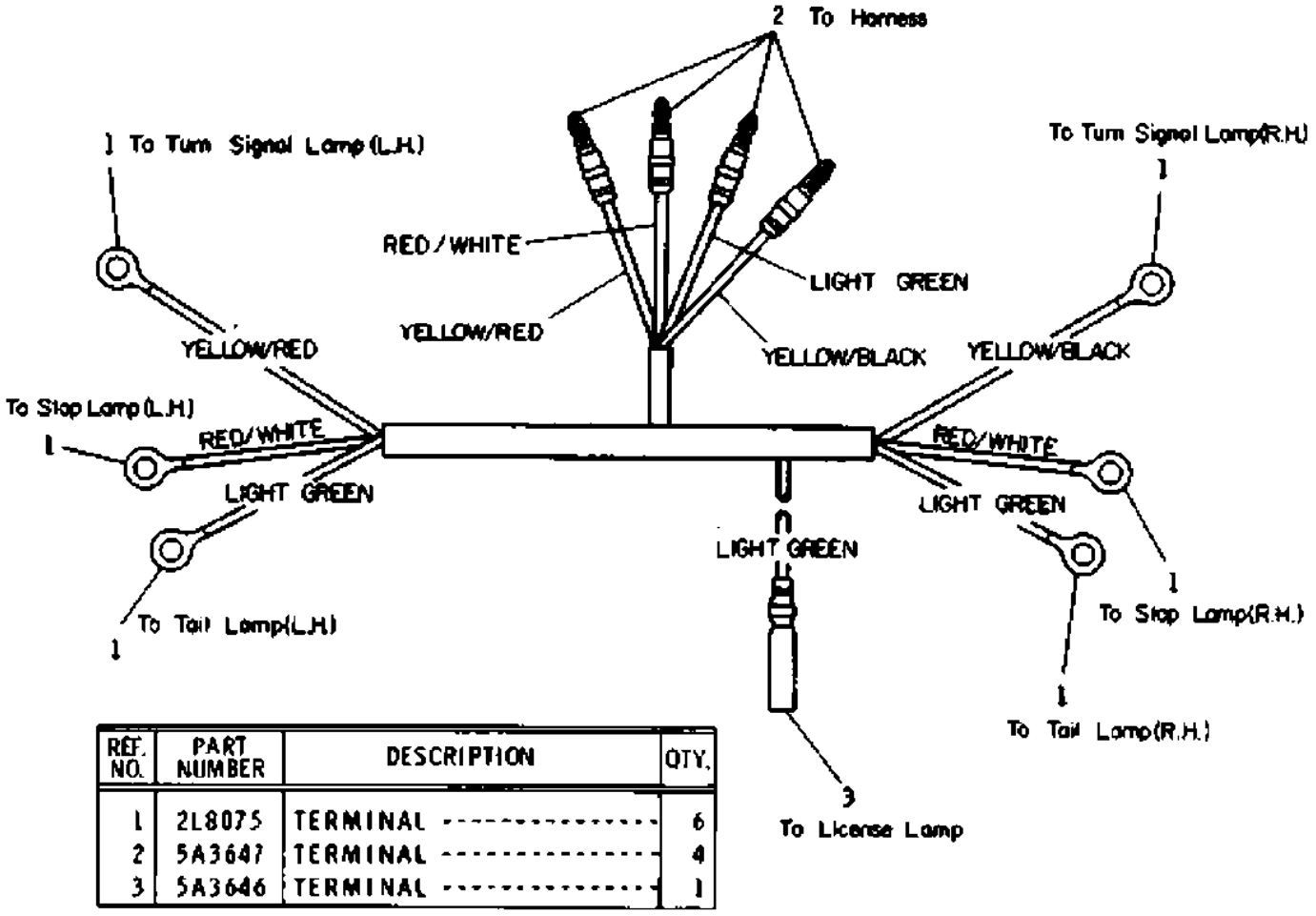

REF. NO.	PART NUMBER	DESCRIPTION	QTY.
1	2L8075	TERMINAL	6
2	5A3647	TERMINAL	4
3	5A3646	TERMINAL	1

J11163E

GRAPHIC #1

j11163e

FLYWHEEL CLUTCH (4K5034 N/S)--Part 1 of 4

Effective with Serial No. 65J1474~65J1524
7S7602 Pump Group parts are shown on Page 182

Key: C - INDICATES CHANGE, Y - SEPARATE ILLUSTRATION

SMCS

NOTE	REF NO	GRAPHIC REF	PART NUMBER	QTY	PART NAME 1 2 3 4 5 6 (PRODUCT LEVEL)	LINK PAGE
	1		5A-3079	1	GAGE ASSEM. (For Japan)	
			4K-5504	1	GAGE ASSEM. (For Outside Japan)	
	2		5H-7110	1	PLUG	
			0L-1124	1	GASKET	
	3		4B-0418	1	CLIP	
	4		0S-0509	1	BOLT	
	5		3B-4506	12	LOCKWASHER	
	6		4K-5539	1	TUBE ASSEM.	
	7		4K-5515	1	SPOUT	
	8		0S-1585	19	BOLT	
	9		3B-4508	23	LOCKWASHER	
	10		0S-1588	5	BOLT (32mm Long)	
	11		3K-4733	1	GASKET	
	12		3F-0957	1	DOWEL	
	13		1A-7669	4	BOLT	
			0V-0531	4	WASHER	
	14		0S-1591	2	BOLT	
	15		4K-5537	1	GASKET	
	16		5F-2636	3	BEARING	
	17		4K-5435	1	SHAFT	
	18		0S-1594	4	BOLT (25.5mm Long)	
YC	19		7S-7602	1	PUMP GROUP	P0230
					(See Separate Illustration)	
	20		2A-3630	2	PIN	
	21		6B-7988	1	PIN	
			1F-9489	1	WASHER	
			3B-4617	1	COTTER PIN	
	22		1H-8933	1	PIN	
			0L-1604	1	LOCK	
			1K-0485	1	WASHER	
			3B-4628	1	COTTER PIN	
	23		1H-8946	1	SHOE ASSEM.	
			1H-8934	1	PIN	
	24		1H-8379	1	FACING	
	25		6B-4284	4	RIVET	

FLYWHEEL CLUTCH (4K5034 N/S)--Part 1 of 4

O Indicates Change.

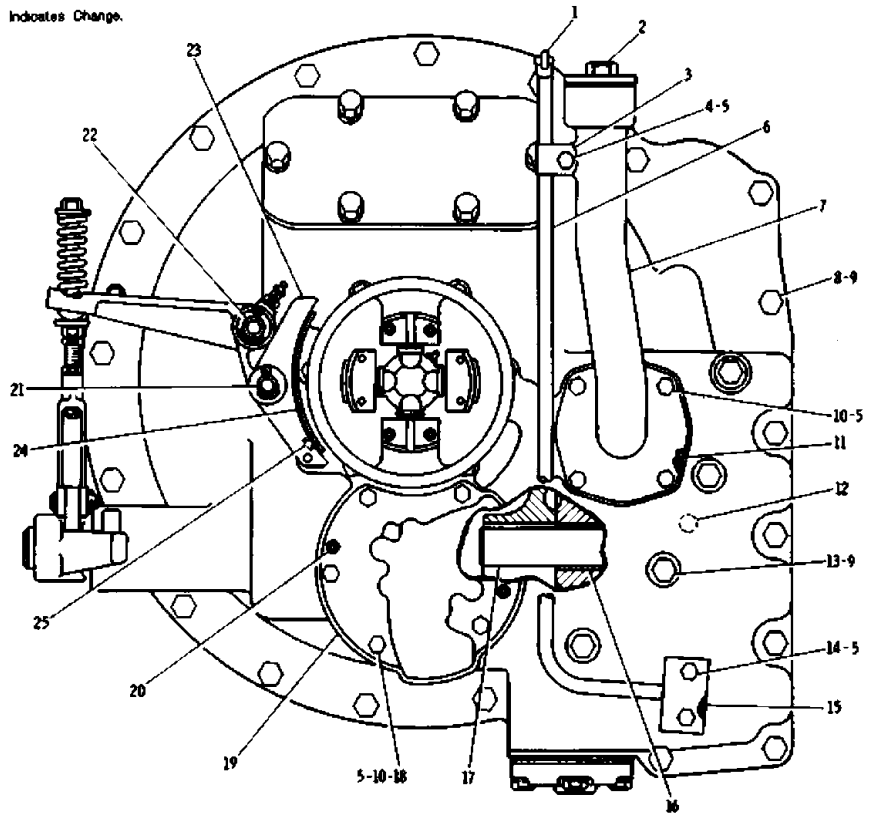

	REF. NO.	PART NUMBER	DESCRIPTION	QTY.
	1	5A3079	GAGE ASSEM. (For Japan)	1
		4K5504	GAGE ASSEM. (For Outside Japan)	1
	2	5H7110	PLUG	1
		L1124	GASKET	1
	3	4B418	CLIP	1
	4	S509	BOLT	1
	5	3B4506	LOCKWASHER	12
	6	4K5539	TUBE ASSEM.	1
	7	4K5515	SPOUT	1
	8	S1585	BOLT	19
	9	3B4508	LOCKWASHER	23
	10	S1588	BOLT (32mm Long)	5
	11	3K4733	GASKET	1
	12	3F957	DOWEL	1
	13	1A7669	BOLT	4
		V531	WASHER	4
	14	S1591	BOLT	2
	15	4K5537	GASKET	1
	16	5F2636	BEARING	3
	17	4K5435	SHAFT	1
	18	S1594	BOLT (25.5mm Long)	4
O	19	7S7602	PUMP GROUP (See Separate Illustration)	1
	20	2A3630	PIN	2
	21	6B7988	PIN	1
		1F9489	WASHER	1
		3B4617	COTTER PIN	1
	22	1H8933	PIN	1
		L1604	LOCK	1
		1K485	WASHER	1
		3B4628	COTTER PIN	1
	23	1H8946	SHOE ASSEM.	1
		1H8934	PIN	1
	24	1H8379	FACING	1
	25	6B4284	RIVET	4

J13341E

GRAPHIC #1

j13341e

FLYWHEEL CLUTCH (4K5034 N/S)--Part 2 of 4

Effective with Serial No. 65J1474~65J1524

Key:

SMCS

NOTE	REF NO	GRAPHIC REF	PART NUMBER	QTY	PART NAME 1 2 3 4 5 6 (PRODUCT LEVEL)	LINK PAGE
	1		1H-8459	1	COVER	
	2		1H-8460	1	GASKET	
	3		0S-1594	6	BOLT	
	4		3B-4506	12	LOCKWASHER	
	5		1A-2029	6	BOLT	
	6		3H-4190	1	PLUG	
			2B-5721	1	GASKET	
	7		5M-3656	1	COVER ASSEM.	
	8		2K-5986	1	PIN	
	9		8H-9501	2	GASKET	
	10		7H-2304	1	SCREEN ASSEM.	
	11		4K-5363	1	COVER	
	12		4K-5421	1	GASKET	
	13		7B-2174	1	SEAL	
	14		4K-5648	1	LEVER	
	15		0S-1625	1	BOLT	
			1D-4720	1	NUT	
	16		0S-0175	1	PIN	
			3B-4617	1	COTTER PIN	
	17		0S-0174	1	ROD END	
	18		1B-4430	2	NUT	
	19		1B-4205	1	NUT	
			1F-7960	1	WASHER	
	20		1H-8938	1	LEVER	
	21		3F-0957	1	DOWEL	
	22		3H-1937	1	SPRING	
	23		7F-0502	1	WASHER	
	24		3H-1930	1	BOLT	
	25		3B-8686	1	FITTING	

FLYWHEEL CLUTCH (4K5034 N/S)--Part 2 of 4

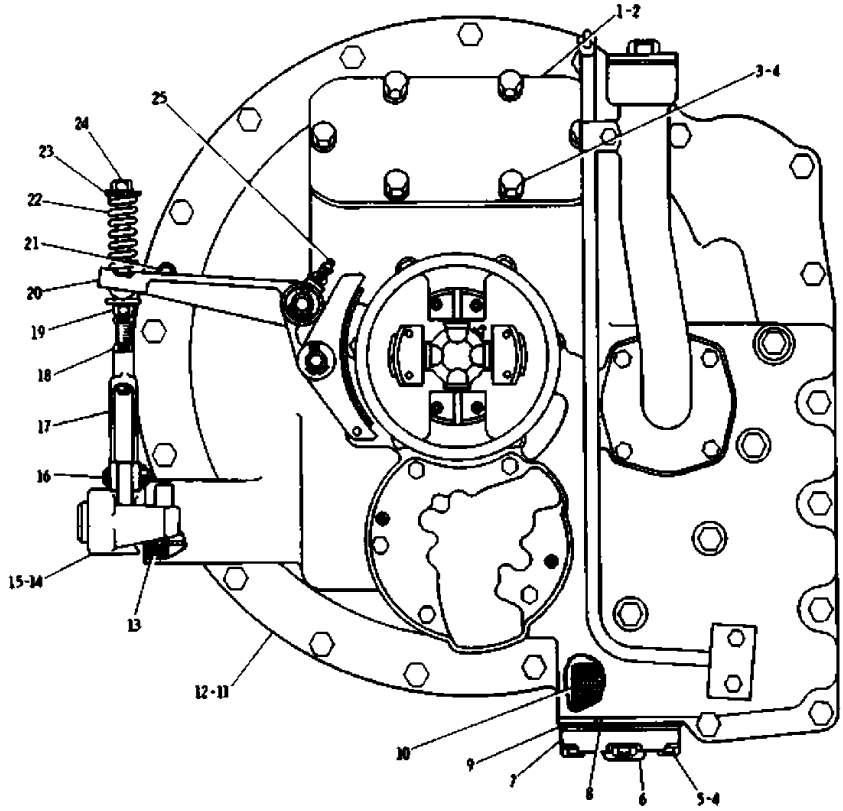

REF. NO.	PART NUMBER	DESCRIPTION	QTY.
1	1H8459	COVER	1
2	1H8460	GASKET	1
3	S1594	BOLT	6
4	3B4506	LOCKWASHER	12
5	1A2029	BOLT	6
6	3H4190	PLUG	1
	2B5721	GASKET	1
7	5M3656	COVER ASSEM.	1
8	2K5986	PIN	1
9	8N9501	GASKET	2
10	7H2304	SCREEN ASSEM.	1
11	4K5363	COVER	1
12	4K5421	GASKET	1
13	7B2174	SEAL	1
14	4K5648	LEVER	1
15	S1625	BOLT	1
	1B4720	NUT	1
16	S175	PIN	1
	3B4617	COTTER PIN	1
17	S174	ROD END	1
18	1B4430	NUT	2
19	1B4205	NUT	1
	1F7960	WASHER	1
20	1H8938	LEVER	1
21	3F957	DOWEL	1
22	3H1937	SPRING	1
23	7F502	WASHER	1
24	3H1930	BOLT	1
25	3B8686	FITTING	1

J13041E

GRAPHIC #1

j13041e

FLYWHEEL CLUTCH (4K5034 N/S)--Part 3 of 4

Effective with Serial No. 65J1474~65J1524
5K5008 Drive Shaft Assembly parts are shown on Page 182

Key: C - INDICATES CHANGE, Y - SEPARATE ILLUSTRATION

SMCS

NOTE	REF NO	GRAPHIC REF	PART NUMBER	QTY	PART NAME 1 2 3 4 5 6 (PRODUCT LEVEL)	LINK PAGE
	1		1S-8764	1	RING	
	2		2H-4482	1	COLLAR	
	3		2H-5330	4	BOLT	
			2H-4499	4	LOCK	
	4		2H-3525	1	RACE (Outer)	
	5		2H-3517	1	RACE & ROLLER ASSEM. (Inner)	
	6		2H-3548	1	RING	
	7		4K-5360	1	SHAFT	
	8		0T-0200	1	PLUG	
	9		2H-4498	8	SHAFT	
	10		2H-5048	4	LINK	
			9F-7101	8	BUSHING	
	11		2H-5047	8	ROLLER	
	12		3H-7347	2	LOCK ASSEM.	
	13		2F-7036	1	STUD	
	14		2H-4385	1	PIN	
	15		2H-4386	2	PLATE	
	16		1B-4203	2	NUT	
	17		2H-5046	4	LINK	
	18		1H-8266	1	GASKET	
	19		4K-5419	1	RETAINER	
C	20		1P-7045	1	GASKET	
	21		0S-0509	4	BOLT	
			1H-8330	2	LOCK	
Y	22		5K-5008	1	DRIVE SHAFT ASSEM.	P0231
					(See Separate Illustration)	
	23		1B-0581	8	BOLT	
			3B-4505	8	LOCKWASHER	
	24		8B-5965	1	BEARING	
	25		0S-1571	6	BOLT	
			3B-4506	6	LOCKWASHER	
	26		2H-4450	1	WASHER	
	27		8M-4000	1	WASHER	
	28		8M-3999	1	WASHER	

FLYWHEEL CLUTCH (4K5034 N/S)--Part 3 of 4

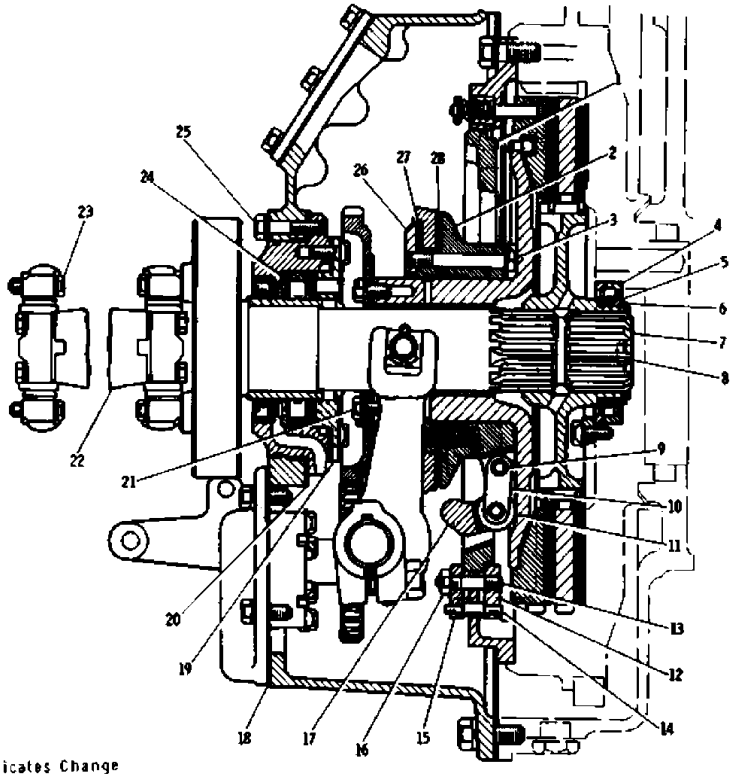

	REF. NO.	PART NUMBER	DESCRIPTION	QTY.
	1	1S8764	RING	1
	2	2H4482	COLLAR	1
	3	2H5330	BOLT	4
		2H4499	LOCK	4
	4	2H3525	RACE (Outer)	1
	5	2H3517	RACE & ROLLER ASSEM. (Inner)	1
	6	2H3548	RING	1
	7	4K5360	SHAFT	1
	8	T200	PLUG	1
	9	2H4498	SHAFT	8
	10	2H5048	LINK	4
		9F7101	BUSHING	8
	11	2H5047	ROLLER	8
	12	3H7347	LOCK ASSEM.	2
	13	2F7036	STUD	1
	14	2H4385	PIN	1
	15	2H4386	PLATE	2
	16	1B4203	NUT	2
	17	2H5046	LINK	4
	18	1H8266	GASKET	1
	19	4K5419	RETAINER	1
C	20	1P7045	GASKET	1
	21	S509	BOLT	4
		1H8330	LOCK	2
	22	5K5008	DRIVE SHAFT ASSEM. -- (See Separate Illustration)	1
	23	1B581	BOLT	8
		3B4505	LOCKWASHER	8
	24	8B5965	BEARING	1
	25	S1571	BOLT	6
		3B4506	LOCKWASHER	6
	26	2H4450	WASHER	1
	27	8M4000	WASHER	1
	28	8M3999	WASHER	1

C Indicates Change

J13630E

GRAPHIC #1

j13630e

FLYWHEEL CLUTCH (4K5034 N/S)--Part 4 of 4

Effective with Serial No. 65J1474~65J1524

Key: C - INDICATES CHANGE

SMCS

NOTE	REF NO	GRAPHIC REF	PART NUMBER	QTY	PART NAME 1 2 3 4 5 6 (PRODUCT LEVEL)	LINK PAGE
	1		7B-3235	8	BOLT	
	2		3B-4508	8	LOCKWASHER	
	3		2M-2290	1	BRACKET	
	4		2H-4438	4	STUD	
	5		1S-8183	2	DISC ASSEM.	
	6		4H-4021	1	PLATE ASSEM.	
	7		4H-3988	1	PIN	
	8		1H-8396	2	BEARING	
	9		2H-3526	1	RING	
	10		9F-7095	2	BLOCK	
			3B-4628	2	COTTER PIN	
	11		2B-2695	3	BOLT	
			5H-5652	3	LOCK	
	12		3K-7124	3	RETAINER ASSEM.	
	13		9M-5682	1	HUB 64 Teeth)	
	14		5B-3097	4	SPRING	
			3H-2646	4	PIN	
	15		2H-4338	1	PLATE (72 Teeth)	
	16		1M-9177	1	PLATE (72 Teeth)	
	17		1A-1135	2	BOLT	
	18		5M-7363	1	YOKE	
	19		1H-8262	1	SHAFT	
			1B-8724	2	KEY	
	20		1H-8466	1	GASKET	
C	21		9M-3786	1	SEAL	
	23		8M-8110	1	SEAL	
	24		1H-8261	1	RACE	
C	25		1P-7161	1	CAGE	
	26		0S-0509	6	BOLT	
			0L-0364	6	LOCK	
	27		1H-8382	1	GEAR (46 Teeth)	
	28		3H-2645	1	WASHER	
	29		5H-5500	1	COLLAR	
	30		5F-4061	4	RETAINER	
			2A-4429	8	LOCK	
	31		2H-4406	4	SPRING	

FLYWHEEL CLUTCH (4K5034 N/S)--Part 4 of 4

REF. NO.	PART NUMBER	DESCRIPTION	QTY.
1	7B3235	BOLT	8
2	3B4508	LOCKWASHER	8
3	2M2290	BRACKET	1

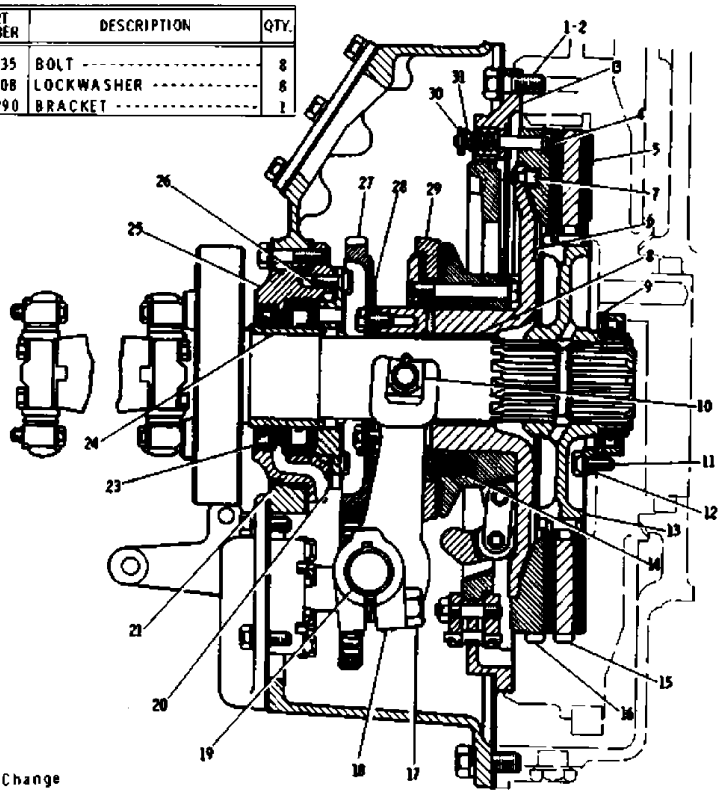

REF. NO.	PART NUMBER	DESCRIPTION	QTY.
4	2H4438	STUD	4
5	1S8183	DISC ASSEM.	2
6	4H4021	PLATE ASSEM.	1
7	4H3988	PIN	1
8	1H8396	BEARING	2
9	2H3526	RING	1
10	9F7095	BLOCK	2
	3B4628	COTTER PIN	2
11	2B2695	BOLT	3
	5H5652	LOCK	3
12	3K7124	RETAINER ASSEM.	3
13	9M5682	HUB (68 Teeth)	1
14	5B3097	SPRING	4
	3H2646	PIN	4
15	2H4338	PLATE (72 Teeth)	1
16	1M9177	PLATE (72 Teeth)	1
17	1A1135	BOLT	2
18	5M7363	YOKE	1
19	1H8262	SHAFT	1
	1B8724	KEY	2
20	1H8466	GASKET	1
C 21	9M3786	SEAL	1
23	8M8110	SEAL	1
24	1H8261	RACE	1
C 25	1P7161	CAGE	1
26	S509	BOLT	6
	L364	LOCK	6
27	1H8382	GEAR (46 Teeth)	1
28	3H2645	WASHER	1
29	5H5500	COLLAR	1
30	5F4061	RETAINER	4
	2A4429	LOCK	8
31	2H4406	SPRING	4

C Indicates Change

J13631E

GRAPHIC #1

j13631e

FLYWHEEL CLUTCH (4K5034 N/S)--Part 1 of 4

Effective with Serial No. 65J1525-UP
7S7602 Pump Group parts are shown on Page 182

Key: C - INDICATES CHANGE, Y - SEPARATE ILLUSTRATION

SMCS

NOTE	REF NO	GRAPHIC REF	PART NUMBER	QTY	PART NAME 1 2 3 4 5 6 (PRODUCT LEVEL)	LINK PAGE
	1		5A-3079	1	CAGE ASSEM. (For Japan)	
			4K-5504	1	CAGE ASSEM. (For Outside Japan)	
	2		5H-7110	1	PLUG	
			0L-1124	1	GASKET	
	3		4B-0418	1	CLIP	
	4		0S-0509	1	BOLT	
	5		3B-4506	12	LOCKWASHER	
	6		4K-5539	1	TUBE ASSEM.	
	7		4K-5515	1	SPOUT	
	8		0S-1585	19	BOLT	
	9		3B-4508	23	LOCKWASHER	
	10		0S-1588	5	BOLT (32mm Long)	
	11		3K-4733	1	GASKET	
C	12		1A-0695	1	PLUG	
	13		1A-7669	4	BOLT	
			0V-0531	4	WASHER	
	14		0S-1591	2	BOLT	
	15		4K-5537	1	GASKET	
	16		5F-2636	3	BEARING	
	17		4K-5435	1	SHAFT	
	18		0S-1594	4	BOLT (25.5mm Long)	
Y	19		7S-7602	1	PUMP GROUP	P0230
					(See Separate Illustration)	
	20		2A-3630	2	PIN	
	21		6B-7988	1	PIN	
			1F-9489	1	WASHER	
			3B-4617	1	COTTER PIN	
	22		1H-8933	1	PIN	
			0L-1604	1	LOCK	
			1K-0485	1	WASHER	
			3B-4628	1	COTTER PIN	
	23		1H-8946	1	SHOE ASSEM.	
			1H-8934	1	PIN	
	24		1H-8379	1	FACING	
	25		6B-4284	4	RIVET	

FLYWHEEL CLUTCH (4K5034 N/S)--Part 1 of 4

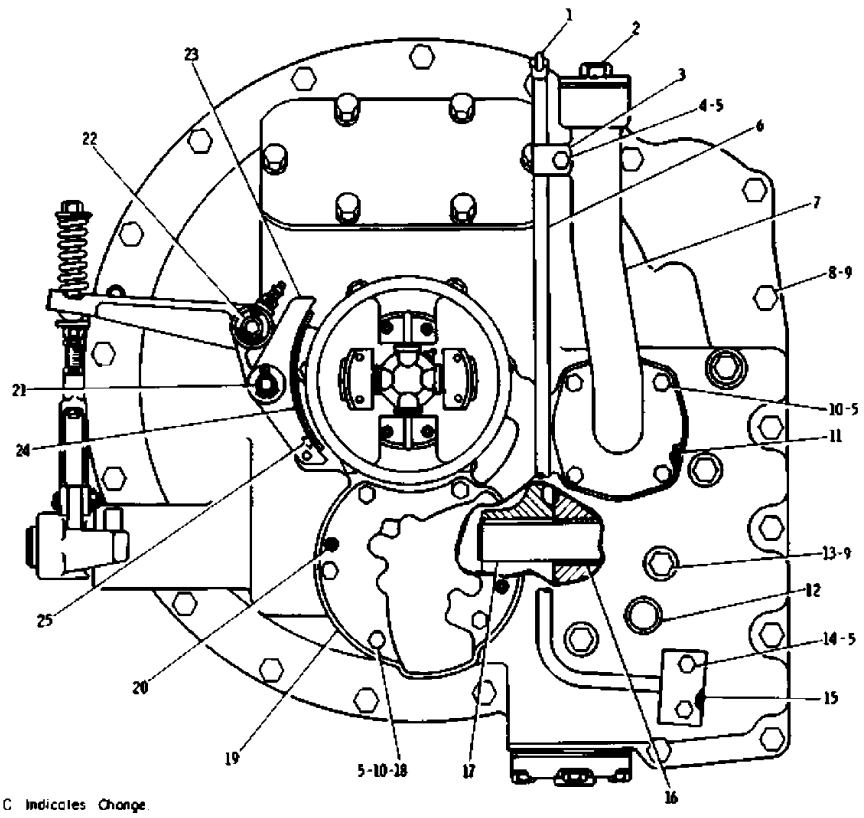

C Indicates Change

	REF. NO.	PART NUMBER	DESCRIPTION	QTY.
	1	5A3079	GAGE ASSEM. (For Japan)	1
		4K5504	GAGE ASSEM. (For Outside Japan)	1
	2	5H7110	PLUG	1
		L1124	GASKET	1
	3	4B418	CLIP	1
	4	S509	BOLT	1
	5	3B4506	LOCKWASHER	12
	6	4K5539	TUBE ASSEM.	1
	7	4K5515	SPOUT	1
	8	S1585	BOLT	19
	9	3B4508	LOCKWASHER	23
	10	S1588	BOLT (32mm Long)	5
	11	3K4733	GASKET	1
C	12	1A695	PLUG	1
	13	1A7669	BOLT	4
		V531	WASHER	4
	14	S1591	BOLT	2
	15	4K5537	GASKET	1
	16	5F2636	BEARING	3
	17	4K5435	SHAFT	1
	18	S1594	BOLT (25.5mm Long)	4
	19	7S7602	PUMP GROUP (See Separate Illustration)	1
	20	2A3630	PIN	2
	21	6B7988	PIN	1
		1F9489	WASHER	1
		3B4617	COTTER PIN	1
	22	1H8933	PIN	1
		L1604	LOCK	1
		1K485	WASHER	1
		3B4628	COTTER PIN	1
	23	1H8946	SHOE ASSEM.	1
		1H8934	PIN	1
	24	1H8379	FACING	1
	25	6B4284	RIVET	4

J13941E

GRAPHIC #1

j13941e

FLYWHEEL CLUTCH (4K5034 N/S)--Part 2 of 4

Effective with Serial No. 65J1525-UP

Key:

SMCS

NOTE	REF NO	GRAPHIC REF	PART NUMBER	QTY	PART NAME 1 2 3 4 5 6 (PRODUCT LEVEL)	LINK PAGE
	1		1H-8459	1	COVER	
	2		1H-8460	1	GASKET	
	3		0S-1594	6	BOLT	
	4		3B-4506	12	LOCKWASHER	
	5		1A-2029	6	BOLT	
	6		3H-4190	1	PLUG	
			2B-5721	1	GASKET	
	7		5M-3656	1	COVER ASSEM.	
	8		2K-5986	1	PIN	
	9		8H-9501	2	GASKET	
	10		7H-2304	1	SCREEN ASSEM.	
	11		4K-5363	1	COVER	
	12		4K-5421	1	GASKET	
	13		7B-2174	1	SEAL	
	14		4K-5648	1	LEVER	
	15		0S-1625	1	BOLT	
			1D-4720	1	NUT	
	16		0S-0175	1	PIN	
			3B-4617	1	COTTER PIN	
	17		0S-0174	1	ROD END	
	18		1B-4430	2	NUT	
	19		1B-4205	1	NUT	
			1F-7960	1	WASHER	
	20		1H-8938	1	LEVER	
	21		3F-0957	1	DOWEL	
	22		3H-1937	1	SPRING	
	23		7F-0502	1	WASHER	
	24		3H-1930	1	BOLT	
	25		3B-8686	1	FITTING	

FLYWHEEL CLUTCH (4K5034 N/S)--Part 2 of 4

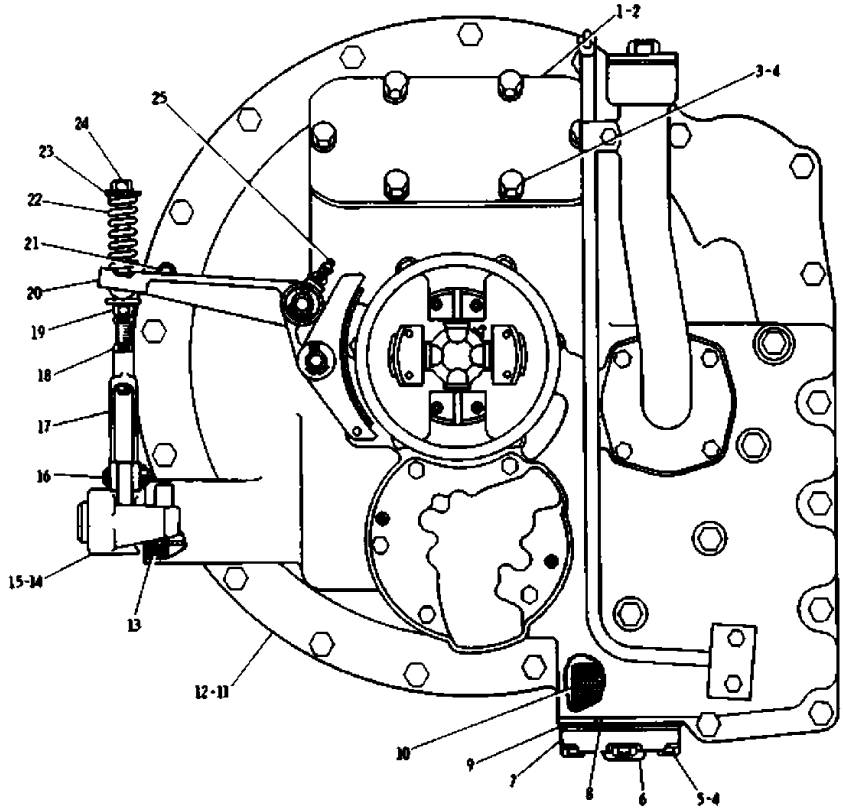

REF. NO.	PART NUMBER	DESCRIPTION	QTY.
1	1H8459	COVER	1
2	1H8460	GASKET	1
3	S1594	BOLT	6
4	3B4506	LOCKWASHER	12
5	1A2029	BOLT	6
6	3H4190	PLUG	1
	2B5721	GASKET	1
7	5M3656	COVER ASSEM.	1
8	2K5986	PIN	1
9	8N9501	GASKET	2
10	7H2304	SCREEN ASSEM.	1
11	4K5363	COVER	1
12	4K5421	GASKET	1
13	7B2174	SEAL	1
14	4K5648	LEVER	1
15	S1625	BOLT	1
	1B4720	NUT	1
16	S175	PIN	1
	3B4617	COTTER PIN	1
17	S174	ROD END	1
18	1B4430	NUT	2
19	1B4205	NUT	1
	1F7960	WASHER	1
20	1H8938	LEVER	1
21	3F957	DOWEL	1
22	3H1937	SPRING	1
23	7F502	WASHER	1
24	3H1930	BOLT	1
25	3B8686	FITTING	1

J13041E

GRAPHIC #1

j13041e

FLYWHEEL CLUTCH (4K5034 N/S)--Part 3 of 4

Effective with Serial No. 65J1525-UP
5K5008 Drive Shaft Assembly parts are shown on Page 182

Key: C - INDICATES CHANGE, Y - SEPARATE ILLUSTRATION

SMCS

NOTE	REF NO	GRAPHIC REF	PART NUMBER	QTY	PART NAME 1 2 3 4 5 6 (PRODUCT LEVEL)	LINK PAGE
	1		1S-8764	1	RING	
	2		2H-4482	1	COLLAR	
	3		2H-5330	4	BOLT	
			2H-4499	4	LOCK	
	4		2H-3525	1	RACE (Outer)	
	5		2H-3517	1	RACE & ROLLER ASSEM. (Inner)	
	6		2H-3548	1	RING	
	7		4K-5360	1	SHAFT	
	8		0T-0200	1	PLUG	
	9		2H-4498	8	SHAFT	
	10		2H-5048	4	LINK	
			9F-7101	8	BUSHING	
	11		2H-5047	8	ROLLER	
	12		3H-7347	2	LOCK ASSEM.	
	13		2F-7036	1	STUD	
	14		2H-4385	1	PIN	
	15		2H-4386	2	PLATE	
	16		1B-4203	2	NUT	
	17		2H-5046	4	LINK	
	18		1H-8266	1	GASKET	
	19		4K-5419	1	RETAINER	
C	20		1P-7045	1	GASKET	
	21		0S-0509	4	BOLT	
			1H-8330	2	LOCK	
Y	22		5K-5008	1	DRIVE SHAFT ASSEM.	P0231
					(See Separate Illustration)	
	23		1B-0581	8	BOLT	
			3B-4505	8	LOCKWASHER	
	24		8B-5965	1	BEARING	
	25		0S-1571	6	BOLT	
			3B-4506	6	LOCKWASHER	
	26		2H-4450	1	WASHER	
	27		8M-4000	1	WASHER	
	28		8M-3999	1	WASHER	

FLYWHEEL CLUTCH (4K5034 N/S)--Part 3 of 4

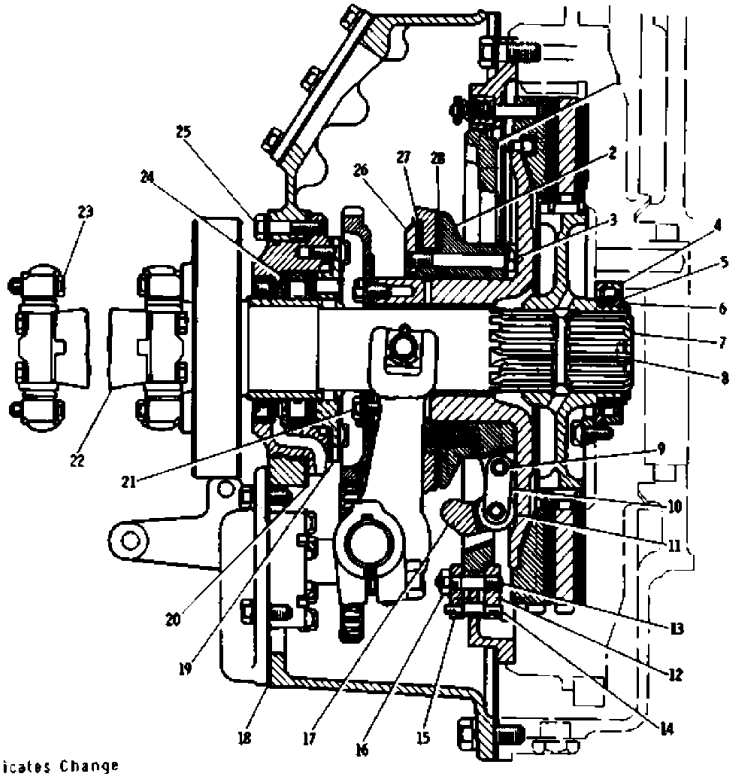

	REF. NO.	PART NUMBER	DESCRIPTION	QTY.
	1	1S8764	RING	1
	2	2H4482	COLLAR	1
	3	2H5330	BOLT	4
		2H4499	LOCK	4
	4	2H3525	RACE (Outer)	1
	5	2H3517	RACE & ROLLER ASSEM. (Inner)	1
	6	2H3548	RING	1
	7	4K5360	SHAFT	1
	8	T200	PLUG	1
	9	2H4498	SHAFT	8
	10	2H5048	LINK	4
		9F7101	BUSHING	8
	11	2H5047	ROLLER	8
	12	3H7347	LOCK ASSEM.	2
	13	2F7036	STUD	1
	14	2H4385	PIN	1
	15	2H4386	PLATE	2
	16	1B4203	NUT	2
	17	2H5046	LINK	4
	18	1H8266	GASKET	1
	19	4K5419	RETAINER	1
C	20	1P7045	GASKET	1
	21	S509	BOLT	4
		1H8330	LOCK	2
	22	5K5008	DRIVE SHAFT ASSEM. -- (See Separate Illustration)	1
	23	1B581	BOLT	8
		3B4505	LOCKWASHER	8
	24	8B5965	BEARING	1
	25	S1571	BOLT	6
		3B4506	LOCKWASHER	6
	26	2H4450	WASHER	1
	27	8M4000	WASHER	1
	28	8M3999	WASHER	1

C Indicates Change

J13630E

GRAPHIC #1

j13630e

FLYWHEEL CLUTCH (4K5034 N/S)--Part 4 of 4

Effective with Serial No. 65J1525-UP

Key: C - INDICATES CHANGE

SMCS

NOTE	REF NO	GRAPHIC REF	PART NUMBER	QTY	PART NAME 1 2 3 4 5 6 (PRODUCT LEVEL)	LINK PAGE
	1		7B-3235	8	BOLT	
	2		3B-4508	8	LOCKWASHER	
	3		2M-2290	1	BRACKET	
	4		2H-4438	4	STUD	
C	5		4S-9074	2	DISC ASSEM.	
	6		4H-4021	1	PLATE ASSEM.	
C	7		3Y-1823	1	PIN	
	8		1H-8396	2	BEARING	
	9		2H-3526	1	RING	
	10		9F-7095	2	BLOCK	
			3B-4628	2	COTTER PIN	
	11		2B-2695	3	BOLT	
			5H-5652	3	LOCK	
	12		3K-7124	3	RETAINER ASSEM.	
	13		9M-5682	1	HUB (64 Teeth)	
	14		5B-3097	4	SPRING	
			3H-2646	4	PIN	
	15		2H-4338	1	PLATE (72 Teeth)	
	16		1M-9177	1	PLATE (72 Teeth)	
	17		1A-1135	2	BOLT	
	18		5M-7363	1	YOKE	
	19		1H-8262	1	SHAFT	
			1B-8724	2	KEY	
	20		1H-8466	1	GASKET	
	21		9M-3786	1	SEAL	
	23		8M-8110	1	SEAL	
	24		1H-8261	1	RACE	
	25		1P-7161	1	CAGE (For Japan)	
			1P-7044	1	CAGE (For Outside Japan)	
	26		0S-0509	6	BOLT	
			0L-0364	6	LOCK	
	27		1H-8382	1	GEAR (46 Teeth)	
	28		3H-2645	1	WASHER	
	29		5H-5500	1	COLLAR	
	30		5F-4061	4	RETAINER	
			2A-4429	8	LOCK	
	31		2H-4406	4	SPRING	

FLYWHEEL CLUTCH (4K5034 N/S)--Part 4 of 4

REF. NO.	PART NUMBER	DESCRIPTION	QTY.
1	7B3235	BOLT	8
2	3B4508	LOCKWASHER	8
3	2M2290	BRACKET	1

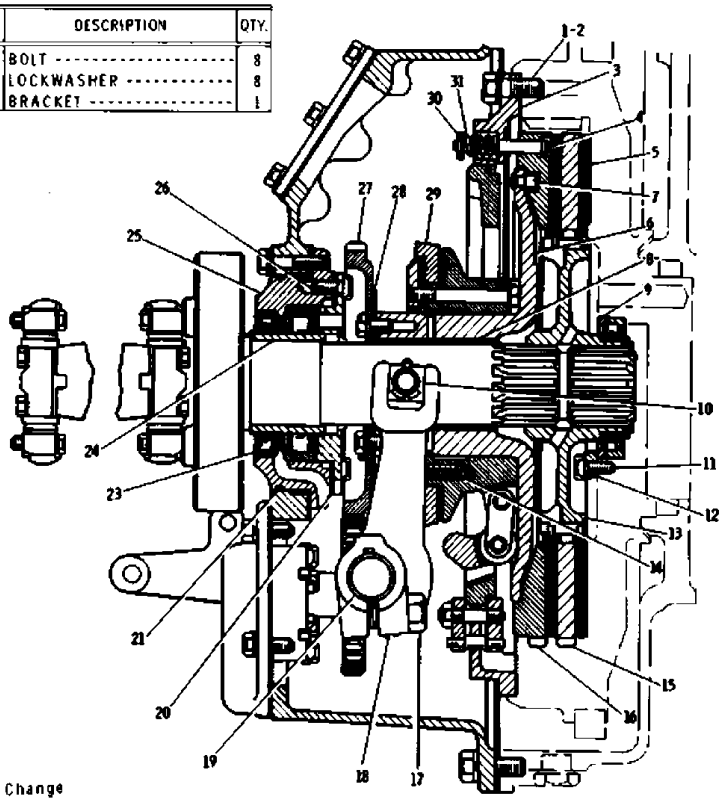

	REF. NO.	PART NUMBER	DESCRIPTION	QTY.
	4	2H4438	STUD	4
C	5	4S9074	DISC ASSEM.	2
	6	4H4021	PLATE ASSEM.	1
C	7	3Y1823	PIN	1
	8	1M8396	BEARING	2
	9	2M3526	RING	1
	10	9F7095	BLOCK	2
		3B4628	COTTER PIN	2
	11	2B2695	BOLT	3
		5H5652	LOCK	3
	12	3K7124	RETAINER ASSEM.	3
	13	9M5682	HUB (64 Teeth)	1
	14	5B3097	SPRING	4
		3H2646	PIN	4
	15	2H4438	PLATE (72 Teeth)	1
	16	1M9177	PLATE (72 Teeth)	1
	17	1A1135	BOLT	2
	18	5M7363	YOKE	1
	19	1H8262	SHAFT	1
		2B8724	KEY	2
	20	1H8466	GASKET	1
	21	9M3786	SEAL	1
	23	8M8110	SEAL	1
	24	1H8261	RACE	1
	25	1P7161	CAGE (For Japan)	1
		1P7044	CAGE (For Outside Japan)	1
	26	5509	BOLT	6
		L364	LOCK	6
	27	1H8382	GEAR (46 Teeth)	1
	28	3H2645	WASHER	1
	29	5H5500	COLLAR	1
	30	5F4061	RETAINER	4
		2A4429	LOCK	8
	31	2H4406	SPRING	4

C Indicates Change

J13942E

GRAPHIC #1

j13942e

7S7602 FLYWHEEL CLUTCH PUMP GROUP

Effective with Serial No. 65J1474-UP
Part of Flywheel Clutch

Key:

SMCS

NOTE	REF NO	GRAPHIC REF	PART NUMBER	QTY	PART NAME 1 2 3 4 5 6 (PRODUCT LEVEL)	LINK PAGE
			1H-3135	1	BUSHING	
					(PART OF COVER ASSEM. 1H8178)	
			7S-7601	1	GEAR	
					(DRIVE-10 TEETH)	
			4F-1113	1	BUSHING	
					(PART OF BODY ASSEM. 1H7480)	
			5H-2532	1	KEY	
			1H-8399	1	RING	
			1H-7480	1	BODY ASSEM.	
			2A-3630	2	PIN	
					(PART OF BODY ASSEM.1H7480)	
			1H-7481	1	SHAFT (IDLER)	
					(PART OF BODY ASSEM.1H7480)	
			3S-8800	1	GEAR	
					(25 TEETH)	
			4F-2611	1	GEAR	
					(IDLER-10 TEETH)	
			1A-9579	6	BOLT	
			2A-5328	6	LOCK	
			1H-8178	1	COVER ASSEM.	

7S7602 FLYWHEEL CLUTCH PUMP GROUP

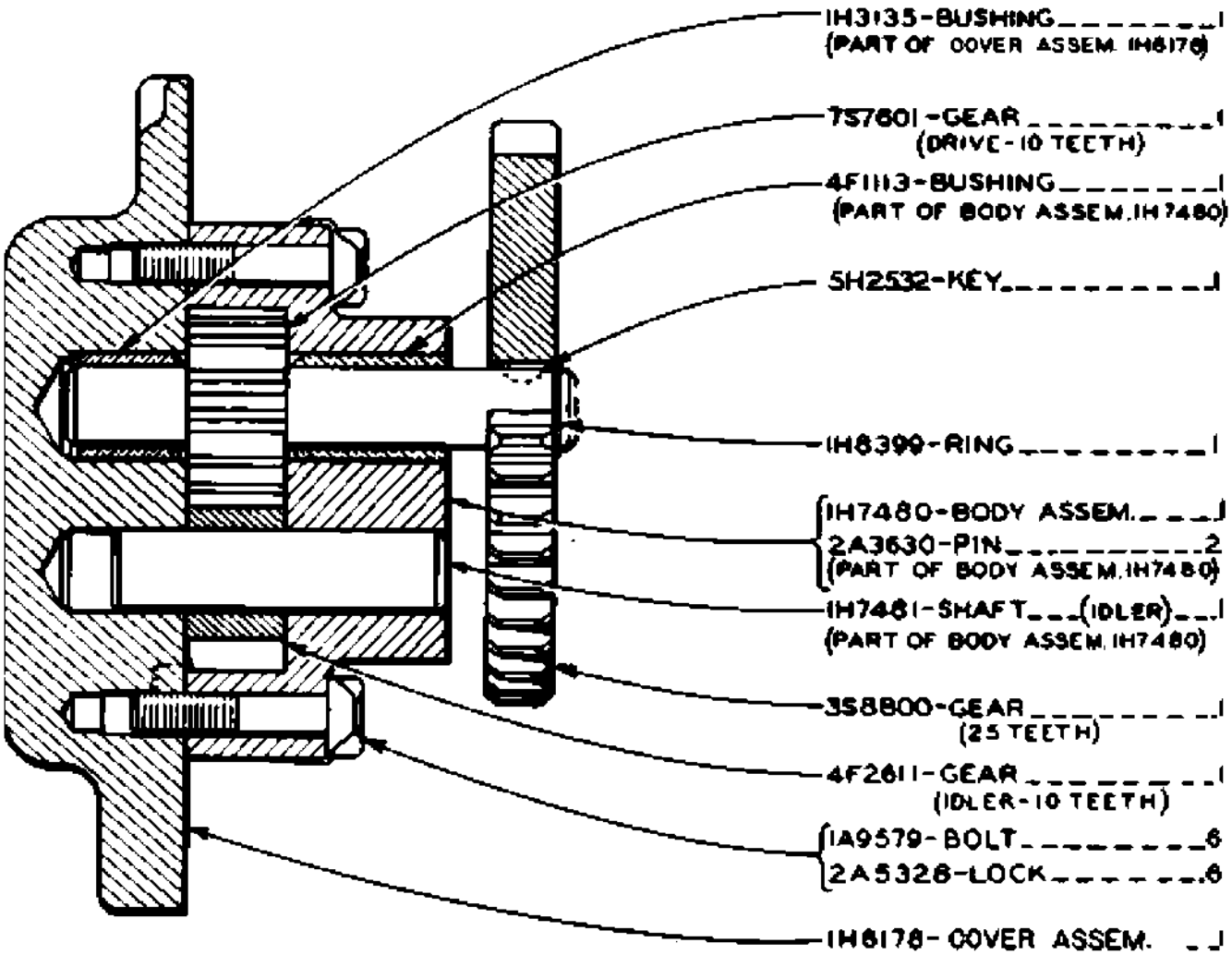

GRAPHIC #1

j3509e

5K5008 DRIVE SHAFT ASSEMBLY

Effective with Serial No. 65J1474-UP
Part of Flywheel Clutch

Key:

SMCS

NOTE	REF NO	GRAPHIC REF	PART NUMBER	QTY	PART NAME 1 2 3 4 5 6 (PRODUCT LEVEL)	LINK PAGE
			2J-9068	2	FITTING	
					(1 IN EACH 6K316 SPIDER AND BEARING ASSEM.)	
			7M-9878	8	SEAL	
					(4 IN EACH 6K316 SPIDER AND BEARING ASSEM.)	
			1B-0581	8	BOLT	
			3B-4506	8	LOCKWASHER	
			6K-0316	2	SPIDER AND BEARING ASSEM.	
			5K-5011	1	YOKE ASSEM.	

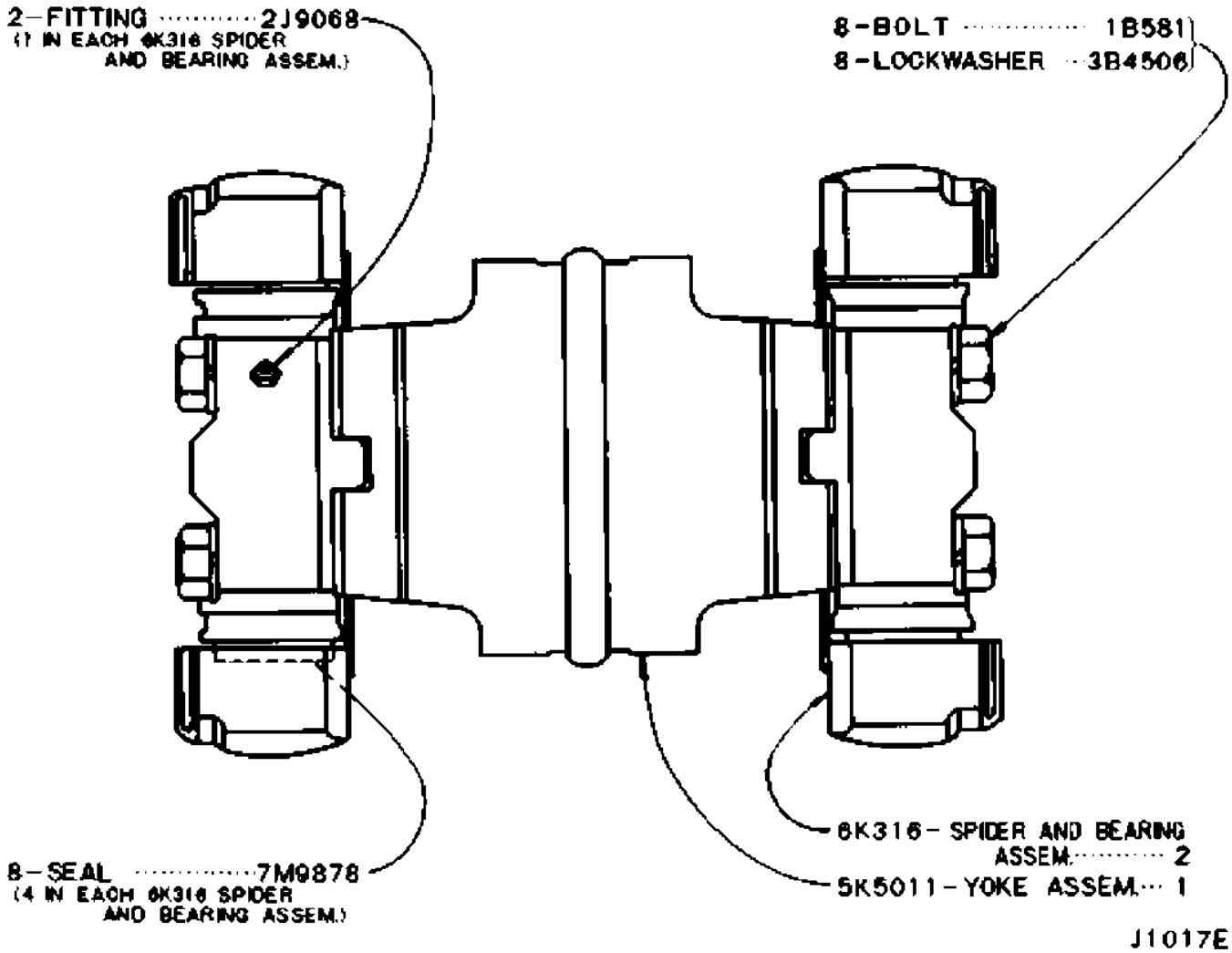

GRAPHIC #1

j1017e

FLYWHEEL CLUTCH CONTROL (5A3013 N/S)

Effective with Serial No. 65J1474-UP

Key:

SMCS

NOTE	REF NO	GRAPHIC REF	PART NUMBER	QTY	PART NAME 1 2 3 4 5 6 (PRODUCT LEVEL)	LINK PAGE
			5K-0706	1	ROD	
			3B-4617	1	COTTER	
			1B-4446	1	SPRING	
			0L-0829	1	HANDLE	
			3B-1012	2	COLLAR	
			5K-0708	1	PIN	
			3B-4610	1	COTTER	
			4J-8265	1	NUT	
			5K-0707	1	ROD	
			3B-4617	1	COTTER	
			0S-0175	1	PIN	
			1K-9040	1	LEVER	
			6K-8088	2	BEARING	
			1K-2602	1	WASHER	
			3B-4629	1	COTTER	
			7B-3235	3	BOLT	
			3B-4508	3	LOCKWASHER	
			4K-5649	1	BRACKET	
			4K-5644	1	ROD	
			1B-4430	1	NUT	
			6F-7010	1	ROD END	
			3B-4617	1	COTTER	
			0S-0175	1	PIN	
			6K-8088	2	BEARING	
			1M-1917	1	SHAFT	
			3B-4629	1	COTTER	
			1K-2602	1	WASHER	
			3B-4617	1	COTTER	
			4H-9369	1	PIN	
			1K-4703	1	WASHER	
			0S-0175	1	PIN	
			3B-4617	1	COTTER	
			5A-3015	1	LEVER	

FLYWHEEL CLUTCH CONTROL (5A3013 N/S)

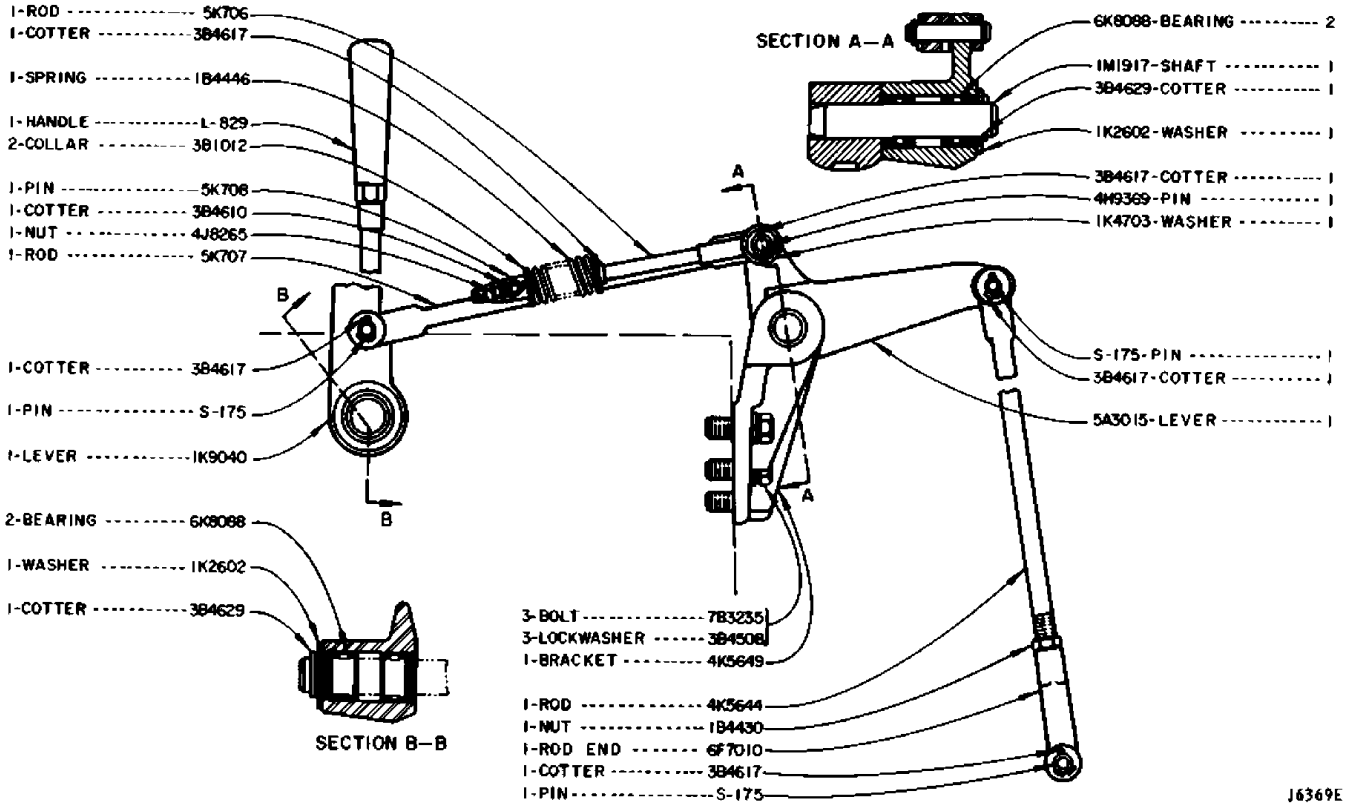

GRAPHIC #1

j6369e

TRANSMISSION CASE AND COVERS (4K5032 N/S)

Effective with Serial No. 65J1474~65J1745

Key:

SMCS

NOTE	REF NO	GRAPHIC REF	PART NUMBER	QTY	PART NAME 1 2 3 4 5 6 (PRODUCT LEVEL)	LINK PAGE
			3K-6849	1	PLUNGER ASSEM.	
			0L-1351	2	BOLT	
			3B-4506	2	LOCKWASHER	
			5H-3895	2	BUSHING	
			4K-5759	1	GUIDE ASSEM.	
			2A-4554	1	GASKET	
			0L-2070	3	BOLT (57mmLong)	
			3B-4506	3	LOCKWASHER	
			4K-5469	11	BOLT (38 mmLong)	
			3B-4506	11	LOCKWASHER	
			4K-5714	1	SEAL	
			8B-6599	1	PLUG	
			0L-1124	1	GASKET	
			5B-5951	4	STUD	
			8S-5820	1	BREATHER	
			4B-2363	1	PLUG	
			6F-4868	1	GASKET	
			1M-1917	2	SHAFT	
			8S-9191	1	BOLT	
			3B-4506	1	LOCKWASHER	
			4K-5173	1	COVER	
			1M-1917	1	SHAFT	
			4K-5264	1	GASKET	
			8F-3469	1	SEAL	
			4K-5240	1	CASE	
			0S-1587	10	BOLT	
			3B-4508	10	LOCKWASHER	

TRANSMISSION CASE AND COVERS (4K5032 N/S)

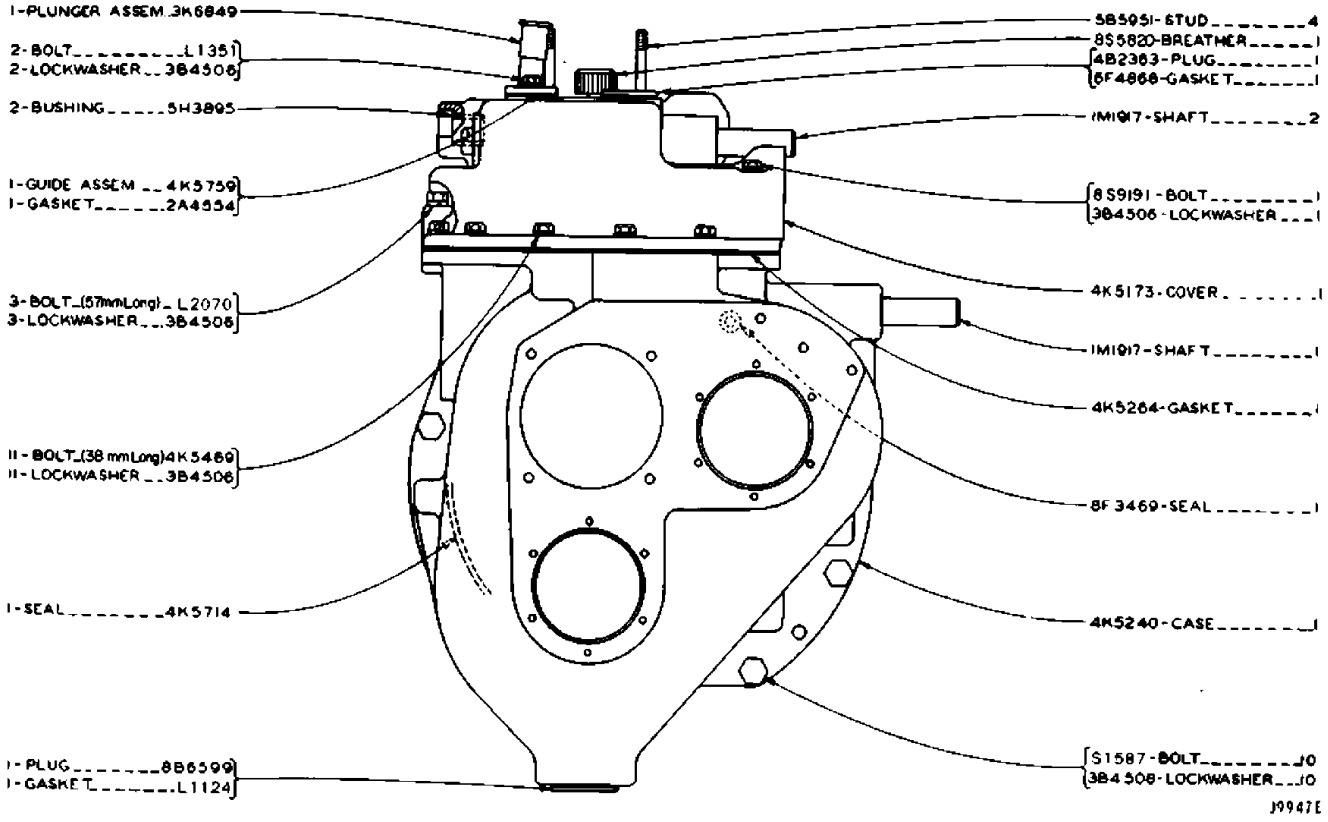

GRAPHIC #1 j9947e

TRANSMISSION CASE AND COVERS (4K5032 N/S)

Effective with Serial No. 65J1746-UP

Key:

SMCS

NOTE	REF NO	GRAPHIC REF	PART NUMBER	QTY	PART NAME 1 2 3 4 5 6 (PRODUCT LEVEL)	LINK PAGE
			3Y-3056	1	GAUGE ASSEM	
			0L-1351	2	BOLT	
			3B-4506	2	LOCKWASHER	
			5H-3895	2	BUSHING	
			3Y-3055	1	GUIDE ASSEM.	
			2A-4554	1	GASKET	
			0L-2070	3	BOLT (57mmLong)	
			3B-4506	3	LOCKWASHER	
			4K-5469	11	BOLT (38 mmLong)	
			3B-4506	11	LOCKWASHER	
			4K-5714	1	SEAL	
			8B-6599	1	PLUG	
			0L-1124	1	GASKET	
			5B-5951	4	STUD	
			8S-5820	1	BREATHER	
			4B-2363	1	PLUG	
			6F-4868	1	GASKET	
			1M-1917	2	SHAFT	
			8S-9191	1	BOLT	
			3B-4506	1	LOCKWASHER	
			4K-5173	1	COVER	
			1M-1917	1	SHAFT	
			4K-5264	1	GASKET	
			8F-3469	1	SEAL	
			4K-5240	1	CASE	
			0S-1587	10	BOLT	
			3B-4508	10	LOCKWASHER	

TRANSMISSION CASE AND COVERS (4K5032 N/S)

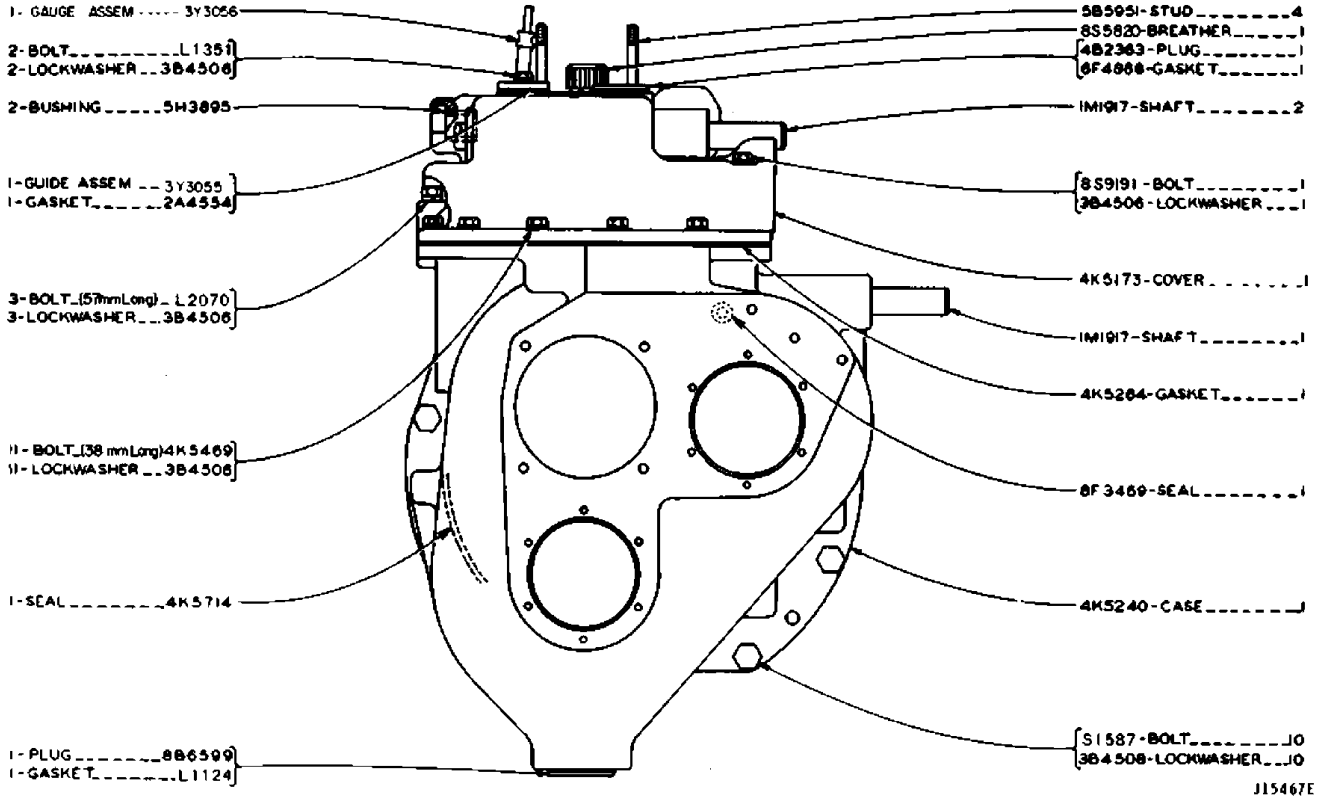

GRAPHIC #1 j15467e

GEARSHIFT CONTROL (4K5029 N/S)--Part 1 of 2

Effective with Serial No. 65J1474~65J1951

Key:

SMCS

NOTE	REF NO	GRAPHIC REF	PART NUMBER	QTY	PART NAME 1 2 3 4 5 6 (PRODUCT LEVEL)	LINK PAGE
	1		1A-1460	3	BOLT	
	2		1D-4719	3	NUT	
	3		5A-3434	1	SEAL	
	4		4K-5090	1	SHAFT	
	5		4B-3728	3	PLUNGER	
	6		0S-0509	2	BOLT	
			0L-0364	1	LOCK	
	7		4K-5037	1	RETAINER	
	8		0L-1170	1	HANDLE	
	9		4K-5042	1	LEVER	
			6B-9557	1	KEY	
	10		4K-5022	1	PLUNGER	
	11		6K-8405	1	SHAFT	
	12		3B-4618	1	COTTER PIN	
	13		4F-4584	1	SEAL	
	14		0S-1618	3	BOLT	
			4B-4277	3	WASHER	
	15		3B-4505	4	LOCKWASHER	
	16		6K-8404	1	BEARING	
	17		4B-4283	2	WASHER	
	18		1B-9575	1	BOLT	
			1D-4716	1	NUT	
	19		4K-5038	1	LEVER	
	20		1T-0550	1	PIN	
	21		4K-5077	1	GASKET	
	22		4K-5171	1	FORK	
	23		1A-6766	4	SET SCREW	
			4S-8743	4	LOCKWIRE (150mm Long)	
	24		4K-5055	1	SHAFT	
	25		1M-1946	1	FORK (Left Hand)	
	26		4K-5064	1	SHAFT (Left Hand)	
	27		4K-5796	1	FORK (Center)	
	28		1M-1945	1	FORK (Right Hand)	
	29		4K-5072	1	SHAFT (Center)	
	30		4K-5075	1	SHAFT (Right Hand)	
	31		3K-5733	4	SPRING	
	32		7B-3235	3	BOLT	
			3B-4508	3	LOCKWASHER	
	33		4K-5367	1	BRACKET	
	34		4K-5365	1	SHAFT	
	35		1B-8714	1	KEY	
	36		8F-5340	2	SEAL	
	37		1M-5063	1	LEVER	
	38		2A-1736	1	HANDLE	
	39		7B-5670	2	BEARING	

GEARSHIFT CONTROL (4K5029 N/S)--Part 1 of 2

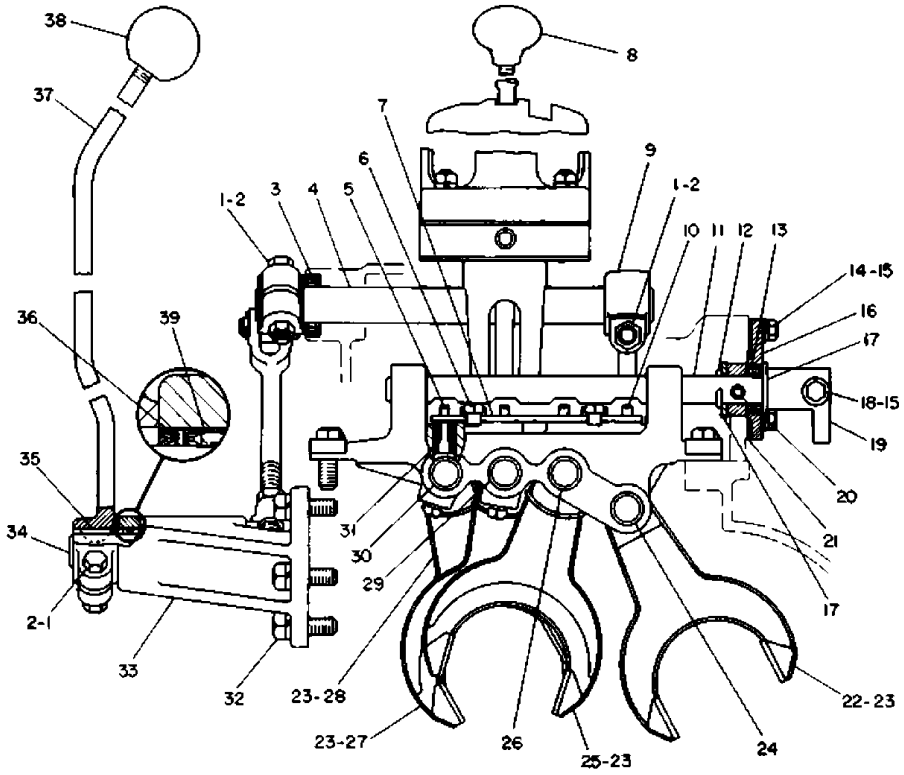

REF. NO.	PART NUMBER	DESCRIPTION	QTY.
1	1A1460	BOLT	3
2	1D4719	NUT	3
3	5A3434	SEAL	1
4	4K5090	SHAFT	1
5	4B3728	PLUNGER	3
6	5509	BOLT	2
	L364	LOCK	1
7	4K5037	RETAINER	1
8	L1170	HANDLE	1
9	4K5042	LEVER	1
	6B9557	KEY	1
10	4K5022	PLUNGER	1
11	6K8405	SHAFT	1
12	3B4618	COTTER PIN	1
13	4F4584	SEAL	1
14	S1618	BOLT	3
	4B4277	WASHER	3
15	3B4505	LOCKWASHER	4
16	6K8404	BEARING	1
17	4B4283	WASHER	2
18	1B9575	BOLT	1
	1D4716	NUT	1
19	4K5038	LEVER	1
20	1T550	PIN	1
21	4K5077	GASKET	1
22	4K5171	FORK	1
23	1A6766	SET SCREW	4
	4S8743	LOCKWIRE (150mm Long)	4
24	4K5055	SHAFT	1
25	1M1946	FORK (Left Hand)	1
26	4K5064	SHAFT (Left Hand)	1
27	4K5796	FORK (Center)	1
28	1M1945	FORK (Right Hand)	1
29	4K5072	SHAFT (Center)	1
30	4K5075	SHAFT (Right Hand)	1
31	3K5733	SPRING	4
32	7B3235	BOLT	3
	3B4508	LOCKWASHER	3
33	4K5367	BRACKET	1
34	4K5365	SHAFT	1
35	1B8714	KEY	1
36	8F5340	SEAL	2
37	1M5063	LEVER	1
38	2A1736	HANDLE	1
39	7B5670	BEARING	2

J10033E

GRAPHIC #1

j10033e

GEARSHIFT CONTROL (4K5029 N/S)--Part 2 of 2

Effective with Serial No. 65J1474~65J1951

Key:

SMCS

NOTE	REF NO	GRAPHIC REF	PART NUMBER	QTY	PART NAME 1 2 3 4 5 6 (PRODUCT LEVEL)	LINK PAGE
	1		3B-8453	1	SEAL	
	2		3B-4618	1	COTTER PIN	
	3		8F-8079	1	BOOT	
	4		1B-4203	4	NUT	
			3B-4506	4	LOCKWASHER	
	5		0L-0974	1	PACKING	
	6		2H-2526	2	SHAFT	
	7		1M-1899	1	GATE ASSEM.	
	8		2H-2521	4	BUSHING	
	9		2H-2522	1	PIN	
	10		5A-4044	1	LEVER	
	11		0S-1595	4	BOLT	
			1C-0155	4	LOCK	
			1K-4703	4	WASHER	
	12		4K-5024	1	BRACKET (Front)	
	13		3B-8488	1	FITTING	
	14		4K-5023	1	LEVER	
			0S-1587	1	BOLT	
	15		1B-8714	2	KEY	
	16		0S-0175	2	PIN	
			3B-4617	2	COTTER PIN	
	17		6F-7010	1	ROD END	
	18		1B-4430	1	NUT	
	19		4K-5041	1	BRACKET (Rear)	
	20		4K-5930	1	LOCK (114.3mm Long)	
	21		0L-1351	2	BOLT	
			0L-0364	2	LOCK (28.5mm Long)	
	22		2D-4116	1	ROD	
	23		4K-0039	1	LEVER	
	24		9H-0285	1	ADAPTER	
			3D-8799	1	GASKET	
	25		2H-2525	2	PIN	
	26		8F-8080	1	RING	
	27		0L-0888	1	COVER	
	28		0L-1045	1	SPRING	
	29		0L-0887	1	COVER	
	30		1M-1840	1	HOUSING	

GEARSHIFT CONTROL (4K5029 N/S)--Part 2 of 2

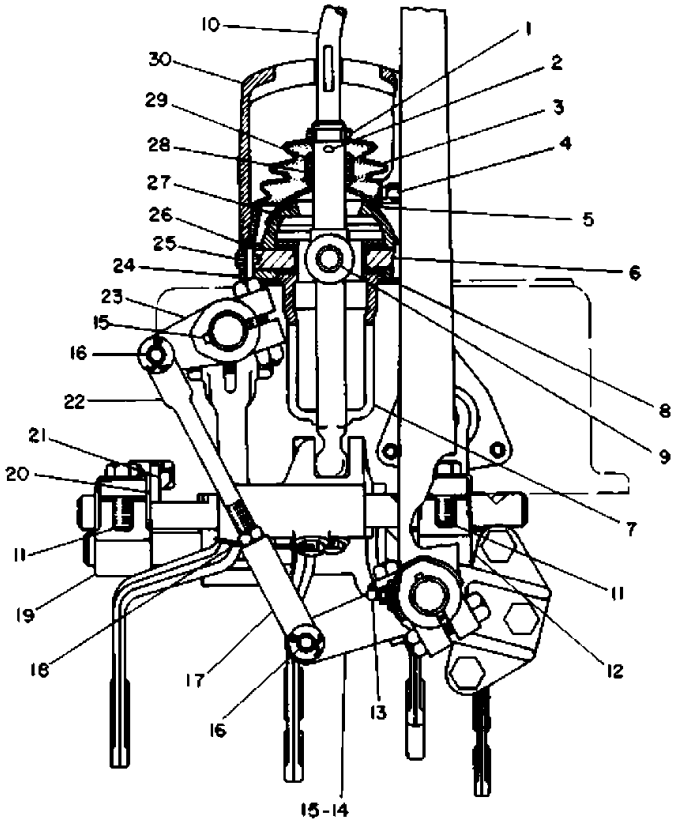

REF. NO.	PART NUMBER	DESCRIPTION	QTY.
1	3B8453	SEAL	1
2	3B4618	COTTER PIN	1
3	8F8079	BOOT	1
4	1B4203	NUT	4
	3B4506	LOCKWASHER	4
5	L974	PACKING	1
6	2H2526	SHAFT	2
7	1M1899	GATE ASSEM.	1
8	2H2521	BUSHING	4
9	2H2522	PIN	1
10	5A4044	LEVER	1
	S1595	BOLT	4
11	1C155	LOCK	4
	1K4703	WASHER	4
12	4K5024	BRACKET (Front)	1
13	3B8488	FITTING	1
14	4K5023	LEVER	1
	S1587	BOLT	1
15	1B8714	KEY	2
16	S175	PIN	2
	3B4617	COTTER PIN	2
17	6F7010	ROD END	1
18	1B4430	NUT	1
19	4K5041	BRACKET (Rear)	1
20	4K5930	LOCK (114.3mm Long)	1
21	L1351	BOLT	2
	L364	LOCK (28.5mm Long)	2
22	2D4116	ROD	1
23	4K39	LEVER	1
24	9H285	ADAPTER	1
	3D8799	GASKET	1
25	2H2525	PIN	2
26	8F8080	RING	1
27	L888	COVER	1
28	L1045	SPRING	1
29	L887	COVER	1
30	1M1840	HOUSING	1

J10034E

GRAPHIC #1

j10034e

GEARSHIFT CONTROL (4K5029 N/S)--Part 1 of 3

Effective with Serial No. 65J1952-UP

Key:

SMCS

NOTE	REF NO	GRAPHIC REF	PART NUMBER	QTY	PART NAME 1 2 3 4 5 6 (PRODUCT LEVEL)	LINK PAGE
	1		6F-7010	1	ROD END	
	2		1B-4430	1	NUT	
	3		2D-4116	1	ROD	
	4		0S-0175	2	PIN	
	5		3B-4617	2	COTTER PIN	
	6		3K-5733	4	SPRING	
	7		4B-3728	3	PLUNGER	
	8		0S-0509	2	BOLT	
			0L-0364	2	LOCK	
	9		4K-5037	1	RETAINER	
	10		4K-5022	1	PLUNGER	
	11		3B-4618	1	COTTER PIN	
	12		1T-0550	1	PIN	
	13		0S-1618	3	BOLT	
			4B-4277	3	WASHER	
	14		3B-4505	3	LOCKWASHER	
	15		6K-8404	1	BEARING	
	16		4B-4283	2	WASHER	
	17		4F-4584	1	SEAL	
	18		4K-5077	1	GASKET	
	19		4K-5055	1	SHAFT	
	20		4K-5171	1	FORK	
	21		1A-6766	4	SET SCREW	
	22		4K-5064	1	SHAFT (L.H.)	
	23		1M-1946	1	FORK (L.H.)	
	24		4K-5796	1	FORK (Center)	
	25		1M-1945	1	FORK (R.H.)	
	26		4K-5072	1	SHAFT (Center)	
	27		4K-5075	1	SHAFT (R.H.)	

GEARSHIFT CONTROL (4K5029 N/S)--Part 1 of 3

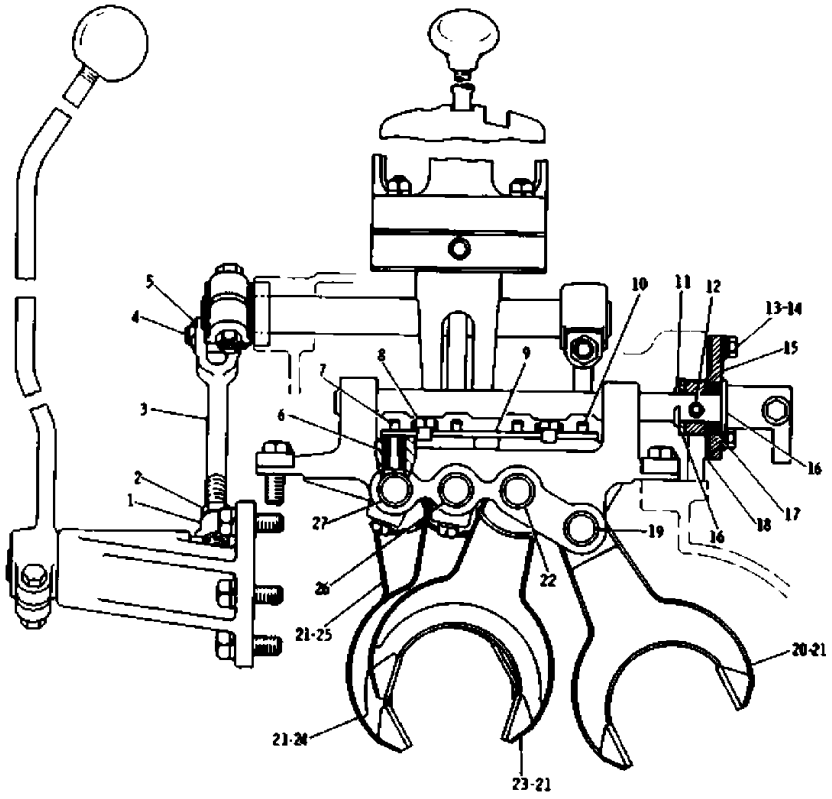

REF. NO.	PART NUMBER	DESCRIPTION	QTY.
1	6F7010	ROD END	1
2	1B4430	NUT	1
3	2D4116	ROD	1
4	S175	PIN	2
5	3B4617	COTTER PIN	2
6	3K5733	SPRING	4
7	4B3728	PLUNGER	3
8	S509	BOLT	2
	L364	LOCK	2
9	4K5037	RETAINER	1
10	4K5022	PLUNGER	1
11	3B4618	COTTER PIN	1
12	1T550	PIN	1
13	S1618	BOLT	3
	4B4277	WASHER	3
14	3B4505	LOCKWASHER	3
15	6K8404	BEARING	1
16	4B4283	WASHER	2
17	4F4584	SEAL	1
18	4K5077	GASKET	1
19	4K5055	SHAFT	1
20	4K5171	FORK	1
21	1A6766	SET SCREW	4
22	4K5064	SHAFT (L.H.)	1
23	1M1946	FORK (L.H.)	1
24	4K5796	FORK (Center)	1
25	1M1945	FORK (R.H.)	1
26	4K5072	SHAFT (Center)	1
27	4K5075	SHAFT (R.H.)	1

J12820E

GRAPHIC #1

j12820e

GEARSHIFT CONTROL (4K5029 N/S)--Part 2 of 3

Effective with Serial No. 65J1952-UP

Key: C - INDICATES CHANGE.

SMCS

NOTE	REF NO	GRAPHIC REF	PART NUMBER	QTY	PART NAME 1 2 3 4 5 6 (PRODUCT LEVEL)	LINK PAGE
	1		1A-1460	3	BOLT	
	2		1D-4719	3	NUT	
C	3		2J-8333	1	SEAL	
	4		4K-5090	1	SHAFT	
	5		1B-4203	4	NUT	
			3B-4506	4	LOCKWASHER	
	6		0L-1170	1	HANDLE	
	7		4K-5042	1	LEVER	
			6B-9557	1	KEY	
	8		6K-8405	1	SHAFT	
	9		4K-5038	1	LEVER	
	10		1B-9575	1	BOLT	
			1D-4716	1	NUT	
	11		3B-4505	1	LOCKWASHER	
	12		7B-3235	3	BOLT	
	13		3B-4508	3	LOCKWASHER	
	14		4K-5367	1	BRACKET	
	15		4K-5365	1	SHAFT	
	16		1B-8714	1	KEY	
	17		1M-5063	1	LEVER	
	18		2A-1736	1	HANDLE	
C	19		6K-8088	2	BEARING	

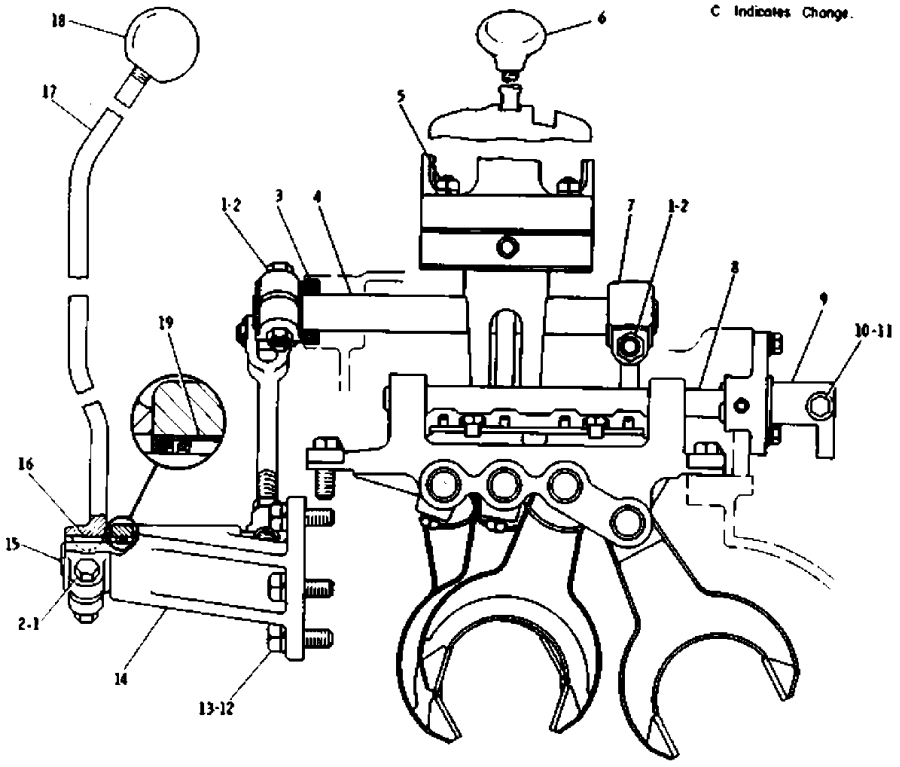

REF. NO.	PART NUMBER	DESCRIPTION	QTY.
1	1A1460	BOLT	3
2	1D4719	NUT	3
C 3	2J8333	SEAL	1
4	4K5090	SHAFT	1
5	1B4203	NUT	4
	3B4506	LOCKWASHER	4
6	L1170	HANDLE	1
7	4K5042	LEVER	1
	6B9557	KEY	1
8	6K8405	SHAFT	1
9	4K5038	LEVER	1
10	1B9575	BOLT	1
	1D4716	NUT	1
11	3B4505	LOCKWASHER	1
12	7B3235	BOLT	3
13	3B4508	LOCKWASHER	3
14	4K5367	BRACKET	1
15	4K5365	SHAFT	1
16	1B8714	KEY	1
17	1M5063	LEVER	1
18	2A1736	HANDLE	1
C 19	6K8088	BEARING	2

J12821E

GRAPHIC #1

j12821e

GEARSHIFT CONTROL (4K5029 N/S)--Part 3 of 3

Effective with Serial No. 65J1952-UP

Key:

SMCS

NOTE	REF NO	GRAPHIC REF	PART NUMBER	QTY	PART NAME 1 2 3 4 5 6 (PRODUCT LEVEL)	LINK PAGE
	1		3B-8453	1	SEAL	
	2		3B-4618	1	COTTER PIN	
	3		8F-8079	1	BOOT	
	4		0L-0888	1	COVER	
	5		0L-0974	1	PACKING	
	6		2H-2526	2	SHAFT	
	7		1M-1899	1	GATE ASSEM.	
	8		2H-2521	4	BUSHING	
	9		2H-2522	1	PIN	
	10		5A-4044	1	LEVER	
	11		0S-1595	4	BOLT	
			1C-0155	4	LOCK	
			1K-4703	4	WASHER	
	12		4K-5024	1	BRACKET (Front)	
	14		4K-5023	1	LEVER	
			0S-1587	1	BOLT	
	15		1B-8714	2	KEY	
	16		4K-5041	1	BRACKET (Rear)	
	17		4K-5930	1	LOCK (114.3mm Long)	
	18		0L-1351	2	BOLT	
			0L-0364	2	LOCK (28.5mm Long)	
	19		4K-0039	1	LEVER	
	20		9H-0285	1	ADAPTER	
			3D-8799	1	GASKET	
	21		2H-2525	2	PIN	
	22		8F-8080	1	RING	
	23		0L-1045	1	SPRING	
	24		0L-0887	1	COVER	
	25		1M-1840	1	HOUSING	

GEARSHIFT CONTROL (4K5029 N/S)--Part 3 of 3

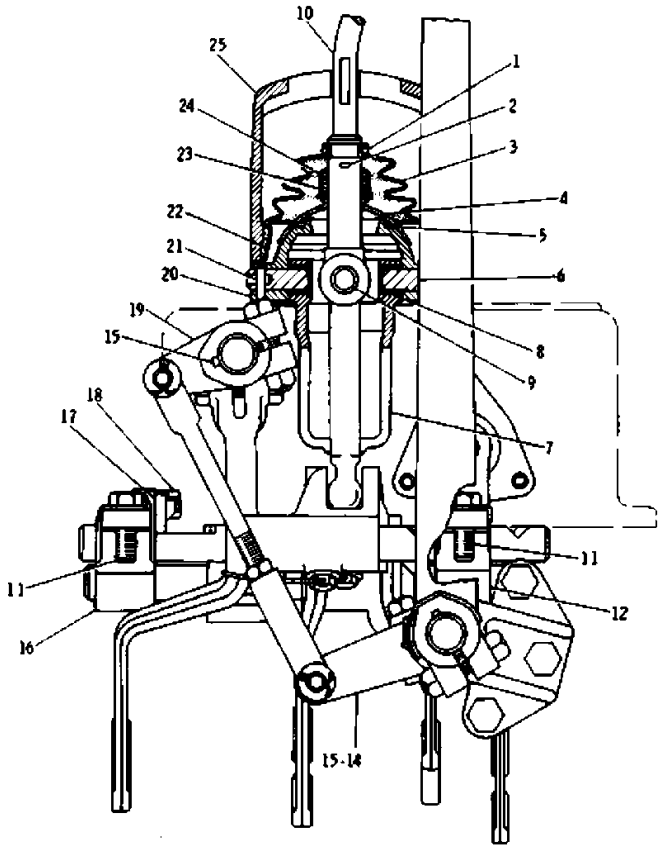

REF. NO.	PART NUMBER	DESCRIPTION	QTY.
1	3B8453	SEAL	1
2	3B4618	COTTER PIN	1
3	8F8079	BOOT	1
4	L888	COVER	1
5	L974	PACKING	1
6	2H2526	SHAFT	2
7	1M1899	GATE ASSEM.	1
8	2H2521	BUSHING	4
9	2H2522	PIN	1
10	5A4044	LEVER	1
11	S1595	BOLT	4
	1C155	LOCK	4
	1K4703	WASHER	4
12	4K5024	BRACKET (Front)	1
14	4K5023	LEVER	1
	S1587	BOLT	1
15	1B8714	KEY	2
16	4K5041	BRACKET (Rear)	1
17	4K5930	LOCK (114.3mm Long)	1
18	L1351	BOLT	2
	L364	LOCK (128.5mm Long)	2
19	4K39	LEVER	1
20	9M285	ADAPTER	1
	3D8799	GASKET	1
21	2N2525	PIN	2
22	8F8080	RING	1
23	L1045	SPRING	1
24	L887	COVER	1
25	1M1840	HOUSING	1

J12822E

GRAPHIC #1

j12822e

TRANSMISSION (4K5035 N/S)--Part 1 of 2

Effective with Serial No. 65J1474-Up

Key:

SMCS

NOTE	REF NO	GRAPHIC REF	PART NUMBER	QTY	PART NAME 1 2 3 4 5 6 (PRODUCT LEVEL)	LINK PAGE
			9H-5907	1	GEAR (30 TEETH)	
			9H-6937	1	SPACER	
			4K-5054	1	GEAR	
					(20 TEETH)	
			2D-6420	1	OUTER RACE	
			9H-6933	1	RING	
			7M-1154	1	INNER RACE AND ROLLER ASSEM.	
			9H-6932	1	NUT	
			4K-5092	1	CAGE	
			1A-5822	7	BOLT	
			4K-5420	2	LOCK	
			1M-1994	1	BEARING ASSEM.	
			4K-5081	1	RETAINER	
			4K-5082	2	SHIM	
			4B-1127	1	RING	
			4B-8108	1	INNER RACE AND ROLLER ASSEM.	
			1J-8694	1	OUTER RACE	
			2M-0138	1	DOWEL	
			2A-3746	2	PLUG	
			1H-8128	1	SEAL	
			4K-5106	1	CAGE	
			0S-1588	6	BOLT	
			3B-4506	6	LOCKWASHER	
			5K-3569	1	COVER	
			6F-7030	2	BOLT	
			0T-0329	1	LOCK	
			4F-3190	1	WASHER	
			4K-5080	1	BEARING ASSEM.	
			5K-2059	1	GASKET	
			4K-5078	1	RING	
			4K-5074	1	PINION	
					(22 TEETH)	
			3B-3985	1	INNER RACE	
			2J-6262	1	OUTER RACE AND ROLLER ASSEM.	
			0L-2351	1	RING	
			4K-5048	1	GEAR	
					(38 TEETH)	
			4K-5109	1	GEAR	
					(45 TEETH)	
			6K-0912	1	SPACER	

TRANSMISSION (4K5035 N/S)--Part 1 of 2

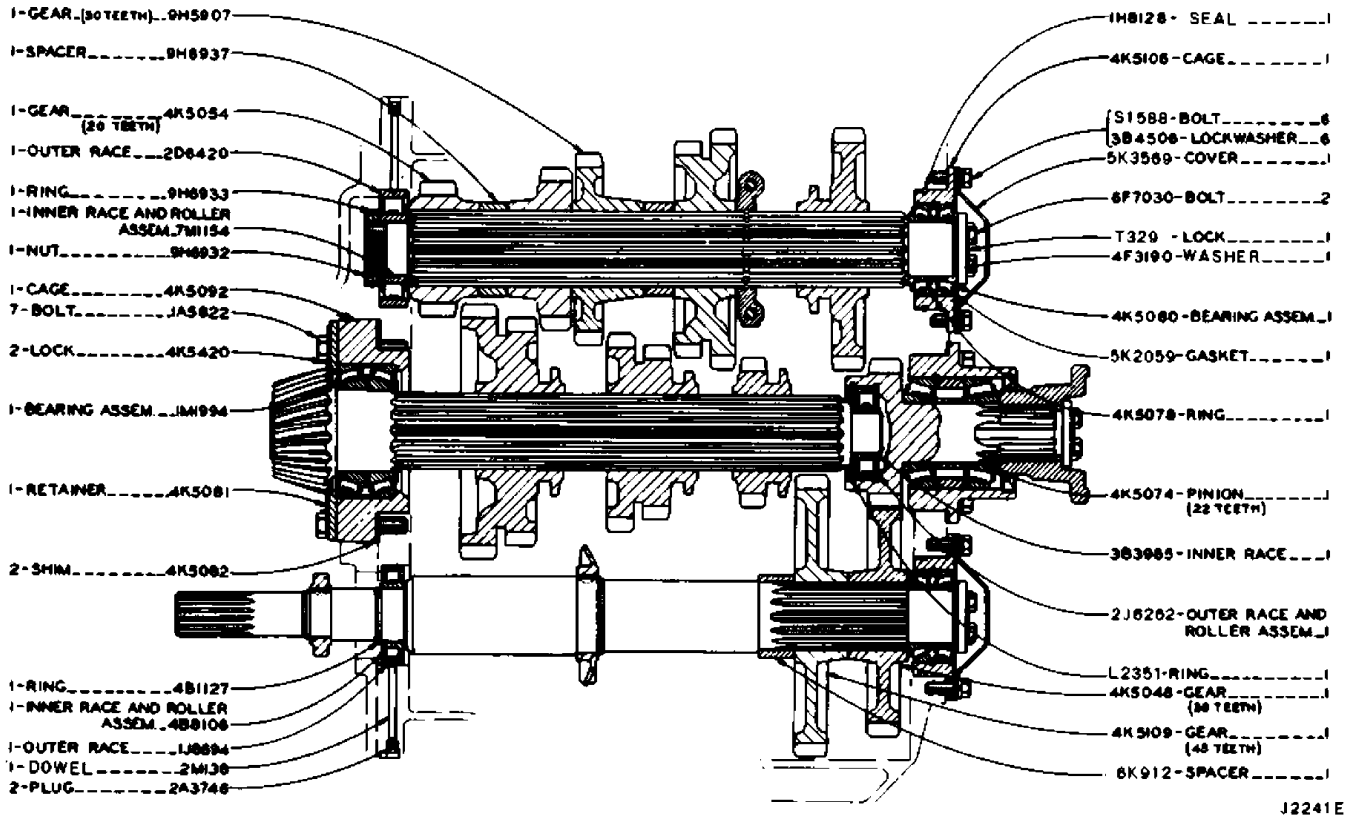

GRAPHIC #1 j2241e

TRANSMISSION (4K5035 N/S)--Part 2 of 2

Effective with Serial No. 65J1474-UP

Key:

SMCS

NOTE	REF NO	GRAPHIC REF	PART NUMBER	QTY	PART NAME 1 2 3 4 5 6 (PRODUCT LEVEL)	LINK PAGE
			9H-6926	1	GEAR	
					(25 TEETH)	
			9H-6937	1	SPACER	
			2A-3746	2	PLUG	
			2M-0138	1	DOWEL	
			1M-1659	1	GEAR	
					(31 AND 27 TEETH)	
			1M-1698	1	GEAR	
					(41 AND 36 TEETH)	
			4K-5098	1	SHAFT	
			9K-0424	1	SHAFT	
					(11 TEETH)	
			4K-6035	1	THROWER	
			1B-8705	1	KEY	
			2A-4758	1	RING	
			4K-5223	1	SHAFT	
			1B-8705	1	KEY	
			1M-1655	1	RING	
			4K-5228	1	THROWER	
			5M-2477	1	PLATE (NUMBER)	
			4B-4158	2	SCREW	
					(NOT SHOWN-MOUNTED ON REAR OF STEERING CLUTCH	
			1M-1692	1	GEAR	
					(38 AND 34 TEETH)	
			0L-0478	2	BOLT	
			1B-4203	2	NUT	
			0S-2415	2	LOCK	
					(PARTS OF COLLAR ASSEM.1M1663)	
			1M-1700	1	GEAR (38 TEETH)	
			1M-1655	1	RING	
			1M-1663	1	COLLAR ASSEM.	
			9H-7408	1	GEAR (23 TEETH)	
			4K-5039	1	CAGE	
			5K-1276	1	RING	
			0S-1595	4	BOLT	
			3B-4508	4	LOCKWASHER	
			4K-5246	1	BEARING ASSEM.	
			3J-0375	1	SEAL	
			4K-5086	1	YOKE	
			4F-7389	1	SEAL	
			6F-7030	2	BOLT	
			0T-0329	1	LOCK	
			2K-1722	1	WASHER	
			1A-1452	1	GASKET	
			4K-5106	1	CAGE	
			4K-5080	1	BEARING ASSEM.	
			5K-3569	1	COVER	
			4F-3190	1	WASHER	
			0T-0329	1	LOCK	

TRANSMISSION (4K5035 N/S)--Part 2 of 2

6F-7030	2	BOLT
4K-5078	1	RING
1H-8128	1	SEAL
0S-1588	6	BOLT
3B-4506	6	LOCKWASHER
5K-2059	1	GASKET

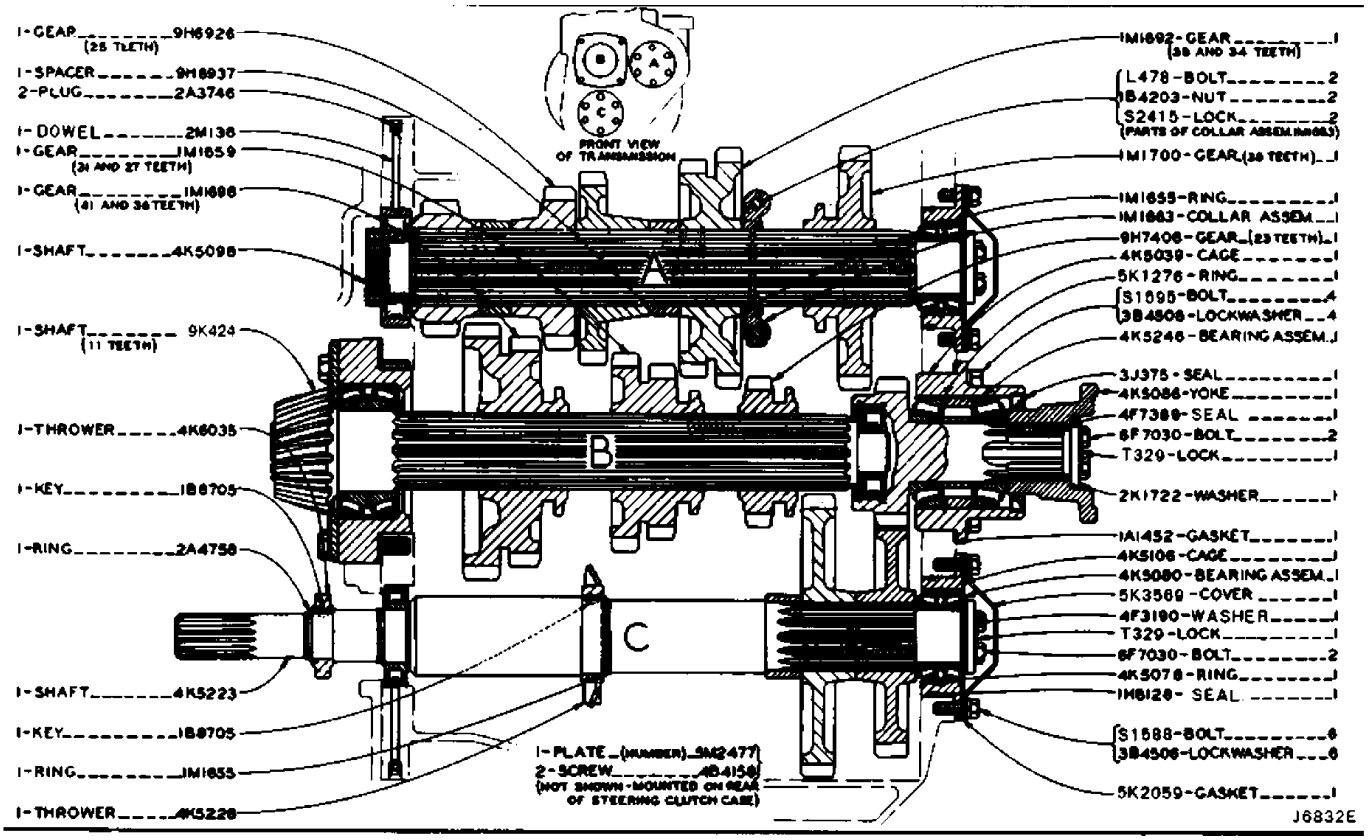

GRAPHIC #1 j6832e

FINAL DRIVE (6K4665 N/S)--Part 1 of 2

Effective with Serial No. 65J1474~65J1645

Key:

SMCS

NOTE	REF NO	GRAPHIC REF	PART NUMBER	QTY	PART NAME 1 2 3 4 5 6 (PRODUCT LEVEL)	LINK PAGE
	1		9K-4058	2	LOCK	
	2		2J-5815	2	NUT	
	3		2B-6325	2	GASKET	
	4		3K-9619	2	SEAL	
	5		1H-9456	4	BOLT	
	6		5A-9374	2	DRUM	
	7		4B-3823	28	BOLT	
	8		3B-4508	56	LOCKWASHER	
	9		0S-1591	12	BOLT	
			5M-2894	12	WASHER	
	10		7K-7333	2	RETAINER	
	11		5K-1311	2	GASKET	
	12		3F-4746	2	DOWEL	
	13		4H-0254	2	DOWEL	
	14		0S-1585	28	BOLT	
	15		7K-3007	2	GASKET	
	16		1A-2610	4	DOWEL	
	17		5B-7267	4	CORK	
	18		2A-3746	2	PLUG	
			3F-1526	2	DOWEL	
	19		7K-5209	2	CASE ASSEM.	
			0L-1392	4	STUD	
	20		2M-0533	2	RACE (Inner)	
			2M-0534	2	RACE AND ROLLER ASSEM.	
	21		7K-4770	2	PINION (9 Teeth)	
	22		8B-2571	2	RACE AND ROLLER ASSEM.	
			8B-2570	2	RACE (Outer)	
	23		1M-1930	2	CAGE	
	24		1M-1795	2	SPACER	
	25		5K-8591	2	RACE AND ROLLER ASSEM.	
			3B-3969	2	RACE (Inner)	
	26		7K-8238	2	FLANGE	

FINAL DRIVE (6K4665 N/S)--Part 1 of 2

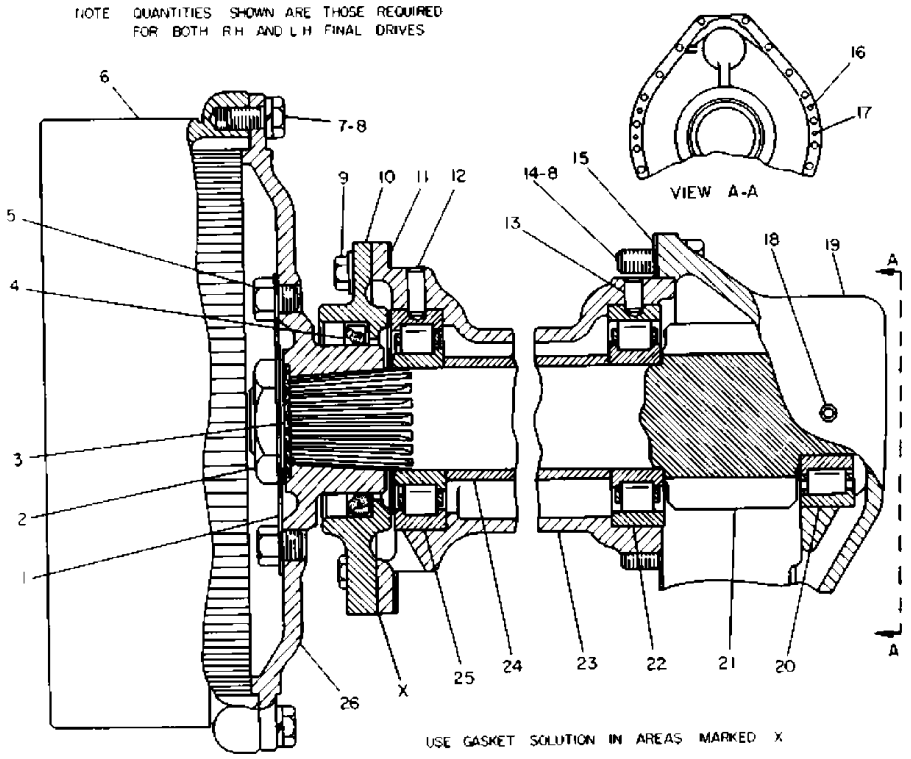

REF. NO.	PART NUMBER	DESCRIPTION	QTY.
1	9K4058	LOCK	2
2	2J5815	NUT	2
3	2B6325	GASKET	2
4	3K9619	SEAL	2
5	1H9456	BOLT	4
6	5A9374	DRUM	2
7	4B3823	BOLT	28
8	3B4508	LOCKWASHER	56
9	S1591	BOLT	12
	5M2894	WASHER	12
10	7K7333	RETAINER	2
11	5K1311	GASKET	2
12	3F4746	DOWEL	2
13	4H254	DOWEL	2
14	S1585	BOLT	28
15	7K3007	GASKET	2
16	1A2610	DOWEL	4
17	5B7267	CORK	4
18	2A3746	PLUG	2
	3F1526	DOWEL	2
19	7K5209	CASE ASSEM.	2
	L1392	STUD	4
20	2M533	RACE (Inner)	2
	2M534	RACE AND ROLLER ASSEM.	2
21	7K4770	PINION (9 Teeth)	2
22	8B2571	RACE AND ROLLER ASSEM.	2
	8B2570	RACE (Outer)	2
23	1M1930	CAGE	2
24	1M1795	SPACER	2
25	5K8591	RACE AND ROLLER ASSEM.	2
	3B3969	RACE (Inner)	2
26	7K8238	FLANGE	2

GRAPHIC #1 j9426e

FINAL DRIVE (6K4665 N/S)--Part 2 of 2

Effective with Serial No. 65J1474~65J1645

Key: H - 7K2514 SPROCKET RIM IS AVAILAB, R - REMFG PART MAY BE AVAILABLE

SMCS

NOTE	REF NO	GRAPHIC REF	PART NUMBER	QTY	PART NAME 1 2 3 4 5 6 (PRODUCT LEVEL)	LINK PAGE
	1		7H-2742	2	NUT	
	2		6K-4617	2	SHAFT	
	3		4B-9373	2	CONE	
	4		4B-9374	2	CUP	
	5		6K-4618	2	HUB	
	6		3K-3815	20	BOLT	
			6B-6683	20	NUT	
			2A-3710	10	LOCK	
	7		7K-4771	2	GEAR (52 Teeth)	
	8		3F-1530	2	GUARD	
	9		1B-4203	8	NUT	
	10		3B-4506	18	LOCKWASHER	
R	11		4K-6049	4	SEAL GROUP	
			4K-0173	2	RING	
	12		4F-8396	2	GUARD	
	13		7K-3582	2	NUT	
	14		1A-4145	2	LOCK	
	15		0S-0509	10	BOLT	
	16		4B-1280	16	MACHINE SCREW	
			3F-1546	2	RETAINER	
	17		1M-1947	2	SUPPORT ASSEM.	
	18		3F-1548	1	BEARING SLEEVE	
	19		9K-6842	2	CAGE ASSEM.	
	20		6B-3223	1	CUP	
	21		6K-8275	2	CONE	
	22		5K-5887	2	KEY	
	23		3F-1556	2	CAP	
	24		2B-8828	2	NUT	
	25		3F-1552	8	SHIM	
	26		2F-2815	2	LOCK	
	27		9K-5382	2	HOLDER ASSEM.	
	28		3F-1542	1	DOWEL	
	29		5B-5821	2	DOWEL	
	30		3F-1554	2	RETAINER ASSEM.	
	31		3H-2617	2	PIN	
	32		0S-1587	12	BOLT	
			3B-4508	12	LOCKWASHER	
	33		3F-1555	2	GASKET	
	34		2M-0122	4	DOWEL	
	35		3F-1547	2	SEAL	
	36		5K-1787	2	SEAL	
	37		3F-1537	2	NUT	
			3F-1536	2	LOCK	
H	38		7K-2445	2	SPROCKET ASSEM. (Standard)	
	39		5K-1765	6	RIVET	
	40		4F-6029	2	GUARD	
	41		1B-5170	2	PLUG	
	42		0S-1585	16	BOLT	
			2M-0849	16	WASHER	

FINAL DRIVE (6K4665 N/S)--Part 2 of 2

43	8K-6521	2	PLATE
44	2B-8093	2	PIN
45	2B-8847	2	RING
46	3B-8486	2	FITTING

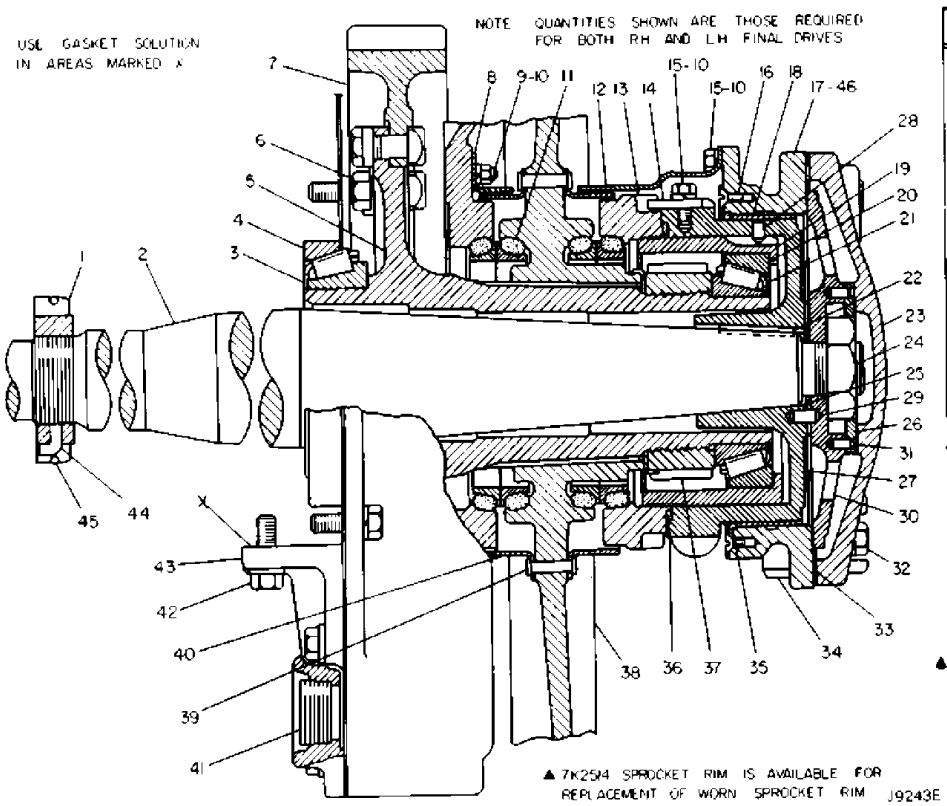

REF NO.	PART NUMBER	DESCRIPTION	QTY
1	7H2742	NUT	2
2	6K4617	SHAFT	2
3	4B9373	CONE	2
4	4B9374	CUP	2
5	6K4618	HUB	2
6	3K3815	BOLT	20
	6B6683	NUT	20
	2A3210	LOCK	10
7	7K4771	GEAR (52 Teeth)	2
8	3F1530	GUARD	2
9	1B4203	NUT	8
10	3B4506	LOCKWASHER	18
11	4K6049	SEAL GROUP	4
	4K177	RING	2
12	4F8396	GUARD	2
13	7K3582	NUT	2
14	1A4145	LOCK	2
15	S509	BOLT	10
16	4B1280	MACHINE SCREW	10
	3F1546	RETAINER	2
17	1M1947	SUPPORT ASSEM.	2
18	3F1548	BEARING SLEEVE	1
19	9K6842	CAGE ASSEM.	2
20	6B3223	CUP	1
21	9K8275	CONE	2
22	5K5887	KEY	2
23	3F1556	CAP	2
24	2B8828	NUT	2
25	3F1552	SHIM	8
26	2K2815	LOCK	2
27	9K5382	HOLDER ASSEM.	2
28	3F1542	DOWEL	1
29	5B5821	DOWEL	2
30	3F1554	RETAINER ASSEM.	2
31	3H2617	PIN	2
32	S1587	BOLT	12
	3B4508	LOCKWASHER	12
33	3F1555	GASKET	2
34	2M122	DOWEL	4
35	3F1547	SEAL	2
36	5K1787	SEAL	2
37	3F1537	NUT	2
	3F1536	LOCK	2
▲ 38	7K2445	SPROCKET ASSEM. (Standard)	2
39	5K1765	RIVET	6
40	4F6029	GUARD	2
41	1B5170	PLUG	2
42	S1585	BOLT	16
	2M849	WASHER	16
43	8K6521	PLATE	2
44	2B8093	PIN	2
45	2B8847	RING	2
46	3B8486	FITTING	2

GRAPHIC #1

j9243e

FINAL DRIVE (6K4665 N/S)--Part 1 of 2

Effective with Serial No. 65J1646-UP

Key:

SMCS

NOTE	REF NO	GRAPHIC REF	PART NUMBER	QTY	PART NAME 1 2 3 4 5 6 (PRODUCT LEVEL)	LINK PAGE
	1		9K-4058	2	LOCK	
	2		2J-5815	2	NUT	
	3		2B-6325	2	GASKET	
	4		3K-9619	2	SEAL	
	5		1H-9456	4	BOLT	
	6		7K-8237	2	DRUM	
	7		0S-1825	28	BOLT	
	8		2M-0849	28	WASHER	
	9		0S-1591	12	BOLT	
			5M-2894	12	WASHER	
	10		7K-7333	2	RETAINER	
	11		5K-1311	2	GASKET	
	12		3F-4746	2	DOWEL	
	13		4H-0254	2	DOWEL	
	14		0S-1585	28	BOLT	
			3B-4508	28	LOCKWASHER	
	15		7K-3007	2	GASKET	
	16		1A-2610	4	DOWEL	
	17		5B-7267	4	CORK	
	18		2A-3746	2	PLUG	
			3F-1526	2	DOWEL	
	19		7K-5209	2	CASE ASSEM.	
			0L-1392	4	STUD	
	20		2M-0533	2	RACE (Inner)	
			2M-0534	2	RACE AND ROLLER ASSEM.	
	21		7K-4770	2	PINION (9 Teeth)	
	22		8B-2571	2	RACE AND ROLLER ASSEM.	
			8B-2570	2	RACE (Outer)	
	23		1M-1930	2	CAGE	
	24		1M-1795	2	SPACER	
	25		5K-8591	2	RACE AND ROLLER ASSEM.	
			3B-3969	2	RACE (Inner)	
	26		7K-8238	2	FLANGE	

FINAL DRIVE (6K4665 N/S)--Part 1 of 2

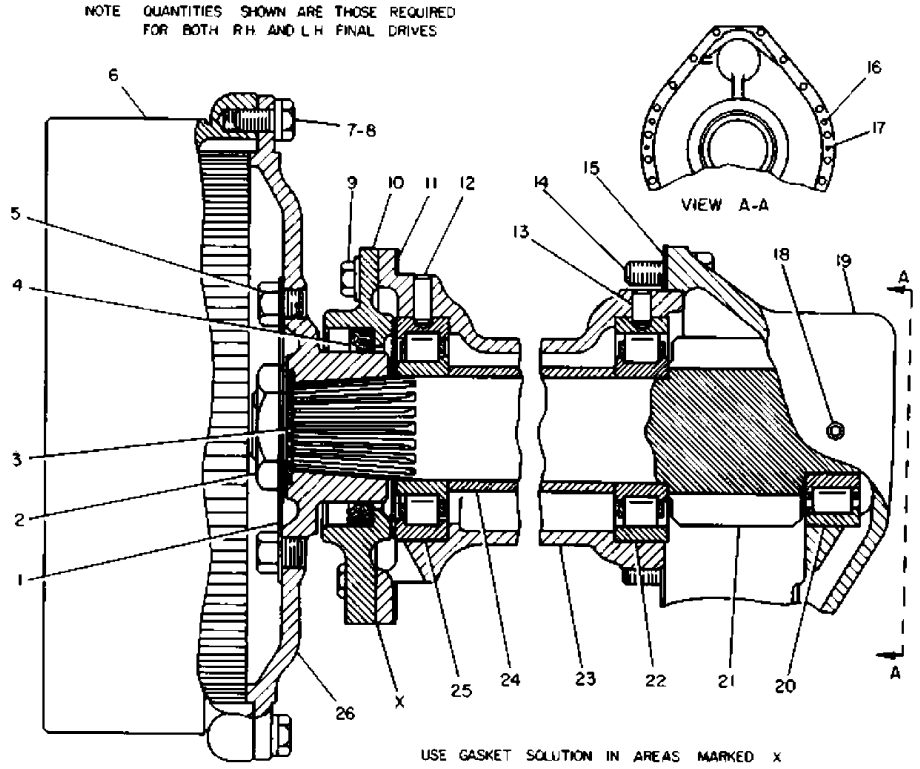

REF. NO.	PART NUMBER	DESCRIPTION	QTY.
1	9K4058	LOCK	2
2	2J5815	NUT	2
3	2B6325	GASKET	2
4	3K9619	SEAL	2
5	1H9456	BOLT	4
6	7K8237	DRUM	2
7	S1825	BOLT	28
8	2M849	WASHER	28
9	S1591	BOLT	12
	5M2894	WASHER	12
10	7K7333	RETAINER	2
11	5K1311	GASKET	2
12	3F4746	DOWEL	2
13	4H254	DOWEL	2
14	S1585	BOLT	28
	3B4508	LOCKWASHER	28
15	7K3007	GASKET	2
16	1A2610	DOWEL	4
17	5B7267	CORK	4
18	2A3746	PLUG	2
	3F1526	DOWEL	2
19	7K5209	CASE ASSEM.	2
	L1392	STUD	4
20	2M533	RACE (Inner)	2
	2M534	RACE AND ROLLER ASSEM.	2
21	7K4770	PINION (9 Teeth)	2
22	8B2571	RACE AND ROLLER ASSEM.	2
	8B2570	RACE (Outer)	2
23	1M1930	CAGE	2
24	1M1795	SPACER	2
25	5K8591	RACE AND ROLLER ASSEM.	2
	3B3969	RACE (Inner)	2
26	7K8238	FLANGE	2

J10941E

GRAPHIC #1 j10941e

FINAL DRIVE (6K4665 N/S)--Part 2 of 2

Effective with Serial No. 65J1646-UP

Key: H - 7K2514 SPROCKET RIM IS AVAILAB, R - REMFG PART MAY BE AVAILABLE

SMCS

NOTE	REF NO	GRAPHIC REF	PART NUMBER	QTY	PART NAME 1 2 3 4 5 6 (PRODUCT LEVEL)	LINK PAGE
	1		7H-2742	2	NUT	
	2		6K-4617	2	SHAFT	
	3		4B-9373	2	CONE	
	4		4B-9374	2	CUP	
	5		6K-4618	2	HUB	
	6		3K-3815	20	BOLT	
			2K-4821	20	NUT	
	7		7K-4771	2	GEAR (52 Teeth)	
	8		3F-1530	2	GUARD	
	9		1B-4203	8	NUT	
	10		3B-4506	18	LOCKWASHER	
R	11		4K-6049	4	SEAL GROUP	
			4K-0173	2	RING	
	12		4F-8396	2	GUARD	
	13		9K-9273	2	NUT	
	14		1A-4145	2	LOCK	
	15		0S-0509	10	BOLT	
	16		4B-1280	16	MACHINE SCREW	
			3F-1546	2	RETAINER	
	17		1M-1947	2	SUPPORT ASSEM.	
	18		3F-1548	1	BEARING SLEEVE	
	19		9K-6842	2	CAGE ASSEM.	
	20		6B-3223	1	CUP	
	21		6K-8275	2	CONE	
	22		5K-5887	2	KEY	
	23		3F-1556	2	CAP	
	24		2B-8828	2	NUT	
	25		3F-1552	8	SHIM	
	26		2F-2815	2	LOCK	
	27		9K-9271	2	HOLDER ASSEM.	
	28		3F-1542	1	DOWEL	
	29		5B-5821	2	DOWEL	
	30		3F-1554	2	RETAINER ASSEM.	
	31		3H-2617	2	PIN	
	32		0S-1587	12	BOLT	
			3B-4508	12	LOCKWASHER	
	33		3F-1555	2	GASKET	
	34		2M-0122	4	DOWEL	
	35		3F-1547	2	SEAL	
	36		3J-0634	2	SEAL	
	37		3F-1537	2	NUT	
			3F-1536	2	LOCK	
H	38		7K-2445	2	SPROCKET ASSEM. (Standard)	
	39		5K-1765	6	RIVET	
	40		4F-6029	2	GUARD	
	41		1B-5170	2	PLUG	
	42		0S-1585	16	BOLT	
			2M-0849	16	WASHER	
	43		8K-6521	2	PLATE	

FINAL DRIVE (6K4665 N/S)--Part 2 of 2

44	2B-8093	2	PIN
45	2B-8847	2	RING
46	3B-8486	2	FITTING

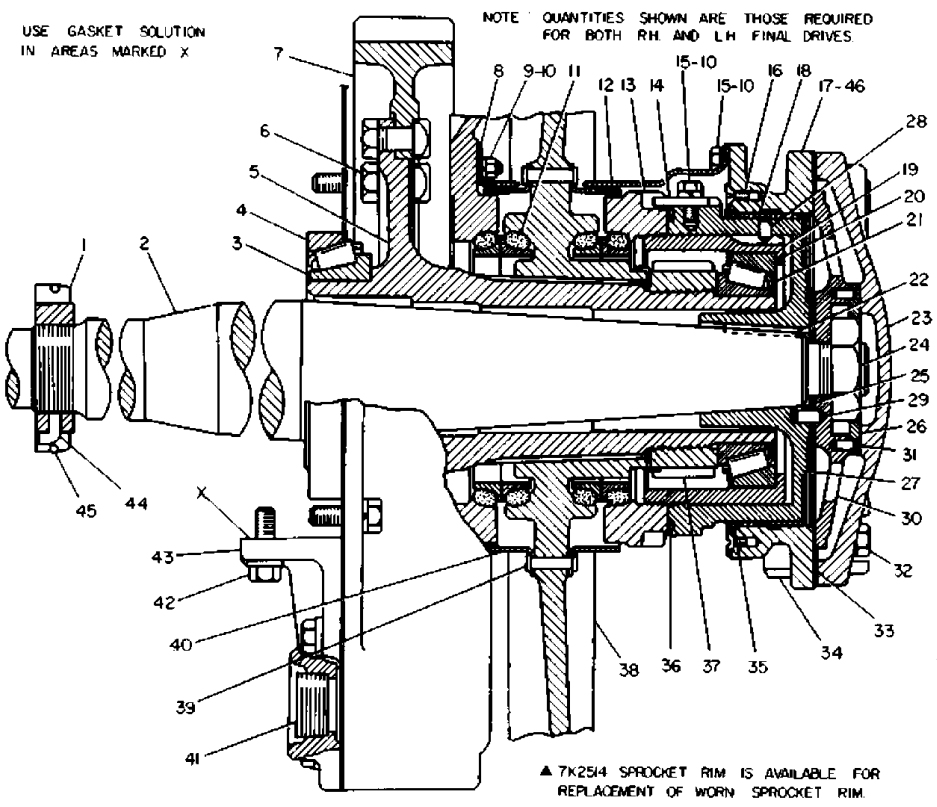

REF NO.	PART NUMBER	DESCRIPTION	QTY.
1	7H2742	NUT	2
2	6K4617	SHAFT	2
3	4B9373	CONE	2
4	4B9374	CUP	2
5	6K4618	HUB	2
6	3K3815	BOLT	20
	2K4821	NUT	20
7	7K4771	GEAR (52 Teeth)	2
8	3F1530	GUARD	2
9	1B4203	NUT	8
10	3B4506	LOCKWASHER	18
11	4K6049	SEAL GROUP	4
	4K173	RING	2
12	4F8396	GUARD	2
13	9K9273	NUT	2
14	1A4145	LOCK	2
15	S509	BOLT	10
16	4B1280	MACHINE SCREW	16
	3F1546	RETAINER	2
17	1M1947	SUPPORT ASSEM.	2
18	3F1548	BEARING SLEEVE	1
19	9K6842	CAGE ASSEM.	2
20	6B3223	CUP	1
21	6K8275	CONE	2
22	5K5887	KEY	2
23	3F1556	CAP	2
24	2B8828	NUT	2
25	3F1552	SHIM	8
26	2F2815	LOCK	2
27	9K9271	HOLDER ASSEM.	2
28	3F1542	DOWEL	1
29	5B5821	DOWEL	2
30	3F1554	RETAINER ASSEM.	2
31	3M2617	PIN	6
32	S1587	BOLT	12
	3B4508	LOCKWASHER	12
33	3F1555	GASKET	2
34	2M122	DOWEL	4
35	3F1547	SEAL	2
36	3J634	SEAL	2
37	3F1537	NUT	2
	3F1536	LOCK	2
▲ 38	7K2445	SPROCKET ASSEM. (Standard)	2
39	5K1765	RIVET	6
40	4F6029	GUARD	2
41	1B5170	PLUG	2
42	S1585	BOLT	16
	2M849	WASHER	16
43	8K6521	PLATE	2
44	2B8093	PIN	2
45	2B8847	RING	2
46	3B8486	FITTING	2

J10942E

GRAPHIC #1

j10942e

FINAL DRIVE MISCELLANEOUS PARTS (5K8851 N/S)--Part 1 of 2

Part of 3Y1582 Oil Steering Clutch Modification Arrangement listed on Page 213
AN ATTACHMENT

Key:

SMCS

NOTE	REF NO	GRAPHIC REF	PART NUMBER	QTY	PART NAME 1 2 3 4 5 6 (PRODUCT LEVEL)	LINK PAGE
	1		4H-7134	2	LOCK	
	2		0L-2341	2	NUT	
	3		2B-6325	2	GASKET	
	4		4K-4376	4	SEAL	
	5		2B-9128	2	PLUG	
	6		5A-9374	2	DRUM	
	7		4B-3823	28	BOLT	
	8		3B-4508	28	LOCKWASHER	
	9		0S-1591	12	BOLT	
			5M-2894	12	WASHER	
	10		7K-7333	2	RETAINER	
	11		5K-1311	2	GASKET	
	12		3F-4746	2	DOWEL	
	13		4H-0254	2	DOWEL	
	14		0S-1585	28	BOLT	
			3B-4508	28	LOCKWASHER	
	15		7K-3007	2	GASKET	
	16		1A-2610	4	DOWEL	
	17		5B-7267	4	CORK	
	18		2A-3746	2	PLUG	
			3F-1526	2	DOWEL	
	19		7K-5209	2	CASE ASSEM	
			0L-1392	4	STUD	
	20		2M-0534	2	RACE & ROLLER ASSEM	
			2M-0533	2	RACE (Inner)	
	21		7K-4770	2	PINION (9 Teeth)	
	22		8B-2571	2	RACE & ROLLER ASSEM	
			8B-2570	2	RACE (Outer)	
	23		1M-1930	2	CAGE	
	24		1M-1795	2	SPACER	
	25		5K-8591	2	RACE & ROLLER ASSEM	
			3B-3969	2	RACE (Inner)	
	26		7K-8238	2	FLANGE	

FINAL DRIVE MISCELLANEOUS PARTS (5K8851 N/S)--Part 1 of 2

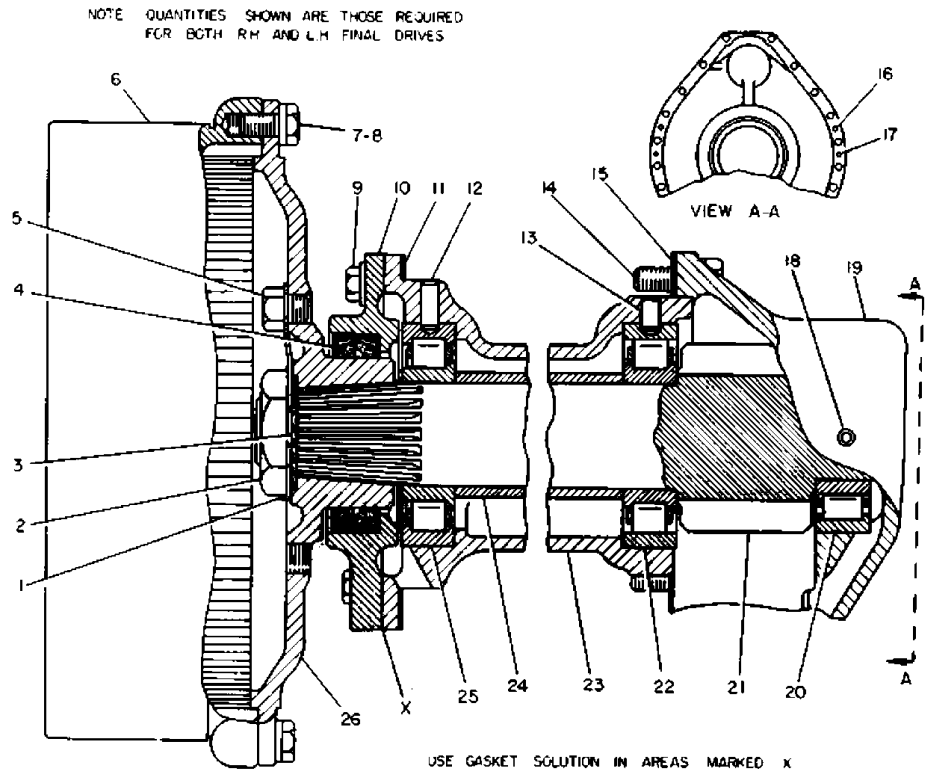

REF. NO.	PART NUMBER	DESCRIPTION	QTY.
1	4H7134	LOCK	2
2	L2341	NUT	2
3	2B6325	GASKET	2
4	4K4376	SEAL	4
5	2B9128	PLUG	2
6	5A9374	DRUM	2
7	4B3823	BOLT	28
8	3B4508	LOCKWASHER	28
9	1S1591	BOLT	12
	5M2894	WASHER	12
10	7K7333	RETAINER	2
11	5K1311	GASKET	2
12	3F4746	DOWEL	2
13	4H254	DOWEL	2
14	1S1585	BOLT	28
	3B4508	LOCKWASHER	28
15	7K3007	GASKET	2
16	1A2610	DOWEL	4
17	5B7267	CORK	4
18	2A3746	PLUG	2
	3F1526	DOWEL	2
19	7K5209	CASE ASSEM	2
	L1392	STUD	4
20	2M534	RACE & ROLLER ASSEM	2
	2M533	RACE (Inner)	2
21	7K4770	PINION (9 Teeth)	2
22	8B2571	RACE & ROLLER ASSEM	2
	8B2570	RACE (Outer)	2
23	1M1930	CAGE	2
24	1M1795	SPACER	2
25	5K8591	RACE & ROLLER ASSEM	2
	3B3969	RACE (Inner)	2
26	7K8238	FLANGE	2

J15855E

GRAPHIC #1

j15855e

FINAL DRIVE MISCELLANEOUS PARTS (5K8851 N/S)--Part 2 of 2

Part of 3Y1582 Oil Steering Clutch Modification Arrangement listed on Page 213
AN ATTACHMENT

Key: H - 7K2514 SPROCKET RIM IS AVAILAB, R - REMFG PART MAY BE AVAILABLE

SMCS

NOTE	REF NO	GRAPHIC REF	PART NUMBER	QTY	PART NAME 1 2 3 4 5 6 (PRODUCT LEVEL)	LINK PAGE
	1		7H-2742	2	NUT	
	2		6K-4617	2	SHAFT	
	3		4B-9373	2	CONE	
	4		4B-9374	2	CUP	
	5		6K-4618	2	HUB	
	6		3K-3815	20	BOLT	
			6B-6683	20	NUT	
			2A-3710	10	LOCK	
	7		7K-4771	2	GEAR (52 Teeth)	
	8		3F-1530	2	GUARD	
	9		1B-4203	8	NUT	
	10		3B-4506	18	LOCKWASHER	
R	11		4K-6049	4	SEAL GROUP	
			4K-0173	2	RING	
	12		4F-8396	2	GUARD	
	13		7K-3582	2	NUT	
	14		1A-4145	2	LOCK	
	15		0S-0509	10	BOLT	
	16		4B-1280	16	SCREW	
			3F-1546	2	RETAINER	
	17		1M-1947	2	SUPPORT ASSEM	
			3B-8486	2	FITTING	
	18		3F-1548	1	BEARING SLEEVE	
	19		5K-1752	2	CAGE	
	20		6B-3223	2	CUP	
	21		6K-8275	2	CONE	
	22		5K-5887	2	KEY	
	23		3F-1556	2	CAP	
	24		2B-8828	2	NUT	
	25		3F-1552	8	SHIM	
	26		2F-2815	2	LOCK	
	27		7K-5033	2	HOLDER ASSEM	
	28		3F-1542	1	DOWEL	
	29		5B-5821	2	DOWEL	
	30		3F-1554	2	RETAINER ASSEM	
	31		3H-2617	2	PIN (Spring)	
	32		0S-1587	12	BOLT	
			3B-4508	12	LOCKWASHER	
	33		3F-1555	2	GASKET	
	34		2M-0122	4	DOWEL	
	35		3F-1547	2	SEAL	
	36		5K-1787	2	SEAL	
	37		3F-1537	2	NUT	
			3F-1536	2	LOCK	
H	38		7K-2445	2	SPROCKET ASSEM (Standard)	
	39		5K-1765	6	RIVET	
	40		4F-6029	2	GUARD	
	41		1B-5170	2	PLUG	

FINAL DRIVE MISCELLANEOUS PARTS (5K8851 N/S)--Part 2 of 2

42	0S-1585	16	BOLT
	2M-0849	16	WASHER
43	8K-6521	2	PLATE
44	2B-8093	2	PIN
45	2B-8847	2	RING
46	0V-0459	2	BOLT
	1B-4206	2	NUT
	3B-4510	2	LOCKWASHER
	5K-1766	2	SEAL

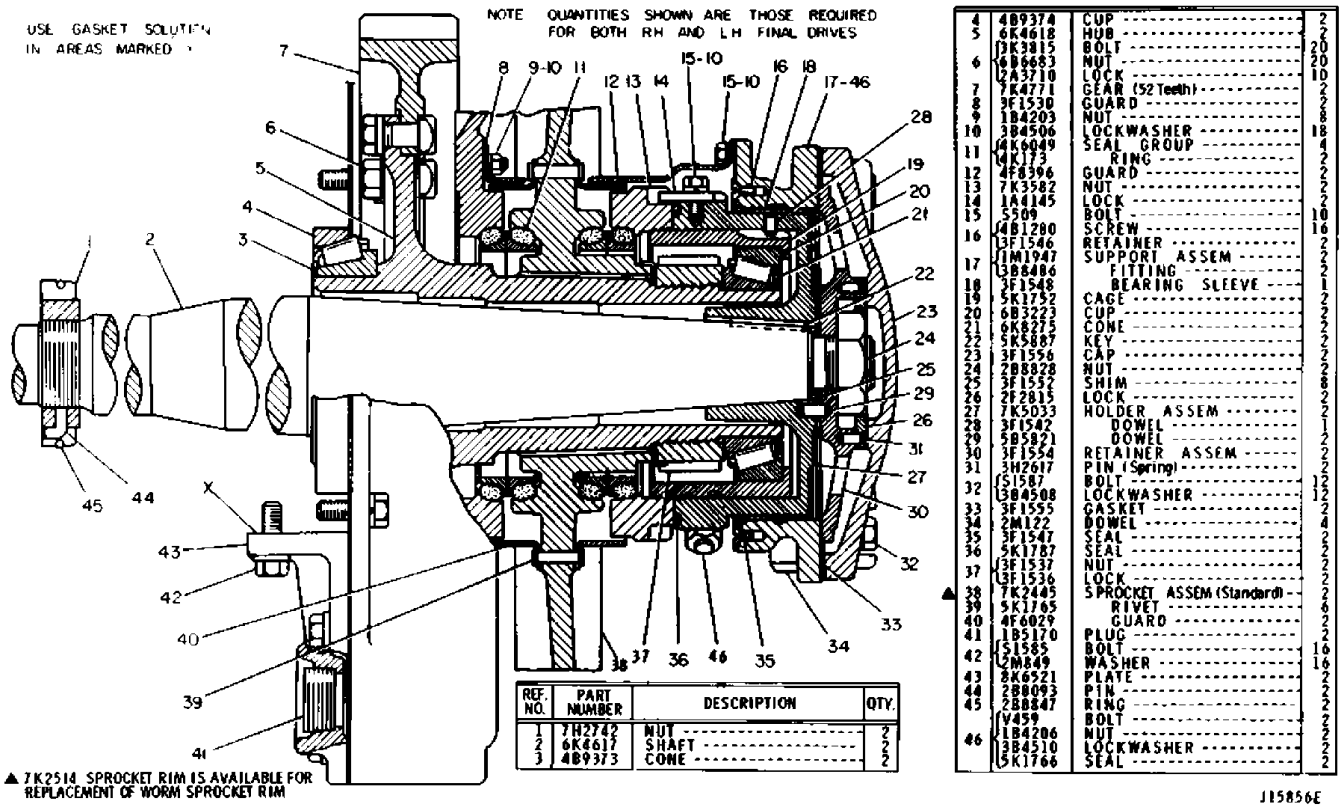

GRAPHIC #1 j15856e

MAIN FRAME (9K8480 N/S) Effective with Serial No. 65J1474~65J1697

Key:

SMCS

NOTE	REF NO	GRAPHIC REF	PART NUMBER	QTY	PART NAME 1 2 3 4 5 6 (PRODUCT LEVEL)	LINK PAGE
			9K-8515	1	MAIN FRAME ASSEM. (LEFT HAND)	
			9K-8514	1	MAIN FRAME (RIGHT HAND)	
			1D-4719	1	NUT (Weld)	
			4K-8433	1	STRIP	
					(Parts of 9K8515 Main Frame Assem.)	
			8K-7201	1	BRACKET	
			1D-4615	2	BOLT	
			5H-1504	2	WASHER	
			1D-4610	16	BOLT	
			2J-3506	16	NUT	
			5H-1504	32	WASHER	
			8K-8211	2	SHIM (3.2mm THICK)	
			8K-8210	2	SHIM (1.6mm THICK)	
			8K-8209	2	SHIM (0.9mm THICK)	
			8K-7200	1	BRACKET	
			4K-8433	1	STRIP	
			1D-4719	1	NUT (Weld)	
					(Parts of 9K8514 Main Frame Assem.)	
			0S-1625	4	BOLT	
			9H-1024	4	WASHER	
			6K-8714	2	WASHER (3.2mm THICK)	
			6K-8716	2	WASHER (1.6mm THICK)	
			6K-8717	2	WASHER (0.9mm THICK)	
			0S-1625	4	BOLT	
			9H-1024	4	WASHER	
			5A-8324	1	BOLT	
			2J-3506	1	NUT	
			5H-1504	2	WASHER	
			5A-8324	1	BOLT	
			2J-3506	1	NUT	
			5H-1504	2	WASHER	

MAIN FRAME (9K8480 N/S) Effective with Serial No. 65J1474~65J1697

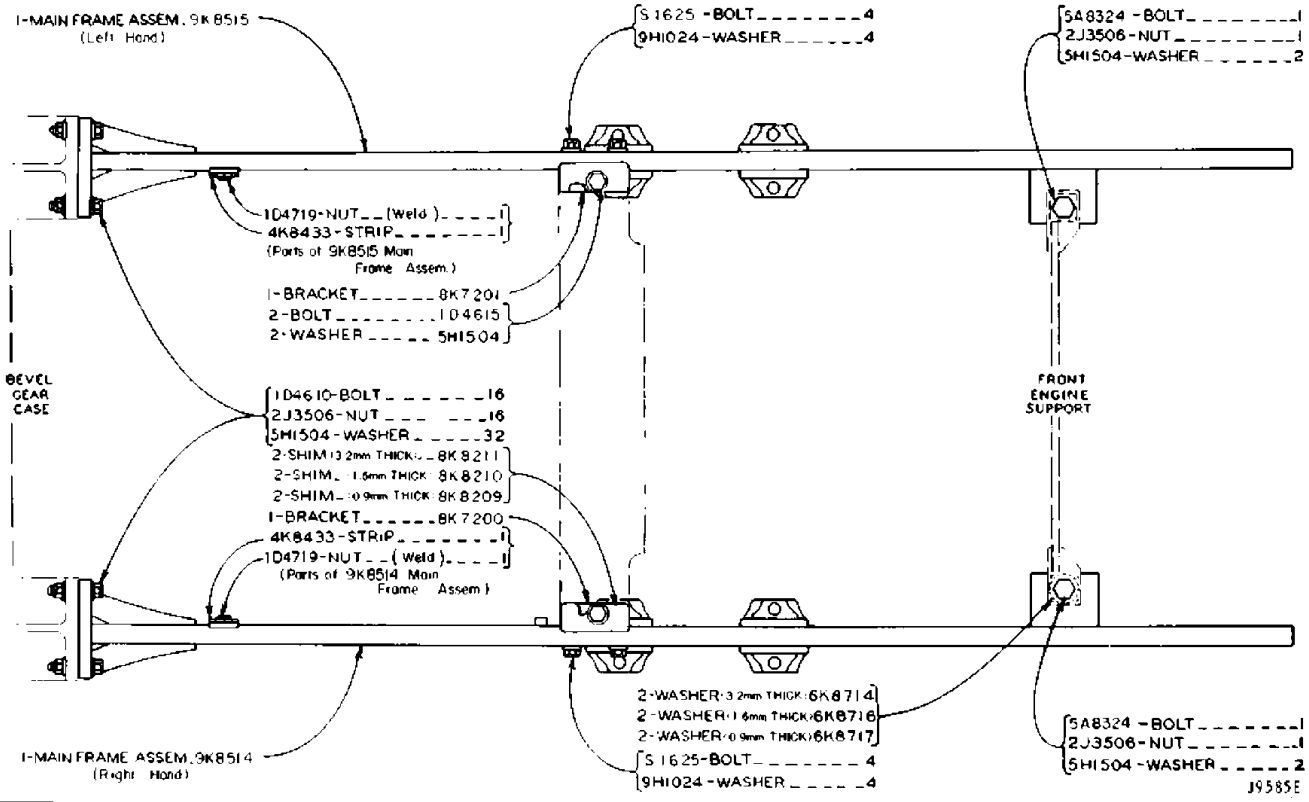

GRAPHIC #1

j9585e

MAIN FRAME (6K5866 N/S)

Effective with Serial No. 65J1698-UP

Key:

SMCS

NOTE	REF NO	GRAPHIC REF	PART NUMBER	QTY	PART NAME 1 2 3 4 5 6 (PRODUCT LEVEL)	LINK PAGE
			9K-0685	1	MAIN FRAME ASSEM.	
					(LEFT HAND)	
			1D-4719	1	NUT (WELD)	
			4K-8433	1	STRIP	
					(PARTS OF MAIN FRAME ASSEM. 9K685)	
			8K-7201	1	BRACKET	
			1D-4615	2	BOLT	
			5H-1504	2	WASHER	
			1D-4610	16	BOLT	
			2J-3506	16	NUT	
			5H-1504	32	WASHER	
			8K-8211	2	SHIM (3.2mm THICK)	
			8K-8210	2	SHIM (1.6mm THICK)	
			8K-8209	2	SHIM (0.9mm THICK)	
			8K-7200	1	BRACKET	
			4K-8433	1	STRIP	
			1D-4719	1	NUT (WELD)	
					(PARTS OF MAIN FRAME ASSEM. 9K684)	
			9K-0684	1	MAIN FRAME ASSEM.	
					(RIGHT HAND)	
			0S-1625	4	BOLT	
			9H-1024	4	WASHER	
			6K-8714	2	WASHER (3.2mm THICK)	
			6K-8716	2	WASHER (1.6mm THICK)	
			6K-8717	2	WASHER (0.9mm THICK)	
			0S-1625	4	BOLT	
			9H-1024	4	WASHER	
			5A-8324	1	BOLT	
			2J-3506	1	NUT	
			5H-1504	2	WASHER	
			5A-8324	1	BOLT	
			2J-3506	1	NUT	
			5H-1504	2	WASHER	

MAIN FRAME (6K5866 N/S)

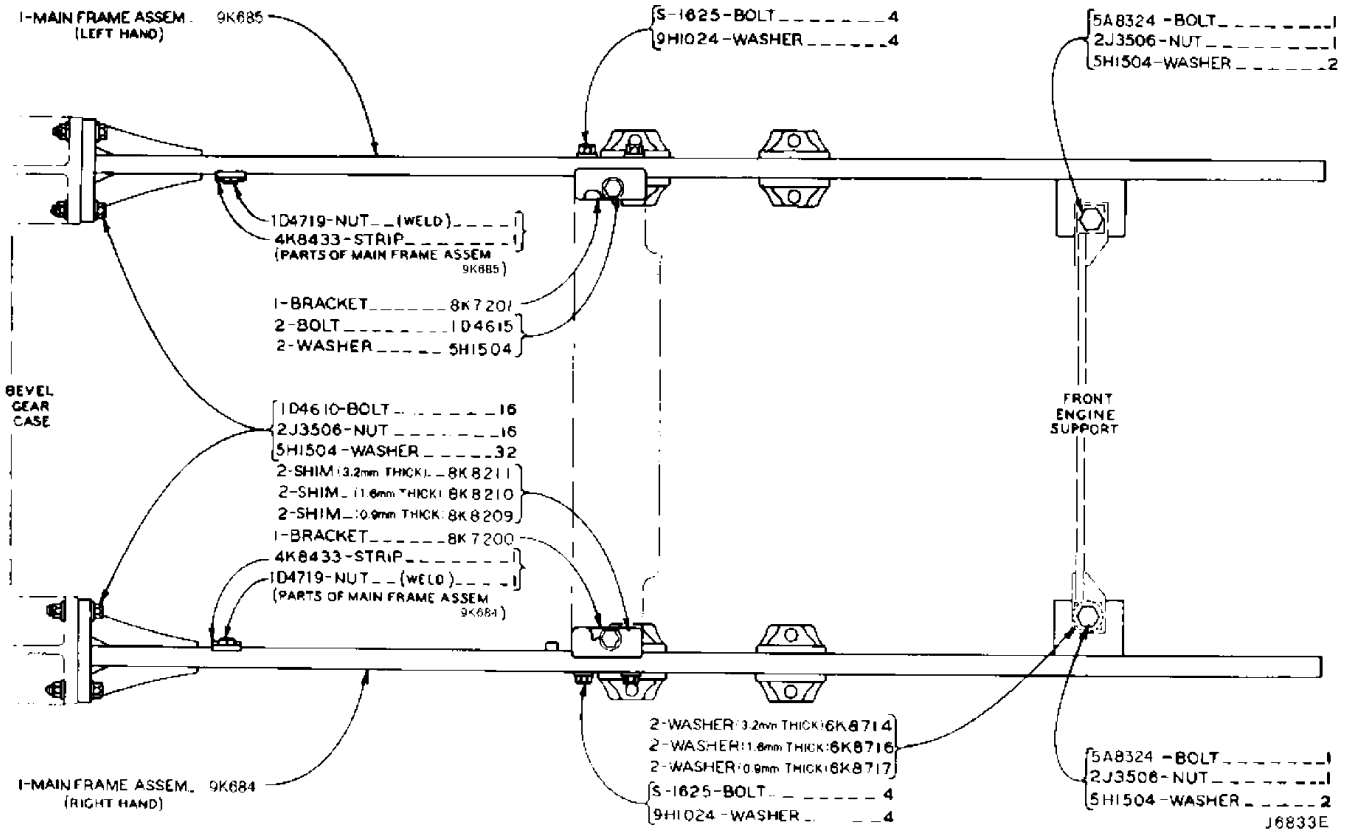

GRAPHIC #1 j6833e

CRANKCASE GUARD (9K217 N/S)

Effective with Serial No. 65J1474-UP

Key:

SMCS

NOTE	REF NO	GRAPHIC REF	PART NUMBER	QTY	PART NAME 1 2 3 4 5 6 (PRODUCT LEVEL)	LINK PAGE
			0S-1587	4	BOLT	
			3B-4508	4	LOCKWASHER	
			4B-5273	4	WASHER	
			9K-0213	1	PLATE ASSEM	
					(REAR)	
			0L-1178	2	BOLT	
			3B-4512	2	LOCKWASHER	
			8S-9092	2	BOLT	
			3B-4510	2	LOCKWASHER	
			4K-6795	1	BRACKET ASSEM	
			2A-1538	2	BOLT	
			3B-4512	2	LOCKWASHER	
			4B-4043	2	BOLT	
			3B-4510	2	LOCKWASHER	
			4B-4281	2	WASHER	
			0S-1592	2	BOLT	
			3B-4510	2	LOCKWASHER	
			7K-3188	1	PLATE ASSEM.	
					(FRONT)	
			7K-3179	4	BAR	
					(Part of 7K3188 Plate Assem.)	
			0S-1595	4	BOLT	
			3B-4508	4	LOCKWASHER	
			7K-3184	1	PLATE	

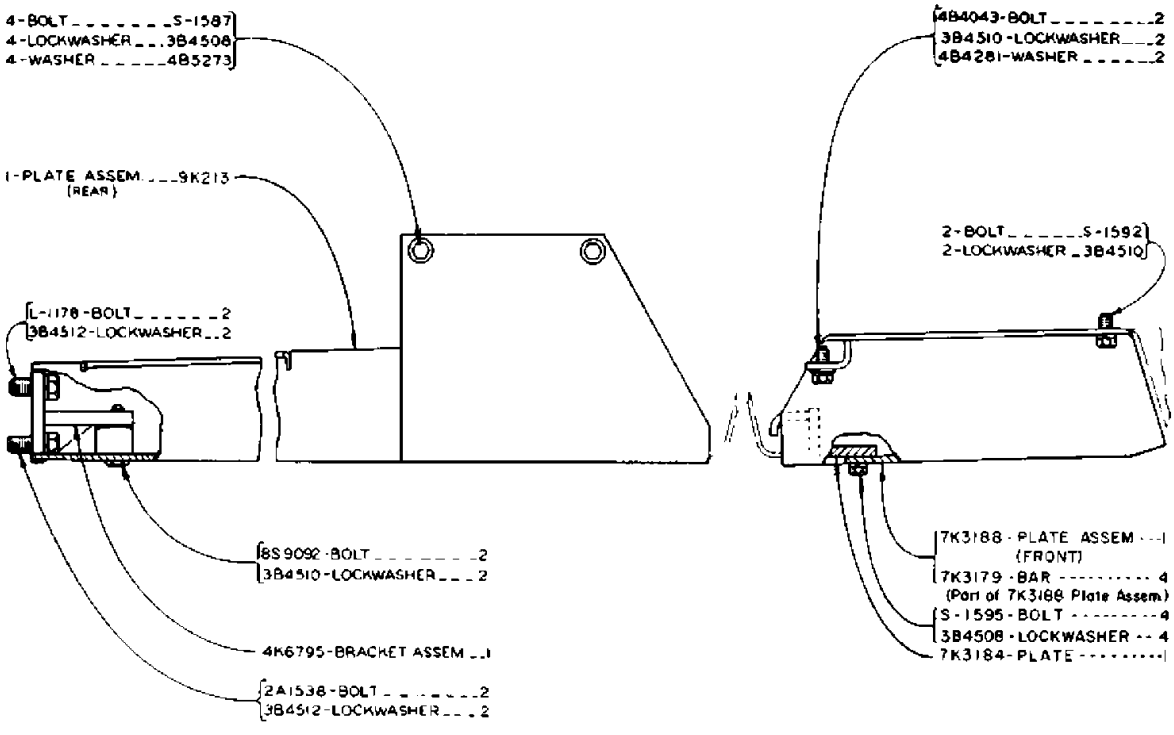

J6876E

CRANKCASE GUARD (9K217 N/S)

GRAPHIC #1

j6876e

FENDER (9K1779 N/S)

Effective with Serial No. 65J1474~65J1502

Key:

SMCS

NOTE	REF NO	GRAPHIC REF	PART NUMBER	QTY	PART NAME 1 2 3 4 5 6 (PRODUCT LEVEL)	LINK PAGE
			4K-5834	2	SPACER	
					(1 IN EACH FENDER ASSEM. 9K1781 AND 9K1782)	
			2B-0947	10	BOLT	
			3B-4508	10	LOCKWASHER	
			6K-2628	1	SUPPORT ASSEM.	
			9F-2978	4	NUT (WELD)	
					(PART OF SUPPORT ASSEM. 6K2628)	
			0S-0509	4	BOLT	
			3B-4506	4	LOCKWASHER	
			4B-5271	4	WASHER	
			4H-7745	2	SPACER	
			3B-3359	2	WASHER	
			0S-1587	2	BOLT	
			3B-4508	2	LOCKWASHER	
			6K-1295	2	WASHER	
			1K-7070	2	WASHER (CUP)	
			9K-1782	1	FENDER ASSEM.	
					(RIGHT HAND)	
			5B-6029	4	LUG	
					(2 IN EACH FENDER ASSEM. 9K1781 AND 9K1782)	
			1D-4717	4	NUT	
			0S-1585	2	BOLT	
			3B-4508	12	LOCKWASHER	
			4B-5273	2	WASHER	
			9S-9489	4	TREAD	
			9K-1781	1	FENDER ASSEM.	
					(LEFT HAND)	
			4K-5600	1	PLATE ASSEM.	
			9F-2978	4	NUT (WELD)	
					(PART OF PLATE ASSEM. 4K5600)	
			4K-5418	1	PLATE	
			4K-9862	2	LUG	
					(1 IN EACH FENDER ASSEM. 9K1781 AND 9K1782)	
			0S-1595	3	BOLT	
			1D-4719	4	NUT	
			3B-4508	4	LOCKWASHER	
			0S-1585	1	BOLT	
			4K-5684	1	SUPPORT ASSEM.	
			9F-2978	2	NUT (WELD)	
					(PART OF SUPPORT ASSEM. 4K5684)	
			0S-0509	26	BOLT	
			3B-4506	26	LOCKWASHER	
			4B-5271	22	WASHER	
			4K-9860	1	SUPPORT	
			4K-5651	1	PLATE	
			4K-5683	1	SUPPORT ASSEM.	
			9F-2978	2	NUT (WELD)	
					(PART OF SUPPORT ASSEM. 4K5683)	
			1A-1460	4	BOLT	

FENDER (9K1779 N/S)

3B-4508	4	LOCKWASHER
5B-5839	4	SPACER
5K-3279	2	BRACKET ASSEM.
1F-0748	10	NUT (WELD)
		(5 IN EACH BRACKET ASSEM. 5K3279)
6M-8449	2	PLATE
0S-1595	8	BOLT
3B-4508	8	LOCKWASHER
1J-8965	2	WASHER
5A-3425	2	SUPPORT ASSEM.
4K-5417	1	PLATE
4K-5599	1	PLATE ASSEM.
9F-2978	3	NUT (WELD)
		(PART OF PLATE ASSEM. 4K5599)

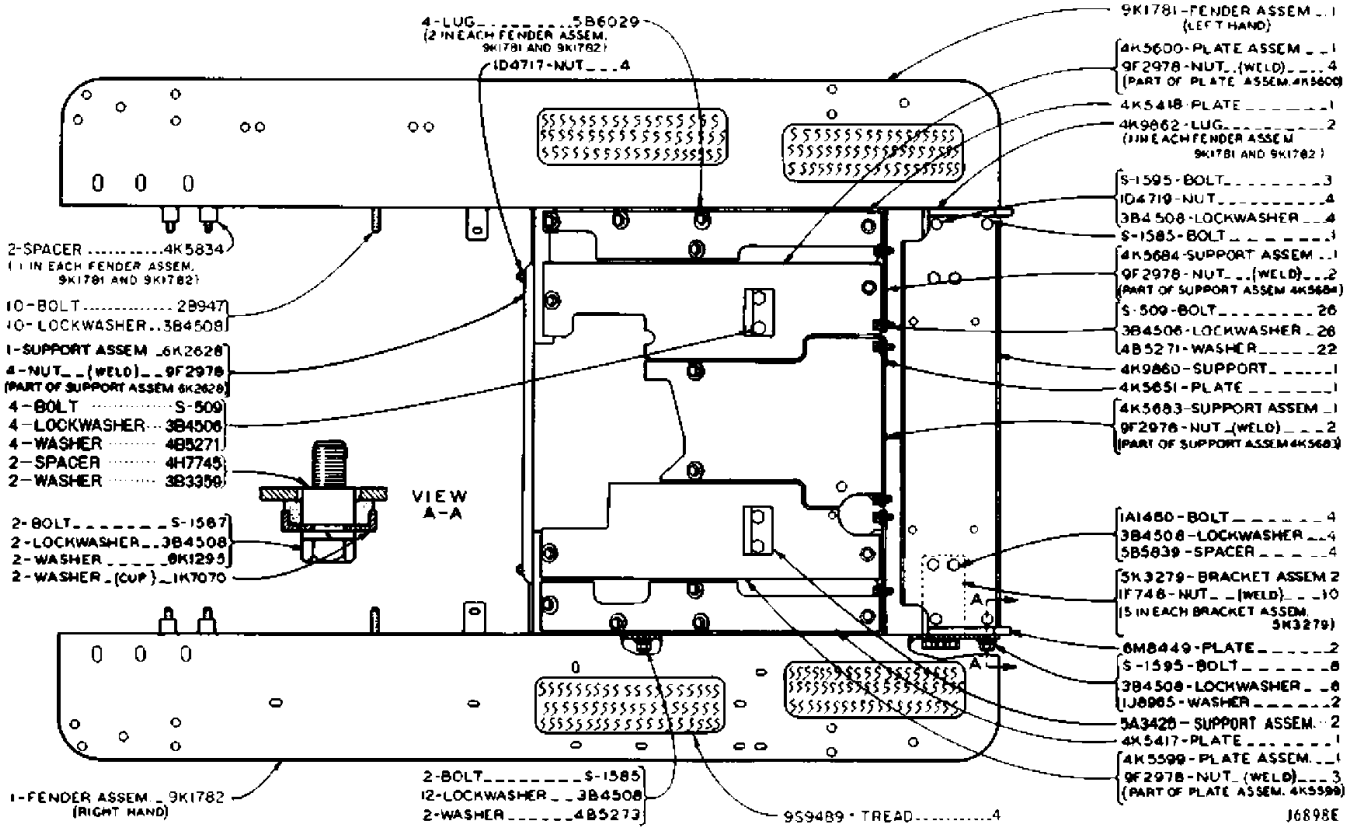

GRAPHIC #1 j6898e

FENDER (9K1779 N/S)

Effective with Serial No. 65J1503-UP

Key:

SMCS

NOTE	REF NO	GRAPHIC REF	PART NUMBER	QTY	PART NAME 1 2 3 4 5 6 (PRODUCT LEVEL)	LINK PAGE
			0S-0509	4	BOLT	
			3B-4506	4	LOCKWASHER	
			1D-4717	4	NUT	
			6K-2628	1	SUPPORT ASSEM.	
			9F-2978	4	NUT (Weld)	
					(Part of 6K2628 Support Assem.)	
			2B-0947	10	BOLT	
			3B-4508	10	LOCKWASHER	
			4K-5242	2	SPACER	
					(1 Each in 9K8485 and 9K8486 Fender Assem.)	
			4K-5834	2	SPACER	
					(1 Each in 9K8485 and 9K8486 Fender Assem.)	
			0S-0509	20	BOLT	
			3B-4506	20	LOCKWASHER	
			4B-5271	20	WASHER	
			4H-7745	2	SPACER	
			3B-3359	2	WASHER	
			1K-7070	2	WASHER (Cup)	
			0S-1587	2	BOLT	
			3B-4508	2	LOCKWASHER	
			6K-1295	2	WASHER	
			9K-8485	1	FENDER ASSEM.	
					(Right Hand)	
			5B-6029	4	LUG	
					(2 Each in 9K8485 and 9K8486 Fender Assem.)	
			4K-5358	2	ANGLE	
					(1 Each in 9K8485 and 9K8486 Fender Assem.)	
			0S-1585	2	BOLT	
			3B-4508	2	LOCKWASHER	
			4B-5273	2	WASHER	
			9K-8486	1	FENDER ASSEM.	
					(Left Hand)	
			4K-5600	1	PLATE ASSEM.	
			9F-2978	4	NUT (Weld)	
					(Part of 4K5600 Plate Assem.)	
			4K-5418	1	PLATE	
			4K-9862	2	LUG	
					(1 Each in 9K8485 and 9K8486 Fender Assem.)	
			0S-1585	1	BOLT	
			1D-4719	1	NUT	
			3B-4508	1	LOCKWASHER	
			0S-1595	3	BOLT	
			1D-4719	3	NUT	
			3B-4508	3	LOCKWASHER	
			4K-5684	1	SUPPORT ASSEM.	
			9F-2978	2	NUT (Weld)	
					(Part of 4K5684 Support Assem.)	
			0S-0509	6	BOLT	
			3B-4506	6	LOCKWASHER	

FENDER (9K1779 N/S)

4B-5271	6	WASHER
4K-9860	1	SUPPORT
4K-5651	1	PLATE
4K-5683	1	SUPPORT ASSEM.
9F-2978	2	NUT (Weld)
		(Part of 4K5683 Support Assem.)
1A-1460	4	BOLT
3B-4508	4	LOCKWASHER
5B-5839	4	SPACER
5K-3279	2	BRACKET ASSEM.
1F-0748	10	NUT (Weld)
		(5 Each in 5K3279 Bracket Assem.)
6M-8449	2	PLATE
0S-1595	8	BOLT
3B-4508	8	LOCKWASHER
1J-8965	2	WASHER
5A-3425	2	SUPPORT ASSEM.
4K-5417	1	PLATE
4K-5599	1	PLATE ASSEM.
9F-2978	3	NUT (Weld)
		(Part of 4K5599 Plate Assem.)
9S-9489	4	TREAD

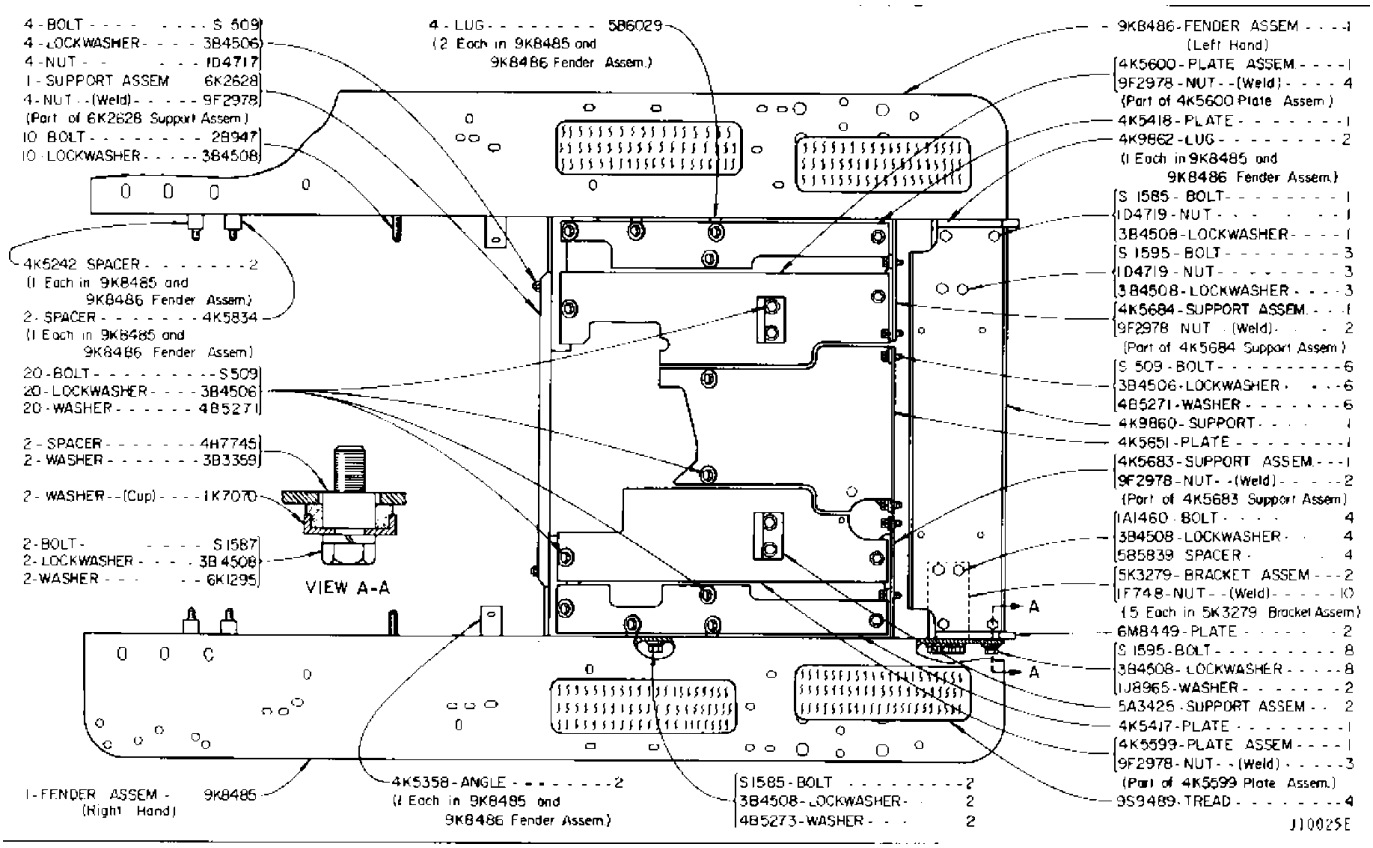

GRAPHIC #1

j10025e

5K1282 HITCH GROUP

AN ATTACHMENT

Key:

SMCS

NOTE	REF NO	GRAPHIC REF	PART NUMBER	QTY	PART NAME 1 2 3 4 5 6 (PRODUCT LEVEL)	LINK PAGE
			1D-4630	4	BOLT	
			3B-4514	4	LOCKWASHER	
			5K-3873	1	HITCH ASSEM	
			1M-4980	1	PIN	
			3B-5319	1	COTTER	

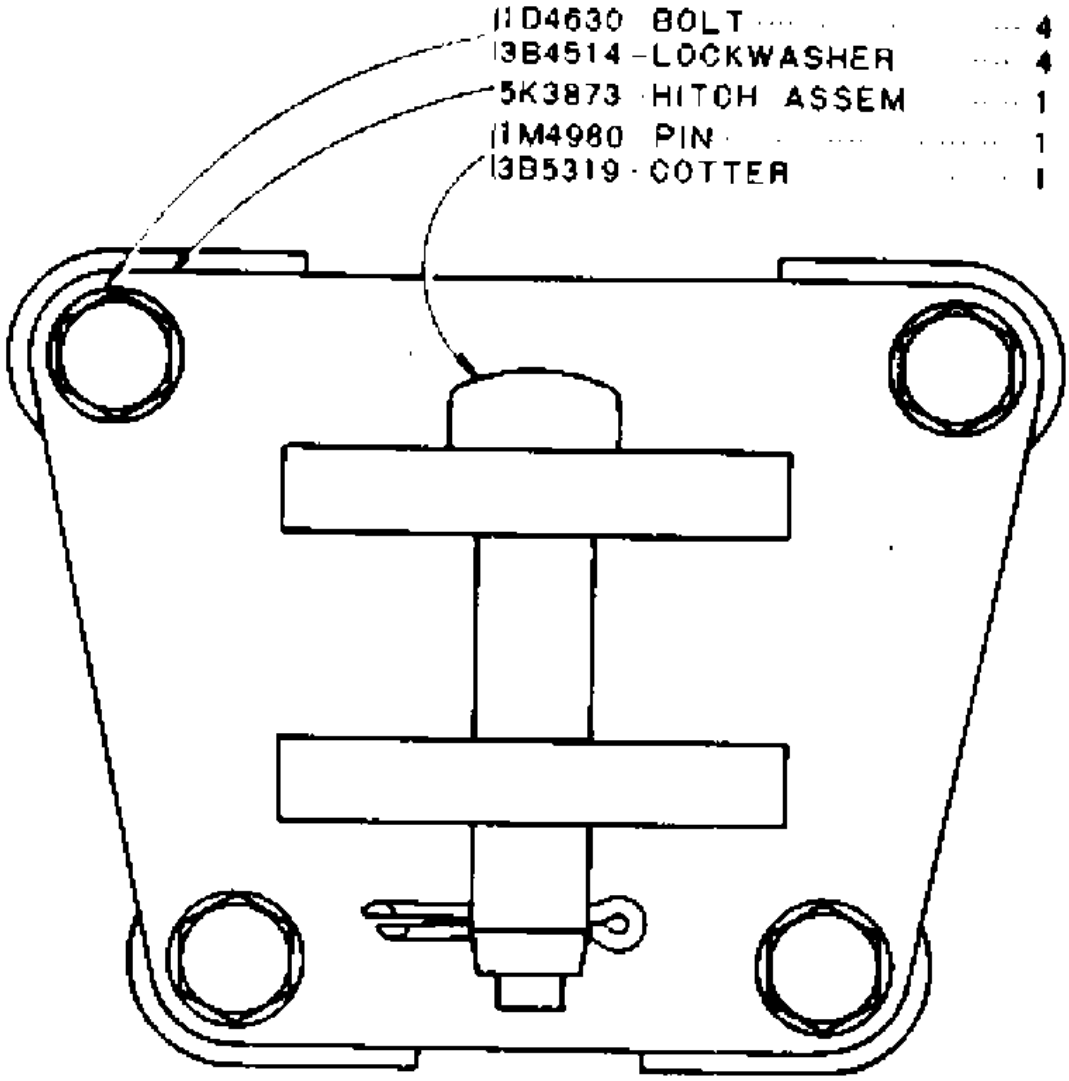

J130E

GRAPHIC #1

j130e

6K1351 SWINGING DRAWBAR GROUP

AN ATTACHMENT

Key:

SMCS

NOTE	REF NO	GRAPHIC REF	PART NUMBER	QTY	PART NAME 1 2 3 4 5 6 (PRODUCT LEVEL)	LINK PAGE
	1		1A-2029	2	BOLT	
			3B-4506	2	LOCKWASHER	
	2		3K-0029	1	BRACKET	
	3		4K-1540	1	PIN	
			3B-4617	1	COTTER PIN	
	4		3K-0028	1	LATCH	
	5		6K-0131	1	BRACKET	
	6		6K-1330	4	BOLT	
			1B-4331	4	NUT	
	7		3B-4512	8	LOCKWASHER	
	8		1D-4627	4	BOLT	
	9		3B-4514	6	LOCKWASHER	
	10		6K-0132	2	BRACE	
	11		9F-9522	2	BOLT	
	12		6K-0129	1	BAR	
	13		2A-1538	2	BOLT (57mm LONG)	
			0L-1178	2	BOLT (51mm LONG)	
	14		5H-7902	2	SCREW	
			3B-4510	2	LOCKWASHER	
	15		4K-6782	1	BRACKET	
	16		1M-8535	1	PIN	
	17		2B-7557	1	CORK	
	18		6K-0128	4	GUARD	
	19		3B-4638	1	COTTER PIN	
	20		1M-8534	1	PIN	
	21		2A-0309	2	DOWEL	
	22		6K-1346	2	SHOE	
	23		6K-1304	4	BOLT	
	24		6K-0130	1	BAR	
	25		1M-4980	1	PIN	
	26		3B-5318	1	COTTER PIN	

6K1351 SWINGING DRAWBAR GROUP

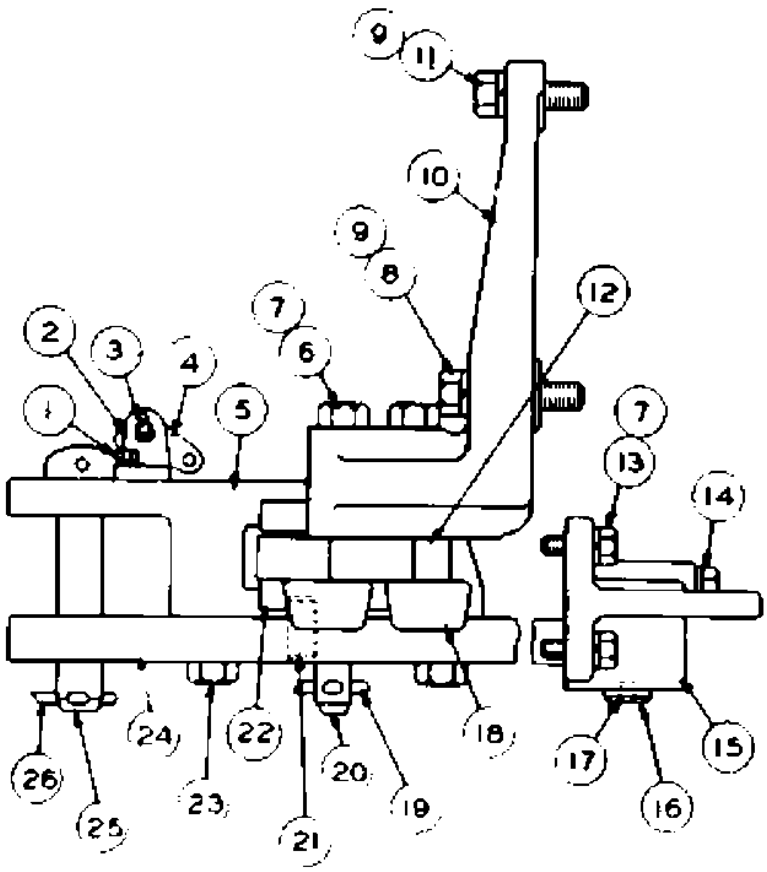

REF NO.	PART NUMBER	DESCRIPTION	QTY
1	1A2029	BOLT	2
	3B4506	LOCKWASHER	2
2	3K29	BRACKET	1
3	4K1540	PIN	1
	3B4617	COTTER PIN	1
4	3K28	LATCH	1
5	6K131	BRACKET	1
6	6K1330	BOLT	4
	1B4331	NUT	4
7	3B4512	LOCKWASHER	8
8	1D4627	BOLT	4
9	3B4514	LOCKWASHER	6
10	6K132	BRACE	2
11	9F9522	BOLT	2
12	6K129	BAR	1
13	2A1538	BOLT (57mm LONG)	2
	L-1178	BOLT (51mm LONG)	2
14	5H7902	SCREW	2
	3B4510	LOCKWASHER	2
15	4K6782	BRACKET	1
16	1M8535	PIN	1
17	2B7557	CORK	1
18	6K128	GUARD	4
19	3B4638	COTTER PIN	1
20	1M8534	PIN	1
21	2A309	DOWEL	2
22	6K1346	SHOE	2
23	6K1304	BOLT	4
24	6K130	BAR	1
25	1M4980	PIN	1
26	3B5318	COTTER PIN	1

J7108E

GRAPHIC #1

j7108e

9K8513 SWINGING DRAWBAR GROUP

AN ATTACHMENT

Key:

SMCS

NOTE	REF NO	GRAPHIC REF	PART NUMBER	QTY	PART NAME 1 2 3 4 5 6 (PRODUCT LEVEL)	LINK PAGE
	1		8K-9781	1	BAR	
	2		1A-2029	2	BOLT	
			3B-4506	2	LOCKWASHER	
	3		3K-0029	1	BRACKET	
	4		4K-1540	1	PIN	
			3B-4617	1	COTTER PIN	
	5		3K-0028	1	LATCH	
	6		6K-1304	4	BOLT	
	7		1M-8534	1	PIN	
			3B-4638	1	COTTER PIN	
	8		6K-1330	4	BOLT	
			1B-4331	4	NUT	
	9		3B-4512	8	LOCKWASHER	
	10		4D-7259	2	STUD	
	11		2J-3505	6	NUT	
			9H-1031	6	WASHER	
	12		6K-0132	2	BRACE	
	13		7D-5002	6	SPACER	
	14		3D-0427	4	STUD	
	15		4K-6782	1	BRACKET	
	16		0L-1178	2	BOLT	
	17		1M-8535	1	PIN	
	18		5H-7902	2	SCREW	
			3B-4510	2	LOCKWASHER	
	19		2A-1538	2	BOLT	
	20		2B-7557	1	CORK	
	21		6K-0128	4	GUARD	
	22		6K-0129	1	PLATE	
	23		6K-1346	2	SHOE	
	24		2A-0309	2	DOWEL	
	25		1M-4980	1	PIN	
			3B-5319	1	COTTER PIN	
	26		6K-0131	1	BRACKET	

9K8513 SWINGING DRAWBAR GROUP

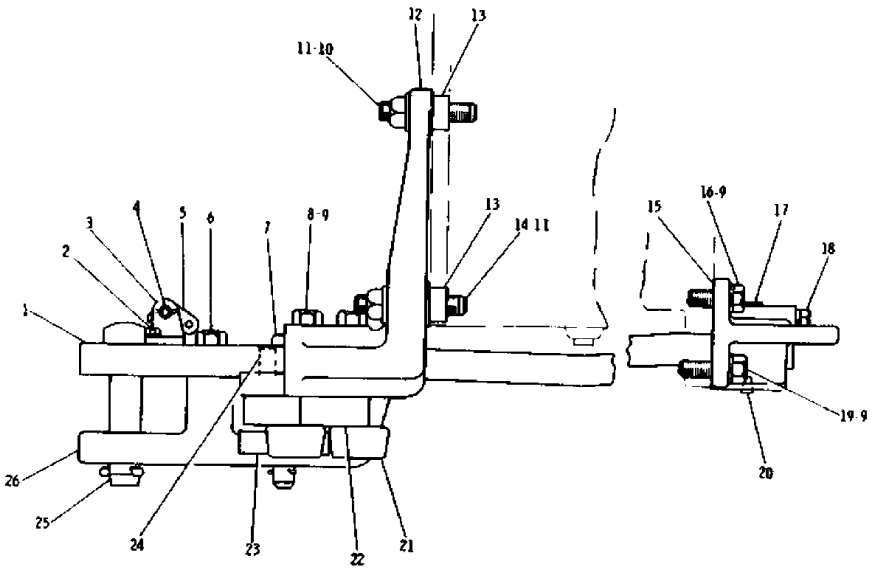

REF NO.	PART NUMBER	DESCRIPTION	QTY.
1	8K9781	BAR	1
2	1A2029	BOLT	2
	3B4506	LOCKWASHER	2
3	3K29	BRACKET	1
4	4K1540	PIN	1
	3B4617	COTTER PIN	1
5	3K28	LATCH	1
6	6K1304	BOLT	4
7	1M8534	PIN	1
	3B4638	COTTER PIN	1
8	6K1330	BOLT	4
	1B4331	NUT	4
9	3B4512	LOCKWASHER	8
10	4D7259	STUD	2
11	2J3505	NUT	6
	9H1031	WASHER	6
12	6K132	BRACE	2
13	7D5002	SPACER	6
14	3D427	STUD	4
15	4K6782	BRACKET	1
16	L1178	BOLT	2
17	1M8535	PIN	1
18	5H7902	SCREW	2
	3B4510	LOCKWASHER	2
19	2A1538	BOLT	2
20	2B7557	CORK	1
21	6K128	GUARD	4
22	6K129	PLATE	1
23	6K1346	SHOE	2
24	2A309	DOWEL	2
25	1M4980	PIN	1
	3B5319	COTTER PIN	1
26	6K131	BRACKET	1

J15014E

GRAPHIC #1

j15014e

6P1107 SWINGING DRAWBAR GROUP

AN ATTACHMENT

Key: CL - Classic Part Available, C - INDICATES CHANGE

SMCS

NOTE	REF NO	GRAPHIC REF	PART NUMBER	QTY	PART NAME 1 2 3 4 5 6 (PRODUCT LEVEL)	LINK PAGE
	1		3K-0028	1	LATCH	
	2		4K-1540	1	PIN	
			3B-4617	1	COTTER PIN	
	3		3K-0029	1	BRACKET	
	4		1A-2029	2	BOLT	
			3B-4506	2	LOCKWASHER	
	5		6K-1304	4	BOLT	
	6		0S-1587	1	BOLT	
			3B-4508	1	LOCKWASHER	
	7		2A-0309	2	DOWEL	
CL	8		3J-3668	1	PIN	
	CL		512-6458	1	PIN-YM	
C	9		3V-3692	1	PLATE	
	10		1A-1135	6	BOLT	
	11		3B-4510	8	LOCKWASHER	
	12		2V-6109	1	BAR	
	13		0L-1178	2	BOLT	
	14		3B-4512	8	LOCKWASHER	
	15		1M-8535	1	PIN	
	16		4K-6782	1	BRACKET	
	17		5H-7902	2	SCREW	
	19		2A-1538	2	BOLT	
C	20		4V-3725	2	BLOCK ASSEM.	
	21		2V-6132	1	BAR	
	22		6K-0128	4	GUARD	
	23		1D-4620	4	BOLT	
			1B-4331	4	NUT	
	24		6P-1111	1	PIN	
	25		6K-1346	2	SHOE	
	26		6K-0131	1	BRACKET	
	27		1M-4980	1	PIN	
			3B-5319	1	COTTER PIN	

6P1107 SWINGING DRAWBAR GROUP

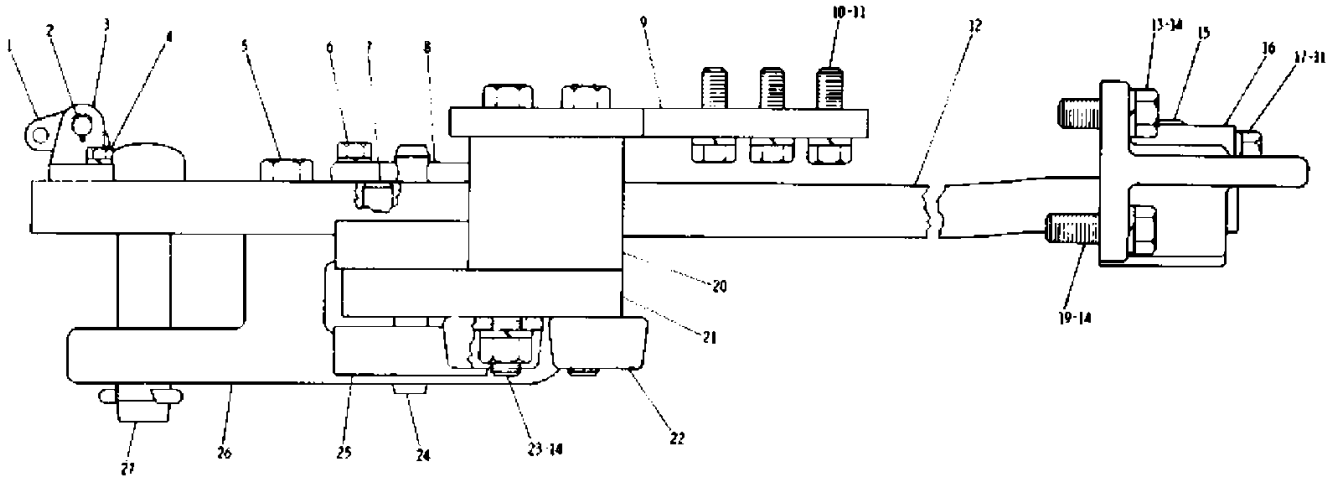

REF NO	PART NUMBER	DESCRIPTION	QTY
1	3K28	LATCH	1
2	4K1540	PIN	1
	384617	COTTER PIN	1
3	3K29	BRACKET	1
4	1A2029	BOLT	2
	384506	LOCKWASHER	2
5	6K1304	BOLT	4
6	S1587	BOLT	1
	384508	LOCKWASHER	1
7	2A309	DOWEL	2
8	313668	PIN	1
C 9	3V3692	PLATE	1
10	1A1135	BOLT	6
11	384510	LOCKWASHER	8
12	2V6109	BAR	1
13	L1178	BOLT	2
14	384512	LOCKWASHER	8
15	1M8535	PIN	1
16	4K6782	BRACKET	1
17	5H7902	SCREW	2
19	2A1538	BOLT	2
C 20	4V3725	BLOCK ASSEM.	2
21	2V6132	BAR	1
22	6K128	GUARD	4
23	104620	BOLT	4
	184331	NUT	4
24	6P1111	PIN	1
25	6K1346	SHOE	2
26	6K131	BRACKET	1
27	1M4980	PIN	1
	385319	COTTER PIN	1

C INDICATES CHANGE

215143

GRAPHIC #1

c215143

9H5806 FIXED DRAWBAR GROUP--Type 1

AN ATTACHMENT

Key:

SMCS

NOTE	REF NO	GRAPHIC REF	PART NUMBER	QTY	PART NAME 1 2 3 4 5 6 (PRODUCT LEVEL)	LINK PAGE
			1M-4981	1	CLEVIS	
			1M-5334	1	BRACKET ASSEM.	
					(Left Hand)	
			1D-4593	4	BOLT	
			3K-0028	1	LATCH	
			3K-0029	1	BRACKET	
			4K-1540	1	PIN	
			3B-4617	1	COTTER PIN	
			1A-2029	2	BOLT	
			3B-4506	2	LOCKWASHER	
			1M-5333	1	BRACKET ASSEM.	
					(Right Hand)	
			3K-7776	6	STUD	
			1A-5666	6	NUT	
			3B-4514	6	LOCKWASHER	
			1D-4720	4	NUT	
			3B-4510	4	LOCKWASHER	
			5B-7267	2	CORK	
			1M-4980	1	PIN	

9H5806 FIXED DRAWBAR GROUP--Type 1

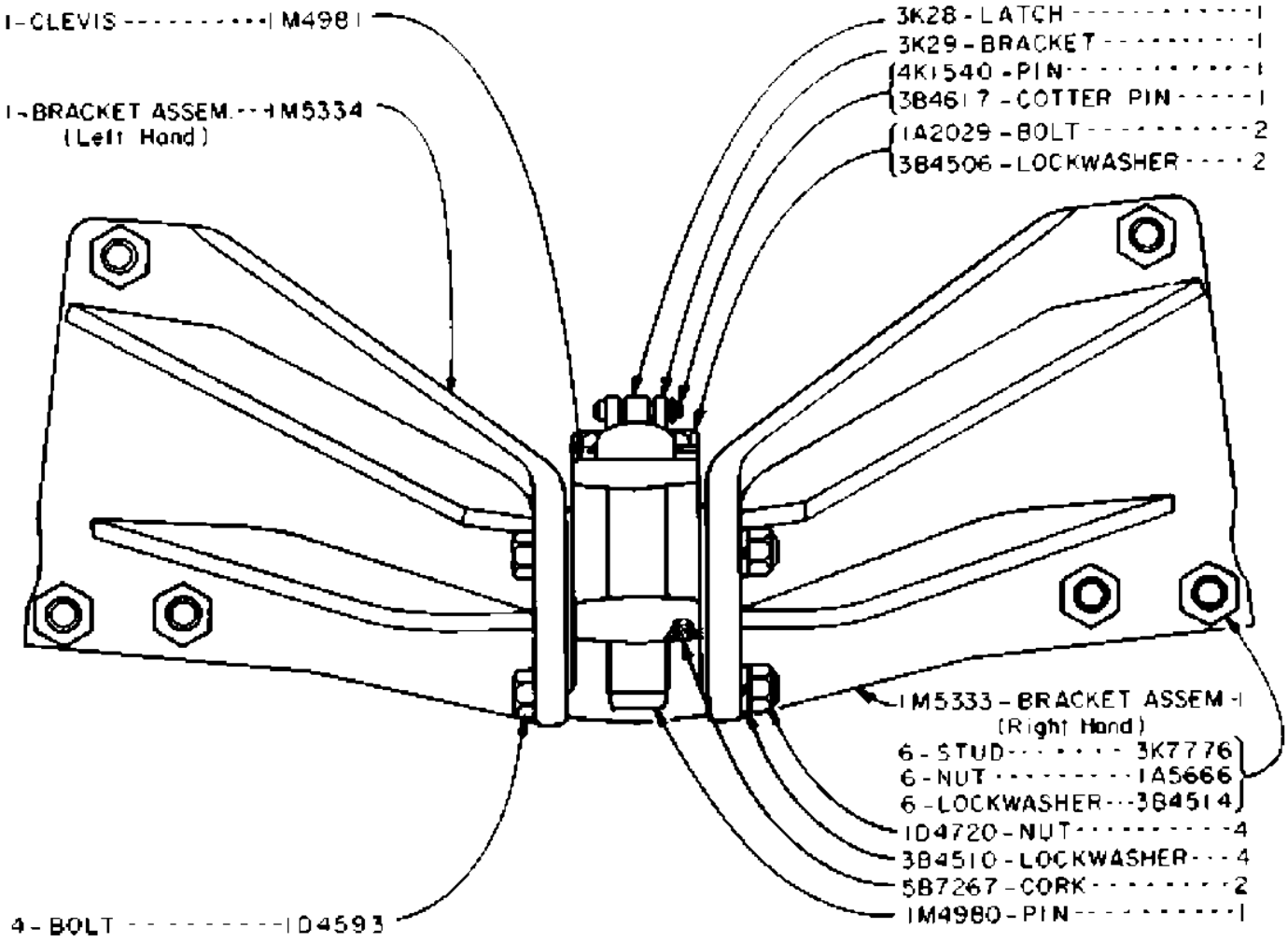

GRAPHIC #1

j5329e

9H5806 FIXED DRAWBAR GROUP--Type 2

AN ATTACHMENT

Key:

SMCS

NOTE	REF NO	GRAPHIC REF	PART NUMBER	QTY	PART NAME 1 2 3 4 5 6 (PRODUCT LEVEL)	LINK PAGE
			1M-4981	1	CLEVIS	
			1M-5334	1	BRACKET ASSEM.	
					(Left Hand)	
			1D-4593	4	BOLT	
			3K-0028	1	LATCH	
			3K-0029	1	BRACKET	
			4K-1540	1	PIN	
			3B-4617	1	COTTER PIN	
			1A-2029	2	BOLT	
			3B-4506	2	LOCKWASHER	
			1M-5333	1	BRACKET ASSEM	
					(Right Hand)	
			4D-7259	6	STUD	
			2J-3505	6	NUT	
			3B-4514	6	LOCKWASHER	
			1D-4720	4	NUT	
			3B-4510	4	LOCKWASHER	
			5B-7267	2	CORK	
			1M-4980	1	PIN	

9H5806 FIXED DRAWBAR GROUP--Type 2

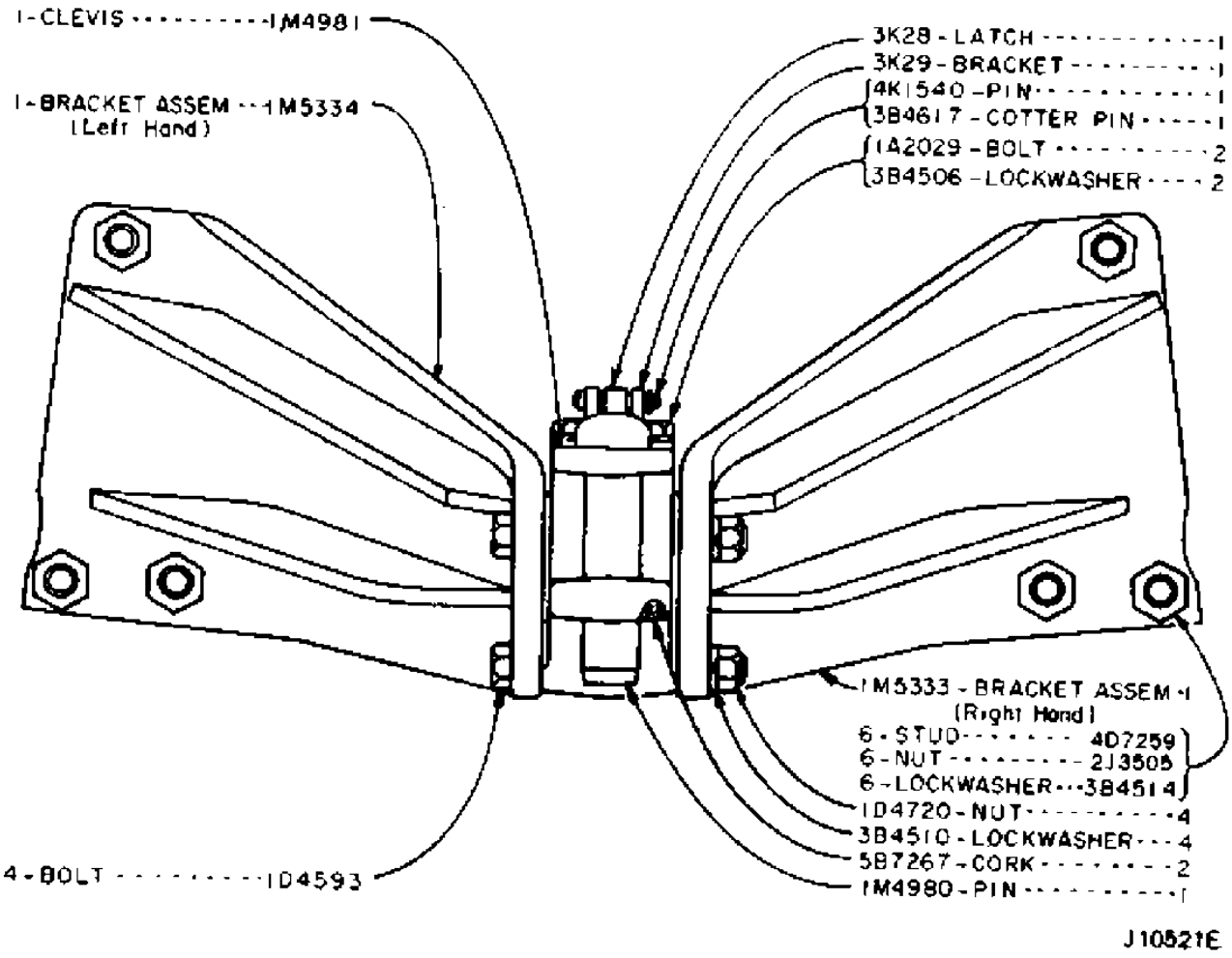

GRAPHIC #1 j10521e

HOOD AND DASH (3Y865 N/S)

Effective with Serial No. 65J1474~65J1590

Key:

SMCS

NOTE	REF NO	GRAPHIC REF	PART NUMBER	QTY	PART NAME 1 2 3 4 5 6 (PRODUCT LEVEL)	LINK PAGE
	1		5A-9465	1	COVER	
	2		6K-4926	1	PLATE ASSEM.	
			9F-6445	2	NUT (Weld)	
	3		4L-6454	4	BOLT	
	4		3B-4506	25	LOCKWASHER	
	5		4B-4278	21	WASHER	
	6		0S-0509	4	BOLT	
	7		1D-4717	6	NUT	
	8		0S-1594	7	BOLT	
	9		6K-3108	1	COVER	
	10		9K-3194	1	HOOD ASSEM.	
			9F-2978	1	NUT (Weld)	
	11		8H-1319	2	RING	
	12		9K-2325	1	FASTENER ASSEM. (R.H.)	
			0T-0537	1	FASTENER ASSEM.	
	13		4B-4312	3	RIVET	
	14		9K-2327	1	BRACKET (R.H.)	
	15		9K-2326	1	FASTENER ASSEM. (L.H.)	
			0T-0537	1	FASTENER ASSEM.	
	16		4B-4312	3	RIVET	
	17		9K-2328	1	BRACKET (L.H.)	
	18		0T-0102	10	BOLT	
	19		9K-4716	1	HOOD ASSEM.	
	20		4B-4440	4	RIVET	
	21		9K-4725	1	SHEET	
			9K-4726	2	PLATE	
	22		9F-2978	4	NUT (Weld)	
	23		0L-1351	4	BOLT	
	24		5A-6103	1	PANEL (R.H.)	
			5A-6104	1	PANEL (L.H.)	
	25		0S-1621	4	BOLT	
			3B-4508	4	LOCKWASHER	
			4B-4280	4	WASHER	
	26		2M-4004	1	BUTTON	
	27		2M-4009	3	BUTTON (20mm Out Side Dial)	
	28		6H-8351	4	LOCKWASHER	
	29		6K-5223	1	DASH ASSEM.	
	30		4K-8735	1	HASP	
	31		4F-8686	2	BEARING	
	32		9F-6445	8	NUT (Weld)	
	33		9F-2978	16	NUT (Weld)	
	34		4K-9230	2	NUT (Weld)	
	35		5B-1983	1	BOSS	

HOOD AND DASH (3Y865 N/S)

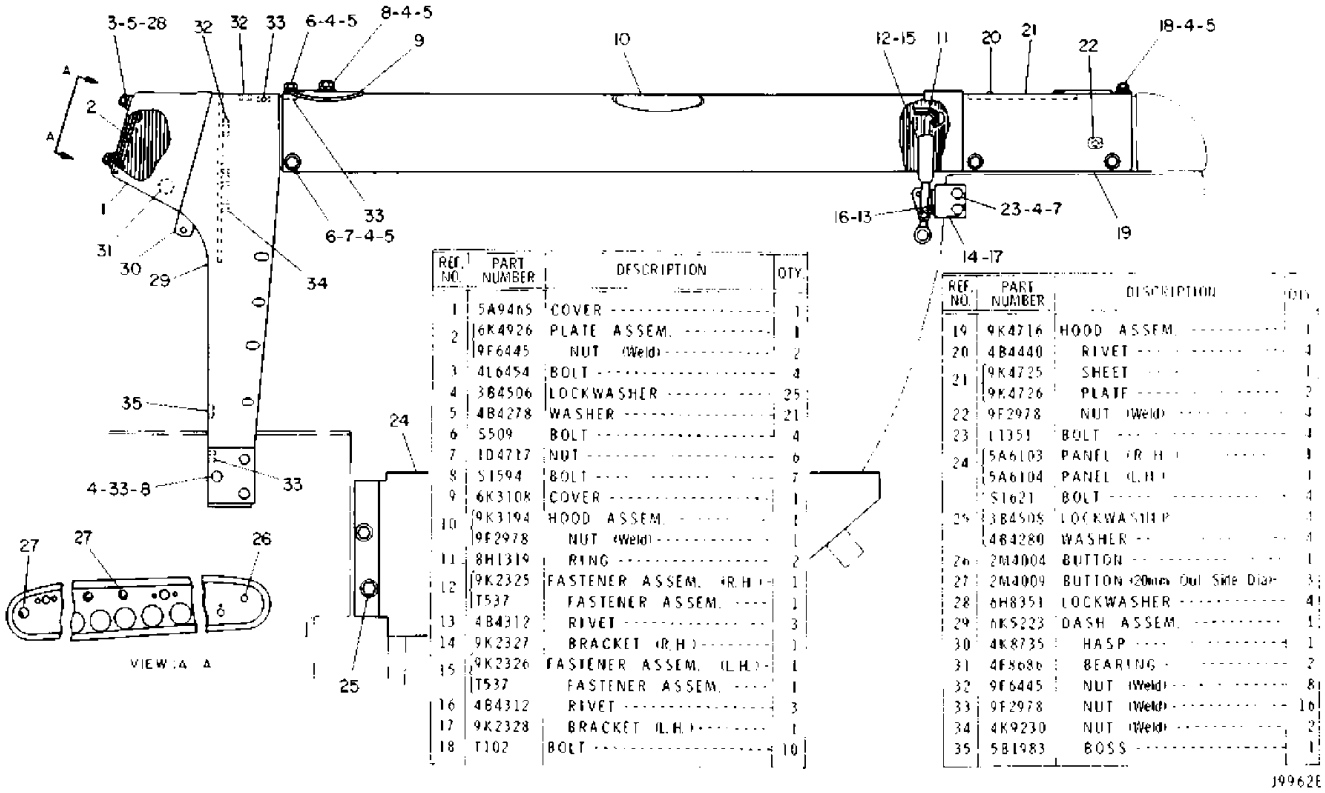

REF. NO.	PART NUMBER	DESCRIPTION	QTY.
1	5A9465	COVER	1
2	6K4926	PLATE ASSEM.	1
	9F6445	NUT (Weld)	2
3	4L6454	BOLT	4
4	3B4506	LOCKWASHER	25
5	4B4278	WASHER	21
6	S509	BOLT	4
7	1D4717	NUT	6
8	S1594	BOLT	7
9	6K3108	COVER	1
10	9K3194	HOOD ASSEM.	1
	9F2978	NUT (Weld)	1
11	8H1319	RING	2
12	9K2325	FASTENER ASSEM. (R.H.)	1
	T537	FASTENER ASSEM.	1
13	4B4312	RIVET	3
14	9K2327	BRACKET (R.H.)	1
15	9K2326	FASTENER ASSEM. (L.H.)	1
	T537	FASTENER ASSEM.	1
16	4B4312	RIVET	3
17	9K2328	BRACKET (L.H.)	1
18	T102	BOLT	10

REF. NO.	PART NUMBER	DESCRIPTION	QTY.
19	9K4716	HOOD ASSEM.	1
20	4B4440	RIVET	4
21	9K4725	SHEET	1
	9K4726	PLATE	2
22	9F2978	NUT (Weld)	4
23	L1351	BOLT	4
24	5A6103	PANEL (R.H.)	1
	5A6104	PANEL (L.H.)	1
	S1621	BOLT	4
25	3B4505	LOCKWASHER	1
	4B4280	WASHER	4
26	2M4004	BUTTON	1
27	2M4009	BUTTON (20mm Out Side Dia.)	3
28	6H8351	LOCKWASHER	4
29	6K5223	DASH ASSEM.	1
30	4K8735	HASP	1
31	4F868b	BEARING	2
32	9F6445	NUT (Weld)	8
33	9F2978	NUT (Weld)	10
34	4K9230	NUT (Weld)	2
35	5B1983	BOSS	1

J9962E

GRAPHIC #1

j9962e

HOOD AND DASH (3Y2085 N/S)

Effective with Serial No. 65J1591~65J1823

Key:

SMCS

NOTE	REF NO	GRAPHIC REF	PART NUMBER	QTY	PART NAME 1 2 3 4 5 6 (PRODUCT LEVEL)	LINK PAGE
	1		5A-9465	1	COVER	
	2		1V-1677	1	PLATE ASSEM.	
			9F-6445	2	NUT (Weld)	
	3		4L-6454	4	BOLT	
	4		3B-4506	25	LOCKWASHER	
	5		4B-4278	21	WASHER	
	6		0S-0509	4	BOLT	
	7		1D-4717	6	NUT	
	8		0S-1594	7	BOLT	
	9		6K-3108	1	COVER	
	10		9K-3194	1	HOOD ASSEM.	
			9F-2978	1	NUT (Weld)	
	11		8H-1319	2	RING	
	12		9K-2325	1	FASTENER ASSEM. (R.H.)	
			0T-0537	1	FASTENER ASSEM.	
	13		4B-4312	3	RIVET	
	14		9K-2327	1	BRACKET (R.H.)	
	15		9K-2326	1	FASTENER ASSEM. (L.H.)	
			0T-0537	1	FASTENER ASSEM.	
	16		4B-4312	3	RIVET	
	17		9K-2328	1	BRACKET (L.H.)	
	18		0T-0102	10	BOLT	
	19		9K-4716	1	HOOD ASSEM.	
	20		4B-4440	4	RIVET	
	21		9K-4725	1	SHEET	
			9K-4726	2	PLATE	
	22		9F-2978	4	NUT (Weld)	
	23		0L-1351	4	BOLT	
	24		5A-6103	1	PANEL (R.H.)	
			5A-6104	1	PANEL (L.H.)	
	25		0S-1621	4	BOLT	
			3B-4508	4	LOCKWASHER	
			4B-4280	4	WASHER	
	26		2M-4004	1	BUTTON	
	27		2M-4009	3	BUTTON (20mm Out Side Dial	
	28		6H-8351	4	LOCKWASHER	
	29		1V-1740	1	DASH ASSEM.	
	30		4K-8735	1	HASP	
	32		9F-6445	8	NUT (Weld)	
	33		9F-2978	20	NUT (Weld)	
	35		5B-1983	1	BOSS	

HOOD AND DASH (3Y2085 N/S)

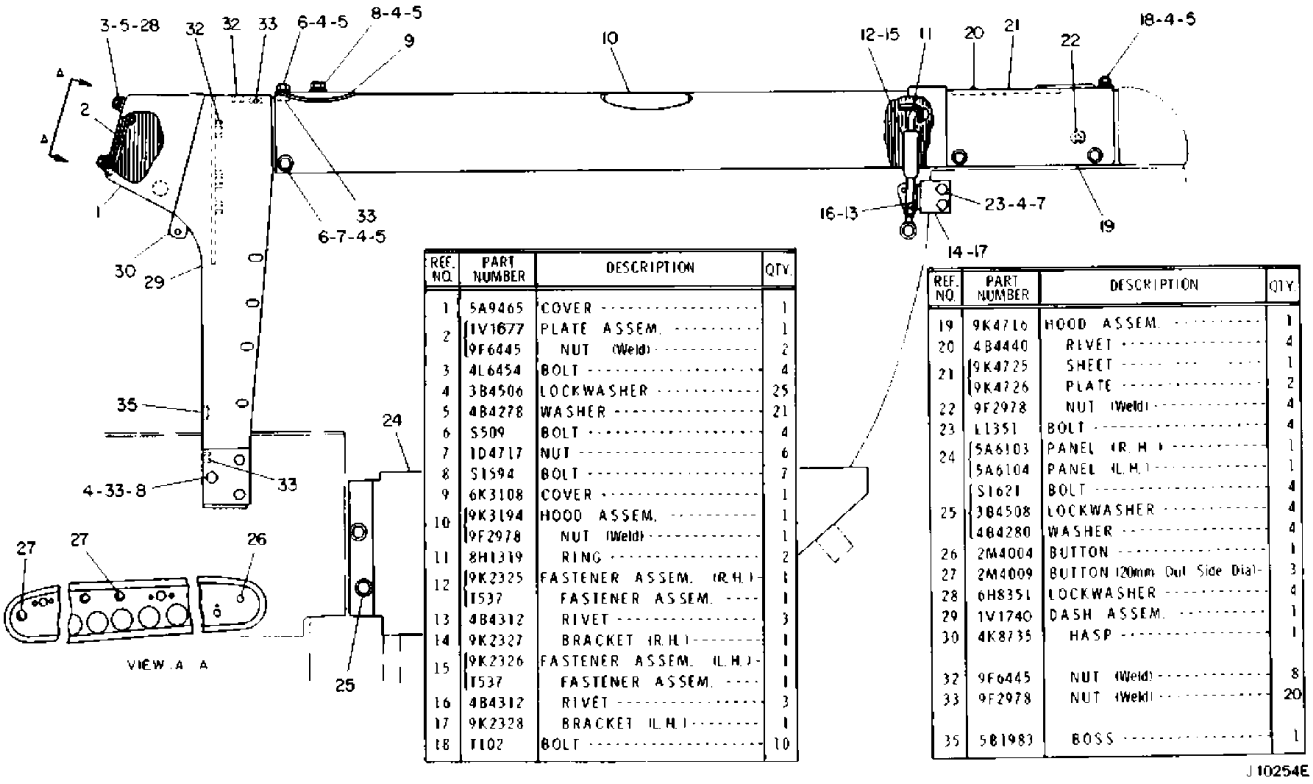

REF. NO.	PART NUMBER	DESCRIPTION	QTY.
1	5A9465	COVER	1
2	1V1677	PLATE ASSEM.	1
	9F6445	NUT (Weld)	2
3	4L6454	BOLT	4
4	3B4506	LOCKWASHER	25
5	4B4278	WASHER	21
6	S509	BOLT	4
7	1D4717	NUT	6
8	S1594	BOLT	7
9	6K3108	COVER	1
10	9K3194	HOOD ASSEM.	1
	9F2978	NUT (Weld)	1
11	8H1319	RING	2
12	9K2325	FASTENER ASSEM. (R.H.)	1
	T537	FASTENER ASSEM.	1
13	4B4312	RIVET	3
14	9K2327	BRACKET (R.H.)	1
15	9K2326	FASTENER ASSEM. (L.H.)	1
	T537	FASTENER ASSEM.	1
16	4B4312	RIVET	3
17	9K2328	BRACKET (L.H.)	1
18	T102	BOLT	10

REF. NO.	PART NUMBER	DESCRIPTION	QTY.
19	9K4716	HOOD ASSEM.	1
20	4B4440	RIVET	4
21	9K4725	SHEET	1
	9K4726	PLATE	2
22	9F2978	NUT (Weld)	4
23	L1351	BOLT	4
24	5A6103	PANEL (R.H.)	1
	5A6104	PANEL (L.H.)	1
25	S1621	BOLT	4
	3B4508	LOCKWASHER	4
	4B4280	WASHER	4
26	2M4004	BUTTON	1
27	2M4009	BUTTON (20mm Dia. Side Dia.)	3
28	6H8351	LOCKWASHER	4
29	1V1740	DASH ASSEM.	1
30	4K8735	HASP	1
32	9F6445	NUT (Weld)	8
33	9F2978	NUT (Weld)	20
35	5B1983	BOSS	1

GRAPHIC #1

j10254e

HOOD AND DASH (3Y2085 N/S)

Effective with Serial No. 65J1824~65J1990

Key: C - INDICATES CHANGE

SMCS

NOTE	REF NO	GRAPHIC REF	PART NUMBER	QTY	PART NAME 1 2 3 4 5 6 (PRODUCT LEVEL)	LINK PAGE
	1		5A-9465	1	COVER	
	2		1V-1677	1	PLATE ASSEM.	
			9F-6445	2	NUT (Weld)	
	3		4L-6454	4	BOLT	
C	4		3B-4506	26	LOCKWASHER	
C	5		4B-4278	22	WASHER	
C	6		0S-0509	5	BOLT	
	7		1D-4717	6	NUT	
	8		0S-1594	7	BOLT	
	9		6K-3108	1	COVER	
C			2V-2585	1	PLATE ASSEM.	
C	10		2V-2588	1	HOOD ASSEM.	
			1V-8638	1	NUT (Weld)	
			9F-2978	1	NUT (Weld)	
	11		8H-1319	2	RING	
	12		9K-2325	1	FASTENER ASSEM. (R.H.)	
			0T-0537	1	FASTENER ASSEM.	
	13		4B-4312	3	RIVET	
	14		9K-2327	1	BRACKET (R.H.)	
	15		9K-2326	1	FASTENER ASSEM. (L.H.)	
			0T-0537	1	FASTENER ASSEM.	
	16		4B-4312	3	RIVET	
	17		9K-2328	1	BRACKET (L.H.)	
	18		0T-0102	10	BOLT	
	19		9K-4716	1	HOOD ASSEM.	
C	20		7B-5054	4	RIVET	
	21		9K-4725	1	SHEET	
			9K-4726	2	PLATE	
	23		0L-1351	4	BOLT	
	24		5A-6103	1	PANEL (R.H.)	
			5A-6104	1	PANEL (L.H.)	
	25		0S-1621	4	BOLT	
			3B-4508	4	LOCKWASHER	
			4B-4280	4	WASHER	
	26		2M-4004	1	BUTTON	
C	27		2M-4009	2	BUTTON (20mm Outside Dial	
	28		6H-8351	4	LOCKWASHER	
	29		1V-1740	1	DASH ASSEM.	
	30		4K-8735	1	HASP	
	32		9F-6445	8	NUT (Weld)	
	33		9F-2978	20	NUT (Weld)	
	35		5B-1983	1	BOSS	

HOOD AND DASH (3Y2085 N/S)

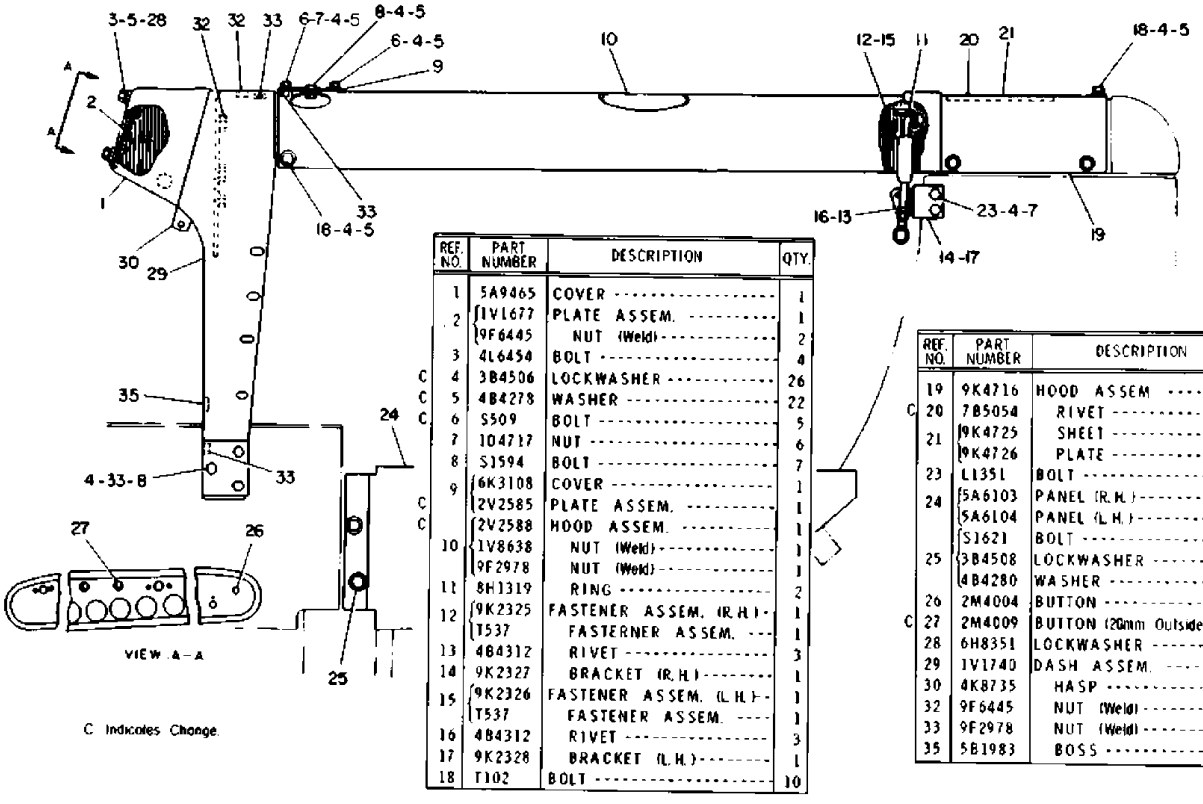

C Indicates Change.

REF. NO.	PART NUMBER	DESCRIPTION	QTY.
1	5A9465	COVER	1
2	1V1677	PLATE ASSEM.	1
	9F6445	NUT (Weld)	2
3	4L6454	BOLT	4
C 4	3B4506	LOCKWASHER	26
C 5	4B4278	WASHER	22
C 6	S509	BOLT	5
7	104717	NUT	6
8	S1594	BOLT	7
9	6K3108	COVER	1
C	2V2585	PLATE ASSEM.	1
C	2V2588	HOOD ASSEM.	1
10	1V8638	NUT (Weld)	1
	9F2978	NUT (Weld)	1
11	8H1319	RING	2
12	9K2325	FASTENER ASSEM. (R.H.)	1
	T537	FASTERNER ASSEM.	1
13	4B4312	RIVET	3
14	9K2327	BRACKET (R.H.)	1
15	9K2326	FASTENER ASSEM. (L.H.)	1
	T537	FASTENER ASSEM.	1
16	4B4312	RIVET	3
17	9K2328	BRACKET (L.H.)	1
18	T102	BOLT	10

REF. NO.	PART NUMBER	DESCRIPTION	QTY.
19	9K4716	HOOD ASSEM	1
C 20	7B5054	RIVET	4
21	9K4725	SHEET	1
	9K4726	PLATE	2
23	L1351	BOLT	4
24	5A6103	PANEL (R.H.)	1
	5A6104	PANEL (L.H.)	1
	S1621	BOLT	4
25	3B4508	LOCKWASHER	4
	4B4280	WASHER	4
26	2M4004	BUTTON	1
C 27	2M4009	BUTTON (20mm Outside Dia.)	2
28	6H8351	LOCKWASHER	4
29	1V1740	DASH ASSEM.	1
30	4K8735	HASP	1
32	9F6445	NUT (Weld)	8
33	9F2978	NUT (Weld)	20
35	5B1983	BOSS	1

J11872E

GRAPHIC #1

j11872e

HOOD AND DASH (3Y2085 N/S)

Effective with Serial No. 65J1991-UP

Key: C - INDICATES CHANGE

SMCS

NOTE	REF NO	GRAPHIC REF	PART NUMBER	QTY	PART NAME 1 2 3 4 5 6 (PRODUCT LEVEL)	LINK PAGE
	1		5A-9465	1	COVER	
	2		1V-1677	1	PLATE ASSEM.	
			9F-6445	2	NUT (Weld)	
C	3		4B-1330	4	BOLT	
	4		3B-4506	26	LOCKWASHER	
C	5		4B-4278	18	WASHER	
	6		0S-0509	5	BOLT	
	7		1D-4717	6	NUT	
	8		0S-1594	7	BOLT	
	9		6K-3108	1	COVER	
			2V-2585	1	PLATE ASSEM.	
	10		2V-2588	1	HOOD ASSEM.	
			1V-8638	1	NUT (Weld)	
			9F-2978	1	NUT (Weld)	
	11		8H-1319	2	RING	
	12		9K-2325	1	FASTENER ASSEM. (R.H.)	
			0T-0537	1	FASTENER ASSEM.	
	13		4B-4312	3	RIVET	
	14		9K-2327	1	BRACKET (R.H.)	
	15		9K-2326	1	FASTENER ASSEM. (L.H.)	
			0T-0537	1	FASTENER ASSEM.	
	16		4B-4312	3	RIVET	
	17		9K-2328	1	BRACKET (L.H.)	
	18		0T-0102	10	BOLT	
	19		9K-4716	1	HOOD ASSEM.	
	20		7B-5054	4	RIVET	
	21		9K-4725	1	SHEET	
			9K-4726	2	PLATE	
C	22		6J-0450	4	SHIM	
	23		0L-1351	4	BOLT	
	24		5A-6103	1	PANEL (R.H.)	
			5A-6104	1	PANEL (L.H.)	
C	25		0S-1621	3	BOLT	
	26		3B-4508	4	LOCKWASHER	
			4B-4280	4	WASHER	
	27		2M-4004	1	BUTTON	
	28		2M-4009	2	BUTTON (20mm Outside Dia)	
C	29		4K-3533	4	WASHER	
	30		1V-1740	1	DASH ASSEM.	
	31		4K-8735	1	HASP	
	32		9F-6445	8	NUT (Weld)	
	33		9F-2978	20	NUT (Weld)	
	34		5B-1983	1	BOSS	
C	35		0S-1585	1	BOLT	

HOOD AND DASH (3Y2085 N/S)

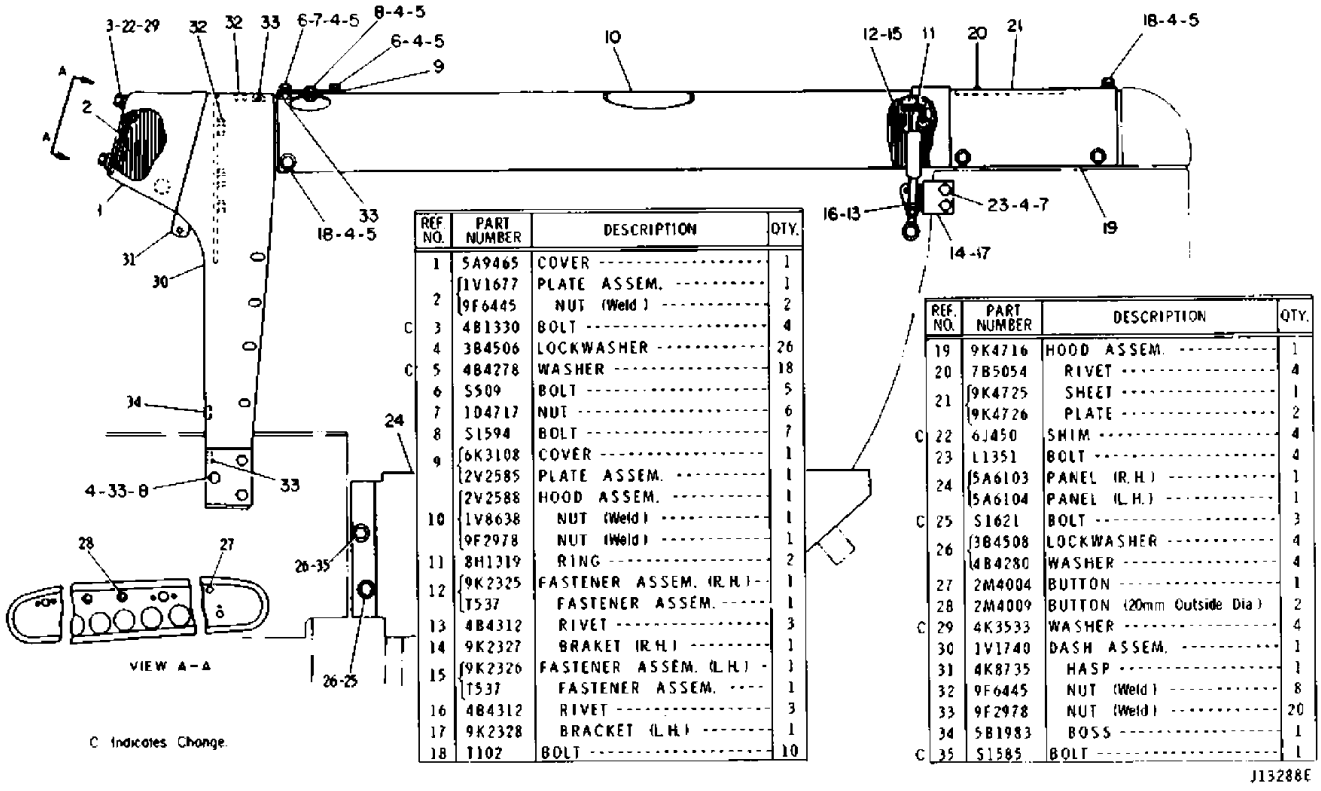

REF NO.	PART NUMBER	DESCRIPTION	QTY.
1	5A9465	COVER	1
2	1V1677	PLATE ASSEM.	1
	9F6445	NUT (Weld)	2
C 3	4B1330	BOLT	4
4	3B4506	LOCKWASHER	26
C 5	4B4278	WASHER	18
6	S509	BOLT	5
7	1D4717	NUT	6
8	S1594	BOLT	7
9	6K3108	COVER	1
	2V2585	PLATE ASSEM.	1
	2V2588	HOOD ASSEM.	1
10	1V8638	NUT (Weld)	1
	9F2978	NUT (Weld)	1
11	8H1319	RING	2
12	9K2325	FASTENER ASSEM. (R.H.)	1
	T537	FASTENER ASSEM.	1
13	4B4312	RIVET	3
14	9K2327	BRAKET (R.H.)	1
15	9K2326	FASTENER ASSEM. (L.H.)	1
	T537	FASTENER ASSEM.	1
16	4B4312	RIVET	3
17	9K2328	BRACKET (L.H.)	1
18	T102	BOLT	10

REF NO.	PART NUMBER	DESCRIPTION	QTY.
19	9K4716	HOOD ASSEM.	1
20	7B5054	RIVET	4
21	9K4725	SHEET	1
	9K4726	PLATE	2
C 22	6J450	SHIM	4
23	L1351	BOLT	4
24	5A6103	PANEL (R.H.)	1
	5A6104	PANEL (L.H.)	1
C 25	S1621	BOLT	3
26	3B4508	LOCKWASHER	4
	4B4280	WASHER	4
27	2M4004	BUTTON	1
28	2M4009	BUTTON (20mm Outside Dia.)	2
C 29	4K3533	WASHER	4
30	1V1740	DASH ASSEM.	1
31	4K8735	HASP	1
32	9F6445	NUT (Weld)	8
33	9F2978	NUT (Weld)	20
34	5B1983	BOSS	1
C 35	S1585	BOLT	1

C Indicates Change.

J13288E

GRAPHIC #1

j13288e

3Y4170 ENGINE SIDE GUARD GROUP

AN ATTACHMENT

Key:

SMCS

NOTE	REF NO	GRAPHIC REF	PART NUMBER	QTY	PART NAME 1 2 3 4 5 6 (PRODUCT LEVEL)	LINK PAGE
	1		3Y-4125	12	BRACKET ASSEM.	
	2		1F-0748	1	NUT (Weld)	
	3		0S-1621	12	BOLT	
			3B-4508	12	LOCKWASHER	
			4B-4280	12	WASHER	
	4		3Y-4171	1	GUARD ASSEM. (R.H.)	
			3Y-4172	1	GUARD ASSEM. (L.H.)	

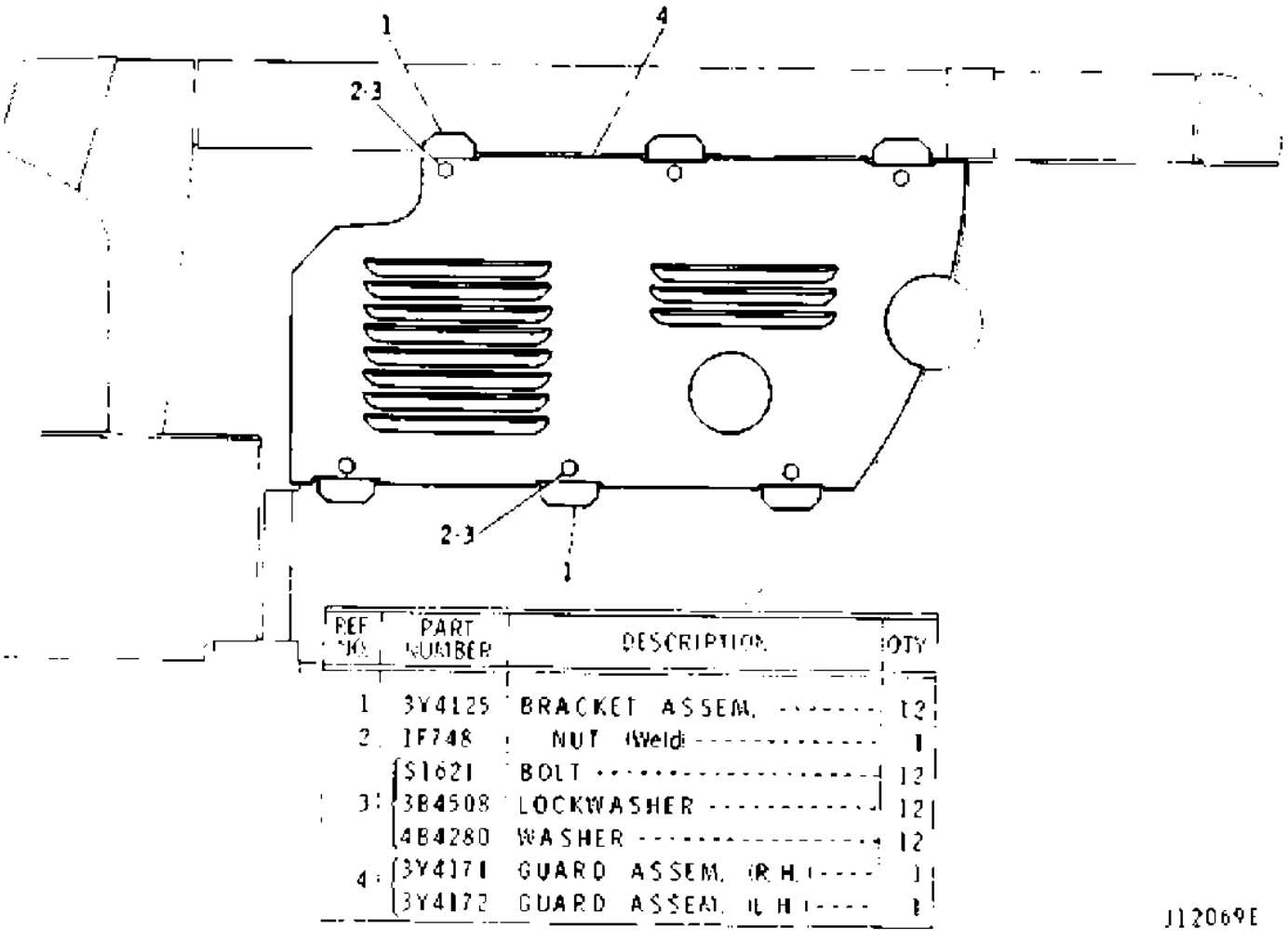

GRAPHIC #1

j12069e

4K6914 BRUSH GUARD GROUP

AN ATTACHMENT

Key:

SMCS

NOTE	REF NO	GRAPHIC REF	PART NUMBER	QTY	PART NAME 1 2 3 4 5 6 (PRODUCT LEVEL)	LINK PAGE
			6H-1717	2	BOLT	
			1F-0748	2	NUT	
					(1 IN EACH GUARD ASSEM. 4K7161 AND 4K7162)	
			3B-4508	2	LOCKWASHER	
			4K-7161	1	GUARD ASSEM.	
					(RIGHT HAND)	
			4K-7162	1	GUARD ASSEM.	
					(LEFT HAND)	

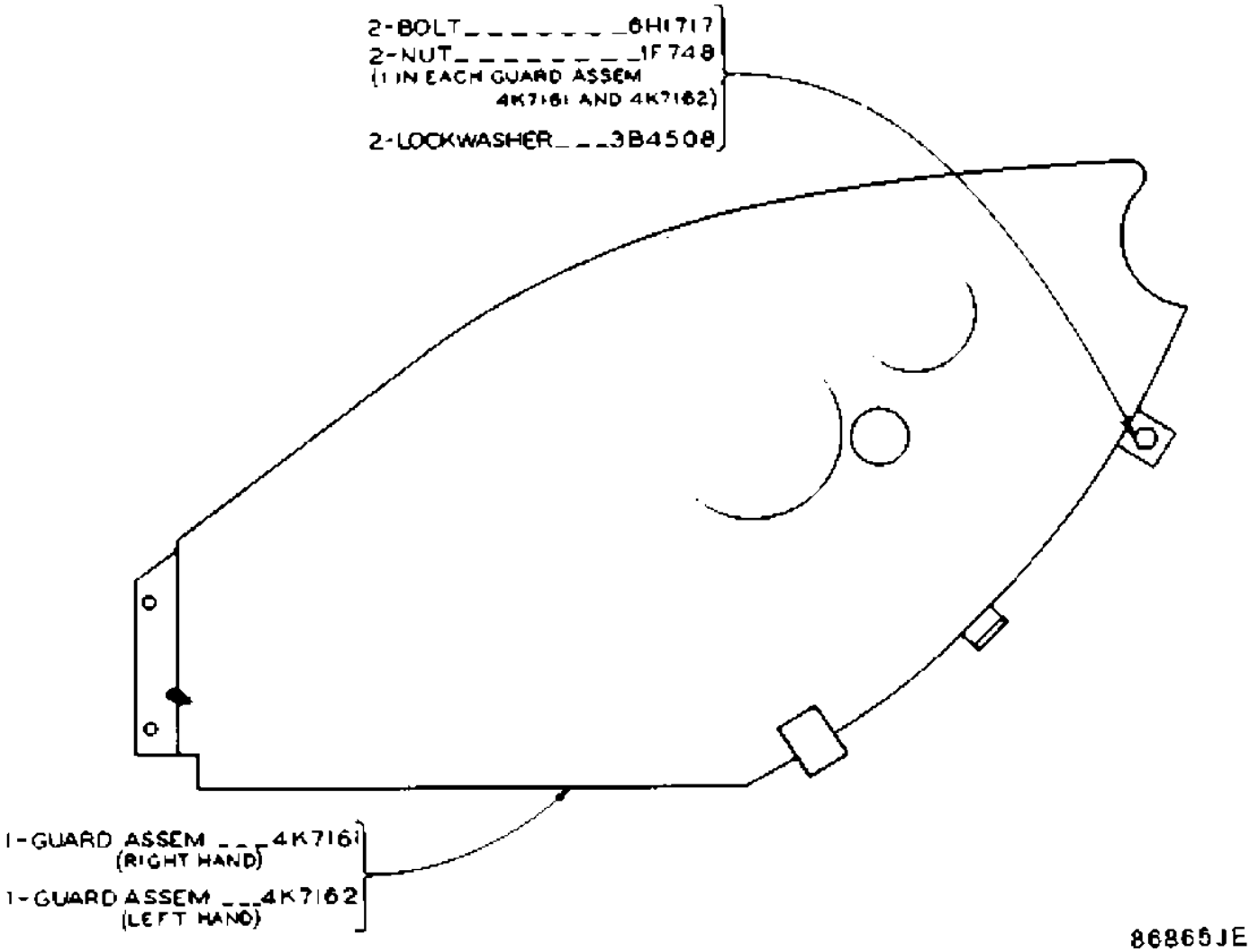

GRAPHIC #1

c927460

1V1921 VANDALISM GUARD GROUP--Dash

AN ATTACHMENT

Key: H - NOT PART OF VANDALISM GUARD GR

SMCS

NOTE	REF NO	GRAPHIC REF	PART NUMBER	QTY	PART NAME 1 2 3 4 5 6 (PRODUCT LEVEL)	LINK PAGE
	1		1V-1916	1	GUARD ASSEM.	
	2		4K-2089	6	RIVET	
	3		9M-5733	4	RIVET	
	4		7K-4199	1	THUMBSCREW	
	5		NOTSERV	1	PADLOCK	
H			8M-0439	1	KEY	
	6		2R-2376	1	WASHER	

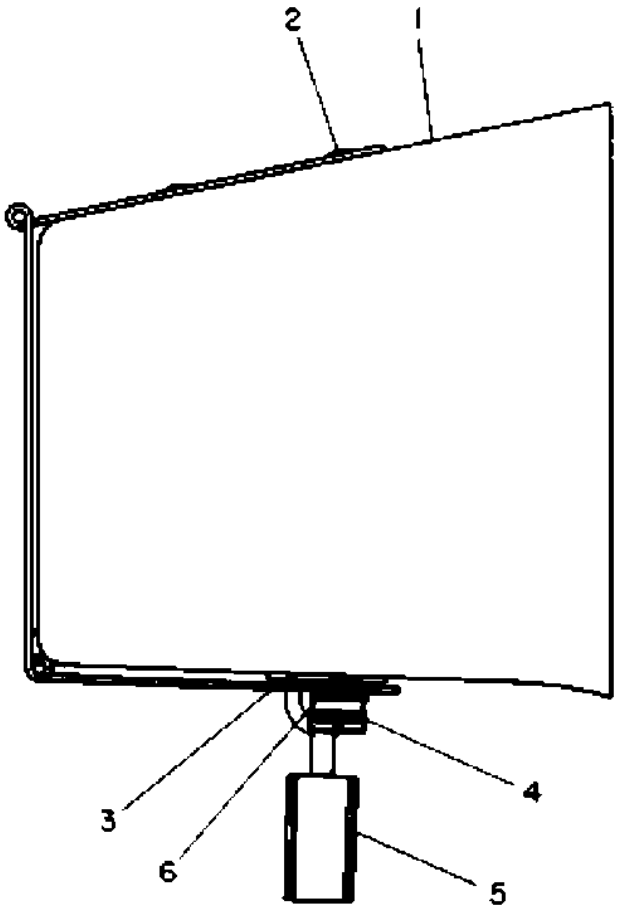

▲Not part of Vandalism Guard Group 1V1921

	REF. NO.	PART NUMBER	DESCRIPTION	QTY.
	1	1V1916	GUARD ASSEM.	1
	2	4K2089	RIVET	6
	3	9M5733	RIVET	4
	4	7K4199	THUMBSCREW	1
	5	Not Serv.	PADLOCK	1
▲		8M439	KEY	1
	6	2R2376	WASHER	1

J9852E

GRAPHIC #1

j9852e

RADIATOR GUARD (9K1409 N/S)

Effective with Serial No. 65J1474-UP

Key:

SMCS

NOTE	REF NO	GRAPHIC REF	PART NUMBER	QTY	PART NAME 1 2 3 4 5 6 (PRODUCT LEVEL)	LINK PAGE
	1		9K-2361	1	GUARD ASSEM.	
	2		4K-5338	4	CLIP	
	3		5A-3995	1	BOSS	
	4		2J-3207	2	PIN	
	5		9F-2978	4	NUT (Weld)	
	6		4K-5093	1	CLIP	
	7		1B-4439	2	NUT	
			3B-5301	2	COTTER	
	8		5J-4272	2	LINK ASSEM.	
	9		0S-1591	2	BOLT	
			1D-4717	2	NUT	
	10		3B-4506	2	LOCKWASHER	
	11		9K-9011	1	GUARD	
	12		0S-1621	6	BOLT	
			4B-4280	6	WASHER	
	13		3B-4508	10	LOCKWASHER	
	14		9K-2333	1	GUARD ASSEM.	
	15		6H-1717	4	BOLT	
	16		4B-4043	6	BOLT	
			4B-4281	6	WASHER	
	17		3B-4510	22	LOCKWASHER	
	18		0S-1566	2	BOLT	
	19		6K-2741	1	GUARD ASSEM.	
	20		8S-9092	14	BOLT	
			1D-4720	14	NUT	

RADIATOR GUARD (9K1409 N/S)

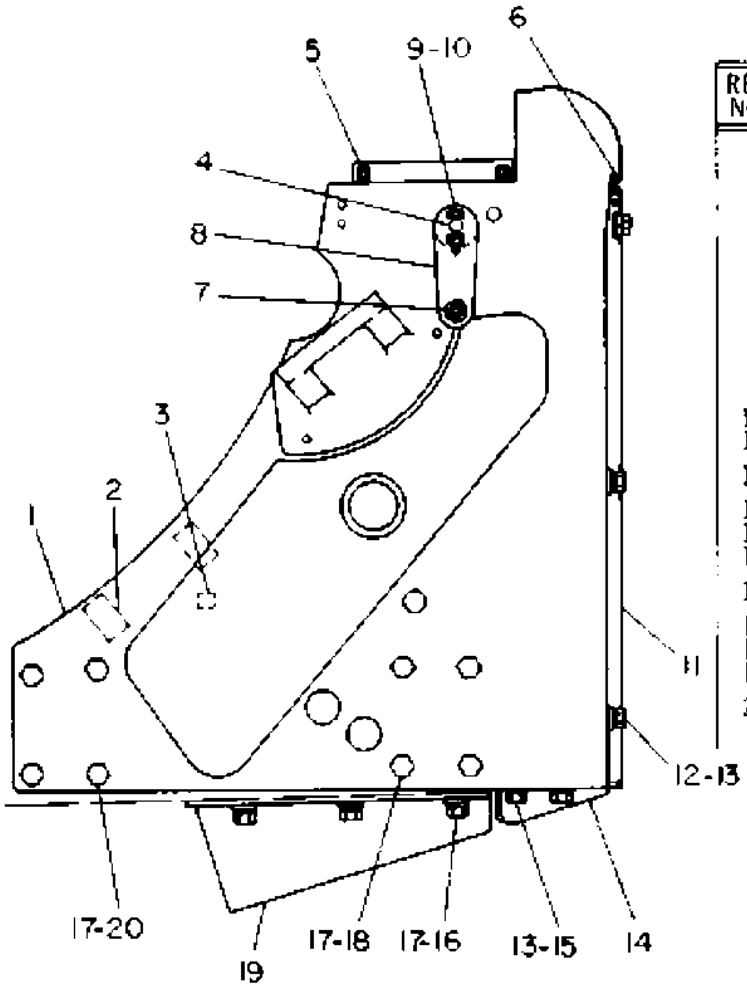

REF. NO.	PART NUMBER	DESCRIPTION	QTY.
1	9K2361	GUARD ASSEM.	1
2	4K5338	CLIP	4
3	5A3995	BOSS	1
4	2J3207	PIN	2
5	9F2978	NUT (Weld)	4
6	4K5093	CLIP	1
7	1B4439	NUT	2
	3B5301	COTTER	2
8	5J4272	LINK ASSEM.	2
9	S1591	BOLT	2
	1D4717	NUT	2
10	3B4506	LOCKWASHER	2
11	9K9011	GUARD	1
12	S1621	BOLT	6
	4B4280	WASHER	6
13	3B4508	LOCKWASHER	10
14	9K2333	GUARD ASSEM.	1
15	6H1717	BOLT	4
	4B4043	BOLT	6
16	4B4281	WASHER	6
17	3B4510	LOCKWASHER	22
18	S1566	BOLT	2
19	6K2741	GUARD ASSEM.	1
20	8S9092	BOLT	14
	1D4720	NUT	14

J9921E

GRAPHIC #1

j9921e

9K2712 RADIATOR GUARD GROUP--Heavy Duty

AN ATTACHMENT

Key:

SMCS

NOTE	REF NO	GRAPHIC REF	PART NUMBER	QTY	PART NAME 1 2 3 4 5 6 (PRODUCT LEVEL)	LINK PAGE
	1		1A-2029	4	BOLT	
			3B-4506	4	LOCKWASHER	
			4B-4278	4	WASHER	
	2		5K-5292	2	BAR ASSEM. (L.H.)	
	3		3K-5499	4	HINGE	
	4		9K-2713	1	GUARD ASSEM.	
	5		5K-5795	4	HINGE	
					(Part of 9K2713 Guard Assem.)	
	6		6K-5291	2	BAR ASSEM. (R.H.)	

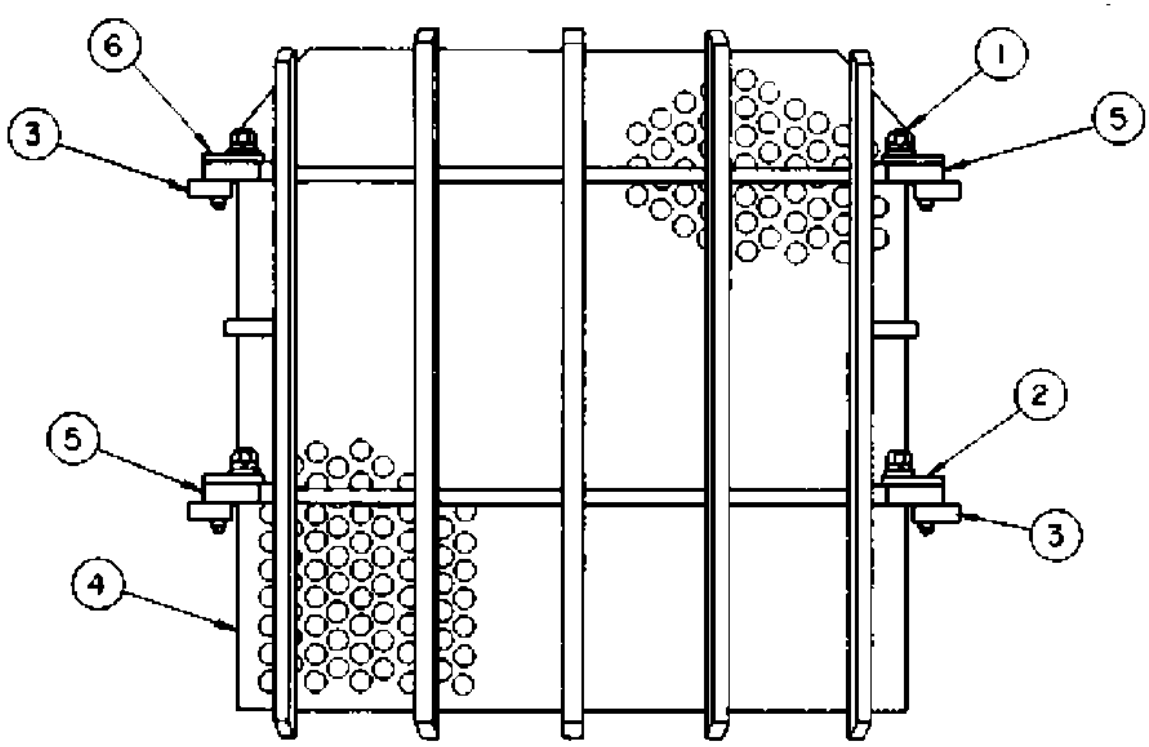

REF. NO.	PART NUMBER	DESCRIPTION	QTY.
1	1A2029	BOLT	4
	3B4506	LOCKWASHER	4
	4B4278	WASHER	4
2	5K5292	BAR ASSEM. (L. H.)	2
3	3K5499	HINGE	4

REF. NO.	PART NUMBER	DESCRIPTION	QTY.
4	9K2713	GUARD ASSEM.	1
5	5K5795	HINGE	4
		(Part of 9K2713 Guard Assem.)	
6	5K5291	BAR ASSEM. (R. H.)	2

J6902E

GRAPHIC #1

j6902e

9K2711 RADIATOR HINGED GUARD GROUP

AN ATTACHMENT

Key:

SMCS

NOTE	REF NO	GRAPHIC REF	PART NUMBER	QTY	PART NAME 1 2 3 4 5 6 (PRODUCT LEVEL)	LINK PAGE
	1		5K-5291	2	BAR ASSEM.	
	2		1A-2029	4	BOLT	
			3B-4506	4	LOCKWASHER	
			4B-4278	4	WASHER	
	3		5K-5292	2	BAR ASSEM.	
	4		3K-5499	4	HINGE	
	5		9K-2714	1	GUARD ASSEM.	
	6		5K-5795	4	HINGE	
					(Part of 9K2714 Guard Assem.)	

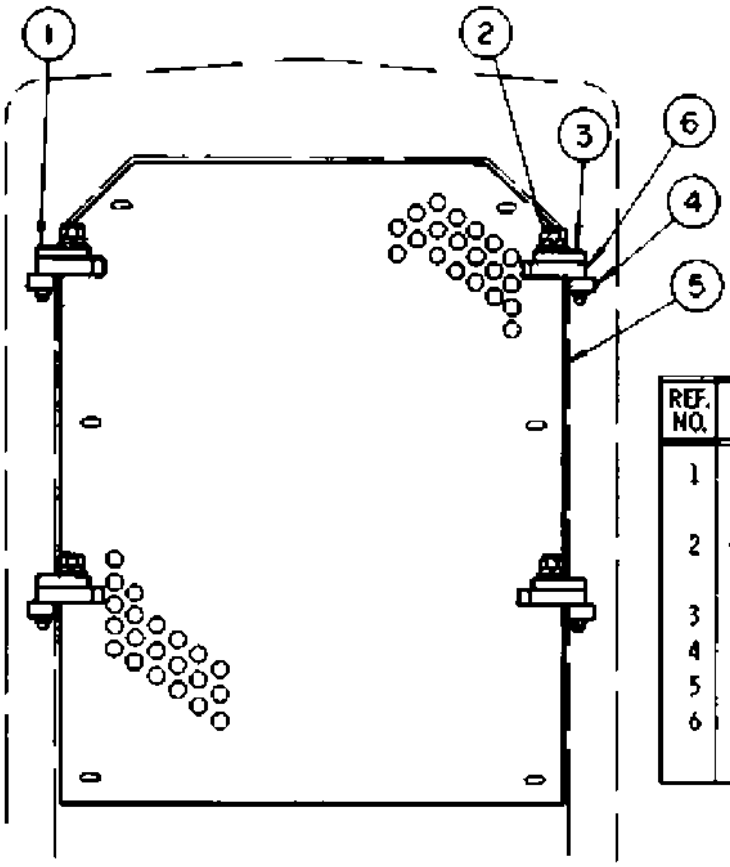

REF. NO.	PART NUMBER	DESCRIPTION	QTY.
1	5K5291	BAR ASSEM.	2
2	1A2029	BOLT	4
	3B4506	LOCKWASHER	4
	4B4278	WASHER	4
3	5K5292	BAR ASSEM.	2
4	3K5499	HINGE	4
5	9K2714	GUARD ASSEM.	1
6	5K5795	HINGE	4
		(Part of 9K2714 Guard Assem.)	

J6901E

GRAPHIC #1

j6901e

6K4438 FRONT PULL HOOK GROUP

AN ATTACHMENT

Key:

SMCS

NOTE	REF NO	GRAPHIC REF	PART NUMBER	QTY	PART NAME 1 2 3 4 5 6 (PRODUCT LEVEL)	LINK PAGE
	1		1B-4331	4	NUT	
	2		3B-4512	4	LOCKWASHER	
	3		2A-1538	4	BOLT	
	4		7K-4519	1	HOOK	

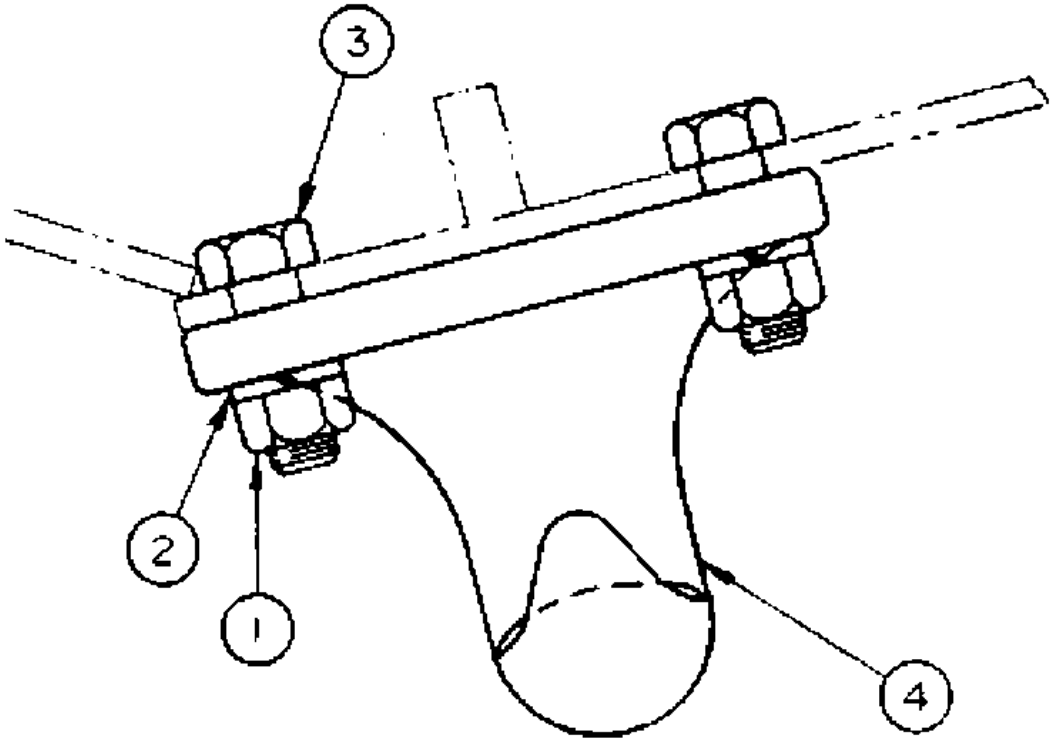

REF NO	PART NUMBER	DESCRIPTION	QTY
1	1B4331	NUT	4
2	3B4512	LOCKWASHER	4
3	2A1538	BOLT	4
4	7K4519	HOOK	1

J5337E

GRAPHIC #1

j5337e

6K4396 FRONT BUMPER GROUP

AN ATTACHMENT

Key:

SMCS

NOTE	REF NO	GRAPHIC REF	PART NUMBER	QTY	PART NAME 1 2 3 4 5 6 (PRODUCT LEVEL)	LINK PAGE
			5K-5595	1	BUMPER ASSEM.	
			4K-8951	2	BAR	
			1A-1135	2	BOLT	
			3B-4510	2	LOCKWASHER	
			1A-8537	6	BOLT (70mm LONG)	
			1D-4720	6	NUT	
			3B-4510	6	LOCKWASHER	

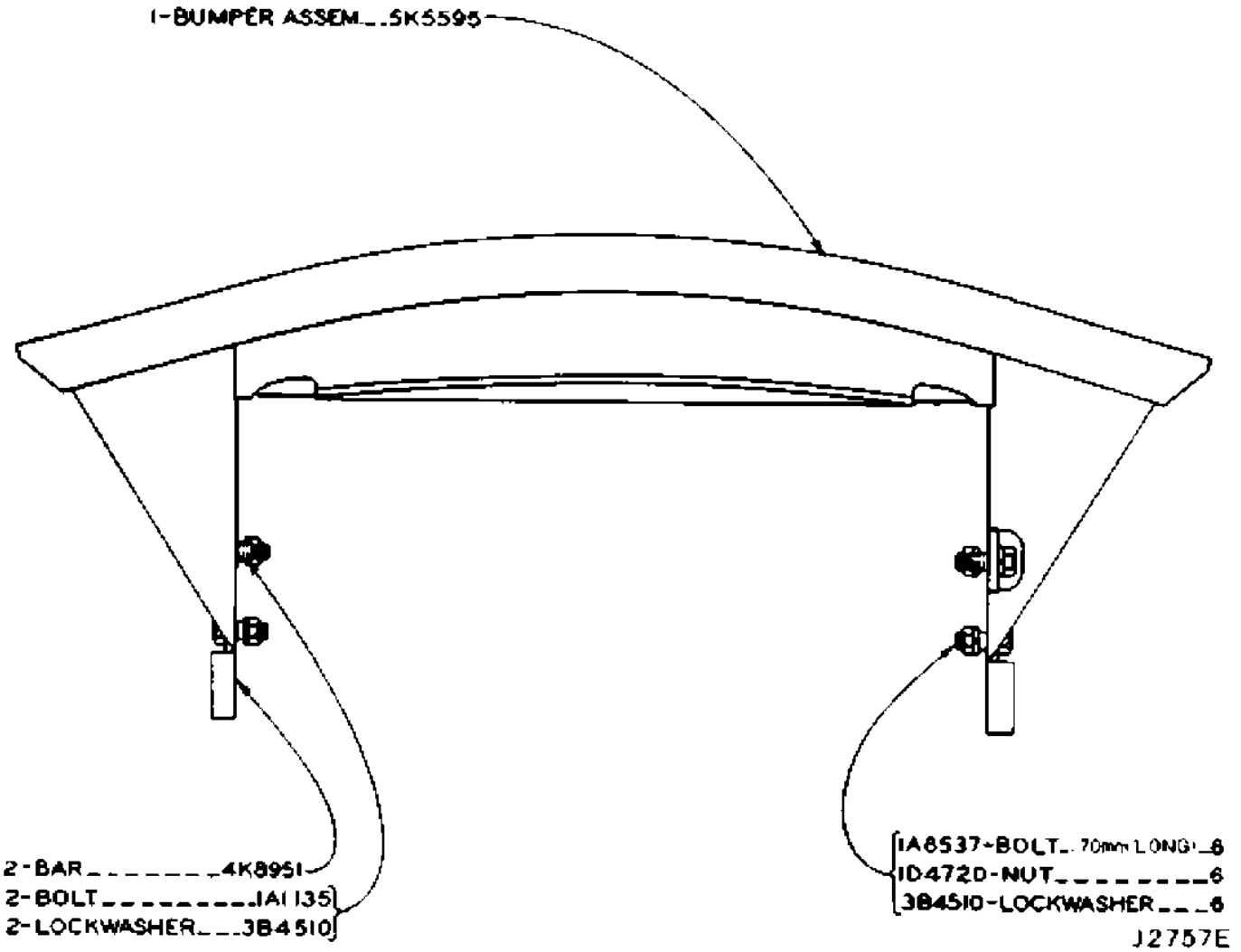

GRAPHIC #1

j2757e

EQUALIZER SPRING (4K5207 N/S)

Effective with Serial No. 65J1474-UP

Key:

SMCS

NOTE	REF NO	GRAPHIC REF	PART NUMBER	QTY	PART NAME 1 2 3 4 5 6 (PRODUCT LEVEL)	LINK PAGE
			1A-8537	8	BOLT	
			1D-4720	8	NUT	
			3B-4510	8	LOCKWASHER	
			4K-8947	1	EQUALIZER SPRING SERVICE GROUP	
			5A-3094	1	FILM(JAPANESE) (WARNING)	
			4K-9072	1	PLATE(ENGLISH) (WARNING)	
					(Part of Equalizer Spring SERVICE GROUP 4K8947	
			4K-7234	2	SLEEVE	
			1D-4621	2	BOLT	
			2H-3790	2	NUT	
			5K-3044	1	SADDLE ASSEM	
			5K-3042	1	PIN	
			4K-5174	2	BEARING	
					(PART OF PLATE ASSEM 4K9271)	
			3F-0957	1	PIN	
					(PART OF PLATE ASSEM 4K9271)	
			4K-9271	1	PLATE ASSEM.	
			4K-6921	2	LINER	
					(PART OF EQUALIZER SPRING SERVICE GROUP 4K8947)	
			4K-9269	1	PLATE	
			4K-4983	2	"U" BOLT	
			5B-0635	4	NUT	
			5H-1504	4	WASHER	
			4K-5089	2	"U" BOLT	
			5B-0635	4	NUT	
			5H-1504	4	WASHER	
			5K-3040	1	WASHER BAR	
			0S-1621	2	BOLT	
			3B-4508	2	LOCKWASHER	
			4K-6366	3	CATCH	
					(PART OF SADDLE ASSEM 5K3044)	

EQUALIZER SPRING (4K5207 N/S)

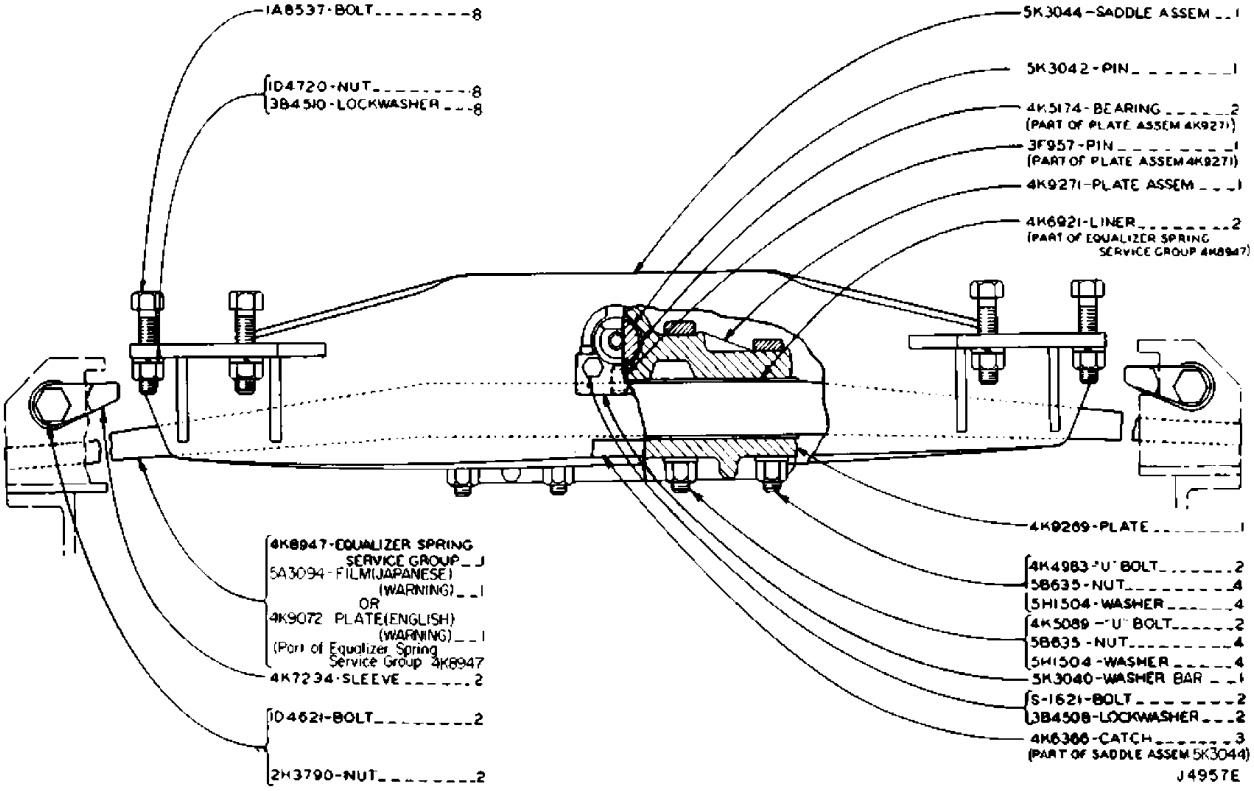

GRAPHIC #1 j4957e

TRACK ROLLER FRAME (4K5210 N/S)

Effective with Serial No. 65J1474~65J2042

Key:

SMCS

NOTE	REF NO	GRAPHIC REF	PART NUMBER	QTY	PART NAME 1 2 3 4 5 6 (PRODUCT LEVEL)	LINK PAGE
			4B-8629	4	BEARING	
			3B-2484	2	DOWEL	
					(1 IN EACH CAP ASSEM. 4K3628)	
			4K-3628	2	CAP ASSEM.	
			5A-3062	1	BRACE (R.H.)	
					(PART OF FRAME ASSEM. 5A9323)	
			5A-3063	1	BRACE (L.H.)	
					(PART OF FRAME ASSEM. 5A9324)	
			7M-4514	4	CORK	
			2B-7559	12	CORK	
			5A-9323	1	FRAME ASSEM. (R.H.)	
			5A-9324	1	FRAME ASSEM. (L.H.)	
			1A-1135	8	BOLT	
			3B-4510	8	LOCKWASHER	
			1A-5405	4	BOLT	
			9H-1024	4	WASHER	
			3B-2483	2	DOWEL	
					(1 IN EACH FRAME ASSEM. 5A9323,5A9324)	
			3B-8487	2	FITTING	
			1D-4586	4	BOLT	
			9H-1024	4	WASHER	
			1A-1460	4	BOLT	
			3B-4508	4	LOCKWASHER	
			1M-9476	2	BRACKET	
			4B-4043	8	BOLT	
			3B-4510	8	LOCKWASHER	
			5K-1723	2	BAR	
			5A-8312	12	ANGLE	
			5A-8386	4	BAR	
					(1/2 IN EACH FRAME ASSEM. 5A9323,5A9324)	
			5K-1904	2	SUPPORT ASSEM.	
					(1 IN EACH FRAME ASSEM 5A9323,5A9324)	
			7K-1294	4	STRIP ASSEM.	
					(2 IN EACH FRAME ASSEM.5A9323,5A9324)	
			7K-1293	4	STRIP	
					(1 IN EACH STRIP ASSEM. 7K1294)	
			2B-7558	34	CORK	

TRACK ROLLER FRAME (4K5210 N/S)

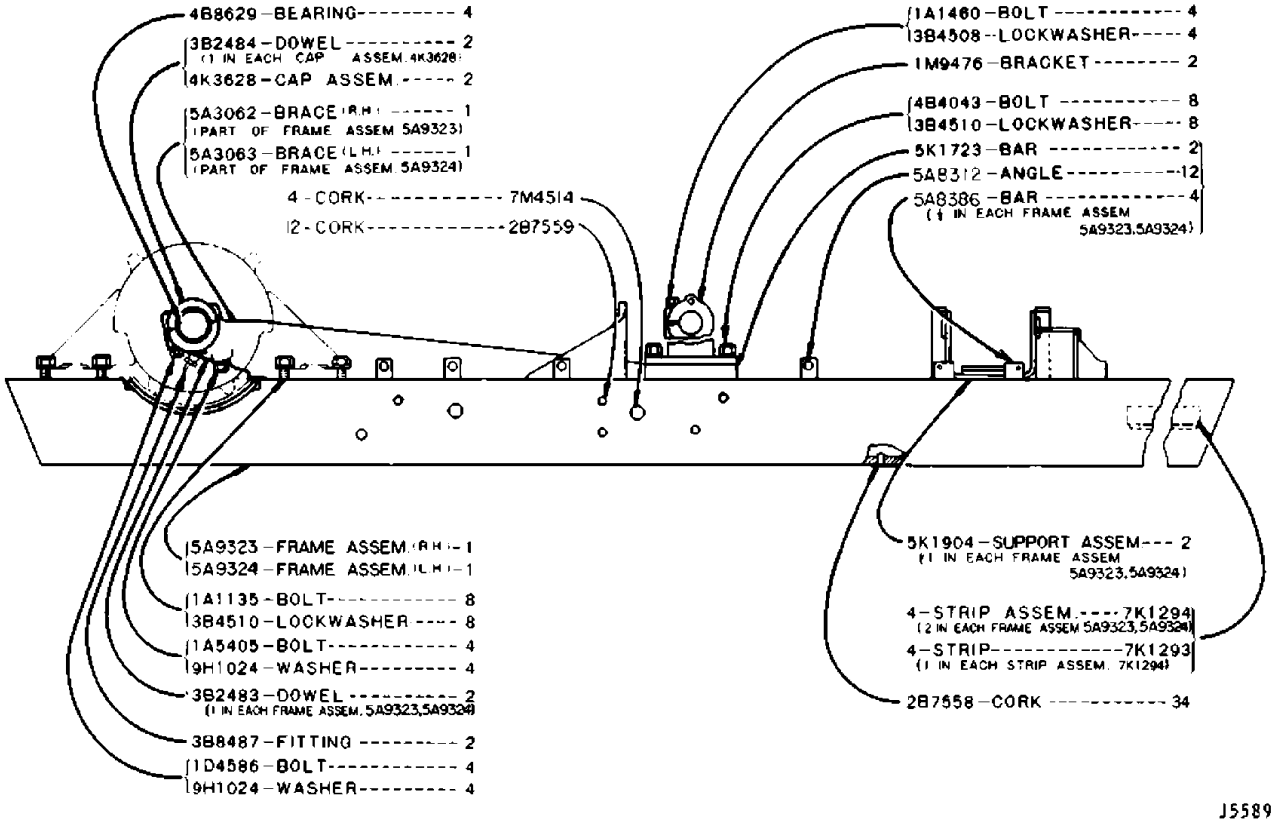

GRAPHIC #1 j5589e

TRACK ROLLER FRAME (4K5210 N/S)

Effective with Serial No. 65J2043-UP

Key:

SMCS

NOTE	REF NO	GRAPHIC REF	PART NUMBER	QTY	PART NAME 1 2 3 4 5 6 (PRODUCT LEVEL)	LINK PAGE
	1		1A-1135	8	BOLT	
	2		3B-4510	16	LOCKWASHER	
	3		4K-3628	2	CAP ASSEM.	
			3B-2484	1	DOWEL	
C	4		9K-9185	4	BEARING	
C	5		9K-6393	2	BRACKET ASSEM.	
C	6		0L-1329	4	BOLT	
			3B-4508	4	LOCKWASHER	
	7		4B-4043	8	BOLT	
	8		1A-5405	4	BOLT	
	9		9H-1024	8	WASHER	
	10		3B-8487	2	FITTING	
	11		1D-4586	4	BOLT	
	12		5A-9323	1	FRAME ASSEM. (R.H.)	
	13		3B-2483	1	DOWEL	
	14		5A-3062	1	BRACE (R.H.)	
C	15		8K-8428	6	BLOCK	
	16		5K-1723	1	BAR	
	17		5K-1904	1	SUPPORT ASSEM.	
	18		5A-8386	2	BAR	
	19		7K-1294	2	STRIP ASSEM.	
	20		7K-1293	1	STRIP	
	21		5A-9324	1	FRAME ASSEM. (L.H.)	
	22		3B-2483	1	DOWEL	
	23		5A-3063	1	BRACE (L.H.)	
C	24		8K-8428	6	BLOCK	
	25		5K-1723	1	BAR	
	26		5K-1904	1	SUPPORT ASSEM.	
	27		5A-8386	2	BAR	
	28		7K-1294	2	STRIP ASSEM.	
	29		7K-1293	1	STRIP	

TRACK ROLLER FRAME (4K5210 N/S)

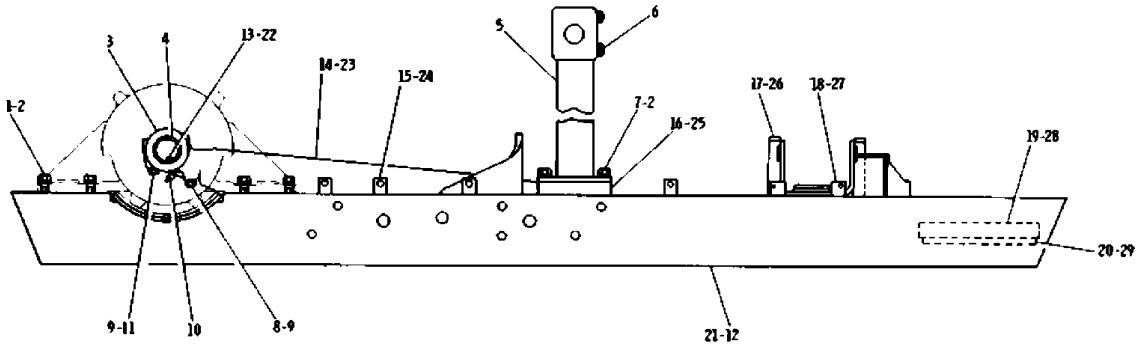

REF. NO.	PART NUMBER	DESCRIPTION	QTY.
1	1A1135	BOLT	8
2	3B4510	LOCKWASHER	16
3	4K3628	CAP ASSEM.	2
	3B2484	DOWEL	1
C 4	9K9185	BEARING	4
C 5	9K6393	BRACKET ASSEM.	2
C 6	LL1329	BOLT	4
	3B4508	LOCKWASHER	4
7	4B4043	BOLT	8
8	1A5405	BOLT	4
9	9H1024	WASHER	8
10	3B8487	FITTING	2
11	1D4586	BOLT	4

REF. NO.	PART NUMBER	DESCRIPTION	QTY.
12	5A9323	FRAME ASSEM. (R.H.)	1
13	3B2483	DOWEL	1
14	5A3062	BRACE (R.H.)	1
C 15	8K8428	BLOCK	6
16	5K1723	BAR	1
17	5K1904	SUPPORT ASSEM.	1
18	5A8386	BAR	2
19	7K1294	STRIP ASSEM.	2
20	7K1293	STRIP	1

REF. NO.	PART NUMBER	DESCRIPTION	QTY.
21	5A9324	FRAME ASSEM. (L.H.)	1
22	3B2483	DOWEL	1
23	5A3063	BRACE (L.H.)	1
C 24	8K8428	BLOCK	6
25	5K1723	BAR	1
26	5K1904	SUPPORT ASSEM.	1
27	5A8386	BAR	2
28	7K1294	STRIP ASSEM.	2
29	7K1293	STRIP	1

J14075E

GRAPHIC #1

j14075e

7K3303 TRACK ROLLER FRAME GROUP--With Guiding Guard

AN ATTACHMENT

Key:

SMCS

NOTE	REF NO	GRAPHIC REF	PART NUMBER	QTY	PART NAME 1 2 3 4 5 6 (PRODUCT LEVEL)	LINK PAGE
	1		5A-9325	1	FRAME ASSEM. (R.H.)	
	2		5A-3062	1	BRACE (R.H.)	
	3		3B-2483	1	DOWEL	
	4		5K-1723	1	BAR	
	5		5A-8312	6	SCREW PLATE	
	6		5A-8386	2	BAR	
	7		5K-1904	1	SUPPORT ASSEM.	
	8		7K-1294	2	STRIP ASSEM.	
	9		7K-1293	2	STRIP	
					(Part of 7K1294 Strip Assem.)	
	10		7K-2943	1	GUARD ASSEM. (R.H.-Inner)	
	11		7K-2944	1	GUARD ASSEM. (R.H.-Outer)	
	12		2M-2933	4	NUT	
					(2 Each in 7K2943 & 7K2944 GUARD ASSEM.)	
	13		7K-2961	1	GUARD ASSEM. (R.H.-Outer)	
	14		2M-2933	2	NUT	
					(Part of 7K2961 Guard Assem.)	
					(Parts of 5A9325 Frame Assem.)	
	15		5A-9326	1	FRAME ASSEM. (L.H.)	
	16		5A-3063	1	BRACE (L.H.)	
	17		3B-2483	1	DOWEL	
	18		5K-1723	1	BAR	
	19		5A-8312	6	SCREW PLATE	
	20		5A-8386	2	BAR	
	21		5K-1904	1	SUPPORT ASSEM.	
	22		7K-1294	2	STRIP ASSEM.	
	23		7K-1293	2	STRIP	
					(Part of 7K1294 Strip Assem.)	
	24		7K-2943		GUARD ASSEM. (L.H.-Outer)	
	25		7K-2944	1	GUARD ASSEM. (L.H.-Inner)	
	26		2M-2933	4	NUT	
					(2 Each in 7K2943 & 7K2944 GUARD ASSEM.)	
	27		7K-2962	1	GUARD ASSEM. (L.H.-Outer)	
	28		2M-2933	2	NUT	
					(Part of 7K2962 Guard Assem.)	
					(Parts of 5A9326 Frame Assem.)	
	29		2B-7559	12	CORK	
	30		7M-4514	4	CORK	
	31		6K-5718	24	BOLT	
	32		7K-2878	4	STRIP (Front)	
	33		2B-7558	24	CORK	
	34		7K-2879	2	STRIP (Rear)	
	35		8K-6529	2	PLATE	
	36		7K-3005	2	GUARD	
	37		0S-1585	24	BOLT	
	38		2M-0849	24	WASHER	
	39		0S-1589	10	BOLT	
	40		3B-4510	10	LOCKWASHER	
	41		4B-2363	2	PLUG	

7K3303 TRACK ROLLER FRAME GROUP--With Guiding Guard

42 6F-4868 2 GASKET

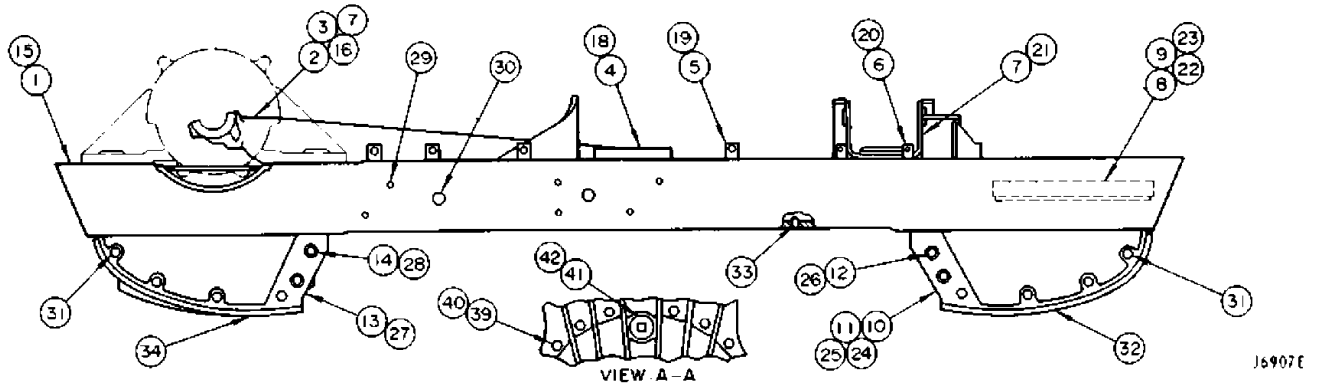

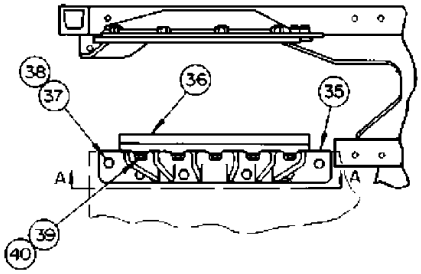

REF. NO.	PART NUMBER	DESCRIPTION	QTY.
1	5A9325	FRAME ASSEM. (R. H.)	1
2	5A3062	BRACE (R. H.)	1
3	3B2483	DOWEL	1
4	5K1723	BAR	1
5	5A8312	SCREW PLATE	6
6	5A8386	BAR	2
7	5K1904	SUPPORT ASSEM.	1
8	7K1294	STRIP ASSEM.	2
9	7K1293	STRIP	2
		(Part of 7K1294 Strip Assem.)	
10	7K2943	GUARD ASSEM. (R.H.-Inner)	1
11	7K2944	GUARD ASSEM. (R.H.-Outer)	1
12	2M2933	NUT	4
		(2 Each in 7K2943 & 7K2944 Guard Assem.)	
13	7K2961	GUARD ASSEM. (R.H.-Outer)	1
14	2M2933	NUT	2
		(Part of 7K2961 Guard Assem.) (Parts of 5A9325 Frame Assem.)	
15	5A9326	FRAME ASSEM. (L. H.)	1
16	5A3063	BRACE (L. H.)	1
17	3B2483	DOWEL	1
18	5K1723	BAR	1
19	5A8312	SCREW PLATE	6
20	5A8386	BAR	2
21	5K1904	SUPPORT ASSEM.	1

REF. NO.	PART NUMBER	DESCRIPTION	QTY.
22	7K1294	STRIP ASSEM.	2
23	7K1293	STRIP	2
		(Part of 7K1294 Strip Assem.)	
24	7K2943	GUARD ASSEM. (L.H.-Outer)	
25	7K2944	GUARD ASSEM. (L.H.-Inner)	1
26	2M2933	NUT	4
		(2 Each in 7K2943 & 7K2944 Guard Assem.)	
27	7K2962	GUARD ASSEM. (L.H.-Outer)	1
28	2M2933	NUT	2
		(Part of 7K2962 Guard Assem.) (Parts of 5A9326 Frame Assem.)	
29	2B7559	CORK	12
30	7M4514	CORK	4
31	6K5718	BOLT	24
32	7K2878	STRIP (Front)	4
33	2B7558	CORK	24
34	7K2879	STRIP (Rear)	2
35	8K6529	PLATE	2
36	7K3005	GUARD	2
37	S-1585	BOLT	24
38	2M849	WASHER	24
39	S-1589	BOLT	10
40	3B4510	LOCKWASHER	10
41	4B2363	PLUG	2
42	6F4868	GASKET	2

GRAPHIC #1 j6907e

5K7248 TRACK ROLLER DIRT GUARD GROUP

AN ATTACHMENT

Key:

SMCS

NOTE	REF NO	GRAPHIC REF	PART NUMBER	QTY	PART NAME 1 2 3 4 5 6 (PRODUCT LEVEL)	LINK PAGE
	1		5K-7315	1	GUARD ASSEM. (Inner R.H.)	
			5K-7316	1	GUARD ASSEM. (Inner L.H.)	
	2		5K-7143	12	BOLT (38mm Long)	
			4B-4280	12	WASHER	
	3		5K-7305	1	GUARD ASSEM. (Outer R.H.)	
			5K-7306	1	GUARD ASSEM. (Outer L.H.)	
	4		5K-7138	20	BOLT (25.4mm Long)	
	5		5K-7144	10	BOLT (279.4mm Long)	
			7B-1756	10	NUT	
	6		4K-7348	6	RETAINER	
	7		5K-7247	10	SPACER	

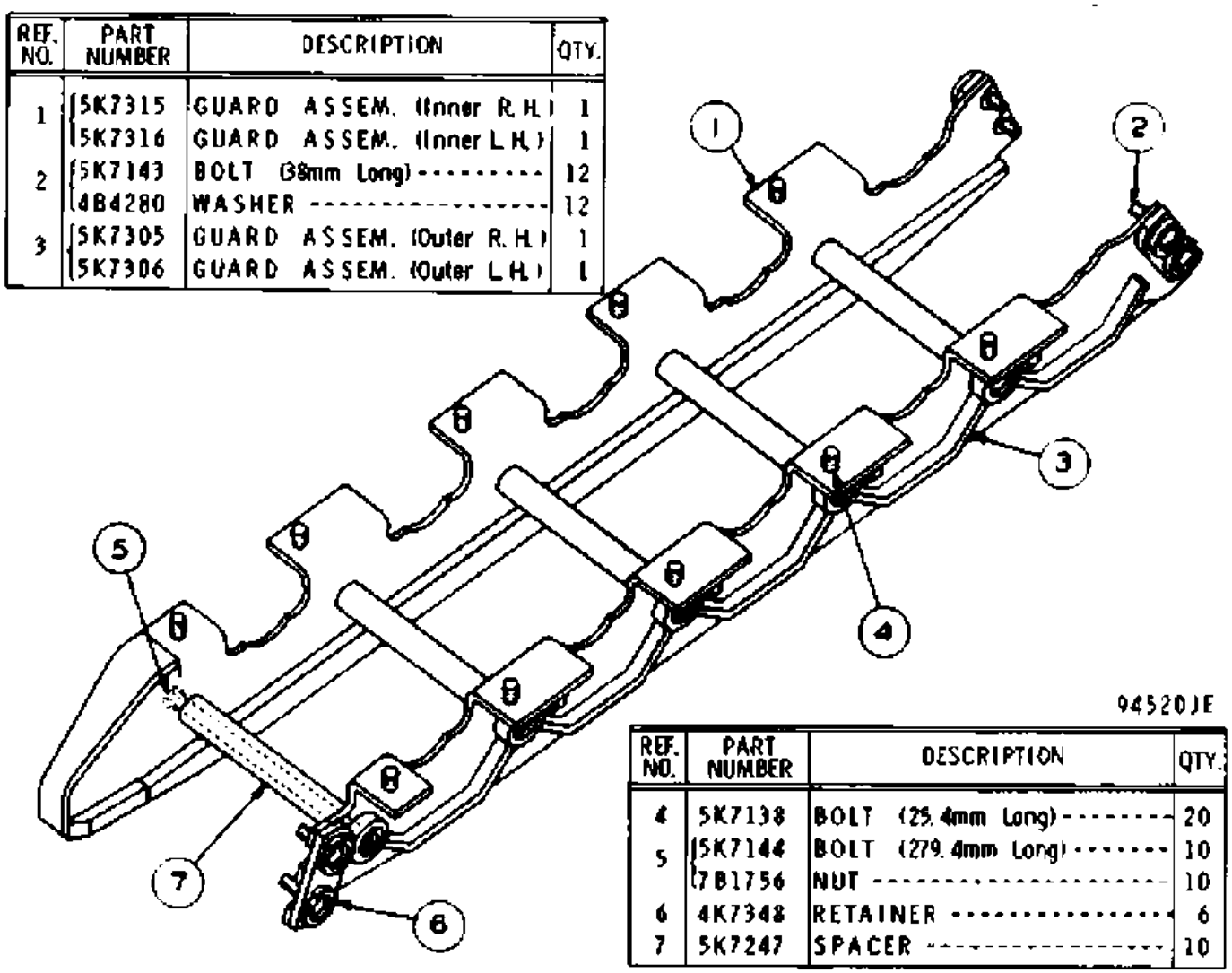

REF. NO.	PART NUMBER	DESCRIPTION	QTY.
1	5K7315	GUARD ASSEM. (Inner R.H.)	1
	5K7316	GUARD ASSEM. (Inner L.H.)	1
2	5K7143	BOLT (38mm Long)	12
	4B4280	WASHER	12
3	5K7305	GUARD ASSEM. (Outer R.H.)	1
	5K7306	GUARD ASSEM. (Outer L.H.)	1

REF. NO.	PART NUMBER	DESCRIPTION	QTY.
4	5K7138	BOLT (25.4mm Long)	20
5	5K7144	BOLT (279.4mm Long)	10
	7B1756	NUT	10
6	4K7348	RETAINER	6
7	5K7247	SPACER	10

GRAPHIC #1

c927461

1M6286 TRACK ROLLER DIRT GUARD GROUP

AN ATTACHMENT

Key:

SMCS

NOTE	REF NO	GRAPHIC REF	PART NUMBER	QTY	PART NAME 1 2 3 4 5 6 (PRODUCT LEVEL)	LINK PAGE
			1M-6289	1	GUARD (OUTER R.H.)	
			1M-6290	1	GUARD (OUTER L.H.)	
			1M-6287	1	GUARD (INNER R.H.)	
			1M-6288	1	GUARD (INNER L.H.)	
			0S-1624	34	BOLT	
			3B-4510	34	LOCKWASHER	

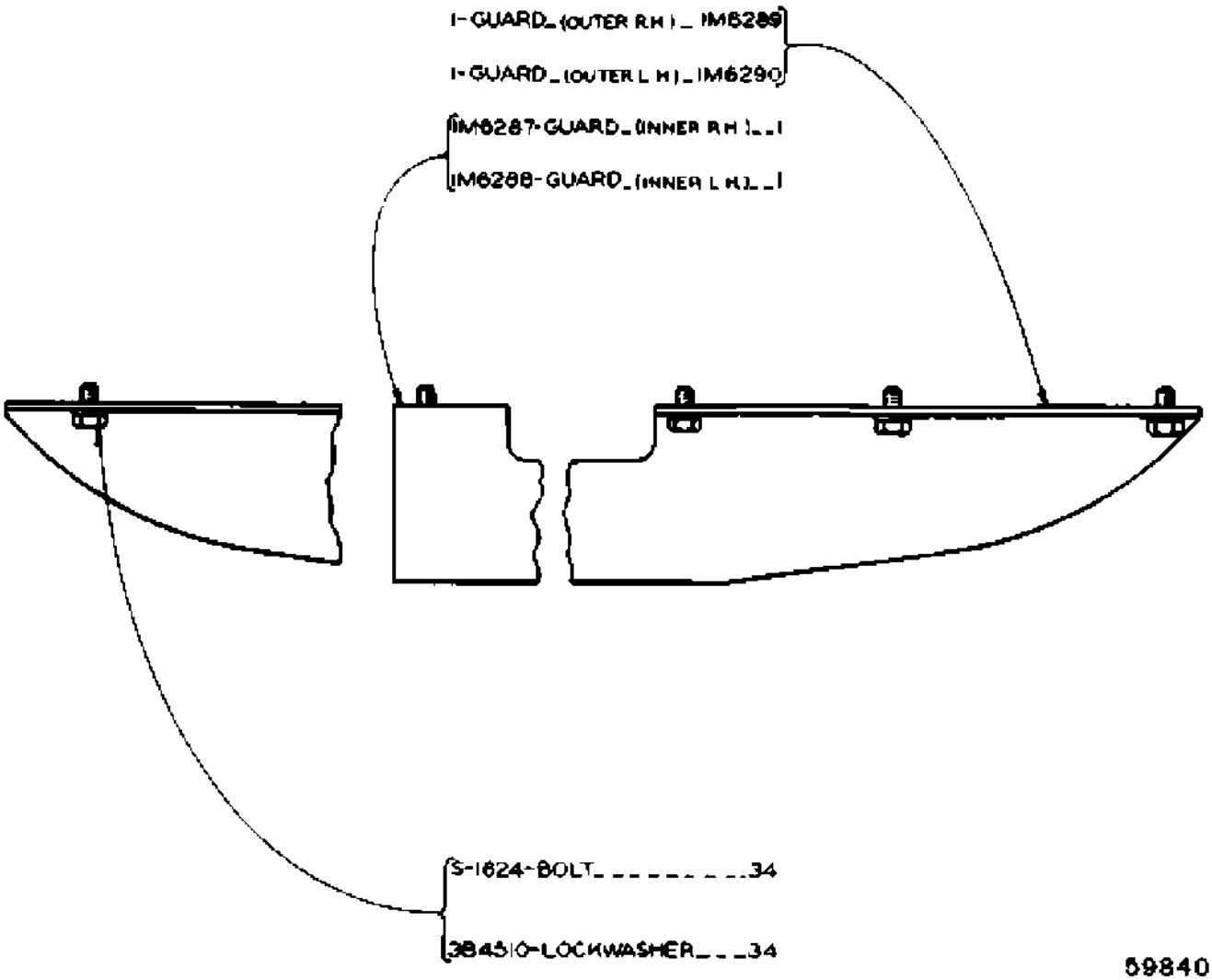

GRAPHIC #1

c927462

1M8549 TRACK ROLLER DIRT GUARD GROUP--Heavy Duty--Type 1

AN ATTACHMENT

Key:

SMCS

NOTE	REF NO	GRAPHIC REF	PART NUMBER	QTY	PART NAME 1 2 3 4 5 6 (PRODUCT LEVEL)	LINK PAGE
			1M-7795	1	GUARD ASSEM. (INNER R.H.)	
			1M-7796	1	GUARD ASSEM. (INNER L.H.)	
			2F-0027	6	PIPE	
			8H-1380	6	ROD ASSEM.	
			1B-4207	6	NUT	
					(1 IN EACH ROD ASSEM.)	
			1B-4207	6	NUT	
			3B-4512	12	LOCKWASHER	
			0S-1592	34	BOLT	
			3B-4510	34	LOCKWASHER	
			1M-7749	1	GUARD ASSEM. (OUTER R.H.)	
			1M-7750	1	GUARD ASSEM. (OUTER L.H.)	

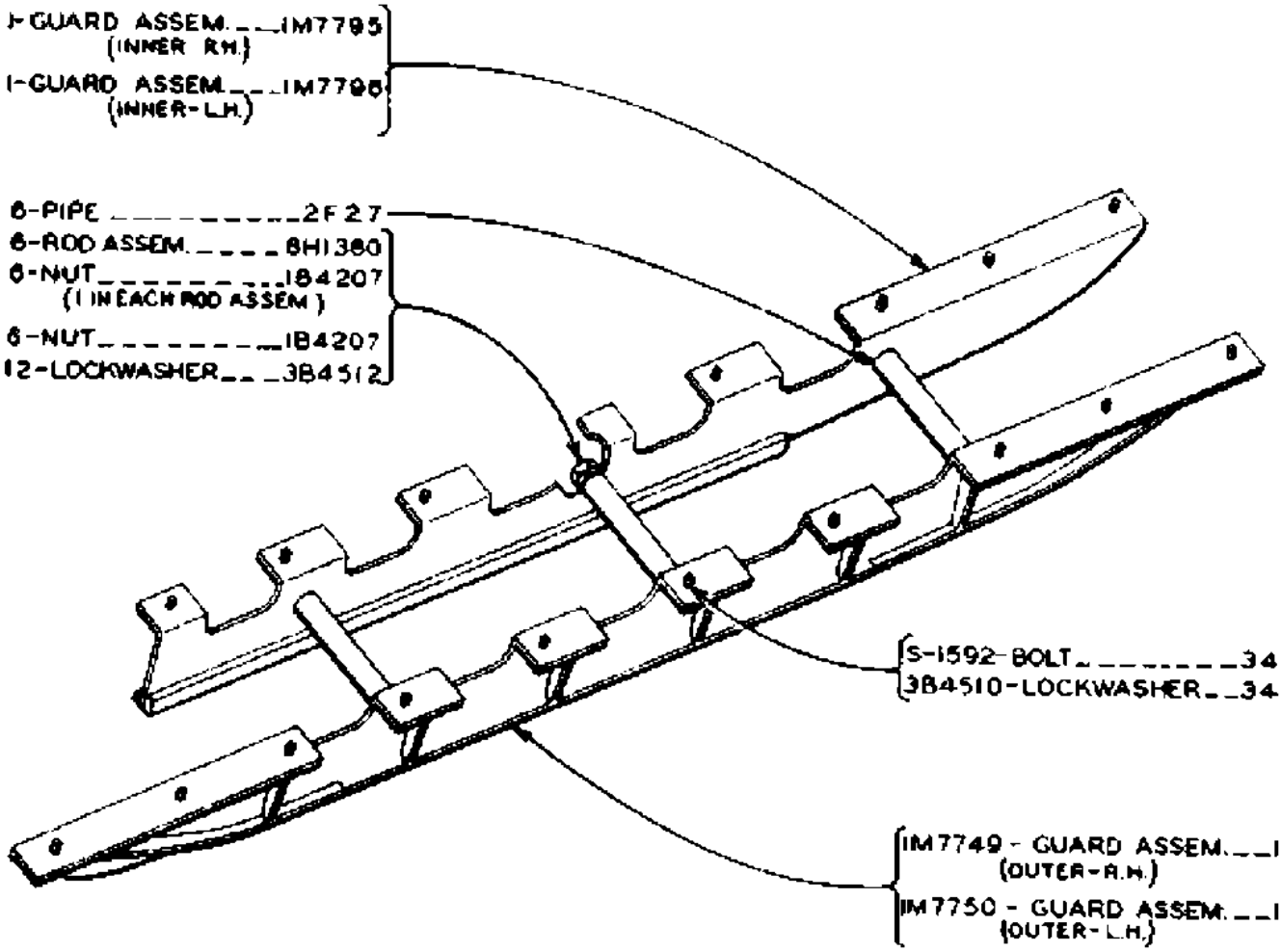

GRAPHIC #1

c59843

1M8549 TRACK ROLLER DIRT GUARD GROUP--Heavy Duty--Type 2

AN ATTACHMENT

Key:

SMCS

NOTE	REF NO	GRAPHIC REF	PART NUMBER	QTY	PART NAME 1 2 3 4 5 6 (PRODUCT LEVEL)	LINK PAGE
	1		1M-7749	1	GUARD ASSEM. (R.H.)	
			1M-7750	1	GUARD ASSEM. (L.H.)	
	2		1B-4207	12	NUT	
			3B-4512	12	LOCKWASHER	
	3		3V-7851	6	PIPE	
	4		8H-1360	6	ROD	
	5		0S-1592	34	BOLT	
			3B-4510	34	LOCKWASHER	
	6		1M-7795	1	GUARD ASSEM. (R.H.)	
			1M-7796	1	GUARD ASSEM. (L.H.)	

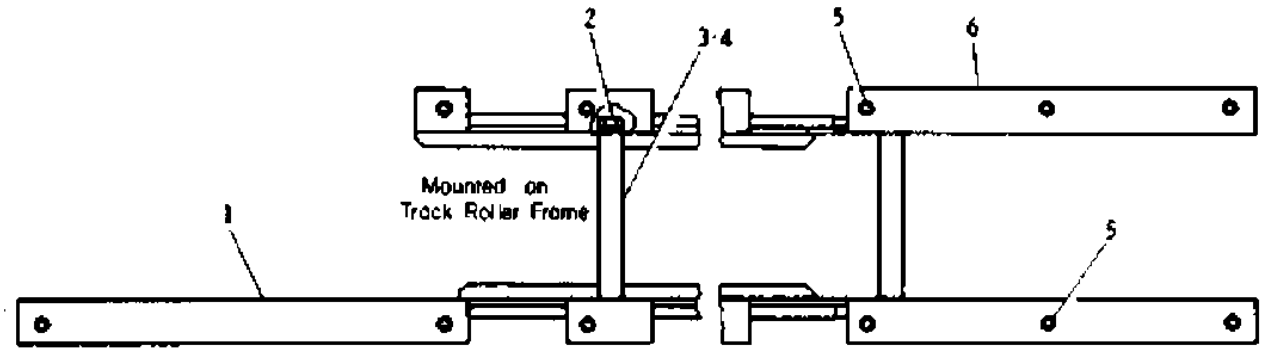

REF. NO.	PART NUMBER	DESCRIPTION	QTY.
1	1M7749	GUARD ASSEM. (R.H.)	1
	1M7750	GUARD ASSEM. (L.H.)	1
2	1B4207	NUT	12
	3B4512	LOCKWASHER	12
3	3V7851	PIPE	6

REF. NO.	PART NUMBER	DESCRIPTION	QTY.
4	8H1360	ROD	6
5	0S1592	BOLT	34
	3B4510	LOCKWASHER	34
6	1M7795	GUARD ASSEM. (R.H.)	1
	1M7796	GUARD ASSEM. (L.H.)	1

J14523E

GRAPHIC #1

j14523e

FRONT IDLER (5A3009 N/S)--Part 1 of 2

Effective with Serial No. 65J1474~65J2010

Key:

SMCS

NOTE	REF NO	GRAPHIC REF	PART NUMBER	QTY	PART NAME 1 2 3 4 5 6 (PRODUCT LEVEL)	LINK PAGE
	1		0L-1328	2	BOLT (101.5mm Long)	
	2		3B-4512	4	LOCKWASHER	
	3		0S-1607	2	BOLT (127mm Long)	
	4		6F-7048	2	WASHER	
	5		7B-5494	4	LOCK	
	6		1B-4207	4	NUT	
	7		1A-1135	8	BOLT	
	8		3B-4510	16	LOCKWASHER	
	9		1M-5391	2	STOP (R.H.-Outer, L.H.-Inner)	
			1M-5392	2	STOP (R.H.-Inner, L.H.-Outer)	
	10		3Y-4258	2	PROTECTOR	
	11		2S-5925	2	VALVE	
	12		2S-5926	2	VALVE	
	13		5M-6708	4	WASHER	
	14		5A-9927	2	ROD GROUP (For Japan)	
	15		5A-3166	1	PLATE (Japanese-Warning)	
			7B-3028	4	SCREW	
	16		8K-5589	2	ROD GROUP (For Outside Japan)	
	17		2S-5927	1	PLATE (English-Warning)	
			7B-3028	4	SCREW	
	18		5K-5369	2	SUPPORT	
	19		5B-7267	4	CORK	
	20		0T-0772	4	BOLT	
			4K-9943	4	WASHER	
			5M-5000	4	LOCK	
	21		0S-1594	8	BOLT	
	22		3B-4506	8	LOCKWASHER	
	23		1M-8867	2	IDLER ASSEM.	
	24		0S-1603	16	BOLT	
			3B-4508	16	LOCKWASHER	
	25		4K-5285	2	BEARING (R.H.)	
			4K-5286	2	BEARING (L.H.)	
	26		4B-8649	4	SPACER	
	27		8B-5144	8	BOLT	
	28		1M-9431	4	ARM	
	29		9H-4105	4	DOWEL	

FRONT IDLER (5A3009 N/S)--Part 1 of 2

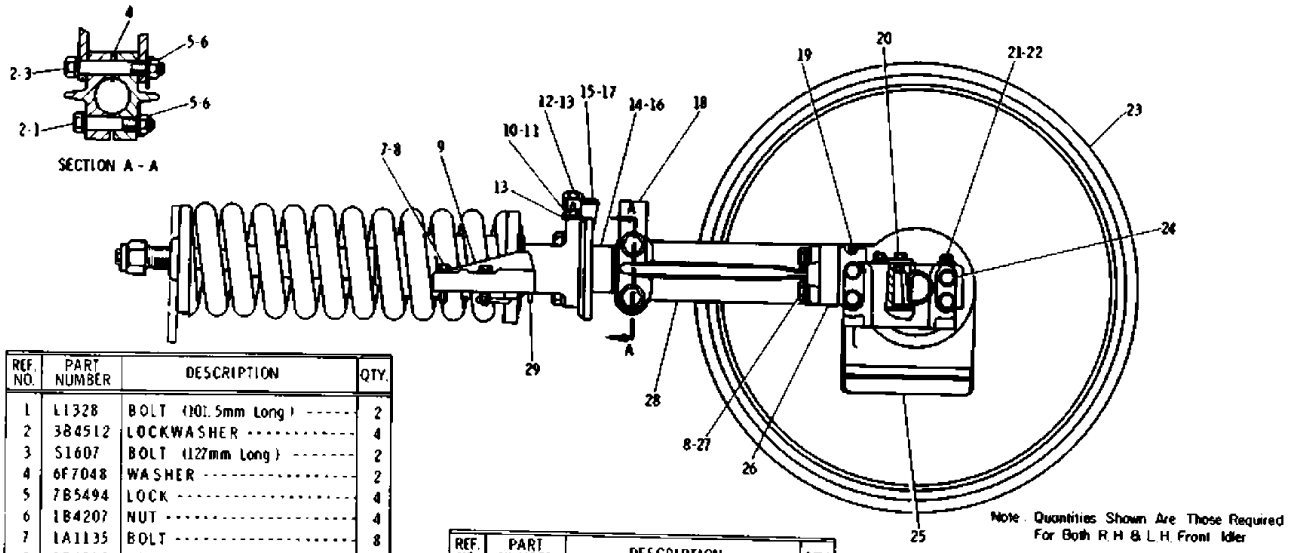

Note: Quantities Shown Are Those Required For Both R.H. & L.H. Front Idler

REF. NO.	PART NUMBER	DESCRIPTION	QTY.
1	1328	BOLT (101.5mm Long)	2
2	3B4512	LOCKWASHER	4
3	51607	BOLT (127mm Long)	2
4	6F7048	WASHER	2
5	7B5494	LOCK	4
6	1B4207	NUT	4
7	1A1135	BOLT	8
8	3B4510	LOCKWASHER	16
9	1M5391	STOP (R.H.-Outer, L.H.-Inner)	2
	1M5392	STOP (R.H.-Inner, L.H.-Outer)	2
10	3Y4258	PROTECTOR	2
11	2S5925	VALVE	2
12	2S5926	VALVE	2
13	5M6708	WASHER	4
14	5A9927	ROD GROUP (For Japan)	2
15	5A3166	PLATE (Japanese-Warning)	1
	7B3028	SCREW	4
16	8K5589	ROD GROUP (For Outside Japan)	2

REF. NO.	PART NUMBER	DESCRIPTION	QTY.
17	2S5927	PLATE (English-Warning)	1
	7B3028	SCREW	4
18	5K5369	SUPPORT	2
19	5B7267	CORK	4
20	7772	BOLT	4
	4K9943	WASHER	4
	5M5000	LOCK	4
21	51594	BOLT	8
22	3B4506	LOCKWASHER	8
23	1M8867	IDLER ASSEM.	2

REF. NO.	PART NUMBER	DESCRIPTION	QTY.
24	51603	BOLT	16
	3B4508	LOCKWASHER	16
25	4K5285	BEARING (R.H.)	2
	4K5286	BEARING (L.H.)	2
26	4B8649	SPACER	4
27	8B5144	BOLT	8
28	1M9431	ARM	4
29	9H4105	DOWEL	4

J12691E

GRAPHIC #1 j12691e

FRONT IDLER (5A3009 N/S)--Part 2 of 2

Effective with Serial No. 65J1474~65J2010

Key: R - REMFG PART MAY BE AVAILABLE

SMCS

NOTE	REF NO	GRAPHIC REF	PART NUMBER	QTY	PART NAME 1 2 3 4 5 6 (PRODUCT LEVEL)	LINK PAGE
	1		0S-1620	2	BOLT	
	2		1B-1067	2	WASHER	
	3		1B-4334	2	NUT	
	4		5K-1686	2	SEAT	
	5		9K-5446	2	BOLT	
	6		6H-7768	2	SPACER	
	7		5K-2754	2	SPRING	
	8		5K-1278	2	PILOT ASSEM.	
	9		8M-6676	2	CYLINDER	
	10		0S-1589	8	BOLT	
	11		3B-4510	8	LOCKWASHER	
	12		4M-7022	2	RING	
	13		4M-7021	2	SEAL	
	14		9H-7668	2	RING	
	15		2S-5867	2	SEAL	
	16		7H-2423	4	RING	
	17		7H-2444	2	SEAL	
	18		9H-7670	2	PISTON	
R	19		2M-2858	4	SEAL GROUP	
			1M-3097	2	RING	
	20		4F-7952	4	SEAL	
	21		2P-0347	2	PLUG	
			1S-8947	2	SEAL	
	22		5A-7205	2	PLATE (R.H.)	
	23		4K-9984	2	SHAFT	
	24		1H-8128	4	SEAL	
	25		7K-1102	4	BUSHING ASSEM.	
	26		9B-2289	2	PIN	
	27		7K-1089	1	BUSHING	
	28		9B-3488	4	PLATE ASSEM.	
			9B-3486	2	PIN	
	29		5A-7206	2	PLATE (L.H.)	
	30		3F-8638	8	SPRING ASSEM.	
	31		4K-3585	32	SHIM (1.6mm Long)	
	32		4B-0897	8	PLATE	
	33		0S-1588	24	BOLT	
			3B-4506	24	LOCKWASHER	

FRONT IDLER (5A3009 N/S)--Part 2 of 2

Note: Quantities Shown Are Those Required For Both R.H. & L.H. Front Idler.

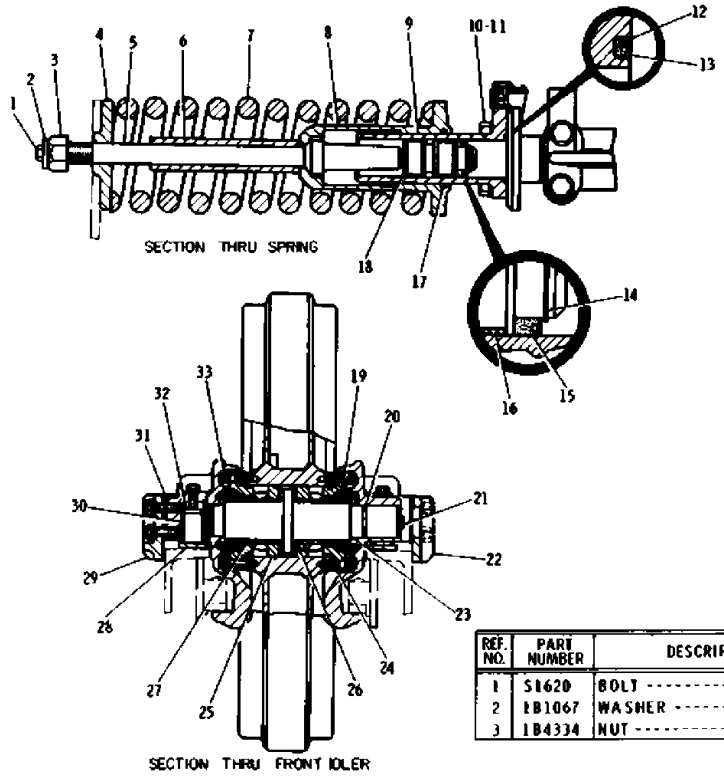

REF. NO.	PART NUMBER	DESCRIPTION	QTY.
1	S1620	BOLT	2
2	1B1067	WASHER	2
3	1B4334	NUT	2

REF. NO.	PART NUMBER	DESCRIPTION	QTY.
4	5K1686	SEAT	2
5	9K5446	BOLT	2
6	6H7768	SPACER	2
7	5K2754	SPRING	2
8	5K1278	PILOT ASSEM.	2
9	8M6676	CYLINDER	2
10	S1589	BOLT	8
11	3B4510	LOCKWASHER	8
12	4M7022	RING	2
13	4M7021	SEAL	2
14	9H7668	RING	2
15	2S5867	SEAL	2
16	7H2423	RING	4
17	7H2444	SEAL	2
18	9H7670	PISTON	2
19	2M2858	SEAL GROUP	4
	1M3097	RING	2
20	4F7952	SEAL	4
21	2P347	PLUG	2
	1S8947	SEAL	2
22	5A7205	PLATE (R.H.)	2
23	4K9984	SHAFT	2
24	1H8128	SEAL	4
25	7K1102	BUSHING ASSEM.	4
26	9B2289	PIN	2
27	7K1089	BUSHING	1
28	9B3488	PLATE ASSEM.	4
	9B3486	PIN	2
29	5A7206	PLATE (L.H.)	2
30	3F8638	SPRING ASSEM.	8
31	4K3585	SHIM (1.6mm Long)	32
32	4B897	PLATE	8
33	S1588	BOLT	24
	3B4506	LOCKWASHER	24

J12692E

GRAPHIC #1

j12692e

FRONT IDLER (5A3009 N/S)--Part 1 of 2

Effective with Serial No. 65J2011~65J2042

Key: C - INDICATES CHANGE

SMCS

NOTE	REF NO	GRAPHIC REF	PART NUMBER	QTY	PART NAME 1 2 3 4 5 6 (PRODUCT LEVEL)	LINK PAGE
	1		0L-1328	2	BOLT (101.5mm Long)	
	2		3B-4512	4	LOCKWASHER	
	3		0S-1607	2	BOLT (127mm Long)	
	4		6F-7048	2	WASHER	
	5		7B-5494	4	LOCK	
	6		1B-4207	4	NUT	
	7		1A-1135	8	BOLT	
	8		3B-4510	16	LOCKWASHER	
	9		1M-5391	2	STOP (R.H.-Outer, L.H.-Inner)	
			1M-5392	2	STOP (R.H.-Inner, L.H.-Outer)	
	10		3Y-4258	2	PROTECTOR	
	11		2S-5925	2	VALVE	
	12		2S-5926	2	VALVE	
	13		5M-6708	4	WASHER	
	14		5A-9927	2	ROD GROUP (For Japan)	
	15		5A-3166	1	PLATE (Japanese-Warning)	
			7B-3028	4	SCREW	
	16		8K-5589	2	ROD GROUP (For Outside Japan)	
	17		2S-5927	1	PLATE (English-Warning)	
			7B-3028	4	SCREW	
	18		5K-5369	2	SUPPORT	
	19		5B-7267	4	CORK	
	20		0T-0772	4	BOLT	
			4K-9943	4	WASHER	
			5M-5000	4	LOCK	
	21		0S-1594	8	BOLT	
	22		3B-4506	8	LOCKWASHER	
	23		1M-8867	2	IDLER ASSEM.	
C	24		0S-1585	16	BOLT	
C			2M-0849	16	WASHER	
C	25		9K-8857	2	BEARING (R.H.)	
C			9K-9113	2	BEARING (L.H.)	
	26		4B-8649	4	SPACER	
C	27		1B-4367	8	BOLT	
	28		1M-9431	4	ARM	
	29		9H-4105	4	DOWEL	

FRONT IDLER (5A3009 N/S)--Part 1 of 2

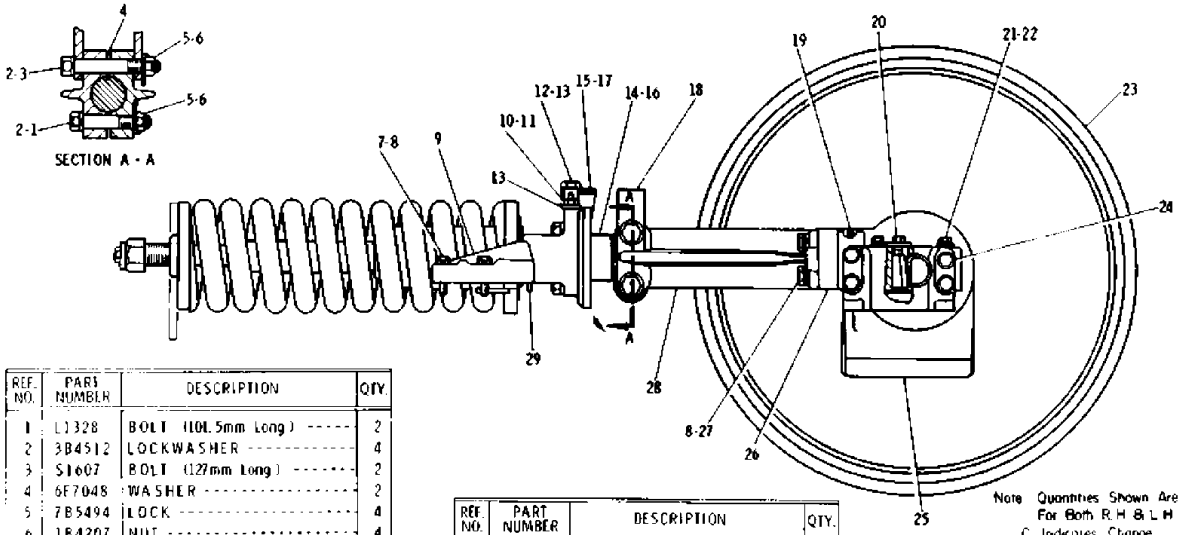

REF. NO.	PART NUMBER	DESCRIPTION	QTY.
1	L1328	BOLT (101.5mm Long)	2
2	3B4512	LOCKWASHER	4
3	S1607	BOLT (127mm Long)	2
4	6F7048	WASHER	2
5	7B5494	LOCK	4
6	1B4207	NUT	4
7	1A1135	BOLT	8
8	3B4510	LOCKWASHER	16
9	1M5391	STOP (R.H.-Outer, L.H.-Inner)	2
	1M5392	STOP (R.H.-Inner, L.H.-Outer)	2
10	3Y4258	PROTECTOR	2
11	2S5925	VALVE	2
12	2S5926	VALVE	2
13	5M6708	WASHER	4
14	5A9927	ROD GROUP (For Japan)	2
15	5A3166	PLATE (Japanese-Warning)	1
	7B3028	SCREW	4

REF. NO.	PART NUMBER	DESCRIPTION	QTY.
16	8K5589	ROD GROUP (For Outside Japan)	2
17	2S5927	PLATE (English-Warning)	1
	7B3028	SCREW	4
18	5K5369	SUPPORT	2
19	5B7267	CORK	4
20	T772	BOLT	4
	4K9943	WASHER	4
	5M5000	LOCK	4
21	S1594	BOLT	8
22	3B4506	LOCKWASHER	8
23	1M8867	IDLER ASSEM.	2

Note Quantities Shown Are Those Required For Both R.H & L.H Front Idler.
C Indicates Change

	REF. NO.	PART NUMBER	DESCRIPTION	QTY.
C	24	S1585	BOLT	16
C		2M849	WASHER	16
C	25	9K8857	BEARING (R.H.)	2
C		9K9113	BEARING (L.H.)	2
	26	4B8649	SPACER	4
C	27	LB4367	BOLT	8
	28	1M9431	ARM	4
	29	9H4105	DOWEL	4

J13531E

GRAPHIC #1 j13531e

FRONT IDLER (5A3009 N/S)--Part 2 of 2

Effective with Serial No. 65J2011~65J2042

Key: C - INDICATES CHANGE, R - REMFG PART MAY BE AVAILABLE

SMCS

NOTE	REF NO	GRAPHIC REF	PART NUMBER	QTY	PART NAME 1 2 3 4 5 6 (PRODUCT LEVEL)	LINK PAGE
C	1		0S-1595	2	BOLT	
	2		1B-1067	2	WASHER	
	3		1B-4334	2	NUT	
	4		5K-1686	2	SEAT	
	5		9K-5446	2	BOLT	
	6		6H-7768	2	SPACER	
	7		5K-2754	2	SPRING	
	8		5K-1278	2	PILOT ASSEM.	
	9		8M-6676	2	CYLINDER	
	10		0S-1589	8	BOLT	
	11		3B-4510	8	LOCKWASHER	
	12		4M-7022	2	RING	
	13		4M-7021	2	SEAL	
	14		9H-7668	2	RING	
	15		2S-5867	2	SEAL	
	16		7H-2423	4	RING	
	17		7H-2444	2	SEAL	
	18		9H-7670	2	PISTON	
R	19		2M-2858	4	SEAL GROUP	
			1M-3097	2	RING	
C	20		7F-8267	4	SEAL	
	21		2P-0347	2	PLUG	
			1S-8947	2	SEAL	
	22		5A-7205	2	PLATE (R.H.)	
C	23		9K-8856	2	SHAFT	
	24		1H-8128	4	SEAL	
C	25		1V-9611	4	BUSHING ASSEM.	
	26		9B-2289	2	PIN	
	27		7K-1089	1	BUSHING	
C	28		2V-6723	4	PLATE ASSEM.	
			2V-6721	2	PIN	
	29		5A-7206	2	PLATE (L.H.)	
	30		3F-8638	8	SPRING ASSEM.	
	31		4K-3585	32	SHIM (1.6mm Thick)	
	32		4B-0897	8	PLATE	
	33		0S-1588	24	BOLT	
			3B-4506	24	LOCKWASHER	

FRONT IDLER (5A3009 N/S)--Part 2 of 2

Note Quantities Shown Are Those Required For Both R.H & L.H Front Idler.

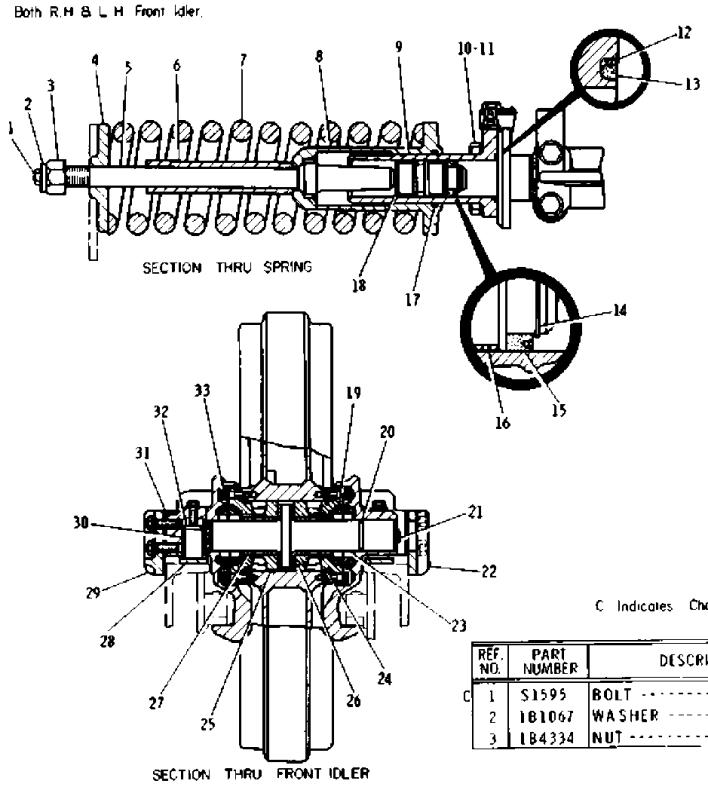

C Indicates Change

REF. NO.	PART NUMBER	DESCRIPTION	QTY.
C 1	S1595	BOLT	2
2	1B1067	WASHER	2
3	1B4334	NUT	2

REF. NO.	PART NUMBER	DESCRIPTION	QTY.
4	5K1686	SEAT	2
5	9K5446	BOLT	2
6	6H7768	SPACER	2
7	5K2754	SPRING	2
8	5K1278	PILOT ASSEM.	2
9	8M6676	CYLINDER	2
10	S1589	BOLT	8
11	3B4510	LOCKWASHER	8
12	4M7022	RING	2
13	4M7021	SEAL	2
14	9H7668	RING	2
15	2S5867	SEAL	2
16	7H2423	RING	4
17	7H2444	SEAL	2
18	9H7670	PISTON	2
19	2M2858	SEAL GROUP	4
	1M3097	RING	2
C 20	7F8267	SEAL	4
21	2P347	PLUG	2
	1S8947	SEAL	2
22	5A7205	PLATE (R.H.)	2
C 23	9K8856	SHAFT	2
24	1H8128	SEAL	4
C 25	1V9611	BUSHING ASSEM.	4
26	9B2289	PIN	2
27	7K1089	BUSHING	1
C 28	2V6723	PLATE ASSEM.	4
	2V6721	PIN	2
29	5A7206	PLATE (L.H.)	2
30	3F8638	SPRING ASSEM.	8
31	4K3585	SHIM (1.6mm Thick)	32
32	4B897	PLATE	8
33	S1588	BOLT	24
	3B4506	LOCKWASHER	24

J13532E

GRAPHIC #1

j13532e

FRONT IDLER (5A3009 N/S)--Part 1 of 2

Effective with Serial No. 65J2043~65J2066

Key: C - INDICATES CHANGE.

SMCS

NOTE	REF NO	GRAPHIC REF	PART NUMBER	QTY	PART NAME 1 2 3 4 5 6 (PRODUCT LEVEL)	LINK PAGE
	1		0L-1328	2	BOLT (101.5mm Long)	
	2		3B-4512	4	LOCKWASHER	
	3		0S-1607	2	BOLT (127mm Long)	
	4		6F-7048	2	WASHER	
	5		7B-5494	4	LOCK	
	6		1B-4207	4	NUT	
	7		1A-1135	8	BOLT	
	8		3B-4510	16	LOCKWASHER	
C	9		2V-7524	2	STOP (R.H.-Outer,L.H.-Inner)	
C			2V-7525	2	STOP (R.H.-Inner,L.H.-Outer)	
	10		3Y-4258	2	PROTECTOR	
	11		2S-5925	2	VALVE	
	12		2S-5926	2	VALVE	
	13		5M-6708	4	WASHER	
	14		5A-9927	2	ROD GROUP (For Japan)	
	15		5A-3166	1	PLATE (Japanese-Warning)	
			7B-3028	4	SCREW	
	16		8K-5589	2	ROD GROUP (For Outside Japan)	
	17		2S-5927	1	PLATE (English-Warning)	
			7B-3028	4	SCREW	
	18		5K-5369	2	SUPPORT	
	19		5B-7267	4	CORK	
	20		0T-0772	4	BOLT	
			4K-9943	4	WASHER	
			5M-5000	4	LOCK	
	21		0S-1594	8	BOLT	
	22		3B-4506	8	LOCKWASHER	
	23		1M-8867	2	IDLER ASSEM.	
	24		0S-1585	16	BOLT	
			2M-0849	16	WASHER	
	25		9K-8857	2	BEARING (R.H.)	
			9K-9113	2	BEARING (L.H.)	
	26		4B-8649	4	SPACER	
	27		1B-4367	8	BOLT	
	28		1M-9431	4	ARM	
C	29		7M-1201	4	DOWEL	

FRONT IDLER (5A3009 N/S)--Part 1 of 2

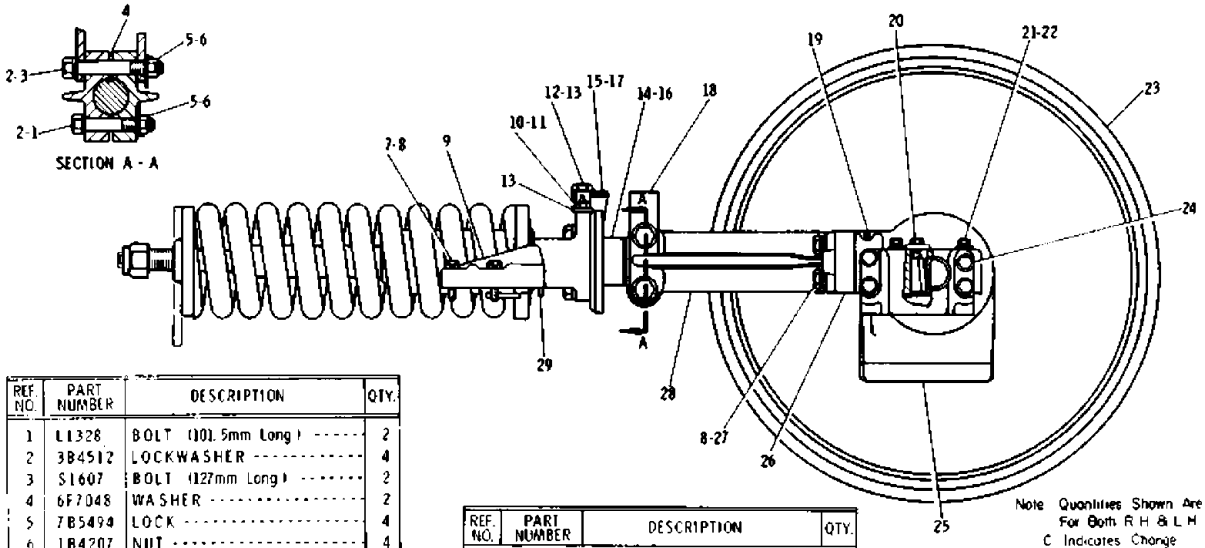

REF. NO.	PART NUMBER	DESCRIPTION	QTY.
1	L1328	BOLT (101.5mm Long)	2
2	3B4512	LOCKWASHER	4
3	S1607	BOLT (127mm Long)	2
4	6F7048	WASHER	2
5	7B5494	LOCK	4
6	1B4207	NUT	4
7	1A1135	BOLT	8
8	3B4510	LOCKWASHER	16
C 9	2V7524	STOP (R.H.-Outer, L.H.-Inner)	2
C	2V7525	STOP (R.H.-Inner, L.H.-Outer)	2
10	3Y4258	PROTECTOR	2
11	2S5925	VALVE	2
12	2S5926	VALVE	2
13	5M6708	WASHER	4
14	5A9927	ROD GROUP (For Japan)	2
15	5A3166	PLATE (Japanese-Warning)	1
	7B3028	SCREW	4

REF. NO.	PART NUMBER	DESCRIPTION	QTY.
16	8K5589	ROD GROUP (For Outside Japan)	2
17	2S5927	PLATE (English-Warning)	1
	7B3028	SCREW	4
18	5K5369	SUPPORT	2
19	5B7267	CORK	4
20	T772	BOLT	4
	4K9943	WASHER	4
	5M5000	LOCK	4
21	S1594	BOLT	8
22	3B4506	LOCKWASHER	8
23	1M8867	IDLER ASSEM.	2

Note Quantities Shown Are Those Required For Both R.H. & L.H. Front Idler
C Indicates Change

REF. NO.	PART NUMBER	DESCRIPTION	QTY.
24	S1585	BOLT	16
	2M849	WASHER	16
25	9K8857	BEARING (R.H.)	2
	9K9113	BEARING (L.H.)	2
26	4B8649	SPACER	4
27	1B4367	BOLT	8
28	1M9431	ARM	4
C 29	7M1201	DOWEL	4

J13882E

GRAPHIC #1

j13882e

FRONT IDLER (5A3009 N/S)--Part 2 of 2

Effective with Serial No. 65J2043~65J2066

Key: C - INDICATES CHANGE., R - REMFG PART MAY BE AVAILABLE

SMCS

NOTE	REF NO	GRAPHIC REF	PART NUMBER	QTY	PART NAME 1 2 3 4 5 6 (PRODUCT LEVEL)	LINK PAGE
	1		0S-1595	2	BOLT	
	2		1B-1067	2	WASHER	
	3		1B-4334	2	NUT	
	4		5K-1686	2	SEAT	
	5		9K-5446	2	BOLT	
	6		6H-7768	2	SPACER	
	7		5K-2754	2	SPRING	
C	8		2V-7198	2	PILOT ASSEM.	
	9		8M-6676	2	CYLINDER	
	10		0S-1589	8	BOLT	
	11		3B-4510	8	LOCKWASHER	
	12		4M-7022	2	RING	
	13		4M-7021	2	SEAL	
	14		9H-7668	2	RING	
	15		2S-5867	2	SEAL	
	16		7H-2423	4	RING	
	17		7H-2444	2	SEAL	
	18		9H-7670	2	PISTON	
R	19		2M-2858	4	SEAL GROUP	
			1M-3097	2	RING	
	20		7F-8267	4	SEAL	
	21		2P-0347	2	PLUG	
			1S-8947	2	SEAL	
	22		5A-7205	2	PLATE (R.H.)	
	23		9K-8856	2	SHAFT	
	24		1H-8128	4	SEAL	
	25		1V-9611	4	BUSHING ASSEM.	
	26		9B-2289	2	PIN	
	27		7K-1089	1	BUSHING	
	28		2V-6723	4	PLATE ASSEM.	
			2V-6721	2	PIN	
	29		5A-7206	2	PLATE (L.H.)	
	30		3F-8638	8	SPRING ASSEM.	
	31		4K-3585	32	SHIM (1.6mm Thick)	
	32		4B-0897	8	PLATE	
	33		0S-1588	24	BOLT	
			3B-4506	24	LOCKWASHER	

FRONT IDLER (5A3009 N/S)--Part 2 of 2

Note Quantities Shown Are Those Required For Both R H & L H Front Idler

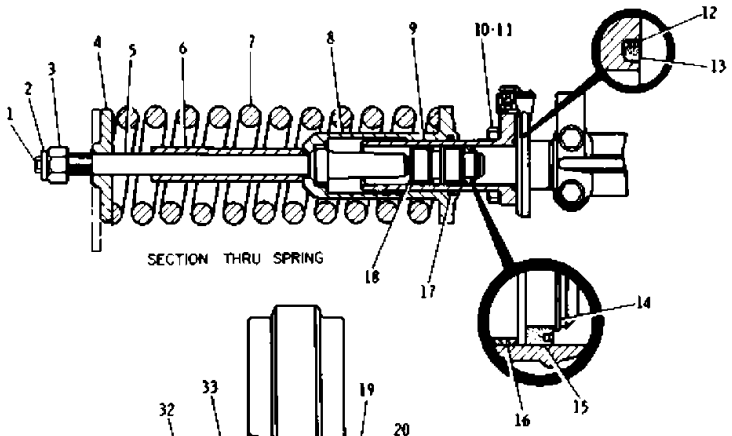

SECTION THRU SPRING

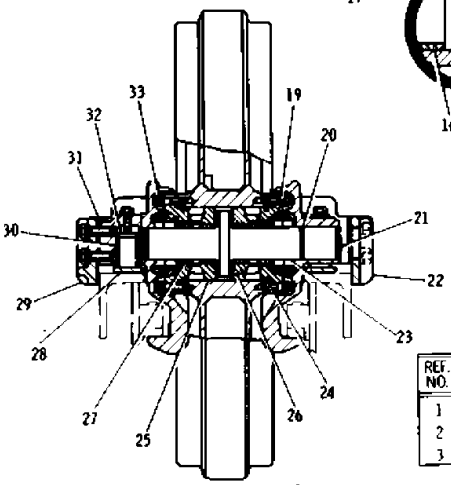

SECTION THRU FRONT IDLER

C Indicates Change

REF. NO.	PART NUMBER	DESCRIPTION	QTY.
1	S1595	BOLT	2
2	1B1067	WASHER	2
3	1B4334	NUT	2

	REF. NO.	PART NUMBER	DESCRIPTION	QTY.
	4	5K1686	SEAT	2
	5	9K5446	BOLT	2
	6	6H7768	SPACER	2
	7	5K2754	SPRING	2
C	8	2V7198	PILOT ASSEM.	2
	9	8M6676	CYLINDER	2
	10	S1589	BOLT	8
	11	3B4510	LOCKWASHER	8
	12	4M7022	RING	2
	13	4M7021	SEAL	2
	14	9H7668	RING	2
	15	2S5867	SEAL	2
	16	7H2423	RING	4
	17	7H2444	SEAL	2
	18	9H7670	PISTON	2
	19	2M2858	SEAL GROUP	4
		1M3097	RING	2
	20	7F8267	SEAL	4
	21	2P347	PLUG	2
		1S8947	SEAL	2
	22	5A7205	PLATE (R.H.)	2
	23	9K8856	SHAFT	2
	24	1H8128	SEAL	4
	25	1V9611	BUSHING ASSEM.	4
	26	9B2289	PIN	2
	27	7K1089	BUSHING	1
	28	2V6723	PLATE ASSEM.	4
		2V6721	PIN	2
	29	5A7206	PLATE (L.H.)	2
	30	3F8638	SPRING ASSEM.	8
	31	4K3585	SHIM (1.6mm Thick)	32
	32	4B897	PLATE	8
	33	S1588	BOLT	24
		3B4506	LOCKWASHER	24

J13883E

GRAPHIC #1

j13883e

FRONT IDLER (5A3009 N/S)--Part 1 of 2

Effective with Serial No. 65J2067-UP

Key: C - INDICATES CHANGE

SMCS

NOTE	REF NO	GRAPHIC REF	PART NUMBER	QTY	PART NAME 1 2 3 4 5 6 (PRODUCT LEVEL)	LINK PAGE
	1		0L-1328	2	BOLT (101.5mm Long)	
	2		3B-4512	4	LOCKWASHER	
	3		0S-1607	2	BOLT (127mm Long)	
	4		6F-7048	2	WASHER	
	5		7B-5494	4	LOCK	
	6		1B-4207	4	NUT	
	7		1A-1135	8	BOLT	
	8		3B-4510	16	LOCKWASHER	
C	9		2V-7524	2	STOP (R.H.-Outer, L.H.-Inner)	
			2V-7525	2	STOP (R.H.-Inner, L.H.-Outer)	
	10		3Y-4258	2	PROTECTOR	
	11		2S-5925	2	VALVE	
	12		2S-5926	2	VALVE	
	13		5M-6708	4	WASHER	
	14		5A-9927	2	ROD GROUP (For Japan)	
	15		5A-3166	1	PLATE (Japanese - Warning)	
			7B-3028	4	SCREW	
	16		8K-5589	2	ROD GROUP (For Outside Japan)	
	17		2S-5927	1	PLATE (English - Warning)	
			7B-3028	4	SCREW	
	18		5K-5369	2	SUPPORT	
	19		5B-7267	4	CORK	
	20		0T-0772	4	BOLT	
			4K-9943	4	WASHER	
			5M-5000	4	LOCK	
	21		0S-1594	8	BOLT	
	22		3B-4506	8	LOCKWASHER	
	23		1M-8867	2	IDLER ASSEM.	
	24		0S-1585	16	BOLT	
			2M-0849	16	WASHER	
	25		9K-8857	2	BEARING (R.H.)	
			9K-9113	2	BEARING (L.H.)	
	26		4B-8649	4	SPACER	
	27		1B-4367	8	BOLT	
	28		1M-9431	4	ARM	
C	29		7M-1201	4	DOWEL	

FRONT IDLER (5A3009 N/S)--Part 1 of 2

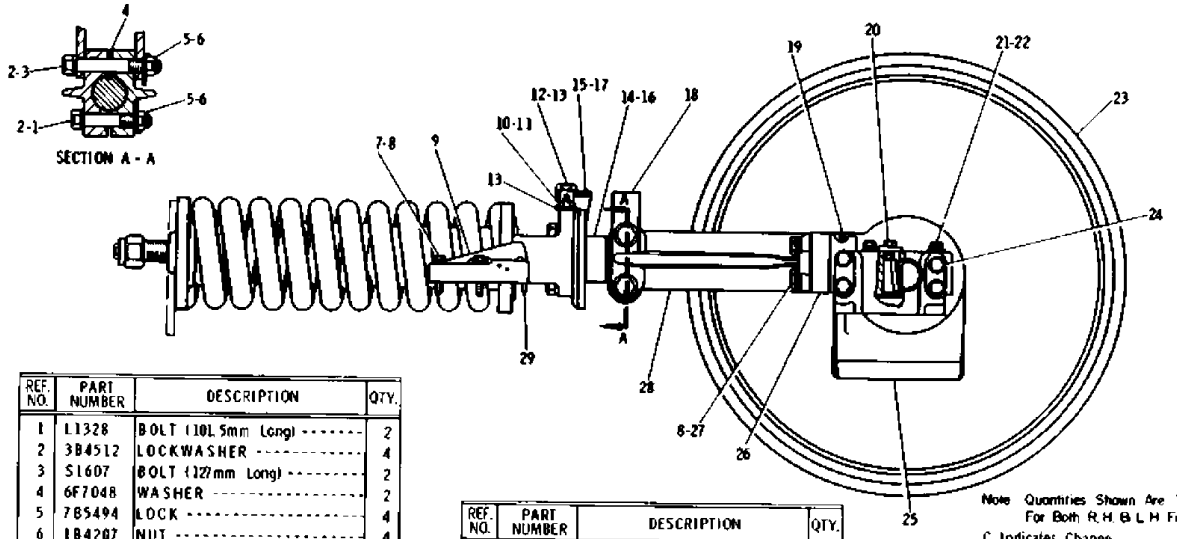

REF. NO.	PART NUMBER	DESCRIPTION	QTY.
1	L1328	BOLT (10L 5mm Long)	2
2	3B4512	LOCKWASHER	4
3	S1607	BOLT (127mm Long)	2
4	6F7048	WASHER	2
5	7B5494	LOCK	4
6	1B4207	NUT	4
7	1A1135	BOLT	8
8	3B4510	LOCKWASHER	16
C 9	2V7524	STOP (R.H.-Outer, L.H.-Inner)	2
	2V7525	STOP (R.H.-Inner, L.H.-Outer)	2
10	3Y4258	PROTECTOR	2
11	2S5925	VALVE	2
12	2S5926	VALVE	2
13	5M6708	WASHER	4
14	5A9927	ROD GROUP (For Japan)	2
15	5A3166	PLATE (Japanese - Warning)	1
	7B3028	SCREW	4

REF. NO.	PART NUMBER	DESCRIPTION	QTY.
16	8K5589	ROD GROUP (For Outside Japan)	2
17	2S5927	PLATE (English - Warning)	1
	7B3028	SCREW	4
18	5K5369	SUPPORT	2
19	5B7267	CORK	4
20	T772	BOLT	4
	4K9943	WASHER	4
	5M5000	LOCK	4
21	S1594	BOLT	8
22	3B4506	LOCKWASHER	8
23	1M8867	IDLER ASSEM.	2

Note Quantities Shown Are Those Required For Both R.H. & L.H. Front Idler
C Indicates Change.

REF. NO.	PART NUMBER	DESCRIPTION	QTY.
24	S1585	BOLT	16
	2M849	WASHER	16
25	9K8857	BEARING (R.H.)	2
	9K9113	BEARING (L.H.)	2
26	4B8649	SPACER	4
27	1B4367	BOLT	8
28	1M9431	ARM	4
C 29	7M1201	DOWEL	4

J14451E

GRAPHIC #1

j14451e

FRONT IDLER (5A3009 N/S)--Part 2 of 2

Effective with Serial No. 65J2067-UP

Key: C - INDICATES CHANGE, R - REMFG PART MAY BE AVAILABLE

SMCS

NOTE	REF NO	GRAPHIC REF	PART NUMBER	QTY	PART NAME 1 2 3 4 5 6 (PRODUCT LEVEL)	LINK PAGE
	1		0S-1595	2	BOLT	
	2		1B-1067	2	WASHER	
	3		1B-4334	2	NUT	
C	4		2V-9025	2	PILOT	
	5		9K-5446	2	BOLT	
C	6		5D-4663	2	PIPE	
C	7		2V-7440	2	SPRING	
C	8		2V-7198	2	PILOT ASSEM.	
	9		8M-6676	2	CYLINDER	
	10		0S-1589	8	BOLT	
	11		3B-4510	8	LOCKWASHER	
	12		4M-7022	2	RING	
	13		4M-7021	2	SEAL	
	14		9H-7668	2	RING	
	15		2S-5867	2	SEAL	
	16		7H-2423	4	RING	
	17		7H-2444	2	SEAL	
	18		9H-7670	2	PISTON	
R	19		2M-2858	4	SEAL GROUP	
			1M-3097	2	RING	
	20		7F-8267	4	SEAL	
	21		2P-0347	2	PLUG	
			1S-8947	2	SEAL	
	22		5A-7205	2	PLATE (R.H.)	
	23		9K-8856	2	SHAFT	
	24		1H-8128	4	SEAL	
	25		1V-9611	4	BUSHING ASSEM.	
	26		9B-2289	2	PIN	
	27		7K-1089	1	BUSHING	
	28		2V-6723	4	PLATE ASSEM.	
			2V-6721	2	PIN	
	29		5A-7206	2	PLATE (L.H.)	
	30		3F-8638	8	SPRING ASSEM.	
	31		4K-3585	32	SHIM (1.6mm Thick)	
	32		4B-0897	8	PLATE	
	33		0S-1588	24	BOLT	
			3B-4506	24	LOCKWASHER	
C	34		2V-7441	2	SPRING	

FRONT IDLER (5A3009 N/S)--Part 2 of 2

Note : Quantities Shown Are Those Required For Both R H & L H. Front Idler.

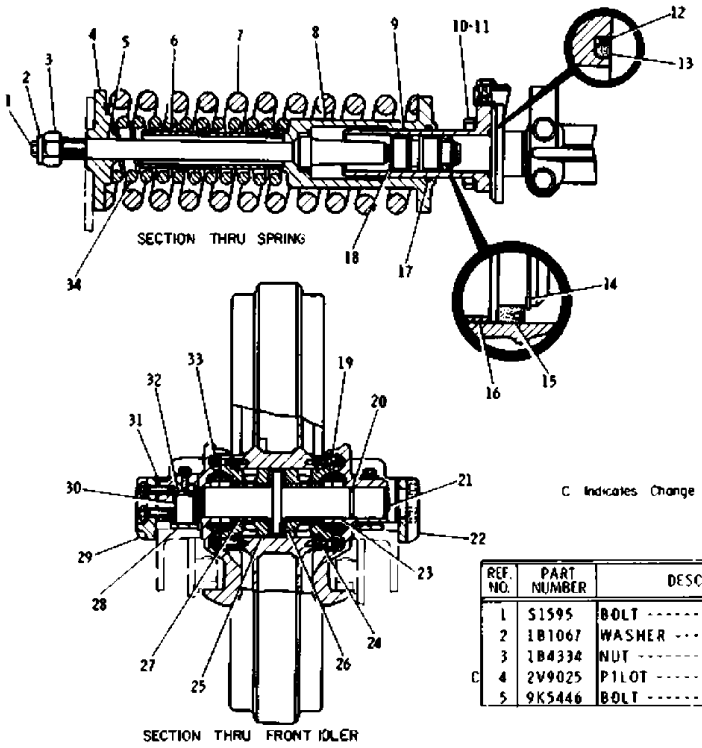

C Indicates Change

REF. NO.	PART NUMBER	DESCRIPTION	QTY.
1	S1595	BOLT	2
2	1B1067	WASHER	2
3	1B4334	NUT	2
C 4	2V9025	PILOT	2
5	9K5446	BOLT	2

	REF. NO.	PART NUMBER	DESCRIPTION	QTY.
C	6	5D4663	PIPE	2
C	7	2V7440	SPRING	2
C	8	2V7198	PILOT ASSEM.	2
	9	8M6676	CYLINDER	2
	10	S1589	BOLT	8
	11	3B4510	LOCKWASHER	8
	12	4M7022	RING	2
	13	4M7021	SEAL	2
	14	9H7668	RING	2
	15	2S5867	SEAL	2
	16	7H2423	RING	4
	17	7H2444	SEAL	2
	18	9H7670	PISTON	2
	19	2M2858	SEAL GROUP	4
		1M3097	RING	2
	20	7F8267	SEAL	4
	21	2P347	PLUG	2
		1S8947	SEAL	2
	22	5A7205	PLATE (R.H.)	2
	23	9K8856	SHAFT	2
	24	1H8128	SEAL	4
	25	1V9611	BUSHING ASSEM.	4
	26	9B2289	PIN	2
	27	7K1089	BUSHING	1
	28	2V6723	PLATE ASSEM.	4
		2V6721	PIN	2
	29	5A7206	PLATE (L.H.)	2
	30	3F8638	SPRING ASSEM.	8
	31	4K3585	SHIM (1.6mm Thick)	32
	32	4B897	PLATE	8
	33	1S1588	BOLT	24
		3B4506	LOCKWASHER	24
C	34	2V7441	SPRING	2

J14452E

GRAPHIC #1

j14452e

TRACK ROLLER FRAME GUARD (4K5211 N/S)

Effective with Serial No. 65J1474-UP

Key:

SMCS

NOTE	REF NO	GRAPHIC REF	PART NUMBER	QTY	PART NAME 1 2 3 4 5 6 (PRODUCT LEVEL)	LINK PAGE
	1		1A-8651	4	BOLT	
	2		3B-4510	4	LOCKWASHER	
	3		0S-1621	8	BOLT	
	4		3B-4508	8	LOCKWASHER	
	5		3K-3420	2	GUARD ASSEM.	
	6		9F-2978	4	NUT (Weld)	
	7		3K-9249	1	GUARD (R.H.)	
			3K-9250	1	GUARD (L.H.)	
	8		0L-1351	38	BOLT	
	9		3B-4506	42	LOCKWASHER	
	10		3L-9689	4	WASHER	
	11		5K-3369	1	GUARD ASSEM. (R.H.)	
			9F-2978	2	NUT (Weld)	
	12		5K-3370	1	GUARD ASSEM. (L.H.)	
			9F-2978	2	NUT (Weld)	
	13		4B-4278	32	WASHER	
	14		5A-9227	1	GUARD GROUP (R.H.-For Japan)	
			8K-5691	1	GUARD GROUP (R.H.-For Outside Japan)	
			5H-8991	1	SHAFT	
	15		7B-3028	4	SCREW	
	16		5A-3384	1	PLATE (Japanese)	
			1S-5242	1	PLATE (English)	
	17		5A-9228	1	GUARD GROUP (L.H.-For Japan)	
			8K-5692	1	GUARD GROUP (L.H.-For Outside Japan)	
			5H-8991	1	SHAFT	
	18		7B-3028	4	SCREW	
	19		5A-3384	1	PLATE (Japanese)	
			1S-5242	1	PLATE (English)	
	20		4K-5549	1	GUARD (R.H.)	
			4K-5550	1	GUARD (L.H.)	
	21		0T-0102	4	BOLT	

TRACK ROLLER FRAME GUARD (4K5211 N/S)

Note: Quantities Shown Are Those Required For Both R.H. & L.H. Roller Frame Guard

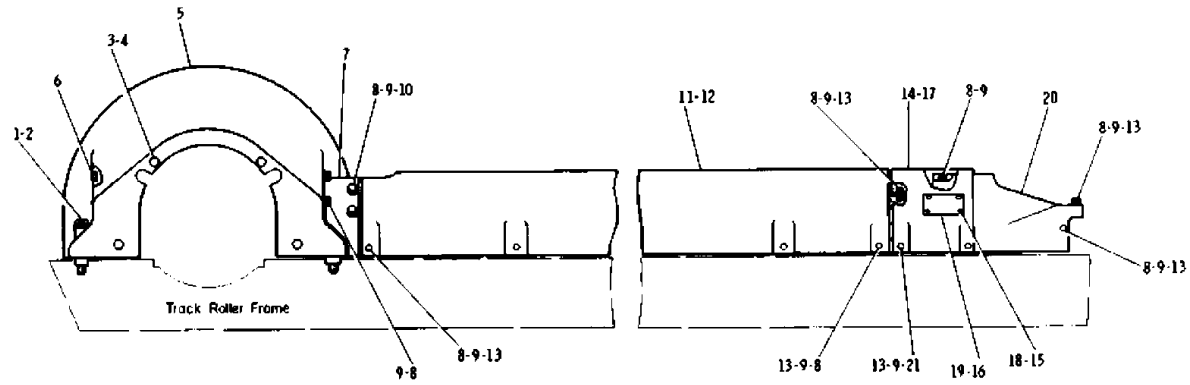

REF NO.	PART NUMBER	DESCRIPTION	QTY.
1	1A8651	BOLT	4
2	3B4510	LOCKWASHER	4
3	S1621	BOLT	8
4	3B4508	LOCKWASHER	8
5	3K3420	GUARD ASSEM.	2
6	9F2978	NUT (Weld)	4
7	3K9249	GUARD (R.H.)	1
	3K9250	GUARD (L.H.)	1
8	LL351	BOLT	38
9	3B4506	LOCKWASHER	42
10	3L9689	WASHER	4
11	5K3369	GUARD ASSEM. (R.H.)	1
	9F2978	NUT (Weld)	2

REF. NO.	PART NUMBER	DESCRIPTION	QTY.
12	5K3370	GUARD ASSEM. (L.H.)	1
	9F2978	NUT (Weld)	2
13	4B4278	WASHER	32
14	5A9227	GUARD GROUP (R.H.-For Japan)	1
	8K5691	GUARD GROUP (R.H.-For Outside Japan)	1
	5H8991	SHAFT	1
15	7B3028	SCREW	4
16	5A3384	PLATE (Japanese)	1
	1S5242	PLATE (English)	1

REF. NO.	PART NUMBER	DESCRIPTION	QTY.
17	5A9228	GUARD GROUP (L.H.-For Japan)	1
	8K5692	GUARD GROUP (L.H.-For Outside Japan)	1
	5H8991	SHAFT	1
18	7B3028	SCREW	4
19	5A3384	PLATE (Japanese)	1
	1S5242	PLATE (English)	1
20	4K5549	GUARD (R.H.)	1
	4K5550	GUARD (L.H.)	1
21	T102	BOLT	4

J12675E

GRAPHIC #1

j12675e

6K9879 TRACK CARRIER ROLLER GROUP--2 Required

Effective with Serial No. 65J1474~65J1545

Key: R - REMFG PART MAY BE AVAILABLE

SMCS

NOTE	REF NO	GRAPHIC REF	PART NUMBER	QTY	PART NAME 1 2 3 4 5 6 (PRODUCT LEVEL)	LINK PAGE
	1		1M-7914	1	RING	
	2		1M-7918	1	COLLAR ASSEM.	
	3		1M-4291	2	DOWEL	
	4		1H-9696	1	SEAL	
R	5		2M-2858	1	SEAL GROUP	
	6		1M-3097	2	RING (Rubber)	
	7		1M-8735	2	CONE	
	8		1M-8736	2	CUP	
	9		1H-6227	1	SEAL	
	10		4K-4235	2	CORK	
	11		2P-0347	1	PLUG	
	12		1S-8947	1	SEAL	
	13		0L-1351	3	BOLT	
	14		3B-4506	3	LOCKWASHER	
	15		6K-7583	1	COVER	
	16		5H-8848	1	SEAL	
	17		0T-0703	2	BOLT	
	18		0T-0329	1	LOCK	
	19		6K-9860	1	PLATE	
	20		6K-9861	1	SHAFT	
	21		6K-9862	1	ROLLER	
	22		2M-7119	1	SUPPORT ASSEM.	
	23		2A-3348	2	DOWEL	

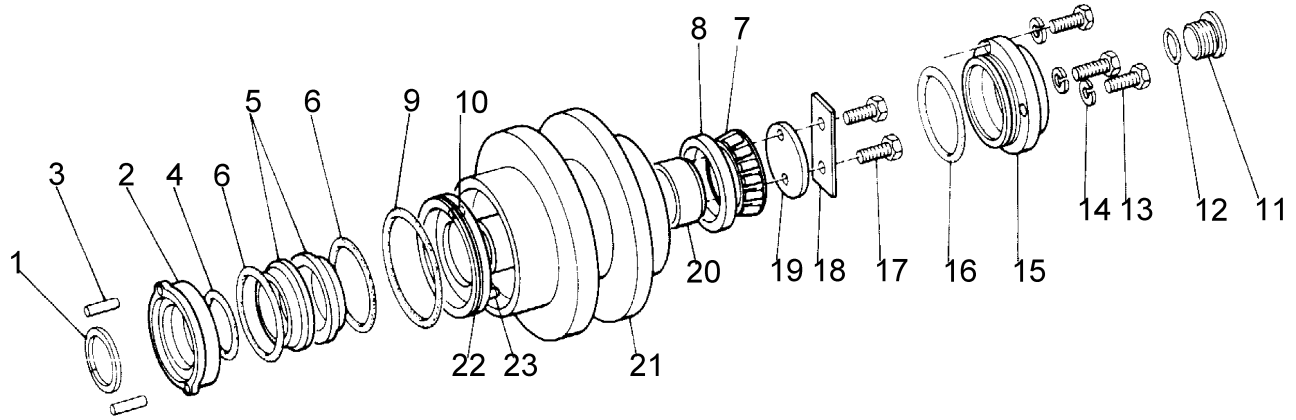

REF. NO.	PART NUMBER	DESCRIPTION	QTY
1	1M7914	RING	1
2	1M7918	COLLAR ASSEM.	1
3	1M4291	DOWEL	2
4	1H9696	SEAL	1
5	2M2858	SEAL GROUP	1
6	1M3097	RING (Rubber)	2
7	1M8735	CONE	2
8	1M8736	CUP	2
9	1H6227	SEAL	1
10	4K4235	CORK	2
11	2P347	PLUG	1
12	1S8947	SEAL	1
13	L1351	BOLT	3
14	3B4506	LOCKWASHER	3
15	6K7583	COVER	1
16	5H8848	SEAL	1
17	T703	BOLT	2
18	T329	LOCK	1
19	6K9860	PLATE	1
20	6K9861	SHAFT	1
21	6K9862	ROLLER	1
22	2M7119	SUPPORT ASSEM.	1
23	2A3348	DOWEL	2

114972

GRAPHIC #1

c114972

6K9880 TRACK CARRIER ROLLER GROUP--2 Required

Effective with Serial No. 65J1546-UP

Key: R - REMFG PART MAY BE AVAILABLE

SMCS

NOTE	REF NO	GRAPHIC REF	PART NUMBER	QTY	PART NAME 1 2 3 4 5 6 (PRODUCT LEVEL)	LINK PAGE
	1		6K-9861	1	SHAFT	
	2		1M-7914	1	RING	
	3		1H-9696	1	SEAL	
	4		1M-7918	1	COLLAR ASSEM.	
	5		1M-4291	2	DOWEL	
	6		1H-6227	1	SEAL	
	7		2M-7119	1	SUPPORT ASSEM.	
	8		2A-3348	2	DOWEL	
	9		6K-9881	1	COLLAR ASSEM.	
	10		1M-8736	2	CUP	
	11		1M-8735	2	CONE	
	12		5H-8848	1	SEAL	
	13		0L-1351	3	BOLT	
	14		3B-4506	3	LOCKWASHER	
	15		2P-0347	1	PLUG	
			1S-8947	1	SEAL	
	16		3K-6638	1	COVER	
	17		0T-0703	2	BOLT	
	18		0T-0329	1	LOCK	
	19		6K-9860	1	PLATE	
	20		4K-4235	2	CORK	
R	21		2M-2858	1	SEAL GROUP	
	22		1M-3097	2	RING	

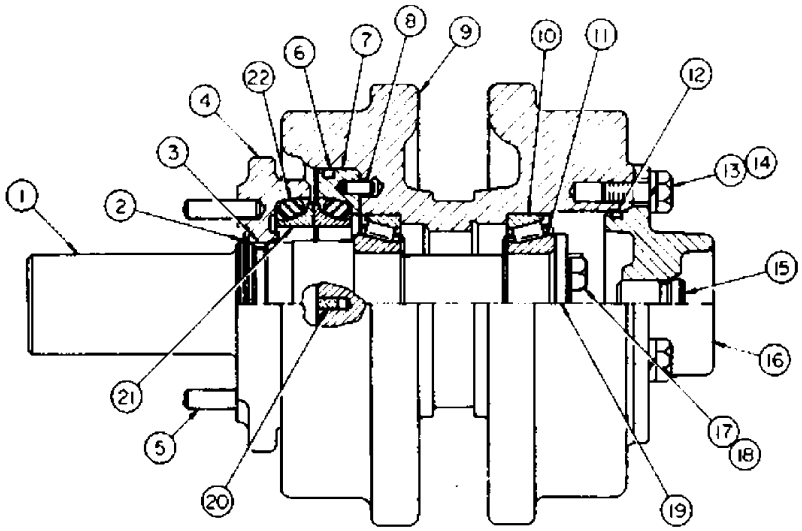

REF NO.	PART NUMBER	DESCRIPTION	QTY.
1	6K9861	SHAFT	1
2	1M7914	RING	1
3	1H9696	SEAL	1
4	1M7918	COLLAR ASSEM.	1
5	1M4291	DOWEL	2
6	1H6227	SEAL	1
7	2M7119	SUPPORT ASSEM.	1
8	2A3348	DOWEL	2
9	6K9881	ROLLAR ASSEM.	1
10	1M8736	CUP	2
11	1M8735	CONE	2
12	5H8848	SEAL	1
13	0L1351	BOLT	3
14	3B4506	LOCKWASHER	3
15	2P347	PLUG	1
	1S8947	SEAL	1
16	3K6638	COVER	1
17	T703	BOLT	2
18	T329	LOCK	1
19	6K9860	PLATE	1
20	4K4235	CORK	2
21	2M2858	SEAL GROUP	1
22	1M3097	RING	2

J9730E

GRAPHIC #1

7K8095 TRACK ROLLER GROUP--Single Flange--4 Required

Effective with Serial No. 65J1474-UP
Roller Arrangement: D-D-S-D-S

Key: R - REMFG PART MAY BE AVAILABLE

SMCS

NOTE	REF NO	GRAPHIC REF	PART NUMBER	QTY	PART NAME 1 2 3 4 5 6 (PRODUCT LEVEL)	LINK PAGE
	1		4K-7392	1	LOCK	
	2		3K-6616	1	SHAFT	
	3		7K-1102	2	BUSHING ASSEM.	
			7K-1103	2	BUSHING ASSEM. (1.0mm Oversize)	
	4		7K-1089	1	BUSHING (Inner)	
			9B-2289	2	PIN	
	5		1A-2029	12	BOLT	
			3B-4506	12	LOCKWASHER	
	6		7K-8759	1	RIM ASSEM.	
	7		1H-8128	2	SEAL (Standard)	
					-OR-	
			5K-1770	2	SEAL (High Temperature)	
	8		5K-7187	2	COLLAR	
R	9		2M-2858	2	SEAL GROUP	
			1M-3097	2	RING	
	10		7F-8267	2	SEAL	
	11		6H-7382	2	RING	
	12		2P-0347	1	PLUG	
	13		1A-1135	4	BOLT	
			4D-3704	4	WASHER	
	14		1S-8947	1	SEAL	

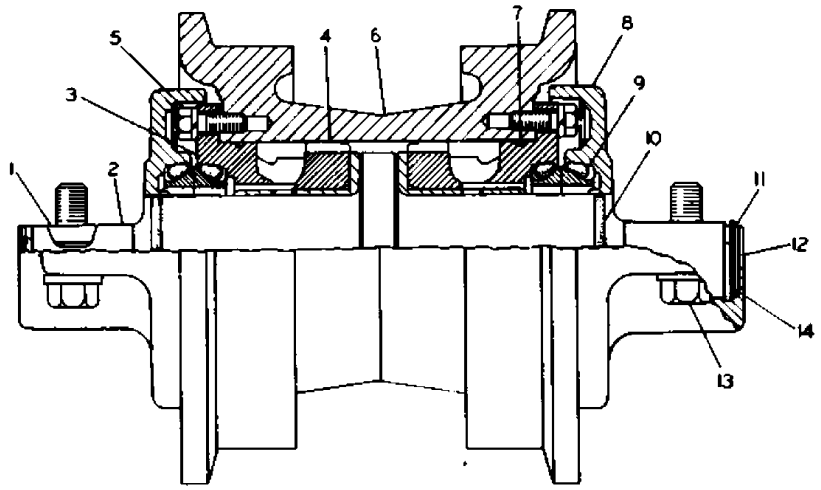

REF NO.	PART NUMBER	DESCRIPTION	QTY.
1	4K7392	LOCK	1
2	3K6616	SHAFT	1
3	7K1102	BUSHING ASSEM.	2
	7K1103	BUSHING ASSEM. (1.0mm Oversize)	2
4	7K1089	BUSHING (Inner)	1
	9B2289	PIN	2
5	1A2029	BOLT	12
	3B4506	LOCKWASHER	12
6	7K8759	RIM ASSEM.	1
7	1H8128	SEAL (Standard)	2
		-OR-	
	5K1770	SEAL (High Temperature)	2
8	5K7187	COLLAR	2
9	2M2858	SEAL GROUP	2
	1M3097	RING	2
10	7F8267	SEAL	2
11	6H7382	RING	2
12	2P347	PLUG	1
13	1A1135	BOLT	4
	4D3704	WASHER	4
14	1S8947	SEAL	1

j10992e

GRAPHIC #1

7K8096 TRACK ROLLER GROUP--Double Flange--6 Required

Effective with Serial No. 65J1474-UP
Roller Arrangement: D-D-S-D-S

Key: H - NOT PART OF 7K8096, R - REMFG PART MAY BE AVAILABLE

SMCS

NOTE	REF NO	GRAPHIC REF	PART NUMBER	QTY	PART NAME 1 2 3 4 5 6 (PRODUCT LEVEL)	LINK PAGE
	1		4K-7392	1	LOCK	
	2		3K-6616	1	SHAFT	
	3		7K-1102	2	BUSHING ASSEM.	
	4		7K-1089	1	BUSHING (Inner)	
			9B-2289	2	PIN	
	5		1A-2029	12	BOLT	
			3B-4506	12	LOCKWASHER	
	6		7K-8760	1	RIM ASSEM.	
	7		1H-8128	2	SEAL (Standard)	
					-OR-	
H			5K-1770	2	SEAL (High Temperature)	
	8		5K-7187	2	COLLAR	
R	9		2M-2858	2	SEAL GROUP	
			1M-3097	2	RING	
	10		7F-8267	2	SEAL	
	11		1A-1135	4	BOLT	
			4D-3704	4	WASHER	
	12		6H-7382	2	RING	
	13		2P-0347	1	PLUG	
			1S-8947	1	SEAL	
H	14		7K-1103	2	BUSHING ASSEM. (1.0mm Oversize)	
	15		7K-1089	1	BUSHING (Inner)	
			9B-2289	2	PIN	

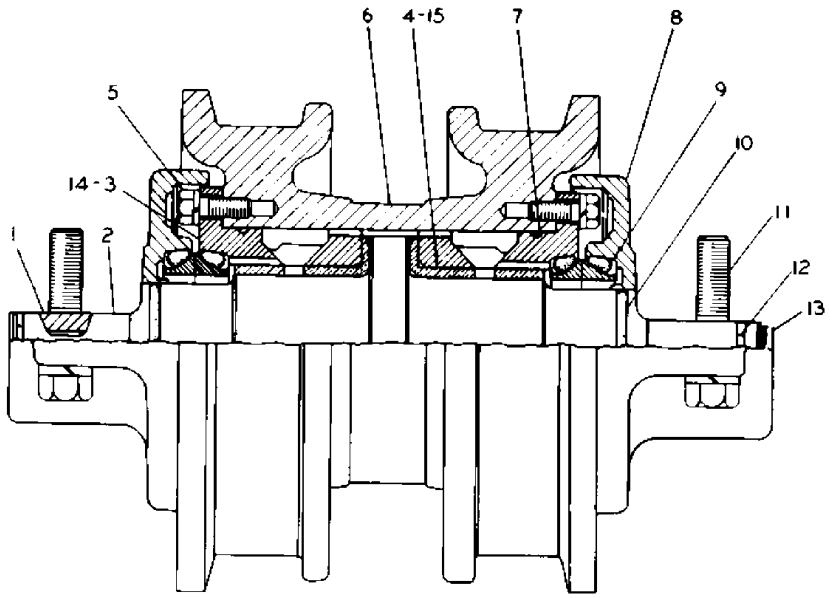

REF. NO.	PART NUMBER	DESCRIPTION	QTY.
1	4K7392	LOCK	1
2	3K6616	SHAFT	1
3	7K1102	BUSHING ASSEM.	2
4	7K1089	BUSHING (Inner)	1
	9B2289	PIN	2
5	1A2029	BOLT	12
	3B4506	LOCKWASHER	12
6	7K8760	RIM ASSEM.	1
7	1H8128	SEAL (Standard)	2
		—OR—	
▲	5K1770	SEAL (High Temperature)	2
8	5K7187	COLLAR	2
9	2M2858	SEAL GROUP	2
	1M3097	RING	2
10	7F8267	SEAL	2
11	1A1135	BOLT	4
	4D3704	WASHER	4
12	6H7382	RING	2
13	2P347	PLUG	1
	1S8947	SEAL	1
▲	14 7K1103	BUSHING ASSEM. (1.0mm Oversize)	2
15	7K1089	BUSHING (Inner)	1
	9B2289	PIN	2

▲ NOT PART OF 7K8096

J8988E

GRAPHIC #1

7K2073 TRACK GROUP--406mm Single Grouser Shoe--2 Required

Effective with Serial No. 65J1474~65J1884

Key:

SMCS

NOTE	REF NO	GRAPHIC REF	PART NUMBER	QTY	PART NAME 1 2 3 4 5 6 (PRODUCT LEVEL)	LINK PAGE
			7K-2049	1	LINK ASSEM	
H			7K-2019	35	BUSHING	
H			4B-6166	35	PIN	
			7K-1826	35	LINK. (LEFT HAND).	
			7K-1828	1	LINK	
					(MASTER-LEFT HAND)	
H			7K-2020	1	BUSHING. (MASTER).	
			7K-1825	35	LINK. (RIGHT HAND).	
H			7K-2016	2	SPACER	
			7K-2018	144	SEAL WASHER.	
			7K-1827	1	LINK	
					(MASTER-RIGHT HAND)	
H			4K-3919	1	PIN (MASTER)	
			4K-7038	144	BOLT	
			7K-2017	144	NUT	
			4K-7175	36	SHOE	
			7K-8454	1	TRACK PIN AND BUSHING GROUP	
					(Consists of h mark parts)	
					NOTE: WHEN COMPLETE REPLACENT OF MASTER PIN IS	
			4K-3919	1	PIN (MASTER)	
			4K-3916	2	SPACER	
			5K-2707	4	SEAL WASHER	

7K2073 TRACK GROUP--406mm Single Grouser Shoe--2 Required

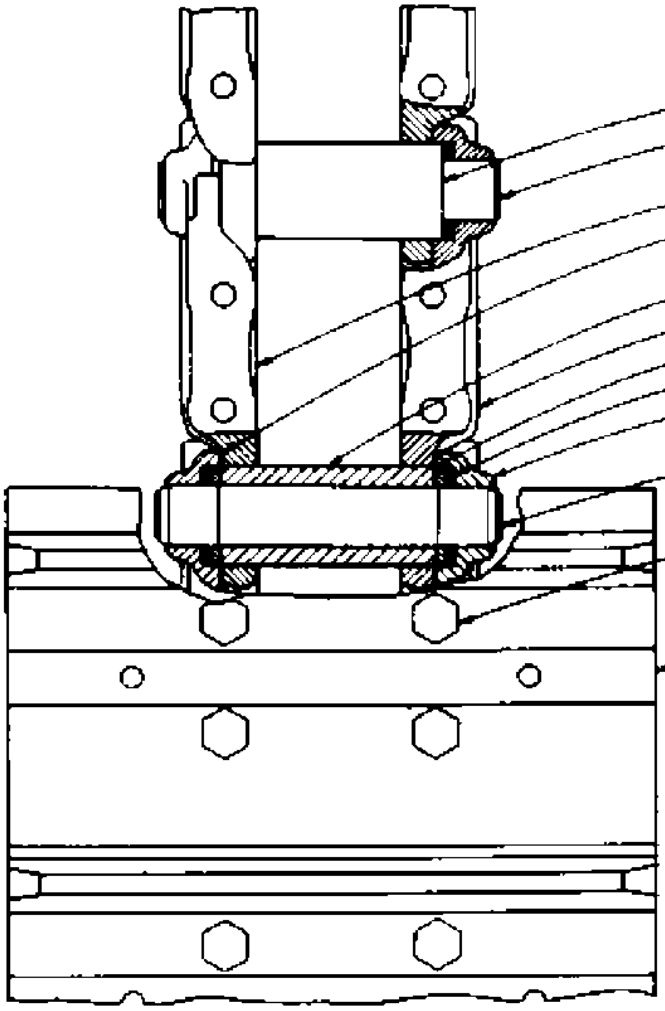

7K2049-LINK ASSEM..... 1
CONSISTING OF:
▲7K2019-BUSHING.....35
▲4B6166-PIN.....35
7K1826-LINK.(LEFT HAND).35
7K1828-LINK.....1
(MASTER-LEFT HAND)
▲7K2020-BUSHING.(MASTER).1
7K1825-LINK.(RIGHT HAND).35
▲7K2016-SPACER.....2
▲7K2018-SEAL WASHER.144
7K1827-LINK.....1
(MASTER-RIGHT HAND)
▲4K3919-PIN...(MASTER).....1
4K7038-BOLT.....144
7K2017-NUT.....144
4K7175-SHOE.....36
7K8454-TRACK PIN AND BUSHING GROUP.....1
(Consists of ▲mark parts)

NOTE:WHEN COMPLETE REPLACENT OF MASTER PIN IS REQUIRED YOU MAY ORDER MASTER PIN & SPACER GROUP 4K4078 WHICH CONSISTS OF:
4K3919-PIN...(MASTER).....1
4K3916-SPACER.....2
5K2707-SEAL WASHER.....4

J12571E

GRAPHIC #1

j12571e

2V2276 TRACK GROUP--406mm Single Grouser Shoe--2 Required

Effective with Serial No. 65J1885-UP

Key:

SMCS

NOTE	REF NO	GRAPHIC REF	PART NUMBER	QTY	PART NAME 1 2 3 4 5 6 (PRODUCT LEVEL)	LINK PAGE
			2V-2260	1	LINK ASSEM.	
	1		9K-0028	1	LINK (Master-L.H.)	
	2		9K-4062	1	PIN (Master)	
	3		7K-2018	144	SEAL WASHER	
	4		7K-2020	1	BUSHING (Master)	
	5		9K-6628	35	LINK (L.H.)	
	6		9K-4060	35	PIN	
	7		9K-4061	35	BUSHING	
	8		9K-6629	35	LINK (R.H.)	
	9		9K-0029	1	LINK (Master-R.H.)	
	10		9K-4059	2	SPASER	
	11		7H-3597	144	BOLT	
			1M-1408	144	NUT	
	12		1V-4626	36	SHOE	

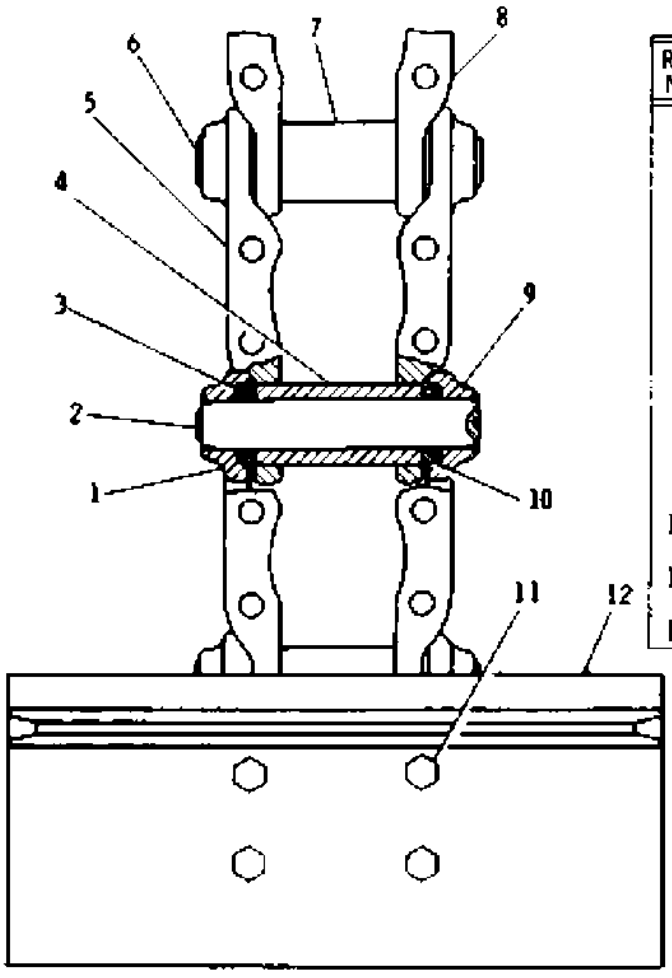

REF. NO	PART NUMBER	DESCRIPTION	QTY
	2V2260	LINK ASSEM.	1
		Consists of:	
1	9K28	LINK (Master-L.H.)	1
2	9K4062	PIN (Master)	1
3	7K2018	SEAL WASHER	144
4	7K2020	BUSHING (Master)	1
5	9K6628	LINK (L.H.)	35
6	9K4060	PIN	35
7	9K4061	BUSHING	35
8	9K6629	LINK (R.H.)	35
9	9K29	LINK (Master-R.H.)	1
10	9K4059	SPASER	2
11	7H3597	BOLT	144
	1M1408	NUT	144
12	1V4626	SHOE ( )	36

J12199E

GRAPHIC #1

7K2072 TRACK GROUP--330mm Single Grouser Shoe--2 Required

AN ATTACHMENT

Key:

SMCS

NOTE	REF NO	GRAPHIC REF	PART NUMBER	QTY	PART NAME 1 2 3 4 5 6 (PRODUCT LEVEL)	LINK PAGE
	1		7K-2049	1	LINK ASSEM.	
	1		7K-1828	1	LINK (Master-L.H.)	
H	2		4K-3919	1	PIN (Master)	
H	3		7K-2018	144	SHEAL WASHER	
H	4		7K-2020	1	BUSHING (Master)	
	5		7K-1826	35	LINK (L.H.)	
H	6		4B-6166	35	PIN	
H	7		7K-2019	35	BUSHING	
	8		7K-1825	35	LINK (R.H.)	
	9		7K-1827	1	LINK (Master-R.H.)	
H	10		7K-2016	2	SPACER	
	11		4K-7038	144	BOLT	
			7K-2017	144	NUT	
	12		4K-7052	36	SHOE	
			7K-8454	1	TRACK PIN AND BUSHING GROUP	
					(Consists of h mark parts)	

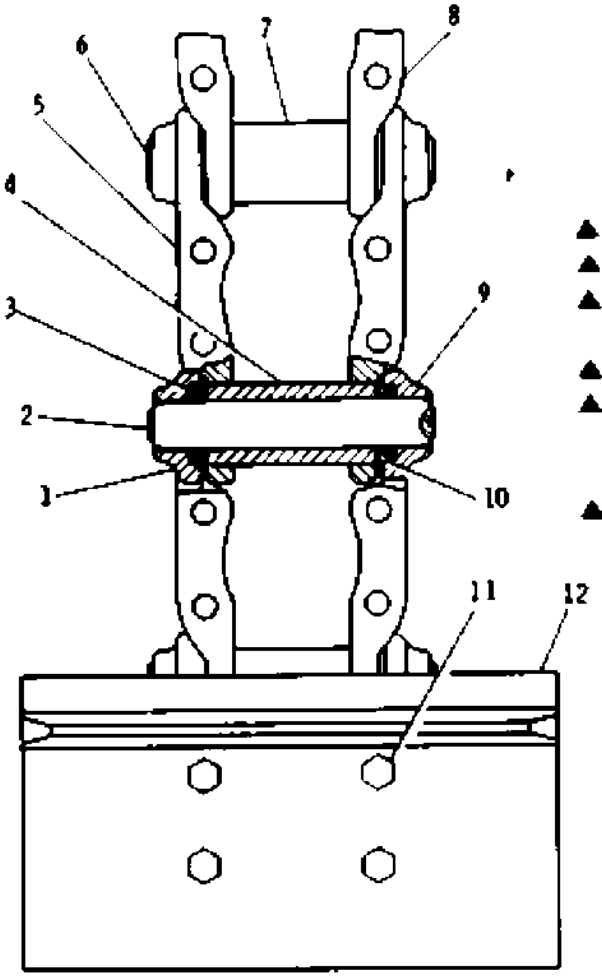

REF. NO.	PART NUMBER	DESCRIPTION	QTY.
	7K2049	LINK ASSEM.	1
		Consists of:	
1	7K1828	LINK (Master-L.H.)	1
▲ 2	4K3919	PIN (Master)	1
▲ 3	7K2018	SHEAL WASHER	144
▲ 4	7K2020	BUSHING (Master)	1
5	7K1826	LINK (L.H.)	35
▲ 6	4B6166	PIN	35
▲ 7	7K2019	BUSHING	35
8	7K1825	LINK (R.H.)	35
9	7K1827	LINK (Master-R.H.)	1
▲ 10	7K2016	SPACER	2
11	4K7038	BOLT	144
	7K2017	NUT	144
12	4K7052	SHOE (▬)	36

7K8454-TRACK PIN AND BUSHING GROUP.....1
(Consists of ▲mark parts)

J13022E

7K2072 TRACK GROUP--330mm Single Grouser Shoe--2 Required

GRAPHIC #1

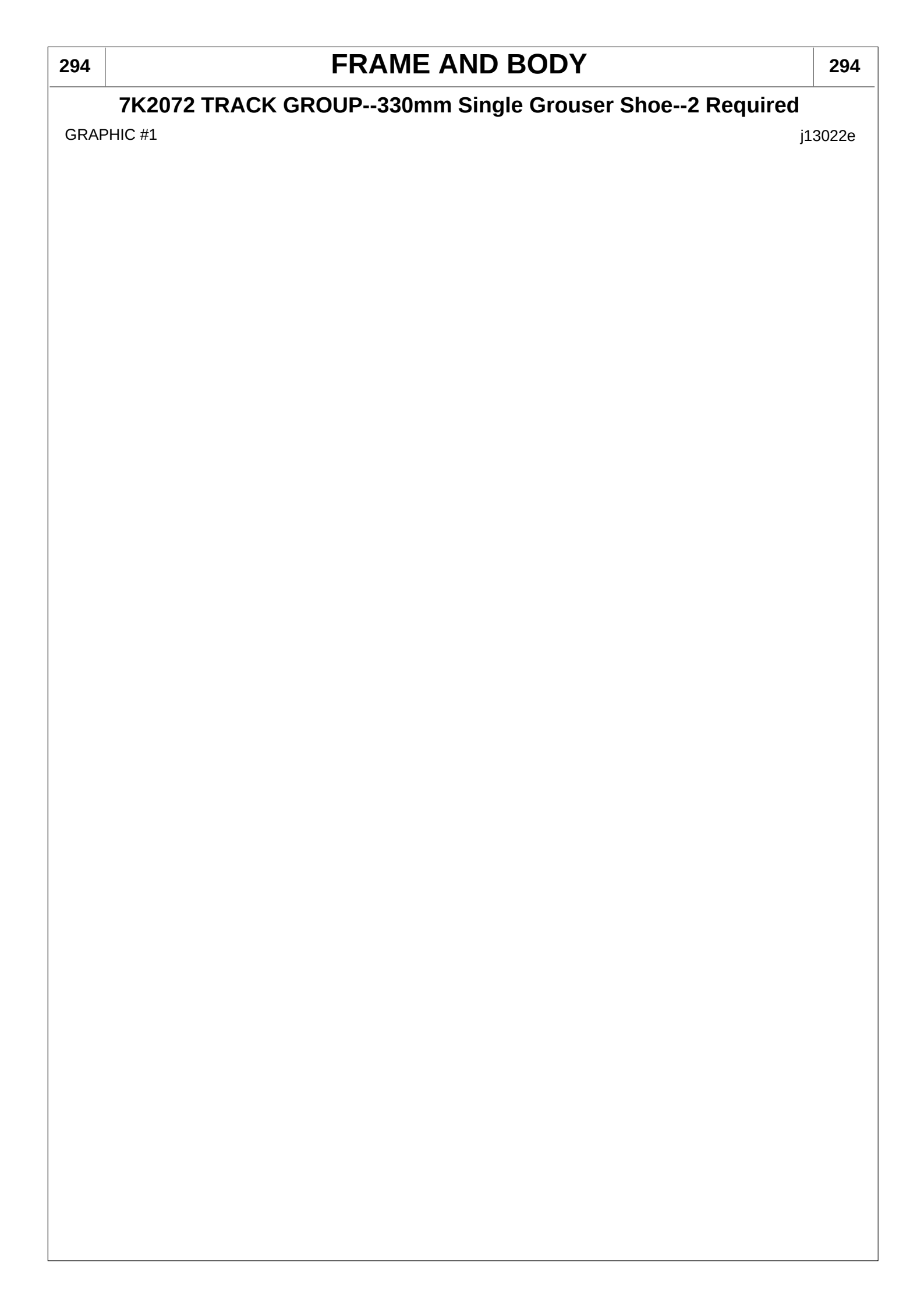

j13022e

2V2273 TRACK GROUP--330mm Single Grouser Shoe--2 Required

AN ATTACHMENT

Key:

SMCS

NOTE	REF NO	GRAPHIC REF	PART NUMBER	QTY	PART NAME 1 2 3 4 5 6 (PRODUCT LEVEL)	LINK PAGE
			2V-2260	1	LINK ASSEM.	
	1		9K-0028	1	LINK (Master-L.H.)	
	2		9K-4062	1	PIN (Master)	
	3		7K-2018	144	SHEAL WASHER	
	4		7K-2020	1	BUSHING (Master)	
	5		9K-6628	35	LINK (L.H.)	
	6		9K-4060	35	PIN	
	7		9K-4061	35	BUSHING	
	8		9K-6629	35	LINK (R.H.)	
	9		9K-0029	1	LINK (Master-R.H.)	
	10		9K-4059	2	SPACER	
	11		7H-3597	144	BOLT	
			1M-1408	144	NUT	
	12		1V-4630	36	SHOE	

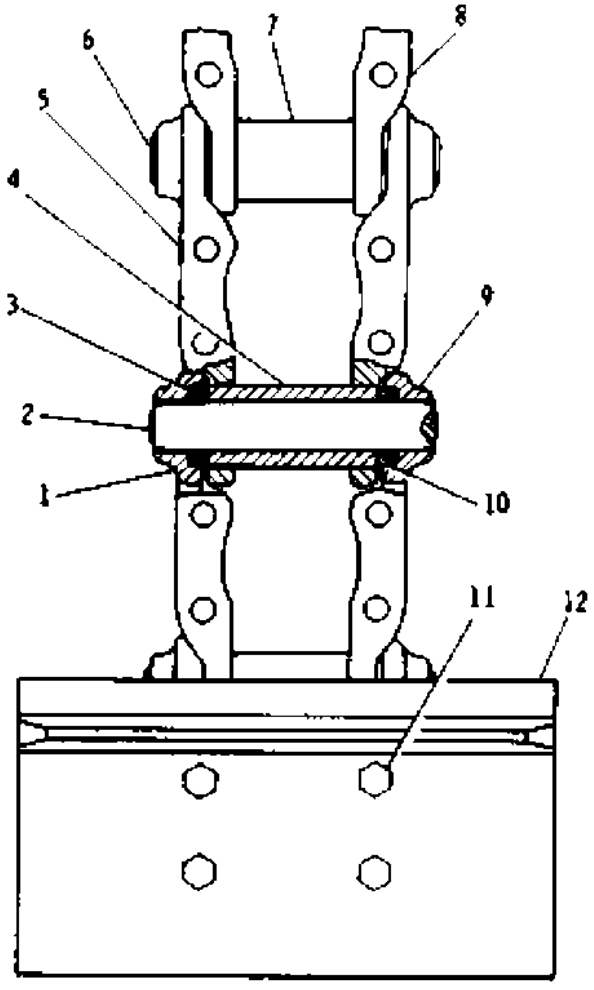

REF. NO.	PART NUMBER	DESCRIPTION	QTY.
	2V2260	LINK ASSEM.	1
		Consists of:	
1	9K28	LINK (Master-L.H.)	1
2	9K4062	PIN (Master)	1
3	7K2018	SHEAL WASHER	144
4	7K2020	BUSHING (Master)	1
5	9K6628	LINK (L.H.)	35
6	9K4060	PIN	35
7	9K4061	BUSHING	35
8	9K6629	LINK (R.H.)	35
9	9K29	LINK (Master-R.H.)	1
10	9K4059	SPACER	2
11	7H3597	BOLT	144
	1M1408	NUT	144
12	1V4630	SHOE ( )	36

J12198E

GRAPHIC #1

1V4624 TRACK GROUP--406mm Single Grouser Shoe--2 Required

Sealed and Lubricated Track
For outside Japan
AN ATTACHMENT

Key:

SMCS

NOTE	REF NO	GRAPHIC REF	PART NUMBER	QTY	PART NAME 1 2 3 4 5 6 (PRODUCT LEVEL)	LINK PAGE
	1		1V-4627	1	SHOE (Master)	
	2		1V-4626	34	SHOE	
	3		7H-3597	136	BOLT	
			1M-1408	136	NUT	
			1V-4602	1	LINK ASSEM.	
	4		9K-6628	34	LINK	
	5		1V-4494	35	BUSHING	
	6		9K-6629	34	LINK	
	7		9K-8550	35	PIN	
	8		1V-3361	70	RING	
	9		1V-4468	70	SEAL ASSEM.	
	10		3P-3080	35	PLUG	
			3P-1103	35	STOPER	
	11		1V-4603	1	LINK (Master-R.H.-Pin End)	
			1V-4604	1	LINK (Master-L.H.-Pin End)	
	12		3P-2274	4	BOLT	
	13		1V-4605	1	LINK (Master)	
					(R.H.-Bushing End)	
			1V-4606	1	LINK (Master)	
					(L.H.-Bushing End)	

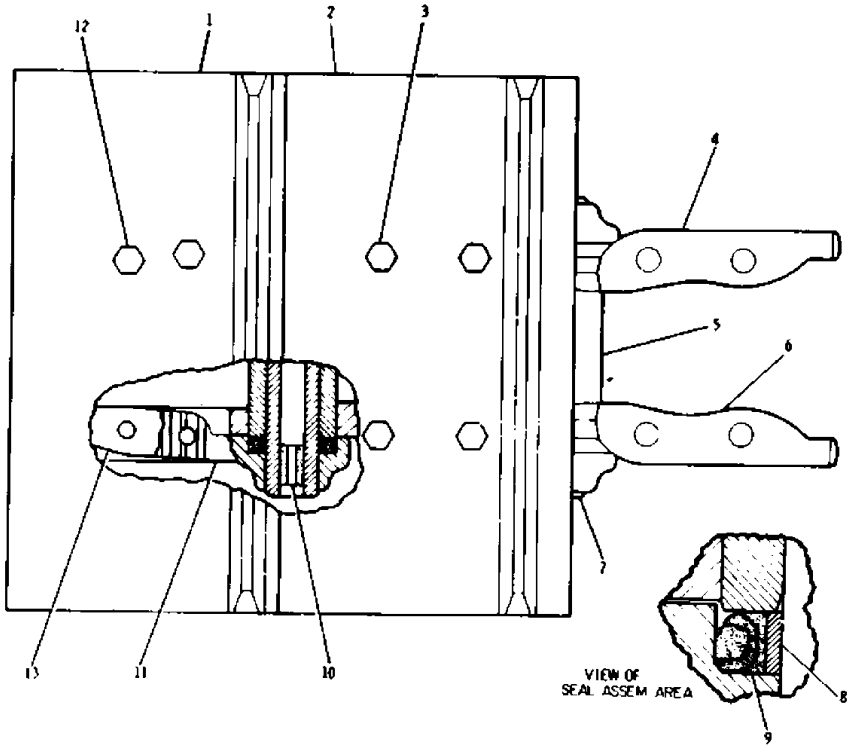

REF. NO.	PART NUMBER	DESCRIPTION	QTY.
1	1V4627	SHOE (Master)	1
2	1V4626	SHOE	34
3	7H3597	BOLT	136
	1M1408	NUT	136
	1V4602	LINK ASSEM	1
		Consists of:	
4	9K6628	LINK	34
5	1V4494	BUSHING	35
6	9K6629	LINK	34
7	9K8550	PIN	35
8	1V3361	RING	70
9	1V4468	SEAL ASSEM.	70
10	3P3080	PLUG	35
	3P1103	STOPER	35
11	1V4603	LINK (Master-R.H.-Pin End)	1
	1V4604	LINK (Master-L.H.-Pin End)	1
12	3P2274	BOLT	4
13	1V4605	LINK (Master)	1
		(R.H.-Bushing End)	
	1V4606	LINK (Master)	1
		(L.H.-Bushing End)	

J15672E

GRAPHIC #1

3Y3476 TRACK GROUP--406mm Double Grouser Shoe--2 Required

For use with Two--Way Dozer
AN ATTACHMENT

Key:

SMCS

NOTE	REF NO	GRAPHIC REF	PART NUMBER	QTY	PART NAME 1 2 3 4 5 6 (PRODUCT LEVEL)	LINK PAGE
			2V-2260	1	LINK ASSEM.	
	1		9K-0028	1	LINK (Master-L.H.)	
	2		9K-4062	1	PIN (Master)	
	3		7K-2018	144	WASHER (Seal)	
	4		7K-2020	1	BUSHING (Master)	
	5		9K-6628	35	LINK (L.H.)	
	6		9K-4061	35	BUSHING	
	7		9K-6629	35	LINK (R.H.)	
	8		9K-4060	35	PIN	
	9		9K-0029	1	LINK (Master-r.h.)	
	10		9K-4059	2	SPACER	
	11		3Y-3477	36	SHOE	
	12		7H-3597	144	BOLT	
			1M-1408	144	NUT	

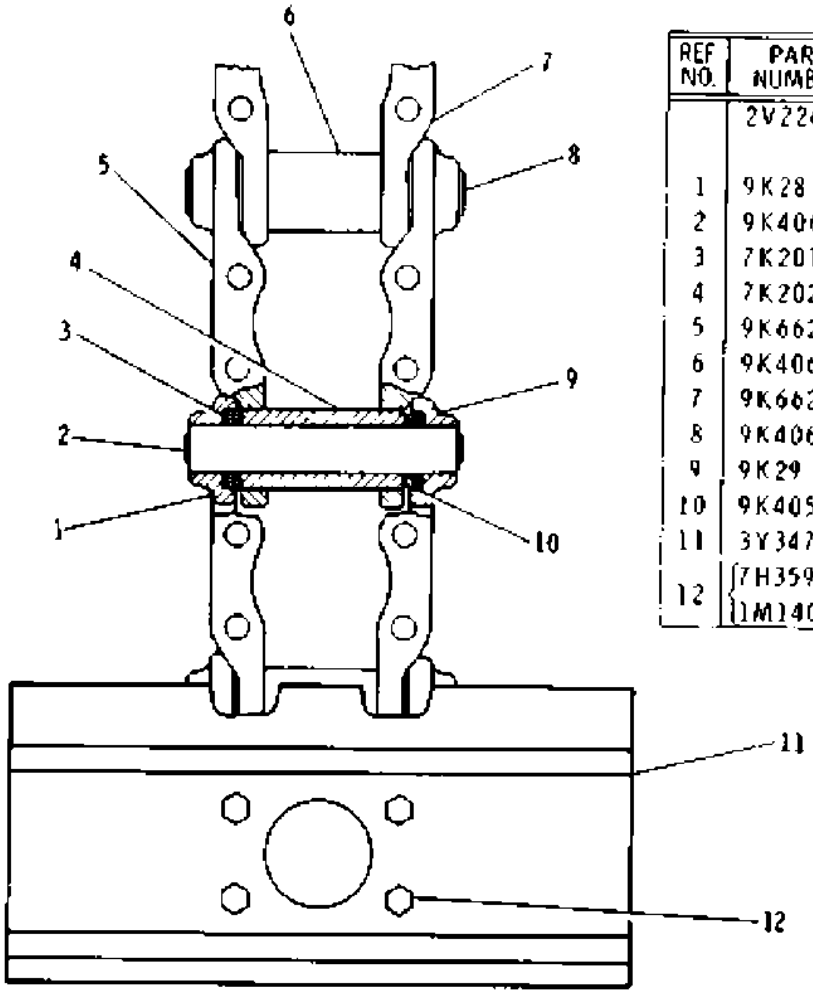

REF NO.	PART NUMBER	DESCRIPTION	QTY.
	2V2260	LINK ASSEM	1
		Consists of:	
1	9K28	LINK (Master-L.H.)	1
2	9K4062	PIN (Master)	1
3	7K2018	WASHER (Seal)	144
4	7K2020	BUSHING (Master)	1
5	9K6628	LINK (L.H.)	35
6	9K4061	BUSHING	35
7	9K6629	LINK (R.H.)	35
8	9K4060	PIN	35
9	9K29	LINK (Master-R.H.)	1
10	9K4059	SPACER	2
11	3Y3477	SHOE( )	36
12	7H3597	BOLT	144
	1M1408	NUT	144

J13629E

GRAPHIC #1

j13629e

5A6912 TRACK GROUP--406mm Tripple Grouser Shoe--2 Required

AN ATTACHMENT

Key:

SMCS

NOTE	REF NO	GRAPHIC REF	PART NUMBER	QTY	PART NAME 1 2 3 4 5 6 (PRODUCT LEVEL)	LINK PAGE
			7K-2049	1	LINK ASSEM.	
	1		7K-1828	1	LINK (L.H. MASTER)	
H	2		7K-2018	144	SEAL WASHER	
H	3		7K-2016	2	SPACER	
H	4		4B-6166	35	PIN	
	5		7K-1826	35	LINK (L.H.)	
H	6		7K-2019	35	BUSHING	
	7		7K-1825	35	LINK (R.H.)	
H	8		7K-2020	1	BUSHING (MASTER)	
	9		7K-1827	1	LINK (R.H. MASTER)	
H	10		4K-3919	1	PIN (MASTER)	
	11		5A-4569	36	SHOE	
	12		4K-7038	144	BOLT	
			7K-2017	144	NUT	
			7K-8454	1	TRACK PIN AND BUSHING GROUP	
					(Consits of h mark parts)	

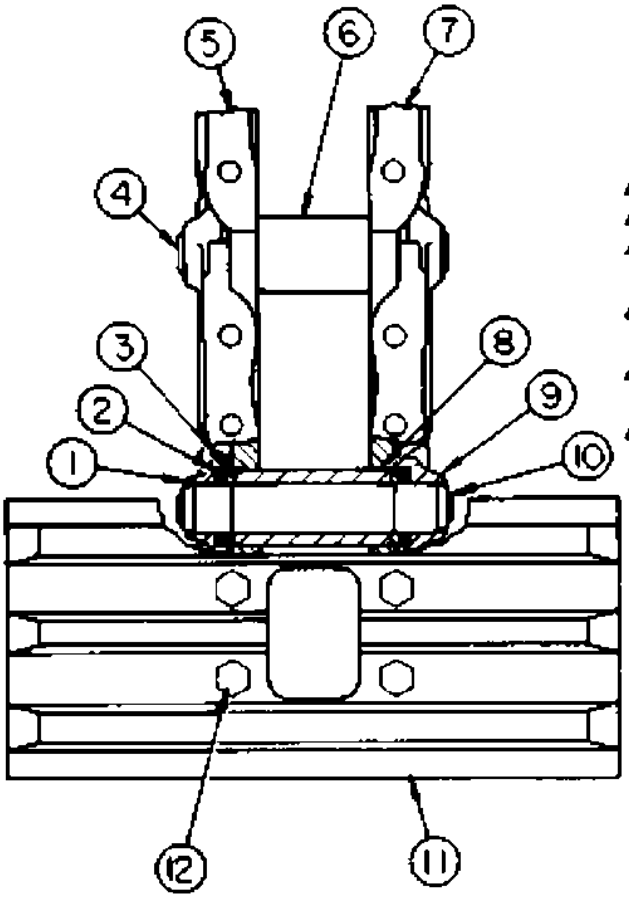

REF NO.	PART NUMBER	DESCRIPTION	QTY
	7K2049	LINK ASSEM.	1
		CONSIST OF :	
1	7K1828	LINK (L H. MASTER)	1
▲ 2	7K2018	SEAL WASHER	144
▲ 3	7K2016	SPACER	2
▲ 4	4B6166	PIN	35
5	7K1826	LINK (L H.)	35
▲ 6	7K2019	BUSHING	35
7	7K1825	LINK (R H.)	35
▲ 8	7K2020	BUSHING (MASTER)	1
9	7K1827	LINK (R H. MASTER)	1
▲ 10	4K3919	PIN (MASTER)	1
11	5A4569	SHOE	36
12	4K7038	BOLT	144
	7K2017	NUT	144

7K8454-TRACK PIN AND BUSHING GROUP 1
(Consists of ▲mark parts)

J12572E

5A6912 TRACK GROUP--406mm Tripple Grouser Shoe--2 Required

GRAPHIC #1

j12572e

3Y4350 TRACK GROUP--406mm Tripple Grouser Shoe--2 Required

AN ATTACHMENT

Key:

SMCS

NOTE	REF NO	GRAPHIC REF	PART NUMBER	QTY	PART NAME 1 2 3 4 5 6 (PRODUCT LEVEL)	LINK PAGE
			2V-2260	1	LINK ASSEM.	
	1		9K-0028	1	LINK (Master - L.H.)	
	2		9K-4062	1	PIN (Master)	
	3		7K-2018	144	WASHER (Seal)	
	4		7K-2020	1	BUSHING (Master)	
	5		9K-6628	35	LINK (L.H.)	
	6		9K-4061	35	BUSHING	
	7		9K-6629	35	LINK (R.H.)	
	8		9K-4060	35	PIN	
	9		9K-0029	1	LINK (Master - r.h.)	
	10		9K-4059	2	SPACER	
	11		3Y-4351	36	SHOE	
	12		7H-3597	144	BOLT	
			1M-1408	144	NUT	

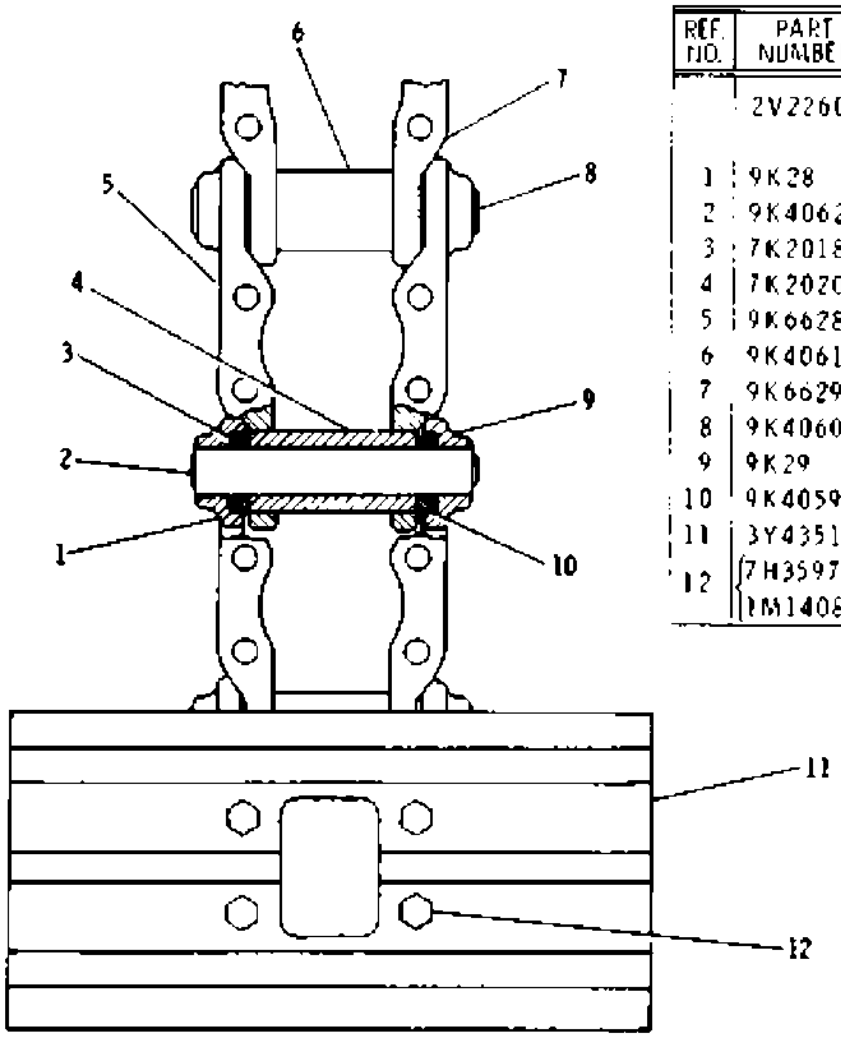

REF. NO.	PART NUMBER	DESCRIPTION	QTY.
	2V2260	LINK ASSEM.	1
		Consists of:	
1	9K28	LINK (Master - L.H.)	1
2	9K4062	PIN (Master)	1
3	7K2018	WASHER (Seal)	144
4	7K2020	BUSHING (Master)	1
5	9K6628	LINK (L.H.)	35
6	9K4061	BUSHING	35
7	9K6629	LINK (R.H.)	35
8	9K4060	PIN	35
9	9K29	LINK (Master - R.H.)	1
10	9K4059	SPACER	2
11	3Y4351	SHOE (▬▬)	36
12	7H3597	BOLT	144
	1M1408	NUT	144

J12497E

GRAPHIC #1

j12497e

3Y3318 TRACK GROUP--406mm Snow & Ice Shoe--2 Required

AN ATTACHMENT

Key:

SMCS

NOTE	REF NO	GRAPHIC REF	PART NUMBER	QTY	PART NAME 1 2 3 4 5 6 (PRODUCT LEVEL)	LINK PAGE
			7K-2049	1	LINK ASSEM.	
H	1		4K-3919	1	PIN (Master)	
	2		7K-1828	1	LINK (Master-L.H.)	
H	3		7K-2020	1	BUSHING (Master)	
H	4		4B-6166	35	PIN	
	5		7K-1826	35	LINK (L.H.)	
H	6		7K-2019	35	BUSHING	
	7		7K-1825	35	LINK (R.H.)	
H	8		7K-2018	144	SEAL WASHER	
	9		7K-1827	1	LINK (Master-R.H.)	
H	10		7K-2016	2	SPACER	
	11		4K-7038	144	BOLT	
			7K-2017	144	NUT	
	12		3Y-3319	36	SHOE ASSEM.	
			7K-8454	1	TRACK PIN AND BUSHING GROUP	
					(Consits of h mark parts)	

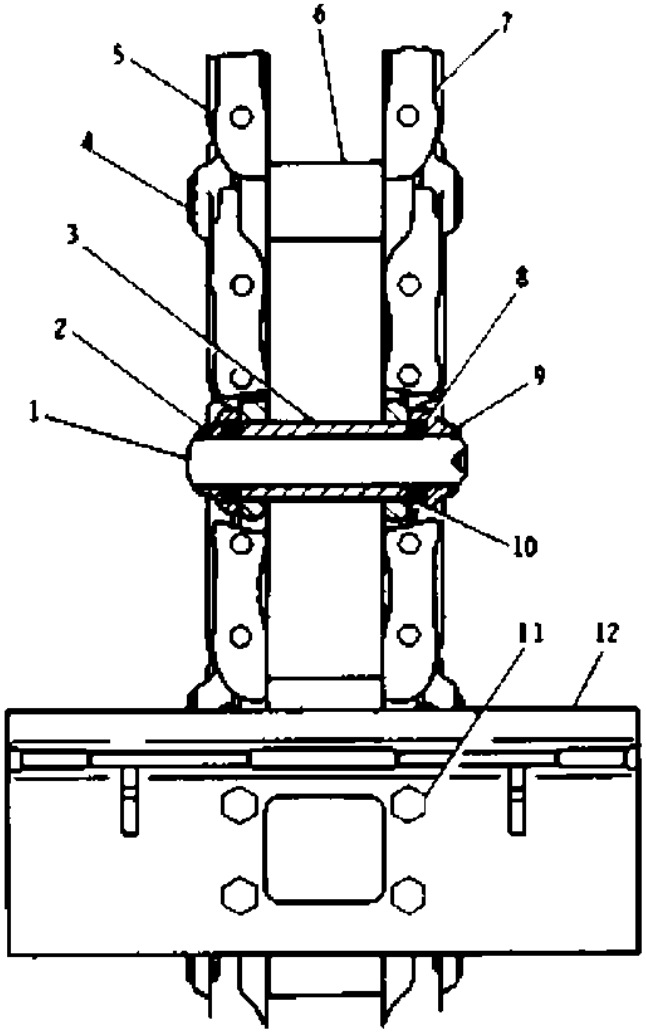

	REF NO.	PART NUMBER	DESCRIPTION	QTY.
		7K2049	LINK ASSEM.	1
			Consists of:	
▲	1	4K3919	PIN (Master)	1
	2	7K1828	LINK (Master-L.H.)	1
▲	3	7K2020	BUSHING (Master)	1
▲	4	4B6166	PIN	35
	5	7K1826	LINK (L.H.)	35
▲	6	7K2019	BUSHING	35
	7	7K1825	LINK (R.H.)	35
▲	8	7K2018	SEAL WASHER	144
	9	7K1827	LINK (Master-R.H.)	1
▲	10	7K2016	SPACER	2
	11	4K7038	BOLT	144
		7K2017	NUT	144
	12	3Y3319	SHOE ASSEM.	36

7K8454-TRACK PIN AND BUSHING GROUP.....1
(Consists of ▲mark parts)

J12570E

3Y3318 TRACK GROUP--406mm Snow & Ice Shoe--2 Required

GRAPHIC #1

j12570e

3Y3461 TRACK GROUP--406mm Snow & Ice Shoe--2 Required

AN ATTACHMENT

Key:

SMCS

NOTE	REF NO	GRAPHIC REF	PART NUMBER	QTY	PART NAME 1 2 3 4 5 6 (PRODUCT LEVEL)	LINK PAGE
			2V-2260	1	LINK ASSEM.	
	1		9K-0028	1	LINK (Master - L.H.)	
	2		9K-4062	1	PIN (Master)	
	3		7K-2018	144	SEAL WASHER	
	4		7K-2020	1	BUSHING (Master)	
	5		9K-6628	35	LINK (L.H.)	
	6		9K-4060	35	PIN	
	7		9K-4061	35	BUSHING	
	8		9K-6629	35	LINK (R.H.)	
	9		9K-0029	1	LINK (Master - R.H.)	
	10		9K-4059	2	SPACER	
	11		7H-3597	144	BOLT	
			1M-1408	144	NUT	
	12		3Y-3773	36	SHOE ASSEM.	

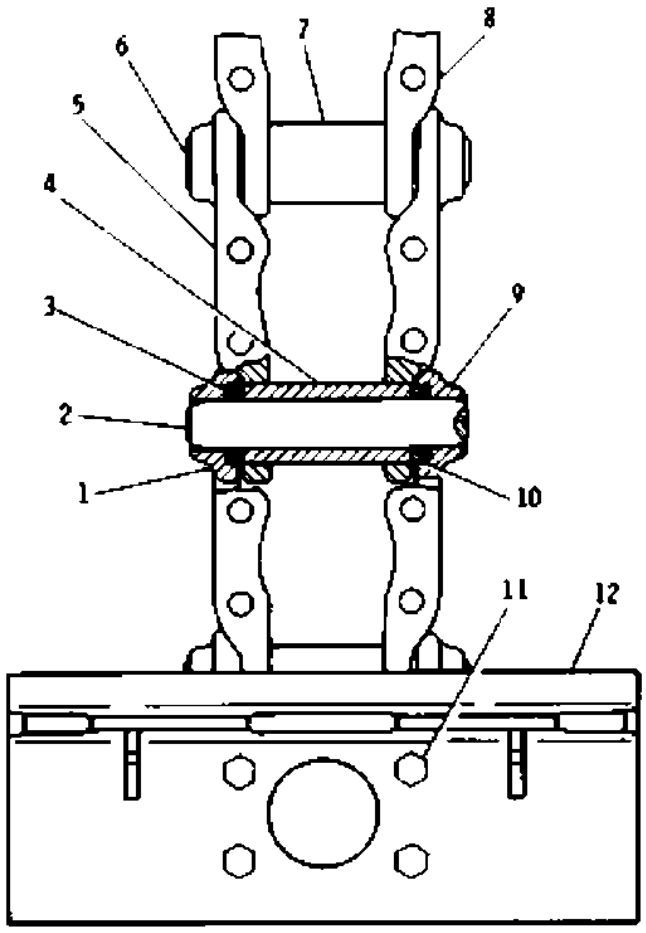

REF. NO.	PART NUMBER	DESCRIPTION	QTY.
	2V2260	LINK ASSEM.	1
		Consists of:	
1	9K28	LINK (Master - L.H.)	1
2	9K4062	PIN (Master)	1
3	7K2018	SEAL WASHER	144
4	7K2020	BUSHING (Master)	1
5	9K6628	LINK (L.H.)	35
6	9K4060	PIN	35
7	9K4061	BUSHING	35
8	9K6629	LINK (R.H.)	35
9	9K29	LINK (Master - R.H.)	1
10	9K4059	SPACER	2
11	7H3597	BOLT	144
	1M1408	NUT	144
12	3Y3773	SHOE ASSEM.	36

J12191E

GRAPHIC #1

7K2074 TRACK GROUP--457mm Single Grouser Shoe--2 Required

AN ATTACHMENT

Key:

SMCS

NOTE	REF NO	GRAPHIC REF	PART NUMBER	QTY	PART NAME 1 2 3 4 5 6 (PRODUCT LEVEL)	LINK PAGE
			7K-2049	1	LINK ASSEM.	
	1		7K-1828	1	LINK (Master-L.H.)	
H	2		4K-3919	1	PIN (Master)	
H	3		7K-2018	144	SEAL WASHER	
H	4		7K-2020	1	BUSHING (Master)	
	5		7K-1826	35	LINK (L.H.)	
H	6		4B-6166	35	PIN	
H	7		7K-2019	35	BUSHING	
	8		7K-1825	35	LINK (R.H.)	
	9		7K-1827	1	LINK (Master-r.h.)	
H	10		7K-2016	2	SPACER	
	11		4K-7038	144	BOLT	
			7K-2017	144	NUT	
	12		4K-7188	36	SHOE	
			7K-8454	1	TRACK PIN AND BUSHING GROUP	
					(Consists of h mark parts)	

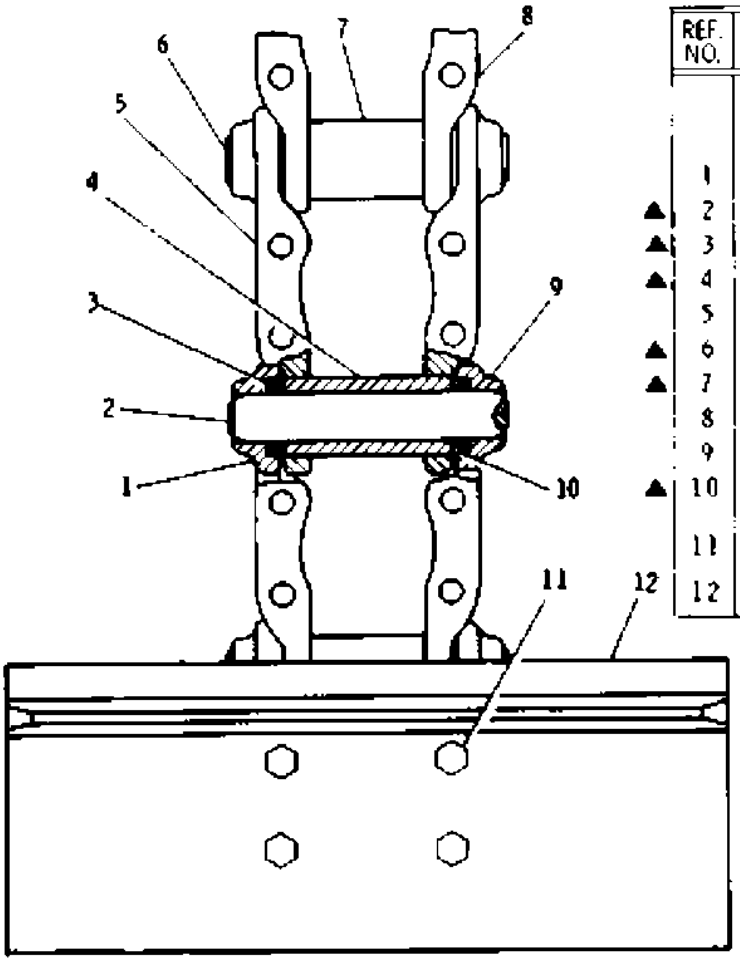

REF. NO.	PART NUMBER	DESCRIPTION	QTY.
	7K2049	LINK ASSEM.	1
		Consists of:	
1	7K1828	LINK (Master-L.H.)	1
▲ 2	4K3919	PIN (Master)	1
▲ 3	7K2018	SEAL WASHER	144
▲ 4	7K2020	BUSHING (Master)	1
5	7K1826	LINK (L.H.)	35
▲ 6	4B6166	PIN	35
▲ 7	7K2019	BUSHING	35
8	7K1825	LINK (R.H.)	35
9	7K1827	LINK (Master-R.H.)	1
▲ 10	7K2016	SPACER	2
11	4K7038	BOLT	144
	7K2017	NUT	144
12	4K7188	SHOE (▬)	36

7K8454-TRACK PIN AND BUSHING GROUP.....1
(Consists of ▲mark parts)

J12568E

GRAPHIC #1

2V2281 TRACK GROUP--457mm Single Grouser Shoe--2 Required

AN ATTACHMENT

Key:

SMCS

NOTE	REF NO	GRAPHIC REF	PART NUMBER	QTY	PART NAME 1 2 3 4 5 6 (PRODUCT LEVEL)	LINK PAGE
			2V-2260	1	LINK ASSEM.	
	1		9K-0028	1	LINK (Master-L.H.)	
	2		9K-4062	1	PIN (Master)	
	3		7K-2018	144	SEAL WASHER	
	4		7K-2020	1	BUSHING (Master)	
	5		9K-6628	35	LINK (L.H.)	
	6		9K-4060	35	PIN	
	7		9K-4061	35	BUSHING	
	8		9K-6629	35	LINK (R.H.)	
	9		9K-0029	1	LINK (Master-R.H.)	
	10		9K-4059	2	SPACER	
	11		7H-3597	144	BOLT	
			1M-1408	144	NUT	
	12		1V-4622	36	SHOE	

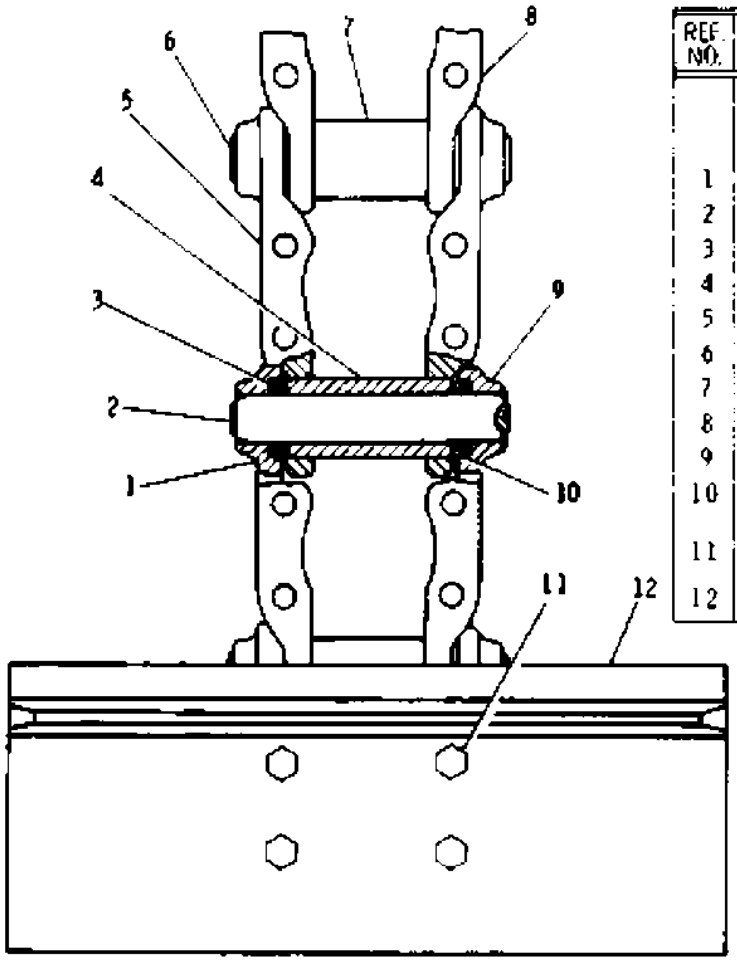

REF NO.	PART NUMBER	DESCRIPTION	QTY.
	2V2260	LINK ASSEM.	1
		Consists of:	
1	9K28	LINK (Master-L.H.)	1
2	9K4062	PIN (Master)	1
3	7K2018	SEAL WASHER	144
4	7K2020	BUSHING (Master)	1
5	9K6628	LINK (L.H.)	35
6	9K4060	PIN	35
7	9K4061	BUSHING	35
8	9K6629	LINK (R.H.)	35
9	9K29	LINK (Master-R.H.)	1
10	9K4059	SPACER	2
11	7H3597	BOLT	144
	1M1408	NUT	144
12	1V4622	SHOE ( )	36

J12200E

GRAPHIC #1

7K2075 TRACK GROUP--508mm Single Grouser Shoe--2 Required

AN ATTACHMENT

Key:

SMCS

NOTE	REF NO	GRAPHIC REF	PART NUMBER	QTY	PART NAME 1 2 3 4 5 6 (PRODUCT LEVEL)	LINK PAGE
			7K-2049	1	LINK ASSEM.	
	1		7K-1828	1	LINK (Master-L.H.)	
H	2		4K-3919	1	PIN (Master)	
H	3		7K-2018	144	SEAL WASHER	
H	4		7K-2020	1	BUSHING (Master)	
	5		7K-1826	35	LINK (L.H.)	
H	6		4B-6166	35	PIN	
H	7		7K-2019	35	BUSHING	
	8		7K-1825	35	LINK (R.H.)	
	9		7K-1827	1	LINK (Master-R.H.)	
H	10		7K-2016	2	SPACER	
	11		4K-7038	144	BOLT	
			7K-2017	144	NUT	
	12		4K-7184	36	SHOE	
			7K-8454	1	TRACK PIN AND BUSHING GROUP	
					(Consists of h mark parts)	

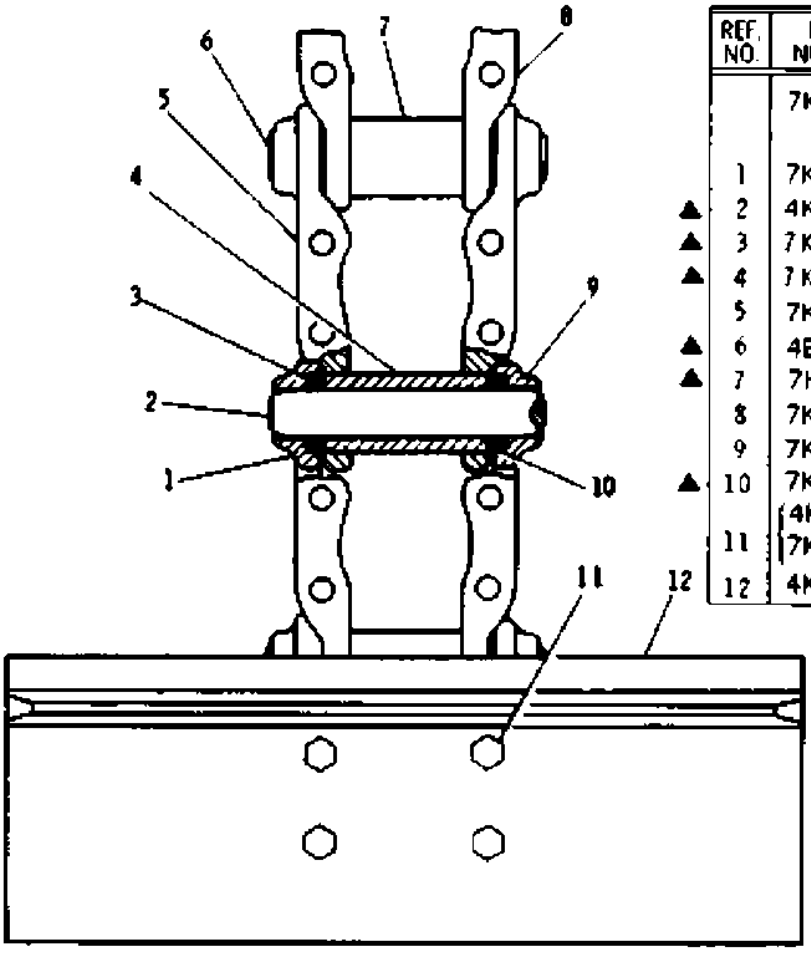

REF. NO.	PART NUMBER	DESCRIPTION	QTY.
	7K2049	LINK ASSEM.	1
		Consists of:	
1	7K1828	LINK (Master-L.H.)	1
▲ 2	4K3919	PIN (Master)	1
▲ 3	7K2018	SEAL WASHER	144
▲ 4	7K2020	BUSHING (Master)	1
5	7K1826	LINK (L.H.)	35
▲ 6	4B6166	PIN	35
▲ 7	7K2019	BUSHING	35
8	7K1825	LINK (R.H.)	35
9	7K1827	LINK (Master-R.H.)	1
▲ 10	7K2016	SPACER	2
11	4K7038 / 7K2017	BOLT / NUT	144
12	4K7184	SHOE (▲)	36

7K8454-TRACK PIN AND BUSHING GROUP.....1
(Consists of ▲mark parts)

J12589E

7K2075 TRACK GROUP--508mm Single Grouser Shoe--2 Required

GRAPHIC #1

j12569e

2V2286 TRACK GROUP--508mm Single Grouser Shoe--2 Required

AN ATTACHMENT

Key:

SMCS

NOTE	REF NO	GRAPHIC REF	PART NUMBER	QTY	PART NAME 1 2 3 4 5 6 (PRODUCT LEVEL)	LINK PAGE
			2V-2260	1	LINK ASSEM.	
	1		9K-0028	1	LINK (Master-L.H.)	
	2		9K-4062	1	PIN (Master)	
	3		7K-2018	144	SEAL WASHER	
	4		7K-2020	1	BUSHING (Master)	
	5		9K-6628	35	LINK (L.H.)	
	6		9K-4060	35	PIN	
	7		9K-4061	35	BUSHING	
	8		9K-6629	35	LINK (R.H.)	
	9		9K-0029	1	LINK (Master-R.H.)	
	10		9K-4059	2	SPACER	
	11		7H-3597	144	BOLT	
			1M-1408	144	NUT	
	12		1V-4615	36	SHOE	

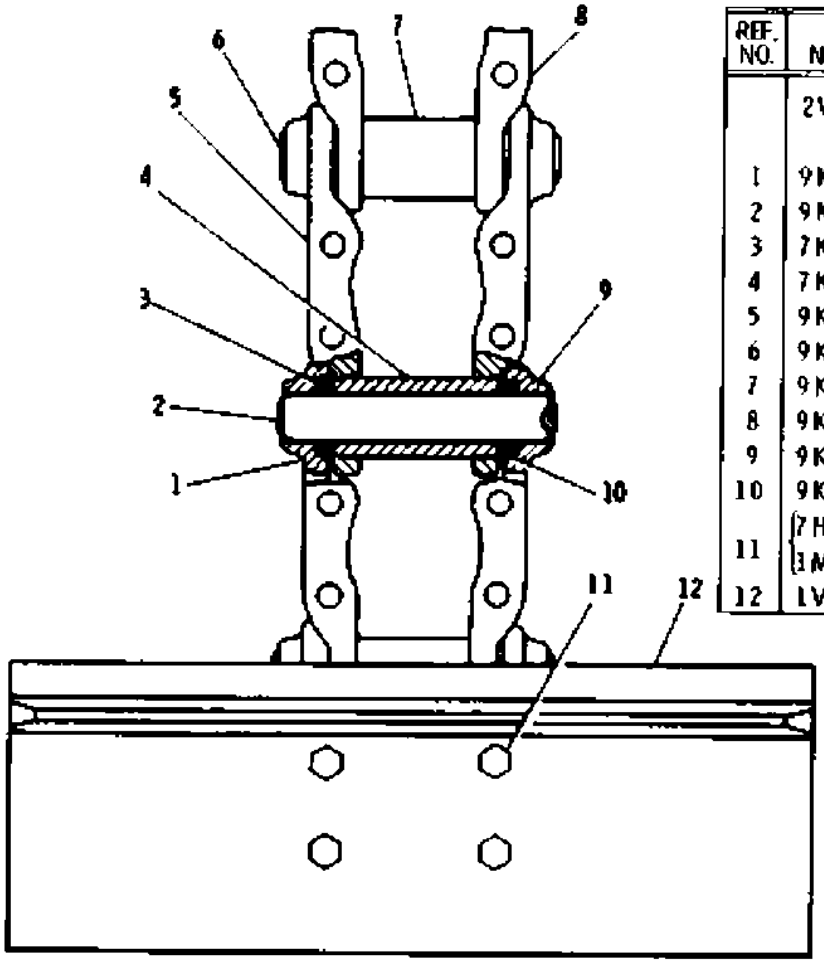

REF. NO.	PART NUMBER	DESCRIPTION	QTY.
	2V2260	LINK ASSEM.	1
		Consists of:	
1	9K28	LINK (Master-L.H.)	1
2	9K4062	PIN (Master)	1
3	7K2018	SEAL WASHER	144
4	7K2020	BUSHING (Master)	1
5	9K6628	LINK (L.H.)	35
6	9K4060	PIN	35
7	9K4061	BUSHING	35
8	9K6629	LINK (R.H.)	35
9	9K29	LINK (Master-R.H.)	1
10	9K4059	SPACER	2
11	7H3597	BOLT	144
	1M1408	NUT	144
12	1V4615	SHOE ( )	36

J12201E

GRAPHIC #1

STEERING CLUTCH CONTROL (4K5028 N/S)--Part 1 of 2

Effective with Serial No. 65J1474~65J1685

Key:

SMCS

NOTE	REF NO	GRAPHIC REF	PART NUMBER	QTY	PART NAME 1 2 3 4 5 6 (PRODUCT LEVEL)	LINK PAGE
	1		0S-1587	3	BOLT	
	2		3B-4508	6	LOCKWASHER	
	3		1A-1460	3	BOLT	
	4		1H-7445	2	SCREW	
			6F-0253	2	LOCKWASHER	
	5		9S-1354	2	NUT	
	6		4B-5006	2	FITTING	
	7		6B-0041	2	COVER	
	8		4K-5685	2	BUMPER	
	9		1M-5267	2	LEVER	
			1B-8736	2	KEY	
	10		5A-4361	1	LEVER (R.H.)	
			5A-4362	1	LEVER (L.H.)	
			0L-0829	2	HANDLE	
	11		0S-1571	2	BOLT	
			1D-4717	2	NUT	
	12		6K-8088	4	BEARING	
	13		3B-4629	2	COTTER PIN	
	14		1K-2602	2	WASHER	
	15		2M-8340	2	END	
	16		1B-4430	2	NUT	
	17		6B-4285	2	ROD	
	18		0S-0175	4	PIN	
			3B-4617	4	COTTER PIN	
	19		4K-3603	2	HOSE	
	20		1H-7460	2	LOCK	
	21		1H-7459	2	GROMMET	
	22		3H-0120	2	ELBOW	
	23		4K-3643	2	SCREW	
	24		0T-0355	4	LOCK	
			6F-6672	4	SEAL	
	25		7K-8915	2	SCREW	
	26		5K-8642	2	YOKE ASSEM.	
			1M-1723	1	INSERT	
	27		5K-8641	1	BALL	
	28		9H-7414	1	SUPPORT	

STEERING CLUTCH CONTROL (4K5028 N/S)--Part 1 of 2

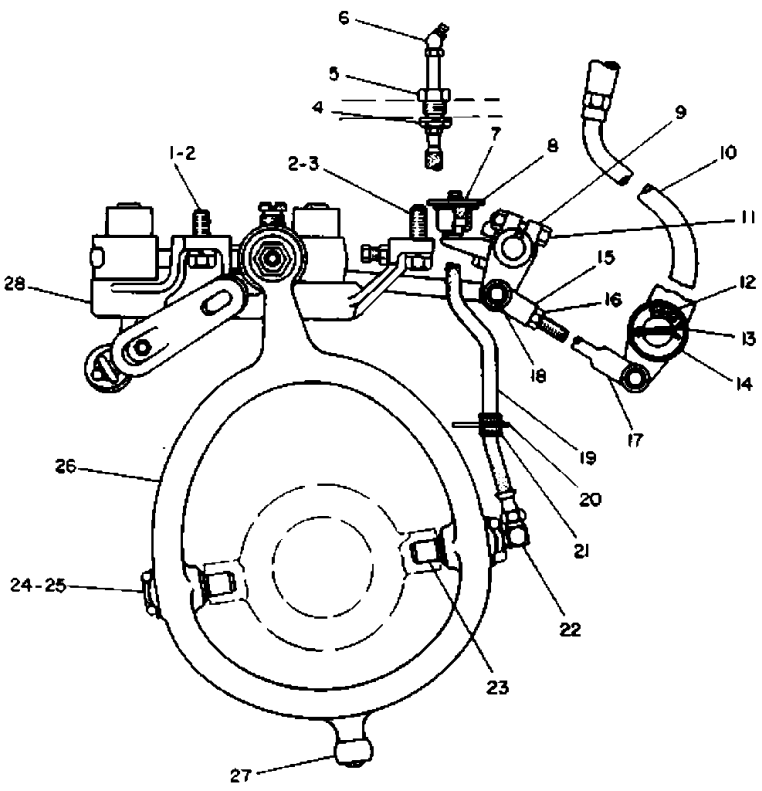

REF NO.	PART NUMBER	DESCRIPTION	QTY.
1	S1587	BOLT	3
2	3B4508	LOCKWASHER	6
3	1A1460	BOLT	3
4	1H7445	SCREW	2
	6F253	LOCKWASHER	2
5	9S1354	NUT	2
6	4B5006	FITTING	2
7	6B41	COVER	2
8	4K5685	BUMPER	2
9	1M5267	LEVER	2
	1B8736	KEY	2
10	5A4361	LEVER (R.H.)	1
	5A4362	LEVER (L.H.)	1
	L829	HANDLE	2
11	S1571	BOLT	2
	1D4717	NUT	2
12	6K8088	BEARING	4
13	3B4629	COTTER PIN	2
14	1K2602	WASHER	2
15	2M8340	END	2
16	1B4430	NUT	2
17	6B4285	ROD	2
18	S175	PIN	4
	3B4617	COTTER PIN	4
19	4K3603	HOSE	2
20	1H7460	LOCK	2
21	1H7459	GROMMET	2
22	3H120	ELBOW	2
23	4K3643	SCREW	2
24	T355	LOCK	4
	6F6672	SEAL	4
25	7K8915	SCREW	2
26	5K8642	YOKE ASSEM.	2
	1M1723	INSERT	1
27	5K8641	BALL	1
28	9H7414	SUPPORT	1

GRAPHIC #1

j9549e

STEERING CLUTCH CONTROL (4K5028 N/S)--Part 2 of 2

Effective with Serial No. 65J1474~65J1685

Key:

SMCS

NOTE	REF NO	GRAPHIC REF	PART NUMBER	QTY	PART NAME 1 2 3 4 5 6 (PRODUCT LEVEL)	LINK PAGE
	1		9B-1447	2	ROD	
	2		0S-0175	2	PIN	
			3B-4617	2	COTTER PIN	
	3		3B-7754	4	BUSHING	
			0S-0484	4	BOLT	
			2M-2570	4	NUT	
	4		0V-0196	2	BOLT	
			1B-2578	2	NUT	
	5		0L-1351	4	BOLT	
			3B-4506	4	LOCKWASHER	
	6		1M-1725	2	ROD	
	7		5K-7280	2	SHAFT	
	8		0S-1588	2	BOLT	
	9		9B-2823	1	LEVER (R.H.)	
			9B-2824	1	LEVER (L.H.)	
			1B-8736	2	KEY	
	10		3K-9021	2	SPACER	
	11		9B-1458	2	PIN	
	12		5H-6347	2	SHAFT	
	13		5B-3254	2	NUT	
			8F-2188	2	LOCK	
			5K-7997	2	PIN	
	14		3H-8363	8	OUTER RACE	
			1B-3756	8	INNER ROLLER ASSEM.	
	15		4K-3966	2	END	
	16		1B-4430	2	NUT	
	17		1M-1729	2	NUT	
	18		1M-1730	2	SCREW	
			9H-7417	2	PIN	
	19		1D-4717	4	NUT	
	20		5F-6848	2	NUT	
	21		5F-6743	2	ANCHOR	
	22		5F-6849	2	STUD	
	23		5K-7809	2	SPRING	
	24		9H-7416	2	BELLCRANK	

STEERING CLUTCH CONTROL (4K5028 N/S)--Part 2 of 2

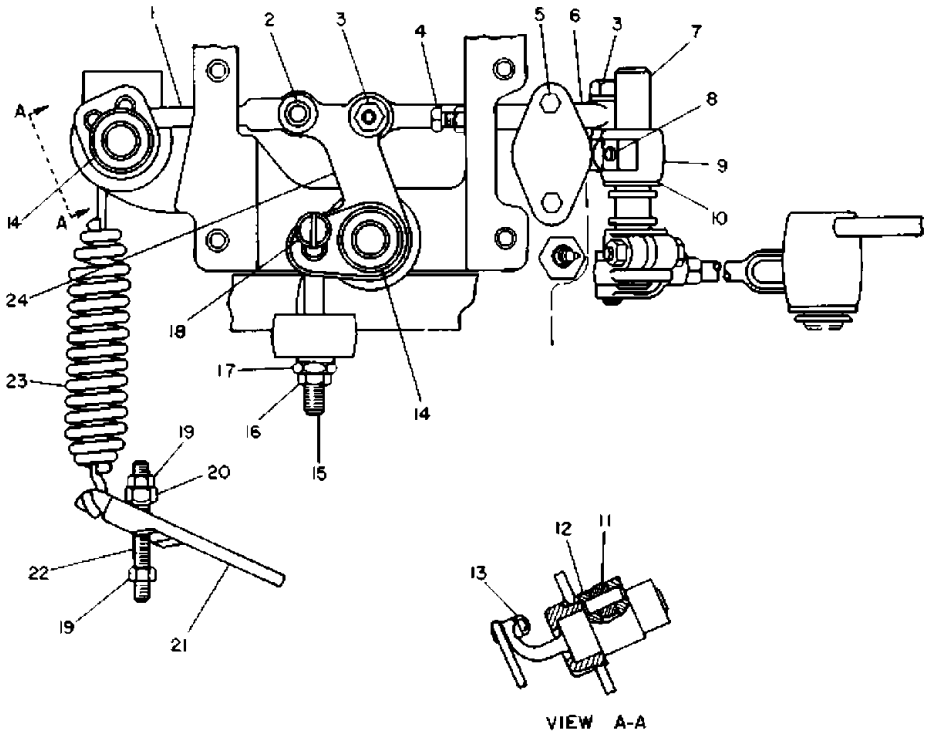

REF. NO.	PART NUMBER	DESCRIPTION	QTY
1	9B1447	ROD	2
2	S175	PIN	2
	3B4617	COTTER PIN	2
3	3B7754	BUSHING	4
	S484	BOLT	4
	2M2570	NUT	4
4	V196	BOLT	2
	1B2578	NUT	2
5	L1351	BOLT	4
	3B4506	LOCKWASHER	4
6	1M1725	ROD	2
7	5K7280	SHAFT	2
8	S1588	BOLT	2
9	9B2823	LEVER (R.H.)	1
	9B2824	LEVER (L.H.)	1
	1B8736	KEY	2
10	3K9021	SPACER	2
11	9B1458	PIN	2
12	5H6347	SHAFT	2
13	5B3254	NUT	2
	8F2188	LOCK	2
	5K7997	PIN	2
14	3H8363	OUTER RACE	8
	1B3756	INNER ROLLER ASSEM.	8
15	4K3966	END	2
16	1B4430	NUT	2
17	1M1729	NUT	2
18	1M1730	SCREW	2
	9H7417	PIN	2
19	1D4717	NUT	4
20	5F6848	NUT	2
21	5F6743	ANCHOR	2
22	5F6849	STUD	2
23	5K7809	SPRING	2
24	9H7416	BELLCRANK	2

J9550E

GRAPHIC #1

j9550e

STEERING CLUTCH CONTROL (4K5028 N/S)--Part 1 of 2

Effective with Serial No. 65J1686-UP

Key:

SMCS

NOTE	REF NO	GRAPHIC REF	PART NUMBER	QTY	PART NAME 1 2 3 4 5 6 (PRODUCT LEVEL)	LINK PAGE
	1		0S-1585	3	BOLT	
	2		3B-4508	6	LOCKWASHER	
	3		0S-1587	3	BOLT	
	4		6B-0041	2	COVER	
	5		4K-5685	2	BUMPER	
	6		1M-5267	2	LEVER	
			1B-8736	2	KEY	
	7		5A-4361	1	LEVER (R.H.)	
			5A-4362	1	LEVER (L.H.)	
			0L-0829	2	HANDLE	
	8		0S-1571	2	BOLT	
			1D-4717	2	NUT	
	9		6K-8088	4	BEARING (With Seal)	
	10		3B-4629	2	COTTER PIN	
	11		1K-2602	2	WASHER	
	12		2M-8340	2	END	
	13		1B-4430	2	NUT	
	14		0S-0175	4	PIN	
			3B-4617	4	COTTER PIN	
	15		6B-4285	2	ROD	
	16		7K-8915	4	SCREW	
			0T-0355	4	LOCK	
	17		5K-8642	2	YOKE ASSEM.	
			1M-1723	1	INSERT	
	18		5K-8641	1	BALL	
	19		9H-7414	1	SUPPORT	

STEERING CLUTCH CONTROL (4K5028 N/S)--Part 1 of 2

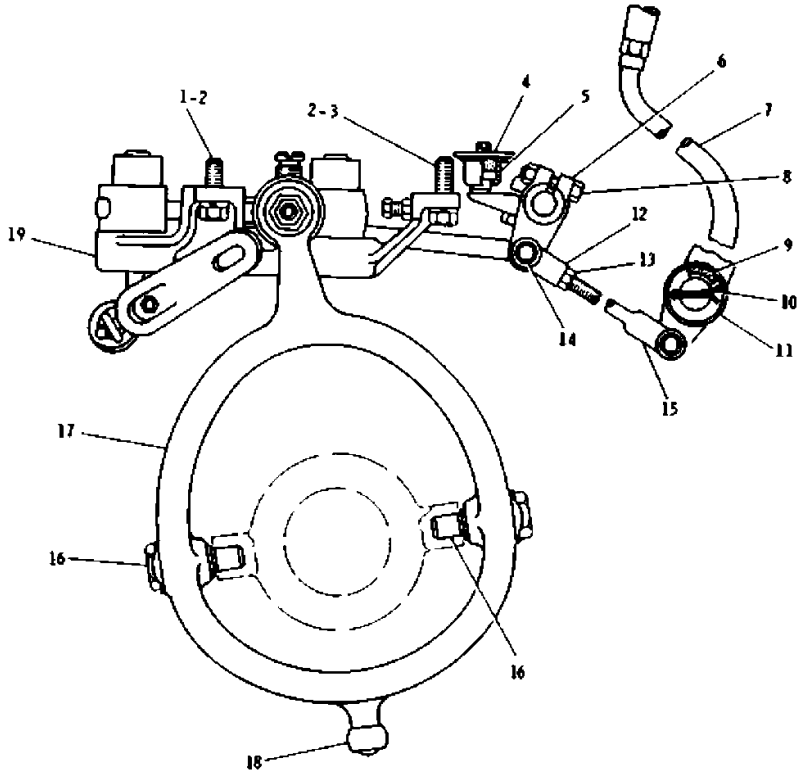

REF. NO.	PART NUMBER	DESCRIPTION	QTY.
1	S1585	BOLT	3
2	3B4508	LOCKWASHER	6
3	S1587	BOLT	3
4	6B41	COVER	2
5	4K5685	BUMPER	2
6	1M5267	LEVER	2
	1B8736	KEY	2
7	5A4361	LEVER (R.H.)	1
	5A4362	LEVER (L.H.)	1
	L829	HANDLE	2
8	S1571	BOLT	2
	1D4717	NUT	2
9	6K8088	BEARING (With Seal)	4
10	3B4629	COTTER PIN	2
11	1K2602	WASHER	2
12	2M8340	END	2
13	1B4430	NUT	2
14	S175	PIN	4
	3B4617	COTTER PIN	4
15	6B4285	ROD	2
16	7K8915	SCREW	4
	T355	LOCK	4
17	5K8642	YOKE ASSEM.	2
	1M1723	INSERT	1
18	5K8641	BALL	1
19	9H7414	SUPPORT	1

J11111E

GRAPHIC #1

j11111e

STEERING CLUTCH CONTROL (4K5028 N/S)--Part 2 of 2

Effective with Serial No. 65J1686-UP

Key:

SMCS

NOTE	REF NO	GRAPHIC REF	PART NUMBER	QTY	PART NAME 1 2 3 4 5 6 (PRODUCT LEVEL)	LINK PAGE
	1		9B-1447	2	ROD	
	2		0S-0175	2	PIN	
			3B-4617	2	COTTER PIN	
	3		3B-7754	4	BUSHING	
			0S-0484	4	BOLT	
			2M-2570	4	NUT	
	4		0V-0196	2	BOLT	
			1B-2578	2	NUT	
	5		0L-1351	4	BOLT	
			3B-4506	4	LOCKWASHER	
	6		1M-1725	2	ROD	
	7		5K-7280	2	SHAFT	
	8		0S-1588	2	BOLT	
	9		9B-2823	1	LEVER (R.H.)	
			9B-2824	1	LEVER (L.H.)	
			1B-8736	2	KEY	
	10		3K-9021	2	SPACER	
	11		9B-1458	2	PIN	
	12		5H-6347	2	SHAFT	
	13		5B-3254	2	NUT	
			8F-2188	2	LOCK	
			5K-7997	2	PIN	
	14		3H-8363	8	OUTER RACE	
			1B-3756	8	INNER ROLLER ASSEM.	
	15		4K-3966	2	END	
	16		1B-4430	2	NUT	
	17		1M-1729	2	NUT	
	18		1M-1730	2	SCREW	
			9H-7417	2	PIN	
	19		1D-4717	4	NUT	
	20		5F-6848	2	NUT	
	21		5F-6743	2	ANCHOR	
	22		5F-6849	2	STUD	
	23		5K-7809	2	SPRING	
	24		9H-7416	2	BELLCRANK	

STEERING CLUTCH CONTROL (4K5028 N/S)--Part 2 of 2

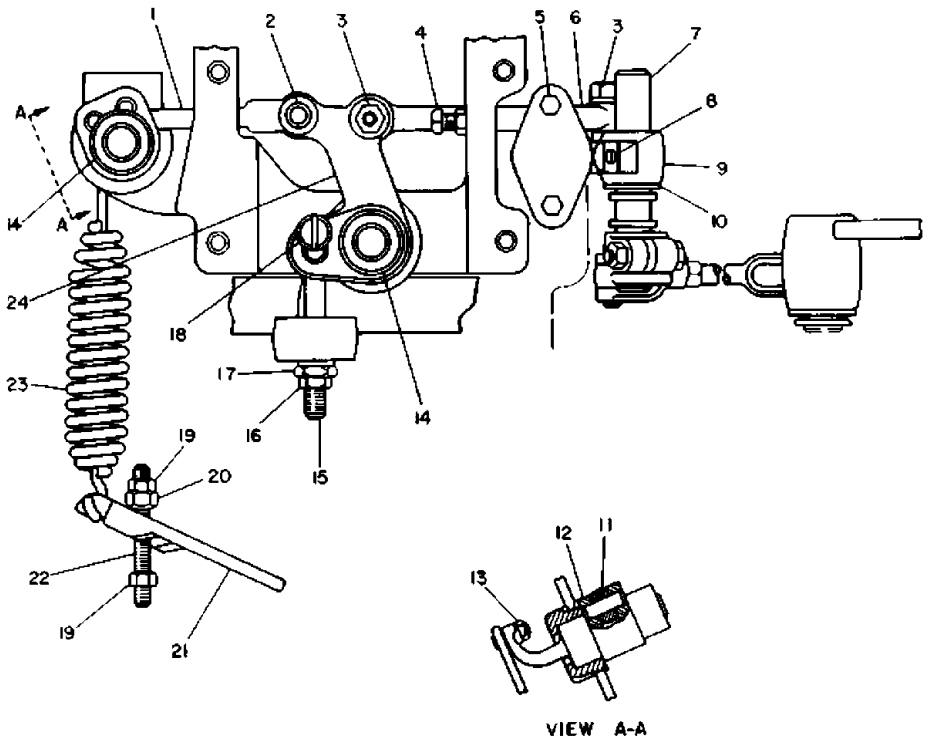

REF. NO.	PART NUMBER	DESCRIPTION	QTY.
1	9B1447	ROD	2
2	S175	PIN	2
	3B4617	COTTER PIN	2
3	3B7754	BUSHING	4
	S484	BOLT	4
	2M2570	NUT	4
4	V196	BOLT	2
	1B2578	NUT	2
5	L1351	BOLT	4
	3B4506	LOCKWASHER	4
6	1M1725	ROD	2
7	5K7280	SHAFT	2
8	S1588	BOLT	2
9	9B2823	LEVER (R.H.)	1
	9B2824	LEVER (L.H.)	1
	1B8736	KEY	2
10	3K9021	SPACER	2
11	9B1458	PIN	2
12	5H6347	SHAFT	2
13	5B3254	NUT	2
	8F2188	LOCK	2
	5K7997	PIN	2
14	3H8363	OUTER RACE	8
	1B3756	INNER ROLLER ASSEM.	8
15	4K3966	END	2
16	1B4430	NUT	2
17	1M1729	NUT	2
18	1M1730	SCREW	2
	9H7417	PIN	2
19	1D4717	NUT	4
20	5F6848	NUT	2
21	5F6743	ANCHOR	2
22	5F6849	STUD	2
23	5K7809	SPRING	2
24	9H7416	BELLCRANK	2

J11112E

GRAPHIC #1

j11112e

STEERING CLUTCH (9K325 N/S)

Effective with Serial No. 65J1474~65J1685

Key:

SMCS

NOTE	REF NO	GRAPHIC REF	PART NUMBER	QTY	PART NAME 1 2 3 4 5 6 (PRODUCT LEVEL)	LINK PAGE
			4B-9806	4	SET SCREW	
			3F-5504	22	DISC ASSEM.	
					(95 TEETH)	
			1B-4102	2	BEARING	
			2M-1086	2	PLATE ASSEM.	
			8H-1174	2	DRUM	
			6B-8807	16	SPRING	
			2B-9020	16	RETAINER	
			2B-8759	16	STUD	
			2B-9018	32	LOCK	
			6B-8804	16	SPRING	
			0L-2341	2	NUT	
			3B-5524	2	LOCK	
			9K-0323	1	SHAFT	
			6H-3569	2	BUSHING	
					(1 IN EACH PLATE ASSEM. 2M1086)	
			0S-1624	4	BOLT	
			3B-4510	4	LOCKWASHER	
			9H-7415	2	CAGE	
			2A-3746	4	PLUG	
			2H-6936	20	DISC (8 TEETH)	
			8K-9637	2	NUT	
			4K-4894	2	CAGE	
			4K-4390	2	SEAL	
			1H-7478	2	RING	
			5F-3144	2	SEAL	
			1H-7422	2	RING	
			0L-1351	2	BOLT	
			0L-0364	2	LOCK	
			4K-4943	1	LOCK	
			2B-8778	2	NUT	
			6H-3568	2	CUP	
			4K-4877	1	DEFLECTOR	
			0S-0130	2	PIN	
			0S-1566	11	BOLT	
			9K-5706	1	BOLT	
			2K-0337	1	LOCKNUT	
			6H-3566	2	CONE	
			6H-3581	2	THROWER	
			8F-4469	2	SEAL	
			8K-9661	1	BEVEL GEAR (55 TEETH)	

STEERING CLUTCH (9K325 N/S)

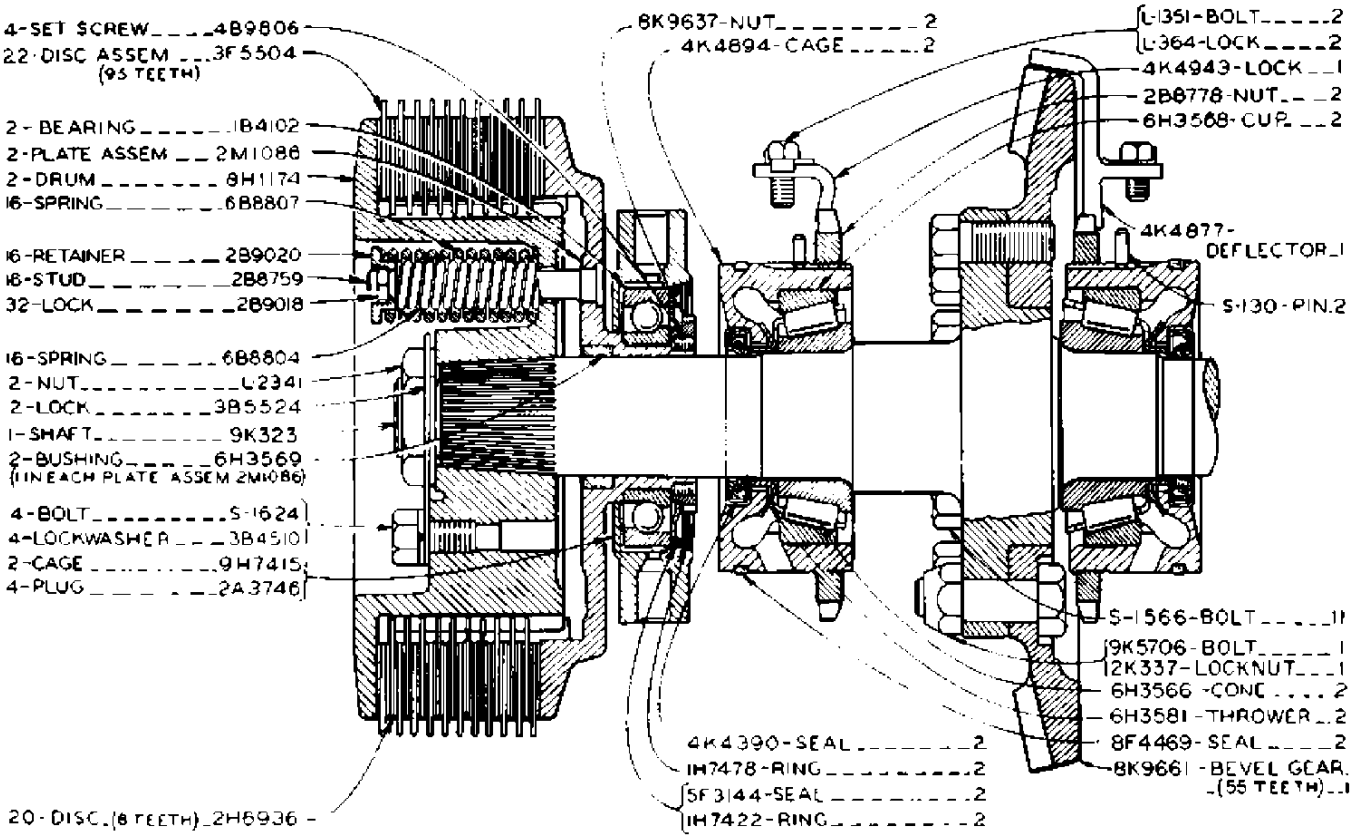

GRAPHIC #1

j6877e

STEERING CLUTCH (9K325 N/S)

Effective with Serial No. 65J1686~65J1990

Key: C - INDICATES CHANGE

SMCS

NOTE	REF NO	GRAPHIC REF	PART NUMBER	QTY	PART NAME 1 2 3 4 5 6 (PRODUCT LEVEL)	LINK PAGE
	1		2M-1086	2	PLATE ASSEM.	
	2		6H-3569	1	BUSHING	
C	3		5P-6982	2	BEARING	
	4		010-2571	4	SET SCREW	
C	5		3V-0002	2	NUT	
	6		6H-3568	2	CUP	
	7		0L-1351	2	BOLT	
			0L-0364	2	LOCK	
	8		4K-4943	1	LOCK	
	9		0S-0130	2	PIN	
	10		0S-1566	11	BOLT	
	11		4K-4877	1	DEFLECTOR	
	12		8K-9661	1	BEVEL GEAR (55 Teeth)	
	13		9K-5706	1	BOLT	
			2K-0337	1	LOCKNUT	
	14		6H-3566	2	CONE	
	15		2B-8778	2	NUT	
	16		6H-3581	2	THROWER	
	17		8F-4469	2	SEAL	
	18		4K-4894	2	CAGE	
	19		4K-4390	2	SEAL	
	20		1H-7478	2	RING	
	21		1V-3243	1	CAGE	
	23		2H-6936	20	DISK	
	24		3F-5504	22	DISK ASSEM. (95Teeth)	
	25		0S-1624	4	BOLT	
			3B-4510	4	LOCKWASHER	
	26		9K-0323	1	SHAFT	
	27		3B-5524	2	LOCK	
	28		0L-2341	2	NUT	
	29		6B-8804	16	SPRING (Inner)	
	30		2B-9018	32	LOCK	
	31		2B-8759	16	STUD	
	32		2B-9020	16	RETAINER	
	33		8H-1174	2	DRUM	
	34		6B-8807	16	SPRING (Outer)	

STEERING CLUTCH (9K325 N/S)

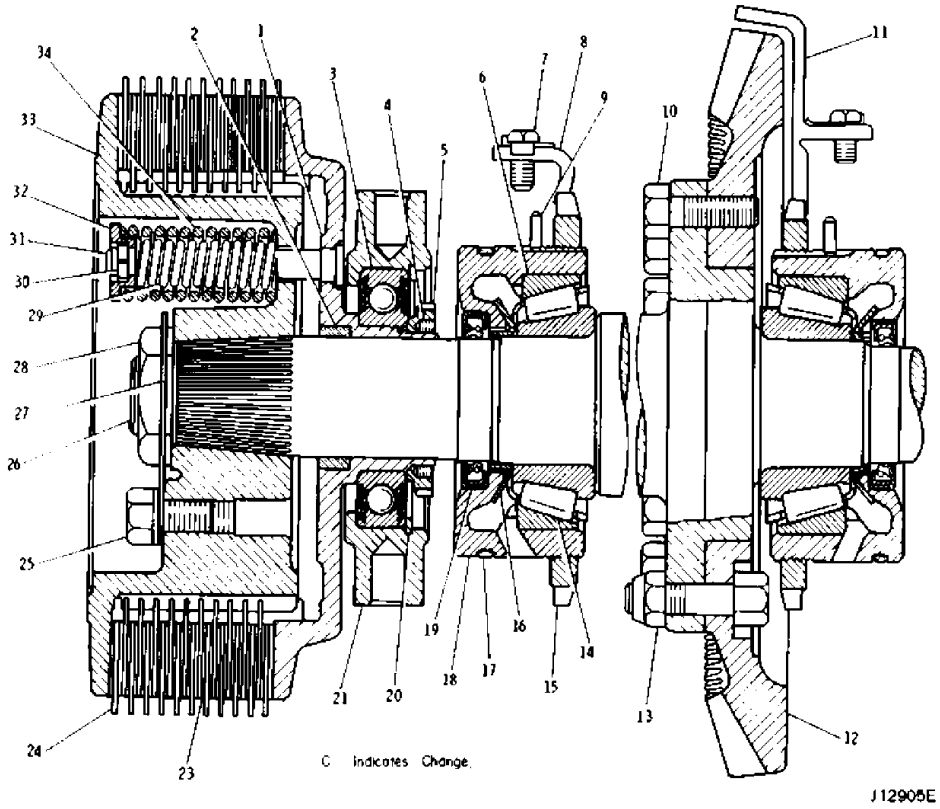

	REF NO	PART NUMBER	DESCRIPTION	QTY
	1	2M1086	PLATE ASSEM	2
	2	6H3569	BUSHING	1
C	3	5P8982	BEARING	2
	4	102571	SET SCREW	4
C	5	3V2	NUT	2
	6	6H3568	CUP	2
	7	L1351	BOLT	2
		L364	LOCK	2
	8	4K4943	LOCK	1
	9	5130	PIN	2
	10	S1566	BOLT	11
	11	4K4877	DEFLECTOR	1
	12	8K9661	BEVEL GEAR (55Teeth)	1
	13	9K5706	BOLT	1
		2K337	LOCKNUT	1
	14	6H3566	CONE	2
	15	2B8778	NUT	2
	16	6H3581	THROWER	2
	17	8F4469	SEAL	2
	18	4K4894	CAGE	2
	19	4K4390	SEAL	2
	20	1H7478	RING	2
	21	1V3243	CAGE	1
	23	2H6936	DISK	20
	24	3F5504	DISK ASSEM. (95Teeth)	22
	25	S1624	BOLT	4
		3B4510	LOCKWASHER	4
	26	9K323	SHAFT	1
	27	3B5524	LOCK	2
	28	L2341	NUT	2
	29	6B8804	SPRING (Inner)	16
	30	2B9018	LOCK	32
	31	2B8759	STUD	16
	32	2B9020	RETAINER	16
	33	8H1174	DRUM	2
	34	6B8807	SPRING (Outer)	16

GRAPHIC #1

j12905e

STEERING CLUTCH (9K325 N/S)

Effective with Serial No. 65J1991-UP

Key: C - INDICATES CHANGE

SMCS

NOTE	REF NO	GRAPHIC REF	PART NUMBER	QTY	PART NAME 1 2 3 4 5 6 (PRODUCT LEVEL)	LINK PAGE
	1		2M-1086	2	PLATE ASSEM.	
	2		6H-3569	1	BUSHING	
C	3		5P-6982	2	BEARING	
	4		010-2571	4	SET SCREW	
C	5		3V-0002	2	NUT	
	6		6H-3568	2	CUP	
	7		0L-1351	2	BOLT	
			0L-0364	2	LOCK	
	8		4K-4943	1	LOCK	
	9		0S-0130	2	PIN	
	10		0S-1566	11	BOLT	
	11		4K-4877	1	DEFLECTOR	
	12		8K-9661	1	BEVEL GEAR (55Teeth)	
	13		9K-5706	1	BOLT	
			2K-0337	1	LOCKNUT	
	14		6H-3566	2	CONE	
	15		2B-8778	2	NUT	
	16		6H-3581	2	THROWER	
	17		8F-4469	2	SEAL	
	18		4K-4894	2	CAGE	
	19		4K-4390	2	SEAL	
	20		1H-7478	2	RING	
	21		1V-3243	1	CAGE	
	23		2H-6936	20	DISK	
	24		3F-5504	22	DISK ASSEM. (95Teeth)	
	25		0S-1624	4	BOLT	
			3B-4510	4	LOCKWASHER	
	26		9K-0323	1	SHAFT	
	27		3B-5524	2	LOCK	
	28		0L-2341	2	NUT	
	29		6B-8804	16	SPRING (Inner)	
	30		2B-9018	32	LOCK	
	31		2B-8759	16	STUD	
	32		2B-9020	16	RETAINER	
	33		8H-1174	2	DRUM	
	34		6B-8807	16	SPRING (Outer)	

STEERING CLUTCH (9K325 N/S)

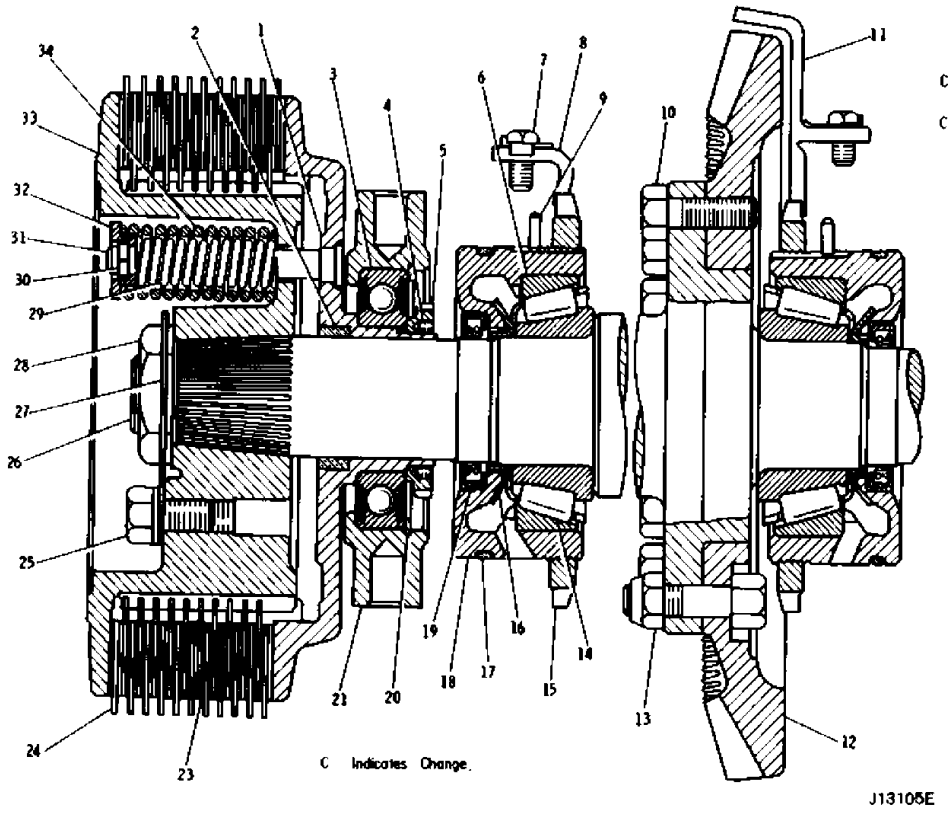

	REF. NO.	PART NUMBER	DESCRIPTION	QTY.
	1	2M1086	PLATE ASSEM.	2
	2	6H3569	BUSHING	1
C	3	5P6982	BEARING	2
	4	102571	SET SCREW	4
C	5	3V2	NUT	2
	6	6H3568	CUP	2
	7	L1351	BOLT	2
		L364	LOCK	2
	8	4K4943	LOCK	1
	9	S130	PIN	2
	10	S1566	BOLT	11
	11	4K4877	DEFLECTOR	1
	12	8K9661	BEVEL GEAR (55Teeth)	1
	13	9K5706	BOLT	1
		2K337	LOCKNUT	1
	14	6H3566	CONE	2
	15	288778	NUT	2
	16	6H3581	THROWER	2
	17	8F4469	SEAL	2
	18	4K4894	CAGE	2
	19	4K4390	SEAL	2
	20	1H7478	RING	2
	21	1V3243	CAGE	1
	23	2H6936	DISK	20
	24	3F5504	DISK ASSEM (95Teeth)	22
	25	S1624	BOLT	4
		3B4510	LOCKWASHER	4
	26	9K323	SHAFT	1
	27	3B5524	LOCK	2
	28	L2341	NUT	2
	29	6B8804	SPRING (Inner)	16
	30	2B9018	LOCK	32
	31	2B8759	STUD	16
	32	2B9020	RETAINER	16
	33	8H1174	DRUM	2
	34	6B8807	SPRING (Outer)	16

GRAPHIC #1 j13105e

STEERING CLUTCH (3Y1583 N/S)--Type 1

Part of 3Y1582 Oil Steering Clutch Modification Arrangement listed on Page 213
AN ATTACHMENT

Key:

SMCS

NOTE	REF NO	GRAPHIC REF	PART NUMBER	QTY	PART NAME 1 2 3 4 5 6 (PRODUCT LEVEL)	LINK PAGE
	1		0S-1624	4	BOLT	
			3B-4510	4	LOCKWASHER	
	2		3B-5524	2	LOCK	
	3		0L-2341	2	NUT	
	4		2B-9020	16	RETAINER	
	5		2B-9018	32	LOCK	
	6		2B-8759	16	STUD	
	7		6B-8804	16	SPRING	
	8		4K-1302	16	SPRING	
	9		3Y-0889	2	DRUM	
	10		4K-1315	2	PLATE ASSEM.	
	11		6H-3569	1	BUSHING	
	12		1H-7478	2	RING	
	13		1H-7422	2	RING	
	14		0L-0364	2	LOCK	
	15		0L-1351	2	BOLT	
	16		4K-4943	2	LOCK	
	17		0S-1566	11	BOLT	
	18		8K-9661	1	GEAR (55 Teeth)	
	19		2B-8778	2	NUT	
	20		0S-0130	2	PIN	
	21		5K-8606	2	CAGE	
	22		9K-5706	1	BOLT	
			2K-0337	1	LOCKNUT	
	23		9K-0323	1	SHAFT	
	24		6H-3566	2	CONE	
	25		6H-3568	2	CUP	
	26		4B-9806	4	SCREW	
	27		8K-9637	2	NUT	
	28		5F-3144	2	SEAL	
	29		1B-4102	2	BEARING	
	30		3Y-0890	2	CAGE	
	31		5K-8616	30	DISC (8 Teeth)	
	32		5K-8617	30	DISC ASSEM. (95 Teeth)	
	33		4K-1333	2	DISC ASSEM. (95 Teeth)	

STEERING CLUTCH (3Y1583 N/S)--Type 1

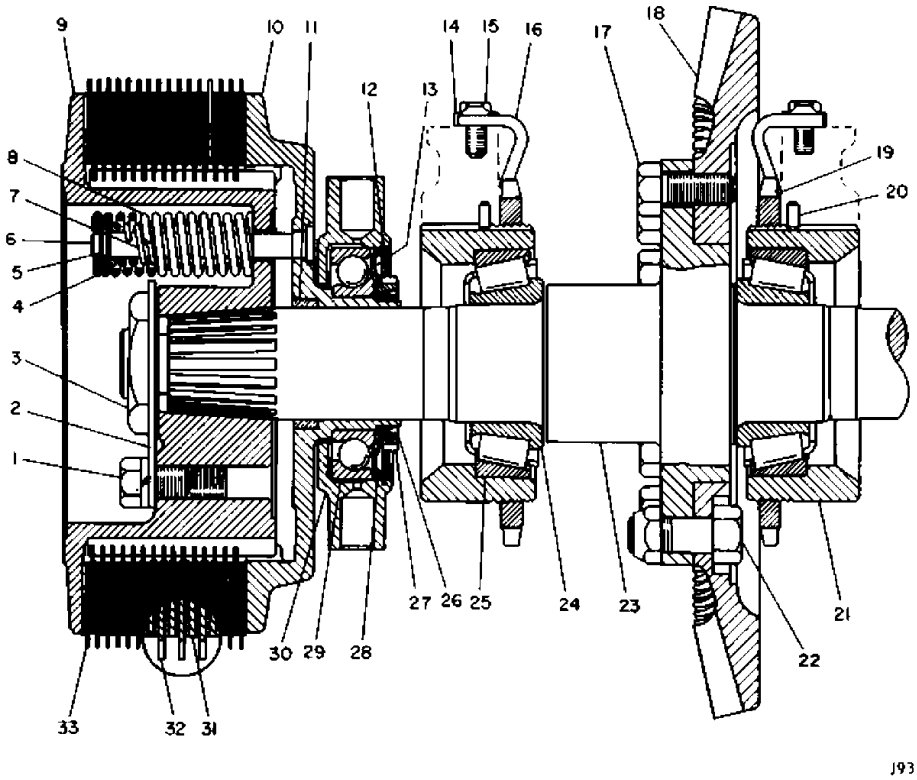

REF. NO.	PART NUMBER	DESCRIPTION	QTY.
1	S1624	BOLT	4
	3B4510	LOCKWASHER	4
2	3B5524	LOCK	2
3	L2341	NUT	2
4	2B9020	RETAINER	16
5	2B9018	LOCK	32
6	2B8759	STUD	16
7	6B8804	SPRING	16
8	4K1302	SPRING	16
9	3Y889	DRUM	2
10	4K1315	PLATE ASSEM.	2
11	6H3569	BUSHING	1
12	1H7478	RING	2
13	1H7422	RING	2
14	L364	LOCK	2
15	L1351	BOLT	2
16	4K4943	LOCK	2
17	S1566	BOLT	11
18	8K9661	GEAR (55 Teeth)	1
19	2B8778	NUT	2
20	S130	PIN	2
21	5K8606	CAGE	2
22	9K5706	BOLT	1
	2K337	LOCKNUT	1
23	9K323	SHAFT	1
24	6H3566	CONE	2
25	6H3568	CUP	2
26	4B9806	SCREW	4
27	8K9637	NUT	2
28	5F3144	SEAL	2
29	1B4102	BEARING	2
30	3Y890	CAGE	2
31	5K8616	DISC (8 Teeth)	30
32	5K8617	DISC ASSEM. (95 Teeth)	30
33	4K1333	DISC ASSEM. (95 Teeth)	2

GRAPHIC #1

j9367e

STEERING CLUTCH (3Y1583 N/S)--Type 2

Part of 3Y1582 Oil Steering Clutch Modification Arrangement listed on Page 213
AN ATTACHMENT

Key: C - INDICATES CHANGE

SMCS

NOTE	REF NO	GRAPHIC REF	PART NUMBER	QTY	PART NAME 1 2 3 4 5 6 (PRODUCT LEVEL)	LINK PAGE
	1		0S-1624	4	BOLT	
			3B-4510	4	LOCKWASHER	
	2		3B-5524	2	LOCK	
	3		0L-2341	2	NUT	
	4		2B-9020	16	RETAINER	
	5		2B-9018	32	LOCK	
	6		2B-8759	16	STUD	
	7		6B-8804	16	SPRING	
	8		4K-1302	16	SPRING	
	9		3Y-0889	2	DRUM	
C	10		3V-5916	2	PLATE ASSEM.	
	11		6H-3569	1	BUSHING	
	12		1H-7478	2	RING	
	14		0L-0364	2	LOCK	
	15		0L-1351	2	BOLT	
	16		4K-4943	2	LOCK	
	17		0S-1566	11	BOLT	
	18		8K-9661	1	GEAR (55 Teeth)	
	19		2B-8778	2	NUT	
	20		0S-0130	2	PIN	
	21		5K-8606	2	CAGE	
	22		9K-5706	1	BOLT	
			2K-0337	1	LOCKNUT	
	23		9K-0323	1	SHAFT	
	24		6H-3566	2	CONE	
	25		6H-3568	2	CUP	
C	26		010-2571	4	SCREW	
C	27		3V-0002	2	NUT	
	29		1B-4102	2	BEARING	
C	30		3Y-2685	2	CAGE	
	31		5K-8616	30	DISC (8 Teeth)	
	32		5K-8617	30	DISC ASSEM. (95 Teeth)	
	33		4K-1333	2	DISC ASSEM. (95 Teeth)	

STEERING CLUTCH (3Y1583 N/S)--Type 2

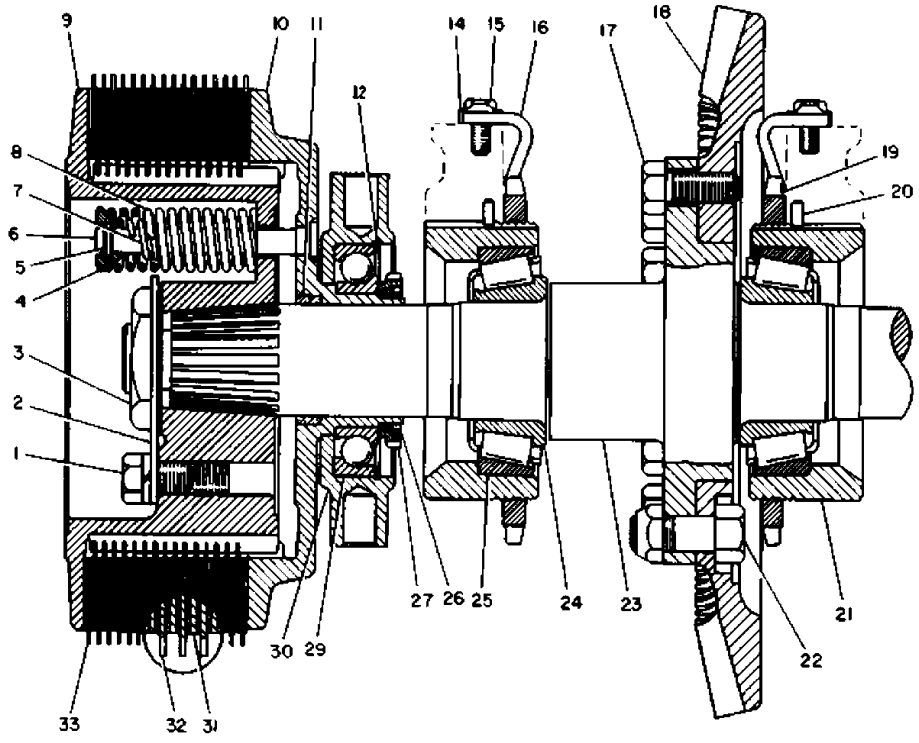

	REF. NO.	PART NUMBER	DESCRIPTION	QTY.
	1	S1624	BOLT	4
		9B4510	LOCKWASHER	4
	2	3B5524	LOCK	2
	3	L2341	NUT	2
	4	2B9020	RETAINER	16
	5	2B9018	LOCK	32
	6	2B8759	STUD	16
	7	6B8804	SPRING	16
	8	4K1302	SPRING	16
	9	3Y889	DRUM	2
C	10	3V5916	PLATE ASSEM.	2
	11	6H3569	BUSHING	1
	12	1H7478	RING	2
	14	L364	LOCK	2
	15	L1351	BOLT	2
	16	4K4943	LOCK	2
	17	S1566	BOLT	11
	18	8K9661	GEAR (55 Teeth)	1
	19	2B8778	NUT	2
	20	S130	PIN	2
	21	5K8606	CAGE	2
	22	9K5706	BOLT	1
		2K337	LOCKNUT	1
	23	9K323	SHAFT	1
	24	6H3566	CONE	2
	25	6H3568	CUP	2
C	26	102571	SCREW	4
C	27	3V2	NUT	2
	29	184102	BEARING	2
C	30	3Y2685	CAGE	2
	31	5K8616	DISC (18 Teeth)	30
	32	5K8617	DISC ASSEM. (95 Teeth)	30
	33	4K1333	DISC ASSEM. (95 Teeth)	2

C Indicates Change

J13252E

GRAPHIC #1

j13252e

STEERING CLUTCH (3Y1583 N/S)--Type 3

Part of 3Y1582 Oil Steering Clutch Modification Arrangement listed on Page 213
AN ATTACHMENT

Key:

SMCS

NOTE	REF NO	GRAPHIC REF	PART NUMBER	QTY	PART NAME 1 2 3 4 5 6 (PRODUCT LEVEL)	LINK PAGE
	1		4K-1333	2	DISK ASSEM. (95 Teeth)	
	2		5K-8616	30	DISK (8 Teeth)	
	3		5K-8617	30	DISK ASSEM. (95 Teeth)	
	4		3Y-2685	2	CAGE	
	5		1H-7478	2	RING	
	6		010-2571	4	SCREW	
	7		4K-4943	2	LOCK	
	8		0S-1566	11	BOLT	
	9		0L-1351	2	BOLT	
	10		0L-0364	2	LOCK	
	11		0S-0130	2	PIN	
	12		8F-4469	2	SEAL	
	13		6H-3581	2	THROWER	
	14		6H-3566	2	CONE	
	15		9K-0323	1	SHAFT	
	16		4K-4390	2	SEAL	
	17		4K-4894	2	CAGE	
	18		6H-3568	2	CUP	
	19		2B-8778	2	NUT	
	20		8K-9661	1	GEAR (55 Teeth)	
	21		9K-5706	1	BOLT	
			2K-0337	1	NUT	
	22		3V-0002	2	NUT	
	23		1B-4102	2	BEARING	
	24		3V-5916	2	PLATE ASSEM.	
	25		6H-3569	1	BUSHING	
	26		0S-1624	4	BOLT	
			3B-4510	4	LOCKWASHER	
	27		3B-5524	2	LOCK	
	28		0L-2341	2	NUT	
	29		4K-1302	16	SPRING	
	30		6B-8804	16	SPRING	
	31		2B-8759	16	STUD	
	32		2B-9018	32	LOCK	
	33		2B-9020	16	RETAINER	
	34		3Y-0889	2	DRUM	

STEERING CLUTCH (3Y1583 N/S)--Type 3

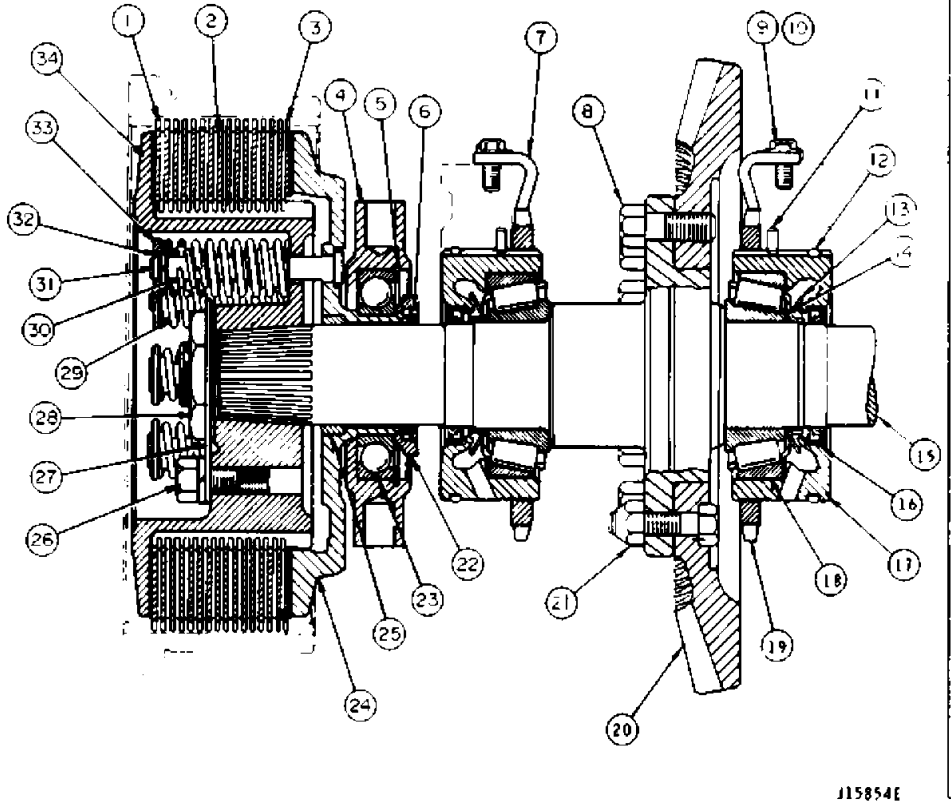

REF NO.	PART NUMBER	DESCRIPTION	QTY.
1	4K1333	DISK ASSEM. (95 Teeth)	2
2	5K8616	DISK (8 Teeth)	30
3	5K8617	DISK ASSEM. (95 Teeth)	30
4	3Y2685	CAGE	2
5	1H7478	RING	2
6	102571	SCREW	4
7	4K4943	LOCK	2
8	S1566	BOLT	11
9	L1351	BOLT	2
10	L364	LOCK	2
11	S130	PIN	2
12	8F4469	SEAL	2
13	6H3581	THROWER	2
14	6H3566	CONE	2
15	9K323	SHAFT	1
16	4K4390	SEAL	2
17	4K4894	CAGE	2
18	6H3568	CUP	2
19	2B8778	NUT	2
20	8K9661	GEAR (55 Teeth)	1
21	9K5706	BOLT	1
	2K337	NUT	1
22	3V2	NUT	2
23	1B4102	BEARING	2
24	3V5916	PLATE ASSEM.	2
25	6H3569	BUSHING	1
26	S1624	BOLT	4
	3B4510	LOCKWASHER	4
27	3B5524	LOCK	2
28	L2341	NUT	2
29	4K1302	SPRING	16
30	6B8804	SPRING	16
31	2B8759	STUD	16
32	2B9018	LOCK	32
33	2B9020	RETAINER	16
34	3Y889	DRUM	2

GRAPHIC #1

j15854e

BRAKES (4K5027 N/S)

Effective with Serial No. 65J1474-Up

Key:

SMCS

NOTE	REF NO	GRAPHIC REF	PART NUMBER	QTY	PART NAME 1 2 3 4 5 6 (PRODUCT LEVEL)	LINK PAGE
			5K-0606	1	PIN	
					(PART OF SUPPORT ASSEM. 4K5557)	
			0S-0175	4	PIN	
			3B-4617	4	COTTER PIN	
			3K-4725	4	LINK	
			1M-1789	2	LEVER	
			0S-1585	8	BOLT	
			3B-4508	8	LOCKWASHER	
			3K-4708	2	ANCHOR	
			7H-3908	4	PIN	
			7H-3788	2	FORK	
			7H-3922	2	BAND ASSEM.	
			4B-4310	4	RIVET	
			3B-0613	2	SPRING	
			3B-0614	2	SPRING	
					(1/2 OF EACH IN EACH BAND ASSEM. 7H3922)	
			4K-6345	2	NUT	
			7B-5054	32	RIVET	
			5H-6030	4	LINING	
			3K-5802	8	BOLT	
					(1/2 OF EACH IN EACH BAND ASSEM. 7H3922)	
			7B-5054	32	RIVET	
			5H-6030	4	LINING	
					(1/2 OF EACH IN EACH BAND ASSEM. 7H3926)	
			1D-5117	2	NUT	
			3K-4724	2	SCREW	
			6H-1298	1	SPRING	
			5K-0634	1	PIN	
					(PART OF PAWL ASSEM. 5K627)	
			4K-5557	1	SUPPORT ASSEM.	
			9F-2978	2	NUT	
					(PART OF SUPPORT ASSEM. 4K5557)	
			0S-1591	2	BOLT	
			3B-4506	2	LOCKWASHER	
			8S-9092	2	BOLT	
			1D-4720	2	NUT	
			4K-5268	2	SHAFT	
			3K-4723	4	KEY	
			5K-0627	1	PAWL ASSEM.	
			5K-0633	1	PIN	
			9S-1315	2	PIN	
			3B-4617	2	COTTER PIN	
			4K-5110	1	LEVER (RIGHT HAND)	
			4K-5622	1	LEVER (LEFT HAND)	
			0S-1585	2	BOLT	
			3K-4709	1	LEVER (RIGHT HAND)	
			3K-4710	1	LEVER (LEFT HAND)	
			1M-1794	2	BAND ASSEM.	
			5H-6030	4	LINING	

BRAKES (4K5027 N/S)

7B-5054	32	RIVET
3K-5802	8	BOLT
		(1/2 OF EACH IN EACH BAND ASSEM. 1M1794)
7H-3926	2	BAND ASSEM.
1D-4716	16	NUT
3B-4505	16	LOCKWASHER
6K-6172	2	LINING GROUP
		EACH CONSISTING OF A COMPLETE SET OF LININGS AND
NOTSERV	6	LINING
7B-5054	48	LIVET
4K-5213	1	PEDAL (RIGHT HAND)
4K-5214	1	PEDAL (LEFT HAND)
6K-3475	1	RATCHET
4H-4641	1	PIN
3B-4617	1	COTTER PIN
4K-5284	2	ROD ASSEM.
4B-6493	2	SPRING
9S-1354	2	NUT
9S-1315	2	PIN
3B-4617	2	COTTER PIN
4K-5563	2	END
4K-5251	2	BRACKET
0S-1585	6	BOLT
3B-4508	6	LOCKWASHER
1K-2602	2	WASHER
3B-4629	2	COTTER PIN
1M-1917	2	SHAFT
6K-8088	4	BEARING

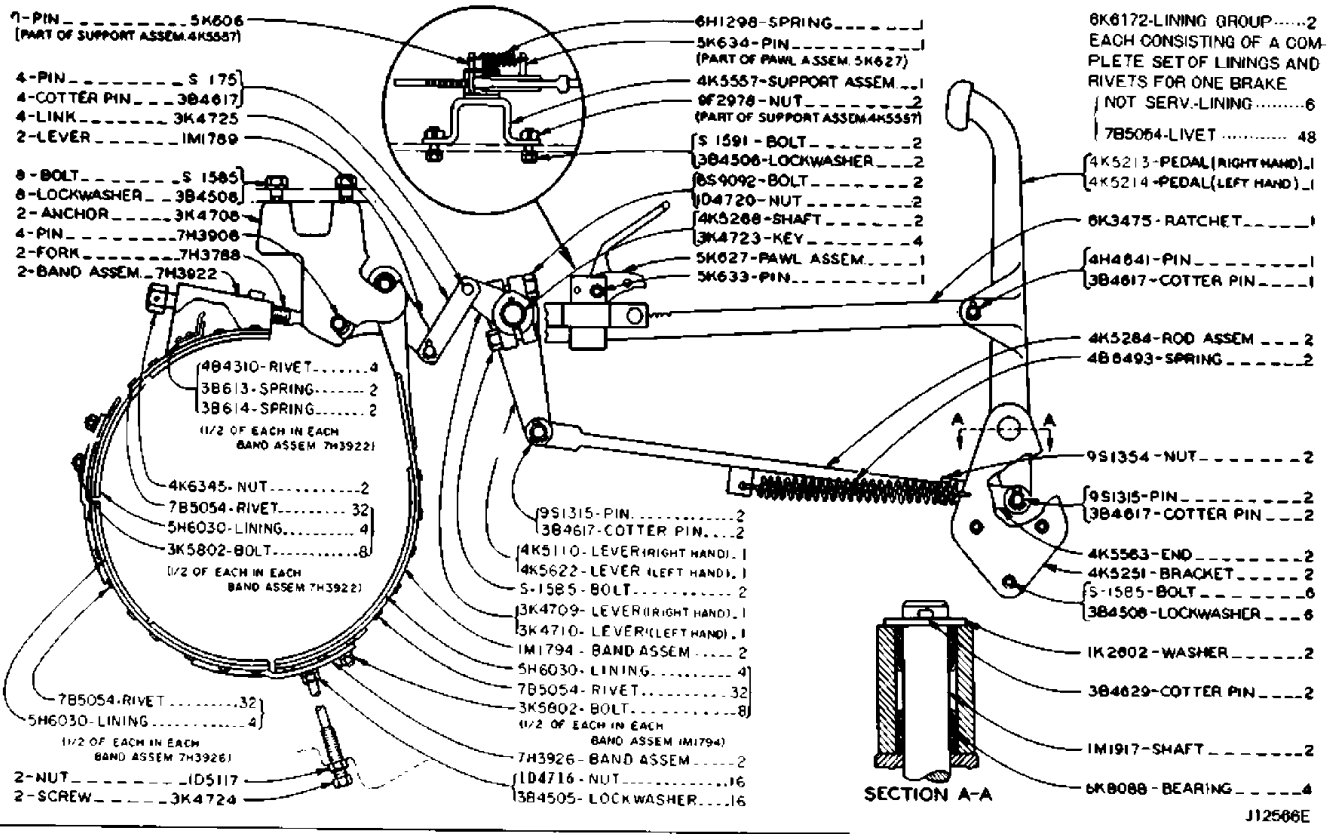

GRAPHIC #1

j12566e

3Y892 BRAKE GROUP--Type 1

Part of 3Y1582 Oil Steering Clutch Modification Arrangement listed on Page 213
AN ATTACHMENT

Key:

SMCS

NOTE	REF NO	GRAPHIC REF	PART NUMBER	QTY	PART NAME 1 2 3 4 5 6 (PRODUCT LEVEL)	LINK PAGE
			5K-0606	1	PIN	
					(Part of 4K5557 Support Assem.)	
			0S-0175	4	PIN	
			3B-4617	4	COTTER PIN	
			3K-4725	4	LINK	
			1M-1789	2	LEVER	
			0S-1585	8	BOLT	
			3B-4508	8	LOCKWASHER	
			3K-4708	2	ANCHOR	
			7H-3908	4	PIN	
			7H-3788	2	FORK	
			5H-6639	2	SPRING	
			9M-8087	2	SPRING	
			1C-0569	2	BOLT	
			3B-4505	2	LOCKWASHER	
			4K-6345	2	NUT	
			6H-1298	1	SPRING	
			5K-0634	1	PIN	
					(Part of 5K627 Pawl Assem.)	
			4K-5557	1	SUPPORT ASSEM.	
			9F-2978	2	NUT (Weld)	
					(Part of 4K5557 Support Assem.)	
			0S-1591	2	BOLT	
			3B-4506	2	LOCKWASHER	
			8S-9092	2	BOLT	
			1D-4720	2	NUT	
			4K-5268	2	SHAFT	
			3K-4723	4	KEY	
			5K-0627	1	PAWL ASSEM.	
			5K-0633	1	PIN	
			4K-5110	1	LEVER (R.H.)	
			4K-5622	1	LEVER (L.H.)	
			9S-1315	2	PIN	
			3B-4617	2	COTTER PIN	
			0S-1585	2	BOLT	
			3K-4709	1	LEVER (R.H.)	
			3K-4710	1	LEVER (L.H.)	
			4K-3529	2	BAND ASSEM.	
			3B-0614	1	SPRING	
			3B-0613	1	SPRING	
			7B-5068	1	RIVET	
			4B-4310	1	RIVET (Button Head)	
			7B-5062	49	RIVET	
			4K-3515	8	LINING	
			4K-3512	6	LINING	
					(1/2 Each in 4K3529 Band Assem.)	
			8M-9307	2	PLUG	
			6F-7062	2	WASHER	

3Y892 BRAKE GROUP--Type 1

9H-4280	2	LINING GROUP
		Each Consisting of a Complete Set OF LININGS AND RIVETS
4K-5213	1	PEDAL (R.H.)
4K-5214	1	PEDAL (L.H.)
6K-3475	1	RATCHET
4H-4641	1	PIN
3B-4617	1	COTTER PIN
4K-5284	2	ROD ASSEM
4B-6493	2	SPRING
9S-1354	2	NUT
9S-1315	2	PIN
3B-4617	2	COTTER PIN
4K-5563	2	END
4K-5251	2	BRACKET
0S-1587	6	BOLT
3B-4508	6	LOCKWASHER
1K-2602	2	WASHER
3B-4629	2	COTTER PIN
1M-1917	2	SHAFT
6K-8088	4	BEARING

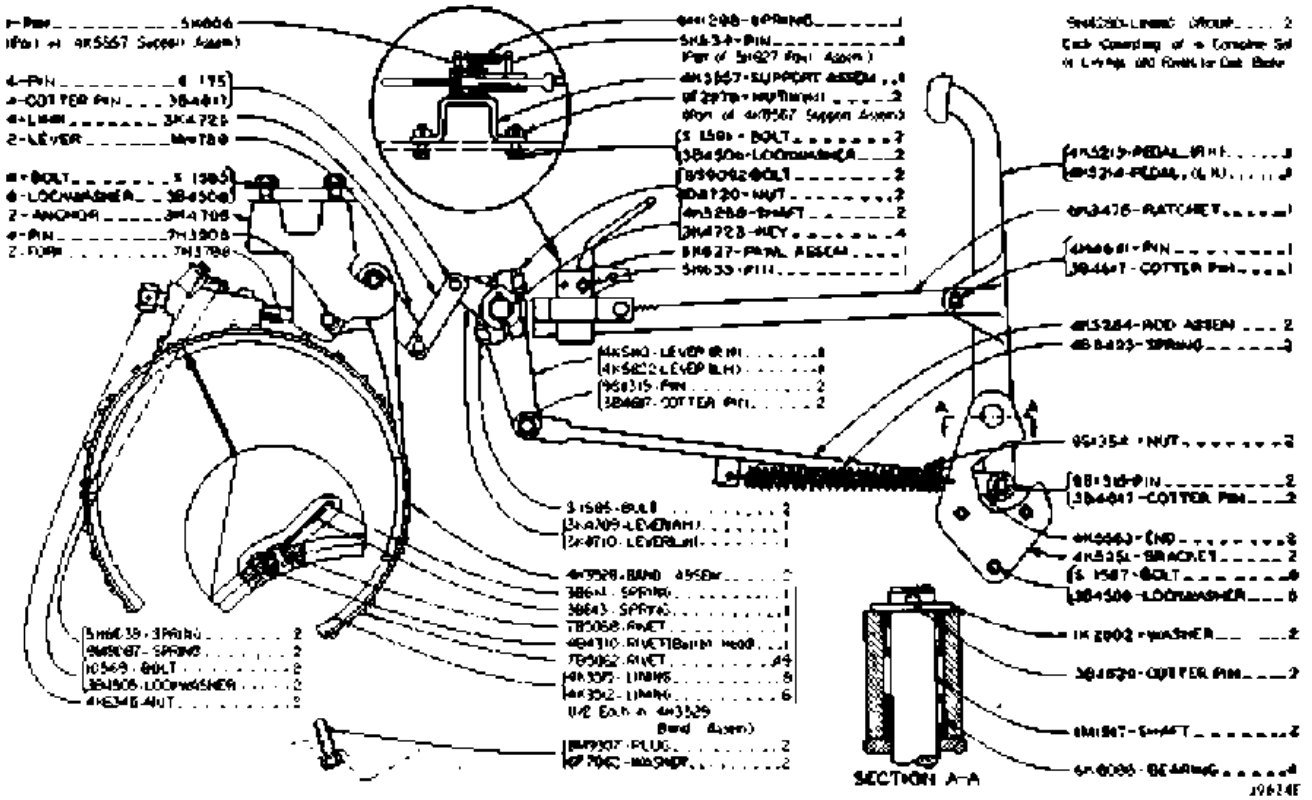

GRAPHIC #1

j9624e

3Y892 BRAKE GROUP--Type 2

Part of 3Y1582 Oil Steering Clutch Modification Arrangement listed on Page 213
AN ATTACHMENT

Key:

SMCS

NOTE	REF NO	GRAPHIC REF	PART NUMBER	QTY	PART NAME 1 2 3 4 5 6 (PRODUCT LEVEL)	LINK PAGE
			5K-0606	1	PIN	
					(Part of 4K5557 Support Assem.)	
			0S-0175	4	PIN	
			3B-4617	4	COTTER PIN	
			3K-4725	4	LINK	
			1M-1789	2	LEVER	
			0S-1585	8	BOLT	
			3B-4508	8	LOCKWASHER	
			3K-4708	2	ANCHOR	
			7H-3908	4	PIN	
			7H-3788	2	FORK	
			4K-6345	2	NUT	
			6H-1298	1	SPRING	
			5K-0634	1	PIN	
					(Part of 5K627 Pawl Assem.)	
			4K-5557	1	SUPPORT ASSEM.	
			9F-2978	2	NUT (Weld)	
					(Part of 4K5557 Support Assem.)	
			0S-1591	2	BOLT	
			3B-4506	2	LOCKWASHER	
			8S-9092	2	BOLT	
			1D-4720	2	NUT	
			4K-5268	2	SHAFT	
			3K-4723	4	KEY	
			5K-0627	1	PAWL ASSEM.	
			5K-0633	1	PIN	
			4K-5110	1	LEVER (R.H.)	
			4K-5622	1	LEVER (L.H.)	
			9S-1315	2	PIN	
			3B-4617	2	COTTER PIN	
			0S-1585	2	BOLT	
			3K-4709	1	LEVER (R.H.)	
			3K-4710	1	LEVER (L.H.)	
			4K-3529	2	BAND ASSEM.	
			3B-0614	1	SPRING	
			3B-0613	1	SPRING	
			7B-5068	1	RIVET	
			4B-4310	1	RIVET (Button Head)	
			7B-5062	49	RIVET	
			4K-3515	8	LINING	
			4K-3512	6	LINING	
					(1/2 Each in 4K3529 Band Assem.)	
			8M-9307	2	PLUG	
			6F-7062	2	WASHER	
			9H-4280	2	LINING GROUP	
					Each Consisting of a Complete Set OF LININGS AND RIVETS	
			4K-5213	1	PEDAL (R.H.)	
			4K-5214	1	PEDAL (L.H.)	

3Y892 BRAKE GROUP--Type 2

6K-3475	1	RATCHET
4H-4641	1	PIN
3B-4617	1	COTTER PIN
4K-5284	2	ROD ASSEM
4B-6493	2	SPRING
9S-1354	2	NUT
9S-1315	2	PIN
3B-4617	2	COTTER PIN
4K-5563	2	END
4K-5251	2	BRACKET
0S-1587	6	BOLT
3B-4508	6	LOCKWASHER
1K-2602	2	WASHER
3B-4629	2	COTTER PIN
1M-1917	2	SHAFT
6K-8088	4	BEARING

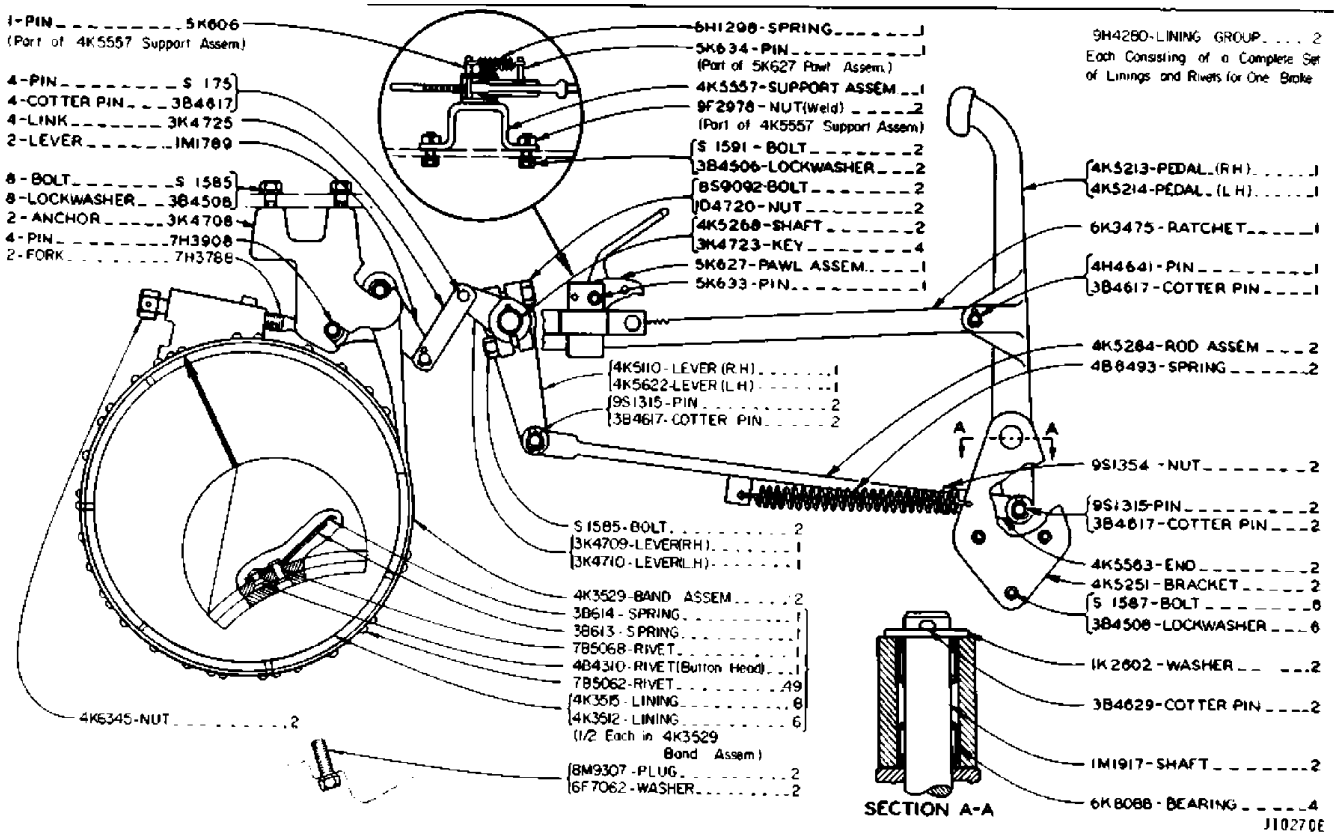

GRAPHIC #1

j10270e

3Y1582 OIL STEERING CLUTCHES MODIFICATION ARRANGEMENT

AN ATTACHMENT

Key: Y - SEPARATE ILLUSTRATION

SMCS

NOTE	REF NO	GRAPHIC REF	PART NUMBER	QTY	PART NAME 1 2 3 4 5 6 (PRODUCT LEVEL)	LINK PAGE
Y			3Y-1583	1		
					STEERING CLUTCH GROUP	
Y			3Y-0885	1		
					STEERING CLUTCH CASE & COVERS GROUP	
Y			3Y-0892	1		
					BRAKE GROUP	
Y			5K-8851	1		
					FINAL DRIVE MISCELLANEOUS PARTS GROUP	
Y			NOTSERV	1		

STEERING CLUTCH CASE AND COVERS (6K4664 N/S)--Part 1 of 2

Effective with Serial No. 65J1474-Up

Key:

SMCS

NOTE	REF NO	GRAPHIC REF	PART NUMBER	QTY	PART NAME 1 2 3 4 5 6 (PRODUCT LEVEL)	LINK PAGE
	1		2B-7562	10	CORK (Z)	
	2		4K-5243	2	SPACER	
	3		1A-2029	2	BOLT	
	4		0S-1594	8	BOLT	
	5		3B-4506	36	LOCKWASHER	
	6		3K-7812	2	COVER	
			4K-5470	2	GASKET	
	7		0L-1351	8	BOLT	
	8		3K-4157	1	COVER	
			3K-4158	1	GASKET	
	9		1K-9011	3	BOLT (45mm Long)	
			0S-1595	1	BOLT (32mm Long)	
	10		3B-4508	4	LOCKWASHER	
	11		0S-1571	8	BOLT (44mm Long)	
	12		3B-1915	4	BOLT (35mm Long)	
	13		6K-6551	2	COVER	
			6K-6552	2	GASKET	
	14		0S-0509	8	BOLT	
	15		3B-0867	2	COVER	
			3B-0866	2	GASKET	
	16		4B-2363	2	PLUG	
			6F-4868	2	GASKET	
	17		0S-1624	4	BOLT	
	18		3B-4510	4	LOCKWASHER	
	19		3B-0844	1	COVER	
			3B-0845	1	GASKET	
	20		2B-7558	4	CORK (Y)	

STEERING CLUTCH CASE AND COVERS (6K4664 N/S)--Part 1 of 2

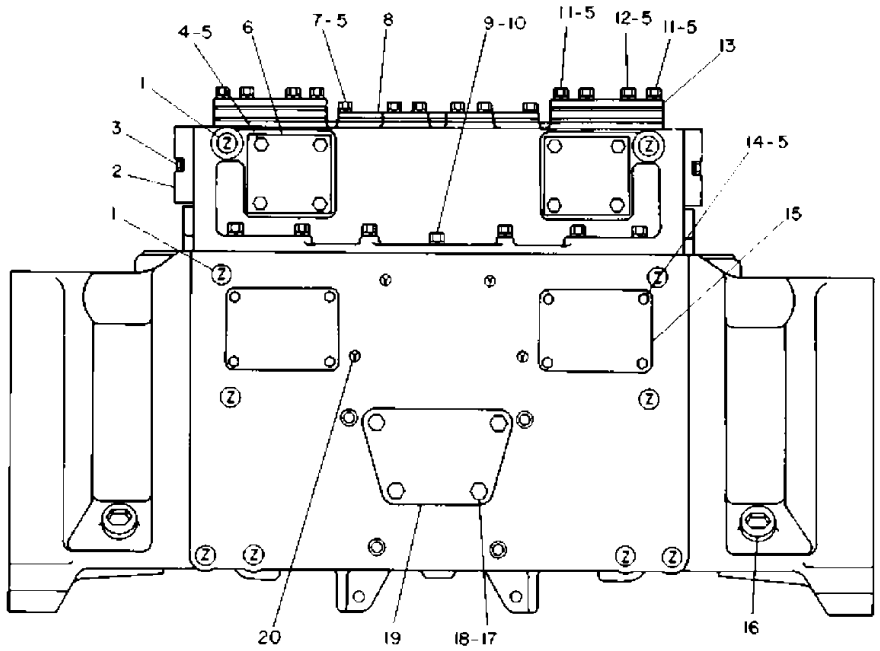

REF. NO.	PART NUMBER	DESCRIPTION	QTY.
1	2B7562	CORK (Z)	10
2	4K5243	SPACER	2
3	1A2029	BOLT	2
4	S1594	BOLT	8
5	3B4506	LOCKWASHER	36
6	3K7812	COVER	2
	4K5470	GASKET	2
7	11351	BOLT	8
8	3K4157	COVER	1
	3K4158	GASKET	1
9	1K9011	BOLT (45mm Long)	3
	S1595	BOLT (32mm Long)	1
10	3B4508	LOCKWASHER	4
11	S1571	BOLT (44mm Long)	8
12	3B1915	BOLT (35mm Long)	4
13	6K6551	COVER	2
	6K6552	GASKET	2
14	S509	BOLT	8
15	3B867	COVER	2
	3B866	GASKET	2
16	4B2363	PLUG	2
	6F4868	GASKET	2
17	S1624	BOLT	4
18	3B4510	LOCKWASHER	4
19	3B844	COVER	1
	3B845	GASKET	1
20	2B7558	CORK (Y)	4

J9712E

GRAPHIC #1

j9712e

STEERING CLUTCH CASE AND COVERS (6K4664 N/S)--Part 2 of 2

Effective with Serial No. 65J1474-UP

Key:

SMCS

NOTE	REF NO	GRAPHIC REF	PART NUMBER	QTY	PART NAME 1 2 3 4 5 6 (PRODUCT LEVEL)	LINK PAGE
	1		0S-1569	2	BOLT	
			3B-4510	2	LOCKWASHER	
	2		0L-1351	4	BOLT	
	3		3B-4506	18	LOCKWASHER	
	4		1F-9386	2	COVER	
			1F-9387	2	GASKET	
	5		0S-1573	4	BOLT	
	6		3B-4508	26	LOCKWASHER	
	7		6K-5893	2	COVER	
			6K-5892	2	GASKET	
	8		4K-4939	1	COVER	
			4K-4938	1	GASKET	
	9		0S-1588	12	BOLT	
	10		4K-4937	12	BOLT	
	11		2B-0947	10	BOLT	
	12		5A-6057	4	SEAL	
	13		8K-7577	1	CASE ASSEM.	
	14		4K-4929	2	CAP	
	15		1D-4595	4	BOLT	
			3B-4510	4	LOCKWASHER	
	16		1A-2223	1	DOWEL	
	17		0S-1594	2	BOLT	
	18		6B-0041	1	COVER	
			9H-8217	1	GASKET	
	19		2B-0858	3	PLUG	
	20		0L-0827	1	PLUG	
			0L-1124	1	GASKET	
	21		3D-2824	1	"O"RING	
	22		9S-4183	1	PLUG	
	23		4K-2143	2	BUSHING	
	24		6K-6556	1	COVER ASSEM.	
	25		6B-7651	2	DOWEL	
	26		2P-3186	2	BEARING	
			2P-3187	2	BEARING	
	27		3K-7202	2	BEARING	
	28		1A-0695	2	PLUG	
	29		3K-7207	2	BEARING	

STEERING CLUTCH CASE AND COVERS (6K4664 N/S)--Part 2 of 2

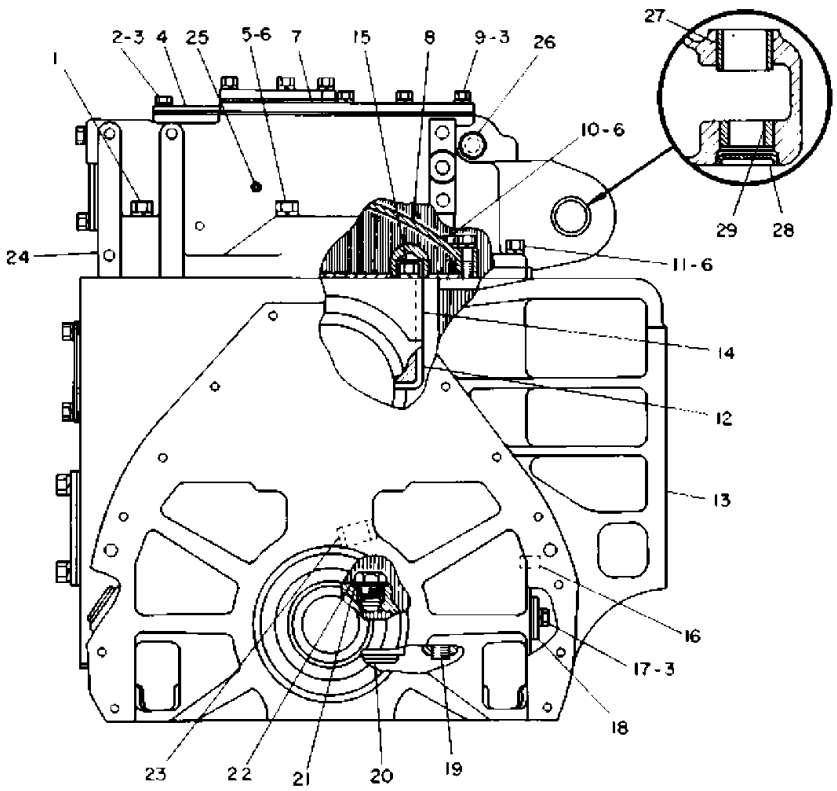

REF. NO.	PART NUMBER	DESCRIPTION	QTY.
1	S1569	BOLT	2
	3B4510	LOCKWASHER	2
2	LL351	BOLT	4
3	3B4506	LOCKWASHER	18
4	1F9386	COVER	2
	1F9387	GASKET	2
5	S1573	BOLT	4
6	3B4508	LOCKWASHER	26
7	6K5893	COVER	2
	6K5892	GASKET	2
8	4K4939	COVER	1
	4K4938	GASKET	1
9	S1588	BOLT	12
10	4K4937	BOLT	12
11	2B947	BOLT	10
12	5A6057	SEAL	4
13	8K7577	CASE ASSEM.	1
14	4K4929	CAP	2
15	104595	BOLT	4
	3B4510	LOCKWASHER	4
16	1A2223	DOWEL	1
17	S1594	BOLT	2
18	6B41	COVER	1
	9H8217	GASKET	1
19	2B858	PLUG	3
20	L827	PLUG	1
	L1124	GASKET	1
21	3D2824	"O" RING	1
22	9S4183	PLUG	1
23	4K2143	BUSHING	2
24	6K6556	COVER ASSEM.	1
25	6B7651	DOWEL	2
26	2P3186	BEARING	2
	2P3187	BEARING	2
27	3K7202	BEARING	2
28	1A695	PLUG	2
J9713E 29	3K7207	BEARING	2

GRAPHIC #1

j9713e

3Y885 STEERING CLUTCH CASE AND COVERS GROUP--Part 1 of 2

Part of 3Y1582 Oil Steering Clutch Modification Arrangement listed on Page 213
AN ATTACHMENT

Key:

SMCS

NOTE	REF NO	GRAPHIC REF	PART NUMBER	QTY	PART NAME 1 2 3 4 5 6 (PRODUCT LEVEL)	LINK PAGE
	1		2B-7562	10	CORK (Y)	
	2		5A-3382	1	PLATE (Serial No.)	
			4B-4158	2	SCREW (Drive)	
	3		0S-1569	2	BOLT	
	4		3B-4510	6	LOCKWASHER	
	5		0S-1594	8	BOLT	
	6		3B-4506	36	LOCKWASHER	
	7		8S-5820	1	BREATHER	
	8		3K-7812	2	COVER	
			4K-5470	2	GASKET	
	9		3Y-0883	1	COVER	
	10		6K-6552	2	GASKET	
	11		0S-1571	8	BOLT (1.75" Long)	
	12		3B-1915	4	BOLT (1.37" Long)	
	13		0L-1351	8	BOLT	
	14		3K-4157	1	COVER	
			3K-4158	1	GASKET	
	15		1K-9011	3	BOLT (1.75" Long)	
			0S-1595	1	BOLT (1.25" Long)	
	16		3B-4508	4	LOCKWASHER	
	17		6K-6551	1	COVER	
	18		0S-0509	8	BOLT (.75" Long)	
	19		4K-3709	2	COVER	
			3B-0866	2	GASKET	
	20		4B-2363	2	PLUG	
			6F-4868	2	GASKET	
	21		0S-1624	4	BOLT	
	22		3B-0844	1	COVER	
			3B-0845	1	GASKET	
	23		2B-7558	4	CORK (Z)	
	24		2B-0858	2	PLUG	

3Y885 STEERING CLUTCH CASE AND COVERS GROUP--Part 1 of 2

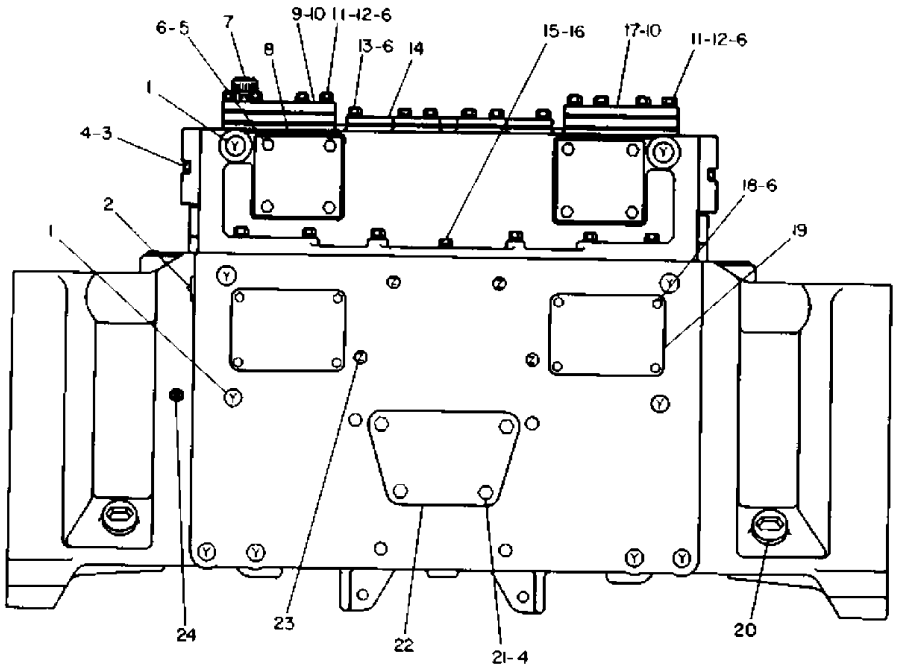

REF. NO.	PART NUMBER	DESCRIPTION	QTY.
1	2B7562	CORK (Y)	10
2	5A3382	PLATE (Serial No.)	1
	4B4158	SCREW (Drive)	2
3	S1569	BOLT	2
4	3B4510	LOCKWASHER	6
5	S1594	BOLT	8
6	3B4506	LOCKWASHER	36
7	8S5820	BREATHER	1
8	3K7812	COVER	2
	4K5470	GASKET	2
9	3Y883	COVER	1
10	6K6552	GASKET	2
11	S1571	BOLT (1.75" Long)	8
12	3B1915	BOLT (1.37" Long)	4
13	L1351	BOLT	8
14	3K4157	COVER	1
	3K4158	GASKET	1
15	1K9011	BOLT (1.75" Long)	3
	S1595	BOLT (1.25" Long)	1
16	3B4508	LOCKWASHER	4
17	6K6551	COVER	1
18	S509	BOLT (.75" Long)	8
19	4K3709	COVER	2
	3B866	GASKET	2
20	4B2363	PLUG	2
	6F4868	GASKET	2
21	S1624	BOLT	4
22	3B844	COVER	1
	3B845	GASKET	1
23	2B7558	CORK (Z)	4
24	2B858	PLUG	2

J9619E

GRAPHIC #1

j9619e

3Y885 STEERING CLUTCH CASE AND COVERS GROUP--Part 2 of 2

Part of 3Y1582 Oil Steering Clutch Modification Arrangement listed on Page 213
AN ATTACHMENT

Key:

SMCS

NOTE	REF NO	GRAPHIC REF	PART NUMBER	QTY	PART NAME 1 2 3 4 5 6 (PRODUCT LEVEL)	LINK PAGE
	1		0S-1573	4	BOLT	
	2		3B-4508	26	LOCKWASHER	
	3		0L-1351	4	BOLT	
	4		3B-4506	18	LOCKWASHER	
	5		1F-9386	2	COVER	
			1F-9387	2	GASKET	
	6		6K-5893	2	COVER	
			6K-5892	2	GASKET	
	7		4K-4939	1	COVER	
			4K-4938	1	GASKET	
	8		0S-1588	12	BOLT	
	9		1A-2029	2	BOLT	
	10		4K-5243	2	SPACER	
	11		4K-4937	12	BOLT	
	12		2B-0947	10	BOLT	
	13		5A-6057	4	SEAL	
	14		3Y-0884	1	CASE ASSEM.	
	15		1A-2223	1	DOWEL	
	16		1D-4595	4	BOLT	
			3B-4510	4	LOCKWASHER	
	17		4K-2143	2	BUSHING	
	18		9S-4183	1	PLUG	
	19		3D-2824	1	"O" RING	
	20		6K-6556	1	COVER ASSEM.	
			6B-7651	2	DOWEL	
	21		2P-3186	2	BEARING	
			2P-3187	2	BEARING	
	22		3K-7202	2	BEARING	
	23		1A-0695	2	PLUG	
	24		3K-7207	2	BEARING	
	25		0S-1594	2	BOLT	
	26		6B-0041	1	COVER	
			9H-8217	1	GASKET	
	27		2B-0858	3	PLUG	
	28		0L-0827	1	PLUG	
			0L-1124	1	GASKET	
	29		5K-8987	1	GASKET	

3Y885 STEERING CLUTCH CASE AND COVERS GROUP--Part 2 of 2

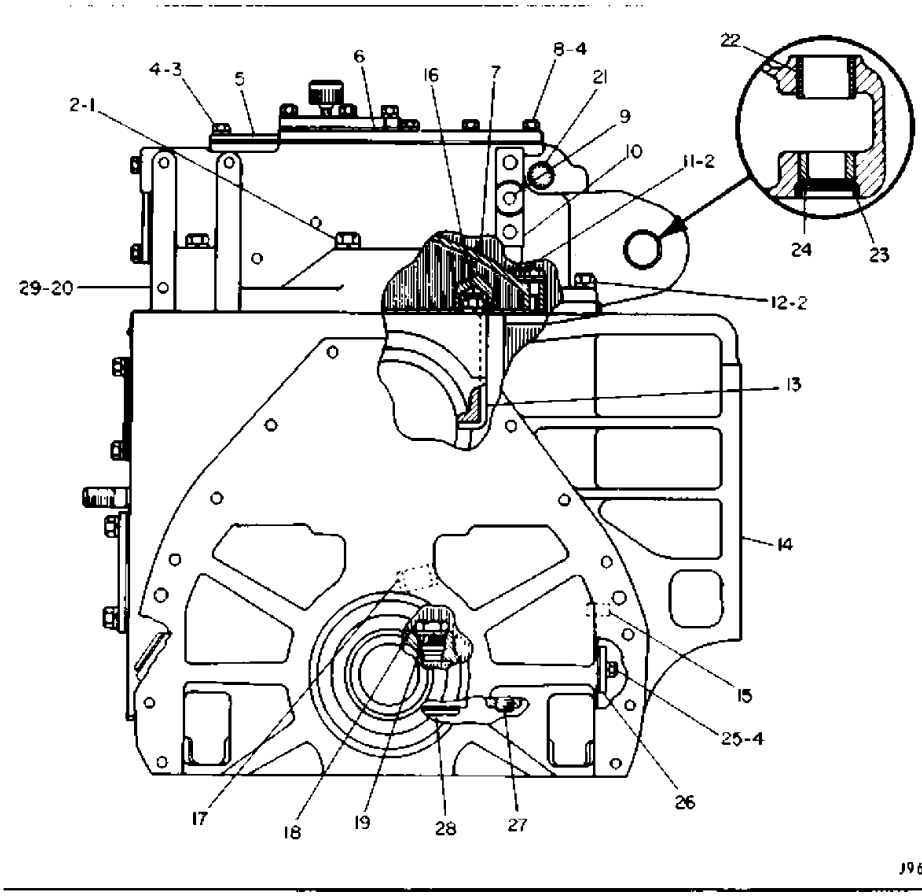

REF. NO.	PART NUMBER	DESCRIPTION	QTY.
1	S1573	BOLT	4
2	3B4508	LOCKWASHER	26
3	L1351	BOLT	4
4	3B4506	LOCKWASHER	18
5	1F9386	COVER	2
	1F9387	GASKET	2
6	6K5893	COVER	2
	6K5892	GASKET	2
7	4K4939	COVER	1
	4K4938	GASKET	1
8	S1588	BOLT	12
9	1A2029	BOLT	2
10	4K5243	SPACER	2
11	4K4937	BOLT	12
12	2B947	BOLT	10
13	5A6057	SEAL	4
14	3Y884	CASE ASSEM.	1
15	1A2223	DOWEL	1
16	1D4595	BOLT	4
	3B4510	LOCKWASHER	4
17	4K2143	BUSHING	2
18	9S4183	PLUG	1
19	3D2824	"O" RING	1
20	6K6556	COVER ASSEM.	1
	6B7651	DOWEL	2
21	2P3186	BEARING	2
	2P3187	BEARING	2
22	3K7202	BEARING	2
23	1A695	PLUG	2
24	3K7207	BEARING	2
25	S1594	BOLT	2
26	6B41	COVER	1
	9H8217	GASKET	1
27	2B858	PLUG	3
28	L827	PLUG	1
	L1124	GASKET	1
29	5K8987	GASKET	1

GRAPHIC #1 j9620e

SEAT CUSHION (4K5595 N/S)

Effective with Serial No. 65J1474-UP

Key:

SMCS

NOTE	REF NO	GRAPHIC REF	PART NUMBER	QTY	PART NAME 1 2 3 4 5 6 (PRODUCT LEVEL)	LINK PAGE
			5A-3320	1	CUSHION ASSEM.	
			7B-6636	4	MACHINE SCREW	
			5A-3286	2	SUPPORT ASSEM.	
			1F-0751	4	NUT (WELD)	
					(2 IN EACH SUPPORT ASSEM. 5A3286)	
			0T-0703	4	BOLT	
			3B-4506	4	LOCKWASHER	
			4B-4278	4	WASHER	
			0T-0703	4	BOLT	
			3B-4506	4	LOCKWASHER	
			4B-4278	4	WASHER	
			5A-7098	2	CUSHION ASSEM.	
			4K-5757	1	CUSHION ASSEM.	
			0L-0472	2	BOLT	
			3B-4506	2	LOCKWASHER	
			4B-4278	2	WASHER	
			5A-3201	1	SUPPORT ASSEM.	

SEAT CUSHION (4K5595 N/S)

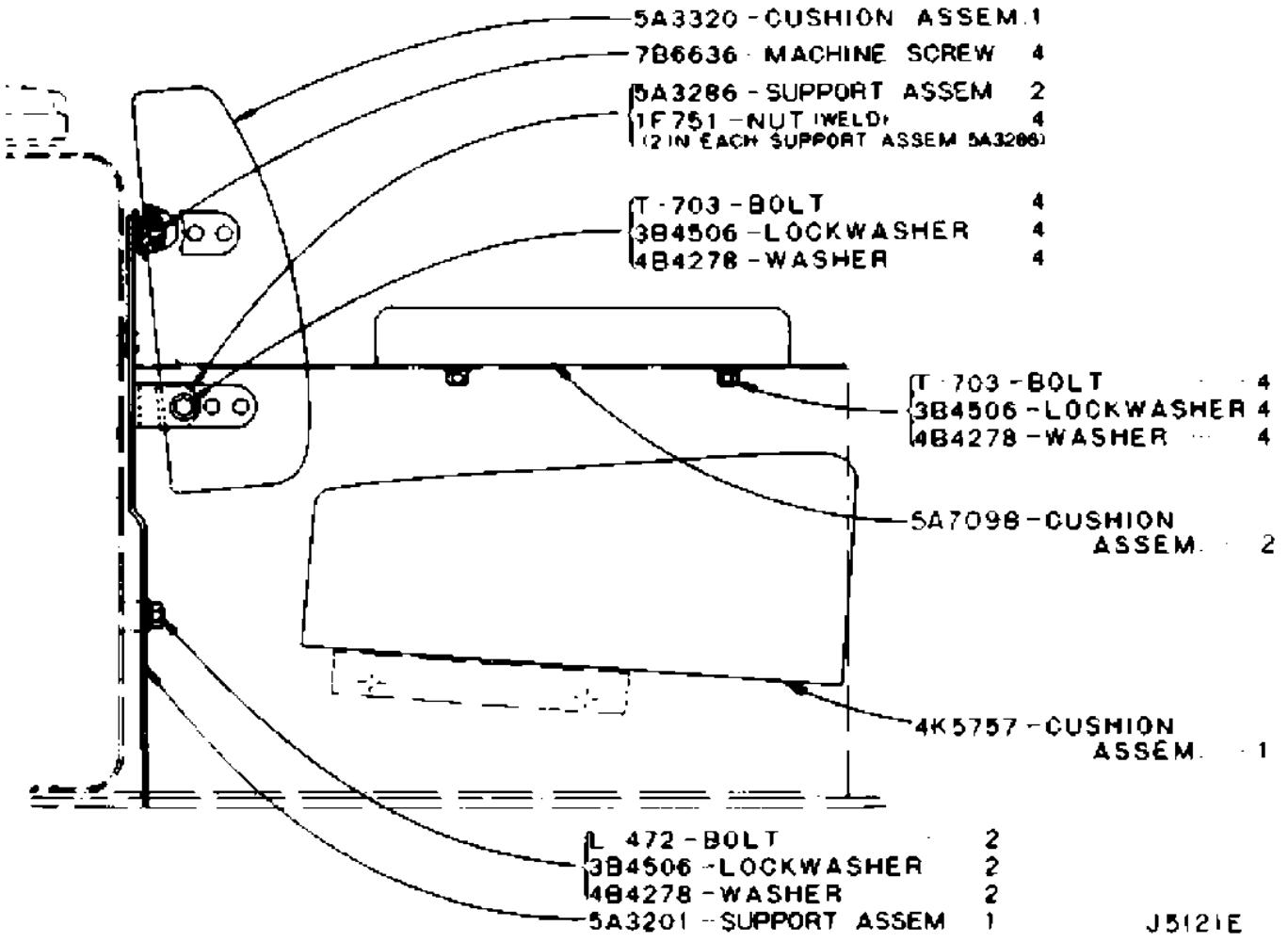

GRAPHIC #1

j5121e

GAUGES (6K5766 N/S)

Effective with Serial No. 65J1474~65J1590

Key: C - INDICATES CHANGES., H - ORDER BY THE CM OR M.

SMCS

NOTE	REF NO	GRAPHIC REF	PART NUMBER	QTY	PART NAME 1 2 3 4 5 6 (PRODUCT LEVEL)	LINK PAGE
	1		3B-8995	1	FITTING	
			1F-1344	1	NUT	
	2		3H-2900	1	GROMMET	
	3		4M-5283	2	BOLT	
	4		1L-4789	2	LOCKWASHER	
	5		5A-6774	1	INDICATOR	
	6		1S-1161	1	INDICATOR (Water Temperature)	
	7		5M-1065	1	GAGE (Oil Pressure)	
	8		5S-9068	1	GAGE (Fuel Pressure)	
	9		4K-8569	1	UNION	
	10		5A-6050	1	PANEL (For Japan)	
			6K-5767	1	PANEL (For Outside Japan)	
	11		8H-6912	1	FITTING	
	12		6H-6699	1	ADAPTER	
C	13		2B-2404	3	CLIP	
H	14		4S-8456		TUBE (3.18mm O. D. Copper)78cm	
C	15		3D-5102	1	GROMMET	
	16		3B-6768	1	BUSHING	
	17		4D-4158	1	FITTING	
			8H-6913	1	NUT	
	18		6K-7683	1	FITTING	
			8H-6913	2	NUT	
	19		7B-8559	1	CLIP	
H	20		5K-3282		TUBE (3.18mm O. D. Nylon)-1.25m	
	21		4K-5803	1	TIE	
	22		5K-5805	1	FITTING	
			5K-5803	1	SLEEVE	
			5K-5804	1	NUT	
	23		5A-6776	1	BRACKET	
H	24		6K-9952		TUBE (6.35mm O. D. Nylon)0.49m	
	25		3B-8998	1	FITTING	
			1F-1344	1	NUT	
CH	26		5K-3282		TUBE (3.18mm O. D. Nylon)1.12m	

GAUGES (6K5766 N/S)

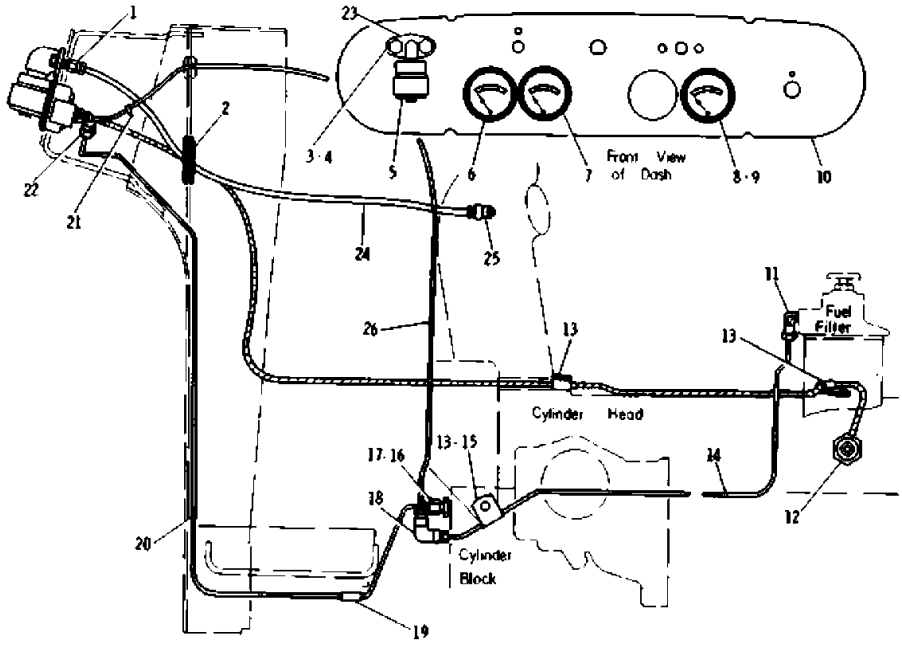

	REF. NO.	PART NUMBER	DESCRIPTION	QTY.
	1	3B8995	FITTING	1
		1F1344	NUT	1
	2	3H2900	GROMMET	1
	3	4M5283	BOLT	2
	4	1L4789	LOCKWASHER	2
	5	5A6774	INDICATOR	1
	6	1S1161	INDICATOR (Water Temperature)	1
	7	5M1065	GAGE (Oil Pressure)	1
	8	5S9068	GAGE (Fuel Pressure)	1
	9	4K8569	UNION	1
	10	5A6050	PANEL (For Japan)	1
		6K5767	PANEL (For Outside Japan)	1
	11	8H6912	FITTING	1
	12	6H6699	ADAPTER	1
C	13	2B2404	CLIP	3
▲	14	4S8456	TUBE (3.18mm O. D. Copper) 78cm	
C	15	3D5102	GROMMET	1
	16	3B6768	BUSHING	1
	17	4D4158	FITTING	1
		8H6913	NUT	1
	18	6K7683	FITTING	1
		8H6913	NUT	2
	19	7B8559	CLIP	1
▲	20	5K3282	TUBE (3.18mm O. D. Nylon) 1.25m	
	21	4K5803	TIE	1
	22	5K5805	FITTING	1
		5K5803	SLEEVE	1
		5K5804	NUT	1
	23	5A6776	BRACKET	1
▲	24	6K9952	TUBE (6.35mm O. D. Nylon) 0.49m	
	25	3B8998	FITTING	1
		1F1344	NUT	1
▲C	26	5K3282	TUBE (3.18mm O. D. Nylon) 1.12m	

▲ ORDER BY THE cm OR m.
C Indicates Changes.

J12828E

GRAPHIC #1

j12828e

GAUGES (1V496 N/S)

Effective with Serial No. 65J1591~65J1990

Key: H - ORDER BY THE CM OR DM

SMCS

NOTE	REF NO	GRAPHIC REF	PART NUMBER	QTY	PART NAME 1 2 3 4 5 6 (PRODUCT LEVEL)	LINK PAGE
	1		3B-8995	1	FITTING	
			1F-1344	1	NUT	
	2		3H-2900	1	GROMMET	
	3		4M-5283	2	BOLT	
	4		3K-6116	2	WASHER	
	5		5A-6774	1	INDICATOR	
	6		1S-1161	1	INDICATOR (Water Temperature)	
	7		5M-1065	1	GAGE (Oil Pressure)	
	8		4N-2234	1	GAGE (Fuel Pressure)	
	9		5P-2949	1	CONNECTOR	
	10		3Y-2870	1	PANEL (For Japan)	
			1V-1679	1	PANEL (For Outside Japan)	
	11		8H-6912	1	FITTING	
	12		6H-6699	1	ADAPTER	
	13		2B-2404	3	CLIP	
H	14		5P-1196		TUBE (3.18mm O. D. Copper) 60cm	
	15		3D-5102	1	GROMMET	
	16		3B-6768	1	BUSHING	
	17		4D-4158	1	FITTING	
			8H-6913	1	NUT	
	18		6K-7683	1	FITTING	
			8H-6913	2	NUT	
	19		7B-8559	1	CLIP	
H	20		5P-0580		TUBE (3.18mm O.D. Nylon)12.45dm	
	21		5K-5805	1	FITTING	
	22		5K-5803	1	SLEEVE	
			5K-5804	1	NUT	
	23		1P-6886	1	ADAPTER	
H	24		5P-0756		TUBE (6.35mm O. D. Nylon) 6dm	
	25		3B-8998	1	FITTING	
			1F-1344	1	NUT	
H	26		5P-0580		TUBE (3.18mm O.D. Nylon)11.2dm	

GAUGES (1V496 N/S)

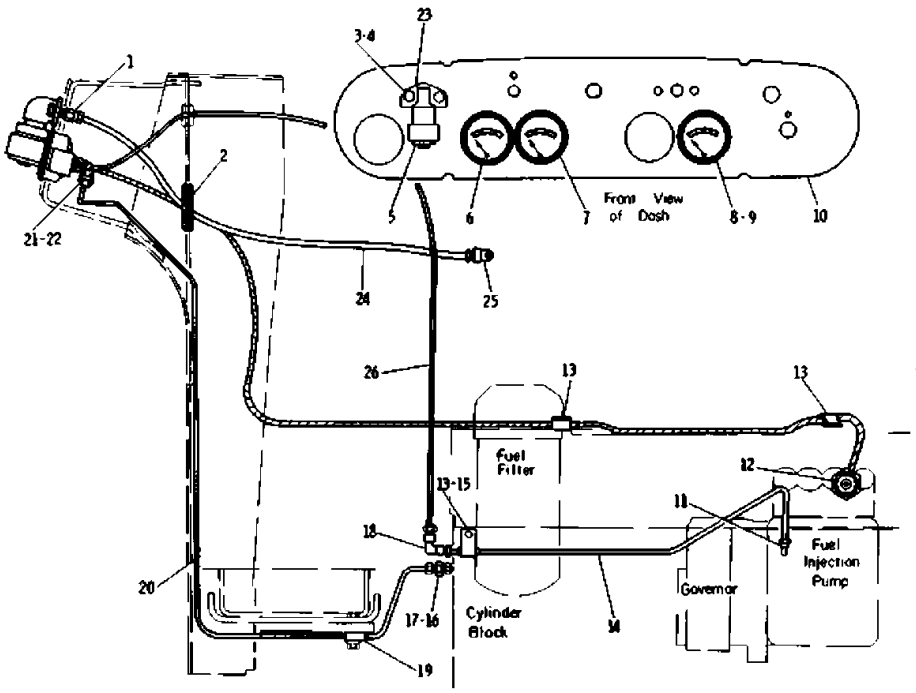

REF. NO.	PART NUMBER	DESCRIPTION	QTY.
1	3B8995	FITTING	1
	1F1344	NUT	1
2	3H2900	GROMMET	1
3	4M5283	BOLT	2
4	3K6116	WASHER	2
5	5A6774	INDICATOR	1
6	1S1161	INDICATOR(Water Temperature)	1
7	5M1065	GAGE (Oil Pressure)	1
8	4N2234	GAGE (Fuel Pressure)	1
9	5P2949	CONNECTOR	1
10	3Y2870	PANEL (For Japan)	1
	1V1679	PANEL (For Outside Japan)	1
11	8H6912	FITTING	1
12	6H6699	ADAPTER	1
13	2B2404	CLIP	3
▲ 14	5P1196	TUBE (3.18mm O. D. Copper) 60cm	
15	3D5102	GROMMET	1
16	3B6768	BUSHING	1
17	4D4158	FITTING	1
	8H6913	NUT	1
18	6K7683	FITTING	1
	8H6913	NUT	2
19	7B8559	CLIP	1
▲ 20	5P580	TUBE(3.18mm O. D. Nylon) 12.45dm	
21	5K5805	FITTING	1
22	5K5803	SLEEVE	1
	5K5804	NUT	1
23	1P6886	ADAPTER	1
▲ 24	5P756	TUBE(6.35mm O. D. Nylon) 6dm	
25	3B8998	FITTING	1
	1F1344	NUT	1
▲ 26	5P580	TUBE (3.18mm O. D. Nylon) 11.2dm	

▲ ORDER BY THE cm OR dm

J13248E

GRAPHIC #1

j13248e

GAUGES (1V1496 N/S)

Effective with Serial No. 65J1991~65J2005, 65J2011~65J2034, 65J2038~65J2042

Key: C - INDICATES CHANGE

SMCS

NOTE	REF NO	GRAPHIC REF	PART NUMBER	QTY	PART NAME 1 2 3 4 5 6 (PRODUCT LEVEL)	LINK PAGE
	1		3B-8995	1	FITTING	
			1F-1344	1	NUT	
	2		3H-2900	1	GROMMET	
	3		4M-5283	2	BOLT	
			3K-6116	2	WASHER	
	4		1P-6886	1	ADAPTER	
	5		5A-6774	1	INDICATOR	
	6		1S-1161	1	INDICATOR (Water Temperature)	
	7		5M-1065	1	GAGE (Oil Pressure)	
C	8		6N-3272	1	INDICATOR (Fuel Pressure)	
C	9		5D-9231	2	CONNECTOR	
	10		3Y-2870	1	PANEL (For Japan)	
			1V-1679	1	PANEL (For Outside Japan)	
C	11		2B-2404	2	CLIP	
	12		6H-6699	1	ADAPTER	
C	13		8M-2772	1	CLIP	
C	14		2V-9906	1	TUBE ASSEM.	
	15		3B-6768	1	BUSHING	
C	16		3V-3037	1	HOSE ASSEM.	
	17		5P-0756		TUBE (6.35mmO. D Nylon) 6dm	
	18		3B-8998	1	FITTING	
			1F-1344	1	NUT	
C	19		3V-3036	1	HOSE ASSEM.	
C	20		067-6495	1	ELBOW	
C	21		2N-1287	1	ELBOW	

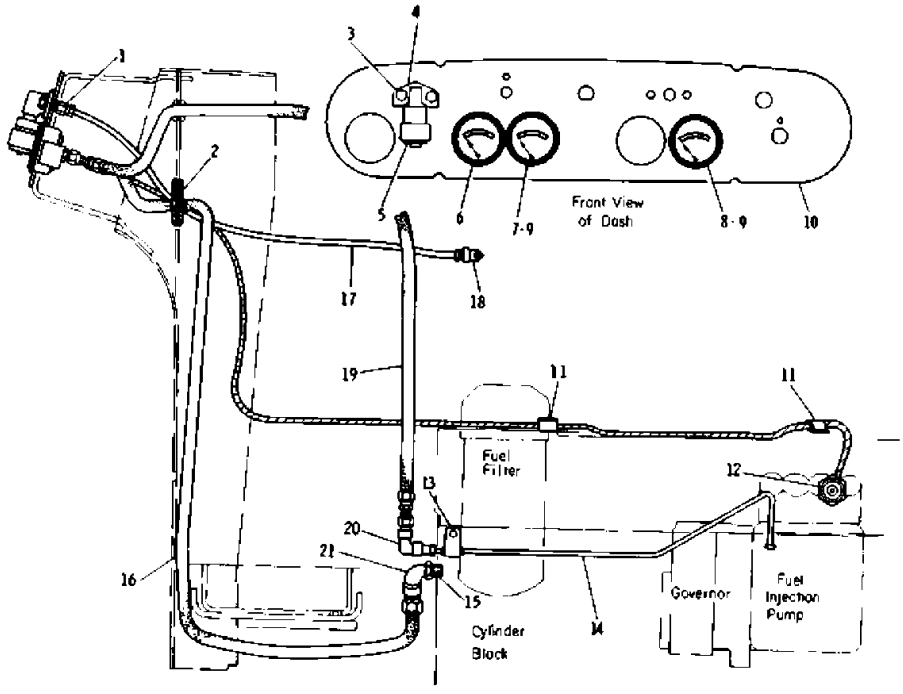

REF. NO.	PART NUMBER	DESCRIPTION	QTY.
1	3B8995	FITTING	1
	1F1344	NUT	1
2	3H2900	GROMMET	1
3	4M5283	BOLT	2
	3K6116	WASHER	2
4	1P6886	ADAPTER	1
5	5A6774	INDICATOR	1
6	1S1161	INDICATOR (Water Temperature)	1
7	5M1065	GAGE (Oil Pressure)	1
C 8	6N3272	INDICATOR (Fuel Pressure)	1
C 9	5D9231	CONNECTOR	2
10	3Y2870	PANEL (For Japan)	1
	1V1679	PANEL (For Outside Japan)	1
C 11	2B2404	CLIP	2
12	6H6699	ADAPTER	1
C 13	8M2772	CLIP	1
C 14	2V9906	TUBE ASSEM.	1
15	3B6768	BUSHING	1
C 16	3V3037	HOSE ASSEM.	1
17	5P756	TUBE (6.35mmO.D Nylon) -6dm	
18	3B8998	FITTING	1
	1F1344	NUT	1
C 19	3V3036	HOSE ASSEM.	1
C 20	676495	ELBOW	1
C 21	2N1287	ELBOW	1

C Indicates Change
▲ ORDER BY THE cm OR dm

J13618C

GAUGES (1V1496 N/S)

GRAPHIC #1

j13618e

GAUGES (4V2281 N/S)

Effective with Serial No. 65J2006~65J2010, 65J2035~65J2037, 65J2043-UP

Key: H - ORDER BY THE M

SMCS

NOTE	REF NO	GRAPHIC REF	PART NUMBER	QTY	PART NAME 1 2 3 4 5 6 (PRODUCT LEVEL)	LINK PAGE
	1		3B-8995	1	FITTING	
			1F-1344	1	NUT	
	2		3H-2900	1	GROMMET	
	3		4M-5283	2	BOLT	
			3K-6116	2	WASHER	
	4		1P-6886	1	ADAPTER	
	5		5A-6774	1	INDICATOR	
	6		1S-1161	1	INDICATOR (Water Temperature)	
	7		5M-1065	1	GAUGE (Oil Pressure)	
	8		6N-3272	1	INDICATOR (Fuel Pressure)	
	9		5D-9231	2	CONNECTOR	
	10		3Y-2870	1	PANEL (For Japan)	
			1V-1679	1	PANEL (For Outside Japan)	
	11		2B-2404	2	CLIP	
	12		2N-1287	2	ELBOW	
	13		6H-6699	1	ADAPTER	
	14		4V-2160	1	TUBE ASSEM.	
	15		8M-2772	1	CLIP	
	17		0S-1591	1	BOLT	
			5M-2894	1	WASHER	
			1B-4971	1	SPACER	
	18		3B-6768	1	BUSHING	
	19		067-6495	1	ELBOW	
	21		3V-3037	1	HOSE ASSEM.	
H	22		5P-6011		TUBE (6.35mm O. D.) 0.6m	
	23		3B-8998	1	FITTING	
			1F-1344	1	NUT	
	24		3V-3036	1	HOSE ASSEM.	

GAUGES (4V2281 N/S)

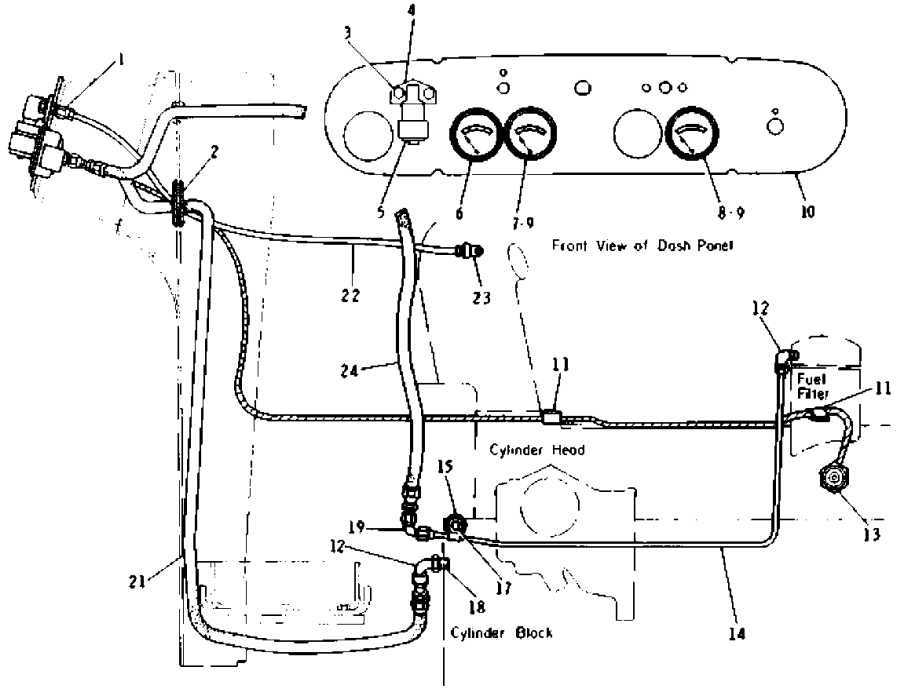

REF NO.	PART NUMBER	DESCRIPTION	QTY
1	3B8995	FITTING	1
	1F1344	NUT	1
2	3H2900	GROMMET	1
3	4M5283	BOLT	2
	3K6116	WASHER	2
4	1P6886	ADAPTER	1
5	5A6774	INDICATOR	1
6	1S1161	INDICATOR (Water Temperature)	1
7	5M1065	GAUGE (Oil Pressure)	1
8	6N3272	INDICATOR (Fuel Pressure)	1
9	5D9231	CONNECTOR	2
10	3Y2870	PANEL (For Japan)	1
	1V1679	PANEL (For Outside Japan)	1
11	2B2404	CLIP	2
12	2N1287	ELBOW	2
13	6H6699	ADAPTER	1
14	4V2160	TUBE ASSEM.	1
15	8M2772	CLIP	1
17	5L591	BOLT	1
	5M2894	WASHER	1
	1B4971	SPACER	1
18	3B6768	BUSHING	1
19	6T6495	ELBOW	1
21	3V3037	HOSE ASSEM.	1
▲ 22	5P6011	TUBE (6.35mm O.D.) 0.6m	
23	3B8998	FITTING	1
	1F1344	NUT	1
24	3V3036	HOSE ASSEM.	1

▲ORDER BY THE m

J14225E

GRAPHIC #1

j14225e

GAUGES

Effective with Serial No. 65J1591~65J1990
Part of Field Conversion Arrangement listed on Page 131
For Japan
AN ATTACHMENT

Key: H - ORDER BY THE CM OR DM

SMCS

NOTE	REF NO	GRAPHIC REF	PART NUMBER	QTY	PART NAME 1 2 3 4 5 6 (PRODUCT LEVEL)	LINK PAGE
	1		3B-8995	1	FITTING	
			1F-1344	1	NUT	
	2		3H-2900	1	GROMMET	
	3		4M-5283	2	BOLT	
	4		3K-6116	2	WASHER	
	5		5A-6774	1	INDICATOR	
	6		1S-1161	1	INDICATOR (Water Temperature)	
	7		5M-1065	1	GAUGE (Oil Pressure)	
	8		4N-2234	1	GAUGE (Fuel Pressure)	
	9		5P-2949	1	CONNECTOR	
	10		3Y-2870	1	PANEL (For Japan)	
	11		2B-2404	3	CLIP	
	12		8H-6912	1	FITTING	
	13		6H-6699	1	ADAPTER	
H	14		5P-1196		TUBE (3.18mm O. D. Copper)100cm	
	15		3D-5102	1	GROMMET	
	16		0S-1590	1	BOLT	
			3B-4506	1	LOCKWASHER	
			2B-0941	1	SPACER	
	17		3B-6768	1	BUSHING	
	18		4D-4158	1	FITTING	
			8H-6913	1	NUT	
	19		6K-7683	1	FITTING	
			8H-6913	2	NUT	
	20		7B-8559	1	CLIP	
H	21		5P-0580		TUBE (3.18mm O. D. Nylon) 2.45dm	
	22		5K-5805	1	FITTING	
			5K-5803	1	SLEEVE	
			5K-5804	1	NUT	
	23		1P-6886	1	ADAPTER	
H	24		5P-0756		TUBE (6.35mm O. D. Nylon) 6dm	
	25		3B-8998	1	FITTING	
			1F-1344	1	NUT	
H	26		5P-0580		TUBE (3.18mm O. D. Nylon)11.2dm	
	27		1V-1679	1	PANEL (For Outside Japan)	

GAUGES

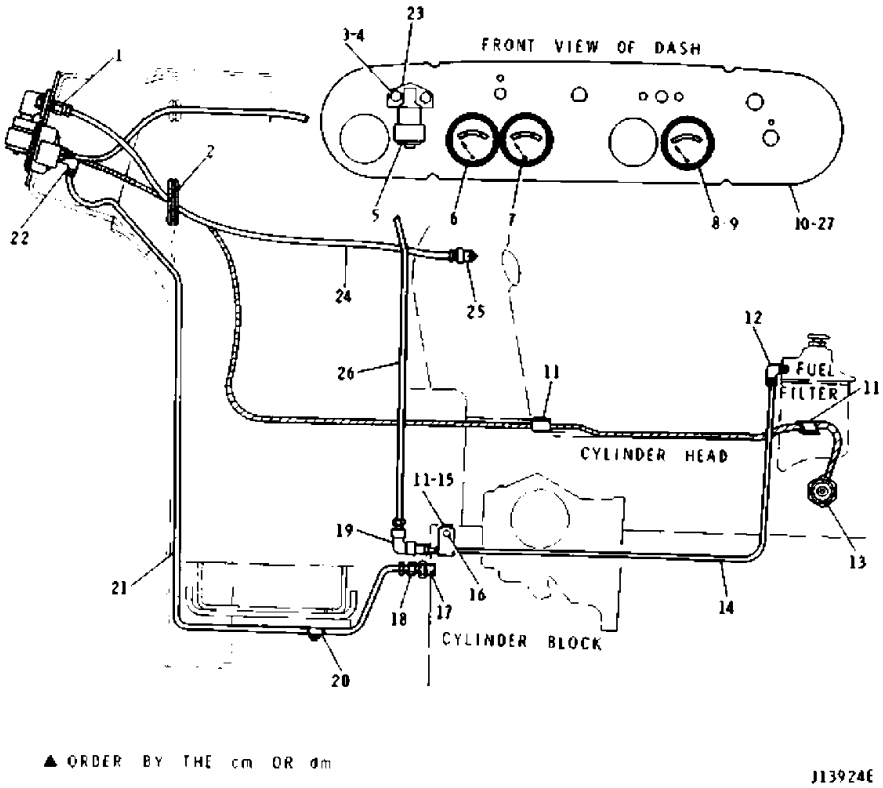

REF. NO.	PART NUMBER	DESCRIPTION	QTY
1	3B8995	FITTING	1
	1F1344	NUT	1
2	3H2900	GROMMET	1
3	4M5283	BOLT	2
4	3K6116	WASHER	2
5	5A6774	INDICATOR	1
6	1S3161	INDICATOR (Water Temperature)	1
7	5M1065	GAUGE (Oil Pressure)	1
8	4N2234	GAUGE (Fuel Pressure)	1
9	5P2949	CONNECTOR	1
10	3Y2870	PANEL (For Japan)	1
11	2B2404	CLIP	3
12	8H6912	FITTING	1
13	6H6699	ADAPTER	1
▲ 14	5P1196	TUBE (3.18mm O.D. Copper) 100cm	
15	3D5102	GROMMET	1
16	1S1590	BOLT	1
	3B4506	LOCKWASHER	1
	2B941	SPACER	1
17	3B6768	BUSHING	1
18	4D4158	FITTING	1
	8H6913	NUT	1
19	6K7683	FITTING	1
	8H6913	NUT	2
20	7B8559	CLIP	1
▲ 21	5P580	TUBE (3.18mm O.D. Nylon) 2.45dm	
22	5K5805	FITTING	1
	5K5803	SLEEVE	1
	5K5804	NUT	1
23	1P6886	ADAPTER	1
▲ 24	5P756	TUBE (6.35mm O.D. Nylon) 6dm	
25	3B8998	FITTING	1
	1F1344	NUT	1
▲ 26	5P580	TUBE (3.18mm O.D. Nylon) 1.2dm	
27	1V1679	PANEL (For Outside Japan)	1

GRAPHIC #1

j13924e

GAUGES

Effective with Serial No. 65J1991~65J2005, 65J2011~65J2034, 65J2038~65J2042
Part of Field Conversion Arrangement listed on Page 131
For Japan
AN ATTACHMENT

Key: H - ORDER BY THE CM OR DM

SMCS

NOTE	REF NO	GRAPHIC REF	PART NUMBER	QTY	PART NAME 1 2 3 4 5 6 (PRODUCT LEVEL)	LINK PAGE
	1		3B-8995	1	FITTING	
			1F-1344	1	NUT	
	2		3H-2900	1	GROMMET	
	3		4M-5283	2	BOLT	
			3K-6116	2	WASHER	
	4		1P-6886	1	ADAPTER	
	5		5A-6774	1	INDICATOR	
	6		1S-1161	1	INDICATOR (Water Temperature)	
	7		5M-1065	1	GAUGE (Oil Pressure)	
	8		6N-3272	1	INDICATOR (Fuel Pressure)	
	9		5D-9231	2	CONNECTOR	
	10		3Y-2870	1	PANEL (For Japan)	
	11		2B-2404	3	CLIP	
	12		8H-6912	1	FITTING	
	13		6H-6699	1	ADAPTER	
H	14		5P-1196		TUBE (3.18mm O. D. Cupper)100cm	
	15		3D-5102	1	GROMMET	
	16		4D-4158	1	FITTING	
			8H-6913	1	NUT	
	17		0S-1590	1	BOLT	
			3B-4506	1	LOCKWASHER	
			2B-0941	1	SPACER	
	18		3B-6768	1	BUSHING	
	19		3S-1099	1	FITTING	
	20		2N-1287	1	ELBOW	
	21		3V-3037	1	HOSE ASSEM.	
H	22		5P-0756		TUBE (6.35mm O. D. Nylon)6dm	
	23		3B-8998	1	FITTING	
			1F-1344	1	NUT	
	24		3V-3036	1	HOSE ASSEM.	
	25		1V-1679	1	PANEL (For Outside Japan)	

GAUGES

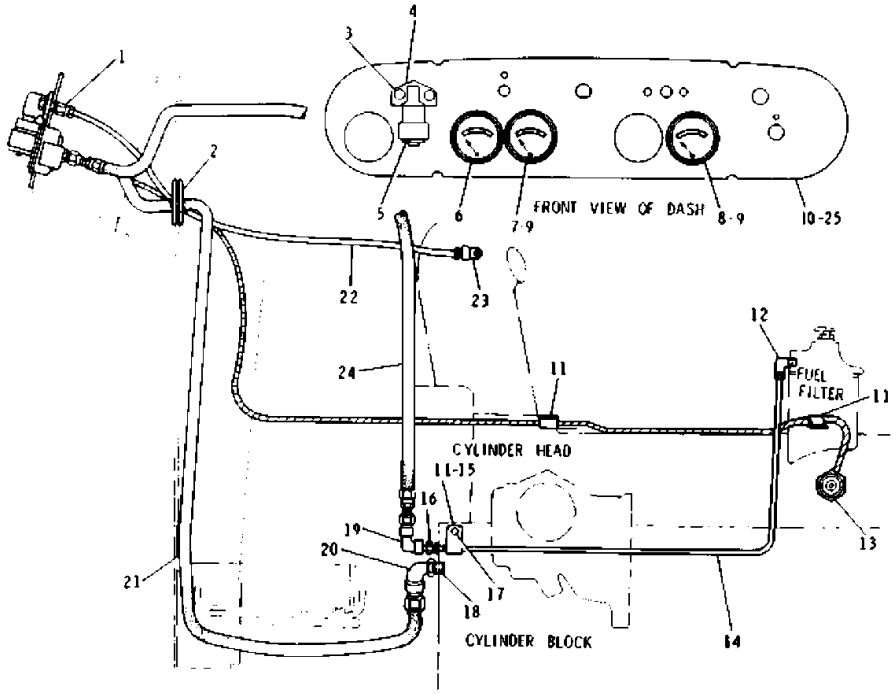

REF. NO.	PART NUMBER	DESCRIPTION	QTY.
1	3B8995	FITTING	1
	1F1344	NUT	1
2	3H2900	GROMMET	1
3	4M5263	BOLT	2
	3K6116	WASHER	2
4	1P6886	ADAPTER	1
5	5A6774	INDICATOR	1
6	1S1161	INDICATOR (Water Temperature)	1
7	5M1065	GAUGE (Oil Pressure)	1
8	6N3272	INDICATOR (Fuel Pressure)	1
9	5D9231	CONNECTOR	2
10	3Y2870	PANEL (For Japan)	1
11	2B2404	CLIP	3
12	8H6912	FITTING	1
13	6H6699	ADAPTER	1
▲ 14	5P1196	TUBE (3.18mm O.D. Copper) 100cm	
15	3D5102	GROMMET	1
16	4D4158	FITTING	1
	8H6913	NUT	1
17	1S1590	BOLT	1
	3B4506	LOCKWASHER	1
	2B941	SPACER	1
18	3B6768	BUSHING	1
19	3S1099	FITTING	1
20	2N1287	ELBOW	1
21	3V3037	HOSE ASSEM.	2
▲ 22	5P756	TUBE (6.35mm O.D. Nylon) 6dm	
23	3B8998	FITTING	1
	1F1344	NUT	1
24	3V3036	HOSE ASSEM.	1
25	1V1679	PANEL (For Outside Japan)	1

▲ ORDER BY THE cm OR dm

J13843E

GRAPHIC #1

j13843e

ELECTRIC SERVICE METER (9K9241 N/S)

Effective with Serial No. 65J1591~65J1961

Key:

SMCS

NOTE	REF NO	GRAPHIC REF	PART NUMBER	QTY	PART NAME 1 2 3 4 5 6 (PRODUCT LEVEL)	LINK PAGE
	1		4N-3700	1	METER GROUP	
	2		2P-1775	1	WIRE ASSEM.	
	3		2L-8075	1	TERMINAL	
	4		2L-8077	1	TERMINAL	
	5		2N-7744	1	SWITCH	
	6		3B-8822	1	ELBOW	

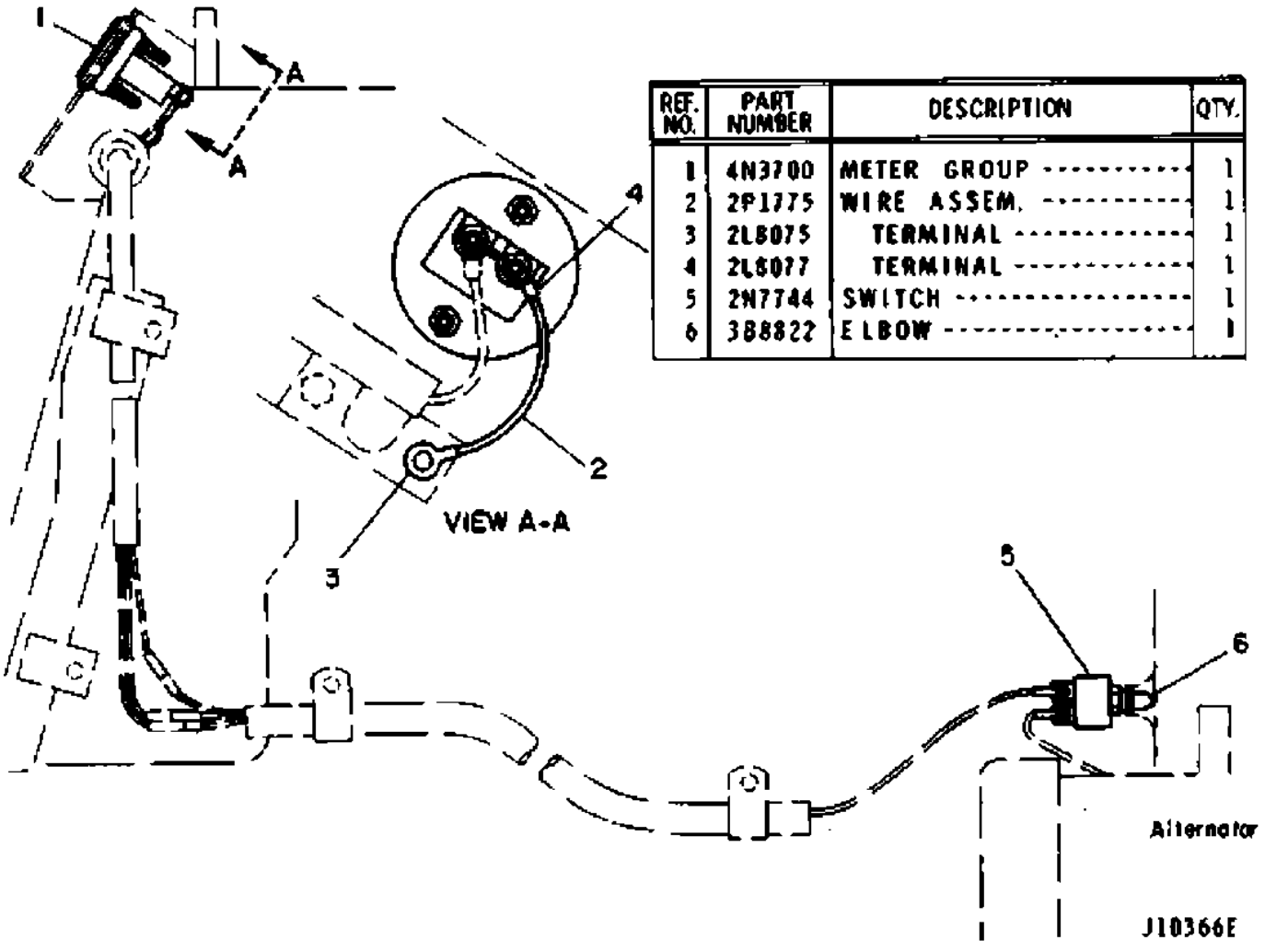

REF. NO.	PART NUMBER	DESCRIPTION	QTY.
1	4N3700	METER GROUP	1
2	2P1775	WIRE ASSEM.	1
3	2L8075	TERMINAL	1
4	2L8077	TERMINAL	1
5	2N7744	SWITCH	1
6	3B8822	ELBOW	1

GRAPHIC #1

j10366e

ELECTRIC SERVICE METER (3Y4176 N/S)

Effective with Serial No. 65J1962~65J2054

Key:

SMCS

NOTE	REF NO	GRAPHIC REF	PART NUMBER	QTY	PART NAME 1 2 3 4 5 6 (PRODUCT LEVEL)	LINK PAGE
	1		4N-3700	1	HOUR METER	
	2		2P-1775	1	WIRE ASSEM.	
	3		2L-8075	1	TERMINAL	
	4		2L-8077	1	TERMINAL	

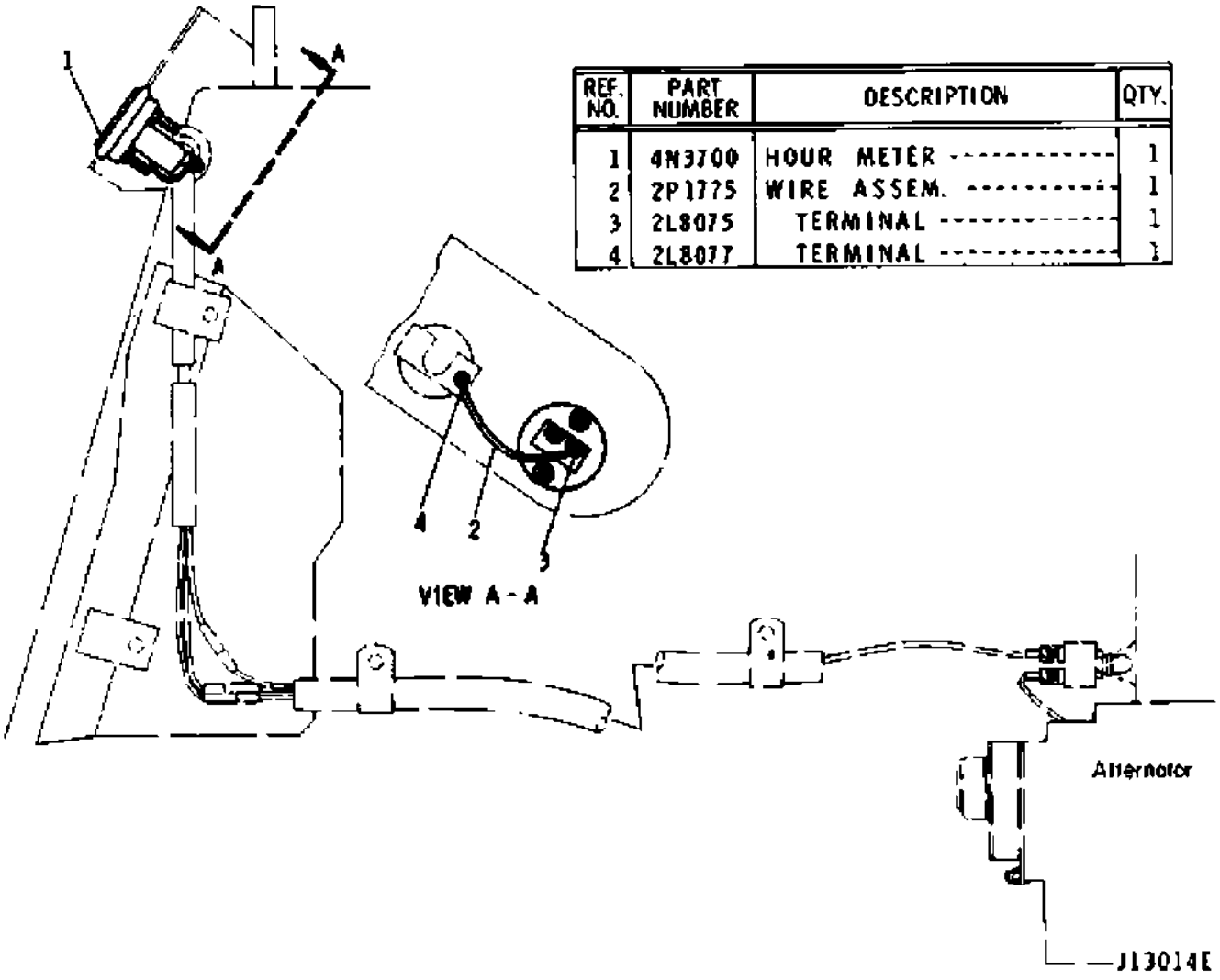

GRAPHIC #1

j13014e

ELECTRIC SERVICE METER (3Y4176 N/S)

Effective with Serial No. 65J2055-UP

Key: C - INDICATES CHANGE

SMCS

NOTE	REF NO	GRAPHIC REF	PART NUMBER	QTY	PART NAME 1 2 3 4 5 6 (PRODUCT LEVEL)	LINK PAGE
C	1		6N-5906	1	METER GROUP (Service)	
			5P-4571	1	TERMINAL	
			4S-1988	1	TERMINAL	
C	2		4V-1390	1	WIRE ASSEM.	
	3		2L-8076	1	TERMINAL	
	4		4S-1988	1	TERMINAL	

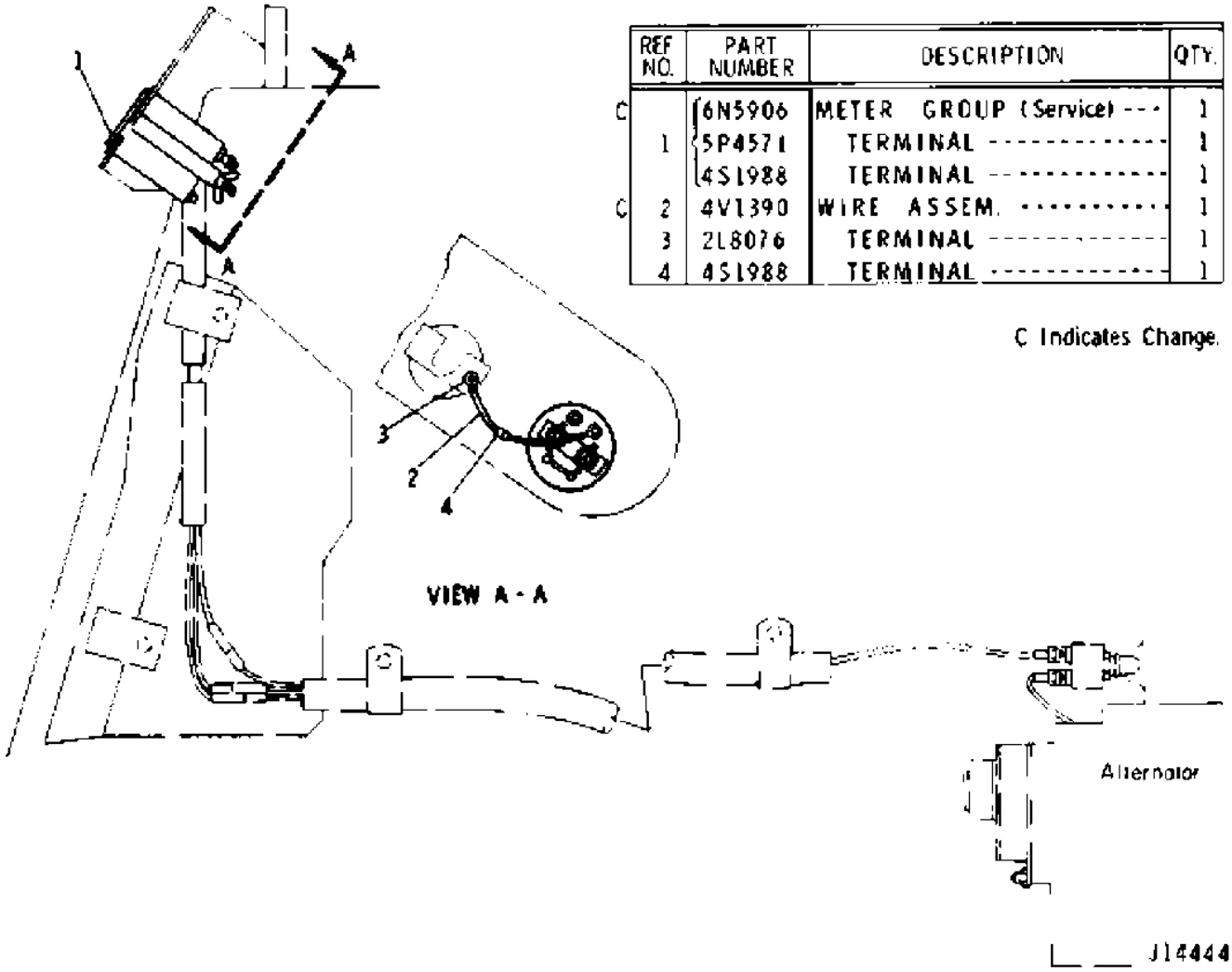

GRAPHIC #1

j14444e

3Y1990 HORN GROUP

3Y1956 Harness Assembly parts are shown on Page 273
AN ATTACHMENT

Key: Y - SEPARATE ILLUSTRATION

SMCS

NOTE	REF NO	GRAPHIC REF	PART NUMBER	QTY	PART NAME 1 2 3 4 5 6 (PRODUCT LEVEL)	LINK PAGE
	1		5A-3812	1	HORN SWITCH	
Y	2		3Y-1956	1	HARNESS ASSEM.	P0335
					(See Separate Illustration)	
	3		4B-1238	2	MACHINE SCREW	
			3B-4502	2	LOCKWASHER	
	4		5A-4306	1	FUSE BLOCK	
			5A-3837	2	FUSE	
	5		1S-6329	5	TIE	
	6		5A-7509	1	HORN	
	7		0S-1618	2	BOLT	
			3B-4505	2	LOCKWASHER	
			4B-4277	2	WASHER	
	8		3Y-1988	1	BRACKET ASSEM.	
			4K-9097	2	NUT	
	9		1A-2029	2	BOLT	

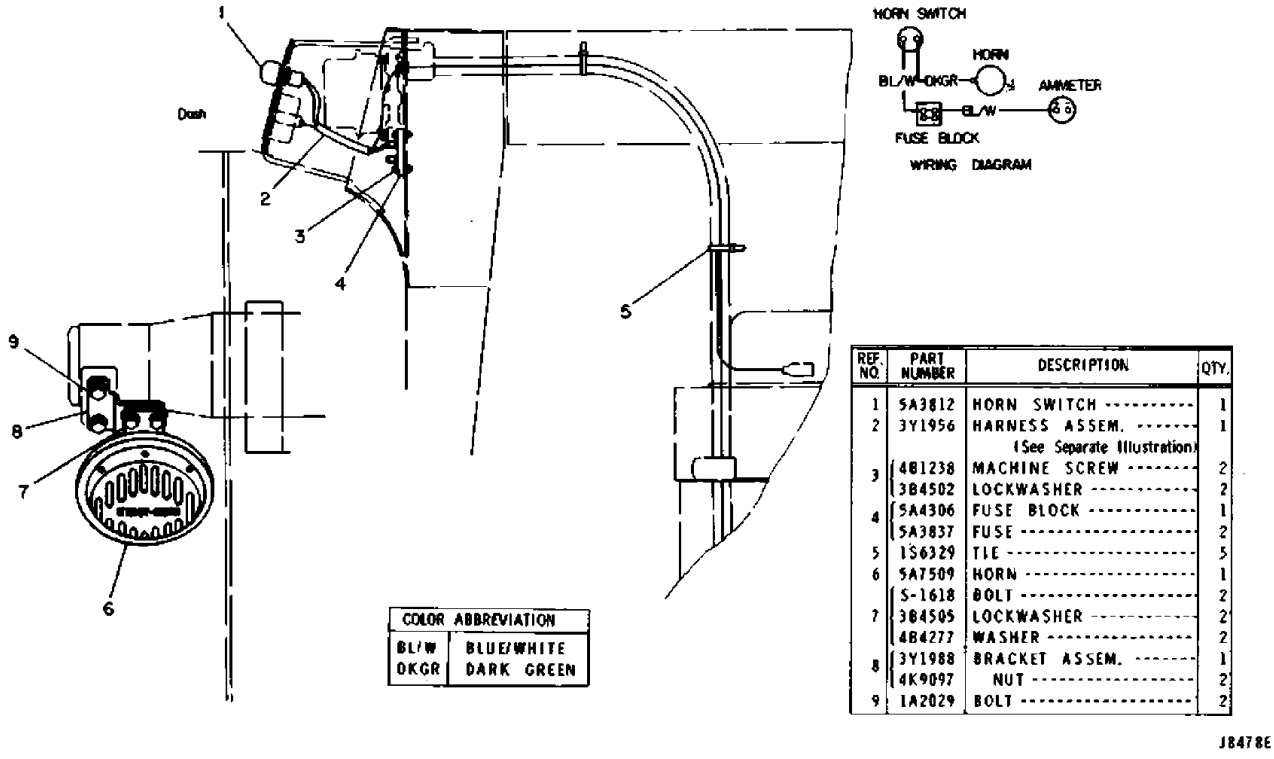

GRAPHIC #1

j8478e

3Y1956 HARNESS ASSEMBLY

Part of 3Y1990 Horn Group
AN ATTACHMENT

Key:

SMCS

NOTE	REF NO	GRAPHIC REF	PART NUMBER	QTY	PART NAME 1 2 3 4 5 6 (PRODUCT LEVEL)	LINK PAGE
	1		5A-3664	2	TERMINAL	
	2		2D-3981	2	INSULATOR	
	3		2L-8076	1	TERMINAL	
	4		4K-5121	2	TERMINAL	
	5		2L-8075	1	TERMINAL	

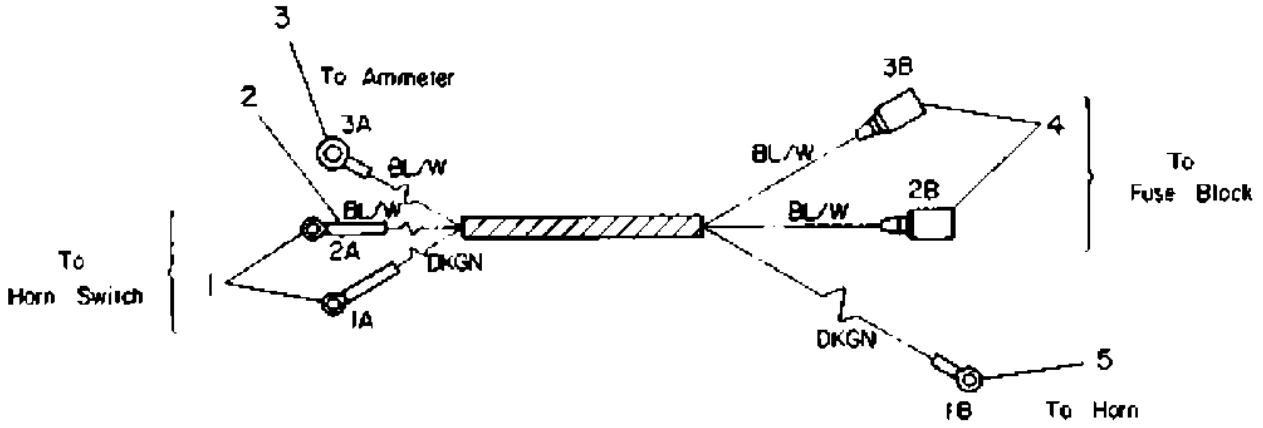

REF. NO.	PART NUMBER	DESCRIPTION	QTY.
1	5A3664	TERMINAL	2
2	2D3981	INSULATOR	2
3	2L8076	TERMINAL	1
4	4K5121	TERMINAL	2
5	2L8075	TERMINAL	1

COLOR ABBREVIATION	
BL/W	BLUE/WHITE
DKGR	DARK GREEN

J8456E

GRAPHIC #1

j8456e

HYDRAULIC TANK CAP PROTECTION COVER (5D1910 N/S)

AN ATTACHMENT

Key: H - NOT PART OF PROTECTION COVER G

SMCS

NOTE	REF NO	GRAPHIC REF	PART NUMBER	QTY	PART NAME 1 2 3 4 5 6 (PRODUCT LEVEL)	LINK PAGE
	1		1L-5072	1	DOWEL	
	2		9M-7394	1	LEVER	
	3		5D-1911	1	COVER	
	4		2J-7761	1	RING	
	5		NOTSERV	1	PADLOCK	
					(For Service of Padlock & Key Order 8S7949 Padlock Group)	
H			8M-0439	2	KEY	
					(NOT SHOWN)	

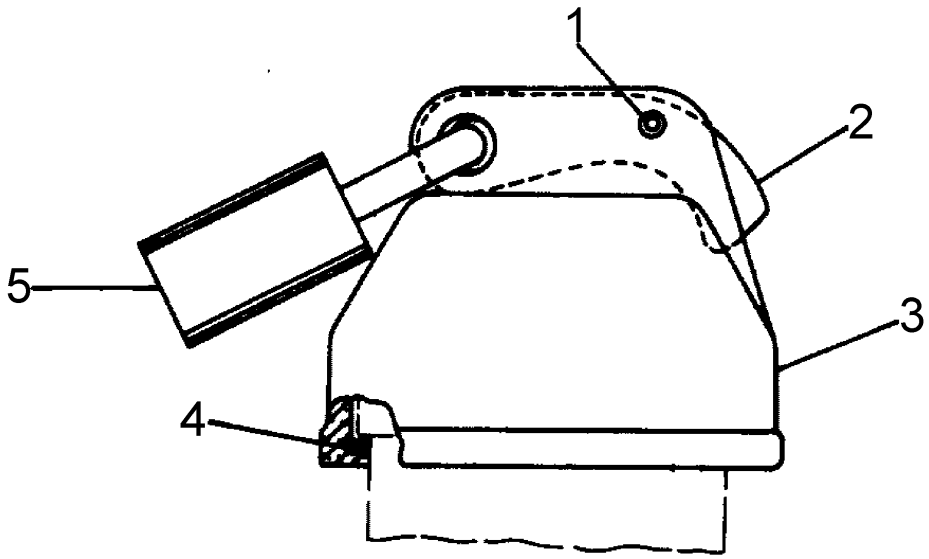

A Not Part of Protection Cover Group 5D1910

REF. NO.	PART NUMBER	DESCRIPTION	QTY
1	1L5072	DOWEL	1
2	9M7394	LEVER	1
3	5D1911	COVER	1
4	2J7761	RING	1
5	Not Serv	PADLOCK (For Service of Padlock & Key Order 8S7949 Padlock Group)	1
A	8M439	KEY (NOT SHOWN)	2

113719

GRAPHIC #1

c113719

ROLL-OVER PROTECTIVE SYSTEM MOUNTING (3V3621 N/S)

AN ATTACHMENT

Key:

SMCS

NOTE	REF NO	GRAPHIC REF	PART NUMBER	QTY	PART NAME 1 2 3 4 5 6 (PRODUCT LEVEL)	LINK PAGE
	1		1V-6262	1	PEDESTAL ASSEM.	
	2		1D-4608	6	BOLT	
			2J-3506	6	NUT	
	3		2S-0115	22	WASHER	
	4		9K-8314	2	BRACKET ASSEM.	
	5		9S-1364	10	BOLT	
	6		9K-8170	1	BRACKET ASSEM.	
	7		2D-8156	8	STUD	
			2J-3505	8	NUT	
			9H-1031	8	WASHER	

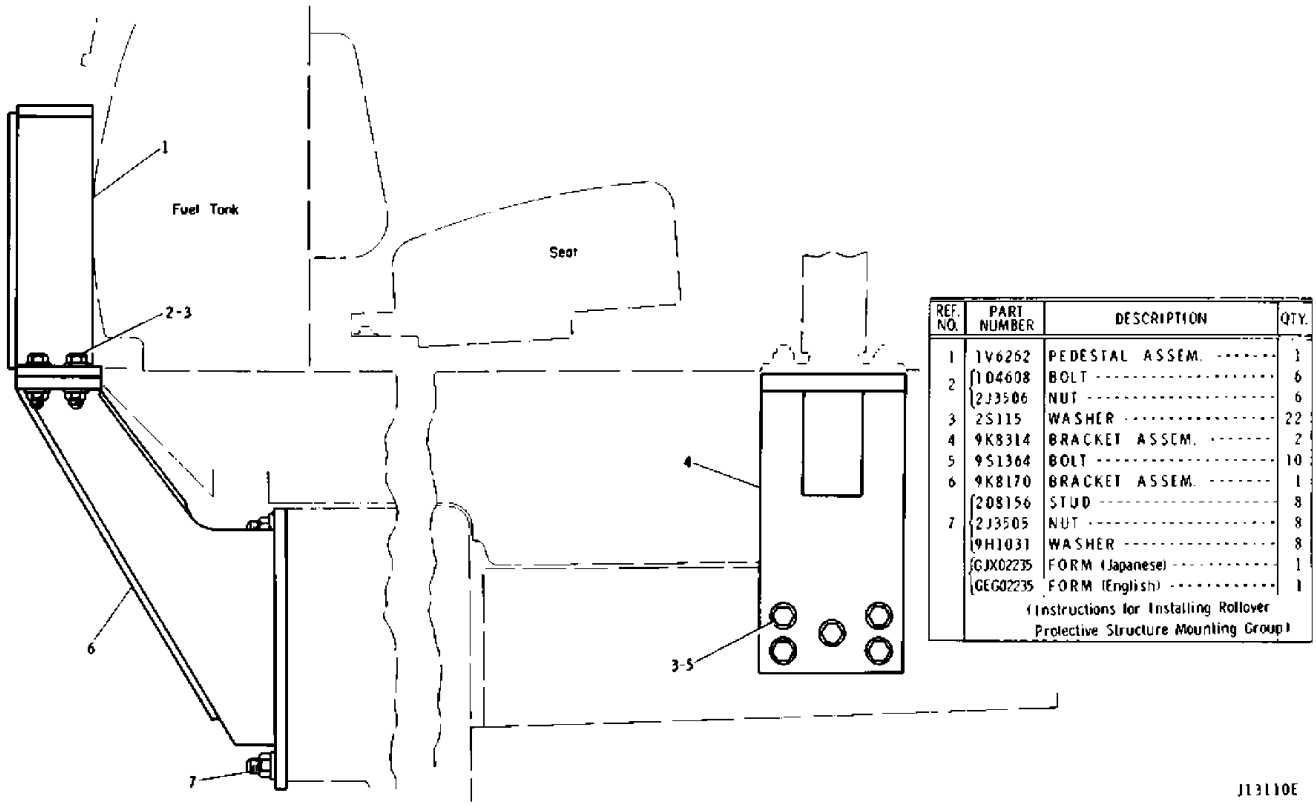

REF. NO.	PART NUMBER	DESCRIPTION	QTY.
1	1V6262	PEDESTAL ASSEM.	1
2	1D4608	BOLT	6
	2J3506	NUT	6
3	2S115	WASHER	22
4	9K8314	BRACKET ASSEM.	2
5	9S1364	BOLT	10
6	9K8170	BRACKET ASSEM.	1
7	2D8156	STUD	8
	2J3505	NUT	8
	9H1031	WASHER	8
	GJX02235	FORM (Japanese)	1
	GEG02235	FORM (English)	1

(Instructions for Installing Rollover Protective Structure Mounting Group)

GRAPHIC #1 j13110e

ROLL-OVER PROTECTIVE SYSTEM MOUNTING (3Y4566 N/S)

For use with Ripper
AN ATTACHMENT

Key:

SMCS

NOTE	REF NO	GRAPHIC REF	PART NUMBER	QTY	PART NAME 1 2 3 4 5 6 (PRODUCT LEVEL)	LINK PAGE
	1		1V-6262	1	PEDESTAL ASSEM.	
	2		1D-4609	6	BOLT	
			2J-3506	6	NUT	
	3		2S-0115	22	WASHER	
	4		9K-8314	2	BRACKET ASSEM.	
	5		9S-1364	10	BOLT	

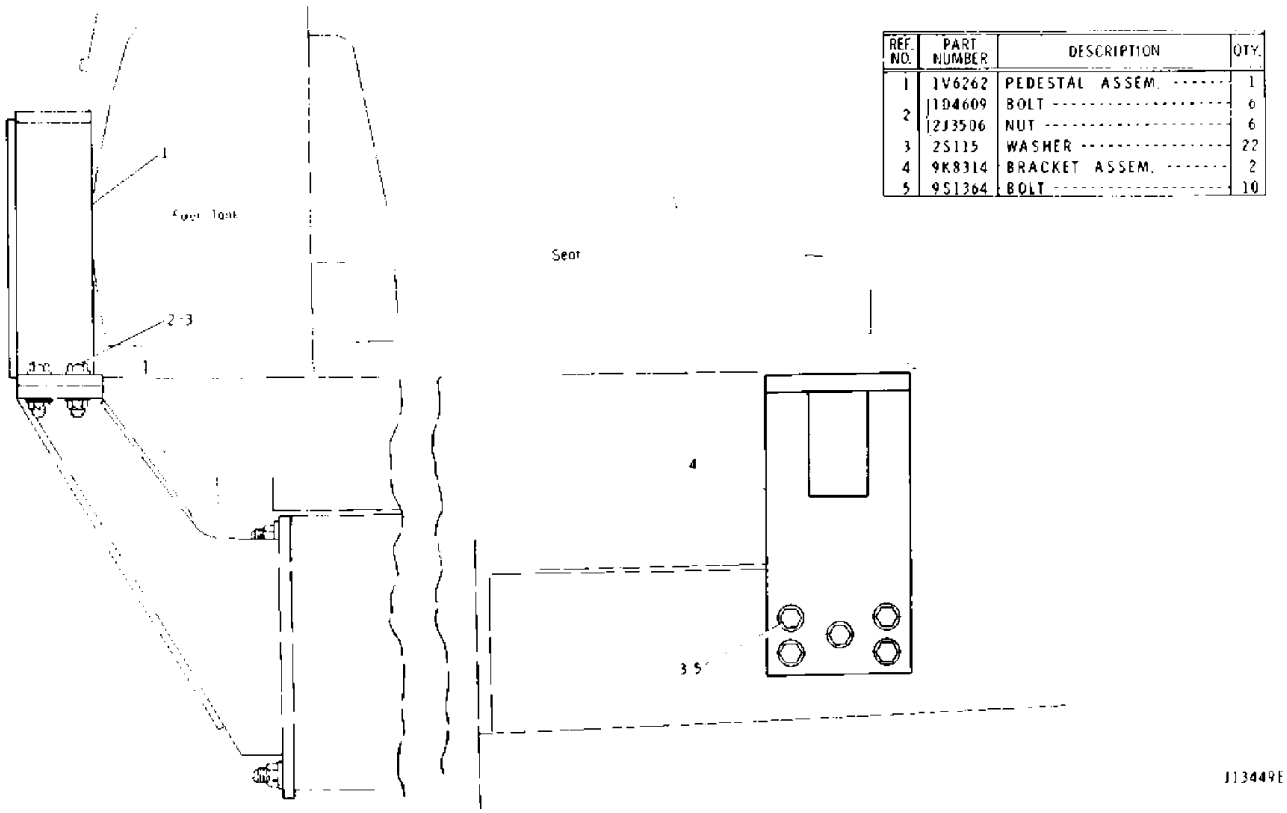

GRAPHIC #1

j13449e

3Y1342 CANOPY GROUP

AN ATTACHMENT

Key:

SMCS

NOTE	REF NO	GRAPHIC REF	PART NUMBER	QTY	PART NAME 1 2 3 4 5 6 (PRODUCT LEVEL)	LINK PAGE
	1		5A-3934	1	TOP ASSEM.	
	2		5A-3923	1	COLUMN ASSEM. (Front)	
	3		5A-3933	2	BOSS	
					(Part of 5A3923 Column Assem.)	
	4		5A-3924	2	BRACKET ASSEM.	
	5		5A-3926	2	PLATE	
					(1 Each in 5A3924 Bracket Assem.)	
	6		0S-1595	10	BOLT	
	7		1D-4719	10	NUT	
	8		3B-4508	18	LOCKWASHER	
	9		0S-1621	4	BOLT	
	10		1D-5117	4	NUT	
	11		3Y-1345	1	BRACKET ASSEM. (R.H.)	
			3Y-1346	1	BRACKET ASSEM. (L.H.)	
	12		3Y-1343	1	COLUMN ASSEM. (Rear)	
	13		5A-3933	2	BOSS	
					(Part of 3Y1343 Column Assem.)	
	14		5A-4974	4	CLIP ASSEM.	
	15		7B-3235	8	BOLT	

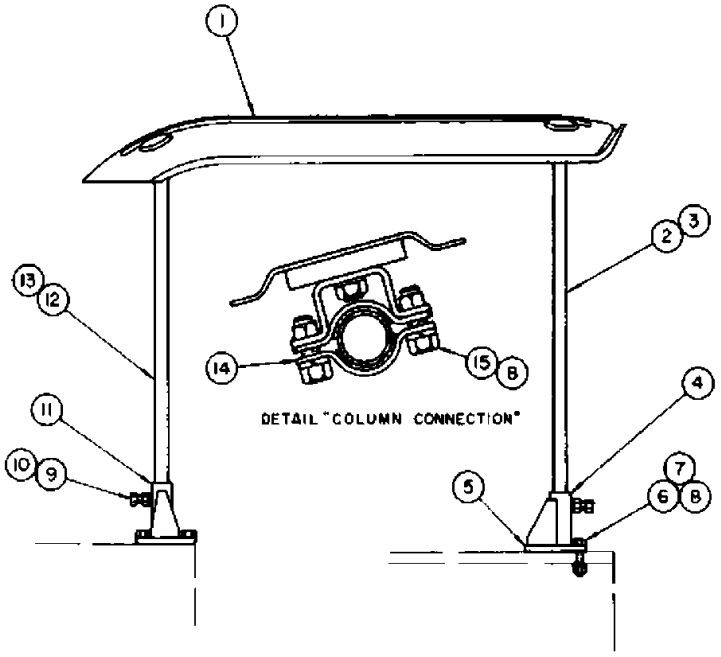

REF. NO.	PART NUMBER	DESCRIPTION	QTY.
1	5A3934	TOP ASSEM.	1
2	5A3923	COLUMN ASSEM. (Front)	1
3	5A3933	BOSS	2
		(Part of 5A3923 Column Assem.)	
4	5A3924	BRACKET ASSEM.	2
5	5A3926	PLATE	2
		(1 Each in 5A3924 Bracket Assem.)	
6	S-1595	BOLT	10
7	1D4719	NUT	10
8	3B4508	LOCKWASHER	18
9	S-1621	BOLT	4
10	1D5117	NUT	4
11	3Y1345	BRACKET ASSEM. (R. H.)	1
	3Y1346	BRACKET ASSEM. (L. H.)	1
12	3Y1343	COLUMN ASSEM. (Rear)	1
13	5A3933	BOSS	2
		(Part of 3Y1343 Column Assem.)	
14	5A4974	CLIP ASSEM.	4
15	7B3235	BOLT	8

J7201E

GRAPHIC #1

CANOPY (3Y3424 N/S)

AN ATTACHMENT

Key:

SMCS

NOTE	REF NO	GRAPHIC REF	PART NUMBER	QTY	PART NAME 1 2 3 4 5 6 (PRODUCT LEVEL)	LINK PAGE
	1		3Y-3425	1	TOP	
	2		3Y-3426	2	COLUMN (Front)	
	3		3Y-1043	2	CLAMP	
	4		3Y-1040	4	SLEEVE	
	5		3Y-1159	2	BRACKET ASSEM.	
	6		0S-1585	8	BOLT	
	7		2M-0849	8	WASHER	
	8		1D-4719	16	NUT	
			3B-4508	16	LOCKWASHER	
	9		7B-3235	8	BOLT	
	10		3Y-2828	2	BRACKET ASSEM.	
	11		5P-2566	16	BOLT	
	12		3Y-3115	2	CLAMP	
	13		3Y-5295	2	COLUMN (Rear)	
	14		3Y-6777	4	BOLT	
	15		3Y-1042	16	WASHER	
	16		3Y-3446	8	PAD	
	17		5P-2424	4	BOLT	
	18		3Y-1039	4	STRAP	
	19		3H-3681	24	NUT	
	20		5S-7385	24	LOCKWASHER	

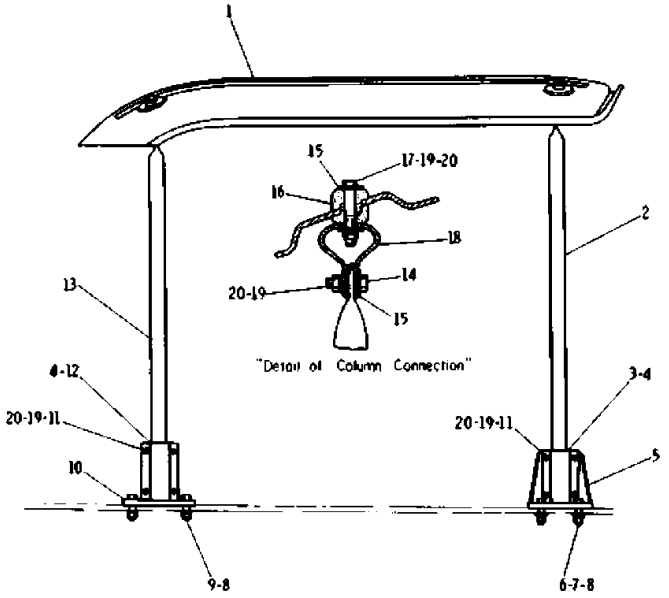

REF. NO.	PART NUMBER	DESCRIPTION	QTY.
1	3Y3425	TOP	1
2	3Y3426	COLUMN (Front)	2
3	3Y1043	CLAMP	2
4	3Y1040	SLEEVE	4
5	3Y1159	BRACKET ASSEM.	2
6	S1585	BOLT	8
7	2M849	WASHER	8
8	1D4719	NUT	16
	3B4508	LOCKWASHER	16
9	7B3235	BOLT	8
10	3Y2828	BRACKET ASSEM.	2
11	5P2566	BOLT	16
12	3Y3115	CLAMP	2
13	3Y5295	COLUMN (Rear)	2
14	3Y6777	BOLT	4
15	3Y1042	WASHER	16
16	3Y3446	PAD	8
17	5P2424	BOLT	4
18	3Y1039	STRAP	4
19	3H3681	NUT	24
20	5S7385	LOCKWASHER	24

J16026E

GRAPHIC #1

9S7977 TOOL GROUP--Type 1

8F9866 Grease Gun Group parts are shown on Page 280
For outside Japan
AN ATTACHMENT

Key: Y - SEPARATE ILLUSTRATION

SMCS

NOTE	REF NO	GRAPHIC REF	PART NUMBER	QTY	PART NAME 1 2 3 4 5 6 (PRODUCT LEVEL)	LINK PAGE
			1P-5521		SCREWDRIVER - NO.2 PHILLIPS	
			1P-5518		SCREWDRIVER	
			5S-9566		WRENCH	
			5S-9567		EXTENSION	
Y			8F-9866		GREASE GUN (LEVER)	P0343
					See Separate Illustration)	
			2P-8250		WRENCH ASSEM STRAP	
			5S-9568		SOCKET	
			1P-5519		GAUGE (Feeler)	
			1P-5517		PRY BAR	
			5S-9569		SOCKET	
			5P-1763		SOCKET	
			1P-5522		WRENCH (5/16" Opening)	
			1P-5523		WRENCH (3/8" Opening)	
			1P-5528		WRENCH (7/8" Opening)	
			1P-5525		WRENCH (9/16" Opening)	
			1P-5526		WRENCH (5/8" Opening)	
			1P-5527		WRENCH (3/4" Opening)	
			1P-5529		WRENCH (1" Opening)	
			1P-5530		SOCKET (9/16" Opening)	
			1P-5534		SOCKET (7/8" Opening)	
			1P-5535		SOCKET (15/16" Opening)	
			1P-5536		SOCKET (1" Opening)	
			1P-5537		SOCKET (1 1/8" Opening)	
			1P-1852		CARTON (Not Shown)	

9S7977 TOOL GROUP--Type 1

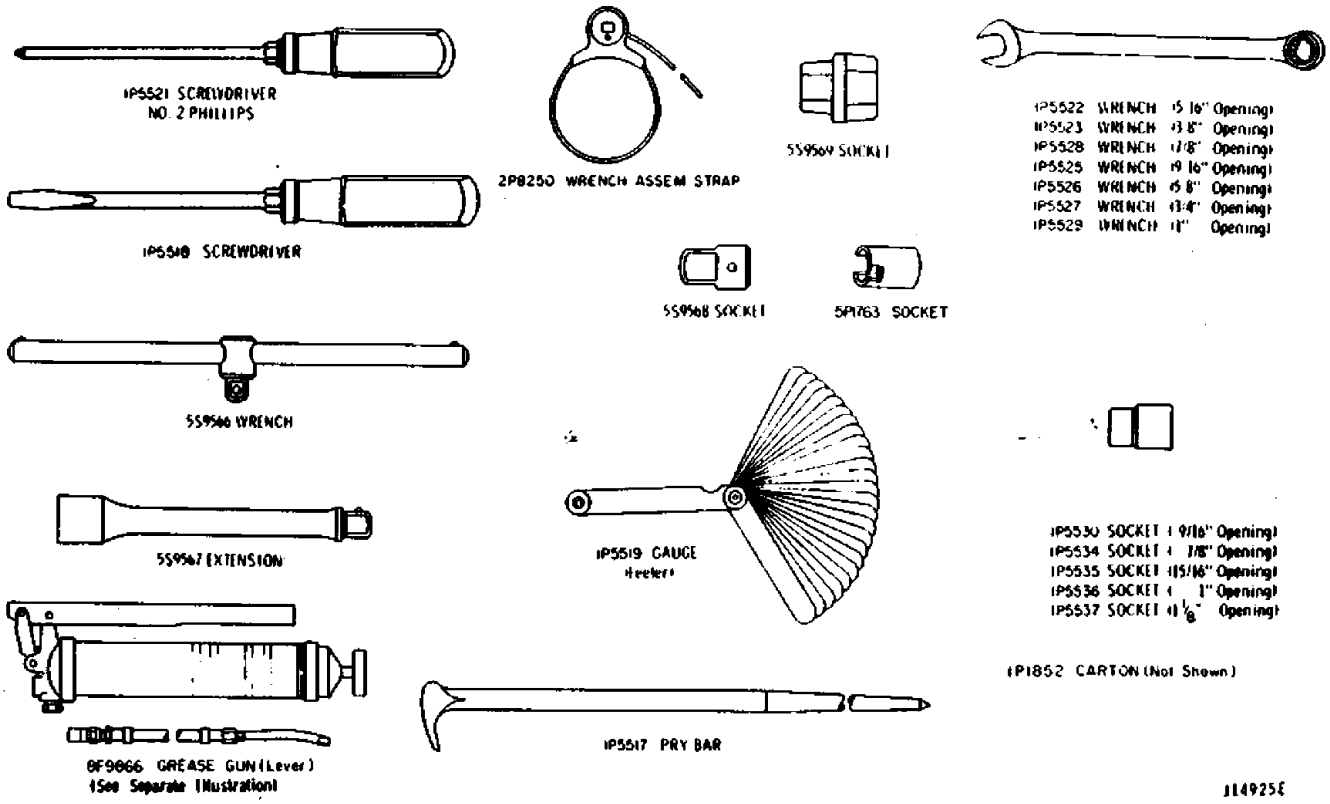

GRAPHIC #1 j14925e

9S7977 TOOL GROUP--Type 2

8F9866 Grease Gun Group parts are shown on Page 280
For outside Japan
AN ATTACHMENT

Key: Y - SEPARATE ILLUSTRATION

SMCS

NOTE	REF NO	GRAPHIC REF	PART NUMBER	QTY	PART NAME 1 2 3 4 5 6 (PRODUCT LEVEL)	LINK PAGE
			1P-5521		SCREWDRIVER	
					NO. 2 PHILLIPS	
			1P-5518		SCREWDRIVER	
			5S-9566		WRENCH	
			5S-9567		EXTENSION	
Y			8F-9866		GREASE GUN (lever)	P0343
					(See Separate Illustration)	
			2P-8250		WRENCH ASSEM STRAP	
			5S-9568		SOCKET	
			1P-5519		GAUGE	
					(Feeler)	
			1P-5517		PRY BAR	
			5S-9569		SOCKET	
			5P-1763		SOCKET	
			1P-5522		WRENCH (5/16" Opening)	
			1P-5523		WRENCH (3/8" Opening)	
			1P-5528		WRENCH (7/8" Opening)	
			1P-5525		WRENCH (9/16" Opening)	
			1P-5526		WRENCH (5/8" Opening)	
			1P-5527		WRENCH (3/4" Opening)	
			1P-5529		WRENCH (1" Opening)	
			1P-5524		WRENCH (1/2" Opening)	
			1P-5530		SOCKET (9/16" Opening)	
			1P-5534		SOCKET (7/8" Opening)	
			1P-5535		SOCKET (15/16" Opening)	
			1P-5536		SOCKET (1" Opening)	
			1P-5537		SOCKET (1 1/8" Opening)	
			5P-6227		SOCKET (1/2" Opening)	
			1P-1852		CARTON (Not Shown)	

9S7977 TOOL GROUP--Type 2

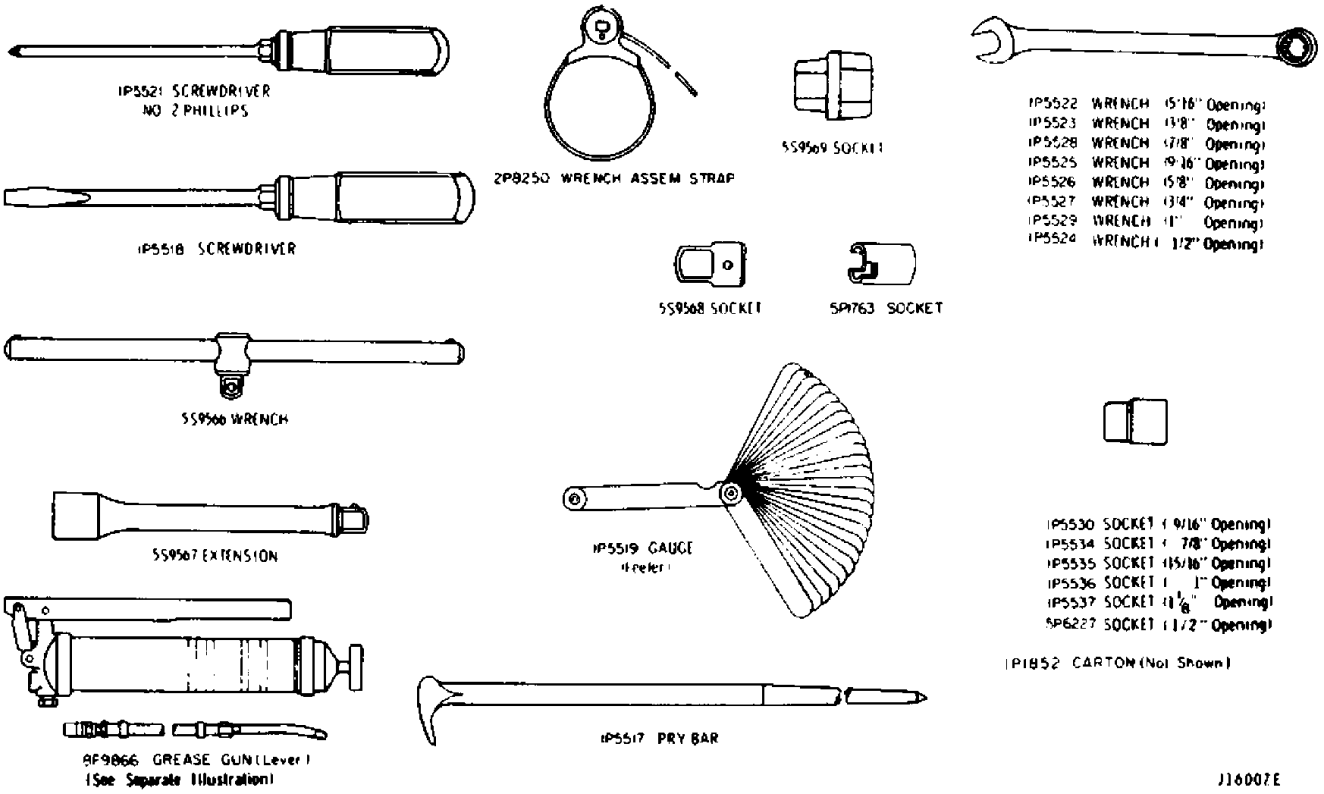

GRAPHIC #1 j16007e

8F9866 GREASE GUN GROUP

Part of Tool Group
AN ATTACHMENT

Key:

SMCS

NOTE	REF NO	GRAPHIC REF	PART NUMBER	QTY	PART NAME 1 2 3 4 5 6 (PRODUCT LEVEL)	LINK PAGE
			9F-2636	1	NOZZLE AS	
			9F-2638	1	HOSE AS	
			2M-2689	1	COUPLER AS	
			9F-2637	1	NIPPLE	

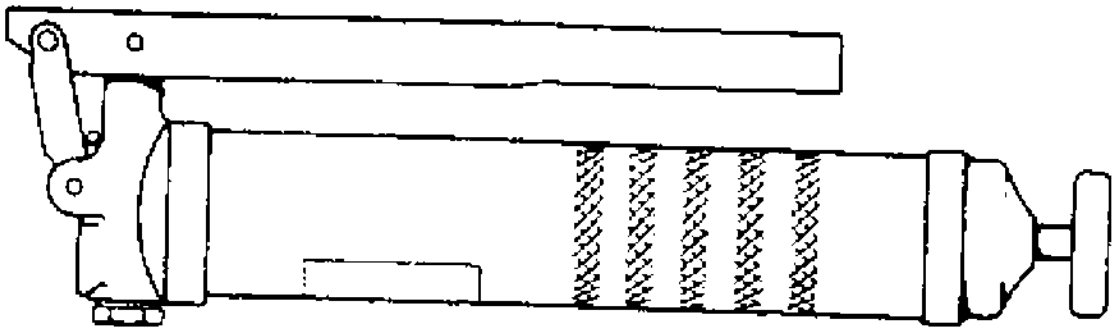

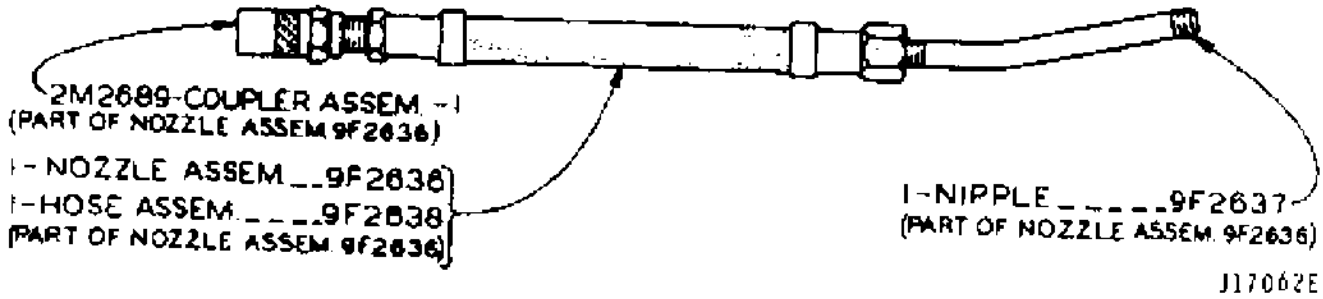

GRAPHIC #1 j17062e

NAME PLATES AND FILMS (3Y1658 N/S)

Part of 3Y1582 Oil Steering Clutches Modification
Arrangement listed on Page 213
AN ATTACHMENT

Key:

SMCS

NOTE	REF NO	GRAPHIC REF	PART NUMBER	QTY	PART NAME 1 2 3 4 5 6 (PRODUCT LEVEL)	LINK PAGE
			8S-3691	1		
					FILM STARTING INSTRUCTIONS	
					(On top of instrument cover)	
			8S-5512	1		
					FILM LUBRICATION INSTRUCTIONS	
					(On hood)	
					-or-	
			5P-6064	1		
					(On hood)	
			3Y-0871	1		
					(On rear of lubrication instructions film)	
			8S-3942	1		
					FILM CATERPILLAR	
					(On front of radiator guard)	
			8S-5496	1		
					FILM CATERPILLAR	
					(On back of fuel tank)	
			8S-3923	2		
					FILM CORPORATE SYMBOL	
					(On each side of fuel tank)	
					-or-	
			2P-3182	2		
					FILM CORPORATE SYMBOL	
					(On side of battery box)	
			8S-8297	2		
					FILM D4D	
					(On each side of fuel tank)	
					-or-	
			5P-3130	2		
					FILM D4D	
					(On outside of battery box)	
			5P-1091	1		
					FILM WARNING	
					(On dash)	
			5P-7119	1		
					(Near the fuel tank filler cap)	
			7B-3028	20		
					DRIVE SCREW	

NAME PLATES AND FILMS

Effective with Serial No. 65J1474~65J1972
For outside Japan

Key:

SMCS

NOTE	REF NO	GRAPHIC REF	PART NUMBER	QTY	PART NAME 1 2 3 4 5 6 (PRODUCT LEVEL)	LINK PAGE
			5P-0215	1		
					PLATE SERIAL NUMBER	
					(On R.H. side of dash plate)	
			5A-3016	1		
					PLATE TRACTOR NUMBER	
					(On rear face of bevel gear & steering clutch case)	
			3N-3790	1		
					PLATE SERIAL NUMBER	
					(On L.H. side of engine cylinder block)	
			5A-6778	1		
					PLATE LUBRICATION INSTRUCTION	
					(On top of battery box left hand side)	
			8H-8648	1		
					PLATE INSTRUCTION	
					(On disconnect switch)	
			1S-5242	2		
					PLATE WARNING	
					(On track roller frame guard)	
			2S-5927	2		
					PLATE WARNING	
					(On hydraulic track adjusting system)	
			6K-5767	1		
					PANEL INLEY	
					(On front of dash)	
			7B-3028	28		
					DRIVE SCREW	
			7S-3178	1		
					FILM AIR CLEANER INSTRUCTION	
					(On air cleaner body)	
			7M-0907	1		
					(On 150mm L.H. for fuel tank filler neck)	
			5P-1091	1		
					FILM WARNING	
					(On top of dash)	
			8S-3691	1		
					FILM STARTING INSTRUCTION	
					(On top of instrument cover)	

NAME PLATES AND FILMS

Effective with Serial No. 65J1973-UP
For outside Japan

Key:

SMCS

NOTE	REF NO	GRAPHIC REF	PART NUMBER	QTY	PART NAME 1 2 3 4 5 6 (PRODUCT LEVEL)	LINK PAGE
			NOTSERV	1		
					(On inside of battery box L.H. side)	
			NOTSERV	1		
					(On L.H. side of steering clutch case)	
			NOTSERV	1		
					(On L.H. side of engine cylinder block)	
			7B-3028	6		
					DRIVE SCREW	
			8S-3942	1		
					FILM CATERPILLAR	
					(On front of radiator guard)	
			8S-5496	1		
					FILM CATERPILLAR	
					(On back of fuel tank)	
			2P-3182	2		
					FILM CORPORATE SYMBOL	
					(On side of battery box)	
			5P-3130	2		
					FILM D4D	
					(On side of battery box)	
			5P-6064	1		
					(On hood)	
			5P-1091	1		
					FILM WARNING	
					(On dash)	
			8S-3691	1		
					FILM STARTING INSTRUCTION	
					(On top of instrument cover)	
			5P-7119	1		
					(Near the fuel tank filler cap)	