RUTHZIL TRATOR COMERCIAL DE PEÇAS LTDA 11 97083-6812 ROLANDO CITRANGULO

Distribuidor Autorizado
RECH TRATORES
(65) 515-8800 Sinop/MT

FORM ZEBP0623
SETEMBRO 1978

CONTENTS

ALPHABETICAL INDEX OF GROUPS__ 3
CONVERSION EQUIVALENT TABLES INSIDE BACK COVER
ORDERING PARTS_____ 2
QUICK REFERENCE CHART INSIDE FRONT COVER
USING THE PARTS BOOK_____2

PARTS BOOK

D4E TRACTOR DIRECT DRIVE POWERED BY 3304 ENGINE

SERIAL NUMBERS
76W1-UP (VEHICLE)
46V4786-UP (ENGINE)

PUBLISHED SEPTEMBER 1978
CATERPILLAR BRASIL S.A.
PUBLICATIONS DIV. – SERVICE DEPT.
SÃO PAULO – BRAZIL
COMPILED BY NELSON O. RIOS

QUICK REFERENCE GUIDE TO MAJOR SECTIONS

BASIC ENGINE
LUBRICATION SYSTEM
COOLING SYSTEM
INTAKE AND EXHAUST SYSTEM
FUEL SYSTEM AND GOVERNOR
STARTING AND ELECTRICAL SYSTEM
POWER TRAIN– POWER TRANSMISSION UNIT
STEERING CLUTCHES AND BRAKES
CHASSIS AND UNDERCARRIAGE
CAB, GAUGES AND ACCESSORIES
SERVICE EQUIPMENT AND SUPPLIES

COMO PEDIR PEÇAS Peças de Reposição de Qualidade Caterpillar são obtidas através dos revendedores Caterpillar em todo o mundo. Seu estoque de peças é atualizado e inclui todas as peças normalmente requeridas para garantir o seu investimento em máquinas Caterpillar. Quando pedir peças, use sempre o catálogo de peças que cubra o número de série de sua máquina. O seu pedido deverá especificar a quantidade, o número da peça, o seu nome e ainda indicar o número de série da máquina para a qual a peça é requerida. Quando estiver em dúvida quanto ao número da peça, forneça ao seu revendedor uma descrição completa do item requerido.

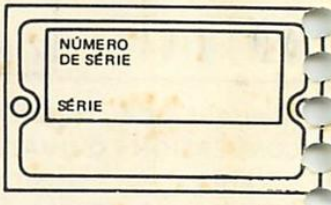

A Placa do No. de Série esta localizada na parte Superio Direita Traseira do Alojamento.

COMO USAR O CATÁLOGO DE PEÇAS Os catálogos de peças Caterpillar incluem ilustrações dos grupos ou conjuntos de que se compoem as máquinas. Estas ilustrações mostram os componentes standard e também alguns dos acessórios disponíveis para as máquinas. O índice alfabético localizado no início do catálogo deve ser usado para determinar o número da página na qual uma determinada ilustração será encontrada. Uma pesquisa nestas páginas servirá para identificar cada uma das peças individuais vendáveis.

Títulos das ilustrações

O título de cada ilustração identifica o número e o nome do grupo ou conjunto mostrado. Se mais de uma ilustração for necessária para um determinado grupo, o título da ilustração mostrará o número de série do qual cada ilustração se aplica. Em alguns casos não é possível determinar especificamente o número de série para o qual as diferentes ilustrações são usadas. Neste caso, o título identificará a ilustração como, "Primeiro Tipo", "Segundo Tipo", etc. Uma pesquisa junto ao grupo em questão se torna então necessária para determinar qual a ilustração a ser usada.

Os títulos fornecem ainda informações adicionais, tais como: números de páginas onde ilustrações de sub conjuntos são encontrados, informações sobre quantidades usadas e outras informações que possam ajudar a determinar os requisitos sobre peças.

Nomes de Peças Fora do Alinhamento

Em cada ilustração existe uma lista de peças identificando cada peça vendável do conjunto. Quando o nome de uma peça é colocad fora de alinhamento nesta lista, isto signific que este item vendável é componente do item vendável que o precede.

Abreviações e Símbolos

▲ ● Usados para chamar a atenção para informações adicionais que aparece em outro lugar na ilustração.

L.D. Lado Direito
L.E. Lado Esquerdo
se referem ao lado d máquina como vist do compartimento d operador.

C. Indica modificação da ilustração ant rior do mesmo grupo ou conjunto.
D.E. Diâmetro externo
D.I. Diâmetro interno
N/V Não vendida separadamente.
Conj. Cj. Conjunto
Pol Polegada
m Metro
cm Centímetro
dm Decímetro

Nota:

O contínuo processo de desenvolvimento melhoria dos projetos dos produtos, pod ocasionar mudanças em seu equipamento qu não estejam ainda incluídas neste catálog Cada edição é revista e revisada, quando necessário, para atualizar e incluir estas modif cações em edições futuras.

Quando em dúvida sobre o seu produto Caterpillar, ou esta publicação, consulte o seu revendedor Caterpillar para obter a últ ma informação disponível.

02

NOMENCLATURA DE PEÇAS
INGLÊS - PORTUGUÊS

ENGLISH - PORTUGUESE
PARTS NOMENCLATURE

NOMENCLATURA DE PEÇAS INGLÊS - PORTUGUÊS

INGLÊS	PORTUGUÊS
ABOVE	Acima
ABSORBER	Amortecedor
ACCESSORY	Acessório
ACCUMULATOR	Acumulador
ACTUATOR	Acionador
ADAPTER	Adaptador
ADHESIVE	Adesivo
ADJUSTER	Ajustador
AFTERCOOLER	Pós-resfriador
AIR	Ar
AIR CLEANER	Purificador de ar
AIR SYSTEM	Sistema de ar
ALARM	Alarme
ALTERNATOR	Alternador
AMMETER	Amperímetro
ANCHOR	Âncora, fixador
ANGLE	Ângulo, canto
ANVIL A.	Bigorna conj.
ARBOR	Mandril, eixo
ARM	Braço
ARMATURE	Armadura, Induzida
ARM REST	Apoio para braço
ARRESTER	Detentor
ASSEM. = ASSEMBLY	Conjunto
ATTACHMENT	Acessório
AVAILABLE	Disponível
AXLE	Eixo
AXLE SHAFT	Semi-eixo, ponta
BACK-UP ALARM	Alarme da marcha à ré
BACK-UP LIGHT	Luz da marcha à ré
BACK-UP SWITCH	Interruptor de marcha à ré
BACKBOARD	Prancha traseira
BACK CUSHION	Encosto
BACKHOE	Retroescavadeira
BAFFLE	Defletor
BAG	Saco, sacola
BAIL	Alça
BALANCER	Balanceador
BALL	Esfera
BALLCHECK ASSEMBLY	Conjunto de (válvula) de esfera de retenção
BALL JOINT	Junta esférica
BALLSTUD	Munhão esférica
BAND	Banda, cinta, tira
BAND & LINING	Banda e revestimento
BAR	Barra
BARREL	Cilindro
BARRIER	Barreira
BASE	Base
BASIN	Bacia, coletor
BATTERY	Bateria
BEAM	Barra, viga, trave
BEARING	Mancal, rolamento
BEARING BALL	Rolamento de esferas
BEARING-SLEEVE.	Mancal tipo luva
BEARING-NEEDLE	Rolamento de agulha
BEARING-ROLLER	Rolamento tipo roletes
BELL	Campânula
BELLCRANK	Alavanca angular
BELLOWS	Fole
BELOW	Abaixo
BELT	Correia, cinto
BELT TIGHTENER	Ajustador de correia
BEVEL GEAR	Coroa
BIT-CUTTER	Broca, fresa
BLACK	Preto
BLADE	Lâmina
BLEEDER	Sangrador
BLOCK	Bloco, calço
BLOWER	Ventilador
BLUE	Azul
BOARD	Prancha, tábua
BODY	Corpo
BOLT	Parafuso
BONNET	Tampa
BOOM	Lança
BOOSTER	Reforçador
BOOT	Protetor contra poeira
BORE	Furo
BOSS	Ressalto
BOTH	Ambos (as)
BOTTOM	Fundo
BOWL	Caçamba
BOX	Caixa
BRACE	Tirante
BRACKET	Suporte
BRAKE	Freio
BREAKER	Interruptor
BREATHER	Respiro
BRIDGE	Bráço
BROWN	Marrom
BRUSH	Escova
BUCKET	Caçamba
BULB	Bulbo
BULLDOZER	Bulldozer
BUMPER	Pára-choque
BUSHING	Bucha
BUTTON	Botão
BUZZER WARNING	Alarme sonoro
C = CHANGE	Alteração
CAB	Cabina
CABINET	Gabinete
CABLE	Cabo
CAGE	Alojamento
CALIPER	Calibrador
CAM	Excêntrico, ressalto
CAMSHAFT	Eixo-comando-de-válvulas

NOMENCLATURA DE PEÇAS INGLÊS - PORTUGUÊS

INGLÊS	PORTUGUÊS	INGLÊS	PORTUGUÊS
CANOPY	Coberta, toldo	CONTROL	Controle
CAP	Tampa	CONVERSION	Conversão
CAPACITOR	Capacitor,condensador	CONVERTER	Conversor
CARBURETOR	Carburador	COOLER	Arrefecedor
CARCASS	Carcaça	COOLING	Arrefecimento
CARRIER	Suporte	CORK	Cortiça
CARTON	Caixa de papelão	CORE	Núcleo
CARTRIDGE	Cartucho	CORNER	Canto
CASE	Caixa, alojamento	COTTER PIN	Contrapino
CASING	Invólucro, revestimento	COUNTER	Contador, tacômetro
		COUNTERWEIGHT	Contrapeso
CASTER	Rolete, roldana	COUPLER	Acoplador, engate
CAST IRON	Ferro fundido	COUPLING	Acoplamento, conexão
CATWALK	Passadiço	COVER	Tampa
CENTER	Centro	COWL	Capota
CHAIN	Corrente	COWLING	Capota
CHAMBER	Câmara	CRADLE	Armação, suporte
CHANGEOVER	Modificação	CRANK	Manivela
CHANNEL	Canal	CRANKCASE	Cárter
CHASSIS	Chassi, armação	CRANKSHAFT	Virabrequim
CHECK-VALVE	Válvula de retenção	CROSS UNION	Junta transversal
CIRCUIT	Circuito	CROSSBAR	Barra transversal
CIRCUIT BREAKER	Interruptor de circuito	CUP	Capa, anel externo
CLAMP	Braçadeira	CURTAIN	Cortina
CLASP	Fecho, grampo	CUSHION	Almofada, amortecedor
CLEANER	Purificador		
CLEVIS	Forquilha, garfo	CUTTER	Fresa, cortador
CLIP	Clipe, presilha, grampo	CUTTING EDGE	Borda cortante
CLOSURE	Fecho	CYLINDER	Cilindro
CLUTCH	Embreagem	CYLINDER BLOCK	Bloco do motor
COARSE	Grosso, áspero	CYLINDER HEAD	Cabeçote
COATING	Capa, revestimento	DAMPER	Amortecedor
COCK	Torneira	DARK GREN	Verde escuro
COIL	Bobina, serpentina	DASH	Painel
COLLAR	Colar	DASH PANEL	Painel de Instrumento
COLLECTOR	Coletor	DECELERATOR	Desacelerador
COLLET	Mandril	DEFLECTOR	Defletor
COLUMN	Coluna	DETENT	Retém, pino de trava
COMPACTOR	Compactador	DIAGRAM-WIRING	Diagrama dos circuitos elétricos
COMPARTMENT	Compartimento		
COMPLETE	Completo	DIAL	Medidor de dial
COMPOUND	Composto	DIAPHRAGM	Diafragma
COMPRESSOR	Compressor	DIESEL ENGINE COMPLETE	Motor diesel completo
CONCAVE	Côncavo	DIFERENTIAL	Diferencial
CONDITIONER	Condicionador	DIFFUSER	Difusor
CONDUIT	Conduite, eletroduto	DIMMER	Redutor de luminosidade
CONE	Cone		
CONNECTING	Ligação	DIODE	Diodo
CONNECTED ROD	Biela	DIRECTOR	Diretor
CONNECTION	Conexão	DISC	Disco
CONNECTOR	Conetor	DISCONNECT	Desligar
CONSISTS OF	Consiste de	DISPOSABLE	Disponível, substituível
CONSOLE	Consolo		
CONTACT	Contato, platinado	DISSIPATOR	Dissipador de calor
CONTACTOR	Contactador	DISTRIBUTOR	Distribuidor
CONTINUED FROM	Continuação de		

NOMENCLATURA DE PEÇAS INGLÊS - PORTUGUÊS

INGLÊS	PORTUGUÊS
DM = DECIMETER.	dm = decímetro
DOME LIGHT ...	Lâmpada do teto
DOOR	Porta
DOWEL	Pino-guia, cavilha
DOWNSHIFT	Mudança para marcha mais baixa
DOZER	Bulldozer (lâmina)
DRAIN	Dreno
DRAWBAR	Barra de tração
DRILL	Broca
DRILLED	Broqueado, perfurado
DRIVE	Comando, acionamento, propulsão
DRIVER	Acionador, mecanismo propulsor
DRIVESHAFT ...	Eixo acionador, eixo de transmissão
DRUM	Tambor
DUCT	Conduto, canal
EACH	Cada
EDGE	Borda, canto
EFFECTIVE WITH .	Efetivo a partir de
EJECTOR	Ejetor
ELBOW	Cotovelo
ELEMENT	Elemento
ENCLOSURE ...	Cobertura
END	Extremidade
END BIT	Canto de lâmina
END VIEW	Vista traseira
ENGINE	Motor
ENGINE ARRANGEMENT.	Arranjo do motor
EXCEPT	Exceto
EXHAUST	Escape
EXHAUST PIPE ..	Cano de escape
EXPANDER	Expansor
EXPANSION PLUG.	Bujão de expansão
EXTENSION	Extensão
EXTINGUISHER :	Extintor
EXTRACTOR ...	Extrator
EYE	Olhal
EYEBOLT	Parafuso de olhal
FABRIC	Tecido, tela textura
FACING	Revestimento, forro
FAN	Ventilador
FASTENED	Fixo, preso
FASTENER	Fixador, prendedor
FENDER	Pára-lamas
FERRULE	Virola
FIELD COIL	Bobina indutora, ou de campo
FIELD REPLACEMENT	Reposição ou substituição no campo
FILLER	Bocal de enchimento
FILM	Película
FILTER	Filtro
FINAL DRIVE ...	Comando final
FINGER	Dedo
FIREWALL	Parede contra fogo
FITTING	Graxeira, conexão
FIXTURE	Dispositivo, Aparelho
FLANGE	Flange
FLASHER	Luz intermitente
FLOAT	Flutuar, livre
FLOOD-LAMP ...	Farol
FLOOR	Piso
FLOORMAT	Tapete
FLOORPLATE ...	Chapa do piso
FLYWEIGHT	Peso volante
FLYWHEEL	Volante
FOLLOWER	Seguidor
FOOT	Pé
FORK	Garfo
FOR USE WITH...	Para usar com
FOUNDATION ...	Assentamento, alicerce
FRAME	Armação, chassi
FRONT	Frente, dianteiro
FT = FOOT	Pé
FUEL INJECTION .	Injeção de combustível
FUEL PUMP.....	Bomba de combustível
FUEL RATIO	Limitador de combustível
FUEL SYSTEM ...	Sistema do combustível
FUEL TANK	Tanque do combustível
FUMES DISPOSAL .	Eliminação de vapores do cárter
FUSE	Fusível
G = GROUP	Grupo
GAGE	Indicador, manômetro
GAP	Folga, lacuna, intervalo
GASKET	Junta
GASKET KIT ...	Jogo de junta
GATE	Entrada, trava
GAUGE	Indicador, manômetro
GEAR	Engrenagem, marcha
GEAR BOX	Caixa de engrenagem
GEAR PUMP	Bomba de engrenagem
GENERATOR ...	Gerador
GLAND	Junta, gaxeta, vedação sobreposta
GLASS	Vidro
GLOW PLUG	Vela incandescente
GOVERNOR ...	Governador
GRAB IRON ...	Balaústre corrimão
GRATE	Grade, grelha
GRAY	Cinza
GRID	Grade, grelha
GRILL	Grade, grelha
GRIP	Pega, garra, cabo
GROMMET	Ilhós
GROUND BRUSH .	Escova-terra

NOMENCLATURA DE PEÇAS INGLÊS - PORTUGUÊS

INGLÊS	PORTUGUÊS
GROUND (ELECTRIC) . . .	Terra (eletricidade)
GROUSER	Garra (de sapata)
GUARD	Protetor
GUIDE	Guia
GUSSET	Cantoneira
HACKSAW	Serra para metais
HALF	Metade, meio (a)
HALF LINK	Semi-elo
HAMMER	Martelo
HAND CONTROL. .	Controle manual
HANDLE	Cabo, alça
HANDRAIL	Corrimão, balaústre
HANGER	Suporte, dispositivo de suspensão
HARDWARE	Ferragem
HARDWARE KIT .	Jogo de ferragem
HARNESS	Chicote
HEAD = HD	Cabeça
HEADER	Coletor
HEADLAMP	Farol dianteiro
HEADLIGHT . . .	Farol dianteiro
HEAT SINK	Difusor de calor
HEATER	Aquecedor
HIGH-IDLE	Marcha acelerada em vazio
HINGE	Dobradiça, articulação
HITCH	Engate
HOIST	Guincho, talha
HOLD	Suporte, fixador
HOLD DOWN	Fixar, reter, manter abaixado
HOLDER	Fixador, suporte
HOLE	Furo, buràco
HOOD	Capô
HOOD & DASH .	Capô e painel
HOOK	Gancho
HORN	Buzina
HOSE	Mangueira
HOUSING	Alojamento
HUB	Cubo
HYDRAULIC . . .	Hidráulico
ID = INSIDE DIAMETER . . .	Diâmetro interno
IDLER	Roda-guia
IDLER & SHAFT .	Roda-guia e eixo
IDLER GEAR	Engrenagem intermediária
IDLER PULLEY . .	Polia intermediária
IMPELLER	Impulsor, rotor
IN = INCH	Polegada
INCLUDES	Inclui
INDICATE	Indicam
INDICATOR	Indicador
INLAY	Incrustação
INLET	Admissão, entrada
INPUT.	Entrada
INSERT	Inserção
INSTALLATION . .	Instalação
INSTALLED ON MODEL	Instalação no modelo
INSTRUCTION . .	Instrução
INSTRUMENT . . .	Instrumento
INSULATED BRUSH	Escova isolada
INSULATION	Isolação, isolamento
INSULATOR	Isolante, isolador
INTAKE	Admissão
INTERLOCK	Trava interna
INTERMEDIATE .	Intermediário
INTERNAL	Interno
INVERTER	Inversor
IRON	Ferro
JACK	Macaco
JAW	Mandíbula, garra
JET	Jato, vaporizador
JOINT	Junta, articulação
JUNCTION	Junção
KEY	Chaveta
KINGBOLT . . .	Pino de engate
KNIFE	Faca, lâmina
KNOB	Maçaneta, botão
LADDER	Escada
LAMP	Lâmpada
LARGE	Grande
LATCH	Trinco, lingüeta
LEAD	Condutor, cabo
LEG	Perna
LENS	Lente
LEVEL	Nível
LEVER	Alavanca
L.H. = LEFT HAND.	Lado esquerdo
LID	Placa, tampa
LIFT	Levantar
LIFT CYLINDER .	Cilindro de levantamento
LIFTER	Tucho
LIFTING EYE . . .	Olhal de levantamento
LIGHT GREEN . . .	Verde claro
LIGHTING	Sistema de iluminação
LINE	Tubulação
LINER	Camisa
LINES & PUMP .	Tubulação e bomba
LINES & VALVE .	Tubulação e válvula
LINING	Revestimento, lona
LINK	Elo
LINKAGE	Articulação
LIP	Lábio, borda
LISTED	Relacionamento
LITERATURE . . .	Literatura
LOCATED	Localizado

NOMENCLATURA DE PEÇAS INGLÊS - PORTUGUÊS

INGLÊS	PORTUGUÊS
LOCATOR	Localizador
LOCK	Trava
LOCKNUT	Contraporca
LOCKWASHER	Arruela de pressão
LOCKWIRE	Arame de trava
LONG	Longo
LOOM	Tubo isolador
LOW IDLE	Marcha lenta
LOUVER	Persiana
LOWER	Abaixar, inferior
LUBRICANT	Lubrificante
LUG	Ressalto, orelha
MACHINE SCREW	Parafuso de fenda
MAGNET	Imã magneto
MAIN	Principal
MAINTENANCE	Manutenção
MANIFOLD	Coletor
MARKED	Marcado (a)
MARKER	Marcador
MASTER PIN	Pino mestre
MAT	Capacho, esteira
METER	Medidor, contador
MINOR	Menor
MIRROR	Espelho
MISCELLANEOUS	Miscelânea
MODIFICATION	Modificação
MOLDBOARD	Armação da lâmina
MOTOR	Motor
MOULDING	Moldura
MOUNT	Montar
MOUNTED	Montado (a)
MOUNTING	Montagem
MUFFLER	Silenciador
NAMEPLATE	Plaqueta de identificação
N.C. (THREAD)	Rosca grossa
NEEDLE	Agulha
N.F. (THREAD)	Rosca fina
NIB	Ponta, bico
NIPPLE	Conexão
NONE	Nenhum (a)
NORMALIZING	Normalização
NOT PART OF	Não faz parte de
NOZZLE	Bocal, bico injetor
N/S = NOT SERVICED	Não vendável
NUMBER (Nº)	Número (Nº)
NUT	Porca
NUT-WING	Porca borboleta
NUT-CASTLE	Porca acastelada
NUT-WELD	Porca-soldada
NUT-CAP	Porca cega
NUT-HEX	Porca sextavada
NUT-LOCK	Contraporca
NUT-IMPERIAL	Porca imperial
NUT-JAM	Porca de trava, contraporca
NUT-LOW CROWN.	Porca de meia coroa
NUT-RETAINING	Porca de retenção
NUT-SELF LOCK	Porca de autotravamento
NUT-SLOTTED	Porca fendada
NUT-SPANNER	Porca para chaves
O.D. = OUTSIDE DIAMETER	Diâmetro externo
O-RING	Anel "O"
OIL	Óleo
OIL PAN	Cárter
OIL PUMP	Bomba de óleo
OIL SYSTEM	Sistema de lubrificação
OILER	Almotolia, lubrificador
ORANGE	Laranja
TO ORDER	Para pedir
ORIFICE	Orifício
OUTER	Externo
OUTER RACE	Anel externo
OUTPUT	Saída
OVERRALL	Geral, total
OVERHAUL	Revisão
OVER SIZE	Sobremedida
PACKING	Embalagem, gaxeta
PAD	Coxim, calço
PADLOCK	Cadeado
PAINT	Pintura
PAN	Cárter
PANEL	Painel
PARKING BRAKE	Freio de estacionamento
PARTITION	Separação
PARTS G.	Grupo de peças
PARTS OF	Peça de
PARTS OF ALL ENGINE ARRANGEMENTS	Peças de todos os arranjos do motor
PARTS OF ALL ENGINE ARRANGEMENTS EXCEPT	Peças de todos os arranjos do motor exceto
PAWL	Garra
PEDAL	Pedal
PEDESTRAL	Pedestral
PERFORMANCE	Desempenho
PILOT	Piloto
PIN	Pino
PIN & BUSHING	Pino e bucha
PIN-COTTER	Contrapino
PINCH BAR	Pé de cabra
PINION	Pinhão

NOMENCLATURA DE PEÇAS INGLÊS - PORTUGUÊS

INGLÊS	PORTUGUÊS
PIPE	Tubo
PISTON	Pistão
PIVOT	Articulação, pivô
PLANETARY	Planetário
PLATE	Placa
PLATFORM	Plataforma
PLUG	Bujão
PLUNGER	Pistão, êmbolo
POINT	Ponta, ponto
POINTER	Ponteiro
POLE & COIL	Polo e bobina
POLE	Polo, lança, vara
POPPET	Gatilho
POST	Poste, coluna
POTENTIOMETER.	Potenciômetro
POWER TAKE OFF.	Tomada de força
POWER TRAIN	Trem de força
PRE-SCREENER	Tela protetora
PRECHAMBER	Câmara de pré-combustão
PRECLEANER	Pré-purificador
PRECOMBUSTION	Pré-combustão
PRESS	Prensa
PRESS = PRESSURE	Pressão
PREVIOUS	Prévio, anterior
PRIMARY	Primário, principal
PROBE	Prova
PROJECTOR	Projetor
PROTECTION	Proteção
PROTECTOR	Protetor
PULLER	Extrator, sacador
PULLEY	Polia
PUMP	Bomba
PURPLE	Roxo
PUSHROD	Haste de empuxo
QTY = QUANTITY.	Quantidade
RACE	Pista
RACE & ROLLER	Pista e rolete
RACK	Cremalheira
RADIATOR	Radiador
RAIL	Trilho, guia
RADIATOR	Radiador
RAIL	Trilho, guia
RANGE TRANSM.	Transmissão manual
RATCHET	Catraca
REAR	Traseiro (a)
REBORED	Escareado, alargado
REBUILD KIT	Jogo de recondicionamento
RECEPTACLE	Recipiente
RECTIFIER	Retificador
RED	Vermelho
REDUCER	Redutor
REFER	Referir
REGULATOR	Regulador

INGLÊS	PORTUGUÊS
RELATED REPAIR ITEMS	Itens de reparos relacionados
RELAY	Relé
RELIEF VALVE	Válvula de alívio
REPAIR G.	Grupo de reparo
REPAIR KIT	Jogo de reparo
REPAIR ITEMS	Itens de reparo
REPLACEMENT.	Reposição, substituição
REQUIRED	Necessário
RESERVOIR A.	Reservatório
RESIN	Resina
RESISTOR	Resistência
RETAINER	Fixador
RETARDER	Retardador
REVERSIBLE	Reversível
R.H. = RIGHT HAND	Lado direito
RIM	Aro
RIM & TIRE	Aro e pneu
RING	Anel
RIVET	Rebite
ROCKET	Balancim
ROD	Haste
ROD END	Extremidade da haste
ROLLER	Rolete
ROPE-STARTING	Partida à corda
ROTATOR	Girador
ROTOCHAMBER	Câmara pneumática
ROTOCOIL	Girador de válvula
ROTOR	Rotor
RUST INHIBITOR	Antioxidante
SADDLE	Sela, assento
SAFETY	Segurança
SAFETY TREAD	Tiras antiderrapante
SCRAPER	Tampa
SCREEN	Tela
SCREW	Parafuso
SCREW-HEX HD.	Parafuso de cabeça hexagonal
SCREW-KIT	Jogos de parafuso
SCREW-MACHINE	Parafuso de fenda
SCREW-ROUND HD.	Parafuso de cabeça redonda
SCREW-FLANGED.	Parafuso com flange
SCREW-LOCKING	Parafuso de trava
SCREW-THUMB.	Parafuso de orelhas
SCREWDRIVER	Chave de fenda
SEAL	Retentor
SEALED UNIT	Unidade vedada
SEALER	Vedador isolante
SEAT	Assento
SECONDARY	Secundário
SECTION.	Seção

NOMENCLATURA DE PEÇAS INGLÊS - PORTUGUÊS

INGLÊS	PORTUGUÊS
SEGMENT	Segmento
SENDER	Emissor
SENSOR	Sensor
SEPARATE	Separar separado
SEPARATOR	Separador
SERIAL NUMBER PLATE	Placa de número de série
SERVICE	Serviço, manutenção
SERVICE KIT	Jogo de manutenção
SERVICE METER	Horômetro
SETSCREW	Parafuso de fixação
SHACKLE	Grilheto, anel, manilha
SHAFT	Eixo
SHANK	Porta-ponta do escarificador
SHEAVE	Polia, roldana
SHEET	Folha, lâmina
SHELL	Invólucro, cápsula, casquilho
SHIELD	Blindagem, protetor
SHIFT	Mudança
SHIM	Calço
SHIPPING	Embarque
SHOCK ABSORBER	Amortecedor de choques
SHOCKMOUNT	Montagem a prova de choques
SHOE	Sapata
SHORT	Curto
SHOWN	Ilustrado, mostrado
SHROUD	Tampa de proteção
SHUNT	Derivação
SHUT OFF	Desligar, parada
SHUTTLE	Pistão de vaivém
SIDE	Lateral
SIDE VIEW	Vista lateral
SILICONE	Silicone
SINK	Absorvente de calor
SKIVING	Desbaste
SLACK ADJUSTER.	Ajustador de folga
SLEEVE	Luva, manga, camisa
SLIDER	Cursor, deslizador
SLIDE RAIL	Trilho deslizante
SLING	Cabos, amarras, linga
SLINGER	Defletor
SLUG	Pistão de reação, pistãozinho
SMALL	Pequeno
SNAP RING	Anel de retenção, anel de pressão
SNUBBER	Amortecedor
SOCKET	Soquete, tomada
SOLENOID	Solenóide
SPACER	Espaçador
SPARE	Sobressalente
SPARK PLUG	Vela de ignição
SPECIAL	Especial
SPEEDOMETER	Velocimetro
SPIDER	Cruzeta
SPINDLE	Ponta de eixo
SPLINE	Estria
SPOOL	Carretel
SPOUT	Calha, tubo
SPRING	Mola
SPROCKET	Roda motriz, roda dentada
STABILIZER	Estabilizador
STACK	Chaminé, cano de escapamento
STAND	Suporte, cavalete
STANDPIPE	Suporte vertical de sucção
STAPLE	Grampo
STARTER	Arranque motor de partida
STATOR	Estator
STEERING	Direção
STEM	Haste
STEP	Degrau
STICK	Vareta
STOP	Parar
STORAGE	Armazenagem
STRAINER	Tela filtrante
STRAP	Tira, cinta, suporte de fixação
STREET ELL	Conexão cotovelo
STRIP	Tira, fita, listra
STROKE	Curso do pistão
STUD	Prisioneiro
SUMP	Tanque, reservatório
SUPPLY VALVE	Válvula de suprimento
SUPPORT	Suporte
SUSPENSION	Suspensão
SWITCH	Interruptor
SWIVEL	Articulação giratória
TAB	Tira, aba, lingüeta
TABLE	Mesa
TACHOGRAPH	Tacógrafo
TACHOMETER	Tacômetro
TAG	Etiqueta
TAIL LAMP	Farol traseiro
TAN	Castanho
TANG	Lingüeta
TANK	Tanque
TAP	Macho
TAPE	Fita
TAPPET	Tucho
TEE	Conexão em "T"
TEMP. = TEMPERATURE	Temperatura

NOMENCLATURA DE PEÇAS INGLÊS - PORTUGUÊS

INGLÊS	PORTUGUÊS
TERMINAL	Terminal
TEST UNIT	Unidade de teste
TESTER	Aparelho de teste
THERMISTOR	Termistor
THERMOCOUPLE	Termopar
THERMOMETER	Termômetro
THERMOSTAT	Termostato
THERMOSWITCH	Interruptor térmico
THICK	Grosso (a) espesso (a)
TIE	Ligação, tirante
THREAD (OF NUT)	Rosca (de porca)
THROTTLE	Acelerador de
THROWER	Defletor
THRU = THROUGH	Através de
TIGHTENER	Tensor
TILT CYLINDER	Cilindro de inclinação
TIMING	Sincronização, Distribuição
TIP	Ponta
TIRE	Pneu
TIRE & RIM	Pneu e aro
TONGUE	Língua, lingueta
TOOL	Ferramenta
TOOLCABINET	Armário para ferramenta
TOOTH/TEETH	Dente/dentes
TOP	Topo, parte superior
TORQUE	Torque
TORQ. CONV.	Conversor de torque
TORQ. DIVIDER	Divisor de torque
TOWER	Torre
TRACK	Esteira
TRACK PIN	Pino de esteira
TRACK ROLLER	Rolete de esteira
TRACTOR	Trator
TRAILING UNIT	Unidade rebocada
TRANSFER	Decalcomania
TRANSFOMER	Transformador
TRANSISTOR	Transistor
TRANSMISSION	Transmissão
TRANSMISSION OVERHAUL	Revisão da transmissão
TREAD	Piso, banda de rodagem
TREADLE	Pedal
TROLLY	Carrinho
TRUCK	Caminhão
TRUNNION	Munhão
TUBE	Tubo, cano
TUBING	Tubulagem canalização
TURBINE	Turbina
TURBOCHARGER	Turboalimentador
U-BOLT	Parafuso em "U"
U-JOINT	Junta universal
UNDERSIZE	Submedida
UNION	União
UPPER	Superior
USE AS REQUIRED	Usar conforme necessitar
VALUE	Valor
VALVE	Válvula
VALVE GRINDING	Retificação das válvulas
VEE BELT	Correia "V"
VEE BELT SET	Jogo de correia em "V"
VENT	Respiro
VIEW	Vista
VISE	Morsa, torno
VISOR	Pára-sol
WALKWAY	Passadiço, corredor
WARNING G.	Grupo de alarma
WASHER	Arruela
WATER PUMP	Bomba d'água
WEARPLATE	Placa de desgaste
WEDGE	Cunha
WEIGHT	Peso
WELD	Solda
WELDNUT	Porca soldada
WHEEL	Roda
WHITE	Branco
WICK	Mecha, pavio
WINCH	Guincho
WINDOW	Janela
WINDSHIELD	Pára-brisa
WIPER	Limpador
WIRE	Fio
WIRING	Sistema elétrico
WIRING DIAGRAM	Diagrama do sistema elétrico
WITH	Com
WRAPPER	Invólucro, envoltório
WRENCH	Chave
YELLOW	Amarelo
YOKE	Garfo

CATEDRA



CATERPILLAR

Caterpillar, Cat e ⊞ são marcas da Caterpillar Tractor Co.

INDEX

A

Name	Page
Adapter – Fan Drive	15
Adjuster – Hydraulic Track	107
Air Cleaner	33
Air Lines	33
Alternator	61
Alternator Adjusting Bracket	61
Ammeter – 60 Ampere	57

B

Baffles – Radiator	27,28
Balancer	11
Base – Engine Oil Filter	23
Base – Fuel Filter	52
Basic Engine Arrangement	4
Battery	55
Battery and Wiring	55
Battery Cables	55
Battery Holddown	55
Bearing Cap – Main	7
Bearings – Balancer	7
Bearings – Camshaft	7
Bearings – Connecting Rod	10
Bell - Oil Pan	25
Bevel Gear	87
Bracket – Drawbar Mounting	98
Bracket – Fan Drive	16
Bracket – Flywheel Clutch Control	80
Brackets – Radiator Mounting	27
Brackets – Screen and Filter Mounting	76,77
Brake Band and Lining	88
Brake – Parking	88
Brake – Steering	88
Breather – Engine Crankcase Oil	26
Breather – Final Drive and Steering Clutch Oil	90
Breather – Transmission Oil	73

C

Name	Page
Camshaft	11
Cap – Engine Oil Filler	22
Cap – Flywheel Clutch Oil Filler	74
Cap – Fuel Tank	54
Cap – Radiator	28
Cap – Radiator Pressure Release	28
Cap – Steering Clutch Oil Filler	92
Cap – Transmission Oil Filler	74
Case and Covers – Steering Clutch	90
Case and Covers – Transmission	73
Circuit Breaker – 40 Ampere	57
Clutch – Flywheel	67
Clutch – Steering	87
Connecting Rod and Piston	10
Control – Flywheel Clutch	80
Control – Gearshift	78
Control – Governor	36
Control – Governor Torque	50
Control – Steering Clutch	84
Core – Radiator	28
Counterweight – Front	96
Cover – Cylinder Block	6
Cover – Front Housing	18
Cover – Gearshift	78
Cover – Governor– Service Meter Drive Opening	38
Cover – Valve Mechanism	14
Crankcase Guard	99
Crankshaft	8
Crankshaft – Bearing – Oversize	9
Crankshaft Bearing – Standard	8
Crankshaft Bearing – Undersize	9
Crankshaft – Hub	10
Cylinder Block	6
Cylinder Head	12
Cylinder Head Fastener	13

D

Name	Page
Dash	102
Dipstick – Engine Oil Level	21
Dipstick – Flywheel Clutch Oil Filler	74
Dipstick – Steering Clutch Oil	92
Dipstick – Transmission Oil	74
Disconnect Switch – Battery	59
Drain Cock – Radiator	27
Drain – Fuel Injection Pump	40,41
Drain Plug – Flywheel Clutch – Housing	67
Drain Plug – Steering Clutch	90
Drain Plug – Transmission and Bevel Gear Compartment	73
Drawbar – Fixed	98
Drawbar – Swinging	98
Drive Shaft	70
Drum – Steering Clutch Driven	81
Drum – Steering Clutch Driving	87
Duo Cone Seal – Final Drive	81
Duo Cone Seal – Front Idler	106

E

Name	Page
Engine Arrangement – Basic	4
Engine Lifting	15
Equalizer Spring	97
Exhaust Manifold	34
Exhaust Manifold Fastener	34
Exhaust Manifold Shield	34
Exhaust Pipe – Muffler	35

F

Name	Page
Fan and Guard – Blower	29
Fan – Suction	29
Fan Drive	16
Fan Drive Bracket	16
Fan – Blower	29
Fan – Reversible	29
Fastener – Cylinder Head	13
Fastener – Front Housing	18
Fastener – Oil Pan	21
Fastener – Timing Gear Housing	18
Fasteners – Exhaust Manifold	34
Fenders	104
Filler – Transmission Oil	74
Filler – Engine Oil	22
Filter – Engine Oil	23
Filter – Fuel	52
Filter – Transmission and Steering Clutch	75
Final Drive	81
Final Drive Pinion	81
Flood Lamp	64
Floorplate	101
Flywheel	20
Flywheel Clutch	67
Flywheel Clutch Control	80
Flywheel Housing	19
Forks – Gearshift	79
Frame	93
Front Housing	17
Front Housing Cover	18
Front Idler	106
Front Pull Hook	96
Fuel Filter	52
Fuel Injection Lines	51
Fuel Lines	53
Fuel Priming Pump	52
Fuel Tank	54
Fumes Disposal – Engine Crankcase Breather	26
Fuse Holders	57
Fuse – Ammeter	57
Fuse – 15 Ampere – Battery and Wiring	55

G

Name	Page
Gasket – Air Cleaner to Air Pipe	33
Gasket – Cylinder Head to Cylinder Block	12
Gaket – Dipstick Guide Tube to Flywheel Clutch Housing	74
Gasket – Exhaust Manifold to Cylinder Head	34
Gasket – Flywheel Clutch to Flywheel Housing	68
Gasket – Flywheel Housing to Cylinder Block	19
Gasket – Fuel.Priming Pump to Fuel Filter Base	52

Name	Page
Gasket – Oil Filler to Block	22
Gasket – Oil Pan Bell to Oil Pump	25
Gasket – Oil Pan to Cylinder Block	20
Gasket – Valve Mechanism Cover to Cylinder Head	14
Gasket – Water Elbow to Cylinder Head	31
Gasket – Water Lines Elbow to Cylinder Block	32
Gasket – Water Lines to Water Pump	31
Gasket – Water Regulator Housing to Cylinder Head	32
Gasket Kits	117
Gaskets – Front Housing Cover to Timing Gear Housing	18
Gasket – Oil Lines to Cylinder Block	25
Gauge – Engine Oil Level	21
Gauge – Fuel Pressure	114
Gauge – Oil Pressure	114
Gauges	114
Gear – Camshaft	17
Gear – Crankshaft	17
Gear – Final Drive	82
Gear – Front Timing	17
Gear – Fuel Pump Drive	17
Gear – Fuel Pump Idler	17
Gear – Oil Pump Drive	23
Gear – Oil Pump Idler	17
Gearshift Control	78
Gearshift – Interlock Mechanism	78
Glow Plug	64
Governor and Fuel Injection Pump	38
Governor and Fuel Injection Pump – Basic	42,46
Governor and Fuel Injection Pump – Field Installation	39,41
Governor and Fuel Injection Support Bracket	51
Governor Control	36
Governor Spring	38
Grease Gun	117
Guard – Crankcase	99
Guard – Final Drive	82
Guard – Front Lamp	65
Guard – Radiator	94
Guard – Track Roller	100
Guard – Track Roller Frame	107

H

Hand Tools	116
Handle – Flywheel Clutch Control	80
Handle – Gearshift Control	79
Handles – Steering Clutch Control	84
Handles – Support and Seat	111
Hardware – Engine Oil Pump	23
Hardware – Exhaust Manifold	34
Harness Assembly – Dash Area	60
Harness Assembly – Engine Area	60
Hood and Dash	102
Hook – Front Pull	96
Hose – Engine Oil Breather to Fumes Disposal Tube	26
Hose – Hydraulic Oil Filter to Hydraulic Control Valve	26
Hose – Radiator Inlet and Outlet	28
Hose – Water Elbow to Water Pipe	31
Hour Meter	115
Housing – Flywheel	19
Housing – Front Timing Gear	17
Housing and Regulator	32

I

Idler – Front	106
Indicator – Air Filter Service	114
Indicator – Water Temperature	114
Inserts – Intake and Exhaust	13

K

Kit – Rebuild – Water Pump	30
Kit – Repair – Alternator	62,63
Kit – Repair – Starting Motor	63
Kits – Gasket	117

L

Name	Page
Lamp – Dash	57
Lamp – Flood	64
Lever – Flywheel Clutch Control	80
Lever – Forward and Reverse Selector	79
Lever – Gearshift Control	79
Lever – Governor Control	37
Lever – Parking Brake	88
Lever – Speed Selector	79
Levers – Steering Clutch Control	84
Lifters – Valve	14
Lifting	65
Liners – Cylinder Block	6
Lines – Air	33
Lines – Engine Oil	25
Lines – Fuel Bleed	51
Lines – Fuel Injection	51
Lines – Water	31
Link – Track – Sealed and Lubricated	105
Linkage – Flywheel Clutch Control	80
Linkage – Gearshift Control	79
Linkage – Governor Control	37
Linkage – Parking Brake	88
Linkage – Steering Brake	88,89
Linkage – Steering Clutch Control	84,85

M

Name	Page
Main Frame	93
Mounting – Non-ROPS Conversion	94
Muffler	35

N

Name	Page
Name Plates and Transfers	118

O

Name	Page
Oil Filler – Engine	22
Oil Filler – Flywheel Clutch	74
Oil Filler – Transmission	74
Oil Filler – Steering Clutch Case	92
Oil Filler Cap Protection Cover	22
Oil Filter	23
Oil Level Gauge	21
Oil Lines – Engine	25
Oil Pan	20
Oil Pan Fastener	21
Oil Pump – Engine	23

P

Name	Page
Padlock and Key – Oil Filler Cap	22
Padlock and Key – Radiator Cap	29
Panel – Dash	114
Panel Engine Enclosure	102
Parking Brake	88
Pedal – Steering Brake	89
Pipe – Exhaust	35
Pipe – Water Lines Inlet	31
Piston	10
Piston Rings	10
Plug – Cylinder Block	25
Plug – Final Drive Lubrication Fill	90
Plugs – Final Drive Oil Drain	83
Plunger – Fuel Tank	54
Power Train Oil Lines	76
Power Train Schematic	66
Precleaner – Air Cleaner	33
Precombustion Chamber	12
Protection Cap – Oil Filler	22
Protection Cap – Radiator	29
Protection Cover – Oil Level Gauge	22
Pulley – Crankshaft	15
Pulley – Fan Drive	15
Pump – Engine Oil	23
Pump – Engine Oil – Basic	24
Pump – Fuel Priming	52
Pump – Flywheel Clutch Oil	70
Pump – Flywheel Clutch Scavenge	70
Pump – Water	30

R

Name	Page
Radiator	27
Radiator Cap	28
Radiator Guard	94

Name	Page
Regulator – Water Temperature.	32
Regulator and Housing.	32
Ring – Piston.	10
Rocker Arms – Intake and Exhaust.	14
Rod and Piston	10

S

Seal Cranckshaft	9
Seal – Oil Filter Base to Engine Oil Lines	23,25
Seal – Tube – Oil Screen to Bevel Gear Case.	97
Seals – Cylinder Liner	6
Segmented Sprocket	83
Shaft – Bevel Gear	87
Shaft – Drive	70
Shaft – Rocker.	14
Shield – Exhaust Manifold	34
Specifications.	125
Spring – Governor.	38
Spring – Valve – Intake and Exhaust.	12
Sprocket – Segmented.	83
Starting Motor – Electric – 24 Volt	61
Steering Brake	88
Steering Brake Pedal	89
Steering Clutch.	87
Steering Clutch Control	84
Steering Clutch Driven Drum. . .	87
Strainer – Fuel Tank	54
Support – Fender	104
Support – Front Engine	19
Support and Seat.	111
Swinging Drawbar	98
Switch – Battery Disconnect. . .	59
Switch – Heat – Start	57
Switch – Light	57
Switch – Oil Pressure.	115

T

Thermostat – Water Temperature.	32
Timing Gear Housing	17
Timing Gears – Front	17
Tools – Hand	116
Torque Control.	50
Track Carrier Roller.	108
Track Roller – Single Flange. . .	109
Track Roller – Double Flange . .	110
Track Roller Frame	107
Transfers	118
Transmission	71
Transmission Case and Covers . .	73
Trunnion	16
Tube – Engine Oil Passage	25
Tube – Fuel Filter to Governor .	51
Tube – Fuel System Bleed	51
Tube – Scavenge Pump to Magnetic Screen	77
Tube – Oil Filter Base to Block .	25
Tubes – Bevel Gear Pinion Sprayer	76
Tubes – Steering Clutch Control Valve to Booster Springs. . .	85

V

Valve – Fuel System Bleed	40,41
Valve – Oil Filter By-Pass.	23
Valve – Steering Clutch Control. .	86
Valves – Fuel Tank Drain and Shut-Off Supply	53
Valves – Intake and Exhaust. . .	12
Valve Mechanism.	14
Vandalism Guard.	15

W

Water Lines	31
Water Lines – Elbow	32
Water Lines – Pipe	31
Water Pump.	30
Wire – Ground – Starting Motor	61
Wiring – Dash – Area	57
Wiring – Hour Meter	115
Wiring Diagram.	58

ÍNDICE

A

Designação	Página
Adaptador – Bomba de Combustível e Suporte do Governador para o Bloco do Motor	51
Adaptador – Comando do Ventilador	15
Alavanca – Controle da Embreagem do Volante	80
Alavanca – Controle de Mudança de Marchas	79
Alavanca – Controle do Governador	37
Alavanca – Freio de Estacionamento	88
Alavanca – Seletora Avante-Ré	79
Alavancas – Controle da Embreagem de Direção	84
Alojamento da Engrenagem de Distribuição	17
Alojamento Dianteiro	17
Alojamento do Volante	19
Alojamento – Engrenagem de Distribuição Dianteira	17
Alojamento e Regulador	32
Alojamento – Volante	19
Alternador	61
Amperímetro – 60 Ampère	57
Anéis do Pistão	10
Anel – Pistão	10
Armação do Rolete da Esteira	107
Armação e Caixa	93
Arranjo do Motor Básico	4
Articulação – Controle da Embreagem de Direção	84,85
Articulação – Controle da Embreagem do Volante	80
Articulação – Controle de Mudança de Marchas	79
Articulação – Controle do Governador	37
Articulação – Freio da Direção	88,89
Articulação – Freio de Estacionamento	88

B

Designação	Página
Balanceador	11
Balancins – Admissão e Escape	14
Barra de Tração	98
Barra de Tração Oscilante	98
Base – Filtro de Combustível	52
Base – Filtro de Óleo do Motor	23
Bateria	55
Bateria e Fiação	55
Bico Ejetor – Combustível	51
Biela e Pistão	10
Bloco do Motor	6
Bocal de Enchimento de Óleo – Caixa da Embreagem de Direção	92
Bocal de Enchimento – Óleo da Transmissão	74
Bocal de Enchimento – Óleo do Motor	22
Bocal de Enchimento de Óleo – Embreagem do Volante	74
Bocal de Enchimento de Óleo – Motor	22
Bocal de Enchimento de Óleo – Transmissão	74
Bomba d'Água	30
Bomba – Água	30
Bomba de Escorva de Combustível	52
Bomba de Óleo – Motor	23
Bomba – Escorva da Embreagem do Volante	70
Bomba – Escorva do Combustível	52
Bomba Manual de Lubrificação	117
Bomba – Óleo da Embreagem do Volante	70
Bomba – Óleo do Motor	23
Bomba – Óleo do Motor – Básico	24
Bujão – Bloco do Motor	25
Bujão de Drenagem – Embreagem da Direção	90

Designação	Página
Bujão de Drenagem – Embreagem do Volante – Alojamento	67
Bujão de Drenagem – Óleo do Cárter	20
Bujão de Drenagem – Sistema Lubrificação do Trem de Força	73
Bujão de Enchimento – Lubrificação do Comando Final	90
Bujão – Drenagem do Sistema de Lubrificação do Trem de Força	73
Bujões – Drenagem do Óleo do Comando Final	83

C

Cabeçote	12
Cabos da Bateria	55
Cadeado e Chave – Tampa do Bocal de Enchimento de Óleo	55
Cadeado e Chave – Tampa do Bocal de Enchimento de Óleo	22
Cadeado e Chave – Tampa do Radiador	29
Cadeado e Chave – Tampa Protetora do Nível de Óleo	21
Caixa da Transmissão e Tampas	73
Caixa e Tampas – Embreagem da Direção	90
Caixa e Tampas – Transmissão	73
Câmara de Pré-Combustão	12
Camisas – Bloco do Motor	6
Campânula – Cárter	25
Capa do Mancal – Principal	7
Capô e Painel	102
Cárter	20
Chave – Chave Desligadora da Bateria	59
Chave Geral – Bateria	59
Chave – Recondicionamento – Bomba d'Água	30
Cinta do Freio e Revestimento	88
Cobertura do Motor do Painel	102
Coletor de Escape	34
Colmeia – Radiador	28
Comando do Ventilador	16
Comando Final	81
Conjunto do Chicote – Área do Motor	60
Conjunto do Chicote – Área do Painel	60
Contrapeso – Dianteiro	96
Controle da Embreagem da Direção	84
Controle da Embreagem do Volante	80
Controle de Mudança de Marchas	78
Controle de Torque	50
Controle do Governador	36
Controle – Embreagem da Direção	84
Controle – Embreagem do Volante	80
Controle – Governador	36
Controle – Mudanças de Marchas	78
Controle – Torque do Governador	50
Coroa	87

D

Decalcomanias	118
Defletores – Radiador	27,28
Diagrama do Circuito Elétrico	58
Dreno – Bomba de Injeção de Combustível	40,41

E

Eixo – Balancim	14
Eixo Comando	70
Eixo – Comando – de – Válvulas	11
Eixo – Coroa	87
Elemento – Primário e Intermediário – Purificador de ar	33
Elemento – Transmissão e Filtro da Embreagem da Direção	75
Elemento – Tubulações de Ar	33

Designação	Página
Eliminação de Vapores — Respiro do Cárter	26
Elo — Esteira — Vedada e Lubrificada	105
Êmbolo — Tanque de Combustível	54
Embreagem — Direção	87
Embreagem — Volante	67
Engrenagem — Comando da Bomba de Combustível	17
Engrenagem — Comando da Bomba de Óleo	23
Engrenagem — Comando Final	82
Engrenagem — Distribuição Dianteira	17
Engrenagem — Eixo-Comando-de-Válvulas	17
Engrenagem — Roda-Guia da Bomba de Combustível	17
Engrenagem — Roda-Guia da Bomba de Óleo	17
Engrenagem — Virabrequim	17
Esquema do Trem de Força	66
Especificações	126

F

Ferragens — Coletor de Escape	34
Ferragens — Bomba de Óleo do Motor	23
Ferramentas Manuais	116
Ferramentas — Manual	116
Fiação — Área do Painel	57
Fiação — Medidor de Horas	115
Filtro — Combustível	23
Filtro de Combustível	52
Filtro — Óleo do Motor	23
Filtro — Transmissão e Embreagem da Direção	75
Fio — Terra — Motor de Partida	61
Fixadores — Coletor de Escape	34
Fixadores dos Fusíveis	57
Fixador — Alojamento da Embreagem de Distribuição	18
Fixador — Alojamento Dianteiro	18
Fixador da Bateria	55
Fixador — Cabeçote	13
Fixador — Cárter	21
Fixador do Coletor de Escape	34
Flange Dupla — Rolete da Esteira	110
Flange Simples — Rolete da Esteira	109
Freio da Direção	88
Freio de Estacionamento	88
Fusíveis — Luz	57
Fusível — 15 Ampère — Bateria e Fiação	55
Fusível — Amperímetro	57

G

Gancho de Engate Dianteiro	96
Gancho — Engate Dianteiro	96
Garfos — Mudança de Marchas	79
Governador e Bomba Injetora de Combustível-Básica	42,46
Governador e Bomba Injetora de Combustível	38
Governador e Bomba Injetora de Combustível — Instalação no Campo	39,41
Governador e Cantoneira do Suporte de Injeção de Combustível	51

I

Indicador — Manutenção do Filtro de Ar	114
Indicador — Nível de Óleo do Motor	21
Indicador — Temperatura d'Água	114
Inserções — Admissão e Escape	113
Interruptor — Aquecimento — Partida	57
Interruptor de Circuito — 40 Ampère	57
Interruptor — Desligar a Bateria	59

J

Jogos de Juntas	117

Designação	Página
Jogo – Reparo – Motor de Partida	63
Jogo – Reparo – Alternador	62,63
Junta – Entre a Campânula do Cárter e a Bomba de Óleo	25
Junta – Entre a Embreagem do Volante e o Alojamento do Volante	68
Junta – Entre a Tampa do Mecanismo das Válvulas e o Cabeçote	14
Junta – Entre as Tubulações d'Água e a Bomba d'Água	31
Junta – Entre as Tubulações de Ar e o Cabeçote	33
Junta – Entre as Tubulações de Óleo e o Bloco do Motor	25
Junta – Entre o Alojamento do Regulador d'Água e o Cabeçote	32
Junta – Entre o Alojamento do Volante e o Bloco do Motor	19
Junta – Entre o Cabeçote e o Bloco do Motor	12
Junta – Entre o Cárter e o Bloco do Motor	20
Junta – Entre o Coletor de Escape e o Cabeçote	34
Junta – Entre o Cotovelo d'Água e o Cabeçote	31
Junta – Entre o Cotovelo das Tubulações d'Água e o Bloco do Motor	32
Junta – Entre o Filtro de Óleo e o Bloco	22
Junta – entre o Purificador de Ar e o Tubo de Ar	33
Juntas – Entre o Tubo das Tubulações d'Água e o Tubo de Entrada	31
Junta – Entre o Tubo da Vareta de Nível e o Alojamento da Embreagem do Volante	74
Junta – Entre o Tubo de Enchimento de Óleo da Direção e a Tampa da Embreagem da Direção	92

L

Designação	Página
Lâmpada de Iluminação Concentrada	64
Levantamento do Motor	15
Longarina	93

M

Maçaneta – Controle de Mudança de Marchas	79
Maçaneta – Controle da Embreagem do Volante	80
Maçanetas – Controle da Embreagem de Direção	84
Maçanetas – Suporte e Assento	111
Mancal do Virabrequim – sob Medida	9
Mancais – Balanceador	7
Mancais – Biela	10
Mancais – Eixo – Comando-de-Válvulas	7
Mancal do Virabrequim-Standard	8
Mangueira – Entrada e Saída do Radiador	28
Mangueira – Entre a Bomba d'Água e o Tubo d'Água	31
Mangueira – Entre o Filtro de Óleo Hidráulico e a Válvula de Controle Hidráulica	26
Mangueira – Entre o Respiro de Óleo do Motor e o Tubo de Eliminação de Vapores	26
Marcador de Horas	115
Mecanismo das Válvulas	114
Medidor do Nível de Óleo	21
Medidor – Elétrico de Hora	115
Medidor – Pressão do Combustível	114
Medidor – Pressão do Óleo	114
Medidores	114
Mola do Governador	38
Mola Equalizadora	97
Mola – Válvula – Admissão e Escape	12
Montagem – Sem Conversão para ROPS	95

Designação	Página
Motor de Partida – Elétrico – 24 Volts	61
Mudança de Marchas – Mecanismo de Travamento Interno	78
Munhão	16

O

Olhal de Levantamento – Motor	15

P

Painel	102
Pára-Lamas	104
Pedal do Freio da Direção	89
Pinhão do Comando Final	81
Pistão e Biela	10
Pistão	10
Placa do Piso	101
Placas e Decalcomanias	118
Polia – Comando do Ventilador	15
Polia – Virabrequim	15
Pré-Purificador – Purificador de ar	33
Protetor – Armação do Rolete da Esteira	107
Proteção da Tampa do Bocal de Enchimento de Óleo	22
Protetor – Coletor de Escape	34
Protetor – Comando Final	82
Protetor Contra Vandalismo	15
Protetor do Cárter	99
Protetor do Coletor de Escape	34
Protetor do Radiador	94
Protetor – Lâmpada Dianteira	65
Protetor – Radiador	94
Protetor – Rolete da Esteira	100
Purificador de Ar	33

R

Radiador	28
Regulador e Alojamento	32
Regulador – Temperatura d'Água	32
Respiro – Comando Final e Óleo da Embreagem da Direção	90
Respiro – Óleo da Transmissão	73
Respiro – Óleo do Cárter	26
Retentor – Alta Temperatura – Comando Final	81
Retentor – Alta Temperatura – Rolete da Esteira	109
Retentores – Camisa do Cilindro	6
Retentor Duo Cone – Comando Final	81
Retentor Duo Cone – Roda Guia Dianteira	106
Retentor Duo Cone – Rolete da Esteira	110
Retentor Duo Cone – Rolete de Suporte da Esteira	109
Retentor – Duo Cone – Comando Final	81
Retentor – Duo Cone – Rolete da Esteira	109
Retentor – Duo Cone – Rolete de Suporte da Esteira	108
Retentor – Duo Cone – Roda Guia Dianteira	106
Retentor – Tubo de Passagem de Óleo	25
Retentor – Virabrequim	9
Roda-Guia Dianteira	106
Roda-Guia Dianteira	106
Roda Motriz Segmentada	83
Roda Motriz – Segmentada	83
Rolete de Suporte da Esteira	108
"Rotocoil" – Válvula do Cabeçote	12

S

Silencioso	35
Sistema de Iluminação	65
Suporte – Controle	80
Suporte do Comando do Ventilador	16
Suporte de Ajustagem do Alternador	61
Suporte – Governador e Suporte do Alojamento da Bomba de Injeção de Combustível	51
Suporte e Assento	111

Designação	Página
Suporte — Montagem da Bomba de Tração	98
Suporte — Motor Dianteiro	19
Suporte — Pára-lama	104
Suporte — Tanque de Combustível	54
Suportes — Alavancas de Controle da Embreagem da Direção	84

T

Tambor — Acionado da Embreagem da Direção	87
Tambor — Acionador da Embreagem da Direção	81
Tampa — Alívio de Pressão do Radiador	28
Tampa — Alojamento Dianteiro	18
Tampa — Bocal de Enchimento de Óleo da Embreagem do Volante	74
Tampa — Bocal de Enchimento de Óleo do Motor	22
Tampa — Bocal de Enchimento de Óleo da Transmissão	74
Tampa — Bloco do Motor	6
Tampa do Alojamento Dianteiro	18
Tampa do Radiador	28
Tampa — Mecanismo das Válvulas	14
Tampa — Mudanças de Marchas	78
Tampa Protetora — Bocal de Enchimento de Óleo	22
Tampa Protetora — Medidor do Nível de Óleo	22
Tampa Protetora — Radiador	29
Tampa — Radiador	28
Tampa — Tanque de Combustível	54
Tanque de Combustível	54
Tela — Embreagem do Volante	67
Tela Filtrante — Tanque de Combustível	54
Termostato — Temperatura d'Água	32
Torneira de Dreno — Radiador	27
Transmissão	71
Tubo — Blindagem do Sistema de Combustível	51
Tubo de Escape — Silencioso	35
Tubo — Entre a Base do Filtro de Óleo e o Bloco	25
Tubo — Entre a Bomba de Escorva e a Tela Magnética	77
Tubo — Entre a Tela do Óleo e a Caixa da Embreagem da Direção	76
Tubo — Tubulações de Entrada d'Água	31
Tubulações — Água	31
Tubulações — Ar	33
Tubulações d'Água — Cotovelo	32
Tubulações d'Água — Tubo	31
Tubulações de Ar	33
Tubulações de Combustível	53
Tubulações de Injeção de Combustível	51
Tubulações de Óleo do Trem de Força	76
Tubulações de Óleo-Motor	25
Tubulações — Injeção de Combustível	51
Tubulações — Óleo do Motor	25
Tubulações — Sangria do Combustível	51
Tuchos — Válvula	14

V

Válvulas — Admissão e Escape	12
Vareta — Nível do Óleo do Motor	21
Vareta — Óleo da Transmissão	74
Velas Incandescentes	64
Ventilador e Protetor — Sopro	29
Ventilador — Reversível	29
Ventilador — Sopro	29
Ventilador — Sucção	29
Virabrequim	8
Virabrequim — Cubo	10
Virabrequim — Mancal sobre Medida	9
Volante	20

2Y4000 BASIC ENGINE ARRANGEMENT

Consists of:			Page
CENTRAL STRUCTURE			
1	2P6540	Cylinder Block Group	6
1	2Y1646	Cylinder Block Cover Group	6
1	2P6218	Crankshaft Group	8
1	2P6226	Crankshaft Seal Group	9
4	4N4028	Rod and Piston Group	10
1	2P6201	Camshaft Group-Single	11
1	5S6425	Balancer Group	11
UPPER STRUCTURE			
1	2P6274	Cylinder Head Group	12
1	2P6544	Cylinder Head Fastener Group	13
1	2P6524	Valve Mechanism Group	14
1	2P6514	Valve Mechanism Cover Group	14
1	1P3840	Engine Lifting Group	15
FRONT STRUCTURE			
1	2P9641	Front Housing Group	17
1	4N6508	Front Housing Cover Group	18
1	2P6498	Front Housing Fastener Group	18
1	2P9642	Front Gear Group-(Timing)	17
1	2P6246	Trunnion Group	16
1	2Y2942	Pulley Group	15
1	2P8598	Crankshaft Hub Group	10
1	2P7753	Engine Support Group	19
1	2P7831	Fan Drive Group	16
REAR STRUCTURE			
1	6N8075	Flywheel Housing Group	19
1	7S7878	Flywheel Group	20
LOWER STRUCTURE			
1	2P6155	Oil Pan Group	20
1	2P6189	Oil Pan Fastener Group	21

LUBRICATION SYSTEM

1	2P1784	Oil Pump Group	23
1	2P6513	Oil Lines Group	25
1	2P6525	Oil Filter Group	23
1	2P6855	Oil Filler Group	22
1	1P4244	Breather Group	26
1	4N3325	Fumes Disposal Group	26
1	2P6491	Oil Level Gauge Group	21

COOLING SYSTEM

1	2P661	Water Pump Group	30
1	2P6188	Water Lines Group	31
1	2P8164	Housing and Regulator Group	32
1	2P7740	Water Elbow Lines Group	32
1	2P7741	Water Pipe Lines Group	31

INTAKE AND EXHAUST SYSTEM

1	2P6840	Air Lines Group	33
1	2P6570	Exhaust Manifold Group	34
1	4N9585	Exhaust Manifold Fastener Group	34
1	3P138	Exhaust Pipe Group	35

FUEL SYSTEM

1	4N3303	Fuel Filter Group	52
1	4N3287	Fuel Priming Pump Group	52
1	6N277	Governor and Fuel Injection Pump Group	38
1	4N3374	Fuel Injection Lines Group	51
1	4N4510	Governor Cover Group	38

ELECTRICAL SYSTEM

1	5S8500	Glow Plug Group	64

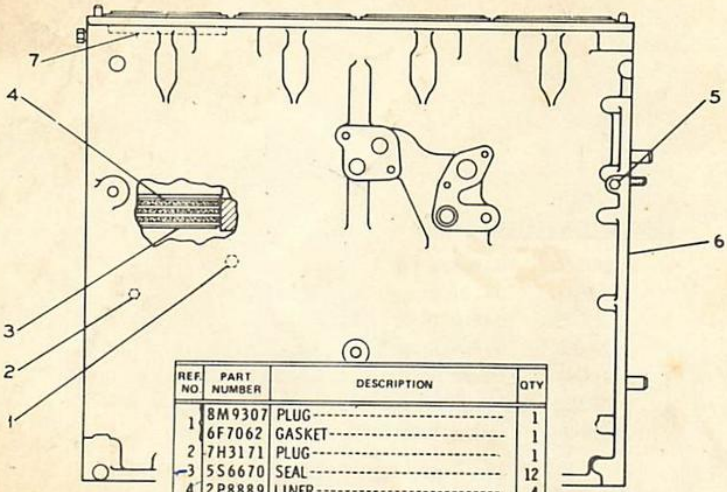

REF. NO.	PART NUMBER	DESCRIPTION	QTY
1	8M9307	PLUG	1
	6F7062	GASKET	1
2	7H3171	PLUG	1
3	5S6670	SEAL	12
4	2P8889	LINER	4
5	5M6214	PLUG	1
6	2P8774	BLOCK ASSEM. (Separate Illustration)	1
C 7	9L5854	BAND	4

C INDICATES CHANGE 205642

2P6540 CYLINDER BLOCK GROUP
2P8774 Block parts are shown on Page 7

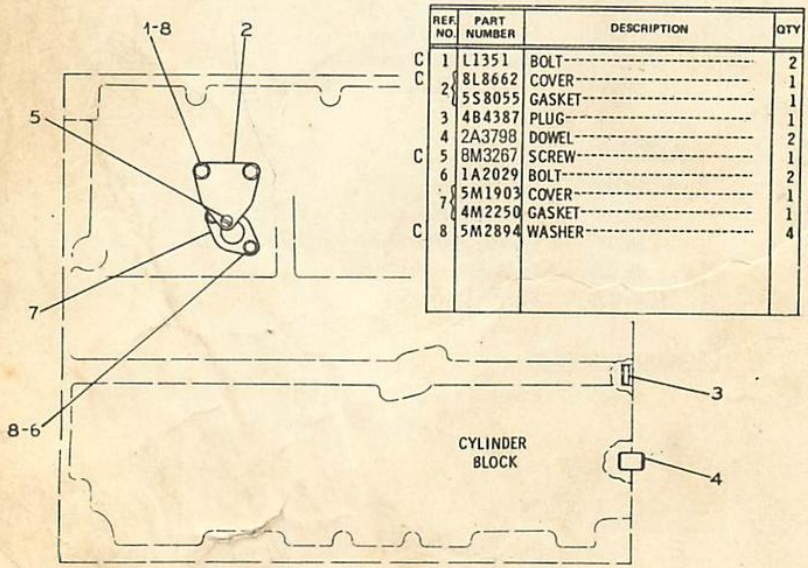

REF. NO.	PART NUMBER	DESCRIPTION	QTY
C 1	L1351	BOLT	2
C 2	8L8662	COVER	1
	5S8055	GASKET	1
3	4B4387	PLUG	1
4	2A3798	DOWEL	2
C 5	8M3267	SCREW	1
6	1A2029	BOLT	2
7	5M1903	COVER	1
	4M2250	GASKET	1
C 8	5M2894	WASHER	4

C INDICATES CHANGE SP1078

2Y1646 CYLINDER BLOCK COVER GROUP

TG 3304 · TG Jun 13
DINELA ou INDRETA

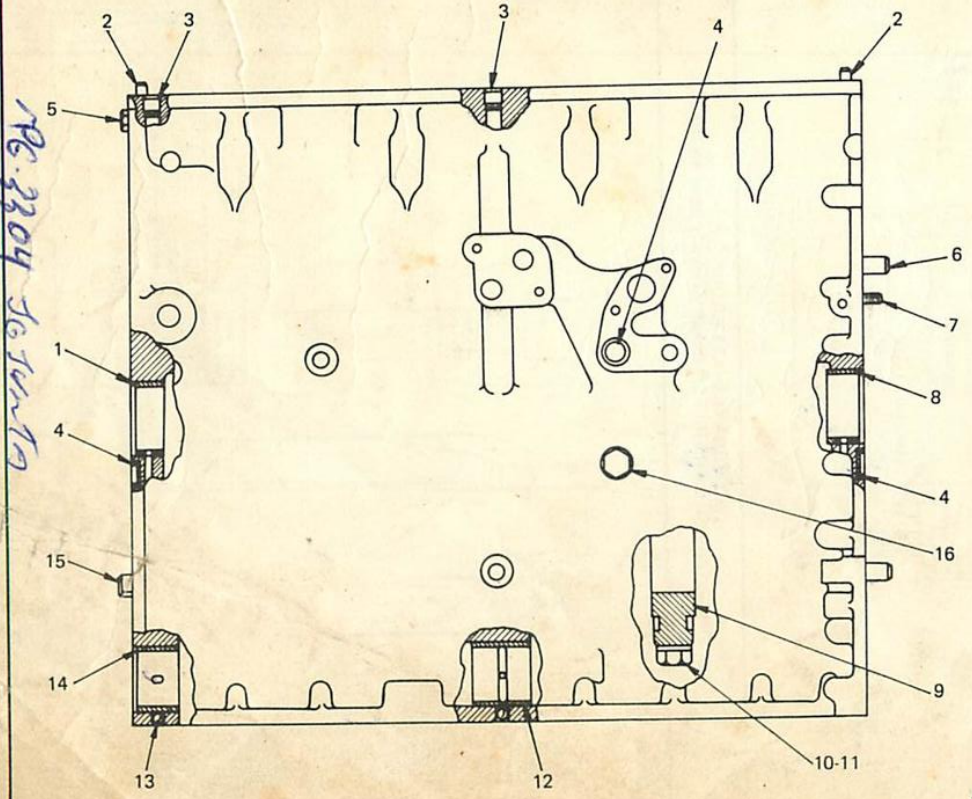

ITEM	PART Nº	DESCRIPTION	QTY.
1	7M4046	BEARING	2
2	8B1312	DOWEL	2
3	5B7652	DOWEL	2
4	4B5387	PLUG	3
5	5M6213	PLUG	1
6	8B6349	DOWEL	2
7	5S8462	STUD	1
8	9M5477	BEARING	1
9	1P2717	BEARING CAP	5
10	7S3224	BOLT	10
11	2S5658	WASHER	10
12	5S6420	BEARING	2
13	4B9782	BALL	5
14	5S6419	BEARING	4
15	2A3798	DOWEL	2
16	2B858	PLUG	1

SP298

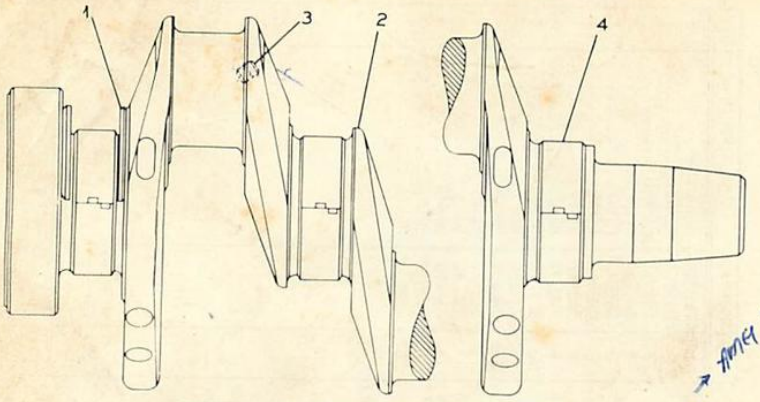

	REF NO.	PART NUMBER	DESCRIPTION	QTY
C	1	6N8940	PLATE	2
	2	4N7695	CRANKSHAFT ASSEM.	1
	3	9F2247	PLUG	4
	4	3S9730	BEARING	5

C INDICATES CHANGE 211892

2P6218 CRANKSHAFT GROUP
For Field Replacement of 4N7695 Crankshaft Assembly order 4N7692

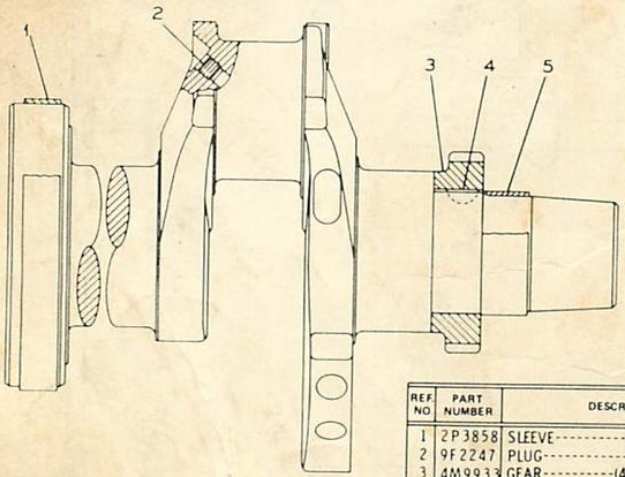

REF NO.	PART NUMBER	DESCRIPTION	QTY
1	2P3858	SLEEVE	1
2	9F2247	PLUG	4
3	4M9933	GEAR-----(40 teeth)-----	1
4	5H2671	KEY	1
5	2P3859	SLEEVE	1

GMG02327-FORM---------- 1
(Installing Crankshafts for Field Replacement)

155610

4N7692 CRANKSHAFT ASSEMBLY — Field Installation

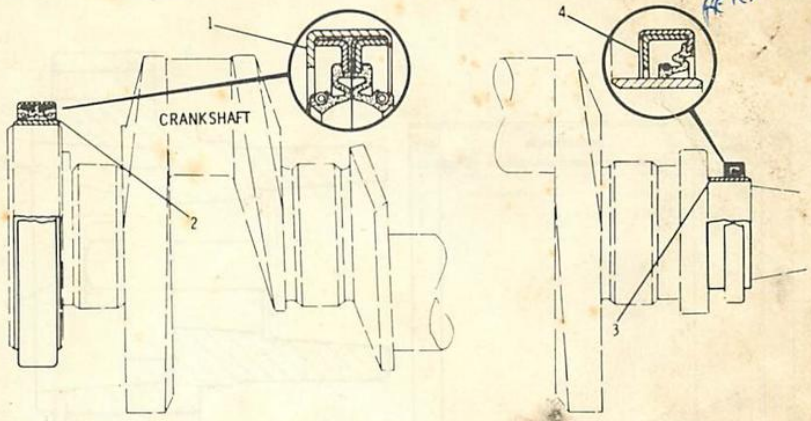

	REF NO	PART NUMBER	DESCRIPTION	QTY
C	1	6N8853	SEAL	1
	2	2P3858	SLEEVE	1
	3	2P3859	SLEEVE	1
	4	5S6296	SEAL	1

C INDICATES CHANGE 210718

2P6226 CRANKSHAFT SEAL GROUP

5	4S8881	Bearing--Main (.010 Undersize)
5	4S8883	Bearing--Main (.020 Undersize)
5	4S8885	Bearing--Main (.030 Undersize)

BEARINGS FOR REBORED CYLINDER BLOCK

5	6N3822	Bearing--Main (.020 Oversize and .010 Undersize)
5	6N3823	Bearing--Main (.020 Oversize)

CRANKSHAFT BEARINGS

REF. NO.	PART NUMBER	DESCRIPTION	QTY
1	2P1818	HUB	1
2	7B5163	BOLT	1
3	5S9948	WASHER	1

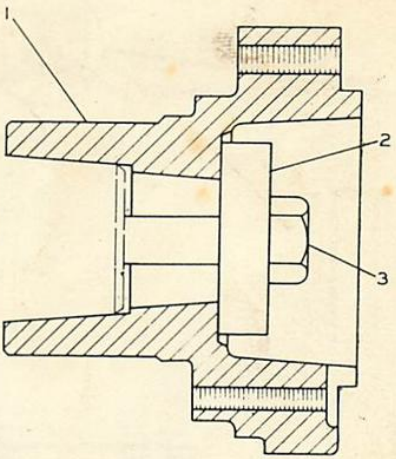

117253

2P8598 CRANKSHAFT HUB GROUP

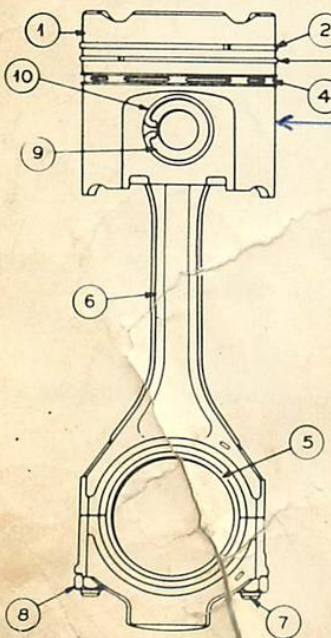

8W-3180 - pistão

REF. NO.	PART NUMBER	DESCRIPTION	QTY
1	4N4029	PISTON GROUP	1
2	7S8378	RING-(Top)	1
3	5S6750	RING-(Intermediate)	1
4	9S7788	RING-(Oil)	1
5	7M7821	BEARING-(Standard)	1
	2S502	BEARING-(.010" Undersize)	1
	2S503	BEARING-(.020" Undersize)	1
	7M7826	BEARING-(.030" Undersize)	1
6	5S6360	ROD ASSEM.	1
	7S9347	BEARING	1
7	1P9956	BOLT	2
8	5S6348	NUT	2
9	9H4016	PIN	1
10	9H4015	RETAINER	2
	7S9404	RING GROUP (Consists of complete set of Rings for one Piston)	1

Jogo de Anéis - 9S-3068

141606

4N4028 CONNECTING ROD AND PISTON GROUP – 6 Required

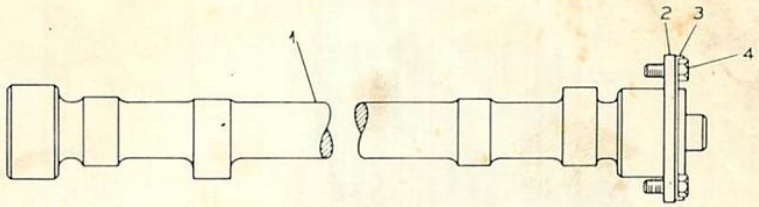

REF NO	PART NUMBER	DESCRIPTION	QTY
1	5S3971	CAMSHAFT	1
2	7S2204	WASHER	1
3	8S1491	LOCK	1
4	S509	BOLT	2

117197

2P6201 CAMSHAFT GROUP

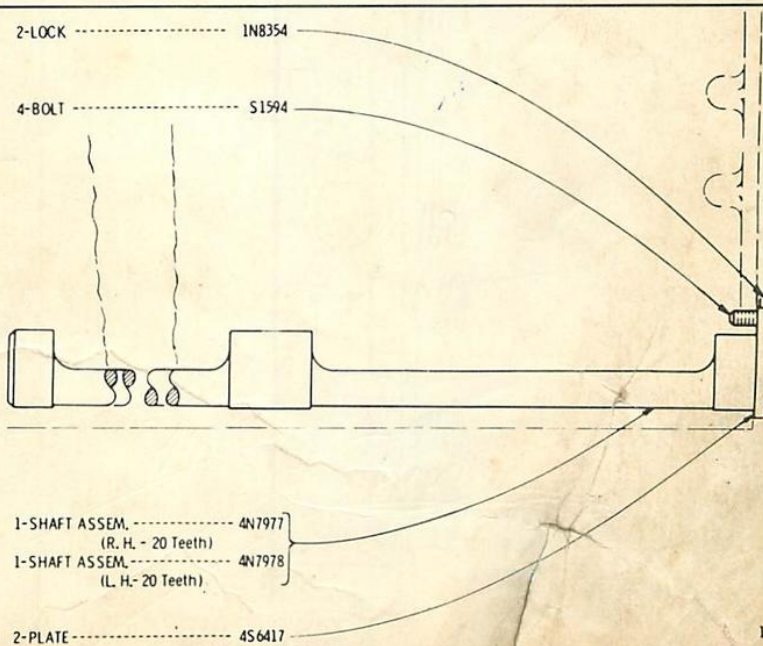

5S6425 BALANCER GROUP

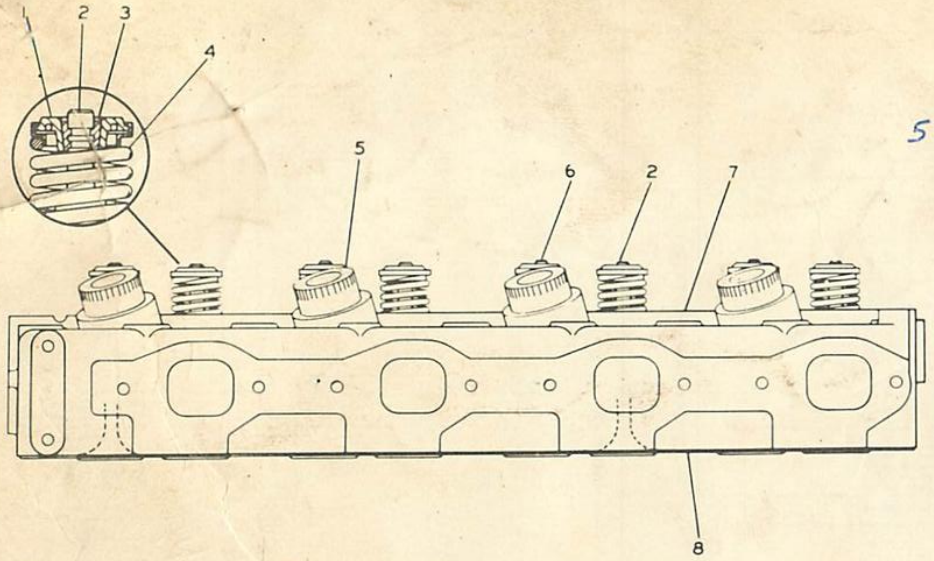

5 = 8S 3970 - Anti Gamme

	REF. NO	PART NUMBER	DESCRIPTION	QTY
	1	5S5874	ROTOCOIL	8
	2	5S6449	VALVE---(exhaust)	4
	3	2A4429	LOCK	16
	4	7S7144	SPRING	8
	5	5S6795	CHAMBER ASSEM.	4
	5	7S3206	SEAL	4
	5	5M2667	GASKET---2.928 mm(.194 in.) thick	4
	5	2S8959	GASKET---5.664 mm(.223 in.) thick	4
	5	2S8960	GASKET---6.299 mm(.248 in.) thick	4
	6	5S6452	VALVE---(intake)	4
C	7	6N8875	HEAD ASSEM. (Separate Illustration)	1
C	8	7N7386	GASKET	1

C INDICATES CHANGE

218800

X

2P6274 CYLINDER HEAD GROUP
6N8875 Head parts are shown on Page 13

AVANÇADO
JUNTA CABEÇOTE 7N 8082
FINA 7N 7544
PARAFUSOS 4N 8087
04 PÇ. 7N 8088

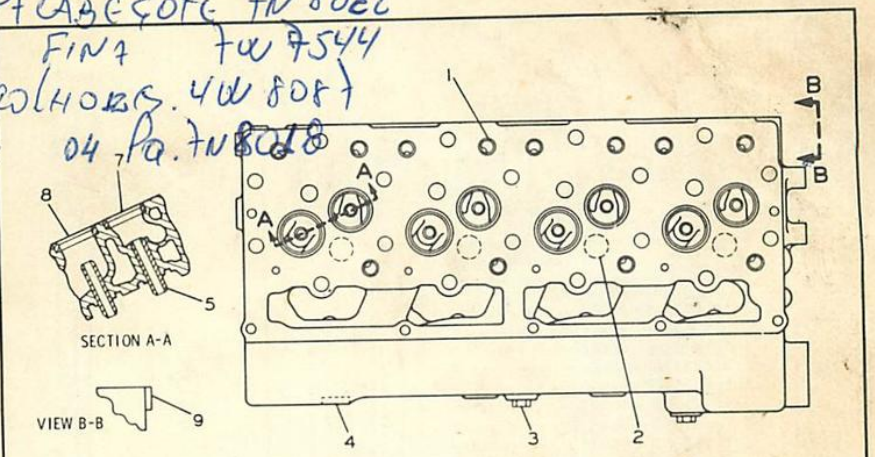

REF NO	PART NUMBER	DESCRIPTION	QTY
1	1S3062	DIRECTOR	12
2	3B623	PLUG	4
3	2B858	PLUG	3
4	3S8313	PLUG	4
5	2P1262	GUIDE	8
7	1P6837	INSERT---------(exhaust)-------	4
8	5S7218	INSERT---------(intake)---------	4
9	7N2597	SPACER	1

214856

4P 12G

6N8875 CYLINDER HEAD ASSEMBLY
Part of 2P6274 Cylinder Head shown on Page 12

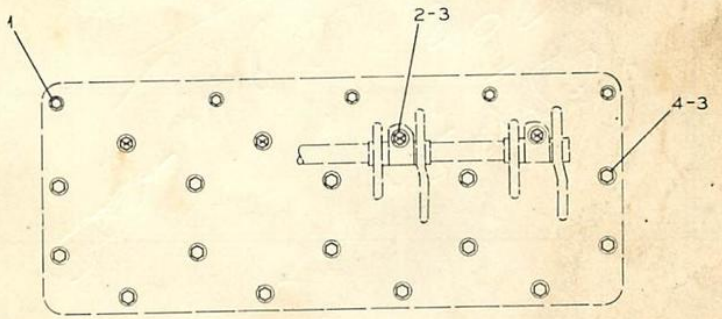

REF NO.	PART NUMBER	DESCRIPTION	QTY
1	1A5183	BOLT	5
	5B3850	WASHER	5
2	1B7709	BOLT---------(Location X)---------	4
3	2S736	WASHER	18
4	1D4595	BOLT	14

117252

2P6544 CYLINDER HEAD FASTENER GROUP

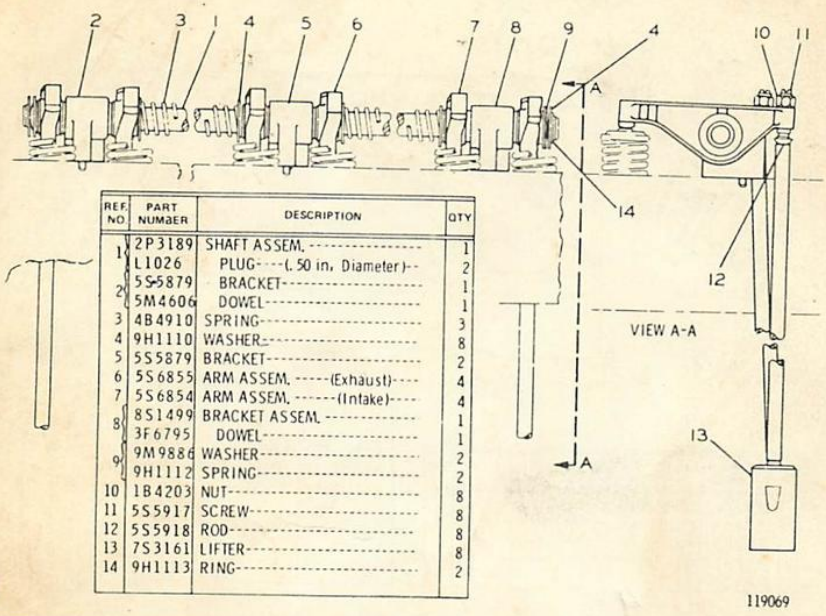

REF. NO.	PART NUMBER	DESCRIPTION	QTY
1	2P3189	SHAFT ASSEM.	1
	L1026	PLUG----(.50 in. Diameter)--	2
2	5S5879	BRACKET	1
	5M4606	DOWEL	1
3	4B4910	SPRING	3
4	9H1110	WASHER	8
5	5S5879	BRACKET	2
6	5S6855	ARM ASSEM. -----(Exhaust)----	4
7	5S6854	ARM ASSEM. -------(Intake)----	4
8	8S1499	BRACKET ASSEM.	1
	3F6795	DOWEL	1
9	9M9886	WASHER	2
	9H1112	SPRING	2
10	1B4203	NUT	8
11	5S5917	SCREW	8
12	5S5918	ROD	8
13	7S3161	LIFTER	8
14	9H1113	RING	2

2P6524 VALVE MECHANISM GROUP

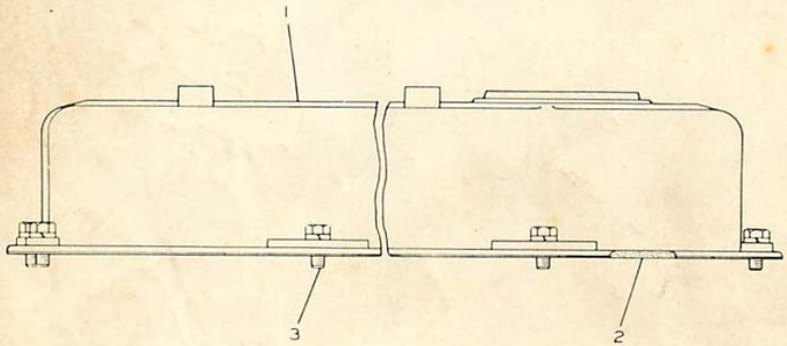

REF. NO	PART NUMBER	DESCRIPTION	QTY
1	2N3871	COVER ASSEM.	1
2	8S1606	GASKET	1
3	S1617	BOLT	11
	B4505	LOCKWASHER	11

8N-0264

117345

2P6514 VALVE MECHANISM COVER GROUP

REF. NO.	PART NUMBER	DESCRIPTION	QTY
1	5L4544	EYE	2

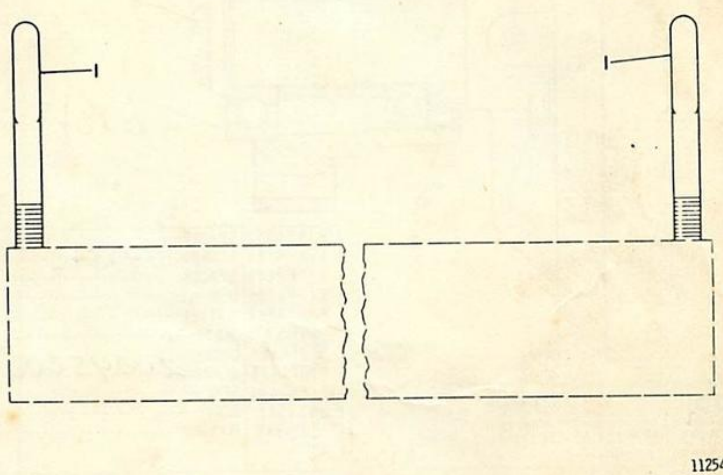

1P3840 ENGINE LIFTING GROUP

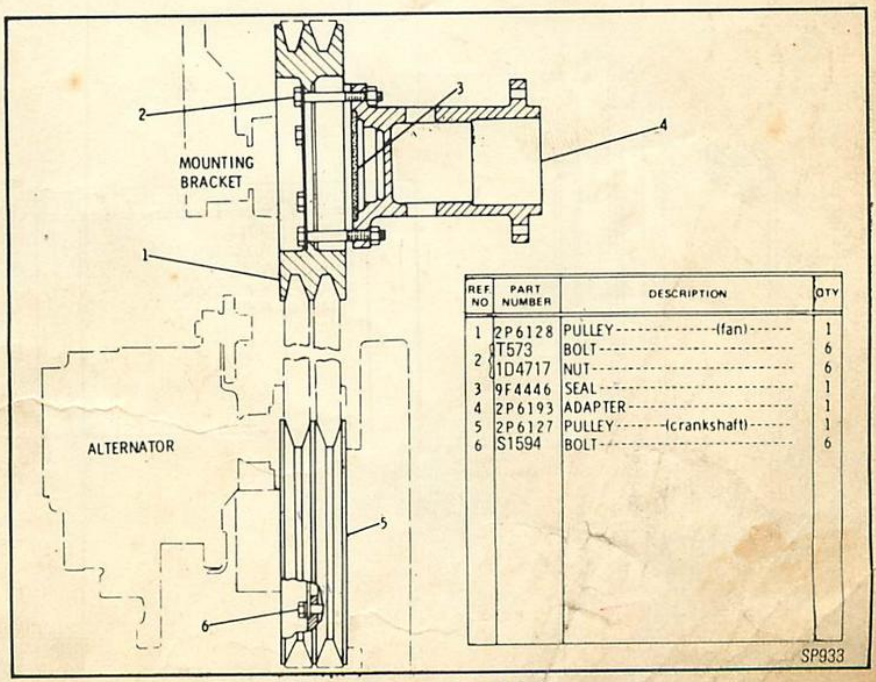

REF. NO.	PART NUMBER	DESCRIPTION	QTY
1	2P6128	PULLEY (fan)	1
2	1T573	BOLT	6
	1D4717	NUT	6
3	9F4446	SEAL	1
4	2P6193	ADAPTER	1
5	2P6127	PULLEY (crankshaft)	1
6	S1594	BOLT	6

2Y2942 PULLEY GROUP

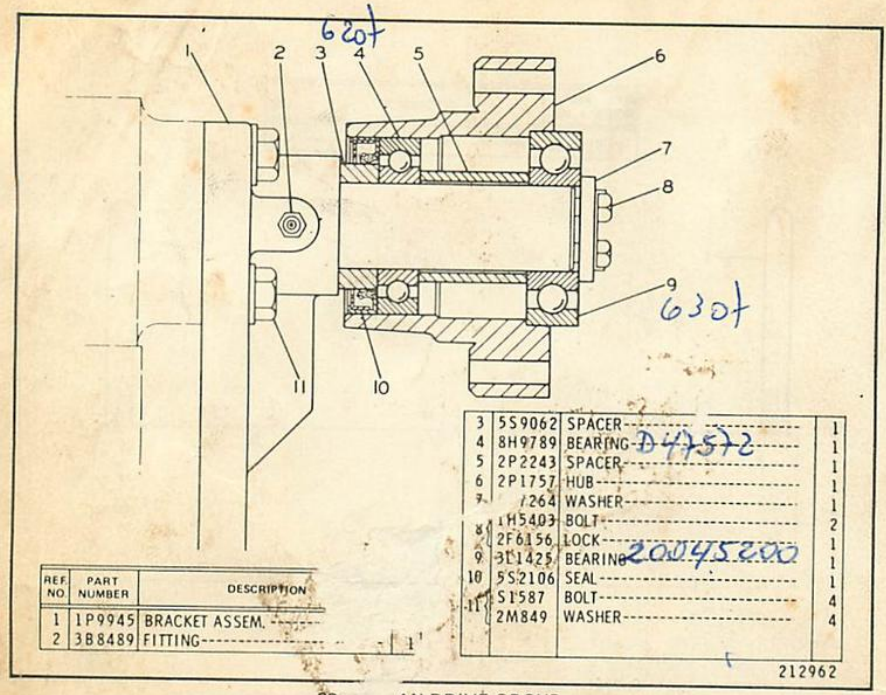

REF. NO	PART NUMBER	DESCRIPTION
1	1P9945	BRACKET ASSEM.
2	3B8489	FITTING

3	5S9062	SPACER	1
4	8H9789	BEARING	1
5	2P2243	SPACER	1
6	2P1757	HUB	1
7	/264	WASHER	1
8	1H5403	BOLT	2
	2F6156	LOCK	1
9	3L1425	BEARING	1
10	5S2106	SEAL	1
11	S1587	BOLT	4
	2M849	WASHER	4

2P AN DRIVE GROUP

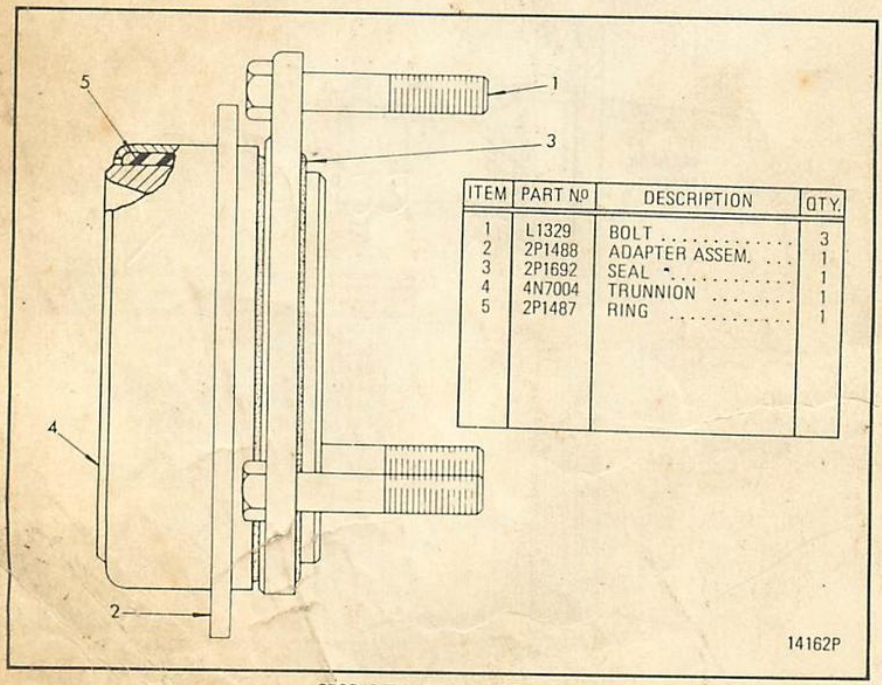

ITEM	PART No	DESCRIPTION	QTY.
1	L1329	BOLT	3
2	2P1488	ADAPTER ASSEM.	1
3	2P1692	SEAL	1
4	4N7004	TRUNNION	1
5	2P1487	RING	1

2P6246 TRUNNION GROUP

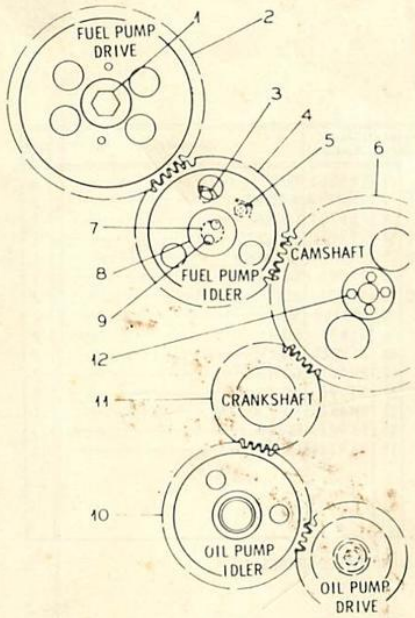

REF NO.	PART NUMBER	DESCRIPTION	QTY
1	5S1603	BOLT	1
	4N3371	WASHER	1
2	4N3330	GEAR (80 Teeth)	1
3	L1351	BOLT	2
4	5S7660	GEAR ASSEM (57 Teeth)	1
	5S7630	BEARING	1
5	5B9079	NUT	1
	5S7611	LOCK	1
6	5S3804	GEAR (80 Teeth)	1
7	5S7608	SHAFT	1
8	5S7612	PLATE	1
9	2H3755	BOLT	2
10	2P1172	GEAR ASSEM (60 Teeth)	1
	2P1168	BEARING	1
11	4M9933	GEAR (40 Teeth)	1
	5H2671	KEY	1
12	S1748	BOLT	4

207194

2P9642 FRONT TIMING GEAR GROUP

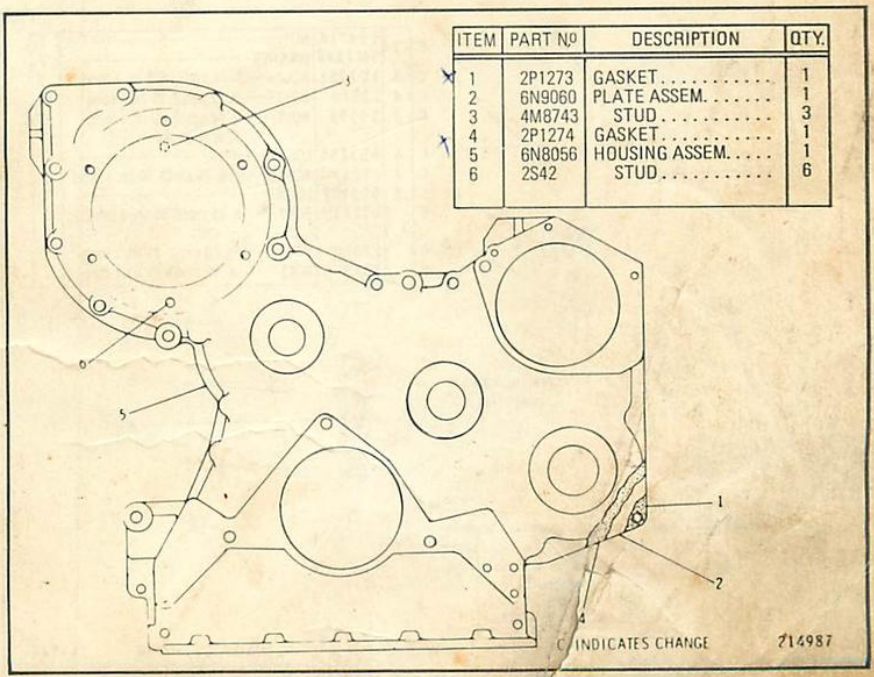

ITEM	PART Nº	DESCRIPTION	QTY.
1	2P1273	GASKET	1
2	6N9060	PLATE ASSEM.	1
3	4M8743	STUD	3
4	2P1274	GASKET	1
5	6N8056	HOUSING ASSEM.	1
6	2S42	STUD	6

2P9641 FRONT HOUSING GROUP

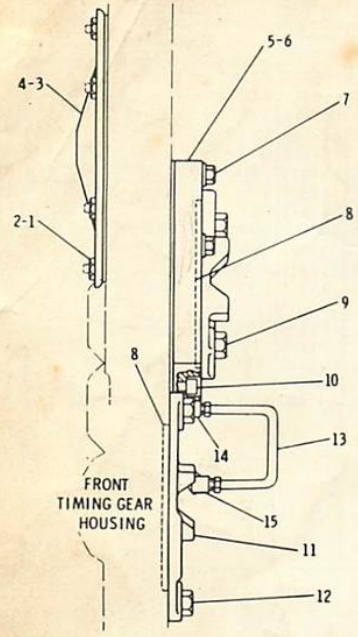

	REF. NO.	PART NUMBER	DESCRIPTION	QTY
	1	1B4203	NUT	6
C	2	5M2894	WASHER	8
	3	2P8701	COVER	1
C	4	2Y3451	GASKET	1
C	5	6N595	ADAPTER	1
	6	2P220	GASKET	1
C	7	1C2251	BOLT	2
	8	5F3106	SEAL	2
	9	S1625	BOLT	2
	10	2J5245	BOLT	1
	11	6N462	COVER	2
	12	S1566	BOLT	2
	13	6N444	TUBE ASSEM.	1
	14	5K9243	ELBOW	1
	15	5K9241	ELBOW	1

C INDICATES CHANGE

SP850

4N6508 FRONT HOUSING COVER GROUP

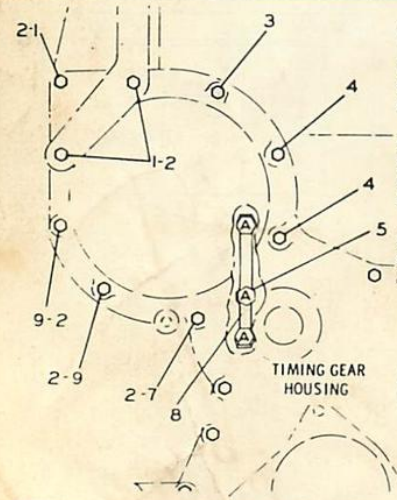

	REF. NO.	PART NUMBER	DESCRIPTION	QTY
C	1	T573	BOLT----6.99 cm(2.75 in.) long	3
			-OR-	
		L1143	BOLT----2.35 cm(2.50 in.) long	3

	REF. NO.	PART NUMBER	DESCRIPTION	QTY
C	2	1D4717	NUT	7
		5M2894	WASHER	7
C	3	1C2251	BOLT----4.76 cm(1.875 in.) long	2
C	4	L2070	BOLT----5.72 cm(2.25 in.) long	12
C	5	S1594	BOLT----2.54 cm(1.00 in.) long (Location A)	6
C	6	9S3188	LOCK	1
C	7	L1143	BOLT----6.35 cm(2.50 in.) long	2
C	8	9S3187	LOCK	1
C	9	L1143	BOLT----6.35 cm(2.50 in.) long	2
			-OR-	
C		L2070	BOLT----5.72 cm(2.25 in.) long	1
C		T573	BOLT----6.99 cm(2.75 in.) long	1

C INDICATES CHANGE

215146

2P6498 FRONT HOUSING FASTENER GROUP

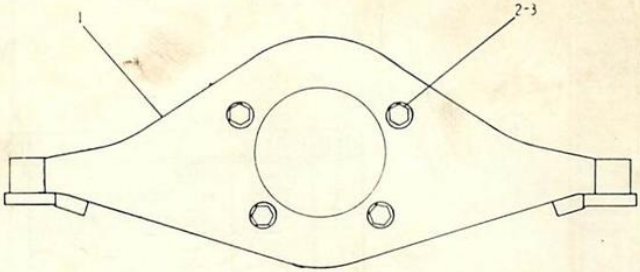

ITEM	PART Nº	DESCRIPTION	QTY.
1	2P1466	SUPPORT ASSEM.	1
C 2	S1585	BOLT	4
C 3	8M4791	WASHER.	4

C INDICATES CHANGE

SP1084

2P7753 SUPPORT GROUP

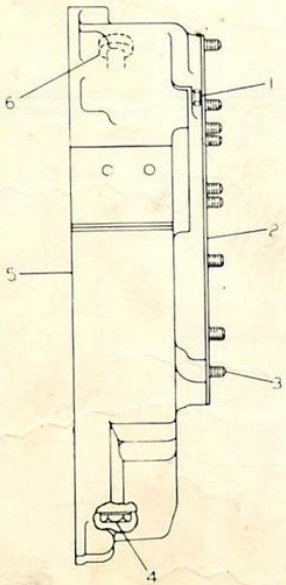

REF NO	PART NUMBER	DESCRIPTION	QTY
1	5M6213	PLUG	2
2	9H5921	GASKET	1
3	1A1460	BOLT	13
4	5B5946	PLUG	1
	1G2407	GASKET	1
5	6N8060	HOUSING	1
6	8S5820	BREATHER	1

SP1140

6N8075 FLYWHEEL HOUSING GROUP

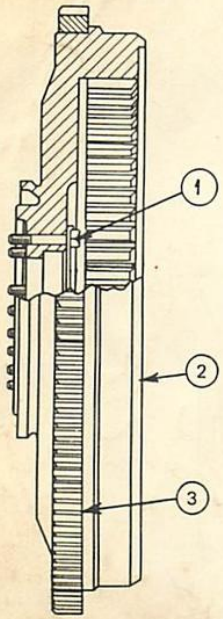

ITEM	PART No	DESCRIPTION	QTY.
1	S1585	BOLT	9
2	7S7829	FLYWHEEL ASSEM. ..	1
3	2S7037	GEAR(156 Teeth) ..	1

SP372

7S7878 FLYWHEEL GROUP

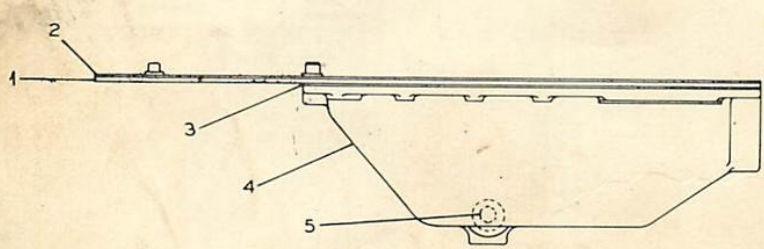

REF. NO.	PART NUMBER	DESCRIPTION	QTY
1	2P2351	PLATE ASSEM. ----------	1
2	5S6045	GASKET----------	1
3	8S1963	GASKET----------	1
4	2P7828	PAN----------	1
5	4B7739	PLUG----------	1

117331

2P6155 OIL PAN GROUP

cont

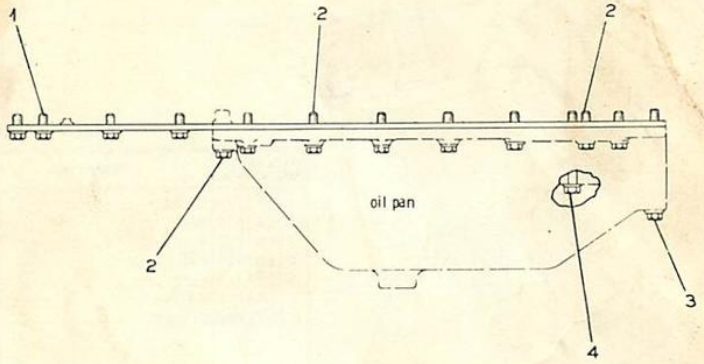

ITEM	PART No	DESCRIPTION	QTY.
1	2P3200	BOLT . . (.75 in. long) . .	12
2	2P3204	BOLT . (1.50 in. long). .	17
3	2P3213	BOLT . (4.50 in. long). .	5
4	2P1301	BOLT . (3.25 in. long). .	2

117333

2P6189 OIL PAN FASTENER GROUP

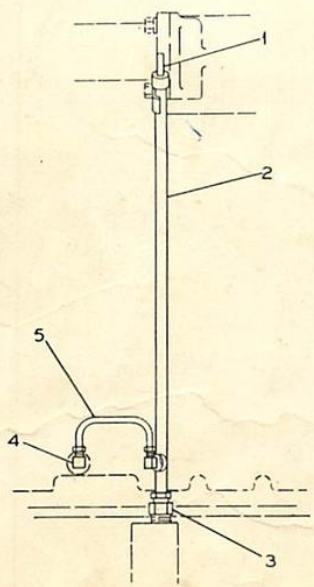

REF. NO.	PART NUMBER	DESCRIPTION	QTY
1	5S8115	GAUGE	1
2	2P2547	TUBE ASSEM.	1
3	8S1326	FITTING	1
	8F8998	NUT	1
4	5K9243	ELBOW	2
5	2P2697	TUBE ASSEM.	1

117328

2P6491 OIL LEVEL GAUGE GROUP

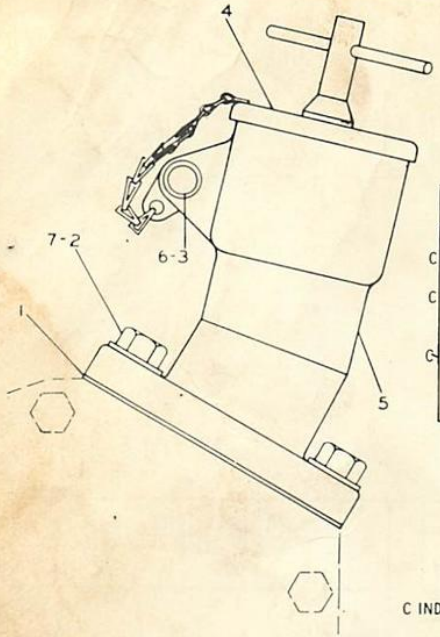

	REF NO	PART NUMBER	DESCRIPTION	QTY
	1	2P2720	GASKET	1
C	2	1A2029	BOLT	2
	3	9M5732	RIVET	1
C	4	6N2985	CAP ASSEM.	1
	5	2P2719	PIPE	1
	6	2A3211	WASHER	1
C	7	5M2894	WASHER	2

C INDICATES CHANGE 167624

2P6855 OIL FILLER GROUP

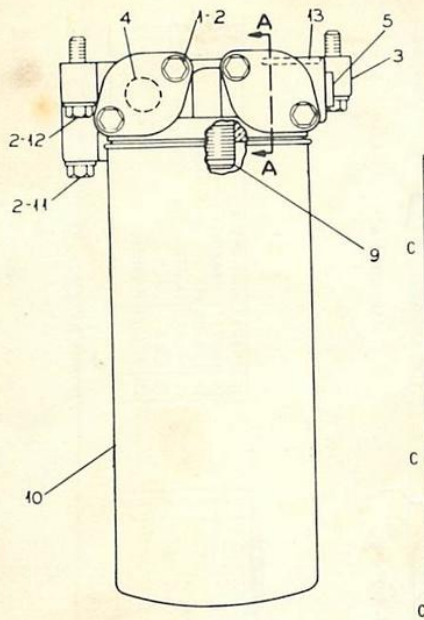

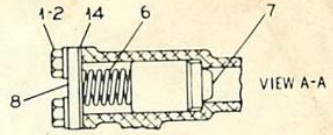

	REF NO	PART NUMBER	DESCRIPTION	QTY
	1	S1618	BOLT	4
	2	9M1974	WASHER	8
C	3	1P6448	BASE ASSEM. (Includes)	1
	4	1B5174	PLUG--1.91 cm(.75 in.) thread	3
	5	3L1850	PLUG--1.27 cm(.50 in.) thread	1
	6	8M3182	SPRING	1
	7	1P1367	PLUNGER	1
	8	6B830	COVER	1
	9	2P2537	STUD	2
	10	2P4004	FILTER ASSEM.	1
	11	1D4540	BOLT------6.99 cm(2.75 in.) long	1
	12	1A9579	BOLT------3.81 cm(1.50 in.) long	1
C	13	8M4332	SEAL	3
	14	4N8207	GASKET	2

C INDICATES CHANGE 159393

2P6525 OIL FILTER GROUP

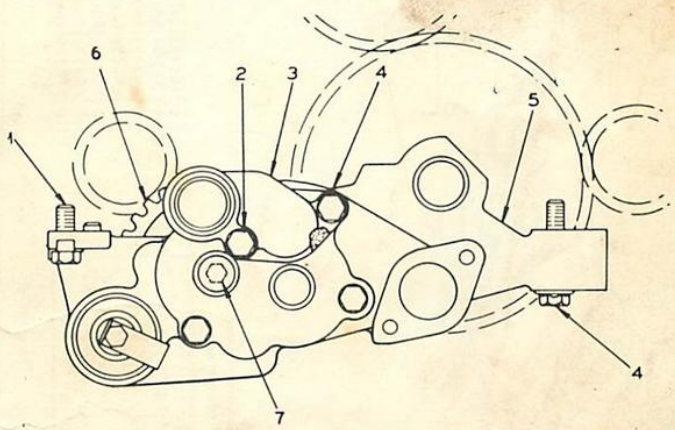

REF NO	PART NUMBER	DESCRIPTION	QTY
1	1A2029	BOLT	2
	8M7587	LOCK	2
2	2P3210	BOLT	1
3	4N5353	ELBOW	1
	2P8746	GASKET	1
4	2P3206	BOLT	3
5	2P1785	PUMP GROUP (Separate Illustration)	1
6	8S497	GEAR--------(40 teeth)	1
	8M5599	KEY	1
7	S1590	BOLT	1
	1P7346	WASHER	1

206005

2P1784 OIL PUMP GROUP
2P1785 Pump parts are shown on Page 24

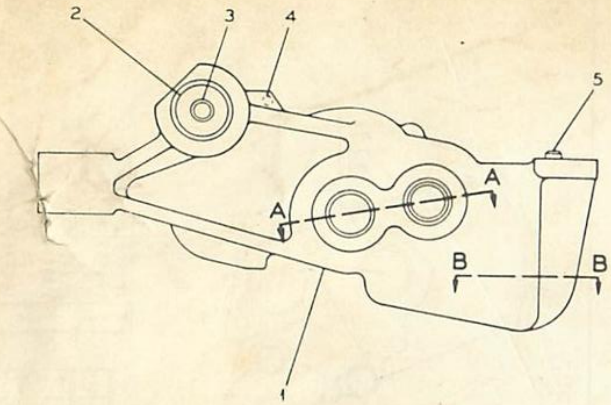

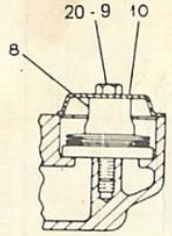

SECTION B-B

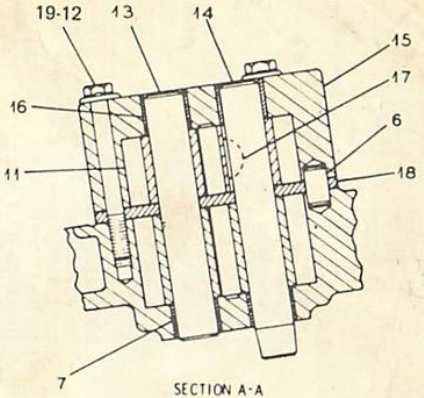

SECTION A-A

REF NO	PART NUMBER	DESCRIPTION	QTY
1	2P685	BODY ASSEM.	1
2	2P1170	SHAFT ASSEM.	1
3	6F7172	DOWEL	1
4	4B9880	BALL	1
5	1F1006	DOWEL	1
6	1M3735	DOWEL	2
7	8S6511	BEARING	2

	8	4N8385	VALVE ASSEM.	1
C	9	2B2694	BOLT	1
	10	4N3732	COVER	1
	11	6N1036	GEAR (8 Teeth)	2
	12	T65	BOLT	3
	13	8S493	SHAFT ASSEM.	1
	14	2P6245	SHAFT ASSEM.	1

	15	4N4055	BODY ASSEM.	1
	16	8S6511	BEARING	2
	17	1B8709	KEY	1
	18	2P1781	SPACER	1
	19	L364	LOCK	3
C	20	9M1974	WASHER	1

C INDICATES CHANGE

SP1135

2P1785 OIL PUMP GROUP
Part of 2P1784 Oil Pump shown on Page 23

2P6513 OIL LINES GROUP

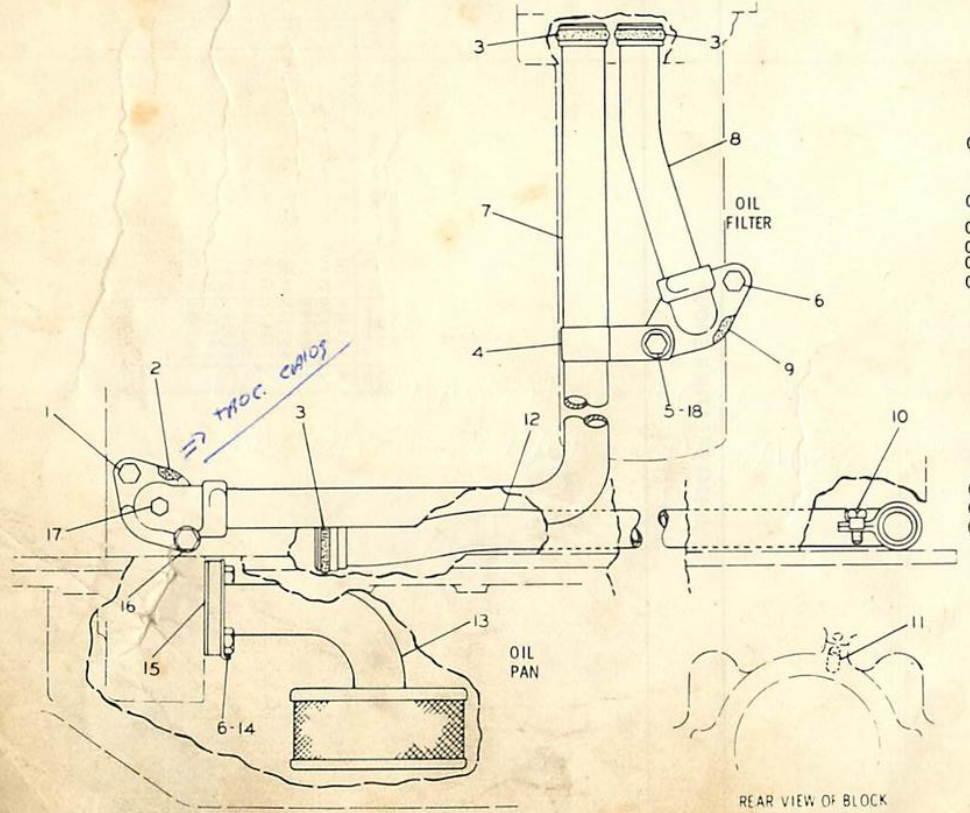

	REF. NO.	PART NUMBER	DESCRIPTION	QTY
C	1	1A2029	BOLT	1
	2	2M5407	GASKET	1
	3	9M4849	SEAL	3
C	4	4L3641	CLIP	1
C	5	S1571	BOLT	1
C		5M2894	WASHER	1
C	6	S1594	BOLT	3
C	7	6N9164	TUBE ASSEM.	1
	8	2P2460	TUBE ASSEM.	1
	9	7F7590	GASKET	1
	10	T102	BOLT	1
		L364	LOCK	1
	11	7M4593	PLUG	4
	12	2P744	TUBE ASSEM.	1
	13	2P1776	BELL ASSEM.	1
	14	S1594	BOLT	2
		8S8874	LOCK	1
	15	8M904	GASKET	1
C	16	L2070	BOLT	1
C	17	5M6213	PLUG	1
C	18	6H7127	SPACER	1

C INDICATES CHANGE

214978

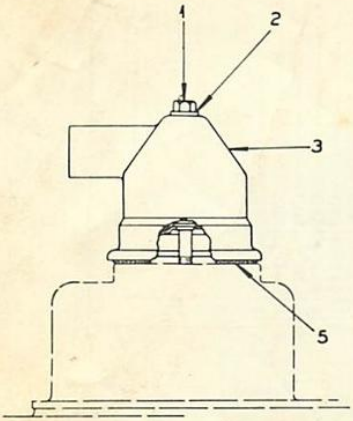

REF. NO.	PART NUMBER	DESCRIPTION	QTY
1	3H3243	BOLT	1
2	4K9890	WASHER	1
3	8S248	BREATHER ASSEM.	1
5	6L5359	SEAL	1

204118

1P4244 BREATHER GROUP

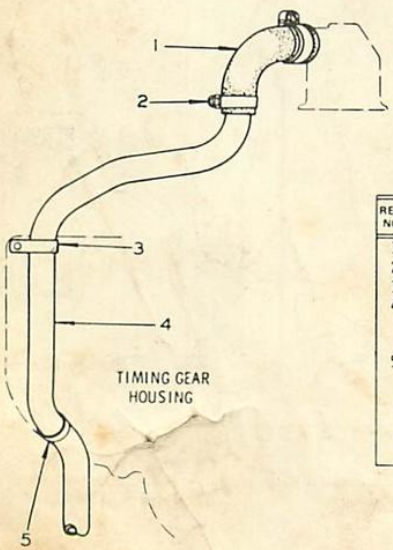

REF. NO	PART NUMBER	DESCRIPTION	QTY
1	4N3326	HOSE	1
2	9M2904	CLAMP	2
3	8M8788	CLIP	1
4	4N3328	TUBE	1
	T386	CLIP (small)	1
	6N1369	CLIP (large)	1
5	L1351	BOLT	1
	1D4717	NUT	1
	5M2894	WASHER	2

202066

4N3325 FUMES DISPOSAL GROUP

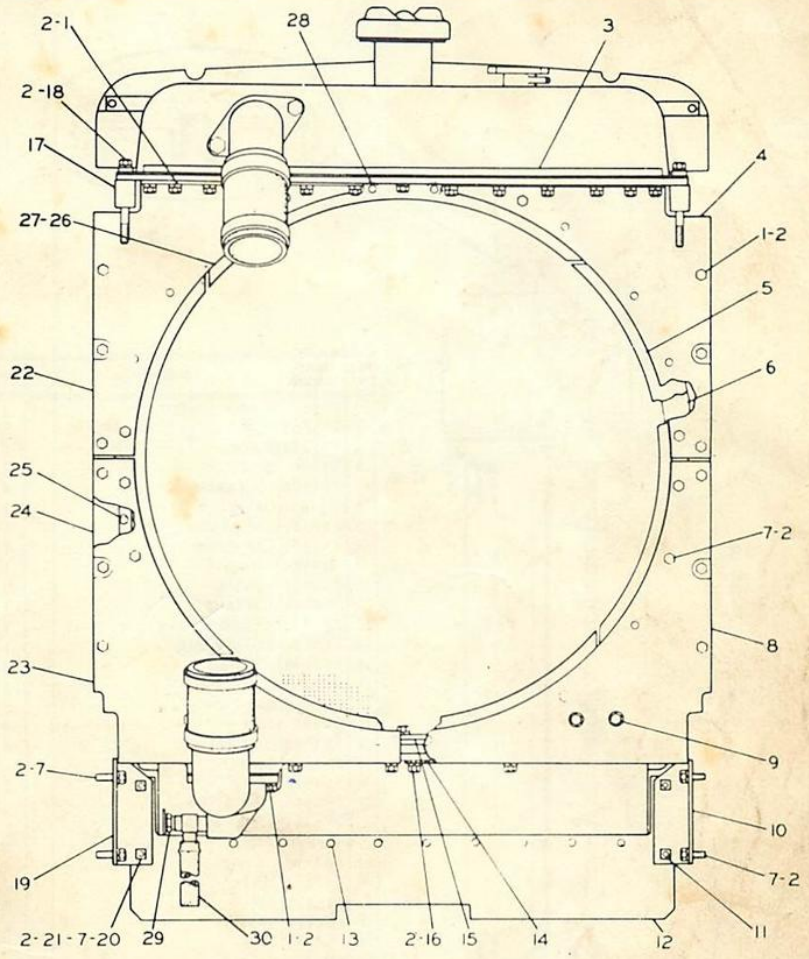

	REF. NO.	PART NUMBER	DESCRIPTION	QTY
	1	1A2029	BOLT	27
C	2	3B4506	LOCKWASHER	55
	3	3S9565	STRIP	1
	4	2P3247	SHIELD	1
	5	2P3248	BAFFLE	3
	6	1P1399	STRIP ASSEM.	3
		9F2978	NUT	6
	7	L1351	BOLT	20
	8	2P3246	SHIELD	1
C	9	S1571	BOLT	4
C		5M2894	WASHER	4
	10	2P3755	BRACKET ASSEM. -----(R. H.)---	1
	11	9F2978	NUT---------(Weld)----------	2
	12	2P3753	BAFFLE ASSEM. -----(Bottom)----	1
	13	6B4594	RIVET	10
	14	7S4117	STRIP	1
	15	5S6138	STRIP	2
	16	S509	BOLT	4
	17	5S6353	BLOCK	2
	18	8S9191	BOLT	4
	19	2P3754	BRACKET ASSEM. -----(L. H.)---	1
	20	9F2978	NUT---------(Weld)----------	2
	21	4B4278	WASHER	4
	22	2P3245	SHIELD	1
	23	2P3244	SHIELD	1
	24	1P1397	BAFFLE ASSEM. -----(L. H.)-----	1
		9F2978	NUT---------(weld)----------	6
	25	6B4594	RIVET	8
	26	1P1380	BAFFLE ASSEM. ----(Upper)-----	1
	27	9F2978	NUT---------(Weld)----------	4
	28	6B4594	RIVET	2
		8H5305	WASHER	2
	29	8F8151	COCK	1
▲	30	5P767	HOSE----------45.7 cm(18 in.)	

C INDICATES CHANGE

▲ ORDER BY THE CENTIMETRE

215144

2P8182 RADIATOR GROUP – Rear View

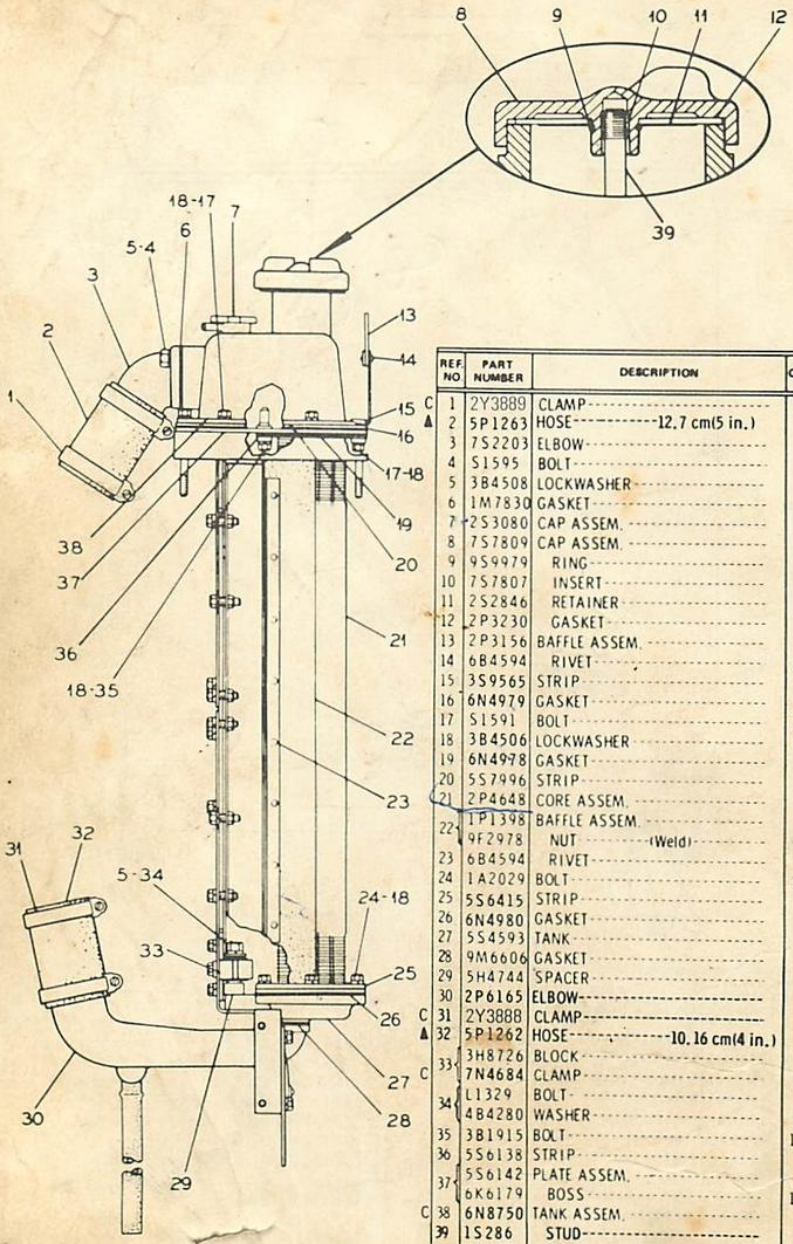

REF NO		PART NUMBER	DESCRIPTION	QTY
	C	1	2Y3889	CLAMP	2
	▲	2	5P1263	HOSE----------12.7 cm(5 in.)	
		3	7S2203	ELBOW	1
		4	S1595	BOLT	2
		5	3B4508	LOCKWASHER	4
		6	1M7830	GASKET	1
		7	2S3080	CAP ASSEM.	1
		8	7S7809	CAP ASSEM.	1
		9	9S9979	RING	1
		10	7S7807	INSERT	1
		11	2S2846	RETAINER	1
		12	2P3230	GASKET	1
		13	2P3156	BAFFLE ASSEM.	1
		14	6B4594	RIVET	13
		15	3S9565	STRIP	1
		16	6N4979	GASKET	1
		17	S1591	BOLT	19
		18	3B4506	LOCKWASHER	64
		19	6N4978	GASKET	1
		20	5S7996	STRIP	2
		21	2P4648	CORE ASSEM.	1
		22	1P1398	BAFFLE ASSEM.	1
			9F2978	NUT (Weld)	6
		23	6B4594	RIVET	8
		24	1A2029	BOLT	32
		25	5S6415	STRIP	2
		26	6N4980	GASKET	1
		27	5S4593	TANK	1
		28	9M6606	GASKET	1
		29	5H4744	SPACER	2
		30	2P6165	ELBOW	1
	C	31	2Y3888	CLAMP	2
	▲	32	5P1262	HOSE----------10.16 cm(4 in.)	
		33	3H8726	BLOCK	2
	C		7N4684	CLAMP	2
		34	L1329	BOLT	2
			4B4280	WASHER	2
		35	3B1915	BOLT	13
		36	5S6138	STRIP	2
		37	5S6142	PLATE ASSEM.	1
			6K6179	BOSS	18
	C	38	6N8750	TANK ASSEM.	1
		39	1S286	STUD	1

▲ ORDER BY THE CENTIMETRE
C INDICATES CHANGE

SP1068

2P8182 RADIATOR GROUP — Side View

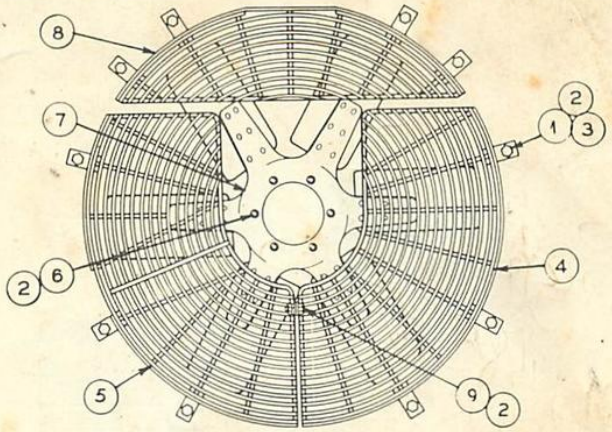

REF. NO.	PART NUMBER	DESCRIPTION	QTY
1	S1588	BOLT	10
2	3B4506	LOCKWASHER	17
3	4B4278	WASHER	10
4	2P4332	GUARD ASSEM. (R.H.)	1
5	2P4333	GUARD ASSEM. (L.H.)	1
6	1A2029	BOLT	6
7	7S542	SPIDER ASSEM.	1
8	2P4331	GUARD ASSEM.	1
9	S509	BOLT	1

115029

2P4602 BLOWER FAN AND GUARD GROUP
Note: 1P8493 Reversible Fan Assembly and 7S548 Suction Fan Spider Assembly is available

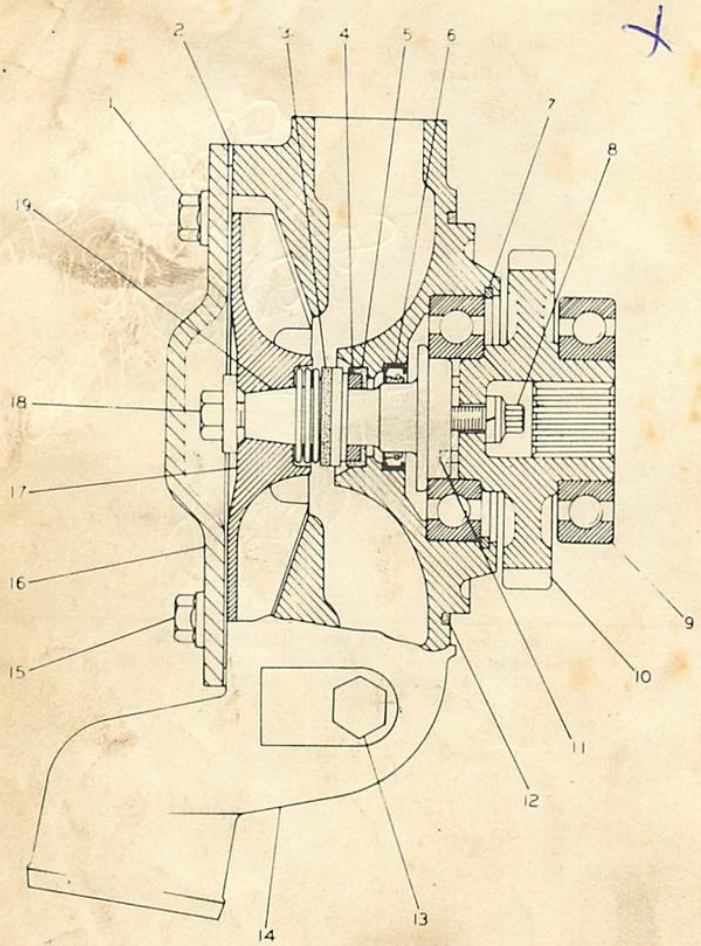

REF NO	PART NUMBER	DESCRIPTION	QTY
	1 2P3200	BOLT	2
	2 2P405	GASKET	1
C	3 4N6556	SEAL ASSEM.	1
	4 8S7762	RING	1
	5 8S8821	SEAL	1
	6 8H9520	SEAL	1
▲	7 1K6985	RETAINER	1
C▲	8 5P76	BOLT	1
▲	8 3B4506	LOCKWASHER	1
▲	9 6H3957	BEARING 6208-425842	2
	10 2P659	GEAR ASSEM. (40 teeth)	1
	11 2L5843	PIN	2

C6N9604-REBUILD KIT----------1
(Consists of parts marked ▲)

	12 5F3106	SEAL	1
▲	13 5M6213	PLUG	1
	14 2P671	HOUSING	1
	15 2P7557	BOLT---------9.53 cm(3.75 in.) long	2
		-OR-	
	15 8S9191	BOLT----------10.16 cm(4 in.) long	2
	5M2894	WASHER	2
	16 2P404	COVER	1
▲	17 1P9952	IMPELLER	1
▲	4L6454	BOLT	1
▲	18 9M6527	WASHER	1
▲	19 1P9929	SHAFT	1

C INDICATES CHANGE 209424

2P661 WATER PUMP GROUP

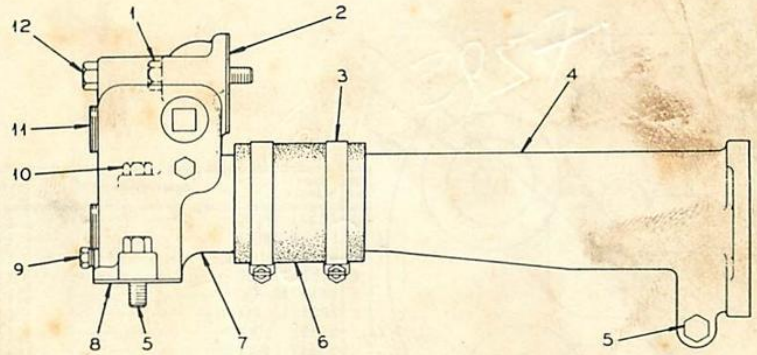

	REF. NO.	PART NUMBER	DESCRIPTION	QTY
	1	2P3211	BOLT	1
	2	2P6132	GASKET	1
C	3	2Y3029	CLAMP 7.5 MM	2
	4	2P2511	PIPE	1
	5	2P3203	BOLT	2
C ▲	6	5P1260	HOSE 7.62 cm (3 in) → 2 3/4 11 cm 14460 B2670	1
	7	2P6117	ELBOW	1
	8	2P406	GASKET	1
	9	5M6213	PLUG	2
	10	2P3210	BOLT	1
	11	1B5174	PLUG	3
	12	2P3206	BOLT	1

▲ ORDER BY THE CENTIMETRE SP627

C INDICATES CHANGE

2P6188 WATER LINES GROUP

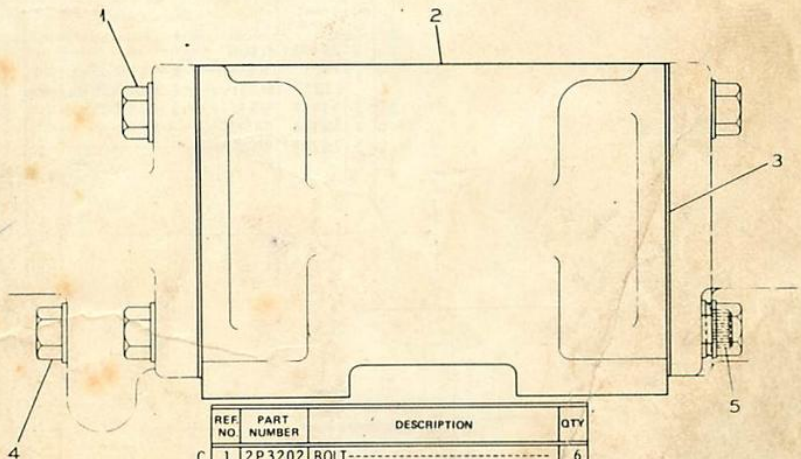

	REF. NO.	PART NUMBER	DESCRIPTION	QTY
	1	2P3202	BOLT	6
	2	9S3206	PIPE	1
	3	5S6051	GASKET	2
	4	2P3207	BOLT	1
	5	2P3202	BOLT (1.125 in. long)	1
C	5	2H3931 AND CL -OR-		2
		1T765	BOLT (1.00 in. long)	1

C INDICATES CHANGE

200722

2P7741 WATER LINES GROUP — Pipe

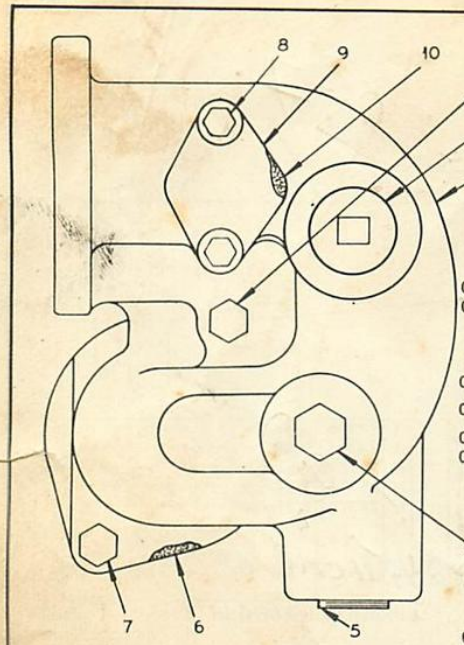

	REF NO	PART NUMBER	DESCRIPTION	QTY
	1	3B551	PLUG	1
C	2	L1352	BOLT	1
C	3	6N122	ELBOW	1
	4	3J5390	PLUG	1
	5	1B5174	PLUG	1
	6	2P2516	GASKET	1
C	7	S1591	BOLT	1
C	8	S1617	BOLT	2
		9M1974	WASHER	2
C	9	4N3840	COVER	1
C	10	4N3841	GASKET	1

C INDICATES CHANGE 202691

2P7740 WATER LINES GROUP – Elbow

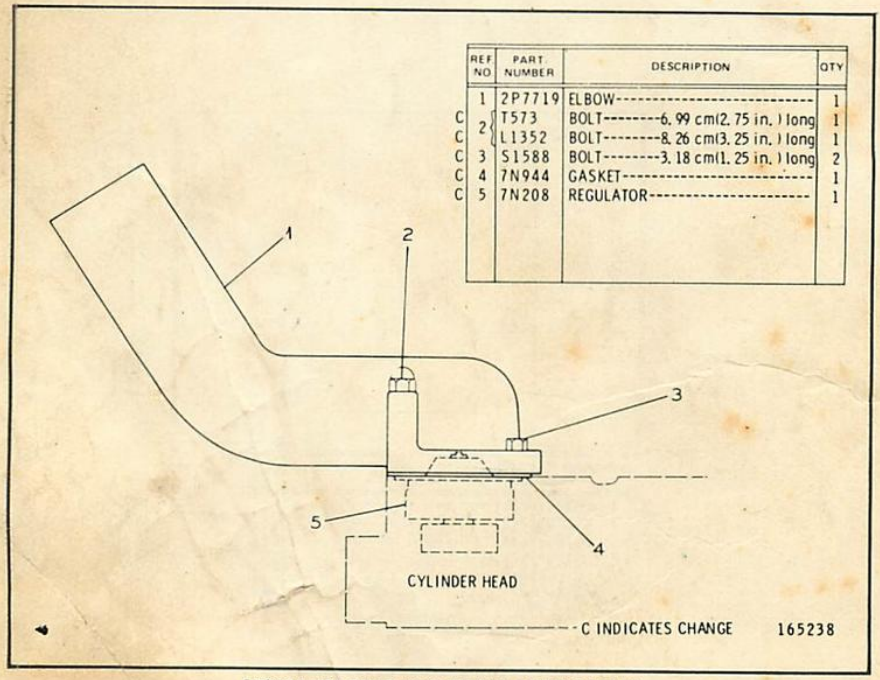

	REF NO	PART NUMBER	DESCRIPTION	QTY
	1	2P7719	ELBOW	1
C	2	T573	BOLT--------6.99 cm(2.75 in.) long	1
C		L1352	BOLT--------8.26 cm(3.25 in.) long	1
C	3	S1588	BOLT--------3.18 cm(1.25 in.) long	2
C	4	7N944	GASKET	1
C	5	7N208	REGULATOR	1

C INDICATES CHANGE 165238

2P8164 HOUSING AND REGULATOR GROUP

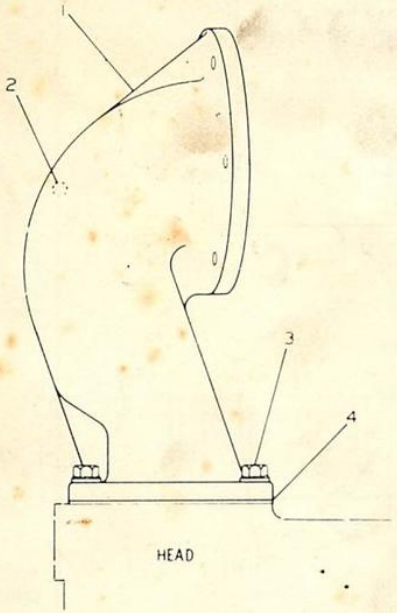

REF NO	PART NUMBER	DESCRIPTION	QTY
1	7S2243	PIPE ASSEM.	1
2	7M1674	ELEMENT	1
3	2P3202	BOLT	4
4	5S6735	GASKET	1

117190

2P6840 AIR LINES GROUP

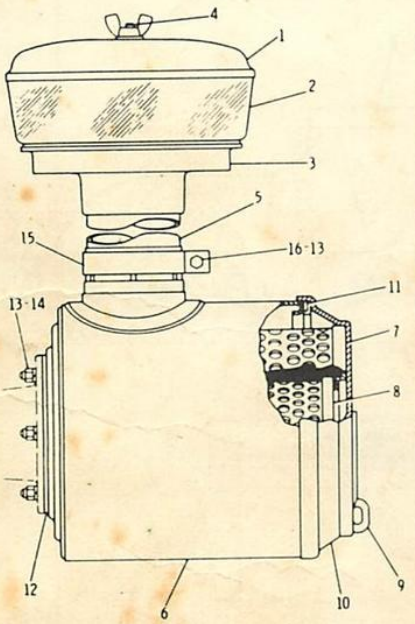

REF NO	PART NUMBER	DESCRIPTION	QTY
1	4M310	PRECLEANER ASSEM. (Includes)	1
	9M9439	COVER ASSEM.	1
2	1M7250	BODY	1
3	4N8945	BASE ASSEM. (Includes)	1
4	1S5163	BOLT	1
5	6N8755	PIPE	1
6	2S1289	AIR CLEANER GROUP (Includes)	1
7	4M8047	ELEMENT-(primary)	1
8	2S1285	ELEMENT-(secondary) (Includes)	1
	4M1485	GASKET	1
9	9M3695	ROD ASSEM.	2
10	9M4894	CUP ASSEM. (Includes)	1
11	9M8511	GASKET	1
12	4M1485	GASKET	1
13	1D4717	NUT	7
14	3B4506	LOCKWASHER	6
15	4F4974	CLAMP	1
16	S1591	BOLT	1

214995

6N8756 AIR CLEANER GROUP

	REF NO	PART NUMBER	DESCRIPTION	QTY
	1	1M7643	SPACER	1
	2	2M2488	STUD	2
		5M2894	WASHER	2
C	3	3M496	STUD	6
	4	1B5355	NUT	8
C	5	2Y3959	SHIELD	1
	6	9M6527	WASHER	1
	7	1B4971	SPACER	1
	8	8M7145	WASHER	7

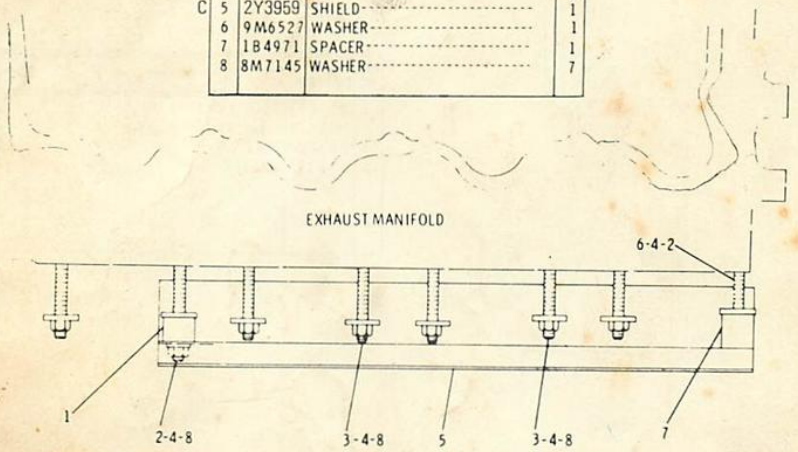

C INDICATES CHANGE

SP1082

4N9585 EXHAUST MANIFOLD FASTENER GROUP

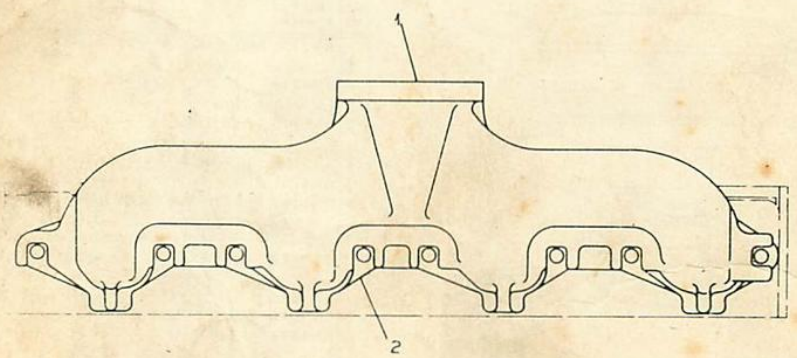

REF NO	PART NUMBER	DESCRIPTION	QTY
1	9S2356	MANIFOLD	1
2	8S8258	GASKET	4

117198

2P6570 EXHAUST MANIFOLD GROUP

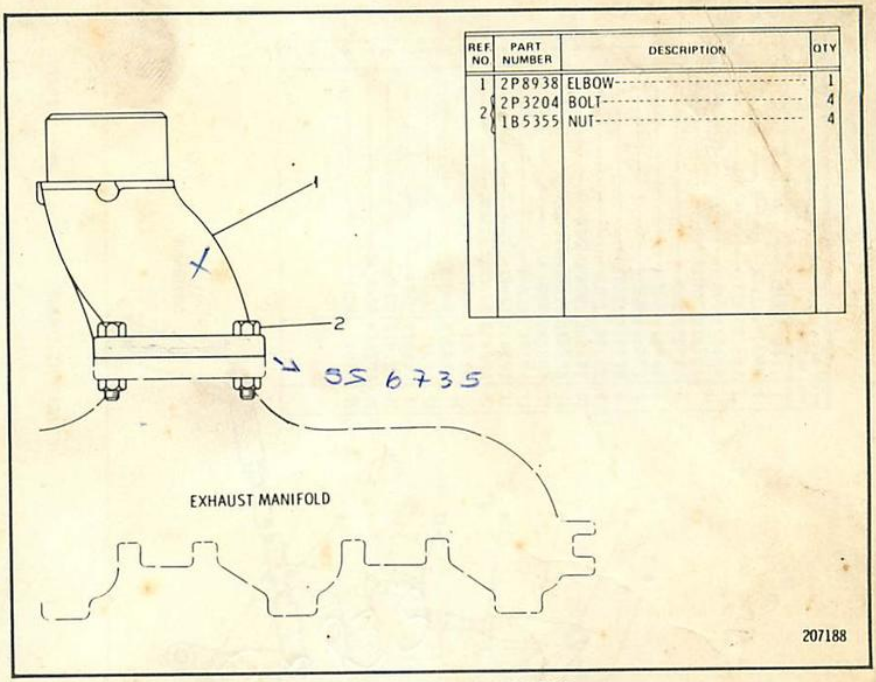

3P138 EXHAUST PIPE GROUP

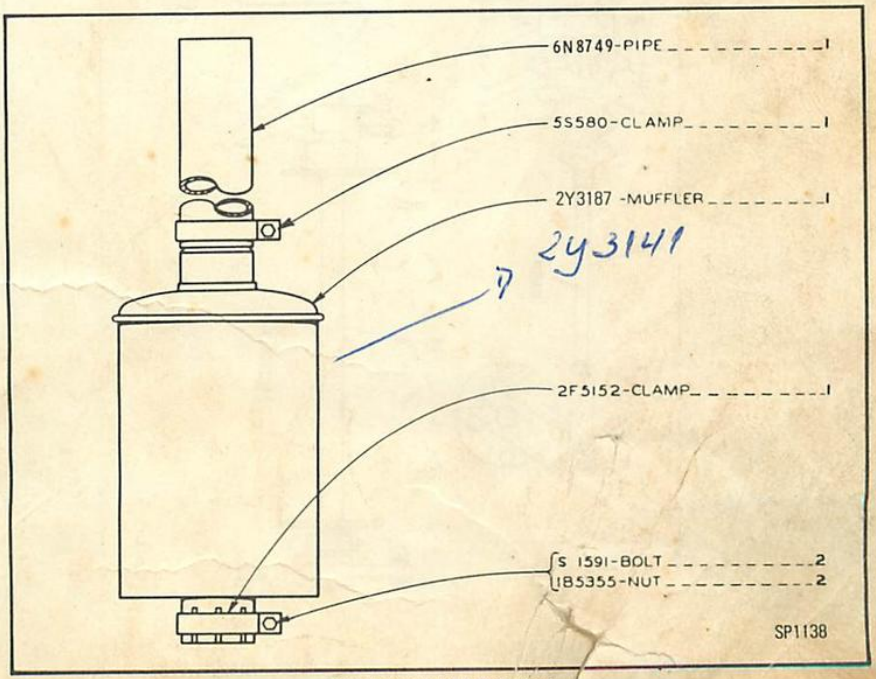

6N8754 MUFFLER GROUP

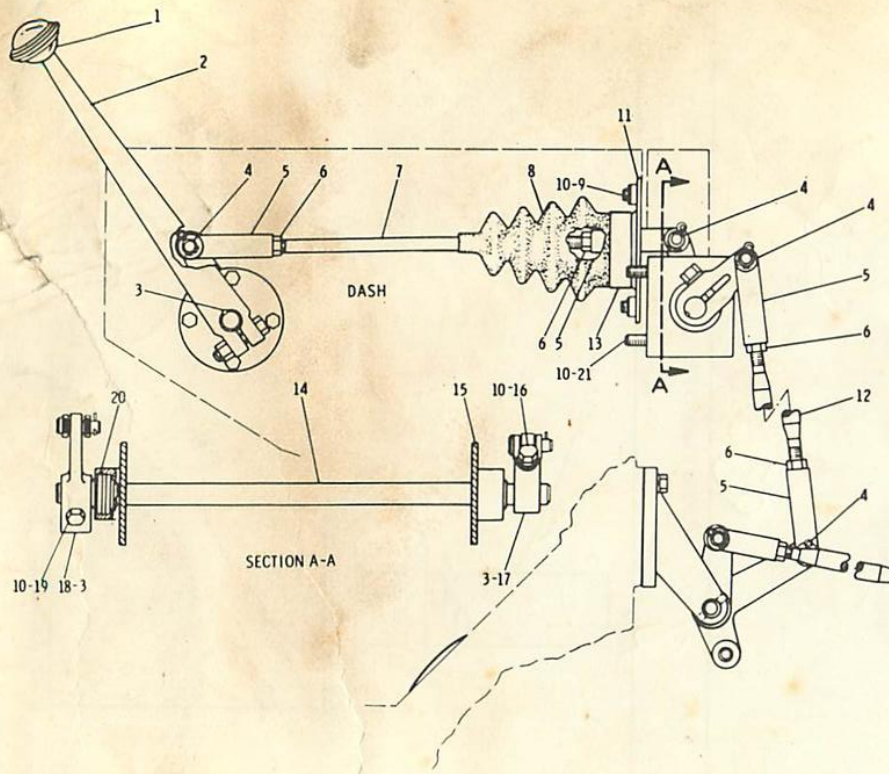

REF. NO.	PART NUMBER	DESCRIPTION	QTY
1	7F8092	KNOB	1
2	8M6770	LEVER	1
3	1B8704	KEY	3
4	9H6673	PIN	4
	3B4611	COTTER PIN	4
5	1A9252	END	4
6	5B9079	NUT	4
7	1P4573	ROD	1
8	8P7317	BOOT	1
C 9	S1594	BOLT	2
10	3B4506	LOCKWASHER	8
11	8P2446	PLATE ASSEM.	1
12	8P2436	ROD	1
13	5P597	CLAMP	1
14	8P2435	SHAFT	1
15	8P2433	BRACKET ASSEM.	2
16	S1591	BOLT	1
	4B4278	WASHER	1
17	4K21	LEVER	1
18	5K6079	LEVER	1
19	3B1915	BOLT	1
20	4D2619	BEARING	2
C 21	S509	BOLT	4

C INDICATES CHANGE

168090

3V3142 GOVERNOR CONTROL GROUP – Part 1

3V3142 GOVERNOR CONTROL GROUP – Part 2

REF. NO	PART NUMBER	DESCRIPTION	QTY
C 1	S1588	BOLT	1
2	3B4506	LOCKWASHER	2
3	8P2437	BRACKET ASSEM.	1
4	1F5403	END	1
5	3V670	ROD	1
6	5B9079	NUT	2
7	1A9252	END	1
8	9H6673	PIN	2
	3B4611	COTTER PIN	2
9	4B3388	BOLT	1
10	1V26	LEVER	1
11	8P2441	BELLCRANK ASSEM. (Includes)	1
	3K6662	BEARING	2
12	6H3956	PIN	1
13	8P2443	SHAFT	1
14	1L6377	BUTTON	1
15	5H7152	SPRING	1
16	7M6955	GASKET	1
17	8P2426	SUPPORT ASSEM. (Includes)	1
18	9F5647	BEARING	2
19	1B8704	KEY	1
20	8P2429	SHAFT	1
	2S6079	KEY	1
	8H7577	PLATE	1
21	8M6773	LEVER	1
22	8H9180	SEAL	2
23	7M2167	RING	1
24	8P2430	SHAFT ASSEM.	1
25	1B2713	BOLT	1
26	1B4330	NUT	4
	3B4504	LOCKWASHER	4
27	3B1915	BOLT	1
	1D4717	NUT	1
28	8B2377	BOLT	3
29	8H9182	ROLLER	2
30	8H9186	SPRING	2
C 31	1A2029	BOLT	2

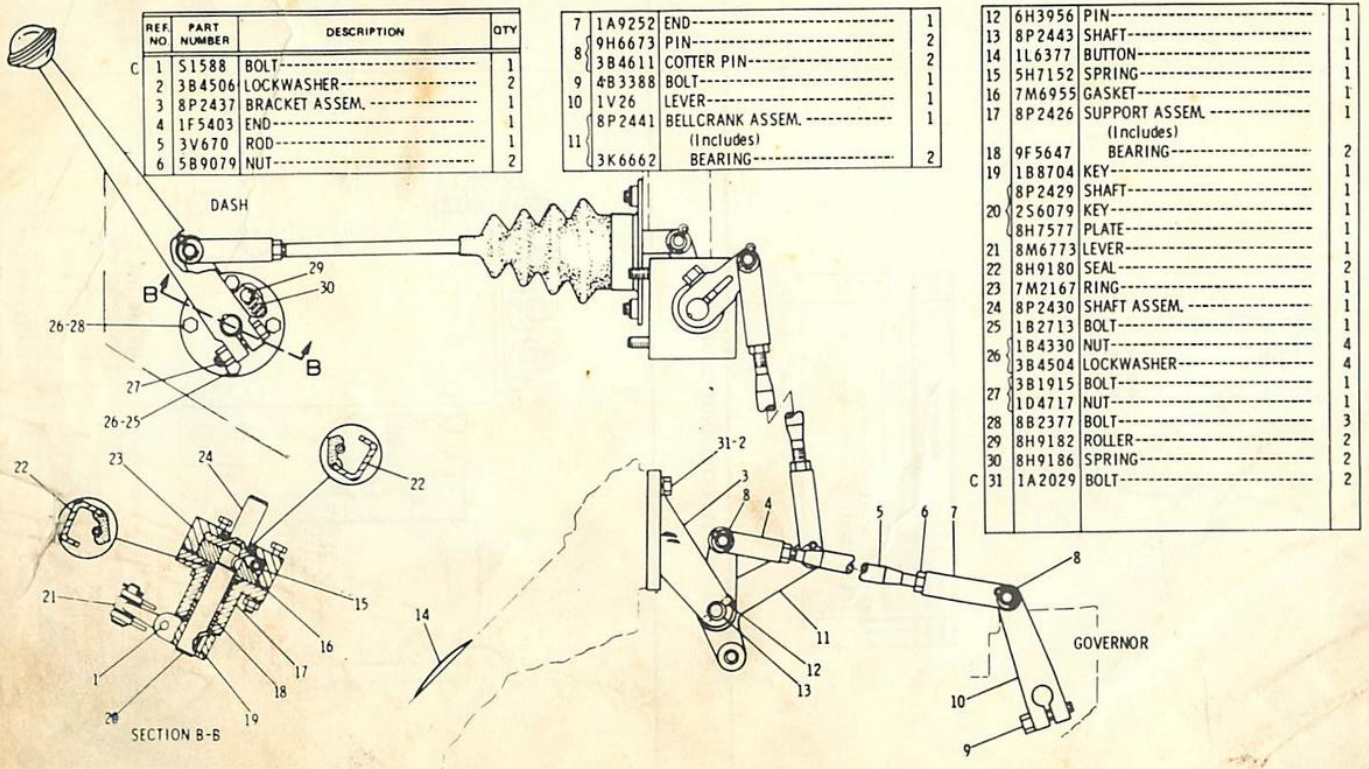

C INDICATES CHANGE

168091

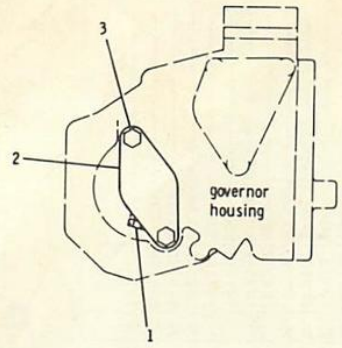

REF. NO.	PART NUMBER	DESCRIPTION	QTY
1	2S7905	PLUG	1
2	4N4508	COVER	1
	4N4509	GASKET	1
3	S1615	BOLT	2

144197

4N4510 GOVERNOR COVER GROUP

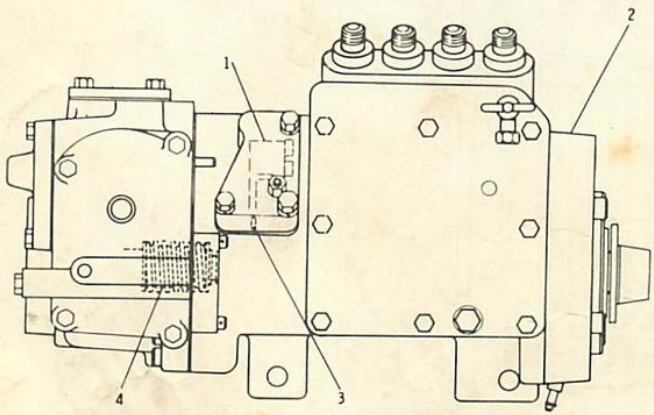

	REF NO	PART NUMBER	DESCRIPTION	QTY
C	1	6N2505	TORQUE CONTROL	1
C	2	6N243	GOVERNOR & FUEL INJECTION PUMP (Separate Illustration)	1
	3	4N443	PIN	1
	4	4N4225	SPRING	1

C INDICATES CHANGE

152518

6N277 GOVERNOR AND FUEL INJECTION PUMP GROUP
6N243 Governor and Fuel Injection Pump and 6N2505 Torque Control parts are shown on Pages 40 and 50

Consists of:			Page
1	4N6115	Governor and Fuel Injection Pump Group	41
1	2H3934	Seal	
1	6L5773	Gasket	
6	8L8601	Spacer .002" (0.05 mm)	
1	9L3625	Spring .022" (0.55 mm)	
1	9L3626	Spacer .016" (0.41 mm)	
1	9L5176	Spring .024" (0.61 mm)	
1	9L6423	Spring .020" (0.52 mm)	
3	9L7235	Shim .039" (0.99 mm)	
2	9L9347	Shim .020" (0.52 mm)	
1	5M6214	Plug	
1	4N49	Gasket	
1	4N159	Gasket	
1	4N402	Gasket	
1	4N508	Gasket	
1	4N594	Gasket	
1	4N4224	Governor Spring (2) Yellow and (1) White Stripe	
1	4N4227	Governor Spring (2) Yellow and (1) Green Stripe	
1	4N4228	Governor Spring (2) Yellow and (1) Purple Stripe	
3	4N7777	Spacer .010" (0.25 mm)	
1	4N9056	Gasket	
1	4N9098	Spacer .200" (5.08 mm)	
1	4N9337	Gasket	
1	6N2504	Spacer .005" (0.12 mm)	
1	6N2843	Gasket	
1	1P436	Gasket	
1	1P6453	Bar .250" (6.35 mm)	
1	2P726	Spring (1) Red Stripe	
1	9S8597	Spring (1) White Stripe	
1	.....	Form SMHS6728	

4N6116 GOVERNOR AND FUEL INJECTION PUMP GROUP
FIELD INSTALLATION

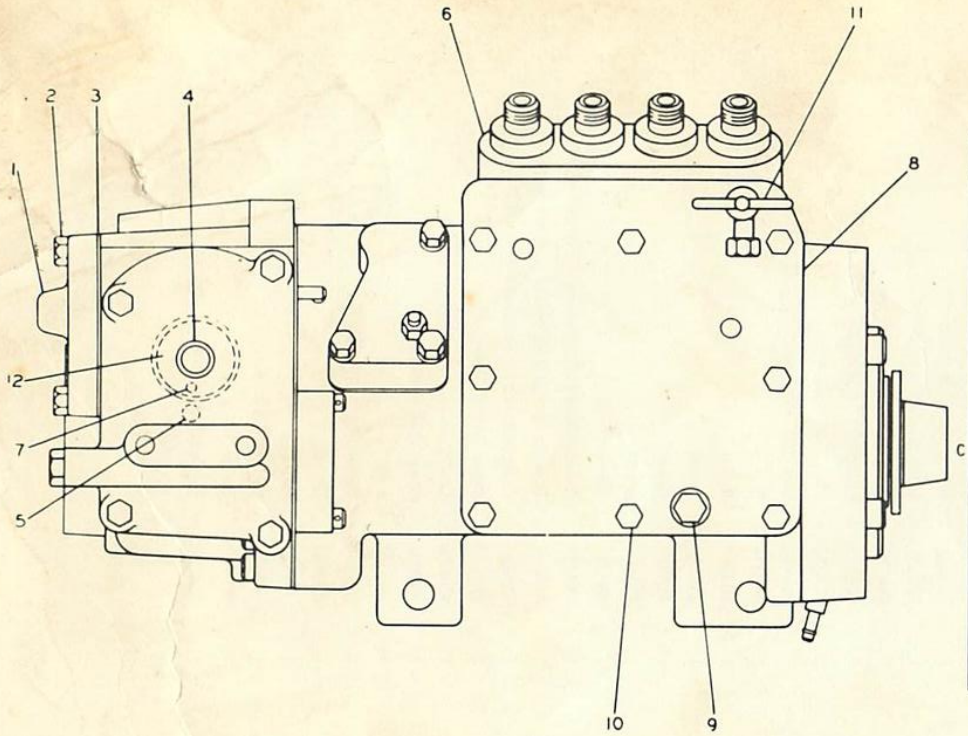

REF. NO.	PART NUMBER	DESCRIPTION	QTY
1	4N53	COVER	1
2	S1616	BOLT--25.40 mm(1 in.) long	1
	8S4710	BOLT--101.60 mm(4 in.) long	2
3	4N159	GASKET	1
4	4N4320	SHAFT ASSEM.	1
5	4N8179	PIN	1
6	4N1834	GOVERNOR AND FUEL PUMP (Separate Illustration)	1
7	4N444	SPACER	2
8	4N9338	COVER	1
	4N9056	GASKET	1
9	9S4180	PLUG	1
	4J7533	SEAL	1
10	S1615	BOLT	8
C 11	7N450	VALVE ASSEM.	1
12	4N4366	SPRING	1

C INDICATES CHANGE

214979

6N243 GOVERNOR AND FUEL INJECTION PUMP GROUP
Part of 6N277 Governor and Fuel Injection Pump shown on Page 38
4N1834 Governor and Fuel Injection Pump parts are shown on Pages 42 through 45

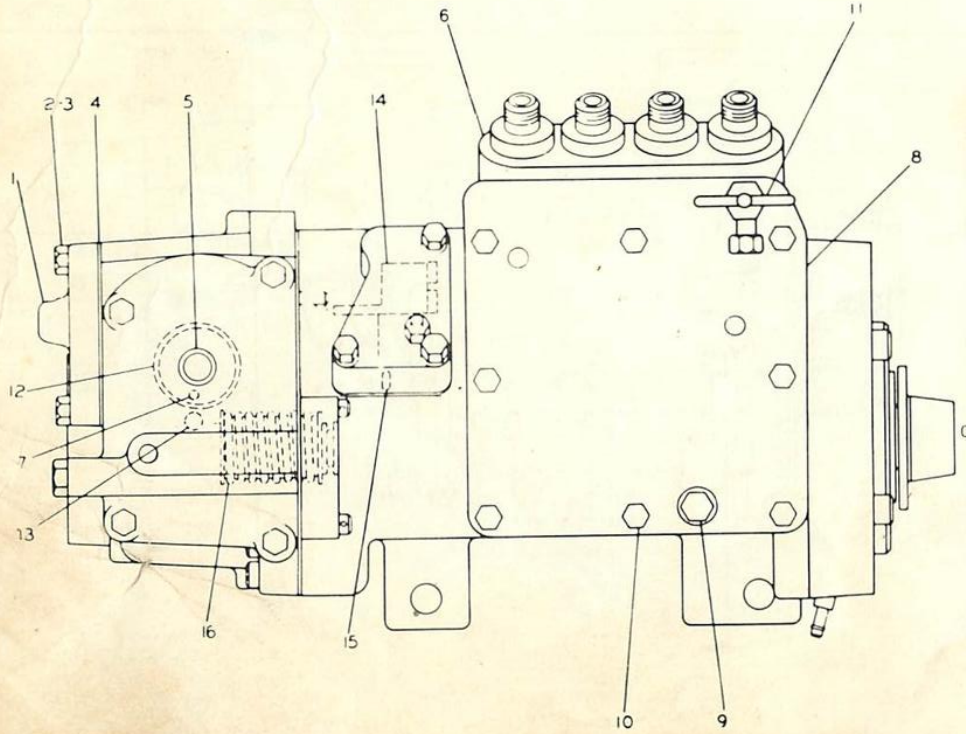

REF NO	PART NUMBER	DESCRIPTION	QTY
1	4N53	COVER	1
2	S1616	BOLT--2.54 cm(1 in.) long	1
3	8S4710	BOLT--10.16 cm(4 in.) long	2
4	4N159	GASKET	1
5	4N4320	SHAFT ASSEM.	1
6	6N5356	GOVERNOR AND FUEL PUMP (Separate Illustration)	1
7	4N444	SPACER	2
8	4N9338	COVER	1
	4N9056	GASKET	1
9	9S4180	PLUG	1
	4J7533	SEAL	1
10	S1615	BOLT	8
11	7N450	VALVE ASSEM.	1
12	4N4366	SPRING	1
13	4N8179	PIN	1
14	6N509	TORQUE CONTROL GROUP (Separate Illustration)	1
15	4N443	PIN	1
16	4N4225	SPRING	1

C INDICATES CHANGE

213935

REF NO	PART NUMBER	DESCRIPTION	QTY
1	4N2954	SLEEVE	1
2	4N3779	KEY	1
3	4N429	GEAR (15 teeth)	1
4	4N527	SPRING	1
5	4N435	SEAT	1
6	6N7451	SEAT	1
7	4N927	SHAFT ASSEM.	1
8	6N2957	WASHER	2
9	6N2956	WASHER	1

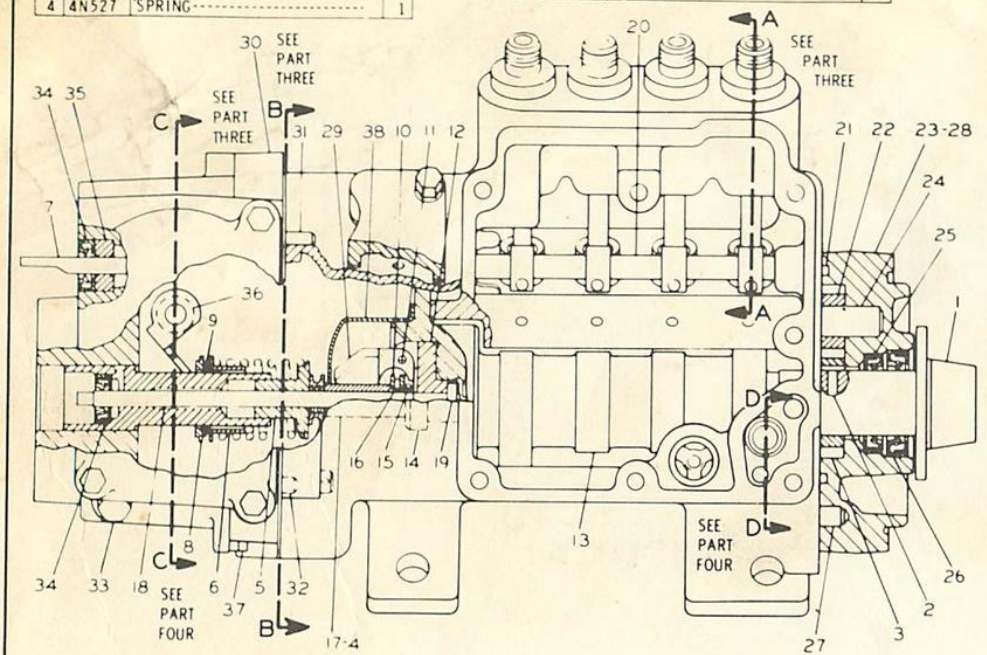

	REF NO	PART NUMBER	DESCRIPTION	QTY
	10	4N2927	RACE	2
	11	4N511	DOWEL	3
	12	4N446	CARRIER	1
	13	6N6567	CAMSHAFT	1
	14	4N2955	BOLT	3
	15	4N2953	RING	1
	16	4N2401	BEARING	1
	17	4N434	RISER	1
	18	4N9018	SHAFT	1
	19	4N9019	DOWEL	1
	20	4N507	SHAFT ASSEM.	1
	21	5M6509	SEAL	1
	22	4N406	GEAR (10 teeth)	1
C	23	9L6863	BODY ASSEM. (Includes)	1
	24	8H9804	SHAFT	1
	25	4N636	SEAL	1
	26	4N1584	SEAL	1
	27	8S6814	DOWEL	1
	28	4N5050	PLUG	1
	29	4N425	WEIGHT	3
C	30	6N5324	HOUSING ASSEM. (Includes)	1
	31	4N2333	DOWEL	1
	32	8S6814	DOWEL	2
	33	4N5050	PLUG	1
	34	4N260	SEAL	2
	35	6N2578	BEARING	1
	36	4N2786	SEAL	1
	37	9S4180	PLUG	1
		4J7533	SEAL	1
	38	4N1723	SHIELD	1

C INDICATES CHANGE

215547

4N1834 GOVERNOR AND FUEL INJECTION PUMP GROUP – Part 1 of 4.
Part of 6N243 Governor and Fuel Injection Pump shown on Page 40

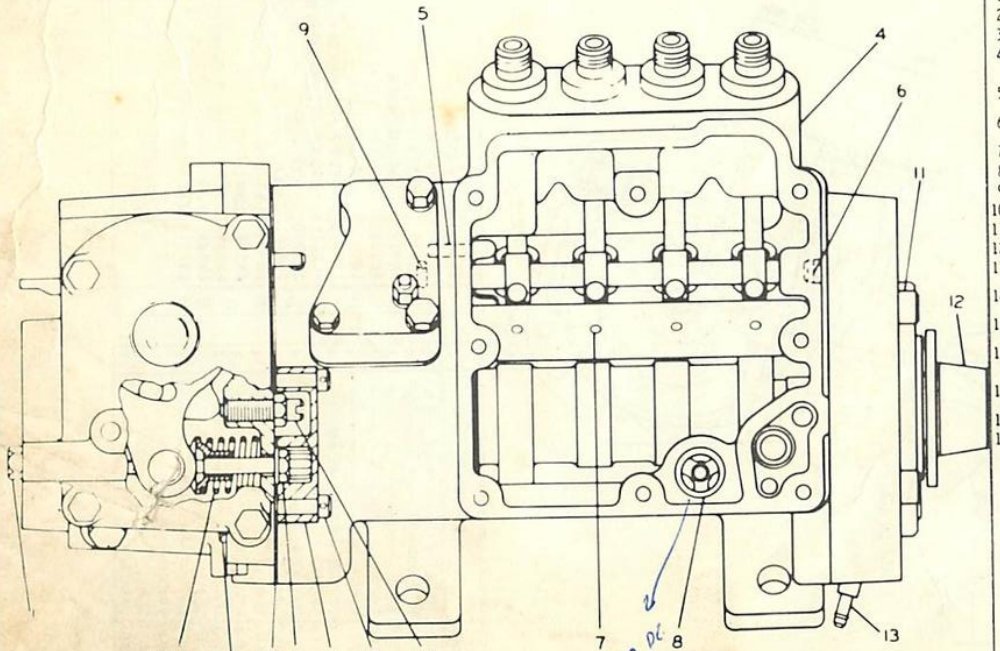

REF NO	PART NUMBER	DESCRIPTION	QTY
1	4N6430	PIN	1
2	3B8695	BOLT ------ 88.9 mm (3.50 in.) long	1
3	2A4781	BOLT ------ 69.8 mm (2.75 in.) long	1
4	6N1346	HOUSING ASSEM.	1
		(Includes)	
5	4N2333	PIN	1
6	4N1826	DOWEL	1
	2D6392	SEAL	1
7	6N5325	PIN	4
8	1P2298	VALVE ASSEM.	1
9	4N5481	STUD	1
10	4N116	GUIDE	1
11	5J5314	BOLT	4
12	4N2954	SLEEVE	1
13	1P4001	FITTING	1
14	4N54	SCREW	1
	5B3180	NUT	1
15	1P2497	BOLT	2
16	4N5578	COVER	1
	4N49	GASKET	1
17	1P9925	BOLT	2
	6N7523	WASHER	1
18	4N594	GASKET	1
19	9S8632	SPRING	1

215548

VALVULA DE COMBUSTIVEL 1P 2298

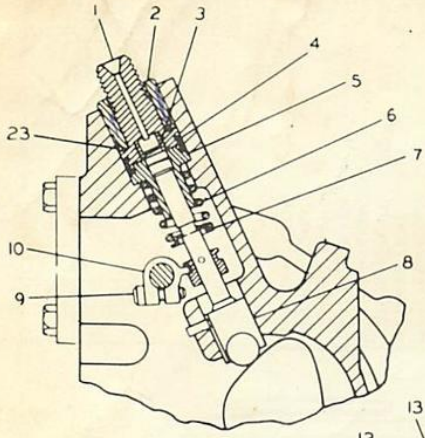

SECTION A-A

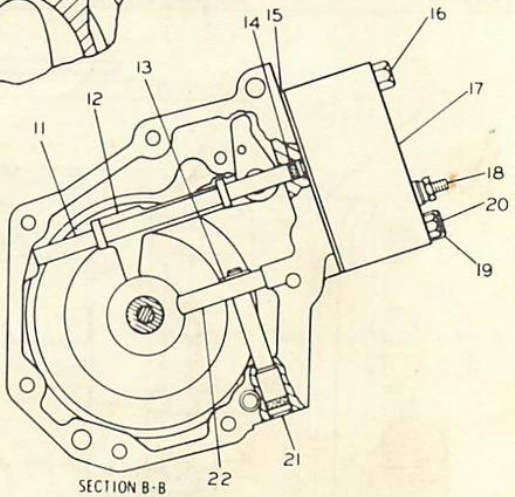

SECTION B-B

REF NO	PART NUMBER	DESCRIPTION	QTY
1	4N209	BONNET	4
2	4N218	BUSHING	4
3	9B1320	VALVE	4
	9L9424	SPRING	4
4	4N224	RING	4
5	4N1765	PLUNGER & BARREL ASSEM.	4
6	4N4318	SPRING	4
7	4N2728	WASHER	4
8	4N1750	LIFTER	4
	4N2685	ROLLER	4
9	2N2658	SCREW	4
10	4N1763	LEVER	4
11	4N528	SHAFT	1
12	4N2677	LEVER ASSEM.	1
13	2M7819	RING	1
14	3H442	SEAL	1
15	4N508	GASKET	1

16	2M5471	BOLT	1
	4N1591	COVER ASSEM.	1
17		(Includes)	
	6N411	COVER	1
	6N412	MACHINE SCREW	1
	4B2042	NUT	1
18	3B4501	LOCKWASHER	1
	1P7326	WASHER--1.52 mm(.06 in.)thick	1
	8F1326	WASHER--.82 mm(.032 in.)thick	1
19	2P3200	BOLT	1
	1J9671	SEAL	1
20	2M5471	BOLT	1
21	4N523	DOWEL	1
	2D6392	SEAL	1
22	4N445	LEVER	1
23	4N223	SEAL	4

215549

4N1834 GOVERNOR AND FUEL INJECTION PUMP GROUP – Part 3 of 4
Part of 6N243 Governor and Fuel Injection Pump shown on Page 40

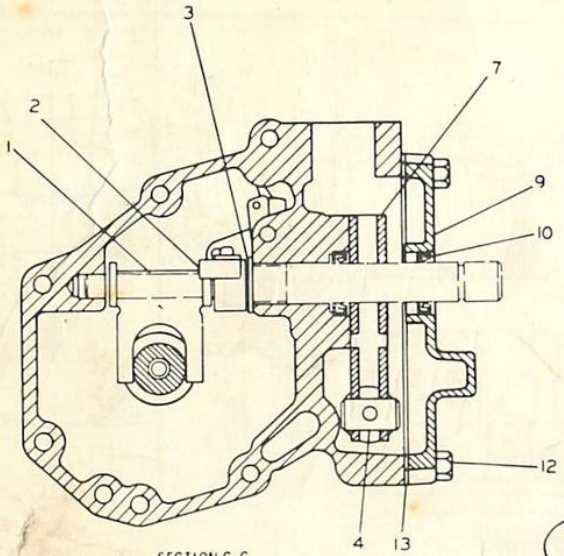

SECTION C-C

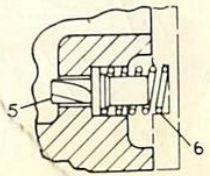

SECTION D-D

REF NO	PART NUMBER	DESCRIPTION	QTY
1	4N1881	LEVER	1
2	4N448	LEVER ASSEM. (Includes)	1
	9L8571	DOWEL	1
3	8F5368	WASHER	1
4	9S8601	PIN	1
5	4N1767	VALVE	1
6	4N605	SPRING	1
7	6N5482	PLATE	2
9	4N687	COVER ASSEM. (Includes)	1
10	4N2786	SEAL	1
12	S1616	BOLT	4
13	4N402	GASKET	1

215550

REF NO	PART NUMBER	DESCRIPTION	QTY
1	6N5324	HOUSING ASSEM. (Includes)	1
2	4N2333	PIN----------(spring)----------	1
3	8S6814	DOWEL----------	1
C 4	4N5050	PLUG----------	1
5	4N260	SEAL----------	2
6	6N2578	BEARING----------	1
7	4N2786	SEAL----------	1
C 8	9S4180	PLUG----------	1
C 8	4J7533	SEAL----------	1
9	4N425	WEIGHT----------	3
10	4N2927	RACE----------	2
11	4N511	DOWEL----------	3
12	4N446	CARRIER----------	1
13	6N6567	CAMSHAFT----------	1
14	4N2955	BOLT----------	3
15	4N2953	RING----------	1
16	4N2401	BEARING----------	1
17	4N434	RISER----------	1
18	4N9018	SHAFT----------	1
19	4N9019	DOWEL----------	1
20	4N927	SHAFT ASSEM. ----------	1
21	5M6509	SEAL----------	1
22	4N406	GEAR----------(10 teeth)--------	1
C 23	9L6863	BODY ASSEM. (Includes) ----------	1
24	8H9804	SHAFT----------	1
25	4N636	SEAL----------	1
26	4N1584	SEAL----------	1
27	8S6814	DOWEL----------	1
28	4N5050	PLUG----------	1
29	4N3779	KEY----------	1
30	4N429	GEAR----------(15 teeth)--------	1
31	4N527	SPRING----------	1
32	6N4655	DASHPOT ASSEM. ----------	1
33	6N2957	WASHER----------	2
	6N2956	WASHER----------(spring)------	1
34	6N7451	SEAT----------	1
35	4N1723	SHIELD----------	1
36	4N507	SHAFT ASSEM. ----------	1

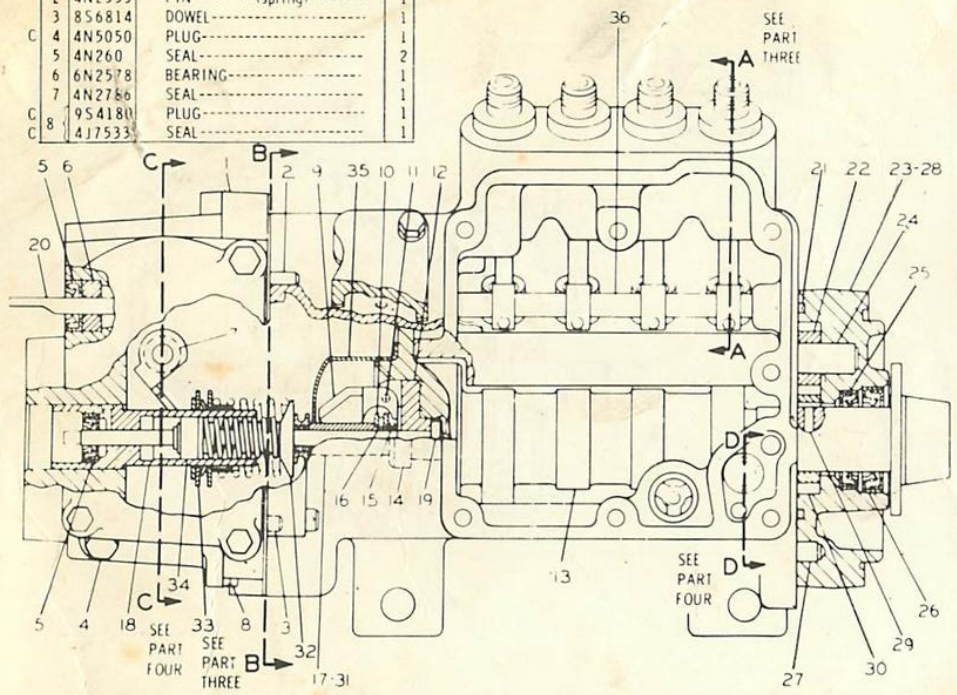

C. INDICATES CHANGE

214980

6N5356 GOVERNOR AND FUEL INJECTION PUMP GROUP – Part 1 of 4
Part of 4N6115 Governor and Fuel Injection Pump shown on Page 41

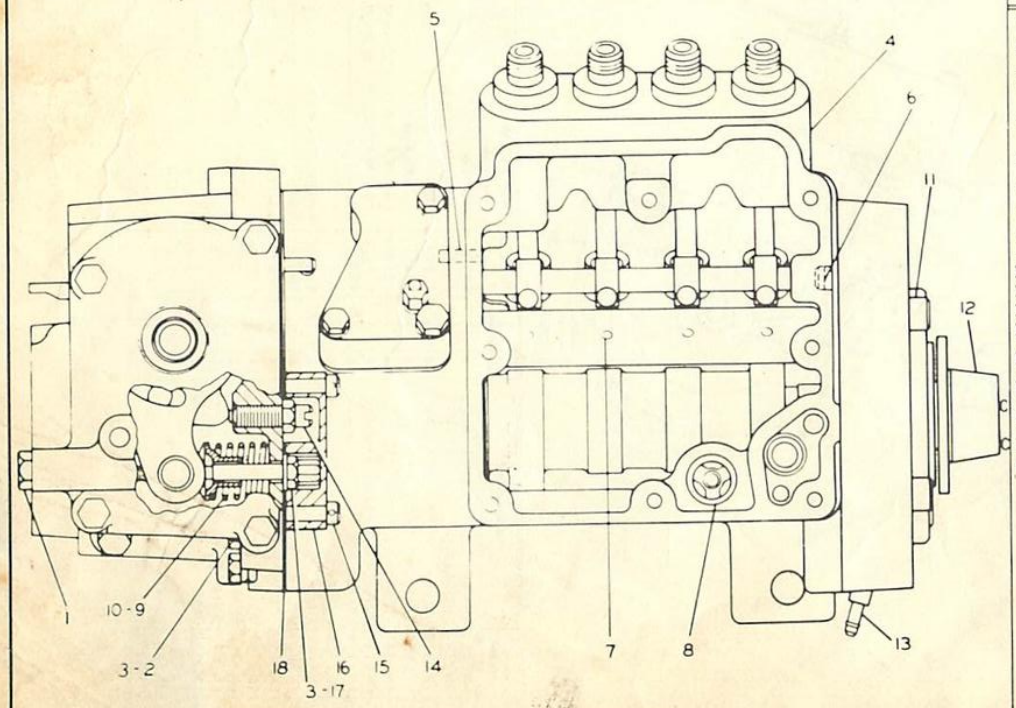

REF NO	PART NUMBER	DESCRIPTION	QTY
1	4N6430	PIN	1
2	3B8695	BOLT-8.89 cm(3.5 in.) long	1
	2A4781	BOLT-6.98 cm(2.75 in.) long	1
3	1P9925	BOLT-6.35 cm(2.5 in.) long	2
4	6N1346	HOUSING ASSEM. (Includes)	1
	6N343	STUD	1
5	4N2333	PIN-(spring)	1
6	4N1826	DOWEL	1
	2D6392	SEAL	1
7	6N5325	PIN	4
8	1P2298	VALVE ASSEM.	1
9	9S8632	SPRING	1
10	4N116	GUIDE	1
11	5J5314	BOLT	4
12	4N2954	SLEEVE	1
13	1P4001	FITTING	1
14	4N54	SCREW	1
	5B3180	NUT	1
15	1P2497	BOLT	2
16	4N5578	COVER	1
	4N49	GASKET	1
17	6N7523	WASHER	1
18	4N594	GASKET	1

C INDICATES CHANGE

214981

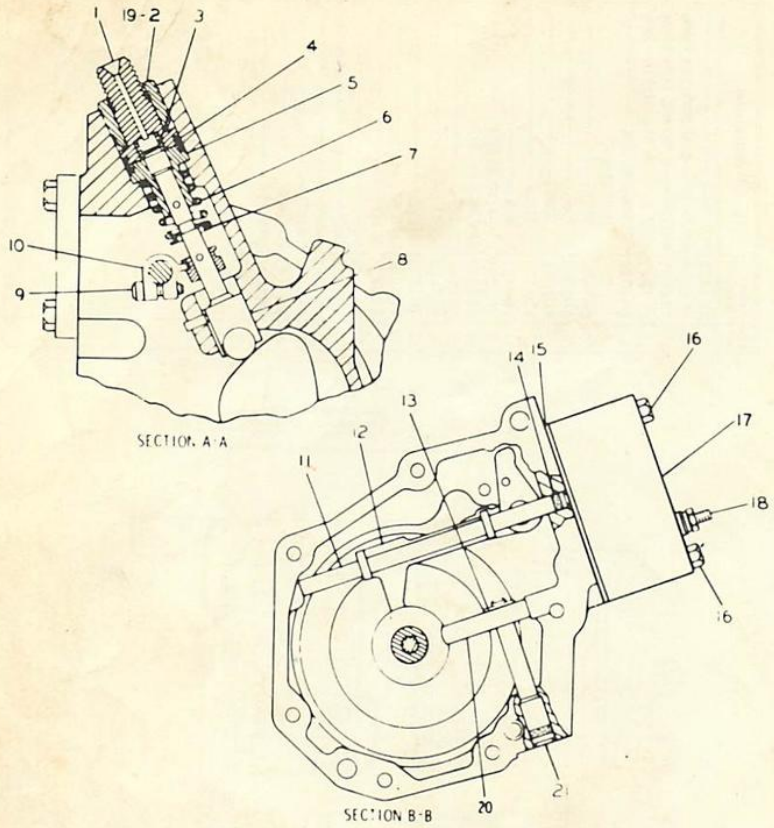

REF. NO	PART NUMBER	DESCRIPTION	QTY
1	4N209	BONNET	4
2	2N218	BUSHING	4
3	9B1320	VALVE	4
	9L9424	SPRING	4
4	4N224	RING	4
5	4N1765	PLUNGER AND BARREL ASSEM.	4
6	4N4318	SPRING	4
7	4N2728	WASHER	4
8	4N1750	LIFTER	4
	2N2685	ROLLER	4
9	2N2658	SCREW	4
10	4N1763	LEVER	4
11	4N528	SHAFT	1
12	4N2677	LEVER ASSEM.	1
13	2M7819	RING	1
14	3H442	SEAL	1
15	4N508	GASKET	1
16	2M5471	BOLT	2
17	4N1591	COVER ASSEM. (Includes)	1
	4N506	COVER	1
	4N1594	MACHINE SCREW	1
18	4B2042	NUT	1
	3B4501	LOCKWASHER	1
	1P7326	WASHER-.06 in. (1.53 mm) thick	1
	8F1326	WASHER-.032 in. (.82 mm) thick	1
19	4N223	SEAL	4
20	4N445	LEVER	1
21	4N523	DOWEL	1
	2D6392	SEAL	1

214982

6N5356 GOVERNOR AND FUEL INJECTION PUMP GROUP – Part 3 of 4
Part of 4N6115 Governor and Fuel Injection Pump shown on Page 41

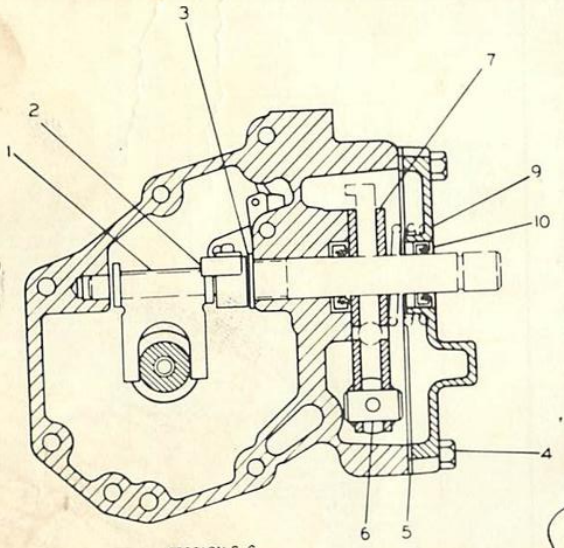

SECTION C-C

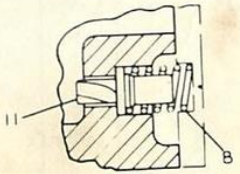

SECTION D-D

REF. NO.	PART NUMBER	DESCRIPTION	QTY
1	4N1881	LEVER	1
2	4N448	LEVER ASSEM. (Includes)	1
	9L8571	DOWEL	1
3	8F5368	WASHER	1
4	51616	BOLT	4
5	4N402	GASKET	1
6	9S8601	PIN	1
7	6N5482	PLATE	2
8	4N605	SPRING	1
9	4N687	COVER ASSEM. (Includes)	1
10	4N2786	SEAL	1
11	4N1767	VALVE	1

160293

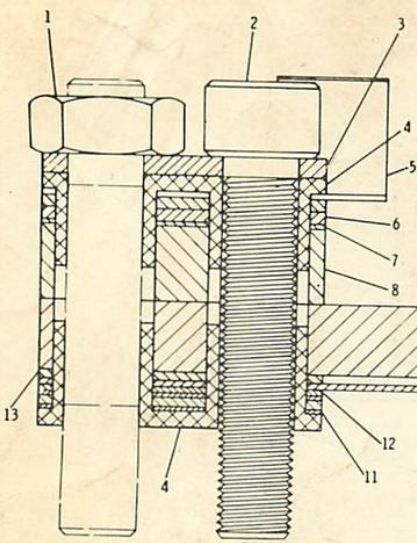

ITEM	PART Nº	DESCRIPTION	QTY.
1	4L6458	NUT	1
2	4L7124	BOLT	1
3	8M9064	SHIM..1.63mm thick	1
4	1P6452	INSULATOR	2
5	4N3882	CONTACT	1
6	9L7235	SHIM..99mm thick	3
7	4N7777	SPACER.254mm thick	2
8	4N9098	SPACER 5.08mm thick	1
9	1P6453	BAR	1
10	9L5176	SPRING .61mm thick.	1

ITEM	PART Nº	DESCRIPTION	QTY.
11	8L8601	SHIM... .051mm thick	6
12	9L9347	SHIM... .508mm thick	1
13	6N2504	SPACER .127mm thick	1

163295

6N2505 TORQUE CONTROL GROUP
Part of 6N277 Governor and Fuel Injection Pump shown on Page 38

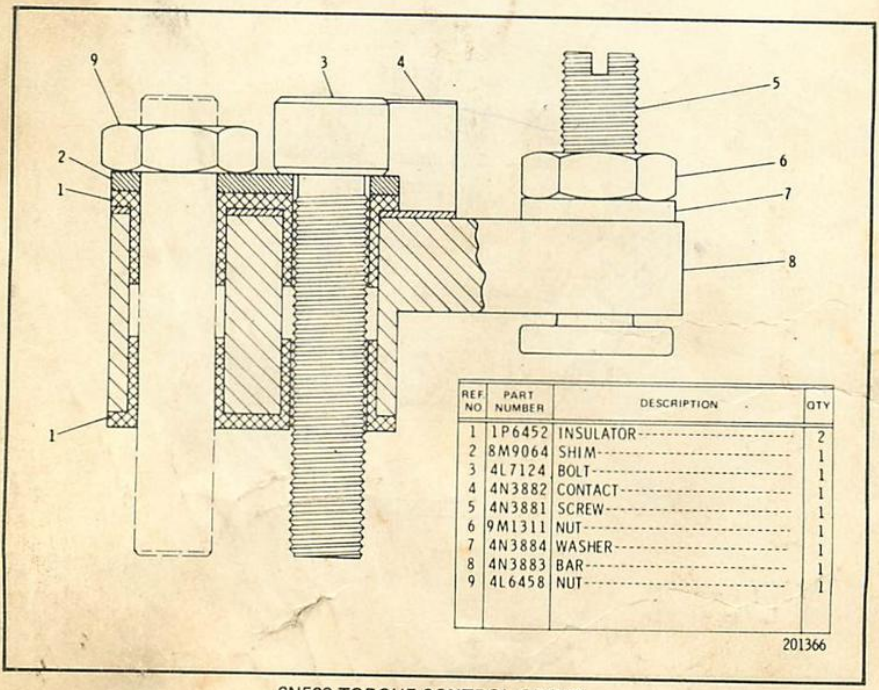

REF NO	PART NUMBER	DESCRIPTION	QTY
1	1P6452	INSULATOR	2
2	8M9064	SHIM	1
3	4L7124	BOLT	1
4	4N3882	CONTACT	1
5	4N3881	SCREW	1
6	9M1311	NUT	1
7	4N3884	WASHER	1
8	4N3883	BAR	1
9	4L6458	NUT	1

201366

6N509 TORQUE CONTROL GROUP
Part of 4N6115 Governor and Fuel Injection Pump shown on Page 41

4N3374 FUEL INJECTION LINES GROUP

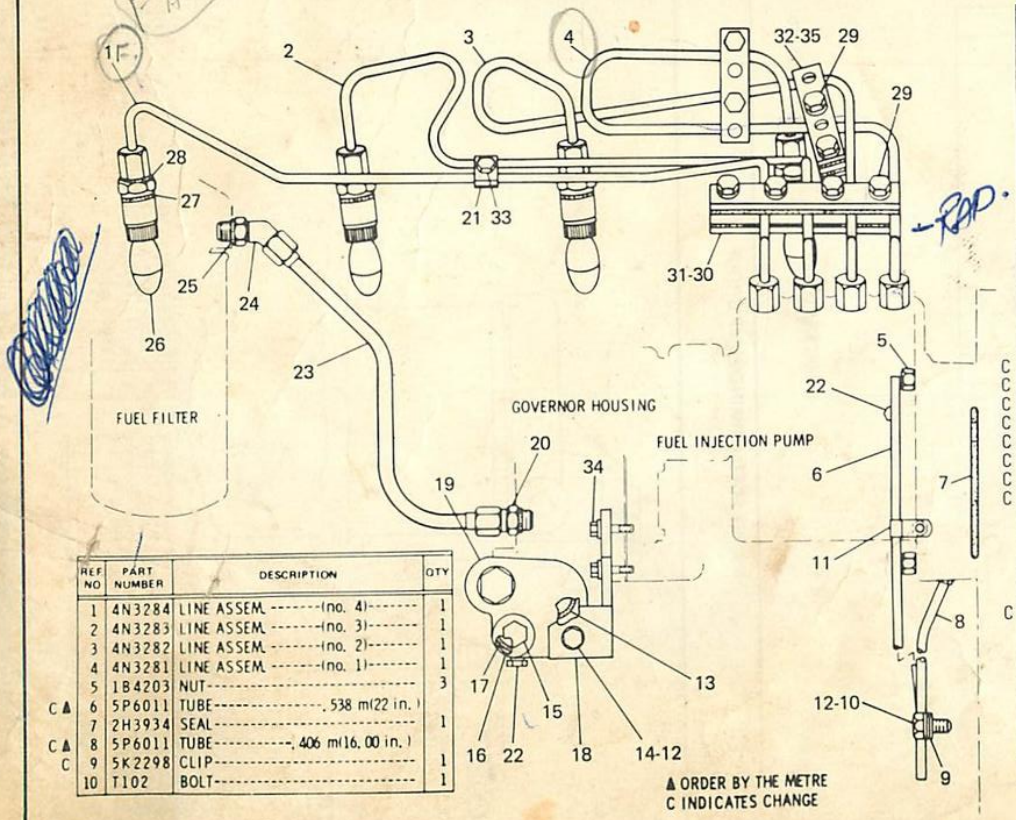

REF NO	PART NUMBER	DESCRIPTION	QTY
1	4N3284	LINE ASSEM. -------(no. 4)-------	1
2	4N3283	LINE ASSEM. -------(no. 3)-------	1
3	4N3282	LINE ASSEM. -------(no. 2)-------	1
4	4N3281	LINE ASSEM. -------(no. 1)-------	1
5	1B4203	NUT----------	3
C▲ 6	5P6011	TUBE----------, 538 m(22 in.)	
7	2H3934	SEAL----------	1
C▲ 8	5P6011	TUBE----------, 406 m(16.00 in.)	
C 9	5K2298	CLIP----------	1
10	T102	BOLT----------	1
11	1A5350	CLIP	1
12	5M2894	WASHER	2
13	8M5248	SEAL	1
14	S1588	BOLT	1
15	3J5390	PLUG	1
16	2Y2298	ADAPTER	1
17	8M5253	SEAL	1
18	2Y2971	BRACKET	1
19	6H1717	BOLT	1
20	2R6806	CONNECTOR.....	1
21	6F8868	CLAMP	2
22	5M6214	PLUG	2
23	4N3551	TUBE ASSEM.	1
24	307942	ELBOW	1
25	3J1907	SEAL	2
26	8S3962	VALVE ASSEM.	4
		(Each Includes)	
27	5B3718	SEAL.....	4
28	6F1069	SEAL ASSEM.	4
C 29	1B7182	BOLT	8
C	3B4505	LOCKWASHER	8
C	8S4003	CLAMP (Tapped)	1
C 30	8S4004	CLAMP	1
C	8S4005	DAMPER	2
C	8S3999	CLAMP	2
C 32	8S3998	CLAMP (Tapped)	2
	S1615	BOLT	1
33	1B4330	NUT	1
	3B4504	LOCKWASHER	1
	2A5546	BOLT	2
34	5P537	WASHER	2
C 35	8S4000	DAMPER	4

▲ ORDER BY THE METRE
C INDICATES CHANGE

SP861

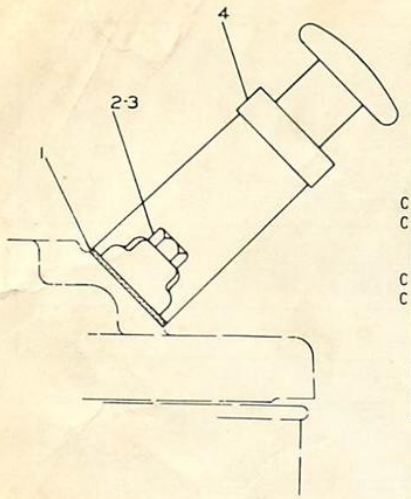

	REF. NO.	PART NUMBER	DESCRIPTION	QTY
	1	1P436	GASKET	1
	2	4B3388	BOLT-2.86 cm(1.125 in.) long	1
			-OR-	
C		1B2790	BOLT-3.49 cm(1.375 in.) long	1
C		9M1974	WASHER-7.95 mm(.313 in.) dia.	1
		S1616	BOLT-2.54 cm(1 in.) long	1
			-OR-	
C	3	7B2742	BOLT-3.18 cm(1.25 in.) long	1
C		5P537	WASHER-6.35 mm(.25 in.) dia.	1
	4	4N2511	PUMP ASSEM.	1

C INDICATES CHANGE

215540

4N3287 FUEL PRIMING PUMP GROUP

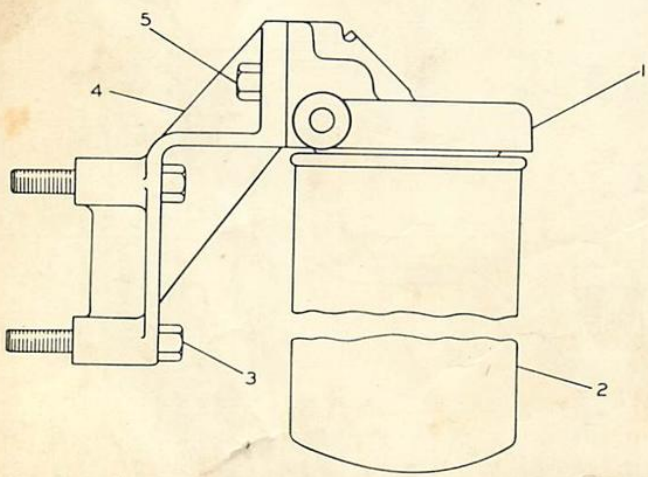

	REF. NO.	PART NUMBER	DESCRIPTION	QTY
C	1	7N811	BASE ASSEM.	1
			(Includes)	
		4N3294	INSERT	1

	2	1P2299	FILTER ASSEM.	1
C	3	S1571	BOLT	2
	4	4N3299	SUPPORT	1
C	5	S1594	BOLT	2

C INDICATES CHANGE

215138

4N3303 FUEL FILTER GROUP

3V3137 FUEL LINES GROUP

REF. NO.	PART NUMBER	DESCRIPTION	QTY
▲ 1	5P1520	HOSE----------215.9 cm(85 in.)	
2	9M8406	CLIP----------	4
	S1594	BOLT----------	4
3	1D4717	NUT----------	4
	3B4506	LOCKWASHER----------	4
▲ 4	5P767	HOSE----------30.48 cm(12 in.)	
5	1V3546	COUPLING----------	3
6	5K9235	ELBOW----------	1
7	9S7722	ELBOW----------	2
8	5P4485	VALVE ASSEM. -----(needle)-----	1
9	3B7739	NIPPLE----------	1
10	38747	ELBOW----------	1
11	5P7486	VALVE----------(ball)----------	1
▲ 12	5P1520	HOSE----------182.9 cm(72 in.)	
13	3B7722	BUSHING----------	1
14	6B5072	BUSHING----------	1

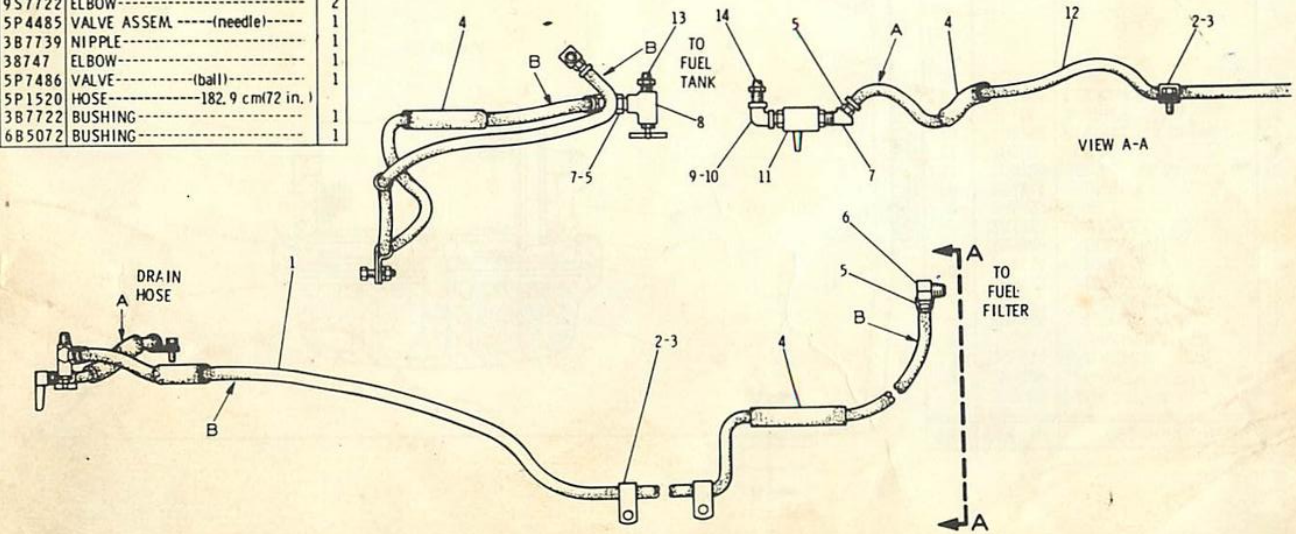

▲ ORDER BY THE CENTIMETRE

167248

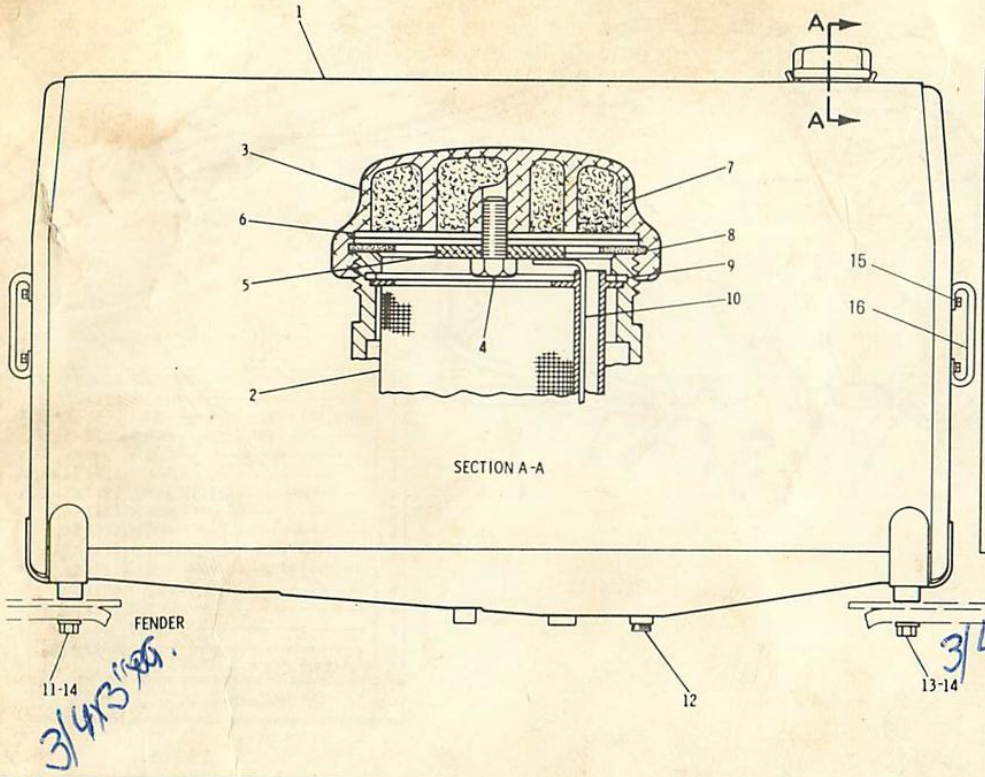

ITEM	PART Nº	DESCRIPTION	QTY.
1	9P6516	TANK ASSEM.	1
2	8H3498	STRAINER ASSEM.	1
3	4B5441	CAP ASSEM. (Includes)	1
4	3H8389	SCREW	1
5	7B2002	WASHER	1
6	4B5423	GASKET	1
	3F4134	BAFFLE	1
7	4B5949	ELEMENT	2
8	2A1763	GASKET	1
9	8H3497	RING	1
10	8P1224	PLUNGER	1
11	1D4609	BOLT . . .76.20 mm . . .	2
12	2B858	PLUG	1
13	3B6753	BOLT . . 114.30 mm . . .	2
14	2S115	WASHER	4
15	3B4508	LOCKWASHER	4
16	1D4164	GRAB IRON	2

3V3136 FUEL TANK GROUP — 66 Gallon (249 Liters)

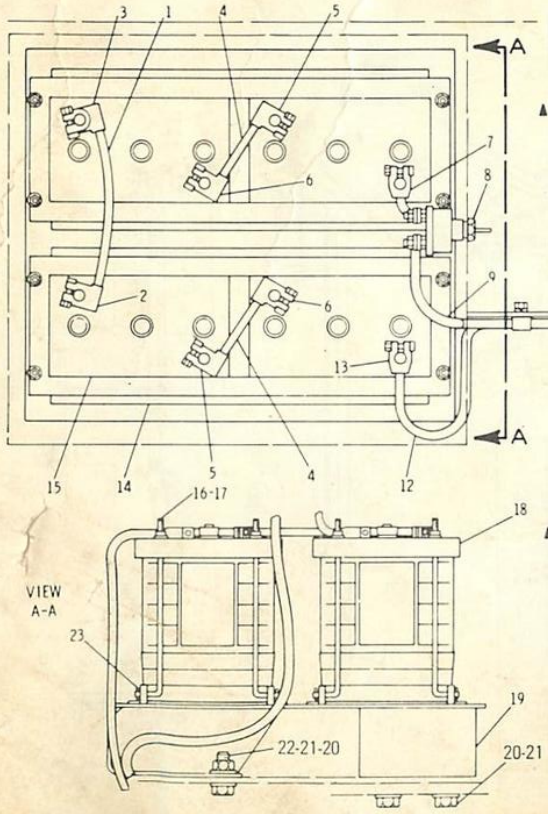

REF NO	PART NUMBER	DESCRIPTION	QTY
1	6K9961	CABLE ASSEM. (Includes)	1
▲	5P747	CABLE--------27.94 cm(11 in.)	
2	5M9205	TERMINAL ASSEM. (Includes)	1
	1M6119	BOLT	1
	1M6120	NUT	1
3	5M9204	TERMINAL ASSEM. (Includes)	1
	1M6119	BOLT	1
	1M6120	NUT	1
4	3R2204	CABLE ASSEM. (Each Includes)	2
▲	5P747	CABLE---------15.24 cm(6 in.)	
5	5M9204	TERMINAL ASSEM. (Includes)	1
	1M6119	BOLT	1
	1M2160	NUT	1
6	5M9205	TERMINAL ASSEM. (Includes)	1
	1M6119	BOLT	1
	1M6120	NUT	1
7	2Y4257	CABLE ASSEM.	1
8	7N718	SWITCH ASSEM. (Separate Illustration)	1
	8H8648	PLATE	1
9	2Y1669	CABLE ASSEM. (Includes)	1
	1S7251	TERMINAL	1
	1S7252	TERMINAL--(to switch assem.)	1
	S1594	BOLT	3
10	1D4717	NUT	3
	3B4506	LOCKWASHER	3
11	2Y1834	CLIP	3
12	2Y1668	CABLE ASSEM. (Includes)	1
	1M4986	TERMINAL	1
	3D2098	TERMINAL ASSEM. (Includes)	1
13	1M6119	BOLT	1
	1M6120	NUT	1
14	7K1301	MAT	2
15	5S7219	BATTERY	4
16	6K4355	ROD	8
	1B4330	NUT	8
17	3B4504	LOCKWASHER	8
	4B4276	WASHER	8
18	2Y3485	FRAME ASSEM.	2
19	4V1913	SUPPORT ASSEM.	1
20	S1589	BOLT	6
21	5P8247	WASHER	8
22	S1589	BOLT	2
	4K367	NUT	2
23	3B4608	COTTER PIN	8

▲ ORDER BY THE CENTIMETRE

SP1203

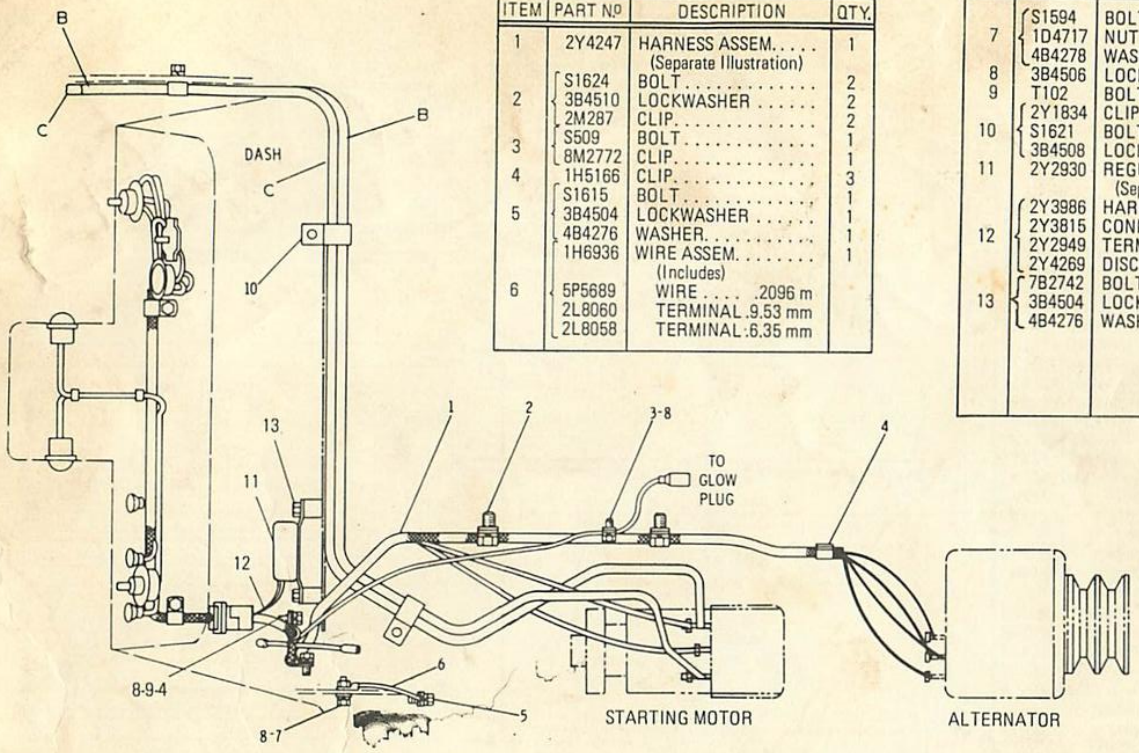

ITEM	PART No	DESCRIPTION	QTY.
1	2Y4247	HARNESS ASSEM. (Separate Illustration)	1
2	S1624	BOLT	2
	3B4510	LOCKWASHER	2
	2M287	CLIP	2
3	S509	BOLT	1
	8M2772	CLIP	1
4	1H5166	CLIP	3
5	S1615	BOLT	1
	3B4504	LOCKWASHER	1
	4B4276	WASHER	1
	1H6936	WIRE ASSEM. (Includes)	1
6	5P5689	WIRE .2096 m	
	2L8060	TERMINAL 9.53 mm	
	2L8058	TERMINAL 6.35 mm	

7	S1594	BOLT	1
	1D4717	NUT	1
	4B4278	WASHER	1
8	3B4506	LOCKWASHER	4
9	T102	BOLT	2
10	2Y1834	CLIP	2
	S1621	BOLT	2
	3B4508	LOCKWASHER	2
11	2Y2930	REGULATOR ASSEM. (Separate Illustration)	1
12	2Y3986	HARNESS ASSEM	1
	2Y3815	CONNECTOR	1
	2Y2949	TERMINAL	3
	2Y4269	DISCONNECT	1
13	7B2742	BOLT	4
	3B4504	LOCKWASHER	4
	4B4276	WASHER	4

▲ HOLE SIZE ● ORDER BY THE METRE SP1204

2Y4054 BATTERY AND WIRING GROUP – 24 Volt – Par 2 of 3
2Y2930 Regulator Assembly and 2Y4247 Harness parts are shown on Pages 59 and 60
See Page 58 for Wiring Diagram

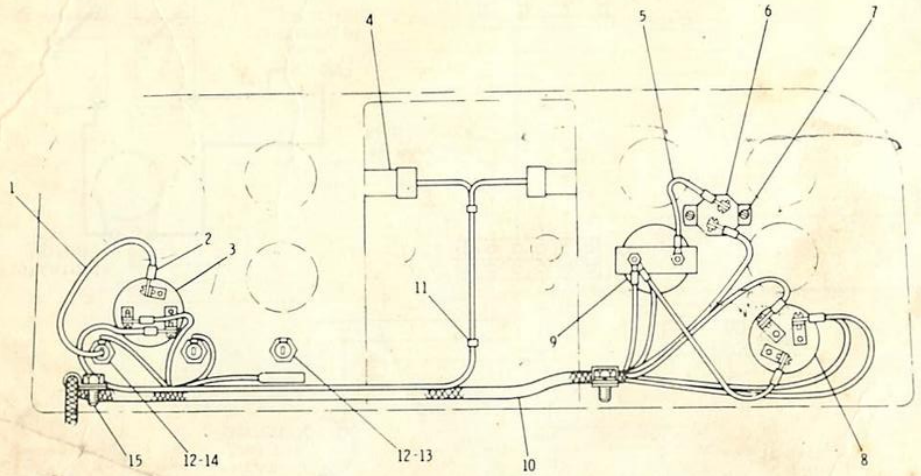

REAR VIEW OF DASH

REF NO	PART NUMBER	DESCRIPTION	QTY
	8P7353	WIRE ASSEM. (Includes)	1
▲ 1	5P5624	WIRE, 155 m(6. 102 in.)	
1	2Y4216	TERMINAL (female)	1
2	2Y3752	TERMINAL	1
3	7S6402	SWITCH ASSEM. (lights)	1
	3S8642	LAMP ASSEM. (Each Includes)	2
4	2D1959	BULB	1
	4S6313	WIRE ASSEM. (Includes)	1
▲ 5	5P5632	WIRE 1 m(3. 94 in.)	
5	2L8066	TERMINAL	2
6	5M2555	CIRCUIT BREAKER (40 amp)	1
7	5M6668	SCREW	2
	8S7713	SWITCH ASSEM. (heat & start) (Includes)	1
8	8F3437	LEVER	1
	5L7200	SCREW	1
	3B4501	LOCKWASHER	1
9	8M7892	AMMETER (60 amp)	1
10	2Y3984	HARNESS ASSEM. (Separate Illustration)	1
11	1S9593	STRAP	2
12	8M8948	FUSE (15 amps)	3
13	4K8029	HOLDER	1
14	4K5122	HOLDER	2
	1H5166	CLIP	2
15	T102	BOLT	2
	3B4506	LOCKWASHER	2

▲ ORDER BY THE METRE

SP1205

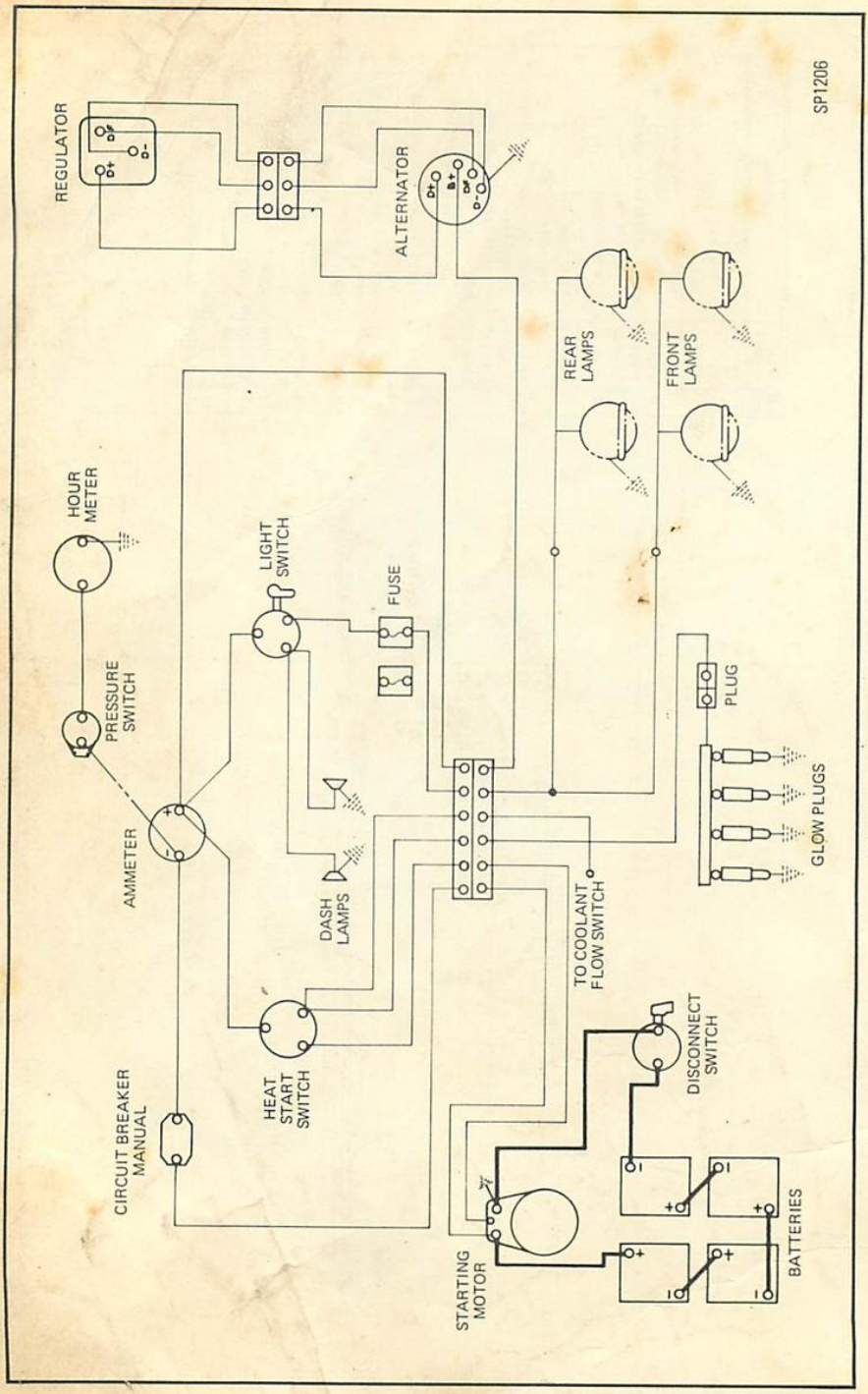

WIRING DIAGRAM – 24 Volt System

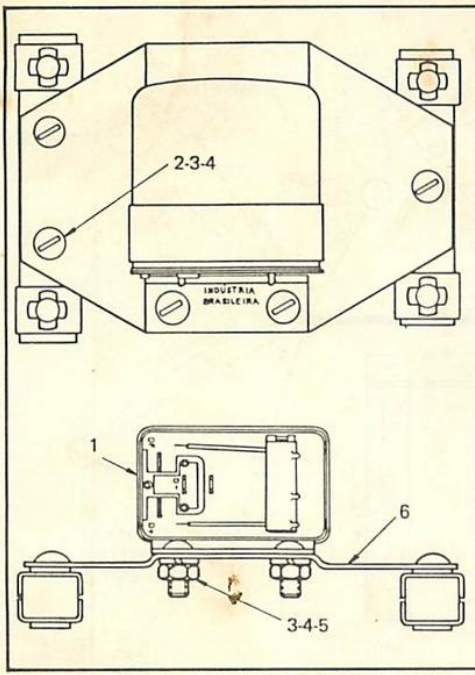

ITEM	PART No.	DESCRIPTION	QTY.
1	2Y2929	REGULATOR	1
2	4B1256	SCREW	3
3	3B4504	LOCKWASHER	5
4	1B4330	NUT	5
5	4B1254	SCREW	2
6	2Y2947	SUPPORT	1
	8M3146	KIT (Grommets, Bolts, Plates, Assem., Lockwasher, Nuts and Support Assem.)	2

SP279

2Y2930 REGULATOR ASSEMBLY
Part of 2Y4054 Battery and Wiring shown on Page 56

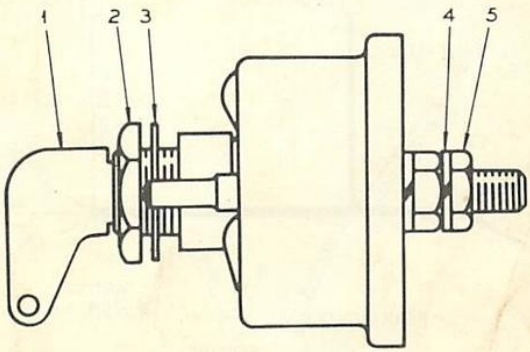

REF. NO.	PART NUMBER	DESCRIPTION	QTY
1	8H5306	KEY	1
2	8H5303	NUT	1
3	2H3922	LOCKWASHER	1
4	7F7259	LOCKWASHER	4
5	6F7045	NUT	4

211499

7N718 DISCONNECT SWITCH ASSEMBLY
Part of 2Y4054 Battery and Wiring shown on Page 55

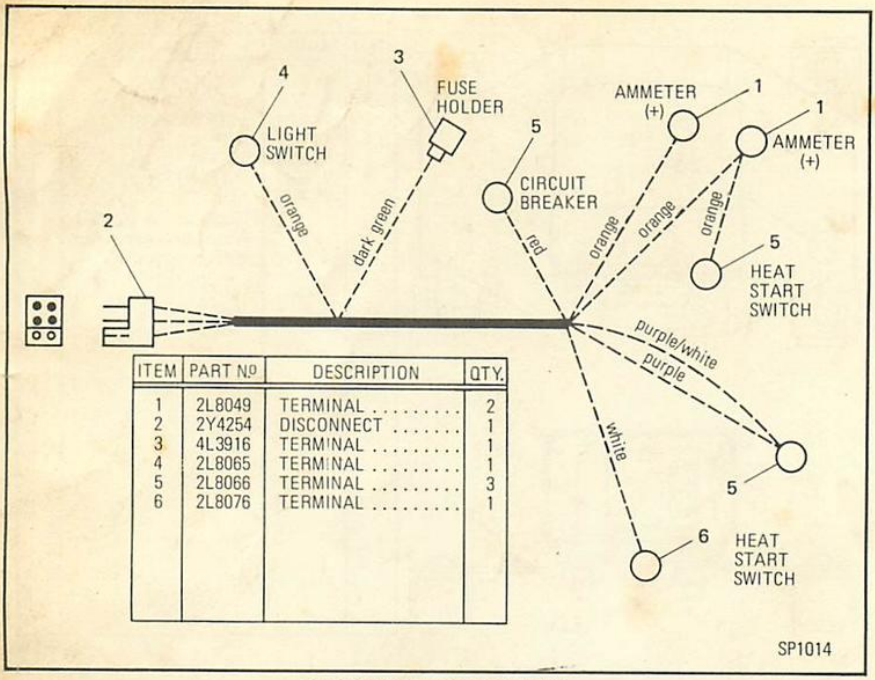

ITEM	PART No	DESCRIPTION	QTY.
1	2L8049	TERMINAL	2
2	2Y4254	DISCONNECT	1
3	4L3916	TERMINAL	1
4	2L8065	TERMINAL	1
5	2L8066	TERMINAL	3
6	2L8076	TERMINAL	1

2Y3984 HARNESS ASSEMBLY
Part of 2Y4054 Battery and Wiring shown on Page 57

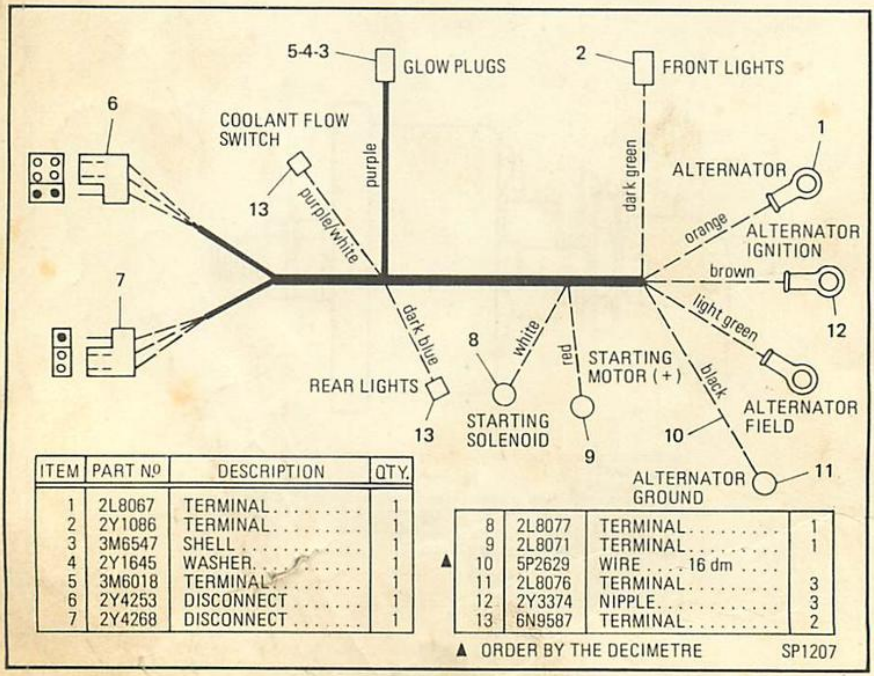

ITEM	PART No	DESCRIPTION	QTY.
1	2L8067	TERMINAL	1
2	2Y1086	TERMINAL	1
3	3M6547	SHELL	1
4	2Y1645	WASHER	1
5	3M6018	TERMINAL	1
6	2Y4253	DISCONNECT	1
7	2Y4268	DISCONNECT	1

	8	2L8077	TERMINAL	1
	9	2L8071	TERMINAL	1
▲	10	5P2629	WIRE .... 16 dm	
	11	2L8076	TERMINAL	3
	12	2Y3374	NIPPLE	3
	13	6N9587	TERMINAL	2

▲ ORDER BY THE DECIMETRE

2Y4247 HARNESS ASSEMBLY
Part of 2Y4054 Battery and Wiring shown on Page 56

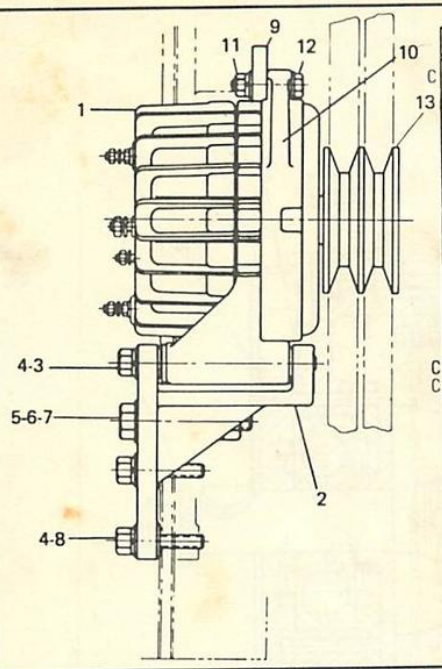

ITEM	PART Nº	DESCRIPTION	QTY.
1	2Y4212	ALTERNATOR, GR.... (Separate Illustration)	1
2	2Y2931	SUPPORT ASSEM....	1
3	1A5964	BOLT	1
4	3B4506	LOCKWASHER.....	3
5	1D4719	NUT	1
6	3B4508	LOCKWASHER.....	2
7	1A5822	BOLT	1
8	S1571	BOLT	2
9	2Y2934	STRAP	1
10	2Y1948	SPACER	1
	S1585	BOLT	1
11	1D4716	NUT	1
	3B4505	LOCKWASHER.....	1
	1A9579	BOLT	1
12	4B5270	WASHER	2
13	2Y4213	PULLEY.....	1

C INDICATES CHANGE SP1098

2Y2936 ALTERNATOR GROUP – 28 Volt – 17 Ampere
2Y4212 Alternator Assembly parts are shown on Page 62
2P1388 Vee Belt Set, includes: 2 Belts is available

ITEM	PART Nº	DESCRIPTION	QTY.
1	4H7869	GASKET	1
2	2Y1920	MOTOR ASSEM..... (Separate Illustration)	1
3	3B4510	LOCKWASHER	3
4	8S2332	BOLT	3
5	2Y2238	WIRE ASSEMBLY	1
▲	2L8052	TERMINAL	2
▲	4S8784	WIRE	4

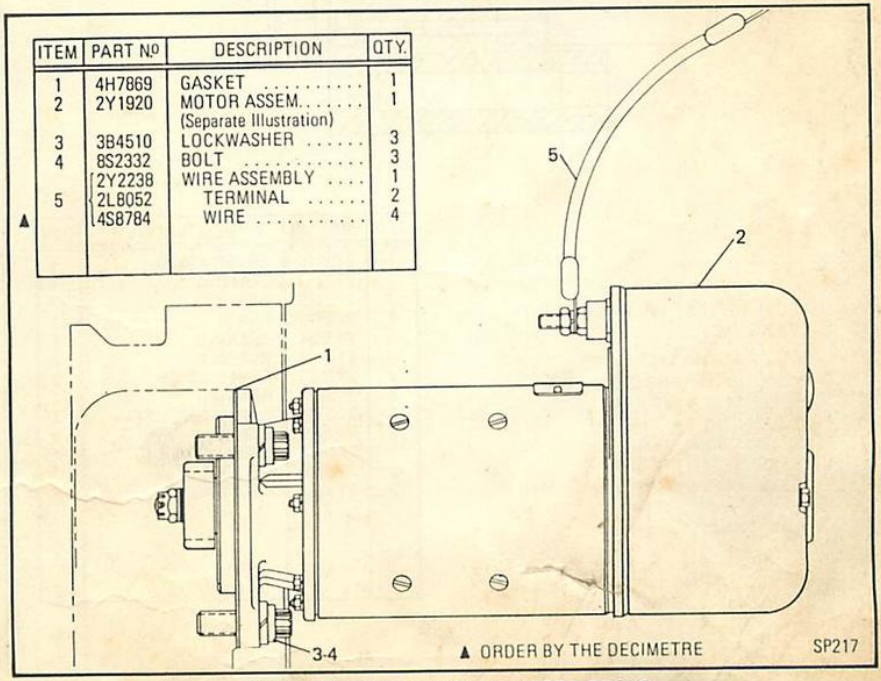

▲ ORDER BY THE DECIMETRE SP217

2Y1921 STARTING ELECTRIC MOTOR GROUP
2Y1920 Motor parts are shown on Page 63

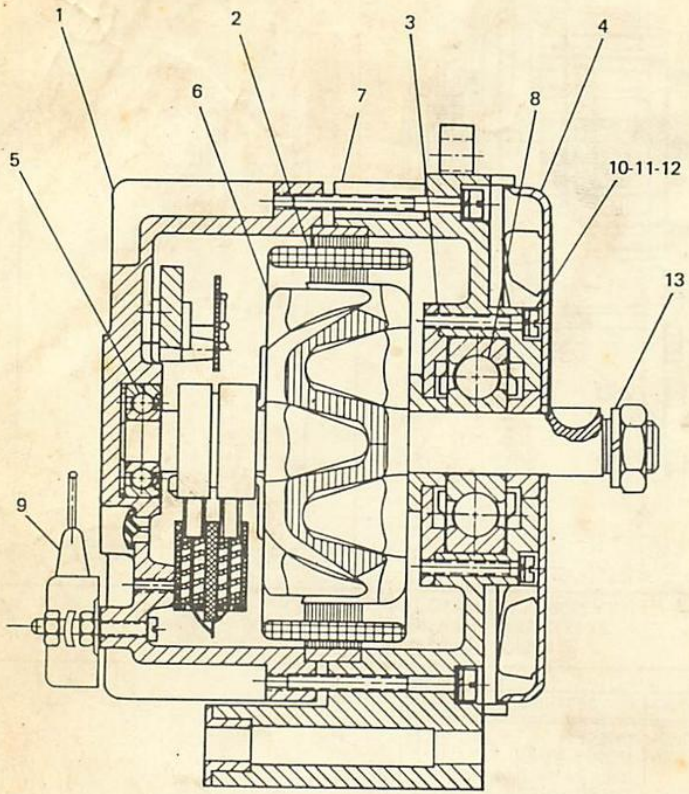

ITEM	PART Nº	DESCRIPTION	QTY.
1	2Y3316	COVER ASSEM.	1
2	2Y3317	STATOR	1
3	2Y3318	DISC	1
4	2Y3319	FAN	1
5	2Y3321	BEARING	1
6	2Y3322	ROTOR	1
7	2Y3323	COVER ASSEM.	1
8	2Y3324	BEARING	1
9	2Y3392	CAPACITOR ASSEM.	1
10	2Y3325	SCREW	4
11	3B4502	LOCKWASHER	4
12	2Y3326	WASHER	4
13	2Y3344	LOCKWASHER	1

THE FOLLOWING SERVICE REPAIR KITS ARE AVAILABLE:

1 - 2Y3327 - ROTOR KIT
1 - 2Y3328 - BRUSH AND SPRING KIT
1 - 2Y3436 - SCREW KIT (D+)
1 - 2Y3333 - SCREW KIT (B+)
1 - 2Y3334 - SCREW KIT (D–)
1 - 2Y3437 - SCREW KIT (DF)
1 - 2Y3438 - SCREW KIT RECTIFIER MTG

SP1197

2Y4212 ALTERNATOR GROUP – 28 Volt – 17 Ampere
Part of 2Y2936 Alternator Group shown on Page 61

2Y1920 STARTING MOTOR ASSEMBLY

Part of 2Y1921 Starting Motor shown on Page 61

ITEM	PART Nº	DESCRIPTION	QTY.
1	2Y2373	PINION	1
2	2Y2374	BAFFLE	1
3	2Y2375	SUPPORT ASSEM.	1
4	2Y2376	SEAL	1
5	2Y2377	BEARING	1
6	2Y2378	SLEEVE	1
7	2Y2379	BEARING	1
8	2Y2380	CLUTCH ASSEM.	1
9	2Y2384	ARMATURE ASSEM.	1
10	2Y2385	BEARING	1
11	2Y2386	COIL ASSEM.	1
12	2Y2387	ROD ASSEM.	1
13	2Y2390	BOLT	8
14	2Y2391	STUD	1
15	2Y2392	SUPPORT ASSEM.	1
16	2Y2393	TERMINAL (Pos.)	1
17	2Y2394	TERMINAL (Neg.)	1

ITEM	PART Nº	DESCRIPTION	QTY.
18	2Y2396	COVER	1
19	2Y2397	SWITCH ASSEM.	1
20	2Y2398	SWITCH ASSEM.	1
21	2Y2399	STUD	3
22	2Y2382	BOLT	2
23	2Y2383	SEAL	1
24	2Y2858	BUSHING	1

THE FOLLOWING REPAIR KITS ARE AVAILABLE:

2Y2400 - Kit (Includes: Nuts, Bushings, Insulators, Lock and Washers)

2Y1799 - Kit (4 Brushes)

2Y2402 - (for Cover) - Includes: Bolt, Washer, Seal and "O" Ring).

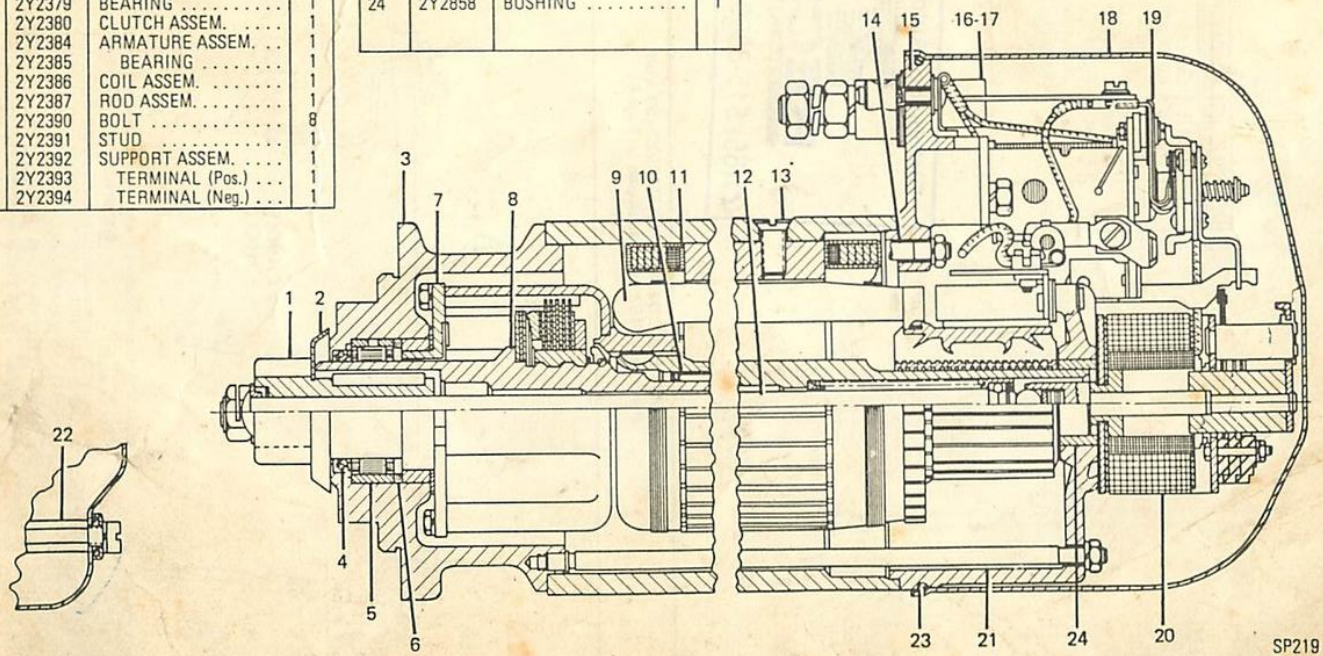

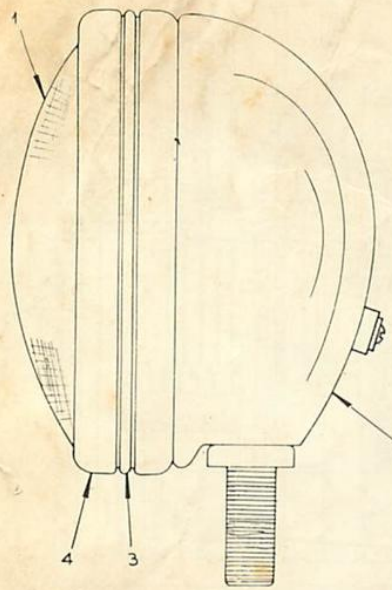

ITEM	PART Nº	DESCRIPTION	QTY.
1	2Y4476	SEALED UNIT	1
2	2P2541	BODY ASSEM.	1
3	2M5282	RING	1
4	2M5284	MOULDING ASSEM..	2
	5M6668	SCREW	2
	FE035430	FORM ..... (Instructions For Installing Lamp Assem.)	1

Distribuidor Autorizado
RECH
TRATORES
(65) 515-8800 Sinop/MT

SP1201

2Y4477 FLOOD LAMP ASSEMBLY – 24 Volt
Part of 4V1163 Lighting shown on Page 65

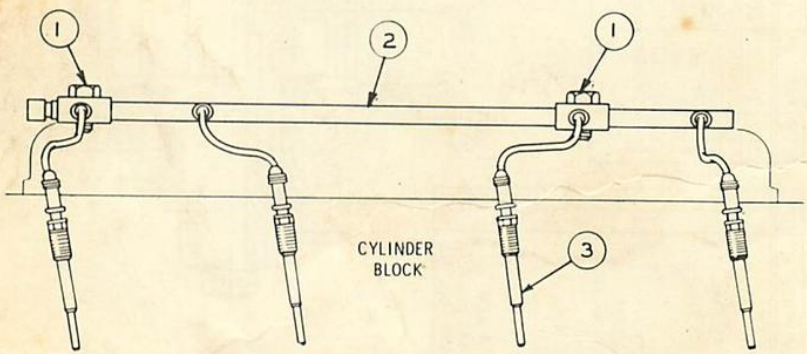

REF. NO.	PART NUMBER	DESCRIPTION	QTY
1	2H3755	BOLT----------	2
C	9M1974	WASHER----------	2
C 2	4N7491	LEAD ASSEM. ----------	1
C 3	4N360	GLOW PLUG---CURTA ----------	4

C INDICATES CHANGE 207037

VELA
1P-7324 COMPRIDA
8600 GLOW PLUG GROUP – 24 Volt
7N-9634 vela FINA curta
4N-7491 " comprida

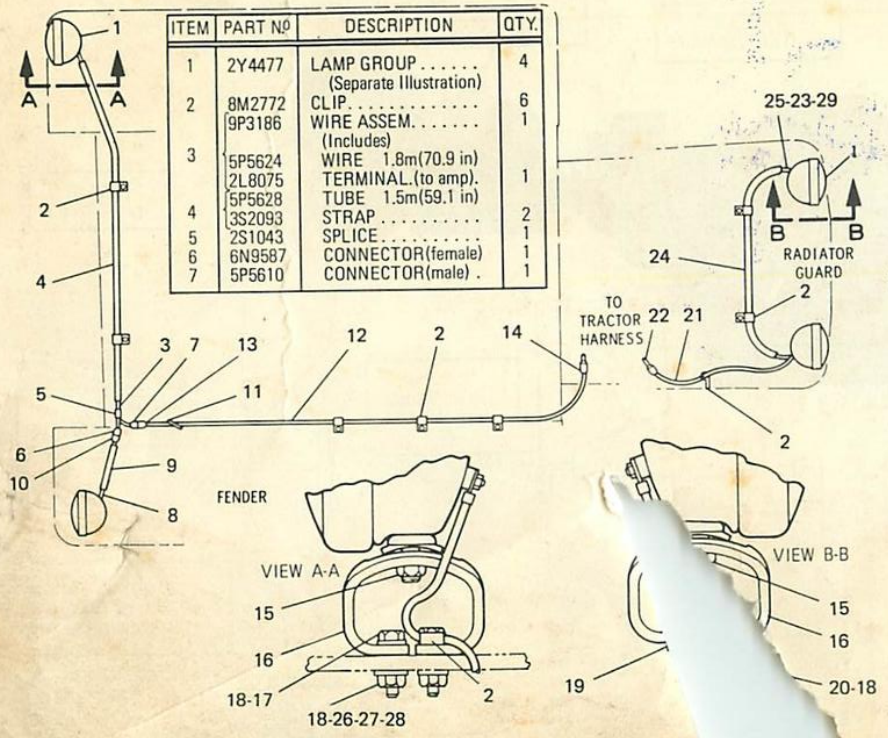

ITEM	PART Nº	DESCRIPTION	QTY.
1	2Y4477	LAMP GROUP . . . . . (Separate Illustration)	4
2	8M2772	CLIP.	6
	9P3186	WIRE ASSEM. . . . . (Includes)	1
3	5P5624	WIRE 1.8m(70.9 in)	
	2L8075	TERMINAL.(to amp).	1
	5P5628	TUBE 1.5m(59.1 in)	
4	3S2093	STRAP	2
5	2S1043	SPLICE	1
6	6N9587	CONNECTOR(female)	1
7	5P5610	CONNECTOR(male) .	1

ITEM	PART Nº	DESCRIPTION	QTY.
	9P3187	WIRE ASSEM. . . . . (Includes)	1
8	5P5624	WIRE .65m(25.59in)	
	2L8075	TERMINAL.(to lamp)	1
	5P5628	TUBE .55m(21.75in)	
9	1S9593	STRAP	2
10	5P5610	CONNECTOR (male)	1
11	3S2093	STRAP	4
12	4V2041	WIRE ASSEM. . . . . (Includes)	1
	5P5623	WIRE 2.3m(90.56in)	
13	6N9587	CONNECTOR(female)	1
14	5P5610	CONNECTOR (male)	1
	5D3183	NUT.	4
15	5D3184	LOCKWASHER	4
	2B8352	WASHER.	8
16	1S1888	BRACKET.	4
17	1D4717	NUT.	8
18	3V3308	WASHER.	8
19	6B933	SPACER	8
20	S1594	BOLT	8
	4V2040	WIRE ASSEM. . . . . (Includes)	1
21	5P5623	WIRE 1.7m(66.93in)	
	2L8075	TERMINAL.(to lamp)	1
22	5P5610	CONNECTOR (male)	1
	6K5843	WIRE ASSEM. . . . . (Includes)	1
23	5P5629	WIRE 1.13m(44.5in)	
24	5P5999	TUBE .711m(28 in)	
25	2L8075	TERMINAL.	2
26	3B1915	BOLT	8
27	4B5271	WASHER.	8
28	5P1075	WASHER.	8
29	6K806	TIE	1

SP1202

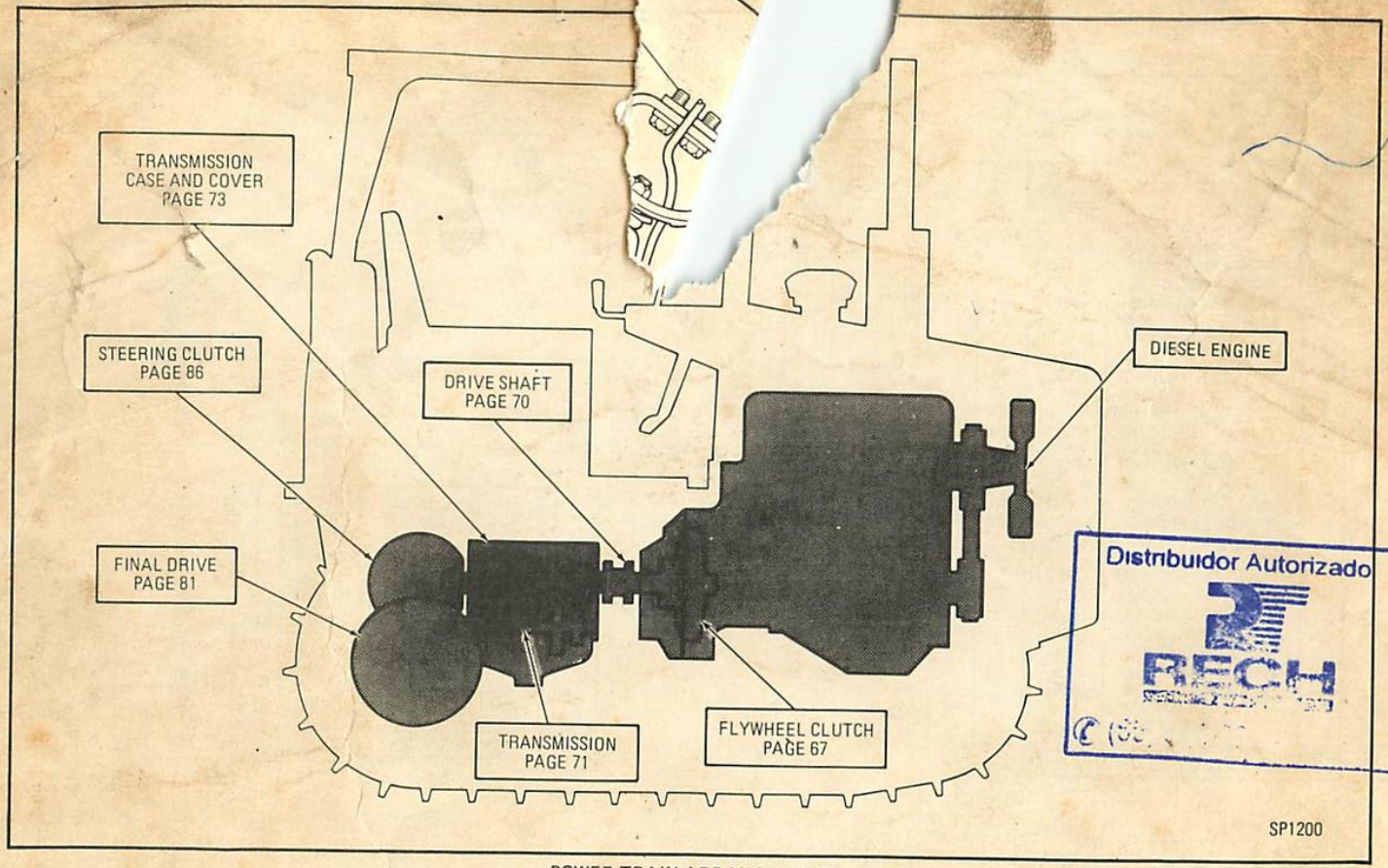

POWER TRAIN ARRANGEMENT

Distribuidor Autorizado
BECH

ESPECIFICAÇÕES

(SUJEITAS A ALTERAÇÕES SEM AVISO PRÉVIO)

Peso de embarque, aproximado	7 370 kg

DIMENSÕES

Comprimento	3 190 mm
Altura (fora o tubo de descarga)	2 690 mm
Largura	1 980 mm
Bitola (centro a centro das esteiras)	1 520 mm
Altura livre por baixo	360 mm
Altura da barra de tração	550 mm

QUANTIDADES CONTIDAS

Sistema de arrefecimento	30 litros
Cárter do motor	19 litros
Caixa de mudanças	9 litros
Embreagens de direção	9 litros
Comando final (cada)	10 litros
Tanque de combustível	238 litros
Embreagens de direção e reforçador hidráulico	68 litros

ACESSÓRIOS

Existem disponíveis equipamentos extras tais como pára-choque, protetor do cárter, guarda-mato, controles hidráulicos, sistema de iluminação, cabine, barra de tração oscilante, rodas-guias grandes, ventilador de pás reversíveis, cinto de segurança, ventilador succionador, tensor hidráulico das esteiras, etc. Consulte o seu Revendedor Caterpillar.

SITUAÇÃO DO NÚMERO DE SÉRIE

Existem placas com o número de série no lado esquerdo do bloco do motor, no lado esquerdo superior da caixa da coroa e no lado interno da caixa da bateria esquerda.

PRINTED IN BRAZIL FORM ZEBP062

SPECIFICATIONS

(SUBJECT TO CHANGE WITHOUT NOTICE)

Weight, shipping (approximate)	16,230 lbs.

DIMENSIONS

Length	10' 5 5/8"
Height (without stack)	8' 10"
Width	6' 6"
Gauge (center to center tracks)	60"
Ground Clearance	14"
Drawbar Height	21 5/8"

CAPACITIES
(Refill)

Cooling System	8 U.S. Gal.
Crankcase, lubricating oil	5 U.S. Gal.
Transmission, lubricating oil	2 1/4 U.S. Gal.
Flywheel Clutch	2 1/4 U.S. Gal.
Steering Clutch Case and Booster System	18 U.S. Gal.
Final Drive, lubricating oil, each side	2 1/2 U.S. Gal.
Fuel Tank	63 U.S. Gal.

ATTACHMENTS

Additional equipment such as Bumpers, Crankcase & Brush Guards, Hydraulic Controls, Lighting System, Cabs, Swinging Drawbar, Large Front Idlers, Reversible Fan, Seat Belt, Suction Fan, Hydraulic Track Adjusters, etc., are available at extra cost. Consult your Caterpillar Dealer.

MACHINE SERIAL NUMBER PLATE LOCATION

Serial number plates are located on the upper rear side of the Steering Clutch Case, on the left-hand side of the Cylinder Block and on the inner surface of the left-hand Battery Box Assembly.



ELECTRICAL TAPE

1P810 (plastic) 2/3" (20mm) width
66 ft. (20m) length
9B4287 (cloth) 3/4" (20mm) width
30 ft. (9M) length
(Plastic tape comes in dispenser. Cloth tape does not.)

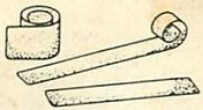

9S8703 ANTI-SKID TREADS

(May be ordered by foot lengths up to 60 feet (18,30m), width 4" (100mm)

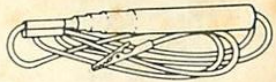

8S4627 CIRCUIT TESTER

(Maximum Capacity: 10 oms)



BUTTON PLUGS

Hole Diameter Inches	mm	Part Number
.219	5,6	4L0820
.310	7,9	7L6479
.380	9,7	5L6688
.438	11,1	4L0821
.469	11,9	3D9871
.484	12,3	8M3839
.500	12,7	3D9872
.625	15,9	2M4009
.687	17,5	6K2660
.750	19,0	5K3546
.875	22,2	5H4871
1.000	25,4	2D3406
1.250	31,8	4S6336
1.375	34,9	4F8711
1.500	38,1	3L1979
2.000	50,8	1L6377
2.250	57,2	7M3248
2.500	63,5	3L8852
3.000	76,2	1L6366



MAGNETIC DRAIN PLUGS

Type	Thread Size-Threads Per Inch	Head Inches	A Inches	A mm	Part No.
I	5/8 - 11	7/8 Hex	1 3/16	26,9	5K1555
I	5/8 - 18	7/8 Hex	3/4	19,1	2R166
I	7/8 - 14	1 1/8 Hex	1 3/16	30,2	3H4190
I	1 1/8 - 12	1 1/2 Hex	1 1/2	38,1	8M3837
I	1 1/8 - 12	1 1/2 Hex	1 7/8	47,8	2J1559
I	1 1/2 - 12	1 Hex	1 1/2	38,1	8M5576
I	1 1/2 - 12	1 7/8 Hex	1 7/8	47,8	2D8390
II	1/2 - 14	9/16 Sq.	1 1/8	28,5	2F3628
II	3/4	5/8 Sq.	1 1/4	31,8	2H3865
II	7/8 - 14	7/8 Hex	1 5/8	41,3	2R1491
II	1 Std. Pipe Thd.	13/16 Sq.	1 7/16	36,6	2H3864
II	1 1/4 Std. Pipe Thd.	15/16 Sq.	1 11/16	42,9	2H3863
II	1 1/4 Std. Pipe Thd.	15/16 Sq.	1 3/8	35,0	7H3664
III	3/4 - 14 Pipe Thd., Fine	1/2 Sq.	1 3/16	30,2	5D1894
III	1 - 11 1/2 Pipe Thd., Fine	1/2 Sq.	1 5/16	33,4	2K744
III	1 1/4 - 11 1/2 Pipe Thd., Fine	3/4 Sq.	13/16	20,6	5S4017
III	2 - 12	3/4 Sq.	1 11/16	42,9	8B6599

139340

RELATED REPAIR ITENS



GASKET CEMENT

5H2471 8 oz. (227 g)



EPOXY CEMENT

5M2941 2 - 2 oz. (57g) Tube



BEARING LUBRICANT

2S3230 14 1/2 oz. (411 g)



GASKET SEALER

4H5363 11 oz. (312 g)
(fast drying-hard setting)
8H5137 11 oz. (312 g)
(non-hardening)



ANTI-SEIZURE COMPOUND

4S9416 16 oz. (454 g) Aerosol
9M3710 16 oz. (454 g) Paste



GLASS OR PLASTIC CEMENT

3S1831 1 pint (0.473 L)



LIQUID GASKET

7M7260 8 oz. (227 g)



SEALING COMPOUND

5S1454 1 pint (0.473 L)



GREASE - SILICONE

4L7464 8 oz. (227 g)



CHAIN & CABLE LUBRICANT

9S6106 16 oz. (454 g) Aerosol
2P2737 Case of 12

BELT DRESSING

9S6107 16 oz. (454 g) Aerosol
2P2738 Case of 12

ELECTRO-INSULATION SPRAY

9S6108 16 oz. (454 g) Aerosol
2P2739 Case of 12

PENETRATING OIL

9S6109 16 oz. (454 g) Aerosol
2P2740 Case of 12

BATTERY SAVER & CLEANER

9S6110 16 oz. (454 g) Aerosol
2P2741 Case of 12



9S3262 SEALANT REPAIR KIT

contains:

Bearing Mount	7M7456	1 2/3 fl. oz. (50 cc)
Thread Lock	9S3263	1 2/3 fl. oz. (50 cc)
Pipe Sealant	9S3264	1 2/3 fl. oz. (50 cc)
Retaining Compound	9S3265	1 2/3 fl. oz. (50 cc)
Quick Cure Primer	8M8060	6 oz. (170 g) Aerosol



SILICONE FLUID

8M553 145 cc.
9M5165 150 cc.



GREASE GUN CARTRIDGE

1P808 14 1/2 oz. (411 gms)



COOLING SYSTEM INHIBITOR

3P2043 1 pint (0.473 L)
P0001 1 case of 12
3P2044 1 quart (0.946 L)
P0002 1 case of 12

139339



1P2305 ELECTRIC TERMINAL KIT

(Insulated)
(Includes terminals, wire joints and crimping tool)

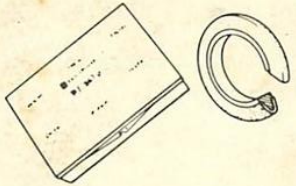

9S3138 SEAL KIT

(Includes 28 metal - backed seals)

Qty.	Nominal Size	Part No.
2	1/2 inch (1,27 cm)	5J1583
6	3/4 inch (1,905 cm)	6J3575
6	1 inch (2,54 cm)	6J3600
6	1 1/4 inch (3,175 cm)	6J3625
4	1 1/2 inch (3,81 cm)	6J3650
4	2 inches (5,08 cm)	6J3800



9S3135 SEAL KIT

(Includes 60 rubber O-ring seals)

Qty.	Nominal Size	Part No.
10	1/2 inch (1,27 cm)	4J5140
10	3/4 inch (1,905 cm)	4J5267
10	1 inch (2,54 cm)	4J0520
10	1 1/4 inch (3,175 cm)	4J0522
10	1 1/2 inch (3,81 cm)	4J0524
10	2 inches (5,08 cm)	4J0527

THREADED INSERTS KITS

Master (Includes inserts and tools)

Coarse	Fine	Size
9S3700	9S3500	Assorted

Repair (Includes inserts and tools)

9S3510	9S3509	#10
9S3512	9S3511	1/4
9S3514	9S3513	5/16
9S3618	9S3515	3/8
9S3620	9S3619	7/16
9S3622	9S3621	1/2
9S3624	9S3623	9/16
9S3626	9S3625	5/8
9S3628	9S3627	3/4
9S3630	9S3629	7/8
9S3632	9S3631	1
9S3633		1 1/8
9S3635		1 1/4
9S3637		1 1/2

Refill (Includes inserts)

9S3674	9S3673	#10
9S3649	9S3639	1/4
9S3650	9S3640	5/16
9S3651	9S3641	3/8
9S3652	9S3642	7/16
9S3653	9S3643	1/2
9S3654	9S3644	9/16
9S3655	9S3645	5/8
9S3656	9S3646	3/4
9S3657	9S3647	7/8
9S3658	9S3648	1
9S3675		1 1/8
9S3677		1 1/4
9S3679		1 1/2

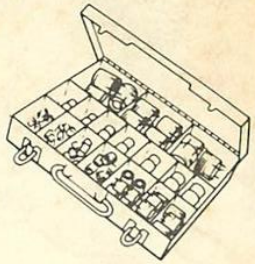



HARDWARE ASSORTMENT KITS

8S7198 Course Thread Hex Nut
8S7197 Fine Thread Hex Nut
8S7196 Lockwasher Assortment
8S7195 Flatwasher Assortment
8S7193 Woodruff Key Assortment

139338

MEMORANDA

MEMORANDA

1	2Y3685	TRANSFER – Address
2	2P931	FILM – Cat
2	8S3923	FILM – Corporate Symbol
2	5P6480	FILM – D4E
1	8S3943	FILM – Caterpillar
1	5P1094	FILM – Warning In Operator Compartment Positioned So Seated Operator Can Read
1	8S3694	FILM – Direct Electric Starting On Top Of Instrument Cover
1	2Y3898	FILM – Drain Valve Adjacent to fuel Tank Filler Cap
1	2Y2171	FILM – Warning Near Radiator Filler Cap On Top Of Radiator Guard
1	5P8492	FILM – Lubrication In Side Of LH Acess Dorr (Battery)
1	2Y4249	PLATE – Tractor Number LH Upper Rear side of Steering Clutch Case
4	4B4158	SCREW – Drive
1	2Y3904	FILM PARKING BRAKE Vertical Surface Adjacent to Parking Brake Lever
1	2Y4236	FILM PARKING BRAKE VERTICAL SURFACE Adjacent to Parking Brake Lever

SP1167

NAME PLATE AND TRANSFERS

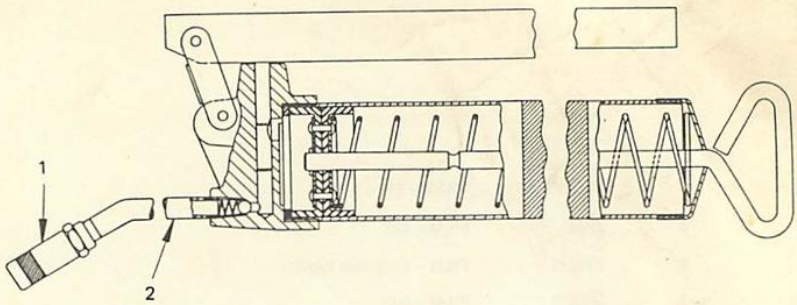

ITEM	PART Nº	DESCRIPTION	QTY.
1	1G100	COUPLING HYDR. . . .	1
2	1G101	NIPPLE	1

SP1060

8F9866 GREASE GUN
Part of 2Y1836 Hand Tool shown on Page 116
AN ATTACHMENT

5P9414	Valve Grinding
5P9415	Central and Lower Structure
5P9416	Front Structure
5P9417	Rear Structure
5P8768	Single Cylinder Liner
5P8771	Water Pump
5P9102	Engine Oil Cooler and Lines
5P9419	Fuel Injection
5P9420	Transmission Case
5P9421	Transmission
5P9422	Gearshift Control
5P9423	Flywheel Clutch
5P9424	Oil System

GASKET KITS

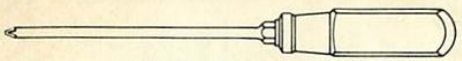

1P5521 SCREWDRIVER
NO. 2 PHILLIPS



2P8250 STRAP WRENCH ASSEM.



5S9569 SOCKET

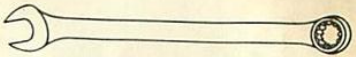

1P5522 WRENCH (5/16" Opening)
1P5523 WRENCH (3/8" Opening)
1P5524 WRENCH (1/2" Opening)
1P5528 WRENCH (7/8" Opening)
1P5525 WRENCH (9/16" Opening)
1P5526 WRENCH (5/8" Opening)
1P5527 WRENCH (3/4" Opening)
1P5529 WRENCH (1" Opening)
• 9F3869 WRENCH (2 3/4" Opening)

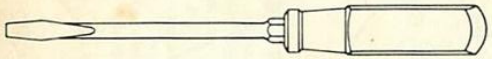

1P5518 SCREWDRIVER



5S9568 SOCKET



5P1763 SOCKET

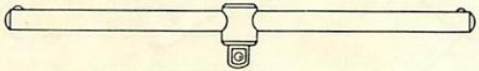

5S9566 WRENCH

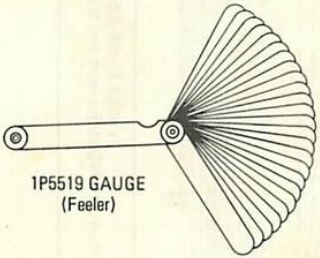

1P5519 GAUGE
(Feeler)



1P5530 SOCKET (9/16" Opening)
1P5534 SOCKET (7/8" Opening)
1P5535 SOCKET (15/16" Opening)
1P5536 SOCKET (1" Opening)
1P5537 SOCKET (11/8" Opening)
5P6227 SOCKET (1/2" Opening)
2Y2577 SOCKET (3/8" Opening)

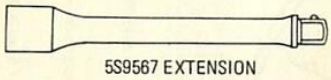

5S9567 EXTENSION

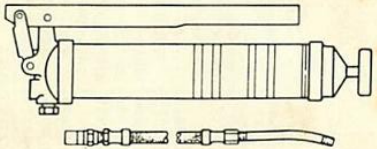

8F9866 GREASE GUN (Lever)
(See Separate Illustration)

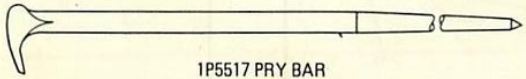

1P5517 PRY BAR

• NOT PART OF 2Y2578 HAND TOOL GROUP

SP1209

2Y2578 HAND TOOLS GROUP
8F9866 Grease Gun parts are shown on Page 117
AN ATTACHMENT

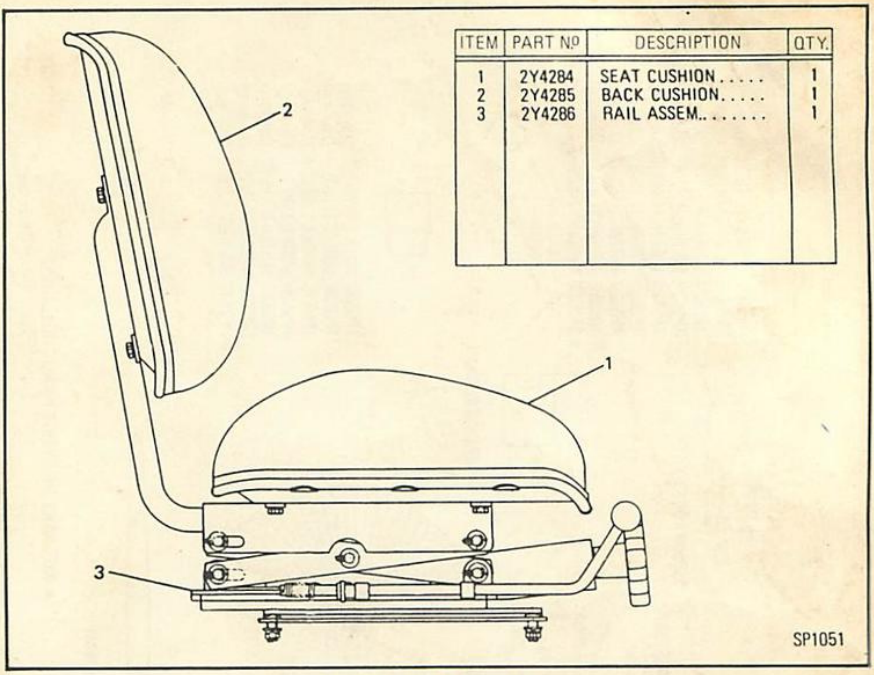

ITEM	PART Nº	DESCRIPTION	QTY.
1	2Y4284	SEAT CUSHION.....	1
2	2Y4285	BACK CUSHION.....	1
3	2Y4286	RAIL ASSEM.....	1

2Y4251 SEAT ASSEMBLY
Part of 8P4901 Support and Seat shown on Page 112

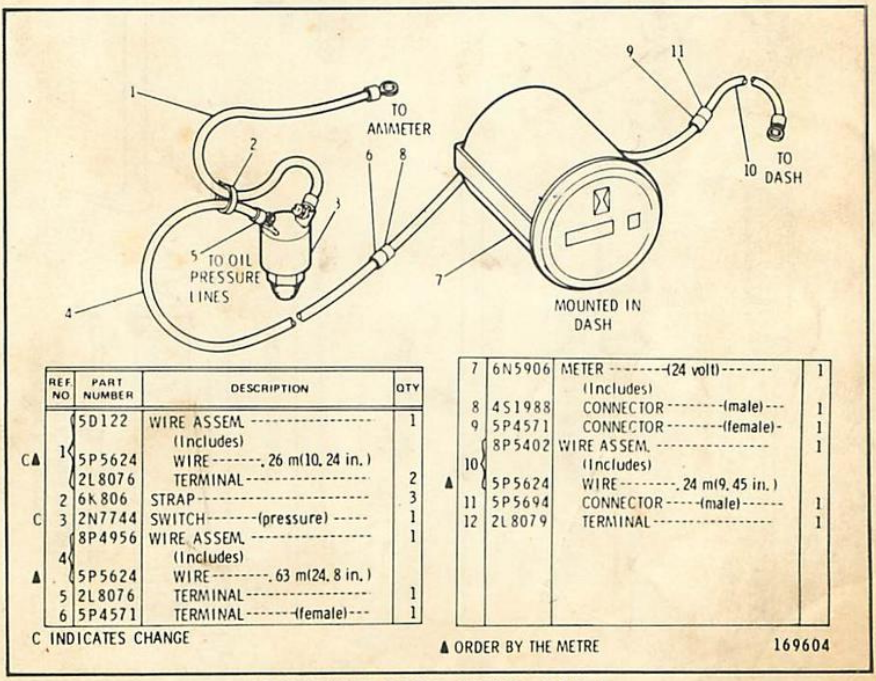

	REF NO	PART NUMBER	DESCRIPTION	QTY
	1	5D122	WIRE ASSEM. (Includes)	1
CA		5P5624	WIRE-------.26 m(10.24 in.)	
		2L8076	TERMINAL	2
	2	6K806	STRAP	3
C	3	2N7744	SWITCH--------(pressure)	1
	4	8P4956	WIRE ASSEM. (Includes)	1
▲		5P5624	WIRE--------.63 m(24.8 in.)	
	5	2L8076	TERMINAL	1
	6	5P4571	TERMINAL-------(female)	1
	7	6N5906	METER --------(24 volt)-------- (Includes)	1
	8	4S1988	CONNECTOR--------(male)	1
	9	5P4571	CONNECTOR--------(female)	1
	10	8P5402	WIRE ASSEM. (Includes)	1
▲		5P5624	WIRE--------.24 m(9.45 in.)	
	11	5P5694	CONNECTOR-----(male)	1
	12	2L8079	TERMINAL	1

C INDICATES CHANGE

▲ ORDER BY THE METRE

169604

8P4957 HOUR METER GROUP — 24 Volt

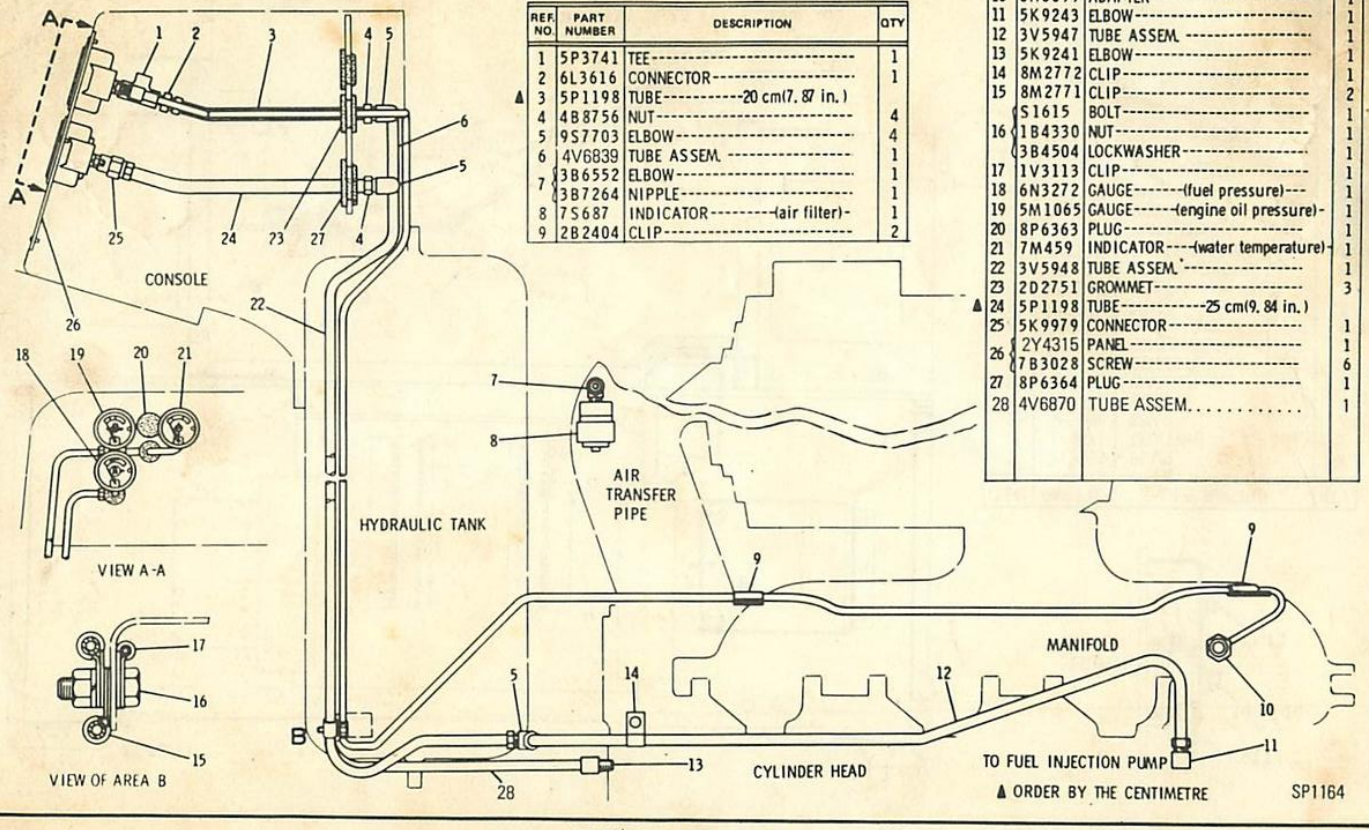

REF. NO.	PART NUMBER	DESCRIPTION	QTY
1	5P3741	TEE	1
2	6L3616	CONNECTOR	1
▲ 3	5P1198	TUBE----------20 cm(7.87 in.)	
4	4B8756	NUT	4
5	9S7703	ELBOW	4
6	4V6839	TUBE ASSEM.	1
7	3B6552	ELBOW	1
	3B7264	NIPPLE	1
8	7S687	INDICATOR---------(air filter)-	1
9	2B2404	CLIP	2
10	6H6699	ADAPTER	1
11	5K9243	ELBOW	1
12	3V5947	TUBE ASSEM.	1
13	5K9241	ELBOW	1
14	8M2772	CLIP	1
15	8M2771	CLIP	2
16	S1615	BOLT	1
	1B4330	NUT	1
	3B4504	LOCKWASHER	1
17	1V3113	CLIP	1
18	6N3272	GAUGE-------(fuel pressure)---	1
19	5M1065	GAUGE------(engine oil pressure)-	1
20	8P6363	PLUG	1
21	7M459	INDICATOR----(water temperature)-	1
22	3V5948	TUBE ASSEM.	1
23	2D2751	GROMMET	3
▲ 24	5P1198	TUBE----------25 cm(9.84 in.)	
25	5K9979	CONNECTOR	1
26	2Y4315	PANEL	1
	7B3028	SCREW	6
27	8P6364	PLUG	1
28	4V6870	TUBE ASSEM.	1

3V3139 GAUGE GROUP

8P4901 SUPPORT AND SEAT GROUP — Part 3 of 3

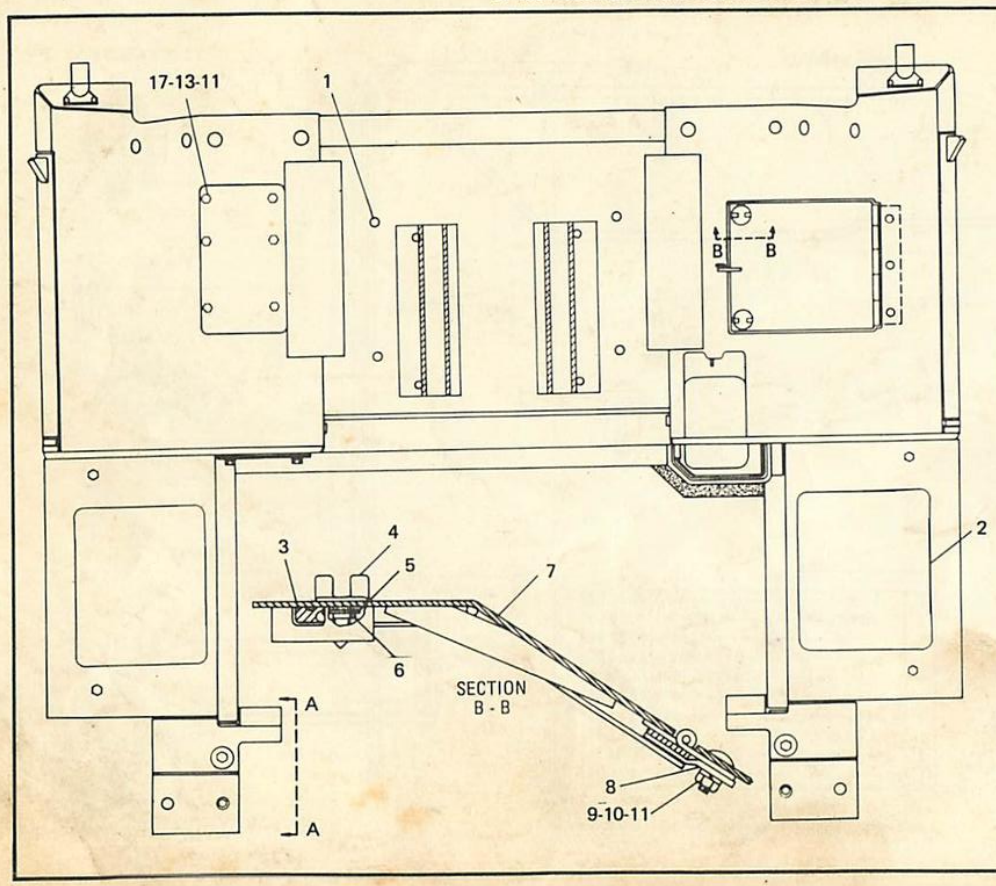

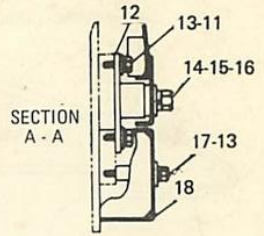

ITEM	PART Nº	DESCRIPTION	QTY.
1	2Y2883	PLUG	4
2	2Y4671	COATING	2
3	5P5968	SEAL	3
4	6D1746	BOLT	2
5	4B4280	WASHER	2
6	3B4610	COTTER	2
7	8P3561	DOOR ASSEM.	1
8	8P3855	PLATE ASSEM.	1
9	1D4717	NUT	3
10	1D4676	BOLT	3
11	3B4506	LOCKWASHER	9
12	9P7764	PLATE ASSEM.	2
13	4B4278	WASHER	6
14	S1585	BOLT	2
15	1B3310	WASHER	2
16	3B4508	LOCKWASHER	2
17	L1143	BOLT	2
18	8P4197	PLATE ASSEM.	1

SP1191

ITEM	PART Nº	DESCRIPTION	QTY.
1	2Y2882	PLUG	14
2	3B4506	LOCKWASHER	8
3	L1351	BOLT	4
4	T703	BOLT	8
5	2Y3076	CUSHION	2
6	2Y4251	SEAT ASSEM. (Separate Illustration)	1
7	8P2452	SUPPORT ASSEM.	1
8	6P3653	PLATE	6

ITEM	PART Nº	DESCRIPTION	QTY.
9	6H1717	BOLT	6
10	3B4508	LOCKWASHER	12
11	8P4605	SUPPORT ASSEM.	6
12	4B4280	WASHER	6
13	7B3235	BOLT	6

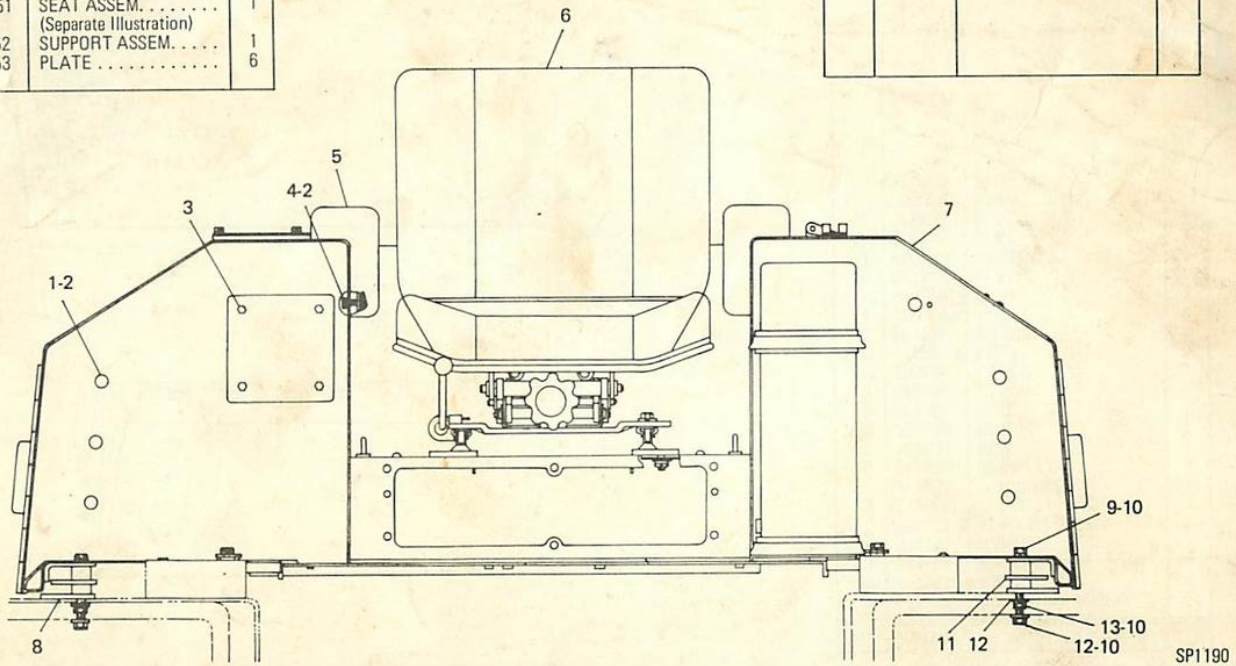

8P4901 SUPPORT AND SEAT GROUP – Part 2 of 3
2Y4251 Seat, parts are shown on Page 115

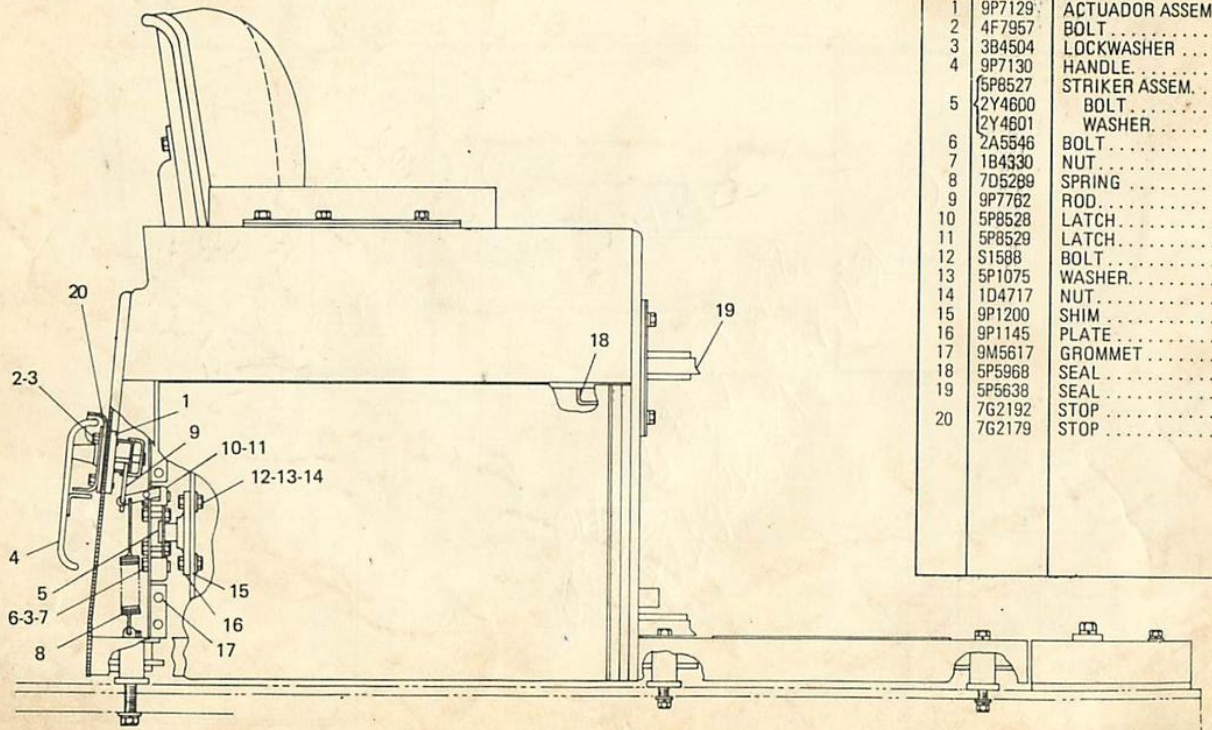

ITEM	PART No	DESCRIPTION	QTY.
1	9P7129	ACTUADOR ASSEM. . .	2
2	4F7957	BOLT	6
3	3B4504	LOCKWASHER	14
4	9P7130	HANDLE.	2
5	5P8527	STRIKER ASSEM.	2
	2Y4600	BOLT	1
	2Y4601	WASHER.	1
6	2A5546	BOLT	8
7	1B4330	NUT	8
8	7D5289	SPRING	2
9	9P7762	ROD.	2
10	5P8528	LATCH	1
11	5P8529	LATCH	1
12	S1588	BOLT	4
13	5P1075	WASHER.	4
14	1D4717	NUT	4
15	9P1200	SHIM	8
16	9P1145	PLATE	2
17	9M5617	GROMMET	8
18	5P5968	SEAL	2
19	5P5638	SEAL	2
20	7G2192	STOP	1
	7G2179	STOP	1

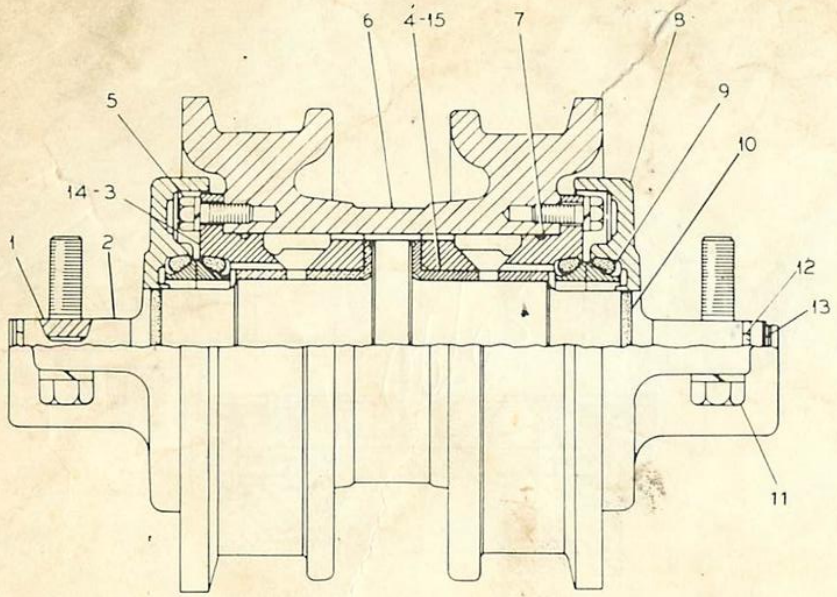

	ITEM	PART Nº	DESCRIPTION	QTY.
	1	4K7392	LOCK	1
	2	3K6616	SHAFT	1
C	3	1V9611	BUSHING ASSEM.	2
	4	7K1089	BUSHING (inner)	1
		9B2289	PIN	2
	5	1A2029	BOLT	12
		3B4506	LOCKWASHER	12
C	6	7K8094	RIM ASSEM.	1
	7	1H8128	SEAL (Standard)	2
			- OR -	
▲		5K1770	SEAL (high temperature)	2
	8	5K7187	COLLAR	2
	9	2M2858	SEAL GROUP	2
		1M3097	RING	2
	10	7F8267	SEAL	2
C	11	S1625	BOLT	4
		4D3704	WASHER	4
	12	6H7382	RING	2
	13	2P347	PLUG	1
		1S8947	SEAL	1
▲	14	7K1103	BUSHING ASSEM. (.040") undersize	2
	15	7K1089	BUSHING (inner)	1
		9B2289	PIN	2

▲ NOT PART OF 7K8096

C INDICATES CHANGE SP1149

7K8096 TRACK ROLLER GROUP - Double Flange - 6 Required

7K8095 TRACK ROLLER GROUP - Single Flange - 4 Required

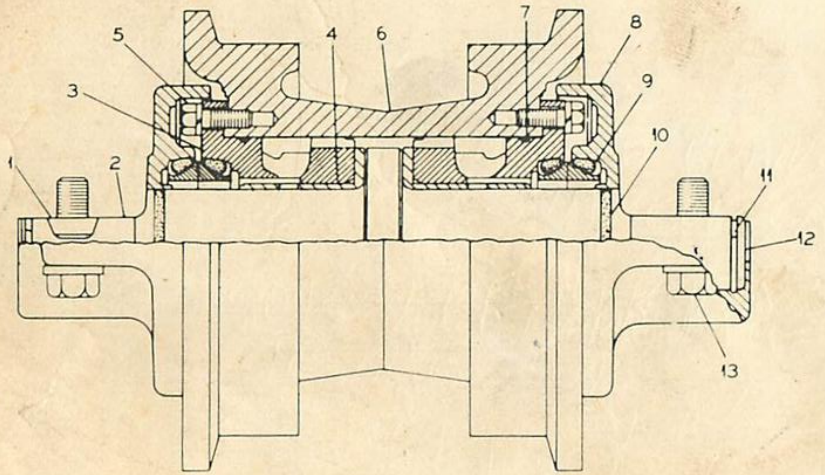

	REF. NO.	PART NUMBER	DESCRIPTION	QTY
	1	4K7392	LOCK	1
	2	3K6616	SHAFT	1
C	3	1V9611	BUSHING ASSEM.	2
▲		7K1103	BUSHING ASSEM. (.040 Undersize)	2
	4	7K1089	BUSHING (Inner)	1
		9B2289	PIN	2
	5	1A2029	BOLT	12
		3B4506	LOCKWASHER	12
	6	7K8091	RIM ASSEM.	1
	7	1H8128	SEAL (Standard)	1
			-OR-	
		5K1770	SEAL (High Temperature)	1
	8	5K7187	COLLAR	2
	9	2M2858	SEAL GROUP	2
		1M3097	RING	2
	10	7F8267	SEAL	2
	11	6H7382	RING	2
	12	2P347	PLUG	1
		1S8947	SEAL	1
C	13	S1625	BOLT	4
		4D3704	WASHER	4

▲ NOT PART OF 7K8095

C INDICATES CHANGE

SP1150

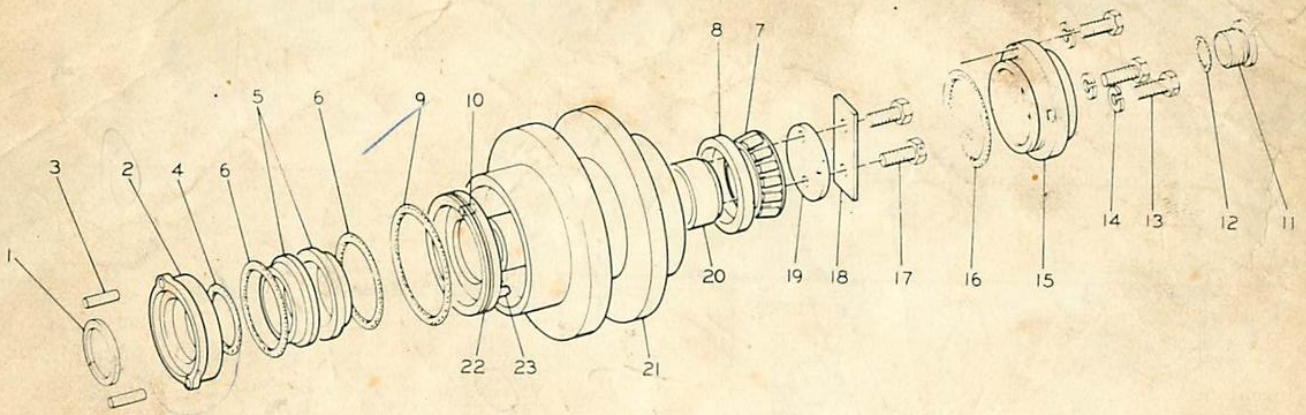

REF. NO.	PART NUMBER	DESCRIPTION	QTY
1	1M7914	RING	1
2	1M7918	COLLAR ASSEM.	1
3	1M4291	DOWEL	2
4	1H9696	SEAL	1
5	2M2858	SEAL GROUP	1
6	1M3097	RING (Rubber)	2
7	1M8735	CONE	2
8	1M8736	CUP	2
9	1H6227	SEAL	1
10	4K4235	CORK	2
11	2P347	PLUG	1
12	1S8947	SEAL	1
13	L1351	BOLT	3
14	3B4506	LOCKWASHER	3
15	6K7583	COVER	1
16	5H8848	SEAL	1
17	T703	BOLT	2
18	T329	LOCK	1
19	6K9860	PLATE	1
20	6K9861	SHAFT	1
21	6K9862	ROLLER	1
22	2M7119	SUPPORT ASSEM.	1
23	2A3348	DOWEL	2

114972

6K9879 TRACK CARRIER ROLLER GROUP – 2 Required

4K5210 TRACK ROLLER FRAME GROUP

Note: Quantities shown are those required for both R.H. and L.H. Sides

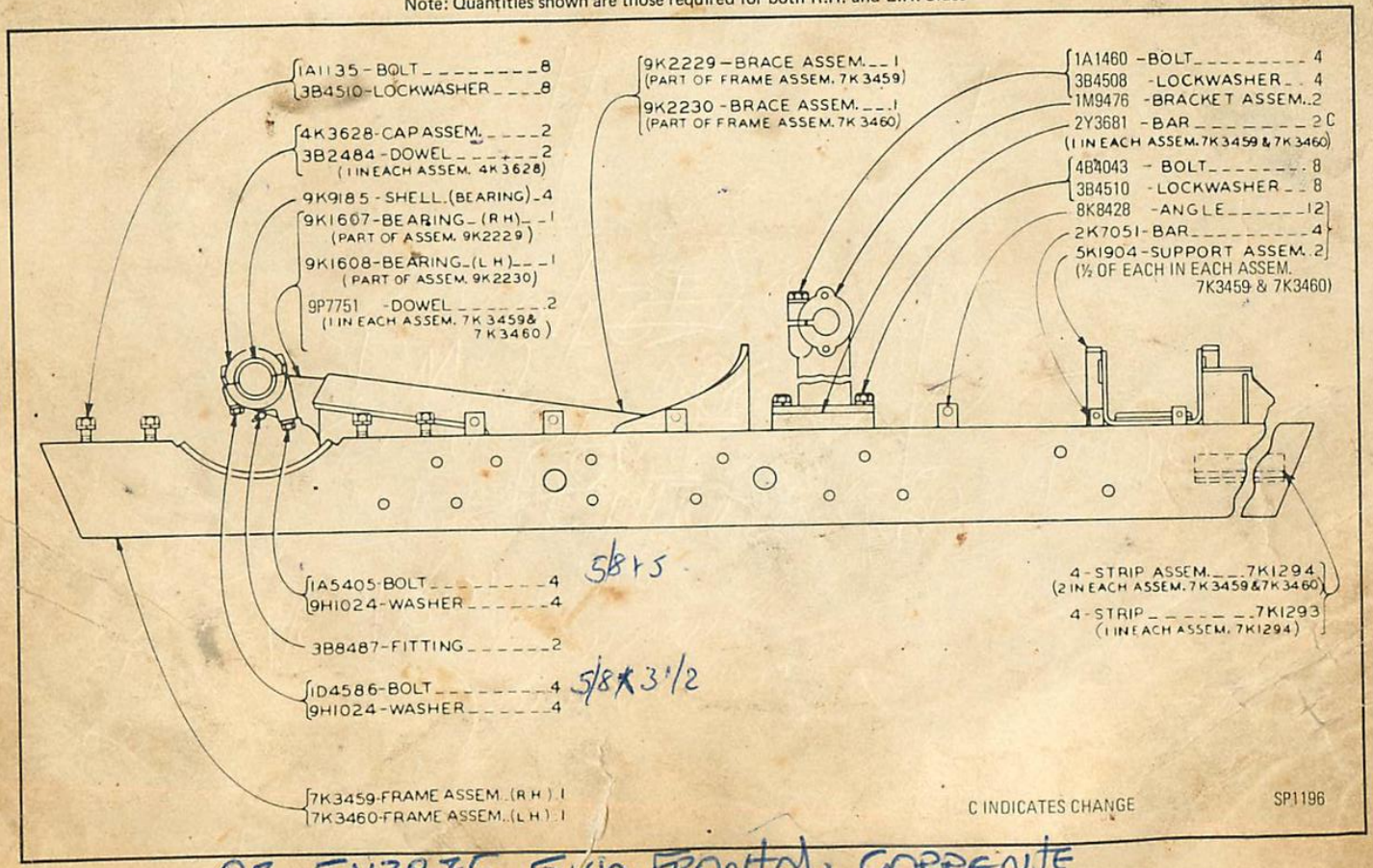

02 5V3876 GUIA FRONTAL CORRENTE
-4 5V3878 GUIA FRONTAL CORRENTE

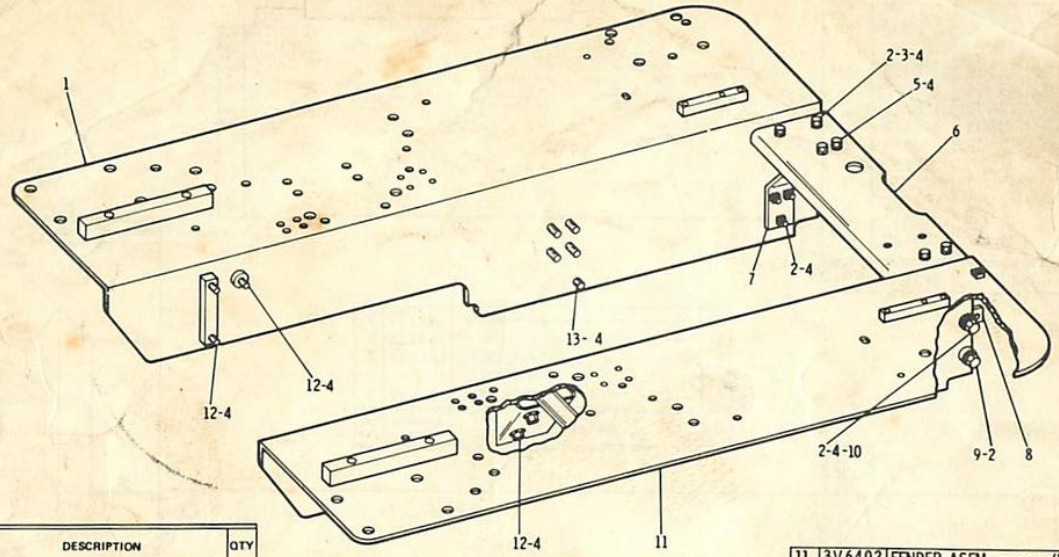

REF. NO.	PART NUMBER	DESCRIPTION	QTY
1	3V6403	FENDER ASSEM. -----(L. H.)----	1
2	S1595	BOLT----------	12
3	1D4719	NUT----------	4
4	3B4508	LOCKWASHER----------	30
5	1A1460	BOLT----------	4
	5B5839	SPACER----------	4
6	3V673	SUPPORT----------	1
7	5K3279	BRACKET ASSEM. ----------	2
8	6M8449	PLATE----------	2

9	S1587	BOLT----------	2
	1K7070	WASHER---------(cup)--------	2
	6K1295	WASHER---11.29 mm(.44 in.) thick	2
	3B3359	WASHER---1.65 mm(.065 in.) thick	2
	4H7745	SPACER----------	2
10	1J8965	WASHER----------	2

11	3V6402	FENDER ASEM. --------(R. H.)--	1
12	2B947	BOLT----------	10
13	S1585	BOLT----------	2
	4B5273	WASHER----------	2

214999

3V2874 FENDER GROUP

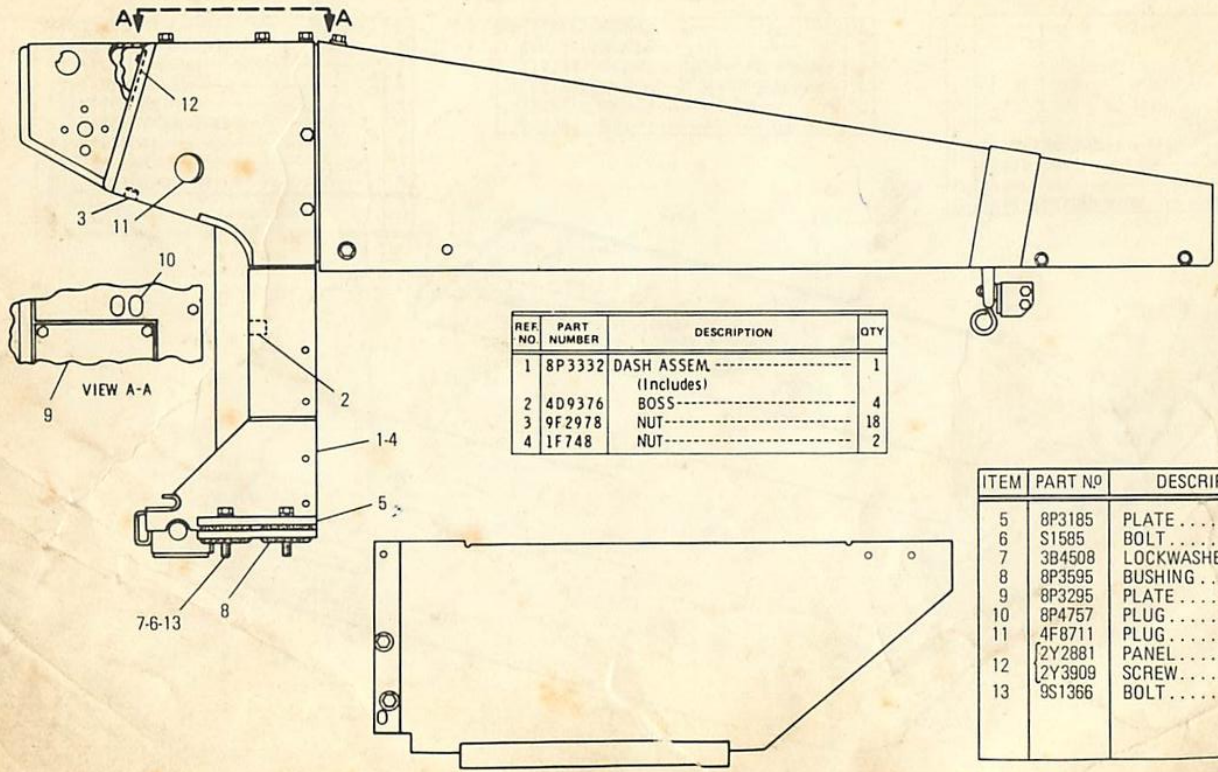

REF. NO.	PART NUMBER	DESCRIPTION	QTY
1	8P3332	DASH ASSEM. (Includes)	1
2	4D9376	BOSS	4
3	9F2978	NUT	18
4	1F748	NUT	2

ITEM	PART Nº	DESCRIPTION	QTY.
5	8P3185	PLATE	2
6	S1585	BOLT	4
7	3B4508	LOCKWASHER	8
8	8P3595	BUSHING	8
9	8P3295	PLATE	1
10	8P4757	PLUG	4
11	4F8711	PLUG	2
12	2Y2881	PANEL	1
	2Y3909	SCREW	4
13	9S1366	BOLT	4

SP1160

5S1601 Pump parts are shown on Page 70

Embreagem

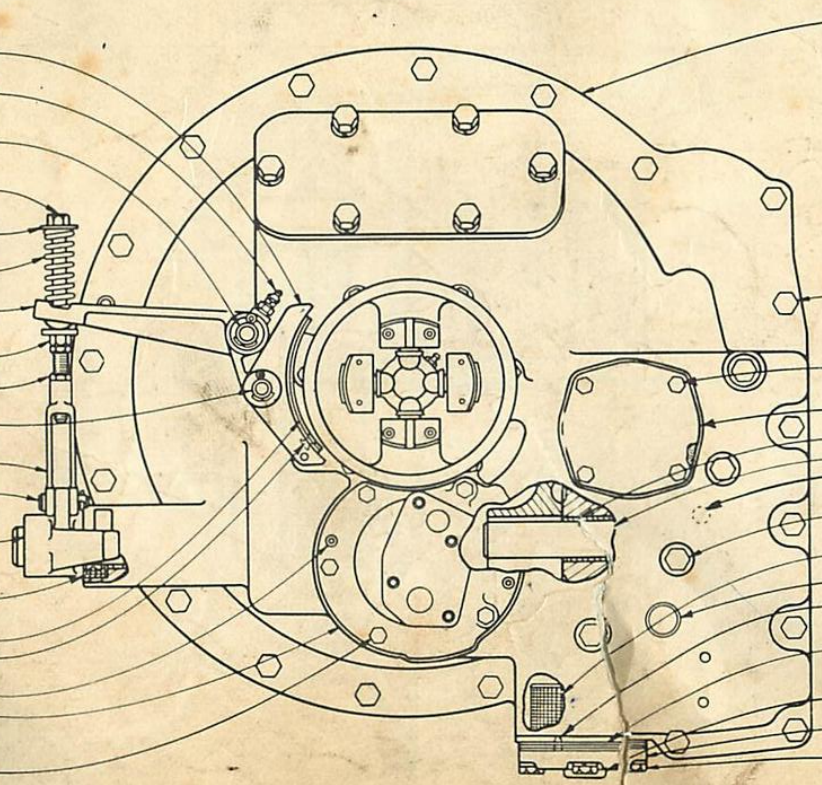

1-SHOE ASSEM. ---1H8946
1-PIN ---------1H8934
(PART OF SHOE ASSEM 1H8946)
1-FITTING ------3B8686
1-PIN ---------1H8933
1-LOCK --------L1604
1-WASHER -------1K485
1-COTTER PIN---3B4628
1-BOLT --------3H1930

1-WASHER -------7F502

1-SPRING -------3H1937

1-LEVER --------1H8938

1-NUT ----------1B4205
1-WASHER -------1F7960
2-NUT ----------1B4430
1-PIN ----------6B7988
1-WASHER -------1F9489
1-COTTER PIN----3B4617
1-END ----------S174
1-PIN ----------S175
1-COTTER PIN----3B4617
1-LEVER --------4K5648
1-BOLT ---------S1625
1-NUT ----------1D4720

1-SEAL ---------7B2174

1-FACING -------1H8379
4-RIVET -------6B4284
(PARTS OF SHOE ASSEM 1H8946)
1-DOWEL --------2A3630
1-PUMP GROUP---5S1601
(SEE SEPARATE ILLUSTRATION)
BOLT----(1 in. long)----S1594
LT----(3 in. long)----S1619
LOCKWASHER---3B4506

4K5363-COVER ----------1

S1585 -BOLT ----------19
3B4508-LOCKWASHER---19

L1351 -BOLT ----------4
3B4506-LOCKWASHER---4
3V5941-COVER ----------1
3K4733-GASKET ----------1
5F2636-BEARING -------3
4K5435-SHAFT ----------1
3F957-DOWEL ----------2
1A7669-BOLT ----------4
3B4508-LOCKWASHER---4
V-531-WASHER ---------4
7H2304-SCREEN ASSEM.--1
1A695-PLUG ------------1
2K5986-PIN ------------1
(Part of 5M3656 Assem.)
8H9501-GASKET --------2

3H4190-PLUG ----------1
2B5721-GASKET --------1
5M3656-COVER ASSEM ---1
1A2029-BOLT ----------6
3B4506-LOCKWAS

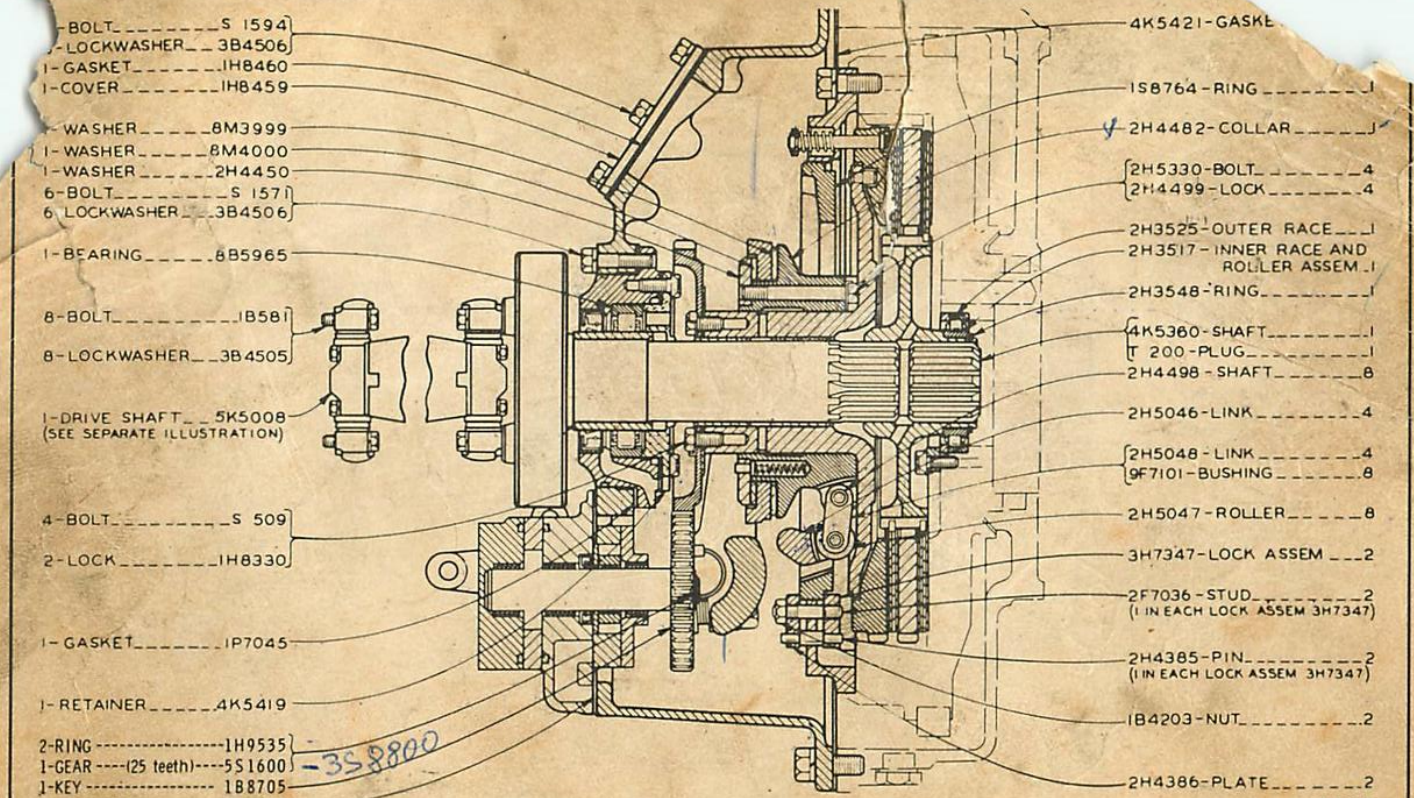

3V3131 FLYWHEEL CLUTCH GROUP — Side View — Part 2 of 3

5K5008 Drive Shaft parts are shown on Page 70

3V5767 TRANSMISSION GROUP – Part 1

Note: This Transmission provides the following speeds: (Forward) First-1.7, Second-2.6, Third-3.4, Fourth-4.4, and Fifth-5.8 M.P.H; (Reverse) First-2.0, Second-2.9, Third-4.0, Fourth-5.2, and Fifth-6.9 M.P.H.

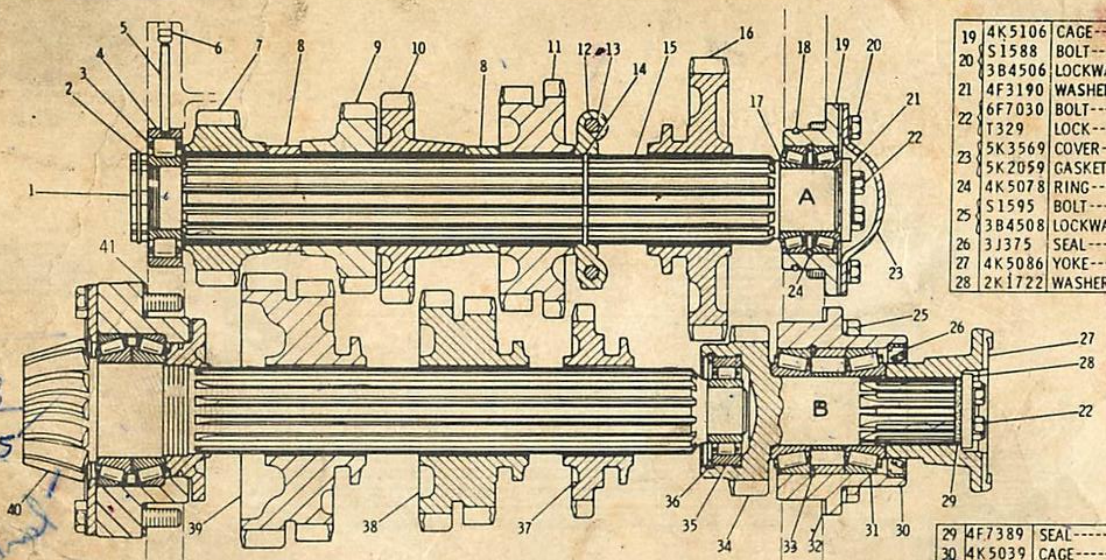

REF. NO.	PART NUMBER	DESCRIPTION	QTY
1	9H6932	NUT	1
2	9H6933	RING	1
3	7M1154	ROLLER ASSEM.	1
4	2D6420	RACE	1
5	2M138	DOWEL	1
6	2A3746	PLUG	2
7	4K5054	GEAR (20 teeth)	1
8	9H6937	SPACER	2
9	9H6926	GEAR (25 teeth)	1
10	9H5907	GEAR (30 teeth)	1
11	1M1692	GEAR (38 & 34 teeth)	1
12	1M1663	COLLAR ASSEM. (Includes)	1
	L478	BOLT	2
13	1B4203	NUT	2
	S2415	LOCK	2
14	1M1655	RING	1
15	4K5098	SHAFT	1
16	1M1700	GEAR (38 teeth)	1
17	4K5080	BEARING ASSEM.	1
18	1H8128	SEAL	1
19	4K5106	CAGE	1
20	S1588	BOLT	12
	3B4506	LOCKWASHER	12
21	4F3190	WASHER	1
22	6F7030	BOLT	6
	T329	LOCK	3
23	5K3569	COVER	1
	5K2059	GASKET	1
24	4K5078	RING	1
25	S1595	BOLT	4
	3B4508	LOCKWASHER	4
26	3J375	SEAL	1
27	4K5086	YOKE	1
28	2K1722	WASHER	1
29	4F7389	SEAL	1
30	4K5039	CAGE	1
31	4K5246	BEARING ASSEM.	1
32	1A1452	GASKET	1
33	5K1276	RING	1
34	4K5074	PINION (22 teeth)	1
35	3B3985	RACE	1
	2J6262	RACE & ROLLER ASSEM.	1
C 36	L2351	RING	1
37	9H7408	GEAR (23 teeth)	1
38	1M1659	GEAR (31 & 27 teeth)	1
39	1M1698	GEAR (41 & 36 teeth)	1
40	3V1025	SHAFT	1
41	2K2939	SEAL	1

C INDICATES CHANGE

REF NO	PART NUMBER	DESCRIPTION	QTY
1	4K5078	RING	1
2	5K3569	COVER	1
3	4F3190	WASHER	1
4	4K5080	BEARING ASSEM.	1
5	5K2059	GASKET	1
6	4K5106	CAGE	1
7	1H8128	SEAL	1

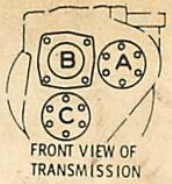

FRONT VIEW OF TRANSMISSION

14	6L2305	SEAL	
15	4B1127	RING	
16	3V6599	SHAFT	
	1A9759	PIN	
17	4K5081	RETAINER	
18	1M1994	BEARING ASSEM.	
19	9F3823	SEAL	1
20	4V2512	NUT	1
21	1A5822	BOLT	7
22	4K5420	LOCK	2

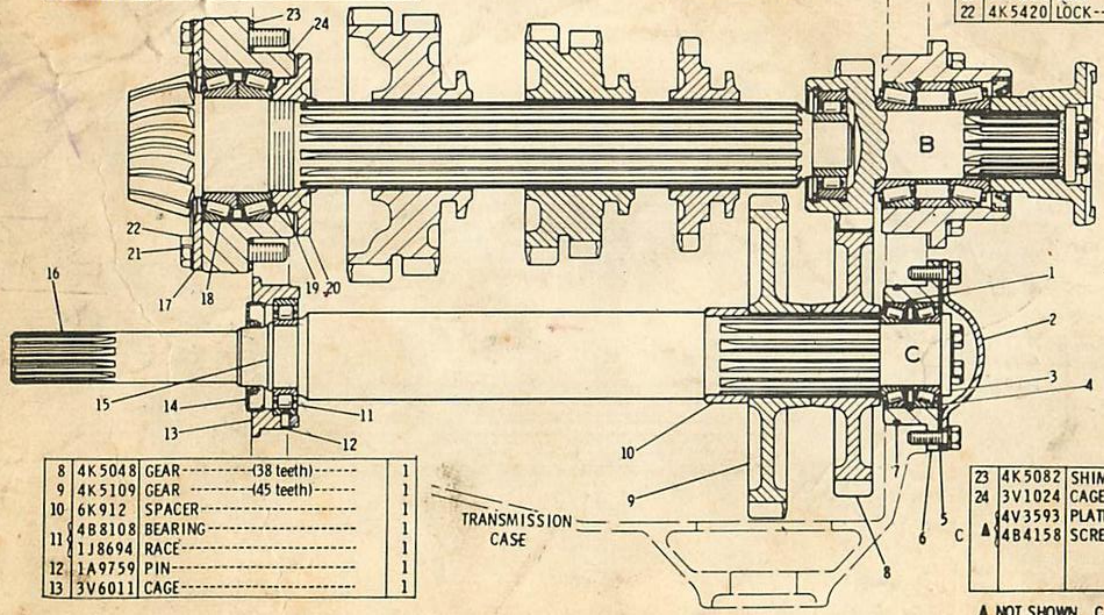

8	4K5048	GEAR (38 teeth)	1
9	4K5109	GEAR (45 teeth)	1
10	6K912	SPACER	1
11	4B8108	BEARING	1
	1J8694	RACE	1
12	1A9759	PIN	1
13	3V6011	CAGE	1

23	4K5082	SHIM	2
24	3V1024	CAGE	1
▲ C	4V3593	PLATE (number)	1
	4B4158	SCREW	2

▲ NOT SHOWN C INDICATES CHANGE 216038

3V5767 TRANSMISSION GROUP – Part 2

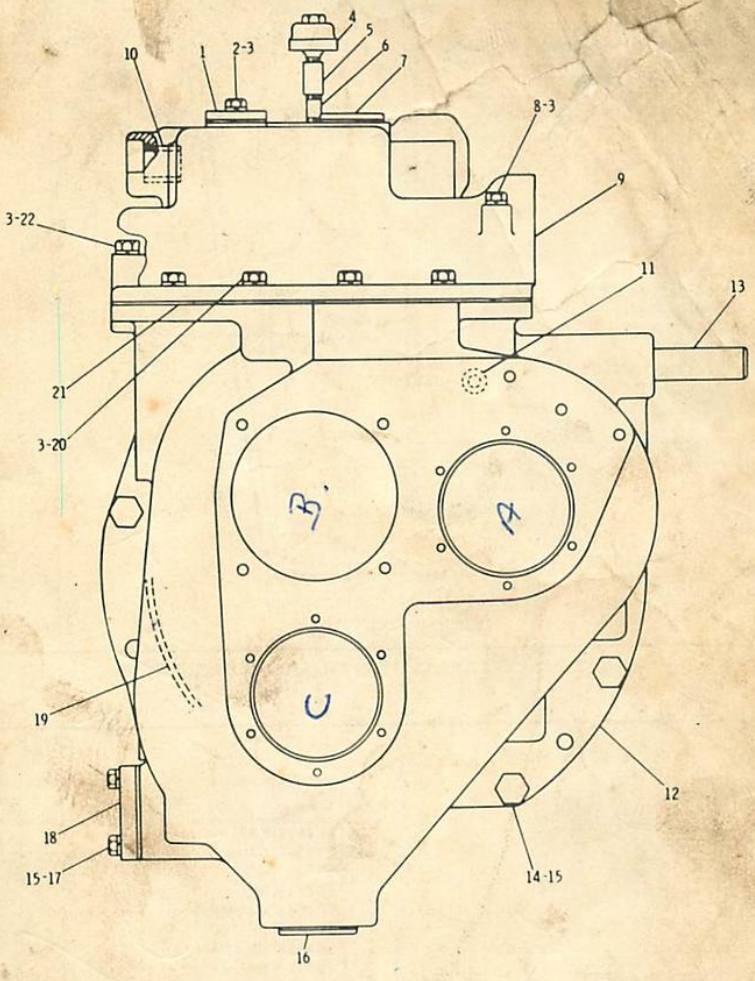

REF. NO	PART NUMBER	DESCRIPTION	QTY
1	4B4948	COVER	1
	2A4554	GASKET	1
2	S509	BOLT	2
3	3B4506	LOCKWASHER	17
4	1F8488	BREATHER	1
5	3B6488	COUPLING	1
6	3B7262	NIPPLE	1
7	4B2363	PLUG	1
	6F4868	GASKET	1
8	8S9191	BOLT	1
9	4K5173	COVER	1
10	5H3895	BUSHING	2
11	8F3469	SEAL	1
12	3V6269	CASE ASSEM. (Includes)	1
13	1M1917	SHAFT	1
14	S1587	BOLT	10
15	3B4508	LOCKWASHER	13
16	8B6599	PLUG	1
	L1124	GASKET	1
17	S1585	BOLT	3
18	3V6	COVER	1
	3V6010	GASKET	1
19	4K5714	SEAL	1
20	4K5469	BOLT	11
21	4K5264	GASKET	1
22	L2070	BOLT	3

SP1156

3V3123 TRANSMISSION CASE AND COVERS GROUP – End View

REF NO	PART NUMBER	DESCRIPTION	QTY
1	5K3294	CLIP	1
2	2Y4228	GUAGE ASSEM.	1
3	S1594	BOLT	1
	5P1075	WASHER	1
4	1D4717	NUT	2
5	684497	CAP	1
6	S1591	BOLT	4
7	5M2894	WASHER	2
8	1A2029	BOLT	1
	4B4278	WASHER	1
9	3B4506	LOCKWASHER	5
10	2L2685	CLIP	1
11	3V3764	TUBE ASSEM.	1
12	4V1932	BRACKET	1
13	4H2719	GASKET	1
14	5D353	BOLT	2
15	3V3962	TUBE ASSEM.	1
16	4K5537	GASKET	1

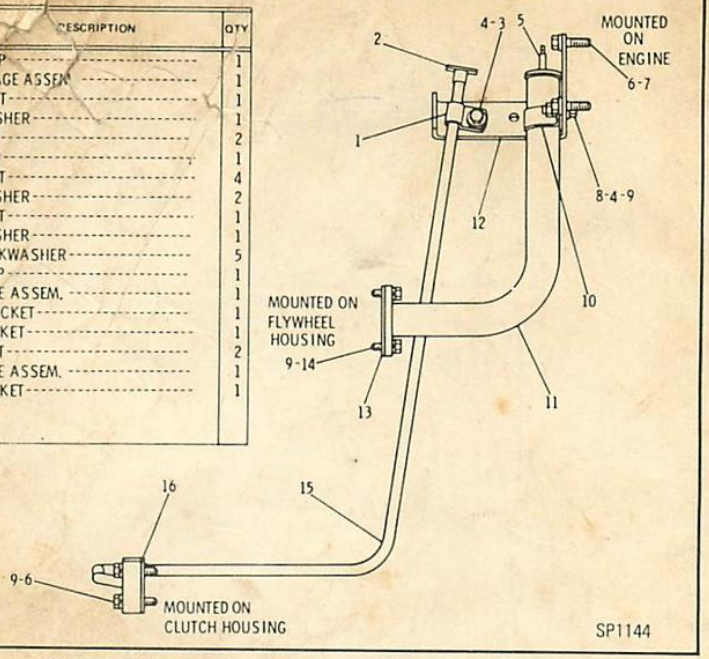

3V3127 FLYWHEEL CLUTCH OIL FILLER GROUP

REF NO	PART NUMBER	DESCRIPTION	QTY
1	684497	CAP	1
2	2Y4361	GAUGE ASSEM.	1
3	S1595	BOLT	2
	1D4719	NUT	2
4	5P1076	WASHER	1
5	3V2898	BRACKET	1
6	3B4508	LOCKWASHER	1
	4B4280	WASHER	1
7	7S8920	CLIP-----(slotted)-----	1
	7S8921	CLIP-----(tab)-----	1
8	4V1918	TUBE ASSEM.	1
9	4H2719	GASKET	1
10	1A2029	BOLT------2.86 cm(1.125 in.) long	1
	L1143	BOLT------6.35 cm(2.5 in.) long	1
	3B4506	LOCKWASHER	2

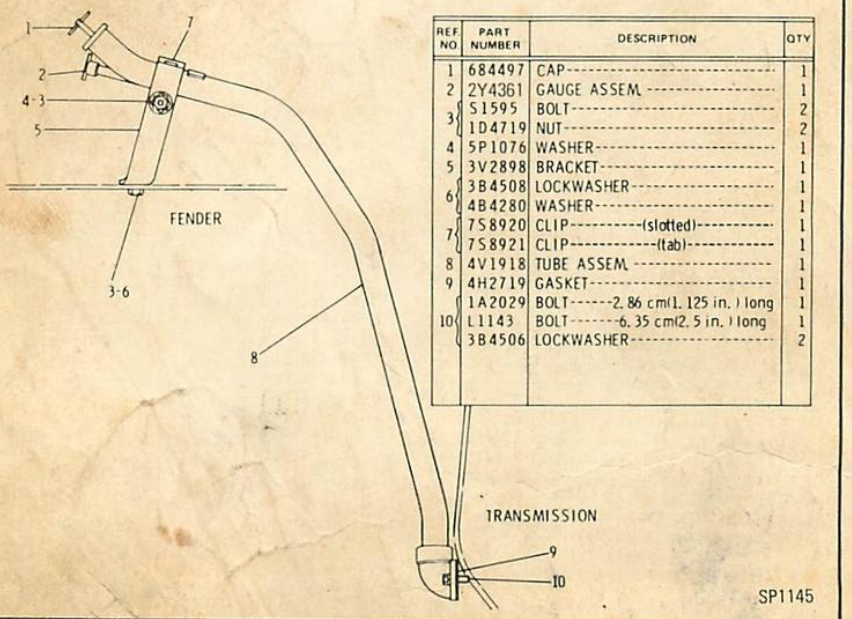

4V1990 TRANSMISSION OIL FILLER GROUP

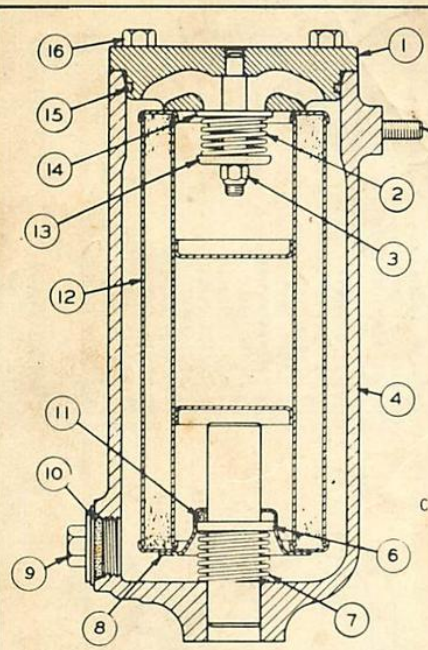

C INDICATES CHANGE

REF. NO.	PART NUMBER	DESCRIPTION	QTY
1	3S7405	COVER ASSEM.	1
2	2J9	SPRING	1
3	2F8616	NUT	1
4	3S7099	HOUSING ASSEM. (Includes)	1
5	3D2871	STUD	2
6	5S9759	RING	1
7	3J3370	SPRING	1
8	3S7101	RETAINER	1
9	4S5858	PLUG ASSEM. (Includes)	1
10	7M8485	SEAL	1
11	3S1751	SEAL	1
12	9M9740	ELEMENT ASSEM. -OR-	1
C▲	3G3467	ELEMENT (fire resistant fluid)	1
13	5S6661	WASHER	1
14	1M5471	VALVE	1
15	2H3928	SEAL	1
16	S1595	BOLT	4

▲ NOT PART OF 3S7406 216941

3S7406 TRANSMISSION STEERING CLUTCH FILTER GROUP
Part of 3V3125 Pump Lines shown on Page 76

Filtro Sistema Hidraulico
Comando da lâmina.

01 - Filtro - 9M-9740

01 - Anel - 2Y-5074

Distribuidor Autorizado
RECH
TRATORES
(65) 515-8800 Sinop/MT

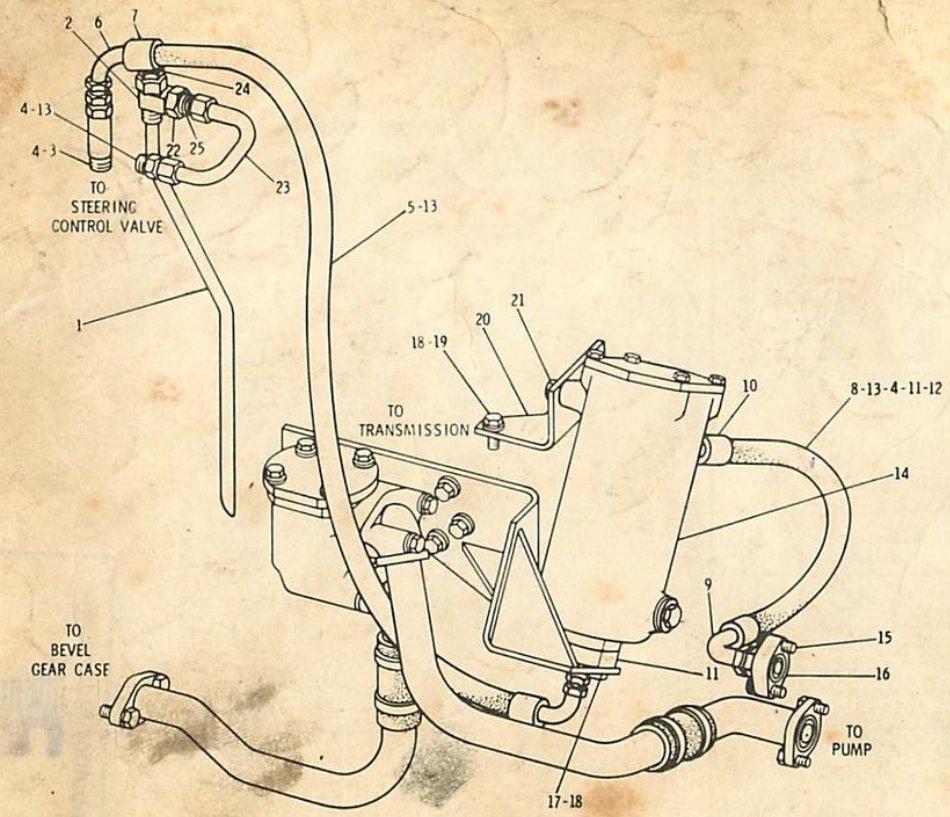

	REF NO	PART NUMBER	DESCRIPTION	QTY
C	1	4V7314	TUBE ASSEM. (Includes)	1
	2	5P2242	TEE	1
C	3	4V8778	CONNECTOR	1
	4	2M9780	SEAL	5
C	5	4V8780	HOSE ASSEM. (Includes)	1
		5P180	HOSE-----121 cm (47.6 in.)	
	6	8S6389	COUPLING ASSEM.	2
	7	3S7166	SLEEVE	2
C	8	4V8779	HOSE ASSEM. (Includes)	1
		5P180	HOSE---------62 cm (24.4 in.)	
		8S3759	COUPLING ASSEM.	1
	9	8S6389	COUPLING ASSEM.	1
	10	3S7166	SLEEVE	2
	11	4V1487	FLANGE	2
		1P3703	SEAL	2
	12	S1591	BOLT	4
C	13	308196	CONNECTOR	4
	14	3S7406	FILTER GROUP (Separate Illustration)	1
C	15	1T720	BOLT	2
	16	3V3703	FLANGE	1
		4F8946	SEAL	1
	17	S1571	BOLT	4
	18	5M2894	WASHER	6
	19	S1590	BOLT	2
		6B933	SPACER	2
	20	3V4174	BRACKET	1
	21	1D4717	NUT	2
		5P1075	WASHER	2
C	22	1P43	NUT	1
C	23	4V7315	TUBE ASSEM.	1
C	24	5P2299	PLUG	1
C	25	676684	REDUCER	1

C INDICATES CHANGE 169242

3V3125 POWER TRAIN OIL LINES GROUP — Part 1
3S7406 Filter parts are shown on Page 75

3V3125 POWER TRAIN OIL LINES GROUP – Part 2

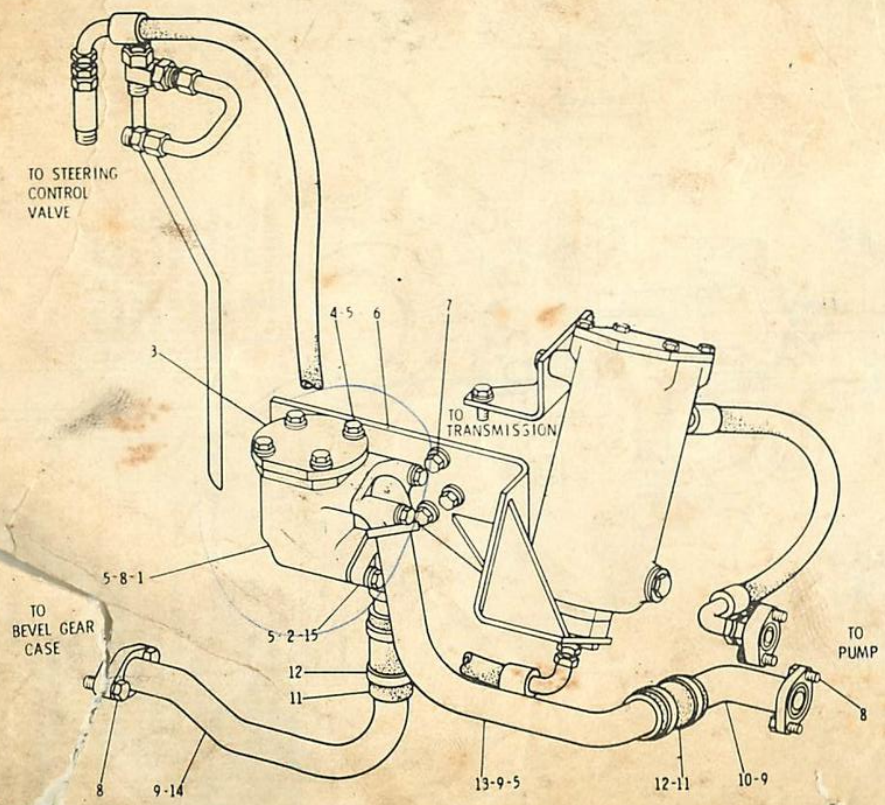

REF NO	PART NUMBER	DESCRIPTION	QTY
	6K38	HOUSING	1
1	8S9129	FILTER	1
	8S9130	SCREEN	1
2	3B1915	BOLT--------3.49 cm(1.37 in.) long	2
3	4V6353	COVER	1
	1H8128	SEAL	1
4	S1588	BOLT	4
5	5M2894	WASHER	10
6	4V1490	BRACKET ASSEM.	1
7	S1595	BOLT--------3.17 cm(1.25 in.) long	3
	5P1076	WASHER	3
8	1A2029	BOLT--------2.85 cm(1.12 in.) long	6
9	4J8998	SEAL	3
10	4V3159	TUBE ASSEM.	1
11	5K5290	HOSE---------120 cm(4.75 in.) long	2
12	9M2904	CLAMP	4
13	4V3161	TUBE ASSEM.	1
	S1590	BOLT----------5.08 cm(2 in.) long	1
	L1143	BOLT----------6.35 cm(2.5 in.) long	1
14	4V3160	TUBE ASSEM.	1
15	4V3123	TUBE ASSEM.	1
	2A3541	GASKET	1

169243

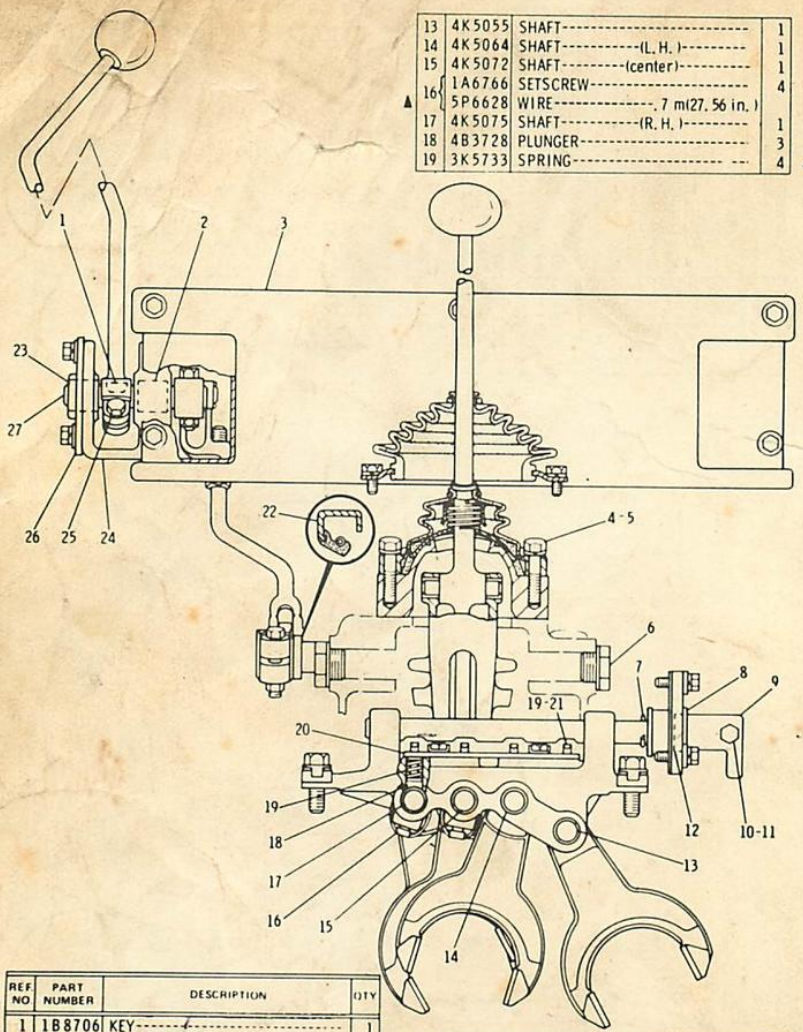

REF NO	PART NUMBER	DESCRIPTION	QTY
1	1B8706	KEY	1
2	9S6465	BEARING	1
3	8P3393	COVER ASSEM. (Includes)	1
▲	5P7246	SEAL--1.4 m(55.12 in.)	
4	S1571	BOLT	2
5	3B4506	LOCKWASHER	2
6	6B5262	PLUG	2
	6K5551	GASKET	2
7	3B4618	COTTER PIN	1
8	4B42[illegible]83	WASHER	2
[illegible]	4K5038	LEVER	1
10	1B9575	BOLT	1
	1D4716	NUT	1
11	3B4505	LOCKWASHER	1
12	4E4584	SEAL	1
13	4K5055	SHAFT	1
14	4K5064	SHAFT--(L. H.)	1
15	4K5072	SHAFT--(center)	1
16	1A6766	SETSCREW	4
▲	5P6628	WIRE--.7 m(27.56 in.)	
17	4K5075	SHAFT--(R. H.)	1
18	4B3728	PLUNGER	3
19	3K5733	SPRING	4
20	4K5037	RETAINER	1
	S509	BOLT	2
	L364	LOCK	2
21	4K5022	PLUNGER	1
22	4J3923	SEAL	1
23	6D3787	BEARING	1
24	8P3127	BRACKET	1
25	3B1915	BOLT	1
26	8P3331	SEAL	1
27	8P3128	SHAFT	1

▲ ORDER BY THE METRE

168448

3V638 GEARSHIFT CONTROL GROUP – Part 1

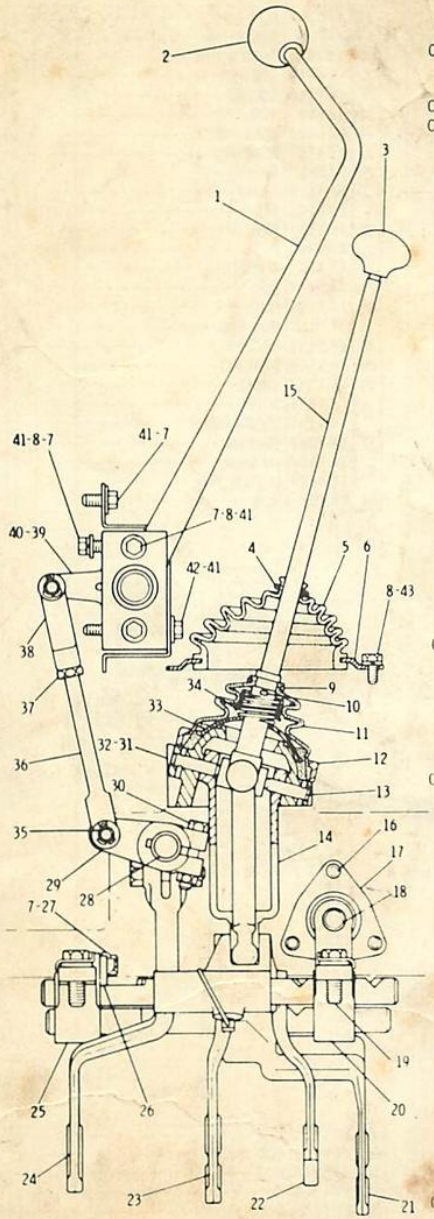

REF NO	PART NUMBER	DESCRIPTION	QTY
1	8P3330	LEVER	1
2	2A1736	HANDLE	1

	REF NO	PART NUMBER	DESCRIPTION	QTY
	3	L1170	HANDLE	1
C	4	9H4557	SEAL	1
	5	9P7522	SEAL	1
	6	3V684	RETAINER	1
C	7	L1351	BOLT	9
C	8	3B4506	LOCKWASHER	6
	9	3B8453	SEAL	1
	10	3B4618	COTTER PIN	1
	11	8F8079	BOOT	1
		8F8080	RING	1
	12	3V19	RETAINER	1
	13	2H2526	SHAFT	2
		2H2525	PIN	2
	14	4V903	GUIDE ASSEM. (Includes)	1
		2H2522	PIN	1
		2H2521	BUSHING	4
	15	4V904	LEVER	1
	16	S1618	BOLT	3
		3B4505	LOCKWASHER	3
		4B4277	WASHER	3
	17	6K8404	BEARING	1
		4K5077	GASKET	1
	18	6K8405	SHAFT	1
		1T550	PIN	1
	19	S1595	BOLT	4
		1K4703	WASHER	4
		1C155	LOCK	4
	20	4K5024	BRACKET (front)	1
	21	4K5171	FORK	1
	22	1M1946	FORK	1
	23	4K5796	FORK	1
C	24	4V7616	FORK ASSEM.	1
	25	4K5041	BRACKET (rear)	1
	26	4K5930	LOCK	1
	27	L364	LOCK	2
	28	4K5090	SHAFT	1
		4K5042	LEVER	1
		6B9557	KEY	1
C	29	4V32	LEVER	1
		1B8714	KEY	1
	30	1A1460	BOLT	2
		1D4719	NUT	2
	31	4V677	ADAPTER	1
	32	S1594	BOLT – 2.54 cm (1 in.) long	2
		S1591	BOLT – 3.81 cm (1.5 in.) long	2
	33	L888	COVER	1
		L974	PACKING	1
	34	L887	COVER	1
		L1045	SPRING	1
	35	S175	PIN	2
		3B4617	COTTER PIN	2
	36	3V683	ROD	1
	37	1B4330	NUT	1
	38	6S6793	END	1
	39	3V641	LEVER	1
		1B8706	KEY	1
	40	S1571	BOLT	1
		1D4717	NUT	1
	41	4B4278	WASHER	9
	42	S1619	BOLT	2
C	43	1A2029	BOLT	3

C INDICATES CHANGE

168449

3V638 GEARSHIFT CONTROL GROUP – Part 2

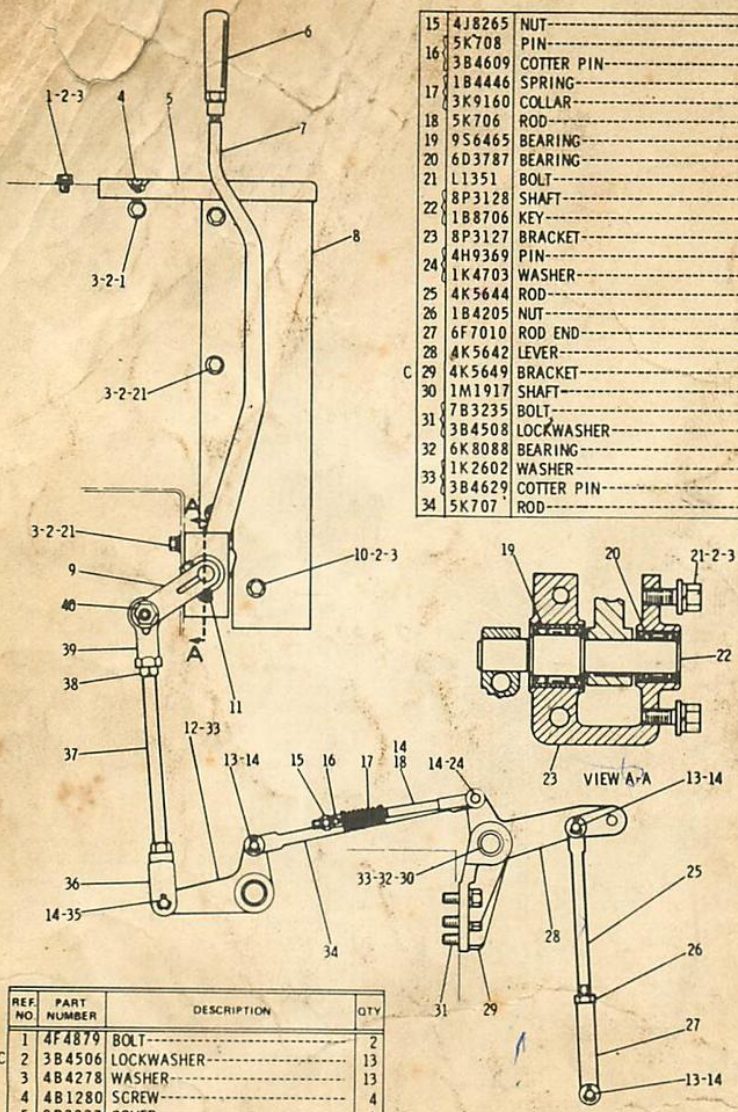

15	4J8265	NUT	1
16	5K708	PIN	1
	3B4609	COTTER PIN	1
17	1B4446	SPRING	1
	3K9160	COLLAR	2
18	5K706	ROD	1
19	9S6465	BEARING	1
20	6D3787	BEARING	1
21	L1351	BOLT	10
22	8P3128	SHAFT	1
	1B8706	KEY	2
23	8P3127	BRACKET	1
24	4H9369	PIN	1
	1K4703	WASHER	1
25	4K5644	ROD	1
26	1B4205	NUT	1
27	6F7010	ROD END	1
28	4K5642	LEVER	1
C 29	4K5649	BRACKET	1
30	1M1917	SHAFT	1
31	7B3235	BOLT	3
	3B4508	LOCKWASHER	3
32	6K8088	BEARING	4
33	1K2602	WASHER	2
	3B4629	COTTER PIN	2
34	5K707	ROD	1

REF. NO.	PART NUMBER	DESCRIPTION	QTY.
1	4F4879	BOLT	2
C 2	3B4506	LOCKWASHER	13
3	4B4278	WASHER	13
4	4B1280	SCREW	4
5	8P3337	COVER	1
6	L829	HANDLE	1
7	8P3198	LEVER	1
	S1588	BOLT	1
C 8	8P3339	COVER	1
9	8P3199	LEVER	1
10	1A2029	BOLT	1
11	S1571	BOLT	1
	1D4717	NUT	1
12	3V647	BELLCRANK	1
13	S175	PIN	3
14	3B4617	COTTER PIN	6

35	8B1419	PIN	1
36	9D8632	ROD END	1
37	3P3843	ROD	1
38	1B4206	NUT	2
39	2K5804	ROD END	1
	8S9092	BOLT	1
40	1D4720	NUT	1
	3B4510	LOCKWASHER	1

C INDICATES CHANGE

218794

3V650 FLYWHEEL CLUTCH CONTROL GROUP

3V3131 FLYWHEEL CLUTCH GROUP – Side View – Part 3 of 3

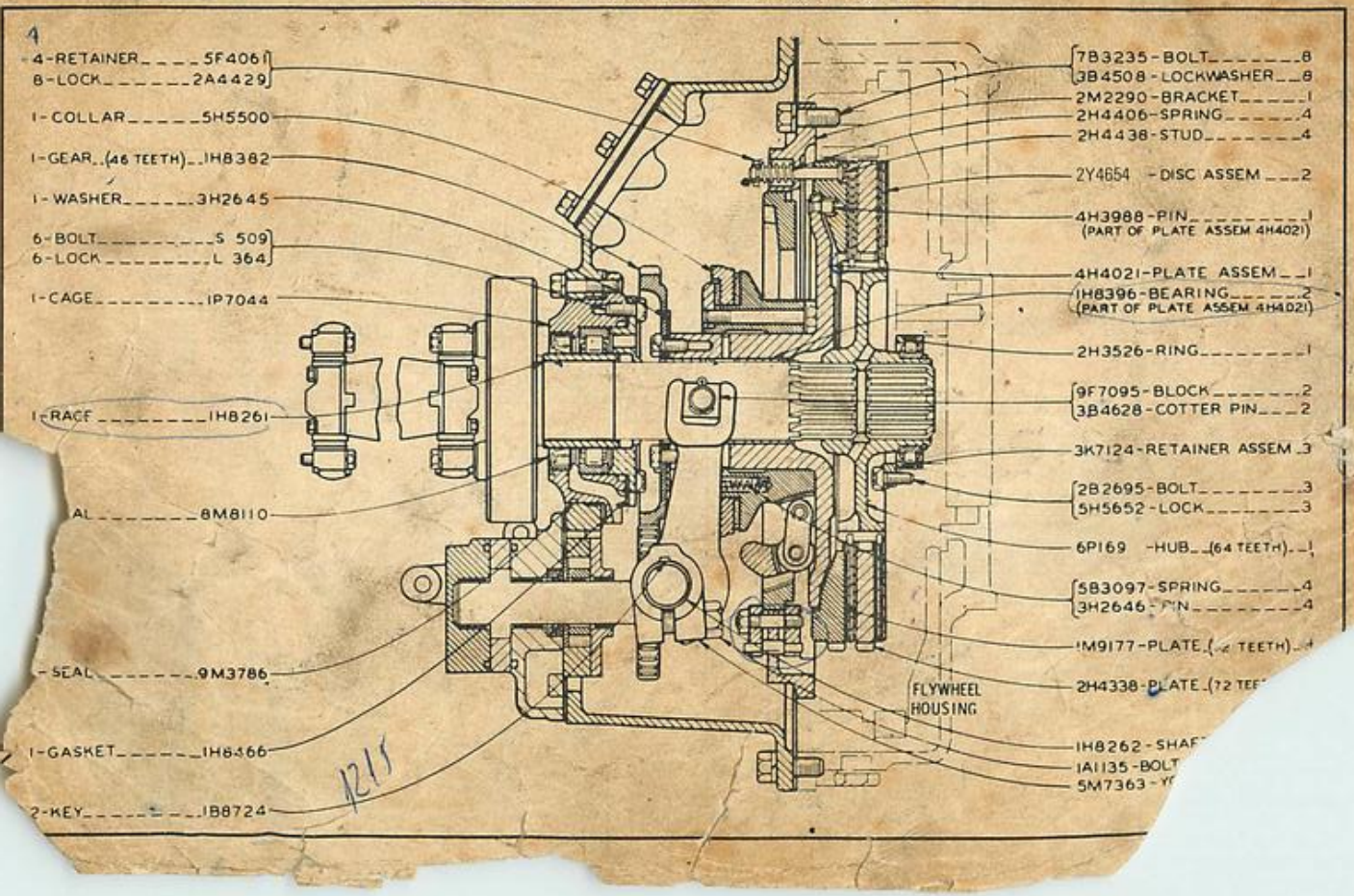

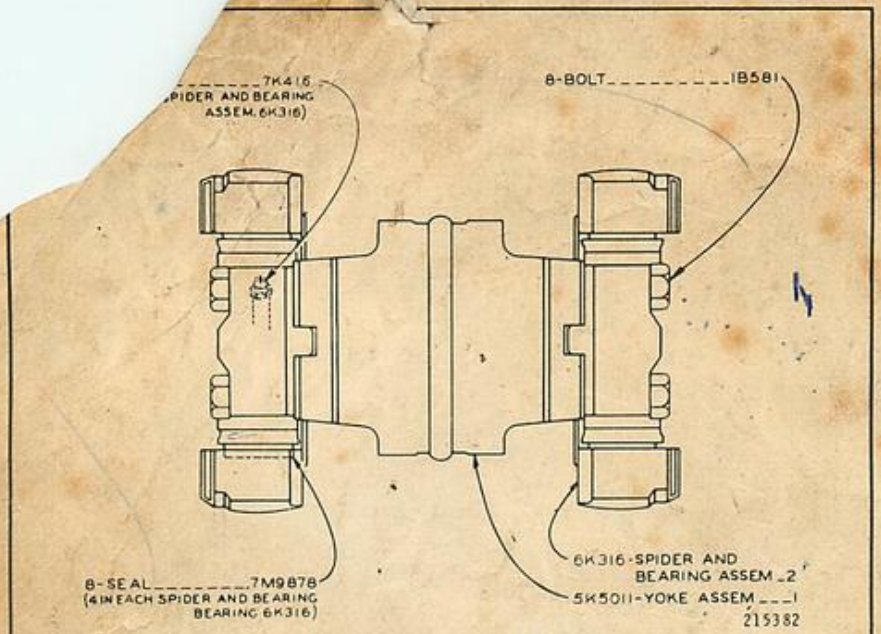

5K5008 DRIVESHAFT ASSEMBLY
Part of 3V3131 Flywheel Clutch shown on Page 68

REF. NO.	PART NUMBER	DESCRIPTION	QTY
1	5S1583	COVER ASSEM. (Includes)	1
2	8S922	BEARING	2

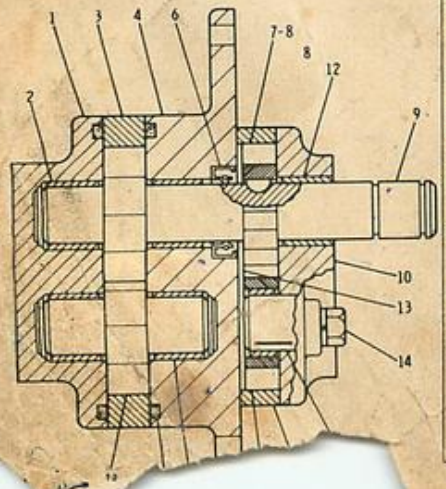

REF. NO.	PART NUMBER	DESCRIPTION	QTY
3	2P59	BODY ASSEM. (Includes)	1
	5M3605	DOWEL	2
4	5S1587	MANIFOLD ASSEM. (Includes)	1
5	8S922	BEARING	2
6	7S3029	SEAL	1
7	5S1596	GEAR (10 teeth)	1
8	5H2532	KEY	1
9	5S1598	GEAR ASSEM. (10 teeth)	1
10	5S1591	COVER ASSEM. (Includes)	1
11	5S1593	SHAFT	1
12	8S922	BEARING	1
13	5S1592	PLATE	1
14	8S9191	BOLT	4
	3B4506	LOCKWASHER	4
15	5S1589	BODY ASSEM. (Includes)	1
	5M3605	DOWEL	2
16	5S1604	GEAR ASSEM. (10 teeth) (Includes)	1
	8S921	BEARING	1
17	4M189	SEAL	2
18	5S1599	GEAR ASSEM. (10 teeth)	1

SP1215

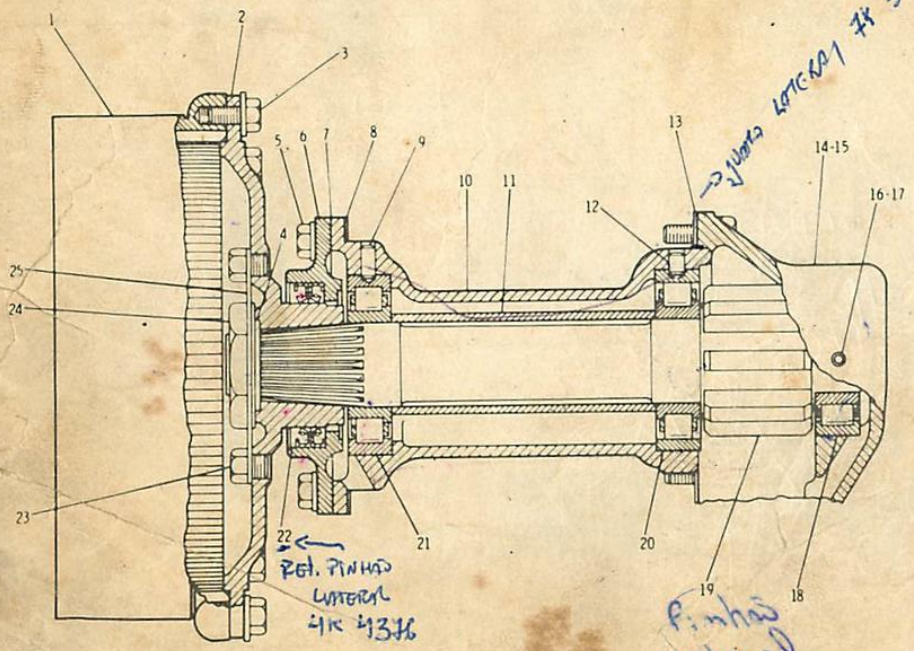

NOTE: QUANTITIES SHOWN ARE THOSE REQUIRED FOR BOTH R.H. AND L.H. SIDES

REF NO	PART NUMBER	DESCRIPTION	QTY
1	7K8237	DRUM	2
2	7K8238	FLANGE	2
3	S1825	BOLT	28
	2M849	WASHER	28
4	2B6325	GASKET	2
5	S1591	BOLT	12
	5M2894	WASHER	12
6	7K7333	RETAINER	2
7	7M7260	LIQUID GASKET	
8	5K1311	GASKET	2
9	3F4746	DOWEL	2
10	1M1930	CAGE	2
11	1M1795	SPACER	2
12	4H1254	DOWEL	2
13	7K3007	GASKET	2
14	9K7173	CASE ASSEM.	2
		(Each Includes)	
	L1392	STUD	4
15	5B7267	CORK	4
16	L1026	PLUG -13mm(.512 in.) outside dia.	2
17	9K3230	DOWEL	2
18	2M534	RACE AND ROLLER ASSEM.	2
	2M533	RACE (inner)	2
19	4V2746	PINION (9 teeth)	2
20	8B2571	RACE AND ROLLER ASSEM.	2
	8B2570	RACE (inner)	
21	5K8591	RACE AND ROLLER ASSEM.	
	3B3969	RACE (inner)	
22	4K4376	SEAL	
23	1H9456	BOLT	
24	2J5815	NUT	
25	9K4058	LOCK	

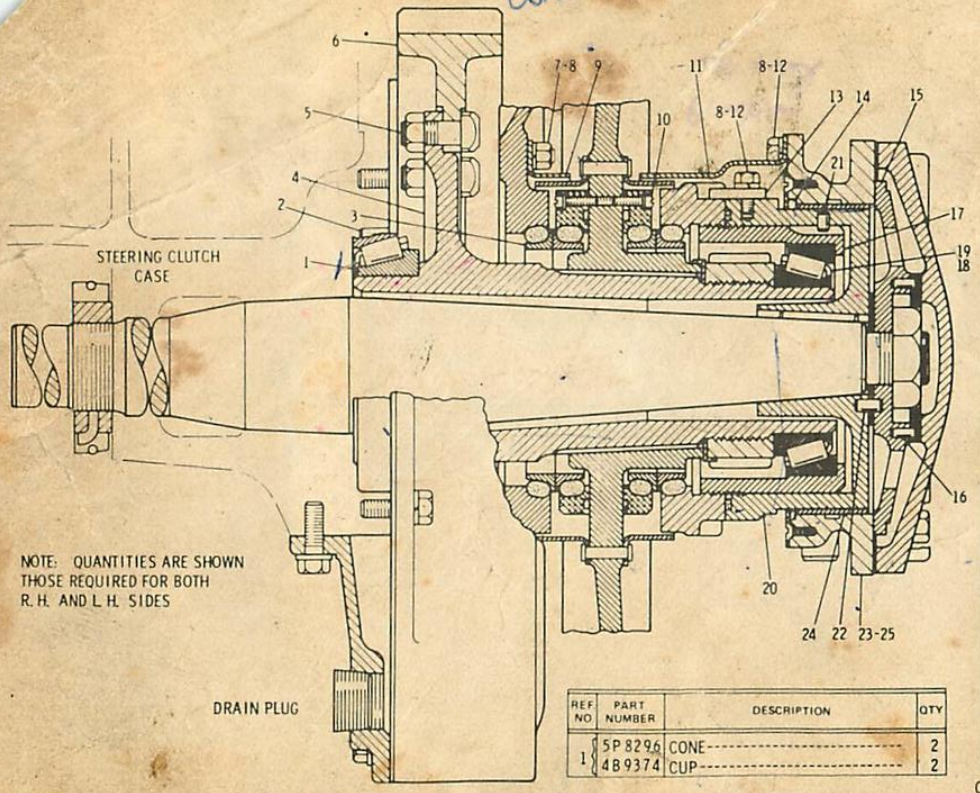

REF NO.	PART NUMBER	DESCRIPTION	QTY
1	5P8296	CONE	2
	4B9374	CUP	2

2	1A2610	DOWEL	2
	4K6049	SEAL GROUP (Each Includes)	2
3	4K173	RING	2
		-OR-	
	5P376	SEAL GROUP (extreme temp.) (Each Includes)	2
	3N801	RING	2
4	4V3396	HUB	2
5	3K3815	BOLT	8
	7H3607	NUT	8
6	4V2744	GEAR (52 teeth)	2
7	1B4203	NUT	8
8	3B4506	LOCKWASHER	18
9	3F1530	GUARD	2
10	4B1322	SCREW	12
	3B4504	LOCKWASHER	12
11	4F8396	GUARD	2
12	S509	BOLT	10
13	1A4145	LOCK	2
14	3F1547	SEAL	2
15	3F1554	RETAINER ASSEM. (Each Includes)	2
16	3H2617	PIN (spring)	2
17	9K6842	CAGE ASSEM. (Each Includes)	2
18	6B3223	CUP	1
19	4B7270	CONE	2
20	9K9271	HOLDER ASSEM. (Each Includes)	2
21	3F1542	DOWEL	1
22	5B5821	DOWEL	4
23	1M1947	SUPPORT ASSEM. (Each Includes)	2
24	3F1548	BUSHING	1
25	3B8486	FITTING	2

C INDICATES CHANGE

215028

ERPILLAR D4E TRACTOR

2V2128 FINAL DRIVE GROUP — Part 2 of 3

3V3129 STEERING CLUTCH CONTROL GROUP — Top View

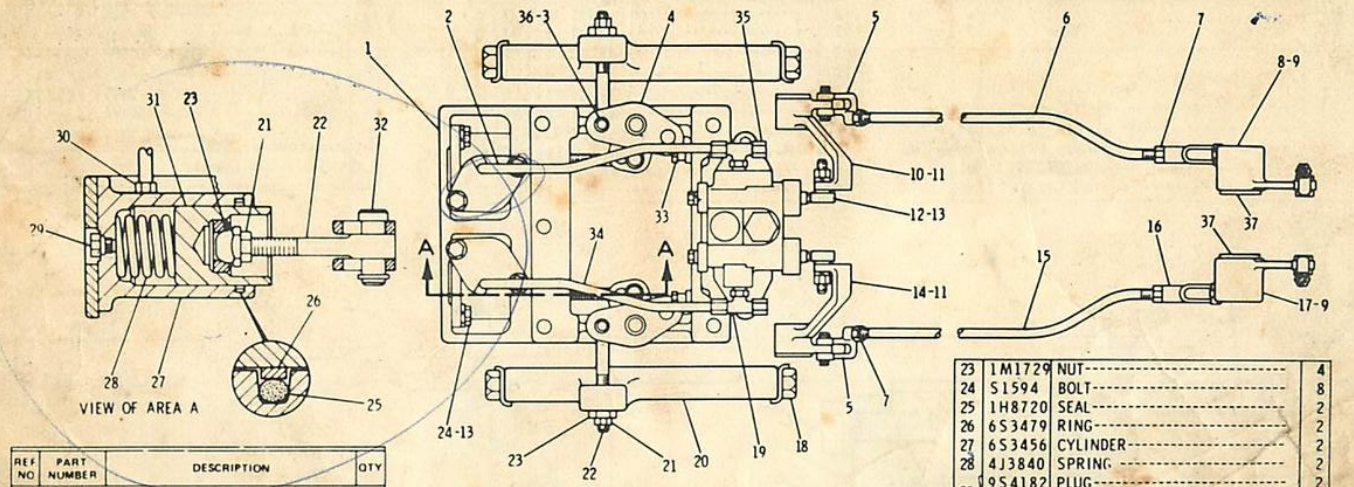

REF NO	PART NUMBER	DESCRIPTION	QTY
1	3V2984	SUPPORT	1
2	4V533	TUBE ASSEM.	1
C 3	4V8014	PIN	2
4	3V6495	BELLCRANK	2
5	2K400	END	2
6	3V4220	ROD	1
7	5B9079	NUT	4
8	8P2506	BELLCRANK	1
9	6K8088	BEARING	4
10	3V6494	BELLCRANK	1
11	2P9858	BEARING	4
12	7K854	ROLLER	2
	1B4203	NUT	2
13	3B4506	LOCKWASHER	10
14	3V6493	BELLCRANK	1
15	3V4219	ROD	1
16	1A9252	END	2
17	8P2505	BELLCRANK	1
18	7K8915	SCREW	4
	T355	LOCK	4
C 19	315894	TEE	2
	1J9671	SEAL	2
	5K8642	YOKE ASSEM.	2
		(Each Includes)	
20	4K4979	YOKE	1
	1M1723	INSERT	1
	5K8641	BALL	1
21	1B4430	NUT	4
22	4K3966	END	4
23	1M1729	NUT	4
24	S1594	BOLT	8
25	1H8720	SEAL	2
26	6S3479	RING	2
27	6S3456	CYLINDER	2
28	4J3840	SPRING	2
29	9S4182	PLUG	2
	3J7354	SEAL	2
30	17025	CONNECTOR	2
31	3V6084	PISTON ASSEM.	2
		(Each Includes)	
	1M1723	INSERT	1
32	3V7189	PIN	
	6H5474	RING	
33	S1588	BOLT	
	1B2578	NUT	
34	4V532	TUBE ASSEM.	
C 35	5P405	CAP	
C 36	308539	BOLT	
C 37	6N2957	WASHER	

C INDICATES CHANGE

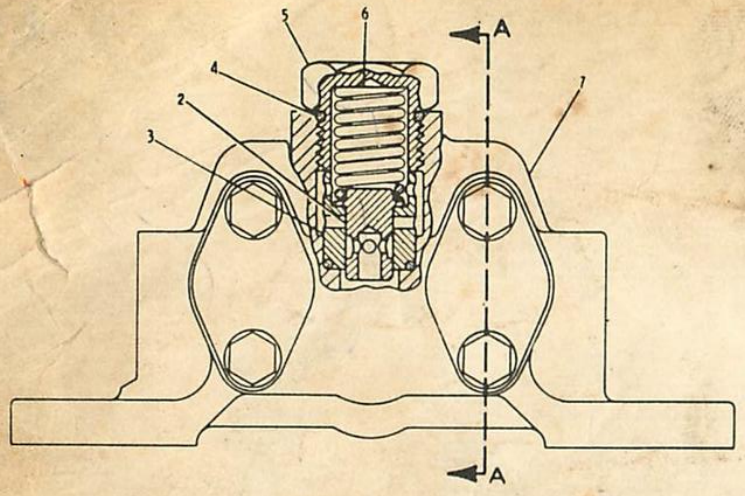

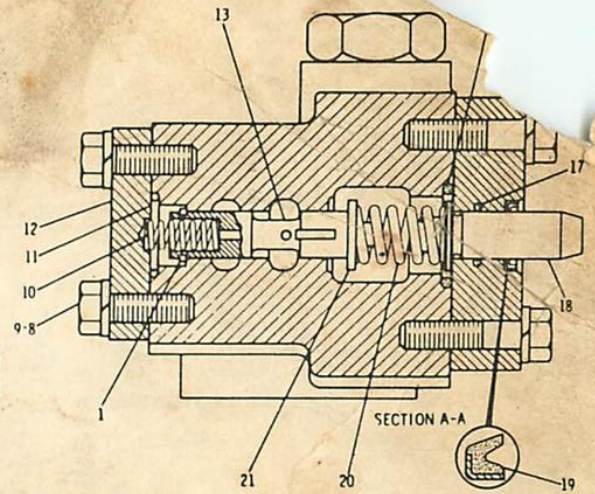

REF NO	PART NUMBER	DESCRIPTION	QTY
1	1H5549	RING	2
2	4V8753	VALVE	1
3	4V689	SEAT	1
4	3D2824	SEAL	1
5	6J4693	PLUG	1
6	7H7130	SPRING	1
7	4V770	BODY	2
8	S1618	BOLT	4
9	3B4505	LOCKWASHER	8
10	3P6881	SPRING	2
11	6F6672	SEAL	2
12	3V6873	COVER	2
13	3V6876	SPOOL	2
14	3H107	SEAL	2
15	4V407	COVER	2
16	1B2790	BOLT	4
17	8F9206	SEAL	2
18	6S3168	STEM	2
19	9L8660	SEAL	2
20	9D7884	SPRING	2
21	6S6412	SPACER	2
22	5P5599	SEAL	1

168919

4V8759 STEERING CONTROL VALVE GROUP

Part of 3V3129 Steering Clutch Control shown on Page 84

3V3128 FINAL DRIVE GROUP – Part 3 of 3

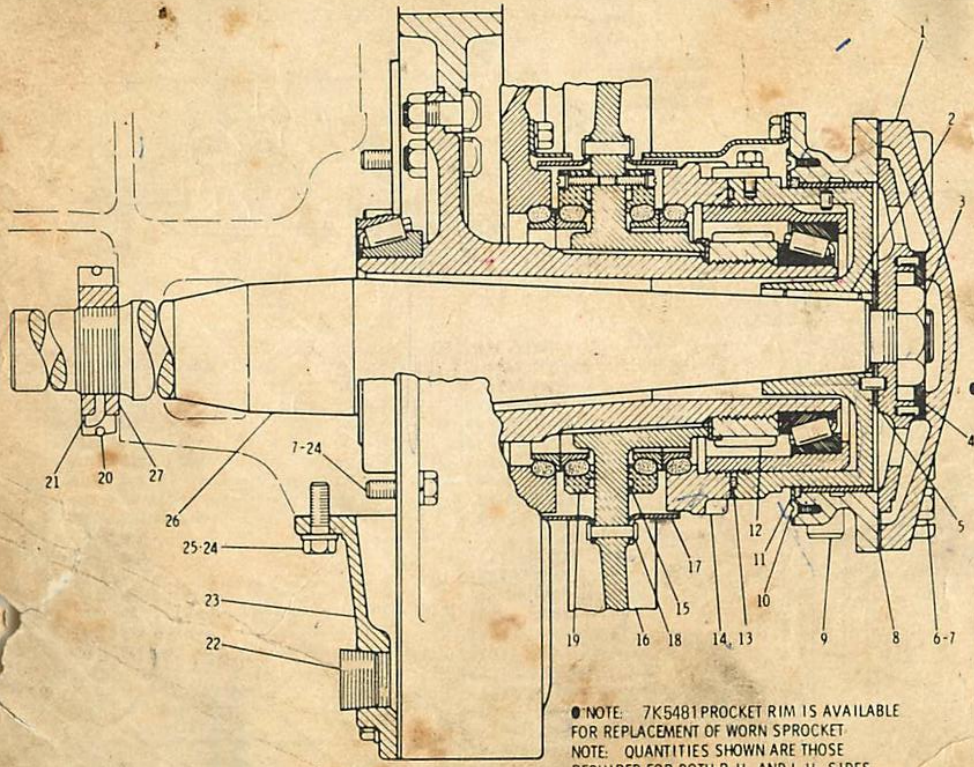

REF NO	PART NUMBER	DESCRIPTION	QTY
1	3F1556	CAP	2
2	5K5887	KEY	2
3	2B8828	NUT	2
4	2F2815	LOCK	8
5	3F1552	SHIM	12
6	S1587	BOLT	40
7	3B4508	LOCKWASHER	2
8	3F1555	GASKET	4
9	2M122	DOWEL	16
10	4B1280	SCREW	2
11	3F1546	RETAINER	2
12	3F1537	NUT	2
13	3F[illegible]36	LOCK	2
14	4J63[illegible]1	SEAL	2
15	9K9273[illegible]	NUT	4
16	2K2939	SEAL	2
	7K5481	SPROCKET ASSEM. ----(standard)---- (Includes:	
		(Ea[illegible]	2
17	4F6029	GUAR[illegible]	6
18	5K1765	RIVET	4
19	4K212	RETAINER	2
20	2B8847	RING	2
21	2B8093	PIN	2
22	1B5170	PLUG	2
23	8K6521	PLATE	2
24	7M7260	LIQUID GASKET	
25	S1585	BOLT	
26	2M849	WASHER	
27	6K4617	SHAFT	
	7H2742	NUT	

● NOTE: 7K5481 PROCKET RIM IS AVAILABLE FOR REPLACEMENT OF WORN SPROCKET.
NOTE: QUANTITIES SHOWN ARE THOSE REQUIRED FOR BOTH R.H. AND L.H. SIDES

REF. NO.	PART NUMBER	DESCRIPTION	QTY
1	L829	HANDLE	2
2	8P3409	BRACKET ASSEM. (Each Includes)	2
	9F2978	NUT	2
3	1P2878	ROLLER	4
4	1F5731	COLLAR	2
	21667	SETSCREW	2
5	8P3410	ROD	2
6	9[illegible]1354	NUT	2
7	4K[illegible]563	END	2
8	9S1315	PIN	2
	3B4617	COTTER PIN	2
9	9M5884	BUMPER	2
10	1B676	PIN	6
11	3B4615	COTTER PIN	12
12	1M1341	END	2
13	2K400	END	2
14	1J4384	PIN	2
15	S1587	BOLT	3
16	3B4508	LOCKWASHER	6

17	3F7147	BOLT	2
	1A1460	BOLT-(center)	1
18	4V666	FLANGE	2
	4V535	GASKET	2
19	4V536	FLANGE	2
	4V534	SEAL	2
C 20	S1594	BOLT	6
C 21	3B4506	LOCKWASHER	6
22	T102	BOLT	4
23	1B3756	ROLLER ASSEM.	4
	3H8363	RACE	4
C 24	4V8759	VALVE GROUP (Separate Illustration)	1
25	4B4283	WASHER	2
	3B4628	COTTER PIN	2
26	5B9079	NUT	4
27	8P2971	ROD	2
28	8P3262	LEVER-(R. H.)	1
	8P3261	LEVER-(L. H.)	1
29	6K8088	BEARING	4
	9S1328	WASHER	4
	8P9821	WASHER-(spring)	4
30	1A8827	PIN	4

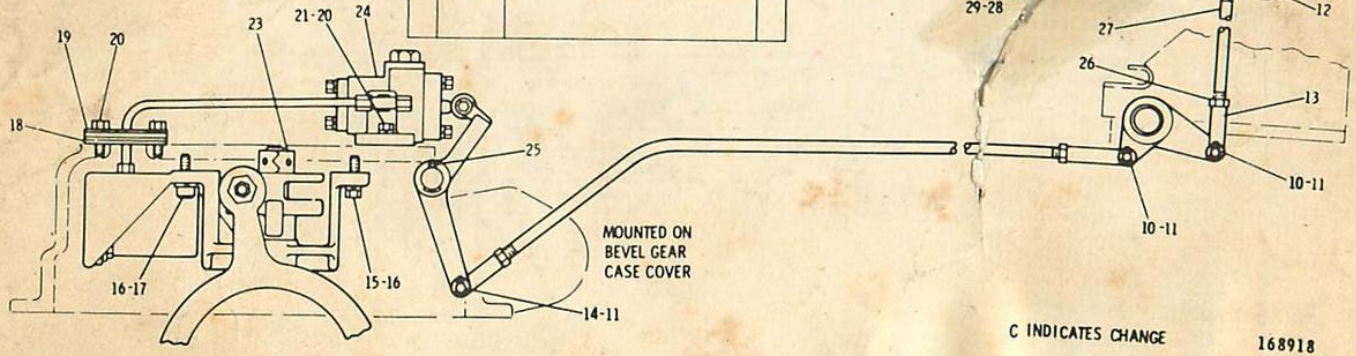

C INDICATES CHANGE

168918

3V3129 STEERING CLUTCH CONTROL GROUP – As Viewed from R.H. Side of Machine

4V8759 Valve parts are shown on Page 86

MEDIDA Pacote 71 A76

3V3183 STEERING CLUTCH GROUP

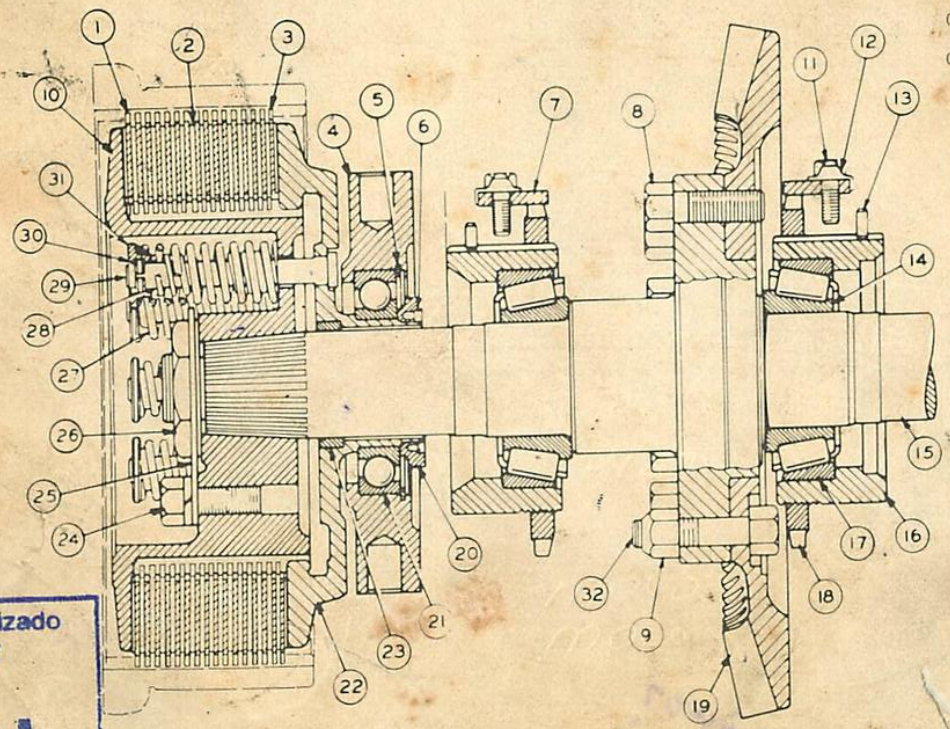

REF NO	PART NUMBER	DESCRIPTION	QTY
C 1	4K1333	DISC ASSEM ------(95 Teeth)---	2
2	5K8616	DISC ----------(8 Teeth)----------	28
C 3	5K8617	DISC ASSEM ---- --(95 Teeth)---	28
4	3V6197	CAGE----------	2
5	1H7478	RING----------	2
6	102571	SCREW----------	4
7	1A4145	LOCK----------	2
8	S1566	BOLT----------	11
9	2K337	NUT----------	1
10	3V6655	DRUM----------	2
11	L1351	BOLT----------	2
12	L364	LOCK----------	2
13	S130	PIN----------	2
14	6H3566	CONE----------	2
15	9K323	SHAFT----------	1
16	5K8606	CAGE----------	2
17	6H3568	CUP----------	2
18	2B8778	NUT----------	2
19	8K9661	GEAR-------(55 Teeth)----------	1
20	3V2	NUT----------	2
21	1B4102	BEARING----------	2
22	3V5916	PLATE ASSEM ----------	2
23	6H3569	BUSHING----------	2
24	S1624	BOLT----------	4
	3B4510	LOCKWASHER----------	4
25	3B5524	LOCK----------	2
26	L2341	NUT----------	2
27	4K1302	SPRING--------(Outer)----------	16
28	6B8804	SPRING--------(Inner)----------	16
29	2B8759	STUD----------	16
30	2B9018	LOCK----------	
31	2B9020	RETAINER----------	
32	9K5706	BOLT----------	

Distribuidor Autorizado
RECH
TRATORES
(65) 515-8800 Shop!

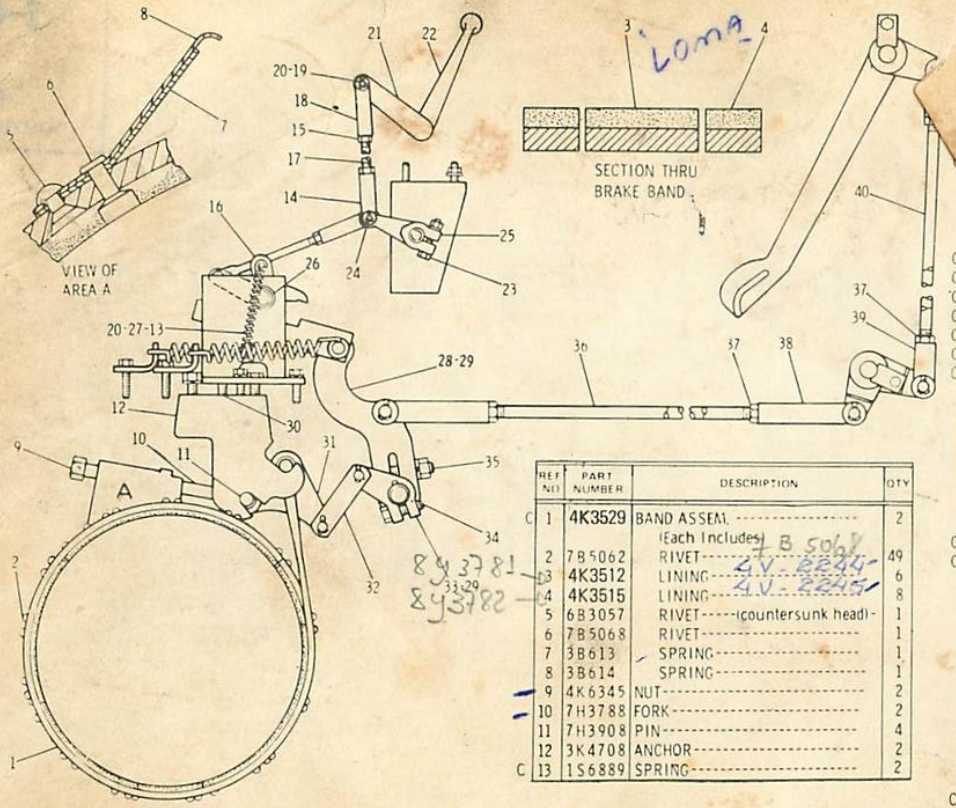

REF NO	PART NUMBER	DESCRIPTION	QTY
C 1	4K3529	BAND ASSEM. (Each Includes)	2
2	7B5062	RIVET	49
3	4K3512	LINING	6
4	4K3515	LINING	8
5	6B3057	RIVET---(countersunk head)	1
6	7B5068	RIVET	1
7	3B613	SPRING	1
8	3B614	SPRING	1
9	4K6345	NUT	2
10	7H3788	FORK	2
11	7H3908	PIN	4
12	3K4708	ANCHOR	2
C 13	1S6889	SPRING	2
21	5P1901	BEAR	1
22	8P3176	LEVER	1
	6H3956	PIN	1
C	7B2742	BOLT	1
C 23	1B4330	NUT	1
C	3B4504	LOCKWASHER	1
C	9S1303	PIN	1
C 24	3B4607	COTTER PIN	1
C	9F8249	LEVER	1
C 25	1B8702	KEY	1
	5M8651	BUSHING	2
26	4B4281	WASHER	2
27	3P8044	PIN	2
28	3V637	LEVER	2
29	3K4723	KEY	4
30	8J5912	SCREW	2
31	1M1789	LEVER	2
32	3K4725	LINK	4
C 33	5K8621	LEVER (R. H.)	1
C	5K8622	LEVER (L. H.)	1
34	S1585	BOLT	2
	7B2725	BOLT	2
35	1D4720	NUT	2
	3B4510	LOCKWASHER	2
36	3V655	ROD	2
37	9S1354	NUT	8
38	9S1314	END	4
39	4M7930	END	4
40	8P2502	ROD	2

C INDICATES CHANGE

SP1187

3V671 STEERING BRAKE GROUP – Part 1

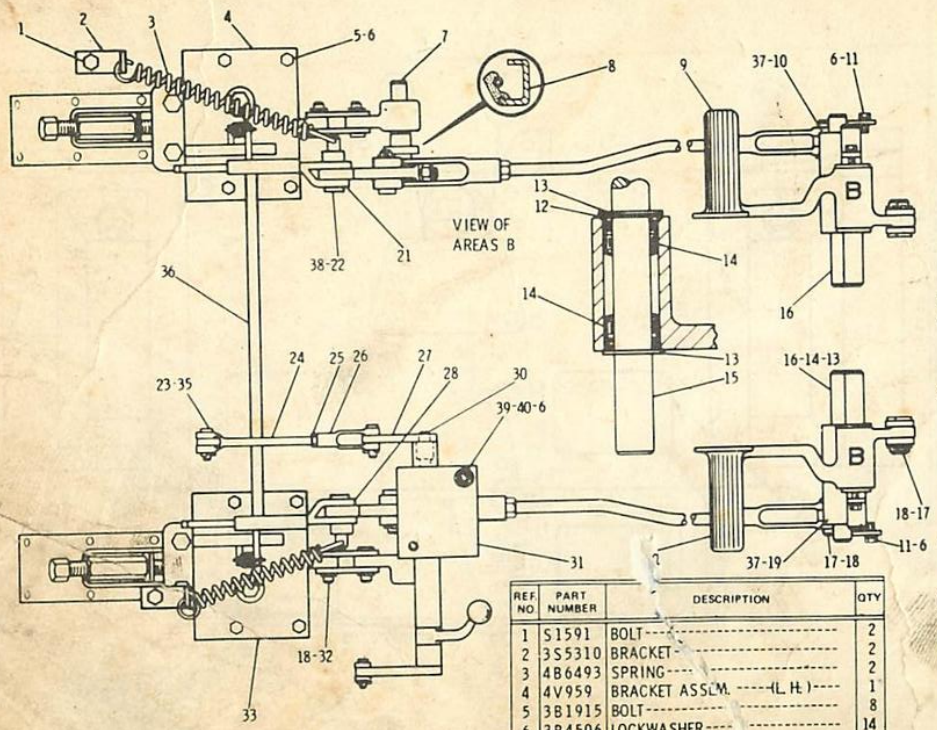

REF. NO.	PART NUMBER	DESCRIPTION	QTY
1	S1591	BOLT	2
2	3S5310	BRACKET	2
3	4B6493	SPRING	2
4	4V959	BRACKET ASSEM. -----(L. H.)	1
5	3B1915	BOLT	8
6	3B4506	LOCKWASHER	14
7	4K5268	SHAFT	2

	8	2Y4590	SEAL	2
	9	3V645	PEDAL -----(L. H.)-----	1
	10	8P2504	BELLCRANK	1
	11	S509	BOLT	4
		L1032	LOCK	4
	12	8P9821	WASHER	2
	13	9S1328	WASHER	6
	14	6K8088	BEARING	8
	15	8P3475	SHAFT	2
	16	8P2507	SHAFT	2
	17	9S1315	PIN	8
	18	3B4617	COTTER PIN	12
	19	8P2503	BELLCRANK	1
	20	3V646	PEDAL -----(R. H.)-----	1
	21	4V964	RATCHET ASSEM. -----(L. H.)---	1
C	22	4H9369	PIN	2
C	23	3B4615	COTTER PIN	2
	24	4K7993	ROD	1
	25	5B9079	NUT	1
	26	1A9252	END	1
C	27	4V7205	LEVER ASSEM.	1
		9F7882	PIN	1
	28	4V961	RATCHET ASSEM. -----(R.H.)----	1
	30	3D8823	BEARING	2
	31	3V3759	BRACKET ASSEM.	1
	32	S175	PIN	4
	33	4V954	BRACKET ASSEM. -----(R. H.)--	1
C	34	S1585	BOLT	8
		3B4508	LOCKWASHER	8
	35	1B676	PIN	2
C	36	4V7204	LEVER ASSEM.	1
C	37	6N2957	WASHER	2
C	38	1B8074	WASHER	2
	39	1S2029	BOLT	2
	40	1D4717	NUT	1
		4B4278	WASHER	1

C INDICATES CHANGE

SP1188

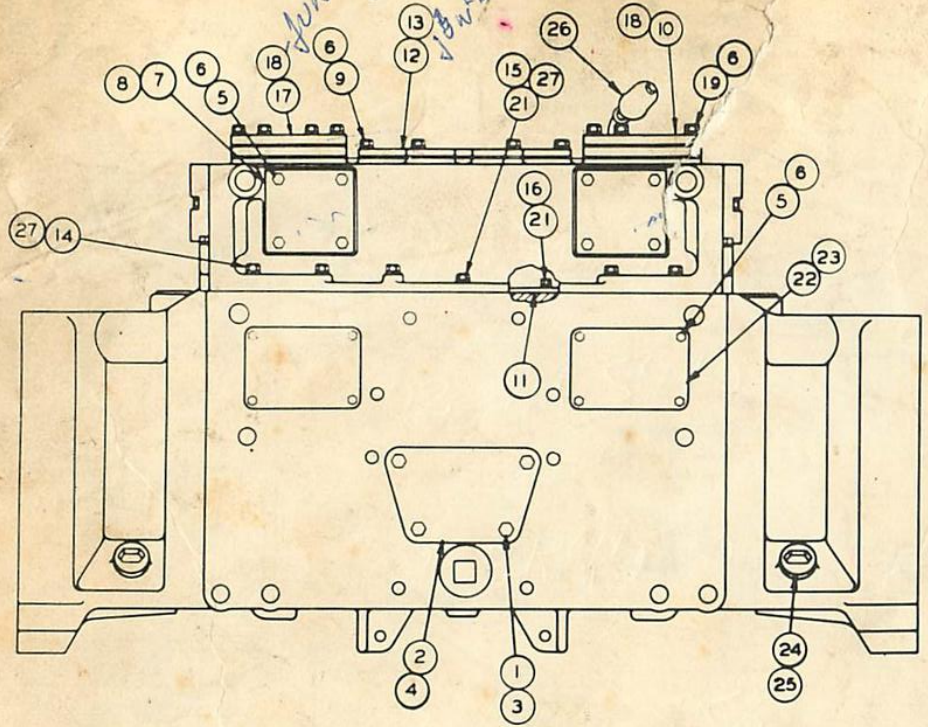

REF. NO.	PART NUMBER	DESCRIPTION	QTY
1	S1624	BOLT	4
2	3B844	COVER	1
3	3B4510	LOCKWASHER	4
4	3B845	GASKET	1
5	S509	BOLT	16
6	3B4506	LOCKWASHER	34
7	3K7812	COVER	2
8	4K5470	GASKET	2
9	L1351	BOLT	8
10	3V2902	COVER	1
11	7K2006	PLATE	1
12	3K4157	COVER	1
13	3K4158	GASKET	1
14	2M947	BOLT	5
15	S1595	BOLT-----3.18 cm(1.25 in.) long	1
16	3B4508	LOCKWASHER	8
17	6K6551	COVER	1
18	6K6552	GASKET	2
C 19	S1591	BOLT-----4.45 cm(1.75 in.) long	7
C 20	3B1915	BOLT-----3.49 cm(1.37 in.)long	3
21	S1587	BOLT	11
22	3B867	COVER	2
23	3B866	GASKET	2
24	4B2363	PLUG	2
25	6F4868	GASKET	2
26	1F8488	BREATHER	1
	3B7730	ELBOW	1
27	1T808	WASHER	9

C INDICATES CHANGE SP1183

3V3132 STEERING CLUTCH CASE GROUP — Part 1

3V3132 STEERING CLUTCH CASE GROUP — Part 2

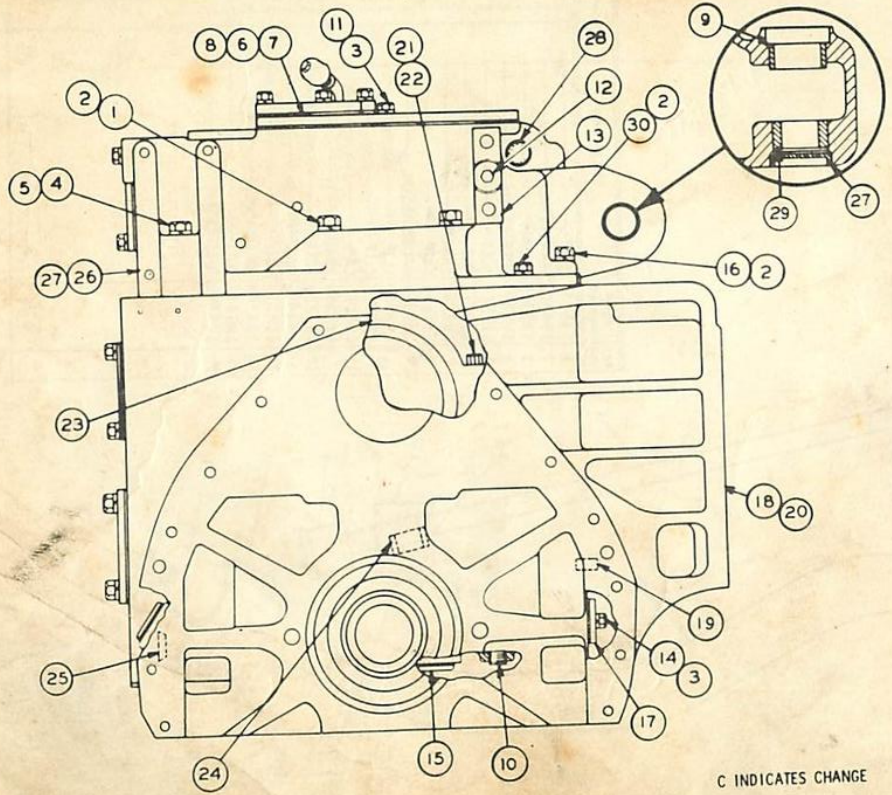

C INDICATES CHANGE

REF. NO.	PART NUMBER	DESCRIPTION	QTY
1	S1573	BOLT	4
2	1T808	WASHER	10
3	3B4506	LOCKWASHER	6
4	S1569	BOLT	2
5	3B4510	LOCKWASHER	2
C 6	4V7328	COVER	1
C 7	6K5893	COVER	1
8	6K5892	GASKET	2
9	5P6684	BEARING	2
10	2B858	PLUG	3
11	S1588	BOLT	4
12	1A2029	BOLT	2
13	4K5243	SPACER	2
14	S509	BOLT	2
15	L827	PLUG	1
	L1124	GASKET	1
16	2B947	BOLT	4
17	6B41	COVER	1
	9H8217	GASKET	1
18	3V6396	CASE ASSEM. (Includes)	1
19	1A2223	DOWEL	1
20	8K7578	CASE ASSEM. (Includes)	1
21	4D3704	WASHER	4
22	7K3116	BOLT	4
23	7K16	CAP	2
24	4K2143	BUSHING	2
25	4H9027	PLUG	1
26	3V6408	COVER ASSEM. (Includes)	1
	3V5496	COVER	1
27	1A695	PLUG	2
28	6K6614	PIN	2
29	3K7207	BEARING	2
30	S1587	BOLT	2

SP1184

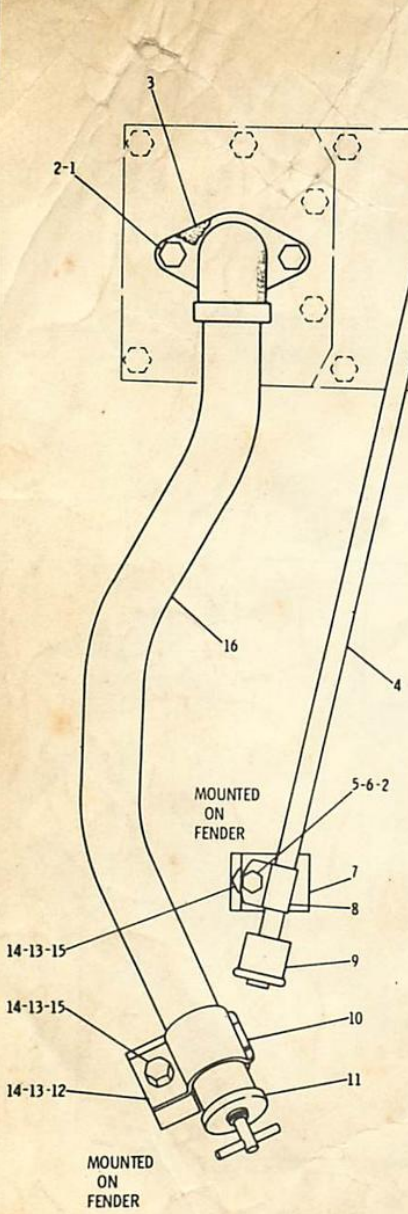

REF. NO.	PART NUMBER	DESCRIPTION	QTY
1	S1588	BOLT	2
2	3B4506	LOCKWASHER	3
3	5B3379	GASKET	1
4	3V2892	TUBE ASSEM.	1
5	L1351	BOLT	1
6	1D4717	NUT	1
7	3V2896	BRACKET	1
8	7B7501	CLIP	1
9	2Y4357	GAUGE ASSEM.	1
10	7S8920	CLIP (slotted)	1
	7S8921	CLIP (tab)	1
11	6B4497	CAP	1
12	4V2155	BRACKET	1
	7B3235	BOLT	1
	2M849	WASHER	1
13	1D4719	NUT	2
14	3B4508	LOCKWASHER	3
15	6H1717	BOLT	2
16	3V2890	TUBE ASSEM.	1

SP1198

3V3126 STEERING CLUTCH CASE OIL FILLER GROUP

2Y2120 MAIN FRAME GROUP

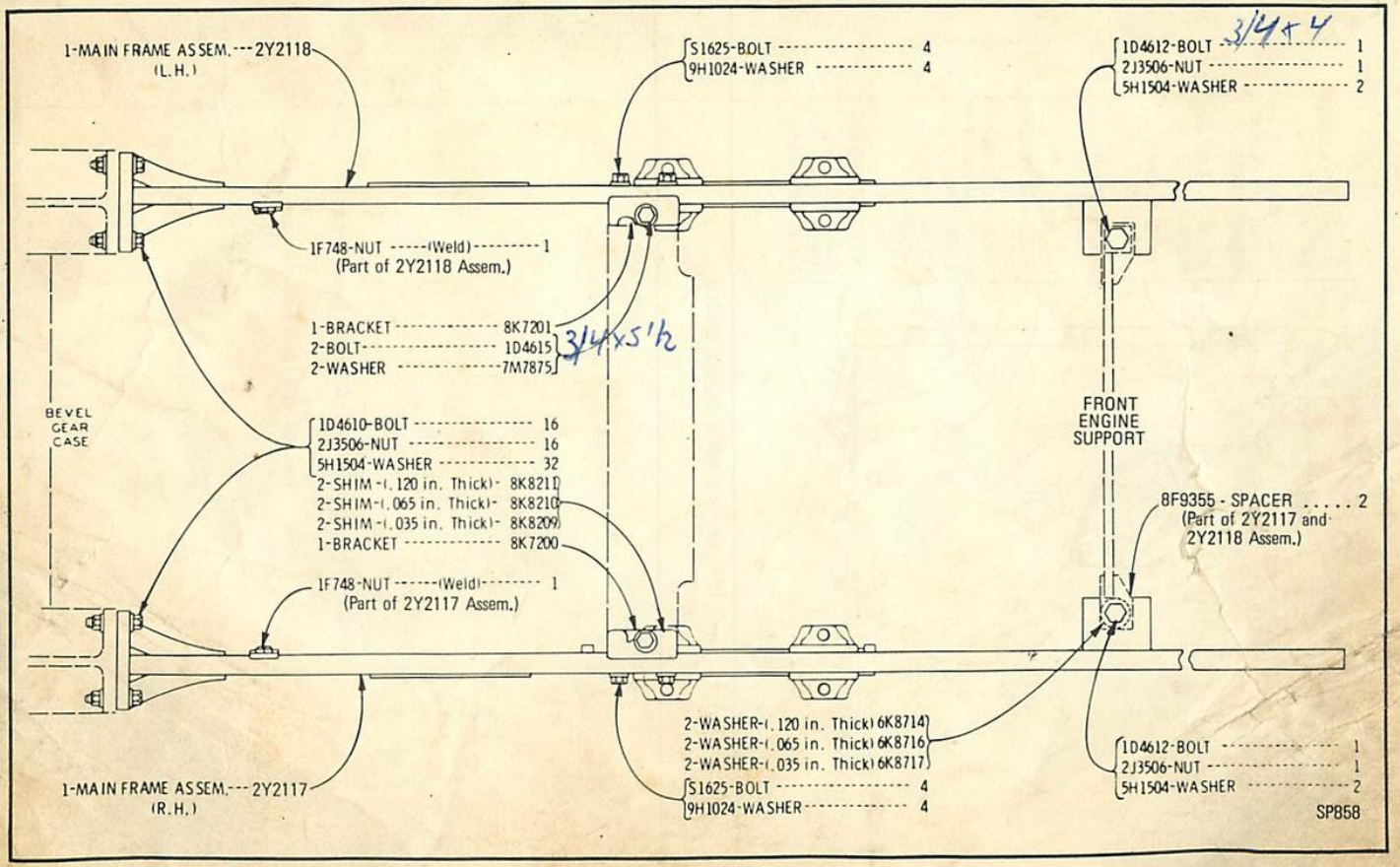

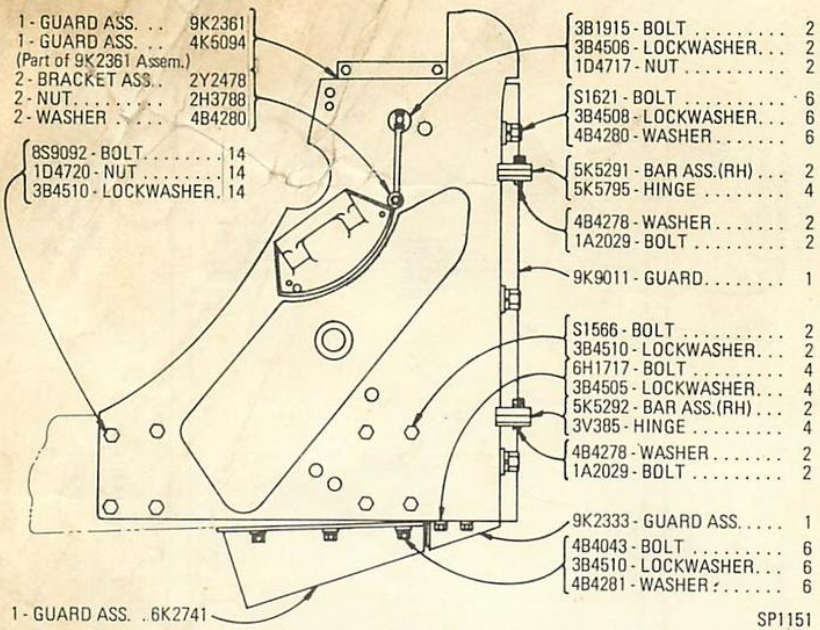

2Y4055 RADIATOR GUARD GROUP

Consists of:

			Page
1	4V216	Front Non ROPS Fender Support Group	95
1	4V217	Rear Non ROPS Fender Support Group	95

4V1161 NON ROPS MOUNTING CONVERSION ARRANGEMENT
FOR USE ON MACHINES EXPORTED WITHOUT RIPPER

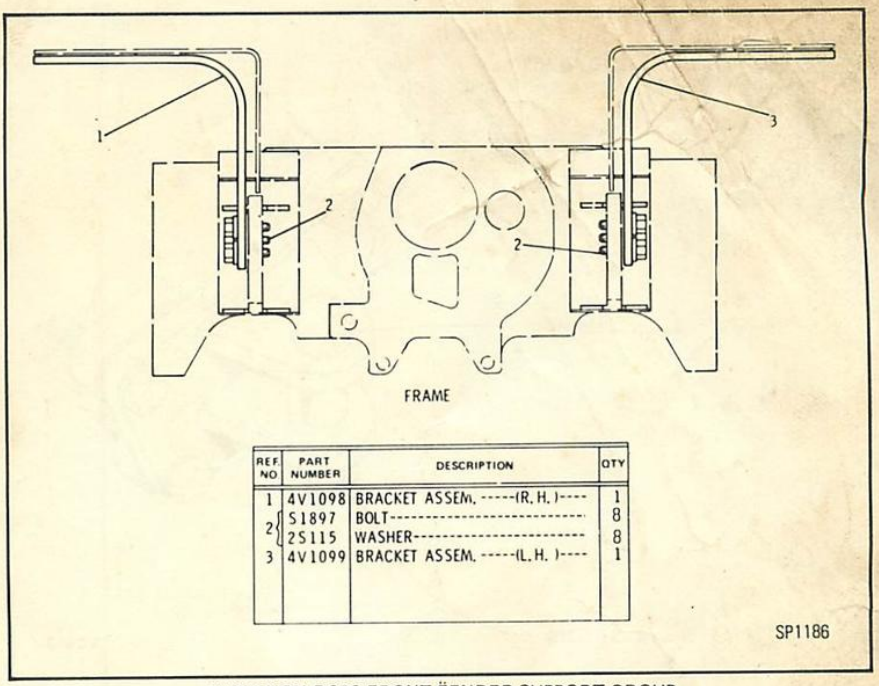

REF NO	PART NUMBER	DESCRIPTION	QTY
1	4V1098	BRACKET ASSEM. -----(R. H.)----	1
2	S1897	BOLT----------	8
	2S115	WASHER----------	8
3	4V1099	BRACKET ASSEM. -----(L. H.)----	1

SP1186

4V216 NON ROPS FRONT FENDER SUPPORT GROUP
Part of 4V1161 Non ROPS Mounting Conversion Arrangement shown on Page 94

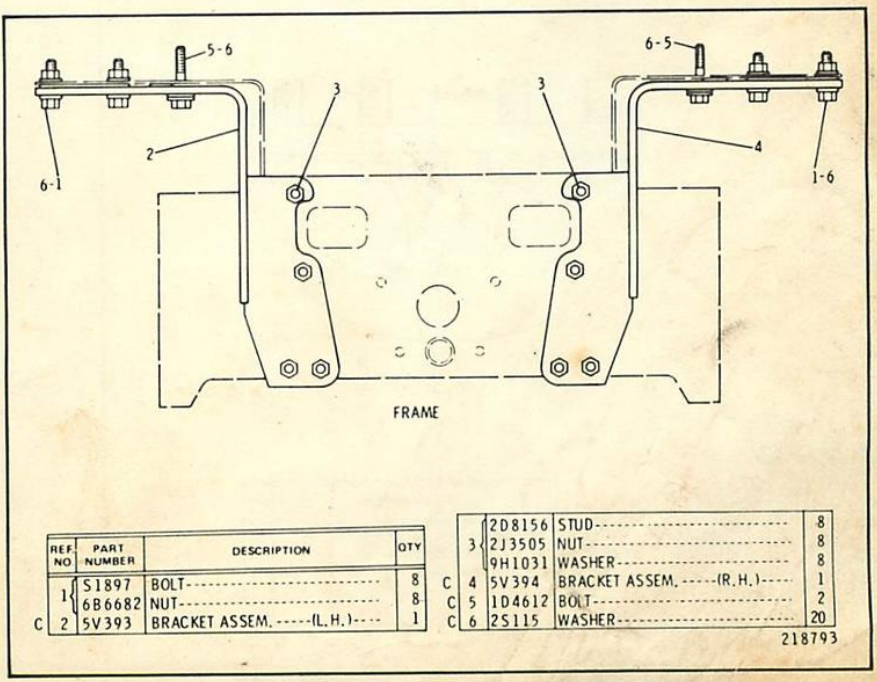

	REF NO	PART NUMBER	DESCRIPTION	QTY
	1	S1897	BOLT----------	8
		6B6682	NUT----------	8
C	2	5V393	BRACKET ASSEM. -----(L. H.)----	1
	3	2D8156	STUD----------	8
		2J3505	NUT----------	8
		9H1031	WASHER----------	8
C	4	5V394	BRACKET ASSEM. -----(R. H.)----	1
C	5	1D4612	BOLT----------	2
C	6	2S115	WASHER----------	20

218793

4V217 NON ROPS REAR FENDER SUPPORT GROUP
Part of 4V1161 Non ROPS Mounting Conversion Arrangement listed on Page 94

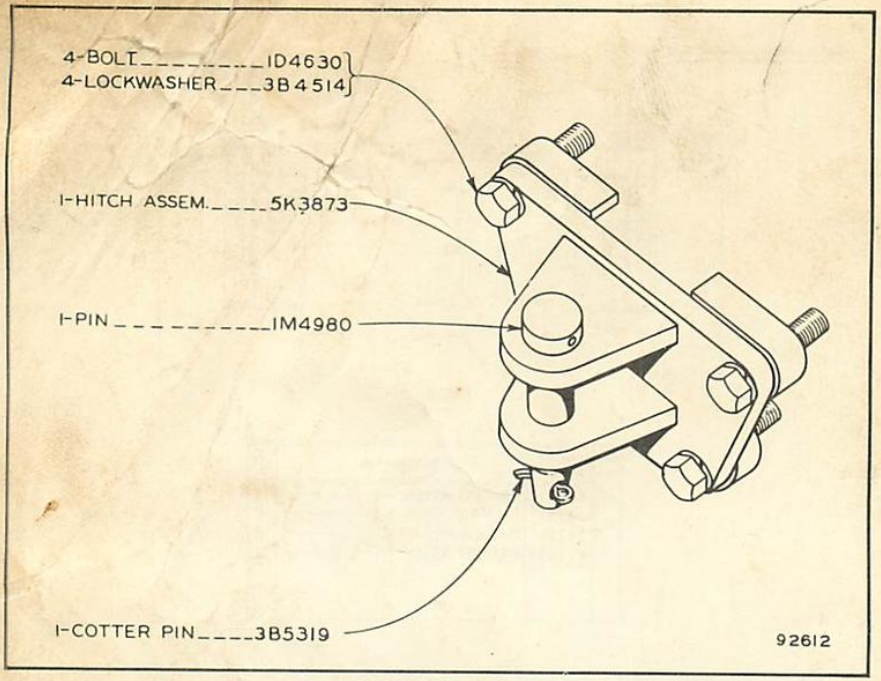

5K1282 HITCH GROUP

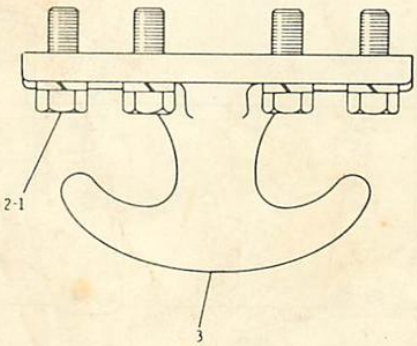

	REF NO	PART NUMBER	DESCRIPTION	QTY
	1	2A1538	BOLT	4
	2	3B4512	LOCKWASHER	4
C	3	2Y4042	HOOK ASSEM.	1

C INDICATES CHANGE

SP1155

6K4438 FRONT PULL HOOK GROUP
FOR USE WITH PULLEY GUARD
AN ATTACHMENT

4K5207 EQUALIZER SPRING GROUP

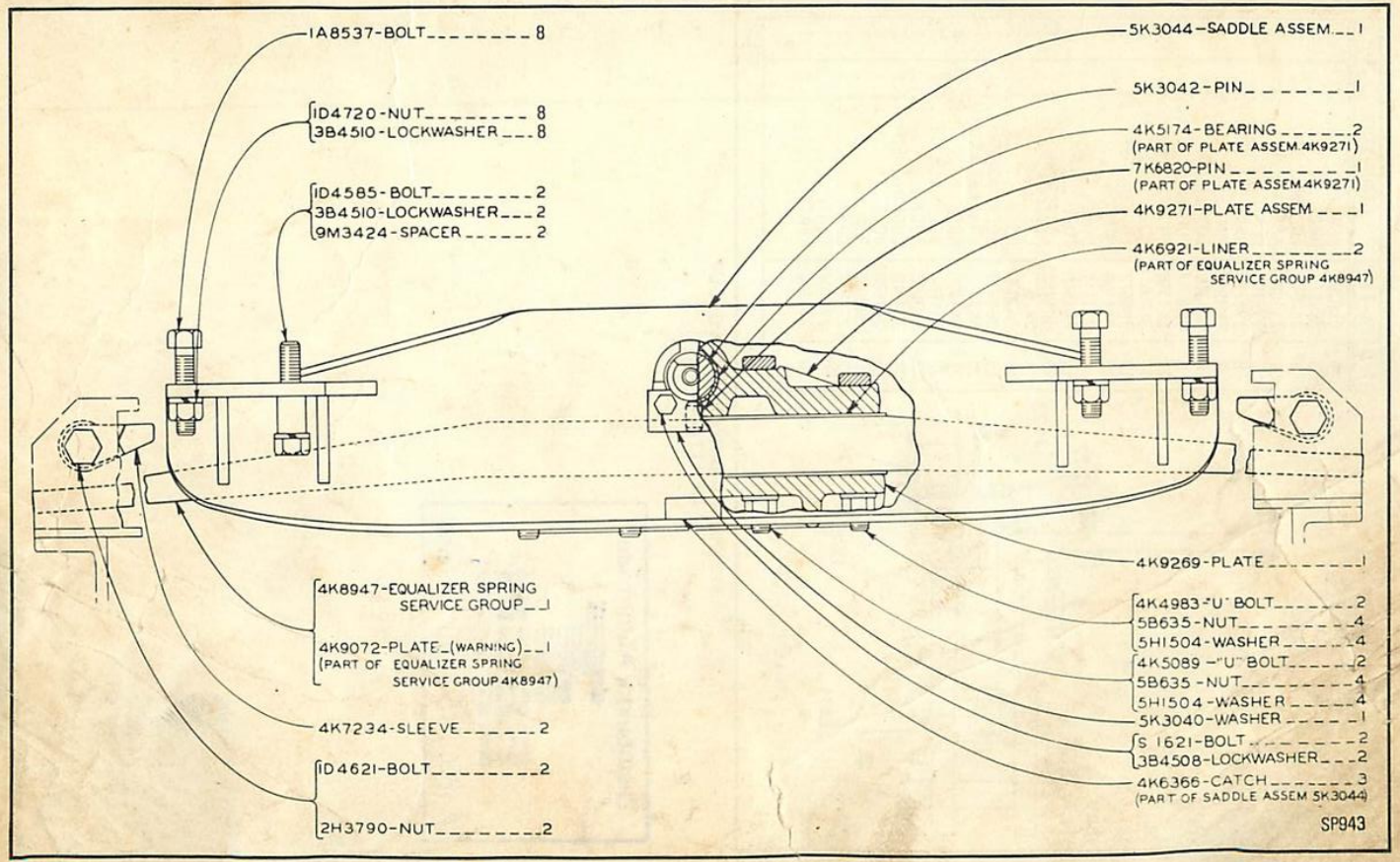

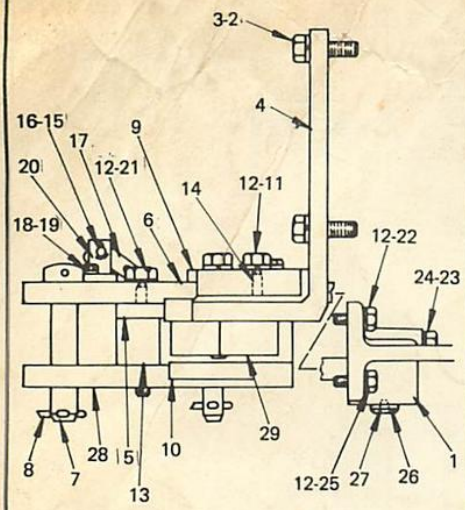

ITEM	PART Nº	DESCRIPTION	QTY.
1	4K6782	BRACKET	1
2	9F9522	BOLT	6
3	3B4514	LOCKWASHER	6
4	2Y1080	ARM ASSEM.	2
5	2Y1105	PLATE	1
6	2Y1110	BAR	1
7	1M4980	PIN	1
8	3B4319	COTTER PIN	1
9	1M8534	PIN	1
10	6K1346	SHOE	2
11	S1756	BOLT	4
12	3B4512	LOCKWASHER	12
13	2Y1106	SPACER	2
14	2Y1111	DOWEL	2
15	4K1540	PIN	1
16	3B4617	COTTER PIN	1
17	3K28	LATCH	1
18	1A2029	BOLT	2
19	3B4506	LOCKWASHER	2
20	3K29	BRACKET ASSEM.	1
21	6K1330	BOLT	4
22	L1178	BOLT	2
23	5H7902	BOLT	2
24	3B4510	LOCKWASHER	2
25	2A1538	BOLT	2
26	1M8535	PIN	1
27	2B7557	CORK	1
28	2Y1104	PLATE	1
29	2Y1107	PLATE	1

SP1021

2Y2170 SWINGING DRAWBAR GROUP
AN ATTACHMENT

Distribuidor Autorizado
RECH
TRATORES
(65) 515-8800 Sinop/MT

9K217 CRANKCASE GUARD GROUP

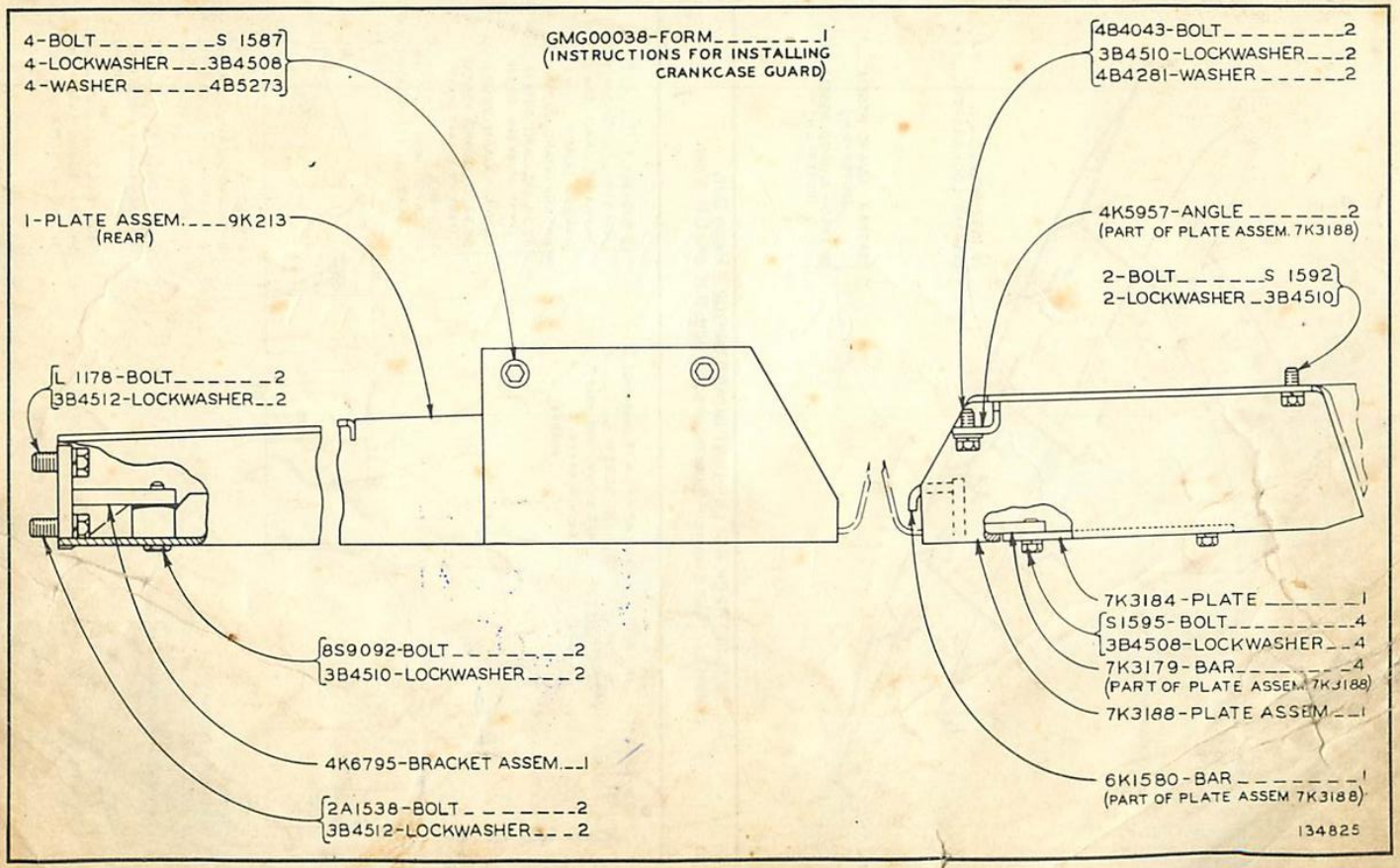

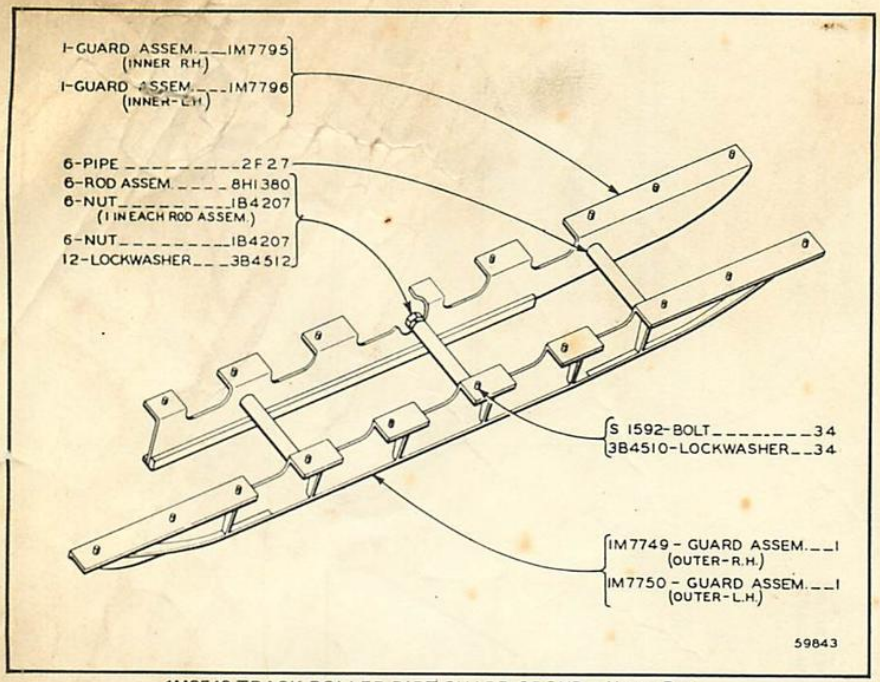

1M8549 TRACK ROLLER DIRT GUARD GROUP – Heavy Duty
Note: Quantities shown are those required for both R.H. and L.H. Sides

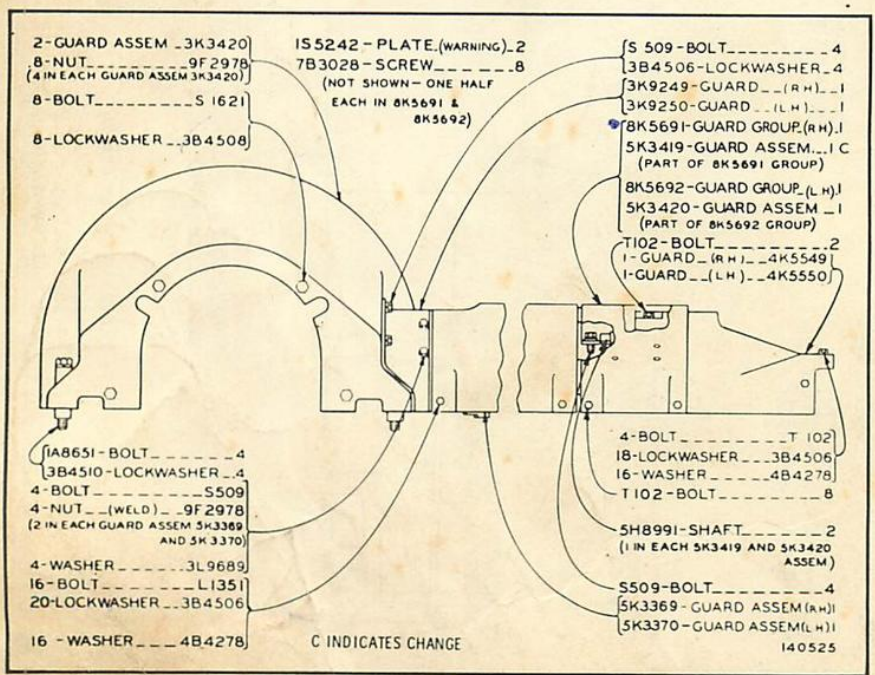

4K5211 TRACK ROLLER FRAME GUARD GROUP

3V2873 FLOOR PLATE GROUP

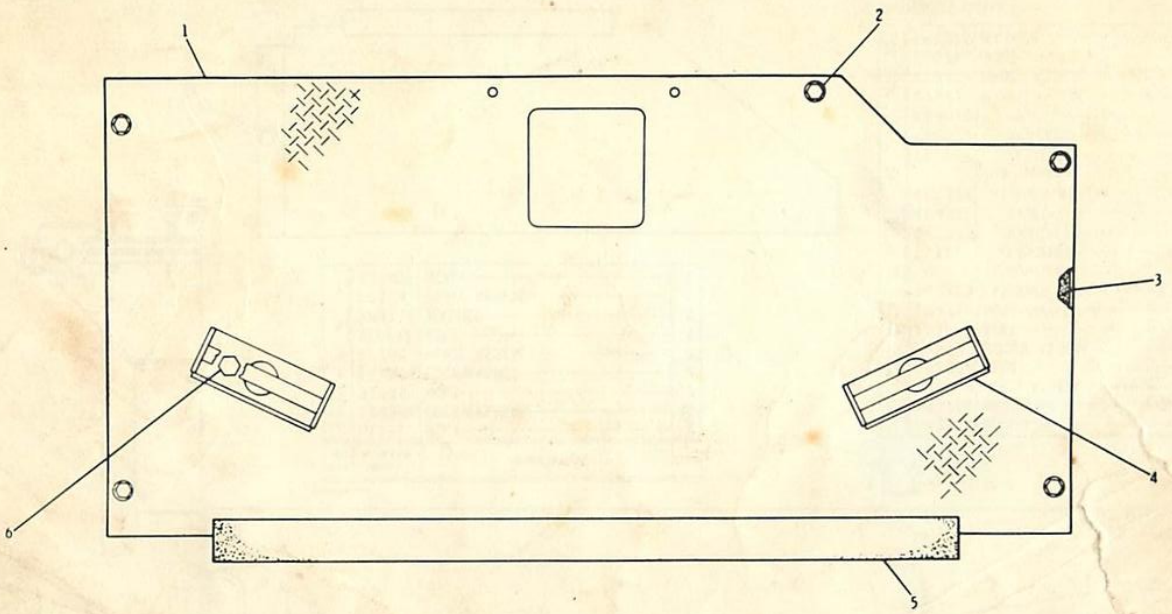

	REF NO	PART NUMBER	DESCRIPTION	QTY
	1	3V2872	FLOORPLATE ASSEM.	1
C	2	1L1351	BOLT	5
C		3B4506	LOCKWASHER	5
C		4B4278	WASHER	5

▲	3	5P7246	SEAL-----.308 m(121.34 in.)	2
	4	5H156	SUPPORT ASSEM.	
▲	5	5P7245	SEAL-----.82 m(32.28 in.)	

6	1S1621	BOLT	4
	3B4508	LOCKWASHER	4

C INDICATES CHANGE

▲ ORDER BY THE METRE-USE AS REQUIRED

168447

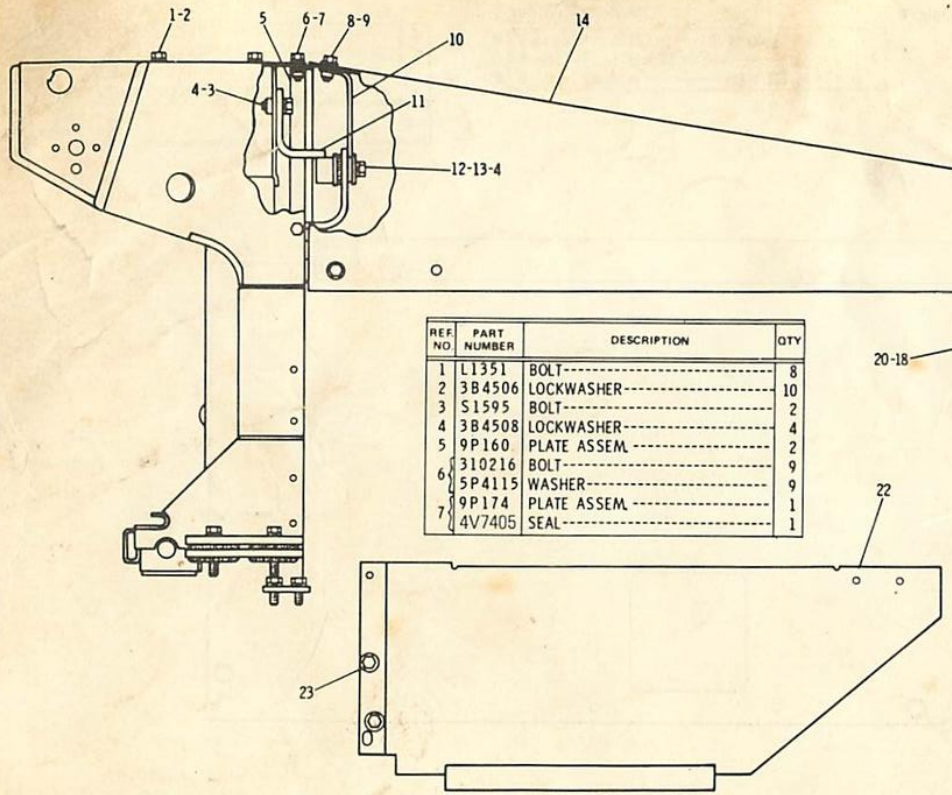

REF. NO.	PART NUMBER	DESCRIPTION	QTY
1	L1351	BOLT	8
2	3B4506	LOCKWASHER	10
3	S1595	BOLT	2
4	3B4508	LOCKWASHER	4
5	9P160	PLATE ASSEM.	2
6	310216	BOLT	9
	5P4115	WASHER	9
7	9P174	PLATE ASSEM.	1
	4V7405	SEAL	1
8	S1594	BOLT	4
9	5P1075	WASHER	12
10	3V2905	PLATE ASSEM. (Includes)	1
	9F2978	NUT	2
11	4V5331	BRACKET ASSEM.	2
12	5P2424	BOLT	2
C 13	1A2519	WASHER	4
	8D3786	MOUNTING	2
14	3V6619	HOOD ASSEM.	1
	6P1294	PLUG	1
15	3V679	COVER ASSEM.	1
16	T102	BOLT	10
17	1D4717	NUT	4
18	9K2325	FASTENER ASSEM. (R. H.) (Includes)	1
	T537	FASTENER	1
19	9K2327	BRACKET	1
	4B4312	RIVET	3
20	9K2326	FASTENER ASSEM. (L. H.) (Includes)	1
	T537	FASTENER	1
21	9K2328	BRACKET	1
	4B4312	RIVET	3
22	4V842	PANEL ASSEM. (R. H.)	1
	4V843	PANEL ASSEM. (L. H.)	1
23	S1621	BOLT	4
	5P1076	WASHER	4

C INDICATES CHANGE

SP1159

3V3138 HOOD AND DASH GROUP – Part 1