SEBP4574-32
September 2013

RUTHZIL TRATOR COMERCIAL DE PEÇAS LTDA 11 97083-6812 ROLANDO

Parts Manual

D4K XL & LGP Track Type Tractor

MMM1-Up (Machine)
RRR1-Up (Machine)
C4E1-Up (Engine)
JMJ1-Up (Ripper)
JAG1-Up (Winch)

Powered By C4.4 Engine

Product and Dealer Information

Note: For product identification plate locations, see the section “Product Identification Information” in the Operation and Maintenance Manual.

Delivery Date: _____

Product Information

Model: _____

Product Identification Number: _____

Engine Serial Number: _____

Transmission Serial Number: _____

Generator Serial Number: _____

Attachment Serial Numbers: _____

Attachment Information: _____

Customer Equipment Number: _____

Dealer Equipment Number: _____

Dealer Information

Name: _____ Branch: _____

Address: _____

_____

_____

	Dealer Contact	Phone Number	Hours
Sales:	_____	_____	_____
Parts:	_____	_____	_____
Service:	_____	_____	_____

MEMORANDA

TABLE OF CONTENTS

NAME	PAGE
GENERAL INFORMATION	**A4**
REPAIR ALTERNATIVES	**A7**
SUPPLEMENTAL COOLANT ADDITIVES	A8
MAINTENANCE PARTS	**A9**
INDEX	**A13**
MACHINE ARRANGEMENT	**1**
CHASSIS AR	1
COMMON AR	2
MODIFICATION AR	2
SPECIAL AR	4
ENGINE ARRANGEMENT	**5**
ENGINE AR-PRIMARY	5
INSTALLATION AR-ENGINE	6
BASIC ENGINE	**7**
ADAPTER GP-AUXILIARY DRIVE	7
BELT TENSIONER GP	8
CAMSHAFT GP	11
COVER GP-CYLINDER HEAD	12
COVER GP-VALVE MECHANISM	13
CRANKSHAFT GP	15
CYLINDER BLOCK GP	21
CYLINDER HEAD AS	26
CYLINDER HEAD GP	28
DRIVE GP-AUXILIARY	29
DRIVE GP-FAN	30
FLYWHEEL GP	31
GEAR GP-FRONT	32
HOUSING GP-FLYWHEEL	34
LIFTING GP-ENGINE	35
MOUNTING GP-ENGINE	36
PAN GP-OIL	37
PISTON & ROD GP	39
PLUG GP-CYLINDER HEAD	43
PLUG GP-ENGINE	44
PULLEY GP-CRANKSHAFT	45
ROCKER ARM GP	46
SUPPORT GP-ENGINE & XMSN	47
VALVE MECHANISM GP	48
LUBRICATION SYSTEM	**50**
FILLER GP-ENGINE OIL	50
FILTER GP-ENGINE OIL	51
PUMP GP-ENGINE OIL	53
VALVE GP-FLUID SAMPLING	54
COOLING SYSTEM	**55**
CONNECTION GP-WATER	55
COOLER GP-ENGINE OIL	57
FAN GP-BLOWER	61
LINES GP-COOLANT	62
PUMP GP-WATER	63
RADIATOR & HYD OIL COOLER GP	69
TANK GP-COOLANT	71
AIR INLET AND EXHAUST SYSTEM	**72**
AIR CLEANER GP	72
ARRESTOR GP-SPARK	73
MUFFLER GP	75
TURBOCHARGER GP	76
FUEL SYSTEM	**79**
BOWL GP-WATER COLLECTION	79
FILTER & LINES GP-FUEL	80
FILTER GP-FUEL	84
FILTER GP-PRIMARY FUEL	87
INJECTOR GP-FUEL	89
LINES GP-FUEL	91
PUMP & MTG GP-UNIT INJ HYD	106
PUMP GP-FUEL INJECTION	107
RAIL GP-FUEL	143
SHUTOFF GP-MANUAL	144
TANK GP-FUEL	145
VALVE GP-CHECK	150
VALVE GP-SOLENOID	151
ELECTRICAL AND STARTING SYSTEM	153
ALTERNATOR GP-CHARGING	153
BATTERY & WIRING GP	156
CABLE AS-COILED	171
CONTROL GP-ENGINE ELECTRONIC	172
CONTROL GP-UNPROGRAMMED	173
CONVERSION GP-ELECTRICAL	174
ELECTRONICS GP-IMPLEMENT	181
ELECTRONICS GP-MACHINE	181
GLOW PLUG GP	182
GRADE CONTROL AR	183
GRADE CONTROL AR-LASER	185
GRADE CONTROL AR-SATELLITE	185
HARNESS AS-SENSOR	188
HEATER GP-JACKET WATER	189
INSTALLATION GP-COMMUNICATION	190
INSTALLATION GP-SECURITY	196
KIT-RETROFIT	198
LAMP GP-FLOOD	203
LIGHTING GP-FLOOD	206
MAST GP	210
MOUNTING GP-CONNECTOR	211
MOUNTING GP-GRADE CONTROL	212
MOUNTING GP-RECEIVER	217
PANEL GP-FUSE	219
RADIO GP-COMMUNICATION	228

TABLE OF CONTENTS

NAME	PAGE
RECEIVER GP-LASER	228
RECEIVER GP-SATELLITE	228
RELAY GP	232
SENSOR GP-POSITION	233
SENSOR GP-PRESSURE	237
SENSOR GP-SPEED	238
SERVICE GP-COMMUNICATION	240
STARTING AID GP-ETHER	241
STARTING MOTOR GP-ELECTRIC	243
SWITCH GP-DISCONNECT	245
SWITCH GP-ROTARY	246
TARGET GP-LASER	247
WARNING GP-BACKUP	249
WIRING GP-AIR CONDITIONER	251
WIRING GP-CAB	252
WIRING GP-ELECTROHYDRAULIC	274
WIRING GP-ENGINE	278
WIRING GP-GRADE CONTROL	286
WIRING GP-PLATFORM	312
POWER TRAIN	**318**
ACTUATOR GP-PUMP	318
BRAKE GP-PARKING	320
DRIVE AR	322
DRIVE GP-FINAL	323
DRIVE GP-HYDROSTATIC	325
FILTER GP-OIL	326
HEAD GP-PUMP	327
LINES GP-HYDROSTATIC	328
LINES GP-POWER TRAIN COOLER	332
LINES GP-PUMP	348
LINES GP-TRANSMISSION OIL	349
MANIFOLD GP-CONTROL	360
MOTOR GP-PISTON	361
POWER TRAIN AR	364
PUMP GP-CHARGE	365
PUMP GP-PISTON	369
ROTATING GP-MOTOR	378
ROTATING GP-PUMP	380
SEGMENT GP-SPROCKET	384
SPROCKET GP	385
VALVE GP-FLUSHING	386
VALVE GP-PILOT	387
VALVE GP-PUMP CONTROL	388
VALVE GP-RELIEF	419
VALVE GP-SOLENOID	424
FRAME AND BODY	**426**
COUNTERWEIGHT GP-FRONT	426
COVER GP-ACCESS	427
DRAWBAR GP	428
ENCLOSURE GP-PLATFORM	429
FRAME GP	436
GRILL AR-RADIATOR	444
GRILL GP-RADIATOR	446
GUARD GP-BOTTOM	448
GUARD GP-BRUSH	451
GUARD GP-FRONT	456
GUARD GP-RADIATOR	457
GUARD GP-REAR	458
HITCH GP-TOWING	462
HOOD & GUARD GP	463
LATCH GP	473
LINER GP-SOUND SUPPRESSION	474
SCREEN GP	476
SUPPRESSION AR-SOUND	477
SWEEP GP	480
UNDERCARRIAGE	**483**
ADJUSTMENT GP-HYDRAULIC TRACK	483
GUARD GP-IDLER	486
GUARD GP-TRACK GUIDE	490
GUARD GP-TRACK ROLLER	496
IDLER GP-FRONT	498
IDLER GP-TRACK	500
LINK AS-TRACK	502
LINK AS-TRACK BOX	504
ROLLER GP-TRACK	507
ROLLER GP-TRACK CARRIER	511
ROLLER GP-TRACK-DOUBLE FLANGE	515
ROLLER GP-TRACK-SINGLE FLANGE	518
SPRING GP-RECOIL	523
TRACK AR	524
TRACK GP	525
UNDERCARRIAGE AR	527
STEERING AND BRAKING SYSTEM	**529**
BRAKE GP-SERVICE & PARKING	529
LINES GP-STEERING	530
HYDRAULIC SYSTEM	**532**
CYLINDER GP-ANGLING	532
CYLINDER GP-BULLDOZER LIFT	534
CYLINDER GP-RIPPER	538
CYLINDER GP-TILT	542
DRIVE AR-PUMP	544
HYDRAULIC AR	544
LINES GP-ANGLE & TILT	547
LINES GP-HYDRAULIC	563
LINES GP-PRESSURE TEST	572
LINES GP-PUMP	575
LINES GP-REAR ATTACHMENT	591
LINES GP-RIPPER	597
LINES GP-WINCH	601
MANIFOLD GP-VALVE	614
PUMP GP-GEAR	615
SUPPORT GP-PUMP DRIVE	616
TANK & MTG GP-HYDRAULIC	617
TANK GP-HYDRAULIC	619

TABLE OF CONTENTS

NAME	PAGE
VALVE & MTG GP-CONTROL	626
VALVE & MTG GP-IMPLEMENT CONT	628
VALVE GP-BANK 3	630
VALVE GP-BANK 4	632
VALVE GP-BANK 5	636
VALVE GP-CONTROL	638
VALVE GP-SOLENOID	646
IMPLEMENTS	**650**
C-FRAME GP-POWER ANGLING	650
LINK GP-PITCH	652
OPERATOR STATION	**654**
ACCESSORY GP-CAB	654
ACCUMULATOR GP-REFRIGERANT	662
AIR CONDITIONER & MOUNTING GP	664
AIR CONDITIONER GP	667
ARM GP-SEAT SUSPENSION	677
ARMREST GP	680
CABLE GP-CONTROL	684
COMPRESSOR & MTG GP-REFRIG	685
COMPRESSOR GP-REFRIGERANT	686
CONDENSER GP-REFRIGERANT	687
CONSOLE GP	689
CONSOLE GP-OPERATOR	692
CONTROL & MTG GP-PEDAL	696
CONTROL GP-HANDLE	699
CONTROL GP-HYDRAULIC	704
CONTROL GP-JOYSTICK	709
CONTROL GP-RIPPER	716
COVER GP-CAB	720
COVER GP-CONSOLE	742
DISPLAY GP-MONITOR	749
DOOR GP-CAB	752
HEATER GP-CAB	771
INSTALLATION GP-RADIO	780
INSTRUMENT GP	781
KIT-CUSHION	785
LINES GP-AIR CONDITIONER	786
LINES GP-HEATER	791
LITERATURE GP	794
MIRROR GP-REAR VIEW	795
MOTOR GP-WINDOW WIPER	796
MOUNTING GP-CAB	800
MOUNTING GP-RADIO	801
PAN GP-BACKREST	802
PEDAL GP-GOVERNOR & BRAKE	803
ROPS AR	811
ROPS AR-ENCLOSED	812
SCREEN GP-CAB	814
SCREEN GP-PROTECTION	815
SEAT & SUPPORT GP	817
SEAT BELT GP	818
SEAT GP	820
SEAT GP-SUSPENSION	837
SUPPORT GP-HYDRAULIC CONTROL	846
SUPPORT GP-STEERING CONTROL	848
SUSPENSION GP-SEAT	850
WASHER GP-WINDOW	854
WINDOW GP-CAB	856
WINDOW GP-SLIDING	864
WIPER GP-WINDOW	868
WORK TOOLS	**870**
BLADE AR-PWR ANGLE & TILT	870
BLADE GP-ANGLING	875
BRAKE & PLANETARY GP-WINCH	893
CASE GP-WINCH	895
CLUTCH & GEAR GP-WINCH	896
CONTROL GP-WINCH	897
DRIVE AR-WINCH	914
EDGE GP-BIT & CUTTING	915
EDGE-CUTTING	920
FILTER GP-OIL	921
GEAR GP-WINCH	922
GEAR GP-WINCH TRANSFER	924
MOTOR & MTG GP-WINCH	925
MOUNTING GP-MAST	927
MOUNTING GP-PUMP	928
MOUNTING GP-RIPPER	929
MOUNTING GP-WINCH	931
PLANETARY GP-WINCH	934
RIPPER AR	935
RIPPER GP	936
SHAFT GP-WINCH DRUM	937
TOOTH GP-RIPPER	939
VALVE & LINES GP-WINCH	940
WINCH AR	942
SERVICE EQUIPMENT AND SUPPLIES	943
FILM GP	943
LOCK GP-VANDALISM	945
PLATE & FILM GP	946
PART NUMBER INDEX	**B1**

GENERAL INFORMATION

1. MACHINE IDENTIFICATION

Cat machines are identified by Product Identification Numbers (PIN). Some components included in a machine may be identified by Serial Numbers (S/N). Typical components that will be serialized include engines, transmissions, bulldozers, and rippers. The machine and engine are further identified by arrangement numbers and in some cases modification numbers. These numbers are shown on the product identification plate(s) and on the master plate in the operator's compartment.

Cat dealers need all of these numbers to determine accurate parts identification.

Effective First Quarter 2001 the Cat Product Identification Number (PIN) changed from 8 to 17 characters. In an effort to provide uniform equipment identification, Caterpillar and other construction equipment manufacturers are moving to comply with the latest version of the product identification numbering standard. Non-road machine PINs are defined by ISO 10261. The new PIN format will apply to all Cat machines and generator sets. The PIN plates and frame marking will display the 17 character PIN. The new format will look like the following:

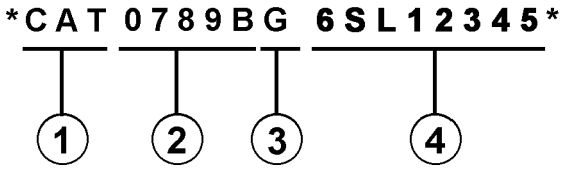

Where:

1. Caterpillar's World Manufacturing Code (characters 1-3)

2. Machine Descriptor (characters 4-8)

3. Check Character (character 9)

4. Machine Indicator Section (MIS) or Product Sequence Number (characters 10-17). These were previously referred to as the Serial Number.

Machines and generator sets produced before First Quarter 2001 will maintain their 8 character PIN format.

Components such as engines, transmissions, axles, etc. and work tools will continue to use an 8 character Serial Number (S/N).

2. ORDERING PARTS

⚠ WARNING

When replacement parts are required for this product Caterpillar recommends using Caterpillar replacement parts or parts with equivalent specifications including, but not limited to, physical dimensions, type, strength and material.

Failure to heed this warning can lead to premature failures, product damage, personal injury or death.

Quality Cat replacement parts are available from Cat dealers throughout the world. Their parts inventories are up to date and include all parts normally required to protect your investment in Cat machines. Dealers may offer repair kits or remanufactured parts to allow selection of the most effective repair alternative for a particular situation. When ordering parts, your order should specify the quantity, part number, part name, and the serial number/product identification number of the machine for which the parts are needed.

3. PARTS MANUAL ORGANIZATION

Product information in this manual is presented as "information elements" that represent all of the components for the specific model. Engine Arrangement and Seat Group are examples of information elements. The information elements are organized alphabetically by part name and secondarily by part number within each major section of the manual.

4. TABLE OF CONTENTS

A table of contents (TOC) is found at the beginning of the manual. The TOC lists each section of the manual with a complete list of all information elements organized as they appear in the manual. Page numbers are provided for quick reference to detailed parts identification illustrations and serviceable consist lists.

5. MAINTENANCE PARTS INDEX

The Maintenance Parts Index, located near the beginning of the manual, references most frequently used maintenance part numbers, providing description, quantity, usage and page number. This information is organized alphabetically by part description.

6. INDEX

The index located near the front of the manual is an alphabetical listing of all information elements included in the manual. Page numbers are provided for quick reference to detailed parts identification illustrations and serviceable consist lists.

7. PART NUMBER INDEX

A numerical index listing all part numbers and the corresponding page number(s) appears at the back of the manual.

8. CAPTIONS

Captions located at the beginning of each information element identify the part number and part name along with additional descriptive information. PIN and S/N information found in each caption should be used to select correct information for a specific machine. Field replacement options, identification of optional attachment components, and where used ("part of") information is also provided.

The first line of a caption is shown in larger type font to indicate the beginning of an information element. Captions for additional pages that may be required to illustrate an information element will be shown in standard type font and will include the term *(contd.)* .

9. NON-SERVICED PARTS

In some instances it is necessary to display non-serviced parts that are a link to a lower level serviceable consist lists. These non-serviced part numbers are shown in *italic* type indicating that they are not available.

10. PARTS LIST REFERENCE NUMBERS

Numbers shown in the Ref No column correspond to numbers used in the associated graphic(s). An alphabetic suffix may be added to a reference number to identify lower level consist items. Numbers shown in the Graphic Ref column refer to the graphic number identifier displayed in the lower left corner of each illustration. The Graphic Ref number may be used in combination with the item Ref No to determine the correct part number. There may be intentional omission of a Ref No in a consist list as information is updated to reflect the latest serviceable part numbers.

11. INDENTED PART NAMES

When a part name is indented in a parts list, it is part of (included in) the group or assembly under which it is indented.

12. ILLUSTRATION REFERENCE LETTERS

When necessary, illustrations contain reference letters (A, B, C etc.) that are intended to track lines and harnesses from one point to another. They are also used to show where to reconnect illustrations that have been separated.

13. ABBREVIATIONS AND SYMBOLS

O.D. – Outside Diameter
I.D. – Inside Diameter
A – Not Part Of This Group
B – Use As Required
C – Change From Previous Type
D – Order By The Meter
E – Order By The Centimeter
F – Not Shown
G – Order By The Inch
I – Refer To Hydraulic Information System
M – Metric Part
R – Remfg Part May Be Available
Y – Separate Illustration
Z – Not Serviced Separately

14. DESCRIPTION OF TYPE CHANGES

Type - A type is defined as any configuration change that requires an additional Information Element for an Arrangement, Group, or Assembly. If serial number breaks for types are not available, a type # (Type 1, Type 2, etc.) will be displayed in the caption. These "type" changes are identified with a "C" note (change from previous type) in the Parts List. Only the "types" that apply to this Parts Manual will be included. Additional types may exist causing "C" notes to appear on an Information Element when no other types are shown.

15.<END>

This symbol indicates the end of an information element.

NOTE:

Continuing improvement and advancement of product design may cause changes to your machine which may not be included in this publication. Whenever a question arises regarding your Cat product or this publication, please consult your Cat dealer for the latest available information.

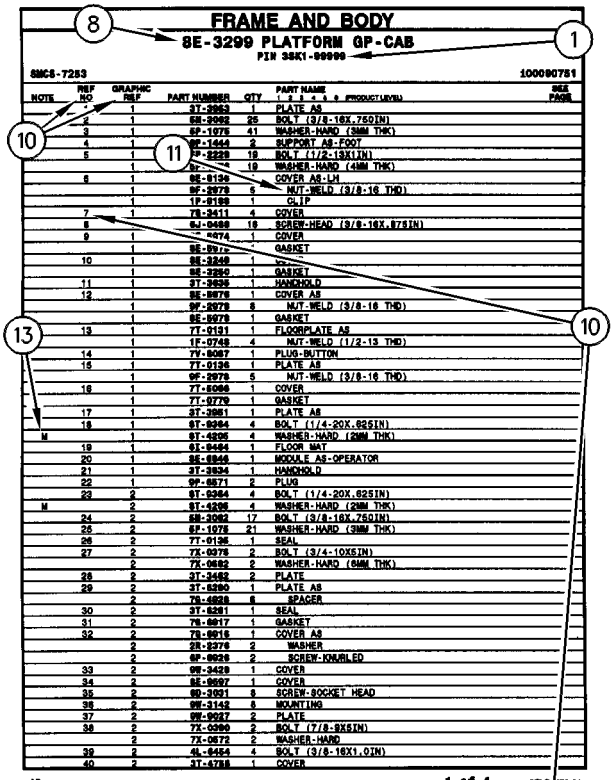

FRAME AND BODY

8E-3299 PLATFORM GP-CAB

PIN 3SK1-00999

SMCS-7283 100090751

NOTE	REF NO	GRAPHIC REF	PART NUMBER	QTY	PART NAME (1 2 3 4 5 6 PRODUCT LEVEL)	SEE PAGE
	1	1	3T-3963	1	PLATE AS	
	2	1	6M-3982	25	BOLT (3/8-16X.75DIN)	
	3	1	5P-1078	41	WASHER-HARD (3MM THK)	
	4	1	9F-1444	2	SUPPORT AS-FOOT	
	5	1	7P-2229	19	BOLT (1/2-13X1IN)	
		1	5P-[illegible]	19	WASHER-HARD (4MM THK)	
	6	1	8E-8136	1	COVER AS-LH	
		1	9F-2979	6	NUT-WELD (3/8-16 THD)	
		1	1F-8188	1	CLIP	
	7	1	7S-3411	4	COVER	
	8		6J-0488	19	SCREW-HEAD (3/8-16X.875IN)	
	9	1	[illegible]-0474	1	COVER	
		1	8E-8976	1	GASKET	
	10	1	8E-3249	1	[illegible]	
		1	8E-3250	1	GASKET	
	11	1	3T-3935	1	HANDHOLD	
	12	1	8E-8978	1	COVER AS	
		1	9F-2979	8	NUT-WELD (3/8-16 THD)	
		1	8E-8979	1	GASKET	
	13	1	7T-0131	1	FLOORPLATE AS	
		1	1F-0748	4	NUT-WELD (1/2-13 THD)	
	14	1	7V-8067	1	PLUG-BUTTON	
	15	1	7T-0136	1	PLATE AS	
		1	9F-2979	5	NUT-WELD (3/8-16 THD)	
	16	1	7T-8066	1	COVER	
		1	7T-0779	1	GASKET	
	17	1	3T-3961	1	PLATE AS	
	18	1	6T-9364	4	BOLT (1/4-20X.625IN)	
M		1	6T-4236	4	WASHER-HARD (2MM THK)	
	19	1	6I-9494	1	FLOOR MAT	
	20	1	8E-8946	1	MODULE AS-OPERATOR	
	21	1	3T-3934	1	HANDHOLD	
	22	1	9F-8571	2	PLUG	
	23	2	6T-9364	4	BOLT (1/4-20X.625IN)	
M		2	6T-4236	4	WASHER-HARD (2MM THK)	
	24	2	6M-3982	17	BOLT (3/8-16X.75DIN)	
	25	2	5P-1078	21	WASHER-HARD (3MM THK)	
	26	2	7T-0136	1	SEAL	
	27	2	7X-0378	2	BOLT (3/4-10X5IN)	
		2	7X-0682	2	WASHER-HARD (6MM THK)	
	28	2	3T-3462	2	PLATE	
	29	2	3T-8280	1	PLATE AS	
		2	7S-4828	6	SPACER	
	30	2	3T-8281	1	SEAL	
	31	2	7S-8917	1	GASKET	
	32	2	7S-8916	1	COVER AS	
		2	2S-2376	2	WASHER	
		2	6F-8628	2	SCREW-KNURLED	
	33	2	9W-3429	1	COVER	
	34	2	8E-8697	1	COVER	
	35	2	9D-3931	8	SCREW-SOCKET HEAD	
	36	2	9W-3142	8	MOUNTING	
	37	2	9W-9927	2	PLATE	
	38	2	7X-0290	2	BOLT (7/8-9X5IN)	
		2	7X-0572	2	WASHER-HARD	
	39	2	4L-6454	4	BOLT (3/8-16X1.0IN)	
	40	2	3T-4788	1	COVER	

12 FRAME AND BODY 1 of 4 SELP[illegible]70-01

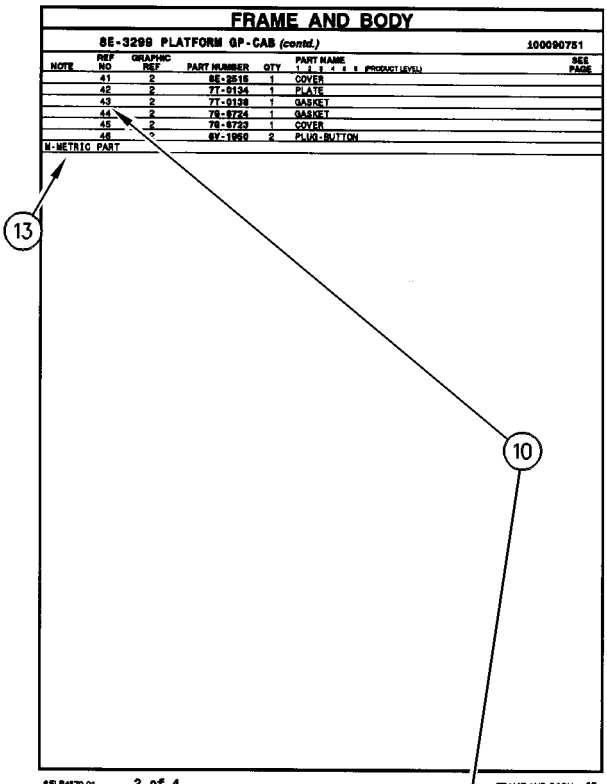

FRAME AND BODY

8E-3299 PLATFORM GP-CAB (contd.) 100090751

NOTE	REF NO	GRAPHIC REF	PART NUMBER	QTY	PART NAME (1 2 3 4 5 6 PRODUCT LEVEL)	SEE PAGE
	41	2	8E-2516	1	COVER	
	42	2	7T-0134	1	PLATE	
	43	2	7T-0138	1	GASKET	
	44	2	7S-8724	1	GASKET	
	45	2	7S-8723	1	COVER	
	46	2	6V-1960	2	PLUG-BUTTON	

M-METRIC PART

SELP4570-01 2 of 4 FRAME AND BODY 13

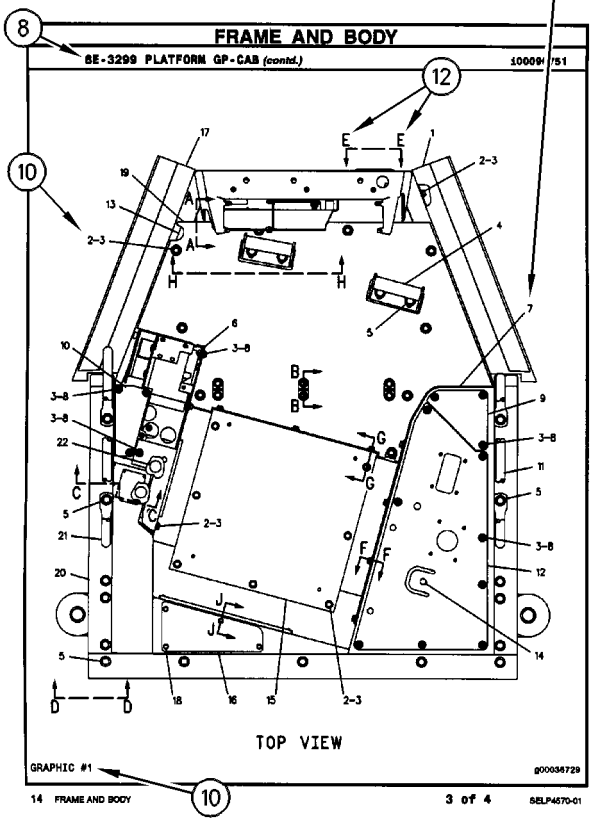

FRAME AND BODY

8E-3299 PLATFORM GP-CAB (contd.) 100090751

TOP VIEW

GRAPHIC #1 g00036729

14 FRAME AND BODY 3 of 4 SELP4570-01

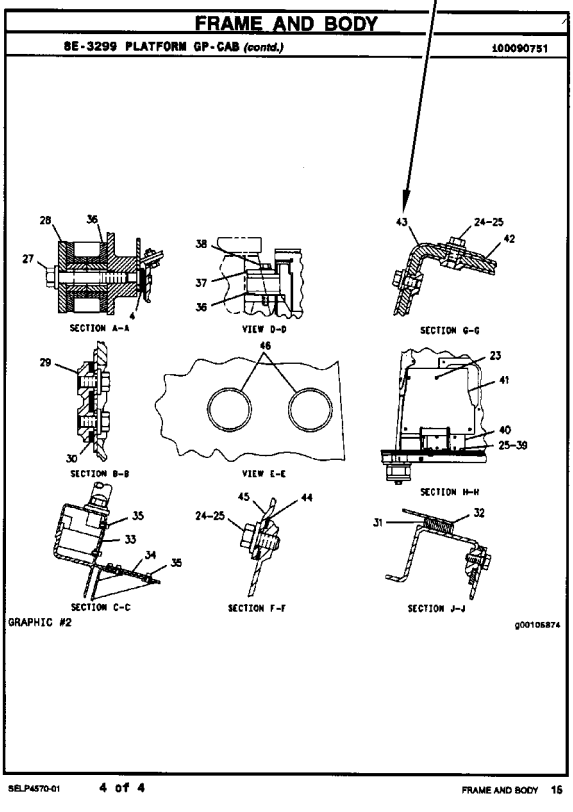

FRAME AND BODY

8E-3299 PLATFORM GP-CAB (contd.) 100090751

SECTION A-A

VIEW D-D

SECTION G-G

SECTION B-B

VIEW E-E

SECTION H-H

SECTION C-C

SECTION F-F

SECTION J-J

GRAPHIC #2 g00105874

SELP4570-01 4 of 4 FRAME AND BODY 15

REMANUFACTURED COMPONENTS

As an option when making repairs consider Cat Remanufactured Components. Components that are available through the Cat Remanufactured Program are identified three ways in the parts book:

- with the letter R in the note field of the parts list
- with an R* at the beginning of the first line of the caption
- with an *R at the end of the first line of the caption

Typical components included in the Remanufacturing Program include:

ALTERNATORS
CONNECTING RODS
CRANKSHAFTS - UNDERSIZE
CRANKSHAFTS - UPGRADE TO NEW
CYLINDER HEADS
ELECTRONIC CONTROL MODULES (ECM)
ELECTRONIC SENSORS
FUEL INJECTORS
FUEL NOZZLES
FUEL PUMPS
GOVERNORS
OIL PUMPS
PISTONS
SHORT BLOCKS
STARTERS
TURBOCHARGERS - COMPLETE
TURBOCHARGER CARTRIDGES
WATER PUMPS

Cat Remanufactured engines for many engine arrangements are also available.

SUPPLEMENTAL COOLANT ADDITIVES

CUSTOMER BENEFITS:

Protects against cavitation, foam, erosion, corrosion, and scale buildup in cooling systems.

- Provides measured coolant conditioner.

DESCRIPTION:

Additives deplete from the coolant with normal operation. For this reason, Supplemental Coolant Additives (SCA) must be added to all heavy duty coolants at regular intervals. In addition, when not using a fully formulated, pre-charged antifreeze, like Cat DEAC, an initial charge of SCA must be added to the cooling system. The amount of SCA added to the system is dependent on the capacity of the system.

The SCA for initial fill is provided as a liquid. SCA's for maintenance intervals are available in liquid form and as a spin-on element. (No Spin-on available for 3600 Family of Engines)

NOTE:

The amount of SCA added at initial fill is not the same as the amount added at maintenance intervals.

The coolant additive elements can be used with any ethylene or propylene glycol type antifreeze which meets ASTM D4985 or ASTM D5345 Specifications.

NOTE:

For use with standard heavy duty coolant only, not for use with Extended Life Coolant.

PARTS NEEDED:

Cooling System Capacity		Liquid SCA at Initial Fill	Liquid SCA at Maintenance*	Spin-on SCA Maintenance Element*
Liters	Gallons			
22-30	(6-8)	3P-2044 (1)	6V-3542 (1)	111-2370 (1)
30-38	(8-10)	3P-2044 (1) 6V-3542 (1)	111-2372 (1)	111-2369 (1)
38-49	(10-13)	3P-2044 (1) 8T-1589 (1)	111-2372 (1)	111-2369 (1)
49-64	(13-17)	3P-2044 (2)	8T-1589 (1)	9N-3368 (1)
64-83	(17-22)	3P-2044 (2) 8T-1589 (1)	111-2372 (1) 6V-3542 (1)	111-2371 (1)
83-114	(22-30)	3P-2044 (3) 8T-1589 (1)	3P-2044 (1)	9N-3718 (1)
114-163	(30-43)	3P-2044 (5)	3P-2044 (1) 6V-3542 (1)	111-2371 (2)
163-242	(43-64)	3P-2044 (8)	3P-2044 (2)	9N-3718 (2)

** Normal maintenance period is 250 hrs. See your Operation and Maintenance Manual for complete coolant maintenance instructions.*

( ) Indicates quantity required.

MAINTENANCE PARTS

DESCRIPTION	PART NUMBER	QTY	WHERE USED	PAGE
AIR INLET AND EXHAUST SYSTEM				
FILTER ELEMENT-AIR (PRIMARY)	293-4053	1	AIR CLEANER GP	72
FILTER ELEMENT-AIR (SECONDARY)	227-7449	1	AIR CLEANER GP	72
BASIC ENGINE				
BELT-SERPENTINE (FAN PULLEY)	298-5874	1	BELT TENSIONER GP	8
	298-5880	1	BELT TENSIONER GP	9
	316-0446	1	BELT TENSIONER GP	10
BREATHER (CRANKCASE)	298-4547	1	COVER GP-VALVE MECHANISM	13
GASKET-VALVE COVER (CYLINDER HEAD)	298-4546	1	COVER GP-VALVE MECHANISM	13
PLUG-DRAIN (ENGINE OIL)	7C-0351	2	PAN GP-OIL	37
COOLING SYSTEM				
CAP AS-COOLANT TANK	251-3227	1	TANK GP-COOLANT	71
GASKET-WATER REGULATOR (TEMPERATURE)	281-8744	1	CONNECTION GP-WATER	55
		1	CONNECTION GP-WATER	56
HOSE-RADIATOR (LOWER)	255-1344	1	LINES GP-COOLANT	62
		1	RADIATOR & HYD OIL COOLER GP	69
HOSE-RADIATOR (UPPER)	255-1343	1	LINES GP-COOLANT	62
		1	RADIATOR & HYD OIL COOLER GP	69
REGULATOR AS-WATER TEMPERATURE (INCLUDES CONNECTOR)	367-1819	1	CONNECTION GP-WATER	55
ELECTRICAL AND STARTING SYSTEM				
BATTERY (12-VOLT, MAINTENANCE FREE, WET)	9X-3404	2	BATTERY & WIRING GP	156
CAP AS-DUST	133-6517	1	HEATER GP-JACKET WATER	189
CIRCUIT BREAKER AS (105-AMPERE) (MAIN)	171-2212	1	PANEL GP-FUSE	219
		1	PANEL GP-FUSE	222
		1	PANEL GP-FUSE	225
CIRCUIT BREAKER AS (15-AMPERE) (FLOODLIGHTS, FRONT)	180-0614	1	CONVERSION GP-ELECTRICAL	174
CIRCUIT BREAKER AS (15-AMPERE) (FRONT LIGHTS)	180-0614	1	CONVERSION GP-ELECTRICAL	174
CIRCUIT BREAKER AS (15-AMPERE) (REAR LIGHTS)	180-0614	1	CONVERSION GP-ELECTRICAL	174
CIRCUIT BREAKER AS (20-AMPERE)	173-3175	2	PANEL GP-FUSE	219
		2	PANEL GP-FUSE	222
CIRCUIT BREAKER AS (30-AMPERE)	180-0613	1	PANEL GP-FUSE	225
CIRCUIT BREAKER AS (35-AMPERE)	229-8377	1	WIRING GP-CAB	258
CIRCUIT BREAKER AS (35-AMPERE) (BLOWER)	229-8377	1	WIRING GP-CAB	268

MAINTENANCE PARTS

DESCRIPTION	PART NUMBER	QTY	WHERE USED	PAGE
FUSE (10-AMPERE)	113-8490	1	CONVERSION GP-ELECTRICAL	174
		8	PANEL GP-FUSE	219
		8	PANEL GP-FUSE	222
		4	PANEL GP-FUSE	225
FUSE (15-AMPERE)	113-8491	13	PANEL GP-FUSE	219
		13	PANEL GP-FUSE	222
		8	PANEL GP-FUSE	225
FUSE (20-AMPERE)	113-8492	5	PANEL GP-FUSE	219
		5	PANEL GP-FUSE	222
		3	PANEL GP-FUSE	225
FUSE (30-AMPERE)	274-9872	1	RELAY GP	232
FUSE (50-AMPERE)	274-9877	1	RELAY GP	232
GLOW PLUG (12-VOLT)	361-9874	4	GLOW PLUG GP	182
KEY (BATTERY DISCONNECT)	8H-5306	1	SWITCH GP-DISCONNECT	245
KEY AS-ELECTRONIC (SECURITY)	206-5162	2	INSTALLATION GP-SECURITY	196
LAMP (12-VOLT, 55-WATT) (FLOODLIGHT)	9W-0607	1	LAMP GP-FLOOD	203
		1	LAMP GP-FLOOD	204
		1	LAMP GP-FLOOD	205
LAMP (12-VOLT) (MINIATURE)	210-8754	1	WIRING GP-CAB	252
		1	WIRING GP-CAB	255
		1	WIRING GP-CAB	258
SEAT BELT GP	258-8373	1	CONVERSION GP-ELECTRICAL	178
FRAME AND BODY				
CAP-FILLER (HYDRAULIC TANK)	7H-1447	1	ENCLOSURE GP-PLATFORM	429
		1	ENCLOSURE GP-PLATFORM	431
		1	ENCLOSURE GP-PLATFORM	433
CAP-FUEL FILLER (LOCKABLE)	276-1243	1	ENCLOSURE GP-PLATFORM	429
		1	ENCLOSURE GP-PLATFORM	431
		1	ENCLOSURE GP-PLATFORM	433
FILTER ELEMENT-BREATHER (FUEL CAP)	279-9876	1	ENCLOSURE GP-PLATFORM	429
		1	ENCLOSURE GP-PLATFORM	431
		1	ENCLOSURE GP-PLATFORM	433
FUEL SYSTEM				
FILTER AS-FUEL	311-2376	1	FILTER GP-PRIMARY FUEL	88
	343-7104	1	FILTER GP-FUEL	85
FILTER AS-FUEL (IN-LINE)	371-4587	1	FILTER & LINES GP-FUEL	80
		1	FILTER & LINES GP-FUEL	82
FILTER AS-FUEL (SECONDARY)	343-7104	1	LINES GP-FUEL	103
FILTER AS-WATER SEP & FUEL	308-7298	1	FILTER GP-FUEL	84
		1	FILTER GP-FUEL	86
FILTER ELEMENT-FUEL (ULTRA HIGH EFFICIENCY)	299-8229	1	FILTER GP-FUEL	85
		1	FILTER GP-PRIMARY FUEL	88
		1	LINES GP-FUEL	103

MAINTENANCE PARTS

DESCRIPTION	PART NUMBER	QTY	WHERE USED	PAGE
FILTER-FUEL (ULTRA HIGH EFFICIENCY)	289-0600	1	FILTER GP-PRIMARY FUEL	87
GASKET-SCREEN (FUEL TANK)	110-1010	1	TANK GP-FUEL	148
SCREEN-FILTER (PILOT)	236-5157	1	VALVE GP-SOLENOID	151
HYDRAULIC SYSTEM				
BATTERY (12-VOLT, MAINTENANCE FREE, WET)	9X-3404	2	DRIVE AR-PUMP	544
CAP-DUST	187-9008	2	LINES GP-PRESSURE TEST	572
FILTER ELEMENT-BREATHER (HYDRAULIC TANK)	9R-9925	2	TANK & MTG GP-HYDRAULIC	617
		2	TANK GP-HYDRAULIC	619
		2	TANK GP-HYDRAULIC	621
GASKET-SCREEN (HYDRAULIC TANK)	110-1010	1	TANK GP-HYDRAULIC	624
SCREEN-SUCTION (HYDRAULIC TANK)	322-9703	1	TANK GP-HYDRAULIC	623
		1	TANK GP-HYDRAULIC	624
		1	TANK GP-HYDRAULIC	625
LUBRICATION SYSTEM				
CAP-OIL FILLER (ENGINE)	130-9888	1	FILLER GP-ENGINE OIL	50
FILTER AS-ENGINE OIL	7W-2326	1	FILTER GP-ENGINE OIL	51
		1	FILTER GP-ENGINE OIL	52
OPERATOR STATION				
BLADE AS-WIPER (450-MM) (DOOR, LH)	125-8175	1	DOOR GP-CAB	756
		1	DOOR GP-CAB	759
		1	DOOR GP-CAB	767
		1	DOOR GP-CAB	769
BLADE AS-WIPER (450-MM) (DOOR, RH)	125-8175	1	DOOR GP-CAB	752
		1	DOOR GP-CAB	754
		1	DOOR GP-CAB	762
		1	DOOR GP-CAB	764
BLADE AS-WIPER (500-MM) (FRONT)	5C-8811	1	WIPER GP-WINDOW	868
BLADE AS-WIPER (500-MM) (REAR)	146-6433	1	WIPER GP-WINDOW	868
CAP-NUT	320-8448	2	DOOR GP-CAB	752
		2	DOOR GP-CAB	754
		2	DOOR GP-CAB	756
		2	DOOR GP-CAB	759
		2	DOOR GP-CAB	762
		2	DOOR GP-CAB	764
		2	DOOR GP-CAB	767
		2	DOOR GP-CAB	769
CAP-VENTED (WINDOW WASHER TANK)	209-4482	1	WASHER GP-WINDOW	854
FILTER (ACTIVATED CHARCOAL)	307-4442	1	AIR CONDITIONER GP	667
		1	AIR CONDITIONER GP	670
		1	AIR CONDITIONER GP	673

MAINTENANCE PARTS

DESCRIPTION	PART NUMBER	QTY	WHERE USED	PAGE
FILTER ELEMENT AS-AIR (ADVANCED EFFICIENCY)	268-6705	1	AIR CONDITIONER GP	667
		1	AIR CONDITIONER GP	670
		1	AIR CONDITIONER GP	673
FILTER ELEMENT-AIR (STANDARD EFFICIENCY) (LOW RESTRICTION MEDIA)	266-7765	1	AIR CONDITIONER & MOUNTING GP	664
FILTER ELEMENT-CAB AIR (ADVANCED EFFICIENCY)	318-7190	1	AIR CONDITIONER GP	667
		1	AIR CONDITIONER GP	670
		1	AIR CONDITIONER GP	673
FILTER ELEMENT-CAB AIR (STANDARD EFFICIENCY)	209-8217	1	AIR CONDITIONER GP	667
		1	AIR CONDITIONER GP	670
		1	AIR CONDITIONER GP	673
FILTER-AIR (AIR CONDITIONER)	326-8179	1	AIR CONDITIONER GP	676
FUSE (15-AMPERE)	133-9012	1	AIR CONDITIONER GP	671
		1	AIR CONDITIONER GP	674
		1	HEATER GP-CAB	774
SCREEN AS-CAB	377-1448	1	SCREEN GP-CAB	814
SEAT BELT GP (RETRACTABLE, 3-IN)	272-2272	1	SEAT GP-SUSPENSION	841
		1	SEAT GP-SUSPENSION	842
		1	SEAT GP-SUSPENSION	843
		1	SEAT GP-SUSPENSION	844
		1	SEAT GP-SUSPENSION	845
POWER TRAIN				
BATTERY (12-VOLT, MAINTENANCE FREE, WET)	9X-3404	2	DRIVE AR	322
		2	DRIVE AR	322
		2	DRIVE AR	322
FILTER-OIL (ADVANCED EFFICIENCY)	1G-8878	1	FILTER GP-OIL	326
		1	LINES GP-TRANSMISSION OIL	351
PLUG AS (FINAL DRIVE OIL DRAIN)	126-8921	1	DRIVE GP-FINAL	323
SCREEN-FILTER (PILOT)	236-5157	1	VALVE GP-SOLENOID	424
WORK TOOLS				
BATTERY (12-VOLT, MAINTENANCE FREE, WET)	9X-3404	2	DRIVE AR-WINCH	914
FILTER-OIL (ADVANCED EFFICIENCY)	144-6691	1	FILTER GP-OIL	921

INDEX

NAME PAGE

A

ACCESSORY GP-CAB–EROPS 654
656
ACCESSORY GP-CAB–FIRE PLOW. 660
ACCESSORY GP-CAB–OROPS. 658
ACCUMULATOR GP-REFRIGERANT–CHARGED 663
ACCUMULATOR GP-REFRIGERANT–UNCHARGED 662
ACTUATOR GP-PUMP–SERVO 318
319
ADAPTER GP-AUXILIARY DRIVE. 7
ADJUSTER GP-CONTROL 694
ADJUSTMENT GP-HYDRAULIC TRACK 483
484
485
AIR CLEANER GP 72
AIR COMPRESSOR GP-SEAT (SUSPENSION). 850
AIR CONDITIONER & MOUNTING GP 664
AIR CONDITIONER GP 667
670
673
676
ALTERNATOR GP-CHARGING 153
155
ARM GP-SEAT SUSPENSION–CENTER. 677
ARM GP-SEAT SUSPENSION–OUTER, LH. 679
ARM GP-SEAT SUSPENSION–OUTER, RH 678
ARM GP-WINDOW WIPER (DOOR, LH). 756
759
767
769
ARM GP-WINDOW WIPER (DOOR, RH) 752
754
ARM GP-WINDOW WIPER (FRONT). 868
ARM GP-WINDOW WIPER (REAR) 868
ARM GP-WINDOW WIPER (RH). 762
764
ARMREST GP–LH 680
ARMREST GP–RH. 682
ARRESTOR GP-SPARK–FIRE PLOW 73

B

BASE GP-VALVE COVER & INJ HARN. 13
BATTERY (12-VOLT, MAINTENANCE FREE, WET) 156
322
544
914
BATTERY & WIRING GP 156
160
163
167
BATTERY GP 322
544
914
BELT TENSIONER GP. 9
10
BELT TENSIONER GP–FAN. 8
BELT-SERPENTINE (FAN PULLEY). 8
9
10
BLADE AR-PWR ANGLE & TILT 871
873
874
BLADE AR-PWR ANGLE & TILT–FORESTRY . . 873
BLADE AR-PWR ANGLE & TILT–LGP 870
871
872
BLADE AR-PWR ANGLE & TILT–XL. 870
871
872
873
BLADE AS-WIPER (450-MM) (DOOR, LH). 756
759
767
769
BLADE AS-WIPER (450-MM) (DOOR, RH) 752
754
762
764
BLADE AS-WIPER (500-MM) (FRONT) 868
BLADE AS-WIPER (500-MM) (REAR) 868
BLADE GP-ANGLING 891
BLADE GP-ANGLING–FORESTRY 890
BLADE GP-ANGLING–GRADE CONTROL 892
BLADE GP-ANGLING–LOW GROUND PRESSURE 875
877
879
882
884
886
BLADE GP-ANGLING–XL GRADE CONTROL. . . 876
878
880
881
883
885
887
888
BLOCK GP-HYDRAULIC 556
BOWL GP-WATER COLLECTION. 79
BRAKE & PLANETARY GP-WINCH. 893
894
BRAKE GP-PARKING. 320
321
BRAKE GP-SERVICE & PARKING. 529
BREATHER (CRANKCASE) 13

C

C-FRAME GP-POWER ANGLING–TILT 650
CABLE AS-COILED–LASER RECEIVER–ACCUGRADE 171

INDEX

NAME	PAGE
CABLE GP-CONTROL–FIRE PLOW–FUEL SHUTOFF	684
CAMSHAFT GP	11
CAP AS-COOLANT TANK	71
CAP AS-DUST	189
CAP GP-FUEL FILLER (LOCKABLE, VENTED)	429 431 433
CAP-DUST	572
CAP-FILLER (HYDRAULIC TANK)	429 431 433
CAP-FUEL FILLER (LOCKABLE)	429 431 433
CAP-NUT	752 754 756 759 762 764 767 769
CAP-OIL FILLER (ENGINE)	50
CAP-VENTED (WINDOW WASHER TANK)	854
CASE GP-WINCH	895
CHASSIS AR	1
CIRCUIT BREAKER AS (105-AMPERE) (MAIN)	219 222 225
CIRCUIT BREAKER AS (15-AMPERE) (FLOODLIGHTS, FRONT)	174
CIRCUIT BREAKER AS (15-AMPERE) (FRONT LIGHTS)	174
CIRCUIT BREAKER AS (15-AMPERE) (REAR LIGHTS)	174
CIRCUIT BREAKER AS (20-AMPERE)	219 222
CIRCUIT BREAKER AS (30-AMPERE)	225
CIRCUIT BREAKER AS (35-AMPERE)	258
CIRCUIT BREAKER AS (35-AMPERE) (BLOWER)	268
CLAMP GP-HYDRAULIC LINES	351
CLUTCH & GEAR GP-WINCH	896
COMMON AR	2
COMPRESSOR & MTG GP-REFRIG	685
COMPRESSOR GP-REFRIGERANT	686
CONDENSER GP-REFRIGERANT	687
CONNECTION GP-WATER	55 56
CONSOLE GP-OPERATOR–LH	693 695
CONSOLE GP-OPERATOR–RH	692 694
CONSOLE GP–LH	689 691
CONTROL & MTG GP-PEDAL–GOVERNOR, BRAKE	696 697 698
CONTROL GP-ENGINE ELECTRONIC	172
CONTROL GP-HANDLE–GRADE CONTROL, RH	700 701
CONTROL GP-HANDLE–IMPLEMENT	703
CONTROL GP-HANDLE–STEERING	702
CONTROL GP-HANDLE–WINCH–RIPPER	699
CONTROL GP-HYDRAULIC–4TH VALVE, FLOAT	704
CONTROL GP-HYDRAULIC–FIRE PLOW	706
CONTROL GP-JOYSTICK–BULLDOZER, RH	710 713
CONTROL GP-JOYSTICK–GRADE CONTROL, RH	709 712
CONTROL GP-JOYSTICK–STEERING, LH	711
CONTROL GP-JOYSTICK–STEERING, TRANSMISSION	714
CONTROL GP-RIPPER	716 718
CONTROL GP-UNPROGRAMMED	898 901
CONTROL GP-UNPROGRAMMED (CHASSIS)	312 315
CONTROL GP-UNPROGRAMMED (MACHINE)	704
CONTROL GP-UNPROGRAMMED (PRODUCT LINK 300)	173
CONTROL GP-UNPROGRAMMED (RIPPER, WINCH)	706 908
CONTROL GP-UNPROGRAMMED (RIPPER)	716 718
CONTROL GP-UNPROGRAMMED (WINCH)	904 906
CONTROL GP-UNPROGRAMMED–PRODUCT LINK 300	173
CONTROL GP-WINCH	897 900 903 906 907 908
CONTROL GP-WINCH–4TH & 5TH VALVE, FLOAT	912
CONTROL GP-WINCH–4TH VALVE, FLOAT	911
CONVERSION GP-ELECTRICAL–FIRE PLOW	174
COOLER GP-ENGINE OIL	57 59 60
COUNTERWEIGHT GP-FRONT	426
COVER GP-ACCESS	427

INDEX

NAME PAGE

COVER GP-CAB–EROPS 724
726
728
730
733
736
739
COVER GP-CAB–OROPS 720
722
COVER GP-CONSOLE–OROPS. 743
745
747
COVER GP-CONSOLE–STANDARD. 742
COVER GP-CYLINDER HEAD. 12
COVER GP-VALVE MECHANISM. 13
CRANKSHAFT GP. 15
16
17
19
20
CYLINDER BLOCK GP 21
22
23
25
CYLINDER GP-ANGLING. 532
CYLINDER GP-BULLDOZER LIFT–LH. 536
CYLINDER GP-BULLDOZER LIFT–RH. 534
CYLINDER GP-RIPPER–LH 540
CYLINDER GP-RIPPER–RH 538
CYLINDER GP-TILT 542
CYLINDER HEAD AS. 26
CYLINDER HEAD GP. 28

D

DISPLAY GP-MONITOR (CD610) 751
DISPLAY GP-MONITOR (CD700C). 749
DISPLAY GP-MONITOR–CD610. 751
DISPLAY GP-MONITOR–CD700. 749
DISPLAY GP-MONITOR–LIGHT BAR. 750
DOOR GP-CAB–LH. 756
759
767
769
DOOR GP-CAB–RH. 752
754
762
764
DRAWBAR GP 428
DRIVE AR-PUMP–HYDRAULIC 544
DRIVE AR-WINCH–HYDRAULIC 914
DRIVE AR–AUXILIARY. 322
DRIVE AR–AUXILIARY PUMP 322
DRIVE AR–STANDARD 322
DRIVE GP-AUXILIARY 29
DRIVE GP-FAN 30
DRIVE GP-FINAL. 323
DRIVE GP-HYDROSTATIC 325

NAME PAGE

E

EDGE GP-BIT & CUTTING. 915
916
918
919
EDGE GP-BIT & CUTTING–LEVEL CUT 917
EDGE-CUTTING 920
ELECTRONICS GP-IMPLEMENT–ACCUGRADE 181
ELECTRONICS GP-MACHINE 181
ELECTRONICS GP-MACHINE–POWER TRAIN 181
ENCLOSURE GP-PLATFORM 429
431
433
ENCLOSURE GP-PLATFORM–FIRE PLOW 435
ENGINE AR-PRIMARY 5
6
EXTENSION GP-BACKREST (CLOTH) 820
824
EXTENSION GP-BACKREST (VINYL) 827
830
834

F

FAN GP-BLOWER 61
FILLER GP-ENGINE OIL 50
FILM GP. 943
944
FILM-IDENTIFICATION (ELECTRICAL POWER) 220
223
226
FILM-IDENTIFICATION (FUSE PANEL) 177
220
223
226
FILM-IDENTIFICATION (GROUP NO., SEQUENCE NO.) 667
670
673
687
774
FILM-IDENTIFICATION (GROUP NO., SEQUENCE NO.) (HEATER). 771
FILM-IDENTIFICATION (HYDRAULIC OIL) 458
FILM-IDENTIFICATION (IGNITION SWITCH, READ OMM). 196
FILM-IDENTIFICATION (IGNITION SWITCH) 196
FILM-IDENTIFICATION (POWER RECEPTACLE, 12-VOLT) 946
948
950
FILM-IDENTIFICATION (SERIAL NUMBER) 850
FILM-INFORMATION (ARMREST ADJUSTMENT) 846
848

INDEX

NAME	PAGE
FILM-INFORMATION (HYDO ADVANCED 10)	946, 950
FILM-INFORMATION (LIFT EYE LOCATION)	946, 950
FILM-INFORMATION (PRODUCT LINK, READ OMM)	194
FILM-INSTRUCTION (AUXILIARY CONTROL VALVE)	704, 706, 912
FILM-INSTRUCTION (BULLDOZER CONTROL)	198, 720, 722, 724, 726, 728, 730, 733, 736, 739, 743, 745, 747
FILM-INSTRUCTION (BULLDOZER, STER, CRUISE CNTL)	274, 276
FILM-INSTRUCTION (HVAC WATER, DRAINING, FILLING)	668, 670, 673, 771, 774
FILM-INSTRUCTION (MACHINE SECURITY, CONSOLE)	196
FILM-INSTRUCTION (NO STEP)	946, 948, 950
FILM-INSTRUCTION (PANEL)	178
FILM-INSTRUCTION (RIPPER CONTROL)	716, 718
FILM-INSTRUCTION (SEAT ADJUSTMENT)	850
FILM-INSTRUCTION (WINCH CONTROL)	897, 900, 903, 908
FILM-PANEL (ENCLOSED ROPS)	783
FILM-PANEL (OPEN ROPS)	781
FILM-WARNING (BLADE, DO NOT CLIMB, READ OMM)	248, 927
FILM-WARNING (DO NOT LIFT)	442, 443
FILM-WARNING (LASER TRANSMITTER)	927
FILM-WARNING (NO WELD, NO DRILL, READ OMM)	946, 948, 950
FILM-WARNING (PRODUCT LINK 300, INTL)	194
FILM-WARNING (PRODUCT LINK 300, U.S.)	194
FILTER (ACTIVATED CHARCOAL)	667, 670, 673
FILTER & LINES GP-FUEL	80, 82
FILTER AS-ENGINE OIL	51, 52
FILTER AS-FUEL	85, 88
FILTER AS-FUEL (IN-LINE)	80, 82
FILTER AS-FUEL (SECONDARY)	103
FILTER AS-WATER SEP & FUEL	84, 86
FILTER ELEMENT AS-AIR (ADVANCED EFFICIENCY)	667, 670, 673
FILTER ELEMENT-AIR (PRIMARY)	72
FILTER ELEMENT-AIR (SECONDARY)	72
FILTER ELEMENT-AIR (STANDARD EFFICIENCY) (LOW RESTRICTION MEDIA)	664
FILTER ELEMENT-BREATHER (FUEL CAP)	429, 431, 433
FILTER ELEMENT-BREATHER (HYDRAULIC TANK)	617, 619, 621
FILTER ELEMENT-CAB AIR (ADVANCED EFFICIENCY)	667, 670, 673
FILTER ELEMENT-CAB AIR (STANDARD EFFICIENCY)	667, 670, 673
FILTER ELEMENT-FUEL (ULTRA HIGH EFFICIENCY)	85, 88, 103
FILTER GP-ENGINE OIL	52
FILTER GP-ENGINE OIL–INCLUDES SHUTOFF VALVE	51
FILTER GP-FUEL	84, 85, 86
FILTER GP-OIL (REAR)	351
FILTER GP-OIL–FRONT	326
FILTER GP-OIL–HYDRAULIC	921
FILTER GP-PRIMARY FUEL	87, 88
FILTER GP-WATER SEP & FUEL	86
FILTER-AIR (AIR CONDITIONER)	676
FILTER-FUEL (ULTRA HIGH EFFICIENCY)	87
FILTER-OIL (ADVANCED EFFICIENCY)	326, 351, 921
FILTER-SECONDARY	80, 82
FINAL DRIVE GP	323

INDEX

NAME	PAGE
FITTING GP-HYDRAULIC	349 351
FLOOR MAT-FRONT	660 720 722 724 726 728 730 733 736 739 743 745 747
FLOOR MAT-REAR	720 722 724 726 728 730 733 736 739 743 745 747
FLYWHEEL GP	31
FRAME GP	436 438 440 442 443
FUSE (10-AMPERE)	174 219 222 225
FUSE (15-AMPERE)	219 222 225 671 674 774
FUSE (20-AMPERE)	219 222 225
FUSE (30-AMPERE)	232
FUSE (50-AMPERE)	232

G

GASKET-SCREEN (FUEL TANK)	148
GASKET-SCREEN (HYDRAULIC TANK)	624
GASKET-VALVE COVER (CYLINDER HEAD)	13
GASKET-WATER REGULATOR (TEMPERATURE)	55 56
GAUGE AS-OIL LEVEL (DIPSTICK) (ENGINE)	37
GAUGE GP-SIGHT (HYDRAULIC TANK OIL)	624 625
GEAR GP-FRONT	32
GEAR GP-WINCH	922
GEAR GP-WINCH TRANSFER	924
GLOW PLUG (12-VOLT)	182
GLOW PLUG GP	182
GRADE CONTROL AR-LASER–ACCUGRADE, DUAL	185
GRADE CONTROL AR-LASER–ACCUGRADE, SINGLE	185
GRADE CONTROL AR-SATELLITE–ACCUGRADE, DUAL	187
GRADE CONTROL AR-SATELLITE–ACCUGRADE, DUAL GNSS	186
GRADE CONTROL AR-SATELLITE–ACCUGRADE, DUAL GPS	185
GRADE CONTROL AR-SATELLITE–ACCUGRADE, SINGLE	187
GRADE CONTROL AR-SATELLITE–ACCUGRADE, SINGLE GNSS	186
GRADE CONTROL AR–ACCUGRADE, ADVANCED TRACKING SYSTEM	184
GRADE CONTROL AR–EROPS	183 184
GRADE CONTROL AR–OROPS	183 184
GRILL AR-RADIATOR–HEAVY-DUTY	445
GRILL AR-RADIATOR–STANDARD	444
GRILL GP-RADIATOR–FIRE PLOW	446
GUARD GP-BOTTOM	448
GUARD GP-BOTTOM–EXTREME-DUTY	449 450
GUARD GP-BRUSH–FRONT	453
GUARD GP-BRUSH–OPEN ROPS	451
GUARD GP-BRUSH–SIDE	455
GUARD GP-FRONT	456
GUARD GP-IDLER	486 488
GUARD GP-RADIATOR	457
GUARD GP-REAR	458 460 461
GUARD GP-TRACK GUIDE	490
GUARD GP-TRACK GUIDE–CENTER	492
GUARD GP-TRACK GUIDE–SYSTEMONE	491 494 495
GUARD GP-TRACK GUIDE–SYSTEMONE, FRONT	493
GUARD GP-TRACK ROLLER–FULL LENGTH	496 497
GUARD GP-VANDALISM	720 722 743 745 747

H

HARNESS AS-ALARM	250
HARNESS AS-CAB	176

INDEX

NAME	PAGE
HARNESS AS-CAB (DASH)	253
	255
	258
	262
	265
	269
	271
HARNESS AS-CAB (OROPS)	268
HARNESS AS-CAB (ROOF)	252
	255
	258
HARNESS AS-CHASSIS	156
	160
	163
	167
	176
HARNESS AS-CONSOLE (EROPS)	252
	255
	259
HARNESS AS-CONSOLE (GRADE CONTROL)	198
	287
	291
	296
	301
	306
	309
HARNESS AS-CONSOLE (OROPS)	262
	265
HARNESS AS-CONTROL	190
	192
	199
	288
	298
	303
	718
HARNESS AS-CONTROL (OROPS)	271
HARNESS AS-CONTROL (PLATFORM)	903
HARNESS AS-CONTROL (WINCH)	704
	706
	908
HARNESS AS-DASH	293
HARNESS AS-DASH (GRADE CONTROL)	199
	286
	292
	297
	302
	306
	309
HARNESS AS-ENGINE	175
	177
	278
	283
HARNESS AS-ENGINE (FUEL INJECTION)	13
HARNESS AS-FRONT (GRADE CONTROL)	199
	286
	291
	296
	301
HARNESS AS-HEATER (SEAT)	843
	844
HARNESS AS-HOOD (GRADE CONTROL)	199
	286
	291
	296
	301
HARNESS AS-LIGHTING	268
HARNESS AS-LIGHTING (OROPS)	262
	265
	271
HARNESS AS-MONITOR	200
	288
	292
	297
	302
HARNESS AS-MOTOR (BLOWER)	667
	670
	673
	771
	774
HARNESS AS-MOTOR (CONDENSER FAN)	687
HARNESS AS-PANEL (FUSE)	219
	222
HARNESS AS-PANEL (FUSE)	225
HARNESS AS-PLATFORM	174
	312
	315
HARNESS AS-PUMP (WINCH)	897
	900
	903
	908
HARNESS AS-PUMP (WINDOW WASHER)	854
HARNESS AS-RADIO (GRADE CONTROL)	200
	286
	293
	298
	303
	306
	310
HARNESS AS-SENSOR (ARMREST, LH)	274
HARNESS AS-SENSOR (ARMREST, LH)	276
HARNESS AS-SENSOR (ARMREST, RH)	274
HARNESS AS-SENSOR (ARMREST, RH)	276
HARNESS AS-SENSOR (GRADE CONTROL)	201
	287
	292
	297
	302
HARNESS AS-SENSOR–ARMREST, LH	188
HARNESS AS-SENSOR–ARMREST, RH	188
HARNESS AS-SWITCH	251
HARNESS AS-SWITCH (DOOR, LH)	756
	759
	767
	769
HARNESS AS-SWITCH (DOOR, RH)	752
	754
	762
	764

INDEX

NAME	PAGE
HARNESS AS-SWITCH (HEATED SEAT)	820, 824, 827, 830
HARNESS AS-VALVE	157, 160, 163, 167, 176, 706, 912
HARNESS AS-VALVE (SEAT AIR COMPRESSOR)	850
HARNESS AS-WIRING	196, 279
HARNESS AS-WIRING (MAST)	210
HARNESS AS-WIRING (POWER SUPPLY MODULE)	201, 286, 291, 296, 301, 306, 309
HARNESS AS-WIRING (PRODUCT LINK)	194
HARNESS AS-WIRING (RECEIVER, LH)	201, 287, 292, 297, 302
HARNESS AS-WIRING (RECEIVER, RH)	201, 287, 292, 297, 302
HARNESS AS-WORK TOOL (PLATFORM)	897, 900
HARNESS AS-WORK TOOL (RIPPER)	716
HARNESS AS-WORK TOOL (WINCH)	897, 900, 903, 908
HEAD GP-PUMP	327
HEATER GP-CAB	771, 774, 777, 778, 779
HEATER GP-JACKET WATER	189
HITCH GP-TOWING	462
HOOD & GUARD GP–SOUND SUPPRESSION	463, 466, 469, 471
HOSE-RADIATOR (LOWER)	62, 69
HOSE-RADIATOR (UPPER)	62, 69
HOUSING GP-FLYWHEEL	34
HYDRAULIC AR	544
HYDRAULIC AR–3-BANK	544
HYDRAULIC AR–4-BANK	545, 546
HYDRAULIC AR–5-BANK	546

I

NAME	PAGE
IDLER GP-FRONT	498, 499
IDLER GP-TRACK	500, 501
INJECTOR GP-FUEL	89, 90
INSTALLATION AR-ENGINE	6
INSTALLATION GP-COMMUNICATION–PRODUCT LINK 121SR	194
INSTALLATION GP-COMMUNICATION–PRODUCT LINK 321SR	190, 192
INSTALLATION GP-RADIO	780
INSTALLATION GP-SECURITY	196
INSTRUMENT GP–EROPS	783
INSTRUMENT GP–OROPS	781

K

NAME	PAGE
KEY (BATTERY DISCONNECT)	245
KEY AS-ELECTRONIC (SECURITY)	196
KIT-CUSHION	785
KIT-RETROFIT	198
KIT-SENSOR (AIR PRESSURE)	108, 112, 116, 121, 126, 131, 136
KIT-SENSOR (COOLANT TEMPERATURE)	108, 112, 116, 121, 126, 131, 136
KIT-SENSOR (ENGINE OIL PRESSURE)	108, 112, 116, 121, 126, 131, 136
KIT-TEMPERATURE SENSOR (AIR)	136
KNOB GP (PUSH-PULL)	684

INDEX

NAME PAGE

L

LAMP (12-VOLT, 55-WATT) (FLOODLIGHT) 203
204
205
LAMP (12-VOLT) (MINIATURE) 252
255
258
LAMP GP-DOME (12-VOLT) (CAB) 252
255
258
LAMP GP-FLOOD 203
204
LAMP GP-FLOOD–CANOPY 205
LATCH GP–FIRE PLOW 473
LIFTING GP-ENGINE 35
LIGHTING GP-FLOOD 206
207
208
209
LINER GP-SOUND SUPPRESSION 474
475
LINES GP-AIR CONDITIONER 786
789
LINES GP-ANGLE & TILT 547
552
556
560
LINES GP-COOLANT 62
LINES GP-FUEL 91
94
97
100
101
102
LINES GP-FUEL–IMPLEMENT PUMP 105
LINES GP-FUEL–LOW PRESSURE 103
LINES GP-HEATER 791
793
LINES GP-HYDRAULIC 563
566
569
LINES GP-HYDRAULIC–LIFT CYLINDER 571
LINES GP-HYDROSTATIC 328
330
331
LINES GP-POWER TRAIN COOLER 332
334
336
338
340
342
344
346
LINES GP-PRESSURE TEST 572
574

NAME PAGE

LINES GP-PUMP 348
575
577
579
581
583
585
589
LINES GP-PUMP–IMPLEMENT PUMP 587
LINES GP-REAR ATTACHMENT 591
593
595
LINES GP-RIPPER 597
599
LINES GP-STEERING 530
LINES GP-TRANSMISSION OIL–CASE DRAIN 349
354
356
357
LINES GP-TRANSMISSION OIL–CHARGE 351
358
LINES GP-WINCH 601
605
609
LINK AS-TRACK 503
LINK AS-TRACK BOX–LINK BOX 504
506
LINK AS-TRACK BOX–LINK BOX, OFFSET 505
LINK AS-TRACK–SYSTEMONE 502
LINK GP-ADJUSTABLE 756
767
LINK GP-PITCH 652
LITERATURE GP 946
948
950
LITERATURE GP–ENCLOSED, OPEN ROPS ... 794
LOCK GP-VANDALISM 945

M

MANIFOLD GP-CONTROL–SERVICE BRAKE ... 360
MANIFOLD GP-VALVE (OUTLET) 632
MANIFOLD GP-VALVE–OUTLET 614
MAST GP–LASER RECEIVER 210
MAST GP–SATELLITE RECEIVER 210
MIRROR GP-REAR VIEW–LH 795
MODIFICATION AR 2
3
4
MODULE GP-INTERFACE (KEY) 196
MONITOR GP-OPERATOR (INSTRUMENT CLUSTER) 781
783
MOTOR & MTG GP-WINCH 925
MOTOR GP-PISTON 362
MOTOR GP-PISTON–WINCH 361
MOTOR GP-WINDOW WIPER 797
MOTOR GP-WINDOW WIPER (DOOR, LH) 796
MOTOR GP-WINDOW WIPER (DOOR, RH) 797

INDEX

NAME PAGE

MOTOR GP-WINDOW WIPER–DOOR, LH 796
MOTOR GP-WINDOW WIPER–FRONT 799
MOTOR GP-WINDOW WIPER–REAR 798
MOUNTING GP-CAB 800
MOUNTING GP-CONNECTOR–GRADE CONTROL 211
MOUNTING GP-ENGINE 36
MOUNTING GP-ETHER CANISTER 241
MOUNTING GP-GRADE CONTROL 212
214
MOUNTING GP-GRADE CONTROL–ACCUGRADE GPS 216
MOUNTING GP-MAST–LASER RECEIVER 927
MOUNTING GP-MAST–SATELLITE RECEIVER 927
MOUNTING GP-PUMP 928
MOUNTING GP-RADIO–GRADE CONTROL 801
MOUNTING GP-RECEIVER–MAST 217
MOUNTING GP-RIPPER 929
MOUNTING GP-WINCH 931
933
MUFFLER GP 75

O

ORIFICE AS-AIR CONDITIONER 786
789

P

PADLOCK GP 458
945
PADLOCK GP (LITERATURE COMPARTMENT) 794
PAN GP-BACKREST–LUMBAR 802
PAN GP-OIL 37
PAN GP-SEAT 820
824
827
830
834
PANEL GP-FUSE 219
222
225
PEDAL GP-GOVERNOR & BRAKE 803
805
807
809
PISTON & ROD GP 39
41
PLANETARY GP-WINCH 934
PLATE & FILM GP 946
948
950
PLATE-SERIAL NUMBER 935
PLATE-SERIAL NUMBER (MACHINE) 950
PLATE-SERIAL NUMBER (MACHINE) (CASE, FRAME) 946
PLUG AS (FINAL DRIVE OIL DRAIN) 323

NAME PAGE

PLUG GP-CYLINDER HEAD 43
PLUG GP-ENGINE 44
PLUG-DRAIN (ENGINE OIL) 37
POWER TRAIN AR 364
PROTECTION GP-FUEL SYSTEM 87
88
108
112
116
121
126
131
136
PROTECTION GP-FUEL SYSTEM (LINE, LOW PRESSURE) 85
91
94
97
100
101
102
PULLEY GP-CRANKSHAFT 45
PULLEY GP-ENGINE 29
PUMP & MTG GP-UNIT INJ HYD 106
PUMP GP-CHARGE–HYSTAT PROPEL 365
PUMP GP-CHARGE–SLIPPER 366
367
PUMP GP-CHARGE–STEERING 368
PUMP GP-ENGINE OIL 53
PUMP GP-FUEL INJECTION 107
108
112
116
121
126
131
136
141
142
PUMP GP-FUEL TRANSFER 106
107
141
PUMP GP-GEAR (IMPLEMENT) 615
PUMP GP-GEAR–IMPLEMENT 615
PUMP GP-PISTON–HYDROSTATIC 370
PUMP GP-PISTON–HYDROSTATIC DRIVE 369
PUMP GP-PISTON–SLIPPER 375
376
377
PUMP GP-PISTON–WINCH 371
373
PUMP GP-WATER 63
65
67

R

RADIATOR & HYD OIL COOLER GP 69
RADIO GP-COMMUNICATION–PRODUCT LINK 121SR 228

INDEX

NAME PAGE

RAIL GP-FUEL 143
RECEIVER GP-LASER 228
RECEIVER GP-LASER–ACCUGRADE, SINGLE 228
RECEIVER GP-SATELLITE–DUAL GNSS, MS990 231
RECEIVER GP-SATELLITE–DUAL GNSS, MS992 229
RECEIVER GP-SATELLITE–DUAL GPS, MS980 228
RECEIVER GP-SATELLITE–GNSS, MS990 230
RECEIVER GP-SATELLITE–SINGLE GNSS, MS990 231
RECEIVER GP-SATELLITE–SINGLE GNSS, MS992 229
REGULATOR AS-WATER TEMPERATURE (INCLUDES CONNECTOR) 55
RELAY AS (12-VOLT) (BLOWER) 253 256 259 263 266 269 272
RELAY AS (12-VOLT) (CAB ACCESSORIES) . . . 178
RELAY AS (12-VOLT) (CONDENSER FAN) 687
RELAY AS (12-VOLT) (FRONT LIGHTS) 220 223 226
RELAY AS (12-VOLT) (HORN) 220 223 226
RELAY AS (12-VOLT) (REAR LIGHTS) 220 223 226
RELAY AS (12-VOLT) (START) 279
RELAY GP–STARTING AID HEATER 232
RESISTOR GP 668 671 673 674 771 774
RIPPER AR 935
RIPPER GP 936
ROCKER ARM GP 46
ROLLER GP-TRACK CARRIER 511
ROLLER GP-TRACK CARRIER–SALT 514
ROLLER GP-TRACK CARRIER–SYSTEMONE . . 512 513
ROLLER GP-TRACK-DOUBLE FLANGE 515 516 517
ROLLER GP-TRACK-SINGLE FLANGE 518 519 520 521 522
ROLLER GP-TRACK–SEALED, LUBRICATED . . . 508 510
ROLLER GP-TRACK–SYSTEMONE 507 509
ROPS AR-ENCLOSED–EROPS 812 813
ROPS AR–EROPS 811
ROPS AR–OROPS 812
ROTATING GP-MOTOR–HYSTAT PROPEL 378
ROTATING GP-MOTOR–IMPLEMENT 379
ROTATING GP-PUMP 382
ROTATING GP-PUMP–IMPLEMENT 383
ROTATING GP-PUMP–PROPEL 380

S

SCREEN AS-CAB 814
SCREEN GP-CAB–OROPS 814
SCREEN GP-PROTECTION 816
SCREEN GP-PROTECTION–SIDES 815
SCREEN GP–FRONT 476
SCREEN-FILTER (PILOT) 151 424
SCREEN-SUCTION (HYDRAULIC TANK) 623
SCREEN-SUCTION (HYDRAULIC TANK) 624 625
SEAL GP-DUO-CONE 323 500 501 511 512 515 516 517 518 519 520 521 522
SEAT & SUPPORT GP–VINYL, HEATED 817
SEAT BELT GP 178
SEAT BELT GP (RETRACTABLE, 3-IN) 841 842 843 844 845
SEAT BELT GP–RETRACTABLE 818 819
SEAT GP-SUSPENSION–CLOTH 839 841
SEAT GP-SUSPENSION–CLOTH, HEATED 840 843
SEAT GP-SUSPENSION–VINYL 837 838 842 845
SEAT GP-SUSPENSION–VINYL, HEATED 844
SEAT GP–CLOTH 824
SEAT GP–CLOTH, HEATED 820
SEAT GP–HEATED SEAT 830
SEAT GP–VINYL 827 834

INDEX

NAME	PAGE
SEGMENT GP-SPROCKET	384
SENDER AS-FUEL LEVEL	157, 161, 164, 168
SENSOR AS-ANGLE (AS400TC)	184, 186, 187
SENSOR AS-POSITION (BULLDOZER CONTROL)	709, 710, 712, 713
SENSOR AS-SPEED (ENGINE)	278
SENSOR GP-POSITION	234, 235, 236
SENSOR GP-POSITION (GOVERNOR, BRAKE PEDAL)	803
SENSOR GP-POSITION (ROTARY) (DECELERATOR)	805
SENSOR GP-POSITION (STEERING, TRANSMISSION)	711
SENSOR GP-POSITION (STEERING)	807, 809
SENSOR GP-POSITION–GOVERNOR, BRAKE PEDAL	233
SENSOR GP-PRESSURE	237
SENSOR GP-PRESSURE (HYDRAULIC OIL)	157, 161, 168
SENSOR GP-PRESSURE (HYDROSTATIC DRIVE)	164
SENSOR GP-PRESSURE (WINCH OIL)	897, 900, 903
SENSOR GP-PRESSURE (WINCH)	909
SENSOR GP-SPEED	116, 121, 131, 136, 238, 239
SENSOR GP-SPEED (FUEL PUMP)	106
SENSOR GP-SPEED (INJECTION PUMP)	142
SENSOR GP-SPEED (SECONDARY, TIMING)	107, 141
SENSOR GP-SPEED (TRACK, LH)	156, 160, 164, 168
SENSOR GP-SPEED (TRACK, RH)	156, 160, 164, 168
SENSOR GP-TEMPERATURE (HYDRAULIC OIL)	157, 160, 163, 167
SENSOR-PRESSURE (FUEL RAIL PRESSURE)	112, 116, 121, 126, 131, 136
SENSOR-PRESSURE (FUEL)	84, 86
SENSOR-TEMPERATURE (AIR)	112, 116, 121, 126, 131
SERVICE GP-COMMUNICATION (PRODUCT LINK 300)	192
SERVICE GP-COMMUNICATION–PRODUCT LINK 300	240
SHAFT GP-MOTOR	378
SHAFT GP-WINCH DRUM	937
SHUTOFF GP-MANUAL–FIRE PLOW	144
SOFTWARE	751
SOFTWARE GP-COMMUNICATION (PRODUCT LINK 300)	240
SOFTWARE GP-MACHINE	181
SOFTWARE GP-MONITOR (PRODUCT LINK 121SR)	228
SOLENOID (AIR FUEL RATIO CONTROL)	76
SOLENOID AS (PILOT VALVE)	151, 387, 424
SOLENOID AS (WINCH PUMP)	151, 424
SPECIAL AR	4
SPRING GP-RECOIL	523
SPROCKET GP	385
STARTING AID GP-ETHER	241
STARTING MOTOR GP-ELECTRIC	243, 244
SUPPORT GP-ENGINE & XMSN	47
SUPPORT GP-HYDRAULIC CONTROL–RH	846
SUPPORT GP-PUMP DRIVE	616
SUPPORT GP-STEERING CONTROL–LH	848
SUPPRESSION AR-SOUND	477, 478, 479
SUSPENSION GP-SEAT	850
SWEEP GP–FRONT	480, 481
SWEEP GP–REAR	482
SWITCH (12-VOLT, 24-VOLT)	830
SWITCH (12-VOLT) (SEAT HEATER ON, OFF)	820
SWITCH AS (LOWER LIMIT)	210
SWITCH AS (UPPER LIMIT)	210
SWITCH AS (WORK LIGHTS)	174, 781, 783

INDEX

NAME PAGE

SWITCH AS-LIMIT (GOVERNOR, BRAKE PEDAL) . . . 805, 807, 809
SWITCH AS-LIMIT (OPERATOR PRESENT) 827
SWITCH AS-LIMIT (SEAT ADJUSTMENT) 820, 824, 830
SWITCH AS-LIMIT (SERVICE BRAKE) 803
SWITCH AS-MAGNETIC (12-VDC) (MAIN POWER RELAY) . . . 219, 222
SWITCH AS-MAGNETIC (12-VDC) (MAIN RELAY) . . . 225
SWITCH AS-PRESSURE (HYDRAULIC OIL FILTER) . . . 921
SWITCH AS-PRESSURE (HYDRAULIC OIL) 351
SWITCH AS-PRESSURE (PRESSURE DIFFERENTIAL) . . . 326
SWITCH AS-PRESSURE (REFRIGERANT COMPR, HIGH SIDE) . . . 251
SWITCH AS-ROCKER (12-VOLT) (DRIVE AWAY) . . . 903
SWITCH AS-ROCKER (12-VOLT) (WINCH BRAKE OFF) . . . 897, 900
SWITCH AS-ROCKER (12-VOLT) (WINCH BRAKE) . . . 909
SWITCH AS-ROCKER (12-VOLT) (WINCH FREE SPOOL) . . . 897, 900
SWITCH AS-ROCKER (12-VOLT) (WINCH FREESPOOL) . . . 903, 909
SWITCH AS-ROCKER (4TH VALVE, FLOAT) . . . 704, 706, 911, 912
SWITCH AS-ROCKER (4TH VALVE) . . . 906, 907, 911
SWITCH AS-ROCKER (5TH VALVE, FLOAT) . . . 706, 912
SWITCH AS-ROCKER (AIR CONDITIONER) 783
SWITCH AS-ROCKER (ENGINE SPEED CONTROL) . . . 174, 477, 478, 479
SWITCH AS-ROCKER (FRONT WIPER) 783
SWITCH AS-ROCKER (IMPLEMENT LOCKOUT) . . . 781, 783
SWITCH AS-ROCKER (PARKING BRAKE) 781, 783
SWITCH AS-ROCKER (REAR WIPER) 783
SWITCH AS-ROCKER (SIDE WIPER, LEFT) . . . 783
SWITCH AS-ROCKER (SIDE WIPER, RIGHT) . . . 783
SWITCH AS-START (KEY) . . . 781, 783
SWITCH GP-DISCONNECT–BATTERY 245
SWITCH GP-ROTARY (THROTTLE POSITION) . . . 781, 783
SWITCH GP-ROTARY–THROTTLE POSITION . . 246
SWITCH-PRESSURE (AIR CLEANER) 72

T

TANK & MTG GP-HYDRAULIC–FIRE PLOW 617
TANK GP-COOLANT 71
TANK GP-EXPANSION (COOLANT) 71
TANK GP-FUEL . . . 145, 147
TANK GP-FUEL–FIRE PLOW 148
TANK GP-HYDRAULIC . . . 619, 621, 623, 625
TANK GP-HYDRAULIC–FIRE PLOW 624
TANK GP-WINDOW WASHER 854
TARGET GP-LASER . . . 184, 247, 248
TOOTH GP-RIPPER 939
TRACK AR . . . 524, 525
TRACK AR–SYSTEMONE 524
TRACK GP–2-REQUIRED 525
TRACK GP–2-REQUIRED, SYSTEMONE 526
TRACK GP–SELF CLEANING 527
TRACK GP–SYSTEMONE 526
TURBOCHARGER GP 76

U

UNDERCARRIAGE AR 528
UNDERCARRIAGE AR–SYSTEMONE 527

V

VALVE & LINES GP-WINCH 940
VALVE & MTG GP-CONTROL . . . 626, 627
VALVE & MTG GP-IMPLEMENT CONT 629
VALVE & MTG GP-IMPLEMENT CONT–STANDARD 628
VALVE AS-PRESSURE RELIEF (REFRIGERANT COMPRESSOR) 686
VALVE AS-RELIEF . . . 116, 126, 131, 136
VALVE AS-RELIEF (FUEL RAIL) . . . 121, 143
VALVE GP-BANK 3–IMPLEMENT 630
VALVE GP-BANK 4–IMPLEMENT . . . 632, 634

INDEX

NAME PAGE

VALVE GP-BANK 5–IMPLEMENT 636
VALVE GP-CAB HEATER 779
VALVE GP-CAB HEATER (WATER) 778
VALVE GP-CHECK (FUEL) 103
VALVE GP-CHECK (IMPLEMENT) 630
632
634
636
VALVE GP-CHECK (LOAD CONTROL) 591
593
595
VALVE GP-CHECK (SLOW RETURN) 638
VALVE GP-CHECK–HYDROSTATIC DRIVE MOTOR 150
VALVE GP-CONTROL 643
VALVE GP-CONTROL–ANGLE 640
VALVE GP-CONTROL–AUXILIARY 641
645
VALVE GP-CONTROL–BLADE LIFT 638
VALVE GP-CONTROL–TILT 642
VALVE GP-FLOW CONTROL (WINCH) 940
VALVE GP-FLUID SAMPLING–ENGINE OIL 54
VALVE GP-FLUSHING–HYDROSTATIC DRIVE 386
VALVE GP-LOAD CONTROL 591
593
VALVE GP-LOAD CONTROL (HYDRAULIC) 595
VALVE GP-MAKEUP (ANGLE) 640
VALVE GP-MAKEUP (AUXILIARY) 641
645
VALVE GP-MAKEUP (BLADE LIFT) 638
VALVE GP-MAKEUP (TILT) 642
VALVE GP-PILOT–HYDROSTATIC DRIVE 387
VALVE GP-PUMP CONTROL 388
391
394
397
400
403
405
408
411
414
417
VALVE GP-RELIEF 327
422
VALVE GP-RELIEF (12-VOLT) (BLADE LIFT) . . . 638
VALVE GP-RELIEF (AUXILIARY) 641
645
VALVE GP-RELIEF (CHARGE PRESSURE) 327
VALVE GP-RELIEF (CROSSOVER) 373
VALVE GP-RELIEF (LOAD CONTROL) 591
593
595
VALVE GP-RELIEF–CHARGE PRESSURE 420
VALVE GP-RELIEF–CROSSOVER 423
VALVE GP-RELIEF–PRESSURE OVERRIDE–HYDROSTATIC PUMP 419
VALVE GP-SHUTTLE 638
VALVE GP-SOLENOID 151

NAME PAGE

VALVE GP-SOLENOID (12-VOLT) (ANGLE) 640
VALVE GP-SOLENOID (12-VOLT) (AUXILIARY) 641
645
VALVE GP-SOLENOID (12-VOLT) (BLADE LIFT) 638
VALVE GP-SOLENOID (12-VOLT) (MOTOR, 2-SPEED) 360
VALVE GP-SOLENOID (12-VOLT) (TILT) 642
VALVE GP-SOLENOID (PARKING BRAKE) 647
VALVE GP-SOLENOID (SERVO) 371
373
VALVE GP-SOLENOID (WINCH) 940
VALVE GP-SOLENOID–PARKING BRAKE 646
VALVE GP-SOLENOID–SERVO 424
VALVE GP-SOLENOID–WINCH 647
648
649
VALVE MECHANISM GP 48

W

WARNING GP-BACKUP 249
250
WASHER GP-WINDOW 854
WINCH AR 942
WINDOW GP-CAB 856
857
858
861
WINDOW GP-CAB–LH 860
863
WINDOW GP-CAB–RH 859
862
WINDOW GP-SLIDING–LH 866
WINDOW GP-SLIDING–RH 864
WIPER GP-WINDOW 868
WIRING GP-AIR CONDITIONER 251
WIRING GP-CAB–EROPS 252
255
258
WIRING GP-CAB–OROPS 262
265
268
271
WIRING GP-ELECTROHYDRAULIC 274
276
WIRING GP-ENGINE 278
283
284
WIRING GP-GRADE CONTROL–BASE 306
309
WIRING GP-GRADE CONTROL–FULL 286
291
296
301
WIRING GP-PLATFORM 312
315

MEMORANDA

MACHINE ARRANGEMENT

244-7378 CHASSIS AR

S/N: MMM1-UP

PART OF 244-7372 COMMON AR

SMCS-7000 **i05343580**

NOTE	PART NUMBER	QTY	PART NAME 1 2 3 4 5 6 (PRODUCT LEVEL)	SEE PAGE
Y	*245-6017*	1	BATTERY & WIRING GP	156
Y	*255-2098*	1	C-FRAME GP-POWER ANGLING	650
Y	*247-6506*	1	CONTROL & MTG GP-PEDAL (GOVERNOR, BRAKE)	696
			—OR—	
Y	*324-0670*	1	CONTROL & MTG GP-PEDAL (GOVERNOR, BRAKE)	697
			—OR—	
Y	*343-3502*	1	CONTROL & MTG GP-PEDAL (GOVERNOR, BRAKE)	698
Y	*244-7512*	1	ENCLOSURE GP-PLATFORM	429
Y	*244-7390*	1	FILM GP	943
Y	*244-7398*	1	FRAME GP	436
Y	*254-8901*	1	GUARD GP-BOTTOM	448
Y	*254-7757*	1	GUARD GP-RADIATOR	457
Y	*244-7482*	1	FILTER & LINES GP-FUEL	80
Y	*255-4241*	1	LINES GP-HEATER	791
Y	*254-3169*	1	MOUNTING GP-CAB	800
Y	*244-7408*	1	TANK GP-FUEL	145
Y	*245-6019*	1	WIRING GP-ENGINE	278
Y	*245-6020*	1	WIRING GP-PLATFORM	312
Y	*245-6027*	1	WIRING GP-ELECTROHYDRAULIC	274

Y - SEPARATE ILLUSTRATION

<END>

244-7379 CHASSIS AR

S/N: RRR1-UP

PART OF 244-7373 COMMON AR

SMCS-7000 **i05343575**

NOTE	PART NUMBER	QTY	PART NAME 1 2 3 4 5 6 (PRODUCT LEVEL)	SEE PAGE
Y	*245-6017*	1	BATTERY & WIRING GP	156
Y	*255-2098*	1	C-FRAME GP-POWER ANGLING	650
Y	*324-0670*	1	CONTROL & MTG GP-PEDAL (GOVERNOR, BRAKE)	697
			S/N: RRR1-670	
Y	*343-3502*	1	CONTROL & MTG GP-PEDAL (GOVERNOR, BRAKE)	698
			S/N: RRR671-UP	
Y	*244-7512*	1	ENCLOSURE GP-PLATFORM	429
Y	*244-7485*	1	FILM GP	944
Y	*244-7482*	1	FILTER & LINES GP-FUEL	80
Y	*244-7399*	1	FRAME GP	438
Y	*254-8901*	1	GUARD GP-BOTTOM	448
Y	*254-7757*	1	GUARD GP-RADIATOR	457
Y	*255-4241*	1	LINES GP-HEATER	791
Y	*254-3169*	1	MOUNTING GP-CAB	800
Y	*244-7408*	1	TANK GP-FUEL	145
Y	*245-6027*	1	WIRING GP-ELECTROHYDRAULIC	274
Y	*245-6019*	1	WIRING GP-ENGINE	278
Y	*245-6020*	1	WIRING GP-PLATFORM	312

Y - SEPARATE ILLUSTRATION

<END>

MACHINE ARRANGEMENT

244-7372 COMMON AR

S/N: MMM1-UP

SMCS-7000 **i02630160**

NOTE	PART NUMBER	QTY	PART NAME 1 2 3 4 5 6 (PRODUCT LEVEL)	SEE PAGE
Y	*244-7378*	1	CHASSIS AR	1
Y	*244-7387*	1	ELECTRONICS GP-MACHINE	181
Y	**254-9233**	1	ENGINE AR-PRIMARY	5
Y	*244-7385*	1	HYDRAULIC AR	544
Y	*244-7386*	1	INSTALLATION AR-ENGINE	6
Y	*244-7483*	1	POWER TRAIN AR	364

Y - SEPARATE ILLUSTRATION

<END>

244-7373 COMMON AR

S/N: RRR1-UP

SMCS-7000 **i02652376**

NOTE	PART NUMBER	QTY	PART NAME 1 2 3 4 5 6 (PRODUCT LEVEL)	SEE PAGE
Y	*244-7379*	1	CHASSIS AR	1
Y	*244-7387*	1	ELECTRONICS GP-MACHINE	181
Y	**254-9233**	1	ENGINE AR-PRIMARY	5
Y	*244-7385*	1	HYDRAULIC AR	544
Y	*244-7386*	1	INSTALLATION AR-ENGINE	6
Y	*244-7446*	1	POWER TRAIN AR	364

Y - SEPARATE ILLUSTRATION

<END>

325-6498 MODIFICATION AR

S/N: MMM1-UP

FOR USE WITH 244-7372—PAGE: 2, 244-7467—PAGE: 480

AN ATTACHMENT

SMCS-7000 **i03682305**

NOTE	PART NUMBER	QTY	PART NAME 1 2 3 4 5 6 (PRODUCT LEVEL)	SEE PAGE
Y	*325-7265*	1	ACCESSORY GP-CAB	660
Y	*325-7267*	1	ARRESTOR GP-SPARK	73
Y	*318-6107*	1	CONVERSION GP-ELECTRICAL	174
Y	*323-7320*	1	ENCLOSURE GP-PLATFORM	435
Y	*325-6506*	1	FRAME GP	442
Y	*325-7266*	1	LATCH GP	473
Y	*322-5900*	1	LINES GP-FUEL (LOW PRESSURE)	103
Y	*322-5904*	1	LINES GP-FUEL (FIRE PLOW)	105
Y	*319-8113*	1	TANK & MTG GP-HYDRAULIC	617
Y	*319-8103*	1	TANK GP-FUEL	148

Y - SEPARATE ILLUSTRATION

<END>

325-6499 MODIFICATION AR

S/N: RRR1-UP
FOR USE WITH 244-7373—PAGE: 2, 244-7467—PAGE: 480
AN ATTACHMENT

SMCS-7000 **i03682306**

NOTE	PART NUMBER	QTY	PART NAME 1 2 3 4 5 6 (PRODUCT LEVEL)	SEE PAGE
Y	*325-7265*	1	ACCESSORY GP-CAB	660
Y	*325-7267*	1	ARRESTOR GP-SPARK	73
Y	*318-6107*	1	CONVERSION GP-ELECTRICAL	174
Y	*323-7320*	1	ENCLOSURE GP-PLATFORM	435
Y	*325-6507*	1	FRAME GP	443
Y	*325-7266*	1	LATCH GP	473
Y	*322-5900*	1	LINES GP-FUEL (LOW PRESSURE)	103
Y	*322-5904*	1	LINES GP-FUEL (FIRE PLOW)	105
Y	*319-8113*	1	TANK & MTG GP-HYDRAULIC	617
Y	*319-8103*	1	TANK GP-FUEL	148

Y - SEPARATE ILLUSTRATION

<END>

325-6543 MODIFICATION AR

S/N: MMM1-UP
FOR USE WITH 325-6498—PAGE: 2
AN ATTACHMENT

SMCS-7000 **i03670364**

NOTE	PART NUMBER	QTY	PART NAME 1 2 3 4 5 6 (PRODUCT LEVEL)	SEE PAGE
Y	*328-8603*	1	LINES GP-ANGLE & TILT	560
Y	*329-5632*	1	LINES GP-COOLANT	62
Y	*327-7684*	1	LINES GP-HEATER	793
Y	*327-8895*	1	LINES GP-HYDRAULIC (LIFT CYLINDER)	571
Y	*327-8880*	1	LINES GP-HYDROSTATIC	331
Y	*327-7666*	1	LINES GP-POWER TRAIN COOLER	344
Y	*328-8600*	1	LINES GP-PRESSURE TEST	574
Y	*327-3393*	1	LINES GP-PUMP	589
Y	*325-1323*	1	LINES GP-STEERING	530
Y	*329-1938*	1	LINES GP-TRANSMISSION OIL (CHARGE)	358
Y	*329-1321*	1	LINES GP-TRANSMISSION OIL (CASE DRAIN)	356

Y - SEPARATE ILLUSTRATION

<END>

MACHINE ARRANGEMENT

325-6544 MODIFICATION AR

S/N: RRR1-UP
FOR USE WITH 325-6499—PAGE: 3
AN ATTACHMENT

SMCS-7000 **i03670367**

NOTE	PART NUMBER	QTY	PART NAME 1 2 3 4 5 6 (PRODUCT LEVEL)	SEE PAGE
Y	*328-8603*	1	LINES GP-ANGLE & TILT	560
Y	*329-5632*	1	LINES GP-COOLANT	62
Y	*327-7684*	1	LINES GP-HEATER	793
Y	*327-8895*	1	LINES GP-HYDRAULIC (LIFT CYLINDER)	571
Y	*325-1324*	1	LINES GP-HYDRAULIC	569
Y	*327-8880*	1	LINES GP-HYDROSTATIC	331
Y	*327-7667*	1	LINES GP-POWER TRAIN COOLER	346
Y	*328-8600*	1	LINES GP-PRESSURE TEST	574
Y	*327-3393*	1	LINES GP-PUMP	589
Y	*329-1938*	1	LINES GP-TRANSMISSION OIL (CHARGE)	358
Y	*329-1922*	1	LINES GP-TRANSMISSION OIL (CASE DRAIN)	357

Y - SEPARATE ILLUSTRATION

<END>

344-7614 SPECIAL AR

S/N: MMM1-UP
FOR USE WITH 244-7372—PAGE: 2, 282-4899—PAGE: 813, 244-7467—PAGE: 480
AN ATTACHMENT

SMCS-7000 **i03701560**

NOTE	PART NUMBER	QTY	PART NAME 1 2 3 4 5 6 (PRODUCT LEVEL)	SEE PAGE
Y	*325-7265*	1	ACCESSORY GP-CAB	660
Y	*325-7267*	1	ARRESTOR GP-SPARK	73
Y	*318-6107*	1	CONVERSION GP-ELECTRICAL	174
Y	*323-7320*	1	ENCLOSURE GP-PLATFORM	435
Y	*325-6506*	1	FRAME GP	442
Y	*325-7266*	1	LATCH GP (FIRE PLOW)	473
Y	*322-5900*	1	LINES GP-FUEL (LOW PRESSURE)	103
Y	*322-5904*	1	LINES GP-FUEL (FIRE PLOW)	105
Y	*319-8113*	1	TANK & MTG GP-HYDRAULIC	617
Y	*319-8103*	1	TANK GP-FUEL	148
	348-5483	1	PLATE	
	348-5660	1	PLATE	

Y - SEPARATE ILLUSTRATION

<END>

ENGINE ARRANGEMENT

254-9233 ENGINE AR-PRIMARY*R

S/N: C4E1-UP
75 BRAKE KW (100 BHP) AT 2000 RPM
FIELD REPLACEMENT ORDER 435-1677—PAGE: 6
PART OF 244-7372, 244-7373 COMMON AR

SMCS-1000 **i05202691**

NOTE	PART NUMBER	QTY	PART NAME 1 2 3 4 5 6 (PRODUCT LEVEL)	SEE PAGE
Y	*303-5775*	1	ADAPTER GP-AUXILIARY DRIVE	7
Y	*303-5774*	1	ALTERNATOR GP-CHARGING	153
			S/N: C4E1-173	
Y	*317-9776*	1	ALTERNATOR GP-CHARGING	155
			S/N: C4E174-UP	
Y	*304-3648*	1	CAMSHAFT GP	11
Y	*301-8243*	1	CONNECTION GP-WATER	55
			—OR—	
Y	*334-2314*	1	CONNECTION GP-WATER	56
Y	*304-3650*	1	CONTROL GP-ENGINE ELECTRONIC	172
Y	*298-5099*	1	COOLER GP-ENGINE OIL	57
Y	*304-3658*	1	COVER GP-CYLINDER HEAD	12
Y	*320-2369*	1	COVER GP-VALVE MECHANISM	13
Y	*304-3642*	1	CRANKSHAFT GP	15
Y	*304-3641*	1	CYLINDER BLOCK GP	21
Y	*304-3645*	1	CYLINDER HEAD GP	28
Y	*303-5770*	1	DRIVE GP-FAN	30
Y	*314-3960*	1	FILLER GP-ENGINE OIL	50
Y	*298-5100*	1	FILTER GP-ENGINE OIL	52
Y	*298-5123*	1	FILTER GP-PRIMARY FUEL	87
			S/N: C4E1-173	
Y	*320-1332*	1	FILTER GP-FUEL	85
			S/N: C4E174-UP	
Y	*304-3654*	1	FLYWHEEL GP	31
Y	*298-5110*	1	GEAR GP-FRONT	32
Y	*304-3660*	1	GLOW PLUG GP	182
Y	*303-5767*	1	HOUSING GP-FLYWHEEL	34
Y	*298-5127*	1	LIFTING GP-ENGINE	35
Y	*304-3659*	1	LINES GP-FUEL (LOW)	91
Y	*304-3662*	1	LINES GP-FUEL	100
Y	*304-3661*	1	MOUNTING GP-ENGINE	36
Y	*304-3656*	1	PAN GP-OIL	37
Y	*304-3643*	1	PISTON & ROD GP	39
Y	*298-5129*	1	PLUG GP-CYLINDER HEAD (TEMPERATURE)	43
Y	*304-3663*	1	PLUG GP-ENGINE	44
Y	*360-7345*	1	PULLEY GP-CRANKSHAFT	45
Y	*298-5112*	1	PUMP GP-ENGINE OIL	53
Y	*304-3649*	1	PUMP GP-FUEL INJECTION	108
Y	*298-5105*	1	PUMP GP-WATER	63
Y	*304-3655*	1	STARTING MOTOR GP-ELECTRIC	243
			—OR—	
Y	*387-5249*	1	STARTING MOTOR GP-ELECTRIC	244
Y	*304-3657*	1	TURBOCHARGER GP	76
Y	*304-5617*	1	VALVE GP-FLUID SAMPLING (OIL)	54
Y	*304-3647*	1	VALVE MECHANISM GP	48
Y	*299-5092*	1	WIRING GP-ENGINE	283
R	**359-0737**	1	CYLINDER BLOCK GP-SHORT	
	305-8452	1	ELECTRONICS GP-ENGINE RATINGS	

R - REMFG PART MAY BE AVAILABLE
Y - SEPARATE ILLUSTRATION

<END>

ENGINE ARRANGEMENT

435-1677 ENGINE AR-PRIMARY

S/N: C4E1-UP
75 BRAKE KW (100 BHP) AT 1900 RPM
FIELD REPLACEMENT FOR 254-9233—PAGE: 5

SMCS-1000 **i05309186**

NOTE	PART NUMBER	QTY	PART NAME 1 2 3 4 5 6 (PRODUCT LEVEL)	SEE PAGE
			(NO SERVICED PARTS)	

<END>

244-7386 INSTALLATION AR-ENGINE

S/N: MMM1-UP; RRR1-UP
PART OF 244-7372, 244-7373 COMMON AR

SMCS-1000 **i03845898**

NOTE	PART NUMBER	QTY	PART NAME 1 2 3 4 5 6 (PRODUCT LEVEL)	SEE PAGE
Y	*244-7427*	1	AIR CLEANER GP	72
Y	*244-7428*	1	FAN GP-BLOWER	61
Y	*283-3426*	1	FILTER GP-ENGINE OIL (INCLUDES SHUTOFF VALVE)	51
Y	*254-8954*	1	MUFFLER GP	75
Y	*244-7430*	1	RADIATOR & HYD OIL COOLER GP	69
Y	*244-7431*	1	SUPPORT GP-ENGINE & XMSN	47
Y	*254-3256*	1	TANK GP-COOLANT	71

Y - SEPARATE ILLUSTRATION

<END>

303-5775 ADAPTER GP-AUXILIARY DRIVE

S/N: C4E1-UP

PART OF 254-9233 ENGINE AR-PRIMARY

SMCS-1207 **i02907611**

NOTE	REF NO	GRAPHIC REF	PART NUMBER	QTY	PART NAME 1 2 3 4 5 6 (PRODUCT LEVEL)	SEE PAGE
	1	1	**235-1063**	1	ADAPTER AS	
	1A	1	**6H-3957**	1	BALL BEARING	
	1B	1	**102-2075**	1	BEARING	
	1C	1	**102-2076**	1	CLIP	
	1D	1	**235-1061**	1	GEAR (33-TEETH)	
	2	1	**102-2073**	1	SEAL-O-RING	
M	3	1	**102-2078**	1	BOLT (M10X1.5X25-MM)	
	5	1	**126-3212**	5	BOLT (M8X1.25X25-MM)	
	6	1	**6I-0646**	1	BOLT (M10X1.5X14-MM)	
	7	1	**214-3203**	1	WASHER (SEALING)	

M - METRIC PART

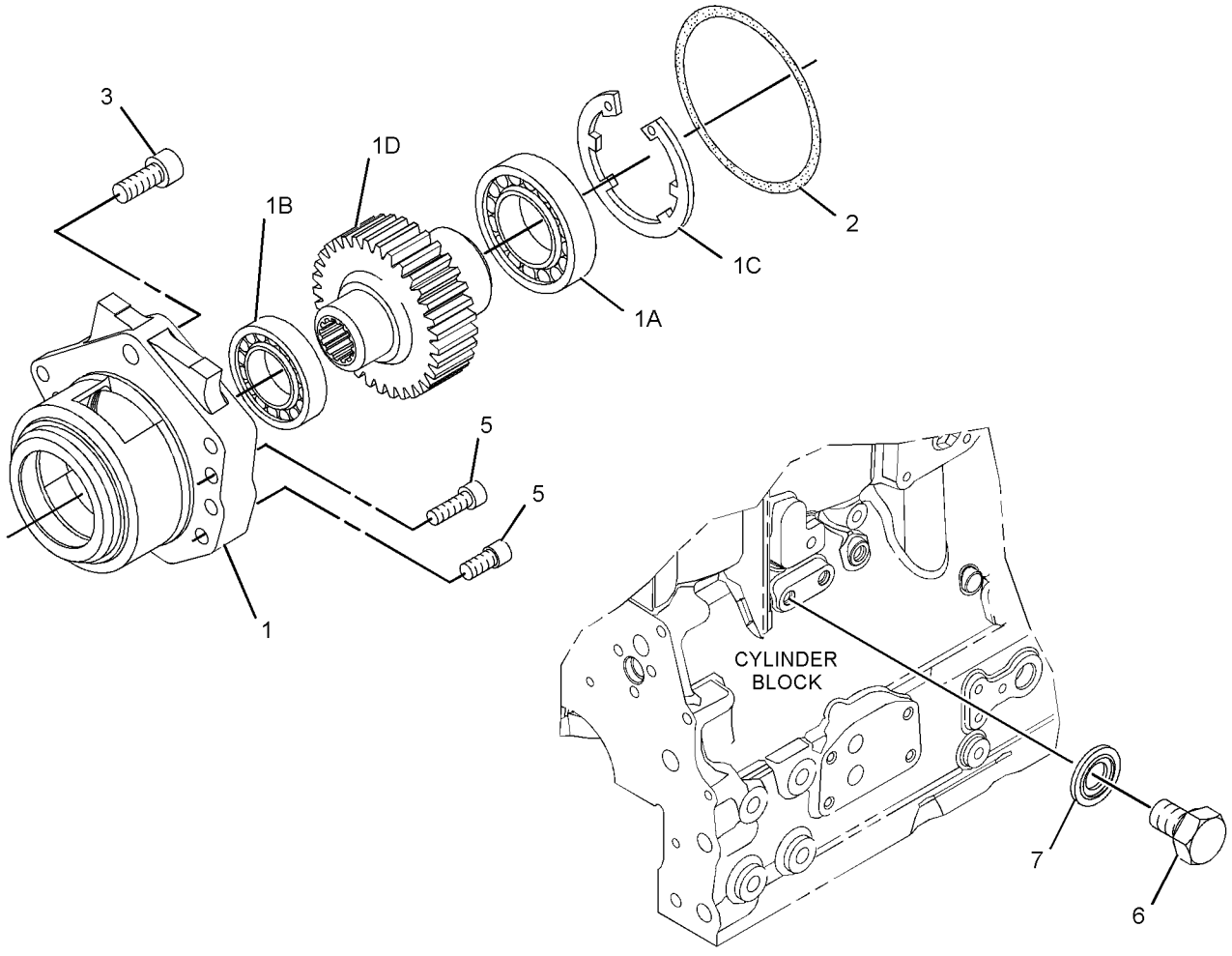

GRAPHIC #1 **<END>** g01447103

260-9294 BELT TENSIONER GP–FAN

S/N: MMM1-UP; RRR1-UP
PART OF 244-7475, 244-7476 ROPS AR
AN ATTACHMENT

SMCS-1358 **i04892826**

NOTE	REF NO	GRAPHIC REF	PART NUMBER	QTY	PART NAME 1 2 3 4 5 6 (PRODUCT LEVEL)	SEE PAGE
	1	1	**377-9087**	1	BELT TENSIONER	
	2	1	**348-8149**	1	PLATE-MOUNTING	
	3	1	**261-0428**	1	PULLEY AS-IDLER	
M		1	**307-2242**	1	BOLT (M10X1.5X45-MM)	
	4	1	**283-4148**	1	PULLEY (8-GROOVE)	
	5	1	**298-5874**	1	BELT-SERPENTINE (FAN PULLEY)	
M	6	1	**6I-0593**	3	BOLT (M10X1.5X30-MM)	

M - METRIC PART

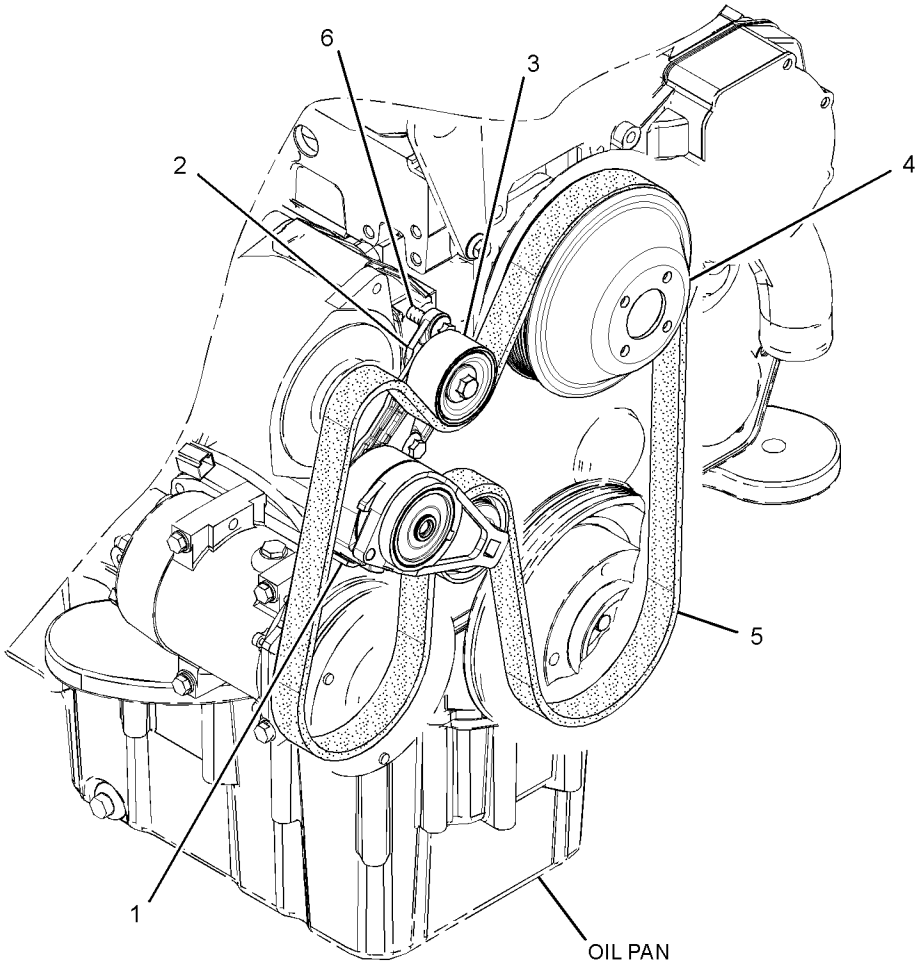

GRAPHIC #1 **<END>** g01440105

260-9295 BELT TENSIONER GP

S/N: MMM1-UP; RRR1-UP
PART OF 282-4898, 282-4899 ROPS AR-ENCLOSED
AN ATTACHMENT

SMCS-1358 **i04892825**

NOTE	REF NO	GRAPHIC REF	PART NUMBER	QTY	PART NAME 1 2 3 4 5 6 (PRODUCT LEVEL)	SEE PAGE
	1	1	**298-5880**	1	BELT-SERPENTINE (FAN PULLEY)	
	2	1	**377-9087**	1	BELT TENSIONER	
	3	1	**348-8149**	1	PLATE-MOUNTING	
	4	1	**261-0428**	1	PULLEY AS-IDLER	
M		1	**307-2242**	1	BOLT (M10X1.5X45-MM)	
	5	1	**284-1026**	1	PULLEY (8-GROOVE)	
M	6	1	**6I-0593**	3	BOLT (M10X1.5X30-MM)	

M - METRIC PART

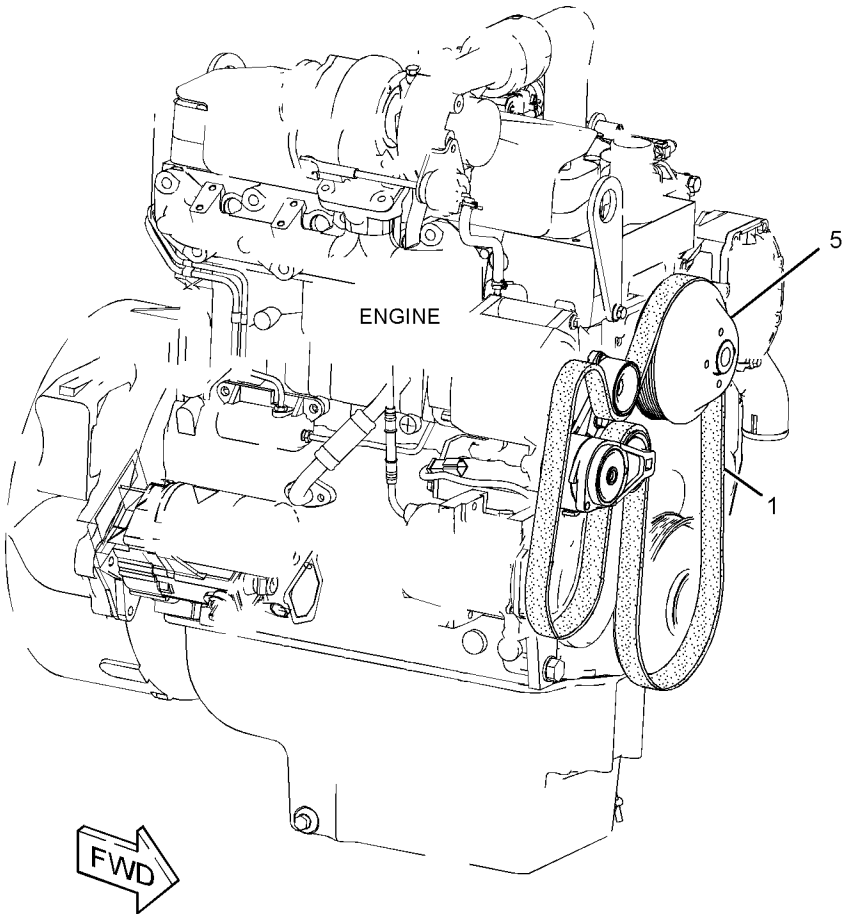

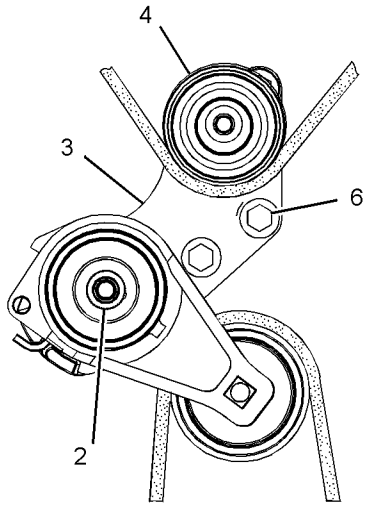

FRONT VIEW
(ENGINE)

GRAPHIC #1 **<END>** g02237753

261-0369 BELT TENSIONER GP

S/N: MMM1-UP; RRR1-UP
PART OF 282-4897 ROPS AR
AN ATTACHMENT

SMCS-1358 **i04892824**

NOTE	REF NO	GRAPHIC REF	PART NUMBER	QTY	PART NAME 1 2 3 4 5 6 (PRODUCT LEVEL)	SEE PAGE
	1	1	**349-3261**	1	PLATE-TENSIONER	
	2	1	**316-0446**	1	BELT-SERPENTINE (FAN PULLEY)	
	3	1	**377-9082**	1	BELT TENSIONER	
	4	1	**284-1026**	1	PULLEY (8-GROOVE)	
M	5	1	**6I-0593**	3	BOLT (M10X1.5X30-MM)	

M - METRIC PART

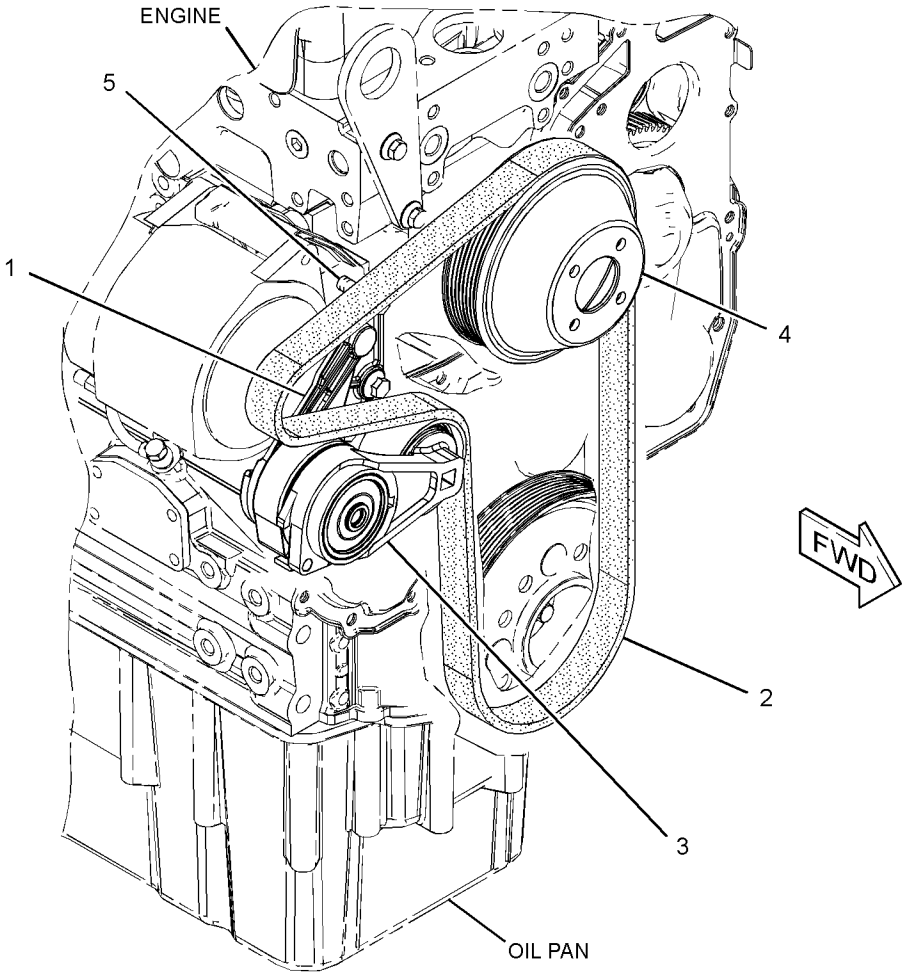

GRAPHIC #1 **<END>** g01527819

304-3648 CAMSHAFT GP

S/N: C4E1-UP

PART OF 254-9233 ENGINE AR-PRIMARY

SMCS-1210 **i04821944**

NOTE	REF NO	GRAPHIC REF	PART NUMBER	QTY	PART NAME 1 2 3 4 5 6 (PRODUCT LEVEL)	SEE PAGE
	1	1	**315-3384**	8	TAPPET	
	2	1	**319-8426**	8	PUSHROD	
	3	1	**394-1399**	1	CAMSHAFT AS	
	3A	1	**067-6135**	1	KEY-WOODRUFF (WOODRUFF)	

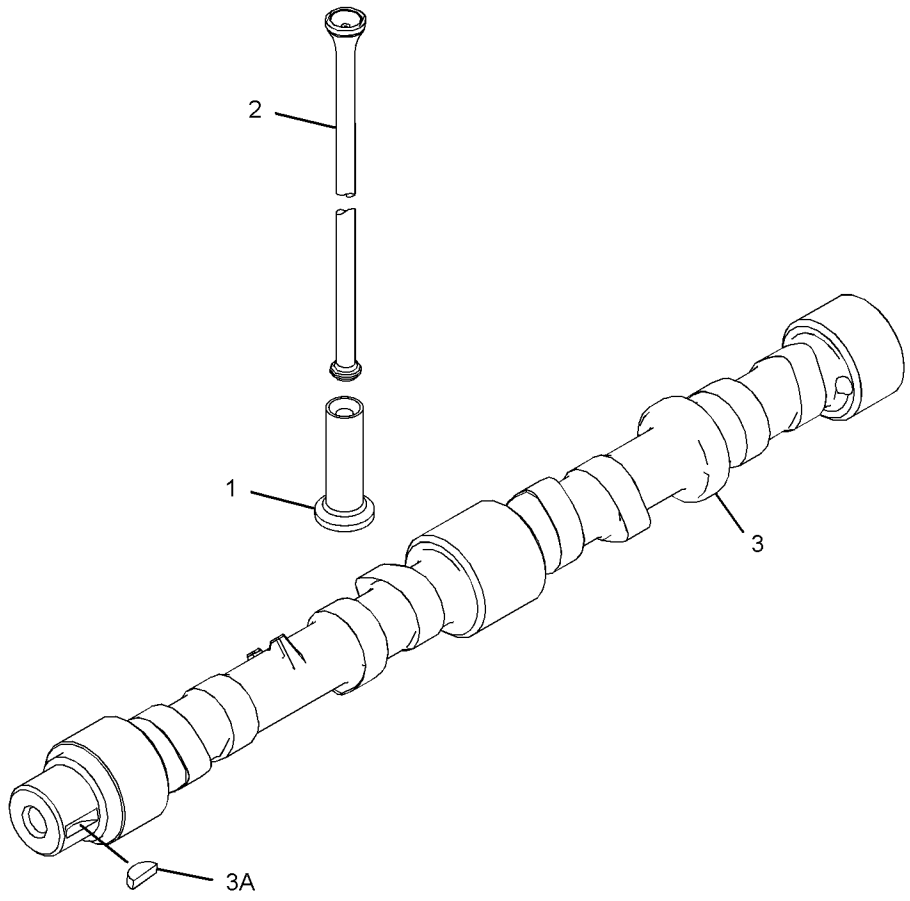

GRAPHIC #1 **<END>** g02953396

304-3658 COVER GP-CYLINDER HEAD

S/N: C4E1-UP

PART OF 254-9233 ENGINE AR-PRIMARY

SMCS-1100 **i03859380**

NOTE	REF NO	GRAPHIC REF	PART NUMBER	QTY	PART NAME 1 2 3 4 5 6 (PRODUCT LEVEL)	SEE PAGE
M	1	1	**124-3815**	4	BOLT (M8X1.25X16-MM)	
	2	1	**111-8222**	4	BOLT (M8X16-MM)	
	3	1	**114-2579**	2	GASKET	
	4	1	**185-6627**	2	PLATE	

M - METRIC PART

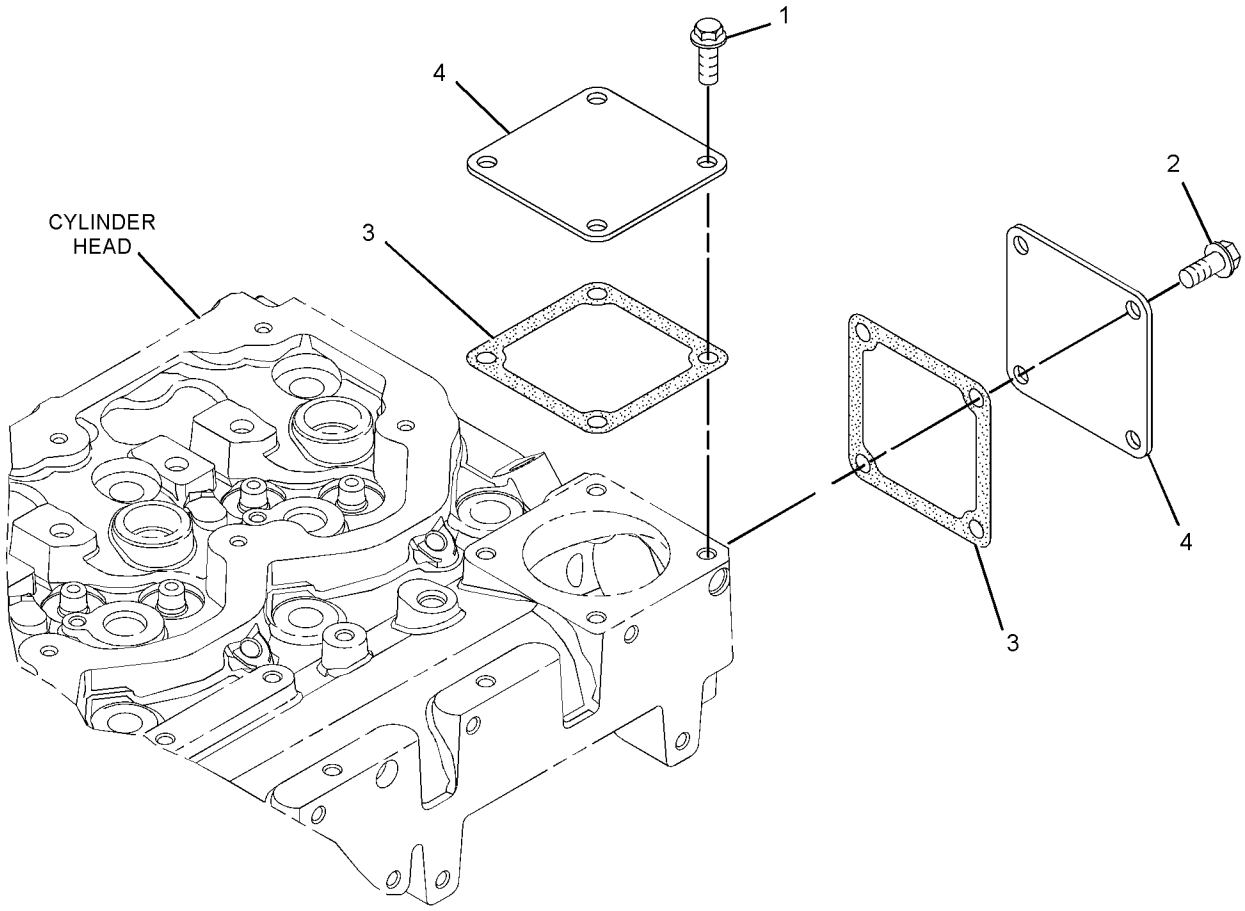

GRAPHIC #1 **<END>** g02122260

320-2369 COVER GP-VALVE MECHANISM

S/N: C4E1-UP

PART OF 254-9233 ENGINE AR-PRIMARY

SMCS-1107 **i05326750**

NOTE	REF NO	GRAPHIC REF	PART NUMBER	QTY	PART NAME 1 2 3 4 5 6 (PRODUCT LEVEL)	SEE PAGE
	1	1	**7C-1281**	1	BRACKET	
	3	1	**6I-0846**	3	BOLT (M6X1X14-MM)	
	4	1	**5D-1026**	1	CLAMP-BAND	
	5	1	**162-1565**	1	SPRING (CRANKCASE BREATHER HOSE)	
	6	1	**320-9921**	1	HOSE	
	7	1	**277-5031**	7	BOLT-SPECIAL (SHOULDER)	
	8	1	**277-5067**	4	SLEEVE	
	10	1	**298-4550**	4	BOLT-SPECIAL (SHOULDER)	
	11	1	**298-4551**	1	BASE GP-VALVE COVER & INJ HARN	
	11A	1	**277-5064**	2	SEAL-O-RING	
	11B	1	**277-5065**	2	CLIP	
	11C	1	**285-1973**	2	HARNESS AS-ENGINE (FUEL INJECTION)	
					(EACH INCLUDES)	
		1	**316-9351**	1	MOUNTING-CABLE TIE	
		1	**180-9339**	4	PIN-CONNECTOR (14-GA TO 18-GA)	
		1	**113-4630**	1	RECEPTACLE AS-CONNECTOR (4-PIN)	
		1	**3E-3377**	1	WEDGE-RECEPTACLE LOCK (4-PIN)	
	11D	1	**298-4552**	1	GASKET (VALVE MECHANISM BASE)	
	12	1	**303-5781**	1	COVER AS-CYLINDER HEAD	
	12A	1	**295-1042**	4	SCREW-TAPPING	
	12B	1	**298-4546**	1	GASKET-VALVE COVER (CYLINDER HEAD)	
	12C	1	**298-4547**	1	BREATHER (CRANKCASE)	
	12D	1	**298-4548**	1	SEPARATOR-OIL	
	12E	1	**298-4549**	1	SEAL-O-RING	
	13	1	**320-2360**	1	SHIELD-HEAT	
	14	1	**320-2362**	1	WASHER	
	15	1	**320-2361**	2	WASHER	
	16	1	**343-8096**	1	CLIP	
	17	1	**217-9039**	1	STRAP-CABLE	

320-2369 **COVER GP-VALVE MECHANISM (*contd.*)** **i05326750**

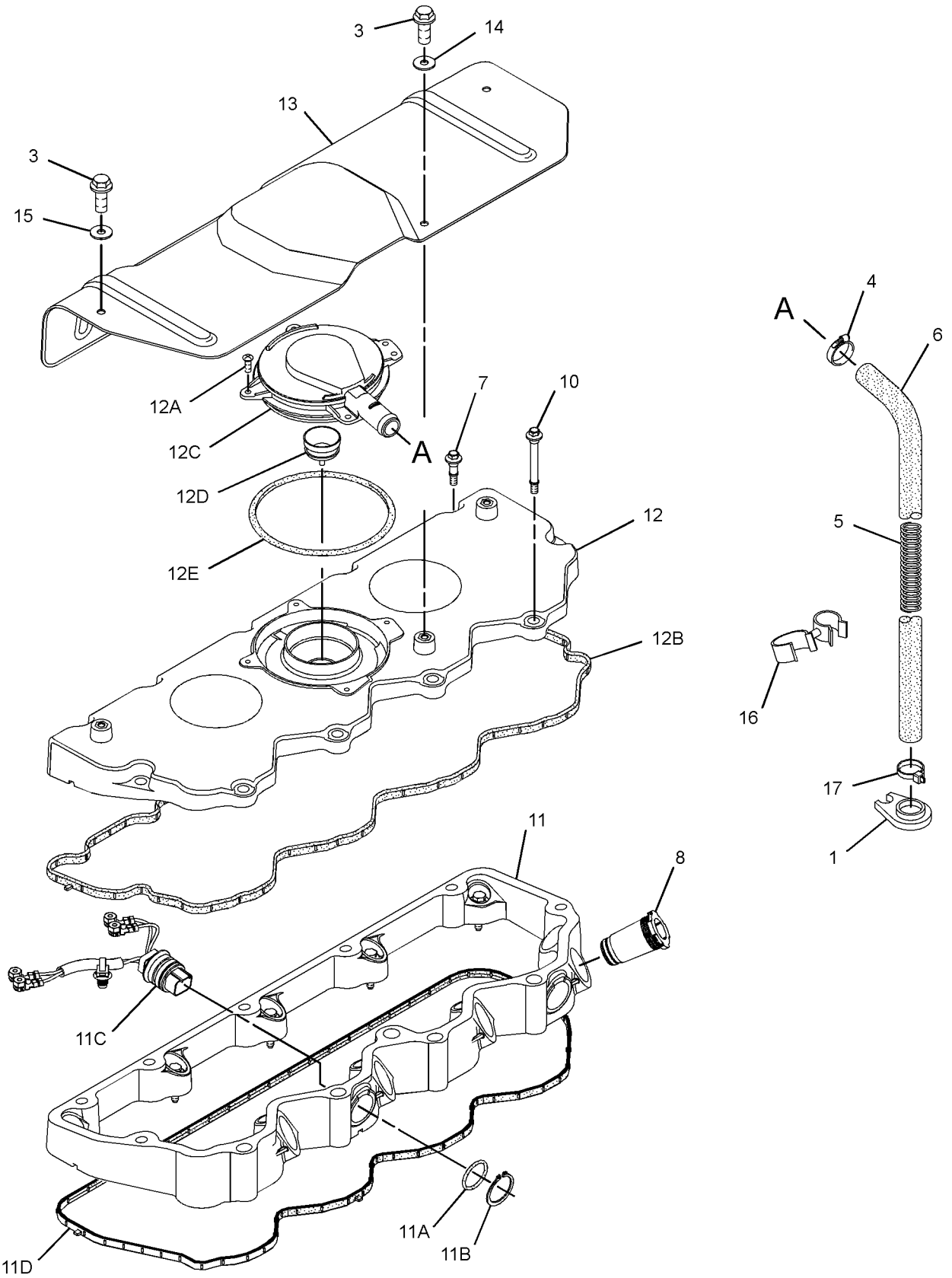

GRAPHIC #1 **<END>** g03384524

304-3642 CRANKSHAFT GP

S/N: C4E1-8929

PART OF 254-9233 ENGINE AR-PRIMARY

SMCS-1202 **i03399180**

NOTE	REF NO	GRAPHIC REF	PART NUMBER	QTY	PART NAME 1 2 3 4 5 6 (PRODUCT LEVEL)	SEE PAGE
Y	1	1	**330-1736**	1	CRANKSHAFT GP	17
	2	1	**276-7394**	3	BOLT	
	3	1	**341-4028**	1	RING-TIMING	

Y - SEPARATE ILLUSTRATION

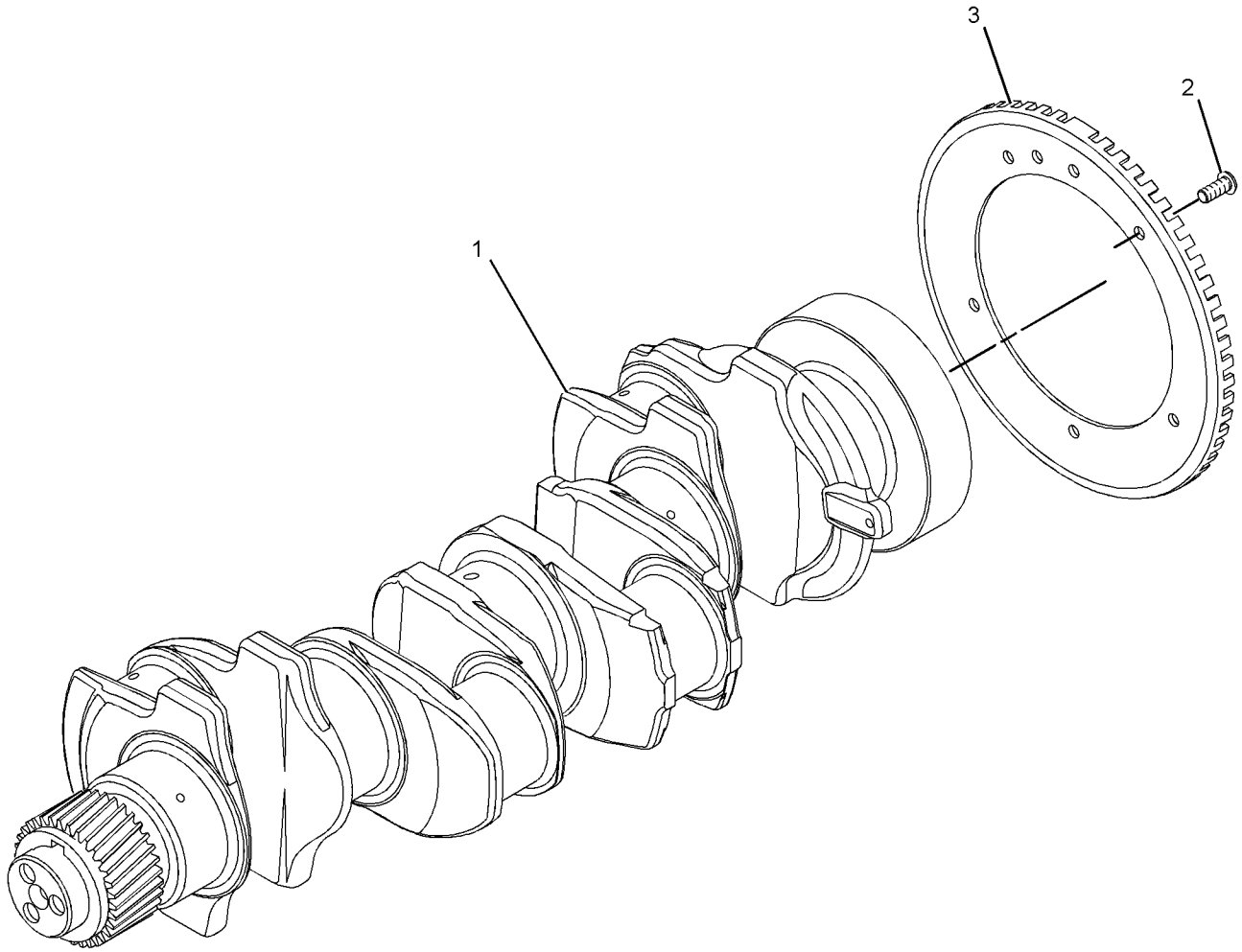

GRAPHIC #1 **<END>** g01763713

304-3642 CRANKSHAFT GP

S/N: C4E8930-UP

PART OF 254-9233 ENGINE AR-PRIMARY

SMCS-1202 **i04897361**

NOTE	REF NO	GRAPHIC REF	PART NUMBER	QTY	PART NAME 1 2 3 4 5 6 (PRODUCT LEVEL)	SEE PAGE
CY	1	1	**359-0716**	1	CRANKSHAFT GP	19
	2	1	**276-7394**	3	BOLT	
	3	1	**341-4028**	1	RING-TIMING	
C	4	1	**339-8780**	1	DOWEL	
C	5	1	**216-8314**	1	GEAR-CRANKSHAFT (34-TEETH)	
C	6	1	**067-6135**	1	KEY-WOODRUFF	

C - CHANGE FROM PREVIOUS TYPE
Y - SEPARATE ILLUSTRATION

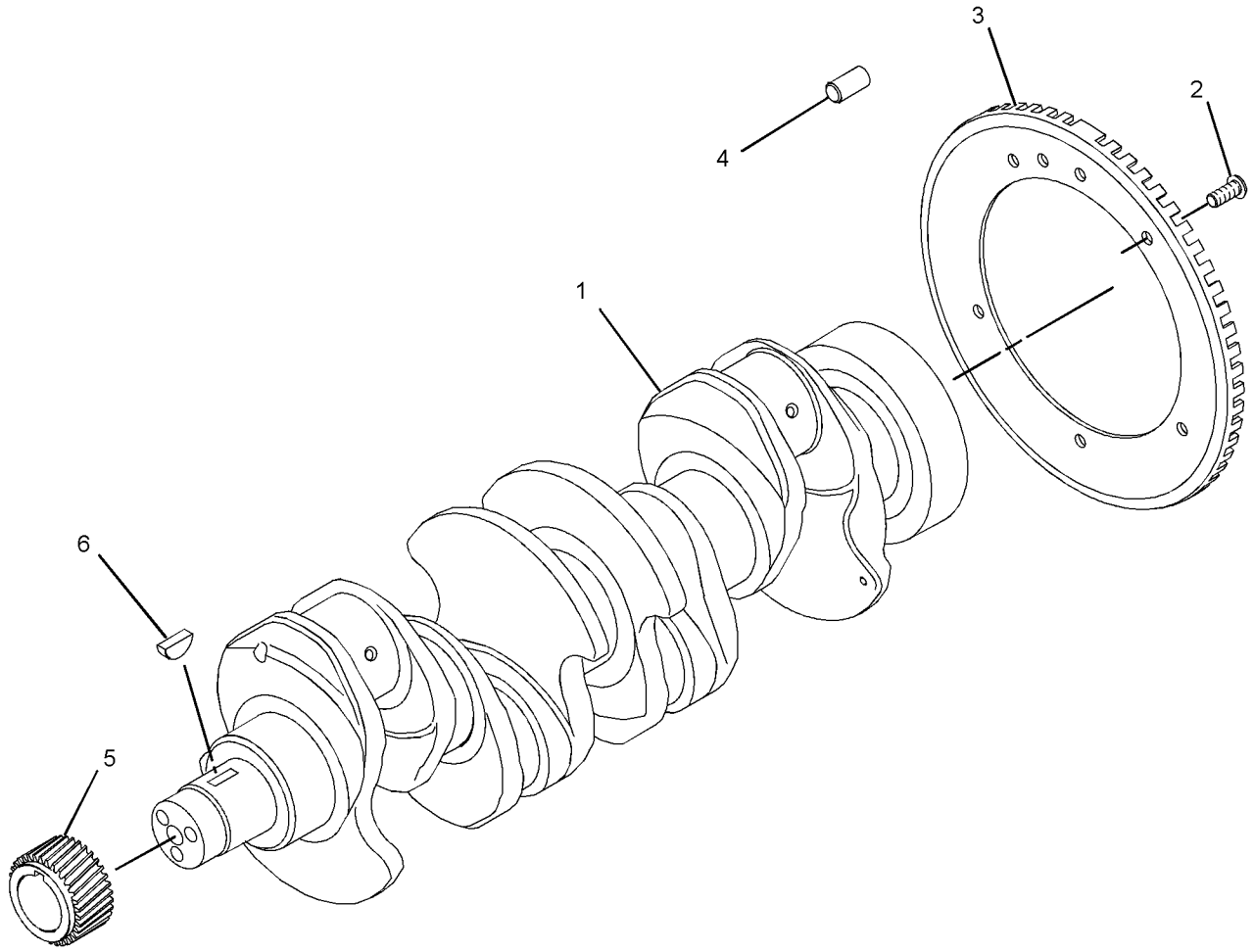

GRAPHIC #1 **<END>** g02189439

330-1736 CRANKSHAFT GP

S/N: C4E1-8929
WITH SPLINE
FIELD REPLACEMENT ORDER 364-2829—PAGE: 20
PART OF 304-3642 CRANKSHAFT GP

SMCS-1202 **i03419135**

NOTE	REF NO	GRAPHIC REF	PART NUMBER	QTY	PART NAME 1 2 3 4 5 6 (PRODUCT LEVEL)	SEE PAGE
	1	1	**1B-8736**	1	KEY-WOODRUFF	
	2	1	**032-9090**	2	WASHER-THRUST (STANDARD-UPPER)	
AB		1	**067-6873**		WASHER-THRUST (0.18-MM OS)	
	3	1	**032-9091**	2	WASHER-THRUST (STANDARD-LOWER)	
AB		1	**067-6874**		WASHER-THRUST (0.18-MM OS)	
	4	1	**216-8314**	1	GEAR-CRANKSHAFT (34-TEETH)	
	5	1	**225-7772**	1	BEARING SET-MAIN (STANDARD)	
AB		1	**233-3784**		KIT-CRANKSHAFT BEARING (0.010-IN US ID)	
AB		1	**233-3785**		KIT-CRANKSHAFT BEARING (0.020-IN US ID)	
AB		1	**233-3786**		KIT-CRANKSHAFT BEARING (0.030-IN US ID)	
	6	1	**339-8780**	1	DOWEL	
	7	1	**298-4524**	1	KIT-BEARING	

A - NOT PART OF THIS GROUP
B - USE AS REQUIRED

330-1736 **CRANKSHAFT GP (*contd.*)** **i03419135**

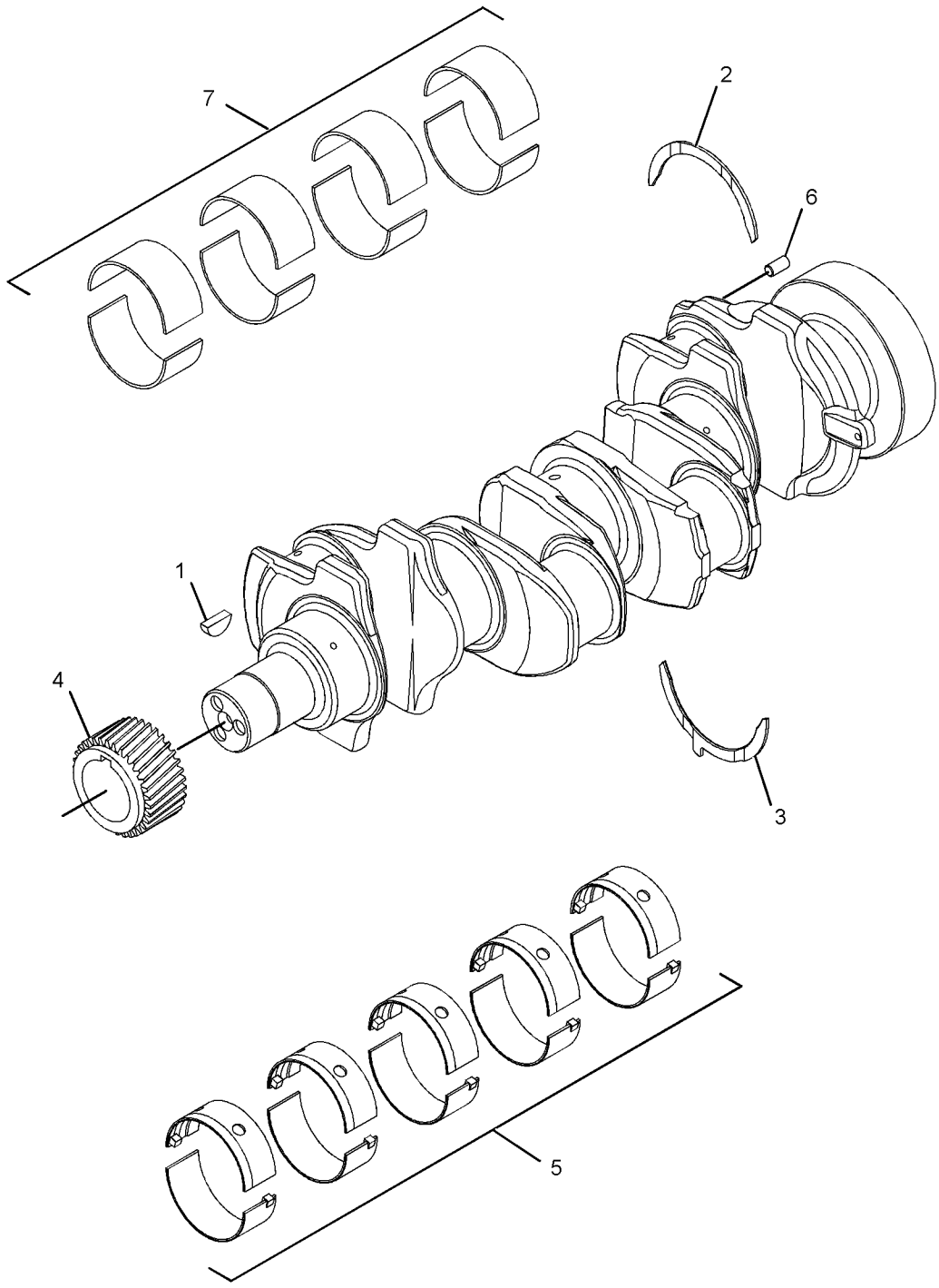

GRAPHIC #1 **<END>** g01541418

359-0716 CRANKSHAFT GP

S/N: C4E8930-UP
W/O SPLINE
PART OF 304-3642 CRANKSHAFT GP

SMCS-1202 **i05167644**

NOTE	REF NO	GRAPHIC REF	PART NUMBER	QTY	PART NAME 1 2 3 4 5 6 (PRODUCT LEVEL)	SEE PAGE
	1	1	**032-9090**	2	WASHER-THRUST (STANDARD-UPPER)	
AB			**067-6873**		WASHER-THRUST (0.18-MM OS)	
	2	1	**032-9091**	2	WASHER-THRUST (STANDARD-LOWER)	
AB			**067-6874**		WASHER-THRUST (0.18-MM OS)	
	3	1	**353-7423**	1	KIT-BEARING (MAIN)	
AB			**233-3786**		KIT-CRANKSHAFT BEARING (0.030-IN US)	
AB			**353-7424**		KIT-BEARING (0.25-MM US)	
AB			**353-7425**		KIT-BEARING (0.50-MM US)	
	4	1	**353-9667**	1	KIT-ROD BEARING (STANDARD)	

A - NOT PART OF THIS GROUP
B - USE AS REQUIRED

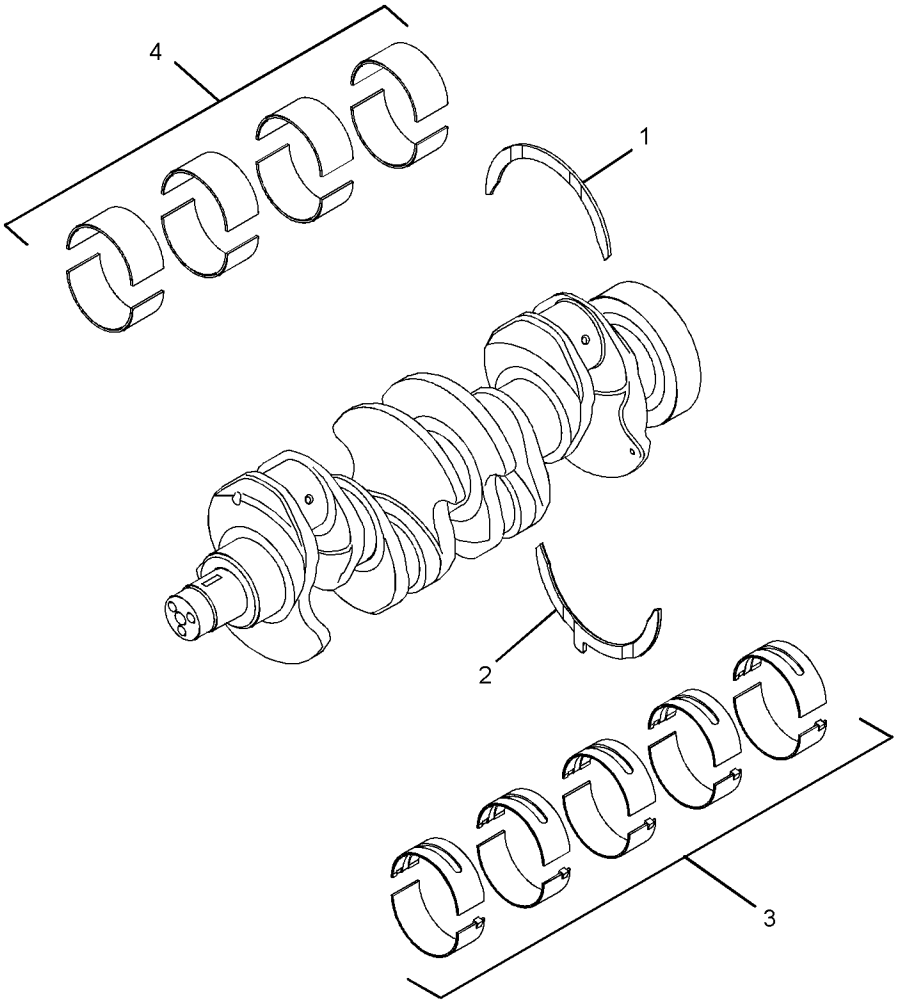

GRAPHIC #1 **<END>** g03331776

364-2829 CRANKSHAFT GP

S/N: C4E1-UP
WITH SPLINE
FIELD REPLACEMENT FOR 330-1736—PAGE: 17

SMCS-1202 **i05210221**

NOTE	REF NO	GRAPHIC REF	PART NUMBER	QTY	PART NAME 1 2 3 4 5 6 (PRODUCT LEVEL)	SEE PAGE
	1	1	**067-6135**	1	KEY-WOODRUFF (CRANKSHAFT)	
B	2	1	**032-9090**	2	WASHER-THRUST (STANDARD-UPPER)	
AB		1	**067-6873**		WASHER-THRUST (0.18-MM OS)	
B	3	1	**032-9091**	2	WASHER-THRUST (STANDARD-LOWER)	
AB		1	**067-6874**		WASHER-THRUST (0.18-MM OS)	
B	4	1	**353-2205**	1	KIT-ROD BEARING	
AB		1	**353-2206**		KIT-ROD BEARING (0.25-MM US)	
AB		1	**353-2207**		KIT-ROD BEARING (0.5-MM US)	
AB		1	**353-2208**		KIT-ROD BEARING (0.75-MM US)	
B	5	1	**353-7423**	1	KIT-BEARING	
AB		1	**233-3786**		KIT-CRANKSHAFT BEARING (0.030-IN US)	
AB		1	**353-7424**		KIT-BEARING (0.25-MM US)	
AB		1	**353-7425**		KIT-BEARING (0.50-MM US)	
AB		1	**353-7426**		KIT-BEARING (0.75-MM US)	

A - NOT PART OF THIS GROUP
B - USE AS REQUIRED

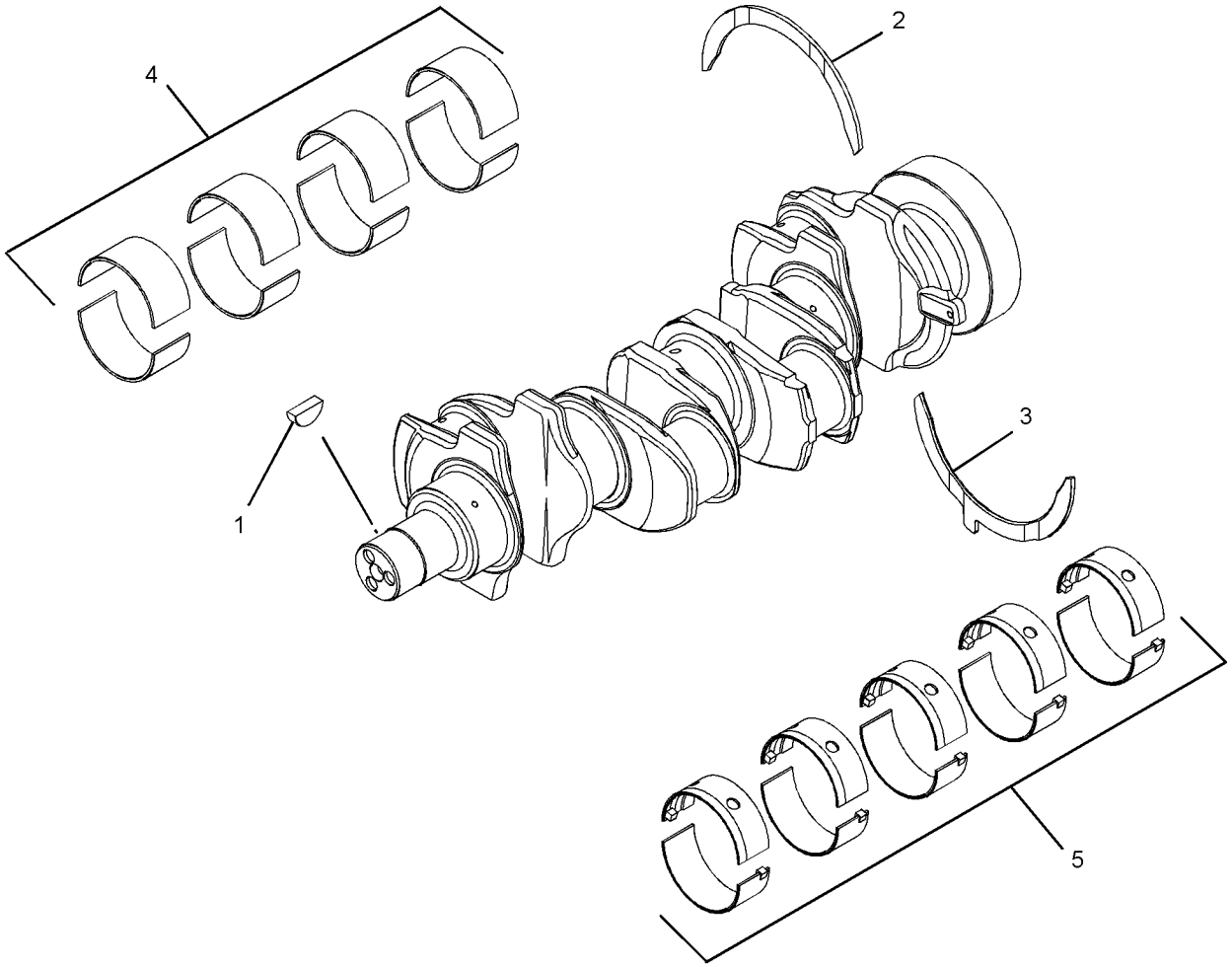

GRAPHIC #1 **<END>** g02178360

304-3641 CYLINDER BLOCK GP

S/N: C4E1-UP

PART OF 254-9233 ENGINE AR-PRIMARY

TYPE 1

SMCS-1201 **i03190979**

NOTE	REF NO	GRAPHIC REF	PART NUMBER	QTY	PART NAME 1 2 3 4 5 6 (PRODUCT LEVEL)	SEE PAGE
M	1	1	**209-9219**	10	BOLT (M8X1.25X16-MM)	
	2	1	**232-7449**	1	HOUSING AS	
Y	3	1	**330-4789**	1	CYLINDER BLOCK GP	23

M - METRIC PART
Y - SEPARATE ILLUSTRATION

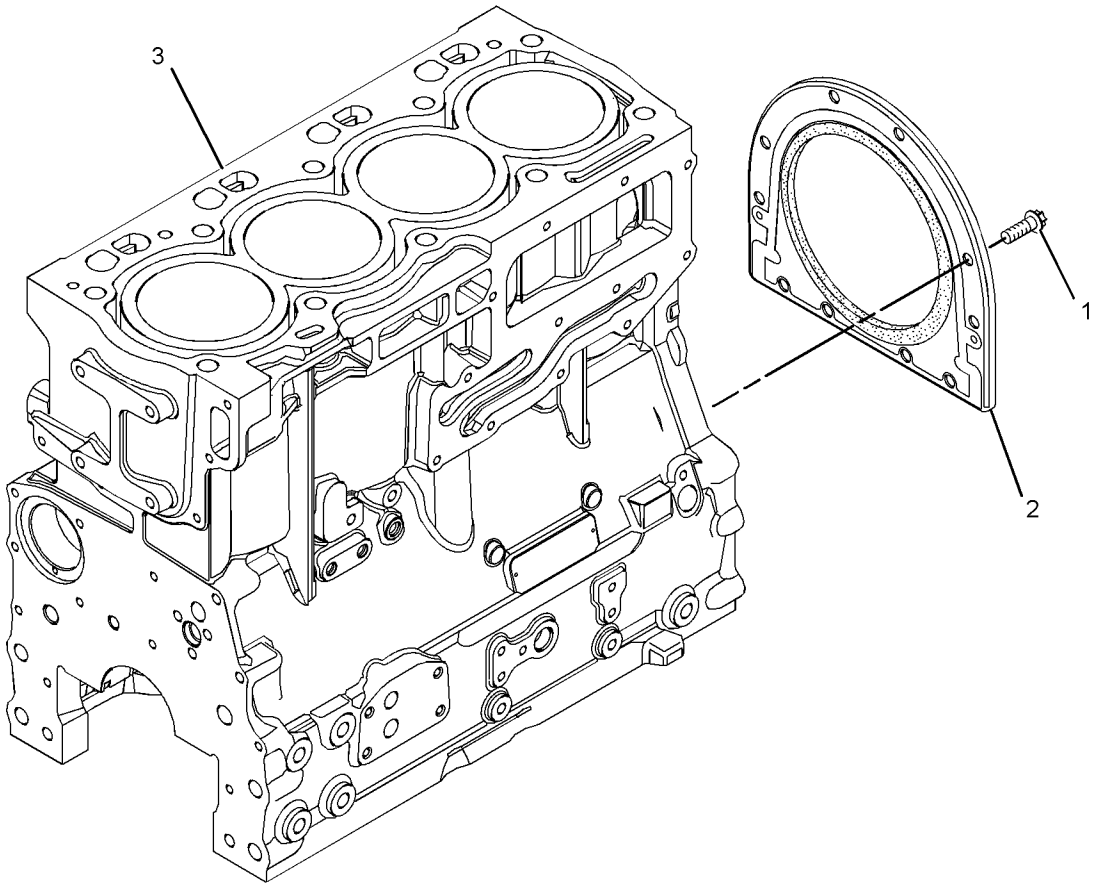

GRAPHIC #1 **<END>** g01630054

304-3641 CYLINDER BLOCK GP

S/N: C4E1-UP
PART OF 254-9233 ENGINE AR-PRIMARY
TYPE 2

SMCS-1201 **i04823189**

NOTE	REF NO	GRAPHIC REF	PART NUMBER	QTY	PART NAME 1 2 3 4 5 6 (PRODUCT LEVEL)	SEE PAGE
M	1	1	**209-9219**	10	BOLT (M8X1.25X16-MM)	
	2	1	**232-7449**	1	HOUSING AS	
CY	3	1	**363-3907**	1	CYLINDER BLOCK GP	25

C - CHANGE FROM PREVIOUS TYPE
M - METRIC PART
Y - SEPARATE ILLUSTRATION

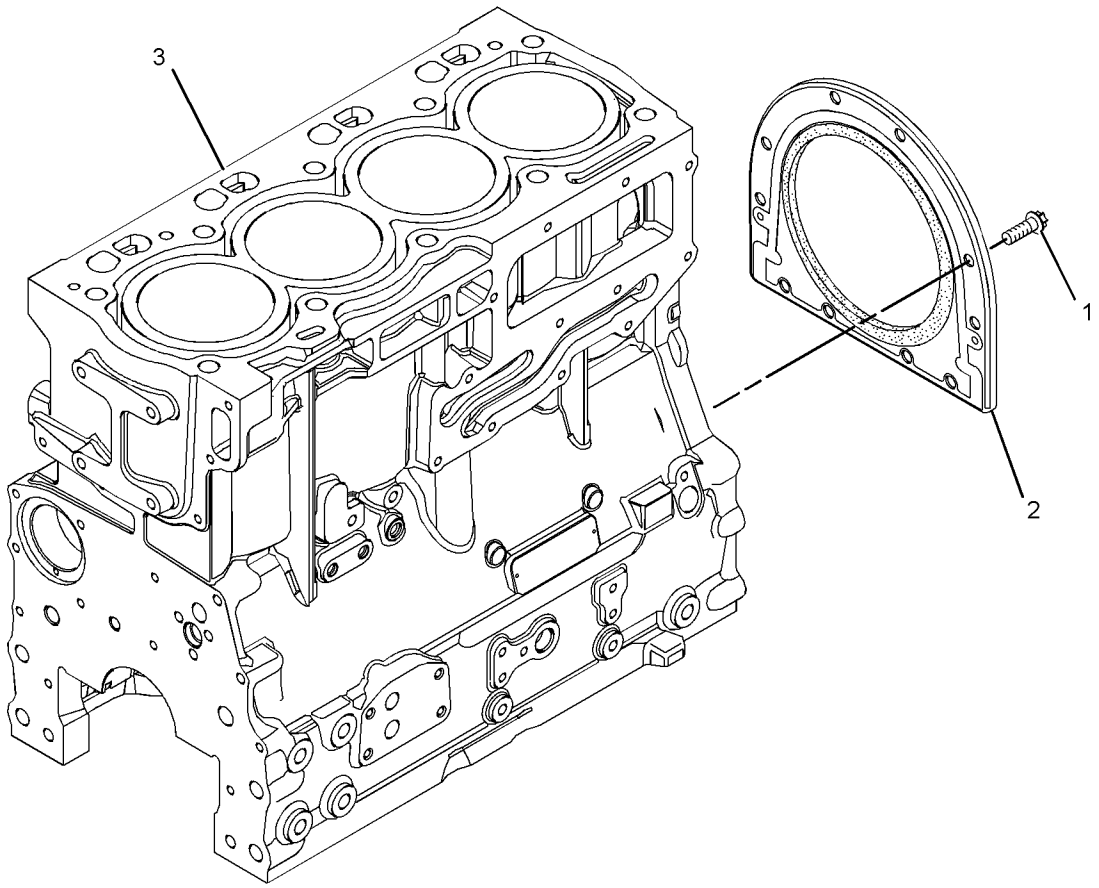

GRAPHIC #1 **<END>** g01630054

330-4789 CYLINDER BLOCK GP

S/N: C4E1-UP

PART OF 304-3641 CYLINDER BLOCK GP

SMCS-1201 **i03192960**

NOTE	REF NO	GRAPHIC REF	PART NUMBER	QTY	PART NAME 1 2 3 4 5 6 (PRODUCT LEVEL)	SEE PAGE
M	1	1	**6I-0645**	4	BOLT (M8X1.25X25-MM)	
	2	1	**6I-0646**	1	BOLT (M10X1.5X14-MM)	
	3	1	**035-8063**	1	PLUG	
	4	1	**035-8068**	10	BOLT (5/8-18X3.75-IN)	
	5	1	**067-6002**	10	DOWEL	
	6	1	**067-6006**	1	PLUG	
	7	1	**067-6043**	1	PLUG-SIDE	
M	8	1	**100-4841**	4	BOLT (M6X1X10-MM)	
	9	1	**185-0884**	2	DOWEL	
	10	1	**214-3203**	1	WASHER (SEALING)	
	11	1	**225-8858**	1	PLUG	
	12	1	**232-7440**	1	BEARING	
	13	1	**232-7596**	1	PLUG	
	14	1	**232-7597**	2	PLUG	
	15	1	**232-7599**	1	PLUG	
	16	1	**233-9408**	1	GASKET	
	17	1	**252-6318**	1	PLATE	
	18	1	**276-5605**	4	JET AS-PISTON COOLING	

M - METRIC PART

330-4789 **CYLINDER BLOCK GP (*contd.*)** **i03192960**

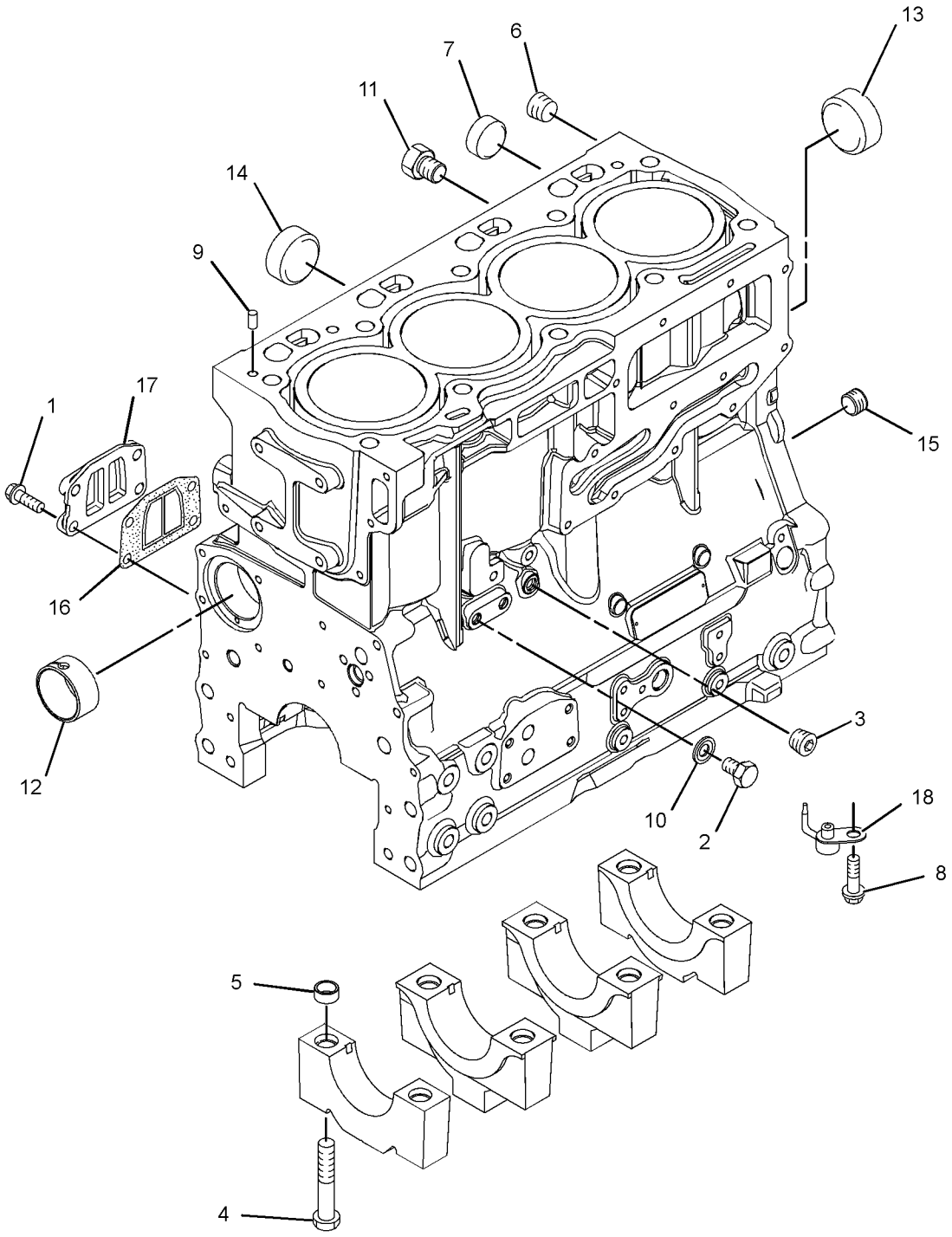

GRAPHIC #1 **<END>** g01586142

363-3907 CYLINDER BLOCK GP

S/N: C4E1-UP

PART OF 304-3641 CYLINDER BLOCK GP

SMCS-1201 **i04930012**

NOTE	REF NO	GRAPHIC REF	PART NUMBER	QTY	PART NAME 1 2 3 4 5 6 (PRODUCT LEVEL)	SEE PAGE
M	1	1	**6I-0645**	4	BOLT (M8X1.25X25-MM)	
	2	1	**6I-0646**	1	BOLT (M10X1.5X14-MM)	
	3	1	**035-8063**	1	PLUG	
M	4	1	**100-4841**	4	BOLT (M6X1X10-MM)	
	5	1	**214-3203**	1	WASHER (SEALING)	
	6	1	**233-9408**	1	GASKET	
	7	1	**252-6318**	1	PLATE	
	8	1	**276-5605**	4	JET AS-PISTON COOLING	
	10	1	**346-0007**	1	WASHER	
	11	1	**363-3908**	1	BOLT-SPECIAL	

M - METRIC PART

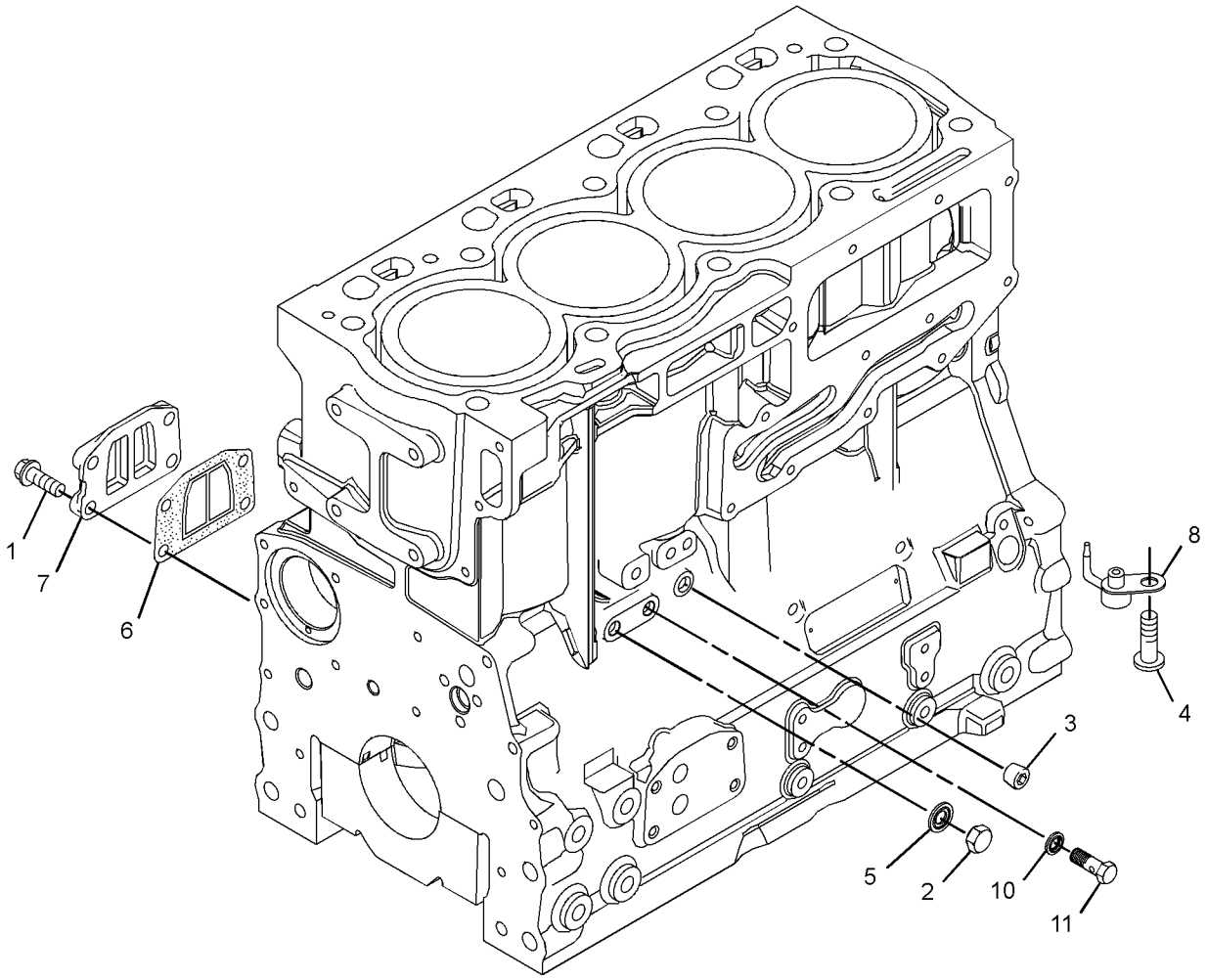

GRAPHIC #1 **<END>** g02442721

298-4526 CYLINDER HEAD AS

S/N: C4E1-UP

PART OF 304-3645 CYLINDER HEAD GP

SMCS-1100, 1101

i05348828

NOTE	REF NO	GRAPHIC REF	PART NUMBER	QTY	PART NAME 1 2 3 4 5 6 (PRODUCT LEVEL)	SEE PAGE
	1	1	**2B-0858**	2	PLUG-PIPE	
	2	1	**199-9751**	1	SEAL-O-RING	
	3	1	**232-1322**	1	PLUG	
	4	1	**276-8116**	4	PLUG-CORE	
	5	1	**276-8117**	9	PLUG-CORE	
	6	1	**309-6678**	8	VALVE-INLET	
	7	1	**276-8123**	32	RETAINER	
	8	1	**339-9637**	8	VALVE-EXHAUST	
	9	1	**299-5511**	16	SEAL-VALVE STEM	
	10	1	**276-8133**	16	CAP-VALVE	
	11	1	**295-6661**	1	PLUG	
	12	1	**298-4527**	1	PLUG-CORE	
	13	1	**298-4528**	1	PLUG-CORE	
	14	1	**298-4530**	16	SPRING-VALVE	
	15	1	**377-0399**	8	INSERT-VALVE SEAT	
	16	1	**377-0400**	8	INSERT-VALVE SEAT	
	17	1	**380-2073**	16	GUIDE-VALVE	

298-4526 **CYLINDER HEAD AS (*contd.*)** **i05348828**

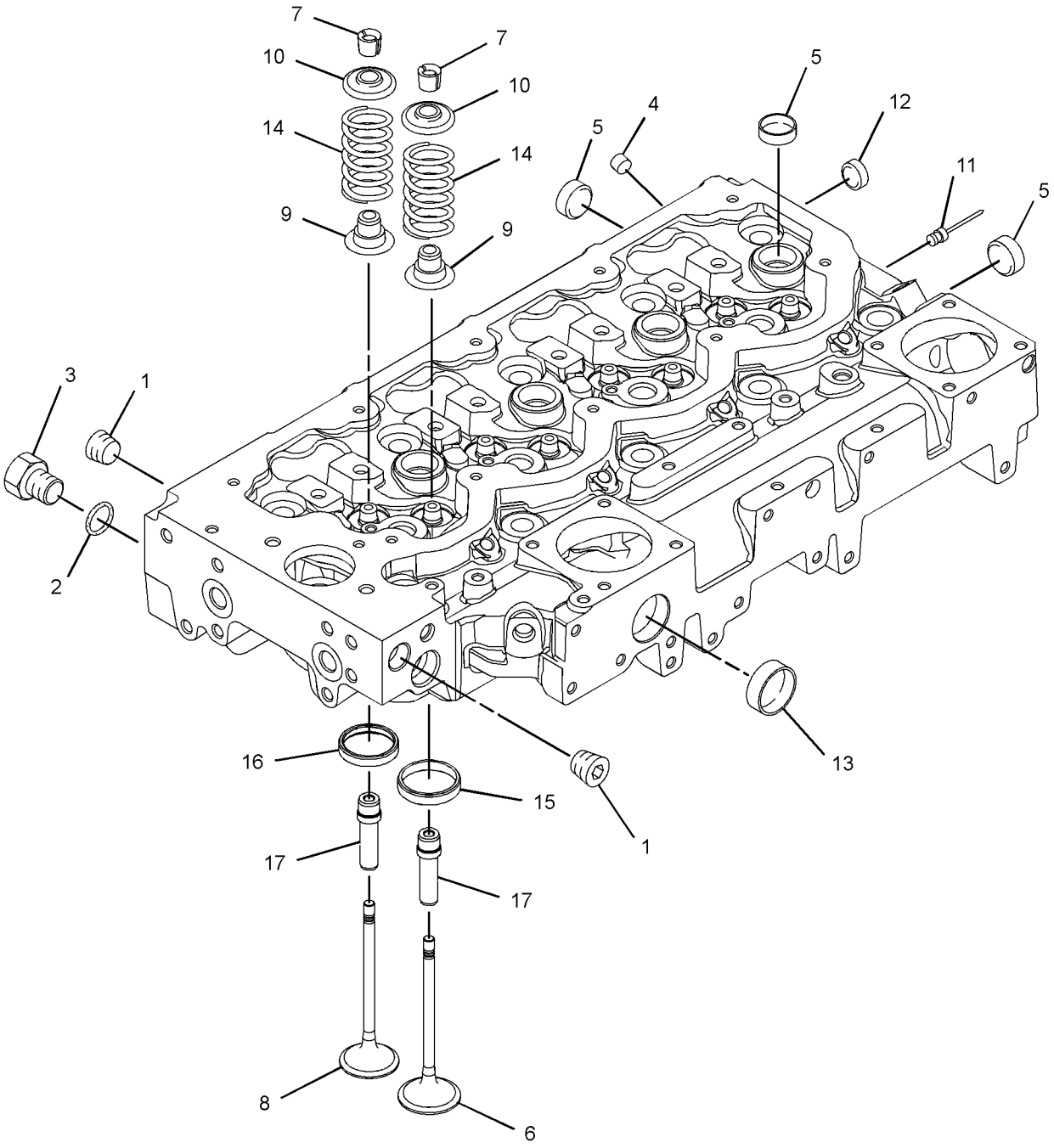

GRAPHIC #1 **<END>** g03388575

304-3645 CYLINDER HEAD GP

S/N: C4E1-UP

PART OF 254-9233 ENGINE AR-PRIMARY

SMCS-1100 **i02845314**

NOTE	REF NO	GRAPHIC REF	PART NUMBER	QTY	PART NAME 1 2 3 4 5 6 (PRODUCT LEVEL)	SEE PAGE
	1	1	**225-5501**	10	BOLT (M15X1.5X137-MM)	
Y	2	1	**298-4526**	1	CYLINDER HEAD AS	26
	3	1	**310-8520**	1	GASKET-CYLINDER HEAD	

Y - SEPARATE ILLUSTRATION

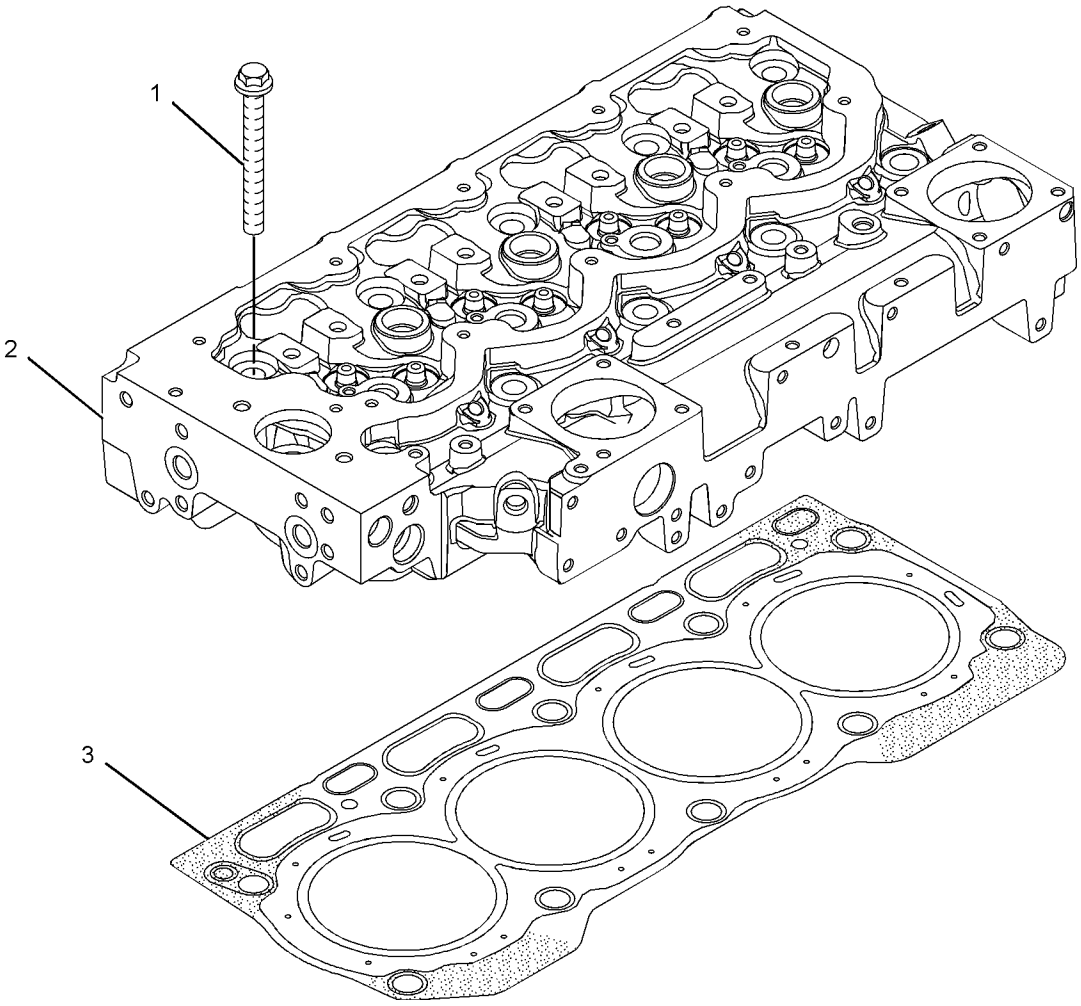

GRAPHIC #1 **<END>** g01307654

306-8855 DRIVE GP-AUXILIARY

S/N: C4E1-8929

PART OF 254-9233 ENGINE AR-PRIMARY

SMCS-1207 **i02724410**

NOTE	REF NO	GRAPHIC REF	PART NUMBER	QTY	PART NAME 1 2 3 4 5 6 (PRODUCT LEVEL)	SEE PAGE
	1	1	**286-7848**	1	PULLEY GP-ENGINE	
	2	1	**306-8857**	1	HUB	
M	3	1	**102-9941**	3	BOLT (M12X1.75X25-MM)	
	4	1	**6I-0501**	1	BLOCK	
	5	1	**7W-4634**	3	BOLT (7/16-20X1.5-IN)	

M - METRIC PART

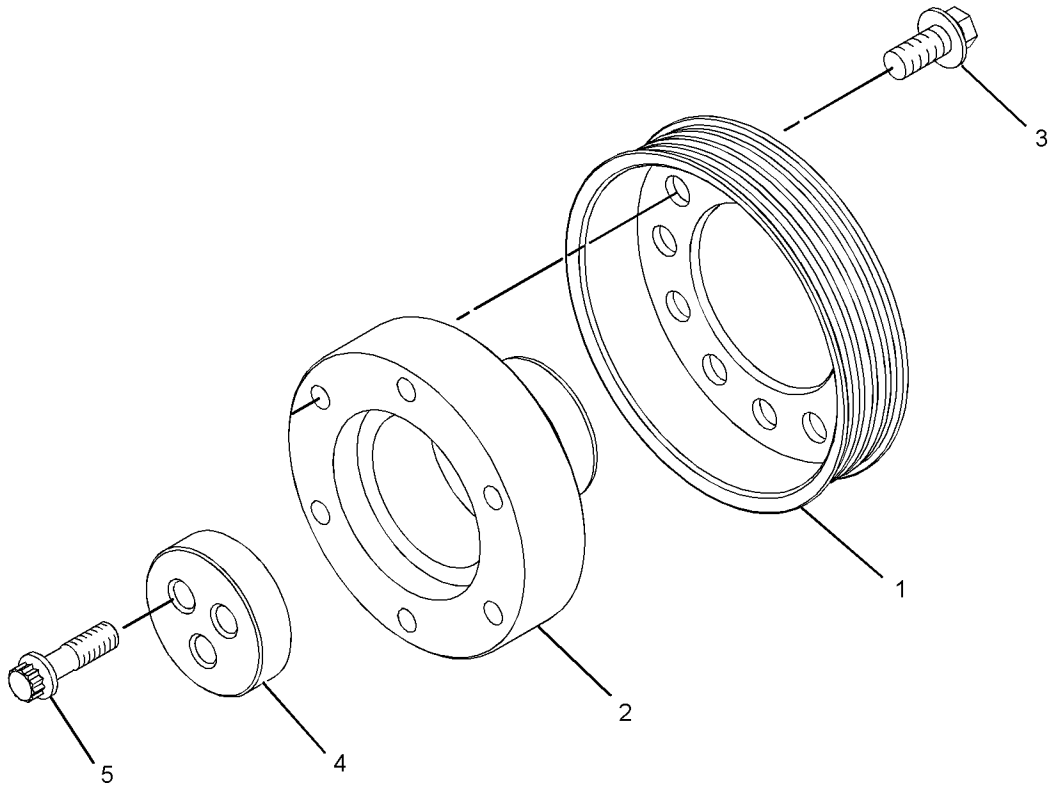

GRAPHIC #1 **<END>** g01377208

303-5770 DRIVE GP-FAN

S/N: C4E1-UP

PART OF 254-9233 ENGINE AR-PRIMARY

SMCS-1359 **i02974925**

NOTE	REF NO	GRAPHIC REF	PART NUMBER	QTY	PART NAME 1 2 3 4 5 6 (PRODUCT LEVEL)	SEE PAGE
	1	1	**326-1880**	1	HOUSING-FAN DRIVE	
	2	1	**251-2437**	1	PLATE	
	3	1	**111-0859**	8	BOLT (M10X1.5X35-MM)	

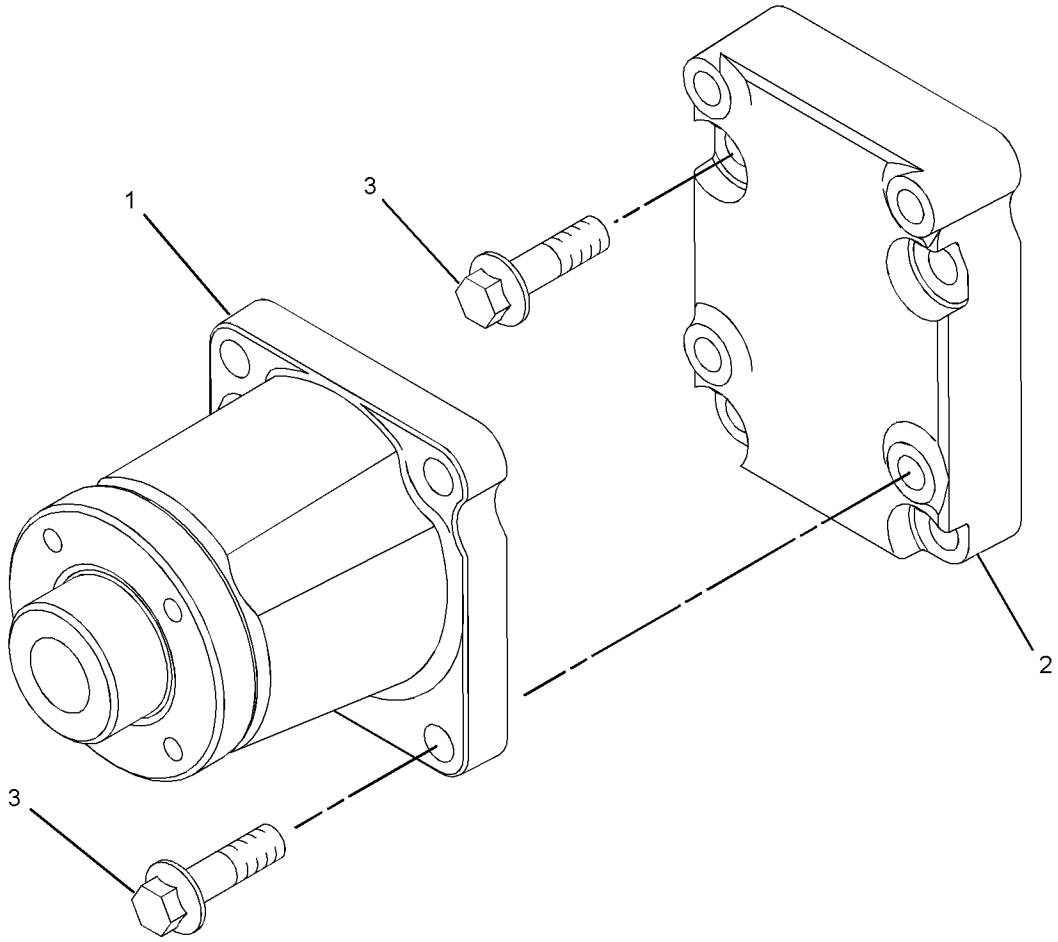

GRAPHIC #1 **<END>** g01340877

304-3654 FLYWHEEL GP

S/N: C4E1-UP

PART OF 254-9233 ENGINE AR-PRIMARY

SMCS-1156 **i02654847**

NOTE	REF NO	GRAPHIC REF	PART NUMBER	QTY	PART NAME 1 2 3 4 5 6 (PRODUCT LEVEL)	SEE PAGE
	1	1	**103-6131**	1	FLYWHEEL AS	
	1A	1	**033-7687**	1	RING-STARTING MOTOR (126-TEETH)	
	2	1	**0S-1603**	6	BOLT (1/2-20X1.5-IN)	
	3	1	**5P-8245**	6	WASHER-HARD (13.5X25.5X3-MM THK)	

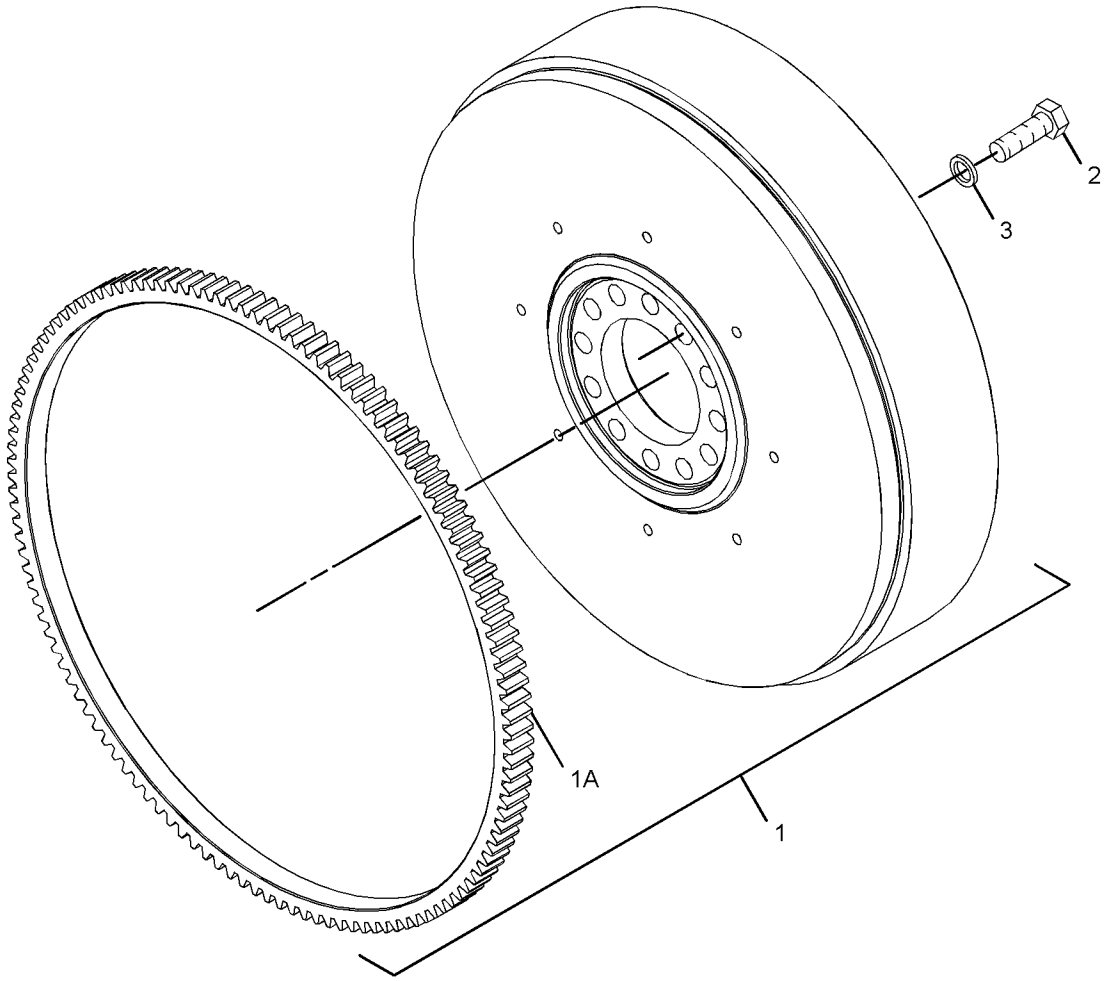

GRAPHIC #1 **<END>** g01280683

298-5110 GEAR GP-FRONT

S/N: C4E1-UP

PART OF 254-9233 ENGINE AR-PRIMARY

SMCS-1151, 1162, 1206 **i05142012**

NOTE	REF NO	GRAPHIC REF	PART NUMBER	QTY	PART NAME 1 2 3 4 5 6 (PRODUCT LEVEL)	SEE PAGE
M	1	1	**6I-0217**	6	BOLT (M8X1.25X20-MM)	
M	2	1	**6I-0645**	4	BOLT (M8X1.25X25-MM)	
M	3	1	**6I-0650**	3	BOLT (M10X1.5X65-MM)	
	4	1	**7C-4616**	1	BOLT (M12X1.75X45-MM)	
	5	1	**067-6179**	1	DOWEL	
M	6	1	**100-3751**	5	BOLT (M8X1.25X65-MM)	
M	7	1	**100-4830**	1	BOLT (M10X1.5X20-MM)	
M	8	1	**101-3895**	2	BOLT (M8X1.25X35-MM)	
M	9	1	**124-3815**	9	BOLT (M8X1.25X16-MM)	
	10	1	**133-1011**	1	WASHER	
	11	1	**216-8634**	1	GEAR-CAMSHAFT (68-TEETH)	
	12	1	**226-8767**	1	COVER AS-FRONT	
	12A	1	**226-8766**	1	GASKET-COVER	
	13	1	**232-3666**	1	WASHER-THRUST	
	14	1	**251-4336**	1	GEAR AS-IDLER (73-TEETH)	
	15	1	**277-3012**	1	GASKET-COVER (HOUSING)	
	16	1	**324-0444**	1	HUB-IDLER GEAR	
	17	1	**288-0422**	1	SEAL-OIL	
	18	1	**323-3515**	1	HOUSING-FRONT	
	19	1	**295-1711**	1	PLATE-RETAINING	
ABF		1	**225-6522**	1	PLUG-CUP	
					(ALSO ORDER IF ONLY ORDERING HOUSING-FRONT)	

A - NOT PART OF THIS GROUP
B - USE AS REQUIRED
F - NOT SHOWN
M - METRIC PART

298-5110 **GEAR GP-FRONT (*contd.*)** **i05142012**

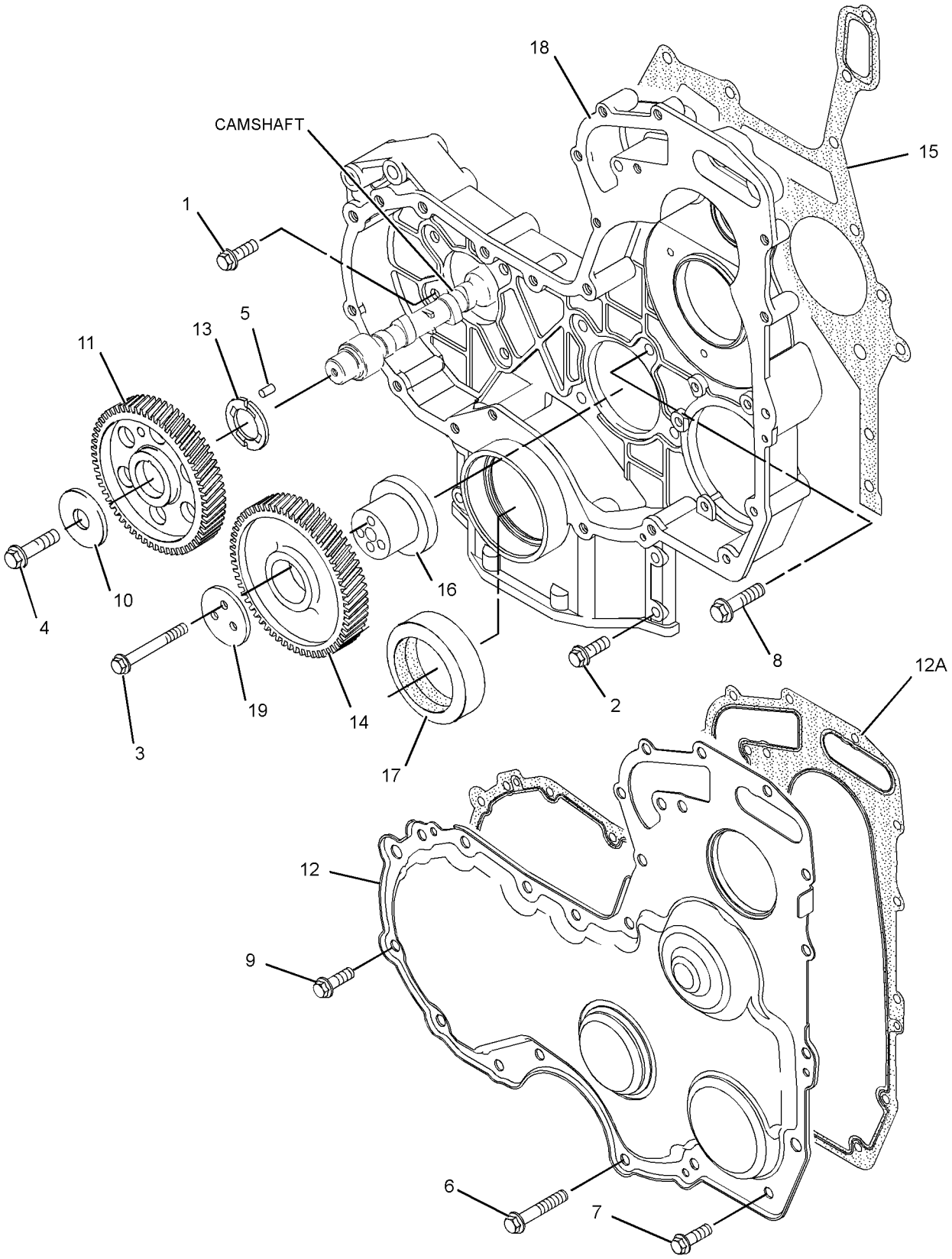

GRAPHIC #1 **<END>** g01304618

303-5767 HOUSING GP-FLYWHEEL

S/N: C4E1-UP

PART OF 254-9233 ENGINE AR-PRIMARY

SMCS-1157 **i04947557**

NOTE	REF NO	GRAPHIC REF	PART NUMBER	QTY	PART NAME 1 2 3 4 5 6 (PRODUCT LEVEL)	SEE PAGE
M	1	1	**6I-0423**	2	BOLT (M12X1.75X30-MM)	
	2	1	**375-9272**	2	PLUG	
	3	1	**7W-1176**	1	PLATE-COVER	
	4	1	**7W-4642**	1	SHIELD-DUST	
	5	1	**287-8597**	2	DOWEL	
	6	1	**114-4363**	2	BOLT (M8X1.25X12-MM)	
	7	1	**101-3617**	3	PLUG	
M	8	1	**121-0883**	6	BOLT (M10X1.5X30-MM)	
	9	1	**220-8631**	1	HOUSING-FLYWHEEL	

M - METRIC PART

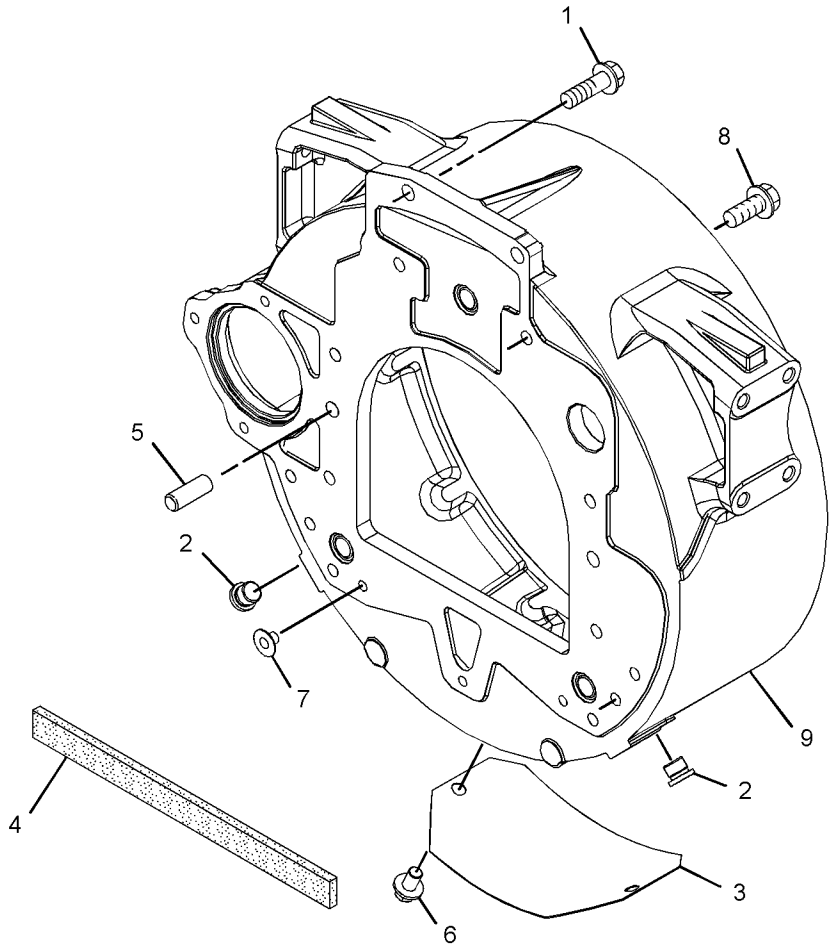

GRAPHIC #1 **<END>** g03137217

298-5127 LIFTING GP-ENGINE

S/N: C4E1-UP

PART OF 254-9233 ENGINE AR-PRIMARY

SMCS-1122 **i02604370**

NOTE	REF NO	GRAPHIC REF	PART NUMBER	QTY	PART NAME 1 2 3 4 5 6 (PRODUCT LEVEL)	SEE PAGE
	1	1	**279-9651**	1	PLATE-LIFTING	
M	2	1	**6I-0654**	4	BOLT (M10X1.5X25-MM)	
	3	1	**298-4604**	1	PLATE-LIFTING	

M - METRIC PART

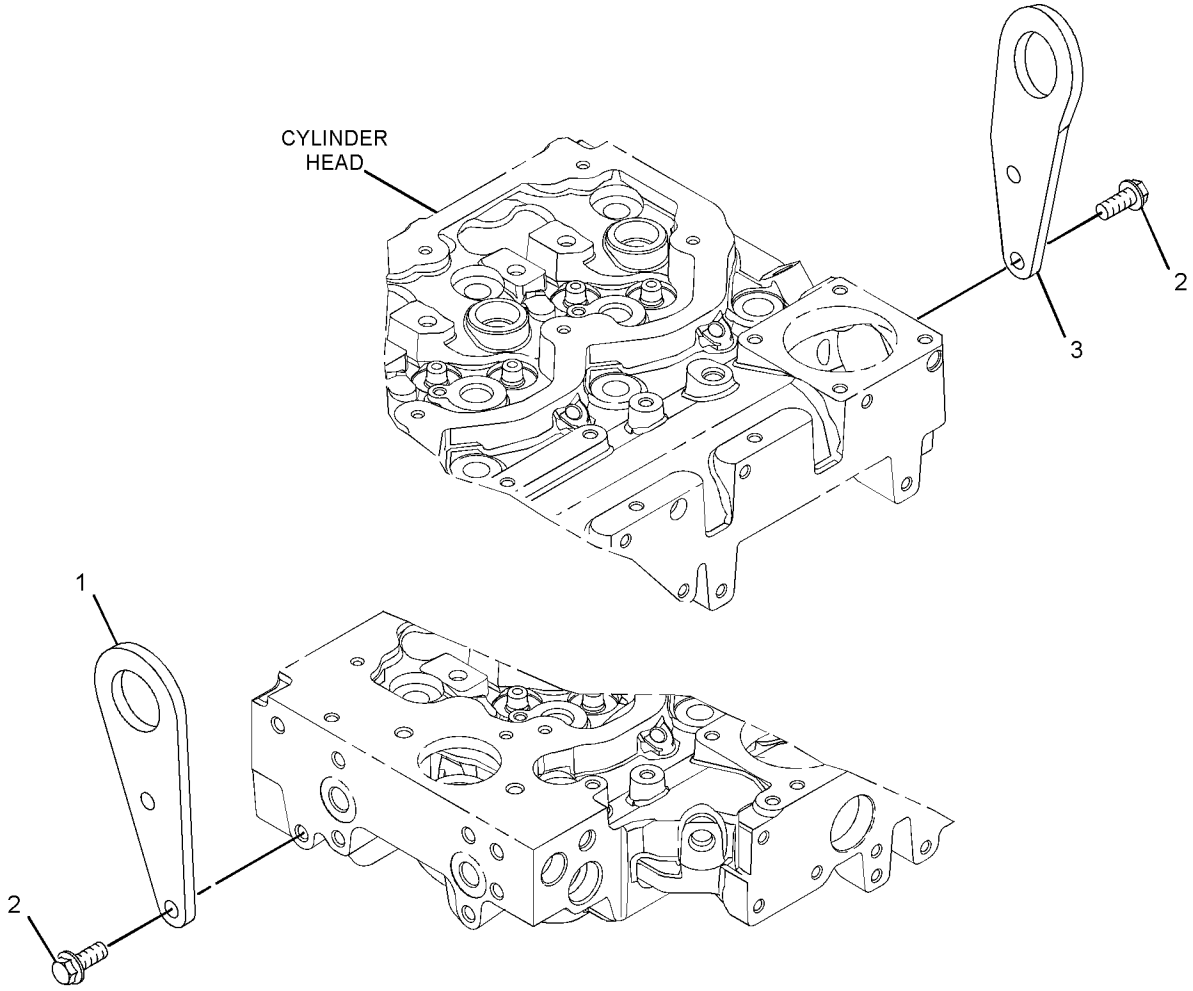

GRAPHIC #1 **<END>** g01305506

304-3661 MOUNTING GP-ENGINE

S/N: C4E1-UP

PART OF 254-9233 ENGINE AR-PRIMARY

SMCS-1152, 1153, 1154

i02654852

NOTE	REF NO	GRAPHIC REF	PART NUMBER	QTY	PART NAME 1 2 3 4 5 6 (PRODUCT LEVEL)	SEE PAGE
	1	1	**6H-3616**	4	PLUG-PROTECTION	
	2	1	**101-2987**	6	PLUG	
	3	1	**195-2136**	8	STUD	
	4	1	**195-2221**	8	NUT (M12X1.75-THD)	
	5	1	**304-3711**	2	MOUNT-ENGINE	

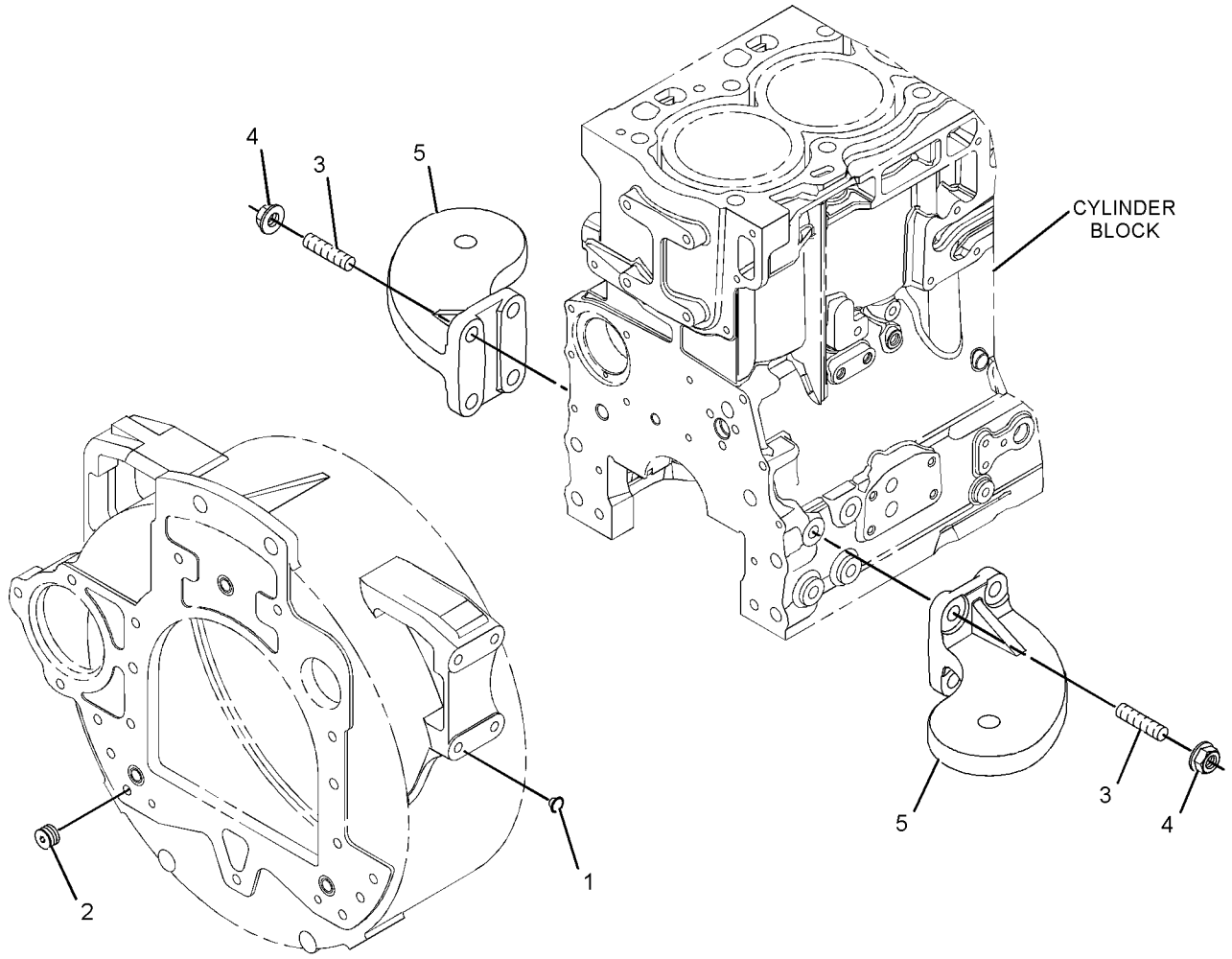

GRAPHIC #1 **<END>** g01340741

304-3656 PAN GP-OIL

S/N: C4E1-UP

PART OF 254-9233 ENGINE AR-PRIMARY

SMCS-1302 **i02776129**

NOTE	REF NO	GRAPHIC REF	PART NUMBER	QTY	PART NAME 1 2 3 4 5 6 (PRODUCT LEVEL)	SEE PAGE
	1	1	**304-3698**	1	TUBE-OIL SUCTION	
	2	1	**067-6213**	1	GASKET	
M	3	1	**6I-0260**	2	BOLT (M8X1.25X25-MM)	
	4	1	**304-3692**	1	TUBE AS-OIL GAUGE	
	4A	1	**187-0555**	1	CLIP	
	5	1	**304-3693**	1	GAUGE AS-OIL LEVEL (DIPSTICK) (ENGINE)	
	6	1	**6I-1497**	1	SEAL	
	7	1	**304-3695**	1	BRACKET	
	8	1	**6I-0846**	1	BOLT (M6X1X14-MM)	
M	9	1	**124-3815**	1	BOLT (M8X1.25X16-MM)	
	10	1	**306-5911**	1	PAN GP-OIL	
	10A	1	**7C-1224**	2	INSERT	
	11	1	**225-6005**	1	GASKET	
	12	1	**230-8094**	1	BRIDGE	
M	13	1	**6I-0363**	2	BOLT (M6X1X20-MM)	
	14	1	**185-7149**	4	BOLT	
	15	1	**7C-0351**	2	PLUG-DRAIN (ENGINE OIL)	
	16	1	**275-9883**	2	SEAL	
	17	1	**6I-0292**	12	BOLT (M8X1.25X140-MM)	
	18	1	**152-6730**	4	BOLT (M8X1.25X120-MM)	

M - METRIC PART

304-3656 **PAN GP-OIL (*contd.*)** **i02776129**

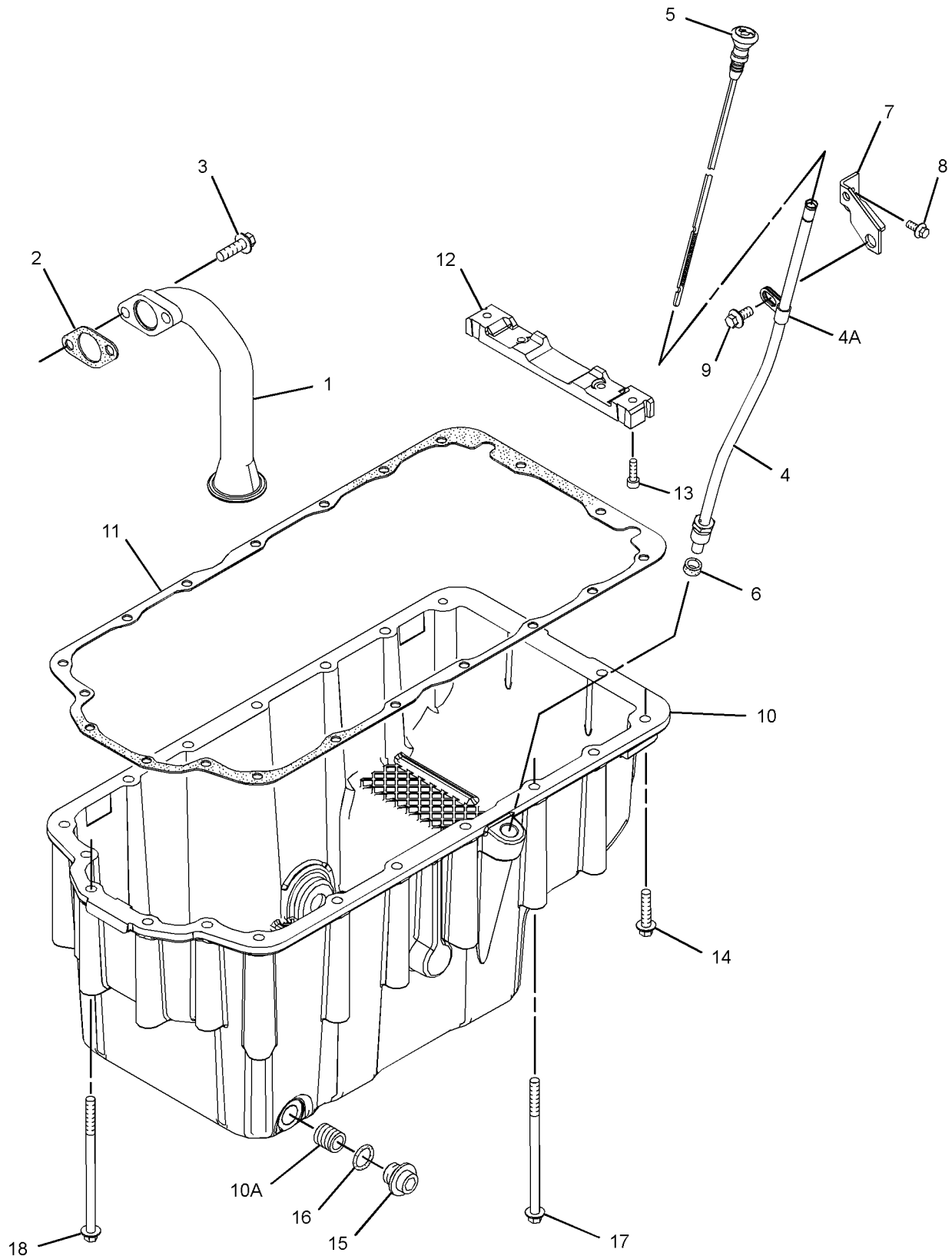

GRAPHIC #1 **<END>** g01351082

304-3643 PISTON & ROD GP

S/N: C4E1-8929

PART OF 254-9233 ENGINE AR-PRIMARY

SMCS-1225 **i05332378**

NOTE	REF NO	GRAPHIC REF	PART NUMBER	QTY	PART NAME 1 2 3 4 5 6 (PRODUCT LEVEL)	SEE PAGE
BJ	1	1	**225-5441**	4	ROD AS-CONNECTING (L-GRADE)	
					—OR—	
BJ		1	**225-5451**	4	ROD AS-CONNECTING (GRADE K)	
					—OR—	
BJ		1	**225-5453**	4	ROD AS-CONNECTING (J-GRADE)	
					—OR—	
BJ		1	**225-5454**	4	ROD AS-CONNECTING (GRADE H)	
					—OR—	
BJ		1	**225-5458**	4	ROD AS-CONNECTING (GRADE G)	
					—OR—	
BJ		1	**225-5459**	4	ROD AS-CONNECTING (F-GRADE)	
					(EACH INCLUDES)	
	1A	1	**225-5438**	1	BUSHING	
	1B	1	**225-5439**	2	BOLT-SPECIAL (CONNECTING ROD)	
	2	1	**310-9269**	4	PISTON AS	
					(EACH INCLUDES)	
	2A	1	**124-3536**	2	RING-RETAINING	
	2B	1	**276-7476**	1	KIT-PISTON RING	
AB		1	**380-2065**		KIT-PISTON RING (0.5-MM OS)	
					(INCLUDES 3 PISTON RINGS)	
AB		1	**396-4482**		KIT-PISTON & RING (0.5-MM OS)	
					(INCLUDES PISTON & RETAINING RING)	

A - NOT PART OF THIS GROUP
B - USE AS REQUIRED
J - ENSURE THAT CORRECT ROD LENGTH IS FITTED

304-3643 **PISTON & ROD GP (*contd.*)** **i05332378**

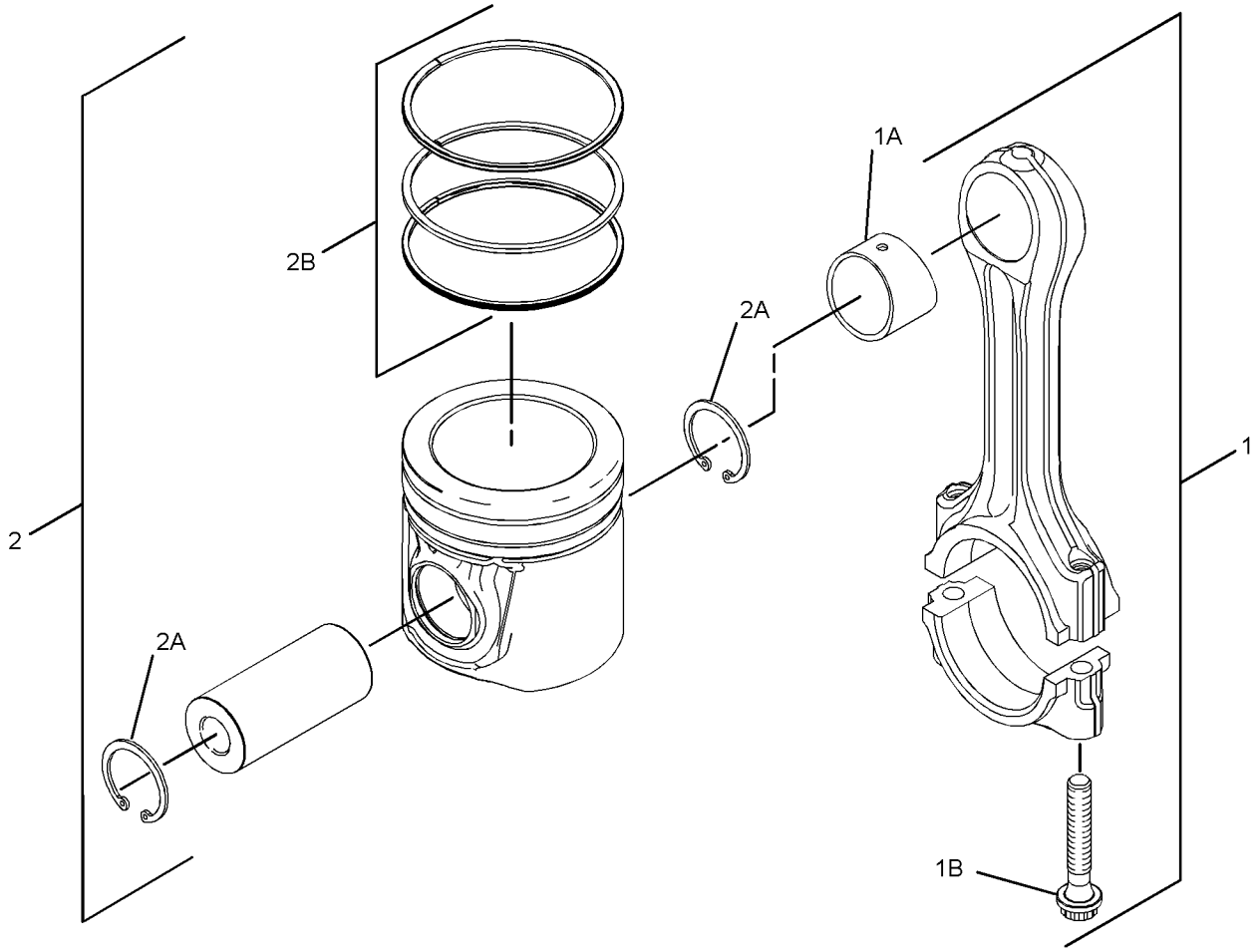

GRAPHIC #1 **<END>** g01369796

304-3643 PISTON & ROD GP

S/N: C4E8930-UP

PART OF 254-9233 ENGINE AR-PRIMARY

SMCS-1225 **i05332383**

NOTE	REF NO	GRAPHIC REF	PART NUMBER	QTY	PART NAME 1 2 3 4 5 6 (PRODUCT LEVEL)	SEE PAGE
BCJ	1	1	**359-0724**	4	ROD AS-CONNECTING (LENGTH B)	
					—OR—	
BCJ		1	**359-0723**	4	ROD AS-CONNECTING (LENGTH P)	
					—OR—	
BCJ		1	**359-0722**	4	ROD AS-CONNECTING (LENGTH G)	
					—OR—	
BCJ		1	**359-0721**	4	ROD AS-CONNECTING (LENGTH W)	
					—OR—	
BCJ		1	**359-0720**	4	ROD AS-CONNECTING (LENGTH O)	
					—OR—	
BCJ		1	**359-0719**	4	ROD AS-CONNECTING (LENGTH R)	
					(EACH INCLUDES)	
	1A	1	**225-5438**	1	BUSHING	
	1B	1	**323-9312**	2	BOLT (M10X1X50-MM)	
	2	1	**310-9269**	4	PISTON AS	
					(EACH INCLUDES)	
	2A	1	**124-3536**	2	RING-RETAINING	
	2B	1	**276-7476**	1	KIT-PISTON RING	
AB		1	**380-2065**		KIT-PISTON RING (0.5-MM OS)	
					(INCLUDES 3 PISTON RINGS)	
AB		1	**396-4482**		KIT-PISTON & RING (0.5-MM OS)	
					(INCLUDES PISTON & RETAINING RING)	

A - NOT PART OF THIS GROUP
B - USE AS REQUIRED
C - CHANGE FROM PREVIOUS TYPE
J - ENSURE THAT CORRECT ROD LENGTH IS FITTED

304-3643 **PISTON & ROD GP (*contd.*)** **i05332383**

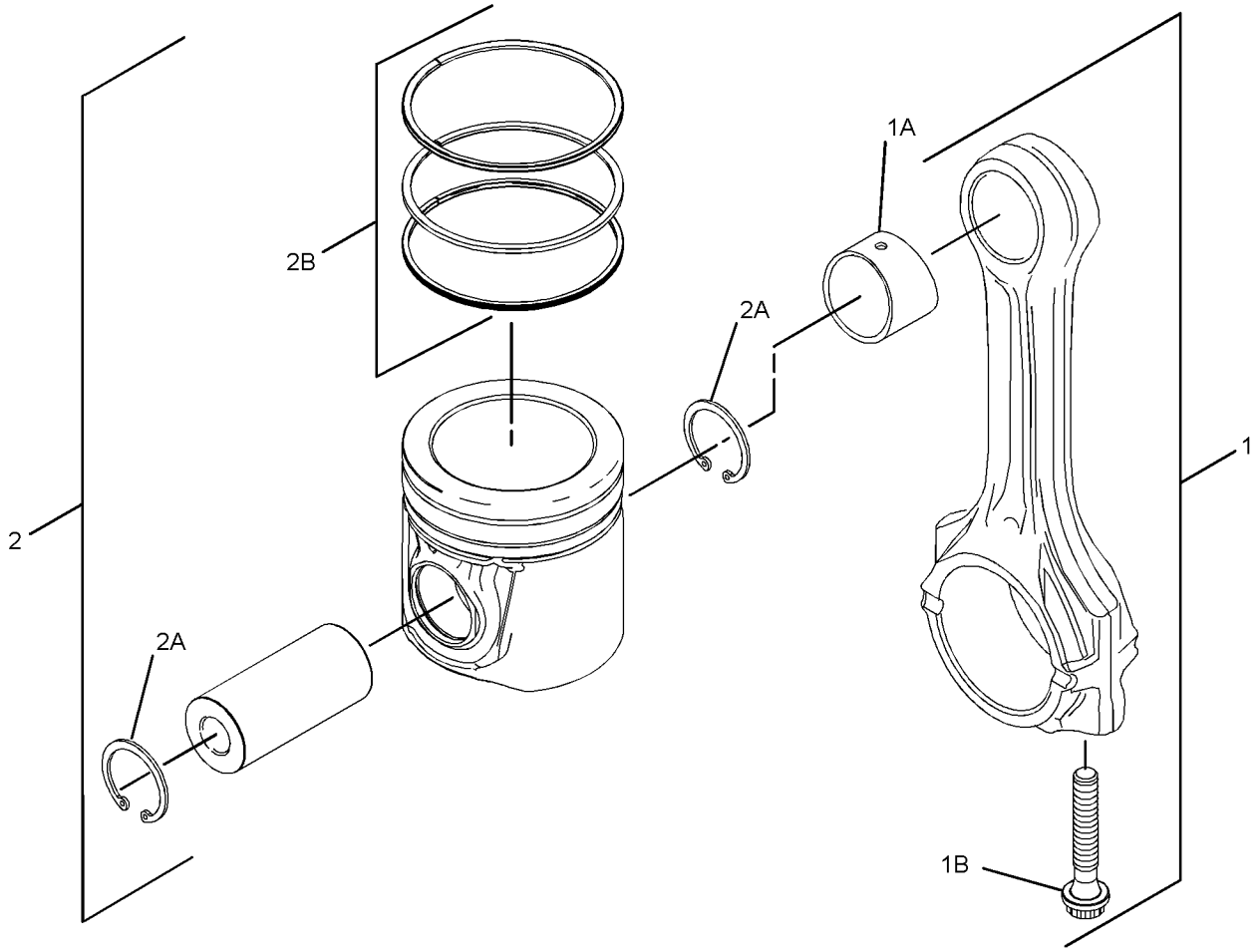

GRAPHIC #1 **<END>** g02241673

298-5129 PLUG GP-CYLINDER HEAD

S/N: C4E1-UP

PART OF 254-9233 ENGINE AR-PRIMARY

SMCS-1100, 1101 **i02604328**

NOTE	REF NO	GRAPHIC REF	PART NUMBER	QTY	PART NAME 1 2 3 4 5 6 (PRODUCT LEVEL)	SEE PAGE
	1	1	**232-1322**	1	PLUG	
	2	1	**199-9751**	1	SEAL-O-RING	

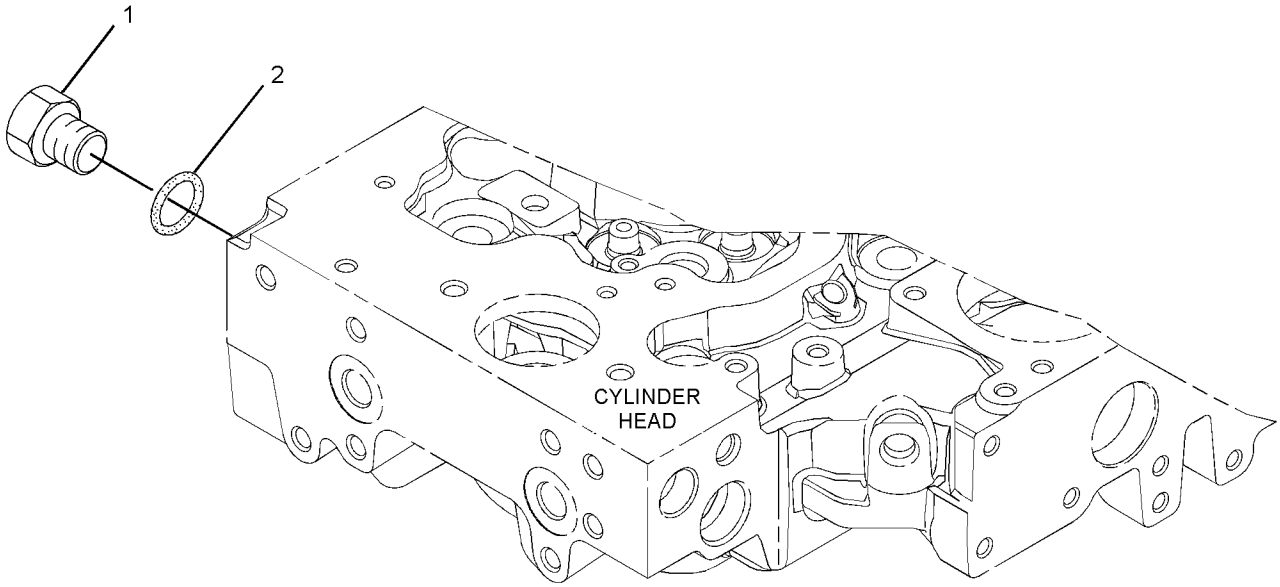

GRAPHIC #1 **<END>** g01305536

304-3663 PLUG GP-ENGINE

S/N: C4E1-UP

PART OF 254-9233 ENGINE AR-PRIMARY

SMCS-1000 **i02654272**

NOTE	REF NO	GRAPHIC REF	PART NUMBER	QTY	PART NAME 1 2 3 4 5 6 (PRODUCT LEVEL)	SEE PAGE
	1	1	**2B-0858**	1	PLUG-PIPE	
	2	1	**7W-4669**	1	ADAPTER	
	3	1	**134-3856**	1	ELBOW	

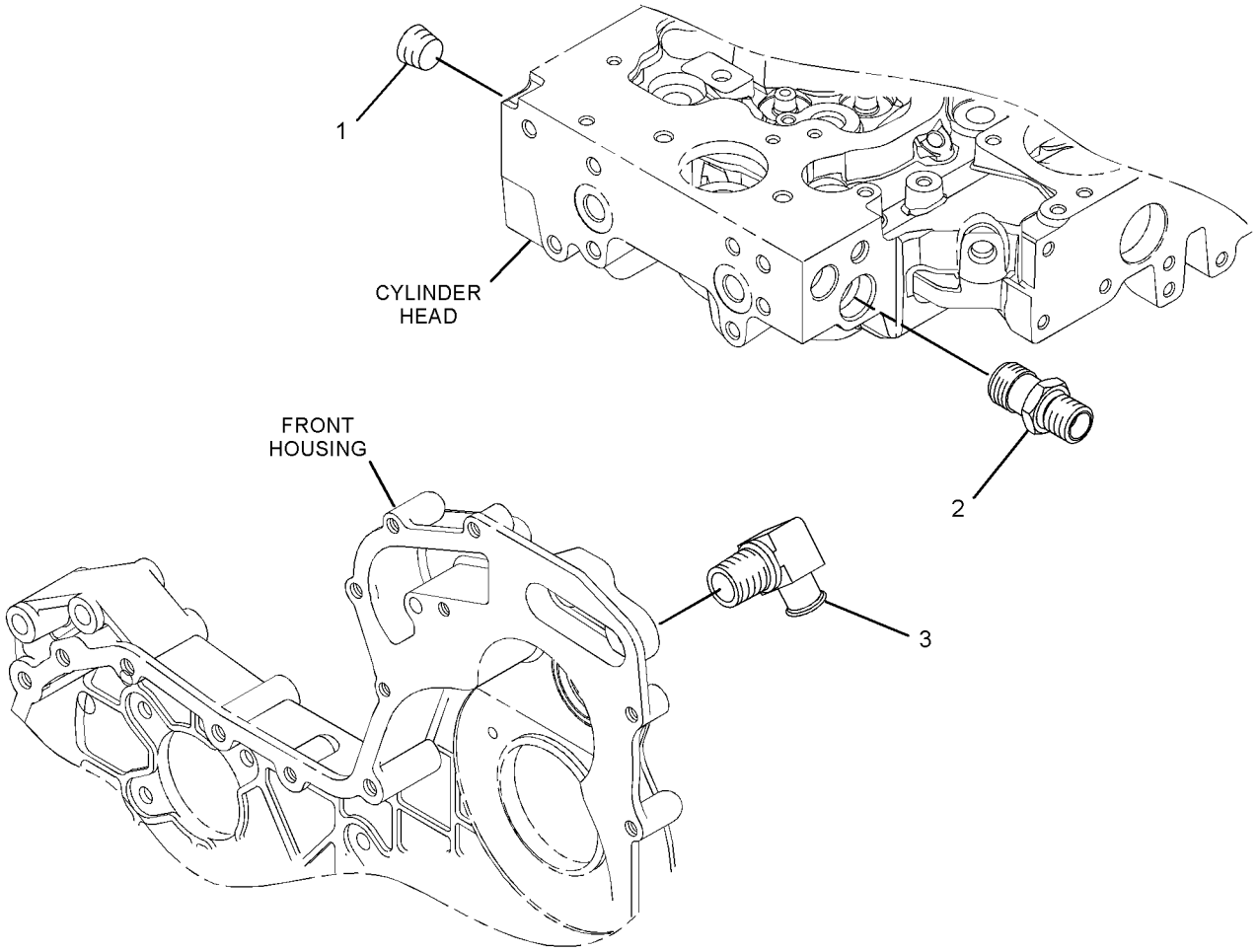

GRAPHIC #1 **<END>** g01346476

360-7345 PULLEY GP-CRANKSHAFT

S/N: C4E8930-UP

PART OF 254-9233 ENGINE AR-PRIMARY

SMCS-1205 **i03900157**

NOTE	REF NO	GRAPHIC REF	PART NUMBER	QTY	PART NAME 1 2 3 4 5 6 (PRODUCT LEVEL)	SEE PAGE
M	1	1	**102-9941**	3	BOLT (M12X1.75X25-MM)	
	2	1	**286-7848**	1	PULLEY GP-ENGINE	
	3	1	**334-9334**	3	BOLT	
	4	1	**359-0750**	1	PULLEY-CRANKSHAFT	

M - METRIC PART

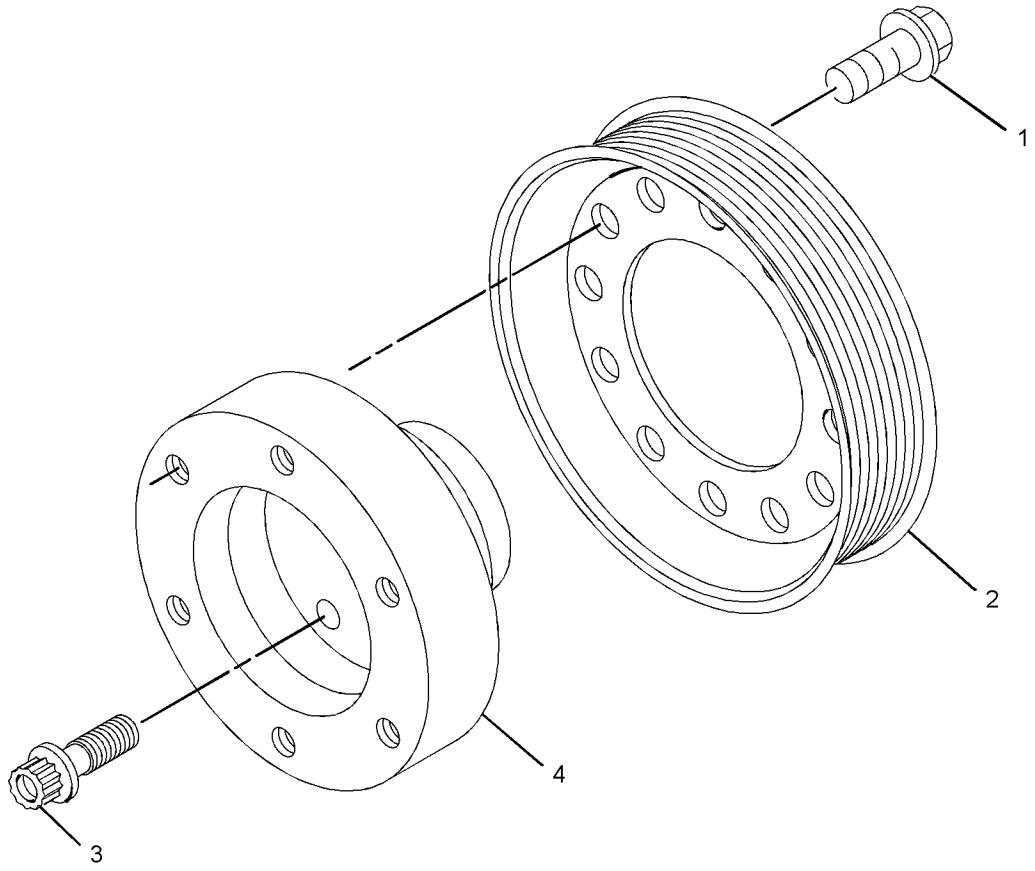

GRAPHIC #1 **<END>** g02156463

298-4533 ROCKER ARM GP

S/N: C4E1-UP

PART OF 304-3647 VALVE MECHANISM GP

SMCS-1123 **i03607223**

NOTE	REF NO	GRAPHIC REF	PART NUMBER	QTY	PART NAME 1 2 3 4 5 6 (PRODUCT LEVEL)	SEE PAGE
	1	1	**276-9200**	2	PLUG-SHAFT END	
	2	1	**276-9201**	1	CLIP	
	3	1	**276-9206**	3	SPRING-SHAFT	
	4	1	**276-9207**	1	SPRING-SHAFT	
	5	1	**278-5111**	4	ROCKER ARM AS	
	5A	1	**276-9230**	1	NUT	
	5B	1	**278-5113**	1	ADJUSTING SCREW (TORX)	
	6	1	**278-5112**	4	ROCKER ARM AS	
	6A	1	**276-9230**	1	NUT	
	6B	1	**278-5113**	1	ADJUSTING SCREW (TORX)	
	7	1	**280-1912**	4	BRACKET	
	8	1	**280-1913**	4	RETAINER	
	9	1	**280-1914**	8	BOLT (M8X1.25X55-MM)	

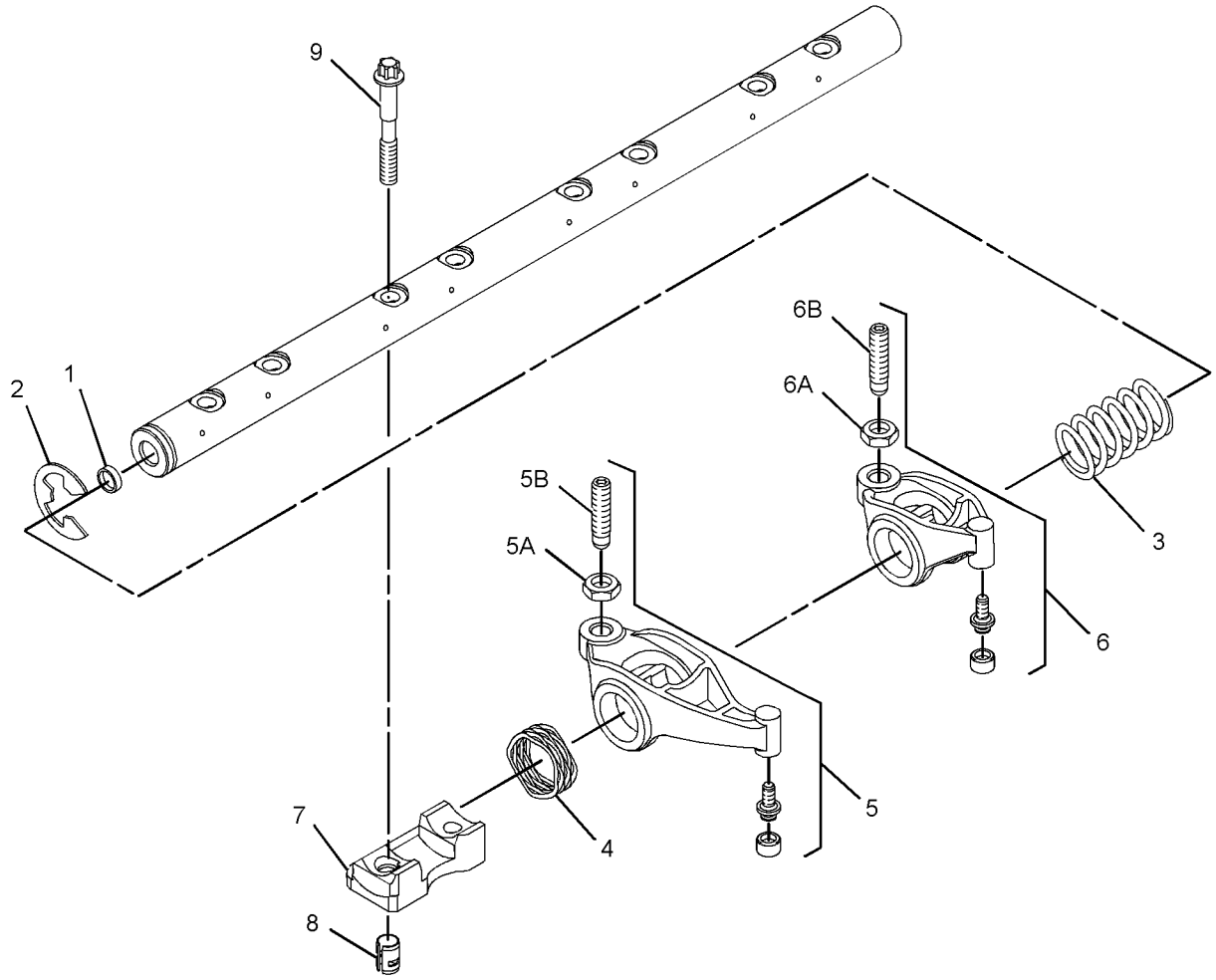

GRAPHIC #1 **<END>** g01532745

244-7431 SUPPORT GP-ENGINE & XMSN

S/N: MMM1-UP; RRR1-UP

PART OF 244-7386 INSTALLATION AR-ENGINE

SMCS-1153, 1154, 3082 **i03004929**

NOTE	REF NO	GRAPHIC REF	PART NUMBER	QTY	PART NAME 1 2 3 4 5 6 (PRODUCT LEVEL)	SEE PAGE
	1	1	**9W-9915**	4	MOUNT AS	
	2	1	**9W-9952**	2	WASHER (16.75X86X8-MM THK)	
	3	1	**9W-9953**	4	SLEEVE	
	4	1	**199-6928**	2	PLATE AS	
					(EACH INCLUDES)	
M		1	**9X-6269**	1	NUT-WELD (M16X2-THD)	
	5	1	**327-4444**	2	PLATE AS	
M	6	1	**8T-4174**	4	BOLT (M16X2X120-MM)	
	7	1	**9X-8257**	4	WASHER (17.5X30X3.5-MM THK)	

M - METRIC PART

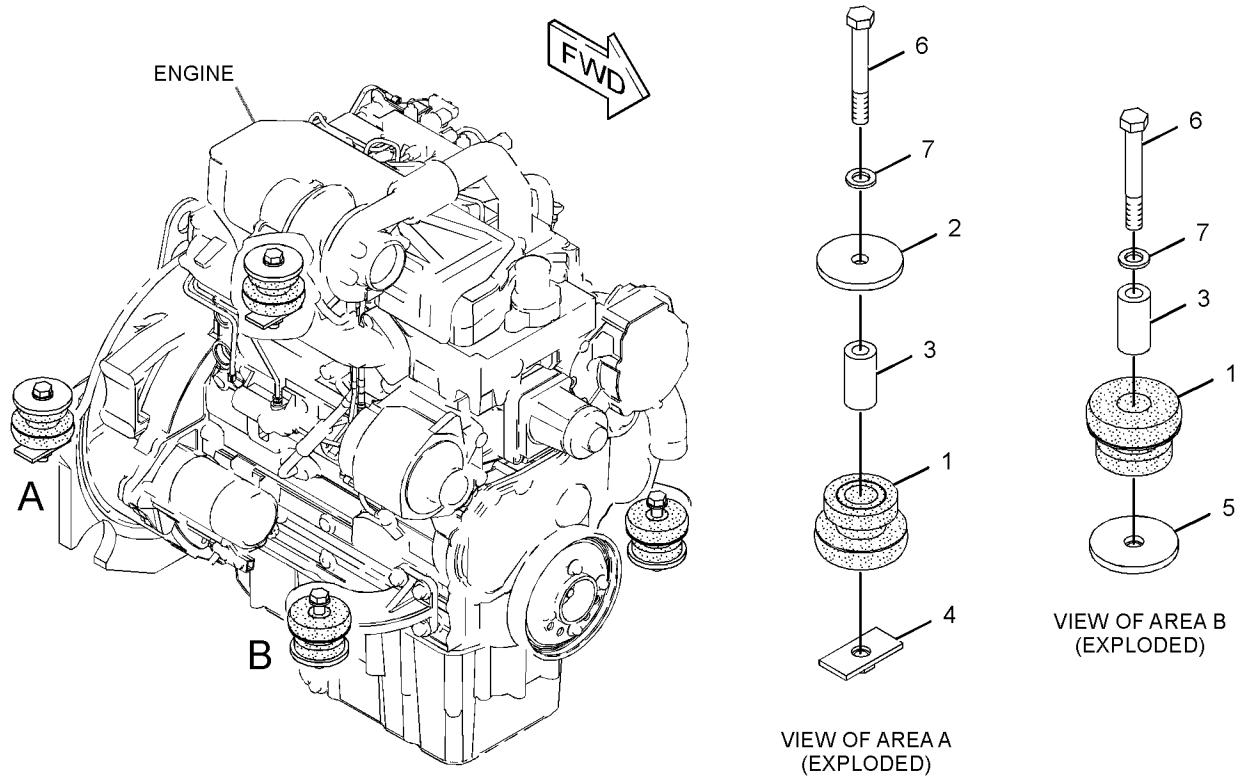

GRAPHIC #1 **<END>** g01577774

304-3647 VALVE MECHANISM GP

S/N: C4E1-UP

PART OF 254-9233 ENGINE AR-PRIMARY

SMCS-1102, 1121, 1123

i04523151

NOTE	REF NO	GRAPHIC REF	PART NUMBER	QTY	PART NAME 1 2 3 4 5 6 (PRODUCT LEVEL)	SEE PAGE
	1	1	**346-4709**	8	BRIDGE GP-VALVE	
Y	2	1	**298-4533**	1	ROCKER ARM GP	46

Y - SEPARATE ILLUSTRATION

304-3647 **VALVE MECHANISM GP (*contd.*)** **i04523151**

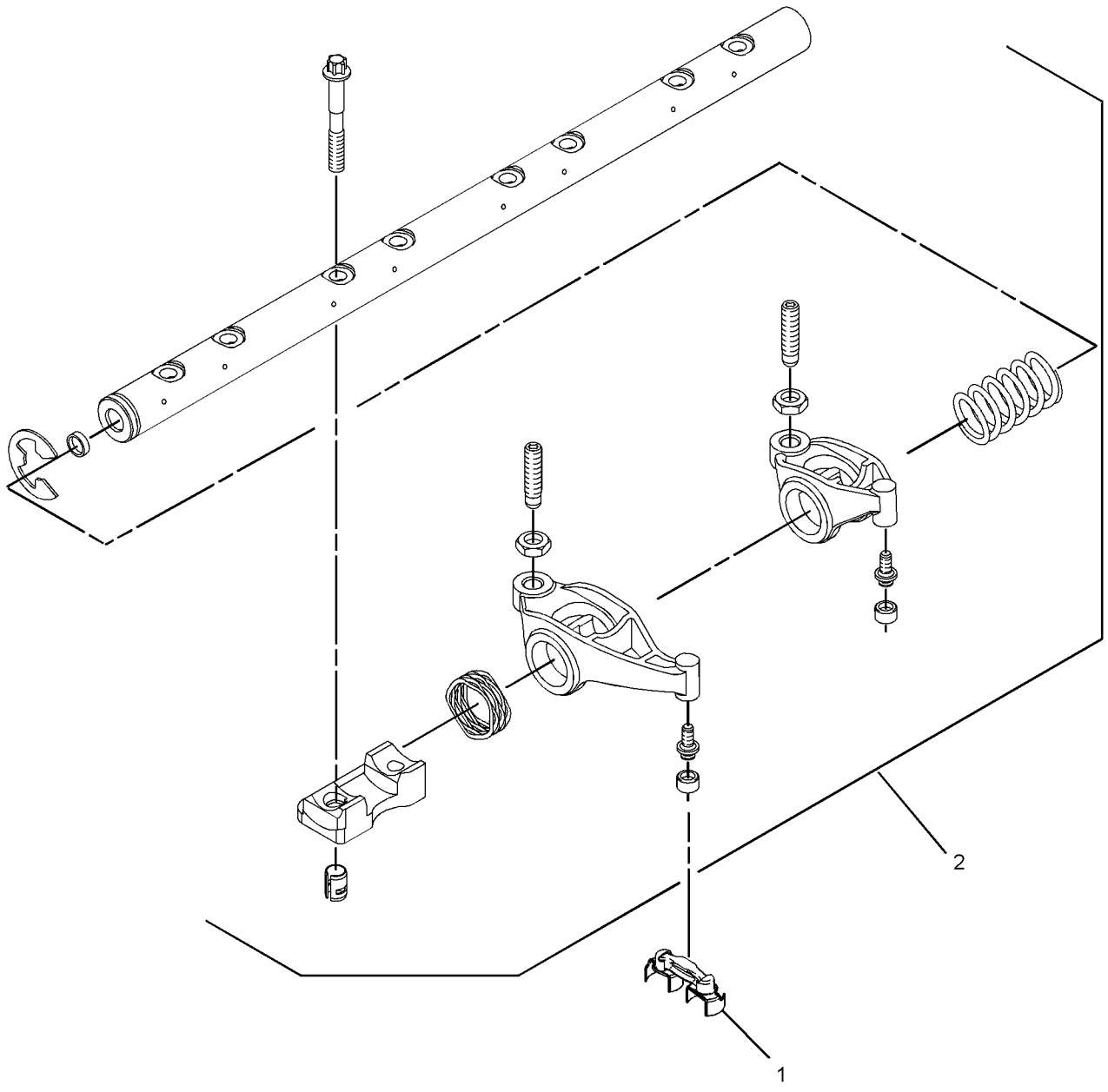

GRAPHIC #1 **<END>** g01932396

314-3960 FILLER GP-ENGINE OIL

S/N: C4E1-UP

PART OF 254-9233 ENGINE AR-PRIMARY

SMCS-1316 **i05223681**

NOTE	REF NO	GRAPHIC REF	PART NUMBER	QTY	PART NAME 1 2 3 4 5 6 (PRODUCT LEVEL)	SEE PAGE
M	1	1	**6I-0217**	1	BOLT (M8X1.25X20-MM)	
M	2	1	**6I-0254**	1	BOLT (M8X1.25X30-MM)	
	3	1	**317-9299**	2	BOLT	
	4	1	**6I-4374**	1	BOLT (M8X1.25X60-MM)	
	5	1	**280-1430**	1	GASKET	
	6	1	**317-3775**	1	FILLER GP-ENGINE OIL	
	6A	1	**306-2337**	1	SEAL-O-RING	
	7	1	**305-7398**	1	WASHER	
	8	1	**314-3956**	1	FILLER AS-OIL (ENGINE)	
	8A	1	**130-9888**	1	CAP-OIL FILLER (ENGINE)	
	8B	1	**113-1504**	1	SEAL-O-RING	
	9	1	**314-3957**	1	BRACKET	
	10	1	**363-4971**	2	SPACER	

M - METRIC PART

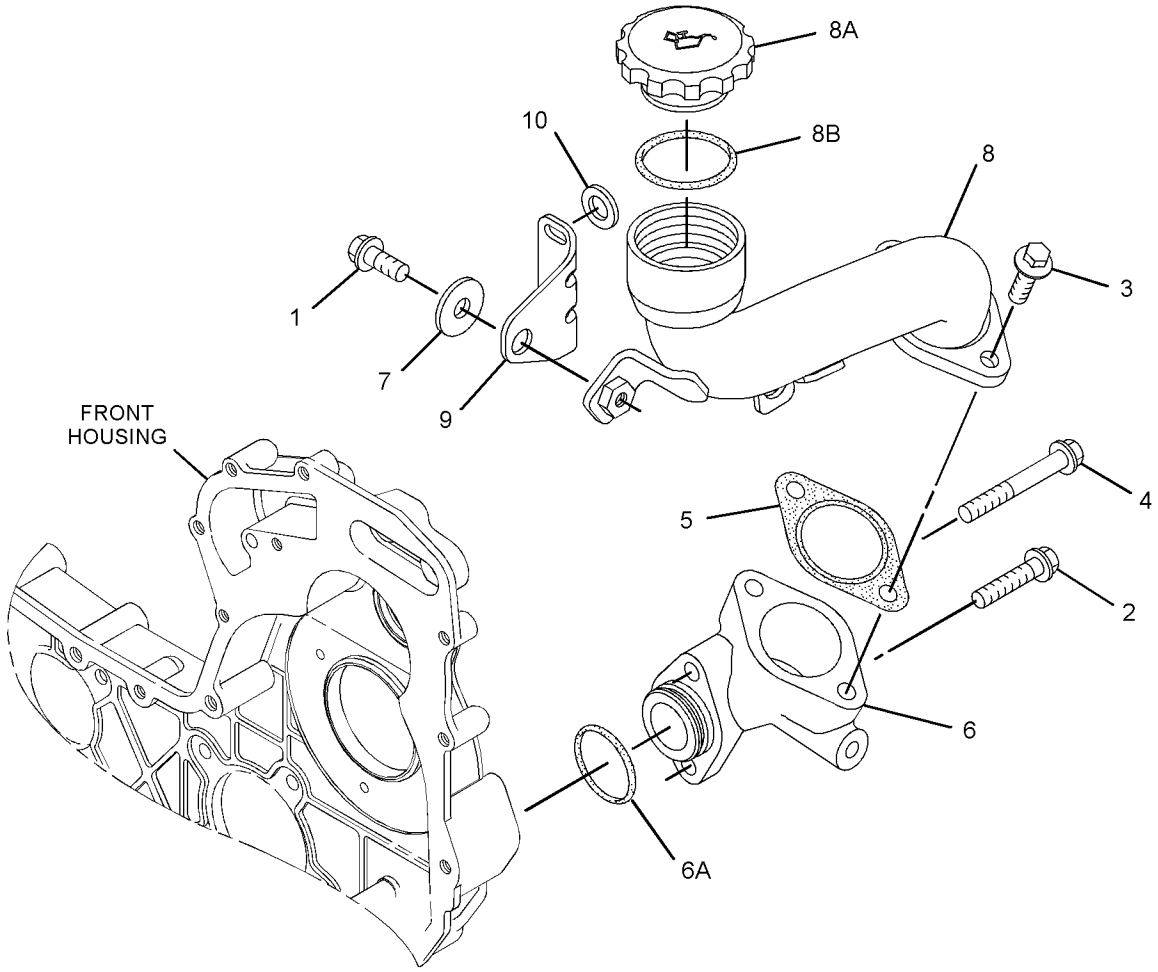

GRAPHIC #1 **<END>** g03345624

283-3426 FILTER GP-ENGINE OIL—INCLUDES SHUTOFF VALVE

S/N: MMM1-UP; RRR1-UP

PART OF 244-7386 INSTALLATION AR-ENGINE

SMCS-1306, 1308

i03845594

NOTE	REF NO	GRAPHIC REF	PART NUMBER	QTY	PART NAME 1 2 3 4 5 6 (PRODUCT LEVEL)	SEE PAGE
	1	1	**6V-7238**	1	VALVE-SHUTOFF (ENGINE OIL)	
	2	1	**7W-2326**	1	FILTER AS-ENGINE OIL	
	3	1	**159-5255**	1	ADAPTER	
	4	1	**3K-0360**	1	SEAL-O-RING	
	5	1	**5P-6718**	1	SEAL-O-RING	

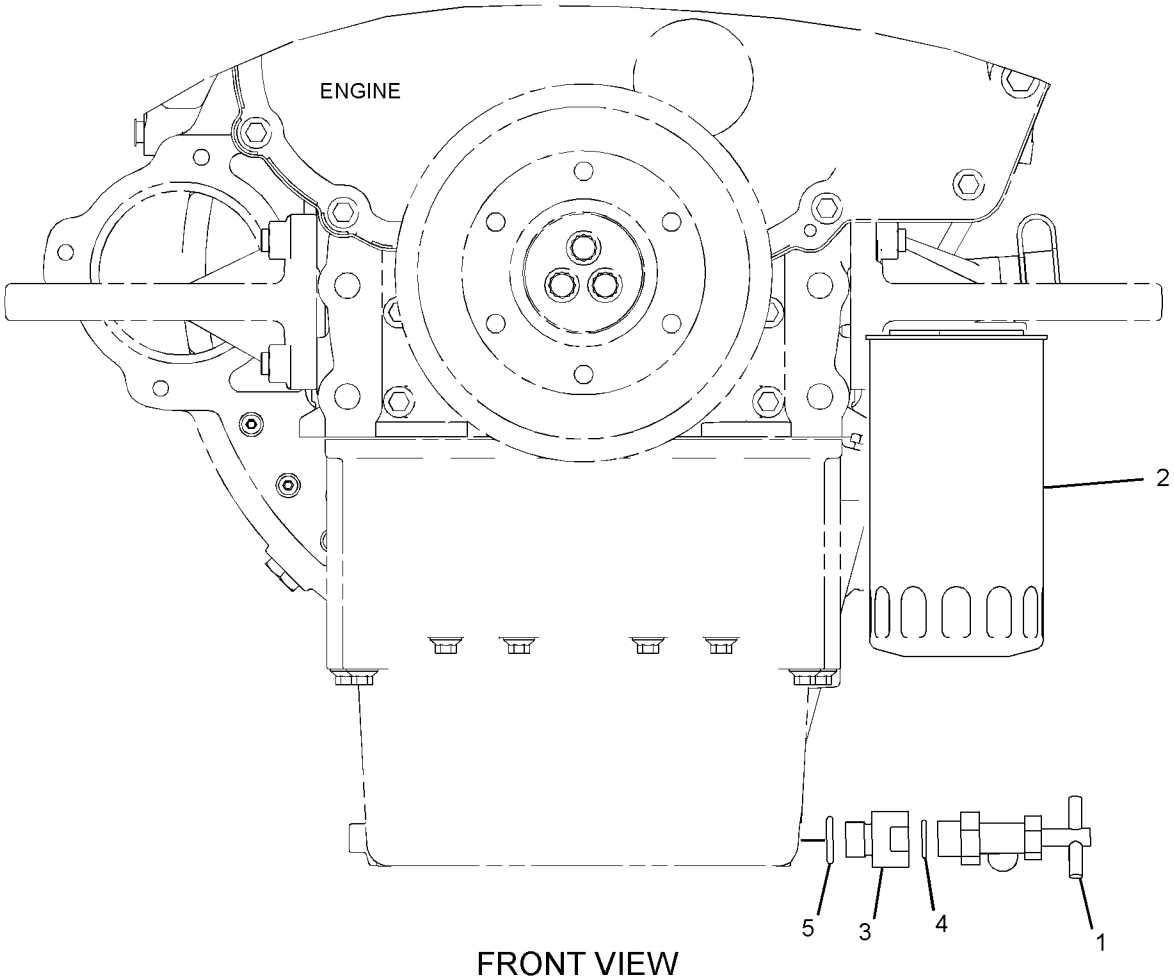

FRONT VIEW

GRAPHIC #1

<END>

g02096473

298-5100 FILTER GP-ENGINE OIL

S/N: C4E1-UP

PART OF 254-9233 ENGINE AR-PRIMARY

SMCS-1306, 1308 **i02604360**

NOTE	REF NO	GRAPHIC REF	PART NUMBER	QTY	PART NAME 1 2 3 4 5 6 (PRODUCT LEVEL)	SEE PAGE
	1	1	**7W-2326**	1	FILTER AS-ENGINE OIL	

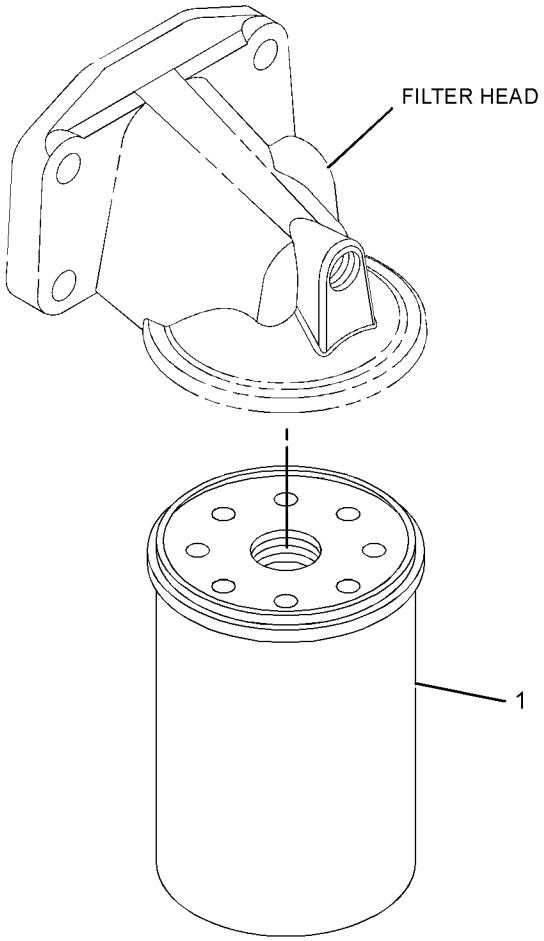

GRAPHIC #1 **<END>** g01304792

298-5112 PUMP GP-ENGINE OIL

S/N: C4E1-UP

PART OF 254-9233 ENGINE AR-PRIMARY

SMCS-1304, 1315

i02604340

NOTE	REF NO	GRAPHIC REF	PART NUMBER	QTY	PART NAME 1 2 3 4 5 6 (PRODUCT LEVEL)	SEE PAGE
	1	1	**225-8329**	1	PUMP AS-ENGINE OIL	
M	2	1	**100-4461**	5	BOLT (M10X1.50X50-MM)	

M - METRIC PART

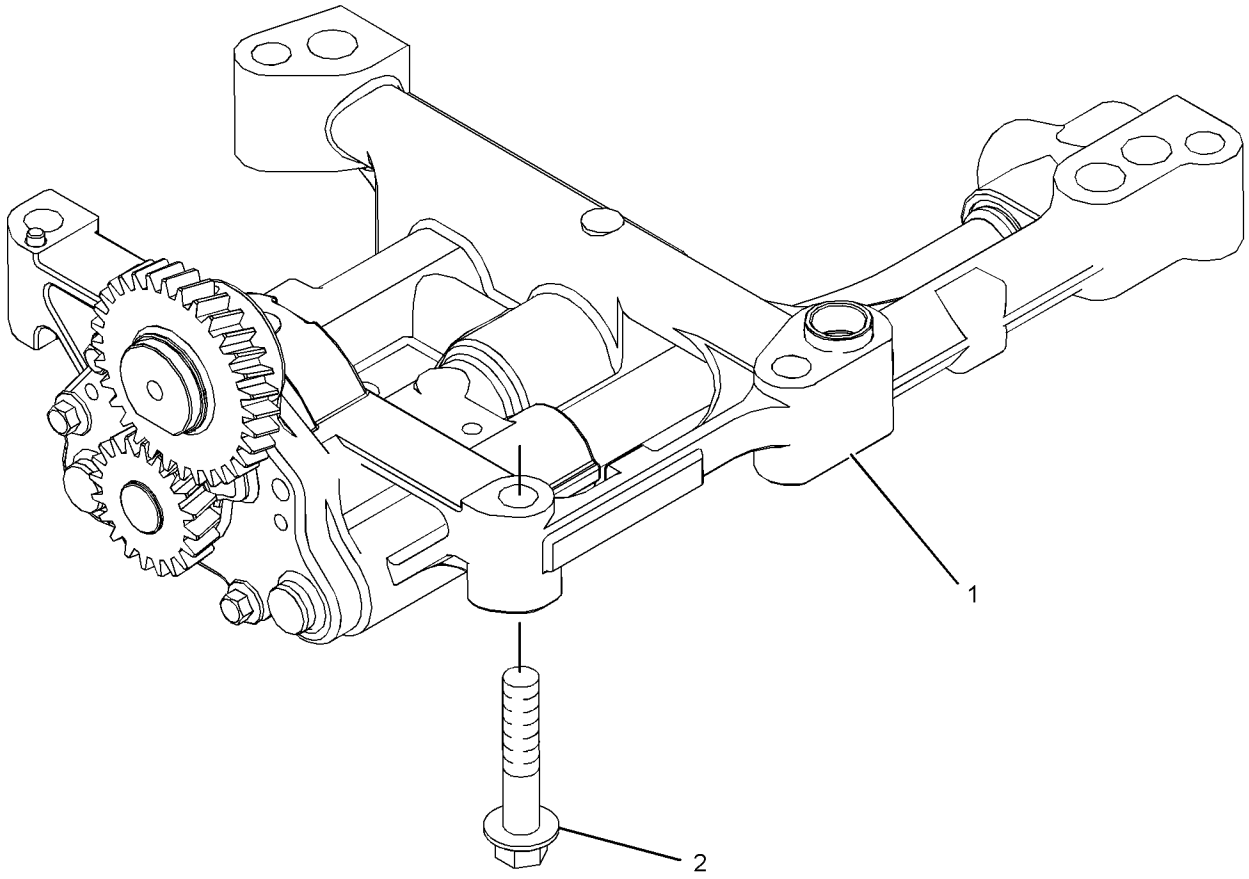

GRAPHIC #1 **<END>** g01304952

304-5617 VALVE GP-FLUID SAMPLING—ENGINE OIL

S/N: C4E1-UP

PART OF 254-9233 ENGINE AR-PRIMARY

SMCS-7542 **i02801742**

NOTE	REF NO	GRAPHIC REF	PART NUMBER	QTY	PART NAME 1 2 3 4 5 6 (PRODUCT LEVEL)	SEE PAGE
	1	1	**8C-3445**	1	CAP-DUST	
	2	1	**035-8063**	1	PLUG	
	3	1	**216-9633**	1	VALVE AS-FLUID SAMPLING	

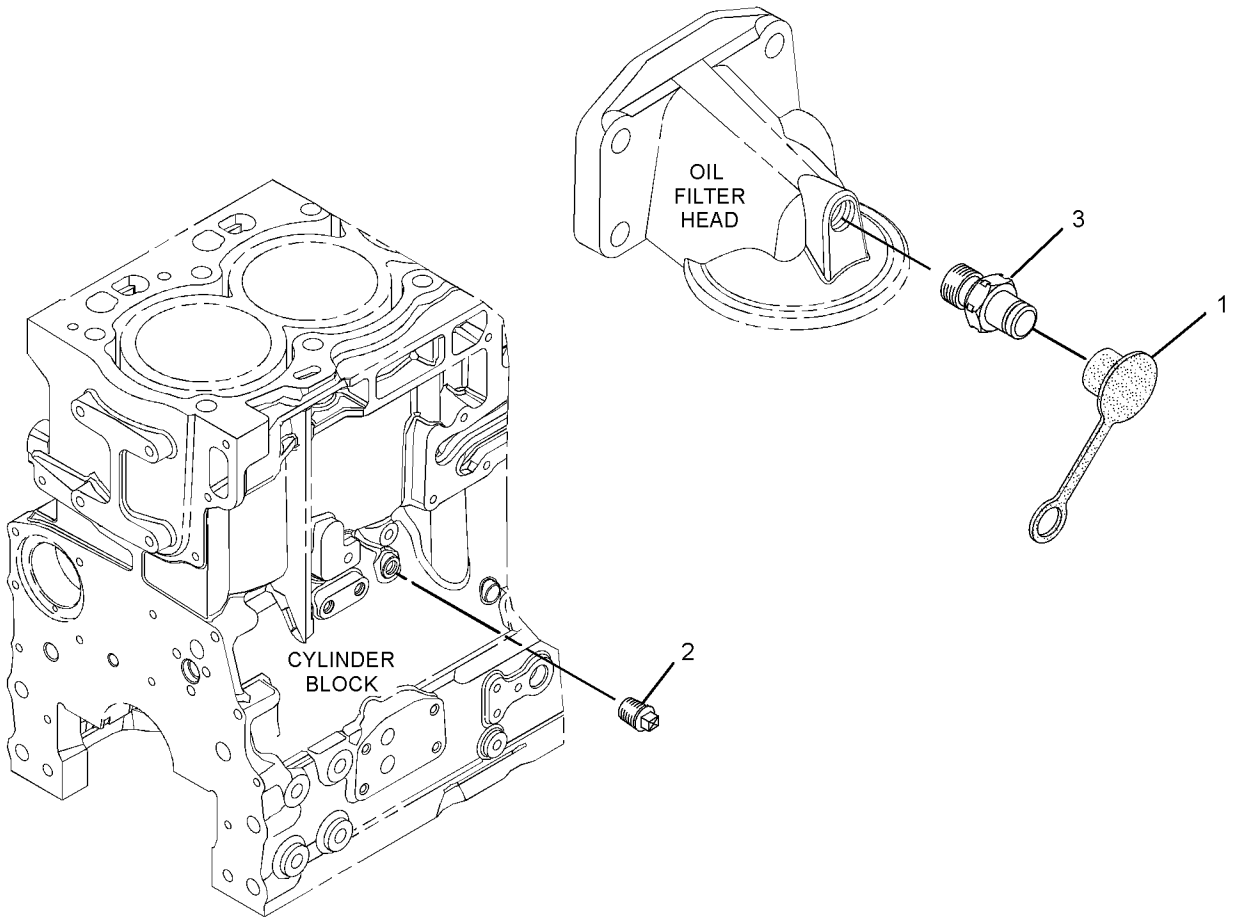

GRAPHIC #1 **<END>** g01438099

301-8243 CONNECTION GP-WATER

S/N: C4E1-UP

PART OF 254-9233 ENGINE AR-PRIMARY

SMCS-1380 **i04822108**

NOTE	REF NO	GRAPHIC REF	PART NUMBER	QTY	PART NAME 1 2 3 4 5 6 (PRODUCT LEVEL)	SEE PAGE
	1	1	**123-2899**	2	BOLT (M10X1.5X40-MM)	
	2	1	**367-1819**	1	REGULATOR AS-WATER TEMPERATURE (INCLUDES CONNECTOR)	
	3	1	**281-8744**	1	GASKET-WATER REGULATOR (TEMPERATURE)	

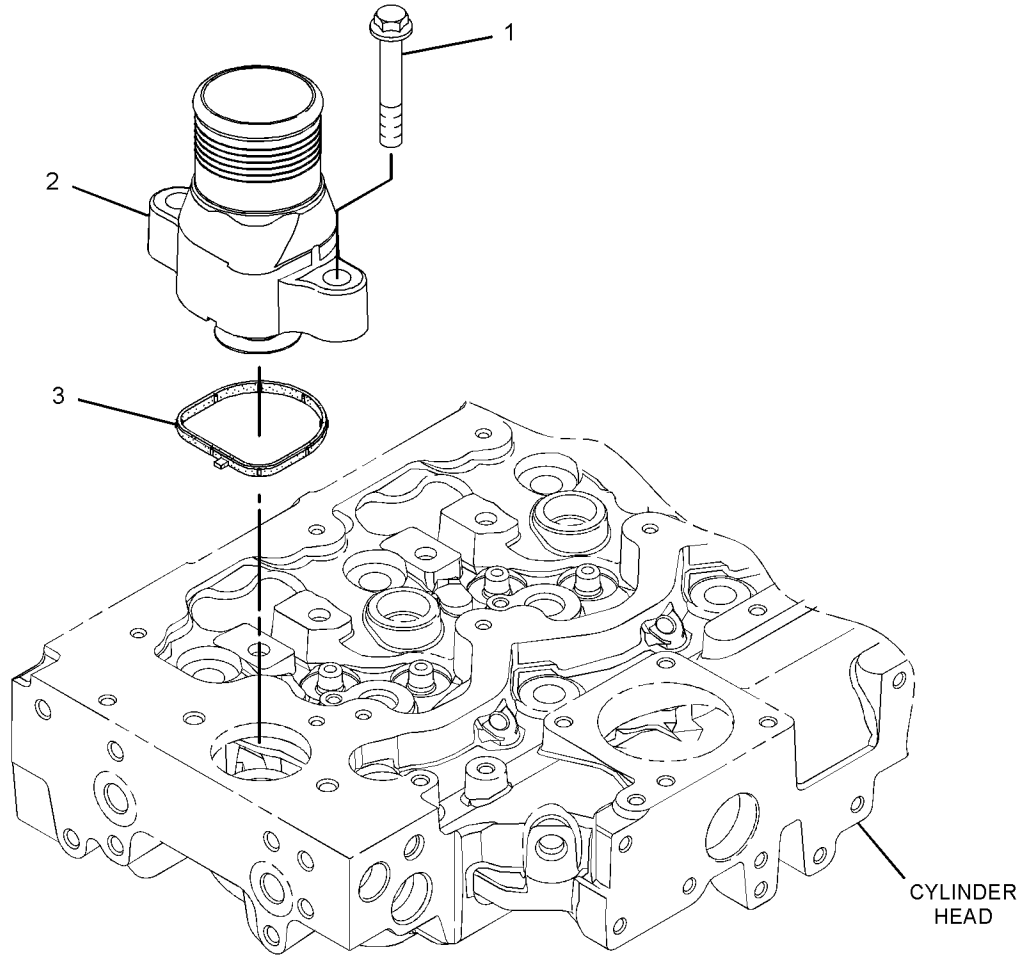

GRAPHIC #1 **<END>** g01371208

334-2314 CONNECTION GP-WATER

S/N: C4E174-UP

PART OF 254-9233 ENGINE AR-PRIMARY

SMCS-1380 **i05091835**

NOTE	REF NO	GRAPHIC REF	PART NUMBER	QTY	PART NAME 1 2 3 4 5 6 (PRODUCT LEVEL)	SEE PAGE
	1	1	**123-2899**	2	BOLT (M10X1.5X40-MM)	
	2	1	**281-8744**	1	GASKET-WATER REGULATOR (TEMPERATURE)	
	3	1	**367-1818**	1	CONNECTION AS (WATER TEMPERATURE)	

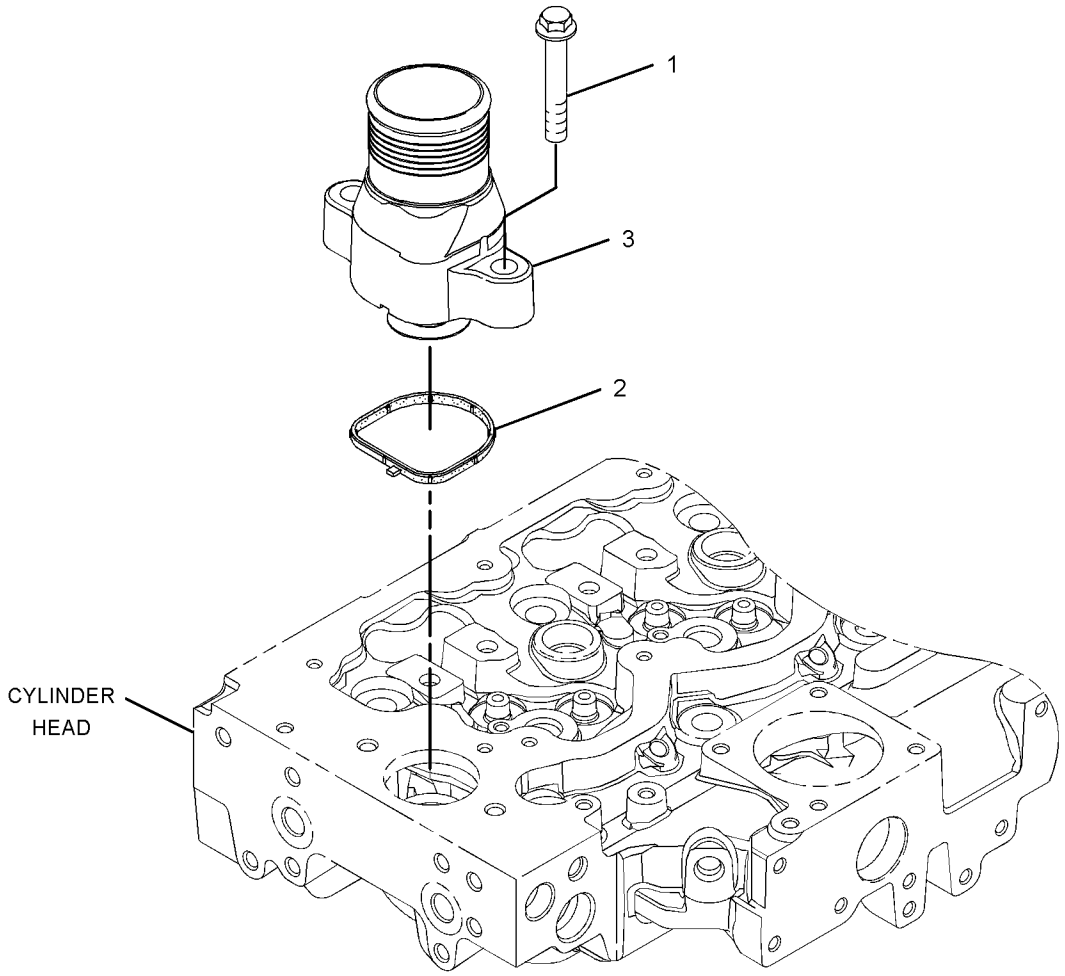

GRAPHIC #1 **<END>** g01699980

298-5099 COOLER GP-ENGINE OIL

S/N: C4E1-UP

PART OF 254-9233 ENGINE AR-PRIMARY

TYPE 1

SMCS-1378 **i02604345**

NOTE	REF NO	GRAPHIC REF	PART NUMBER	QTY	PART NAME 1 2 3 4 5 6 (PRODUCT LEVEL)	SEE PAGE
	1	1	**6I-0572**	4	BOLT (M8X1.25X20-MM)	
M	2	1	**6I-0645**	4	BOLT (M8X1.25X25-MM)	
	3	1	**225-7944**	2	GASKET	
	4	1	**232-3751**	1	PLATE	
	5	1	**249-0974**	1	HEAD AS-OIL FILTER	
	6	1	**298-4553**	1	COOLER AS-OIL (ENGINE)	
	6A	1	**298-4558**	1	COOLER-OIL (ENGINE)	
	6B	1	**298-4559**	1	GASKET	
	6C	1	**298-4560**	2	GASKET	
	6D	1	**6I-1090**	5	BOLT (M8X1.25X40-MM)	
	6E	1	**101-3771**	2	BOLT	
M	6F	1	**6I-0217**	1	BOLT (M8X1.25X20-MM)	
M	6G	1	**6I-0260**	8	BOLT (M8X1.25X25-MM)	

M - METRIC PART

298-5099 **COOLER GP-ENGINE OIL (*contd.*)** **i02604345**

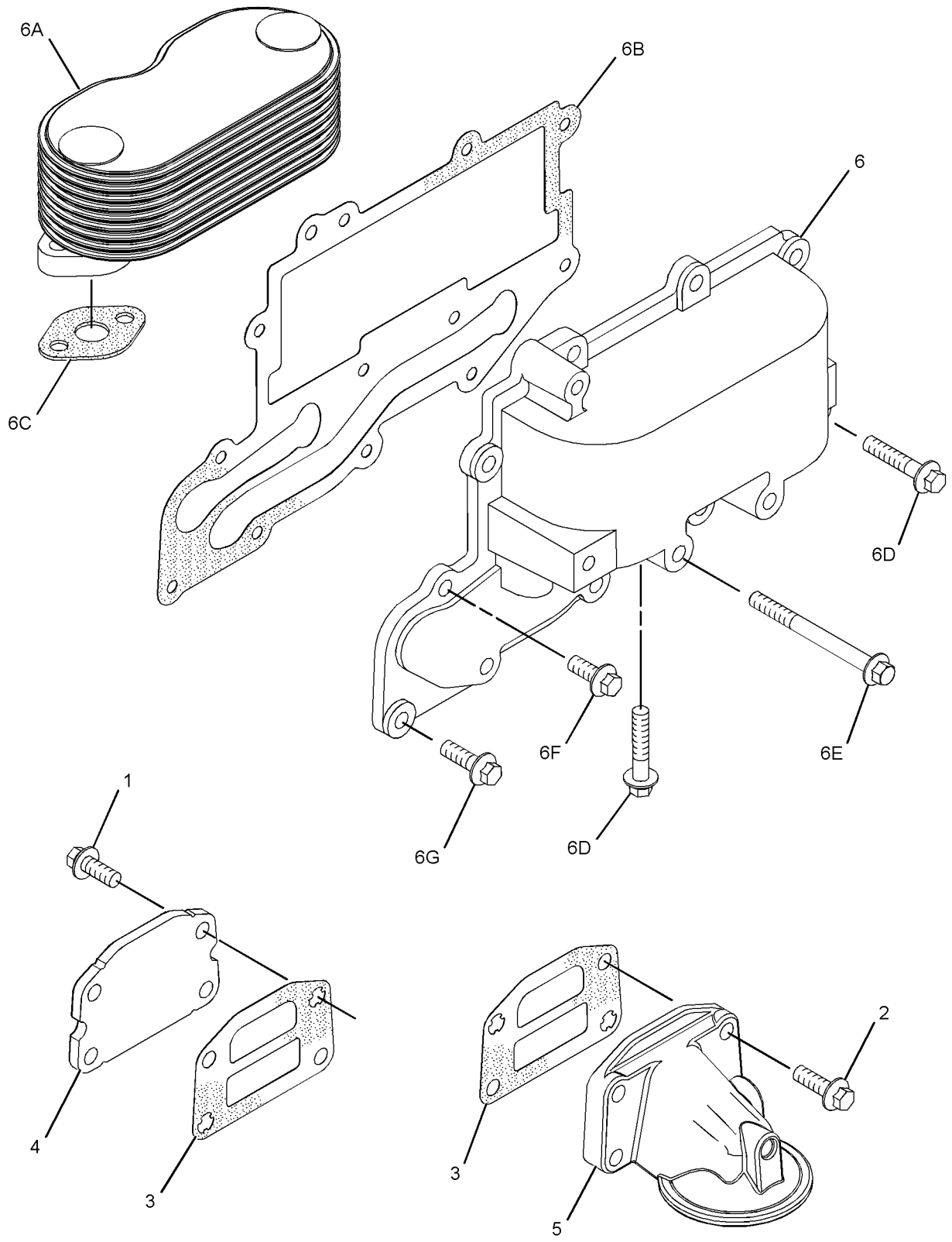

GRAPHIC #1 **<END>** g01304480

298-5099 COOLER GP-ENGINE OIL

S/N: C4E1-UP

PART OF 254-9233 ENGINE AR-PRIMARY

TYPE 2

SMCS-1378 **i03868169**

NOTE	REF NO	GRAPHIC REF	PART NUMBER	QTY	PART NAME 1 2 3 4 5 6 (PRODUCT LEVEL)	SEE PAGE
	1	1	**6I-0572**	4	BOLT (M8X1.25X20-MM)	
M	2	1	**6I-0645**	4	BOLT (M8X1.25X25-MM)	
	3	1	**225-7944**	2	GASKET	
	4	1	**232-3751**	1	PLATE	
	5	1	**249-0974**	1	HEAD AS-OIL FILTER	
CY	6	1	**353-7717**	1	COOLER GP-ENGINE OIL	60

C - CHANGE FROM PREVIOUS TYPE
M - METRIC PART
Y - SEPARATE ILLUSTRATION

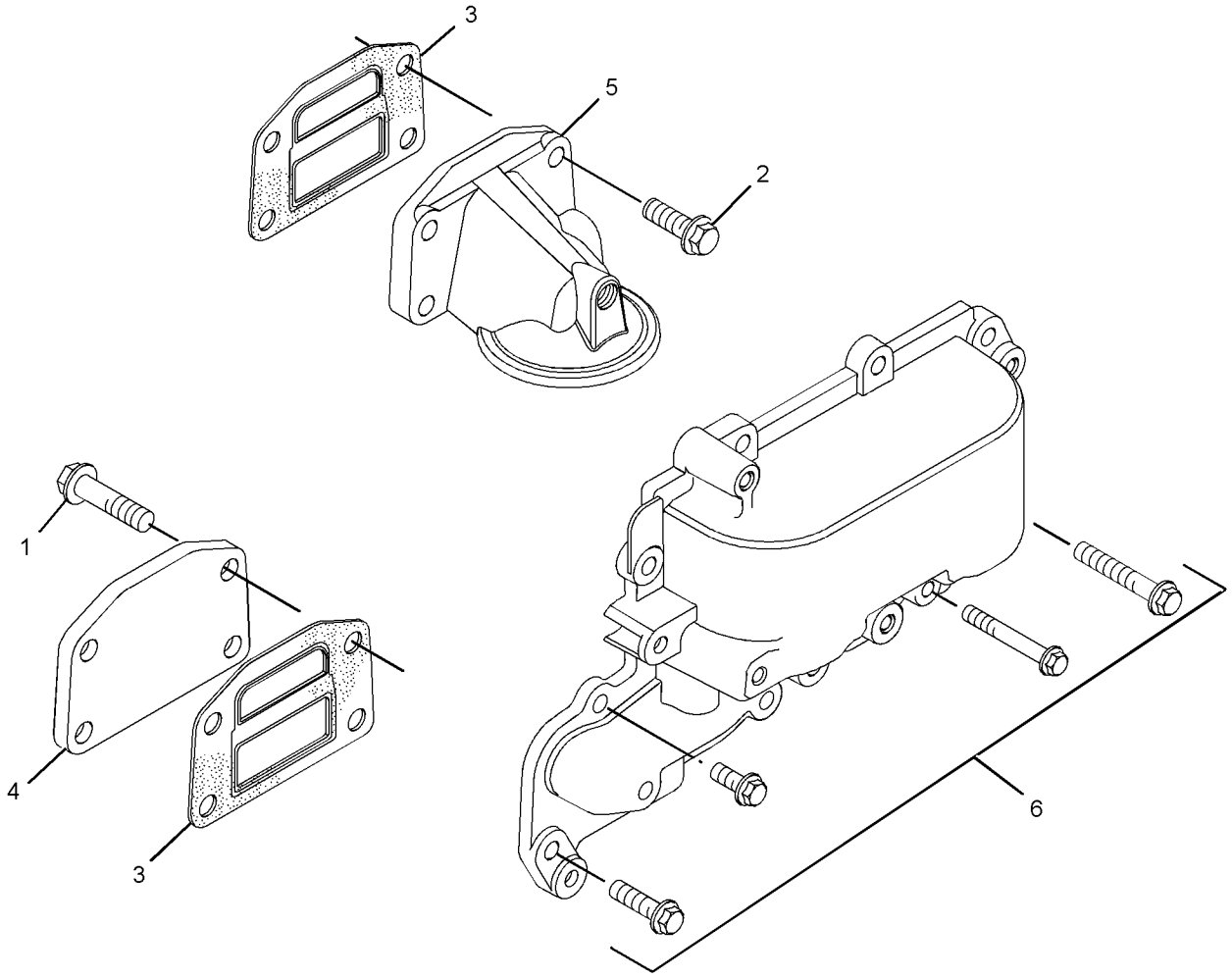

GRAPHIC #1 **<END>** g02124518

353-7717 COOLER GP-ENGINE OIL

S/N: C4E1-UP

PART OF 298-5099 COOLER GP-ENGINE OIL

SMCS-1378 **i04003850**

NOTE	REF NO	GRAPHIC REF	PART NUMBER	QTY	PART NAME 1 2 3 4 5 6 (PRODUCT LEVEL)	SEE PAGE
M	1	1	**6I-0217**	2	BOLT (M8X1.25X20-MM)	
M	2	1	**6I-0260**	7	BOLT (M8X1.25X25-MM)	
	3	1	**6I-1090**	1	BOLT (M8X1.25X40-MM)	
M	4	1	**100-3751**	2	BOLT (M8X1.25X65-MM)	
	5	1	**298-4558**	1	COOLER-OIL	
	6	1	**353-7715**	1	GASKET	
	7	1	**298-4560**	2	GASKET	

M - METRIC PART

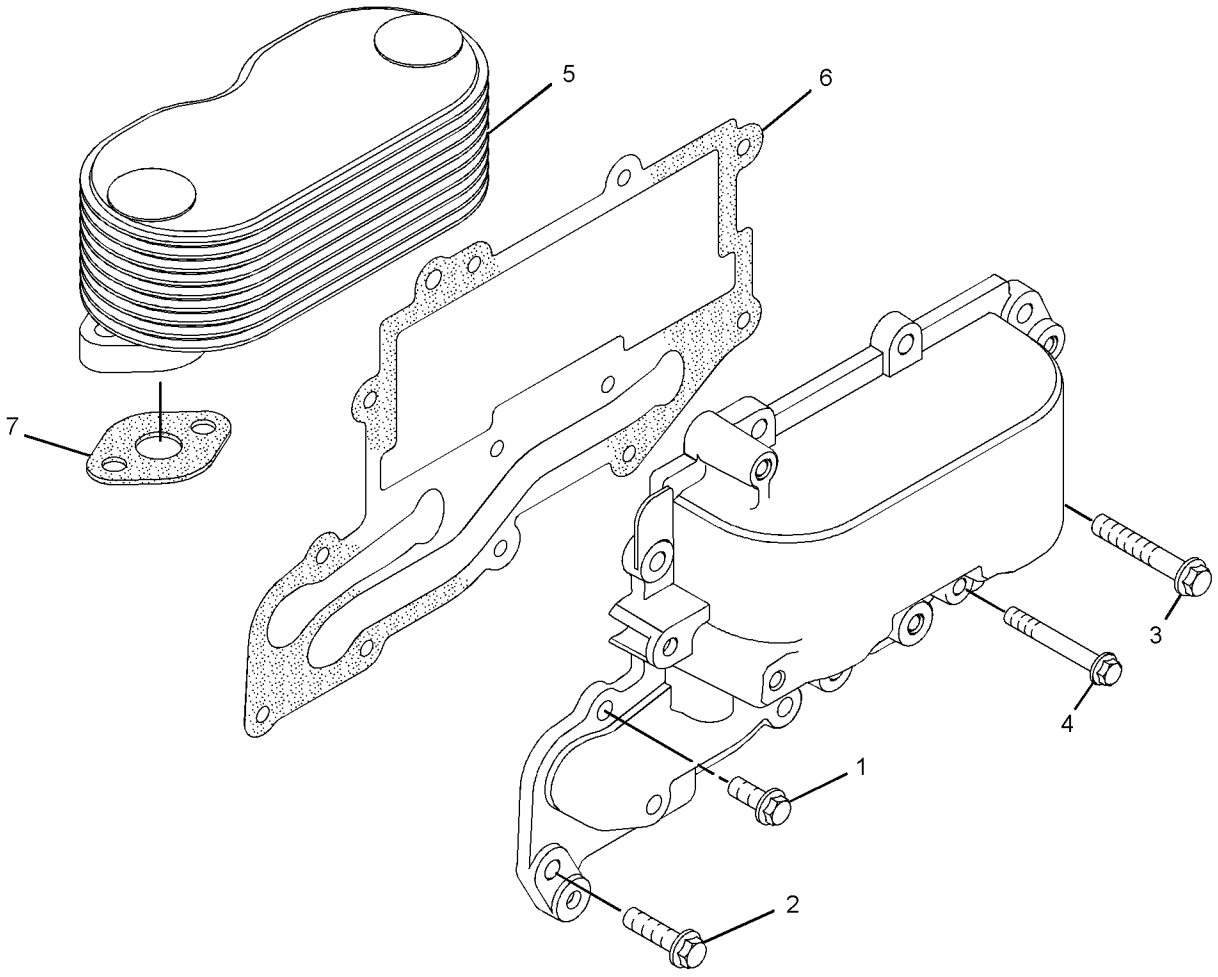

GRAPHIC #1 **<END>** g02196064

244-7428 FAN GP-BLOWER

S/N: MMM1-UP; RRR1-UP

PART OF 244-7386 INSTALLATION AR-ENGINE

SMCS-1356, 1360 **i04893841**

NOTE	REF NO	GRAPHIC REF	PART NUMBER	QTY	PART NAME 1 2 3 4 5 6 (PRODUCT LEVEL)	SEE PAGE
	1	1	**207-2554**	1	SPACER-FAN	
	2	1	**337-5633**	1	GUARD AS-FAN	
	3	1	**316-1441**	1	FAN AS-BLOWER (6-BLADE)	
	4	1	**5P-4116**	8	WASHER-HARD (8.8X20.5X2-MM THK)	
M	5	1	**7X-2539**	4	BOLT (M8X1.25X110-MM)	
M	6	1	**8T-4189**	4	BOLT (M8X1.25X20-MM)	

M - METRIC PART

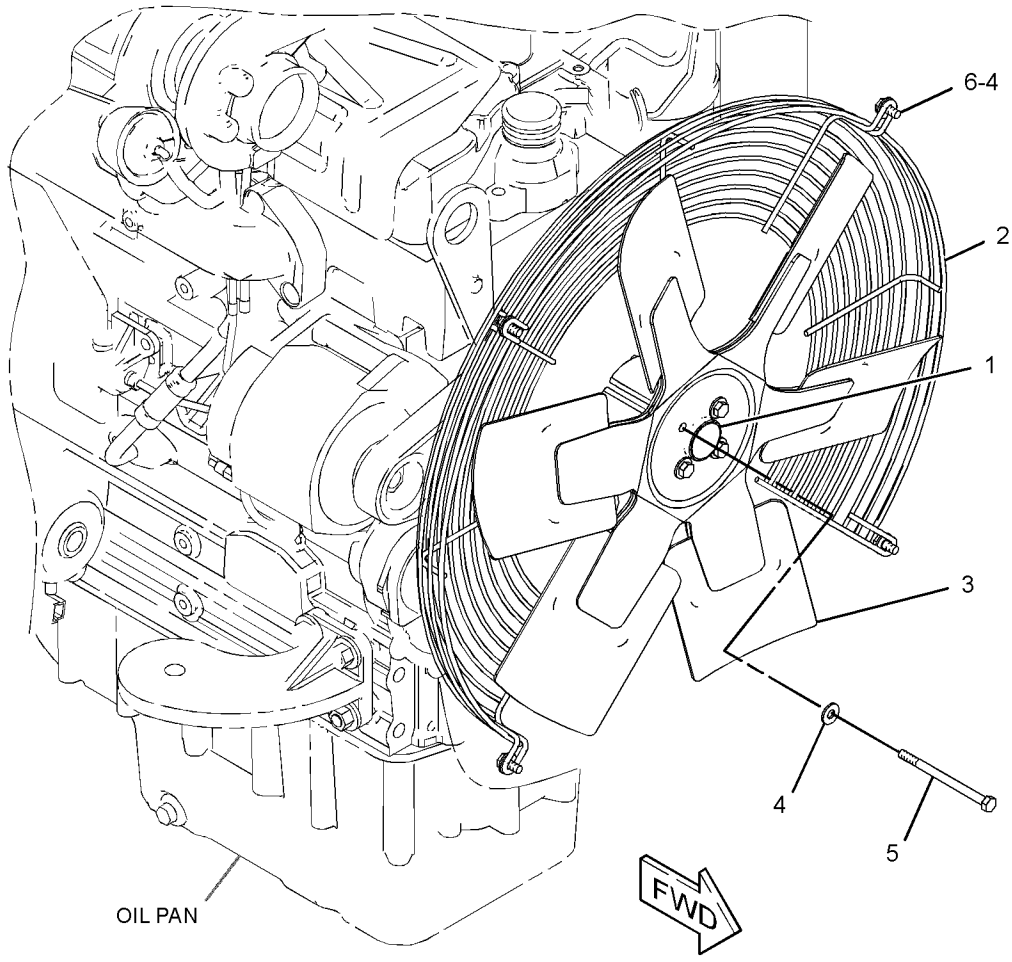

GRAPHIC #1 **<END>** g02004314

329-5632 LINES GP-COOLANT

S/N: MMM1-UP; RRR1-UP
PART OF 325-6543, 325-6544 MODIFICATION AR
AN ATTACHMENT

SMCS-1380 **i03776901**

NOTE	REF NO	GRAPHIC REF	PART NUMBER	QTY	PART NAME 1 2 3 4 5 6 (PRODUCT LEVEL)	SEE PAGE
	1	1	**330-5410**	1	HOSE AS	
		1	**255-1343**	1	HOSE-RADIATOR (UPPER)	
E		1	**326-3563**		INSULATION (44-CM)	
	2	1	**330-5411**	1	HOSE AS	
		1	**255-1344**	1	HOSE-RADIATOR (LOWER)	
E		1	**326-3570**		INSULATION (43-CM)	
	3	1	**330-5412**	1	HOSE AS	
		1	**293-4381**	1	HOSE	
E		1	**326-3568**		INSULATION (22-CM)	
E	4	1	**193-6911**		INSULATION (35-CM)	

E - ORDER BY THE CENTIMETER

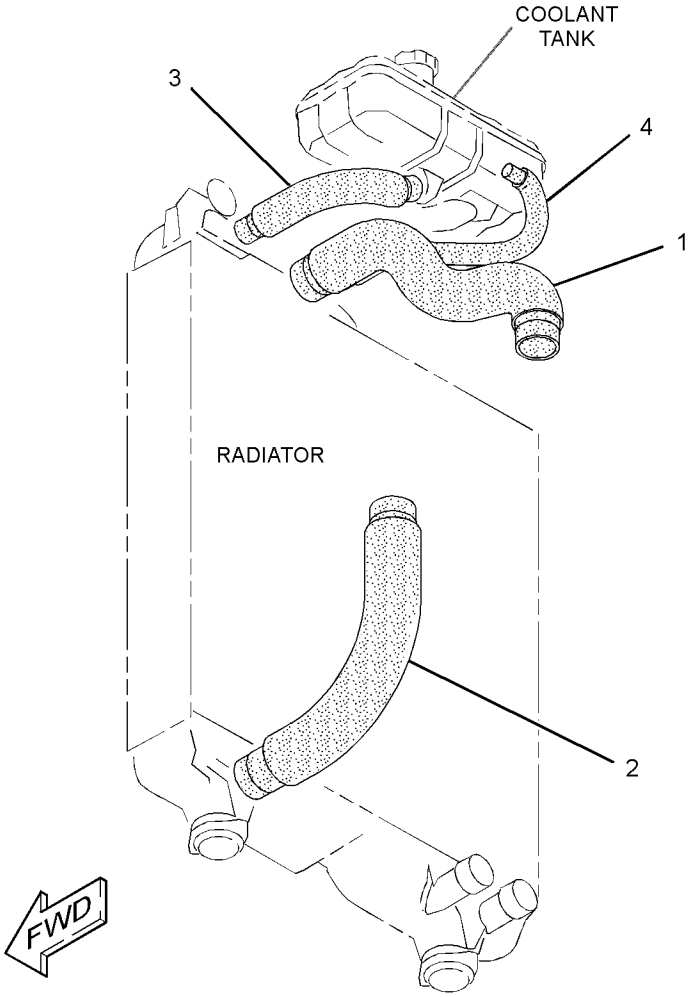

GRAPHIC #1 **<END>** g02023857

298-5105 PUMP GP-WATER

S/N: C4E1-UP

PART OF 254-9233 ENGINE AR-PRIMARY

TYPE 1

SMCS-1361 **i02685560**

NOTE	REF NO	GRAPHIC REF	PART NUMBER	QTY	PART NAME 1 2 3 4 5 6 (PRODUCT LEVEL)	SEE PAGE
M	1	1	**6I-0217**	2	BOLT (M8X1.25X20-MM)	
M	2	1	**6I-0254**	2	BOLT (M8X1.25X30-MM)	
	3	1	**113-8129**	7	BOLT (M8X75-MM)	
	4	1	**307-9843**	1	PUMP GP-WATER	
	4A	1	**278-3242**	2	BOLT-FLANGE HEAD	
	4B	1	**287-7430**	1	GASKET-COVER	
	4C	1	**225-8019**	1	GASKET	
	5	1	**277-2925**	1	CONNECTION AS	
	5A	1	**225-7738**	1	SEAL-O-RING	
	5B	1	**277-2923**	1	GASKET	

M - METRIC PART

298-5105 **PUMP GP-WATER (*contd.*)** **i02685560**

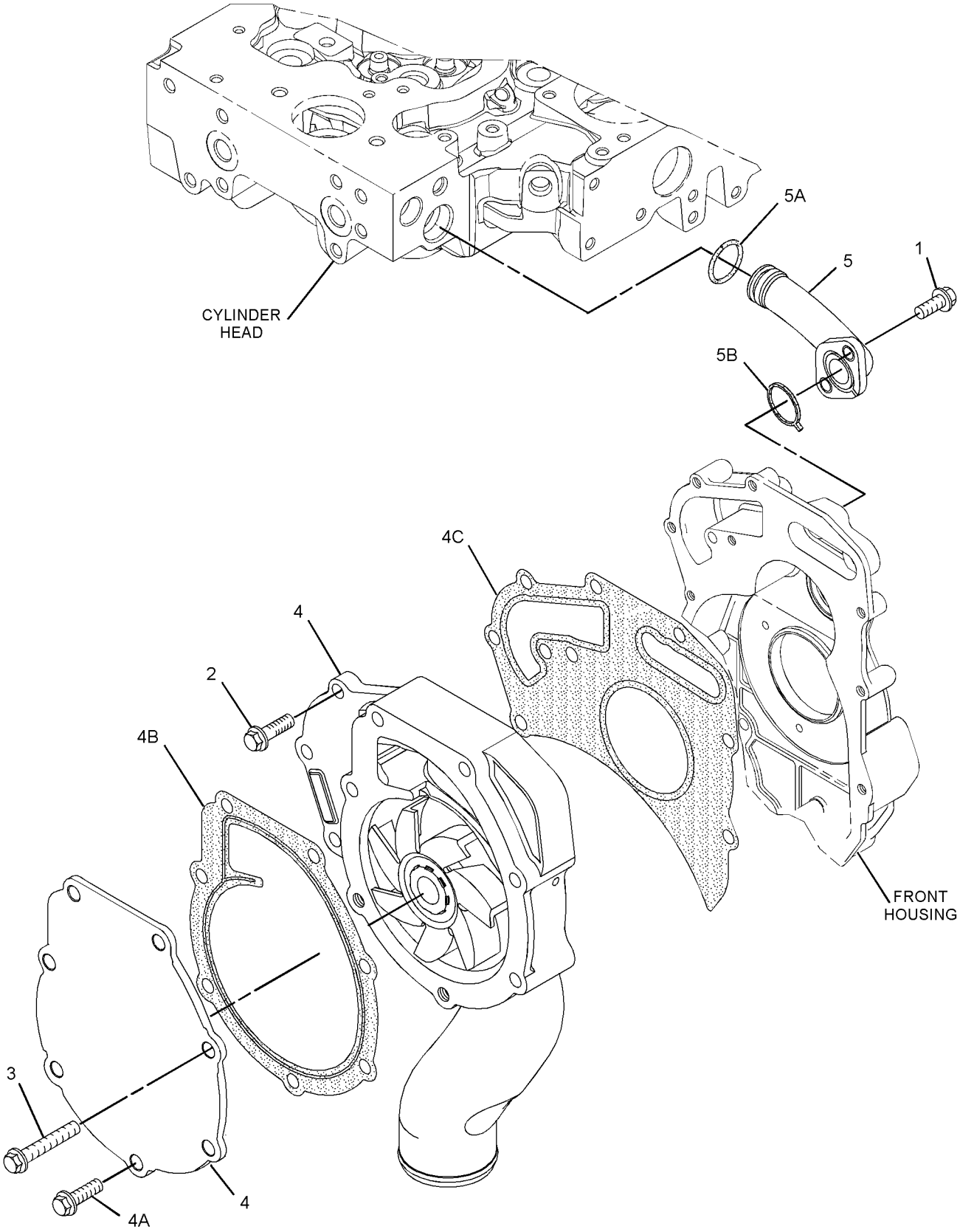

GRAPHIC #1 **<END>** g01305584

298-5105 PUMP GP-WATER

S/N: C4E1-UP

PART OF 254-9233 ENGINE AR-PRIMARY

TYPE 2

SMCS-1361 **i05391378**

NOTE	REF NO	GRAPHIC REF	PART NUMBER	QTY	PART NAME 1 2 3 4 5 6 (PRODUCT LEVEL)	SEE PAGE
C	1	1	**322-9662**	1	PUMP GP-WATER	
	1A	1	**225-8019**	1	GASKET	
M	2	1	**6I-0254**	2	BOLT (M8X1.25X30-MM)	
	3	1	**113-8129**	7	BOLT (M8X1.25X75-MM)	
	4	1	**277-2925**	1	CONNECTION AS	
	4A	1	**225-7738**	1	SEAL-O-RING	
	4B	1	**277-2923**	1	GASKET	
M	5	1	**6I-0217**	2	BOLT (M8X1.25X20-MM)	

C - CHANGE FROM PREVIOUS TYPE
M - METRIC PART

298-5105 **PUMP GP-WATER (*contd.*)** **i05391378**

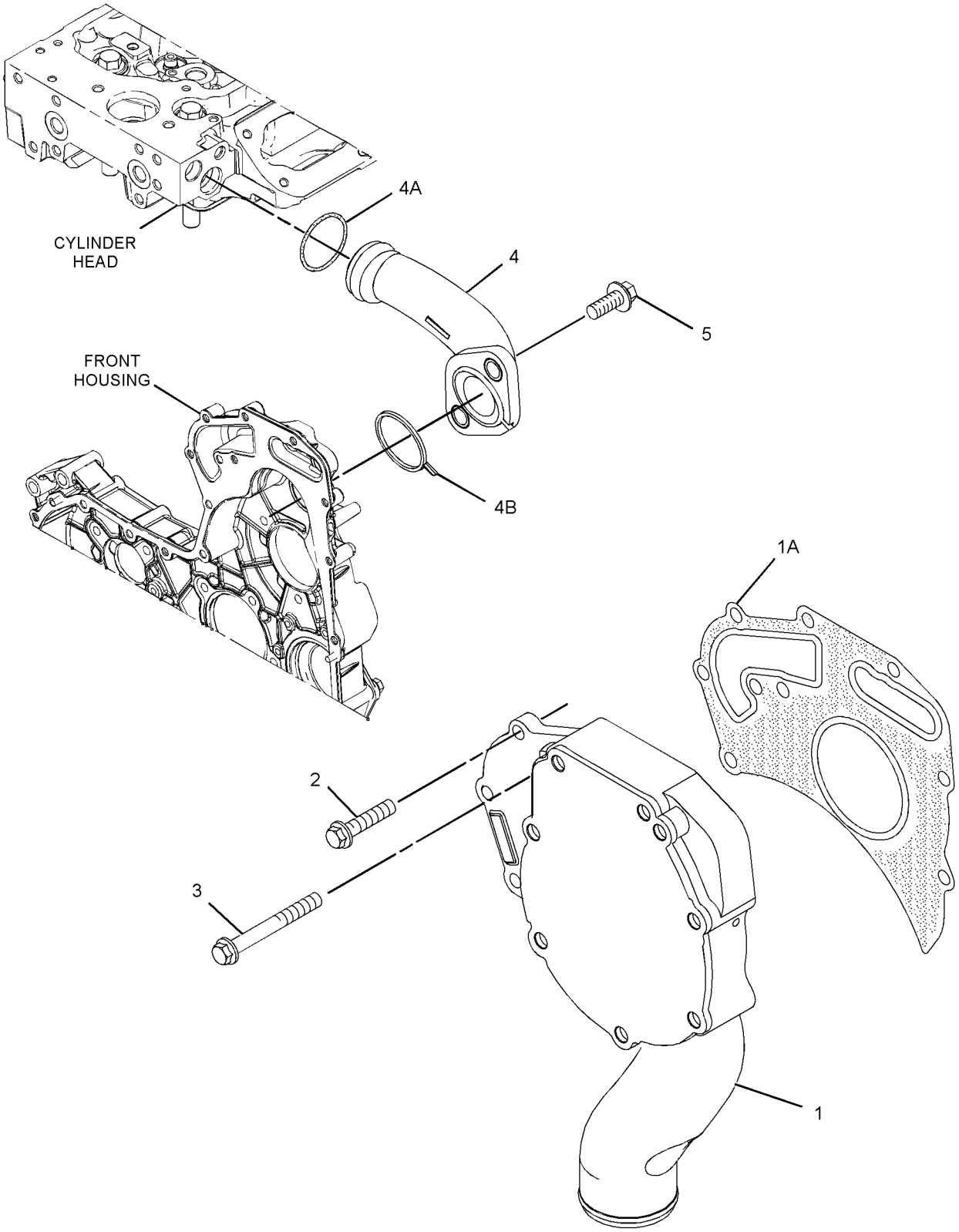

GRAPHIC #1 **<END>** g03405500

298-5105 PUMP GP-WATER

S/N: C4E1-UP

PART OF 254-9233 ENGINE AR-PRIMARY

TYPE 3

SMCS-1361 **i05391429**

NOTE	REF NO	GRAPHIC REF	PART NUMBER	QTY	PART NAME 1 2 3 4 5 6 (PRODUCT LEVEL)	SEE PAGE
C	1	1	**354-4754**	1	KIT-WATER PUMP	
	1A	1	**225-8019**	1	GASKET	
M	2	1	**6I-0254**	2	BOLT (M8X1.25X30-MM)	
	3	1	**113-8129**	2	BOLT (M8X1.25X75-MM)	
	4	1	**277-2925**	1	CONNECTION AS	
	4A	1	**225-7738**	1	SEAL-O-RING	
	4B	1	**277-2923**	1	GASKET	
M	5	1	**6I-0217**	2	BOLT (M8X1.25X20-MM)	
	6	1	**6I-0839**	5	BOLT (M8X1.25X70-MM)	

C - CHANGE FROM PREVIOUS TYPE
M - METRIC PART

298-5105 **PUMP GP-WATER (*contd.*)** **i05391429**

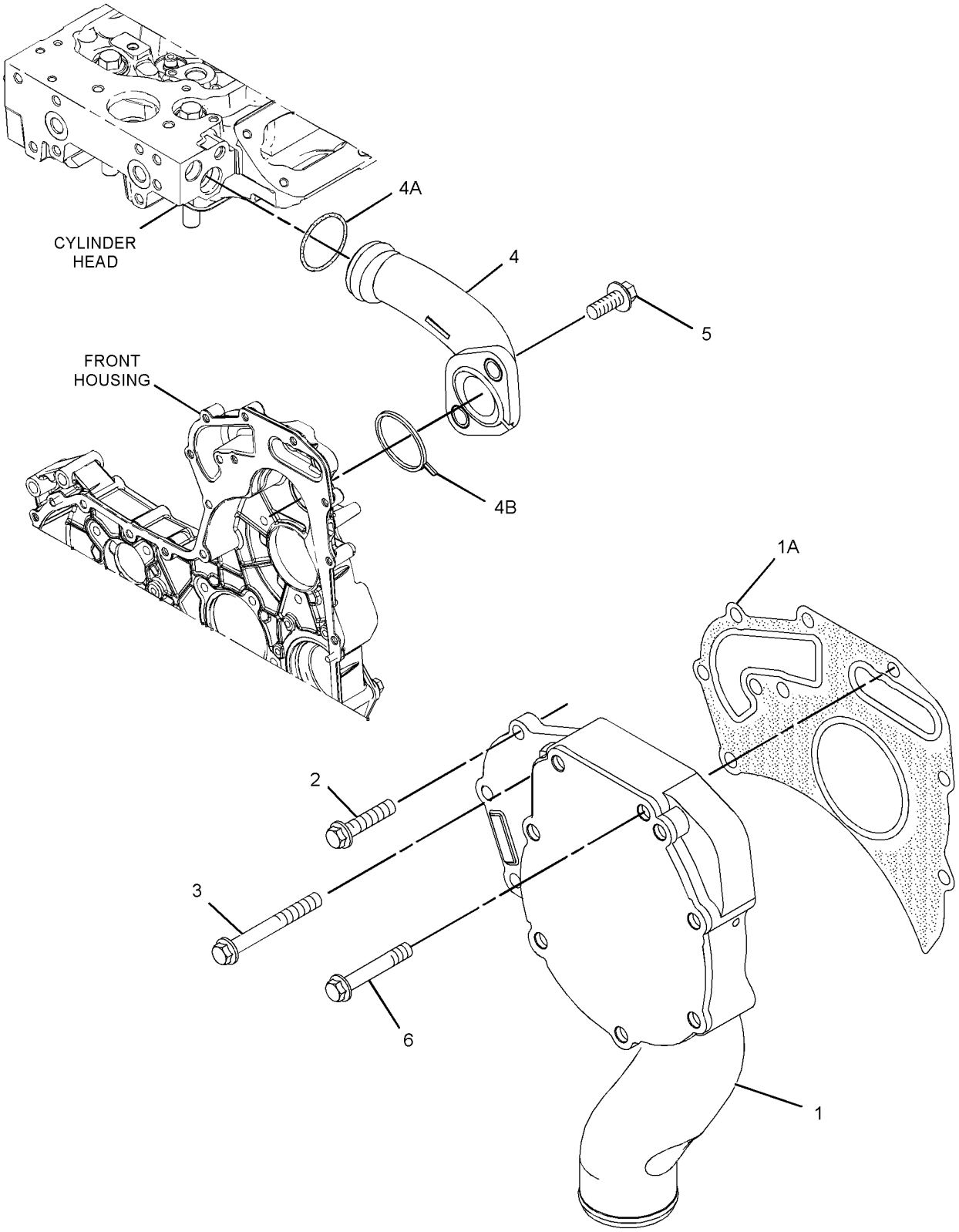

GRAPHIC #1 **<END>** g02177184

244-7430 RADIATOR & HYD OIL COOLER GP

S/N: MMM1-UP; RRR1-UP

PART OF 244-7386 INSTALLATION AR-ENGINE

SMCS-1353, 1374

i03601140

NOTE	REF NO	GRAPHIC REF	PART NUMBER	QTY	PART NAME 1 2 3 4 5 6 (PRODUCT LEVEL)	SEE PAGE
	1	1	**6V-7238**	1	VALVE-SHUTOFF (RADIATOR DRAIN)	
	2	1	**069-4269**	1	ADAPTER	
	3	1	**247-7954**	1	FITTING	
	4	1	**140-4829**	1	SEAL	
	5	1	**214-7457**	4	CLAMP	
	6	1	**223-0189**	2	MOUNT AS	
	7	1	**8S-9378**	2	MOUNT-FLEXIBLE	
	8	1	**253-1218**	1	COOLER AS	
	9	1	**255-1343**	1	HOSE-RADIATOR (UPPER)	
	10	1	**255-1344**	1	HOSE-RADIATOR (LOWER)	
	11	1	**258-9982**	1	SHROUD AS-FAN	
	12	1	**285-6627**	2	PLATE AS	
	13	1	**198-4777**	4	WASHER-HARD (11X25X10-MM THK)	
	14	1	**3D-2824**	1	SEAL-O-RING	
	15	1	**3K-0360**	1	SEAL-O-RING	
	16	1	**7G-8839**	6	SPACER (13.5X57X6-MM THK)	
	17	1	**7X-7729**	4	WASHER (11X25X3-MM THK)	
	18	1	**8T-4121**	2	WASHER-HARD (11X21X2.5-MM THK)	
M	19	1	**8T-4137**	6	BOLT (M10X1.5X20-MM)	
M	20	1	**8T-4185**	4	BOLT (M10X1.5X50-MM)	
M	21	1	**8T-4189**	4	BOLT (M8X1.25X20-MM)	
	22	1	**8T-4224**	4	WASHER-HARD (8.8X16X2-MM THK)	
M	23	1	**8T-4910**	2	BOLT (M12X1.75X60-MM)	
M	24	1	**8T-6868**	2	BOLT (M12X1.75X80-MM)	
D	25	1	**5P-8309**		SEAL (0.8-M EACH)	
D	25A	1	**5P-8309**		SEAL (0.7-M EACH)	

D - ORDER BY THE METER
M - METRIC PART

244-7430 **RADIATOR & HYD OIL COOLER GP (*contd.*)** **i03601140**

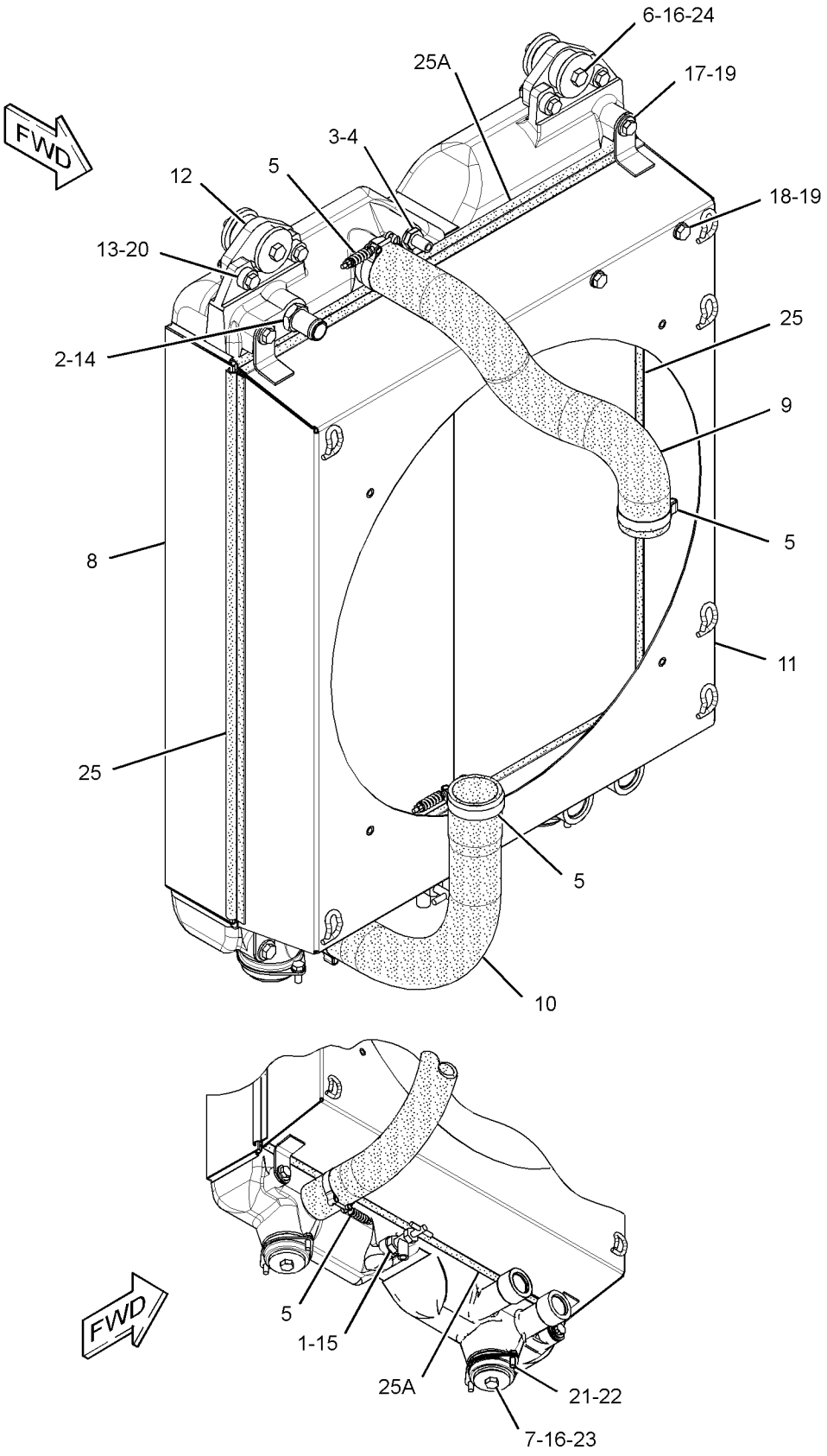

GRAPHIC #1 **<END>** g01622261

254-3256 TANK GP-COOLANT

S/N: MMM1-UP; RRR1-UP
4.3-LITER (1.2-US GAL)
PART OF 244-7386 INSTALLATION AR-ENGINE

SMCS-1377 **i02883871**

NOTE	REF NO	GRAPHIC REF	PART NUMBER	QTY	PART NAME 1 2 3 4 5 6 (PRODUCT LEVEL)	SEE PAGE
	1	1	**2S-3440**	2	CLAMP-HOSE	
	2	1	**3S-2093**	3	STRAP-CABLE	
	3	1	**5D-1026**	2	CLAMP-BAND	
	4	1	**247-1385**	1	TANK GP-EXPANSION (COOLANT)	
		1	**251-3227**	1	CAP AS-COOLANT TANK	
	5	1	**260-0633**	1	PLATE	
	6	1	**293-4381**	1	HOSE	
	7	1	**5P-4116**	2	WASHER-HARD (8.8X20.5X2-MM THK)	
	8	1	**8T-4121**	2	WASHER-HARD (11X21X2.5-MM THK)	
M	9	1	**8T-4136**	2	BOLT (M10X1.5X25-MM)	
M	10	1	**8T-4200**	2	BOLT (M8X1.25X16-MM)	
E	11	1	**9X-2133**		HOSE (43-CM)	
E	12	1	**8C-3681**		HOSE (120-CM)	

E - ORDER BY THE CENTIMETER
M - METRIC PART

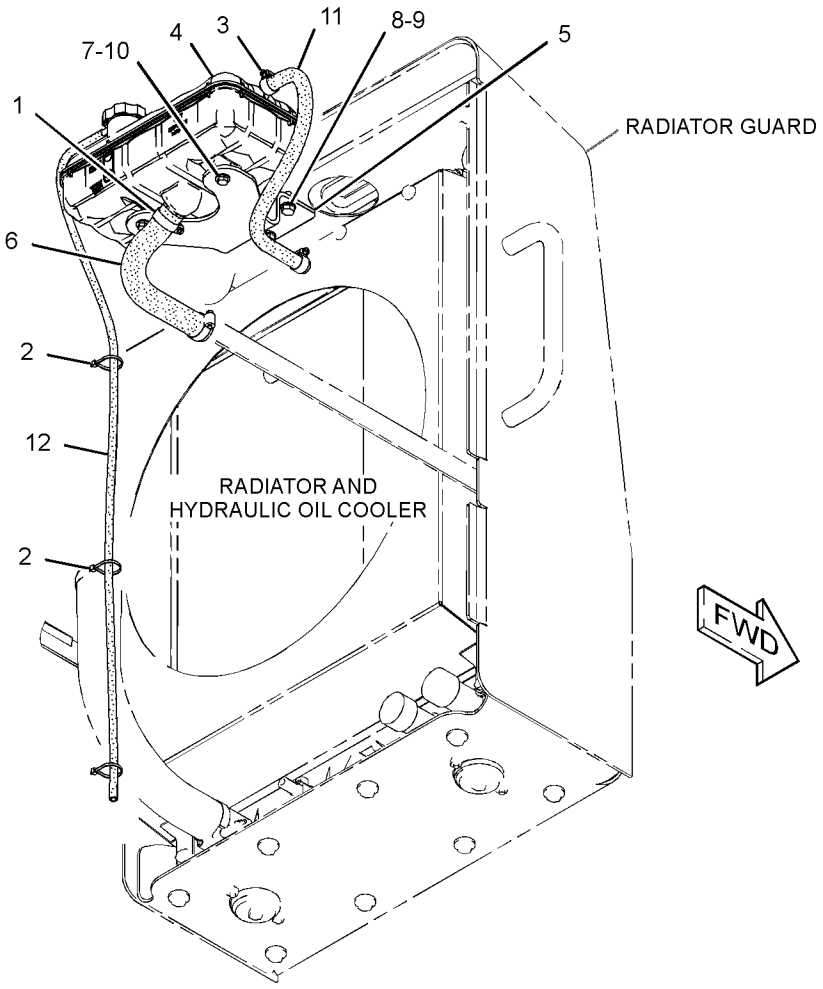

GRAPHIC #1 **<END>** g01330792

244-7427 AIR CLEANER GP

S/N: MMM1-UP; RRR1-UP

PART OF 244-7386 INSTALLATION AR-ENGINE

SMCS-1051, 1054 **i05171511**

NOTE	REF NO	GRAPHIC REF	PART NUMBER	QTY	PART NAME 1 2 3 4 5 6 (PRODUCT LEVEL)	SEE PAGE
	1	1	**5P-0598**	1	CLAMP-HOSE	
	2	1	**127-4471**	3	CLAMP-HOSE	
	3	1	**159-0186**	1	CLAMP-HOSE	
	4	1	**224-9476**	1	AIR CLEANER GP	
		1	**227-7446**	1	COVER	
		1	**293-4053**	1	FILTER ELEMENT-AIR (PRIMARY)	
		1	**227-7449**	1	FILTER ELEMENT-AIR (SECONDARY)	
		1	**262-9786**	1	FRAME	
	5	1	**247-9730**	1	VALVE AS-CHECK (AIR CLEANER)	
	6	1	**254-1087**	1	HOSE-AIR	
	7	1	**254-1090**	1	HOSE-AIR	
	8	1	**254-3257**	1	BRACKET AS	
	9	1	**260-0631**	1	HOSE	
	10	1	**260-0634**	1	TUBE	
	11	1	**276-4836**	1	SWITCH-PRESSURE (AIR CLEANER)	
	12	1	**5P-4116**	2	WASHER-HARD (8.8X20.5X2-MM THK)	
	13	1	**8T-4121**	4	WASHER-HARD (11X21X2.5-MM THK)	
M	14	1	**8T-4137**	4	BOLT (M10X1.5X20-MM)	
M	15	1	**8T-4189**	2	BOLT (M8X1.25X20-MM)	
	16	1	**5P-4868**	1	CLAMP-HOSE	

M - METRIC PART

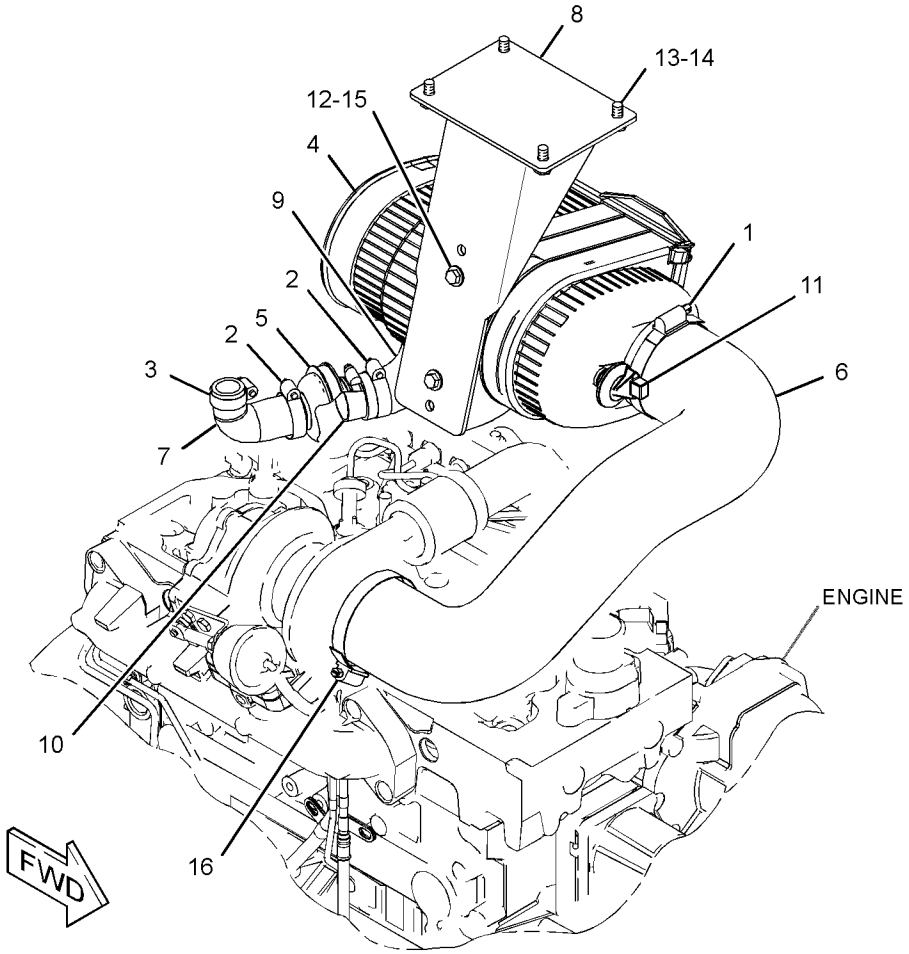

GRAPHIC #1 **<END>** g03371122

325-7267 ARRESTOR GP-SPARK–FIRE PLOW

S/N: MMM1-UP; RRR1-UP

PART OF 325-6498, 325-6499 MODIFICATION AR, 344-7614 SPECIAL AR AN ATTACHMENT

SMCS-1062 **i03919062**

NOTE	REF NO	GRAPHIC REF	PART NUMBER	QTY	PART NAME 1 2 3 4 5 6 (PRODUCT LEVEL)	SEE PAGE
	1	1	**3B-7942**	1	ARRESTOR AS	
	2	1	**5E-9091**	2	BAND	
	3	1	**7N-0808**	1	CLAMP	
	4	1	**7S-4992**	1	CAP AS-RAIN (EXHAUST)	
	5	1	**087-8799**	1	CLAMP	
	6	1	**329-4986**	1	TUBE AS	
	7	1	**329-4996**	1	PLATE	
M	8	1	**096-4885**	2	LOCKNUT (M16X2-THD)	
	10	1	**3V-9244**	4	WASHER (16.5X50.0X5.0-MM THK)	
M	11	1	**6V-7743**	2	LOCKNUT (M6X1-THD)	
M	12	1	**7X-2533**	2	BOLT (M6X1X35-MM)	
M	13	1	**8T-0643**	1	BOLT (M10X1.5X80-MM)	
	14	1	**8T-4121**	16	WASHER-HARD (11X21X2.5-MM THK)	
M	15	1	**8T-4133**	8	NUT (M10X1.5-THD)	
M	16	1	**8T-4136**	4	BOLT (M10X1.5X25-MM)	
M	17	1	**8T-4174**	2	BOLT (M16X2X120-MM)	
M	18	1	**8T-4195**	2	BOLT (M10X1.5X30-MM)	
	19	1	**9X-8256**	4	WASHER (6.6X12X2-MM THK)	
M	20	1	**8T-4186**	1	BOLT (M10X1.5X40-MM)	
M	21	1	**5C-2890**	2	NUT (M6X1-THD)	

M - METRIC PART

325-7267 **ARRESTOR GP-SPARK (*contd.*)** **i03919062**

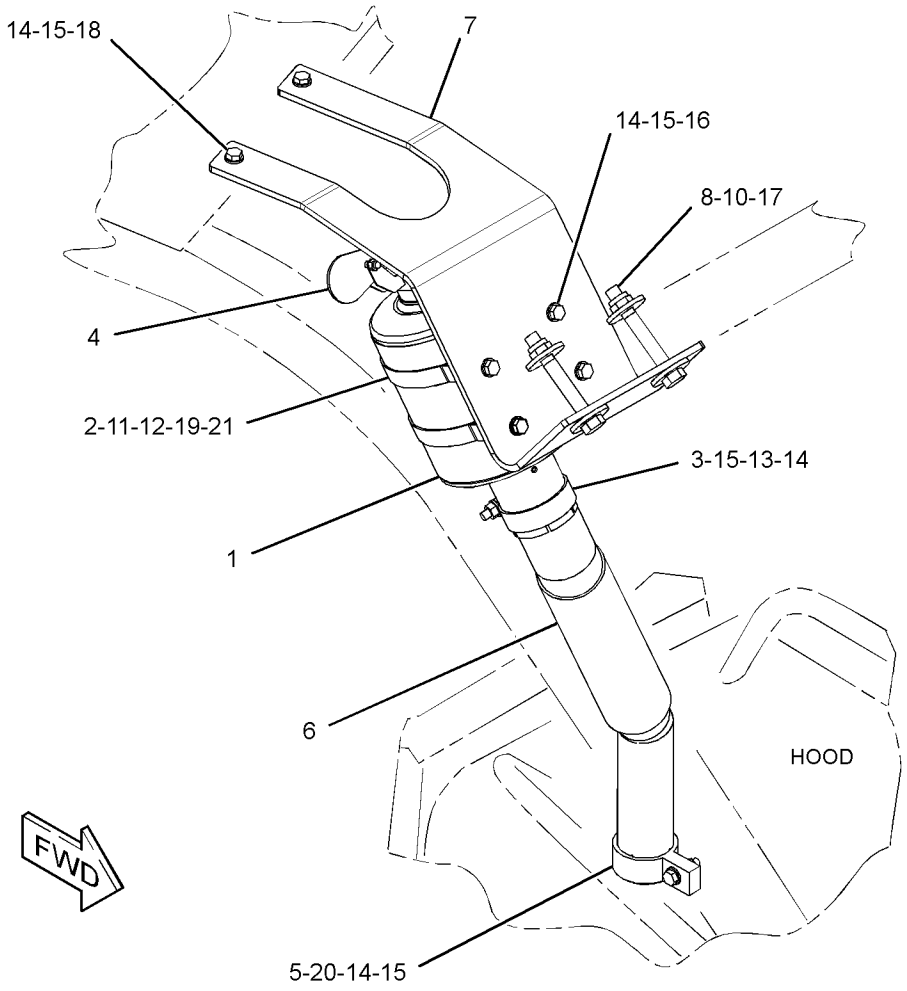

GRAPHIC #1 **<END>** g02202533

254-8954 MUFFLER GP

S/N: MMM1-UP; RRR1-UP

PART OF 244-7386 INSTALLATION AR-ENGINE

SMCS-1062 **i05367450**

NOTE	REF NO	GRAPHIC REF	PART NUMBER	QTY	PART NAME 1 2 3 4 5 6 (PRODUCT LEVEL)	SEE PAGE
	1	1	**6I-0364**	3	STUD (M10X1.5X45-MM)	
	2	1	**6I-0563**	3	NUT (M10X1.5-THD)	
	3	1	**388-7012**	1	CLAMP-BENT BOLT	
	4	1	**236-2507**	2	CLAMP AS	
	5	1	**246-4960**	1	PIPE-EXTENSION	
	6	1	**255-1204**	1	PLATE	
	7	1	**291-5505**	1	MUFFLER AS	
	8	1	**7X-7729**	8	WASHER (11X25X3-MM THK)	
	9	1	**8T-4121**	6	WASHER-HARD (11X21X2.5-MM THK)	
M	10	1	**8T-4133**	4	NUT (M10X1.5-THD)	
M	11	1	**8T-4195**	10	BOLT (M10X1.5X30-MM)	

M - METRIC PART

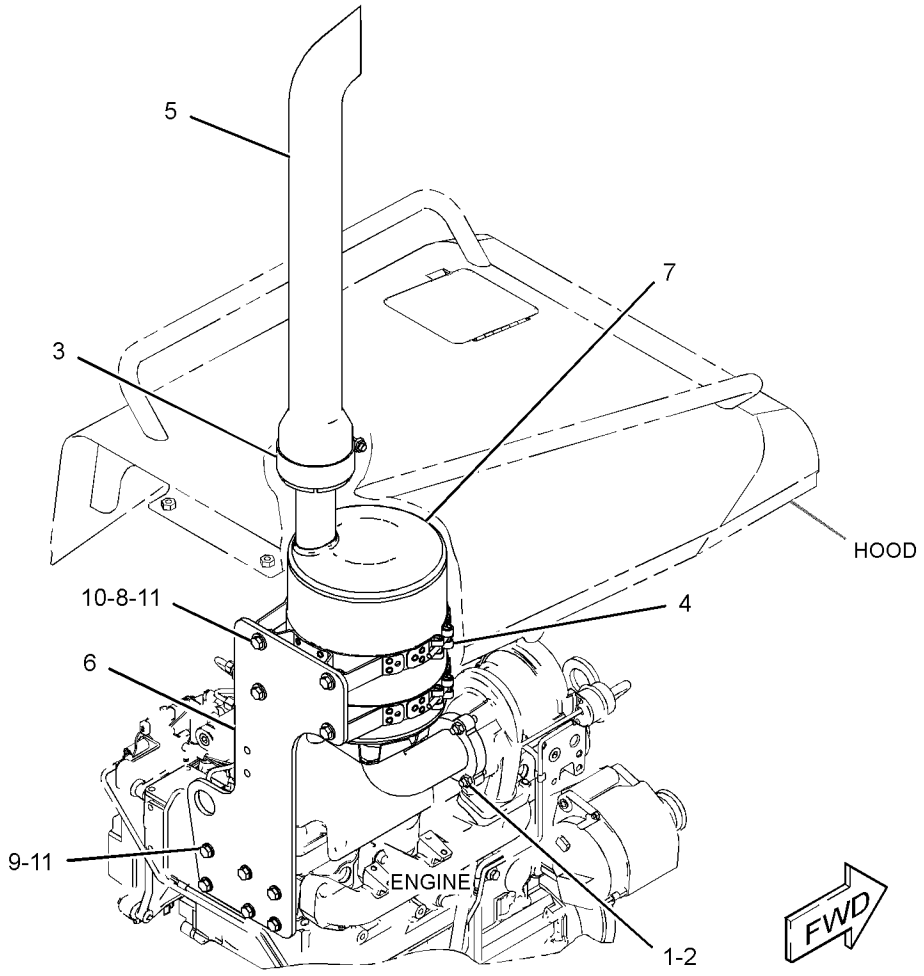

GRAPHIC #1 **<END>** g01334041

AIR INLET AND EXHAUST SYSTEM

304-3657 TURBOCHARGER GP

S/N: C4E1-UP

PART OF 254-9233 ENGINE AR-PRIMARY

SMCS-1052, 1053 **i04889469**

NOTE	REF NO	GRAPHIC REF	PART NUMBER	QTY	PART NAME 1 2 3 4 5 6 (PRODUCT LEVEL)	SEE PAGE
M	1	1	**6I-0217**	2	BOLT (M8X1.25X20-MM)	
M	2	2	**6I-0260**	4	BOLT (M8X1.25X25-MM)	
M	3	1	**6I-0593**	1	BOLT (M10X1.5X30-MM)	
M	4	1	**6I-0654**	1	BOLT (M10X1.5X25-MM)	
	5	2	**6I-0817**	1	ADAPTER	
	6	2	**6I-4200**	2	BOLT (M10X1.5X16-MM)	
	7	2	**9Y-9381**	1	WASHER-HARD	
M	8	2	**100-4830**	2	BOLT (M10X1.5X20-MM)	
	9	1	**106-8916**	2	BOLT (M6X16-MM)	
	10	1	**123-4038**	1	SPACER	
	11	2	**266-7092**	2	CLAMP-HOSE	
	12	1	**172-4325**	1	SPACER	
	13	1	**225-8533**	1	GASKET	
	14	1	**225-8534**	1	GASKET	
	15	2	**234-3030**	1	GASKET-INLET	
	16	1	**238-8292**	1	BOLT-FLANGE HEAD	
	17	2	**263-5376**	1	HOSE	
	18	1	**278-0361**	7	BOLT (M10X1.5X45-MM)	
	19	2	**294-7375**	1	SOLENOID (AIR FUEL RATIO CONTROL)	
	20	1	**298-4570**	1	GASKET-EXHAUST MANIFOLD	
	21	2	**303-2116**	6	CLIP	
	22	1	**303-5786**	1	TUBE AS-TURBOCHARGER OIL (SUPPLY)	
	22A	1	**220-7163**	1	CLIP	
	22B	1	**225-8524**	2	BOLT-SPECIAL (BANJO)	
	22C	1	**225-8526**	4	WASHER (10.4X13.75X1.37-MM THK)	
	23	1	**303-5787**	1	TUBE AS-TURBOCHARGER OIL (DRAIN)	
	23A	1	**103-2135**	1	CLIP	
	24	1	**303-5788**	1	MANIFOLD-EXHAUST	
	25	2	**303-5793**	1	TUBE AS	
	25A	2	**4B-8774**	1	NUT-FLARED	
	25B	2	**032-8047**	1	FERRULE	
	25C	2	**278-0316**	2	CLIP	
	25D	2	**298-4576**	1	CLIP	
	25E	2	**300-6520**	1	HOSE AS	
	25F	2	**107-2348**	2	CLIP	
R	26	1	**316-0468**	1	TURBOCHARGER	
	27	2	**304-3702**	1	TUBE-CROSSOVER	
	28	2	**363-9700**	1	TUBE AS	
	28A	2	**133-9469**	2	CLIP	
	28B	2	**035-8014**	1	NUT (7/16-IN)	
	28C	2	**032-8047**	1	FERRULE	
	28D	2	**032-8191**	1	NUT	
	28E	2	**278-0316**	4	CLIP	
	29	1	**6I-0563**	4	NUT (M10X1.5-THD)	
	30	1	**194-5390**	1	GASKET-MANIFOLD	
	31	1	**147-5553**	4	STUD	
	32	2	**127-8165**	2	SPACER	
	33	2	**303-5792**	1	BRACKET	
	34	2	**298-4576**	1	CLIP	

M - METRIC PART
R - REMFG PART MAY BE AVAILABLE

304-3657 **TURBOCHARGER GP (*contd.*)** **i04889469**

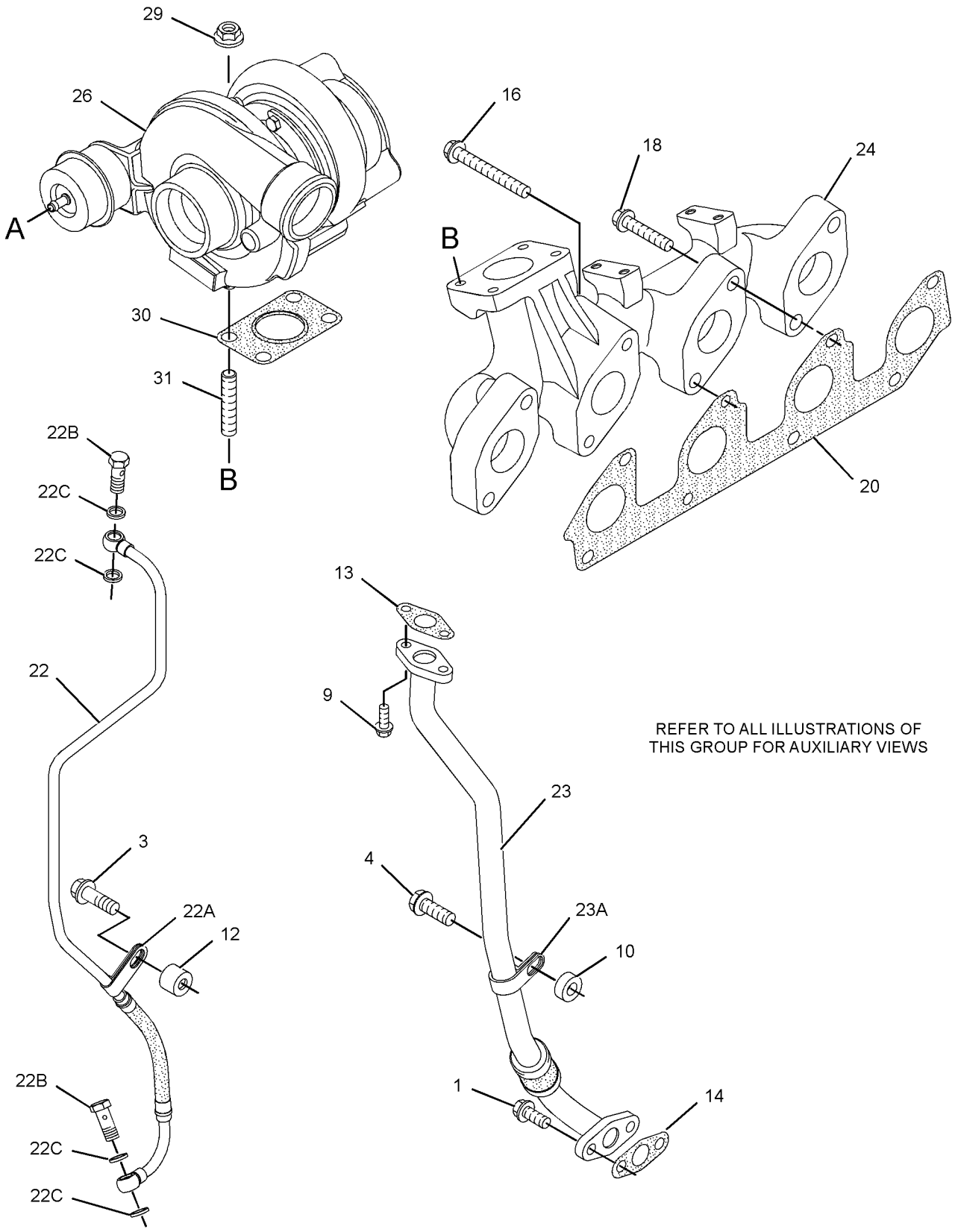

GRAPHIC #1

g01429325

304-3657 **TURBOCHARGER GP (*contd.*)** **i04889469**

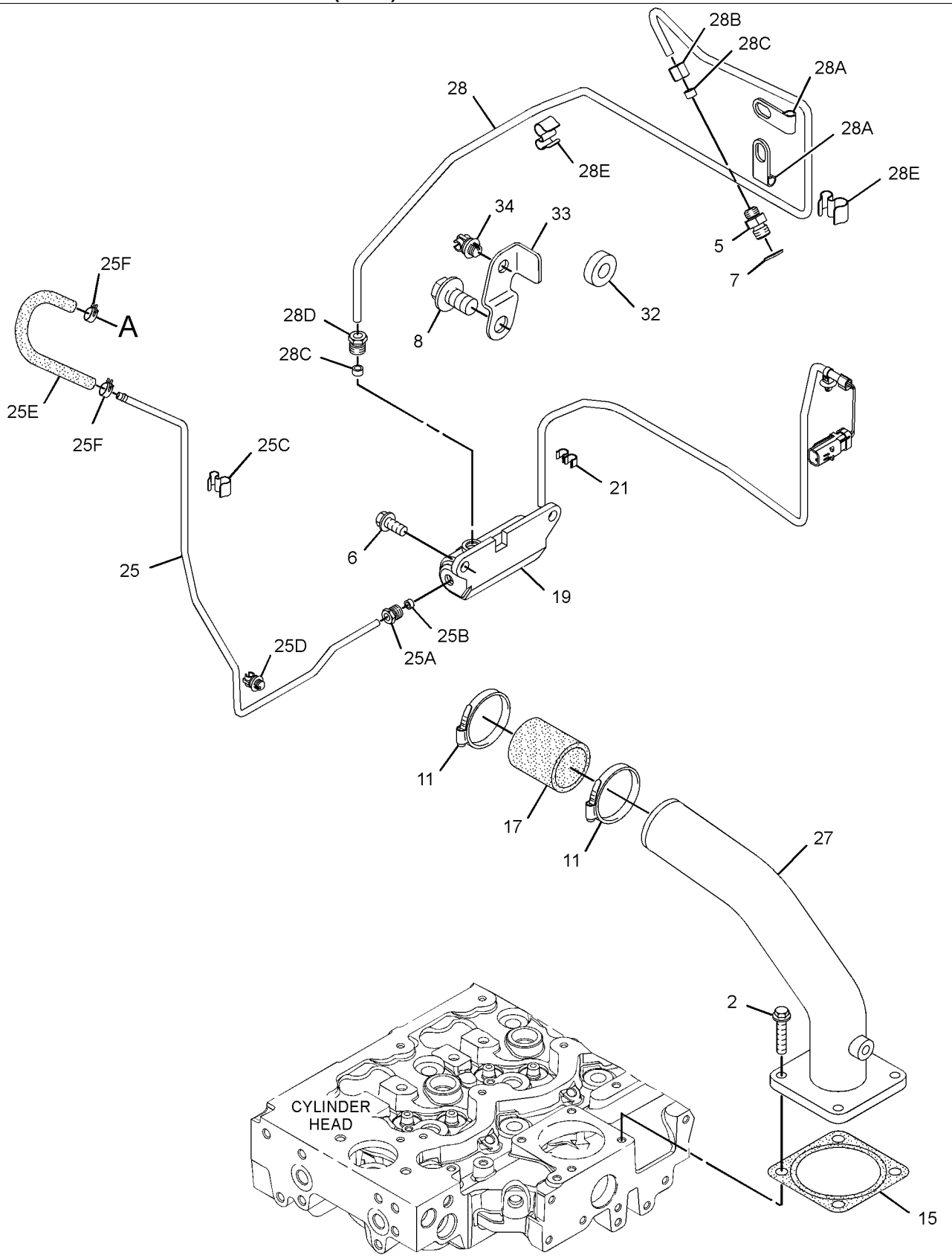

GRAPHIC #2 **<END>** g03138838

327-6347 BOWL GP-WATER COLLECTION

S/N: MMM1-UP; RRR1-UP
PART OF 322-5900 LINES GP-FUEL
AN ATTACHMENT

SMCS-1260, 1263

i05436524

NOTE	REF NO	GRAPHIC REF	PART NUMBER	QTY	PART NAME 1 2 3 4 5 6 (PRODUCT LEVEL)	SEE PAGE
	1	1	**6V-0681**	1	VALVE-DRAIN (RADIATOR)	
	2	1	**210-6964**	1	BOLT-FLANGE HEAD (M12X1.75X16-MM)	
	3	1	**9S-4191**	1	PLUG	
M	4	1	**281-2711**	1	WASHER (11.7X19.3X1.7-MM THK)	
	5	1	**3J-1907**	1	SEAL-O-RING	

M - METRIC PART

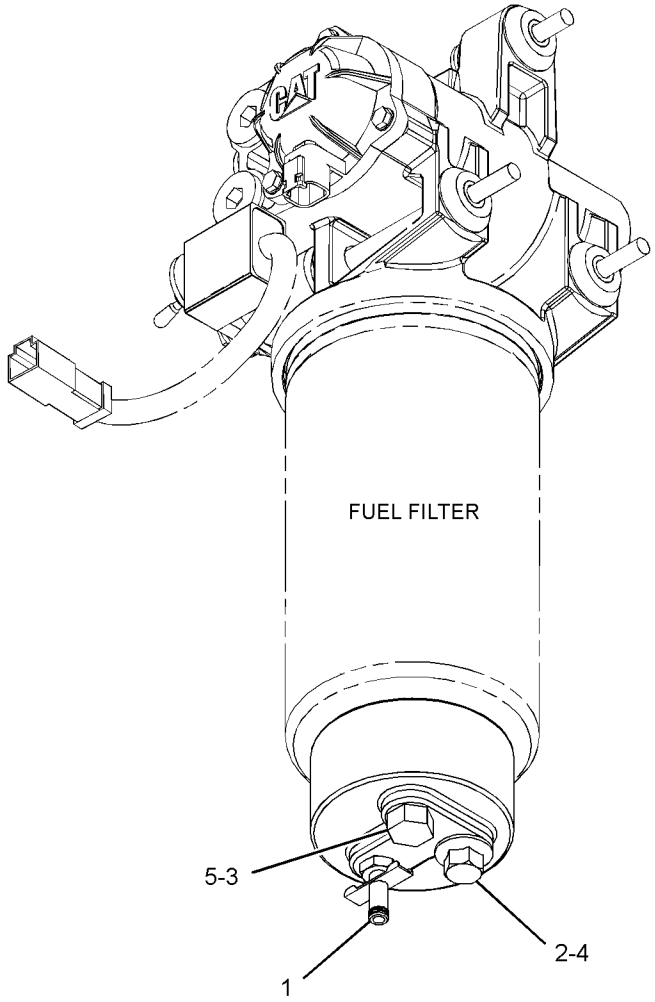

GRAPHIC #1

<END>

g02264833

244-7482 FILTER & LINES GP-FUEL

S/N: MMM1-866; RRR1-666

PART OF 244-7378, 244-7379 CHASSIS AR

SMCS-1261, 1274 **i04895213**

NOTE	REF NO	GRAPHIC REF	PART NUMBER	QTY	PART NAME 1 2 3 4 5 6 (PRODUCT LEVEL)	SEE PAGE
	1	1	**1P-4278**	10	CLAMP-HOSE	
	2	1	**7K-1181**	4	STRAP-CABLE	
	3	1	**8T-6725**	1	CONNECTOR	
	4	1	**206-2423**	1	SADDLE	
	5	1	**215-9513**	1	CONNECTOR-HOSE	
	6	1	**215-9515**	1	CONNECTOR-HOSE (QUICK DISCONNECT)	
	7	1	**238-1844**	1	ELBOW	
	8	1	**263-1431**	1	TUBE	
	9	1	**263-1432**	1	TUBE	
	10	1	**343-3684**	1	BRACKET AS	
	11	1	**371-4587**	1	FILTER AS-FUEL (IN-LINE)	
	12	1	**119-5708**	3	CLIP	
	13	1	**5K-8451**	4	CLIP	
	14	1	**5P-4116**	3	WASHER-HARD (8.8X20.5X2-MM THK)	
	15	1	**5P-9085**	3	CLIP	
	16	1	**6V-8397**	1	SEAL-O-RING	
	17	1	**8T-4121**	7	WASHER-HARD (11X21X2.5-MM THK)	
M	18	1	**8T-4136**	3	BOLT (M10X1.5X25-MM)	
M	19	1	**8T-4137**	2	BOLT (M10X1.5X20-MM)	
M	20	1	**8T-4195**	2	BOLT (M10X1.5X30-MM)	
M	21	1	**8T-4200**	3	BOLT (M8X1.25X16-MM)	
	22	1	**8T-6850**	1	SEAL-O-RING	
E	23	1	**5P-1420**		HOSE (66.8-CM)	
E	23A	1	**5P-1420**		HOSE (80-CM)	
E	24	1	**5P-1442**		HOSE (97-CM)	
E	24A	1	**5P-1442**		HOSE (77-CM)	

E - ORDER BY THE CENTIMETER
M - METRIC PART

244-7482 **FILTER & LINES GP-FUEL (*contd.*)** **i04895213**

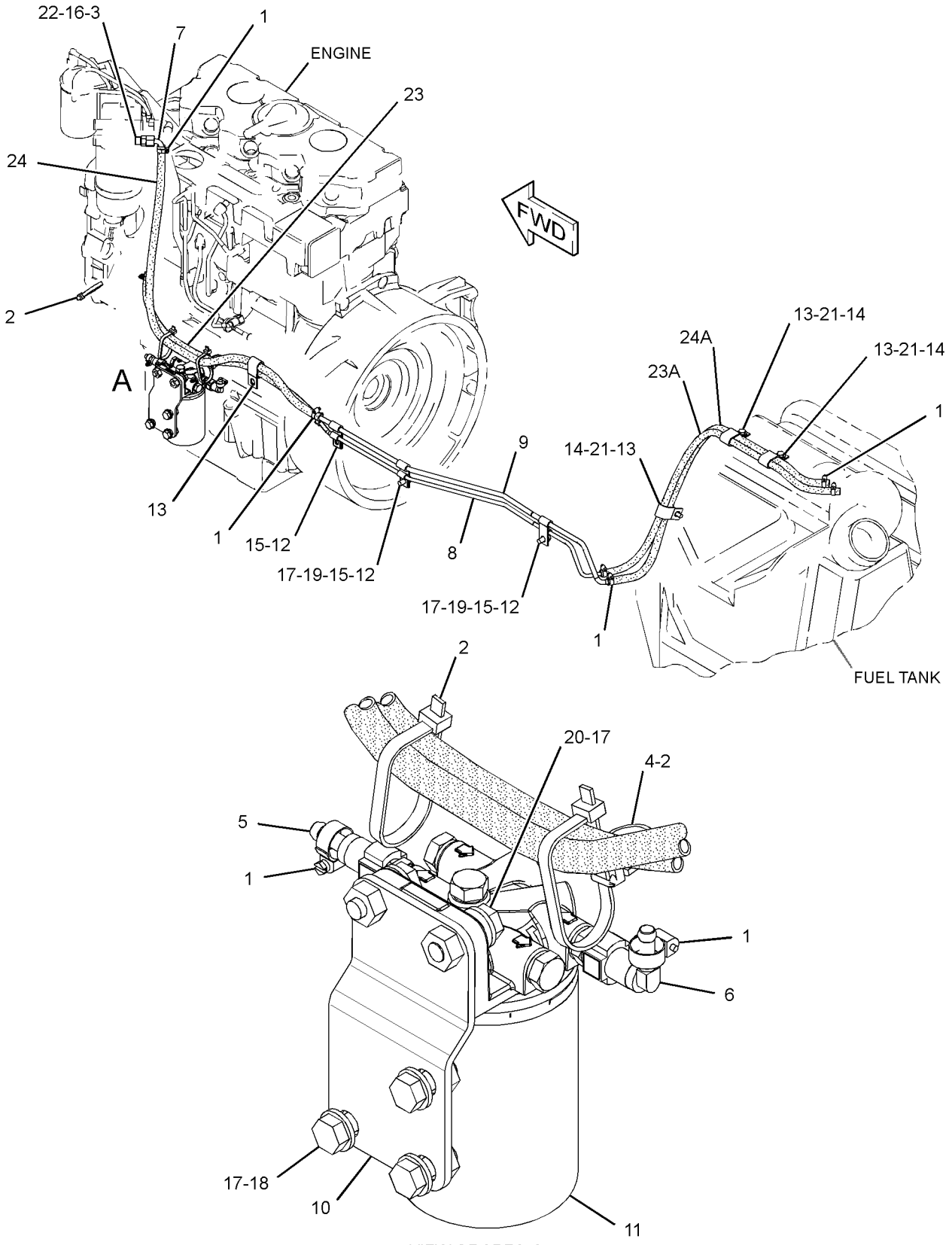

GRAPHIC #1

<END>

g03070576

244-7482 FILTER & LINES GP-FUEL

S/N: MMM867-UP; RRR667-UP

PART OF 244-7378, 244-7379 CHASSIS AR

SMCS-1261, 1274 **i05301055**

NOTE	REF NO	GRAPHIC REF	PART NUMBER	QTY	PART NAME 1 2 3 4 5 6 (PRODUCT LEVEL)	SEE PAGE
C	1	1	**1P-4278**	8	CLAMP-HOSE	
C	2	1	**6S-8620**	4	CLAMP-HOSE	
C	3	1	**7K-1181**	6	STRAP-CABLE	
	4	1	**8T-6725**	1	CONNECTOR	
	5	1	**206-2423**	1	SADDLE	
	6	1	**215-9513**	1	CONNECTOR-HOSE	
C	7	1	**215-9515**	2	CONNECTOR-HOSE (QUICK DISCONNECT)	
C	8	1	**224-5917**	1	CONNECTOR-SPECIAL	
	9	1	**238-1844**	1	ELBOW	
	10	1	**263-1431**	1	TUBE	
	11	1	**263-1432**	1	TUBE	
C	12	1	**343-3682**	1	PLATE	
C	13	1	**343-3683**	1	PLATE	
	14	1	**343-3684**	1	BRACKET AS	
	15	1	**371-4587**	1	FILTER AS-FUEL (IN-LINE)	
	16	1	**119-5708**	3	CLIP	
C	17	1	**3E-4321**	1	CLIP	
	18	1	**5K-8451**	4	CLIP	
	19	1	**5P-4116**	3	WASHER-HARD (8.8X20.5X2-MM THK)	
	20	1	**5P-9085**	3	CLIP	
	21	1	**6V-8397**	1	SEAL-O-RING	
	22	1	**8T-4121**	7	WASHER-HARD (11X21X2.5-MM THK)	
M	23	1	**8T-4136**	3	BOLT (M10X1.5X25-MM)	
M	24	1	**8T-4137**	2	BOLT (M10X1.5X20-MM)	
CM	25	1	**8T-4138**	1	BOLT (M6X1X20-MM)	
M	26	1	**8T-4195**	2	BOLT (M10X1.5X30-MM)	
M	27	1	**8T-4200**	3	BOLT (M8X1.25X16-MM)	
	28	1	**8T-6850**	1	SEAL-O-RING	
C	29	1	**9M-8406**	1	CLIP	
C	30	1	**9X-8256**	1	WASHER (6.6X12X2-MM THK)	
CE	31	1	**8C-5063**		CONDUIT-FLEXIBLE (15.49-MM ID, SPLIT) (22-CM)	
G	32	1	**423-1982**		HOSE (38.2-IN)	
G	32A	1	**423-1982**		HOSE (30.2-IN)	
CG	33	1	**423-1981**		HOSE (30-IN)	
CG	33A	1	**423-1981**		HOSE (14.2-IN)	
CG	33B	1	**423-1981**		HOSE (31.5-IN)	
CG	33C	1	**423-1981**		HOSE (26.3-IN)	

C - CHANGE FROM PREVIOUS TYPE
E - ORDER BY THE CENTIMETER
G - ORDER BY THE INCH
M - METRIC PART

244-7482 **FILTER & LINES GP-FUEL (*contd.*)** **i05301055**

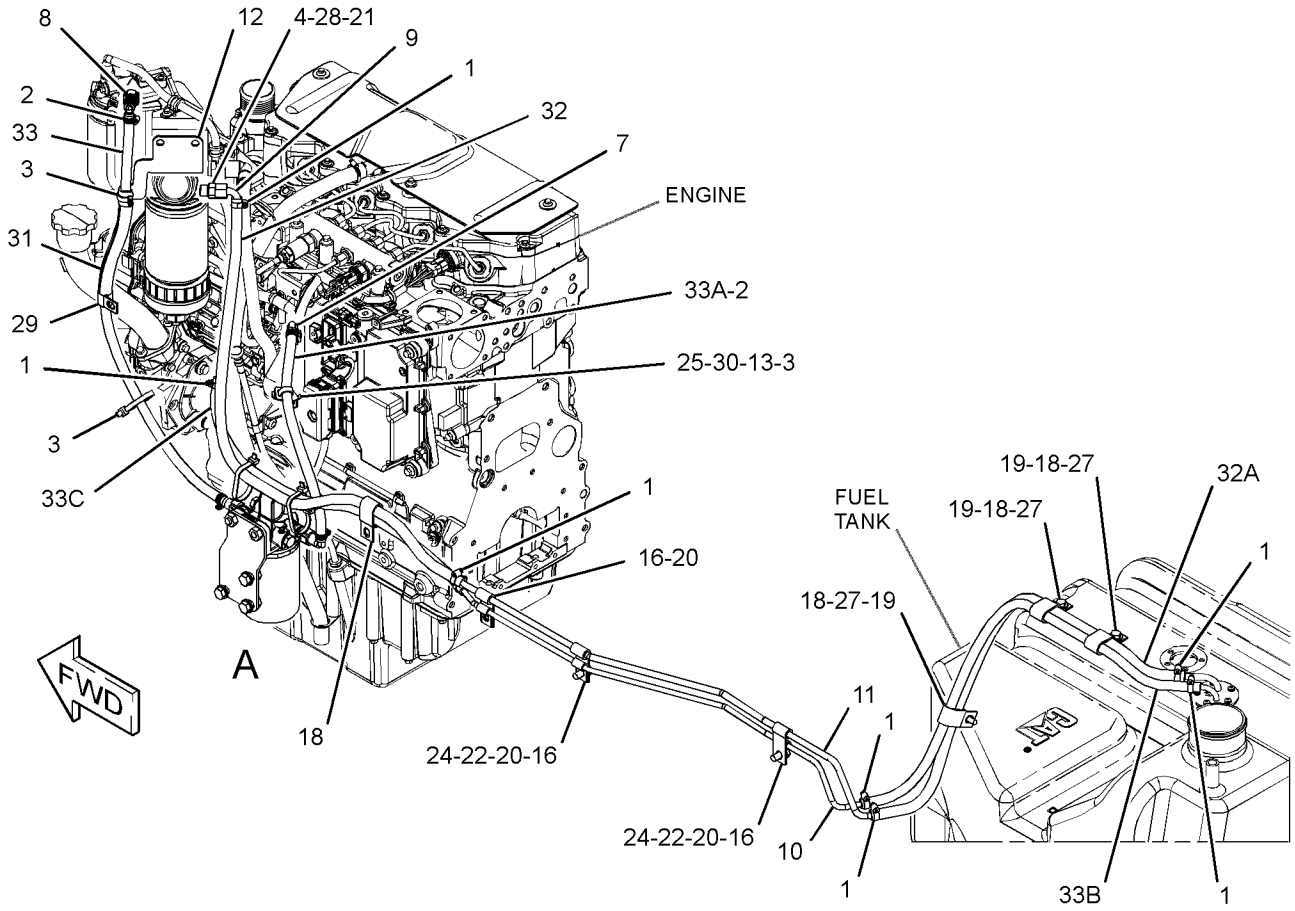

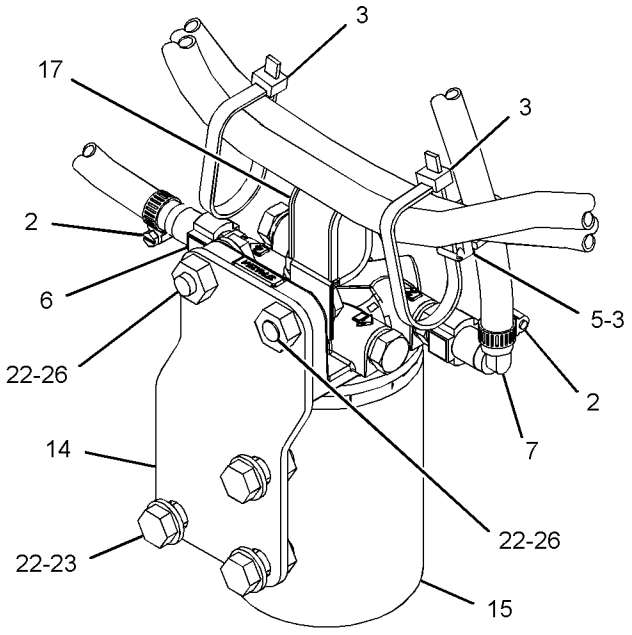

VIEW OF AREA A

GRAPHIC #1 **<END>** g03371157

318-8063 FILTER GP-FUEL

S/N: C4E1-5303

PART OF 304-3662 LINES GP-FUEL

SMCS-1261 **i04519176**

NOTE	REF NO	GRAPHIC REF	PART NUMBER	QTY	PART NAME 1 2 3 4 5 6 (PRODUCT LEVEL)	SEE PAGE
	1	1	**333-5435**	1	BOLT AS	
	2	1	**313-1663**	1	SENSOR-PRESSURE (FUEL)	
	3	1	**333-9693**	1	KIT-CONNECTION (FUEL, WATER SEPARATOR)	
					(INCLUDES 2 BLANKING PLUGS & 2 CONNECTORS)	
	4	1	**333-9694**	1	BOOT-SEAL	
	5	1	**308-7298**	1	FILTER AS-WATER SEP & FUEL	
	6	1	**310-5912**	1	BOWL AS	
F			**220-8678**	1	SEAL-RING	

F - NOT SHOWN

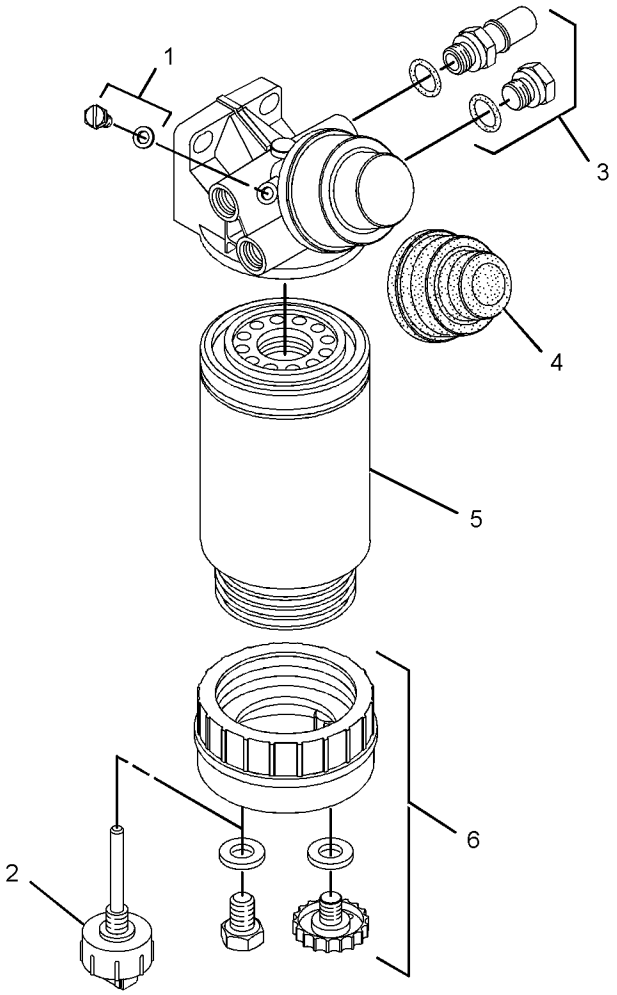

GRAPHIC #1 **<END>** g01621581

320-1332 FILTER GP-FUEL

S/N: C4E174-UP

PART OF 254-9233 ENGINE AR-PRIMARY

SMCS-1261 **i03662154**

NOTE	REF NO	GRAPHIC REF	PART NUMBER	QTY	PART NAME 1 2 3 4 5 6 (PRODUCT LEVEL)	SEE PAGE
	1	1	**343-7104**	1	FILTER AS-FUEL	
	1A	1	**299-8229**	1	FILTER ELEMENT-FUEL (ULTRA HIGH EFFICIENCY)	
F			**278-4138**	1	PROTECTION GP-FUEL SYSTEM (LINE, LOW PRESSURE)	

F - NOT SHOWN

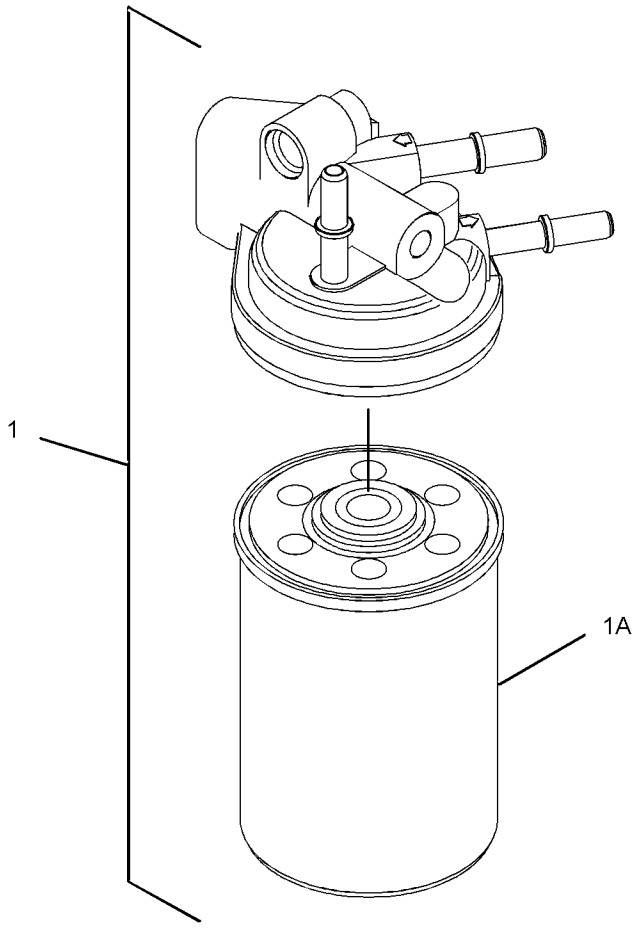

GRAPHIC #1 **<END>** g01962571

334-0808 FILTER GP-FUEL

S/N: C4E5304-UP; MMM1-UP; RRR1-UP
PART OF 304-3662, 322-5900 LINES GP-FUEL
ALSO AN ATTACHMENT

SMCS-1261 **i04522130**

NOTE	REF NO	GRAPHIC REF	PART NUMBER	QTY	PART NAME 1 2 3 4 5 6 (PRODUCT LEVEL)	SEE PAGE
	1	1	*308-7576*	1	FILTER GP-WATER SEP & FUEL	
	1A	1	**308-7298**	1	FILTER AS-WATER SEP & FUEL	
	1B	1	**310-5912**	1	BOWL AS	
	2	1	**313-1663**	1	SENSOR-PRESSURE (FUEL)	
	3	1	**333-5435**	1	BOLT AS	
	4	1	**333-9693**	1	KIT-CONNECTION (FUEL, WATER SEPARATOR)	
					(INCLUDES 2 BLANKING PLUGS & 2 CONNECTORS)	
	5	1	**333-9694**	1	BOOT-SEAL	

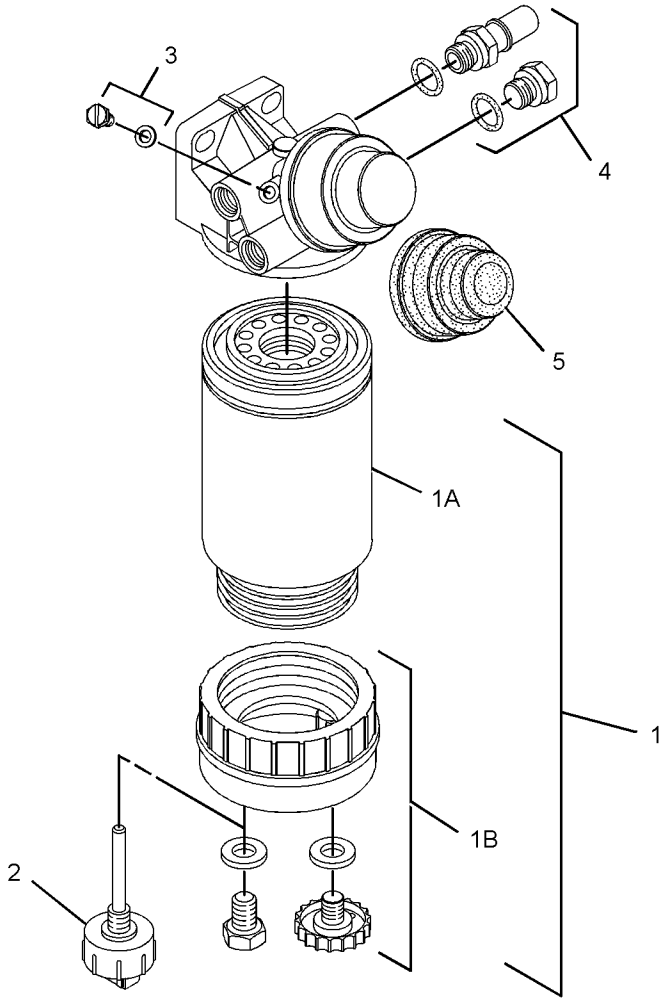

GRAPHIC #1 **<END>** g01719340

298-5123 FILTER GP-PRIMARY FUEL

S/N: C4E1-49

PART OF 254-9233 ENGINE AR-PRIMARY

SMCS-1260, 1261

i02896281

NOTE	REF NO	GRAPHIC REF	PART NUMBER	QTY	PART NAME 1 2 3 4 5 6 (PRODUCT LEVEL)	SEE PAGE
	1	1	**298-4603**	1	FILTER AS-FUEL (PRIMARY)	
	1A	1	**289-0600**	1	FILTER-FUEL (ULTRA HIGH EFFICIENCY)	
F			**278-4138**	1	PROTECTION GP-FUEL SYSTEM	

F - NOT SHOWN

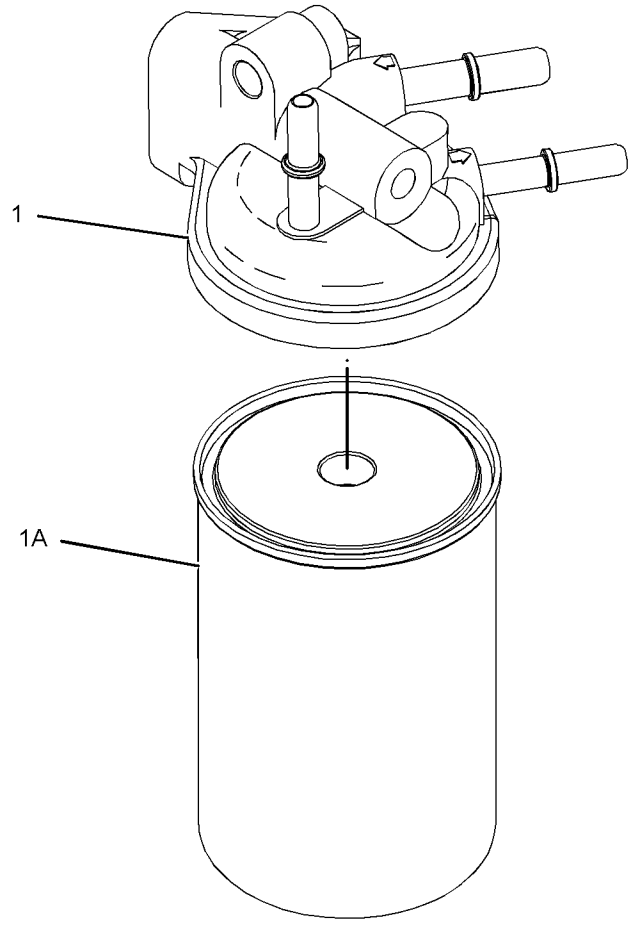

GRAPHIC #1

<END>

g01304976

298-5123 FILTER GP-PRIMARY FUEL

S/N: C4E50-173

PART OF 254-9233 ENGINE AR-PRIMARY

SMCS-1260, 1261 **i03021825**

NOTE	REF NO	GRAPHIC REF	PART NUMBER	QTY	PART NAME 1 2 3 4 5 6 (PRODUCT LEVEL)	SEE PAGE
	1	1	**311-2376**	1	FILTER AS-FUEL	
	1A	1	**299-8229**	1	FILTER ELEMENT-FUEL (ULTRA HIGH EFFICIENCY)	
F			**278-4138**	1	PROTECTION GP-FUEL SYSTEM	

F - NOT SHOWN

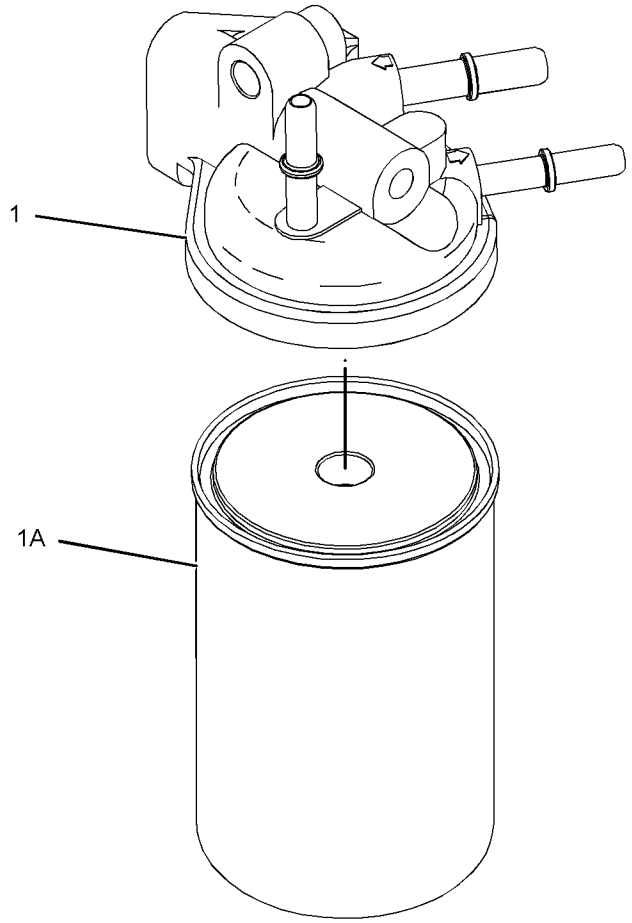

GRAPHIC #1 **<END>** g01304976

292-3778 INJECTOR GP-FUEL

S/N: C4E1-3159

PART OF 304-3649 PUMP GP-FUEL INJECTION

SMCS-1251, 1254, 1290

i02720134

NOTE	REF NO	GRAPHIC REF	PART NUMBER	QTY	PART NAME 1 2 3 4 5 6 (PRODUCT LEVEL)	SEE PAGE
	1	1	**287-7637**	1	WASHER	
	2	1	**274-1639**	1	SEAL	

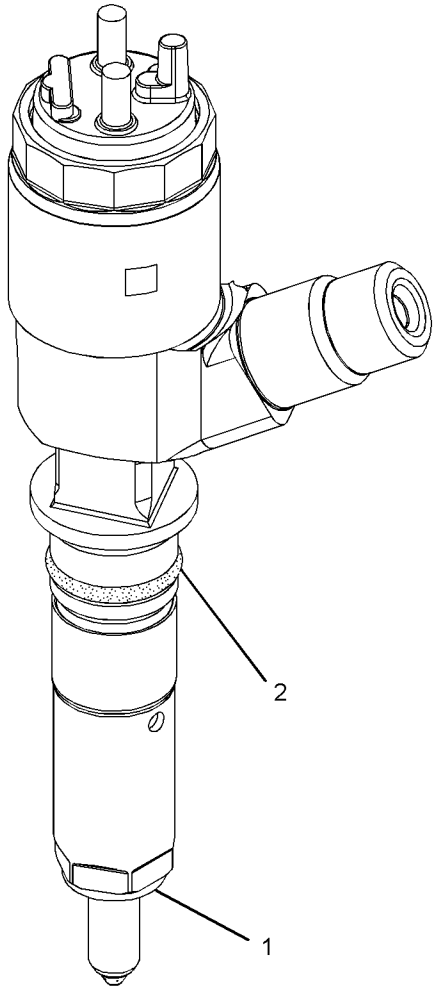

GRAPHIC #1

<END>

g01321917

320-0677 INJECTOR GP-FUEL

S/N: C4E3160-UP

PART OF 304-3649 PUMP GP-FUEL INJECTION

SMCS-1251, 1254, 1290

i02966445

NOTE	REF NO	GRAPHIC REF	PART NUMBER	QTY	PART NAME 1 2 3 4 5 6 (PRODUCT LEVEL)	SEE PAGE
	1	1	**287-7637**	1	WASHER	
	2	1	**274-1639**	1	SEAL	

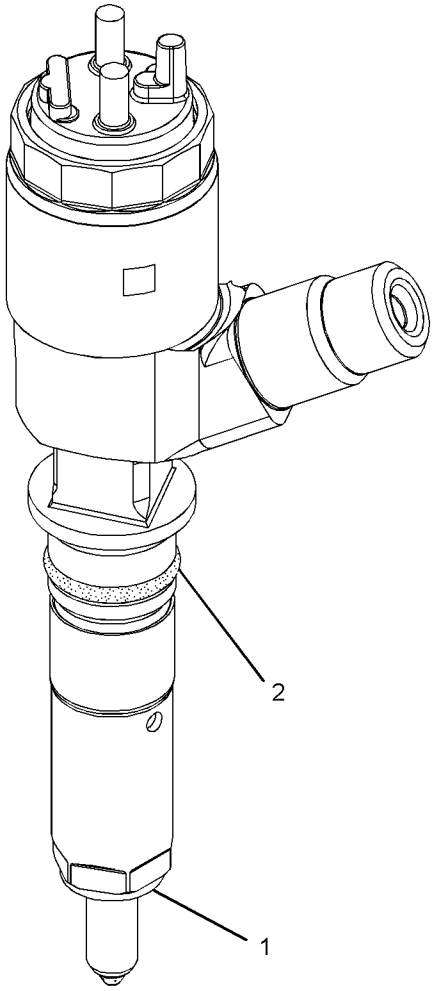

GRAPHIC #1

<END>

g01321917

304-3659 LINES GP-FUEL

S/N: C4E1-642

PART OF 254-9233 ENGINE AR-PRIMARY

SMCS-1274 **i03304669**

NOTE	REF NO	GRAPHIC REF	PART NUMBER	QTY	PART NAME 1 2 3 4 5 6 (PRODUCT LEVEL)	SEE PAGE
M	1	2	**6I-0217**	2	BOLT (M8X1.25X20-MM)	
M	2	2	**6I-0260**	1	BOLT (M8X1.25X25-MM)	
	3	2	**6I-4709**	1	BOLT (M8X1.25X100-MM)	
M	4	1,2	**124-3815**	4	BOLT (M8X16X1.25-MM)	
	5	2	**215-9509**	1	FITTING (QUICK DISCONNECT, FEMALE)	
	7	2	**232-1115**	2	CLIP-PIPE	
	9	2	**277-6165**	1	CONNECTION-FUEL	
	11	1	**308-7571**	1	TUBE AS	
	11A	1	**295-4670**	2	BOLT-SPECIAL (BANJO)	
	11B	1	**317-8476**	4	WASHER-SEAL	
	12	1	**304-3706**	1	TUBE	
	13	1	**304-3707**	1	TUBE	
	14	2	**304-3708**	1	TUBE	
	15	2	**314-2892**	1	BRACKET	
	16	1	**324-1482**	1	BRACKET	
	17	2	**324-1481**	1	BRACKET	
F			**234-3063**	1	CLIP	
F			**278-4138**	1	PROTECTION GP-FUEL SYSTEM (LINE, LOW PRESSURE)	

F - NOT SHOWN
M - METRIC PART

304-3659 **LINES GP-FUEL (*contd.*)** **i03304669**

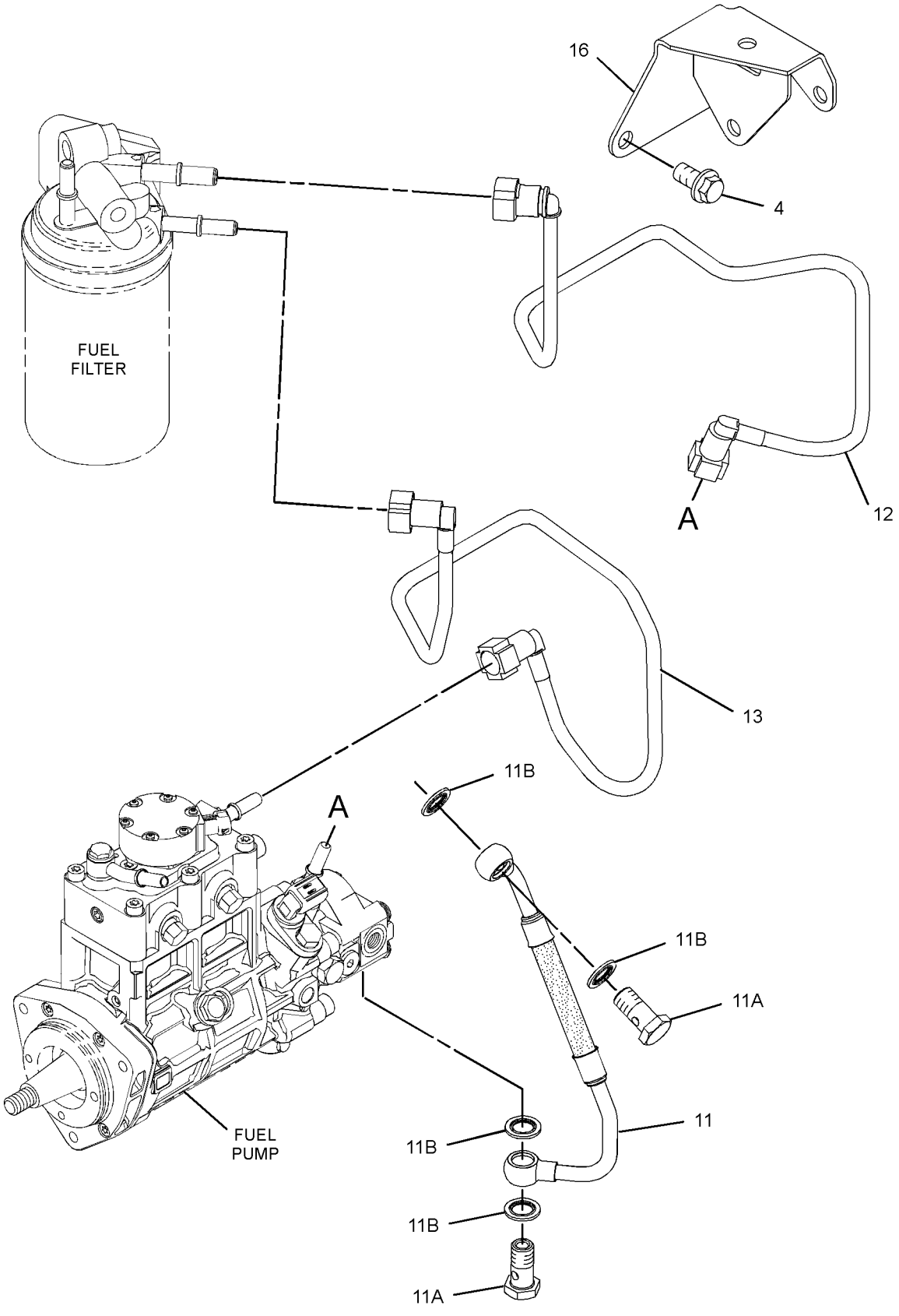

GRAPHIC #1 g01709713

304-3659 **LINES GP-FUEL (*contd.*)** **i03304669**

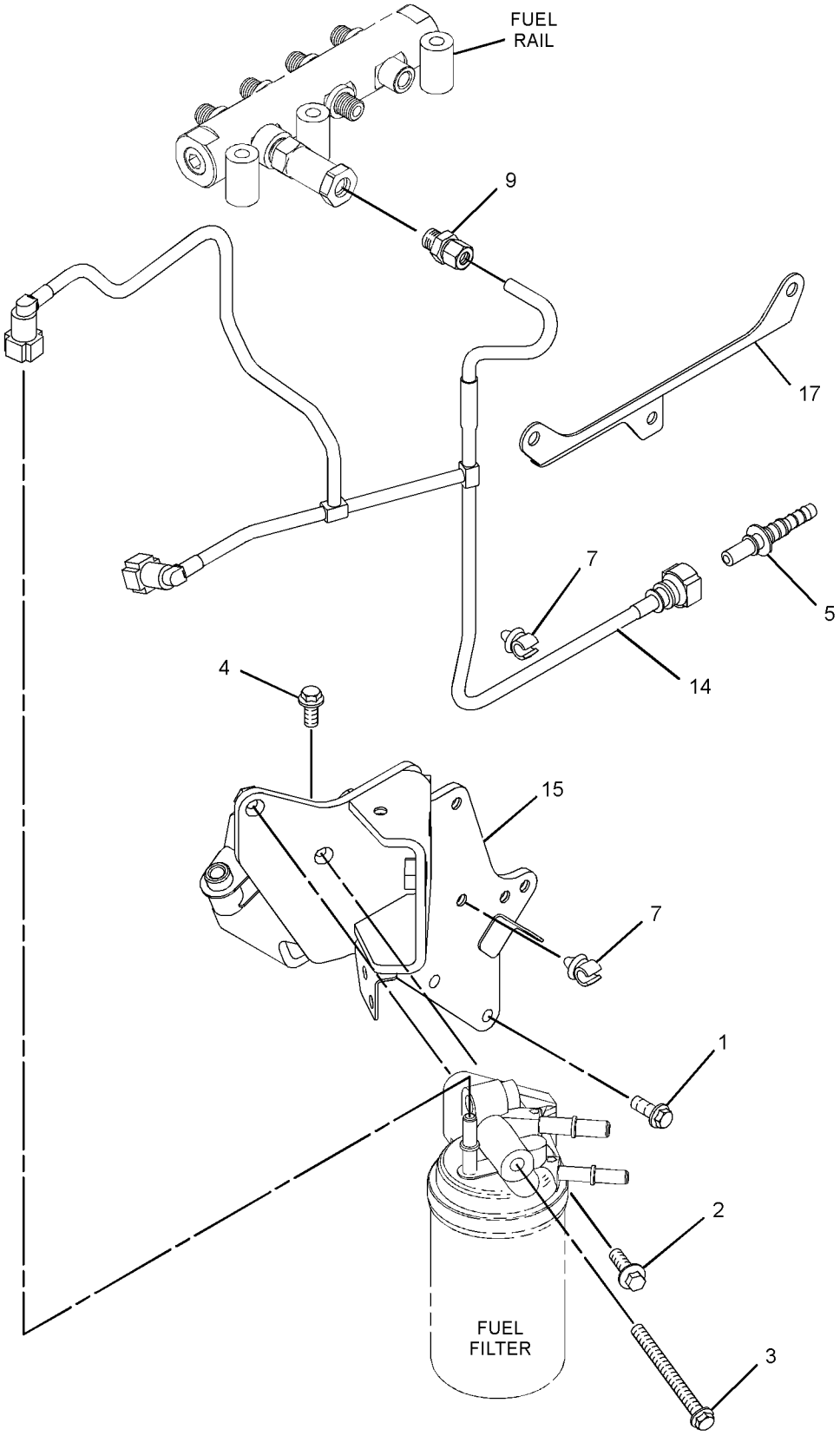

GRAPHIC #2 **<END>** g01709714

304-3659 LINES GP-FUEL

S/N: C4E643-6228

PART OF 254-9233 ENGINE AR-PRIMARY

SMCS-1274 **i03348261**

NOTE	REF NO	GRAPHIC REF	PART NUMBER	QTY	PART NAME 1 2 3 4 5 6 (PRODUCT LEVEL)	SEE PAGE
M	1	1	**6I-0217**	2	BOLT (M8X1.25X20-MM)	
M	2	1	**6I-0260**	1	BOLT (M8X1.25X25-MM)	
	3	1	**6I-4709**	1	BOLT (M8X1.25X100-MM)	
M	4	1,2	**124-3815**	4	BOLT (M8X16X1.25-MM)	
	5	1	**215-9509**	1	FITTING (QUICK DISCONNECT, FEMALE)	
	7	1	**232-1115**	2	CLIP-PIPE	
	9	1	**277-6165**	1	CONNECTION-FUEL	
	11	2	**308-7571**	1	TUBE AS	
	11A	2	**295-4670**	2	BOLT-SPECIAL (BANJO)	
	11B	2	**317-8476**	4	WASHER-SEAL	
	12	2	**304-3706**	1	TUBE	
	13	2	**304-3707**	1	TUBE	
	14	1	**304-3708**	1	TUBE	
	15	1	**314-2892**	1	BRACKET	
	16	2	**324-1482**	1	BRACKET	
	17	1	**324-1481**	1	BRACKET	
BCM	18	1	**100-4830**	2	BOLT (M10X1.5X20-MM)	
BC	19	1	**335-5782**	1	BRACKET	
F			**234-3063**	1	CLIP	
F			**278-4138**	1	PROTECTION GP-FUEL SYSTEM (LINE, LOW PRESSURE)	

B - USE AS REQUIRED
C - CHANGE FROM PREVIOUS TYPE
F - NOT SHOWN
M - METRIC PART

304-3659 **LINES GP-FUEL (*contd.*)** **i03348261**

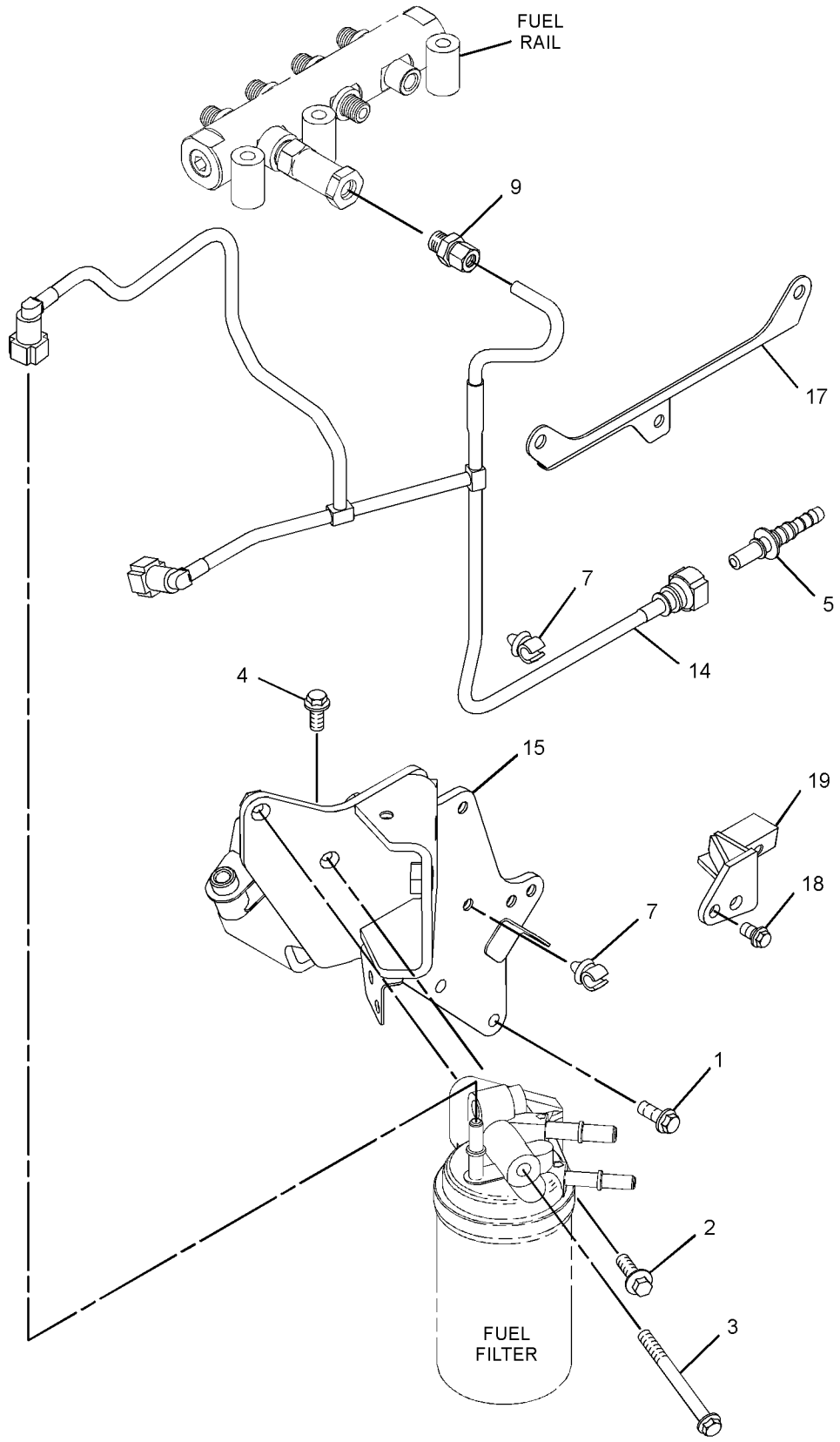

GRAPHIC #1 g01735953

304-3659 **LINES GP-FUEL (*contd.*)** **i03348261**

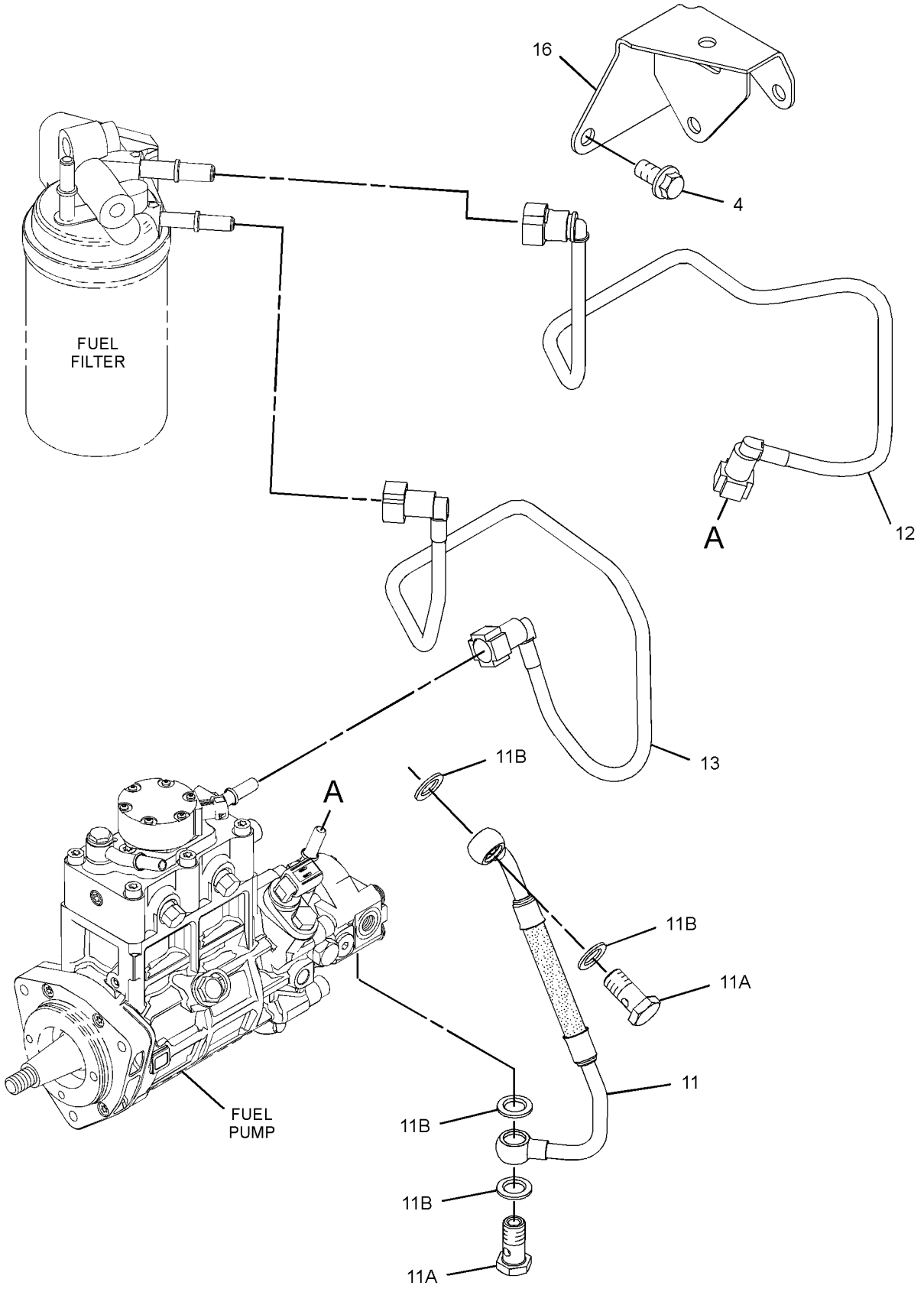

GRAPHIC #2 **<END>** g01735954

304-3659 LINES GP-FUEL

S/N: C4E6229-UP

PART OF 254-9233 ENGINE AR-PRIMARY

SMCS-1274 **i04001484**

NOTE	REF NO	GRAPHIC REF	PART NUMBER	QTY	PART NAME 1 2 3 4 5 6 (PRODUCT LEVEL)	SEE PAGE
CM	1	2	**6I-0217**	3	BOLT (M8X1.25X20-MM)	
M	2	2	**6I-0260**	1	BOLT (M8X1.25X25-MM)	
	3	2	**103-5705**	1	BOLT (M8X1.25X110-MM)	
CM	4	2	**124-3815**	2	BOLT (M8X1.25X16-MM)	
	5	2	**215-9509**	1	FITTING (QUICK DISCONNECT, FEMALE)	
	6	2	**277-6165**	1	CONNECTION-FUEL	
	7	1	**308-7571**	1	TUBE AS	
	7A	1	**295-4670**	2	BOLT-SPECIAL (BANJO)	
	7B	1	**317-8476**	4	WASHER-SEAL	
C	8	1	**338-8071**	1	TUBE AS	
	8A	1	**329-1197**	2	CLIP-PIPE	
C	9	1	**338-8072**	1	TUBE AS	
	9A	1	**329-1197**	2	CLIP-PIPE	
C	10	2	**338-8070**	1	TUBE AS	
	10A	2	**329-1197**	3	CLIP-PIPE	
C	11	2	**338-8075**	1	BRACKET AS	
	11A	2	**289-2478**	1	CLIP	
C	12	2	**338-8069**	1	BRACKET	
C	13	1,2	**106-8916**	4	BOLT (M6X16-MM)	
CM	14	1	**100-4841**	2	BOLT (M6X1X10-MM)	
F			**278-4138**	4	PROTECTION GP-FUEL SYSTEM (LINE, LOW PRESSURE)	

C - CHANGE FROM PREVIOUS TYPE
F - NOT SHOWN
M - METRIC PART

304-3659 **LINES GP-FUEL (*contd.*)** **i04001484**

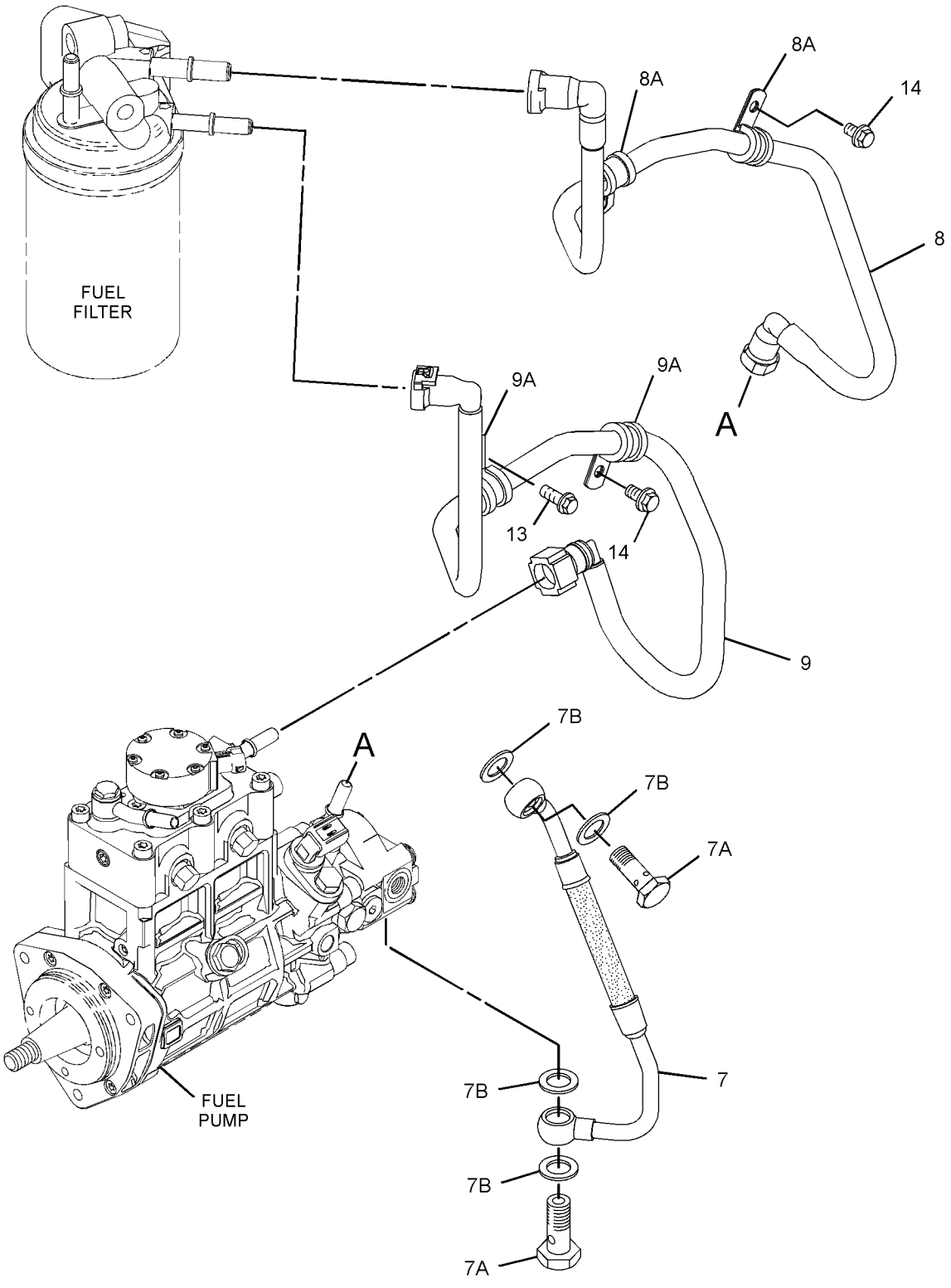

GRAPHIC #1 g02363365

304-3659 **LINES GP-FUEL (*contd.*)** **i04001484**

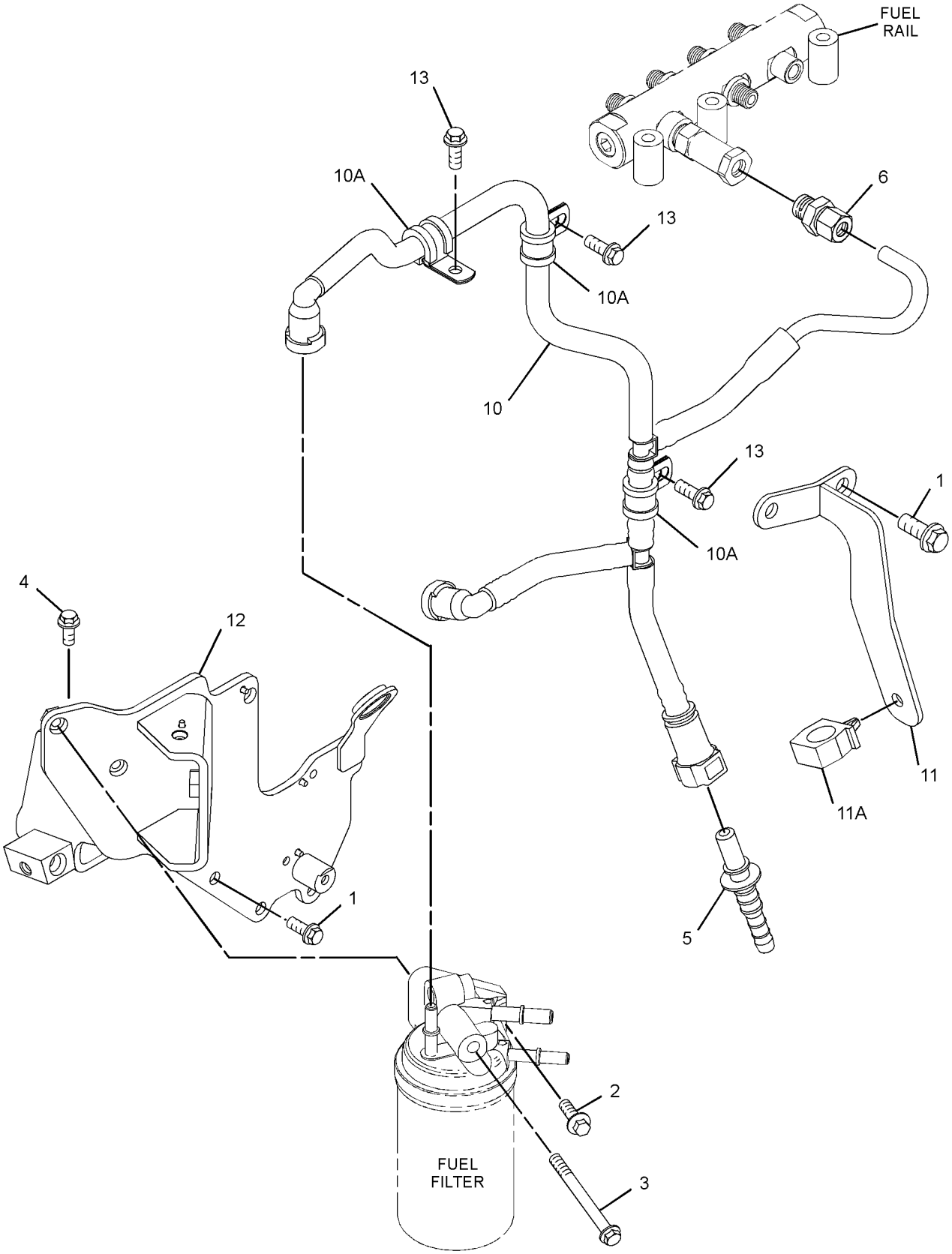

GRAPHIC #2

<END>

g02363366

304-3662 LINES GP-FUEL

S/N: C4E1-5303

PART OF 254-9233 ENGINE AR-PRIMARY

SMCS-1274 **i03153881**

NOTE	REF NO	GRAPHIC REF	PART NUMBER	QTY	PART NAME 1 2 3 4 5 6 (PRODUCT LEVEL)	SEE PAGE
M	1	1	**6I-0593**	2	BOLT (M10X1.5X30-MM)	
Y	2	1	**318-8063**	1	FILTER GP-FUEL	84
	3	1	**304-3713**	1	TUBE	
BF			**278-4138**	1	PROTECTION GP-FUEL SYSTEM (LINE, LOW PRESSURE)	

B - USE AS REQUIRED
F - NOT SHOWN
M - METRIC PART
Y - SEPARATE ILLUSTRATION

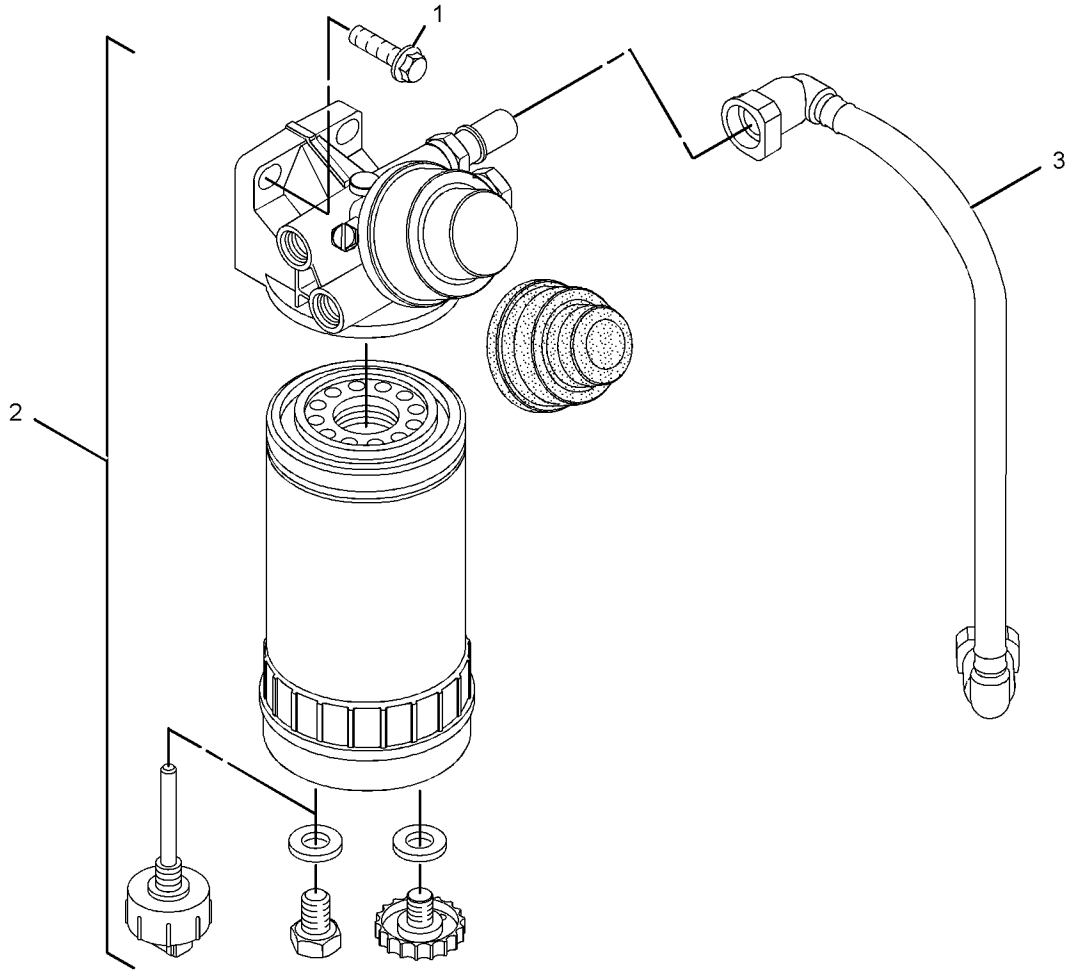

GRAPHIC #1 **<END>** g01621684

304-3662 LINES GP-FUEL

S/N: C4E5304-6228

PART OF 254-9233 ENGINE AR-PRIMARY

SMCS-1274 **i03339480**

NOTE	REF NO	GRAPHIC REF	PART NUMBER	QTY	PART NAME 1 2 3 4 5 6 (PRODUCT LEVEL)	SEE PAGE
M	1	1	**6I-0593**	2	BOLT (M10X1.5X30-MM)	
CY	2	1	**334-0808**	1	FILTER GP-FUEL	86
	3	1	**304-3713**	1	TUBE	
BF			**278-4138**	1	PROTECTION GP-FUEL SYSTEM (LINE, LOW PRESSURE)	

B - USE AS REQUIRED
C - CHANGE FROM PREVIOUS TYPE
F - NOT SHOWN
M - METRIC PART
Y - SEPARATE ILLUSTRATION

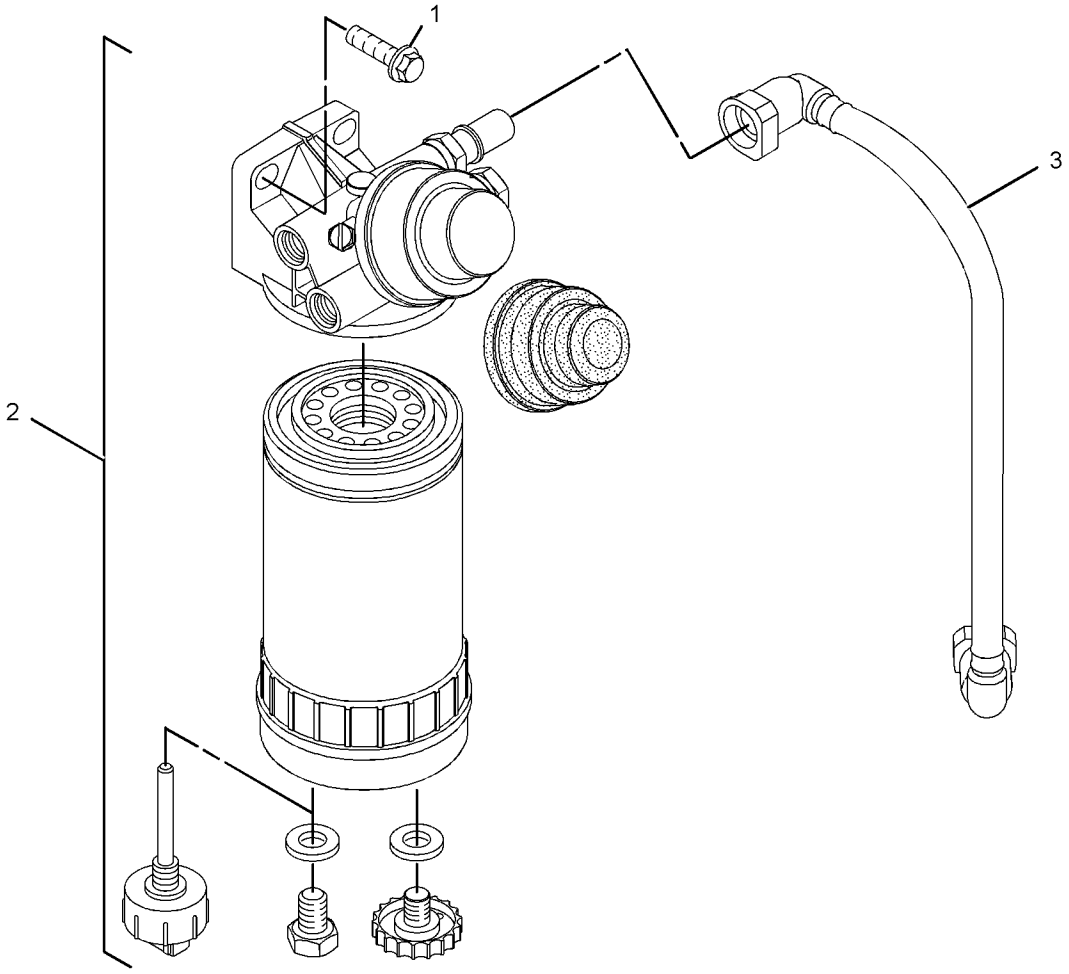

GRAPHIC #1 **<END>** g01621684

304-3662 LINES GP-FUEL

S/N: C4E6229-UP

PART OF 254-9233 ENGINE AR-PRIMARY

SMCS-1274 **i03360840**

NOTE	REF NO	GRAPHIC REF	PART NUMBER	QTY	PART NAME 1 2 3 4 5 6 (PRODUCT LEVEL)	SEE PAGE
M	1	1	**6I-0593**	2	BOLT (M10X1.5X30-MM)	
CY	2	1	**334-0808**	1	FILTER GP-FUEL	86
	3	1	**338-8085**	1	TUBE AS	
BF			**278-4138**	1	PROTECTION GP-FUEL SYSTEM (LINE, LOW PRESSURE)	

B - USE AS REQUIRED
C - CHANGE FROM PREVIOUS TYPE
F - NOT SHOWN
M - METRIC PART
Y - SEPARATE ILLUSTRATION

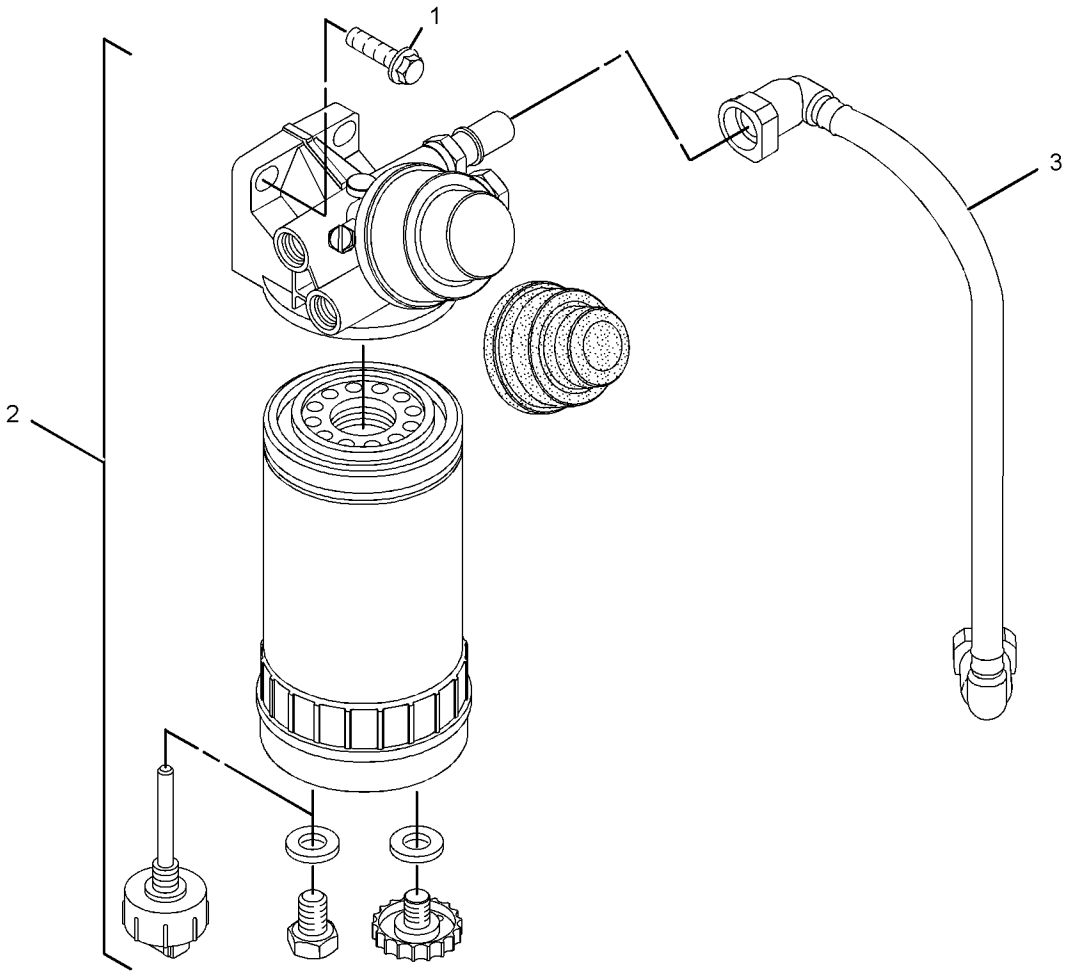

GRAPHIC #1 **<END>** g01621684

322-5900 LINES GP-FUEL—LOW PRESSURE

S/N: MMM1-UP; RRR1-UP

PART OF 325-6498, 325-6499 MODIFICATION AR, 344-7614 SPECIAL AR AN ATTACHMENT

SMCS-1274 **i04396470**

NOTE	REF NO	GRAPHIC REF	PART NUMBER	QTY	PART NAME 1 2 3 4 5 6 (PRODUCT LEVEL)	SEE PAGE
M	1	1	**6I-0217**	2	BOLT (M8X1.25X20-MM)	
M	2	1	**6I-0260**	1	BOLT (M8X1.25X25-MM)	
M	3	1	**6I-0593**	2	BOLT (M10X1.5X30-MM)	
	4	1	**6I-4709**	1	BOLT (M8X1.25X100-MM)	
M	5	1	**100-4841**	2	BOLT (M6X1X10-MM)	
	6	1	**106-8916**	3	BOLT (M6X16-MM)	
	7	1	**286-2890**	4	WASHER	
	8	1	**294-3014**	2	WASHER (8.05X15.2X1.27-MM THK)	
	9	1	**295-4670**	2	BOLT-SPECIAL (BANJO)	
	10	1	**308-7571**	1	TUBE AS	
I	11	1	**322-5898**	1	HOSE AS	
	12	1	**322-5906**	1	MANIFOLD AS	
	13	1	**322-5910**	1	HOSE AS	
	14	1	**322-5911**	1	HOSE AS	
	15	1	**322-5912**	1	HOSE AS	
	16	1	**322-5913**	1	HOSE AS	
	17	1	**322-5914**	1	HOSE AS	
	18	1	**327-2127**	1	VALVE GP-CHECK (FUEL)	
		1	**214-7568**	1	SEAL-O-RING	
Y	19	1	**327-6347**	1	BOWL GP-WATER COLLECTION	79
	20	1	**329-1197**	1	CLIP-PIPE	
	21	1	*332-8576*	2	ELBOW AS	
					(EACH INCLUDES)	
		1	**218-1755**	1	ELBOW	
		1	**228-7089**	1	SEAL-O-RING	
		1	**228-7102**	1	SEAL-O-RING	
Y	22	1	**334-0808**	1	FILTER GP-FUEL	86
	23	1	**337-3574**	1	TUBE	
	24	1	**343-7104**	1	FILTER AS-FUEL (SECONDARY)	
		1	**299-8229**	1	FILTER ELEMENT-FUEL (ULTRA HIGH EFFICIENCY)	
	25	1	**214-7566**	3	SEAL-O-RING	
	26	1	**214-7568**	1	SEAL-O-RING	
	27	1	**228-5009**	4	CLIP	
	28	1	**228-7088**	3	SEAL-O-RING	
	29	1	**228-7089**	2	SEAL-O-RING	
	30	1	**228-7100**	1	SEAL-O-RING	
	31	1	**260-9155**	1	CONNECTOR	
	32	1	**2V-3216**	2	CLIP	
	33	1	**6V-8647**	3	CONNECTOR	
	34	1	**6V-9001**	1	ELBOW	

I - REFER TO HYDRAULIC INFORMATION SYSTEM
M - METRIC PART
Y - SEPARATE ILLUSTRATION

322-5900 **LINES GP-FUEL (*contd.*)** **i04396470**

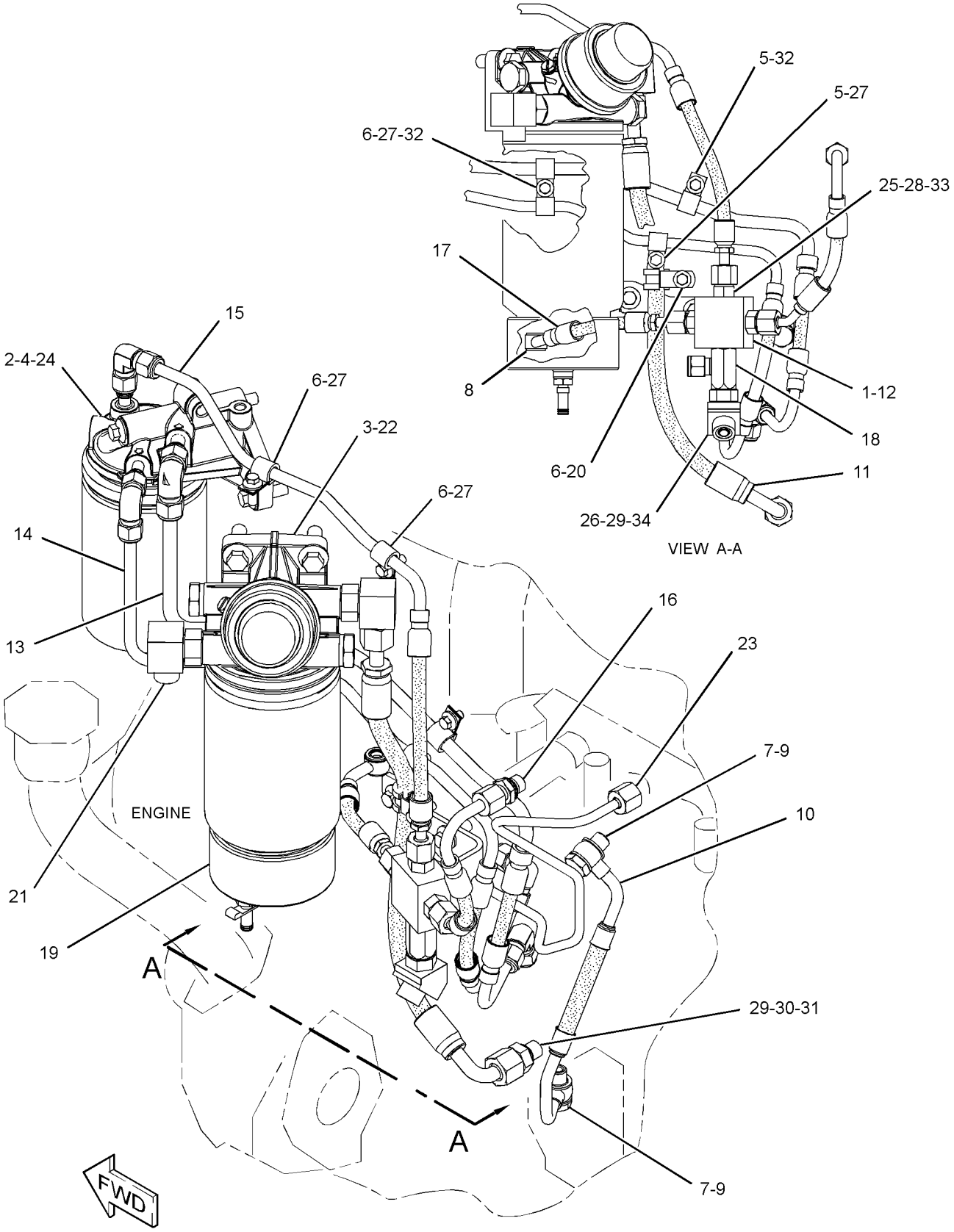

GRAPHIC #1 **<END>** g02024794

322-5904 LINES GP-FUEL—IMPLEMENT PUMP

S/N: MMM1-UP; RRR1-UP

PART OF 325-6498, 325-6499 MODIFICATION AR, 344-7614 SPECIAL AR AN ATTACHMENT

SMCS-1274 **i03696047**

NOTE	REF NO	GRAPHIC REF	PART NUMBER	QTY	PART NAME 1 2 3 4 5 6 (PRODUCT LEVEL)	SEE PAGE
	1	1	**7K-1181**	5	STRAP-CABLE	
I	2	1	**322-5895**	1	HOSE AS	
I	3	1	**322-5896**	1	HOSE AS	
I	4	1	**322-5897**	1	HOSE AS	
Y	5	1	*322-5920*	1	SHUTOFF GP-MANUAL (FIRE PLOW)	144
	6	1	**228-7089**	2	SEAL-O-RING	
	7	1	**5P-4116**	1	WASHER-HARD (8.8X20.5X2-MM THK)	
	8	1	**8T-4121**	4	WASHER-HARD (11X21X2.5-MM THK)	
M	9	1	**8T-4137**	4	BOLT (M10X1.5X20-MM)	
M	10	1	**8T-4200**	1	BOLT (M8X1.25X16-MM)	
	11	1	**9M-4995**	5	CLIP	

I - REFER TO HYDRAULIC INFORMATION SYSTEM
M - METRIC PART
Y - SEPARATE ILLUSTRATION

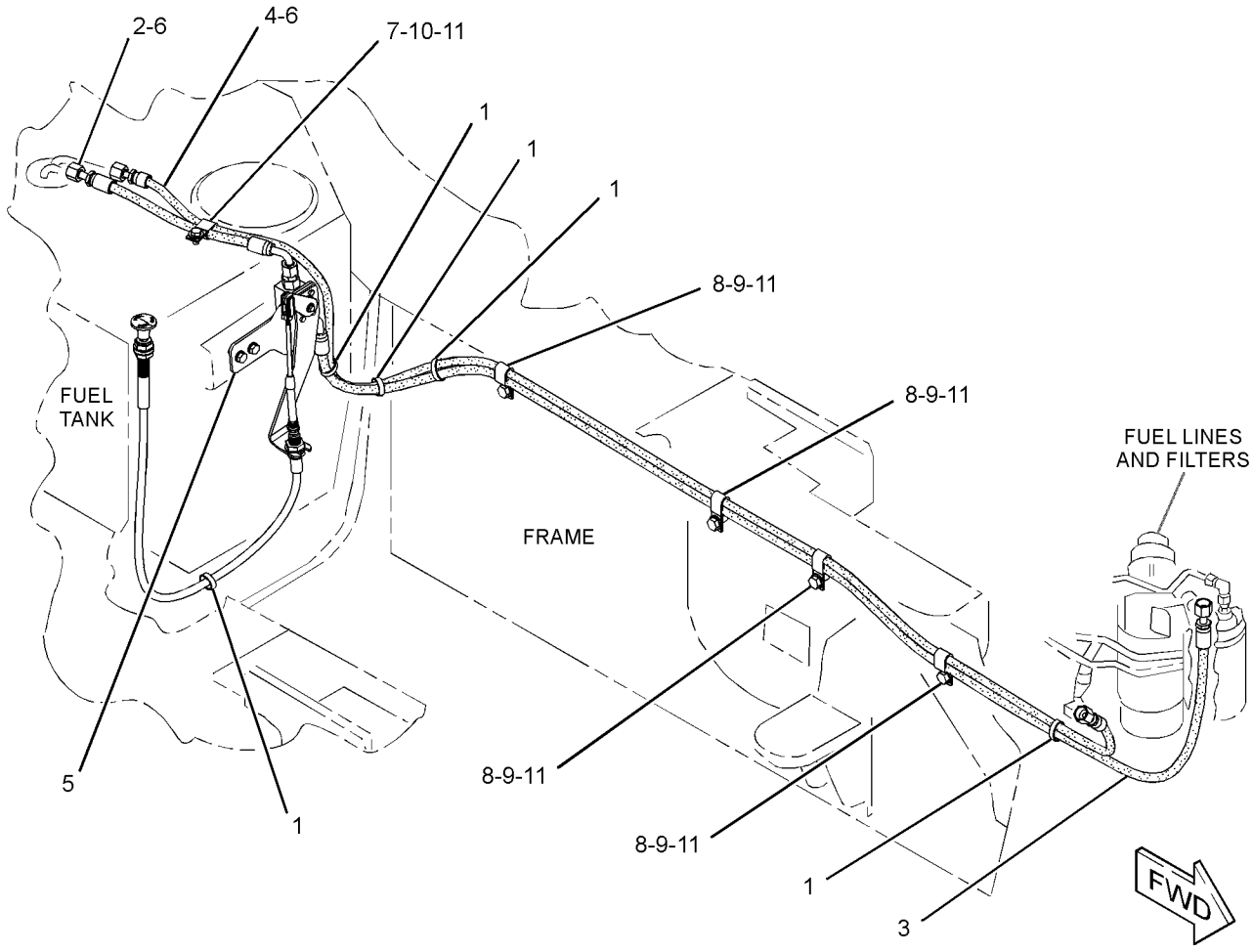

GRAPHIC #1 **<END>** g02014225

295-9125 PUMP & MTG GP-UNIT INJ HYD*R

S/N: C4E1-UP

PART OF 304-3649 PUMP GP-FUEL INJECTION

SMCS-1714 **i02906550**

NOTE	REF NO	GRAPHIC REF	PART NUMBER	QTY	PART NAME 1 2 3 4 5 6 (PRODUCT LEVEL)	SEE PAGE
M	1	1	**5A-3604**	5	BOLT-SOCKET HEAD (M8X1.25X25-MM)	
	2	1	**238-0120**	1	SENSOR GP-SPEED (FUEL PUMP)	
	3	1	**117-1385**	1	SEAL-O-RING	
	4	1	**6D-7889**	1	SEAL-O-RING	
	5	1	**295-4801**	1	NUT (M14X1.5-THD)	
	6	1	**296-3542**	1	LOCKWASHER	
	7	1	**228-7100**	1	SEAL-O-RING	
	8	1	**248-1066**	1	FITTING-FUEL	
	9	1	**293-0249**	1	PUMP GP-FUEL TRANSFER	
	10	1	**247-6020**	1	SEAL	
M	11	1	**8T-4200**	1	BOLT (M8X1.25X16-MM)	

M - METRIC PART

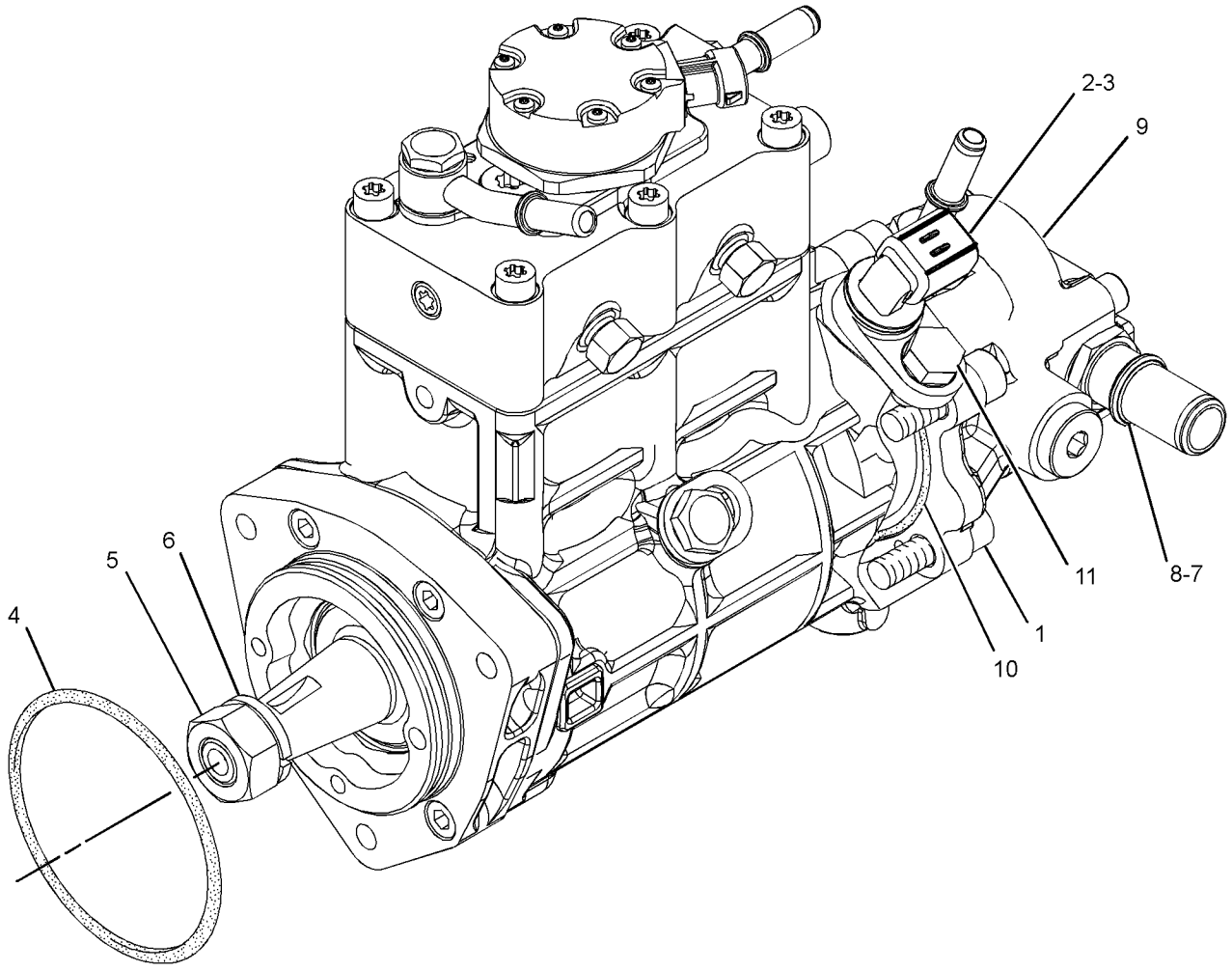

GRAPHIC #1 **<END>** g01447455

283-2271 PUMP GP-FUEL INJECTION

S/N: C4E1-UP

PART OF 304-3649 PUMP GP-FUEL INJECTION

SMCS-1251, 1290

i03327681

NOTE	REF NO	GRAPHIC REF	PART NUMBER	QTY	PART NAME 1 2 3 4 5 6 (PRODUCT LEVEL)	SEE PAGE
M	1	1	**5A-3604**	5	BOLT-SOCKET HEAD (M8X1.25X25-MM)	
	2	1	**238-0120**	1	SENSOR GP-SPEED (SECONDARY, TIMING)	
	3	1	**117-1385**	1	SEAL-O-RING	
	4	1	**6D-7889**	1	SEAL-O-RING	
	5	1	**277-1950**	1	NUT	
	6	1	**277-1949**	1	WASHER	
	7	1	**228-7100**	1	SEAL-O-RING	
	8	1	**248-1066**	1	FITTING-FUEL	
	9	1	**293-0249**	1	PUMP GP-FUEL TRANSFER	
	10	1	**247-6019**	1	SEAL	
M	11	1	**8T-4200**	1	BOLT (M8X1.25X16-MM)	

M - METRIC PART

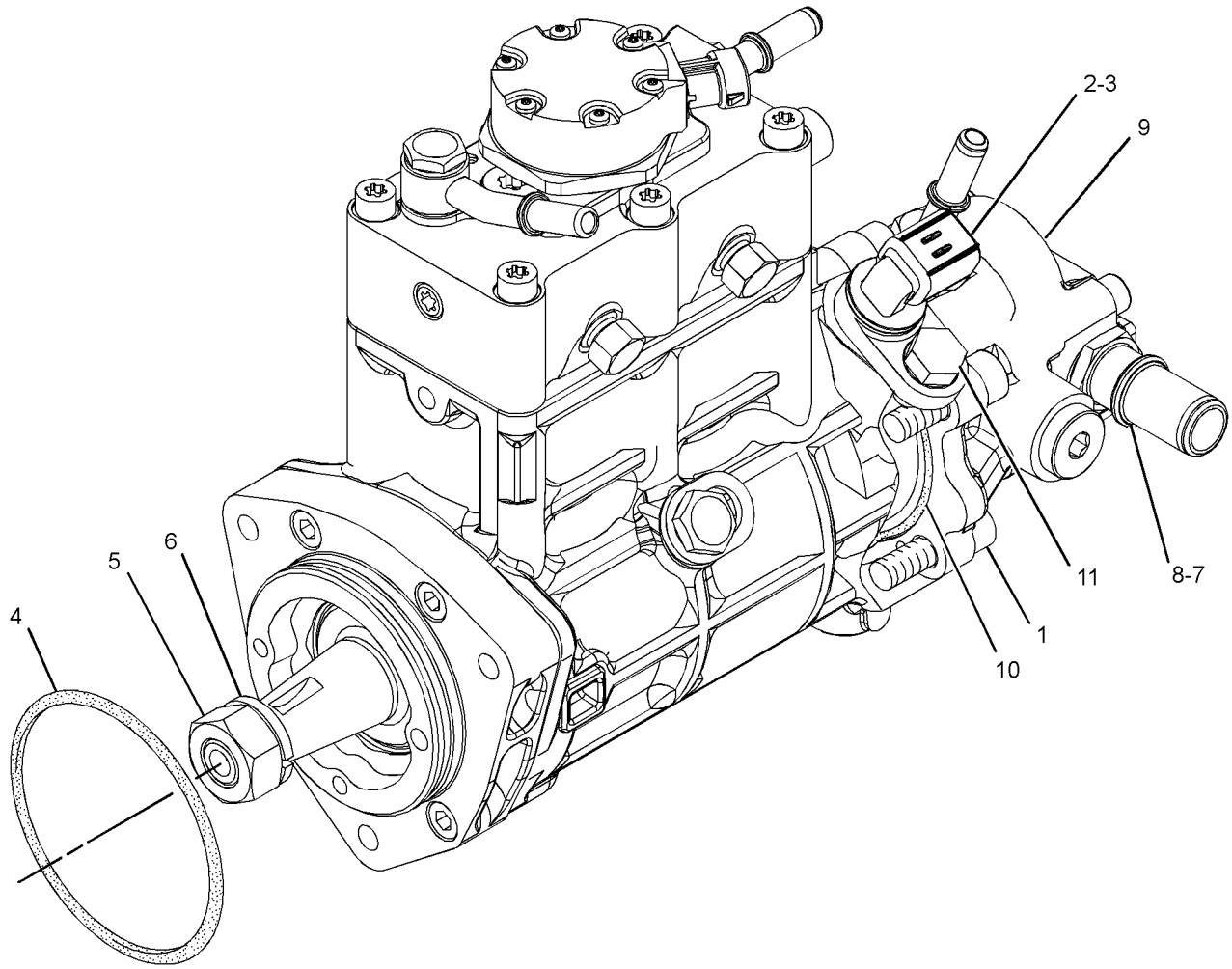

GRAPHIC #1

<END>

g01447455

304-3649 PUMP GP-FUEL INJECTION

S/N: C4E1-UP

PART OF 254-9233 ENGINE AR-PRIMARY

SMCS-1251, 1290 **i04703012**

NOTE	REF NO	GRAPHIC REF	PART NUMBER	QTY	PART NAME 1 2 3 4 5 6 (PRODUCT LEVEL)	SEE PAGE
M	1	1	**6I-0260**	3	BOLT (M8X1.25X25-MM)	
	2	1	**6I-0455**	3	BOLT (M8X1.25X55-MM)	
	3	2	**6I-0572**	4	BOLT (M8X1.25X20-MM)	
	4	2	**7W-2632**	1	WASHER (8.5X16.8X1.6-MM THK)	
	5	3	**035-8017**	2	UNION	
	6	3	**365-3308**	2	NUT-COMPRESSION	
	7	3	**067-6265**	2	FITTING-BRASS	
M	8	1	**100-4830**	1	BOLT (M10X1.5X20-MM)	
M	9	1	**101-3895**	4	BOLT (M8X1.25X35-MM)	
M	10	1,3	**124-3815**	4	BOLT (M8X1.25X16-MM)	
	11	2	**141-8584**	4	BOLT (M8X1.25X50-MM)	
	12	2	**155-0576**	8	MOUNT-ISOLATION	
	13	1	**160-0162**	2	WASHER	
	14	3	**199-9252**	1	SEAL-O-RING	
	15	2	**217-0099**	4	SPACER (8.2X25X2-MM THK)	
	16	2	**217-8477**	1	CLIP	
	17	1	**230-8989**	1	GEAR-FUEL PUMP (68-TEETH)	
	18	1	**232-3149**	6	WASHER (8.35X16.85X1.55-MM THK)	
	20	2	**268-6678**	1	BRACKET AS	
		1	**260-3719**	1	BRACKET	
	20A	1	**260-3939**		SCREW-HEX HEAD	
	21	2	**268-6677**	1	BRACKET AS	
		1	**260-3718**	1	BRACKET	
	21A	1	**260-3939**	1	SCREW-HEX HEAD	
	22	1	**308-8425**	1	RAIL AS-FUEL	
	23	1	**278-5168**	4	CLAMP-INJECTOR	
	24	1	**278-5170**	4	BOLT	
	25	2	**278-5203**	4	SPACER	
	27	3	**278-5225**	1	KIT-SENSOR (ENGINE OIL PRESSURE)	
	27A	3	**278-5226**	1	SEAL-O-RING	
	28	3	**278-5228**	1	KIT-SENSOR (ENGINE SPEED)	
	28A	3	**278-5227**	1	SEAL-O-RING	
	29	3	**278-5273**	1	KIT-SENSOR (AIR PRESSURE)	
	29A	3	**199-9252**	1	SEAL-O-RING	
	30	3	**278-5307**	1	KIT-SENSOR (COOLANT TEMPERATURE)	
	30A	3	**199-9267**	1	SEAL-O-RING	
	31	1	**278-5308**	1	KIT-SENSOR (FUEL RAIL PRESSURE)	
	31A	1	**278-5309**	1	WASHER	
Y	32	1	**292-3778**	4	INJECTOR GP-FUEL	89
Y	33	1	**283-2271**	1	PUMP GP-FUEL INJECTION	107
	34	1	**298-4535**	1	BRACKET-SUPPORT	
	35	1	**298-4536**	1	BRACKET-MOUNTING	
	36	1	**298-4537**	1	TUBE AS	
	37	1	**298-4538**	1	TUBE AS (CYL NO. 1)	
	38	1	**298-4539**	1	TUBE AS (CYL NO. 2)	
	39	1	**298-4540**	1	TUBE AS (CYL NO. 3)	
	40	1	**298-4541**	1	TUBE AS (CYL NO. 4)	
	41	1	**298-4542**	1	TUBE AS	
	42	1	**298-4543**	1	BOLT	
	43	2	**298-4544**	1	BRACKET MOUNTING	
	44	3	**304-3687**	1	SENSOR-AIR TEMPERATURE	
	44A	3	**278-5226**	1	SEAL-O-RING	
	45	3	**304-3688**	1	TUBE	
	46	3	**304-3689**	1	ADAPTER	
F			**278-4138**	4	PROTECTION GP-FUEL SYSTEM	

F - NOT SHOWN
M - METRIC PART
Y - SEPARATE ILLUSTRATION

304-3649 **PUMP GP-FUEL INJECTION (*contd.*)** **i04703012**

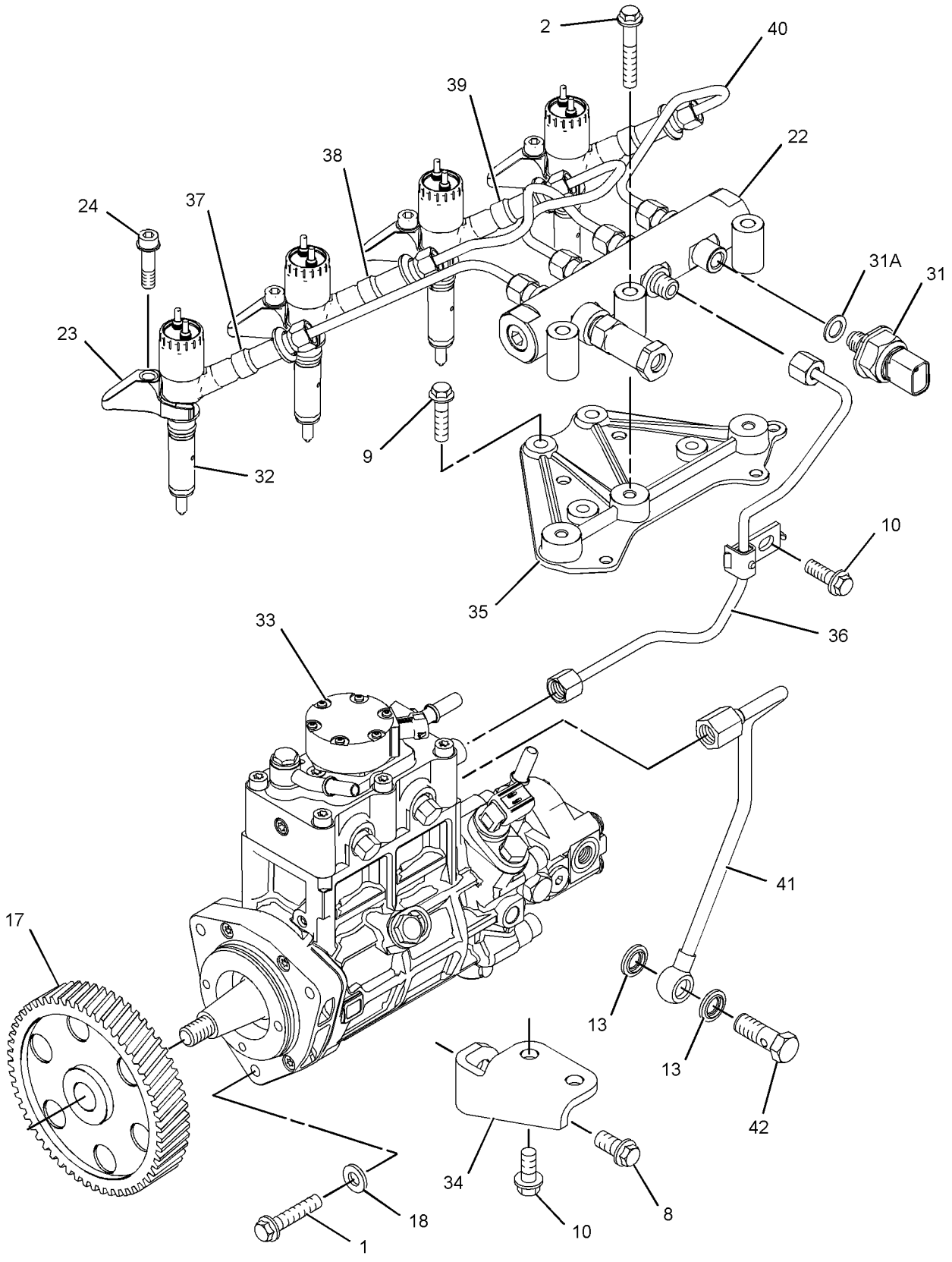

GRAPHIC #1 g01379219

304-3649 **PUMP GP-FUEL INJECTION (*contd.*)** **i04703012**

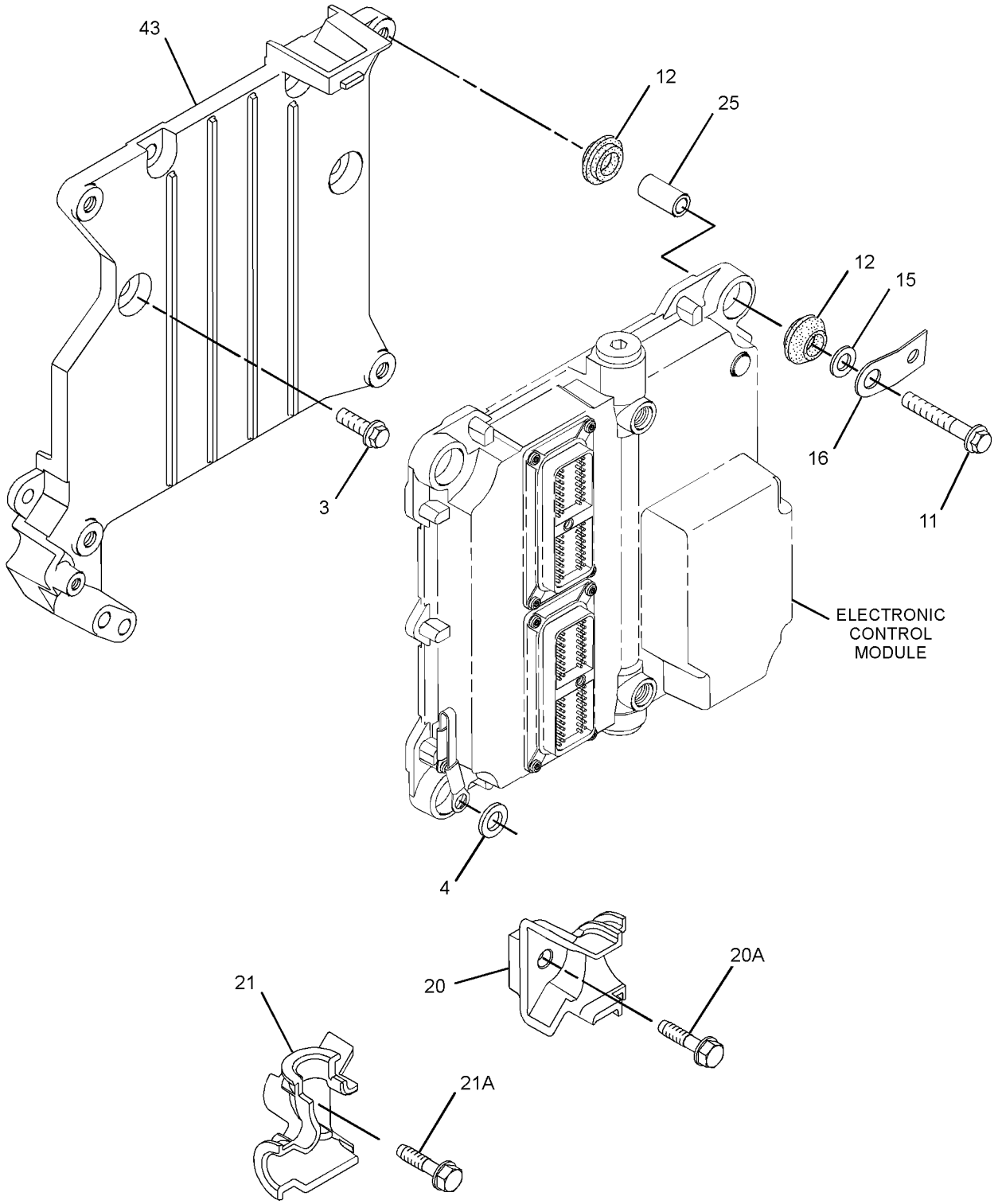

GRAPHIC #2 g01379222

304-3649 **PUMP GP-FUEL INJECTION (*contd.*)** **i04703012**

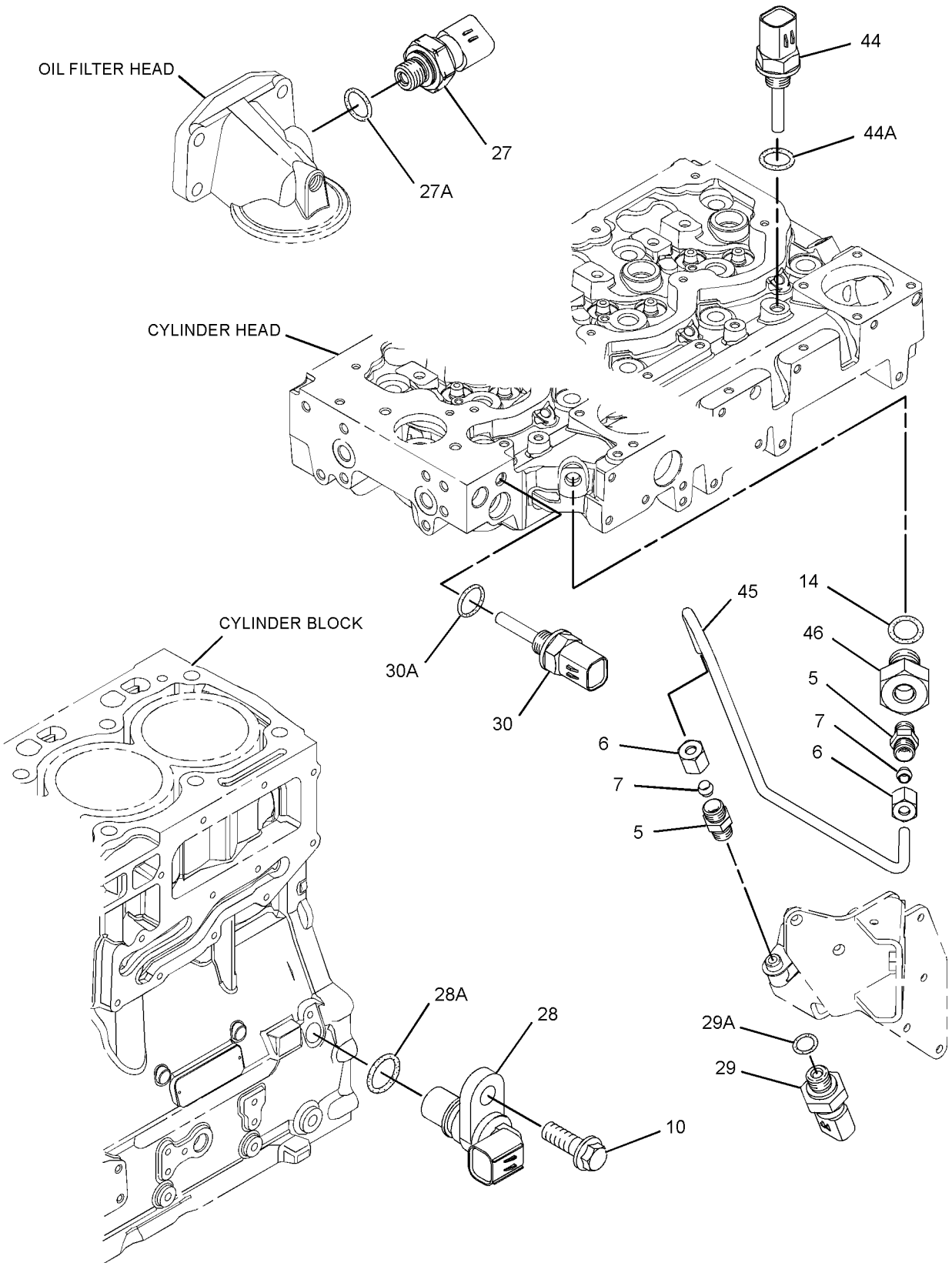

GRAPHIC #3 **<END>** g01342211

304-3649 PUMP GP-FUEL INJECTION

S/N: C4E1-3159

PART OF 254-9233 ENGINE AR-PRIMARY

SMCS-1251, 1290 **i04703031**

NOTE	REF NO	GRAPHIC REF	PART NUMBER	QTY	PART NAME 1 2 3 4 5 6 (PRODUCT LEVEL)	SEE PAGE
M	1	1	**6I-0260**	3	BOLT (M8X1.25X25-MM)	
	2	1	**6I-0455**	3	BOLT (M8X1.25X55-MM)	
	3	2	**6I-0572**	4	BOLT (M8X1.25X20-MM)	
	4	2	**7W-2632**	1	WASHER (8.5X16.8X1.6-MM THK)	
	5	3	**035-8017**	2	UNION	
	6	3	**365-3308**	2	NUT-COMPRESSION	
	7	3	**067-6265**	2	FITTING-BRASS	
M	8	1	**100-4830**	1	BOLT (M10X1.5X20-MM)	
M	9	1	**101-3895**	4	BOLT (M8X1.25X35-MM)	
M	10	1,3	**124-3815**	4	BOLT (M8X1.25X16-MM)	
	11	2	**141-8584**	4	BOLT (M8X1.25X50-MM)	
C	12	2	**300-6714**	8	MOUNT	
	13	1	**160-0162**	2	WASHER	
	14	3	**199-9252**	1	SEAL-O-RING	
	15	2	**217-0099**	4	SPACER (8.2X25X2-MM THK)	
	16	2	**217-8477**	1	CLIP	
	17	1	**230-8989**	1	GEAR-FUEL PUMP (68-TEETH)	
	18	1	**232-3149**	3	WASHER (8.35X16.85X1.55-MM THK)	
	20	2	**268-6678**	1	BRACKET AS	
	20A	2	**260-3939**		SCREW-HEX HEAD	
	21	2	**268-6677**	1	BRACKET AS	
	21A	2	**260-3939**	1	SCREW-HEX HEAD	
	22	1	**308-8425**	1	RAIL AS-FUEL	
	23	1	**278-5168**	4	CLAMP-INJECTOR	
	24	1	**278-5170**	4	BOLT	
	25	2	**278-5203**	4	SPACER	
	27	3	**278-5225**	1	KIT-SENSOR (ENGINE OIL PRESSURE)	
	27A	3	**278-5226**	1	SEAL-O-RING	
C	28	3	**311-3858**	1	KIT-SENSOR (ENGINE SPEED)	
	28A	3	**274-1639**	1	SEAL	
	29	3	**278-5273**	1	KIT-SENSOR (AIR PRESSURE)	
	29A	3	**199-9252**	1	SEAL-O-RING	
	30	3	**278-5307**	1	KIT-SENSOR (COOLANT TEMPERATURE)	
	30A	3	**199-9267**	1	SEAL-O-RING	
C	31	1	**311-6342**	1	SENSOR-PRESSURE (FUEL RAIL PRESSURE)	
	31A	1	**309-8006**	1	WASHER	
Y	32	1	**292-3778**	4	INJECTOR GP-FUEL	89
YR	33	1	**295-9125**	1	PUMP & MTG GP-UNIT INJ HYD	106
	34	1	**298-4535**	1	BRACKET-SUPPORT	
	35	1	**298-4536**	1	BRACKET-MOUNTING	
	36	1	**298-4537**	1	TUBE AS	
	37	1	**298-4538**	1	TUBE AS (CYL NO. 1)	
	38	1	**298-4539**	1	TUBE AS (CYL NO. 2)	
	39	1	**298-4540**	1	TUBE AS (CYL NO. 3)	
	40	1	**298-4541**	1	TUBE AS (CYL NO. 4)	
	41	1	**298-4542**	1	TUBE AS	
	42	1	**298-4543**	1	BOLT	
	43	2	**317-3144**	1	BRACKET	
C	44	3	**313-2455**	1	SENSOR-TEMPERATURE (AIR)	
	44A	3	**278-5226**	1	SEAL-O-RING	
	45	3	**304-3688**	1	TUBE	
	46	3	**304-3689**	1	ADAPTER	
F			**278-4138**	4	PROTECTION GP-FUEL SYSTEM	

C - CHANGE FROM PREVIOUS TYPE
F - NOT SHOWN
M - METRIC PART
R - REMFG PART MAY BE AVAILABLE
Y - SEPARATE ILLUSTRATION

304-3649 **PUMP GP-FUEL INJECTION (*contd.*)** **i04703031**

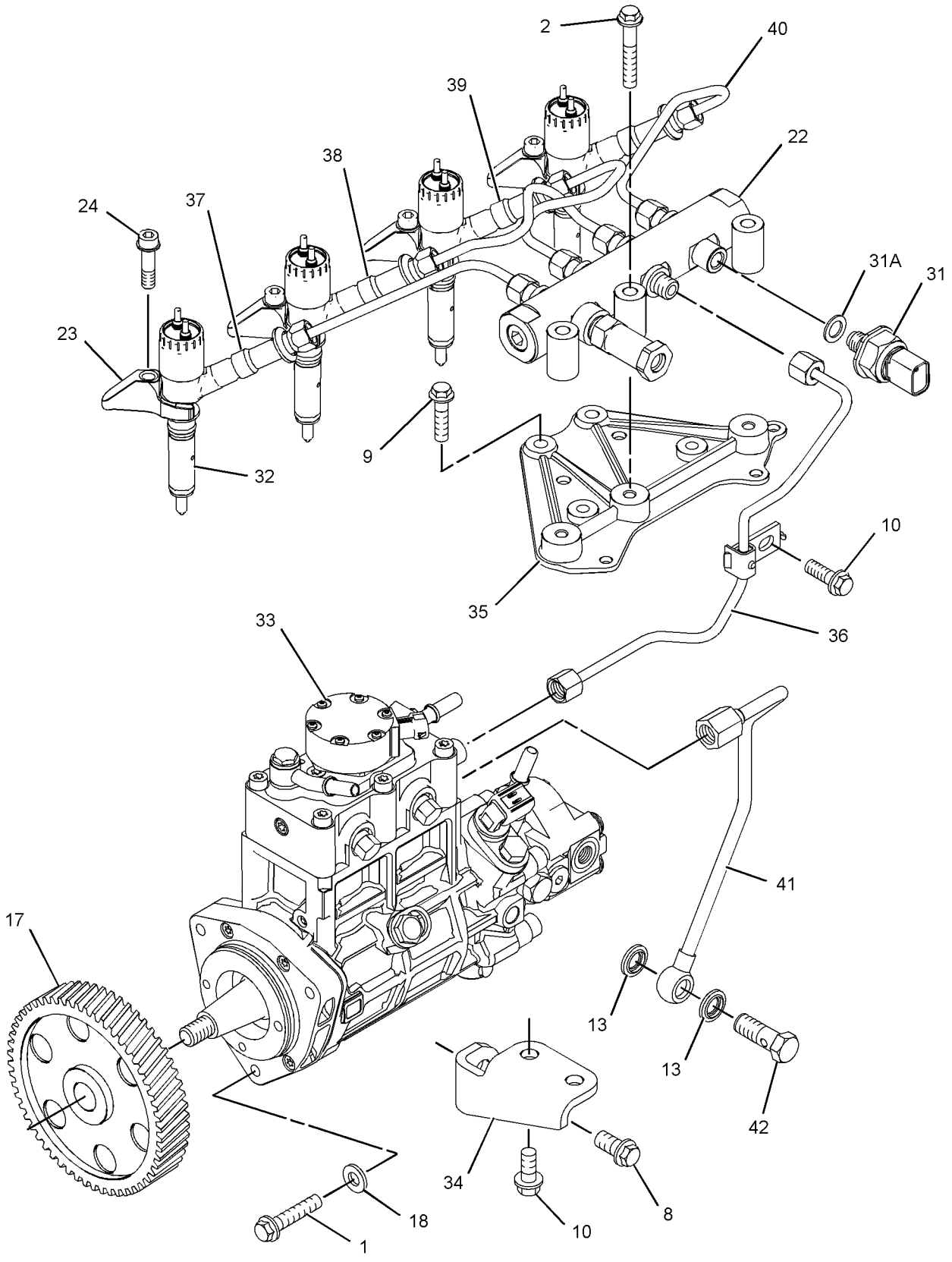

GRAPHIC #1 g01379219

304-3649 **PUMP GP-FUEL INJECTION (*contd.*)** **i04703031**

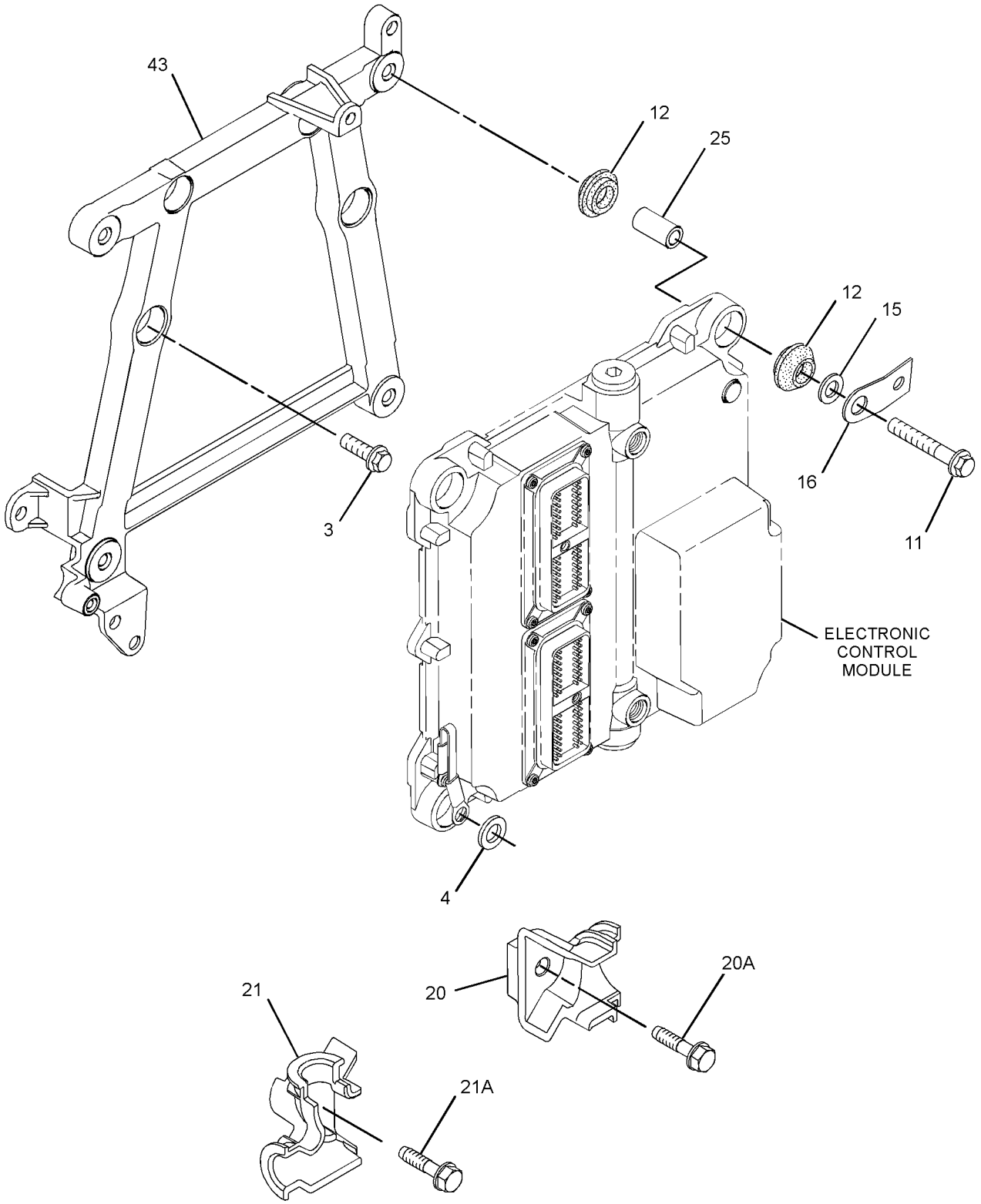

GRAPHIC #2 g01431297

304-3649 **PUMP GP-FUEL INJECTION (*contd.*)** **i04703031**

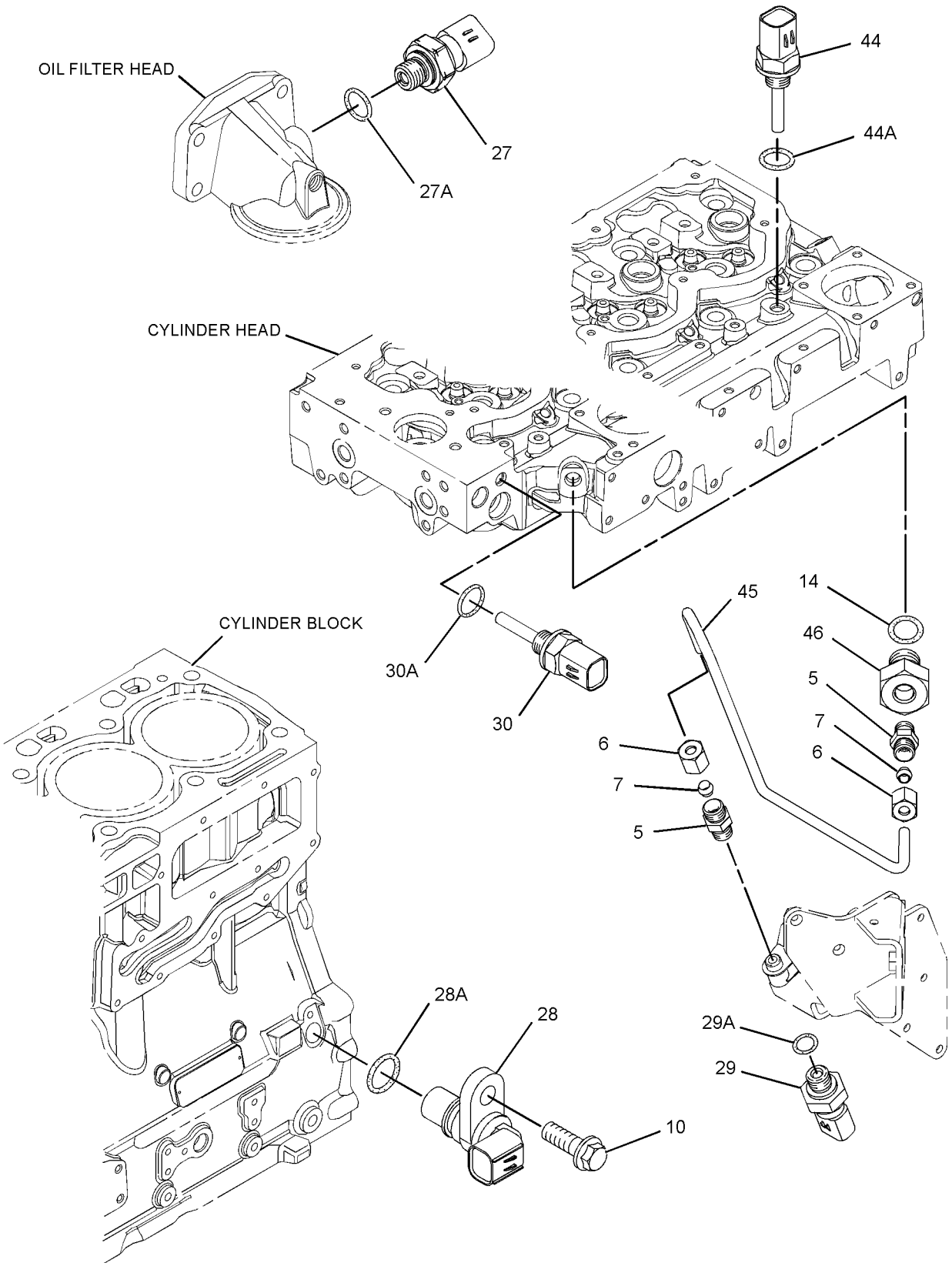

GRAPHIC #3 **<END>** g01342211

304-3649 PUMP GP-FUEL INJECTION

S/N: C4E3160-5057

PART OF 254-9233 ENGINE AR-PRIMARY

SMCS-1251, 1290 **i04703030**

NOTE	REF NO	GRAPHIC REF	PART NUMBER	QTY	PART NAME 1 2 3 4 5 6 (PRODUCT LEVEL)	SEE PAGE
M	1	1	**6I-0260**	3	BOLT (M8X1.25X25-MM)	
	2	1	**6I-0455**	3	BOLT (M8X1.25X55-MM)	
	3	2	**6I-0572**	4	BOLT (M8X1.25X20-MM)	
	4	2	**7W-2632**	1	WASHER (8.5X16.8X1.6-MM THK)	
	5	3	**035-8017**	2	UNION	
	6	3	**365-3308**	2	NUT-COMPRESSION	
	7	3	**067-6265**	2	FITTING-BRASS	
M	8	1	**100-4830**	1	BOLT (M10X1.5X20-MM)	
M	9	1	**101-3895**	4	BOLT (M8X1.25X35-MM)	
M	10	1,3	**124-3815**	4	BOLT (M8X1.25X16-MM)	
	11	2	**141-8584**	4	BOLT (M8X1.25X50-MM)	
	12	2	**300-6714**	8	MOUNT	
	13	1	**160-0162**	2	WASHER	
	14	3	**199-9252**	1	SEAL-O-RING	
	15	2	**217-0099**	5	SPACER (8.2X25X2-MM THK)	
	16	2	**217-8477**	1	CLIP	
	17	1	**230-8989**	1	GEAR-FUEL PUMP (68-TEETH)	
	18	1	**232-3149**	3	WASHER (8.35X16.85X1.55-MM THK)	
	20	2	**268-6678**	1	BRACKET AS	
	20A	2	**260-3939**		SCREW-HEX HEAD	
	21	2	**268-6677**	1	BRACKET AS	
	21A	2	**260-3939**	1	SCREW-HEX HEAD	
C	22	1	**311-6631**	1	RAIL AS-FUEL	
		1	**305-5291**	1	VALVE AS-RELIEF	
		1	**228-7102**	1	SEAL-O-RING	
	23	1	**278-5168**	4	CLAMP-INJECTOR	
	24	1	**278-5170**	4	BOLT	
	25	2	**278-5203**	4	SPACER	
	27	3	**278-5225**	1	KIT-SENSOR (ENGINE OIL PRESSURE)	
	27A	3	**199-9267**	1	SEAL-O-RING	
	28	3	**311-3858**	1	KIT-SENSOR (ENGINE SPEED)	
	28A	3	**274-1639**	1	SEAL	
		3	**238-0120**	1	SENSOR GP-SPEED	
	29	3	**278-5273**	1	KIT-SENSOR (AIR PRESSURE)	
	29A	3	**199-9252**	1	SEAL-O-RING	
	30	3	**278-5307**	1	KIT-SENSOR (COOLANT TEMPERATURE)	
	30A	3	**199-9267**	1	SEAL-O-RING	
	31	1	**311-6342**	1	SENSOR-PRESSURE (FUEL RAIL PRESSURE)	
	31A	1	**309-8006**	1	WASHER	
CYR	32	1	**320-0677**	4	INJECTOR GP-FUEL	90
YR	33	1	**324-0532**	1	PUMP GP-FUEL INJECTION	141
	34	1	**298-4535**	1	BRACKET-SUPPORT	
	35	1	**298-4536**	1	BRACKET-MOUNTING	
	36	1	**322-3744**	1	TUBE	
	37	1	**322-3745**	1	TUBE (CYL NO. 1) (CYL NO. 1)	
	38	1	**322-3746**	1	TUBE (CYL NO. 2) (CYL NO. 2)	
	39	1	**322-3747**	1	TUBE (CYL NO. 3) (CYL NO. 3)	
	40	1	**322-3748**	1	TUBE (CYL NO. 4) (CYL NO. 4)	
	41	1	**298-4542**	1	TUBE AS	
	42	1	**298-4543**	1	BOLT	
	43	2	**317-3144**	1	BRACKET	
	44	3	**313-2455**	1	SENSOR-TEMPERATURE (AIR)	
	44A	3	**278-5226**	1	SEAL-O-RING	
	45	3	**304-3688**	1	TUBE	
	46	3	**304-3689**	1	ADAPTER	
F			**278-4138**	4	PROTECTION GP-FUEL SYSTEM	

304-3649 **PUMP GP-FUEL INJECTION (*contd.*)** **i04703030**

NOTE	REF NO	GRAPHIC REF	PART NUMBER	QTY	PART NAME 1 2 3 4 5 6 (PRODUCT LEVEL)	SEE PAGE

C - CHANGE FROM PREVIOUS TYPE
F - NOT SHOWN
M - METRIC PART
R - REMFG PART MAY BE AVAILABLE
Y - SEPARATE ILLUSTRATION

304-3649 **PUMP GP-FUEL INJECTION (*contd.*)** **i04703030**

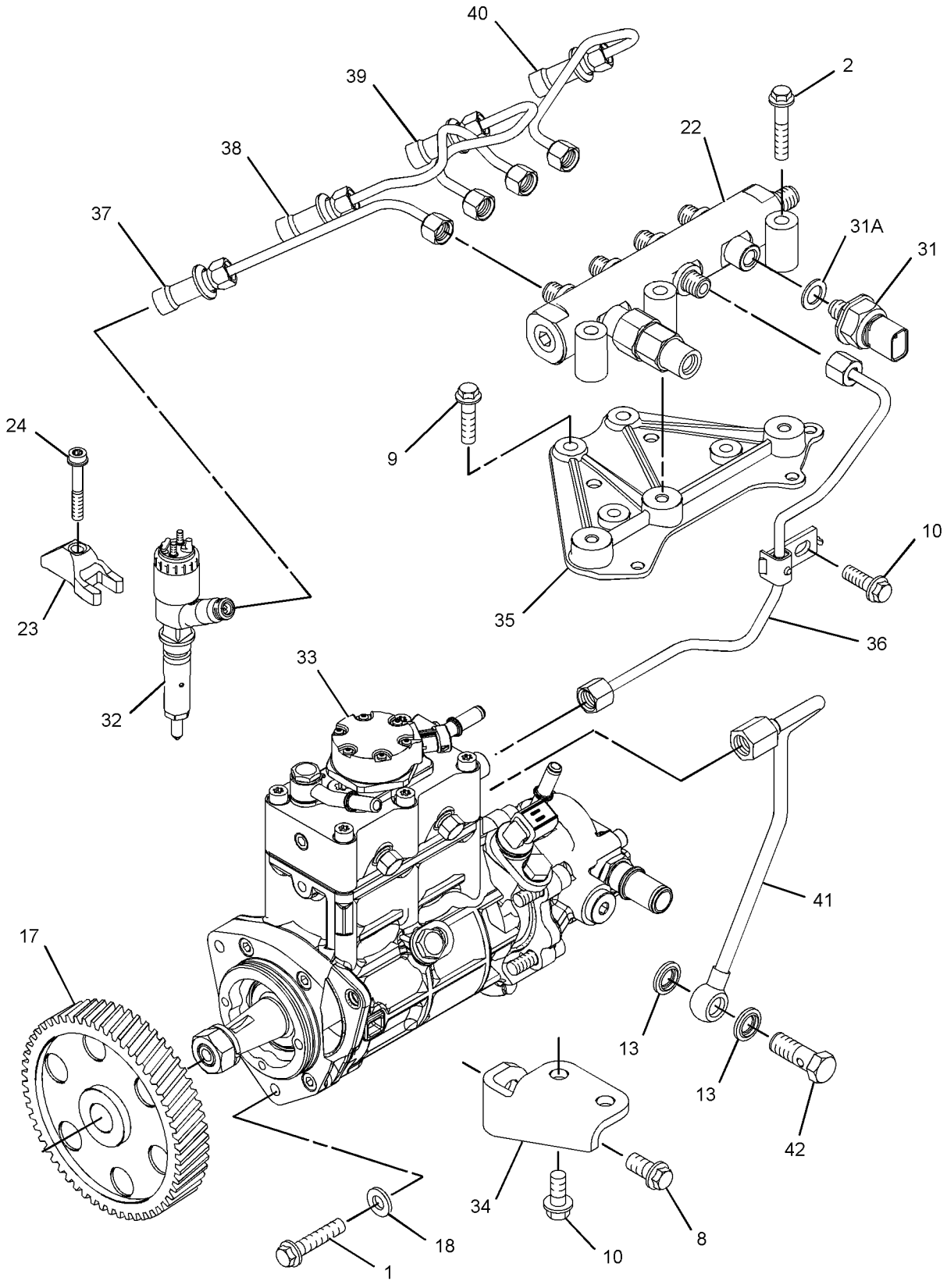

GRAPHIC #1 g01681533

304-3649 **PUMP GP-FUEL INJECTION (*contd.*)** **i04703030**

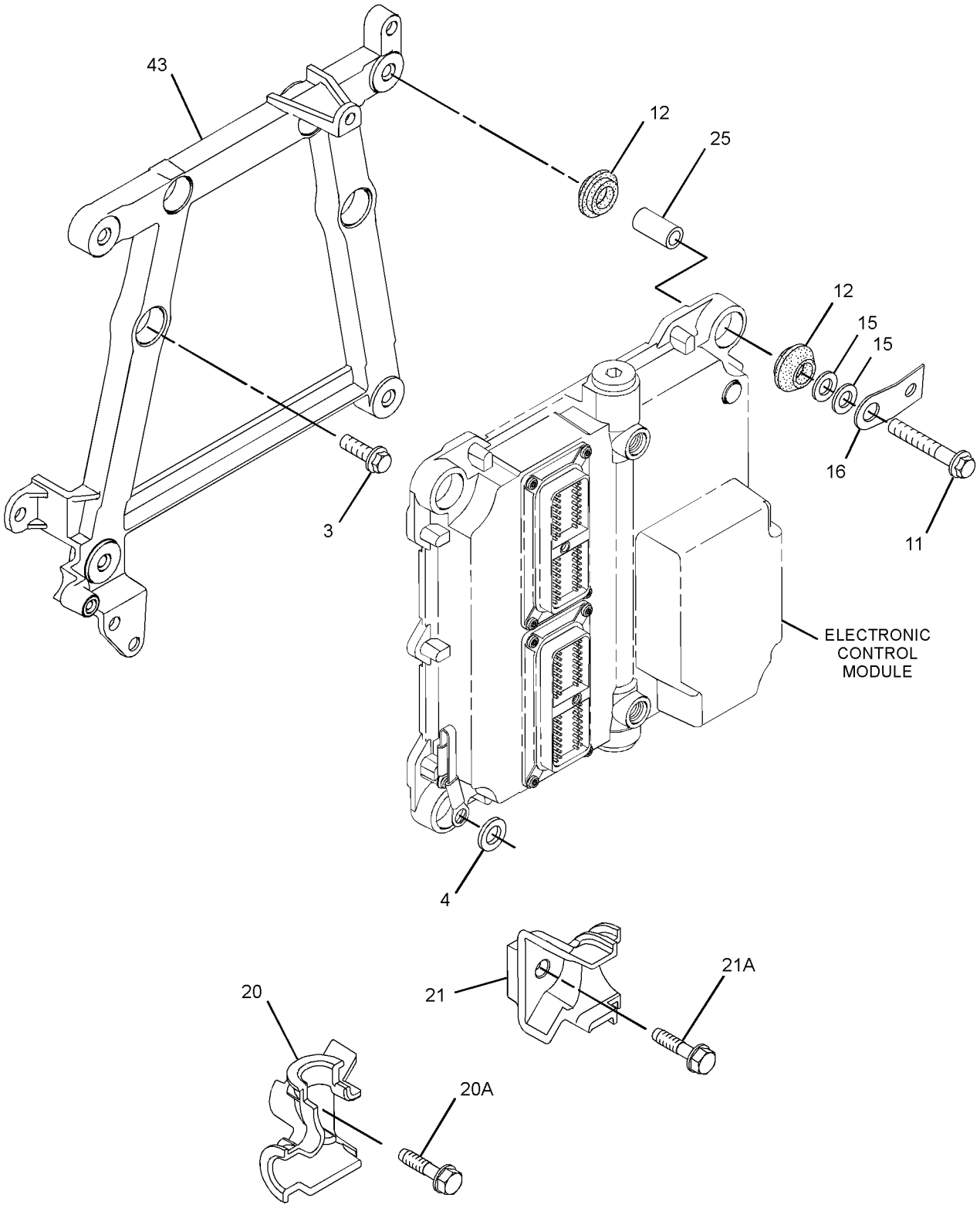

GRAPHIC #2 g01681917

304-3649 **PUMP GP-FUEL INJECTION (*contd.*)** **i04703030**

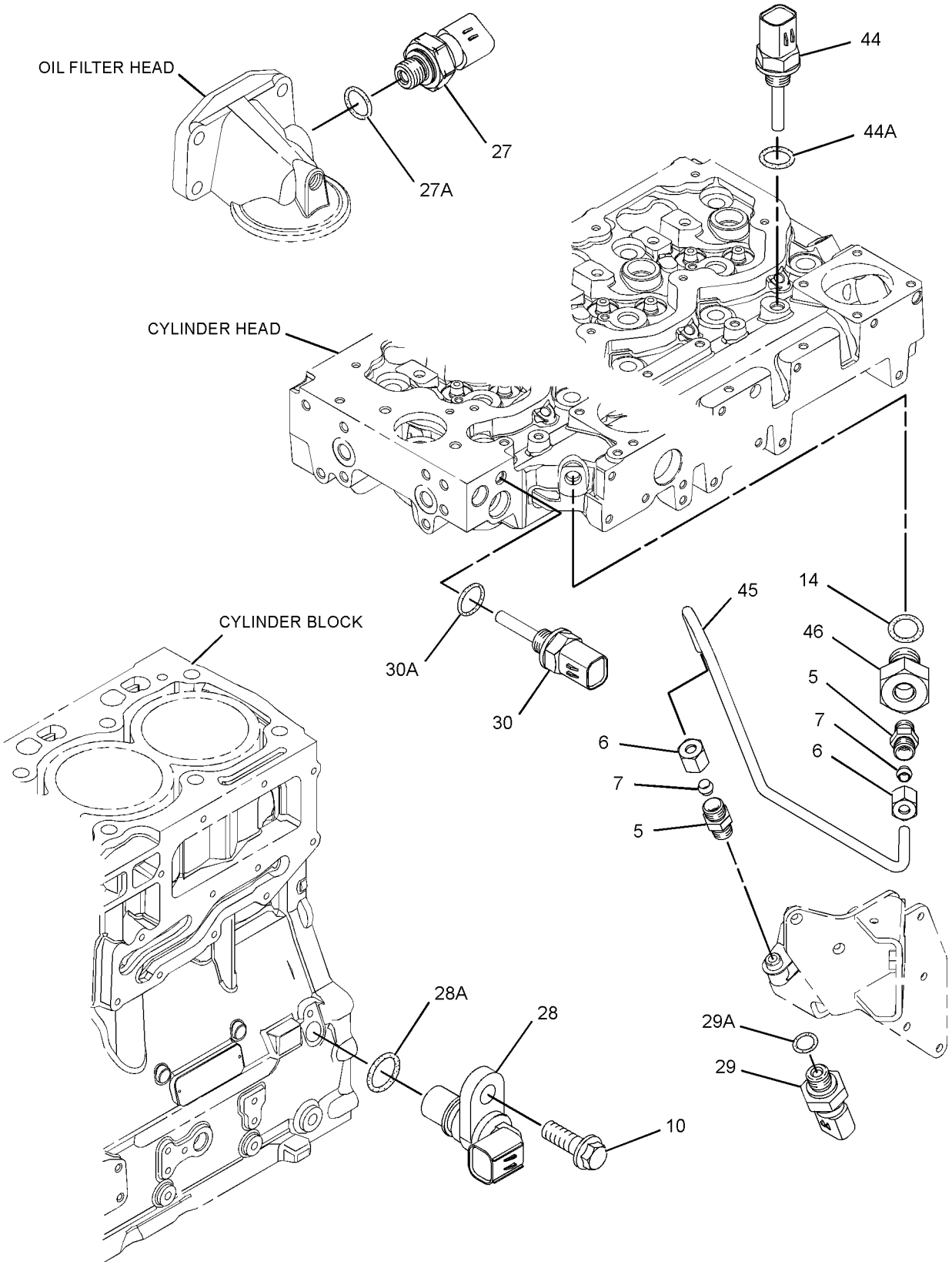

GRAPHIC #3 **<END>** g01342211

304-3649 PUMP GP-FUEL INJECTION

S/N: C4E5058-6228

PART OF 254-9233 ENGINE AR-PRIMARY

SMCS-1251, 1290 **i04703034**

NOTE	REF NO	GRAPHIC REF	PART NUMBER	QTY	PART NAME 1 2 3 4 5 6 (PRODUCT LEVEL)	SEE PAGE
M	1	1	**6I-0260**	3	BOLT (M8X1.25X25-MM)	
	2	1	**6I-0455**	3	BOLT (M8X1.25X55-MM)	
	3	2	**6I-0572**	4	BOLT (M8X1.25X20-MM)	
	4	2	**7W-2632**	1	WASHER (8.5X16.8X1.6-MM THK)	
	5	3	**035-8017**	2	UNION	
	6	3	**365-3308**	2	NUT-COMPRESSION	
	7	3	**067-6265**	2	FITTING-BRASS	
M	8	1	**100-4830**	1	BOLT (M10X1.5X20-MM)	
M	9	1	**101-3895**	4	BOLT (M8X1.25X35-MM)	
M	10	1,3	**124-3815**	4	BOLT (M8X1.25X16-MM)	
	11	2	**141-8584**	4	BOLT (M8X1.25X50-MM)	
	12	2	**300-6714**	8	MOUNT	
	13	1	**160-0162**	2	WASHER	
	14	3	**199-9252**	1	SEAL-O-RING	
	15	2	**217-0099**	5	SPACER (8.2X25X2-MM THK)	
	16	2	**217-8477**	1	CLIP	
	17	1	**230-8989**	1	GEAR-FUEL PUMP (68-TEETH)	
	18	1	**232-3149**	3	WASHER (8.35X16.85X1.55-MM THK)	
	20	2	**268-6678**	1	BRACKET AS	
	20A	2	**260-3939**		SCREW-HEX HEAD	
	21	2	**268-6677**	1	BRACKET AS	
	21A	2	**260-3939**	1	SCREW-HEX HEAD	
	22	1	**318-2394**	1	RAIL AS-FUEL	
		1	**305-5291**		VALVE AS-RELIEF (FUEL RAIL)	
		1	**228-7102**	1	SEAL-O-RING	
	23	1	**278-5168**	4	CLAMP-INJECTOR	
	24	1	**278-5170**	4	BOLT	
	25	2	**278-5203**	4	SPACER	
	27	3	**278-5225**	1	KIT-SENSOR (ENGINE OIL PRESSURE)	
	27A	3	**199-9267**	1	SEAL-O-RING	
	28	3	**311-3858**	1	KIT-SENSOR (ENGINE SPEED)	
	28A	3	**274-1639**	1	SEAL	
		3	**238-0120**	1	SENSOR GP-SPEED	
	29	3	**278-5273**	1	KIT-SENSOR (AIR PRESSURE)	
	29A	3	**199-9252**	1	SEAL-O-RING	
	30	3	**278-5307**	1	KIT-SENSOR (COOLANT TEMPERATURE)	
	30A	3	**199-9267**	1	SEAL-O-RING	
	31	1	**311-6342**	1	SENSOR-PRESSURE (FUEL RAIL PRESSURE)	
	31A	1	**309-8006**	1	WASHER	
YR	32	1	**320-0677**	4	INJECTOR GP-FUEL	90
YR	33	1	**324-0532**	1	PUMP GP-FUEL INJECTION	141
	34	1	**298-4535**	1	BRACKET-SUPPORT	
	35	1	**298-4536**	1	BRACKET-MOUNTING	
	36	1	**322-3744**	1	TUBE	
	37	1	**322-3745**	1	TUBE (CYL NO. 1) (CYL NO. 1)	
	38	1	**322-3746**	1	TUBE (CYL NO. 2) (CYL NO. 2)	
C	39	1	**333-4732**	1	LINE-FUEL INJECTION (CYL NO. 3) (CYL NO. 3)	
C	40	1	**333-4733**	1	LINE-FUEL INJECTION (CYL NO. 4) (CYL NO. 4)	
	41	1	**298-4542**	1	TUBE AS	
	42	1	**298-4543**	1	BOLT	
	43	2	**317-3144**	1	BRACKET	
	44	3	**313-2455**	1	SENSOR-TEMPERATURE (AIR)	
	44A	3	**278-5226**	1	SEAL-O-RING	
	45	3	**304-3688**	1	TUBE	
	46	3	**304-3689**	1	ADAPTER	
F			**278-4138**	4	PROTECTION GP-FUEL SYSTEM	

304-3649 **PUMP GP-FUEL INJECTION (*contd.*)** **i04703034**

NOTE	REF NO	GRAPHIC REF	PART NUMBER	QTY	PART NAME 1 2 3 4 5 6 (PRODUCT LEVEL)	SEE PAGE

C - CHANGE FROM PREVIOUS TYPE
F - NOT SHOWN
M - METRIC PART
R - REMFG PART MAY BE AVAILABLE
Y - SEPARATE ILLUSTRATION

304-3649 **PUMP GP-FUEL INJECTION (*contd.*)** **i04703034**

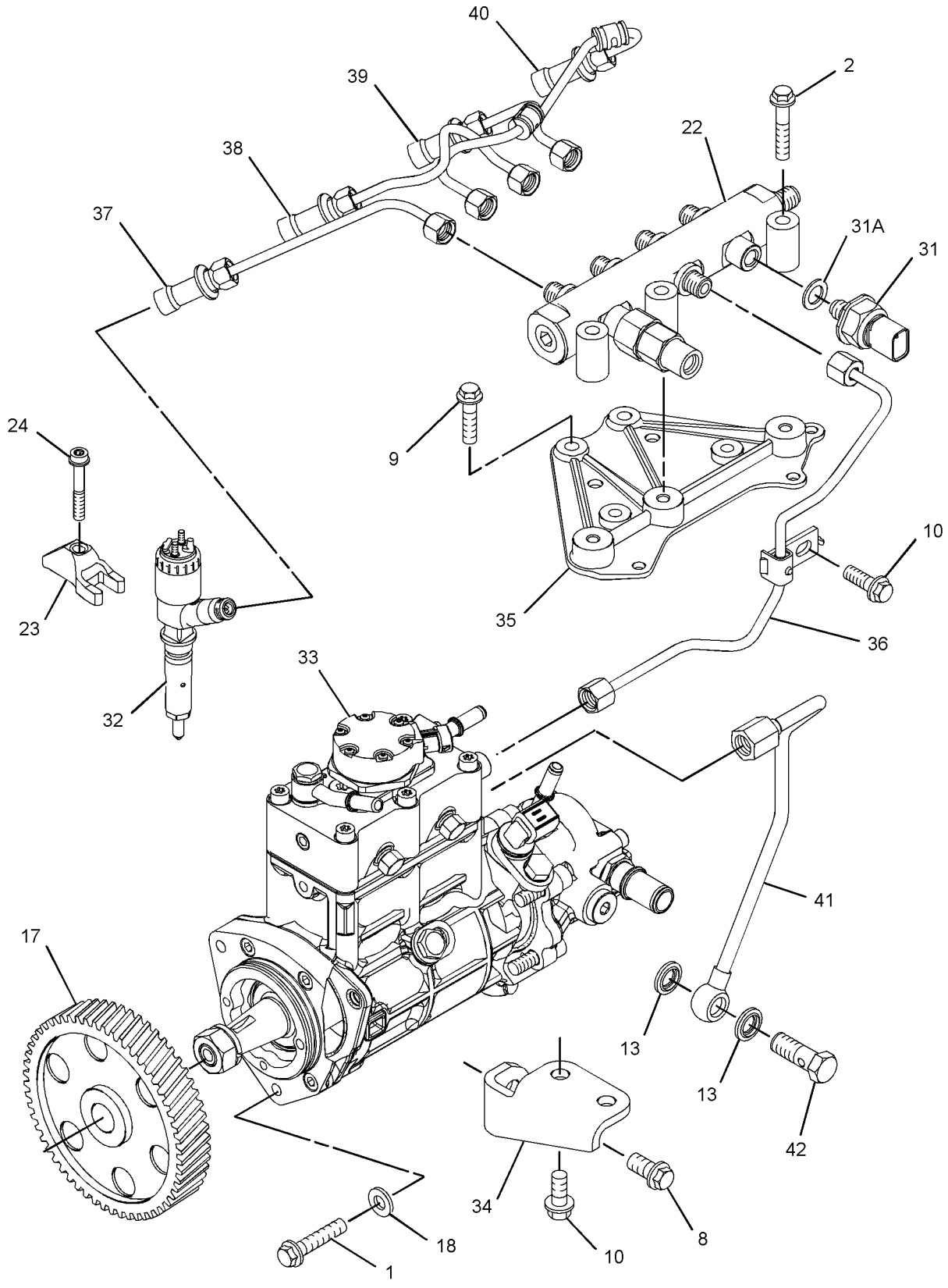

GRAPHIC #1 g01704629

304-3649 **PUMP GP-FUEL INJECTION (*contd.*)** **i04703034**

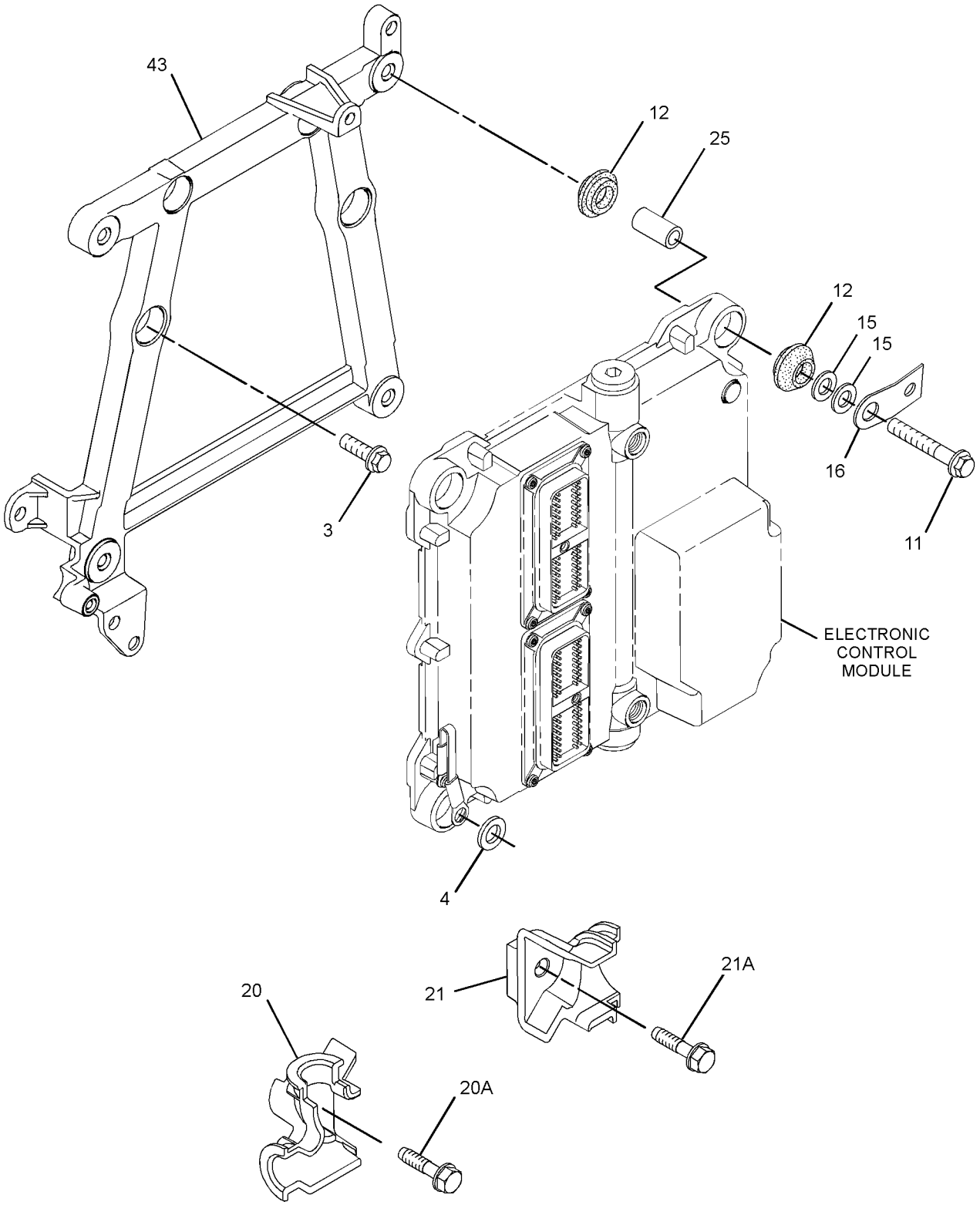

GRAPHIC #2 g01681917

304-3649 **PUMP GP-FUEL INJECTION (*contd.*)** **i04703034**

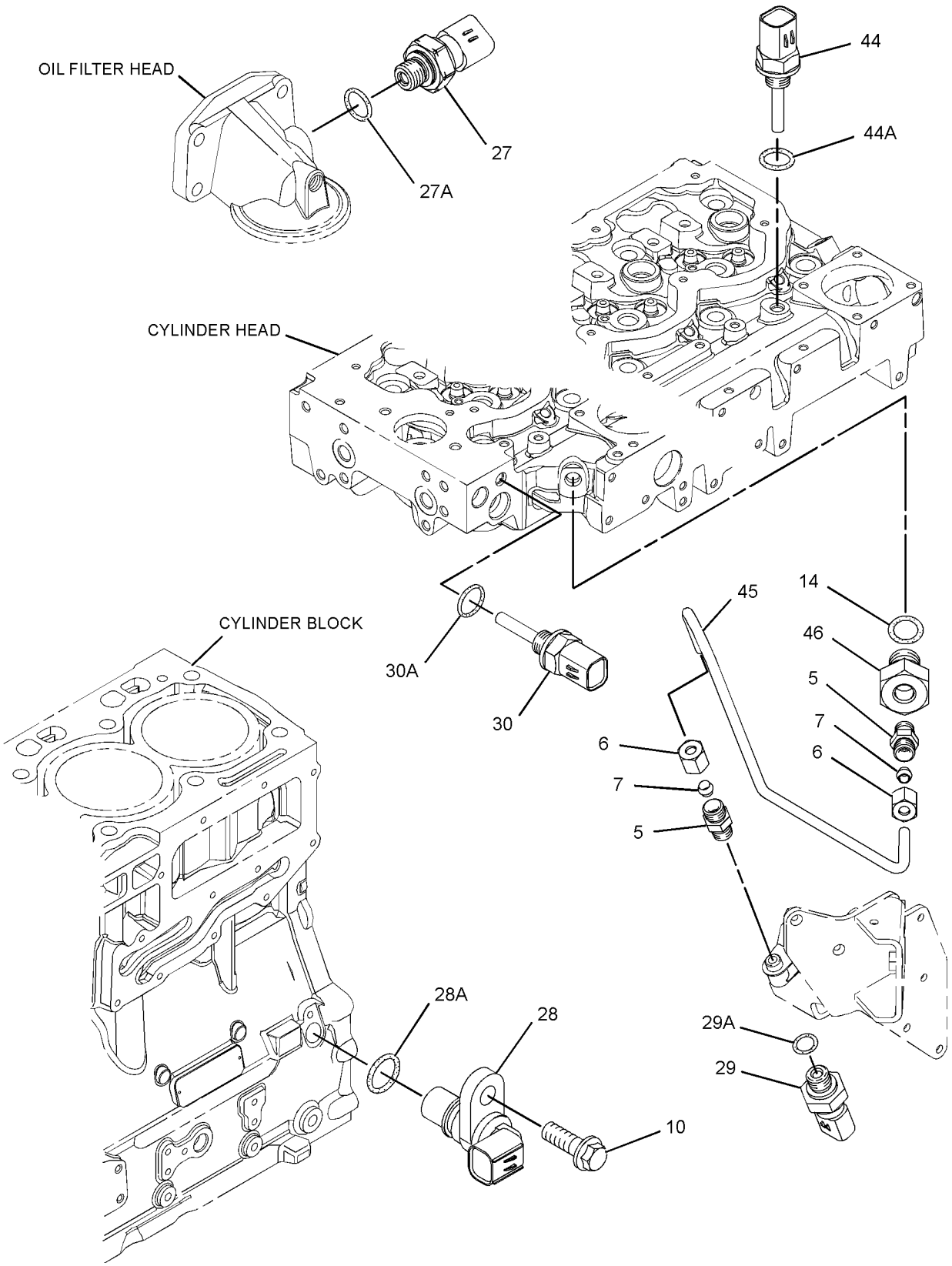

GRAPHIC #3 **<END>** g01342211

304-3649 PUMP GP-FUEL INJECTION

S/N: C4E6229-UP

PART OF 254-9233 ENGINE AR-PRIMARY

TYPE 1

SMCS-1251, 1290 **i04703033**

NOTE	REF NO	GRAPHIC REF	PART NUMBER	QTY	PART NAME 1 2 3 4 5 6 (PRODUCT LEVEL)	SEE PAGE
M	1	1	**6I-0260**	3	BOLT (M8X1.25X25-MM)	
	2	1	**6I-0455**	3	BOLT (M8X1.25X55-MM)	
	3	2	**6I-0572**	4	BOLT (M8X1.25X20-MM)	
	4	2	**7W-2632**	1	WASHER (8.5X16.8X1.6-MM THK)	
	5	3	**035-8017**	2	UNION	
	6	3	**365-3308**	2	NUT-COMPRESSION	
	7	3	**067-6265**	2	FITTING-BRASS	
M	8	1	**100-4830**	1	BOLT (M10X1.5X20-MM)	
M	9	1	**101-3895**	4	BOLT (M8X1.25X35-MM)	
M	10	1,3	**124-3815**	4	BOLT (M8X1.25X16-MM)	
	11	2	**141-8584**	4	BOLT (M8X1.25X50-MM)	
	12	2	**300-6714**	8	MOUNT	
	13	1	**160-0162**	2	WASHER	
	14	3	**199-9252**	1	SEAL-O-RING	
	15	2	**217-0099**	5	SPACER (8.2X25X2-MM THK)	
	17	1	**230-8989**	1	GEAR-FUEL PUMP (68-TEETH)	
	18	1	**232-3149**	3	WASHER (8.35X16.85X1.55-MM THK)	
	20	2	**268-6678**	1	BRACKET AS	
	20A	2	**260-3939**	1	SCREW-HEX HEAD	
	21	2	**268-6677**	1	BRACKET AS	
	21A	2	**260-3939**	1	SCREW-HEX HEAD	
	22	1	**318-2394**	1	RAIL AS-FUEL	
	22A	1	**305-5291**	1	VALVE AS-RELIEF	
	23	1	**278-5168**	4	CLAMP-INJECTOR	
	24	1	**278-5170**	4	BOLT	
	25	2	**278-5203**	4	SPACER	
	27	3	**278-5225**	1	KIT-SENSOR (ENGINE OIL PRESSURE)	
	27A	3	**199-9267**	1	SEAL-O-RING	
	28	3	**311-3858**	1	KIT-SENSOR (ENGINE SPEED)	
	28A	3	**274-1639**	1	SEAL	
	29	3	**278-5273**	1	KIT-SENSOR (AIR PRESSURE)	
	29A	3	**199-9252**	1	SEAL-O-RING	
	30	3	**278-5307**	1	KIT-SENSOR (COOLANT TEMPERATURE)	
	30A	3	**199-9267**	1	SEAL-O-RING	
	31	1	**311-6342**	1	SENSOR-PRESSURE (FUEL RAIL PRESSURE)	
	31A	1	**309-8006**	1	WASHER	
YR	32	1	**320-0677**	4	INJECTOR GP-FUEL	90
YR	33	1	**324-0532**	1	PUMP GP-FUEL INJECTION	141
	34	1	**298-4535**	1	BRACKET-SUPPORT	
	35	1	**337-3573**	1	BRACKET	
	36	1	**337-3574**	1	TUBE	
	37	1	**322-3745**	1	TUBE (CYL NO. 1)	
	38	1	**322-3746**	1	TUBE (CYL NO. 2)	
	39	1	**333-4732**	1	LINE-FUEL INJECTION (CYL NO. 3)	
	40	1	**333-4733**	1	LINE-FUEL INJECTION (CYL NO. 4)	
	41	1	**298-4542**	1	TUBE AS	
	42	1	**298-4543**	1	BOLT	
	43	2	**317-3144**	1	BRACKET	
	44	3	**313-2455**	1	SENSOR-TEMPERATURE (AIR)	
	44A	3	**278-5226**	1	SEAL-O-RING	
C	45	3	**335-8266**	1	TUBE	
	46	3	**304-3689**	1	ADAPTER	
F			**278-4138**	4	PROTECTION GP-FUEL SYSTEM	

304-3649 **PUMP GP-FUEL INJECTION (*contd.*)** **i04703033**

NOTE	REF NO	GRAPHIC REF	PART NUMBER	QTY	PART NAME 1 2 3 4 5 6 (PRODUCT LEVEL)	SEE PAGE

C - CHANGE FROM PREVIOUS TYPE
F - NOT SHOWN
M - METRIC PART
R - REMFG PART MAY BE AVAILABLE
Y - SEPARATE ILLUSTRATION

304-3649 **PUMP GP-FUEL INJECTION (*contd.*)** **i04703033**

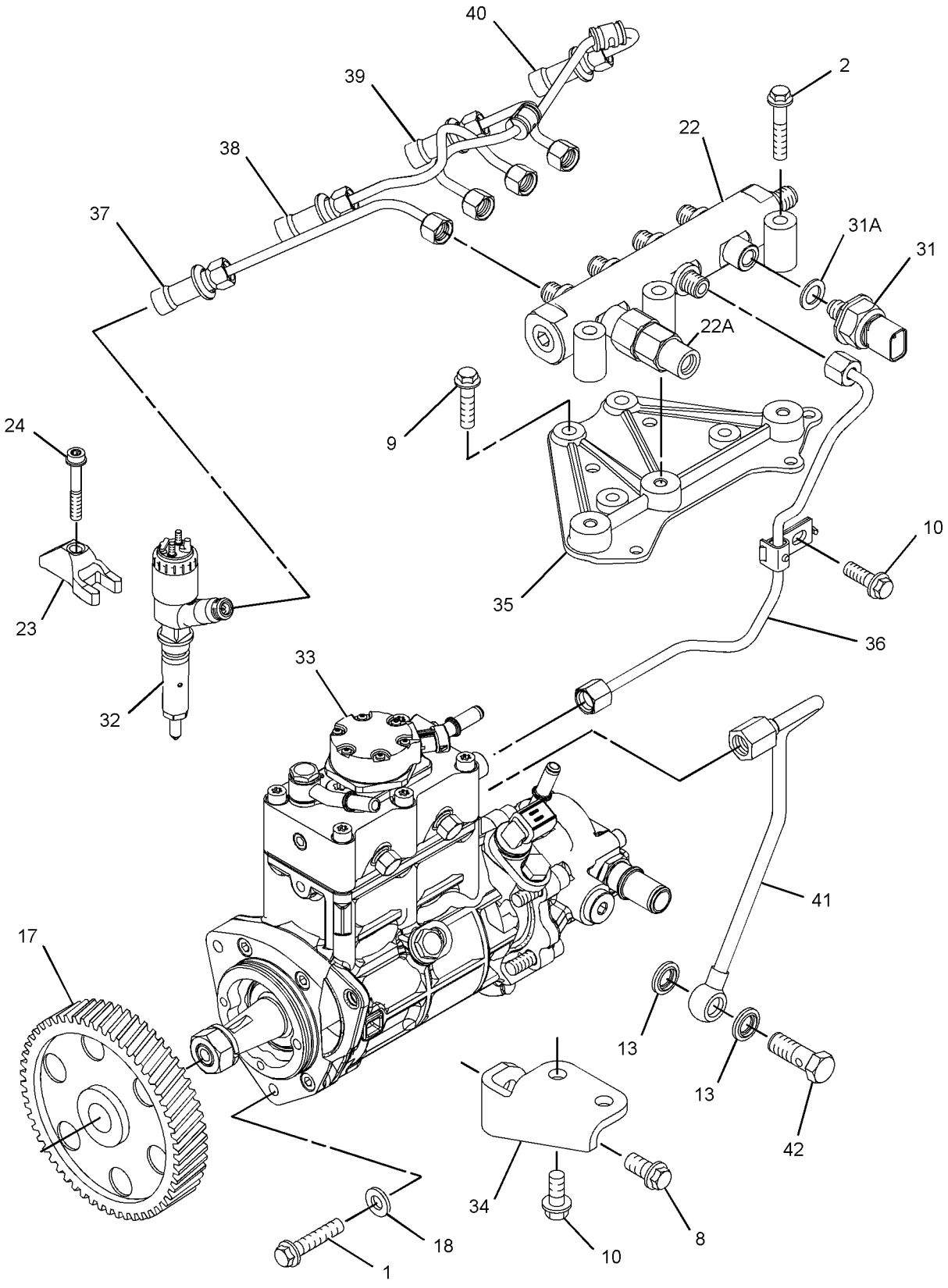

GRAPHIC #1 g01763875

304-3649 **PUMP GP-FUEL INJECTION (*contd.*)** **i04703033**

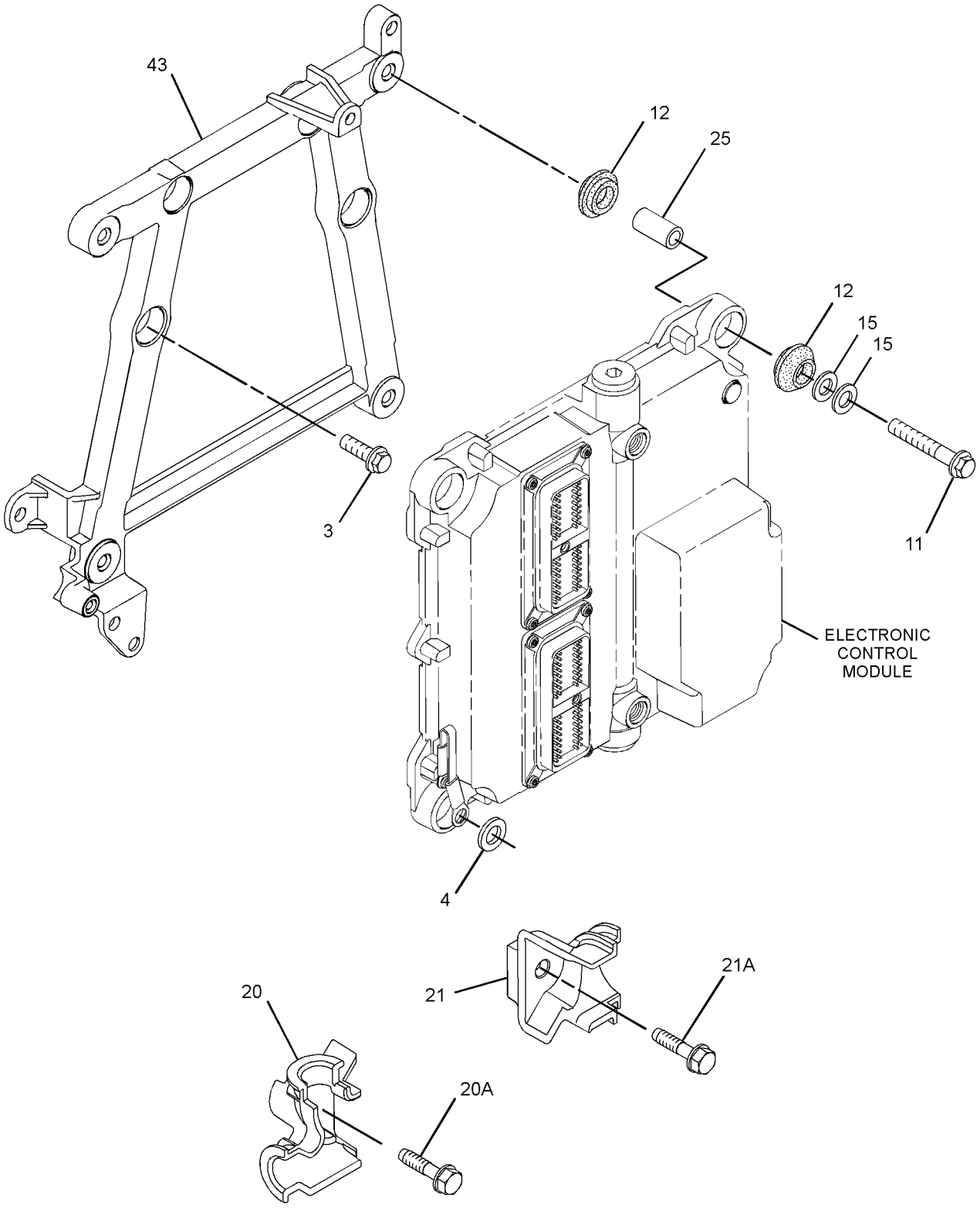

GRAPHIC #2 g01934254

304-3649 **PUMP GP-FUEL INJECTION (*contd.*)** **i04703033**

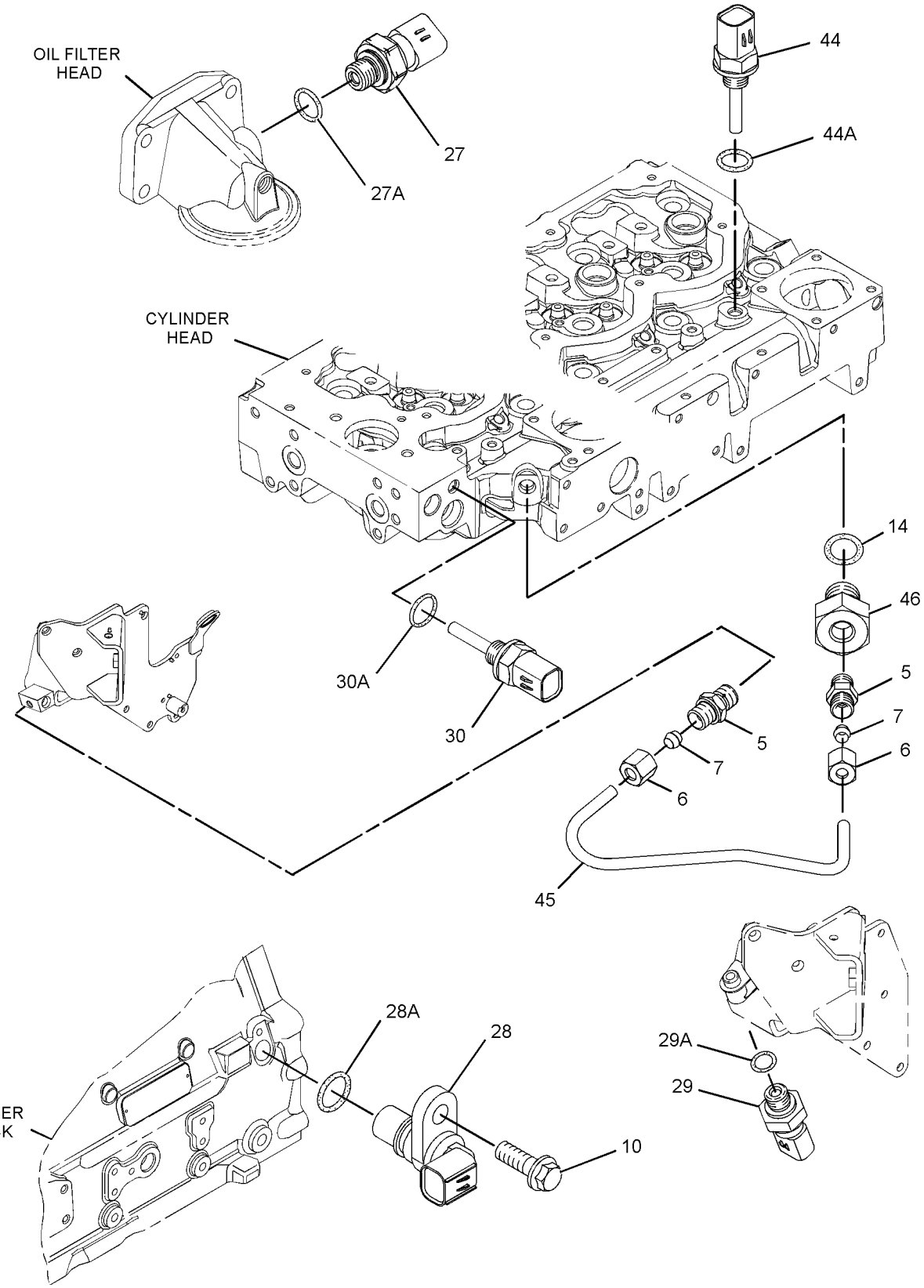

GRAPHIC #3 **<END>** g01719281

304-3649 PUMP GP-FUEL INJECTION

S/N: C4E6229-UP

PART OF 254-9233 ENGINE AR-PRIMARY

TYPE 2

SMCS-1251, 1290

i04703032

NOTE	REF NO	GRAPHIC REF	PART NUMBER	QTY	PART NAME 1 2 3 4 5 6 (PRODUCT LEVEL)	SEE PAGE
M	1	1	**6I-0260**	3	BOLT (M8X1.25X25-MM)	
	2	1	**6I-0455**	3	BOLT (M8X1.25X55-MM)	
	3	2	**6I-0572**	4	BOLT (M8X1.25X20-MM)	
	4	2	**7W-2632**	1	WASHER (8.5X16.8X1.6-MM THK)	
	5	3	**035-8017**	2	UNION	
	6	3	**365-3308**	2	NUT-COMPRESSION	
	7	3	**067-6265**	2	FITTING-BRASS	
M	8	1	**100-4830**	1	BOLT (M10X1.5X20-MM)	
M	9	1	**101-3895**	4	BOLT (M8X1.25X35-MM)	
M	10	1,3	**124-3815**	4	BOLT (M8X1.25X16-MM)	
	11	2	**141-8584**	4	BOLT (M8X1.25X50-MM)	
	12	2	**300-6714**	8	MOUNT	
	13	1	**160-0162**	2	WASHER	
	14	3	**199-9252**	1	SEAL-O-RING	
	15	2	**217-0099**	5	SPACER (8.2X25X2-MM THK)	
	17	1	**230-8989**	1	GEAR-FUEL PUMP (68-TEETH)	
	18	1	**232-3149**	3	WASHER (8.35X16.85X1.55-MM THK)	
	20	2	**268-6678**	1	BRACKET AS	
	20A	2	**260-3939**	1	SCREW-HEX HEAD	
	21	2	**268-6677**	1	BRACKET AS	
	21A	2	**260-3939**	1	SCREW-HEX HEAD	
	22	1	**318-2394**	1	RAIL AS-FUEL	
	22A	1	**305-5291**	1	VALVE AS-RELIEF	
	23	1	**278-5168**	4	CLAMP-INJECTOR	
	24	1	**278-5170**	4	BOLT	
	25	2	**278-5203**	4	SPACER	
	27	3	**278-5225**	1	KIT-SENSOR (ENGINE OIL PRESSURE)	
	27A	3	**199-9267**	1	SEAL-O-RING	
	28	3	**311-3858**	1	KIT-SENSOR (ENGINE SPEED)	
	28A	3	**274-1639**	1	SEAL	
		3	**238-0120**	1	SENSOR GP-SPEED	
	29	3	**278-5273**	1	KIT-SENSOR (AIR PRESSURE)	
	29A	3	**199-9252**	1	SEAL-O-RING	
	30	3	**278-5307**	1	KIT-SENSOR (COOLANT TEMPERATURE)	
	30A	3	**199-9267**	1	SEAL-O-RING	
	31	1	**311-6342**	1	SENSOR-PRESSURE (FUEL RAIL PRESSURE)	
	31A	1	**309-8006**	1	WASHER	
YR	32	1	**320-0677**	4	INJECTOR GP-FUEL	90
CYR	33	1	**352-6584**	1	PUMP GP-FUEL INJECTION	142
	34	1	**298-4535**	1	BRACKET-SUPPORT	
	35	1	**337-3573**	1	BRACKET	
	36	1	**337-3574**	1	TUBE	
	37	1	**322-3745**	1	TUBE (CYL NO. 1)	
	38	1	**322-3746**	1	TUBE (CYL NO. 2)	
	39	1	**333-4732**	1	LINE-FUEL INJECTION (CYL NO. 3)	
	40	1	**333-4733**	1	LINE-FUEL INJECTION (CYL NO. 4)	
	41	1	**298-4542**	1	TUBE AS	
	42	1	**298-4543**	1	BOLT	
	43	2	**317-3144**	1	BRACKET	
	44	3	**313-2455**	1	SENSOR-TEMPERATURE (AIR)	
	44A	3	**278-5226**	1	SEAL-O-RING	
	45	3	**335-8266**	1	TUBE	
	46	3	**304-3689**	1	ADAPTER	
F			**278-4138**	4	PROTECTION GP-FUEL SYSTEM	

304-3649 **PUMP GP-FUEL INJECTION (*contd.*)** **i04703032**

NOTE	REF NO	GRAPHIC REF	PART NUMBER	QTY	PART NAME 1 2 3 4 5 6 (PRODUCT LEVEL)	SEE PAGE

C - CHANGE FROM PREVIOUS TYPE
F - NOT SHOWN
M - METRIC PART
R - REMFG PART MAY BE AVAILABLE
Y - SEPARATE ILLUSTRATION

304-3649 **PUMP GP-FUEL INJECTION (*contd.*)** **i04703032**

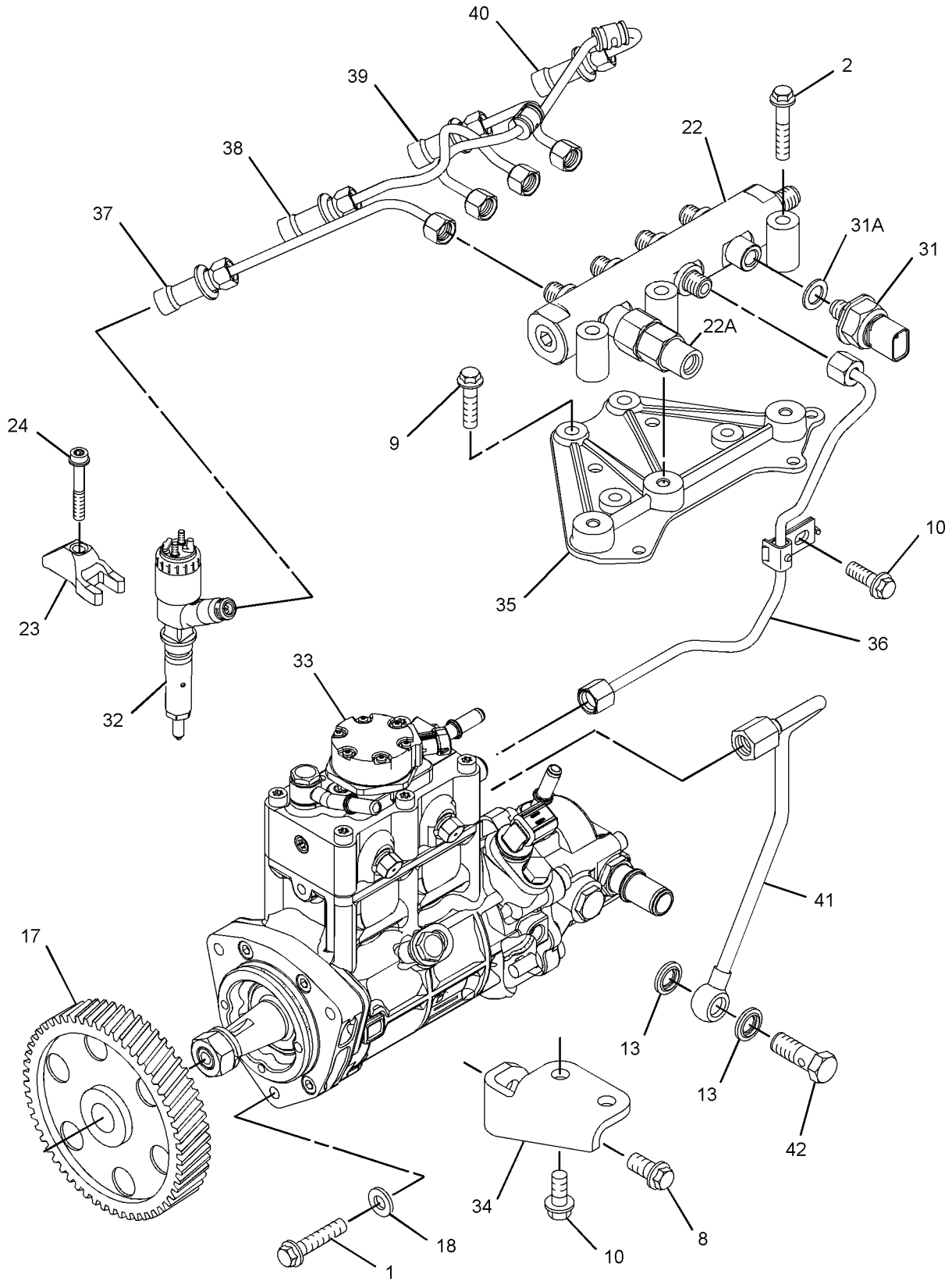

GRAPHIC #1 g02242593

304-3649 **PUMP GP-FUEL INJECTION (*contd.*)** **i04703032**

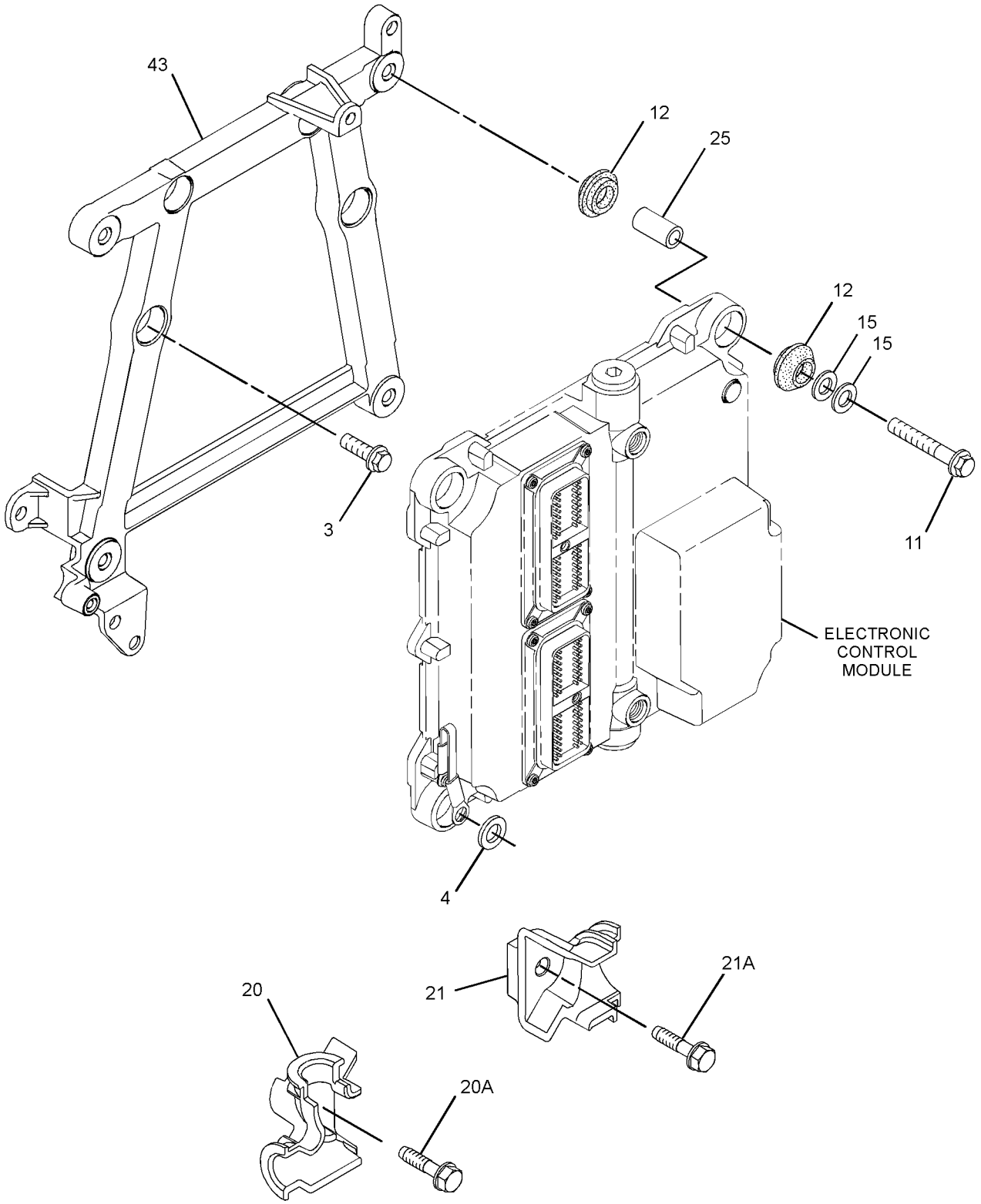

GRAPHIC #2 g01934254

304-3649 **PUMP GP-FUEL INJECTION (*contd.*)** **i04703032**

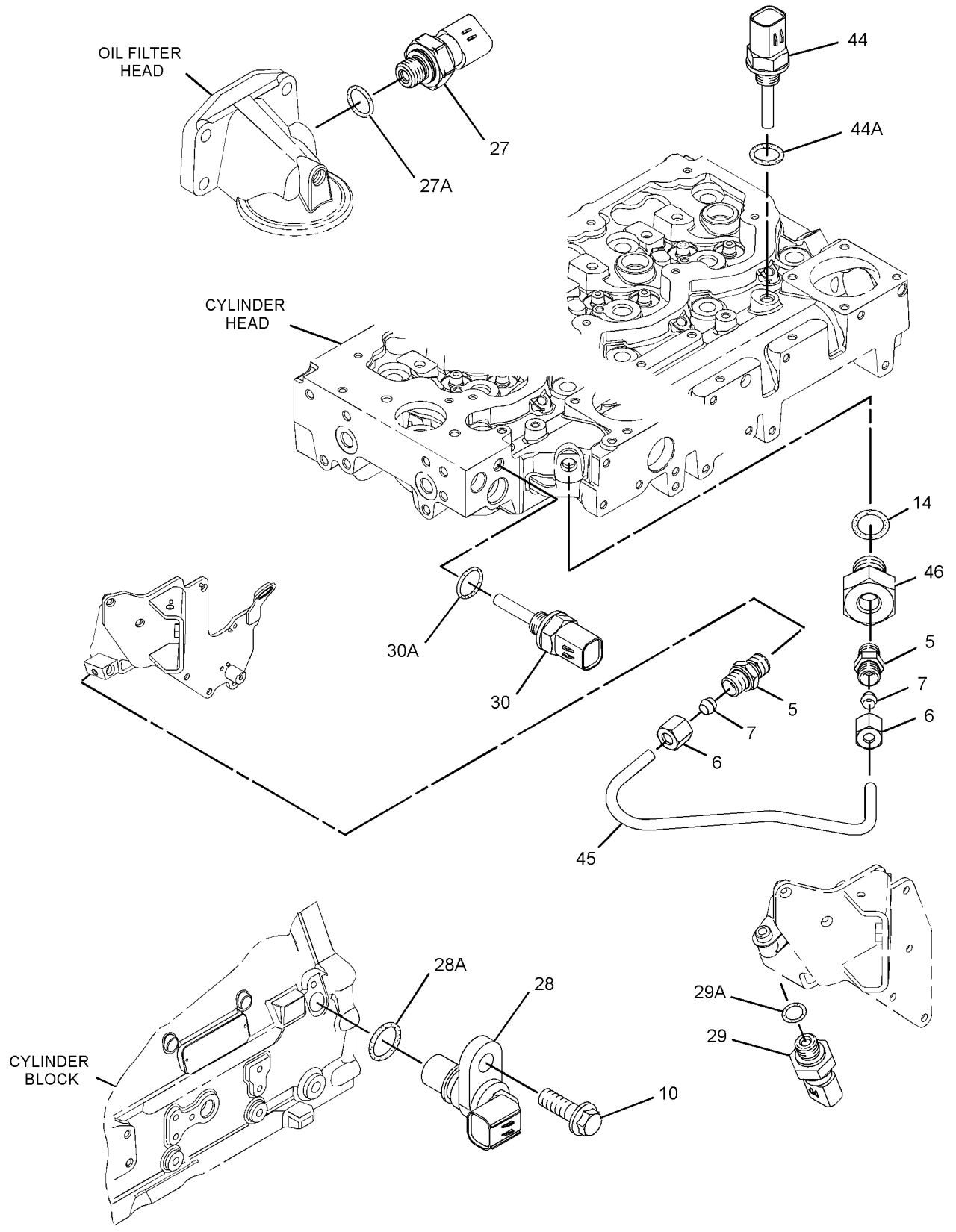

GRAPHIC #3 **<END>** g01719281

304-3649 PUMP GP-FUEL INJECTION

S/N: C4E6229-UP

PART OF 254-9233 ENGINE AR-PRIMARY

TYPE 3

SMCS-1251, 1290 **i04887586**

NOTE	REF NO	GRAPHIC REF	PART NUMBER	QTY	PART NAME 1 2 3 4 5 6 (PRODUCT LEVEL)	SEE PAGE
M	1	1	**6I-0260**	3	BOLT (M8X1.25X25-MM)	
	2	1	**6I-0455**	3	BOLT (M8X1.25X55-MM)	
	3	2	**6I-0572**	4	BOLT (M8X1.25X20-MM)	
	4	2	**7W-2632**	1	WASHER (8.5X16.8X1.6-MM THK)	
	5	3	**035-8017**	2	UNION	
	6	3	**365-3308**	2	NUT-COMPRESSION	
	7	3	**067-6265**	2	FITTING-BRASS	
M	8	1	**100-4830**	1	BOLT (M10X1.5X20-MM)	
M	9	1	**101-3895**	4	BOLT (M8X1.25X35-MM)	
M	10	1,3	**124-3815**	4	BOLT (M8X1.25X16-MM)	
	11	2	**141-8584**	4	BOLT (M8X1.25X50-MM)	
	12	2	**300-6714**	8	MOUNT	
	13	1	**160-0162**	2	WASHER	
	14	3	**199-9252**	1	SEAL-O-RING	
	15	2	**217-0099**	5	SPACER (8.2X25X2-MM THK)	
	17	1	**230-8989**	1	GEAR-FUEL PUMP (68-TEETH)	
	18	1	**232-3149**	3	WASHER (8.35X16.85X1.55-MM THK)	
	20	2	**268-6678**	1	BRACKET AS	
	20A	2	**260-3939**	1	SCREW-HEX HEAD	
	21	2	**268-6677**	1	BRACKET AS	
	21A	2	**260-3939**	1	SCREW-HEX HEAD	
	22	1	**358-6632**	1	RAIL GP-FUEL	
	22A	1	**305-5291**	1	VALVE AS-RELIEF	
	23	1	**278-5168**	4	CLAMP-INJECTOR	
	24	1	**278-5170**	4	BOLT	
	25	2	**278-5203**	4	SPACER	
	27	3	**278-5225**	1	KIT-SENSOR (ENGINE OIL PRESSURE)	
	27A	3	**199-9267**	1	SEAL-O-RING	
	28	3	**311-3858**	1	KIT-SENSOR (ENGINE SPEED)	
	28A	3	**274-1639**	1	SEAL	
		3	**238-0120**	1	SENSOR GP-SPEED	
	29	3	**278-5273**	1	KIT-SENSOR (AIR PRESSURE)	
	29A	3	**199-9252**	1	SEAL-O-RING	
	30	3	**278-5307**	1	KIT-SENSOR (COOLANT TEMPERATURE)	
	30A	3	**199-9267**	1	SEAL-O-RING	
	31	1	**311-6342**	1	SENSOR-PRESSURE (FUEL RAIL PRESSURE)	
	31A	1	**309-8006**	1	WASHER	
YR	32	1	**320-0677**	4	INJECTOR GP-FUEL	90
YR	33	1	**324-0532**	1	PUMP GP-FUEL INJECTION	141
	34	1	**298-4535**	1	BRACKET-SUPPORT	
	35	1	**337-3573**	1	BRACKET	
	36	1	**337-3574**	1	TUBE	
	37	1	**322-3745**	1	TUBE (CYL NO. 1)	
	38	1	**322-3746**	1	TUBE (CYL NO. 2)	
	39	1	**333-4732**	1	LINE-FUEL INJECTION (CYL NO. 3)	
	40	1	**333-4733**	1	LINE-FUEL INJECTION (CYL NO. 4)	
	41	1	**298-4542**	1	TUBE AS	
	42	1	**298-4543**	1	BOLT	
	43	2	**317-3144**	1	BRACKET	
C	44	3	**364-1102**	1	KIT-TEMPERATURE SENSOR (AIR) (INCLUDES SEAL & SENSOR)	
	45	3	**335-8266**	1	TUBE	
	46	3	**304-3689**	1	ADAPTER	
F			**278-4138**	4	PROTECTION GP-FUEL SYSTEM	

304-3649 **PUMP GP-FUEL INJECTION (*contd.*)** **i04887586**

NOTE	REF NO	GRAPHIC REF	PART NUMBER	QTY	PART NAME 1 2 3 4 5 6 (PRODUCT LEVEL)	SEE PAGE

C - CHANGE FROM PREVIOUS TYPE
F - NOT SHOWN
M - METRIC PART
R - REMFG PART MAY BE AVAILABLE
Y - SEPARATE ILLUSTRATION

304-3649 **PUMP GP-FUEL INJECTION (*contd.*)** **i04887586**

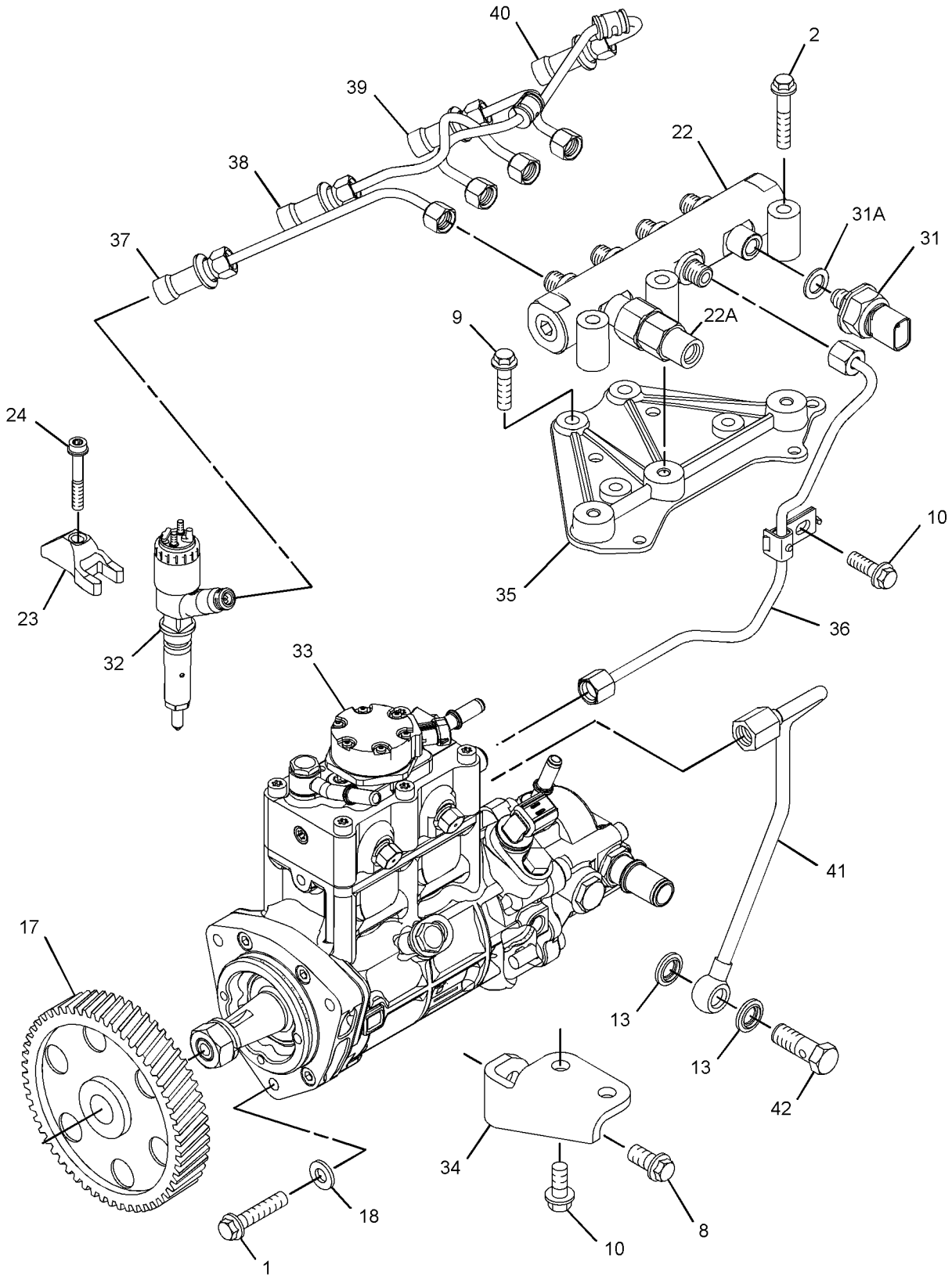

GRAPHIC #1 g03203081

304-3649 **PUMP GP-FUEL INJECTION (*contd.*)** **i04887586**

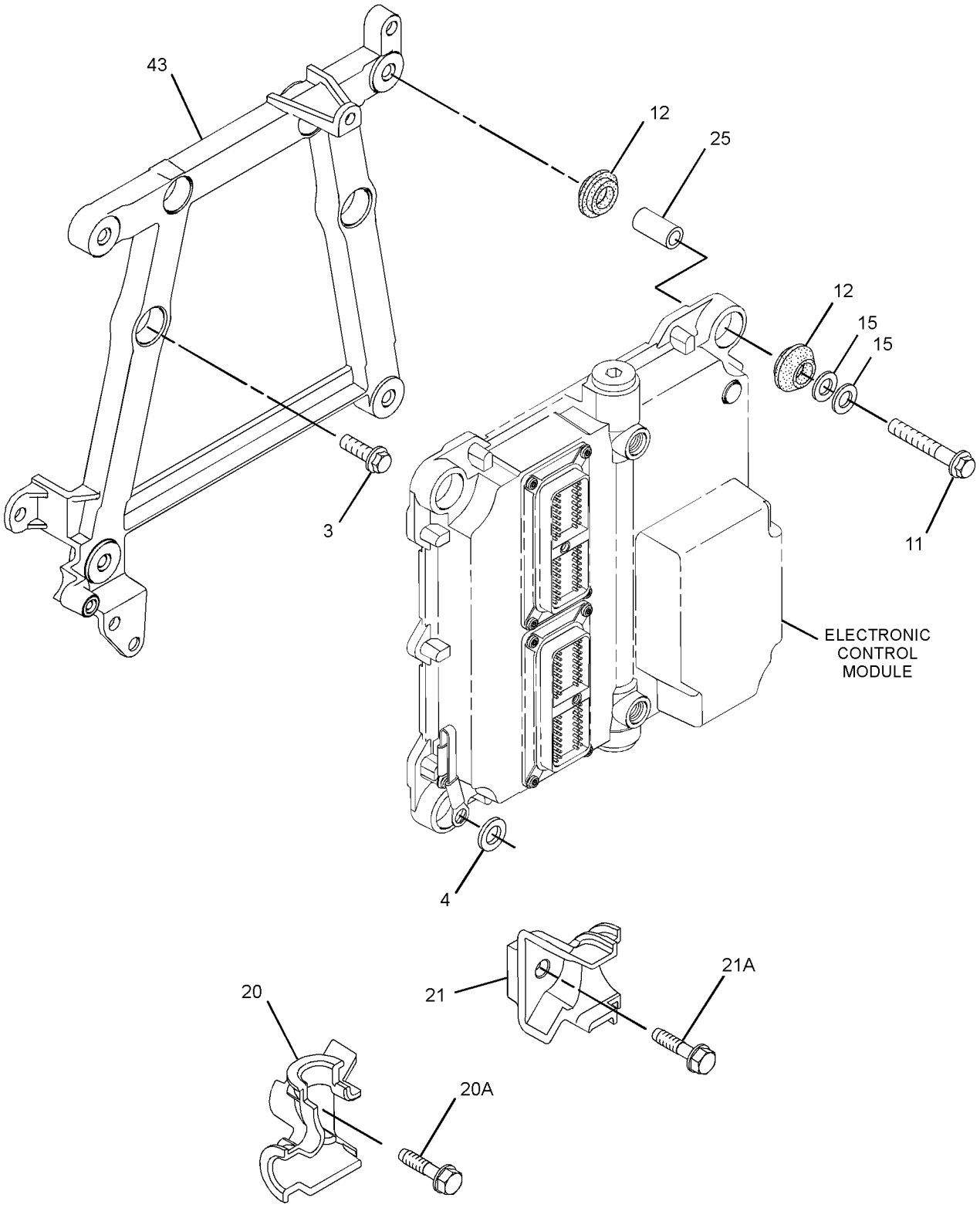

GRAPHIC #2 g01934254

304-3649 **PUMP GP-FUEL INJECTION (*contd.*)** **i04887586**

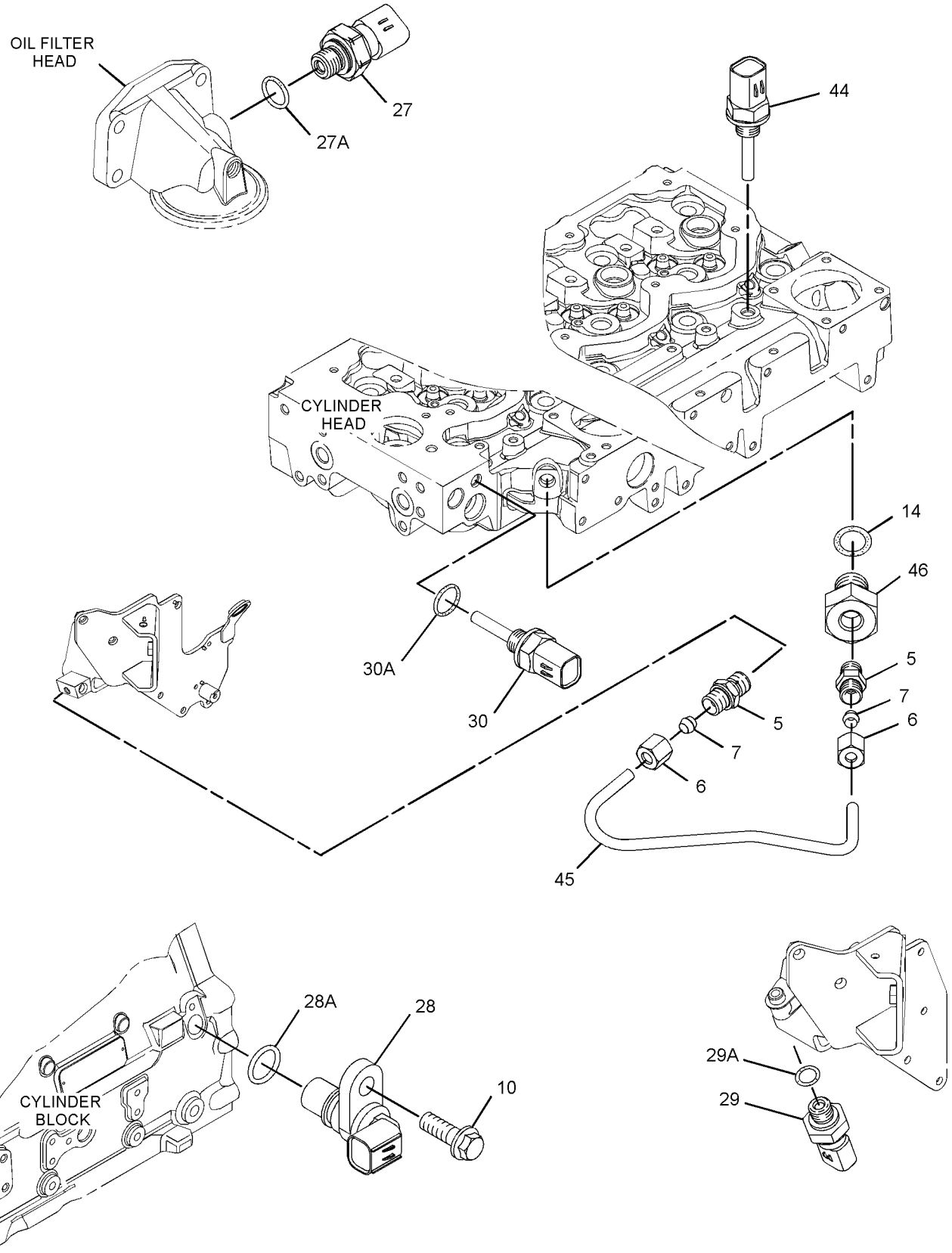

GRAPHIC #3 **<END>** g03203088

324-0532 PUMP GP-FUEL INJECTION*R

S/N: C4E1-UP

PART OF 304-3649 PUMP GP-FUEL INJECTION

SMCS-1251, 1290

i04903842

NOTE	REF NO	GRAPHIC REF	PART NUMBER	QTY	PART NAME 1 2 3 4 5 6 (PRODUCT LEVEL)	SEE PAGE
	1	1	**228-0172**	2	FITTING-FUEL	
	2	1	**228-7100**	3	SEAL-O-RING	
	3	1	**238-0120**	1	SENSOR GP-SPEED (SECONDARY, TIMING)	
	4	1	**247-6019**	2	SEAL	
	5	1	**248-1066**	1	FITTING-FUEL	
	6	1	**293-0249**	1	PUMP GP-FUEL TRANSFER	
	7	1	*295-0189*	1	CONNECTOR AS	
	7A	1	**8C-3076**	1	SEAL-O-RING	
	8	1	**295-4801**	1	NUT (M14X1.5-THD)	
	9	1	**296-3542**	1	LOCKWASHER	
	10	1	**117-1385**	1	SEAL-O-RING	
M	11	1	**5A-3604**	5	BOLT-SOCKET HEAD (M8X1.25X25-MM)	
	12	1	**334-2932**	1	SEAL-O-RING	
	13	1	**8L-2779**	4	SEAL-O-RING	
M	14	1	**8T-4200**	1	BOLT (M8X1.25X16-MM)	
	15	1	**257-2381**	2	PIN	
	16	1	**257-2382**	2	PLUG	
	17	1	**258-8149**	2	SPRING	
	18	1	**294-3031**	1	BOLT-SPECIAL	
	19	1	**294-3032**	1	WASHER-SPECIAL	

M - METRIC PART

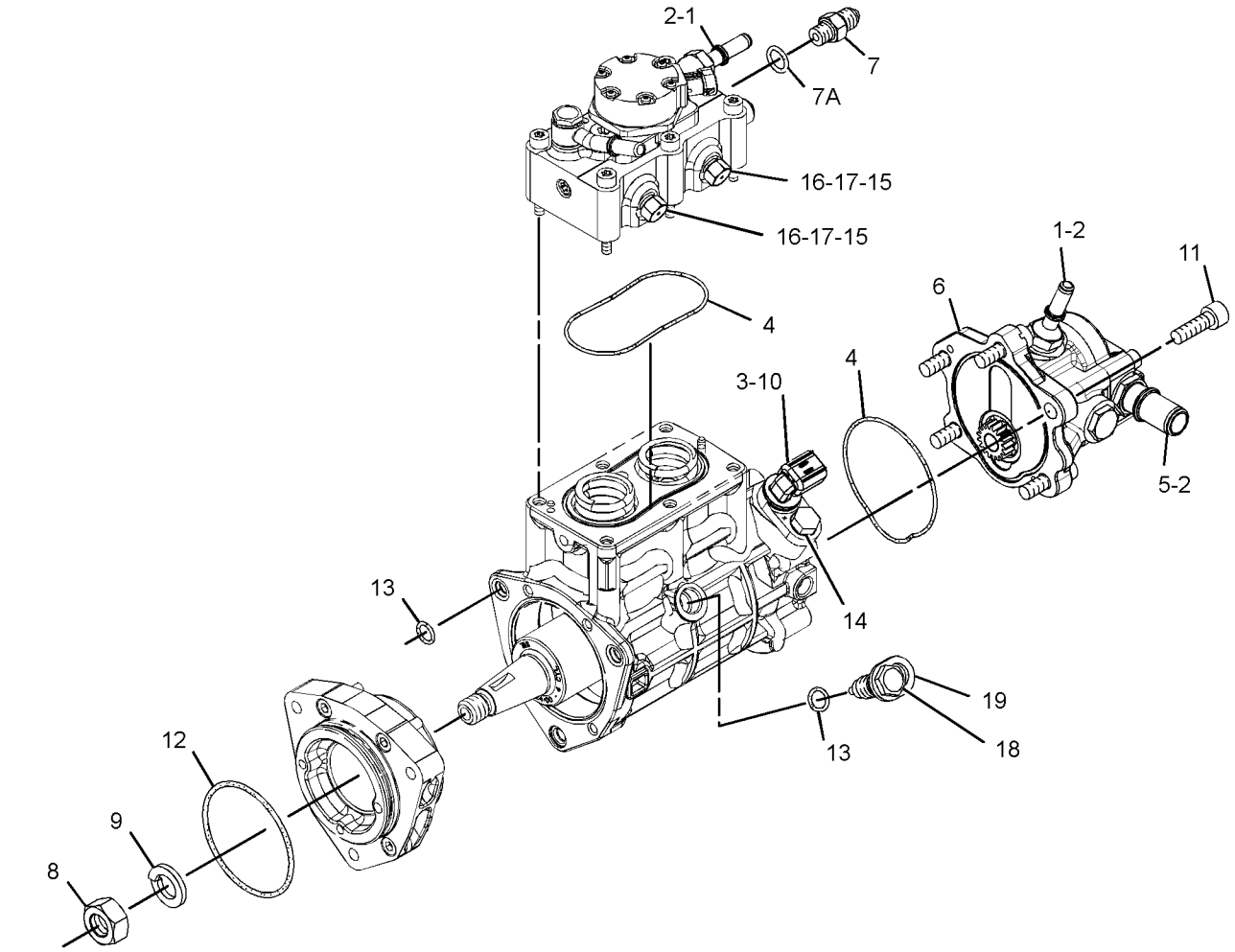

GRAPHIC #1

<END>

g03066716

352-6584 PUMP GP-FUEL INJECTION*R

S/N: C4E1-UP

PART OF 304-3649 PUMP GP-FUEL INJECTION

SMCS-1251, 1290 **i03995514**

NOTE	REF NO	GRAPHIC REF	PART NUMBER	QTY	PART NAME 1 2 3 4 5 6 (PRODUCT LEVEL)	SEE PAGE
	1	1	**228-0172**	1	FITTING-FUEL	
	2	1	**228-7100**	3	SEAL-O-RING	
	3	1	**238-0120**	1	SENSOR GP-SPEED (INJECTION PUMP)	
	4	1	**248-1066**	1	FITTING-FUEL	
	5	1	**295-4801**	1	NUT (M14X1.5-THD)	
	6	1	**296-3542**	1	LOCKWASHER	
	7	1	**117-1385**	1	SEAL-O-RING	
	8	1	**334-2932**	1	SEAL-O-RING	
M	9	1	**5A-3604**	5	BOLT-SOCKET HEAD (M8X1.25X25-MM)	
M	10	1	**8T-4200**	1	BOLT (M8X1.25X16-MM)	
	11	1	**247-6019**	1	SEAL	
	12	1	**8L-2779**	1	SEAL-O-RING	
	13	1	**351-2799**	1	FITTING	

M - METRIC PART

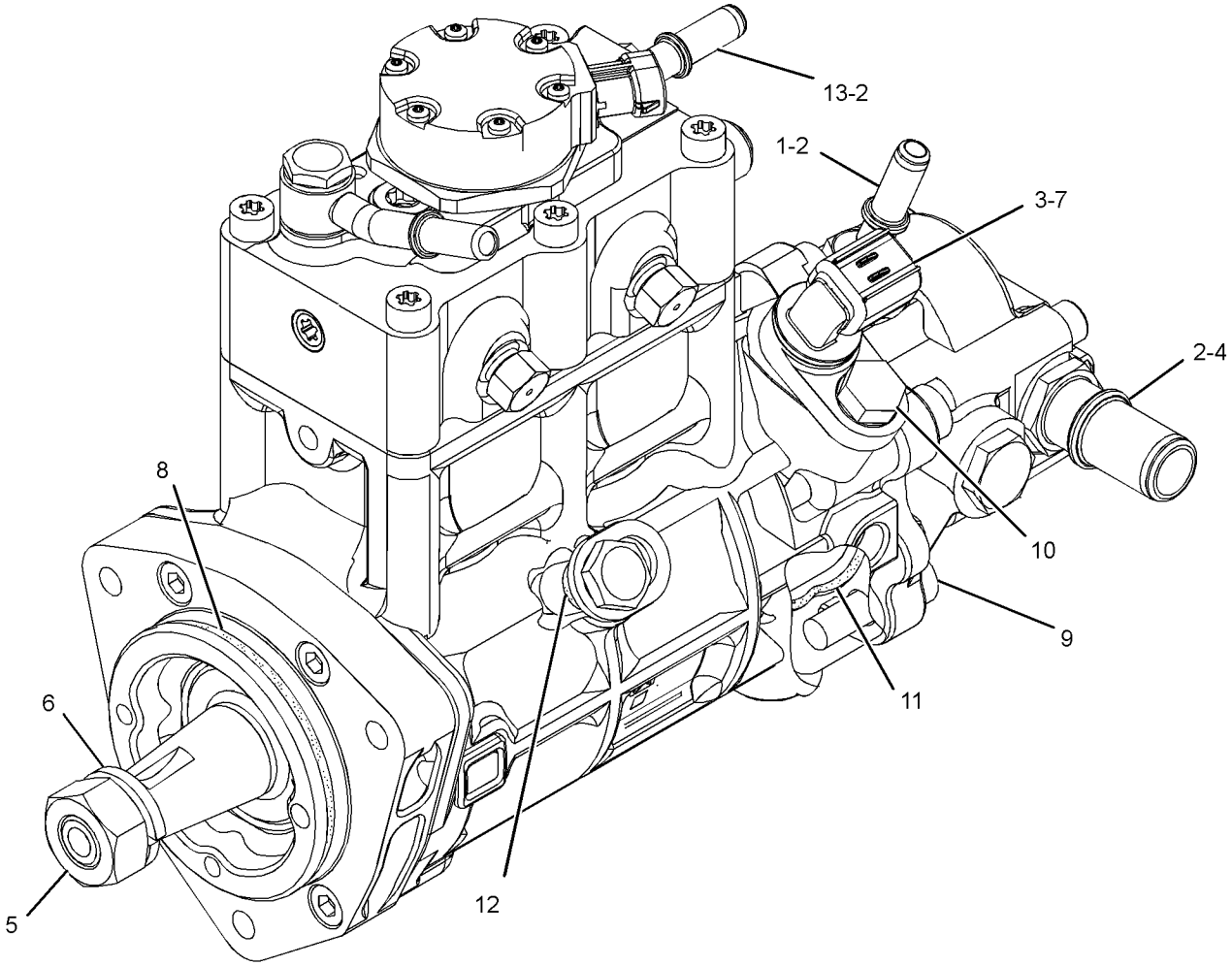

GRAPHIC #1 **<END>** g02199955

358-6633 RAIL GP-FUEL

S/N: MMM1-UP; RRR1-UP

AN ATTACHMENT

SMCS-1288 **i04020469**

NOTE	REF NO	GRAPHIC REF	PART NUMBER	QTY	PART NAME 1 2 3 4 5 6 (PRODUCT LEVEL)	SEE PAGE
	1	1	**305-5291**	1	VALVE AS-RELIEF (FUEL RAIL)	

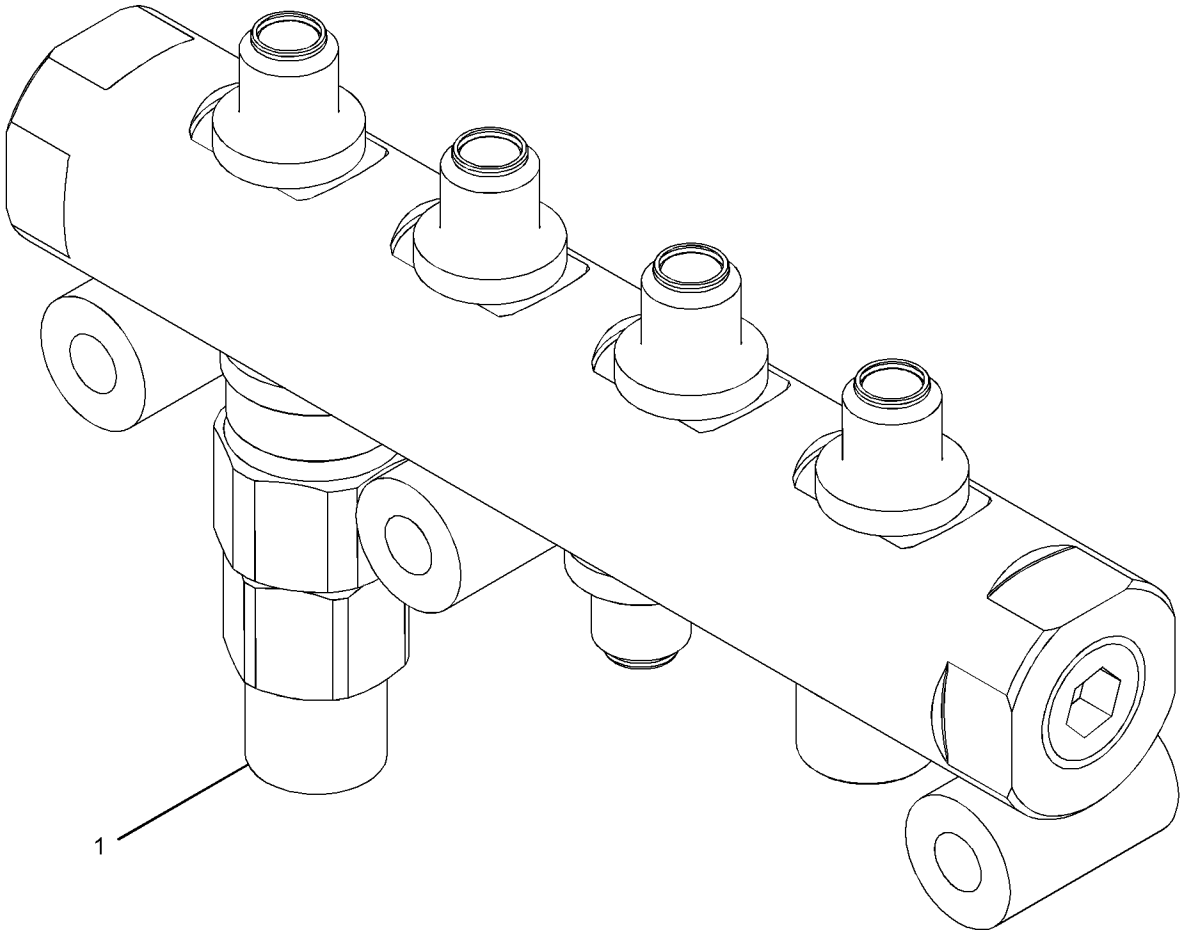

GRAPHIC #1 **<END>** g02203695

322-5920 SHUTOFF GP-MANUAL–FIRE PLOW

S/N: MMM1-UP; RRR1-UP
PART OF 322-5904 LINES GP-FUEL
AN ATTACHMENT

SMCS-1704 **i05404296**

NOTE	REF NO	GRAPHIC REF	PART NUMBER	QTY	PART NAME 1 2 3 4 5 6 (PRODUCT LEVEL)	SEE PAGE
	1	1	**112-1817**	1	VALVE-BALL (FIRE PLOW)	
Y	2	1	*322-5908*	1	CABLE GP-CONTROL (FIRE PLOW)	684
	3	1	**322-5915**	1	BRACKET	
	4	1	**322-5916**	1	BRACKET	
	5	1	**322-5917**	1	BRACKET	
	6	1	**214-7568**	2	SEAL-O-RING	
	7	1	**228-7089**	2	SEAL-O-RING	
	8	1	**4B-4274**	1	WASHER (5.5X13X1.2-MM THK)	
	9	1	**6V-8636**	1	CONNECTOR	
	10	1	**6V-8724**	1	ELBOW	
M	11	1	**8T-0285**	4	SCREW-MACHINE (M4X0.7X12-MM)	
M	12	1	**8T-0287**	1	BOLT (M5X0.8X10-MM)	
M	13	1	**8T-4189**	2	BOLT (M8X1.25X20-MM)	
	14	1	**8T-4223**	1	WASHER-HARD (13.5X25.5X3-MM THK)	
	15	1	**8T-4224**	2	WASHER-HARD (8.8X16X2-MM THK)	
	16	1	**8T-7971**	1	WASHER-HARD (13.5X25.5X5-MM THK)	

M - METRIC PART
Y - SEPARATE ILLUSTRATION

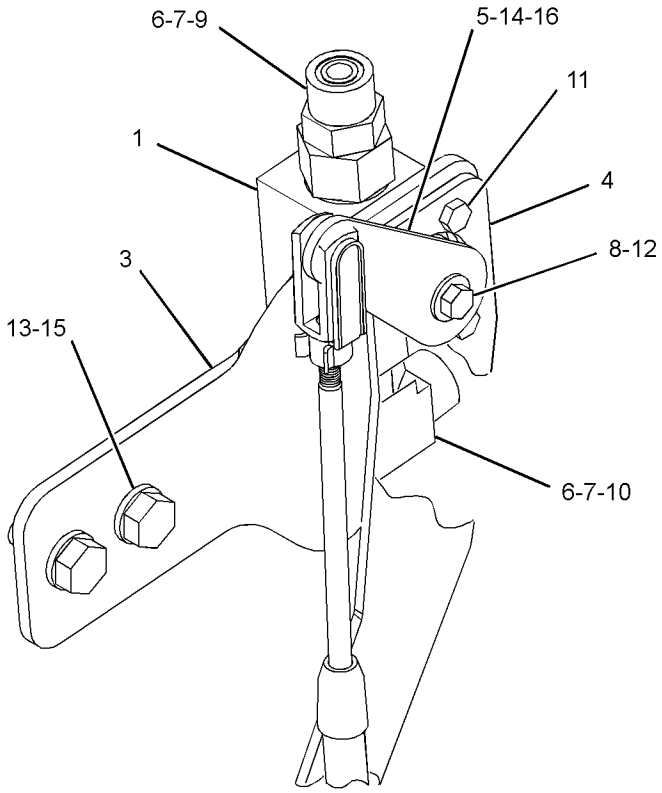

VIEW OF AREA A

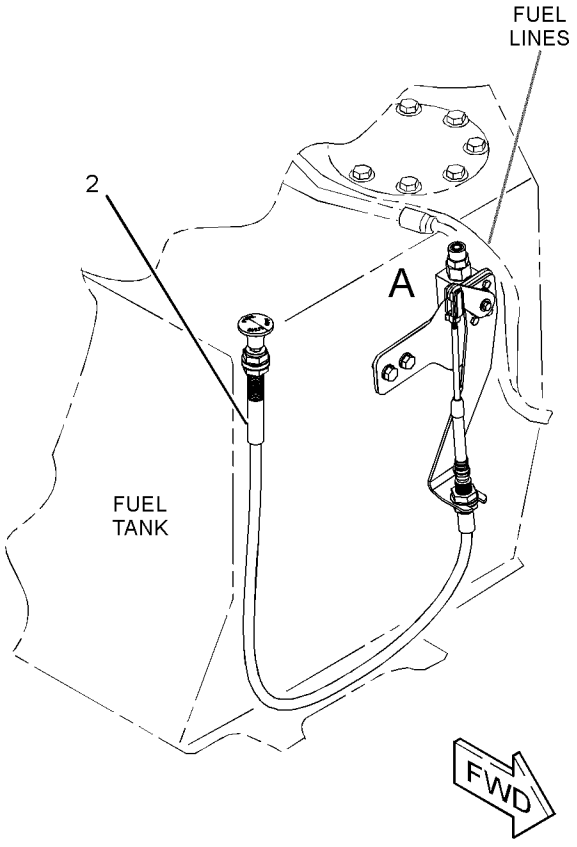

GRAPHIC #1 **<END>** g02006195

244-7408 TANK GP-FUEL

S/N: MMM1-UP; RRR1-UP
195-LITER (51.5-GAL)
PART OF 244-7378, 244-7379 CHASSIS AR

SMCS-1273 **i02895051**

NOTE	REF NO	GRAPHIC REF	PART NUMBER	QTY	PART NAME 1 2 3 4 5 6 (PRODUCT LEVEL)	SEE PAGE
	1	1	**9M-6738**	2	CLAMP-HOSE	
	2	1	**151-2110**	1	GASKET	
M	3	1	**160-8744**	2	BOLT (M10X1.5X65-MM)	
	4	1	**256-2268**	2	STRAP AS	
D	5	1	**6V-2495**		SEAL (0.54-M)	
D	5A	1	**6V-2495**		SEAL (0.14-M)	
D	5B	1	**6V-2495**		SEAL (0.2-M)	
D	5C	1	**6V-2495**		SEAL (0.5-M EACH)	
	6	1	**260-0083**	1	FLANGE AS-FUEL TANK	
	7	1	**285-6704**	1	HOSE	
Y	8	1	**287-1962**	1	TANK GP-FUEL	147
M	9	1	**095-0736**	5	SCREW-MACHINE (M5X0.8X10-MM)	
	10	1	**5P-1076**	2	WASHER-HARD (13.5X30X4-MM THK)	
	11	1	**8T-0328**	5	WASHER-HARD (5.5X10X1-MM THK)	
	12	1	**8T-4121**	2	WASHER-HARD (11X21X2.5-MM THK)	
M	13	1	**8T-4179**	2	BOLT (M12X1.75X20-MM)	
E	14	1	**5P-6442**		HOSE (35-CM)	
E	15	1	**136-1955**		HOSE (29-CM)	
	16	1	**140-4765**	2	CLAMP-HOSE	

D - ORDER BY THE METER
E - ORDER BY THE CENTIMETER
M - METRIC PART
Y - SEPARATE ILLUSTRATION

244-7408 **TANK GP-FUEL (*contd.*)** **i02895051**

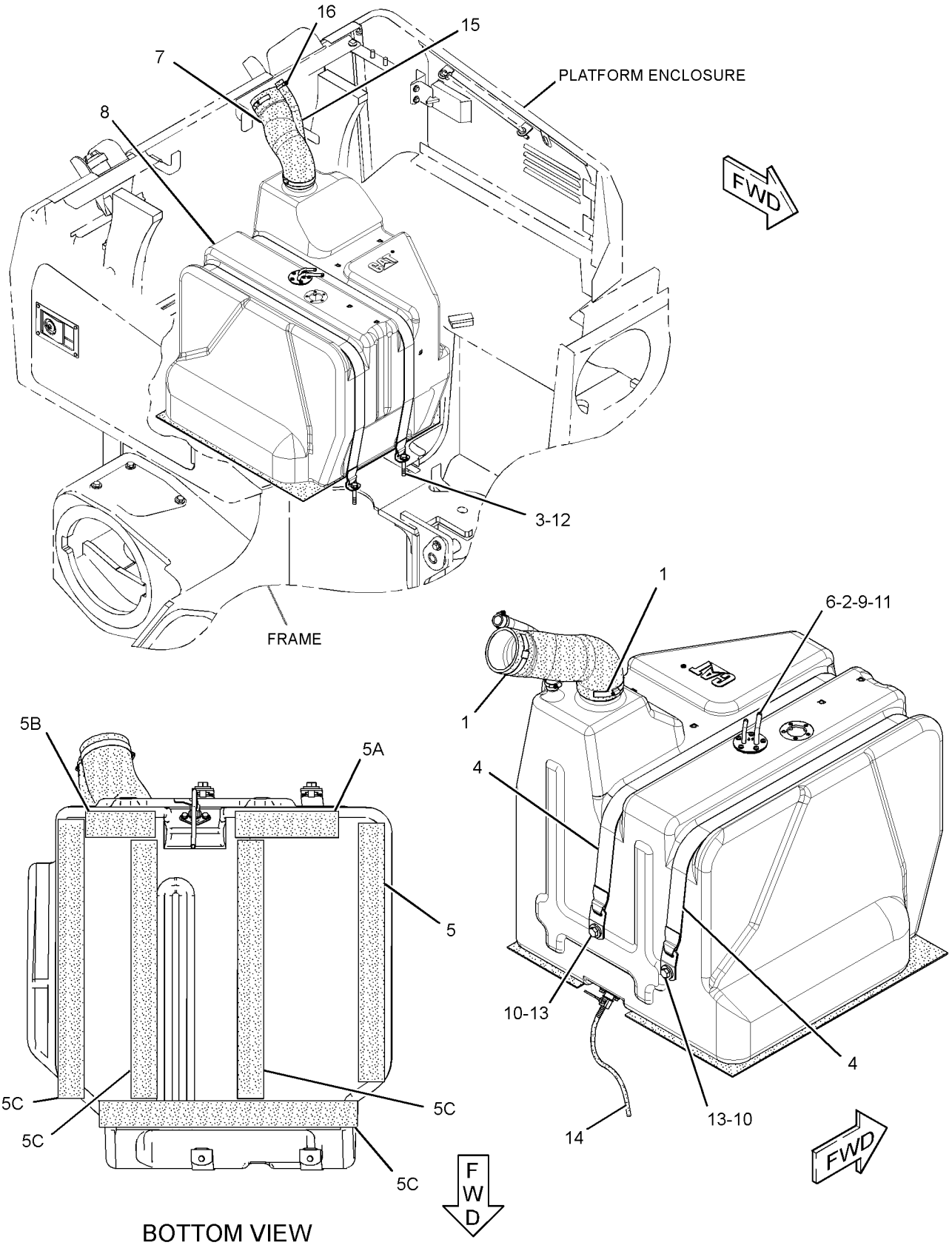

GRAPHIC #1 **<END>** g01424493

287-1962 TANK GP-FUEL

S/N: MMM1-UP; RRR1-UP

PART OF 244-7408 TANK GP-FUEL

SMCS-1273 **i03601785**

NOTE	REF NO	GRAPHIC REF	PART NUMBER	QTY	PART NAME 1 2 3 4 5 6 (PRODUCT LEVEL)	SEE PAGE
	1	1	**4J-5268**	1	SEAL-O-RING	
	2	1	**175-4614**	1	VALVE AS (FUEL TANK)	
	3	1	**233-4065**	1	FLANGE AS	
	4	1	**287-1965**	1	TANK AS-FUEL	
M	5	1	**8T-4970**	2	BOLT (M6X1X14-MM)	
	6	1	**9X-8256**	2	WASHER (6.6X12X2-MM THK)	

M - METRIC PART

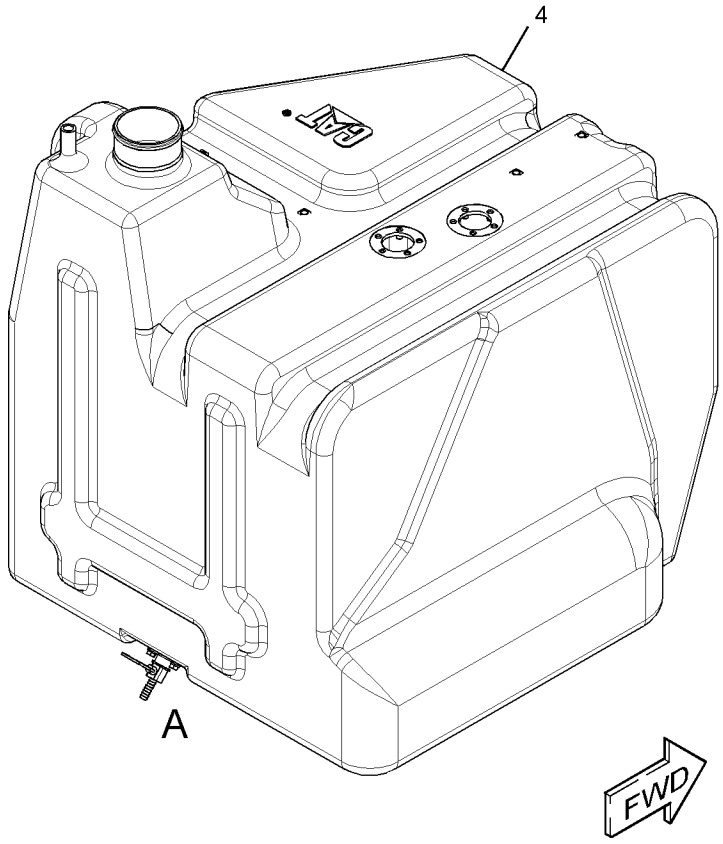

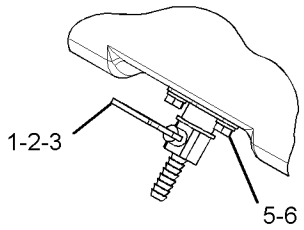

VIEW OF AREA A

GRAPHIC #1 **<END>** g01376271

319-8103 TANK GP-FUEL—FIRE PLOW

S/N: MMM1-UP; RRR1-UP
195-LITERS (51.5-US GAL)
PART OF 325-6498, 325-6499 MODIFICATION AR, 344-7614 SPECIAL AR
AN ATTACHMENT

SMCS-1273 **i05335981**

NOTE	REF NO	GRAPHIC REF	PART NUMBER	QTY	PART NAME 1 2 3 4 5 6 (PRODUCT LEVEL)	SEE PAGE
	1	1	**7K-1181**	1	STRAP-CABLE	
	2	1	**9M-6738**	2	CLAMP-HOSE	
	3	1	**110-1011**	1	COVER	
	4	1	**112-1817**	1	VALVE-BALL (FIRE PLOW)	
	5	1	**140-4765**	2	CLAMP-HOSE	
	6	1	**151-2110**	1	GASKET	
	7	1	**285-6704**	1	HOSE	
	8	1	**436-0206**	1	TANK AS-FUEL	
I	9	1	**436-2856**	1	HOSE AS	
	10	1	**319-8108**	1	FLANGE AS-FUEL TANK	
	11	1	**322-5917**	1	BRACKET	
M	12	1	**095-0736**	5	SCREW-MACHINE (M5X0.8X10-MM)	
	13	1	**110-1010**	1	GASKET-SCREEN (FUEL TANK)	
	14	1	**214-7568**	3	SEAL-O-RING	
	15	1	**228-7089**	2	SEAL-O-RING	
	16	1	**4B-4274**	1	WASHER (5.5X13X1.2-MM THK)	
	17	1	**6V-8636**	2	CONNECTOR	
	18	1	**7X-7729**	13	WASHER (11X25X3-MM THK)	
M	19	1	**8C-7581**	4	SCREW-MACHINE (M4X0.7X8-MM)	
M	20	1	**8T-0287**	1	BOLT (M5X0.8X10-MM)	
	21	1	**8T-0328**	5	WASHER-HARD (5.5X10X1-MM THK)	
M	22	1	**8T-4136**	8	BOLT (M10X1.5X25-MM)	
M	23	1	**8T-4195**	5	BOLT (M10X1.5X30-MM)	
	24	1	**7X-0591**	1	WASHER-HARD (17X29X3-MM THK)	
	25	1	**8T-7971**	1	WASHER-HARD (13.5X25.5X5-MM THK)	
	26	1	**9S-8004**	1	PLUG-O-RING	
E	27	1	**136-1955**		HOSE (39.5-CM)	

E - ORDER BY THE CENTIMETER
I - REFER TO HYDRAULIC INFORMATION SYSTEM
M - METRIC PART

319-8103 **TANK GP-FUEL (*contd.*)** **i05335981**

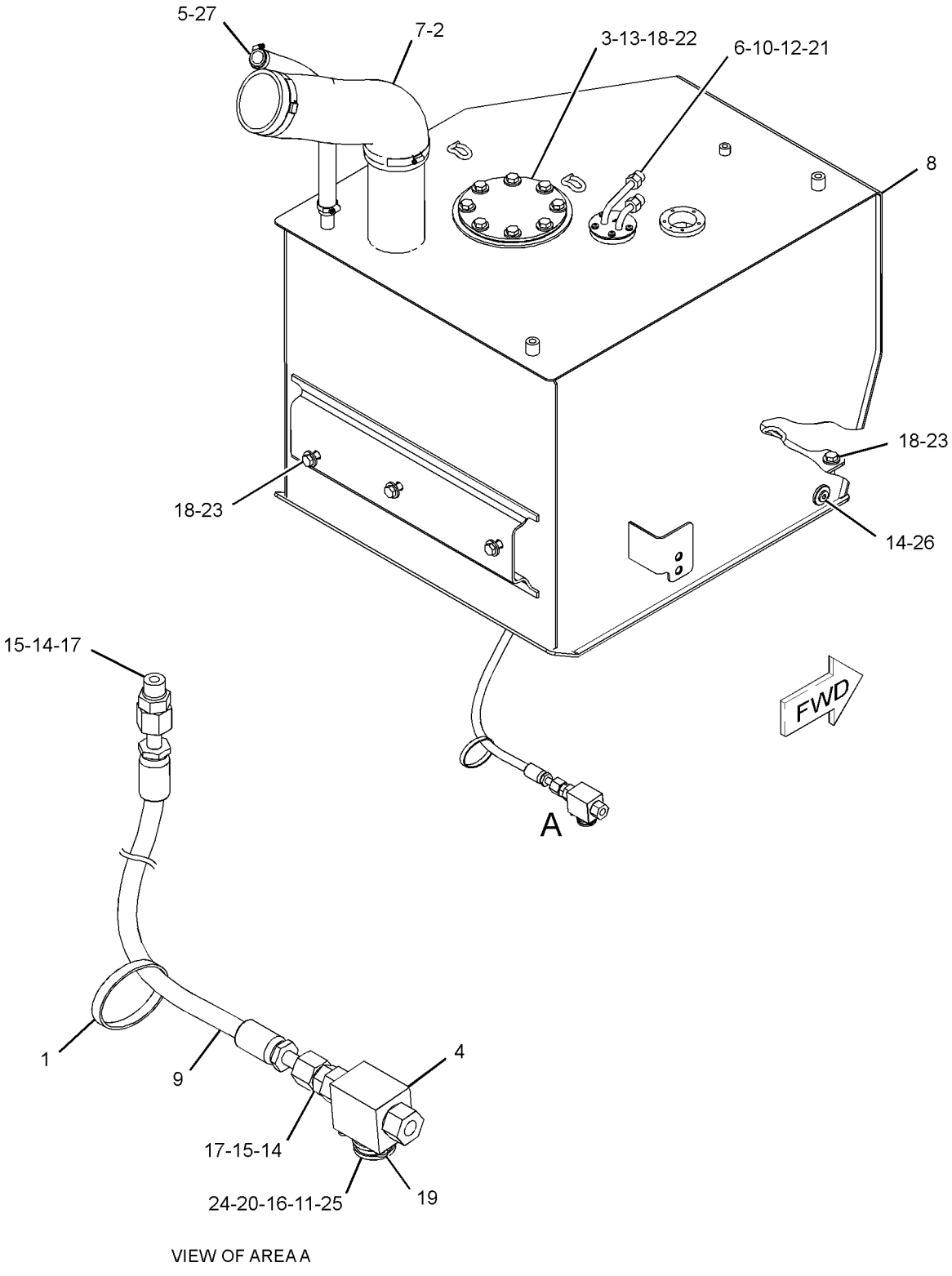

VIEW OF AREA A

GRAPHIC #1 **<END>** g03396608

301-7890 VALVE GP-CHECK—HYDROSTATIC DRIVE MOTOR

S/N: MMM1-UP; RRR1-UP

PART OF 254-1354 MOTOR GP-PISTON

SMCS-1262, 5067 **i02663226**

NOTE	REF NO	GRAPHIC REF	PART NUMBER	QTY	PART NAME 1 2 3 4 5 6 (PRODUCT LEVEL)	SEE PAGE
	1	1	**033-6039**	1	SEAL-O-RING	
	2	1	**242-0262**	1	RING-BACKUP	
	3	1	**269-4676**	1	SEAL-O-RING	

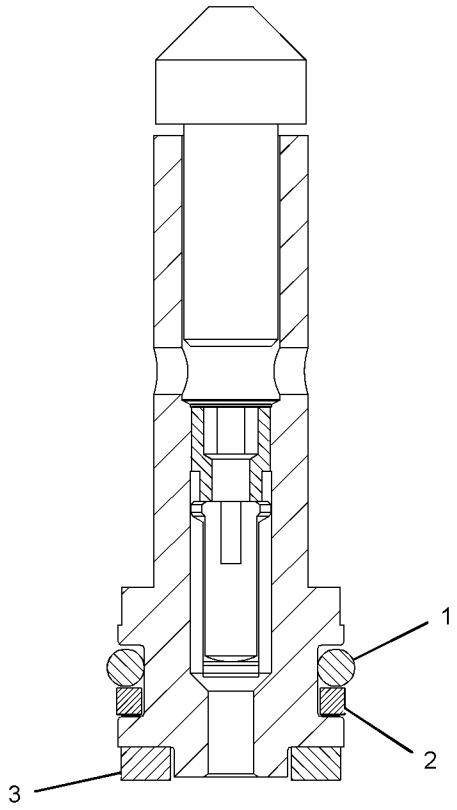

GRAPHIC #1 **<END>** g01332617

293-5450 VALVE GP-SOLENOID

S/N: MMM1-UP; RRR1-UP
PART OF 254-1379 PUMP GP-PISTON
AN ATTACHMENT

SMCS-1259 **i02833434**

NOTE	REF NO	GRAPHIC REF	PART NUMBER	QTY	PART NAME 1 2 3 4 5 6 (PRODUCT LEVEL)	SEE PAGE
	1	1	**269-4669**	1	SOLENOID AS (PILOT VALVE)	
		1	**217-3875**	1	SEAL-O-RING	
	2	1	**209-3565**	1	SEAL	
	3	1	**277-6631**	1	SPRING	
	4	1	**196-4253**	1	GASKET	
	5	1	**296-6705**	1	SOLENOID AS (WINCH PUMP)	
		1	**217-3875**	1	SEAL-O-RING	
		1	**247-7054**	1	COLLAR-LOCKING	
M	6	1	**8T-2922**	4	BOLT-SOCKET HEAD (M6X1X65-MM)	
M	7	1	**8C-6965**	1	BOLT-SOCKET HEAD (M6X1X45-MM)	
M	8	1	**099-0822**	8	BOLT-SOCKET HEAD (M5X0.8X10-MM)	
	9	1	**6J-3134**	1	SEAL-O-RING	
	10	1	**085-7539**	2	SEAL-O-RING	
	11	1	**196-4254**	2	SPRING	
	12	1	**6H-9691**	1	SEAL-O-RING	
	13	1	**215-8011**	1	BOLT-SPECIAL	
	14	1	**215-8010**	1	SHIM (3-MM THK)	
	15	1	**9S-8004**	1	PLUG-O-RING	
	16	1	**3J-1907**	1	SEAL-O-RING	
	17	1	**236-5157**	1	SCREEN-FILTER (PILOT)	
	18	1	**123-7583**	1	ORIFICE	

M - METRIC PART

293-5450 **VALVE GP-SOLENOID (*contd.*)** **i02833434**

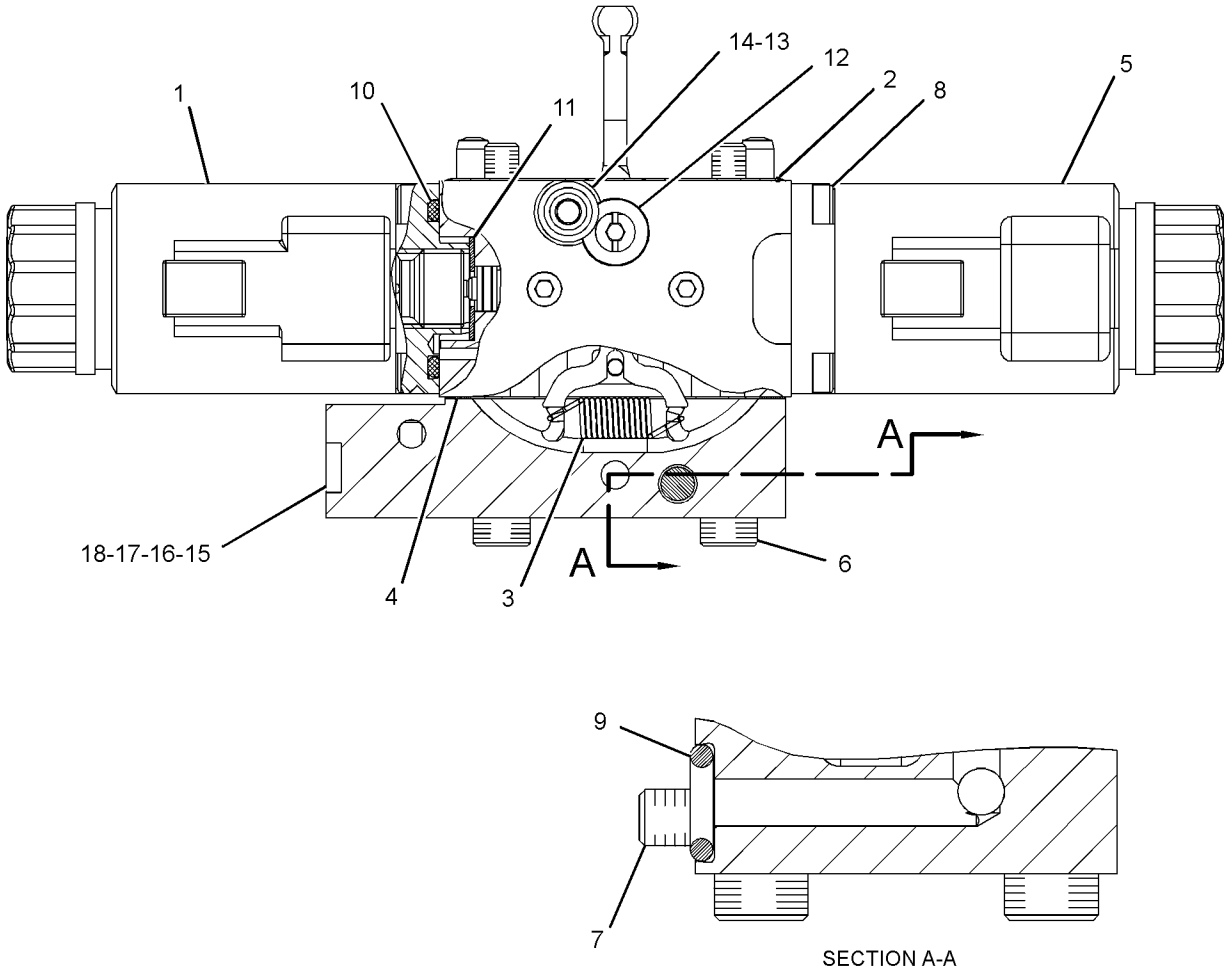

GRAPHIC #1 **<END>** g01358140

303-5774 ALTERNATOR GP-CHARGING

S/N: C4E1-UP
12 VOLT
PART OF 254-9233 ENGINE AR-PRIMARY

SMCS-1405 **i05180982**

NOTE	REF NO	GRAPHIC REF	PART NUMBER	QTY	PART NAME 1 2 3 4 5 6 (PRODUCT LEVEL)	SEE PAGE
M	1	1	**6I-0260**	1	BOLT (M8X1.25X25-MM)	
M	2	1	**6I-0593**	3	BOLT (M10X1.5X30-MM)	
M	3	1	**6I-0650**	1	BOLT (M10X1.5X65-MM)	
	4	1	**359-9666**	1	BOLT-FLANGE HEAD	
	5	1	**113-6349**	1	NUT (M8X1.25-THD)	
M	6	1	**140-8783**	2	BOLT (M10X1.5X45-MM)	
	7	1	**383-2557**	1	ALTERNATOR (12-VOLT, 120-AMPERE)	
	8	1	**377-9082**	1	BELT TENSIONER	
	9	1	**390-7340**	1	PULLEY-ALTERNATOR	
	10	1	**339-5256**	1	BRACKET	
	11	1	**349-3261**	1	PLATE-TENSIONER	

M - METRIC PART

303-5774 **ALTERNATOR GP-CHARGING (*contd.*)** **i05180982**

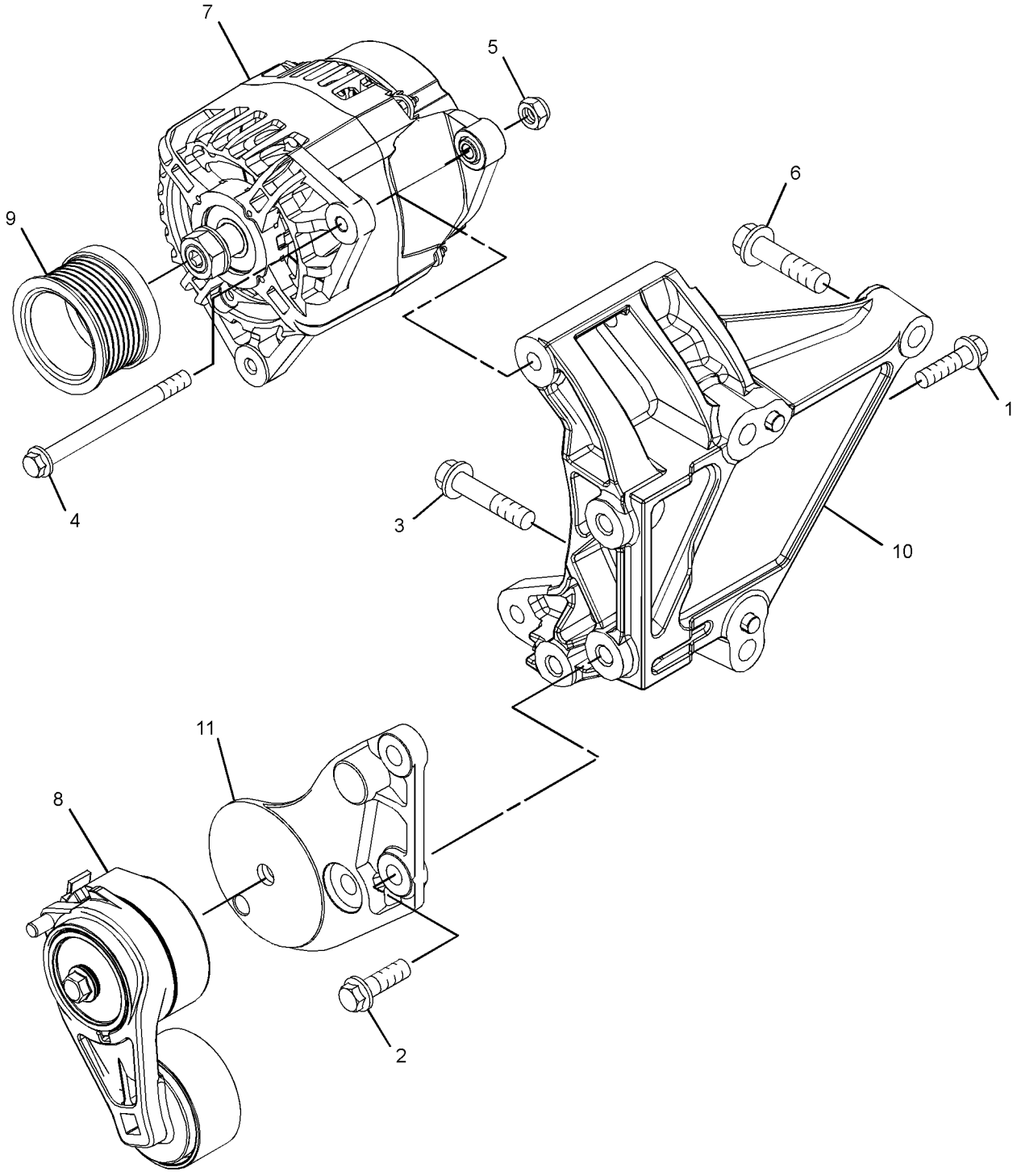

GRAPHIC #1 **<END>** g03332280

317-9776 ALTERNATOR GP-CHARGING

S/N: C4E1-UP

PART OF 254-9233 ENGINE AR-PRIMARY

SMCS-1405 **i05376565**

NOTE	REF NO	GRAPHIC REF	PART NUMBER	QTY	PART NAME 1 2 3 4 5 6 (PRODUCT LEVEL)	SEE PAGE
M	1	1	**6I-0260**	1	BOLT (M8X1.25X25-MM)	
M	2	1	**6I-0650**	1	BOLT (M10X1.5X65-MM)	
	3	1	**359-9666**	1	BOLT-FLANGE HEAD	
	4	1	**113-6349**	1	NUT (M8X1.25-THD)	
M	5	1	**140-8783**	2	BOLT (M10X1.5X45-MM)	
J	6	1	**383-2557**	1	ALTERNATOR (12-VOLT, 120-AMPERE)	
	7	1	**390-7340**	1	PULLEY-ALTERNATOR (8-GROOVE)	
J	8	1	**339-5256**	1	BRACKET	

J - BRACKET REQUIRED WITH ALTERNATOR TO ENSURE FITMENT
M - METRIC PART

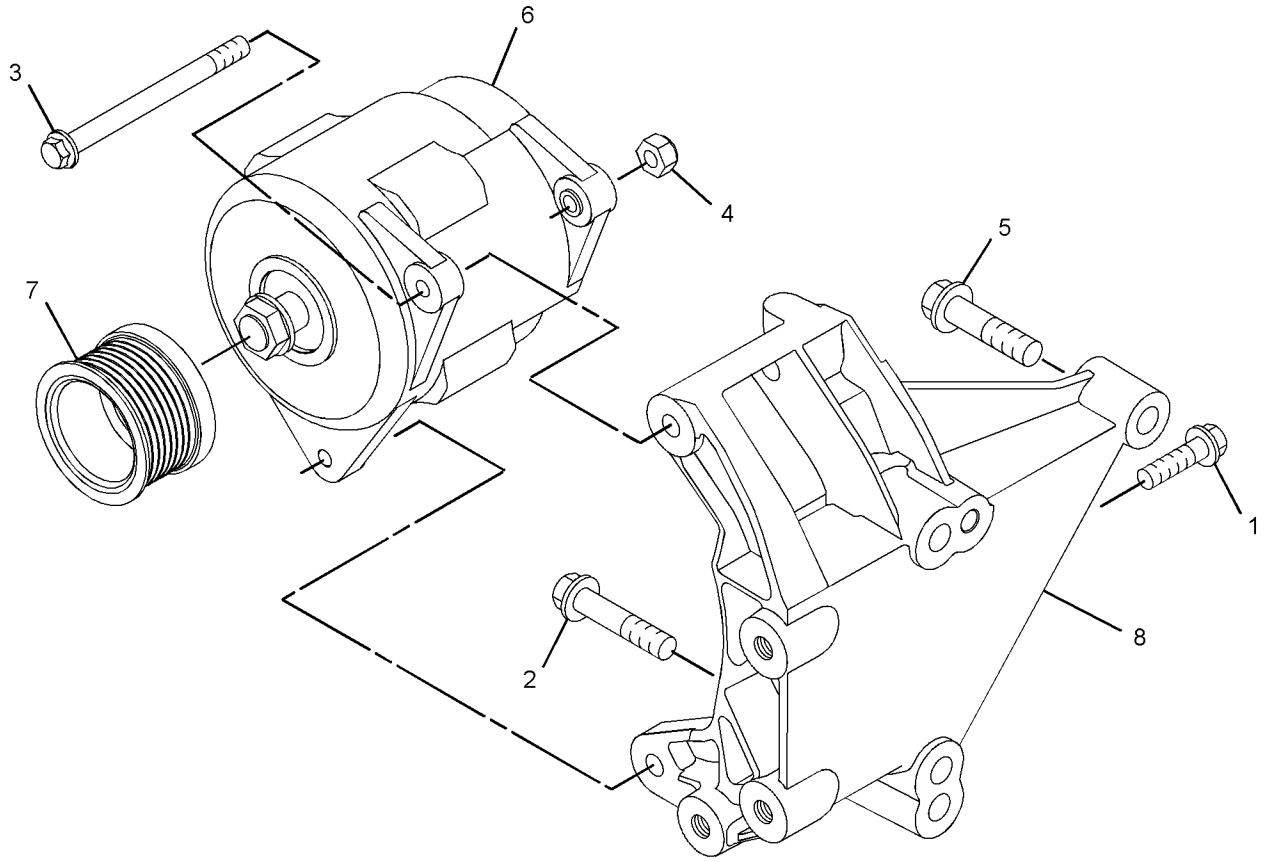

GRAPHIC #1 **<END>** g03402846

245-6017 BATTERY & WIRING GP

S/N: MMM1-UP; RRR1-UP
PART OF 244-7378, 244-7379 CHASSIS AR
TYPE 1

SMCS-1401, 1402, 1408 **i04415629**

NOTE	REF NO	GRAPHIC REF	PART NUMBER	QTY	PART NAME 1 2 3 4 5 6 (PRODUCT LEVEL)	SEE PAGE
	1	1	**3E-8320**	1	PLATE-INSTRUCTION (BATTERY)	
	2	1	**7K-1181**	32	STRAP-CABLE	
Y	3	1	**7N-0718**	1	SWITCH GP-DISCONNECT (BATTERY)	245
	4	1	**9X-3404**	2	BATTERY (12-VOLT, MAINTENANCE FREE, WET)	
D	5	1	**8T-3425**		CHANNEL-TRIM (0.1-M EACH)	
	6	1	**128-5531**	4	CLAMP-HALF	
	7	1	**151-2110**	1	GASKET	
Y	8	1	*183-4584*	1	SENSOR GP-SPEED (TRACK, RH)	238
Y	8A	1	*183-4584*	1	SENSOR GP-SPEED (TRACK, LH)	238
	9	1	**196-7007**	4	ROD	
	10	1	**220-0230**	1	ALARM AS (BACKUP) (BACKUP)	
		1	**102-8802**	1	KIT-RECEPTACLE (2-PIN)	
					(INCLUDES RECEPTACLE AS & WEDGE)	
D		1	**5P-5623**		WIRE-ELECTRICAL (16-GA, BLACK) (0.8-M)	
		1	**186-3735**	2	PIN-CONNECTOR (16-GA TO 18-GA)	
E		1	**9X-1813**		SLEEVE (29-CM)	
	11	1	**245-6037**	1	HARNESS AS-CHASSIS	
		1	**155-2257**	1	KIT-CONNECTING PLUG (12-PIN)	
		1	**155-2255**	1	KIT-CONNECTING PLUG (12-PIN)	
		1	**155-2270**	3	KIT-CONNECTING PLUG (2-PIN)	
		1	**155-2271**	2	KIT-CONNECTING PLUG (4-PIN)	
		1	**155-2257**	1	KIT-CONNECTING PLUG (12-PIN)	
		1	**155-2274**	1	KIT-CONNECTING PLUG (6-PIN)	
					(EACH PLUG KIT INCLUDES PLUG AS, WEDGE & INTERFACE SEAL)	
		1	**230-4011**	2	PLUG AS-CONNECTOR (2-PIN)	
					(EACH INCLUDES)	
		1	**264-7029**	1	SEAL-CONNECTOR	
		1	**237-0227**	1	PLUG AS-CONNECTOR (3-PIN)	
		1	**264-7030**	1	SEAL-CONNECTOR	
		1	**8T-8737**	8	PLUG-SEAL	
		1	**102-8805**	1	KIT-RECEPTACLE (6-PIN)	
					(INCLUDES RECEPTACLE AS & WEDGE)	
		1	**8T-8730**	25	SOCKET-CONNECTOR (16-GA TO 18-GA)	
		1	**9X-3402**	7	SOCKET-CONNECTOR (16-GA TO 18-GA)	
		1	**180-9340**	17	SOCKET-CONNECTOR (14-GA TO 18-GA)	
		1	**3S-2093**	5	STRAP-CABLE	
		1	**5P-1476**	2	TERMINAL-FORK (14-GA TO 16-GA, NO. 10 SCREW)	
E		1	**125-7874**		TUBE-HEAT SHRINK (5.72-MM DIA) (20-CM)	
E		1	**125-7875**		TUBE-HEAT SHRINK (7.44-MM DIA) (5-CM)	
	12	1	**249-9017**	1	CABLE AS	
B		1	**1P-0810**		TAPE-ELECTRICAL	
		1	**3L-6513**	1	TERMINAL-RING (1-GA TO 2-GA, 1/2-IN SCREW)	
		1	**1S-7252**	1	TERMINAL-CABLE (00-GA, 3/8-IN SCREW)	
E		1	**8C-3056**		CABLE (2-GA, RED) (50-CM)	
E		1	**159-8049**		CABLE (00-GA, RED) (120-CM)	
		1	**3S-2093**	2	STRAP-CABLE	
		1	**8N-0869**	1	COVER-TERMINAL (RED)	
		1	**8T-8827**	1	BOOT (RED)	
	13	1	**249-9018**	1	CABLE AS	
B		1	**1P-0810**		TAPE-ELECTRICAL	
		1	**249-9042**	1	TERMINAL AS-BATTERY	
		1	**1M-6119**	1	BOLT (5/16-18X1.375-IN)	
		1	**1M-6120**	1	NUT (5/16-18-THD)	
		1	**269-7682**	1	COVER-TERMINAL	
E		1	**159-8050**		CABLE (00-GA, BLACK) (226-CM)	

245-6017 **BATTERY & WIRING GP (*contd.*)** **i04415629**

NOTE	REF NO	GRAPHIC REF	PART NUMBER	QTY	PART NAME 1 2 3 4 5 6 (PRODUCT LEVEL)	SEE PAGE
		1	**1S-7252**	1	TERMINAL-CABLE (00-GA, 3/8-IN SCREW)	
		1	**3S-2093**	1	STRAP-CABLE	
		1	**6T-0465**	1	COVER-TERMINAL (BLACK)	
	14	1	**249-9019**	1	CABLE AS	
E		1	**5P-0747**		CABLE (00-GA, BLACK) (29-CM)	
		1	**1S-7251**	1	TERMINAL-CABLE (00-GA, 1/2-IN SCREW)	
		1	**1S-7252**	1	TERMINAL-CABLE (00-GA, 3/8-IN SCREW)	
	15	1	**249-9024**	1	HARNESS AS-VALVE	
		1	**8T-8729**	10	PIN-CONNECTOR (16-GA TO 18-GA)	
		1	**155-2270**	7	KIT-CONNECTING PLUG (2-PIN)	
					(EACH INCLUDES PLUG AS, WEDGE & INTERFACE SEAL)	
		1	**8T-8737**	2	PLUG-SEAL	
		1	**102-8801**	1	KIT-RECEPTACLE (12-PIN)	
					(INCLUDES RECEPTACLE AS & WEDGE)	
		1	**8T-8730**	14	SOCKET-CONNECTOR (16-GA TO 18-GA)	
E		1	**125-7874**		TUBE-HEAT SHRINK (5.72-MM DIA) (5-CM)	
E		1	**125-7875**		TUBE-HEAT SHRINK (7.44-MM DIA) (5-CM)	
	16	1	**249-9074**	1	BRACKET AS	
	17	1	**254-8895**	1	BRACKET AS	
	18	1	**257-8924**	1	SENDER AS-FUEL LEVEL	
		1	**8T-8729**	1	PIN-CONNECTOR (16-GA TO 18-GA)	
		1	**9X-3401**	1	PIN-CONNECTOR (16-GA TO 18-GA)	
		1	**230-4012**	1	RECEPTACLE AS-CONNECTOR (2-PIN)	
	19	1	**269-7653**	1	CLIP	
	20	1	**269-7658**	1	CABLE AS	
		1	**1S-7251**	1	TERMINAL-CABLE (00-GA, 1/2-IN SCREW)	
E		1	**159-8049**		CABLE (00-GA, RED) (82-CM)	
		1	**8N-0869**	1	COVER-TERMINAL (RED)	
		1	**283-3436**	1	COVER-TERMINAL (RED)	
	21	1	**269-7674**	1	BRACKET AS	
	22	1	**269-7678**	1	CLIP	
	23	1	**269-7680**	2	CLIP	
M	24	1	**095-0736**	5	SCREW-MACHINE (M5X0.8X10-MM)	
	25	1	**124-0174**	1	CLIP	
M	26	1	**191-8920**	4	BOLT-SOCKET HEAD (M6X1X12-MM)	
	27	1	**238-0112**	1	SENSOR GP-TEMPERATURE (HYDRAULIC OIL)	
	28	1	**261-0420**	1	SENSOR GP-PRESSURE (HYDRAULIC OIL)	
	29	1	**3J-1907**	1	SEAL-O-RING	
	30	1	**3J-5696**	1	PIPE	
	31	1	**4P-7581**	1	CLIP	
	32	1	**277-1873**	1	CLIP	
M	33	1	**5C-7261**	4	NUT (M8X1.25-THD)	
	34	1	**5K-8451**	1	CLIP	
	35	1	**5P-4116**	10	WASHER-HARD (8.8X20.5X2-MM THK)	
	36	1	**107-4749**	2	PLATE	
	37	1	**6D-3479**	9	CLIP	
	38	1	**6V-9028**	1	SEAL-O-RING	
M	39	1	**7X-2534**	4	BOLT (M6X1X50-MM)	
	40	1	**7X-7729**	1	WASHER (11X25X3-MM THK)	
	41	1	**8T-0328**	5	WASHER-HARD (5.5X10X1-MM THK)	
	42	1	**8T-4121**	11	WASHER-HARD (11X21X2.5-MM THK)	
M	43	1	**8T-4137**	2	BOLT (M10X1.5X20-MM)	
M	44	1	**8T-4179**	3	BOLT (M12X1.75X20-MM)	
M	45	1	**8T-4186**	1	BOLT (M10X1.5X40-MM)	
M	46	1	**8T-4191**	9	BOLT (M10X1.5X16-MM)	
M	47	1	**8T-4200**	6	BOLT (M8X1.25X16-MM)	
	48	1	**8T-4223**	3	WASHER-HARD (13.5X25.5X3-MM THK)	
	49	1	**8T-4224**	1	WASHER-HARD (8.8X16X2-MM THK)	
	50	1	**9X-8256**	4	WASHER (6.6X12X2-MM THK)	
	51	1	**287-2654**	1	STRAP-LIFTING	

245-6017 **BATTERY & WIRING GP (*contd.*)** **i04415629**

NOTE	REF NO	GRAPHIC REF	PART NUMBER	QTY	PART NAME 1 2 3 4 5 6 (PRODUCT LEVEL)	SEE PAGE

B - USE AS REQUIRED
D - ORDER BY THE METER
E - ORDER BY THE CENTIMETER
M - METRIC PART
Y - SEPARATE ILLUSTRATION

245-6017 **BATTERY & WIRING GP (*contd.*)** **i04415629**

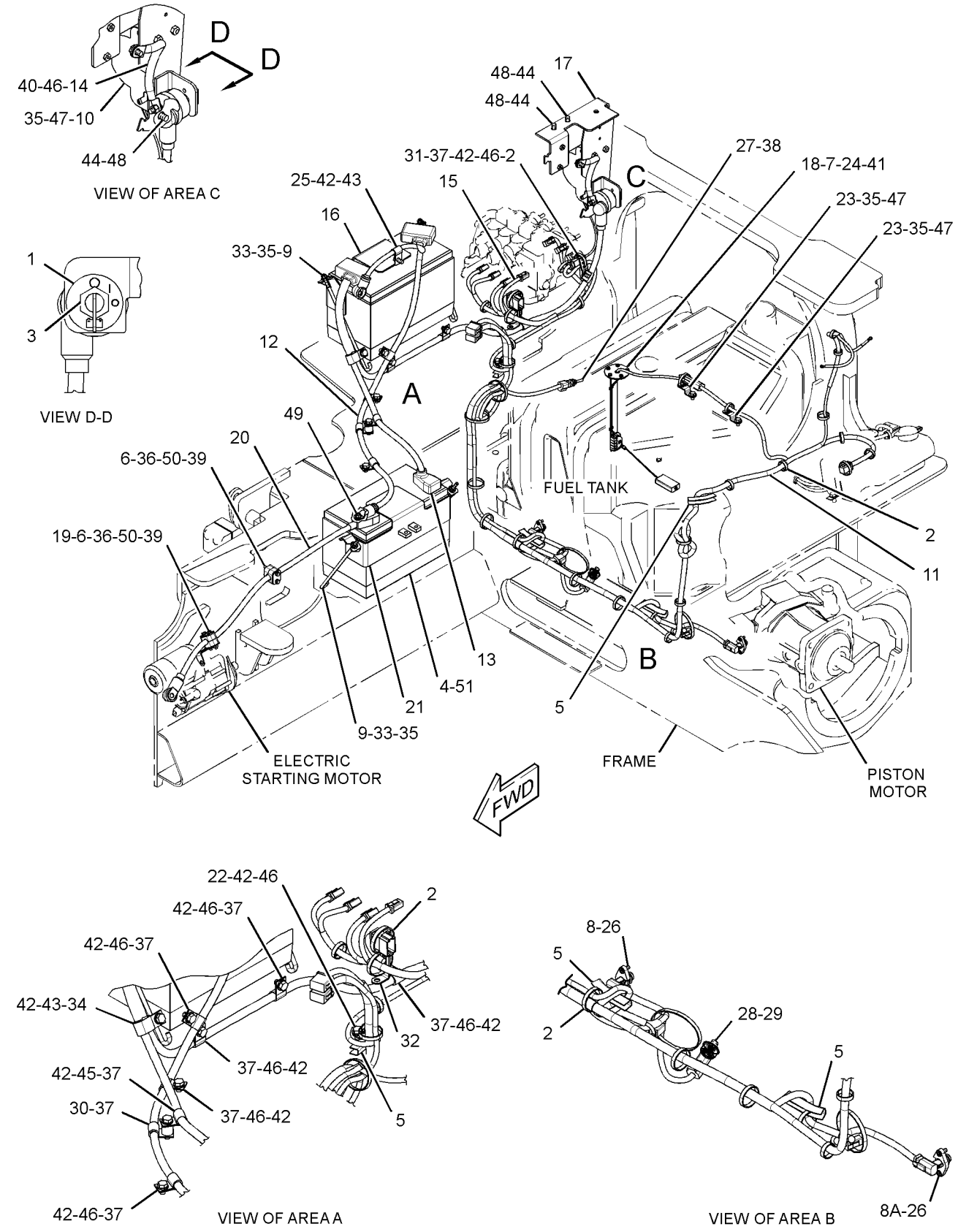

GRAPHIC #1 **<END>** g02152926

245-6017 BATTERY & WIRING GP

S/N: MMM1-UP; RRR1-UP
PART OF 244-7378, 244-7379 CHASSIS AR
TYPE 2

SMCS-1401, 1402, 1408 **i04415769**

NOTE	REF NO	GRAPHIC REF	PART NUMBER	QTY	PART NAME 1 2 3 4 5 6 (PRODUCT LEVEL)	SEE PAGE
	1	1	**3E-8320**	1	PLATE-INSTRUCTION (BATTERY)	
C	2	1	**7K-1181**	36	STRAP-CABLE	
Y	3	1	**7N-0718**	1	SWITCH GP-DISCONNECT (BATTERY)	245
C	4	1	**8T-1887**	1	CLIP (SLOT)	
C	5	1	**8T-1888**	1	CLIP (TAB)	
C	6	1	**8X-5489**	1	SLEEVE	
C	7	1	**128-5531**	2	CLAMP-HALF	
	8	1	**151-2110**	1	GASKET	
Y	9	1	*183-4584*	1	SENSOR GP-SPEED (TRACK, RH)	238
Y	9A	1	*183-4584*	1	SENSOR GP-SPEED (TRACK, LH)	238
	10	1	**196-7007**	4	ROD	
	11	1	**238-0112**	1	SENSOR GP-TEMPERATURE (HYDRAULIC OIL)	
	12	1	**245-6037**	1	HARNESS AS-CHASSIS	
		1	**155-2257**	1	KIT-CONNECTING PLUG (12-PIN)	
		1	**155-2255**	1	KIT-CONNECTING PLUG (12-PIN)	
		1	**155-2270**	3	KIT-CONNECTING PLUG (2-PIN)	
		1	**155-2271**	2	KIT-CONNECTING PLUG (4-PIN)	
		1	**155-2257**	1	KIT-CONNECTING PLUG (12-PIN)	
		1	**155-2274**	1	KIT-CONNECTING PLUG (6-PIN)	
					(EACH PLUG KIT INCLUDES PLUG AS, WEDGE & INTERFACE SEAL)	
		1	**230-4011**	2	PLUG AS-CONNECTOR (2-PIN)	
					(EACH INCLUDES)	
		1	**264-7029**	1	SEAL-CONNECTOR	
		1	**237-0227**	1	PLUG AS-CONNECTOR (3-PIN)	
		1	**264-7030**	1	SEAL-CONNECTOR	
		1	**8T-8737**	8	PLUG-SEAL	
		1	**102-8805**	1	KIT-RECEPTACLE (6-PIN)	
					(INCLUDES RECEPTACLE AS & WEDGE)	
		1	**8T-8730**	25	SOCKET-CONNECTOR (16-GA TO 18-GA)	
		1	**9X-3402**	7	SOCKET-CONNECTOR (16-GA TO 18-GA)	
		1	**180-9340**	17	SOCKET-CONNECTOR (14-GA TO 18-GA)	
		1	**3S-2093**	5	STRAP-CABLE	
		1	**5P-1476**	2	TERMINAL-FORK (14-GA TO 16-GA, NO. 10 SCREW)	
E		1	**125-7874**		TUBE-HEAT SHRINK (5.72-MM DIA) (20-CM)	
E		1	**125-7875**		TUBE-HEAT SHRINK (7.44-MM DIA) (5-CM)	
	13	1	**249-9017**	1	CABLE AS	
B		1	**1P-0810**		TAPE-ELECTRICAL	
		1	**3L-6513**	1	TERMINAL-RING (1-GA TO 2-GA, 1/2-IN SCREW)	
		1	**1S-7252**	1	TERMINAL-CABLE (00-GA, 3/8-IN SCREW)	
E		1	**8C-3056**		CABLE (2-GA, RED) (50-CM)	
E		1	**159-8049**		CABLE (00-GA, RED) (120-CM)	
		1	**3S-2093**	2	STRAP-CABLE	
		1	**8N-0869**	1	COVER-TERMINAL (RED)	
		1	**8T-8827**	1	BOOT (RED)	
	14	1	**249-9018**	1	CABLE AS	
B		1	**1P-0810**		TAPE-ELECTRICAL	
		1	**249-9042**	1	TERMINAL AS-BATTERY	
		1	**1M-6119**	1	BOLT (5/16-18X1.375-IN)	
		1	**1M-6120**	1	NUT (5/16-18-THD)	
		1	**269-7682**	1	COVER-TERMINAL	
E		1	**159-8050**		CABLE (00-GA, BLACK) (226-CM)	
		1	**1S-7252**	1	TERMINAL-CABLE (00-GA, 3/8-IN SCREW)	
		1	**3S-2093**	1	STRAP-CABLE	
		1	**6T-0465**	1	COVER-TERMINAL (BLACK)	
	15	1	**249-9024**	1	HARNESS AS-VALVE	

245-6017 **BATTERY & WIRING GP (*contd.*)** **i04415769**

NOTE	REF NO	GRAPHIC REF	PART NUMBER	QTY	PART NAME 1 2 3 4 5 6 (PRODUCT LEVEL)	SEE PAGE
		1	**8T-8729**	10	PIN-CONNECTOR (16-GA TO 18-GA)	
		1	**155-2270**	7	KIT-CONNECTING PLUG (2-PIN)	
					(EACH INCLUDES PLUG AS, WEDGE & INTERFACE SEAL)	
		1	**8T-8737**	2	PLUG-SEAL	
		1	**102-8801**	1	KIT-RECEPTACLE (12-PIN)	
					(INCLUDES RECEPTACLE AS & WEDGE)	
		1	**8T-8730**	14	SOCKET-CONNECTOR (16-GA TO 18-GA)	
E		1	**125-7874**		TUBE-HEAT SHRINK (5.72-MM DIA) (5-CM)	
E		1	**125-7875**		TUBE-HEAT SHRINK (7.44-MM DIA) (5-CM)	
	16	1	**249-9074**	1	BRACKET AS	
	17	1	**257-8924**	1	SENDER AS-FUEL LEVEL	
		1	**8T-8729**	1	PIN-CONNECTOR (16-GA TO 18-GA)	
		1	**9X-3401**	1	PIN-CONNECTOR (16-GA TO 18-GA)	
		1	**230-4012**	1	RECEPTACLE AS-CONNECTOR (2-PIN)	
	18	1	**269-7658**	1	CABLE AS	
		1	**1S-7251**	1	TERMINAL-CABLE (00-GA, 1/2-IN SCREW)	
E		1	**159-8049**		CABLE (00-GA, RED) (82-CM)	
		1	**8N-0869**	1	COVER-TERMINAL (RED)	
		1	**283-3436**	1	COVER-TERMINAL (RED)	
	19	1	**269-7674**	1	BRACKET AS	
	20	1	**269-7678**	1	CLIP	
	21	1	**269-7680**	2	CLIP	
C	22	1	**311-0306**	1	CLIP AS	
C	23	1	**311-0307**	1	CABLE AS	
		1	**1S-7251**	1	TERMINAL-CABLE (00-GA, 1/2-IN SCREW)	
		1	**1S-7252**	1	TERMINAL-CABLE (00-GA, 3/8-IN SCREW)	
E		1	**159-8050**		CABLE (00-GA, BLACK) (25-CM)	
M	24	1	**095-0736**	5	SCREW-MACHINE (M5X0.8X10-MM)	
	25	1	**124-0174**	1	CLIP	
M	26	1	**191-8920**	4	BOLT-SOCKET HEAD (M6X1X12-MM)	
	27	1	**261-0420**	1	SENSOR GP-PRESSURE (HYDRAULIC OIL)	
	28	1	**277-1873**	1	CLIP	
	29	1	**3J-1907**	1	SEAL-O-RING	
	30	1	**3J-5696**	1	PIPE	
C	31	1	**3S-2093**	1	STRAP-CABLE	
	32	1	**4P-7581**	1	CLIP	
M	33	1	**5C-7261**	4	NUT (M8X1.25-THD)	
	34	1	**5K-8451**	1	CLIP	
C	35	1	**5P-4116**	6	WASHER-HARD (8.8X20.5X2-MM THK)	
C	36	1	**107-4749**	1	PLATE	
	37	1	**6D-3479**	9	CLIP	
	38	1	**6V-9028**	1	SEAL-O-RING	
CM	39	1	**7X-2534**	2	BOLT (M6X1X50-MM)	
	40	1	**7X-7729**	1	WASHER (11X25X3-MM THK)	
	41	1	**8T-0328**	5	WASHER-HARD (5.5X10X1-MM THK)	
C	42	1	**8T-4121**	12	WASHER-HARD (11X21X2.5-MM THK)	
CM	43	1	**8T-4133**	1	NUT (M10X1.5-THD)	
M	44	1	**8T-4137**	2	BOLT (M10X1.5X20-MM)	
M	45	1	**8T-4186**	1	BOLT (M10X1.5X40-MM)	
M	46	1	**8T-4191**	9	BOLT (M10X1.5X16-MM)	
CM	47	1	**8T-4200**	2	BOLT (M8X1.25X16-MM)	
	48	1	**8T-4224**	1	WASHER-HARD (8.8X16X2-MM THK)	
C	49	1	**9X-8256**	2	WASHER (6.6X12X2-MM THK)	
D	50	1	**8T-3425**		CHANNEL-TRIM (0.1-M EACH)	

B - USE AS REQUIRED
C - CHANGE FROM PREVIOUS TYPE
D - ORDER BY THE METER
E - ORDER BY THE CENTIMETER
M - METRIC PART
Y - SEPARATE ILLUSTRATION

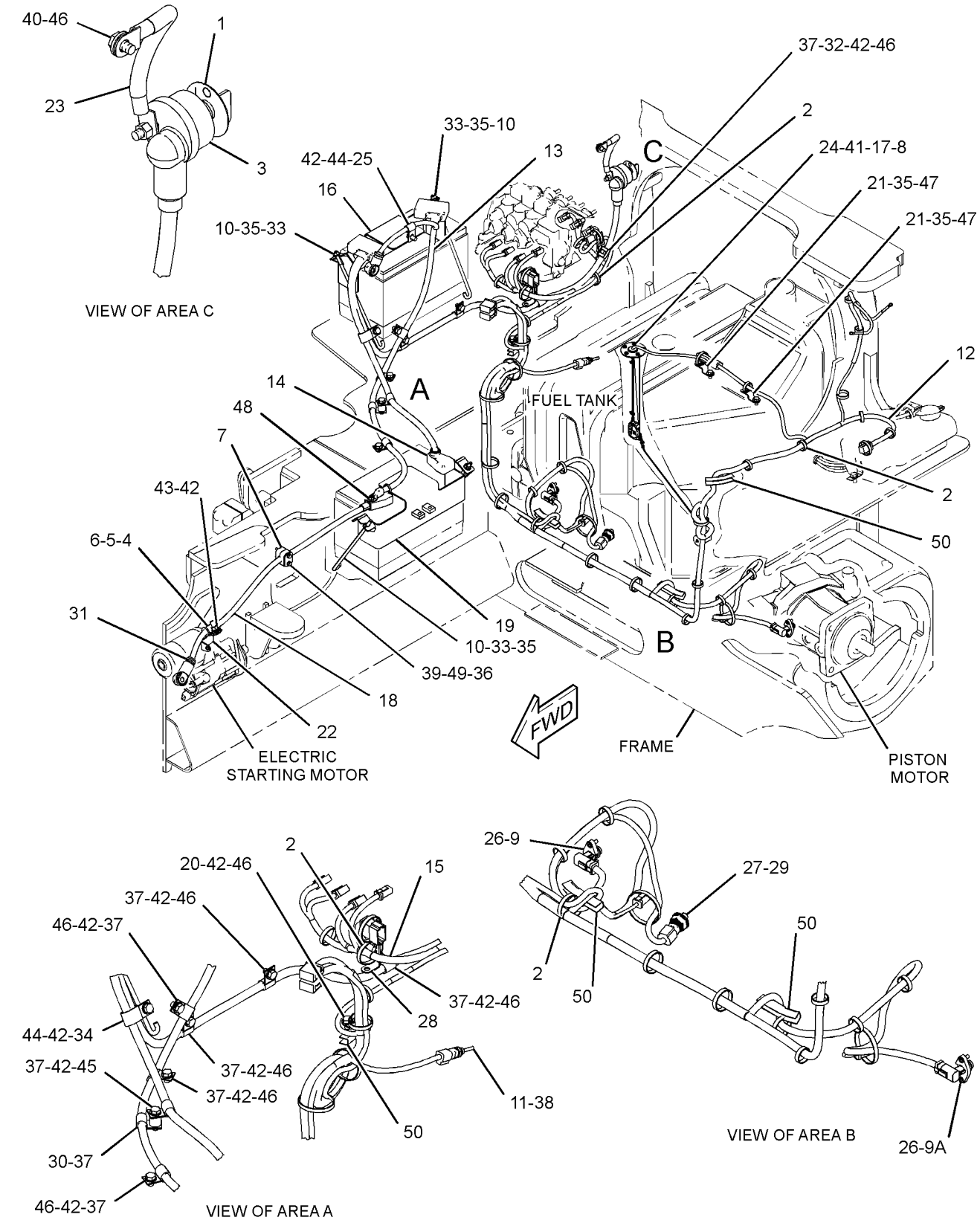

GRAPHIC #1 **<END>** g02152921

245-6017 BATTERY & WIRING GP

S/N: MMM1-UP; RRR1-UP
PART OF 244-7378, 244-7379 CHASSIS AR
TYPE 3

SMCS-1401, 1402, 1408 **i03926270**

NOTE	REF NO	GRAPHIC REF	PART NUMBER	QTY	PART NAME 1 2 3 4 5 6 (PRODUCT LEVEL)	SEE PAGE
	1	2	**3E-8320**	1	PLATE-INSTRUCTION (BATTERY)	
	2	1,2	**7K-1181**	37	STRAP-CABLE	
Y	3	2	**7N-0718**	1	SWITCH GP-DISCONNECT (BATTERY) (12-VOLT)	245
	4	1,2	**8T-1887**	2	CLIP (SLOT)	
	5	1,2	**8T-1888**	2	CLIP (TAB)	
	6	1	**8X-5489**	1	SLEEVE	
	7	1	**128-5531**	2	CLAMP-HALF	
	8	1	**151-2110**	1	GASKET	
	9	2	**196-7007**	4	ROD	
	10	2	**238-0112**	1	SENSOR GP-TEMPERATURE (HYDRAULIC OIL)	
	11	1	**245-6037**	1	HARNESS AS-CHASSIS	
		1	**155-2255**	1	KIT-CONNECTING PLUG (12-PIN)	
		1	**155-2270**	3	KIT-CONNECTING PLUG (2-PIN)	
		1	**155-2271**	2	KIT-CONNECTING PLUG (4-PIN)	
		1	**155-2257**	1	KIT-CONNECTING PLUG (12-PIN)	
		1	**155-2274**	1	KIT-CONNECTING PLUG (6-PIN)	
					(EACH PLUG KIT INCLUDES PLUG AS, WEDGE & INTERFACE SEAL)	
		1	**230-4011**	2	PLUG AS-CONNECTOR (2-PIN)	
					(EACH INCLUDES)	
		1	**264-7029**	1	SEAL-CONNECTOR	
		1	**237-0227**	1	PLUG AS-CONNECTOR (3-PIN)	
		1	**264-7030**	1	SEAL-CONNECTOR	
		1	**8T-8737**	8	PLUG-SEAL	
		1	**102-8805**	1	KIT-RECEPTACLE (6-PIN)	
					(INCLUDES RECEPTACLE AS & WEDGE)	
		1	**9X-3402**	7	SOCKET-CONNECTOR (16-GA TO 18-GA)	
		1	**180-9340**	17	SOCKET-CONNECTOR (14-GA TO 18-GA)	
		1	**186-3736**	25	SOCKET-CONNECTOR (16-GA TO 18-GA)	
		1	**3S-2093**	5	STRAP-CABLE	
		1	**5P-1476**	2	TERMINAL-FORK (14-GA TO 16-GA, NO. 10 SCREW)	
E		1	**125-7874**		TUBE-HEAT SHRINK (5.72-MM DIA) (20-CM)	
E		1	**125-7875**		TUBE-HEAT SHRINK (7.44-MM DIA) (5-CM)	
	12	1	**249-9017**	1	CABLE AS	
		1	**3L-6513**	1	TERMINAL-RING (1-GA TO 2-GA, 1/2-IN SCREW)	
		1	**1S-7252**	1	TERMINAL-CABLE (00-GA, 3/8-IN SCREW)	
E		1	**8C-3056**		CABLE (2-GA, RED) (50-CM)	
E		1	**5P-0761**		CABLE (00-GA, RED) (120-CM)	
		1	**3S-2093**	2	STRAP-CABLE	
		1	**8N-0869**	1	COVER-TERMINAL (RED)	
		1	**8T-8827**	1	BOOT (RED)	
	13	1	**249-9018**	1	CABLE AS	
		1	**249-9042**	1	TERMINAL AS-BATTERY	
		1	**1M-6119**	1	BOLT (5/16-18X1.375-IN)	
		1	**1M-6120**	1	NUT (5/16-18-THD)	
		1	**269-7682**	1	COVER-TERMINAL	
E		1	**5P-0747**		CABLE (00-GA, BLACK) (226-CM)	
		1	**1S-7252**	1	TERMINAL-CABLE (00-GA, 3/8-IN SCREW)	
		1	**3S-2093**	1	STRAP-CABLE	
		1	**6T-0465**	1	COVER-TERMINAL (BLACK)	
	14	2	**249-9024**	1	HARNESS AS-VALVE	
		2	**186-3735**	10	PIN-CONNECTOR (16-GA TO 18-GA)	
		2	**155-2270**	7	KIT-CONNECTING PLUG (2-PIN)	
					(EACH INCLUDES PLUG AS, WEDGE & INTERFACE SEAL)	
		2	**8T-8737**	2	PLUG-SEAL	

245-6017 **BATTERY & WIRING GP (*contd.*)** **i03926270**

NOTE	REF NO	GRAPHIC REF	PART NUMBER	QTY	PART NAME 1 2 3 4 5 6 (PRODUCT LEVEL)	SEE PAGE
		2	**102-8801**	1	KIT-RECEPTACLE (12-PIN)	
					(INCLUDES RECEPTACLE AS & WEDGE)	
		2	**186-3736**	14	SOCKET-CONNECTOR (16-GA TO 18-GA)	
E		2	**125-7874**		TUBE-HEAT SHRINK (5.72-MM DIA) (5-CM)	
E		2	**125-7875**		TUBE-HEAT SHRINK (7.44-MM DIA) (5-CM)	
	15	2	**249-9074**	1	BRACKET AS	
	16	1	**257-8924**	1	SENDER AS-FUEL LEVEL	
		1	**186-3735**	1	PIN-CONNECTOR (16-GA TO 18-GA)	
		1	**9X-3401**	1	PIN-CONNECTOR (16-GA TO 18-GA)	
		1	**230-4012**	1	RECEPTACLE AS-CONNECTOR (2-PIN)	
	17	1	**269-7658**	1	CABLE AS	
		1	**1S-7251**	1	TERMINAL-CABLE (00-GA, 1/2-IN SCREW)	
E		1	**5P-0761**		CABLE (00-GA, RED) (84-CM)	
		1	**8N-0869**	1	COVER-TERMINAL (RED)	
		1	**283-3436**	1	COVER-TERMINAL (RED)	
	18	2	**269-7674**	1	BRACKET AS	
	19	2	**269-7678**	1	CLIP	
	20	1	**269-7680**	2	CLIP	
	21	1	**311-0306**	1	CLIP AS	
	22	2	**311-0307**	1	CABLE AS	
		2	**1S-7251**	1	TERMINAL-CABLE (00-GA, 1/2-IN SCREW)	
		2	**1S-7252**	1	TERMINAL-CABLE (00-GA, 3/8-IN SCREW)	
E		2	**5P-0747**		CABLE (00-GA, BLACK) (25-CM)	
CY	23	2	**319-6491**	1	SENSOR GP-SPEED (TRACK, RH)	239
CY	23A	2	**319-6491**	1	SENSOR GP-SPEED (TRACK, LH)	239
M	24	1	**095-0736**	5	SCREW-MACHINE (M5X0.8X10-MM)	
M	25	2	**191-8920**	4	BOLT-SOCKET HEAD (M6X1X12-MM)	
	26	2	**261-0420**	1	SENSOR GP-PRESSURE (HYDROSTATIC DRIVE)	
	27	2	**277-1873**	1	CLIP	
	28	2	**3J-1907**	1	SEAL-O-RING	
	29	2	**3J-5696**	1	PIPE	
	30	1	**3S-2093**	1	STRAP-CABLE	
	31	2	**4P-7581**	1	CLIP	
CM	32	2	**5C-7261**	8	NUT (M8X1.25-THD)	
	33	2	**5K-8451**	1	CLIP	
	34	1,2	**5P-4116**	6	WASHER-HARD (8.8X20.5X2-MM THK)	
	35	1	**107-4749**	1	PLATE	
	36	2	**6D-3479**	9	CLIP	
	37	2	**6V-9028**	1	SEAL-O-RING	
M	38	1	**7X-2534**	2	BOLT (M6X1X50-MM)	
M	39	1	**7X-2536**	2	BOLT (M8X1.25X14-MM)	
	40	2	**7X-7729**	1	WASHER (11X25X3-MM THK)	
	41	1	**8T-0328**	5	WASHER-HARD (5.5X10X1-MM THK)	
	42	1,2	**8T-4121**	12	WASHER-HARD (11X21X2.5-MM THK)	
M	43	1	**8T-4133**	1	NUT (M10X1.5-THD)	
M	44	2	**8T-4137**	1	BOLT (M10X1.5X20-MM)	
M	45	2	**8T-4186**	1	BOLT (M10X1.5X40-MM)	
M	46	2	**8T-4191**	9	BOLT (M10X1.5X16-MM)	
M	47	2	**8T-4195**	1	BOLT (M10X1.5X30-MM)	
	48	2	**8T-4224**	1	WASHER-HARD (8.8X16X2-MM THK)	
	49	2	**8W-8909**	1	SLEEVE	
	50	1	**9X-8256**	2	WASHER (6.6X12X2-MM THK)	
D	51	1,2	**8T-3425**		CHANNEL-TRIM (0.1-M EACH)	

C - CHANGE FROM PREVIOUS TYPE
D - ORDER BY THE METER
E - ORDER BY THE CENTIMETER
M - METRIC PART
Y - SEPARATE ILLUSTRATION

245-6017 **BATTERY & WIRING GP (*contd.*)** **i03926270**

REFER TO ALL ILLUSTRATIONS OF
THIS GROUP FOR AUXILIARY VIEWS

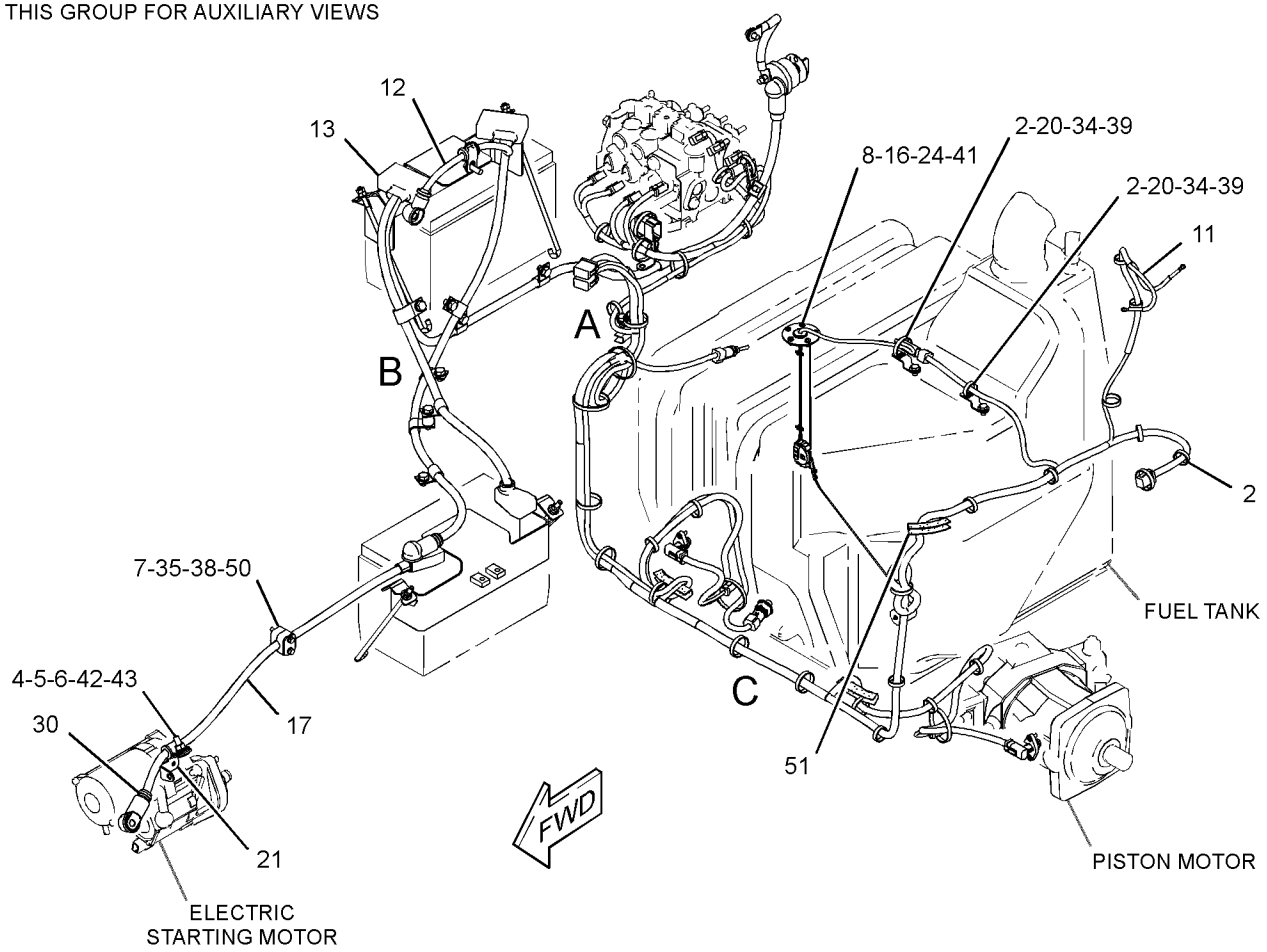

GRAPHIC #1 g01694283

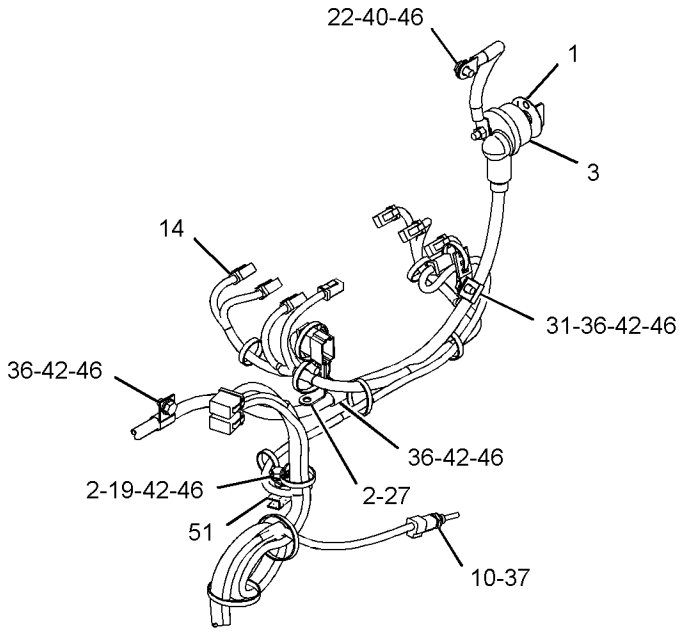

VIEW OF AREA A

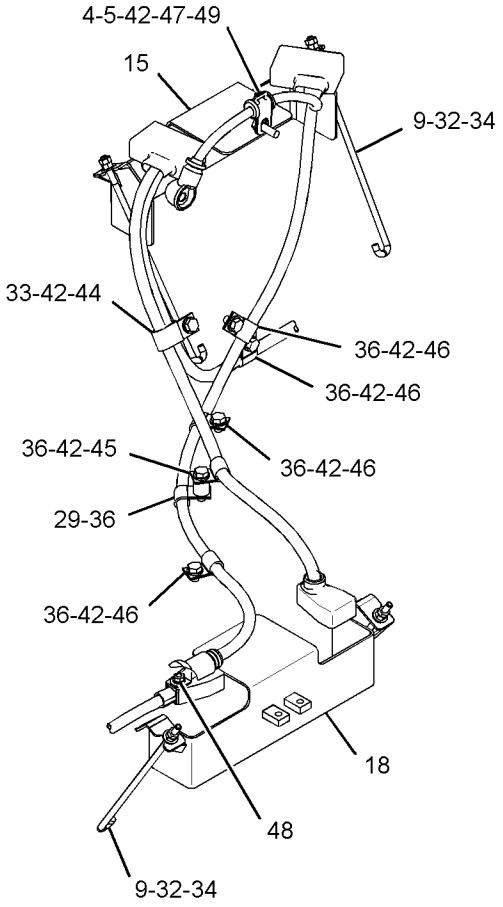

VIEW OF AREA B

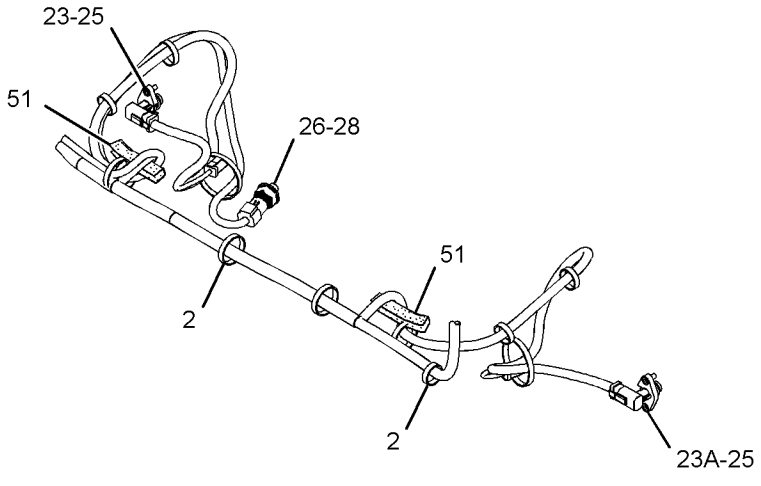

VIEW OF AREA C

GRAPHIC #2 **<END>** g02152925

245-6017 BATTERY & WIRING GP

S/N: MMM1-UP; RRR1-UP
PART OF 244-7378, 244-7379 CHASSIS AR
TYPE 4

SMCS-1401, 1402, 1408 **i05368196**

NOTE	REF NO	GRAPHIC REF	PART NUMBER	QTY	PART NAME 1 2 3 4 5 6 (PRODUCT LEVEL)	SEE PAGE
	1	2	**3E-8320**	1	PLATE-INSTRUCTION (BATTERY) (DISCONNECT SWITCH)	
C	2	1,2	**7K-1181**	38	STRAP-CABLE	
Y	3	2	**7N-0718**	1	SWITCH GP-DISCONNECT (BATTERY)	245
	4	1,2	**8T-1887**	2	CLIP (SLOT)	
	5	1,2	**8T-1888**	2	CLIP (TAB)	
	6	1	**8X-5489**	1	SLEEVE	
	7	1	**128-5531**	2	CLAMP-HALF	
	8	1	**151-2110**	1	GASKET	
	9	2	**196-7007**	4	ROD	
	10	2	**238-0112**	1	SENSOR GP-TEMPERATURE (HYDRAULIC OIL)	
	11	1	**245-6037**	1	HARNESS AS-CHASSIS	
		1	**155-2257**	1	KIT-CONNECTING PLUG (12-PIN)	
		1	**155-2255**	1	KIT-CONNECTING PLUG (12-PIN)	
		1	**155-2270**	3	KIT-CONNECTING PLUG (2-PIN)	
		1	**155-2271**	2	KIT-CONNECTING PLUG (4-PIN)	
		1	**155-2257**	1	KIT-CONNECTING PLUG (12-PIN)	
		1	**155-2274**	1	KIT-CONNECTING PLUG (6-PIN)	
					(EACH PLUG KIT INCLUDES PLUG AS, WEDGE & INTERFACE SEAL)	
		1	**230-4011**	2	PLUG AS-CONNECTOR (2-PIN)	
					(EACH INCLUDES)	
		1	**264-7029**	1	SEAL-CONNECTOR	
		1	**237-0227**	1	PLUG AS-CONNECTOR (3-PIN)	
		1	**264-7030**	1	SEAL-CONNECTOR	
		1	**8T-8737**	8	PLUG-SEAL	
		1	**102-8805**	1	KIT-RECEPTACLE (6-PIN)	
					(INCLUDES RECEPTACLE AS & WEDGE)	
		1	**8T-8730**	25	SOCKET-CONNECTOR (16-GA TO 18-GA)	
		1	**9X-3402**	7	SOCKET-CONNECTOR (16-GA TO 18-GA)	
		1	**180-9340**	17	SOCKET-CONNECTOR (14-GA TO 18-GA)	
		1	**3S-2093**	5	STRAP-CABLE	
		1	**5P-1476**	2	TERMINAL-FORK (14-GA TO 16-GA, NO. 10 SCREW)	
E		1	**125-7874**		TUBE-HEAT SHRINK (5.72-MM DIA) (20-CM)	
E		1	**125-7875**		TUBE-HEAT SHRINK (7.44-MM DIA) (5-CM)	
	12	1	**249-9017**	1	CABLE AS	
B		1	**1P-0810**		TAPE-ELECTRICAL	
		1	**3L-6513**	1	TERMINAL-RING (1-GA TO 2-GA, 1/2-IN SCREW)	
		1	**1S-7252**	1	TERMINAL-CABLE (00-GA, 3/8-IN SCREW)	
E		1	**8C-3056**		CABLE (2-GA, RED) (50-CM)	
E		1	**159-8049**		CABLE (00-GA, RED) (120-CM)	
		1	**3S-2093**	2	STRAP-CABLE	
		1	**8N-0869**	1	COVER-TERMINAL (RED)	
		1	**8T-8827**	1	BOOT (RED)	
	13	1	**249-9018**	1	CABLE AS	
B		1	**1P-0810**		TAPE-ELECTRICAL	
		1	**249-9042**	1	TERMINAL AS-BATTERY	
		1	**1M-6119**	1	BOLT (5/16-18X1.375-IN)	
		1	**1M-6120**	1	NUT (5/16-18-THD)	
		1	**269-7682**	1	COVER-TERMINAL	
E		1	**159-8050**		CABLE (00-GA, BLACK) (226-CM)	
		1	**1S-7252**	1	TERMINAL-CABLE (00-GA, 3/8-IN SCREW)	
		1	**3S-2093**	1	STRAP-CABLE	
		1	**6T-0465**	1	COVER-TERMINAL (BLACK)	
	14	2	**249-9024**	1	HARNESS AS-VALVE	
		2	**8T-8729**	10	PIN-CONNECTOR (16-GA TO 18-GA)	

245-6017 **BATTERY & WIRING GP (*contd.*)** **i05368196**

NOTE	REF NO	GRAPHIC REF	PART NUMBER	QTY	PART NAME 1 2 3 4 5 6 (PRODUCT LEVEL)	SEE PAGE
		2	**155-2270**	7	KIT-CONNECTING PLUG (2-PIN)	
					(EACH INCLUDES PLUG AS, WEDGE & INTERFACE SEAL)	
		2	**8T-8737**	2	PLUG-SEAL	
		2	**102-8801**	1	KIT-RECEPTACLE (12-PIN)	
					(INCLUDES RECEPTACLE AS & WEDGE)	
		2	**8T-8730**	14	SOCKET-CONNECTOR (16-GA TO 18-GA)	
E		2	**125-7874**		TUBE-HEAT SHRINK (5.72-MM DIA) (5-CM)	
E		2	**125-7875**		TUBE-HEAT SHRINK (7.44-MM DIA) (5-CM)	
	15	2	**249-9074**	1	BRACKET AS	
	16	1	**257-8924**	1	SENDER AS-FUEL LEVEL	
		1	**8T-8729**	1	PIN-CONNECTOR (16-GA TO 18-GA)	
		1	**9X-3401**	1	PIN-CONNECTOR (16-GA TO 18-GA)	
		1	**230-4012**	1	RECEPTACLE AS-CONNECTOR (2-PIN)	
	17	1	**269-7658**	1	CABLE AS	
		1	**1S-7251**	1	TERMINAL-CABLE (00-GA, 1/2-IN SCREW)	
E		1	**159-8049**		CABLE (00-GA, RED) (82-CM)	
		1	**8N-0869**	1	COVER-TERMINAL (RED)	
		1	**283-3436**	1	COVER-TERMINAL (RED)	
	18	2	**269-7674**	1	BRACKET AS	
	19	2	**269-7678**	1	CLIP	
	20	1	**269-7680**	2	CLIP	
	21	1	**311-0306**	1	CLIP AS	
	22	2	**311-0307**	1	CABLE AS	
		2	**1S-7251**	1	TERMINAL-CABLE (00-GA, 1/2-IN SCREW)	
		2	**1S-7252**	1	TERMINAL-CABLE (00-GA, 3/8-IN SCREW)	
E		2	**159-8050**		CABLE (00-GA, BLACK) (25-CM)	
Y	23	2	**319-6491**	1	SENSOR GP-SPEED (TRACK, RH)	239
Y	23A	2	**319-6491**	1	SENSOR GP-SPEED (TRACK, LH)	239
M	24	1	**095-0736**	5	SCREW-MACHINE (M5X0.8X10-MM)	
M	25	2	**191-8920**	4	BOLT-SOCKET HEAD (M6X1X12-MM)	
	26	2	**335-5321**	1	SENSOR GP-PRESSURE (HYDRAULIC OIL)	
	27	2	**277-1873**	1	CLIP	
	28	2	**3J-1907**	1	SEAL-O-RING	
C	29	2	**204-2281**	1	STRAP-CABLE	
	30	1,2	**3S-2093**	2	STRAP-CABLE	
	31	2	**4P-7581**	1	CLIP	
M	32	2	**5C-7261**	8	NUT (M8X1.25-THD)	
	33	2	**5K-8451**	1	CLIP	
	34	1,2	**5P-4116**	6	WASHER-HARD (8.8X20.5X2-MM THK)	
	35	1	**107-4749**	1	PLATE	
C	36	2	**6D-3479**	10	CLIP	
	37	2	**6V-9028**	1	SEAL-O-RING	
M	38	1	**7X-2534**	2	BOLT (M6X1X50-MM)	
M	39	1	**7X-2536**	2	BOLT (M8X1.25X14-MM)	
	40	2	**7X-7729**	1	WASHER (11X25X3-MM THK)	
	41	1	**8T-0328**	5	WASHER-HARD (5.5X10X1-MM THK)	
	42	1,2	**8T-4121**	12	WASHER-HARD (11X21X2.5-MM THK)	
M	43	1	**8T-4133**	1	NUT (M10X1.5-THD)	
M	44	2	**8T-4137**	1	BOLT (M10X1.5X20-MM)	
CM	45	2	**8T-4196**	2	BOLT (M10X1.5X35-MM)	
CM	46	2	**8T-4191**	8	BOLT (M10X1.5X16-MM)	
M	47	2	**8T-4195**	1	BOLT (M10X1.5X30-MM)	
	48	2	**8T-4224**	1	WASHER-HARD (8.8X16X2-MM THK)	
	49	2	**8W-8909**	1	SLEEVE	
	50	1	**9X-8256**	2	WASHER (6.6X12X2-MM THK)	
D	51	1,2	**8T-3425**		CHANNEL-TRIM (0.1-M EACH)	
CY	52	2	*318-8136*	1	WARNING GP-BACKUP	250
C	53	2	**154-2302**	2	SPACER (11X20X15-MM THK)	
	54	2	**117-1385**	2	SEAL-O-RING	

245-6017 **BATTERY & WIRING GP (*contd.*)** **i05368196**

NOTE	REF NO	GRAPHIC REF	PART NUMBER	QTY	PART NAME 1 2 3 4 5 6 (PRODUCT LEVEL)	SEE PAGE

B - USE AS REQUIRED
C - CHANGE FROM PREVIOUS TYPE
D - ORDER BY THE METER
E - ORDER BY THE CENTIMETER
M - METRIC PART
Y - SEPARATE ILLUSTRATION

REFER TO ALL ILLUSTRATIONS OF
THIS GROUP FOR AUXILIARY VIEWS

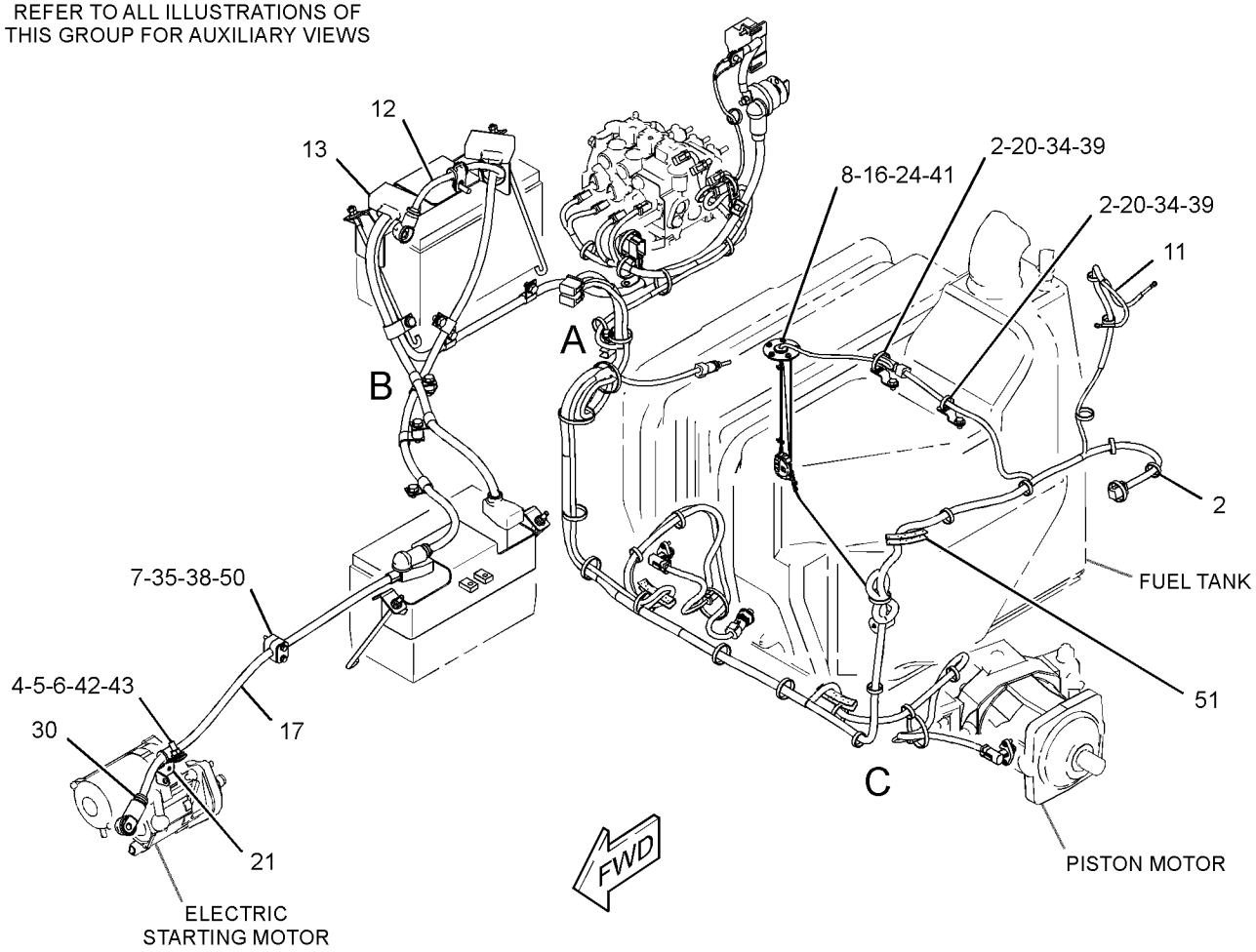

GRAPHIC #1 g02117874

245-6017 **BATTERY & WIRING GP (*contd.*)** **i05368196**

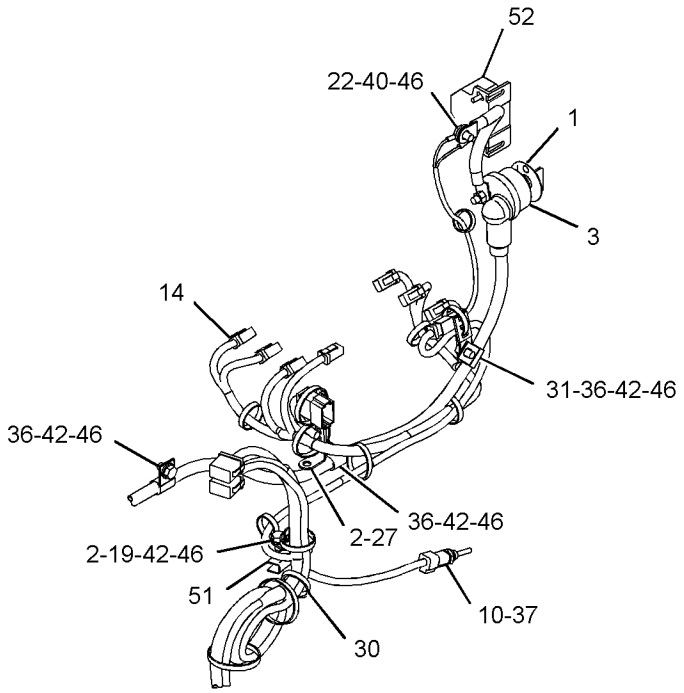

VIEW OF AREA A

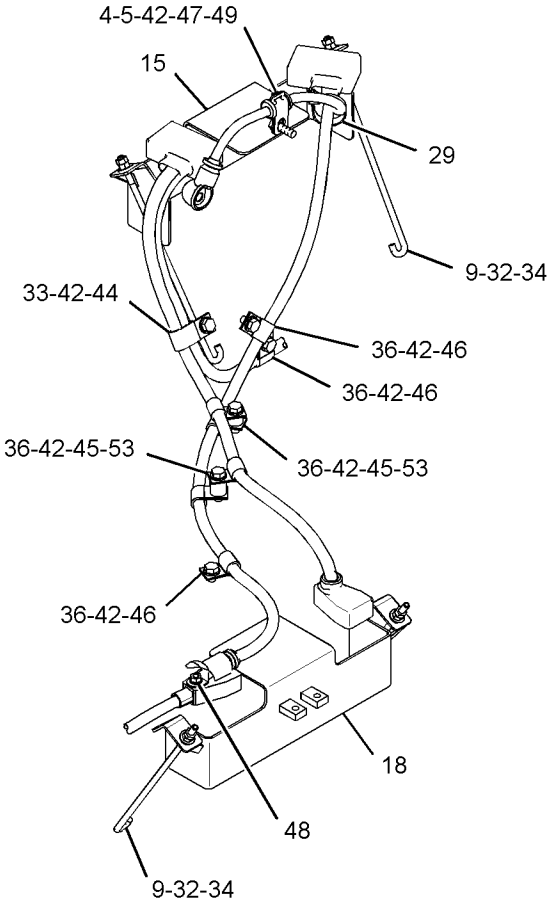

VIEW OF AREA B

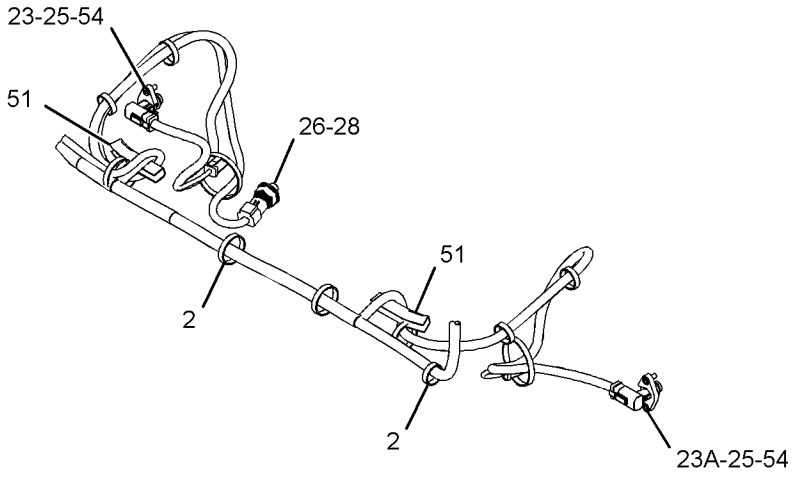

VIEW OF AREA C

GRAPHIC #2 **<END>** g03425877

292-0294 CABLE AS-COILED–LASER RECEIVER–ACCUGRADE

S/N: MMM1-UP; RRR1-UP

FIELD INSTALLATION

SMCS-1408 **i02977940**

NOTE	REF NO	GRAPHIC REF	PART NUMBER	QTY	PART NAME 1 2 3 4 5 6 (PRODUCT LEVEL)	SEE PAGE
	1	1	**311-4863**	1	CABLE AS-COILED (MAST)	

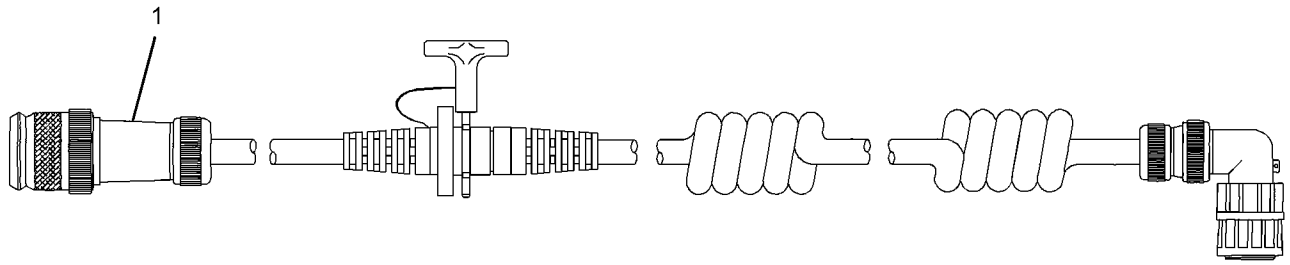

GRAPHIC #1 **<END>** g01458178

304-3650 CONTROL GP-ENGINE ELECTRONIC

S/N: C4E1-UP

PART OF 254-9233 ENGINE AR-PRIMARY

SMCS-1901 **i03190840**

NOTE	REF NO	GRAPHIC REF	PART NUMBER	QTY	PART NAME 1 2 3 4 5 6 (PRODUCT LEVEL)	SEE PAGE
	1	1	**331-7540**	1	CONTROL GP-UNPROGRAMMED	

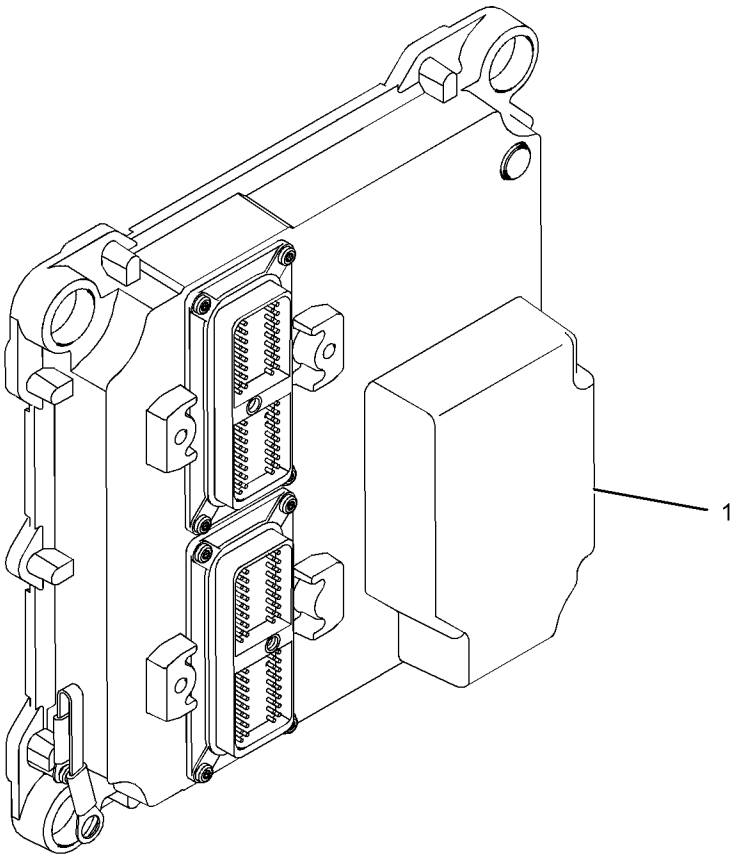

GRAPHIC #1 **<END>** g01342227

239-9954 CONTROL GP-UNPROGRAMMED–PRODUCT LINK 300

S/N: MMM1-UP; RRR1-UP
8-VOLT
PART OF 268-4699 SERVICE GP-COMMUNICATION
AN ATTACHMENT

SMCS-7610 **i03121725**

NOTE	REF NO	GRAPHIC REF	PART NUMBER	QTY	PART NAME 1 2 3 4 5 6 (PRODUCT LEVEL)	SEE PAGE
	1	1	**285-1133**	1	CONTROL GP-UNPROGRAMMED (PRODUCT LINK 300)	
	1A	1	**7X-6315**	1	STRAP AS-GROUND	
	1B	1	**126-7574**	1	SCREW-PAN HEAD (8-32X9.52-MM)	
	1C	1	**134-4126**	1	WASHER (4.52X8.28X0.76-MM THK)	

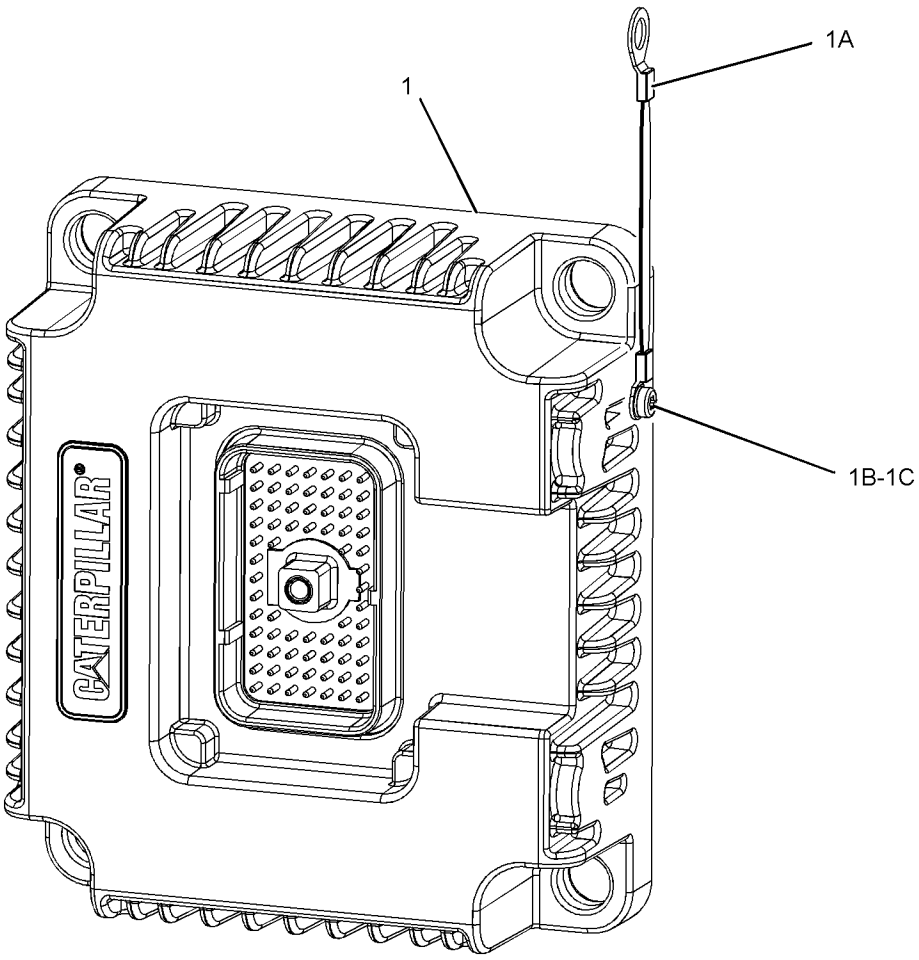

GRAPHIC #1 **<END>** g01377625

318-6107 CONVERSION GP-ELECTRICAL—FIRE PLOW

S/N: MMM1-UP; RRR1-UP

PART OF 325-6498, 325-6499 MODIFICATION AR, 344-7614 SPECIAL AR

AN ATTACHMENT

SMCS-1400, 1450

i03696041

NOTE	REF NO	GRAPHIC REF	PART NUMBER	QTY	PART NAME 1 2 3 4 5 6 (PRODUCT LEVEL)	SEE PAGE
E	1	2	**324-9708**		INSULATION (0.9-CM)	
E	1A	1	**324-9708**		INSULATION (12-CM)	
E	1B	2	**324-9708**		INSULATION (13.5-CM)	
E	2	1,2	**324-9707**		INSULATION (0.9-CM EACH)	
E	3	1,2	**2Q-0604**		INSULATION (12-CM EACH)	
D	5	1	**6V-1359**		SEAL (0.05-M)	
	6	2	**7K-1181**	1	STRAP-CABLE	
	7	2	**113-8490**	1	FUSE (10-AMPERE)	
	8	2	**126-2743**	1	SPACER (12X20X9-MM THK)	
	9	2	**180-0614**	1	CIRCUIT BREAKER AS (15-AMPERE) (REAR LIGHTS)	
	9A	2	**180-0614**	1	CIRCUIT BREAKER AS (15-AMPERE) (FLOODLIGHTS, FRONT)	
	9B	2	**180-0614**	1	CIRCUIT BREAKER AS (15-AMPERE) (FRONT LIGHTS)	
	10	2	**180-6615**	2	SWITCH AS (WORK LIGHTS)	
					(EACH INCLUDES)	
		2	**111-7899**	1	GASKET	
	11	2	**259-2384**	1	PLUG-ILLUMINATED	
		2	**111-7899**	1	GASKET	
	12	2	**268-6677**	1	BRACKET AS	
		2	**260-3939**	1	SCREW-HEX HEAD	
	13	2	**311-7070**	1	SWITCH AS-ROCKER (ENGINE SPEED CONTROL)	
		2	**111-7899**	1	GASKET	
	14	1	**318-6097**	1	HARNESS AS-PLATFORM	
		1	**311-0294**	1	HARNESS AS-PLATFORM	
		1	**126-1774**	2	COVER-CONNECTOR	
		1	**211-0052**	1	NUT (1-11/16-18-THD)	
		1	**213-0139**	5	PIN	
		1	**186-3735**	14	PIN-CONNECTOR (16-GA TO 18-GA)	
		1	**9W-0852**	4	PIN-CONNECTOR (14-GA TO 16-GA)	
		1	**9X-3401**	62	PIN-CONNECTOR (16-GA TO 18-GA)	
		1	**160-7690**	1	PLUG AS-CONNECTOR (70-PIN)	
		1	**147-1445**	1	PLUG AS-CONNECTOR (70-PIN)	
		1	**147-1446**	1	PLUG AS-CONNECTOR (70-PIN)	
					(EACH PLUG AS INCLUDES)	
		1	**159-9322**	1	SEAL-O-RING	
		1	**155-2255**	5	KIT-CONNECTING PLUG (12-PIN)	
		1	**155-2265**	3	KIT-CONNECTING PLUG (8-PIN)	
		1	**155-2260**	1	KIT-CONNECTING PLUG (3-PIN)	
		1	**155-2270**		KIT-CONNECTING PLUG (2-PIN)	
					(EACH PLUG KIT INCLUDES PLUG AS, WEDGE & INTERFACE SEAL)	
		1	**197-7261**	1	PLUG AS-CONNECTOR (19-PIN)	
		1	**8T-8737**	141	PLUG-SEAL	
		1	**102-8802**	2	KIT-RECEPTACLE (2-PIN)	
		1	**102-8803**	1	KIT-RECEPTACLE (3-PIN)	
		1	**102-8806**	3	KIT-RECEPTACLE (8-PIN)	
		1	**102-8801**	5	KIT-RECEPTACLE (12-PIN)	
		1	**190-7615**	1	KIT-RECEPTACLE (12-PIN)	
					(EACH RECEPTACLE KIT INCLUDES RECEPTACLE AS & WEDGE)	
		1	**167-3692**	1	RECEPTACLE AS-CONNECTOR (31-PIN)	
		1	**186-3736**	22	SOCKET-CONNECTOR (16-GA TO 18-GA)	
		1	**9W-0844**	8	SOCKET-CONNECTOR (14-GA TO 16-GA)	
		1	**9X-3402**	174	SOCKET-CONNECTOR (16-GA TO 18-GA)	
		1	**180-9340**	24	SOCKET-CONNECTOR (14-GA TO 18-GA)	
		1	**8L-8413**	15	STRAP-CABLE	

318-6107 **CONVERSION GP-ELECTRICAL (*contd.*)** **i03696041**

NOTE	REF NO	GRAPHIC REF	PART NUMBER	QTY	PART NAME 1 2 3 4 5 6 (PRODUCT LEVEL)	SEE PAGE
		1	**9X-6772**	4	STRAP-CABLE	
		1	**3T-4696**	1	TERMINAL-RING (10-GA TO 12-GA, 7/16-IN SCREW)	
		1	**2L-8079**	1	TERMINAL-RING (14-GA TO 16-GA, 3/8-IN SCREW)	
E		1	**119-3662**		TUBE-HEAT SHRINK (10.85-MM DIA) (13-CM)	
E		1	**125-7874**		TUBE-HEAT SHRINK (5.72-MM DIA) (125-CM)	
E		1	**125-7875**		TUBE-HEAT SHRINK (7.44-MM DIA) (15-CM)	
		1	**128-4249**	1	LOCKWASHER	
	15	1	**318-6098**	1	HARNESS AS-ENGINE	
		1	**245-6040**	1	HARNESS AS-ENGINE	
		1	**245-1045**	2	COVER	
		1	**245-1044**	2	LOCK-CONNECTOR	
		1	**176-1477**	1	PLUG AS (2-PIN)	
		1	**9X-1054**	1	PLUG AS-CONNECTOR (4-PIN)	
		1	**155-2265**	1	KIT-CONNECTING PLUG (8-PIN)	
		1	**155-2260**	1	KIT-CONNECTING PLUG (3-PIN)	
		1	**155-2270**	12	KIT-CONNECTING PLUG (2-PIN)	
					(EACH PLUG KIT INCLUDES PLUG AS, WEDGE & INTERFACE SEAL)	
		1	**230-4011**	1	PLUG AS-CONNECTOR (2-PIN)	
		1	**264-7029**	1	SEAL-CONNECTOR	
		1	**245-1042**	1	PLUG AS-CONNECTOR (64-PIN)	
		1	**267-7208**	1	RING-RETAINING	
		1	**274-4990**	1	SEAL	
M		1	**267-7207**	1	BOLT-SPECIAL	
		1	**167-3693**	1	PLUG AS-CONNECTOR (31-PIN)	
		1	**245-1048**	4	PLUG-CONNECTOR	
		1	**8T-8737**	16	PLUG-SEAL	
		1	**102-8802**	2	KIT-RECEPTACLE (2-PIN)	
		1	**102-8806**	1	KIT-RECEPTACLE (8-PIN)	
					(EACH RECEPTACLE KIT INCLUDES RECEPTACLE AS & WEDGE)	
		1	**134-2540**	1	RESISTOR AS-CONNECTION (3-PIN)	
		1	**238-9397**	1	RESISTOR AS	
		1	**8T-8729**	2	PIN-CONNECTOR (16-GA TO 18-GA)	
		1	**102-8802**	1	KIT-RECEPTACLE (2-PIN)	
					(INCLUDES RECEPTACLE AS & WEDGE)	
		1	**186-3736**	35	SOCKET-CONNECTOR (16-GA TO 18-GA)	
		1	**9W-0844**	7	SOCKET-CONNECTOR (14-GA TO 16-GA)	
		1	**9X-3402**	2	SOCKET-CONNECTOR (16-GA TO 18-GA)	
		1	**180-9340**	20	SOCKET-CONNECTOR (14-GA TO 18-GA)	
		1	**245-1047**	20	SOCKET-CONNECTOR	
		1	**189-3158**	1	SUPPRESSOR-ARC	
		1	**2L-8066**	1	TERMINAL-RING (10-GA TO 12-GA, NO. 10 SCREW)	
		1	**2L-8051**	1	TERMINAL-RING (6-GA, 5/16-IN SCREW)	
		1	*128-4178*	1	TERMINAL AS	
		1	**2L-8068**	1	TERMINAL-RING (10-GA TO 12-GA, 5/16-IN SCREW)	
D		1	**5P-6006**		TUBE-HEAT SHRINK (9.52-MM DIA) (0.1-M)	
		1	**131-1488**	2	TERMINAL AS-RING (6-GA TO 8-GA)	
					(EACH INCLUDES)	
E		1	**119-3662**		TUBE-HEAT SHRINK (10.85-MM DIA) (4-CM)	
		1	*131-1490*	1	TERMINAL AS (6-GA TO 8-GA)	
E		1	**119-3662**		TUBE-HEAT SHRINK (10.85-MM DIA) (4-CM)	
		1	**2L-8067**	1	TERMINAL-RING (10-GA TO 12-GA, 1/4-IN SCREW)	
		1	**2L-8069**	1	TERMINAL-RING (2-GA TO 10-GA, 3/8-IN SCREW)	
		1	**2L-8079**	1	TERMINAL-RING (14-GA TO 16-GA, 3/8-IN SCREW)	

318-6107 **CONVERSION GP-ELECTRICAL (*contd.*)** **i03696041**

NOTE	REF NO	GRAPHIC REF	PART NUMBER	QTY	PART NAME 1 2 3 4 5 6 (PRODUCT LEVEL)	SEE PAGE
		1	**7N-9017**	2	TERMINAL-RING (18-GA TO 22-GA, NO. 10 SCREW)	
		1	**9X-1055**	2	TERMINAL-RECEPTACLE (12-GA)	
		1	**9X-1056**	2	TERMINAL-RECEPTACLE (14-GA TO 16-GA)	
E		1	**119-3662**		TUBE-HEAT SHRINK (10.85-MM DIA) (7-CM)	
E		1	**125-7874**		TUBE-HEAT SHRINK (5.72-MM DIA) (15-CM)	
E		1	**125-7875**		TUBE-HEAT SHRINK (7.44-MM DIA) (15-CM)	
B		1	**268-4412**		TAPE-INSULATOR	
	16	1	**318-6099**	1	HARNESS AS-CHASSIS	
B		1	**268-4412**		TAPE-INSULATOR	
		1	**245-6037**	1	HARNESS AS-CHASSIS	
		1	**155-2255**	1	KIT-CONNECTING PLUG (12-PIN)	
		1	**155-2270**	3	KIT-CONNECTING PLUG (2-PIN)	
		1	**155-2271**	2	KIT-CONNECTING PLUG (4-PIN)	
		1	**155-2257**	1	KIT-CONNECTING PLUG (12-PIN)	
		1	**155-2274**	1	KIT-CONNECTING PLUG (6-PIN)	
					(EACH PLUG KIT INCLUDES PLUG AS, WEDGE & INTERFACE SEAL)	
		1	**230-4011**	2	PLUG AS-CONNECTOR (2-PIN)	
					(EACH INCLUDES)	
		1	**264-7029**	1	SEAL-CONNECTOR	
		1	**237-0227**	1	PLUG AS-CONNECTOR (3-PIN)	
		1	**264-7030**	1	SEAL-CONNECTOR	
		1	**8T-8737**	8	PLUG-SEAL	
		1	**102-8805**	1	KIT-RECEPTACLE (6-PIN)	
					(INCLUDES RECEPTACLE AS & WEDGE)	
		1	**9X-3402**	7	SOCKET-CONNECTOR (16-GA TO 18-GA)	
		1	**180-9340**	17	SOCKET-CONNECTOR (14-GA TO 18-GA)	
		1	**186-3736**	25	SOCKET-CONNECTOR (16-GA TO 18-GA)	
		1	**3S-2093**	5	STRAP-CABLE	
		1	**5P-1476**	2	TERMINAL-FORK (14-GA TO 16-GA, NO. 10 SCREW)	
E		1	**125-7874**		TUBE-HEAT SHRINK (5.72-MM DIA) (20-CM)	
E		1	**125-7875**		TUBE-HEAT SHRINK (7.44-MM DIA) (5-CM)	
	17	1	**318-6100**	1	HARNESS AS-VALVE	
BE		1	**268-4412**		TAPE-INSULATOR	
		1	**249-9024**	1	HARNESS AS-VALVE	
		1	**186-3735**	10	PIN-CONNECTOR (16-GA TO 18-GA)	
		1	**155-2270**	7	KIT-CONNECTING PLUG (2-PIN)	
					(EACH INCLUDES PLUG AS, WEDGE & INTERFACE SEAL)	
		1	**8T-8737**	2	PLUG-SEAL	
		1	**102-8801**	1	KIT-RECEPTACLE (12-PIN)	
					(EACH INCLUDES RECEPTACLE AS & WEDGE)	
		1	**186-3736**	14	SOCKET-CONNECTOR (16-GA TO 18-GA)	
E		1	**125-7874**		TUBE-HEAT SHRINK (5.72-MM DIA) (5-CM)	
E		1	**125-7875**		TUBE-HEAT SHRINK (7.44-MM DIA) (5-CM)	
	18	2	**318-6104**	1	PLATE	
	19	1	**318-6105**	1	HARNESS AS-CAB	
		1	**274-3774**	4	CAP-CONNECTOR	
		1	**228-5856**	4	CONNECTOR	
		1	**213-0139**	4	PIN	
		1	**186-3735**	5	PIN-CONNECTOR (16-GA TO 18-GA)	
		1	**9W-0852**	6	PIN-CONNECTOR (14-GA TO 16-GA)	
		1	**9X-3401**	7	PIN-CONNECTOR (16-GA TO 18-GA)	
		1	**9X-1054**	1	PLUG AS-CONNECTOR (4-PIN)	
		1	**155-2255**	1	KIT-CONNECTING PLUG (12-PIN)	
		1	**155-2265**	3	KIT-CONNECTING PLUG (8-PIN)	
		1	**155-2270**	9	KIT-CONNECTING PLUG (2-PIN)	
		1	**155-2271**	2	KIT-CONNECTING PLUG (4-PIN)	
		1	**177-9656**	1	KIT-CONNECTING PLUG (4-PIN)	

318-6107 **CONVERSION GP-ELECTRICAL (*contd.*)** **i03696041**

NOTE	REF NO	GRAPHIC REF	PART NUMBER	QTY	PART NAME 1 2 3 4 5 6 (PRODUCT LEVEL)	SEE PAGE
					(EACH PLUG KIT INCLUDES PLUG AS, WEDGE & INTERFACE SEAL)	
		1	**230-5008**	2	PLUG AS-CONNECTOR (4-PIN)	
					(EACH INCLUDES)	
		1	**264-7031**	1	SEAL-CONNECTOR	
		1	**8T-8737**	50	PLUG-SEAL	
		1	**102-8804**	3	KIT-RECEPTACLE (4-PIN)	
		1	**102-8806**	2	KIT-RECEPTACLE (8-PIN)	
					(EACH RECEPTACLE KIT INCLUDES RECEPTACLE AS & WEDGE)	
		1	**274-3778**	1	CAP-SEAL	
		1	**186-3736**	28	SOCKET-CONNECTOR (16-GA TO 18-GA)	
		1	**9W-0844**	9	SOCKET-CONNECTOR (14-GA TO 16-GA)	
		1	**9X-3402**	8	SOCKET-CONNECTOR (16-GA TO 18-GA)	
		1	**3S-2093**	81	STRAP-CABLE	
B		1	**268-4412**		TAPE-INSULATOR	
		1	**2L-8052**	1	TERMINAL-RING (6-GA, 3/8-IN SCREW)	
		1	**2L-8079**	2	TERMINAL-RING (14-GA TO 16-GA, 3/8-IN SCREW)	
		1	**5P-4571**	4	TERMINAL-BLADE (14-GA TO 16-GA)	
		1	**097-7234**	2	TERMINAL-BLADE (18-GA TO 22-GA)	
		1	**091-2436**	15	TERMINAL-BLADE (18-GA TO 22-GA)	
		1	**104-1995**	6	TERMINAL-BLADE (14-GA TO 18-GA)	
		1	**100-5041**	4	TERMINAL-RECEPTACLE (18-GA TO 20-GA)	
E		1	**119-3662**		TUBE-HEAT SHRINK (10.85-MM DIA) (20-CM)	
E		1	**125-7874**		TUBE-HEAT SHRINK (5.72-MM DIA) (40-CM)	
E		1	**125-7875**		TUBE-HEAT SHRINK (7.44-MM DIA) (10-CM)	
	20	1	**318-6114**	1	FILM-IDENTIFICATION (FUSE PANEL)	
	21	2	**318-6115**	1	HARNESS AS-ENGINE	
		2	**304-5165**	1	HARNESS AS-ENGINE	
B		2	**268-4412**		TAPE-INSULATOR (700-CM)	
	22	1	**318-6116**	1	CABLE AS	
E		1	**324-9706**		INSULATION (210-CM)	
		1	**249-9018**	1	CABLE AS	
		1	**249-9042**	1	TERMINAL AS-BATTERY	
		1	**1M-6119**	1	BOLT (5/16-18X1.375-IN)	
		1	**1M-6120**	1	NUT (5/16-18-THD)	
		1	**269-7682**	1	COVER-TERMINAL	
E		1	**5P-0747**		CABLE (00-GA, BLACK) (226-CM)	
		1	**1S-7252**	1	TERMINAL-CABLE (00-GA, 3/8-IN SCREW)	
		1	**3S-2093**	1	STRAP-CABLE	
		1	**6T-0465**	1	COVER-TERMINAL (BLACK)	
	23	1	**318-6117**	1	CABLE AS	
BE		1	**268-4412**		TAPE-INSULATOR	
BE		1	**318-6126**		TAPE	
		1	**311-0307**	1	CABLE AS	
		1	**1S-7251**	1	TERMINAL-CABLE (00-GA, 1/2-IN SCREW)	
		1	**1S-7252**	1	TERMINAL-CABLE (00-GA, 3/8-IN SCREW)	
E		1	**5P-0747**		CABLE (00-GA, BLACK) (25-CM)	
	24	1	**318-6118**	1	CABLE AS	
E		1	**324-9706**		INSULATION (155-CM)	
		1	**249-9017**	1	CABLE AS	
		1	**3L-6513**	1	TERMINAL-RING (1-GA TO 2-GA, 1/2-IN SCREW)	
		1	**1S-7252**	1	TERMINAL-CABLE (00-GA, 3/8-IN SCREW)	
E		1	**8C-3056**		CABLE (2-GA, RED) (50-CM)	
E		1	**5P-0761**		CABLE (00-GA, RED) (120-CM)	
		1	**3S-2093**	2	STRAP-CABLE	
		1	**8N-0869**	1	COVER-TERMINAL (RED)	
		1	**8T-8827**	1	BOOT (RED) (RED)	
	25	1	**318-6119**	1	CABLE AS	
BE		1	**268-4412**		TAPE-INSULATOR	
		1	**249-9072**	1	CABLE AS	

318-6107 **CONVERSION GP-ELECTRICAL (*contd.*)** **i03696041**

NOTE	REF NO	GRAPHIC REF	PART NUMBER	QTY	PART NAME 1 2 3 4 5 6 (PRODUCT LEVEL)	SEE PAGE
E		1	**8C-3056**		CABLE (2-GA, RED) (59-CM)	
		1	**242-3294**	1	TERMINAL AS	
	26	1	*318-6120*	1	CABLE AS	
E		1	**324-9706**		INSULATION (73-CM)	
		1	**269-7658**	1	CABLE AS	
		1	**1S-7251**	1	TERMINAL-CABLE (00-GA, 1/2-IN SCREW)	
E		1	**5P-0761**		CABLE (00-GA, RED) (84-CM)	
		1	**8N-0869**	1	COVER-TERMINAL (RED)	
		1	**283-3436**	1	COVER-TERMINAL (RED)	
	27	2	**115-1615**	1	RELAY AS (12-VOLT) (CAB ACCESSORIES)	
Y	28	1	**258-8373**	1	SEAT BELT GP	818
	29	2	**318-6113**	1	FILM-INSTRUCTION (PANEL)	
	30	1,2	**3S-2093**	67	STRAP-CABLE	
B	31	1,2	**3S-2093**	50	STRAP-CABLE	

B - USE AS REQUIRED
D - ORDER BY THE METER
E - ORDER BY THE CENTIMETER
M - METRIC PART
Y - SEPARATE ILLUSTRATION

REFER TO ALL ILLUSTRATIONS OF
THIS GROUP FOR AUXILIARY VIEWS

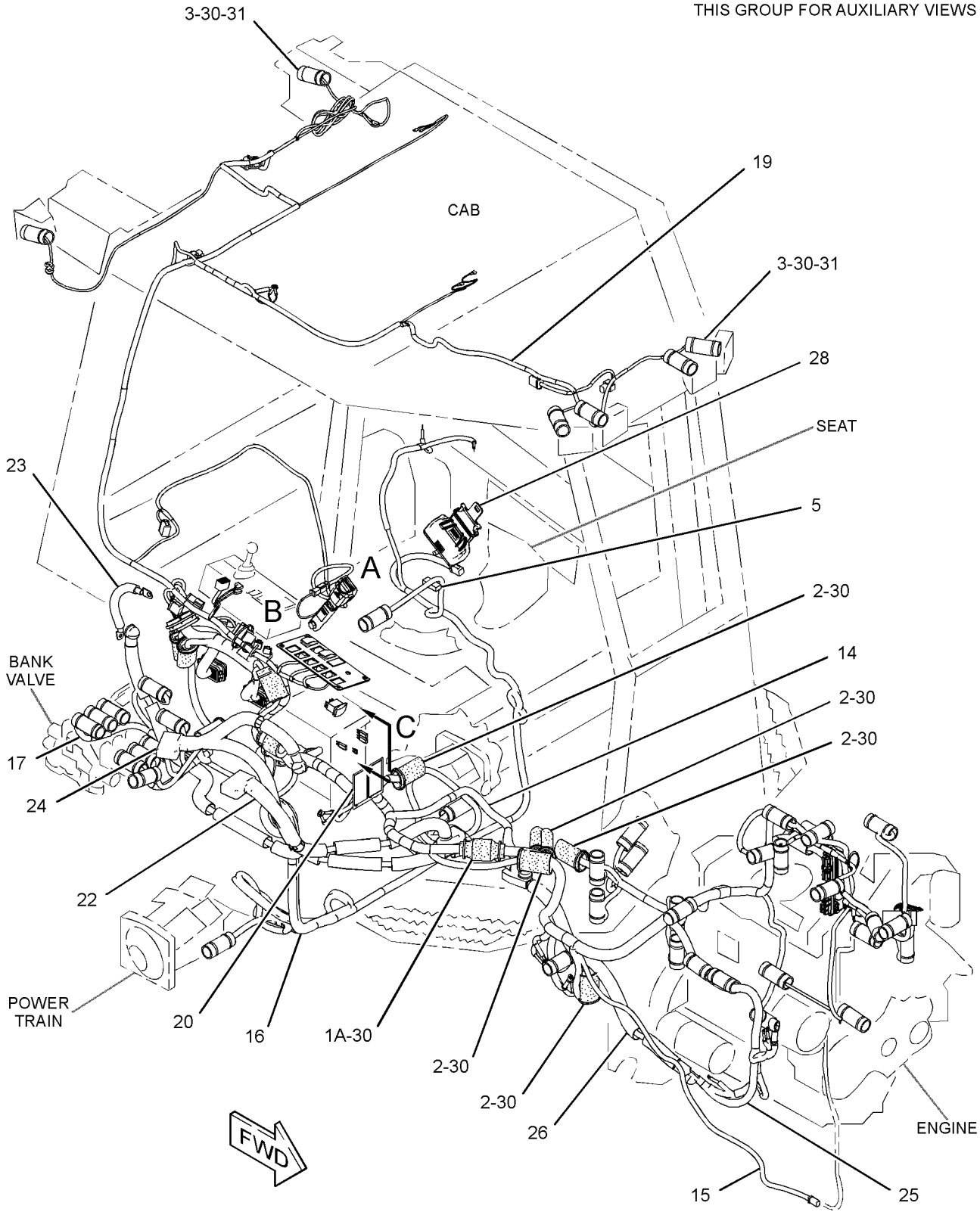

GRAPHIC #1

g02024981

318-6107 **CONVERSION GP-ELECTRICAL (*contd.*)** **i03696041**

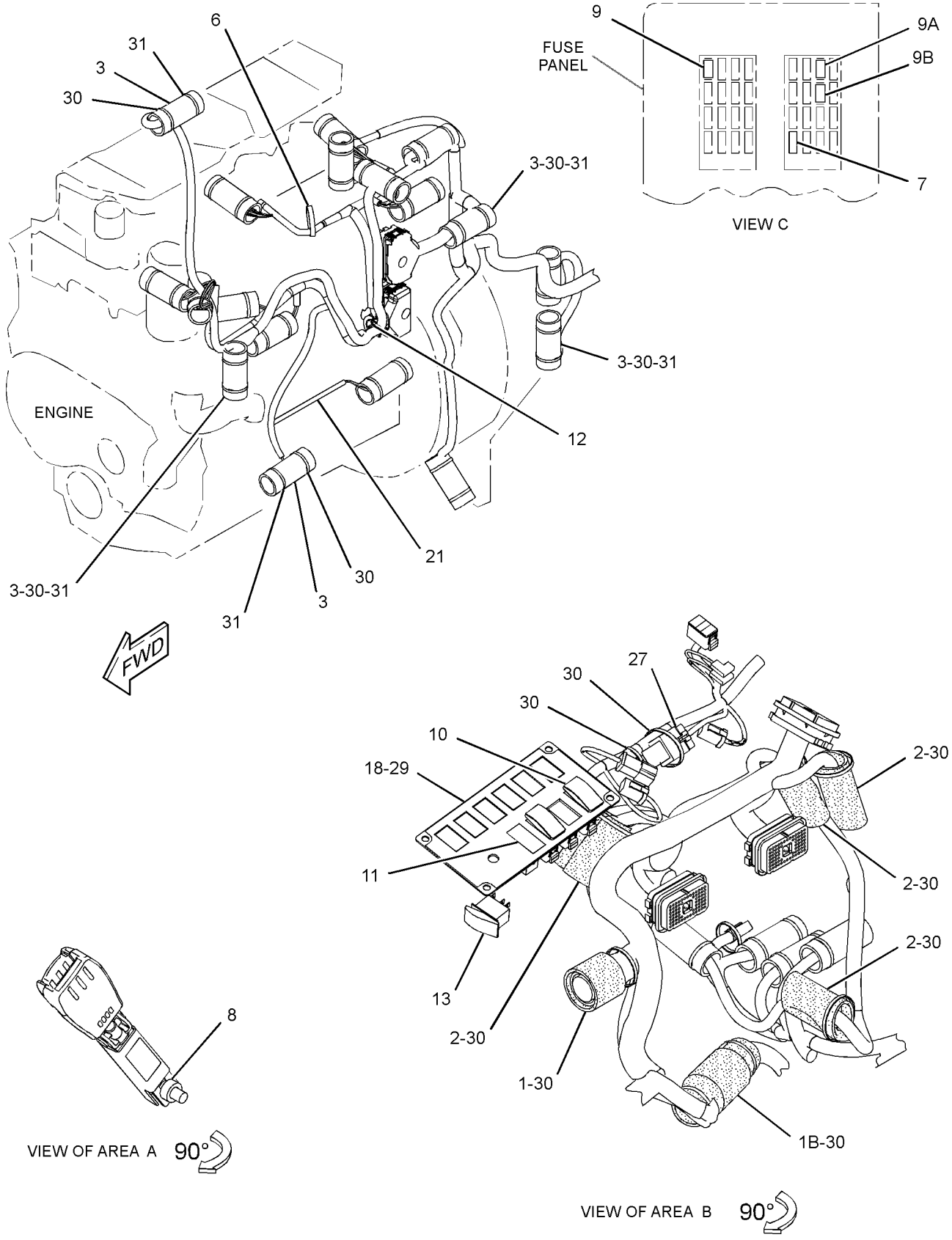

GRAPHIC #2 **<END>** g02025356

303-4685 ELECTRONICS GP-IMPLEMENT—ACCUGRADE

S/N: MMM1-UP; RRR1-UP
AN ATTACHMENT

SMCS-5701, 7610, 7620 **i02694194**

NOTE	PART NUMBER	QTY	PART NAME 1 2 3 4 5 6 (PRODUCT LEVEL)	SEE PAGE
J	**303-4221**	1	CONFIGURATION-PREMIUM	
J - DLR INSTALL CONFIG:IRM:EESO3-01				

<END>

244-7387 ELECTRONICS GP-MACHINE

S/N: MMM1-UP; RRR1-UP
PART OF 244-7372, 244-7373 COMMON AR

SMCS-7610, 7620 **i02652035**

NOTE	PART NUMBER	QTY	PART NAME 1 2 3 4 5 6 (PRODUCT LEVEL)	SEE PAGE
Y	*284-0825*	1	ELECTRONICS GP-MACHINE (POWERTRAIN)	181
Y - SEPARATE ILLUSTRATION				

<END>

284-0825 ELECTRONICS GP-MACHINE—POWER TRAIN

S/N: MMM1-UP; RRR1-UP
PART OF 244-7387 ELECTRONICS GP-MACHINE

SMCS-7610, 7620 **i04895215**

NOTE	PART NUMBER	QTY	PART NAME 1 2 3 4 5 6 (PRODUCT LEVEL)	SEE PAGE
	317-0657	1	SOFTWARE GP-MACHINE	
			S/N: MMM1-339 ; RRR1-266	
	338-0841	1	SOFTWARE GP-MACHINE	
			S/N: MMM340-602 ; RRR267-431	
	390-3315	1	SOFTWARE GP-MACHINE	
			S/N: MMM603-UP ; RRR432-UP	

<END>

304-3660 GLOW PLUG GP

S/N: C4E1-UP

PART OF 254-9233 ENGINE AR-PRIMARY

SMCS-1412 **i05392676**

NOTE	REF NO	GRAPHIC REF	PART NUMBER	QTY	PART NAME 1 2 3 4 5 6 (PRODUCT LEVEL)	SEE PAGE
	1	1	**292-3462**	1	PLUG-PIPE	
	2	1	**361-9874**	4	GLOW PLUG (12-VOLT)	
	3	1	**368-3147**	1	BUS BAR AS	

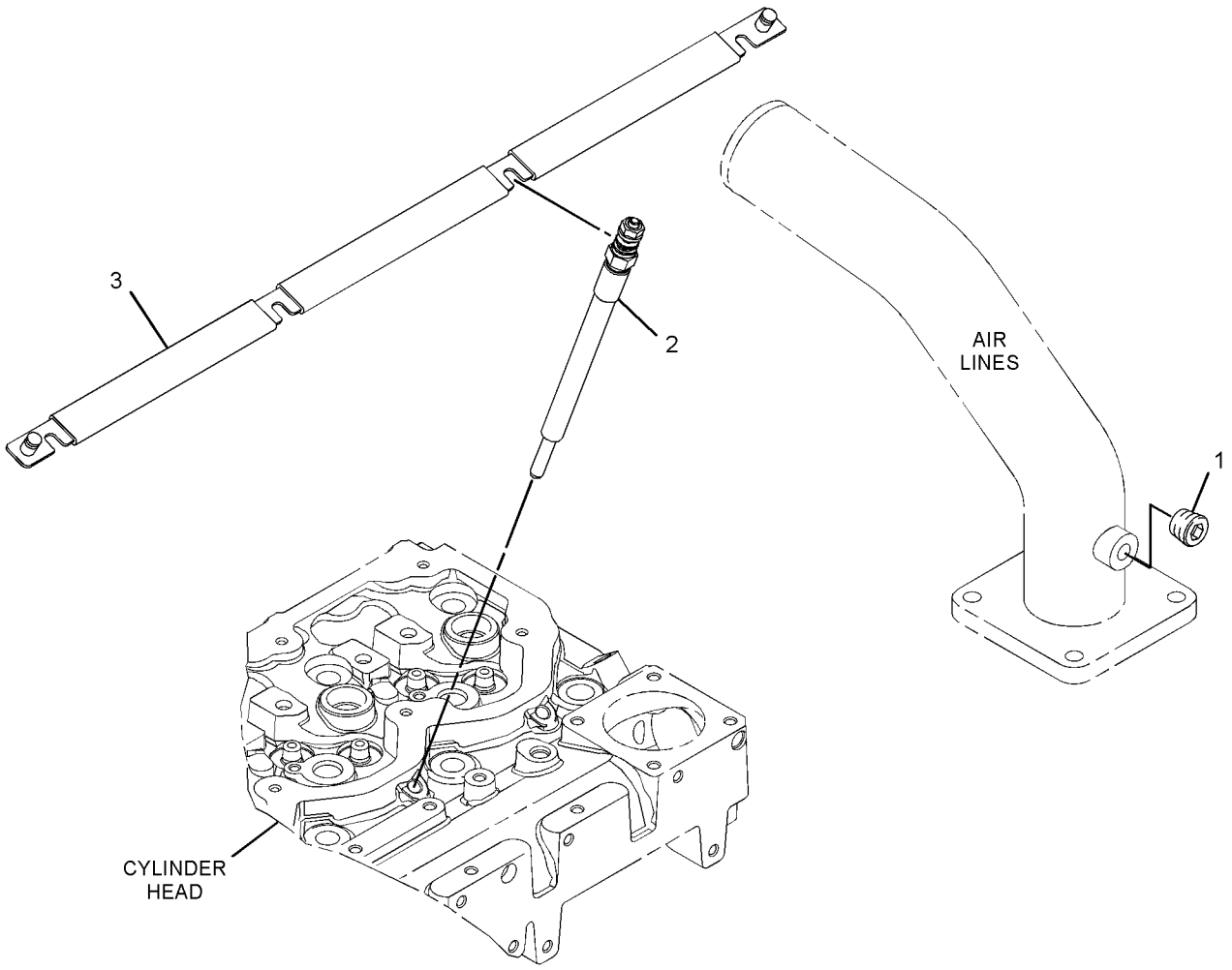

GRAPHIC #1 **<END>** g02729701

296-5751 GRADE CONTROL AR–OROPS

S/N: MMM1-UP; RRR1-UP

AN ATTACHMENT

SMCS-7220 **i03911405**

NOTE	PART NUMBER	QTY	PART NAME 1 2 3 4 5 6 (PRODUCT LEVEL)	SEE PAGE
Y	**274-4646**	1	CONTROL GP-JOYSTICK (GRADE CONTROL, RH)	710
			–OR–	
Y	**328-0895**	1	CONTROL GP-JOYSTICK (GRADE CONTROL, RH)	713
Y	*255-4230*	1	COVER GP-CAB (ROPS)	720

Y - SEPARATE ILLUSTRATION

<END>

296-5752 GRADE CONTROL AR–EROPS

S/N: MMM1-UP; RRR1-UP

AN ATTACHMENT

SMCS-7220 **i03911406**

NOTE	PART NUMBER	QTY	PART NAME 1 2 3 4 5 6 (PRODUCT LEVEL)	SEE PAGE
Y	**274-4646**	1	CONTROL GP-JOYSTICK (GRADE CONTROL, RH)	710
			–OR–	
Y	**328-0895**	1	CONTROL GP-JOYSTICK (GRADE CONTROL, RH)	713
Y	*255-4231*	1	COVER GP-CAB (EROPS)	724

Y - SEPARATE ILLUSTRATION

<END>

296-5753 GRADE CONTROL AR–OROPS

S/N: MMM1-UP; RRR1-UP

AN ATTACHMENT

SMCS-7220 **i03911407**

NOTE	PART NUMBER	QTY	PART NAME 1 2 3 4 5 6 (PRODUCT LEVEL)	SEE PAGE
Y	**274-4645**	1	CONTROL GP-JOYSTICK (GRADE CONTROL, RH)	709
			–OR–	
Y	**328-0894**	1	CONTROL GP-JOYSTICK (GRADE CONTROL, RH)	712
Y	*255-4230*	1	COVER GP-CAB (ROPS)	720
Y	*249-9040*	1	WIRING GP-GRADE CONTROL (BASE)	306

Y - SEPARATE ILLUSTRATION

<END>

296-5754 GRADE CONTROL AR–EROPS

S/N: MMM1-UP; RRR1-UP

AN ATTACHMENT

SMCS-7220 **i03911408**

NOTE	PART NUMBER	QTY	PART NAME 1 2 3 4 5 6 (PRODUCT LEVEL)	SEE PAGE
Y	**274-4645**	1	CONTROL GP-JOYSTICK (GRADE CONTROL, RH)	709
			–OR–	
Y	**328-0894**	1	CONTROL GP-JOYSTICK (GRADE CONTROL, RH)	712
Y	*255-4231*	1	COVER GP-CAB (EROPS)	724
Y	*249-9040*	1	WIRING GP-GRADE CONTROL (BASE)	306

Y - SEPARATE ILLUSTRATION

<END>

296-5755 GRADE CONTROL AR—OROPS

S/N: MMM1-UP; RRR1-UP
FOR USE WITH BLADE AR-DOZER, GRADE CONTROL
AN ATTACHMENT

SMCS-7220 **i03911409**

NOTE	PART NUMBER	QTY	PART NAME 1 2 3 4 5 6 (PRODUCT LEVEL)	SEE PAGE
Y	**274-4645**	1	CONTROL GP-JOYSTICK (GRADE CONTROL, RH)	709
			—OR—	
Y	**328-0894**	1	CONTROL GP-JOYSTICK (GRADE CONTROL, RH)	712
Y	*285-0330*	1	COVER GP-CONSOLE (OROPS)	743
Y	*255-4260*	1	MOUNTING GP-GRADE CONTROL	212
Y	*245-6029*	1	WIRING GP-GRADE CONTROL (FULL)	286

Y - SEPARATE ILLUSTRATION

<END>

296-5756 GRADE CONTROL AR—EROPS

S/N: MMM1-UP; RRR1-UP
FOR USE WITH BLADE AR-DOZER, GRADE CONTROL
AN ATTACHMENT

SMCS-7220 **i03911410**

NOTE	PART NUMBER	QTY	PART NAME 1 2 3 4 5 6 (PRODUCT LEVEL)	SEE PAGE
Y	**274-4645**	1	CONTROL GP-JOYSTICK (GRADE CONTROL, RH)	709
			—OR—	
Y	**328-0894**	1	CONTROL GP-JOYSTICK (GRADE CONTROL, RH)	712
Y	*285-0331*	1	COVER GP-CAB (EROPS)	730
Y	*255-4260*	1	MOUNTING GP-GRADE CONTROL	212
Y	*245-6029*	1	WIRING GP-GRADE CONTROL (FULL)	286

Y - SEPARATE ILLUSTRATION

<END>

317-6527 GRADE CONTROL AR—ACCUGRADE, ADVANCED TRACKING SYSTEM

S/N: MMM1-UP
FIELD INSTALLATION

SMCS-7220 **i03899418**

NOTE	PART NUMBER	QTY	PART NAME 1 2 3 4 5 6 (PRODUCT LEVEL)	SEE PAGE
Y	**286-0134**	1	DISPLAY GP-MONITOR (CD700)	749
Y	**286-9124**	3	DISPLAY GP-MONITOR (LIGHT BAR)	750
Y	**226-2333**	1	MAST GP (LASER RECEIVER)	210
Y	*292-0296*	1	MOUNTING GP-GRADE CONTROL	216
Y	*292-0302*	1	MOUNTING GP-MAST (LASER RECEIVER)	927
Y	**234-9970**	1	MOUNTING GP-RECEIVER (MAST)	217
Y	**295-9880**	1	TARGET GP-LASER	248
	276-6146	1	SENSOR AS-ANGLE (AS400TC)	
	311-4864	1	CABLE-COILED (ANGLE SENSOR)	

Y - SEPARATE ILLUSTRATION

<END>

292-0293 GRADE CONTROL AR-LASER—ACCUGRADE, SINGLE

S/N: MMM1-UP; RRR1-UP
FOR USE WITH K SERIES, N SERIES, R SERIES, T SERIES TRACK TYPE TRACTOR
FIELD INSTALLATION

SMCS-7220 **i03754139**

NOTE	PART NUMBER	QTY	PART NAME 1 2 3 4 5 6 (PRODUCT LEVEL)	SEE PAGE
Y	**292-0309**	1	DISPLAY GP-MONITOR (CD610)	751
Y	**226-2333**	1	MAST GP (GRADE CONTROL)	210
Y	*292-0302*	1	MOUNTING GP-MAST (LASER RECEIVER)	927
Y	**234-9970**	1	MOUNTING GP-RECEIVER	217
Y	**239-9950**	1	RECEIVER GP-LASER (SINGLE) (GRADE CONTROL)	228
Y - SEPARATE ILLUSTRATION				

<END>

292-0312 GRADE CONTROL AR-LASER—ACCUGRADE, DUAL

S/N: MMM1-UP; RRR1-UP
FOR USE WITH TRACK TYPE TRACTOR
FIELD INSTALLATION

SMCS-7220 **i04418649**

NOTE	PART NUMBER	QTY	PART NAME 1 2 3 4 5 6 (PRODUCT LEVEL)	SEE PAGE
Y	*292-0309*	1	DISPLAY GP-MONITOR (CD610)	751
Y	*226-2333*	2	MAST GP (LASER RECEIVER)	210
Y	*292-0302*	2	MOUNTING GP-MAST (LASER RECEIVER)	927
Y	*234-9970*	2	MOUNTING GP-RECEIVER (MAST)	217
Y	*292-0285*	2	RECEIVER GP-LASER (DUAL)	228
	235-4587	1	CASE-PLASTIC	
Y - SEPARATE ILLUSTRATION				

<END>

290-5570 GRADE CONTROL AR-SATELLITE—ACCUGRADE, DUAL GPS

S/N: MMM1-UP; RRR1-UP
REPLACED BY 290-5571—PAGE: 186
FOR USE WITH TRACK TYPE TRACTOR
FIELD INSTALLATION

SMCS-7220 **i02852359**

NOTE	PART NUMBER	QTY	PART NAME 1 2 3 4 5 6 (PRODUCT LEVEL)	SEE PAGE
Y	*286-0134*	1	DISPLAY GP-MONITOR (CD700)	749
Y	*292-0290*	2	MAST GP (SATELLITE RECEIVER)	210
Y	**286-9124**	3	DISPLAY GP-MONITOR (LIGHT BAR)	750
Y	*292-0296*	1	MOUNTING GP-GRADE CONTROL	216
Y	*286-0137*	1	RECEIVER GP-SATELLITE (DUAL GPS, MS980)	228
	254-9136	2	CABLE-COILED (RECEIVER)	
Y - SEPARATE ILLUSTRATION				

<END>

290-5571 GRADE CONTROL AR-SATELLITE–ACCUGRADE, DUAL GNSS

S/N: MMM1-UP; RRR1-UP
FOR USE WITH TRACK TYPE TRACTOR
FIELD INSTALLATION

SMCS-7220 **i03635371**

NOTE	PART NUMBER	QTY	PART NAME 1 2 3 4 5 6 (PRODUCT LEVEL)	SEE PAGE
Y	**286-0134**	1	DISPLAY GP-MONITOR (CD700)	749
Y	**286-9124**	3	DISPLAY GP-MONITOR (LIGHT BAR)	750
Y	*292-0296*	1	MOUNTING GP-GRADE CONTROL	216
Y	*292-0303*	2	MOUNTING GP-MAST (SATELLITE RECEIVER)	927
Y	**292-0291**	1	RECEIVER GP-SATELLITE (DUAL GNSS, MS992)	229
	248-1500	2	MAST AS (SATELLITE RECEIVER)	
	311-4862	2	CABLE-COILED (RECEIVER)	
Y - SEPARATE ILLUSTRATION				

<END>

292-0280 GRADE CONTROL AR-SATELLITE–ACCUGRADE, SINGLE GNSS

S/N: MMM1-UP; RRR1-UP
FOR USE WITH TRACK TYPE TRACTOR
FIELD INSTALLATION

SMCS-7220 **i03635374**

NOTE	PART NUMBER	QTY	PART NAME 1 2 3 4 5 6 (PRODUCT LEVEL)	SEE PAGE
Y	**286-0134**	1	DISPLAY GP-MONITOR (CD700)	749
Y	**286-9124**	3	DISPLAY GP-MONITOR (LIGHT BAR)	750
Y	*292-0296*	1	MOUNTING GP-GRADE CONTROL	216
Y	*292-0303*	1	MOUNTING GP-MAST (SATELLITE RECEIVER)	927
Y	**292-0292**	1	RECEIVER GP-SATELLITE (SINGLE GNSS, MS992)	229
	248-1500	1	MAST AS (SATELLITE RECEIVER)	
	276-6146	1	SENSOR AS-ANGLE (AS400TC)	
	311-4862	1	CABLE-COILED (RECEIVER)	
	311-4864	1	CABLE-COILED (ANGLE SENSOR)	
Y - SEPARATE ILLUSTRATION				

<END>

347-0915 GRADE CONTROL AR-SATELLITE–ACCUGRADE, SINGLE

S/N: RRR1-UP

FIELD INSTALLATION

SMCS-7220 **i04108929**

NOTE	PART NUMBER	QTY	PART NAME 1 2 3 4 5 6 (PRODUCT LEVEL)	SEE PAGE
Y	**286-0134**	1	DISPLAY GP-MONITOR (CD700)	749
Y	**286-9124**	3	DISPLAY GP-MONITOR (LIGHT BAR)	750
Y	*292-0296*	1	MOUNTING GP-GRADE CONTROL	216
Y	*292-0303*	1	MOUNTING GP-MAST (SATELLITE RECEIVER)	927
Y	*347-0912*	1	RECEIVER GP-SATELLITE (SINGLE GNSS, MS990)	231
	248-1500	1	MAST AS (SATELLITE RECEIVER)	
	276-6146	1	SENSOR AS-ANGLE (AS400TC)	
	311-4862	1	CABLE-COILED (RECEIVER)	
	311-4864	1	CABLE-COILED (ANGLE SENSOR)	

Y - SEPARATE ILLUSTRATION

<END>

347-0916 GRADE CONTROL AR-SATELLITE–ACCUGRADE, DUAL

S/N: RRR1-UP

FIELD INSTALLATION

SMCS-7220 **i04519752**

NOTE	PART NUMBER	QTY	PART NAME 1 2 3 4 5 6 (PRODUCT LEVEL)	SEE PAGE
Y	*286-0134*	1	DISPLAY GP-MONITOR (CD700)	749
Y	**286-9124**	3	DISPLAY GP-MONITOR (LIGHT BAR)	750
Y	*292-0296*	1	MOUNTING GP-GRADE CONTROL	216
Y	*292-0303*	2	MOUNTING GP-MAST (SATELLITE RECEIVER)	927
Y	*347-0913*	1	RECEIVER GP-SATELLITE (DUAL GNSS, MS990)	231
	248-1500	2	MAST AS (SATELLITE RECEIVER)	
	311-4862	2	CABLE-COILED (RECEIVER)	

Y - SEPARATE ILLUSTRATION

<END>

327-6173 HARNESS AS-SENSOR—ARMREST, LH

S/N: MMM1001-UP; RRR801-UP

PART OF 245-6027 WIRING GP-ELECTROHYDRAULIC

SMCS-1408 **i05317230**

NOTE	PART NUMBER	QTY	PART NAME 1 2 3 4 5 6 (PRODUCT LEVEL)	SEE PAGE
	9X-3401	12	PIN-CONNECTOR (16-GA TO 18-GA)	
			—OR—	
	126-1767	12	PIN-CONNECTOR (14-GA TO 16-GA)	
	155-2274	1	KIT-CONNECTING PLUG (6-PIN)	
			(INCLUDES PLUG AS, WEDGE & INTERFACE SEAL)	
	230-4009	1	PLUG AS-CONNECTOR (12-PIN)	
	264-7034	1	SEAL-CONNECTOR	
	8T-8737	3	PLUG-SEAL	
	230-4010	1	RECEPTACLE AS-CONNECTOR (12-PIN)	
	9X-3402	11	SOCKET-CONNECTOR (16-GA TO 18-GA)	
			—OR—	
	126-1768	11	SOCKET-CONNECTOR (14-GA TO 16-GA)	
	194-5226	4	WIRE AS (16-GA)	
			—OR—	
	194-5227	4	WIRE AS (14-GA)	
B	**1P-0810**		TAPE-ELECTRICAL	
E	**125-7874**		TUBE-HEAT SHRINK (5.72-MM DIA) (15-CM)	

B - USE AS REQUIRED
E - ORDER BY THE CENTIMETER

<END>

327-6174 HARNESS AS-SENSOR—ARMREST, RH

S/N: MMM1001-UP; RRR801-UP

PART OF 245-6027 WIRING GP-ELECTROHYDRAULIC

SMCS-1408 **i05317234**

NOTE	PART NUMBER	QTY	PART NAME 1 2 3 4 5 6 (PRODUCT LEVEL)	SEE PAGE
	9X-3401	11	PIN-CONNECTOR (16-GA TO 18-GA)	
			—OR—	
	126-1767	11	PIN-CONNECTOR (14-GA TO 16-GA)	
	230-4009	1	PLUG AS-CONNECTOR (12-PIN)	
	264-7034	1	SEAL-CONNECTOR	
	230-5010	1	PLUG AS-CONNECTOR (6-PIN)	
	264-7032	1	SEAL-CONNECTOR	
	8T-8737	5	PLUG-SEAL	
	239-7357	1	RECEPTACLE AS-CONNECTOR (12-PIN)	
	9X-3402	14	SOCKET-CONNECTOR (16-GA TO 18-GA)	
			—OR—	
	126-1768	14	SOCKET-CONNECTOR (14-GA TO 16-GA)	
B	**1P-0810**		TAPE-ELECTRICAL	
E	**125-7874**		TUBE-HEAT SHRINK (5.72-MM DIA) (15-CM)	

B - USE AS REQUIRED
E - ORDER BY THE CENTIMETER

<END>

253-5391 HEATER GP-JACKET WATER

S/N: MMM1-UP; RRR1-UP

AN ATTACHMENT

SMCS-1383 **i02644587**

NOTE	REF NO	GRAPHIC REF	PART NUMBER	QTY	PART NAME 1 2 3 4 5 6 (PRODUCT LEVEL)	SEE PAGE
	1	1	**7K-1181**	2	STRAP-CABLE	
	2	1	**130-0165**	1	RECEPTACLE AS (FLUSH MOUNT)	
	3	1	**231-3054**	1	HEATER GP-JACKET WATER	
		1	**219-3273**	1	ELEMENT AS-JACKET WATER HEATER (120-VOLT, 1000-WATT)	
		1	**133-3413**	1	KIT-SEAL (WATER JACKET)	
					(KIT INCLUDES RINGS, SPACER & SEAL)	
		1	**133-6517**	1	CAP AS-DUST	
		1	**231-3052**	1	CORD AS	
	4	1	**253-6168**	1	PLATE AS	
	5	1	**4P-7581**	2	CLIP	
	6	1	**8T-4121**	2	WASHER-HARD (11X21X2.5-MM THK)	
M	7	1	**8T-4195**	2	BOLT (M10X1.5X30-MM)	

M - METRIC PART

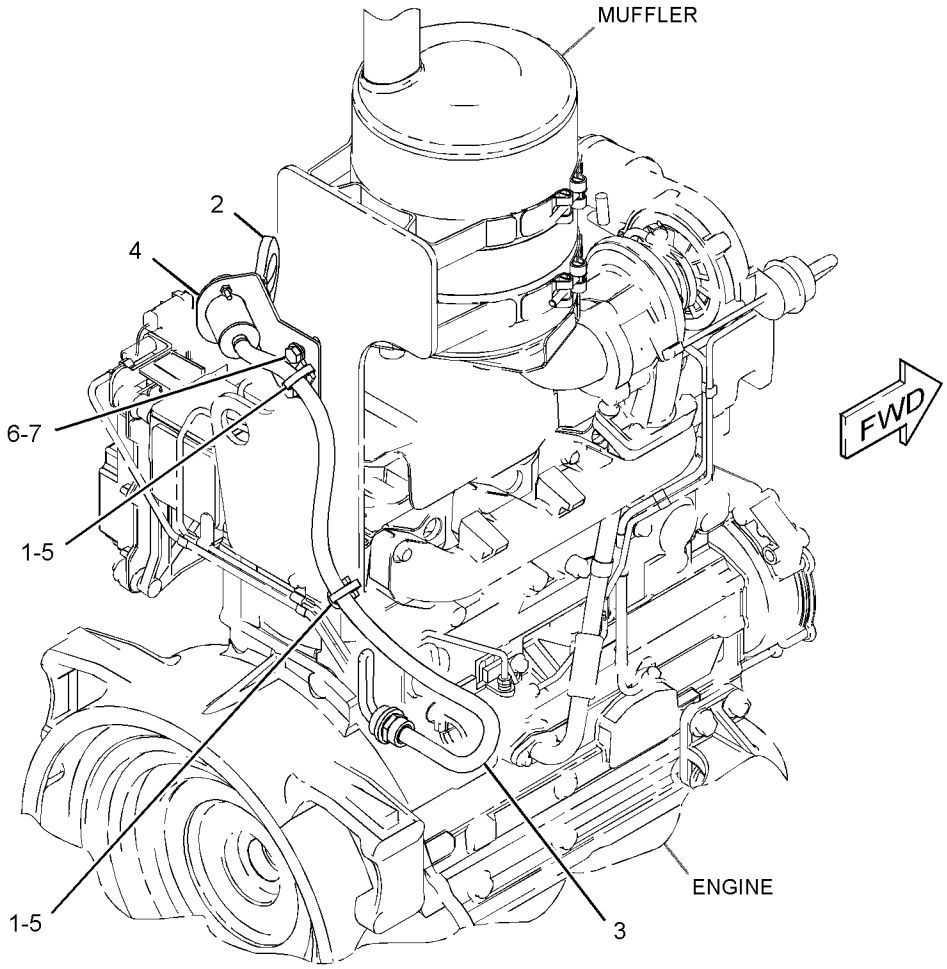

GRAPHIC #1 **<END>** g01329099

249-9029 INSTALLATION GP-COMMUNICATION—PRODUCT LINK

321SR
S/N: MMM1-UP; RRR1-UP
AN ATTACHMENT
TYPE 1

SMCS-7606 **i03588204**

NOTE	REF NO	GRAPHIC REF	PART NUMBER	QTY	PART NAME 1 2 3 4 5 6 (PRODUCT LEVEL)	SEE PAGE
	1	1	**7K-1181**	1	STRAP-CABLE	
	2	1	**8C-5607**	8	MOUNT-ISOLATION	
	3	1	**8C-5608**	4	SPACER (6.5X9.5X25.4-MM THK)	
	4	1	**249-9035**	1	HARNESS AS-CONTROL	
		1	**9X-3401**	5	PIN-CONNECTOR (16-GA TO 18-GA)	
		1	**186-3735**	3	PIN-CONNECTOR (16-GA TO 18-GA)	
		1	**155-2255**	1	KIT-CONNECTING PLUG (12-PIN)	
		1	**155-2270**	1	KIT-CONNECTING PLUG (2-PIN)	
					(EACH PLUG KIT INCLUDES PLUG AS, WEDGE & INTERFACE SEAL)	
		1	**160-7690**	1	PLUG AS-CONNECTOR (70-PIN)	
		1	**8T-8737**	66	PLUG-SEAL	
		1	**102-8801**	1	KIT-RECEPTACLE (12-PIN)	
					(INCLUDES RECEPTACLE AS & WEDGE)	
		1	**9X-3402**	6	SOCKET-CONNECTOR (16-GA TO 18-GA)	
		1	**186-3736**	3	SOCKET-CONNECTOR (16-GA TO 18-GA)	
		1	**126-1766**	13	SOCKET-CONNECTOR (14-GA TO 18-GA)	
B		1	**141-8061**		TAPE	
E		1	**125-7874**		TUBE-HEAT SHRINK (5.72-MM DIA) (20-CM)	
Y	5	1	*249-9068*	1	INSTALLATION GP-COMMUNICATION (PRODUCT LINK 121SR)	194
Y	6	1	**268-4699**	1	SERVICE GP-COMMUNICATION (PRODUCT LINK 300)	240
	7	1	**132-5789**	1	CLIP	
	8	1	**2A-2677**	1	SPACER (10.7X17.14X19.05-MM THK)	
M	9	1	**6V-2315**	3	BOLT (M6X1X35-MM)	
M	10	1	**7X-2535**	1	BOLT (M6X1X60-MM)	
	11	1	**9X-6165**	5	WASHER (6.5X22X2.5-MM THK)	

B - USE AS REQUIRED
E - ORDER BY THE CENTIMETER
M - METRIC PART
Y - SEPARATE ILLUSTRATION

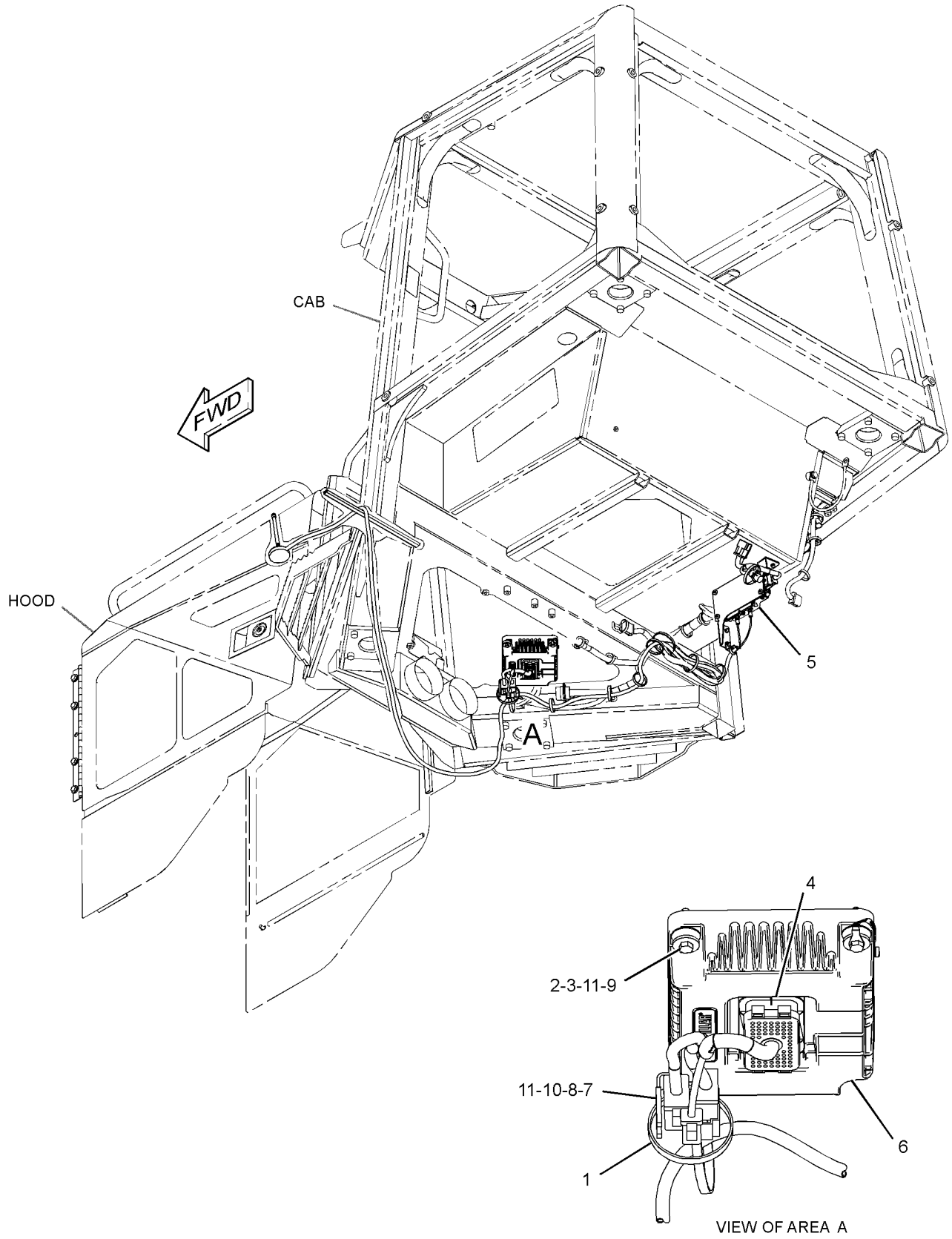

GRAPHIC #1 **<END>** g01346263

249-9029 INSTALLATION GP-COMMUNICATION—PRODUCT LINK

321SR
S/N: MMM1-UP; RRR1-UP
AN ATTACHMENT
TYPE 2

SMCS-7606 **i03588437**

NOTE	REF NO	GRAPHIC REF	PART NUMBER	QTY	PART NAME 1 2 3 4 5 6 (PRODUCT LEVEL)	SEE PAGE
	1	1	**7K-1181**	1	STRAP-CABLE	
	2	1	**8C-5607**	8	MOUNT-ISOLATION	
	3	1	**8C-5608**	4	SPACER (6.5X9.5X25.4-MM THK)	
	4	1	**249-9035**	1	HARNESS AS-CONTROL	
		1	**9X-3401**	5	PIN-CONNECTOR (16-GA TO 18-GA)	
		1	**186-3735**	3	PIN-CONNECTOR (16-GA TO 18-GA)	
		1	**155-2255**	1	KIT-CONNECTING PLUG (12-PIN)	
		1	**155-2270**	1	KIT-CONNECTING PLUG (2-PIN)	
					(EACH PLUG KIT INCLUDES PLUG AS, WEDGE & INTERFACE SEAL)	
		1	**160-7690**	1	PLUG AS-CONNECTOR (70-PIN)	
		1	**8T-8737**	66	PLUG-SEAL	
		1	**102-8801**	1	KIT-RECEPTACLE (12-PIN)	
					(INCLUDES RECEPTACLE AS & WEDGE)	
		1	**9X-3402**	6	SOCKET-CONNECTOR (16-GA TO 18-GA)	
		1	**186-3736**	3	SOCKET-CONNECTOR (16-GA TO 18-GA)	
		1	**126-1766**	13	SOCKET-CONNECTOR (14-GA TO 18-GA)	
B		1	**141-8061**		TAPE	
E		1	**125-7874**		TUBE-HEAT SHRINK (5.72-MM DIA) (20-CM)	
Y	5	1	*249-9068*	1	INSTALLATION GP-COMMUNICATION	194
	6	1	**311-8376**	1	SERVICE GP-COMMUNICATION (PRODUCT LINK 300)	
	7	1	**132-5789**	1	CLIP	
	8	1	**2A-2677**	1	SPACER (10.7X17.14X19.05-MM THK)	
M	9	1	**6V-2315**	3	BOLT (M6X1X35-MM)	
M	10	1	**7X-2535**	1	BOLT (M6X1X60-MM)	
	11	1	**9X-6165**	5	WASHER (6.5X22X2.5-MM THK)	

B - USE AS REQUIRED
E - ORDER BY THE CENTIMETER
M - METRIC PART
Y - SEPARATE ILLUSTRATION

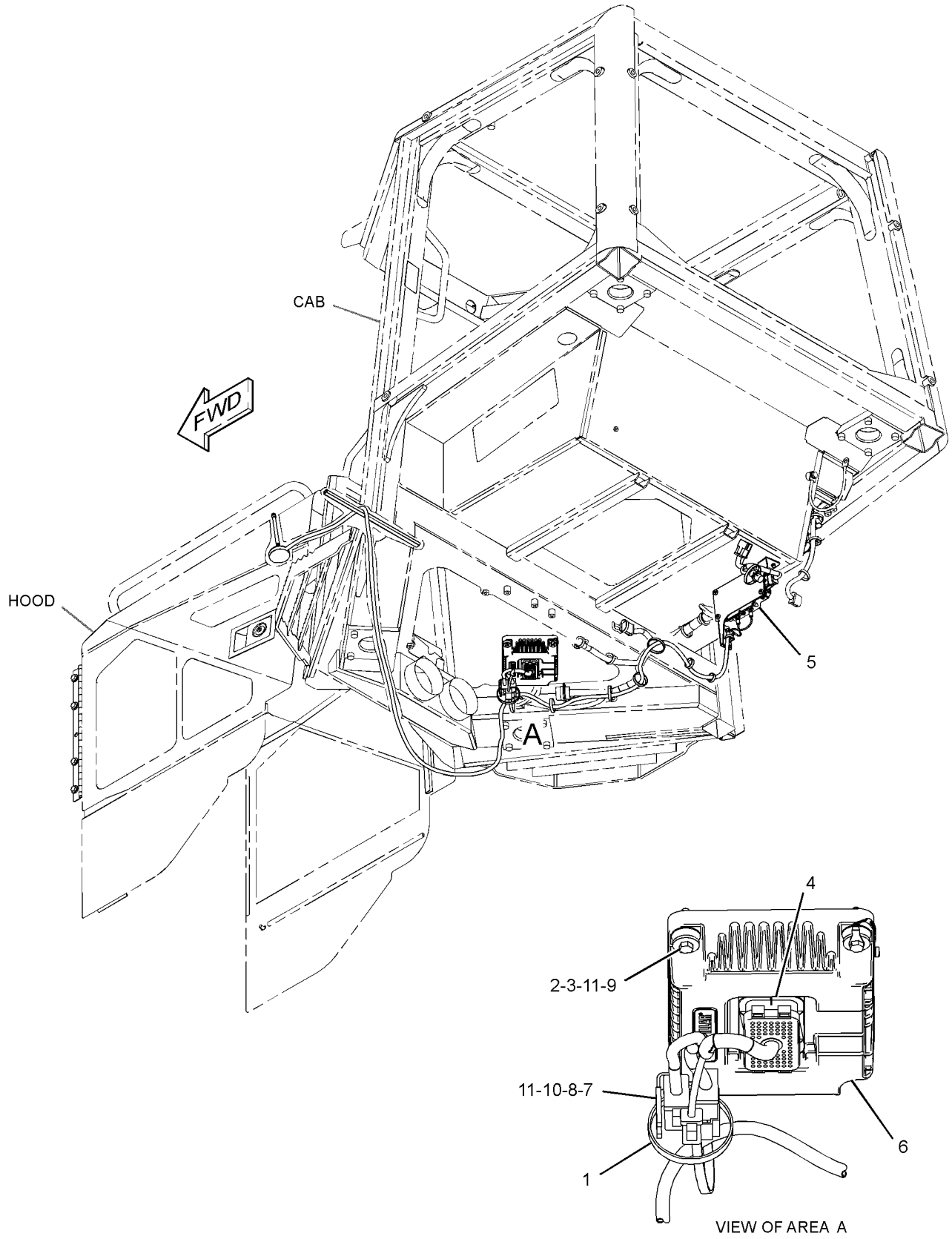

GRAPHIC #1 **<END>** g01408692

249-9068 INSTALLATION GP-COMMUNICATION—PRODUCT LINK

121SR

S/N: MMM1-UP; RRR1-UP

PART OF 249-9029 INSTALLATION GP-COMMUNICATION

AN ATTACHMENT

SMCS-7606 **i04105310**

NOTE	REF NO	GRAPHIC REF	PART NUMBER	QTY	PART NAME 1 2 3 4 5 6 (PRODUCT LEVEL)	SEE PAGE
	1	1	**7K-1181**	9	STRAP-CABLE	
	2	1	**249-9069**	1	HARNESS AS-WIRING (PRODUCT LINK)	
		1	**100-5805**	1	CAP-RECEPTACLE	
		1	**186-3735**	12	PIN-CONNECTOR (16-GA TO 18-GA)	
		1	**155-2255**	1	KIT-CONNECTING PLUG (12-PIN)	
					(INCLUDES PLUG AS, WEDGE & INTERFACE SEAL)	
		1	**8T-8737**	8	PLUG-SEAL	
		1	**102-8802**	1	KIT-RECEPTACLE (2-PIN)	
		1	**102-8801**	1	KIT-RECEPTACLE (12-PIN)	
					(EACH RECEPTACLE KIT INCLUDES RECEPTACLE AS & WEDGE)	
		1	**9X-4813**	1	RECEPTACLE AS-CONNECTOR (3-PIN)	
		1	**186-3736**	9	SOCKET-CONNECTOR (16-GA TO 18-GA)	
E		1	**125-7874**		TUBE-HEAT SHRINK (5.72-MM DIA) (15-CM)	
B	3	1	**260-7653**	1	FILM-WARNING (PRODUCT LINK 300, INTL)	
					—OR—	
B		1	**260-7652**	1	FILM-WARNING (PRODUCT LINK 300, U.S.)	
E	4	1	**3E-6600**		SEAL (40-CM)	
Y	5	1	**336-3545**	1	RADIO GP-COMMUNICATION (PRODUCT LINK 121SR)	228
	6	1	**269-7650**	1	PLATE AS	
	7	1	**156-6175**	1	CLIP	
	8	1	**310-2392**	1	ANTENNA AS (MAGNETIC MOUNT, PRODUCT LINK)	
		1	**301-0589**	1	ANTENNA (FLEXIBLE)	
M	9	1	**8C-3210**	7	BOLT (M6X1X16-MM)	
	10	1	**9X-8256**	7	WASHER (6.6X12X2-MM THK)	
	11	1	**307-0047**	1	FILM-INFORMATION (PRODUCT LINK, READ OMM)	

B - USE AS REQUIRED
E - ORDER BY THE CENTIMETER
M - METRIC PART
Y - SEPARATE ILLUSTRATION

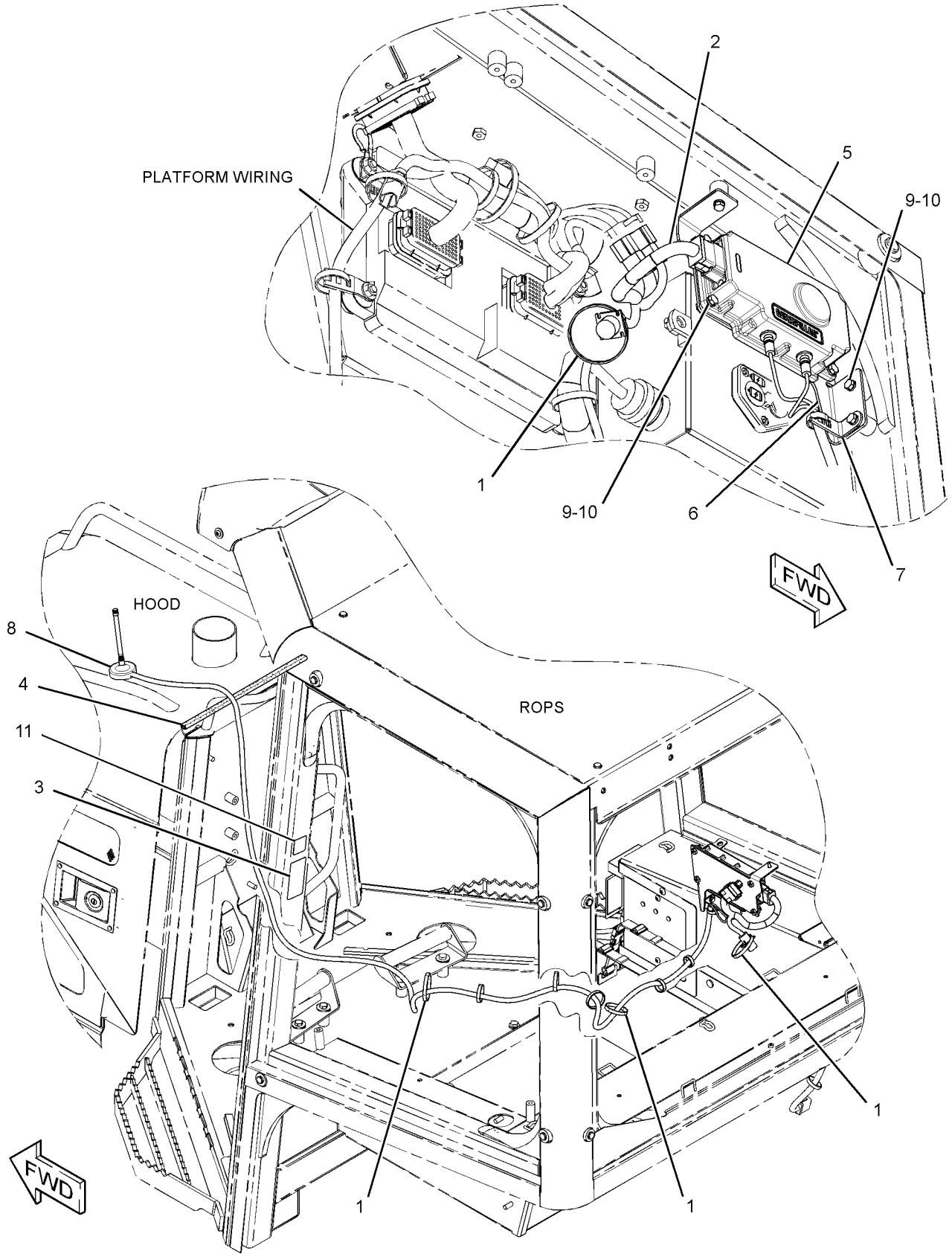

GRAPHIC #1 **<END>** g01621858

245-6028 INSTALLATION GP-SECURITY

S/N: MMM1-UP; RRR1-UP

AN ATTACHMENT

SMCS-7631 **i04415870**

NOTE	REF NO	GRAPHIC REF	PART NUMBER	QTY	PART NAME 1 2 3 4 5 6 (PRODUCT LEVEL)	SEE PAGE
	1	1	**7K-1181**	2	STRAP-CABLE	
	2	1	**8C-5607**	4	MOUNT-ISOLATION	
	3	1	**8C-5608**	2	SPACER (6.5X9.5X25.4-MM THK)	
	4	1	**206-5162**	2	KEY AS-ELECTRONIC (SECURITY)	
	5	1	*206-5203*	1	COIL AS (EXCITER)	
		1	**102-8802**	1	KIT-RECEPTACLE (2-PIN)	
					(INCLUDES RECEPTACLE AS & WEDGE)	
		1	**198-5389**	1	FILM-IDENTIFICATION (IGNITION SWITCH)	
		1	**205-8257**	1	COIL AS (EXCITER)	
		1	**207-5271**	1	WASHER (27X60.5X0.36-MM THK)	
D		1	**5P-5677**		WIRE (18-GA, BLACK) (0.4-M)	
		1	**8T-8729**	2	PIN-CONNECTOR (16-GA TO 18-GA)	
	6	1	**218-0404**	1	MODULE GP-INTERFACE (KEY)	
		1	**6V-6715**	1	SCREW-PAN HEAD (4-20X0.25-IN)	
		1	**8C-3095**	1	SEAL-O-RING	
	7	1	**219-6314**	2	KEY RING (IDENTIFICATION)	
M	8	1	**7X-2533**	2	BOLT (M6X1X35-MM)	
	9	1	**249-9028**	1	HARNESS AS-WIRING	
		1	**8T-8729**	4	PIN-CONNECTOR (16-GA TO 18-GA)	
		1	**155-2265**	1	KIT-CONNECTING PLUG (8-PIN)	
		1	**155-2270**	1	KIT-CONNECTING PLUG (2-PIN)	
					(EACH INCLUDES PLUG AS, WEDGE & INTERFACE SEAL)	
		1	**8T-8737**	6	PLUG-SEAL	
		1	**102-8806**	1	KIT-RECEPTACLE (8-PIN)	
					(INCLUDES RECEPTACLE AS & WEDGE)	
		1	**8T-8730**	8	SOCKET-CONNECTOR (16-GA TO 18-GA)	
	10	1	**9X-6165**	2	WASHER (6.5X22X2.5-MM THK)	
	11	1	**292-2558**	1	FILM-IDENTIFICATION (IGNITION SWITCH, READ OMM)	
	12	1	**205-0826**	1	FILM-INSTRUCTION (MACHINE SECURITY, CONSOLE)	

D - ORDER BY THE METER
M - METRIC PART

245-6028 **INSTALLATION GP-SECURITY (*contd.*)** **i04415870**

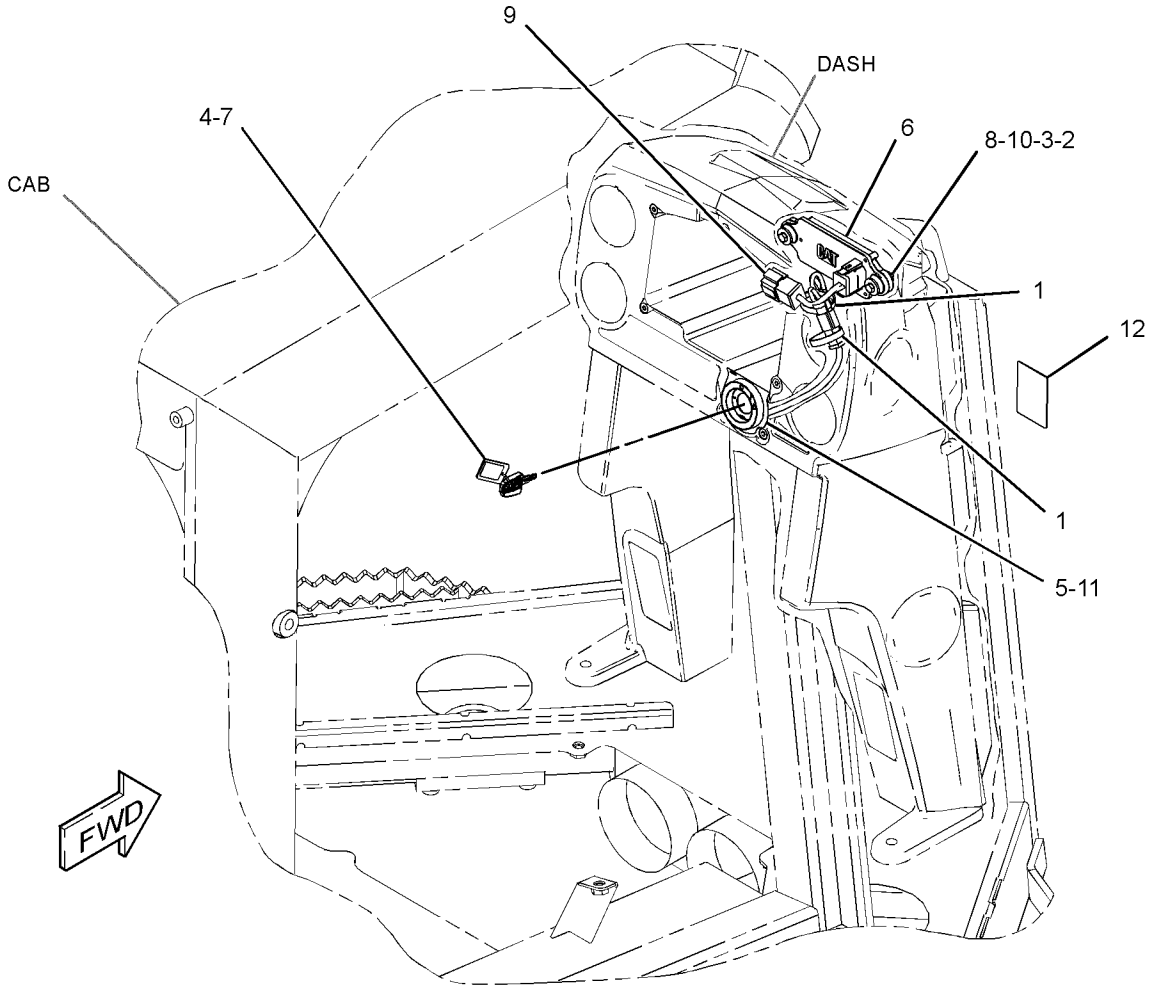

GRAPHIC #1 **<END>** g01923083

355-2386 KIT-RETROFIT

S/N: MMM1-UP; RRR1-UP

FOR USE WITH D3K, D4K, D5K TRACTOR AS FIELD INSTALLED ACCUGRADE RETROFIT KIT, FFF1-UP, LLL1-UP, MMM1-UP, RRR1-UP, WWW1-UP, YYY1-UP, JTD1-UP, JLF1-UP

FIELD INSTALLATION

SMCS-5705, 7220 **i05330231**

NOTE	PART NUMBER	QTY	PART NAME 1 2 3 4 5 6 (PRODUCT LEVEL)	SEE PAGE
Y	**266-7632**	1	CONTROL GP-HANDLE	701
	167-8712	1	ALARM	
	314-2573	1	BASE AS	
M	**8T-0286**	2	BOLT (M5X0.8X8-MM)	
M	**8T-4171**	4	BOLT (M6X1X12-MM)	
M	**5C-9553**	1	BOLT (M6X1X16-MM)	
M	**7I-2272**	2	BOLT (M5X0.8X12-MM)	
M	**7X-2553**	1	BOLT (M16X2X40-MM)	
M	**8T-4137**	1	BOLT (M10X1.5X20-MM)	
M	**8T-4185**	1	BOLT (M10X1.5X50-MM)	
M	**8T-4186**	2	BOLT (M10X1.5X40-MM)	
M	**8T-4195**	2	BOLT (M10X1.5X30-MM)	
M	**8T-4200**	4	BOLT (M8X1.25X16-MM)	
M	**8T-4908**	4	BOLT (M8X1.25X25-MM)	
	236-8826	3	BOSS (1-1/8-18X0.708-IN)	
	311-0311	1	BRACKET AS	
	4Y-1214	1	SPACER (18X26X15-MM THK)	
M	**6V-9632**	6	NUT-WELD (M6X1-THD)	
	132-2250	1	SPACER (21X35X10-MM THK)	
	154-2302	2	SPACER (11X20X15-MM THK)	
	314-3011	1	BRACKET AS	
M	**9X-2032**	2	NUT-WELD (M4X0.7-THD)	
	314-3012	1	BRACKET AS	
M	**9X-2032**	2	NUT-WELD (M4X0.7-THD)	
	343-3690	1	BRACKET-MOUNTING	
	283-9901	1	CAM	
	7R-3029	3	CAP-DUST	
	4P-8134	1	CLIP	
	130-5300	4	CLIP	
	132-5789	2	CLIP	
	343-3688	1	COVER	
	347-2729	1	FILM-INSTRUCTION (BULLDOZER CONTROL)	
	2D-0388	1	GROMMET	
	249-9033	1	HARNESS AS-CONSOLE (GRADE CONTROL)	
	102-8806	1	KIT-RECEPTACLE (8-PIN)	
	102-8801	1	KIT-RECEPTACLE (12-PIN)	
			(EACH RECEPTACLE KIT INCLUDES RECEPTACLE AS & WEDGE)	
	8C-6354	1	CAP-RECEPTACLE (ET CONNECTOR)	
	8T-8736	1	RECEPTACLE-CONNECTOR (9-PIN)	
	8T-8737	12	PLUG-SEAL	
	9X-3401	10	PIN-CONNECTOR (16-GA TO 18-GA)	
	9X-3402	13	SOCKET-CONNECTOR (16-GA TO 18-GA)	
	115-1050	10	PIN-CONNECTOR	
			(EACH INCLUDES)	
	351-1885	1	PIN-CONNECTOR	
	115-1052	2	PIN-CONNECTOR	
			(EACH INCLUDES)	
	9W-0852	1	PIN-CONNECTOR (14-GA TO 16-GA)	
	115-1053	6	SOCKET-CONNECTOR	
			(EACH INCLUDES)	
	9W-0844	1	SOCKET-CONNECTOR (14-GA TO 16-GA)	
E	**125-7874**		TUBE-HEAT SHRINK (5.72-MM DIA) (40-CM)	
E	**125-7875**		TUBE-HEAT SHRINK (7.44-MM DIA) (10-CM)	
B	**141-8061**		TAPE	

355-2386 **KIT-RETROFIT (*contd.*)** **i05330231**

NOTE	PART NUMBER	QTY	PART NAME 1 2 3 4 5 6 (PRODUCT LEVEL)	SEE PAGE
	155-2255	1	KIT-CONNECTING PLUG (12-PIN)	
			(INCLUDES PLUG AS, WEDGE, & INTERFACE SEAL)	
	253-2695	1	PLUG AS-CONNECTOR	
	327-6133	1	HARNESS AS-CONTROL	
	102-8801	1	KIT-RECEPTACLE (12-PIN)	
			(INCLUDES RECEPTACLE AS & WEDGE)	
	8T-8737	9	PLUG-SEAL	
E	**125-7874**		TUBE-HEAT SHRINK (5.72-MM DIA) (5-CM)	
E	**125-7875**		TUBE-HEAT SHRINK (7.44-MM DIA) (5-CM)	
B	**141-8061**	2	TAPE	
	190-7615	1	KIT-RECEPTACLE (12-PIN)	
			(INCLUDES RECEPTACLE AS & WEDGE)	
	230-7254	15	PIN-CONNECTOR	
	311-0295	1	HARNESS AS-DASH (GRADE CONTROL)	
	102-8801	1	KIT-RECEPTACLE (12-PIN)	
			(INCLUDES RECEPTACLE AS & WEDGE)	
	8T-8737	24	PLUG-SEAL	
	115-1050	1	PIN-CONNECTOR	
	351-1885	1	PIN-CONNECTOR	
	115-1052	2	PIN-CONNECTOR	
			(EACH INCLUDES)	
	9W-0852	1	PIN-CONNECTOR (14-GA TO 16-GA)	
E	**125-7874**		TUBE-HEAT SHRINK (5.72-MM DIA) (45-CM)	
	126-1766	12	SOCKET-CONNECTOR (14-GA TO 18-GA)	
			(EACH INCLUDES)	
	9X-3402	1	SOCKET-CONNECTOR (16-GA TO 18-GA)	
	126-1768	1	SOCKET-CONNECTOR (14-GA TO 16-GA)	
	131-1474	2	TERMINAL AS	
			(EACH INCLUDES)	
	5P-2321	2	TERMINAL-FORK (14-GA TO 16-GA, NO. 6 SCREW)	
E	**125-7874**		TUBE-HEAT SHRINK (5.72-MM DIA) (3-CM)	
	134-2540	2	RESISTOR AS-CONNECTION (3-PIN)	
	155-2255	1	KIT-CONNECTING PLUG (12-PIN)	
	155-2257	1	KIT-CONNECTING PLUG (12-PIN)	
	155-2265	1	KIT-CONNECTING PLUG (8-PIN)	
	155-2260		KIT-CONNECTING PLUG (3-PIN)	
			(EACH PLUG KIT INCLUDES PLUD AS, WEDGE, & INTERFACE SEAL)	
	180-9339	6	PIN-CONNECTOR (14-GA TO 18-GA)	
			(EACH INCLUDES)	
	9X-3401	1	PIN-CONNECTOR (16-GA TO 18-GA)	
	126-1767	1	PIN-CONNECTOR (14-GA TO 16-GA)	
	180-9340	10	SOCKET-CONNECTOR (14-GA TO 18-GA)	
			(EACH INCLUDES)	
	9X-3402	1	SOCKET-CONNECTOR (16-GA TO 18-GA)	
	126-1768	1	SOCKET-CONNECTOR (14-GA TO 16-GA)	
	230-5008	3	PLUG AS-CONNECTOR (4-PIN)	
	264-7031	1	SEAL-CONNECTOR	
	230-5009	3	RECEPTACLE AS-CONNECTOR (4-PIN)	
	249-9031	1	HARNESS AS-FRONT (GRADE CONTROL)	
	9X-3402	8	SOCKET-CONNECTOR (16-GA TO 18-GA)	
	115-1053	8	SOCKET-CONNECTOR	
			(EACH INCLUDES)	
	9W-0844	1	SOCKET-CONNECTOR (14-GA TO 16-GA)	
	155-2265	1	KIT-CONNECTING PLUG (8-PIN)	
			(INCLUDES PLUG AS, WEDGE & INTERFACE SEAL)	
	249-9032	1	HARNESS AS-HOOD (GRADE CONTROL)	
	155-2271		KIT-CONNECTING PLUG (4-PIN)	
	155-2260		KIT-CONNECTING PLUG (3-PIN)	
	155-2265		KIT-CONNECTING PLUG (8-PIN)	

355-2386 **KIT-RETROFIT (*contd.*)** **i05330231**

NOTE	PART NUMBER	QTY	PART NAME 1 2 3 4 5 6 (PRODUCT LEVEL)	SEE PAGE
			(EACH PLUG KIT INCLUDES PLUG AS, WEDGE, & INTERFACE SEAL)	
	144-1636	17	PIN-CONNECTOR (14-GA TO 18-GA)	
			(EACH INCLUDES)	
	9X-3401	1	PIN-CONNECTOR (16-GA TO 18-GA)	
	126-1767	1	PIN-CONNECTOR (14-GA TO 16-GA)	
	8L-8413	2	STRAP-CABLE	
	102-8804	1	KIT-RECEPTACLE (4-PIN)	
	102-8806	1	KIT-RECEPTACLE (8-PIN)	
	102-8801	1	KIT-RECEPTACLE (12-PIN)	
			(EACH RECEPTACLE KIT INCLUDES RECEPTACLE AS & WEDGE)	
	8T-8737	9	PLUG-SEAL	
	9X-3401	4	PIN-CONNECTOR (16-GA TO 18-GA)	
	115-1050	4	PIN-CONNECTOR	
			(EACH INCLUDES)	
	8T-8729	1	PIN-CONNECTOR (16-GA TO 18-GA)	
	115-1051	10	SOCKET-CONNECTOR	
			(EACH INCLUDES)	
	8T-8730	1	SOCKET-CONNECTOR (16-GA TO 18-GA)	
	115-1052	9	PIN-CONNECTOR	
			(EACH INCLUDES)	
	9W-0852	1	PIN-CONNECTOR (14-GA TO 16-GA)	
	115-1053	6	SOCKET-CONNECTOR	
			(EACH INCLUDES)	
	9W-0844	1	SOCKET-CONNECTOR (14-GA TO 16-GA)	
E	**119-3662**		TUBE-HEAT SHRINK (10.85-MM DIA) (7-CM)	
E	**125-7874**		TUBE-HEAT SHRINK (5.72-MM DIA) (60-CM)	
E	**125-7875**		TUBE-HEAT SHRINK (7.44-MM DIA) (5-CM)	
	126-1766	16	SOCKET-CONNECTOR (14-GA TO 18-GA)	
			(EACH INCLUDES)	
	9X-3402	1	SOCKET-CONNECTOR (16-GA TO 18-GA)	
	126-1768	1	SOCKET-CONNECTOR (14-GA TO 16-GA)	
	134-2540	2	RESISTOR AS-CONNECTION (3-PIN)	
	130-5300	1	CLIP	
	130-5301	1	CLIP	
	311-0297	1	HARNESS AS-MONITOR	
	102-8801	1	KIT-RECEPTACLE (12-PIN)	
			(INCLUDES RECEPTACLE AS & WEDGE)	
	8T-8737	67	PLUG-SEAL	
E	**125-7874**		TUBE-HEAT SHRINK (5.72-MM DIA) (5-CM)	
	126-1766	14	SOCKET-CONNECTOR (14-GA TO 18-GA)	
			(EACH INCLUDES)	
	9X-3402	1	SOCKET-CONNECTOR (16-GA TO 18-GA)	
	126-1768	1	SOCKET-CONNECTOR (14-GA TO 16-GA)	
B	**141-8061**	1	TAPE	
	147-1444	1	PLUG AS-CONNECTOR (70-PIN)	
	159-9322	1	SEAL-O-RING	
	190-7615	1	KIT-RECEPTACLE (12-PIN)	
			(INCLUDES RECEPTACLE AS & WEDGE)	
	230-7254	13	PIN-CONNECTOR	
	311-0305	1	HARNESS AS-RADIO (GRADE CONTROL)	
	8T-8737	4	PLUG-SEAL	
	115-1053	2	SOCKET-CONNECTOR	
			(EACH INCLUDES)	
	9W-0844	1	SOCKET-CONNECTOR (14-GA TO 16-GA)	
	155-2255	1	KIT-CONNECTING PLUG (12-PIN)	
			(INCLUDES PLUG AS, WEDGE, & INTERFACE SEAL))	
	167-8987	1	PLUG AS-CONNECTOR (8-PIN)	
	180-9340	6	SOCKET-CONNECTOR (14-GA TO 18-GA)	
			(EACH INCLUDES)	

355-2386 **KIT-RETROFIT (*contd.*)** **i05330231**

NOTE	PART NUMBER	QTY	PART NAME 1 2 3 4 5 6 (PRODUCT LEVEL)	SEE PAGE
	9X-3402	1	SOCKET-CONNECTOR (16-GA TO 18-GA)	
	126-1768	1	SOCKET-CONNECTOR (14-GA TO 16-GA)	
	249-9034	1	HARNESS AS-SENSOR (GRADE CONTROL)	
	102-8804	1	KIT-RECEPTACLE (4-PIN)	
			(INCLUDES RECEPTACLE AS & WEDGE)	
	115-1050	2	PIN-CONNECTOR	
			(EACH INCLUDES)	
	351-1885	1	PIN-CONNECTOR	
	115-1052	2	PIN-CONNECTOR	
			(EACH INCLUDES)	
	9W-0852	1	PIN-CONNECTOR (14-GA TO 16-GA)	
	228-3323	1	CLIP-SPRING	
	249-9030	1	HARNESS AS-WIRING (POWER SUPPLY MODULE)	
	3R-9965	1	PLUG AS-CONNECTOR (8-PIN)	
	6D-5257	1	PLUG AS-CONNECTOR (8-PIN)	
	8T-8737	5	PLUG-SEAL	
	144-1636	9	PIN-CONNECTOR (14-GA TO 18-GA)	
			(EACH INCLUDES)	
	126-1767	1	PIN-CONNECTOR (14-GA TO 16-GA)	
	9X-3401	1	PIN-CONNECTOR (16-GA TO 18-GA)	
	102-8801	1	KIT-RECEPTACLE (12-PIN)	
			(INCLUDES RECEPTACLE AS & WEDGE)	
	3R-9965	1	PLUG AS-CONNECTOR (8-PIN)	
	6D-5257	1	PLUG AS-CONNECTOR (8-PIN)	
	8T-8737	5	PLUG-SEAL	
	115-1052	7	PIN-CONNECTOR	
			(EACH INCLUDES)	
	9W-0852	1	PIN-CONNECTOR (14-GA TO 16-GA)	
B	**125-7874**		TUBE-HEAT SHRINK (5.72-MM DIA)	
	249-9049	1	HARNESS AS-WIRING (RECEIVER, LH)	
	102-8806	1	KIT-RECEPTACLE (8-PIN)	
			(INCLUDES RECEPTACLE AS & WEDGE)	
	115-1050	4	PIN-CONNECTOR	
			(EACH INCLUDES)	
	351-1885	1	PIN-CONNECTOR	
	115-1052	4	PIN-CONNECTOR	
			(EACH INCLUDES)	
	9W-0852	1	PIN-CONNECTOR (14-GA TO 16-GA)	
	228-3323	1	CLIP-SPRING	
	249-9050	1	HARNESS AS-WIRING (RECEIVER, RH)	
	8T-8737	3	PLUG-SEAL	
	115-1051	4	SOCKET-CONNECTOR	
			(EACH INCLUDES)	
	351-1886	1	SOCKET-CONNECTOR	
	115-1053	5	SOCKET-CONNECTOR	
			(EACH INCLUDES)	
	9W-0844	1	SOCKET-CONNECTOR (14-GA TO 16-GA)	
	155-2255	1	KIT-CONNECTING PLUG (12-PIN)	
			(INCLUDES PLUG AS, WEDGE, & INTERFACE SEAL)	
	228-3323	1	CLIP-SPRING	
	293-0886	1	HINGE AS	
	255-4261	2	HINGE AS	
	102-8801	1	KIT-RECEPTACLE (12-PIN)	
			(INCLUDES RECEPTACLE AS & WEDGE)	
	190-7615	1	KIT-RECEPTACLE (12-PIN)	
			(INCLUDES RECEPTACLE AS & WEDGE)	
	188-8846	1	LATCH AS	
	226-9169	1	MODULE AS-POWER SUPPLY	
	343-3697	1	MOUNT AS (DISPLAY)	
M	**8T-3490**	1	NUT-WELD (M10X1.5-THD)	

355-2386 **KIT-RETROFIT (*contd.*)** **i05330231**

NOTE	PART NUMBER	QTY	PART NAME 1 2 3 4 5 6 (PRODUCT LEVEL)	SEE PAGE
M	**5C-2890**	4	NUT (M6X1-THD)	
M	**5C-8312**	6	NUT (M4X0.7-THD)	
	132-8487	3	NUT-RING	
	314-3026	1	PIN	
	314-3015	1	PLATE	
	314-3024	1	PLATE	
	249-9077	1	PLATE AS	
M	**8T-3612**	4	NUT-WELD (M8X1.25-THD)	
	257-7501	1	PLATE AS	
M	**8T-3612**	3	NUT-WELD (M8X1.25-THD)	
	211-1084	2	SPACER (16.5X30X8.8-MM THK)	
	343-3689	1	PLATE-MOUNTING	
	343-3698	1	PLATE-MOUNTING	
	8T-8737	24	PLUG-SEAL	
	2S-6251	12	SCREW (4-40X0.75-IN)	
M	**3E-4313**	10	SCREW-BUTTON HEAD (M4X0.7X8-MM)	
M	**131-3539**	3	SCREW-FLAT HEAD (M8X1.25X30-MM)	
M	**138-8454**	6	SCREW-TRUSS HEAD (M4X0.7X10-MM)	
M	**9X-2042**	3	SCREW-TRUSS HEAD (M6X1X12-MM)	
M	**174-8131**	2	SCREW-TRUSS HEAD (M4X0.7X12-MM)	
	198-9706	2	SCREW-TRUSS HEAD (M5X0.8X16-MM)	
	133-6934	1	SPACER (11X20X25-MM THK)	
	7K-1181	65	STRAP-CABLE	
	9X-8256	4	WASHER (6.6X12X2-MM THK)	
	8T-0328	2	WASHER-HARD (5.5X10X1-MM THK)	
	8T-4121	4	WASHER-HARD (11X21X2.5-MM THK)	
	8T-4122	1	WASHER-HARD (17X32X3.5-MM THK)	
	8T-4224	8	WASHER-HARD (8.8X16X2-MM THK)	
	096-5962	12	WASHER-HARD (3.4X7X0.8-MM THK)	

B - USE AS REQUIRED
E - ORDER BY THE CENTIMETER
M - METRIC PART
Y - SEPARATE ILLUSTRATION

<END>

154-7986 LAMP GP-FLOOD

S/N: MMM1-UP; RRR1-UP
12-VOLT
PART OF 269-7696 LIGHTING GP-FLOOD
AN ATTACHMENT

SMCS-1434 **i03776889**

NOTE	REF NO	GRAPHIC REF	PART NUMBER	QTY	PART NAME 1 2 3 4 5 6 (PRODUCT LEVEL)	SEE PAGE
	1	1	**9W-0607**	1	LAMP (12-VOLT, 55-WATT) (FLOODLIGHT)	
	2	1	**155-5354**	1	LENS AS (FLOODLIGHT)	
	3	1	**155-5355**	1	BODY AS (FLOODLIGHT)	
M	4	1	**6V-9189**	1	LOCKNUT (M8X1.25-THD)	
M	5	1	**8T-4195**	1	BOLT (M10X1.5X30-MM)	
M	6	1	**7X-0818**	1	BOLT (M8X1.25X45-MM)	

M - METRIC PART

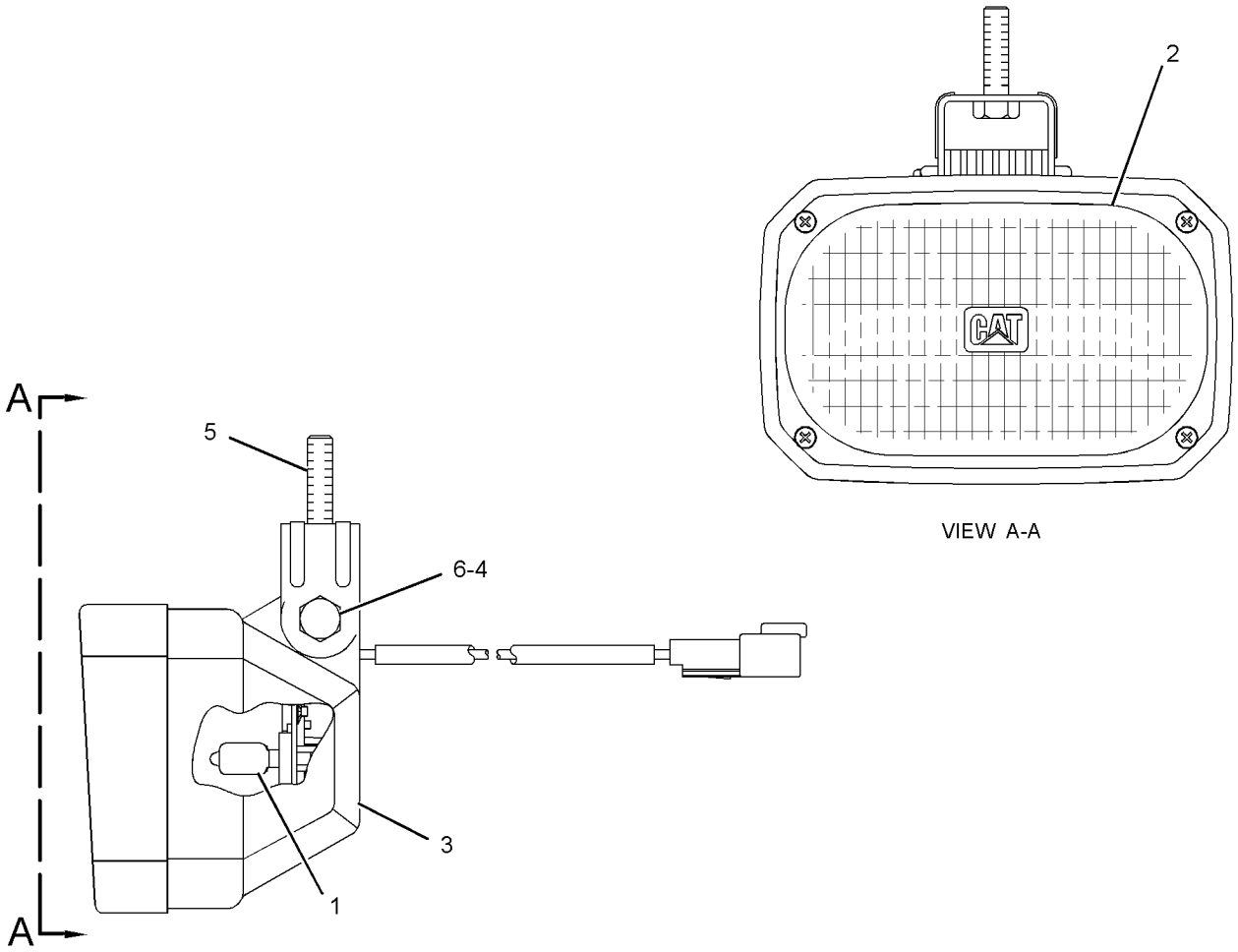

GRAPHIC #1 **<END>** g01408594

240-0101 LAMP GP-FLOOD

S/N: MMM1-UP; RRR1-UP
12-VOLT
PART OF 269-7695 LIGHTING GP-FLOOD, 245-6021, 245-6047 WIRING GP-CAB
AN ATTACHMENT

SMCS-1434 **i03776890**

NOTE	REF NO	GRAPHIC REF	PART NUMBER	QTY	PART NAME 1 2 3 4 5 6 (PRODUCT LEVEL)	SEE PAGE
	1	1	**9W-0607**	1	LAMP (12-VOLT, 55-WATT) (FLOODLIGHT)	
	2	1	**9X-4244**	2	SCREW-SPECIAL (M4X1.79X25-MM)	
	3	1	**202-6611**	1	LENS AS (FLOODLIGHT)	
	4	1	**240-0124**	1	BODY AS (FLOODLIGHT)	
	5	1	**164-7556**	1	BRACKET (LAMP RETAINING)	

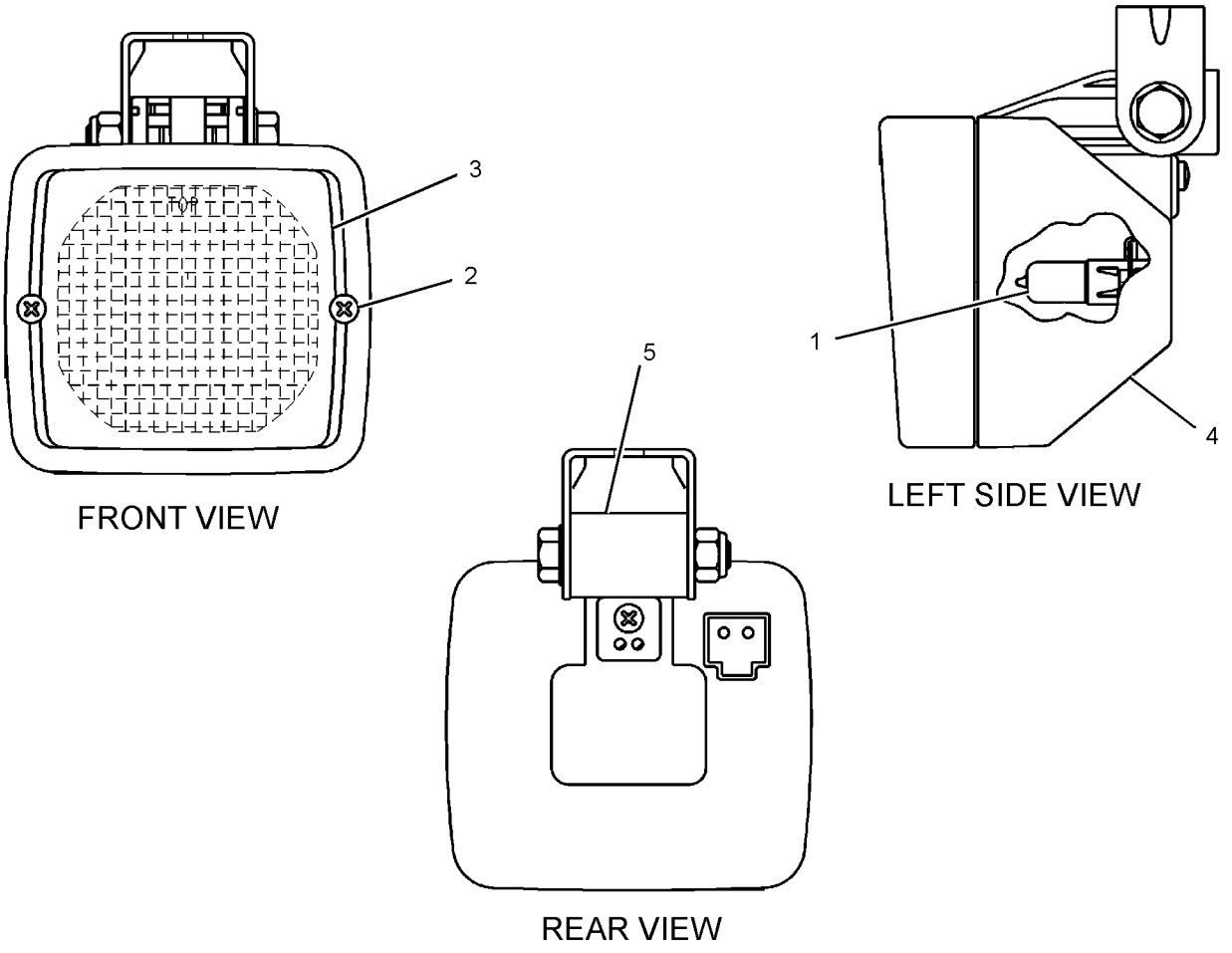

GRAPHIC #1 **<END>** g01333595

240-0102 LAMP GP-FLOOD–CANOPY

S/N: MMM1-UP; RRR1-UP
12-VOLT
PART OF 269-7695, 269-7696 LIGHTING GP-FLOOD, 245-6021, 245-6047 WIRING GP-CAB
AN ATTACHMENT

SMCS-1434 **i03776891**

NOTE	REF NO	GRAPHIC REF	PART NUMBER	QTY	PART NAME 1 2 3 4 5 6 (PRODUCT LEVEL)	SEE PAGE
	1	1	**9W-0607**	1	LAMP (12-VOLT, 55-WATT) (FLOODLIGHT)	
	2	1	**9X-4244**	2	SCREW-SPECIAL (M4X1.79X25-MM)	
	3	1	**202-6614**	1	LENS AS (FLOODLIGHT)	
	4	1	**240-0124**	1	BODY AS (FLOODLIGHT)	
	5	1	**164-7556**	1	BRACKET (LAMP RETAINING)	

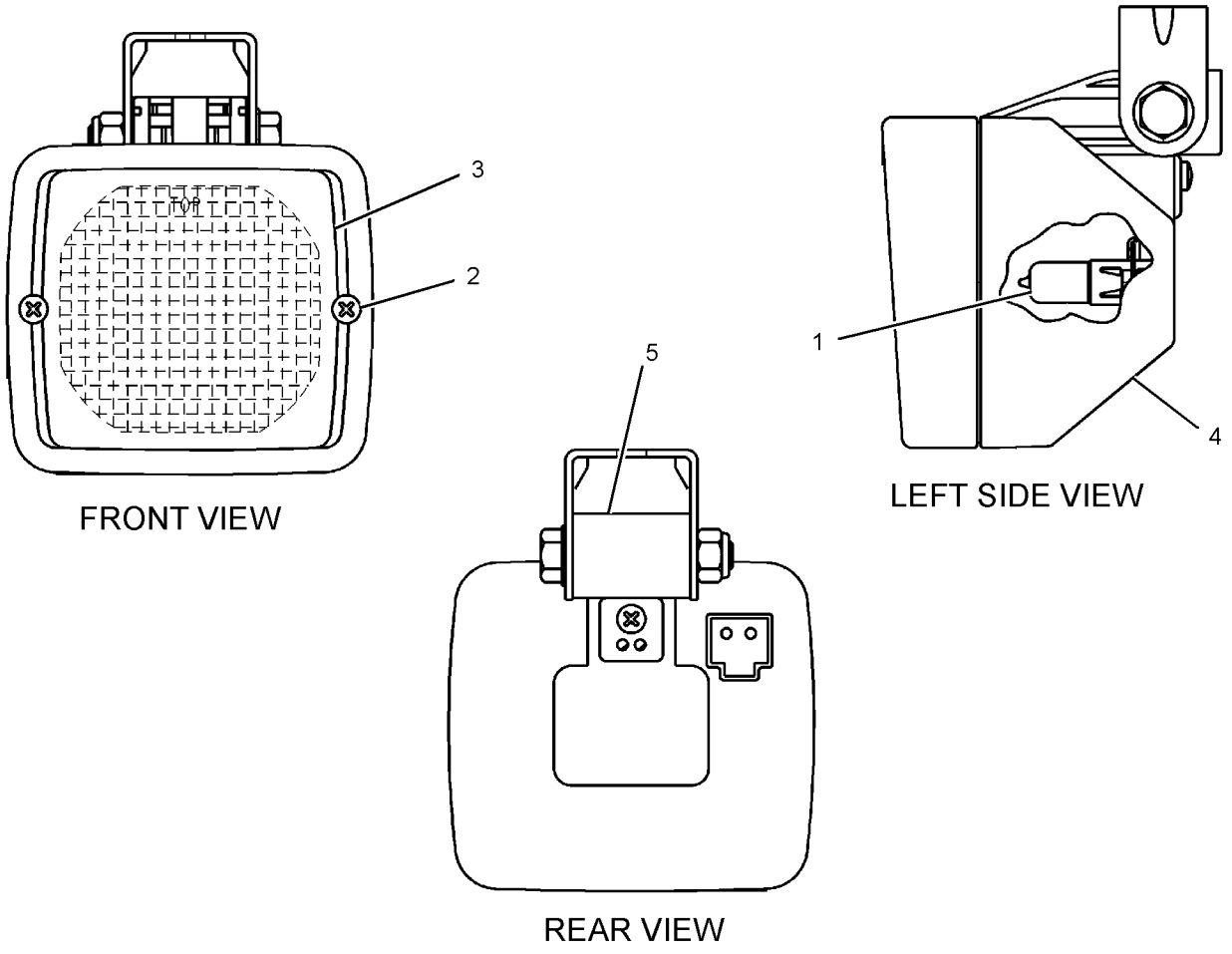

GRAPHIC #1 **<END>** g01341506

269-7695 LIGHTING GP-FLOOD

S/N: MMM1-UP; RRR1-UP
AN ATTACHMENT
TYPE 1

SMCS-1434 **i04419267**

NOTE	REF NO	GRAPHIC REF	PART NUMBER	QTY	PART NAME 1 2 3 4 5 6 (PRODUCT LEVEL)	SEE PAGE
Y	1	1	**240-0101**	2	LAMP GP-FLOOD (12-VOLT)	204
Y	2	1	**240-0102**	4	LAMP GP-FLOOD (12-VOLT)	205
M	3	1	**8T-4189**	4	BOLT (M8X1.25X20-MM)	
	4	1	**8T-4224**	6	WASHER-HARD (8.8X16X2-MM THK)	
M	5	1	**8T-7547**	2	BOLT (M8X1.25X30-MM)	

M - METRIC PART
Y - SEPARATE ILLUSTRATION

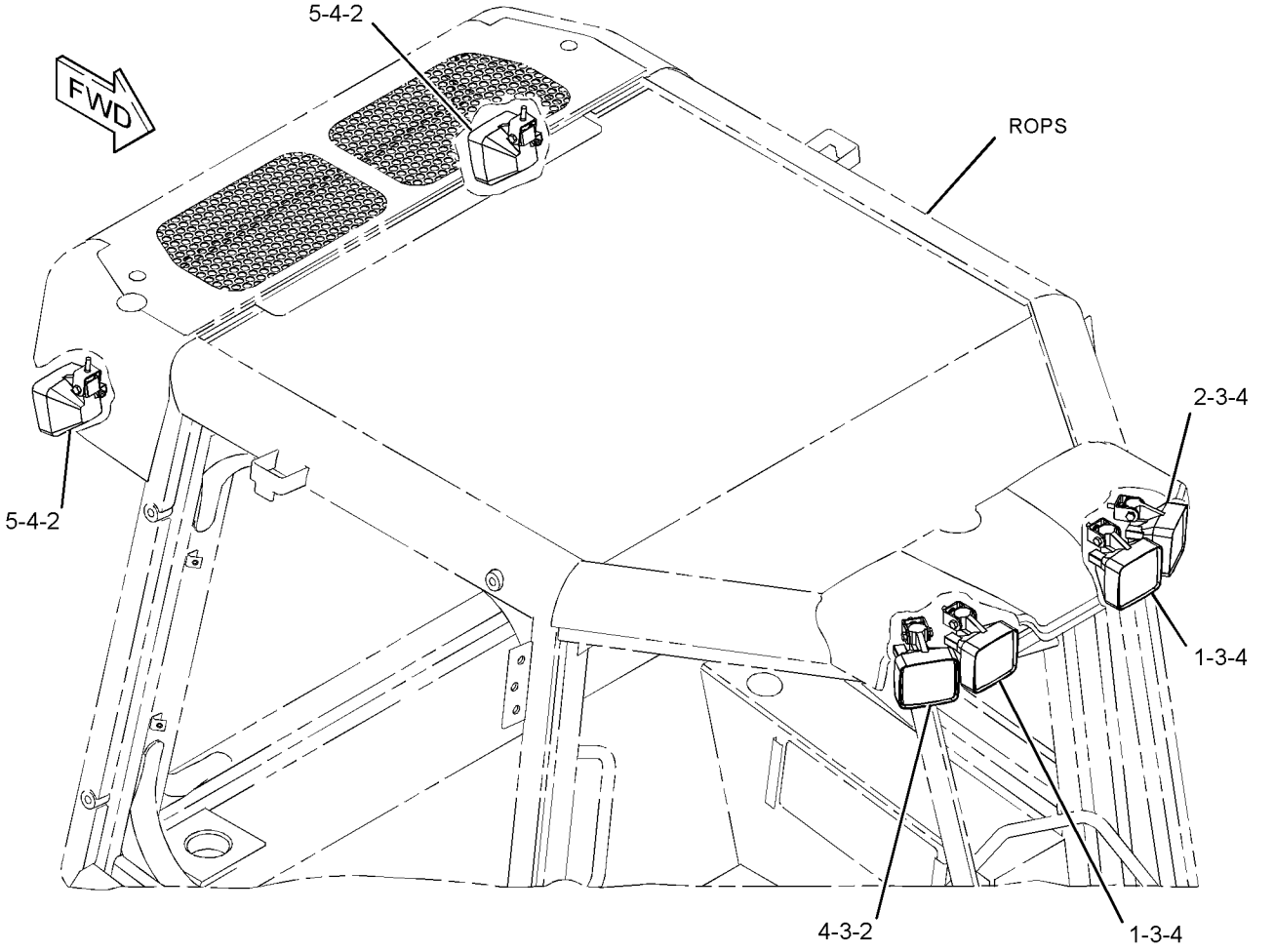

GRAPHIC #1 **<END>** g01406834

269-7695 LIGHTING GP-FLOOD

S/N: MMM1-UP; RRR1-UP
AN ATTACHMENT
TYPE 2

SMCS-1434 **i04419261**

NOTE	REF NO	GRAPHIC REF	PART NUMBER	QTY	PART NAME 1 2 3 4 5 6 (PRODUCT LEVEL)	SEE PAGE
Y	1	1	**240-0101**	2	LAMP GP-FLOOD (12-VOLT)	204
Y	2	1	**240-0102**	4	LAMP GP-FLOOD (12-VOLT)	205
CM	3	1	**8T-4189**	6	BOLT (M8X1.25X20-MM)	
	4	1	**8T-4224**	6	WASHER-HARD (8.8X16X2-MM THK)	

C - CHANGE FROM PREVIOUS TYPE
M - METRIC PART
Y - SEPARATE ILLUSTRATION

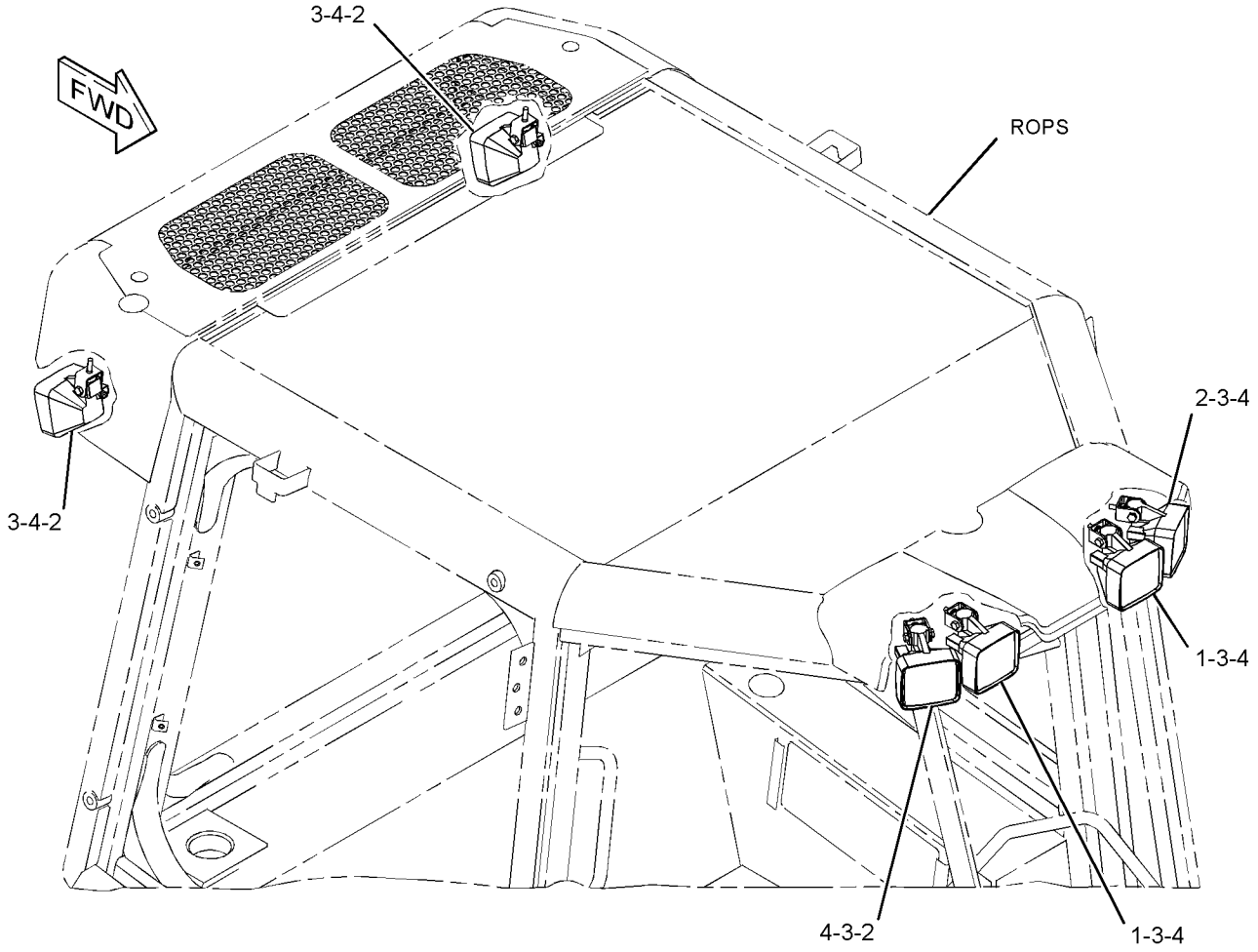

GRAPHIC #1 **<END>** g01441996

269-7696 LIGHTING GP-FLOOD

S/N: MMM1-UP; RRR1-UP
AN ATTACHMENT
TYPE 1

SMCS-1434 **i02865265**

NOTE	REF NO	GRAPHIC REF	PART NUMBER	QTY	PART NAME 1 2 3 4 5 6 (PRODUCT LEVEL)	SEE PAGE
Y	1	1	**154-7986**	2	LAMP GP-FLOOD (12-VOLT)	203
Y	2	1	**240-0102**	1	LAMP GP-FLOOD (12-VOLT)	205
M	3	1	**6V-7744**	2	LOCKNUT (M10X1.5-THD)	
	4	1	**8T-4121**	2	WASHER-HARD (11X21X2.5-MM THK)	
	5	1	**8T-4224**	1	WASHER-HARD (8.8X16X2-MM THK)	
M	6	1	**8T-4189**	1	BOLT (M8X1.25X20-MM)	

M - METRIC PART
Y - SEPARATE ILLUSTRATION

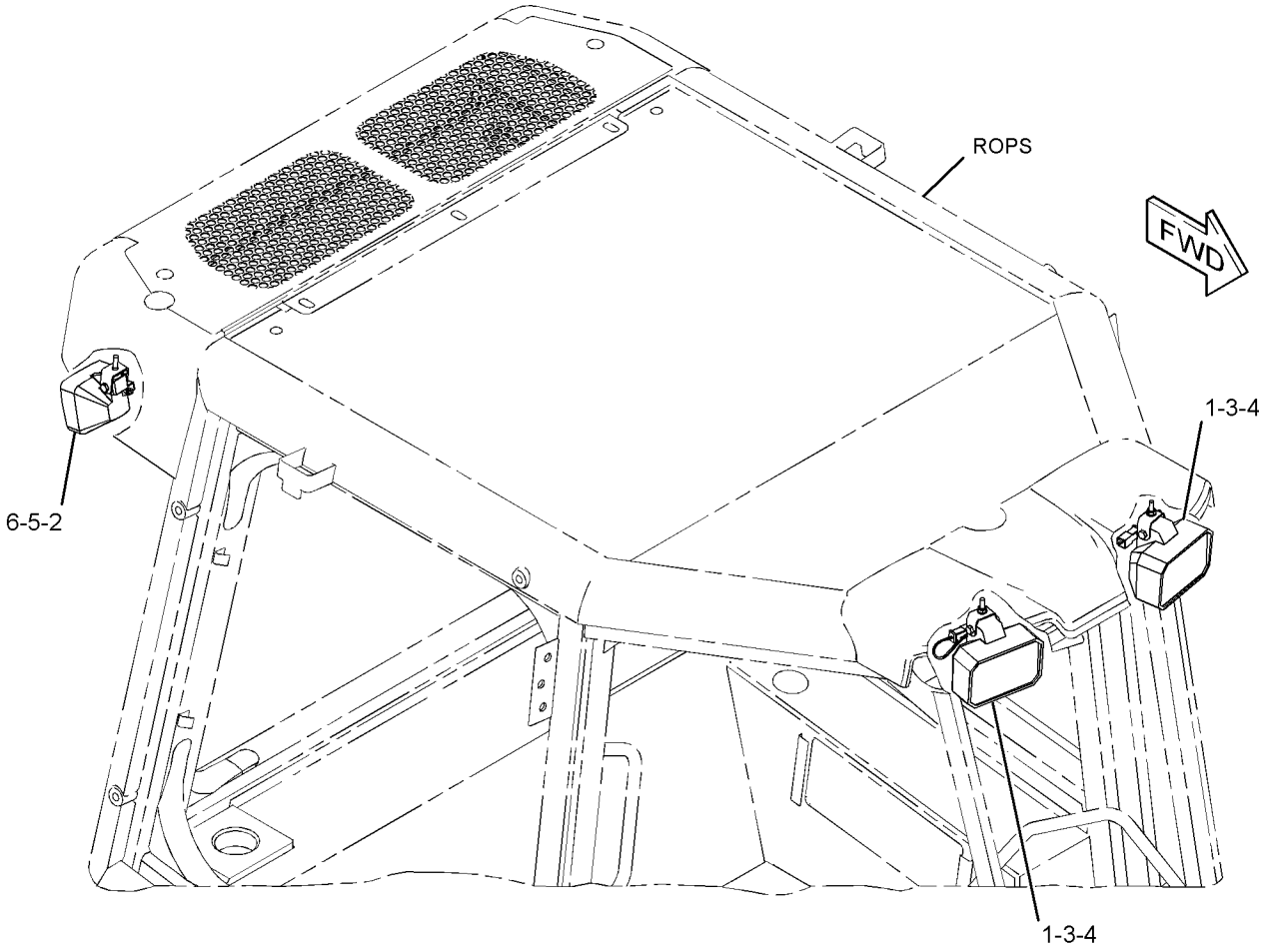

GRAPHIC #1 **<END>** g01406866

269-7696 LIGHTING GP-FLOOD

S/N: MMM1-UP; RRR1-UP
AN ATTACHMENT
TYPE 2

SMCS-1434 **i02895159**

NOTE	REF NO	GRAPHIC REF	PART NUMBER	QTY	PART NAME 1 2 3 4 5 6 (PRODUCT LEVEL)	SEE PAGE
Y	1	1	**154-7986**	2	LAMP GP-FLOOD (12-VOLT)	203
CY	2	1	**240-0102**	2	LAMP GP-FLOOD (12-VOLT)	205
M	3	1	**6V-7744**	2	LOCKNUT (M10X1.5-THD)	
	4	1	**8T-4121**	2	WASHER-HARD (11X21X2.5-MM THK)	
C	5	1	**8T-4224**	2	WASHER-HARD (8.8X16X2-MM THK)	
CM	6	1	**8T-4189**	2	BOLT (M8X1.25X20-MM)	

C - CHANGE FROM PREVIOUS TYPE
M - METRIC PART
Y - SEPARATE ILLUSTRATION

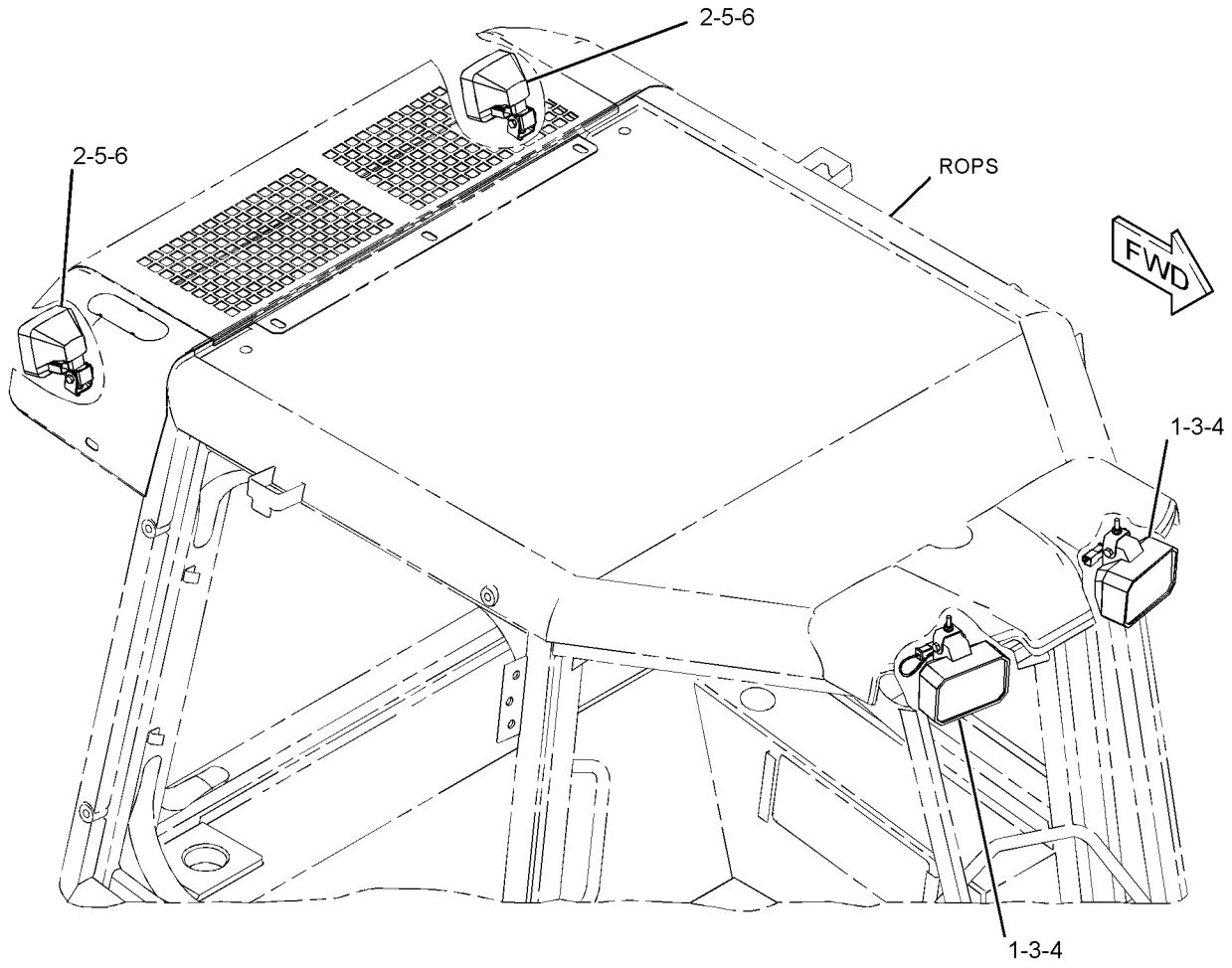

GRAPHIC #1 **<END>** g01441998

226-2333 MAST GP—LASER RECEIVER

S/N: MMM1-UP; RRR1-UP

PART OF 317-6527 GRADE CONTROL AR, 292-0293, 292-0312 GRADE CONTROL AR-LASER

SMCS-79NS **i03588632**

NOTE	PART NUMBER	QTY	PART NAME 1 2 3 4 5 6 (PRODUCT LEVEL)	SEE PAGE
	256-5732	1	HARNESS AS-WIRING (MAST)	
	256-4580	1	MOTOR AS	
	256-4579	1	SCREW AS	
	256-5720	1	SWITCH AS (UPPER LIMIT)	
	256-5721	1	SWITCH AS (LOWER LIMIT)	
	256-4581	1	BUSHING	
	256-4582	1	GEAR (141-TEETH)	
	256-5722	1	GEAR (15-TEETH)	
	260-6480	1	RING-SNAP	
	260-6478	1	SEAL-O-RING	
	256-5719	1	SEAL-WIPER	
			AVAILABLE REPAIR KIT(S):	
	295-8930	1	KIT-CIRCUIT BOARD	
			(INCLUDES BOARD AS, SCREWS, LOCKWASHERS, LOCTITE & GREASE)	
A	**245-4747**	1	KIT-ADAPTER (MAST)	
			(INCLUDES ADAPTER, BOLTS & WASHER)	
			(FOR USE WITH LR400 RECEIVER)	

A - NOT PART OF THIS GROUP

<END>

292-0290 MAST GP—SATELLITE RECEIVER

S/N: MMM1-UP; RRR1-UP

PART OF 290-5570 GRADE CONTROL AR-SATELLITE

SMCS-79NS **i02732261**

NOTE	PART NUMBER	QTY	PART NAME 1 2 3 4 5 6 (PRODUCT LEVEL)	SEE PAGE
Y	*292-0303*	1	MOUNTING GP-MAST (SATELLITE RECEIVER)	927
	248-1500	1	MAST AS	

Y - SEPARATE ILLUSTRATION

<END>

346-9800 MOUNTING GP-CONNECTOR—GRADE CONTROL

S/N: MMM1-UP; RRR1-UP

FIELD INSTALLATION

SMCS-1408 **i03997881**

NOTE	REF NO	GRAPHIC REF	PART NUMBER	QTY	PART NAME 1 2 3 4 5 6 (PRODUCT LEVEL)	SEE PAGE
	1	1	**261-0166**	1	COVER AS	
	2	1	**267-8958**	1	PLATE	
	3	1	**326-9197**	1	PLATE	
M	4	1	**8T-4138**	4	BOLT (M6X1X20-MM)	
M	5	1	**8T-4139**	4	BOLT (M12X1.75X30-MM)	
	6	1	**8T-4223**	4	WASHER-HARD (13.5X25.5X3-MM THK)	
M	7	1	**8T-6868**	4	BOLT (M12X1.75X80-MM)	
	8	1	**9X-8256**	4	WASHER (6.6X12X2-MM THK)	

M - METRIC PART

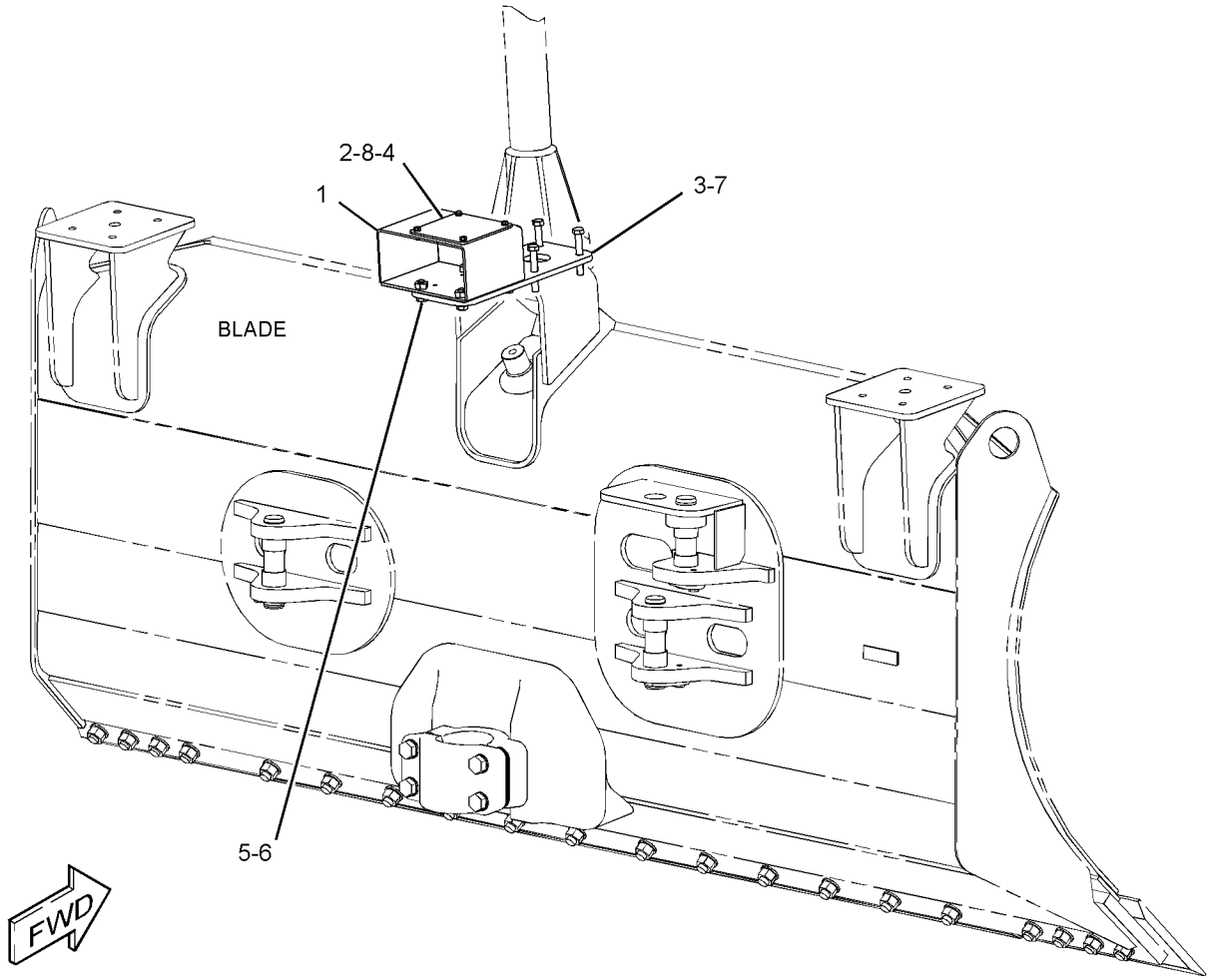

GRAPHIC #1 **<END>** g02323319

255-4260 MOUNTING GP-GRADE CONTROL

S/N: MMM1-745; RRR1-553
PART OF 296-5755, 296-5756 GRADE CONTROL AR
AN ATTACHMENT

SMCS-7220 **i02847072**

NOTE	REF NO	GRAPHIC REF	PART NUMBER	QTY	PART NAME 1 2 3 4 5 6 (PRODUCT LEVEL)	SEE PAGE
	1	1	**9M-5617**	1	GROMMET	
	2	1	**255-4261**	2	HINGE AS	
	3	1	**283-9900**	1	LATCH AS (COMPRESSION)	
	4	1	**283-9901**	1	CAM	
	5	1	**314-2573**	1	BASE AS	
		1	**314-2574**	2	INSERT-THREADED	
	6	1	**314-3011**	1	BRACKET AS (LH)	
	7	1	**314-3012**	1	BRACKET AS (RH)	
	8	1	**314-3013**	1	MOUNT AS (DISPLAY)	
	9	1	**314-3014**	1	COVER	
	10	1	**314-3026**	1	PIN	
M	11	1	**174-8131**	2	SCREW-TRUSS HEAD (M4X0.7X12-MM)	
	12	1	**198-9706**	2	SCREW-TRUSS HEAD (M5X0.8X16-MM)	
M	13	1	**3E-4313**	10	SCREW-BUTTON HEAD (M4X0.7X8-MM)	
M	14	1	**5C-2890**	4	NUT (M6X1-THD)	
M	15	1	**5C-8312**	6	NUT (M4X0.7-THD)	
M	16	1	**6V-4298**	4	BOLT (M5X0.8X16-MM)	
M	17	1	**7I-2272**	4	BOLT (M5X0.8X12-MM)	
M	18	1	**7X-2619**	4	BOLT (M6X1X10-MM)	
M	19	1	**9X-2042**	3	SCREW-TRUSS HEAD (M6X1X12-MM)	
	20	1	**9X-8256**	4	WASHER (6.6X12X2-MM THK)	
E	21	1	**3E-3892**		SEAL (19-CM)	
E	22	1	**8C-7332**		TRIM-EDGE (30-CM)	

E - ORDER BY THE CENTIMETER
M - METRIC PART

255-4260 **MOUNTING GP-GRADE CONTROL (*contd.*)** **i02847072**

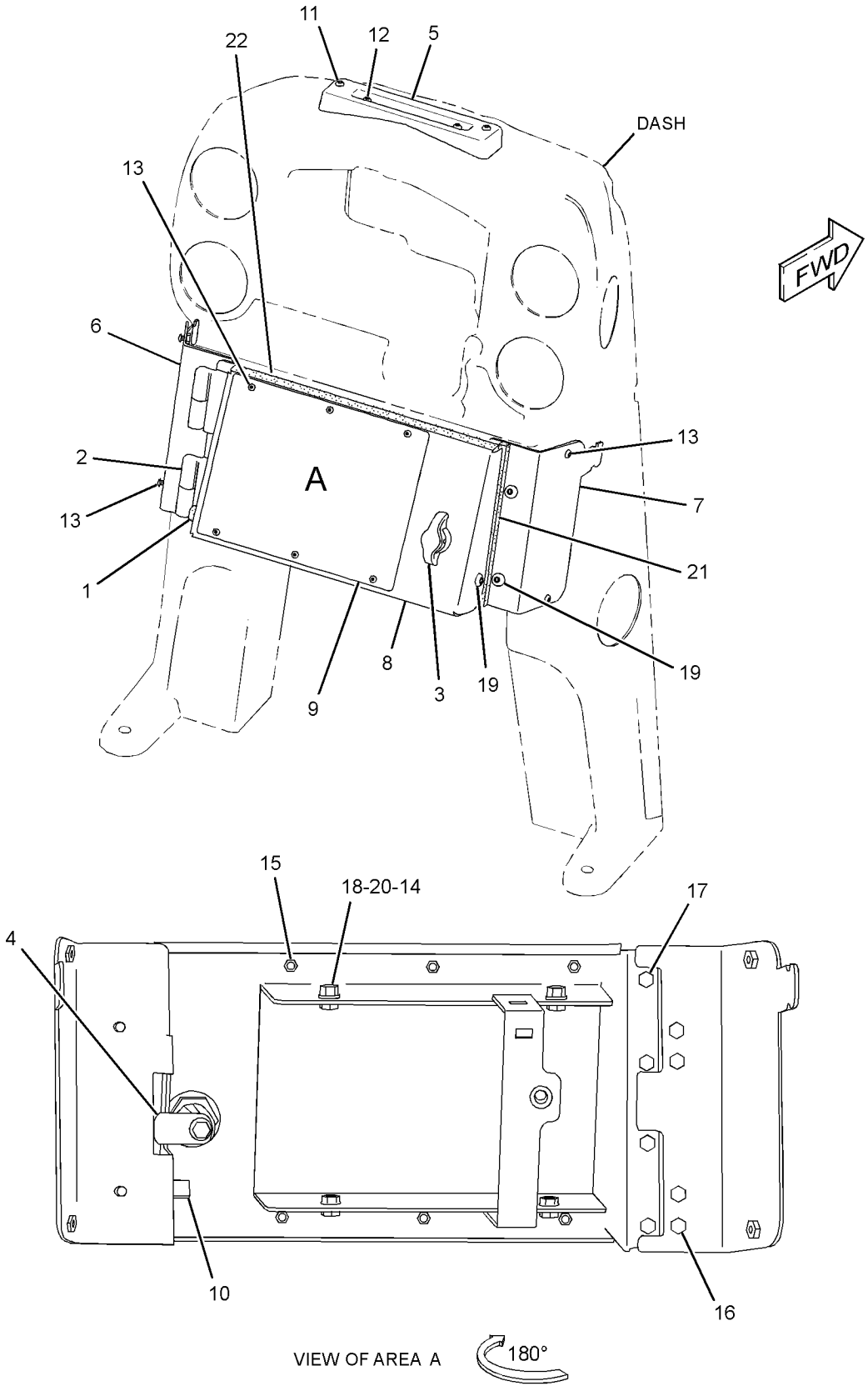

GRAPHIC #1 **<END>** g01419827

255-4260 MOUNTING GP-GRADE CONTROL

S/N: MMM746-UP; RRR554-UP
PART OF 296-5755, 296-5756 GRADE CONTROL AR
AN ATTACHMENT

SMCS-7220 **i04908618**

NOTE	REF NO	GRAPHIC REF	PART NUMBER	QTY	PART NAME 1 2 3 4 5 6 (PRODUCT LEVEL)	SEE PAGE
C	1	1	**188-8846**	1	LATCH AS	
	2	1	**255-4261**	1	HINGE AS	
	3	1	**283-9901**	1	CAM	
C	4	1	**293-0886**	1	HINGE AS	
	5	1	**314-2573**	1	BASE AS	
	6	1	**314-3011**	1	BRACKET AS (LH)	
M		1	**9X-2032**	2	NUT-WELD (M4X0.7-THD)	
	7	1	**314-3012**	1	BRACKET AS (RH)	
M		1	**9X-2032**	2	NUT-WELD (M4X0.7-THD)	
	8	1	**314-3026**	1	PIN	
C	9	1	**343-3688**	1	COVER	
C	10	1	**343-3689**	1	PLATE-MOUNTING	
C	11	1	**343-3690**	1	BRACKET-MOUNTING	
C	12	1	**343-3697**	1	MOUNT AS (DISPLAY)	
C	13	1	**343-3698**	1	PLATE-MOUNTING	
CM	14	1	**138-8454**	6	SCREW-TRUSS HEAD (M4X0.7X10-MM)	
M	15	1	**174-8131**	2	SCREW-TRUSS HEAD (M4X0.7X12-MM)	
	16	1	**198-9706**	2	SCREW-TRUSS HEAD (M5X0.8X16-MM)	
CM	17	1	**3E-4313**	4	SCREW-BUTTON HEAD (M4X0.7X8-MM)	
M	18	1	**5C-2890**	4	NUT (M6X1-THD)	
M	19	1	**5C-8312**	6	NUT (M4X0.7-THD)	
M	20	1	**7I-2273**	4	BOLT (M5X0.8X16-MM)	
CM	21	1	**7I-2272**	2	BOLT (M5X0.8X12-MM)	
CM	22	1	**8T-0286**	2	BOLT (M5X0.8X8-MM)	
C	23	1	**8T-0328**	2	WASHER-HARD (5.5X10X1-MM THK)	
CM	24	1	**8T-4171**	4	BOLT (M6X1X12-MM)	
M	25	1	**9X-2042**	3	SCREW-TRUSS HEAD (M6X1X12-MM)	
	26	1	**9X-8256**	4	WASHER (6.6X12X2-MM THK)	
E	27	1	**3E-3892**		SEAL (19-CM)	
CE	28	1	**8C-7332**		TRIM-EDGE (32-CM)	

C - CHANGE FROM PREVIOUS TYPE
E - ORDER BY THE CENTIMETER
M - METRIC PART

255-4260 **MOUNTING GP-GRADE CONTROL (*contd.*)** **i04908618**

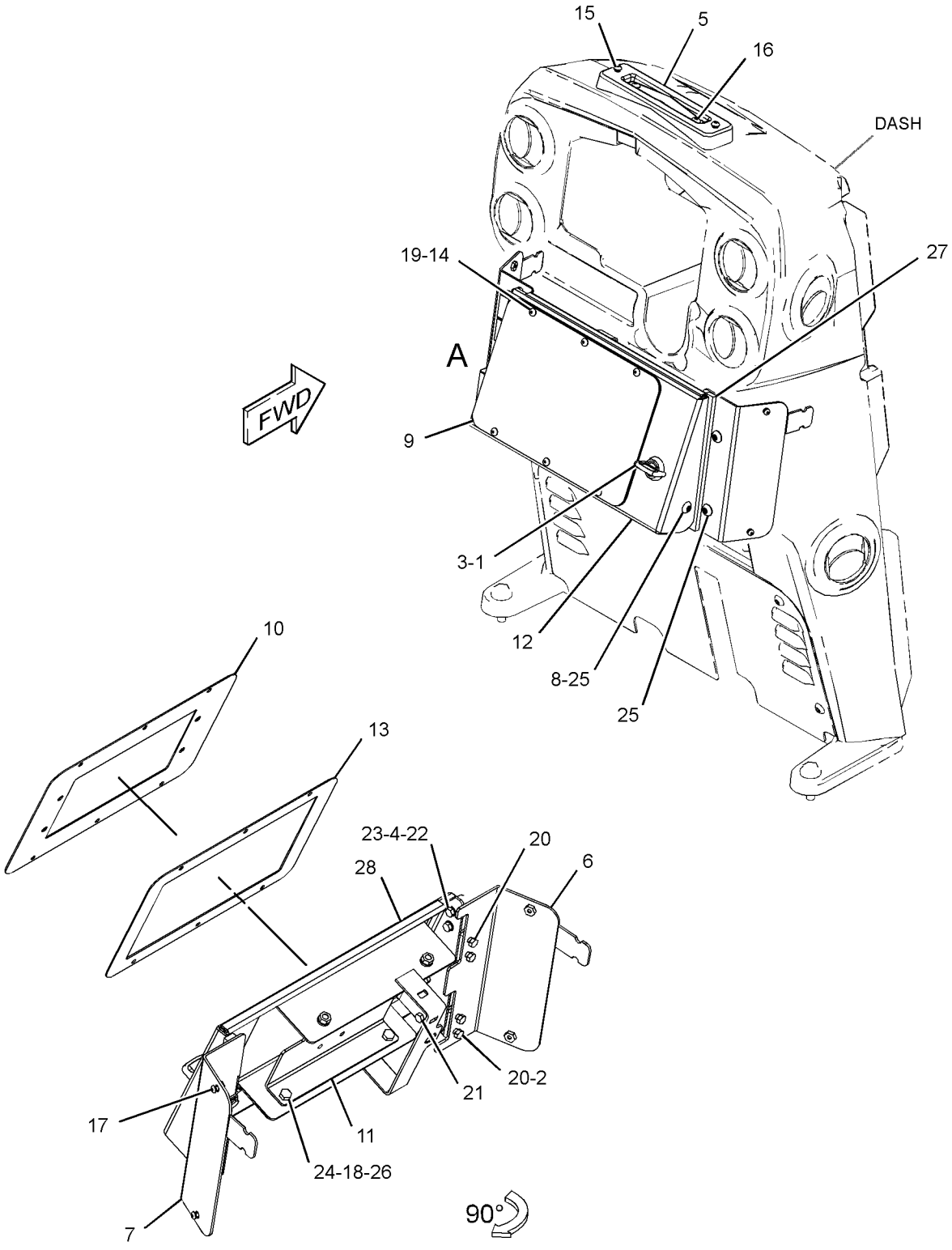

VIEW OF AREA A
(PARTS REMOVED FOR CLARITY AND EXPLODED)

GRAPHIC #1 **<END>** g03324933

292-0296 MOUNTING GP-GRADE CONTROL–ACCUGRADE GPS

S/N: MMM1-UP; RRR1-UP

PART OF 317-6527 GRADE CONTROL AR, 290-5570, 290-5571, 292-0280, 347-0915, 347-0916 GRADE CONTROL AR-SATELLITE

SMCS-7220 **i03776894**

NOTE	PART NUMBER	QTY	PART NAME 1 2 3 4 5 6 (PRODUCT LEVEL)	SEE PAGE
Y	*259-4746*	1	MOUNTING GP-RADIO (GRADE CONTROL)	801
	230-5008	3	PLUG AS-CONNECTOR (4-PIN)	
			(EACH INCLUDES)	
	264-7031	1	SEAL-CONNECTOR	
M	**143-6020**	2	BOLT-SOCKET HEAD (M6X1X75-MM)	
	2V-8259	3	GROMMET	
	2Y-5429	3	GROMMET	
M	**8T-2659**	6	LOCKNUT (M4X0.7-THD)	
M	**5C-2890**	2	NUT (M6X1-THD)	
	8T-8737	3	PLUG-SEAL	
M	**9X-1046**	8	SCREW (M4X0.7X18-MM)	
	104-2091	6	SCREW-FLAT HEAD (6-20X0.5-IN)	
	9X-3402	9	SOCKET-CONNECTOR (16-GA TO 18-GA)	
	4B-4863	12	WASHER (4.7X11X1.2-MM THK)	
	9X-8256	2	WASHER (6.6X12X2-MM THK)	

M - METRIC PART
Y - SEPARATE ILLUSTRATION

<END>

234-9970 MOUNTING GP-RECEIVER–MAST

S/N: MMM1-UP; RRR1-UP

PART OF 317-6527 GRADE CONTROL AR, 292-0293, 292-0312 GRADE CONTROL AR-LASER

SMCS-7009, 7010 **i02294016**

NOTE	REF NO	GRAPHIC REF	PART NUMBER	QTY	PART NAME 1 2 3 4 5 6 (PRODUCT LEVEL)	SEE PAGE
	1	2	**253-8967**	1	ROD-THREADED	
	2	2	**253-8969**	1	BRACKET	
	3	2	**237-4132**	4	MOUNT-FLEXIBLE	
	4	1	**237-4133**	2	GASKET	
	5	1	**237-4134**	1	CLAMP	
	6	1	**237-4135**	1	MOUNT-FLEXIBLE	
	7	2	**237-7252**	1	BOLT (3/4-16X1.25-IN)	
	8	2	**3B-4508**	4	LOCKWASHER	
	9	2	**3B-4512**	1	LOCKWASHER	
	10	2	**4M-6425**	2	BOLT (5/16-18X1-IN)	
	11	2	**5W-1437**	2	LOCKWASHER	
	12	2	**8T-9383**	2	BOLT (1/2-13X0.75-IN)	
	13	2	**9B-0453**	2	LOCKWASHER	
	14	2	**253-8981**	4	ROD-THREADED	
	15	2	**6V-8188**	6	NUT (1/2-13-THD)	

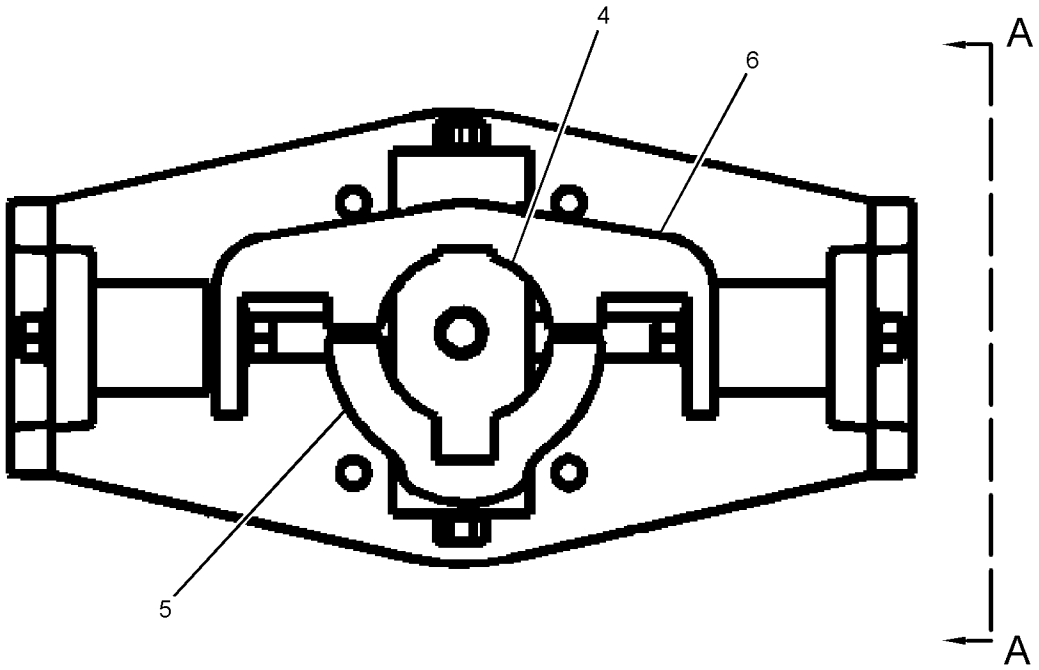

REFER TO ALL ILLUSTRATIONS OF
THIS GROUP FOR AUXILIARY VIEWS

GRAPHIC #1 g01186401

234-9970 **MOUNTING GP-RECEIVER (*contd.*)** **i02294016**

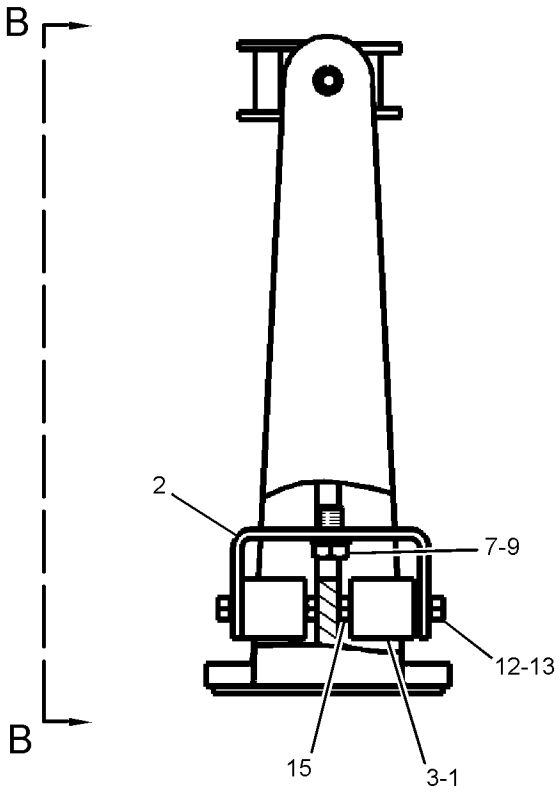

VIEW A-A

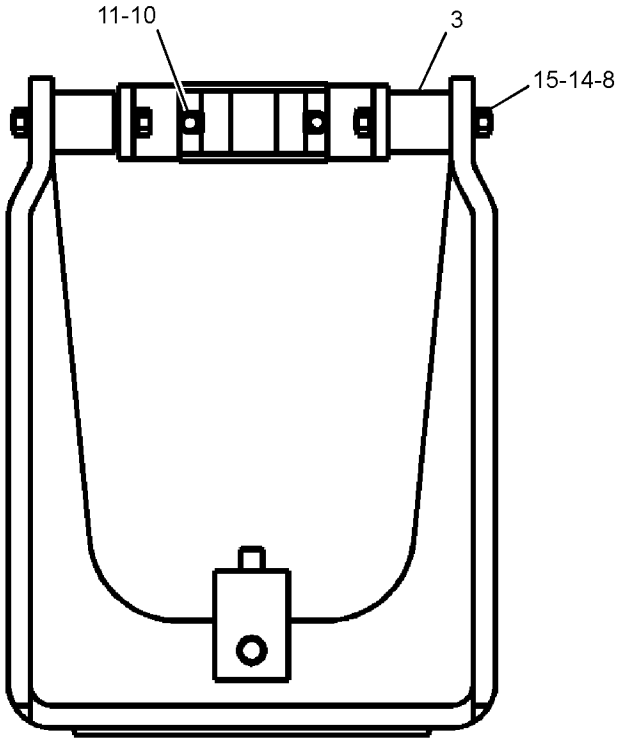

VIEW B-B

GRAPHIC #2 **<END>** g01186365

249-9023 PANEL GP-FUSE

S/N: MMM1-UP; RRR1-UP
PART OF 245-6020 WIRING GP-PLATFORM
TYPE 1

SMCS-1417 **i04509273**

NOTE	REF NO	GRAPHIC REF	PART NUMBER	QTY	PART NAME 1 2 3 4 5 6 (PRODUCT LEVEL)	SEE PAGE
	1	1	**7K-1181**	8	STRAP-CABLE	
	2	1	**116-7471**	1	PULLER-MINIFUSE	
	3	1	**171-2212**	1	CIRCUIT BREAKER AS (105-AMPERE) (MAIN)	
		1	**8T-0122**	2	NUT-FULL (1/4-28-THD)	
		1	**253-2111**	2	LOCKWASHER	
		1	**4E-5724**	2	WASHER (7X12X1-MM THK)	
	4	1	**172-4863**	1	JUNCTION BLOCK	
	5	1	**241-8367**	1	SWITCH AS-MAGNETIC (12-VDC) (MAIN POWER RELAY)	
		1	**155-2270**	1	KIT-CONNECTING PLUG (2-PIN)	
					(INCLUDES PLUG AS, WEDGE & INTERFACE SEAL)	
		1	**4F-2294**	2	NUT-JAM (5/16-24-THD)	
		1	**8T-8730**	2	SOCKET-CONNECTOR (16-GA TO 18-GA)	
	6	1	**245-6034**	1	BAR-BUS	
	7	1	**245-6036**	1	PLATE AS	
	8	1	**249-9020**	1	BAR-BUS	
	9	1	**249-9021**	1	BOX AS-FUSE	
	10	1	**249-9026**	1	HARNESS AS-PANEL (FUSE)	
		1	**124-9636**	2	BLOCK-MINIFUSE	
		1	**173-3175**	2	CIRCUIT BREAKER AS (20-AMPERE)	
		1	**264-5425**	1	CAP AS-PROTECTION	
		1	**113-8490**	8	FUSE (10-AMPERE)	
		1	**113-8491**	13	FUSE (15-AMPERE)	
		1	**113-8492**	5	FUSE (20-AMPERE)	
		1	**124-9637**	2	LOCK-MINIFUSE	
		1	**211-0052**	2	NUT (1-11/16-18-THD)	
		1	**9X-3401**	8	PIN-CONNECTOR (16-GA TO 18-GA)	
		1	**8T-8729**	8	PIN-CONNECTOR (16-GA TO 18-GA)	
		1	**9W-0852**	4	PIN-CONNECTOR (14-GA TO 16-GA)	
		1	**262-9151**	2	PIN-CONNECTOR (12-GA TO 14-GA)	
		1	**9X-1054**	3	PLUG AS-CONNECTOR (4-PIN)	
		1	**8T-8737**	6	PLUG-SEAL	
		1	**102-8802**	1	KIT-RECEPTACLE (2-PIN)	
					(INCLUDES RECEPTACLE AS & WEDGE)	
		1	**197-7259**	1	RECEPTACLE AS-CONNECTOR (19-PIN)	
		1	**225-3861**	1	RECEPTACLE AS (31-PIN)	
		1	**9W-1951**	1	RECEPTACLE-CONNECTOR (9-PIN)	
		1	**8T-8730**	10	SOCKET-CONNECTOR (16-GA TO 18-GA)	
		1	**9W-0844**	20	SOCKET-CONNECTOR (14-GA TO 16-GA)	
		1	*128-4168*	1	TERMINAL AS	
		1	**6H-3592**	1	TERMINAL-RING (6-GA TO 8-GA, 5/16-IN SCREW)	
E		1	**6V-9023**		TUBE-HEAT SHRINK (12.7-MM DIA) (4-CM)	
		1	*128-4175*	1	TERMINAL AS	
		1	**9F-3965**	1	TERMINAL (6-GA, 1/4-IN SCREW)	
E		1	**8T-5346**		TUBE-HEAT SHRINK (19.1-MM DIA) (4-CM)	
		1	**2L-8052**	2	TERMINAL-RING (6-GA, 3/8-IN SCREW)	
		1	**116-4160**	13	TERMINAL-BLADE (12-GA TO 14-GA)	
		1	**116-4161**	10	TERMINAL-BLADE (16-GA TO 18-GA)	
		1	**113-5100**	8	TERMINAL-BUS	
		1	**9X-1056**	12	TERMINAL-RECEPTACLE (14-GA TO 16-GA)	
E		1	**125-7874**		TUBE-HEAT SHRINK (5.72-MM DIA) (40-CM)	
E		1	**125-7875**		TUBE-HEAT SHRINK (7.44-MM DIA) (5-CM)	
		1	**128-4249**	2	LOCKWASHER	
	11	1	**269-7647**	1	BAR-BUS	
	12	1	**269-7654**	1	PLATE AS	
	13	1	**269-7662**	1	PLATE AS	

249-9023 **PANEL GP-FUSE (*contd.*)** **i04509273**

NOTE	REF NO	GRAPHIC REF	PART NUMBER	QTY	PART NAME 1 2 3 4 5 6 (PRODUCT LEVEL)	SEE PAGE
	14	1	**269-7690**	1	SEAL	
	15	1	**115-1615**	1	RELAY AS (12-VOLT) (REAR LIGHTS)	
	15A	1	**115-1615**	1	RELAY AS (12-VOLT) (FRONT LIGHTS)	
	15B	1	**115-1615**	1	RELAY AS (12-VOLT) (HORN)	
M	16	1	**191-8920**	3	BOLT-SOCKET HEAD (M6X1X12-MM)	
	17	1	**311-0312**	1	FILM-IDENTIFICATION (FUSE PANEL)	
	18	1	**269-7661**	1	FILM-IDENTIFICATION (ELECTRICAL POWER)	
M	19	1	**5C-2890**	3	NUT (M6X1-THD)	
	20	1	**6V-7978**	2	SCREW-MACHINE (10-32X0.375-IN)	
M	21	1	**7X-2548**	2	BOLT (M12X1.75X16-MM)	
	22	1	**8T-4121**	1	WASHER-HARD (11X21X2.5-MM THK)	
M	23	1	**8T-4138**	4	BOLT (M6X1X20-MM)	
M	24	1	**8T-4171**	2	BOLT (M6X1X12-MM)	
M	25	1	**8T-4191**	1	BOLT (M10X1.5X16-MM)	
	26	1	**8T-4205**	2	WASHER-HARD (7.2X14.5X2-MM THK)	
	27	1	**8T-4223**	2	WASHER-HARD (13.5X25.5X3-MM THK)	
M	28	1	**9X-2043**	2	SCREW-TRUSS HEAD (M6X1X14-MM)	
	29	1	**9X-8256**	7	WASHER (6.6X12X2-MM THK)	
E	30	1	**103-2543**		SEAL (3-CM)	

E - ORDER BY THE CENTIMETER
M - METRIC PART

249-9023 **PANEL GP-FUSE (*contd.*)** **i04509273**

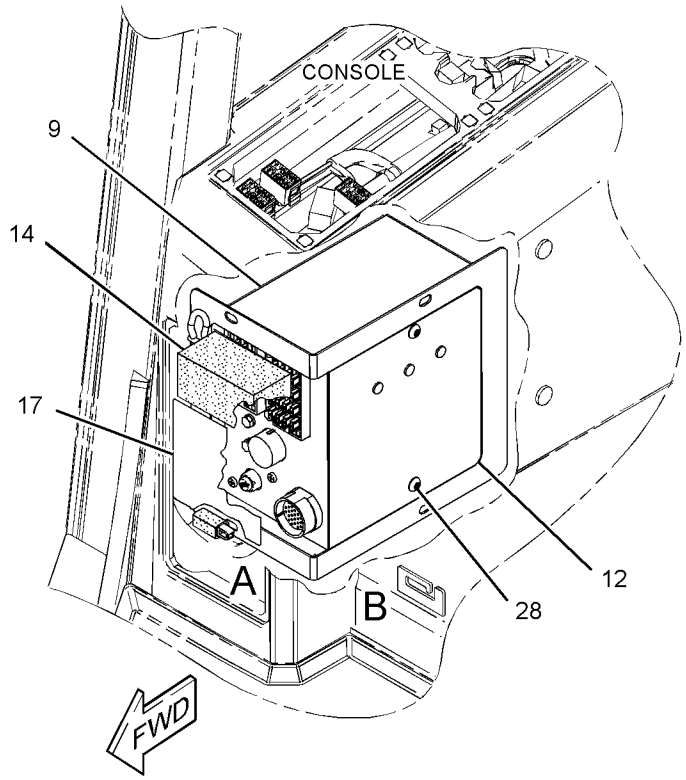

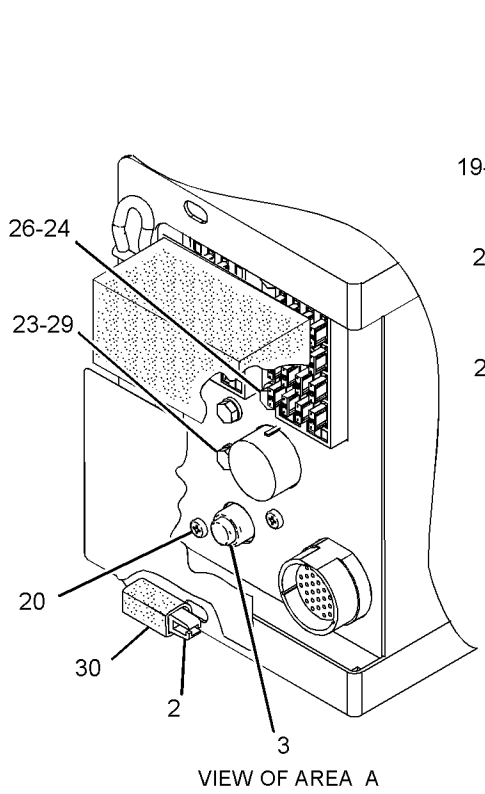

VIEW OF AREA A

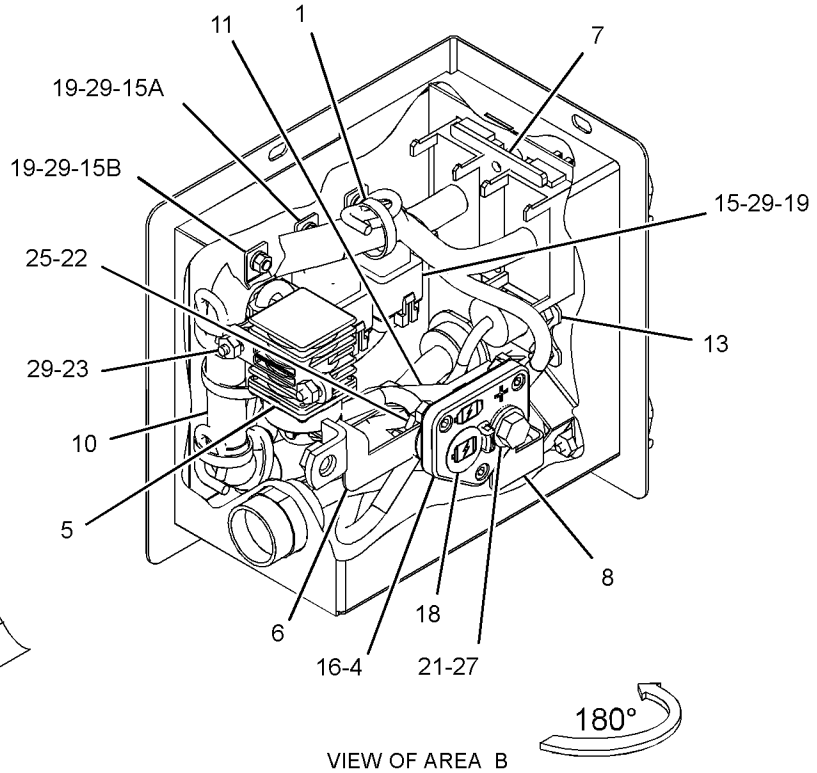

VIEW OF AREA B

GRAPHIC #1 **<END>** g02712074

249-9023 PANEL GP-FUSE

S/N: MMM1-UP; RRR1-UP
PART OF 245-6021 WIRING GP-CAB, 245-6020 WIRING GP-PLATFORM
ALSO AN ATTACHMENT
TYPE 2

SMCS-1417 **i04509274**

NOTE	REF NO	GRAPHIC REF	PART NUMBER	QTY	PART NAME 1 2 3 4 5 6 (PRODUCT LEVEL)	SEE PAGE
	1	1	**7K-1181**	8	STRAP-CABLE	
	2	1	**116-7471**	1	PULLER-MINIFUSE	
	3	1	**171-2212**	1	CIRCUIT BREAKER AS (105-AMPERE) (MAIN)	
		1	**4E-5724**	2	WASHER (7X12X1-MM THK)	
		1	**8T-0122**	2	NUT-FULL (1/4-28-THD)	
		1	**253-2111**	2	LOCKWASHER	
	4	1	**172-4863**	1	JUNCTION BLOCK	
	5	1	**241-8367**	1	SWITCH AS-MAGNETIC (12-VDC) (MAIN POWER RELAY)	
		1	**155-2270**	1	KIT-CONNECTING PLUG (2-PIN)	
					(INCLUDES PLUG AS, WEDGE & INTERFACE SEAL)	
		1	**4F-2294**	2	NUT-JAM (5/16-24-THD)	
		1	**186-3736**	2	SOCKET-CONNECTOR (16-GA TO 18-GA)	
	6	1	**245-6034**	1	BAR-BUS	
	7	1	**245-6036**	1	PLATE AS	
	8	1	**327-6138**	1	WIRE AS	
	9	1	**249-9021**	1	BOX AS-FUSE	
C	10	1	**318-6095**	1	HARNESS AS-PANEL (FUSE)	
		1	**124-9636**	2	BLOCK-MINIFUSE	
		1	**173-3175**	2	CIRCUIT BREAKER AS (20-AMPERE)	
		1	**264-5425**	1	CAP AS-PROTECTION	
		1	**113-8490**	8	FUSE (10-AMPERE)	
		1	**113-8491**	13	FUSE (15-AMPERE)	
		1	**113-8492**	5	FUSE (20-AMPERE)	
		1	**124-9637**	2	LOCK-MINIFUSE	
		1	**211-0052**	2	NUT (1-11/16-18-THD)	
		1	**9X-3401**	8	PIN-CONNECTOR (16-GA TO 18-GA)	
		1	**8T-8729**	8	PIN-CONNECTOR (16-GA TO 18-GA)	
		1	**9W-0852**	4	PIN-CONNECTOR (14-GA TO 16-GA)	
		1	**262-9151**	5	PIN-CONNECTOR (12-GA TO 14-GA)	
		1	**9X-1054**	3	PLUG AS-CONNECTOR (4-PIN)	
		1	**8T-8737**	6	PLUG-SEAL	
		1	**102-8802**	1	KIT-RECEPTACLE (2-PIN)	
					(INCLUDES RECEPTACLE AS & WEDGE)	
		1	**197-7259**	1	RECEPTACLE AS-CONNECTOR (19-PIN)	
		1	**225-3861**	1	RECEPTACLE AS (31-PIN)	
		1	**9W-1951**	1	RECEPTACLE-CONNECTOR (9-PIN)	
		1	**8T-8730**	10	SOCKET-CONNECTOR (16-GA TO 18-GA)	
		1	**9W-0844**	20	SOCKET-CONNECTOR (14-GA TO 16-GA)	
		1	*128-4168*	1	TERMINAL AS	
		1	**6H-3592**	1	TERMINAL-RING (6-GA TO 8-GA, 5/16-IN SCREW)	
E		1	**6V-9023**		TUBE-HEAT SHRINK (12.7-MM DIA) (4-CM)	
		1	*128-4175*	1	TERMINAL AS	
		1	**9F-3965**	1	TERMINAL (6-GA, 1/4-IN SCREW)	
E		1	**8T-5346**		TUBE-HEAT SHRINK (19.1-MM DIA) (4-CM)	
		1	**2L-8052**	2	TERMINAL-RING (6-GA, 3/8-IN SCREW)	
		1	**116-4160**	16	TERMINAL-BLADE (12-GA TO 14-GA)	
		1	**116-4161**	10	TERMINAL-BLADE (16-GA TO 18-GA)	
		1	**113-5100**	8	TERMINAL-BUS	
		1	**9X-1056**	12	TERMINAL-RECEPTACLE (14-GA TO 16-GA)	
E		1	**125-7874**		TUBE-HEAT SHRINK (5.72-MM DIA) (40-CM)	
E		1	**125-7875**		TUBE-HEAT SHRINK (7.44-MM DIA) (5-CM)	
		1	**128-4249**	2	LOCKWASHER	
	11	1	**327-6139**	1	WIRE AS	
	12	1	**269-7654**	1	PLATE AS	

249-9023 **PANEL GP-FUSE (*contd.*)** **i04509274**

NOTE	REF NO	GRAPHIC REF	PART NUMBER	QTY	PART NAME 1 2 3 4 5 6 (PRODUCT LEVEL)	SEE PAGE
	13	1	**269-7662**	1	PLATE AS	
	14	1	**269-7690**	1	SEAL	
	15	1	**115-1615**	1	RELAY AS (12-VOLT) (REAR LIGHTS)	
	15A	1	**115-1615**	1	RELAY AS (12-VOLT) (FRONT LIGHTS)	
	15B	1	**115-1615**	1	RELAY AS (12-VOLT) (HORN)	
M	16	1	**191-8920**	3	BOLT-SOCKET HEAD (M6X1X12-MM)	
C	17	1	**318-6096**	1	FILM-IDENTIFICATION (FUSE PANEL)	
	18	1	**269-7661**	1	FILM-IDENTIFICATION (ELECTRICAL POWER)	
M	19	1	**5C-2890**	3	NUT (M6X1-THD)	
	20	1	**6V-7978**	2	SCREW-MACHINE (10-32X0.375-IN)	
M	21	1	**7X-2548**	2	BOLT (M12X1.75X16-MM)	
	22	1	**8T-4121**	1	WASHER-HARD (11X21X2.5-MM THK)	
M	23	1	**8T-4138**	4	BOLT (M6X1X20-MM)	
M	24	1	**8T-4171**	2	BOLT (M6X1X12-MM)	
M	25	1	**8T-4191**	1	BOLT (M10X1.5X16-MM)	
	26	1	**8T-4205**	2	WASHER-HARD (7.2X14.5X2-MM THK)	
	27	1	**8T-4223**	2	WASHER-HARD (13.5X25.5X3-MM THK)	
M	28	1	**9X-2042**	2	SCREW-TRUSS HEAD (M6X1X12-MM)	
	29	1	**9X-8256**	7	WASHER (6.6X12X2-MM THK)	

C - CHANGE FROM PREVIOUS TYPE
E - ORDER BY THE CENTIMETER
M - METRIC PART

249-9023 **PANEL GP-FUSE (*contd.*)** **i04509274**

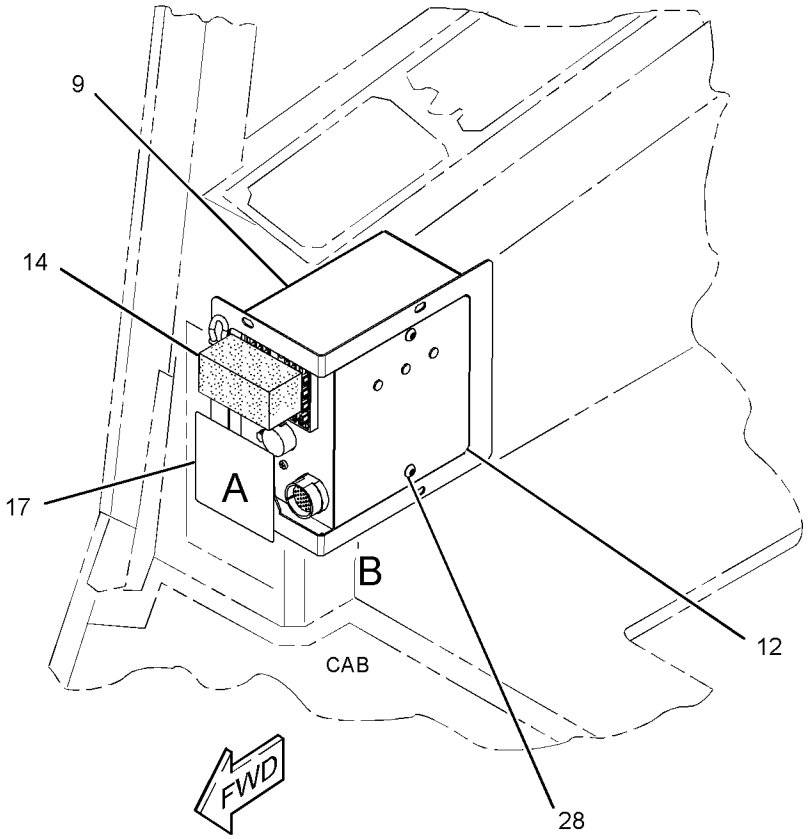

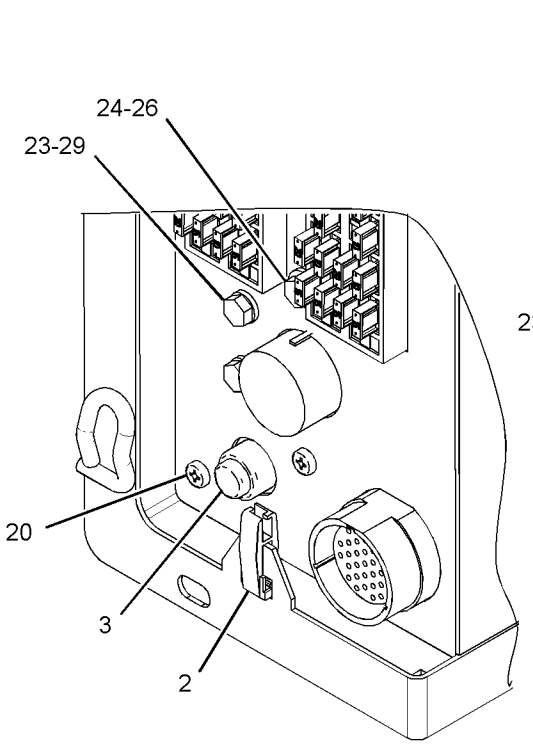

VIEW OF AREA A
(PARTS REMOVED FOR CLARITY)

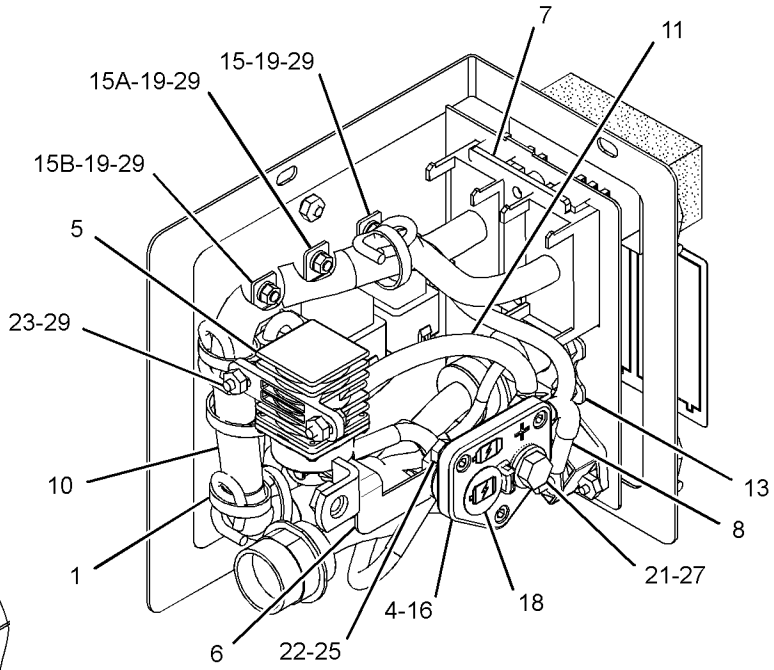

VIEW OF AREA B
(PARTS REMOVED FOR CLARITY)

GRAPHIC #1 **<END>** g02709774

318-6121 PANEL GP-FUSE

S/N: MMM1-UP; RRR1-UP
PART OF 245-6047 WIRING GP-CAB
AN ATTACHMENT

SMCS-1417 **i04527117**

NOTE	REF NO	GRAPHIC REF	PART NUMBER	QTY	PART NAME 1 2 3 4 5 6 (PRODUCT LEVEL)	SEE PAGE
	1	1	**7K-1181**	8	STRAP-CABLE	
	2	1	**116-7471**	1	PULLER-MINIFUSE	
	3	1	**171-2212**	1	CIRCUIT BREAKER AS (105-AMPERE) (MAIN)	
		1	**4E-5724**	2	WASHER (7X12X1-MM THK)	
		1	**8T-0122**	2	NUT-FULL (1/4-28-THD)	
		1	**253-2111**	2	LOCKWASHER	
	4	1	**172-4863**	1	JUNCTION BLOCK	
	5	1	**241-8367**	1	SWITCH AS-MAGNETIC (12-VDC) (MAIN RELAY)	
		1	**155-2270**	1	KIT-CONNECTING PLUG (2-PIN)	
					(INCLUDES PLUG AS, WEDGE & INTERFACE SEAL)	
		1	**4F-2294**	2	NUT-JAM (5/16-24-THD)	
		1	**8T-8730**	2	SOCKET-CONNECTOR (16-GA TO 18-GA)	
	6	1	**245-6036**	1	PLATE AS	
	7	1	**249-9021**	1	BOX AS-FUSE	
	8	1	**269-7654**	1	PLATE AS	
	9	1	**269-7662**	1	PLATE AS	
	10	1	**269-7690**	1	SEAL	
	11	1	**318-6122**	1	HARNESS AS-PANEL (FUSE)	
		1	**124-9636**	1	BLOCK-MINIFUSE	
		1	**180-0613**	1	CIRCUIT BREAKER AS (30-AMPERE)	
		1	**264-5425**	1	CAP AS-PROTECTION	
		1	**8C-6354**	1	CAP-RECEPTACLE (ET CONNECTOR)	
E		1	**125-7875**		TUBE-HEAT SHRINK (7.44-MM DIA) (3-CM)	
		1	**2L-8076**	1	TERMINAL-RING (14-GA TO 16-GA, NO. 10 SCREW)	
		1	**113-8490**	4	FUSE (10-AMPERE)	
		1	**113-8491**	8	FUSE (15-AMPERE)	
		1	**113-8492**	3	FUSE (20-AMPERE)	
		1	**124-9637**	1	LOCK-MINIFUSE	
		1	**211-0052**	2	NUT (1-11/16-18-THD)	
		1	**8T-8729**	4	PIN-CONNECTOR (16-GA TO 18-GA)	
		1	**9W-0852**	4	PIN-CONNECTOR (14-GA TO 16-GA)	
		1	**9X-3401**	8	PIN-CONNECTOR (16-GA TO 18-GA)	
		1	**9X-1054**	3	PLUG AS-CONNECTOR (4-PIN)	
		1	**8T-8737**	27	PLUG-SEAL	
		1	**102-8802**	1	KIT-RECEPTACLE (2-PIN)	
					(INCLUDES RECEPTACLE AS & WEDGE)	
		1	**197-7259**	1	RECEPTACLE AS-CONNECTOR (19-PIN)	
		1	**225-3861**	1	RECEPTACLE AS (31-PIN)	
		1	**9W-1951**	1	RECEPTACLE-CONNECTOR (9-PIN)	
		1	**8T-8730**	4	SOCKET-CONNECTOR (16-GA TO 18-GA)	
		1	**9W-0844**	12	SOCKET-CONNECTOR (14-GA TO 16-GA)	
		1	*128-4168*	1	TERMINAL AS	
		1	**6H-3592**	1	TERMINAL-RING (6-GA TO 8-GA, 5/16-IN SCREW)	
E		1	**6V-9023**		TUBE-HEAT SHRINK (12.7-MM DIA) (4-CM)	
		1	**2L-8067**	1	TERMINAL-RING (10-GA TO 12-GA, 1/4-IN SCREW)	
		1	*131-1497*	1	TERMINAL AS-RING (10-GA TO 12-GA)	
		1	**2L-8068**	1	TERMINAL-RING (10-GA TO 12-GA, 5/16-IN SCREW)	
E		1	**125-7875**		TUBE-HEAT SHRINK (7.44-MM DIA) (4-CM)	
		1	**116-4160**	11	TERMINAL-BLADE (12-GA TO 14-GA)	
		1	**116-4161**	4	TERMINAL-BLADE (16-GA TO 18-GA)	
		1	**113-5100**	4	TERMINAL-BUS	
		1	**9X-1056**	12	TERMINAL-RECEPTACLE (14-GA TO 16-GA)	
E		1	**125-7874**		TUBE-HEAT SHRINK (5.72-MM DIA) (35-CM)	

318-6121 **PANEL GP-FUSE (*contd.*)** **i04527117**

NOTE	REF NO	GRAPHIC REF	PART NUMBER	QTY	PART NAME 1 2 3 4 5 6 (PRODUCT LEVEL)	SEE PAGE
		1	**128-4249**	2	LOCKWASHER	
	12	1	**327-6138**	1	WIRE AS	
	13	1	**327-6139**	1	WIRE AS	
	14	1	**115-1615**	1	RELAY AS (12-VOLT) (REAR LIGHTS)	
	14A	1	**115-1615**	1	RELAY AS (12-VOLT) (FRONT LIGHTS)	
	14B	1	**115-1615**	1	RELAY AS (12-VOLT) (HORN)	
M	15	1	**191-8920**	3	BOLT-SOCKET HEAD (M6X1X12-MM)	
	16	1	**269-7661**	1	FILM-IDENTIFICATION (ELECTRICAL POWER)	
	17	1	**318-6128**	1	FILM-IDENTIFICATION (FUSE PANEL)	
M	18	1	**5C-2890**	3	NUT (M6X1-THD)	
	19	1	**6V-7978**	2	SCREW-MACHINE (10-32X0.375-IN)	
M	20	1	**7X-2548**	2	BOLT (M12X1.75X16-MM)	
M	21	1	**8T-4138**	4	BOLT (M6X1X20-MM)	
M	22	1	**8T-4171**	2	BOLT (M6X1X12-MM)	
	23	1	**8T-4205**	2	WASHER-HARD (7.2X14.5X2-MM THK)	
	24	1	**8T-4223**	2	WASHER-HARD (13.5X25.5X3-MM THK)	
M	25	1	**9X-2042**	2	SCREW-TRUSS HEAD (M6X1X12-MM)	
	26	1	**9X-8256**	7	WASHER (6.6X12X2-MM THK)	

E - ORDER BY THE CENTIMETER
M - METRIC PART

318-6121 **PANEL GP-FUSE (*contd.*)** **i04527117**

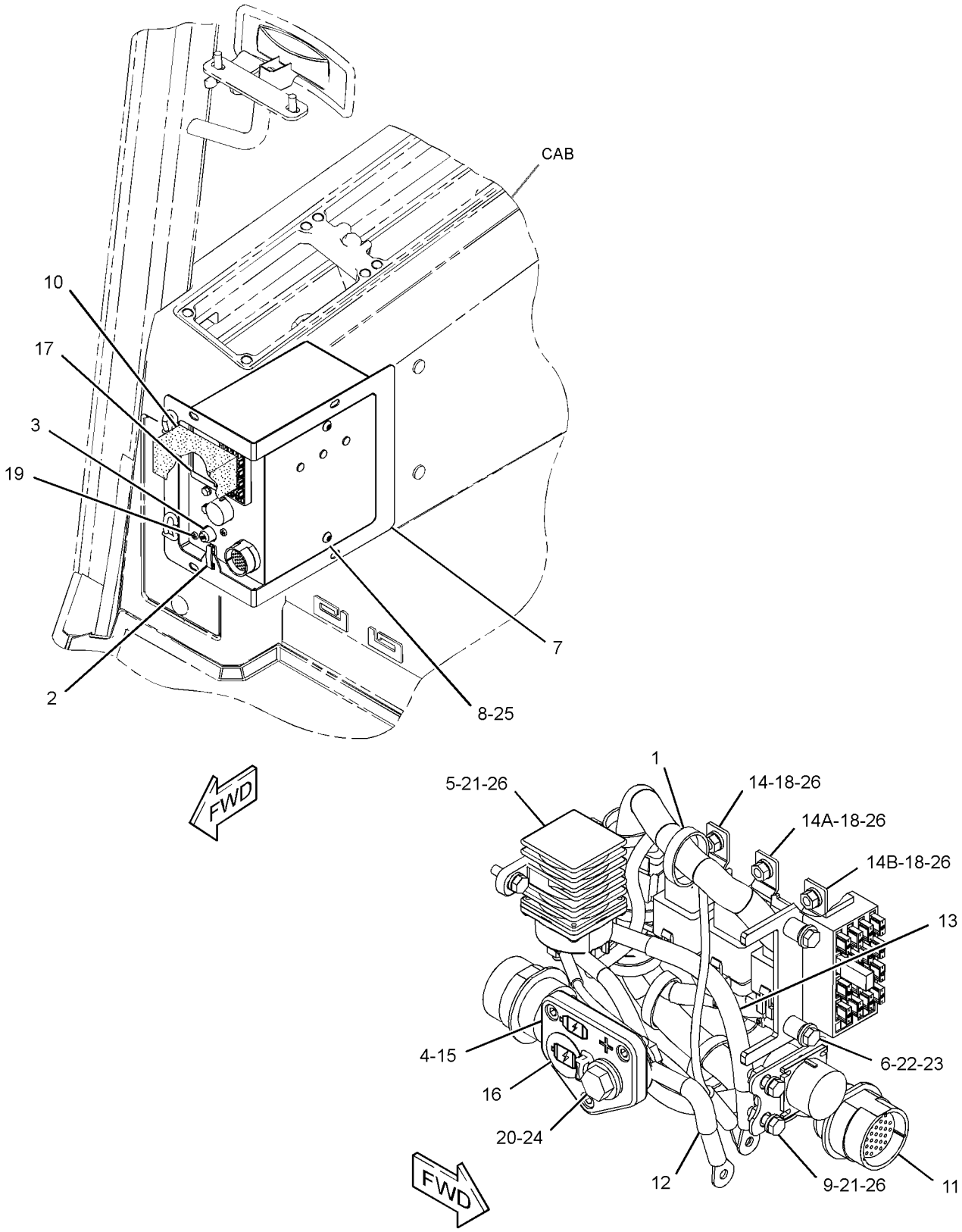

(PARTS REMOVED FOR CLARITY)

GRAPHIC #1 **<END>** g02499536

336-3545 RADIO GP-COMMUNICATION—PRODUCT LINK 121SR

S/N: MMM1-UP; RRR1-UP
PART OF 249-9068 INSTALLATION GP-COMMUNICATION
AN ATTACHMENT

SMCS-733T **i05317633**

NOTE	PART NUMBER	QTY	PART NAME 1 2 3 4 5 6 (PRODUCT LEVEL)	SEE PAGE
	434-1356	1	SOFTWARE GP-MONITOR (PRODUCT LINK 121SR)	

<END>

239-9950 RECEIVER GP-LASER—ACCUGRADE, SINGLE

S/N: MMM1-UP; RRR1-UP
PART OF 292-0293 GRADE CONTROL AR-LASER

SMCS-7009 **i03766955**

NOTE	PART NUMBER	QTY	PART NAME 1 2 3 4 5 6 (PRODUCT LEVEL)	SEE PAGE
	342-9559	1	RECEIVER AS-LASER	
	276-0764	1	CABLE-COILED (LASER RECEIVER)	
	257-1729	1	CASE-CARRYING	

<END>

292-0285 RECEIVER GP-LASER

S/N: MMM1-UP; RRR1-UP
PART OF 292-0312 GRADE CONTROL AR-LASER

SMCS-7009 **i03768195**

NOTE	PART NUMBER	QTY	PART NAME 1 2 3 4 5 6 (PRODUCT LEVEL)	SEE PAGE
	342-9559	1	RECEIVER AS-LASER	
	276-0764	1	CABLE-COILED (LASER RECEIVER)	

<END>

286-0137 RECEIVER GP-SATELLITE—DUAL GPS, MS980

S/N: MMM1-UP; RRR1-UP
PART OF 290-5570 GRADE CONTROL AR-SATELLITE

SMCS-7010 **i03615540**

NOTE	PART NUMBER	QTY	PART NAME 1 2 3 4 5 6 (PRODUCT LEVEL)	SEE PAGE
	252-9628	2	MOUNTING GP-RECEIVER	
			(EACH INCLUDES)	
	8R-1803	5	WASHER (10.5X18X1-MM THK)	
M	**8T-9388**	4	BOLT (M10X1.5X25-MM)	
	113-0693	5	LOCKWASHER	
	289-8449	1	HANDLE AS	
	244-1717	2	RECEIVER AS-SATELLITE (GPS, MS980)	
	255-0939	1	CASE-PLASTIC (RECEIVER)	

M - METRIC PART

<END>

292-0291 RECEIVER GP-SATELLITE—DUAL GNSS, MS992

S/N: MMM1-UP; RRR1-UP

PART OF 290-5571 GRADE CONTROL AR-SATELLITE

SMCS-7010 **i05400395**

NOTE	PART NUMBER	QTY	PART NAME 1 2 3 4 5 6 (PRODUCT LEVEL)	SEE PAGE
	252-9628	2	MOUNTING GP-RECEIVER	
			(EACH INCLUDES)	
	8R-1803	5	WASHER (10.5X18X1-MM THK)	
M	**8T-9388**	4	BOLT (M10X1.5X25-MM)	
	113-0693	5	LOCKWASHER	
	289-8449	1	HANDLE AS	
	353-2794	2	RECEIVER AS-SATELLITE (GNSS, MS992)	
	255-0939	1	CASE-PLASTIC (RECEIVER)	
	286-3017	2	HANDLE (RECEIVER)	

M - METRIC PART

<END>

292-0292 RECEIVER GP-SATELLITE—SINGLE GNSS, MS992

S/N: MMM1-UP; RRR1-UP

PART OF 292-0280 GRADE CONTROL AR-SATELLITE

SMCS-7010 **i05400408**

NOTE	PART NUMBER	QTY	PART NAME 1 2 3 4 5 6 (PRODUCT LEVEL)	SEE PAGE
	252-9628	1	MOUNTING GP-RECEIVER	
	8R-1803	5	WASHER (10.5X18X1-MM THK)	
M	**8T-9388**	4	BOLT (M10X1.5X25-MM)	
	113-0693	5	LOCKWASHER	
	289-8449	1	HANDLE AS	
	353-2794	1	RECEIVER AS-SATELLITE (GNSS, MS992)	
	255-0939	1	CASE-PLASTIC (RECEIVER)	
	286-3017	1	HANDLE (RECEIVER)	

M - METRIC PART

<END>

347-0911 RECEIVER GP-SATELLITE–GNSS, MS990

S/N: RRR1-UP

PART OF 347-0912, 347-0913 RECEIVER GP-SATELLITE

SMCS-7010 **i04351369**

NOTE	REF NO	GRAPHIC REF	PART NUMBER	QTY	PART NAME 1 2 3 4 5 6 (PRODUCT LEVEL)	SEE PAGE
	1	1	**252-9628**	1	MOUNTING GP-RECEIVER	
	1A	1	**8R-1803**	5	WASHER (10.5X18X1-MM THK)	
M	1B	1	**8T-9388**	4	BOLT (M10X1.5X25-MM)	
	1C	1	**113-0693**	5	LOCKWASHER	
	1D	1	**289-8449**	1	HANDLE AS	
	2	1	**286-3017**	1	HANDLE (RECEIVER)	

M - METRIC PART

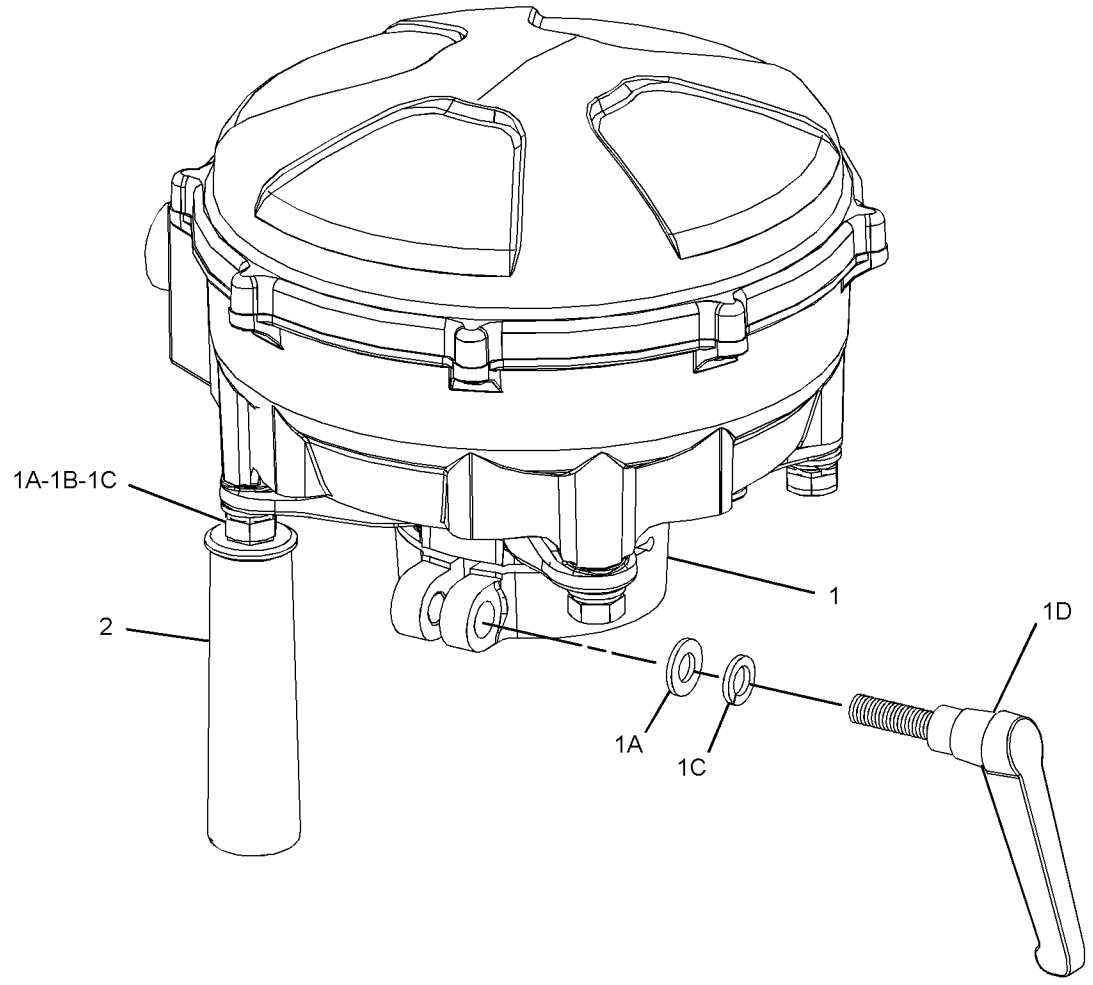

GRAPHIC #1 **<END>** g02316993

347-0912 RECEIVER GP-SATELLITE—SINGLE GNSS, MS990

S/N: RRR1-UP

PART OF 347-0915 GRADE CONTROL AR-SATELLITE

SMCS-7010 **i04109589**

NOTE	PART NUMBER	QTY	PART NAME 1 2 3 4 5 6 (PRODUCT LEVEL)	SEE PAGE
Y	*347-0911*	1	RECEIVER GP-SATELLITE (GNSS, MS990)	230
	255-0939	1	CASE-PLASTIC (RECEIVER)	

Y - SEPARATE ILLUSTRATION

<END>

347-0913 RECEIVER GP-SATELLITE—DUAL GNSS, MS990

S/N: RRR1-UP

PART OF 347-0916 GRADE CONTROL AR-SATELLITE

SMCS-7010 **i04109570**

NOTE	PART NUMBER	QTY	PART NAME 1 2 3 4 5 6 (PRODUCT LEVEL)	SEE PAGE
Y	*347-0911*	2	RECEIVER GP-SATELLITE (GNSS, MS990)	230
	255-0939	1	CASE-PLASTIC (RECEIVER)	

Y - SEPARATE ILLUSTRATION

<END>

275-0490 RELAY GP–STARTING AID HEATER

S/N: MMM1-UP; RRR1-UP

12-VOLT

PART OF 245-6019 WIRING GP-ENGINE

SMCS-4493 **i04337973**

NOTE	REF NO	GRAPHIC REF	PART NUMBER	QTY	PART NAME 1 2 3 4 5 6 (PRODUCT LEVEL)	SEE PAGE
	1	1	**1H-3244**	2	LOCKWASHER	
M	2	1	**5C-2890**	2	NUT (M6X1-THD)	
M	3	1	**5C-7261**	1	NUT (M8X1.25-THD)	
	4	1	**8T-4205**	2	WASHER-HARD (7.2X14.5X2-MM THK)	
	5	1	**8T-4224**	1	WASHER-HARD (8.8X16X2-MM THK)	
	6	1	**267-5211**	1	SEAL	
	7	1	**267-5213**	1	COVER (FUSE)	
	8	1	**274-9872**	1	FUSE (30-AMPERE)	
	9	1	**274-9877**	1	FUSE (50-AMPERE)	
	10	1	**9F-5644**	1	LOCKWASHER	

M - METRIC PART

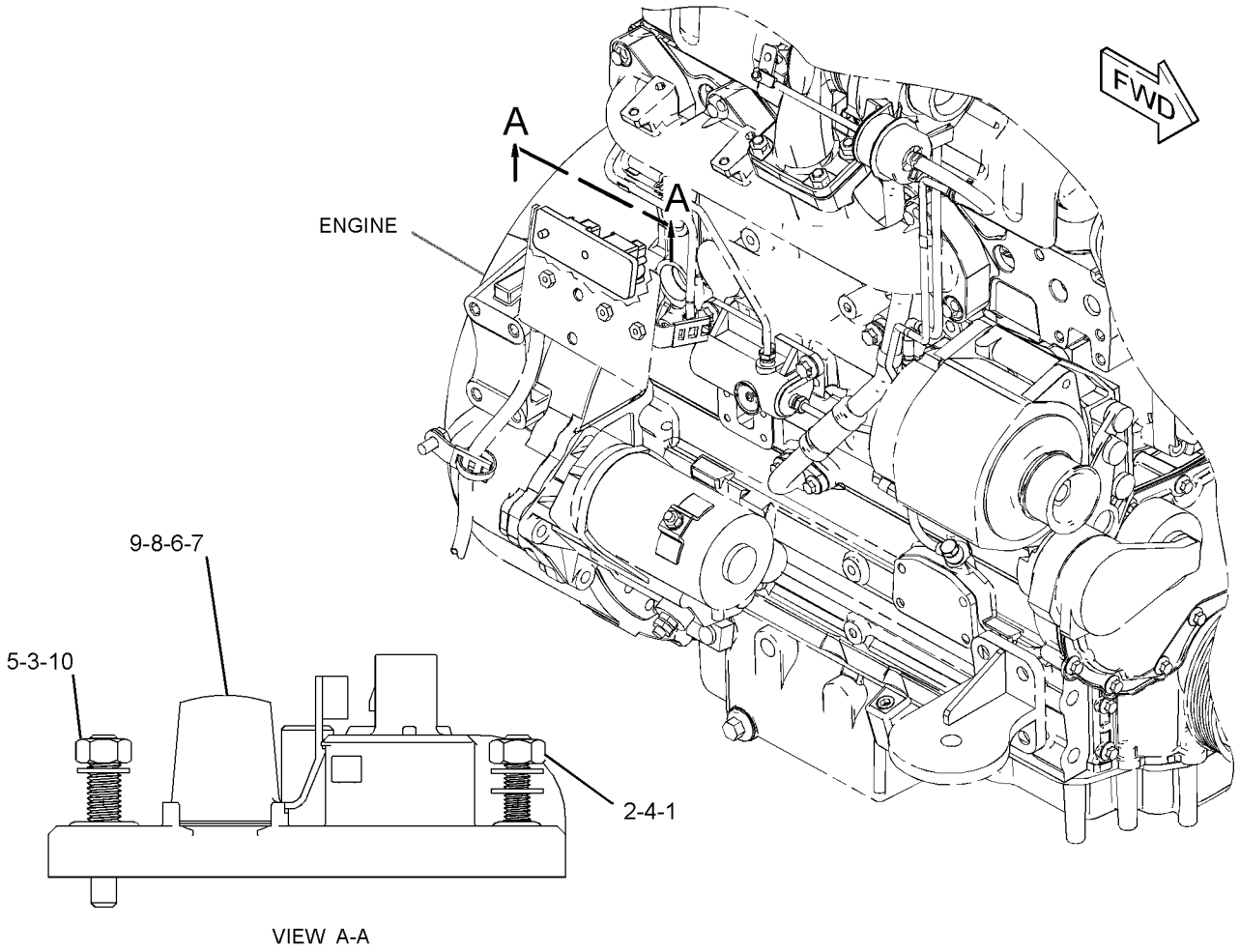

VIEW A-A

GRAPHIC #1 **<END>** g02500936

224-5530 SENSOR GP-POSITION—GOVERNOR, BRAKE PEDAL

S/N: MMM1-UP

FIELD REPLACEMENT ORDER 266-1470—PAGE: 235

PART OF 253-2439 PEDAL GP-GOVERNOR & BRAKE

SMCS-1905, 1911, 430S

i02241488

NOTE	REF NO	GRAPHIC REF	PART NUMBER	QTY	PART NAME 1 2 3 4 5 6 (PRODUCT LEVEL)	SEE PAGE
	2	1	**102-8803**	1	KIT-RECEPTACLE (3-PIN)	
					(INCLUDES RECEPTACLE AS & WEDGE)	
	3	1	**8T-8729**	3	PIN-CONNECTOR (16-GA TO 18-GA)	
	4	1	**3E-3371**	1	WEDGE-RECEPTACLE LOCK (3-PIN)	
E	5	1	**9X-1813**		SLEEVE (13-CM)	

E - ORDER BY THE CENTIMETER

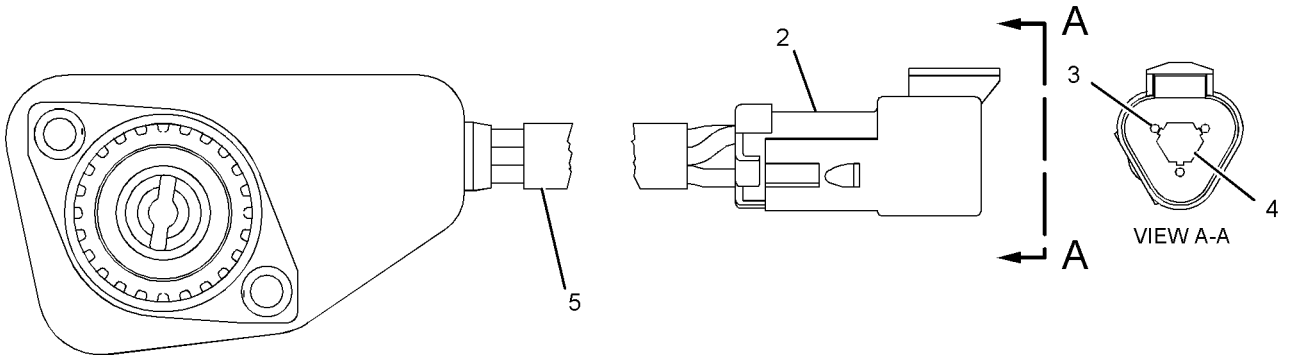

GRAPHIC #1

<END>

g01107385

266-1467 SENSOR GP-POSITION

S/N: MMM1-UP

GOVERNOR, BRAKE PEDAL

PART OF 253-2439 PEDAL GP-GOVERNOR & BRAKE

SMCS-1905, 1911, 430S **i04182816**

NOTE	REF NO	GRAPHIC REF	PART NUMBER	QTY	PART NAME 1 2 3 4 5 6 (PRODUCT LEVEL)	SEE PAGE
	1	1	**180-9339**	3	PIN-CONNECTOR (14-GA TO 18-GA)	
	2	1	**102-8803**	1	KIT-RECEPTACLE (3-PIN)	
					(INCLUDES RECEPTACLE AS & WEDGE)	

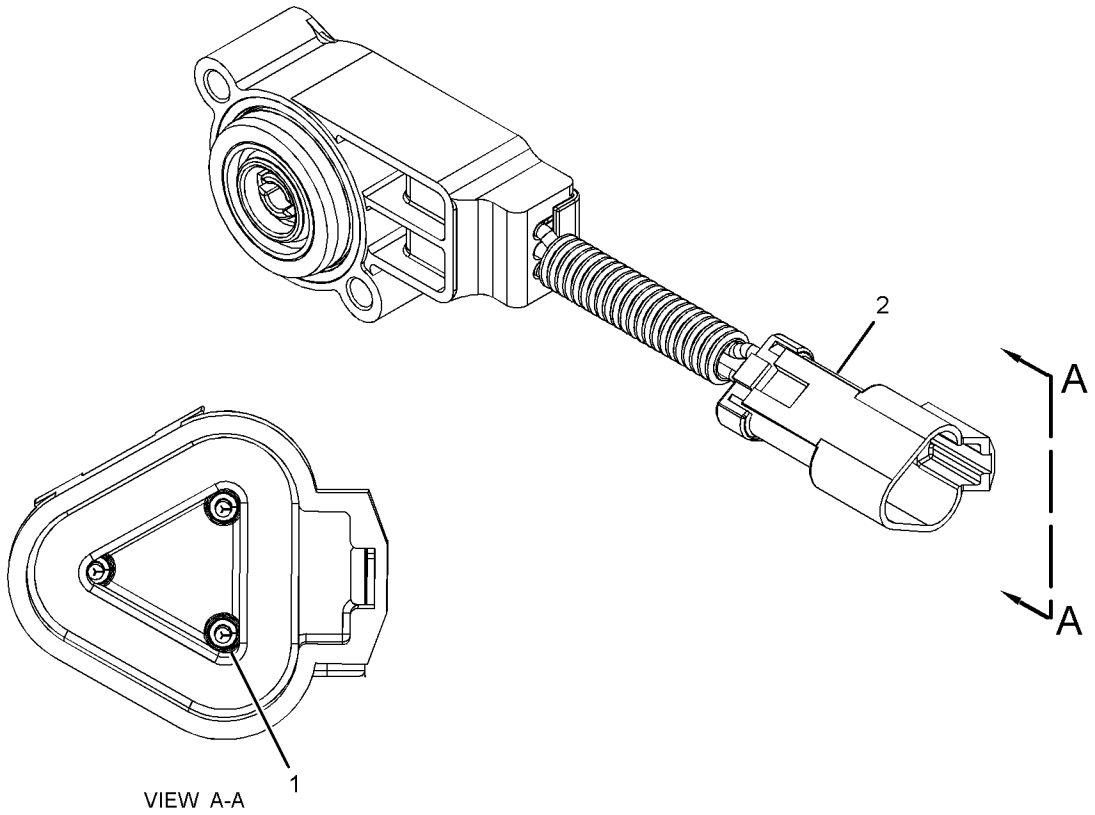

GRAPHIC #1 **<END>** g01740694

266-1470 SENSOR GP-POSITION

S/N: MMM1-UP; RRR1-UP
FIELD REPLACEMENT FOR 224-5530—PAGE: 233
PART OF 324-0669, 343-3503 PEDAL GP-GOVERNOR & BRAKE

SMCS-1905, 1911, 430S **i03896320**

NOTE	REF NO	GRAPHIC REF	PART NUMBER	QTY	PART NAME 1 2 3 4 5 6 (PRODUCT LEVEL)	SEE PAGE
	1	1	**180-9339**	3	PIN-CONNECTOR (14-GA TO 18-GA)	
	2	1	**102-8803**	1	KIT-RECEPTACLE (3-PIN)	
					(INCLUDES RECEPTACLE AS & WEDGE)	
E	3	1	**9X-1813**		SLEEVE (13-CM)	

E - ORDER BY THE CENTIMETER

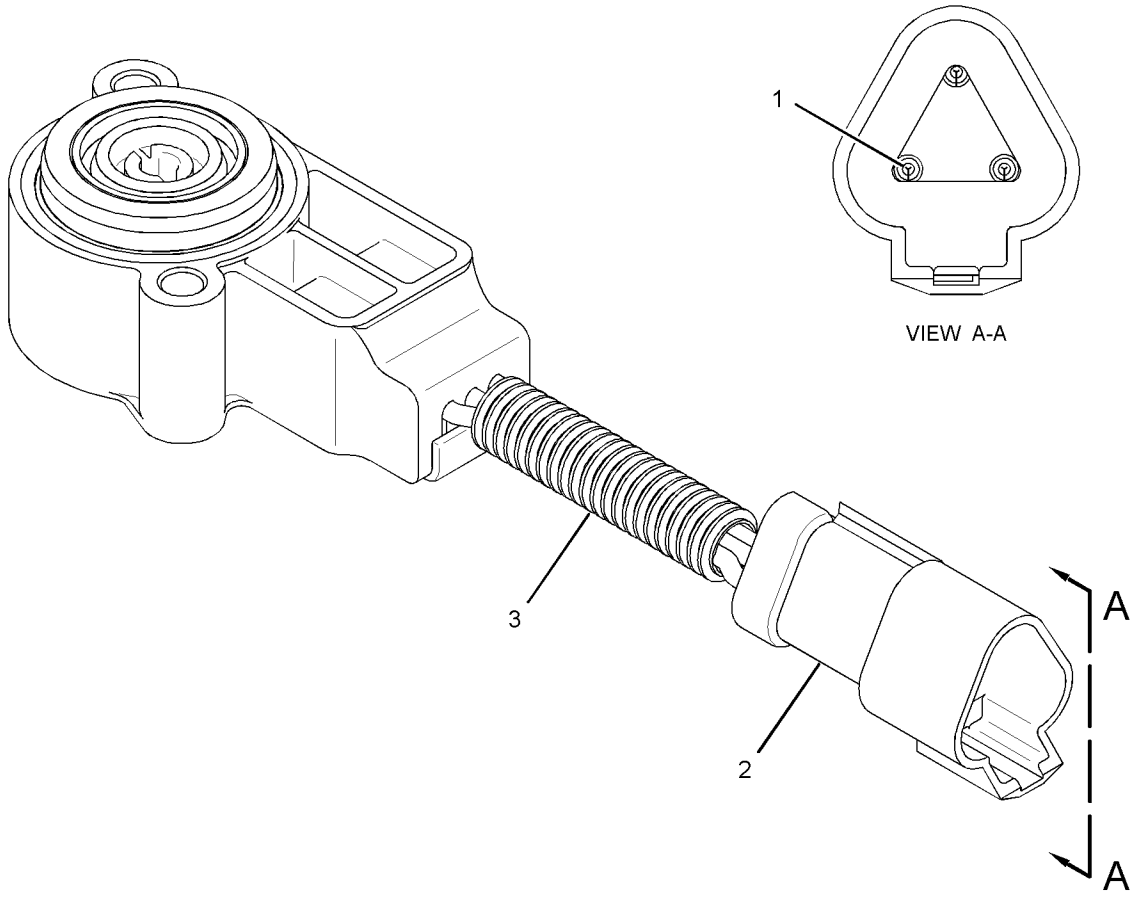

GRAPHIC #1 **<END>** g02140688

284-8207 SENSOR GP-POSITION

S/N: MMM1-1000; RRR1-800

PART OF 290-4835 CONTROL GP-JOYSTICK

SMCS-1905, 1911, 430S **i04418621**

NOTE	REF NO	GRAPHIC REF	PART NUMBER	QTY	PART NAME 1 2 3 4 5 6 (PRODUCT LEVEL)	SEE PAGE
	1	1	**284-8208**	1	SHAFT-ADAPTER	
	2	1	**102-8805**	1	KIT-RECEPTACLE (6-PIN)	
					(INCLUDES RECEPTACLE AS & WEDGE)	
	3	1	**8T-8729**	4	PIN-CONNECTOR (16-GA TO 18-GA)	
	4	1	**8T-8737**	2	PLUG-SEAL	

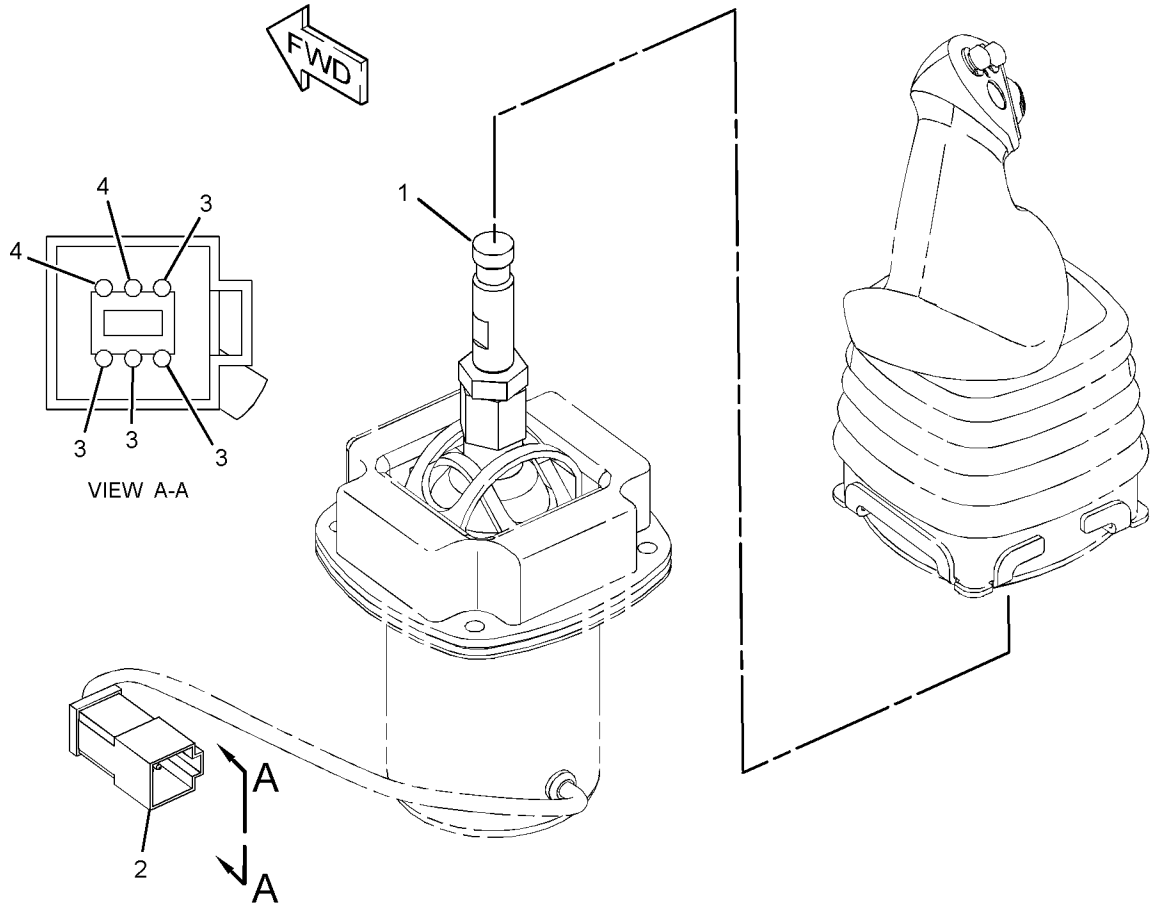

GRAPHIC #1 **<END>** g01328459

214-6863 SENSOR GP-PRESSURE

S/N: MMM1-UP; RRR1-UP
PART OF 244-7504, 318-6108 CONTROL GP-WINCH
AN ATTACHMENT

SMCS-1718, 1916, 1917, 1923, 1924, 1925

i05206263

NOTE	REF NO	GRAPHIC REF	PART NUMBER	QTY	PART NAME 1 2 3 4 5 6 (PRODUCT LEVEL)	SEE PAGE
	1	1	**155-2260**	1	KIT-CONNECTING PLUG (3-PIN)	
					(INCLUDES PLUG AS, WEDGE & INTERFACE SEAL)	
	2	1	**180-9340**	3	SOCKET-CONNECTOR (14-GA TO 18-GA)	

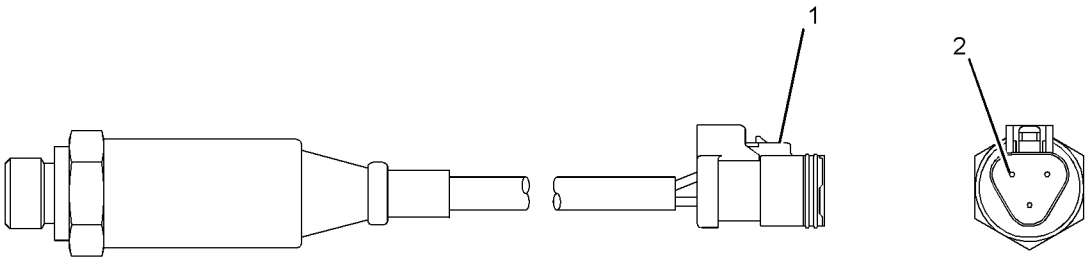

GRAPHIC #1

<END>

g02615603

183-4584 SENSOR GP-SPEED

S/N: MMM1-UP; RRR1-UP

PART OF 245-6017 BATTERY & WIRING GP

SMCS-1907 **i01990496**

NOTE	REF NO	GRAPHIC REF	PART NUMBER	QTY	PART NAME 1 2 3 4 5 6 (PRODUCT LEVEL)	SEE PAGE
	1	1	**6J-2245**	1	SEAL-O-RING	

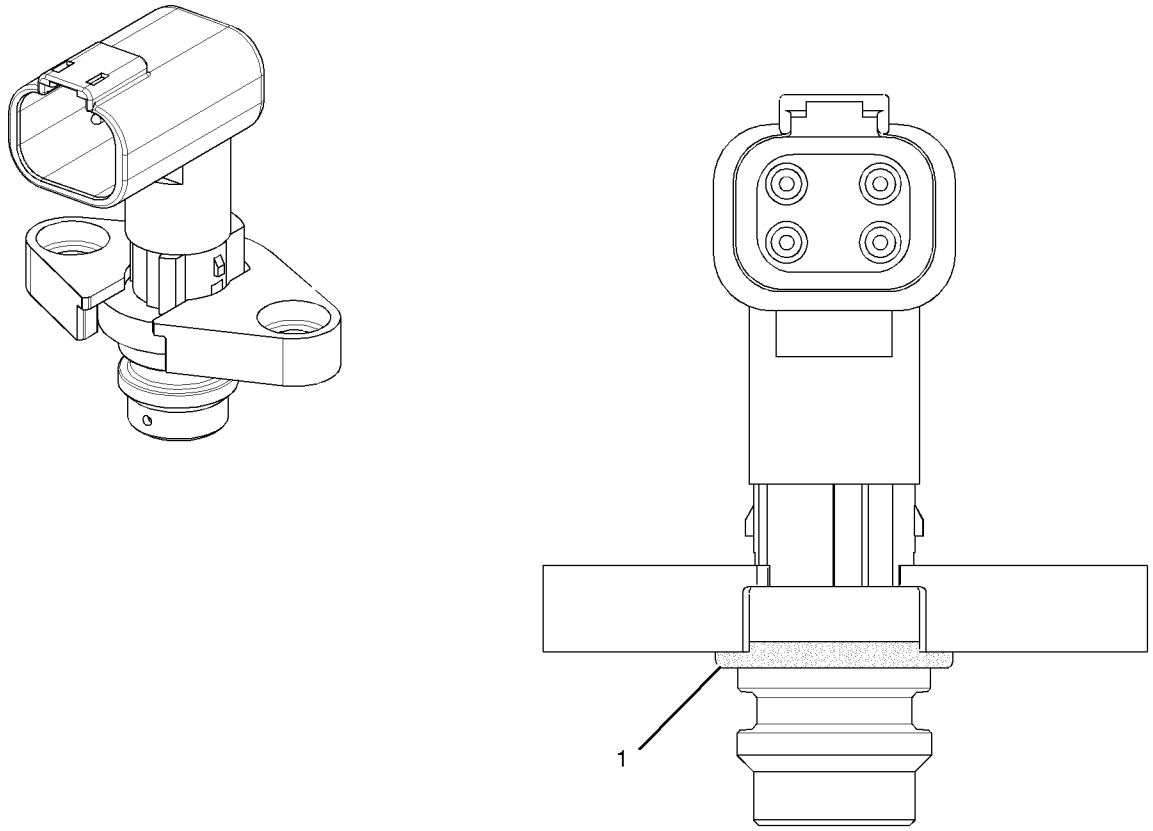

GRAPHIC #1 **<END>** g01031645

319-6491 SENSOR GP-SPEED

S/N: MMM1-UP; RRR1-UP

PART OF 245-6017 BATTERY & WIRING GP

SMCS-1907 **i03415582**

NOTE	REF NO	GRAPHIC REF	PART NUMBER	QTY	PART NAME 1 2 3 4 5 6 (PRODUCT LEVEL)	SEE PAGE
	1	1	**6J-2245**	1	SEAL-O-RING	

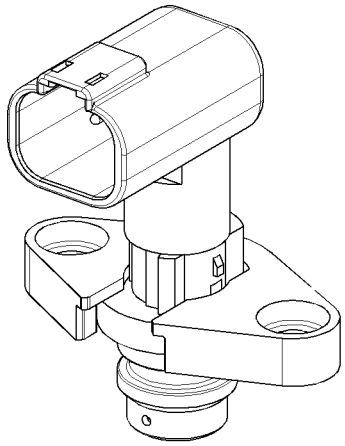

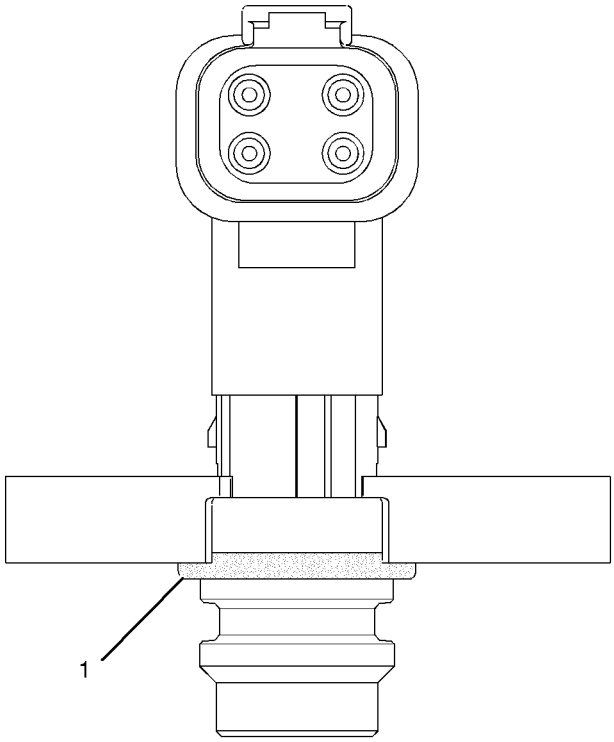

GRAPHIC #1 **<END>** g01031645

268-4699 SERVICE GP-COMMUNICATION—PRODUCT LINK 300

S/N: MMM1-UP; RRR1-UP

PART OF 249-9029 INSTALLATION GP-COMMUNICATION

AN ATTACHMENT

SMCS-7606 **i03637859**

NOTE	PART NUMBER	QTY	PART NAME 1 2 3 4 5 6 (PRODUCT LEVEL)	SEE PAGE
Y	**239-9954**	1	CONTROL GP-UNPROGRAMMED (PRODUCT LINK 300) (COMMUNICATION)	173
	268-4698	1	SOFTWARE GP-COMMUNICATION (PRODUCT LINK 300)	

Y - SEPARATE ILLUSTRATION

<END>

245-6026 STARTING AID GP-ETHER

S/N: MMM1-UP; RRR1-UP

AN ATTACHMENT

SMCS-1456 **i04268050**

NOTE	REF NO	GRAPHIC REF	PART NUMBER	QTY	PART NAME 1 2 3 4 5 6 (PRODUCT LEVEL)	SEE PAGE
	1	1	**3S-2093**	1	STRAP-CABLE	
	2	1	**241-4194**	1	FITTING AS (CONTROL)	
		1	**236-4545**	1	NUT-SLEEVE (5/16-24-THD)	
	3	1	**273-5070**	1	VALVE AS-ETHER START (12-VOLT)	
		1	**7N-9801**	1	GASKET	
		1	**102-8802**	1	KIT-RECEPTACLE (2-PIN)	
					(INCLUDES RECEPTACLE AS & WEDGE)	
		1	**8T-8729**	2	PIN-CONNECTOR (16-GA TO 18-GA)	
	4	1	*276-6597*	1	MOUNTING GP-ETHER CANISTER	
		1	**236-8013**	1	BRACKET	
		1	**276-6596**	1	CLAMP	
	5	1	**285-3329**	1	ATOMIZER AS (ETHER)	
		1	**236-4545**	1	NUT-SLEEVE (5/16-24-THD)	
M	6	1	**8T-4189**	3	BOLT (M8X1.25X20-MM)	
	7	1	**8T-4224**	3	WASHER-HARD (8.8X16X2-MM THK)	
H	8	1	**5P-5630**		TUBE (10-DM)	
E	9	1	**211-5358**		CONDUIT-FLEXIBLE (40-CM)	
A		1	**7N-0296**	1	CYLINDER AS-ETHER	
					(MUST BE PROCURED LOCALLY FROM YOUR CATERPILLAR DEALER)	

A - NOT PART OF THIS GROUP
E - ORDER BY THE CENTIMETER
H - ORDER BY THE DECIMETER
M - METRIC PART

245-6026 **STARTING AID GP-ETHER (*contd.*)** **i04268050**

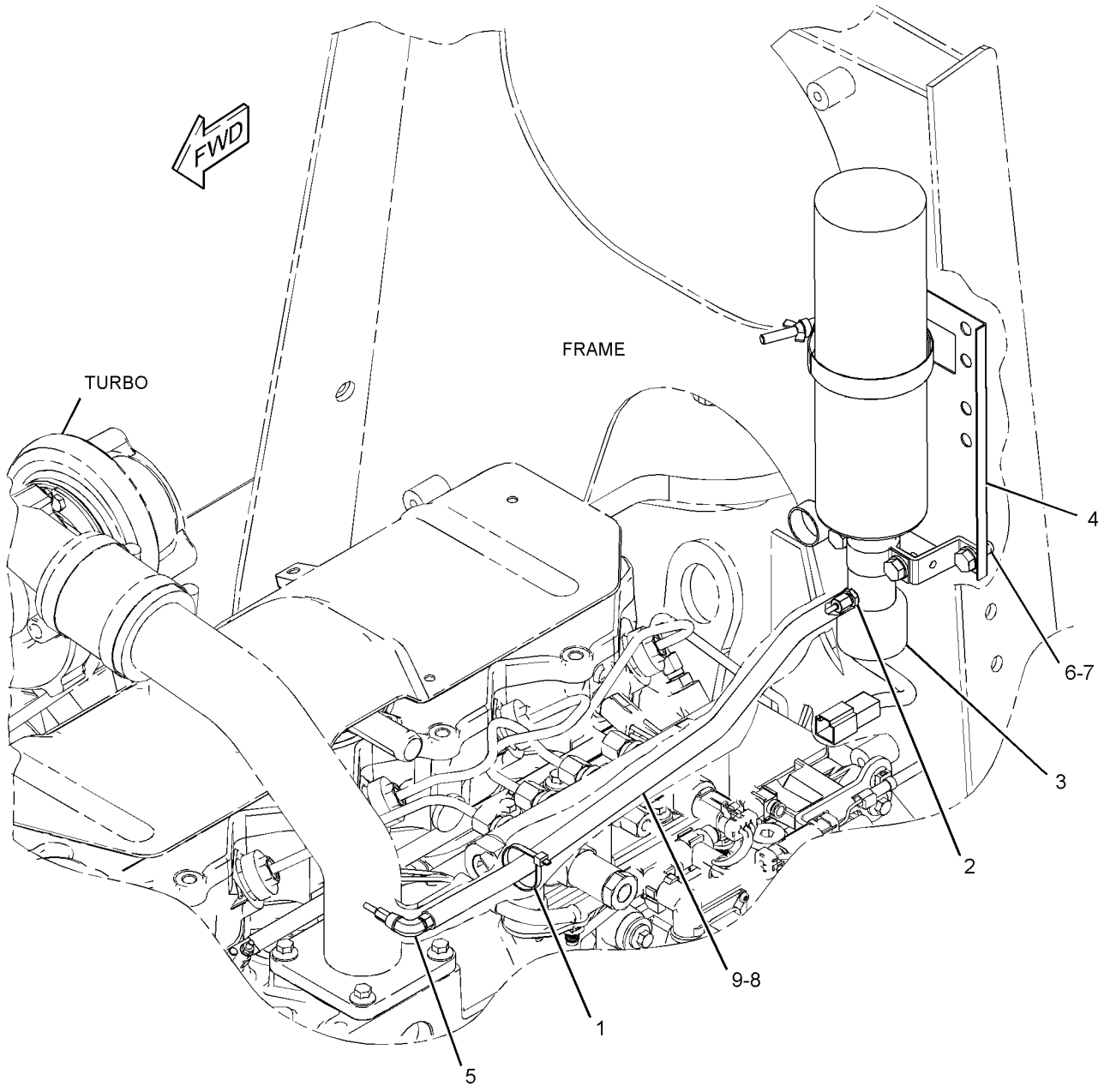

GRAPHIC #1 **<END>** g01440908

304-3655 STARTING MOTOR GP-ELECTRIC

S/N: C4E1-UP
12 VOLT, 4 KW
PART OF 254-9233 ENGINE AR-PRIMARY

SMCS-1453 **i02902110**

NOTE	REF NO	GRAPHIC REF	PART NUMBER	QTY	PART NAME 1 2 3 4 5 6 (PRODUCT LEVEL)	SEE PAGE
	1	1	**7W-4540**	1	SPACER	
	2	1	**128-1599**	3	STUD (M10X1.5X50-MM)	
	3	1	**6I-0594**	3	NUT (M10X1.5-THD)	
	4	1	**300-4415**	1	STARTING MOTOR GP-ELECTRIC	

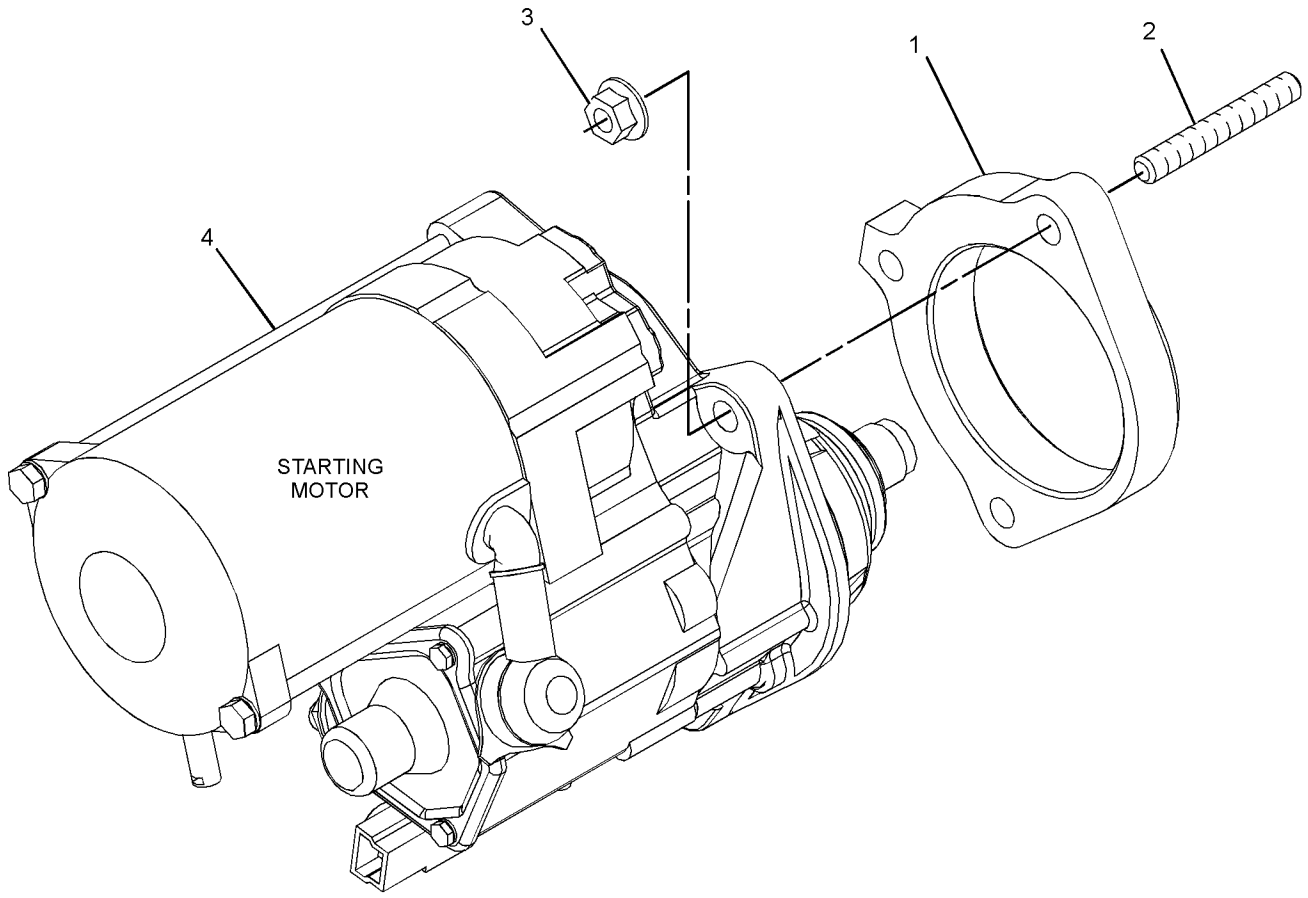

GRAPHIC #1 **<END>** g01384280

387-5249 STARTING MOTOR GP-ELECTRIC

S/N: C4E8930-UP

PART OF 254-9233 ENGINE AR-PRIMARY

SMCS-1453 **i05090148**

NOTE	REF NO	GRAPHIC REF	PART NUMBER	QTY	PART NAME 1 2 3 4 5 6 (PRODUCT LEVEL)	SEE PAGE
	1	1	**7W-4540**	1	SPACER	
	2	1	**128-1599**	3	STUD (M10X1.5X50-MM)	
	3	1	**6I-0594**	3	NUT (M10X1.5-THD)	
	4	1	**300-4415**	1	STARTING MOTOR GP-ELECTRIC	

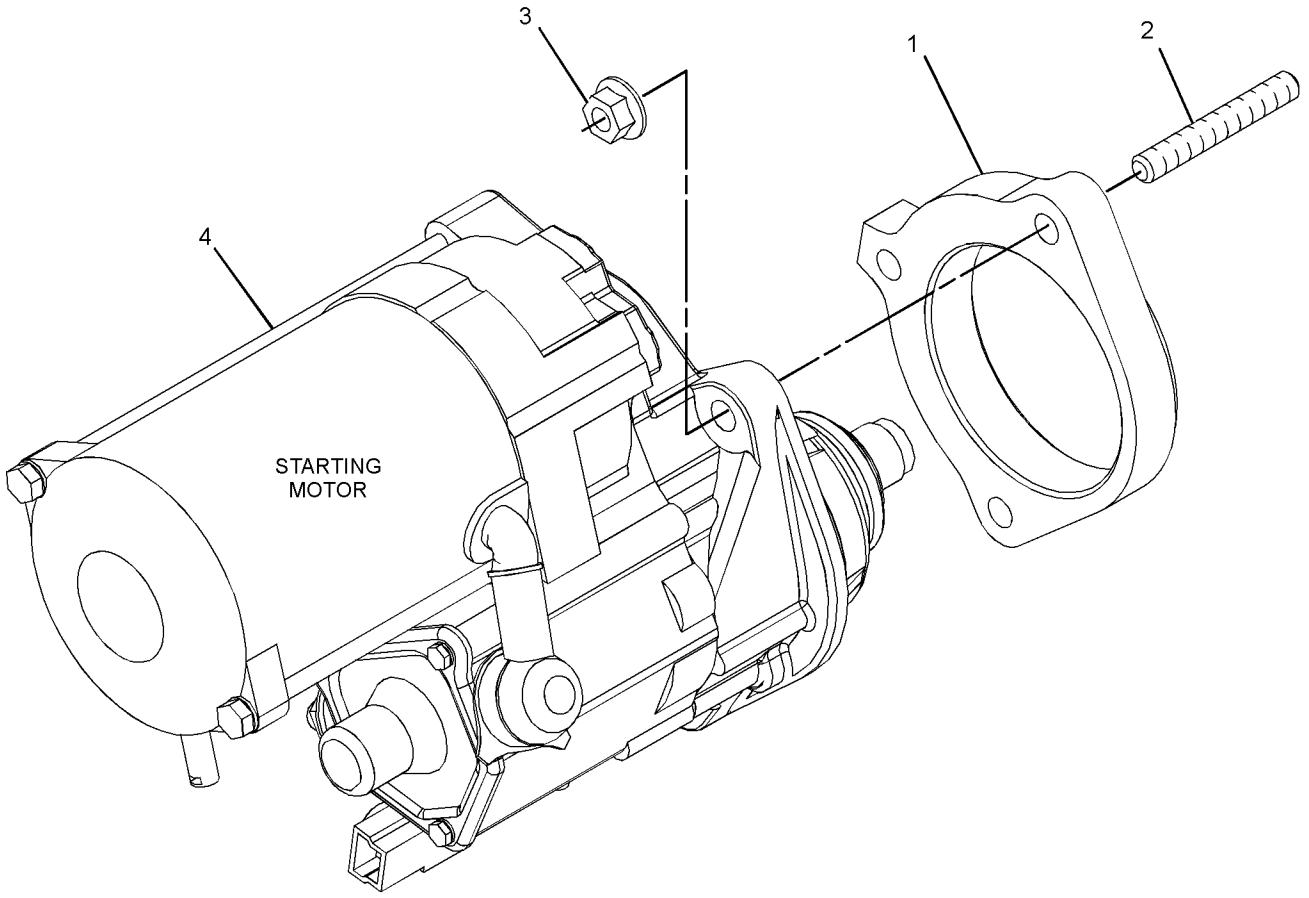

GRAPHIC #1 **<END>** g01384280

7N-0718 SWITCH GP-DISCONNECT–BATTERY

S/N: MMM1-UP; RRR1-UP
12-VOLT
PART OF 245-6017 BATTERY & WIRING GP

SMCS-1411 **i02459121**

NOTE	REF NO	GRAPHIC REF	PART NUMBER	QTY	PART NAME 1 2 3 4 5 6 (PRODUCT LEVEL)	SEE PAGE
	1	1	**8H-5306**	1	KEY (BATTERY DISCONNECT)	
	2	1	**8H-5303**	1	NUT (3/4-16-THD)	
	3	1	**2H-3922**	2	LOCKWASHER	
	4	1	**9F-5644**	2	LOCKWASHER	
	5	1	**6F-7045**	2	NUT-FULL (3/8-24-THD)	

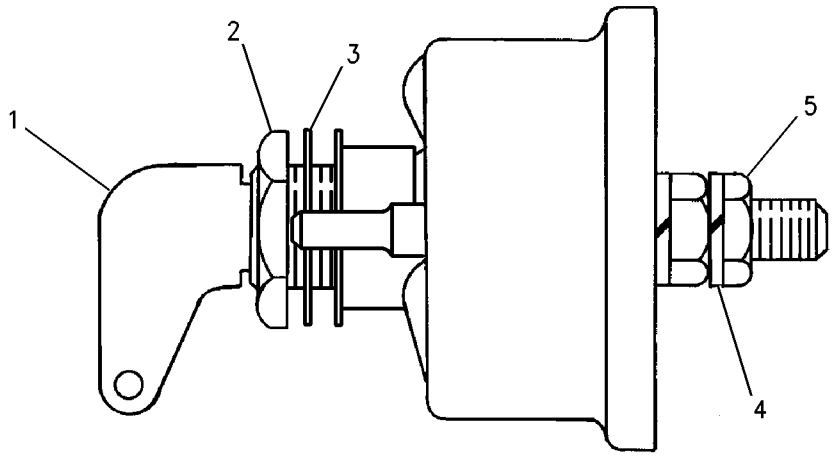

GRAPHIC #1 **<END>** g00715584

106-0107 SWITCH GP-ROTARY–THROTTLE POSITION

S/N: MMM1-UP; RRR1-UP
PART OF 245-6022, 245-6039 INSTRUMENT GP
AN ATTACHMENT

SMCS-7332 **i04415561**

NOTE	REF NO	GRAPHIC REF	PART NUMBER	QTY	PART NAME 1 2 3 4 5 6 (PRODUCT LEVEL)	SEE PAGE
	1	1	**102-8805**	1	KIT-RECEPTACLE (6-PIN)	
					(INCLUDES RECEPTACLE AS & WEDGE)	
	2	1	**106-0210**	1	SEAL	
	3	1	**8T-8737**	1	PLUG-SEAL	
	4	1	**9X-3401**	5	PIN-CONNECTOR (16-GA TO 18-GA)	
					–OR–	
		1	**126-1767**	5	PIN-CONNECTOR (14-GA TO 16-GA)	
M	5	1	**7Y-5458**	1	NUT (M12X1-THD)	
	6	1	**7Y-5464**	1	WASHER (12.2X15.4X0.5-MM THK)	

M - METRIC PART

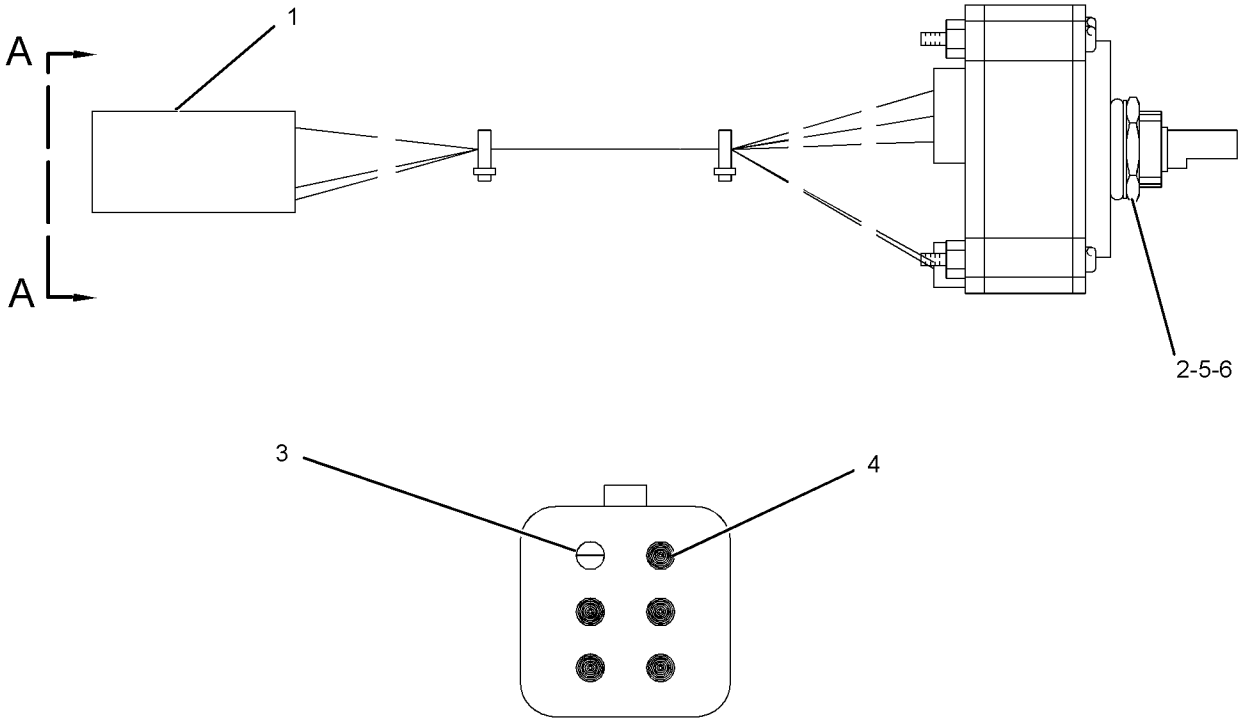

VIEW A-A

GRAPHIC #1 **<END>** g02613916

256-2907 TARGET GP-LASER

S/N: MMM1-UP

PART OF 295-9880 TARGET GP-LASER

SMCS-7009 **i05400417**

NOTE	REF NO	GRAPHIC REF	PART NUMBER	QTY	PART NAME 1 2 3 4 5 6 (PRODUCT LEVEL)	SEE PAGE
	1	1	**291-1915**	1	TARGET AS-LASER	
	2	1	**275-3378**	1	SPACER (16.7X38.1X12.7-MM THK)	
	3	1	**7X-0345**	1	BOLT (5/8-11X1.75-IN)	
	4	1	**7M-4672**	1	WASHER (0.656X1.31X0.109-IN THK)	
	5	1	**8T-9368**	4	BOLT (1/4-20X2.25-IN)	
	6	1	**9X-6165**	8	WASHER (6.5X22X2.5-MM THK)	
	7	1	**8C-5607**	8	MOUNT-ISOLATION	
	8	1	**8C-5608**	4	SPACER (6.5X9.5X25.4-MM THK)	
	9	1	**275-4012**	4	BUSHING	
	10	1	**6V-8185**	4	NUT (1/4-20-THD)	
	11	1	**5P-4115**	4	WASHER-HARD (7.2X19X2-MM THK)	
	12	1	**252-9628**	1	MOUNTING GP-RECEIVER	
	12A	1	**113-0693**	1	LOCKWASHER	
	12B	1	**8R-1803**	1	WASHER (10.5X18X1-MM THK)	
	12C	1	**289-8449**	1	HANDLE AS	
	13	1	**264-3171**	1	PLATE-SHOCK	

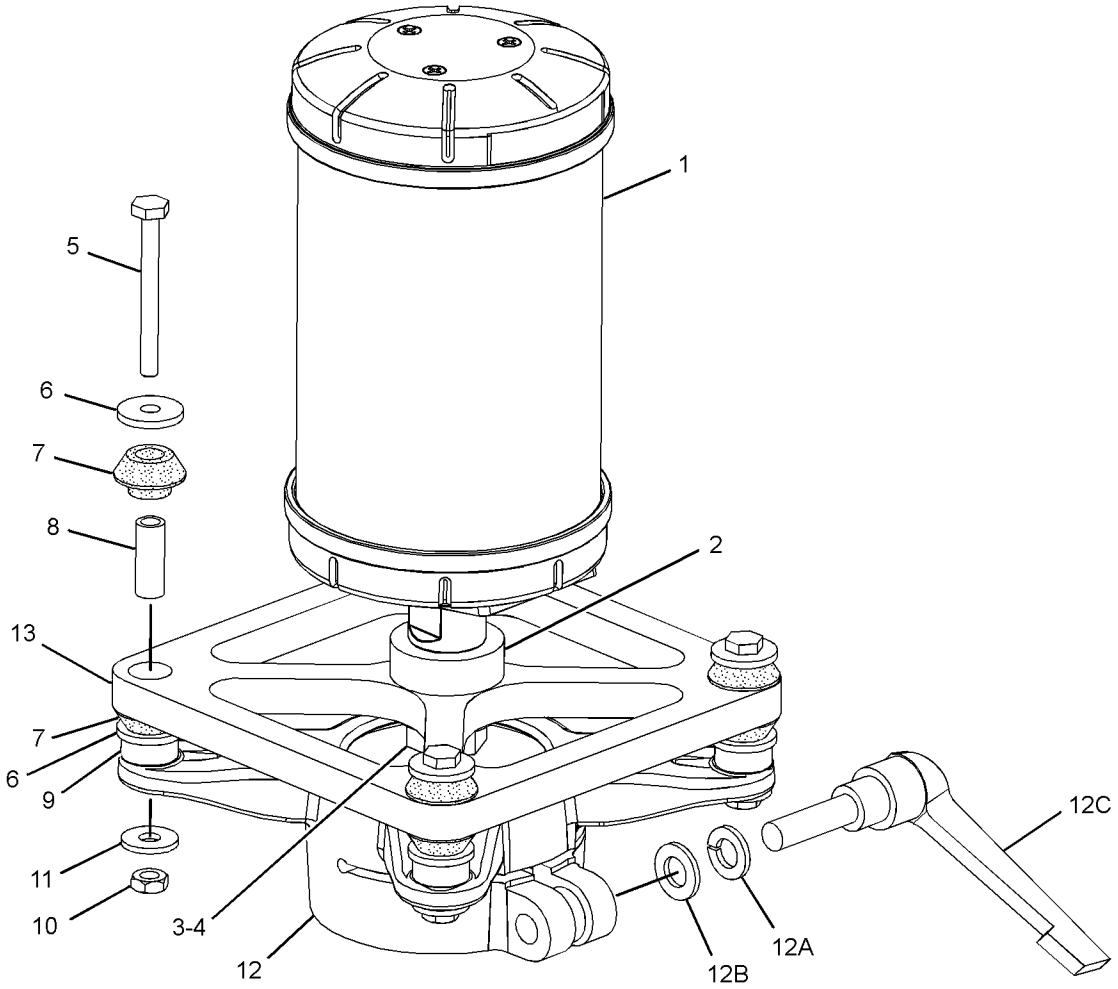

GRAPHIC #1 **<END>** g02059833

295-9880 TARGET GP-LASER

S/N: MMM1-UP

PART OF 317-6527 GRADE CONTROL AR

SMCS-7009 **i03910854**

NOTE	PART NUMBER	QTY	PART NAME 1 2 3 4 5 6 (PRODUCT LEVEL)	SEE PAGE
Y	*256-2907*	1	TARGET GP-LASER (GRADE CONTROL)	247
	275-3376	1	BLOCK	
	276-0764	1	CABLE-COILED (LASER RECEIVER)	
	244-1719	1	CASE-CARRYING	
	252-8744	1	FILM-WARNING (BLADE, DO NOT CLIMB, READ OMM)	

Y - SEPARATE ILLUSTRATION

<END>

318-8135 WARNING GP-BACKUP

S/N: MMM1-UP; RRR1-UP
PART OF 312-1035 GUARD GP-REAR
AN ATTACHMENT

SMCS-7406 **i04418670**

NOTE	REF NO	GRAPHIC REF	PART NUMBER	QTY	PART NAME 1 2 3 4 5 6 (PRODUCT LEVEL)	SEE PAGE
	1	1	**220-0230**	1	ALARM AS (BACKUP)	
		1	**102-8802**	1	KIT-RECEPTACLE (2-PIN)	
					(INCLUDES RECEPTACLE AS & WEDGE)	
D		1	**5P-5623**		WIRE-ELECTRICAL (16-GA, BLACK) (0.8-M)	
		1	**8T-8729**	2	PIN-CONNECTOR (16-GA TO 18-GA)	
E		1	**9X-1813**		SLEEVE (29-CM)	
	2	1	**5P-4116**	4	WASHER-HARD (8.8X20.5X2-MM THK)	
M	3	1	**8T-4200**	4	BOLT (M8X1.25X16-MM)	
E	4	1	**128-8423**		SEAL (29-CM)	

D - ORDER BY THE METER
E - ORDER BY THE CENTIMETER
M - METRIC PART

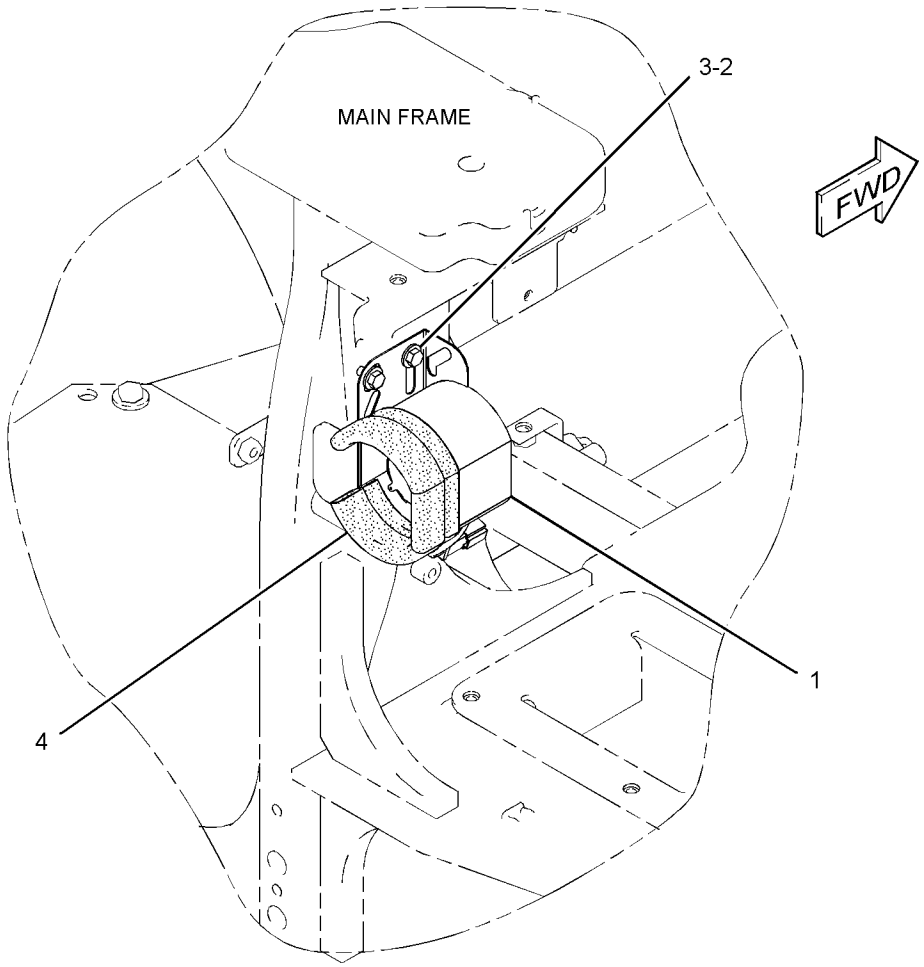

GRAPHIC #1 **<END>** g01441596

318-8136 WARNING GP-BACKUP

S/N: MMM1-UP; RRR1-UP

PART OF 245-6017 BATTERY & WIRING GP

SMCS-7406 **i04418689**

NOTE	REF NO	GRAPHIC REF	PART NUMBER	QTY	PART NAME 1 2 3 4 5 6 (PRODUCT LEVEL)	SEE PAGE
	1	1	**170-0950**	1	ALARM AS (BACKUP)	
		1	**4B-2043**	2	NUT (8-32-THD)	
	2	1	**269-7686**	1	HARNESS AS-ALARM	
		1	**8T-8729**	2	PIN-CONNECTOR (16-GA TO 18-GA)	
		1	**102-8802**	1	KIT-RECEPTACLE (2-PIN)	
					(INCLUDES RECEPTACLE AS & WEDGE)	
		1	**9G-3186**	2	TERMINAL-FORK (18-GA TO 22-GA, NO. 8 SCREW)	
B		1	**1P-0810**		TAPE-ELECTRICAL	
M	3	1	**8T-4138**	2	BOLT (M6X1X20-MM)	
	4	1	**9X-8256**	2	WASHER (6.6X12X2-MM THK)	

B - USE AS REQUIRED
M - METRIC PART

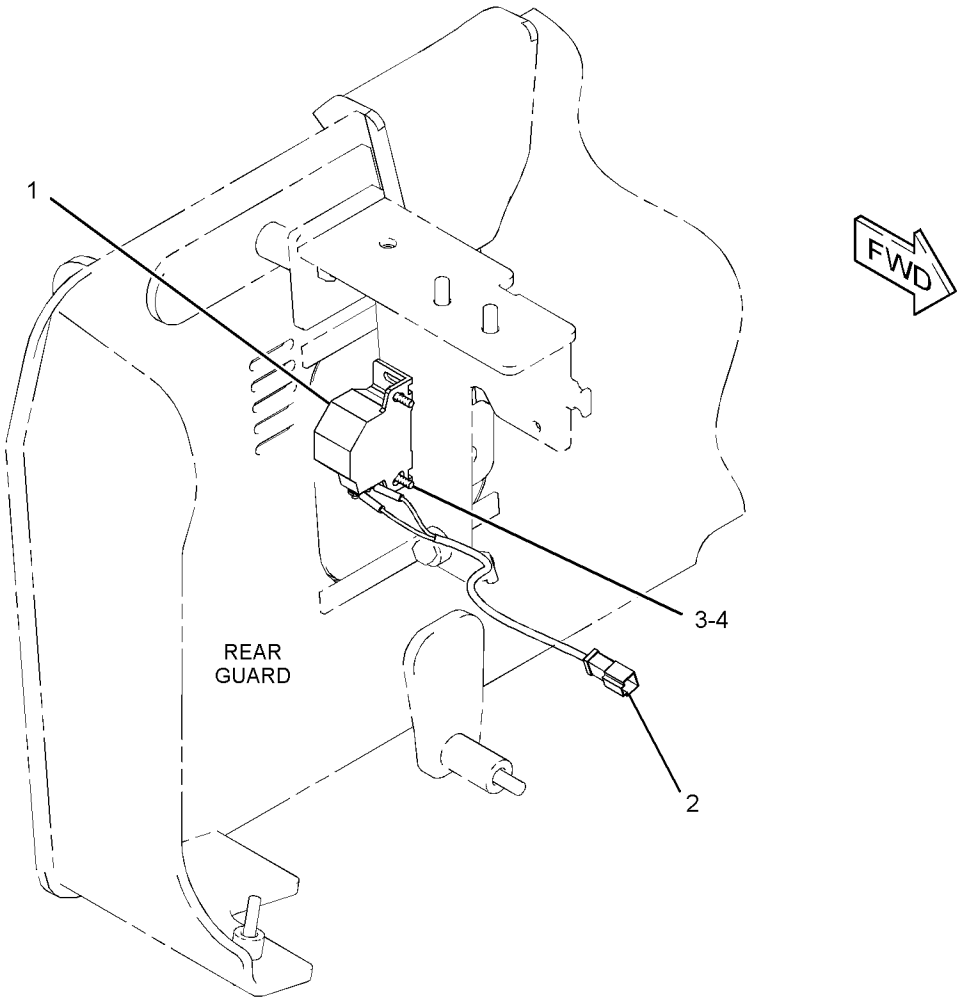

GRAPHIC #1 **<END>** g01651953

245-6024 WIRING GP-AIR CONDITIONER

S/N: MMM1-UP; RRR1-UP
PART OF 254-3210 AIR CONDITIONER & MOUNTING GP
AN ATTACHMENT

SMCS-1408, 7320 **i04418691**

NOTE	REF NO	GRAPHIC REF	PART NUMBER	QTY	PART NAME 1 2 3 4 5 6 (PRODUCT LEVEL)	SEE PAGE
	1	1	**7K-1181**	6	STRAP-CABLE	
	2	1	**236-6923**	1	SWITCH AS-PRESSURE (REFRIGERANT COMPR, HIGH SIDE)	
	3	1	**249-9048**	1	HARNESS AS-SWITCH	
		1	**9W-0852**	2	PIN-CONNECTOR (14-GA TO 16-GA)	
		1	**155-2270**	2	KIT-CONNECTING PLUG (2-PIN)	
					(EACH INCLUDES PLUG AS, WEDGE & INTERFACE SEAL)	
		1	**168-4999**	1	PLUG-CONNECTOR	
		1	**102-8802**	1	KIT-RECEPTACLE (2-PIN)	
					(INCLUDES RECEPTACLE AS & WEDGE)	
		1	**100-6674**	2	SEAL-CONNECTOR	
		1	**8T-8730**	4	SOCKET-CONNECTOR (16-GA TO 18-GA)	
		1	**305-5362**	2	TERMINAL AS (18-GA)	
		1	**189-3158**	1	SUPPRESSOR-ARC	
E		1	**125-7874**		TUBE-HEAT SHRINK (5.72-MM DIA) (5-CM)	
E		1	**125-7875**		TUBE-HEAT SHRINK (7.44-MM DIA) (5-CM)	
	4	1	**4P-8134**	1	CLIP	
	5	1	**9X-7378**	1	SEAL-O-RING	

E - ORDER BY THE CENTIMETER

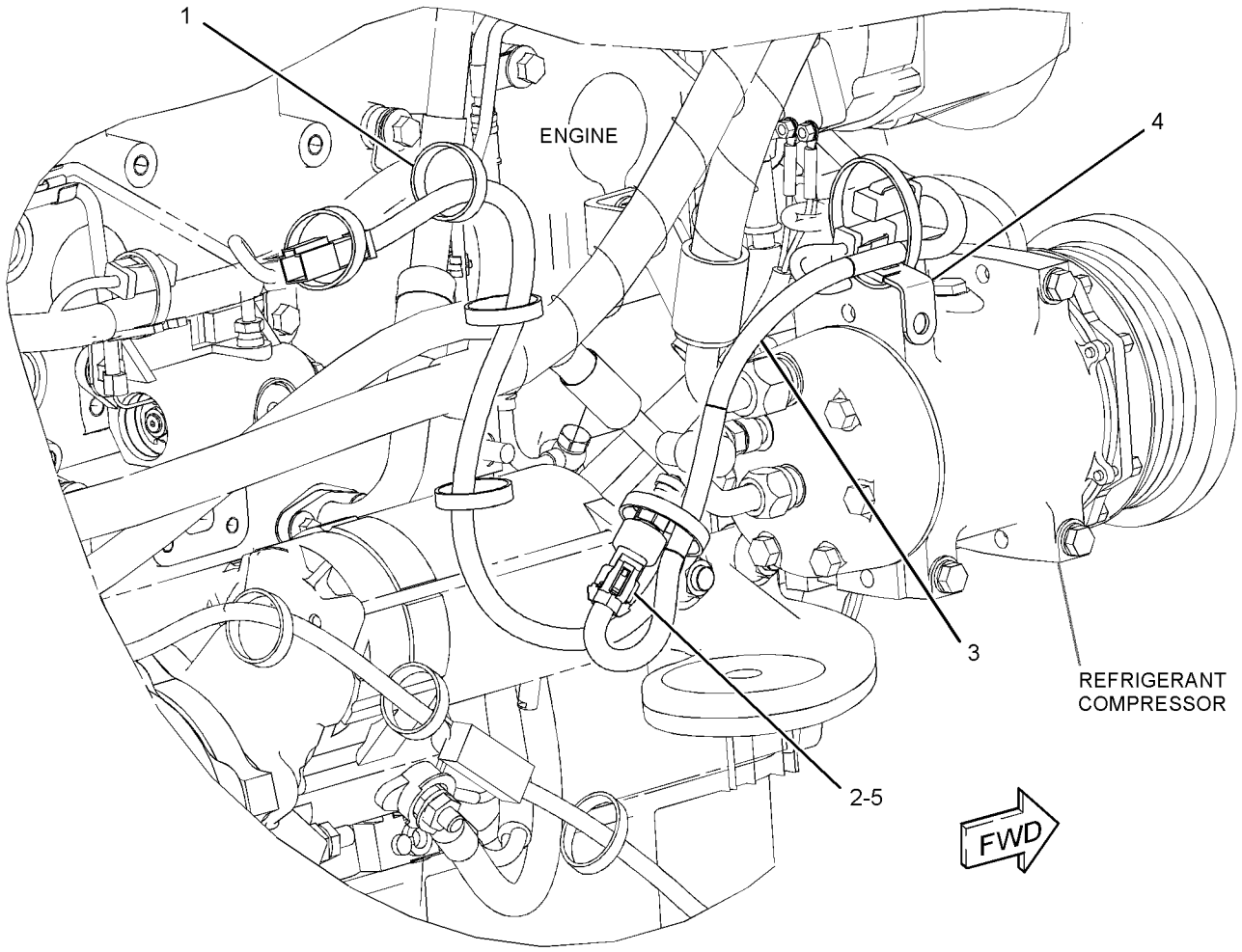

GRAPHIC #1 **<END>** g01346312

245-6021 WIRING GP-CAB–EROPS

S/N: MMM1-UP; RRR1-UP
PART OF 282-4898, 282-4899 ROPS AR-ENCLOSED
AN ATTACHMENT
TYPE 1

SMCS-1408, 7301 **i04415790**

NOTE	REF NO	GRAPHIC REF	PART NUMBER	QTY	PART NAME 1 2 3 4 5 6 (PRODUCT LEVEL)	SEE PAGE
	1	1	**7K-1181**	72	STRAP-CABLE	
	2	1	**7T-8894**	1	GROMMET	
	3	1	**7T-8895**	1	GROMMET	
	4	1	**084-4277**	1	LAMP GP-DOME (12-VOLT) (CAB)	
		1	**210-8754**	1	LAMP (12-VOLT) (MINIATURE)	
Y	5	1	**240-0101**	2	LAMP GP-FLOOD (12-VOLT)	204
	6	1	**245-6042**	1	HARNESS AS-CONSOLE (EROPS)	
		1	**8T-8729**	16	PIN-CONNECTOR (16-GA TO 18-GA)	
		1	**9W-0852**	31	PIN-CONNECTOR (14-GA TO 16-GA)	
		1	**9X-3401**	53	PIN-CONNECTOR (16-GA TO 18-GA)	
		1	**9X-1054**	1	PLUG AS-CONNECTOR (4-PIN)	
		1	**155-2255**	4	KIT-CONNECTING PLUG (12-PIN)	
		1	**155-2256**	1	KIT-CONNECTING PLUG (12-PIN)	
					(EACH PLUG KIT INCLUDES PLUG AS, WEDGE & INTERFACE SEAL)	
		1	**8T-8737**	45	PLUG-SEAL	
		1	**102-8804**	1	KIT-RECEPTACLE (4-PIN)	
		1	**102-8806**	1	KIT-RECEPTACLE (8-PIN)	
		1	**102-8801**	1	KIT-RECEPTACLE (12-PIN)	
					(EACH RECEPTACLE KIT INCLUDES RECEPTACLE AS & WEDGE)	
		1	**8T-8730**	28	SOCKET-CONNECTOR (16-GA TO 18-GA)	
		1	**9W-0844**	28	SOCKET-CONNECTOR (14-GA TO 16-GA)	
		1	**2L-8069**	2	TERMINAL-RING (2-GA TO 10-GA, 3/8-IN SCREW)	
		1	**2L-8079**	2	TERMINAL-RING (14-GA TO 16-GA, 3/8-IN SCREW)	
		1	**5P-4571**	2	TERMINAL-BLADE (14-GA TO 16-GA)	
		1	**091-2436**	66	TERMINAL-BLADE (18-GA TO 22-GA)	
		1	**104-1995**	16	TERMINAL-BLADE (14-GA TO 18-GA)	
		1	**9X-1055**	2	TERMINAL-RECEPTACLE (12-GA)	
		1	**9X-1056**	2	TERMINAL-RECEPTACLE (14-GA TO 16-GA)	
E		1	**119-3662**		TUBE-HEAT SHRINK (10.85-MM DIA) (33-CM)	
E		1	**125-7874**		TUBE-HEAT SHRINK (5.72-MM DIA) (65-CM)	
E		1	**125-7875**		TUBE-HEAT SHRINK (7.44-MM DIA) (35-CM)	
	7	1	**245-6043**	1	HARNESS AS-CAB (ROOF)	
		1	**274-3774**	3	CAP-CONNECTOR	
		1	**213-0139**	4	PIN	
		1	**8T-8729**	2	PIN-CONNECTOR (16-GA TO 18-GA)	
		1	**9W-0852**	6	PIN-CONNECTOR (14-GA TO 16-GA)	
		1	**155-2265**	2	KIT-CONNECTING PLUG (8-PIN)	
		1	**155-2270**	7	KIT-CONNECTING PLUG (2-PIN)	
		1	**177-9656**	1	KIT-CONNECTING PLUG (4-PIN)	
					(EACH PLUG KIT INCLUDES PLUG AS, WEDGE & INTERFACE SEAL)	
		1	**230-5008**	2	PLUG AS-CONNECTOR (4-PIN)	
					(EACH INCLUDES)	
		1	**264-7031**	1	SEAL-CONNECTOR	
		1	**8T-8737**	11	PLUG-SEAL	
		1	**102-8806**	1	KIT-RECEPTACLE (8-PIN)	
					(INCLUDES RECEPTACLE AS & WEDGE)	
		1	**274-3778**	1	CAP-SEAL	
		1	**8T-8730**	19	SOCKET-CONNECTOR (16-GA TO 18-GA)	
		1	**9W-0844**	8	SOCKET-CONNECTOR (14-GA TO 16-GA)	
		1	**9X-3402**	8	SOCKET-CONNECTOR (16-GA TO 18-GA)	
		1	**8L-8413**	52	STRAP-CABLE	

245-6021 **WIRING GP-CAB (*contd.*)** **i04415790**

NOTE	REF NO	GRAPHIC REF	PART NUMBER	QTY	PART NAME 1 2 3 4 5 6 (PRODUCT LEVEL)	SEE PAGE
		1	**2L-8052**	1	TERMINAL-RING (6-GA, 3/8-IN SCREW)	
		1	**2L-8079**	1	TERMINAL-RING (14-GA TO 16-GA, 3/8-IN SCREW)	
		1	**5P-4571**	4	TERMINAL-BLADE (14-GA TO 16-GA)	
		1	**9R-9442**	2	TERMINAL	
E		1	**119-3662**		TUBE-HEAT SHRINK (10.85-MM DIA) (7-CM)	
E		1	**125-7874**		TUBE-HEAT SHRINK (5.72-MM DIA) (20-CM)	
E		1	**125-7875**		TUBE-HEAT SHRINK (7.44-MM DIA) (15-CM)	
	8	1	**245-6044**	1	HARNESS AS-CAB (DASH)	
		1	**8T-8729**	11	PIN-CONNECTOR (16-GA TO 18-GA)	
		1	**155-2265**	1	KIT-CONNECTING PLUG (8-PIN)	
		1	**155-2260**	2	KIT-CONNECTING PLUG (3-PIN)	
		1	**155-2271**	2	KIT-CONNECTING PLUG (4-PIN)	
					(EACH PLUG KIT INCLUDES PLUG AS, WEDGE & INTERFACE SEAL)	
		1	**230-4009**	1	PLUG AS-CONNECTOR (12-PIN)	
		1	**264-7034**	1	SEAL-CONNECTOR	
		1	**8T-8737**	21	PLUG-SEAL	
		1	**102-8806**	1	KIT-RECEPTACLE (8-PIN)	
		1	**102-8801**	1	KIT-RECEPTACLE (12-PIN)	
					(EACH RECEPTACLE KIT INCLUDES RECEPTACLE AS & WEDGE)	
		1	**134-2540**	1	RESISTOR AS-CONNECTION (3-PIN)	
		1	**8T-8730**	15	SOCKET-CONNECTOR (16-GA TO 18-GA)	
		1	**9X-3402**	7	SOCKET-CONNECTOR (16-GA TO 18-GA)	
		1	**8L-8413**	19	STRAP-CABLE	
		1	**5P-4571**	2	TERMINAL-BLADE (14-GA TO 16-GA)	
E		1	**125-7874**		TUBE-HEAT SHRINK (5.72-MM DIA) (35-CM)	
	9	1	**115-1615**	1	RELAY AS (12-VOLT) (BLOWER)	
	10	1	**132-5789**	1	CLIP	
Y	11	1	**240-0102**	4	LAMP GP-FLOOD (12-VOLT)	205
	12	1	**1V-6688**	1	GROMMET	
	13	1	**4P-7581**	1	CLIP	
	14	1	**4P-8134**	1	CLIP	
	15	1	**8T-4121**	2	WASHER-HARD (11X21X2.5-MM THK)	
M	16	1	**8T-4138**	5	BOLT (M6X1X20-MM)	
M	17	1	**8T-4189**	4	BOLT (M8X1.25X20-MM)	
M	18	1	**8T-4191**	2	BOLT (M10X1.5X16-MM)	
	20	1	**8T-4224**	6	WASHER-HARD (8.8X16X2-MM THK)	
M	21	1	**8T-7547**	2	BOLT (M8X1.25X30-MM)	
	22	1	**9D-3768**	2	GROMMET	
	23	1	**9X-7345**	3	GROMMET	
	24	1	**9X-8256**	5	WASHER (6.6X12X2-MM THK)	
E	25	1	**3E-6600**		SEAL (3-CM EACH)	
M	26	1	**5C-9553**	3	BOLT (M6X1X16-MM)	
	27	1	**5P-4115**	3	WASHER-HARD (7.2X19X2-MM THK)	

E - ORDER BY THE CENTIMETER
M - METRIC PART
Y - SEPARATE ILLUSTRATION

245-6021 **WIRING GP-CAB (*contd.*)** **i04415790**

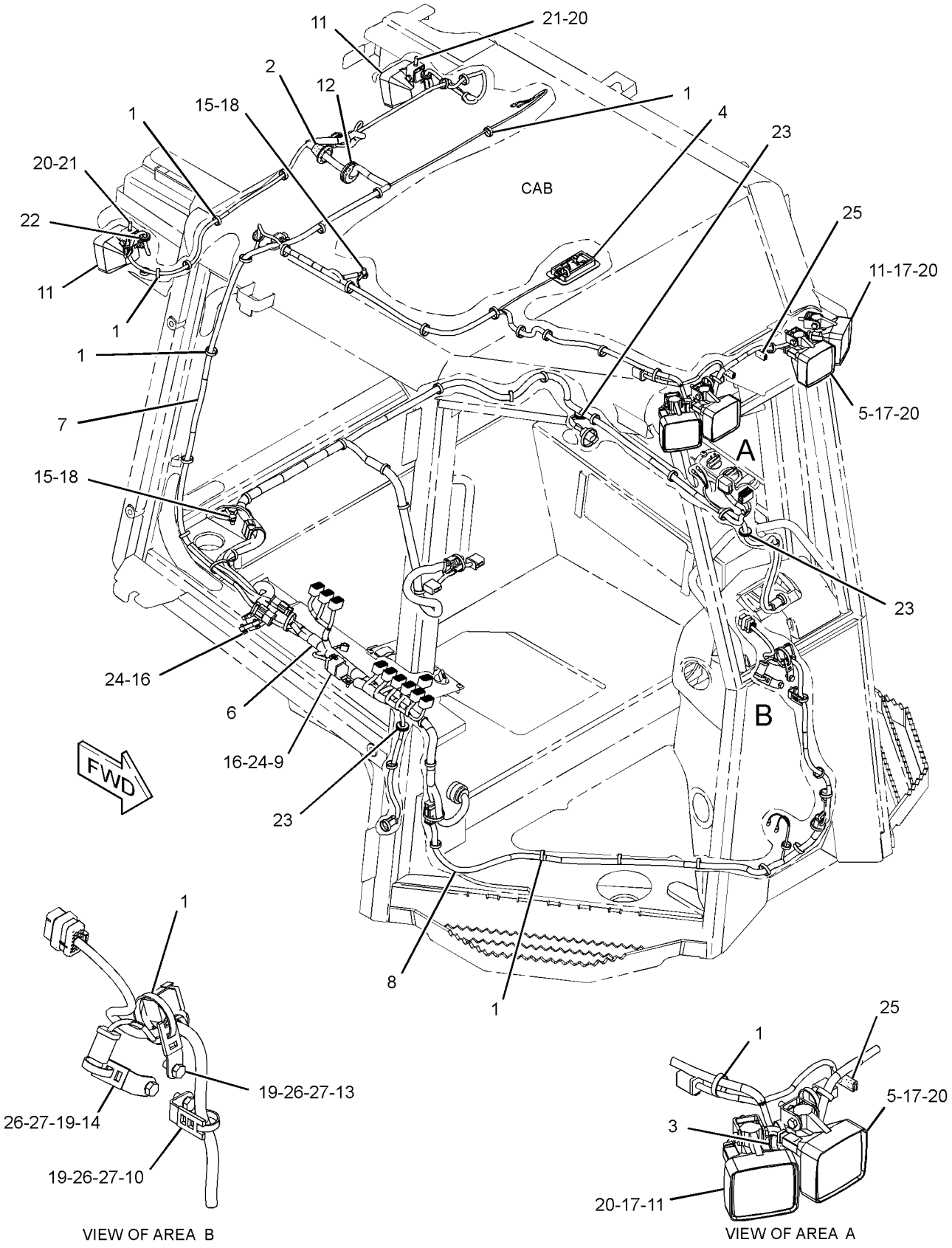

GRAPHIC #1 **<END>** g01365665

245-6021 WIRING GP-CAB—EROPS

S/N: MMM1-UP; RRR1-UP
PART OF 282-4898, 282-4899 ROPS AR-ENCLOSED
AN ATTACHMENT
TYPE 2

SMCS-1408, 7301 **i04415831**

NOTE	REF NO	GRAPHIC REF	PART NUMBER	QTY	PART NAME 1 2 3 4 5 6 (PRODUCT LEVEL)	SEE PAGE
	1	1	**7K-1181**	72	STRAP-CABLE	
	2	1	**7T-8894**	1	GROMMET	
	3	1	**7T-8895**	1	GROMMET	
	4	1	**084-4277**	1	LAMP GP-DOME (12-VOLT) (CAB)	
		1	**210-8754**	1	LAMP (12-VOLT) (MINIATURE)	
	5	1	**245-6043**	1	HARNESS AS-CAB (ROOF)	
		1	**274-3774**	3	CAP-CONNECTOR	
		1	**213-0139**	4	PIN	
		1	**8T-8729**	2	PIN-CONNECTOR (16-GA TO 18-GA)	
		1	**9W-0852**	6	PIN-CONNECTOR (14-GA TO 16-GA)	
		1	**155-2265**	2	KIT-CONNECTING PLUG (8-PIN)	
		1	**155-2270**	7	KIT-CONNECTING PLUG (2-PIN)	
		1	**177-9656**	1	KIT-CONNECTING PLUG (4-PIN)	
					(EACH PLUG KIT INCLUDES PLUG AS, WEDGE & INTERFACE SEAL)	
		1	**230-5008**	2	PLUG AS-CONNECTOR (4-PIN)	
					(EACH INCLUDES)	
		1	**264-7031**	1	SEAL-CONNECTOR	
		1	**8T-8737**	11	PLUG-SEAL	
		1	**102-8806**	1	KIT-RECEPTACLE (8-PIN)	
					(INCLUDES RECEPTACLE AS & WEDGE)	
		1	**274-3778**	1	CAP-SEAL	
		1	**8T-8730**	19	SOCKET-CONNECTOR (16-GA TO 18-GA)	
		1	**9W-0844**	8	SOCKET-CONNECTOR (14-GA TO 16-GA)	
		1	**9X-3402**	8	SOCKET-CONNECTOR (16-GA TO 18-GA)	
		1	**8L-8413**	52	STRAP-CABLE	
		1	**2L-8052**	1	TERMINAL-RING (6-GA, 3/8-IN SCREW)	
		1	**2L-8079**	1	TERMINAL-RING (14-GA TO 16-GA, 3/8-IN SCREW)	
		1	**5P-4571**	4	TERMINAL-BLADE (14-GA TO 16-GA)	
		1	**9R-9442**	2	TERMINAL	
E		1	**119-3662**		TUBE-HEAT SHRINK (10.85-MM DIA) (7-CM)	
E		1	**125-7874**		TUBE-HEAT SHRINK (5.72-MM DIA) (20-CM)	
E		1	**125-7875**		TUBE-HEAT SHRINK (7.44-MM DIA) (15-CM)	
	6	1	**245-6044**	1	HARNESS AS-CAB (DASH)	
		1	**8T-8729**	11	PIN-CONNECTOR (16-GA TO 18-GA)	
		1	**155-2265**	1	KIT-CONNECTING PLUG (8-PIN)	
		1	**155-2260**	2	KIT-CONNECTING PLUG (3-PIN)	
		1	**155-2271**	2	KIT-CONNECTING PLUG (4-PIN)	
					(EACH PLUG KIT INCLUDES PLUG AS, WEDGE & INTERFACE SEAL)	
		1	**230-4009**	1	PLUG AS-CONNECTOR (12-PIN)	
		1	**264-7034**	1	SEAL-CONNECTOR	
		1	**8T-8737**	21	PLUG-SEAL	
		1	**102-8806**	1	KIT-RECEPTACLE (8-PIN)	
		1	**102-8801**	1	KIT-RECEPTACLE (12-PIN)	
					(EACH RECEPTACLE KIT INCLUDES RECEPTACLE AS & WEDGE)	
		1	**134-2540**	1	RESISTOR AS-CONNECTION (3-PIN)	
		1	**8T-8730**	15	SOCKET-CONNECTOR (16-GA TO 18-GA)	
		1	**9X-3402**	7	SOCKET-CONNECTOR (16-GA TO 18-GA)	
		1	**8L-8413**	19	STRAP-CABLE	
		1	**5P-4571**	2	TERMINAL-BLADE (14-GA TO 16-GA)	
E		1	**125-7874**		TUBE-HEAT SHRINK (5.72-MM DIA) (35-CM)	
C	7	1	**311-0292**	1	HARNESS AS-CONSOLE (EROPS)	
		1	**228-5856**	13	CONNECTOR	

245-6021 **WIRING GP-CAB (*contd.*)** **i04415831**

NOTE	REF NO	GRAPHIC REF	PART NUMBER	QTY	PART NAME 1 2 3 4 5 6 (PRODUCT LEVEL)	SEE PAGE
		1	**213-0139**	4	PIN	
		1	**8T-8729**	16	PIN-CONNECTOR (16-GA TO 18-GA)	
		1	**9W-0852**	31	PIN-CONNECTOR (14-GA TO 16-GA)	
		1	**9X-3401**	59	PIN-CONNECTOR (16-GA TO 18-GA)	
		1	**9X-1054**	1	PLUG AS-CONNECTOR (4-PIN)	
		1	**155-2255**	4	KIT-CONNECTING PLUG (12-PIN)	
		1	**155-2256**	1	KIT-CONNECTING PLUG (12-PIN)	
		1	**155-2265**	1	KIT-CONNECTING PLUG (8-PIN)	
		1	**155-2260**	1	KIT-CONNECTING PLUG (3-PIN)	
		1	**155-2270**	1	KIT-CONNECTING PLUG (2-PIN)	
		1	**155-2271**	4	KIT-CONNECTING PLUG (4-PIN)	
		1	**155-2274**	1	KIT-CONNECTING PLUG (6-PIN)	
		1	**177-9656**	1	KIT-CONNECTING PLUG (4-PIN)	
					(EACH PLUG KIT INCLUDES PLUG AS, WEDGE & INTERFACE SEAL)	
		1	**225-3854**	1	PLUG AS-CONNECTOR (31-PIN)	
		1	**8T-8737**	39	PLUG-SEAL	
		1	**102-8804**	1	KIT-RECEPTACLE (4-PIN)	
		1	**102-8806**	1	KIT-RECEPTACLE (8-PIN)	
		1	**102-8801**	1	KIT-RECEPTACLE (12-PIN)	
					(EACH RECEPTACLE KIT INCLUDES RECEPTACLE AS & WEDGE)	
		1	**214-4208**	1	RECEPTACLE AS-CONNECTOR (70-PIN)	
		1	**8T-8730**	28	SOCKET-CONNECTOR (16-GA TO 18-GA)	
		1	**9W-0844**	28	SOCKET-CONNECTOR (14-GA TO 16-GA)	
		1	**180-9340**	19	SOCKET-CONNECTOR (14-GA TO 18-GA)	
		1	**2L-8069**	2	TERMINAL-RING (2-GA TO 10-GA, 3/8-IN SCREW)	
		1	**2L-8079**	2	TERMINAL-RING (14-GA TO 16-GA, 3/8-IN SCREW)	
		1	**5P-4571**	2	TERMINAL-BLADE (14-GA TO 16-GA)	
		1	**091-2436**	80	TERMINAL-BLADE (18-GA TO 22-GA)	
		1	**104-1995**	16	TERMINAL-BLADE (14-GA TO 18-GA)	
		1	**9X-1055**	2	TERMINAL-RECEPTACLE (12-GA)	
		1	**9X-1056**	2	TERMINAL-RECEPTACLE (14-GA TO 16-GA)	
E		1	**119-3662**		TUBE-HEAT SHRINK (10.85-MM DIA) (26-CM)	
E		1	**125-7874**		TUBE-HEAT SHRINK (5.72-MM DIA) (65-CM)	
E		1	**125-7875**		TUBE-HEAT SHRINK (7.44-MM DIA) (40-CM)	
	8	1	**115-1615**	1	RELAY AS (12-VOLT) (BLOWER)	
	9	1	**132-5789**	1	CLIP	
	10	1	**1V-6688**	1	GROMMET	
	11	1	**4P-7581**	1	CLIP	
	12	1	**4P-8134**	1	CLIP	
M	13	1	**5C-9553**	3	BOLT (M6X1X16-MM)	
	14	1	**5P-4115**	3	WASHER-HARD (7.2X19X2-MM THK)	
	15	1	**8T-4121**	2	WASHER-HARD (11X21X2.5-MM THK)	
M	16	1	**8T-4138**	5	BOLT (M6X1X20-MM)	
M	17	1	**8T-4191**	2	BOLT (M10X1.5X16-MM)	
	18	1	**9X-7345**	3	GROMMET	
	19	1	**9X-8256**	5	WASHER (6.6X12X2-MM THK)	
E	20	1	**3E-6600**		SEAL (3-CM EACH)	

C - CHANGE FROM PREVIOUS TYPE
E - ORDER BY THE CENTIMETER
M - METRIC PART

245-6021 **WIRING GP-CAB (*contd.*)** **i04415831**

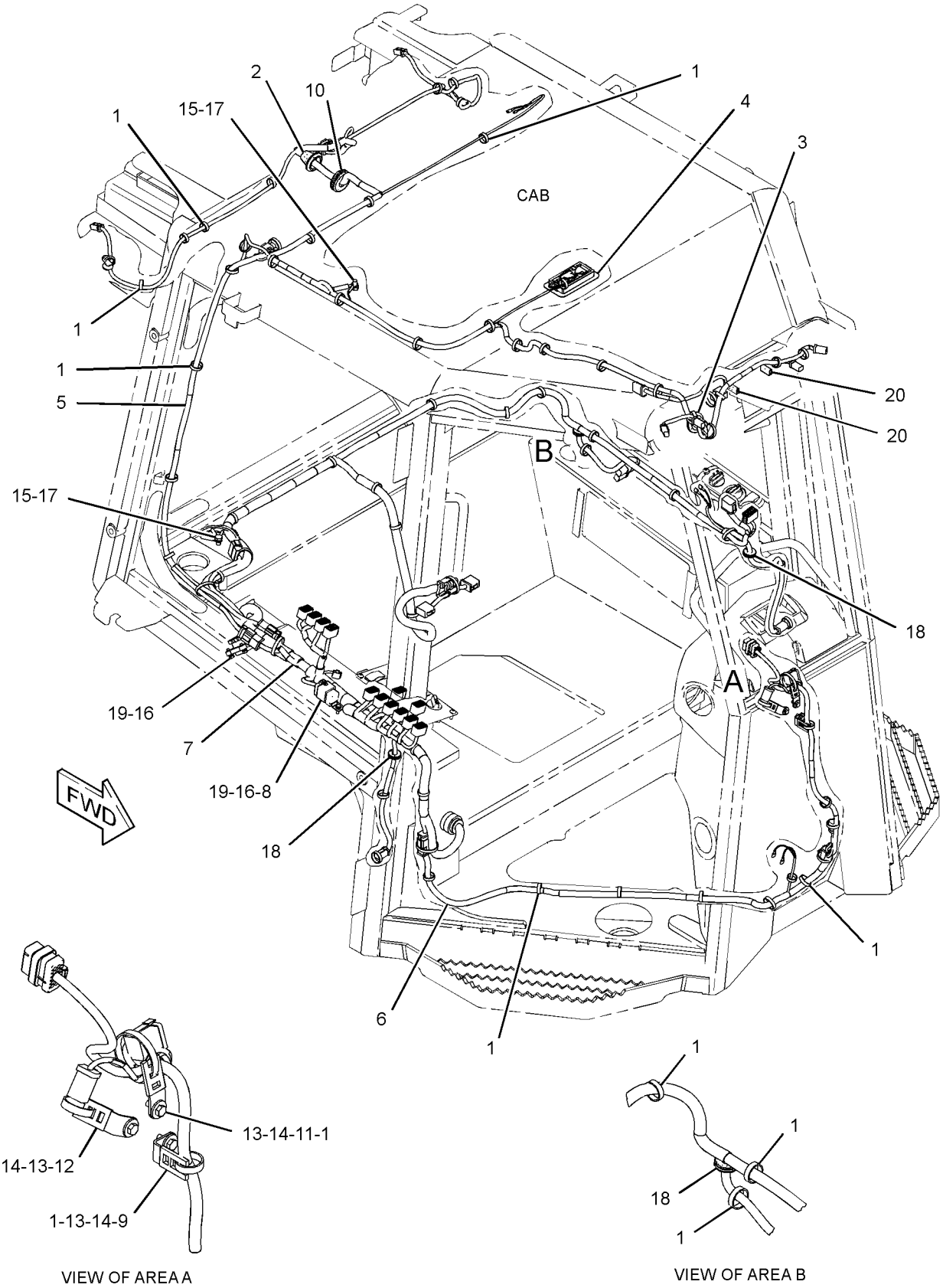

GRAPHIC #1 **<END>** g01736533

245-6021 WIRING GP-CAB—EROPS

S/N: MMM1-UP; RRR1-UP
PART OF 244-7475, 244-7476 ROPS AR, 282-4898, 282-4899 ROPS AR-ENCLOSED
AN ATTACHMENT
TYPE 3

SMCS-1408, 7301 **i04415850**

NOTE	REF NO	GRAPHIC REF	PART NUMBER	QTY	PART NAME 1 2 3 4 5 6 (PRODUCT LEVEL)	SEE PAGE
C	1	1	**7K-1181**	77	STRAP-CABLE	
	2	1	**7T-8894**	1	GROMMET	
	3	1	**7T-8895**	1	GROMMET	
	4	1	**084-4277**	1	LAMP GP-DOME (12-VOLT) (CAB)	
		1	**210-8754**	1	LAMP (12-VOLT) (MINIATURE)	
C	5	1	**229-8377**	1	CIRCUIT BREAKER AS (35-AMPERE)	
		1	**6V-8378**	2	NUT (10-32-THD)	
		1	**8F-1434**	2	LOCKWASHER	
		1	**8T-0328**	2	WASHER-HARD (5.5X10X1-MM THK)	
	6	1	**245-6043**	1	HARNESS AS-CAB (ROOF)	
		1	**274-3774**	3	CAP-CONNECTOR	
		1	**213-0139**	4	PIN	
		1	**8T-8729**	2	PIN-CONNECTOR (16-GA TO 18-GA)	
		1	**9W-0852**	6	PIN-CONNECTOR (14-GA TO 16-GA)	
		1	**155-2265**	2	KIT-CONNECTING PLUG (8-PIN)	
		1	**155-2270**	7	KIT-CONNECTING PLUG (2-PIN)	
		1	**177-9656**	1	KIT-CONNECTING PLUG (4-PIN)	
					(EACH PLUG KIT INCLUDES PLUG AS, WEDGE & INTERFACE SEAL)	
		1	**230-5008**	2	PLUG AS-CONNECTOR (4-PIN)	
					(EACH INCLUDES)	
		1	**264-7031**	1	SEAL-CONNECTOR	
		1	**8T-8737**	11	PLUG-SEAL	
		1	**102-8806**	1	KIT-RECEPTACLE (8-PIN)	
					(INCLUDES RECEPTACLE AS & WEDGE)	
		1	**274-3778**	1	CAP-SEAL	
		1	**8T-8730**	19	SOCKET-CONNECTOR (16-GA TO 18-GA)	
		1	**9W-0844**	8	SOCKET-CONNECTOR (14-GA TO 16-GA)	
		1	**9X-3402**	8	SOCKET-CONNECTOR (16-GA TO 18-GA)	
		1	**8L-8413**	52	STRAP-CABLE	
		1	**2L-8052**	1	TERMINAL-RING (6-GA, 3/8-IN SCREW)	
		1	**2L-8079**	1	TERMINAL-RING (14-GA TO 16-GA, 3/8-IN SCREW)	
		1	**5P-4571**	4	TERMINAL-BLADE (14-GA TO 16-GA)	
		1	**9R-9442**	2	TERMINAL	
E		1	**119-3662**		TUBE-HEAT SHRINK (10.85-MM DIA) (7-CM)	
E		1	**125-7874**		TUBE-HEAT SHRINK (5.72-MM DIA) (20-CM)	
E		1	**125-7875**		TUBE-HEAT SHRINK (7.44-MM DIA) (15-CM)	
	7	1	**245-6044**	1	HARNESS AS-CAB (DASH)	
		1	**8T-8729**	11	PIN-CONNECTOR (16-GA TO 18-GA)	
		1	**155-2265**	1	KIT-CONNECTING PLUG (8-PIN)	
		1	**155-2260**	2	KIT-CONNECTING PLUG (3-PIN)	
		1	**155-2271**	2	KIT-CONNECTING PLUG (4-PIN)	
					(EACH PLUG KIT INCLUDES PLUG AS, WEDGE & INTERFACE SEAL)	
		1	**230-4009**	1	PLUG AS-CONNECTOR (12-PIN)	
		1	**264-7034**	1	SEAL-CONNECTOR	
		1	**8T-8737**	21	PLUG-SEAL	
		1	**102-8806**	1	KIT-RECEPTACLE (8-PIN)	
		1	**102-8801**	1	KIT-RECEPTACLE (12-PIN)	
					(EACH RECEPTACLE KIT INCLUDES RECEPTACLE AS & WEDGE)	
		1	**134-2540**	1	RESISTOR AS-CONNECTION (3-PIN)	
		1	**8T-8730**	15	SOCKET-CONNECTOR (16-GA TO 18-GA)	
		1	**9X-3402**	7	SOCKET-CONNECTOR (16-GA TO 18-GA)	
		1	**8L-8413**	19	STRAP-CABLE	

245-6021 **WIRING GP-CAB (*contd.*)** **i04415850**

NOTE	REF NO	GRAPHIC REF	PART NUMBER	QTY	PART NAME 1 2 3 4 5 6 (PRODUCT LEVEL)	SEE PAGE
		1	**5P-4571**	2	TERMINAL-BLADE (14-GA TO 16-GA)	
E		1	**125-7874**		TUBE-HEAT SHRINK (5.72-MM DIA) (35-CM)	
C	8	1	**318-6093**	1	HARNESS AS-CONSOLE (EROPS)	
		1	**228-5856**	13	CONNECTOR	
		1	**213-0139**	4	PIN	
		1	**8T-8729**	16	PIN-CONNECTOR (16-GA TO 18-GA)	
		1	**9W-0852**	31	PIN-CONNECTOR (14-GA TO 16-GA)	
		1	**9X-3401**	59	PIN-CONNECTOR (16-GA TO 18-GA)	
		1	**9X-1054**	2	PLUG AS-CONNECTOR (4-PIN)	
		1	**155-2255**	4	KIT-CONNECTING PLUG (12-PIN)	
		1	**155-2256**	1	KIT-CONNECTING PLUG (12-PIN)	
		1	**155-2265**	1	KIT-CONNECTING PLUG (8-PIN)	
		1	**155-2260**	1	KIT-CONNECTING PLUG (3-PIN)	
		1	**155-2270**	1	KIT-CONNECTING PLUG (2-PIN)	
		1	**155-2274**	1	KIT-CONNECTING PLUG (6-PIN)	
		1	**177-9656**	1	KIT-CONNECTING PLUG (4-PIN)	
		1	**155-2271**	4	KIT-CONNECTING PLUG (4-PIN)	
					(EACH PLUG KIT INCLUDES PLUG AS, WEDGE & INTERFACE SEAL)	
		1	**225-3854**	1	PLUG AS-CONNECTOR (31-PIN)	
		1	**8T-8737**	39	PLUG-SEAL	
		1	**102-8804**	1	KIT-RECEPTACLE (4-PIN)	
		1	**102-8806**	1	KIT-RECEPTACLE (8-PIN)	
		1	**102-8801**	1	KIT-RECEPTACLE (12-PIN)	
					(EACH RECEPTACLE KIT INCLUDES RECEPTACLE AS & WEDGE)	
		1	**214-4208**	1	RECEPTACLE AS-CONNECTOR (70-PIN)	
		1	**8T-8730**	27	SOCKET-CONNECTOR (16-GA TO 18-GA)	
		1	**9W-0844**	29	SOCKET-CONNECTOR (14-GA TO 16-GA)	
		1	**180-9340**	19	SOCKET-CONNECTOR (14-GA TO 18-GA)	
B		1	**141-8061**		TAPE	
		1	**2L-8069**	2	TERMINAL-RING (2-GA TO 10-GA, 3/8-IN SCREW)	
		1	**2L-8079**	2	TERMINAL-RING (14-GA TO 16-GA, 3/8-IN SCREW)	
		1	**5P-4571**	2	TERMINAL-BLADE (14-GA TO 16-GA)	
		1	**2L-8066**	2	TERMINAL-RING (10-GA TO 12-GA, NO. 10 SCREW)	
		1	**091-2436**	79	TERMINAL-BLADE (18-GA TO 22-GA)	
		1	**104-1995**	17	TERMINAL-BLADE (14-GA TO 18-GA)	
		1	**9X-1055**	6	TERMINAL-RECEPTACLE (12-GA)	
		1	**9X-1056**	2	TERMINAL-RECEPTACLE (14-GA TO 16-GA)	
E		1	**119-3662**		TUBE-HEAT SHRINK (10.85-MM DIA) (26-CM)	
E		1	**125-7874**		TUBE-HEAT SHRINK (5.72-MM DIA) (70-CM)	
E		1	**125-7875**		TUBE-HEAT SHRINK (7.44-MM DIA) (40-CM)	
	9	1	**115-1615**	2	RELAY AS (12-VOLT) (BLOWER)	
	10	1	**132-5789**	2	CLIP	
CM	11	1	**213-7315**	2	SCREW-TRUSS HEAD (M4X0.7X25-MM)	
	12	1	**1V-6688**	1	GROMMET	
	13	1	**4P-7581**	1	CLIP	
	14	1	**4P-8134**	1	CLIP	
M	15	1	**5C-9553**	3	BOLT (M6X1X16-MM)	
	16	1	**5P-4115**	3	WASHER-HARD (7.2X19X2-MM THK)	
	17	1	**8T-4121**	2	WASHER-HARD (11X21X2.5-MM THK)	
M	18	1	**8T-4138**	5	BOLT (M6X1X20-MM)	
M	19	1	**8T-4191**	2	BOLT (M10X1.5X16-MM)	
	20	1	**9X-7345**	3	GROMMET	
	21	1	**9X-8256**	5	WASHER (6.6X12X2-MM THK)	
CD	22	1	**5P-5923**		SEAL (0.1-M)	
E	23	1	**3E-6600**		SEAL (3-CM EACH)	
	24	1	**5P-4116**	1	WASHER-HARD (8.8X20.5X2-MM THK)	
M	25	1	**7Y-9099**	4	SCREW-TRUSS HEAD (M8X1.25X25-MM)	
Y	26	1	*249-9023*	1	PANEL GP-FUSE	219

245-6021 **WIRING GP-CAB (*contd.*)** **i04415850**

NOTE	REF NO	GRAPHIC REF	PART NUMBER	QTY	PART NAME 1 2 3 4 5 6 (PRODUCT LEVEL)	SEE PAGE

B - USE AS REQUIRED
C - CHANGE FROM PREVIOUS TYPE
D - ORDER BY THE METER
E - ORDER BY THE CENTIMETER
M - METRIC PART
Y - SEPARATE ILLUSTRATION

245-6021 **WIRING GP-CAB (*contd.*)** **i04415850**

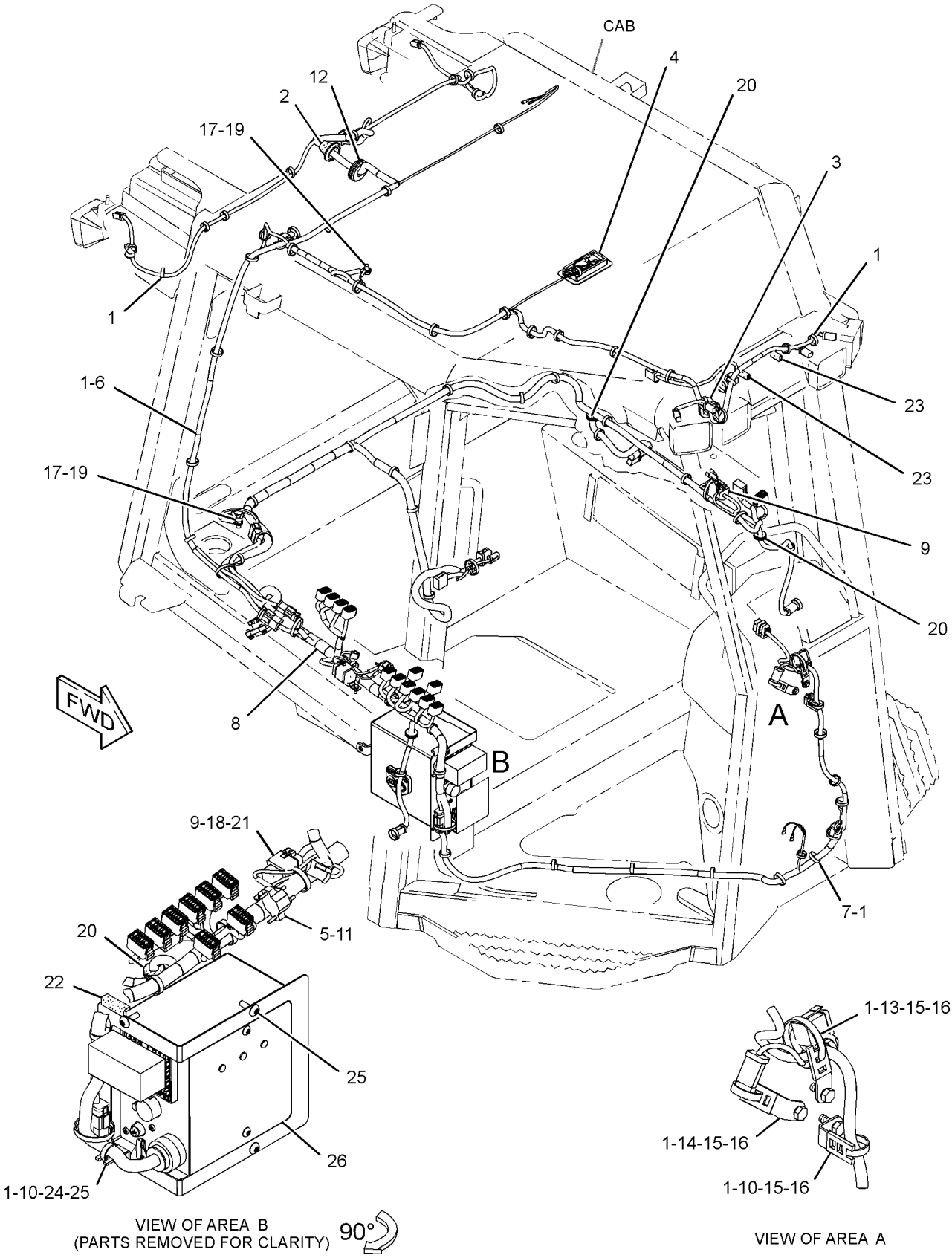

GRAPHIC #1 **<END>** g02428001

245-6047 WIRING GP-CAB–OROPS

S/N: MMM1-UP; RRR1-UP
PART OF 282-4897 ROPS AR
AN ATTACHMENT
TYPE 1

SMCS-1408, 7301 **i04415909**

NOTE	REF NO	GRAPHIC REF	PART NUMBER	QTY	PART NAME 1 2 3 4 5 6 (PRODUCT LEVEL)	SEE PAGE
	1	1	**7K-1181**	52	STRAP-CABLE	
	2	1	**7T-8895**	1	GROMMET	
Y	3	1	**240-0101**	2	LAMP GP-FLOOD (12-VOLT)	204
	4	1	**245-6023**	1	HARNESS AS-CONSOLE (OROPS)	
		1	**8T-8729**	10	PIN-CONNECTOR (16-GA TO 18-GA)	
		1	**9W-0852**	18	PIN-CONNECTOR (14-GA TO 16-GA)	
		1	**9X-3401**	51	PIN-CONNECTOR (16-GA TO 18-GA)	
		1	**9X-1054**	1	PLUG AS-CONNECTOR (4-PIN)	
		1	**155-2255**	4	KIT-CONNECTING PLUG (12-PIN)	
		1	**155-2256**	1	KIT-CONNECTING PLUG (12-PIN)	
		1	**155-2260**	1	KIT-CONNECTING PLUG (3-PIN)	
		1	**155-2270**	1	KIT-CONNECTING PLUG (2-PIN)	
		1	**155-2271**	2	KIT-CONNECTING PLUG (4-PIN)	
		1	**155-2274**	1	KIT-CONNECTING PLUG (6-PIN)	
					(EACH PLUG KIT INCLUDES PLUG AS, WEDGE & INTERFACE SEAL)	
		1	**8T-8737**	62	PLUG-SEAL	
		1	**102-8802**	1	KIT-RECEPTACLE (2-PIN)	
		1	**102-8804**	1	KIT-RECEPTACLE (4-PIN)	
		1	**102-8801**	1	KIT-RECEPTACLE (12-PIN)	
					(EACH RECEPTACLE KIT INCLUDES RECEPTACLE AS & WEDGE)	
		1	**8T-8730**	42	SOCKET-CONNECTOR (16-GA TO 18-GA)	
		1	**9W-0844**	15	SOCKET-CONNECTOR (14-GA TO 16-GA)	
		1	**2L-8069**	2	TERMINAL-RING (2-GA TO 10-GA, 3/8-IN SCREW)	
		1	**2L-8079**	2	TERMINAL-RING (14-GA TO 16-GA, 3/8-IN SCREW)	
		1	**5P-4571**	2	TERMINAL-BLADE (14-GA TO 16-GA)	
		1	**091-2436**	40	TERMINAL-BLADE (18-GA TO 22-GA)	
		1	**104-1995**	2	TERMINAL-BLADE (14-GA TO 18-GA)	
		1	**9X-1055**	2	TERMINAL-RECEPTACLE (12-GA)	
		1	**9X-1056**	2	TERMINAL-RECEPTACLE (14-GA TO 16-GA)	
E		1	**119-3662**		TUBE-HEAT SHRINK (10.85-MM DIA) (26-CM)	
E		1	**125-7874**		TUBE-HEAT SHRINK (5.72-MM DIA) (30-CM)	
E		1	**125-7875**		TUBE-HEAT SHRINK (7.44-MM DIA) (20-CM)	
	5	1	**245-6032**	1	HARNESS AS-LIGHTING (OROPS)	
		1	**274-3774**	3	CAP-CONNECTOR	
		1	**155-2270**	7	KIT-CONNECTING PLUG (2-PIN)	
					(EACH INCLUDES PLUG AS, WEDGE & INTERFACE SEAL)	
		1	**8T-8730**	12	SOCKET-CONNECTOR (16-GA TO 18-GA)	
		1	**9W-0844**	2	SOCKET-CONNECTOR (14-GA TO 16-GA)	
		1	**3T-4696**	1	TERMINAL-RING (10-GA TO 12-GA, 7/16-IN SCREW)	
E		1	**125-7874**		TUBE-HEAT SHRINK (5.72-MM DIA) (15-CM)	
E		1	**125-7875**		TUBE-HEAT SHRINK (7.44-MM DIA) (5-CM)	
	6	1	**245-6044**	1	HARNESS AS-CAB (DASH)	
		1	**8T-8729**	11	PIN-CONNECTOR (16-GA TO 18-GA)	
		1	**155-2265**	1	KIT-CONNECTING PLUG (8-PIN)	
		1	**155-2260**	2	KIT-CONNECTING PLUG (3-PIN)	
		1	**155-2271**	2	KIT-CONNECTING PLUG (4-PIN)	
					(EACH PLUG KIT INCLUDES PLUG AS, WEDGE & INTERFACE SEAL)	
		1	**230-4009**	1	PLUG AS-CONNECTOR (12-PIN)	
		1	**264-7034**	1	SEAL-CONNECTOR	
		1	**8T-8737**	21	PLUG-SEAL	

245-6047 **WIRING GP-CAB (*contd.*)** **i04415909**

NOTE	REF NO	GRAPHIC REF	PART NUMBER	QTY	PART NAME 1 2 3 4 5 6 (PRODUCT LEVEL)	SEE PAGE
		1	**102-8806**	1	KIT-RECEPTACLE (8-PIN)	
		1	**102-8801**	1	KIT-RECEPTACLE (12-PIN)	
					(EACH RECEPTACLE KIT INCLUDES RECEPTACLE AS & WEDGE)	
		1	**134-2540**	1	RESISTOR AS-CONNECTION (3-PIN)	
		1	**8T-8730**	15	SOCKET-CONNECTOR (16-GA TO 18-GA)	
		1	**9X-3402**	7	SOCKET-CONNECTOR (16-GA TO 18-GA)	
		1	**8L-8413**	19	STRAP-CABLE	
		1	**5P-4571**	2	TERMINAL-BLADE (14-GA TO 16-GA)	
E		1	**125-7874**		TUBE-HEAT SHRINK (5.72-MM DIA) (35-CM)	
	7	1	**115-1615**	1	RELAY AS (12-VOLT) (BLOWER)	
	8	1	**132-5789**	1	CLIP	
Y	9	1	**240-0102**	4	LAMP GP-FLOOD (12-VOLT)	205
	10	1	**4P-7581**	1	CLIP	
	11	1	**4P-8134**	1	CLIP	
	12	1	**8T-4121**	2	WASHER-HARD (11X21X2.5-MM THK)	
M	13	1	**8T-4138**	5	BOLT (M6X1X20-MM)	
M	14	1	**8T-4189**	6	BOLT (M8X1.25X20-MM)	
M	15	1	**8T-4191**	2	BOLT (M10X1.5X16-MM)	
	17	1	**8T-4224**	6	WASHER-HARD (8.8X16X2-MM THK)	
	18	1	**9X-7345**	1	GROMMET	
	19	1	**9X-8256**	5	WASHER (6.6X12X2-MM THK)	
M	20	1	**5C-9553**	3	BOLT (M6X1X16-MM)	
	21	1	**5P-4115**	3	WASHER-HARD (7.2X19X2-MM THK)	

E - ORDER BY THE CENTIMETER
M - METRIC PART
Y - SEPARATE ILLUSTRATION

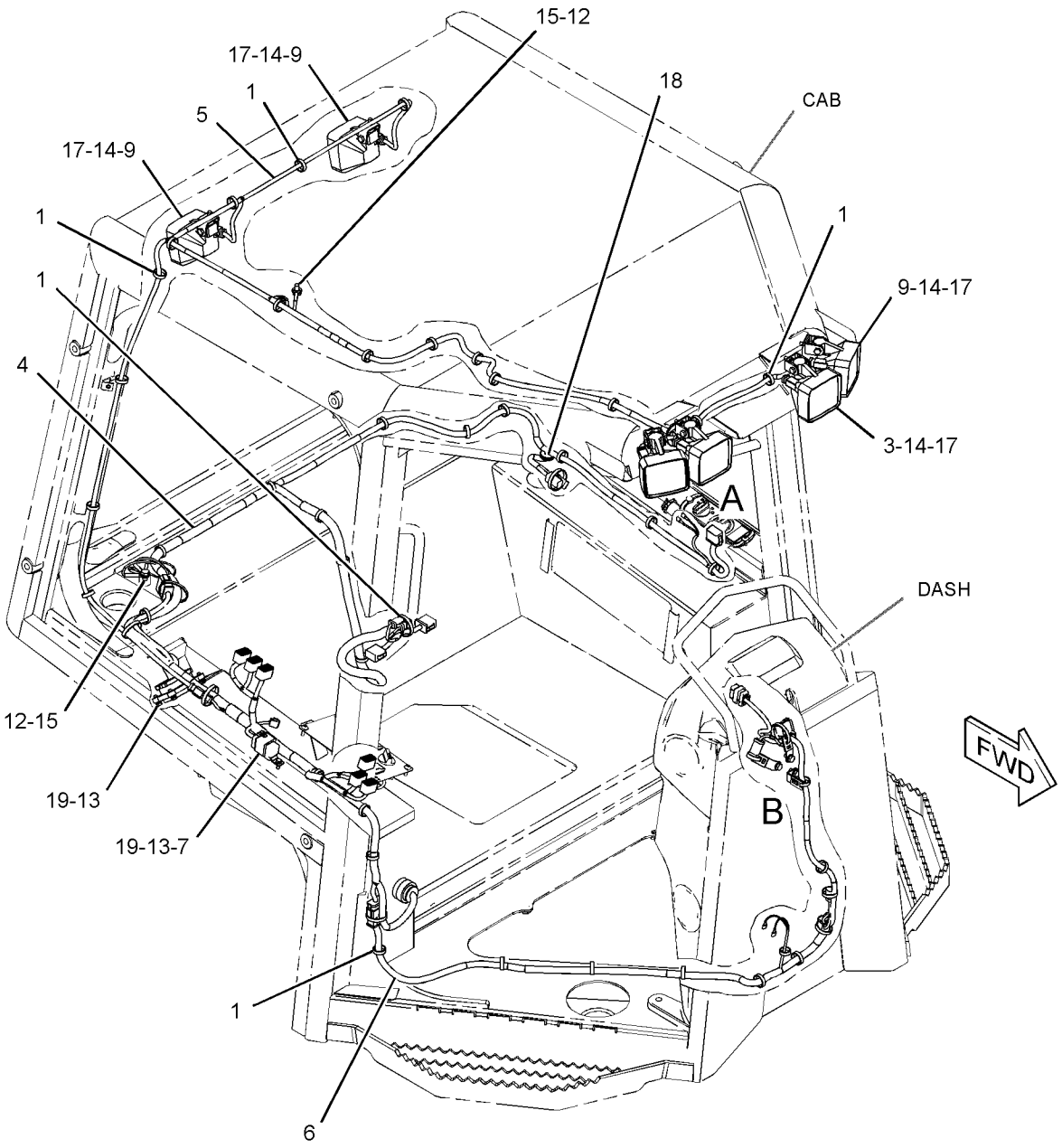

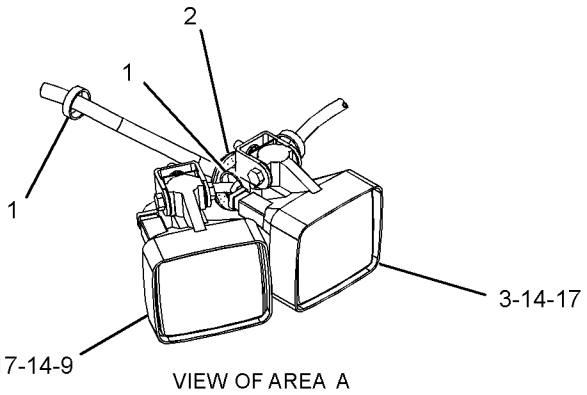

VIEW OF AREA A

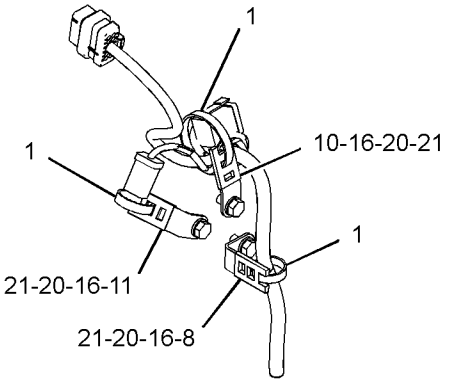

VIEW OF AREA B

GRAPHIC #1 **<END>** g01365610

245-6047 WIRING GP-CAB–OROPS

S/N: MMM1-UP; RRR1-UP
PART OF 282-4897 ROPS AR
AN ATTACHMENT
TYPE 2

SMCS-1408, 7301 **i04416249**

NOTE	REF NO	GRAPHIC REF	PART NUMBER	QTY	PART NAME 1 2 3 4 5 6 (PRODUCT LEVEL)	SEE PAGE
C	1	1	**7K-1181**	53	STRAP-CABLE	
	2	1	**7T-8895**	1	GROMMET	
	3	1	**245-6032**	1	HARNESS AS-LIGHTING (OROPS)	
		1	**274-3774**	3	CAP-CONNECTOR	
		1	**155-2270**	7	KIT-CONNECTING PLUG (2-PIN)	
					(EACH INCLUDES PLUG AS, WEDGE & INTERFACE SEAL)	
		1	**8T-8730**	12	SOCKET-CONNECTOR (16-GA TO 18-GA)	
		1	**9W-0844**	2	SOCKET-CONNECTOR (14-GA TO 16-GA)	
		1	**3T-4696**	1	TERMINAL-RING (10-GA TO 12-GA, 7/16-IN SCREW)	
E		1	**125-7874**		TUBE-HEAT SHRINK (5.72-MM DIA) (15-CM)	
E		1	**125-7875**		TUBE-HEAT SHRINK (7.44-MM DIA) (5-CM)	
	4	1	**245-6044**	1	HARNESS AS-CAB (DASH)	
		1	**8T-8729**	11	PIN-CONNECTOR (16-GA TO 18-GA)	
		1	**155-2265**	1	KIT-CONNECTING PLUG (8-PIN)	
		1	**155-2260**	2	KIT-CONNECTING PLUG (3-PIN)	
		1	**155-2271**	2	KIT-CONNECTING PLUG (4-PIN)	
					(EACH PLUG KIT INCLUDES PLUG AS, WEDGE & INTERFACE SEAL)	
		1	**230-4009**	1	PLUG AS-CONNECTOR (12-PIN)	
		1	**264-7034**	1	SEAL-CONNECTOR	
		1	**8T-8737**	21	PLUG-SEAL	
		1	**102-8806**	1	KIT-RECEPTACLE (8-PIN)	
		1	**102-8801**	1	KIT-RECEPTACLE (12-PIN)	
					(EACH RECEPTACLE KIT INCLUDES RECEPTACLE AS & WEDGE)	
		1	**134-2540**	1	RESISTOR AS-CONNECTION (3-PIN)	
		1	**8T-8730**	15	SOCKET-CONNECTOR (16-GA TO 18-GA)	
		1	**9X-3402**	7	SOCKET-CONNECTOR (16-GA TO 18-GA)	
		1	**8L-8413**	19	STRAP-CABLE	
		1	**5P-4571**	2	TERMINAL-BLADE (14-GA TO 16-GA)	
E		1	**125-7874**		TUBE-HEAT SHRINK (5.72-MM DIA) (35-CM)	
C	5	1	**311-0293**	1	HARNESS AS-CONSOLE (OROPS)	
		1	**228-5856**	8	CONNECTOR	
		1	**213-0139**	4	PIN	
		1	**8T-8729**	10	PIN-CONNECTOR (16-GA TO 18-GA)	
		1	**9W-0852**	18	PIN-CONNECTOR (14-GA TO 16-GA)	
		1	**9X-3401**	57	PIN-CONNECTOR (16-GA TO 18-GA)	
		1	**9X-1054**	1	PLUG AS-CONNECTOR (4-PIN)	
		1	**155-2255**	4	KIT-CONNECTING PLUG (12-PIN)	
		1	**155-2256**	1	KIT-CONNECTING PLUG (12-PIN)	
		1	**155-2260**	1	KIT-CONNECTING PLUG (3-PIN)	
		1	**155-2270**	1	KIT-CONNECTING PLUG (2-PIN)	
		1	**155-2271**	2	KIT-CONNECTING PLUG (4-PIN)	
		1	**155-2274**	1	KIT-CONNECTING PLUG (6-PIN)	
		1	**177-9656**	1	KIT-CONNECTING PLUG (4-PIN)	
					(EACH PLUG KIT INCLUDES PLUG AS, WEDGE & INTERFACE SEAL)	
		1	**225-3854**	1	PLUG AS-CONNECTOR (31-PIN)	
		1	**8T-8737**	56	PLUG-SEAL	
		1	**102-8802**	1	KIT-RECEPTACLE (2-PIN)	
		1	**102-8804**	1	KIT-RECEPTACLE (4-PIN)	
		1	**102-8801**	1	KIT-RECEPTACLE (12-PIN)	

245-6047 **WIRING GP-CAB (*contd.*)** **i04416249**

NOTE	REF NO	GRAPHIC REF	PART NUMBER	QTY	PART NAME 1 2 3 4 5 6 (PRODUCT LEVEL)	SEE PAGE
					(EACH RECEPTACLE KIT INCLUDES RECEPTACLE AS & WEDEGE)	
		1	**214-4208**	1	RECEPTACLE AS-CONNECTOR (70-PIN)	
		1	**8T-8730**	42	SOCKET-CONNECTOR (16-GA TO 18-GA)	
		1	**9W-0844**	15	SOCKET-CONNECTOR (14-GA TO 16-GA)	
		1	**2L-8069**	2	TERMINAL-RING (2-GA TO 10-GA, 3/8-IN SCREW)	
		1	**2L-8079**	2	TERMINAL-RING (14-GA TO 16-GA, 3/8-IN SCREW)	
		1	**5P-4571**	2	TERMINAL-BLADE (14-GA TO 16-GA)	
		1	**091-2436**	54	TERMINAL-BLADE (18-GA TO 22-GA)	
		1	**104-1995**	2	TERMINAL-BLADE (14-GA TO 18-GA)	
		1	**9X-1055**	2	TERMINAL-RECEPTACLE (12-GA)	
		1	**9X-1056**	2	TERMINAL-RECEPTACLE (14-GA TO 16-GA)	
E		1	**119-3662**		TUBE-HEAT SHRINK (10.85-MM DIA) (26-CM)	
E		1	**125-7874**		TUBE-HEAT SHRINK (5.72-MM DIA) (30-CM)	
E		1	**125-7875**		TUBE-HEAT SHRINK (7.44-MM DIA) (20-CM)	
	6	1	**115-1615**	1	RELAY AS (12-VOLT) (BLOWER)	
	7	1	**132-5789**	1	CLIP	
	8	1	**4P-7581**	1	CLIP	
	9	1	**4P-8134**	1	CLIP	
M	10	1	**5C-9553**	3	BOLT (M6X1X16-MM)	
	11	1	**5P-4115**	3	WASHER-HARD (7.2X19X2-MM THK)	
	12	1	**8T-4121**	2	WASHER-HARD (11X21X2.5-MM THK)	
M	13	1	**8T-4138**	5	BOLT (M6X1X20-MM)	
M	14	1	**8T-4191**	2	BOLT (M10X1.5X16-MM)	
	15	1	**9X-7345**	1	GROMMET	
	16	1	**9X-8256**	5	WASHER (6.6X12X2-MM THK)	

C - CHANGE FROM PREVIOUS TYPE
E - ORDER BY THE CENTIMETER
M - METRIC PART

245-6047 **WIRING GP-CAB (*contd.*)** **i04416249**

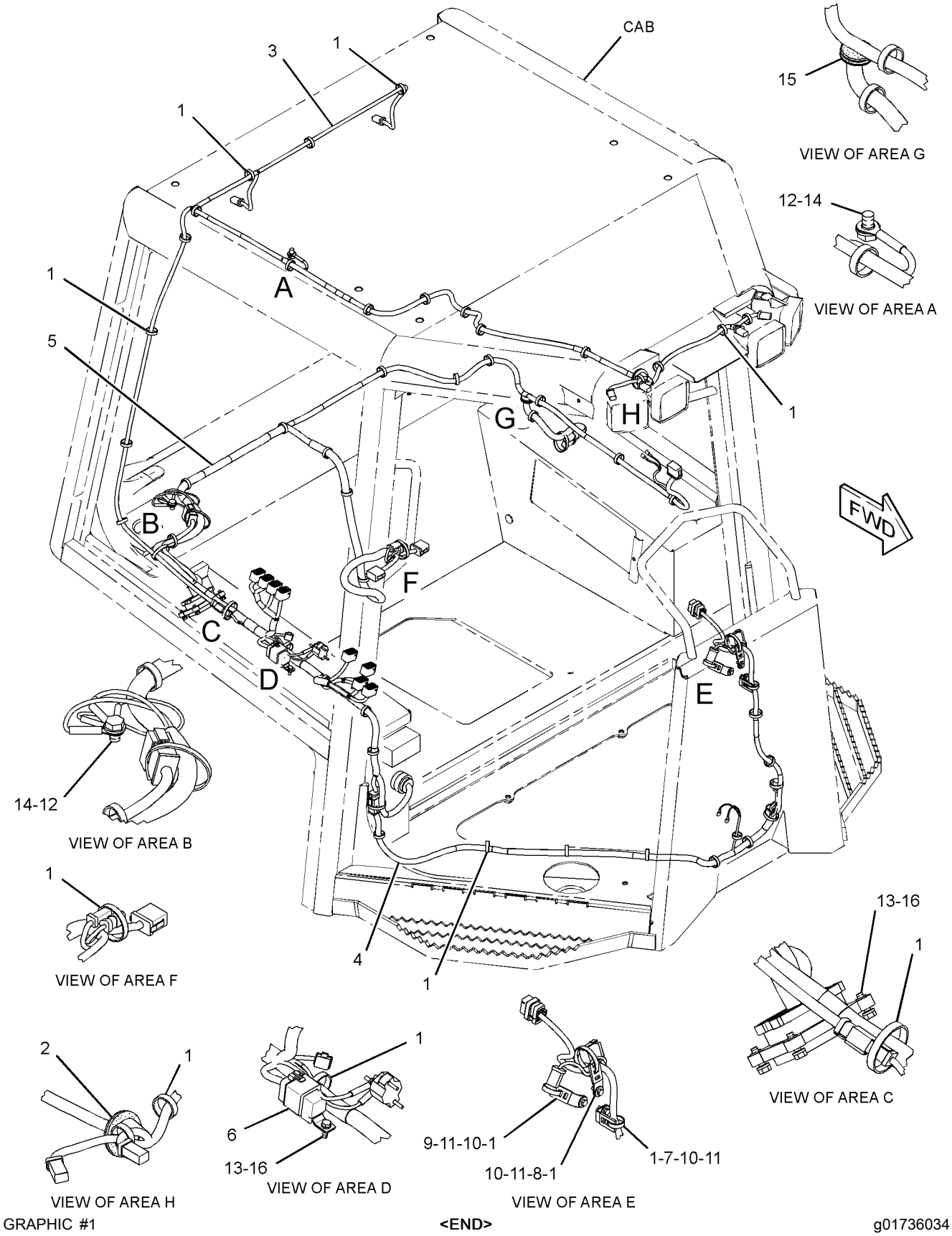

GRAPHIC #1

<END>

g01736034

245-6047 WIRING GP-CAB–OROPS

S/N: MMM1-UP; RRR1-UP
PART OF 282-4897 ROPS AR
AN ATTACHMENT
TYPE 3

SMCS-1408, 7301 **i04416310**

NOTE	REF NO	GRAPHIC REF	PART NUMBER	QTY	PART NAME 1 2 3 4 5 6 (PRODUCT LEVEL)	SEE PAGE
C	1	1	**7K-1181**	56	STRAP-CABLE	
	2	1	**7T-8895**	1	GROMMET	
C	3	1	**229-8377**	1	CIRCUIT BREAKER AS (35-AMPERE) (BLOWER)	
		1	**6V-8378**	2	NUT (10-32-THD)	
		1	**8F-1434**	2	LOCKWASHER	
		1	**8T-0328**	2	WASHER-HARD (5.5X10X1-MM THK)	
C	4	1	**318-6094**	1	HARNESS AS-CAB (OROPS)	
		1	**228-5856**	8	CONNECTOR	
		1	**213-0139**	4	PIN	
		1	**8T-8729**	10	PIN-CONNECTOR (16-GA TO 18-GA)	
		1	**9W-0852**	18	PIN-CONNECTOR (14-GA TO 16-GA)	
		1	**9X-3401**	57	PIN-CONNECTOR (16-GA TO 18-GA)	
		1	**9X-1054**	1	PLUG AS-CONNECTOR (4-PIN)	
		1	**155-2255**	4	KIT-CONNECTING PLUG (12-PIN)	
		1	**155-2256**	1	KIT-CONNECTING PLUG (12-PIN)	
		1	**155-2260**	1	KIT-CONNECTING PLUG (3-PIN)	
		1	**155-2270**	1	KIT-CONNECTING PLUG (2-PIN)	
		1	**155-2271**	2	KIT-CONNECTING PLUG (4-PIN)	
		1	**155-2274**	1	KIT-CONNECTING PLUG (6-PIN)	
		1	**177-9656**	1	KIT-CONNECTING PLUG (4-PIN)	
					(EACH PLUG KIT INCLUDES PLUG AS, WEDGE & INTERFACE SEAL)	
		1	**225-3854**	1	PLUG AS-CONNECTOR (31-PIN)	
		1	**8T-8737**	56	PLUG-SEAL	
		1	**102-8802**	1	KIT-RECEPTACLE (2-PIN)	
		1	**102-8804**	1	KIT-RECEPTACLE (4-PIN)	
		1	**102-8801**	1	KIT-RECEPTACLE (12-PIN)	
					(EACH RECEPTACLE KIT INCLUDES RECEPTACLE AS & WEDGE)	
		1	**214-4208**	1	RECEPTACLE AS-CONNECTOR (70-PIN)	
		1	**8T-8730**	42	SOCKET-CONNECTOR (16-GA TO 18-GA)	
		1	**9W-0844**	15	SOCKET-CONNECTOR (14-GA TO 16-GA)	
B		1	**141-8061**		TAPE	
		1	**2L-8069**	2	TERMINAL-RING (2-GA TO 10-GA, 3/8-IN SCREW)	
		1	**2L-8079**	2	TERMINAL-RING (14-GA TO 16-GA, 3/8-IN SCREW)	
		1	**5P-4571**	2	TERMINAL-BLADE (14-GA TO 16-GA)	
		1	**2L-8066**	2	TERMINAL-RING (10-GA TO 12-GA, NO. 10 SCREW)	
		1	**091-2436**	54	TERMINAL-BLADE (18-GA TO 22-GA)	
		1	**104-1995**	2	TERMINAL-BLADE (14-GA TO 18-GA)	
		1	**9X-1055**	2	TERMINAL-RECEPTACLE (12-GA)	
		1	**9X-1056**	2	TERMINAL-RECEPTACLE (14-GA TO 16-GA)	
E		1	**119-3662**		TUBE-HEAT SHRINK (10.85-MM DIA) (26-CM)	
E		1	**125-7874**		TUBE-HEAT SHRINK (5.72-MM DIA) (30-CM)	
E		1	**125-7875**		TUBE-HEAT SHRINK (7.44-MM DIA) (20-CM)	
	5	1	**245-6032**	1	HARNESS AS-LIGHTING	
		1	**274-3774**	3	CAP-CONNECTOR	
		1	**155-2270**	7	KIT-CONNECTING PLUG (2-PIN)	
					(EACH INCLUDES PLUG AS, WEDGE & INTERFACE SEAL)	
		1	**8T-8730**	12	SOCKET-CONNECTOR (16-GA TO 18-GA)	
		1	**9W-0844**	2	SOCKET-CONNECTOR (14-GA TO 16-GA)	
		1	**3T-4696**	1	TERMINAL-RING (10-GA TO 12-GA, 7/16-IN SCREW)	
E		1	**125-7874**		TUBE-HEAT SHRINK (5.72-MM DIA) (15-CM)	
E		1	**125-7875**		TUBE-HEAT SHRINK (7.44-MM DIA) (5-CM)	

245-6047 **WIRING GP-CAB (*contd.*)** **i04416310**

NOTE	REF NO	GRAPHIC REF	PART NUMBER	QTY	PART NAME 1 2 3 4 5 6 (PRODUCT LEVEL)	SEE PAGE
	6	1	**245-6044**	1	HARNESS AS-CAB (DASH)	
		1	**8T-8729**	11	PIN-CONNECTOR (16-GA TO 18-GA)	
		1	**155-2265**	1	KIT-CONNECTING PLUG (8-PIN)	
		1	**155-2260**	2	KIT-CONNECTING PLUG (3-PIN)	
		1	**155-2271**	2	KIT-CONNECTING PLUG (4-PIN)	
					(EACH PLUG KIT INCLUDES PLUG AS, WEDGE & INTERFACE SEAL)	
		1	**230-4009**	1	PLUG AS-CONNECTOR (12-PIN)	
		1	**264-7034**	1	SEAL-CONNECTOR	
		1	**8T-8737**	21	PLUG-SEAL	
		1	**102-8806**	1	KIT-RECEPTACLE (8-PIN)	
		1	**102-8801**	1	KIT-RECEPTACLE (12-PIN)	
					(EACH RECEPTACLE KIT INCLUDES RECEPTACLE AS & WEDGE)	
		1	**134-2540**	1	RESISTOR AS-CONNECTION (3-PIN)	
		1	**8T-8730**	15	SOCKET-CONNECTOR (16-GA TO 18-GA)	
		1	**9X-3402**	7	SOCKET-CONNECTOR (16-GA TO 18-GA)	
		1	**8L-8413**	19	STRAP-CABLE	
		1	**5P-4571**	2	TERMINAL-BLADE (14-GA TO 16-GA)	
E		1	**125-7874**		TUBE-HEAT SHRINK (5.72-MM DIA) (35-CM)	
	7	1	**115-1615**	1	RELAY AS (12-VOLT) (BLOWER)	
	8	1	**132-5789**	1	CLIP	
	9	1	**5P-4115**	3	WASHER-HARD (7.2X19X2-MM THK)	
	10	1	**4P-7581**	1	CLIP	
	11	1	**4P-8134**	1	CLIP	
	12	1	**8T-4121**	2	WASHER-HARD (11X21X2.5-MM THK)	
M	13	1	**8T-4138**	5	BOLT (M6X1X20-MM)	
CM	14	1	**213-7315**	2	SCREW-TRUSS HEAD (M4X0.7X25-MM)	
M	15	1	**8T-4191**	2	BOLT (M10X1.5X16-MM)	
CD	16	1	**5P-5923**		SEAL (0.1-M)	
C	17	1	**3S-2093**	2	STRAP-CABLE	
	18	1	**9X-7345**	1	GROMMET	
	19	1	**9X-8256**	5	WASHER (6.6X12X2-MM THK)	
M	20	1	**5C-9553**	3	BOLT (M6X1X16-MM)	

B - USE AS REQUIRED
C - CHANGE FROM PREVIOUS TYPE
D - ORDER BY THE METER
E - ORDER BY THE CENTIMETER
M - METRIC PART

245-6047 **WIRING GP-CAB (*contd.*)** **i04416310**

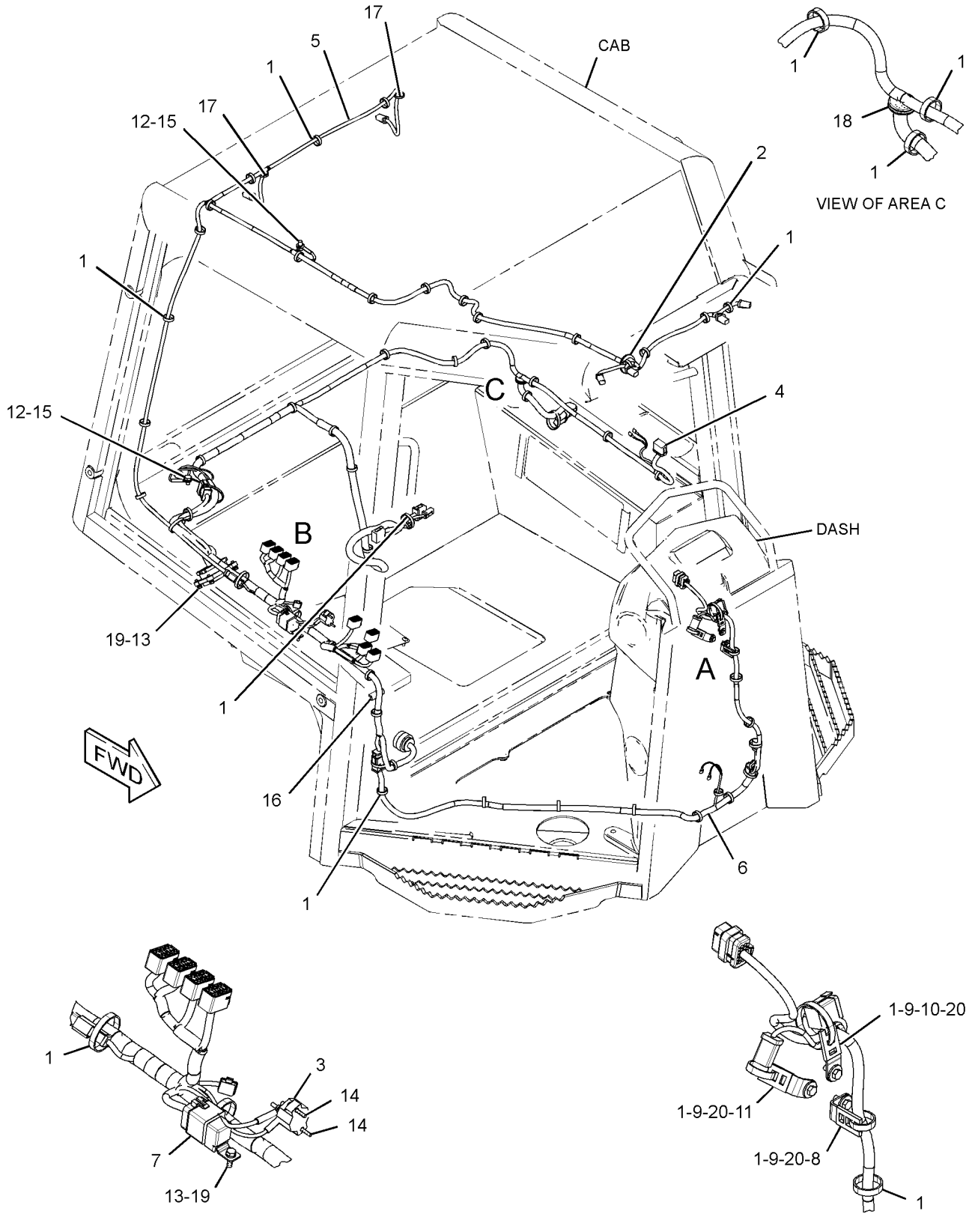

GRAPHIC #1 **<END>** g02043877

245-6047 WIRING GP-CAB–OROPS

S/N: MMM1-UP; RRR1-UP
PART OF 282-4897 ROPS AR
AN ATTACHMENT
TYPE 4

SMCS-1408, 7301 **i04418620**

NOTE	REF NO	GRAPHIC REF	PART NUMBER	QTY	PART NAME 1 2 3 4 5 6 (PRODUCT LEVEL)	SEE PAGE
	1	1	**7K-1181**	56	STRAP-CABLE	
	2	1	**7T-8895**	1	GROMMET	
	3	1	**245-6032**	1	HARNESS AS-LIGHTING (OROPS)	
		1	**274-3774**	3	CAP-CONNECTOR	
		1	**155-2270**	7	KIT-CONNECTING PLUG (2-PIN)	
					(EACH INCLUDES PLUG AS, WEDGE & INTERFACE SEAL)	
		1	**8T-8730**	12	SOCKET-CONNECTOR (16-GA TO 18-GA)	
		1	**9W-0844**	2	SOCKET-CONNECTOR (14-GA TO 16-GA)	
		1	**3T-4696**	1	TERMINAL-RING (10-GA TO 12-GA, 7/16-IN SCREW)	
E		1	**125-7874**		TUBE-HEAT SHRINK (5.72-MM DIA) (15-CM)	
E		1	**125-7875**		TUBE-HEAT SHRINK (7.44-MM DIA) (5-CM)	
	4	1	**245-6044**	1	HARNESS AS-CAB (DASH)	
		1	**8T-8729**	11	PIN-CONNECTOR (16-GA TO 18-GA)	
		1	**155-2265**	1	KIT-CONNECTING PLUG (8-PIN)	
		1	**155-2260**	2	KIT-CONNECTING PLUG (3-PIN)	
		1	**155-2271**	2	KIT-CONNECTING PLUG (4-PIN)	
					(EACH PLUG KIT INCLUDES PLUG AS, WEDGE & INTERFACE SEAL)	
		1	**230-4009**	1	PLUG AS-CONNECTOR (12-PIN)	
		1	**264-7034**	1	SEAL-CONNECTOR	
		1	**8T-8737**	21	PLUG-SEAL	
		1	**102-8806**	1	KIT-RECEPTACLE (8-PIN)	
		1	**102-8801**	1	KIT-RECEPTACLE (12-PIN)	
					(EACH RECEPTACLE KIT INCLUDES RECEPTACLE AS & WEDGE)	
		1	**134-2540**	1	RESISTOR AS-CONNECTION (3-PIN)	
		1	**8T-8730**	15	SOCKET-CONNECTOR (16-GA TO 18-GA)	
		1	**9X-3402**	7	SOCKET-CONNECTOR (16-GA TO 18-GA)	
		1	**8L-8413**	19	STRAP-CABLE	
		1	**5P-4571**	2	TERMINAL-BLADE (14-GA TO 16-GA)	
E		1	**125-7874**		TUBE-HEAT SHRINK (5.72-MM DIA) (35-CM)	
CY	5	1	*318-6121*	1	PANEL GP-FUSE	225
C	6	1	**327-6147**	1	HARNESS AS-CONTROL (OROPS)	
		1	**228-5856**	8	CONNECTOR	
		1	**213-0139**	4	PIN	
		1	**8T-8729**	10	PIN-CONNECTOR (16-GA TO 18-GA)	
		1	**9W-0852**	18	PIN-CONNECTOR (14-GA TO 16-GA)	
		1	**9X-3401**	57	PIN-CONNECTOR (16-GA TO 18-GA)	
		1	**9X-1054**	1	PLUG AS-CONNECTOR (4-PIN)	
		1	**155-2255**	4	KIT-CONNECTING PLUG (12-PIN)	
		1	**155-2256**	1	KIT-CONNECTING PLUG (12-PIN)	
		1	**155-2260**	1	KIT-CONNECTING PLUG (3-PIN)	
		1	**155-2270**	1	KIT-CONNECTING PLUG (2-PIN)	
		1	**155-2271**	2	KIT-CONNECTING PLUG (4-PIN)	
		1	**155-2274**	1	KIT-CONNECTING PLUG (6-PIN)	
		1	**177-9656**	1	KIT-CONNECTING PLUG (4-PIN)	
					(EACH PLUG KIT INCLUDES PLUG AS, WEDGE & INTERFACE SEAL)	
		1	**225-3854**	1	PLUG AS-CONNECTOR (31-PIN)	
		1	**8T-8737**	56	PLUG-SEAL	
		1	**102-8802**	1	KIT-RECEPTACLE (2-PIN)	
		1	**102-8804**	1	KIT-RECEPTACLE (4-PIN)	
		1	**102-8801**	1	KIT-RECEPTACLE (12-PIN)	

245-6047 **WIRING GP-CAB (*contd.*)** **i04418620**

NOTE	REF NO	GRAPHIC REF	PART NUMBER	QTY	PART NAME 1 2 3 4 5 6 (PRODUCT LEVEL)	SEE PAGE
					(EACH RECEPTACLE KIT INCLUDES RECEPTACLE AS & WEDGE)	
		1	**214-4208**	1	RECEPTACLE AS-CONNECTOR (70-PIN)	
		1	**8T-8730**	42	SOCKET-CONNECTOR (16-GA TO 18-GA)	
		1	**9W-0844**	15	SOCKET-CONNECTOR (14-GA TO 16-GA)	
		1	**2L-8069**	2	TERMINAL-RING (2-GA TO 10-GA, 3/8-IN SCREW)	
		1	**2L-8079**	2	TERMINAL-RING (14-GA TO 16-GA, 3/8-IN SCREW)	
		1	**5P-4571**	2	TERMINAL-BLADE (14-GA TO 16-GA)	
		1	**091-2436**	54	TERMINAL-BLADE (18-GA TO 22-GA)	
		1	**104-1995**	2	TERMINAL-BLADE (14-GA TO 18-GA)	
		1	**9X-1055**	2	TERMINAL-RECEPTACLE (12-GA)	
		1	**9X-1056**	2	TERMINAL-RECEPTACLE (14-GA TO 16-GA)	
E		1	**119-3662**		TUBE-HEAT SHRINK (10.85-MM DIA) (26-CM)	
E		1	**125-7874**		TUBE-HEAT SHRINK (5.72-MM DIA) (30-CM)	
E		1	**125-7875**		TUBE-HEAT SHRINK (7.44-MM DIA) (20-CM)	
	7	1	**115-1615**	1	RELAY AS (12-VOLT) (BLOWER)	
C	8	1	**132-5789**	2	CLIP	
	9	1	**3S-2093**	2	STRAP-CABLE	
	10	1	**4P-7581**	1	CLIP	
	11	1	**4P-8134**	1	CLIP	
M	12	1	**5C-9553**	3	BOLT (M6X1X16-MM)	
	13	1	**5P-4115**	3	WASHER-HARD (7.2X19X2-MM THK)	
C	14	1	**5P-4116**	1	WASHER-HARD (8.8X20.5X2-MM THK)	
CM	15	1	**7Y-9099**	4	SCREW-TRUSS HEAD (M8X1.25X25-MM)	
	16	1	**8T-4121**	2	WASHER-HARD (11X21X2.5-MM THK)	
M	17	1	**8T-4138**	5	BOLT (M6X1X20-MM)	
M	18	1	**8T-4191**	2	BOLT (M10X1.5X16-MM)	
	19	1	**9X-7345**	1	GROMMET	
	20	1	**9X-8256**	5	WASHER (6.6X12X2-MM THK)	
D	21	1	**5P-5923**		SEAL (0.1-M)	

C - CHANGE FROM PREVIOUS TYPE
D - ORDER BY THE METER
E - ORDER BY THE CENTIMETER
M - METRIC PART
Y - SEPARATE ILLUSTRATION

245-6047 **WIRING GP-CAB (*contd.*)** **i04418620**

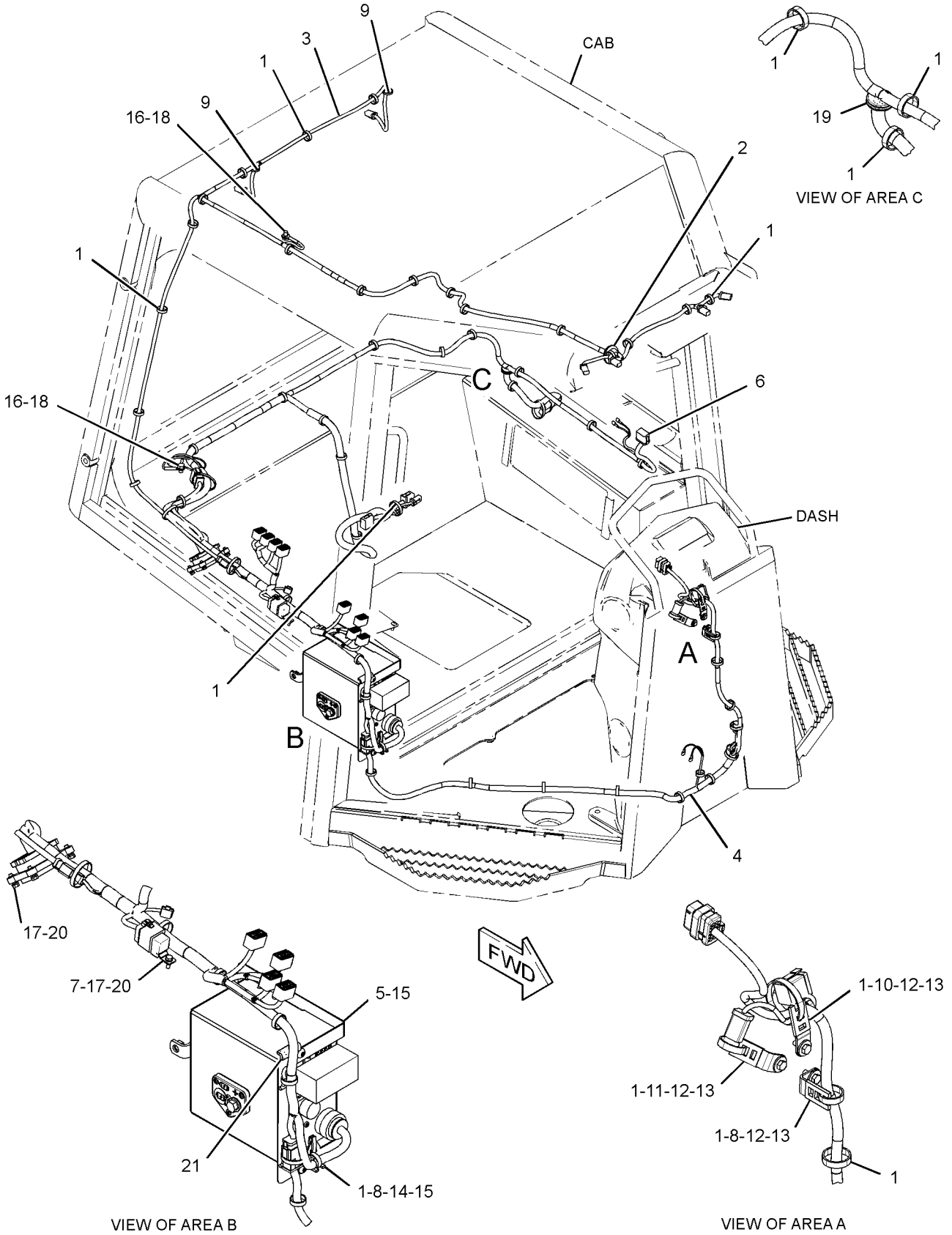

GRAPHIC #1 **<END>** g02502541

245-6027 WIRING GP-ELECTROHYDRAULIC

S/N: MMM1-1000; RRR1-800

PART OF 244-7378, 244-7379 CHASSIS AR

SMCS-5734 **i03773890**

NOTE	REF NO	GRAPHIC REF	PART NUMBER	QTY	PART NAME 1 2 3 4 5 6 (PRODUCT LEVEL)	SEE PAGE
	1	1	**7K-1181**	18	STRAP-CABLE	
M	2	1	**112-6646**	4	LOCKNUT (M6X1-THD)	
	3	1	**4P-7581**	2	CLIP	
	4	1	**269-7656**	1	HARNESS AS-SENSOR (ARMREST, LH)	
		1	**9X-3401**	9	PIN-CONNECTOR (16-GA TO 18-GA)	
		1	**155-2274**	1	KIT-CONNECTING PLUG (6-PIN)	
					(INCLUDES PLUG AS, WEDGE & INTERFACE SEAL)	
		1	**230-4009**	1	PLUG AS-CONNECTOR (12-PIN)	
		1	**264-7034**	1	SEAL-CONNECTOR	
		1	**8T-8737**	10	PLUG-SEAL	
		1	**102-8801**	1	KIT-RECEPTACLE (12-PIN)	
					(INCLUDES RECEPTACLE AS & WEDGE)	
		1	**9X-3402**	7	SOCKET-CONNECTOR (16-GA TO 18-GA)	
		1	**180-9340**	4	SOCKET-CONNECTOR (14-GA TO 18-GA)	
E		1	**125-7874**		TUBE-HEAT SHRINK (5.72-MM DIA) (10-CM)	
	5	1	**269-7657**	1	HARNESS AS-SENSOR (ARMREST, RH)	
		1	**102-8801**	1	KIT-RECEPTACLE (12-PIN)	
					(INCLUDES RECEPTACLE AS & WEDGE)	
		1	**9X-3401**	10	PIN-CONNECTOR (16-GA TO 18-GA)	
		1	**230-4009**	1	PLUG AS-CONNECTOR (12-PIN)	
		1	**264-7034**	1	SEAL-CONNECTOR	
		1	**230-5010**	1	PLUG AS-CONNECTOR (6-PIN)	
		1	**264-7032**	1	SEAL-CONNECTOR	
		1	**8T-8737**	8	PLUG-SEAL	
		1	**190-7614**	1	KIT-RECEPTACLE (12-PIN)	
					(INCLUDES RECEPTACLE AS & WEDGE)	
		1	**9X-3402**	12	SOCKET-CONNECTOR (16-GA TO 18-GA)	
E		1	**125-7874**		TUBE-HEAT SHRINK (5.72-MM DIA) (10-CM)	
	6	1	**270-7882**	1	FILM-INSTRUCTION (BULLDOZER, STER, CRUISE CNTL)	
Y	7	1	*290-4835*	1	CONTROL GP-JOYSTICK (STEERING, TRANSMISSION)	711
	8	1	**132-5789**	3	CLIP	
	9	1	**4P-7428**	2	CLIP	
M	10	1	**5C-7261**	3	NUT (M8X1.25-THD)	
M	11	1	**3E-8020**	4	SCREW-TRUSS HEAD (M6X1X25-MM)	
	12	1	**8T-4224**	3	WASHER-HARD (8.8X16X2-MM THK)	
M	13	1	**8T-4908**	3	BOLT (M8X1.25X25-MM)	

E - ORDER BY THE CENTIMETER
M - METRIC PART
Y - SEPARATE ILLUSTRATION

245-6027 **WIRING GP-ELECTROHYDRAULIC (*contd.*)** **i03773890**

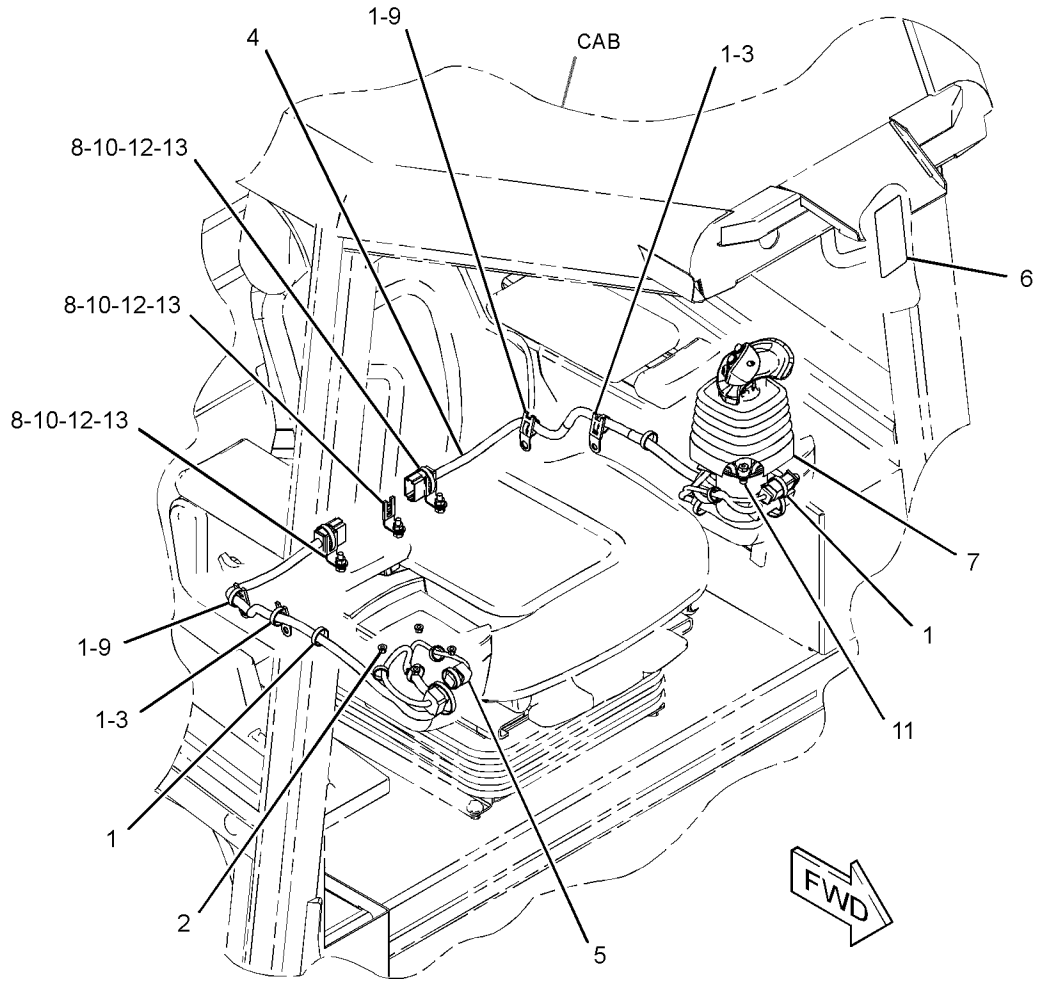

GRAPHIC #1 **<END>** g02044075

245-6027 WIRING GP-ELECTROHYDRAULIC

S/N: MMM1001-UP; RRR801-UP

PART OF 244-7378, 244-7379 CHASSIS AR

SMCS-5734 **i05317051**

NOTE	REF NO	GRAPHIC REF	PART NUMBER	QTY	PART NAME 1 2 3 4 5 6 (PRODUCT LEVEL)	SEE PAGE
C	1	1	**7K-1181**	10	STRAP-CABLE	
	2	1	**270-7882**	1	FILM-INSTRUCTION (BULLDOZER, STER, CRUISE CNTL)	
CY	3	1	**327-6173**	1	HARNESS AS-SENSOR (ARMREST, LH)	188
CY	4	1	**327-6174**	1	HARNESS AS-SENSOR (ARMREST, RH)	188
CY	5	1	*343-3676*	1	CONTROL GP-JOYSTICK (LH)	714
C	6	1	**096-1349**	2	CLIP	
C	7	1	**132-5789**	2	CLIP	
C	8	1	**156-6175**	2	CLIP	
C	9	1	**352-3968**	1	CLIP	
C	10	1	**4P-7581**	4	CLIP	
CM	11	1	**5C-2890**	2	NUT (M6X1-THD)	
CM	12	1	**5C-7261**	3	NUT (M8X1.25-THD)	
CM	13	1	**5C-9553**	4	BOLT (M6X1X16-MM)	
CM	14	1	**6V-7357**	2	BOLT (M6X1X25-MM)	
C	15	1	**8T-4205**	4	WASHER-HARD (7.2X14.5X2-MM THK)	
	16	1	**8T-4224**	3	WASHER-HARD (8.8X16X2-MM THK)	
M	17	1	**8T-4908**	3	BOLT (M8X1.25X25-MM)	
CM	18	1	**9X-2043**	2	SCREW-TRUSS HEAD (M6X1X14-MM)	
C	19	1	**9X-6165**	6	WASHER (6.5X22X2.5-MM THK)	

C - CHANGE FROM PREVIOUS TYPE
M - METRIC PART
Y - SEPARATE ILLUSTRATION

245-6027 **WIRING GP-ELECTROHYDRAULIC (*contd.*)** **i05317051**

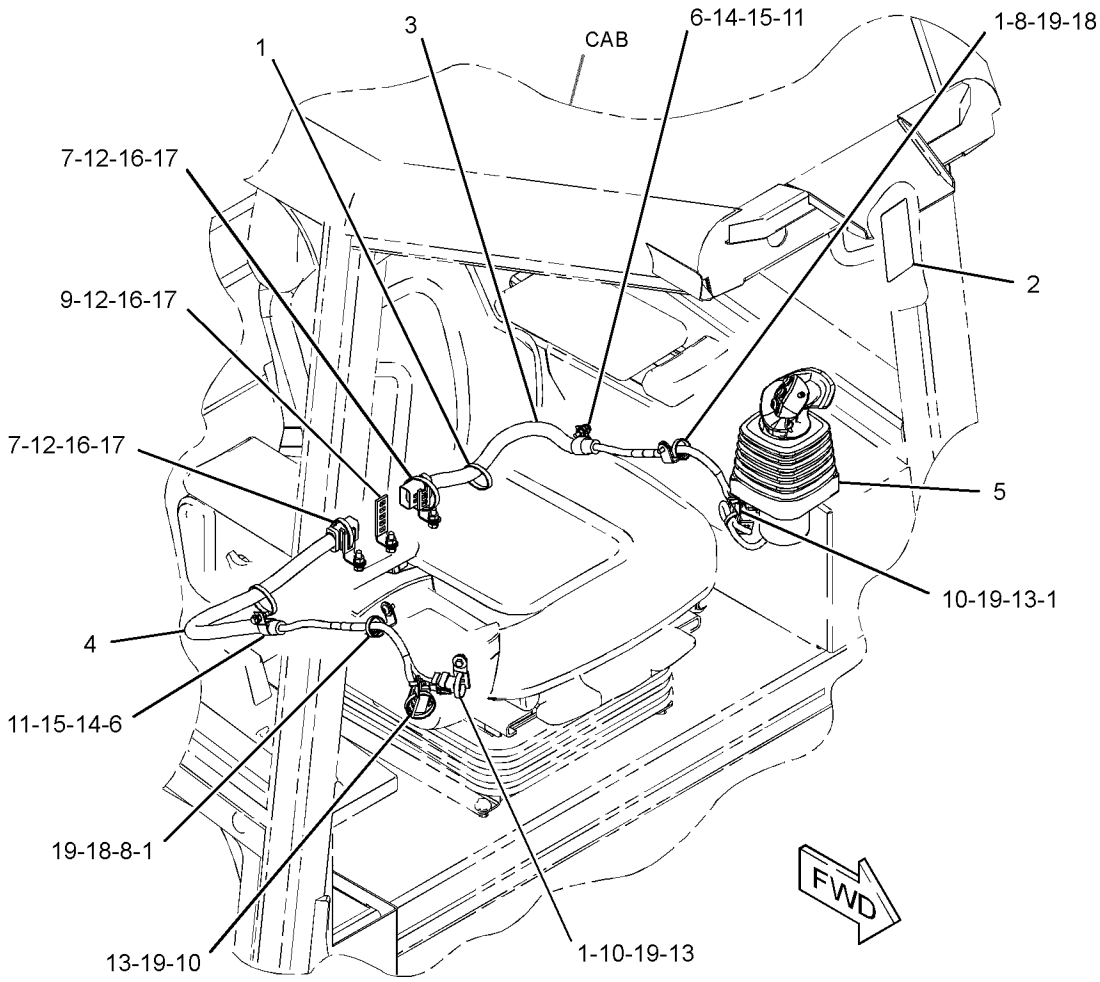

GRAPHIC #1 **<END>** g03371742

245-6019 WIRING GP-ENGINE

S/N: MMM1-UP; RRR1-UP

PART OF 244-7378, 244-7379 CHASSIS AR

SMCS-1000, 1408 **i04407618**

NOTE	REF NO	GRAPHIC REF	PART NUMBER	QTY	PART NAME 1 2 3 4 5 6 (PRODUCT LEVEL)	SEE PAGE
D	1	2	**6V-1359**		SEAL (0.1-M)	
	2	1	**132-1805**	1	STRAP AS-GROUND	
	3	1,2	**7K-1181**	56	STRAP-CABLE	
	4	1	**8T-8799**	3	BOOT (RED)	
D	5	1	**8T-3425**		CHANNEL-TRIM (0.1-M)	
	6	1	**116-6680**	1	SENSOR AS-SPEED (ENGINE)	
E		1	**9X-1386**		SLEEVE (14-CM)	
		1	**171-5349**	1	STRAP-MARKER	
		1	**9X-3401**	2	PIN-CONNECTOR (16-GA TO 18-GA)	
					—OR—	
		1	**126-1767**	2	PIN-CONNECTOR (14-GA TO 16-GA)	
		1	**102-8802**	1	KIT-RECEPTACLE (2-PIN)	
					(INCLUDES RECEPTACLE AS & WEDGE)	
	7	1,2	**204-2281**	2	STRAP-CABLE	
	8	2	**243-5027**	1	NUT AS (M6X1-THD)	
	9	2	**245-6040**	1	HARNESS AS-ENGINE	
		1	**245-1045**	1	COVER	
		1	**245-1044**	2	LOCK-CONNECTOR	
		1	**176-1477**	1	PLUG AS (2-PIN)	
		1	**9X-1054**	1	PLUG AS-CONNECTOR (4-PIN)	
		1	**155-2265**	1	KIT-CONNECTING PLUG (8-PIN)	
		1	**155-2260**	1	KIT-CONNECTING PLUG (3-PIN)	
		1	**155-2270**	12	KIT-CONNECTING PLUG (2-PIN)	
					(EACH PLUG KIT INCLUDES PLUG AS, WEDGE & INTERFACE SEAL)	
		1	**230-4011**	1	PLUG AS-CONNECTOR (2-PIN)	
		1	**264-7029**	1	SEAL-CONNECTOR	
		1	**245-1042**	1	PLUG AS-CONNECTOR (64-PIN)	
M		1	**267-7207**	1	BOLT-SPECIAL	
		1	**267-7208**	1	RING-RETAINING	
		1	**274-4990**	1	SEAL	
		1	**273-3143**	1	PLUG AS-CONNECTOR	
		1	**167-3693**	1	PLUG AS-CONNECTOR (31-PIN)	
		1	**245-1048**	44	PLUG-CONNECTOR	
		1	**8T-8737**	16	PLUG-SEAL	
		1	**102-8802**	2	KIT-RECEPTACLE (2-PIN)	
		1	**102-8806**	1	KIT-RECEPTACLE (8-PIN)	
					(EACH RECEPTACLE KIT INCLUDES RECEPTACLE AS & WEDGE)	
		1	**134-2540**	1	RESISTOR AS-CONNECTION (3-PIN)	
		1	**238-9397**	1	RESISTOR AS	
		1	**8T-8729**	2	PIN-CONNECTOR (16-GA TO 18-GA)	
		1	**186-3736**	35	SOCKET-CONNECTOR (16-GA TO 18-GA)	
		1	**9W-0844**	7	SOCKET-CONNECTOR (14-GA TO 16-GA)	
		1	**9X-3402**	2	SOCKET-CONNECTOR (16-GA TO 18-GA)	
		1	**180-9340**	20	SOCKET-CONNECTOR (14-GA TO 18-GA)	
		1	**267-9572**	20	SOCKET-CONNECTION (18-GA)	
		1	**189-3158**	1	SUPPRESSOR-ARC	
E		1	**1P-0810**		TAPE-ELECTRICAL (8-CM)	
		1	**176-1521**	5	TERMINAL	
		1	**2L-8066**	1	TERMINAL-RING (10-GA TO 12-GA, NO. 10 SCREW)	
		1	*128-4168*	1	TERMINAL AS	
		1	**2L-8051**	1	TERMINAL-RING (6-GA, 5/16-IN SCREW)	
		1	**5P-3455**	1	TERMINAL-RING (8-GA, 5/16-IN SCREW)	
		1	*128-4178*	1	TERMINAL AS	
		1	**2L-8068**	1	TERMINAL-RING (10-GA TO 12-GA, 5/16-IN SCREW)	

245-6019 **WIRING GP-ENGINE (*contd.*)** **i04407618**

NOTE	REF NO	GRAPHIC REF	PART NUMBER	QTY	PART NAME 1 2 3 4 5 6 (PRODUCT LEVEL)	SEE PAGE
D		1	**5P-6006**		TUBE-HEAT SHRINK (9.52-MM DIA) (1-M)	
		1	*131-1488*	2	TERMINAL AS-RING (6-GA TO 8-GA)	
					(EACH INCLUDES)	
		1	**6H-3586**	1	TERMINAL-RING (6-GA TO 8-GA, 1/4-IN SCREW)	
E		1	**119-3662**		TUBE-HEAT SHRINK (10.85-MM DIA) (4-CM)	
		1	*131-1490*	1	TERMINAL AS (6-GA TO 8-GA)	
		1	**6H-3587**	1	TERMINAL-RING (6-GA TO 8-GA, 3/8-IN SCREW)	
E		1	**119-3662**		TUBE-HEAT SHRINK (10.85-MM DIA) (4-CM)	
		1	**2L-8067**	1	TERMINAL-RING (10-GA TO 12-GA, 1/4-IN SCREW)	
		1	**2L-8069**	1	TERMINAL-RING (2-GA TO 10-GA, 3/8-IN SCREW)	
		1	**2L-8079**	1	TERMINAL-RING (14-GA TO 16-GA, 3/8-IN SCREW)	
		1	**7N-9017**	2	TERMINAL-RING (18-GA TO 22-GA, NO. 10 SCREW)	
		1	**9X-1055**	2	TERMINAL-RECEPTACLE (12-GA)	
		1	**9X-1056**	2	TERMINAL-RECEPTACLE (14-GA TO 16-GA)	
E		1	**119-3662**		TUBE-HEAT SHRINK (10.85-MM DIA) (7-CM)	
E		1	**125-7874**		TUBE-HEAT SHRINK (5.72-MM DIA) (15-CM)	
E		1	**125-7875**		TUBE-HEAT SHRINK (7.44-MM DIA) (15-CM)	
	10	2	**249-9072**	1	CABLE AS (ALTERNATOR)	
E		2	**8C-3056**		CABLE (2-GA, RED) (59-CM)	
		2	*242-3291*	1	TERMINAL AS	
E		2	**125-7876**		TUBE-HEAT SHRINK (17.78-MM DIA) (5-CM)	
	11	2	**269-7648**	1	HARNESS AS-WIRING	
		2	**9W-0852**	2	PIN-CONNECTOR (14-GA TO 16-GA)	
		2	**155-2270**	1	KIT-CONNECTING PLUG (2-PIN)	
					(INCLUDES PLUG AS, WEDGE & INTERFACE SEAL)	
		2	**102-8802**	1	KIT-RECEPTACLE (2-PIN)	
					(INCLUDES RECEPTACLE AS & WEDGE)	
		2	**9W-0844**	2	SOCKET-CONNECTOR (14-GA TO 16-GA)	
	12	1	**269-7652**	1	PLATE AS	
	13	1	**269-7669**	1	PLATE	
	14	1	**269-7677**	1	PLATE	
	15	2	**301-9819**	1	BRACKET AS	
	16	1	**115-1615**	1	RELAY AS (12-VOLT) (START)	
	17	1	**164-9425**	1	HORN AS (12-VOLT, LOW TONE)	
	18	1,2	**204-8000**	2	MOUNTING-CABLE TIE	
Y	19	1	**275-0490**	1	RELAY GP (12-VOLT) (STARTING AID HEATER)	232
	20	1	**1H-3244**	2	LOCKWASHER	
	21	1	**1L-5081**	1	SPACER (0.41X0.75X0.56-IN THK)	
	22	1	**3S-2093**	5	STRAP-CABLE	
	23	1	**4P-7428**	1	CLIP	
	24	1	**4P-7429**	1	CLIP	
	25	1,2	**4P-7581**	3	CLIP	
	26	1,2	**4P-8134**	8	CLIP	
M	27	2	**5C-2874**	2	NUT (M5X0.8-THD)	
M	28	1	**5C-2890**	3	NUT (M6X1-THD)	
M	29	1	**5C-7261**	1	NUT (M8X1.25-THD)	
	30	2	**5P-8439**	2	GROMMET	
	31	1	**7X-0579**	1	WASHER-HARD (8.8X25.5X2-MM THK)	
M	32	1	**7X-2536**	1	BOLT (M8X1.25X14-MM)	
M	33	1	**191-7503**	1	BOLT (M12X1.75X16-MM)	
	34	1	**7X-7729**	1	WASHER (11X25X3-MM THK)	
	35	2	**8F-1434**	2	LOCKWASHER	
	36	2	**8T-0328**	2	WASHER-HARD (5.5X10X1-MM THK)	
	37	1,2	**8T-4121**	9	WASHER-HARD (11X21X2.5-MM THK)	
M	38	1,2	**8T-4136**	2	BOLT (M10X1.5X25-MM)	
M	39	1	**8T-4137**	1	BOLT (M10X1.5X20-MM)	
M	40	1,2	**8T-4191**	5	BOLT (M10X1.5X16-MM)	
M	41	1,2	**8T-4192**	4	BOLT (M12X1.75X25-MM)	
M	42	1	**8T-4199**	1	BOLT (M8X1.25X12-MM)	
	43	1,2	**8T-4223**	5	WASHER-HARD (13.5X25.5X3-MM THK)	

245-6019 **WIRING GP-ENGINE (*contd.*)** **i04407618**

NOTE	REF NO	GRAPHIC REF	PART NUMBER	QTY	PART NAME 1 2 3 4 5 6 (PRODUCT LEVEL)	SEE PAGE
	44	1	**8T-4224**	3	WASHER-HARD (8.8X16X2-MM THK)	
M	45	1	**8T-4971**	1	BOLT (M6X1X30-MM)	
M	46	1	**9X-2480**	1	BOLT (M6X1X45-MM)	
	47	1	**9X-8256**	4	WASHER (6.6X12X2-MM THK)	
E	48	2	**7I-7439**		GUARD (48-CM)	
	49	2	**091-0081**	2	SPACER (10.5X20X10-MM THK)	
M	50	2	**8T-4186**	1	BOLT (M10X1.5X40-MM)	
M	51	2	**8T-4196**	1	BOLT (M10X1.5X35-MM)	

D - ORDER BY THE METER
E - ORDER BY THE CENTIMETER
M - METRIC PART
Y - SEPARATE ILLUSTRATION

245-6019 **WIRING GP-ENGINE (*contd.*)** **i04407618**

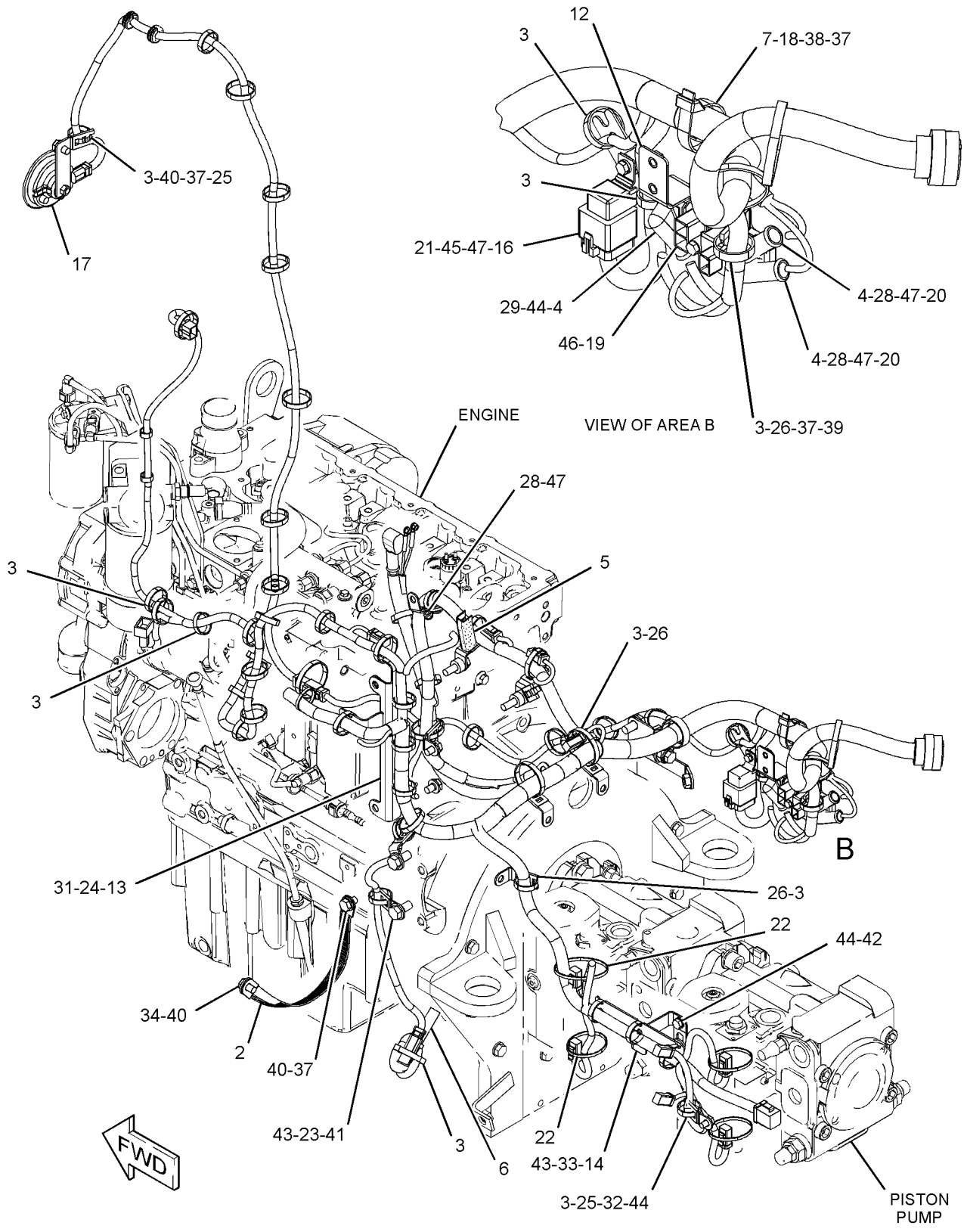

GRAPHIC #1 g02207697

245-6019 **WIRING GP-ENGINE (*contd.*)** **i04407618**

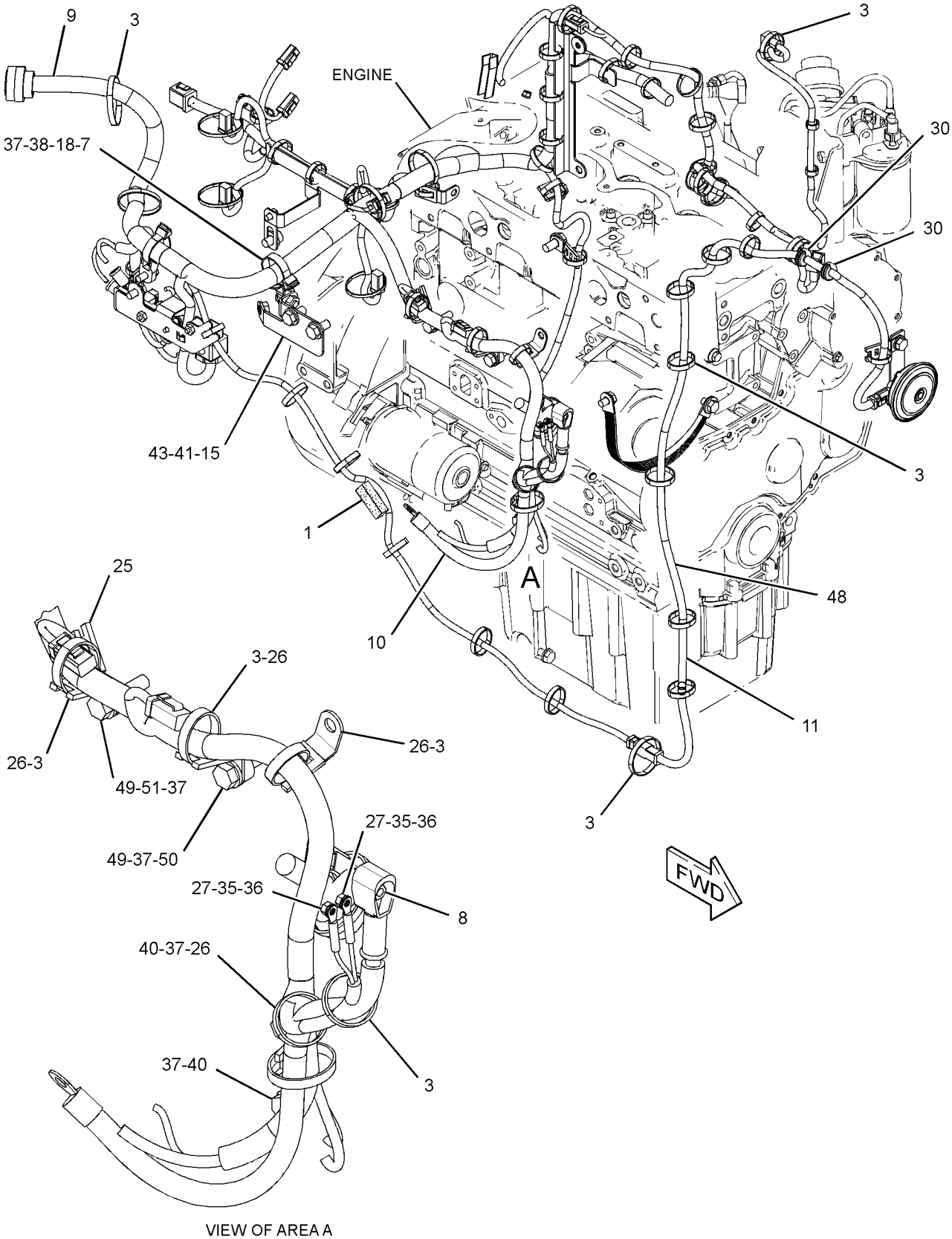

VIEW OF AREA A

GRAPHIC #2 **<END>** g02207698

299-5092 WIRING GP-ENGINE

S/N: C4E1-238

PART OF 254-9233 ENGINE AR-PRIMARY

SMCS-1000, 1408 **i02656765**

NOTE	REF NO	GRAPHIC REF	PART NUMBER	QTY	PART NAME 1 2 3 4 5 6 (PRODUCT LEVEL)	SEE PAGE
	1	1	**288-0526**	1	HARNESS AS-ENGINE	
	2	1	**298-4605**	1	BRACKET	
M	3	1	**124-3815**	3	BOLT (M8X16X1.25-MM)	
	4	1	**217-8477**	1	CLIP	
	5	1	**298-4606**	1	BRACKET	
	6	1	**298-4607**	1	BRACKET	
	7	1	**217-9039**	3	STRAP-CABLE	

M - METRIC PART

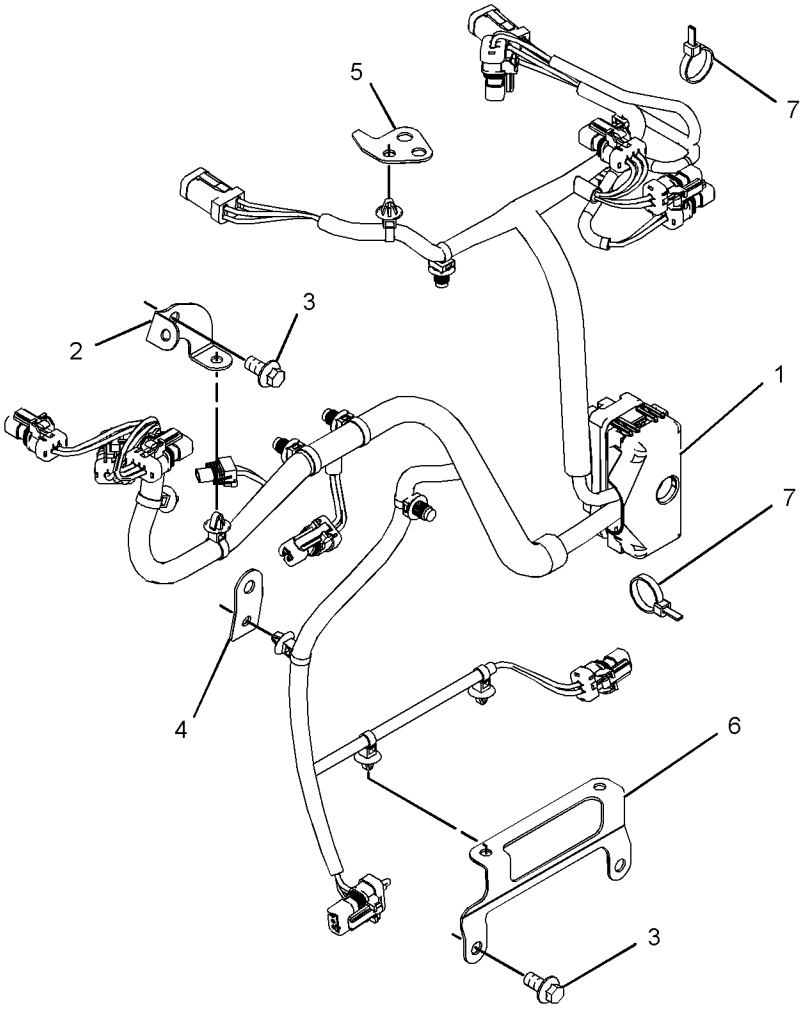

GRAPHIC #1 **<END>** g01337588

299-5092 WIRING GP-ENGINE

S/N: C4E239-UP

PART OF 254-9233 ENGINE AR-PRIMARY

SMCS-1000, 1408

i03568854

NOTE	REF NO	GRAPHIC REF	PART NUMBER	QTY	PART NAME 1 2 3 4 5 6 (PRODUCT LEVEL)	SEE PAGE
CM	1	1	**124-3815**	1	BOLT (M8X16X1.25-MM)	
	2	1	**217-9039**	3	STRAP-CABLE	
	3	1	**346-1449**	1	BRACKET	
C	4	1	**304-5165**	1	HARNESS AS-ENGINE	

C - CHANGE FROM PREVIOUS TYPE
M - METRIC PART

299-5092 **WIRING GP-ENGINE (*contd.*)** **i03568854**

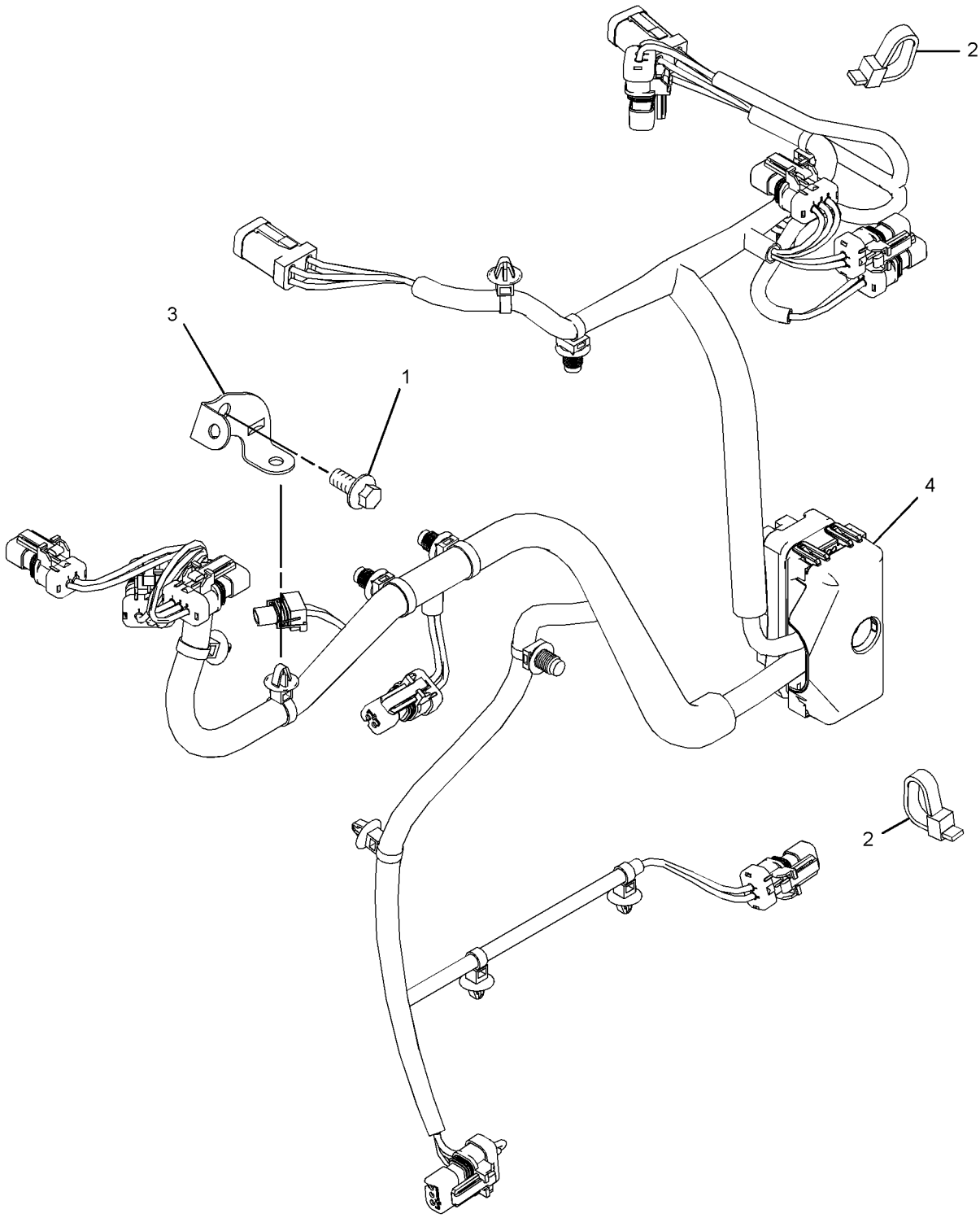

GRAPHIC #1 **<END>** g01922053

245-6029 WIRING GP-GRADE CONTROL–FULL

S/N: MMM1-130; RRR1-134
PART OF 296-5755, 296-5756 GRADE CONTROL AR
AN ATTACHMENT

SMCS-1408 **i04415714**

NOTE	REF NO	GRAPHIC REF	PART NUMBER	QTY	PART NAME 1 2 3 4 5 6 (PRODUCT LEVEL)	SEE PAGE
	1	1,2	**7K-1181**	64	STRAP-CABLE	
	2	1	**8C-5607**	6	MOUNT-ISOLATION	
	3	1	**8C-5608**	3	SPACER (6.5X9.5X25.4-MM THK)	
	4	2	**132-8487**	3	NUT-RING	
	5	2	**167-8712**	1	ALARM (ADVISOR)	
	6	2	**226-9169**	1	MODULE AS-POWER SUPPLY	
	7	2	**236-8826**	3	BOSS (1-1/8-18X0.708-IN)	
	8	1	**245-6030**	1	HARNESS AS-DASH (GRADE CONTROL)	
		1	**9X-3401**	6	PIN-CONNECTOR (16-GA TO 18-GA)	
		1	**8T-8729**	4	PIN-CONNECTOR (16-GA TO 18-GA)	
		1	**9W-0852**	2	PIN-CONNECTOR (14-GA TO 16-GA)	
		1	**230-7254**	18	PIN-CONNECTOR	
		1	**155-2255**	1	KIT-CONNECTING PLUG (12-PIN)	
		1	**155-2256**	1	KIT-CONNECTING PLUG (12-PIN)	
		1	**155-2265**	1	KIT-CONNECTING PLUG (8-PIN)	
		1	**155-2260**	2	KIT-CONNECTING PLUG (3-PIN)	
					(EACH PLUG KIT INCLUDES PLUG AS, WEDGE & INTERFACE SEAL)	
		1	**230-5008**	3	PLUG AS-CONNECTOR (4-PIN)	
					(EACH INCLUDES)	
		1	**264-7031**	1	SEAL-CONNECTOR	
		1	**8T-8737**	44	PLUG-SEAL	
		1	**102-8801**	2	KIT-RECEPTACLE (12-PIN)	
		1	**190-7614**	1	KIT-RECEPTACLE (12-PIN)	
					(EACH RECEPTACLE KIT INCLUDES RECEPTACLE AS & WEDGE)	
		1	**134-2540**	2	RESISTOR AS-CONNECTION (3-PIN)	
		1	**230-5009**	3	RECEPTACLE AS-CONNECTOR (4-PIN)	
		1	**9X-3402**	6	SOCKET-CONNECTOR (16-GA TO 18-GA)	
		1	**8T-8730**	6	SOCKET-CONNECTOR (16-GA TO 18-GA)	
		1	**9X-3402**	12	SOCKET-CONNECTOR (16-GA TO 18-GA)	
		1	**5P-2321**	2	TERMINAL-FORK (14-GA TO 16-GA, NO. 6 SCREW)	
E		1	**125-7874**		TUBE-HEAT SHRINK (5.72-MM DIA) (45-CM)	
	9	1	**249-9025**	1	HARNESS AS-RADIO (GRADE CONTROL)	
		1	**155-2255**	1	KIT-CONNECTING PLUG (12-PIN)	
					(INCLUDES PLUG AS, WEDGE & INTERFACE SEAL)	
		1	**167-8987**	1	PLUG AS-CONNECTOR (8-PIN)	
		1	**8T-8737**	6	PLUG-SEAL	
		1	**9X-3402**	4	SOCKET-CONNECTOR (16-GA TO 18-GA)	
		1	**9W-0844**	2	SOCKET-CONNECTOR (14-GA TO 16-GA)	
	10	2	**249-9030**	1	HARNESS AS-WIRING (POWER SUPPLY MODULE)	
		2	**9W-0844**	7	SOCKET-CONNECTOR (14-GA TO 16-GA)	
		2	**3R-9965**	1	PLUG AS-CONNECTOR (8-PIN)	
		2	**6D-5257**	1	PLUG AS-CONNECTOR (8-PIN)	
		2	**8T-8737**	5	PLUG-SEAL	
		2	**102-8801**	1	KIT-RECEPTACLE (12-PIN)	
					(INCLUDES RECEPTACLE AS & WEDGE)	
E		2	**125-7874**		TUBE-HEAT SHRINK (5.72-MM DIA) (5-CM)	
	11	1	**249-9031**	1	HARNESS AS-FRONT (GRADE CONTROL)	
		1	**155-2265**	2	KIT-CONNECTING PLUG (8-PIN)	
					(EACH INCLUDES PLUG AS, WEDGE & INTERFACE SEAL)	
		1	**9X-3402**	8	SOCKET-CONNECTOR (16-GA TO 18-GA)	
		1	**9W-0844**	8	SOCKET-CONNECTOR (14-GA TO 16-GA)	
	12	1	**249-9032**	1	HARNESS AS-HOOD (GRADE CONTROL)	
		1	**9X-3401**	4	PIN-CONNECTOR (16-GA TO 18-GA)	

245-6029 **WIRING GP-GRADE CONTROL (*contd.*)** **i04415714**

NOTE	REF NO	GRAPHIC REF	PART NUMBER	QTY	PART NAME 1 2 3 4 5 6 (PRODUCT LEVEL)	SEE PAGE
		1	**8T-8729**	4	PIN-CONNECTOR (16-GA TO 18-GA)	
		1	**9W-0852**	9	PIN-CONNECTOR (14-GA TO 16-GA)	
		1	**155-2265**	1	KIT-CONNECTING PLUG (8-PIN)	
		1	**155-2260**	2	KIT-CONNECTING PLUG (3-PIN)	
		1	**155-2271**	1	KIT-CONNECTING PLUG (4-PIN)	
					(EACH PLUG KIT INCLUDES PLUG AS, WEDGE & INTERFACE SEAL)	
		1	**8T-8737**	9	PLUG-SEAL	
		1	**102-8804**	1	KIT-RECEPTACLE (4-PIN)	
		1	**102-8806**	1	KIT-RECEPTACLE (8-PIN)	
		1	**102-8801**	1	KIT-RECEPTACLE (12-PIN)	
					(EACH RECEPTACLE KIT INCLUDES RECEPTACLE AS & WEDGE)	
		1	**134-2540**	2	RESISTOR AS-CONNECTION (3-PIN)	
		1	**8T-8729**	10	PIN-CONNECTOR (16-GA TO 18-GA)	
		1	**9W-0844**	6	SOCKET-CONNECTOR (14-GA TO 16-GA)	
E		1	**119-3662**		TUBE-HEAT SHRINK (10.85-MM DIA) (7-CM)	
E		1	**125-7874**		TUBE-HEAT SHRINK (5.72-MM DIA) (60-CM)	
E		1	**125-7875**		TUBE-HEAT SHRINK (7.44-MM DIA) (60-CM)	
	13	1	**249-9033**	1	HARNESS AS-CONSOLE (GRADE CONTROL)	
		1	**8C-6354**	1	CAP-RECEPTACLE (ET CONNECTOR)	
		1	**9X-3401**	10	PIN-CONNECTOR (16-GA TO 18-GA)	
		1	**8T-8729**	10	PIN-CONNECTOR (16-GA TO 18-GA)	
		1	**9W-0852**	2	PIN-CONNECTOR (14-GA TO 16-GA)	
		1	**155-2255**	2	KIT-CONNECTING PLUG (12-PIN)	
					(EACH PLUG KIT INCLUDES PLUG AS, WEDGE & INTERFACE SEAL)	
		1	**253-2695**	1	PLUG AS-CONNECTOR	
		1	**8T-8737**	12	PLUG-SEAL	
		1	**102-8806**	1	KIT-RECEPTACLE (8-PIN)	
		1	**102-8801**	1	KIT-RECEPTACLE (12-PIN)	
					(EACH RECEPTACLE KIT INCLUDES RECEPTACLE AS & WEDGE)	
		1	**8T-8736**	1	RECEPTACLE-CONNECTOR (9-PIN)	
		1	**9X-3402**	13	SOCKET-CONNECTOR (16-GA TO 18-GA)	
		1	**9W-0844**	6	SOCKET-CONNECTOR (14-GA TO 16-GA)	
B		1	**141-8061**		TAPE	
E		1	**125-7874**		TUBE-HEAT SHRINK (5.72-MM DIA) (40-CM)	
E		1	**125-7875**		TUBE-HEAT SHRINK (7.44-MM DIA) (10-CM)	
	14	2	**249-9034**	1	HARNESS AS-SENSOR (GRADE CONTROL)	
		2	**228-3323**	1	CLIP-SPRING	
		2	**8T-8729**	2	PIN-CONNECTOR (16-GA TO 18-GA)	
		2	**9W-0852**	2	PIN-CONNECTOR (14-GA TO 16-GA)	
		2	**102-8804**	1	KIT-RECEPTACLE (4-PIN)	
					(INCLUDES RECEPTACLE AS & WEDGE)	
	15	2	**249-9049**	1	HARNESS AS-WIRING (RECEIVER, LH)	
		2	**228-3323**	1	CLIP-SPRING	
		2	**8T-8729**	4	PIN-CONNECTOR (16-GA TO 18-GA)	
		2	**9W-0852**	4	PIN-CONNECTOR (14-GA TO 16-GA)	
		2	**102-8806**	1	KIT-RECEPTACLE (8-PIN)	
					(INCLUDES RECEPTACLE AS & WEDGE)	
	16	2	**249-9050**	1	HARNESS AS-WIRING (RECEIVER, RH)	
		2	**228-3323**	1	CLIP-SPRING	
		2	**155-2255**	1	KIT-CONNECTING PLUG (12-PIN)	
					(INCLUDES PLUG AS, WEDGE & INTERFACE SEAL)	
		2	**8T-8737**	3	PLUG-SEAL	
		2	**8T-8730**	4	SOCKET-CONNECTOR (16-GA TO 18-GA)	
		2	**9W-0844**	5	SOCKET-CONNECTOR (14-GA TO 16-GA)	
	17	2	**249-9077**	1	PLATE AS	
	18	1	**257-7501**	1	PLATE AS	
	19	1	**264-4510**	1	BRACKET AS	

245-6029 **WIRING GP-GRADE CONTROL (*contd.*)** **i04415714**

NOTE	REF NO	GRAPHIC REF	PART NUMBER	QTY	PART NAME 1 2 3 4 5 6 (PRODUCT LEVEL)	SEE PAGE
	20	1	**269-7664**	1	BRACKET AS	
	21	2	**269-7676**	1	HARNESS AS-MONITOR	
		2	**8T-8729**	2	PIN-CONNECTOR (16-GA TO 18-GA)	
		2	**147-1444**	1	PLUG AS-CONNECTOR (70-PIN)	
		2	**155-2255**	1	KIT-CONNECTING PLUG (12-PIN)	
		2	**155-2256**	1	KIT-CONNECTING PLUG (12-PIN)	
					(EACH PLUG KIT INCLUDES PLUG AS, WEDGE & INTERFACE SEAL)	
		2	**8T-8737**	87	PLUG-SEAL	
		2	**102-8801**	1	KIT-RECEPTACLE (12-PIN)	
		2	**190-7614**	1	KIT-RECEPTACLE (12-PIN)	
					(EACH RECEPTACLE KIT INCLUDES RECEPTACLE AS & WEDGE)	
		2	**8T-8730**	2	SOCKET-CONNECTOR (16-GA TO 18-GA)	
		2	**9X-3402**	14	SOCKET-CONNECTOR (16-GA TO 18-GA)	
E		2	**125-7874**		TUBE-HEAT SHRINK (5.72-MM DIA) (5-CM)	
	22	2	**269-7687**	1	HARNESS AS-CONTROL	
		2	**155-2255**	1	KIT-CONNECTING PLUG (12-PIN)	
		2	**155-2256**	1	KIT-CONNECTING PLUG (12-PIN)	
					(EACH PLUG KIT INCLUDES PLUG AS, WEDGE & INTERFACE SEAL)	
		2	**180-5305**	1	PLUG AS-CONNECTOR	
		2	**8T-8737**	9	PLUG-SEAL	
		2	**8T-8730**	1	SOCKET-CONNECTOR (16-GA TO 18-GA)	
E		2	**125-7875**		TUBE-HEAT SHRINK (7.44-MM DIA) (5-CM)	
	23	2	**096-5962**	12	WASHER-HARD (3.4X7X0.8-MM THK)	
M	24	2	**117-6952**	3	SCREW (M8X1.25X30-MM)	
	25	2	**132-5789**	2	CLIP	
	26	2	**2D-0388**	1	GROMMET	
	27	2	**7R-3029**	3	CAP-DUST	
M	28	2	**7X-2553**	1	BOLT (M16X2X40-MM)	
M	29	1	**8C-8451**	3	BOLT (M6X1X40-MM)	
	30	2	**033-4818**	12	SCREW-MACHINE	
	31	2	**8T-4121**	4	WASHER-HARD (11X21X2.5-MM THK)	
	32	2	**8T-4122**	1	WASHER-HARD (17X32X3.5-MM THK)	
M	33	2	**8T-4186**	2	BOLT (M10X1.5X40-MM)	
M	34	2	**8T-4195**	2	BOLT (M10X1.5X30-MM)	
M	35	2	**8T-4200**	2	BOLT (M8X1.25X16-MM)	
	36	1	**8T-4205**	6	WASHER-HARD (7.2X14.5X2-MM THK)	
	37	2	**8T-4224**	8	WASHER-HARD (8.8X16X2-MM THK)	
M	38	2	**8T-4908**	4	BOLT (M8X1.25X25-MM)	
D	39	2	**8T-3426**		CHANNEL-TRIM (1-M)	
E	40	2	**109-2013**		GUARD (49-CM)	
D	41	1	**6V-1359**		SEAL (0.1-M)	
E	42	1	**3E-6600**		SEAL (31-CM)	
E	42A	2	**3E-6600**		SEAL (32-CM)	
E	42B	2	**3E-6600**		SEAL (3-CM)	

B - USE AS REQUIRED
D - ORDER BY THE METER
E - ORDER BY THE CENTIMETER
M - METRIC PART

245-6029 **WIRING GP-GRADE CONTROL (*contd.*)** **i04415714**

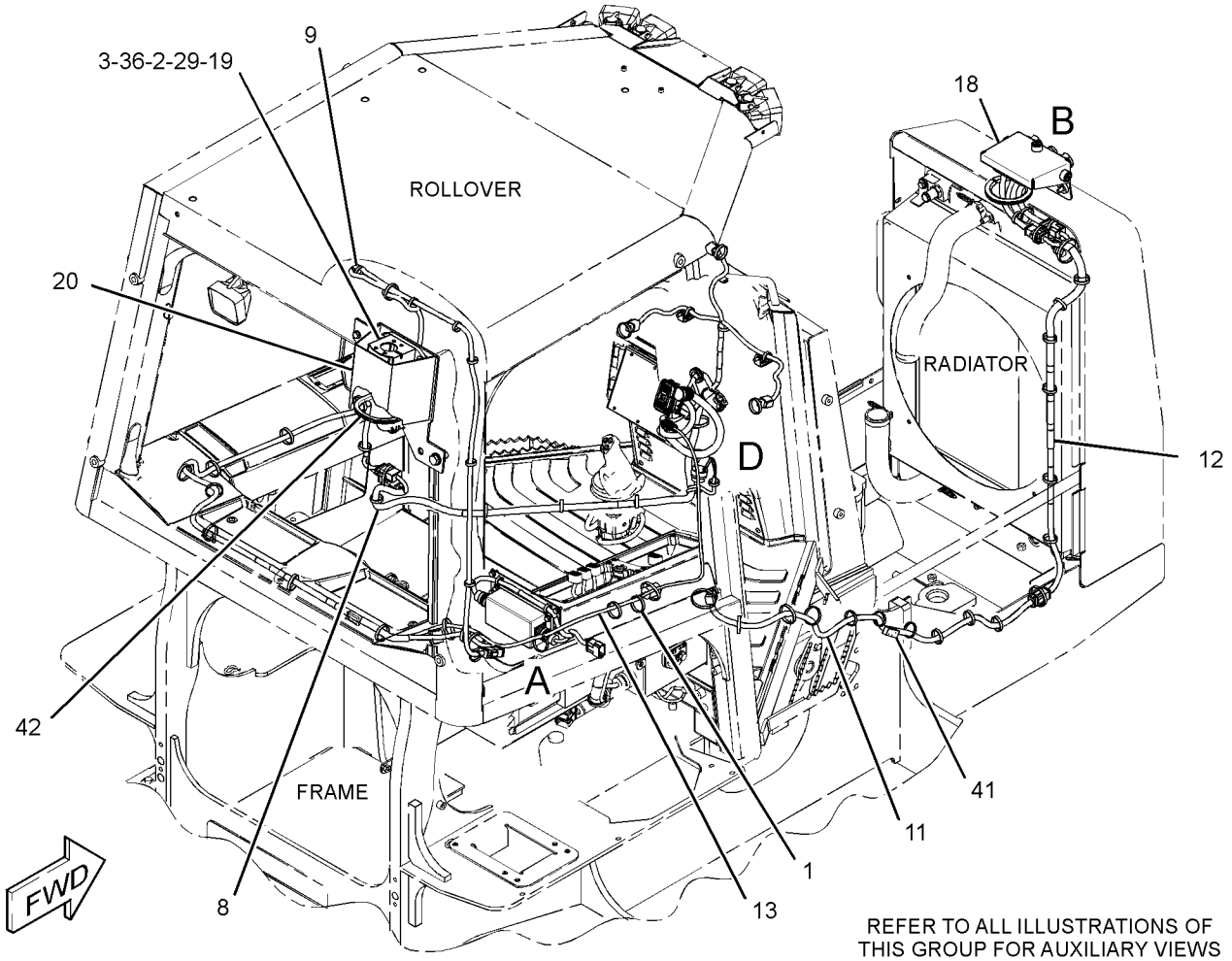

GRAPHIC #1

g01380519

245-6029 **WIRING GP-GRADE CONTROL (*contd.*)** **i04415714**

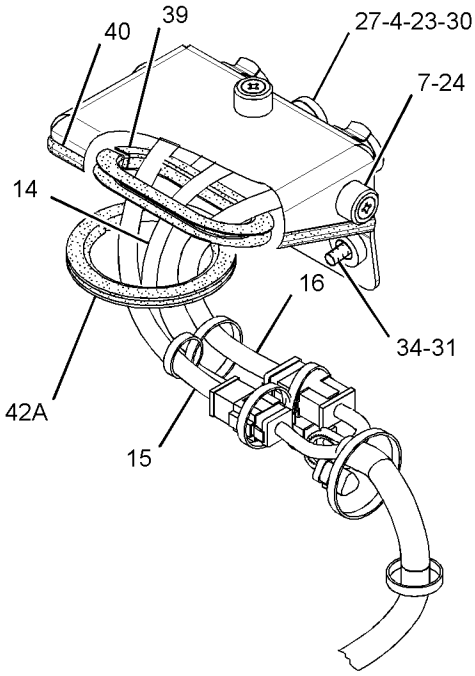

VIEW OF AREA B

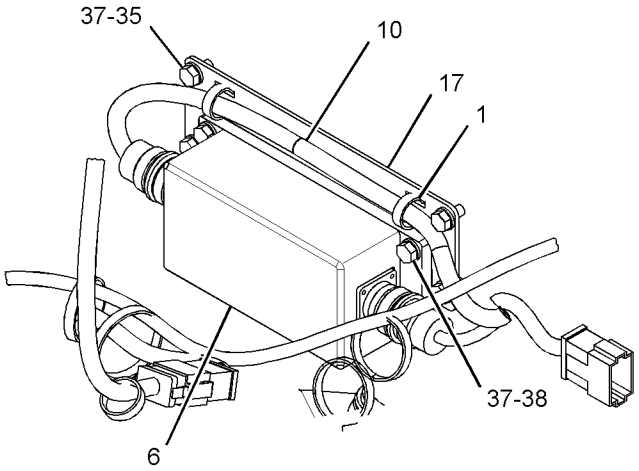

VIEW OF AREA A

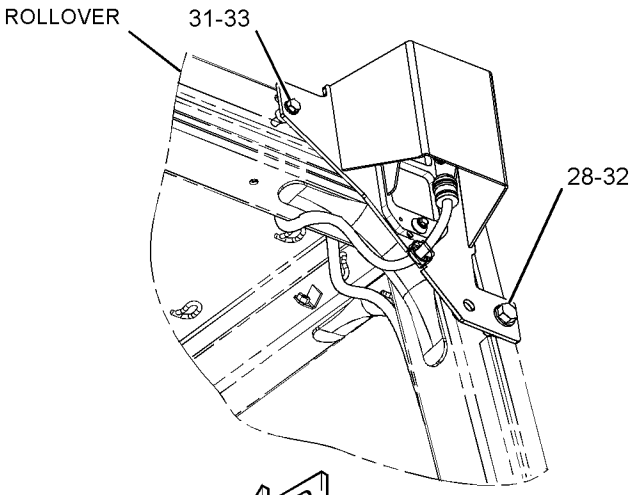

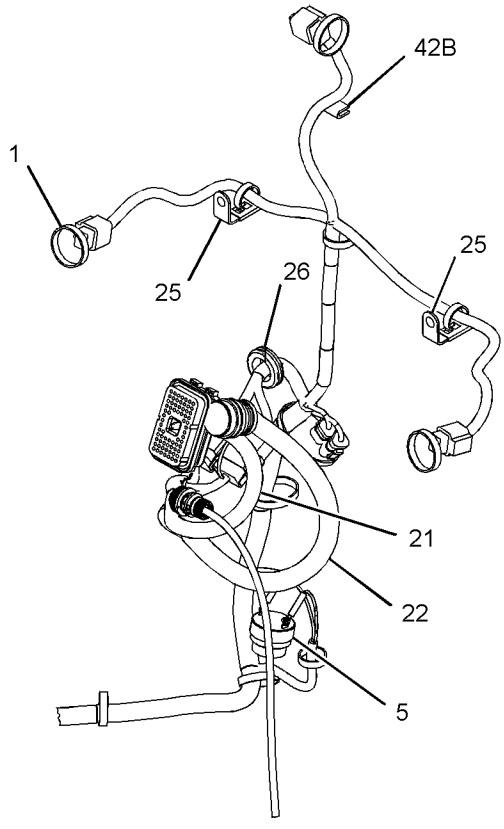

VIEW OF AREA D

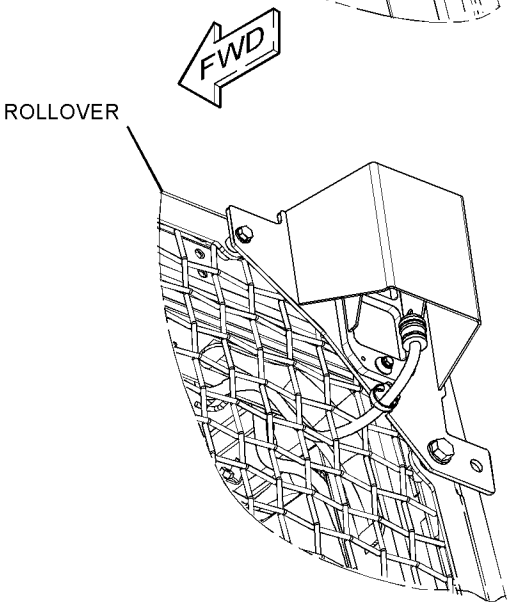

(ALTERNATE VIEW WITH REAR SCREEN)

GRAPHIC #2 **<END>** g01380575

245-6029 WIRING GP-GRADE CONTROL–FULL

S/N: MMM131-UP; RRR135-UP
PART OF 296-5755, 296-5756 GRADE CONTROL AR
AN ATTACHMENT
TYPE 1

SMCS-1408 **i04416211**

NOTE	REF NO	GRAPHIC REF	PART NUMBER	QTY	PART NAME 1 2 3 4 5 6 (PRODUCT LEVEL)	SEE PAGE
C	1	1,2	**7K-1181**	65	STRAP-CABLE	
	2	2	**8C-5607**	6	MOUNT-ISOLATION	
	3	2	**8C-5608**	3	SPACER (6.5X9.5X25.4-MM THK)	
C	4	2	**8T-8737**	24	PLUG-SEAL	
C	5	2	**130-5300**	4	CLIP	
	6	2	**132-8487**	3	NUT-RING	
	7	2	**167-8712**	1	ALARM	
C	8	2	**190-7615**	1	KIT-RECEPTACLE (12-PIN)	
					(INCLUDES RECEPTACLE AS & WEDGE)	
	9	2	**226-9169**	1	MODULE AS-POWER SUPPLY	
	10	2	**236-8826**	3	BOSS (1-1/8-18X0.708-IN)	
	11	2	**249-9030**	1	HARNESS AS-WIRING (POWER SUPPLY MODULE)	
		2	**9W-0844**	7	SOCKET-CONNECTOR (14-GA TO 16-GA)	
		2	**3R-9965**	1	PLUG AS-CONNECTOR (8-PIN)	
		2	**6D-5257**	1	PLUG AS-CONNECTOR (8-PIN)	
		2	**8T-8737**	5	PLUG-SEAL	
		2	**102-8801**	1	KIT-RECEPTACLE (12-PIN)	
					(INCLUDES RECEPTACLE AS & WEDGE)	
E		2	**125-7874**		TUBE-HEAT SHRINK (5.72-MM DIA) (5-CM)	
	12	1	**249-9031**	1	HARNESS AS-FRONT (GRADE CONTROL)	
		1	**155-2265**	2	KIT-CONNECTING PLUG (8-PIN)	
					(EACH INCLUDES PLUG AS, WEDGE & INTERFACE SEAL)	
		1	**9X-3402**	8	SOCKET-CONNECTOR (16-GA TO 18-GA)	
		1	**9W-0844**	8	SOCKET-CONNECTOR (14-GA TO 16-GA)	
	13	1	**249-9032**	1	HARNESS AS-HOOD (GRADE CONTROL)	
		1	**9X-3401**	4	PIN-CONNECTOR (16-GA TO 18-GA)	
		1	**8T-8729**	4	PIN-CONNECTOR (16-GA TO 18-GA)	
		1	**9W-0852**	9	PIN-CONNECTOR (14-GA TO 16-GA)	
		1	**155-2265**	1	KIT-CONNECTING PLUG (8-PIN)	
		1	**155-2260**	2	KIT-CONNECTING PLUG (3-PIN)	
		1	**155-2271**	1	KIT-CONNECTING PLUG (4-PIN)	
					(EACH PLUG KIT INCLUDES PLUG AS, WEDGE & INTERFACE SEAL)	
		1	**8T-8737**	9	PLUG-SEAL	
		1	**102-8804**	1	KIT-RECEPTACLE (4-PIN)	
		1	**102-8806**	1	KIT-RECEPTACLE (8-PIN)	
		1	**102-8801**	1	KIT-RECEPTACLE (12-PIN)	
					(EACH RECEPTACLE KIT INCLUDES RECEPTACLE AS & WEDGE)	
		1	**134-2540**	2	RESISTOR AS-CONNECTION (3-PIN)	
		1	**8T-8730**	10	SOCKET-CONNECTOR (16-GA TO 18-GA)	
		1	**9W-0844**	6	SOCKET-CONNECTOR (14-GA TO 16-GA)	
E		1	**119-3662**		TUBE-HEAT SHRINK (10.85-MM DIA) (7-CM)	
E		1	**125-7874**		TUBE-HEAT SHRINK (5.72-MM DIA) (60-CM)	
E		1	**125-7875**		TUBE-HEAT SHRINK (7.44-MM DIA) (60-CM)	
	14	1	**249-9033**	1	HARNESS AS-CONSOLE (GRADE CONTROL)	
		1	**8C-6354**	1	CAP-RECEPTACLE (ET CONNECTOR)	
		1	**9X-3401**	10	PIN-CONNECTOR (16-GA TO 18-GA)	
		1	**8T-8729**	10	PIN-CONNECTOR (16-GA TO 18-GA)	
		1	**9W-0852**	2	PIN-CONNECTOR (14-GA TO 16-GA)	
		1	**155-2255**	2	KIT-CONNECTING PLUG (12-PIN)	
					(INCLUDES PLUG AS, WEDGE & INTERFACE SEAL)	
		1	**253-2695**	1	PLUG AS-CONNECTOR	
		1	**8T-8737**	12	PLUG-SEAL	

245-6029 **WIRING GP-GRADE CONTROL (*contd.*)** **i04416211**

NOTE	REF NO	GRAPHIC REF	PART NUMBER	QTY	PART NAME 1 2 3 4 5 6 (PRODUCT LEVEL)	SEE PAGE
		1	**102-8806**	1	KIT-RECEPTACLE (8-PIN)	
		1	**102-8801**	1	KIT-RECEPTACLE (12-PIN)	
					(EACH RECEPTACLE KIT INCLUDES RECEPTACLE AS & WEDGE)	
		1	**8T-8736**	1	RECEPTACLE-CONNECTOR (9-PIN)	
		1	**9X-3402**	13	SOCKET-CONNECTOR (16-GA TO 18-GA)	
		1	**9W-0844**	6	SOCKET-CONNECTOR (14-GA TO 16-GA)	
B		1	**141-8061**		TAPE	
E		1	**125-7874**		TUBE-HEAT SHRINK (5.72-MM DIA) (40-CM)	
E		1	**125-7875**		TUBE-HEAT SHRINK (7.44-MM DIA) (10-CM)	
	15	2	**249-9034**	1	HARNESS AS-SENSOR (GRADE CONTROL)	
		2	**228-3323**	1	CLIP-SPRING	
		2	**186-3735**	2	PIN-CONNECTOR (16-GA TO 18-GA)	
		2	**9W-0852**	2	PIN-CONNECTOR (14-GA TO 16-GA)	
		2	**102-8804**	1	KIT-RECEPTACLE (4-PIN)	
					(INCLUDES RECEPTACLE AS & WEDGE)	
	16	2	**249-9049**	1	HARNESS AS-WIRING (RECEIVER, LH)	
		2	**228-3323**	1	CLIP-SPRING	
		2	**8T-8729**	4	PIN-CONNECTOR (16-GA TO 18-GA)	
		2	**9W-0852**	4	PIN-CONNECTOR (14-GA TO 16-GA)	
		2	**102-8806**	1	KIT-RECEPTACLE (8-PIN)	
					(INCLUDES RECEPTACLE AS & WEDGE)	
	17	2	**249-9050**	1	HARNESS AS-WIRING (RECEIVER, RH)	
		2	**228-3323**	1	CLIP-SPRING	
		2	**155-2255**	1	KIT-CONNECTING PLUG (12-PIN)	
					(INCLUDES PLUG AS, WEDGE & INTERFACE SEAL)	
		2	**8T-8737**	3	PLUG-SEAL	
		2	**8T-8730**	4	SOCKET-CONNECTOR (16-GA TO 18-GA)	
		2	**9W-0844**	5	SOCKET-CONNECTOR (14-GA TO 16-GA)	
	18	2	**249-9077**	1	PLATE AS	
	19	2	**257-7501**	1	PLATE AS	
	20	2	**264-4510**	1	BRACKET AS	
	21	2	**269-7664**	1	BRACKET AS	
C	22	1	**311-0295**	1	HARNESS AS-DASH (GRADE CONTROL)	
		1	**8T-8729**	1	PIN-CONNECTOR (16-GA TO 18-GA)	
		1	**9W-0852**	2	PIN-CONNECTOR (14-GA TO 16-GA)	
		1	**9X-3401**	6	PIN-CONNECTOR (16-GA TO 18-GA)	
					—OR—	
		1	**126-1767**	6	PIN-CONNECTOR (14-GA TO 16-GA)	
		1	**155-2255**	1	KIT-CONNECTING PLUG (12-PIN)	
		1	**155-2257**	1	KIT-CONNECTING PLUG (12-PIN)	
		1	**155-2265**	1	KIT-CONNECTING PLUG (8-PIN)	
		1	**155-2260**	2	KIT-CONNECTING PLUG (3-PIN)	
					(EACH PLUG KIT INCLUDES PLUG AS, WEDGE & INTERFACE SEAL)	
		1	**230-5008**	3	PLUG AS-CONNECTOR (4-PIN)	
		1	**8T-8737**	24	PLUG-SEAL	
		1	**102-8801**	1	KIT-RECEPTACLE (12-PIN)	
					(INCLUDES RECEPTACLE AS & WEDGE)	
		1	**134-2540**	2	RESISTOR AS-CONNECTION (3-PIN)	
		1	**230-5009**	3	RECEPTACLE AS-CONNECTOR (4-PIN)	
		1	**9X-3402**	12	SOCKET-CONNECTOR (16-GA TO 18-GA)	
		1	**180-9340**	10	SOCKET-CONNECTOR (14-GA TO 18-GA)	
		1	**5P-2321**	2	TERMINAL-FORK (14-GA TO 16-GA, NO. 6 SCREW)	
E		1	**125-7874**		TUBE-HEAT SHRINK (5.72-MM DIA) (45-CM)	
C	23	2	**311-0297**	1	HARNESS AS-MONITOR	
		2	**230-7254**	13	PIN-CONNECTOR	
		2	**147-1444**	1	PLUG AS-CONNECTOR (70-PIN)	
		2	**159-9322**	1	SEAL-O-RING	
		2	**8T-8737**	67	PLUG-SEAL	
		2	**102-8801**	1	KIT-RECEPTACLE (12-PIN)	

245-6029 **WIRING GP-GRADE CONTROL (*contd.*)** **i04416211**

NOTE	REF NO	GRAPHIC REF	PART NUMBER	QTY	PART NAME 1 2 3 4 5 6 (PRODUCT LEVEL)	SEE PAGE
		2	**190-7615**	1	KIT-RECEPTACLE (12-PIN)	
					(EACH RECEPTACLE KIT INCLUDES RECEPTACLE AS & WEDGE)	
		2	**9X-3402**	14	SOCKET-CONNECTOR (16-GA TO 18-GA)	
B		2	**141-8061**		TAPE	
E		2	**125-7874**		TUBE-HEAT SHRINK (5.72-MM DIA) (5-CM)	
C	24	2	**311-0298**	1	HARNESS AS-DASH	
		2	**230-7254**	15	PIN-CONNECTOR	
		2	**8T-8737**	9	PLUG-SEAL	
		2	**102-8801**	1	KIT-RECEPTACLE (12-PIN)	
		2	**190-7615**	1	KIT-RECEPTACLE (12-PIN)	
					(EACH RECEPTACLE KIT INCLUDES RECEPTACLE AS & WEDGE)	
B		2	**141-8061**		TAPE	
E		2	**125-7875**		TUBE-HEAT SHRINK (7.44-MM DIA) (5-CM)	
	25	2	**096-5962**	12	WASHER-HARD (3.4X7X0.8-MM THK)	
M	26	2	**117-6952**	3	SCREW (M8X1.25X30-MM)	
	27	2	**132-5789**	2	CLIP	
C	28	2	**133-6934**	1	SPACER (11X20X25-MM THK)	
C	29	1	**311-0305**	1	HARNESS AS-RADIO (GRADE CONTROL)	
		1	**155-2255**	1	KIT-CONNECTING PLUG (12-PIN)	
					(INCLUDES PLUG AS, WEDGE & INTERFACE SEAL)	
		1	**167-8987**	1	PLUG AS-CONNECTOR (8-PIN)	
		1	**8T-8737**	4	PLUG-SEAL	
		1	**9W-0844**	2	SOCKET-CONNECTOR (14-GA TO 16-GA)	
		1	**180-9340**	6	SOCKET-CONNECTOR (14-GA TO 18-GA)	
	30	2	**2D-0388**	1	GROMMET	
C	31	2	**102-8801**	1	KIT-RECEPTACLE (12-PIN)	
					(INCLUDES RECEPTACLE AS & WEDGE)	
C	32	2	**4P-8134**	1	CLIP	
CM	33	2	**5C-9553**	1	BOLT (M6X1X16-MM)	
	34	2	**7R-3029**	3	CAP-DUST	
M	35	2	**7X-2553**	1	BOLT (M16X2X40-MM)	
M	36	2	**8C-8451**	3	BOLT (M6X1X40-MM)	
	37	2	**033-4818**	12	SCREW-MACHINE	
C	38	2	**8T-4121**	6	WASHER-HARD (11X21X2.5-MM THK)	
	39	2	**8T-4122**	1	WASHER-HARD (17X32X3.5-MM THK)	
CM	40	2	**8T-4137**	1	BOLT (M10X1.5X20-MM)	
CM	41	2	**8T-4185**	1	BOLT (M10X1.5X50-MM)	
M	42	2	**8T-4186**	2	BOLT (M10X1.5X40-MM)	
M	43	2	**8T-4195**	2	BOLT (M10X1.5X30-MM)	
M	44	2	**8T-4200**	2	BOLT (M8X1.25X16-MM)	
	45	2	**8T-4205**	6	WASHER-HARD (7.2X14.5X2-MM THK)	
	46	2	**8T-4224**	8	WASHER-HARD (8.8X16X2-MM THK)	
M	47	2	**8T-4908**	4	BOLT (M8X1.25X25-MM)	
C	48	2	**9X-8256**	1	WASHER (6.6X12X2-MM THK)	
D	49	2	**8T-3426**		CHANNEL-TRIM (1-M)	
CE	50	1	**7Y-5074**		GUARD-HOSE (48-CM)	
E	51	2	**109-2013**		GUARD (49-CM)	
D	52	1	**6V-1359**		SEAL (0.1-M)	
E	53	2	**3E-6600**		SEAL (31-CM)	
E	53A	2	**3E-6600**		SEAL (32-CM)	
E	53B	2	**3E-6600**		SEAL (3-CM)	

B - USE AS REQUIRED
C - CHANGE FROM PREVIOUS TYPE
D - ORDER BY THE METER
E - ORDER BY THE CENTIMETER
M - METRIC PART

245-6029 **WIRING GP-GRADE CONTROL (*contd.*)** **i04416211**

REFER TO ALL ILLUSTRATIONS OF
THIS GROUP FOR AUXILIARY VIEWS

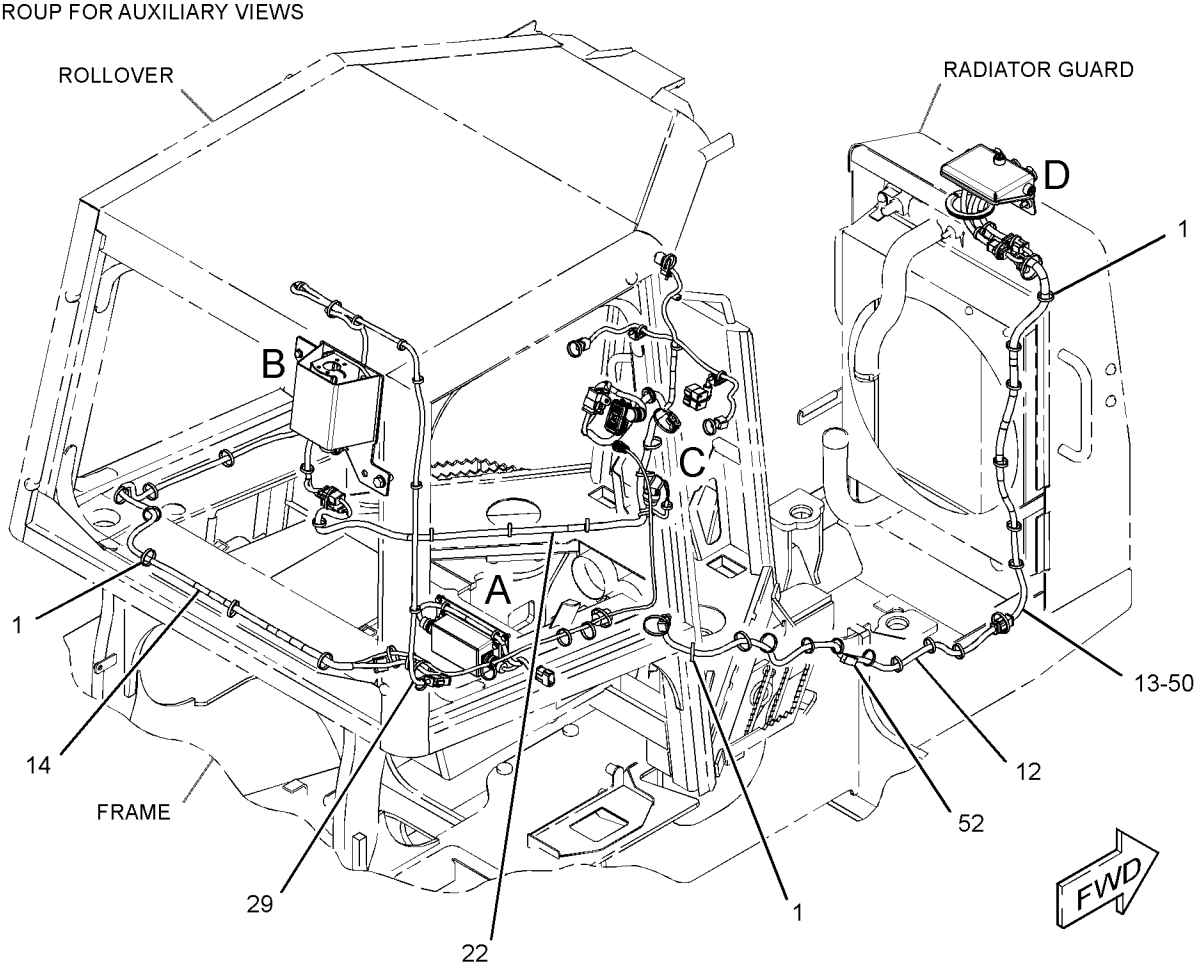

GRAPHIC #1 g01572135

245-6029 **WIRING GP-GRADE CONTROL (*contd.*)** **i04416211**

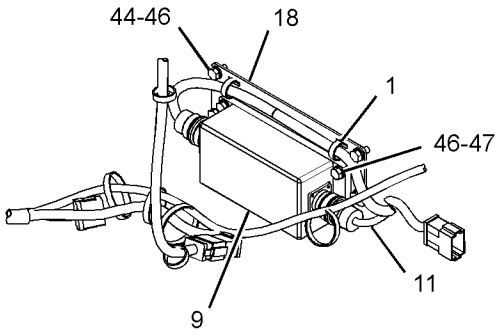

VIEW OF AREA A

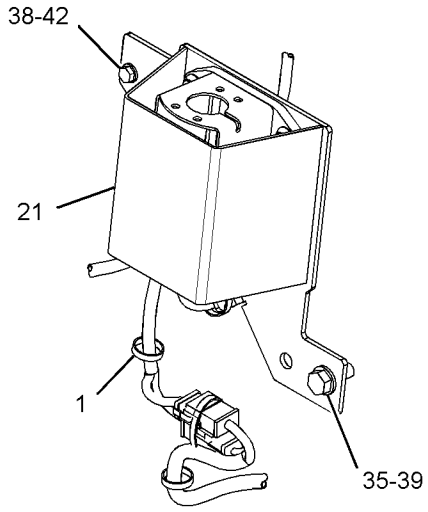

VIEW OF AREA B

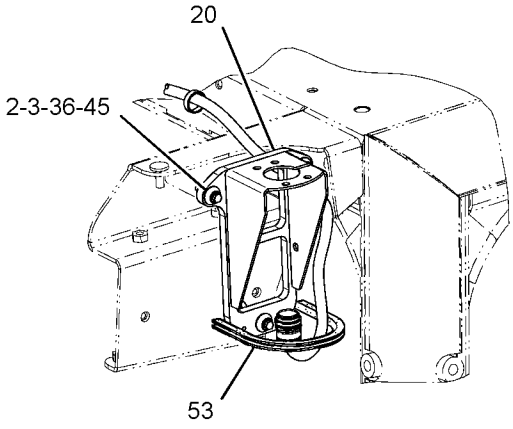

VIEW OF AREA B
(ALTERNATE VIEW ENCLOSED ROPS)

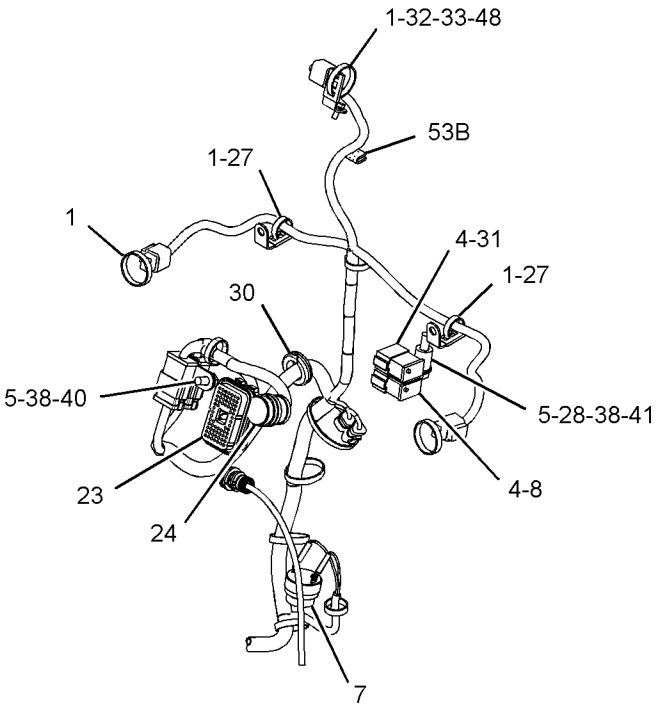

VIEW OF AREA C

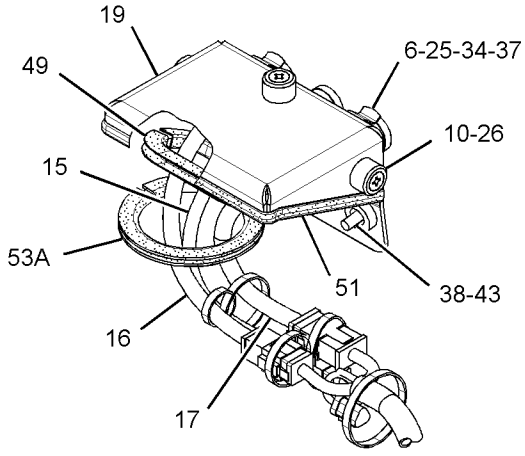

VIEW OF AREA D

GRAPHIC #2 **<END>** g01572138

245-6029 WIRING GP-GRADE CONTROL–FULL

S/N: MMM131-UP; RRR135-UP
PART OF 296-5755, 296-5756 GRADE CONTROL AR
AN ATTACHMENT
TYPE 2

SMCS-1408 **i04416210**

NOTE	REF NO	GRAPHIC REF	PART NUMBER	QTY	PART NAME 1 2 3 4 5 6 (PRODUCT LEVEL)	SEE PAGE
	1	1,2	**7K-1181**	65	STRAP-CABLE	
	4	2	**8T-8737**	24	PLUG-SEAL	
	5	2	**130-5300**	4	CLIP	
	6	2	**132-8487**	3	NUT-RING	
	7	2	**167-8712**	1	ALARM	
	8	2	**190-7615**	1	KIT-RECEPTACLE (12-PIN)	
					(INCLUDES RECEPTACLE AS & WEDGE)	
	9	2	**226-9169**	1	MODULE AS-POWER SUPPLY	
	10	2	**236-8826**	3	BOSS (1-1/8-18X0.708-IN)	
	11	2	**249-9030**	1	HARNESS AS-WIRING (POWER SUPPLY MODULE)	
		2	**9W-0844**	7	SOCKET-CONNECTOR (14-GA TO 16-GA)	
		2	**3R-9965**	1	PLUG AS-CONNECTOR (8-PIN)	
		2	**6D-5257**	1	PLUG AS-CONNECTOR (8-PIN)	
		2	**8T-8737**	5	PLUG-SEAL	
		2	**102-8801**	1	KIT-RECEPTACLE (12-PIN)	
					(INCLUDES RECEPTACLE AS & WEDGE)	
E		2	**125-7874**		TUBE-HEAT SHRINK (5.72-MM DIA) (5-CM)	
	12	1	**249-9031**	1	HARNESS AS-FRONT (GRADE CONTROL)	
		1	**155-2265**	2	KIT-CONNECTING PLUG (8-PIN)	
					(EACH INCLUDES PLUG AS, WEDGE & INTERFACE SEAL)	
		1	**9X-3402**	8	SOCKET-CONNECTOR (16-GA TO 18-GA)	
		1	**9W-0844**	8	SOCKET-CONNECTOR (14-GA TO 16-GA)	
	13	1	**249-9032**	1	HARNESS AS-HOOD (GRADE CONTROL)	
		1	**9X-3401**	4	PIN-CONNECTOR (16-GA TO 18-GA)	
		1	**8T-8729**	4	PIN-CONNECTOR (16-GA TO 18-GA)	
		1	**9W-0852**	9	PIN-CONNECTOR (14-GA TO 16-GA)	
		1	**155-2265**	1	KIT-CONNECTING PLUG (8-PIN)	
		1	**155-2260**	2	KIT-CONNECTING PLUG (3-PIN)	
		1	**155-2271**	1	KIT-CONNECTING PLUG (4-PIN)	
					(EACH PLUG KIT INCLUDES PLUG AS, WEDGE & INTERFACE SEAL)	
		1	**8T-8737**	9	PLUG-SEAL	
		1	**102-8804**	1	KIT-RECEPTACLE (4-PIN)	
		1	**102-8806**	1	KIT-RECEPTACLE (8-PIN)	
		1	**102-8801**	1	KIT-RECEPTACLE (12-PIN)	
					(EACH RECEPTACLE KIT INCLUDES RECEPTACLE AS & WEDGE)	
		1	**134-2540**	2	RESISTOR AS-CONNECTION (3-PIN)	
		1	**8T-8730**	10	SOCKET-CONNECTOR (16-GA TO 18-GA)	
		1	**9W-0844**	6	SOCKET-CONNECTOR (14-GA TO 16-GA)	
E		1	**119-3662**		TUBE-HEAT SHRINK (10.85-MM DIA) (7-CM)	
E		1	**125-7874**		TUBE-HEAT SHRINK (5.72-MM DIA) (60-CM)	
E		1	**125-7875**		TUBE-HEAT SHRINK (7.44-MM DIA) (60-CM)	
	14	1	**249-9033**	1	HARNESS AS-CONSOLE (GRADE CONTROL)	
		1	**8C-6354**	1	CAP-RECEPTACLE (ET CONNECTOR)	
		1	**9X-3401**	10	PIN-CONNECTOR (16-GA TO 18-GA)	
		1	**8T-8729**	10	PIN-CONNECTOR (16-GA TO 18-GA)	
		1	**9W-0852**	2	PIN-CONNECTOR (14-GA TO 16-GA)	
		1	**155-2255**	2	KIT-CONNECTING PLUG (12-PIN)	
					(INCLUDES PLUG AS, WEDGE & INTERFACE SEAL)	
		1	**253-2695**	1	PLUG AS-CONNECTOR	
		1	**8T-8737**	12	PLUG-SEAL	
		1	**102-8806**	1	KIT-RECEPTACLE (8-PIN)	
		1	**102-8801**	1	KIT-RECEPTACLE (12-PIN)	

245-6029 **WIRING GP-GRADE CONTROL (*contd.*)** **i04416210**

NOTE	REF NO	GRAPHIC REF	PART NUMBER	QTY	PART NAME 1 2 3 4 5 6 (PRODUCT LEVEL)	SEE PAGE
					(EACH RECEPTACLE KIT INCLUDES RECEPTACLE AS & WEDGE)	
		1	**8T-8736**	1	RECEPTACLE-CONNECTOR (9-PIN)	
		1	**9X-3402**	13	SOCKET-CONNECTOR (16-GA TO 18-GA)	
		1	**9W-0844**	6	SOCKET-CONNECTOR (14-GA TO 16-GA)	
B		1	**141-8061**		TAPE	
E		1	**125-7874**		TUBE-HEAT SHRINK (5.72-MM DIA) (40-CM)	
E		1	**125-7875**		TUBE-HEAT SHRINK (7.44-MM DIA) (10-CM)	
	15	2	**249-9034**	1	HARNESS AS-SENSOR (GRADE CONTROL)	
		2	**228-3323**	1	CLIP-SPRING	
		2	**8T-8729**	2	PIN-CONNECTOR (16-GA TO 18-GA)	
		2	**9W-0852**	2	PIN-CONNECTOR (14-GA TO 16-GA)	
		2	**102-8804**	1	KIT-RECEPTACLE (4-PIN)	
					(INCLUDES RECEPTACLE AS & WEDGE)	
	16	2	**249-9049**	1	HARNESS AS-WIRING (RECEIVER, LH)	
		2	**228-3323**	1	CLIP-SPRING	
		2	**8T-8729**	4	PIN-CONNECTOR (16-GA TO 18-GA)	
		2	**9W-0852**	4	PIN-CONNECTOR (14-GA TO 16-GA)	
		2	**102-8806**	1	KIT-RECEPTACLE (8-PIN)	
					(INCLUDES RECEPTACLE AS & WEDGE)	
	17	2	**249-9050**	1	HARNESS AS-WIRING (RECEIVER, RH)	
		2	**228-3323**	1	CLIP-SPRING	
		2	**155-2255**	1	KIT-CONNECTING PLUG (12-PIN)	
					(INCLUDES PLUG AS, WEDGE & INTERFACE SEAL)	
		2	**8T-8737**	3	PLUG-SEAL	
		2	**8T-8730**	4	SOCKET-CONNECTOR (16-GA TO 18-GA)	
		2	**9W-0844**	5	SOCKET-CONNECTOR (14-GA TO 16-GA)	
	18	2	**249-9077**	1	PLATE AS	
	19	2	**257-7501**	1	PLATE AS	
C	21	2	**311-0311**	1	BRACKET AS	
	22	1	**311-0295**	1	HARNESS AS-DASH (GRADE CONTROL)	
		1	**8T-8729**	1	PIN-CONNECTOR (16-GA TO 18-GA)	
		1	**9W-0852**	2	PIN-CONNECTOR (14-GA TO 16-GA)	
		1	**9X-3401**	6	PIN-CONNECTOR (16-GA TO 18-GA)	
					—OR—	
		1	**126-1767**	6	PIN-CONNECTOR (14-GA TO 16-GA)	
		1	**155-2255**	1	KIT-CONNECTING PLUG (12-PIN)	
		1	**155-2257**	1	KIT-CONNECTING PLUG (12-PIN)	
		1	**155-2265**	1	KIT-CONNECTING PLUG (8-PIN)	
		1	**155-2260**	2	KIT-CONNECTING PLUG (3-PIN)	
					(EACH PLUG KIT INCLUDES PLUG AS, WEDGE & INTERFACE SEAL)	
		1	**230-5008**	3	PLUG AS-CONNECTOR (4-PIN)	
		1	**8T-8737**	24	PLUG-SEAL	
		1	**102-8801**	1	KIT-RECEPTACLE (12-PIN)	
					(INCLUDES RECEPTACLE AS & WEDGE)	
		1	**134-2540**	2	RESISTOR AS-CONNECTION (3-PIN)	
		1	**230-5009**	3	RECEPTACLE AS-CONNECTOR (4-PIN)	
		1	**9X-3402**	12	SOCKET-CONNECTOR (16-GA TO 18-GA)	
		1	**180-9340**	10	SOCKET-CONNECTOR (14-GA TO 18-GA)	
		1	**5P-2321**	2	TERMINAL-FORK (14-GA TO 16-GA, NO. 6 SCREW)	
E		1	**125-7874**		TUBE-HEAT SHRINK (5.72-MM DIA) (45-CM)	
	23	2	**311-0297**	1	HARNESS AS-MONITOR	
		2	**230-7254**	13	PIN-CONNECTOR	
		2	**147-1444**	1	PLUG AS-CONNECTOR (70-PIN)	
		2	**159-9322**	1	SEAL-O-RING	
		2	**8T-8737**	67	PLUG-SEAL	
		2	**102-8801**	1	KIT-RECEPTACLE (12-PIN)	
		2	**190-7615**	1	KIT-RECEPTACLE (12-PIN)	
					(EACH RECEPTACLE KIT INCLUDES RECEPTACLE AS & WEDGE)	

245-6029 **WIRING GP-GRADE CONTROL (*contd.*)** **i04416210**

NOTE	REF NO	GRAPHIC REF	PART NUMBER	QTY	PART NAME 1 2 3 4 5 6 (PRODUCT LEVEL)	SEE PAGE
		2	**9X-3402**	14	SOCKET-CONNECTOR (16-GA TO 18-GA)	
B		2	**141-8061**		TAPE	
E		2	**125-7874**		TUBE-HEAT SHRINK (5.72-MM DIA) (5-CM)	
	24	2	**327-6133**	1	HARNESS AS-CONTROL	
		2	**230-7254**	15	PIN-CONNECTOR	
		2	**8T-8737**	9	PLUG-SEAL	
		2	**102-8801**	1	KIT-RECEPTACLE (12-PIN)	
		2	**190-7615**	1	KIT-RECEPTACLE (12-PIN)	
					(EACH RECEPTACLE KIT INCLUDES RECEPTACLE AS & WEDGE)	
B		2	**141-8061**		TAPE	
E		2	**125-7874**		TUBE-HEAT SHRINK (5.72-MM DIA) (5-CM)	
E		2	**125-7875**		TUBE-HEAT SHRINK (7.44-MM DIA) (5-CM)	
	25	2	**096-5962**	12	WASHER-HARD (3.4X7X0.8-MM THK)	
M	26	2	**117-6952**	3	SCREW (M8X1.25X30-MM)	
	27	2	**132-5789**	2	CLIP	
	28	2	**133-6934**	1	SPACER (11X20X25-MM THK)	
	29	1	**311-0305**	1	HARNESS AS-RADIO (GRADE CONTROL)	
		1	**155-2255**	1	KIT-CONNECTING PLUG (12-PIN)	
					(INCLUDES PLUG AS, WEDGE & INTERFACE SEAL)	
		1	**167-8987**	1	PLUG AS-CONNECTOR (8-PIN)	
		1	**8T-8737**	4	PLUG-SEAL	
		1	**9W-0844**	2	SOCKET-CONNECTOR (14-GA TO 16-GA)	
		1	**180-9340**	6	SOCKET-CONNECTOR (14-GA TO 18-GA)	
	30	2	**2D-0388**	1	GROMMET	
	31	2	**102-8801**	1	KIT-RECEPTACLE (12-PIN)	
					(INCLUDES RECEPTACLE AS & WEDGE)	
	32	2	**4P-8134**	1	CLIP	
M	33	2	**5C-9553**	1	BOLT (M6X1X16-MM)	
	34	2	**7R-3029**	3	CAP-DUST	
M	35	2	**7X-2553**	1	BOLT (M16X2X40-MM)	
	37	2	**033-4818**	12	SCREW-MACHINE	
	38	2	**8T-4121**	6	WASHER-HARD (11X21X2.5-MM THK)	
	39	2	**8T-4122**	1	WASHER-HARD (17X32X3.5-MM THK)	
M	40	2	**8T-4137**	1	BOLT (M10X1.5X20-MM)	
M	41	2	**8T-4185**	1	BOLT (M10X1.5X50-MM)	
M	42	2	**8T-4186**	2	BOLT (M10X1.5X40-MM)	
M	43	2	**8T-4195**	2	BOLT (M10X1.5X30-MM)	
M	44	2	**8T-4200**	2	BOLT (M8X1.25X16-MM)	
	46	2	**8T-4224**	8	WASHER-HARD (8.8X16X2-MM THK)	
M	47	2	**8T-4908**	4	BOLT (M8X1.25X25-MM)	
	48	2	**9X-8256**	1	WASHER (6.6X12X2-MM THK)	
D	49	2	**8T-3426**		CHANNEL-TRIM (0.4-M)	
E	50	1	**7Y-5074**		GUARD-HOSE (48-CM)	
E	51	2	**109-2013**		GUARD (49-CM)	
D	52	1	**6V-1359**		SEAL (0.1-M)	
E	53	2	**3E-6600**		SEAL (31-CM)	
E	53A	2	**3E-6600**		SEAL (32-CM)	
E	53B	2	**3E-6600**		SEAL (3-CM)	

B - USE AS REQUIRED
C - CHANGE FROM PREVIOUS TYPE
D - ORDER BY THE METER
E - ORDER BY THE CENTIMETER
M - METRIC PART

245-6029 **WIRING GP-GRADE CONTROL (*contd.*)** **i04416210**

REFER TO ALL ILLUSTRATIONS OF
THIS GROUP FOR AUXILIARY VIEWS

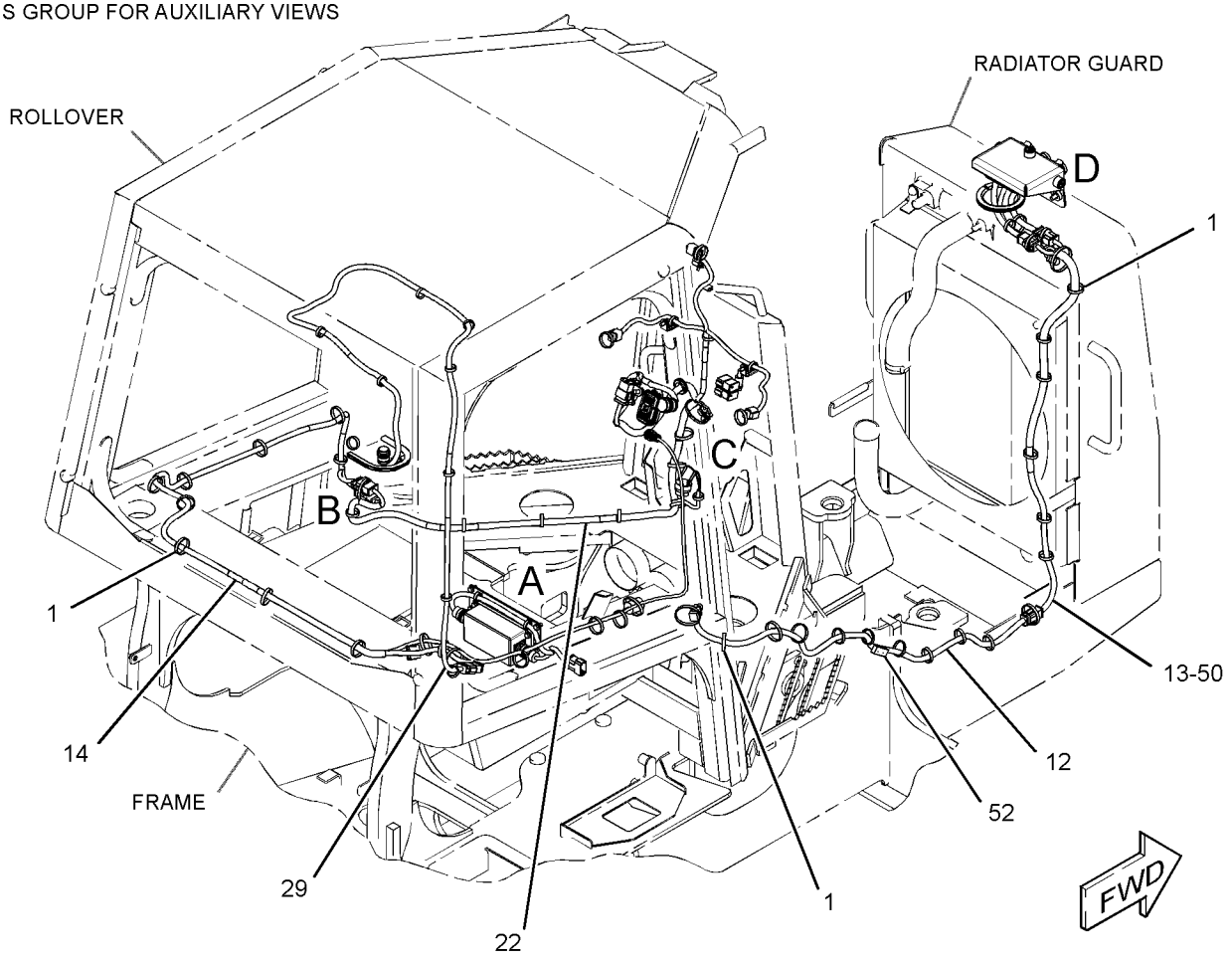

GRAPHIC #1 g01577053

245-6029 **WIRING GP-GRADE CONTROL (*contd.*)** **i04416210**

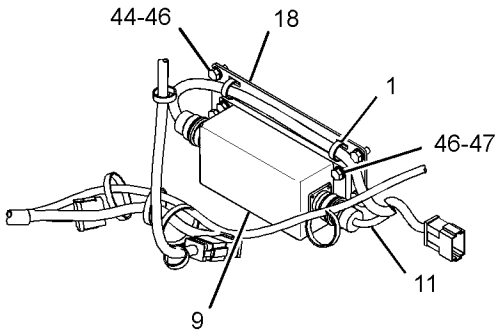

VIEW OF AREA A

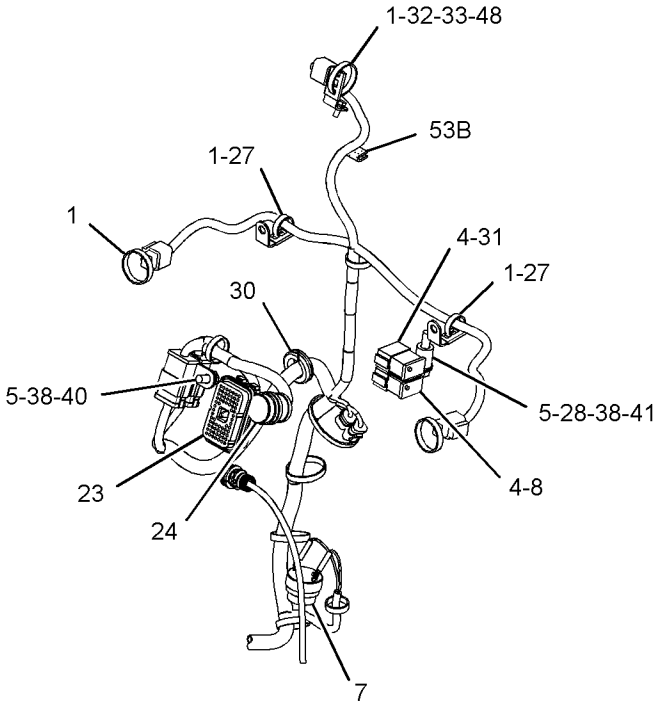

VIEW OF AREA C

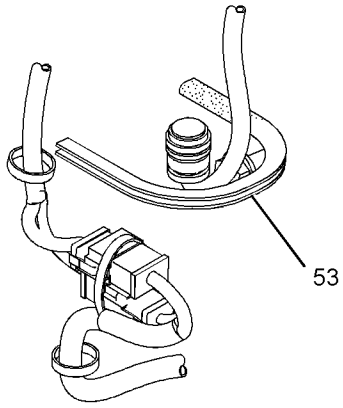

VIEW OF AREA B

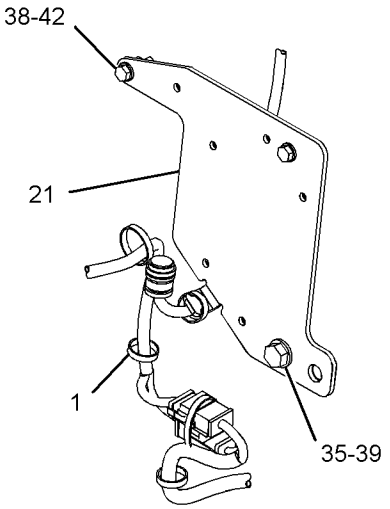

VIEW OF AREA B
(ALTERNATE ROPS CAB MOUNTING)

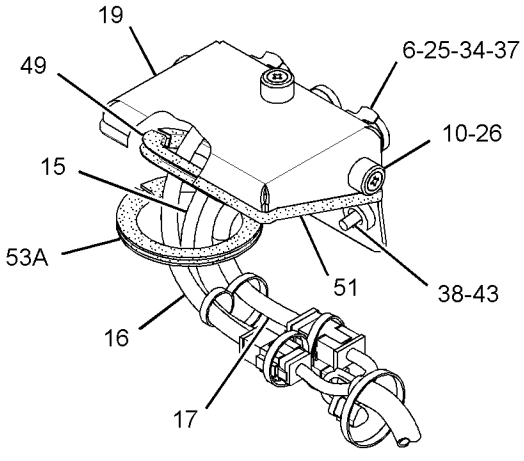

VIEW OF AREA D

GRAPHIC #2 **<END>** g01577054

245-6029 WIRING GP-GRADE CONTROL–FULL

S/N: MMM131-UP; RRR135-UP
PART OF 296-5755, 296-5756 GRADE CONTROL AR
AN ATTACHMENT
TYPE 3

SMCS-1408 **i04416212**

NOTE	REF NO	GRAPHIC REF	PART NUMBER	QTY	PART NAME 1 2 3 4 5 6 (PRODUCT LEVEL)	SEE PAGE
	1	1,2	**7K-1181**	65	STRAP-CABLE	
	4	2	**8T-8737**	24	PLUG-SEAL	
	5	2	**130-5300**	4	CLIP	
	6	2	**132-8487**	3	NUT-RING	
	7	2	**167-8712**	1	ALARM	
	8	2	**190-7615**	1	KIT-RECEPTACLE (12-PIN)	
					(INCLUDES RECEPTACLE AS & WEDGE)	
	9	2	**226-9169**	1	MODULE AS-POWER SUPPLY	
	10	2	**236-8826**	3	BOSS (1-1/8-18XO.708-IN)	
	11	2	**249-9030**	1	HARNESS AS-WIRING (POWER SUPPLY MODULE)	
		2	**9W-0852**	7	PIN-CONNECTOR (14-GA TO 16-GA)	
		2	**3R-9965**	1	PLUG AS-CONNECTOR (8-PIN)	
		2	**6D-5257**	1	PLUG AS-CONNECTOR (8-PIN)	
		2	**8T-8737**	5	PLUG-SEAL	
		2	**102-8801**	1	KIT-RECEPTACLE (12-PIN)	
					(INCLUDES RECEPTACLE AS & WEDGE)	
E		2	**125-7874**		TUBE-HEAT SHRINK (5.72-MM DIA) (5-CM)	
	12	1	**249-9031**	1	HARNESS AS-FRONT (GRADE CONTROL)	
		1	**155-2265**	2	KIT-CONNECTING PLUG (8-PIN)	
					(EACH INCLUDES PLUG AS, WEDGE & INTERFACE SEAL)	
		1	**9X-3402**	8	SOCKET-CONNECTOR (16-GA TO 18-GA)	
		1	**9W-0844**	8	SOCKET-CONNECTOR (14-GA TO 16-GA)	
	13	1	**249-9032**	1	HARNESS AS-HOOD (GRADE CONTROL)	
		1	**9X-3401**	4	PIN-CONNECTOR (16-GA TO 18-GA)	
		1	**8T-8729**	4	PIN-CONNECTOR (16-GA TO 18-GA)	
		1	**9W-0852**	9	PIN-CONNECTOR (14-GA TO 16-GA)	
		1	**155-2265**	1	KIT-CONNECTING PLUG (8-PIN)	
		1	**155-2260**	2	KIT-CONNECTING PLUG (3-PIN)	
		1	**155-2271**	1	KIT-CONNECTING PLUG (4-PIN)	
					(EACH PLUG KIT INCLUDES PLUG AS, WEDGE & INTERFACE SEAL)	
		1	**8T-8737**	9	PLUG-SEAL	
		1	**102-8804**	1	KIT-RECEPTACLE (4-PIN)	
		1	**102-8806**	1	KIT-RECEPTACLE (8-PIN)	
		1	**102-8801**	1	KIT-RECEPTACLE (12-PIN)	
					(EACH RECEPTACLE KIT INCLUDES RECEPTACLE AS & WEDGE)	
		1	**134-2540**	2	RESISTOR AS-CONNECTION (3-PIN)	
		1	**8T-8730**	10	SOCKET-CONNECTOR (16-GA TO 18-GA)	
		1	**9W-0844**	6	SOCKET-CONNECTOR (14-GA TO 16-GA)	
E		1	**119-3662**		TUBE-HEAT SHRINK (10.85-MM DIA) (7-CM)	
E		1	**125-7874**		TUBE-HEAT SHRINK (5.72-MM DIA) (60-CM)	
E		1	**125-7875**		TUBE-HEAT SHRINK (7.44-MM DIA) (5-CM)	
	14	1	**249-9033**	1	HARNESS AS-CONSOLE (GRADE CONTROL)	
		1	**8C-6354**	1	CAP-RECEPTACLE (ET CONNECTOR)	
		1	**9X-3401**	10	PIN-CONNECTOR (16-GA TO 18-GA)	
		1	**8T-8729**	10	PIN-CONNECTOR (16-GA TO 18-GA)	
		1	**9W-0852**	2	PIN-CONNECTOR (14-GA TO 16-GA)	
		1	**155-2255**	2	KIT-CONNECTING PLUG (12-PIN)	
					(EACH INCLUDES PLUG AS, WEDGE & INTERFACE SEAL)	
		1	**253-2695**	1	PLUG AS-CONNECTOR	
		1	**8T-8737**	12	PLUG-SEAL	
		1	**102-8806**	1	KIT-RECEPTACLE (8-PIN)	

245-6029 **WIRING GP-GRADE CONTROL (*contd.*)** **i04416212**

NOTE	REF NO	GRAPHIC REF	PART NUMBER	QTY	PART NAME 1 2 3 4 5 6 (PRODUCT LEVEL)	SEE PAGE
		1	**102-8801**	1	KIT-RECEPTACLE (12-PIN)	
					(EACH RECEPTACLE KIT INCLUDES RECEPTACLE AS & WEDGE)	
		1	**8T-8736**	1	RECEPTACLE-CONNECTOR (9-PIN)	
		1	**9X-3402**	13	SOCKET-CONNECTOR (16-GA TO 18-GA)	
		1	**9W-0844**	6	SOCKET-CONNECTOR (14-GA TO 16-GA)	
B		1	**141-8061**		TAPE	
E		1	**125-7874**		TUBE-HEAT SHRINK (5.72-MM DIA) (40-CM)	
E		1	**125-7875**		TUBE-HEAT SHRINK (7.44-MM DIA) (10-CM)	
	15	2	**249-9034**	1	HARNESS AS-SENSOR (GRADE CONTROL)	
		2	**228-3323**	1	CLIP-SPRING	
		2	**8T-8729**	2	PIN-CONNECTOR (16-GA TO 18-GA)	
		2	**9W-0852**	2	PIN-CONNECTOR (14-GA TO 16-GA)	
		2	**102-8804**	1	KIT-RECEPTACLE (4-PIN)	
					(INCLUDES RECEPTACLE AS & WEDGE)	
	16	2	**249-9049**	1	HARNESS AS-WIRING (RECEIVER, LH)	
		2	**228-3323**	1	CLIP-SPRING	
		2	**8T-8729**	4	PIN-CONNECTOR (16-GA TO 18-GA)	
		2	**9W-0852**	4	PIN-CONNECTOR (14-GA TO 16-GA)	
		2	**102-8806**	1	KIT-RECEPTACLE (8-PIN)	
					(INCLUDES RECEPTACLE AS & WEDGE)	
	17	2	**249-9050**	1	HARNESS AS-WIRING (RECEIVER, RH)	
		2	**228-3323**	1	CLIP-SPRING	
		2	**155-2255**	1	KIT-CONNECTING PLUG (12-PIN)	
					(INCLUDES PLUG AS, WEDGE & INTERFACE SEAL)	
		2	**8T-8737**	3	PLUG-SEAL	
		2	**8T-8730**	4	SOCKET-CONNECTOR (16-GA TO 18-GA)	
		2	**9W-0844**	5	SOCKET-CONNECTOR (14-GA TO 16-GA)	
	18	2	**249-9077**	1	PLATE AS	
	19	2	**257-7501**	1	PLATE AS	
	21	2	**311-0311**	1	BRACKET AS	
	22	1	**311-0295**	1	HARNESS AS-DASH (GRADE CONTROL)	
		1	**8T-8729**	1	PIN-CONNECTOR (16-GA TO 18-GA)	
		1	**9W-0852**	2	PIN-CONNECTOR (14-GA TO 16-GA)	
		1	**9X-3401**	6	PIN-CONNECTOR (16-GA TO 18-GA)	
		1	**155-2255**	1	KIT-CONNECTING PLUG (12-PIN)	
		1	**155-2257**	1	KIT-CONNECTING PLUG (12-PIN)	
		1	**155-2265**	1	KIT-CONNECTING PLUG (8-PIN)	
		1	**155-2260**	2	KIT-CONNECTING PLUG (3-PIN)	
					(EACH PLUG KIT INCLUDES PLUG AS, WEDGE & INTERFACE SEAL)	
		1	**230-5008**	3	PLUG AS-CONNECTOR (4-PIN)	
					(EACH INCLUDES)	
		1	**264-7031**	1	SEAL-CONNECTOR	
		1	**8T-8737**	24	PLUG-SEAL	
		1	**102-8801**	1	KIT-RECEPTACLE (12-PIN)	
					(INCLUDES RECEPTACLE AS & WEDGE)	
		1	**134-2540**	2	RESISTOR AS-CONNECTION (3-PIN)	
		1	**230-5009**	3	RECEPTACLE AS-CONNECTOR (4-PIN)	
		1	**9X-3402**	12	SOCKET-CONNECTOR (16-GA TO 18-GA)	
		1	**180-9340**	10	SOCKET-CONNECTOR (14-GA TO 18-GA)	
		1	**5P-2321**	2	TERMINAL-FORK (14-GA TO 16-GA, NO. 6 SCREW)	
E		1	**125-7874**		TUBE-HEAT SHRINK (5.72-MM DIA) (45-CM)	
	23	2	**311-0297**	1	HARNESS AS-MONITOR	
		2	**230-7254**	13	PIN-CONNECTOR	
		2	**147-1444**	1	PLUG AS-CONNECTOR (70-PIN)	
		2	**159-9322**	1	SEAL-O-RING	
		2	**8T-8737**	67	PLUG-SEAL	
		2	**102-8801**	1	KIT-RECEPTACLE (12-PIN)	
		2	**190-7615**	1	KIT-RECEPTACLE (12-PIN)	

245-6029 **WIRING GP-GRADE CONTROL (*contd.*)** **i04416212**

NOTE	REF NO	GRAPHIC REF	PART NUMBER	QTY	PART NAME 1 2 3 4 5 6 (PRODUCT LEVEL)	SEE PAGE
					(EACH RECEPTACLE KIT INCLUDES RECEPTACLE AS & WEDGE)	
		2	**9X-3402**	14	SOCKET-CONNECTOR (16-GA TO 18-GA)	
B		2	**141-8061**		TAPE	
E		2	**125-7874**		TUBE-HEAT SHRINK (5.72-MM DIA) (5-CM)	
	24	2	**327-6133**	1	HARNESS AS-CONTROL	
		2	**230-7254**	15	PIN-CONNECTOR	
		2	**8T-8737**	9	PLUG-SEAL	
		2	**102-8801**	1	KIT-RECEPTACLE (12-PIN)	
		2	**190-7615**	1	KIT-RECEPTACLE (12-PIN)	
					(EACH RECEPTACLE KIT INCLUDES RECEPTACLE AS & WEDGE)	
B		2	**141-8061**		TAPE	
E		2	**125-7874**		TUBE-HEAT SHRINK (5.72-MM DIA) (5-CM)	
E		2	**125-7875**		TUBE-HEAT SHRINK (7.44-MM DIA) (5-CM)	
	25	2	**096-5962**	12	WASHER-HARD (3.4X7X0.8-MM THK)	
M	26	2	**117-6952**	3	SCREW (M8X1.25X30-MM)	
	27	2	**132-5789**	2	CLIP	
	28	2	**133-6934**	1	SPACER (11X20X25-MM THK)	
	29	1	**311-0305**	1	HARNESS AS-RADIO (GRADE CONTROL)	
		1	**155-2255**	1	KIT-CONNECTING PLUG (12-PIN)	
					(INCLUDES PLUG AS, WEDGE & INTERFACE SEAL)	
		1	**167-8987**	1	PLUG AS-CONNECTOR (8-PIN)	
		1	**8T-8737**	4	PLUG-SEAL	
		1	**9W-0844**	2	SOCKET-CONNECTOR (14-GA TO 16-GA)	
		1	**180-9340**	6	SOCKET-CONNECTOR (14-GA TO 18-GA)	
	30	2	**2D-0388**	1	GROMMET	
	31	2	**102-8801**	1	KIT-RECEPTACLE (12-PIN)	
					(INCLUDES RECEPTACLE AS & WEDGE)	
	32	2	**4P-8134**	1	CLIP	
M	33	2	**5C-9553**	1	BOLT (M6X1X16-MM)	
	34	2	**7R-3029**	3	CAP-DUST	
M	35	2	**7X-2553**	1	BOLT (M16X2X40-MM)	
	37	2	**033-4818**	12	SCREW-MACHINE	
C	38	2	**8T-4121**	4	WASHER-HARD (11X21X2.5-MM THK)	
	39	2	**8T-4122**	1	WASHER-HARD (17X32X3.5-MM THK)	
M	40	2	**8T-4137**	1	BOLT (M10X1.5X20-MM)	
M	41	2	**8T-4185**	1	BOLT (M10X1.5X50-MM)	
M	42	2	**8T-4186**	2	BOLT (M10X1.5X40-MM)	
M	43	2	**8T-4195**	2	BOLT (M10X1.5X30-MM)	
M	44	2	**8T-4200**	2	BOLT (M8X1.25X16-MM)	
	46	2	**8T-4224**	8	WASHER-HARD (8.8X16X2-MM THK)	
M	47	2	**8T-4908**	4	BOLT (M8X1.25X25-MM)	
	48	2	**9X-8256**	1	WASHER (6.6X12X2-MM THK)	
D	49	2	**8T-3426**		CHANNEL-TRIM (0.4-M)	
E	50	1	**7Y-5074**		GUARD-HOSE (48-CM)	
D	52	1	**6V-1359**		SEAL (0.1-M)	
E	53	2	**3E-6600**		SEAL (31-CM)	
E	53A	2	**3E-6600**		SEAL (32-CM)	
E	53B	2	**3E-6600**		SEAL (3-CM)	
C	54	2	**7X-7729**	2	WASHER (11X25X3-MM THK)	

B - USE AS REQUIRED
C - CHANGE FROM PREVIOUS TYPE
D - ORDER BY THE METER
E - ORDER BY THE CENTIMETER
M - METRIC PART

245-6029 **WIRING GP-GRADE CONTROL (*contd.*)** **i04416212**

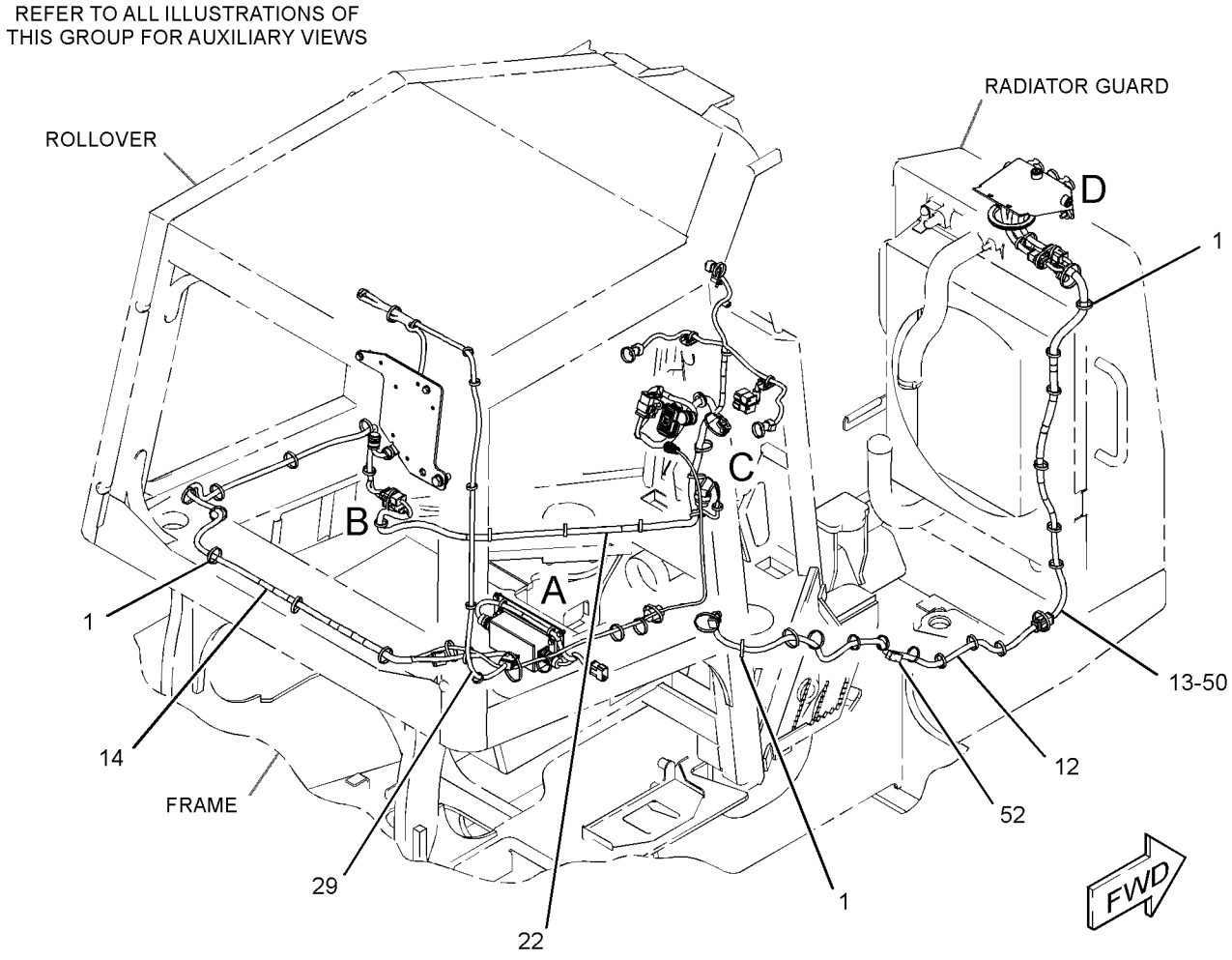

GRAPHIC #1 g02176417

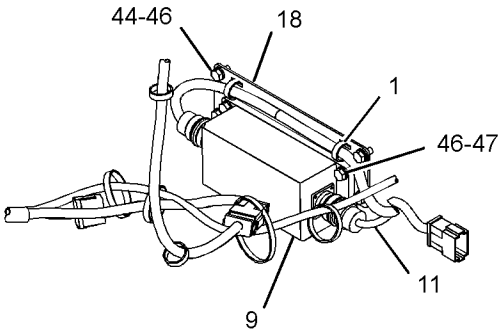

VIEW OF AREA A

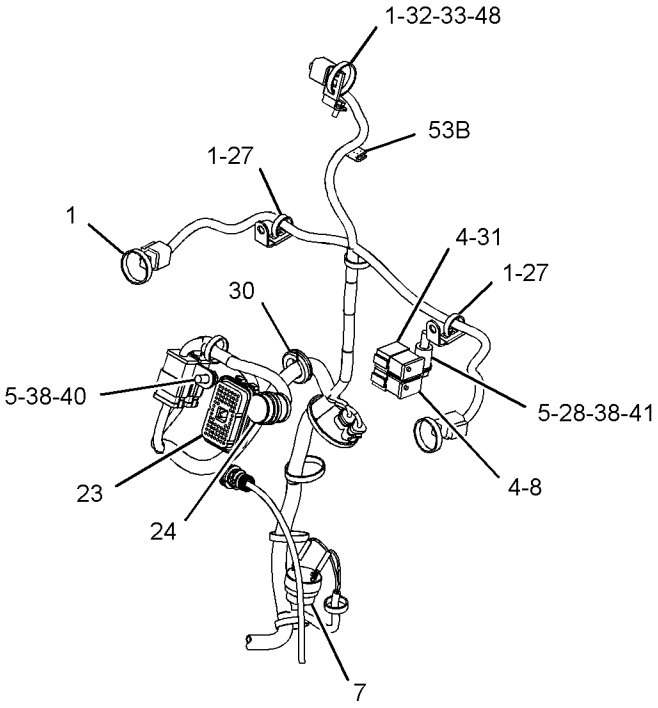

VIEW OF AREA C

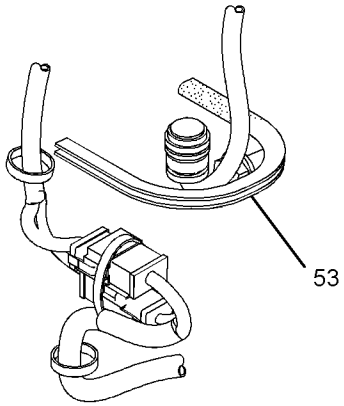

VIEW OF AREA B

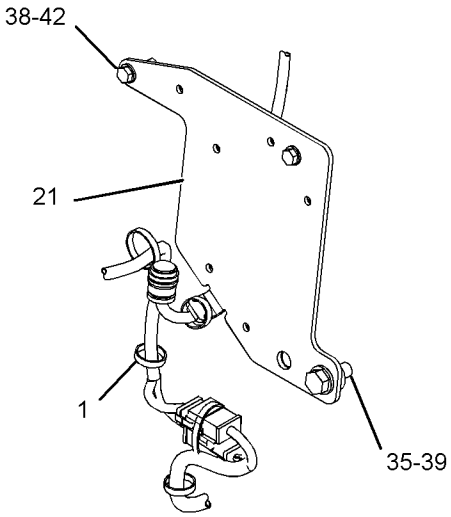

VIEW OF AREA B
(ALTERNATE ROPS CAB MOUNTING)

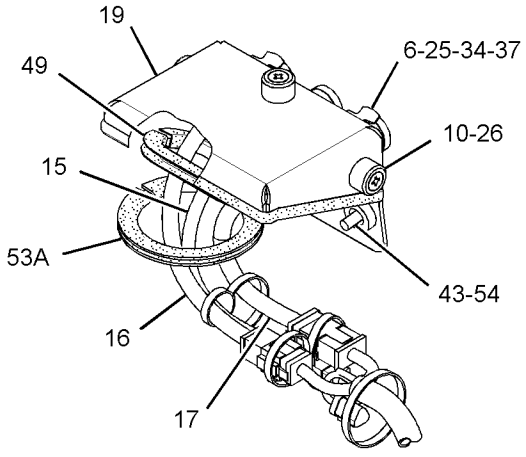

VIEW OF AREA D

GRAPHIC #2 **<END>** g02176539

249-9040 WIRING GP-GRADE CONTROL–BASE

S/N: MMM1-UP; RRR1-UP
PART OF 296-5753, 296-5754 GRADE CONTROL AR
AN ATTACHMENT
TYPE 1

SMCS-1408 **i04415713**

NOTE	REF NO	GRAPHIC REF	PART NUMBER	QTY	PART NAME 1 2 3 4 5 6 (PRODUCT LEVEL)	SEE PAGE
	1	1	**7K-1181**	42	STRAP-CABLE	
	2	1	**167-8712**	1	ALARM (ADVISOR)	
	3	1	**226-9169**	1	MODULE AS-POWER SUPPLY	
	4	1	**245-6030**	1	HARNESS AS-DASH (GRADE CONTROL)	
		1	**9X-3401**	6	PIN-CONNECTOR (16-GA TO 18-GA)	
		1	**8T-8729**	4	PIN-CONNECTOR (16-GA TO 18-GA)	
		1	**9W-0852**	2	PIN-CONNECTOR (14-GA TO 16-GA)	
		1	**230-7254**	18	PIN-CONNECTOR	
		1	**155-2255**	1	KIT-CONNECTING PLUG (12-PIN)	
		1	**155-2256**	1	KIT-CONNECTING PLUG (12-PIN)	
		1	**155-2265**	1	KIT-CONNECTING PLUG (8-PIN)	
		1	**155-2260**	2	KIT-CONNECTING PLUG (3-PIN)	
					(EACH PLUG KIT INCLUDES PLUG AS, WEDGE & INTERFACE SEAL)	
		1	**230-5008**	3	PLUG AS-CONNECTOR (4-PIN)	
		1	**8T-8737**	44	PLUG-SEAL	
		1	**102-8801**	2	KIT-RECEPTACLE (12-PIN)	
		1	**190-7614**	1	KIT-RECEPTACLE (12-PIN)	
					(EACH RECEPTACLE KIT INCLUDES RECEPTACLE AS & WEDGE)	
		1	**134-2540**	2	RESISTOR AS-CONNECTION (3-PIN)	
		1	**230-5009**	3	RECEPTACLE AS-CONNECTOR (4-PIN)	
		1	**9X-3402**	6	SOCKET-CONNECTOR (16-GA TO 18-GA)	
		1	**8T-8730**	6	SOCKET-CONNECTOR (16-GA TO 18-GA)	
		1	**9X-3402**	12	SOCKET-CONNECTOR (16-GA TO 18-GA)	
		1	**5P-2321**	2	TERMINAL-FORK (14-GA TO 16-GA, NO. 6 SCREW)	
E		1	**125-7874**		TUBE-HEAT SHRINK (5.72-MM DIA) (45-CM)	
	5	1	**249-9025**	1	HARNESS AS-RADIO (GRADE CONTROL)	
		1	**155-2255**	1	KIT-CONNECTING PLUG (12-PIN)	
					(INCLUDES PLUG AS, WEDGE & INTERFACE SEAL)	
		1	**167-8987**	1	PLUG AS-CONNECTOR (8-PIN)	
		1	**8T-8737**	6	PLUG-SEAL	
		1	**9X-3402**	4	SOCKET-CONNECTOR (16-GA TO 18-GA)	
		1	**9W-0844**	2	SOCKET-CONNECTOR (14-GA TO 16-GA)	
		1	**155-2255**	1	KIT-CONNECTING PLUG (12-PIN)	
					(INCLUDES PLUG AS, WEDGE, & INTERFACE SEAL)	
		1	**167-8987**	1	PLUG AS-CONNECTOR (8-PIN)	
	6	1	**249-9030**	1	HARNESS AS-WIRING (POWER SUPPLY MODULE)	
		1	**9W-0852**	7	PIN-CONNECTOR (14-GA TO 16-GA)	
		1	**3R-9965**	1	PLUG AS-CONNECTOR (8-PIN)	
		1	**6D-5257**	1	PLUG AS-CONNECTOR (8-PIN)	
		1	**8T-8737**	5	PLUG-SEAL	
		1	**102-8801**	1	KIT-RECEPTACLE (12-PIN)	
					(INCLUDES RECEPTACLE AS & WEDGE)	
E		1	**125-7874**		TUBE-HEAT SHRINK (5.72-MM DIA) (5-CM)	
	7	1	**249-9033**	1	HARNESS AS-CONSOLE (GRADE CONTROL)	
		1	**8T-8729**	10	PIN-CONNECTOR (16-GA TO 18-GA)	
		1	**9W-0852**	2	PIN-CONNECTOR (14-GA TO 16-GA)	
		1	**155-2255**	2	KIT-CONNECTING PLUG (12-PIN)	
					(EACH INCLUDES PLUG AS, WEDGE & INTERFACE SEAL)	
		1	**253-2695**	1	PLUG AS-CONNECTOR	
		1	**8T-8737**	12	PLUG-SEAL	
		1	**102-8806**	1	KIT-RECEPTACLE (8-PIN)	

249-9040 **WIRING GP-GRADE CONTROL (*contd.*)** **i04415713**

NOTE	REF NO	GRAPHIC REF	PART NUMBER	QTY	PART NAME 1 2 3 4 5 6 (PRODUCT LEVEL)	SEE PAGE
		1	**102-8801**	1	KIT-RECEPTACLE (12-PIN)	
					(EACH RECEPTACLE KIT INCLUDES RECEPTACLE AS & WEDGE)	
		1	**8T-8736**	1	RECEPTACLE-CONNECTOR (9-PIN)	
		1	**9X-3402**	13	SOCKET-CONNECTOR (16-GA TO 18-GA)	
		1	**9W-0844**	6	SOCKET-CONNECTOR (14-GA TO 16-GA)	
B		1	**141-8061**		TAPE	
E		1	**125-7874**		TUBE-HEAT SHRINK (5.72-MM DIA) (40-CM)	
E		1	**125-7875**		TUBE-HEAT SHRINK (7.44-MM DIA) (10-CM)	
	8	1	**249-9077**	1	PLATE AS	
	9	1	**132-5789**	2	CLIP	
	10	1	**2D-0388**	1	GROMMET	
M	11	1	**8T-4200**	6	BOLT (M8X1.25X16-MM)	
	12	1	**8T-4224**	10	WASHER-HARD (8.8X16X2-MM THK)	
M	13	1	**8T-4908**	4	BOLT (M8X1.25X25-MM)	
E	14	1	**3E-6600**		SEAL (3-CM)	

B - USE AS REQUIRED
E - ORDER BY THE CENTIMETER
M - METRIC PART

249-9040 **WIRING GP-GRADE CONTROL (*contd.*)** **i04415713**

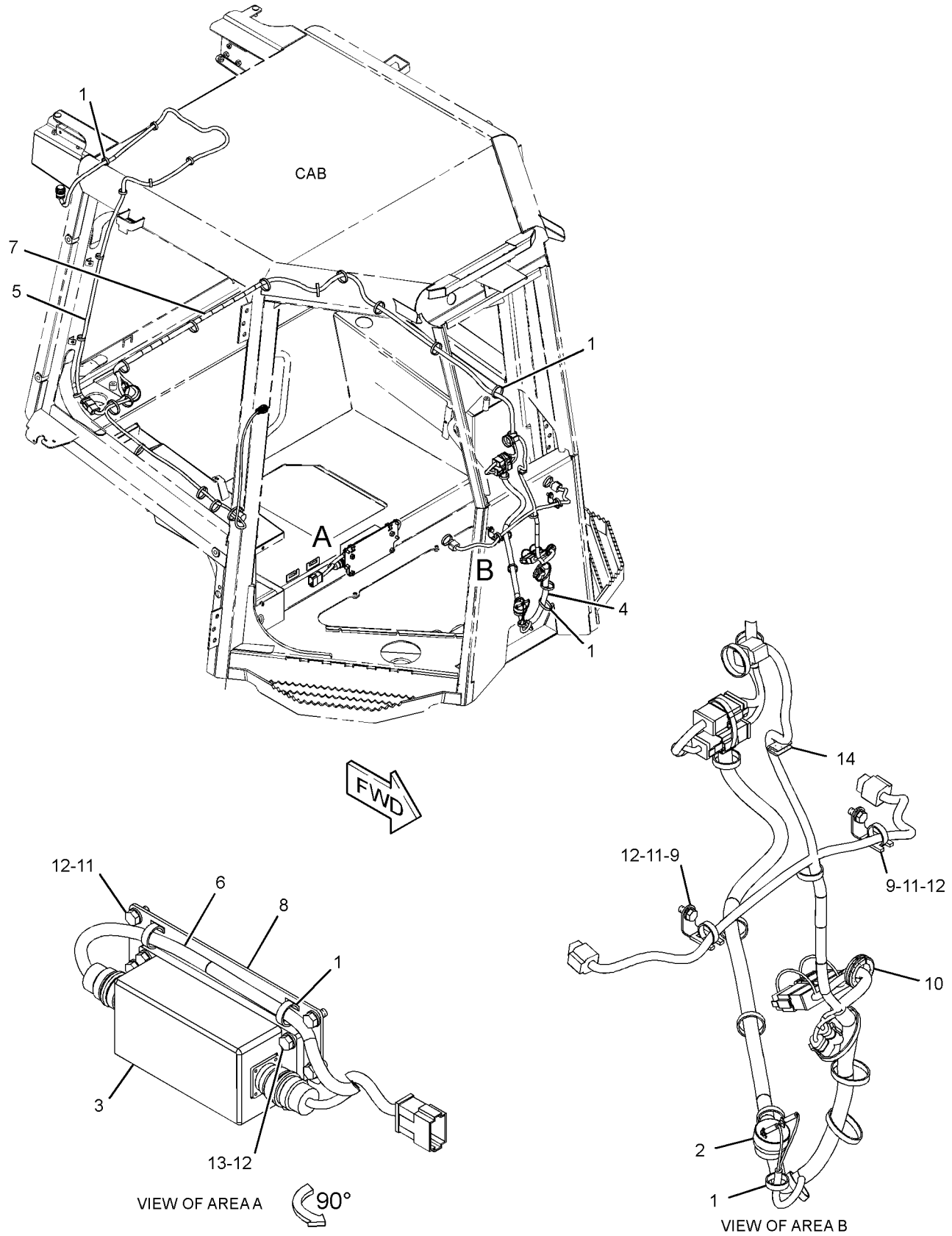

GRAPHIC #1 **<END>** g01376975

249-9040 WIRING GP-GRADE CONTROL–BASE

S/N: MMM1-UP; RRR1-UP
PART OF 296-5753, 296-5754 GRADE CONTROL AR
AN ATTACHMENT
TYPE 2

SMCS-1408 **i04416169**

NOTE	REF NO	GRAPHIC REF	PART NUMBER	QTY	PART NAME 1 2 3 4 5 6 (PRODUCT LEVEL)	SEE PAGE
C	1	1	**7K-1181**	39	STRAP-CABLE	
C	2	1	**8T-8737**	24	PLUG-SEAL	
	3	1	**167-8712**	1	ALARM	
C	4	1	**190-7615**	1	KIT-RECEPTACLE (12-PIN)	
					(INCLUDES RECEPTACLE AS & WEDGE)	
	5	1	**226-9169**	1	MODULE AS-POWER SUPPLY	
	6	1	**249-9030**	1	HARNESS AS-WIRING (POWER SUPPLY MODULE)	
		1	**9W-0852**	7	PIN-CONNECTOR (14-GA TO 16-GA)	
		1	**3R-9965**	1	PLUG AS-CONNECTOR (8-PIN)	
		1	**6D-5257**	1	PLUG AS-CONNECTOR (8-PIN)	
		1	**8T-8737**	5	PLUG-SEAL	
		1	**102-8801**	1	KIT-RECEPTACLE (12-PIN)	
					(INCLUDES RECEPTACLE AS & WEDGE)	
E		1	**125-7874**		TUBE-HEAT SHRINK (5.72-MM DIA) (5-CM)	
	7	1	**249-9033**	1	HARNESS AS-CONSOLE (GRADE CONTROL)	
		1	**8T-8729**	10	PIN-CONNECTOR (16-GA TO 18-GA)	
		1	**9W-0852**	2	PIN-CONNECTOR (14-GA TO 16-GA)	
		1	**155-2255**	2	KIT-CONNECTING PLUG (12-PIN)	
					(EACH INCLUDES PLUG AS, WEDGE & INTERFACE SEAL)	
		1	**253-2695**	1	PLUG AS-CONNECTOR	
		1	**8T-8737**	12	PLUG-SEAL	
		1	**102-8806**	1	KIT-RECEPTACLE (8-PIN)	
		1	**102-8801**	1	KIT-RECEPTACLE (12-PIN)	
					(EACH RECEPTACLE KIT INCLUDES RECEPTACLE AS & WEDGE)	
		1	**8T-8736**	1	RECEPTACLE-CONNECTOR (9-PIN)	
		1	**9X-3402**	13	SOCKET-CONNECTOR (16-GA TO 18-GA)	
		1	**9W-0844**	6	SOCKET-CONNECTOR (14-GA TO 16-GA)	
B		1	**141-8061**		TAPE	
E		1	**125-7874**		TUBE-HEAT SHRINK (5.72-MM DIA) (40-CM)	
E		1	**125-7875**		TUBE-HEAT SHRINK (7.44-MM DIA) (10-CM)	
	8	1	**249-9077**	1	PLATE AS	
C	9	1	**311-0295**	1	HARNESS AS-DASH (GRADE CONTROL)	
		1	**8T-8729**	1	PIN-CONNECTOR (16-GA TO 18-GA)	
		1	**9W-0852**	2	PIN-CONNECTOR (14-GA TO 16-GA)	
		1	**9X-3401**	6	PIN-CONNECTOR (16-GA TO 18-GA)	
					–OR–	
		1	**126-1767**	6	PIN-CONNECTOR (14-GA TO 16-GA)	
		1	**155-2255**	1	KIT-CONNECTING PLUG (12-PIN)	
		1	**155-2257**	1	KIT-CONNECTING PLUG (12-PIN)	
		1	**155-2265**	1	KIT-CONNECTING PLUG (8-PIN)	
		1	**155-2260**	2	KIT-CONNECTING PLUG (3-PIN)	
					(EACH PLUG KIT INCLUDES PLUG AS, WEDGE & INTERFACE SEAL)	
		1	**230-5008**	3	PLUG AS-CONNECTOR (4-PIN)	
		1	**8T-8737**	24	PLUG-SEAL	
		1	**102-8801**	1	KIT-RECEPTACLE (12-PIN)	
					(INCLUDES RECEPTACLE AS & WEDGE)	
		1	**134-2540**	2	RESISTOR AS-CONNECTION (3-PIN)	
		1	**230-5009**	3	RECEPTACLE AS-CONNECTOR (4-PIN)	
		1	**9X-3402**	12	SOCKET-CONNECTOR (16-GA TO 18-GA)	
		1	**180-9340**	10	SOCKET-CONNECTOR (14-GA TO 18-GA)	
		1	**5P-2321**	2	TERMINAL-FORK (14-GA TO 16-GA, NO. 6 SCREW)	
E		1	**125-7874**		TUBE-HEAT SHRINK (5.72-MM DIA) (45-CM)	

249-9040 **WIRING GP-GRADE CONTROL (*contd.*)** **i04416169**

NOTE	REF NO	GRAPHIC REF	PART NUMBER	QTY	PART NAME 1 2 3 4 5 6 (PRODUCT LEVEL)	SEE PAGE
	10	1	**132-5789**	2	CLIP	
C	11	1	**311-0305**	1	HARNESS AS-RADIO (GRADE CONTROL)	
		1	**155-2255**	1	KIT-CONNECTING PLUG (12-PIN)	
					(INCLUDES PLUG AS, WEDGE & INTERFACE SEAL)	
		1	**167-8987**	1	PLUG AS-CONNECTOR (8-PIN)	
		1	**8T-8737**	4	PLUG-SEAL	
		1	**9W-0844**	2	SOCKET-CONNECTOR (14-GA TO 16-GA)	
		1	**180-9340**	6	SOCKET-CONNECTOR (14-GA TO 18-GA)	
C	12	1	**102-8801**	1	KIT-RECEPTACLE (12-PIN)	
					(INCLUDES RECEPTACLE AS & WEDGE)	
CM	13	1	**8T-4200**	4	BOLT (M8X1.25X16-MM)	
C	14	1	**8T-4224**	8	WASHER-HARD (8.8X16X2-MM THK)	
M	15	1	**8T-4908**	4	BOLT (M8X1.25X25-MM)	

B - USE AS REQUIRED
C - CHANGE FROM PREVIOUS TYPE
E - ORDER BY THE CENTIMETER
M - METRIC PART

249-9040 **WIRING GP-GRADE CONTROL (*contd.*)** **i04416169**

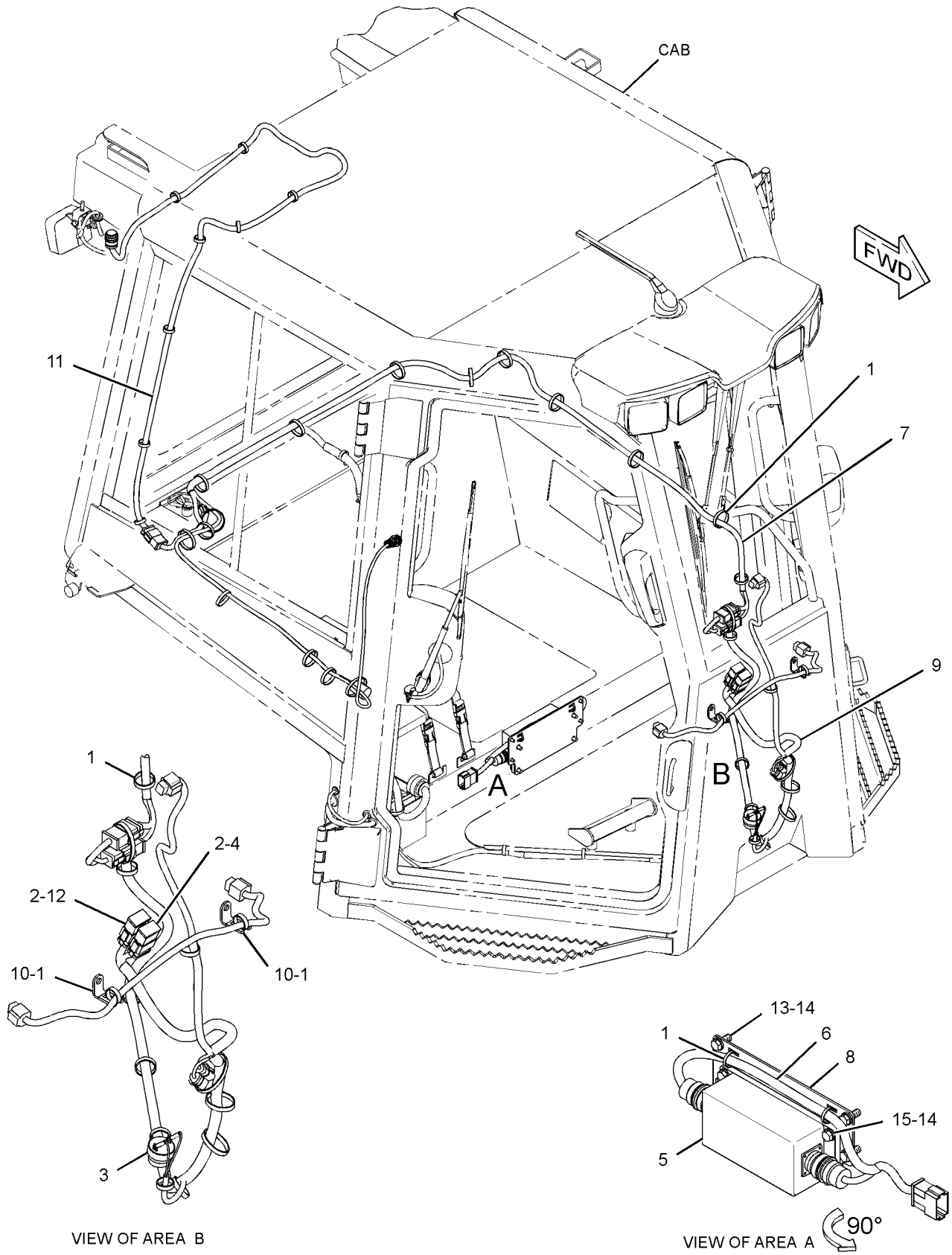

GRAPHIC #1

<END>

g01738474

245-6020 WIRING GP-PLATFORM

S/N: MMM1-UP; RRR1-UP
PART OF 244-7378, 244-7379 CHASSIS AR
TYPE 1

SMCS-1408 **i04415711**

NOTE	REF NO	GRAPHIC REF	PART NUMBER	QTY	PART NAME 1 2 3 4 5 6 (PRODUCT LEVEL)	SEE PAGE
	1	1	**6I-1418**	4	SPACER (8.2X12.7X28.7-MM THK)	
	2	1	**7G-1060**	1	STRAP AS-GROUND	
	3	1	**7K-1181**	17	STRAP-CABLE	
	4	1	**8T-9655**	8	MOUNT-ISOLATION	
	5	1	**130-5300**	2	CLIP	
	6	1	**201-1024**	1	BRACKET	
	7	1	**311-0294**	1	HARNESS AS-PLATFORM	
		1	**126-1774**	2	COVER-CONNECTOR	
		1	**211-0052**	1	NUT (1-11/16-18-THD)	
		1	**213-0139**	5	PIN	
		1	**186-3735**	14	PIN-CONNECTOR (16-GA TO 18-GA)	
		1	**9W-0852**	4	PIN-CONNECTOR (14-GA TO 16-GA)	
		1	**9X-3401**	62	PIN-CONNECTOR (16-GA TO 18-GA)	
					—OR—	
		1	**126-1767**	62	PIN-CONNECTOR (14-GA TO 16-GA)	
		1	**147-1445**	1	PLUG AS-CONNECTOR (70-PIN)	
		1	**147-1446**	1	PLUG AS-CONNECTOR (70-PIN)	
		1	**155-2255**	5	KIT-CONNECTING PLUG (12-PIN)	
		1	**155-2265**	3	KIT-CONNECTING PLUG (8-PIN)	
		1	**155-2260**	1	KIT-CONNECTING PLUG (3-PIN)	
		1	**155-2270**	2	KIT-CONNECTING PLUG (2-PIN)	
					(EACH PLUG KIT INCLUDES PLUG AS, WEDGE & INTERFACE SEAL)	
		1	**160-7690**	1	PLUG AS-CONNECTOR (70-PIN)	
		1	**159-9322**	1	SEAL-O-RING	
		1	**197-7261**	1	PLUG AS-CONNECTOR (19-PIN)	
		1	**8T-8737**	141	PLUG-SEAL	
		1	**102-8802**	2	KIT-RECEPTACLE (2-PIN)	
		1	**102-8803**	1	KIT-RECEPTACLE (3-PIN)	
		1	**102-8806**	3	KIT-RECEPTACLE (8-PIN)	
		1	**102-8801**	5	KIT-RECEPTACLE (12-PIN)	
		1	**190-7615**	1	KIT-RECEPTACLE (12-PIN)	
					(EACH RECEPTACLE KIT INCLUDES RECEPTACLE AS & WEDGE)	
		1	**167-3692**	1	RECEPTACLE AS-CONNECTOR (31-PIN)	
		1	**186-3736**	22	SOCKET-CONNECTOR (16-GA TO 18-GA)	
		1	**9W-0844**	8	SOCKET-CONNECTOR (14-GA TO 16-GA)	
		1	**9X-3402**	174	SOCKET-CONNECTOR (16-GA TO 18-GA)	
		1	**180-9340**	24	SOCKET-CONNECTOR (14-GA TO 18-GA)	
		1	**8L-8413**	15	STRAP-CABLE	
		1	**9X-6772**	4	STRAP-CABLE	
		1	**3T-4696**	1	TERMINAL-RING (10-GA TO 12-GA, 7/16-IN SCREW)	
		1	**2L-8079**	1	TERMINAL-RING (14-GA TO 16-GA, 3/8-IN SCREW)	
E		1	**119-3662**		TUBE-HEAT SHRINK (10.85-MM DIA) (13-CM)	
E		1	**125-7874**		TUBE-HEAT SHRINK (5.72-MM DIA) (125-CM)	
E		1	**125-7875**		TUBE-HEAT SHRINK (7.44-MM DIA) (15-CM)	
		1	**128-4249**	1	LOCKWASHER	
Y	8	1	*249-9023*	1	PANEL GP-FUSE	219
R	9	1	**262-1408**	1	CONTROL GP-UNPROGRAMMED (CHASSIS)	
	10	1	**269-7680**	1	CLIP	
M	11	1	**127-2170**	4	SCREW-TRUSS HEAD (M8X1.25X20-MM)	
	12	1	**132-5789**	1	CLIP	
	13	1	**4P-7581**	1	CLIP	
	14	1	**4P-8134**	2	CLIP	
M	15	1	**5C-7261**	4	NUT (M8X1.25-THD)	

245-6020 **WIRING GP-PLATFORM (*contd.*)** **i04415711**

NOTE	REF NO	GRAPHIC REF	PART NUMBER	QTY	PART NAME 1 2 3 4 5 6 (PRODUCT LEVEL)	SEE PAGE
	16	1	**5P-4116**	4	WASHER-HARD (8.8X20.5X2-MM THK)	
	17	1	**8T-4121**	4	WASHER-HARD (11X21X2.5-MM THK)	
M	18	1	**8T-4133**	1	NUT (M10X1.5-THD)	
M	19	1	**8T-4191**	3	BOLT (M10X1.5X16-MM)	

E - ORDER BY THE CENTIMETER
M - METRIC PART
R - REMFG PART MAY BE AVAILABLE
Y - SEPARATE ILLUSTRATION

245-6020 **WIRING GP-PLATFORM (*contd.*)** **i04415711**

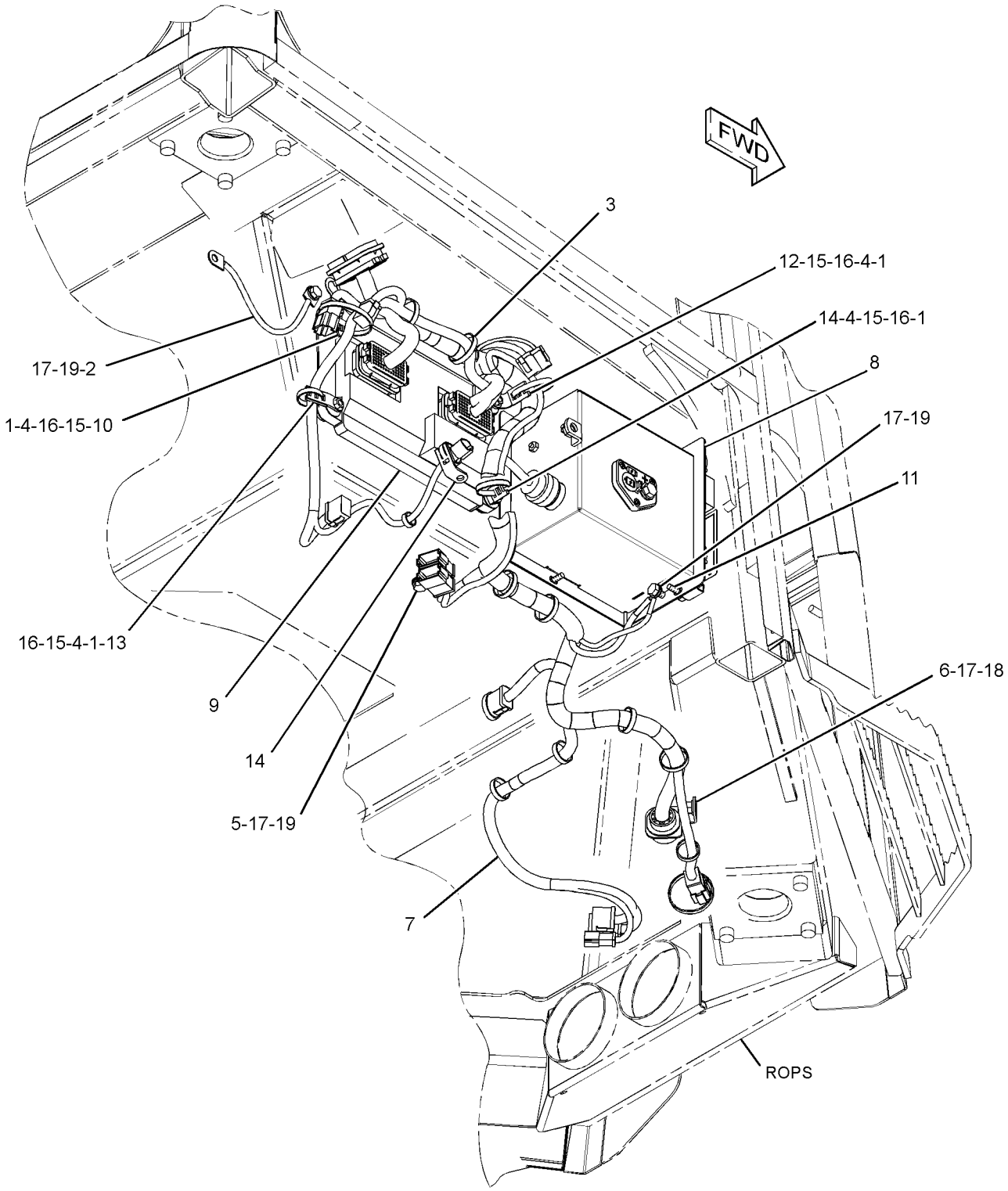

GRAPHIC #1 **<END>** g01517236

245-6020 WIRING GP-PLATFORM

S/N: MMM1-UP; RRR1-UP
PART OF 244-7378, 244-7379 CHASSIS AR
TYPE 2

SMCS-1408 **i03995883**

NOTE	REF NO	GRAPHIC REF	PART NUMBER	QTY	PART NAME 1 2 3 4 5 6 (PRODUCT LEVEL)	SEE PAGE
	1	1	**6I-1418**	4	SPACER (8.2X12.7X28.7-MM THK)	
	2	1	**7G-1060**	1	STRAP AS-GROUND	
C	3	1	**7K-1181**	20	STRAP-CABLE	
	4	1	**8T-9655**	8	MOUNT-ISOLATION	
	5	1	**130-5300**	2	CLIP	
	6	1	**201-1024**	1	BRACKET	
	7	1	**311-0294**	1	HARNESS AS-PLATFORM	
		1	**126-1774**	2	COVER-CONNECTOR	
		1	**211-0052**	1	NUT (1-11/16-18-THD)	
		1	**213-0139**	5	PIN	
		1	**8T-8729**	14	PIN-CONNECTOR (16-GA TO 18-GA)	
		1	**9W-0852**	4	PIN-CONNECTOR (14-GA TO 16-GA)	
		1	**9X-3401**	62	PIN-CONNECTOR (16-GA TO 18-GA)	
		1	**160-7690**	1	PLUG AS-CONNECTOR (70-PIN)	
		1	**147-1445**	1	PLUG AS-CONNECTOR (70-PIN)	
		1	**147-1446**	1	PLUG AS-CONNECTOR (70-PIN)	
					(EACH PLUG AS INCLUDES)	
		1	**159-9322**	1	SEAL-O-RING	
		1	**155-2255**	5	KIT-CONNECTING PLUG (12-PIN)	
		1	**155-2265**	3	KIT-CONNECTING PLUG (8-PIN)	
		1	**155-2260**	1	KIT-CONNECTING PLUG (3-PIN)	
		1	**155-2270**	2	KIT-CONNECTING PLUG (2-PIN)	
					(EACH PLUG KIT INCLUDES PLUG AS, WEDGE & INTERFACE SEAL)	
		1	**197-7261**	1	PLUG AS-CONNECTOR (19-PIN)	
		1	**8T-8737**	141	PLUG-SEAL	
		1	**102-8802**	2	KIT-RECEPTACLE (2-PIN)	
		1	**102-8803**	1	KIT-RECEPTACLE (3-PIN)	
		1	**102-8806**	3	KIT-RECEPTACLE (8-PIN)	
		1	**102-8801**	5	KIT-RECEPTACLE (12-PIN)	
		1	**190-7615**	1	KIT-RECEPTACLE (12-PIN)	
					(EACH RECEPTACLE KIT INCLUDES RECEPTACLE AS & WEDGE)	
		1	**167-3692**	1	RECEPTACLE AS-CONNECTOR (31-PIN)	
		1	**8T-8730**	22	SOCKET-CONNECTOR (16-GA TO 18-GA)	
		1	**9W-0844**	8	SOCKET-CONNECTOR (14-GA TO 16-GA)	
		1	**9X-3402**	174	SOCKET-CONNECTOR (16-GA TO 18-GA)	
		1	**180-9340**	24	SOCKET-CONNECTOR (14-GA TO 18-GA)	
		1	**8L-8413**	15	STRAP-CABLE	
		1	**9X-6772**	4	STRAP-CABLE	
		1	**3T-4696**	1	TERMINAL-RING (10-GA TO 12-GA, 7/16-IN SCREW)	
		1	**2L-8079**	1	TERMINAL-RING (14-GA TO 16-GA, 3/8-IN SCREW)	
E		1	**119-3662**		TUBE-HEAT SHRINK (10.85-MM DIA) (13-CM)	
E		1	**125-7874**		TUBE-HEAT SHRINK (5.72-MM DIA) (125-CM)	
E		1	**125-7875**		TUBE-HEAT SHRINK (7.44-MM DIA) (15-CM)	
		1	**128-4249**	1	LOCKWASHER	
CR	9	1	**304-5687**	1	CONTROL GP-UNPROGRAMMED (CHASSIS)	
	10	1	**269-7680**	1	CLIP	
	12	1	**132-5789**	1	CLIP	
	13	1	**4P-7581**	1	CLIP	
	14	1	**4P-8134**	2	CLIP	
M	15	1	**5C-7261**	4	NUT (M8X1.25-THD)	
	16	1	**5P-4116**	4	WASHER-HARD (8.8X20.5X2-MM THK)	
	17	1	**8T-4121**	4	WASHER-HARD (11X21X2.5-MM THK)	

245-6020 **WIRING GP-PLATFORM (*contd.*)** **i03995883**

NOTE	REF NO	GRAPHIC REF	PART NUMBER	QTY	PART NAME 1 2 3 4 5 6 (PRODUCT LEVEL)	SEE PAGE
M	18	1	**8T-4133**	1	NUT (M10X1.5-THD)	
M	19	1	**8T-4191**	3	BOLT (M10X1.5X16-MM)	

C - CHANGE FROM PREVIOUS TYPE
E - ORDER BY THE CENTIMETER
M - METRIC PART
R - REMFG PART MAY BE AVAILABLE

245-6020 **WIRING GP-PLATFORM (*contd.*)** **i03995883**

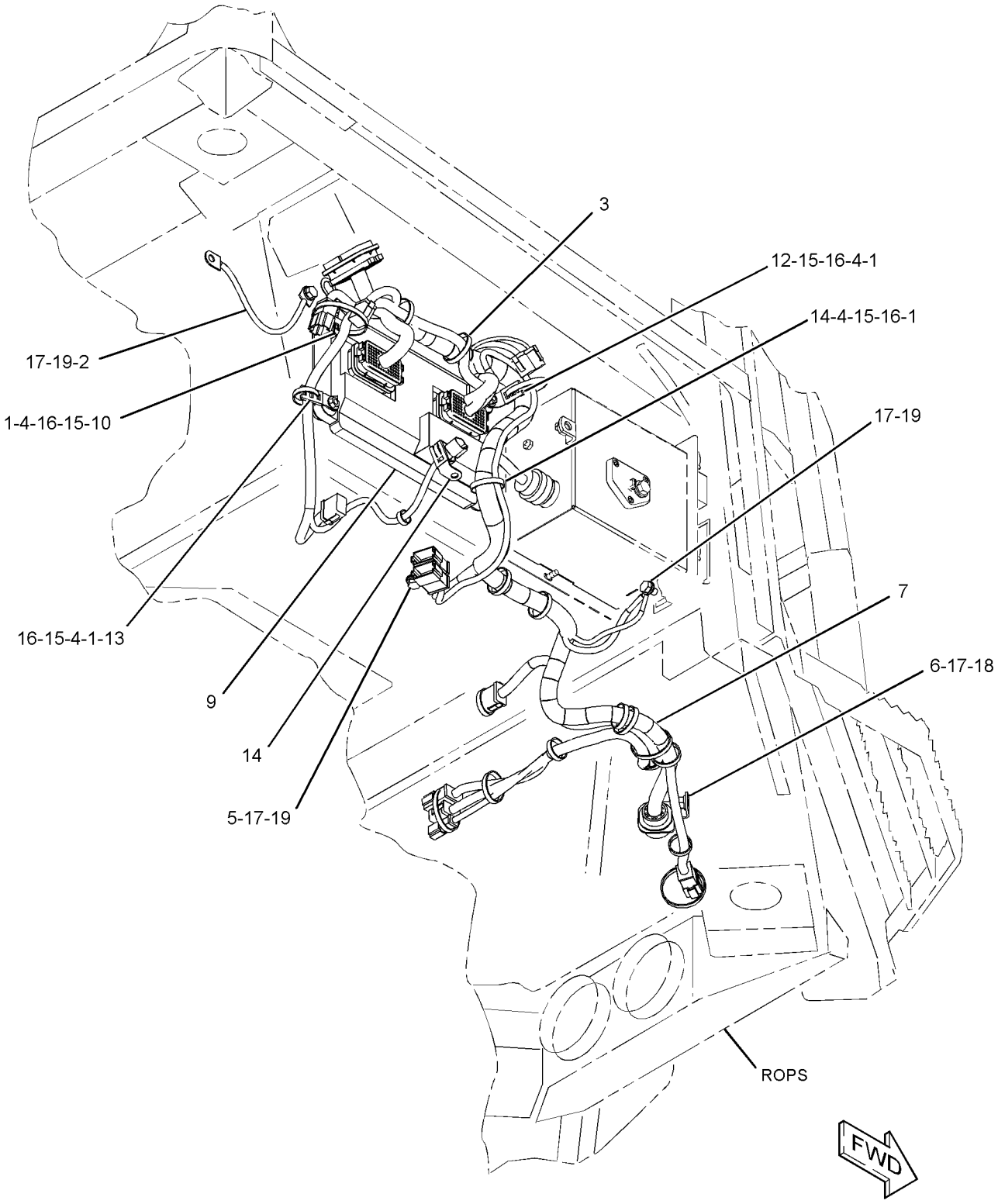

GRAPHIC #1 **<END>** g02362017

199-6225 ACTUATOR GP-PUMP–SERVO

S/N: MMM1-UP; RRR1-UP

PART OF 289-6385, 289-6386, 289-6387 PUMP GP-PISTON

AN ATTACHMENT

SMCS-5078 **i01944034**

NOTE	REF NO	GRAPHIC REF	PART NUMBER	QTY	PART NAME 1 2 3 4 5 6 (PRODUCT LEVEL)	SEE PAGE
	1	1	**117-7273**	2	SEAL-O-RING	
	2	1	**145-3812**	2	RING	
	3	1	**145-3813**	2	RING-SEAL	

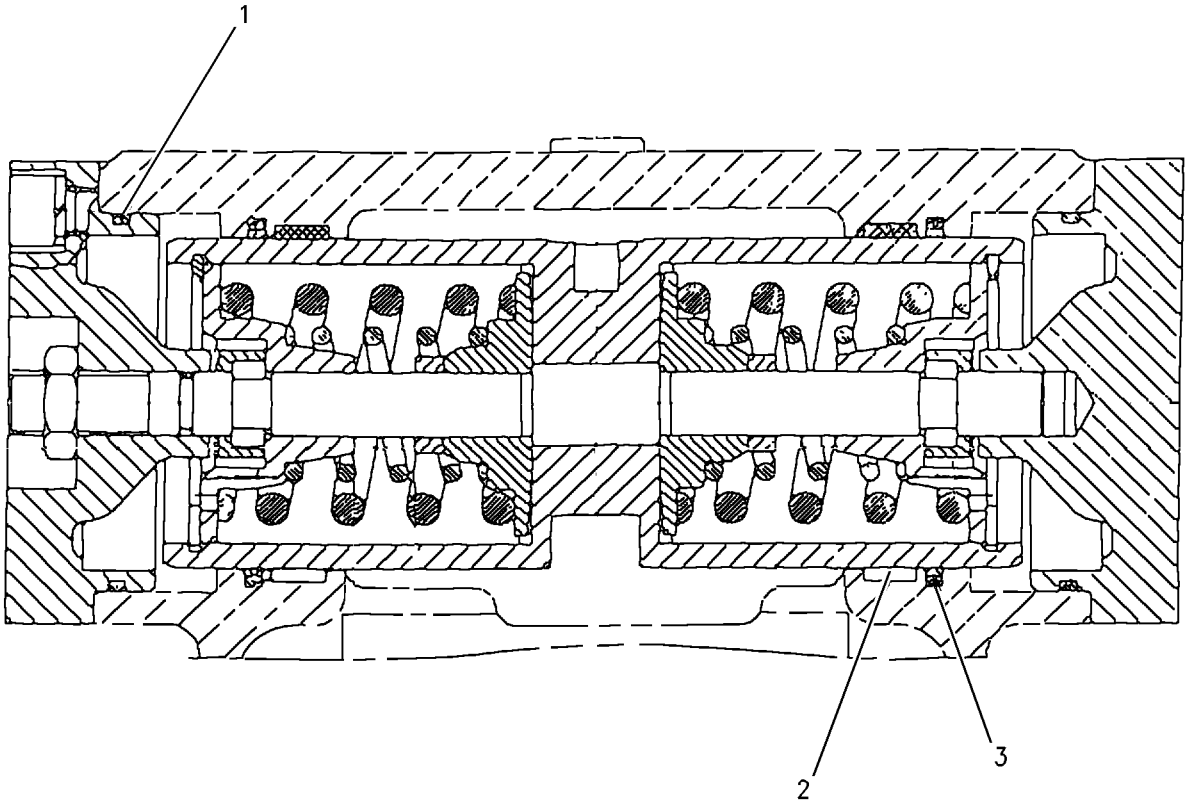

GRAPHIC #1 **<END>** g00830276

212-7032 ACTUATOR GP-PUMP–SERVO

S/N: MMM1-UP; RRR1-UP
PART OF 254-1379 PUMP GP-PISTON
AN ATTACHMENT

SMCS-5078 **i01936506**

NOTE	REF NO	GRAPHIC REF	PART NUMBER	QTY	PART NAME 1 2 3 4 5 6 (PRODUCT LEVEL)	SEE PAGE
	1	1	**8T-7000**	2	SEAL	
	2	1	**159-8246**	2	RING	
	3	1	**159-8247**	2	RING	

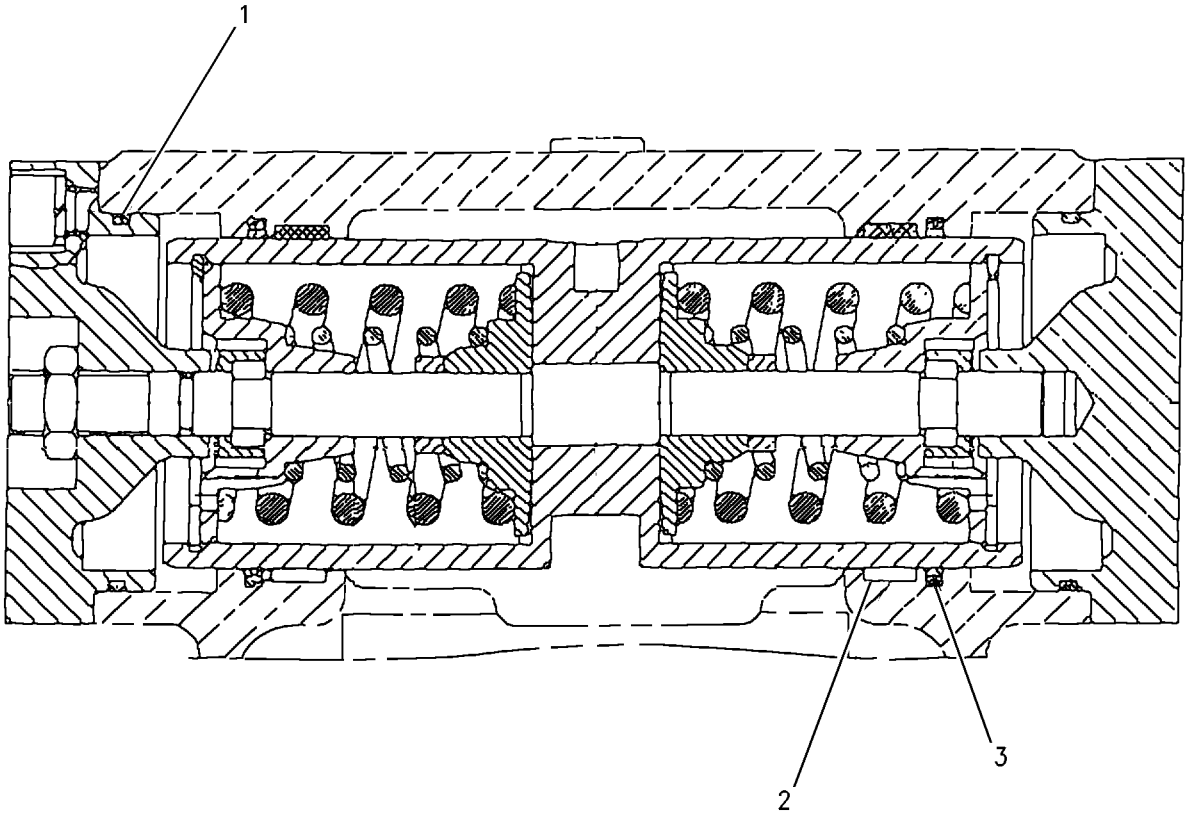

GRAPHIC #1 **<END>** g00836060

244-7616 BRAKE GP-PARKING

S/N: MMM1-507; RRR1-370

PART OF 244-7446, 244-7483 POWER TRAIN AR

SMCS-4267 **i02912371**

NOTE	REF NO	GRAPHIC REF	PART NUMBER	QTY	PART NAME 1 2 3 4 5 6 (PRODUCT LEVEL)	SEE PAGE
	1	1	**5E-8178**	16	SPRING	
	2	1	**7X-9261**	1	RETAINER	
	3	1	**249-5656**	1	SHAFT	
	4	1	**249-5661**	1	HOUSING	
	5	1	**249-5663**	1	KIT-DISC	
					(INCLUDES DISCS-ROTATING, DISCS-STATIONARY, PINS & DISC-PRIMARY)	
	6	1	**249-5665**	1	KIT-BEARING (BRAKE)	
					(INCLUDES BEARINGS-BALL, RINGS-RETAINING & SEALS-LIP)	
	7	1	**249-5666**	1	PISTON	
	8	1	**249-5670**	1	HOUSING	
	9	1	**303-0462**	1	KIT-SEAL	
					(INCLUDES GASKET, PACKING & SEAL-O-RING)	
M	10	1	**095-0658**	2	BOLT-SOCKET HEAD (M10X1.5X70-MM)	
	12	1	**9F-2247**	2	PLUG-PIPE	

M - METRIC PART

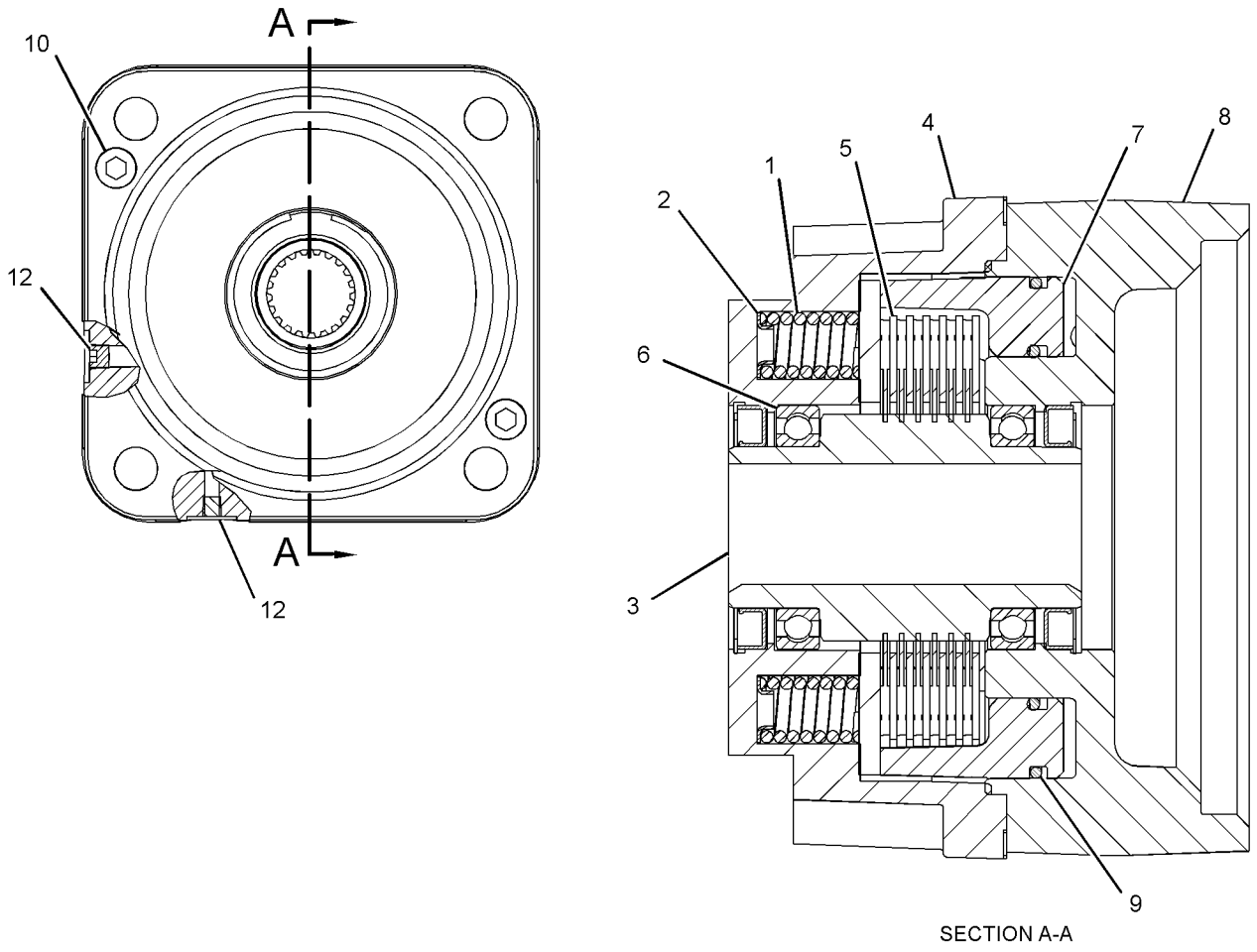

SECTION A-A

GRAPHIC #1 **<END>** g01526754

244-7616 BRAKE GP-PARKING

S/N: MMM508-UP; RRR371-UP

PART OF 244-7446, 244-7483 POWER TRAIN AR

SMCS-4267 **i03657198**

NOTE	REF NO	GRAPHIC REF	PART NUMBER	QTY	PART NAME 1 2 3 4 5 6 (PRODUCT LEVEL)	SEE PAGE
	1	1	**5E-8178**	16	SPRING	
	2	1	**7X-9261**	1	RETAINER	
C	3	1	**303-0465**	1	SHAFT	
	4	1	**249-5663**	1	KIT-DISC	
					(INCLUDES DISCS-ROTATING, DISCS-STATIONARY, PINS & DISC-PRIMARY)	
C	5	1	**303-0464**	1	KIT-BEARING (BRAKE)	
					(INCLUDES BEARINGS-BALL, RINGS-RETAINING & SEALS-LIP)	
	6	1	**249-5666**	1	PISTON	
C	7	1	**303-0462**	1	KIT-SEAL	
					(INCLUDES GASKET, PACKING & SEAL-O-RING)	
M	8	1	**095-0658**	2	BOLT-SOCKET HEAD (M10X1.5X70-MM)	
	9	1	**9F-2247**	2	PLUG-PIPE	

C - CHANGE FROM PREVIOUS TYPE
M - METRIC PART

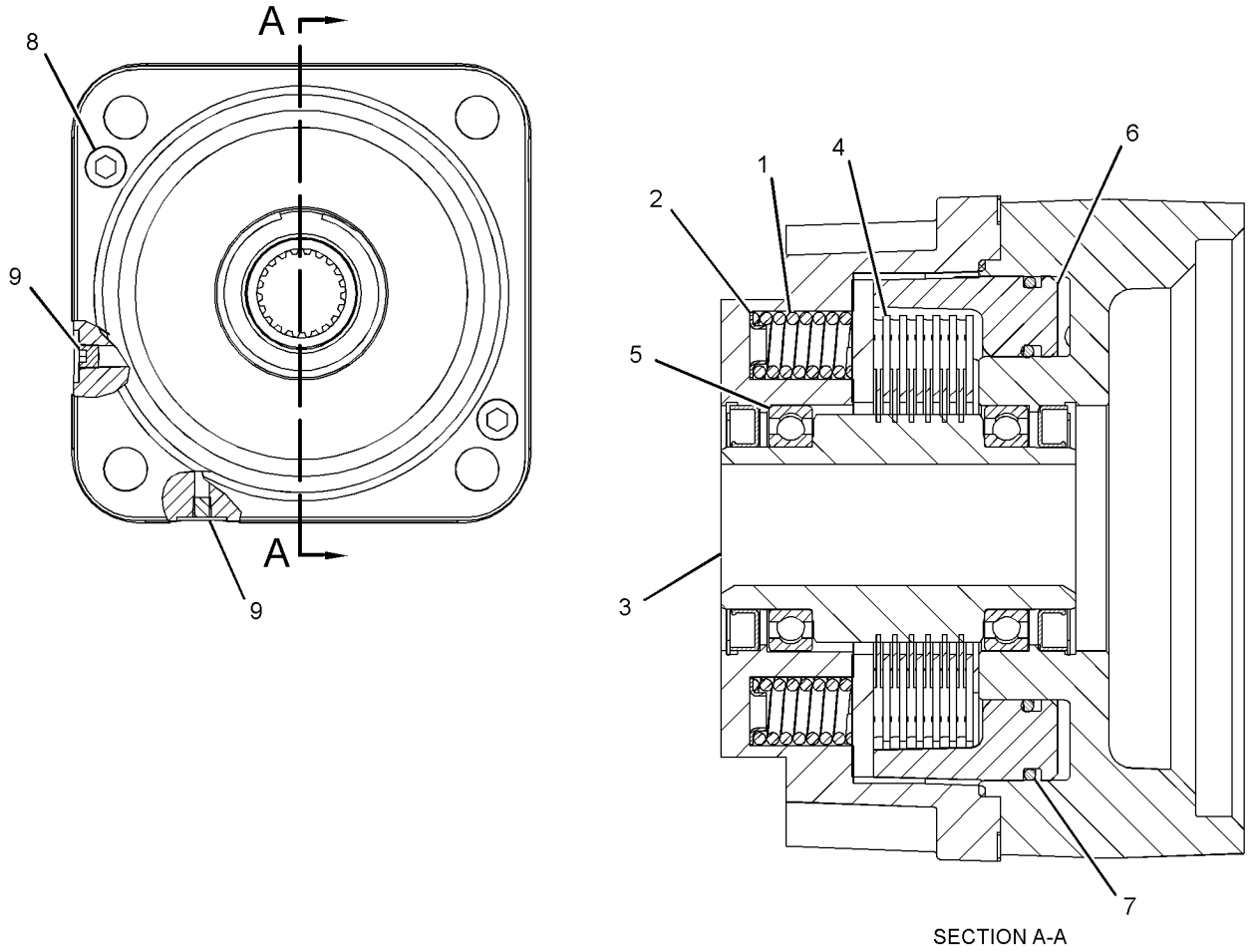

SECTION A-A

GRAPHIC #1 **<END>** g01576794

244-7450 DRIVE AR—AUXILIARY PUMP

S/N: MMM1-UP; RRR1-UP
CANNOT BE USED WITH 256-3738—PAGE: 942
AN ATTACHMENT

SMCS-5158 **i02818283**

NOTE	PART NUMBER	QTY	PART NAME 1 2 3 4 5 6 (PRODUCT LEVEL)	SEE PAGE
Y	*244-7411*	1	LINES GP-HYDROSTATIC	328
Y	**254-1377**	1	PUMP GP-PISTON (HYDROSTATIC DRIVE)	369
Y	*274-7516*	1	SUPPORT GP-PUMP DRIVE	616
	311-0300	1	BATTERY GP	
	9X-3404	2	BATTERY (12-VOLT, MAINTENANCE FREE, WET)	
Y - SEPARATE ILLUSTRATION				

<END>

291-5095 DRIVE AR—STANDARD

S/N: MMM1-UP; RRR1-UP
CANNOT BE USED WITH 264-4552—PAGE: 545, 244-7517—PAGE: 933, 256-3738—PAGE: 942
AN ATTACHMENT

SMCS-5158 **i02817858**

NOTE	PART NUMBER	QTY	PART NAME 1 2 3 4 5 6 (PRODUCT LEVEL)	SEE PAGE
Y	*289-0254*	1	LINES GP-PUMP	348
Y	**254-1378**	1	PUMP GP-PISTON (HYDROSTATIC)	370
	311-0301	1	BATTERY GP	
	9X-3404	2	BATTERY (12-VOLT, MAINTENANCE FREE, WET)	
Y - SEPARATE ILLUSTRATION				

<END>

291-5205 DRIVE AR—AUXILIARY

S/N: MMM1-UP; RRR1-UP
CANNOT BE USED WITH 256-3738—PAGE: 942
AN ATTACHMENT

SMCS-5158 **i02817841**

NOTE	PART NUMBER	QTY	PART NAME 1 2 3 4 5 6 (PRODUCT LEVEL)	SEE PAGE
Y	*244-7412*	1	LINES GP-HYDROSTATIC	330
Y	**254-1377**	1	PUMP GP-PISTON (HYDROSTATIC DRIVE)	369
Y	*274-7516*	1	SUPPORT GP-PUMP DRIVE	616
	311-0300	1	BATTERY GP	
	9X-3404	2	BATTERY (12-VOLT, MAINTENANCE FREE, WET)	
Y - SEPARATE ILLUSTRATION				

<END>

244-1529 DRIVE GP-FINAL

S/N: MMM1-UP; RRR1-UP

PART OF 244-7446, 244-7483 POWER TRAIN AR

SMCS-4050 **i03077120**

NOTE	REF NO	GRAPHIC REF	PART NUMBER	QTY	PART NAME 1 2 3 4 5 6 (PRODUCT LEVEL)	SEE PAGE
	1	1	**6V-0330**	2	CUP-BEARING (TAPERED ROLLER)	
	2	1	**6Y-0859**	1	SEAL GP-DUO-CONE	
		1	**1M-9011**	2	RING-TORIC	
	3	1	**7Y-0223**	3	SHAFT-PLANETARY	
	4	1	**7Y-0225**	3	SHAFT-PLANETARY	
	5	1	**271-7780**	1	COVER	
	6	1	**7Y-1433**	1	CARRIER	
	7	1	**7Y-1434**	1	SPACER (40X69.5X6-MM THK)	
	8	1	**7Y-1558**	1	SPACER (90X119.6X7.5-MM THK)	
	9	1	**8T-0072**	2	CONE-BEARING	
	10	1	**303-0463**	1	PLUG	
	11	1	**094-0611**	6	WASHER (47.3X76X1-MM THK)	
	12	1	**094-0616**	3	BEARING AS-ROLLER	
M	13	1	**094-1528**	6	WASHER (53X84X1-MM THK)	
	14	1	**095-0891**	6	PIN-SPRING	
M	15	1	**113-8216**	4	STUD-TAPERLOCK	
	16	1	**113-9769**	1	RETAINER	
	17	1	**272-2317**	1	GEAR-RING (79-TEETH)	
	18	1	**322-0304**	1	GEAR-SUN (13-TEETH)	
	19	1	**244-1516**	1	GEAR-SUN (17-TEETH)	
	20	1	**244-1518**	3	GEAR-PLANETARY (30-TEETH)	
M	21	1	**095-1277**	2	SETSCREW-SOCKET	
	22	1	**244-1522**	1	GEAR-COUPLING (55-TEETH)	
	23	1	**244-1524**	1	SPINDLE	
	24	1	**289-5883**	1	HUB	
	25	1	**246-6190**	1	CARRIER	
	26	1	**247-1459**	3	GEAR-PLANETARY (44-TEETH)	
	27	1	**248-0732**	6	BEARING AS-ROLLER	
	28	1	**126-8921**	1	PLUG AS (FINAL DRIVE OIL DRAIN)	
		1	**9S-8008**	1	PLUG	
M	29	1	**099-0169**	18	BOLT (M16X2X55-MM)	
	30	1	**9S-9334**	1	PLUG-O-RING (STRAIGHT THREAD O-RING)	
	31	1	**5P-3864**	1	SEAL-O-RING	
	32	1	**6D-0692**	1	SEAL-O-RING	
	33	1	**7J-6285**	1	SEAL-O-RING	
	34	1	**3D-2824**	1	SEAL-O-RING	
M	35	1	**7X-2568**	16	BOLT (M20X2.5X180-MM)	
	36	1	**8T-4123**	16	WASHER (3.62X5.75X0.375-MM THK)	
M	37	1	**8T-4132**	4	NUT (M16X2-THD)	
M	38	1	**8T-4194**	9	BOLT (M12X1.75X50-MM)	
	39	1	**9X-8257**	22	WASHER (17.5X30X3.5-MM THK)	
B	40	1	**1U-8846**		SEALANT-GASKET	
	41	1	**7M-8485**	1	SEAL-O-RING	

B - USE AS REQUIRED
M - METRIC PART

244-1529 **DRIVE GP-FINAL (*contd.*)** **i03077120**

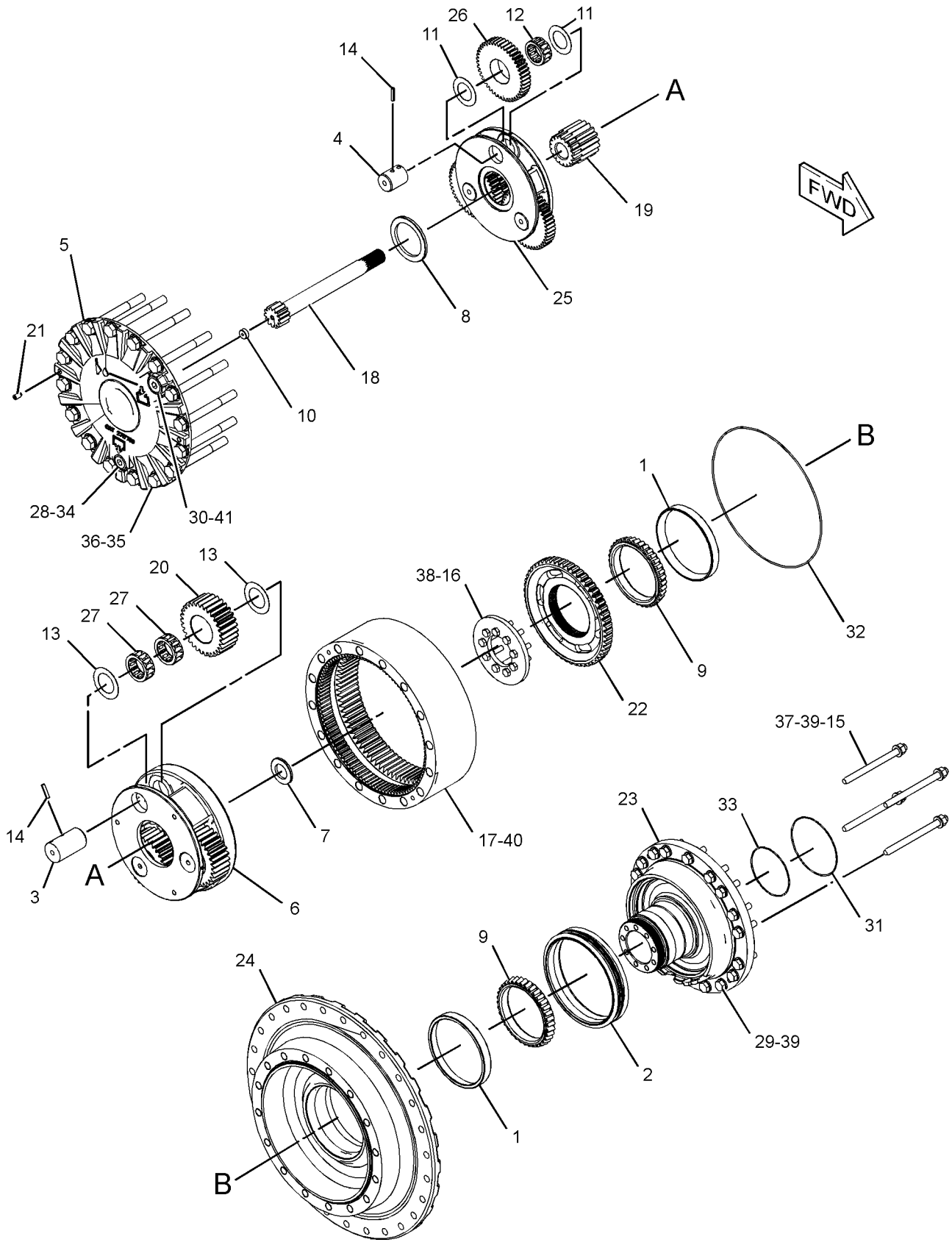

GRAPHIC #1 **<END>** g01345204

244-7409 DRIVE GP-HYDROSTATIC

S/N: MMM1-UP; RRR1-UP

PART OF 244-7446, 244-7483 POWER TRAIN AR

SMCS-3159, 4350 **i04921871**

NOTE	REF NO	GRAPHIC REF	PART NUMBER	QTY	PART NAME 1 2 3 4 5 6 (PRODUCT LEVEL)	SEE PAGE
	1	1	**352-8170**	1	FLANGE	
	2	1	**261-4747**	1	PLATE AS	
	3	1	**352-8169**	1	HUB-COUPLING	
M	4	1	**118-4977**	2	BOLT (M16X2X65-MM)	
	5	1	**1L-9062**	8	BOLT (3/8-24X1.5-IN)	
	6	1	**3E-4356**	2	WASHER-HARD (17.5X30X6-MM THK)	
	7	1	**8T-4121**	12	WASHER-HARD (11X21X2.5-MM THK)	
M	8	1	**8T-4192**	2	BOLT (M12X1.75X25-MM)	
M	9	1	**8T-4196**	12	BOLT (M10X1.5X35-MM)	
	10	1	**8T-4223**	2	WASHER-HARD (13.5X25.5X3-MM THK)	

M - METRIC PART

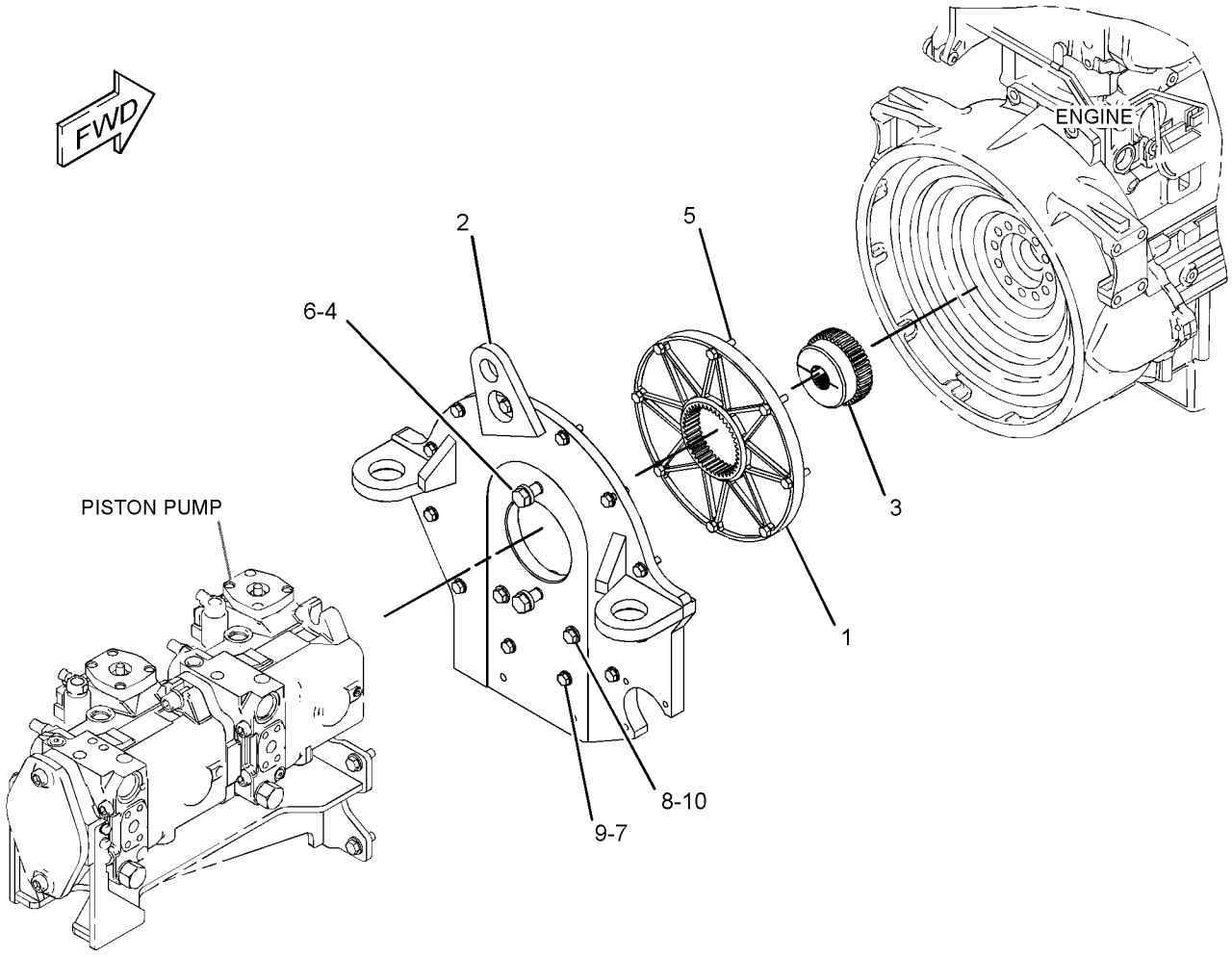

GRAPHIC #1 **<END>** g01333408

212-9363 FILTER GP-OIL–FRONT

S/N: MMM1-UP; RRR1-UP

PART OF 254-1366 LINES GP-TRANSMISSION OIL

SMCS-3004, 3067

i01966259

NOTE	REF NO	GRAPHIC REF	PART NUMBER	QTY	PART NAME 1 2 3 4 5 6 (PRODUCT LEVEL)	SEE PAGE
	1	1	**1G-8878**	1	FILTER-OIL (ADVANCED EFFICIENCY)	
	2	1	**8C-3446**	1	VALVE-FLUID SAMPLING (HYDRAULIC OIL FILTER)	
	3	1	**8C-3451**	1	CAP-DUST	
	4	1	**134-0404**	1	SWITCH AS-PRESSURE (PRESSURE DIFFERENTIAL)	
	5	1	**3J-1907**	1	SEAL-O-RING	
	6	1	**3J-7354**	1	SEAL-O-RING	

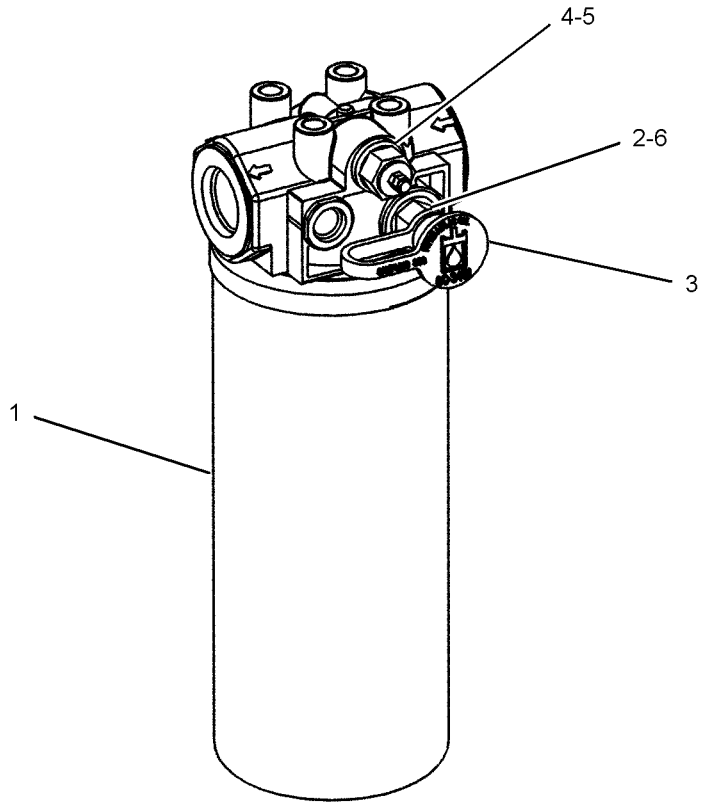

GRAPHIC #1 **<END>** g01022392

296-6707 HEAD GP-PUMP

S/N: MMM1-UP; RRR1-UP
PART OF 289-6385, 289-6386, 289-6387 PUMP GP-PISTON
AN ATTACHMENT

SMCS-3202, 5070

i05208425

NOTE	REF NO	GRAPHIC REF	PART NUMBER	QTY	PART NAME 1 2 3 4 5 6 (PRODUCT LEVEL)	SEE PAGE
	1	1	**233-5621**	2	VALVE GP-RELIEF	
					(EACH INCLUDES)	
		1	**6V-5326**	1	SEAL-O-RING	
		1	**167-7713**	1	RING-BACKUP	
Y	2	1	**212-6679**	1	VALVE GP-RELIEF (CHARGE PRESSURE)	422
	3	1	**117-7278**	1	BUSHING	
	4	1	**117-7279**	1	BUSHING (EXTERNAL)	
	5	1	**117-7280**	1	BUSHING (INTERNAL)	
	6	1	**5J-3886**	1	SEAL-O-RING	
	7	1	**9S-8002**	1	PLUG-O-RING	
	8	1	**3J-7354**	1	SEAL-O-RING	
	9	1	**120-4394**	1	PLUG-BREAK OFF	
M	10	1	**160-8493**	4	BOLT-SOCKET HEAD (M14X2X80-MM)	
	11	1	**123-7575**	1	SCREW-LOCK	
	12	1	**123-7576**	1	SEAL-O-RING	

M - METRIC PART
Y - SEPARATE ILLUSTRATION

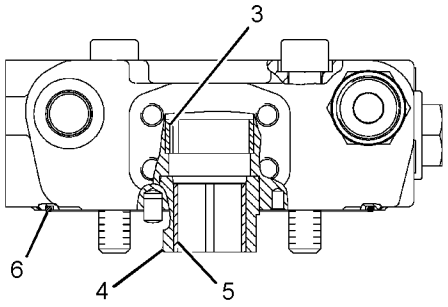

SECTION B-B

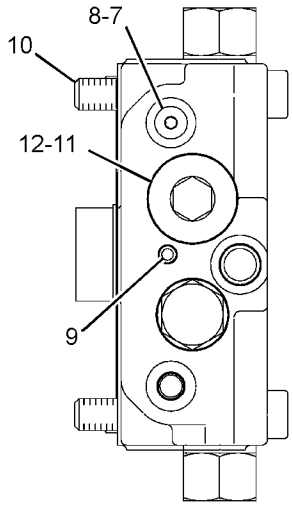

VIEW A-A

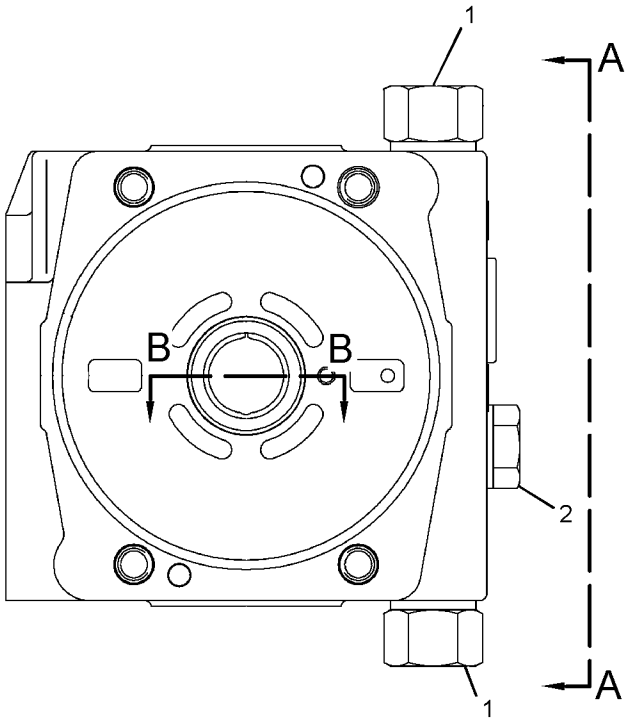

GRAPHIC #1

<END>

g01377786

244-7411 LINES GP-HYDROSTATIC

S/N: MMM1-UP; RRR1-UP
PART OF 244-7450 DRIVE AR
AN ATTACHMENT

SMCS-3154 **i02843762**

NOTE	REF NO	GRAPHIC REF	PART NUMBER	QTY	PART NAME 1 2 3 4 5 6 (PRODUCT LEVEL)	SEE PAGE
I	1	1	**261-4275**	1	HOSE AS	
I	2	1	**261-4276**	1	HOSE AS	
I	3	1	**261-4277**	1	HOSE AS	
I	4	1	**261-4278**	1	HOSE AS	
	5	1	**1P-3702**	4	SEAL-RECTANGULAR	
	6	1	**1P-3703**	4	SEAL-RECTANGULAR	
	7	1	**5P-7466**	2	CLIP (SLOT)	
	8	1	**5P-7467**	2	CLIP (TAB)	
	9	1	**5P-8112**	2	GROMMET	
	10	1	**6V-0400**	8	FLANGE-HALF	
	11	1	**7G-3832**	1	GROMMET	
	12	1	**7G-3833**	1	CLIP (TAB)	
	13	1	**7G-3834**	1	CLIP (SLOT)	
	14	1	**8T-4121**	16	WASHER-HARD (11X21X2.5-MM THK)	
M	15	1	**8T-4183**	1	BOLT (M12X1.75X40-MM)	
M	16	1	**8T-4182**	16	BOLT (M10X1.5X45-MM)	
M	17	1	**8T-4184**	16	BOLT (M12X1.75X45-MM)	
	18	1	**8T-4223**	19	WASHER-HARD (13.5X25.5X3-MM THK)	
	19	1	**8T-9403**	8	FLANGE-HALF	
M	20	1	**8T-4244**	2	NUT (M12X1.75-THD)	

I - REFER TO HYDRAULIC INFORMATION SYSTEM
M - METRIC PART

244-7411 **LINES GP-HYDROSTATIC (*contd.*)** **i02843762**

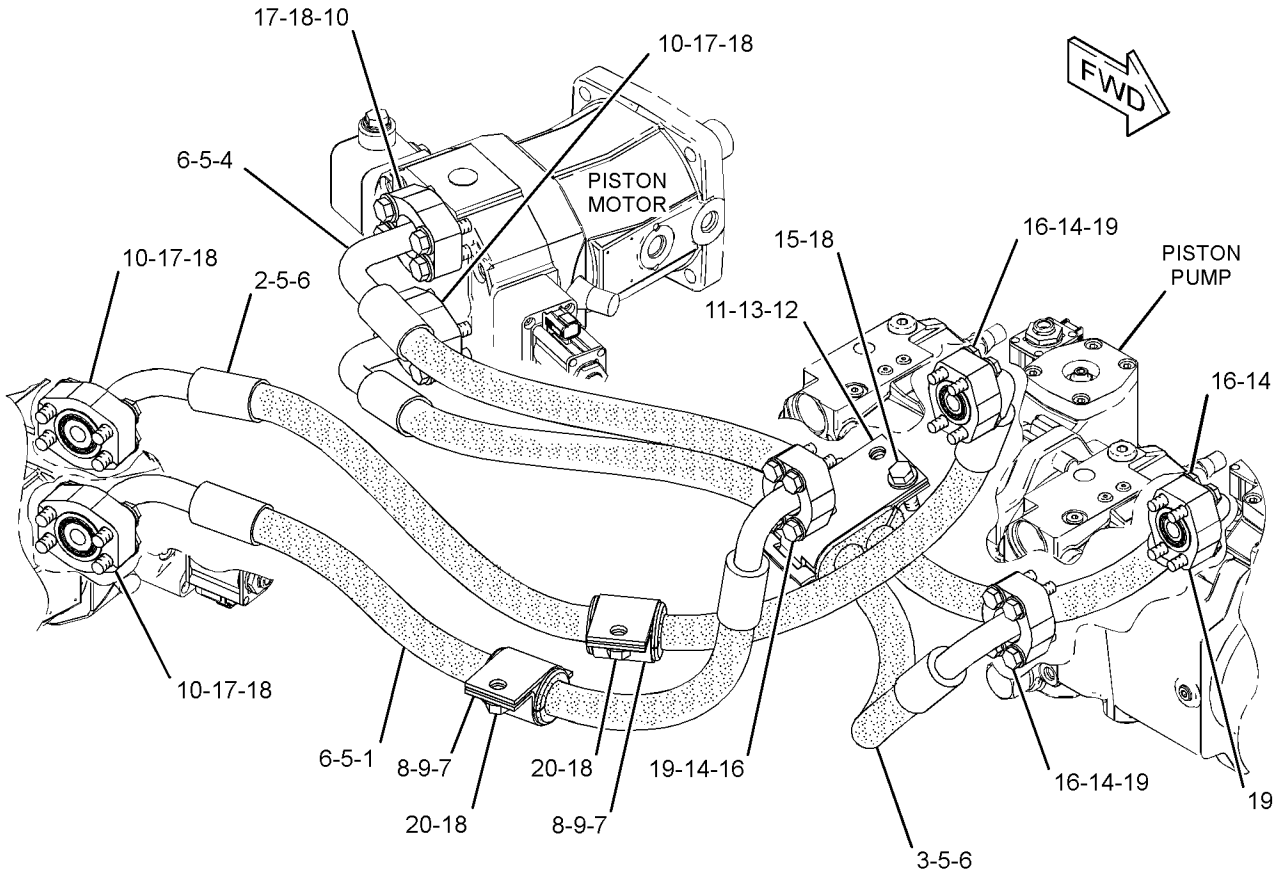

GRAPHIC #1 **<END>** g01421815

244-7412 LINES GP-HYDROSTATIC

S/N: MMM1-UP; RRR1-UP

PART OF 291-5205 DRIVE AR, 325-6517 DRIVE AR-PUMP, 271-9180 DRIVE AR-WINCH

AN ATTACHMENT

SMCS-3154 **i02662566**

NOTE	REF NO	GRAPHIC REF	PART NUMBER	QTY	PART NAME 1 2 3 4 5 6 (PRODUCT LEVEL)	SEE PAGE
I	1	1	**261-4271**	1	HOSE AS	
I	2	1	**261-4272**	1	HOSE AS	
I	3	1	**261-4273**	1	HOSE AS	
I	4	1	**261-4274**	1	HOSE AS	
	5	1	**1P-3702**	4	SEAL-RECTANGULAR	
	6	1	**1P-3703**	4	SEAL-RECTANGULAR	
	7	1	**6V-0400**	8	FLANGE-HALF	
	8	1	**7G-3832**	2	GROMMET	
	9	1	**7G-3833**	2	CLIP (TAB)	
	10	1	**7G-3834**	2	CLIP (SLOT)	
	11	1	**8T-4121**	16	WASHER-HARD (11X21X2.5-MM THK)	
M	12	1	**8T-4182**	16	BOLT (M10X1.5X45-MM)	
M	13	1	**8T-4183**	2	BOLT (M12X1.75X40-MM)	
M	14	1	**8T-4184**	16	BOLT (M12X1.75X45-MM)	
	15	1	**8T-4223**	18	WASHER-HARD (13.5X25.5X3-MM THK)	
	16	1	**8T-9403**	8	FLANGE-HALF	

I - REFER TO HYDRAULIC INFORMATION SYSTEM
M - METRIC PART

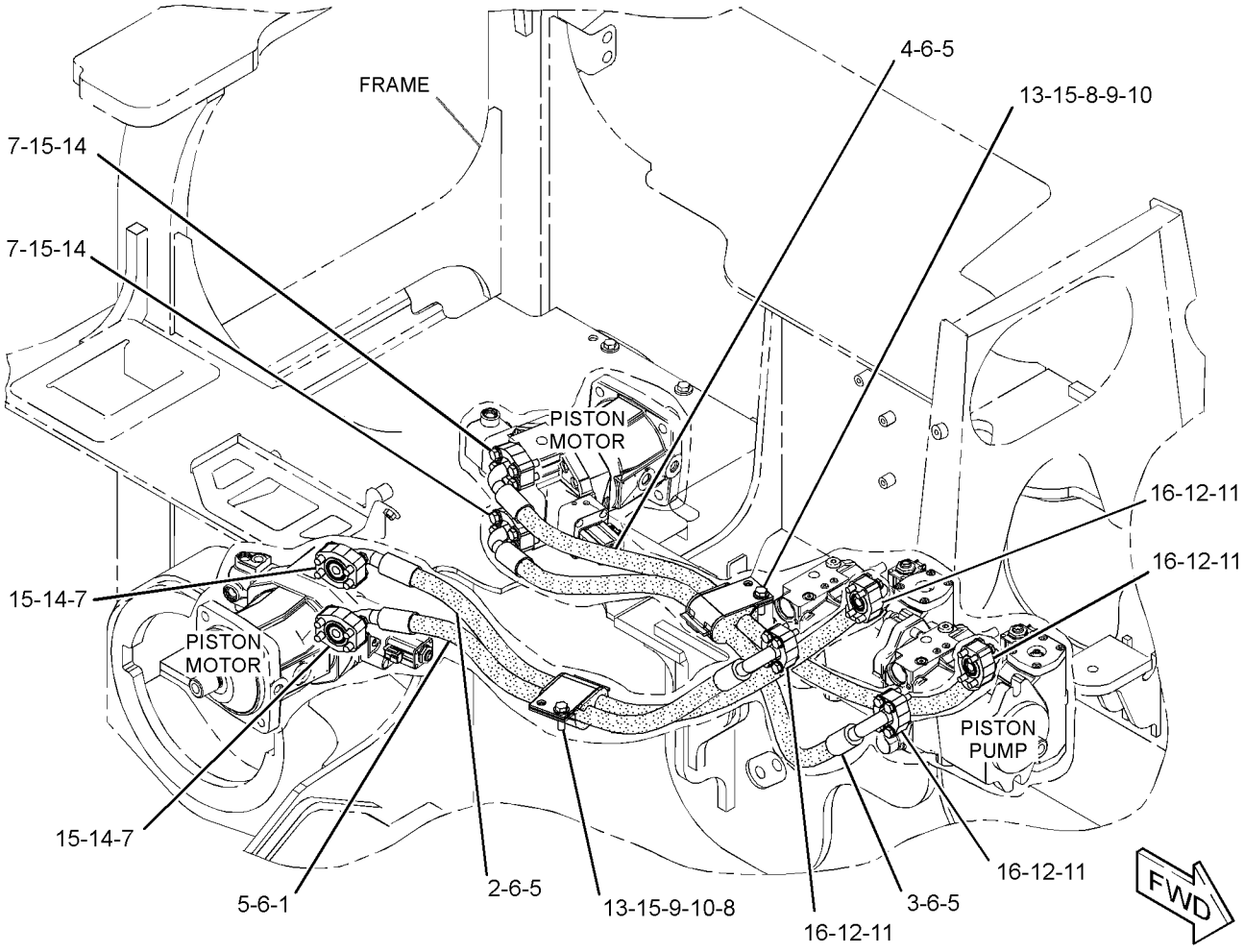

GRAPHIC #1 **<END>** g01338284

327-8880 LINES GP-HYDROSTATIC

S/N: MMM1-UP; RRR1-UP
PART OF 325-6543, 325-6544 MODIFICATION AR
AN ATTACHMENT

SMCS-3154 **i03670377**

NOTE	REF NO	GRAPHIC REF	PART NUMBER	QTY	PART NAME 1 2 3 4 5 6 (PRODUCT LEVEL)	SEE PAGE
	1	1	*327-8881*	1	HOSE AS	
		1	**163-8812**	2	CLAMP	
I		1	**261-4271**	1	HOSE AS	
E		1	**324-9706**		INSULATION (97-CM)	
	2	1	*327-8882*	1	HOSE AS	
		1	**163-8812**	2	CLAMP	
I		1	**261-4272**	1	HOSE AS	
E		1	**324-9706**		INSULATION (113-CM)	
	3	1	*327-8883*	1	HOSE AS	
		1	**163-8812**	2	CLAMP	
I		1	**261-4273**	1	HOSE AS	
E		1	**324-9706**		INSULATION (129-CM)	
	4	1	*327-8884*	1	HOSE AS	
		1	**163-8812**	2	CLAMP	
I		1	**261-4274**	1	HOSE AS	
E		1	**324-9706**		INSULATION (123-CM)	
	5	1	**7G-5984**	2	CLIP (TAB)	
	6	1	**7G-5985**	2	CLIP (SLOT)	
	7	1	**278-6469**	2	GROMMET	

E - ORDER BY THE CENTIMETER
I - REFER TO HYDRAULIC INFORMATION SYSTEM

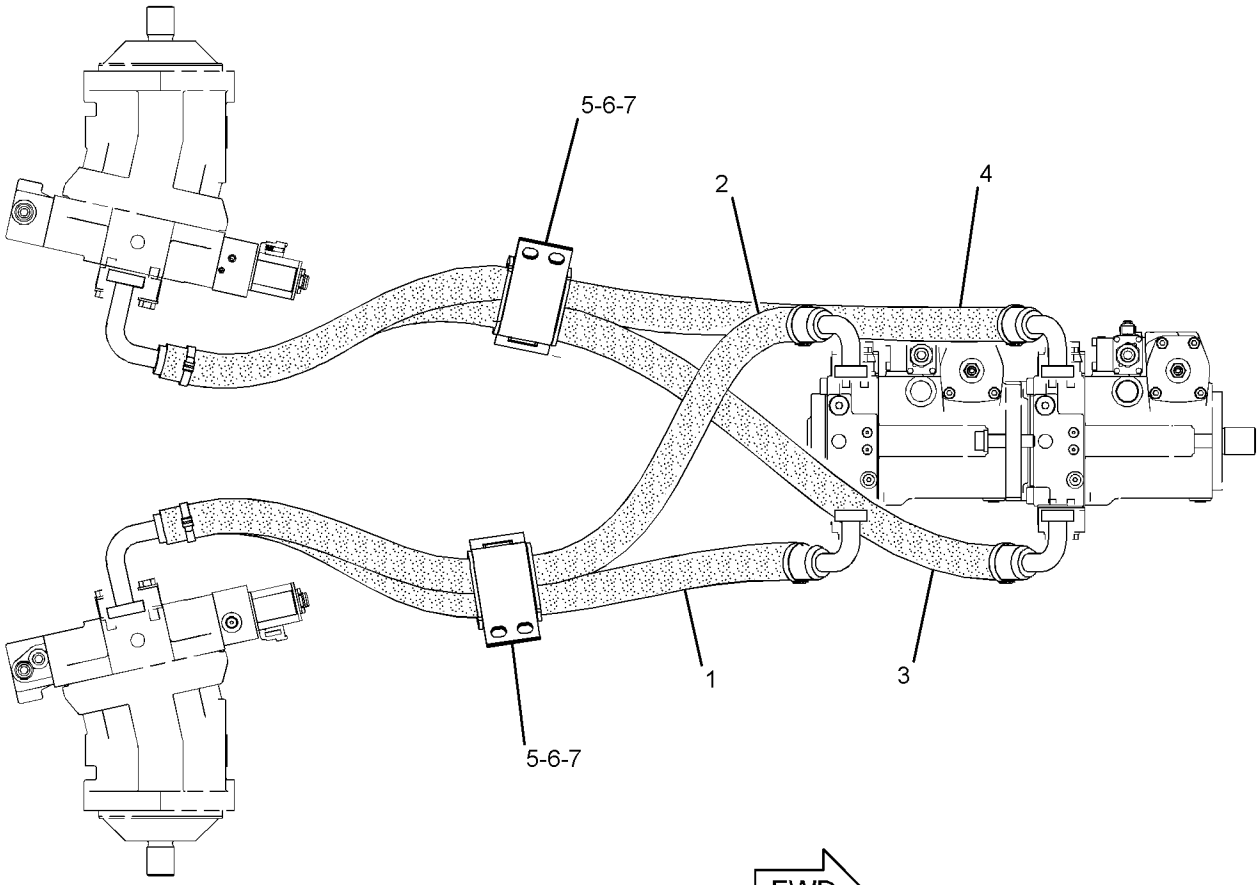

GRAPHIC #1 **<END>** g02024333

244-7441 LINES GP-POWER TRAIN COOLER

S/N: RRR1-402

PART OF 244-7446 POWER TRAIN AR

SMCS-1375, 3016 **i02956641**

NOTE	REF NO	GRAPHIC REF	PART NUMBER	QTY	PART NAME 1 2 3 4 5 6 (PRODUCT LEVEL)	SEE PAGE
I	1	1	**203-1926**	1	HOSE AS	
I	2	1	**261-1108**	2	HOSE AS	
	3	1	**261-8501**	1	TUBE AS	
	4	1	**261-8502**	1	TUBE AS	
	5	1	**272-3537**	1	TUBE AS	
I	6	1	**283-4939**	1	HOSE AS	
I	7	1	**283-4943**	1	HOSE AS	
	8	1	*148-8318*	1	CONNECTOR AS (RIGHT MOTOR)	
		1	**3K-0360**	1	SEAL-O-RING	
		1	**6V-8397**	1	SEAL-O-RING	
		1	**6V-8634**	1	CONNECTOR	
	9	1	*148-8364*	1	ELBOW AS (MOTOR BEARING)	
		1	**3K-0360**	1	SEAL-O-RING	
		1	**6V-8398**	1	SEAL-O-RING	
		1	**6V-8625**	1	ELBOW	
	10	1	*148-8428*	1	TEE AS (LEFT MOTOR)	
		1	**3K-0360**	1	SEAL-O-RING	
		1	**6V-8398**	2	SEAL-O-RING	
		1	**6V-8782**	1	TEE	
	11	1	*153-6242*	1	CONNECTOR AS (LEFT SIDE)	
	11A	1	*153-6242*	1	CONNECTOR AS (RIGHT SIDE)	
					(EACH CONNECTOR AS INCLUDES)	
		1	**8T-0197**	1	CONNECTOR	
		1	**6V-9746**	1	SEAL-O-RING	
		1	**7M-8485**	1	SEAL-O-RING	
	12	1	**3D-2824**	2	SEAL-O-RING	
	13	1	**4H-7655**	4	CLAMP-TUBE	
	14	1	**5D-0718**	1	CLIP	
	15	1	**6V-8397**	1	SEAL-O-RING	
	16	1	**6V-9746**	6	SEAL-O-RING	
	17	1	**7X-7729**	1	WASHER (11X25X3-MM THK)	
	18	1	**5K-5338**	2	CLIP	
	19	1	**8T-4121**	4	WASHER-HARD (11X21X2.5-MM THK)	
M	20	1	**8T-4136**	3	BOLT (M10X1.5X25-MM)	
M	21	1	**8T-4137**	2	BOLT (M10X1.5X20-MM)	
	22	1	**8T-9023**	2	CONNECTOR-O-RING	

I - REFER TO HYDRAULIC INFORMATION SYSTEM
M - METRIC PART

244-7441 **LINES GP-POWER TRAIN COOLER (*contd.*)** **i02956641**

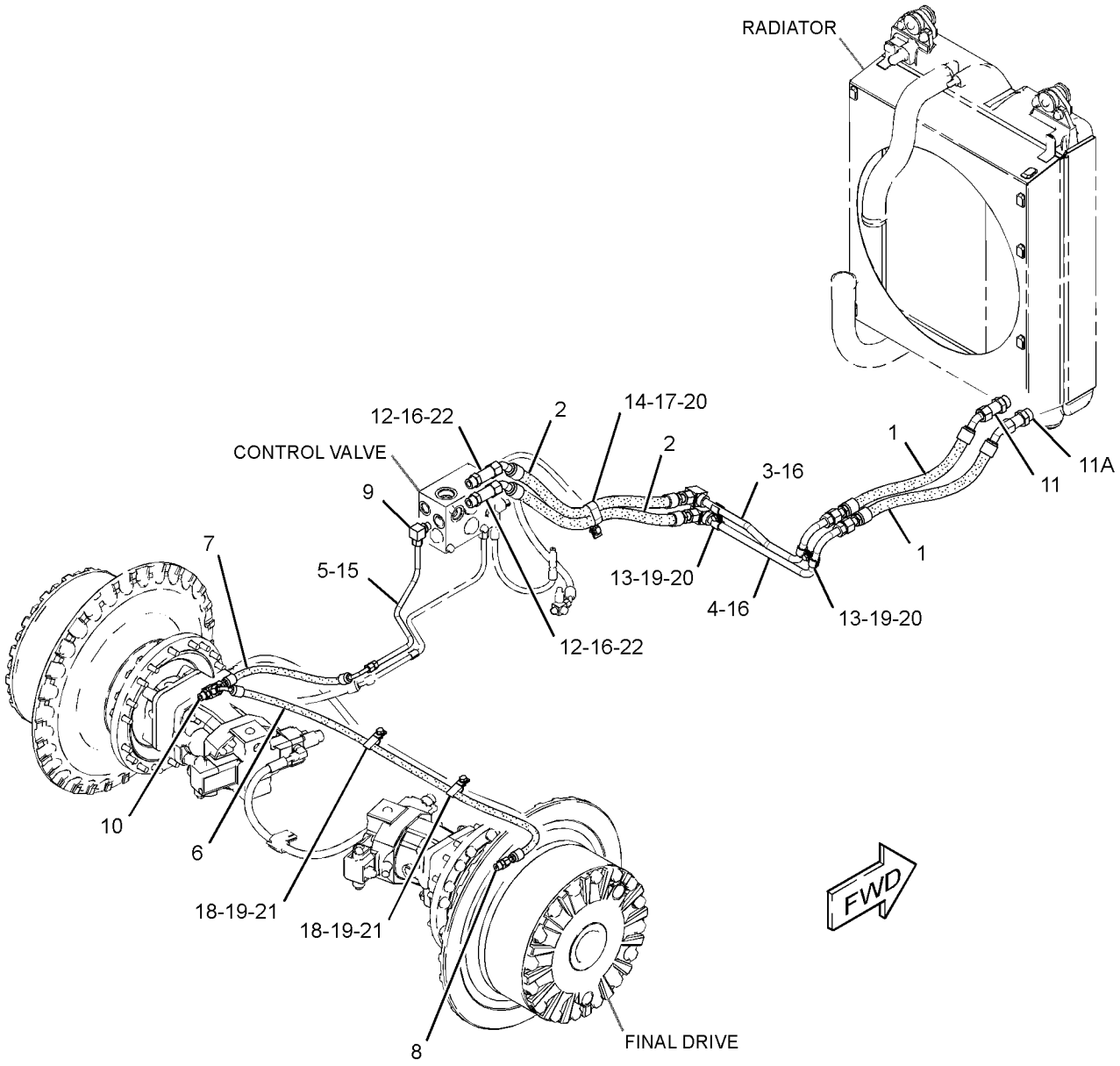

GRAPHIC #1 **<END>** g01375295

244-7441 LINES GP-POWER TRAIN COOLER

S/N: RRR403-444

PART OF 244-7446 POWER TRAIN AR

SMCS-1375, 3016 **i03996972**

NOTE	REF NO	GRAPHIC REF	PART NUMBER	QTY	PART NAME 1 2 3 4 5 6 (PRODUCT LEVEL)	SEE PAGE
I	1	1	**203-1926**	2	HOSE AS	
I	2	1	**261-1108**	2	HOSE AS	
	3	1	**261-8501**	1	TUBE AS	
	4	1	**261-8502**	1	TUBE AS	
	5	1	**272-3537**	1	TUBE AS	
CI	6	1	**345-9626**	1	HOSE AS	
I	7	1	**283-4943**	1	HOSE AS	
C	8	1	*148-8363*	1	ELBOW AS	
		1	**3K-0360**	1	SEAL-O-RING	
		1	**6V-8397**	1	SEAL-O-RING	
		1	**6V-9876**	1	ELBOW	
	9	1	*148-8364*	1	ELBOW AS	
		1	**3K-0360**	1	SEAL-O-RING	
		1	**6V-8398**	1	SEAL-O-RING	
		1	**6V-8625**	1	ELBOW	
	10	1	*148-8428*	1	TEE AS	
		1	**3K-0360**	1	SEAL-O-RING	
		1	**6V-8398**	2	SEAL-O-RING	
		1	**6V-8782**	1	TEE	
	11	1	*153-6242*	2	CONNECTOR AS	
					(EACH INCLUDES)	
		1	**8T-0197**	1	CONNECTOR	
		1	**6V-9746**	1	SEAL-O-RING	
		1	**7M-8485**	1	SEAL-O-RING	
	12	1	**3D-2824**	2	SEAL-O-RING	
	13	1	**4H-7655**	4	CLAMP-TUBE	
	14	1	**5D-0718**	1	CLIP	
	15	1	**6V-8397**	1	SEAL-O-RING	
	16	1	**6V-9746**	6	SEAL-O-RING	
	17	1	**7X-7729**	1	WASHER (11X25X3-MM THK)	
	18	1	**5K-5338**	2	CLIP	
	19	1	**8T-4121**	4	WASHER-HARD (11X21X2.5-MM THK)	
M	20	1	**8T-4136**	3	BOLT (M10X1.5X25-MM)	
M	21	1	**8T-4137**	2	BOLT (M10X1.5X20-MM)	
	22	1	**8T-9023**	2	CONNECTOR-O-RING	

C - CHANGE FROM PREVIOUS TYPE
I - REFER TO HYDRAULIC INFORMATION SYSTEM
M - METRIC PART

244-7441 **LINES GP-POWER TRAIN COOLER (*contd.*)** **i03996972**

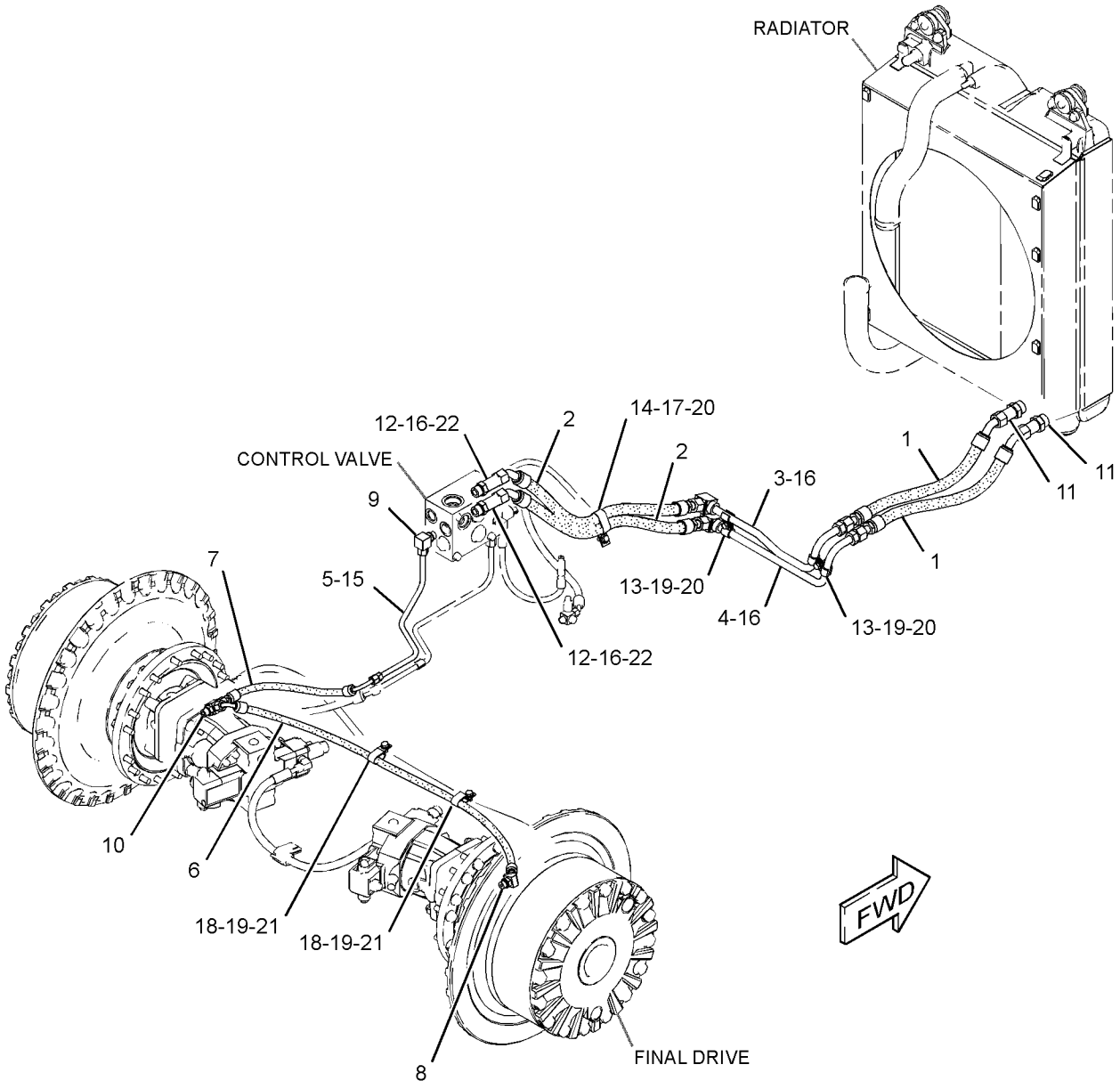

GRAPHIC #1 **<END>** g02360616

244-7441 LINES GP-POWER TRAIN COOLER

S/N: RRR445-UP

PART OF 244-7446 POWER TRAIN AR

SMCS-1375, 3016 **i04251453**

NOTE	REF NO	GRAPHIC REF	PART NUMBER	QTY	PART NAME 1 2 3 4 5 6 (PRODUCT LEVEL)	SEE PAGE
I	1	1	**203-1926**	2	HOSE AS	
I	2	1	**261-1108**	2	HOSE AS	
	3	1	**261-8501**	1	TUBE AS	
	4	1	**261-8502**	1	TUBE AS	
C	5	1	**363-1762**	1	TUBE AS	
I	6	1	**345-9626**	1	HOSE AS	
CI	7	1	**365-9590**	1	HOSE AS	
	8	1	*148-8363*	1	ELBOW AS	
		1	**3K-0360**	1	SEAL-O-RING	
		1	**6V-8397**	1	SEAL-O-RING	
		1	**6V-9876**	1	ELBOW	
	9	1	*148-8364*	1	ELBOW AS	
		1	**3K-0360**	1	SEAL-O-RING	
		1	**6V-8398**	1	SEAL-O-RING	
		1	**6V-8625**	1	ELBOW	
	10	1	*148-8428*	1	TEE AS	
		1	**3K-0360**	1	SEAL-O-RING	
		1	**6V-8398**	2	SEAL-O-RING	
		1	**6V-8782**	1	TEE	
	11	1	*153-6242*	2	CONNECTOR AS	
					(EACH INCLUDES)	
		1	**8T-0197**	1	CONNECTOR	
		1	**6V-9746**	1	SEAL-O-RING	
		1	**7M-8485**	1	SEAL-O-RING	
	12	1	**3D-2824**	2	SEAL-O-RING	
	13	1	**4H-7655**	4	CLAMP-TUBE	
	14	1	**5D-0718**	1	CLIP	
	15	1	**6V-8397**	1	SEAL-O-RING	
	16	1	**6V-9746**	6	SEAL-O-RING	
	17	1	**7X-7729**	1	WASHER (11X25X3-MM THK)	
	18	1	**5K-5338**	2	CLIP	
	19	1	**8T-4121**	4	WASHER-HARD (11X21X2.5-MM THK)	
M	20	1	**8T-4136**	3	BOLT (M10X1.5X25-MM)	
M	21	1	**8T-4137**	2	BOLT (M10X1.5X20-MM)	
	22	1	**8T-9023**	2	CONNECTOR-O-RING	

C - CHANGE FROM PREVIOUS TYPE
I - REFER TO HYDRAULIC INFORMATION SYSTEM
M - METRIC PART

244-7441 **LINES GP-POWER TRAIN COOLER (*contd.*)** **i04251453**

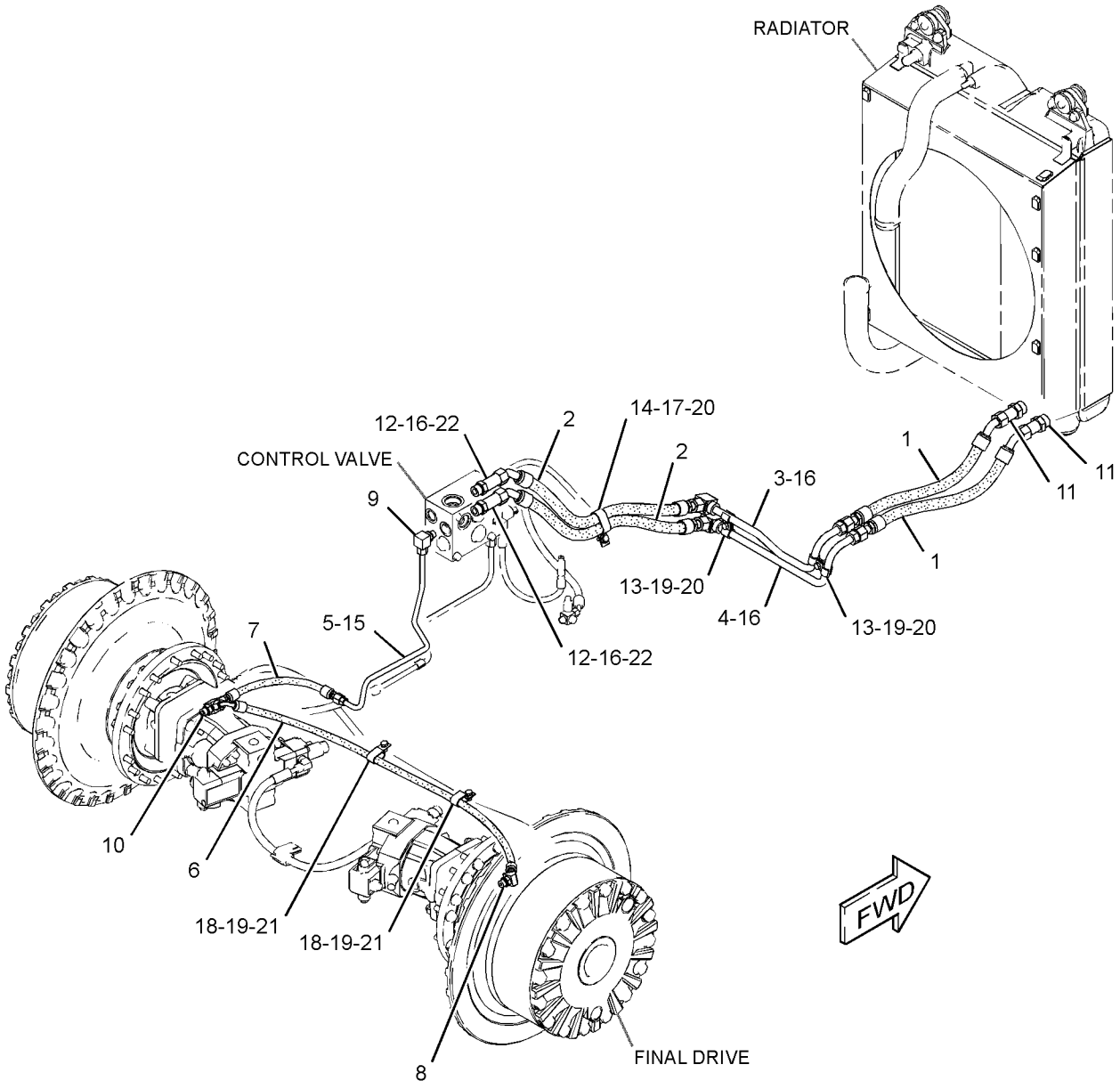

GRAPHIC #1 **<END>** g02493376

303-6594 LINES GP-POWER TRAIN COOLER

S/N: MMM1-562

PART OF 244-7483 POWER TRAIN AR

SMCS-1375, 3016 **i02963622**

NOTE	REF NO	GRAPHIC REF	PART NUMBER	QTY	PART NAME 1 2 3 4 5 6 (PRODUCT LEVEL)	SEE PAGE
I	1	1	**128-0164**	1	HOSE AS	
I	2	1	**203-1926**	2	HOSE AS	
I	3	1	**261-1108**	2	HOSE AS	
	4	1	**261-8501**	1	TUBE AS	
	5	1	**261-8502**	1	TUBE AS	
	6	1	**272-3537**	1	TUBE AS	
I	7	1	**303-6596**	1	HOSE AS	
	8	1	*148-8318*	1	CONNECTOR AS	
		1	**3K-0360**	1	SEAL-O-RING	
		1	**6V-8397**	1	SEAL-O-RING	
		1	**6V-8634**	1	CONNECTOR	
	9	1	*148-8364*	1	ELBOW AS	
		1	**3K-0360**	1	SEAL-O-RING	
		1	**6V-8398**	1	SEAL-O-RING	
		1	**6V-8625**	1	ELBOW	
	10	1	*148-8428*	1	TEE AS	
		1	**3K-0360**	1	SEAL-O-RING	
		1	**6V-8398**	2	SEAL-O-RING	
		1	**6V-8782**	1	TEE	
	11	1	*153-6242*	2	CONNECTOR AS	
					(EACH INCLUDES)	
		1	**6V-9746**	1	SEAL-O-RING	
		1	**7M-8485**	1	SEAL-O-RING	
		1	**8T-0197**	1	CONNECTOR	
	12	1	**3D-2824**	2	SEAL-O-RING	
	13	1	**4H-7655**	4	CLAMP-TUBE	
	14	1	**5D-0718**	1	CLIP	
	15	1	**5K-5338**	2	CLIP	
	16	1	**6V-8397**	1	SEAL-O-RING	
	17	1	**6V-9746**	6	SEAL-O-RING	
	18	1	**7X-7729**	1	WASHER (11X25X3-MM THK)	
	19	1	**8T-4121**	4	WASHER-HARD (11X21X2.5-MM THK)	
M	20	1	**8T-4136**	3	BOLT (M10X1.5X25-MM)	
M	21	1	**8T-4137**	2	BOLT (M10X1.5X20-MM)	
	22	1	**8T-9023**	2	CONNECTOR-O-RING	

I - REFER TO HYDRAULIC INFORMATION SYSTEM
M - METRIC PART

303-6594 **LINES GP-POWER TRAIN COOLER (*contd.*)** **i02963622**

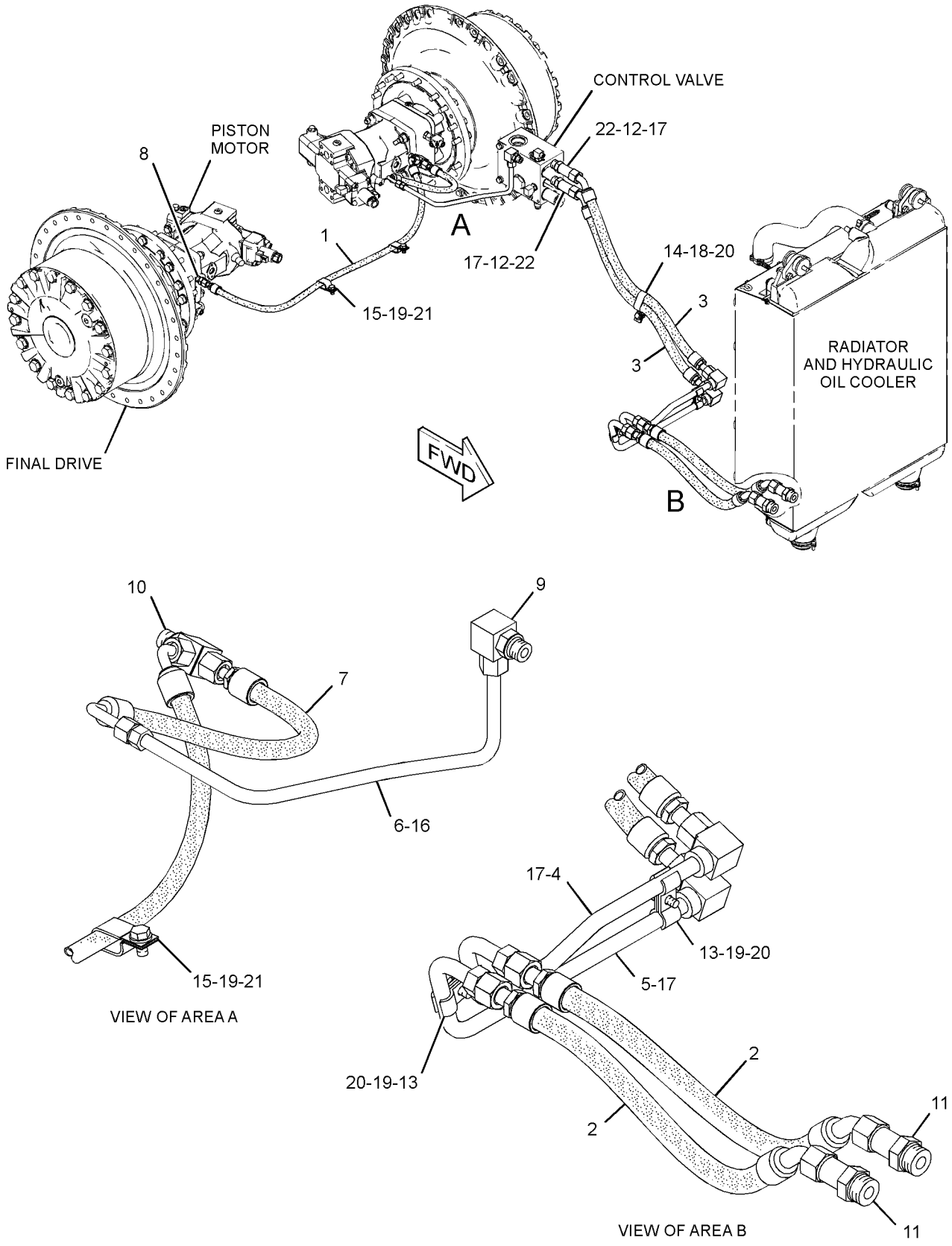

GRAPHIC #1 **<END>** g01618456

303-6594 LINES GP-POWER TRAIN COOLER

S/N: MMM563-610

PART OF 244-7483 POWER TRAIN AR

SMCS-1375, 3016 **i03997027**

NOTE	REF NO	GRAPHIC REF	PART NUMBER	QTY	PART NAME 1 2 3 4 5 6 (PRODUCT LEVEL)	SEE PAGE
CI	1	1	**345-9624**	1	HOSE AS	
I	2	1	**203-1926**	2	HOSE AS	
I	3	1	**261-1108**	2	HOSE AS	
	4	1	**261-8501**	1	TUBE AS	
	5	1	**261-8502**	1	TUBE AS	
	6	1	**272-3537**	1	TUBE AS	
I	7	1	**303-6596**	1	HOSE AS	
C	8	1	*148-8363*	1	ELBOW AS	
		1	**3K-0360**	1	SEAL-O-RING	
		1	**6V-8397**	1	SEAL-O-RING	
		1	**6V-9876**	1	ELBOW	
	9	1	*148-8364*	1	ELBOW AS	
		1	**3K-0360**	1	SEAL-O-RING	
		1	**6V-8398**	1	SEAL-O-RING	
		1	**6V-8625**	1	ELBOW	
	10	1	*148-8428*	1	TEE AS	
		1	**3K-0360**	1	SEAL-O-RING	
		1	**6V-8398**	2	SEAL-O-RING	
		1	**6V-8782**	1	TEE	
	11	1	*153-6242*	2	CONNECTOR AS	
					(EACH INCLUDES)	
		1	**6V-9746**	1	SEAL-O-RING	
		1	**7M-8485**	1	SEAL-O-RING	
		1	**8T-0197**	1	CONNECTOR	
	12	1	**3D-2824**	2	SEAL-O-RING	
	13	1	**4H-7655**	4	CLAMP-TUBE	
	14	1	**5D-0718**	1	CLIP	
	15	1	**5K-5338**	2	CLIP	
	16	1	**6V-8397**	1	SEAL-O-RING	
	17	1	**6V-9746**	6	SEAL-O-RING	
	18	1	**7X-7729**	1	WASHER (11X25X3-MM THK)	
	19	1	**8T-4121**	4	WASHER-HARD (11X21X2.5-MM THK)	
M	20	1	**8T-4136**	3	BOLT (M10X1.5X25-MM)	
M	21	1	**8T-4137**	2	BOLT (M10X1.5X20-MM)	
	22	1	**8T-9023**	2	CONNECTOR-O-RING	

C - CHANGE FROM PREVIOUS TYPE
I - REFER TO HYDRAULIC INFORMATION SYSTEM
M - METRIC PART

303-6594 **LINES GP-POWER TRAIN COOLER (*contd.*)** **i03997027**

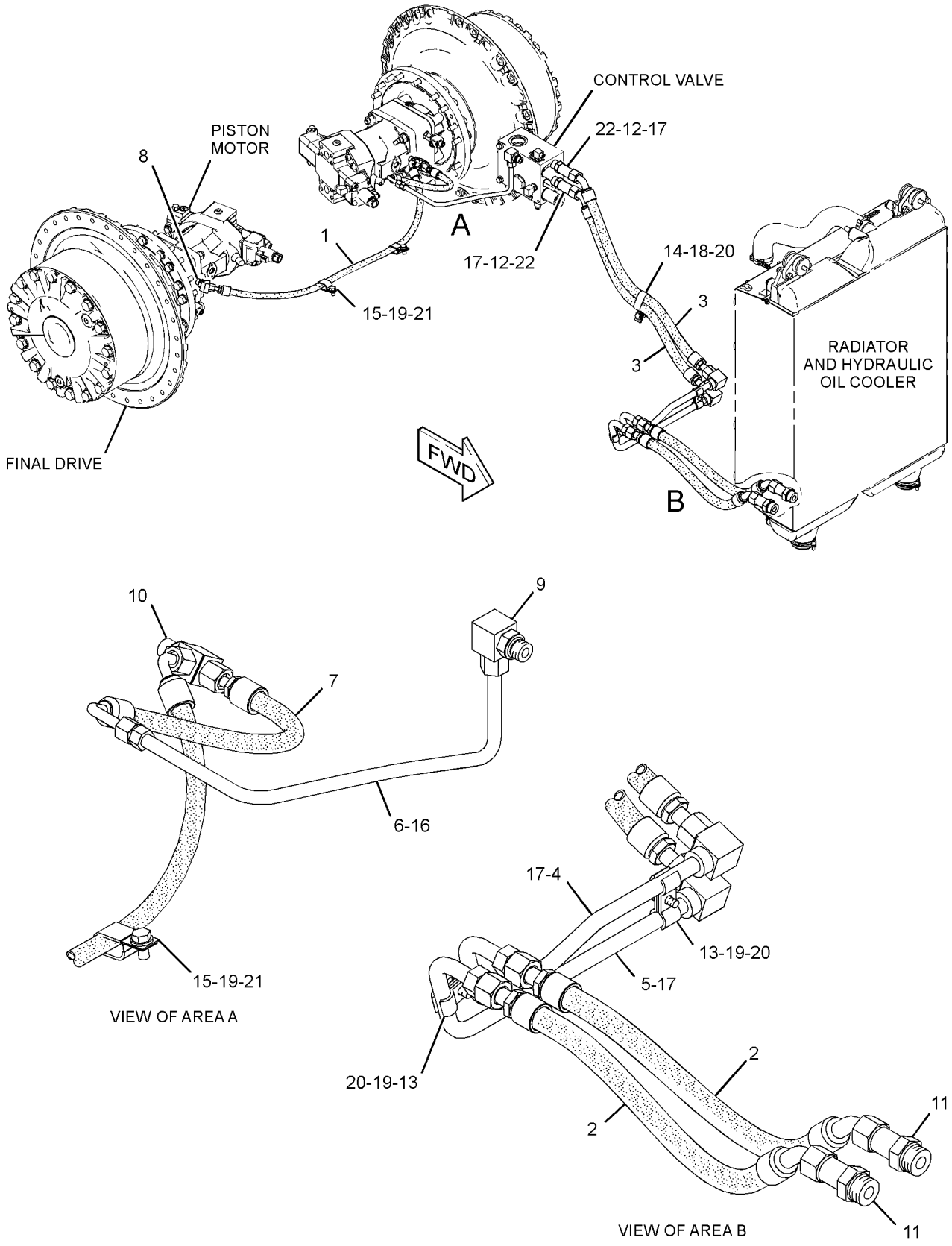

GRAPHIC #1 **<END>** g02352365

303-6594 LINES GP-POWER TRAIN COOLER

S/N: MMM611-UP

PART OF 244-7483 POWER TRAIN AR

SMCS-1375, 3016 **i04251376**

NOTE	REF NO	GRAPHIC REF	PART NUMBER	QTY	PART NAME 1 2 3 4 5 6 (PRODUCT LEVEL)	SEE PAGE
I	1	1	**345-9624**	1	HOSE AS	
I	2	1	**203-1926**	2	HOSE AS	
I	3	1	**261-1108**	2	HOSE AS	
	4	1	**261-8501**	1	TUBE AS	
	5	1	**261-8502**	1	TUBE AS	
C	6	1	**363-1762**	1	TUBE AS	
CI	7	1	**365-9588**	1	HOSE AS	
	8	1	*148-8363*	1	ELBOW AS	
		1	**3K-0360**	1	SEAL-O-RING	
		1	**6V-8397**	1	SEAL-O-RING	
		1	**6V-9876**	1	ELBOW	
	9	1	*148-8364*	1	ELBOW AS	
		1	**3K-0360**	1	SEAL-O-RING	
		1	**6V-8398**	1	SEAL-O-RING	
		1	**6V-8625**	1	ELBOW	
	10	1	*148-8428*	1	TEE AS	
		1	**3K-0360**	1	SEAL-O-RING	
		1	**6V-8398**	2	SEAL-O-RING	
		1	**6V-8782**	1	TEE	
	11	1	*153-6242*	2	CONNECTOR AS	
					(EACH INCLUDES)	
		1	**6V-9746**	1	SEAL-O-RING	
		1	**7M-8485**	1	SEAL-O-RING	
		1	**8T-0197**	1	CONNECTOR	
	12	1	**3D-2824**	2	SEAL-O-RING	
	13	1	**4H-7655**	4	CLAMP-TUBE	
	14	1	**5D-0718**	1	CLIP	
	15	1	**5K-5338**	2	CLIP	
	16	1	**6V-8397**	1	SEAL-O-RING	
	17	1	**6V-9746**	6	SEAL-O-RING	
	18	1	**7X-7729**	1	WASHER (11X25X3-MM THK)	
	19	1	**8T-4121**	4	WASHER-HARD (11X21X2.5-MM THK)	
M	20	1	**8T-4136**	3	BOLT (M10X1.5X25-MM)	
M	21	1	**8T-4137**	2	BOLT (M10X1.5X20-MM)	
	22	1	**8T-9023**	2	CONNECTOR-O-RING	

C - CHANGE FROM PREVIOUS TYPE
I - REFER TO HYDRAULIC INFORMATION SYSTEM
M - METRIC PART

303-6594 **LINES GP-POWER TRAIN COOLER (*contd.*)** **i04251376**

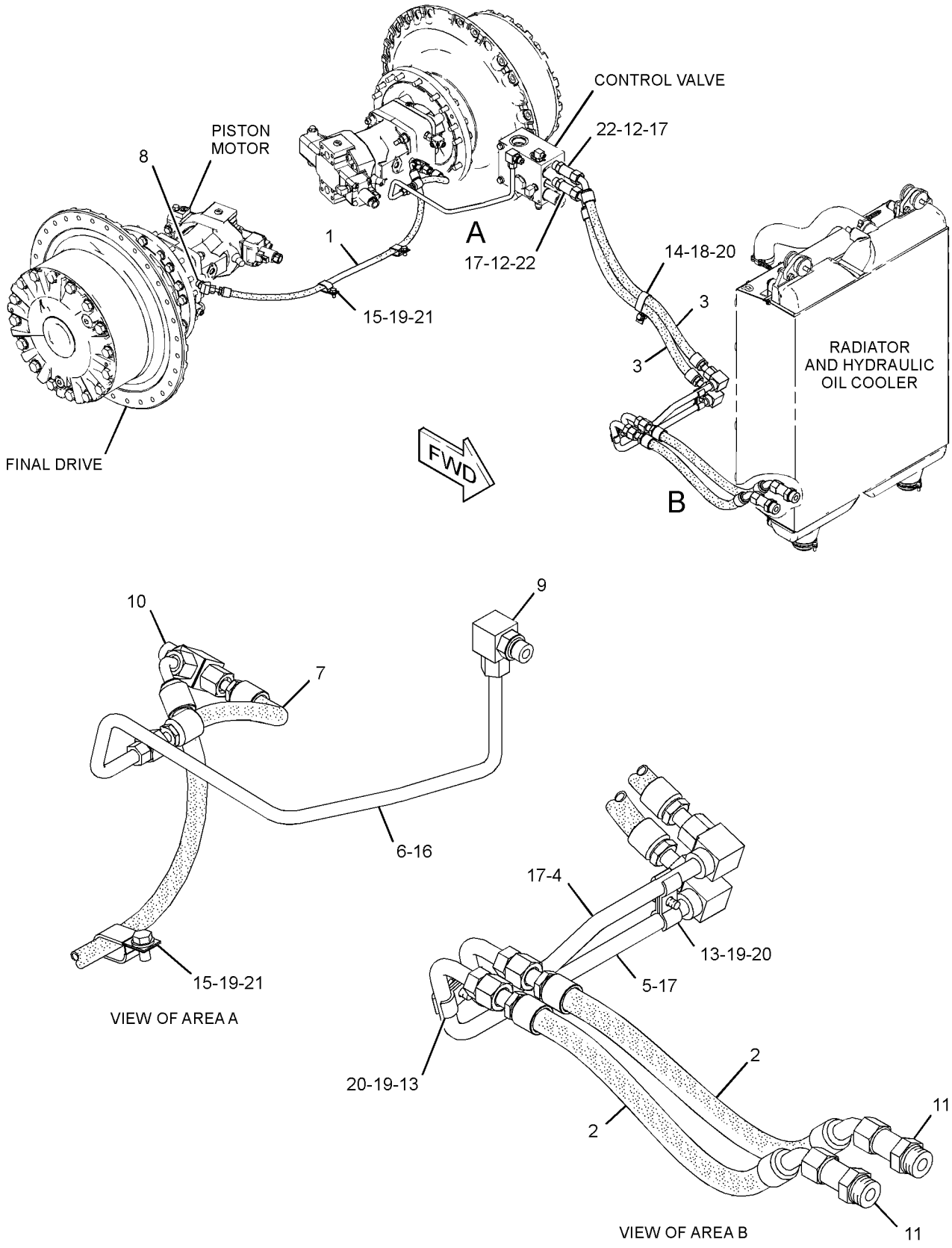

GRAPHIC #1 **<END>** g02493399

327-7666 LINES GP-POWER TRAIN COOLER

S/N: MMM1-UP
PART OF 325-6543 MODIFICATION AR
AN ATTACHMENT

SMCS-1375, 3016

i03670383

NOTE	REF NO	GRAPHIC REF	PART NUMBER	QTY	PART NAME 1 2 3 4 5 6 (PRODUCT LEVEL)	SEE PAGE
I	1	1	*325-0524*	2	HOSE AS	
					(EACH INCLUDES)	
I		1	**203-1926**	1	HOSE AS	
		1	**163-8812**	2	CLAMP	
E		1	**324-9706**		INSULATION (52-CM)	
I	2	1	*325-0525*	2	HOSE AS	
					(EACH INCLUDES)	
		1	**163-8812**	2	CLAMP	
I		1	**261-1108**	1	HOSE AS	
E		1	**324-9706**		INSULATION (69-CM)	
	3	1	*327-7673*	1	HOSE AS	
		1	**163-8811**	2	CLAMP	
E		1	**193-6911**		INSULATION (42-CM)	
I		1	**303-6596**	1	HOSE AS	
	4	1	*327-7674*	1	HOSE AS	
		1	**163-8811**	2	CLAMP	
I		1	**128-0164**	1	HOSE AS	
E		1	**193-6911**		INSULATION (110-CM)	
	5	1	**2P-6470**	1	CLIP (SLOT)	
	6	1	**2P-6471**	1	CLIP (TAB)	
	7	1	**3E-4321**	2	CLIP	

E - ORDER BY THE CENTIMETER
I - REFER TO HYDRAULIC INFORMATION SYSTEM

327-7666 **LINES GP-POWER TRAIN COOLER (*contd.*)** **i03670383**

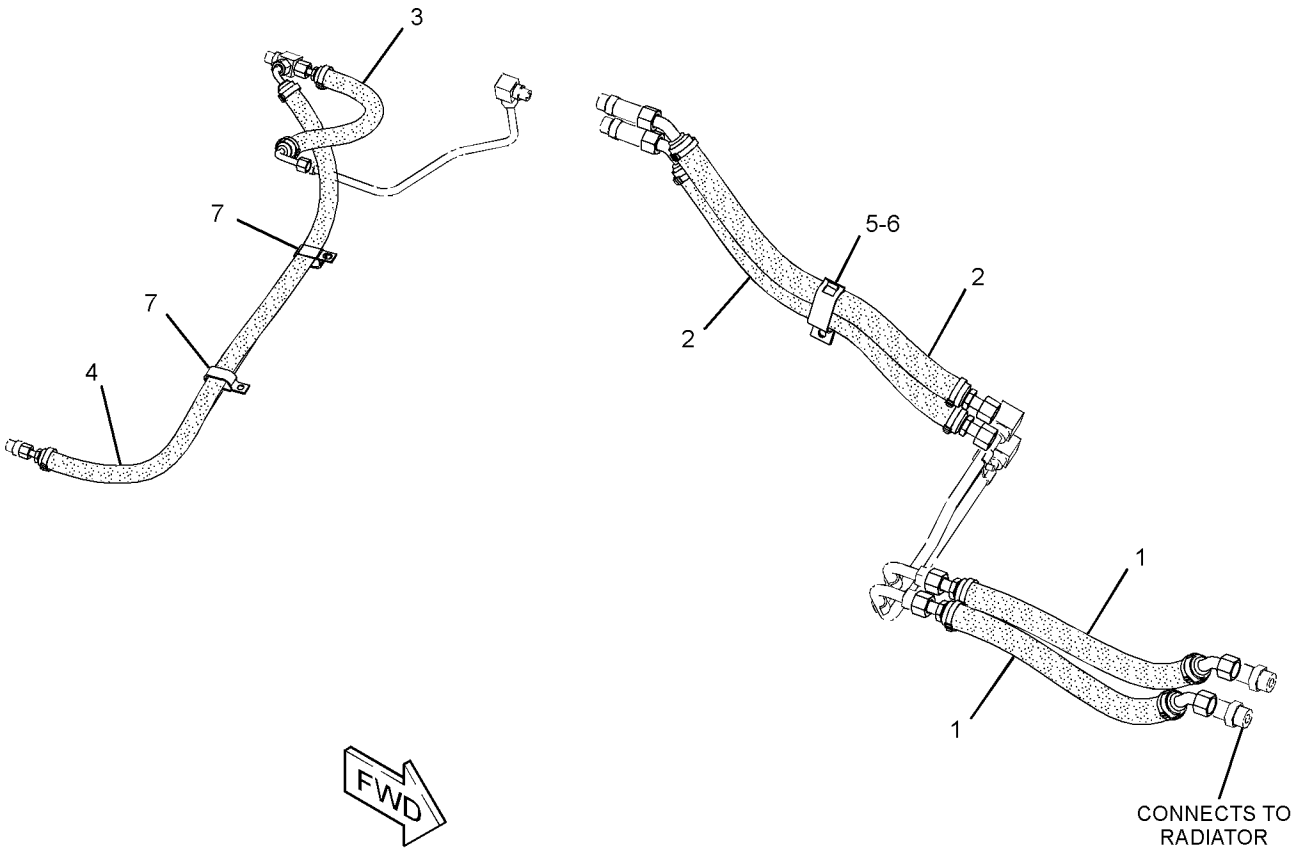

GRAPHIC #1 **<END>** g02024441

327-7667 LINES GP-POWER TRAIN COOLER

S/N: RRR1-UP
PART OF 325-6544 MODIFICATION AR
AN ATTACHMENT

SMCS-1375, 3016

i03670483

NOTE	REF NO	GRAPHIC REF	PART NUMBER	QTY	PART NAME 1 2 3 4 5 6 (PRODUCT LEVEL)	SEE PAGE
I	1	1	*325-0524*	2	HOSE AS	
					(EACH INCLUDES)	
I		1	**203-1926**	1	HOSE AS	
		1	**163-8812**	2	CLAMP	
E		1	**324-9706**		INSULATION (52-CM)	
I	2	1	*325-0525*	2	HOSE AS	
					(EACH INCLUDES)	
		1	**163-8812**	2	CLAMP	
I		1	**261-1108**	1	HOSE AS	
E		1	**324-9706**		INSULATION (69-CM)	
	3	1	*327-7675*	1	HOSE AS	
		1	**163-8811**	2	CLAMP	
E		1	**193-6911**		INSULATION (126-CM)	
I		1	**283-4939**	1	HOSE AS	
	4	1	*327-7676*	1	HOSE AS	
		1	**163-8811**	2	CLAMP	
E		1	**193-6911**		INSULATION (48-CM)	
I		1	**283-4943**	1	HOSE AS	
	5	1	**2P-6470**	1	CLIP (SLOT)	
	6	1	**2P-6471**	1	CLIP (TAB)	
	7	1	**3E-4321**	2	CLIP	

E - ORDER BY THE CENTIMETER
I - REFER TO HYDRAULIC INFORMATION SYSTEM

327-7667 **LINES GP-POWER TRAIN COOLER (*contd.*)** **i03670483**

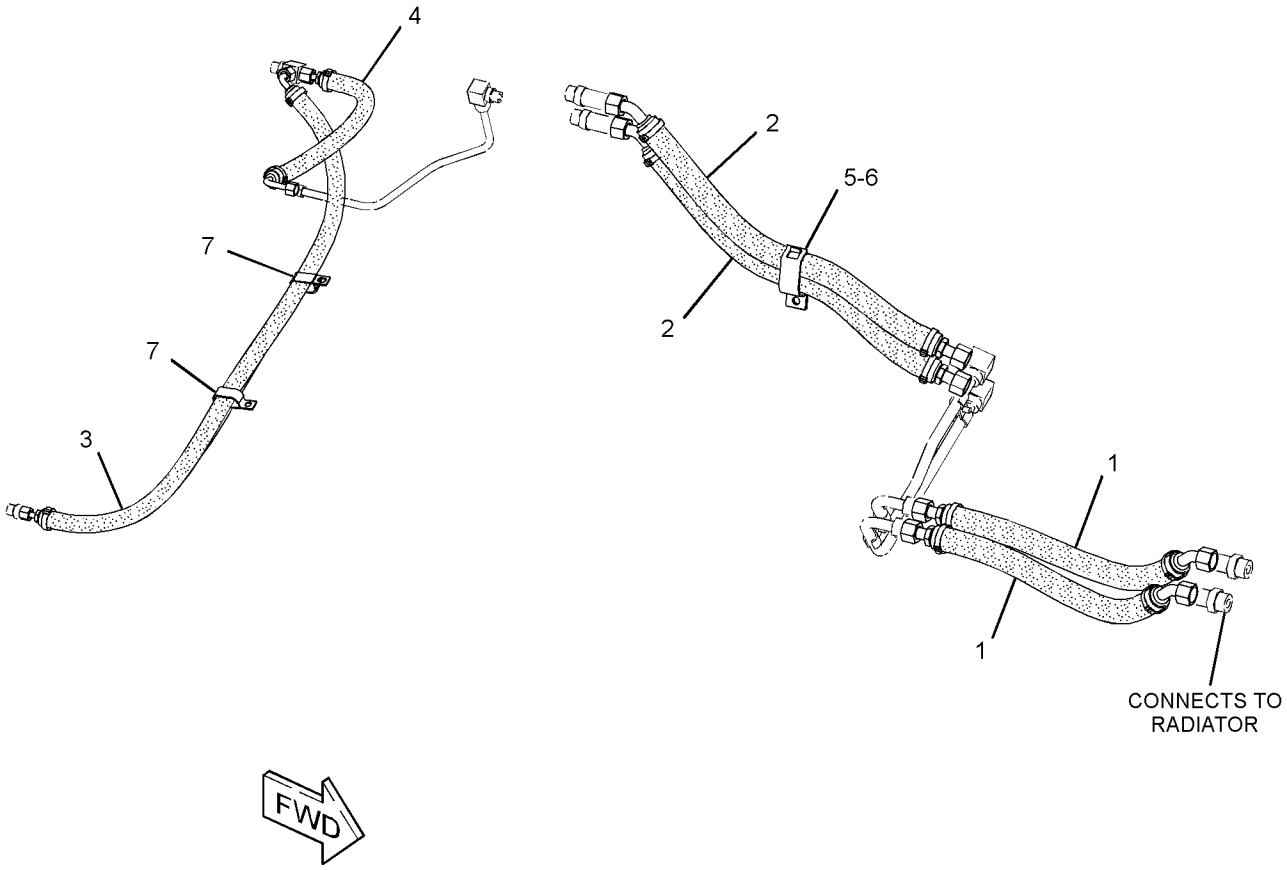

GRAPHIC #1 **<END>** g02024422

289-0254 LINES GP-PUMP

S/N: MMM1-UP; RRR1-UP
PART OF 291-5095 DRIVE AR
AN ATTACHMENT

SMCS-3016 **i02698845**

NOTE	REF NO	GRAPHIC REF	PART NUMBER	QTY	PART NAME 1 2 3 4 5 6 (PRODUCT LEVEL)	SEE PAGE
I	1	1	**289-0246**	1	HOSE AS	
I	2	1	**289-0247**	1	HOSE AS	
I	3	1	**289-0248**	1	HOSE AS	
I	4	1	**289-0249**	1	HOSE AS	
	5	1	**1P-3702**	4	SEAL-RECTANGULAR	
	6	1	**1P-3703**	4	SEAL-RECTANGULAR	
	7	1	**6V-0400**	8	FLANGE-HALF	
	8	1	**7G-3832**	2	GROMMET	
	9	1	**7G-3833**	2	CLIP (TAB)	
	10	1	**7G-3834**	2	CLIP (SLOT)	
	11	1	**8T-4121**	16	WASHER-HARD (11X21X2.5-MM THK)	
M	12	1	**8T-4182**	16	BOLT (M10X1.5X45-MM)	
M	13	1	**8T-4183**	2	BOLT (M12X1.75X40-MM)	
M	14	1	**8T-4184**	16	BOLT (M12X1.75X45-MM)	
	15	1	**8T-4223**	18	WASHER-HARD (13.5X25.5X3-MM THK)	
	16	1	**8T-9403**	8	FLANGE-HALF	

I - REFER TO HYDRAULIC INFORMATION SYSTEM
M - METRIC PART

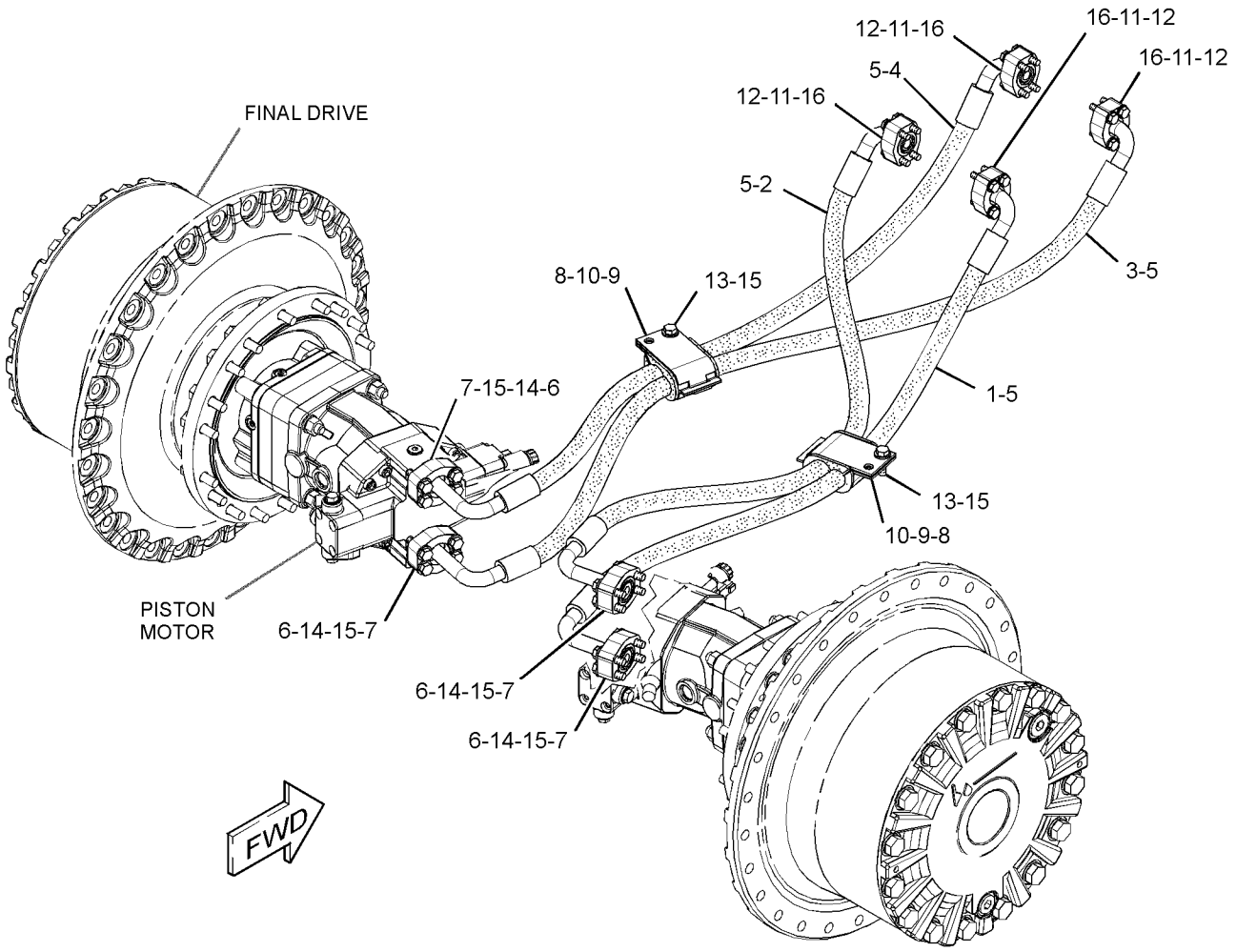

GRAPHIC #1 **<END>** g01378979

244-7443 LINES GP-TRANSMISSION OIL–CASE DRAIN

S/N: MMM1-UP

PART OF 244-7483 POWER TRAIN AR

SMCS-3016, 3154 **i02918773**

NOTE	REF NO	GRAPHIC REF	PART NUMBER	QTY	PART NAME 1 2 3 4 5 6 (PRODUCT LEVEL)	SEE PAGE
	1	1	**6V-5258**	1	ADAPTER	
	2	1	**6V-9171**	1	NUT-BULKHEAD (1-3/16-12-THD)	
	3	1	**9U-7000**	1	FITTING GP-HYDRAULIC	
		1	**2S-4078**	1	SEAL-O-RING	
	4	1	**257-1105**	1	HOSE	
I	5	1	**261-8523**	1	HOSE AS	
I	6	1	**263-4158**	1	HOSE AS	
	7	1	**263-7803**	1	TUBE AS	
	8	1	**283-4947**	1	TUBE AS	
I	9	1	**294-1064**	1	HOSE AS	
	10	1	**294-1070**	1	TUBE AS	
	11	1	**139-1398**	1	CLIP	
	12	1	*148-8317*	2	CONNECTOR AS	
					(EACH INCLUDES)	
		1	**3D-2824**	1	SEAL-O-RING	
		1	**5K-9090**	1	SEAL-O-RING	
		1	**6V-8714**	1	CONNECTOR	
	13	1	*148-8327*	2	CONNECTOR AS	
					(EACH INCLUDES)	
		1	**3D-2824**	1	SEAL-O-RING	
		1	**6V-8637**	1	CONNECTOR	
		1	**6V-9746**	1	SEAL-O-RING	
	14	1	*148-8352*	1	ELBOW AS	
		1	**5K-9090**	1	SEAL-O-RING	
		1	**6V-9854**	1	ELBOW	
	15	1	*148-8357*	1	ELBOW AS	
		1	**5K-9090**	1	SEAL-O-RING	
		1	**6V-9008**	1	ELBOW	
		1	**7M-8485**	1	SEAL-O-RING	
	16	1	*148-8450*	1	TEE AS	
		1	**3E-7443**	1	TEE-UNION	
		1	**5K-9090**	1	SEAL-O-RING	
		1	**6V-9746**	2	SEAL-O-RING	
	17	1	**158-0851**	1	CLIP	
	18	1	*164-6858*	1	TEE AS	
		1	**5K-9090**	2	SEAL-O-RING	
		1	**6V-8778**	1	TEE-FACE SEAL	
		1	**7M-8485**	1	SEAL-O-RING	
	19	1	**2S-4078**	1	SEAL-O-RING	
	20	1	**3D-2824**	1	SEAL-O-RING	
	21	1	**6V-9746**	2	SEAL-O-RING	
	22	1	**6V-9832**	1	CAP AS	
	23	1	**7X-7958**	1	CLAMP-HOSE	
	24	1	**8T-1887**	1	CLIP (SLOT)	
	25	1	**8T-1888**	1	CLIP (TAB)	
	26	1	**8T-4121**	1	WASHER-HARD (11X21X2.5-MM THK)	
M	27	1	**8T-4137**	1	BOLT (M10X1.5X20-MM)	
M	28	1	**8T-4200**	1	BOLT (M8X1.25X16-MM)	
	29	1	**8T-4224**	2	WASHER-HARD (8.8X16X2-MM THK)	
	30	1	**8T-4983**	1	CLAMP-HOSE	
M	31	1	**8T-4189**	1	BOLT (M8X1.25X20-MM)	

I - REFER TO HYDRAULIC INFORMATION SYSTEM
M - METRIC PART

244-7443 **LINES GP-TRANSMISSION OIL (*contd.*)** **i02918773**

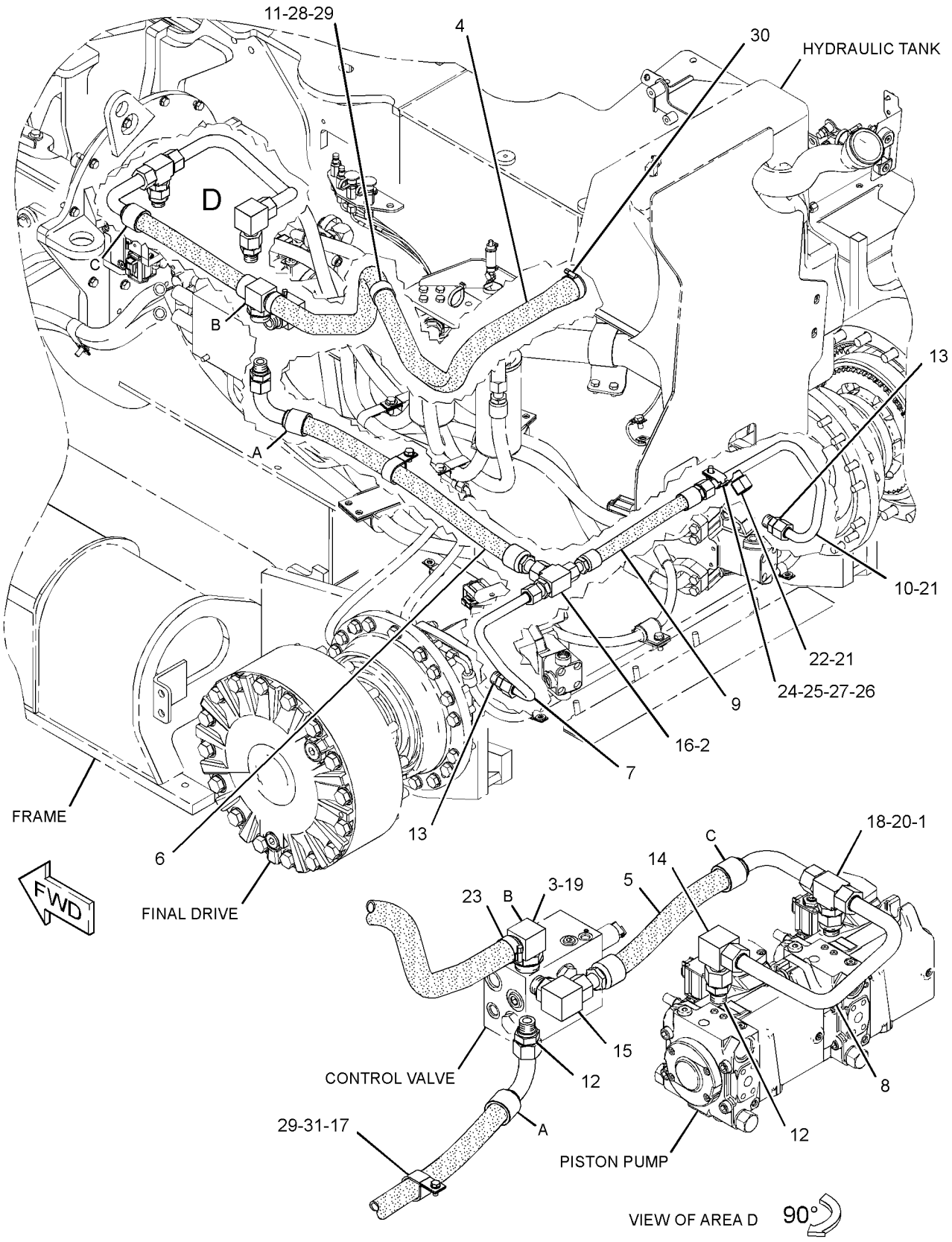

GRAPHIC #1 **<END>** g01526840

254-1366 LINES GP-TRANSMISSION OIL–CHARGE

S/N: MMM1-UP; RRR1-UP

PART OF 244-7446, 244-7483 POWER TRAIN AR

SMCS-3016, 3154 **i04403772**

NOTE	REF NO	GRAPHIC REF	PART NUMBER	QTY	PART NAME 1 2 3 4 5 6 (PRODUCT LEVEL)	SEE PAGE
	1	1	**3E-2345**	1	TEE-O-RING	
	2	1	**6V-0852**	2	CAP-DUST	
	3	1	**8T-4984**	2	CLAMP-HOSE	
	4	1	*9U-7000*	2	FITTING GP-HYDRAULIC	
					(EACH INCLUDES)	
		1	**2S-4078**	1	SEAL-O-RING	
		1	**5P-7506**	1	ELBOW	
	5	1	**173-3323**	2	ADAPTER	
	6	1	**196-1803**	1	FILTER GP-OIL (REAR)	
		1	**1G-8878**	1	FILTER-OIL (ADVANCED EFFICIENCY)	
		1	**3J-1907**	1	SEAL-O-RING	
		1	**134-0404**	1	SWITCH AS-PRESSURE (HYDRAULIC OIL)	
	7	1	**197-7611**	1	BLOCK AS	
	8	1	**200-3106**	1	HOSE	
	9	1	**302-8726**	1	HOSE	
Y	10	1	**212-9363**	1	FILTER GP-OIL (FRONT)	326
	11	1	**218-2148**	1	ELBOW	
	12	1	**245-5082**	1	GUARD	
I	13	1	**256-7754**	1	HOSE AS	
I	14	1	**256-7755**	1	HOSE AS	
I	15	1	**256-7756**	1	HOSE AS	
I	16	1	**256-7757**	1	HOSE AS	
	17	1	**256-7758**	1	BRACKET AS	
	18	1	**256-7761**	1	HOSE	
	19	1	*262-0481*	1	CLAMP GP-HYDRAULIC LINES	
		1	**8I-6686**	1	CLAMP	
		1	**262-0482**	1	CLAMP-DOUBLE	
	20	1	**263-0975**	1	PLATE AS	
	21	1	**119-5917**	1	CLIP	
	22	1	*148-8342*	2	CONNECTOR AS	
					(EACH INCLUDES)	
		1	**3K-0360**	1	SEAL-O-RING	
		1	**6V-8632**	1	CONNECTOR	
		1	**7J-9108**	1	SEAL-O-RING	
	23	1	*148-8347*	2	ELBOW AS	
					(EACH INCLUDES)	
		1	**3D-2824**	1	SEAL-O-RING	
		1	**6V-9007**	1	ELBOW	
		1	**6V-9746**	1	SEAL-O-RING	
	24	1	*150-3035*	1	ELBOW AS	
		1	**6V-9746**	1	SEAL-O-RING	
		1	**8T-1718**	1	ELBOW	
	25	1	*164-5567*	1	COUPLER AS-QUICK DISCONNECT (MALE)	
		1	**214-7568**	1	SEAL-O-RING	
		1	**6V-3965**	1	FITTING (QUICK DISCONNECT)	
	26	1	*164-5616*	1	PLUG AS	
		1	**2S-4078**	1	SEAL-O-RING	
		1	**9S-6130**	1	PLUG	
	27	1	*164-6863*	2	ELBOW AS	
					(EACH INCLUDES)	
		1	**3K-0360**	1	SEAL-O-RING	
		1	**6V-9746**	1	SEAL-O-RING	
		1	**8C-6920**	1	ELBOW	
	28	1	**2S-4078**	2	SEAL-O-RING	
	29	1	**3D-2824**	2	SEAL-O-RING	
	30	1	**5D-0718**	3	CLIP	
	31	1	**6V-9746**	2	SEAL-O-RING	
	32	1	**7M-8485**	2	SEAL-O-RING	
M	33	1	**7X-2543**	3	BOLT (M10X1.5X120-MM)	

254-1366 **LINES GP-TRANSMISSION OIL (*contd.*)** **i04403772**

NOTE	REF NO	GRAPHIC REF	PART NUMBER	QTY	PART NAME 1 2 3 4 5 6 (PRODUCT LEVEL)	SEE PAGE
	34	1	**7X-7729**	6	WASHER (11X25X3-MM THK)	
	35	1	**8T-3613**	1	VALVE AS-PRESSURE (TEST)	
	36	1	**8T-4121**	14	WASHER-HARD (11X21X2.5-MM THK)	
M	37	1	**8T-4136**	4	BOLT (M10X1.5X25-MM)	
M	38	1	**8T-4137**	2	BOLT (M10X1.5X20-MM)	
M	39	1	**8T-4195**	11	BOLT (M10X1.5X30-MM)	
	40	1	**8T-4983**	4	CLAMP-HOSE	

I - REFER TO HYDRAULIC INFORMATION SYSTEM
M - METRIC PART
Y - SEPARATE ILLUSTRATION

254-1366 **LINES GP-TRANSMISSION OIL (*contd.*)** **i04403772**

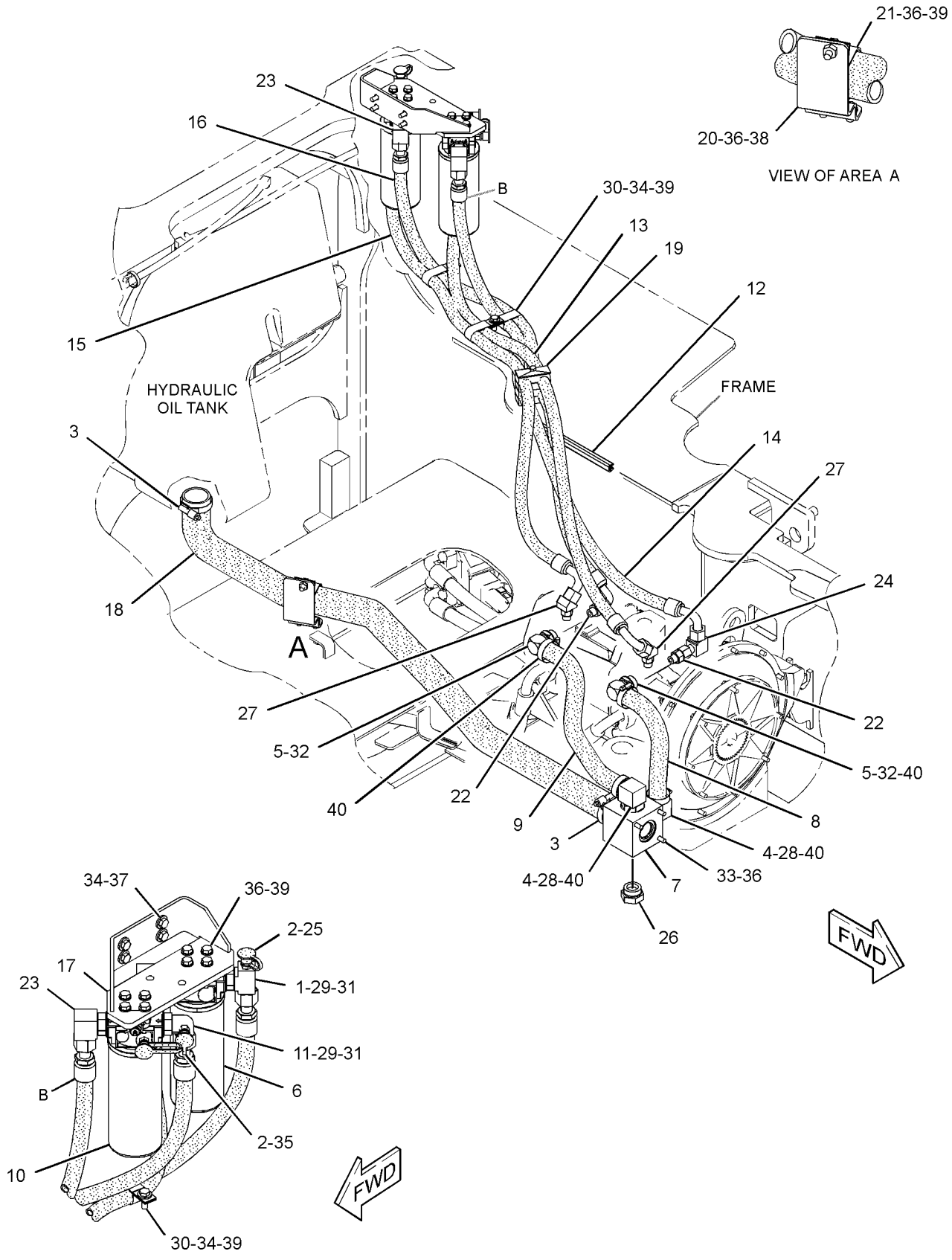

GRAPHIC #1 **<END>** g01338390

263-4157 LINES GP-TRANSMISSION OIL–CASE DRAIN

S/N: RRR1-UP

PART OF 244-7446 POWER TRAIN AR

SMCS-3016, 3154 **i02920693**

NOTE	REF NO	GRAPHIC REF	PART NUMBER	QTY	PART NAME 1 2 3 4 5 6 (PRODUCT LEVEL)	SEE PAGE
	1	1	**6V-5258**	1	ADAPTER	
	2	1	**6V-9171**	1	NUT-BULKHEAD (1-3/16-12-THD)	
	4	1	**257-1105**	1	HOSE	
I	5	1	**261-8523**	1	HOSE AS	
I	6	1	**263-4158**	1	HOSE AS	
	7	1	**263-4159**	1	TUBE AS	
	8	1	**283-4947**	1	TUBE AS	
	9	1	**289-0120**	1	TUBE AS	
I	10	1	**294-1061**	1	HOSE AS	
	11	1	**139-1398**	1	CLIP	
	12	1	*148-8317*	2	CONNECTOR AS	
					(EACH INCLUDES)	
		1	**3D-2824**	1	SEAL-O-RING	
		1	**5K-9090**	1	SEAL-O-RING	
		1	**6V-8714**	1	CONNECTOR	
	13	1	*148-8327*	2	CONNECTOR AS	
					(EACH INCLUDES)	
		1	**3D-2824**	1	SEAL-O-RING	
		1	**6V-8637**	1	CONNECTOR	
		1	**6V-9746**	1	SEAL-O-RING	
	14	1	*148-8352*	1	ELBOW AS	
		1	**5K-9090**	1	SEAL-O-RING	
		1	**6V-9854**	1	ELBOW	
	15	1	*148-8357*	1	ELBOW AS	
		1	**5K-9090**	1	SEAL-O-RING	
		1	**6V-9008**	1	ELBOW	
		1	**7M-8485**	1	SEAL-O-RING	
	16	1	*148-8450*	1	TEE AS	
		1	**3E-7443**	1	TEE-UNION	
		1	**5K-9090**	1	SEAL-O-RING	
		1	**6V-9746**	2	SEAL-O-RING	
	17	1	**158-0851**	1	CLIP	
	18	1	*164-6858*	1	TEE AS	
		1	**5K-9090**	2	SEAL-O-RING	
		1	**6V-8778**	1	TEE-FACE SEAL	
		1	**7M-8485**	1	SEAL-O-RING	
	19	1	**2S-4078**	1	SEAL-O-RING	
	20	1	**3D-2824**	1	SEAL-O-RING	
	21	1	**6V-9746**	2	SEAL-O-RING	
	22	1	**6V-9832**	1	CAP AS	
	23	1	**7X-7958**	1	CLAMP-HOSE	
	24	1	**8T-1887**	1	CLIP (SLOT)	
	25	1	**8T-1888**	1	CLIP (TAB)	
	26	1	**8T-4121**	1	WASHER-HARD (11X21X2.5-MM THK)	
M	27	1	**8T-4137**	1	BOLT (M10X1.5X20-MM)	
M	28	1	**8T-4200**	1	BOLT (M8X1.25X16-MM)	
	29	1	**8T-4224**	2	WASHER-HARD (8.8X16X2-MM THK)	
	30	1	**8T-4983**	1	CLAMP-HOSE	
M	31	1	**8T-4189**	1	BOLT (M8X1.25X20-MM)	

I - REFER TO HYDRAULIC INFORMATION SYSTEM
M - METRIC PART

263-4157 **LINES GP-TRANSMISSION OIL (*contd.*)** **i02920693**

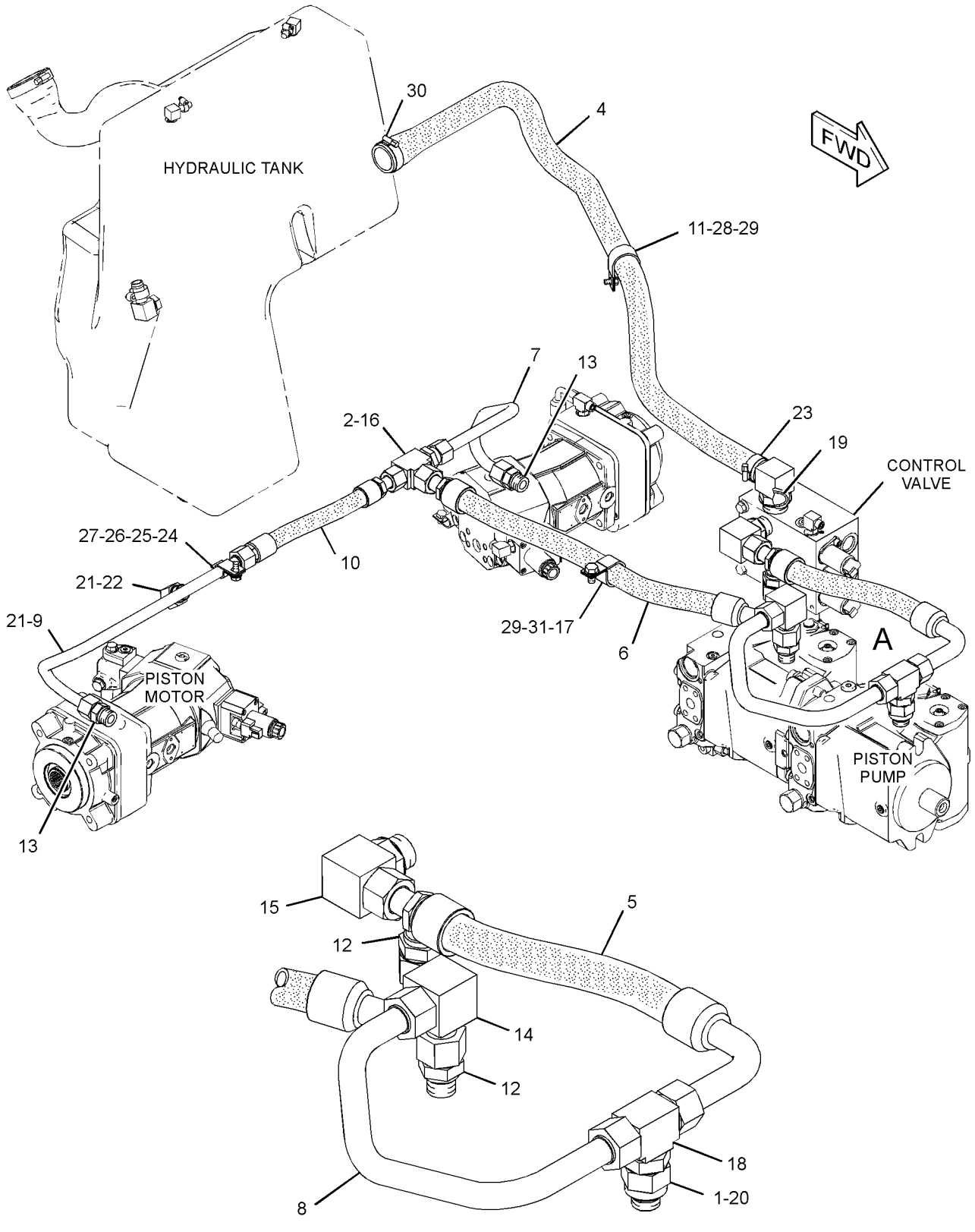

VIEW OF AREA A

GRAPHIC #1 **<END>** g01522071

329-1321 LINES GP-TRANSMISSION OIL–CASE DRAIN

S/N: MMM1-UP
PART OF 325-6543 MODIFICATION AR
AN ATTACHMENT

SMCS-3016, 3154

i03670386

NOTE	REF NO	GRAPHIC REF	PART NUMBER	QTY	PART NAME 1 2 3 4 5 6 (PRODUCT LEVEL)	SEE PAGE
	1	1	**329-1323**	1	HOSE AS	
B		1	**268-4412**		TAPE-INSULATOR	
		1	**257-1105**	1	HOSE	
E		1	**324-9708**		INSULATION (120-CM)	
	2	1	*329-1325*	1	HOSE AS	
		1	**163-8813**	2	CLAMP	
I		1	**261-8523**	1	HOSE AS	
E		1	**324-9707**		INSULATION (38-CM)	
	3	1	*329-1921*	1	HOSE AS	
		1	**163-8812**	2	CLAMP	
I		1	**294-1064**	1	HOSE AS	
E		1	**324-9706**		INSULATION (33-CM)	
	4	1	*329-1923*	1	HOSE AS	
		1	**163-8813**	2	CLAMP	
I		1	**263-4158**	1	HOSE AS	
E		1	**324-9707**		INSULATION (68-CM)	
	5	1	**105-1866**	1	CLIP	
	6	1	**7D-1553**	1	CLIP	

B - USE AS REQUIRED
E - ORDER BY THE CENTIMETER
I - REFER TO HYDRAULIC INFORMATION SYSTEM

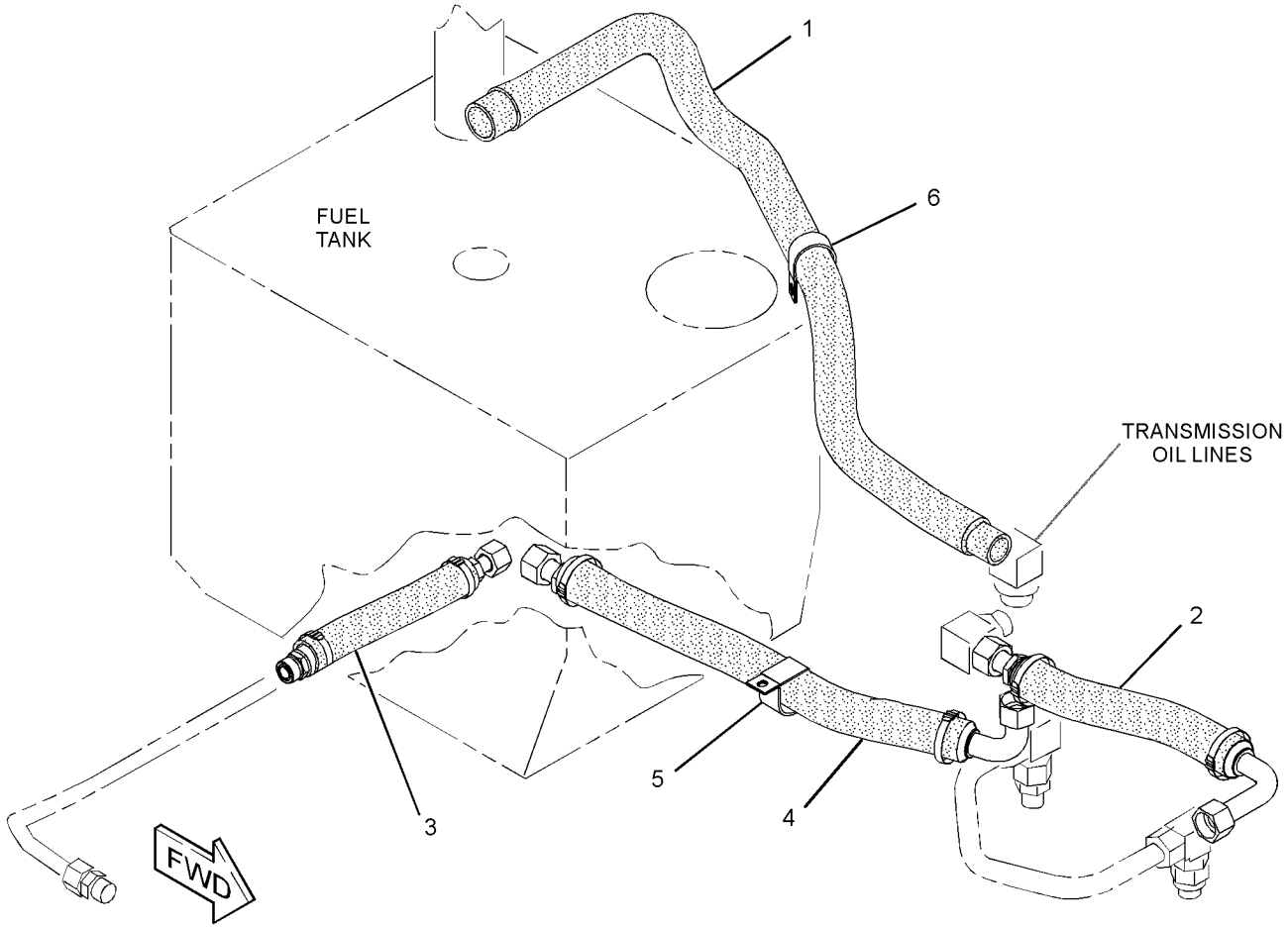

GRAPHIC #1

<END>

g02024183

329-1922 LINES GP-TRANSMISSION OIL–CASE DRAIN

S/N: RRR1-UP
PART OF 325-6544 MODIFICATION AR
AN ATTACHMENT

SMCS-3016, 3154

i03670485

NOTE	REF NO	GRAPHIC REF	PART NUMBER	QTY	PART NAME 1 2 3 4 5 6 (PRODUCT LEVEL)	SEE PAGE
	1	1	**329-1323**	1	HOSE AS	
		1	**257-1105**	1	HOSE	
B		1	**268-4412**		TAPE-INSULATOR	
E		1	**324-9708**		INSULATION (120-CM)	
	2	1	*329-1325*	1	HOSE AS	
		1	**163-8813**	2	CLAMP	
I		1	**261-8523**	1	HOSE AS	
E		1	**324-9707**		INSULATION (38-CM)	
	3	1	*329-1920*	1	HOSE AS	
		1	**163-8812**	2	CLAMP	
I		1	**294-1061**	1	HOSE AS	
E		1	**324-9706**		INSULATION (30-CM)	
	4	1	*329-1923*	1	HOSE AS	
		1	**163-8813**	2	CLAMP	
I		1	**263-4158**	1	HOSE AS	
E		1	**324-9707**		INSULATION (68-CM)	
	5	1	**105-1866**	1	CLIP	
	6	1	**7D-1553**	1	CLIP	

B - USE AS REQUIRED
E - ORDER BY THE CENTIMETER
I - REFER TO HYDRAULIC INFORMATION SYSTEM

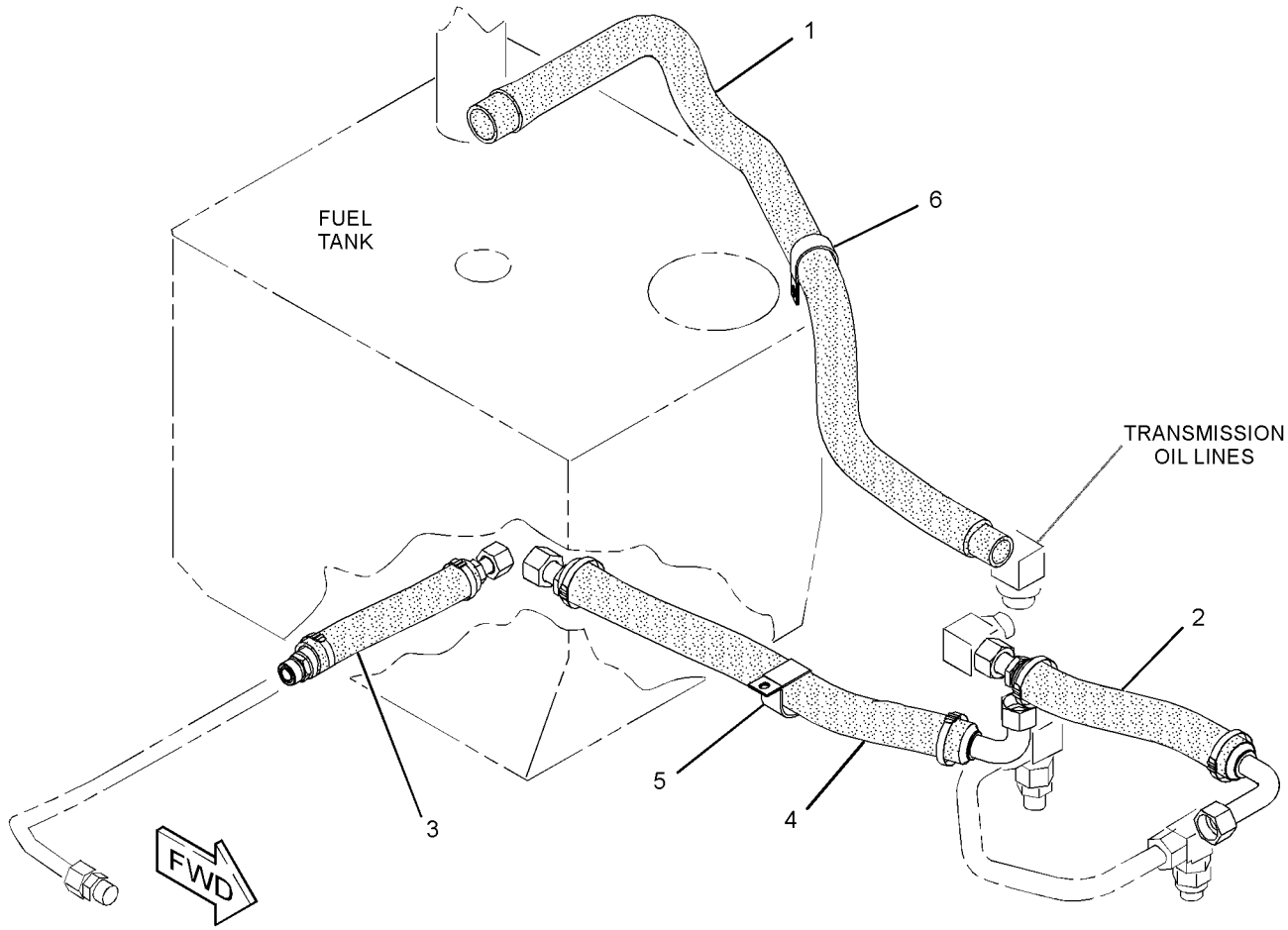

GRAPHIC #1

<END>

g02024179

329-1938 LINES GP-TRANSMISSION OIL–CHARGE

S/N: MMM1-UP; RRR1-UP
PART OF 325-6543, 325-6544 MODIFICATION AR
AN ATTACHMENT

SMCS-3016, 3154

i03664470

NOTE	REF NO	GRAPHIC REF	PART NUMBER	QTY	PART NAME 1 2 3 4 5 6 (PRODUCT LEVEL)	SEE PAGE
	1	1	**328-8622**	1	HOSE AS	
B		1	**268-4412**		TAPE-INSULATOR	
		1	**302-8726**	1	HOSE	
E		1	**326-3569**		INSULATION (40-CM)	
	2	1	**328-8623**	1	HOSE AS	
B		1	**268-4412**		TAPE-INSULATOR	
		1	**200-3106**	1	HOSE	
E		1	**326-3569**		INSULATION (26-CM)	
	3	1	*329-1925*	1	HOSE AS	
B		1	**268-4412**		TAPE-INSULATOR	
		1	**256-7761**	1	HOSE	
E		1	**326-3570**		INSULATION (140-CM)	
	4	1	*329-1934*	1	HOSE AS	
I		1	**256-7757**	1	HOSE AS	
		1	**163-8812**	2	CLAMP	
E		1	**324-9706**		INSULATION (152-CM)	
	5	1	*329-1939*	1	HOSE AS	
		1	**163-8812**	2	CLAMP	
I		1	**256-7754**	1	HOSE AS	
E		1	**324-9706**		INSULATION (170-CM)	
	6	1	*329-1940*	1	HOSE AS	
		1	**163-8812**	2	CLAMP	
I		1	**256-7755**	1	HOSE AS	
E		1	**324-9706**		INSULATION (151-CM)	
	7	1	*329-1941*	1	HOSE AS	
		1	**163-8812**	2	CLAMP	
I		1	**256-7756**	1	HOSE AS	
E		1	**324-9706**		INSULATION (164-CM)	
	8	1	**122-3606**	1	CLIP	
	9	1	**228-2775**	2	CLIP	

B - USE AS REQUIRED
E - ORDER BY THE CENTIMETER
I - REFER TO HYDRAULIC INFORMATION SYSTEM

329-1938 **LINES GP-TRANSMISSION OIL (*contd.*)** **i03664470**

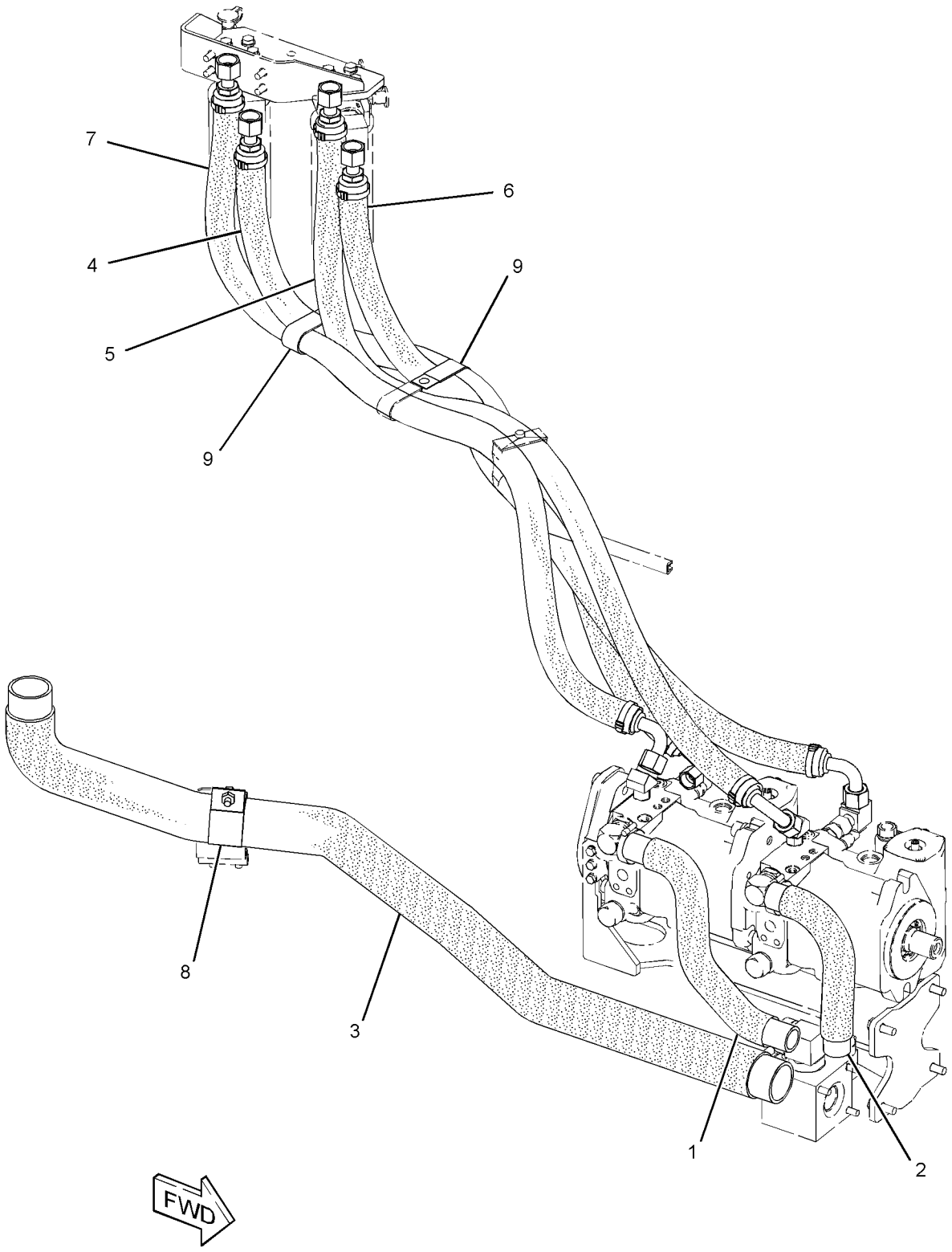

GRAPHIC #1 **<END>** g02024282

274-6747 MANIFOLD GP-CONTROL–SERVICE BRAKE

S/N: MMM1-UP; RRR1-UP

PART OF 322-6506 VALVE GP-CONTROL, 244-7442, 271-9178, 322-6507 VALVE GP-PUMP CONTROL

SMCS-5264 **i04895816**

NOTE	REF NO	GRAPHIC REF	PART NUMBER	QTY	PART NAME 1 2 3 4 5 6 (PRODUCT LEVEL)	SEE PAGE
M	1	1	**8T-1158**	2	BOLT-SOCKET HEAD (M8X1.25X20-MM)	
	2	1	**105-4593**	2	POPPET	
	3	1	**212-6603**	1	PLUG AS	
		1	**6V-8978**	1	SEAL-O-RING	
	4	1	**245-1181**	2	FLANGE	
J	5	1	**252-4734**	2	VALVE GP-SOLENOID (12-VOLT) (MOTOR, 2-SPEED)	
					(EACH INCLUDES)	
		1	**245-1181**	1	FLANGE	
	6	1	**263-9560**	1	SPRING	
	7	1	**263-9561**	1	SPRING	
	8	1	**354-1621**	1	PLUG AS	
		1	**7M-8485**		SEAL-O-RING	
					AVAILABLE REPAIR KIT(S):	
J			**245-1912**	1	KIT-SEAL (SOLENOID VALVE)	
					(INCLUDES O-RING SEALS)	

J - KIT MARKED J SERVICES PARTS MARKED J
M - METRIC PART

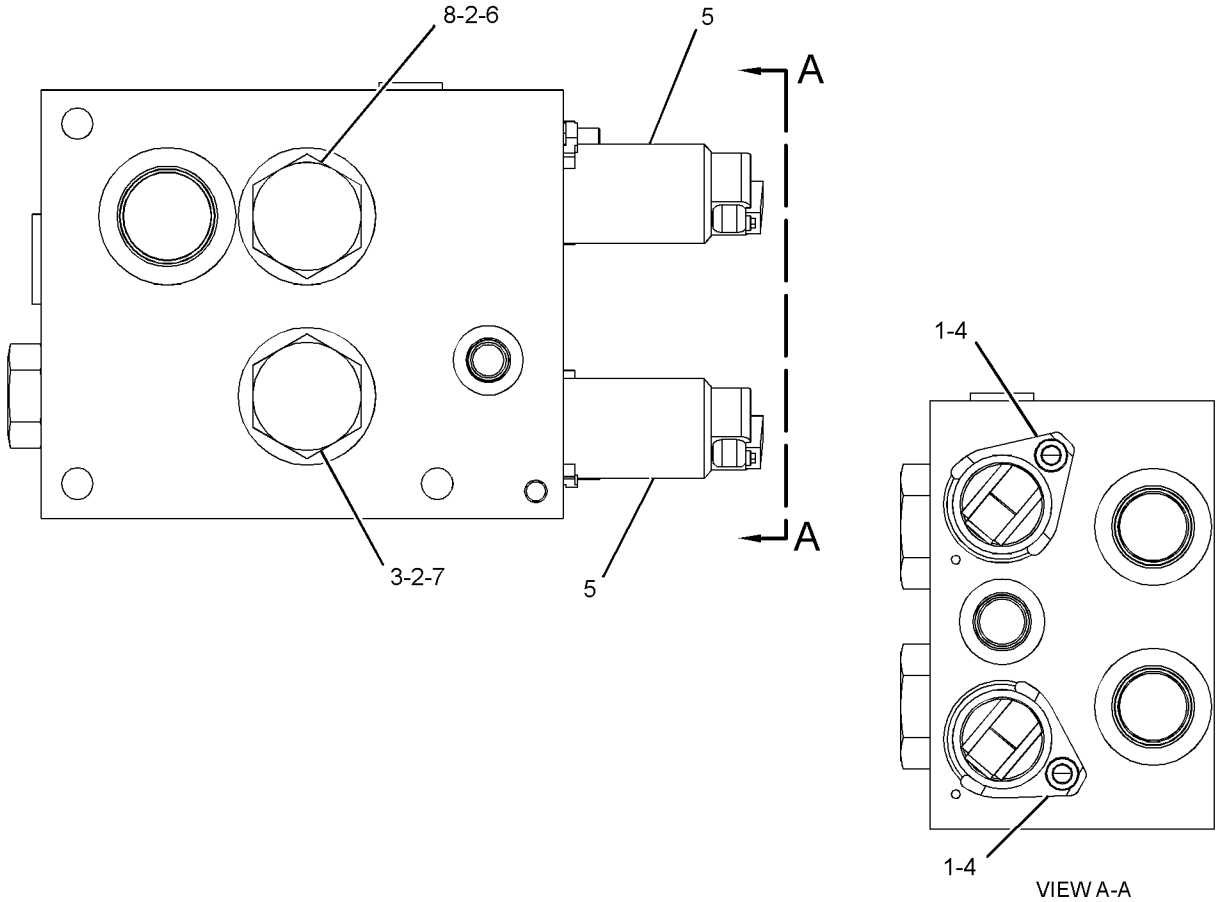

GRAPHIC #1 **<END>** g03041277

200-1729 MOTOR GP-PISTON–WINCH

S/N: MMM1-UP; RRR1-UP
PART OF 208-5549 MOTOR & MTG GP-WINCH
AN ATTACHMENT

SMCS-4351, 5058 **i04419067**

NOTE	REF NO	GRAPHIC REF	PART NUMBER	QTY	PART NAME 1 2 3 4 5 6 (PRODUCT LEVEL)	SEE PAGE
	1	1	**2H-9247**	1	SEAL-O-RING	
	2	1	**191-3539**	2	NUT-SEAL	
	3	1	**9S-8006**	1	PLUG-O-RING	
	4	1	**6V-4589**	1	SEAL-O-RING	
	5	1	**8T-9598**	1	RING-RETAINING	
	6	1	**6E-5063**	2	CAP AS	
	7	1	**7X-1553**	1	SEAL-LIP TYPE	
	8	1	**9S-8008**	1	PLUG	
	9	1	**6V-5050**	1	SEAL-O-RING	
	10	1	**9S-8004**	3	PLUG-O-RING	
	11	1	**6V-5049**	3	SEAL-O-RING	
	12	1	**141-0305**	1	SETSCREW	
M	13	1	**096-4900**	1	SETSCREW-SOCKET	

M - METRIC PART

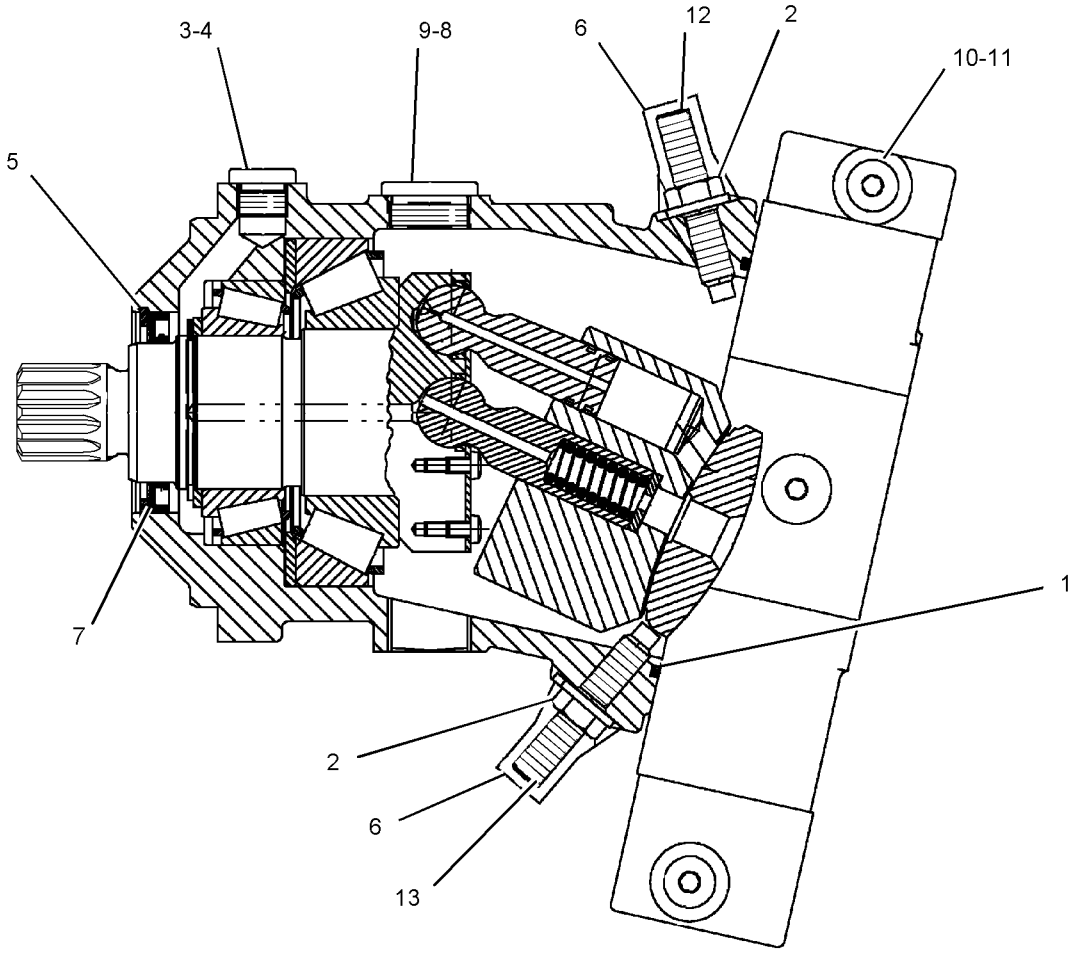

GRAPHIC #1 **<END>** g01009333

254-1354 MOTOR GP-PISTON*R

S/N: MMM1-UP; RRR1-UP

PART OF 244-7446, 244-7483 POWER TRAIN AR

SMCS-4351 **i03607660**

NOTE	REF NO	GRAPHIC REF	PART NUMBER	QTY	PART NAME 1 2 3 4 5 6 (PRODUCT LEVEL)	SEE PAGE
Y	1	1	**199-1088**	1	ROTATING GP-MOTOR (HYSTAT PROPEL)	378
Y	2	1	**293-5442**	1	VALVE GP-PILOT (SERVO) (HYDROSTATIC DRIVE)	387
Y	3	1	**293-5448**	1	VALVE GP-FLUSHING (HYDROSTATIC DRIVE)	386
Y	4	1	**301-7890**	2	VALVE GP-CHECK (HYDROSTATIC DRIVE)	150
M	5	1	**6V-8200**	8	BOLT-SOCKET HEAD (M12X1.75X35-MM)	
	6	1	**124-9940**	1	PISTON	
	7	1	**123-5782**	1	PIN	
	8	1	**138-4181**	1	PISTON	
	9	1	**123-2016**	1	PIN	
	10	1	**123-5787**	2	SEAT	
	11	1	**258-0129**	6	SEAL-O-RING	
	12	1	**138-4182**	3	SEAL	
	13	1	**123-5800**	2	PLUG	
	14	1	**2W-1145**	1	RING-RETAINING	
	15	1	**124-9913**	1	SEAL-SHAFT	
	16	1	**124-9914**	1	SHIM (3-MM THK)	
	17	1	**6F-4718**	1	SEAL-O-RING	
M	18	1	**9X-8483**	1	SETSCREW-SOCKET (M12X1.75X80-MM)	
M	19	1	**6E-3283**	2	LOCKNUT (M12X1.75-THD)	
M	20	1	**9X-8482**	1	SETSCREW-SOCKET (M12X1.75X70-MM)	
	21	1	**128-8981**	2	CAP	
	22	1	**120-4394**	1	PLUG-BREAK OFF	

PARTS SHOWN IN GRAPHIC(S) WITHOUT A REFERENCE NUMBER ARE NOT SERVICED SEPARATELY

M - METRIC PART
Y - SEPARATE ILLUSTRATION

254-1354 **MOTOR GP-PISTON (*contd.*)** **i03607660**

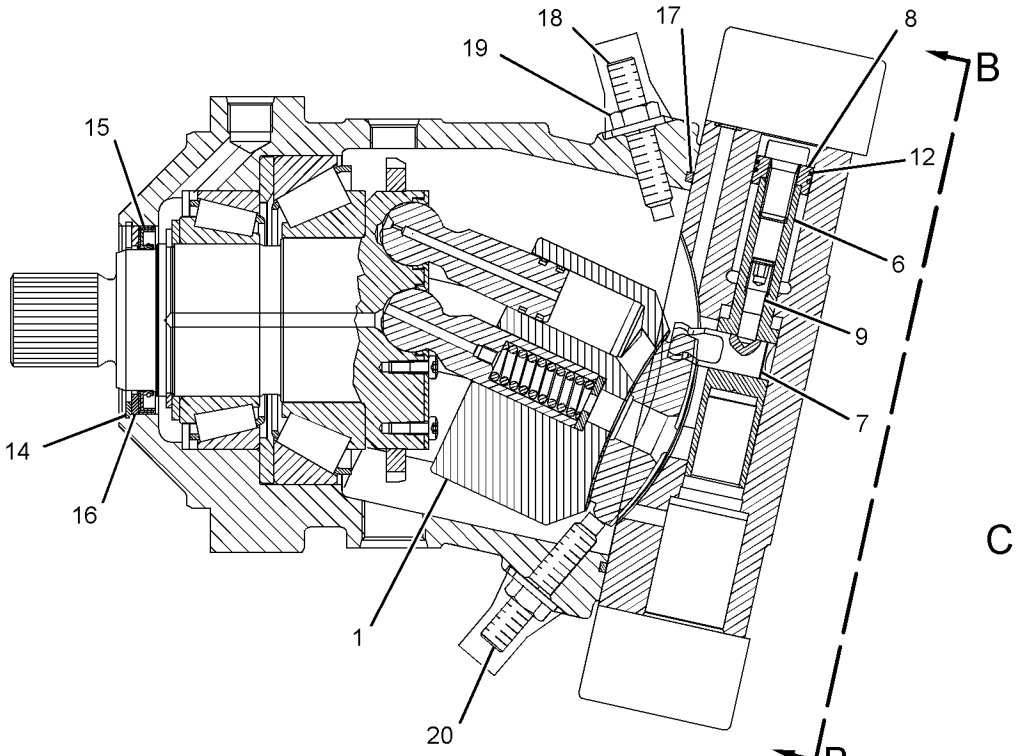

SECTION A-A

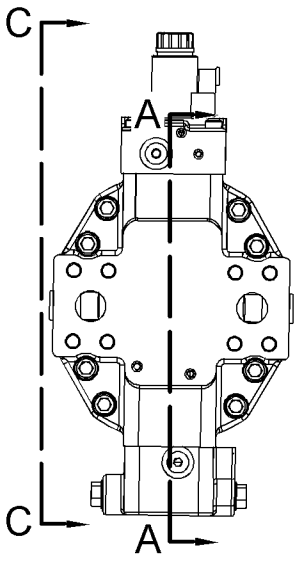

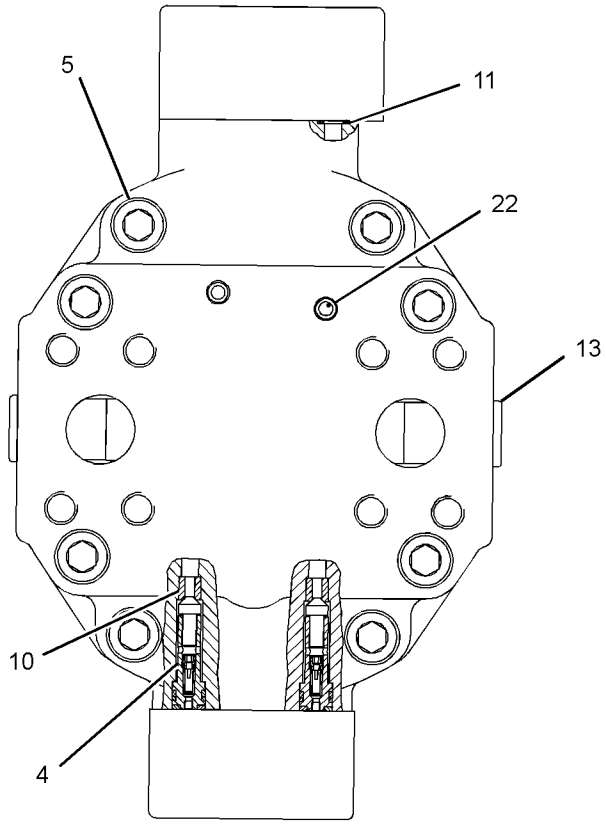

VIEW B-B

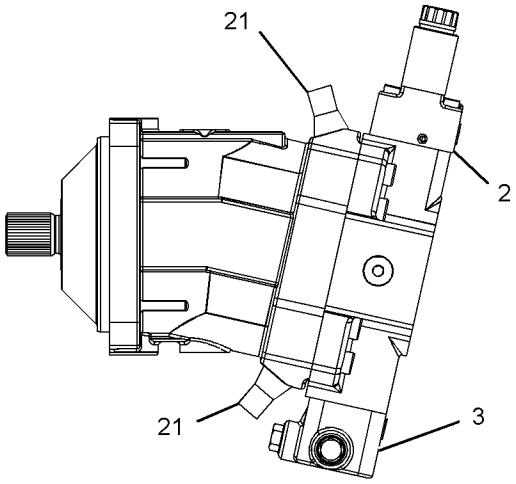

VIEW C-C

GRAPHIC #1 **<END>** g01343678

244-7446 POWER TRAIN AR

S/N: RRR1-UP

PART OF 244-7373 COMMON AR

SMCS-3000, 4000 **i03656835**

NOTE	PART NUMBER	QTY	PART NAME 1 2 3 4 5 6 (PRODUCT LEVEL)	SEE PAGE
Y	**244-7616**	2	BRAKE GP-PARKING	320
Y	*244-1529*	2	DRIVE GP-FINAL	323
Y	*244-7409*	1	DRIVE GP-HYDROSTATIC	325
Y	*244-7441*	1	LINES GP-POWER TRAIN COOLER	332
Y	*254-1371*	1	LINES GP-PRESSURE TEST	572
Y	*254-1366*	1	LINES GP-TRANSMISSION OIL (CHARGE)	351
Y	*263-4157*	1	LINES GP-TRANSMISSION OIL (CASE DRAIN)	354
YR	**254-1354**	2	MOTOR GP-PISTON	362
Y	*244-7442*	1	VALVE GP-PUMP CONTROL	388

R - REMFG PART MAY BE AVAILABLE
Y - SEPARATE ILLUSTRATION

<END>

244-7483 POWER TRAIN AR

S/N: MMM1-UP

PART OF 244-7372 COMMON AR

SMCS-3000, 4000 **i03656837**

NOTE	PART NUMBER	QTY	PART NAME 1 2 3 4 5 6 (PRODUCT LEVEL)	SEE PAGE
Y	**244-7616**	2	BRAKE GP-PARKING	320
Y	*244-1529*	2	DRIVE GP-FINAL	323
Y	*244-7409*	1	DRIVE GP-HYDROSTATIC	325
Y	*303-6594*	1	LINES GP-POWER TRAIN COOLER	338
Y	*254-1371*	1	LINES GP-PRESSURE TEST	572
Y	*244-7443*	1	LINES GP-TRANSMISSION OIL (CASE DRAIN)	349
Y	*254-1366*	1	LINES GP-TRANSMISSION OIL (CHARGE)	351
YR	**254-1354**	2	MOTOR GP-PISTON	362
Y	*271-9178*	1	VALVE GP-PUMP CONTROL	403

R - REMFG PART MAY BE AVAILABLE
Y - SEPARATE ILLUSTRATION

<END>

212-7037 PUMP GP-CHARGE–HYSTAT PROPEL

S/N: MMM1-UP; RRR1-UP
PART OF 254-1379 PUMP GP-PISTON
AN ATTACHMENT

SMCS-3204 **i01937023**

NOTE	REF NO	GRAPHIC REF	PART NUMBER	QTY	PART NAME 1 2 3 4 5 6 (PRODUCT LEVEL)	SEE PAGE
M	1	1	**171-2039**	4	BOLT-SOCKET HEAD (M8X1.25X30-MM)	
	2	1	**117-7278**	1	BUSHING	
	3	1	**5W-1437**	4	LOCKWASHER	
	4	1	**117-7322**	2	SEAL-RING	
	5	1	**126-5709**	1	PLATE	

M - METRIC PART

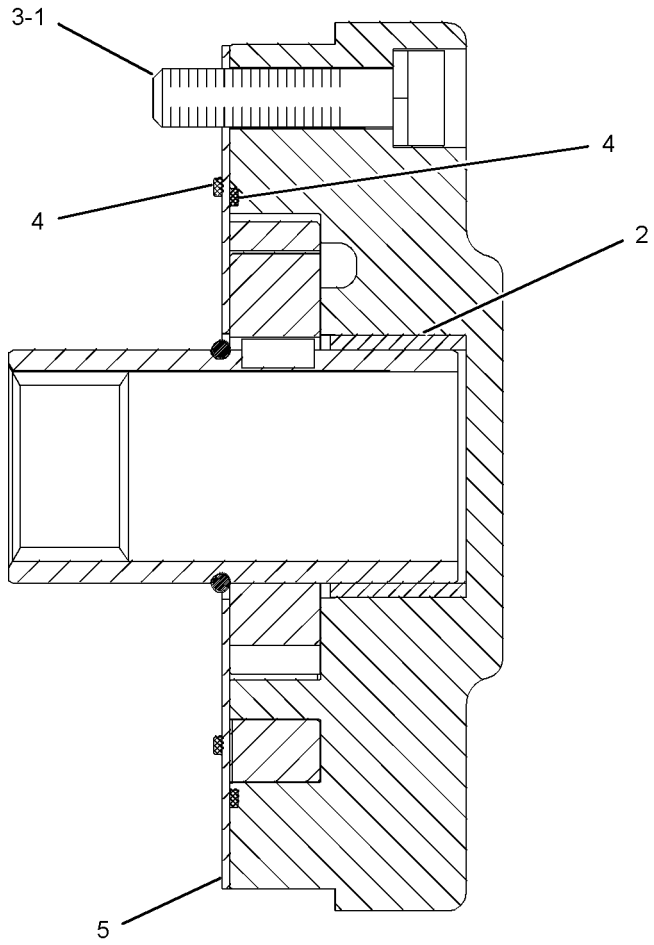

GRAPHIC #1 **<END>** g01011104

293-5438 PUMP GP-CHARGE—SLIPPER

S/N: MMM1-UP; RRR1-UP
PART OF 289-6385 PUMP GP-PISTON
AN ATTACHMENT

SMCS-3204 **i02730505**

NOTE	REF NO	GRAPHIC REF	PART NUMBER	QTY	PART NAME 1 2 3 4 5 6 (PRODUCT LEVEL)	SEE PAGE
	1	1	**123-7598**	4	SEAL-BONDED	
	2	1	**117-7278**	1	BUSHING (BEARING)	
	3	1	**179-0464**	2	SEAL-O-RING	
	4	1	**7R-8872**	1	SEAL-O-RING	
	5	1	**7J-6285**	1	SEAL-O-RING	
	6	1	**277-6624**	1	PLATE-WEAR	
	7	1	**246-5804**	2	PLUG (LOCATING)	

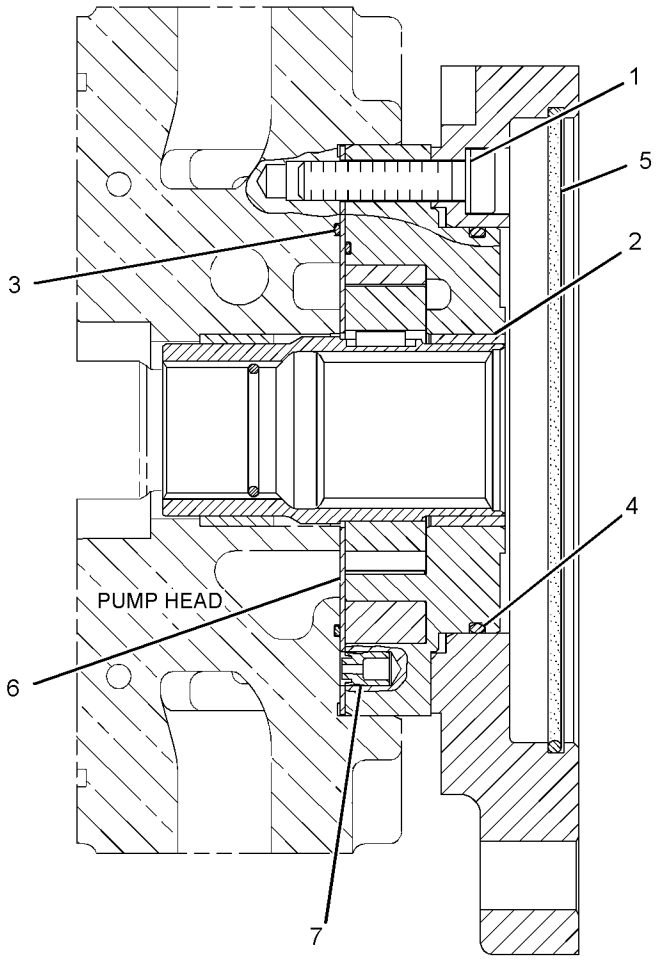

GRAPHIC #1 **<END>** g01378946

293-5439 PUMP GP-CHARGE–SLIPPER

S/N: MMM1-UP; RRR1-UP
PART OF 289-6386 PUMP GP-PISTON
AN ATTACHMENT

SMCS-3204 **i03777069**

NOTE	REF NO	GRAPHIC REF	PART NUMBER	QTY	PART NAME 1 2 3 4 5 6 (PRODUCT LEVEL)	SEE PAGE
	1	1	**123-7598**	4	SEAL-BONDED	
	2	1	**117-7278**	1	BUSHING (BEARING)	
	3	1	**179-0464**	2	SEAL-O-RING	
	4	1	**7R-8872**	1	SEAL-O-RING	
	5	1	**7J-6285**	1	SEAL-O-RING	
	6	1	**277-6624**	1	PLATE-WEAR	
	7	1	**246-5804**	2	PLUG	

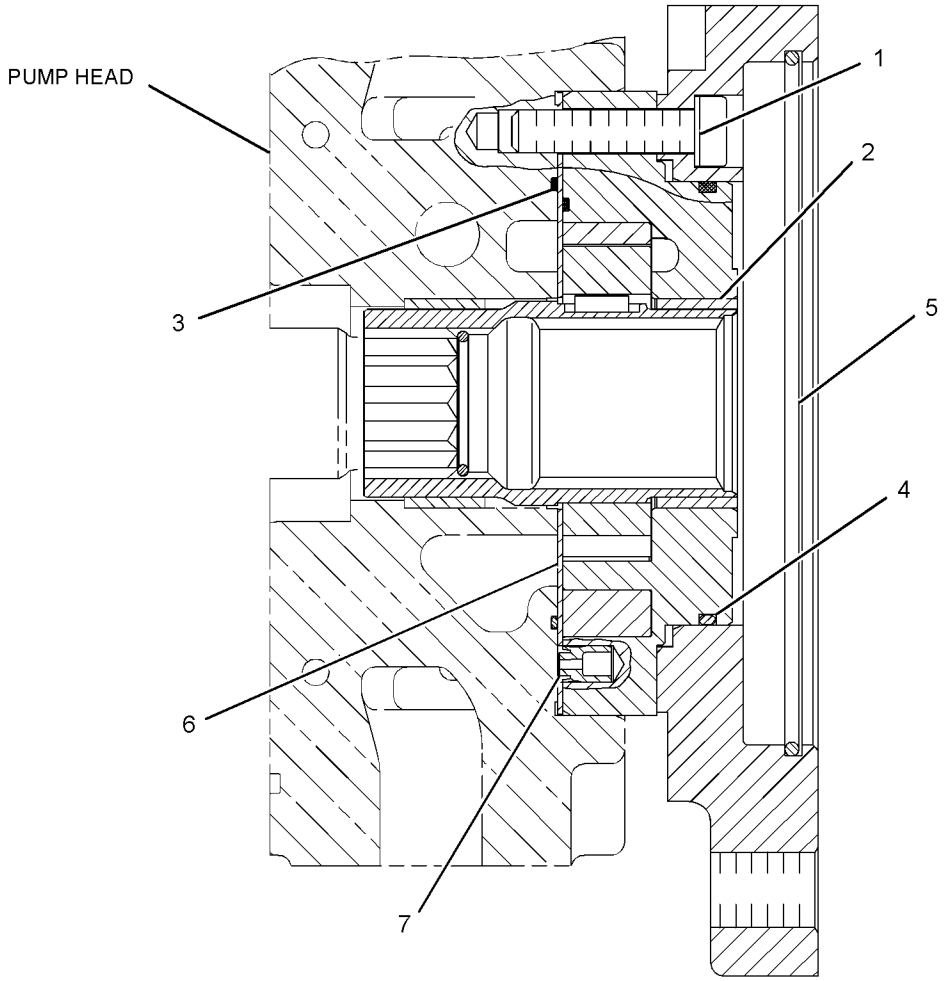

GRAPHIC #1 **<END>** g01374223

293-5440 PUMP GP-CHARGE–STEERING

S/N: MMM1-UP; RRR1-UP
PART OF 289-6387 PUMP GP-PISTON
AN ATTACHMENT

SMCS-3204 **i03415581**

NOTE	REF NO	GRAPHIC REF	PART NUMBER	QTY	PART NAME 1 2 3 4 5 6 (PRODUCT LEVEL)	SEE PAGE
M	1	1	**096-0001**	4	BOLT-SOCKET HEAD (M8X1.25X40-MM)	
	2	1	**123-7598**	4	SEAL-BONDED	
	3	1	**117-7278**	1	BUSHING (BEARING)	
	4	1	**179-0464**	2	SEAL-O-RING	
	5	1	**277-6624**	1	PLATE-WEAR	
	6	1	**246-5804**	2	PLUG	

M - METRIC PART

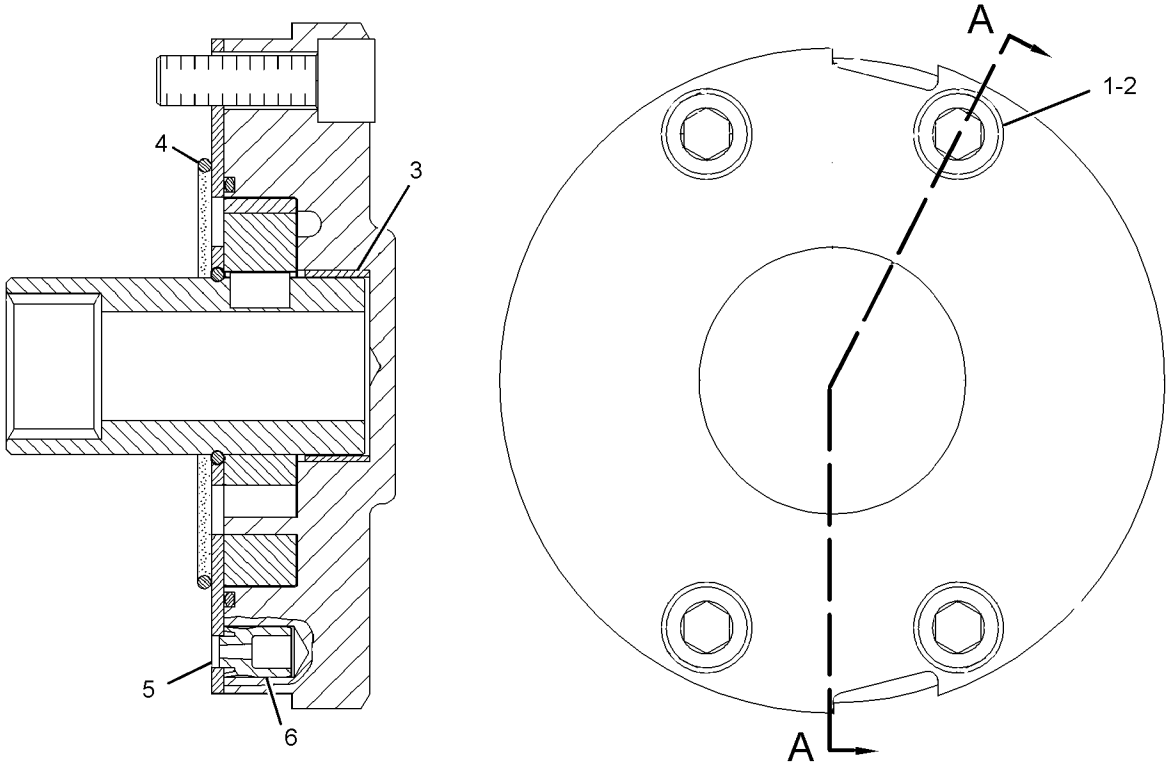

SECTION A-A

GRAPHIC #1 **<END>** g01377495

254-1377 PUMP GP-PISTON—HYDROSTATIC DRIVE

S/N: MMM1-UP; RRR1-UP

PART OF 244-7450, 291-5205 DRIVE AR, 325-6517 DRIVE AR-PUMP, 271-9180 DRIVE AR-WINCH AN ATTACHMENT

SMCS-3203, 5070

i02689710

NOTE	REF NO	GRAPHIC REF	PART NUMBER	QTY	PART NAME 1 2 3 4 5 6 (PRODUCT LEVEL)	SEE PAGE
Y	1	1	**289-6385**	1	PUMP GP-PISTON (SLIPPER)	375
Y	2	1	**289-6386**	1	PUMP GP-PISTON (SLIPPER)	376
M	3	1	**6V-8201**	2	BOLT-SOCKET HEAD (M16X2X45-MM)	
	4	1	**9X-8257**	2	WASHER (17.5X30X3.5-MM THK)	

M - METRIC PART
Y - SEPARATE ILLUSTRATION

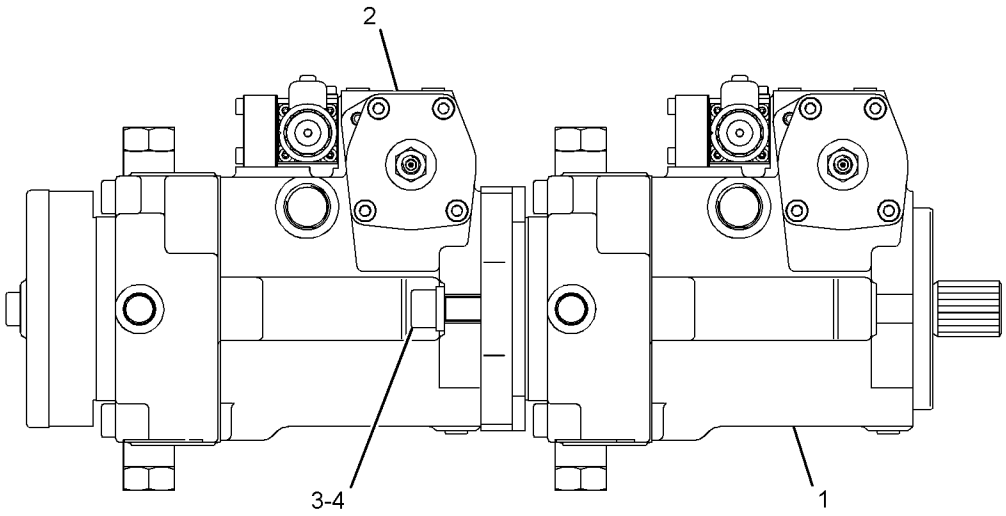

GRAPHIC #1

<END>

g01379608

254-1378 PUMP GP-PISTON—HYDROSTATIC

S/N: MMM1-UP; RRR1-UP
CANNOT BE USED WITH 256-3738—PAGE: 942, 264-4552—PAGE: 545, 244-7517—PAGE: 933
PART OF 291-5095 DRIVE AR
AN ATTACHMENT

SMCS-3203 **i02685900**

NOTE	REF NO	GRAPHIC REF	PART NUMBER	QTY	PART NAME 1 2 3 4 5 6 (PRODUCT LEVEL)	SEE PAGE
Y	1	1	**289-6385**	1	PUMP GP-PISTON (SLIPPER)	375
Y	2	1	**289-6387**	1	PUMP GP-PISTON (SLIPPER)	377
M	3	1	**6V-8201**	2	BOLT-SOCKET HEAD (M16X2X45-MM)	
	4	1	**9X-8257**	2	WASHER (17.5X30X3.5-MM THK)	

M - METRIC PART
Y - SEPARATE ILLUSTRATION

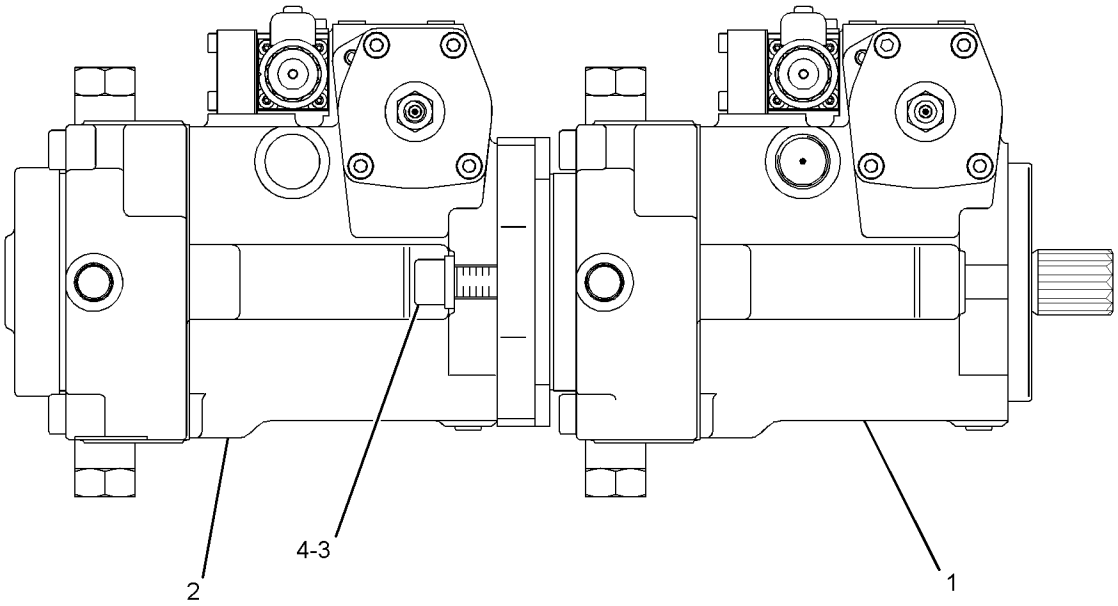

GRAPHIC #1 **<END>** g01373716

254-1379 PUMP GP-PISTON—WINCH*R

S/N: MMM1-UP; RRR1-UP
PART OF 325-6517 DRIVE AR-PUMP, 271-9180 DRIVE AR-WINCH
AN ATTACHMENT
TYPE 1

SMCS-3203 **i04415991**

NOTE	REF NO	GRAPHIC REF	PART NUMBER	QTY	PART NAME 1 2 3 4 5 6 (PRODUCT LEVEL)	SEE PAGE
Y	1	1	**293-5445**	1	ROTATING GP-PUMP (IMPLEMENT)	383
Y	2	1	**293-5450**	1	VALVE GP-SOLENOID (SERVO)	151
Y	3	1	**212-7032**	1	ACTUATOR GP-PUMP (SERVO)	319
Y	4	1	**177-7122**	1	VALVE GP-RELIEF (CHARGE PRESSURE)	420
Y	5	1	**212-7037**	1	PUMP GP-CHARGE (HYSTAT PROPEL)	365
	6	1	**9S-8002**	7	PLUG-O-RING	
	7	1	**3J-7354**	7	SEAL-O-RING	
	8	1	**9S-8004**	1	PLUG-O-RING	
	9	1	**3J-1907**	1	SEAL-O-RING	
	10	1	**2M-9780**	1	SEAL-O-RING	
	11	1	**9S-8006**	1	PLUG-O-RING	
	12	1	**167-6805**	2	PIN	
	13	1	**122-9718**	1	PIN	
	14	1	**9T-3928**	1	PLUG AS	
		1	**187-8001**	1	SEAL	
	16	1	**6E-4350**	1	PIN	
Y	17	1	**154-9445**	1	VALVE GP-RELIEF (HYDROSTATIC PUMP)	419
	18	1	**112-4629**	1	SCREW	
	19	1	**117-7236**	1	PLUG	
	20	1	**126-5676**	1	BUSHING	
	21	1	**126-5677**	1	BUSHING	
	22	1	**126-5678**	1	BUSHING	
M	23	1	**108-3819**	4	BOLT-SOCKET HEAD (M12X1.75X70-MM)	
	24	1	**112-4640**	2	PIN	
	25	1	**7J-6285**	1	SEAL-O-RING	
	26	1	**087-4772**	3	PLUG-O-RING	
	27	1	**161-6154**	2	SEAL-O-RING	
M	28	1	**1G-3176**	1	SCREW-LOCK	
	29	1	**106-0699**	1	PLUG (METRIC)	
	30	1	**6V-5326**	1	SEAL-O-RING	
	31	1	**9T-3726**	2	PLUG	
	32	1	**202-7704**	1	PLUG	
Y	33	1	**212-7035**	2	VALVE GP-RELIEF (CROSSOVER)	423

M - METRIC PART
Y - SEPARATE ILLUSTRATION

254-1379 **PUMP GP-PISTON (*contd.*)** **i04415991**

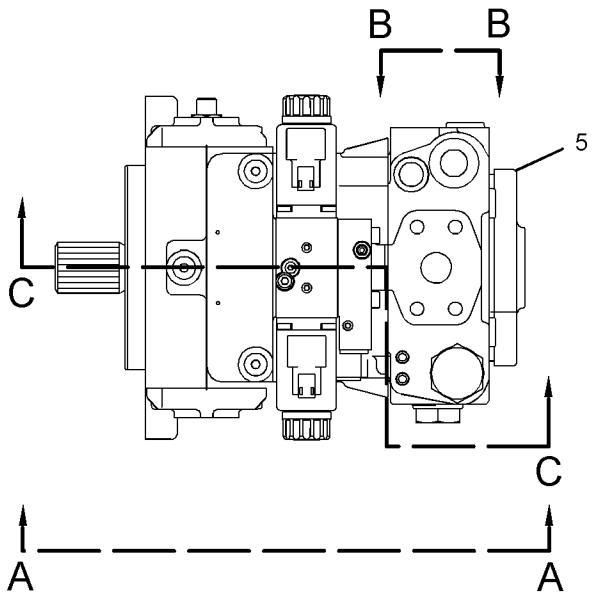

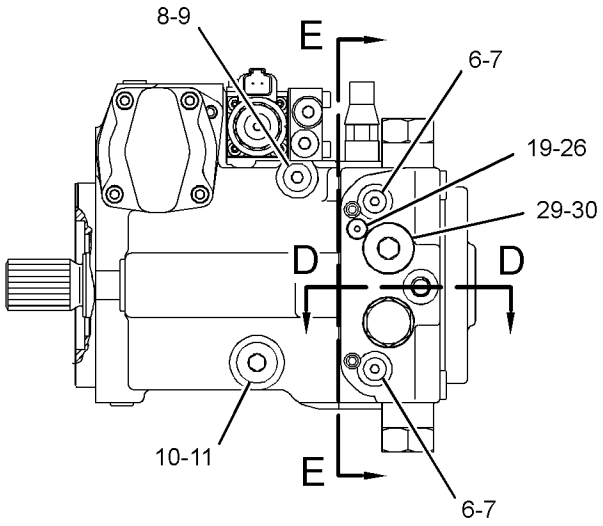

VIEW A-A

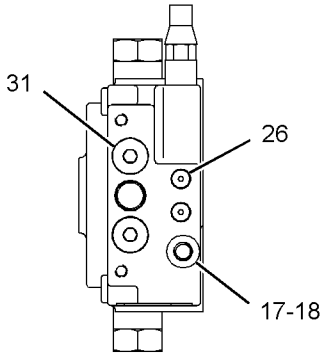

VIEW B-B

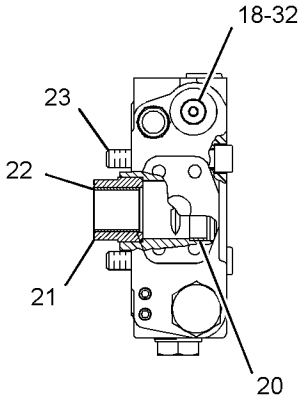

SECTION D-D

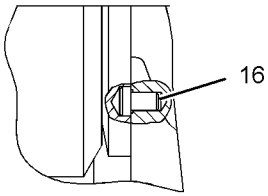

SECTION F-F

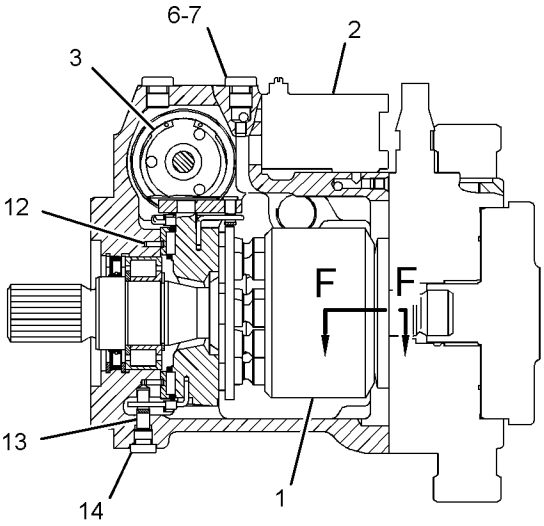

SECTION C-C

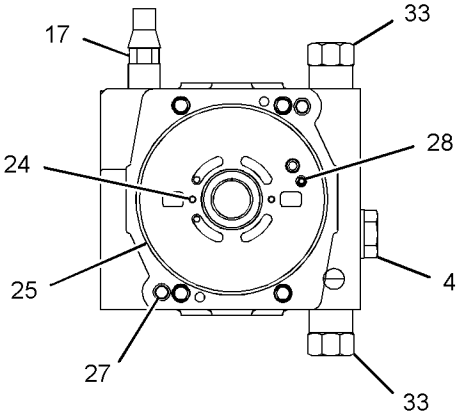

SECTION E-E

GRAPHIC #1 **<END>** g02615599

254-1379 PUMP GP-PISTON—WINCH*R

S/N: MMM1-UP; RRR1-UP
PART OF 325-6517 DRIVE AR-PUMP, 271-9180 DRIVE AR-WINCH
AN ATTACHMENT
TYPE 2

SMCS-3203 **i05208442**

NOTE	REF NO	GRAPHIC REF	PART NUMBER	QTY	PART NAME 1 2 3 4 5 6 (PRODUCT LEVEL)	SEE PAGE
Y	1	1	**293-5445**	1	ROTATING GP-PUMP (IMPLEMENT)	383
Y	2	1	**293-5450**	1	VALVE GP-SOLENOID (SERVO)	151
Y	3	1	**212-7032**	1	ACTUATOR GP-PUMP (SERVO)	319
CY	4	1	**212-6679**	1	VALVE GP-RELIEF (CHARGE PRESSURE)	422
Y	5	1	**212-7037**	1	PUMP GP-CHARGE (HYSTAT PROPEL)	365
	6	1	**9S-8002**	7	PLUG-O-RING	
	7	1	**3J-7354**	7	SEAL-O-RING	
	8	1	**9S-8004**	1	PLUG-O-RING	
	9	1	**3J-1907**	1	SEAL-O-RING	
	10	1	**2M-9780**	1	SEAL-O-RING	
	11	1	**9S-8006**	1	PLUG-O-RING	
	12	1	**167-6805**	2	PIN	
	13	1	**122-9718**	1	PIN	
	14	1	**9T-3928**	1	PLUG AS	
		1	**187-8001**	1	SEAL	
	16	1	**6E-4350**	1	PIN	
Y	17	1	**154-9445**	1	VALVE GP-RELIEF (HYDROSTATIC PUMP)	419
	18	1	**112-4629**	1	SCREW	
	19	1	**117-7236**	1	PLUG	
	20	1	**126-5676**	1	BUSHING	
	21	1	**126-5677**	1	BUSHING	
	22	1	**126-5678**	1	BUSHING	
M	23	1	**108-3819**	4	BOLT-SOCKET HEAD (M12X1.75X70-MM)	
	24	1	**112-4640**	2	PIN	
	25	1	**7J-6285**	1	SEAL-O-RING	
	26	1	**087-4772**	3	PLUG-O-RING	
	27	1	**161-6154**	2	SEAL-O-RING	
M	28	1	**1G-3176**	1	SCREW-LOCK	
	29	1	**106-0699**	1	PLUG	
	30	1	**6V-5326**	1	SEAL-O-RING	
	31	1	**9T-3726**	2	PLUG	
	32	1	**202-7704**	1	PLUG	
Y	33	1	**212-7035**	2	VALVE GP-RELIEF (CROSSOVER)	423

C - CHANGE FROM PREVIOUS TYPE
M - METRIC PART
Y - SEPARATE ILLUSTRATION

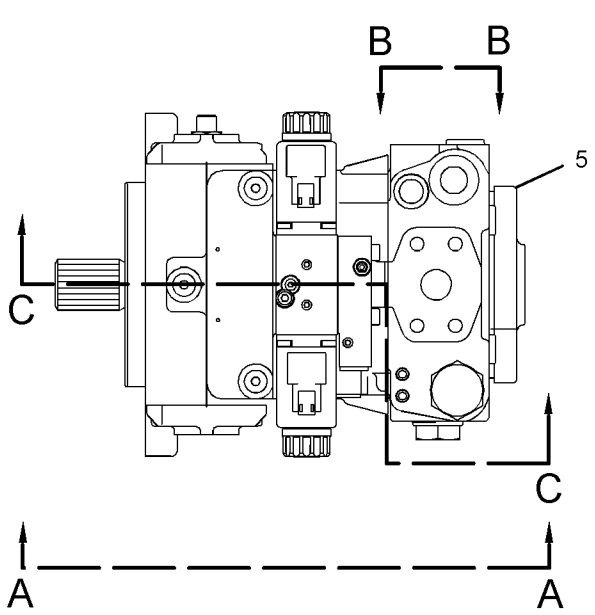

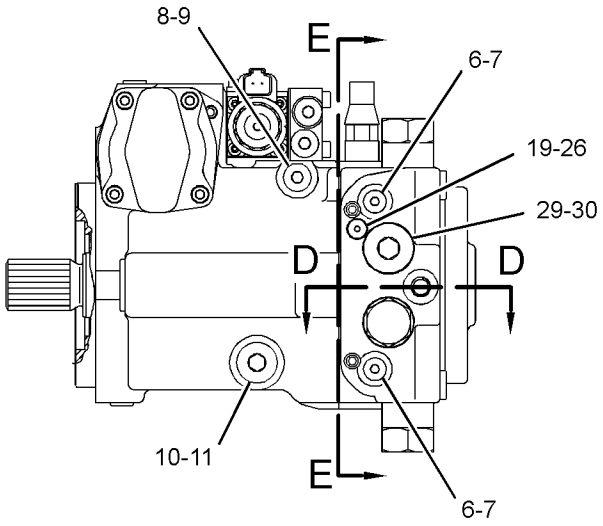

VIEW A-A

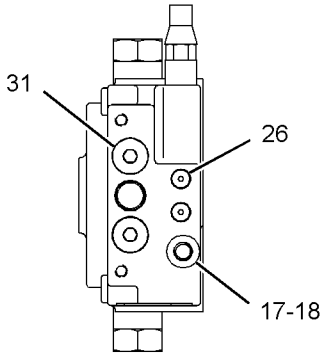

VIEW B-B

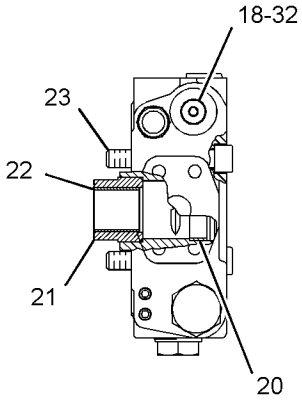

SECTION D-D

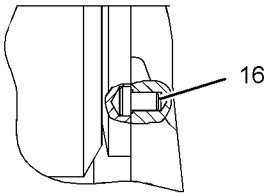

SECTION F-F

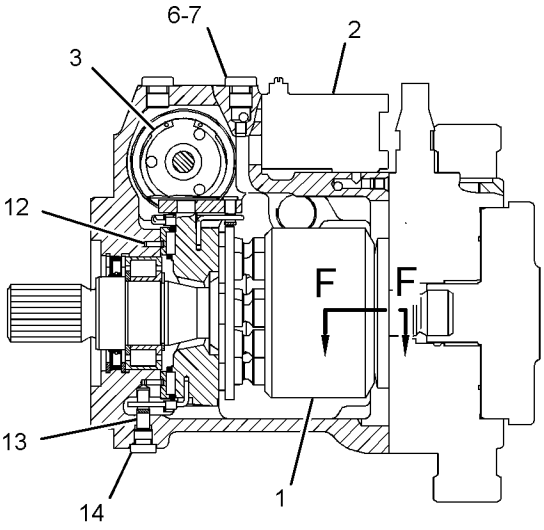

SECTION C-C

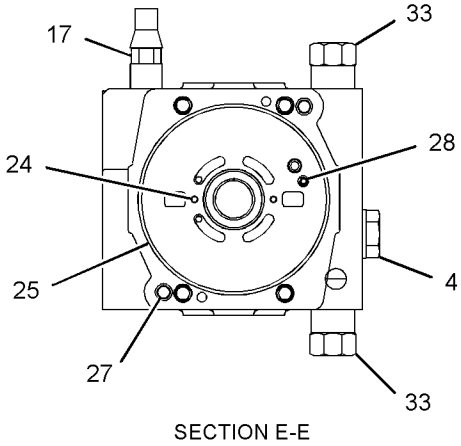

SECTION E-E

GRAPHIC #1 **<END>** g02509296

289-6385 PUMP GP-PISTON—SLIPPER

S/N: MMM1-UP; RRR1-UP
PART OF 254-1377, 254-1378 PUMP GP-PISTON
AN ATTACHMENT

SMCS-3203, 5070

i03415620

NOTE	REF NO	GRAPHIC REF	PART NUMBER	QTY	PART NAME 1 2 3 4 5 6 (PRODUCT LEVEL)	SEE PAGE
Y	1	1	**276-8206**	1	ROTATING GP-PUMP (PROPEL)	380
Y	2	1	**199-6225**	1	ACTUATOR GP-PUMP (SERVO)	318
Y	3	1	**293-5451**	1	VALVE GP-SOLENOID (SERVO)	424
Y	4	1	*296-6707*	1	HEAD GP-PUMP	327
	5	1	**9S-8002**	3	PLUG-O-RING (STRAIGHT THREAD O-RING)	
	6	1	**3J-7354**	3	SEAL-O-RING	
Y	7	1	**293-5438**	1	PUMP GP-CHARGE (BASIC)	366
	8	1	**167-6805**	2	PIN	
	9	1	**122-9718**	1	PIN	
	10	1	**9T-3928**	1	PLUG AS	
		1	**187-8001**	1	SEAL	
	11	1	**6E-4350**	1	PIN	

Y - SEPARATE ILLUSTRATION

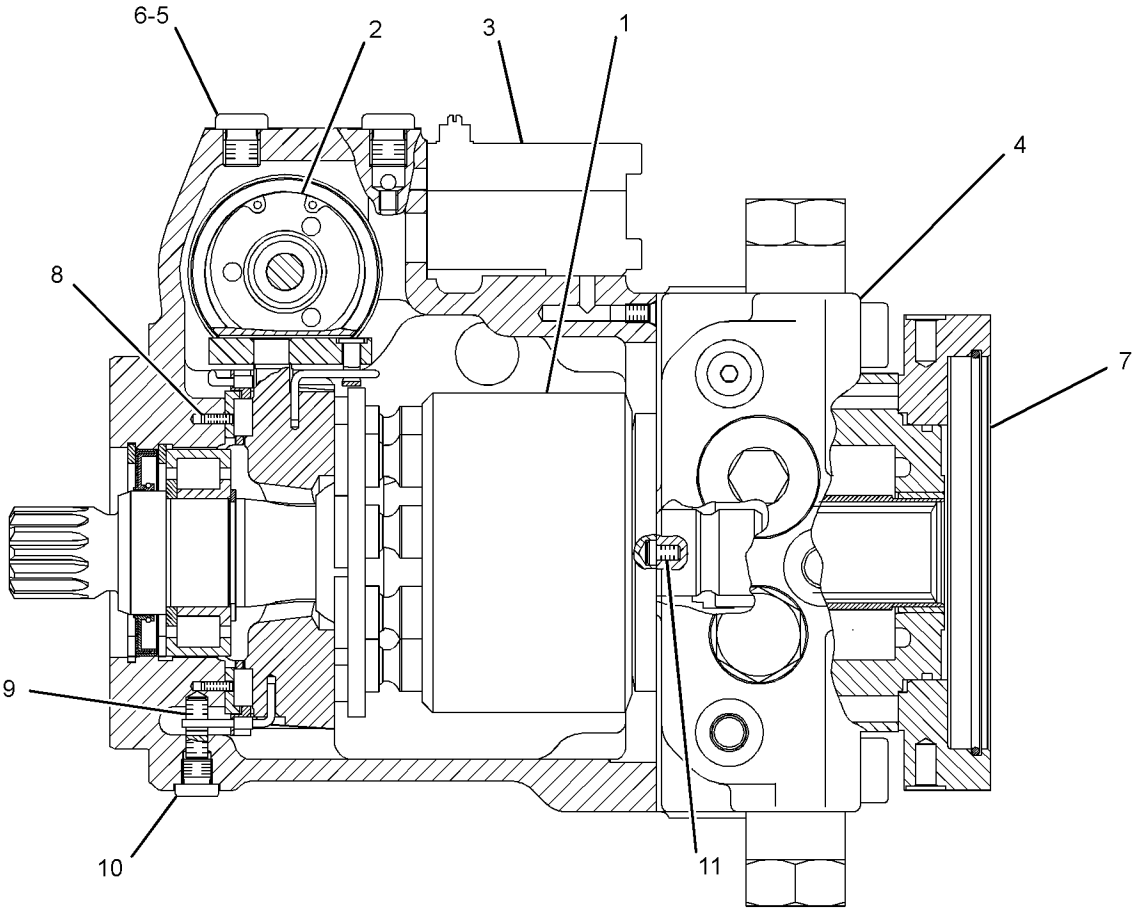

GRAPHIC #1

<END>

g01372143

289-6386 PUMP GP-PISTON–SLIPPER

S/N: MMM1-UP; RRR1-UP
PART OF 254-1377 PUMP GP-PISTON
AN ATTACHMENT

SMCS-3203, 5070 **i02730639**

NOTE	REF NO	GRAPHIC REF	PART NUMBER	QTY	PART NAME 1 2 3 4 5 6 (PRODUCT LEVEL)	SEE PAGE
Y	1	1	**293-5444**	1	ROTATING GP-PUMP	382
Y	2	1	**199-6225**	1	ACTUATOR GP-PUMP (SERVO)	318
Y	3	1	**293-5451**	1	VALVE GP-SOLENOID (SERVO)	424
Y	4	1	*296-6707*	1	HEAD GP-PUMP	327
	5	1	**9S-8002**	3	PLUG-O-RING	
	6	1	**3J-7354**	3	SEAL-O-RING	
Y	7	1	**293-5439**	1	PUMP GP-CHARGE	367
	8	1	**167-6805**	2	PIN	
	9	1	**122-9718**	1	PIN	
	10	1	**9T-3928**	1	PLUG AS	
		1	**187-8001**	1	SEAL	
	11	1	**6E-4350**	1	PIN	

Y - SEPARATE ILLUSTRATION

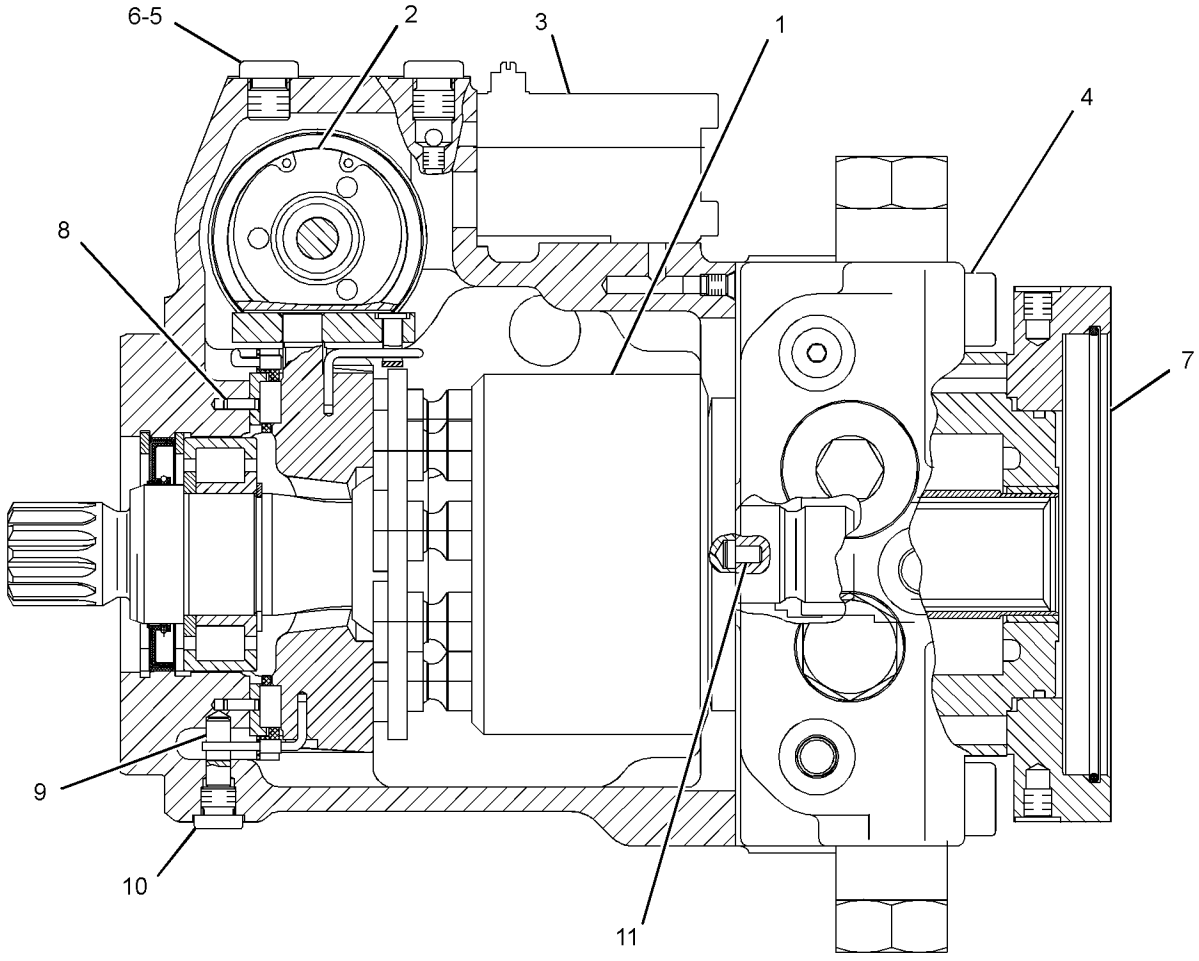

GRAPHIC #1 **<END>** g01378764

289-6387 PUMP GP-PISTON—SLIPPER

S/N: MMM1-UP; RRR1-UP
PART OF 254-1378 PUMP GP-PISTON
AN ATTACHMENT

SMCS-3203 **i02730471**

NOTE	REF NO	GRAPHIC REF	PART NUMBER	QTY	PART NAME 1 2 3 4 5 6 (PRODUCT LEVEL)	SEE PAGE
Y	1	1	**293-5444**	1	ROTATING GP-PUMP	382
Y	2	1	**199-6225**	1	ACTUATOR GP-PUMP (SERVO)	318
Y	3	1	**293-5451**	1	VALVE GP-SOLENOID (SERVO)	424
Y	4	1	*296-6707*	1	HEAD GP-PUMP	327
	5	1	**9S-8002**	3	PLUG-O-RING (STRAIGHT THREAD O-RING)	
	6	1	**3J-7354**	3	SEAL-O-RING	
Y	7	1	**293-5440**	1	PUMP GP-CHARGE	368
	8	1	**167-6805**	2	PIN	
	9	1	**122-9718**	1	PIN	
	10	1	**9T-3928**	1	PLUG AS	
		1	**187-8001**	1	SEAL	
	11	1	**6E-4350**	1	PIN	

Y - SEPARATE ILLUSTRATION

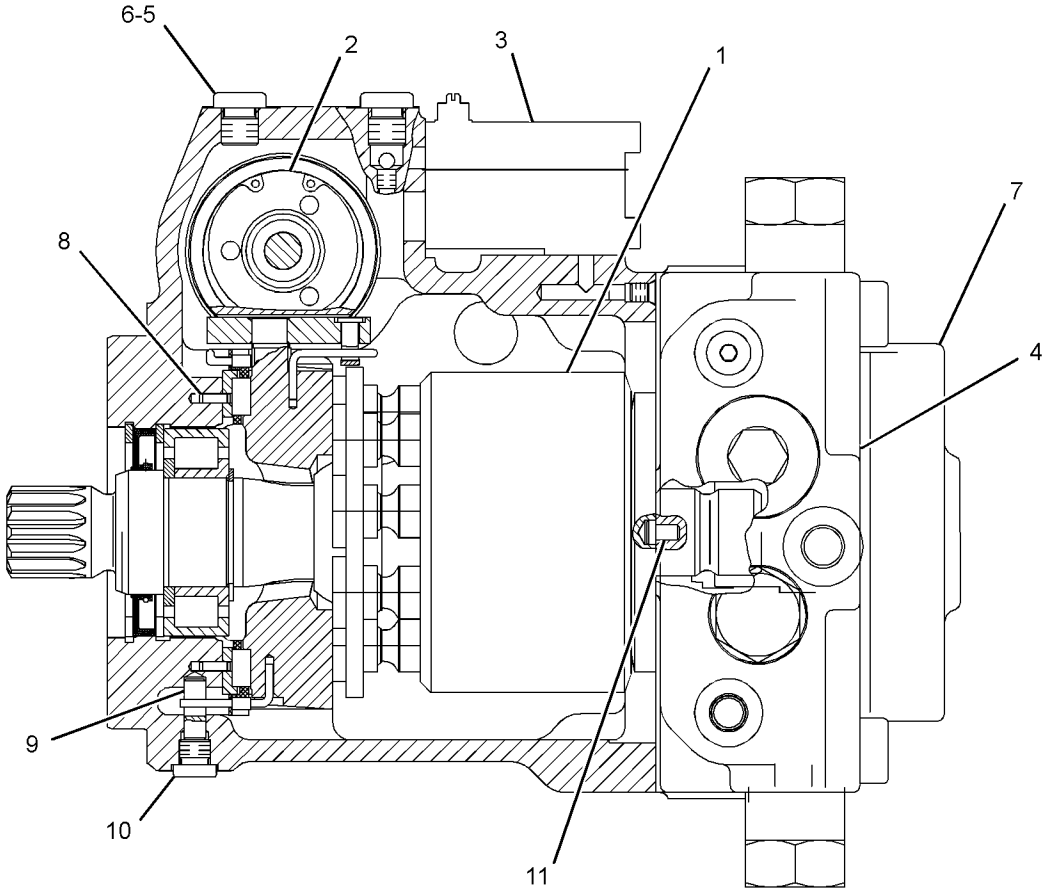

GRAPHIC #1 **<END>** g01378676

199-1088 ROTATING GP-MOTOR–HYSTAT PROPEL

S/N: MMM1-UP; RRR1-UP

PART OF 254-1354 MOTOR GP-PISTON

SMCS-5058 **i03415586**

NOTE	REF NO	GRAPHIC REF	PART NUMBER	QTY	PART NAME 1 2 3 4 5 6 (PRODUCT LEVEL)	SEE PAGE
M	1	1	**113-4419**	14	SCREW-SPECIAL (M5X0.8X8-MM)	
	2	1	**216-8716**	1	SHAFT GP-MOTOR	
B	3	1	**124-9932**	1	SHIM (3.5-MM THK)	
B	4	1	**124-9933**	1	SHIM (3.6-MM THK)	
B	5	1	**124-9934**	1	SHIM (3.7-MM THK)	
B	6	1	**124-9935**	1	SHIM (3.8-MM THK)	
B	7	1	**124-9936**	1	SHIM (3.9-MM THK)	
B	8	1	**124-9937**	1	SHIM (4-MM THK)	
					PARTS SHOWN IN GRAPHIC(S) WITHOUT A REFERENCE NUMBER ARE NOT SERVICED SEPARATELY	

B - USE AS REQUIRED
M - METRIC PART

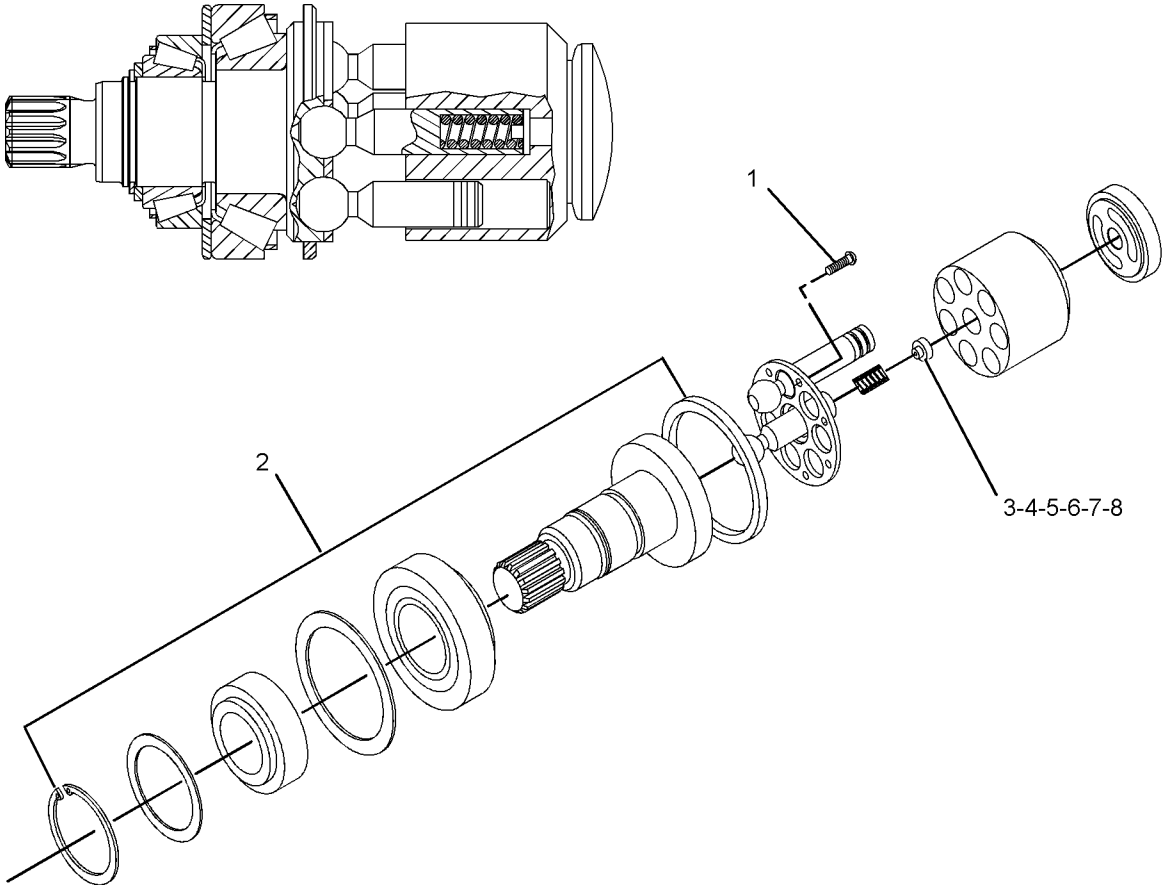

GRAPHIC #1 **<END>** g01010939

280-7343 ROTATING GP-MOTOR–IMPLEMENT

S/N: MMM1-UP; RRR1-UP
PART OF 293-5445 ROTATING GP-PUMP
AN ATTACHMENT

SMCS-5058 **i02680383**

NOTE	REF NO	GRAPHIC REF	PART NUMBER	QTY	PART NAME 1 2 3 4 5 6 (PRODUCT LEVEL)	SEE PAGE
	1	1	**126-5632**	9	PISTON	
	2	1	**126-5638**	1	PLATE-RETAINER	
	3	1	**126-5639**	1	RETAINER	
	4	1	**127-4195**	1	SHIM (1.2-MM THK)	
	5	1	**127-4196**	1	SHIM (1-MM THK)	
	6	1	**127-4197**	1	SHIM (0.8-MM THK)	
	7	1	**127-4198**	1	SHIM (0.6-MM THK)	
	8	1	**126-5633**	1	SPRING-CUP	
	9	1	**126-5641**	2	SHIM (3-MM THK)	
	10	1	**126-5642**	1	SPRING	
	11	1	**8T-9597**	1	RING-RETAINING	
					PARTS SHOWN IN GRAPHIC(S) WITHOUT A REFERENCE NUMBER ARE NOT SERVICED SEPARATELY	

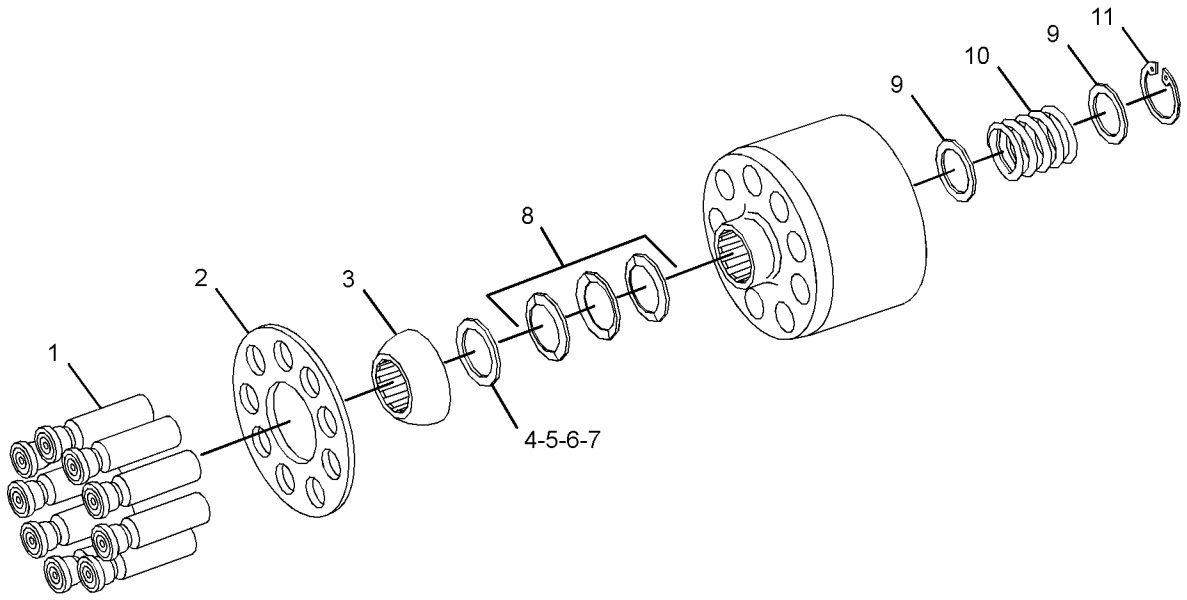

GRAPHIC #1 **<END>** g01348406

276-8206 ROTATING GP-PUMP–PROPEL

S/N: MMM1-UP; RRR1-UP
PART OF 289-6385 PUMP GP-PISTON
AN ATTACHMENT

SMCS-5070 **i04951796**

NOTE	REF NO	GRAPHIC REF	PART NUMBER	QTY	PART NAME 1 2 3 4 5 6 (PRODUCT LEVEL)	SEE PAGE
	1	1	**212-4483**	2	RING-RETAINING	
	2	1	**194-1983**	1	SEAL-SHAFT	
	3	1	**117-7251**	1	BEARING	
	4	1	**108-3565**	1	CLIP	
	5	1	**251-1803**	1	PLATE-CONTROL	
	6	1	**251-1752**	1	KIT-PUMP ROTATING GROUP	
					(INCLUDES RING-SNAP, SHIMS, SPRING, SPRING SET, RETAINER, PLATE-RETAINER, PISTON & CYLINDER)	
					PARTS SHOWN IN GRAPHIC(S) WITHOUT A REFERENCE NUMBER ARE NOT SERVICED SEPARATELY	

276-8206 **ROTATING GP-PUMP (*contd.*)** **i04951796**

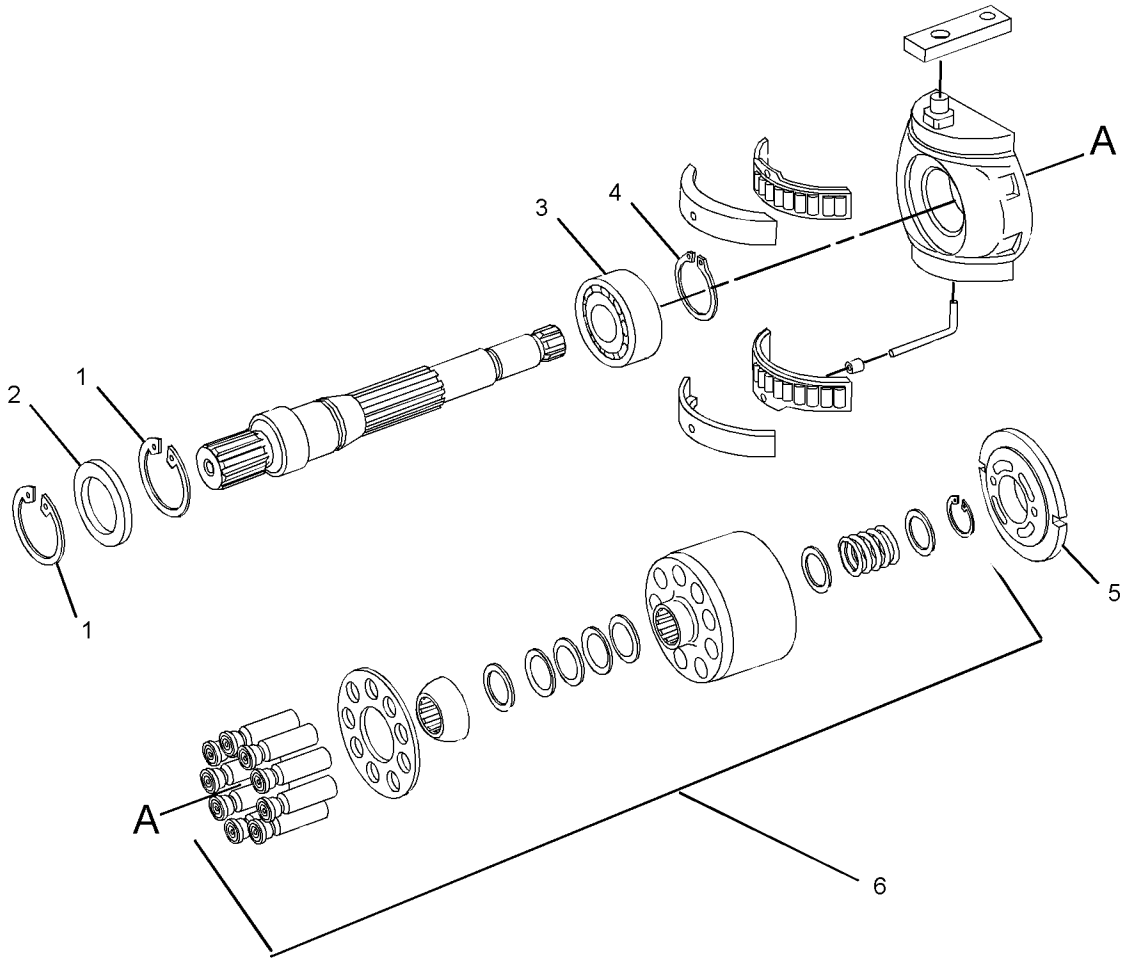

GRAPHIC #1 **<END>** g01195874

293-5444 ROTATING GP-PUMP

S/N: MMM1-UP; RRR1-UP
PART OF 289-6386, 289-6387 PUMP GP-PISTON
AN ATTACHMENT

SMCS-5070 **i03779009**

NOTE	REF NO	GRAPHIC REF	PART NUMBER	QTY	PART NAME 1 2 3 4 5 6 (PRODUCT LEVEL)	SEE PAGE
	1	1	**251-1752**	1	KIT-PUMP ROTATING GROUP	
					(INCLUDES PISTONS, PLATE RETAINING, RETAINER, SHIMS, SPRING CUP, CYLINDER, SPRING & SNAP RINGS)	
	2	1	**251-1803**	1	PLATE-CONTROL (RH)	
	3	1	**117-7242**	1	SHAFT-DRIVE	
	4	1	**1G-3410**	1	WIRE (ROD)	
	5	1	**122-9068**	1	WIRE	
	6	1	**125-9134**	1	BEARING AS	
	7	1	**117-7252**	1	CAGE (ROLLER-SET)	
	8	1	**117-7251**	1	BEARING (RACE-SET)	
	9	1	**108-3565**	1	CLIP (CIRCLE)	
	10	1	**212-4483**	1	RING-RETAINING	
	11	1	**194-1983**	1	SEAL-SHAFT	

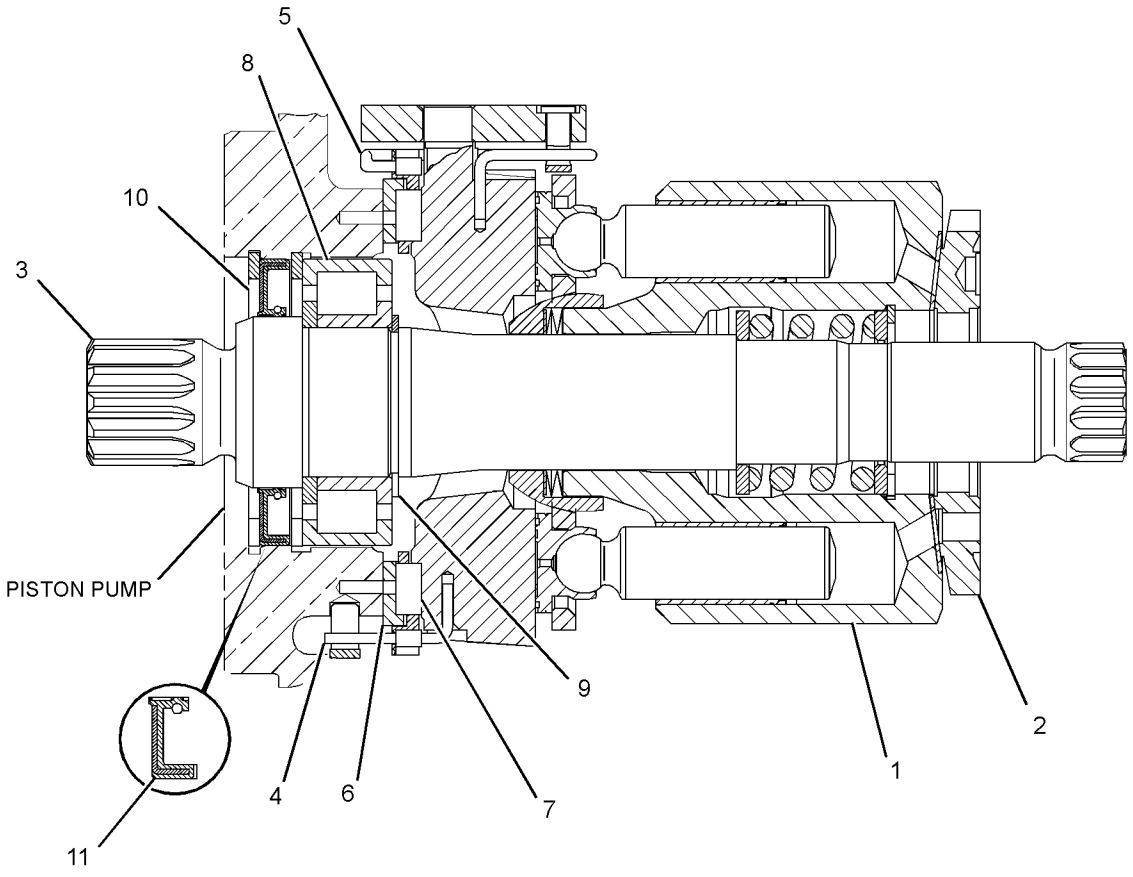

GRAPHIC #1 **<END>** g01374580

293-5445 ROTATING GP-PUMP–IMPLEMENT

S/N: MMM1-UP; RRR1-UP
PART OF 254-1379 PUMP GP-PISTON
AN ATTACHMENT

SMCS-5070 **i04419318**

NOTE	REF NO	GRAPHIC REF	PART NUMBER	QTY	PART NAME 1 2 3 4 5 6 (PRODUCT LEVEL)	SEE PAGE
Y	1	1	**280-7343**	1	ROTATING GP-MOTOR (IMPLEMENT)	379
	2	1	**212-7044**	1	SHAFT-DRIVE	
	3	1	**1G-3410**	1	WIRE (ROD)	
	4	1	**126-5637**	1	WIRE (ROD)	
	5	1	**126-5640**	1	BEARING-ROLLER	
	6	1	**126-5643**	1	CAGE	
	7	1	**081-3698**	1	BEARING	
	8	1	**108-3565**	1	CLIP	
	9	1	**140-1739**	2	RING-RETAINING	
	10	1	**233-9744**	1	SEAL-LIP TYPE	

Y - SEPARATE ILLUSTRATION

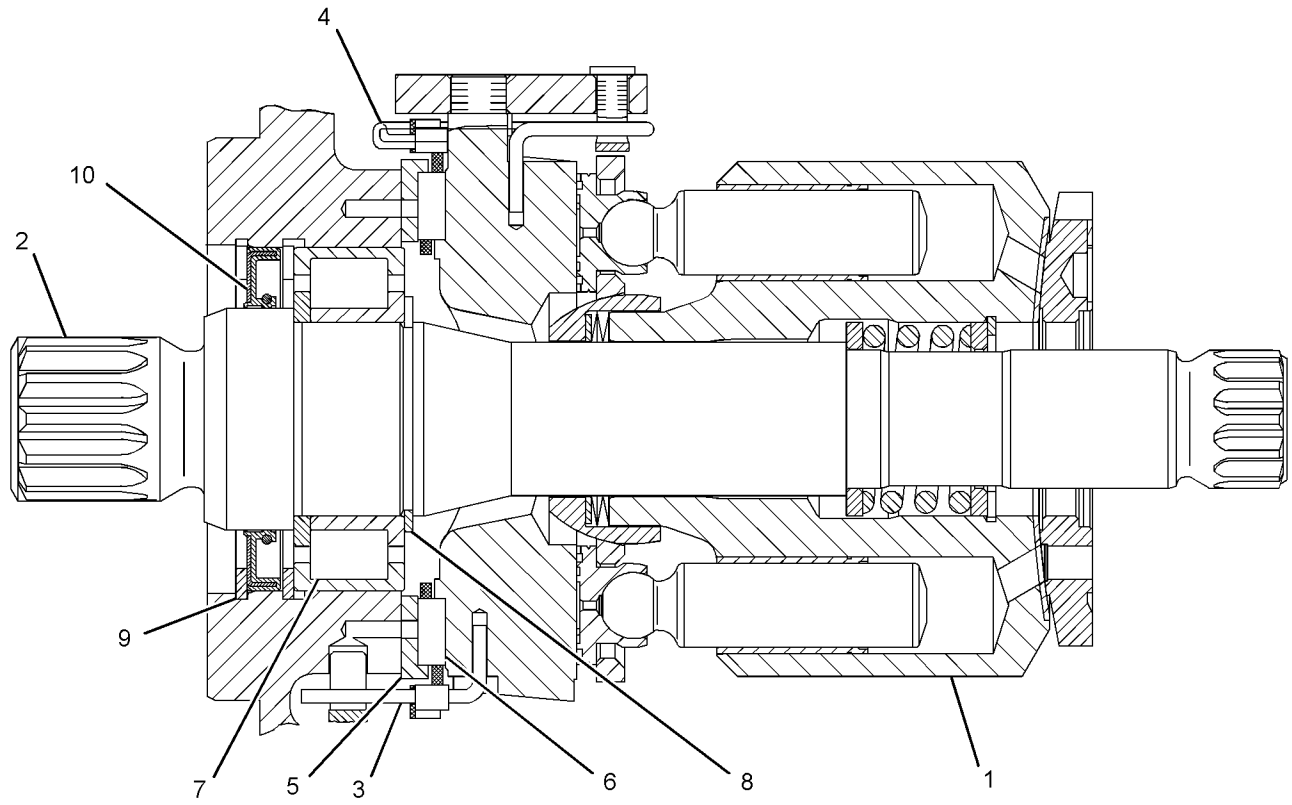

GRAPHIC #1 **<END>** g01358095

278-2357 SEGMENT GP-SPROCKET

S/N: MMM1-UP; RRR1-UP
PART OF 244-7449 UNDERCARRIAGE AR
AN ATTACHMENT

SMCS-4155 **i03682675**

NOTE	REF NO	GRAPHIC REF	PART NUMBER	QTY	PART NAME 1 2 3 4 5 6 (PRODUCT LEVEL)	SEE PAGE
	1	1	**8H-5724**	31	NUT (1/2-20-THD)	
	2	1	**278-2355**	1	SEGMENT	
	3	1	**278-2356**	5	SEGMENT	
	4	1	**5P-8246**	31	WASHER-HARD (15.5X29X3-MM THK)	
	5	1	**9W-9265**	31	BOLT (1/2-20-NF)	

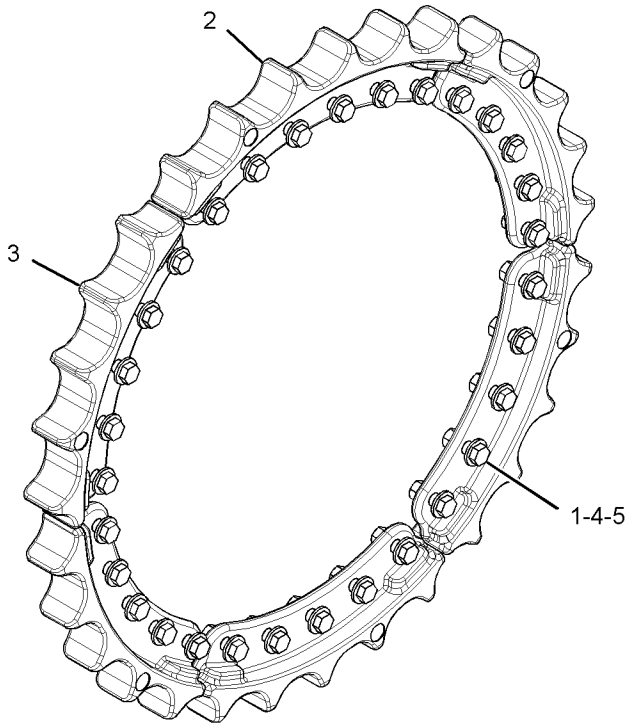

GRAPHIC #1 **<END>** g01342584

258-9789 SPROCKET GP

S/N: MMM1-UP; RRR1-UP
PART OF 244-7394 UNDERCARRIAGE AR
AN ATTACHMENT

SMCS-4164 **i03682674**

NOTE	REF NO	GRAPHIC REF	PART NUMBER	QTY	PART NAME 1 2 3 4 5 6 (PRODUCT LEVEL)	SEE PAGE
	1	1	**8H-5724**	31	NUT (1/2-20-THD)	
	2	1	**258-9787**	1	SPROCKET-TRACK	
	3	1	**5P-8246**	31	WASHER-HARD (15.5X29X3-MM THK)	
	4	1	**9W-9265**	31	BOLT (1/2-20-NF)	

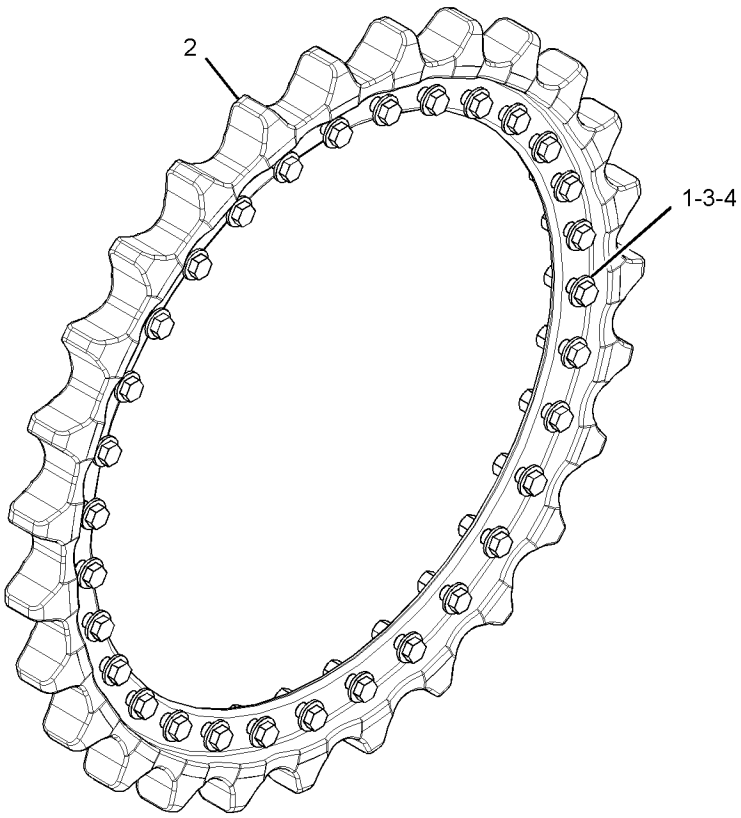

GRAPHIC #1 **<END>** g01342916

293-5448 VALVE GP-FLUSHING—HYDROSTATIC DRIVE

S/N: MMM1-UP; RRR1-UP

PART OF 254-1354 MOTOR GP-PISTON

SMCS-5066 **i03415580**

NOTE	REF NO	GRAPHIC REF	PART NUMBER	QTY	PART NAME 1 2 3 4 5 6 (PRODUCT LEVEL)	SEE PAGE
	1	1	**3J-1907**	2	SEAL-O-RING	
	2	1	**6V-8351**	1	SEAL-O-RING	
	3	1	**9S-8004**	2	PLUG-O-RING	
	4	1	**107-3117**	2	SEAL-O-RING	
B	5	1	**124-9904**	1	SHIM (1-MM THK)	
B	6	1	**124-9905**	1	SHIM (0.3-MM THK)	
B	7	1	**124-9906**	1	SHIM (0.5-MM THK)	
	8	1	**124-9908**	1	ORIFICE	
M	9	1	**129-3181**	4	BOLT-SOCKET HEAD (M10X1.5X55-MM)	
	10	1	**170-5715**	1	SEAL-O-RING	

B - USE AS REQUIRED
M - METRIC PART

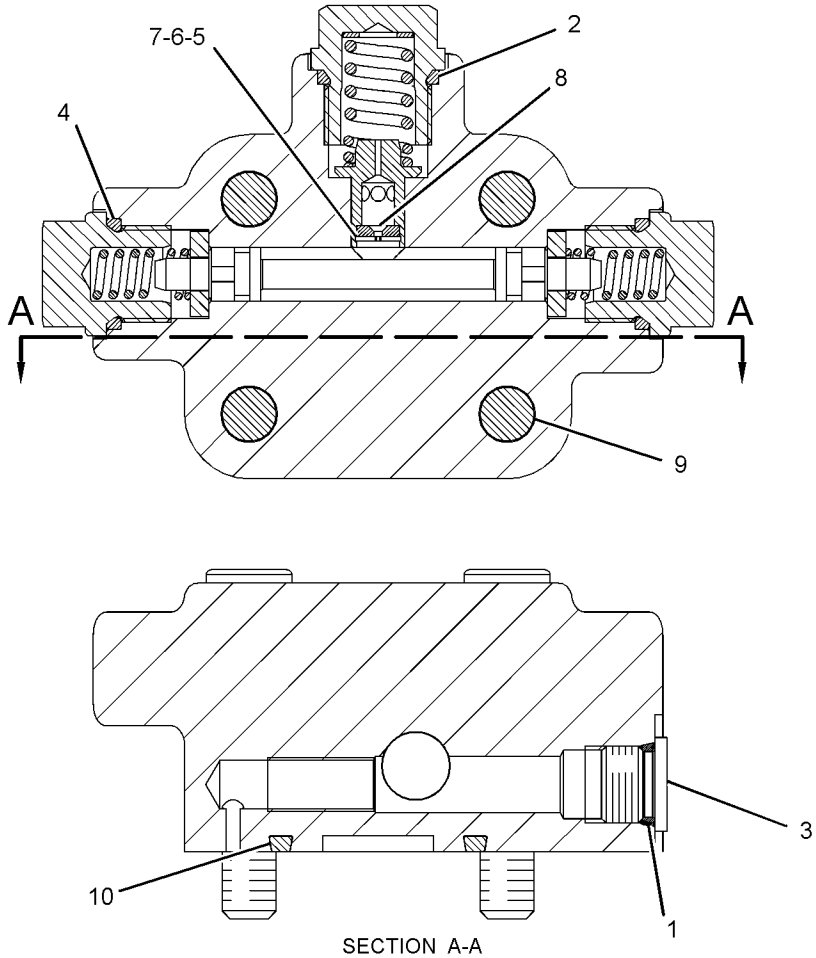

SECTION A-A

GRAPHIC #1 **<END>** g01340186

293-5442 VALVE GP-PILOT—HYDROSTATIC DRIVE

S/N: MMM1-UP; RRR1-UP

PART OF 254-1354 MOTOR GP-PISTON

SMCS-5059 **i02719456**

NOTE	REF NO	GRAPHIC REF	PART NUMBER	QTY	PART NAME 1 2 3 4 5 6 (PRODUCT LEVEL)	SEE PAGE
M	1	1	**8T-0338**	4	BOLT-SOCKET HEAD (M8X1.25X45-MM)	
	2	1	**9S-8004**	1	PLUG-O-RING (STRAIGHT THREAD O-RING)	
	3	1	**3J-1907**	1	SEAL-O-RING	
	4	1	**6V-1250**	1	SEAL-O-RING	
M	5	1	**9T-3853**	1	LOCKNUT (M6X1-THD)	
	6	1	**123-9769**	2	PLUG	
	7	1	**269-4669**	1	SOLENOID AS (PILOT VALVE)	
		1	**217-3875**	1	SEAL-O-RING	
	8	1	**9T-4367**	1	CAP AS	

M - METRIC PART

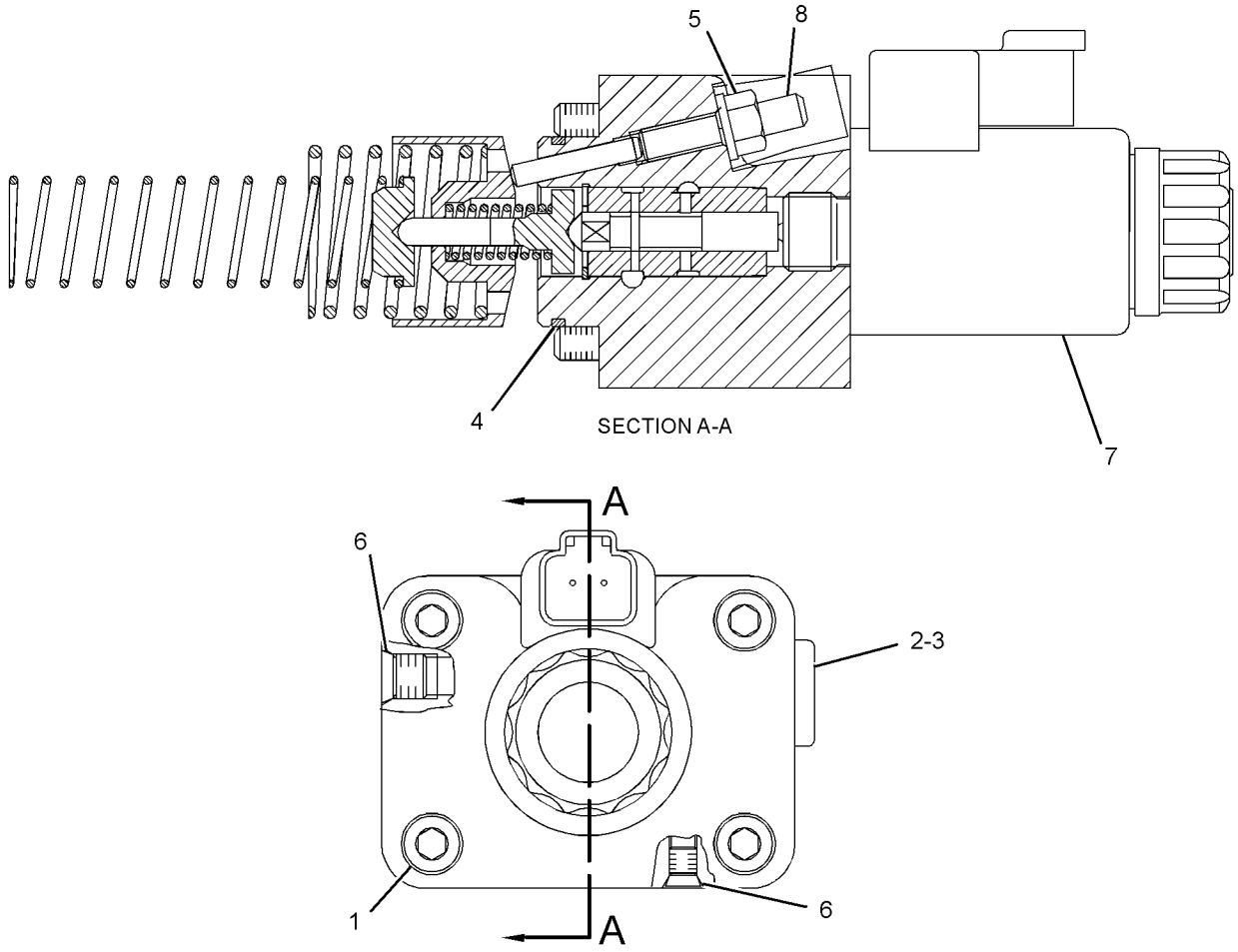

GRAPHIC #1 **<END>** g01358079

244-7442 VALVE GP-PUMP CONTROL

S/N: RRR1-402

PART OF 244-7446 POWER TRAIN AR

TYPE 1

SMCS-5455 **i02683145**

NOTE	REF NO	GRAPHIC REF	PART NUMBER	QTY	PART NAME 1 2 3 4 5 6 (PRODUCT LEVEL)	SEE PAGE
I	1	1	**8Y-7520**	1	HOSE AS	
I	2	1	**135-7193**	1	HOSE AS	
	3	1	*164-9640*	2	CONNECTOR AS	
					(EACH INCLUDES)	
		1	**3J-1907**	1	SEAL-O-RING	
		1	**4J-5477**	1	SEAL-O-RING	
		1	**145-2237**	1	CONNECTOR	
I	4	1	**165-4632**	1	HOSE AS	
I	5	1	**185-3166**	1	HOSE AS	
	6	1	**272-3535**	1	TUBE AS	
Y	7	1	**274-6747**	1	MANIFOLD GP-CONTROL	360
I	8	1	**285-3772**	1	HOSE AS	
	9	1	**295-9265**	1	TEE AS	
		1	**6V-8397**	2	SEAL-O-RING	
		1	**6V-9843**	1	TEE	
I	10	1	**305-5017**	1	HOSE AS	
	11	1	**092-3635**	1	CONNECTOR	
	12	1	*148-8336*	1	CONNECTOR AS	
		1	**3J-1907**	1	SEAL-O-RING	
		1	**6V-8397**	1	SEAL-O-RING	
		1	**6V-8636**	1	CONNECTOR	
	13	1	*148-8368*	2	ELBOW AS	
					(EACH INCLUDES)	
		1	**3J-1907**	1	SEAL-O-RING	
		1	**4J-5477**	1	SEAL-O-RING	
		1	**6V-8627**	1	ELBOW	
	14	1	*148-8378*	1	ELBOW AS	
		1	**3J-1907**	1	SEAL-O-RING	
		1	**6V-8397**	1	SEAL-O-RING	
		1	**6V-8724**	1	ELBOW	
	15	1	*148-8424*	1	TEE AS	
		1	**6V-8397**	1	SEAL-O-RING	
		1	**8T-8902**	1	TEE	
	16	1	*148-8433*	1	TEE AS	
		1	**6V-8397**	2	SEAL-O-RING	
		1	**6V-9836**	1	TEE-SWIVEL	
	17	1	*148-8443*	1	TEE AS	
		1	**3J-1907**	1	SEAL-O-RING	
		1	**6V-8397**	1	SEAL-O-RING	
		1	**7X-2459**	1	TEE-O-RING	
	18	1	*150-4043*	1	CONNECTOR AS	
		1	**3J-1907**	1	SEAL-O-RING	
		1	**6V-8398**	1	SEAL-O-RING	
		1	**6V-9873**	1	CONNECTOR	
	19	1	*155-7327*	2	CONNECTOR AS	
					(EACH INCLUDES)	
		1	**3J-1907**	1	SEAL-O-RING	
		1	**5H-8853**	1	SEAL-O-RING	
		1	**6V-8636**	1	CONNECTOR	
	20	1	**2H-0435**	2	CLAMP	
	21	1	**3K-0360**	1	SEAL-O-RING	
	22	1	**5P-7462**	1	CLIP (SLOT)	
	23	1	**5P-7463**	1	CLIP (TAB)	
	24	1	**6V-0683**	1	GROMMET	
	25	1	**6V-8397**	2	SEAL-O-RING	
M	26	1	**7X-2543**	3	BOLT (M10X1.5X120-MM)	
	27	1	**8T-4121**	2	WASHER-HARD (11X21X2.5-MM THK)	

244-7442 **VALVE GP-PUMP CONTROL (*contd.*)** **i02683145**

NOTE	REF NO	GRAPHIC REF	PART NUMBER	QTY	PART NAME 1 2 3 4 5 6 (PRODUCT LEVEL)	SEE PAGE
M	28	1	**8T-4195**	2	BOLT (M10X1.5X30-MM)	
	29	1	**8T-7934**	3	WASHER-HARD (11X21X5-MM THK)	

I - REFER TO HYDRAULIC INFORMATION SYSTEM
M - METRIC PART
Y - SEPARATE ILLUSTRATION

244-7442 **VALVE GP-PUMP CONTROL (*contd.*)** **i02683145**

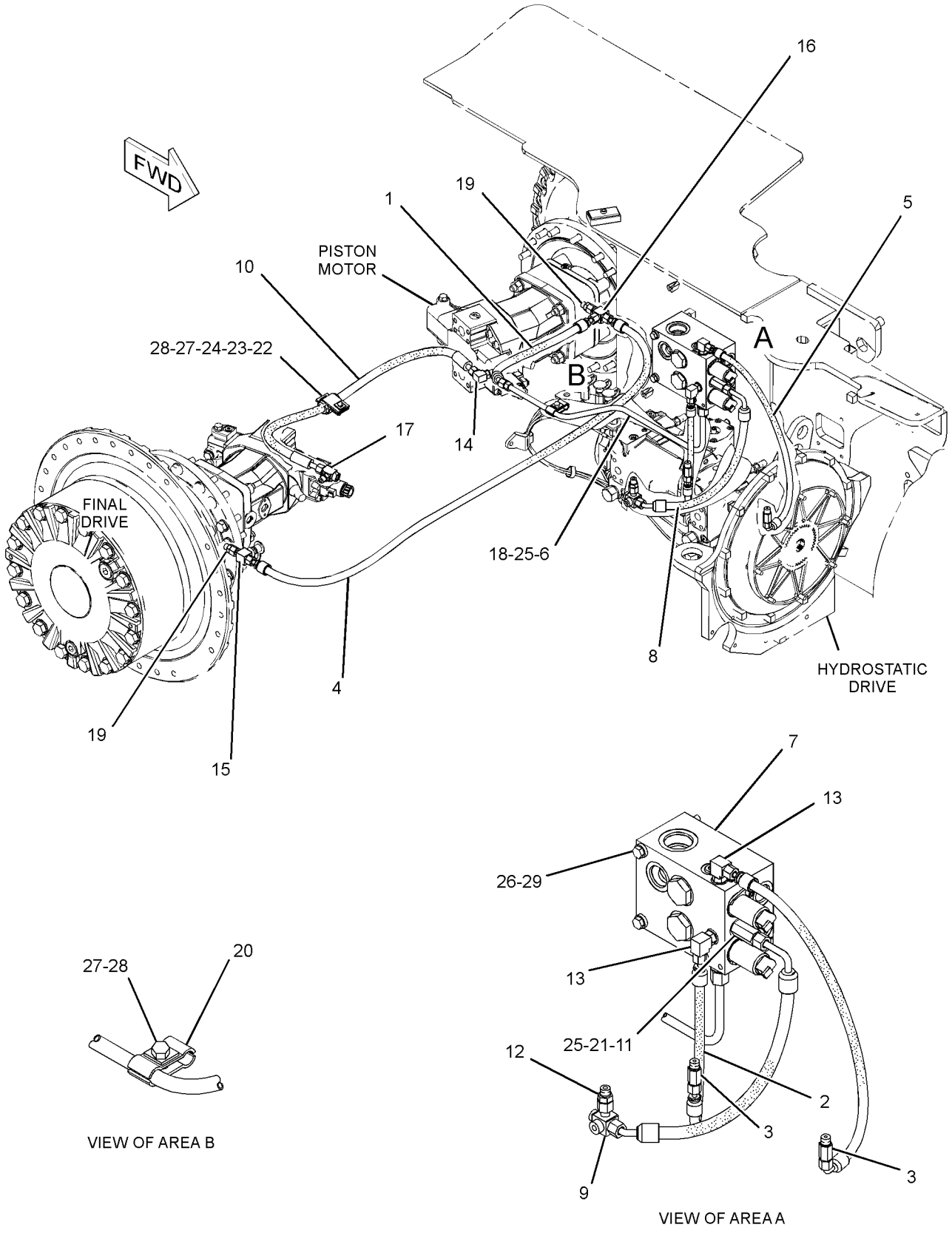

GRAPHIC #1 **<END>** g01378968

244-7442 VALVE GP-PUMP CONTROL

S/N: RRR1-402

PART OF 244-7446 POWER TRAIN AR

TYPE 2

SMCS-5455 **i02912311**

NOTE	REF NO	GRAPHIC REF	PART NUMBER	QTY	PART NAME 1 2 3 4 5 6 (PRODUCT LEVEL)	SEE PAGE
I	1	1	**8Y-7520**	1	HOSE AS	
I	2	1	**135-7193**	1	HOSE AS	
	3	1	*164-9640*	2	CONNECTOR AS	
					(EACH INCLUDES)	
		1	**3J-1907**	1	SEAL-O-RING	
		1	**4J-5477**	1	SEAL-O-RING	
		1	**145-2237**	1	CONNECTOR	
I	4	1	**165-4632**	1	HOSE AS	
I	5	1	**185-3166**	1	HOSE AS	
	6	1	**272-3535**	1	TUBE AS	
Y	7	1	**274-6747**	1	MANIFOLD GP-CONTROL	360
I	8	1	**285-3772**	1	HOSE AS	
C	9	1	**315-9855**	1	UNION AS-CROSS	
I	10	1	**305-5017**	1	HOSE AS	
	11	1	**092-3635**	1	CONNECTOR	
	12	1	*148-8336*	1	CONNECTOR AS	
		1	**3J-1907**	1	SEAL-O-RING	
		1	**6V-8397**	1	SEAL-O-RING	
		1	**6V-8636**	1	CONNECTOR	
	13	1	*148-8368*	2	ELBOW AS	
					(EACH INCLUDES)	
		1	**3J-1907**	1	SEAL-O-RING	
		1	**4J-5477**	1	SEAL-O-RING	
		1	**6V-8627**	1	ELBOW	
	14	1	*148-8378*	1	ELBOW AS	
		1	**3J-1907**	1	SEAL-O-RING	
		1	**6V-8397**	1	SEAL-O-RING	
		1	**6V-8724**	1	ELBOW	
	15	1	*148-8424*	1	TEE AS	
		1	**6V-8397**	1	SEAL-O-RING	
		1	**8T-8902**	1	TEE	
	16	1	*148-8433*	1	TEE AS	
		1	**6V-8397**	2	SEAL-O-RING	
		1	**6V-9836**	1	TEE-SWIVEL	
	17	1	*148-8443*	1	TEE AS	
		1	**3J-1907**	1	SEAL-O-RING	
		1	**6V-8397**	1	SEAL-O-RING	
		1	**7X-2459**	1	TEE-O-RING	
	18	1	*150-4043*	1	CONNECTOR AS	
		1	**3J-1907**	1	SEAL-O-RING	
		1	**6V-8398**	1	SEAL-O-RING	
		1	**6V-9873**	1	CONNECTOR	
	19	1	*155-7327*	2	CONNECTOR AS	
					(EACH INCLUDES)	
		1	**3J-1907**	1	SEAL-O-RING	
		1	**5H-8853**	1	SEAL-O-RING	
		1	**6V-8636**	1	CONNECTOR	
	20	1	**2H-0435**	2	CLAMP	
	21	1	**3K-0360**	1	SEAL-O-RING	
	22	1	**5P-7462**	1	CLIP (SLOT)	
	23	1	**5P-7463**	1	CLIP (TAB)	
	24	1	**6V-0683**	1	GROMMET	
	25	1	**6V-8397**	2	SEAL-O-RING	
M	26	1	**7X-2543**	3	BOLT (M10X1.5X120-MM)	
	27	1	**8T-4121**	2	WASHER-HARD (11X21X2.5-MM THK)	
M	28	1	**8T-4195**	2	BOLT (M10X1.5X30-MM)	
	29	1	**8T-7934**	3	WASHER-HARD (11X21X5-MM THK)	

244-7442 **VALVE GP-PUMP CONTROL (*contd.*)** **i02912311**

NOTE	REF NO	GRAPHIC REF	PART NUMBER	QTY	PART NAME 1 2 3 4 5 6 (PRODUCT LEVEL)	SEE PAGE

C - CHANGE FROM PREVIOUS TYPE
I - REFER TO HYDRAULIC INFORMATION SYSTEM
M - METRIC PART
Y - SEPARATE ILLUSTRATION

244-7442 **VALVE GP-PUMP CONTROL (*contd.*)** **i02912311**

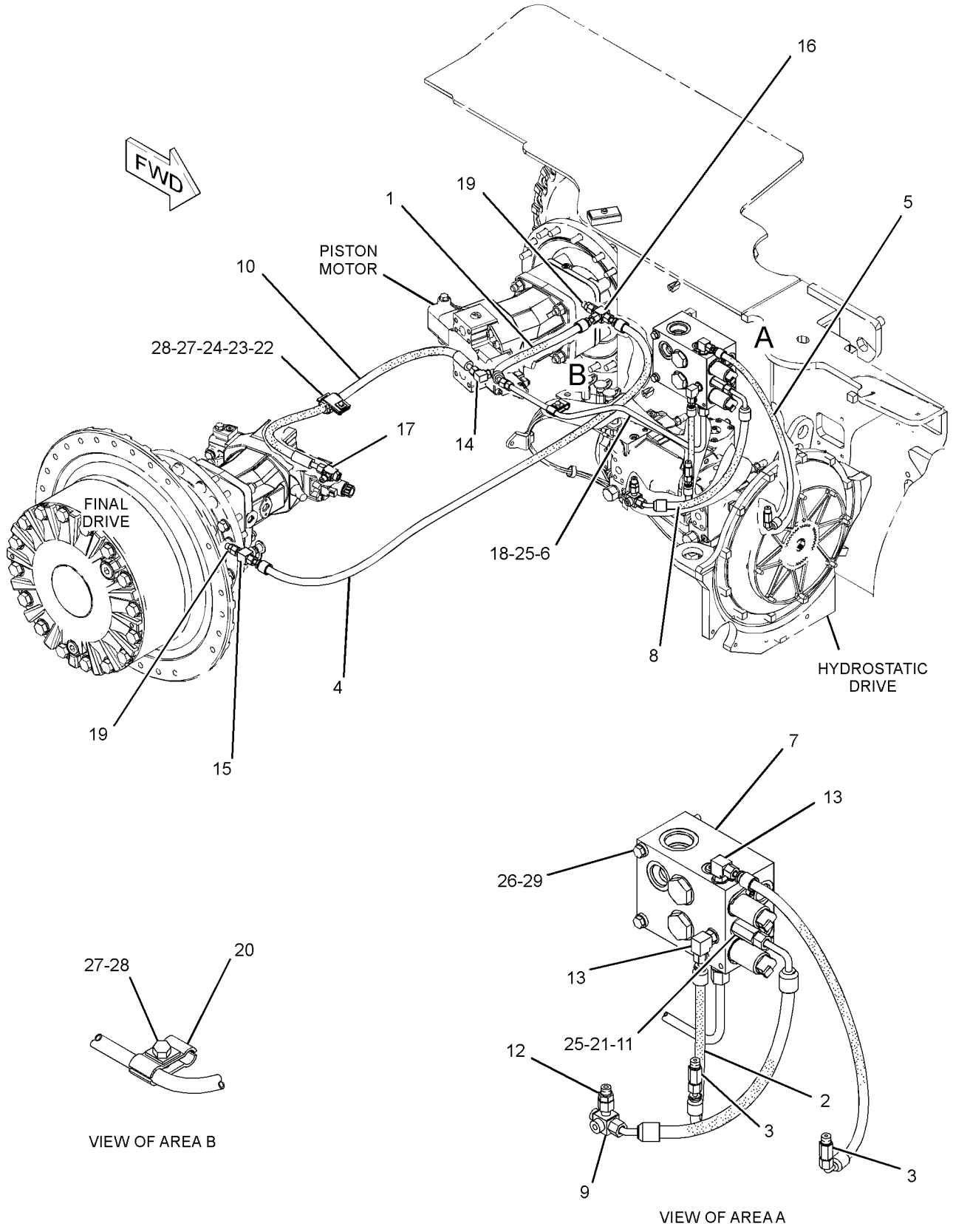

GRAPHIC #1 **<END>** g01378968

244-7442 VALVE GP-PUMP CONTROL

S/N: RRR1-402
PART OF 244-7446 POWER TRAIN AR
TYPE 3

SMCS-5455 **i03714726**

NOTE	REF NO	GRAPHIC REF	PART NUMBER	QTY	PART NAME 1 2 3 4 5 6 (PRODUCT LEVEL)	SEE PAGE
I	1	1	**8Y-7520**	1	HOSE AS	
I	2	1	**135-7193**	1	HOSE AS	
	3	1	*164-9640*	2	CONNECTOR AS	
					(EACH INCLUDES)	
		1	**3J-1907**	1	SEAL-O-RING	
		1	**4J-5477**	1	SEAL-O-RING	
		1	**145-2237**	1	CONNECTOR	
CI	4	1	**306-2094**	1	HOSE AS	
I	5	1	**185-3166**	1	HOSE AS	
	6	1	**272-3535**	1	TUBE AS	
Y	7	1	**274-6747**	1	MANIFOLD GP-CONTROL	360
I	8	1	**285-3772**	1	HOSE AS	
	9	1	*315-9855*	1	UNION AS-CROSS	
		1	**6V-8397**	2	SEAL-O-RING	
		1	**315-9854**	1	CROSS	
I	10	1	**305-5017**	1	HOSE AS	
	11	1	**092-3635**	1	CONNECTOR	
	12	1	*148-8336*	1	CONNECTOR AS	
		1	**3J-1907**	1	SEAL-O-RING	
		1	**6V-8397**	1	SEAL-O-RING	
		1	**6V-8636**	1	CONNECTOR	
	13	1	*148-8368*	2	ELBOW AS	
					(EACH INCLUDES)	
		1	**3J-1907**	1	SEAL-O-RING	
		1	**4J-5477**	1	SEAL-O-RING	
		1	**6V-8627**	1	ELBOW	
	14	1	*148-8378*	1	ELBOW AS	
		1	**3J-1907**	1	SEAL-O-RING	
		1	**6V-8397**	1	SEAL-O-RING	
		1	**6V-8724**	1	ELBOW	
	15	1	*148-8424*	1	TEE AS	
		1	**6V-8397**	1	SEAL-O-RING	
		1	**8T-8902**	1	TEE	
	17	1	*148-8443*	1	TEE AS	
		1	**3J-1907**	1	SEAL-O-RING	
		1	**6V-8397**	1	SEAL-O-RING	
		1	**7X-2459**	1	TEE-O-RING	
	18	1	*150-4043*	1	CONNECTOR AS	
		1	**3J-1907**	1	SEAL-O-RING	
		1	**6V-8398**	1	SEAL-O-RING	
		1	**6V-9873**	1	CONNECTOR	
	19	1	*155-7327*	2	CONNECTOR AS	
					(EACH INCLUDES)	
		1	**3J-1907**	1	SEAL-O-RING	
		1	**5H-8853**	1	SEAL-O-RING	
		1	**6V-8636**	1	CONNECTOR	
	20	1	**2H-0435**	2	CLAMP	
	21	1	**3K-0360**	1	SEAL-O-RING	
	22	1	**5P-7462**	1	CLIP (SLOT)	
	23	1	**5P-7463**	1	CLIP (TAB)	
	24	1	**6V-0683**	1	GROMMET	
	25	1	**6V-8397**	3	SEAL-O-RING	
M	26	1	**7X-2543**	3	BOLT (M10X1.5X120-MM)	
	27	1	**8T-4121**	2	WASHER-HARD (11X21X2.5-MM THK)	
M	28	1	**8T-4195**	2	BOLT (M10X1.5X30-MM)	
	29	1	**8T-7934**	3	WASHER-HARD (11X21X5-MM THK)	
	30	1	**7X-2459**	1	TEE-O-RING	

244-7442 **VALVE GP-PUMP CONTROL (*contd.*)** **i03714726**

NOTE	REF NO	GRAPHIC REF	PART NUMBER	QTY	PART NAME 1 2 3 4 5 6 (PRODUCT LEVEL)	SEE PAGE
	31	1	**341-0083**	1	CONNECTOR	
	32	1	**3J-1907**	2	SEAL-O-RING	

C - CHANGE FROM PREVIOUS TYPE
I - REFER TO HYDRAULIC INFORMATION SYSTEM
M - METRIC PART
Y - SEPARATE ILLUSTRATION

244-7442 **VALVE GP-PUMP CONTROL (*contd.*)** **i03714726**

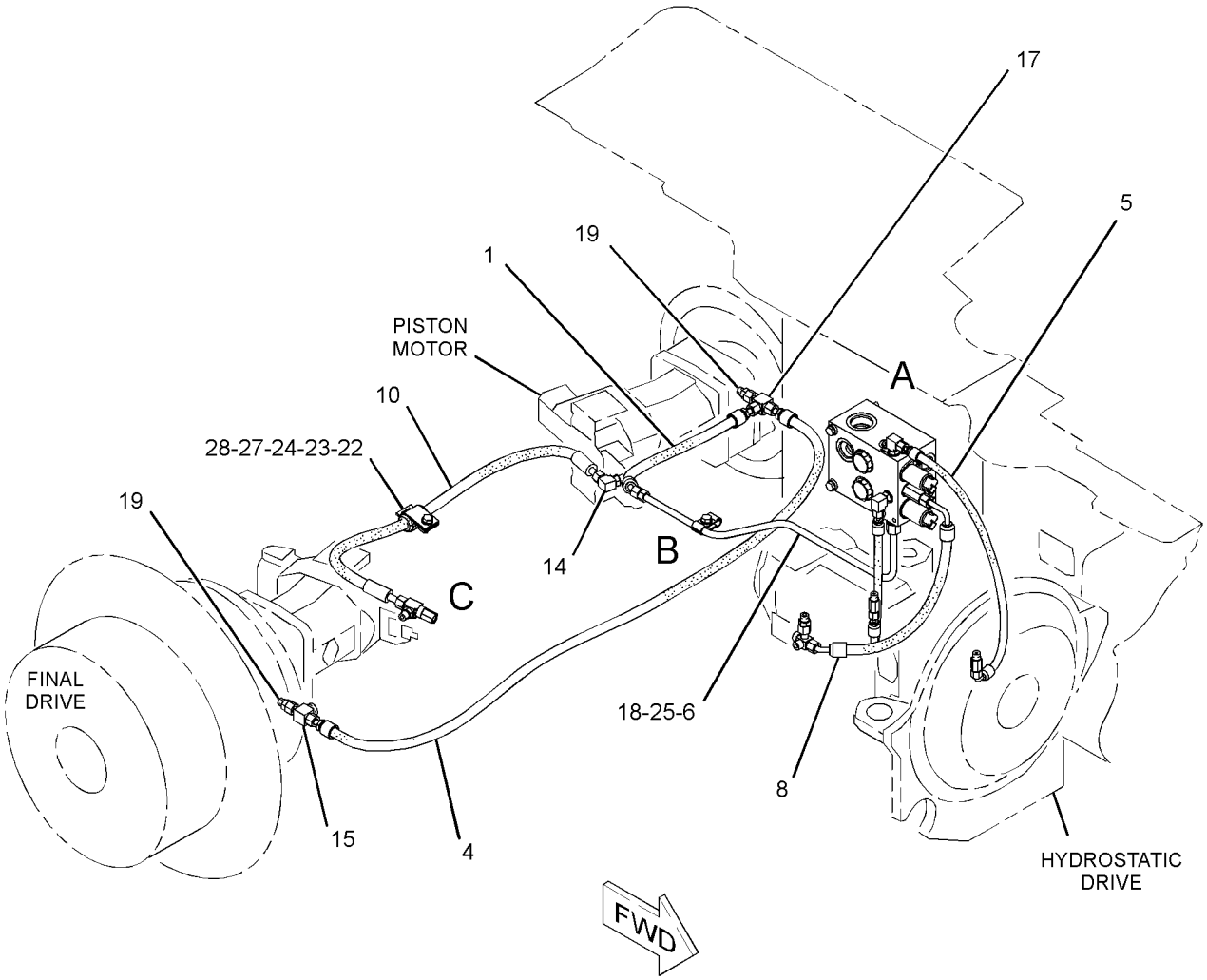

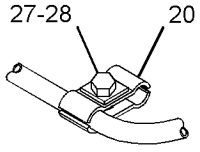

VIEW OF AREA B

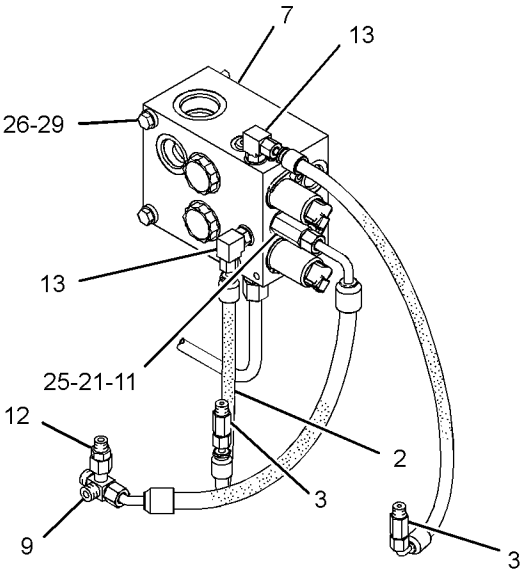

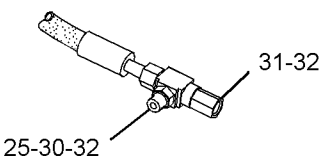

VIEW OF AREA C

VIEW OF AREA A

GRAPHIC #1 **<END>** g02025062

244-7442 VALVE GP-PUMP CONTROL

S/N: RRR403-444

PART OF 244-7446 POWER TRAIN AR

SMCS-5455 **i03996974**

NOTE	REF NO	GRAPHIC REF	PART NUMBER	QTY	PART NAME 1 2 3 4 5 6 (PRODUCT LEVEL)	SEE PAGE
I	1	1	**8Y-7520**	1	HOSE AS	
I	2	1	**135-7193**	1	HOSE AS	
	3	1	*164-9640*	2	CONNECTOR AS	
					(EACH INCLUDES)	
		1	**3J-1907**	1	SEAL-O-RING	
		1	**4J-5477**	1	SEAL-O-RING	
		1	**145-2237**	1	CONNECTOR	
CI	4	1	**345-9623**	1	HOSE AS	
I	5	1	**185-3166**	1	HOSE AS	
	6	1	**272-3535**	1	TUBE AS	
Y	7	1	**274-6747**	1	MANIFOLD GP-CONTROL (SERVICE BRAKE)	360
I	8	1	**285-3772**	1	HOSE AS	
	9	1	*315-9855*	1	UNION AS-CROSS	
		1	**6V-8397**	2	SEAL-O-RING	
		1	**315-9854**	1	CROSS	
I	10	1	**305-5017**	1	HOSE AS	
	11	1	**092-3635**	1	CONNECTOR	
	12	1	*148-8336*	1	CONNECTOR AS	
		1	**3J-1907**	1	SEAL-O-RING	
		1	**6V-8397**	1	SEAL-O-RING	
		1	**6V-8636**	1	CONNECTOR	
	13	1	*148-8368*	2	ELBOW AS	
					(EACH INCLUDES)	
		1	**3J-1907**	1	SEAL-O-RING	
		1	**4J-5477**	1	SEAL-O-RING	
		1	**6V-8627**	1	ELBOW	
	14	1	*148-8378*	1	ELBOW AS	
		1	**3J-1907**	1	SEAL-O-RING	
		1	**6V-8397**	1	SEAL-O-RING	
		1	**6V-8724**	1	ELBOW	
	15	1	*148-8424*	1	TEE AS	
		1	**6V-8397**	1	SEAL-O-RING	
		1	**8T-8902**	1	TEE	
	17	1	*148-8433*	1	TEE AS	
		1	**6V-8397**	2	SEAL-O-RING	
		1	**6V-9836**	1	TEE-SWIVEL	
	18	1	*150-4043*	1	CONNECTOR AS	
		1	**3J-1907**	1	SEAL-O-RING	
		1	**6V-8398**	1	SEAL-O-RING	
		1	**6V-9873**	1	CONNECTOR	
	19	1	*155-7327*	2	CONNECTOR AS	
					(EACH INCLUDES)	
		1	**3J-1907**	1	SEAL-O-RING	
		1	**5H-8853**	1	SEAL-O-RING	
		1	**6V-8636**	1	CONNECTOR	
	20	1	**2H-0435**	2	CLAMP	
	21	1	**3K-0360**	1	SEAL-O-RING	
	22	1	**5P-7462**	1	CLIP (SLOT)	
	23	1	**5P-7463**	1	CLIP (TAB)	
	24	1	**6V-0683**	1	GROMMET	
	25	1	**6V-8397**	3	SEAL-O-RING	
M	26	1	**7X-2543**	3	BOLT (M10X1.5X120-MM)	
	27	1	**8T-4121**	2	WASHER-HARD (11X21X2.5-MM THK)	
M	28	1	**8T-4195**	2	BOLT (M10X1.5X30-MM)	
	29	1	**8T-7934**	3	WASHER-HARD (11X21X5-MM THK)	
	30	1	**7X-2459**	1	TEE-O-RING	
	31	1	**341-0083**	1	CONNECTOR	
	32	1	**3J-1907**	2	SEAL-O-RING	

244-7442 **VALVE GP-PUMP CONTROL (*contd.*)** **i03996974**

NOTE	REF NO	GRAPHIC REF	PART NUMBER	QTY	PART NAME 1 2 3 4 5 6 (PRODUCT LEVEL)	SEE PAGE

C - CHANGE FROM PREVIOUS TYPE
I - REFER TO HYDRAULIC INFORMATION SYSTEM
M - METRIC PART
Y - SEPARATE ILLUSTRATION

244-7442 **VALVE GP-PUMP CONTROL (*contd.*)** **i03996974**

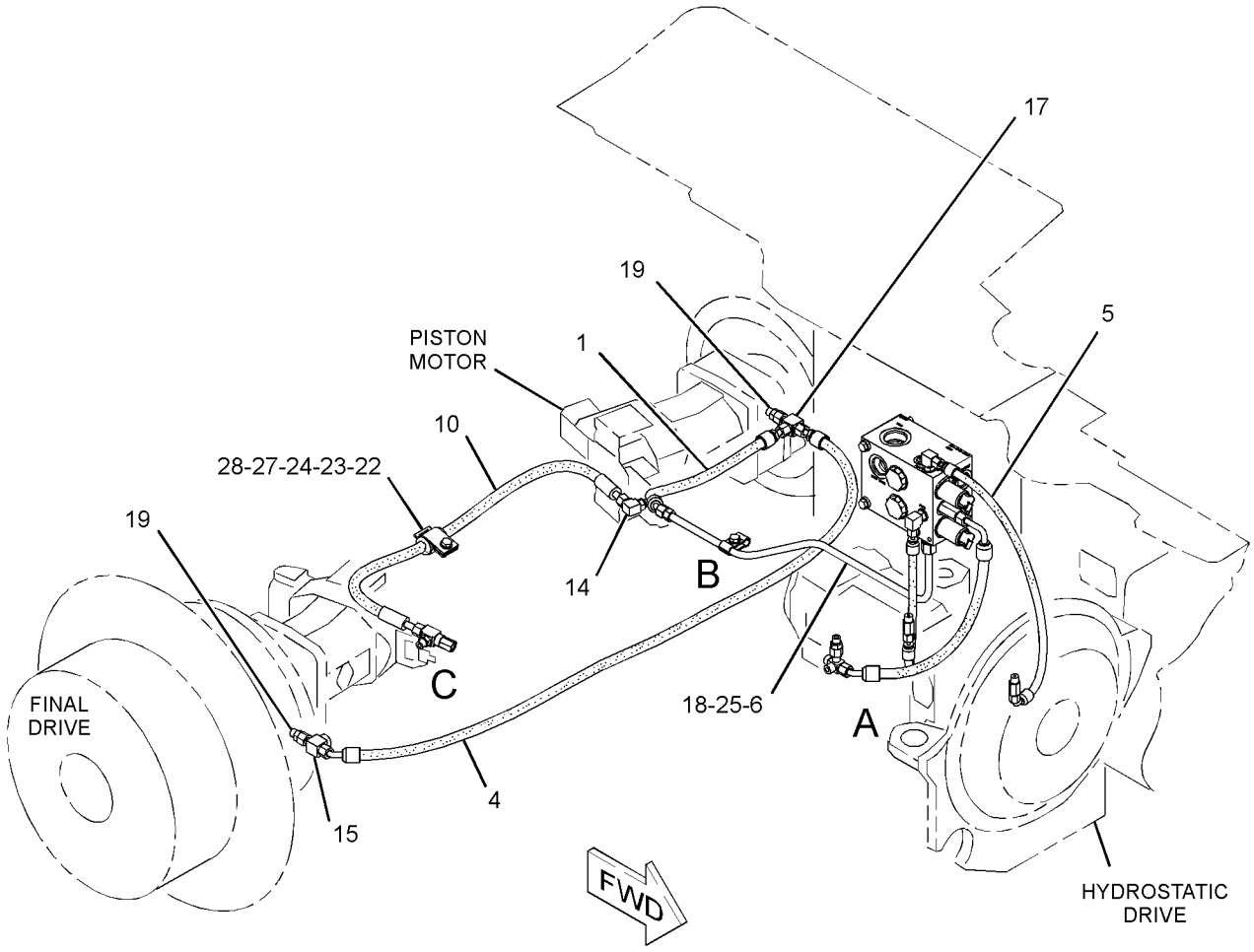

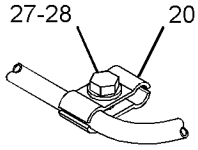

VIEW OF AREA B

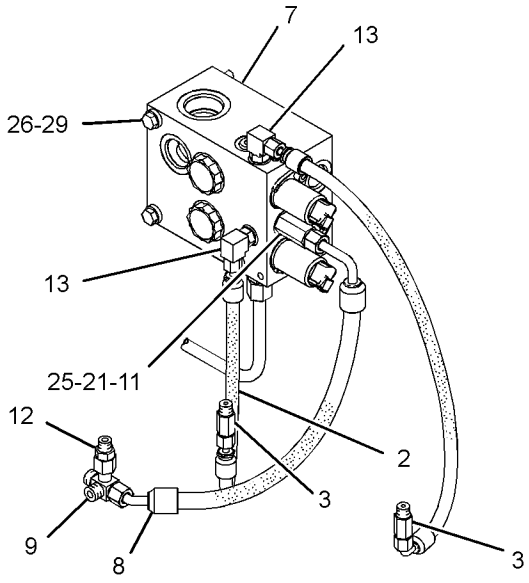

VIEW OF AREA A

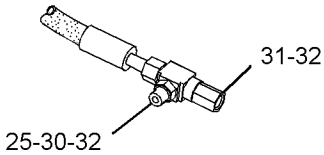

VIEW OF AREA C

GRAPHIC #1

<END>

g02494636

244-7442 VALVE GP-PUMP CONTROL

S/N: RRR445-UP

PART OF 244-7446 POWER TRAIN AR

SMCS-5455 **i04251452**

NOTE	REF NO	GRAPHIC REF	PART NUMBER	QTY	PART NAME 1 2 3 4 5 6 (PRODUCT LEVEL)	SEE PAGE
CI	1	1	**365-9589**	1	HOSE AS	
I	2	1	**135-7193**	1	HOSE AS	
	3	1	*164-9640*	2	CONNECTOR AS	
					(EACH INCLUDES)	
		1	**3J-1907**	1	SEAL-O-RING	
		1	**4J-5477**	1	SEAL-O-RING	
		1	**145-2237**	1	CONNECTOR	
I	4	1	**345-9623**	1	HOSE AS	
I	5	1	**185-3166**	1	HOSE AS	
C	6	1	**365-9591**	1	TUBE AS	
Y	7	1	**274-6747**	1	MANIFOLD GP-CONTROL (SERVICE BRAKE)	360
I	8	1	**285-3772**	1	HOSE AS	
	9	1	*315-9855*	1	UNION AS-CROSS	
		1	**6V-8397**	2	SEAL-O-RING	
		1	**315-9854**	1	CROSS	
I	10	1	**305-5017**	1	HOSE AS	
	11	1	**092-3635**	1	CONNECTOR	
	12	1	*148-8336*	1	CONNECTOR AS	
		1	**3J-1907**	1	SEAL-O-RING	
		1	**6V-8397**	1	SEAL-O-RING	
		1	**6V-8636**	1	CONNECTOR	
	13	1	*148-8368*	2	ELBOW AS	
					(EACH INCLUDES)	
		1	**3J-1907**	1	SEAL-O-RING	
		1	**4J-5477**	1	SEAL-O-RING	
		1	**6V-8627**	1	ELBOW	
	14	1	*148-8378*	1	ELBOW AS	
		1	**3J-1907**	1	SEAL-O-RING	
		1	**6V-8397**	1	SEAL-O-RING	
		1	**6V-8724**	1	ELBOW	
	15	1	*148-8424*	1	TEE AS	
		1	**6V-8397**	1	SEAL-O-RING	
		1	**8T-8902**	1	TEE	
	17	1	*148-8433*	1	TEE AS	
		1	**6V-8397**	2	SEAL-O-RING	
		1	**6V-9836**	1	TEE-SWIVEL	
	18	1	*150-4043*	1	CONNECTOR AS	
		1	**3J-1907**	1	SEAL-O-RING	
		1	**6V-8398**	1	SEAL-O-RING	
		1	**6V-9873**	1	CONNECTOR	
	19	1	*155-7327*	2	CONNECTOR AS	
					(EACH INCLUDES)	
		1	**3J-1907**	1	SEAL-O-RING	
		1	**5H-8853**	1	SEAL-O-RING	
		1	**6V-8636**	1	CONNECTOR	
	20	1	**2H-0435**	2	CLAMP	
	21	1	**3K-0360**	1	SEAL-O-RING	
	22	1	**5P-7462**	1	CLIP (SLOT)	
	23	1	**5P-7463**	1	CLIP (TAB)	
	24	1	**6V-0683**	1	GROMMET	
	25	1	**6V-8397**	3	SEAL-O-RING	
M	26	1	**7X-2543**	3	BOLT (M10X1.5X120-MM)	
	27	1	**8T-4121**	2	WASHER-HARD (11X21X2.5-MM THK)	
M	28	1	**8T-4195**	2	BOLT (M10X1.5X30-MM)	
	29	1	**8T-7934**	3	WASHER-HARD (11X21X5-MM THK)	
	30	1	**7X-2459**	1	TEE-O-RING	
	31	1	**341-0083**	1	CONNECTOR	
	32	1	**3J-1907**	2	SEAL-O-RING	

244-7442 **VALVE GP-PUMP CONTROL (*contd.*)** **i04251452**

NOTE	REF NO	GRAPHIC REF	PART NUMBER	QTY	PART NAME 1 2 3 4 5 6 (PRODUCT LEVEL)	SEE PAGE

C - CHANGE FROM PREVIOUS TYPE
I - REFER TO HYDRAULIC INFORMATION SYSTEM
M - METRIC PART
Y - SEPARATE ILLUSTRATION

244-7442 **VALVE GP-PUMP CONTROL (*contd.*)** **i04251452**

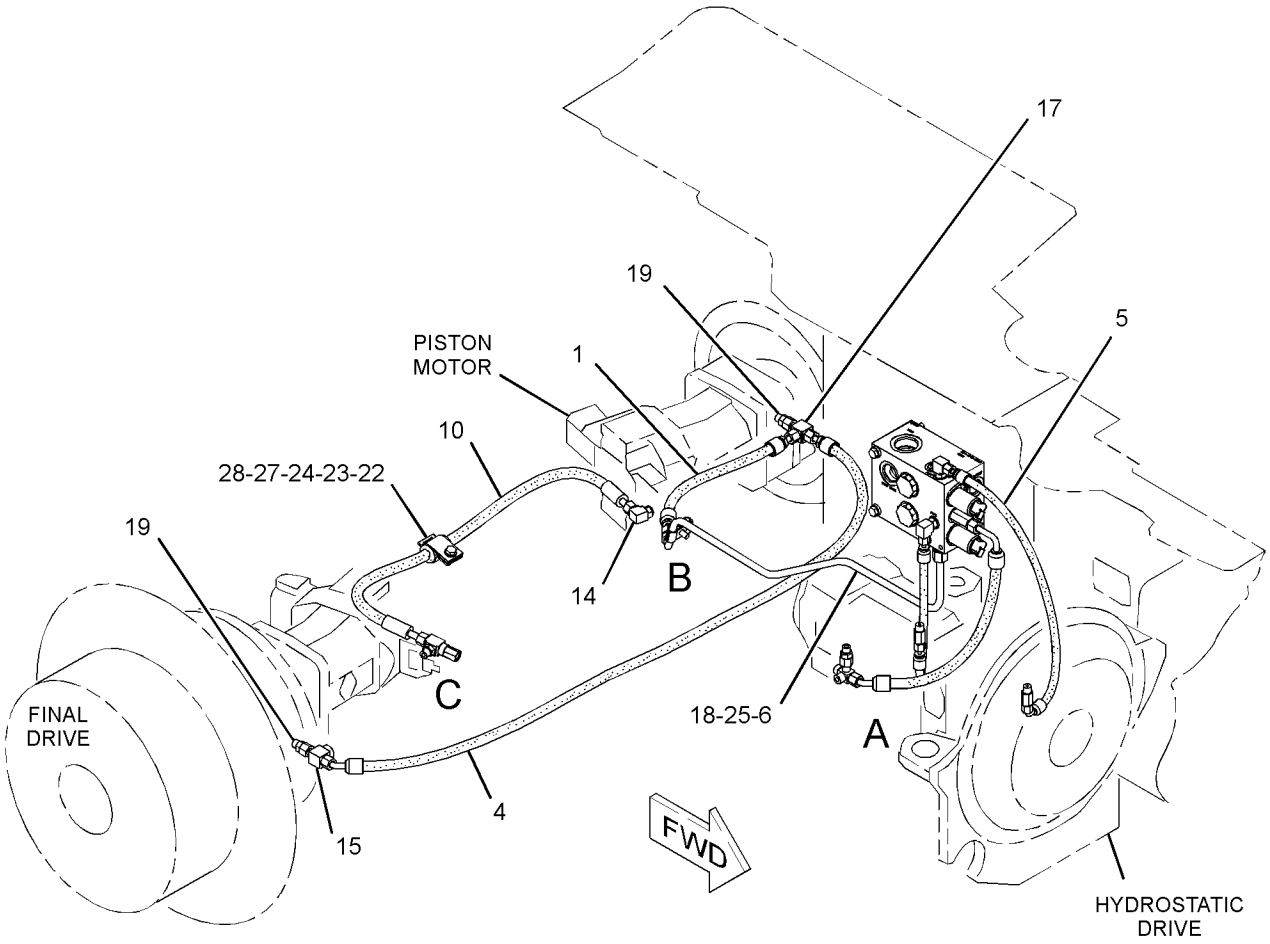

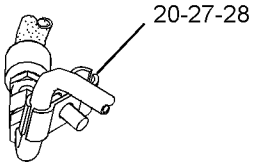

VIEW OF AREA B

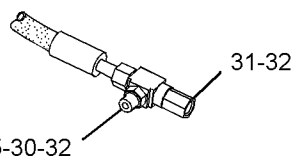

VIEW OF AREA C

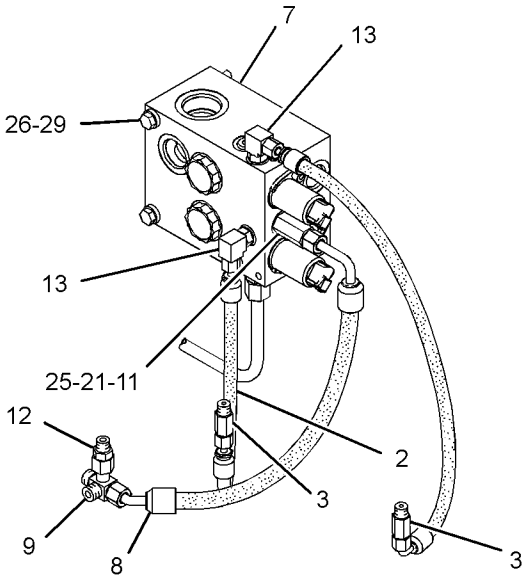

VIEW OF AREA A

GRAPHIC #1 **<END>** g02502436

271-9178 VALVE GP-PUMP CONTROL

S/N: MMM1-562

PART OF 244-7483 POWER TRAIN AR

TYPE 1

SMCS-5455 **i02663168**

NOTE	REF NO	GRAPHIC REF	PART NUMBER	QTY	PART NAME 1 2 3 4 5 6 (PRODUCT LEVEL)	SEE PAGE
I	1	1	**135-7193**	1	HOSE AS	
I	2	1	**159-5901**	1	HOSE AS	
I	3	1	**185-3166**	1	HOSE AS	
I	4	1	**228-0463**	1	HOSE AS	
	5	1	**272-3535**	1	TUBE AS	
Y	6	1	**274-6747**	1	MANIFOLD GP-CONTROL	360
I	7	1	**283-4929**	1	HOSE AS	
I	8	1	**285-3772**	1	HOSE AS	
	9	1	**295-9265**	1	TEE AS	
		1	**6V-8397**	2	SEAL-O-RING	
		1	**6V-9843**	1	TEE	
	10	1	**092-3635**	1	CONNECTOR	
	11	1	*148-8325*	2	CONNECTOR AS	
					(EACH INCLUDES)	
		1	**3J-1907**	1	SEAL-O-RING	
		1	**4J-5477**	1	SEAL-O-RING	
		1	**6V-8641**	1	CONNECTOR	
	12	1	*148-8336*	1	CONNECTOR AS	
		1	**3J-1907**	1	SEAL-O-RING	
		1	**6V-8397**	1	SEAL-O-RING	
		1	**6V-8636**	1	CONNECTOR	
	13	1	*148-8368*	2	ELBOW AS	
					(EACH INCLUDES)	
		1	**3J-1907**	1	SEAL-O-RING	
		1	**4J-5477**	1	SEAL-O-RING	
		1	**6V-8627**	1	ELBOW	
	14	1	*148-8378*	1	ELBOW AS	
		1	**3J-1907**	1	SEAL-O-RING	
		1	**6V-8397**	1	SEAL-O-RING	
		1	**6V-8724**	1	ELBOW	
	15	1	*148-8439*	2	TEE AS	
					(EACH INCLUDES)	
		1	**3J-1907**	1	SEAL-O-RING	
		1	**6V-8397**	2	SEAL-O-RING	
		1	**6V-8774**	1	TEE	
	16	1	*148-8443*	1	TEE AS	
		1	**3J-1907**	1	SEAL-O-RING	
		1	**6V-8397**	1	SEAL-O-RING	
		1	**7X-2459**	1	TEE-O-RING	
	17	1	*150-4043*	1	CONNECTOR AS	
		1	**3J-1907**	1	SEAL-O-RING	
		1	**6V-8398**	1	SEAL-O-RING	
		1	**6V-9873**	1	CONNECTOR	
	18	1	**2H-0435**	2	CLAMP	
	19	1	**3K-0360**	1	SEAL-O-RING	
	20	1	**5P-7462**	1	CLIP (SLOT)	
	21	1	**5P-7463**	1	CLIP (TAB)	
	22	1	**6V-0683**	1	GROMMET	
	23	1	**6V-8397**	2	SEAL-O-RING	
M	24	1	**7X-2543**	3	BOLT (M10X1.5X120-MM)	
	25	1	**8M-2773**	3	CLIP	
	26	1	**8T-4121**	4	WASHER-HARD (11X21X2.5-MM THK)	
M	27	1	**8T-4191**	2	BOLT (M10X1.5X16-MM)	
M	28	1	**8T-4195**	2	BOLT (M10X1.5X30-MM)	
	29	1	**8T-7934**	3	WASHER-HARD (11X21X5-MM THK)	

I - REFER TO HYDRAULIC INFORMATION SYSTEM
M - METRIC PART
Y - SEPARATE ILLUSTRATION

271-9178 **VALVE GP-PUMP CONTROL (*contd.*)** **i02663168**

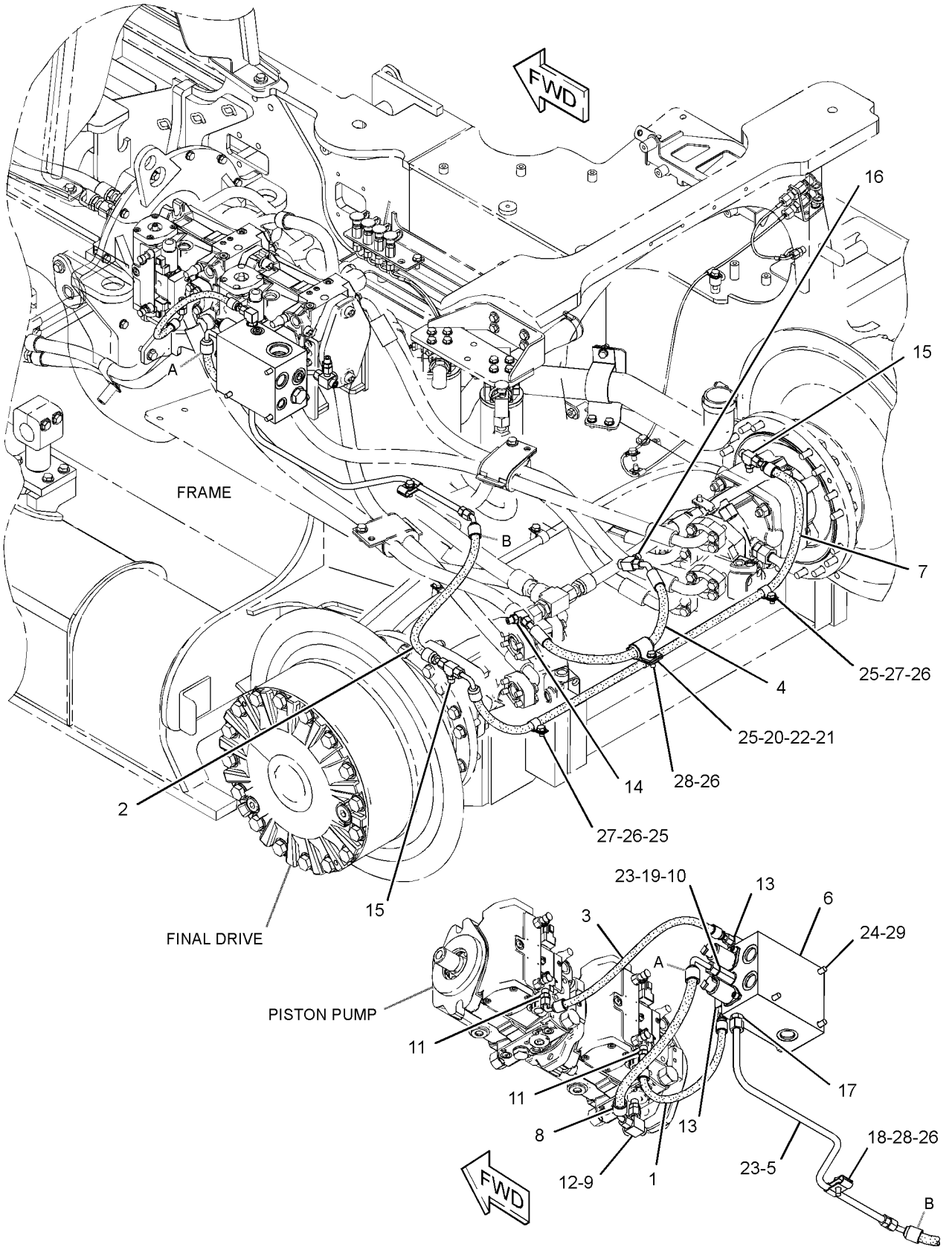

GRAPHIC #1 **<END>** g01342945

271-9178 VALVE GP-PUMP CONTROL

S/N: MMM1-562

PART OF 244-7483 POWER TRAIN AR

TYPE 2

SMCS-5455 **i03720104**

NOTE	REF NO	GRAPHIC REF	PART NUMBER	QTY	PART NAME 1 2 3 4 5 6 (PRODUCT LEVEL)	SEE PAGE
CI	1	1	**8W-6047**	1	HOSE AS	
I	2	1	**135-7193**	1	HOSE AS	
CI	3	1	**160-4641**	1	HOSE AS	
C	4	1	*164-9640*	2	CONNECTOR AS	
					(EACH INCLUDES)	
		1	**3J-1907**	1	SEAL-O-RING	
		1	**4J-5477**	1	SEAL-O-RING	
		1	**145-2237**	1	CONNECTOR	
I	5	1	**185-3166**	1	HOSE AS	
	6	1	**272-3535**	1	TUBE AS	
Y	7	1	**274-6747**	1	MANIFOLD GP-CONTROL	360
I	8	1	**285-3772**	1	HOSE AS	
CI	9	1	**305-5014**	1	HOSE AS	
	10	1	**315-9855**	1	UNION AS-CROSS	
		1	**6V-8397**	2	SEAL-O-RING	
		1	**315-9854**	1	CROSS	
	11	1	**092-3635**	1	CONNECTOR	
	12	1	*148-8336*	1	CONNECTOR AS	
		1	**3J-1907**	1	SEAL-O-RING	
		1	**6V-8397**	1	SEAL-O-RING	
		1	**6V-8636**	1	CONNECTOR	
	13	1	*148-8368*	2	ELBOW AS	
					(EACH INCLUDES)	
		1	**3J-1907**	1	SEAL-O-RING	
		1	**4J-5477**	1	SEAL-O-RING	
		1	**6V-8627**	1	ELBOW	
	14	1	*148-8378*	1	ELBOW AS	
		1	**3J-1907**	1	SEAL-O-RING	
		1	**6V-8397**	1	SEAL-O-RING	
		1	**6V-8724**	1	ELBOW	
C	15	1	*148-8424*	1	TEE AS	
		1	**6V-8397**	1	SEAL-O-RING	
		1	**8T-8902**	1	TEE	
C	16	1	*148-8433*	1	TEE AS	
		1	**6V-8397**	2	SEAL-O-RING	
		1	**6V-9836**	1	TEE-SWIVEL	
	17	1	*148-8443*	1	TEE AS	
		1	**3J-1907**	1	SEAL-O-RING	
		1	**6V-8397**	1	SEAL-O-RING	
		1	**7X-2459**	1	TEE-O-RING	
	18	1	*150-4043*	1	CONNECTOR AS	
		1	**3J-1907**	1	SEAL-O-RING	
		1	**6V-8398**	1	SEAL-O-RING	
		1	**6V-9873**	1	CONNECTOR	
C	19	1	*155-7327*	2	CONNECTOR AS	
					(EACH INCLUDES)	
		1	**3J-1907**	1	SEAL-O-RING	
		1	**5H-8853**	1	SEAL-O-RING	
		1	**6V-8636**	1	CONNECTOR	
	20	1	**2H-0435**	2	CLAMP	
	21	1	**3K-0360**	1	SEAL-O-RING	
	22	1	**5P-7462**	1	CLIP (SLOT)	
	23	1	**5P-7463**	1	CLIP (TAB)	
	24	1	**6V-0683**	1	GROMMET	
	25	1	**6V-8397**	2	SEAL-O-RING	
M	26	1	**7X-2543**	3	BOLT (M10X1.5X120-MM)	
C	27	1	**8T-4121**	2	WASHER-HARD (11X21X2.5-MM THK)	

271-9178 **VALVE GP-PUMP CONTROL (*contd.*)** **i03720104**

NOTE	REF NO	GRAPHIC REF	PART NUMBER	QTY	PART NAME 1 2 3 4 5 6 (PRODUCT LEVEL)	SEE PAGE
M	28	1	**8T-4195**	2	BOLT (M10X1.5X30-MM)	
	29	1	**8T-7934**	3	WASHER-HARD (11X21X5-MM THK)	

C - CHANGE FROM PREVIOUS TYPE
I - REFER TO HYDRAULIC INFORMATION SYSTEM
M - METRIC PART
Y - SEPARATE ILLUSTRATION

271-9178 **VALVE GP-PUMP CONTROL (*contd.*)** **i03720104**

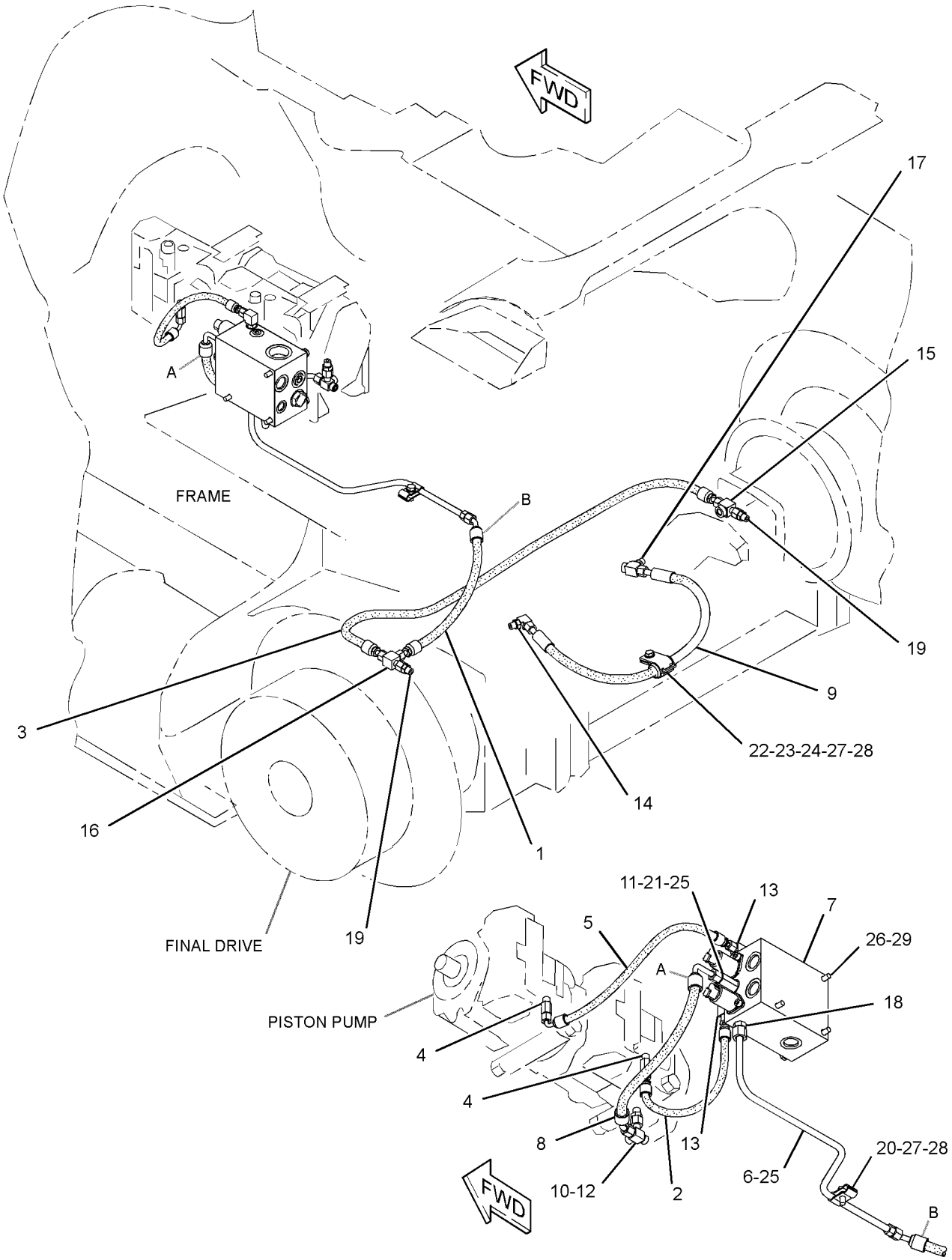

GRAPHIC #1 **<END>** g02009560

271-9178 VALVE GP-PUMP CONTROL

S/N: MMM1-562

PART OF 244-7483 POWER TRAIN AR

TYPE 3

SMCS-5455 **i03744094**

NOTE	REF NO	GRAPHIC REF	PART NUMBER	QTY	PART NAME 1 2 3 4 5 6 (PRODUCT LEVEL)	SEE PAGE
I	1	1	**8W-6047**	1	HOSE AS	
I	2	1	**135-7193**	1	HOSE AS	
I	3	1	**160-4641**	1	HOSE AS	
	4	1	*164-9640*	2	CONNECTOR AS	
					(EACH INCLUDES)	
		1	**3J-1907**	1	SEAL-O-RING	
		1	**4J-5477**	1	SEAL-O-RING	
		1	**145-2237**	1	CONNECTOR	
I	5	1	**185-3166**	1	HOSE AS	
	6	1	**272-3535**	1	TUBE AS	
Y	7	1	**274-6747**	1	MANIFOLD GP-CONTROL	360
I	8	1	**285-3772**	1	HOSE AS	
CI	9	1	**342-5337**	1	HOSE AS	
	10	1	**315-9855**	1	UNION AS-CROSS	
		1	**6V-8397**	2	SEAL-O-RING	
		1	**315-9854**	1	CROSS	
	11	1	**092-3635**	1	CONNECTOR	
	12	1	*148-8336*	1	CONNECTOR AS	
		1	**3J-1907**	1	SEAL-O-RING	
		1	**6V-8397**	1	SEAL-O-RING	
		1	**6V-8636**	1	CONNECTOR	
	13	1	*148-8368*	2	ELBOW AS	
					(EACH INCLUDES)	
		1	**3J-1907**	1	SEAL-O-RING	
		1	**4J-5477**	1	SEAL-O-RING	
		1	**6V-8627**	1	ELBOW	
	14	1	*148-8378*	1	ELBOW AS	
		1	**3J-1907**	1	SEAL-O-RING	
		1	**6V-8397**	1	SEAL-O-RING	
		1	**6V-8724**	1	ELBOW	
	15	1	*148-8424*	1	TEE AS	
		1	**6V-8397**	1	SEAL-O-RING	
		1	**8T-8902**	1	TEE	
	16	1	*148-8433*	1	TEE AS	
		1	**6V-8397**	2	SEAL-O-RING	
		1	**6V-9836**	1	TEE-SWIVEL	
C	17	1	**341-0083**	1	CONNECTOR	
	18	1	*150-4043*	1	CONNECTOR AS	
		1	**3J-1907**	1	SEAL-O-RING	
		1	**6V-8398**	1	SEAL-O-RING	
		1	**6V-9873**	1	CONNECTOR	
	19	1	*155-7327*	2	CONNECTOR AS	
					(EACH INCLUDES)	
		1	**3J-1907**	1	SEAL-O-RING	
		1	**5H-8853**	1	SEAL-O-RING	
		1	**6V-8636**	1	CONNECTOR	
	20	1	**2H-0435**	2	CLAMP	
	21	1	**3K-0360**	1	SEAL-O-RING	
	22	1	**5P-7462**	1	CLIP (SLOT)	
	23	1	**5P-7463**	1	CLIP (TAB)	
	24	1	**6V-0683**	1	GROMMET	
C	25	1	**6V-8397**	3	SEAL-O-RING	
M	26	1	**7X-2543**	3	BOLT (M10X1.5X120-MM)	
	27	1	**8T-4121**	2	WASHER-HARD (11X21X2.5-MM THK)	
M	28	1	**8T-4195**	2	BOLT (M10X1.5X30-MM)	
	29	1	**8T-7934**	3	WASHER-HARD (11X21X5-MM THK)	
C	30	1	**7X-2459**	1	TEE-O-RING	
C	31	1	**3J-1907**	2	SEAL-O-RING	

271-9178 **VALVE GP-PUMP CONTROL (*contd.*)** **i03744094**

NOTE	REF NO	GRAPHIC REF	PART NUMBER	QTY	PART NAME 1 2 3 4 5 6 (PRODUCT LEVEL)	SEE PAGE

C - CHANGE FROM PREVIOUS TYPE
I - REFER TO HYDRAULIC INFORMATION SYSTEM
M - METRIC PART
Y - SEPARATE ILLUSTRATION

271-9178 **VALVE GP-PUMP CONTROL (*contd.*)** **i03744094**

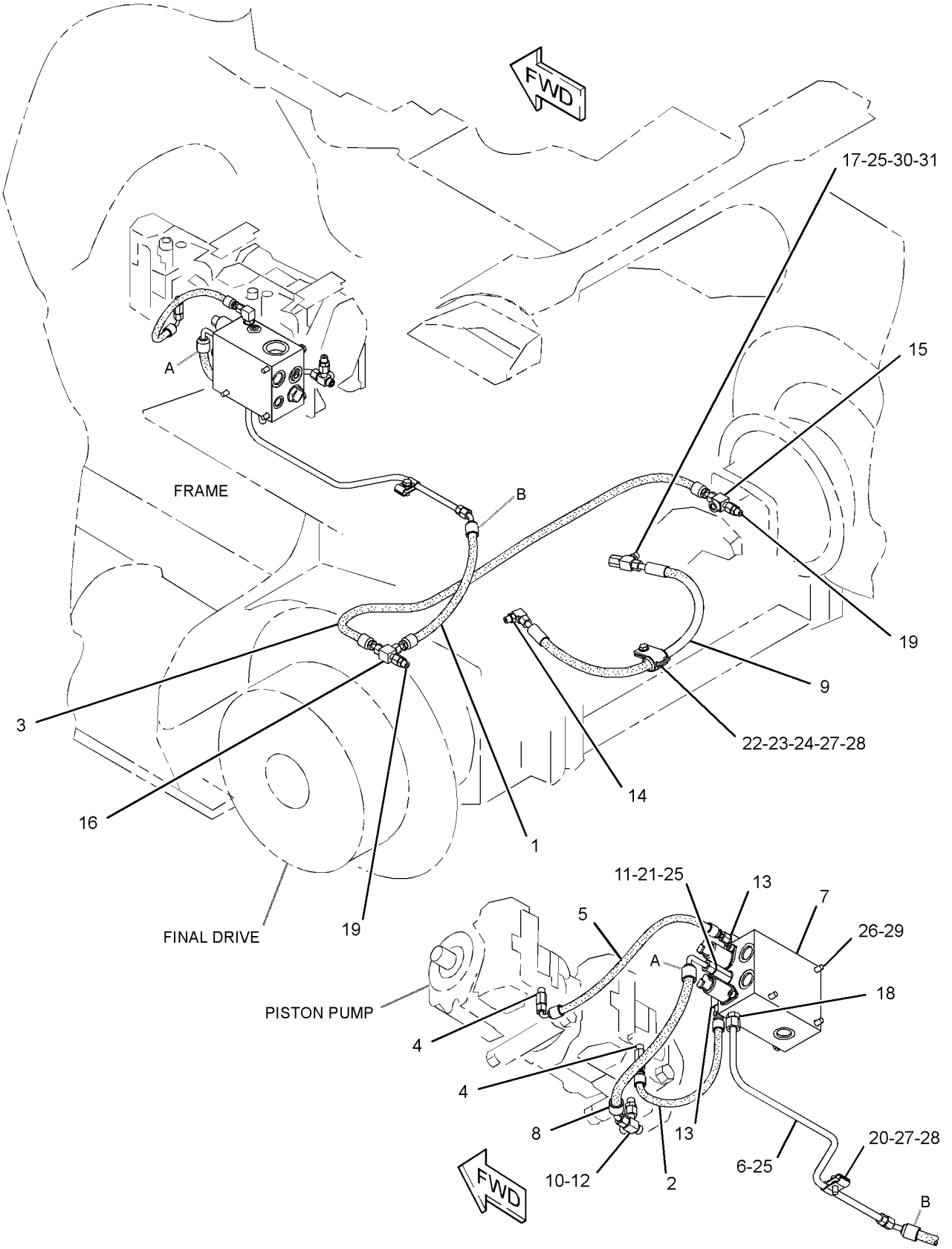

GRAPHIC #1 **<END>** g02033199

271-9178 VALVE GP-PUMP CONTROL

S/N: MMM563-610

PART OF 244-7483 POWER TRAIN AR

SMCS-5455 **i03996982**

NOTE	REF NO	GRAPHIC REF	PART NUMBER	QTY	PART NAME 1 2 3 4 5 6 (PRODUCT LEVEL)	SEE PAGE
I	1	1	**8W-6047**	1	HOSE AS	
I	2	1	**135-7193**	1	HOSE AS	
CI	3	1	**345-9625**	1	HOSE AS	
	4	1	*164-9640*	2	CONNECTOR AS	
					(EACH INCLUDES)	
		1	**3J-1907**	1	SEAL-O-RING	
		1	**4J-5477**	1	SEAL-O-RING	
		1	**145-2237**	1	CONNECTOR	
I	5	1	**185-3166**	1	HOSE AS	
	6	1	**272-3535**	1	TUBE AS	
Y	7	1	**274-6747**	1	MANIFOLD GP-CONTROL	360
I	8	1	**285-3772**	1	HOSE AS	
I	9	1	**342-5337**	1	HOSE AS	
	10	1	**315-9855**	1	UNION AS-CROSS	
		1	**6V-8397**	2	SEAL-O-RING	
		1	**315-9854**	1	CROSS	
	11	1	**092-3635**	1	CONNECTOR	
	12	1	*148-8336*	1	CONNECTOR AS	
		1	**3J-1907**	1	SEAL-O-RING	
		1	**6V-8397**	1	SEAL-O-RING	
		1	**6V-8636**	1	CONNECTOR	
	13	1	*148-8368*	2	ELBOW AS	
					(EACH INCLUDES)	
		1	**3J-1907**	1	SEAL-O-RING	
		1	**4J-5477**	1	SEAL-O-RING	
		1	**6V-8627**	1	ELBOW	
	14	1	*148-8378*	1	ELBOW AS	
		1	**3J-1907**	1	SEAL-O-RING	
		1	**6V-8397**	1	SEAL-O-RING	
		1	**6V-8724**	1	ELBOW	
	15	1	*148-8424*	1	TEE AS	
		1	**6V-8397**	1	SEAL-O-RING	
		1	**8T-8902**	1	TEE	
	16	1	*148-8433*	1	TEE AS	
		1	**6V-8397**	2	SEAL-O-RING	
		1	**6V-9836**	1	TEE-SWIVEL	
	17	1	**341-0083**	1	CONNECTOR	
	18	1	*150-4043*	1	CONNECTOR AS	
		1	**3J-1907**	1	SEAL-O-RING	
		1	**6V-8398**	1	SEAL-O-RING	
		1	**6V-9873**	1	CONNECTOR	
	19	1	*155-7327*	2	CONNECTOR AS	
					(EACH INCLUDES)	
		1	**3J-1907**	1	SEAL-O-RING	
		1	**5H-8853**	1	SEAL-O-RING	
		1	**6V-8636**	1	CONNECTOR	
	20	1	**2H-0435**	2	CLAMP	
	21	1	**3K-0360**	1	SEAL-O-RING	
	22	1	**5P-7462**	1	CLIP (SLOT)	
	23	1	**5P-7463**	1	CLIP (TAB)	
	24	1	**6V-0683**	1	GROMMET	
	25	1	**6V-8397**	3	SEAL-O-RING	
M	26	1	**7X-2543**	3	BOLT (M10X1.5X120-MM)	
	27	1	**8T-4121**	2	WASHER-HARD (11X21X2.5-MM THK)	
M	28	1	**8T-4195**	2	BOLT (M10X1.5X30-MM)	
	29	1	**8T-7934**	3	WASHER-HARD (11X21X5-MM THK)	
	30	1	**7X-2459**	1	TEE-O-RING	
	31	1	**3J-1907**	2	SEAL-O-RING	

271-9178 **VALVE GP-PUMP CONTROL (*contd.*)** **i03996982**

NOTE	REF NO	GRAPHIC REF	PART NUMBER	QTY	PART NAME 1 2 3 4 5 6 (PRODUCT LEVEL)	SEE PAGE

C - CHANGE FROM PREVIOUS TYPE
I - REFER TO HYDRAULIC INFORMATION SYSTEM
M - METRIC PART
Y - SEPARATE ILLUSTRATION

271-9178 **VALVE GP-PUMP CONTROL (*contd.*)** **i03996982**

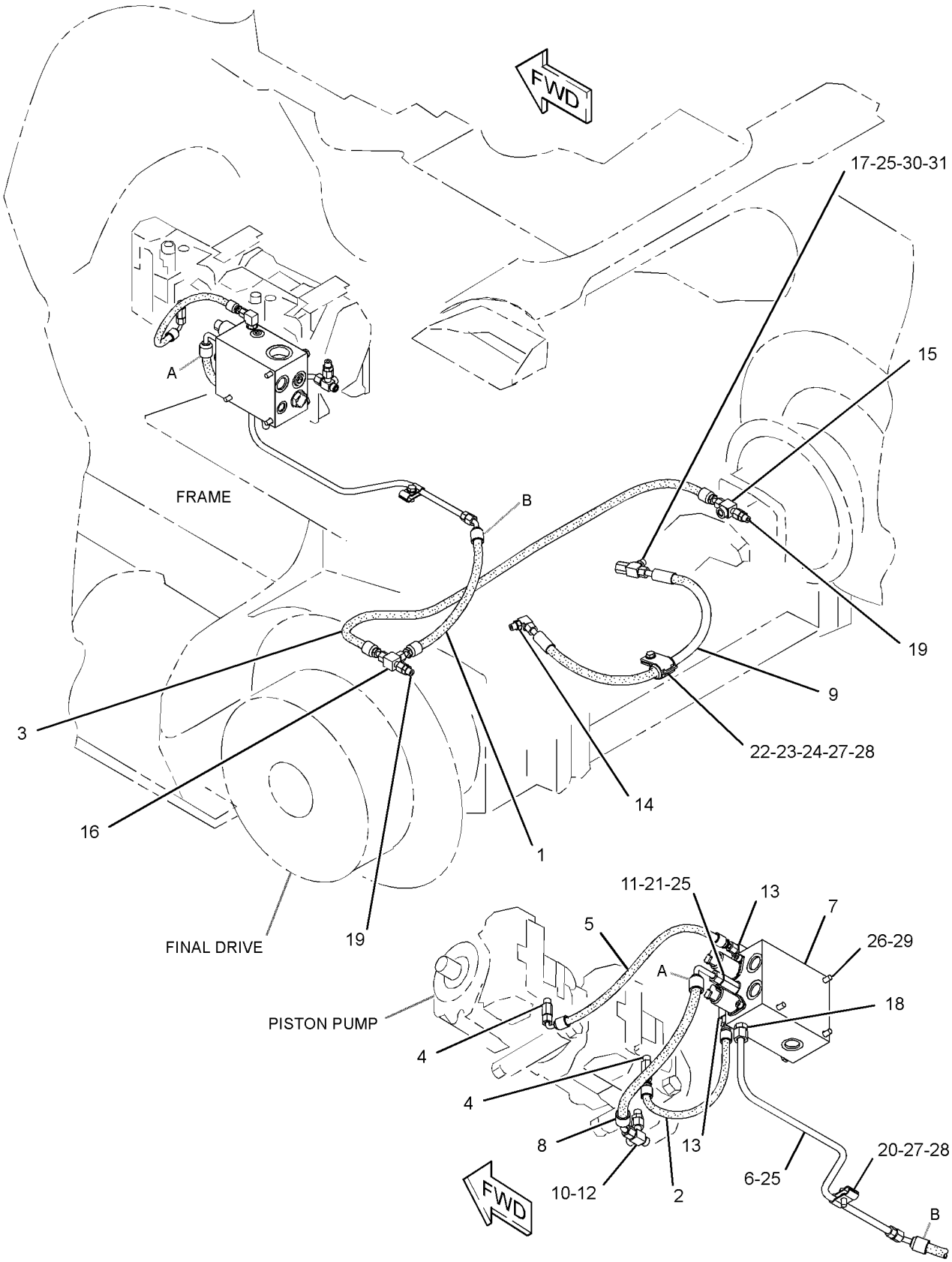

GRAPHIC #1 **<END>** g02033199

271-9178 VALVE GP-PUMP CONTROL

S/N: MMM611-UP

PART OF 244-7483 POWER TRAIN AR

SMCS-5455 **i04251450**

NOTE	REF NO	GRAPHIC REF	PART NUMBER	QTY	PART NAME 1 2 3 4 5 6 (PRODUCT LEVEL)	SEE PAGE
CI	1	1	**365-9587**	1	HOSE AS	
I	2	1	**135-7193**	1	HOSE AS	
I	3	1	**345-9625**	1	HOSE AS	
	4	1	*164-9640*	2	CONNECTOR AS	
					(EACH INCLUDES)	
		1	**3J-1907**	1	SEAL-O-RING	
		1	**4J-5477**	1	SEAL-O-RING	
		1	**145-2237**	1	CONNECTOR	
I	5	1	**185-3166**	1	HOSE AS	
C	6	1	**365-9591**	1	TUBE AS	
Y	7	1	**274-6747**	1	MANIFOLD GP-CONTROL (SERVICE BRAKE)	360
I	8	1	**285-3772**	1	HOSE AS	
I	9	1	**342-5337**	1	HOSE AS	
	10	1	*315-9855*	1	UNION AS-CROSS	
		1	**6V-8397**	2	SEAL-O-RING	
		1	**315-9854**	1	CROSS	
	11	1	**092-3635**	1	CONNECTOR	
	12	1	*148-8336*	1	CONNECTOR AS	
		1	**3J-1907**	1	SEAL-O-RING	
		1	**6V-8397**	1	SEAL-O-RING	
		1	**6V-8636**	1	CONNECTOR	
	13	1	*148-8368*	2	ELBOW AS	
					(EACH INCLUDES)	
		1	**3J-1907**	1	SEAL-O-RING	
		1	**4J-5477**	1	SEAL-O-RING	
		1	**6V-8627**	1	ELBOW	
	14	1	*148-8378*	1	ELBOW AS	
		1	**3J-1907**	1	SEAL-O-RING	
		1	**6V-8397**	1	SEAL-O-RING	
		1	**6V-8724**	1	ELBOW	
	15	1	*148-8424*	1	TEE AS	
		1	**6V-8397**	1	SEAL-O-RING	
		1	**8T-8902**	1	TEE	
	16	1	*148-8433*	1	TEE AS	
		1	**6V-8397**	2	SEAL-O-RING	
		1	**6V-9836**	1	TEE-SWIVEL	
	17	1	**341-0083**	1	CONNECTOR	
	18	1	*150-4043*	1	CONNECTOR AS	
		1	**3J-1907**	1	SEAL-O-RING	
		1	**6V-8398**	1	SEAL-O-RING	
		1	**6V-9873**	1	CONNECTOR	
	19	1	*155-7327*	2	CONNECTOR AS	
					(EACH INCLUDES)	
		1	**3J-1907**	1	SEAL-O-RING	
		1	**5H-8853**	1	SEAL-O-RING	
		1	**6V-8636**	1	CONNECTOR	
	20	1	**2H-0435**	2	CLAMP	
	21	1	**3K-0360**	1	SEAL-O-RING	
	22	1	**5P-7462**	1	CLIP (SLOT)	
	23	1	**5P-7463**	1	CLIP (TAB)	
	24	1	**6V-0683**	1	GROMMET	
	25	1	**6V-8397**	3	SEAL-O-RING	
M	26	1	**7X-2543**	3	BOLT (M10X1.5X120-MM)	
	27	1	**8T-4121**	2	WASHER-HARD (11X21X2.5-MM THK)	
M	28	1	**8T-4195**	2	BOLT (M10X1.5X30-MM)	
	29	1	**8T-7934**	3	WASHER-HARD (11X21X5-MM THK)	
	30	1	**7X-2459**	1	TEE-O-RING	
	31	1	**3J-1907**	2	SEAL-O-RING	

271-9178 **VALVE GP-PUMP CONTROL (*contd.*)** **i04251450**

NOTE	REF NO	GRAPHIC REF	PART NUMBER	QTY	PART NAME 1 2 3 4 5 6 (PRODUCT LEVEL)	SEE PAGE

C - CHANGE FROM PREVIOUS TYPE
I - REFER TO HYDRAULIC INFORMATION SYSTEM
M - METRIC PART
Y - SEPARATE ILLUSTRATION

271-9178 **VALVE GP-PUMP CONTROL (*contd.*)** **i04251450**

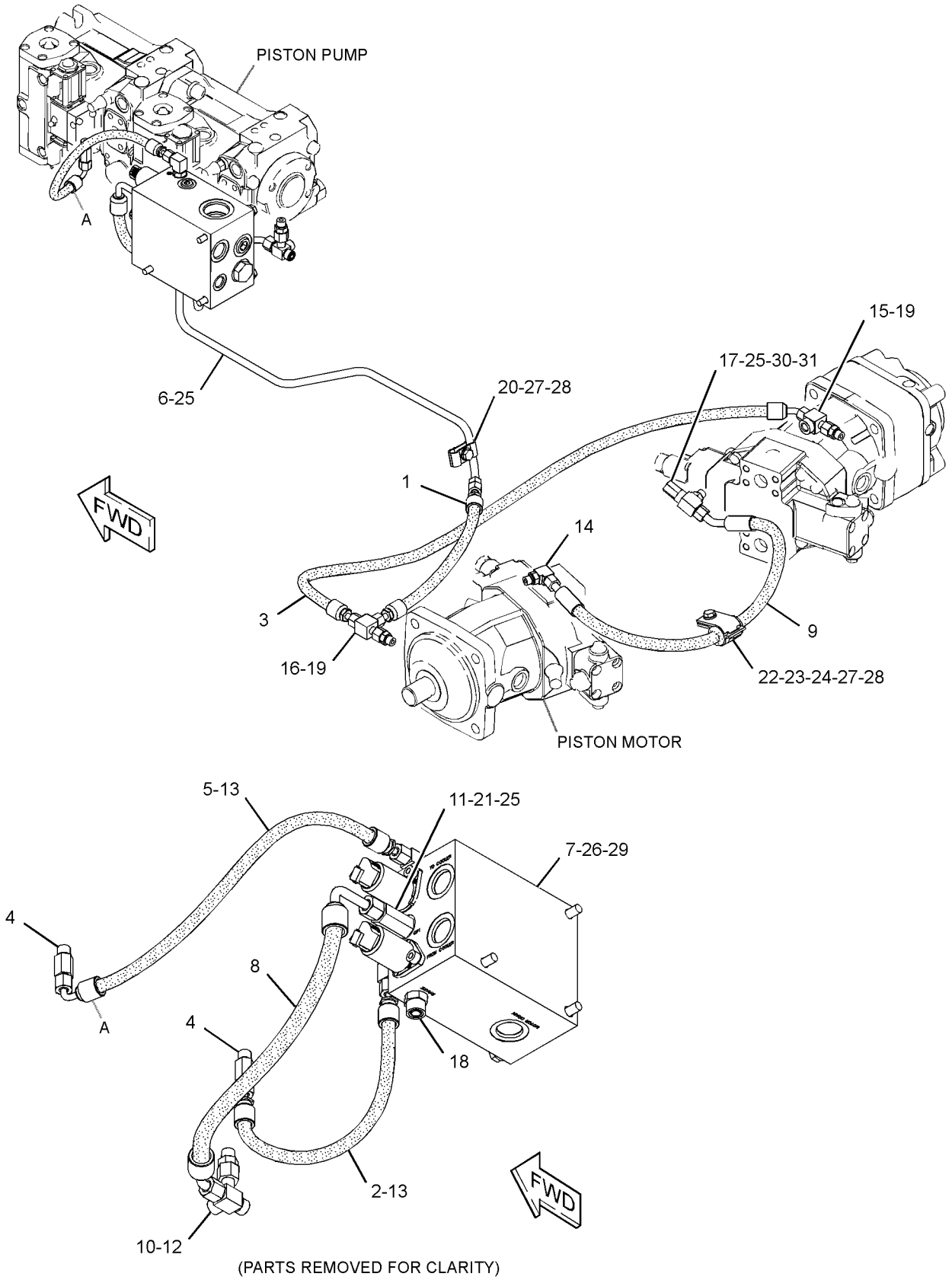

GRAPHIC #1 **<END>** g02492937

322-6507 VALVE GP-PUMP CONTROL

S/N: RRR1-UP

FIELD INSTALLATION

SMCS-5455 **i03005566**

NOTE	REF NO	GRAPHIC REF	PART NUMBER	QTY	PART NAME 1 2 3 4 5 6 (PRODUCT LEVEL)	SEE PAGE
I	1	1	**112-4851**	1	HOSE AS	
I	2	1	**135-7193**	1	HOSE AS	
I	3	1	**185-3166**	1	HOSE AS	
I	4	1	**261-8507**	1	HOSE AS	
	5	1	**272-3535**	1	TUBE AS	
Y	6	1	**274-6747**	1	MANIFOLD GP-CONTROL	360
I	7	1	**283-4936**	1	HOSE AS	
I	8	1	**285-3772**	1	HOSE AS	
	9	1	**315-9855**	1	UNION AS-CROSS	
	10	1	**092-3635**	1	CONNECTOR	
	11	1	*148-8325*	2	CONNECTOR AS	
					(EACH INCLUDES)	
		1	**3J-1907**	1	SEAL-O-RING	
		1	**4J-5477**	1	SEAL-O-RING	
		1	**6V-8641**	1	CONNECTOR	
	12	1	*148-8336*	1	CONNECTOR AS	
		1	**3J-1907**	1	SEAL-O-RING	
		1	**6V-8397**	1	SEAL-O-RING	
		1	**6V-8636**	1	CONNECTOR	
	13	1	*148-8368*	2	ELBOW AS	
					(EACH INCLUDES)	
		1	**3J-1907**	1	SEAL-O-RING	
		1	**4J-5477**	1	SEAL-O-RING	
		1	**6V-8627**	1	ELBOW	
	14	1	*148-8378*	1	ELBOW AS	
		1	**3J-1907**	1	SEAL-O-RING	
		1	**6V-8397**	1	SEAL-O-RING	
		1	**6V-8724**	1	ELBOW	
	15	1	*148-8439*	1	TEE AS	
		1	**3J-1907**	1	SEAL-O-RING	
		1	**6V-8397**	2	SEAL-O-RING	
		1	**6V-8774**	1	TEE	
	16	1	*148-8443*	2	TEE AS	
					(EACH INCLUDES)	
		1	**3J-1907**	1	SEAL-O-RING	
		1	**6V-8397**	1	SEAL-O-RING	
		1	**7X-2459**	1	TEE-O-RING	
	17	1	*150-4043*	1	CONNECTOR AS	
		1	**3J-1907**	1	SEAL-O-RING	
		1	**6V-8398**	1	SEAL-O-RING	
		1	**6V-9873**	1	CONNECTOR	
	18	1	**2H-0435**	2	CLAMP	
	19	1	**3K-0360**	1	SEAL-O-RING	
	20	1	**5P-7462**	1	CLIP (SLOT)	
	21	1	**5P-7463**	1	CLIP (TAB)	
	22	1	**6V-0683**	1	GROMMET	
	23	1	**6V-8397**	2	SEAL-O-RING	
M	24	1	**7X-2543**	3	BOLT (M10X1.5X120-MM)	
	25	1	**8M-2773**	3	CLIP	
	26	1	**8T-4121**	4	WASHER-HARD (11X21X2.5-MM THK)	
M	27	1	**8T-4191**	2	BOLT (M10X1.5X16-MM)	
M	28	1	**8T-4195**	2	BOLT (M10X1.5X30-MM)	
	29	1	**8T-7934**	3	WASHER-HARD (11X21X5-MM THK)	

I - REFER TO HYDRAULIC INFORMATION SYSTEM
M - METRIC PART
Y - SEPARATE ILLUSTRATION

322-6507 **VALVE GP-PUMP CONTROL (*contd.*)** **i03005566**

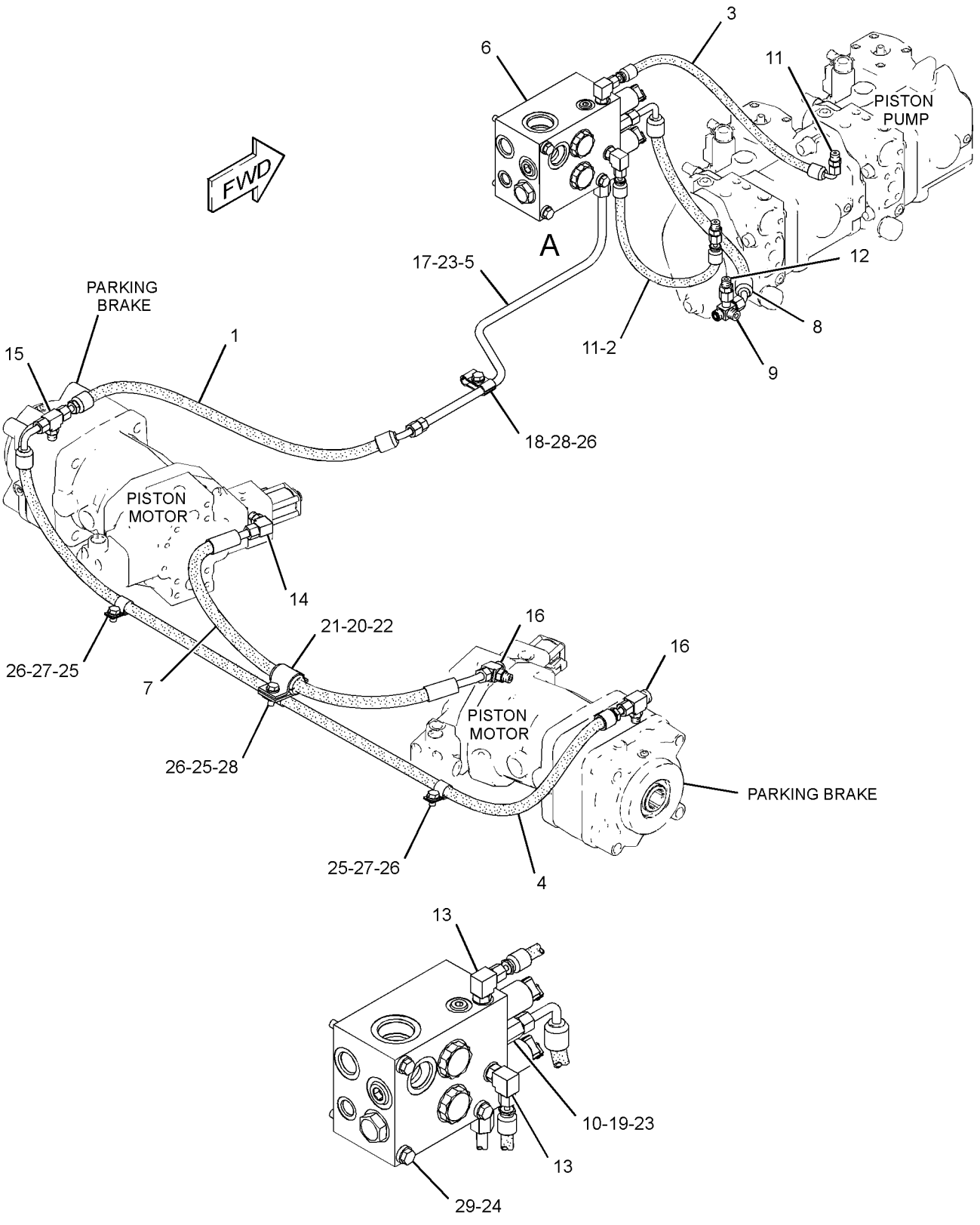

VIEW OF AREA A

GRAPHIC #1 **<END>** g01525902

154-9445 VALVE GP-RELIEF–PRESSURE OVERRIDE–HYDROSTATIC PUMP

S/N: MMM1-UP; RRR1-UP
PART OF 254-1379 PUMP GP-PISTON
AN ATTACHMENT

SMCS-3133, 3182

i03408141

NOTE	REF NO	GRAPHIC REF	PART NUMBER	QTY	PART NAME 1 2 3 4 5 6 (PRODUCT LEVEL)	SEE PAGE
J	1	1	**7Y-5219**	1	SEAL-O-RING	
J	2	1	**6V-5586**	1	SEAL-O-RING	
JM	3	1	**6E-1607**	1	LOCKNUT-SEALING	
					AVAILABLE REPAIR KIT(S):	
J			**122-9363**	1	KIT-SEAL (RELIEF VALVE)	

J - KIT MARKED J SERVICES PART(S) MARKED J
M - METRIC PART

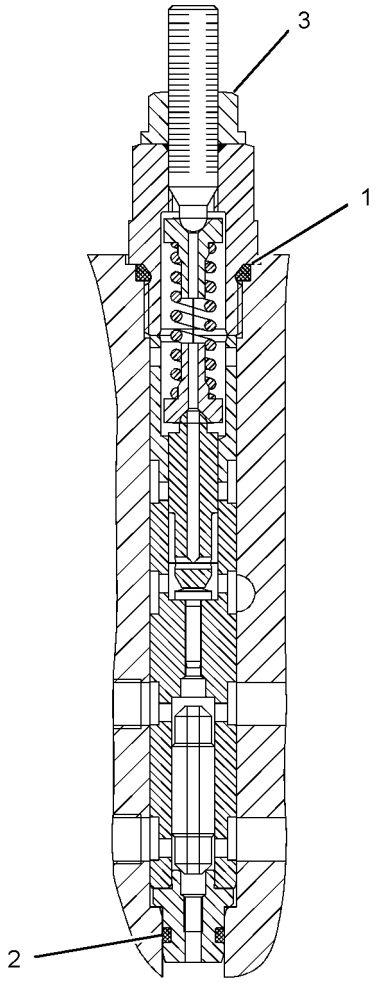

GRAPHIC #1

<END>

g01011120

177-7122 VALVE GP-RELIEF—CHARGE PRESSURE

S/N: MMM1-UP; RRR1-UP
FIELD REPLACEMENT ORDER 212-6679—PAGE: 422
PART OF 254-1379 PUMP GP-PISTON
AN ATTACHMENT

SMCS-3133, 3182 **i04403748**

NOTE	REF NO	GRAPHIC REF	PART NUMBER	QTY	PART NAME 1 2 3 4 5 6 (PRODUCT LEVEL)	SEE PAGE
	1	1	**6E-4404**	1	VALVE-POPPET	
	2	1	**167-7715**	1	RETAINER-SPRING	
	3	1	**112-4645**	1	SPRING	
	4	1	**6V-8352**	1	SEAL-O-RING	
	5	1	**112-4647**	1	SHIM (0.3-MM THK)	
	6	1	**177-7747**	1	RING	
					PARTS SHOWN IN GRAPHIC(S) WITHOUT A REFERENCE NUMBER ARE NOT SERVICED SEPARATELY	
					AVAILABLE REPAIR KIT(S):	
			215-7697	1	KIT-SHIM	
					(INCLUDES SHIMS)	

177-7122 **VALVE GP-RELIEF (*contd.*)** **i04403748**

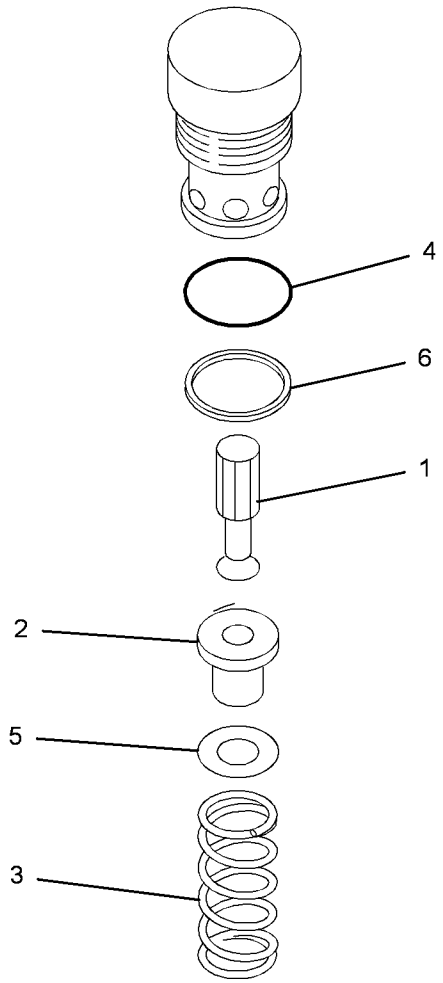

GRAPHIC #1 **<END>** g01422347

212-6679 VALVE GP-RELIEF

S/N: MMM1-UP; RRR1-UP
FIELD REPLACEMENT FOR 177-7122—PAGE: 420
PART OF 296-6707 HEAD GP-PUMP, 254-1379 PUMP GP-PISTON
AN ATTACHMENT

SMCS-3133, 3182, 5069, 5117 **i05208408**

NOTE	REF NO	GRAPHIC REF	PART NUMBER	QTY	PART NAME 1 2 3 4 5 6 (PRODUCT LEVEL)	SEE PAGE
	1	1	**6V-8352**	1	SEAL-O-RING	

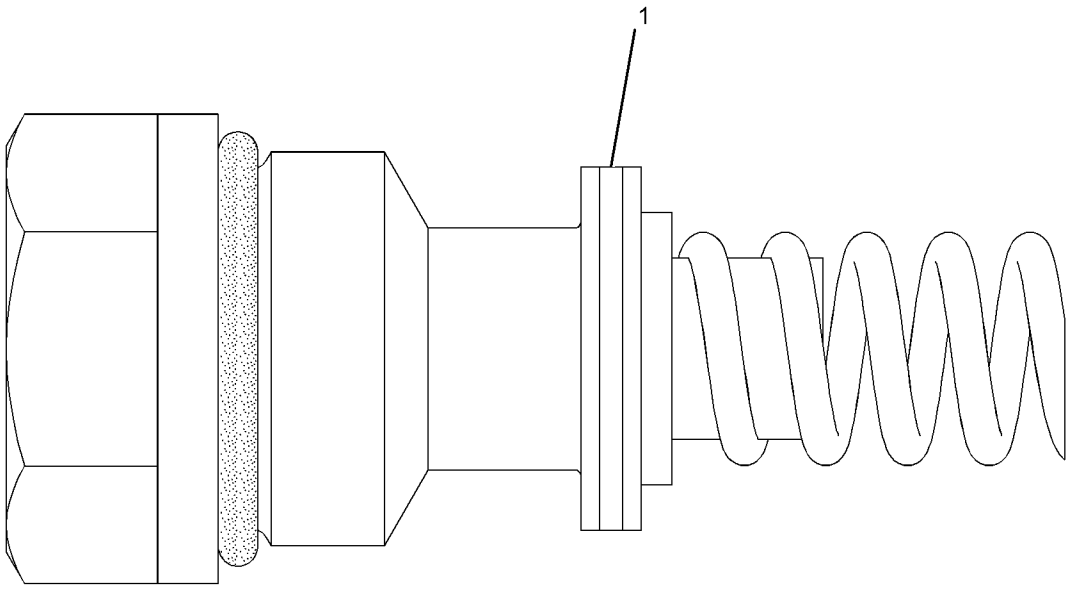

GRAPHIC #1 **<END>** g03035896

212-7035 VALVE GP-RELIEF–CROSSOVER

S/N: MMM1-UP; RRR1-UP
PART OF 254-1379 PUMP GP-PISTON
AN ATTACHMENT

SMCS-3133, 3182

i02832199

NOTE	REF NO	GRAPHIC REF	PART NUMBER	QTY	PART NAME 1 2 3 4 5 6 (PRODUCT LEVEL)	SEE PAGE
	1	1	**6V-5326**	1	SEAL-O-RING	
	2	1	**167-7713**	1	RING-BACKUP	

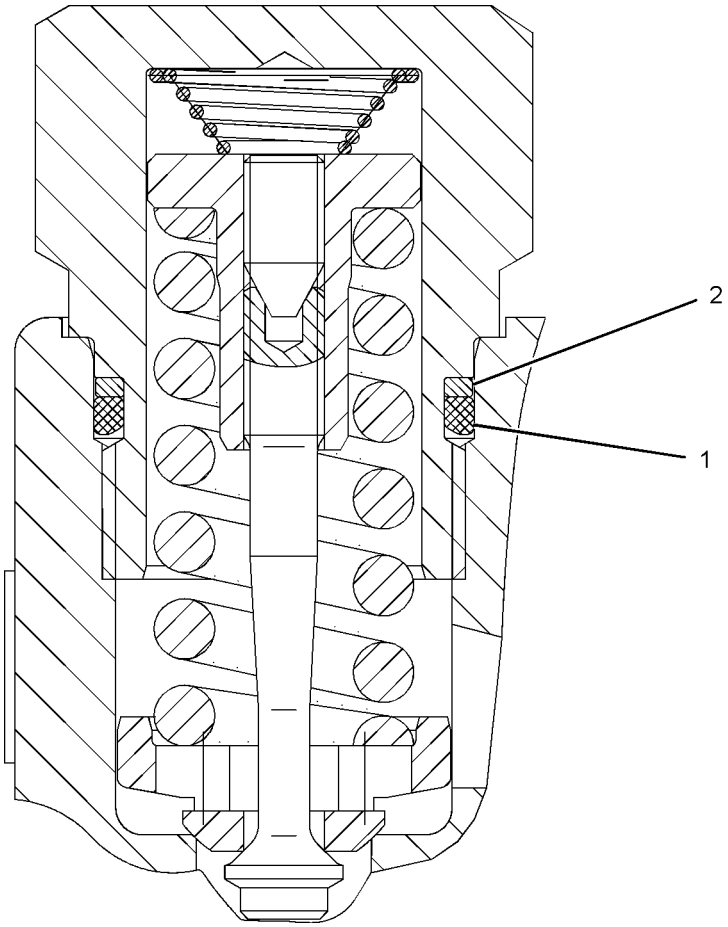

GRAPHIC #1

<END>

g01024349

293-5451 VALVE GP-SOLENOID–SERVO

S/N: MMM1-UP; RRR1-UP

PART OF 289-6385, 289-6386, 289-6387 PUMP GP-PISTON

AN ATTACHMENT

SMCS-4282, 5479

i03911514

NOTE	REF NO	GRAPHIC REF	PART NUMBER	QTY	PART NAME 1 2 3 4 5 6 (PRODUCT LEVEL)	SEE PAGE
	1	1	**269-4669**	1	SOLENOID AS (PILOT VALVE)	
		1	**217-3875**	1	SEAL-O-RING	
	2	1	**209-3565**	1	SEAL	
	3	1	**277-6631**	1	SPRING	
	4	1	**196-4253**	1	GASKET	
	5	1	**296-6705**	1	SOLENOID AS (WINCH PUMP)	
		1	**217-3875**	1	SEAL-O-RING	
		1	**247-7054**	1	COLLAR-LOCKING	
M	6	1	**8T-2922**	4	BOLT-SOCKET HEAD (M6X1X65-MM)	
M	7	1	**8C-6965**	1	BOLT-SOCKET HEAD (M6X1X45-MM)	
M	8	1	**099-0822**	8	BOLT-SOCKET HEAD (M5X0.8X10-MM)	
	9	1	**6J-3134**	1	SEAL-O-RING	
	10	1	**085-7539**	2	SEAL-O-RING	
	11	1	**196-4254**	2	SPRING	
	12	1	**6H-9691**	1	SEAL-O-RING	
	13	1	**215-8011**	1	BOLT-SPECIAL	
	14	1	**215-8010**	1	SHIM (3-MM THK)	
	15	1	**9S-8004**	1	PLUG-O-RING (STRAIGHT THREAD O-RING)	
	16	1	**3J-1907**	1	SEAL-O-RING	
	17	1	**236-5157**	1	SCREEN-FILTER (PILOT)	

M - METRIC PART

293-5451 **VALVE GP-SOLENOID (*contd.*)** **i03911514**

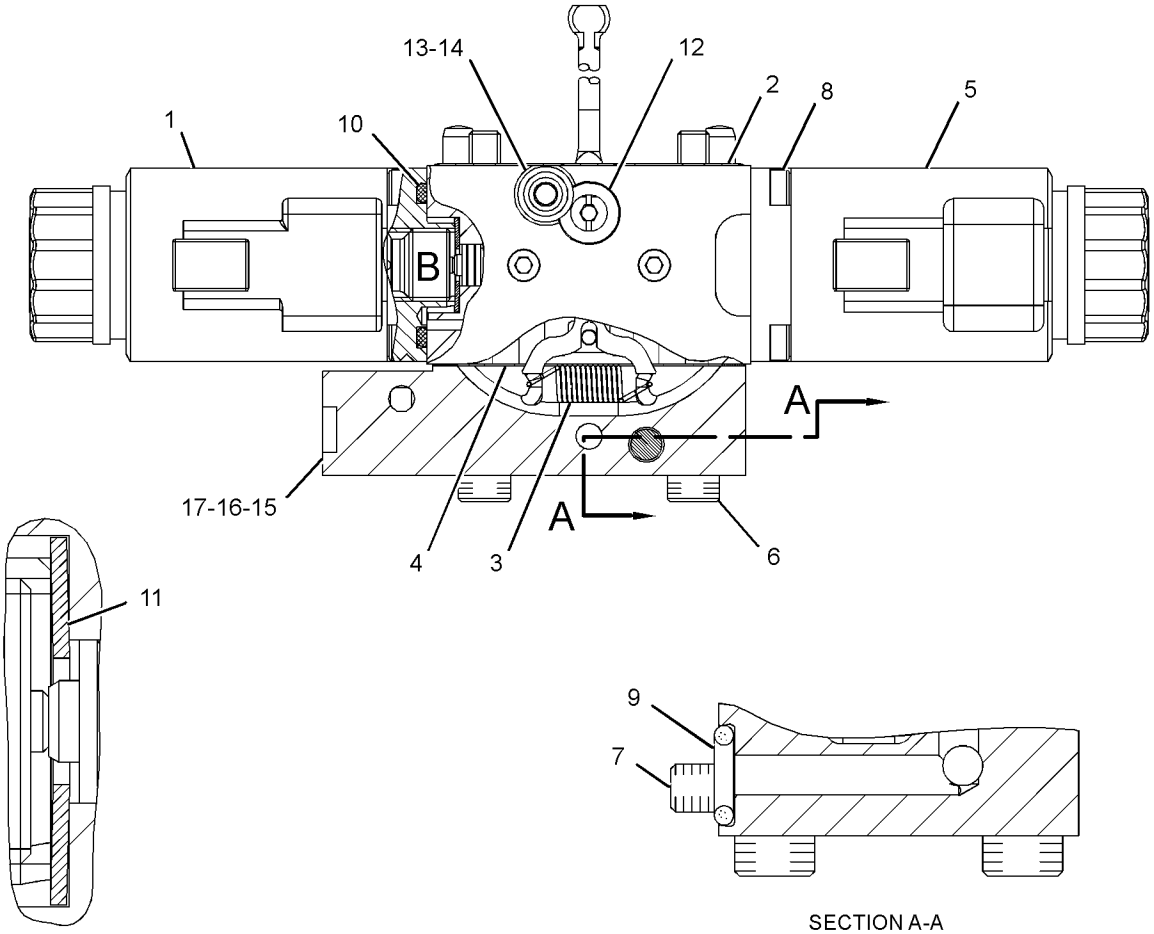

GRAPHIC #1 **<END>** g01378143

244-7516 COUNTERWEIGHT GP-FRONT

S/N: MMM1-UP; RRR1-UP
300.3-KG (662-LB)
CANNOT BE USED WITH 244-7503—PAGE: 456
AN ATTACHMENT

SMCS-7056 **i02918950**

NOTE	REF NO	GRAPHIC REF	PART NUMBER	QTY	PART NAME 1 2 3 4 5 6 (PRODUCT LEVEL)	SEE PAGE
	1	1	**256-8796**	1	COUNTERWEIGHT	
	2	1	**258-2111**	2	CAP	
	3	1	**198-4767**	8	WASHER-HARD (13.5X30X12-MM THK)	
M	4	1	**8T-5041**	4	BOLT (M12X1.75X120-MM)	
M	5	1	**8T-6868**	4	BOLT (M12X1.75X80-MM)	

M - METRIC PART

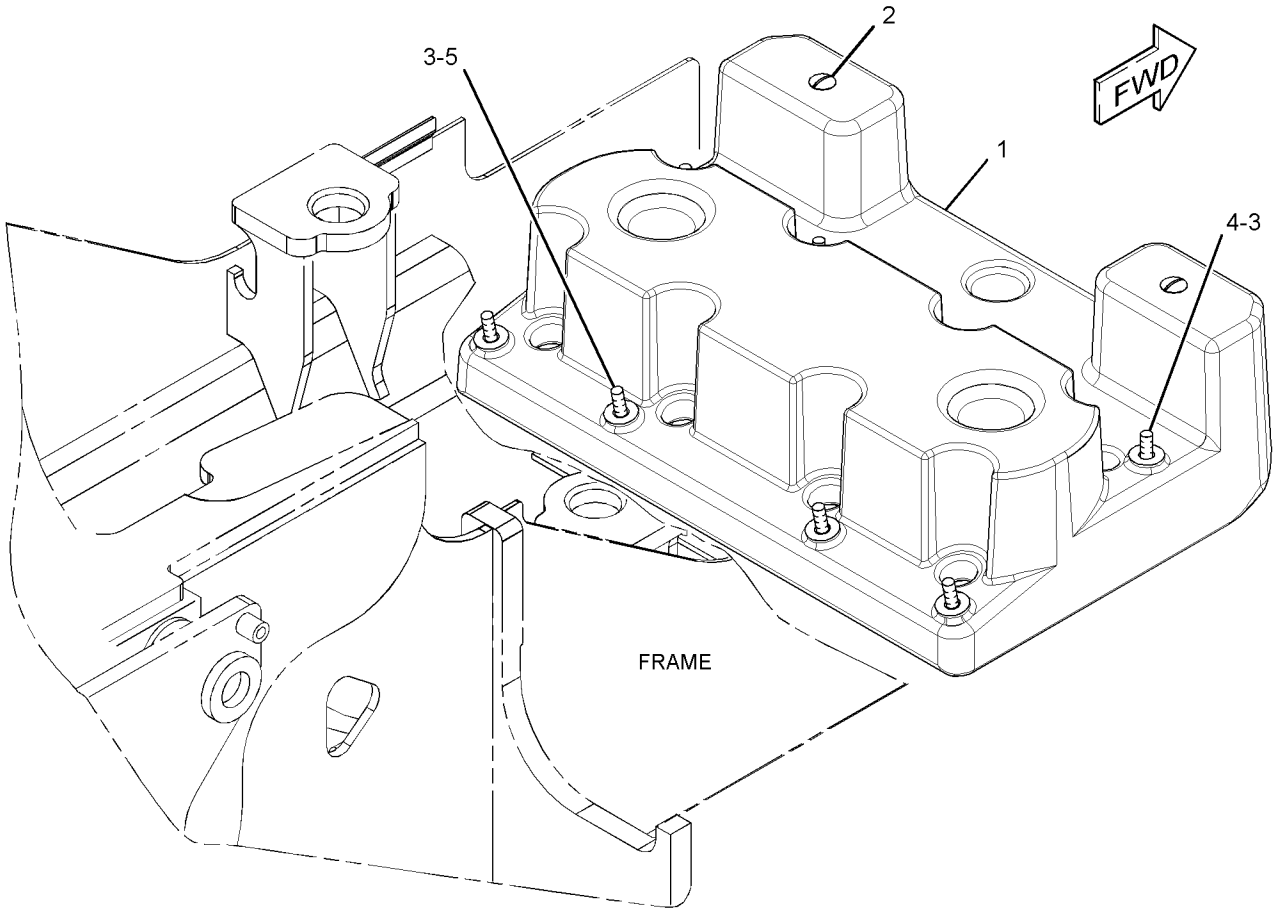

GRAPHIC #1 **<END>** g01578013

262-5868 COVER GP-ACCESS

S/N: MMM1-UP; RRR1-UP
PART OF 244-7398, 244-7399 FRAME GP
ALSO AN ATTACHMENT

SMCS-726A **i02819890**

NOTE	REF NO	GRAPHIC REF	PART NUMBER	QTY	PART NAME 1 2 3 4 5 6 (PRODUCT LEVEL)	SEE PAGE
	1	1	**7B-3028**	8	SCREW-DRIVE (NO 4X 3/16-IN)	
	2	1	**262-5867**	1	COVER	

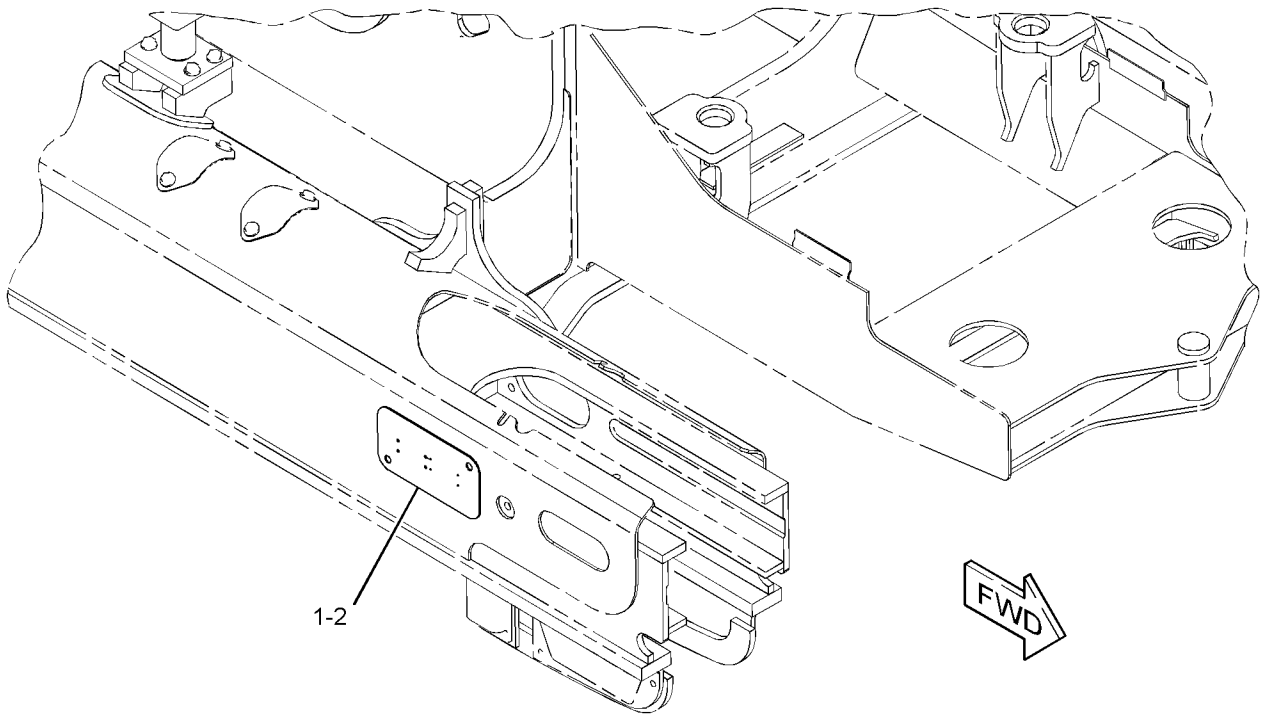

GRAPHIC #1 **<END>** g01407524

244-7433 DRAWBAR GP

S/N: MMM1-UP; RRR1-UP

CANNOT BE USED WITH 244-7517—PAGE: 933, 244-7434—PAGE: 462, 262-4407—PAGE: 935

AN ATTACHMENT

SMCS-7105, 7119

i05192273

NOTE	REF NO	GRAPHIC REF	PART NUMBER	QTY	PART NAME 1 2 3 4 5 6 (PRODUCT LEVEL)	SEE PAGE
	1	1	**5G-0792**	1	PIN	
	2	1	**5P-8837**	1	LOCK PIN	
	3	1	**274-7990**	1	PLATE-COVER	
	4	1	**299-3902**	1	DRAWBAR AS	
	5	1	**299-3903**	1	PLATE AS	
	6	1	**5P-1076**	4	WASHER-HARD (13.5X30X4-MM THK)	
M	7	1	**7X-2576**	4	BOLT (M24X3X70-MM)	
	8	1	**8T-4121**	4	WASHER-HARD (11X21X2.5-MM THK)	
M	9	1	**8T-4137**	7	BOLT (M10X1.5X20-MM)	
M	10	1	**8T-4139**	4	BOLT (M12X1.75X30-MM)	
	11	1	**8T-4167**	4	WASHER-HARD (26X44X4-MM THK)	
	12	1	**8T-4222**	3	WASHER-PLATED (11X32X2.5-MM THK)	
E	13	1	**9X-2092**		TRIM-EDGE (70-CM)	

E - ORDER BY THE CENTIMETER
M - METRIC PART

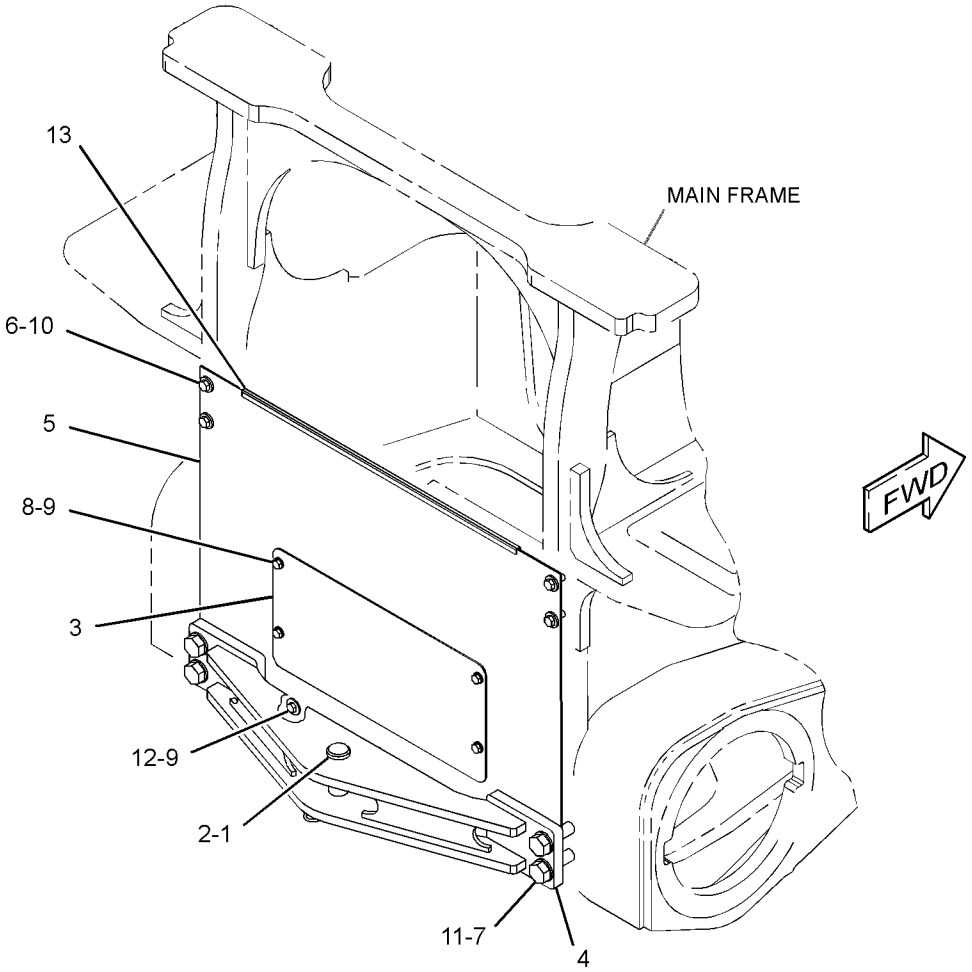

GRAPHIC #1

<END>

g03371099

244-7512 ENCLOSURE GP-PLATFORM

S/N: MMM1-551; RRR1-398

PART OF 244-7378, 244-7379 CHASSIS AR

SMCS-7253, 7301 **i04415989**

NOTE	REF NO	GRAPHIC REF	PART NUMBER	QTY	PART NAME 1 2 3 4 5 6 (PRODUCT LEVEL)	SEE PAGE
	1	1	**6H-5139**	1	PLATE-PRESSURE	
	2	1	**7H-1447**	1	CAP-FILLER (HYDRAULIC TANK)	
	3	1	**306-4998**	1	CAP GP-FUEL FILLER (LOCKABLE, VENTED)	
		1	**364-0856**	1	BOOT-FUEL CAP	
		1	**276-1243**	1	CAP-FUEL FILLER (LOCKABLE)	
		1	**279-9876**	1	FILTER ELEMENT-BREATHER (FUEL CAP)	
		1	**278-5684**	1	PLATE	
B	4	1	**216-0143**	4	SHIM (1-MM THK)	
	5	1	**256-2271**	1	ENCLOSURE AS	
	6	1	**256-2272**	1	ENCLOSURE AS	
	7	1	**260-0088**	2	BRACKET	
	10	1	**274-1923**	2	LOCK AS	
J	11	1	**275-0572**	1	LATCH AS	
	12	1	**275-0571**	1	CAM-LATCH	
	14	1	**301-7301**	1	ENCLOSURE AS	
	15	1	**301-7302**	1	FILLER AS	
	16	1	**301-7303**	1	FILLER AS	
	18	1	**4B-9782**	1	BALL	
M	20	1	**5C-2890**	8	NUT (M6X1-THD)	
	21	1	**5P-4116**	4	WASHER-HARD (8.8X20.5X2-MM THK)	
	22	1	**7X-7729**	20	WASHER (11X25X3-MM THK)	
M	23	1	**8T-4137**	8	BOLT (M10X1.5X20-MM)	
M	25	1	**8T-4195**	12	BOLT (M10X1.5X30-MM)	
M	27	1	**8T-7547**	4	BOLT (M8X1.25X30-MM)	
	28	1	**9H-6454**	1	GASKET	
	29	1	**9X-8256**	8	WASHER (6.6X12X2-MM THK)	
	30	1	**191-0286**	1	WASHER (23X32X1.6-MM THK)	
D	31	1	**8T-5372**		SEAL (0.2-M EACH)	

B - USE AS REQUIRED
D - ORDER BY THE METER
J - REQUIERS CORPORATE KEY
M - METRIC PART

244-7512 **ENCLOSURE GP-PLATFORM (*contd.*)** **i04415989**

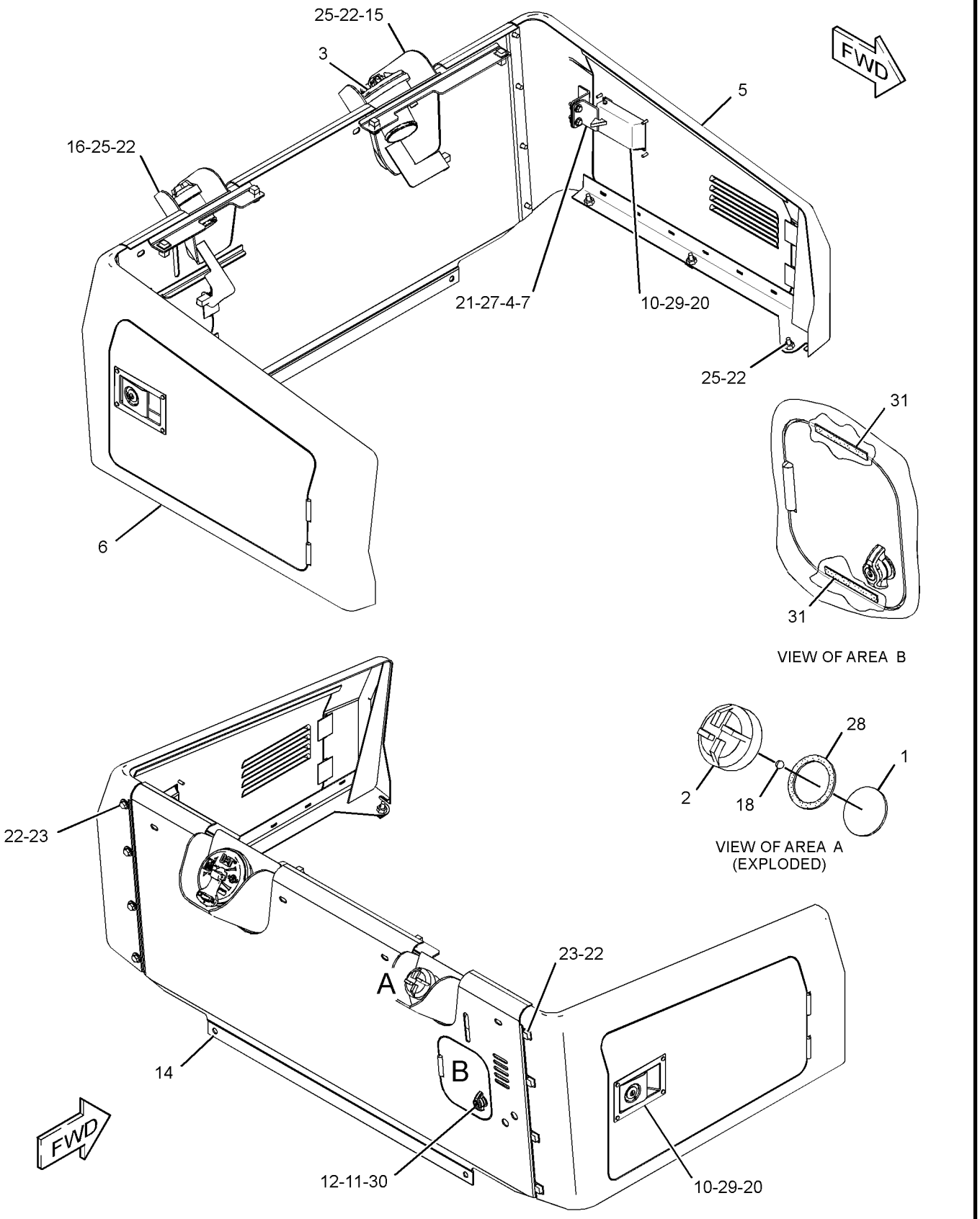

GRAPHIC #1 **<END>** g01408597

244-7512 ENCLOSURE GP-PLATFORM

S/N: MMM552-860; RRR399-662

PART OF 244-7378, 244-7379 CHASSIS AR

SMCS-7253, 7301 **i04047201**

NOTE	REF NO	GRAPHIC REF	PART NUMBER	QTY	PART NAME 1 2 3 4 5 6 (PRODUCT LEVEL)	SEE PAGE
	1	1	**6H-5139**	1	PLATE-PRESSURE	
	2	1	**7H-1447**	1	CAP-FILLER (HYDRAULIC TANK)	
	3	1	**306-4998**	1	CAP GP-FUEL FILLER (LOCKABLE, VENTED)	
		1	**276-1243**	1	CAP-FUEL FILLER (LOCKABLE)	
		1	**279-9876**	1	FILTER ELEMENT-BREATHER (FUEL CAP)	
		1	**364-0856**	1	BOOT-FUEL CAP	
B	4	1	**216-0143**	4	SHIM (1-MM THK)	
	5	1	**256-2271**	1	ENCLOSURE AS	
	6	1	**256-2272**	1	ENCLOSURE AS	
	7	1	**260-0088**	2	BRACKET	
	10	1	**274-1923**	2	LOCK AS	
J	11	1	**275-0572**	1	LATCH AS	
	12	1	**275-0571**	1	CAM-LATCH	
C	14	1	**340-4528**	1	PANEL AS-ENCLOSURE	
	15	1	**301-7302**	1	FILLER AS	
	16	1	**301-7303**	1	FILLER AS	
	18	1	**4B-9782**	1	BALL	
M	20	1	**5C-2890**	8	NUT (M6X1-THD)	
	21	1	**5P-4116**	4	WASHER-HARD (8.8X20.5X2-MM THK)	
	22	1	**7X-7729**	20	WASHER (11X25X3-MM THK)	
M	23	1	**8T-4137**	8	BOLT (M10X1.5X20-MM)	
M	25	1	**8T-4195**	12	BOLT (M10X1.5X30-MM)	
M	27	1	**8T-7547**	4	BOLT (M8X1.25X30-MM)	
	28	1	**9H-6454**	1	GASKET	
	29	1	**9X-8256**	8	WASHER (6.6X12X2-MM THK)	
	30	1	**191-0286**	1	WASHER (23X32X1.6-MM THK)	

B - USE AS REQUIRED
C - CHANGE FROM PREVIOUS TYPE
J - REQUIRES CORPORATE KEY
M - METRIC PART

244-7512 **ENCLOSURE GP-PLATFORM (*contd.*)** **i04047201**

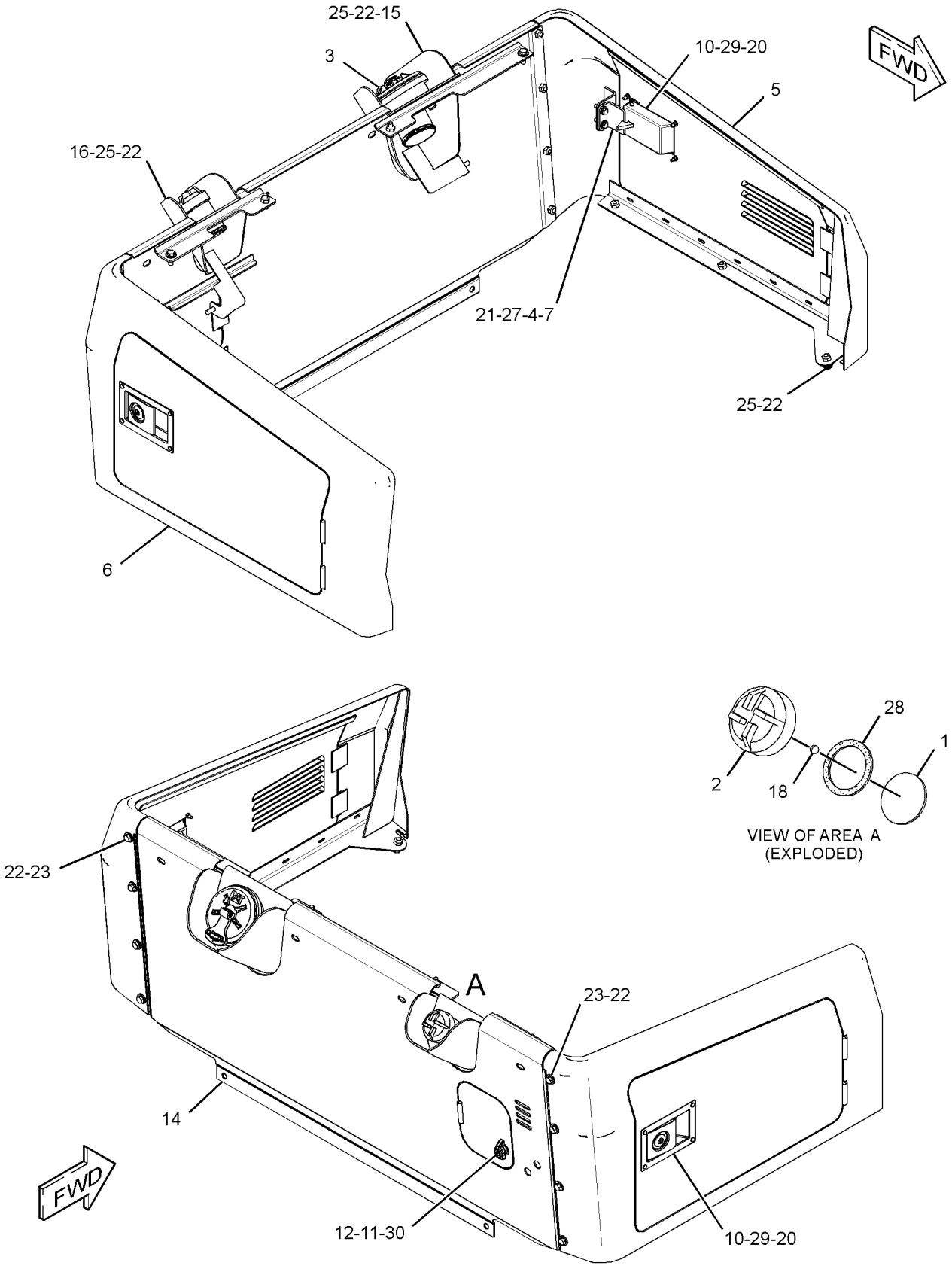

GRAPHIC #1 **<END>** g02494518

244-7512 ENCLOSURE GP-PLATFORM

S/N: MMM861-UP; RRR663-UP

PART OF 244-7378, 244-7379 CHASSIS AR

SMCS-7253, 7301 **i04916733**

NOTE	REF NO	GRAPHIC REF	PART NUMBER	QTY	PART NAME 1 2 3 4 5 6 (PRODUCT LEVEL)	SEE PAGE
	1	1	**6H-5139**	1	PLATE-PRESSURE	
	2	1	**7H-1447**	1	CAP-FILLER (HYDRAULIC TANK)	
	3	1	**306-4998**	1	CAP GP-FUEL FILLER (LOCKABLE, VENTED)	
		1	**276-1243**	1	CAP-FUEL FILLER (LOCKABLE)	
		1	**279-9876**	1	FILTER ELEMENT-BREATHER (FUEL CAP)	
		1	**364-0856**	1	BOOT-FUEL CAP	
B	4	1	**216-0143**	4	SHIM (1-MM THK)	
	5	1	**256-2271**	1	ENCLOSURE AS	
	6	1	**256-2272**	1	ENCLOSURE AS	
	7	1	**260-0088**	2	BRACKET	
C	10	1	**358-0921**	2	LATCH AS	
J	11	1	**275-0572**	1	LATCH AS	
	12	1	**275-0571**	1	CAM-LATCH	
	14	1	**340-4528**	1	PANEL AS-ENCLOSURE	
	15	1	**301-7302**	1	FILLER AS	
	16	1	**301-7303**	1	FILLER AS	
	18	1	**4B-9782**	1	BALL	
M	20	1	**5C-2890**	8	NUT (M6X1-THD)	
	21	1	**5P-4116**	4	WASHER-HARD (8.8X20.5X2-MM THK)	
	22	1	**7X-7729**	20	WASHER (11X25X3-MM THK)	
M	23	1	**8T-4137**	8	BOLT (M10X1.5X20-MM)	
M	25	1	**8T-4195**	12	BOLT (M10X1.5X30-MM)	
M	27	1	**8T-7547**	4	BOLT (M8X1.25X30-MM)	
	28	1	**9H-6454**	1	GASKET	
	29	1	**9X-8256**	8	WASHER (6.6X12X2-MM THK)	
	30	1	**191-0286**	1	WASHER (23X32X1.6-MM THK)	

B - USE AS REQUIRED
C - CHANGE FROM PREVIOUS TYPE
J - REQUIRES CORPORATE KEY
M - METRIC PART

244-7512 **ENCLOSURE GP-PLATFORM (*contd.*)** **i04916733**

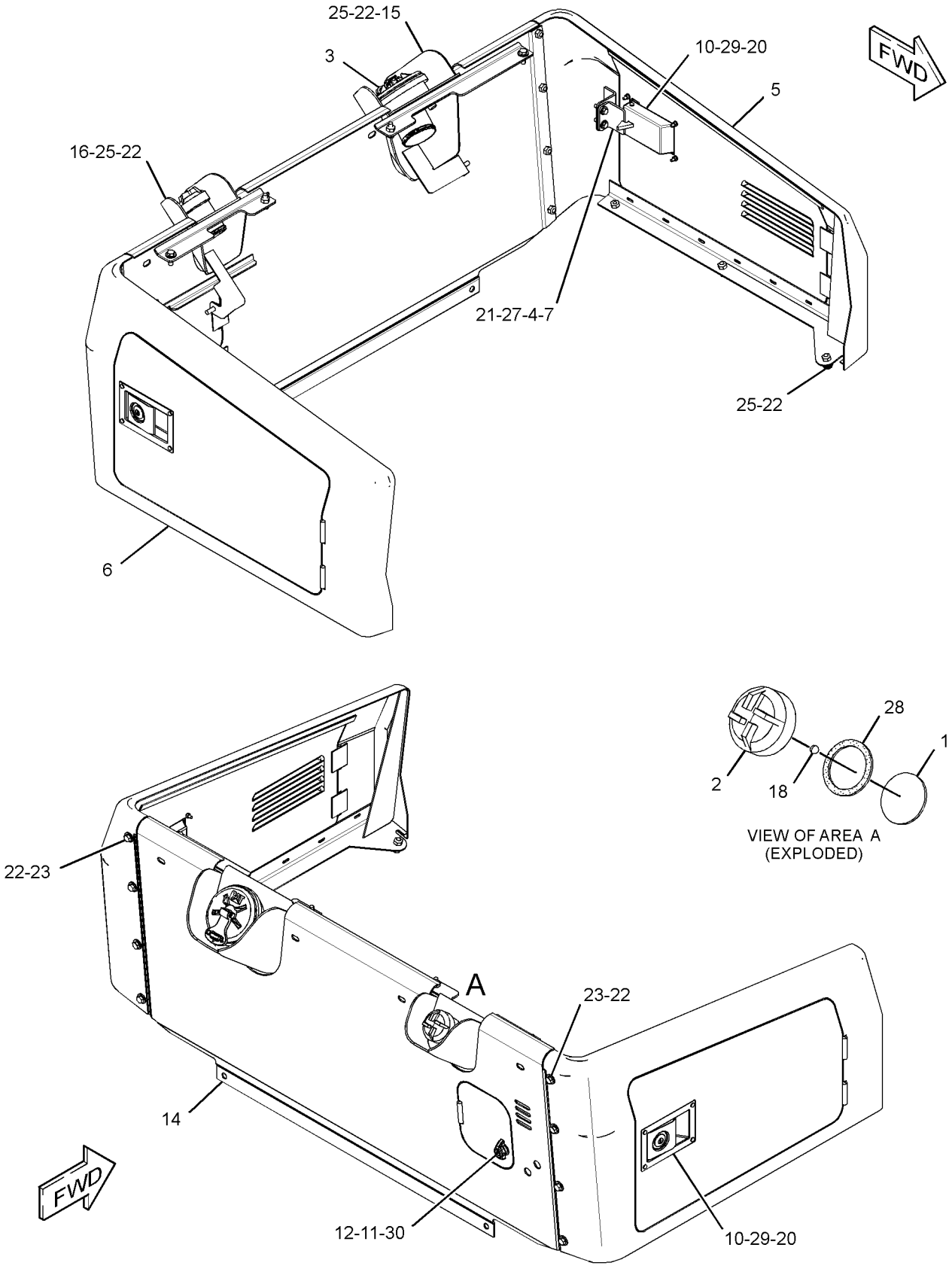

GRAPHIC #1 **<END>** g02494518

323-7320 ENCLOSURE GP-PLATFORM–FIRE PLOW

S/N: MMM1-UP; RRR1-UP
PART OF 325-6498, 325-6499 MODIFICATION AR, 344-7614 SPECIAL AR
AN ATTACHMENT

SMCS-7253, 7301

i04141169

NOTE	REF NO	GRAPHIC REF	PART NUMBER	QTY	PART NAME 1 2 3 4 5 6 (PRODUCT LEVEL)	SEE PAGE
	1	1	**323-7319**	1	PANEL AS-ENCLOSURE (LH)	
	2	1	**317-9767**	1	PANEL AS-ENCLOSURE (RH)	

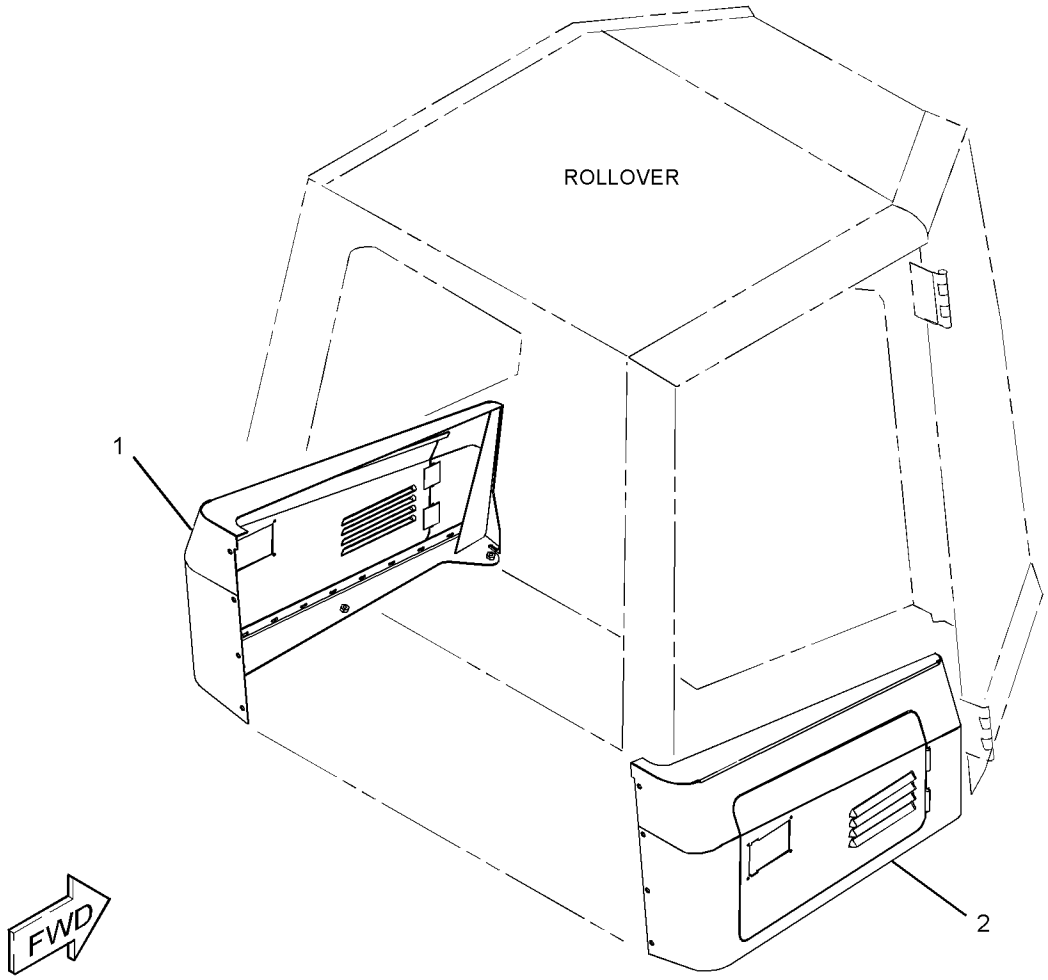

GRAPHIC #1

<END>

g02005995

244-7398 FRAME GP

S/N: MMM1-UP

PART OF 244-7378 CHASSIS AR, 325-6506 FRAME GP

ALSO AN ATTACHMENT

SMCS-7050, 7051

i03996610

NOTE	REF NO	GRAPHIC REF	PART NUMBER	QTY	PART NAME 1 2 3 4 5 6 (PRODUCT LEVEL)	SEE PAGE
	1	1	**211-5941**	8	SPACER (13.9X21.3X8-MM THK)	
	2	1	**254-8752**	1	FRAME AS	
	3	1	**254-8880**	1	SUPPORT AS (HOOD)	
	4	1	**256-2269**	1	PLATE AS	
	5	1	**262-5866**	2	COVER	
Y	6	1	*262-5868*	2	COVER GP-ACCESS	427
	8	1	**271-2734**	2	PIN AS	
	9	1	**293-6145**	1	PLATE	
	10	1	**5P-1076**	11	WASHER-HARD (13.5X30X4-MM THK)	
	11	1	**7X-0590**	8	WASHER-HARD (13.5X44.5X6-MM THK)	
	12	1	**7X-7729**	10	WASHER (11X25X3-MM THK)	
M	13	1	**8T-4137**	2	BOLT (M10X1.5X20-MM)	
M	14	1	**8T-4179**	2	BOLT (M12X1.75X20-MM)	
M	16	1	**8T-4196**	8	BOLT (M10X1.5X35-MM)	
M	19	1	**8T-4956**	13	BOLT (M12X1.75X35-MM)	
E	20	1	**123-3827**		SEAL (198-CM)	
M	21	1	**8T-4139**	4	BOLT (M12X1.75X30-MM)	

E - ORDER BY THE CENTIMETER
M - METRIC PART
Y - SEPARATE ILLUSTRATION

244-7398 **FRAME GP (*contd.*)** **i03996610**

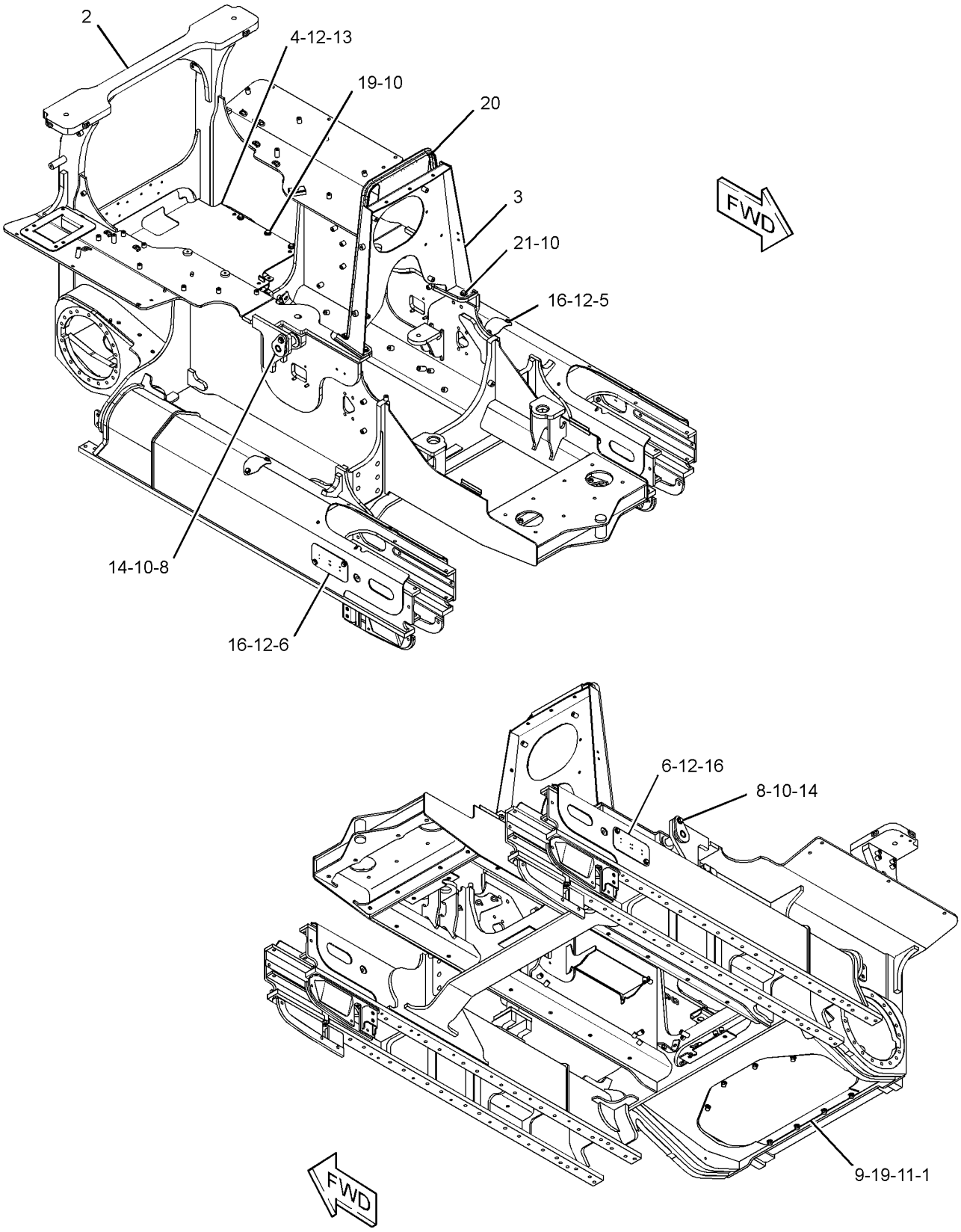

GRAPHIC #1 **<END>** g02369356

244-7399 FRAME GP

S/N: RRR1-666

PART OF 244-7379 CHASSIS AR, 325-6507 FRAME GP

ALSO AN ATTACHMENT

SMCS-7050, 7051

i03996613

NOTE	REF NO	GRAPHIC REF	PART NUMBER	QTY	PART NAME 1 2 3 4 5 6 (PRODUCT LEVEL)	SEE PAGE
	1	1	**211-5941**	8	SPACER (13.9X21.3X8-MM THK)	
	2	1	**254-8753**	1	FRAME AS	
	3	1	**254-8880**	1	SUPPORT AS (HOOD)	
	4	1	**256-2269**	1	PLATE AS	
	5	1	**262-5866**	2	COVER	
Y	6	1	*262-5868*	2	COVER GP-ACCESS	427
	8	1	**271-2734**	2	PIN AS	
	9	1	**276-2430**	1	COVER	
	10	1	**276-2431**	1	COVER	
	11	1	**293-6144**	1	PLATE	
	12	1	**5P-1076**	17	WASHER-HARD (13.5X30X4-MM THK)	
	13	1	**7X-0590**	8	WASHER-HARD (13.5X44.5X6-MM THK)	
	14	1	**7X-7729**	10	WASHER (11X25X3-MM THK)	
M	15	1	**8T-4137**	2	BOLT (M10X1.5X20-MM)	
M	16	1	**8T-4179**	2	BOLT (M12X1.75X20-MM)	
M	18	1	**8T-4196**	8	BOLT (M10X1.5X35-MM)	
M	21	1	**8T-4956**	19	BOLT (M12X1.75X35-MM)	
E	22	1	**123-3827**		SEAL (198-CM)	
M	23	1	**8T-4139**	4	BOLT (M12X1.75X30-MM)	

E - ORDER BY THE CENTIMETER
M - METRIC PART
Y - SEPARATE ILLUSTRATION

244-7399 **FRAME GP (*contd.*)** **i03996613**

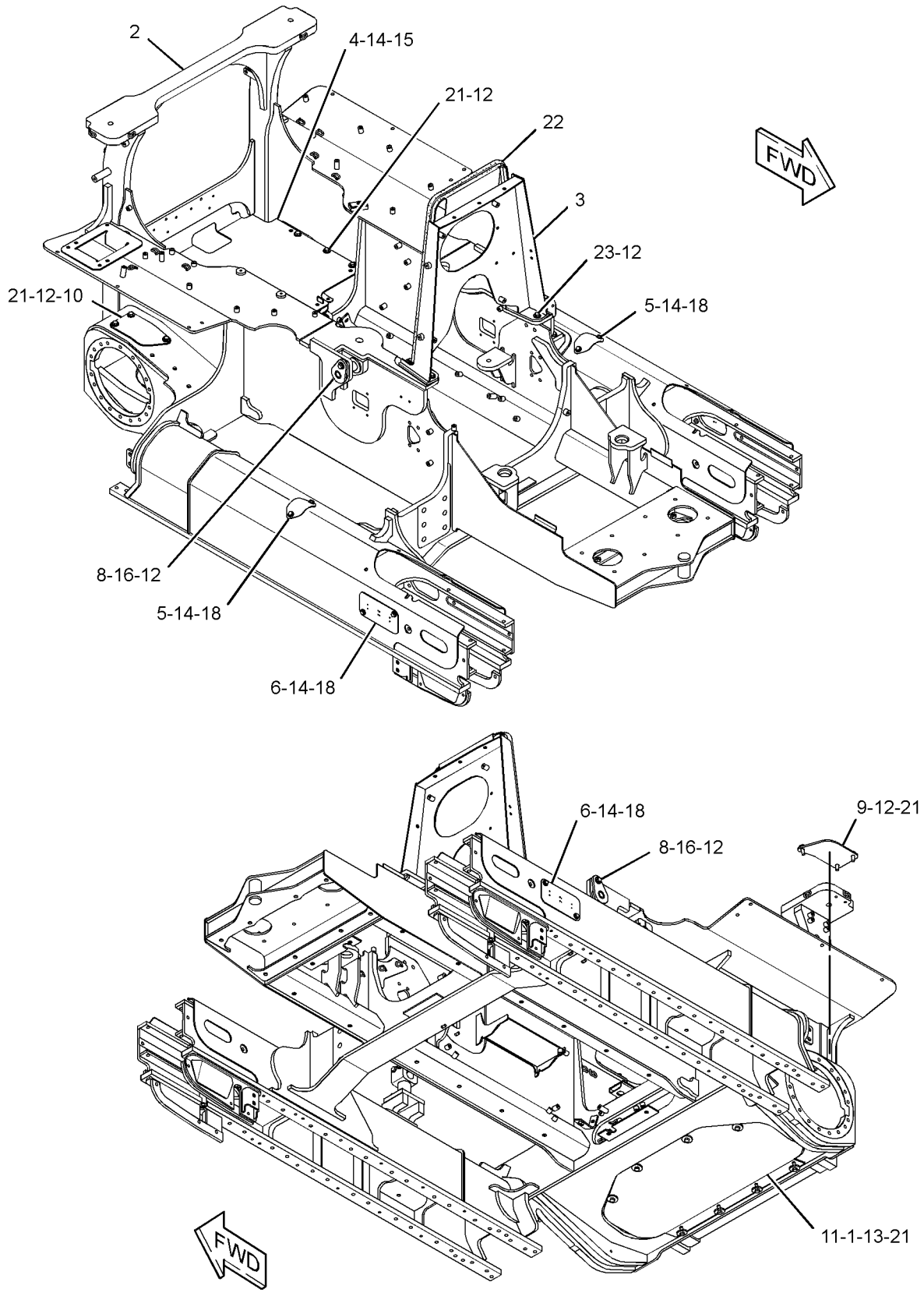

GRAPHIC #1 **<END>** g02361197

244-7399 FRAME GP

S/N: RRR667-UP
PART OF 244-7379 CHASSIS AR, 325-6507 FRAME GP
ALSO AN ATTACHMENT

SMCS-7050, 7051

i05343561

NOTE	REF NO	GRAPHIC REF	PART NUMBER	QTY	PART NAME 1 2 3 4 5 6 (PRODUCT LEVEL)	SEE PAGE
	1	1	**211-5941**	8	SPACER (13.9X21.3X8-MM THK)	
	2	1	**254-8753**	1	FRAME AS	
	3	1	**254-8880**	1	SUPPORT AS (HOOD)	
	4	1	**256-2269**	1	PLATE AS	
	5	1	**262-5866**	2	COVER	
Y	6	1	*262-5868*	2	COVER GP-ACCESS	427
	8	1	**271-2734**	2	PIN AS	
	11	1	**293-6144**	1	PLATE	
C	12	1	**5P-1076**	11	WASHER-HARD (13.5X30X4-MM THK)	
	13	1	**7X-0590**	8	WASHER-HARD (13.5X44.5X6-MM THK)	
	14	1	**7X-7729**	10	WASHER (11X25X3-MM THK)	
M	15	1	**8T-4137**	2	BOLT (M10X1.5X20-MM)	
M	16	1	**8T-4179**	2	BOLT (M12X1.75X20-MM)	
M	18	1	**8T-4196**	8	BOLT (M10X1.5X35-MM)	
CM	21	1	**8T-4956**	13	BOLT (M12X1.75X35-MM)	
E	22	1	**123-3827**		SEAL (198-CM)	
M	23	1	**8T-4139**	4	BOLT (M12X1.75X30-MM)	

C - CHANGE FROM PREVIOUS TYPE
E - ORDER BY THE CENTIMETER
M - METRIC PART
Y - SEPARATE ILLUSTRATION

244-7399 **FRAME GP (*contd.*)** **i05343561**

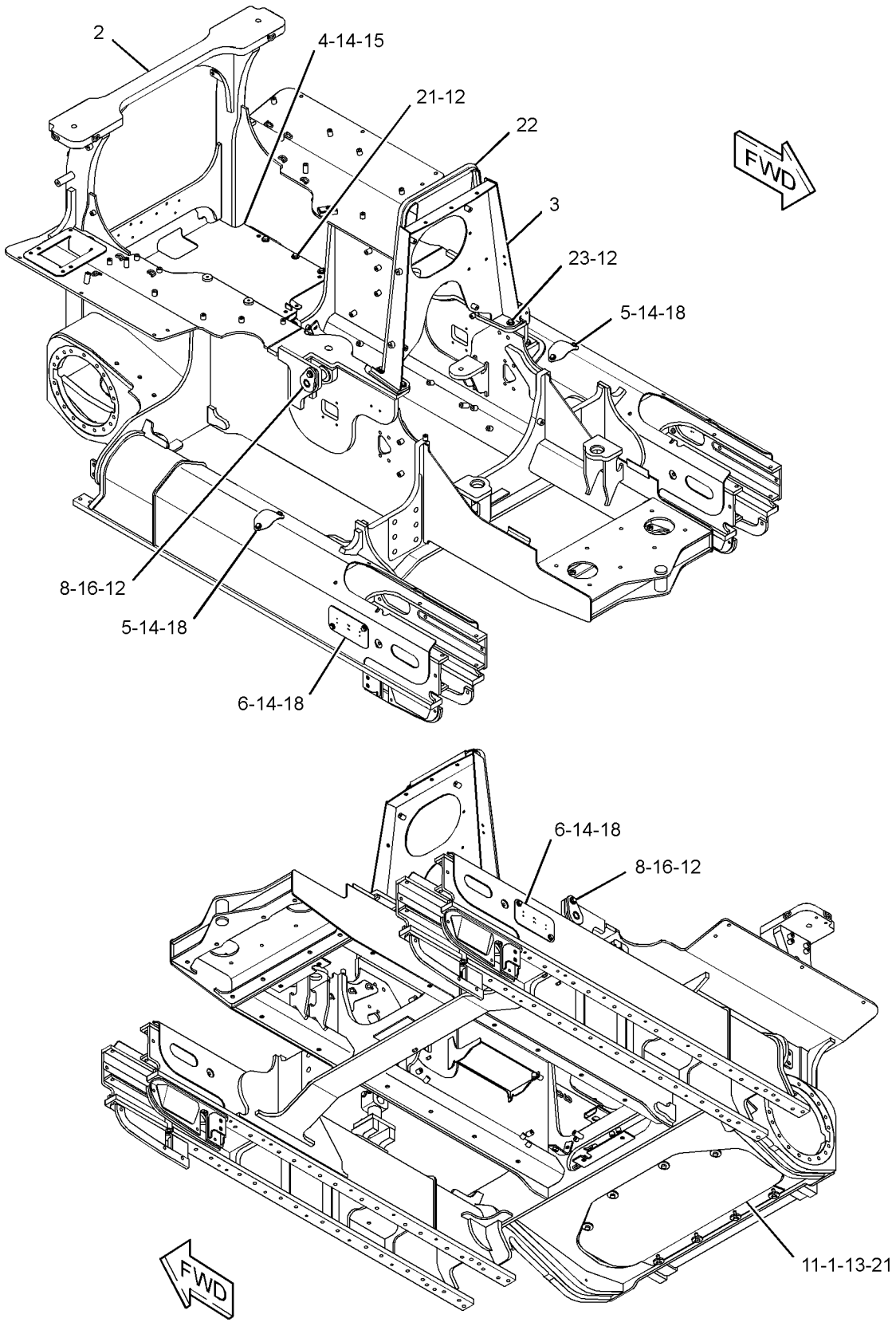

GRAPHIC #1 **<END>** g03412644

325-6506 FRAME GP

S/N: MMM1-UP
PART OF 325-6498 MODIFICATION AR, 344-7614 SPECIAL AR
AN ATTACHMENT

SMCS-7050, 7051

i03696049

NOTE	REF NO	GRAPHIC REF	PART NUMBER	QTY	PART NAME 1 2 3 4 5 6 (PRODUCT LEVEL)	SEE PAGE
	1	1	**8T-7038**	4	FILM-WARNING (DO NOT LIFT)	
Y	2	1	*244-7398*	1	FRAME GP	436
	3	1	*327-4552*	1	BRACKET AS	
M		1	**8T-3490**	5	NUT-WELD (M10X1.5-THD)	
M	4	1	**8T-3597**	2	NUT-WELD (M12X1.75-THD)	

M - METRIC PART
Y - SEPARATE ILLUSTRATION

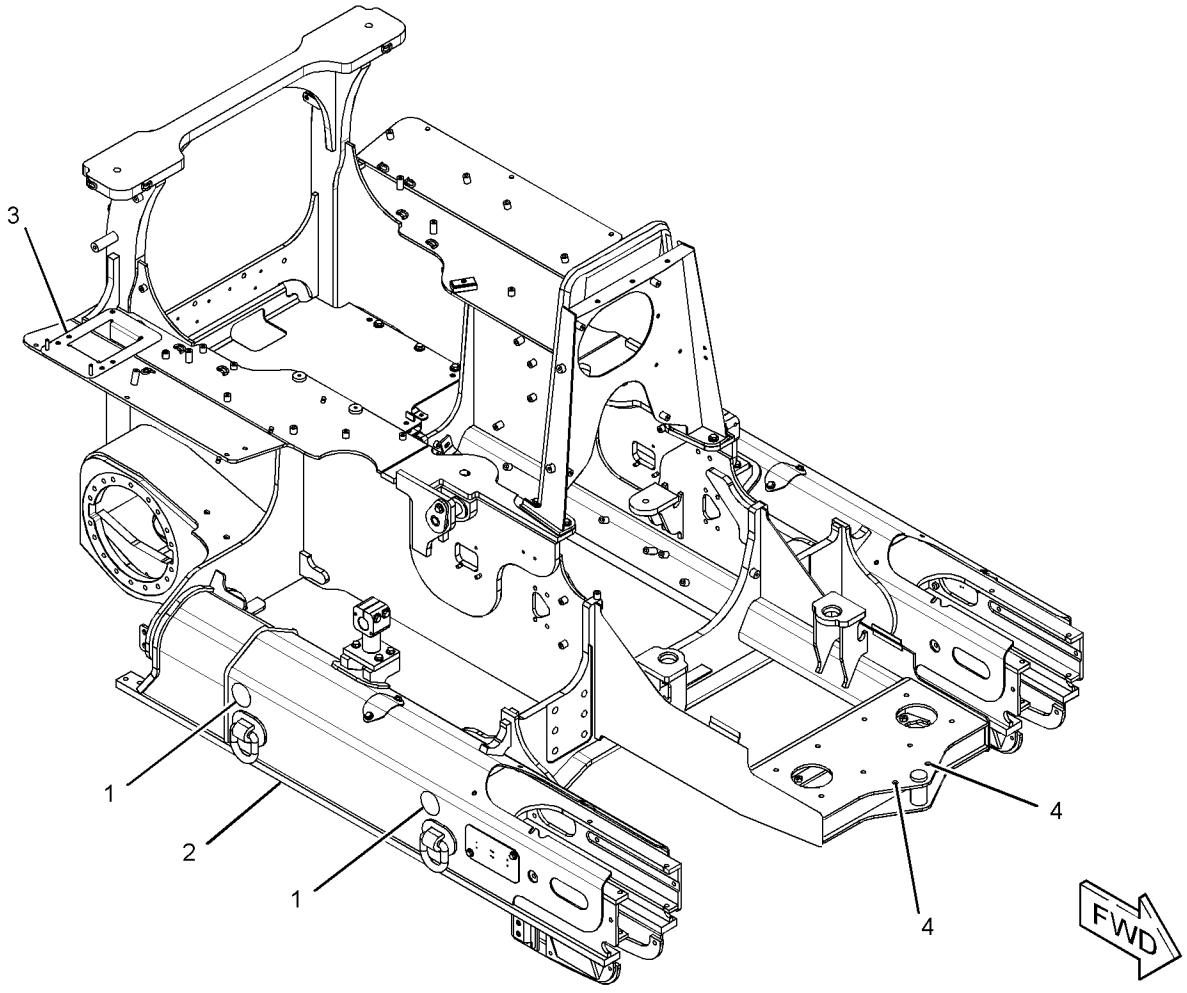

GRAPHIC #1

<END>

g02014133

325-6507 FRAME GP

S/N: RRR1-UP
PART OF 325-6499 MODIFICATION AR
AN ATTACHMENT

SMCS-7050, 7051

i03696143

NOTE	REF NO	GRAPHIC REF	PART NUMBER	QTY	PART NAME 1 2 3 4 5 6 (PRODUCT LEVEL)	SEE PAGE
	1	1	**8T-7038**	4	FILM-WARNING (DO NOT LIFT)	
Y	2	1	*244-7399*	1	FRAME GP	438
	3	1	*327-4552*	1	BRACKET AS	
M		1	**8T-3490**	5	NUT-WELD (M10X1.5-THD)	
M	4	1	**8T-3597**	2	NUT-WELD (M12X1.75-THD)	

M - METRIC PART
Y - SEPARATE ILLUSTRATION

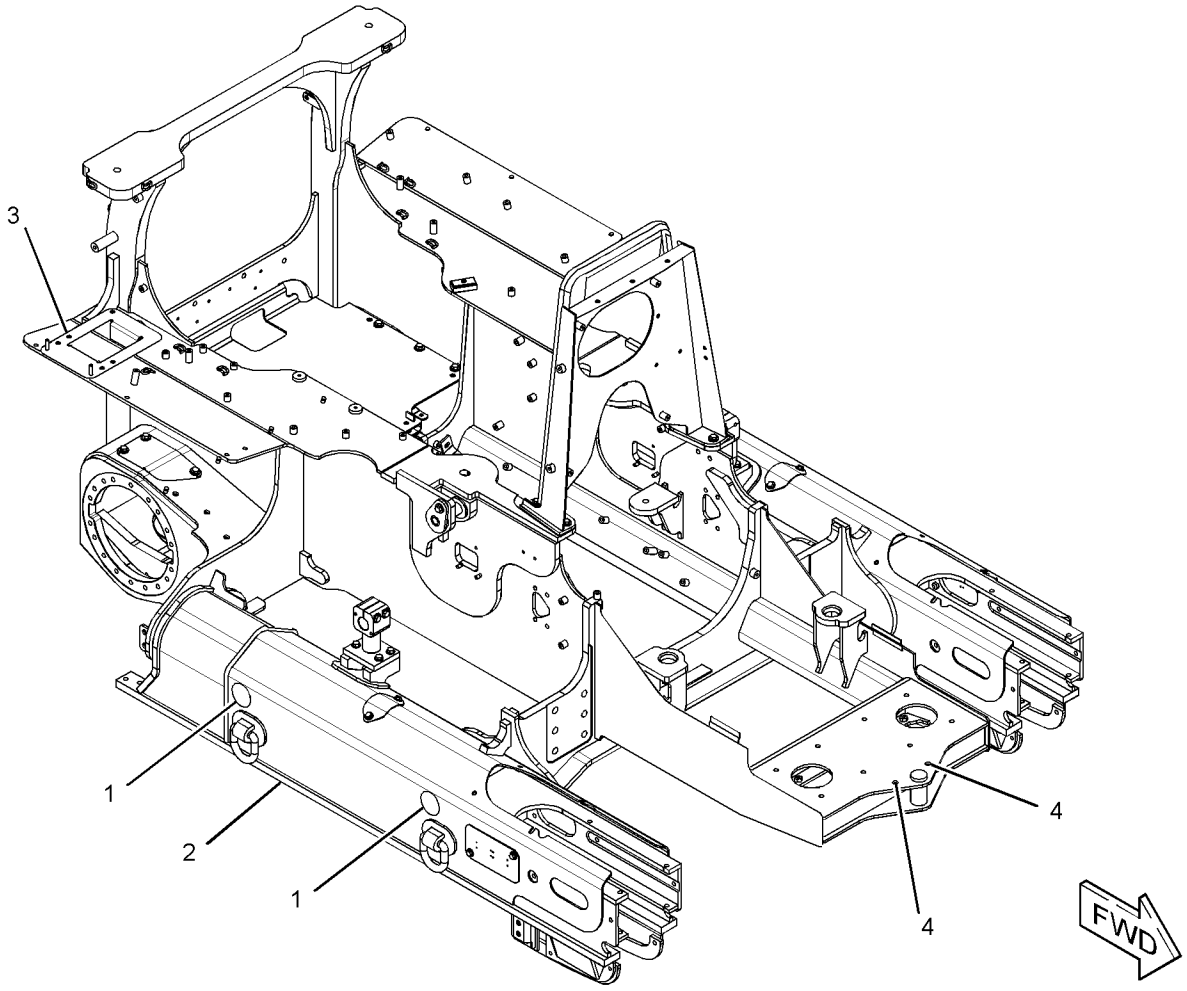

GRAPHIC #1

<END>

g02007097

244-7436 GRILL AR-RADIATOR—STANDARD

S/N: MMM1-UP; RRR1-UP
CANNOT BE USED WITH 244-7437—PAGE: 445
AN ATTACHMENT

SMCS-7170 **i03714728**

NOTE	REF NO	GRAPHIC REF	PART NUMBER	QTY	PART NAME 1 2 3 4 5 6 (PRODUCT LEVEL)	SEE PAGE
	1	1	**327-0939**	1	GRILL AS	
	2	1	**7X-7729**	6	WASHER (11X25X3-MM THK)	
M	3	1	**8T-4196**	6	BOLT (M10X1.5X35-MM)	

M - METRIC PART

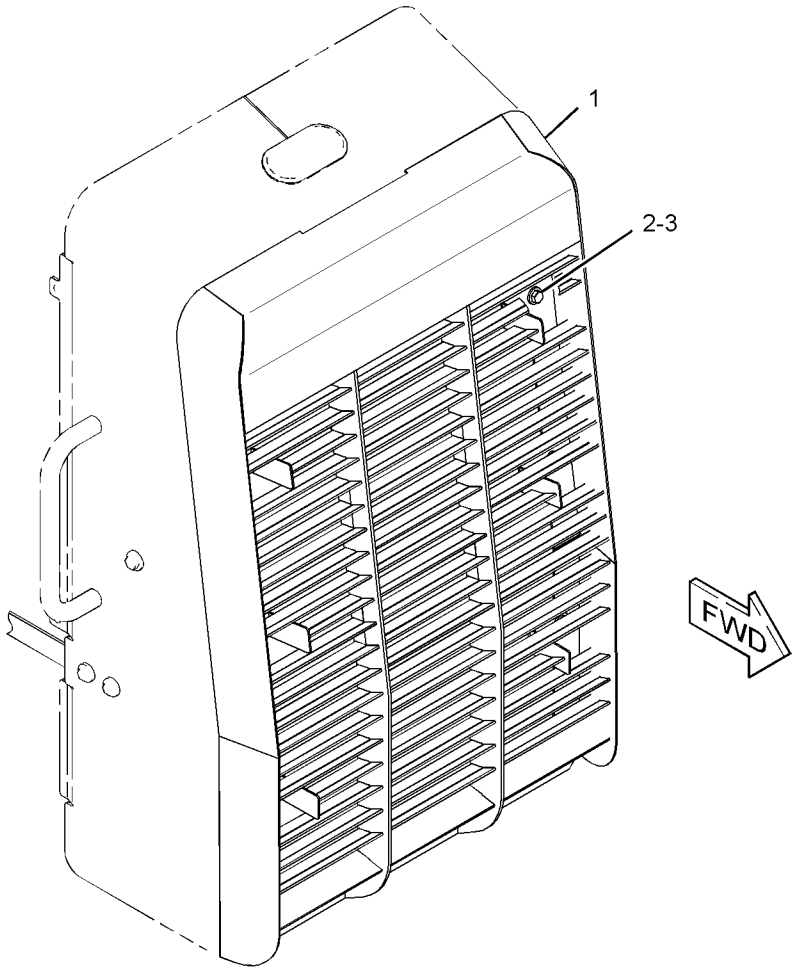

GRAPHIC #1 **<END>** g01330877

244-7437 GRILL AR-RADIATOR—HEAVY-DUTY

S/N: MMM1-UP; RRR1-UP
CANNOT BE USED WITH 244-7436—PAGE: 444
AN ATTACHMENT

SMCS-7170 **i03331501**

NOTE	REF NO	GRAPHIC REF	PART NUMBER	QTY	PART NAME 1 2 3 4 5 6 (PRODUCT LEVEL)	SEE PAGE
	1	1	**327-0948**	1	GRILL AS	
	2	1	**7X-7729**	6	WASHER (11X25X3-MM THK)	
M	3	1	**8T-4186**	6	BOLT (M10X1.5X40-MM)	

M - METRIC PART

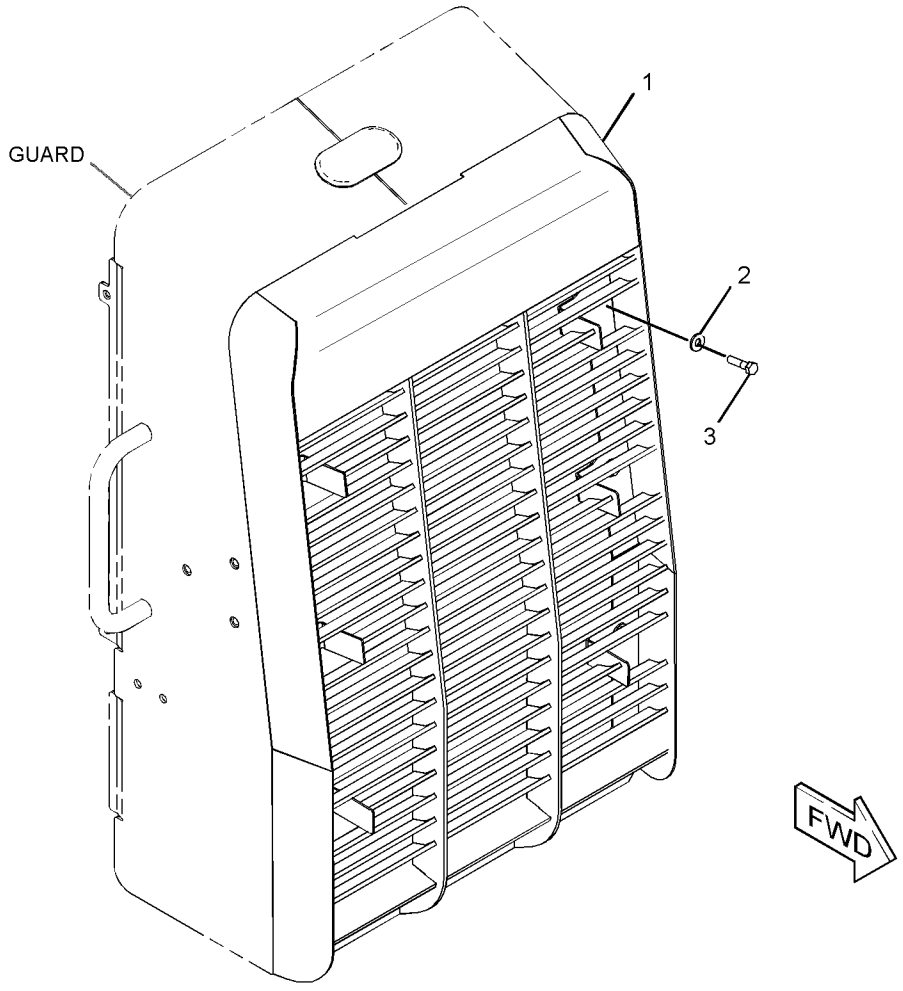

GRAPHIC #1 **<END>** g01333618

307-1593 GRILL GP-RADIATOR—FIRE PLOW

S/N: MMM1-UP; RRR1-UP
FOR USE WITH 325-6506—PAGE: 442, 325-6507—PAGE: 443
CANNOT BE USED WITH 244-7436—PAGE: 444, 244-7437—PAGE: 445
AN ATTACHMENT

SMCS-7170 **i03879251**

NOTE	REF NO	GRAPHIC REF	PART NUMBER	QTY	PART NAME 1 2 3 4 5 6 (PRODUCT LEVEL)	SEE PAGE
	1	1	**254-8045**	1	PLUG	
	2	1	**302-6802**	1	GRILL AS	
	3	1	**307-1599**	1	PIVOT AS	
	4	1	**307-1600**	1	GUARD AS	
		1	**7T-1099**	7	LINK	
M		1	**8T-3490**	12	NUT-WELD (M10X1.5-THD)	
M		1	**8T-3597**	16	NUT-WELD (M12X1.75-THD)	
M		1	**8T-3612**	8	NUT-WELD (M8X1.25-THD)	
		1	**8Y-3465**	1	BOSS	
	5	1	**326-9262**	2	LATCH AS	
M	6	1	**110-6969**	1	BOLT (M16X2X300-MM)	
	7	1	**5P-1076**	16	WASHER-HARD (13.5X30X4-MM THK)	
	8	1	**5P-4116**	4	WASHER-HARD (8.8X20.5X2-MM THK)	
M	9	1	**8T-4139**	8	BOLT (M12X1.75X30-MM)	
M	10	1	**8T-4179**	6	BOLT (M12X1.75X20-MM)	
M	11	1	**8T-4183**	2	BOLT (M12X1.75X40-MM)	
M	12	1	**8T-4189**	4	BOLT (M8X1.25X20-MM)	
M	13	1	**8T-4778**	1	LOCKNUT (M16X2-THD)	
	14	1	**9X-8257**	2	WASHER (17.5X30X3.5-MM THK)	
D	15	1	**8T-3426**		CHANNEL-TRIM (0.13-M)	
D	16	1	**8T-5372**		SEAL (0.12-M)	
D	16A	1	**8T-5372**		SEAL (0.52-M)	
E	17	1	**3E-6600**		SEAL (12.5-CM)	
E	18	1	**3E-3805**		SEAL (10-CM EACH)	
D	19	1	**5P-5931**		SEAL (0.7-M)	
D	19A	1	**5P-5931**		SEAL (0.8-M EACH)	
D	19B	1	**5P-5931**		SEAL (0.75-M)	
	20	1	**8T-4121**	2	WASHER-HARD (11X21X2.5-MM THK)	
M	21	1	**8T-4137**	2	BOLT (M10X1.5X20-MM)	

D - ORDER BY THE METER
E - ORDER BY THE CENTIMETER
M - METRIC PART

307-1593 **GRILL GP-RADIATOR (*contd.*)** **i03879251**

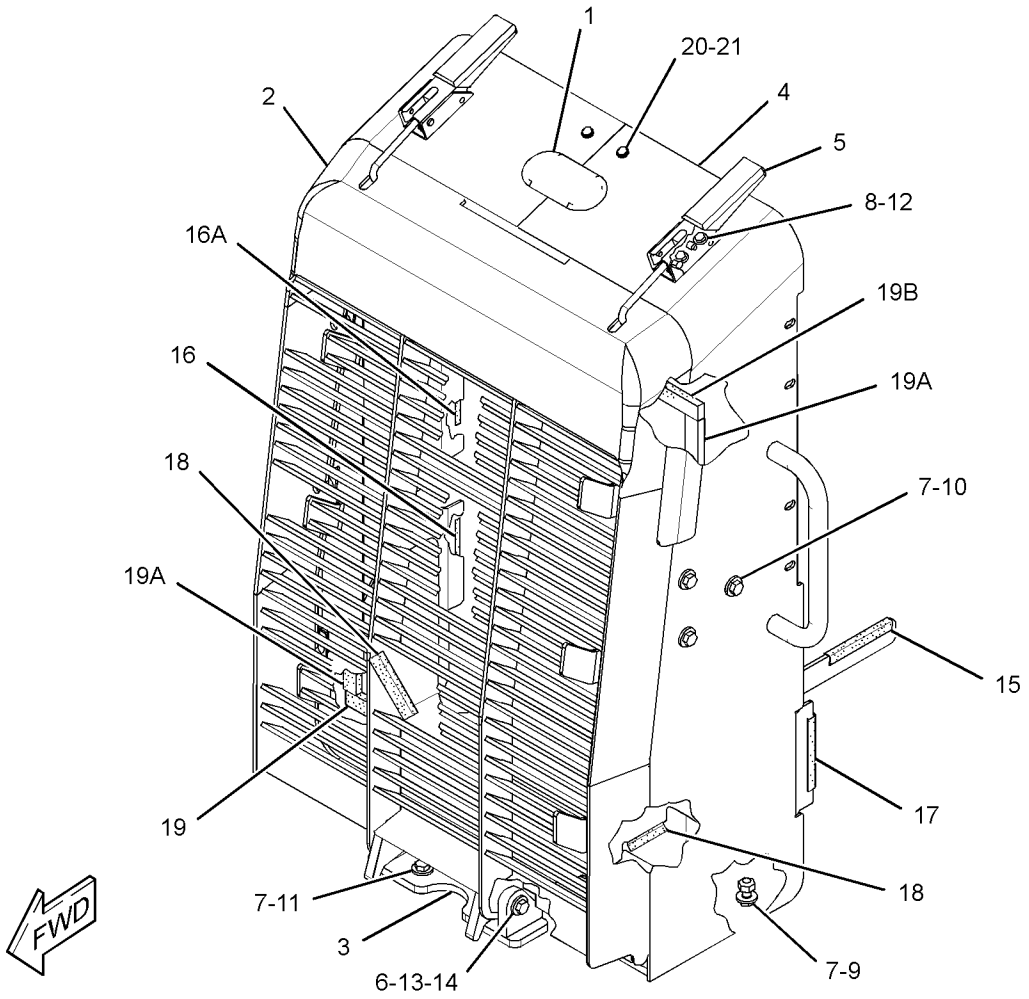

GRAPHIC #1 **<END>** g02131613

254-8901 GUARD GP-BOTTOM

S/N: MMM1-UP; RRR1-UP

PART OF 244-7378, 244-7379 CHASSIS AR

SMCS-7153 **i02664350**

NOTE	REF NO	GRAPHIC REF	PART NUMBER	QTY	PART NAME 1 2 3 4 5 6 (PRODUCT LEVEL)	SEE PAGE
	1	1	**211-5941**	8	SPACER (13.9X21.3X8-MM THK)	
	2	1	**254-8858**	2	PLATE-COVER	
	3	1	**254-8904**	1	PLATE AS (REAR)	
	4	1	**254-8906**	1	PLATE AS (FRONT)	
	5	1	**5P-1076**	12	WASHER-HARD (13.5X30X4-MM THK)	
	6	1	**7X-0590**	8	WASHER-HARD (13.5X44.5X6-MM THK)	
M	7	1	**8T-4956**	20	BOLT (M12X1.75X35-MM)	

M - METRIC PART

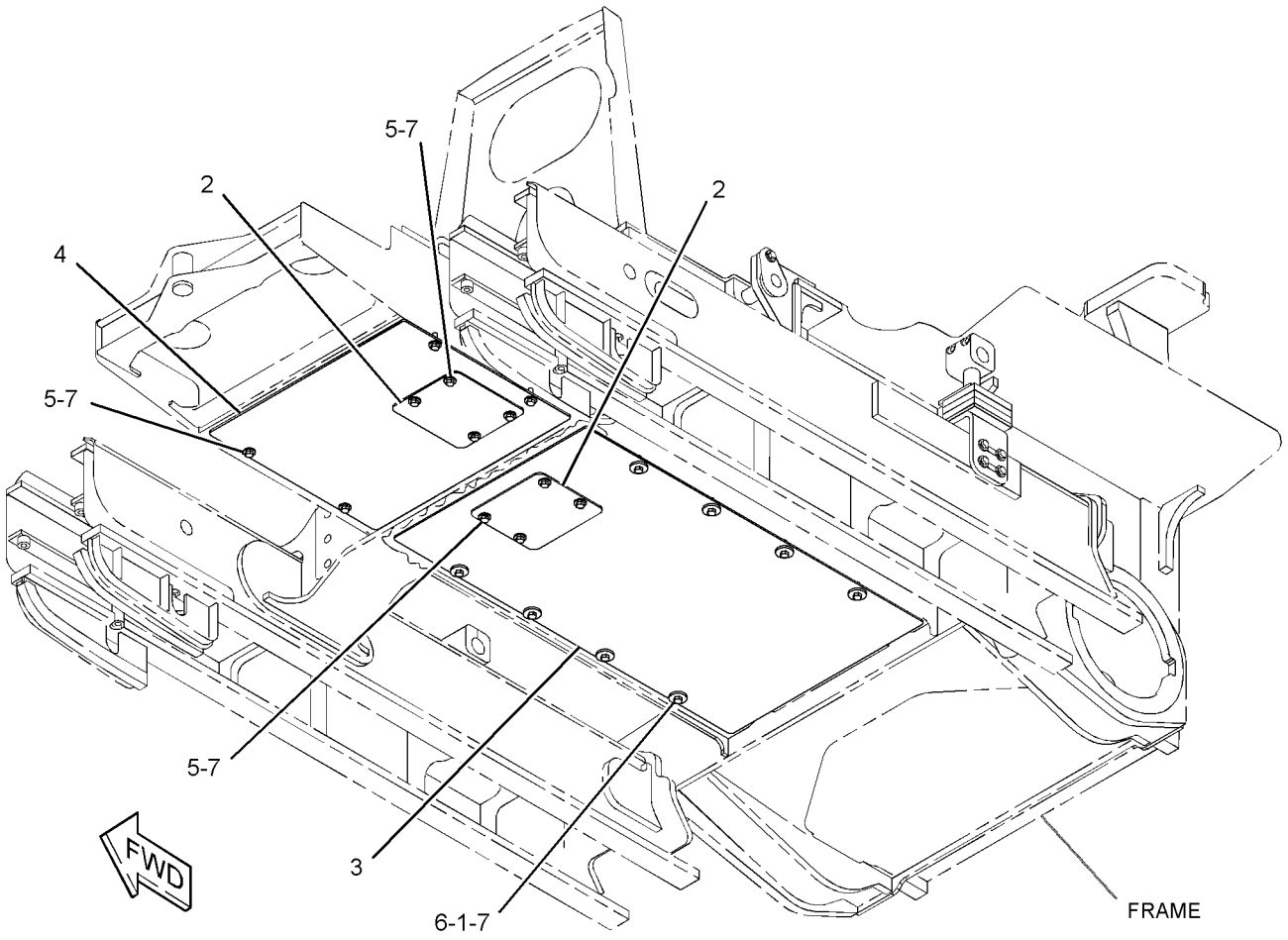

GRAPHIC #1 **<END>** g01339108

322-6482 GUARD GP-BOTTOM–EXTREME-DUTY

S/N: MMM1-UP

AN ATTACHMENT

SMCS-7153 **i05343595**

NOTE	REF NO	GRAPHIC REF	PART NUMBER	QTY	PART NAME 1 2 3 4 5 6 (PRODUCT LEVEL)	SEE PAGE
	1	1	**311-8646**	1	PLATE AS (FRONT)	
	2	1	**317-9763**	3	PLATE-COVER	
	3	1	**317-9764**	16	SPACER (13.9X21.3X15-MM THK)	
	4	1	**322-6493**	1	GUARD AS	
M		1	**8T-3597**	4	NUT-WELD (M12X1.75-THD)	
	5	1	**322-6494**	1	GUARD AS	
	6	1	**322-6495**	1	PLATE	
	7	1	**5P-1076**	12	WASHER-HARD (13.5X30X4-MM THK)	
	8	1	**7X-0590**	8	WASHER-HARD (13.5X44.5X6-MM THK)	
M	9	1	**8T-4183**	32	BOLT (M12X1.75X40-MM)	

M - METRIC PART

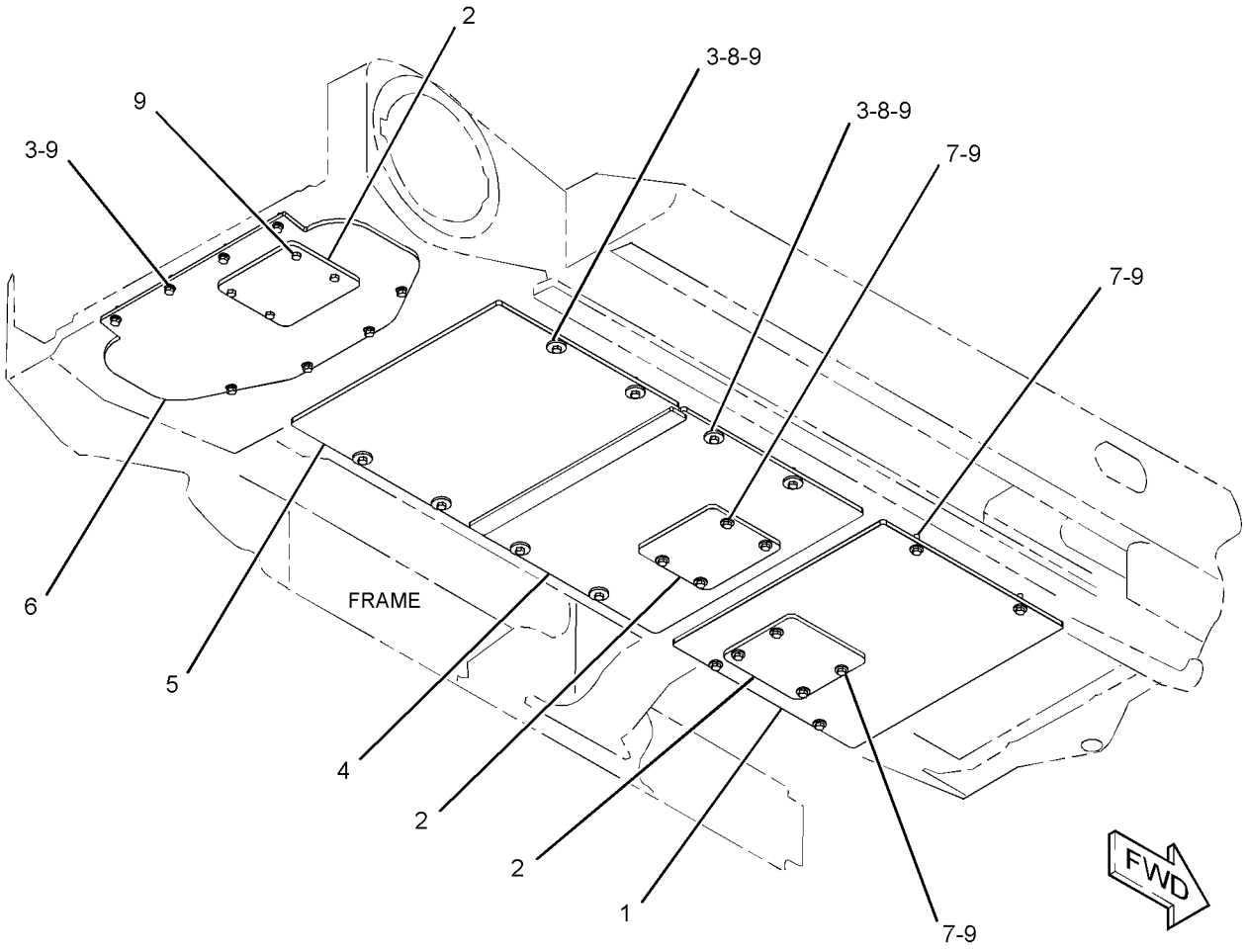

GRAPHIC #1 **<END>** g03419976

322-6483 GUARD GP-BOTTOM–EXTREME-DUTY

S/N: RRR1-UP

AN ATTACHMENT

SMCS-7153 **i05343599**

NOTE	REF NO	GRAPHIC REF	PART NUMBER	QTY	PART NAME 1 2 3 4 5 6 (PRODUCT LEVEL)	SEE PAGE
	1	1	**311-8646**	1	PLATE AS (FRONT)	
	2	1	**317-9763**	3	PLATE-COVER	
	3	1	**317-9764**	16	SPACER (13.9X21.3X15-MM THK)	
	4	1	**322-6491**	1	PLATE	
	5	1	**322-6493**	1	GUARD AS	
M		1	**8T-3597**	4	NUT-WELD (M12X1.75-THD)	
	6	1	**322-6494**	1	GUARD AS	
	7	1	**5P-1076**	12	WASHER-HARD (13.5X30X4-MM THK)	
	8	1	**7X-0590**	8	WASHER-HARD (13.5X44.5X6-MM THK)	
M	9	1	**8T-4183**	32	BOLT (M12X1.75X40-MM)	

M - METRIC PART

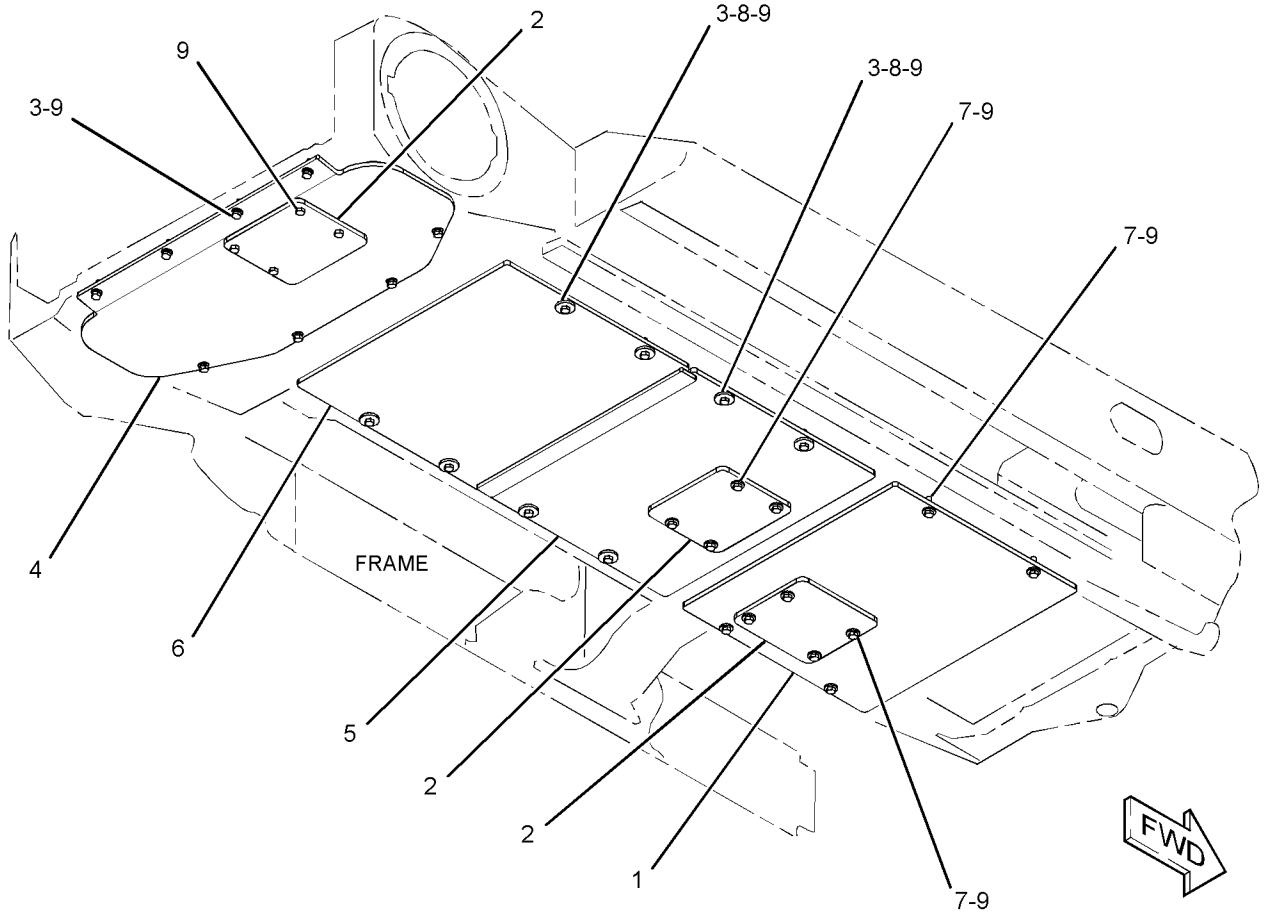

GRAPHIC #1 **<END>** g03420001

255-4276 GUARD GP-BRUSH—OPEN ROPS

S/N: MMM1-UP; RRR1-UP
DOOR, FRONT
FOR USE WITH CANOPY AR, CAB AR
AN ATTACHMENT

SMCS-7158 **i03634655**

NOTE	REF NO	GRAPHIC REF	PART NUMBER	QTY	PART NAME 1 2 3 4 5 6 (PRODUCT LEVEL)	SEE PAGE
B	1	1	**8T-0318**	6	SHIM (0.8-MM THK)	
	2	1	**114-9284**	6	BUMPER	
	3	1	**123-0380**	2	SHIELD-STRIKER	
	4	1	**187-0413**	2	STRIKER	
Y	5	1	**262-2923**	1	SCREEN GP (FRONT)	476
	6	1	**262-2925**	1	GUARD AS (RH)	
		1	**5G-8871**	2	BOSS (M6X1-THD)	
M		1	**8T-3597**	4	NUT-WELD (M12X1.75-THD)	
M		1	**8T-3612**	1	NUT-WELD (M8X1.25-THD)	
	7	1	**262-2930**	4	HINGE AS	
					(EACH INCLUDES)	
M		1	**8T-3612**	1	NUT-WELD (M8X1.25-THD)	
	8	1	**263-7360**	1	GUARD AS (LH)	
	9	1	**276-0062**	1	PLATE AS (LH)	
	10	1	**276-0063**	1	PLATE AS (RH)	
					(EACH PLATE AS INCLUDES)	
M		1	**8T-3612**	1	NUT-WELD (M8X1.25-THD)	
	11	1	**147-1076**	2	CYLINDER AS-GAS	
M	12	1	**5C-7261**	6	NUT (M8X1.25-THD)	
	13	1	**5P-1076**	18	WASHER-HARD (13.5X30X4-MM THK)	
	14	1	**5P-4116**	10	WASHER-HARD (8.8X20.5X2-MM THK)	
	15	1	**8T-4121**	4	WASHER-HARD (11X21X2.5-MM THK)	
M	16	1	**8T-4139**	16	BOLT (M12X1.75X30-MM)	
M	17	1	**8T-4189**	8	BOLT (M8X1.25X20-MM)	
M	18	1	**8T-4195**	4	BOLT (M10X1.5X30-MM)	
	19	1	**8T-4224**	6	WASHER-HARD (8.8X16X2-MM THK)	
M	20	1	**8T-4244**	2	NUT (M12X1.75-THD)	
	21	1	**281-3974**	4	BUMPER	
M	22	1	**5C-2890**	4	NUT (M6X1-THD)	

B - USE AS REQUIRED
M - METRIC PART
Y - SEPARATE ILLUSTRATION

255-4276 **GUARD GP-BRUSH (*contd.*)** **i03634655**

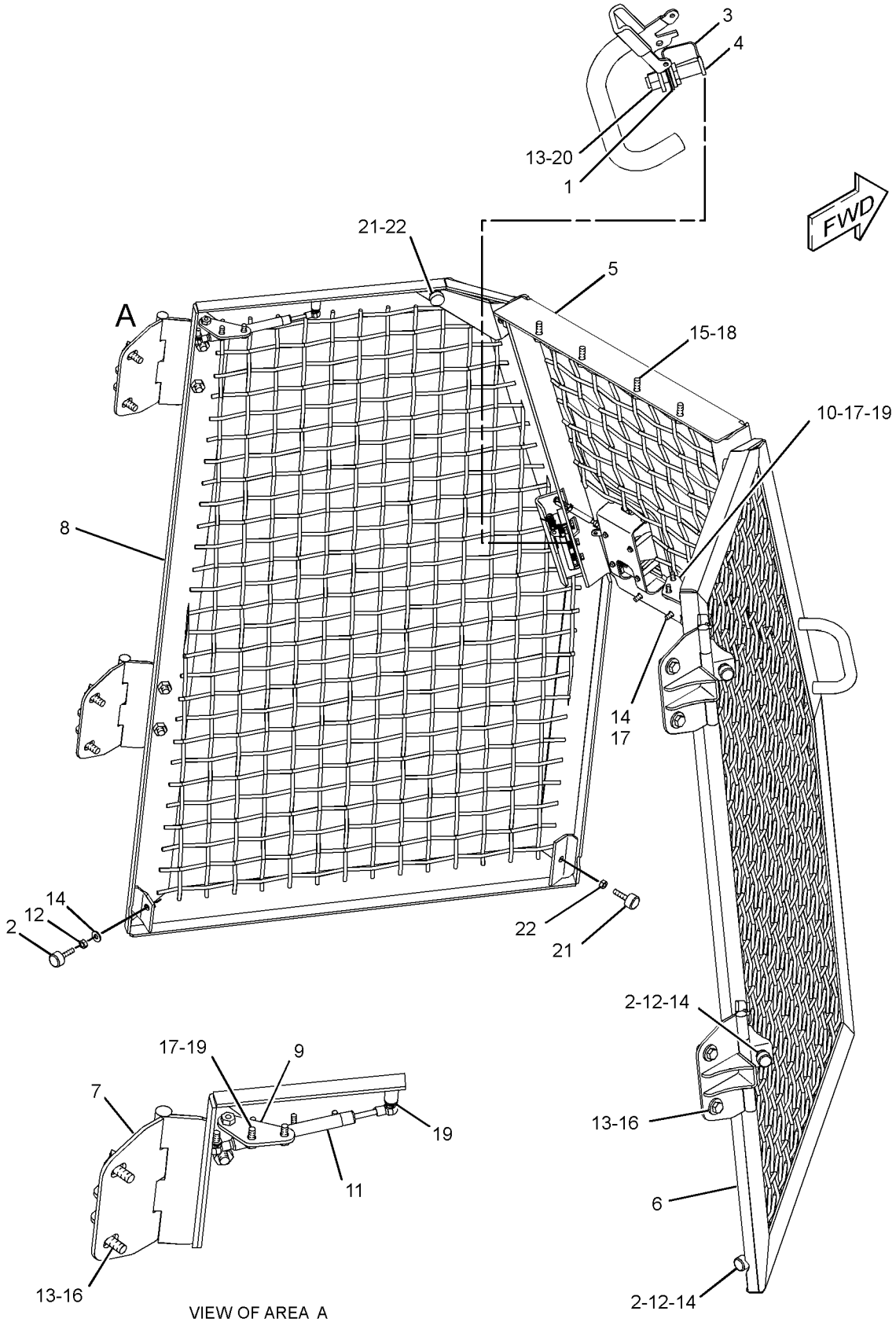

VIEW OF AREA A

GRAPHIC #1 **<END>** g01407366

336-4125 GUARD GP-BRUSH—FRONT

S/N: MMM1-UP; RRR1-UP
FOR USE WITH 325-6498—PAGE: 2, 325-6499—PAGE: 3
AN ATTACHMENT

SMCS-7158 **i03726826**

NOTE	REF NO	GRAPHIC REF	PART NUMBER	QTY	PART NAME 1 2 3 4 5 6 (PRODUCT LEVEL)	SEE PAGE
	1	1	**282-2170**	4	KNOB	
	2	1	**339-0103**	1	PLATE AS	
M		1	**8T-3597**	2	NUT-WELD (M12X1.75-THD)	
M		1	**8T-3490**	4	NUT-WELD (M10X1.5-THD)	
	3	1	**339-0104**	1	BRACKET AS	
	4	1	**339-0112**	1	SCREEN AS-PROTECTION	
	5	1	**339-0113**	1	GUARD	
	6	1	**339-0114**	2	HINGE AS	
	7	1	**339-0115**	1	HINGE AS	
	8	1	**339-0116**	1	HINGE AS	
	9	1	**339-0117**	1	DOOR AS (RH)	
	10	1	**339-0118**	1	DOOR AS (LH)	
	11	1	**340-7270**	1	STRIKER AS (RH)	
	12	1	**340-7271**	1	STRIKER AS (LH)	
M	13	1	**095-1207**	4	NUT (M12X1.75-THD)	
	14	1	**4E-1384**	4	BUMPER-CONICAL	
M	15	1	**5C-7261**	4	NUT (M8X1.25-THD)	
	16	1	**5P-1076**	8	WASHER-HARD (13.5X30X4-MM THK)	
	17	1	**8T-4121**	4	WASHER-HARD (11X21X2.5-MM THK)	
M	18	1	**8T-4136**	4	BOLT (M10X1.5X25-MM)	
M	19	1	**8T-4139**	8	BOLT (M12X1.75X30-MM)	
M	20	1	**8T-4171**	1	BOLT (M6X1X12-MM)	
M	21	1	**8T-7547**	2	BOLT (M8X1.25X30-MM)	
	22	1	**9X-6165**	1	WASHER (6.5X22X2.5-MM THK)	
E	23	1	**9X-2092**		TRIM-EDGE (15-CM EACH)	

E - ORDER BY THE CENTIMETER
M - METRIC PART

336-4125 **GUARD GP-BRUSH (*contd.*)** **i03726826**

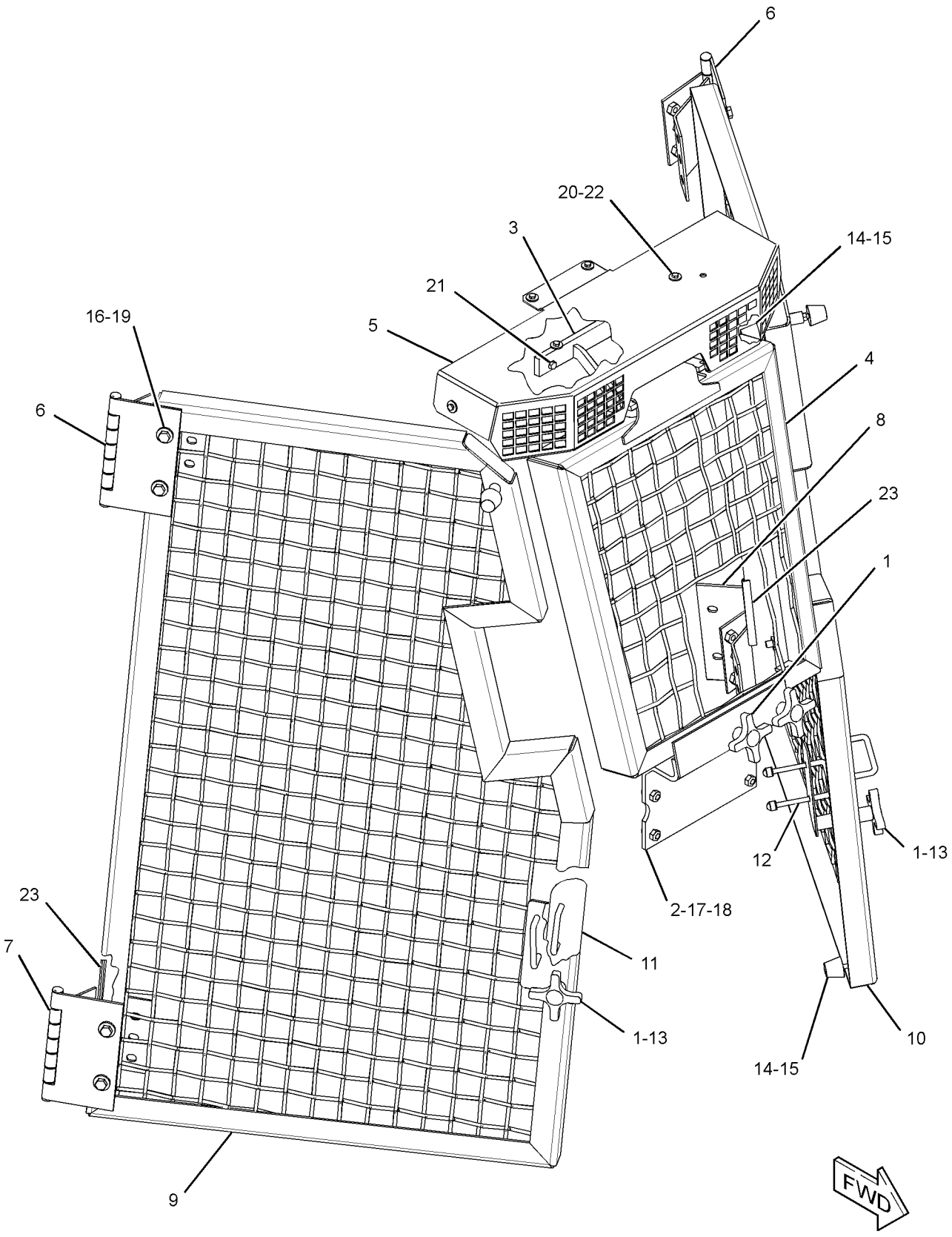

GRAPHIC #1 **<END>** g02017653

336-4126 GUARD GP-BRUSH—SIDE

S/N: MMM1-UP; RRR1-UP
FOR USE WITH 325-6498—PAGE: 2, 325-6499—PAGE: 3
CANNOT BE USED WITH 250-1699—PAGE: 815
AN ATTACHMENT

SMCS-7158 **i03726828**

NOTE	REF NO	GRAPHIC REF	PART NUMBER	QTY	PART NAME 1 2 3 4 5 6 (PRODUCT LEVEL)	SEE PAGE
	1	1	**5P-0372**	4	LOCK PIN	
	2	1	**180-3153**	1	LATCH AS-DOOR (ROTARY) (RH)	
	3	1	**180-3154**	1	LATCH AS-DOOR (ROTARY) (LH)	
	4	1	**336-4116**	2	PLATE AS	
	5	1	**336-4119**	1	HINGE AS	
	6	1	**336-4123**	1	SCREEN AS-CAB (RH)	
	7	1	**336-4132**	1	HINGE AS	
	8	1	**336-4134**	1	SCREEN AS-CAB (LH)	
	9	1	**178-2593**	4	BUMPER	
M	10	1	**5C-7261**	4	NUT (M8X1.25-THD)	
	11	1	**6S-9277**	4	PIN	
	12	1	**7X-0513**	12	WASHER-HARD (17X30X5-MM THK)	
M	13	1	**7X-2553**	8	BOLT (M16X2X40-MM)	
M	14	1	**8T-4138**	8	BOLT (M6X1X20-MM)	
	15	1	**9X-8256**	8	WASHER (6.6X12X2-MM THK)	

M - METRIC PART

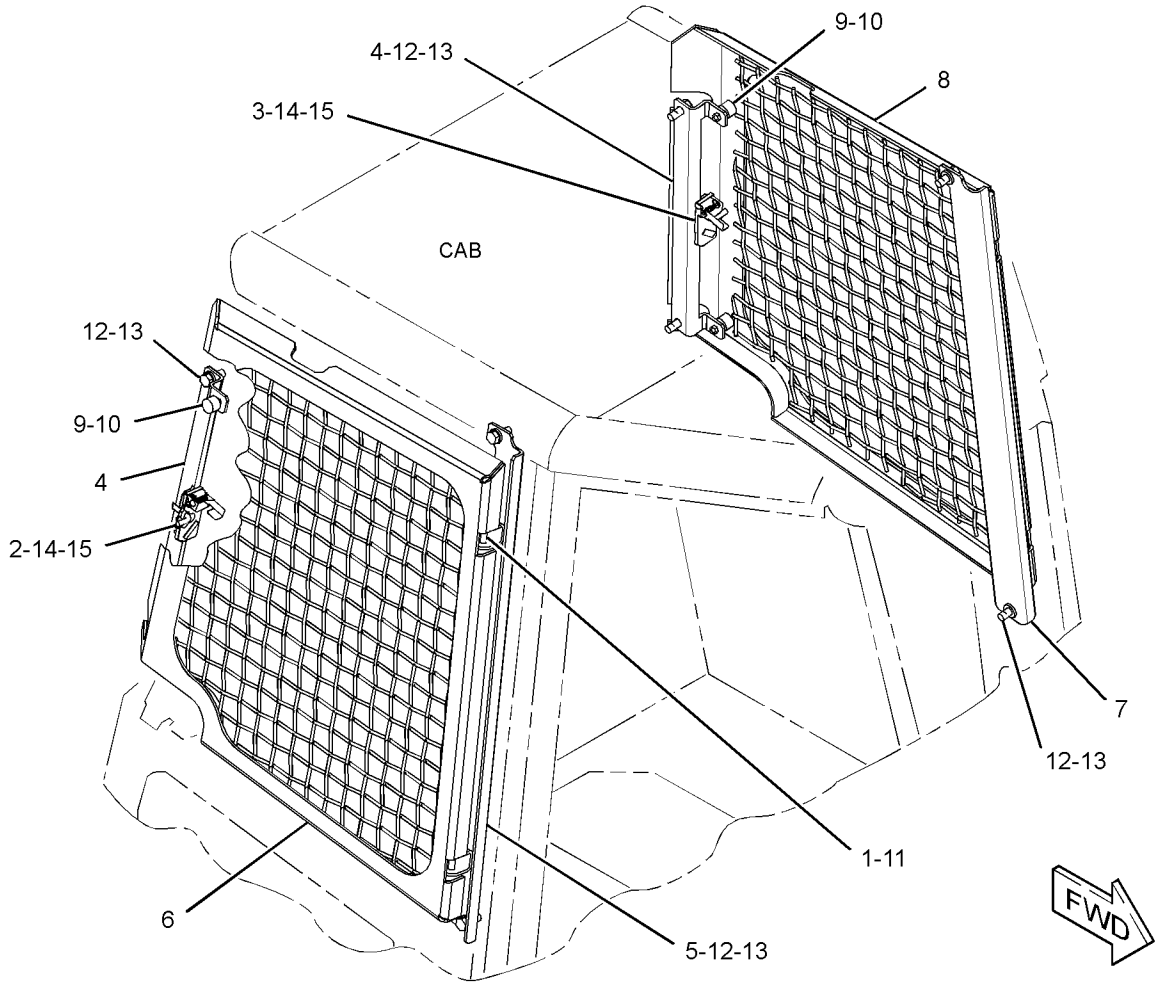

GRAPHIC #1 **<END>** g02017353

244-7503 GUARD GP-FRONT

S/N: MMM1-UP; RRR1-UP
CANNOT BE USED WITH 244-7516—PAGE: 426
AN ATTACHMENT

SMCS-7167 **i02636797**

NOTE	REF NO	GRAPHIC REF	PART NUMBER	QTY	PART NAME 1 2 3 4 5 6 (PRODUCT LEVEL)	SEE PAGE
	1	1	**254-8919**	1	PLATE	
	2	1	**5P-1076**	8	WASHER-HARD (13.5X30X4-MM THK)	
M	3	1	**8T-4956**	8	BOLT (M12X1.75X35-MM)	

M - METRIC PART

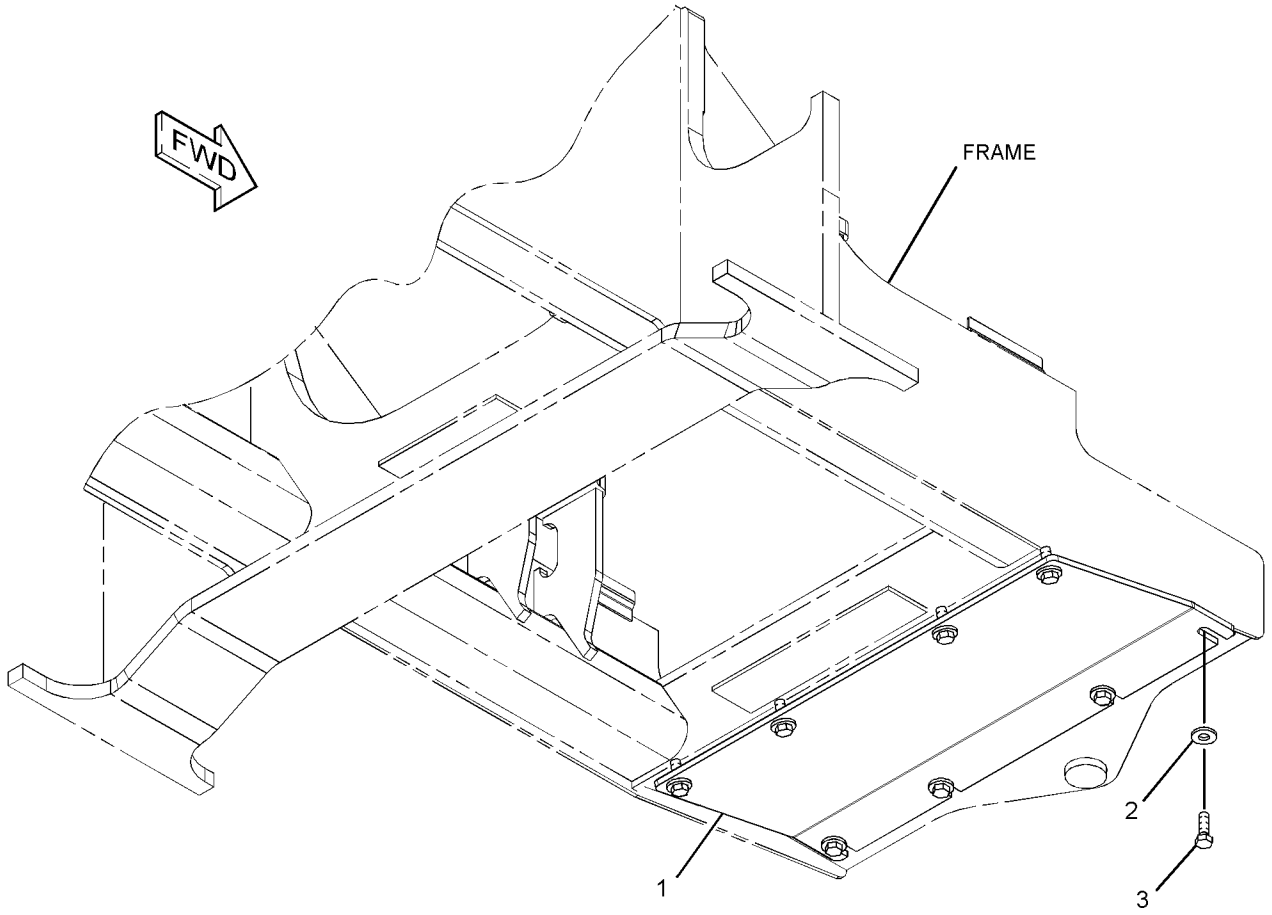

GRAPHIC #1 **<END>** g01326851

254-7757 GUARD GP-RADIATOR

S/N: MMM1-UP; RRR1-UP

PART OF 244-7378, 244-7379 CHASSIS AR

SMCS-7155 **i03759549**

NOTE	REF NO	GRAPHIC REF	PART NUMBER	QTY	PART NAME 1 2 3 4 5 6 (PRODUCT LEVEL)	SEE PAGE
	1	1	**254-7760**	1	GUARD AS	
	2	1	**254-8045**	1	PLUG	
	3	1	**5P-1076**	14	WASHER-HARD (13.5X30X4-MM THK)	
M	4	1	**8T-4139**	8	BOLT (M12X1.75X30-MM)	
M	5	1	**8T-4179**	6	BOLT (M12X1.75X20-MM)	
D	6	1	**8T-3426**		CHANNEL-TRIM (0.13-M)	
D	7	1	**5P-5931**		SEAL (0.8-M EACH)	
D	7A	1	**5P-5931**		SEAL (0.71-M)	
D	7B	1	**5P-5931**		SEAL (0.7-M)	
D	8	1	**8T-5372**		SEAL (0.5-M)	
D	8A	1	**8T-5372**		SEAL (0.1-M)	
E	9	1	**3E-6600**		SEAL (12.5-CM)	
E	10	1	**3E-3805**		SEAL (10-CM EACH)	
	11	1	**8T-4121**	2	WASHER-HARD (11X21X2.5-MM THK)	
M	12	1	**8T-4137**	2	BOLT (M10X1.5X20-MM)	

D - ORDER BY THE METER
E - ORDER BY THE CENTIMETER
M - METRIC PART

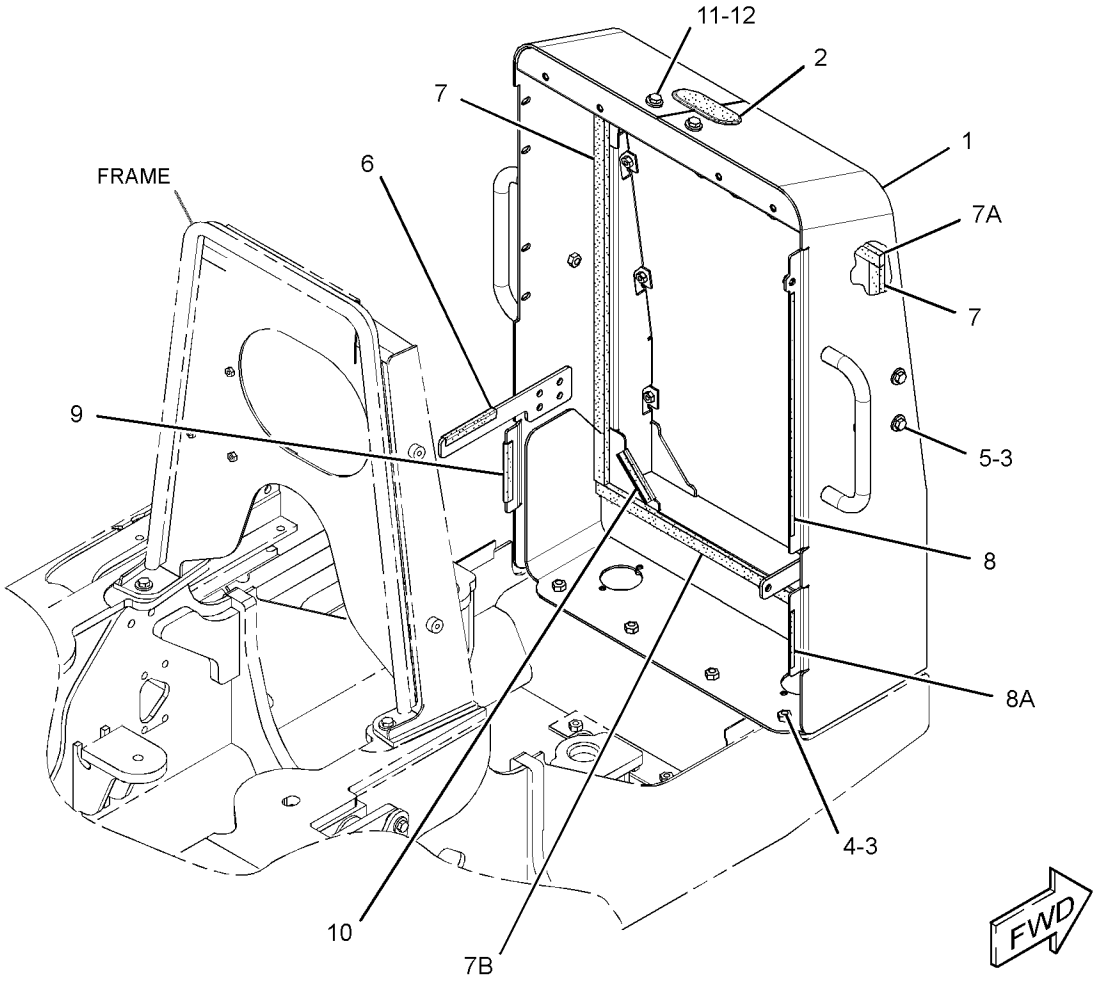

GRAPHIC #1 **<END>** g02028054

311-8644 GUARD GP-REAR

S/N: MMM1-UP; RRR1-UP
CANNOT BE USED WITH 312-1035—PAGE: 460
AN ATTACHMENT

SMCS-7187 **i04415971**

NOTE	REF NO	GRAPHIC REF	PART NUMBER	QTY	PART NAME 1 2 3 4 5 6 (PRODUCT LEVEL)	SEE PAGE
	1	1	**5G-6504**	2	LUG	
	2	1	**246-2641**	1	PADLOCK GP	
		1	**5P-8500**	1	KEY	
	3	1	**299-3240**	1	FILM-IDENTIFICATION (CAT)	
	4	1	**311-8305**	1	GUARD AS	
	5	1	**311-8306**	1	PLATE AS	
	6	1	**311-8307**	1	BRACKET AS	
	7	1	**311-8643**	1	BRACKET AS	
M		1	**8T-3490**	2	NUT-WELD (M10X1.5-THD)	
	8	1	**198-4777**	8	WASHER-HARD (11X25X10-MM THK)	
	9	1	**198-4778**	7	WASHER-HARD (13.5X30X12-MM THK)	
M	11	1	**7X-2543**	4	BOLT (M10X1.5X120-MM)	
M	12	1	**7X-2549**	2	BOLT (M12X1.75X100-MM)	
M	13	1	**8T-4138**	2	BOLT (M6X1X20-MM)	
M	14	1	**8T-4183**	4	BOLT (M12X1.75X40-MM)	
M	15	1	**8T-4186**	2	BOLT (M10X1.5X40-MM)	
M	17	1	**8T-4956**	1	BOLT (M12X1.75X35-MM)	
M	18	1	**8T-5005**	2	BOLT (M10X1.5X70-MM)	
	19	1	**9X-8256**	2	WASHER (6.6X12X2-MM THK)	
	20	1	**318-6522**	1	SEAL	
	22	1	**158-7864**	1	FILM-IDENTIFICATION (HYDRAULIC OIL)	

M - METRIC PART

311-8644 **GUARD GP-REAR (*contd.*)** **i04415971**

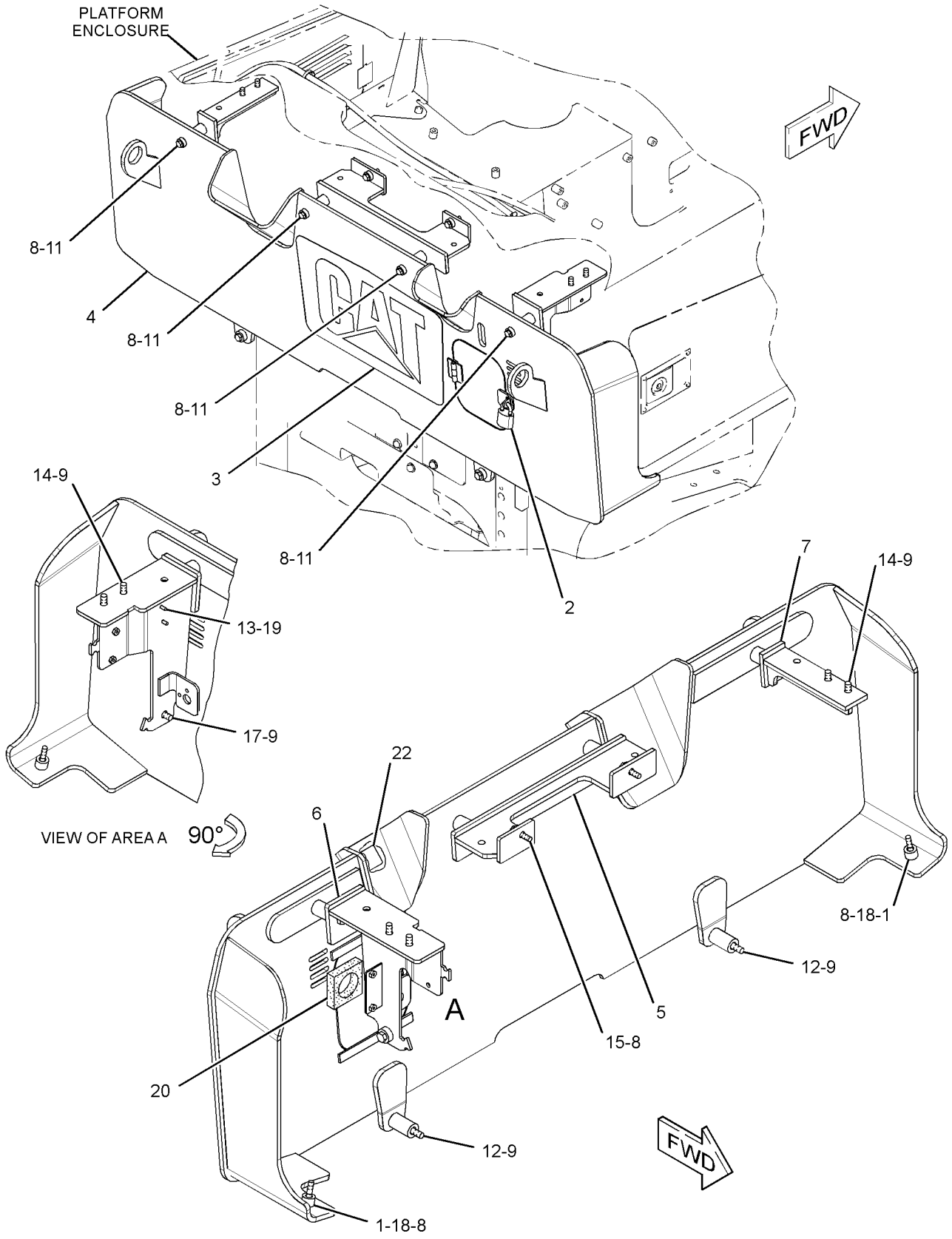

GRAPHIC #1 **<END>** g01706933

312-1035 GUARD GP-REAR

S/N: MMM1-UP; RRR1-UP
CANNOT BE USED WITH 311-8644—PAGE: 458
AN ATTACHMENT
TYPE 1

SMCS-7187 **i02873281**

NOTE	REF NO	GRAPHIC REF	PART NUMBER	QTY	PART NAME 1 2 3 4 5 6 (PRODUCT LEVEL)	SEE PAGE
	1	1	**7K-1181**	1	STRAP-CABLE	
	2	1	**254-8895**	1	BRACKET AS	
	3	1	**260-0089**	1	BRACKET AS	
	4	1	**301-7299**	1	BRACKET AS	
Y	5	1	*318-8135*	1	WARNING GP-BACKUP	249
	6	1	**7X-7729**	6	WASHER (11X25X3-MM THK)	
M	7	1	**8T-4137**	4	BOLT (M10X1.5X20-MM)	
M	8	1	**8T-4139**	2	BOLT (M12X1.75X30-MM)	
M	9	1	**8T-4179**	3	BOLT (M12X1.75X20-MM)	
M	10	1	**8T-4195**	2	BOLT (M10X1.5X30-MM)	
	11	1	**8T-4223**	5	WASHER-HARD (13.5X25.5X3-MM THK)	

M - METRIC PART
Y - SEPARATE ILLUSTRATION

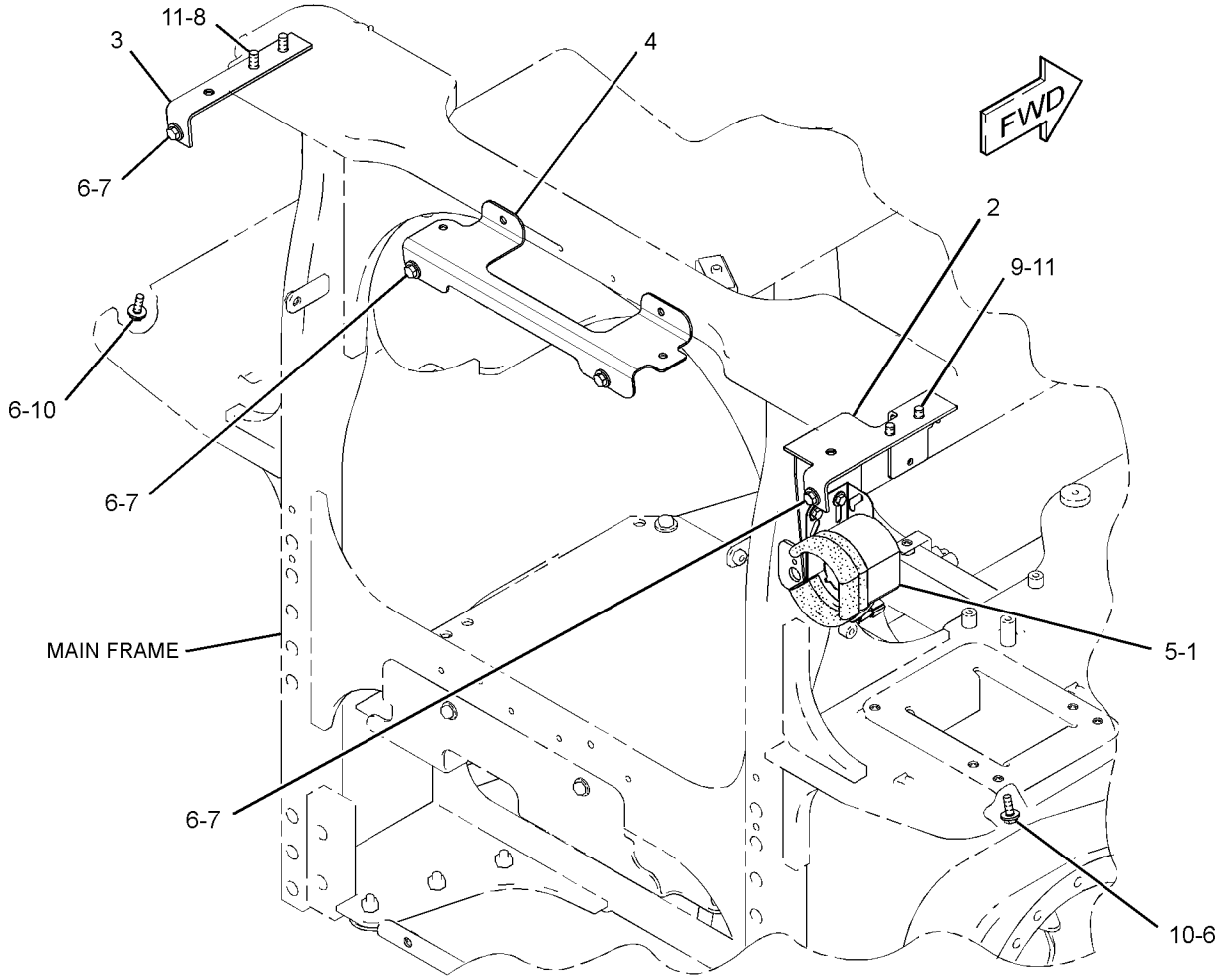

GRAPHIC #1 **<END>** g01442051

312-1035 GUARD GP-REAR

S/N: MMM1-UP; RRR1-UP
CANNOT BE USED WITH 311-8644—PAGE: 458
AN ATTACHMENT
TYPE 2

SMCS-7187 **i03290916**

NOTE	REF NO	GRAPHIC REF	PART NUMBER	QTY	PART NAME 1 2 3 4 5 6 (PRODUCT LEVEL)	SEE PAGE
	1	1	**260-0089**	1	BRACKET AS	
	2	1	**301-7299**	1	BRACKET AS	
C	3	1	**318-6129**	1	BRACKET AS	
	4	1	**7X-7729**	6	WASHER (11X25X3-MM THK)	
M	5	1	**8T-4137**	4	BOLT (M10X1.5X20-MM)	
M	6	1	**8T-4139**	2	BOLT (M12X1.75X30-MM)	
M	7	1	**8T-4179**	3	BOLT (M12X1.75X20-MM)	
M	8	1	**8T-4195**	2	BOLT (M10X1.5X30-MM)	
	9	1	**8T-4223**	5	WASHER-HARD (13.5X25.5X3-MM THK)	

C - CHANGE FROM PREVIOUS TYPE
M - METRIC PART

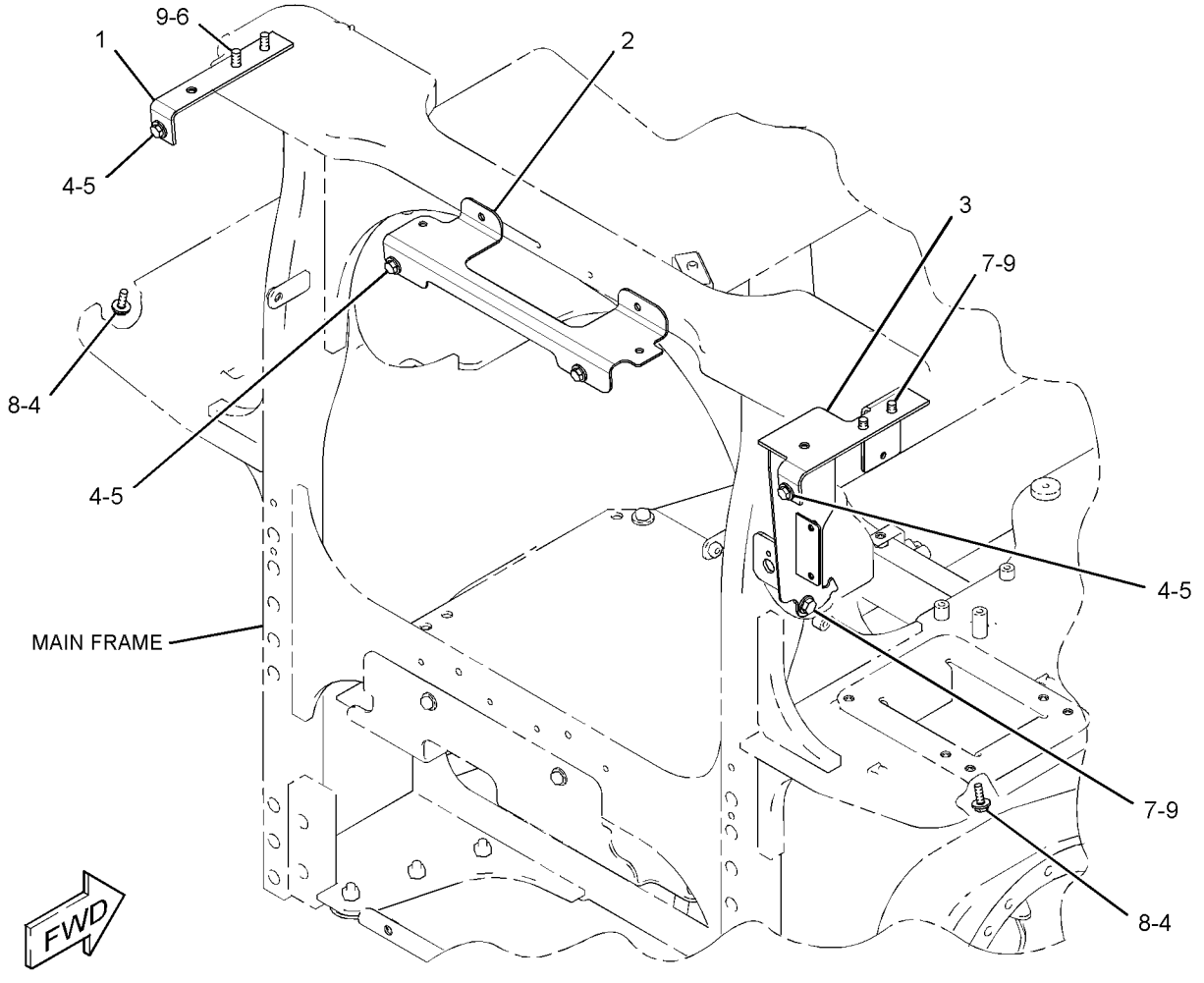

GRAPHIC #1 **<END>** g01711500

244-7434 HITCH GP-TOWING

S/N: MMM1-UP; RRR1-UP

CANNOT BE USED WITH 244-7433—PAGE: 428, 262-4407—PAGE: 935, 244-7517—PAGE: 933

AN ATTACHMENT

SMCS-7100 **i04965031**

NOTE	REF NO	GRAPHIC REF	PART NUMBER	QTY	PART NAME 1 2 3 4 5 6 (PRODUCT LEVEL)	SEE PAGE
	1	1	**5G-0792**	1	PIN	
	2	1	**5P-8837**	1	LOCK PIN	
	3	1	**299-4116**	1	DRAWBAR AS	
	4	1	**299-3903**	1	PLATE AS	
	5	1	**274-7990**	1	PLATE-COVER	
	6	1	**198-4782**	4	WASHER-HARD (26X47X12-MM THK)	
	7	1	**5P-1076**	4	WASHER-HARD (13.5X30X4-MM THK)	
	8	1	**8T-4121**	4	WASHER-HARD (11X21X2.5-MM THK)	
M	9	1	**8T-4137**	7	BOLT (M10X1.5X20-MM)	
M	10	1	**8T-4139**	4	BOLT (M12X1.75X30-MM)	
M	11	1	**8T-5878**	4	BOLT (M24X3X80-MM)	
	12	1	**8T-4222**	3	WASHER-PLATED (11X32X2.5-MM THK)	
E	13	1	**9X-2092**		TRIM-EDGE (70-CM)	

E - ORDER BY THE CENTIMETER
M - METRIC PART

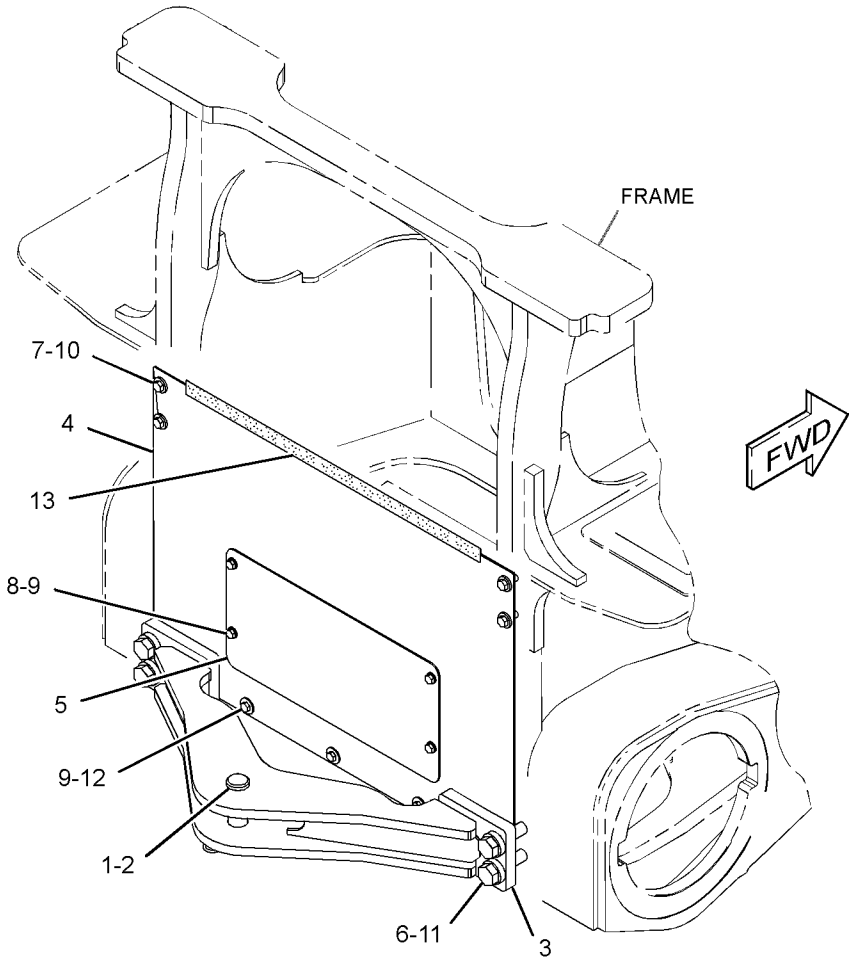

GRAPHIC #1 **<END>** g03155256

255-1431 HOOD & GUARD GP–SOUND SUPPRESSION

S/N: MMM1-860; RRR1-662
PART OF 244-7479 SUPPRESSION AR-SOUND
AN ATTACHMENT

SMCS-7251 **i02920658**

NOTE	REF NO	GRAPHIC REF	PART NUMBER	QTY	PART NAME 1 2 3 4 5 6 (PRODUCT LEVEL)	SEE PAGE
	1	1	**255-1433**	1	HOOD AS	
	2	2	**255-1450**	1	PANEL AS (RH)	
	3	2	**255-1455**	1	DOOR AS (LH)	
	4	2	**255-1539**	1	PANEL AS (LH)	
	5	1	**264-3010**	1	LATCH AS	
	6	1	**264-3011**	1	STRIKER AS	
	7	1	**264-3014**	1	PLATE AS	
	8	1	**264-3017**	1	ROD AS	
J	9	2	**274-1923**	1	LOCK AS	
	10	2	**198-4777**	4	WASHER-HARD (11X25X10-MM THK)	
	11	1	**4M-7470**	2	GROMMET	
M	12	2	**5C-2890**	4	NUT (M6X1-THD)	
	13	1	**5P-4116**	2	WASHER-HARD (8.8X20.5X2-MM THK)	
	14	1,2	**7X-7729**	9	WASHER (11X25X3-MM THK)	
M	15	1,2	**8T-4137**	8	BOLT (M10X1.5X20-MM)	
M	16	1	**8T-4138**	2	BOLT (M6X1X20-MM)	
M	17	2	**8T-4186**	6	BOLT (M10X1.5X40-MM)	
M	18	1	**8T-4189**	2	BOLT (M8X1.25X20-MM)	
M	19	1	**8T-4195**	3	BOLT (M10X1.5X30-MM)	
	20	1,2	**9X-8256**	6	WASHER (6.6X12X2-MM THK)	
	21	2	**254-7761**	1	PLATE AS (LH)	
D	22	1	**5P-7483**		SEAL (0.2-M EACH)	
D	22A	2	**5P-7483**		SEAL (0.43-M)	
E	23	1,2	**3E-6600**		SEAL (12.5-CM EACH)	
E	23A	1,2	**3E-6600**		SEAL (60-CM EACH)	
E	23B	1	**3E-6600**		SEAL (30-CM)	
E	23C	1	**3E-6600**		SEAL (25-CM)	
	24	1	**8T-4222**	4	WASHER-PLATED (11X32X2.5-MM THK)	

D - ORDER BY THE METER
E - ORDER BY THE CENTIMETER
J - REQUIRES CORPORATE KEY
M - METRIC PART

255-1431 **HOOD & GUARD GP (*contd.*)** **i02920658**

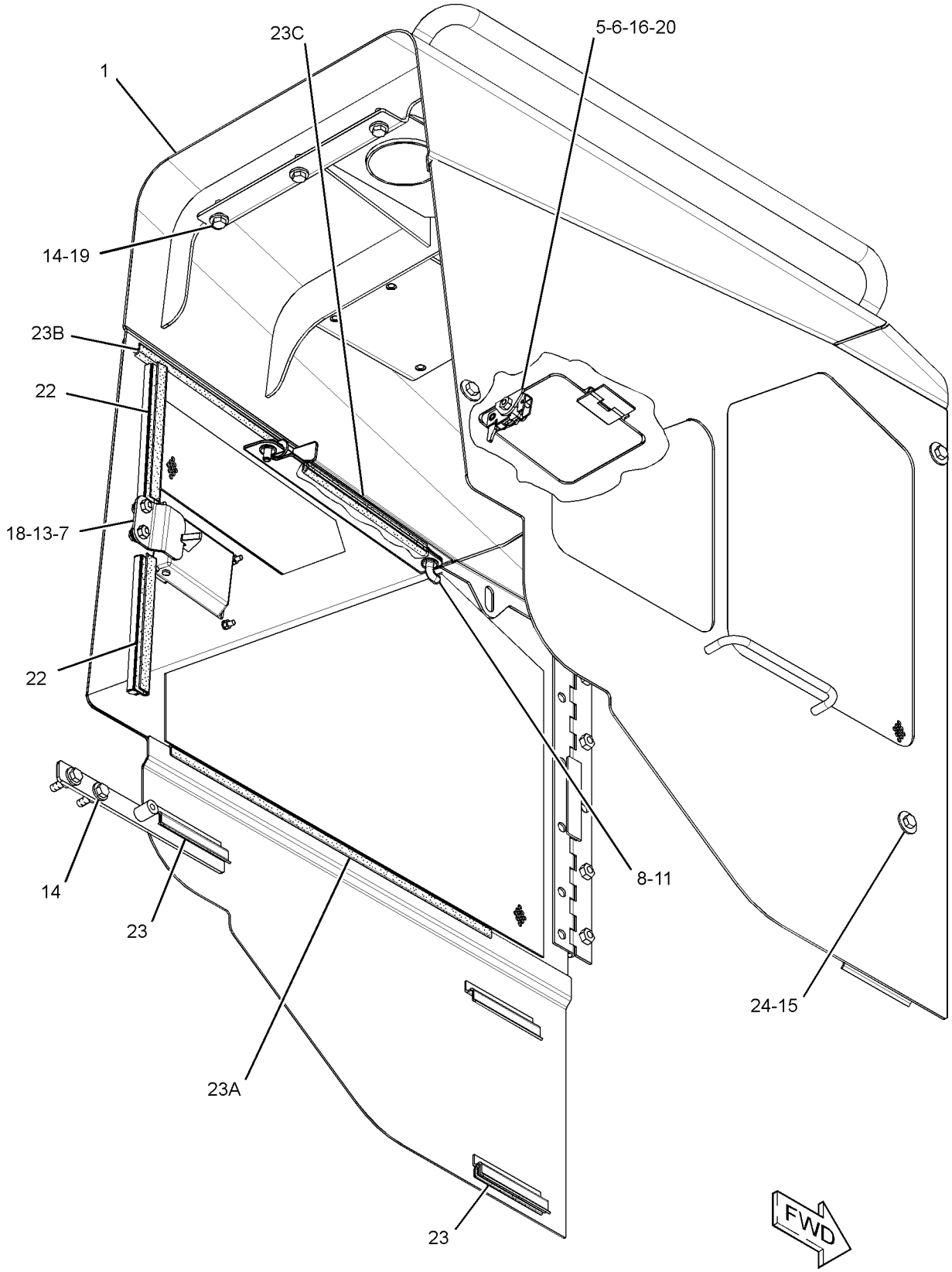

GRAPHIC #1 g01514204

255-1431 **HOOD & GUARD GP (*contd.*)** **i02920658**

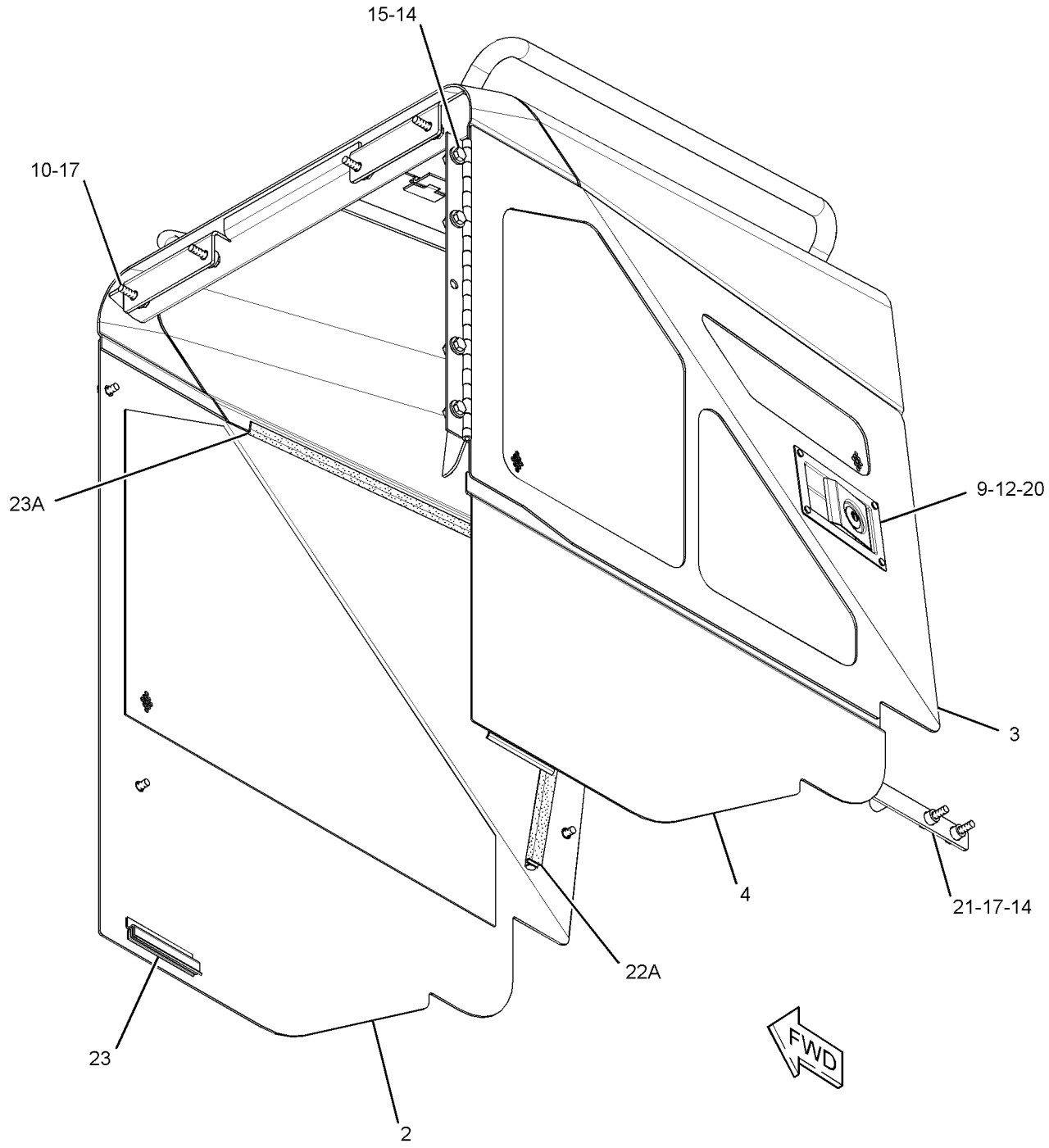

GRAPHIC #2 **<END>** g01514205

255-1431 HOOD & GUARD GP—SOUND SUPPRESSION

S/N: MMM861-UP; RRR663-UP
PART OF 244-7479 SUPPRESSION AR-SOUND
AN ATTACHMENT

SMCS-7251 **i04916756**

NOTE	REF NO	GRAPHIC REF	PART NUMBER	QTY	PART NAME 1 2 3 4 5 6 (PRODUCT LEVEL)	SEE PAGE
	1	1	**255-1433**	1	HOOD AS	
	2	2	**255-1450**	1	PANEL AS (RH)	
	3	2	**255-1455**	1	DOOR AS (LH)	
	4	2	**255-1539**	1	PANEL AS (LH)	
	5	1	**264-3010**	1	LATCH AS	
	6	1	**264-3011**	1	STRIKER AS	
	7	1	**264-3014**	1	PLATE AS	
	8	1	**264-3017**	1	ROD AS	
C	9	2	**358-0921**	1	LATCH AS	
	10	2	**198-4777**	4	WASHER-HARD (11X25X10-MM THK)	
	11	1	**4M-7470**	2	GROMMET	
M	12	2	**5C-2890**	4	NUT (M6X1-THD)	
	13	1	**5P-4116**	2	WASHER-HARD (8.8X20.5X2-MM THK)	
	14	1,2	**7X-7729**	9	WASHER (11X25X3-MM THK)	
M	15	1,2	**8T-4137**	8	BOLT (M10X1.5X20-MM)	
M	16	1	**8T-4138**	2	BOLT (M6X1X20-MM)	
M	17	2	**8T-4186**	6	BOLT (M10X1.5X40-MM)	
M	18	1	**8T-4189**	2	BOLT (M8X1.25X20-MM)	
M	19	1	**8T-4195**	3	BOLT (M10X1.5X30-MM)	
	20	1,2	**9X-8256**	6	WASHER (6.6X12X2-MM THK)	
	21	2	**254-7761**	1	PLATE AS (LH)	
D	22	1	**5P-7483**		SEAL (0.2-M EACH)	
D	22A	2	**5P-7483**		SEAL (0.43-M)	
E	23	1,2	**3E-6600**		SEAL (12.5-CM EACH)	
E	23A	1,2	**3E-6600**		SEAL (60-CM EACH)	
E	23B	1	**3E-6600**		SEAL (30-CM)	
E	23C	1	**3E-6600**		SEAL (25-CM)	
	24	1	**8T-4222**	4	WASHER-PLATED (11X32X2.5-MM THK)	

C - CHANGE FROM PREVIOUS TYPE
D - ORDER BY THE METER
E - ORDER BY THE CENTIMETER
M - METRIC PART

255-1431 **HOOD & GUARD GP (*contd.*)** **i04916756**

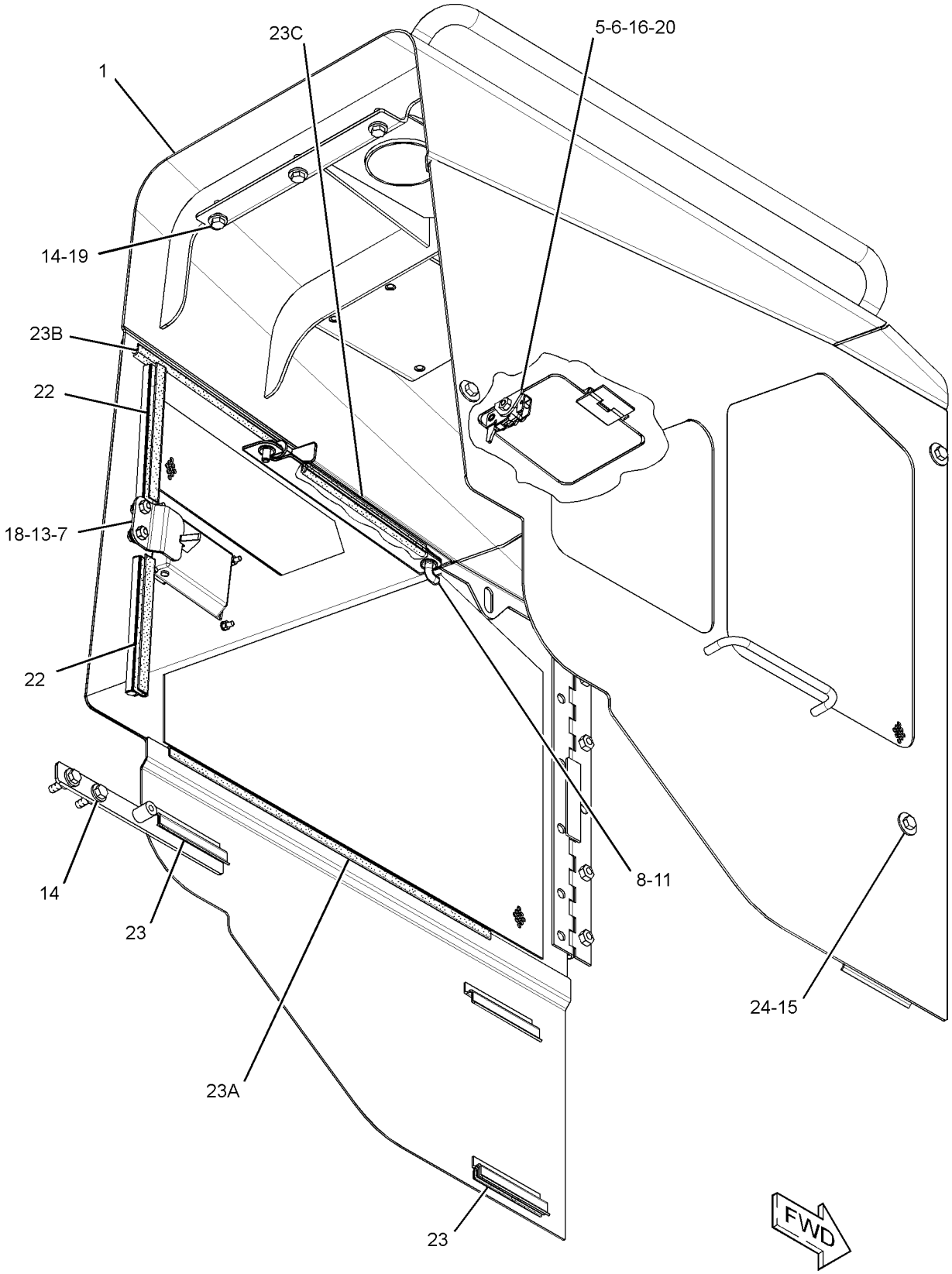

GRAPHIC #1 g01514204

255-1431 **HOOD & GUARD GP (*contd.*)** **i04916756**

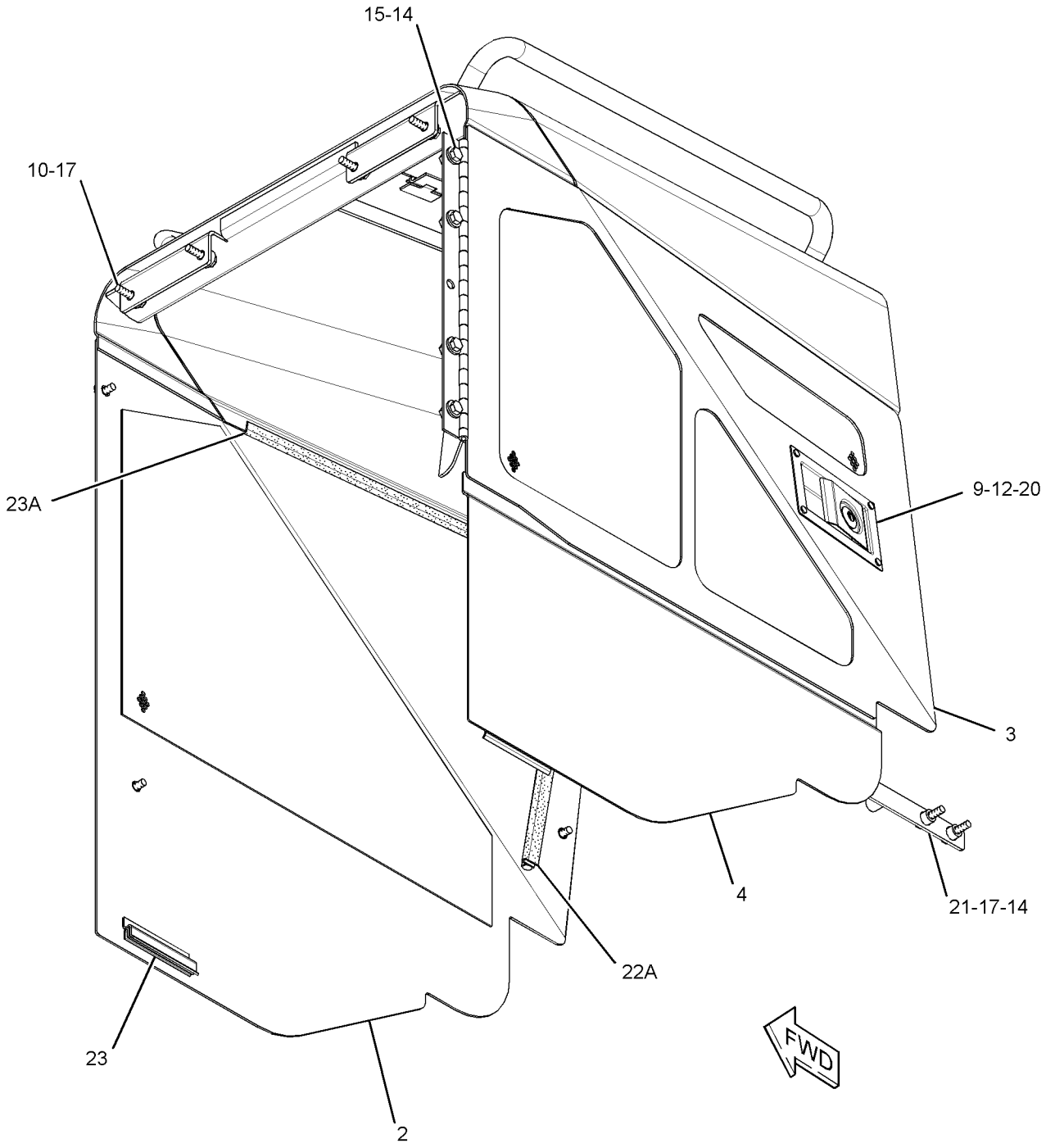

GRAPHIC #2 **<END>** g01514205

255-1452 HOOD & GUARD GP–SOUND SUPPRESSION

S/N: MMM1-860; RRR1-662
PART OF 244-7488, 244-7491 SUPPRESSION AR-SOUND
AN ATTACHMENT

SMCS-7251 **i02913459**

NOTE	REF NO	GRAPHIC REF	PART NUMBER	QTY	PART NAME 1 2 3 4 5 6 (PRODUCT LEVEL)	SEE PAGE
	1	1	**6P-2216**	14	CAP (PUSH ON)	
	2	1	**255-1453**	1	HOOD AS	
	3	1	**255-1539**	1	PANEL AS (LH)	
	4	1	**255-6642**	1	PANEL AS (RH)	
	5	1	**255-6644**	1	DOOR AS-ACCESS (LH)	
	6	1	**262-4324**	1	LINER (LH)	
	7	1	**262-4325**	1	LINER (LH)	
	8	1	**262-4326**	1	LINER (LH)	
	9	1	**262-4328**	1	LINER (RH)	
	10	1	**262-4329**	1	LINER (RH)	
	11	1	**263-3483**	1	LINER (RH)	
	12	1	**264-3010**	1	LATCH AS	
	13	1	**264-3011**	1	STRIKER AS	
	14	1	**264-3014**	1	PLATE AS	
	15	1	**264-3017**	1	ROD AS	
	16	1	**264-3019**	1	LINER (LH)	
	17	1	**274-1923**	1	LOCK AS	
	18	1	**198-4777**	4	WASHER-HARD (11X25X10-MM THK)	
	19	1	**4M-7470**	2	GROMMET	
M	20	1	**5C-2890**	4	NUT (M6X1-THD)	
	21	1	**5P-4116**	2	WASHER-HARD (8.8X20.5X2-MM THK)	
	22	1	**7X-7729**	9	WASHER (11X25X3-MM THK)	
M	23	1	**8T-4137**	8	BOLT (M10X1.5X20-MM)	
M	24	1	**8T-4138**	2	BOLT (M6X1X20-MM)	
M	25	1	**8T-4186**	6	BOLT (M10X1.5X40-MM)	
M	26	1	**8T-4189**	2	BOLT (M8X1.25X20-MM)	
M	27	1	**8T-4195**	3	BOLT (M10X1.5X30-MM)	
	28	1	**9X-8256**	6	WASHER (6.6X12X2-MM THK)	
D	29	1	**5P-7483**		SEAL (0.2-M EACH)	
D	29A	1	**5P-7483**		SEAL (0.43-M)	
	31	1	**254-7761**	1	PLATE AS (LH)	
E	32	1	**3E-6600**		SEAL (12.5-CM EACH)	
E	32A	1	**3E-6600**		SEAL (60-CM EACH)	
E	32B	1	**3E-6600**		SEAL (30-CM)	
E	32C	1	**3E-6600**		SEAL (25-CM)	
	33	1	**8T-4222**	4	WASHER-PLATED (11X32X2.5-MM THK)	

D - ORDER BY THE METER
E - ORDER BY THE CENTIMETER
M - METRIC PART

255-1452 **HOOD & GUARD GP (*contd.*)** **i02913459**

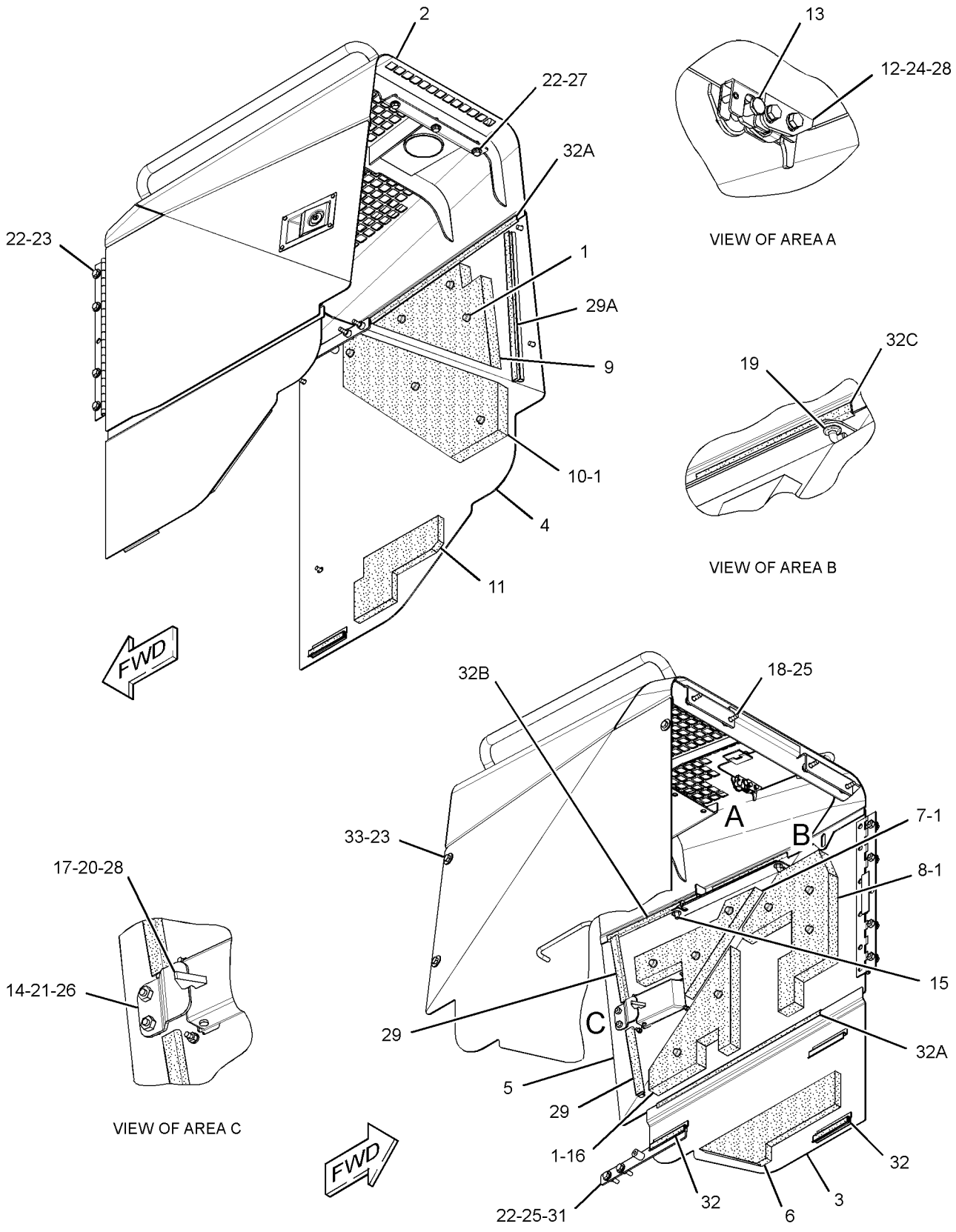

GRAPHIC #1 **<END>** g01459062

255-1452 HOOD & GUARD GP–SOUND SUPPRESSION

S/N: MMM861-UP; RRR663-UP
PART OF 244-7488, 244-7491 SUPPRESSION AR-SOUND
AN ATTACHMENT

SMCS-7251 **i04916758**

NOTE	REF NO	GRAPHIC REF	PART NUMBER	QTY	PART NAME 1 2 3 4 5 6 (PRODUCT LEVEL)	SEE PAGE
	1	1	**6P-2216**	14	CAP	
	2	1	**255-1453**	1	HOOD AS	
	3	1	**255-1539**	1	PANEL AS (LH)	
	4	1	**255-6642**	1	PANEL AS (RH)	
	5	1	**255-6644**	1	DOOR AS-ACCESS (LH)	
	6	1	**262-4324**	1	LINER (LH)	
	7	1	**262-4325**	1	LINER (LH)	
	8	1	**262-4326**	1	LINER (LH)	
	9	1	**262-4328**	1	LINER (RH)	
	10	1	**262-4329**	1	LINER (RH)	
	11	1	**263-3483**	1	LINER (RH)	
	12	1	**264-3010**	1	LATCH AS	
	13	1	**264-3011**	1	STRIKER AS	
	14	1	**264-3014**	1	PLATE AS	
	15	1	**264-3017**	1	ROD AS	
	16	1	**264-3019**	1	LINER (LH)	
C	17	1	**358-0921**	1	LATCH AS	
	18	1	**198-4777**	4	WASHER-HARD (11X25X10-MM THK)	
	19	1	**4M-7470**	2	GROMMET	
M	20	1	**5C-2890**	4	NUT (M6X1-THD)	
	21	1	**5P-4116**	2	WASHER-HARD (8.8X20.5X2-MM THK)	
	22	1	**7X-7729**	9	WASHER (11X25X3-MM THK)	
M	23	1	**8T-4137**	8	BOLT (M10X1.5X20-MM)	
M	24	1	**8T-4138**	2	BOLT (M6X1X20-MM)	
M	25	1	**8T-4186**	6	BOLT (M10X1.5X40-MM)	
M	26	1	**8T-4189**	2	BOLT (M8X1.25X20-MM)	
M	27	1	**8T-4195**	3	BOLT (M10X1.5X30-MM)	
	28	1	**9X-8256**	6	WASHER (6.6X12X2-MM THK)	
D	29	1	**5P-7483**		SEAL (0.2-M EACH)	
D	29A	1	**5P-7483**		SEAL (0.43-M)	
	31	1	**254-7761**	1	PLATE AS (LH)	
E	32	1	**3E-6600**		SEAL (12.5-CM EACH)	
E	32A	1	**3E-6600**		SEAL (60-CM EACH)	
E	32B	1	**3E-6600**		SEAL (30-CM)	
E	32C	1	**3E-6600**		SEAL (25-CM)	
	33	1	**8T-4222**	4	WASHER-PLATED (11X32X2.5-MM THK)	

C - CHANGE FROM PREVIOUS TYPE
D - ORDER BY THE METER
E - ORDER BY THE CENTIMETER
M - METRIC PART

255-1452 **HOOD & GUARD GP (*contd.*)** **i04916758**

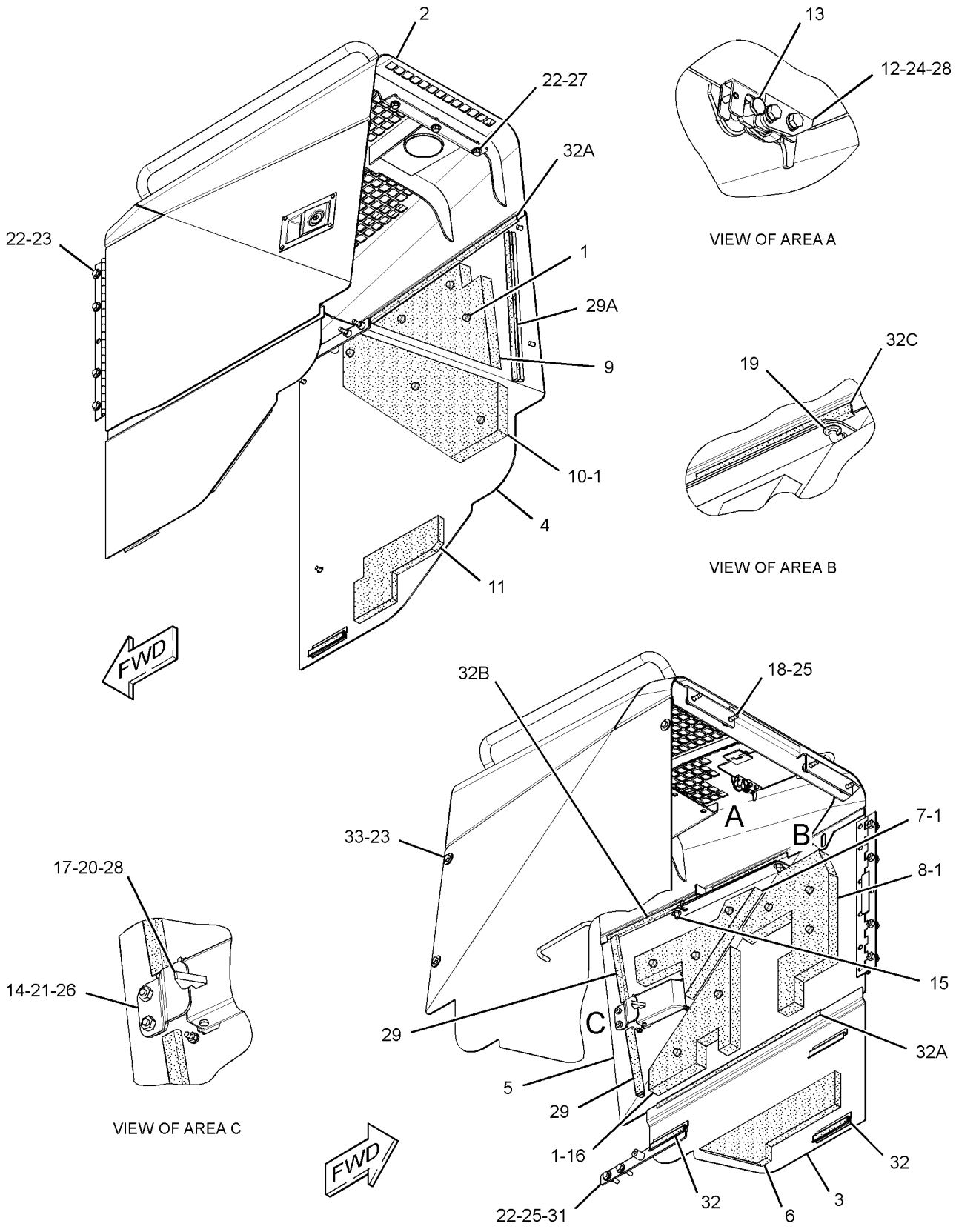

GRAPHIC #1 **<END>** g01459062

325-7266 LATCH GP–FIRE PLOW

S/N: MMM1-UP; RRR1-UP
PART OF 325-6498, 325-6499 MODIFICATION AR, 344-7614 SPECIAL AR
AN ATTACHMENT

SMCS-7251 **i03696050**

NOTE	REF NO	GRAPHIC REF	PART NUMBER	QTY	PART NAME 1 2 3 4 5 6 (PRODUCT LEVEL)	SEE PAGE
	1	1	**5D-8159**	4	PIN AS	
	2	1	**303-0467**	4	PIN	
	3	1	**8T-4121**	4	WASHER-HARD (11X21X2.5-MM THK)	
M	4	1	**8T-4133**	4	NUT (M10X1.5-THD)	

M - METRIC PART

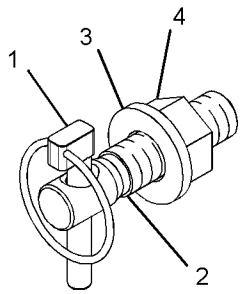

VIEW OF AREA A

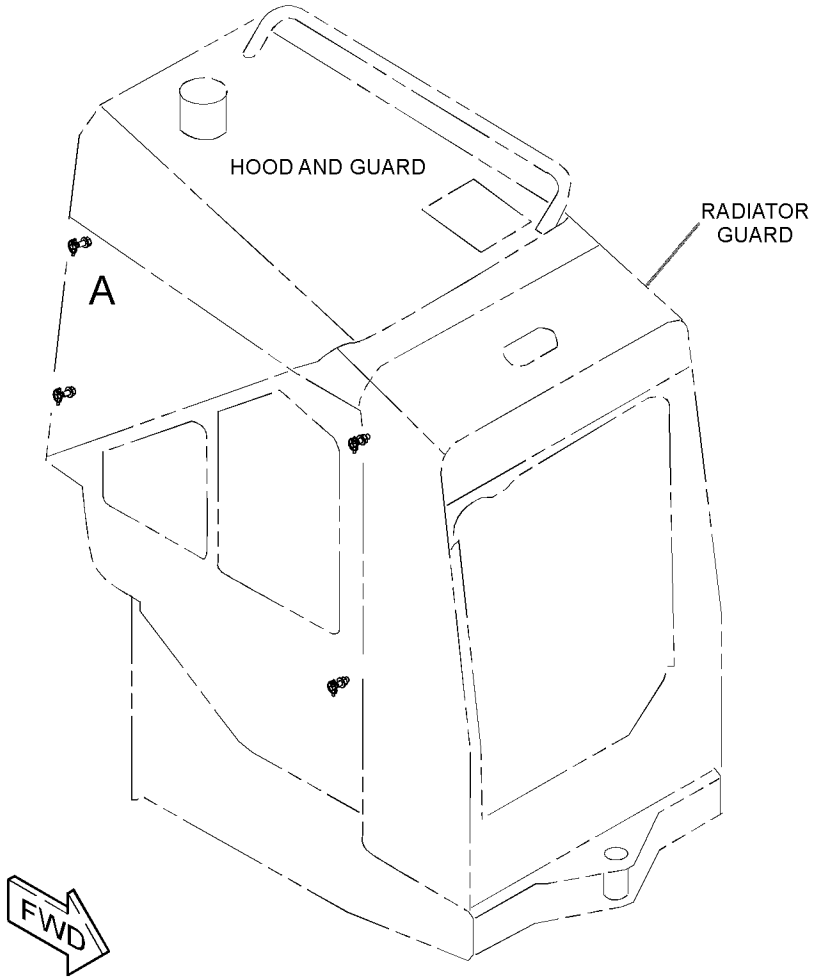

GRAPHIC #1 **<END>** g02006078

244-7498 LINER GP-SOUND SUPPRESSION

S/N: MMM1-UP; RRR1-UP
PART OF 244-7488, 244-7491 SUPPRESSION AR-SOUND
AN ATTACHMENT
TYPE 1

SMCS-7329 **i02883087**

NOTE	REF NO	GRAPHIC REF	PART NUMBER	QTY	PART NAME 1 2 3 4 5 6 (PRODUCT LEVEL)	SEE PAGE
	1	1	**262-9276**	1	LINER	
	2	1	**262-9277**	1	LINER	
	3	1	**262-9278**	4	LINER	
	4	1	**262-9279**	4	LINER	
	5	1	**264-5003**	10	LINER	
	6	1	**264-5004**	3	LINER	
	7	1	**264-5005**	1	LINER	
	8	1	**264-5007**	7	LINER	
	9	1	**264-5009**	6	LINER	
	10	1	**264-5010**	1	LINER	
	11	1	**264-5011**	1	LINER	
	12	1	**7X-0603**	4	WASHER-HARD (9.9X35X2.5-MM THK)	
M	13	1	**8T-4189**	4	BOLT (M8X1.25X20-MM)	

M - METRIC PART

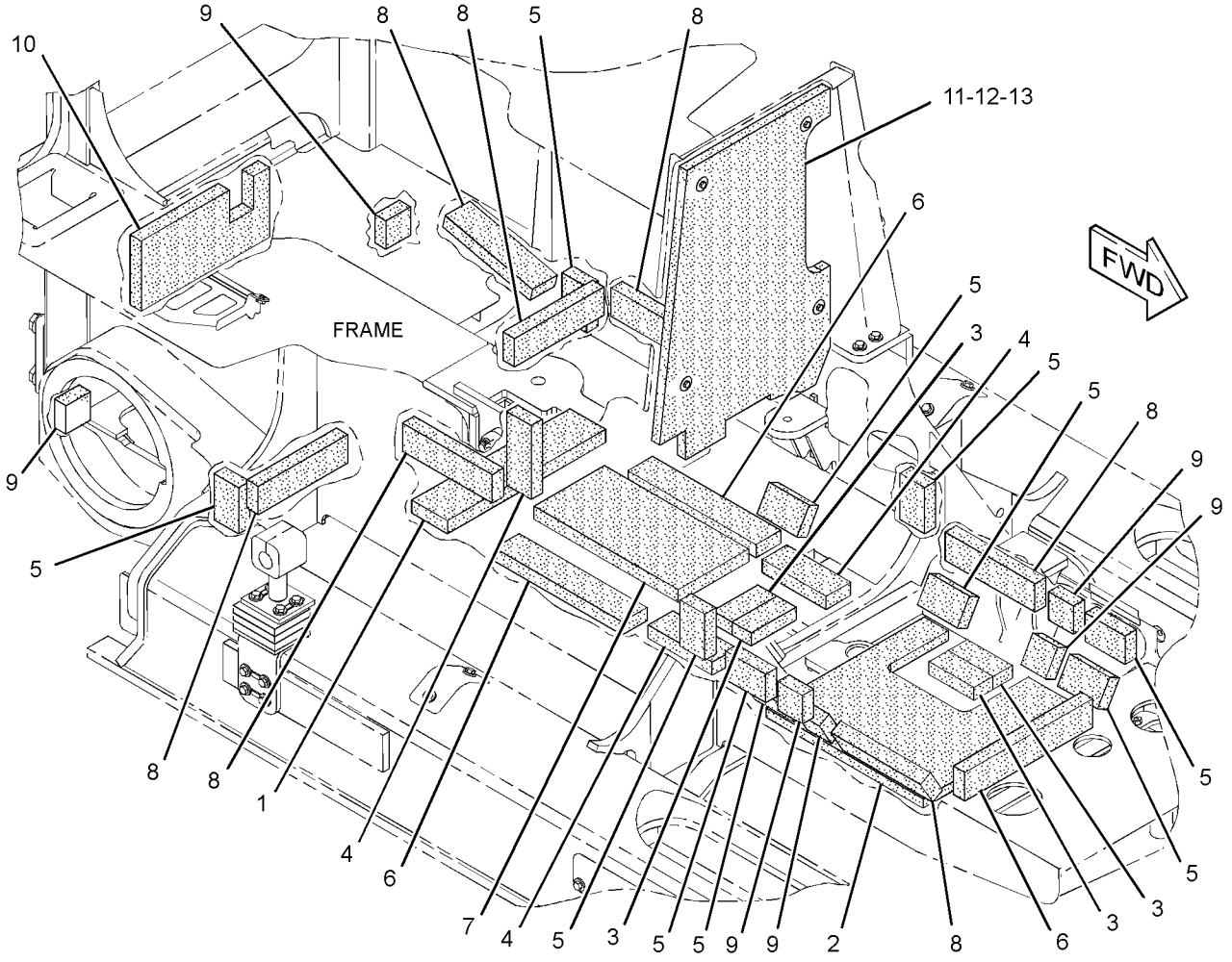

GRAPHIC #1 **<END>** g01438246

244-7498 LINER GP-SOUND SUPPRESSION

S/N: MMM1-UP; RRR1-UP
PART OF 244-7488, 244-7491 SUPPRESSION AR-SOUND
AN ATTACHMENT
TYPE 2

SMCS-7329 **i04348609**

NOTE	REF NO	GRAPHIC REF	PART NUMBER	QTY	PART NAME 1 2 3 4 5 6 (PRODUCT LEVEL)	SEE PAGE
	1	1	**262-9276**	1	LINER	
	2	1	**262-9277**	1	LINER	
C	3	1	**262-9278**	6	LINER	
C	4	1	**262-9279**	3	LINER	
	5	1	**264-5003**	10	LINER	
	6	1	**264-5004**	3	LINER	
	7	1	**264-5005**	1	LINER	
C	8	1	**264-5007**	6	LINER	
C	9	1	**264-5009**	8	LINER	
	10	1	**264-5010**	1	LINER	
	11	1	**264-5011**	1	LINER	
	12	1	**7X-0603**	4	WASHER-HARD (9.9X35X2.5-MM THK)	
M	13	1	**8T-4189**	4	BOLT (M8X1.25X20-MM)	

C - CHANGE FROM PREVIOUS TYPE
M - METRIC PART

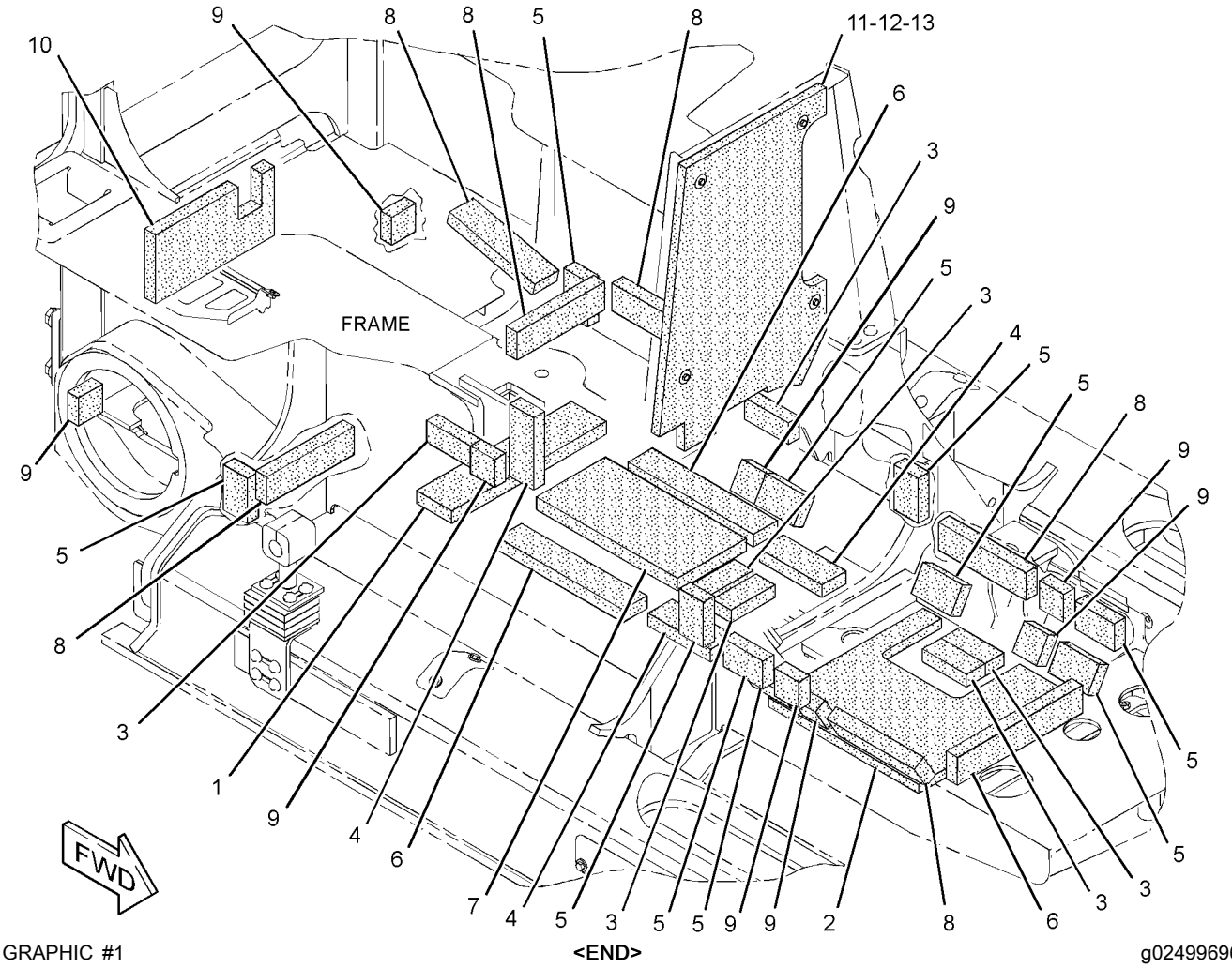

GRAPHIC #1 **<END>** g02499696

262-2923 SCREEN GP–FRONT

S/N: MMM1-UP; RRR1-UP
PART OF 255-4276 GUARD GP-BRUSH
AN ATTACHMENT

SMCS-7165 **i04415972**

NOTE	REF NO	GRAPHIC REF	PART NUMBER	QTY	PART NAME 1 2 3 4 5 6 (PRODUCT LEVEL)	SEE PAGE
M	1	1	**6V-7357**	8	BOLT (M6X1X25-MM)	
	2	1	**172-2384**	1	LATCH AS-ROTARY (LH)	
	3	1	**172-2385**	1	LATCH AS-ROTARY (RH)	
	4	1	**267-8655**	1	GUARD AS-FRONT	
J	5	1	**297-3275**	1	HANDLE AS (RH)	
J	6	1	**297-3274**	1	HANDLE AS (LH)	
					(EACH HANDLE AS INCLUDES)	
		1	**8Y-4501**	1	SPRING-HANDLE	
	7	1	**297-3272**	1	ROD AS (LH)	
		1	**6V-8185**	1	NUT (1/4-20-THD)	
		1	**108-5471**	1	CLEVIS	
	8	1	**6V-7636**	4	PIN AS-SPRING	
M	9	1	**8T-4180**	8	SCREW-MACHINE (M5X0.8X20-MM)	
	10	1	**9X-8256**	8	WASHER (6.6X12X2-MM THK)	
	11	1	**297-3273**	1	ROD AS (RH)	
		1	**6V-8185**	1	NUT (1/4-20-THD)	
		1	**108-5471**	1	CLEVIS	

J - REQUIRES CORPORATE KEY
M - METRIC PART

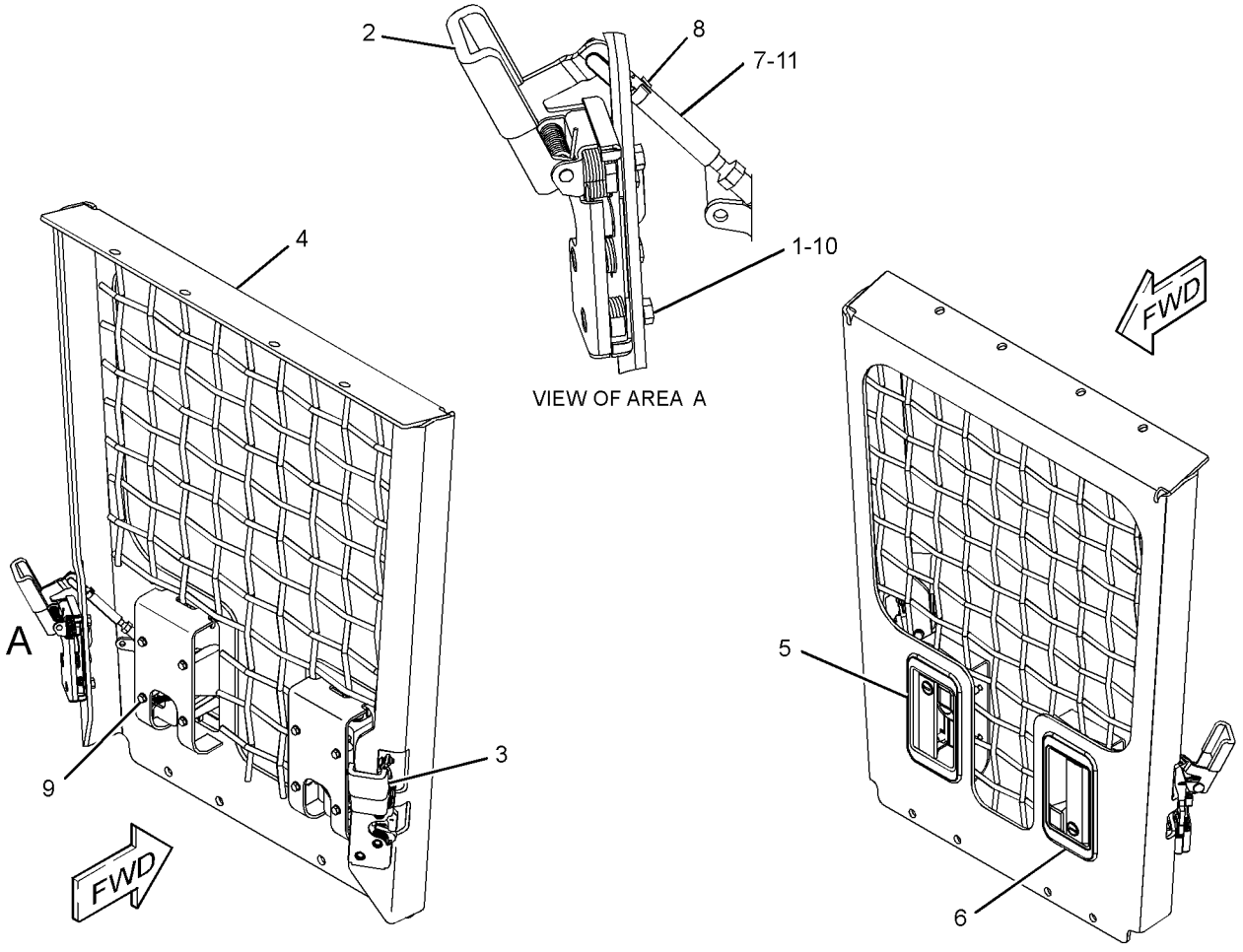

GRAPHIC #1 **<END>** g01294727

244-7479 SUPPRESSION AR-SOUND

S/N: MMM1-UP; RRR1-UP
FOR USE WITH 244-7394—PAGE: 527
AN ATTACHMENT

SMCS-7076 **i03601088**

NOTE	PART NUMBER	QTY	PART NAME 1 2 3 4 5 6 (PRODUCT LEVEL)	SEE PAGE
Y	*255-1431*	1	HOOD & GUARD GP	463
	311-7070	1	SWITCH AS-ROCKER (ENGINE SPEED CONTROL)	
	111-7899	1	GASKET	

Y - SEPARATE ILLUSTRATION

<END>

244-7488 SUPPRESSION AR-SOUND

S/N: MMM1-UP; RRR1-UP
FOR USE WITH 244-7394—PAGE: 527
AN ATTACHMENT

SMCS-7076 **i03411100**

NOTE	REF NO	GRAPHIC REF	PART NUMBER	QTY	PART NAME 1 2 3 4 5 6 (PRODUCT LEVEL)	SEE PAGE
	1	1	**190-5386**	2	FILM-STRIPE (ROUND RED REFLECTIVE)	
Y	2	1	*255-1452*	1	HOOD & GUARD GP (SOUND SUPPRESSION)	469
FY			*244-7498*	1	LINER GP-SOUND SUPPRESSION	474
F			**311-7070**	1	SWITCH AS-ROCKER (ENGINE SPEED CONTROL)	
F			**111-7899**	1	GASKET	
F			**8T-4223**	8	WASHER-HARD (13.5X25.5X3-MM THK)	

F - NOT SHOWN
Y - SEPARATE ILLUSTRATION

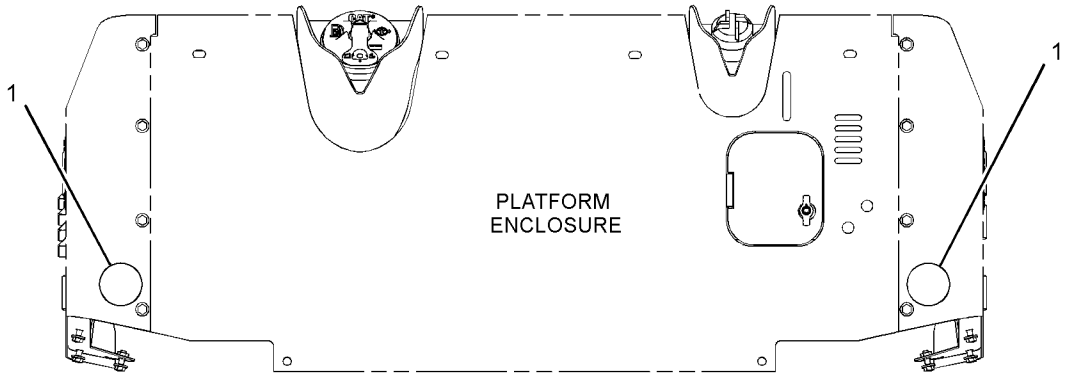

REAR VIEW

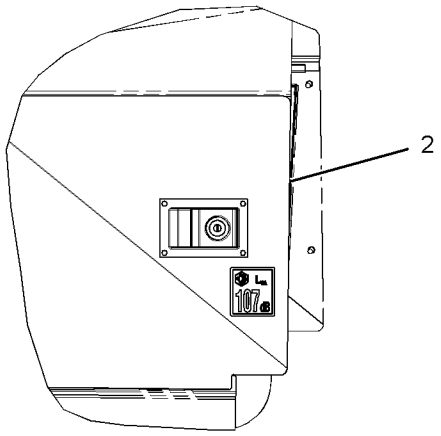

LEFT SIDE VIEW

GRAPHIC #1 **<END>** g01732937

244-7491 SUPPRESSION AR-SOUND

S/N: MMM1-UP; RRR1-UP

AN ATTACHMENT

SMCS-7076 **i02882851**

NOTE	PART NUMBER	QTY	PART NAME 1 2 3 4 5 6 (PRODUCT LEVEL)	SEE PAGE
Y	*255-1452*	1	HOOD & GUARD GP	469
Y	*244-7498*	1	LINER GP-SOUND SUPPRESSION	474
	311-7070	1	SWITCH AS-ROCKER (ENGINE SPEED CONTROL)	

Y - SEPARATE ILLUSTRATION

<END>

244-7467 SWEEP GP–FRONT

S/N: MMM1-UP; RRR1-UP
AN ATTACHMENT
TYPE 1

SMCS-7162 **i05342567**

NOTE	REF NO	GRAPHIC REF	PART NUMBER	QTY	PART NAME 1 2 3 4 5 6 (PRODUCT LEVEL)	SEE PAGE
	1	1	**5V-0500**	16	WASHER (16.5X75X6-MM THK)	
	2	1	**217-5807**	4	MOUNT	
	4	1	**260-9289**	1	SUPPORT (RH)	
	5	1	**260-9290**	1	SUPPORT (LH)	
	6	1	**260-9291**	2	PLATE	
	7	1	**261-8095**	1	PLATE	
	8	1	**261-8096**	1	PLATE	
M	9	1	**096-4885**	14	LOCKNUT (M16X2-THD)	
	10	1	**3V-9244**	18	WASHER (16.5X50X5-MM THK)	
M	11	1	**7X-2553**	2	BOLT (M16X2X40-MM)	
M	12	1	**7X-2555**	4	BOLT (M16X2X80-MM)	
M	13	1	**8T-4174**	4	BOLT (M16X2X120-MM)	
M	14	1	**8T-4183**	6	BOLT (M12X1.75X40-MM)	
	15	1	**306-8892**	1	SWEEP AS (RH)	
	16	1	**306-5054**	1	SWEEP AS (LH)	
	17	1	**306-5053**	1	TUBE AS	
M	18	1	**8T-4175**	2	BOLT (M16X2X90-MM)	
M	19	1	**8T-4173**	6	BOLT (M16X2X110-MM)	

M - METRIC PART

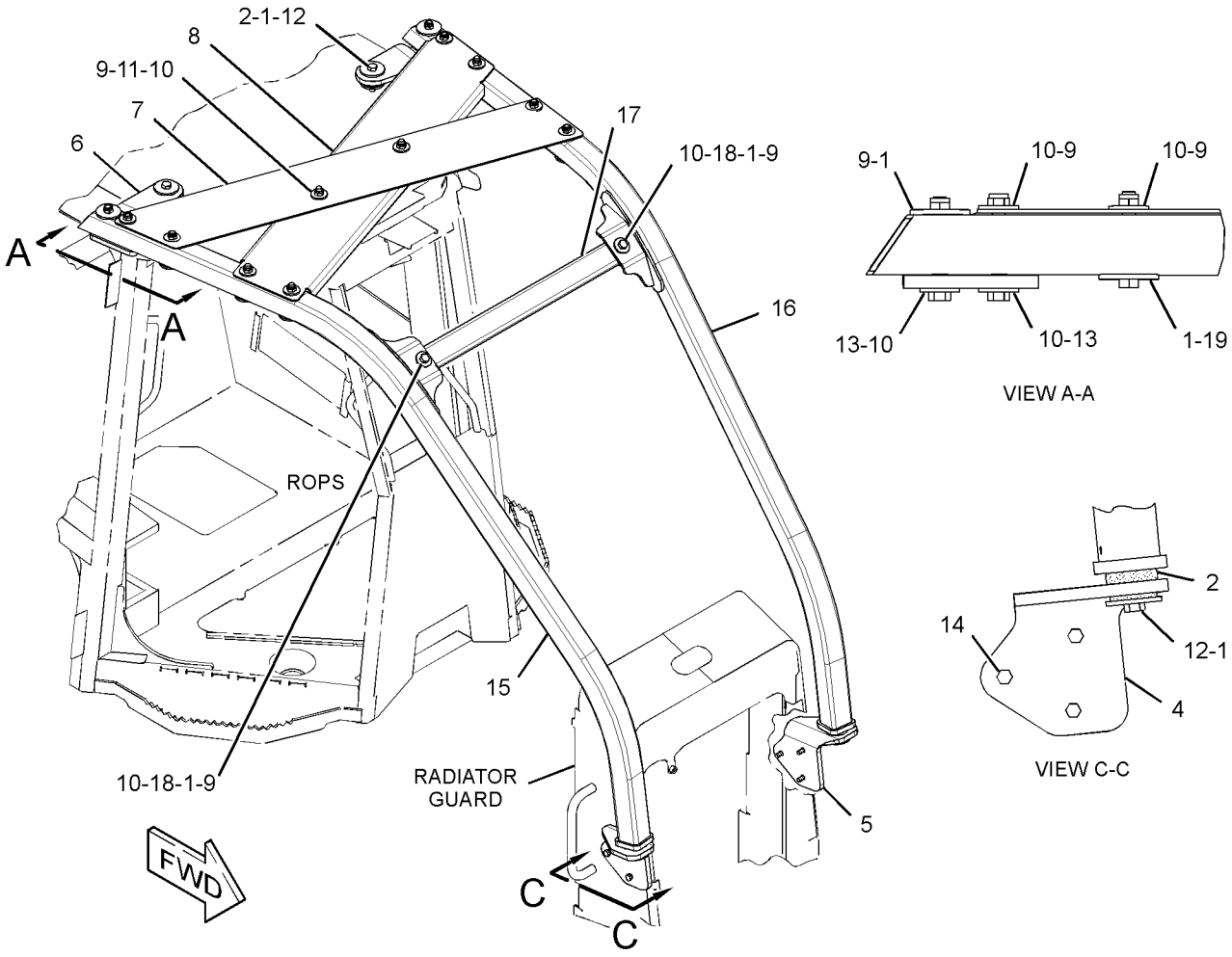

GRAPHIC #1 **<END>** g03325302

244-7467 SWEEP GP–FRONT

S/N: MMM1-UP; RRR1-UP
AN ATTACHMENT
TYPE 2

SMCS-7162 **i05342571**

NOTE	REF NO	GRAPHIC REF	PART NUMBER	QTY	PART NAME 1 2 3 4 5 6 (PRODUCT LEVEL)	SEE PAGE
C	1	1	**5V-0500**	14	WASHER (16.5X75X6-MM THK)	
	2	1	**217-5807**	4	MOUNT	
	4	1	**342-9789**	1	SUPPORT (RH)	
	5	1	**342-9790**	1	SUPPORT (LH)	
C	6	1	**342-9788**	2	PLATE AS	
C	7	1	**349-6992**	1	PLATE AS	
C	8	1	**349-6993**	1	PLATE AS	
C	10	1	**3V-9244**	6	WASHER (16.5X50X5-MM THK)	
CM	11	1	**7X-2552**	2	BOLT (M16X2X30-MM)	
CM	12	1	**7X-2555**	6	BOLT (M16X2X80-MM)	
M	13	1	**8T-4174**	4	BOLT (M16X2X120-MM)	
M	14	1	**8T-4183**	6	BOLT (M12X1.75X40-MM)	
	15	1	**306-8892**	1	SWEEP AS (RH)	
	16	1	**306-5054**	1	SWEEP AS (LH)	
	17	1	**306-5053**	1	TUBE AS	
M	19	1	**8T-4173**	6	BOLT (M16X2X110-MM)	

C - CHANGE FROM PREVIOUS TYPE
M - METRIC PART

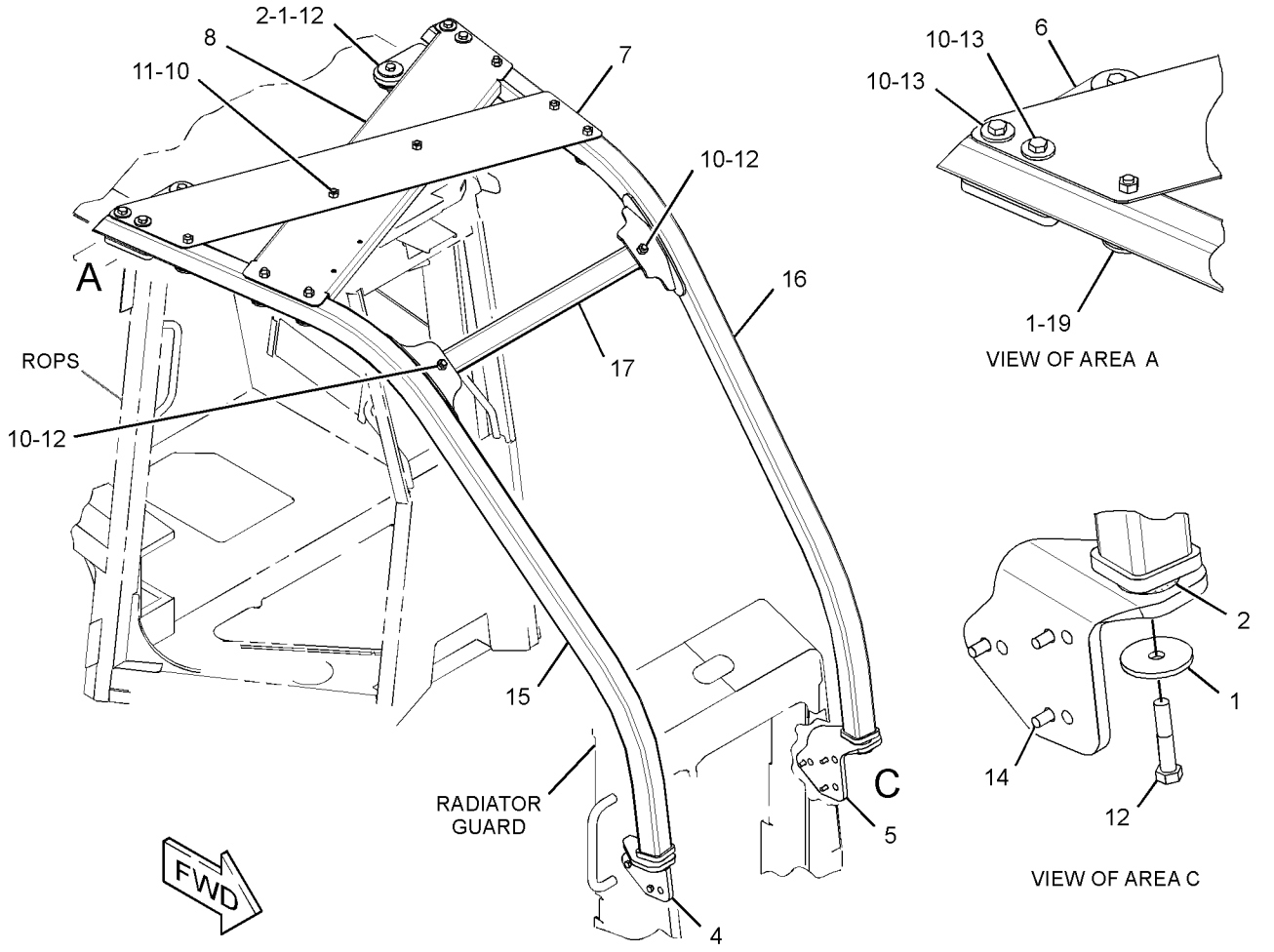

GRAPHIC #1 **<END>** g03323805

244-7468 SWEEP GP–REAR

S/N: MMM1-UP; RRR1-UP
FOR USE WITH 244-7467–PAGE: 480
AN ATTACHMENT

SMCS-7162 **i03408701**

NOTE	REF NO	GRAPHIC REF	PART NUMBER	QTY	PART NAME 1 2 3 4 5 6 (PRODUCT LEVEL)	SEE PAGE
	1	1	**301-7305**	4	SPACER (16.5X75X13.5-MM THK)	
	2	1	**260-9293**	1	SWEEP AS	
	3	1	**3V-9244**	4	WASHER (16.5X50X5-MM THK)	
M	4	1	**8T-4140**	4	BOLT (M16X2X60-MM)	

M - METRIC PART

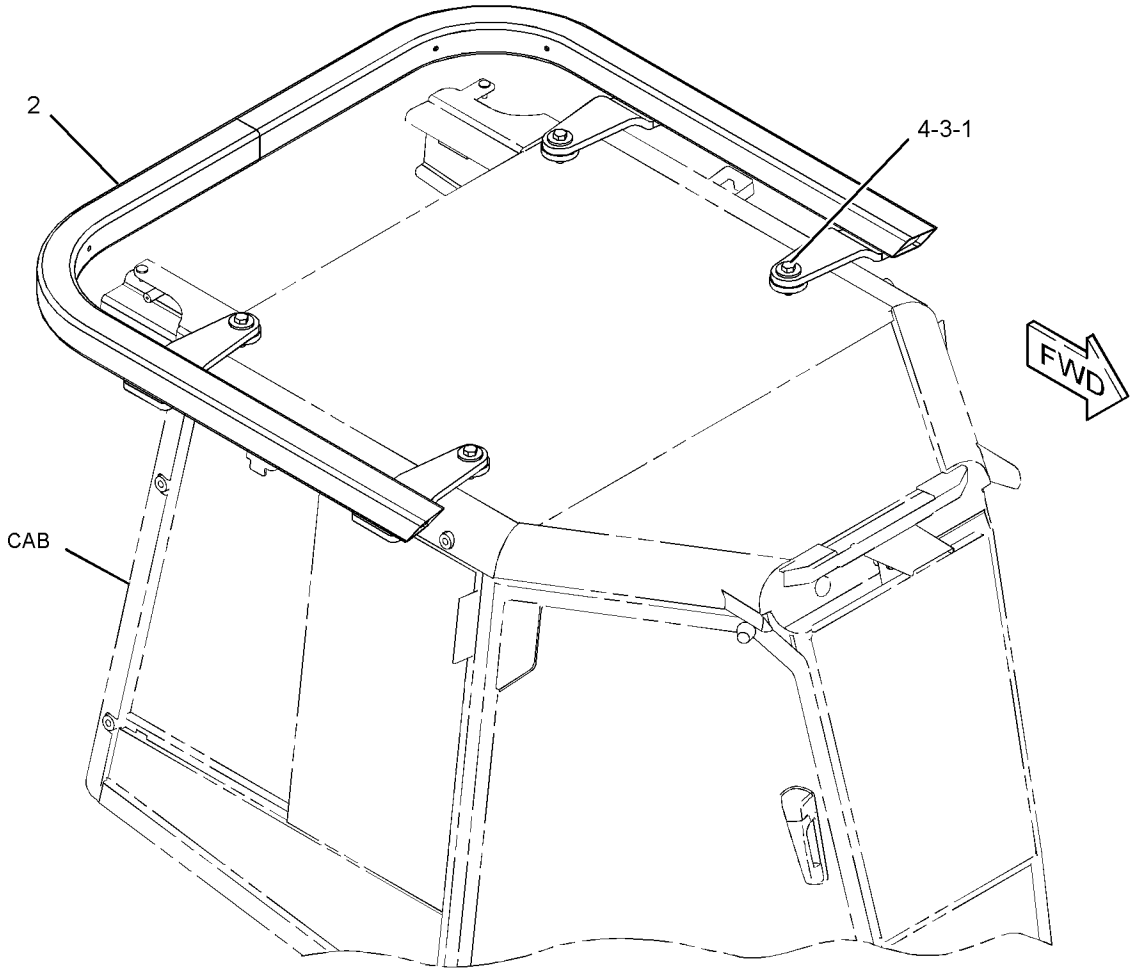

GRAPHIC #1 **<END>** g01329111

254-0664 ADJUSTMENT GP-HYDRAULIC TRACK

S/N: MMM1-263; RRR1-231
PART OF 244-7500, 254-0593 IDLER GP-FRONT
AN ATTACHMENT

SMCS-4157 **i04415712**

NOTE	REF NO	GRAPHIC REF	PART NUMBER	QTY	PART NAME 1 2 3 4 5 6 (PRODUCT LEVEL)	SEE PAGE
	1	1	**2S-5926**	1	VALVE-RELIEF (RECOIL SPRING OIL)	
	2	1	**3G-3259**	1	SEAL AS	
	3	1	**4T-5613**	1	RING-WEAR	
	4	1	**190-8609**	1	VALVE-FILL (RECOIL SPRING OIL)	
	5	1	**308-1845**	1	SEAL-WIPER	
	6	1	**231-0070**	2	WASHER-SPECIAL	
	7	1	**254-0601**	1	YOKE	
	8	1	**254-0656**	1	PLUNGER	
	9	1	**293-9150**	1	GUARD	
	10	1	**2S-4078**	1	SEAL-O-RING	
M	11	1	**5C-9553**	2	BOLT (M6X1X16-MM)	
	12	1	**9S-8010**	1	PLUG	
	13	1	**9X-8256**	2	WASHER (6.6X12X2-MM THK)	

M - METRIC PART

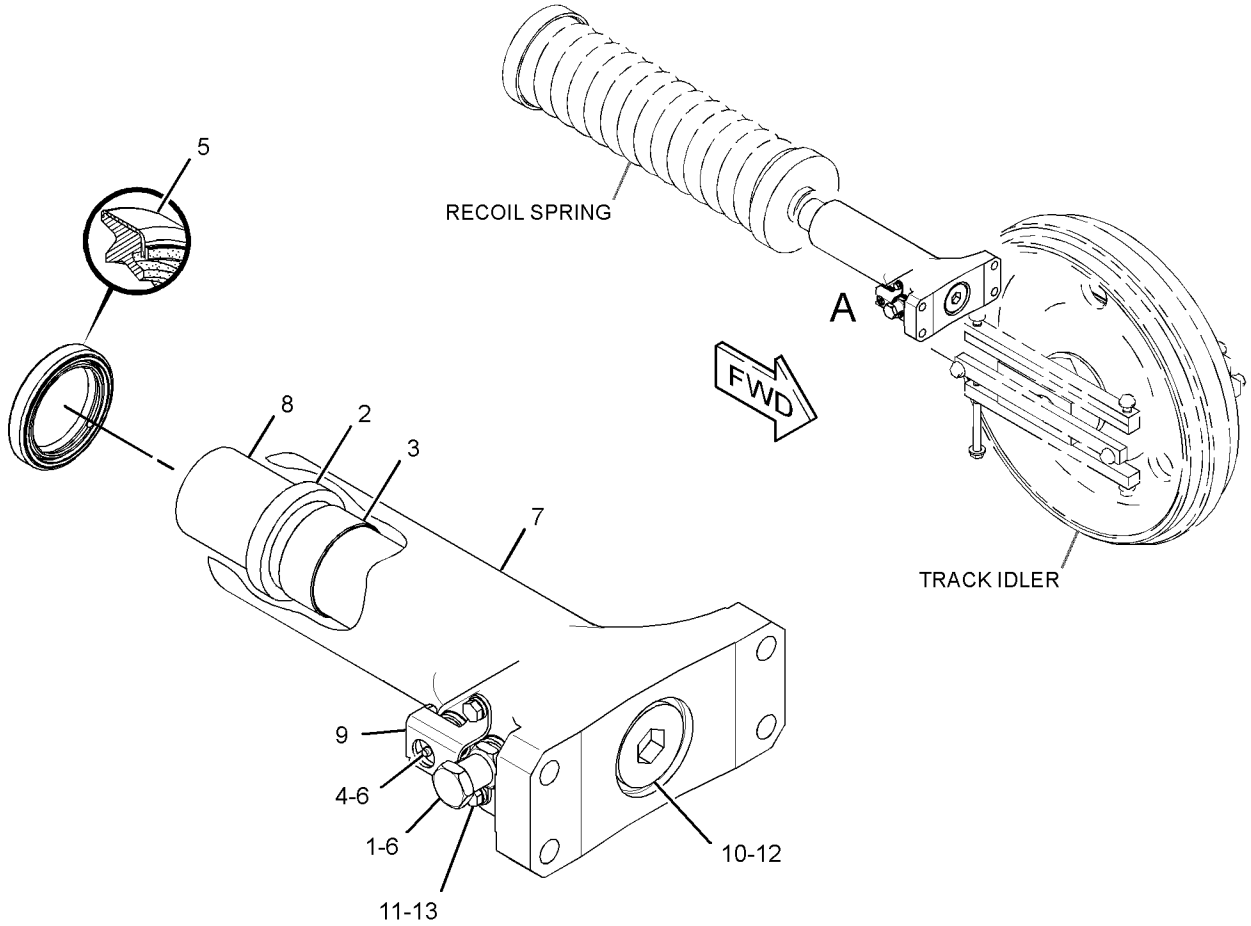

VIEW OF AREA A
(EXPLODED)

GRAPHIC #1 **<END>** g01679229

254-0664 ADJUSTMENT GP-HYDRAULIC TRACK

S/N: MMM264-UP; RRR232-UP
PART OF 244-7500, 254-0593 IDLER GP-FRONT
AN ATTACHMENT
TYPE 1

SMCS-4157 **i04416154**

NOTE	REF NO	GRAPHIC REF	PART NUMBER	QTY	PART NAME 1 2 3 4 5 6 (PRODUCT LEVEL)	SEE PAGE
	1	1	**2S-5926**	1	VALVE-RELIEF (RECOIL SPRING OIL)	
	2	1	**3G-3259**	1	SEAL AS	
	3	1	**4T-5613**	1	RING-WEAR	
	4	1	**190-8609**	1	VALVE-FILL (RECOIL SPRING OIL)	
	5	1	**308-1845**	1	SEAL-WIPER	
	6	1	**231-0070**	2	WASHER-SPECIAL	
	7	1	**254-0601**	1	YOKE	
	8	1	**254-0656**	1	PLUNGER	
	9	1	**293-9150**	1	GUARD	
C	10	1	*148-8406*	1	PLUG AS (RECOIL SPRING OIL)	
		1	**7M-8485**	1	SEAL-O-RING	
		1	**9S-9334**	1	PLUG-O-RING (STRAIGHT THREAD O-RING)	
M	11	1	**5C-9553**	2	BOLT (M6X1X16-MM)	
	12	1	**9X-8256**	2	WASHER (6.6X12X2-MM THK)	

C - CHANGE FROM PREVIOUS TYPE
M - METRIC PART

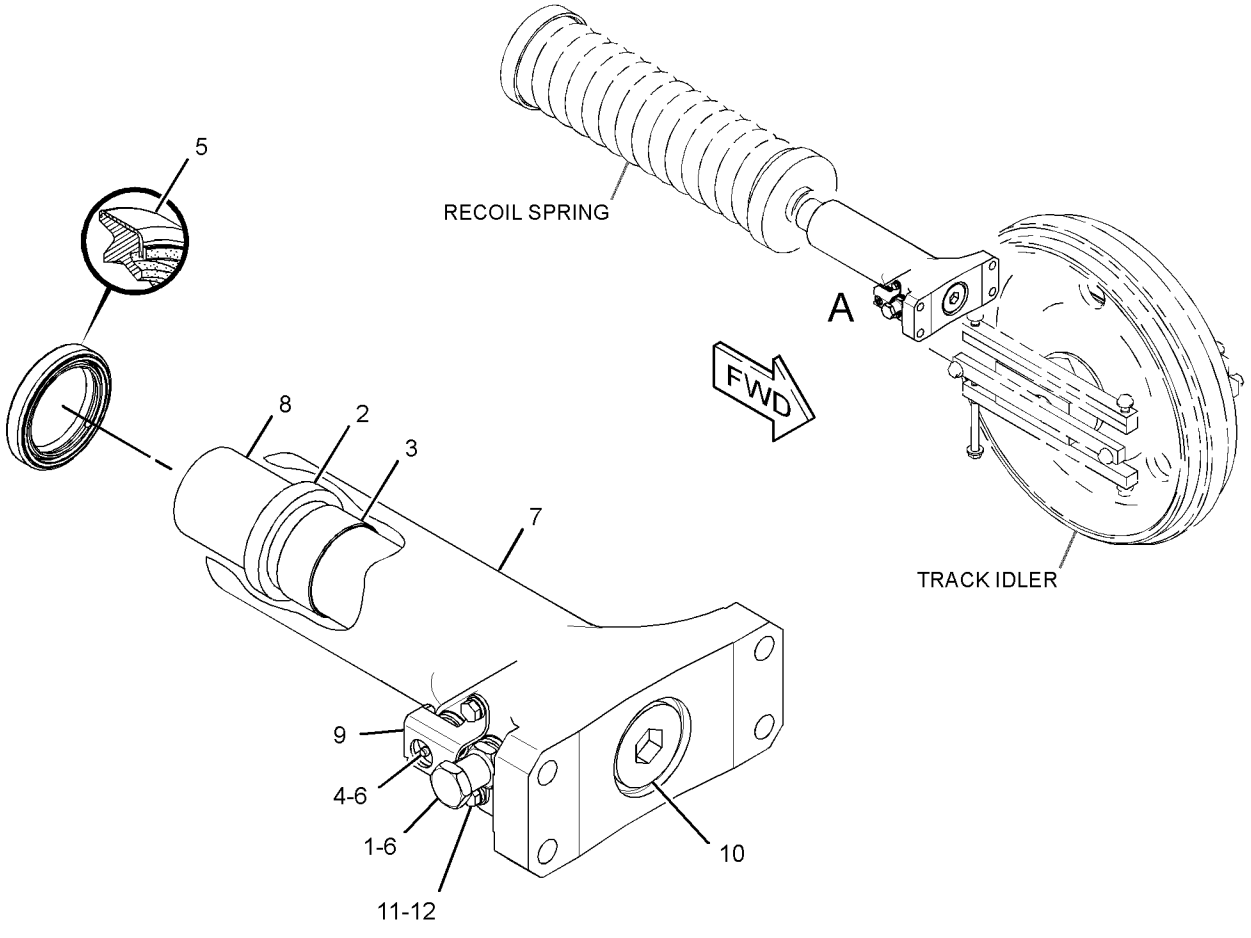

VIEW OF AREA A
(EXPLODED)

GRAPHIC #1 **<END>** g01408610

254-0664 ADJUSTMENT GP-HYDRAULIC TRACK

S/N: MMM264-UP; RRR232-UP
PART OF 244-7500, 254-0593 IDLER GP-FRONT
AN ATTACHMENT
TYPE 2

SMCS-4157 **i04338012**

NOTE	REF NO	GRAPHIC REF	PART NUMBER	QTY	PART NAME 1 2 3 4 5 6 (PRODUCT LEVEL)	SEE PAGE
C	1	1	**9S-4183**	1	PLUG	
	2	1	**3G-3259**	1	SEAL AS	
	3	1	**4T-5613**	1	RING-WEAR	
	4	1	**190-8609**	1	VALVE-FILL (RECOIL SPRING OIL)	
	5	1	**308-1845**	1	SEAL-WIPER	
C	6	1	**231-0070**	1	WASHER-SPECIAL	
	7	1	**254-0656**	1	PLUNGER	
C	8	1	**353-5793**	1	YOKE	
C	9	1	**353-5795**	1	PLATE	
C	10	1	**353-6188**	1	GUARD	
C	11	1	**3D-2824**	1	SEAL-O-RING	
C	12	1	**4J-5268**	1	SEAL-O-RING	
C	13	1	**8T-4121**	2	WASHER-HARD (11X21X2.5-MM THK)	
CM	14	1	**8T-4195**	2	BOLT (M10X1.5X30-MM)	
CM	15	1	**8T-4200**	2	BOLT (M8X1.25X16-MM)	
C	16	1	**8T-4224**	2	WASHER-HARD (8.8X16X2-MM THK)	

C - CHANGE FROM PREVIOUS TYPE
M - METRIC PART

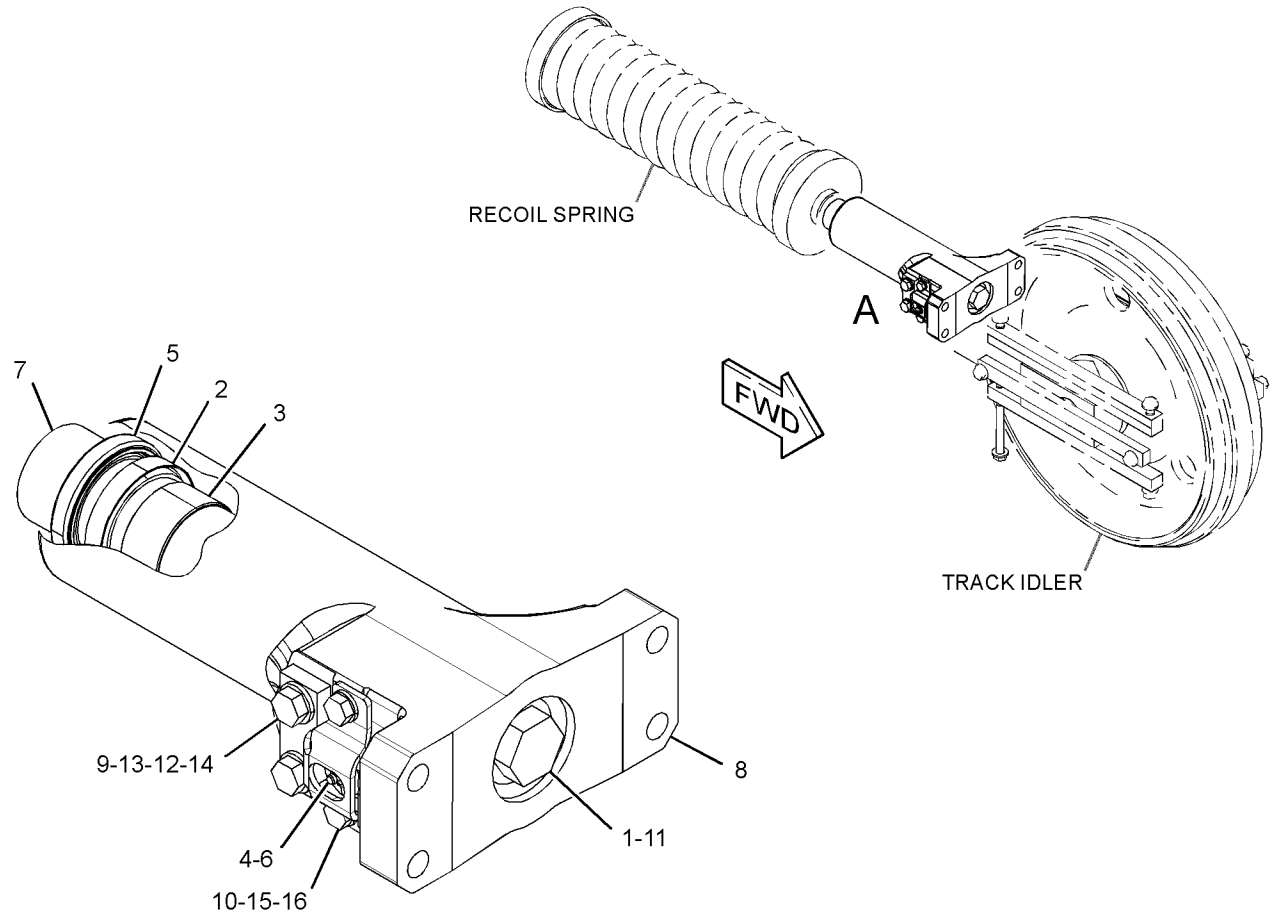

VIEW OF AREA A

GRAPHIC #1 **<END>** g02498856

244-7418 GUARD GP-IDLER

S/N: MMM1-UP; RRR1-UP
PART OF 244-7394 UNDERCARRIAGE AR
AN ATTACHMENT

SMCS-7169 **i02819972**

NOTE	REF NO	GRAPHIC REF	PART NUMBER	QTY	PART NAME 1 2 3 4 5 6 (PRODUCT LEVEL)	SEE PAGE
	1	1	**290-3391**	2	PLATE AS	
	2	1	**305-1443**	2	BRACKET AS	
					(EACH INCLUDES)	
M		1	**8T-3597**	3	NUT-WELD (M12X1.75-THD)	
	3	1	**305-1446**	2	BRACKET AS	
					(EACH INCLUDES)	
M		1	**8T-3597**	3	NUT-WELD (M12X1.75-THD)	
	4	1	**305-1451**	2	BRACKET AS	
	5	1	**305-1453**	2	BRACKET AS	
	6	1	**305-1454**	2	GUARD	
	7	1	**305-1455**	4	PLATE	
	8	1	**7X-0584**	8	WASHER-HARD (13.5X20.5X2-MM THK)	
	9	1	**7X-7729**	8	WASHER (11X25X3-MM THK)	
M	10	1	**8T-4133**	4	NUT (M10X1.5-THD)	
M	11	1	**8T-4139**	4	BOLT (M12X1.75X30-MM)	
M	12	1	**8T-4184**	8	BOLT (M12X1.75X45-MM)	
M	13	1	**8T-4192**	8	BOLT (M12X1.75X25-MM)	
M	14	1	**8T-4195**	4	BOLT (M10X1.5X30-MM)	
	15	1	**8T-4223**	20	WASHER-HARD (13.5X25.5X3-MM THK)	
M	16	1	**8T-4956**	8	BOLT (M12X1.75X35-MM)	

M - METRIC PART

244-7418 **GUARD GP-IDLER (*contd.*)** **i02819972**

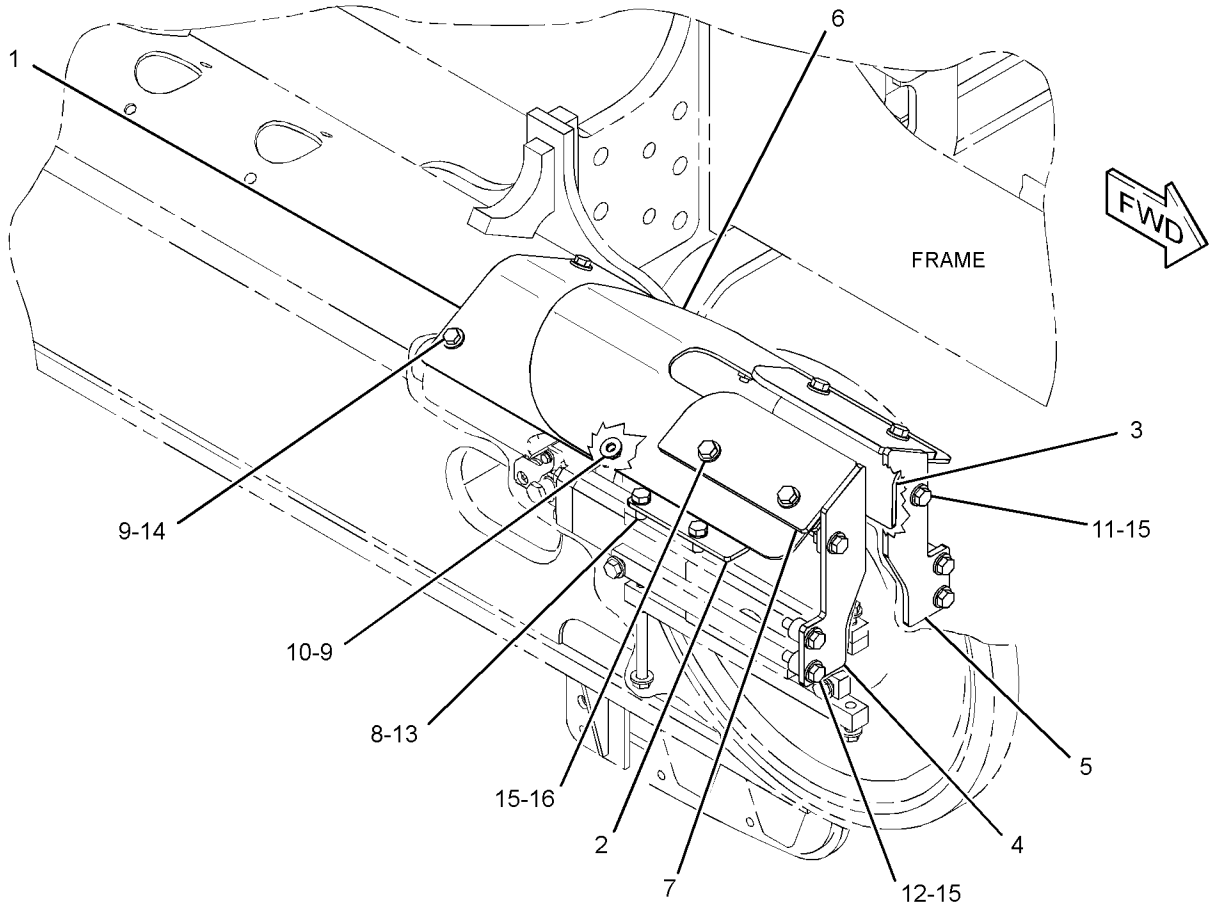

GRAPHIC #1 **<END>** g01407153

262-5874 GUARD GP-IDLER

S/N: MMM1-UP; RRR1-UP
PART OF 244-7449 UNDERCARRIAGE AR
AN ATTACHMENT

SMCS-7169 **i02819962**

NOTE	REF NO	GRAPHIC REF	PART NUMBER	QTY	PART NAME 1 2 3 4 5 6 (PRODUCT LEVEL)	SEE PAGE
	1	1	**290-3391**	2	PLATE AS	
	2	1	**305-1439**	2	BRACKET AS	
	3	1	**305-1442**	2	BRACKET AS	
	4	1	**305-1443**	2	BRACKET AS	
					(EACH INCLUDES)	
M		1	**8T-3597**	3	NUT-WELD (M12X1.75-THD)	
	5	1	**305-1446**	2	BRACKET AS	
					(EACH INCLUDES)	
M		1	**8T-3597**	3	NUT-WELD (M12X1.75-THD)	
	6	1	**305-1448**	2	GUARD	
	7	1	**305-1449**	2	PLATE	
	8	1	**305-1450**	2	PLATE	
	9	1	**7X-0584**	8	WASHER-HARD (13.5X20.5X2-MM THK)	
	10	1	**7X-7729**	8	WASHER (11X25X3-MM THK)	
M	11	1	**8T-4133**	4	NUT (M10X1.5-THD)	
M	12	1	**8T-4139**	4	BOLT (M12X1.75X30-MM)	
M	13	1	**8T-4184**	8	BOLT (M12X1.75X45-MM)	
M	14	1	**8T-4192**	8	BOLT (M12X1.75X25-MM)	
M	15	1	**8T-4195**	4	BOLT (M10X1.5X30-MM)	
	16	1	**8T-4223**	20	WASHER-HARD (13.5X25.5X3-MM THK)	
M	17	1	**8T-4956**	8	BOLT (M12X1.75X35-MM)	

M - METRIC PART

262-5874 **GUARD GP-IDLER (*contd.*)** **i02819962**

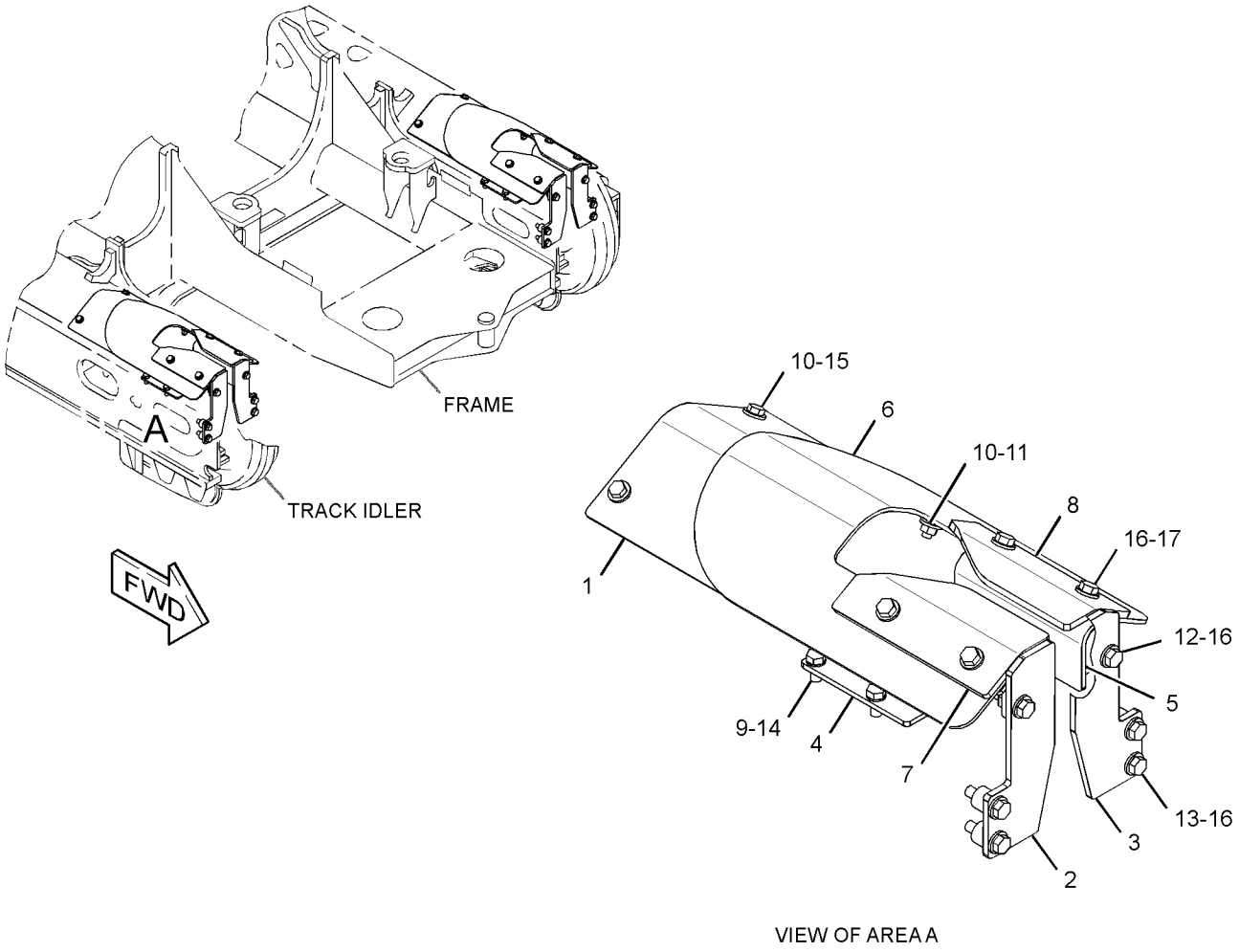

GRAPHIC #1 **<END>** g01407202

244-7424 GUARD GP-TRACK GUIDE

S/N: MMM1-562; RRR1-402
PART OF 244-7449 UNDERCARRIAGE AR
AN ATTACHMENT

SMCS-4177 **i02657301**

NOTE	REF NO	GRAPHIC REF	PART NUMBER	QTY	PART NAME 1 2 3 4 5 6 (PRODUCT LEVEL)	SEE PAGE
	1	1	**263-8325**	1	GUARD AS	
M		1	**8T-3597**	2	NUT-WELD (M12X1.75-THD)	
	2	1	**263-8337**	1	GUARD AS	
M		1	**8T-3597**	2	NUT-WELD (M12X1.75-THD)	
	3	1	**263-8355**	1	GUARD AS	
M		1	**8T-3597**	1	NUT-WELD (M12X1.75-THD)	
	4	1	**263-8356**	1	GUARD AS	
M		1	**8T-3597**	1	NUT-WELD (M12X1.75-THD)	
	5	1	**263-8363**	1	GUARD AS	
	6	1	**263-8364**	1	GUARD AS	
	7	1	**284-7832**	1	GUARD AS	
M		1	**8T-3597**	1	NUT-WELD (M12X1.75-THD)	
	8	1	**284-7833**	1	GUARD AS	
M		1	**8T-3597**	1	NUT-WELD (M12X1.75-THD)	
	9	1	**5P-1076**	14	WASHER-HARD (13.5X30X4-MM THK)	
M	10	1	**7X-2556**	12	BOLT (M16X2X100-MM)	
	11	1	**8T-4122**	12	WASHER-HARD (17X32X3.5-MM THK)	
M	12	1	**8T-4139**	14	BOLT (M12X1.75X30-MM)	

M - METRIC PART

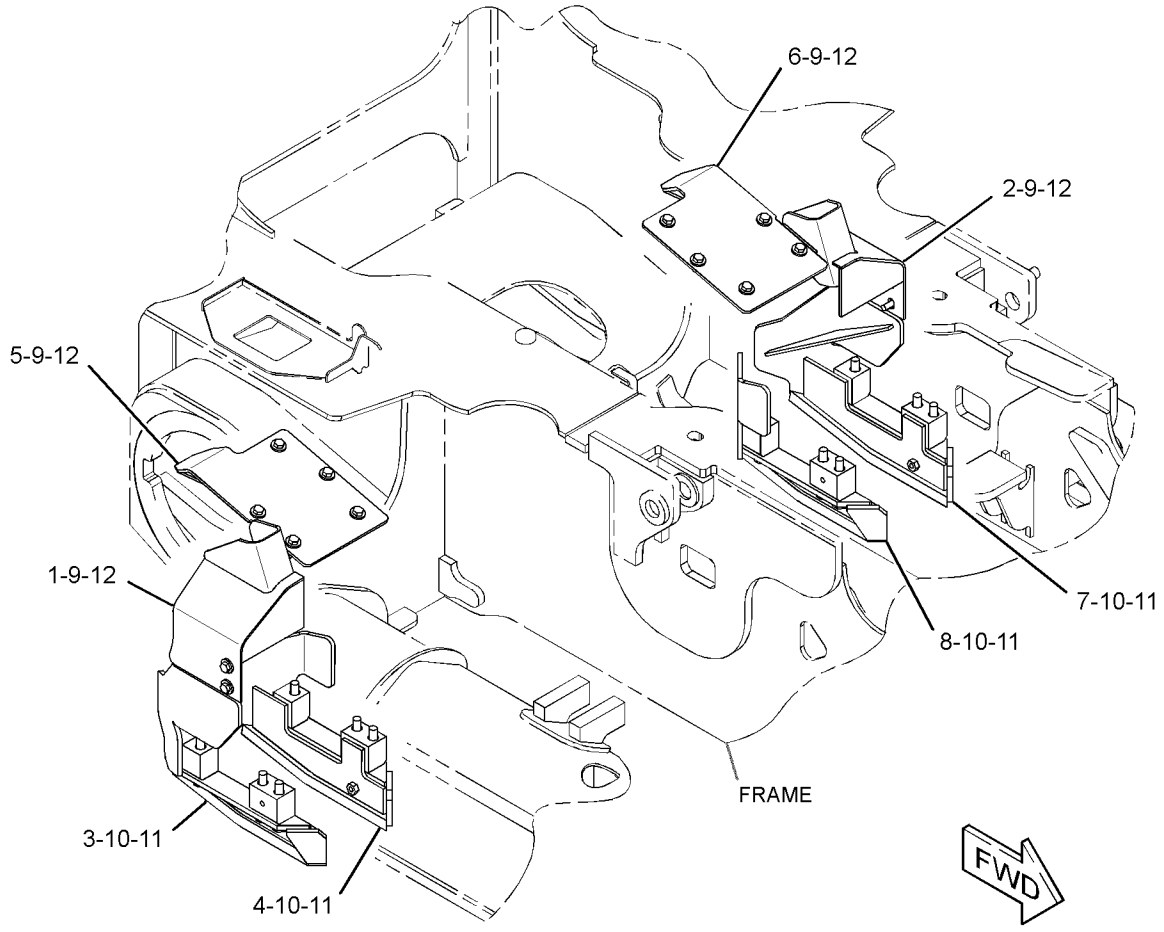

GRAPHIC #1 **<END>** g01353218

282-3664 GUARD GP-TRACK GUIDE–SYSTEMONE

S/N: MMM1-UP; RRR1-UP
CENTER
CANNOT BE USED WITH GUARD GP-TRACK ROLLER (FULL LENGTH)
AN ATTACHMENT

SMCS-4177 **i02656771**

NOTE	REF NO	GRAPHIC REF	PART NUMBER	QTY	PART NAME 1 2 3 4 5 6 (PRODUCT LEVEL)	SEE PAGE
	1	1	**276-1754**	2	GUARD AS	
	2	1	**198-4778**	8	WASHER-HARD (13.5X30X12-MM THK)	
M	3	1	**8T-4194**	8	BOLT (M12X1.75X50-MM)	

M - METRIC PART

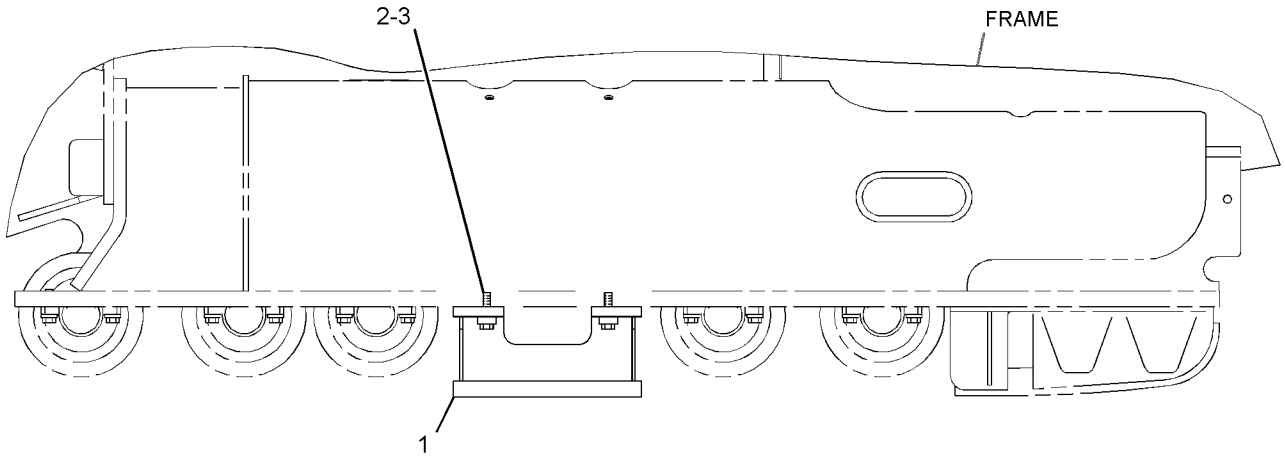

RIGHT SIDE VIEW

GRAPHIC #1 **<END>** g01335516

282-3674 GUARD GP-TRACK GUIDE–CENTER

S/N: MMM1-UP; RRR1-UP
FOR USE WITH SALT UNDERCARRIAGE
CANNOT BE USED WITH GUARD GP-TRACK ROLLER (FULL LENGTH) AN ATTACHMENT

SMCS-4177 **i02665805**

NOTE	REF NO	GRAPHIC REF	PART NUMBER	QTY	PART NAME 1 2 3 4 5 6 (PRODUCT LEVEL)	SEE PAGE
	1	1	**282-3669**	2	GUARD AS	
	2	1	**198-4778**	8	WASHER-HARD (13.5X30X12-MM THK)	
M	3	1	**8T-4194**	8	BOLT (M12X1.75X50-MM)	

M - METRIC PART

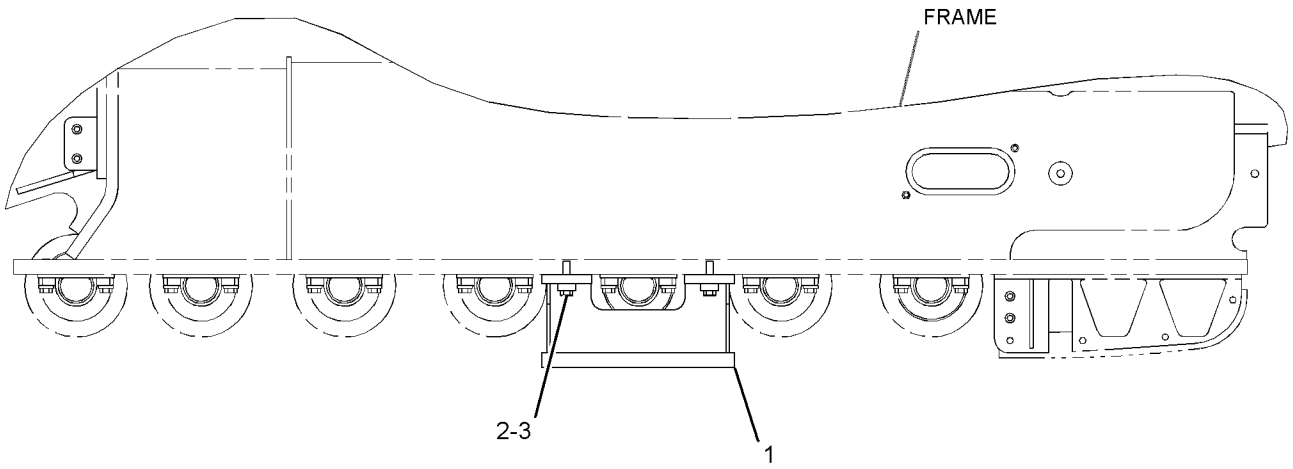

RIGHT SIDE VIEW

GRAPHIC #1 **<END>** g01342923

282-3703 GUARD GP-TRACK GUIDE–SYSTEMONE, FRONT

S/N: MMM1-UP; RRR1-UP
PART OF 244-7394 UNDERCARRIAGE AR
AN ATTACHMENT

SMCS-4177 **i02819900**

NOTE	REF NO	GRAPHIC REF	PART NUMBER	QTY	PART NAME 1 2 3 4 5 6 (PRODUCT LEVEL)	SEE PAGE
	1	1	**310-7502**	2	PLATE	
	2	1	**310-7503**	2	PLATE	
M	3	1	**8T-0722**	12	BOLT-LOCKING (M10X1.5X30-MM)	
	4	1	**8T-4121**	12	WASHER-HARD (11X21X2.5-MM THK)	

M - METRIC PART

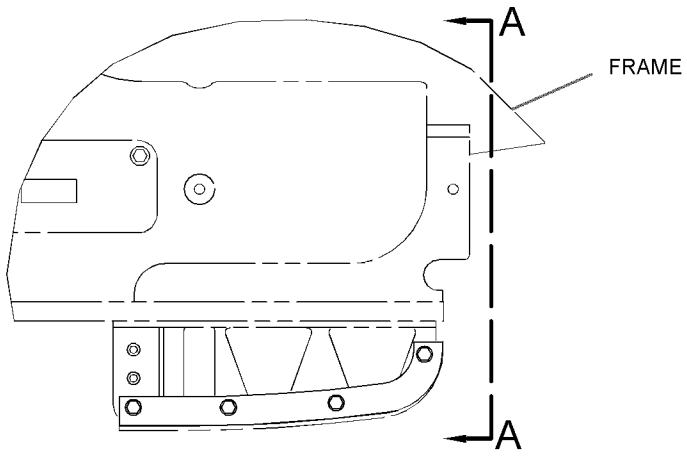

RIGHT SIDE VIEW

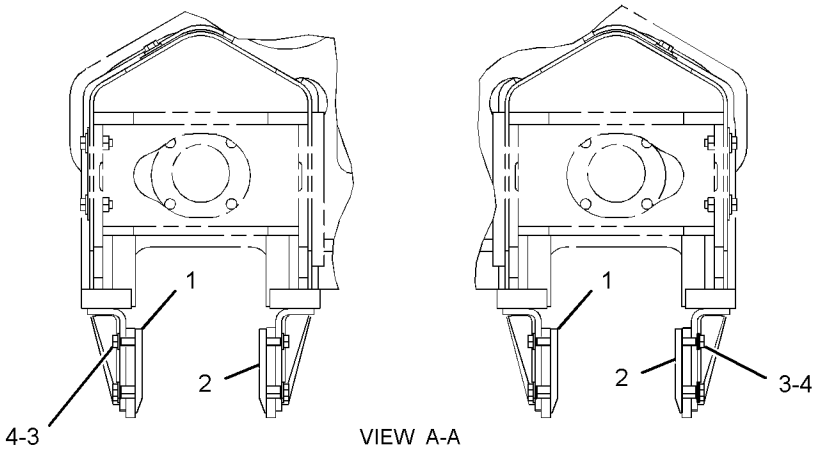

VIEW A-A

GRAPHIC #1

<END>

g01342936

282-3714 GUARD GP-TRACK GUIDE–SYSTEMONE

S/N: MMM1-562; RRR1-402
PART OF 244-7394 UNDERCARRIAGE AR
AN ATTACHMENT

SMCS-4177 **i02708338**

NOTE	REF NO	GRAPHIC REF	PART NUMBER	QTY	PART NAME 1 2 3 4 5 6 (PRODUCT LEVEL)	SEE PAGE
	1	1	**263-8325**	1	GUARD AS	
M		1	**8T-3597**	2	NUT-WELD (M12X1.75-THD)	
	2	1	**263-8337**	1	GUARD AS	
M		1	**8T-3597**	2	NUT-WELD (M12X1.75-THD)	
	3	1	**263-8363**	1	GUARD AS	
	4	1	**263-8364**	1	GUARD AS	
	5	1	**287-4021**	1	GUARD AS-TRACK GUIDE	
M		1	**8T-3597**	1	NUT-WELD (M12X1.75-THD)	
	6	1	**287-4022**	1	GUARD AS	
M		1	**8T-3597**	1	NUT-WELD (M12X1.75-THD)	
	7	1	**287-4023**	1	GUARD AS	
M		1	**8T-3597**	1	NUT-WELD (M12X1.75-THD)	
	8	1	**287-4024**	1	GUARD AS	
M		1	**8T-3597**	1	NUT-WELD (M12X1.75-THD)	
	9	1	**5P-1076**	14	WASHER-HARD (13.5X30X4-MM THK)	
M	10	1	**7X-2556**	12	BOLT (M16X2X100-MM)	
	11	1	**8T-4122**	12	WASHER-HARD (17X32X3.5-MM THK)	
M	12	1	**8T-4139**	14	BOLT (M12X1.75X30-MM)	

M - METRIC PART

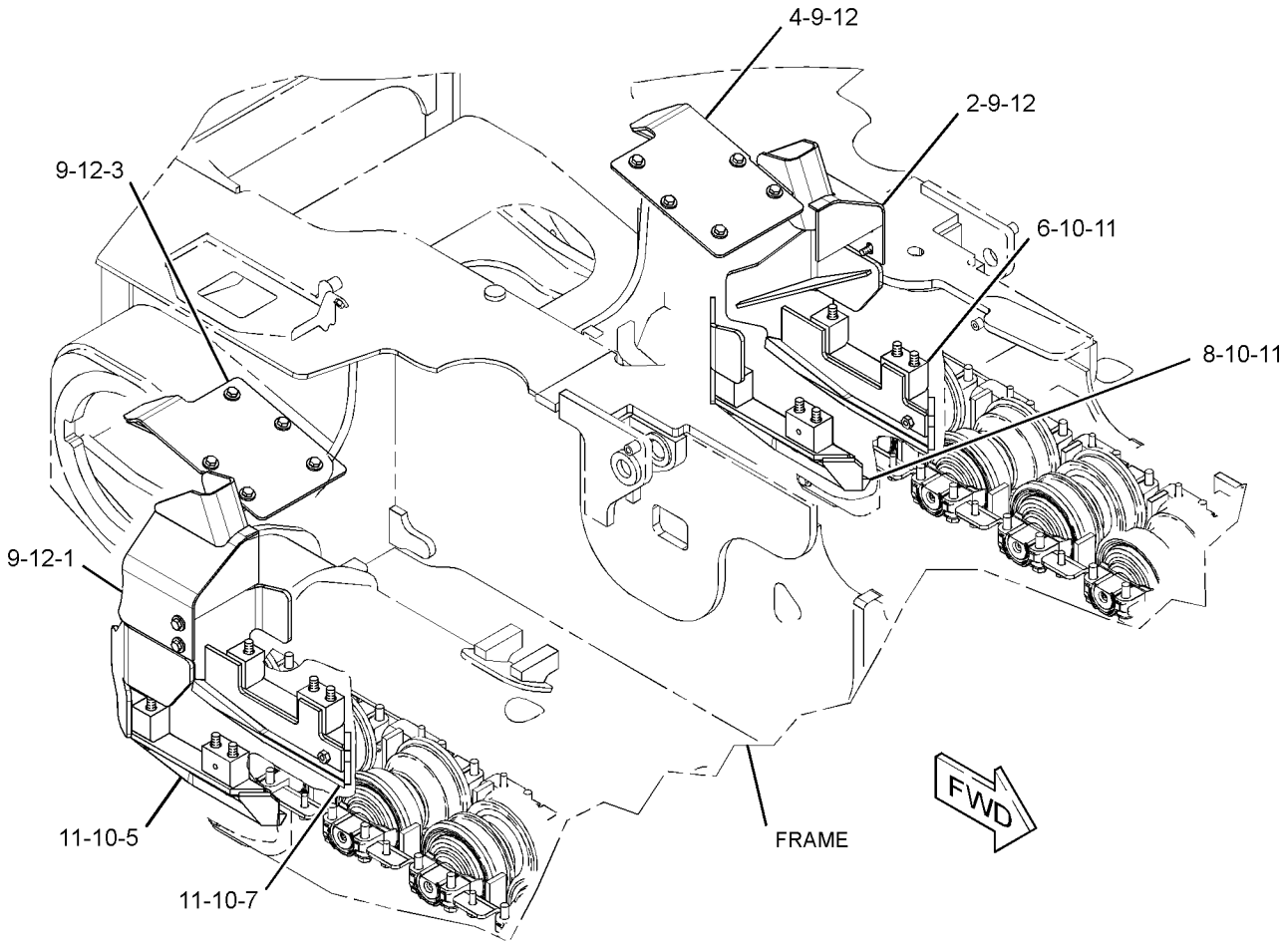

GRAPHIC #1 **<END>** g01372121

282-3714 GUARD GP-TRACK GUIDE–SYSTEMONE

S/N: MMM563-UP; RRR403-UP
PART OF 244-7394 UNDERCARRIAGE AR
AN ATTACHMENT

SMCS-4177 **i04246452**

NOTE	REF NO	GRAPHIC REF	PART NUMBER	QTY	PART NAME 1 2 3 4 5 6 (PRODUCT LEVEL)	SEE PAGE
C	1	1	**345-9587**	1	GUARD AS	
C	2	1	**345-9588**	1	GUARD AS	
C	3	1	**345-9583**	1	GUARD AS	
C	4	1	**345-9584**	1	GUARD AS	
C	5	1	**345-9597**	1	GUARD AS	
C	6	1	**345-9598**	1	GUARD AS	
	7	1	**287-4023**	1	GUARD AS	
M		1	**8T-3597**	1	NUT-WELD (M12X1.75-THD)	
	8	1	**287-4024**	1	GUARD AS	
M		1	**8T-3597**	1	NUT-WELD (M12X1.75-THD)	
	9	1	**5P-1076**	14	WASHER-HARD (13.5X30X4-MM THK)	
M	10	1	**7X-2556**	12	BOLT (M16X2X100-MM)	
	11	1	**7X-0515**	12	WASHER-HARD (17X35X5-MM THK)	
M	12	1	**8T-4139**	14	BOLT (M12X1.75X30-MM)	

C - CHANGE FROM PREVIOUS TYPE
M - METRIC PART

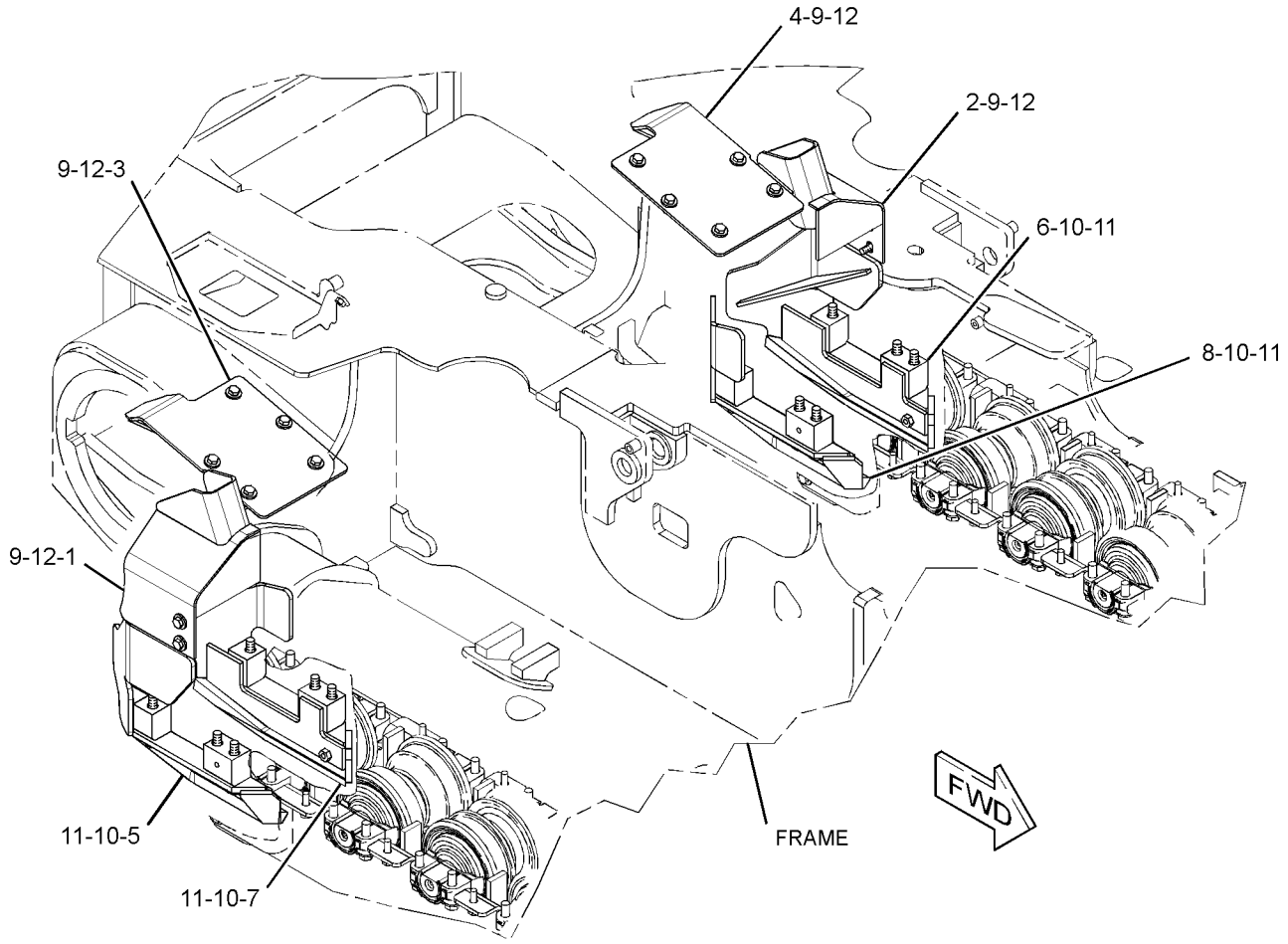

GRAPHIC #1 **<END>** g01372121

244-7524 GUARD GP-TRACK ROLLER–FULL LENGTH

S/N: MMM1-UP; RRR1-UP
FOR USE WITH SALT UNDERCARRIAGE
CANNOT BE USED WITH GUARD GP-TRACK GUIDE (CENTER)
AN ATTACHMENT

SMCS-7152 **i02816027**

NOTE	REF NO	GRAPHIC REF	PART NUMBER	QTY	PART NAME 1 2 3 4 5 6 (PRODUCT LEVEL)	SEE PAGE
	1	1	**5P-1076**	8	WASHER-HARD (13.5X30X4-MM THK)	
	2	1	**286-1845**	2	GUARD AS	
	3	1	**286-1846**	2	GUARD AS	
	4	1	**145-5181**	24	SPACER (13.5X25X12-MM THK)	
	5	1	**7X-0550**	8	WASHER-HARD (13.5X32X5-MM THK)	
M	6	1	**8T-4139**	8	BOLT (M12X1.75X30-MM)	
M	7	1	**8T-4176**	4	BOLT (M12X1.75X90-MM)	
M	8	1	**8T-4183**	24	BOLT (M12X1.75X40-MM)	
M	9	1	**8T-4194**	4	BOLT (M12X1.75X50-MM)	

M - METRIC PART

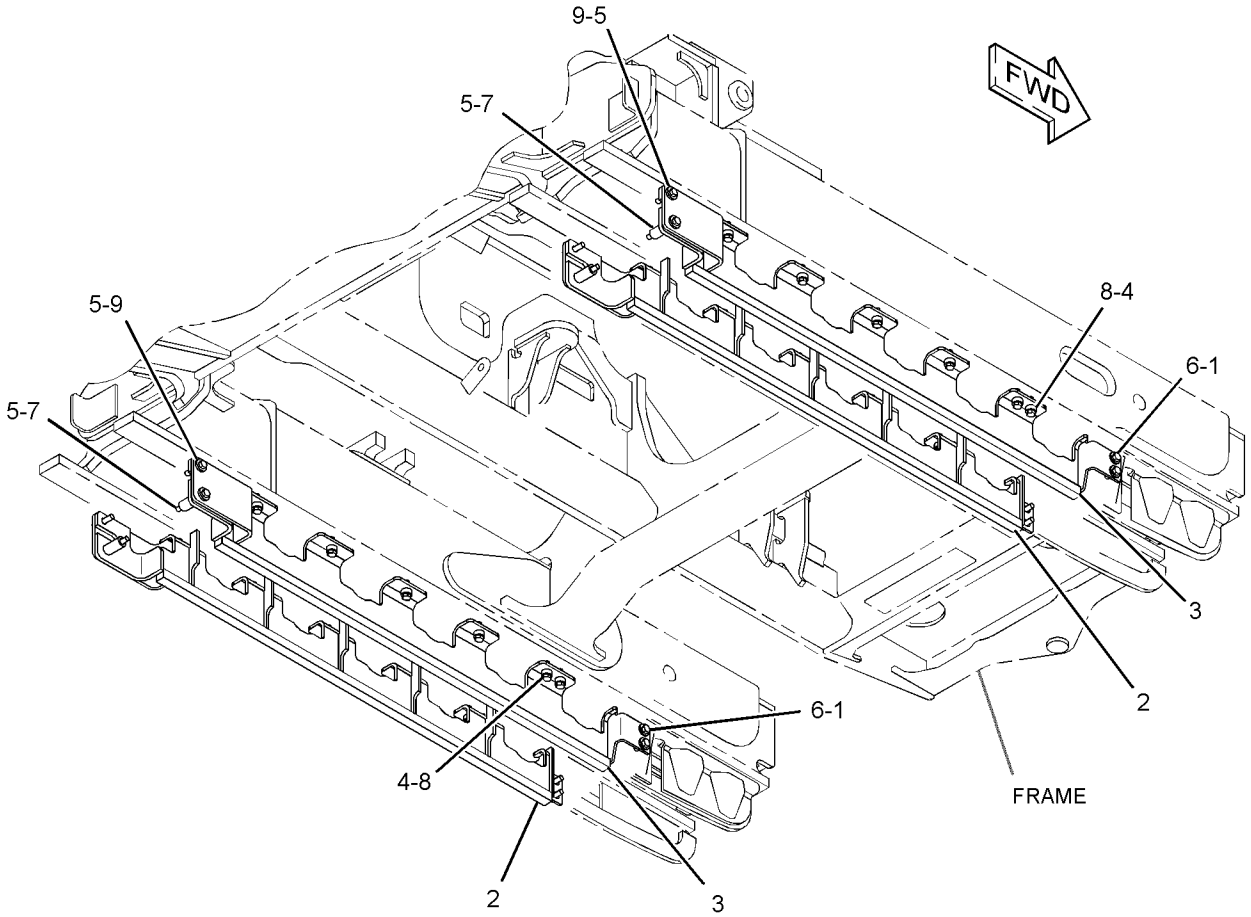

GRAPHIC #1 **<END>** g01406826

282-3684 GUARD GP-TRACK ROLLER–FULL LENGTH

S/N: MMM1-UP; RRR1-UP
FOR USE WITH SYSTEMONE UNDERCARRIAGE
CANNOT BE USED WITH GUARD GP-TRACK GUIDE (CENTER)
AN ATTACHMENT

SMCS-7152 **i02816020**

NOTE	REF NO	GRAPHIC REF	PART NUMBER	QTY	PART NAME 1 2 3 4 5 6 (PRODUCT LEVEL)	SEE PAGE
	1	1	**5P-1076**	8	WASHER-HARD (13.5X30X4-MM THK)	
	2	1	**286-1840**	2	GUARD AS (LH)	
	3	1	**286-1850**	2	GUARD AS (RH)	
	4	1	**145-5181**	24	SPACER (13.5X25X12-MM THK)	
	5	1	**7X-0550**	8	WASHER-HARD (13.5X32X5-MM THK)	
M	6	1	**8T-4139**	8	BOLT (M12X1.75X30-MM)	
M	7	1	**8T-4176**	4	BOLT (M12X1.75X90-MM)	
M	8	1	**8T-4183**	24	BOLT (M12X1.75X40-MM)	
M	9	1	**8T-4194**	4	BOLT (M12X1.75X50-MM)	

M - METRIC PART

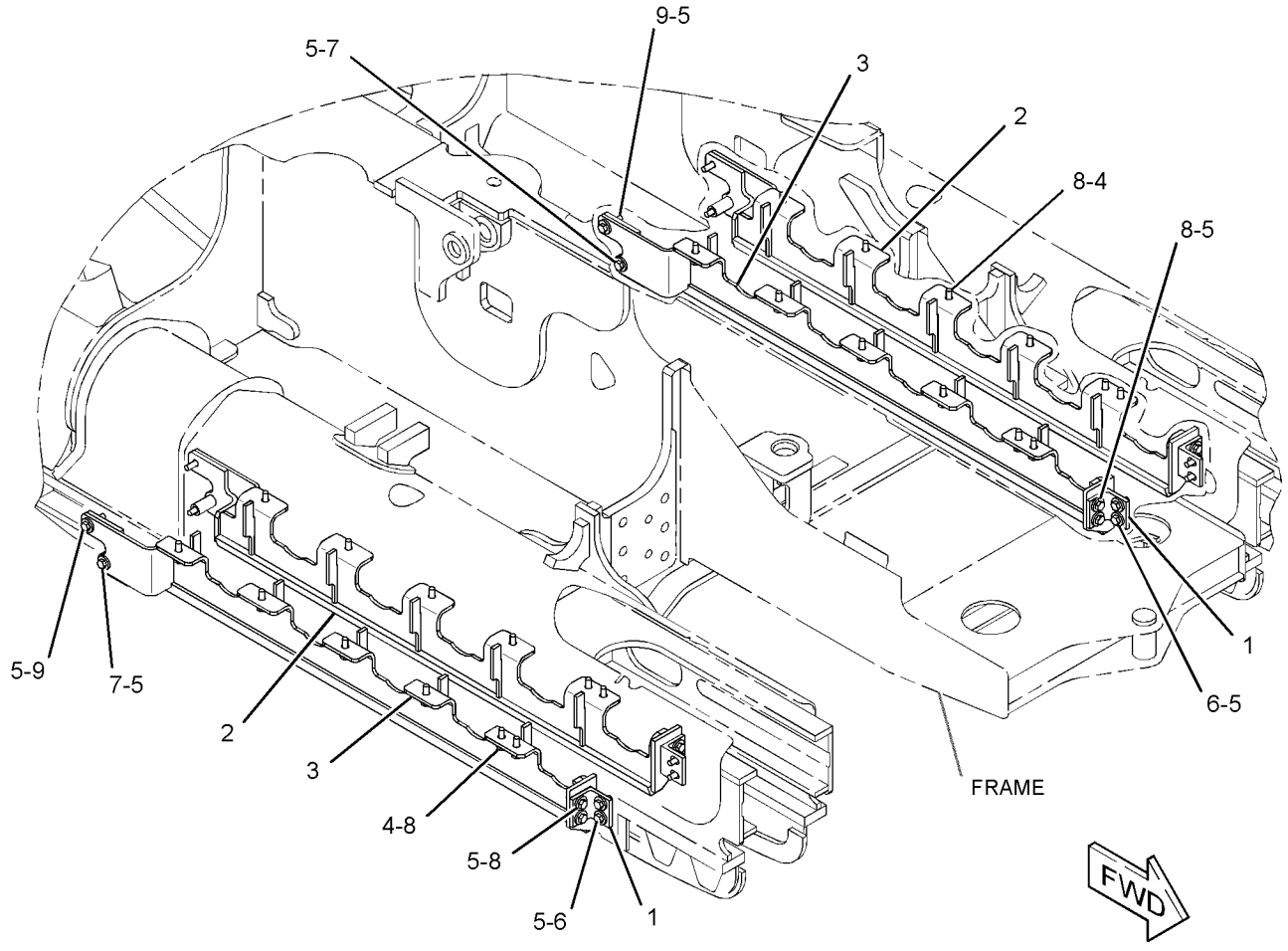

GRAPHIC #1 **<END>** g01335687

244-7500 IDLER GP-FRONT

S/N: MMM1-UP; RRR1-UP
PART OF 244-7449 UNDERCARRIAGE AR
AN ATTACHMENT

SMCS-4159 **i04535852**

NOTE	REF NO	GRAPHIC REF	PART NUMBER	QTY	PART NAME 1 2 3 4 5 6 (PRODUCT LEVEL)	SEE PAGE
	1	1	**361-3049**	4	STRIP-WEAR	
	2	1	**254-0590**	16	STRIP-WEAR	
B	3	1	**254-0589**	8	STRIP-WEAR	
Y	4	1	*254-0603*	2	SPRING GP-RECOIL	523
Y	5	1	*254-0664*	2	ADJUSTMENT GP-HYDRAULIC TRACK	483
Y	6	1	*254-0684*	2	IDLER GP-TRACK	501
	7	1	**7X-0584**	8	WASHER-HARD (13.5X20.5X2-MM THK)	
M	8	1	**8T-4184**	8	BOLT (M12X1.75X45-MM)	
M	9	1	**8T-4192**	8	BOLT (M12X1.75X25-MM)	
M	10	1	**8T-4194**	8	BOLT (M12X1.75X50-MM)	
	11	1	**8T-4223**	32	WASHER-HARD (13.5X25.5X3-MM THK)	
M	12	1	**8T-4956**	12	BOLT (M12X1.75X35-MM)	
M	13	1	**8T-5001**	4	BOLT (M12X1.75X130-MM)	

B - USE AS REQUIRED
M - METRIC PART
Y - SEPARATE ILLUSTRATION

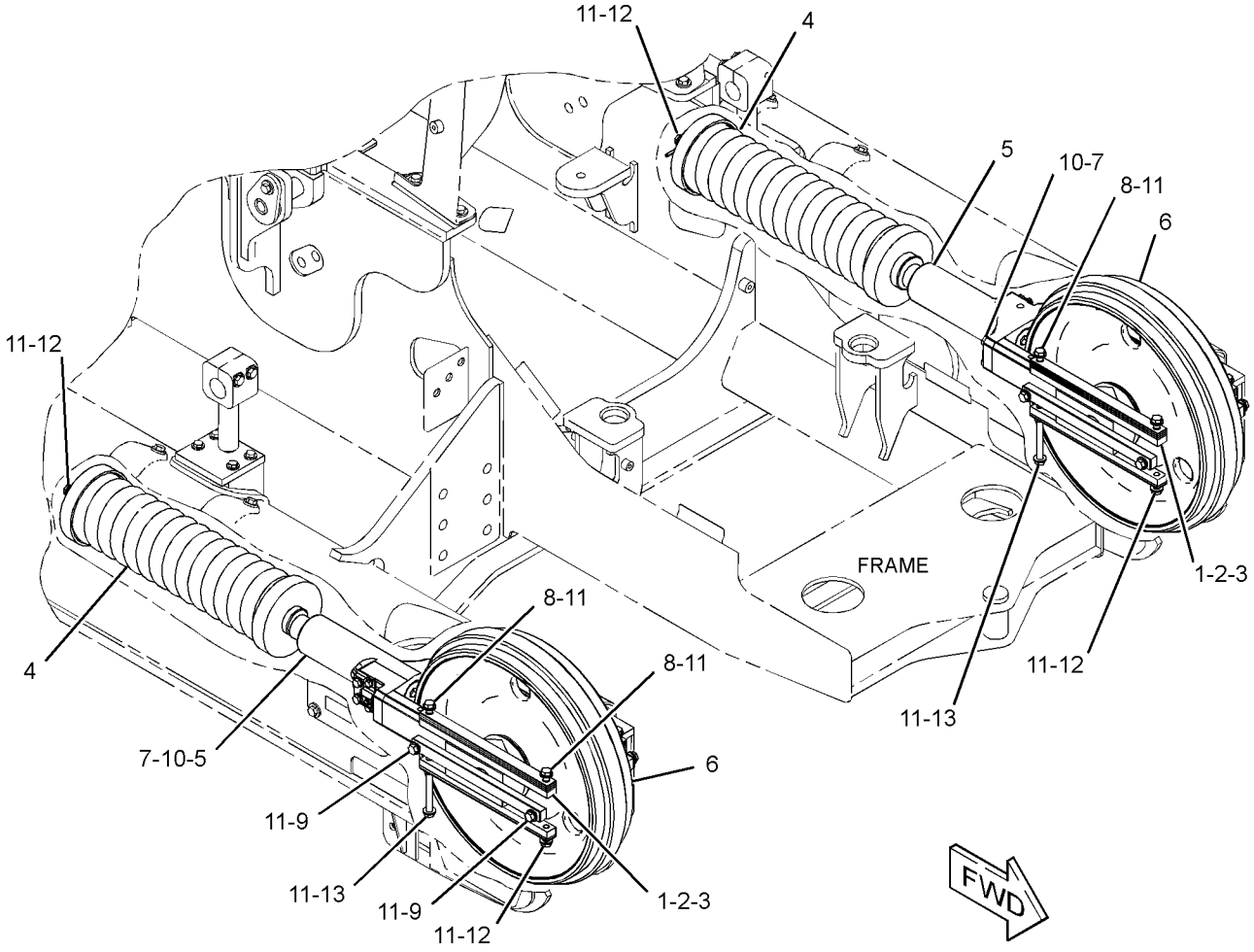

GRAPHIC #1 **<END>** g02824936

254-0593 IDLER GP-FRONT

S/N: MMM1-UP; RRR1-UP
PART OF 244-7394 UNDERCARRIAGE AR
AN ATTACHMENT

SMCS-4159 **i02666366**

NOTE	REF NO	GRAPHIC REF	PART NUMBER	QTY	PART NAME 1 2 3 4 5 6 (PRODUCT LEVEL)	SEE PAGE
	1	1	**254-0589**	12	STRIP-WEAR	
	2	1	**254-0590**	16	STRIP-WEAR	
B	3	1	**254-0591**	12	STRIP-WEAR	
Y	4	1	*254-0603*	2	SPRING GP-RECOIL	523
Y	5	1	*254-0614*	2	IDLER GP-TRACK	500
Y	6	1	*254-0664*	2	ADJUSTMENT GP-HYDRAULIC TRACK	483
	7	1	**7X-0584**	8	WASHER-HARD (13.5X20.5X2-MM THK)	
M	8	1	**8T-4184**	8	BOLT (M12X1.75X45-MM)	
M	9	1	**8T-4192**	8	BOLT (M12X1.75X25-MM)	
M	10	1	**8T-4194**	8	BOLT (M12X1.75X50-MM)	
	11	1	**8T-4223**	32	WASHER-HARD (13.5X25.5X3-MM THK)	
M	12	1	**8T-4956**	12	BOLT (M12X1.75X35-MM)	
M	13	1	**8T-5001**	4	BOLT (M12X1.75X130-MM)	

B - USE AS REQUIRED
M - METRIC PART
Y - SEPARATE ILLUSTRATION

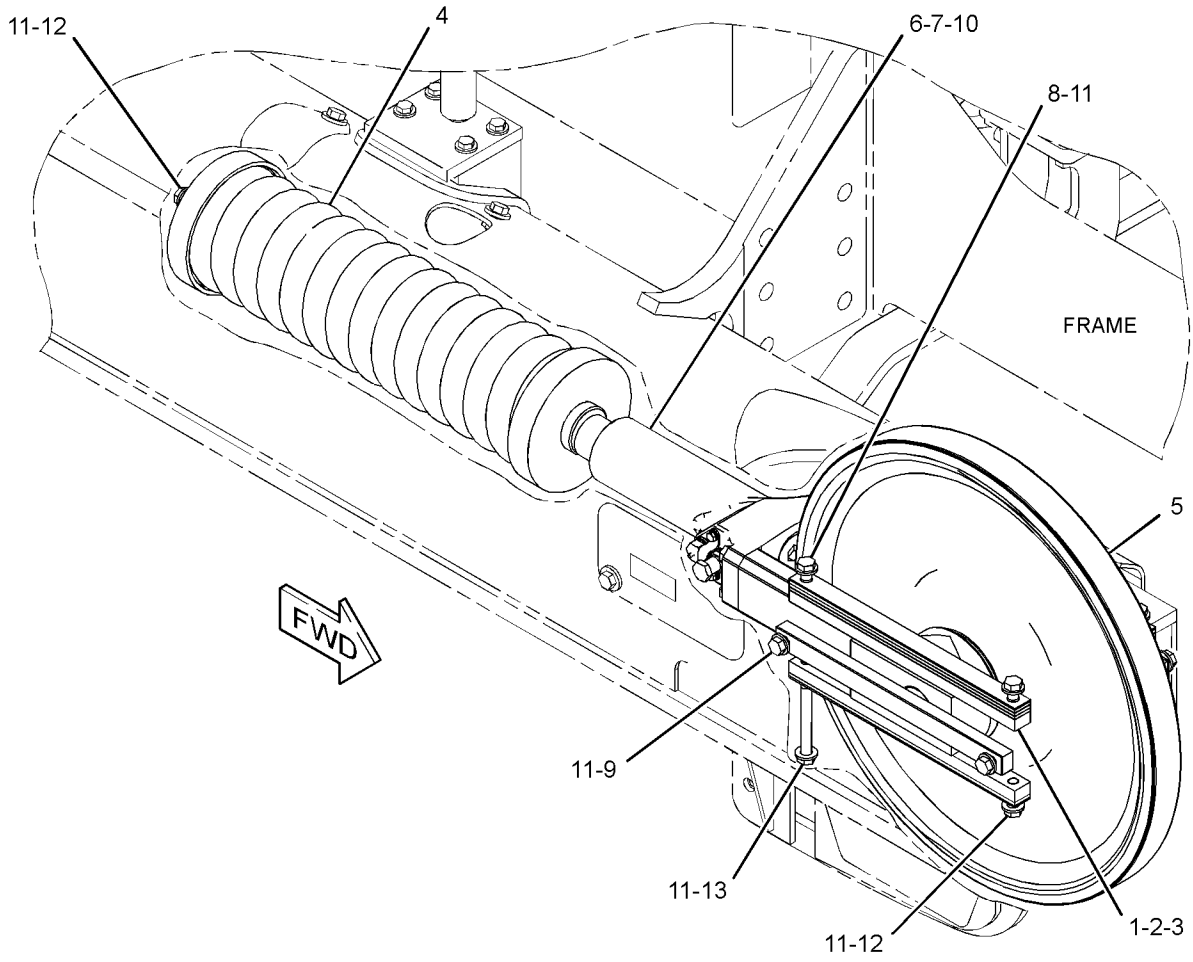

GRAPHIC #1 **<END>** g01342913

254-0614 IDLER GP-TRACK

S/N: MMM1-UP; RRR1-UP
PART OF 254-0593 IDLER GP-FRONT
AN ATTACHMENT

SMCS-4159 **i02667639**

NOTE	REF NO	GRAPHIC REF	PART NUMBER	QTY	PART NAME 1 2 3 4 5 6 (PRODUCT LEVEL)	SEE PAGE
R	1	1	**6S-3285**	2	SEAL GP-DUO-CONE	
					(EACH INCLUDES)	
		1	**6S-3284**	2	RING-TORIC	
	2	1	**6S-7715**	2	WASHER-THRUST (52X86X6.35-MM THK)	
	3	1	**027-3873**	2	PIN-SPRING	
	4	1	**254-0634**	2	BEARING-IDLER	
	5	1	**254-0644**	1	SHAFT	
	6	1	**261-4473**	1	IDLER & BEARING AS	
	7	1	**1H-9696**	2	SEAL-O-RING	
	8	1	**9F-2247**	1	PLUG-PIPE	

R - REMFG PART MAY BE AVAILABLE

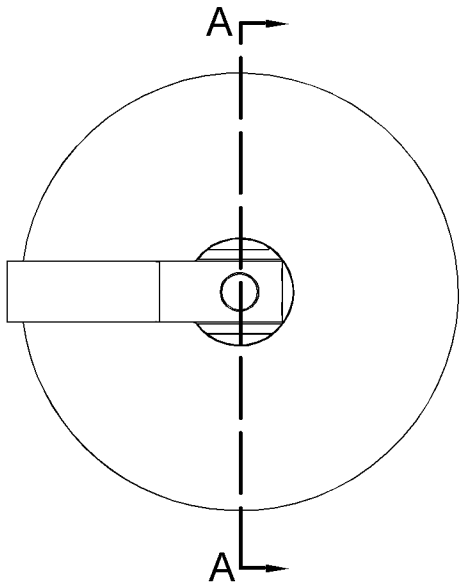

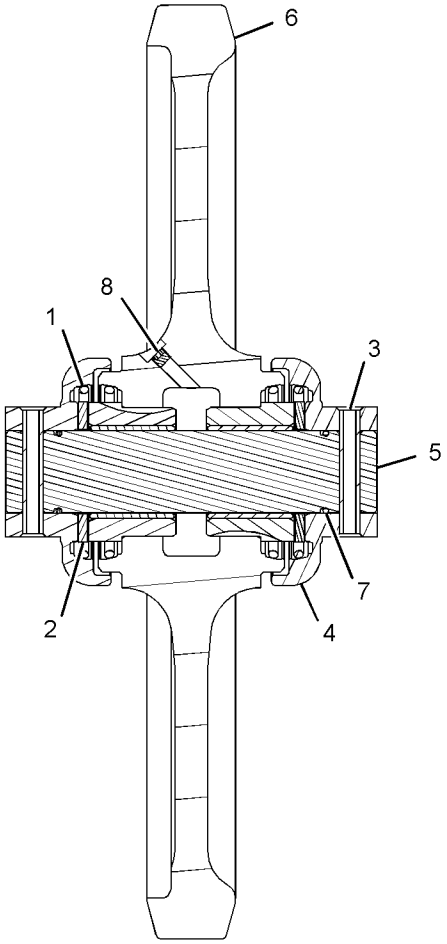

SECTION A-A

GRAPHIC #1 **<END>** g01341531

254-0684 IDLER GP-TRACK

S/N: MMM1-UP; RRR1-UP
PART OF 244-7500 IDLER GP-FRONT
AN ATTACHMENT

SMCS-4159 **i02883075**

NOTE	REF NO	GRAPHIC REF	PART NUMBER	QTY	PART NAME 1 2 3 4 5 6 (PRODUCT LEVEL)	SEE PAGE
R	1	1	**6S-3285**	2	SEAL GP-DUO-CONE	
					(EACH INCLUDES)	
		1	**6S-3284**	2	RING-TORIC	
	2	1	**6S-7715**	2	WASHER-THRUST (52X86X6.35-MM THK)	
	3	1	**027-3873**	2	PIN-SPRING	
	4	1	**106-9187**	1	IDLER & BEARING AS	
		1	**6S-3495**	2	BEARING AS	
					(EACH INCLUDES)	
		1	**6Y-4744**	1	BEARING-SLEEVE	
	5	1	**254-0634**	2	BEARING-IDLER	
	6	1	**254-0644**	1	SHAFT	
	7	1	**1H-9696**	2	SEAL-O-RING	
	8	1	**9F-2247**	1	PLUG-PIPE	

R - REMFG PART MAY BE AVAILABLE

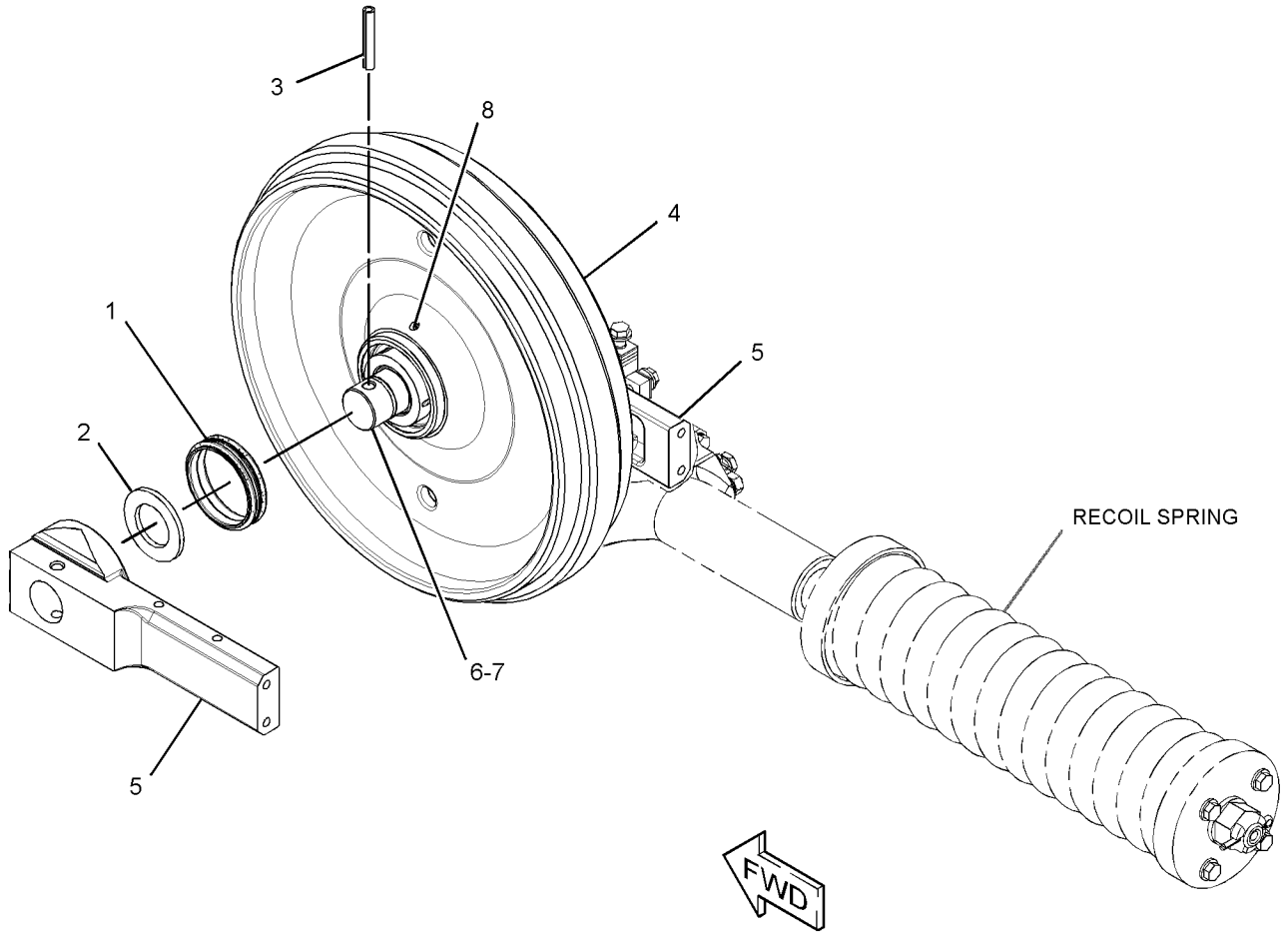

GRAPHIC #1 **<END>** g01440085

289-3059 LINK AS-TRACK–SYSTEMONE

S/N: MMM1-UP; RRR1-UP
38-JOINTS. SEALED, LUBRICATED
FOR USE WITH SYSTEMONE ROLLERS, GUARDS, SPROCKETS, IDLERS, SHOES
PART OF 289-3065, 289-3066 TRACK GP
AN ATTACHMENT

SMCS-4169, 4171 **i03747022**

NOTE	REF NO	GRAPHIC REF	PART NUMBER	QTY	PART NAME 1 2 3 4 5 6 (PRODUCT LEVEL)	SEE PAGE
	1	1	**260-6740**	36	LINK-TRACK	
Y	2	1	*289-3057*	19	LINK AS-TRACK BOX	506
BF			**254-0228**	4	BOLT-TRACK MASTER (M16X1.5X81-MM)	
BF			**260-6740**	2	LINK-TRACK	
BF			**311-6180**	2	LINK-TRACK MASTER	

B - USE AS REQUIRED
F - NOT SHOWN
Y - SEPARATE ILLUSTRATION

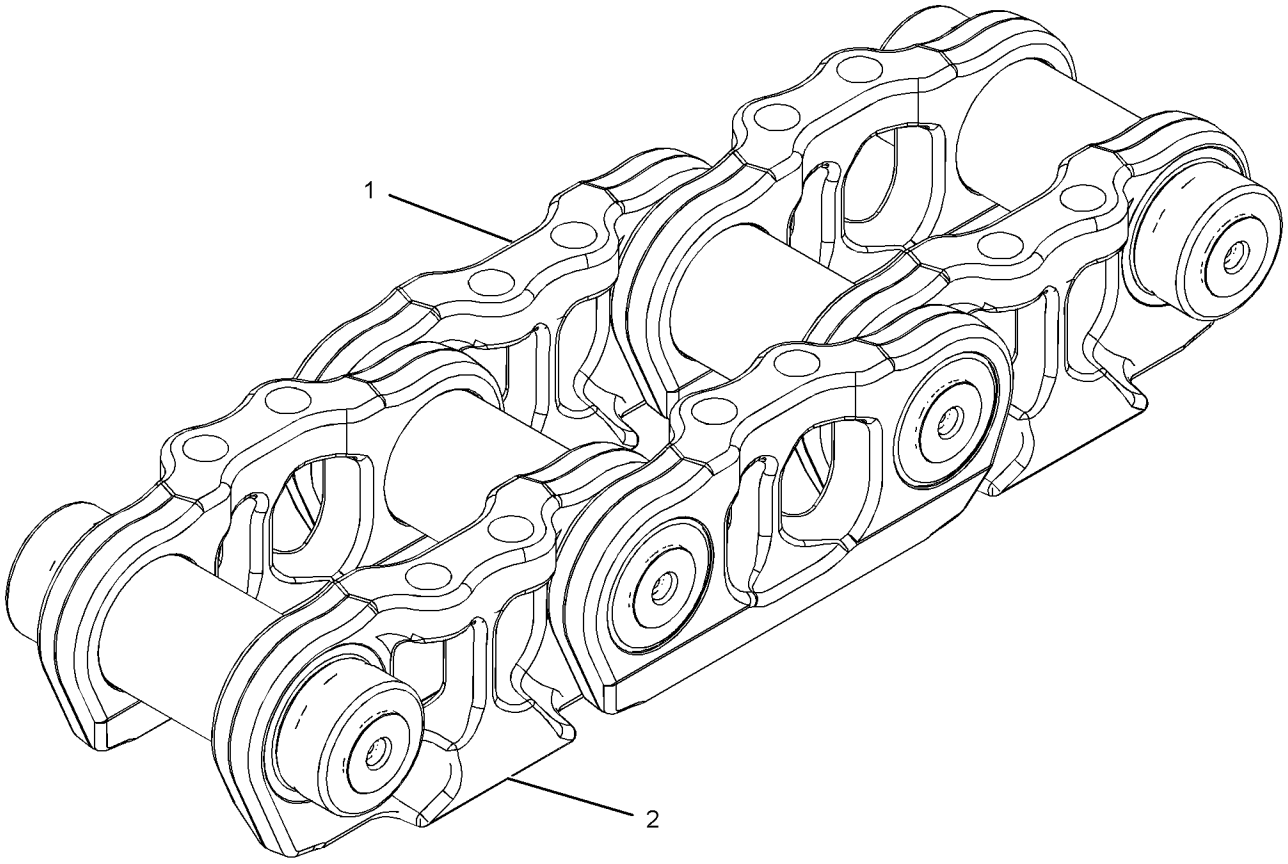

GRAPHIC #1 **<END>** g01193467

323-8755 LINK AS-TRACK

S/N: MMM1-UP; RRR1-UP
PART OF 263-5385, 282-9045, 320-6195 TRACK GP
AN ATTACHMENT

SMCS-4169, 4171

i04403733

NOTE	PART NUMBER	QTY	PART NAME 1 2 3 4 5 6 (PRODUCT LEVEL)	SEE PAGE
	250-4002	86	SEAL AS	
	6Y-1198	43	STOP AS	
			(EACH INCLUDES)	
	5G-2247	1	STOPPER-RUBBER	
	6Y-0473	1	PLUG-CLEAR	
	188-6246	43	BUSHING-TRACK	
	6Y-0937	1	LINK-MASTER (PIN END, RH)	
	6Y-0938	1	LINK-MASTER (PIN END, LH)	
	6Y-0939	1	LINK-MASTER (BUSHING END, RH)	
	6Y-0940	1	LINK-MASTER (BUSHING END, LH)	
	6Y-0935	42	LINK-TRACK (RH)	
	6Y-0936	42	LINK-TRACK (LH)	
	303-9455	43	PIN-TRACK	
	6S-9049	86	RING-THRUST	

<END>

264-9767 LINK AS-TRACK BOX—LINK BOX

S/N: MMM1-UP; RRR1-UP

70%-WORN. FIELD REPLACEMENT FOR 260-6744 LINK AS THAT IS MORE THAN 40% WORN. FIELD REPLACEMENT FOR 289-3057 LINK AS THAT IS MORE THAN 40% WORN

PART OF 264-9772 LINK AS-TRACK BOX

FIELD INSTALLATION

SMCS-4169 **i04077150**

NOTE	REF NO	GRAPHIC REF	PART NUMBER	QTY	PART NAME 1 2 3 4 5 6 (PRODUCT LEVEL)	SEE PAGE
	1	1	*321-7854*	2	PIN AS	
					(EACH INCLUDES)	
		1	**6Y-0473**	2	PLUG-CLEAR	
		1	**9G-1642**	2	STOPPER-RUBBER	
					PARTS SHOWN IN GRAPHIC(S) WITHOUT A REFERENCE NUMBER ARE NOT SERVICED SEPARATELY	

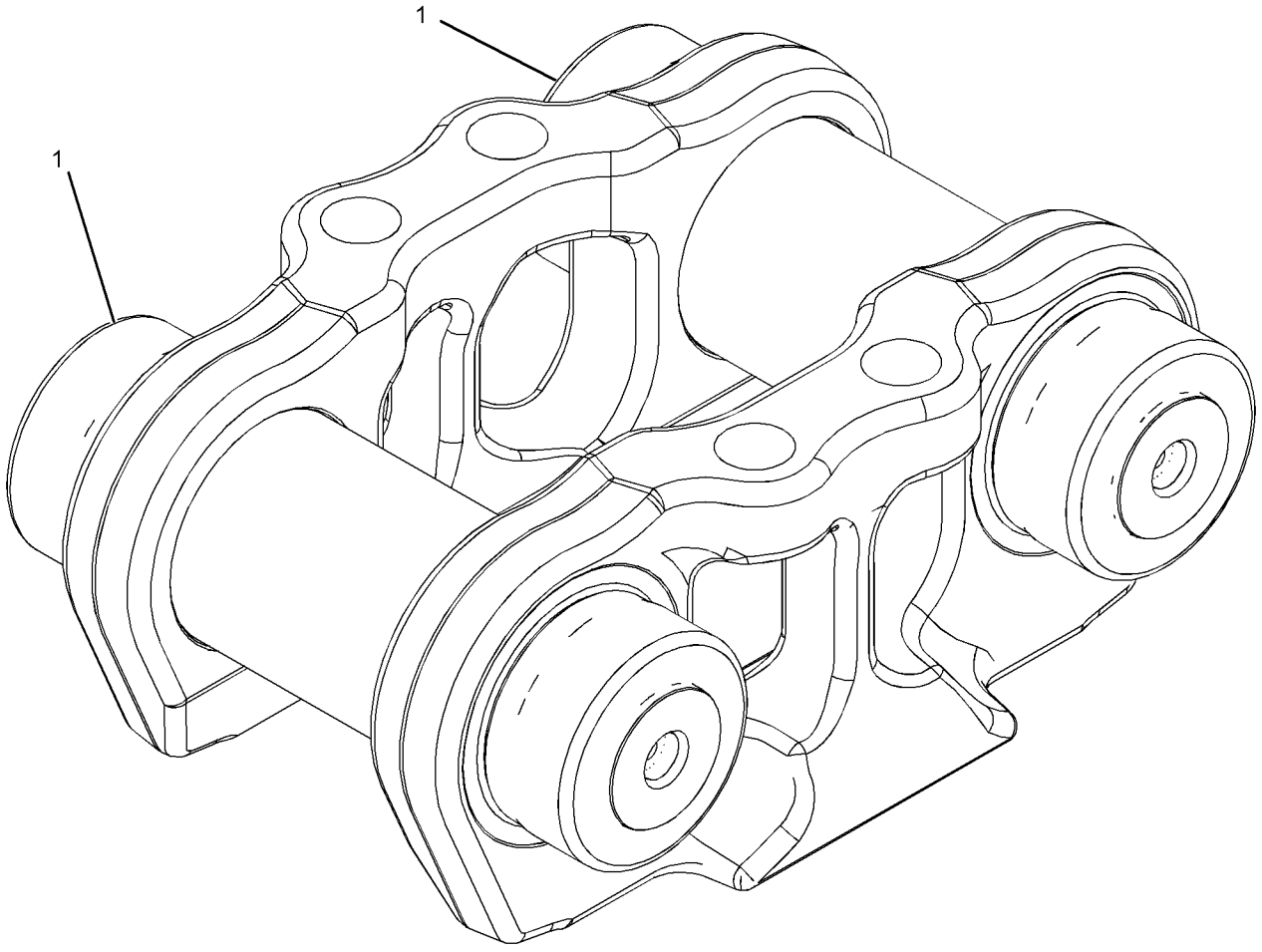

GRAPHIC #1 **<END>** g01416784

264-9772 LINK AS-TRACK BOX—LINK BOX, OFFSET

S/N: MMM1-UP; RRR1-UP

70%-WORN. SEALED, LUBRICATED. FIELD REPLACEMENT FOR 260-6745 LINK AS THAT IS MORE THAN 40% WORN. FIELD REPLACEMENT FOR 289-3058 LINK AS THAT IS MORE THAN 40% WORN FIELD INSTALLATION

SMCS-4169 **i04077151**

NOTE	REF NO	GRAPHIC REF	PART NUMBER	QTY	PART NAME 1 2 3 4 5 6 (PRODUCT LEVEL)	SEE PAGE
Y	1	1	**264-9767**	1	LINK AS-TRACK BOX	504
	2	1	*321-7854*	1	PIN AS	
		1	**6Y-0473**	2	PLUG-CLEAR	
		1	**9G-1642**	2	STOPPER-RUBBER	
					PARTS SHOWN IN GRAPHIC(S) WITHOUT A REFERENCE NUMBER ARE NOT SERVICED SEPARATELY	

Y - SEPARATE ILLUSTRATION

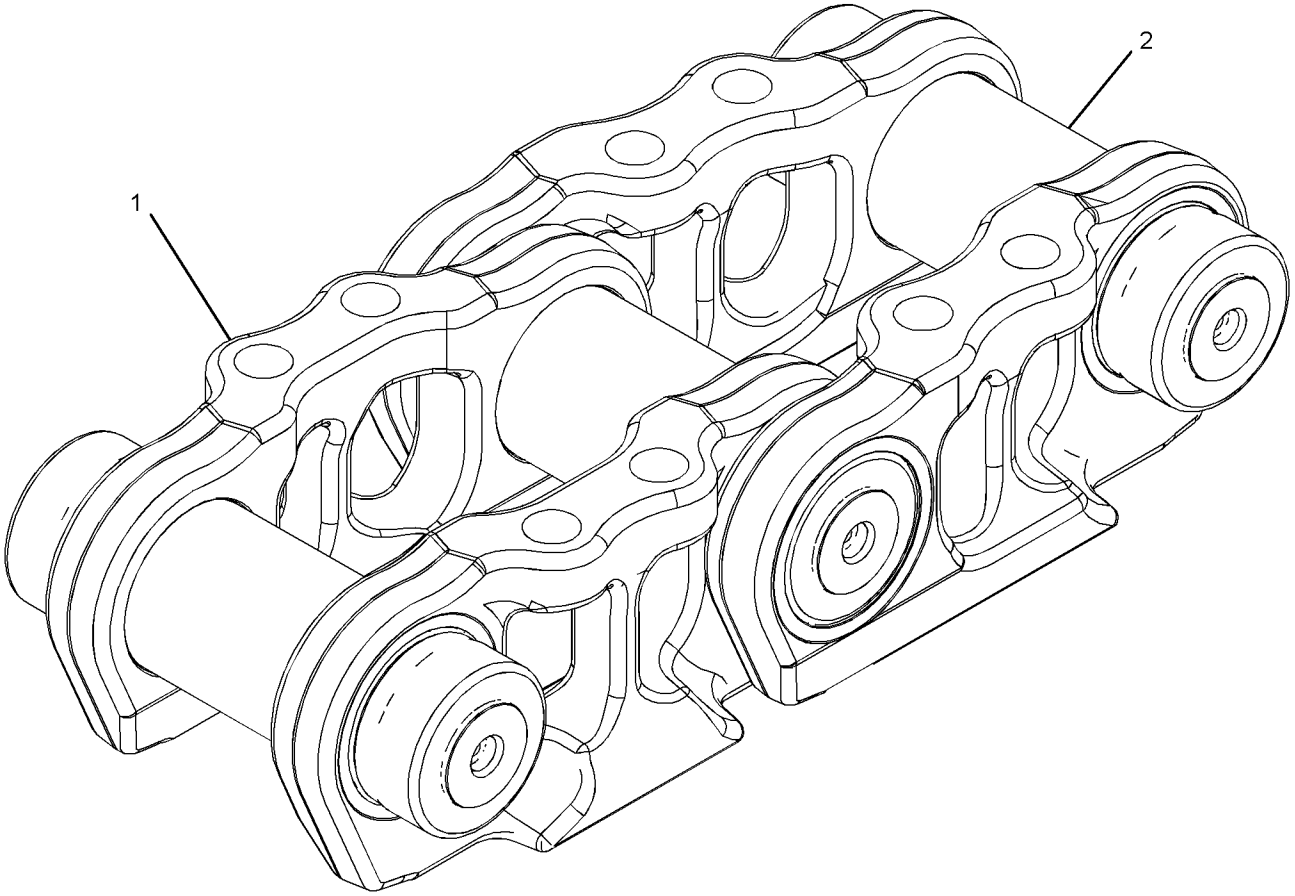

GRAPHIC #1 **<END>** g02297253

289-3057 LINK AS-TRACK BOX—LINK BOX

S/N: MMM1-UP; RRR1-UP
SEALED, LUBRICATED, FOR FIELD REPLACEMENT OF LINK BOX THAT IS MORE THAN 40% WORN
OPTIONAL FIELD REPLACEMENT ORDER 264-9767—PAGE: 504
PART OF 289-3059 LINK AS-TRACK
AN ATTACHMENT

SMCS-4169 **i04077153**

NOTE	REF NO	GRAPHIC REF	PART NUMBER	QTY	PART NAME 1 2 3 4 5 6 (PRODUCT LEVEL)	SEE PAGE
	1	1	**260-6740**	2	LINK-TRACK	
	2	1	*321-7854*	2	PIN AS	
					(EACH INCLUDES)	
		1	**6Y-0473**	2	PLUG-CLEAR	
		1	**9G-1642**	2	STOPPER-RUBBER	

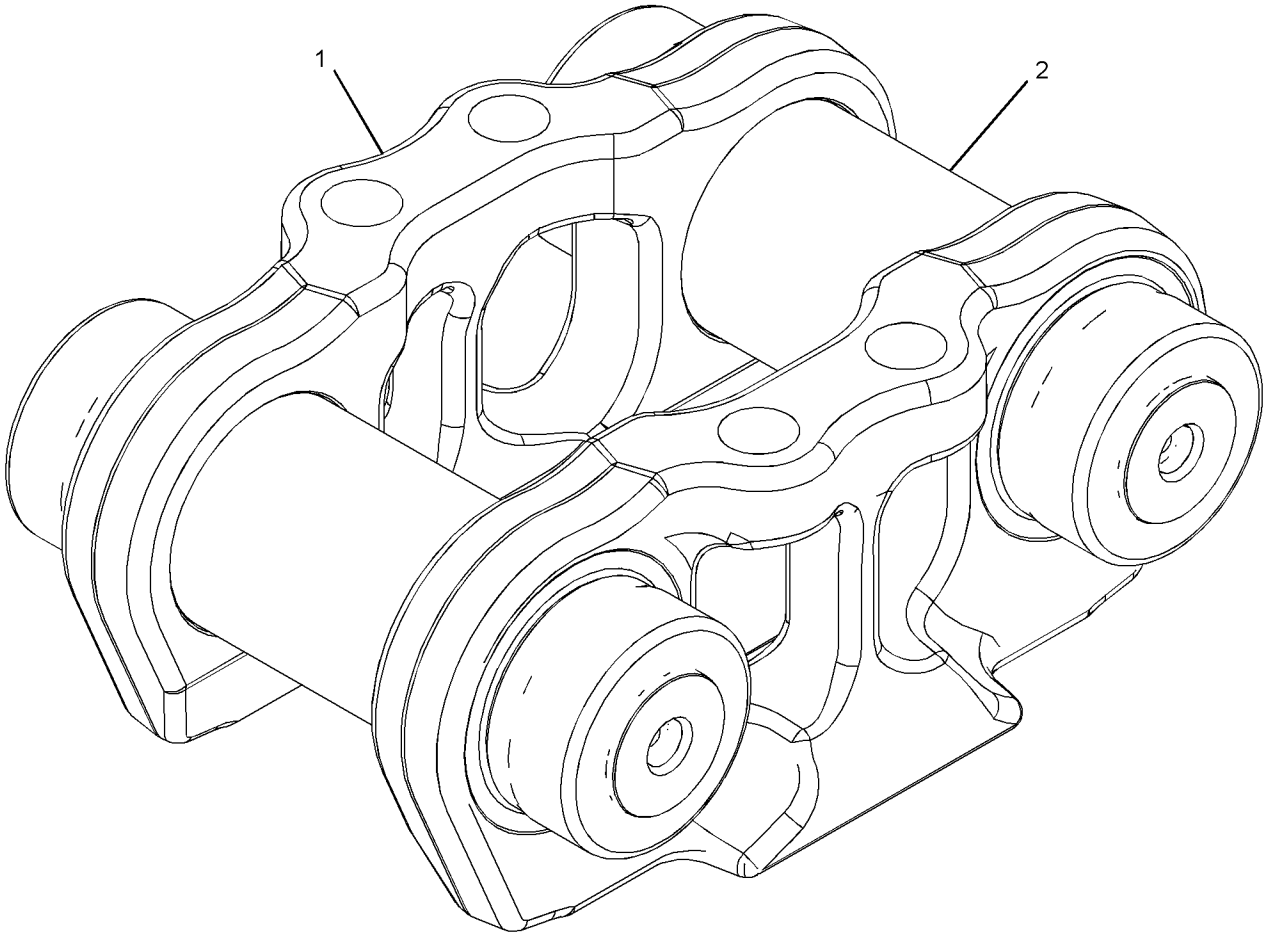

GRAPHIC #1 **<END>** g02297233

282-8804 ROLLER GP-TRACK–SYSTEMONE

S/N: MMM1-123; RRR1-131
PART OF 244-7394 UNDERCARRIAGE AR
AN ATTACHMENT

SMCS-4180 **i02739771**

NOTE	REF NO	GRAPHIC REF	PART NUMBER	QTY	PART NAME 1 2 3 4 5 6 (PRODUCT LEVEL)	SEE PAGE
Y	1	1	**243-3277**	14	ROLLER GP-TRACK-SINGLE FLANGE	518
	2	1	**215-2901**	56	BOLT (M12X1.75X50-MM)	
	3	1	**145-5181**	56	SPACER (13.5X25X12-MM THK)	

Y - SEPARATE ILLUSTRATION

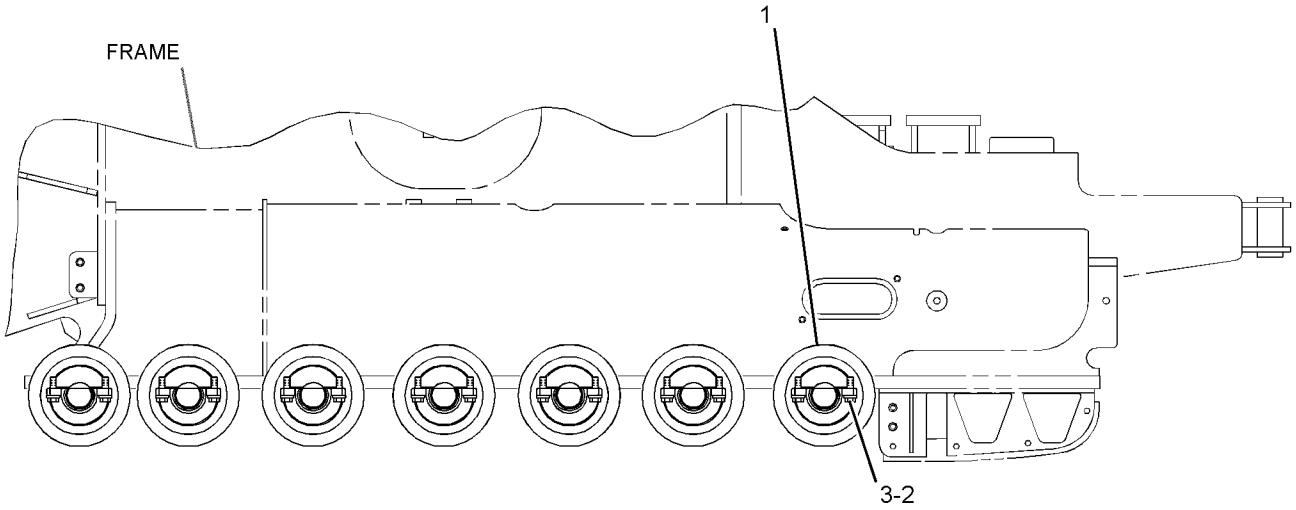

RIGHT SIDE VIEW

GRAPHIC #1 **<END>** g01344183

282-8814 ROLLER GP-TRACK–SEALED, LUBRICATED

S/N: MMM1-123; RRR1-131
PART OF 244-7449 UNDERCARRIAGE AR
AN ATTACHMENT

SMCS-4180 **i03415585**

NOTE	REF NO	GRAPHIC REF	PART NUMBER	QTY	PART NAME 1 2 3 4 5 6 (PRODUCT LEVEL)	SEE PAGE
	1	1	**203-4604**	28	PLATE	
Y	2	1	**281-8338**	6	ROLLER GP-TRACK-DOUBLE FLANGE	515
Y	3	1	**281-8339**	8	ROLLER GP-TRACK-SINGLE FLANGE	519
	4	1	**145-5181**	56	SPACER (13.5X25X12-MM THK)	
	5	1	**215-2901**	56	BOLT (M12X1.75X50-MM)	

Y - SEPARATE ILLUSTRATION

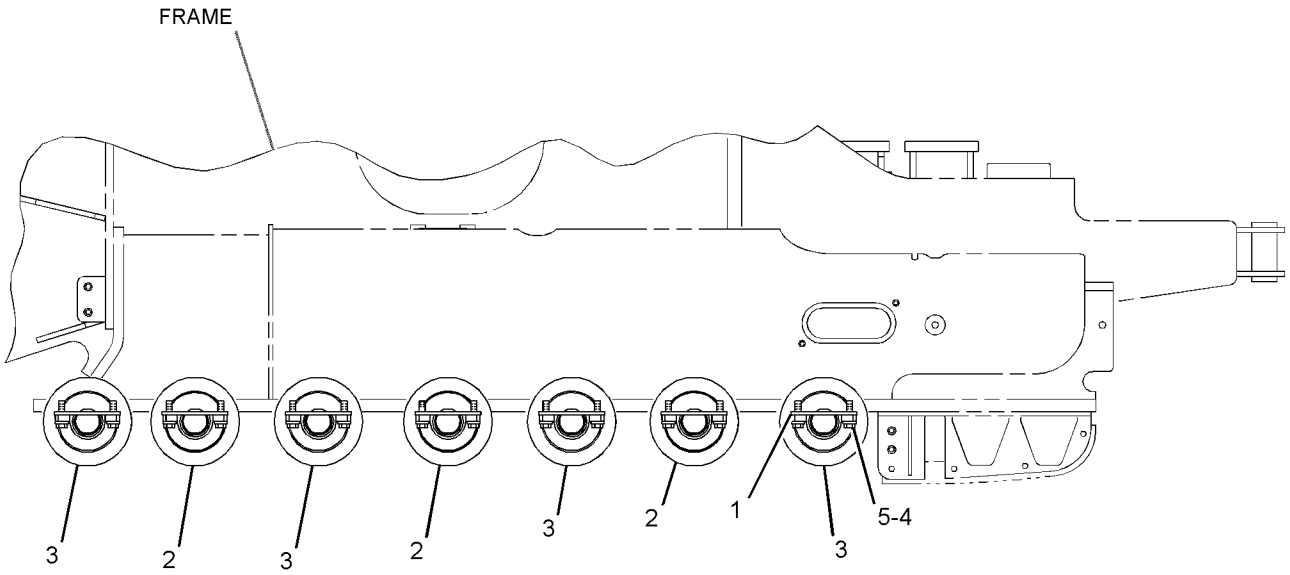

RIGHT SIDE VIEW

GRAPHIC #1 **<END>** g01344198

302-6804 ROLLER GP-TRACK–SYSTEMONE

S/N: MMM1-UP; RRR1-UP
PART OF 244-7394 UNDERCARRIAGE AR
AN ATTACHMENT

SMCS-4180 **i02666352**

NOTE	REF NO	GRAPHIC REF	PART NUMBER	QTY	PART NAME 1 2 3 4 5 6 (PRODUCT LEVEL)	SEE PAGE
Y	1	1	*301-0654*	14	ROLLER GP-TRACK-SINGLE FLANGE	522
	2	1	**5P-8247**	56	WASHER-HARD (17X32X3.5-MM THK)	
M	3	1	**8T-0088**	56	BOLT (M16X2X65-MM)	

M - METRIC PART
Y - SEPARATE ILLUSTRATION

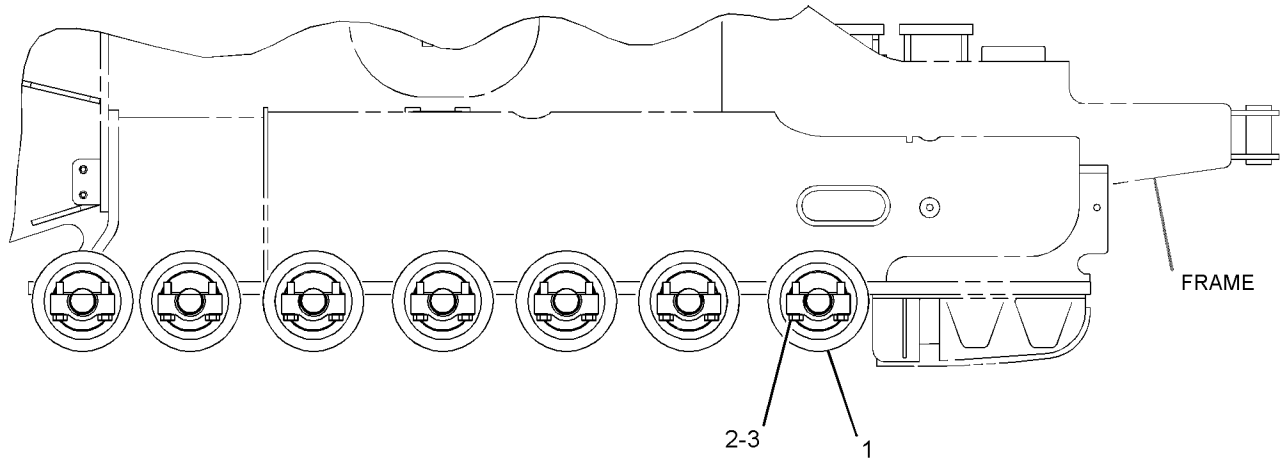

RIGHT SIDE VIEW

GRAPHIC #1 **<END>** g01342907

302-6814 ROLLER GP-TRACK–SEALED, LUBRICATED

S/N: MMM124-562; RRR132-402
PART OF 244-7449 UNDERCARRIAGE AR
AN ATTACHMENT

SMCS-4180 **i02674946**

NOTE	REF NO	GRAPHIC REF	PART NUMBER	QTY	PART NAME 1 2 3 4 5 6 (PRODUCT LEVEL)	SEE PAGE
Y	1	1	**301-0650**	6	ROLLER GP-TRACK-DOUBLE FLANGE	516
Y	2	1	**301-0652**	8	ROLLER GP-TRACK-SINGLE FLANGE	520
	3	1	**302-5722**	28	PLATE	
	4	1	**5P-8247**	56	WASHER-HARD (17X32X3.5-MM THK)	
M	5	1	**8T-0357**	56	BOLT (M16X2X70-MM)	

M - METRIC PART
Y - SEPARATE ILLUSTRATION

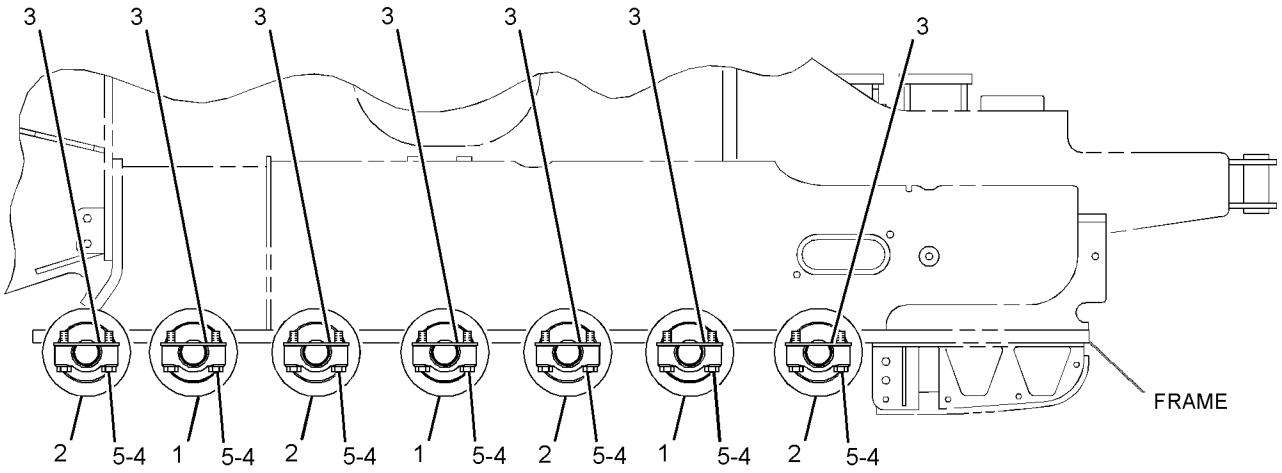

RIGHT SIDE VIEW

GRAPHIC #1 **<END>** g01353216

6S-3609 ROLLER GP-TRACK CARRIER

S/N: MMM1-UP; RRR1-UP

PART OF 356-5273 ROLLER GP-TRACK CARRIER

AN ATTACHMENT

SMCS-4154 **i04415709**

NOTE	REF NO	GRAPHIC REF	PART NUMBER	QTY	PART NAME 1 2 3 4 5 6 (PRODUCT LEVEL)	SEE PAGE
	1	1	**1M-7914**	1	RING-RETAINING	
	2	1	**1M-7918**	1	COLLAR AS-END	
	3	1	**1M-4291**	2	DOWEL	
R	4	1	**9W-7216**	1	SEAL GP-DUO-CONE	
	5	1	**3B-4506**	5	LOCKWASHER	
	6	1	**1H-9696**	1	SEAL-O-RING	
	7	1	**6K-9861**	1	SHAFT-ROLLER	
	8	1	**172-0160**	1	ROLLER AS	
	9	1	**1M-8736**	2	CUP-BEARING	
	10	1	**1M-8735**	2	CONE-BEARING	
	11	1	**6K-9860**	1	PLATE-RETAINER	
	12	1	**0L-1351**	5	BOLT (3/8-16X0.875-IN)	
C	13	1	**6V-4791**	2	BOLT (3/8-24X0.75-IN)	
	14	1	**4H-9628**	1	GASKET	
	15	1	**4H-9527**	1	COVER	

C - CHANGE FROM PREVIOUS TYPE
R - REMFG PART MAY BE AVAILABLE

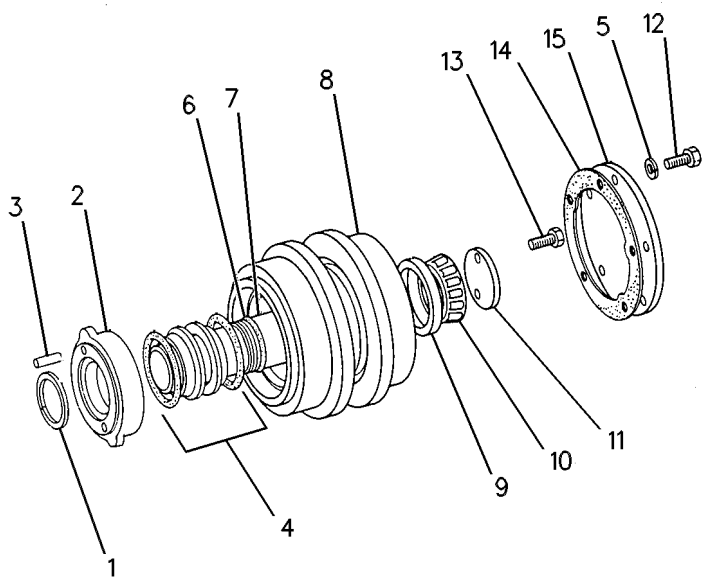

GRAPHIC #1 **<END>** g00129713

225-7650 ROLLER GP-TRACK CARRIER–SYSTEMONE

S/N: MMM1-UP; RRR1-UP
PART OF 356-5272 ROLLER GP-TRACK CARRIER
AN ATTACHMENT

SMCS-4154 **i04332522**

NOTE	REF NO	GRAPHIC REF	PART NUMBER	QTY	PART NAME 1 2 3 4 5 6 (PRODUCT LEVEL)	SEE PAGE
	1	1	**8P-6188**	1	PLATE-RETAINER	
	2	1	**7H-3171**	1	PLUG-PIPE	
	3	1	**9W-5224**	1	SEAL GP-DUO-CONE	
	4	1	**217-6359**	1	COLLAR	
	5	1	**241-8494**	2	BEARING AS-TAPERED ROLLER	
M	6	1	**192-4744**	2	BOLT (M10X1.5X20-MM)	
					PARTS SHOWN IN GRAPHIC(S) WITHOUT A REFERENCE NUMBER ARE NOT SERVICED SEPARATELY	

M - METRIC PART

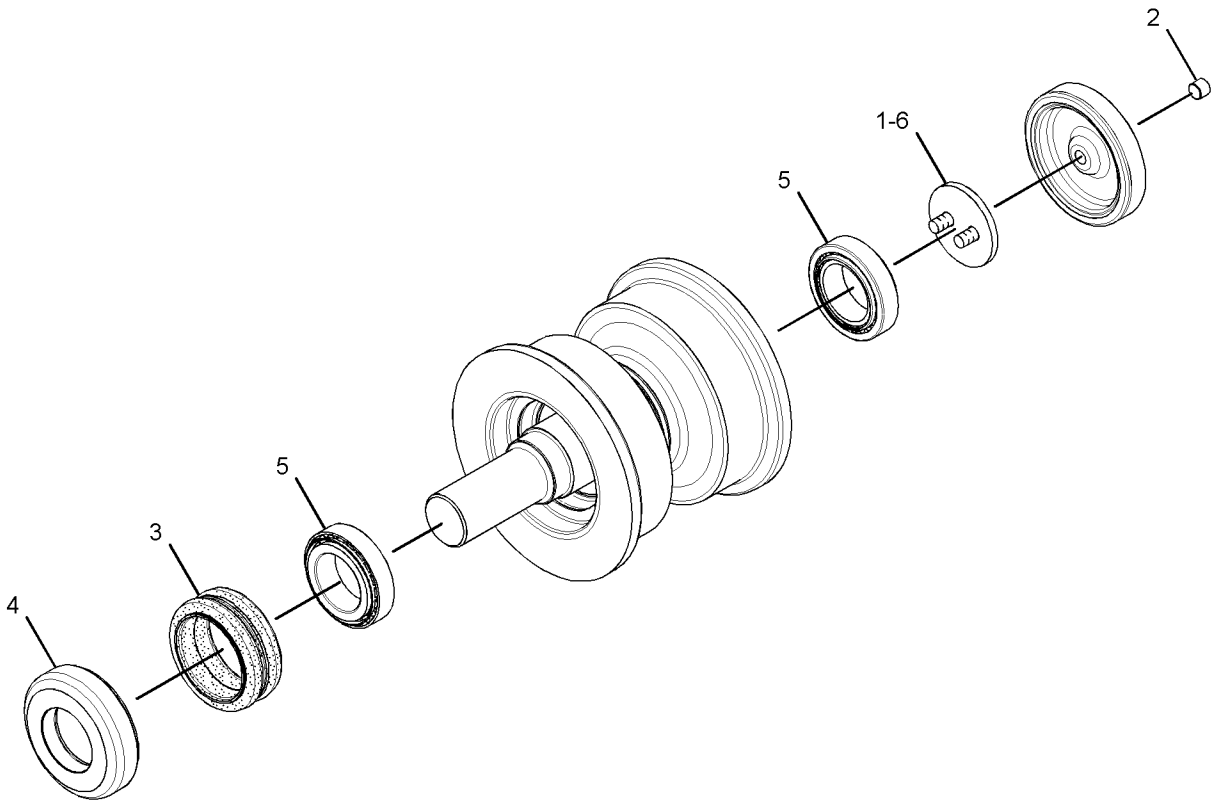

GRAPHIC #1 **<END>** g01787673

356-5272 ROLLER GP-TRACK CARRIER–SYSTEMONE

S/N: MMM1-UP; RRR1-UP
PART OF 244-7394 UNDERCARRIAGE AR
AN ATTACHMENT

SMCS-4154 **i04000943**

NOTE	REF NO	GRAPHIC REF	PART NUMBER	QTY	PART NAME 1 2 3 4 5 6 (PRODUCT LEVEL)	SEE PAGE
Y	1	1	**225-7650**	2	ROLLER GP-TRACK CARRIER (SYSTEMONE)	512
	2	1	**264-5014**	2	BRACKET AS	
M	3	1	**8T-4184**	8	BOLT (M12X1.75X45-MM)	
	4	1	**8T-4223**	12	WASHER-HARD (13.5X25.5X3-MM THK)	
M	5	1	**8T-4910**	4	BOLT (M12X1.75X60-MM)	

M - METRIC PART
Y - SEPARATE ILLUSTRATION
QUANTITIES SHOWN ARE THOSE REQUIRED FOR BOTH LH AND RH SIDES

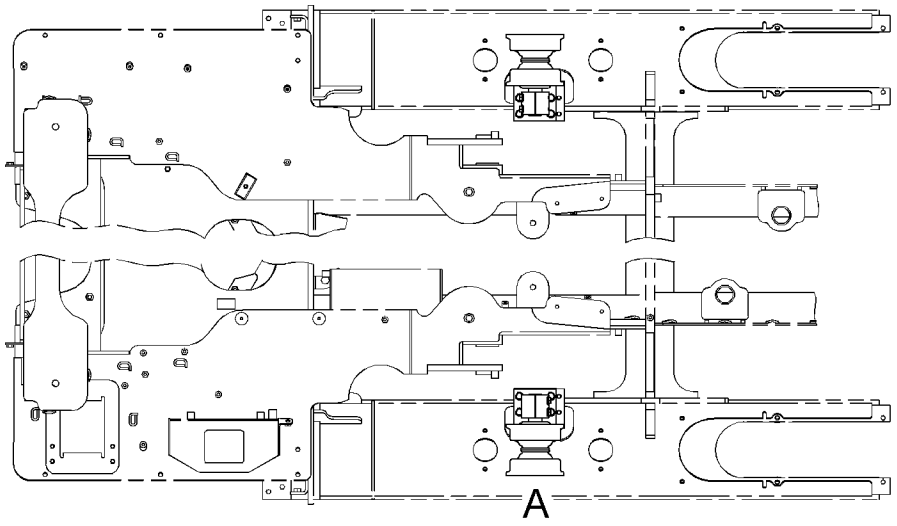

TOP VIEW FWD

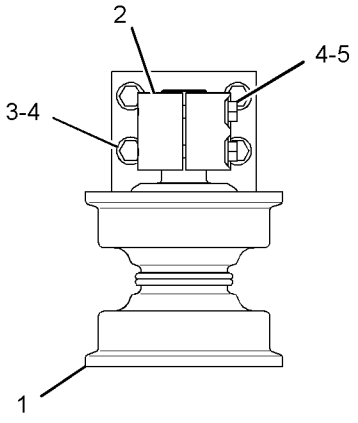

VIEW OF AREA A

GRAPHIC #1 **<END>** g02279876

356-5273 ROLLER GP-TRACK CARRIER–SALT

S/N: MMM1-UP; RRR1-UP
PART OF 244-7449 UNDERCARRIAGE AR
AN ATTACHMENT

SMCS-4154 **i04000944**

NOTE	REF NO	GRAPHIC REF	PART NUMBER	QTY	PART NAME 1 2 3 4 5 6 (PRODUCT LEVEL)	SEE PAGE
Y	1	1	**6S-3609**	2	ROLLER GP-TRACK CARRIER	511
	2	1	**264-5014**	2	BRACKET AS	
M	3	1	**8T-4184**	8	BOLT (M12X1.75X45-MM)	
	4	1	**8T-4223**	12	WASHER-HARD (13.5X25.5X3-MM THK)	
M	5	1	**8T-4910**	4	BOLT (M12X1.75X60-MM)	

M - METRIC PART
Y - SEPARATE ILLUSTRATION
QUANTITIES SHOWN ARE THOSE REQUIRED FOR BOTH LH AND RH SIDES

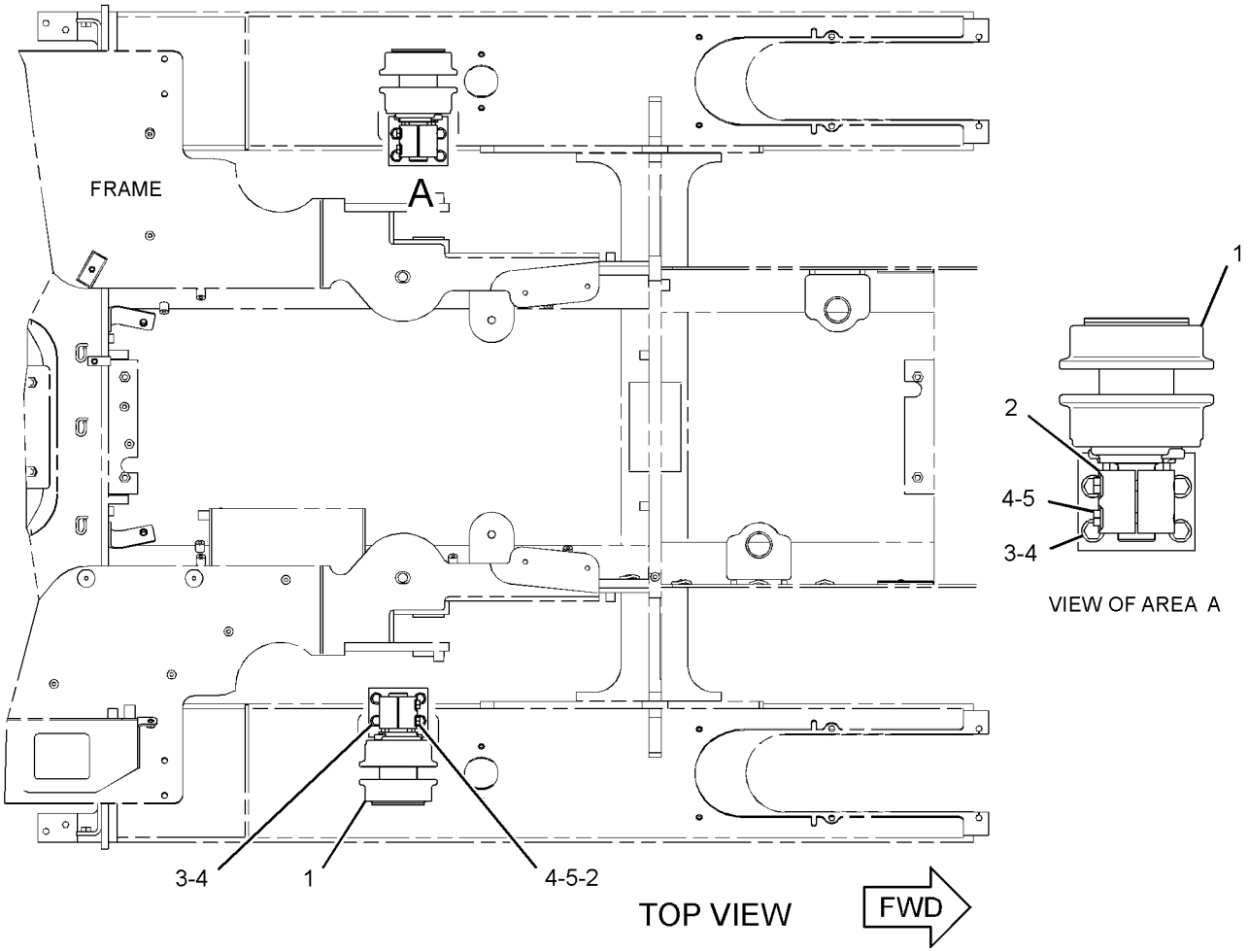

GRAPHIC #1 **<END>** g02323374

281-8338 ROLLER GP-TRACK-DOUBLE FLANGE

S/N: MMM1-123; RRR1-131
PART OF 282-8814 ROLLER GP-TRACK
AN ATTACHMENT

SMCS-4180 **i02510456**

NOTE	REF NO	GRAPHIC REF	PART NUMBER	QTY	PART NAME 1 2 3 4 5 6 (PRODUCT LEVEL)	SEE PAGE
	1	1	**3T-4283**	2	COLLAR	
	2	1	**6S-3171**	1	SHAFT	
	3	1	**6S-3172**	2	RING	
	4	1	*6S-3721*	1	ROLLER AS	
		1	**6S-3495**	2	BEARING AS	
					(EACH INCLUDES)	
		1	**6Y-4744**	1	BEARING-SLEEVE	
		1	**6S-7040**	1	RIM AS-ROLLER	
	5	1	**6S-7715**	2	WASHER-THRUST (52X86X6.35-MM THK)	
	6	1	**7D-9749**	2	SEAL-O-RING	
	7	1	**216-2957**	2	SEAL GP-DUO-CONE	
					(EACH INCLUDES)	
		1	**216-2956**	2	RING-TORIC	
	8	1	**9F-2247**	1	PLUG-PIPE	

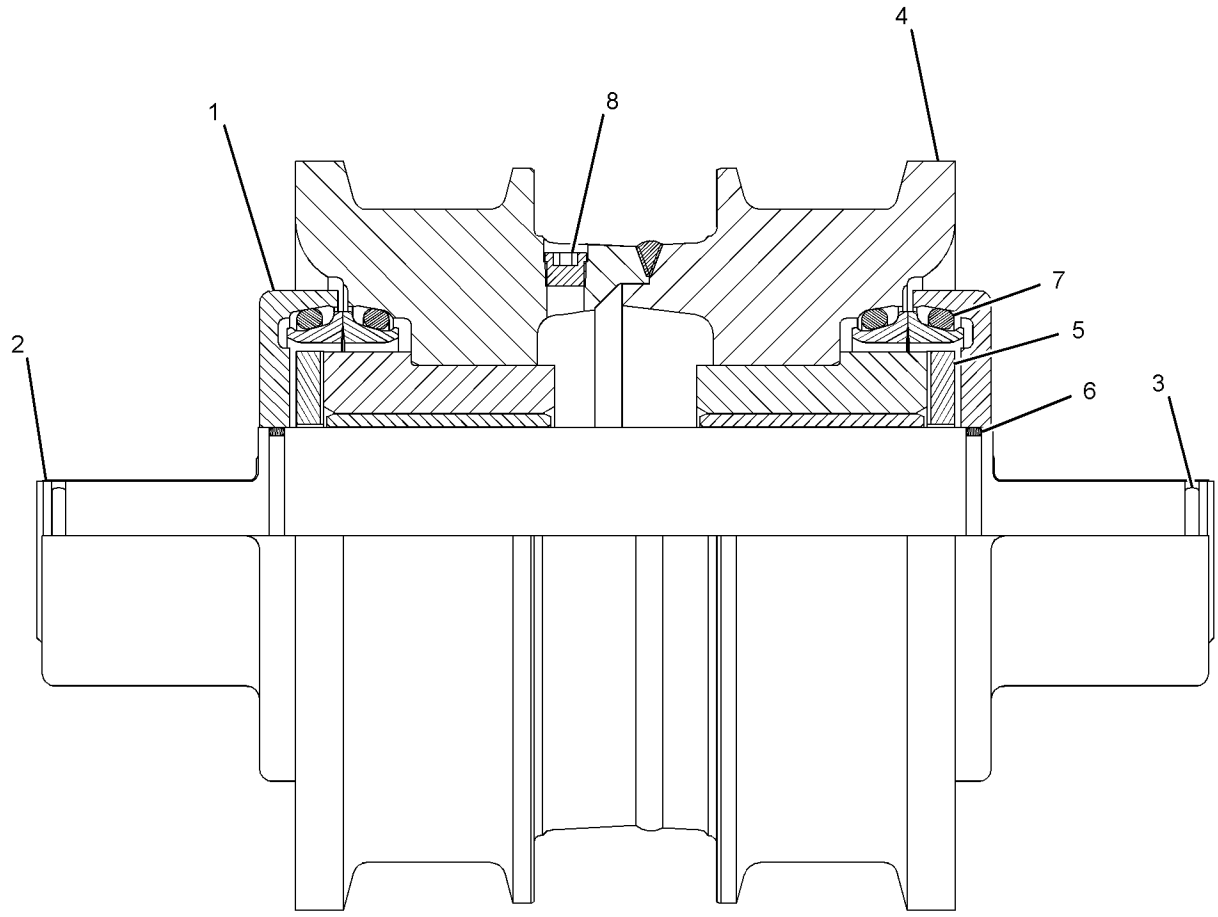

GRAPHIC #1 **<END>** g01269179

301-0650 ROLLER GP-TRACK-DOUBLE FLANGE

S/N: MMM124-UP; RRR132-UP
PART OF 302-6814 ROLLER GP-TRACK
AN ATTACHMENT

SMCS-4180 **i02674911**

NOTE	REF NO	GRAPHIC REF	PART NUMBER	QTY	PART NAME 1 2 3 4 5 6 (PRODUCT LEVEL)	SEE PAGE
	1	1	**6S-3171**	1	SHAFT	
	2	1	**6S-3172**	2	RING	
	3	1	*6S-3721*	1	ROLLER AS	
		1	**6S-3495**	2	BEARING AS	
					(EACH INCLUDES)	
		1	**6Y-4744**	1	BEARING-SLEEVE	
		1	**6S-7040**	1	RIM AS-ROLLER	
	4	1	**6S-7715**	2	WASHER-THRUST (52X86X6.35-MM THK)	
	5	1	**7D-9749**	2	SEAL-O-RING	
	6	1	**301-0096**	2	COLLAR-TRACK ROLLER	
	7	1	**216-2957**	2	SEAL GP-DUO-CONE	
					(EACH INCLUDES)	
		1	**216-2956**	2	RING-TORIC	
	8	1	**9F-2247**	1	PLUG-PIPE	

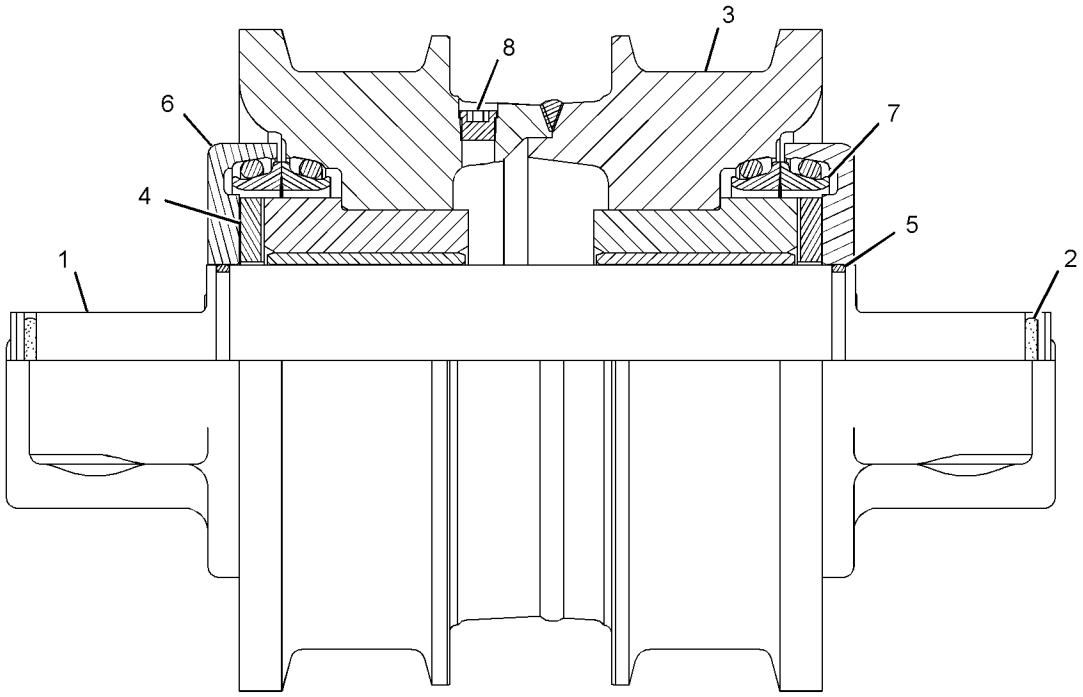

GRAPHIC #1 **<END>** g01345560

301-0650 ROLLER GP-TRACK-DOUBLE FLANGE

S/N: MMM124-562; RRR132-402
PART OF 302-6814 ROLLER GP-TRACK
AN ATTACHMENT

SMCS-4180 **i02895361**

NOTE	REF NO	GRAPHIC REF	PART NUMBER	QTY	PART NAME 1 2 3 4 5 6 (PRODUCT LEVEL)	SEE PAGE
	1	1	**6S-3171**	1	SHAFT	
	2	1	**6S-3172**	2	RING	
	3	1	*6S-3721*	1	ROLLER AS	
		1	**6S-3495**	2	BEARING AS	
					(EACH INCLUDES)	
		1	**6Y-4744**	1	BEARING-SLEEVE	
		1	**6S-7040**	1	RIM AS-ROLLER	
	4	1	**6S-7715**	2	WASHER-THRUST (52X86X6.35-MM THK)	
	5	1	**7D-9749**	2	SEAL-O-RING	
	6	1	**301-0096**	2	COLLAR-TRACK ROLLER	
CR	7	1	**6S-3285**	2	SEAL GP-DUO-CONE	
					(EACH INCLUDES)	
		1	**6S-3284**	2	RING-TORIC	
	8	1	**9F-2247**	1	PLUG-PIPE	

C - CHANGE FROM PREVIOUS TYPE
R - REMFG PART MAY BE AVAILABLE

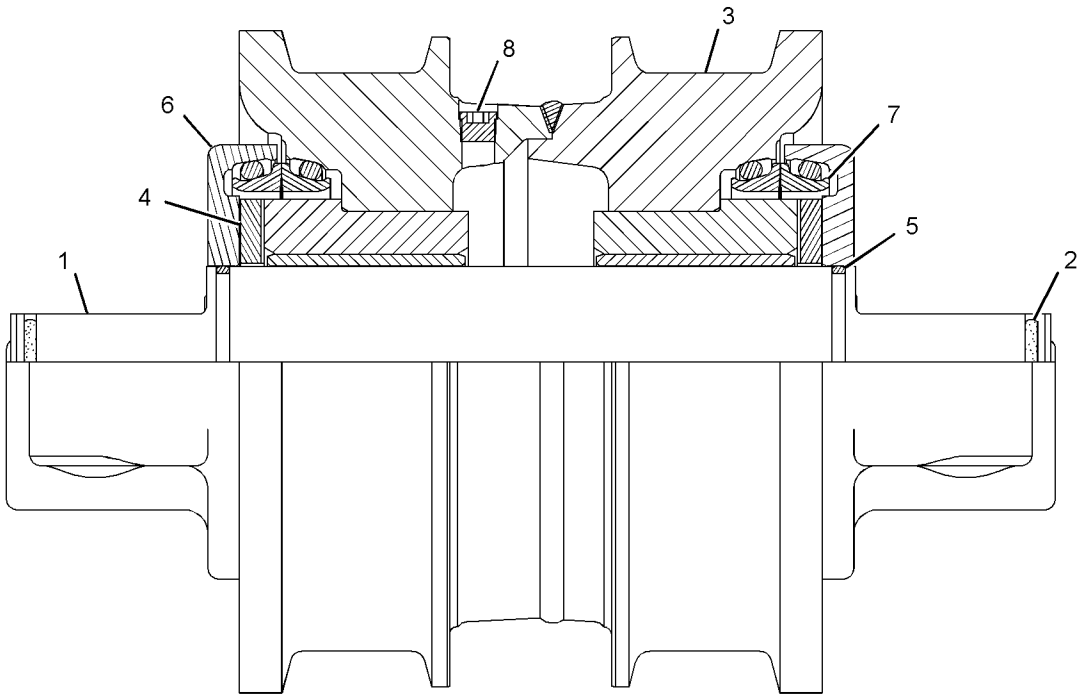

GRAPHIC #1 **<END>** g01345560

243-3277 ROLLER GP-TRACK-SINGLE FLANGE

S/N: MMM1-UP; RRR1-UP
FOR USE WITH SYSTEMONE TRACK
PART OF 282-8804 ROLLER GP-TRACK
AN ATTACHMENT AND FIELD INSTALLATION

SMCS-4180 **i04416271**

NOTE	REF NO	GRAPHIC REF	PART NUMBER	QTY	PART NAME 1 2 3 4 5 6 (PRODUCT LEVEL)	SEE PAGE
	1	1	**3T-4283**	2	COLLAR	
	2	1	**6S-3171**	1	SHAFT	
	3	1	**6S-3172**	2	RING	
R	4	1	**6S-3285**	2	SEAL GP-DUO-CONE	
					(EACH INCLUDES)	
		1	**6S-3284**	2	RING-TORIC	
	5	1	**6S-7715**	2	WASHER-THRUST (52X86X6.35-MM THK)	
	6	1	**7D-9749**	2	SEAL-O-RING	
	7	1	**243-3278**	1	ROLLER AS	
		1	**6S-3495**	2	BEARING AS	
					(EACH INCLUDES)	
		1	**6Y-4744**	1	BUSHING	
	8	1	**9F-2247**	1	PLUG-PIPE	

R - REMFG PART MAY BE AVAILABLE

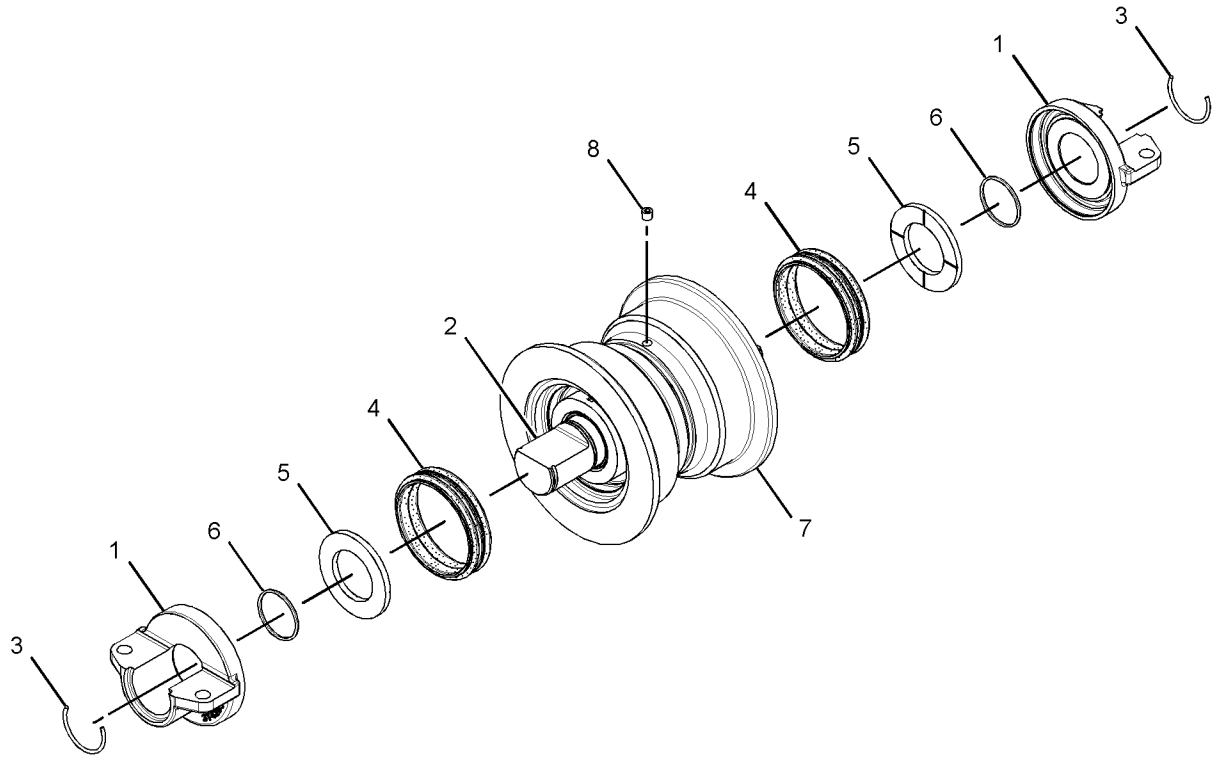

GRAPHIC #1 **<END>** g01787495

281-8339 ROLLER GP-TRACK-SINGLE FLANGE

S/N: MMM1-123; RRR1-131
PART OF 282-8814 ROLLER GP-TRACK
AN ATTACHMENT

SMCS-4180 **i04416269**

NOTE	REF NO	GRAPHIC REF	PART NUMBER	QTY	PART NAME 1 2 3 4 5 6 (PRODUCT LEVEL)	SEE PAGE
	1	1	**3T-4283**	2	COLLAR	
	2	1	**6S-3171**	1	SHAFT	
	3	1	**6S-3172**	2	RING	
	4	1	*6S-3722*	1	ROLLER AS	
		1	**6S-3495**	2	BEARING AS	
					(EACH INCLUDES)	
		1	**6Y-4744**	1	BUSHING	
		1	**6S-7038**	1	RIM AS	
	5	1	**6S-7715**	2	WASHER-THRUST (52X86X6.35-MM THK)	
	6	1	**7D-9749**	2	SEAL-O-RING	
	7	1	**216-2957**	2	SEAL GP-DUO-CONE	
					(EACH INCLUDES)	
		1	**216-2956**	2	RING-TORIC	
	8	1	**9F-2247**	1	PLUG-PIPE	

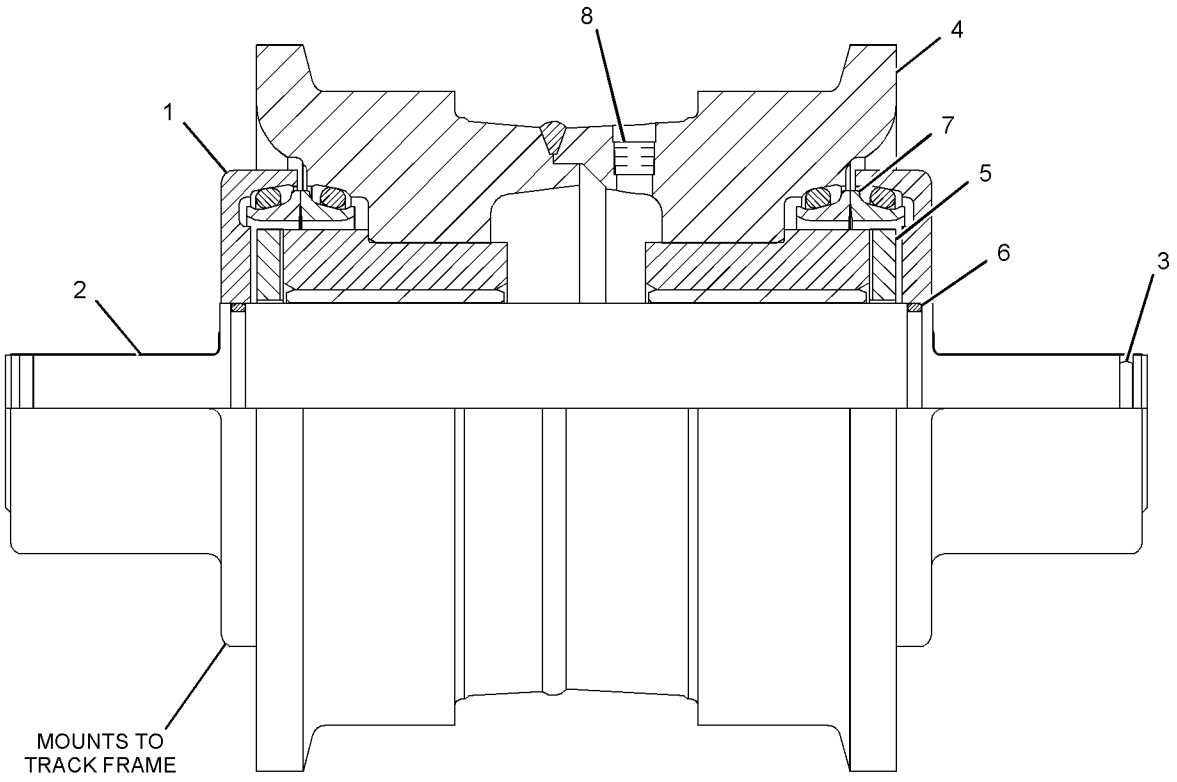

GRAPHIC #1 **<END>** g01362960

301-0652 ROLLER GP-TRACK-SINGLE FLANGE

S/N: MMM124-UP; RRR132-UP
PART OF 302-6814 ROLLER GP-TRACK
AN ATTACHMENT

SMCS-4180 **i02674912**

NOTE	REF NO	GRAPHIC REF	PART NUMBER	QTY	PART NAME 1 2 3 4 5 6 (PRODUCT LEVEL)	SEE PAGE
	1	1	**6S-3171**	1	SHAFT	
	2	1	**6S-3172**	2	RING	
	3	1	*6S-3722*	1	ROLLER AS	
		1	**6S-3495**	2	BEARING AS	
					(EACH INCLUDES)	
		1	**6Y-4744**	1	BEARING-SLEEVE	
		1	**6S-7038**	1	RIM AS	
	4	1	**6S-7715**	2	WASHER-THRUST (52X86X6.35-MM THK)	
	5	1	**7D-9749**	2	SEAL-O-RING	
	6	1	**301-0096**	2	COLLAR-TRACK ROLLER	
	7	1	**216-2957**	2	SEAL GP-DUO-CONE	
					(EACH INCLUDES)	
		1	**216-2956**	2	RING-TORIC	
	8	1	**9F-2247**	1	PLUG-PIPE	

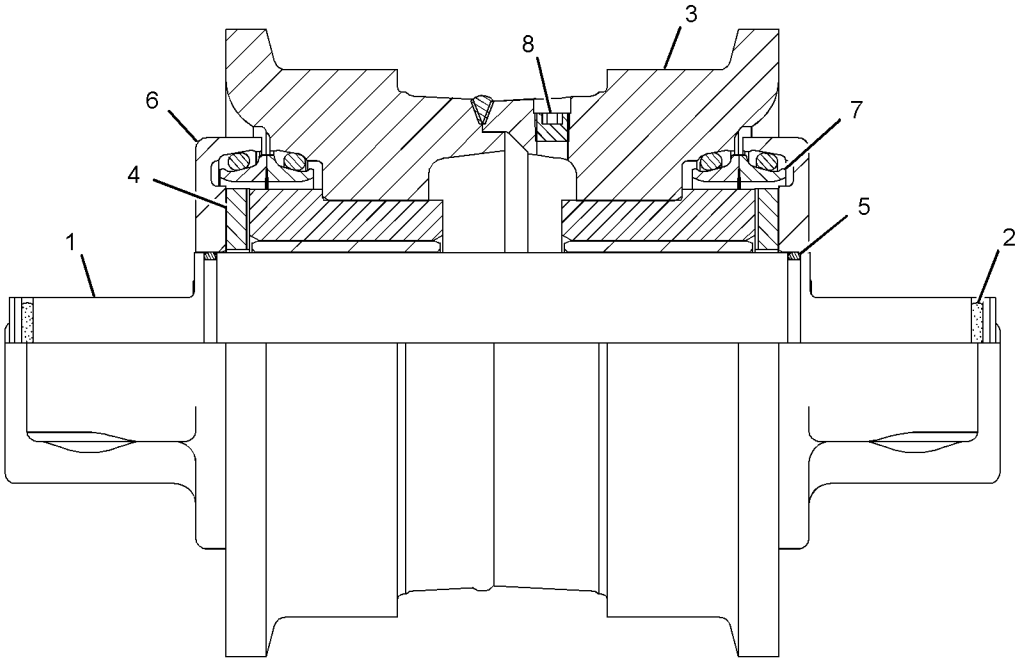

GRAPHIC #1 **<END>** g01345522

301-0652 ROLLER GP-TRACK-SINGLE FLANGE

S/N: MMM124-562; RRR132-402
PART OF 302-6814 ROLLER GP-TRACK
AN ATTACHMENT

SMCS-4180 **i02895371**

NOTE	REF NO	GRAPHIC REF	PART NUMBER	QTY	PART NAME 1 2 3 4 5 6 (PRODUCT LEVEL)	SEE PAGE
	1	1	**6S-3171**	1	SHAFT	
	2	1	**6S-3172**	2	RING	
	3	1	*6S-3722*	1	ROLLER AS	
		1	**6S-3495**	2	BEARING AS	
					(EACH INCLUDES)	
		1	**6Y-4744**	1	BEARING-SLEEVE	
		1	**6S-7038**	1	RIM AS	
	4	1	**6S-7715**	2	WASHER-THRUST (52X86X6.35-MM THK)	
	5	1	**7D-9749**	2	SEAL-O-RING	
	6	1	**301-0096**	2	COLLAR-TRACK ROLLER	
CR	7	1	**6S-3285**	2	SEAL GP-DUO-CONE	
					(EACH INCLUDES)	
		1	**6S-3284**	2	RING-TORIC	
	8	1	**9F-2247**	1	PLUG-PIPE	

C - CHANGE FROM PREVIOUS TYPE
R - REMFG PART MAY BE AVAILABLE

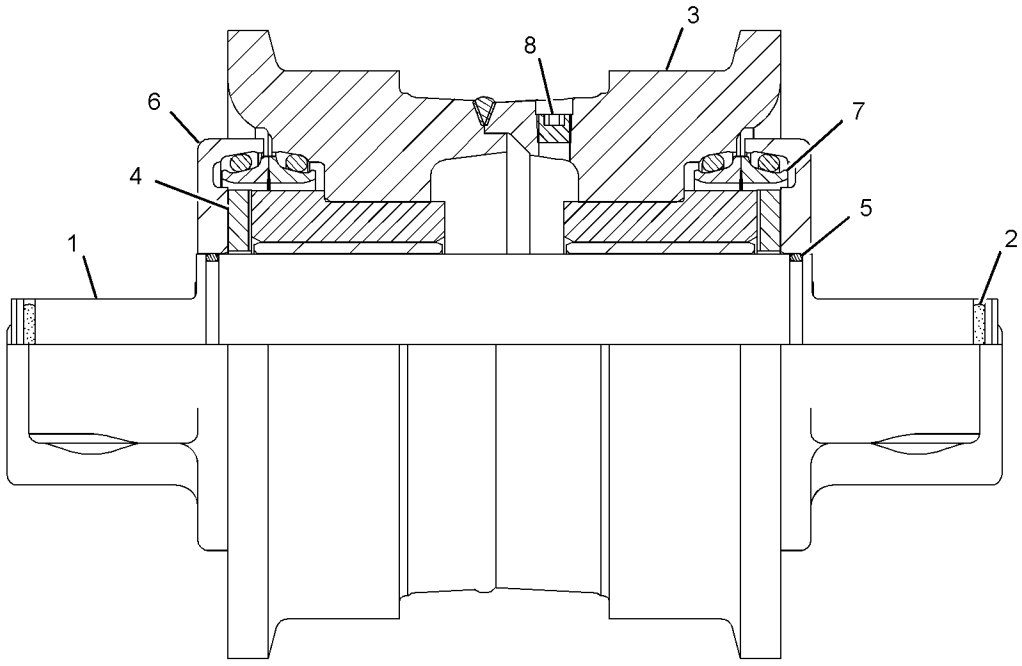

GRAPHIC #1 **<END>** g01345522

301-0654 ROLLER GP-TRACK-SINGLE FLANGE

S/N: MMM1-UP; RRR1-UP
PART OF 302-6804 ROLLER GP-TRACK
AN ATTACHMENT

SMCS-4180 **i03779049**

NOTE	REF NO	GRAPHIC REF	PART NUMBER	QTY	PART NAME 1 2 3 4 5 6 (PRODUCT LEVEL)	SEE PAGE
	1	1	**6S-3171**	1	SHAFT	
	2	1	**6S-3172**	2	RING	
R	3	1	**6S-3285**	2	SEAL GP-DUO-CONE	
	4	1	**6S-7715**	2	WASHER-THRUST (52X86X6.35-MM THK)	
	5	1	**7D-9749**	2	SEAL-O-RING	
	6	1	**243-3278**	1	ROLLER AS	
	6A	1	**6S-3495**	2	BEARING AS	
					(EACH INCLUDES)	
		1	**6Y-4744**	1	BEARING-SLEEVE	
	7	1	**301-0096**	2	COLLAR-TRACK ROLLER	
	8	1	**9F-2247**	1	PLUG-PIPE	

R - REMFG PART MAY BE AVAILABLE

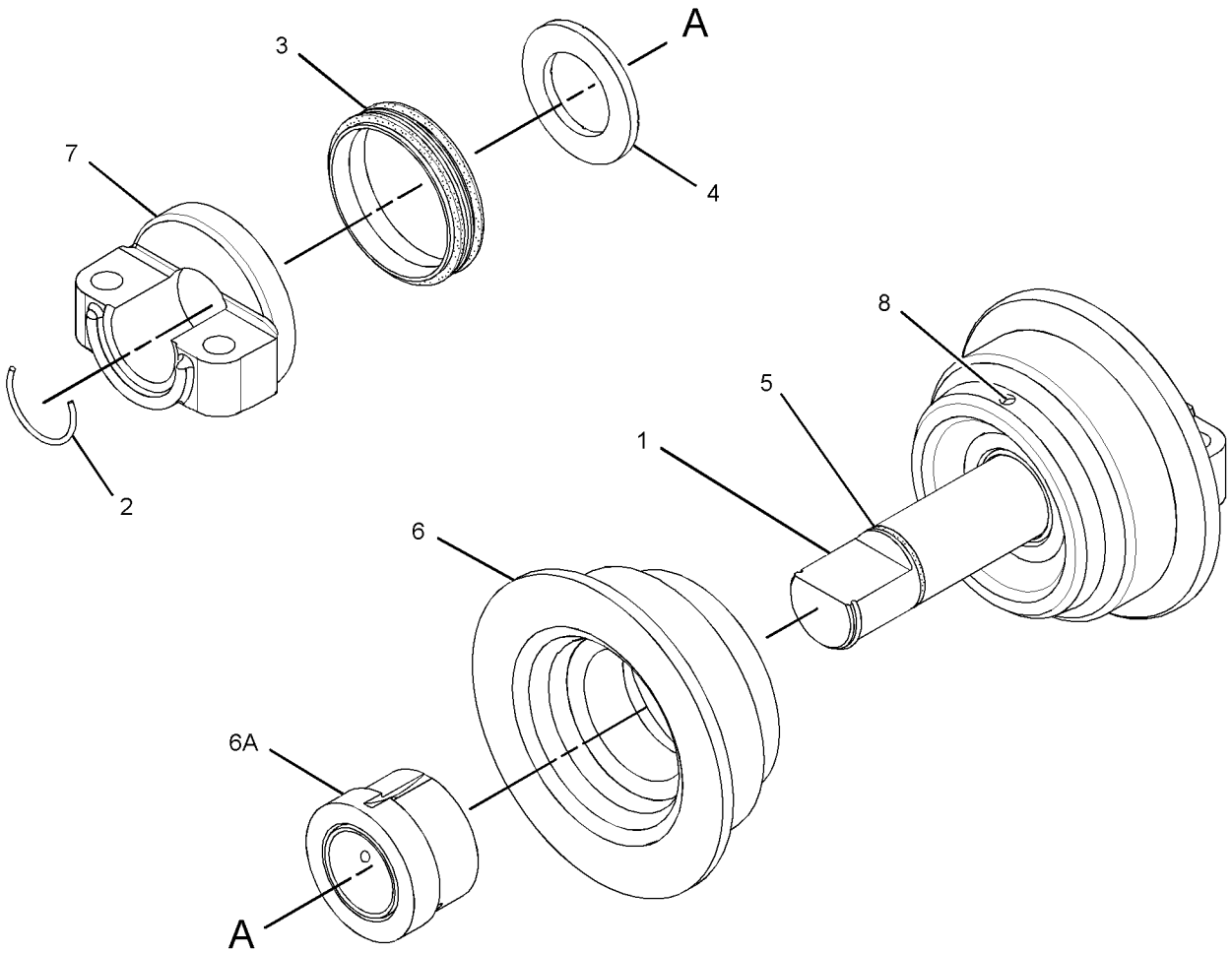

GRAPHIC #1 **<END>** g02045157

254-0603 SPRING GP-RECOIL

S/N: MMM1-UP; RRR1-UP
PART OF 244-7500, 254-0593 IDLER GP-FRONT
AN ATTACHMENT

SMCS-4158 **i02718056**

NOTE	REF NO	GRAPHIC REF	PART NUMBER	QTY	PART NAME 1 2 3 4 5 6 (PRODUCT LEVEL)	SEE PAGE
	1	1	**254-0623**	1	SPRING-RECOIL	
	2	1	**254-0662**	1	SUPPORT AS	
	3	1	**303-0461**	1	ROD	
	4	1	**289-5884**	1	NUT-CASTLE (M36X3-THD)	
	5	1	**099-5217**	1	PIN-COTTER	
	6	1	**9X-8259**	1	WASHER (39X66X6-MM THK)	
	7	1	**254-0648**	1	PLATE	

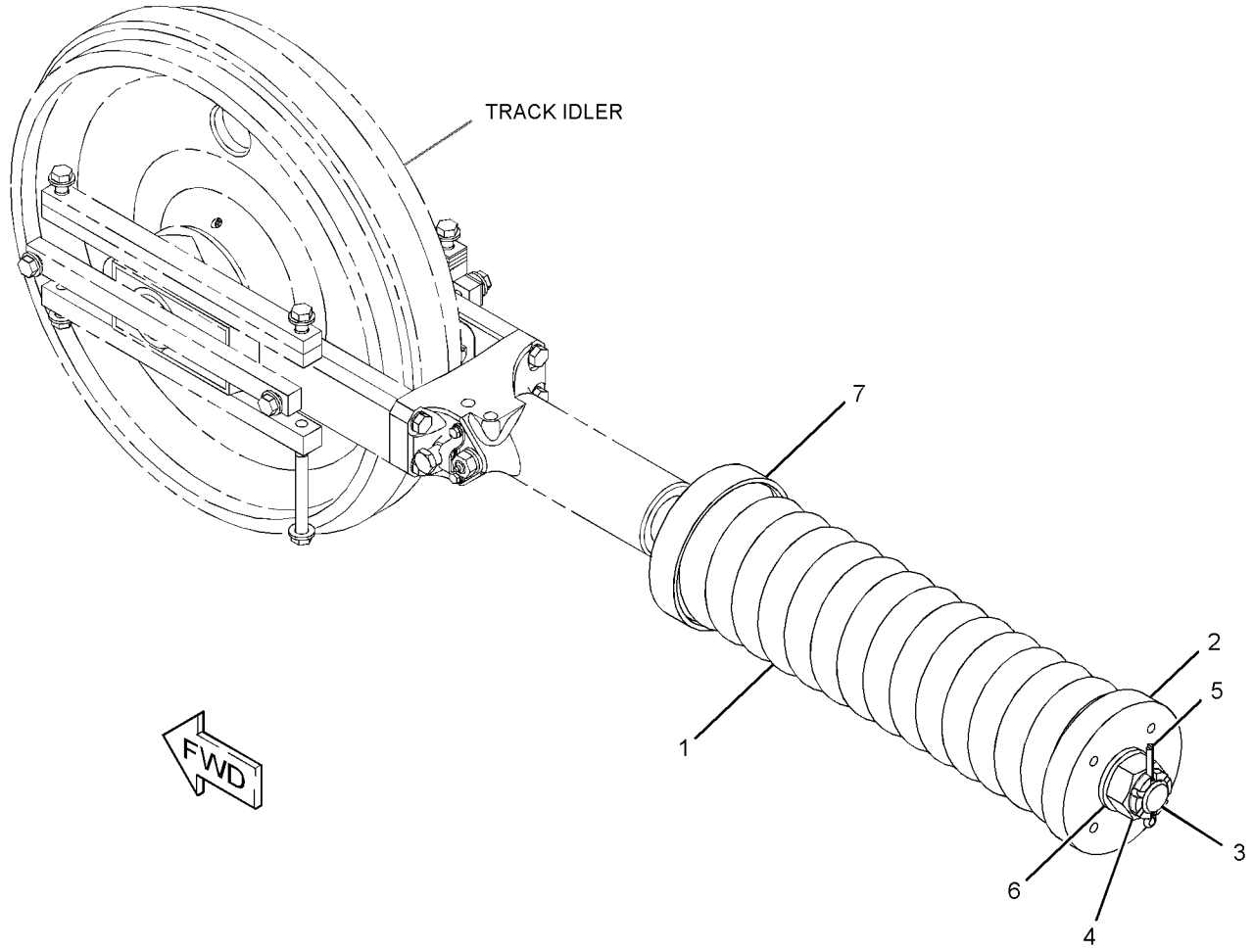

GRAPHIC #1 **<END>** g01369999

286-4304 TRACK AR

S/N: MMM1-UP; RRR1-UP
MODERATE SERVICE, SEALED, LUBRICATED
FOR USE WITH 244-7449—PAGE: 528
AN ATTACHMENT

SMCS-4170 **i04887931**

NOTE	PART NUMBER	QTY	PART NAME 1 2 3 4 5 6 (PRODUCT LEVEL)	SEE PAGE
Y	*263-5385*	2	TRACK GP (2-REQUIRED)	525

Y - SEPARATE ILLUSTRATION

<END>

286-4309 TRACK AR

S/N: RRR1-UP
MODERATE SERVICE, SEALED, LUBRICATED
FOR USE WITH 244-7449—PAGE: 528
AN ATTACHMENT

SMCS-4170 **i04887927**

NOTE	PART NUMBER	QTY	PART NAME 1 2 3 4 5 6 (PRODUCT LEVEL)	SEE PAGE
Y	*282-9045*	2	TRACK GP (2-REQUIRED)	525

Y - SEPARATE ILLUSTRATION

<END>

286-4314 TRACK AR—SYSTEMONE

S/N: MMM1-UP; RRR1-UP
MODERATE SERVICE
FOR USE WITH 244-7394—PAGE: 527
AN ATTACHMENT

SMCS-4170 **i04887923**

NOTE	PART NUMBER	QTY	PART NAME 1 2 3 4 5 6 (PRODUCT LEVEL)	SEE PAGE
Y	*289-3065*	2	TRACK GP (2-REQUIRED, SYSTEMONE)	526

Y - SEPARATE ILLUSTRATION

<END>

286-4319 TRACK AR—SYSTEMONE

S/N: RRR1-UP
MODERATE SERVICE
CANNOT BE USED WITH 244-7394—PAGE: 527
AN ATTACHMENT

SMCS-4170 **i04898769**

NOTE	PART NUMBER	QTY	PART NAME 1 2 3 4 5 6 (PRODUCT LEVEL)	SEE PAGE
Y	*289-3066*	2	TRACK GP (SYSTEMONE)	526

Y - SEPARATE ILLUSTRATION

<END>

319-9514 TRACK AR

S/N: RRR1-UP
AN ATTACHMENT

SMCS-4170 **i04898770**

NOTE	PART NUMBER	QTY	PART NAME 1 2 3 4 5 6 (PRODUCT LEVEL)	SEE PAGE
Y	*320-6195*	2	TRACK GP (SELF CLEANING)	527

Y - SEPARATE ILLUSTRATION

<END>

263-5385 TRACK GP—2-REQUIRED

S/N: MMM1-UP; RRR1-UP
460-MM (18.11-IN) GROUSER SHOE. SEALED, LUBRICATED. MODERATE SERVICE. LARGE CAPACITY
FOR USE WITH 244-7449—PAGE: 528
PART OF 286-4304 TRACK AR
AN ATTACHMENT

SMCS-4170 **i03079827**

NOTE	PART NUMBER	QTY	PART NAME 1 2 3 4 5 6 (PRODUCT LEVEL)	SEE PAGE
Y	**323-8755**	1	LINK AS-TRACK	503
	4K-7038	168	BOLT-TRACK (9/16-18X1.625-IN)	
	5A-3187	4	BOLT-TRACK (9/16-18X3-IN)	
	7K-2017	168	NUT-SQUARE (9/16-18-THD)	
	198-6989	42	SHOE-TRACK	
	198-6990	1	SHOE-TRACK MASTER	

Y - SEPARATE ILLUSTRATION

<END>

282-9045 TRACK GP—2-REQUIRED

S/N: RRR1-UP
635-MM (25-IN) GROUSER SHOE. SEALED, LUBRICATED. MODERATE SERVICE
FOR USE WITH 244-7449—PAGE: 528
PART OF 286-4309 TRACK AR
AN ATTACHMENT

SMCS-4170 **i03079840**

NOTE	PART NUMBER	QTY	PART NAME 1 2 3 4 5 6 (PRODUCT LEVEL)	SEE PAGE
Y	**323-8755**	1	LINK AS-TRACK	503
	4K-7038	168	BOLT-TRACK (9/16-18X1.625-IN)	
	5A-3187	4	BOLT-TRACK (9/16-18X3-IN)	
	7K-2017	168	NUT-SQUARE (9/16-18-THD)	
	198-6991	42	SHOE-TRACK	
	198-6992	1	SHOE-TRACK MASTER	

Y - SEPARATE ILLUSTRATION

<END>

289-3065 TRACK GP–2-REQUIRED, SYSTEMONE

S/N: MMM1-UP; RRR1-UP
460-MM (18.11-IN). SEALED, LUBRICATED. MODERATE SERVICE
FOR USE WITH SYSTEMONE ROLLERS, GUARDS, GUIDESTRIPS
PART OF 286-4314 TRACK AR
AN ATTACHMENT

SMCS-4170 **i04348854**

NOTE	PART NUMBER	QTY	PART NAME 1 2 3 4 5 6 (PRODUCT LEVEL)	SEE PAGE
Y	*289-3059*	1	LINK AS-TRACK (SYSTEMONE)	502
	301-4302	148	BOLT-TRACK (M16X1.5X46-MM)	
	254-0228	4	BOLT-TRACK MASTER (M16X1.5X81-MM)	
	260-6740	2	LINK-TRACK	
			–OR–	
	311-6180	2	LINK-TRACK MASTER	
M	**5I-6125**	148	NUT-TRACK (M16X1.5-THD)	
	243-2693	38	SHOE-TRACK	

M - METRIC PART
Y - SEPARATE ILLUSTRATION

<END>

289-3066 TRACK GP–SYSTEMONE

S/N: RRR1-UP
635-MM (25-IN) GROUSER SHOE. SEALED, LUBRICATED. MODERATE SERVICE
FOR USE WITH SYSTEMONE ROLLERS, GUARDS AND GUIDESTRIPS
PART OF 286-4319 TRACK AR
AN ATTACHMENT

SMCS-4170 **i04348850**

NOTE	PART NUMBER	QTY	PART NAME 1 2 3 4 5 6 (PRODUCT LEVEL)	SEE PAGE
Y	*289-3059*	1	LINK AS-TRACK (SYSTEMONE)	502
	301-4302	148	BOLT-TRACK (M16X1.5X46-MM)	
	254-0228	4	BOLT-TRACK MASTER (M16X1.5X81-MM)	
	260-6740	2	LINK-TRACK	
			–OR–	
	311-6180	2	LINK-TRACK MASTER	
M	**5I-6125**	148	NUT-TRACK (M16X1.5-THD)	
	235-2558	37	SHOE-TRACK	
	263-3798	1	SHOE-TRACK MASTER	

M - METRIC PART
Y - SEPARATE ILLUSTRATION

<END>

320-6195 TRACK GP—SELF CLEANING

S/N: RRR1-UP
PART OF 319-9514 TRACK AR
AN ATTACHMENT

SMCS-4170 **i03143627**

NOTE	PART NUMBER	QTY	PART NAME 1 2 3 4 5 6 (PRODUCT LEVEL)	SEE PAGE
Y	**323-8755**	1	LINK AS-TRACK	503
	4K-7038	84	BOLT-TRACK (9/16-18X1.625-IN)	
	5A-3187	86	BOLT-TRACK (9/16-18X3-IN)	
	5P-4683	2	BOLT-TRACK (9/16-18X4.29-IN)	
	7K-2017	168	NUT-SQUARE (9/16-18-THD)	
	6S-9115	42	SHOE-LGP TRACK	
	6S-9102	1	SHOE-MASTER LGP TRACK	
Y - SEPARATE ILLUSTRATION				

<END>

244-7394 UNDERCARRIAGE AR—SYSTEMONE

S/N: MMM1-UP; RRR1-UP
FOR USE WITH SYSTEMONE TRACK GROUP
AN ATTACHMENT

SMCS-4150 **i04001497**

NOTE	PART NUMBER	QTY	PART NAME 1 2 3 4 5 6 (PRODUCT LEVEL)	SEE PAGE
Y	*244-7418*	1	GUARD GP-IDLER	486
Y	*282-3703*	1	GUARD GP-TRACK GUIDE (SYSTEMONE, FRONT)	493
Y	*282-3714*	1	GUARD GP-TRACK GUIDE (SYSTEMONE)	494
Y	*254-0593*	1	IDLER GP-FRONT	499
Y	*258-9789*	2	SPROCKET GP	385
Y	*282-8804*	1	ROLLER GP-TRACK (SYSTEMONE)	507
			S/N: MMM1-123 ; RRR1-131	
Y	*302-6804*	1	ROLLER GP-TRACK (SYSTEMONE)	509
			S/N: MMM124-UP ; RRR132-UP	
Y	*356-5272*	1	ROLLER GP-TRACK CARRIER (SYSTEMONE)	513
Y - SEPARATE ILLUSTRATION				

<END>

244-7449 UNDERCARRIAGE AR

S/N: MMM1-562; RRR1-402

AN ATTACHMENT

SMCS-4150 **i05027812**

NOTE	PART NUMBER	QTY	PART NAME 1 2 3 4 5 6 (PRODUCT LEVEL)	SEE PAGE
Y	*262-5874*	1	GUARD GP-IDLER	488
Y	*244-7424*	1	GUARD GP-TRACK GUIDE	490
Y	*244-7500*	1	IDLER GP-FRONT	498
Y	*282-8814*	1	ROLLER GP-TRACK (SEALED, LUBRICATED)	508
			S/N: MMM1-123 ; RRR1-131	
Y	*302-6814*	1	ROLLER GP-TRACK (SEALED, LUBRICATED)	510
			S/N: MMM124-562 ; RRR132-402	
Y	*356-5273*	1	ROLLER GP-TRACK CARRIER	514
Y	*278-2357*	2	SEGMENT GP-SPROCKET	384

Y - SEPARATE ILLUSTRATION

<END>

309-5075 BRAKE GP-SERVICE & PARKING

S/N: MMM1-UP; RRR1-UP
PART OF 309-5091 BRAKE & PLANETARY GP-WINCH
AN ATTACHMENT

SMCS-4251, 4255, 4267 **i02718214**

NOTE	REF NO	GRAPHIC REF	PART NUMBER	QTY	PART NAME 1 2 3 4 5 6 (PRODUCT LEVEL)	SEE PAGE
	1	1	**129-7321**	6	DISC-FRICTION	
	2	1	**203-6618**	1	HOUSING (BRAKE)	
	3	1	**203-6620**	1	PLATE	
	4	1	**203-6621**	1	SEAL	
	5	1	**203-6623**	7	DISC-BRAKE	
	6	1	**203-6626**	1	RETAINER (BRAKE)	
	7	1	**211-8215**	8	SPRING	
	8	1	**211-8216**	1	SPACER (SPRING)	
	9	1	**211-8217**	1	PISTON	
	10	1	**3Y-9267**	1	BALL	
	11	1	**6V-4495**	1	RING-RETAINING	
	12	1	**8M-4704**	1	SEAL-O-RING	

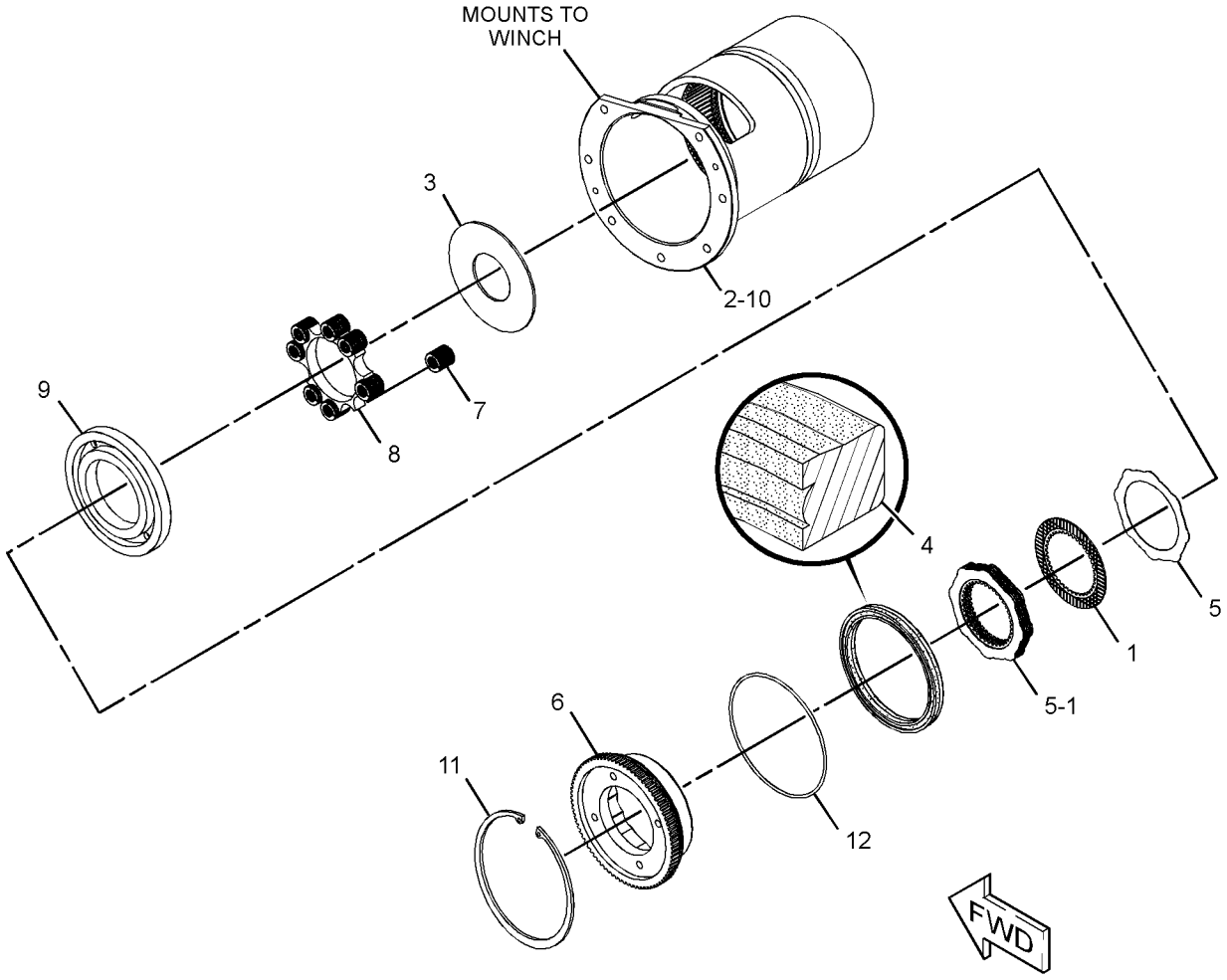

GRAPHIC #1 **<END>** g01375429

325-1323 LINES GP-STEERING

S/N: MMM1-UP
PART OF 325-6543 MODIFICATION AR
AN ATTACHMENT

SMCS-4104, 4133, 4304

i04921387

NOTE	REF NO	GRAPHIC REF	PART NUMBER	QTY	PART NAME 1 2 3 4 5 6 (PRODUCT LEVEL)	SEE PAGE
	1	1	*325-0494*	1	HOSE AS	
I		1	**135-7193**	1	HOSE AS	
		1	**163-8811**	2	CLAMP	
E		1	**326-3566**		INSULATION (33-CM)	
	2	1	*325-0495*	1	HOSE AS	
		1	**163-8811**	2	CLAMP	
E		1	**193-6911**		INSULATION (73-CM)	
I		1	**305-5014**	1	HOSE AS	
	3	1	*325-0496*	1	HOSE AS	
		1	**163-8811**	2	CLAMP	
E		1	**193-6911**		INSULATION (38-CM)	
I		1	**285-3772**	1	HOSE AS	
	4	1	*325-0497*	1	HOSE AS	
		1	**163-8811**	2	CLAMP	
I		1	**185-3166**	1	HOSE AS	
E		1	**326-3566**		INSULATION (53-CM)	
	5	1	**363-1763**	1	HOSE AS	
		1	**384-4127**	2	CLAMP	
I		1	**345-9625**	1	HOSE AS	
E		1	**193-6911**		INSULATION (121-CM)	
	6	1	**366-3348**	1	HOSE AS	
		1	**163-8811**	2	CLAMP	
I		1	**365-9587**	1	HOSE AS	
E		1	**193-6911**		INSULATION (31-CM)	

E - ORDER BY THE CENTIMETER
I - REFER TO HYDRAULIC INFORMATION SYSTEM

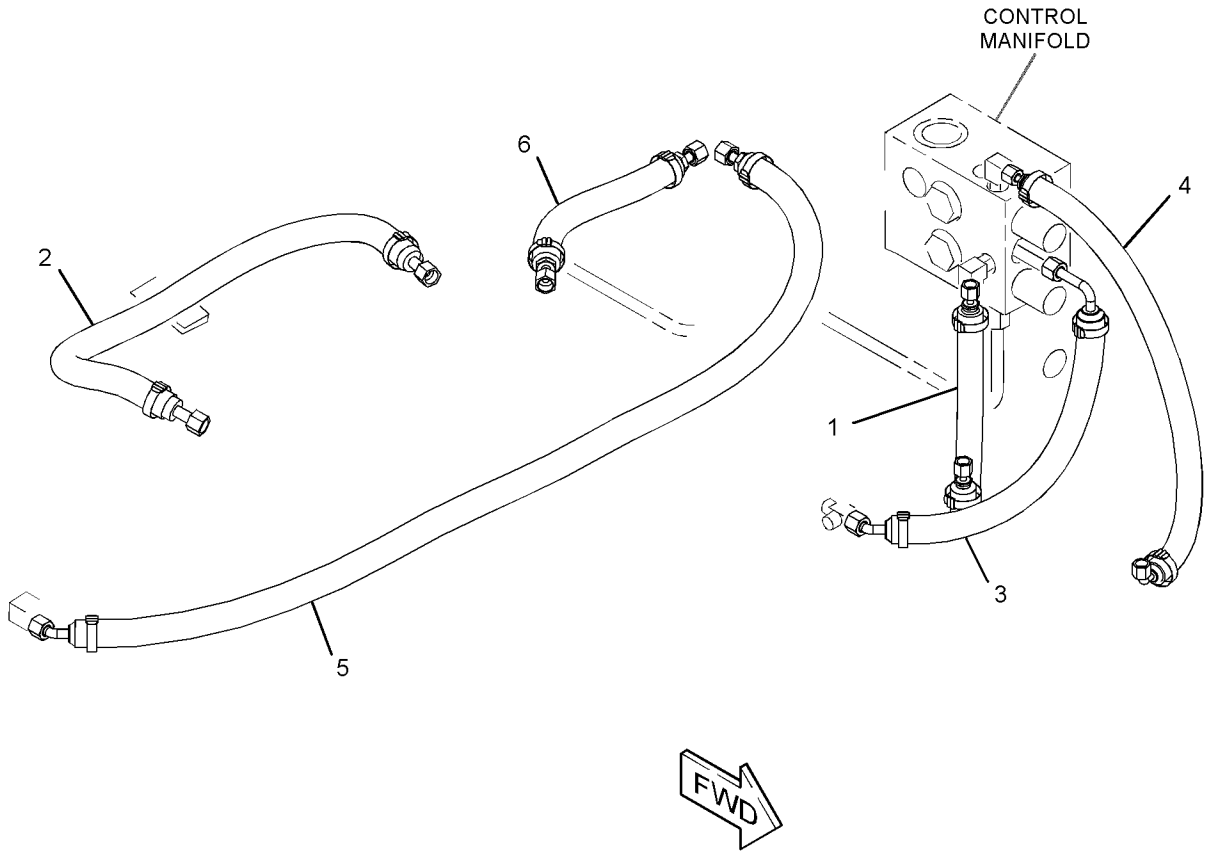

GRAPHIC #1 **<END>** g03132937

263-3745 CYLINDER GP-ANGLING

S/N: MMM1-UP; RRR1-UP
76.2-MM(3-IN)BORE X 399.9-MM(15.74-IN)STROKE
PART OF 244-7385 HYDRAULIC AR

SMCS-5101 **i05426298**

NOTE	REF NO	GRAPHIC REF	PART NUMBER	QTY	PART NAME 1 2 3 4 5 6 (PRODUCT LEVEL)	SEE PAGE
	1	1	**3B-8489**	2	FITTING-GREASE	
	2	1	**191-6159**	1	HEAD	
	3	1	**239-2170**	1	PISTON	
	4	1	**263-3746**	1	CYLINDER AS	
	4A	1	**4D-0298**	1	BEARING	
	5	1	**263-3748**	1	ROD AS	
	5A	1	**9J-9812**	1	BEARING	
J	6	1	**167-2186**	1	SEAL AS-BUFFER	
J	7	1	**167-2294**	1	SEAL-U-CUP	
	8	1	**1H-7339**	1	SEAL-O-RING	
J	9	1	**226-8202**	1	SEAL-WIPER	
J	10	1	**4T-6780**	1	RING-WEAR	
J	11	1	**5H-8848**	1	SEAL-O-RING	
J	12	1	**6J-1972**	1	SEAL AS	
	13	1	**6J-5730**	1	LOCKNUT (1-1/8-12-THD)	
J	14	1	**6J-5731**	1	RING-BACKUP	
J	15	1	**6J-5733**	1	RING-WEAR	
					AVAILABLE REPAIR KIT(S):	
J			**380-9484**	1	KIT-HYD CYLINDER SEAL (ANGLING)	
					(INCLUDES RINGS & SEALS)	
					(FOR USE WITH REHS1392 FOUND IN SISWEB)	

J - KIT MARKED J SERVICES PARTS MARKED J

263-3745 **CYLINDER GP-ANGLING (*contd.*)** **i05426298**

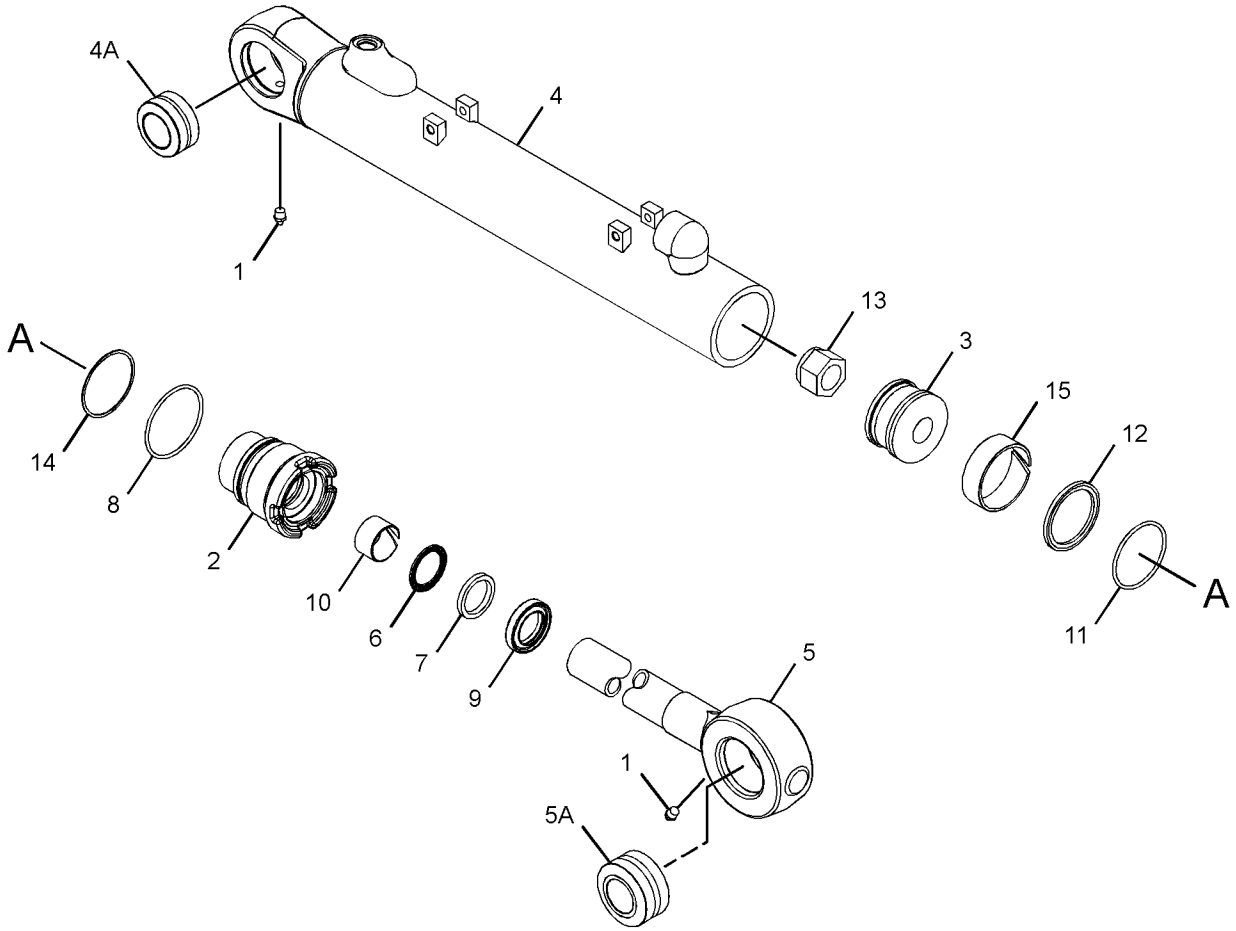

GRAPHIC #1 **<END>** g02044953

263-4068 CYLINDER GP-BULLDOZER LIFT–RH

S/N: MMM1-UP; RRR1-UP
88.9-MM(3.5-IN)BORE X 353.9-MM(13.93-IN)STROKE
PART OF 244-7385 HYDRAULIC AR

SMCS-5102 **i05426323**

NOTE	REF NO	GRAPHIC REF	PART NUMBER	QTY	PART NAME 1 2 3 4 5 6 (PRODUCT LEVEL)	SEE PAGE
	1	1	**3B-8489**	1	FITTING-GREASE	
	2	1	**7J-9886**	1	PISTON	
	3	1	**7J-9887**	1	CROWN	
	4	1	**221-0375**	1	HEAD	
	5	1	**263-4069**	1	CYLINDER AS-HYDRAULIC (RH)	
	5A	1	**263-3181**	1	BUSHING	
	6	1	**263-4072**	1	ROD AS	
	6A	1	**263-3181**	1	BUSHING	
J	7	1	**167-2186**	1	SEAL AS-BUFFER	
J	8	1	**167-2294**	1	SEAL-U-CUP	
J	9	1	**226-8202**	1	SEAL-WIPER	
J	10	1	**2H-3931**	1	SEAL-O-RING	
J	11	1	**4J-9224**	1	RING-BACKUP	
J	12	1	**4T-6780**	1	RING-WEAR	
J	13	1	**4T-8054**	1	SEAL AS	
J	14	1	**7J-5639**	1	BOLT-LOCKING (1-14X2.5-IN)	
	15	1	**7J-9885**	1	RING-WEAR	
	16	1	**8J-7415**	1	WASHER-HARD (28X51X4.5-MM THK)	
					AVAILABLE REPAIR KIT(S):	
J			**393-3608**	1	KIT-HYD CYLINDER SEAL (LIFT)	
					(FOR USE WITH REHS1392 FOUND IN SISWEB)	

J - KIT MARKED J SERVICES PARTS MARKED J

263-4068 **CYLINDER GP-BULLDOZER LIFT (*contd.*)** **i05426323**

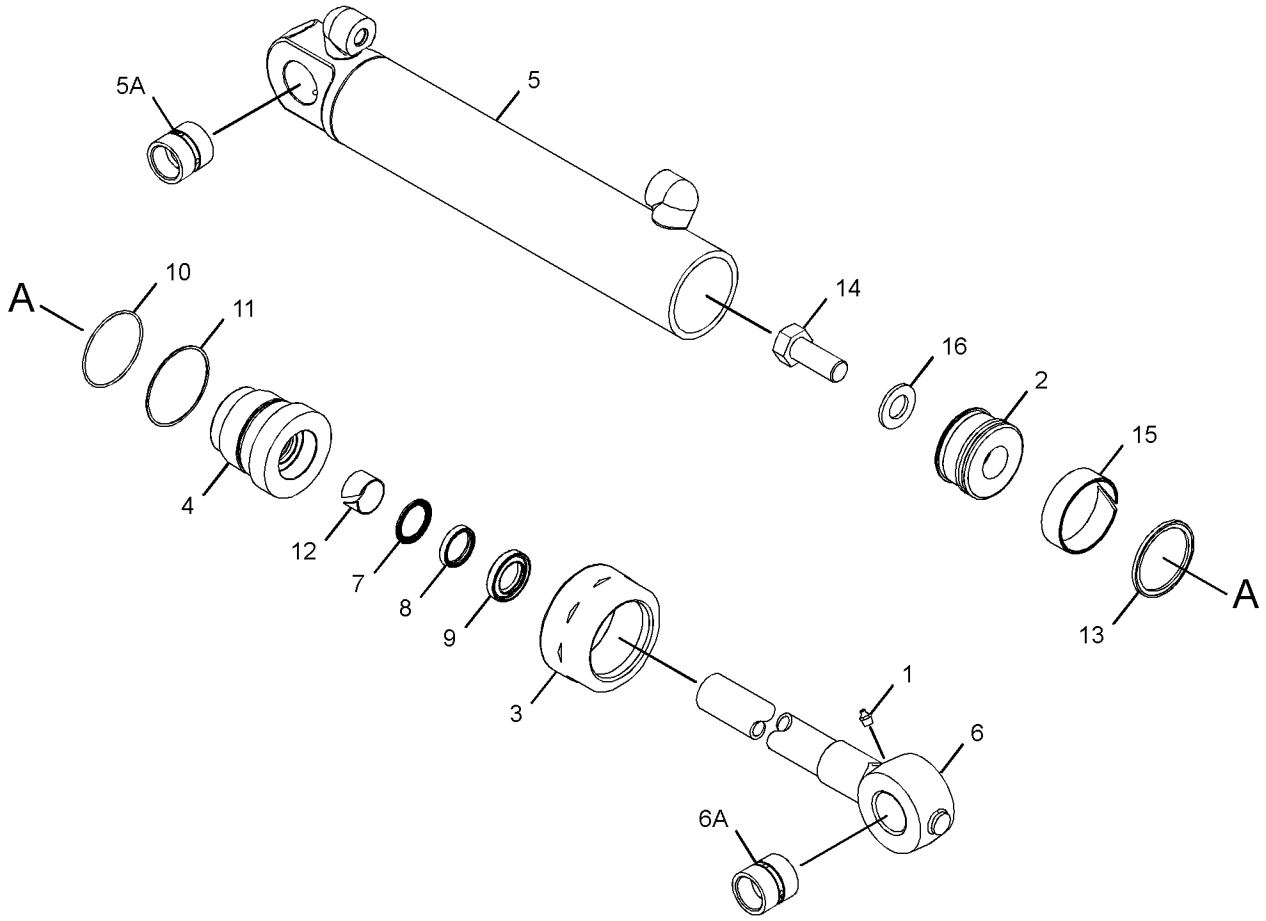

GRAPHIC #1 **<END>** g02044213

276-4667 CYLINDER GP-BULLDOZER LIFT–LH

S/N: MMM1-UP; RRR1-UP
88.9-MM(3.5-IN)BORE X 353.9-MM (13.93-IN)STROKE
PART OF 244-7385 HYDRAULIC AR

SMCS-5102 **i05426283**

NOTE	REF NO	GRAPHIC REF	PART NUMBER	QTY	PART NAME 1 2 3 4 5 6 (PRODUCT LEVEL)	SEE PAGE
	1	1	**3B-8489**	1	FITTING-GREASE	
	2	1	**7J-9886**	1	PISTON	
	3	1	**7J-9887**	1	CROWN	
	4	1	**221-0375**	1	HEAD	
	5	1	**263-4072**	1	ROD AS	
	5A	1	**263-3181**	1	BUSHING	
	6	1	**276-4668**	1	CYLINDER AS	
	6A	1	**263-3181**	1	BUSHING	
J	7	1	**167-2186**	1	SEAL AS-BUFFER	
J	8	1	**167-2294**	1	SEAL-U-CUP	
J	9	1	**226-8202**	1	SEAL-WIPER	
J	10	1	**2H-3931**	1	SEAL-O-RING	
J	11	1	**4J-9224**	1	RING-BACKUP	
J	12	1	**4T-6780**	1	RING-WEAR	
J	13	1	**4T-8054**	1	SEAL AS	
	14	1	**7J-5639**	1	BOLT-LOCKING (1-14X2.5-IN)	
J	15	1	**7J-9885**	1	RING-WEAR	
	16	1	**8J-7415**	1	WASHER-HARD (28X51X4.5-MM THK)	
					AVAILABLE REPAIR KIT(S):	
J			**393-3608**	1	KIT-HYD CYLINDER SEAL (LIFT)	
					(FOR USE WITH REHS1392 FOUND IN SISWEB)	

J - KIT MARKED J SERVICES PARTS MARKED J

276-4667 **CYLINDER GP-BULLDOZER LIFT (*contd.*)** **i05426283**

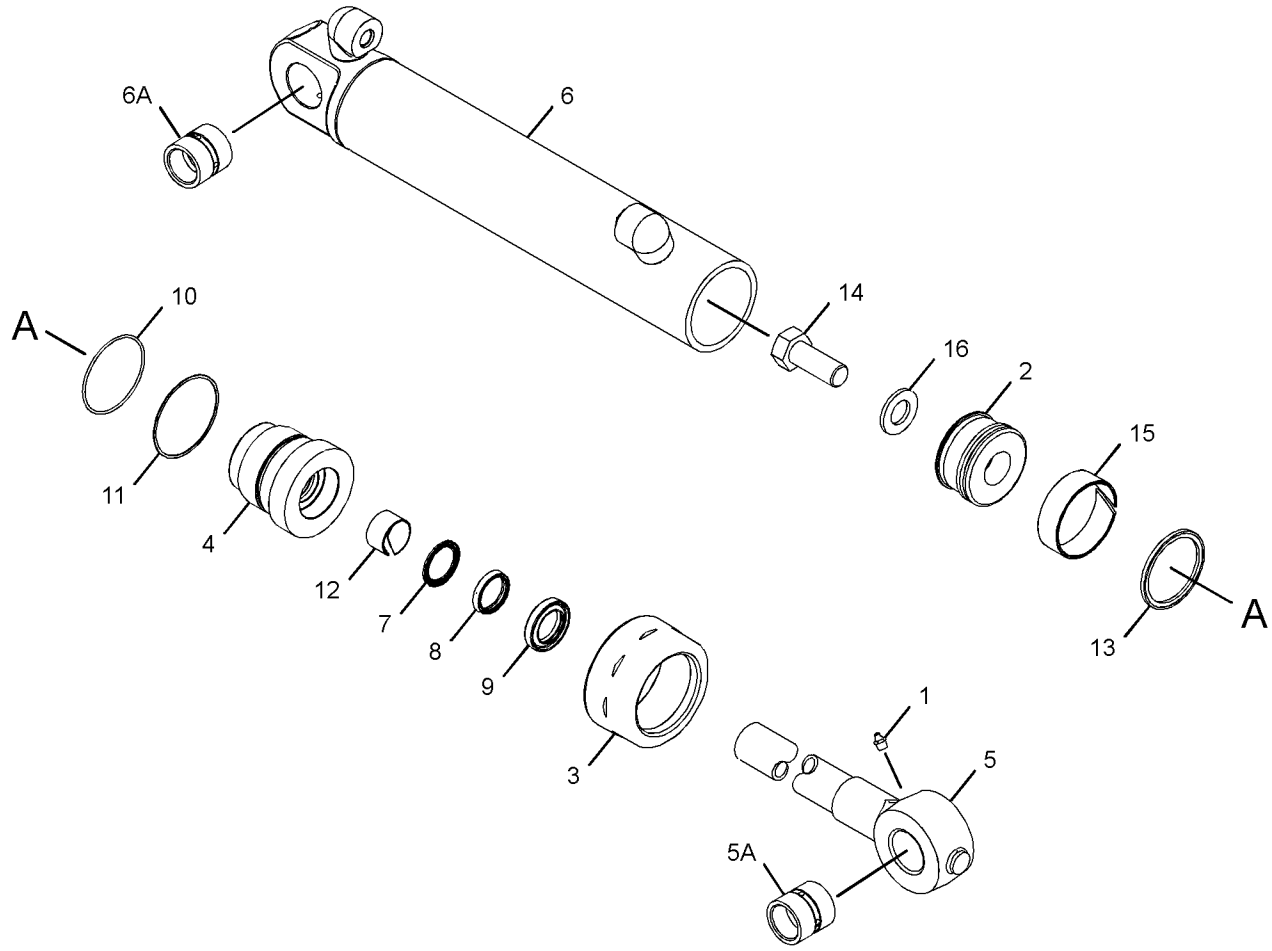

GRAPHIC #1 **<END>** g02044857

262-4415 CYLINDER GP-RIPPER–RH

S/N: MMM1-UP; RRR1-UP
76.2-MM (3-IN) BORE X 205.1-MM (8.08-IN) STROKE
PART OF 262-4407 RIPPER AR
AN ATTACHMENT

SMCS-5352, 5356 **i04895230**

NOTE	REF NO	GRAPHIC REF	PART NUMBER	QTY	PART NAME 1 2 3 4 5 6 (PRODUCT LEVEL)	SEE PAGE
	1	1	**3B-8489**	2	FITTING-GREASE	
	2	1	**8J-0553**	1	PISTON	
	3	1	**191-6159**	1	HEAD	
	4	1	**193-1546**	1	ROD AS	
	4A	1	**7K-6365**	1	BUSHING	
	5	1	**262-4416**	1	CYLINDER AS-HYDRAULIC (RH)	
	5A	1	**7K-6365**	1	BUSHING	
J	6	1	**167-2186**	1	SEAL AS-BUFFER	
J	7	1	**167-2294**	1	SEAL-U-CUP	
	8	1	**1H-7339**	1	SEAL-O-RING	
J	9	1	**226-8202**	1	SEAL-WIPER	
J	10	1	**4T-6780**	1	RING-WEAR	
J	11	1	**5H-8848**	1	SEAL-O-RING	
	12	1	**5P-8250**	1	WASHER (28X49X5-MM THK)	
J	13	1	**6J-1972**	1	SEAL AS	
J	14	1	**6J-5731**	1	RING-BACKUP	
J	15	1	**6J-5733**	1	RING-WEAR	
	16	1	**7J-5639**	1	BOLT-LOCKING (1-14X2.5-IN)	
					AVAILABLE REPAIR KIT(S):	
J			**380-9484**	1	KIT-HYD CYLINDER SEAL	
					(ALSO INCLUDES O-RING SEAL)	

J - KIT MARKED J SERVICES PARTS MARKED J

262-4415 **CYLINDER GP-RIPPER (*contd.*)** **i04895230**

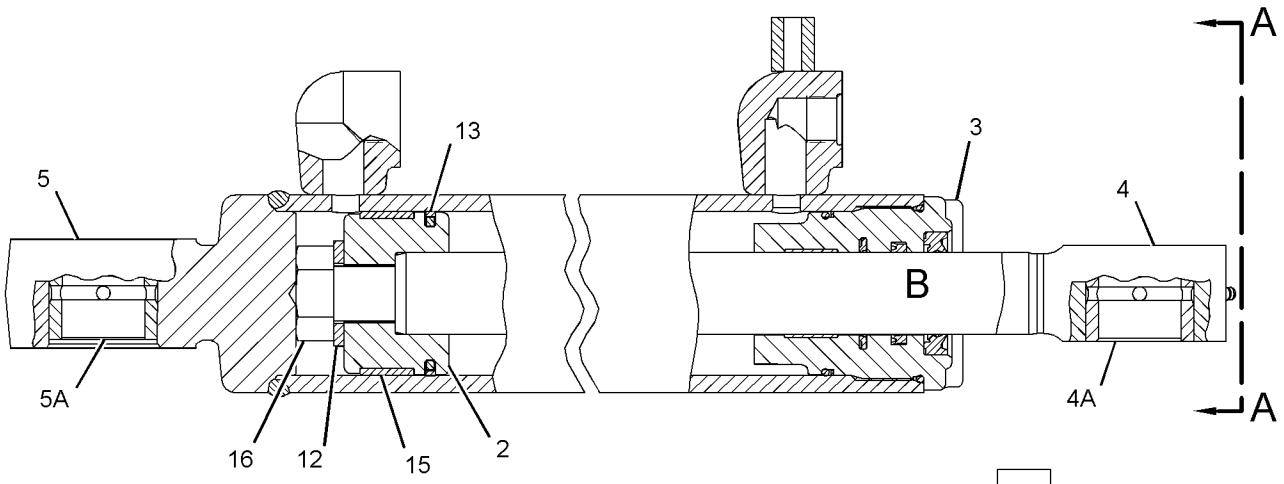

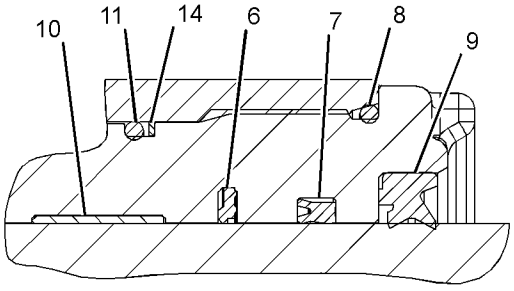

VIEW OF AREA B

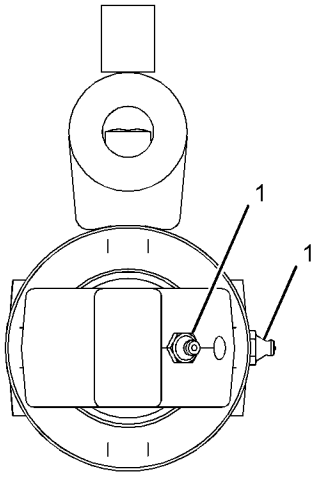

VIEW A-A

GRAPHIC #1 **<END>** g02615377

262-4418 CYLINDER GP-RIPPER–LH

S/N: MMM1-UP; RRR1-UP
76.2-MM (3-IN) BORE X 205.1-MM (8.08-IN) STROKE
PART OF 262-4407 RIPPER AR
AN ATTACHMENT

SMCS-5352, 5356 **i04895229**

NOTE	REF NO	GRAPHIC REF	PART NUMBER	QTY	PART NAME 1 2 3 4 5 6 (PRODUCT LEVEL)	SEE PAGE
	1	1	**3B-8489**	2	FITTING-GREASE	
	2	1	**8J-0553**	1	PISTON	
	3	1	**191-6159**	1	HEAD	
	4	1	**193-1546**	1	ROD AS	
	4A	1	**7K-6365**	1	BUSHING	
	5	1	**262-9253**	1	CYLINDER AS-HYDRAULIC (LH)	
	5A	1	**7K-6365**	1	BUSHING	
J	6	1	**167-2186**	1	SEAL AS-BUFFER	
J	7	1	**167-2294**	1	SEAL-U-CUP	
	8	1	**1H-7339**	1	SEAL-O-RING	
J	9	1	**226-8202**	1	SEAL-WIPER	
J	10	1	**4T-6780**	1	RING-WEAR	
J	11	1	**5H-8848**	1	SEAL-O-RING	
	12	1	**5P-8250**	1	WASHER (28X49X5-MM THK)	
J	13	1	**6J-1972**	1	SEAL AS	
J	14	1	**6J-5731**	1	RING-BACKUP	
J	15	1	**6J-5733**	1	RING-WEAR	
	16	1	**7J-5639**	1	BOLT-LOCKING (1-14X2.5-IN)	
					AVAILABLE REPAIR KIT(S):	
J			**380-9484**	1	KIT-HYD CYLINDER SEAL	
					(ALSO INCLUDES O-RING SEAL)	

J - KIT MARKED J SERVICES PARTS MARKED J

262-4418 **CYLINDER GP-RIPPER (*contd.*)** **i04895229**

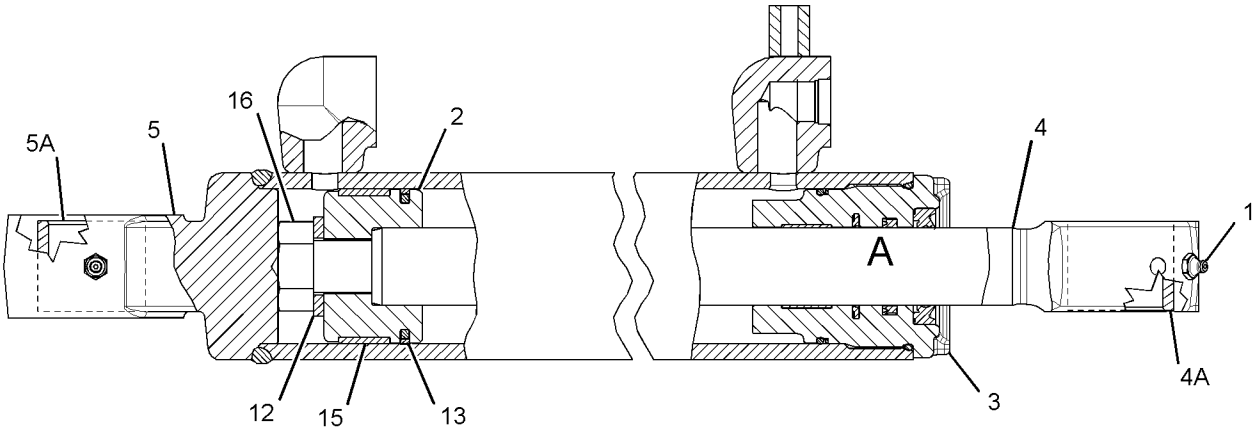

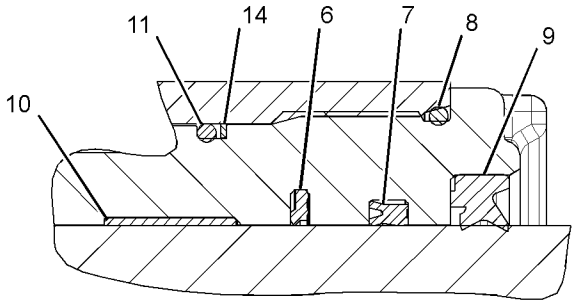

VIEW OF AREA A

GRAPHIC #1 **<END>** g03050217

263-5008 CYLINDER GP-TILT

S/N: MMM1-UP; RRR1-UP
88.9-MM(3.5-IN)BORE X 144.6-MM(5.69-IN)STROKE
PART OF 244-7385 HYDRAULIC AR

SMCS-5104 **i04895228**

NOTE	REF NO	GRAPHIC REF	PART NUMBER	QTY	PART NAME 1 2 3 4 5 6 (PRODUCT LEVEL)	SEE PAGE
	1	1	**3B-8489**	2	FITTING-GREASE	
	2	1	**7J-9886**	1	PISTON	
	3	1	**7J-9887**	1	CROWN	
	4	1	**221-0375**	1	HEAD	
	5	1	**263-5009**	1	CYLINDER AS	
	5A	1	**9J-9812**	1	BEARING	
		1	**2H-5549**	1	RING-RETAINING	
	6	1	**263-5013**	1	ROD AS	
	6A	1	**4D-0298**	1	BEARING	
		1	**1L-4775**	2	RING-RETAINING	
J	7	1	**167-2186**	1	SEAL AS-BUFFER	
J	8	1	**167-2294**	1	SEAL-U-CUP	
J	9	1	**226-8202**	1	SEAL-WIPER	
J	10	1	**2H-3931**	1	SEAL-O-RING	
J	11	1	**4J-9224**	1	RING-BACKUP	
J	12	1	**4T-6780**	1	RING-WEAR	
J	13	1	**4T-8054**	1	SEAL AS	
	14	1	**7J-5639**	1	BOLT-LOCKING (1-14X2.5-IN)	
J	15	1	**7J-9885**	1	RING-WEAR	
	16	1	**8J-7415**	1	WASHER-HARD (28X51X4.5-MM THK)	
					AVAILABLE REPAIR KIT(S):	
J			**393-3608**	1	KIT-HYD CYLINDER SEAL	

J - KIT MARKED J SERVICES PARTS MARKED J

263-5008 **CYLINDER GP-TILT (*contd.*)** **i04895228**

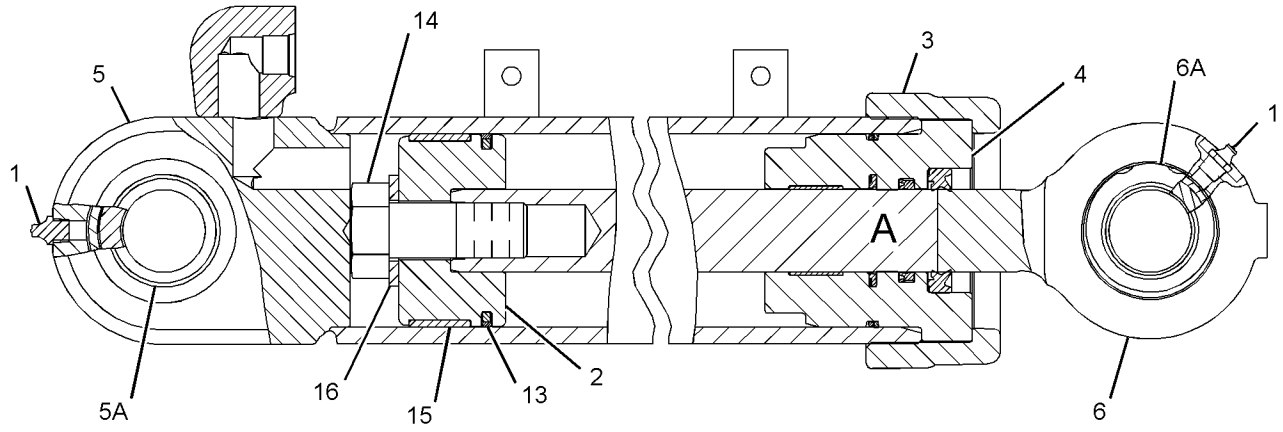

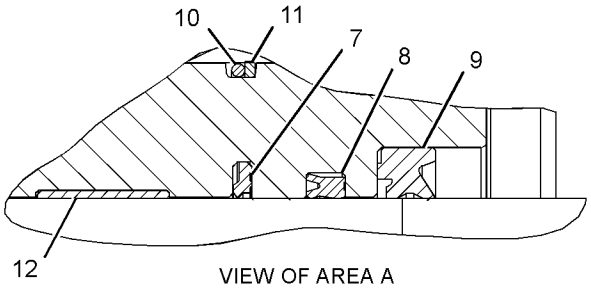

VIEW OF AREA A

GRAPHIC #1 **<END>** g03050236

325-6517 DRIVE AR-PUMP—HYDRAULIC

S/N: MMM1-UP; RRR1-UP
WINCH
FOR USE WITH 244-7517—PAGE: 933
AN ATTACHMENT

SMCS-5164 **i03714074**

NOTE	PART NUMBER	QTY	PART NAME 1 2 3 4 5 6 (PRODUCT LEVEL)	SEE PAGE
Y	*318-6108*	1	CONTROL GP-WINCH	908
Y	*244-7412*	1	LINES GP-HYDROSTATIC	330
Y	*325-7269*	1	LINES GP-WINCH	609
Y	*281-3997*	1	MIRROR GP-REAR VIEW (LH)	795
Y	*217-2004*	1	MOUNTING GP-PUMP	928
Y	**254-1377**	1	PUMP GP-PISTON (HYDROSTATIC DRIVE)	369
Y	**254-1379**	1	PUMP GP-PISTON (WINCH)	371
Y	*274-7516*	1	SUPPORT GP-PUMP DRIVE	616
	311-0300	1	BATTERY GP	
	9X-3404	2	BATTERY (12-VOLT, MAINTENANCE FREE, WET)	

Y - SEPARATE ILLUSTRATION

<END>

244-7385 HYDRAULIC AR

S/N: MMM1-UP; RRR1-UP
PART OF 244-7372, 244-7373 COMMON AR

SMCS-5050 **i03607682**

NOTE	PART NUMBER	QTY	PART NAME 1 2 3 4 5 6 (PRODUCT LEVEL)	SEE PAGE
Y	**263-3745**	2	CYLINDER GP-ANGLING	532
Y	**276-4667**	1	CYLINDER GP-BULLDOZER LIFT (LH)	536
Y	**263-4068**	1	CYLINDER GP-BULLDOZER LIFT (RH)	534
Y	**263-5008**	1	CYLINDER GP-TILT	542
Y	*244-7452*	1	PUMP GP-GEAR (IMPLEMENT)	615
Y	*244-7426*	1	TANK GP-HYDRAULIC	619

Y - SEPARATE ILLUSTRATION

<END>

264-4550 HYDRAULIC AR—3-BANK

S/N: MMM1-UP; RRR1-UP
CANNOT BE USED WITH 262-4407—PAGE: 935
AN ATTACHMENT

SMCS-5050 **i03776812**

NOTE	PART NUMBER	QTY	PART NAME 1 2 3 4 5 6 (PRODUCT LEVEL)	SEE PAGE
Y	*269-7665*	1	COVER GP-CONSOLE (STANDARD)	742
Y	*263-9700*	1	LINES GP-ANGLE & TILT	547
Y	*263-9710*	1	LINES GP-HYDRAULIC	563
Y	*283-3513*	1	LINES GP-PUMP	581
Y	*254-1386*	1	VALVE & MTG GP-IMPLEMENT CONT (STANDARD)	628

Y - SEPARATE ILLUSTRATION

<END>

264-4551 HYDRAULIC AR–4-BANK

S/N: MMM1-UP; RRR1-UP
CANNOT BE USED WITH 271-9180–PAGE: 914, 244-7517–PAGE: 933, 256-3738–PAGE: 942 AN ATTACHMENT

SMCS-5050 **i03776813**

NOTE	PART NUMBER	QTY	PART NAME 1 2 3 4 5 6 (PRODUCT LEVEL)	SEE PAGE
Y	*249-9051*	1	CONTROL GP-RIPPER	716
Y	*263-9700*	1	LINES GP-ANGLE & TILT	547
Y	*263-9710*	1	LINES GP-HYDRAULIC	563
Y	*276-4680*	1	LINES GP-PUMP	575
Y	*254-1460*	1	LINES GP-REAR ATTACHMENT	591
Y	*281-3997*	1	MIRROR GP-REAR VIEW (LH)	795
Y	*254-1457*	1	VALVE & MTG GP-IMPLEMENT CONT	629

Y - SEPARATE ILLUSTRATION

<END>

264-4552 HYDRAULIC AR–4-BANK

S/N: MMM1-UP; RRR1-UP
FOR USE WITH 271-9180–PAGE: 914
CANNOT BE USED WITH 254-1378–PAGE: 370, 244-7450–PAGE: 322, 244-7433–PAGE: 428, 244-7434–PAGE: 462, 262-4407–PAGE: 935 AN ATTACHMENT

SMCS-5050 **i02683486**

NOTE	PART NUMBER	QTY	PART NAME 1 2 3 4 5 6 (PRODUCT LEVEL)	SEE PAGE
Y	*249-9052*	1	CONTROL GP-WINCH	906
Y	*263-9700*	1	LINES GP-ANGLE & TILT	547
Y	*263-9710*	1	LINES GP-HYDRAULIC	563
Y	*276-4680*	1	LINES GP-PUMP	575
Y	*254-1460*	1	LINES GP-REAR ATTACHMENT	591
Y	*254-1457*	1	VALVE & MTG GP-IMPLEMENT CONT	629

Y - SEPARATE ILLUSTRATION

<END>

325-6523 HYDRAULIC AR–4-BANK

S/N: MMM1-UP; RRR1-UP
CANNOT BE USED WITH 325-6517–PAGE: 544 AN ATTACHMENT

SMCS-5050 **i03776814**

NOTE	PART NUMBER	QTY	PART NAME 1 2 3 4 5 6 (PRODUCT LEVEL)	SEE PAGE
Y	*318-6109*	1	CONTROL GP-HYDRAULIC	704
Y	*263-9700*	1	LINES GP-ANGLE & TILT	547
Y	*263-9710*	1	LINES GP-HYDRAULIC	563
Y	*276-4680*	1	LINES GP-PUMP	575
Y	*325-7273*	1	LINES GP-REAR ATTACHMENT	595
Y	*281-3997*	1	MIRROR GP-REAR VIEW (LH)	795
Y	*325-7271*	1	VALVE & MTG GP-CONTROL	626

Y - SEPARATE ILLUSTRATION

<END>

325-6526 HYDRAULIC AR–4-BANK

S/N: MMM1-UP; RRR1-UP
FOR USE WITH 325-6517–PAGE: 544
AN ATTACHMENT

SMCS-5050 **i03726301**

NOTE	PART NUMBER	QTY	PART NAME 1 2 3 4 5 6 (PRODUCT LEVEL)	SEE PAGE
Y	*318-6110*	1	CONTROL GP-WINCH	911
Y	*263-9700*	1	LINES GP-ANGLE & TILT	547
Y	*263-9710*	1	LINES GP-HYDRAULIC	563
Y	*276-4680*	1	LINES GP-PUMP	575
Y	*325-7273*	1	LINES GP-REAR ATTACHMENT	595
Y	*325-7271*	1	VALVE & MTG GP-CONTROL	626

Y - SEPARATE ILLUSTRATION

<END>

325-6529 HYDRAULIC AR–5-BANK

S/N: MMM1-UP; RRR1-UP
CANNOT BE USED WITH 325-6517–PAGE: 544
AN ATTACHMENT

SMCS-5050 **i03776815**

NOTE	PART NUMBER	QTY	PART NAME 1 2 3 4 5 6 (PRODUCT LEVEL)	SEE PAGE
Y	*318-6111*	1	CONTROL GP-HYDRAULIC	706
Y	*263-9700*	1	LINES GP-ANGLE & TILT	547
Y	*263-9710*	1	LINES GP-HYDRAULIC	563
Y	*325-7275*	1	LINES GP-PUMP (IMPLEMENT PUMP)	587
Y	*325-7273*	1	LINES GP-REAR ATTACHMENT	595
Y	*281-3997*	1	MIRROR GP-REAR VIEW (LH)	795
Y	*325-7272*	1	VALVE & MTG GP-CONTROL	627

Y - SEPARATE ILLUSTRATION

<END>

325-6531 HYDRAULIC AR–5-BANK

S/N: MMM1-UP; RRR1-UP
FOR USE WITH 325-6517–PAGE: 544
AN ATTACHMENT

SMCS-5050 **i03726303**

NOTE	PART NUMBER	QTY	PART NAME 1 2 3 4 5 6 (PRODUCT LEVEL)	SEE PAGE
Y	*318-6112*	1	CONTROL GP-WINCH (4TH & 5TH VALVE, FLOAT)	912
Y	*263-9700*	1	LINES GP-ANGLE & TILT	547
Y	*263-9710*	1	LINES GP-HYDRAULIC	563
Y	*325-7275*	1	LINES GP-PUMP (IMPLEMENT PUMP)	587
Y	*325-7273*	1	LINES GP-REAR ATTACHMENT	595
Y	*325-7272*	1	VALVE & MTG GP-CONTROL	627

Y - SEPARATE ILLUSTRATION

<END>

263-9700 LINES GP-ANGLE & TILT

S/N: MMM1-592; RRR1-421

PART OF 264-4550, 264-4551, 264-4552, 325-6523, 325-6526, 325-6529, 325-6531 HYDRAULIC AR

AN ATTACHMENT

SMCS-5057, 5101, 5104 **i05091269**

NOTE	REF NO	GRAPHIC REF	PART NUMBER	QTY	PART NAME 1 2 3 4 5 6 (PRODUCT LEVEL)	SEE PAGE
I	1	1	**153-7299**	1	HOSE AS	
	2	2	**184-1137**	2	PLATE	
	3	2	**184-1138**	2	CLAMP	
I	4	2	**194-3750**	1	HOSE AS	
I	5	1	**229-4995**	1	HOSE AS	
I	6	2	**233-7970**	1	HOSE AS	
	7	3	*260-9171*	6	CONNECTOR AS	
					(EACH INCLUDES)	
		3	**3J-1907**	1	SEAL-O-RING	
		3	**6V-8397**	1	SEAL-O-RING	
		3	**8T-9041**	1	CONNECTOR	
I	8	2	**263-4154**	2	HOSE AS	
	9	2	**263-4914**	1	GUARD	
	10	1	**263-4915**	2	PLATE AS	
I	11	1	**276-2817**	1	HOSE AS	
I	12	1	**276-4672**	2	HOSE AS	
	13	2	**289-0100**	4	TUBE AS	
	14	2	**289-0102**	2	TUBE AS	
I	15	2	**292-2208**	1	HOSE AS	
I	16	2	**292-2209**	1	HOSE AS	
I	17	1	**292-2332**	2	HOSE AS	
I	18	1	**292-2333**	2	HOSE AS	
	19	1	**293-3820**	1	COVER AS (RH)	
	20	1	**293-3821**	1	COVER AS (LH)	
	21	3	**300-2121**	2	BLOCK	
I	22	1	**301-9295**	2	HOSE AS	
I	23	1	**301-9300**	4	HOSE AS	
	24	3	**334-1573**	1	TUBE AS	
	25	1	**334-1574**	1	TUBE AS	
	26	1	**303-1890**	1	TUBE AS	
	27	3	**303-1892**	2	BRACKET	
	28	3	**303-1893**	2	PLATE AS	
	29	1	**303-6576**	1	TUBE AS	
	30	1	**303-6577**	1	TUBE AS	
	31	1	**303-6578**	1	TUBE AS	
	32	1	**303-6579**	1	TUBE AS	
	33	2	**033-8248**	2	CLIP	
	34	3	**100-4336**	4	CLIP	
	35	1,2	*148-8318*	4	CONNECTOR AS	
					(EACH INCLUDES)	
		1,2	**3K-0360**	1	SEAL-O-RING	
		1,2	**6V-8397**	1	SEAL-O-RING	
		1,2	**6V-8634**	1	CONNECTOR	
	36	3	*148-8336*	2	CONNECTOR AS	
					(EACH INCLUDES)	
		3	**3J-1907**	1	SEAL-O-RING	
		3	**6V-8397**	1	SEAL-O-RING	
		3	**6V-8636**	1	CONNECTOR	
	37	3	*148-8365*	2	ELBOW AS	
					(EACH INCLUDES)	
		3	**3J-1907**	1	SEAL-O-RING	
		3	**6V-8398**	1	SEAL-O-RING	
		3	**8T-6876**	1	ELBOW	
	38	1	*148-8374*	2	ELBOW AS	
					(EACH INCLUDES)	
		1	**3K-0360**	1	SEAL-O-RING	

263-9700 **LINES GP-ANGLE & TILT (*contd.*)** **i05091269**

NOTE	REF NO	GRAPHIC REF	PART NUMBER	QTY	PART NAME 1 2 3 4 5 6 (PRODUCT LEVEL)	SEE PAGE
		1	**6V-8397**	1	SEAL-O-RING	
		1	**6V-8723**	1	ELBOW	
	39	3	*150-4044*	2	CONNECTOR AS	
					(EACH INCLUDES)	
		3	**3J-1907**	1	SEAL-O-RING	
		3	**6V-8397**	1	SEAL-O-RING	
		3	**8T-1779**	1	CONNECTOR	
	40	1	**1S-0994**	6	CLIP	
	41	3	**2H-0435**	2	CLAMP	
	42	1,2,3	**3B-8489**	4	FITTING-GREASE	
	43	1,3	**3B-8822**	2	ELBOW	
	44	2	**5P-7462**	3	CLIP (SLOT)	
	45	2	**5P-7463**	3	CLIP (TAB)	
	46	2	**6V-0683**	3	GROMMET (19-MM ID)	
	47	1,2,3	**6V-8397**	20	SEAL-O-RING	
	48	1,3	**6V-8398**	3	SEAL-O-RING	
	49	3	**6V-8936**	2	REDUCER	
	50	1,2	**7J-9108**	6	SEAL-O-RING	
	51	1,3	**7X-7729**	7	WASHER (11X25X3-MM THK)	
	52	2	**8L-5008**	4	ELBOW-PIPE	
	53	3	**8T-1885**	2	CLIP (SLOT)	
	54	3	**8T-1886**	2	CLIP (TAB)	
	55	1,2,3	**8T-4121**	51	WASHER-HARD (11X21X2.5-MM THK)	
M	56	2,3	**8T-4136**	17	BOLT (M10X1.5X25-MM)	
M	57	1,2,3	**8T-4137**	25	BOLT (M10X1.5X20-MM)	
M	58	2	**8T-4186**	8	BOLT (M10X1.5X40-MM)	
M	59	2	**8T-4191**	2	BOLT (M10X1.5X16-MM)	
M	60	1,2,3	**8T-4195**	6	BOLT (M10X1.5X30-MM)	
	61	1,2,3	**9M-9162**	8	CLAMP	
I	62	1	**282-7665**	1	HOSE AS	

I - REFER TO HYDRAULIC INFORMATION SYSTEM
M - METRIC PART

263-9700 **LINES GP-ANGLE & TILT (*contd.*)** **i05091269**

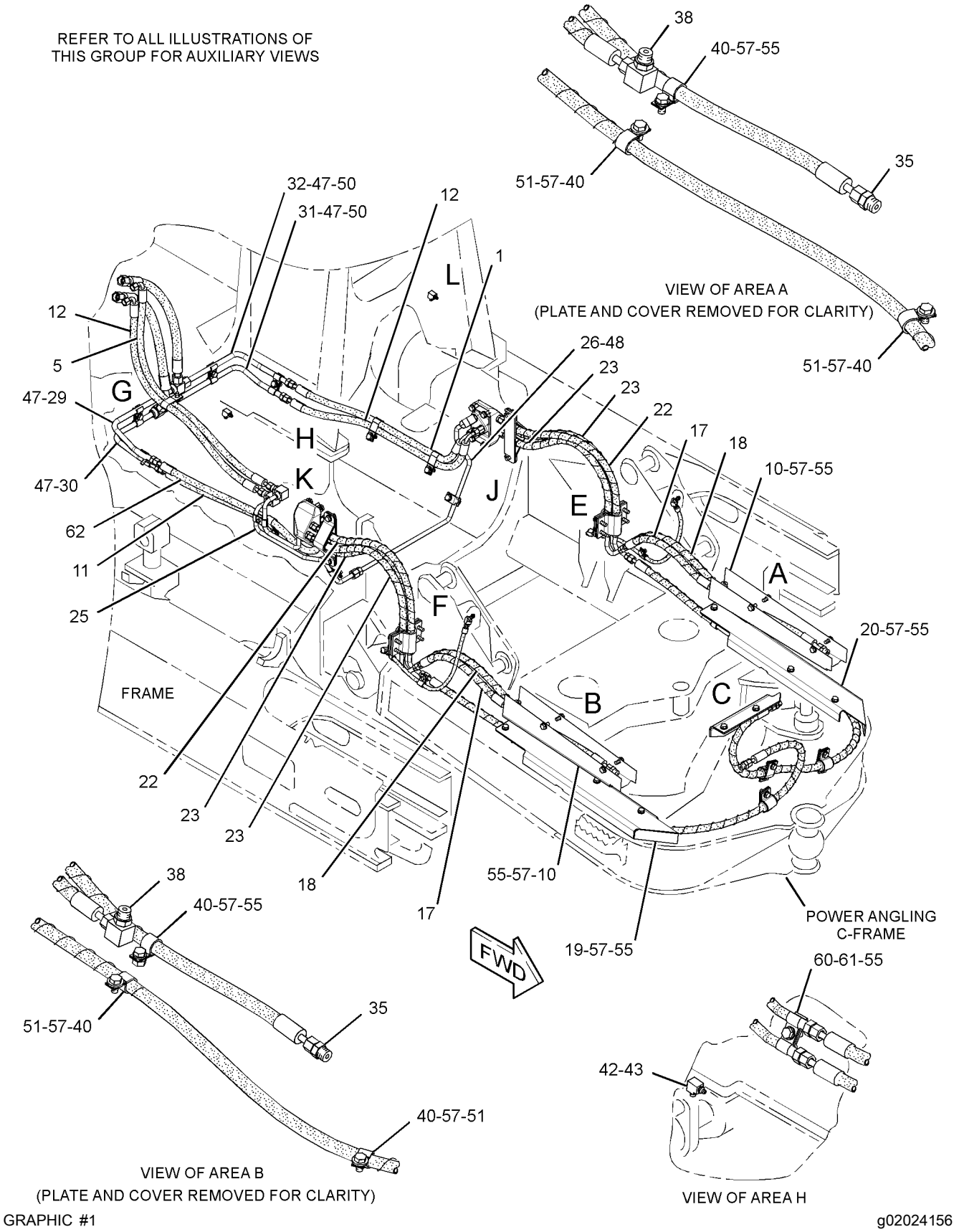

GRAPHIC #1

g02024156

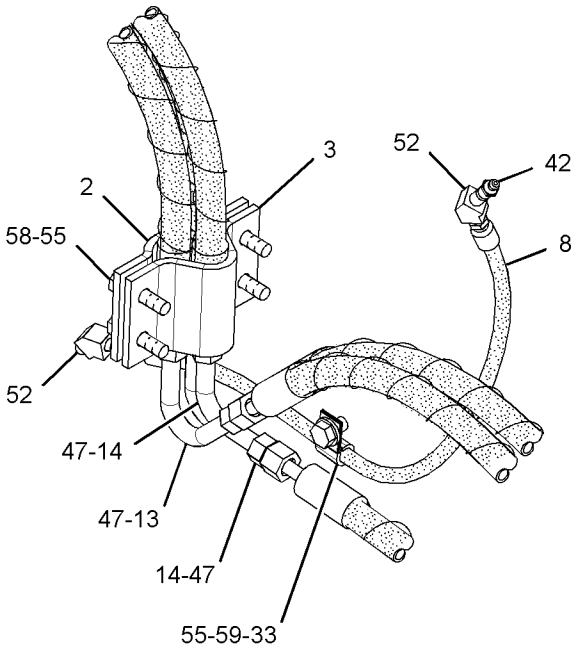

VIEW OF AREA E

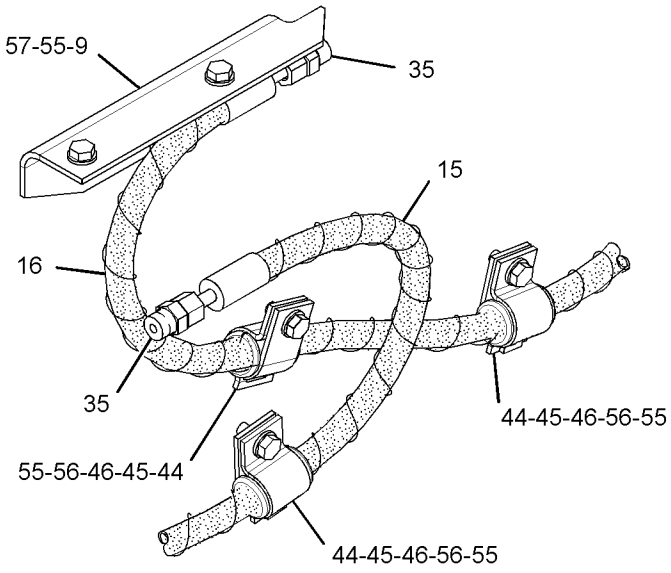

VIEW OF AREA C

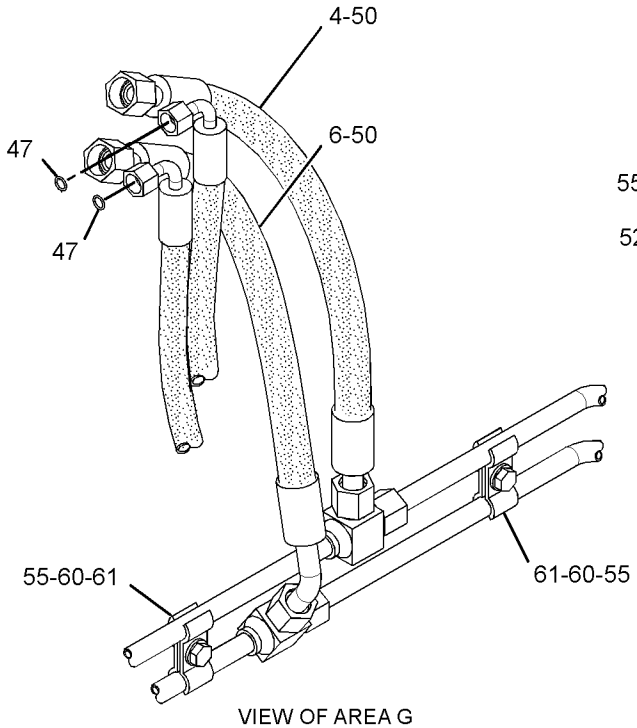

VIEW OF AREA G

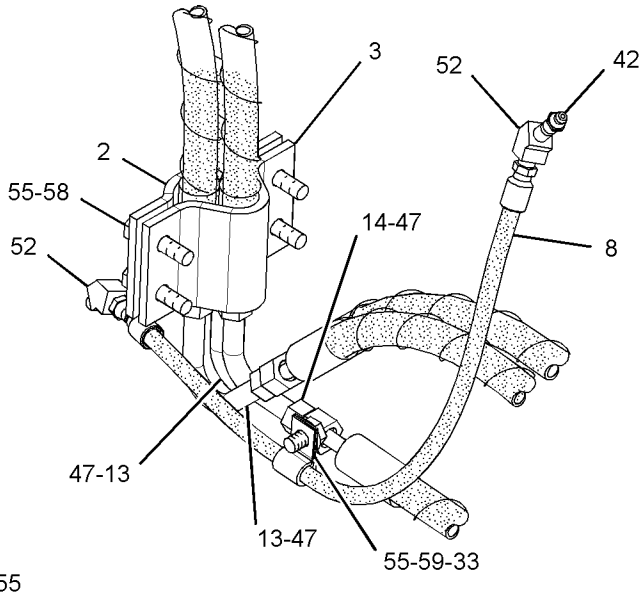

VIEW OF AREA F

GRAPHIC #2 g03256721

263-9700 **LINES GP-ANGLE & TILT (*contd.*)** **i05091269**

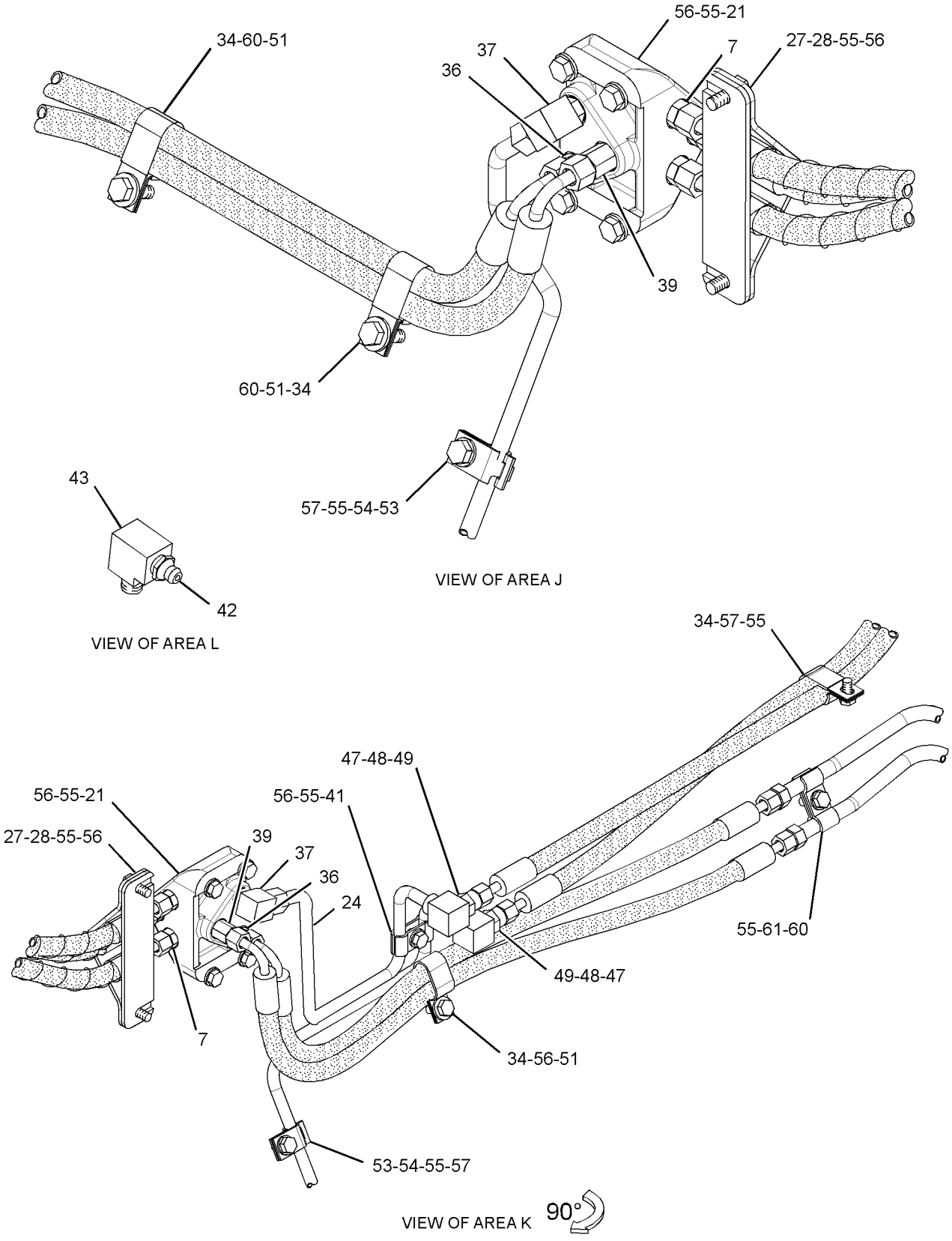

GRAPHIC #3 **<END>** g02024157

263-9700 LINES GP-ANGLE & TILT

S/N: MMM593-UP; RRR422-UP
PART OF 264-4550, 264-4551, 264-4552, 325-6523, 325-6526, 325-6529, 325-6531 HYDRAULIC AR
AN ATTACHMENT

SMCS-5057, 5101, 5104 **i04251451**

NOTE	REF NO	GRAPHIC REF	PART NUMBER	QTY	PART NAME 1 2 3 4 5 6 (PRODUCT LEVEL)	SEE PAGE
I	1	1	**153-7299**	1	HOSE AS	
	2	2	**184-1137**	2	PLATE	
	3	2	**184-1138**	2	CLAMP	
I	4	1	**229-4995**	1	HOSE AS	
I	5	1	**233-7970**	1	HOSE AS	
	6	1	*260-9171*	6	CONNECTOR AS	
					(EACH INCLUDES)	
		1	**3J-1907**	1	SEAL-O-RING	
		1	**6V-8397**	1	SEAL-O-RING	
		1	**8T-9041**	1	CONNECTOR	
I	7	2	**263-4154**	2	HOSE AS	
	8	2	**263-4914**	1	GUARD	
	9	2	**263-4915**	2	PLATE AS	
I	10	1	**276-2817**	1	HOSE AS	
I	11	1	**276-4672**	2	HOSE AS	
I	12	1	**282-7665**	1	HOSE AS	
	13	2	**289-0100**	4	TUBE AS	
	14	2	**289-0102**	2	TUBE AS	
I	15	2	**292-2208**	1	HOSE AS	
I	16	2	**292-2209**	1	HOSE AS	
I	17	2	**292-2332**	2	HOSE AS	
I	18	2	**292-2333**	2	HOSE AS	
	19	2	**293-3820**	1	COVER AS (RH)	
	20	2	**293-3821**	1	COVER AS (LH)	
	21	1	**300-2121**	2	BLOCK	
I	22	2	**301-9295**	2	HOSE AS	
I	23	2	**301-9300**	4	HOSE AS	
	24	1	**303-1890**	1	TUBE AS	
	25	2	**303-1892**	2	BRACKET	
	26	2	**303-1893**	2	PLATE AS	
	27	1	**334-1573**	1	TUBE AS	
	28	1	**334-1574**	1	TUBE AS	
C	29	1	**360-9636**	1	TUBE AS	
C	30	1	**360-9637**	1	TUBE AS	
C	31	1	**360-9638**	1	TUBE AS	
C	32	1	**360-9639**	1	TUBE AS	
CI	33	1	**360-9641**	1	HOSE AS	
	34	2	**033-8248**	2	CLIP	
	35	1	**100-4336**	4	CLIP	
	36	2	*148-8318*	4	CONNECTOR AS	
					(EACH INCLUDES)	
		2	**3K-0360**	1	SEAL-O-RING	
		2	**6V-8397**	1	SEAL-O-RING	
		2	**6V-8634**	1	CONNECTOR	
	37	1	*148-8336*	2	CONNECTOR AS	
					(EACH INCLUDES)	
		1	**3J-1907**	1	SEAL-O-RING	
		1	**6V-8397**	1	SEAL-O-RING	
		1	**6V-8636**	1	CONNECTOR	
	38	1	*148-8365*	2	ELBOW AS	
					(EACH INCLUDES)	
		1	**3J-1907**	1	SEAL-O-RING	
		1	**6V-8398**	1	SEAL-O-RING	
		1	**8T-6876**	1	ELBOW	
	39	2	*148-8374*	2	ELBOW AS	
					(EACH INCLUDES)	
		2	**3K-0360**	1	SEAL-O-RING	

263-9700 **LINES GP-ANGLE & TILT (*contd.*)** **i04251451**

NOTE	REF NO	GRAPHIC REF	PART NUMBER	QTY	PART NAME 1 2 3 4 5 6 (PRODUCT LEVEL)	SEE PAGE
		2	**6V-8397**	1	SEAL-O-RING	
		2	**6V-8723**	1	ELBOW	
	40	1	*150-4044*	2	CONNECTOR AS	
					(EACH INCLUDES)	
		1	**3J-1907**	1	SEAL-O-RING	
		1	**6V-8397**	1	SEAL-O-RING	
		1	**8T-1779**	1	CONNECTOR	
	41	2	**1S-0994**	6	CLIP	
	42	1	**2H-0435**	2	CLAMP	
	43	1,2	**3B-8489**	4	FITTING-GREASE	
	44	1	**3B-8822**	2	ELBOW	
	45	2	**5P-7462**	3	CLIP (SLOT)	
	46	2	**5P-7463**	3	CLIP (TAB)	
	47	2	**6V-0683**	3	GROMMET (19-MM ID)	
	48	1,2	**6V-8397**	20	SEAL-O-RING	
	49	1	**6V-8398**	3	SEAL-O-RING	
	50	1	**6V-8936**	2	REDUCER	
	51	1	**7J-9108**	6	SEAL-O-RING	
	52	1,2	**7X-7729**	7	WASHER (11X25X3-MM THK)	
	53	2	**8L-5008**	4	ELBOW-PIPE	
	54	1	**8T-1885**	2	CLIP (SLOT)	
	55	1	**8T-1886**	2	CLIP (TAB)	
C	56	1,2	**8T-4121**	50	WASHER-HARD (11X21X2.5-MM THK)	
M	57	1,2	**8T-4136**	17	BOLT (M10X1.5X25-MM)	
M	58	1,2	**8T-4137**	25	BOLT (M10X1.5X20-MM)	
M	59	2	**8T-4186**	8	BOLT (M10X1.5X40-MM)	
M	60	2	**8T-4191**	2	BOLT (M10X1.5X16-MM)	
CM	61	1	**8T-4195**	5	BOLT (M10X1.5X30-MM)	
C	62	1	**9M-9162**	6	CLAMP	

C - CHANGE FROM PREVIOUS TYPE
I - REFER TO HYDRAULIC INFORMATION SYSTEM
M - METRIC PART

263-9700 **LINES GP-ANGLE & TILT (*contd.*)** **i04251451**

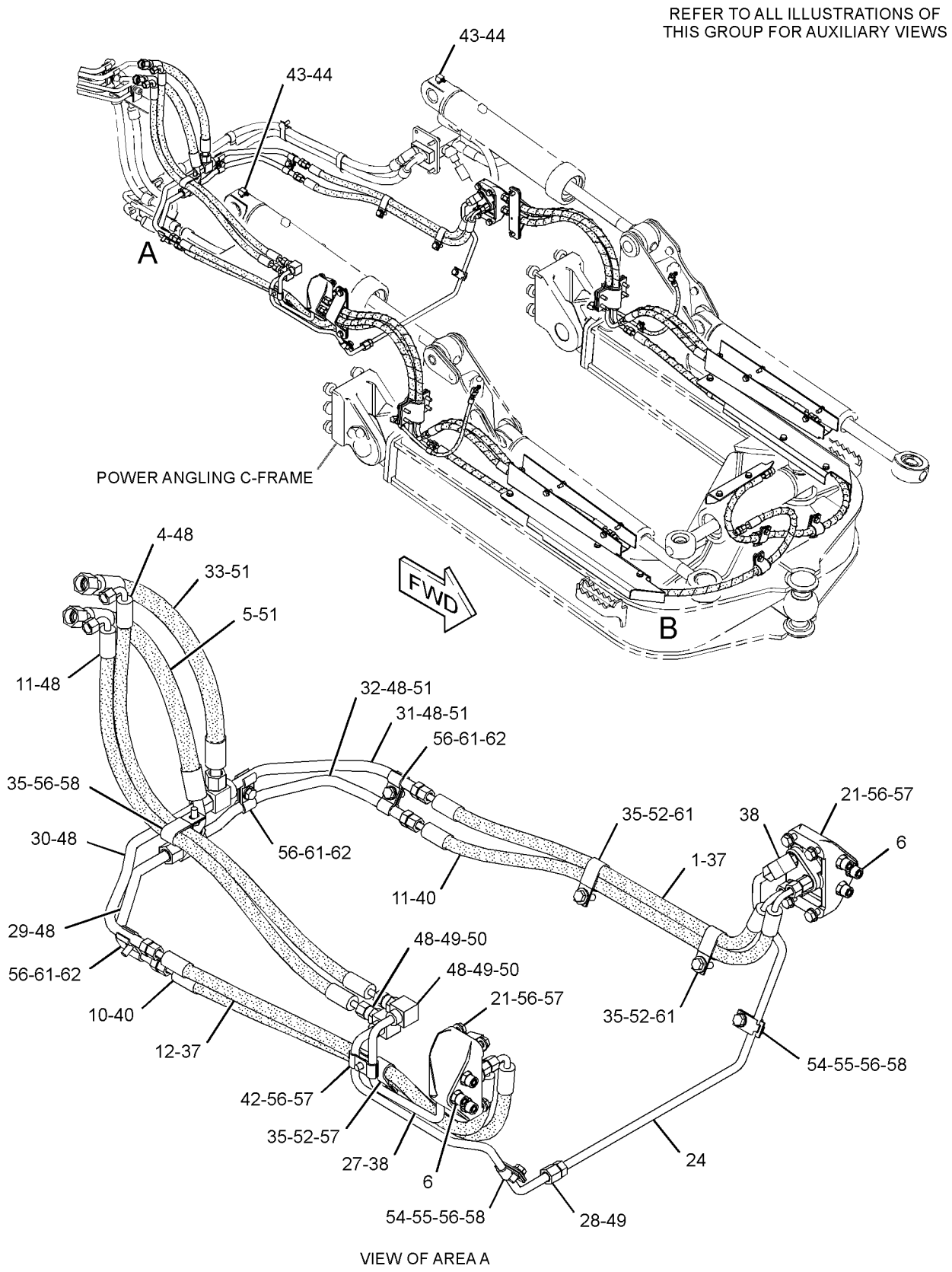

VIEW OF AREA A

GRAPHIC #1 g02498722

263-9700 **LINES GP-ANGLE & TILT (*contd.*)** **i04251451**

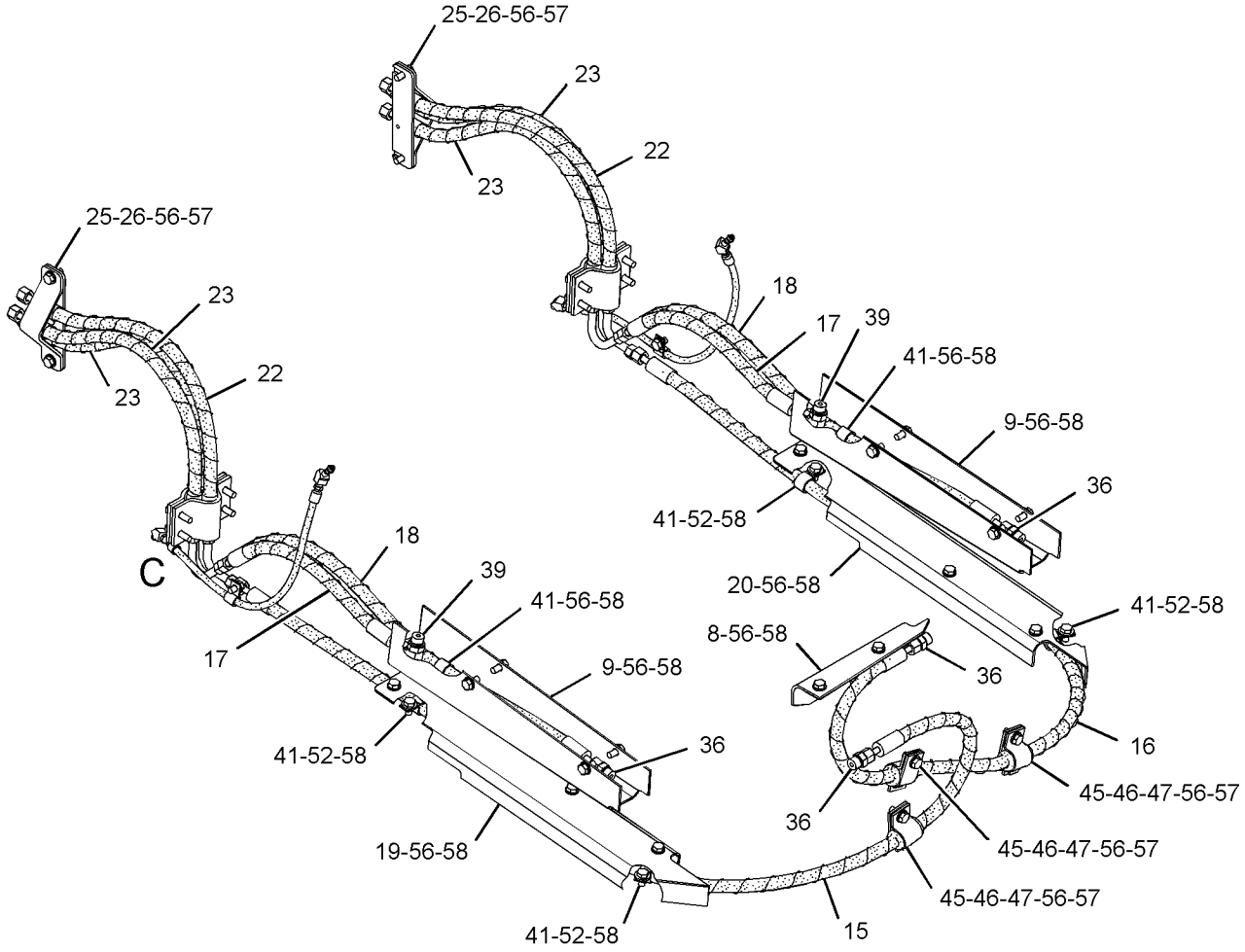

VIEW OF AREA B

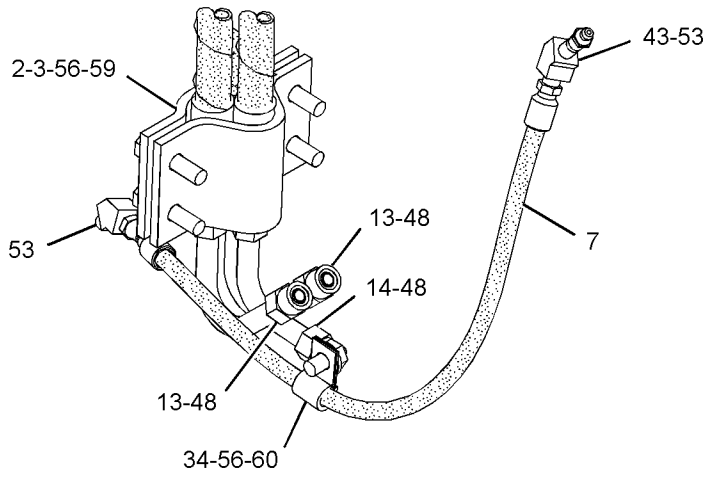

VIEW OF AREA C
(PARTS REMOVED FOR CLARITY)

GRAPHIC #2 **<END>** g02498724

320-1704 LINES GP-ANGLE & TILT

S/N: MMM1-UP; RRR1-UP
FIELD INSTALLATION

SMCS-5057, 5101, 5104 **i03158700**

NOTE	REF NO	GRAPHIC REF	PART NUMBER	QTY	PART NAME 1 2 3 4 5 6 (PRODUCT LEVEL)	SEE PAGE
I	1	1	**7T-9105**	1	HOSE AS	
	2	1,2	**184-1137**	2	PLATE	
	3	1,2	**184-1138**	2	CLAMP	
I	4	1	**190-2830**	2	HOSE AS	
I	5	1	**246-6314**	2	HOSE AS	
	6	1	*260-9171*	2	CONNECTOR AS	
					(EACH INCLUDES)	
		1	**3J-1907**	1	SEAL-O-RING	
		1	**6V-8397**	1	SEAL-O-RING	
		1	**8T-9041**	1	CONNECTOR	
I	7	1	**261-8495**	1	HOSE AS	
I	8	1,2	**263-4154**	2	HOSE AS	
	9	2	**263-4914**	1	GUARD	
	10	2	**263-4915**	2	PLATE AS	
	11	1	**283-4935**	1	TUBE AS	
	12	1	**283-4942**	1	TUBE AS	
	13	1	*289-0099*	2	BLOCK GP-HYDRAULIC	
					(EACH INCLUDES)	
		1	*148-8407*	4	PLUG AS	
		1	**3J-1907**	1	SEAL-O-RING	
		1	**9S-4191**	1	PLUG	
		1	**272-3022**	1	BLOCK	
	14	1,2	**289-0100**	4	TUBE AS	
I	15	1	**289-0101**	4	HOSE AS	
	16	1,2	**289-0102**	2	TUBE AS	
I	17	1	**289-0103**	2	HOSE AS	
I	18	1	**292-2208**	1	HOSE AS	
I	19	1	**292-2209**	1	HOSE AS	
I	20	1,2	**292-2332**	2	HOSE AS	
I	21	1,2	**292-2333**	2	HOSE AS	
	22	2	**293-3820**	1	COVER AS (RH)	
	23	2	**293-3821**	1	COVER AS (LH)	
	24	2	**303-6576**	1	TUBE AS	
	25	2	**303-6577**	1	TUBE AS	
	26	2	**303-6578**	1	TUBE AS	
	27	2	**303-6579**	1	TUBE AS	
I	28	1	**320-1702**	1	HOSE AS	
I	29	1	**320-1703**	1	HOSE AS	
	30	1,2	**033-8248**	2	CLIP	
	31	1	**100-4336**	4	CLIP	
	32	2	*148-8318*	4	CONNECTOR AS	
					(EACH INCLUDES)	
		2	**3K-0360**	1	SEAL-O-RING	
		2	**6V-8397**	1	SEAL-O-RING	
		2	**6V-8634**	1	CONNECTOR	
	33	2	*148-8374*	2	ELBOW AS	
					(EACH INCLUDES)	
		2	**3K-0360**	1	SEAL-O-RING	
		2	**6V-8397**	1	SEAL-O-RING	
		2	**6V-8723**	1	ELBOW	
	34	1	*148-8378*	4	ELBOW AS	
					(EACH INCLUDES)	
		1	**3J-1907**	1	SEAL-O-RING	
		1	**6V-8397**	1	SEAL-O-RING	
		1	**6V-8724**	1	ELBOW	
	35	1	*150-4044*	6	CONNECTOR AS	
					(EACH INCLUDES)	
		1	**3J-1907**	1	SEAL-O-RING	

320-1704 **LINES GP-ANGLE & TILT (*contd.*)** **i03158700**

NOTE	REF NO	GRAPHIC REF	PART NUMBER	QTY	PART NAME 1 2 3 4 5 6 (PRODUCT LEVEL)	SEE PAGE
		1	**6V-8397**	1	SEAL-O-RING	
		1	**8T-1779**	1	CONNECTOR	
	36	2	**1S-0994**	6	CLIP	
	37	1,2	**3B-8489**	4	FITTING-GREASE	
	38	1	**3B-8822**	2	ELBOW	
	39	2	**5P-7462**	3	CLIP (SLOT)	
	40	2	**5P-7463**	3	CLIP (TAB)	
	41	1	**5P-9297**	3	CLIP	
	42	2	**6V-0683**	3	GROMMET (19-MM ID)	
	43	1,2	**6V-8397**	20	SEAL-O-RING	
	44	1,2	**7J-9108**	6	SEAL-O-RING	
	45	1,2	**7X-7729**	8	WASHER (11X25X3-MM THK)	
	46	1,2	**8L-5008**	4	ELBOW-PIPE	
	47	1	**8S-0948**	1	CLIP	
	48	1,2	**8T-4121**	46	WASHER-HARD (11X21X2.5-MM THK)	
M	49	1,2	**8T-4136**	5	BOLT (M10X1.5X25-MM)	
M	50	1,2	**8T-4137**	23	BOLT (M10X1.5X20-MM)	
M	51	1	**8T-4186**	8	BOLT (M10X1.5X40-MM)	
M	52	1,2	**8T-4191**	3	BOLT (M10X1.5X16-MM)	
M	53	1,2	**8T-4195**	7	BOLT (M10X1.5X30-MM)	
M	54	1	**8T-4196**	8	BOLT (M10X1.5X35-MM)	
	55	2	**9M-9162**	8	CLAMP	

I - REFER TO HYDRAULIC INFORMATION SYSTEM
M - METRIC PART

320-1704 **LINES GP-ANGLE & TILT (*contd.*)** **i03158700**

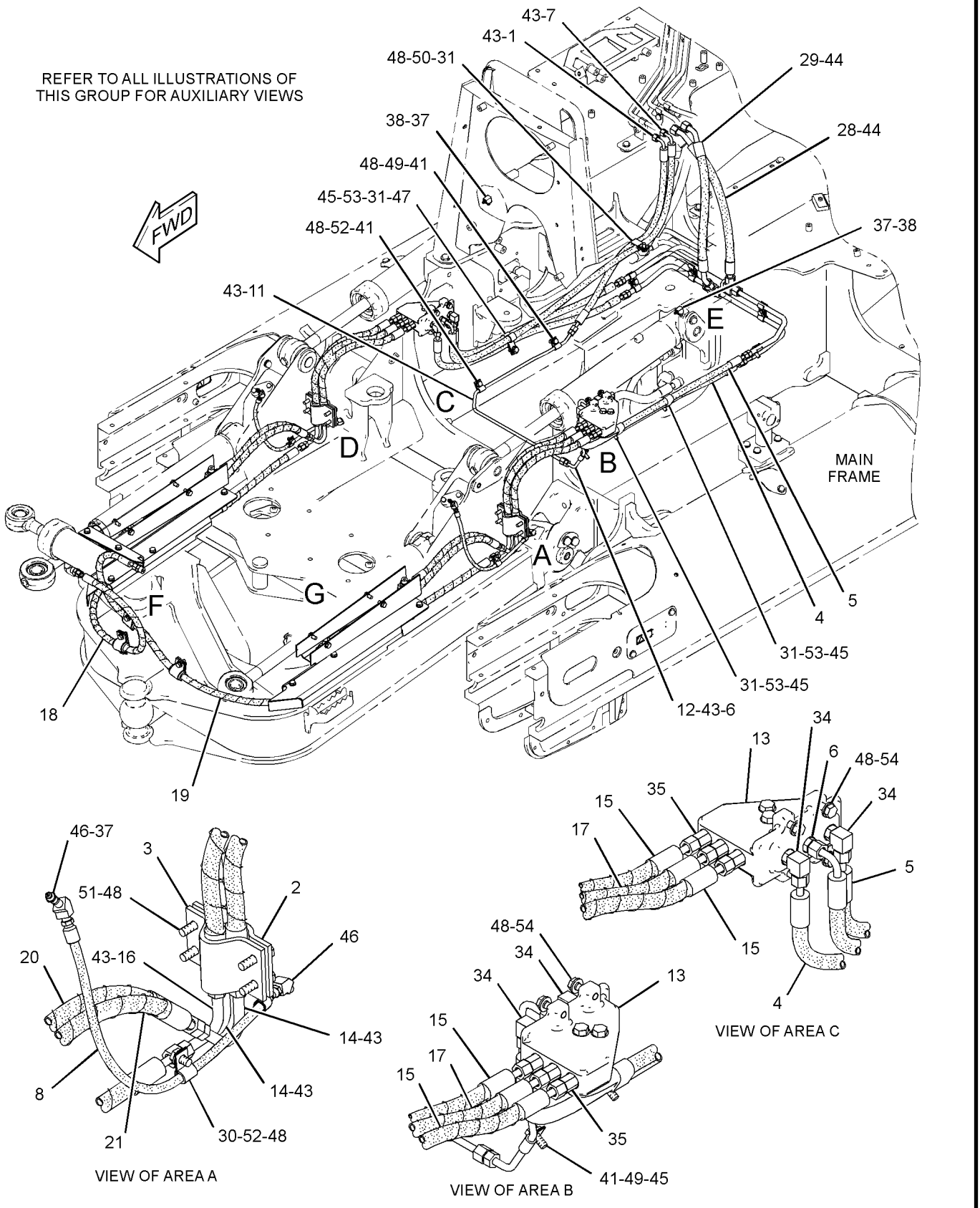

GRAPHIC #1 g01732935

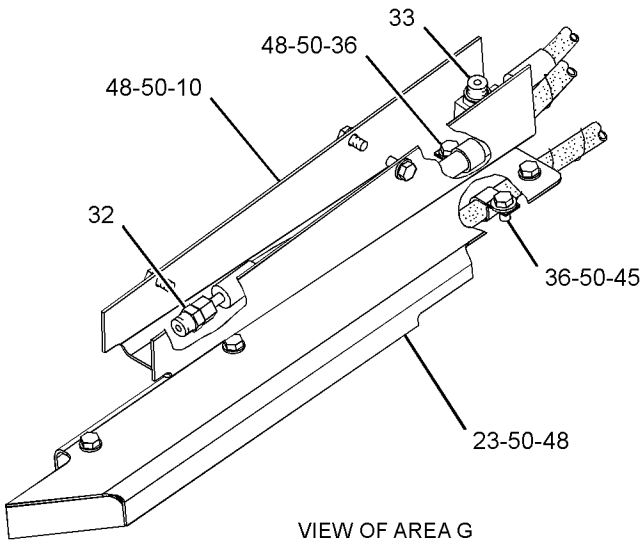

VIEW OF AREA G

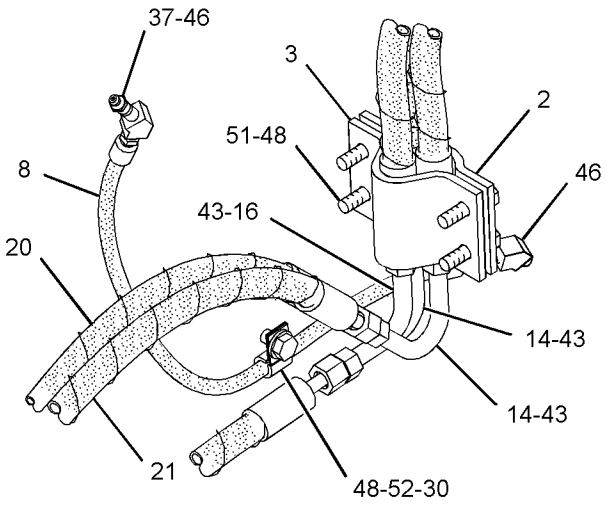

VIEW OF AREA D

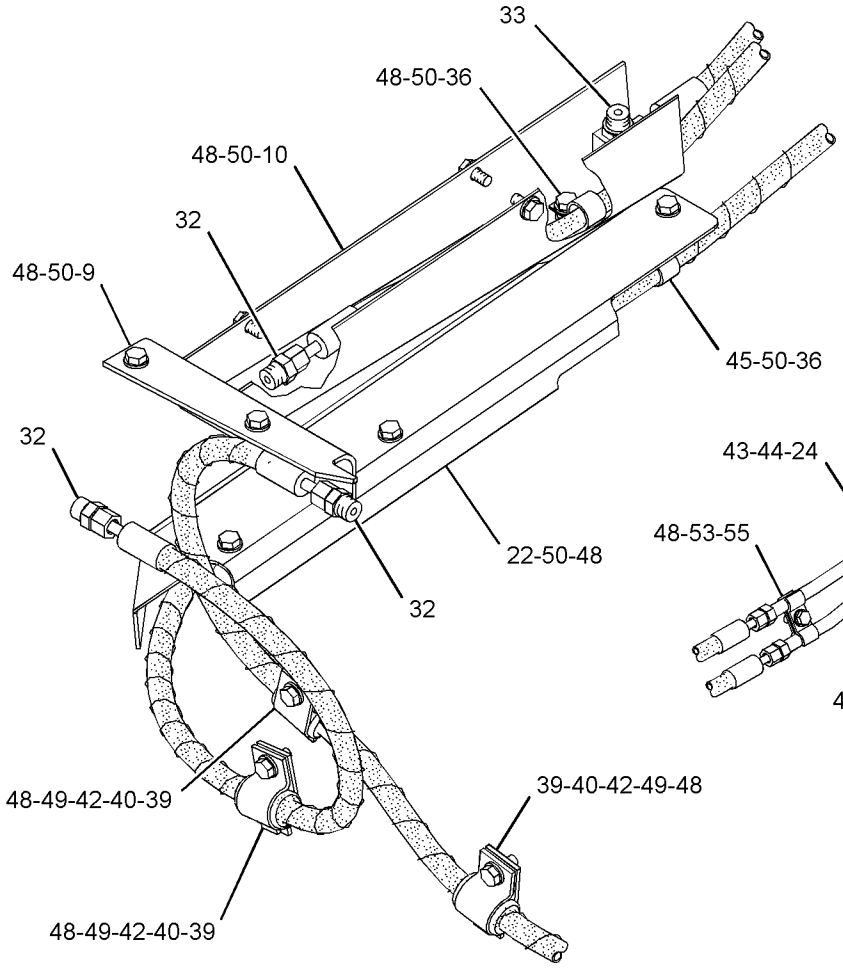

VIEW OF AREA F

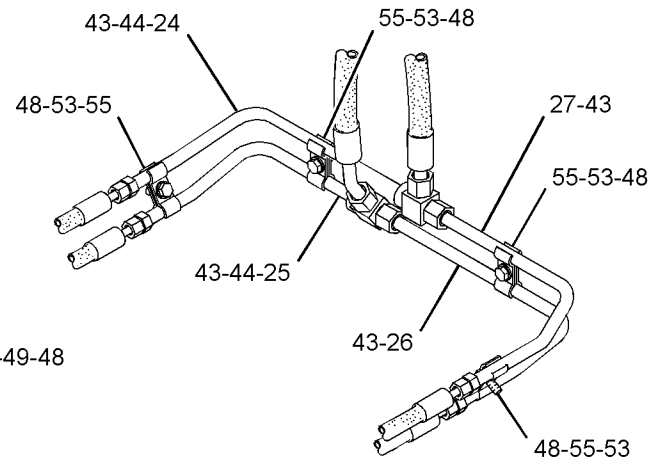

VIEW OF AREA E

GRAPHIC #2 **<END>** g01732936

328-8603 LINES GP-ANGLE & TILT

S/N: MMM1-UP; RRR1-UP
PART OF 325-6543, 325-6544 MODIFICATION AR
AN ATTACHMENT

SMCS-5057, 5101, 5104

i03670381

NOTE	REF NO	GRAPHIC REF	PART NUMBER	QTY	PART NAME 1 2 3 4 5 6 (PRODUCT LEVEL)	SEE PAGE
	1	1	**130-9984**	4	CLIP	
I	2	1	*329-3846*	1	HOSE AS	
		1	**163-8811**	2	CLAMP	
I		1	**229-4995**	1	HOSE AS	
E		1	**324-9705**		INSULATION (90-CM)	
I	3	1	*329-3847*	2	HOSE AS	
					(EACH INCLUDES)	
		1	**163-8811**	2	CLAMP	
I		1	**263-4154**	1	HOSE AS	
E		1	**324-9704**		INSULATION (55-CM)	
I	4	1	*329-3848*	2	HOSE AS	
					(EACH INCLUDES)	
		1	**163-8811**	2	CLAMP	
I		1	**276-4672**	1	HOSE AS	
E		1	**324-9705**		INSULATION (84-CM)	
I	5	1	*329-3849*	1	HOSE AS	
		1	**163-8811**	4	CLAMP	
I		1	**292-2208**	1	HOSE AS	
E		1	**324-9705**		INSULATION (186-CM)	
I	6	1	*329-3850*	1	HOSE AS	
		1	**163-8811**	4	CLAMP	
I		1	**292-2209**	1	HOSE AS	
E		1	**324-9705**		INSULATION (202-CM)	
I	7	1	*329-3851*	2	HOSE AS	
					(EACH INCLUDES)	
		1	**163-8811**	4	CLAMP	
I		1	**292-2332**	1	HOSE AS	
E		1	**324-9705**		INSULATION (39-CM)	
I	8	1	*329-3852*	2	HOSE AS	
					(EACH INCLUDES)	
		1	**163-8811**	4	CLAMP	
I		1	**292-2333**	1	HOSE AS	
E		1	**324-9705**		INSULATION (82-CM)	
I	9	1	*329-3855*	2	HOSE AS	
					(EACH INCLUDES)	
		1	**163-8811**	4	CLAMP	
I		1	**301-9295**	1	HOSE AS	
E		1	**324-9705**		INSULATION (62-CM)	
I	10	1	*329-3856*	4	HOSE AS	
					(EACH INCLUDES)	
		1	**163-8811**	4	CLAMP	
I		1	**301-9300**	1	HOSE AS	
E		1	**324-9705**		INSULATION (58-CM)	
I	11	1	*329-3858*	1	HOSE AS	
		1	**163-8811**	2	CLAMP	
I		1	**153-7299**	1	HOSE AS	
E		1	**324-9705**		INSULATION (75-CM)	
I	12	1	*329-3859*	1	HOSE AS	
		1	**163-8812**	2	CLAMP	
I		1	**194-3750**	1	HOSE AS	
E		1	**324-9706**		INSULATION (48-CM)	
I	13	1	*329-3860*	1	HOSE AS	
		1	**163-8812**	2	CLAMP	
I		1	**233-7970**	1	HOSE AS	
E		1	**324-9706**		INSULATION (43-CM)	
I	14	1	*329-3861*	1	HOSE AS	
		1	**163-8811**	2	CLAMP	

328-8603 **LINES GP-ANGLE & TILT (*contd.*)** **i03670381**

NOTE	REF NO	GRAPHIC REF	PART NUMBER	QTY	PART NAME 1 2 3 4 5 6 (PRODUCT LEVEL)	SEE PAGE
I		1	**276-2817**	1	HOSE AS	
E		1	**324-9705**		INSULATION (87-CM)	
	15	1	**329-8873**	2	PLATE AS	
					(EACH INCLUDES)	
M		1	**8T-3490**	1	NUT-WELD (M10X1.5-THD)	
	16	1	**341-0660**	2	PLATE AS	
	17	1	*341-3334*	1	HOSE AS	
		1	**163-8811**	2	CLAMP	
I		1	**282-7665**	1	HOSE AS	
E		1	**324-9705**		INSULATION (80-CM)	
	18	1	**6D-4246**	2	CLIP	
	19	1	**6V-1889**	6	CLIP	
	20	1	**7S-8920**	3	CLIP (SLOT)	
	21	1	**7S-8921**	3	CLIP (TAB)	
	22	1	**8T-2920**	3	GROMMET	
B	23	1	**8T-7934**	8	WASHER-HARD (11X21X5-MM THK)	

B - USE AS REQUIRED
E - ORDER BY THE CENTIMETER
I - REFER TO HYDRAULIC INFORMATION SYSTEM
M - METRIC PART

328-8603 **LINES GP-ANGLE & TILT (*contd.*)** **i03670381**

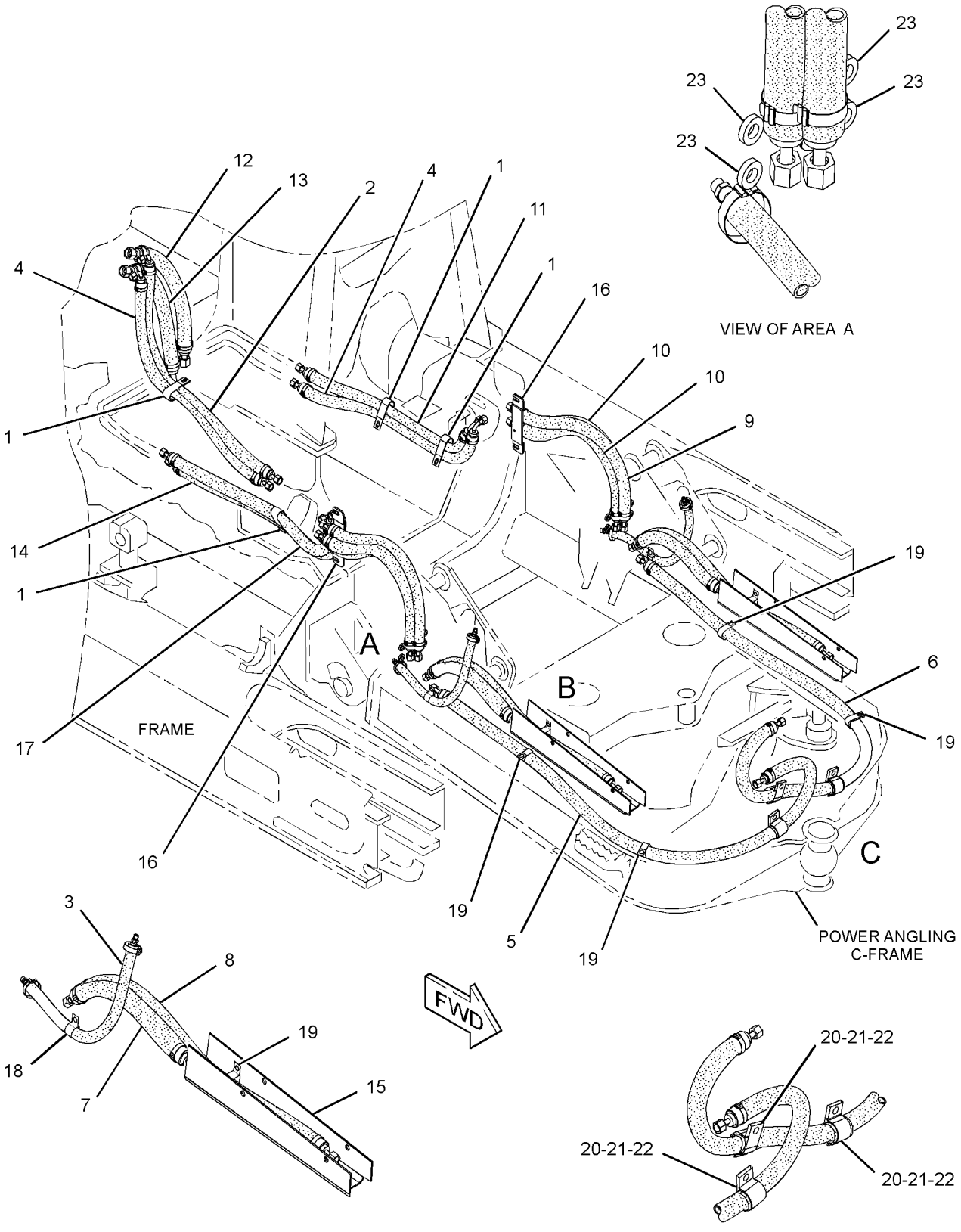

GRAPHIC #1 **<END>** g02024443

263-9710 LINES GP-HYDRAULIC

S/N: MMM1-UP; RRR1-UP
PART OF 264-4550, 264-4551, 264-4552, 325-6523, 325-6526, 325-6529, 325-6531 HYDRAULIC AR
AN ATTACHMENT
TYPE 1

SMCS-5057 **i02683618**

NOTE	REF NO	GRAPHIC REF	PART NUMBER	QTY	PART NAME 1 2 3 4 5 6 (PRODUCT LEVEL)	SEE PAGE
	1	1	**256-7753**	1	TUBE AS	
	2	1	**257-1096**	1	TUBE AS	
	3	1	**257-1099**	1	TUBE AS	
	4	1	**272-3540**	1	BRACKET AS	
	5	1	**285-4312**	2	BLOCK AS	
I	6	1	**285-4313**	2	HOSE AS	
I	7	1	**285-4314**	2	HOSE AS	
	8	1	**301-9281**	1	TUBE AS	
	9	1	**301-9282**	1	TUBE AS	
	10	1	**301-9283**	1	TUBE AS	
	11	1	**301-9288**	1	TUBE AS	
	12	1	**301-9289**	1	TUBE AS	
	13	1	**301-9293**	1	TUBE AS	
	14	1	**301-9294**	1	TUBE AS	
	15	1	**303-1894**	1	TUBE AS	
	16	1	**303-1895**	1	TUBE AS	
I	17	1	**303-1896**	1	HOSE AS	
I	18	1	**303-1897**	1	HOSE AS	
	19	1	*148-8315*	8	CONNECTOR AS	
					(EACH INCLUDES)	
		1	**2M-9780**	1	SEAL-O-RING	
		1	**6V-8642**	1	CONNECTOR	
		1	**7J-9108**	1	SEAL-O-RING	
	20	1	*148-8340*	2	CONNECTOR AS	
					(EACH INCLUDES)	
		1	**3K-0360**	1	SEAL-O-RING	
		1	**6V-8398**	1	SEAL-O-RING	
		1	**6V-8639**	1	CONNECTOR	
	21	1	*148-8342*	2	CONNECTOR AS	
					(EACH INCLUDES)	
		1	**3K-0360**	1	SEAL-O-RING	
		1	**6V-8632**	1	CONNECTOR	
		1	**7J-9108**	1	SEAL-O-RING	
	22	1	*148-8345*	2	CONNECTOR AS	
					(EACH INCLUDES)	
		1	**2M-9780**	1	SEAL-O-RING	
		1	**6V-8398**	1	SEAL-O-RING	
		1	**6V-8638**	1	CONNECTOR	
	23	1	*148-8358*	2	ELBOW AS	
					(EACH INCLUDES)	
		1	**2M-9780**	1	SEAL-O-RING	
		1	**6V-8398**	1	SEAL-O-RING	
		1	**6V-8624**	1	ELBOW	
	24	1	*148-8390*	2	ELBOW AS	
					(EACH INCLUDES)	
		1	**2M-9780**	1	SEAL-O-RING	
		1	**6V-8626**	1	ELBOW	
		1	**7J-9108**	1	SEAL-O-RING	
	25	1	*148-8393*	2	ELBOW AS	
					(EACH INCLUDES)	
		1	**6V-9852**	1	ELBOW	
		1	**7J-9108**	1	SEAL-O-RING	
	26	1	**2H-0435**	2	CLAMP	
	27	1	**7J-9108**	8	SEAL-O-RING	
	28	1	**7X-7729**	2	WASHER (11X25X3-MM THK)	
	29	1	**8T-4121**	13	WASHER-HARD (11X21X2.5-MM THK)	

263-9710 **LINES GP-HYDRAULIC (*contd.*)** **i02683618**

NOTE	REF NO	GRAPHIC REF	PART NUMBER	QTY	PART NAME 1 2 3 4 5 6 (PRODUCT LEVEL)	SEE PAGE
M	30	1	**8T-4136**	3	BOLT (M10X1.5X25-MM)	
M	31	1	**8T-4137**	4	BOLT (M10X1.5X20-MM)	
M	32	1	**8T-4191**	2	BOLT (M10X1.5X16-MM)	
M	33	1	**8T-4196**	6	BOLT (M10X1.5X35-MM)	
	34	1	**9M-9162**	12	CLAMP	

I - REFER TO HYDRAULIC INFORMATION SYSTEM
M - METRIC PART

263-9710 **LINES GP-HYDRAULIC (*contd.*)** **i02683618**

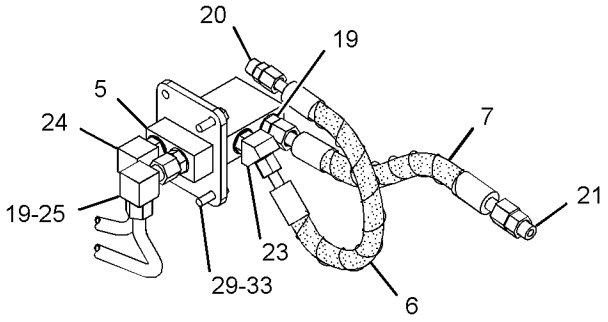

VIEW OF AREA A

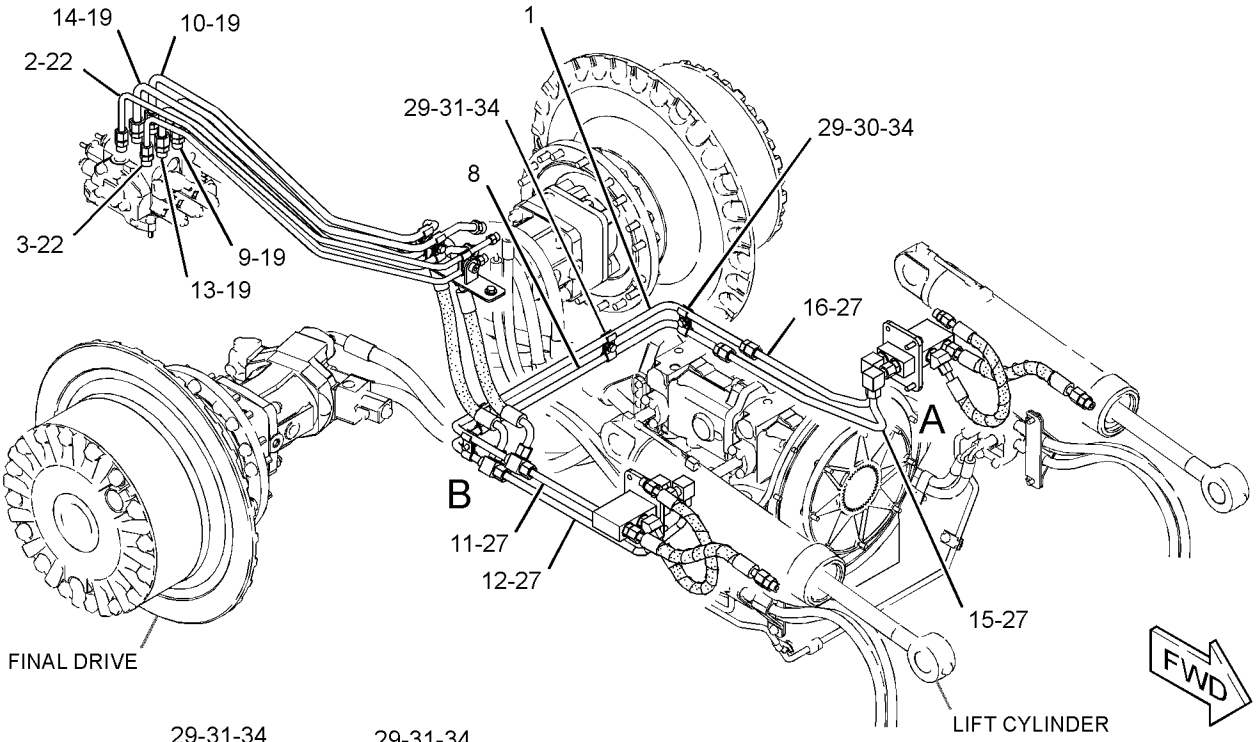

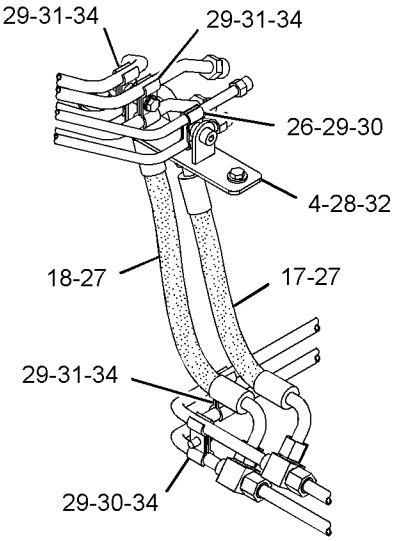

VIEW OF AREA B

GRAPHIC #1 **<END>** g01353914

263-9710 LINES GP-HYDRAULIC

S/N: MMM1-UP; RRR1-UP
PART OF 264-4550, 264-4551, 264-4552, 325-6523, 325-6526, 325-6529, 325-6531 HYDRAULIC AR
AN ATTACHMENT
TYPE 2

SMCS-5057 **i04338009**

NOTE	REF NO	GRAPHIC REF	PART NUMBER	QTY	PART NAME 1 2 3 4 5 6 (PRODUCT LEVEL)	SEE PAGE
	1	1	**257-1096**	1	TUBE AS	
	2	1	**257-1099**	1	TUBE AS	
	3	1	**272-3540**	1	BRACKET AS	
I	4	1	**285-4313**	2	HOSE AS	
I	5	1	**285-4314**	2	HOSE AS	
	6	1	**301-9282**	1	TUBE AS	
	7	1	**301-9283**	1	TUBE AS	
	8	1	**301-9293**	1	TUBE AS	
	9	1	**301-9294**	1	TUBE AS	
CI	10	1	**346-9745**	1	HOSE AS	
CI	11	1	**346-9746**	1	HOSE AS	
C	12	1	**360-9630**	1	TUBE AS	
C	13	1	**360-9631**	1	TUBE AS	
CI	14	1	**360-9652**	1	HOSE AS	
CI	15	1	**360-9653**	1	HOSE AS	
CI	16	1	**360-9654**	1	HOSE AS	
CI	17	1	**360-9655**	1	HOSE AS	
C	18	1	**365-9563**	2	BLOCK AS	
C	19	1	*148-8315*	9	CONNECTOR AS	
					(EACH INCLUDES)	
		1	**2M-9780**	1	SEAL-O-RING	
		1	**6V-8642**	1	CONNECTOR	
		1	**7J-9108**	1	SEAL-O-RING	
	20	1	*148-8340*	2	CONNECTOR AS	
					(EACH INCLUDES)	
		1	**3K-0360**	1	SEAL-O-RING	
		1	**6V-8398**	1	SEAL-O-RING	
		1	**6V-8639**	1	CONNECTOR	
	21	1	*148-8342*	2	CONNECTOR AS	
					(EACH INCLUDES)	
		1	**3K-0360**	1	SEAL-O-RING	
		1	**6V-8632**	1	CONNECTOR	
		1	**7J-9108**	1	SEAL-O-RING	
	22	1	*148-8345*	2	CONNECTOR AS	
					(EACH INCLUDES)	
		1	**2M-9780**	1	SEAL-O-RING	
		1	**6V-8398**	1	SEAL-O-RING	
		1	**6V-8638**	1	CONNECTOR	
	23	1	*148-8358*	2	ELBOW AS	
					(EACH INCLUDES)	
		1	**2M-9780**	1	SEAL-O-RING	
		1	**6V-8398**	1	SEAL-O-RING	
		1	**6V-8624**	1	ELBOW	
C	24	1	*148-8390*	1	ELBOW AS	
		1	**2M-9780**	1	SEAL-O-RING	
		1	**6V-8626**	1	ELBOW	
		1	**7J-9108**	1	SEAL-O-RING	
	25	1	**2H-0435**	2	CLAMP	
C	26	1	**3E-4321**	3	CLIP	
	27	1	**7J-9108**	8	SEAL-O-RING	
	28	1	**7X-7729**	2	WASHER (11X25X3-MM THK)	
C	29	1	**8T-4121**	15	WASHER-HARD (11X21X2.5-MM THK)	
CM	30	1	**8T-4136**	1	BOLT (M10X1.5X25-MM)	
CM	31	1	**8T-4137**	2	BOLT (M10X1.5X20-MM)	
M	32	1	**8T-4191**	2	BOLT (M10X1.5X16-MM)	
CM	33	1	**8T-4195**	6	BOLT (M10X1.5X30-MM)	

263-9710 **LINES GP-HYDRAULIC (*contd.*)** **i04338009**

NOTE	REF NO	GRAPHIC REF	PART NUMBER	QTY	PART NAME 1 2 3 4 5 6 (PRODUCT LEVEL)	SEE PAGE
M	34	1	**8T-4196**	6	BOLT (M10X1.5X35-MM)	
C	35	1	**9M-9162**	8	CLAMP	
C	36	1	**9X-8250**	2	CLIP	

C - CHANGE FROM PREVIOUS TYPE
I - REFER TO HYDRAULIC INFORMATION SYSTEM
M - METRIC PART

263-9710 **LINES GP-HYDRAULIC (*contd.*)** **i04338009**

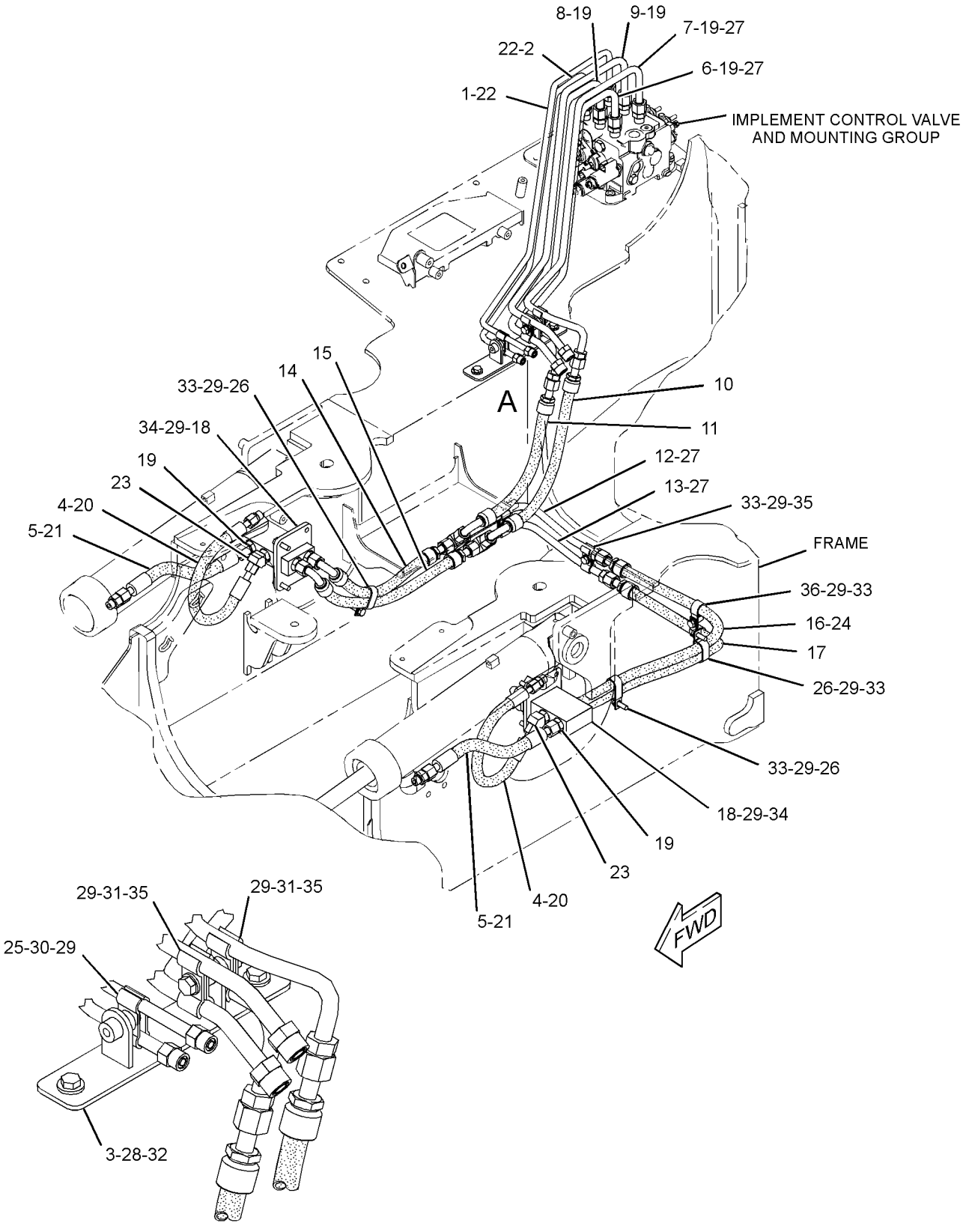

VIEW OF AREA A

GRAPHIC #1 **<END>** g02516557

325-1324 LINES GP-HYDRAULIC

S/N: RRR1-UP
PART OF 325-6544 MODIFICATION AR
AN ATTACHMENT

SMCS-5057 **i03670420**

NOTE	REF NO	GRAPHIC REF	PART NUMBER	QTY	PART NAME 1 2 3 4 5 6 (PRODUCT LEVEL)	SEE PAGE
	1	1	*325-0494*	1	HOSE AS	
I		1	**135-7193**	1	HOSE AS	
		1	**163-8811**	2	CLAMP	
E		1	**326-3566**		INSULATION (33-CM)	
	2	1	*325-0496*	1	HOSE AS	
		1	**163-8811**	2	CLAMP	
E		1	**193-6911**		INSULATION (38-CM)	
I		1	**285-3772**	1	HOSE AS	
	3	1	*325-0497*	1	HOSE AS	
		1	**163-8811**	2	CLAMP	
I		1	*185-3166*	1	HOSE AS	
E		1	**326-3566**		INSULATION (53-CM)	
	4	1	*325-0500*	1	HOSE AS	
		1	**163-8811**	2	CLAMP	
E		1	**193-6911**		INSULATION (147-CM)	
I		1	**306-2094**	1	HOSE AS	
	5	1	*325-0505*	1	HOSE AS	
I		1	**8Y-7520**	1	HOSE AS	
E		1	**193-6911**		INSULATION (50-CM)	
		1	**163-8811**	2	CLAMP	
	6	1	*325-0506*	1	HOSE AS	
E		1	**193-6911**		INSULATION (87-CM)	
		1	**163-8811**	1	CLAMP	
I		1	**305-5017**	1	HOSE AS	

E - ORDER BY THE CENTIMETER
I - REFER TO HYDRAULIC INFORMATION SYSTEM

325-1324 **LINES GP-HYDRAULIC (*contd.*)** **i03670420**

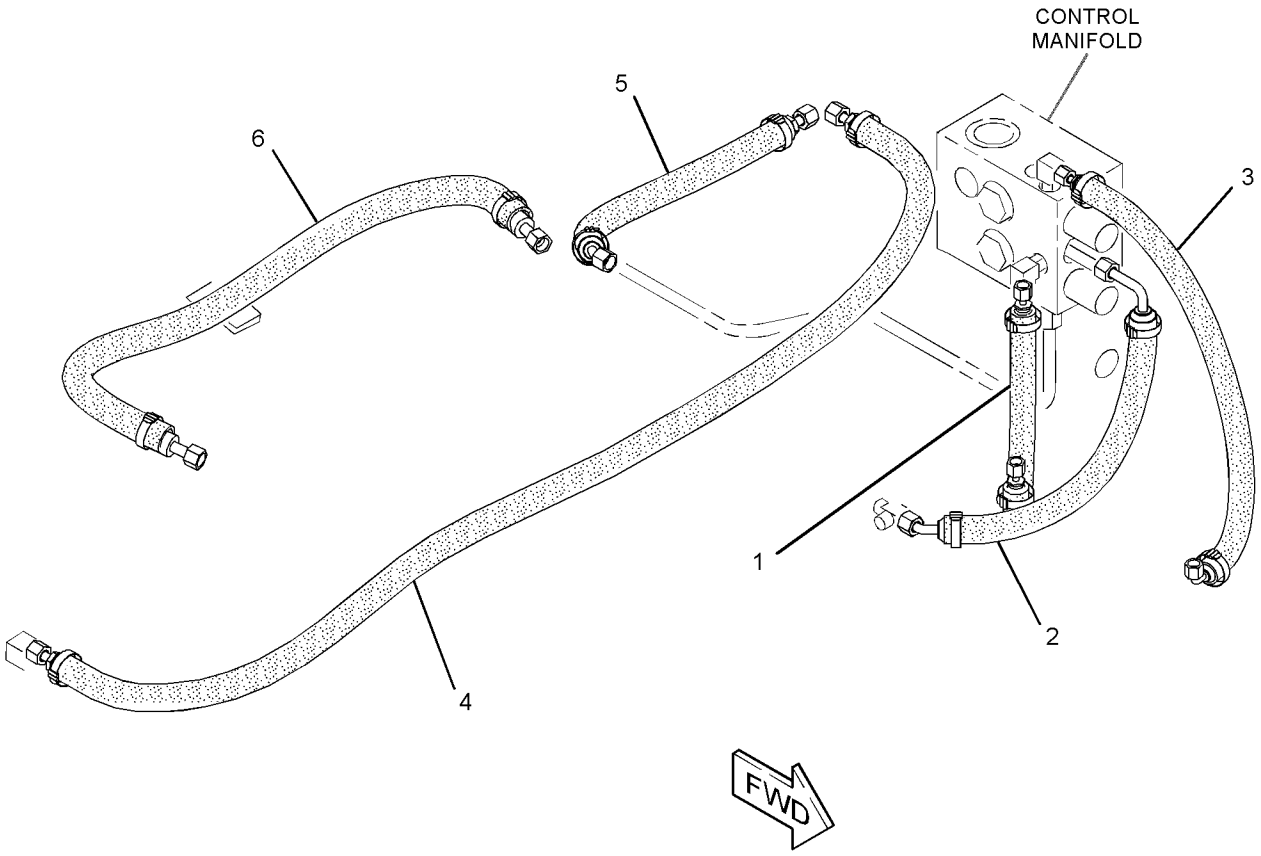

GRAPHIC #1 **<END>** g02024484

327-8895 LINES GP-HYDRAULIC—LIFT CYLINDER

S/N: MMM1-UP; RRR1-UP
PART OF 325-6543, 325-6544 MODIFICATION AR
AN ATTACHMENT

SMCS-5057 **i03670379**

NOTE	REF NO	GRAPHIC REF	PART NUMBER	QTY	PART NAME 1 2 3 4 5 6 (PRODUCT LEVEL)	SEE PAGE
	1	1	**327-8892**	2	HOSE AS	
					(EACH INCLUDES)	
		1	**163-8812**	4	CLAMP	
I		1	**285-4313**	1	HOSE AS	
E		1	**324-9705**		INSULATION (44-CM)	
	2	1	**327-8893**	2	HOSE AS	
					(EACH INCLUDES)	
		1	**163-8812**	4	CLAMP	
I		1	**285-4314**	1	HOSE AS	
E		1	**326-3567**		INSULATION (34-CM)	
	3	1	**327-8896**	1	HOSE AS	
		1	**163-8812**	4	CLAMP	
I		1	**303-1896**	1	HOSE AS	
E		1	**324-9706**		INSULATION (33-CM)	
	4	1	**327-8897**	1	HOSE AS	
		1	**163-8812**	4	CLAMP	
I		1	**303-1897**	1	HOSE AS	
E		1	**324-9706**		INSULATION (40-CM)	

E - ORDER BY THE CENTIMETER
I - REFER TO HYDRAULIC INFORMATION SYSTEM

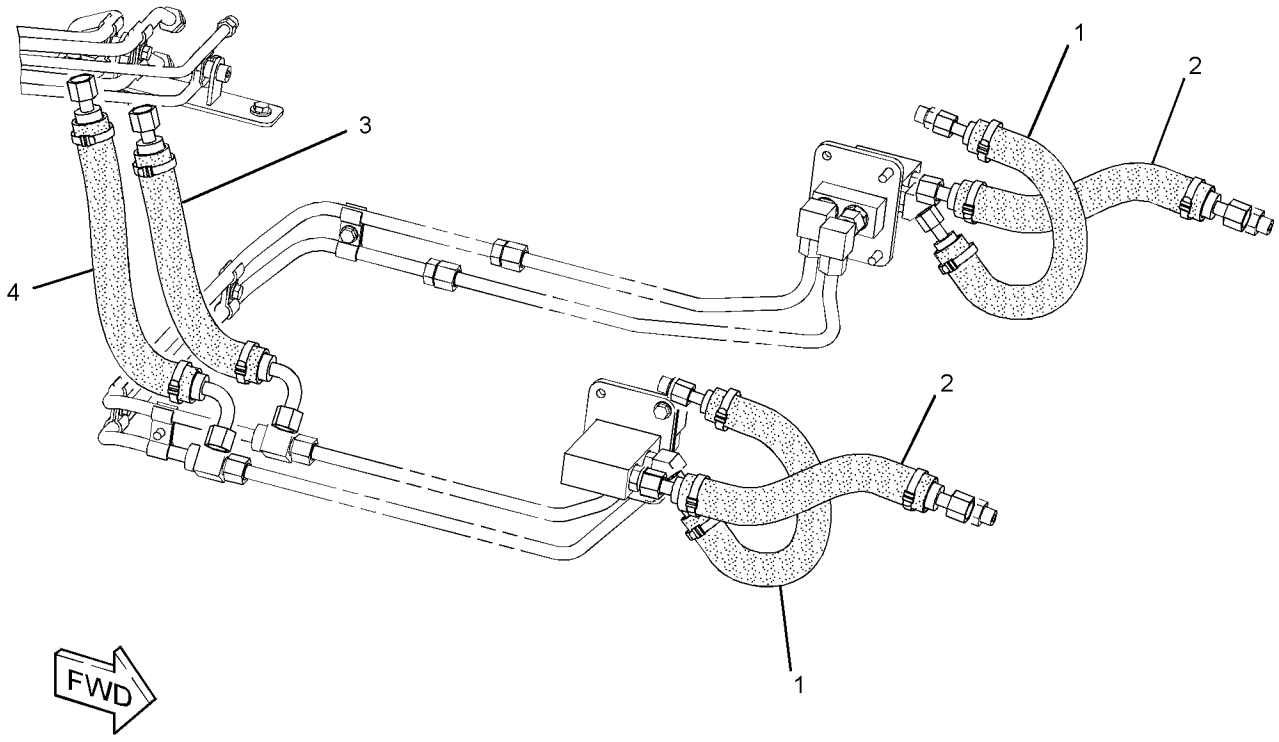

GRAPHIC #1 **<END>** g02024298

254-1371 LINES GP-PRESSURE TEST

S/N: MMM1-UP; RRR1-UP

PART OF 244-7446, 244-7483 POWER TRAIN AR

SMCS-5057 **i03438040**

NOTE	REF NO	GRAPHIC REF	PART NUMBER	QTY	PART NAME 1 2 3 4 5 6 (PRODUCT LEVEL)	SEE PAGE
	1	1	**6V-0852**	4	CAP-DUST	
	2	1	**7X-7945**	4	ADAPTER	
	4	1	**111-4837**	1	CLIP	
	5	1	**187-3547**	1	COUPLER AS-QUICK DISCONNECT (FRONT PUMP, MA PORT)	
	5A	1	**187-3547**	1	COUPLER AS-QUICK DISCONNECT (REAR PUMP, MA PORT)	
	6	1	**187-9008**	2	CAP-DUST	
	7	1	**193-3973**	1	STRAP-CABLE	
	8	1	**261-8513**	1	HOSE AS	
	9	1	**261-8514**	1	HOSE AS	
	10	1	**261-8515**	1	HOSE AS	
	11	1	**263-0971**	1	HOSE AS	
	14	1	**283-9797**	1	PLATE	
	17	1	*148-8351*	1	ELBOW AS	
		1	**4J-5477**	1	SEAL-O-RING	
		1	**6V-9849**	1	ELBOW	
	18	1	*148-8367*	1	ELBOW AS	
		1	**6V-8397**	1	SEAL-O-RING	
		1	**6V-9850**	1	ELBOW	
	19	1	*148-8369*	1	ELBOW AS (REAR PUMP, MA PORT)	
	19A	1	*148-8369*	1	ELBOW AS (FRONT PUMP, MA PORT)	
					(EACH INCLUDES)	
		1	**3J-7354**	1	SEAL-O-RING	
		1	**4J-5477**	1	SEAL-O-RING	
		1	**6V-8628**	1	ELBOW	
	20	1	*148-8439*	1	TEE AS (FRONT PUMP, G PORT)	
		1	**3J-1907**	1	SEAL-O-RING	
		1	**6V-8397**	2	SEAL-O-RING	
		1	**6V-8774**	1	TEE	
	21	1	**2P-1279**	4	LOCKNUT (9/16-18-THD)	
	22	1	**3J-1907**	6	SEAL-O-RING	
	23	1	**4J-5477**	4	SEAL-O-RING	
	24	1	**5P-4116**	2	WASHER-HARD (8.8X20.5X2-MM THK)	
	25	1	**6K-8179**	2	CLIP	
	26	1	**6V-3965**	1	FITTING (QUICK DISCONNECT) (REAR PUMP, G PORT)	
	26A	1	**6V-3965**	1	FITTING (QUICK DISCONNECT) (FRONT PUMP, G PORT)	
	26B	1	**6V-3965**	1	FITTING (QUICK DISCONNECT) (RIGHT MOTOR, BRAKE PRESS PORT)	
	26C	1	**6V-3965**	1	FITTING (QUICK DISCONNECT) (IMPLEMENT VALVE, P PORT)	
M	27	1	**7X-2536**	1	BOLT (M8X1.25X14-MM)	
	28	1	**8T-4121**	2	WASHER-HARD (11X21X2.5-MM THK)	
M	29	1	**8T-4136**	2	BOLT (M10X1.5X25-MM)	
M	32	1	**8T-4189**	1	BOLT (M8X1.25X20-MM)	
	34	1	*241-6215*	1	ELBOW AS (IMPLEMENT VALVE, P PORT)	
		1	**3J-1907**	1	SEAL-O-RING	
		1	**6V-8076**	1	ELBOW	

M - METRIC PART

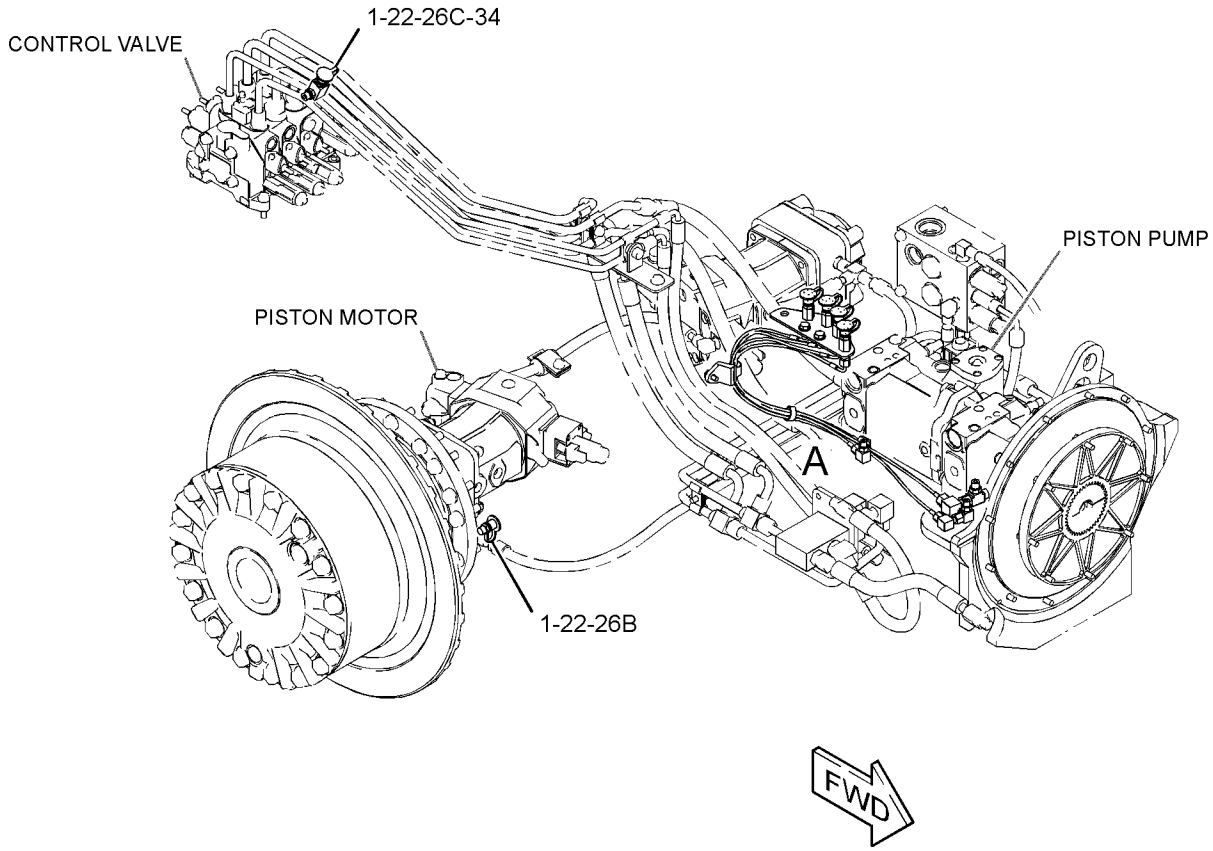

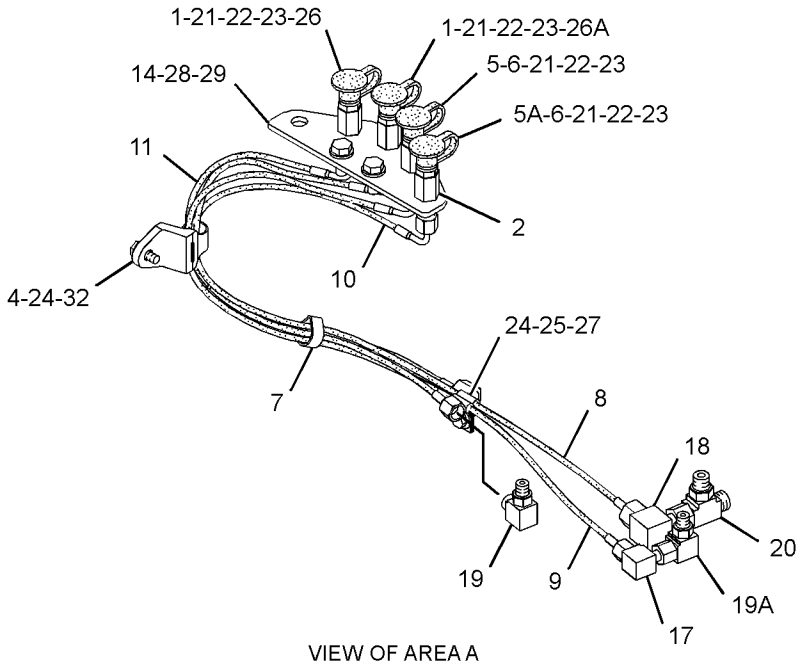

VIEW OF AREA A

GRAPHIC #1 **<END>** g01702553

328-8600 LINES GP-PRESSURE TEST

S/N: MMM1-UP; RRR1-UP
PART OF 325-6543, 325-6544 MODIFICATION AR
AN ATTACHMENT

SMCS-5057 **i04921388**

NOTE	REF NO	GRAPHIC REF	PART NUMBER	QTY	PART NAME 1 2 3 4 5 6 (PRODUCT LEVEL)	SEE PAGE
	1	1	**111-4838**	1	CLIP	
	2	1	**204-2281**	1	STRAP-CABLE	
	3	1	*328-8614*	1	HOSE AS	
B		1	**268-4412**		TAPE-INSULATOR	
		1	**261-8513**	1	HOSE AS	
E		1	**324-9705**		INSULATION (79-CM)	
	4	1	*328-8615*	1	HOSE AS	
B		1	**268-4412**		TAPE-INSULATOR	
		1	**261-8514**	1	HOSE AS	
E		1	**324-9705**		INSULATION (86-CM)	
	5	1	*328-8616*	1	HOSE AS	
B		1	**268-4412**		TAPE-INSULATOR	
		1	**261-8515**	1	HOSE AS	
E		1	**324-9705**		INSULATION (61-CM)	
	6	1	*328-8617*	1	HOSE AS	
B		1	**268-4412**		TAPE-INSULATOR	
		1	**263-0971**	1	HOSE AS	
E		1	**324-9705**		INSULATION (51-CM)	

B - USE AS REQUIRED
E - ORDER BY THE CENTIMETER

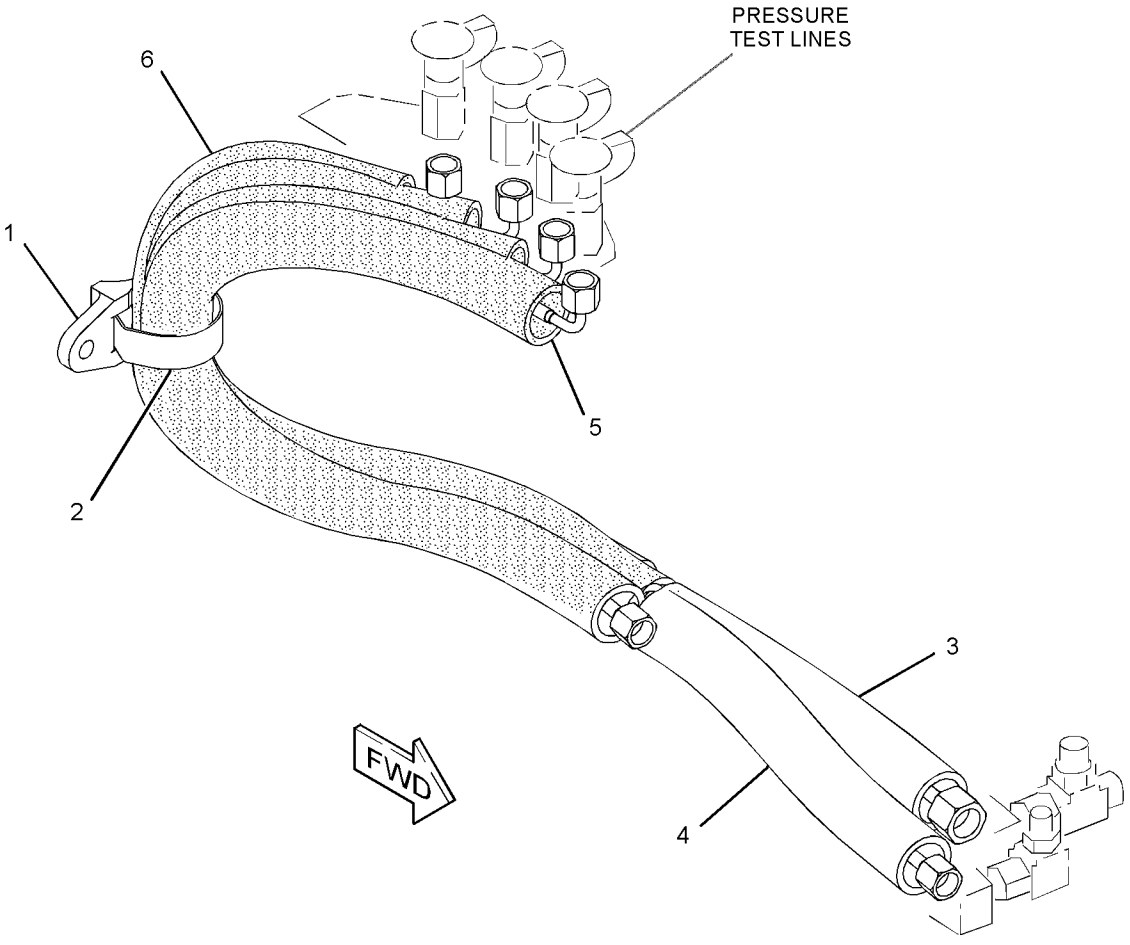

GRAPHIC #1 **<END>** g03177175

276-4680 LINES GP-PUMP

S/N: MMM1-505; RRR1-364

PART OF 264-4551, 264-4552, 325-6523, 325-6526 HYDRAULIC AR AN ATTACHMENT

SMCS-5057 **i03776816**

NOTE	REF NO	GRAPHIC REF	PART NUMBER	QTY	PART NAME 1 2 3 4 5 6 (PRODUCT LEVEL)	SEE PAGE
	1	1	**1Y-3818**	1	VALVE-DRAIN (PUMP LINES)	
	2	1	**119-5708**	1	CLIP	
I	3	1	**163-4520**	1	HOSE AS	
I	4	1	**196-3940**	1	HOSE AS	
	5	1	*205-4132*	1	CONNECTOR AS	
		1	**2S-4078**	1	SEAL-O-RING	
		1	**8T-0315**	1	SEAL-O-RING	
		1	**8T-8985**	1	CONNECTOR	
I	6	1	**256-7765**	1	HOSE AS	
	7	1	**257-1108**	1	TUBE AS	
I	8	1	**9C-2413**	1	HOSE AS	
	9	1	**261-8505**	1	TUBE AS	
	10	1	**261-8506**	1	TUBE AS	
	11	1	**263-9720**	1	TUBE AS	
	12	1	*268-1507*	1	CONNECTOR AS	
		1	**7M-8485**	1	SEAL-O-RING	
		1	**8T-0315**	1	SEAL-O-RING	
		1	**268-1506**	1	CONNECTOR	
	13	1	**277-7091**	1	TUBE AS	
	14	1	**282-5064**	1	TUBE AS	
I	15	1	**294-1066**	1	HOSE AS	
	16	1	**303-1891**	1	TUBE AS	
	17	1	**303-6597**	1	TUBE AS	
	18	1	**308-7677**	1	CONNECTOR-FILTER	
	19	1	*148-8327*	3	CONNECTOR AS	
					(EACH INCLUDES)	
		1	**3D-2824**	1	SEAL-O-RING	
		1	**6V-8637**	1	CONNECTOR	
		1	**6V-9746**	1	SEAL-O-RING	
	20	1	*148-8336*	1	CONNECTOR AS	
		1	**3J-1907**	1	SEAL-O-RING	
		1	**6V-8397**	1	SEAL-O-RING	
		1	**6V-8636**	1	CONNECTOR	
	21	1	*148-8347*	1	ELBOW AS	
		1	**3D-2824**	1	SEAL-O-RING	
		1	**6V-9007**	1	ELBOW	
		1	**6V-9746**	1	SEAL-O-RING	
	22	1	*148-8383*	1	ELBOW AS	
		1	**3K-0360**	1	SEAL-O-RING	
		1	**6V-8397**	1	SEAL-O-RING	
		1	**8T-1683**	1	ELBOW	
	23	1	**3J-1907**	1	SEAL-O-RING	
	24	1	**4H-7655**	4	CLAMP-TUBE	
	25	1	**5P-9297**	4	CLIP	
	26	1	**6V-8397**	5	SEAL-O-RING	
	27	1	**6V-9746**	4	SEAL-O-RING	
	28	1	**7X-7729**	1	WASHER (11X25X3-MM THK)	
	29	1	**8M-2773**	1	CLIP	
	30	1	**8T-1887**	2	CLIP (SLOT)	
	31	1	**8T-1888**	2	CLIP (TAB)	
	32	1	**8T-4121**	9	WASHER-HARD (11X21X2.5-MM THK)	
M	33	1	**8T-4136**	2	BOLT (M10X1.5X25-MM)	
M	34	1	**8T-4137**	7	BOLT (M10X1.5X20-MM)	
M	35	1	**8T-4191**	1	BOLT (M10X1.5X16-MM)	

I - REFER TO HYDRAULIC INFORMATION SYSTEM
M - METRIC PART

276-4680 **LINES GP-PUMP (*contd.*)** **i03776816**

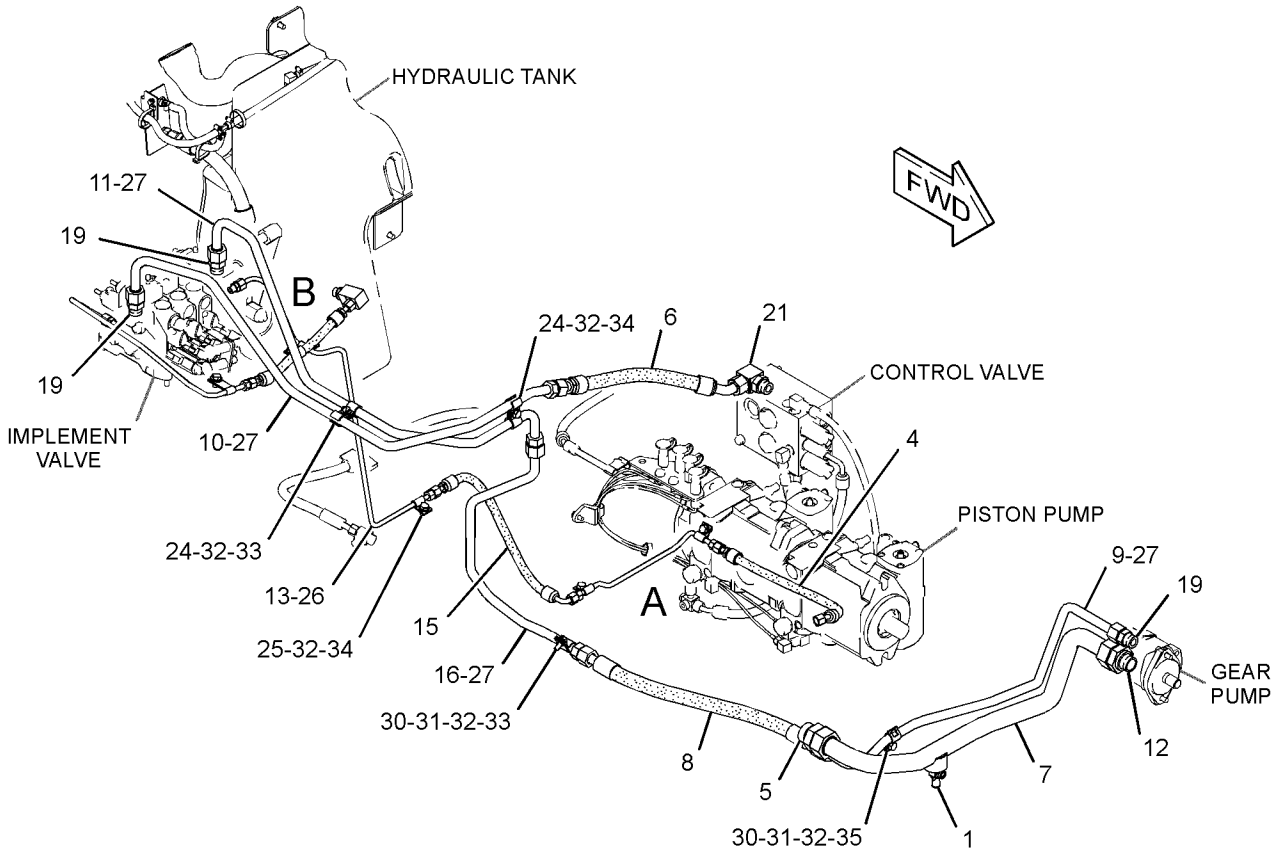

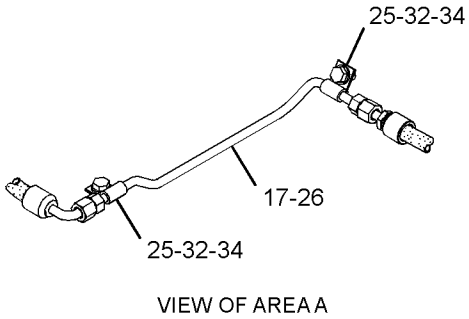

VIEW OF AREA A

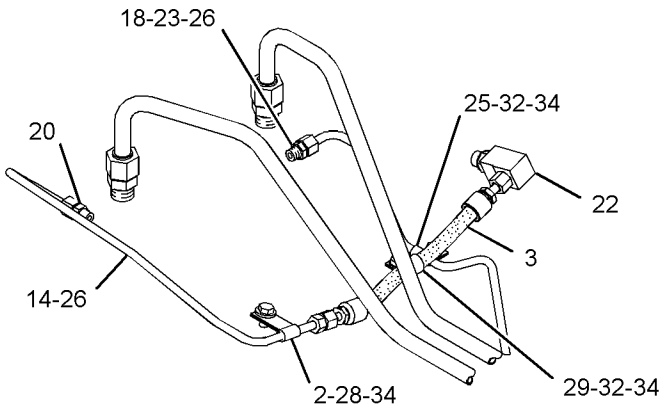

VIEW OF AREA B

GRAPHIC #1 **<END>** g01446066

276-4680 LINES GP-PUMP

S/N: MMM506-610; RRR365-444

PART OF 264-4551, 264-4552, 325-6523, 325-6526 HYDRAULIC AR AN ATTACHMENT

SMCS-5057 **i04403725**

NOTE	REF NO	GRAPHIC REF	PART NUMBER	QTY	PART NAME 1 2 3 4 5 6 (PRODUCT LEVEL)	SEE PAGE
C	1	1	**6V-7238**	1	VALVE-SHUTOFF (IMPLEMENT PUMP)	
	2	1	**119-5708**	1	CLIP	
I	3	1	**163-4520**	1	HOSE AS	
I	4	1	**196-3940**	1	HOSE AS	
	5	1	*205-4132*	1	CONNECTOR AS	
		1	**2S-4078**	1	SEAL-O-RING	
		1	**8T-0315**	1	SEAL-O-RING	
		1	**8T-8985**	1	CONNECTOR	
I	6	1	**256-7765**	1	HOSE AS	
C	7	1	**329-5347**	1	TUBE AS	
I	8	1	**9C-2413**	1	HOSE AS	
	9	1	**261-8505**	1	TUBE AS	
	10	1	**261-8506**	1	TUBE AS	
	11	1	**263-9720**	1	TUBE AS	
	12	1	*268-1507*	1	CONNECTOR AS	
		1	**7M-8485**	1	SEAL-O-RING	
		1	**8T-0315**	1	SEAL-O-RING	
		1	**268-1506**	1	CONNECTOR	
	13	1	**277-7091**	1	TUBE AS	
	14	1	**282-5064**	1	TUBE AS	
I	15	1	**294-1066**	1	HOSE AS	
	16	1	**303-1891**	1	TUBE AS	
	17	1	**303-6597**	1	TUBE AS	
	18	1	**308-7677**	1	CONNECTOR-FILTER	
	19	1	*148-8327*	3	CONNECTOR AS	
					(EACH INCLUDES)	
		1	**3D-2824**	1	SEAL-O-RING	
		1	**6V-8637**	1	CONNECTOR	
		1	**6V-9746**	1	SEAL-O-RING	
	20	1	*148-8336*	1	CONNECTOR AS	
		1	**3J-1907**	1	SEAL-O-RING	
		1	**6V-8397**	1	SEAL-O-RING	
		1	**6V-8636**	1	CONNECTOR	
	21	1	*148-8347*	1	ELBOW AS	
		1	**3D-2824**	1	SEAL-O-RING	
		1	**6V-9007**	1	ELBOW	
		1	**6V-9746**	1	SEAL-O-RING	
	22	1	*148-8383*	1	ELBOW AS	
		1	**3K-0360**	1	SEAL-O-RING	
		1	**6V-8397**	1	SEAL-O-RING	
		1	**8T-1683**	1	ELBOW	
	23	1	**3J-1907**	1	SEAL-O-RING	
	24	1	**4H-7655**	4	CLAMP-TUBE	
	25	1	**5P-9297**	4	CLIP	
	26	1	**6V-8397**	5	SEAL-O-RING	
	27	1	**6V-9746**	4	SEAL-O-RING	
	28	1	**7X-7729**	1	WASHER (11X25X3-MM THK)	
	29	1	**8M-2773**	1	CLIP	
	30	1	**8T-1887**	2	CLIP (SLOT)	
	31	1	**8T-1888**	2	CLIP (TAB)	
	32	1	**8T-4121**	9	WASHER-HARD (11X21X2.5-MM THK)	
M	33	1	**8T-4136**	2	BOLT (M10X1.5X25-MM)	
M	34	1	**8T-4137**	7	BOLT (M10X1.5X20-MM)	
M	35	1	**8T-4191**	1	BOLT (M10X1.5X16-MM)	
C	36	1	**3K-0360**	1	SEAL-O-RING	

C - CHANGE FROM PREVIOUS TYPE
I - REFER TO HYDRAULIC INFORMATION SYSTEM
M - METRIC PART

276-4680 **LINES GP-PUMP (*contd.*)** **i04403725**

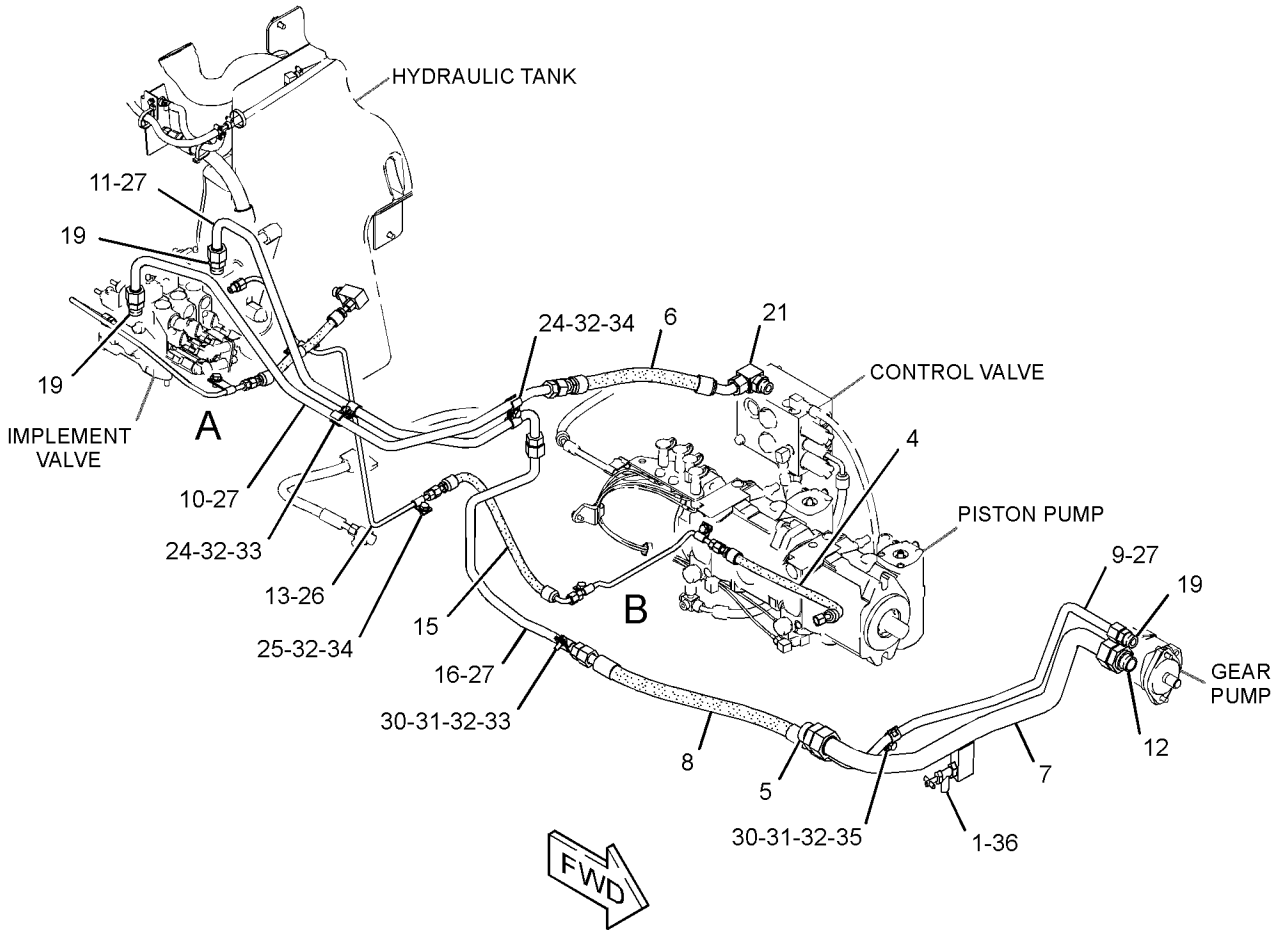

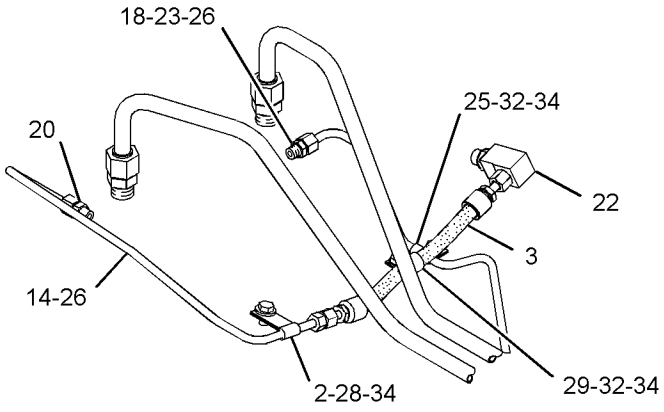

VIEW OF AREA A

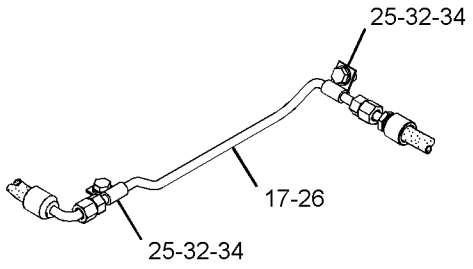

VIEW OF AREA B

GRAPHIC #1 **<END>** g02144672

276-4680 LINES GP-PUMP

S/N: MMM611-UP; RRR445-UP
PART OF 264-4551, 264-4552, 325-6523, 325-6526 HYDRAULIC AR
AN ATTACHMENT

SMCS-5057 **i04895139**

NOTE	REF NO	GRAPHIC REF	PART NUMBER	QTY	PART NAME 1 2 3 4 5 6 (PRODUCT LEVEL)	SEE PAGE
	1	1	**6V-7238**	1	VALVE-SHUTOFF (PUMP LINES)	
	2	1	**119-5708**	1	CLIP	
I	3	1	**163-4520**	1	HOSE AS	
I	4	1	**196-3940**	1	HOSE AS	
	5	1	*205-4132*	1	CONNECTOR AS	
		1	**2S-4078**	1	SEAL-O-RING	
		1	**8T-0315**	1	SEAL-O-RING	
		1	**8T-8985**	1	CONNECTOR	
I	6	1	**256-7765**	1	HOSE AS	
	7	1	**329-5347**	1	TUBE AS	
I	8	1	**9C-2413**	1	HOSE AS	
	9	1	**261-8505**	1	TUBE AS	
	10	1	**261-8506**	1	TUBE AS	
	11	1	**263-9720**	1	TUBE AS	
	12	1	*268-1507*	1	CONNECTOR AS	
		1	**7M-8485**	1	SEAL-O-RING	
		1	**8T-0315**	1	SEAL-O-RING	
		1	**268-1506**	1	CONNECTOR	
	13	1	**277-7091**	1	TUBE AS	
	14	1	**282-5064**	1	TUBE AS	
I	15	1	**294-1066**	1	HOSE AS	
C	16	1	**363-1761**	1	TUBE AS	
	17	1	**303-6597**	1	TUBE AS	
	18	1	**308-7677**	1	CONNECTOR-FILTER	
	19	1	*148-8327*	3	CONNECTOR AS	
					(EACH INCLUDES)	
		1	**3D-2824**	1	SEAL-O-RING	
		1	**6V-8637**	1	CONNECTOR	
		1	**6V-9746**	1	SEAL-O-RING	
	20	1	*148-8336*	1	CONNECTOR AS	
		1	**3J-1907**	1	SEAL-O-RING	
		1	**6V-8397**	1	SEAL-O-RING	
		1	**6V-8636**	1	CONNECTOR	
	21	1	*148-8347*	1	ELBOW AS	
		1	**3D-2824**	1	SEAL-O-RING	
		1	**6V-9007**	1	ELBOW	
		1	**6V-9746**	1	SEAL-O-RING	
	22	1	*148-8374*	1	ELBOW AS	
		1	**3K-0360**	1	SEAL-O-RING	
		1	**6V-8397**	1	SEAL-O-RING	
		1	**6V-8723**	1	ELBOW	
	23	1	**3J-1907**	1	SEAL-O-RING	
	24	1	**4H-7655**	4	CLAMP-TUBE	
	25	1	**5P-9297**	4	CLIP	
	26	1	**6V-8397**	5	SEAL-O-RING	
	27	1	**6V-9746**	4	SEAL-O-RING	
	29	1	**8M-2773**	1	CLIP	
	30	1	**8T-1887**	2	CLIP (SLOT)	
	31	1	**8T-1888**	2	CLIP (TAB)	
	32	1	**8T-4121**	10	WASHER-HARD (11X21X2.5-MM THK)	
M	33	1	**8T-4136**	2	BOLT (M10X1.5X25-MM)	
M	34	1	**8T-4137**	7	BOLT (M10X1.5X20-MM)	
M	35	1	**8T-4191**	1	BOLT (M10X1.5X16-MM)	
	36	1	**3K-0360**	1	SEAL-O-RING	

C - CHANGE FROM PREVIOUS TYPE
I - REFER TO HYDRAULIC INFORMATION SYSTEM
M - METRIC PART

276-4680 **LINES GP-PUMP (*contd.*)** **i04895139**

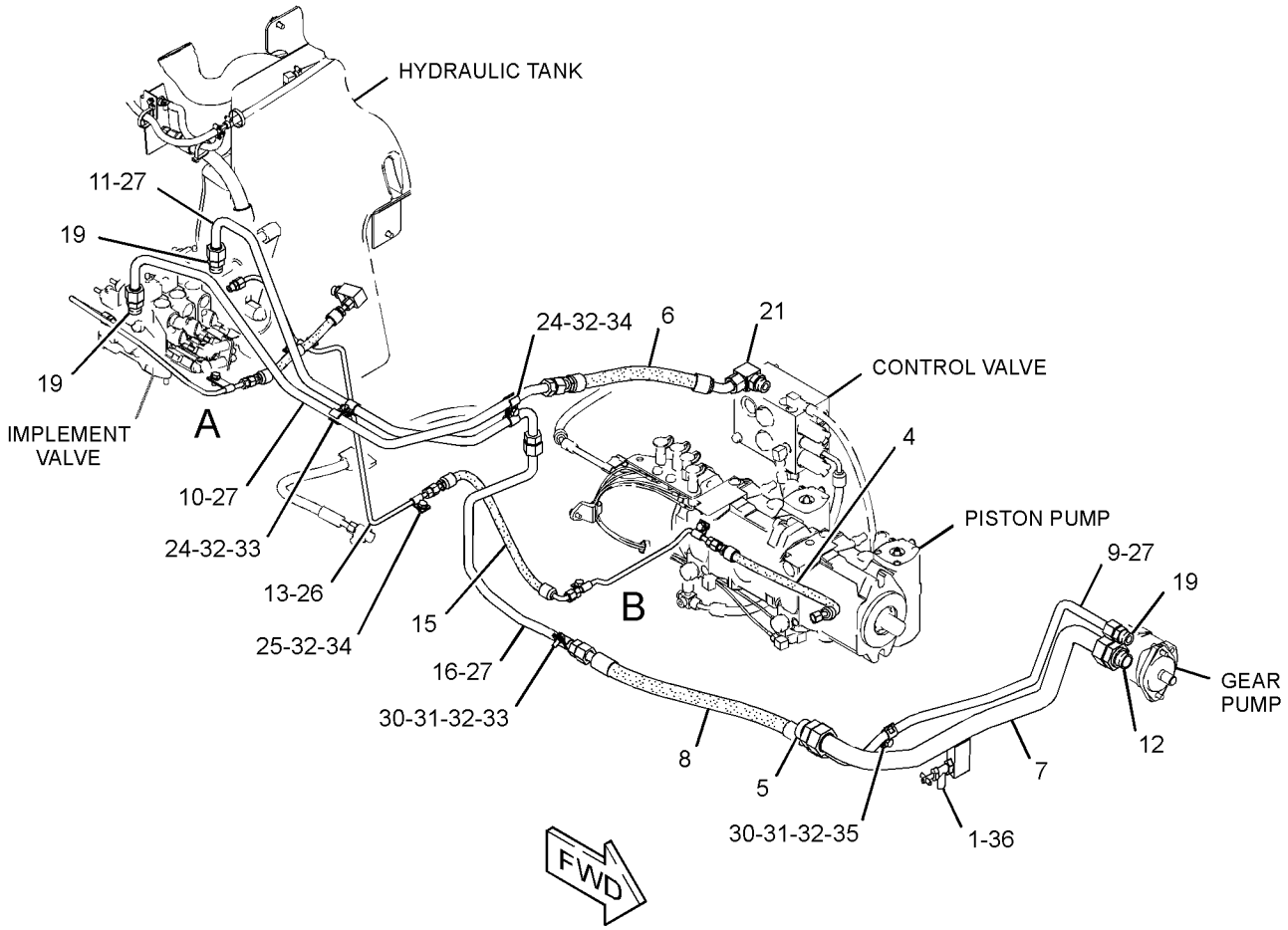

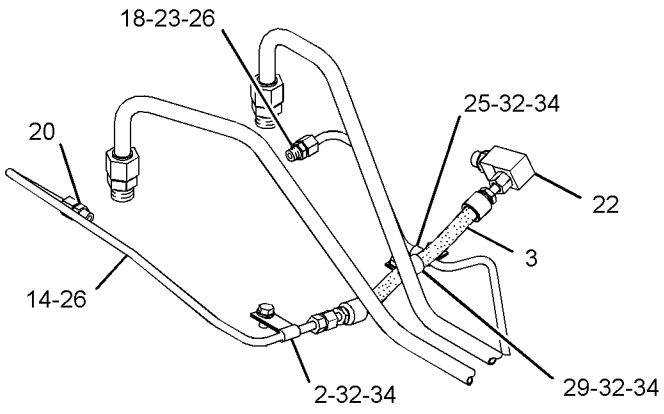

VIEW OF AREA A

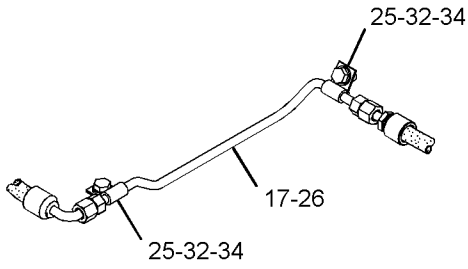

VIEW OF AREA B

GRAPHIC #1 **<END>** g03039378

283-3513 LINES GP-PUMP

S/N: MMM1-612; RRR1-446
PART OF 264-4550 HYDRAULIC AR
AN ATTACHMENT

SMCS-5057 **i03720861**

NOTE	REF NO	GRAPHIC REF	PART NUMBER	QTY	PART NAME 1 2 3 4 5 6 (PRODUCT LEVEL)	SEE PAGE
	1	1	**6V-7238**	1	VALVE-SHUTOFF (PUMP LINES)	
	2	1	**3K-0360**	1	SEAL-O-RING	
	3	1	*205-4132*	1	CONNECTOR AS	
		1	**2S-4078**	1	SEAL-O-RING	
		1	**8T-0315**	1	SEAL-O-RING	
		1	**8T-8985**	1	CONNECTOR	
I	4	1	**256-7765**	1	HOSE AS	
	5	1	**329-5347**	1	TUBE AS	
I	6	1	**9C-2413**	1	HOSE AS	
	7	1	**261-8505**	1	TUBE AS	
	8	1	**263-9720**	1	TUBE AS	
	9	1	*268-1507*	1	CONNECTOR AS	
		1	**7M-8485**	1	SEAL-O-RING	
		1	**8T-0315**	1	SEAL-O-RING	
		1	**268-1506**	1	CONNECTOR	
	10	1	**277-7091**	1	TUBE AS	
	11	1	**283-3515**	1	TUBE AS	
I	12	1	**283-3516**	1	HOSE AS	
I	14	1	**294-1066**	1	HOSE AS	
	15	1	**303-1891**	1	TUBE AS	
	16	1	*148-8327*	3	CONNECTOR AS	
					(EACH INCLUDES)	
		1	**3D-2824**	1	SEAL-O-RING	
		1	**6V-8637**	1	CONNECTOR	
		1	**6V-9746**	1	SEAL-O-RING	
	17	1	*148-8336*	1	CONNECTOR AS	
		1	**3J-1907**	1	SEAL-O-RING	
		1	**6V-8397**	1	SEAL-O-RING	
		1	**6V-8636**	1	CONNECTOR	
	18	1	*148-8347*	1	ELBOW AS	
		1	**3D-2824**	1	SEAL-O-RING	
		1	**6V-9007**	1	ELBOW	
		1	**6V-9746**	1	SEAL-O-RING	
	19	1	*148-8367*	1	ELBOW AS	
		1	**6V-8397**	1	SEAL-O-RING	
		1	**6V-9850**	1	ELBOW	
	20	1	*148-8383*	1	ELBOW AS	
		1	**3K-0360**	1	SEAL-O-RING	
		1	**6V-8397**	1	SEAL-O-RING	
		1	**8T-1683**	1	ELBOW	
	24	1	**4H-7655**	4	CLAMP-TUBE	
	25	1	**5P-9297**	4	CLIP	
	26	1	**6V-8397**	4	SEAL-O-RING	
	28	1	**6V-9746**	4	SEAL-O-RING	
	30	1	**8M-2773**	2	CLIP	
	31	1	**8T-1887**	2	CLIP (SLOT)	
	32	1	**8T-1888**	2	CLIP (TAB)	
	33	1	**8T-4121**	10	WASHER-HARD (11X21X2.5-MM THK)	
M	34	1	**8T-4136**	2	BOLT (M10X1.5X25-MM)	
M	35	1	**8T-4137**	7	BOLT (M10X1.5X20-MM)	
M	36	1	**8T-4191**	1	BOLT (M10X1.5X16-MM)	
	37	1	**308-7677**	1	CONNECTOR-FILTER	
	38	1	**303-6597**	1	TUBE AS	
I	39	1	**196-3940**	1	HOSE AS	
	40	1	**3J-1907**	1	SEAL-O-RING	

I - REFER TO HYDRAULIC INFORMATION SYSTEM
M - METRIC PART

283-3513 **LINES GP-PUMP (*contd.*)** **i03720861**

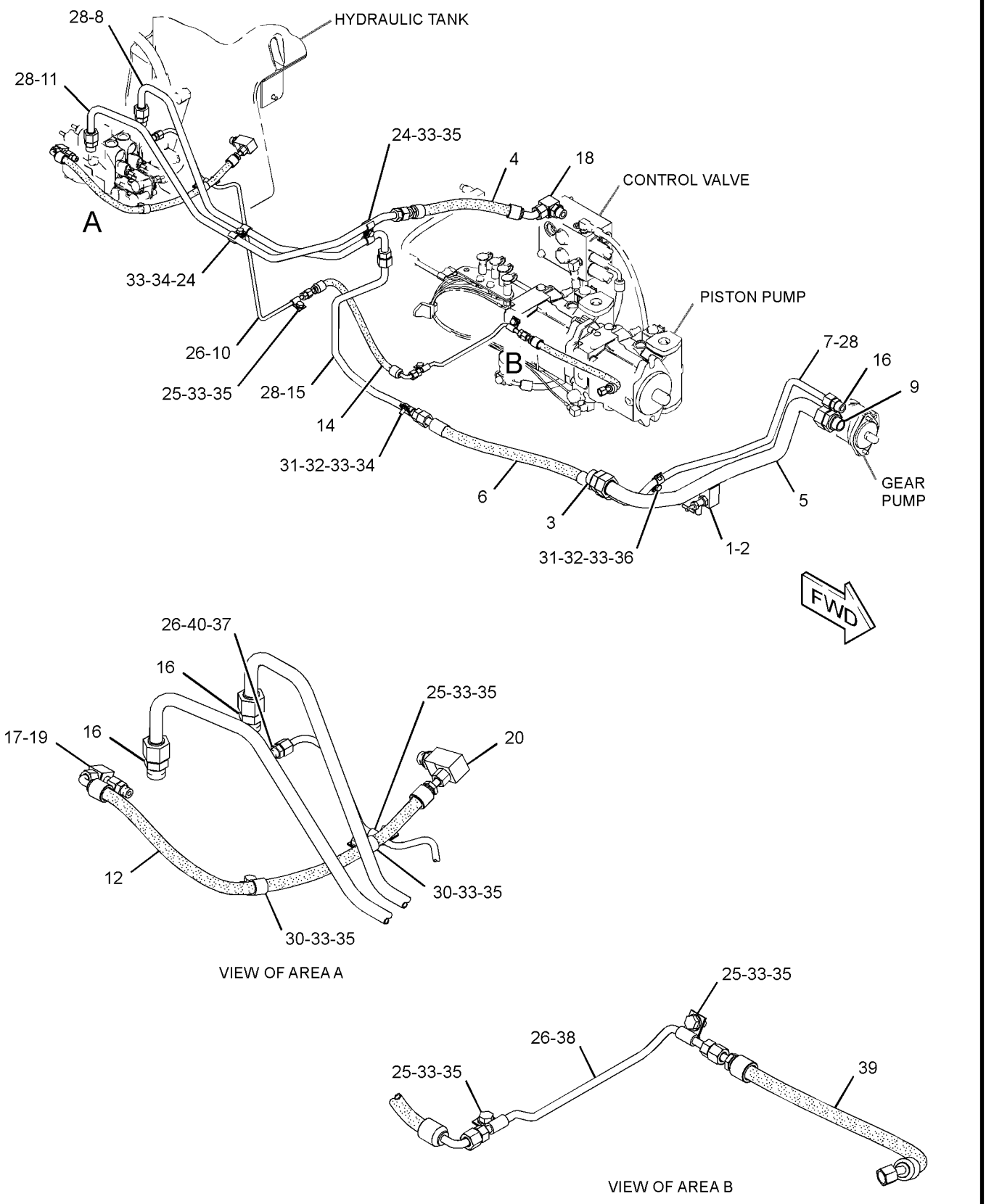

GRAPHIC #1 **<END>** g02043693

283-3513 LINES GP-PUMP

S/N: MMM613-860; RRR447-662
PART OF 264-4550 HYDRAULIC AR
AN ATTACHMENT

SMCS-5057 **i04251379**

NOTE	REF NO	GRAPHIC REF	PART NUMBER	QTY	PART NAME 1 2 3 4 5 6 (PRODUCT LEVEL)	SEE PAGE
	1	1	**6V-7238**	1	VALVE-SHUTOFF (PUMP LINES)	
	2	1	**3K-0360**	1	SEAL-O-RING	
	3	1	*205-4132*	1	CONNECTOR AS	
		1	**2S-4078**	1	SEAL-O-RING	
		1	**8T-0315**	1	SEAL-O-RING	
		1	**8T-8985**	1	CONNECTOR	
I	4	1	**256-7765**	1	HOSE AS	
	5	1	**329-5347**	1	TUBE AS	
I	6	1	**9C-2413**	1	HOSE AS	
	7	1	**261-8505**	1	TUBE AS	
	8	1	**263-9720**	1	TUBE AS	
	9	1	*268-1507*	1	CONNECTOR AS	
		1	**7M-8485**	1	SEAL-O-RING	
		1	**8T-0315**	1	SEAL-O-RING	
		1	**268-1506**	1	CONNECTOR	
	10	1	**277-7091**	1	TUBE AS	
	11	1	**283-3515**	1	TUBE AS	
I	12	1	**283-3516**	1	HOSE AS	
I	14	1	**294-1066**	1	HOSE AS	
C	15	1	**363-1761**	1	TUBE AS	
	16	1	*148-8327*	3	CONNECTOR AS	
					(EACH INCLUDES)	
		1	**3D-2824**	1	SEAL-O-RING	
		1	**6V-8637**	1	CONNECTOR	
		1	**6V-9746**	1	SEAL-O-RING	
	17	1	*148-8336*	1	CONNECTOR AS	
		1	**3J-1907**	1	SEAL-O-RING	
		1	**6V-8397**	1	SEAL-O-RING	
		1	**6V-8636**	1	CONNECTOR	
	18	1	*148-8347*	1	ELBOW AS	
		1	**3D-2824**	1	SEAL-O-RING	
		1	**6V-9007**	1	ELBOW	
		1	**6V-9746**	1	SEAL-O-RING	
	19	1	*148-8367*	1	ELBOW AS	
		1	**6V-8397**	1	SEAL-O-RING	
		1	**6V-9850**	1	ELBOW	
	20	1	*148-8383*	1	ELBOW AS	
		1	**3K-0360**	1	SEAL-O-RING	
		1	**6V-8397**	1	SEAL-O-RING	
		1	**8T-1683**	1	ELBOW	
	24	1	**4H-7655**	4	CLAMP-TUBE	
	25	1	**5P-9297**	4	CLIP	
	26	1	**6V-8397**	4	SEAL-O-RING	
	28	1	**6V-9746**	4	SEAL-O-RING	
	30	1	**8M-2773**	2	CLIP	
	31	1	**8T-1887**	2	CLIP (SLOT)	
	32	1	**8T-1888**	2	CLIP (TAB)	
	33	1	**8T-4121**	10	WASHER-HARD (11X21X2.5-MM THK)	
M	34	1	**8T-4136**	2	BOLT (M10X1.5X25-MM)	
M	35	1	**8T-4137**	7	BOLT (M10X1.5X20-MM)	
M	36	1	**8T-4191**	1	BOLT (M10X1.5X16-MM)	
	37	1	**308-7677**	1	CONNECTOR-FILTER	
	38	1	**303-6597**	1	TUBE AS	
I	39	1	**196-3940**	1	HOSE AS	
	40	1	**3J-1907**	1	SEAL-O-RING	

C - CHANGE FROM PREVIOUS TYPE
I - REFER TO HYDRAULIC INFORMATION SYSTEM
M - METRIC PART

283-3513 **LINES GP-PUMP (*contd.*)** **i04251379**

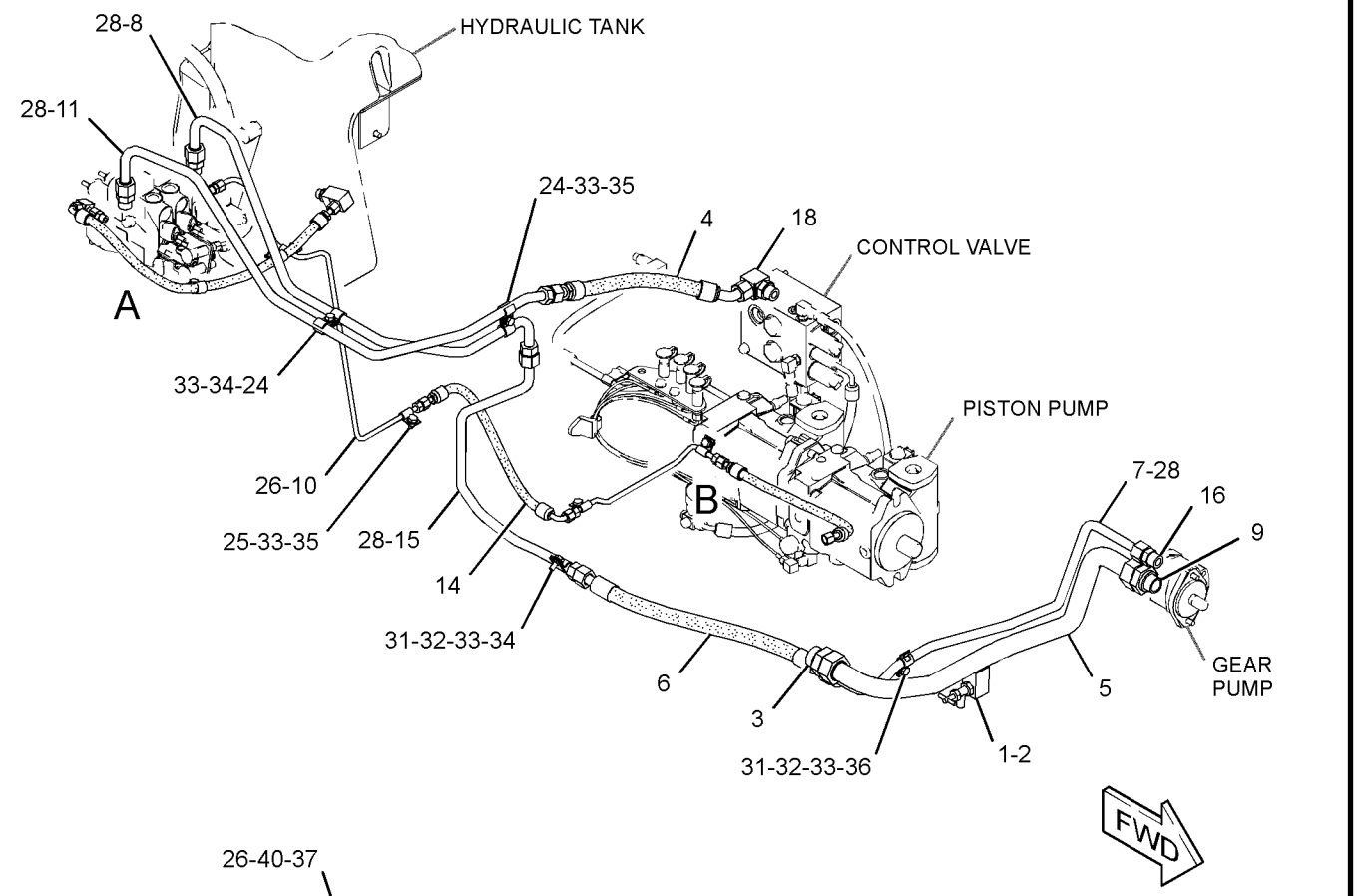

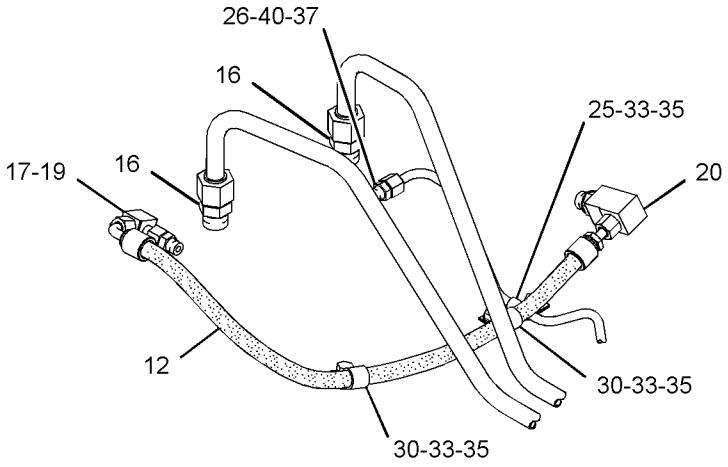

VIEW OF AREA A

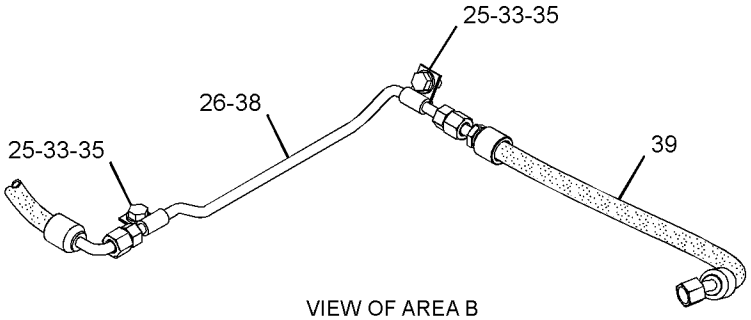

VIEW OF AREA B

GRAPHIC #1 **<END>** g02043693

283-3513 LINES GP-PUMP

S/N: MMM861-UP; RRR663-UP
PART OF 264-4550 HYDRAULIC AR
AN ATTACHMENT

SMCS-5057 **i04921279**

NOTE	REF NO	GRAPHIC REF	PART NUMBER	QTY	PART NAME 1 2 3 4 5 6 (PRODUCT LEVEL)	SEE PAGE
	1	1	**6V-7238**	1	VALVE-SHUTOFF (PUMP LINES)	
	2	1	**3K-0360**	1	SEAL-O-RING	
	3	1	*205-4132*	1	CONNECTOR AS	
		1	**2S-4078**	1	SEAL-O-RING	
		1	**8T-0315**	1	SEAL-O-RING	
		1	**8T-8985**	1	CONNECTOR	
I	4	1	**256-7765**	1	HOSE AS	
	5	1	**329-5347**	1	TUBE AS	
I	6	1	**9C-2413**	1	HOSE AS	
	7	1	**261-8505**	1	TUBE AS	
	8	1	**263-9720**	1	TUBE AS	
	9	1	*268-1507*	1	CONNECTOR AS	
		1	**7M-8485**	1	SEAL-O-RING	
		1	**8T-0315**	1	SEAL-O-RING	
		1	**268-1506**	1	CONNECTOR	
	10	1	**277-7091**	1	TUBE AS	
	11	1	**283-3515**	1	TUBE AS	
I	12	1	**283-3516**	1	HOSE AS	
I	14	1	**294-1066**	1	HOSE AS	
	15	1	**363-1761**	1	TUBE AS	
	16	1	*148-8327*	3	CONNECTOR AS	
					(EACH INCLUDES)	
		1	**3D-2824**	1	SEAL-O-RING	
		1	**6V-8637**	1	CONNECTOR	
		1	**6V-9746**	1	SEAL-O-RING	
	17	1	*148-8336*	1	CONNECTOR AS	
		1	**3J-1907**	1	SEAL-O-RING	
		1	**6V-8397**	1	SEAL-O-RING	
		1	**6V-8636**	1	CONNECTOR	
	18	1	*148-8347*	1	ELBOW AS	
		1	**3D-2824**	1	SEAL-O-RING	
		1	**6V-9007**	1	ELBOW	
		1	**6V-9746**	1	SEAL-O-RING	
	19	1	*148-8367*	1	ELBOW AS	
		1	**6V-8397**	1	SEAL-O-RING	
		1	**6V-9850**	1	ELBOW	
C	20	1	*148-8374*	1	ELBOW AS	
		1	**3K-0360**	1	SEAL-O-RING	
		1	**6V-8397**	1	SEAL-O-RING	
		1	**6V-8723**	1	ELBOW	
	24	1	**4H-7655**	4	CLAMP-TUBE	
	25	1	**5P-9297**	4	CLIP	
	26	1	**6V-8397**	4	SEAL-O-RING	
	28	1	**6V-9746**	4	SEAL-O-RING	
	30	1	**8M-2773**	2	CLIP	
	31	1	**8T-1887**	2	CLIP (SLOT)	
	32	1	**8T-1888**	2	CLIP (TAB)	
	33	1	**8T-4121**	10	WASHER-HARD (11X21X2.5-MM THK)	
M	34	1	**8T-4136**	2	BOLT (M10X1.5X25-MM)	
M	35	1	**8T-4137**	7	BOLT (M10X1.5X20-MM)	
M	36	1	**8T-4191**	1	BOLT (M10X1.5X16-MM)	
	37	1	**308-7677**	1	CONNECTOR-FILTER	
	38	1	**303-6597**	1	TUBE AS	
I	39	1	**196-3940**	1	HOSE AS	
	40	1	**3J-1907**	1	SEAL-O-RING	

C - CHANGE FROM PREVIOUS TYPE
I - REFER TO HYDRAULIC INFORMATION SYSTEM
M - METRIC PART

283-3513 **LINES GP-PUMP (*contd.*)** **i04921279**

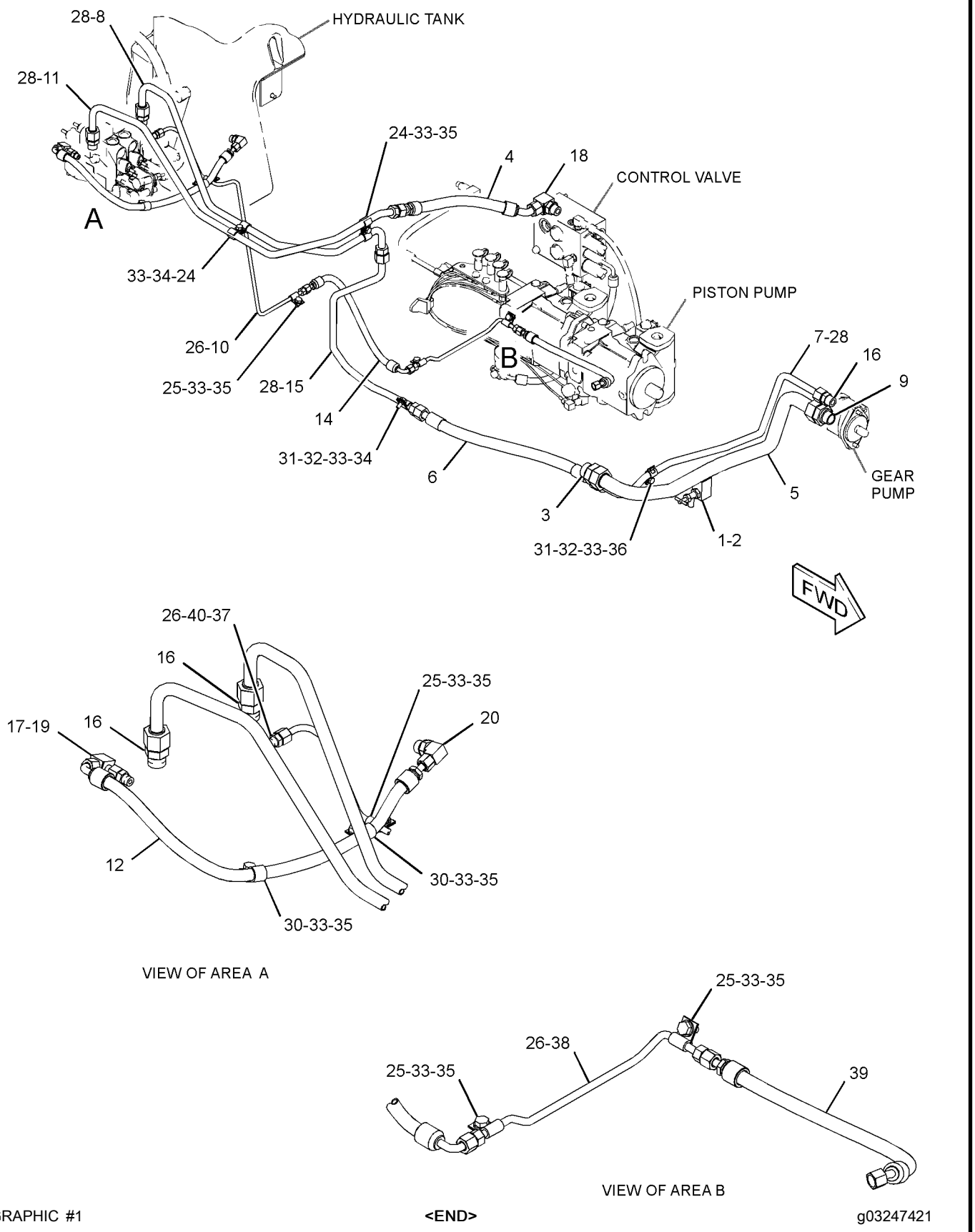

GRAPHIC #1 **<END>** g03247421

325-7275 LINES GP-PUMP—IMPLEMENT PUMP

S/N: MMM1-UP; RRR1-UP
PART OF 325-6529, 325-6531 HYDRAULIC AR
AN ATTACHMENT

SMCS-5057 **i04895222**

NOTE	REF NO	GRAPHIC REF	PART NUMBER	QTY	PART NAME 1 2 3 4 5 6 (PRODUCT LEVEL)	SEE PAGE
	1	1	**6V-7238**	1	VALVE-SHUTOFF (IMPLEMENT PUMP)	
I	2	1	**9C-2413**	1	HOSE AS	
	3	1	**119-5708**	1	CLIP	
I	4	1	**163-4520**	1	HOSE AS	
I	5	1	**196-3940**	1	HOSE AS	
	6	1	*205-4132*	1	CONNECTOR AS	
		1	**2S-4078**	1	SEAL-O-RING	
		1	**8T-0315**	1	SEAL-O-RING	
		1	**8T-8985**	1	CONNECTOR	
I	7	1	**256-7765**	1	HOSE AS	
	8	1	**261-8505**	1	TUBE AS	
	9	1	**263-9720**	1	TUBE AS	
	10	1	*268-1507*	1	CONNECTOR AS	
		1	**7M-8485**	1	SEAL-O-RING	
		1	**8T-0315**	1	SEAL-O-RING	
		1	**268-1506**	1	CONNECTOR	
	11	1	**277-7091**	1	TUBE AS	
I	12	1	**294-1066**	1	HOSE AS	
	13	1	**363-1761**	1	TUBE AS	
	14	1	**303-6597**	1	TUBE AS	
	15	1	**308-7677**	1	CONNECTOR-FILTER	
	16	1	**327-6742**	1	TUBE AS	
	17	1	**327-6743**	1	TUBE AS	
	18	1	**329-5347**	1	TUBE AS	
	19	1	*148-8327*	3	CONNECTOR AS	
					(EACH INCLUDES)	
		1	**3D-2824**	1	SEAL-O-RING	
		1	**6V-8637**	1	CONNECTOR	
		1	**6V-9746**	1	SEAL-O-RING	
	20	1	*148-8336*	1	CONNECTOR AS	
		1	**3J-1907**	1	SEAL-O-RING	
		1	**6V-8397**	1	SEAL-O-RING	
		1	**6V-8636**	1	CONNECTOR	
	21	1	*148-8347*	1	ELBOW AS	
		1	**3D-2824**	1	SEAL-O-RING	
		1	**6V-9007**	1	ELBOW	
		1	**6V-9746**	1	SEAL-O-RING	
	22	1	*148-8383*	1	ELBOW AS	
		1	**3K-0360**	1	SEAL-O-RING	
		1	**6V-8397**	1	SEAL-O-RING	
		1	**8T-1683**	1	ELBOW	
	23	1	**3J-1907**	1	SEAL-O-RING	
	24	1	**3K-0360**	1	SEAL-O-RING	
	25	1	**4H-7655**	4	CLAMP-TUBE	
	26	1	**5P-9297**	4	CLIP	
	27	1	**6V-8397**	5	SEAL-O-RING	
	28	1	**6V-9746**	4	SEAL-O-RING	
	30	1	**8M-2773**	1	CLIP	
	31	1	**8T-1887**	2	CLIP (SLOT)	
	32	1	**8T-1888**	2	CLIP (TAB)	
	33	1	**8T-4121**	10	WASHER-HARD (11X21X2.5-MM THK)	
M	34	1	**8T-4136**	2	BOLT (M10X1.5X25-MM)	
M	35	1	**8T-4137**	7	BOLT (M10X1.5X20-MM)	
M	36	1	**8T-4191**	1	BOLT (M10X1.5X16-MM)	

I - REFER TO HYDRAULIC INFORMATION SYSTEM
M - METRIC PART

325-7275 **LINES GP-PUMP (*contd.*)** **i04895222**

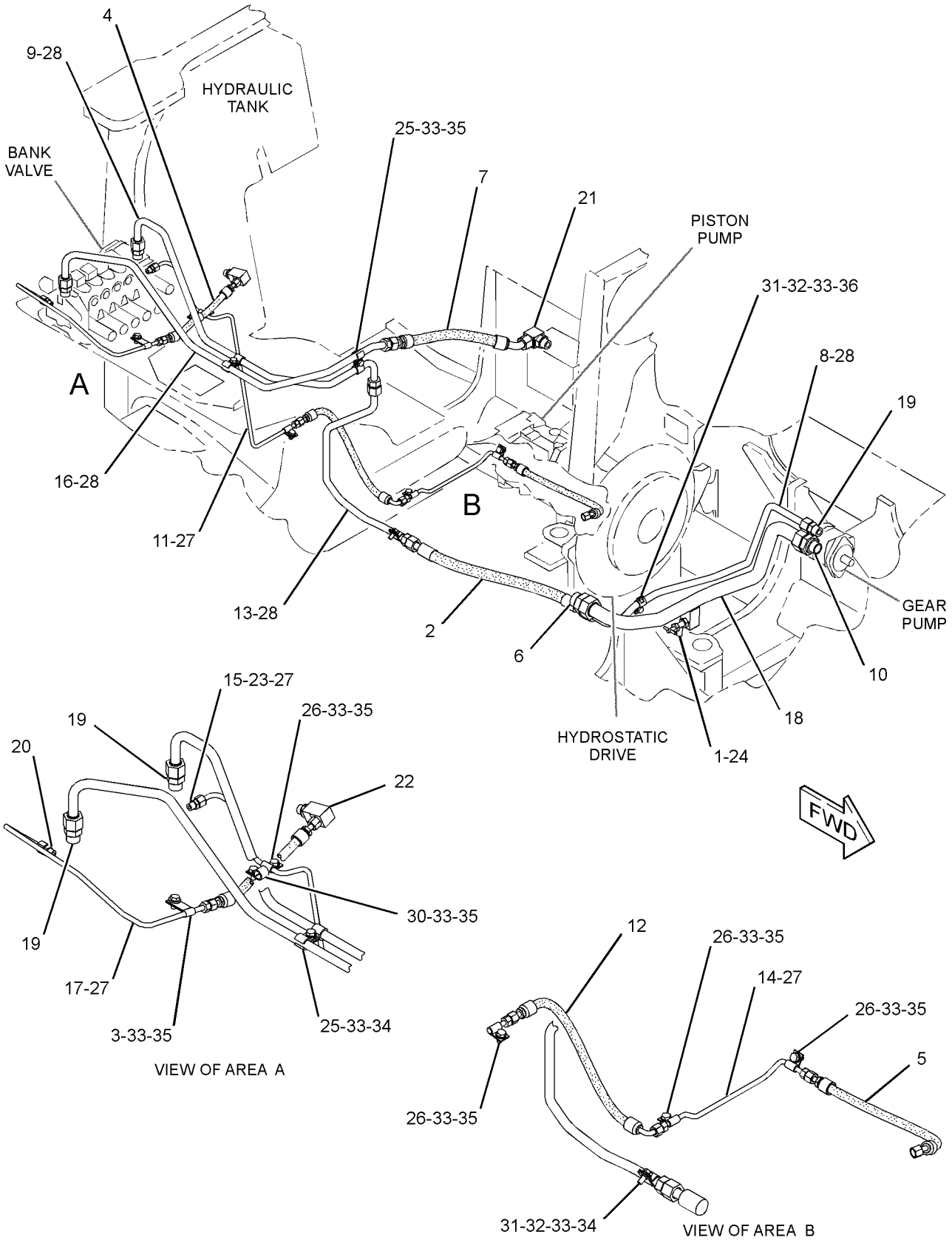

GRAPHIC #1 **<END>** g03043196

327-3393 LINES GP-PUMP

S/N: MMM1-UP; RRR1-UP
PART OF 325-6543, 325-6544 MODIFICATION AR
AN ATTACHMENT

SMCS-5057 **i03755251**

NOTE	REF NO	GRAPHIC REF	PART NUMBER	QTY	PART NAME 1 2 3 4 5 6 (PRODUCT LEVEL)	SEE PAGE
I	1	1	*327-3395*	1	HOSE AS	
I		1	**256-7765**	1	HOSE AS	
		1	**163-8812**	2	CLAMP	
E		1	**324-9706**		INSULATION (47-CM)	
I	2	1	*327-8915*	1	HOSE AS	
		1	**163-8812**	2	CLAMP	
I		1	**9C-2413**	1	HOSE AS	
E		1	**326-3568**		INSULATION (52-CM)	
I	3	1	*327-8916*	1	HOSE AS	
E		1	**193-6911**		INSULATION (61-CM)	
		1	**163-8811**	2	CLAMP	
I		1	**196-3940**	1	HOSE AS	
I	4	1	*328-8626*	1	HOSE AS	
		1	**163-8811**	2	CLAMP	
E		1	**193-6911**		INSULATION (42-CM)	
I		1	**294-1066**	1	HOSE AS	
I	5	1	*328-8627*	1	HOSE AS	
		1	**163-8811**	2	CLAMP	
I		1	**163-4520**	1	HOSE AS	
E		1	**193-6911**		INSULATION (27-CM)	
	6	1	**6V-1889**	2	CLIP	

E - ORDER BY THE CENTIMETER
I - REFER TO HYDRAULIC INFORMATION SYSTEM

327-3393 **LINES GP-PUMP (*contd.*)** **i03755251**

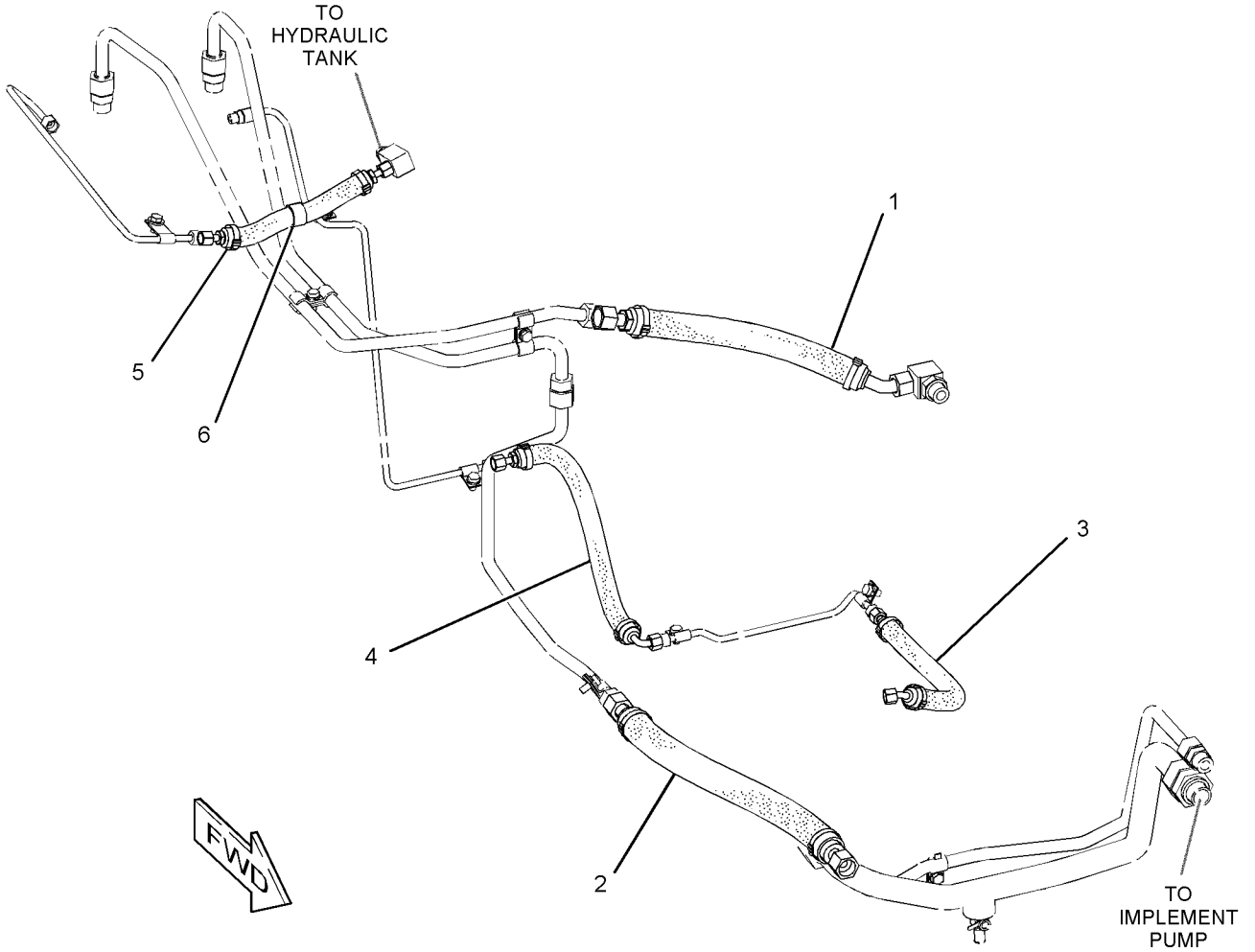

GRAPHIC #1 **<END>** g02024088

254-1460 LINES GP-REAR ATTACHMENT

S/N: MMM1-UP; RRR1-UP
PART OF 264-4551, 264-4552 HYDRAULIC AR
AN ATTACHMENT
TYPE 1

SMCS-5057 **i02679288**

NOTE	REF NO	GRAPHIC REF	PART NUMBER	QTY	PART NAME 1 2 3 4 5 6 (PRODUCT LEVEL)	SEE PAGE
I	1	1	**237-2598**	1	HOSE AS	
I	2	1	**259-0122**	1	HOSE AS	
I	3	1	**272-0343**	1	HOSE AS	
	4	1	**292-3480**	1	VALVE GP-LOAD CONTROL	
		1	**295-4695**	1	VALVE GP-RELIEF (LOAD CONTROL)	
		1	**148-9364**	1	VALVE GP-CHECK (LOAD CONTROL)	
	5	1	*148-8345*	3	CONNECTOR AS	
					(EACH INCLUDES)	
		1	**2M-9780**	1	SEAL-O-RING	
		1	**6V-8398**	1	SEAL-O-RING	
		1	**6V-8638**	1	CONNECTOR	
	6	1	*148-8375*	2	ELBOW AS	
					(EACH INCLUDES)	
		1	**6V-8398**	2	SEAL-O-RING	
		1	**6V-8981**	1	ELBOW	
	7	1	**2M-9780**	1	SEAL-O-RING	
	8	1	**6V-8398**	1	SEAL-O-RING	
	9	1	**6V-8721**	1	ELBOW	
	10	1	**6V-9169**	2	NUT (13/16-16-THD)	
	11	1	**6V-9830**	2	CAP AS (AUX HYD FUNCTION)	
M	12	1	**7X-2535**	2	BOLT (M6X1X60-MM)	
	13	1	**9X-8256**	2	WASHER (6.6X12X2-MM THK)	

I - REFER TO HYDRAULIC INFORMATION SYSTEM
M - METRIC PART

254-1460 **LINES GP-REAR ATTACHMENT (*contd.*)** **i02679288**

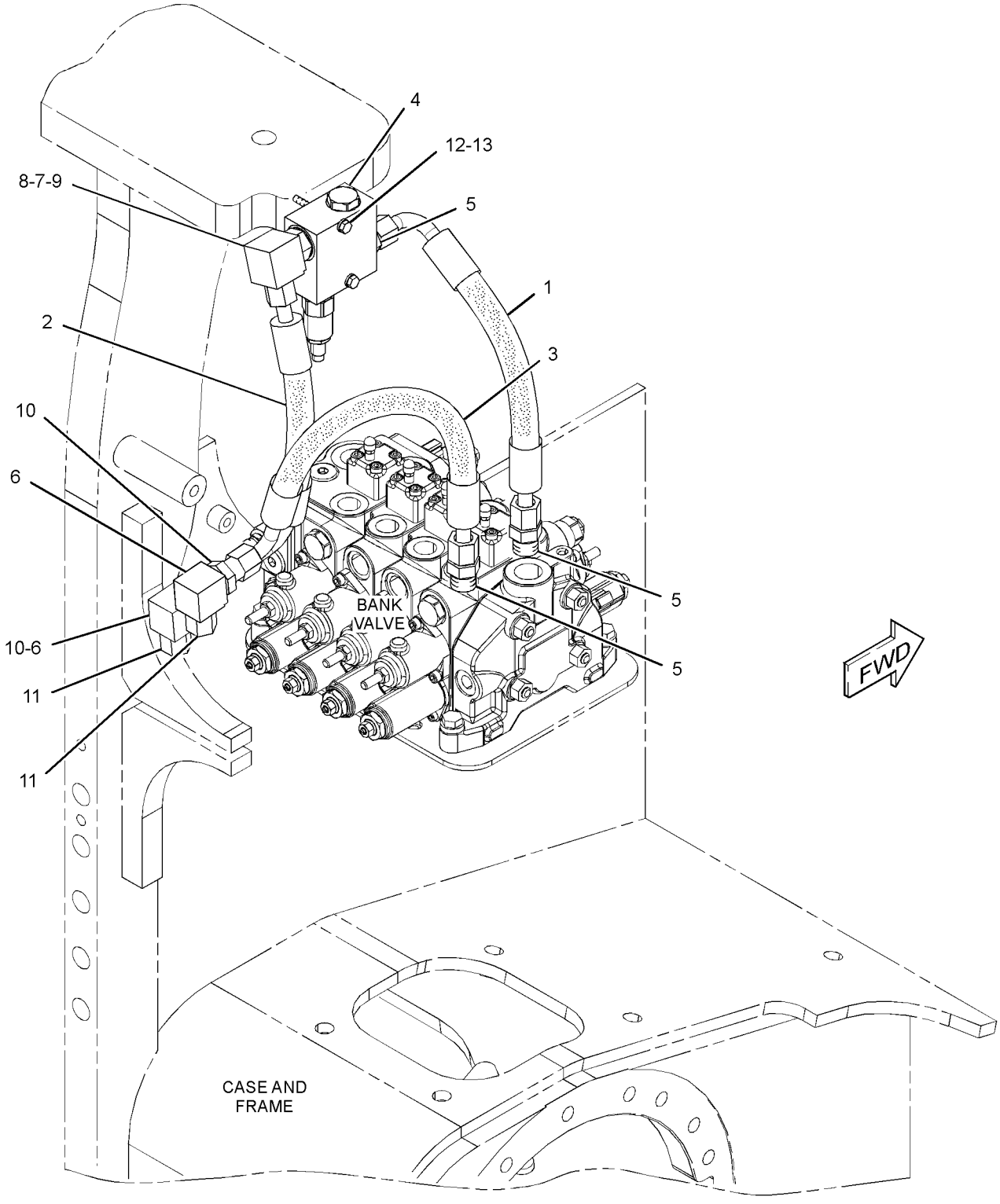

GRAPHIC #1 **<END>** g01362499

254-1460 LINES GP-REAR ATTACHMENT

S/N: MMM1-UP; RRR1-UP
PART OF 264-4551, 264-4552 HYDRAULIC AR
AN ATTACHMENT
TYPE 2

SMCS-5057 **i03149707**

NOTE	REF NO	GRAPHIC REF	PART NUMBER	QTY	PART NAME 1 2 3 4 5 6 (PRODUCT LEVEL)	SEE PAGE
I	1	1	**237-2598**	1	HOSE AS	
I	2	1	**259-0122**	1	HOSE AS	
I	3	1	**272-0343**	1	HOSE AS	
C	4	1	**319-6909**	1	VALVE GP-LOAD CONTROL	
		1	**319-1824**	1	VALVE GP-RELIEF (LOAD CONTROL)	
		1	**148-9364**	1	VALVE GP-CHECK (LOAD CONTROL)	
	5	1	*148-8345*	3	CONNECTOR AS	
					(EACH INCLUDES)	
		1	**2M-9780**	1	SEAL-O-RING	
		1	**6V-8398**	1	SEAL-O-RING	
		1	**6V-8638**	1	CONNECTOR	
	6	1	*148-8375*	2	ELBOW AS	
					(EACH INCLUDES)	
		1	**6V-8398**	2	SEAL-O-RING	
		1	**6V-8981**	1	ELBOW	
	7	1	**2M-9780**	1	SEAL-O-RING	
	8	1	**6V-8398**	1	SEAL-O-RING	
	9	1	**6V-8721**	1	ELBOW	
	10	1	**6V-9169**	2	NUT (13/16-16-THD)	
	11	1	**6V-9830**	2	CAP AS (AUX HYD FUNCTION)	
M	12	1	**7X-2535**	2	BOLT (M6X1X60-MM)	
	13	1	**9X-8256**	2	WASHER (6.6X12X2-MM THK)	

C - CHANGE FROM PREVIOUS TYPE
I - REFER TO HYDRAULIC INFORMATION SYSTEM
M - METRIC PART

254-1460 **LINES GP-REAR ATTACHMENT (*contd.*)** **i03149707**

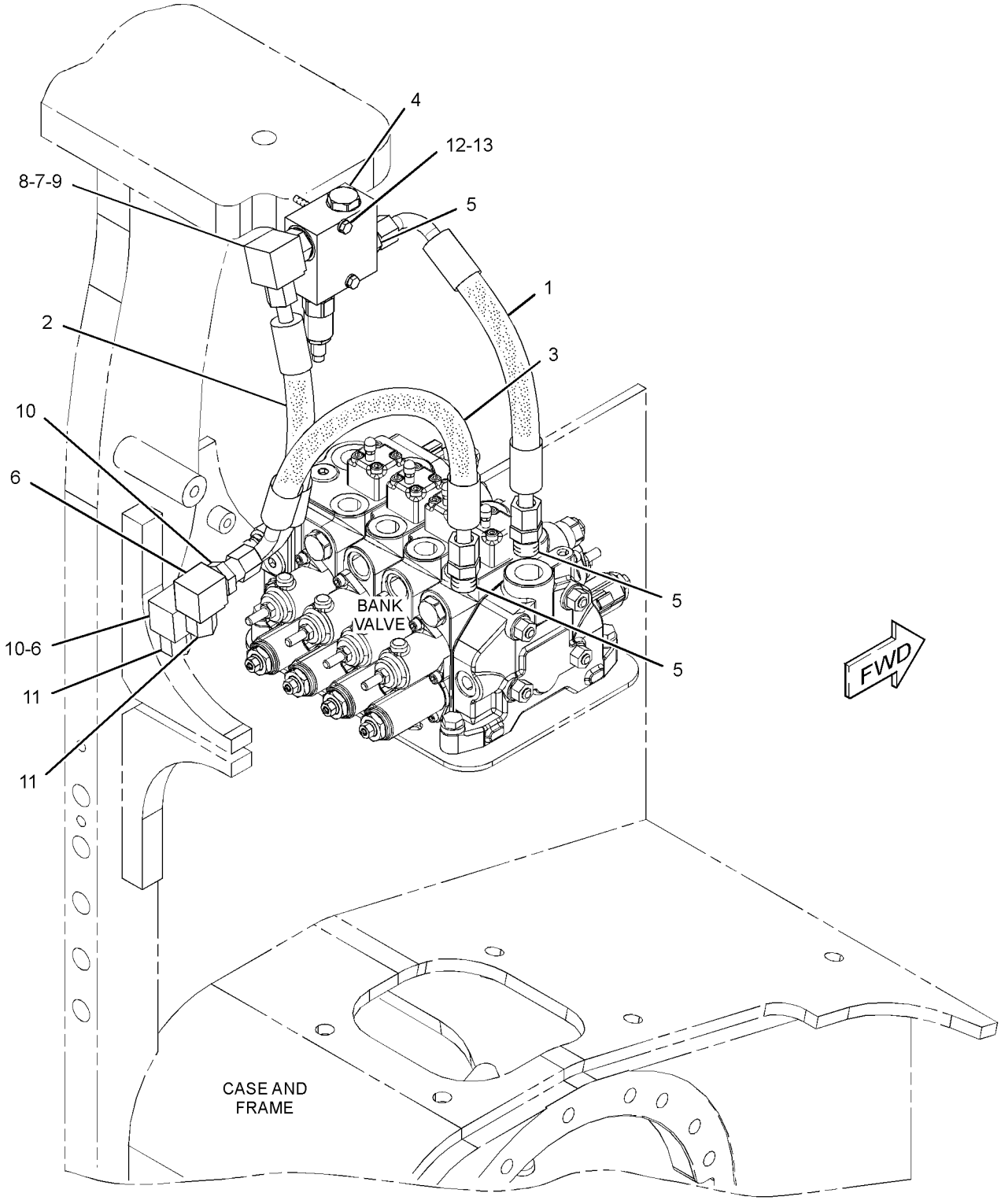

GRAPHIC #1 **<END>** g01362499

325-7273 LINES GP-REAR ATTACHMENT

S/N: MMM1-UP; RRR1-UP

PART OF 325-6523, 325-6526, 325-6529, 325-6531 HYDRAULIC AR AN ATTACHMENT

SMCS-5057 **i04403742**

NOTE	REF NO	GRAPHIC REF	PART NUMBER	QTY	PART NAME 1 2 3 4 5 6 (PRODUCT LEVEL)	SEE PAGE
	1	1	**319-6909**	1	VALVE GP-LOAD CONTROL (HYDRAULIC)	
		1	**148-9364**	1	VALVE GP-CHECK (LOAD CONTROL)	
		1	**319-1824**	1	VALVE GP-RELIEF (LOAD CONTROL)	
	2	1	*330-3518*	1	HOSE AS	
I		1	**237-2598**	1	HOSE AS	
E		1	**326-3567**		INSULATION (24-CM)	
		1	**163-8811**	2	CLAMP	
	3	1	*330-3519*	1	HOSE AS	
I		1	**259-0122**	1	HOSE AS	
E		1	**326-3567**		INSULATION (20-CM)	
		1	**163-8811**	2	CLAMP	
	4	1	**330-3520**	1	HOSE AS	
I		1	**272-0343**	1	HOSE AS	
E		1	**326-3567**		INSULATION (36-CM)	
		1	**163-8811**	2	CLAMP	
	5	1	*148-8345*	3	CONNECTOR AS	
					(EACH INCLUDES)	
		1	**2M-9780**	1	SEAL-O-RING	
		1	**6V-8398**	1	SEAL-O-RING	
		1	**6V-8638**	1	CONNECTOR	
	6	1	*148-8375*	2	ELBOW AS	
					(EACH INCLUDES)	
		1	**6V-8398**	2	SEAL-O-RING	
		1	**6V-8981**	1	ELBOW	
	7	1	**2M-9780**	1	SEAL-O-RING	
	8	1	**6V-8398**	1	SEAL-O-RING	
	9	1	**6V-8721**	1	ELBOW	
	10	1	**6V-9169**	2	NUT (13/16-16-THD)	
	11	1	**6V-9830**	2	CAP AS	
M	12	1	**7X-2535**	2	BOLT (M6X1X60-MM)	
	13	1	**9X-8256**	2	WASHER (6.6X12X2-MM THK)	

E - ORDER BY THE CENTIMETER
I - REFER TO HYDRAULIC INFORMATION SYSTEM
M - METRIC PART

325-7273 **LINES GP-REAR ATTACHMENT (*contd.*)** **i04403742**

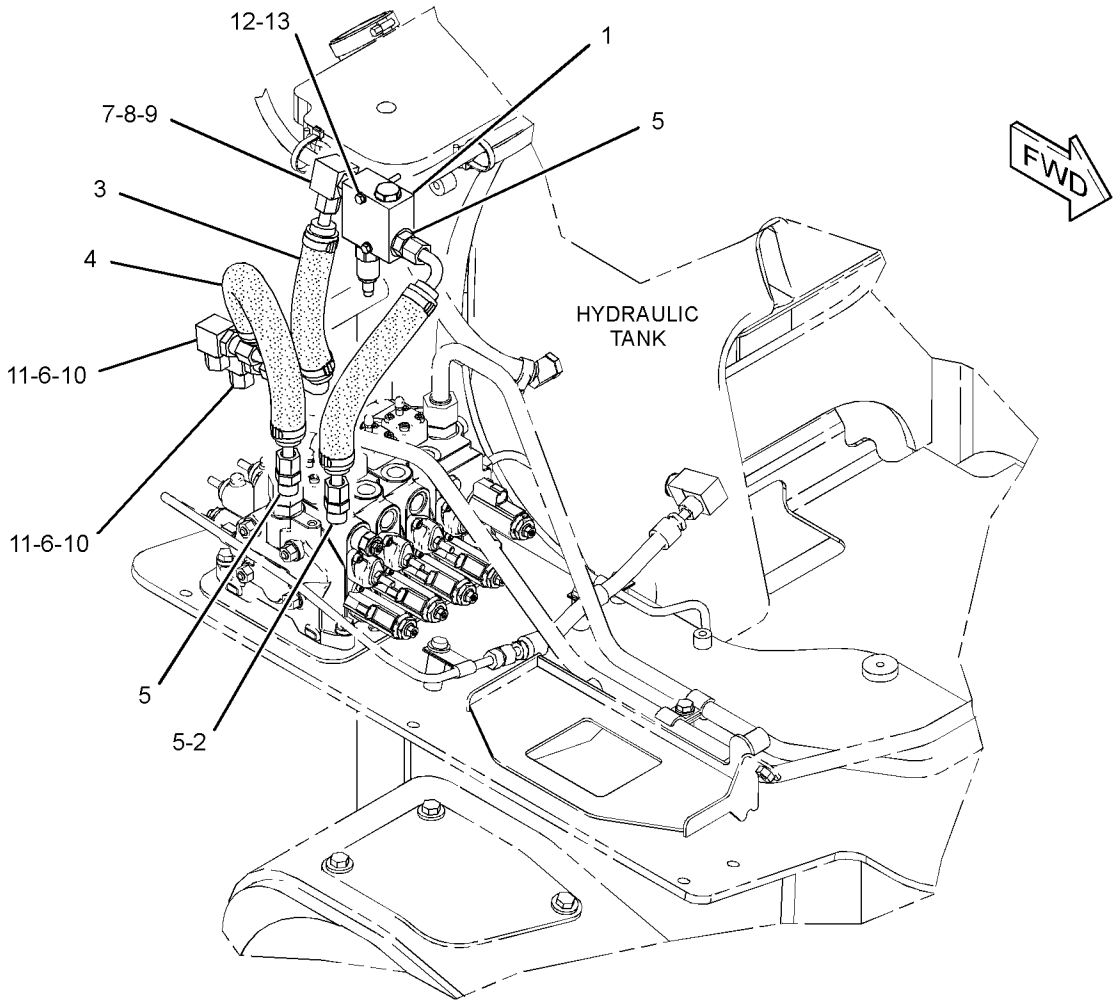

GRAPHIC #1 **<END>** g02024490

263-3323 LINES GP-RIPPER

S/N: MMM1-UP; RRR1-UP
PART OF 262-4407 RIPPER AR
AN ATTACHMENT
TYPE 1

SMCS-5057, 5352, 5356 **i02882979**

NOTE	REF NO	GRAPHIC REF	PART NUMBER	QTY	PART NAME 1 2 3 4 5 6 (PRODUCT LEVEL)	SEE PAGE
I	1	1	**194-0627**	2	HOSE AS	
I	2	1	**194-0628**	2	HOSE AS	
	3	1	**264-3888**	1	TUBE AS	
	4	1	**264-3889**	1	TUBE AS	
	5	1	**264-3890**	1	PLATE AS	
	6	1	**264-3891**	1	PLATE	
	7	1	**264-6941**	1	BRACKET AS	
	8	1	**283-6370**	2	TUBE AS	
	9	1	*148-8315*	2	CONNECTOR AS	
					(EACH INCLUDES)	
		1	**2M-9780**	1	SEAL-O-RING	
		1	**6V-8642**	1	CONNECTOR	
		1	**7J-9108**	1	SEAL-O-RING	
	10	1	*148-8345*	2	CONNECTOR AS	
					(EACH INCLUDES)	
		1	**2M-9780**	1	SEAL-O-RING	
		1	**6V-8398**	1	SEAL-O-RING	
		1	**6V-8638**	1	CONNECTOR	
	11	1	*148-8375*	2	ELBOW AS	
					(EACH INCLUDES)	
		1	**6V-8398**	2	SEAL-O-RING	
		1	**6V-8981**	1	ELBOW	
	12	1	*150-4037*	2	TEE AS	
					(EACH INCLUDES)	
		1	**6V-8398**	2	SEAL-O-RING	
		1	**6V-9844**	1	TEE-SWIVEL	
M	13	1	**5C-7261**	1	NUT (M8X1.25-THD)	
	14	1	**6V-8398**	2	SEAL-O-RING	
	15	1	**6V-9169**	2	NUT (13/16-16-THD)	
	16	1	**7X-7729**	5	WASHER (11X25X3-MM THK)	
	17	1	**8B-9424**	2	CLAMP	
	18	1	**8T-1895**	4	CLIP (SLOT)	
	19	1	**8T-1896**	4	CLIP (TAB)	
	20	1	**8T-4121**	6	WASHER-HARD (11X21X2.5-MM THK)	
M	21	1	**8T-4136**	11	BOLT (M10X1.5X25-MM)	
	23	1	**8T-4224**	2	WASHER-HARD (8.8X16X2-MM THK)	
M	24	1	**8T-4908**	1	BOLT (M8X1.25X25-MM)	
	25	1	**9R-1004**	2	CLIP (TAB)	
	26	1	**9R-1005**	2	CLIP (SLOT)	

I - REFER TO HYDRAULIC INFORMATION SYSTEM
M - METRIC PART

263-3323 **LINES GP-RIPPER (*contd.*)** **i02882979**

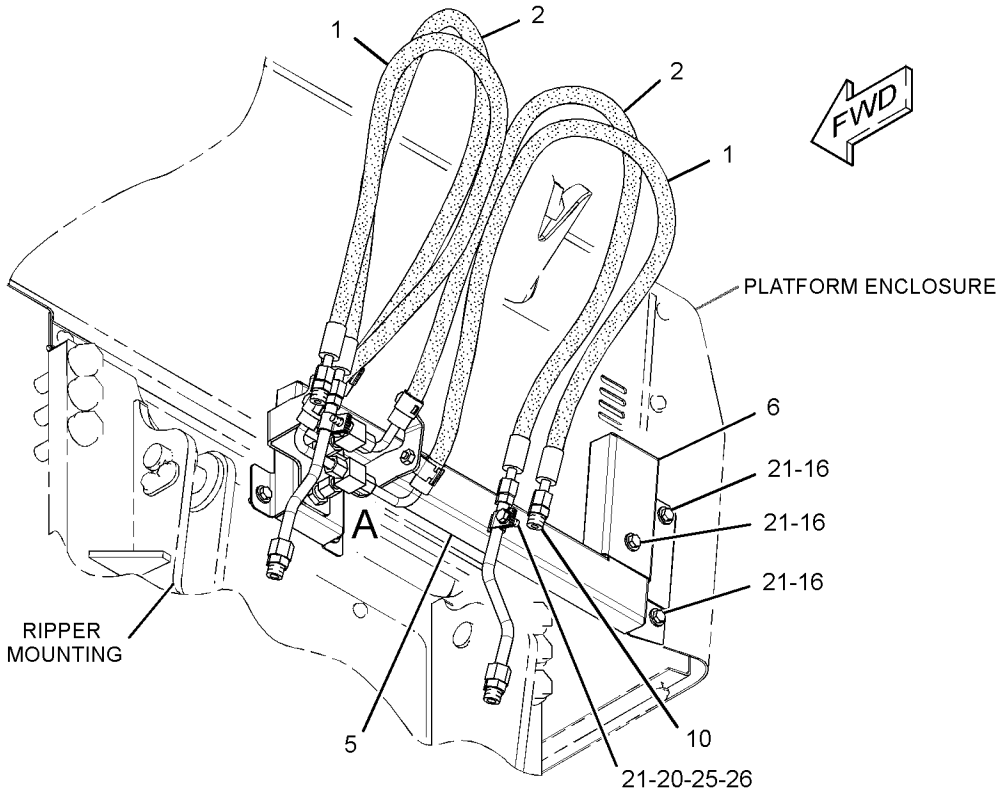

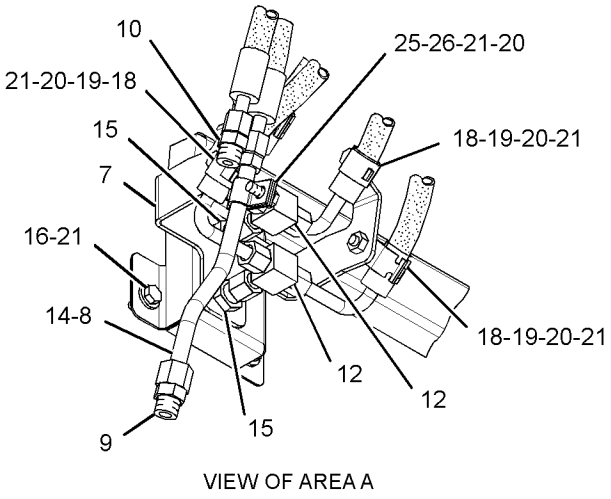

VIEW OF AREA A

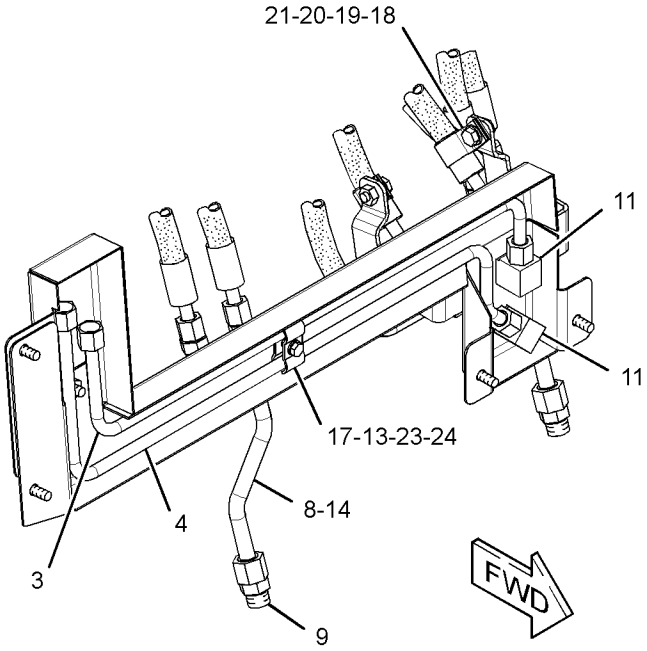

GRAPHIC #1 **<END>** g01520727

263-3323 LINES GP-RIPPER

S/N: MMM1-UP; RRR1-UP
PART OF 262-4407 RIPPER AR
AN ATTACHMENT
TYPE 2

SMCS-5057, 5352, 5356 **i04338010**

NOTE	REF NO	GRAPHIC REF	PART NUMBER	QTY	PART NAME 1 2 3 4 5 6 (PRODUCT LEVEL)	SEE PAGE
	1	1	**264-3888**	1	TUBE AS	
	2	1	**264-3889**	1	TUBE AS	
	3	1	**264-3890**	1	PLATE AS	
	4	1	**264-3891**	1	PLATE	
	5	1	**264-6941**	1	BRACKET AS	
CI	6	1	**369-4706**	2	HOSE AS	
CI	7	1	**369-4707**	2	HOSE AS	
C	8	1	*148-8345*	4	CONNECTOR AS	
					(EACH INCLUDES)	
		1	**2M-9780**	1	SEAL-O-RING	
		1	**6V-8398**	1	SEAL-O-RING	
		1	**6V-8638**	1	CONNECTOR	
	9	1	*148-8375*	2	ELBOW AS	
					(EACH INCLUDES)	
		1	**6V-8398**	2	SEAL-O-RING	
		1	**6V-8981**	1	ELBOW	
	10	1	*150-4037*	2	TEE AS	
					(EACH INCLUDES)	
		1	**6V-8398**	2	SEAL-O-RING	
		1	**6V-9844**	1	TEE-SWIVEL	
M	11	1	**5C-7261**	1	NUT (M8X1.25-THD)	
C	12	1	**5P-7462**	4	CLIP (SLOT)	
C	13	1	**5P-7463**	4	CLIP (TAB)	
C	14	1	**5P-7464**	2	CLIP (SLOT)	
C	15	1	**5P-7465**	2	CLIP (TAB)	
C	16	1	**6V-1249**	2	GROMMET	
	17	1	**6V-9169**	2	NUT (13/16-16-THD)	
	18	1	**7X-7729**	5	WASHER (11X25X3-MM THK)	
	19	1	**8B-9424**	2	CLAMP	
	20	1	**8T-4121**	6	WASHER-HARD (11X21X2.5-MM THK)	
CM	21	1	**8T-4136**	5	BOLT (M10X1.5X25-MM)	
CM	22	1	**8T-4195**	6	BOLT (M10X1.5X30-MM)	
	23	1	**8T-4224**	2	WASHER-HARD (8.8X16X2-MM THK)	
M	24	1	**8T-4908**	1	BOLT (M8X1.25X25-MM)	

C - CHANGE FROM PREVIOUS TYPE
I - REFER TO HYDRAULIC INFORMATION SYSTEM
M - METRIC PART

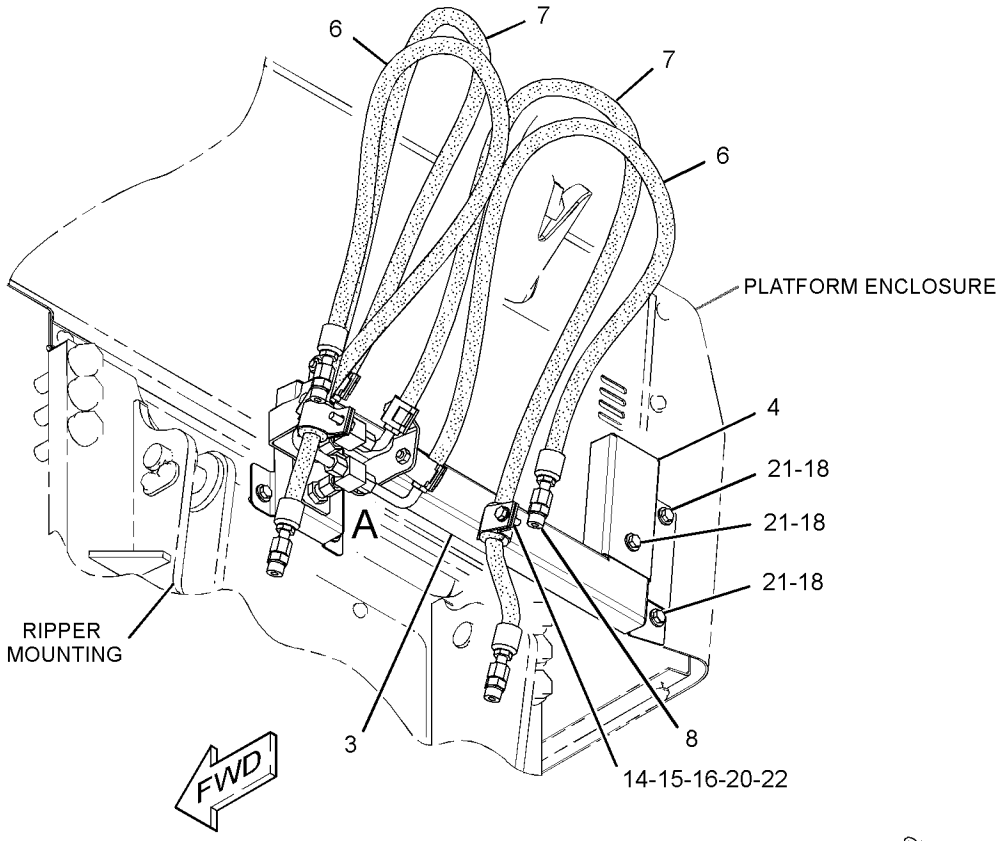

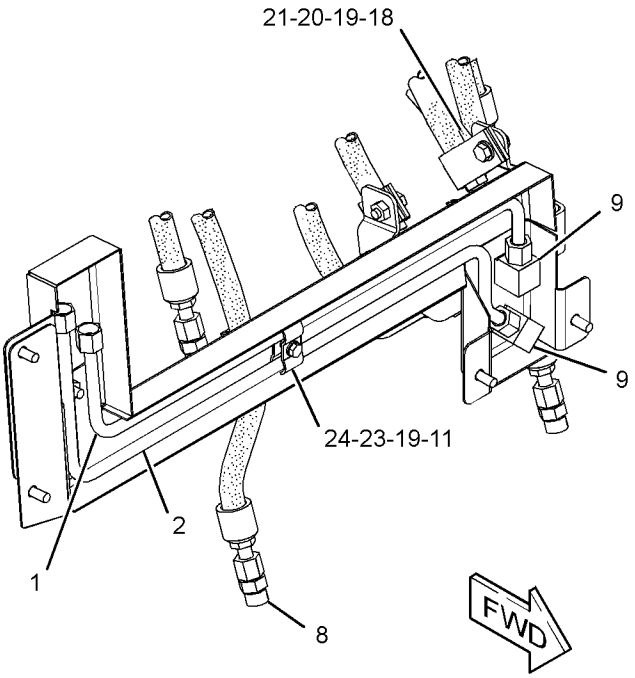

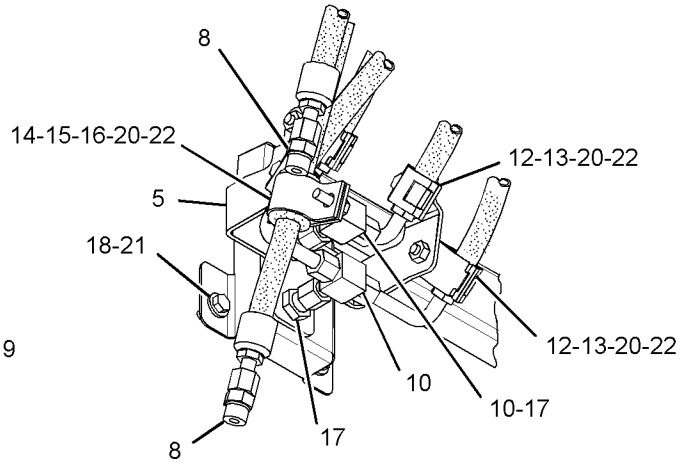

VIEW OF AREA A

GRAPHIC #1 **<END>** g02533059

284-0970 LINES GP-WINCH

S/N: MMM1-UP; RRR1-UP
PART OF 271-9180 DRIVE AR-WINCH
AN ATTACHMENT
TYPE 1

SMCS-5179 **i02696084**

NOTE	REF NO	GRAPHIC REF	PART NUMBER	QTY	PART NAME 1 2 3 4 5 6 (PRODUCT LEVEL)	SEE PAGE
	1	2	**6V-0852**	1	CAP-DUST	
	2	2	**7K-1181**	5	STRAP-CABLE	
	3	2	**7X-7945**	1	ADAPTER	
	4	1	**9V-6589**	2	CLAMP-DOUBLE	
	5	2	**091-9035**	1	SPACER (11X25X20-MM THK)	
	6	1	**102-8705**	1	PLATE	
I	7	2	**115-3799**	1	HOSE AS	
	8	2	**122-1951**	2	COVER	
	9	2	*164-9640*	1	CONNECTOR AS	
		2	**3J-1907**	1	SEAL-O-RING	
		2	**4J-5477**	1	SEAL-O-RING	
		2	**145-2237**	1	CONNECTOR	
	10	2	**200-6345**	2	MOUNT (DUAL SWIVEL)	
Y	11	1	**201-2744**	1	FILTER GP-OIL (HYDRAULIC)	921
	12	1	**206-0452**	1	PLATE	
I	13	1	**261-8503**	1	HOSE AS	
I	14	1	**261-8504**	1	HOSE AS	
	15	1	**265-2166**	1	BRACKET AS	
	16	1	**272-3545**	1	TUBE AS	
	17	1	**276-4679**	1	TUBE AS	
	18	2	**276-8181**	1	HOSE AS	
	19	2	**282-5062**	1	BRACKET AS	
I	20	2	**282-5066**	1	HOSE AS	
I	21	1	**282-5072**	1	HOSE AS	
I	22	1	**282-5074**	1	HOSE AS	
I	23	1	**305-7954**	1	HOSE AS	
I	24	2	**305-7955**	1	HOSE AS	
	25	1	**132-7551**	3	SPACER (11X19X6-MM THK)	
	26	2	*148-8315*	1	CONNECTOR AS	
		2	**2M-9780**	1	SEAL-O-RING	
		2	**6V-8642**	1	CONNECTOR	
		2	**7J-9108**	1	SEAL-O-RING	
	27	1	*148-8336*	1	CONNECTOR AS	
		1	**3J-1907**	1	SEAL-O-RING	
		1	**6V-8397**	1	SEAL-O-RING	
		1	**6V-8636**	1	CONNECTOR	
	28	1,2	*148-8341*	2	CONNECTOR AS	
					(EACH INCLUDES)	
		1,2	**3D-2824**	1	SEAL-O-RING	
		1,2	**6V-8713**	1	CONNECTOR	
		1,2	**7J-9108**	1	SEAL-O-RING	
	29	2	*148-8342*	1	CONNECTOR AS	
		2	**3K-0360**	1	SEAL-O-RING	
		2	**6V-8632**	1	CONNECTOR	
		2	**7J-9108**	1	SEAL-O-RING	
	30	1	*148-8356*	1	ELBOW AS	
		1	**2S-4078**	1	SEAL-O-RING	
		1	**6V-8400**	1	SEAL-O-RING	
		1	**6V-9009**	1	ELBOW	
	31	2	*148-8367*	1	ELBOW AS	
		2	**6V-8397**	1	SEAL-O-RING	
		2	**6V-9850**	1	ELBOW	
	32	2	*148-8369*	1	ELBOW AS	
		2	**3J-7354**	1	SEAL-O-RING	
		2	**4J-5477**	1	SEAL-O-RING	
		2	**6V-8628**	1	ELBOW	
	33	2	*148-8373*	1	ELBOW AS	

284-0970 **LINES GP-WINCH (*contd.*)** **i02696084**

NOTE	REF NO	GRAPHIC REF	PART NUMBER	QTY	PART NAME 1 2 3 4 5 6 (PRODUCT LEVEL)	SEE PAGE
		2	**6V-8400**	1	SEAL-O-RING	
		2	**7M-8485**	1	SEAL-O-RING	
		2	**8C-3364**	1	ELBOW	
	34	1	*148-8382*	1	ELBOW AS	
		1	**3D-2824**	1	SEAL-O-RING	
		1	**7J-9108**	1	SEAL-O-RING	
		1	**8T-0404**	1	ELBOW	
	35	2	*148-8433*	1	TEE AS	
		2	**6V-8397**	2	SEAL-O-RING	
		2	**6V-9836**	1	TEE-SWIVEL	
	36	2	*164-5581*	1	PLUG AS	
		2	**6V-9511**	1	PLUG (1-3/16-12-THD)	
		2	**6V-9746**	1	SEAL-O-RING	
	37	2	*165-4934*	1	PLUG AS	
		2	**6V-8397**	1	SEAL-O-RING	
		2	**6V-9508**	1	PLUG (11/16-16-THD)	
	38	2	*241-6228*	1	CONNECTOR AS	
		2	**3K-0360**	1	SEAL-O-RING	
		2	**7J-9108**	1	SEAL-O-RING	
		2	**156-9791**	1	CONNECTOR-SPECIAL	
	39	2	**1P-3702**	4	SEAL-RECTANGULAR	
	40	2	**2P-1279**	1	LOCKNUT (9/16-18-THD)	
	41	2	**3J-1907**	1	SEAL-O-RING	
	42	2	**4J-5477**	1	SEAL-O-RING	
	43	1	**4P-7581**	1	CLIP	
	44	2	**5P-7466**	2	CLIP (SLOT)	
	45	2	**5P-7467**	2	CLIP (TAB)	
	46	2	**5P-8112**	2	GROMMET	
	47	2	**5P-9297**	1	CLIP	
	48	1	**6D-1641**	1	CLIP	
	49	2	**6D-3479**	2	CLIP	
	50	2	**6V-3965**	1	FITTING (QUICK DISCONNECT)	
	51	2	**6V-8397**	1	SEAL-O-RING	
M	52	1	**7X-2541**	1	BOLT (M8X1.25X140-MM)	
	53	1,2	**8T-4121**	24	WASHER-HARD (11X21X2.5-MM THK)	
M	54	2	**8T-4133**	8	NUT (M10X1.5-THD)	
M	55	1,2	**8T-4136**	5	BOLT (M10X1.5X25-MM)	
M	56	2	**8T-4137**	3	BOLT (M10X1.5X20-MM)	
M	57	2	**8T-4183**	2	BOLT (M12X1.75X40-MM)	
M	58	2	**8T-4186**	1	BOLT (M10X1.5X40-MM)	
M	59	1	**8T-4195**	2	BOLT (M10X1.5X30-MM)	
	60	2	**8T-4223**	4	WASHER-HARD (13.5X25.5X3-MM THK)	
	61	2	**8T-4224**	2	WASHER-HARD (8.8X16X2-MM THK)	
M	62	2	**8T-6466**	4	BOLT (M10X1.5X60-MM)	
	63	2	**8T-9403**	8	FLANGE-HALF	
M	64	2	**8T-4182**	12	BOLT (M10X1.5X45-MM)	

I - REFER TO HYDRAULIC INFORMATION SYSTEM
M - METRIC PART
Y - SEPARATE ILLUSTRATION

284-0970 **LINES GP-WINCH (*contd.*)** **i02696084**

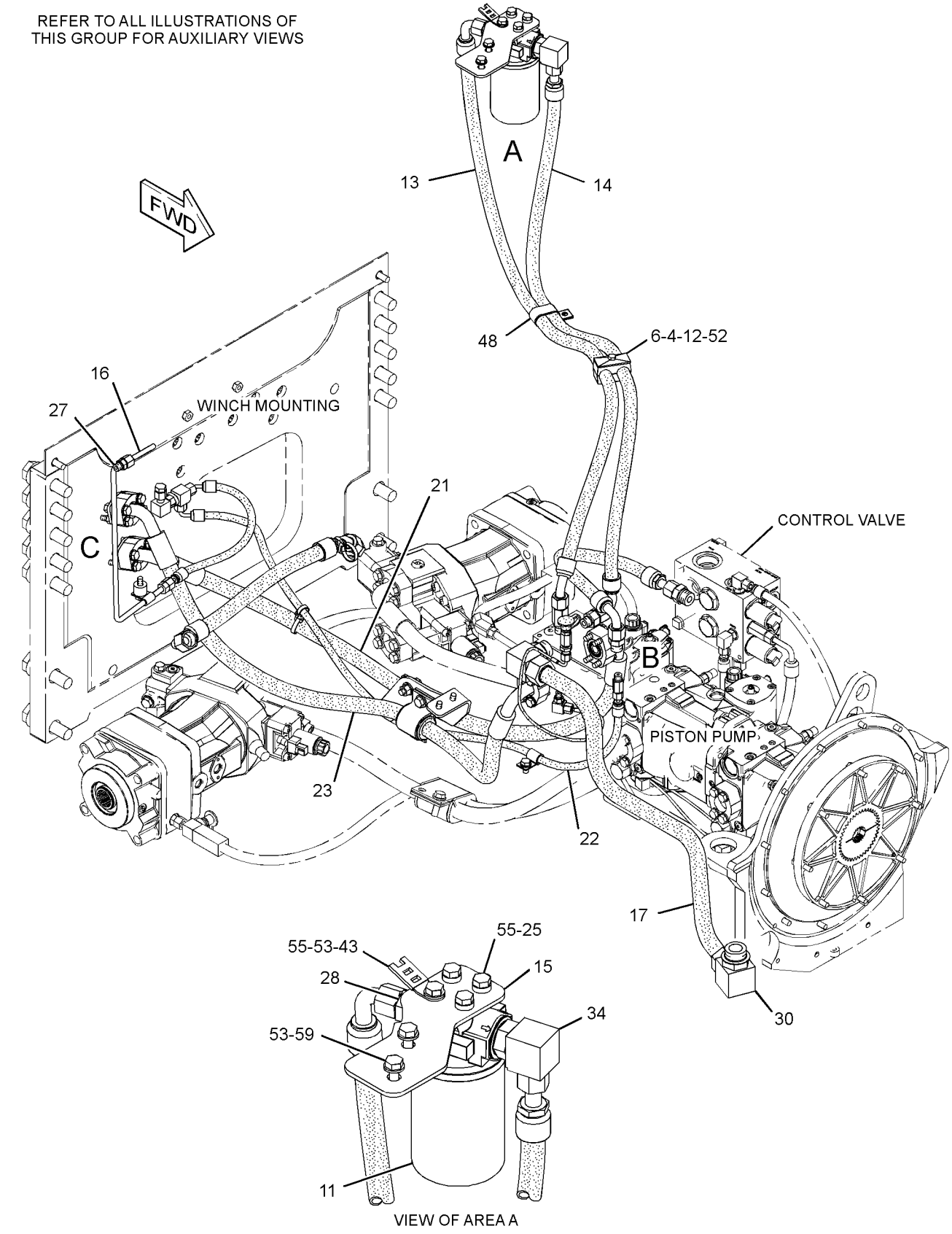

GRAPHIC #1 g01381228

284-0970 **LINES GP-WINCH (*contd.*)** **i02696084**

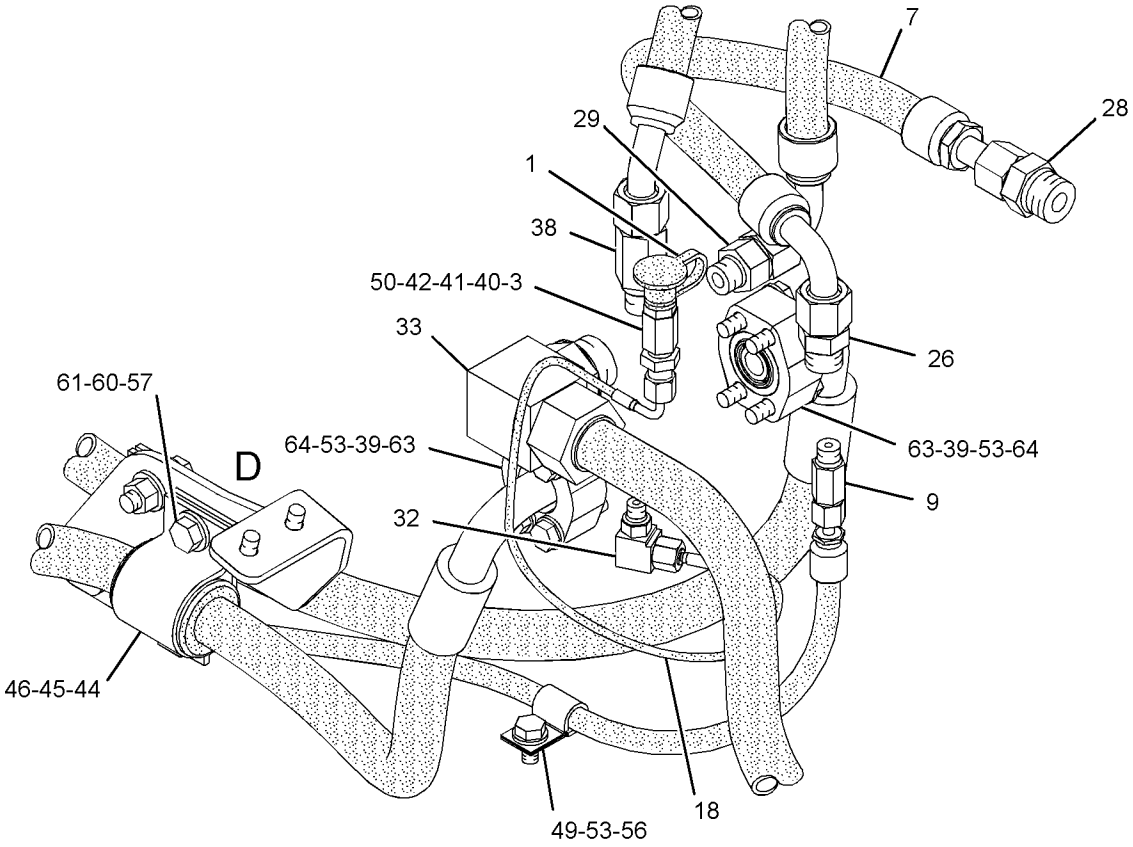

VIEW OF AREA B

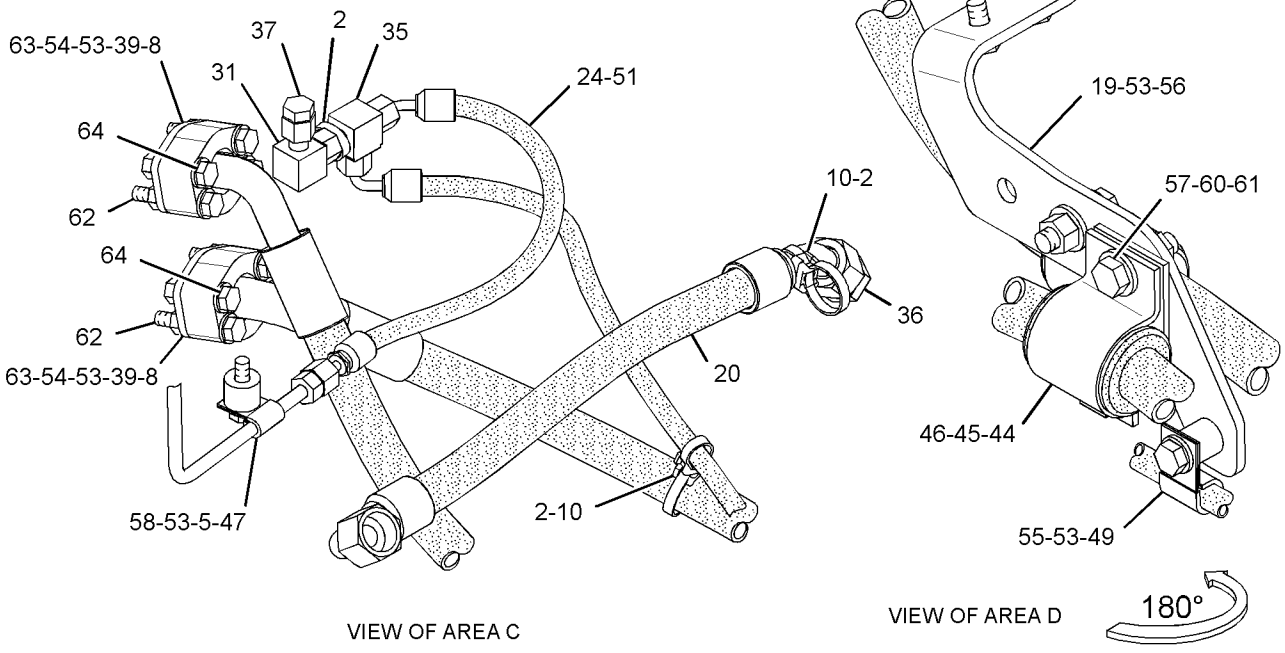

VIEW OF AREA C

VIEW OF AREA D

GRAPHIC #2 **<END>** g01381230

284-0970 LINES GP-WINCH

S/N: MMM1-UP; RRR1-UP
PART OF 271-9180 DRIVE AR-WINCH
AN ATTACHMENT
TYPE 2

SMCS-5179 **i03438080**

NOTE	REF NO	GRAPHIC REF	PART NUMBER	QTY	PART NAME 1 2 3 4 5 6 (PRODUCT LEVEL)	SEE PAGE
	1	2	**6V-0852**	1	CAP-DUST	
	2	2	**7K-1181**	5	STRAP-CABLE	
	3	2	**7X-7945**	1	ADAPTER	
	4	1	**9V-6589**	2	CLAMP-DOUBLE	
	5	2	**091-9035**	1	SPACER (11X25X20-MM THK)	
	6	1	**102-8705**	1	PLATE	
I	7	2	**115-3799**	1	HOSE AS	
	8	2	**122-1951**	2	COVER	
	9	2	*164-9640*	1	CONNECTOR AS	
		2	**3J-1907**	1	SEAL-O-RING	
		2	**4J-5477**	1	SEAL-O-RING	
		2	**145-2237**	1	CONNECTOR	
	10	2	**200-6345**	2	MOUNT (DUAL SWIVEL)	
Y	11	1	**201-2744**	1	FILTER GP-OIL (HYDRAULIC)	921
	12	1	**206-0452**	1	PLATE	
I	13	1	**261-8504**	1	HOSE AS	
	14	1	**265-2166**	1	BRACKET AS	
	15	1	**272-3545**	1	TUBE AS	
	16	1	**276-4679**	1	TUBE AS	
	17	2	**276-8181**	1	HOSE AS	
	18	2	**282-5062**	1	BRACKET AS	
I	19	2	**282-5066**	1	HOSE AS	
I	20	1	**282-5072**	1	HOSE AS	
I	21	1	**305-7954**	1	HOSE AS	
CI	22	2	**313-7225**	1	HOSE AS	
CI	23	1	**313-7226**	1	HOSE AS	
CI	24	1	**316-0625**	1	HOSE AS	
	25	1	**132-7551**	3	SPACER (11X19X6-MM THK)	
	26	2	*148-8315*	1	CONNECTOR AS	
		2	**2M-9780**	1	SEAL-O-RING	
		2	**6V-8642**	1	CONNECTOR	
		2	**7J-9108**	1	SEAL-O-RING	
	27	1	*148-8336*	1	CONNECTOR AS	
		1	**3J-1907**	1	SEAL-O-RING	
		1	**6V-8397**	1	SEAL-O-RING	
		1	**6V-8636**	1	CONNECTOR	
C	28	2	*148-8341*	1	CONNECTOR AS	
		2	**3D-2824**	1	SEAL-O-RING	
		2	**6V-8713**	1	CONNECTOR	
		2	**7J-9108**	1	SEAL-O-RING	
	29	2	*148-8342*	1	CONNECTOR AS	
		2	**3K-0360**	1	SEAL-O-RING	
		2	**6V-8632**	1	CONNECTOR	
		2	**7J-9108**	1	SEAL-O-RING	
	30	1	*148-8356*	1	ELBOW AS	
		1	**2S-4078**	1	SEAL-O-RING	
		1	**6V-8400**	1	SEAL-O-RING	
		1	**6V-9009**	1	ELBOW	
	31	2	*148-8369*	1	ELBOW AS	
		2	**3J-7354**	1	SEAL-O-RING	
		2	**4J-5477**	1	SEAL-O-RING	
		2	**6V-8628**	1	ELBOW	
	32	2	*148-8373*	1	ELBOW AS	
		2	**6V-8400**	1	SEAL-O-RING	
		2	**7M-8485**	1	SEAL-O-RING	
		2	**8C-3364**	1	ELBOW	
C	33	1	*148-8382*	2	ELBOW AS	

284-0970 **LINES GP-WINCH (*contd.*)** **i03438080**

NOTE	REF NO	GRAPHIC REF	PART NUMBER	QTY	PART NAME 1 2 3 4 5 6 (PRODUCT LEVEL)	SEE PAGE
					(EACH INCLUDES)	
		1	**3D-2824**	1	SEAL-O-RING	
		1	**7J-9108**	1	SEAL-O-RING	
		1	**8T-0404**	1	ELBOW	
	34	2	*148-8433*	1	TEE AS	
		2	**6V-8397**	2	SEAL-O-RING	
		2	**6V-9836**	1	TEE-SWIVEL	
	35	2	*164-5581*	1	PLUG AS	
		2	**6V-9511**	1	PLUG (1-3/16-12-THD)	
		2	**6V-9746**	1	SEAL-O-RING	
	36	2	*165-4934*	1	PLUG AS	
		2	**6V-8397**	1	SEAL-O-RING	
		2	**6V-9508**	1	PLUG (11/16-16-THD)	
	37	2	*241-6228*	1	CONNECTOR AS	
		2	**3K-0360**	1	SEAL-O-RING	
		2	**7J-9108**	1	SEAL-O-RING	
		2	**156-9791**	1	CONNECTOR-SPECIAL	
	38	2	**1P-3702**	4	SEAL-RECTANGULAR	
	39	2	**2P-1279**	1	LOCKNUT (9/16-18-THD)	
	40	2	**3J-1907**	1	SEAL-O-RING	
	41	2	**4J-5477**	1	SEAL-O-RING	
	42	1	**4P-7581**	1	CLIP	
	43	2	**5P-7466**	2	CLIP (SLOT)	
	44	2	**5P-7467**	2	CLIP (TAB)	
	45	2	**5P-8112**	2	GROMMET	
	46	2	**5P-9297**	1	CLIP	
	47	1	**6D-1641**	1	CLIP	
	48	2	**6D-3479**	2	CLIP	
	49	2	**6V-3965**	1	FITTING (QUICK DISCONNECT)	
	50	1	**6V-8397**	1	SEAL-O-RING	
M	51	1	**8T-7329**	1	BOLT (M8X1.25X55-MM)	
C	52	2	**7X-7729**	4	WASHER (11X25X3-MM THK)	
	53	1,2	**8T-4121**	24	WASHER-HARD (11X21X2.5-MM THK)	
CM	54	2	**8T-4133**	12	NUT (M10X1.5-THD)	
M	55	1,2	**8T-4136**	5	BOLT (M10X1.5X25-MM)	
M	56	2	**8T-4137**	3	BOLT (M10X1.5X20-MM)	
M	57	2	**8T-4182**	12	BOLT (M10X1.5X45-MM)	
M	58	2	**8T-4183**	2	BOLT (M12X1.75X40-MM)	
M	59	2	**8T-4186**	1	BOLT (M10X1.5X40-MM)	
M	60	1	**8T-4195**	2	BOLT (M10X1.5X30-MM)	
	61	2	**8T-4223**	4	WASHER-HARD (13.5X25.5X3-MM THK)	
	62	2	**8T-4224**	2	WASHER-HARD (8.8X16X2-MM THK)	
M	63	2	**8T-6466**	4	BOLT (M10X1.5X60-MM)	
	64	2	**8T-9403**	8	FLANGE-HALF	
	65	1	**154-4891**	1	BOLT-STACKING (M8X1.25X49-MM)	

C - CHANGE FROM PREVIOUS TYPE
I - REFER TO HYDRAULIC INFORMATION SYSTEM
M - METRIC PART
Y - SEPARATE ILLUSTRATION

284-0970 **LINES GP-WINCH (*contd.*)** **i03438080**

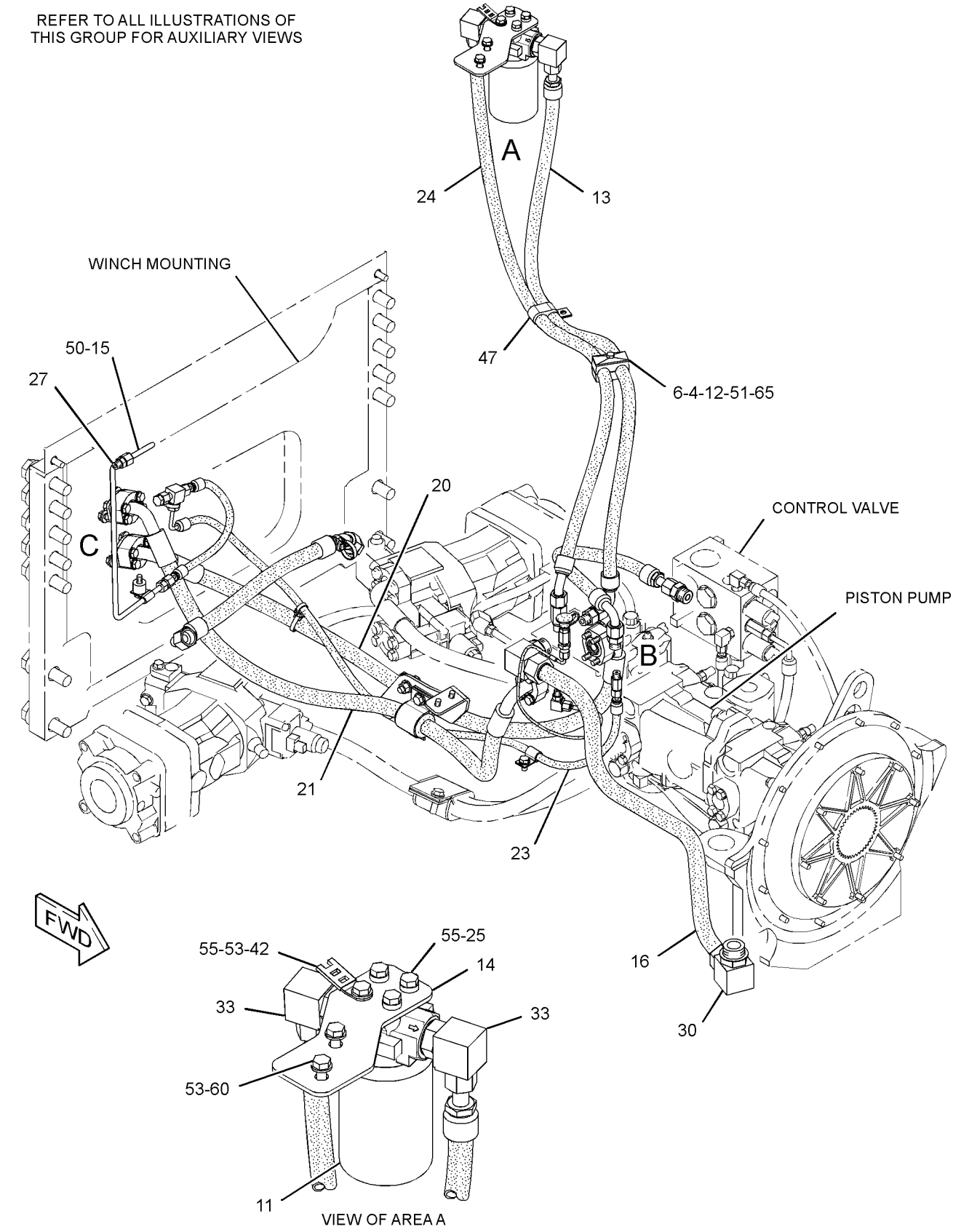

GRAPHIC #1

g01726780

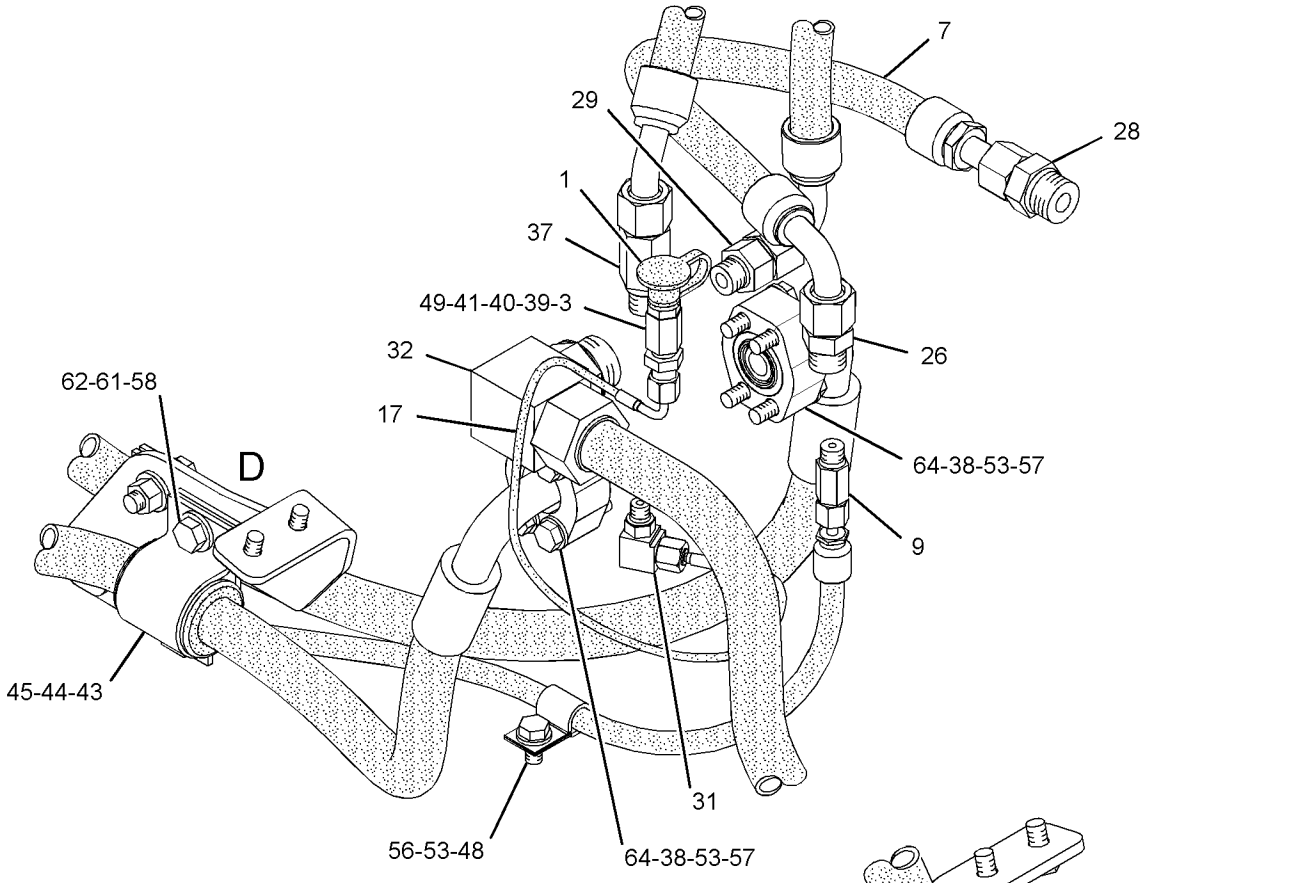

VIEW OF AREA B

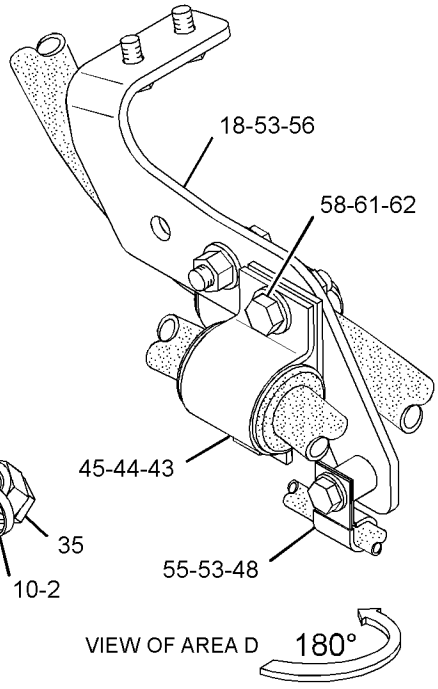

VIEW OF AREA D 180°

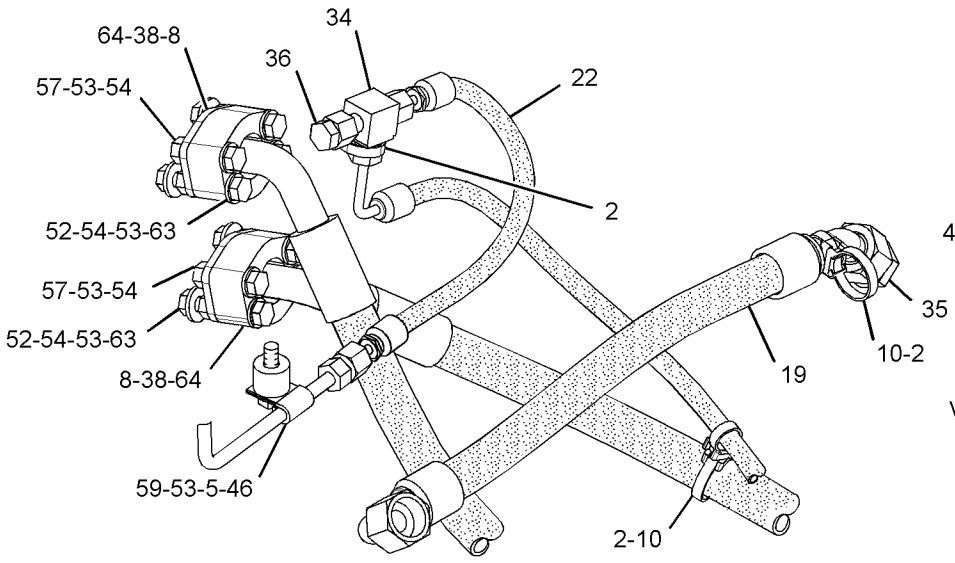

VIEW OF AREA C

GRAPHIC #2 **<END>** g01726783

325-7269 LINES GP-WINCH

S/N: MMM1-UP; RRR1-UP
PART OF 325-6517 DRIVE AR-PUMP
AN ATTACHMENT

SMCS-5179 **i03720000**

NOTE	REF NO	GRAPHIC REF	PART NUMBER	QTY	PART NAME 1 2 3 4 5 6 (PRODUCT LEVEL)	SEE PAGE
	1	1	**6V-0852**	1	CAP-DUST	
	2	2	**7K-1181**	5	STRAP-CABLE	
	3	1	**7X-7945**	1	ADAPTER	
	4	1	**9V-6589**	2	CLAMP-DOUBLE	
	5	2	**091-9035**	1	SPACER (11X25X20-MM THK)	
	6	1	**102-8705**	1	PLATE	
	7	2	**122-1951**	2	COVER	
	8	1	**154-4891**	1	BOLT-STACKING (M8X1.25X49-MM)	
	9	2	*164-9640*	1	CONNECTOR AS	
		2	**3J-1907**	1	SEAL-O-RING	
		2	**4J-5477**	1	SEAL-O-RING	
		2	**145-2237**	1	CONNECTOR	
	10	2	**200-6345**	2	MOUNT (DUAL SWIVEL)	
Y	11	1	**201-2744**	1	FILTER GP-OIL (HYDRAULIC)	921
	12	1	**206-0452**	1	PLATE	
	13	1	**265-2166**	1	BRACKET AS	
	14	1	**272-3545**	1	TUBE AS	
	15	1	**276-4679**	1	TUBE AS	
	16	1	**282-5062**	1	BRACKET AS	
	17	1	*330-7301*	1	HOSE AS	
		1	**276-8181**	1	HOSE AS	
E		1	**324-9705**		INSULATION (53-CM)	
	18	1	**332-1074**	1	HOSE AS	
E		1	**324-9706**		INSULATION (132-CM)	
		1	**163-8812**	2	CLAMP	
I		1	**261-8504**	1	HOSE AS	
	19	1	**332-1075**	1	HOSE AS	
E		1	**324-9706**		INSULATION (139-CM)	
I		1	**316-0625**	1	HOSE AS	
		1	**163-8812**	2	CLAMP	
	20	2	**332-1076**	1	HOSE AS	
E		1	**324-9706**		INSULATION (45-CM)	
I		2	**115-3799**	1	HOSE AS	
		1	**163-8812**	1	CLAMP	
	21	2	*332-1082*	1	HOSE AS	
E		2	**326-3568**		INSULATION (38-CM)	
I		2	**282-5066**	1	HOSE AS	
		2	**163-8812**	2	CLAMP	
	22	1	**332-1083**	1	HOSE AS	
E		1	**324-9706**		INSULATION (125-CM)	
I		1	**282-5066**	1	HOSE AS	
		1	**163-8812**	2	CLAMP	
	23	1	**332-1084**	1	HOSE AS	
E		1	**324-9706**		INSULATION (126-CM)	
I		1	**305-7954**	1	HOSE AS	
		1	**163-8812**	2	CLAMP	
	24	2	*332-1085*	1	HOSE AS	
E		1	**193-6911**		INSULATION (33-CM)	
I		2	**313-7225**	1	HOSE AS	
		2	**163-8811**	2	CLAMP	
	25	1	*332-1086*	1	HOSE AS	
E		1	**193-6911**		INSULATION (138-CM)	
I		1	**313-7226**	1	HOSE AS	
		1	**163-8811**	2	CLAMP	
	26	1	**067-3045**	2	CLIP	
	27	1	**132-7551**	3	SPACER (11X19X6-MM THK)	
	28	2	*148-8315*	1	CONNECTOR AS	

325-7269 **LINES GP-WINCH (*contd.*)** **i03720000**

NOTE	REF NO	GRAPHIC REF	PART NUMBER	QTY	PART NAME 1 2 3 4 5 6 (PRODUCT LEVEL)	SEE PAGE
		2	**2M-9780**	1	SEAL-O-RING	
		2	**6V-8642**	1	CONNECTOR	
		2	**7J-9108**	1	SEAL-O-RING	
	29	1	*148-8336*	1	CONNECTOR AS	
		1	**3J-1907**	1	SEAL-O-RING	
		1	**6V-8397**	1	SEAL-O-RING	
		1	**6V-8636**	1	CONNECTOR	
	30	2	*148-8341*	1	CONNECTOR AS	
		2	**3D-2824**	1	SEAL-O-RING	
		2	**6V-8713**	1	CONNECTOR	
		2	**7J-9108**	1	SEAL-O-RING	
	31	2	*148-8342*	1	CONNECTOR AS	
		2	**3K-0360**	1	SEAL-O-RING	
		2	**6V-8632**	1	CONNECTOR	
		2	**7J-9108**	1	SEAL-O-RING	
	32	1	*148-8356*	1	ELBOW AS	
		1	**2S-4078**	1	SEAL-O-RING	
		1	**6V-8400**	1	SEAL-O-RING	
		1	**6V-9009**	1	ELBOW	
	33	2	*148-8369*	1	ELBOW AS	
		2	**3J-7354**	1	SEAL-O-RING	
		2	**4J-5477**	1	SEAL-O-RING	
		2	**6V-8628**	1	ELBOW	
	34	1	*148-8373*	1	ELBOW AS	
		1	**6V-8400**	1	SEAL-O-RING	
		1	**7M-8485**	1	SEAL-O-RING	
		1	**8C-3364**	1	ELBOW	
	35	1	*148-8382*	2	ELBOW AS	
					(EACH INCLUDES)	
		1	**3D-2824**	1	SEAL-O-RING	
		1	**7J-9108**	1	SEAL-O-RING	
		1	**8T-0404**	1	ELBOW	
	36	2	*148-8433*	1	TEE AS	
		2	**6V-8397**	2	SEAL-O-RING	
		2	**6V-9836**	1	TEE-SWIVEL	
	37	2	*164-5581*	1	PLUG AS	
		2	**6V-9511**	1	PLUG (1-3/16-12-THD)	
		2	**6V-9746**	1	SEAL-O-RING	
	38	2	*165-4934*	1	PLUG AS	
		2	**6V-8397**	1	SEAL-O-RING	
		2	**6V-9508**	1	PLUG (11/16-16-THD)	
	39	2	**1P-3702**	4	SEAL-RECTANGULAR	
	40	2	*241-6228*	1	CONNECTOR AS	
		2	**3K-0360**	1	SEAL-O-RING	
		2	**7J-9108**	1	SEAL-O-RING	
		2	**156-9791**	1	CONNECTOR-SPECIAL	
	41	1	**2P-1279**	1	LOCKNUT (9/16-18-THD)	
	42	1	**3J-1907**	1	SEAL-O-RING	
	43	1	**4J-5477**	1	SEAL-O-RING	
	44	1	**4P-7581**	1	CLIP	
	45	1	**5P-7468**	2	CLIP (SLOT)	
	46	1	**5P-7469**	2	CLIP (TAB)	
	47	1	**5P-8444**	2	GROMMET	
	48	2	**5P-9297**	1	CLIP	
	49	1	**6D-1641**	1	CLIP	
	50	1	**6V-3965**	1	FITTING (QUICK DISCONNECT)	
	51	1	**6V-8397**	1	SEAL-O-RING	
	52	2	**7X-7729**	4	WASHER (11X25X3-MM THK)	
	53	1,2	**8T-4121**	24	WASHER-HARD (11X21X2.5-MM THK)	
M	54	2	**8T-4133**	12	NUT (M10X1.5-THD)	
M	55	1	**8T-4136**	5	BOLT (M10X1.5X25-MM)	
M	56	1	**8T-4137**	3	BOLT (M10X1.5X20-MM)	
M	57	2	**8T-4182**	12	BOLT (M10X1.5X45-MM)	

325-7269 **LINES GP-WINCH (*contd.*)** **i03720000**

NOTE	REF NO	GRAPHIC REF	PART NUMBER	QTY	PART NAME 1 2 3 4 5 6 (PRODUCT LEVEL)	SEE PAGE
M	58	1	**8T-4183**	2	BOLT (M12X1.75X40-MM)	
M	59	2	**8T-4186**	1	BOLT (M10X1.5X40-MM)	
M	60	1	**8T-4195**	2	BOLT (M10X1.5X30-MM)	
	61	1	**8T-4223**	4	WASHER-HARD (13.5X25.5X3-MM THK)	
M	62	1	**8T-4244**	2	NUT (M12X1.75-THD)	
M	63	2	**8T-6466**	4	BOLT (M10X1.5X60-MM)	
M	64	1	**8T-7329**	1	BOLT (M8X1.25X55-MM)	
	65	2	**8T-9403**	8	FLANGE-HALF	

E - ORDER BY THE CENTIMETER
I - REFER TO HYDRAULIC INFORMATION SYSTEM
M - METRIC PART
Y - SEPARATE ILLUSTRATION

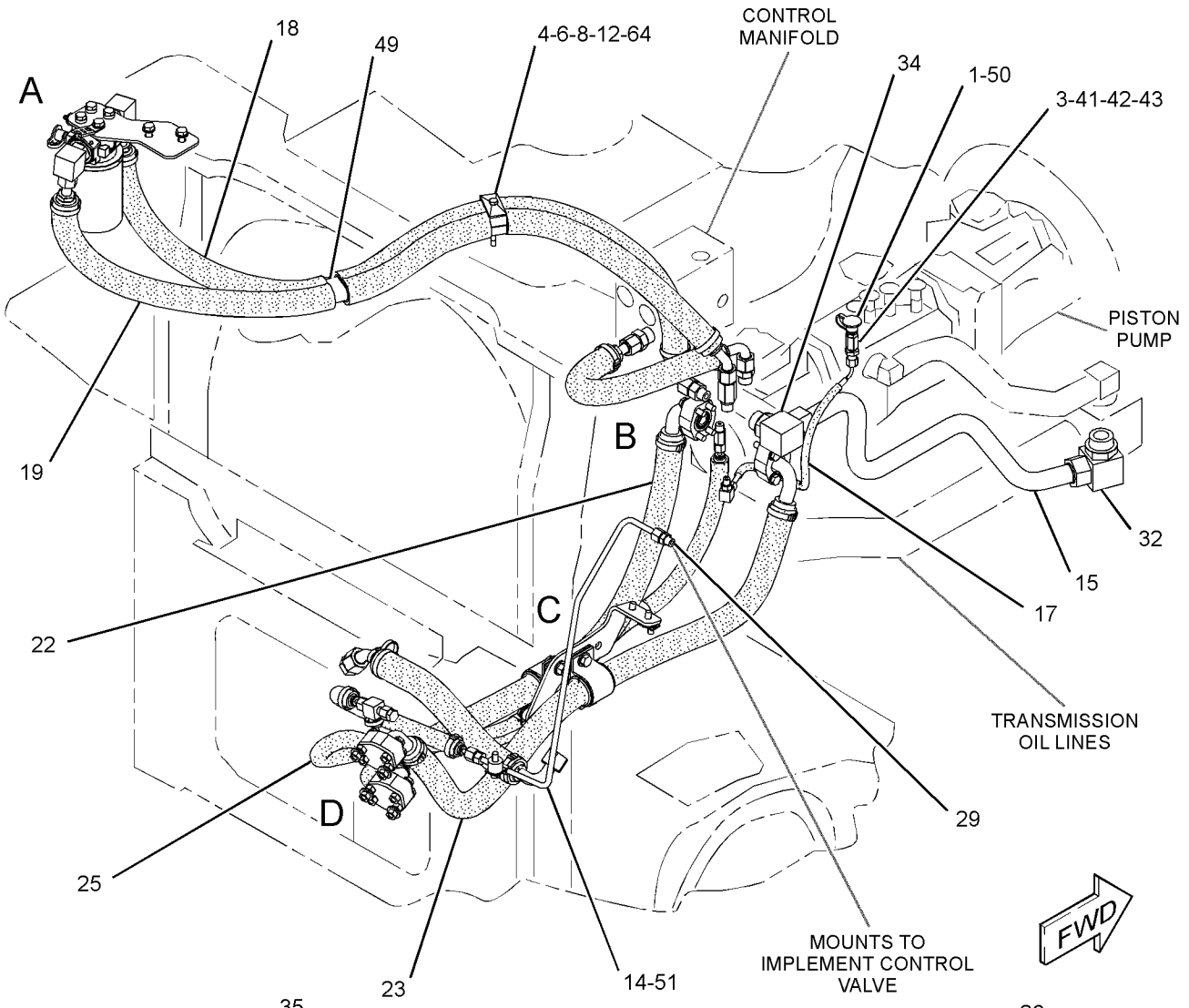

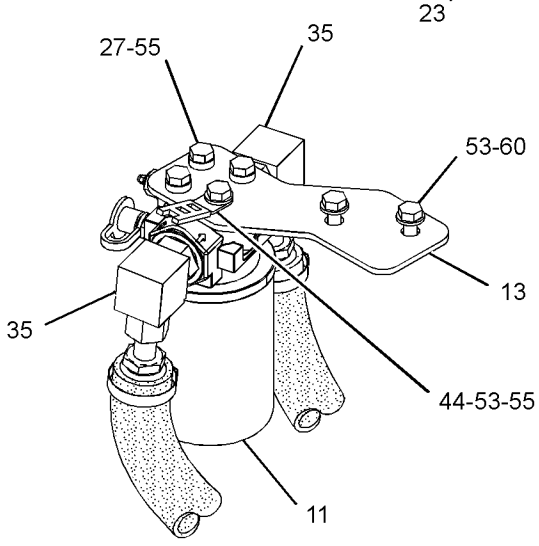

VIEW OF AREA A

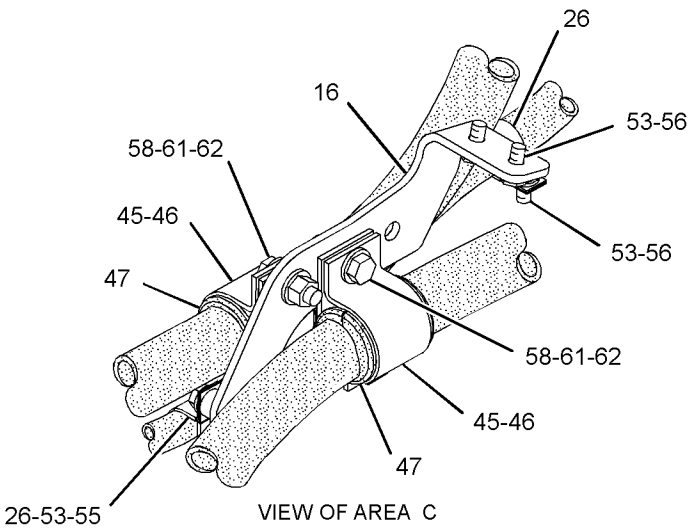

VIEW OF AREA C

REFER TO ALL ILLUSTRATIONS OF THIS GROUP FOR AUXILIARY VIEWS

GRAPHIC #1

g02016253

325-7269 **LINES GP-WINCH (*contd.*)** **i03720000**

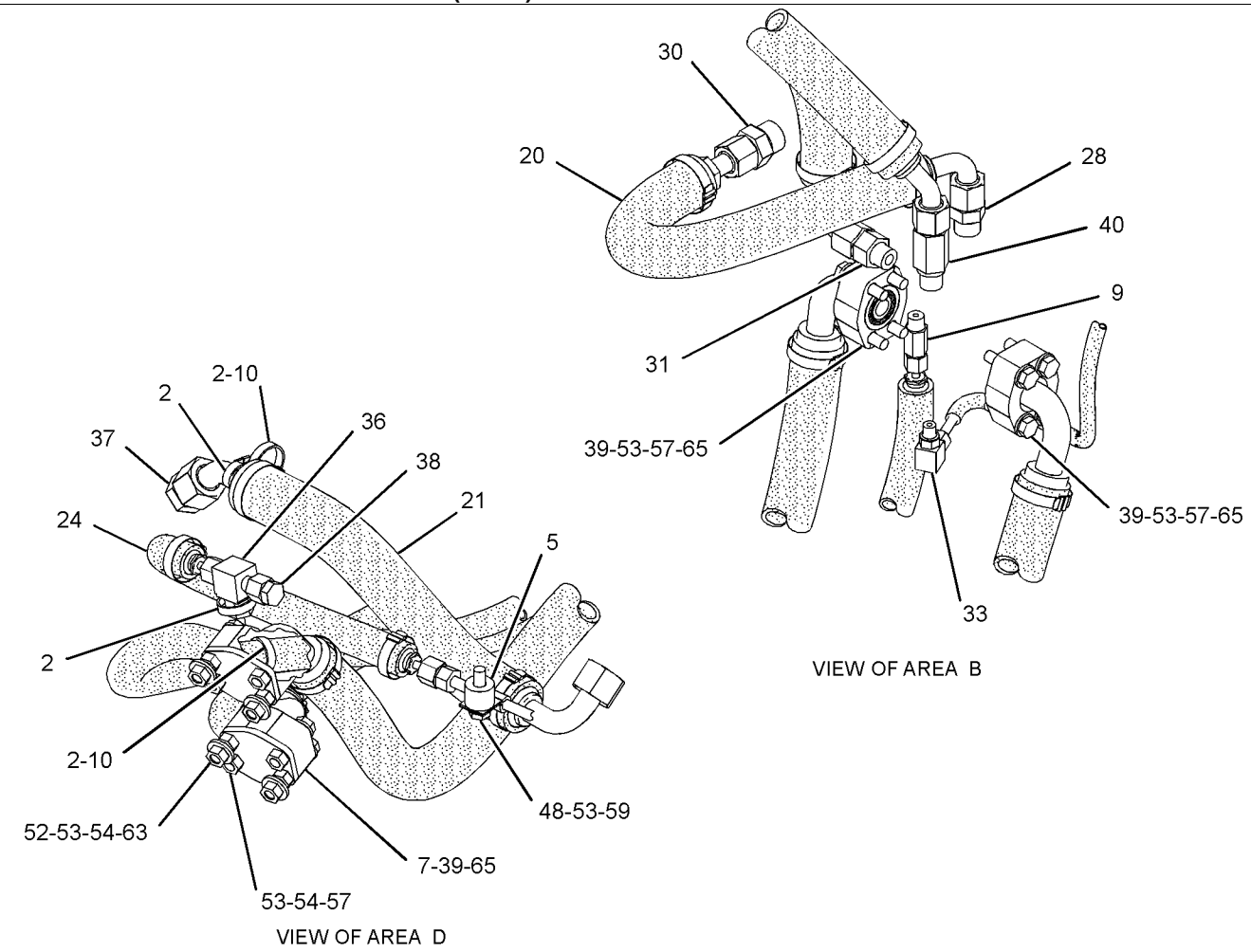

GRAPHIC #2 **<END>** g02016254

269-1087 MANIFOLD GP-VALVE–OUTLET

S/N: MMM1-UP; RRR1-UP

PART OF 254-1450 VALVE GP-BANK 3, 323-8150 VALVE GP-BANK 4, 323-8151 VALVE GP-BANK 5 AN ATTACHMENT

SMCS-5264 **i03634806**

NOTE	REF NO	GRAPHIC REF	PART NUMBER	QTY	PART NAME 1 2 3 4 5 6 (PRODUCT LEVEL)	SEE PAGE
					(NO SERVICED PARTS)	

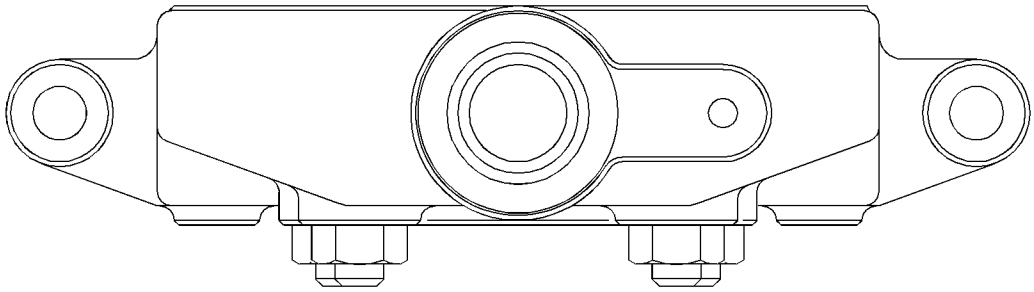

GRAPHIC #1 **<END>** g01776457

244-7452 PUMP GP-GEAR–IMPLEMENT

S/N: MMM1-UP; RRR1-UP

PART OF 244-7385 HYDRAULIC AR

SMCS-5073 **i04419070**

NOTE	REF NO	GRAPHIC REF	PART NUMBER	QTY	PART NAME 1 2 3 4 5 6 (PRODUCT LEVEL)	SEE PAGE
	1	1	**6D-1004**	1	GASKET	
J	2	1	**269-0004**	1	PUMP GP-GEAR (IMPLEMENT)	
	3	1	**8T-4121**	2	WASHER-HARD (11X21X2.5-MM THK)	
M	4	1	**9X-6032**	2	BOLT-SOCKET HEAD (M10X1.5X30-MM)	
					AVAILABLE REPAIR KIT(S):	
J			**138-8381**	1	KIT-SEAL (GEAR PUMP)	
					(INCLUDES SHAFT SEAL, COVER SEALS, SEALS & RETAINING RING)	

J - KIT MARKED J SERVICES PART MARKED J
M - METRIC PART

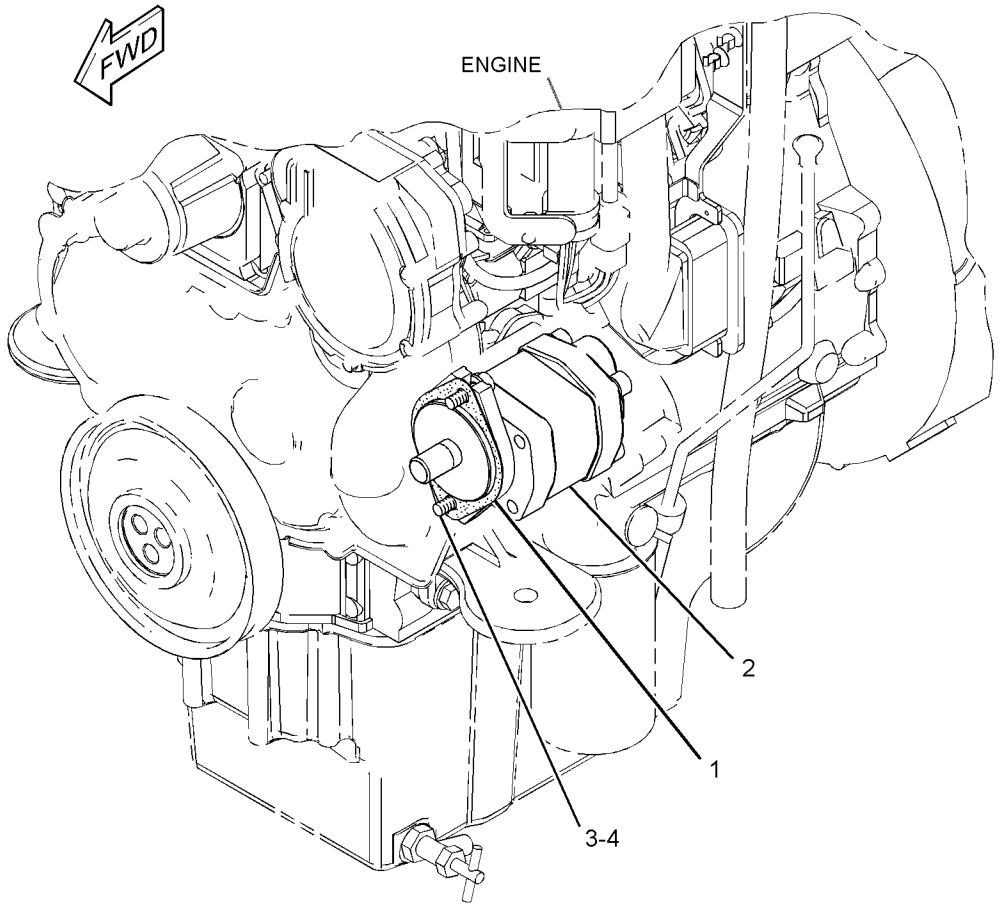

GRAPHIC #1 **<END>** g01331076

274-7516 SUPPORT GP-PUMP DRIVE

S/N: MMM1-UP; RRR1-UP

PART OF 244-7450, 291-5205 DRIVE AR, 325-6517 DRIVE AR-PUMP, 271-9180 DRIVE AR-WINCH AN ATTACHMENT

SMCS-3203 **i05388366**

NOTE	REF NO	GRAPHIC REF	PART NUMBER	QTY	PART NAME 1 2 3 4 5 6 (PRODUCT LEVEL)	SEE PAGE
	1	1	**347-2719**	1	BRACKET AS	
	2	1	**5P-4116**	1	WASHER-HARD (8.8X20.5X2-MM THK)	
M	3	1	**8T-4189**	6	BOLT (M8X1.25X20-MM)	
	4	1	**8T-4223**	4	WASHER-HARD (13.5X25.5X3-MM THK)	
	5	1	**8T-4224**	5	WASHER-HARD (8.8X16X2-MM THK)	
M	6	1	**8T-4956**	4	BOLT (M12X1.75X35-MM)	

M - METRIC PART

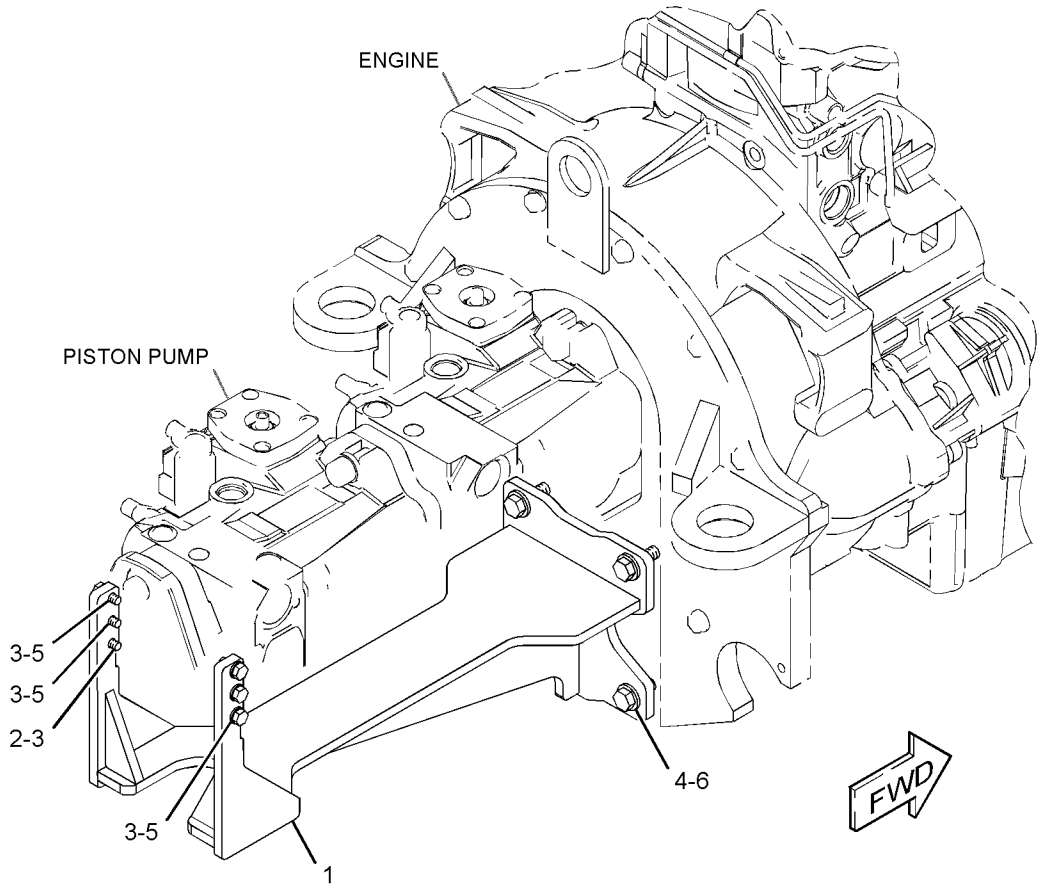

GRAPHIC #1 **<END>** g01333221

319-8113 TANK & MTG GP-HYDRAULIC—FIRE PLOW

S/N: MMM1-UP; RRR1-UP
PART OF 325-6498, 325-6499 MODIFICATION AR, 344-7614 SPECIAL AR
AN ATTACHMENT

SMCS-5056 **i03696045**

NOTE	REF NO	GRAPHIC REF	PART NUMBER	QTY	PART NAME 1 2 3 4 5 6 (PRODUCT LEVEL)	SEE PAGE
	1	1	**1P-4278**	6	CLAMP-HOSE	
	2	1	**7K-1181**	9	STRAP-CABLE	
	3	1	**9R-9925**	2	FILTER ELEMENT-BREATHER (HYDRAULIC TANK)	
	4	1	**255-1152**	1	BRACKET AS	
	5	1	**284-2885**	1	HOSE	
Y	6	1	*319-8114*	1	TANK GP-HYDRAULIC (FIRE PLOW)	624
	7	1	**5P-9297**	1	CLIP	
	8	1	**7X-7729**	14	WASHER (11X25X3-MM THK)	
	9	1	**8T-4121**	1	WASHER-HARD (11X21X2.5-MM THK)	
M	10	1	**8T-4136**	10	BOLT (M10X1.5X25-MM)	
M	11	1	**8T-4137**	5	BOLT (M10X1.5X20-MM)	
	12	1	**8T-4984**	1	CLAMP-HOSE	
	13	1	**8T-6703**	1	CLAMP-HOSE	
E	14	1	**188-4653**		HOSE-HYDRAULIC (89-CM EACH)	
E	15	1	**5P-1442**		HOSE (138.6-CM)	
E	15A	1	**5P-1442**		HOSE (162.2-CM)	
D	16	1	**6V-2495**		SEAL (0.2-M EACH)	

D - ORDER BY THE METER
E - ORDER BY THE CENTIMETER
M - METRIC PART
Y - SEPARATE ILLUSTRATION

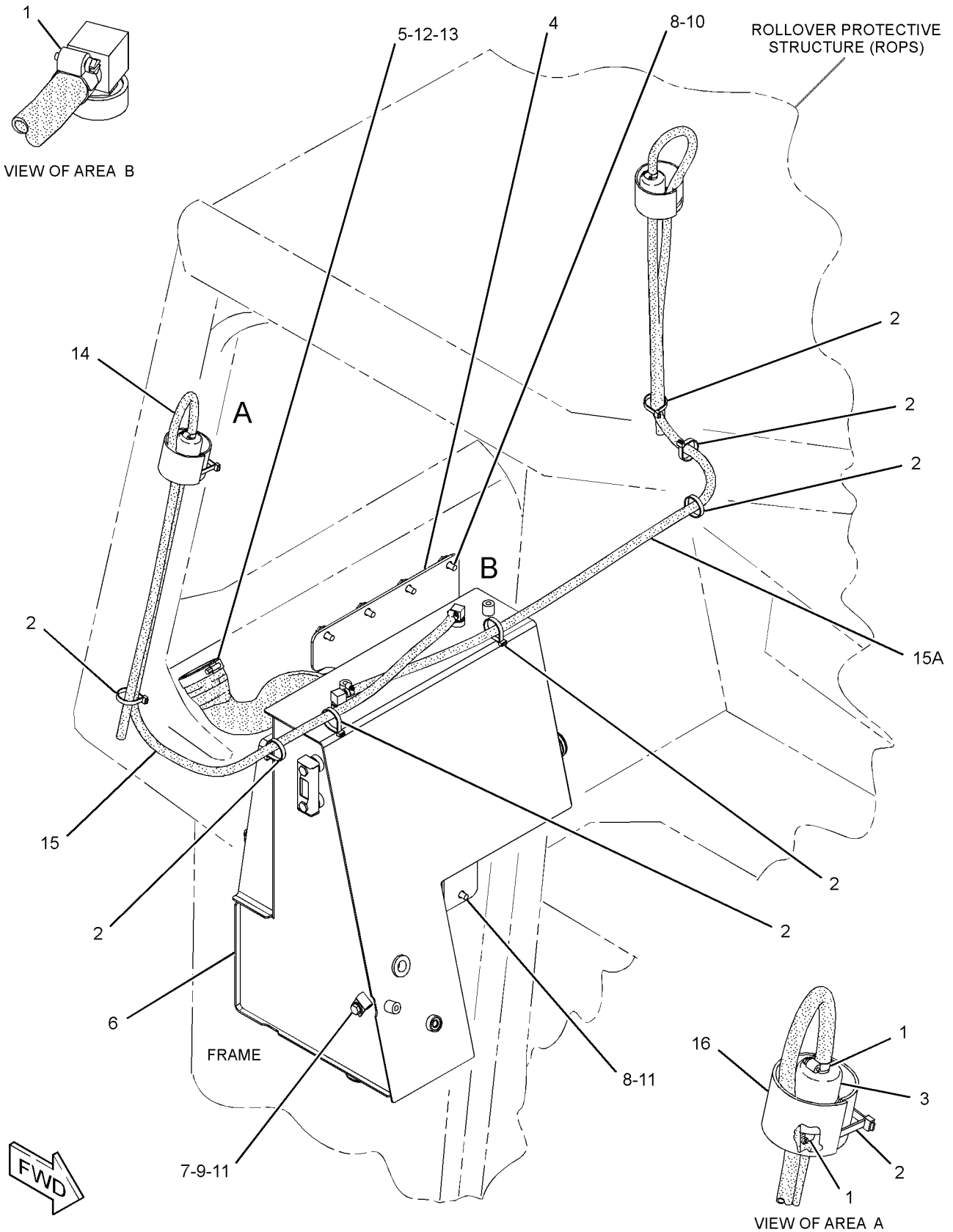

GRAPHIC #1

<END>

g02006313

244-7426 TANK GP-HYDRAULIC

S/N: MMM1-551; RRR1-398

PART OF 244-7385 HYDRAULIC AR

SMCS-5056 **i03602316**

NOTE	REF NO	GRAPHIC REF	PART NUMBER	QTY	PART NAME 1 2 3 4 5 6 (PRODUCT LEVEL)	SEE PAGE
	1	1	**1P-4278**	10	CLAMP-HOSE	
	2	1	**7K-1181**	11	STRAP-CABLE	
	3	1	**8T-2173**	1	CONNECTOR-HOSE	
	5	1	**187-5086**	1	TEE	
	6	1	**9R-9925**	2	FILTER ELEMENT-BREATHER (HYDRAULIC TANK)	
Y	7	1	*244-7440*	1	TANK GP-HYDRAULIC	623
	8	1	**255-1152**	1	BRACKET AS	
	9	1	**284-2885**	1	HOSE	
	10	1	**291-9247**	1	BRACKET AS	
E	11	1	**5P-1442**		HOSE (139.2-CM)	
E	11A	1	**5P-1442**		HOSE (59-CM)	
E	11B	1	**5P-1442**		HOSE (104-CM)	
E	11C	1	**5P-1442**		HOSE (106-CM)	
D	12	1	**6V-2495**		SEAL (0.2-M EACH)	
M	13	1	**5C-9553**	2	BOLT (M6X1X16-MM)	
	14	1	**7X-7729**	14	WASHER (11X25X3-MM THK)	
M	15	1	**8T-4136**	4	BOLT (M10X1.5X25-MM)	
M	16	1	**8T-4137**	4	BOLT (M10X1.5X20-MM)	
M	17	1	**8T-4191**	6	BOLT (M10X1.5X16-MM)	
	18	1	**8T-4984**	1	CLAMP-HOSE	
	19	1	**8T-6703**	1	CLAMP-HOSE	
	20	1	**9X-8256**	2	WASHER (6.6X12X2-MM THK)	
	21	1	**314-9768**	1	GAUGE-SIGHT	
	22	1	**8T-9402**	2	CLAMP-HOSE	
E	23	1	**5P-0743**		HOSE (32-CM)	

D - ORDER BY THE METER
E - ORDER BY THE CENTIMETER
M - METRIC PART
Y - SEPARATE ILLUSTRATION

244-7426 **TANK GP-HYDRAULIC (*contd.*)** **i03602316**

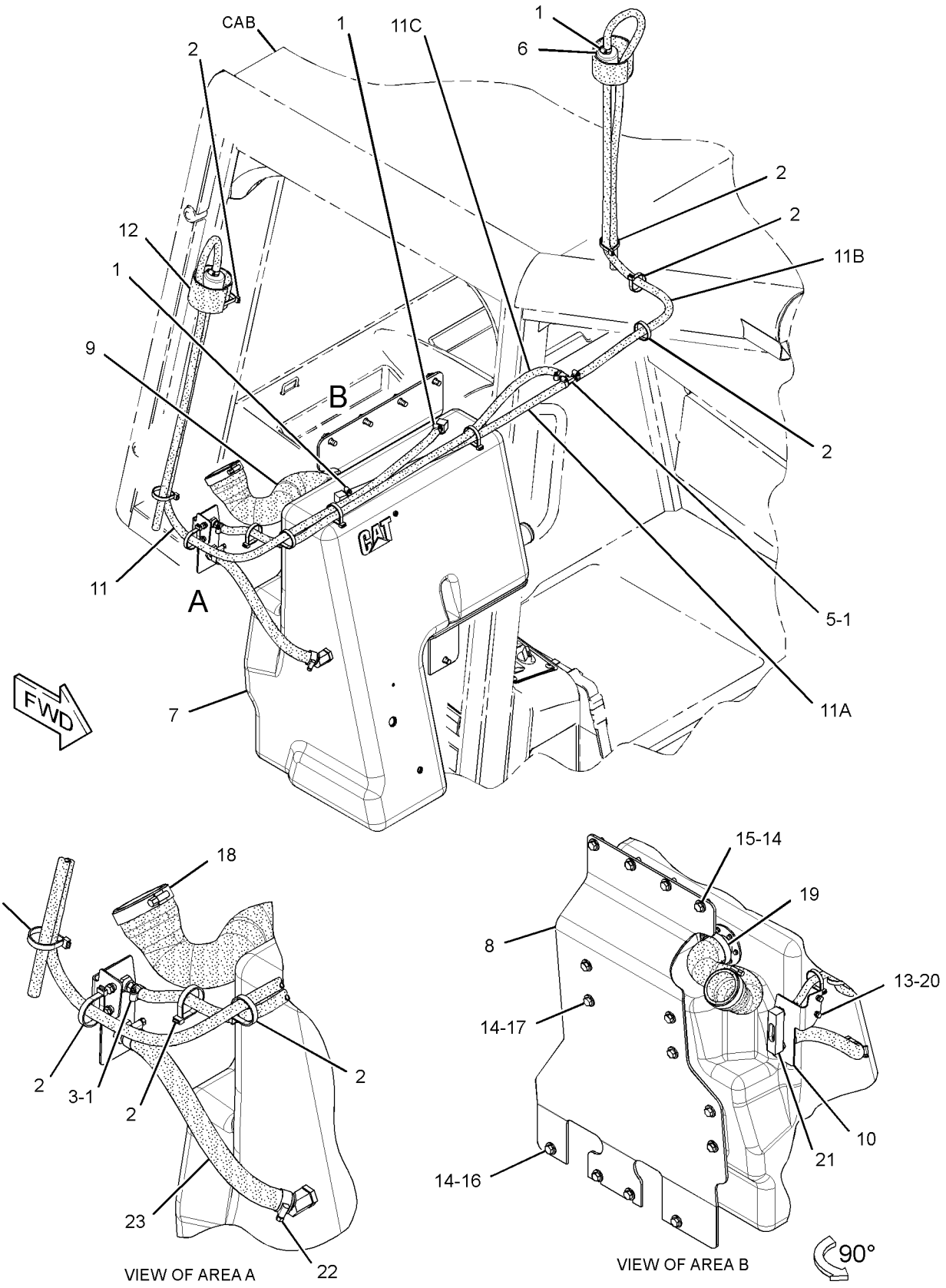

GRAPHIC #1 **<END>** g01733673

244-7426 TANK GP-HYDRAULIC

S/N: MMM552-UP; RRR399-UP

PART OF 244-7385 HYDRAULIC AR

SMCS-5056 **i04046699**

NOTE	REF NO	GRAPHIC REF	PART NUMBER	QTY	PART NAME 1 2 3 4 5 6 (PRODUCT LEVEL)	SEE PAGE
C	1	1	**1P-4278**	6	CLAMP-HOSE	
C	2	1	**7K-1181**	8	STRAP-CABLE	
	3	1	**9R-9925**	2	FILTER ELEMENT-BREATHER (HYDRAULIC TANK)	
	4	1	**255-1152**	1	BRACKET AS	
	5	1	**284-2885**	1	HOSE	
CY	6	1	*319-8820*	1	TANK GP-HYDRAULIC	625
	7	1	**7X-7729**	14	WASHER (11X25X3-MM THK)	
M	8	1	**8T-4136**	4	BOLT (M10X1.5X25-MM)	
M	9	1	**8T-4137**	4	BOLT (M10X1.5X20-MM)	
M	10	1	**8T-4191**	6	BOLT (M10X1.5X16-MM)	
	11	1	**8T-4984**	1	CLAMP-HOSE	
	12	1	**8T-6703**	1	CLAMP-HOSE	
E	13	1	**188-4653**		HOSE-HYDRAULIC (89-CM EACH)	
CE	14	1	**5P-1442**		HOSE (170-CM)	
CE	14A	1	**5P-1442**		HOSE (140-CM)	
CD	15	1	**6V-2495**		SEAL (0.2-M EACH)	

C - CHANGE FROM PREVIOUS TYPE
D - ORDER BY THE METER
E - ORDER BY THE CENTIMETER
M - METRIC PART
Y - SEPARATE ILLUSTRATION

244-7426 **TANK GP-HYDRAULIC (*contd.*)** **i04046699**

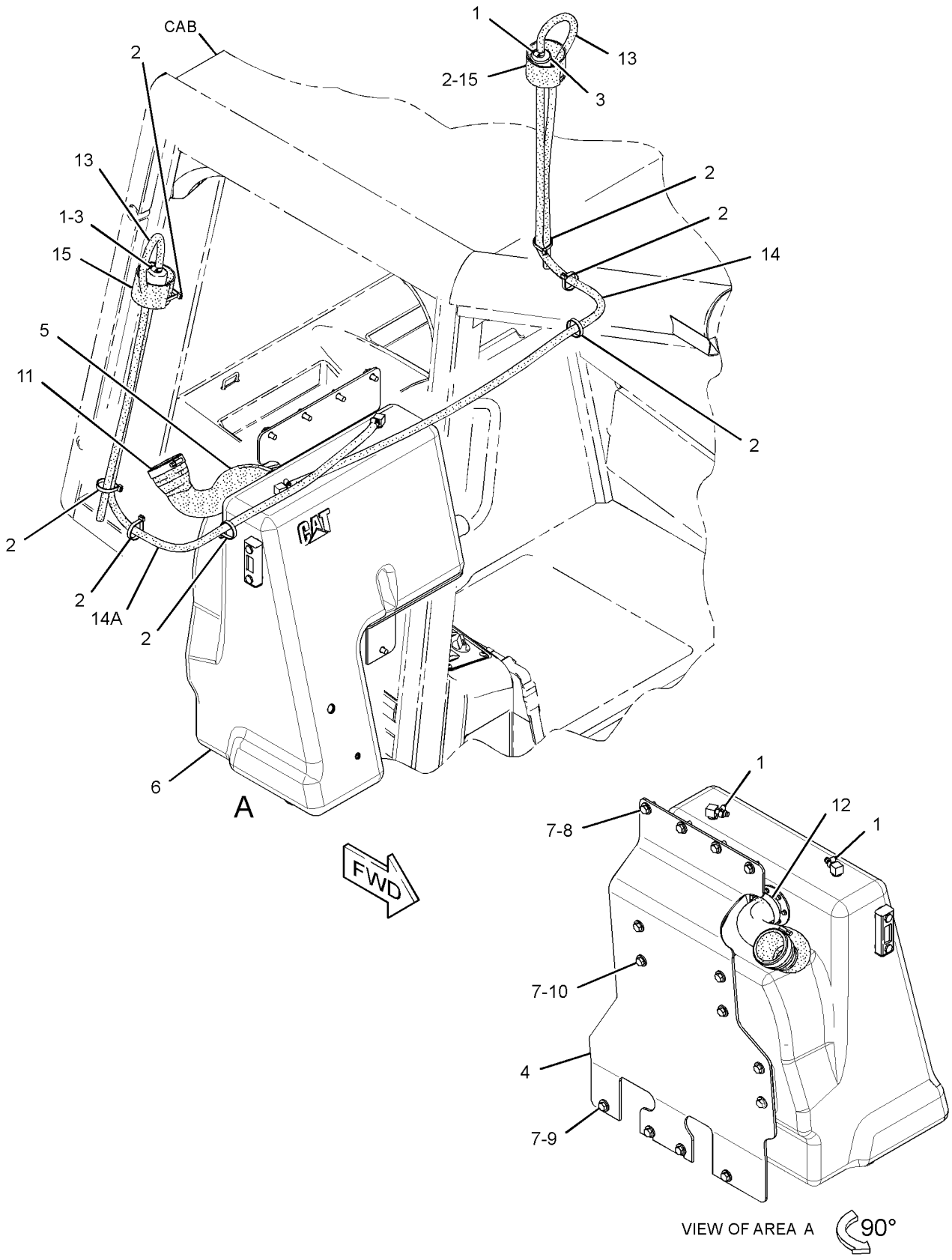

GRAPHIC #1 **<END>** g02506396

244-7440 TANK GP-HYDRAULIC

S/N: MMM1-551; RRR1-398
59.5- LITER (15.8-GAL)
PART OF 244-7426 TANK GP-HYDRAULIC

SMCS-5056 **i02918747**

NOTE	REF NO	GRAPHIC REF	PART NUMBER	QTY	PART NAME 1 2 3 4 5 6 (PRODUCT LEVEL)	SEE PAGE
	1	1	**3E-4091**	2	ELBOW	
	2	1	**7F-8267**	1	SEAL-O-RING	
	3	1	**132-3056**	1	SEAL-O-RING	
	4	1	**194-4864**	1	ELBOW	
	5	1	**322-9703**	1	SCREEN-SUCTION (HYDRAULIC TANK)	
	6	1	**255-1155**	1	TANK AS-HYDRAULIC	
	7	1	**256-7752**	1	COVER AS	
	8	1	**284-3705**	1	TUBE AS	
	9	1	**3J-7354**	2	SEAL-O-RING	
	10	1	**6V-4589**	1	SEAL-O-RING	
M	11	1	**8T-0288**	6	BOLT (M5X0.8X12-MM)	
	12	1	**8T-0328**	6	WASHER-HARD (5.5X10X1-MM THK)	
M	13	1	**8T-4200**	6	BOLT (M8X1.25X16-MM)	
	14	1	**8T-4224**	6	WASHER-HARD (8.8X16X2-MM THK)	

M - METRIC PART

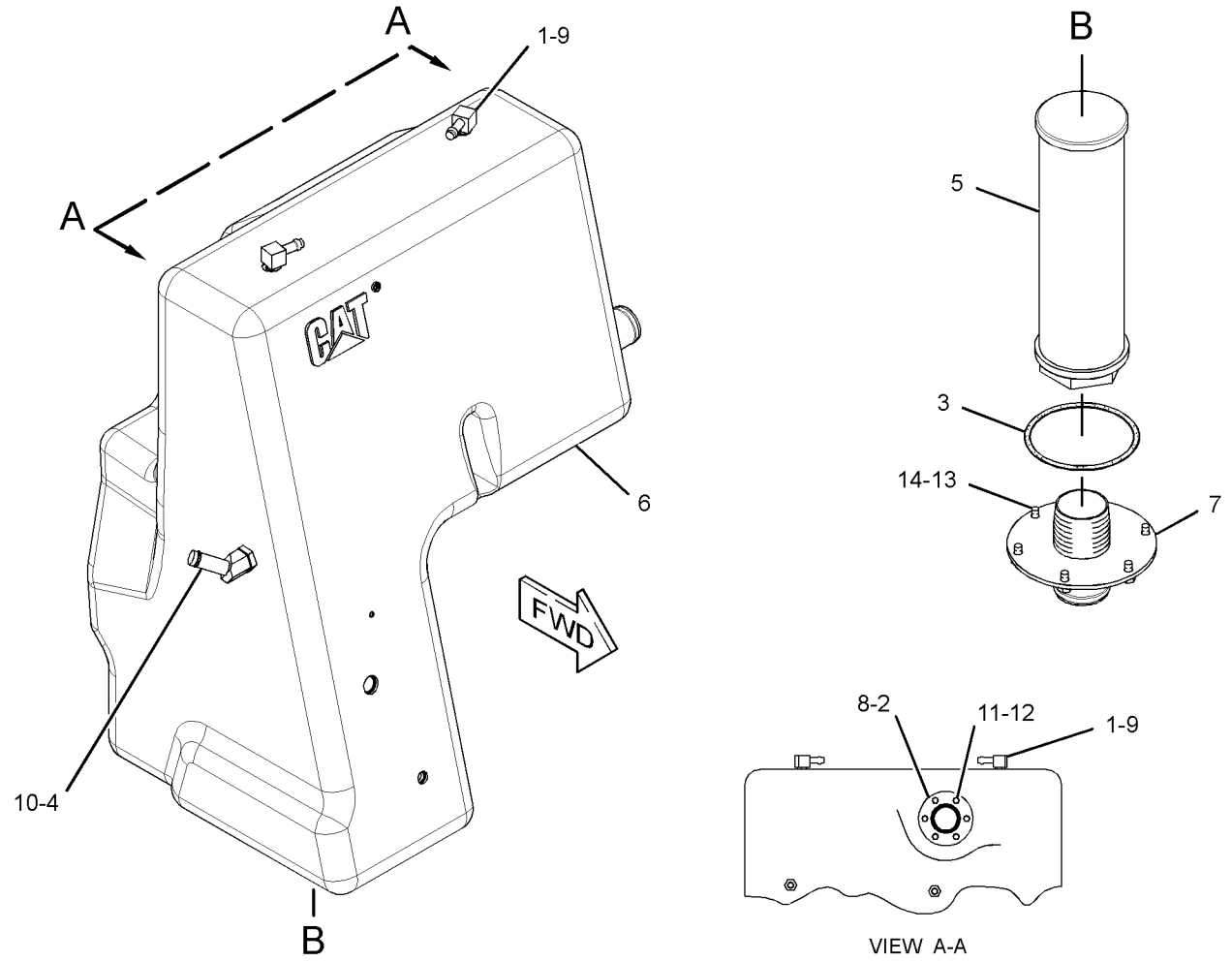

GRAPHIC #1 **<END>** g01407076

319-8114 TANK GP-HYDRAULIC–FIRE PLOW

S/N: MMM1-UP; RRR1-UP
PART OF 319-8113 TANK & MTG GP-HYDRAULIC
AN ATTACHMENT

SMCS-5056 **i03698960**

NOTE	REF NO	GRAPHIC REF	PART NUMBER	QTY	PART NAME 1 2 3 4 5 6 (PRODUCT LEVEL)	SEE PAGE
	1	1	**3E-4091**	2	ELBOW	
	2	1	**197-7610**	1	COVER AS	
	3	1	**265-5644**	1	GAUGE GP-SIGHT (HYDRAULIC TANK OIL)	
	4	1	**319-8115**	1	TANK AS-HYDRAULIC	
	5	1	**322-9703**	1	SCREEN-SUCTION (HYDRAULIC TANK)	
	6	1	**110-1010**	1	GASKET-SCREEN (HYDRAULIC TANK)	
	7	1	**3J-7354**	2	SEAL-O-RING	
	8	1	**7X-7729**	8	WASHER (11X25X3-MM THK)	
M	9	1	**8T-4136**	8	BOLT (M10X1.5X25-MM)	

M - METRIC PART

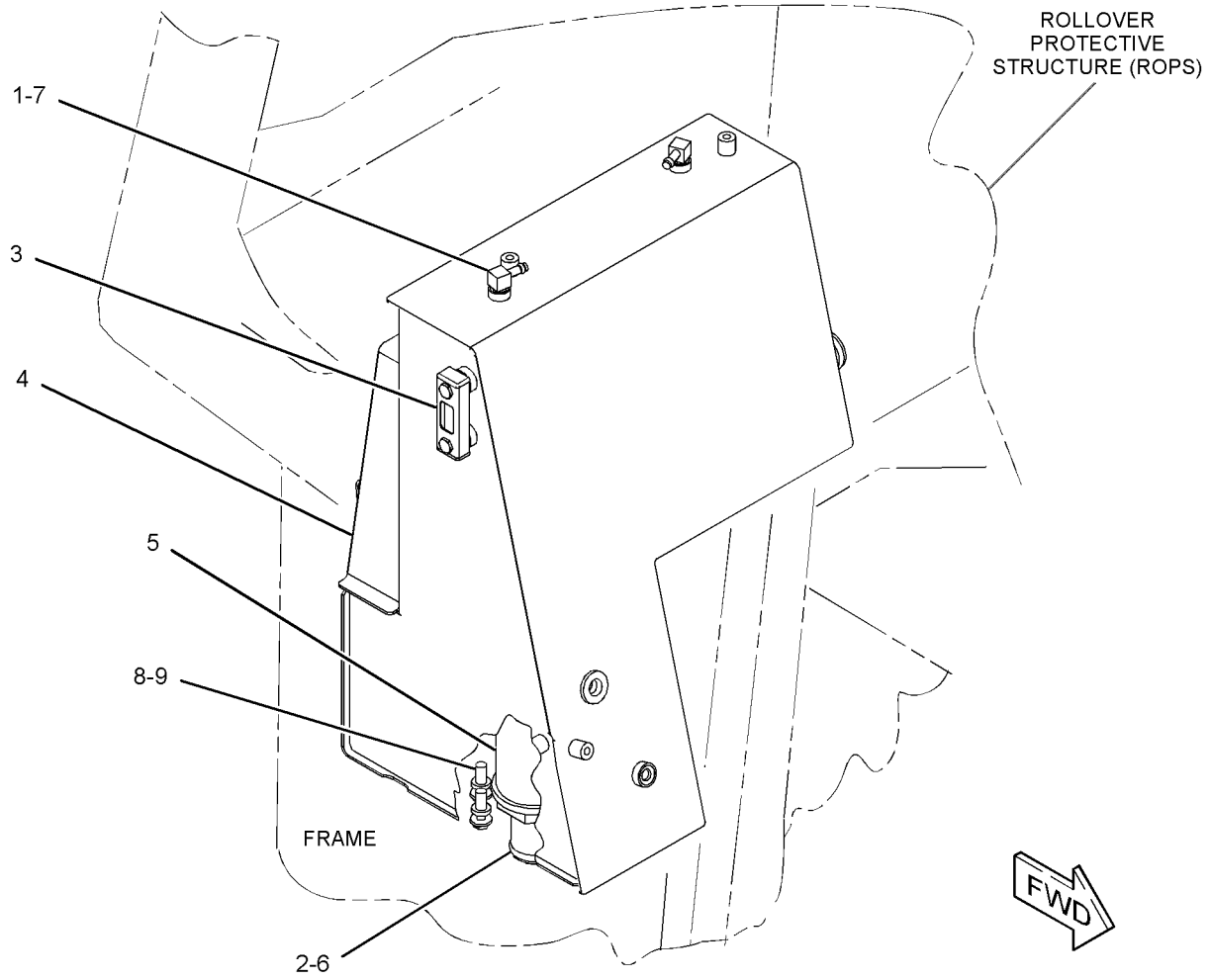

GRAPHIC #1 **<END>** g02006734

319-8820 TANK GP-HYDRAULIC

S/N: MMM552-UP; RRR399-UP
59-LITER (15.6-US GAL)
PART OF 244-7426 TANK GP-HYDRAULIC

SMCS-5056 **i04051794**

NOTE	REF NO	GRAPHIC REF	PART NUMBER	QTY	PART NAME 1 2 3 4 5 6 (PRODUCT LEVEL)	SEE PAGE
	1	1	**3E-4091**	2	ELBOW	
	2	1	**7F-8267**	1	SEAL-O-RING	
	3	1	**256-7752**	1	COVER AS	
	4	1	**284-3705**	1	TUBE AS	
	5	1	**319-8110**	1	TANK GP-HYDRAULIC	
		1	**265-5644**	1	GAUGE GP-SIGHT (HYDRAULIC TANK OIL)	
		1	**319-8832**	1	TANK AS-HYDRAULIC	
	6	1	**322-9703**	1	SCREEN-SUCTION (HYDRAULIC TANK)	
	7	1	**132-3056**	1	SEAL-O-RING	
	8	1	**3J-7354**	2	SEAL-O-RING	
M	9	1	**8T-0288**	6	BOLT (M5X0.8X12-MM)	
	10	1	**8T-0328**	6	WASHER-HARD (5.5X10X1-MM THK)	
M	11	1	**8T-4200**	6	BOLT (M8X1.25X16-MM)	
	12	1	**8T-4224**	6	WASHER-HARD (8.8X16X2-MM THK)	

M - METRIC PART

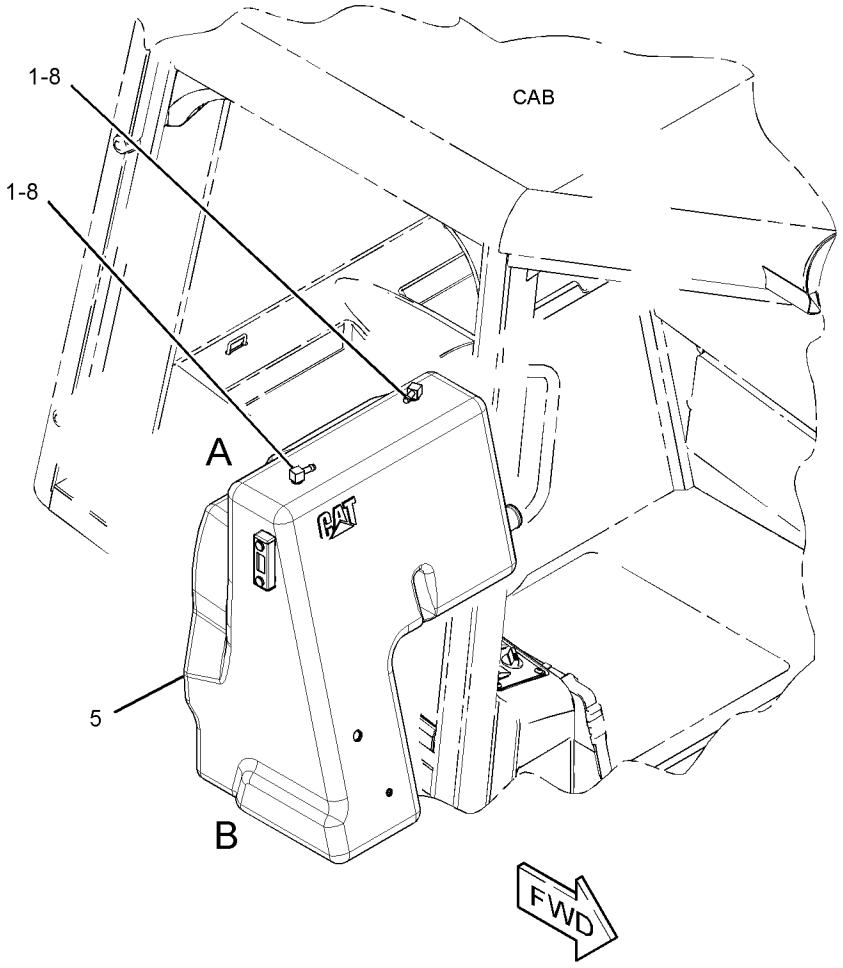

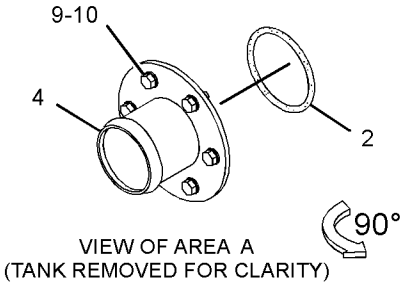

VIEW OF AREA A
(TANK REMOVED FOR CLARITY)

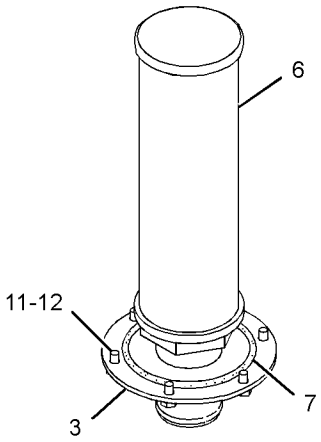

VIEW OF AREA B
(TANK REMOVED FOR CLARITY)

GRAPHIC #1 **<END>** g02492757

325-7271 VALVE & MTG GP-CONTROL

S/N: MMM1-UP; RRR1-UP
PART OF 325-6523, 325-6526 HYDRAULIC AR
AN ATTACHMENT

SMCS-5051 **i03726322**

NOTE	REF NO	GRAPHIC REF	PART NUMBER	QTY	PART NAME 1 2 3 4 5 6 (PRODUCT LEVEL)	SEE PAGE
Y	1	1	**323-8150**	1	VALVE GP-BANK 4	634
M	2	1	**8T-4182**	3	BOLT (M10X1.5X45-MM)	
	3	1	**8T-7934**	3	WASHER-HARD (11X21X5-MM THK)	

M - METRIC PART
Y - SEPARATE ILLUSTRATION

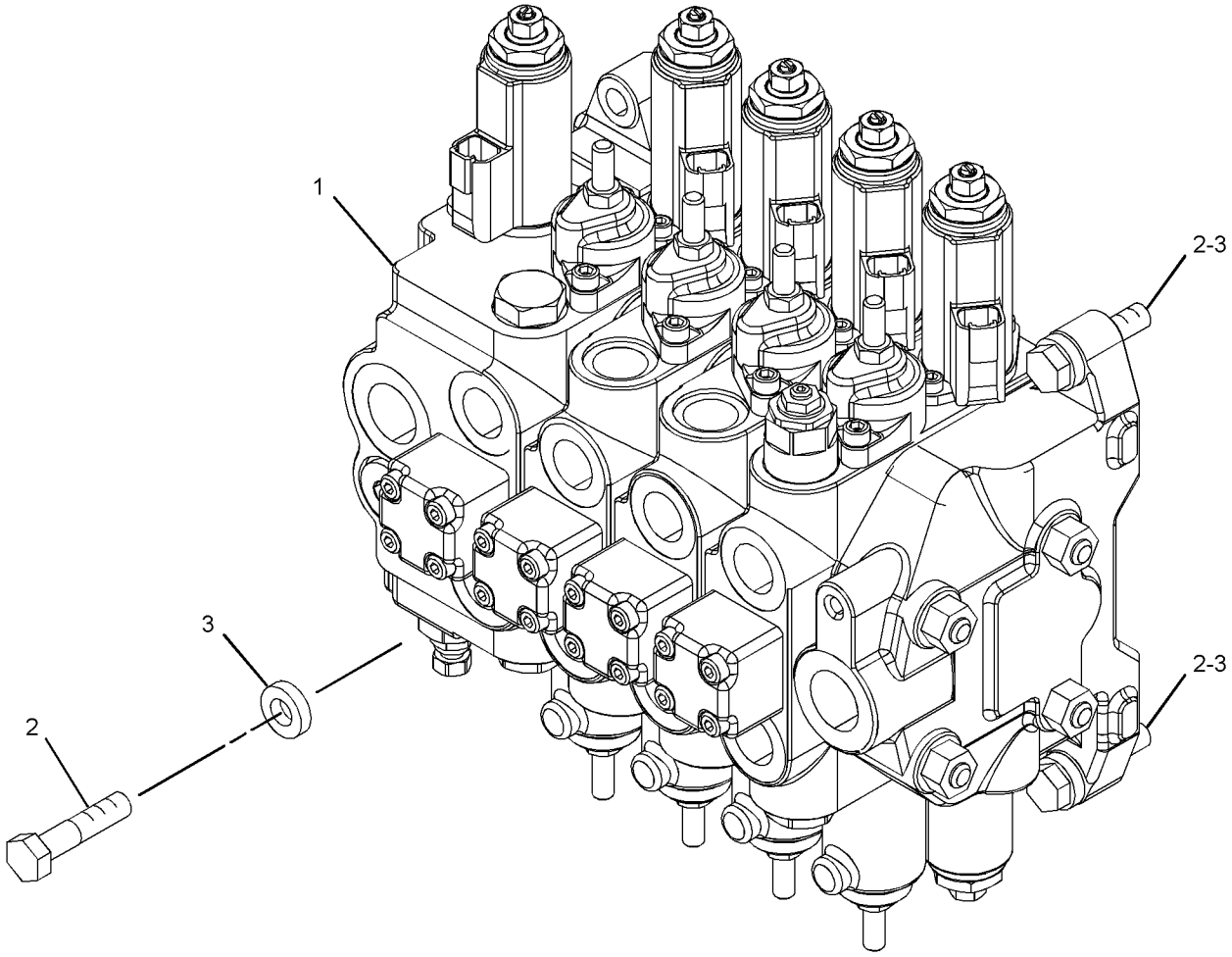

GRAPHIC #1 **<END>** g02010993

325-7272 VALVE & MTG GP-CONTROL

S/N: MMM1-UP; RRR1-UP
PART OF 325-6529, 325-6531 HYDRAULIC AR
AN ATTACHMENT

SMCS-5051 **i03726468**

NOTE	REF NO	GRAPHIC REF	PART NUMBER	QTY	PART NAME 1 2 3 4 5 6 (PRODUCT LEVEL)	SEE PAGE
Y	1	1	**323-8151**	1	VALVE GP-BANK 5	636
	2	1	**2M-9780**	2	SEAL-O-RING	
	3	1	**8T-4121**	2	WASHER-HARD (11X21X2.5-MM THK)	
M	4	1	**8T-4133**	2	NUT (M10X1.5-THD)	
M	5	1	**8T-4182**	1	BOLT (M10X1.5X45-MM)	
	6	1	**8T-7934**	1	WASHER-HARD (11X21X5-MM THK)	
	7	1	**9S-4190**	2	PLUG-O-RING	

M - METRIC PART
Y - SEPARATE ILLUSTRATION

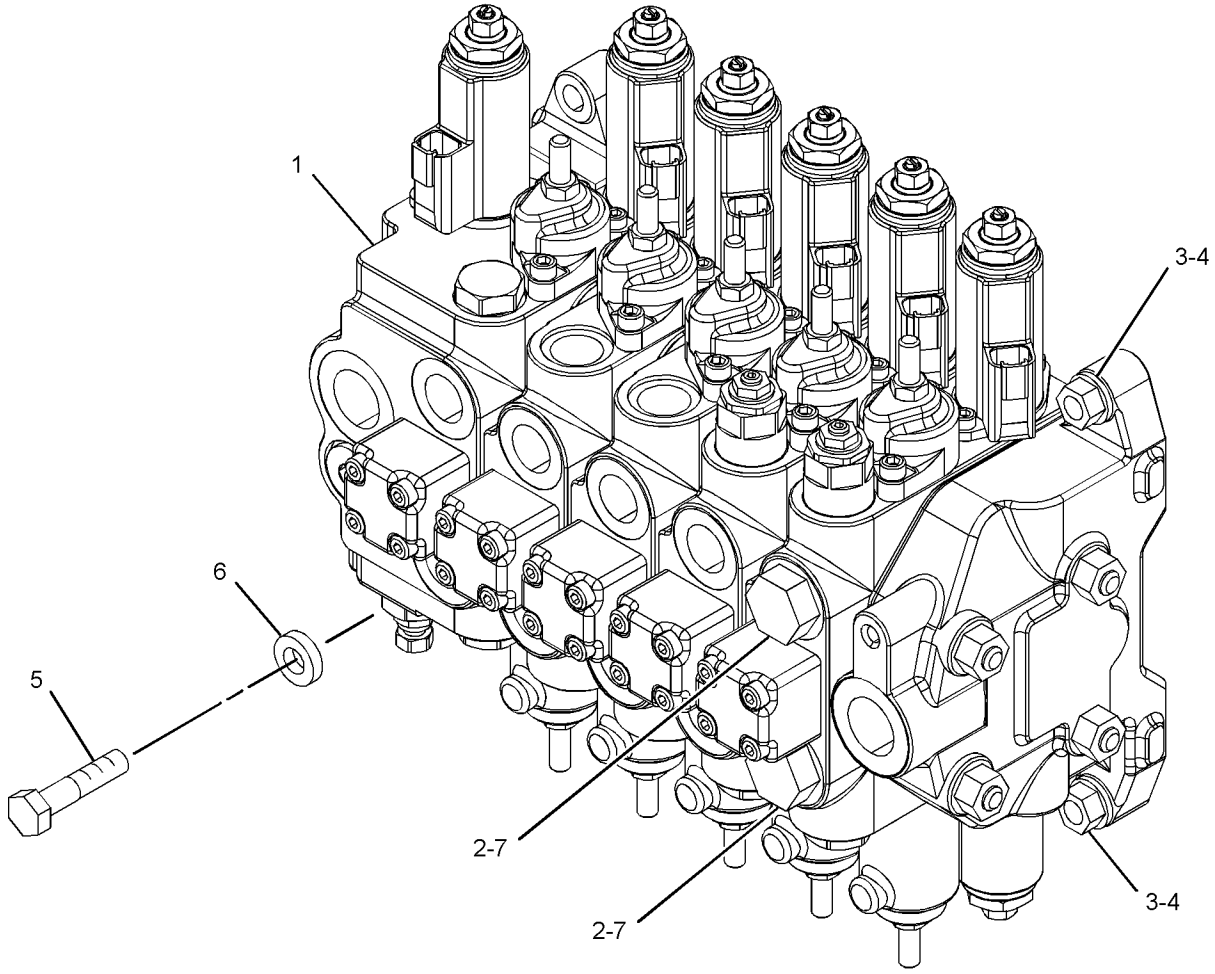

GRAPHIC #1 **<END>** g02013960

254-1386 VALVE & MTG GP-IMPLEMENT CONT–STANDARD

S/N: MMM1-UP; RRR1-UP
PART OF 264-4550 HYDRAULIC AR
AN ATTACHMENT

SMCS-5051 **i02819289**

NOTE	REF NO	GRAPHIC REF	PART NUMBER	QTY	PART NAME 1 2 3 4 5 6 (PRODUCT LEVEL)	SEE PAGE
Y	1	1	**254-1450**	1	VALVE GP-BANK 3	630
M	2	1	**8T-4182**	3	BOLT (M10X1.5X45-MM)	
	3	1	**8T-7934**	3	WASHER-HARD (11X21X5-MM THK)	

M - METRIC PART
Y - SEPARATE ILLUSTRATION

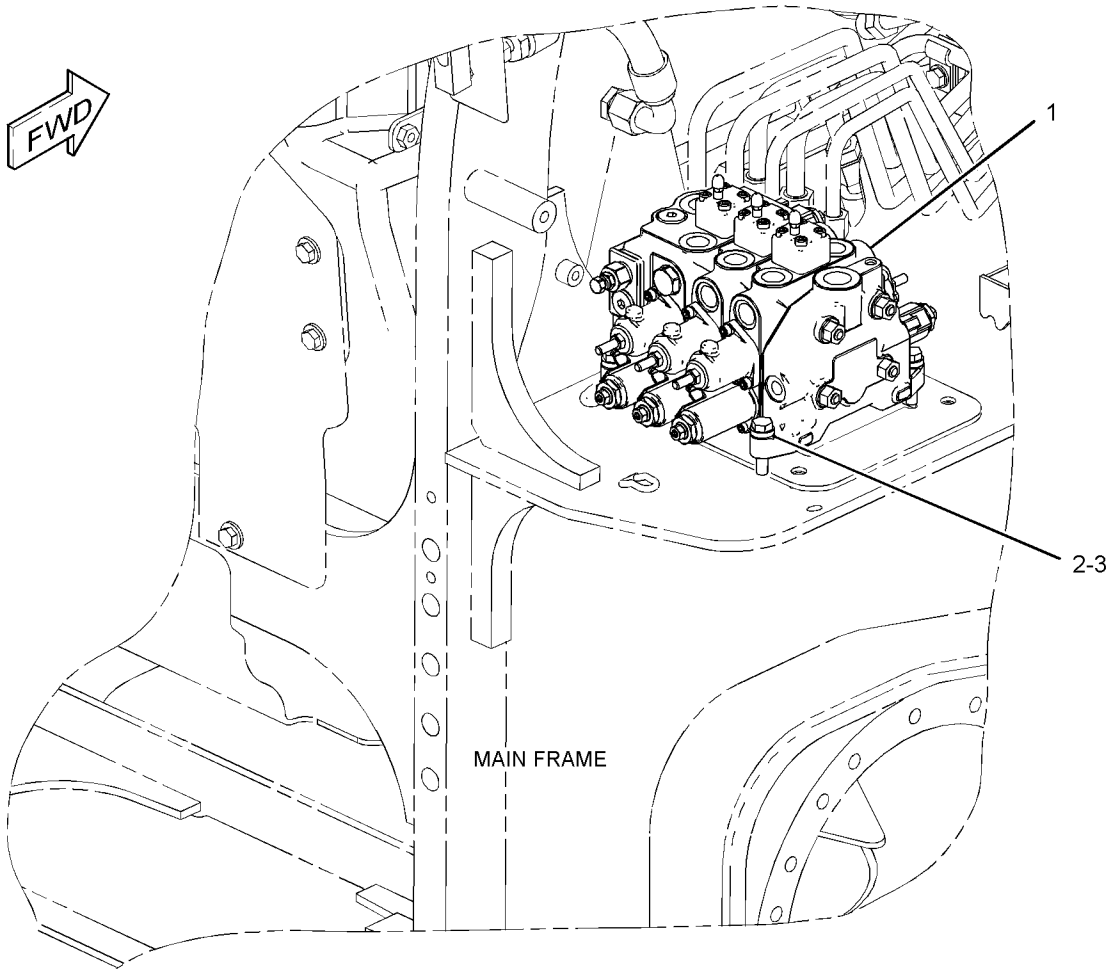

GRAPHIC #1 **<END>** g01373994

254-1457 VALVE & MTG GP-IMPLEMENT CONT

S/N: MMM1-UP; RRR1-UP
PART OF 264-4551, 264-4552 HYDRAULIC AR
AN ATTACHMENT

SMCS-5051 **i02679428**

NOTE	REF NO	GRAPHIC REF	PART NUMBER	QTY	PART NAME 1 2 3 4 5 6 (PRODUCT LEVEL)	SEE PAGE
Y	1	1	**254-1451**	1	VALVE GP-BANK 4 (IMPLEMENT)	632
M	2	1	**8T-4182**	3	BOLT (M10X1.5X45-MM)	
	3	1	**8T-7934**	3	WASHER-HARD (11X21X5-MM THK)	

M - METRIC PART
Y - SEPARATE ILLUSTRATION

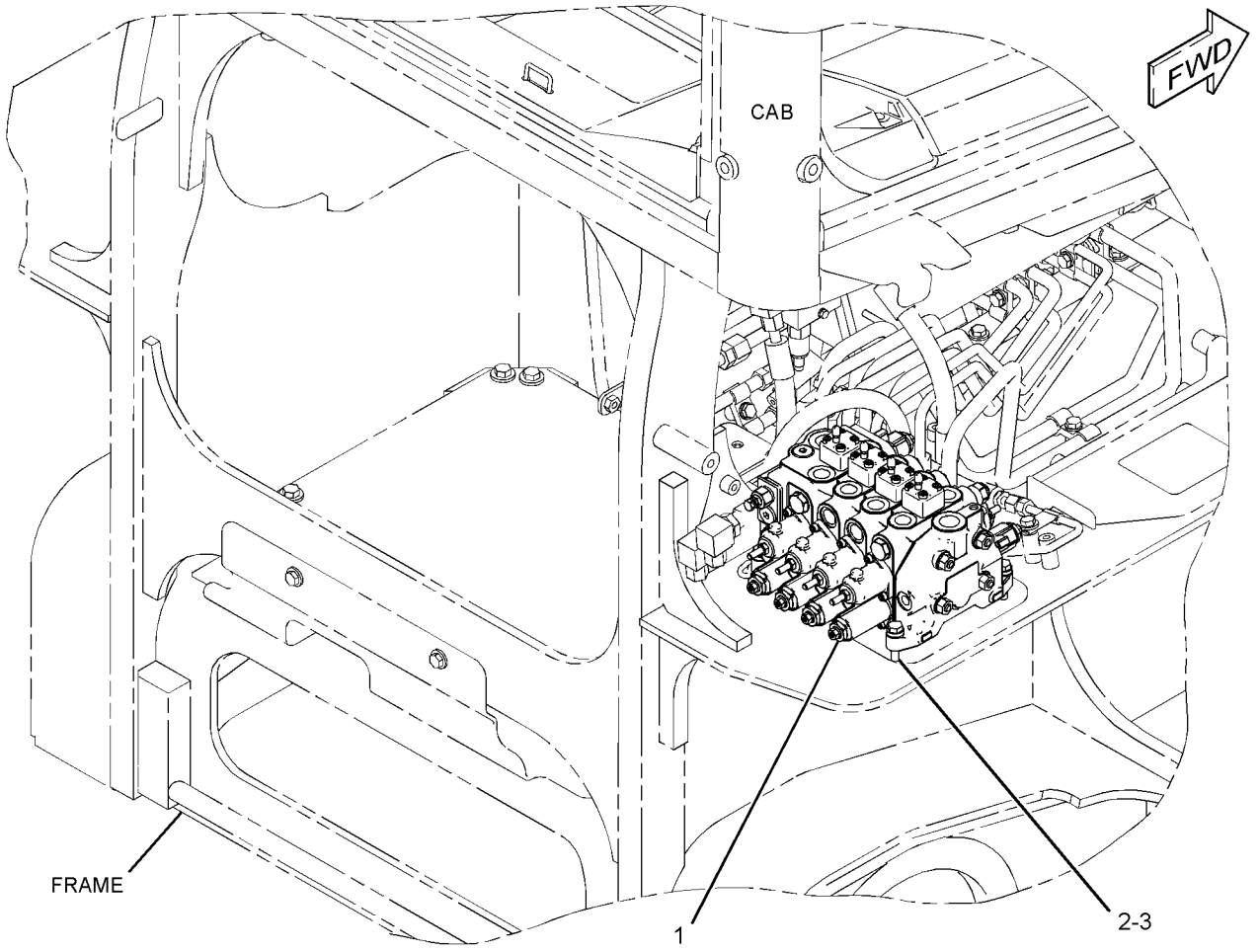

GRAPHIC #1 **<END>** g01379603

254-1450 VALVE GP-BANK 3–IMPLEMENT

S/N: MMM1-UP; RRR1-UP

PART OF 254-1386 VALVE & MTG GP-IMPLEMENT CONT

AN ATTACHMENT

SMCS-5051 **i03871955**

NOTE	REF NO	GRAPHIC REF	PART NUMBER	QTY	PART NAME 1 2 3 4 5 6 (PRODUCT LEVEL)	SEE PAGE
Y	1	1	**269-1084**	1	VALVE GP-CONTROL (BLADE LIFT)	638
Y	2	1	**269-1085**	1	VALVE GP-CONTROL (ANGLE)	640
Y	3	1	**304-1139**	1	VALVE GP-CONTROL (TILT)	642
Y	4	1	**269-1087**	1	MANIFOLD GP-VALVE (OUTLET)	614
	5	1	**123-4363**	4	ROD	
M	6	1	**8T-4133**	4	NUT (M10X1.5-THD)	
	7	1	**095-1574**	24	SEAL-O-RING	
	8	1	**095-1590**	9	SEAL-O-RING	
	9	1	**095-1586**	3	SEAL-O-RING	
	10	1	**304-1154**	3	VALVE GP-CHECK (IMPLEMENT)	

M - METRIC PART
Y - SEPARATE ILLUSTRATION

254-1450 **VALVE GP-BANK 3 (*contd.*)** **i03871955**

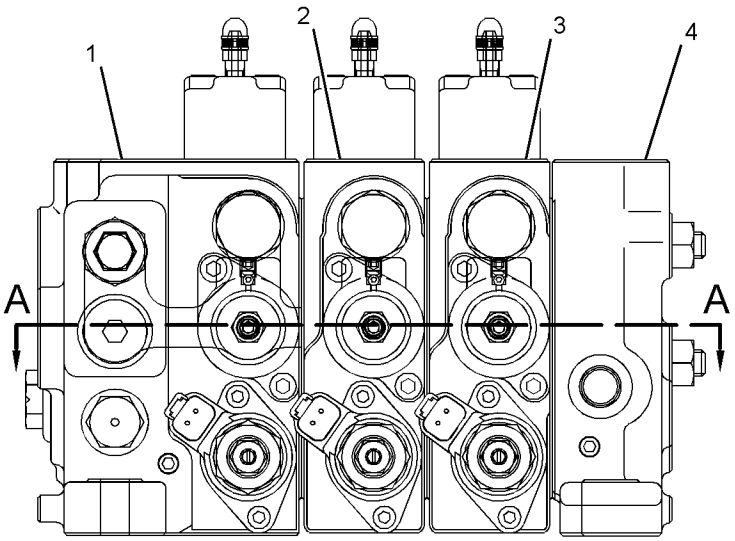

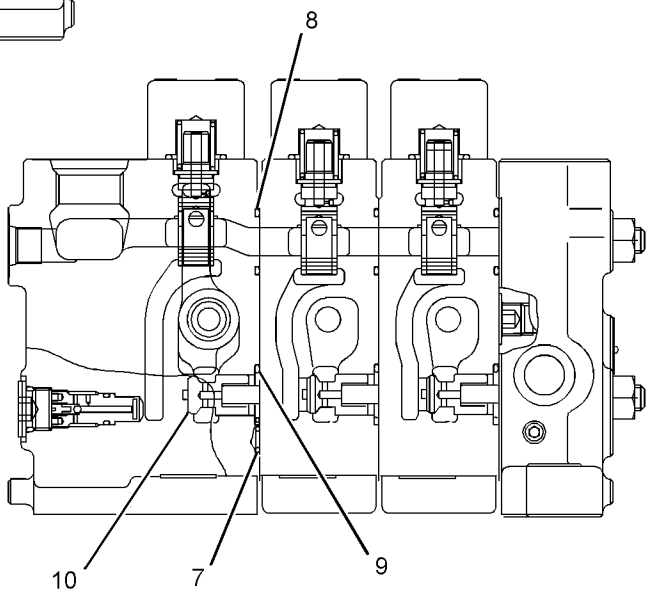

SECTION B-B

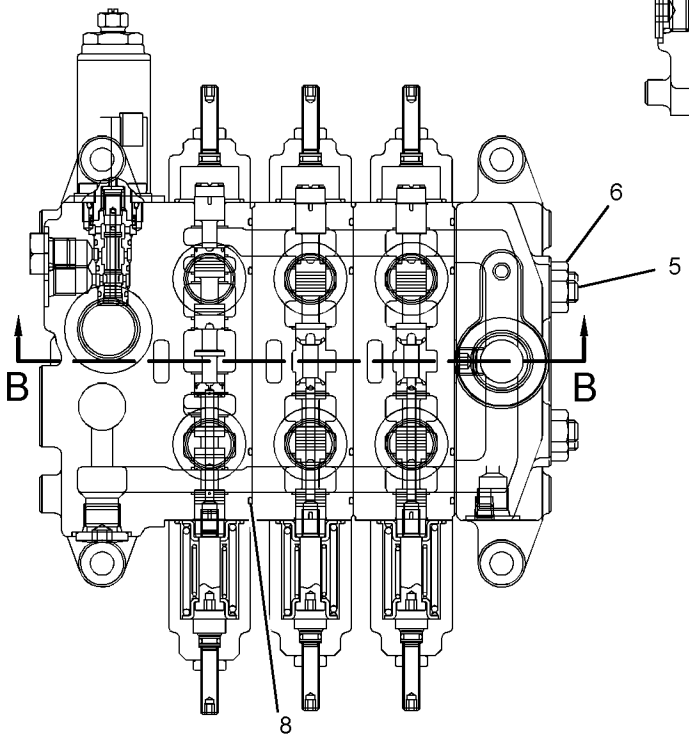

SECTION A-A

GRAPHIC #1 **<END>** g02004822

254-1451 VALVE GP-BANK 4—IMPLEMENT

S/N: MMM1-UP; RRR1-UP

PART OF 254-1457 VALVE & MTG GP-IMPLEMENT CONT

AN ATTACHMENT

SMCS-5051 **i04415562**

NOTE	REF NO	GRAPHIC REF	PART NUMBER	QTY	PART NAME 1 2 3 4 5 6 (PRODUCT LEVEL)	SEE PAGE
Y	1	1	**269-1084**	1	VALVE GP-CONTROL (BLADE LIFT)	638
Y	2	1	**269-1085**	1	VALVE GP-CONTROL (ANGLE)	640
Y	3	1	**304-1139**	1	VALVE GP-CONTROL (TILT)	642
Y	4	1	**269-1086**	1	VALVE GP-CONTROL (AUXILIARY)	641
	5	1	**269-1087**	1	MANIFOLD GP-VALVE (OUTLET)	
	6	1	**9R-0699**	4	ROD	
M	7	1	**8T-4133**	4	NUT (M10X1.5-THD)	
	8	1	**095-1574**	32	SEAL-O-RING	
	9	1	**095-1590**	12	SEAL-O-RING	
	10	1	**095-1586**	4	SEAL-O-RING	
	11	1	**304-1154**	4	VALVE GP-CHECK (IMPLEMENT)	

M - METRIC PART
Y - SEPARATE ILLUSTRATION

254-1451 **VALVE GP-BANK 4 (*contd.*)** **i04415562**

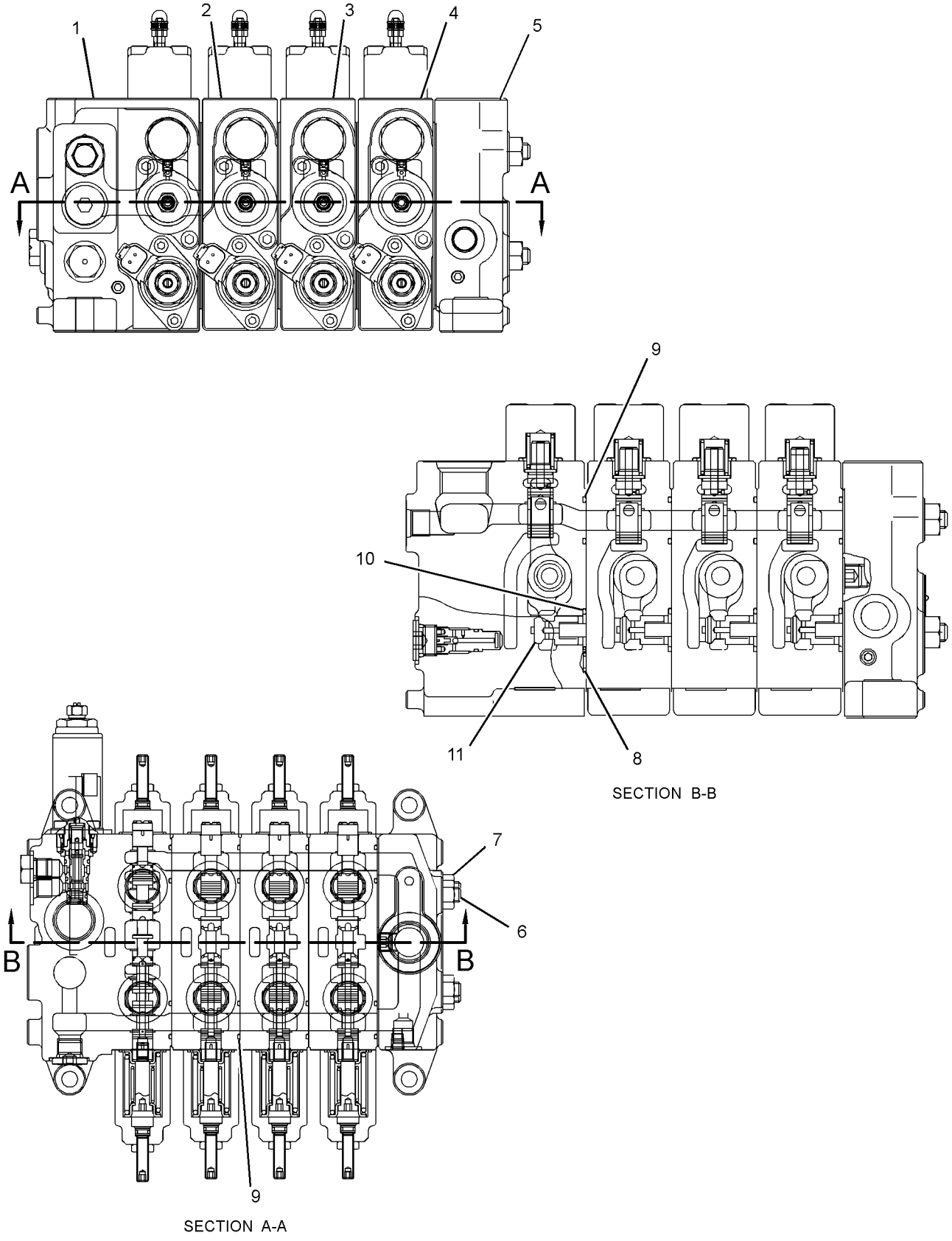

GRAPHIC #1 **<END>** g02004814

323-8150 VALVE GP-BANK 4—IMPLEMENT

S/N: MMM1-UP; RRR1-UP
PART OF 325-7271 VALVE & MTG GP-CONTROL
AN ATTACHMENT

SMCS-5051 **i04402165**

NOTE	REF NO	GRAPHIC REF	PART NUMBER	QTY	PART NAME 1 2 3 4 5 6 (PRODUCT LEVEL)	SEE PAGE
Y	1	1	**269-1084**	1	VALVE GP-CONTROL (BLADE LIFT)	638
Y	2	1	**269-1085**	1	VALVE GP-CONTROL (ANGLE)	640
Y	3	1	**304-1139**	1	VALVE GP-CONTROL (TILT)	642
Y	4	1	**326-8749**	1	VALVE GP-CONTROL (AUXILIARY)	645
Y	5	1	**269-1087**	1	MANIFOLD GP-VALVE (OUTLET)	614
	6	1	**9R-0699**	4	ROD	
M	7	1	**8T-4133**	4	NUT (M10X1.5-THD)	
	8	1	**095-1574**	32	SEAL-O-RING	
	9	1	**095-1590**	12	SEAL-O-RING	
	10	1	**095-1586**	4	SEAL-O-RING	
	11	1	**304-1154**	4	VALVE GP-CHECK (IMPLEMENT)	

M - METRIC PART
Y - SEPARATE ILLUSTRATION

323-8150 **VALVE GP-BANK 4 (*contd.*)** **i04402165**

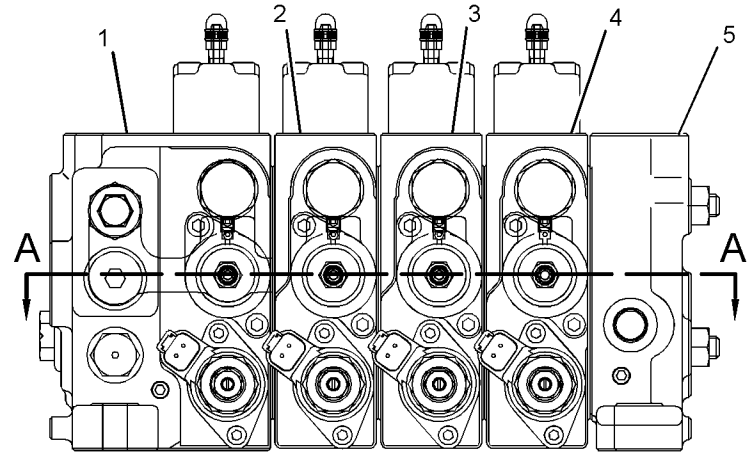

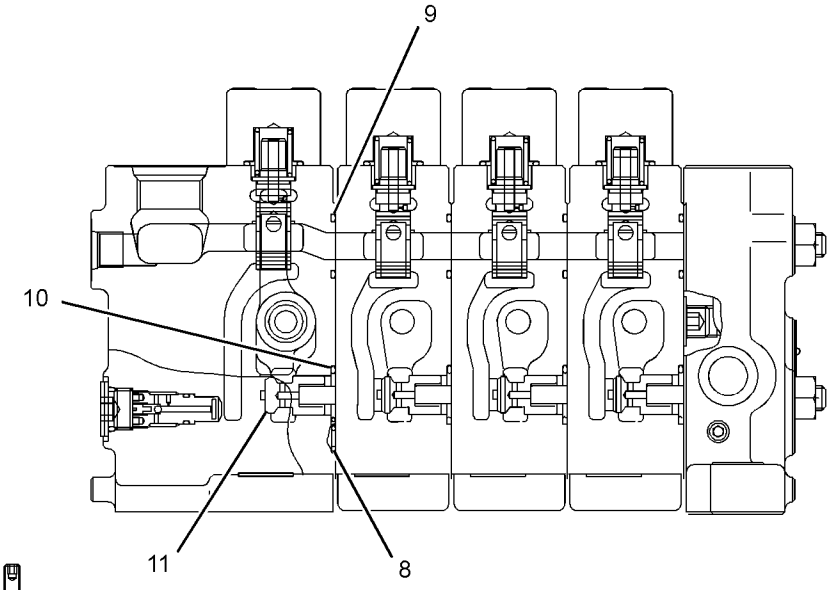

SECTION B-B

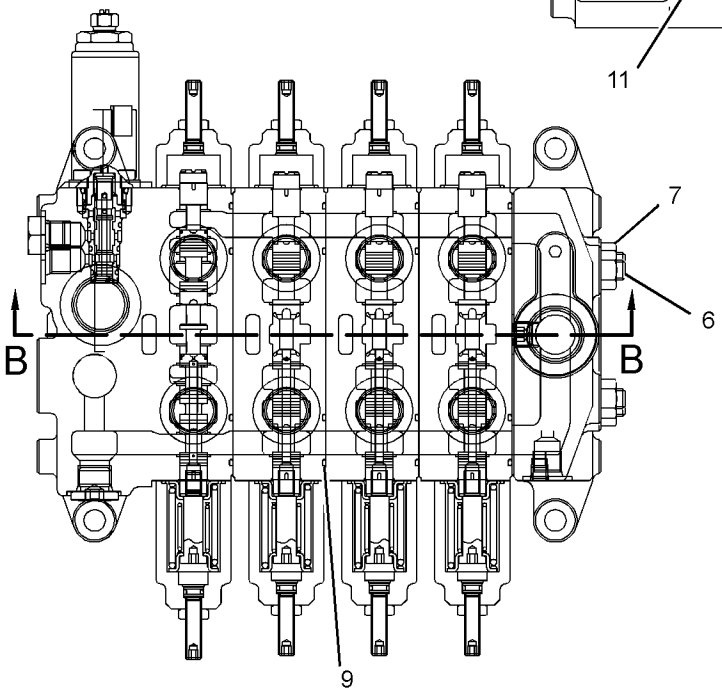

SECTION A-A

GRAPHIC #1 **<END>** g02014057

323-8151 VALVE GP-BANK 5—IMPLEMENT

S/N: MMM1-UP; RRR1-UP
PART OF 325-7272 VALVE & MTG GP-CONTROL
AN ATTACHMENT

SMCS-5051 **i04403732**

NOTE	REF NO	GRAPHIC REF	PART NUMBER	QTY	PART NAME 1 2 3 4 5 6 (PRODUCT LEVEL)	SEE PAGE
Y	1	1	**269-1084**	1	VALVE GP-CONTROL (BLADE LIFT)	638
Y	2	1	**269-1085**	1	VALVE GP-CONTROL (ANGLE)	640
Y	3	1	**304-1139**	1	VALVE GP-CONTROL (TILT)	642
Y	4	1	**326-8749**	2	VALVE GP-CONTROL (AUXILIARY)	645
Y	5	1	**269-1087**	1	MANIFOLD GP-VALVE (OUTLET)	614
	6	1	**108-2949**	4	ROD	
M	7	1	**8T-4133**	4	NUT (M10X1.5-THD)	
	8	1	**095-1574**	40	SEAL-O-RING	
	9	1	**095-1590**	15	SEAL-O-RING	
	10	1	**095-1586**	5	SEAL-O-RING	
	11	1	**304-1154**	5	VALVE GP-CHECK (IMPLEMENT)	

M - METRIC PART
Y - SEPARATE ILLUSTRATION

323-8151 **VALVE GP-BANK 5 (*contd.*)** **i04403732**

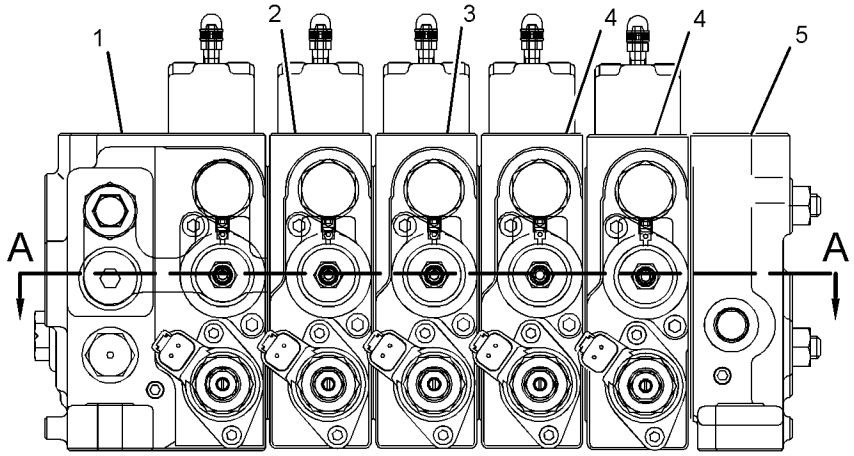

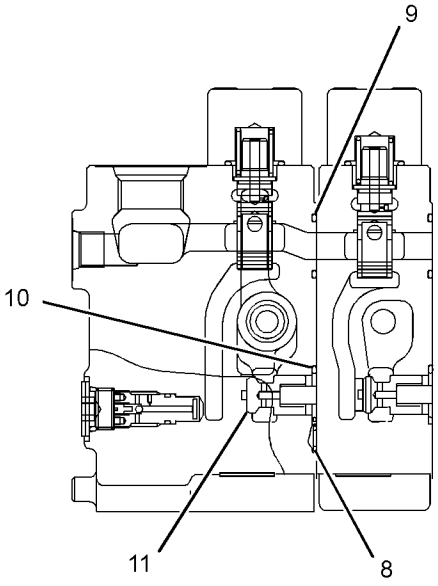

SECTION B-B

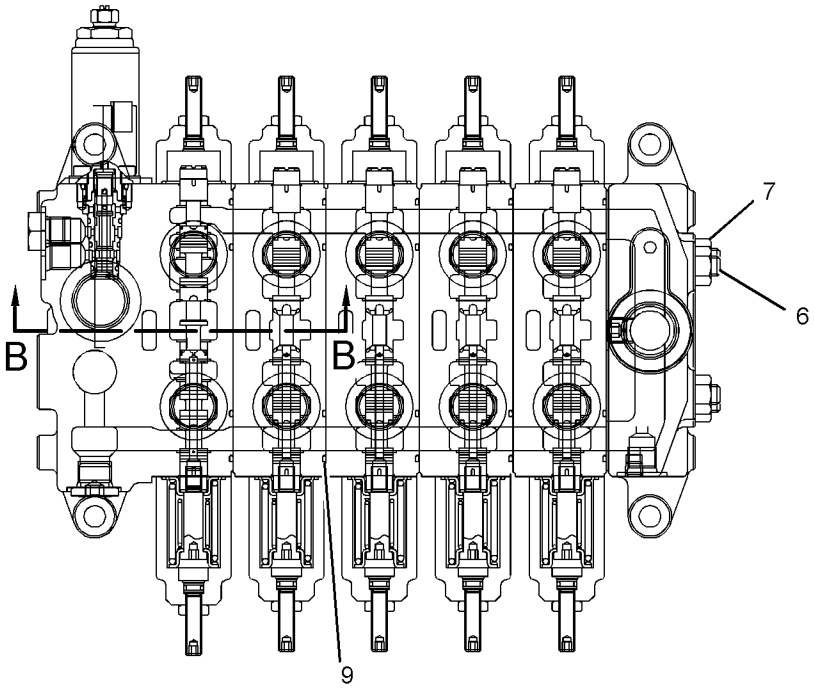

SECTION A-A

GRAPHIC #1 **<END>** g02015693

269-1084 VALVE GP-CONTROL–BLADE LIFT

S/N: MMM1-UP; RRR1-UP

PART OF 254-1450 VALVE GP-BANK 3, 254-1451, 323-8150 VALVE GP-BANK 4, 323-8151 VALVE GP-BANK 5

AN ATTACHMENT

SMCS-5051 **i04415689**

NOTE	REF NO	GRAPHIC REF	PART NUMBER	QTY	PART NAME 1 2 3 4 5 6 (PRODUCT LEVEL)	SEE PAGE
	1	1	**304-1140**	1	VALVE GP-RELIEF (12-VOLT) (BLADE LIFT)	
	2	1	**304-1141**	1	VALVE GP-SOLENOID (12-VOLT) (IMPLEMENT OVERRIDE)	
	3	1	**304-1142**	2	VALVE GP-SOLENOID (12-VOLT) (BLADE LIFT)	
	4	1	**304-1144**	1	KIT-COVER	
					(INCLUDES COVER, VALVE, CAP, O-RING SEAL & BOLTS)	
	5	1	**304-1147**	2	VALVE GP-MAKEUP (BLADE LIFT)	
	6	1	**304-1149**	1	KIT-COVER	
	7	1	**304-1150**	1	KIT-COVER	
					(EACH COVER KIT INCLUDES COVER, O-RING SEALS, SCREWS, BALL & NUT)	
M	8	1	**8T-0269**	4	BOLT-SOCKET HEAD (M6X1X20-MM)	
M	9	1	**099-2374**	6	BOLT-SOCKET HEAD (M5X0.8X12-MM)	
	10	1	**304-1156**	1	VALVE GP-SHUTTLE	
		1	**095-1582**	1	SEAL-O-RING	
		1	**095-1750**	1	SEAL-O-RING	
		1	**161-6154**	1	SEAL-O-RING	
	11	1	**304-1153**	1	VALVE GP-CHECK (SLOW RETURN)	
		1	**095-1582**	1	SEAL-O-RING	
		1	**161-6154**	1	SEAL-O-RING	
	12	1	**304-1155**	1	KIT-SPRING	
					(INCLUDES SPRINGS)	
	13	1	**9S-4191**	2	PLUG	
	14	1	**197-0145**	3	PLUG	
	15	1	**3J-1907**	2	SEAL-O-RING	
	16	1	**095-1590**	3	SEAL-O-RING	

M - METRIC PART

269-1084 **VALVE GP-CONTROL (*contd.*)** **i04415689**

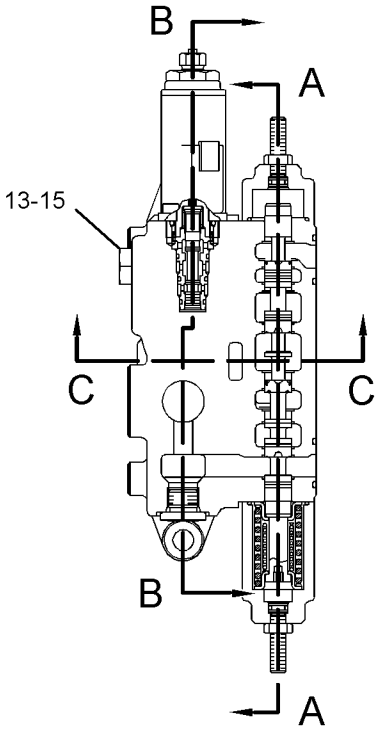

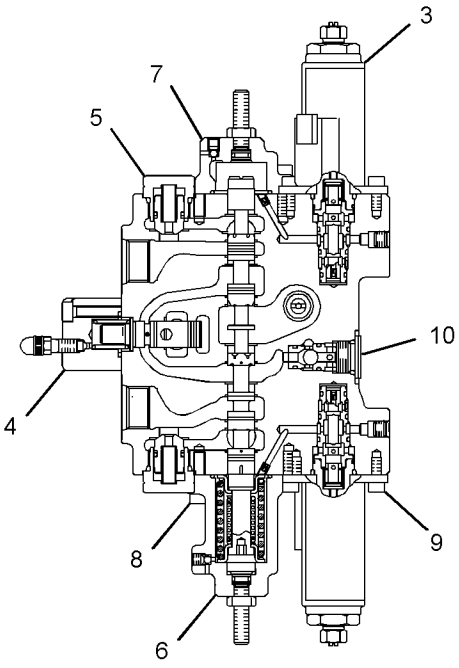

SECTION A-A

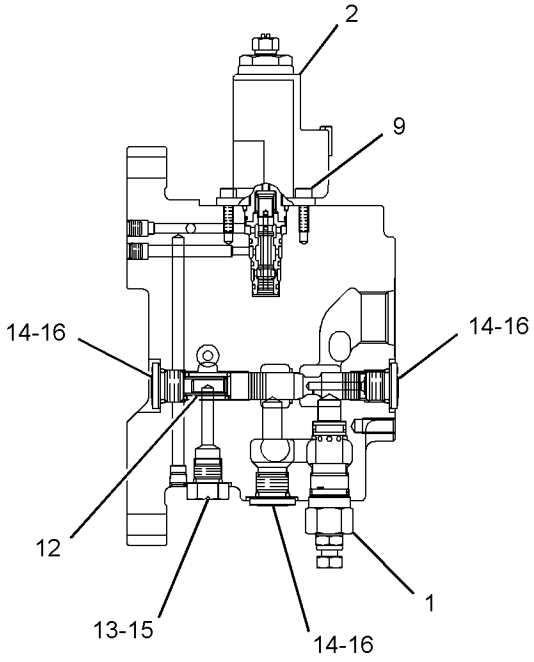

SECTION B-B

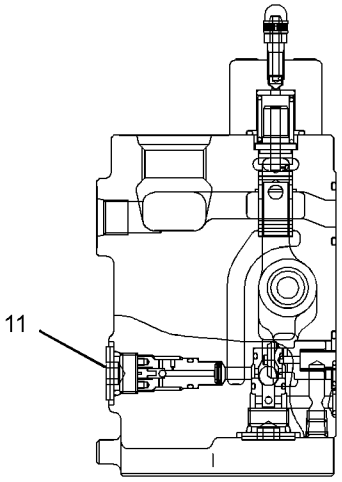

SECTION C-C

GRAPHIC #1 **<END>** g02020833

269-1085 VALVE GP-CONTROL–ANGLE

S/N: MMM1-UP; RRR1-UP

PART OF 254-1450 VALVE GP-BANK 3, 254-1451, 323-8150 VALVE GP-BANK 4, 323-8151 VALVE GP-BANK 5

AN ATTACHMENT

SMCS-5051 **i04403723**

NOTE	REF NO	GRAPHIC REF	PART NUMBER	QTY	PART NAME 1 2 3 4 5 6 (PRODUCT LEVEL)	SEE PAGE
	1	1	**304-1142**	2	VALVE GP-SOLENOID (12-VOLT) (ANGLE)	
	2	1	**304-1145**	1	KIT-COVER (COMPENSATOR)	
					(INCLUDES COVER, VALVE, CAP, SEAL & BOLTS)	
	3	1	**304-1147**	2	VALVE GP-MAKEUP (ANGLE)	
	4	1	**304-1150**	1	KIT-COVER	
					(INCLUDES COVER, SEALS, SCREWS, BALL & NUT)	
	5	1	**304-1151**	1	KIT-COVER	
					(INCLUDES COVER, SEALS, SCREWS, BALL & NUT)	
M	6	1	**8T-0269**	4	BOLT-SOCKET HEAD (M6X1X20-MM)	
M	7	1	**099-2374**	4	BOLT-SOCKET HEAD (M5X0.8X12-MM)	
	8	1	**304-1156**	1	VALVE GP-SHUTTLE	
		1	**095-1582**	1	SEAL-O-RING	
		1	**095-1750**	1	SEAL-O-RING	
		1	**161-6154**	1	SEAL-O-RING	

M - METRIC PART

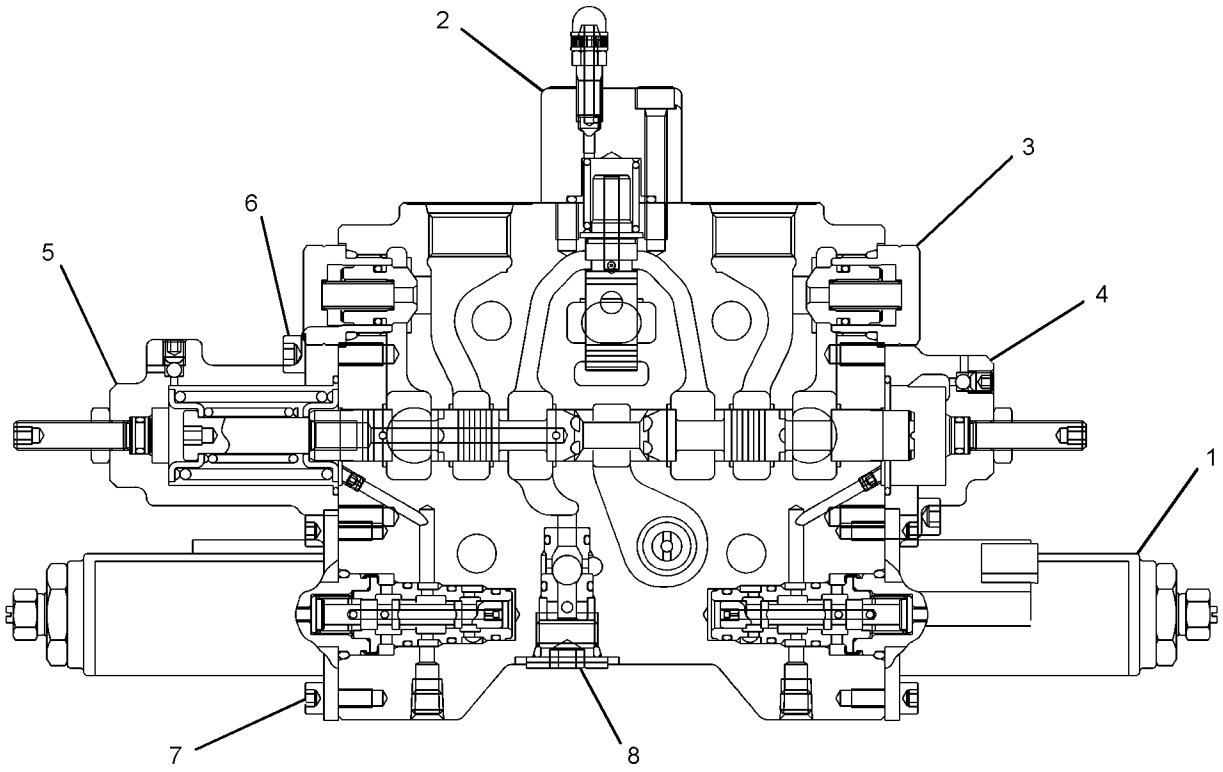

GRAPHIC #1 **<END>** g01407053

269-1086 VALVE GP-CONTROL–AUXILIARY

S/N: MMM1-UP; RRR1-UP
PART OF 254-1451 VALVE GP-BANK 4
AN ATTACHMENT

SMCS-5051 **i04403724**

NOTE	REF NO	GRAPHIC REF	PART NUMBER	QTY	PART NAME 1 2 3 4 5 6 (PRODUCT LEVEL)	SEE PAGE
	1	1	**304-1142**	2	VALVE GP-SOLENOID (12-VOLT) (AUXILIARY)	
	2	1	**304-1145**	1	KIT-COVER (COMPENSATOR)	
					(INCLUDES COVER, VALVE, CAP, SEAL, & BOLTS)	
	3	1	**304-1147**	1	VALVE GP-MAKEUP (AUXILIARY)	
	4	1	**304-1150**	1	KIT-COVER	
					(INCLUDES COVER, SEALS, SCREWS, BALL, & NUT)	
	5	1	**304-1151**	1	KIT-COVER	
					(INCLUDES COVER, SEALS, SCREWS, BALL, & NUT)	
	6	1	**304-1152**	1	VALVE GP-RELIEF (AUXILIARY)	
M	7	1	**8T-0269**	4	BOLT-SOCKET HEAD (M6X1X20-MM)	
M	8	1	**099-2374**	4	BOLT-SOCKET HEAD (M5X0.8X12-MM)	
	9	1	**304-1156**	1	VALVE GP-SHUTTLE	
		1	**095-1582**	1	SEAL-O-RING	
		1	**095-1750**	1	SEAL-O-RING	
		1	**161-6154**	1	SEAL-O-RING	

M - METRIC PART

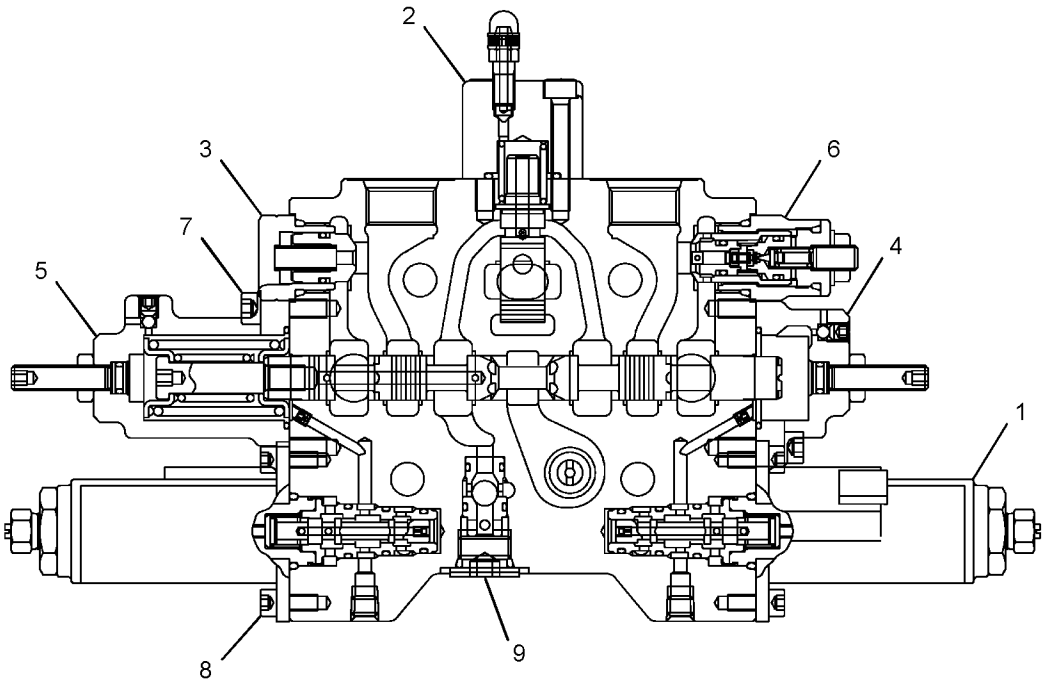

GRAPHIC #1 **<END>** g01408684

304-1139 VALVE GP-CONTROL–TILT

S/N: MMM1-UP; RRR1-UP

PART OF 254-1450 VALVE GP-BANK 3, 254-1451, 323-8150 VALVE GP-BANK 4, 323-8151 VALVE GP-BANK 5

AN ATTACHMENT

SMCS-5051 **i04415690**

NOTE	REF NO	GRAPHIC REF	PART NUMBER	QTY	PART NAME 1 2 3 4 5 6 (PRODUCT LEVEL)	SEE PAGE
	1	1	**304-1143**	2	VALVE GP-SOLENOID (12-VOLT) (TILT)	
	2	1	**304-1145**	1	KIT-COVER	
					(INCLUDES COVER, VALVE, CAP, SEAL, & BOLTS)	
	3	1	**304-1147**	2	VALVE GP-MAKEUP (TILT)	
	4	1	**304-1150**	1	KIT-COVER	
	5	1	**304-1151**	1	KIT-COVER	
					(EACH KIT INCLUDES COVER, SEALS, SCREWS, BALL, & NUT)	
M	6	1	**8T-0269**	4	BOLT-SOCKET HEAD (M6X1X20-MM)	
M	7	1	**099-2374**	4	BOLT-SOCKET HEAD (M5X0.8X12-MM)	
	8	1	**304-1156**	1	VALVE GP-SHUTTLE	
		1	**095-1582**	1	SEAL-O-RING	
		1	**095-1750**	1	SEAL-O-RING	
		1	**161-6154**	1	SEAL-O-RING	

M - METRIC PART

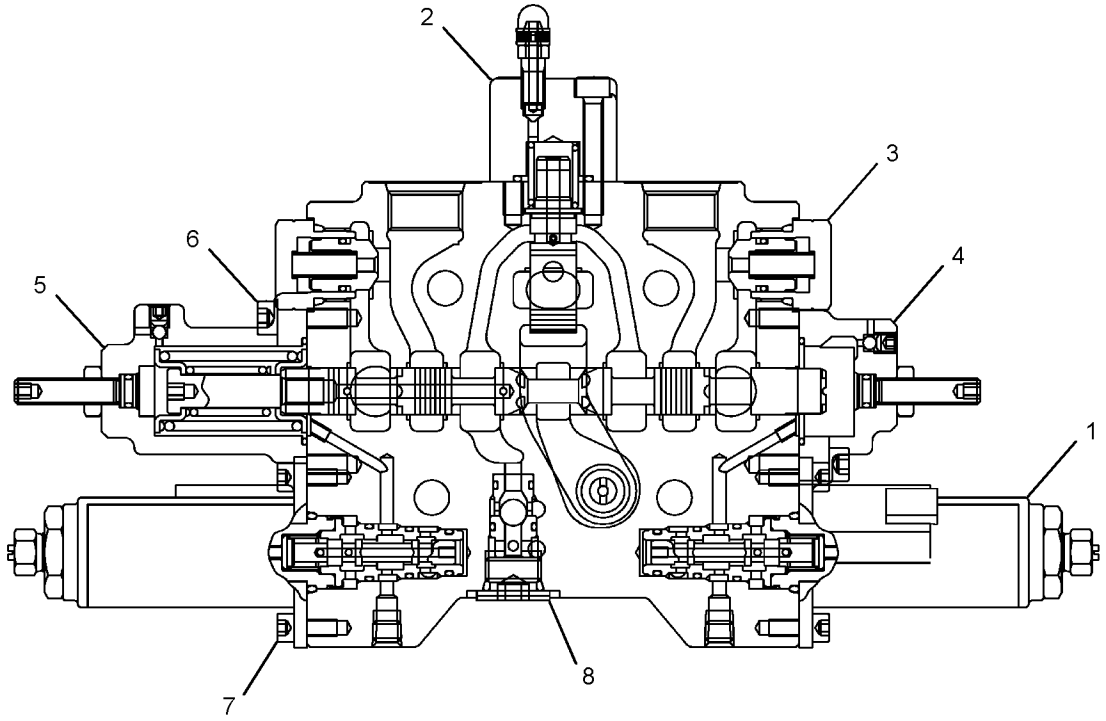

GRAPHIC #1 **<END>** g01408658

322-6506 VALVE GP-CONTROL

S/N: MMM1-UP

FIELD INSTALLATION

SMCS-5051 **i03005562**

NOTE	REF NO	GRAPHIC REF	PART NUMBER	QTY	PART NAME 1 2 3 4 5 6 (PRODUCT LEVEL)	SEE PAGE
I	1	1	**135-7193**	1	HOSE AS	
I	2	1	**159-5901**	1	HOSE AS	
I	3	1	**185-3166**	1	HOSE AS	
I	4	1	**228-0463**	1	HOSE AS	
	5	1	**272-3535**	1	TUBE AS	
Y	6	1	**274-6747**	1	MANIFOLD GP-CONTROL	360
I	7	1	**283-4929**	1	HOSE AS	
I	8	1	**285-3772**	1	HOSE AS	
	9	1	**315-9855**	1	UNION AS-CROSS	
	10	1	**092-3635**	1	CONNECTOR	
	11	1	*148-8325*	2	CONNECTOR AS	
					(EACH INCLUDES)	
		1	**3J-1907**	1	SEAL-O-RING	
		1	**4J-5477**	1	SEAL-O-RING	
		1	**6V-8641**	1	CONNECTOR	
	12	1	*148-8336*	1	CONNECTOR AS	
		1	**3J-1907**	1	SEAL-O-RING	
		1	**6V-8397**	1	SEAL-O-RING	
		1	**6V-8636**	1	CONNECTOR	
	13	1	*148-8368*	2	ELBOW AS	
					(EACH INCLUDES)	
		1	**3J-1907**	1	SEAL-O-RING	
		1	**4J-5477**	1	SEAL-O-RING	
		1	**6V-8627**	1	ELBOW	
	14	1	*148-8378*	1	ELBOW AS	
		1	**3J-1907**	1	SEAL-O-RING	
		1	**6V-8397**	1	SEAL-O-RING	
		1	**6V-8724**	1	ELBOW	
	15	1	*148-8439*	1	TEE AS	
		1	**3J-1907**	1	SEAL-O-RING	
		1	**6V-8397**	2	SEAL-O-RING	
		1	**6V-8774**	1	TEE	
	16	1	*148-8443*	2	TEE AS	
					(EACH INCLUDES)	
		1	**3J-1907**	1	SEAL-O-RING	
		1	**6V-8397**	1	SEAL-O-RING	
		1	**7X-2459**	1	TEE-O-RING	
	17	1	*150-4043*	1	CONNECTOR AS	
		1	**3J-1907**	1	SEAL-O-RING	
		1	**6V-8398**	1	SEAL-O-RING	
		1	**6V-9873**	1	CONNECTOR	
	18	1	**2H-0435**	2	CLAMP	
	19	1	**3K-0360**	1	SEAL-O-RING	
	20	1	**5P-7462**	1	CLIP (SLOT)	
	21	1	**5P-7463**	1	CLIP (TAB)	
	22	1	**6V-0683**	1	GROMMET	
	23	1	**6V-8397**	2	SEAL-O-RING	
M	24	1	**7X-2543**	3	BOLT (M10X1.5X120-MM)	
	25	1	**8M-2773**	3	CLIP	
	26	1	**8T-4121**	4	WASHER-HARD (11X21X2.5-MM THK)	
M	27	1	**8T-4191**	2	BOLT (M10X1.5X16-MM)	
M	28	1	**8T-4195**	2	BOLT (M10X1.5X30-MM)	
	29	1	**8T-7934**	3	WASHER-HARD (11X21X5-MM THK)	

I - REFER TO HYDRAULIC INFORMATION SYSTEM
M - METRIC PART
Y - SEPARATE ILLUSTRATION

322-6506 **VALVE GP-CONTROL (*contd.*)** **i03005562**

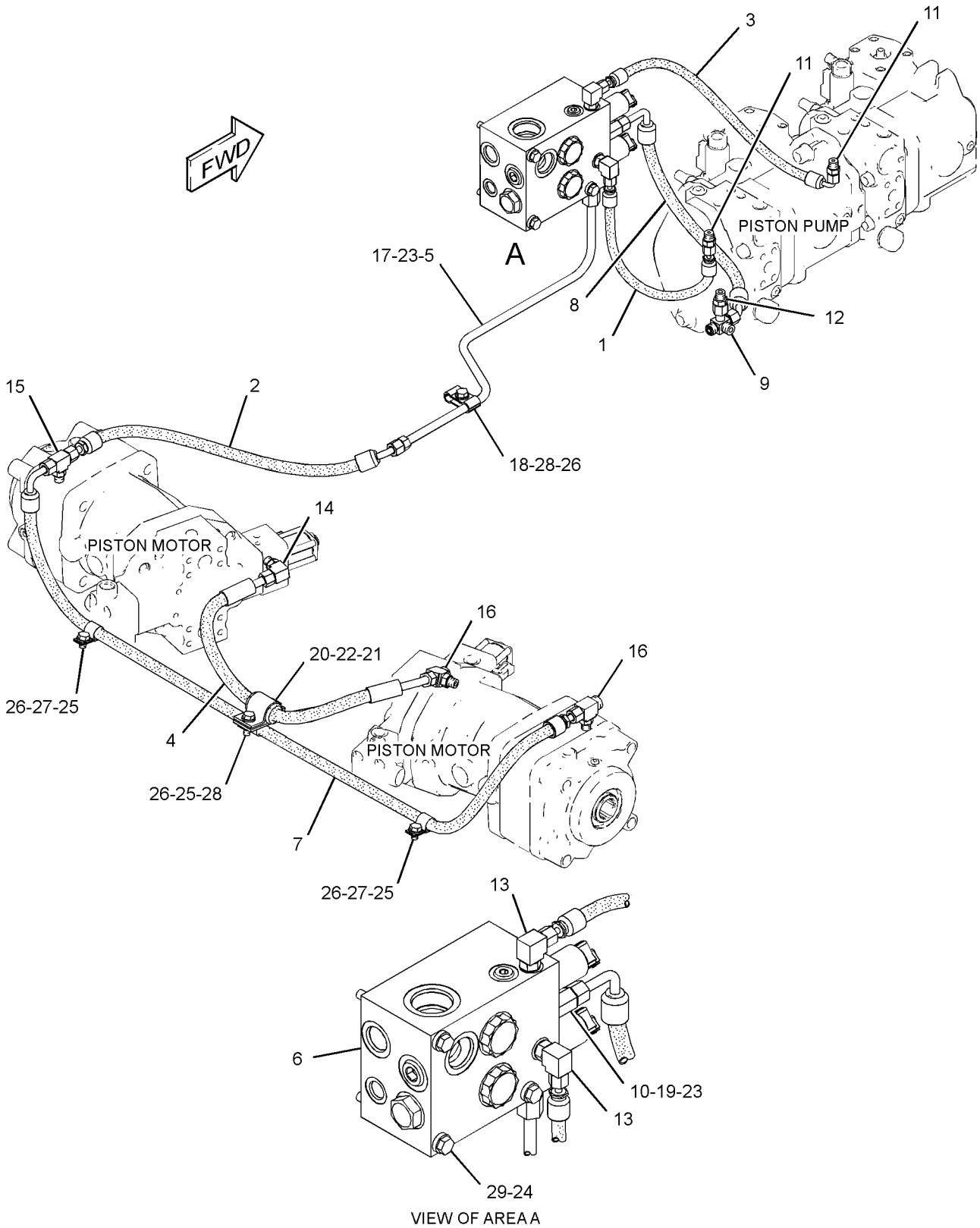

VIEW OF AREA A

GRAPHIC #1 **<END>** g01572479

326-8749 VALVE GP-CONTROL–AUXILIARY

S/N: MMM1-UP; RRR1-UP

PART OF 323-8150 VALVE GP-BANK 4, 323-8151 VALVE GP-BANK 5

AN ATTACHMENT

SMCS-5051 **i04415691**

NOTE	REF NO	GRAPHIC REF	PART NUMBER	QTY	PART NAME 1 2 3 4 5 6 (PRODUCT LEVEL)	SEE PAGE
	1	1	**304-1142**	2	VALVE GP-SOLENOID (12-VOLT) (AUXILIARY)	
	2	1	**304-1145**	1	KIT-COVER	
					(INCLUDES COVER, CAP, O-RING SEAL, BOLTS & AIR VENT VALVE)	
	3	1	**304-1147**	1	VALVE GP-MAKEUP (AUXILIARY)	
	4	1	**304-1150**	1	KIT-COVER	
	5	1	**304-1151**	1	KIT-COVER	
					(EACH COVER KIT INCLUDES COVER, O-RING SEALS, SCREWS, BALL & NUT)	
	6	1	**304-1152**	1	VALVE GP-RELIEF (AUXILIARY)	
M	7	1	**8T-0269**	4	BOLT-SOCKET HEAD (M6X1X20-MM)	
M	8	1	**099-2374**	4	BOLT-SOCKET HEAD (M5X0.8X12-MM)	
	9	1	**304-1156**	1	VALVE GP-SHUTTLE	
		1	**095-1582**	1	SEAL-O-RING	
		1	**095-1750**	1	SEAL-O-RING	
		1	**161-6154**	1	SEAL-O-RING	

M - METRIC PART

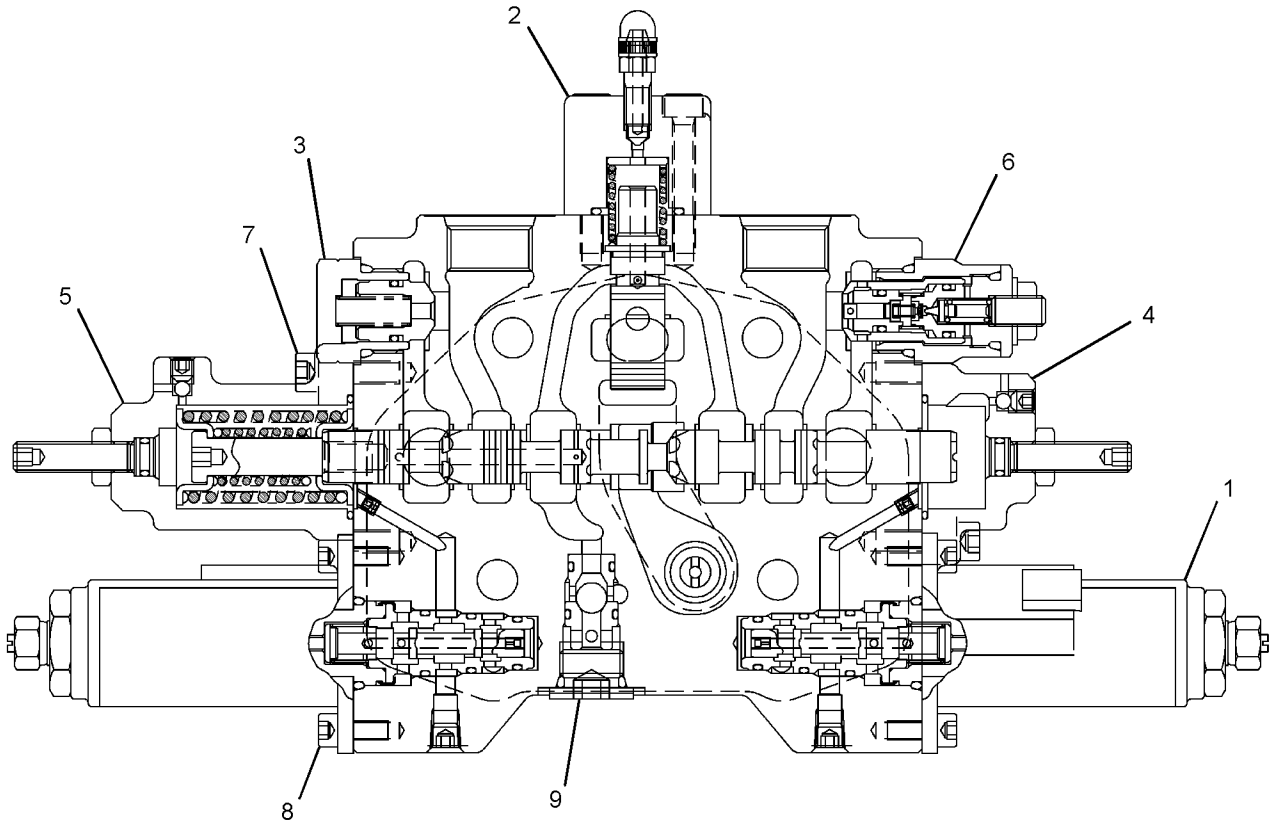

GRAPHIC #1 **<END>** g02024456

259-8194 VALVE GP-SOLENOID—PARKING BRAKE

S/N: MMM1-UP; RRR1-UP
12-VOLT
PART OF 264-3709 VALVE GP-SOLENOID
AN ATTACHMENT

SMCS-5479 **i02485890**

NOTE	REF NO	GRAPHIC REF	PART NUMBER	QTY	PART NAME 1 2 3 4 5 6 (PRODUCT LEVEL)	SEE PAGE
	1	1	**238-4626**	1	COIL AS (AUXILIARY FLOW CONTROL)	

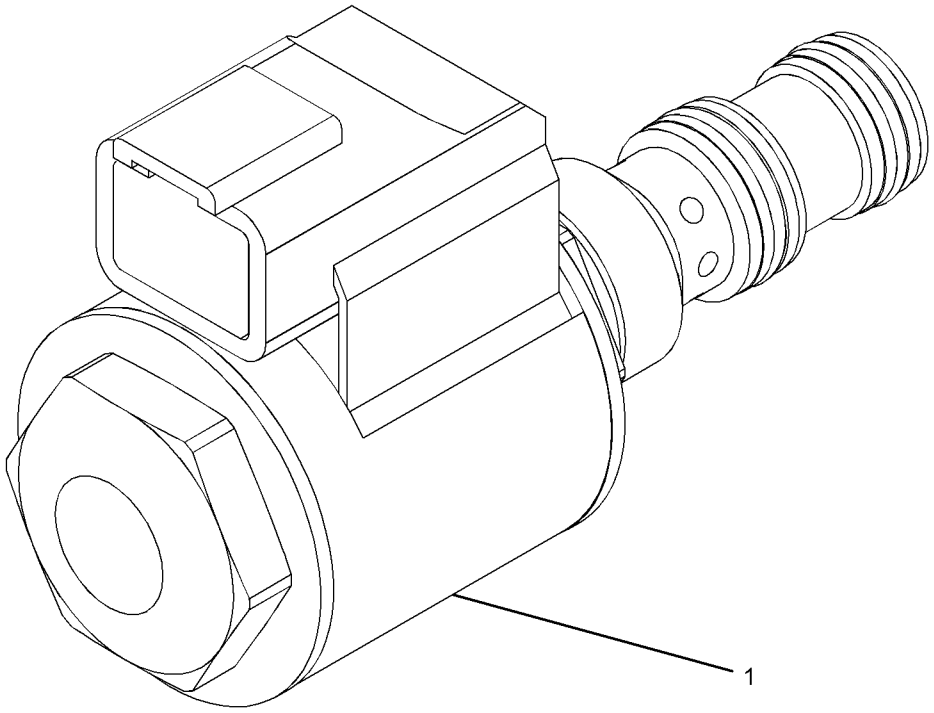

GRAPHIC #1 **<END>** g01121017

264-3709 VALVE GP-SOLENOID–WINCH

S/N: MMM1-UP; RRR1-UP
PART OF 256-3739 VALVE & LINES GP-WINCH
AN ATTACHMENT

SMCS-5479 **i04415574**

NOTE	PART NUMBER	QTY	PART NAME 1 2 3 4 5 6 (PRODUCT LEVEL)	SEE PAGE
Y	**259-8194**	1	VALVE GP-SOLENOID (PARKING BRAKE)	646
Y	**279-6529**	2	VALVE GP-SOLENOID (WINCH)	648

Y - SEPARATE ILLUSTRATION

<END>

279-6529 VALVE GP-SOLENOID—WINCH

S/N: MMM1-UP; RRR1-UP
FIELD REPLACEMENT ORDER 341-9215—PAGE: 649
PART OF 264-3709 VALVE GP-SOLENOID
AN ATTACHMENT

SMCS-5479 **i03918710**

NOTE	REF NO	GRAPHIC REF	PART NUMBER	QTY	PART NAME 1 2 3 4 5 6 (PRODUCT LEVEL)	SEE PAGE
	1	1	**3K-0360**	1	SEAL-O-RING	
	2	1	**4K-2039**	1	SEAL-O-RING	
	3	1	**6M-5062**	1	SEAL-O-RING	
	4	1	**146-3728**	1	WASHER-SPRING	
	5	1	**326-5208**	1	COIL AS (12-VDC)	

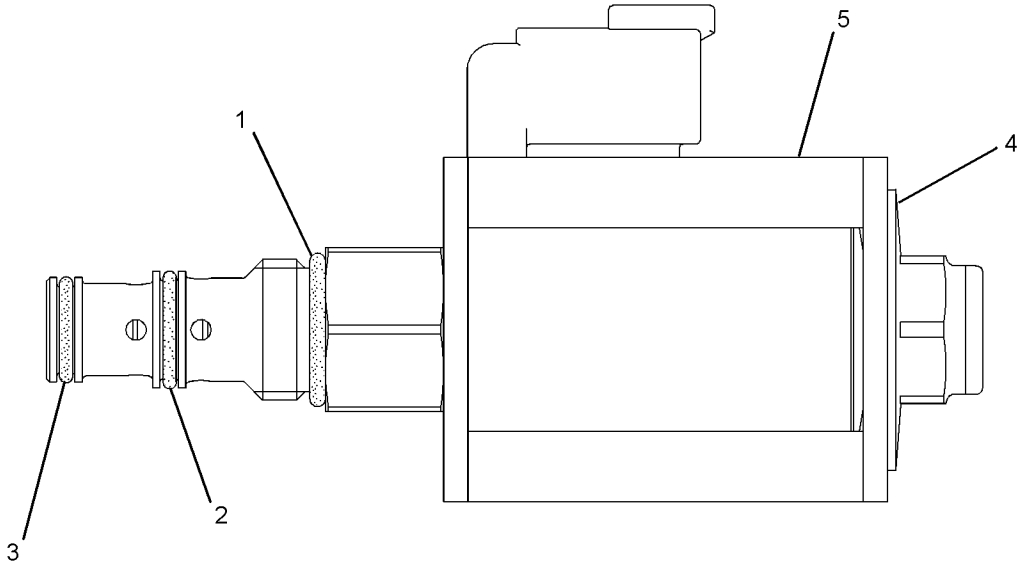

GRAPHIC #1 **<END>** g02176888

341-9215 VALVE GP-SOLENOID–WINCH

S/N: MMM1-UP; RRR1-UP

FIELD REPLACEMENT FOR 279-6529–PAGE: 648

SMCS-5479 **i04047726**

NOTE	REF NO	GRAPHIC REF	PART NUMBER	QTY	PART NAME 1 2 3 4 5 6 (PRODUCT LEVEL)	SEE PAGE
	1	1	**191-9247**	1	WASHER (19.15X31.65X2.36-MM THK)	
	2	1	**198-2914**	1	NUT (3/4-32-THD)	
	3	1	**214-7568**	2	SEAL-O-RING	
	4	1	**326-5208**	1	COIL AS (12-VDC)	
	5	1	**3K-0360**	1	SEAL-O-RING	
	6	1	**4K-2039**	1	SEAL-O-RING	
	7	1	**6M-5062**	1	SEAL-O-RING	

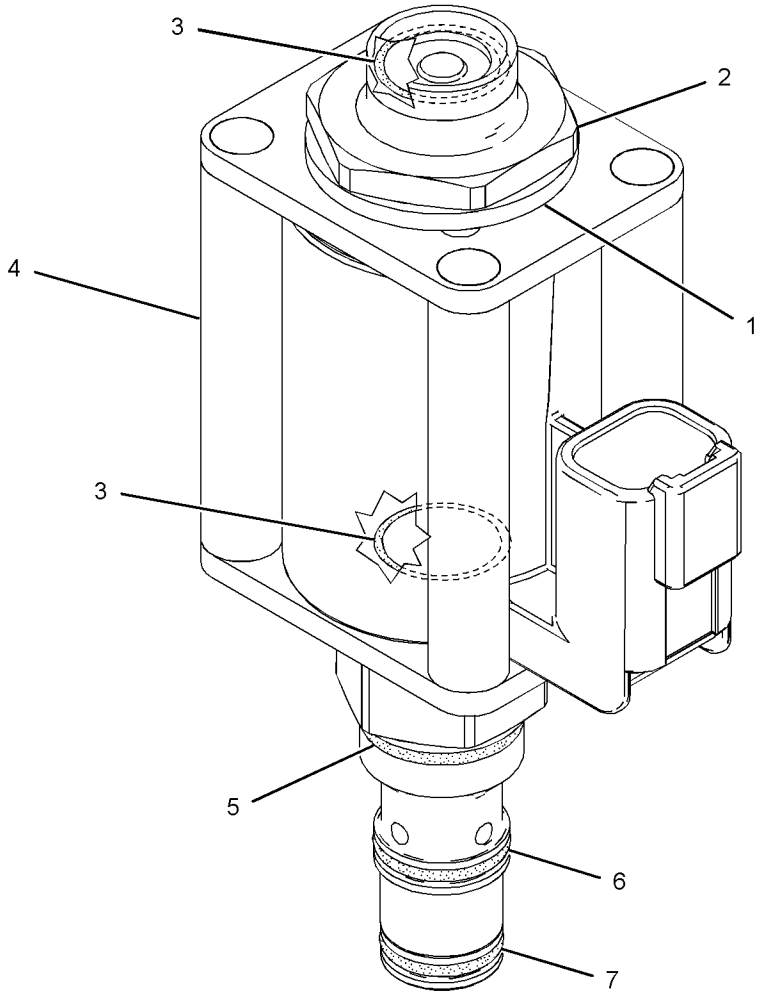

GRAPHIC #1 **<END>** g02453280

255-2098 C-FRAME GP-POWER ANGLING—TILT

S/N: MMM1-UP; RRR1-UP

PART OF 244-7378, 244-7379 CHASSIS AR

SMCS-6063 **i04560256**

NOTE	REF NO	GRAPHIC REF	PART NUMBER	QTY	PART NAME 1 2 3 4 5 6 (PRODUCT LEVEL)	SEE PAGE
	1	1	**8J-0729**	1	RETAINER	
	2	1	**8J-0928**	1	PIN	
	3	1	**150-0353**	6	SPACER (38.3X44.45X14-MM THK)	
	4	1	**299-7704**	2	PIN	
	5	1	**183-1176**	2	BEARING	
	6	1	**183-1178**	4	WASHER-THRUST	
	7	1	**9X-8257**	4	WASHER (17.5X30X3.5-MM THK)	
	8	1	**255-2100**	4	PIN AS	
	9	1	**255-2102**	1	FRAME AS	
	9A	1	**255-2130**	2	BEARING	
	10	1	**255-2114**	1	BEARING (LH)	
	11	1	**255-2122**	1	BEARING (RH)	
	12	1	**262-3104**	2	BAR	
	13	1	**262-7686**	12	BOLT (M20X2.5X65-MM)	
	14	1	**283-7697**	2	BOSS	
	15	1	**198-4781**	12	WASHER-HARD (22X40X10-MM THK)	
	16	1	**7K-9206**	4	SEAL-LIP TYPE	
M	17	1	**7X-2537**	4	BOLT (M8X1.25X35-MM)	
M	18	1	**7X-2553**	4	BOLT (M16X2X40-MM)	
M	19	1	**8T-4192**	4	BOLT (M12X1.75X25-MM)	
M	20	1	**8T-4195**	1	BOLT (M10X1.5X30-MM)	
	21	1	**8T-4223**	4	WASHER-HARD (13.5X25.5X3-MM THK)	
	22	1	**8T-4224**	4	WASHER-HARD (8.8X16X2-MM THK)	
Y	23	1	*255-1357*	1	LINK GP-PITCH	652

M - METRIC PART
Y - SEPARATE ILLUSTRATION

255-2098 **C-FRAME GP-POWER ANGLING (*contd.*)** **i04560256**

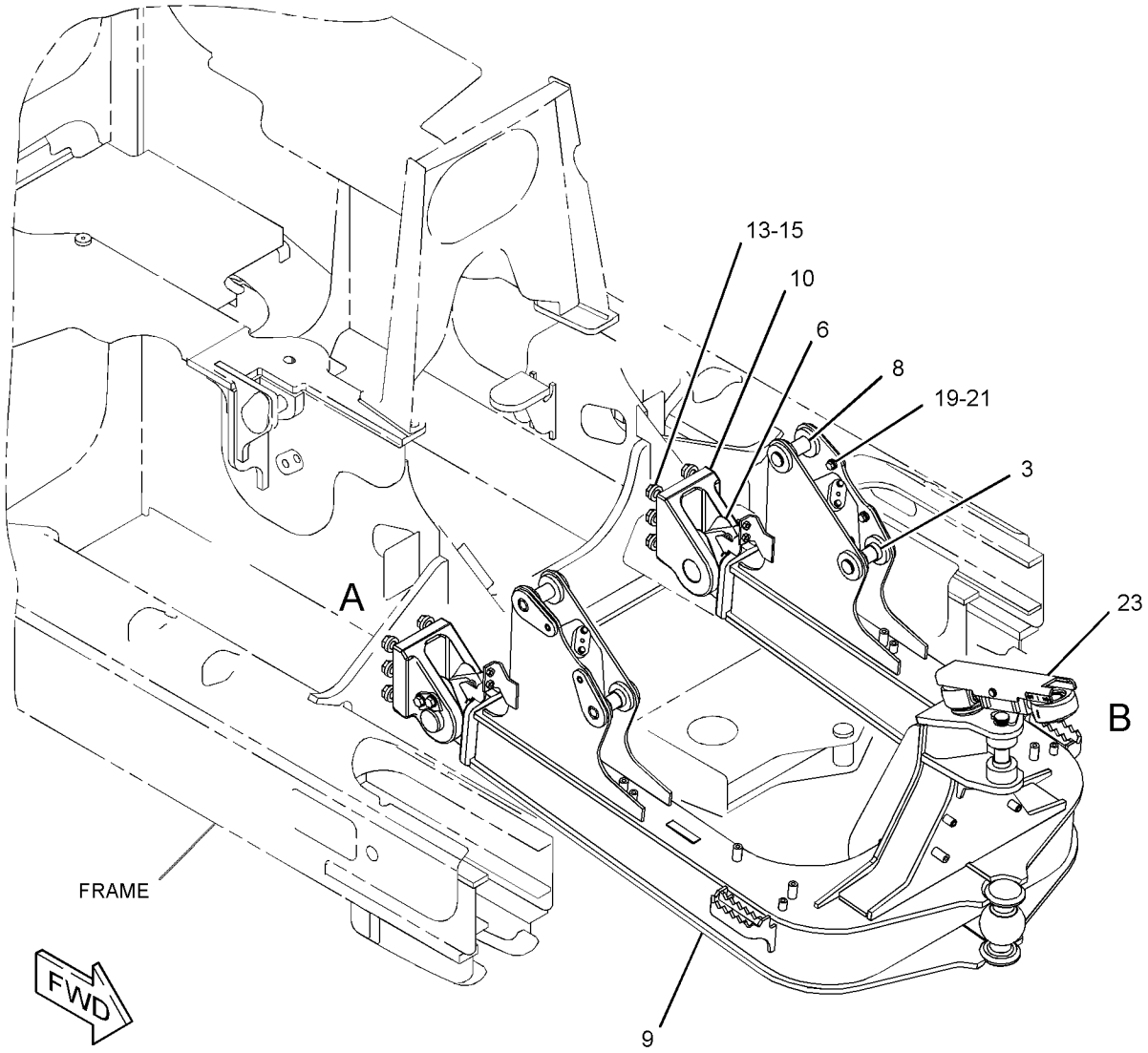

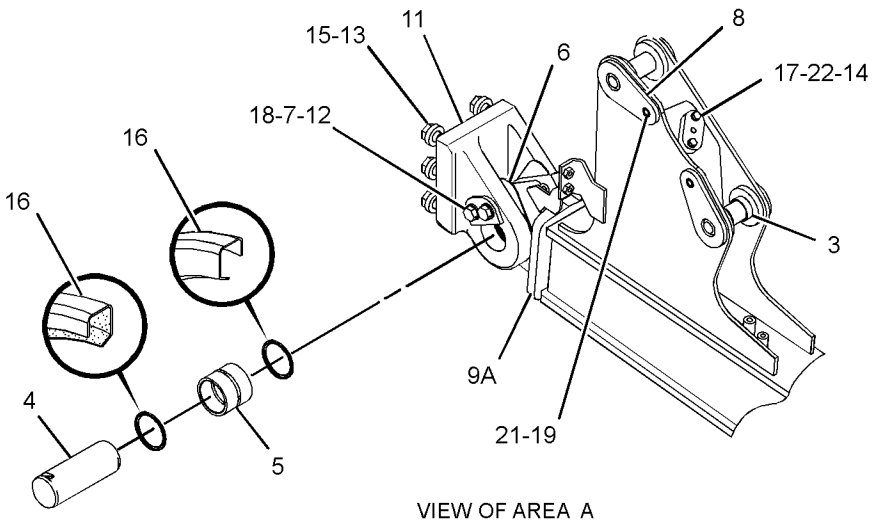

VIEW OF AREA A
(EXPLODED)

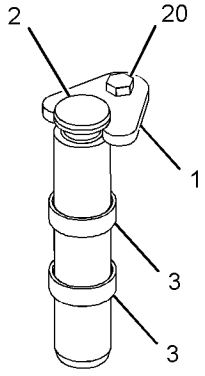

VIEW OF AREA B
(PARTS REMOVED FOR CLARITY)

GRAPHIC #1 **<END>** g02946239

255-1357 LINK GP-PITCH

S/N: MMM1-UP; RRR1-UP

PART OF 255-2098 C-FRAME GP-POWER ANGLING

SMCS-6079, 6081 **i04544109**

NOTE	REF NO	GRAPHIC REF	PART NUMBER	QTY	PART NAME 1 2 3 4 5 6 (PRODUCT LEVEL)	SEE PAGE
	1	1	**4D-4431**	2	BEARING-ALIGNING	
	2	1	**9V-4460**	1	SPACER (13X50X18-MM THK)	
	3	1	**150-5123**	1	BOSS AS (1-1/2-6X3.64-IN, LH)	
	4	1	**150-6215**	1	BOSS AS (1-1/2-6X3.95-IN, RH)	
	5	1	**179-8232**	1	LOCK PIN	
	6	1	**216-4251**	1	PIN	
	7	1	**255-1359**	1	BAR AS	
	8	1	**255-1361**	1	COVER AS	
	9	1	**2H-5549**	2	RING-RETAINING	
	10	1	**3B-8489**	4	FITTING-GREASE	
	11	1	**5M-6214**	1	PLUG-PIPE	
	12	1	**7D-1649**	1	WASHER-HARD (13.5X32X5-MM THK)	
M	13	1	**8T-4194**	1	BOLT (M12X1.75X50-MM)	

M - METRIC PART

255-1357 **LINK GP-PITCH (*contd.*)** **i04544109**

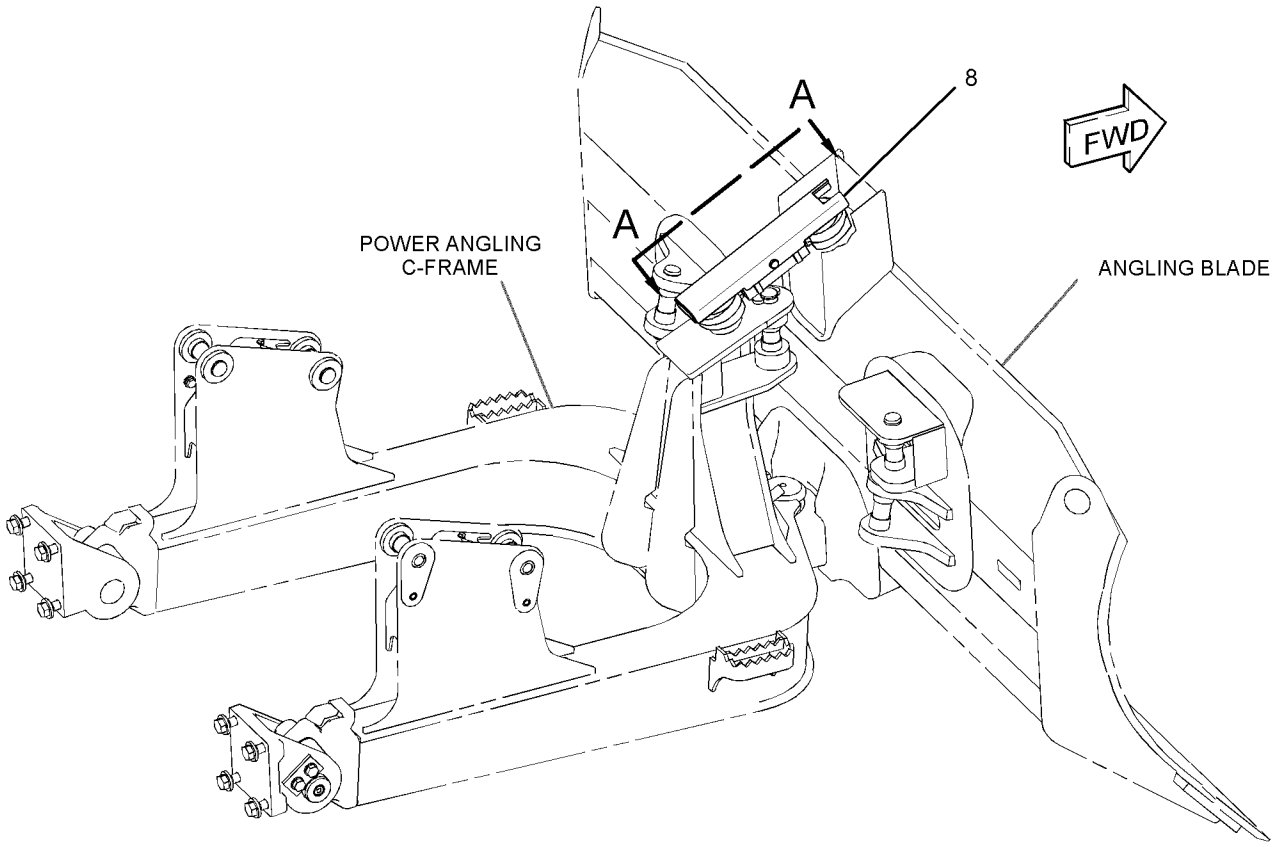

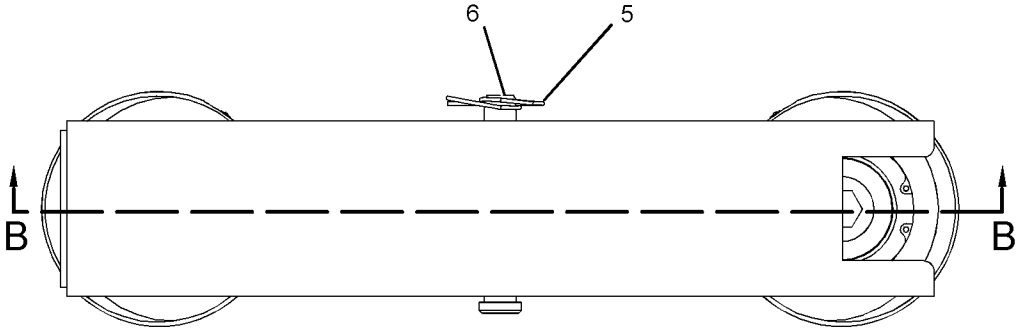

VIEW A-A

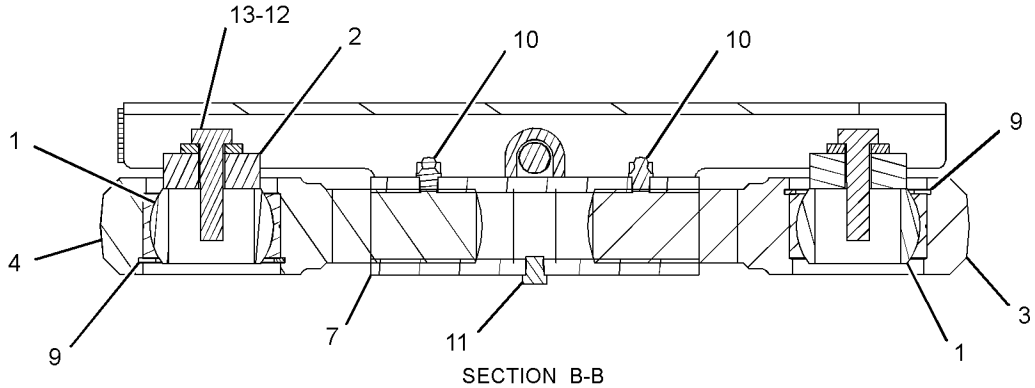

SECTION B-B

GRAPHIC #1 **<END>** g02884317

255-4239 ACCESSORY GP-CAB—EROPS

S/N: MMM1-UP; RRR1-UP
PART OF 244-7475, 244-7476 ROPS AR, 282-4898, 282-4899 ROPS AR-ENCLOSED
AN ATTACHMENT
TYPE 1

SMCS-1408, 1421, 7301 **i04403706**

NOTE	REF NO	GRAPHIC REF	PART NUMBER	QTY	PART NAME 1 2 3 4 5 6 (PRODUCT LEVEL)	SEE PAGE
	1	1	**180-3153**	1	LATCH AS-DOOR (ROTARY) (RH)	
	2	1	**180-3154**	1	LATCH AS-DOOR (ROTARY) (LH)	
	3	1	**263-3013**	19	CAP	
	4	1	**254-3183**	2	HINGE AS	
	5	1	**254-3204**	4	COVER (LH)	
	6	1	**255-4235**	1	HINGE AS (RH)	
	7	1	**255-4236**	1	HINGE AS (LH)	
					(EACH HINGE AS INCLUDES)	
M		1	**8T-3597**	3	NUT-WELD (M12X1.75-THD)	
	8	1	**255-4258**	1	PLATE AS	
	9	1	**259-1060**	1	COVER AS (LIGHT)	
	10	1	**271-2773**	1	SUPPORT AS (LH)	
	11	1	**271-2774**	1	SUPPORT AS (FOOT REST) (RH)	
	12	1	**281-3986**	1	PLATE AS	
	13	1	**281-7631**	2	STRIKER	
	14	1	**9X-6165**	5	WASHER (6.5X22X2.5-MM THK)	
	15	1	**178-2593**	2	BUMPER	
M	16	1	**5C-7261**	4	NUT (M8X1.25-THD)	
	17	1	**5P-1076**	12	WASHER-HARD (13.5X30X4-MM THK)	
	18	1	**7G-4824**	2	STRAP	
	19	1	**7X-7729**	4	WASHER (11X25X3-MM THK)	
	20	1	**8E-7791**	2	STRAP	
M	21	1	**8T-4137**	8	BOLT (M10X1.5X20-MM)	
M	22	1	**8T-4138**	8	BOLT (M6X1X20-MM)	
M	23	1	**8T-4139**	12	BOLT (M12X1.75X30-MM)	
	24	1	**8T-4222**	4	WASHER-PLATED (11X32X2.5-MM THK)	
M	25	1	**8T-4171**	5	BOLT (M6X1X12-MM)	
M	26	1	**9X-2045**	8	SCREW-TRUSS HEAD (M6X1X20-MM)	
	27	1	**9X-8256**	8	WASHER (6.6X12X2-MM THK)	

M - METRIC PART

255-4239 **ACCESSORY GP-CAB (*contd.*)** **i04403706**

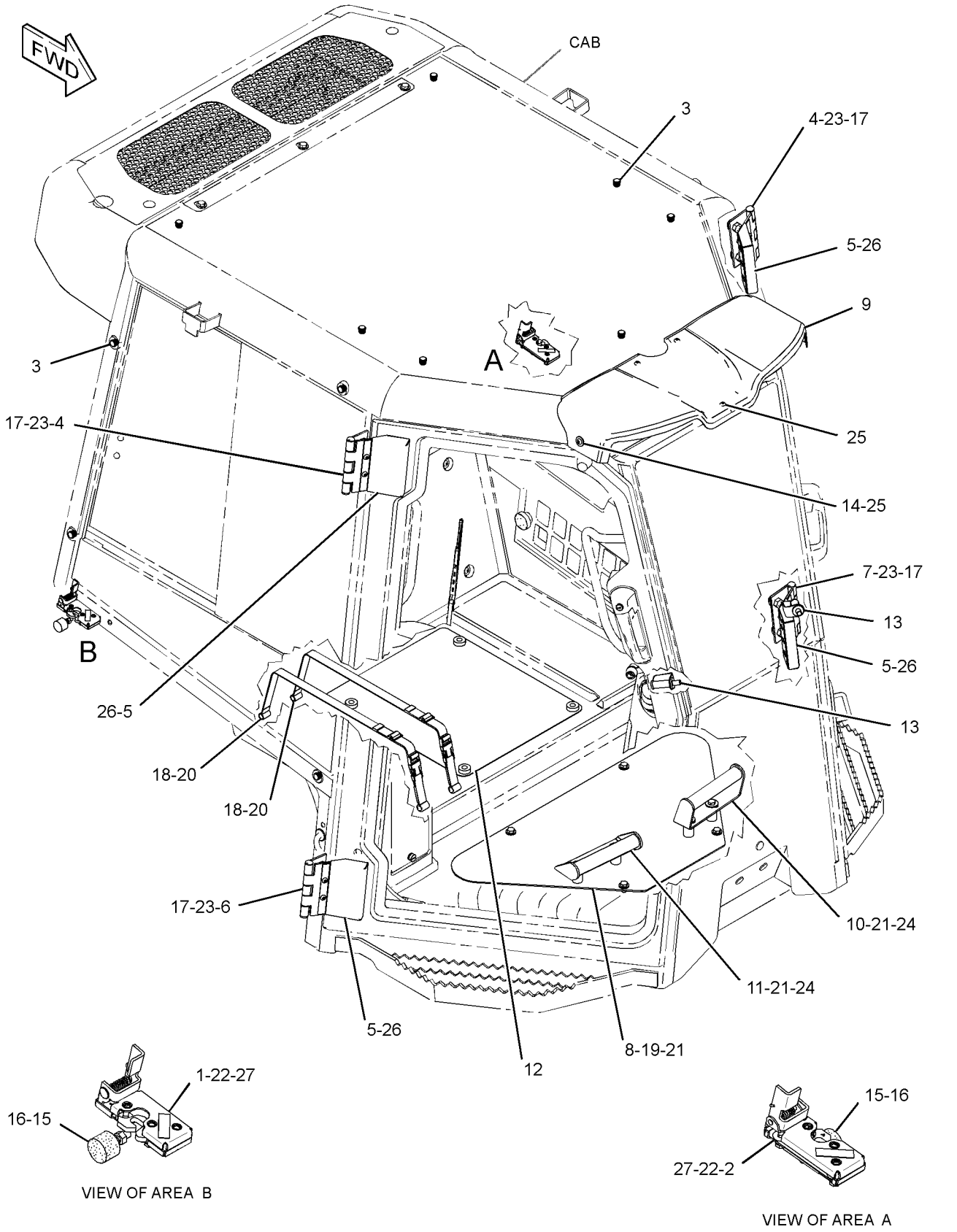

GRAPHIC #1 **<END>** g01349337

255-4239 ACCESSORY GP-CAB—EROPS

S/N: MMM1-UP; RRR1-UP
PART OF 244-7475, 244-7476 ROPS AR, 282-4898, 282-4899 ROPS AR-ENCLOSED
AN ATTACHMENT
TYPE 2

SMCS-1408, 1421, 7301 **i04544095**

NOTE	REF NO	GRAPHIC REF	PART NUMBER	QTY	PART NAME 1 2 3 4 5 6 (PRODUCT LEVEL)	SEE PAGE
	1	1	**180-3153**	1	LATCH AS-DOOR (ROTARY) (RH)	
	2	1	**180-3154**	1	LATCH AS-DOOR (ROTARY) (LH)	
	3	1	**263-3013**	19	CAP	
	4	1	**254-3183**	2	HINGE AS	
	6	1	**255-4235**	1	HINGE AS (RH)	
	7	1	**255-4236**	1	HINGE AS (LH)	
					(EACH HINGE AS INCLUDES)	
M		1	**8T-3597**	3	NUT-WELD (M12X1.75-THD)	
	8	1	**255-4258**	1	PLATE AS	
	9	1	**343-3549**	1	COVER-LIGHT	
	10	1	**271-2773**	1	SUPPORT AS (FOOT REST) (LH)	
	11	1	**271-2774**	1	SUPPORT AS (FOOT REST) (RH)	
	12	1	**281-3986**	1	PLATE AS	
	13	1	**281-7631**	2	STRIKER	
	14	1	**9X-6165**	5	WASHER (6.5X22X2.5-MM THK)	
	15	1	**114-9284**	2	BUMPER	
M	16	1	**5C-7261**	4	NUT (M8X1.25-THD)	
	17	1	**5P-1076**	12	WASHER-HARD (13.5X30X4-MM THK)	
	18	1	**7G-4824**	2	STRAP	
	19	1	**7X-7729**	4	WASHER (11X25X3-MM THK)	
	20	1	**8E-7791**	2	STRAP	
M	21	1	**8T-4137**	8	BOLT (M10X1.5X20-MM)	
M	22	1	**8T-4138**	8	BOLT (M6X1X20-MM)	
M	23	1	**8T-4139**	12	BOLT (M12X1.75X30-MM)	
	24	1	**8T-4222**	4	WASHER-PLATED (11X32X2.5-MM THK)	
M	25	1	**8T-4171**	5	BOLT (M6X1X12-MM)	
	27	1	**9X-8256**	8	WASHER (6.6X12X2-MM THK)	

M - METRIC PART

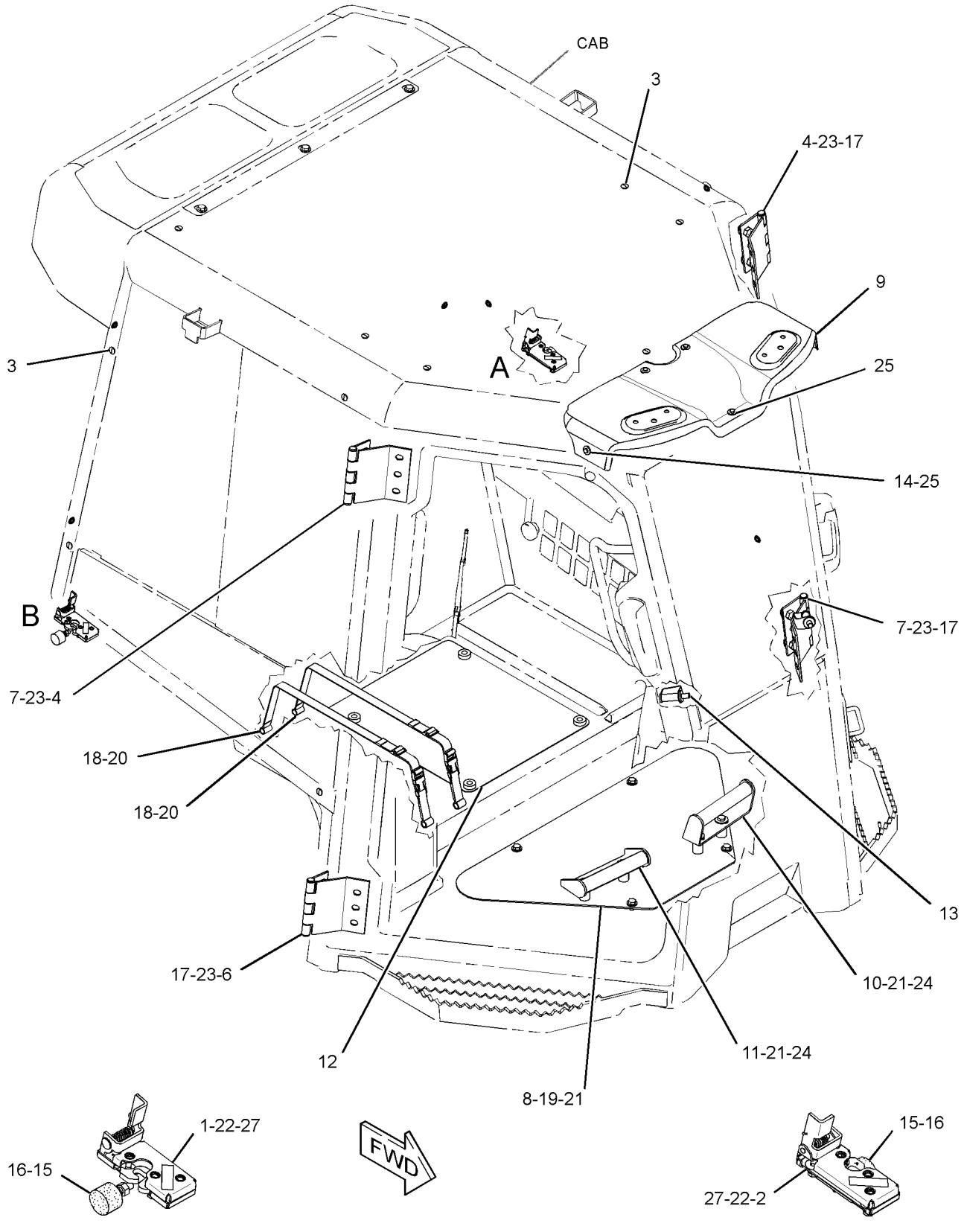

GRAPHIC #1

<END>

g02201673

255-4240 ACCESSORY GP-CAB–OROPS

S/N: MMM1-UP; RRR1-UP
PART OF 282-4897 ROPS AR
AN ATTACHMENT

SMCS-1408, 1421, 7301

i03918463

NOTE	REF NO	GRAPHIC REF	PART NUMBER	QTY	PART NAME 1 2 3 4 5 6 (PRODUCT LEVEL)	SEE PAGE
	1	1	**263-3013**	19	CAP	
	2	1	**255-4258**	1	PLATE AS	
	3	1	**343-3549**	1	COVER-LIGHT	
	4	1	**271-2773**	1	SUPPORT AS (LH)	
	5	1	**271-2774**	1	SUPPORT AS (FOOT REST) (RH)	
	6	1	**281-3986**	1	PLATE AS	
	7	1	**7G-4824**	2	STRAP	
	8	1	**7X-7729**	4	WASHER (11X25X3-MM THK)	
	9	1	**8E-7791**	2	STRAP	
M	10	1	**8T-4137**	8	BOLT (M10X1.5X20-MM)	
	11	1	**8T-4222**	4	WASHER-PLATED (11X32X2.5-MM THK)	
M	12	1	**8T-4171**	5	BOLT (M6X1X12-MM)	
	13	1	**9X-6165**	5	WASHER (6.5X22X2.5-MM THK)	

M - METRIC PART

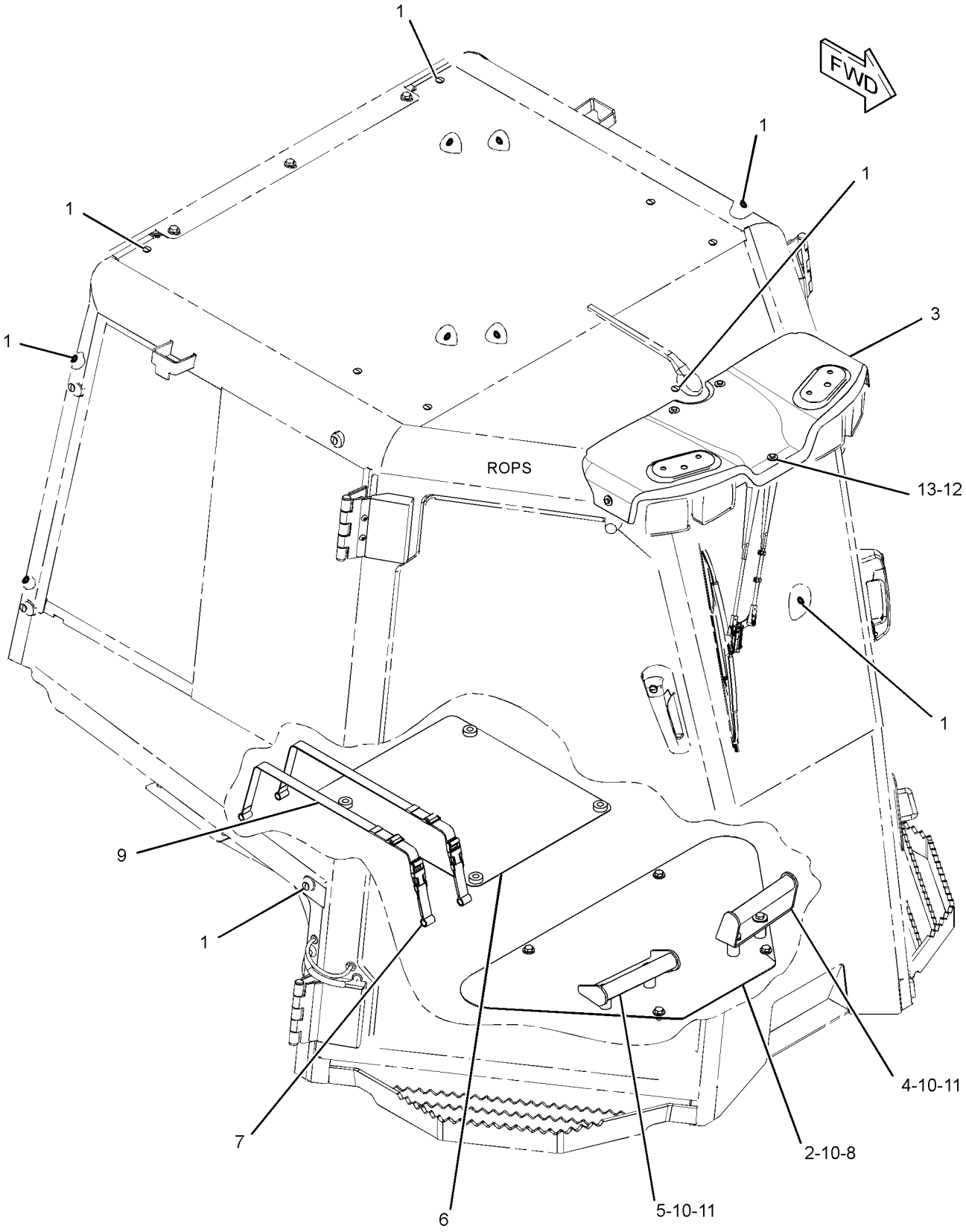

GRAPHIC #1 **<END>** g02200253

325-7265 ACCESSORY GP-CAB—FIRE PLOW

S/N: MMM1-UP; RRR1-UP

PART OF 325-6498, 325-6499 MODIFICATION AR, 344-7614 SPECIAL AR

AN ATTACHMENT

SMCS-1408, 1421, 7301

i04923849

NOTE	REF NO	GRAPHIC REF	PART NUMBER	QTY	PART NAME 1 2 3 4 5 6 (PRODUCT LEVEL)	SEE PAGE
M	1	1	**225-3322**	6	SCREW-TRUSS HEAD (M6X1X10-MM)	
	2	1	**252-6596**	2	HANDLE AS	
	3	1	**259-8704**	2	PLATE-STOP	
	4	1	**322-6486**	1	PLATE	
	5	1	**322-8499**	1	PLATE	
	6	1	**254-3180**	1	ROLLOVER AS	
	7	1	**326-8172**	1	PLATE AS-FLOOR	
	8		**326-8173**	1	FLOOR MAT-FRONT	
		1	**284-3754**	1	FLOOR MAT-FRONT	
	9	1	**348-6651**	2	PLATE	
	10	1	**349-4589**	6	LUG	
	11	1	**096-6166**	6	WASHER-HARD (4.5X9X1-MM THK)	
M	12	1	**111-4627**	2	SCREW-MACHINE (M6X1X30-MM)	
M	13	1	**5C-2890**	8	NUT (M6X1-THD)	
M	14	1	**5C-8312**	6	NUT (M4X0.7-THD)	
M	15	1	**8T-4138**	8	BOLT (M6X1X20-MM)	
M	16	1	**8T-7852**	6	BOLT (M4X0.7X10-MM)	
	17	1	**9X-8256**	16	WASHER (6.6X12X2-MM THK)	
E	18	1	**123-3827**		SEAL (51-CM EACH)	

E - ORDER BY THE CENTIMETER
M - METRIC PART

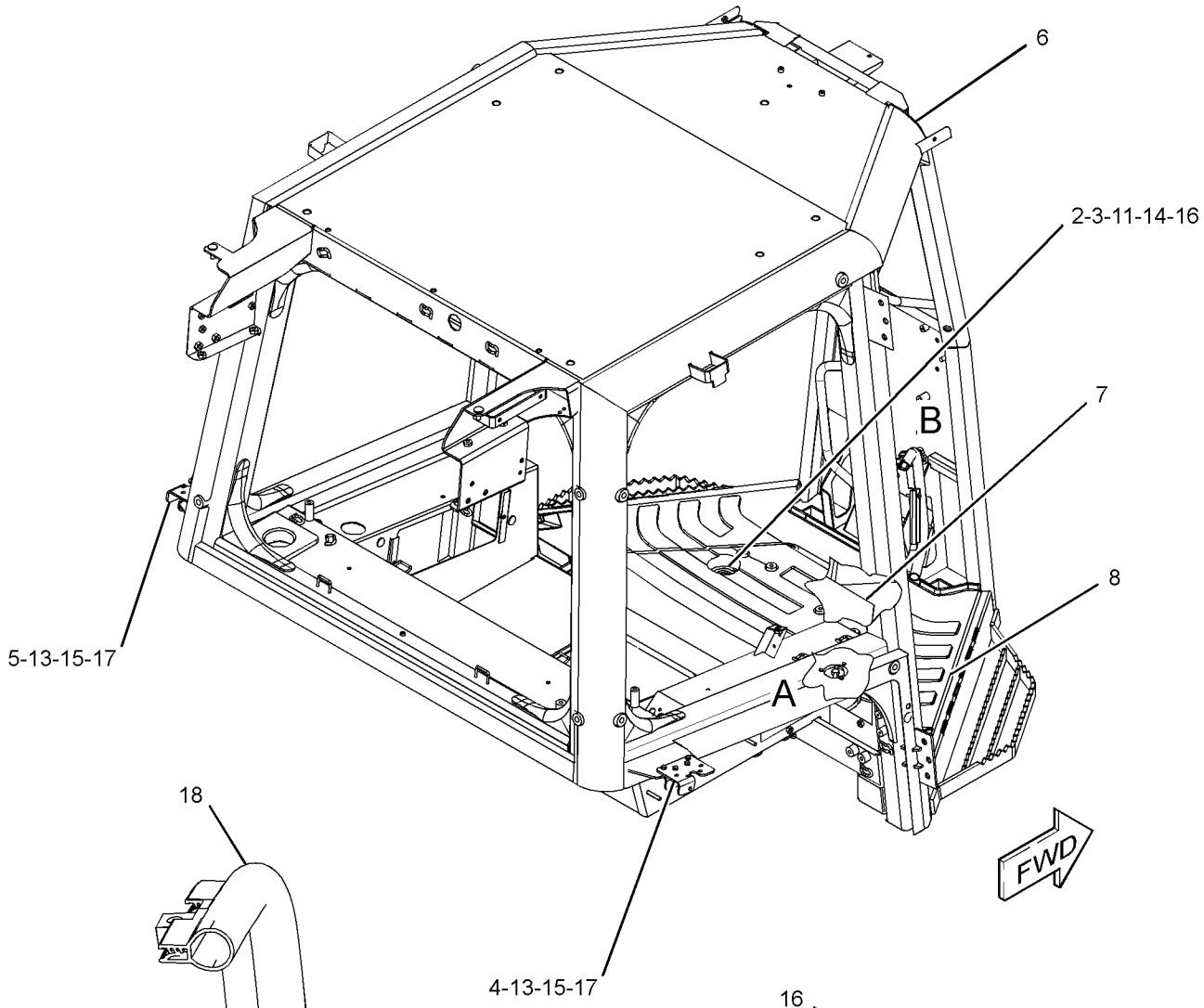

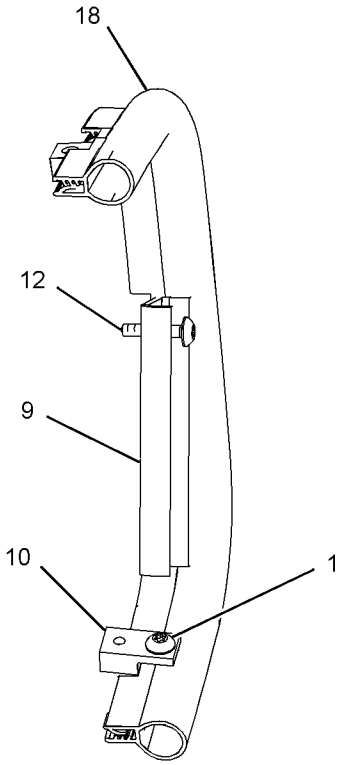

VIEW OF AREA B

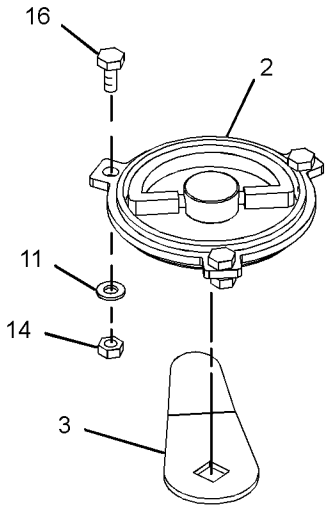

VIEW OF AREA A
(EXPLODED)

GRAPHIC #1 **<END>** g02007033

176-3900 ACCUMULATOR GP-REFRIGERANT–UNCHARGED

S/N: MMM1-UP; RRR1-UP

SMCS-7320 **i02195254**

NOTE	REF NO	GRAPHIC REF	PART NUMBER	QTY	PART NAME 1 2 3 4 5 6 (PRODUCT LEVEL)	SEE PAGE

(NO SERVICED PARTS)

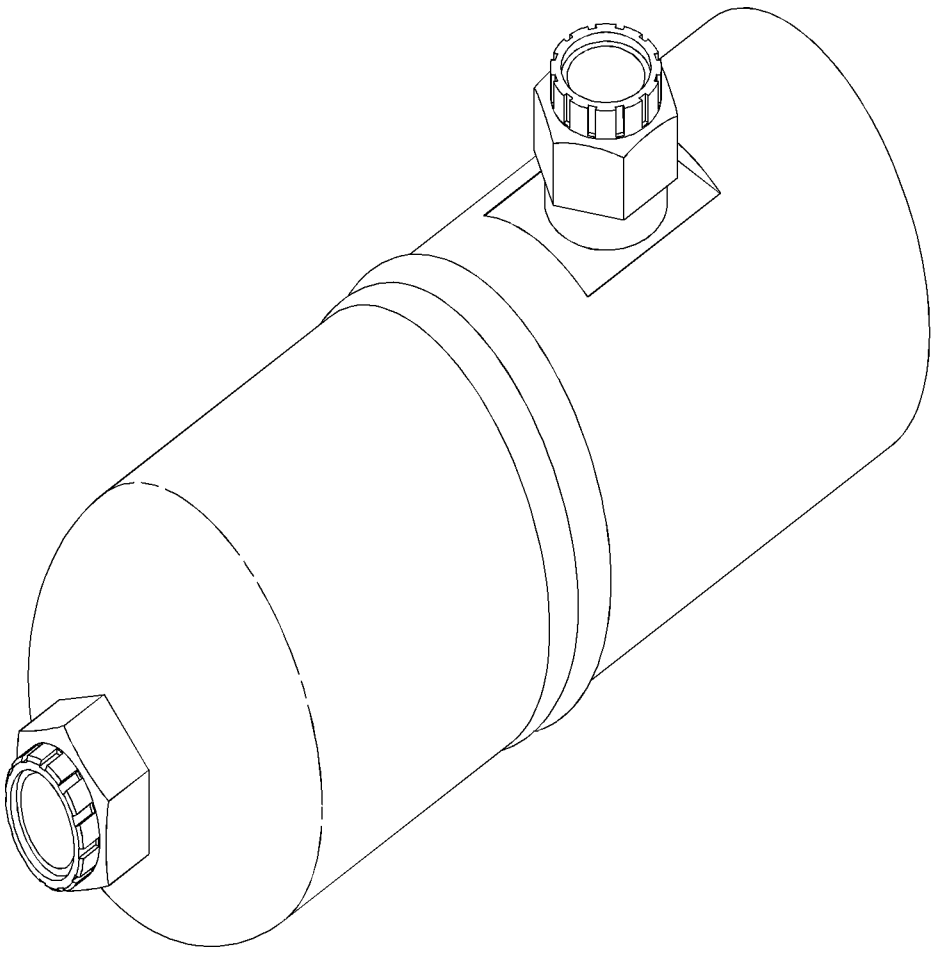

GRAPHIC #1 **<END>** g01035076

186-6190 ACCUMULATOR GP-REFRIGERANT–CHARGED

S/N: MMM1-UP; RRR1-UP
PART OF 257-9819 LINES GP-AIR CONDITIONER
AN ATTACHMENT

SMCS-7320 **i02306357**

NOTE	REF NO	GRAPHIC REF	PART NUMBER	QTY	PART NAME 1 2 3 4 5 6 (PRODUCT LEVEL)	SEE PAGE
					(NO SERVICED PARTS)	

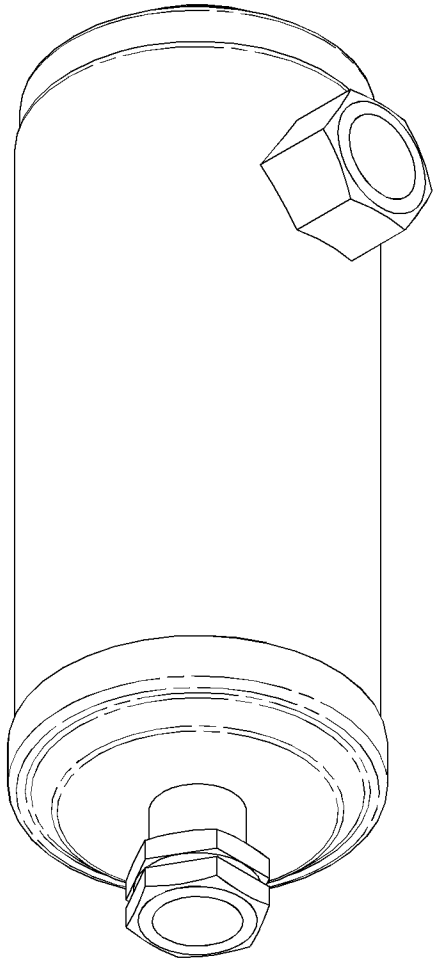

GRAPHIC #1 **<END>** g01155244

254-3210 AIR CONDITIONER & MOUNTING GP

S/N: MMM1-UP; RRR1-UP

PART OF 244-7475, 244-7476 ROPS AR, 282-4898, 282-4899 ROPS AR-ENCLOSED AN ATTACHMENT

SMCS-7320 **i02883074**

NOTE	REF NO	GRAPHIC REF	PART NUMBER	QTY	PART NAME 1 2 3 4 5 6 (PRODUCT LEVEL)	SEE PAGE
	1	2	**3S-2093**	1	STRAP-CABLE	
Y	2	2	**180-5927**	1	CONDENSER GP-REFRIGERANT	687
Y	3	2	*245-6024*	1	WIRING GP-AIR CONDITIONER	251
	4	2	**247-6648**	1	GRID	
	5	2	**315-6737**	1	COVER AS (LH)	
	6	2	**315-6735**	1	COVER AS (RH)	
Y	7	1	*252-4502*	1	AIR CONDITIONER GP	667
	8	1	**315-6738**	1	COVER AS	
	9	1	**254-3196**	1	HOSE	
	10	1	**254-3199**	1	HOSE	
	11	1	**254-3200**	1	GASKET	
	12	1	**254-3201**	1	DUCT AS-AIR	
		1	**6C-3680**	4	RIVET-POP	
Y	13	2	*255-3696*	1	COMPRESSOR & MTG GP-REFRIG	685
	14	1	**255-5153**	1	COVER-FILTER	
Y	15	1	*257-9819*	1	LINES GP-AIR CONDITIONER	786
	16	1	**266-7765**	1	FILTER ELEMENT-AIR (STANDARD EFFICIENCY) (LOW RESTRICTION MEDIA)	
	17	2	**281-4005**	1	PLATE	
	18	1	**288-3657**	2	SCREW-THUMB (M6X1X10-MM)	
	19	1	**300-3665**	4	GROMMET	
	20	1	**5P-0597**	2	CLAMP-HOSE	
	21	1	**5P-0599**	4	CLAMP-BAND	
M	22	1	**6V-7744**	3	LOCKNUT (M10X1.5-THD)	
	23	1,2	**7X-7729**	21	WASHER (11X25X3-MM THK)	
M	24	1,2	**8T-4137**	14	BOLT (M10X1.5X20-MM)	
M	25	2	**8T-4189**	4	BOLT (M8X1.25X20-MM)	
M	26	2	**8T-4195**	4	BOLT (M10X1.5X30-MM)	
	27	2	**8T-4224**	4	WASHER-HARD (8.8X16X2-MM THK)	
H	28	1	**242-4885**		HOSE (2-DM)	

H - ORDER BY THE DECIMETER
M - METRIC PART
Y - SEPARATE ILLUSTRATION

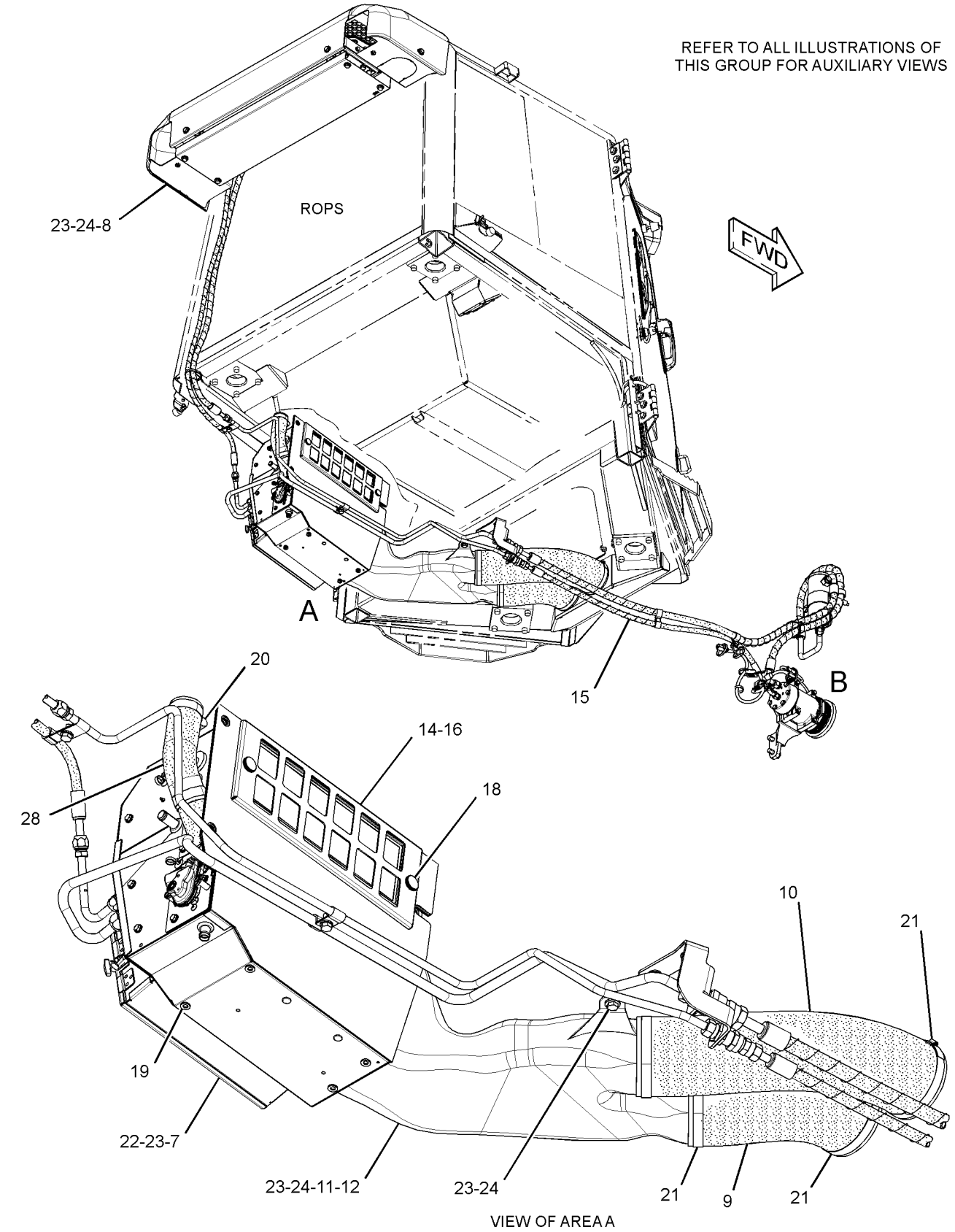

VIEW OF AREA A

GRAPHIC #1 g01527799

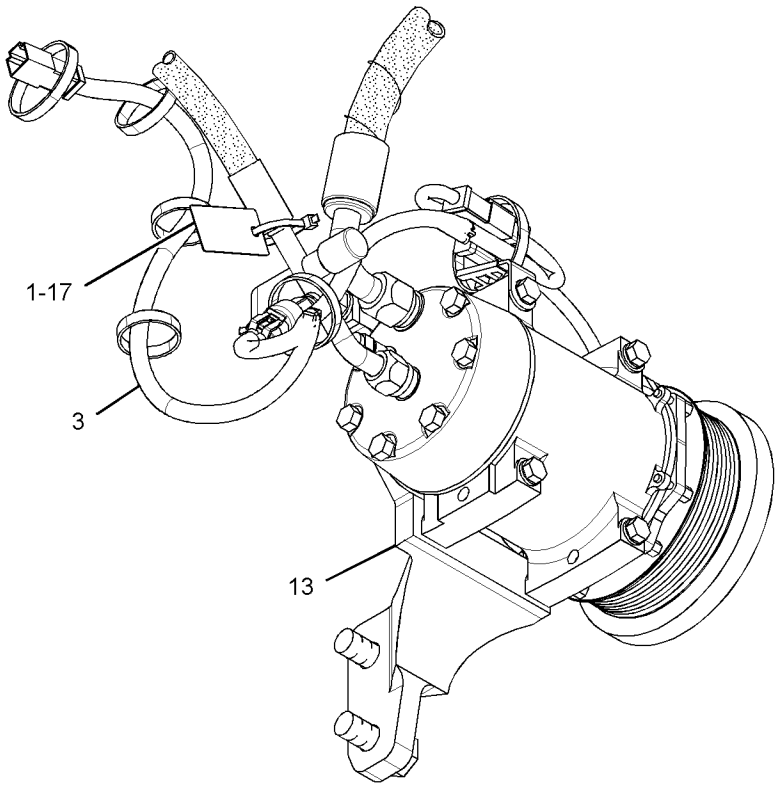

VIEW OF AREA B

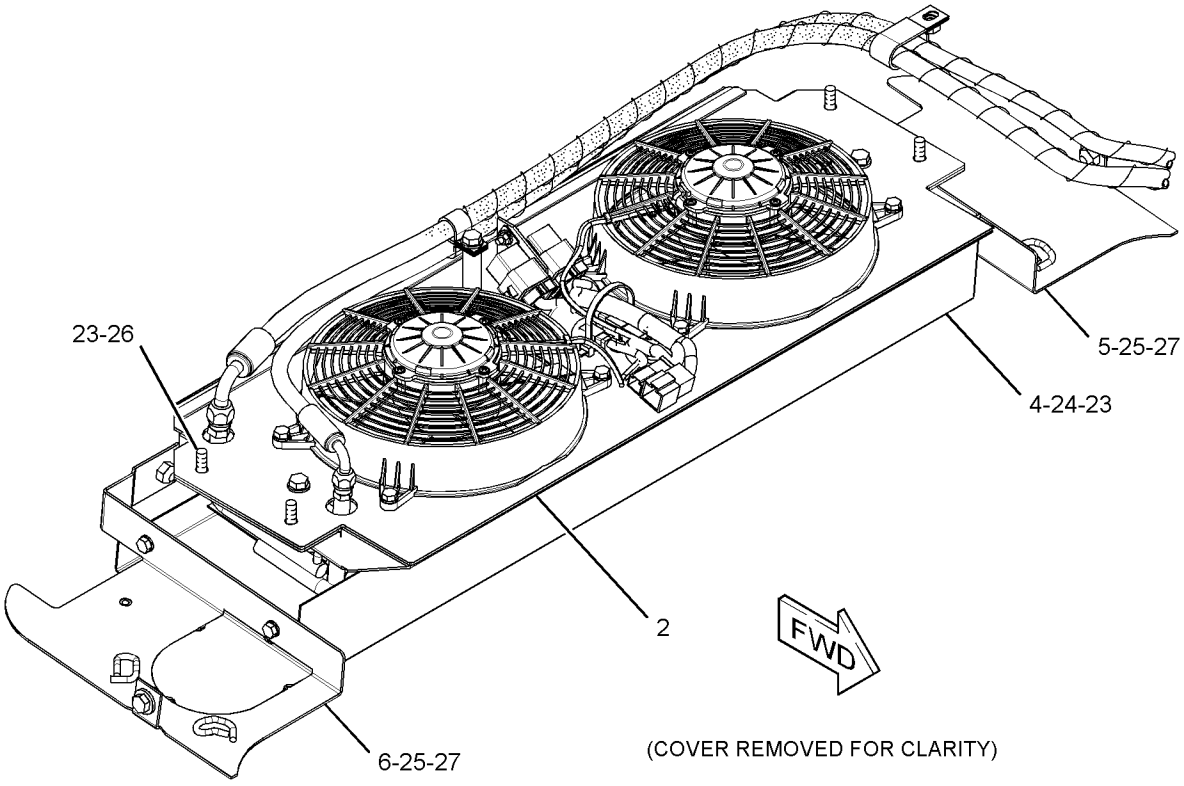

(COVER REMOVED FOR CLARITY)

GRAPHIC #2 **<END>** g01527800

252-4502 AIR CONDITIONER GP

S/N: MMM1-UP; RRR1-UP
PART OF 254-3210 AIR CONDITIONER & MOUNTING GP
AN ATTACHMENT
TYPE 1

SMCS-7320 **i04415565**

NOTE	REF NO	GRAPHIC REF	PART NUMBER	QTY	PART NAME 1 2 3 4 5 6 (PRODUCT LEVEL)	SEE PAGE
	1	1	**3E-5464**	1	THERMOSTAT (HVAC)	
	2	1	**3S-2093**	3	STRAP-CABLE	
	3	1	**8C-3756**	1	FILM-IDENTIFICATION (GROUP NO., SEQUENCE NO.)	
	4	1	**111-4015**	1	GROMMET	
	5	1	**131-3093**	1	BUSHING	
	6	1	**133-8714**	1	GROMMET	
	7	1	**134-3518**	2	TIE-PUSH MOUNT	
	8	1	**151-5650**	2	PLUG	
	9	1	**153-6932**	1	GASKET	
	10	1	**209-8217**	1	FILTER ELEMENT-CAB AIR (STANDARD EFFICIENCY)	
					—OR—	
		1	**268-6705**	1	FILTER ELEMENT AS-AIR (ADVANCED EFFICIENCY)	
					—OR—	
		1	**307-4442**	1	FILTER (ACTIVATED CHARCOAL)	
					—OR—	
		1	**318-7190**	1	FILTER ELEMENT-CAB AIR (ADVANCED EFFICIENCY)	
	11	1	**248-6772**	2	SCREW-MACHINE (8-16X7.75-IN)	
	12	1	**255-6210**	1	COIL AS-EVAPORATOR	
	13	1	**256-0761**	1	CASE AS-AIR CONDITIONER	
	14	1	**256-0762**	1	PLATE AS	
M		1	**6V-9632**	1	NUT-WELD (M6X1-THD)	
	15	1	**256-0768**	1	PLATE AS	
M		1	**6V-9632**	6	NUT-WELD (M6X1-THD)	
M		1	**9X-2032**	2	NUT-WELD (M4X0.7-THD)	
	16	1	**256-0770**	1	PLATE AS	
	17	1	**262-2814**	1	PLATE AS	
	18	1	**265-9620**	1	ACTUATOR (ELECTRONIC)	
	19	1	**266-7145**	1	DUCT AS	
	20	1	**275-6707**	2	GROMMET	
	21	1	**276-4299**	1	HARNESS AS-MOTOR (BLOWER)	
		1	**6T-6505**	7	HOUSING-RECEPTACLE (BLADE, POSITIVE LOCK)	
		1	**7T-0093**	4	PIN-CONNECTOR (12-GA TO 14-GA)	
		1	**8T-8729**	3	PIN-CONNECTOR (16-GA TO 18-GA)	
		1	**9W-0852**	1	PIN-CONNECTOR (14-GA TO 16-GA)	
		1	**155-2271**	1	KIT-CONNECTING PLUG (4-PIN)	
		1	**177-9648**	1	KIT-CONNECTING PLUG (2-PIN)	
					(EACH PLUG KIT INCLUDES PLUG AS, WEDGE & INTERFACE SEAL)	
		1	**8T-8737**	1	PLUG-SEAL	
		1	**177-9651**	1	LOCK	
		1	**7T-0094**	2	SOCKET-CONNECTOR (12-GA TO 14-GA)	
		1	**126-1766**	2	SOCKET-CONNECTOR (14-GA TO 18-GA)	
		1	**126-1766**		SOCKET-CONNECTOR (14-GA TO 18-GA)	
		1	**9X-3402**	3	SOCKET-CONNECTOR (16-GA TO 18-GA)	
		1	**8T-9850**	3	TERMINAL-BLADE	
		1	**6T-6506**	4	TERMINAL-BLADE (14-GA TO 18-GA)	
E		1	**125-7875**		TUBE-HEAT SHRINK (7.44-MM DIA) (5-CM)	
		1	**102-8804**	1	KIT-RECEPTACLE (4-PIN)	
		1	**177-9653**	1	KIT-RECEPTACLE (4-PIN)	
					(EACH RECEPTACLE KIT INCLUDES RECEPTACLE AS & WEDGE)	
		1	**6T-6506**	1	TERMINAL-BLADE (14-GA TO 18-GA)	
E		1	**119-3662**		TUBE-HEAT SHRINK (10.85-MM DIA) (7-CM)	
	22	1	**277-7113**	1	PLATE AS	
	23	1	**277-7114**	2	PLUG	

252-4502 **AIR CONDITIONER GP (*contd.*)** **i04415565**

NOTE	REF NO	GRAPHIC REF	PART NUMBER	QTY	PART NAME 1 2 3 4 5 6 (PRODUCT LEVEL)	SEE PAGE
	24	1	**277-7115**	1	BLOWER AS	
	25	1	**277-9966**	1	PLATE AS	
Y	26	1	**277-9969**	1	HEATER GP-CAB	778
	27	1	**318-0815**	1	PLATE AS	
	28	1	**278-3354**	1	FILM-INSTRUCTION (HVAC WATER, DRAINING, FILLING)	
	29	1	*282-3475*	1	RESISTOR GP	
		1	**280-9453**	3	SCREW-SELF-TAPPING (6X0.375-IN)	
		1	**282-3481**	1	PLATE AS	
		1	**284-8773**	1	RESISTOR AS	
	30	1	**282-3653**	1	BRACKET	
M	31	1	**283-8651**	7	BOLT (M4X0.7X10-MM)	
	32	1	**096-6166**	4	WASHER-HARD (4.5X9X1-MM THK)	
	33	1	**3B-4501**	2	LOCKWASHER	
	34	1	**4P-7581**	1	CLIP	
M	35	1	**5C-9553**	21	BOLT (M6X1X16-MM)	
	36	1	**8C-8514**	2	SCREW-MACHINE (8-32X0.375-IN)	
	37	1	**8T-4121**	1	WASHER-HARD (11X21X2.5-MM THK)	
M	38	1	**8T-4137**	1	BOLT (M10X1.5X20-MM)	
	39	1	**8T-4205**	21	WASHER-HARD (7.2X14.5X2-MM THK)	
D	40	1	**6V-2496**		SEAL (0.1-M EACH)	
D	40A	1	**6V-2496**		SEAL (0.2-M EACH)	
D	40B	1	**6V-2496**		SEAL (0.3-M EACH)	
					AVAILABLE REPAIR KIT(S):	
			285-8553	1	KIT-GASKET (AIR CONDITIONER)	
					(INCLUDES GASKETS)	

D - ORDER BY THE METER
E - ORDER BY THE CENTIMETER
M - METRIC PART
Y - SEPARATE ILLUSTRATION

252-4502 **AIR CONDITIONER GP (*contd.*)** **i04415565**

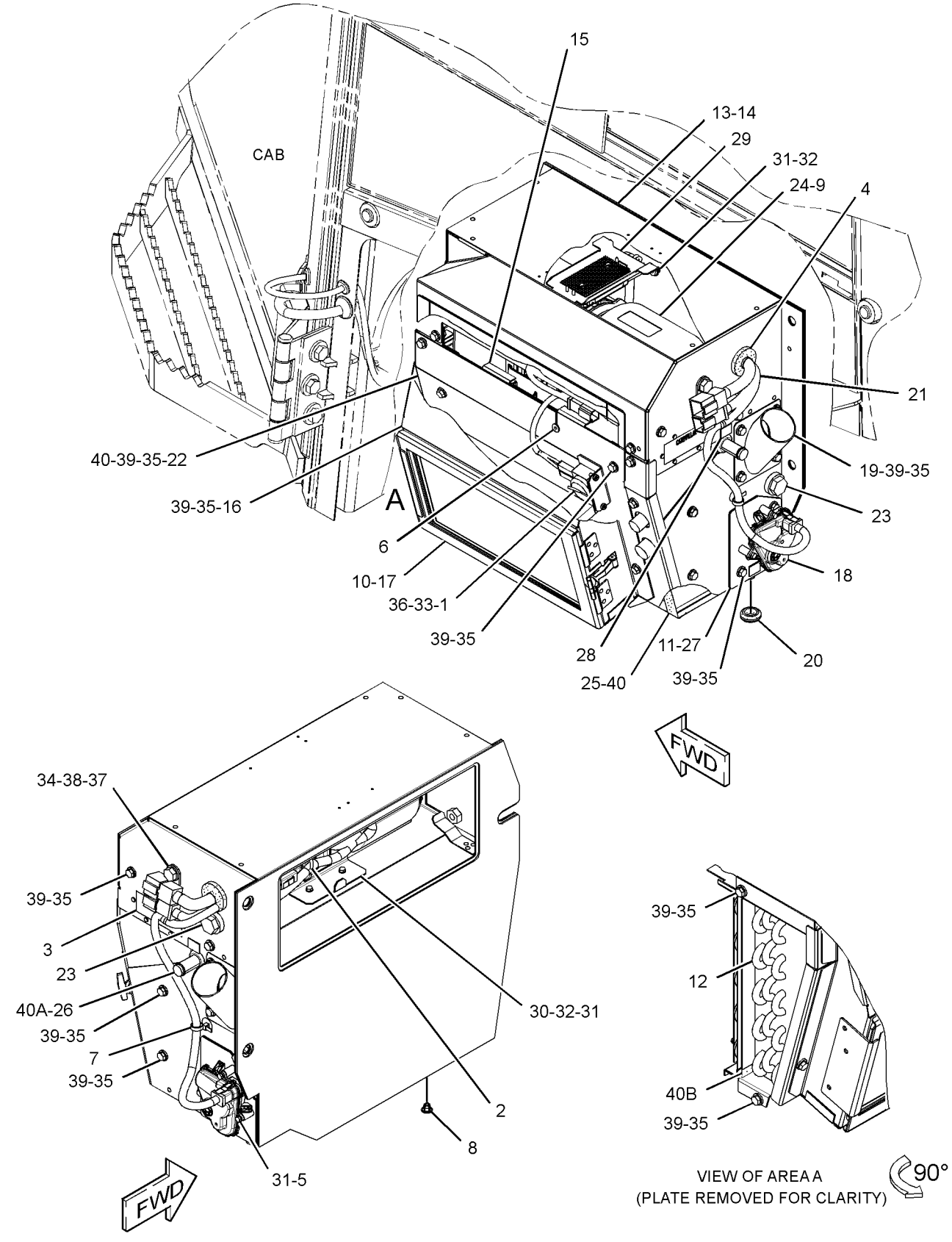

GRAPHIC #1 **<END>** g02615598

252-4502 AIR CONDITIONER GP

S/N: MMM1-UP; RRR1-UP
PART OF 254-3210 AIR CONDITIONER & MOUNTING GP
AN ATTACHMENT
TYPE 2

SMCS-7320 **i05253162**

NOTE	REF NO	GRAPHIC REF	PART NUMBER	QTY	PART NAME 1 2 3 4 5 6 (PRODUCT LEVEL)	SEE PAGE
	1	1	**3E-5464**	1	THERMOSTAT (HVAC)	
	2	1	**3S-2093**	3	STRAP-CABLE	
	3	1	**8C-3756**	1	FILM-IDENTIFICATION (GROUP NO., SEQUENCE NO.)	
	4	1	**111-4015**	1	GROMMET	
	5	1	**131-3093**	1	BUSHING	
	6	1	**133-8714**	1	GROMMET	
C	7	1	**134-3518**	3	TIE-PUSH MOUNT	
	8	1	**151-5650**	2	PLUG	
	9	1	**153-6932**	1	GASKET	
	10	1	**209-8217**	1	FILTER ELEMENT-CAB AIR (STANDARD EFFICIENCY)	
					—OR—	
		1	**268-6705**	1	FILTER ELEMENT AS-AIR (ADVANCED EFFICIENCY)	
					—OR—	
		1	**307-4442**	1	FILTER (ACTIVATED CHARCOAL)	
					—OR—	
		1	**318-7190**	1	FILTER ELEMENT-CAB AIR (ADVANCED EFFICIENCY)	
	11	1	**248-6772**	2	SCREW-MACHINE (8-16X7.75-IN)	
	12	1	**255-6210**	1	COIL AS-EVAPORATOR	
	13	1	**256-0761**	1	CASE AS-AIR CONDITIONER	
	14	1	**256-0762**	1	PLATE AS	
	15	1	**256-0768**	1	PLATE AS	
M		1	**6V-9632**	6	NUT-WELD (M6X1-THD)	
M		1	**9X-2032**	2	NUT-WELD (M4X0.7-THD)	
	16	1	**256-0770**	1	PLATE AS	
	17	1	**262-2814**	1	PLATE AS	
	18	1	**265-9620**	1	ACTUATOR (ELECTRONIC)	
	19	1	**266-7145**	1	DUCT AS	
	20	1	**275-6707**	2	GROMMET	
C	21	1	**364-6136**	1	HARNESS AS-MOTOR (BLOWER)	
		1	**6T-6505**	3	HOUSING-RECEPTACLE (BLADE, POSITIVE LOCK)	
		1	**7T-0093**	4	PIN-CONNECTOR (12-GA TO 14-GA)	
		1	**8T-8729**	3	PIN-CONNECTOR (16-GA TO 18-GA)	
		1	**9W-0852**	1	PIN-CONNECTOR (14-GA TO 16-GA)	
		1	**155-2271**	1	KIT-CONNECTING PLUG (4-PIN)	
		1	**177-9648**	1	KIT-CONNECTING PLUG (2-PIN)	
					(EACH PLUG KIT INCLUDES PLUG AS, WEDGE & INTERFACE SEAL)	
		1	**8T-8737**	1	PLUG-SEAL	
		1	**102-8804**	1	KIT-RECEPTACLE (4-PIN)	
		1	**177-9653**		KIT-RECEPTACLE (4-PIN)	
					(EACH RECEPTACLE KIT INCLUDES RECEPTACLE AS & WEDGE)	
		1	**7T-0094**	2	SOCKET-CONNECTOR (12-GA TO 14-GA)	
		1	**192-2112**	3	SOCKET-TERMINAL	
		1	**9X-3402**	3	SOCKET-CONNECTOR (16-GA TO 18-GA)	
		1	**5P-5618**	2	TERMINAL-BLADE (10-GA TO 12-GA)	
		1	**6T-6506**	3	TERMINAL-BLADE (14-GA TO 18-GA)	
E		1	**125-7875**		TUBE-HEAT SHRINK (7.44-MM DIA) (10-CM)	
	22	1	**277-7113**	1	PLATE AS	
	23	1	**277-7114**	2	PLUG	
	24	1	**277-7115**	1	BLOWER AS	
	25	1	**277-9966**	1	PLATE AS	
Y	26	1	**277-9969**	1	HEATER GP-CAB	778
	27	1	**318-0815**	1	PLATE AS	
	28	1	**278-3354**	1	FILM-INSTRUCTION (HVAC WATER, DRAINING, FILLING)	

252-4502 **AIR CONDITIONER GP (*contd.*)** **i05253162**

NOTE	REF NO	GRAPHIC REF	PART NUMBER	QTY	PART NAME 1 2 3 4 5 6 (PRODUCT LEVEL)	SEE PAGE
C	29	1	*363-5992*	1	RESISTOR GP	
		1	**9X-2185**	3	SCREW (8-15X0.44-IN)	
		1	**133-9012**	1	FUSE (15-AMPERE)	
		1	**354-1384**	1	RESISTOR GP	
		1	**363-5991**	1	BRACKET AS	
	30	1	**282-3653**	1	BRACKET	
M	31	1	**116-6952**	7	BOLT (M4X0.7X10-MM)	
	32	1	**096-6166**	4	WASHER-HARD (4.5X9X1-MM THK)	
	33	1	**3B-4501**	2	LOCKWASHER	
	34	1	**4P-7581**	1	CLIP	
M	35	1	**5C-9553**	21	BOLT (M6X1X16-MM)	
	36	1	**8C-8514**	2	SCREW-MACHINE (8-32X0.375-IN)	
	37	1	**8T-4121**	1	WASHER-HARD (11X21X2.5-MM THK)	
M	38	1	**8T-4137**	1	BOLT (M10X1.5X20-MM)	
	39	1	**8T-4205**	21	WASHER-HARD (7.2X14.5X2-MM THK)	
D	40	1	**6V-2496**		SEAL (0.1-M EACH)	
D	40A	1	**6V-2496**		SEAL (0.2-M EACH)	
D	40B	1	**6V-2496**		SEAL (0.3-M EACH)	

C - CHANGE FROM PREVIOUS TYPE
D - ORDER BY THE METER
E - ORDER BY THE CENTIMETER
M - METRIC PART
Y - SEPARATE ILLUSTRATION

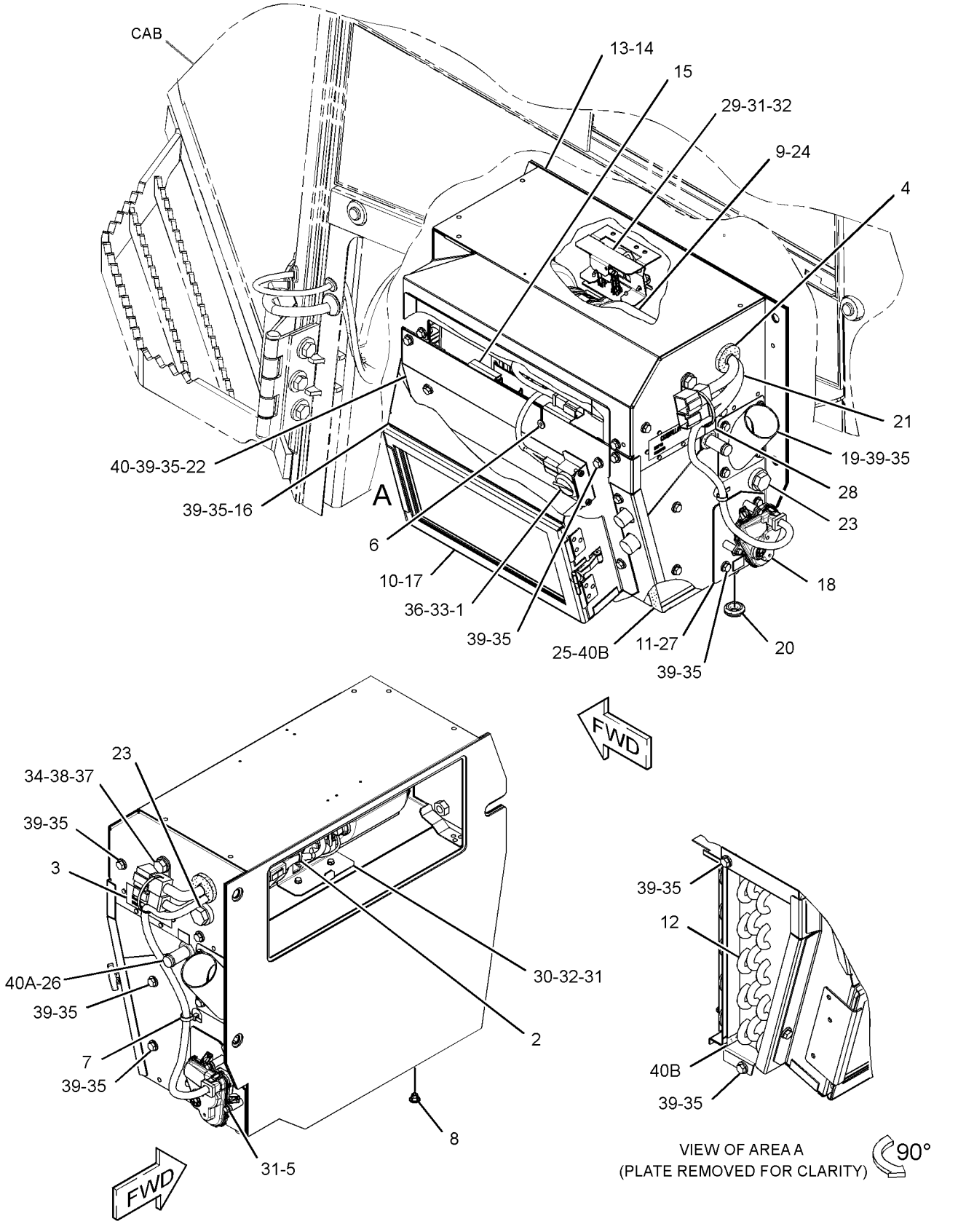

GRAPHIC #1 **<END>** g02524616

252-4502 AIR CONDITIONER GP

S/N: MMM1-UP; RRR1-UP
PART OF 254-3210 AIR CONDITIONER & MOUNTING GP
AN ATTACHMENT
TYPE 3

SMCS-7320 **i05367396**

NOTE	REF NO	GRAPHIC REF	PART NUMBER	QTY	PART NAME 1 2 3 4 5 6 (PRODUCT LEVEL)	SEE PAGE
	1	1	**3E-5464**	1	THERMOSTAT (HVAC)	
	2	1	**3S-2093**	3	STRAP-CABLE	
	3	1	**8C-3756**	1	FILM-IDENTIFICATION (GROUP NO., SEQUENCE NO.)	
	4	1	**111-4015**	1	GROMMET	
	5	1	**131-3093**	1	BUSHING	
	6	1	**133-8714**	1	GROMMET	
	7	1	**134-3518**	3	TIE-PUSH MOUNT	
	8	1	**151-5650**	2	PLUG	
	10	1	**209-8217**	1	FILTER ELEMENT-CAB AIR (STANDARD EFFICIENCY)	
					—OR—	
		1	**268-6705**	1	FILTER ELEMENT AS-AIR (ADVANCED EFFICIENCY)	
					—OR—	
		1	**307-4442**	1	FILTER (ACTIVATED CHARCOAL)	
					—OR—	
			318-7190	1	FILTER ELEMENT-CAB AIR (ADVANCED EFFICIENCY)	
	11	1	**248-6772**	2	SCREW-MACHINE (8-16X7.75-IN)	
	12	1	**255-6210**	1	COIL AS-EVAPORATOR	
	13	1	**256-0761**	1	CASE AS-AIR CONDITIONER	
	14	1	**256-0762**	1	PLATE AS	
	15	1	**256-0768**	1	PLATE AS	
M		1	**6V-9632**	6	NUT-WELD (M6X1-THD)	
M		1	**9X-2032**	2	NUT-WELD (M4X0.7-THD)	
	16	1	**256-0770**	1	PLATE AS	
	17	1	**262-2814**	1	PLATE AS	
	18	1	**265-9620**	1	ACTUATOR (ELECTRONIC)	
	19	1	**266-7145**	1	DUCT AS	
	20	1	**275-6707**	2	GROMMET	
	21	1	**364-6136**	1	HARNESS AS-MOTOR (BLOWER)	
		1	**6T-6505**	3	HOUSING-RECEPTACLE (BLADE, POSITIVE LOCK)	
		1	**7T-0093**	4	PIN-CONNECTOR (12-GA TO 14-GA)	
		1	**8T-8729**	3	PIN-CONNECTOR (16-GA TO 18-GA)	
		1	**9W-0852**	1	PIN-CONNECTOR (14-GA TO 16-GA)	
		1	**155-2271**	1	KIT-CONNECTING PLUG (4-PIN)	
		1	**177-9648**	1	KIT-CONNECTING PLUG (2-PIN)	
					(EACH PLUG KIT INCLUDES PLUG AS, WEDGE & INTERFACE SEAL)	
		1	**8T-8737**	1	PLUG-SEAL	
		1	**102-8804**	1	KIT-RECEPTACLE (4-PIN)	
		1	**177-9653**		KIT-RECEPTACLE (4-PIN)	
					(EACH RECEPTACLE KIT INCLUDES RECEPTACLE AS & WEDGE)	
		1	**7T-0094**	2	SOCKET-CONNECTOR (12-GA TO 14-GA)	
		1	**192-2112**	3	SOCKET-TERMINAL	
		1	**9X-3402**	3	SOCKET-CONNECTOR (16-GA TO 18-GA)	
		1	**5P-5618**	2	TERMINAL-BLADE (10-GA TO 12-GA)	
		1	**6T-6506**	3	TERMINAL-BLADE (14-GA TO 18-GA)	
E		1	**125-7875**		TUBE-HEAT SHRINK (7.44-MM DIA) (10-CM)	
C	22	1	**428-7410**	1	PLATE AS	
	23	1	**277-7114**	2	PLUG	
	24	1	**277-7115**	1	BLOWER AS	
C	25	1	**428-7409**	1	PLATE AS	
Y	26	1	**277-9969**	1	HEATER GP-CAB	778
	27	1	**318-0815**	1	PLATE AS	
	28	1	**278-3354**	1	FILM-INSTRUCTION (HVAC WATER, DRAINING, FILLING)	
	29	1	*363-5992*	1	RESISTOR GP	

252-4502 **AIR CONDITIONER GP (*contd.*)** **i05367396**

NOTE	REF NO	GRAPHIC REF	PART NUMBER	QTY	PART NAME 1 2 3 4 5 6 (PRODUCT LEVEL)	SEE PAGE
		1	**9X-2185**	3	SCREW (8-15X0.44-IN)	
		1	**133-9012**	1	FUSE (15-AMPERE)	
		1	**354-1384**	1	RESISTOR GP	
		1	**363-5991**	1	BRACKET AS	
	30	1	**282-3653**	1	BRACKET	
M	31	1	**116-6952**	7	BOLT (M4X0.7X10-MM)	
	32	1	**096-6166**	4	WASHER-HARD (4.5X9X1-MM THK)	
	33	1	**3B-4501**	2	LOCKWASHER	
	34	1	**4P-7581**	1	CLIP	
M	35	1	**5C-9553**	21	BOLT (M6X1X16-MM)	
	36	1	**8C-8514**	2	SCREW-MACHINE (8-32X0.375-IN)	
	37	1	**8T-4121**	1	WASHER-HARD (11X21X2.5-MM THK)	
M	38	1	**8T-4137**	1	BOLT (M10X1.5X20-MM)	
	39	1	**8T-4205**	21	WASHER-HARD (7.2X14.5X2-MM THK)	
D	40	1	**6V-2496**		SEAL (0.1-M EACH)	
D	40A	1	**6V-2496**		SEAL (0.2-M EACH)	
D	40B	1	**6V-2496**		SEAL (0.3-M EACH)	
C	41	1	**433-2861**	1	SEAL	
C	42	1	**433-2862**	1	SEAL	
					AVAILABLE REPAIR KIT(S):	
			285-8553	1	KIT-GASKET (AIR CONDITIONER)	
					(INCLUDES GASKETS)	

C - CHANGE FROM PREVIOUS TYPE
D - ORDER BY THE METER
E - ORDER BY THE CENTIMETER
M - METRIC PART
Y - SEPARATE ILLUSTRATION

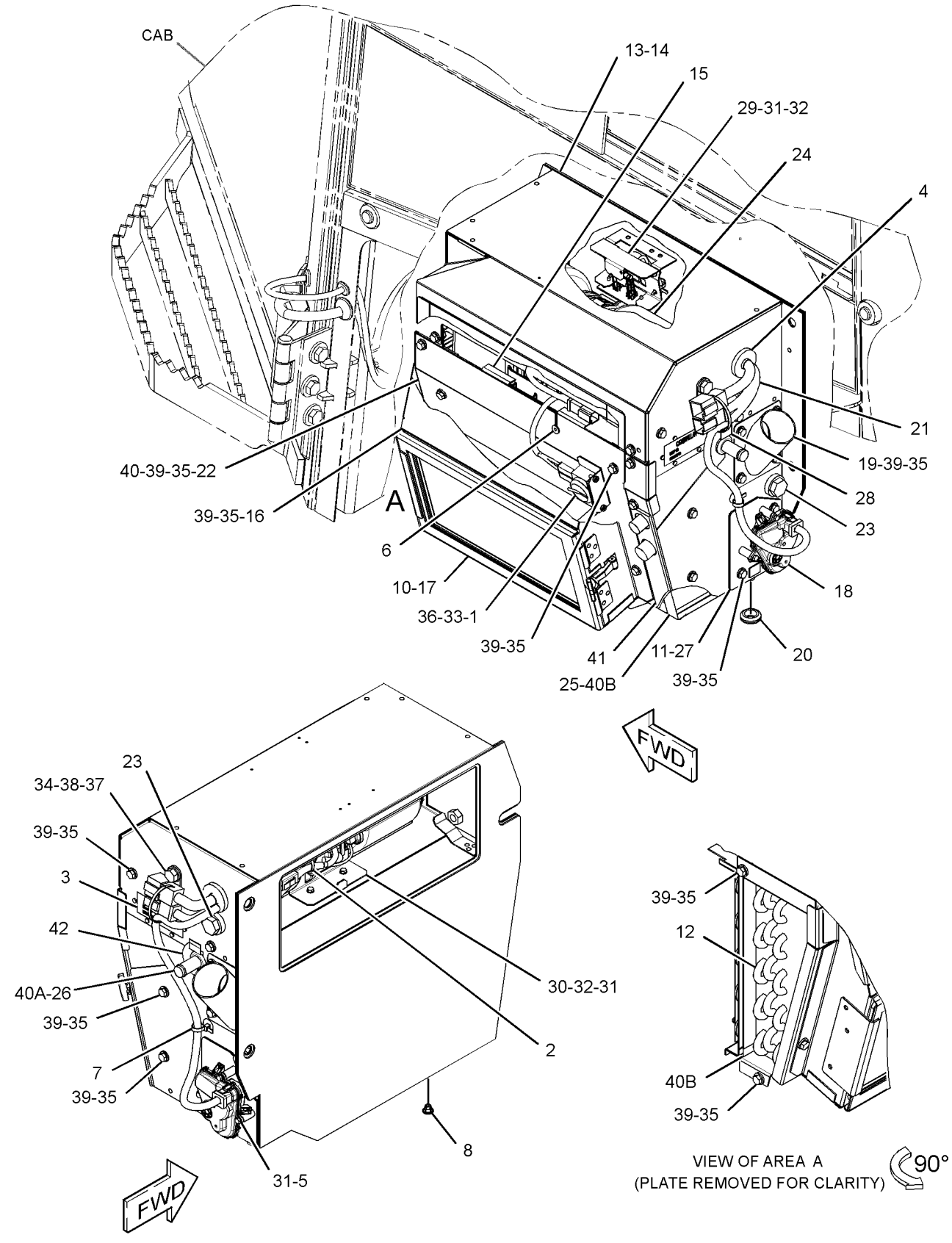

GRAPHIC #1 **<END>** g03414160

326-8180 AIR CONDITIONER GP

S/N: MMM1-UP; RRR1-UP
FOR USE WITH 325-6498—PAGE: 2, 325-6499—PAGE: 3
AN ATTACHMENT

SMCS-7320 **i04928530**

NOTE	REF NO	GRAPHIC REF	PART NUMBER	QTY	PART NAME 1 2 3 4 5 6 (PRODUCT LEVEL)	SEE PAGE
E	1	1	**3E-3892**		SEAL (15.3-CM EACH)	
E	1A	1	**3E-3892**		SEAL (31.6-CM EACH)	
	2	1	**326-8178**	1	PLATE AS	
	3	1	**326-8179**	1	FILTER-AIR (AIR CONDITIONER)	
	4	1	**262-2816**	1	GASKET	
					PARTS SHOWN IN GRAPHIC(S) WITHOUT A REFERENCE NUMBER ARE NOT SERVICED SEPARATELY	

E - ORDER BY THE CENTIMETER

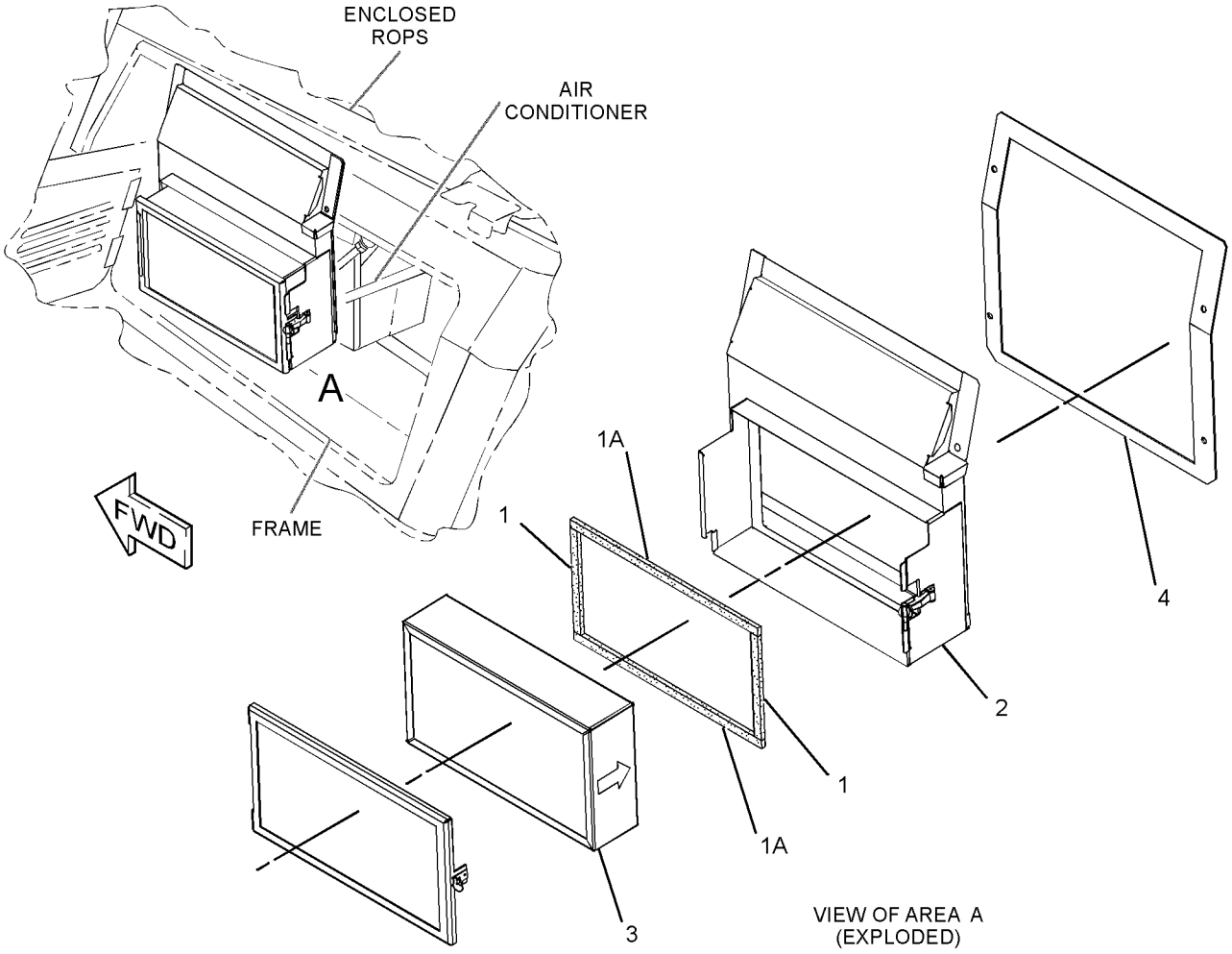

GRAPHIC #1 **<END>** g03097337

291-7980 ARM GP-SEAT SUSPENSION–CENTER

S/N: MMM1-UP; RRR1-UP
PART OF 316-8368 SUSPENSION GP-SEAT
AN ATTACHMENT

SMCS-7324 **i02891542**

NOTE	REF NO	GRAPHIC REF	PART NUMBER	QTY	PART NAME 1 2 3 4 5 6 (PRODUCT LEVEL)	SEE PAGE
	1	1	**291-7981**	1	ARM AS (INNER, RH)	
	2	1	**291-7984**	1	ARM AS (INNER, LH)	
	3	1	**291-7986**	1	PLATE AS	
	4	1	**291-7989**	2	PLATE	
	5	1	**291-7990**	2	BEARING	
	6	1	**291-7992**	1	SHAFT	
	7	1	**291-8030**	1	SPACER (19.3X25.4X225-MM THK)	
	8	1	**291-9310**	2	BELT-TETHER	
	9	1	**2B-2695**	4	BOLT (5/16-18X0.875-IN)	
	10	1	**6V-8189**	4	NUT (5/16-18-THD)	
	11	1	**6V-8801**	4	NUT (3/8-16-THD)	
	12	1	**7X-0289**	4	BOLT (3/8-16X1.875-IN)	
	13	1	**8T-4896**	8	WASHER-HARD (10.2X18.5X2.5-MM THK)	
	14	1	**9S-5282**	4	WASHER-HARD (8.8X14.5X2-MM THK)	
	15	1	**313-2794**	1	CLIP	

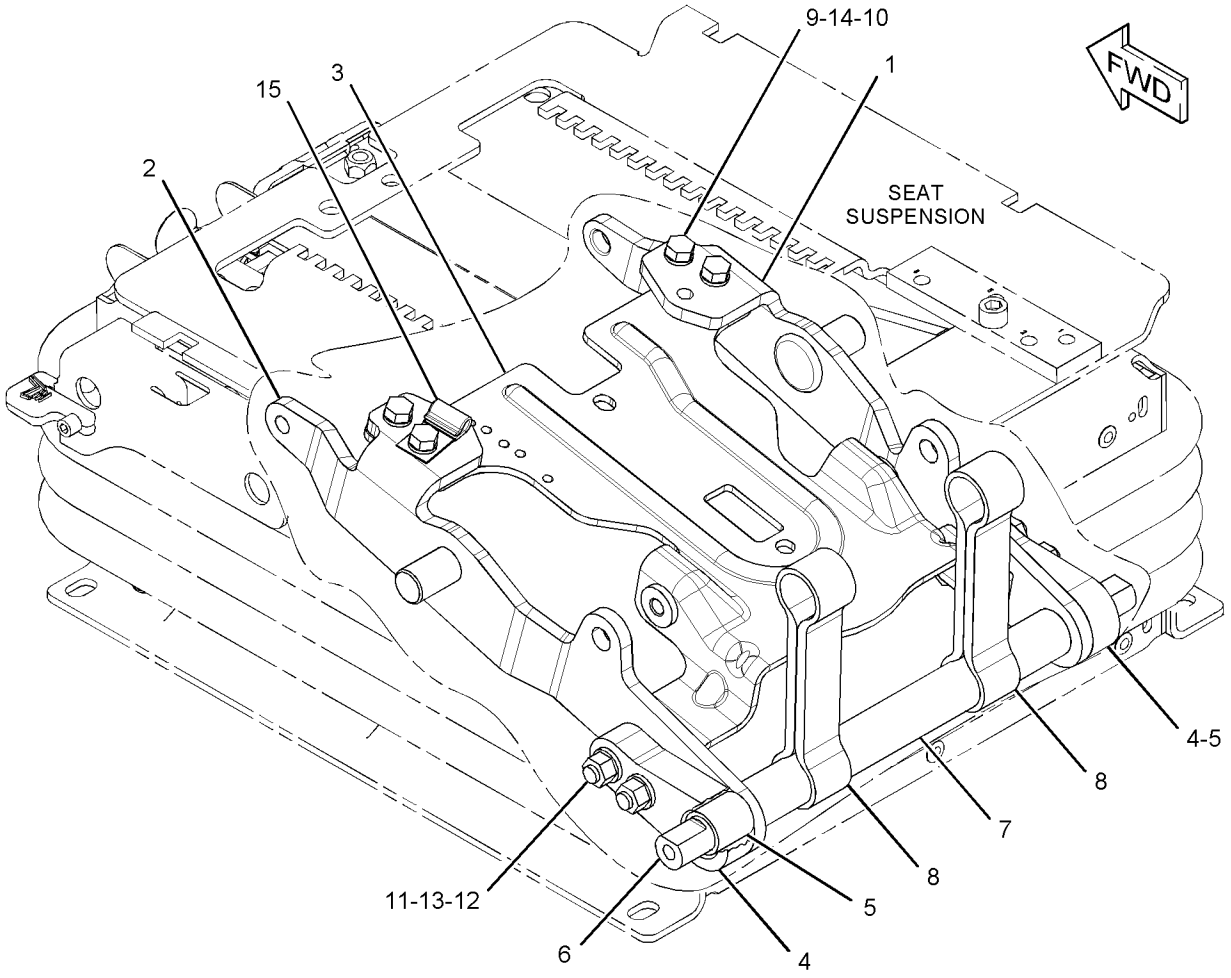

GRAPHIC #1 **<END>** g01445899

291-8004 ARM GP-SEAT SUSPENSION—OUTER, RH

S/N: MMM1-UP; RRR1-UP
PART OF 316-8368 SUSPENSION GP-SEAT
AN ATTACHMENT

SMCS-7324 **i03098048**

NOTE	REF NO	GRAPHIC REF	PART NUMBER	QTY	PART NAME 1 2 3 4 5 6 (PRODUCT LEVEL)	SEE PAGE
	1	1	**291-7990**	1	BEARING	
	2	1	**291-8005**	1	ARM AS (OUTER, RH)	
	3	1	**291-8008**	1	SPACER	
M	4	1	**5C-7261**	2	NUT (M8X1.25-THD)	
M	5	1	**8T-4197**	2	BOLT (M8X1.25X40-MM)	
	6	1	**8T-4224**	4	WASHER-HARD (8.8X16X2-MM THK)	

M - METRIC PART

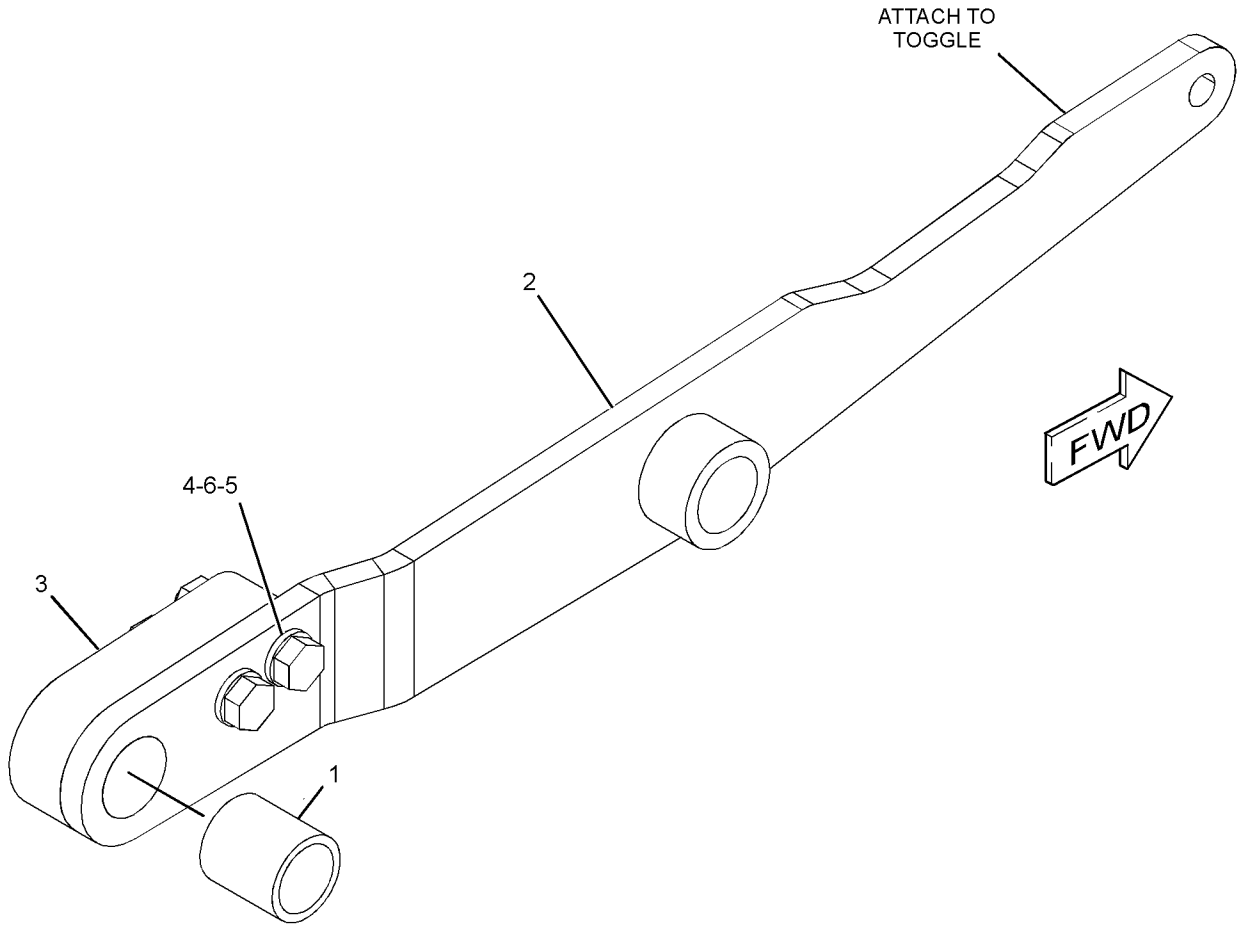

GRAPHIC #1 **<END>** g01578696

291-8011 ARM GP-SEAT SUSPENSION—OUTER, LH

S/N: MMM1-UP; RRR1-UP
PART OF 316-8368 SUSPENSION GP-SEAT
AN ATTACHMENT

SMCS-7324 **i03098049**

NOTE	REF NO	GRAPHIC REF	PART NUMBER	QTY	PART NAME 1 2 3 4 5 6 (PRODUCT LEVEL)	SEE PAGE
	1	1	**291-7990**	1	BEARING	
	2	1	**291-8008**	1	SPACER	
	3	1	**291-8012**	1	ARM (OUTER, LH)	
M	4	1	**5C-7261**	2	NUT (M8X1.25-THD)	
M	5	1	**8T-4197**	2	BOLT (M8X1.25X40-MM)	
	6	1	**8T-4224**	4	WASHER-HARD (8.8X16X2-MM THK)	

M - METRIC PART

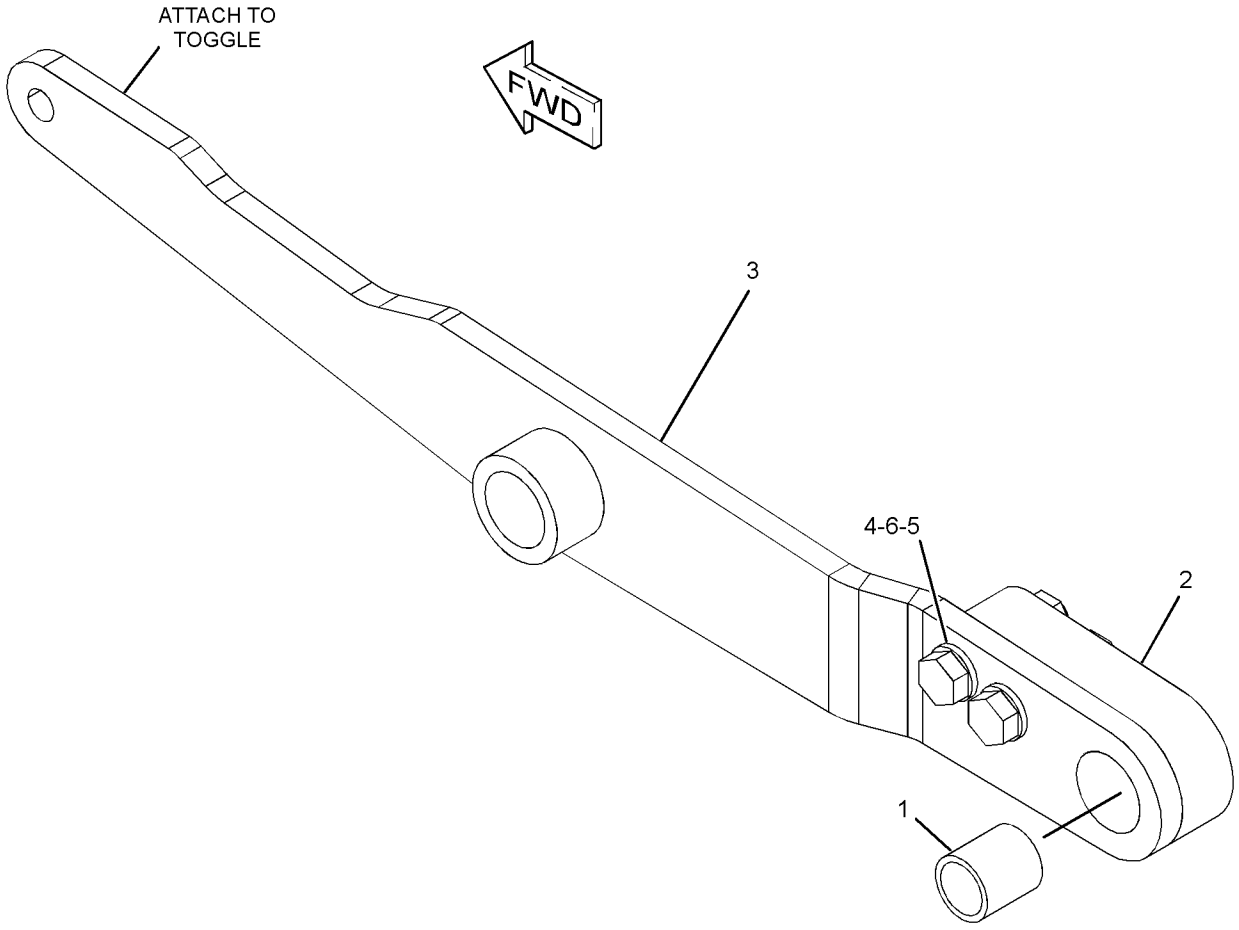

GRAPHIC #1 **<END>** g01578695

280-9679 ARMREST GP–LH

S/N: MMM1-UP; RRR1-UP

PART OF 255-4242 SEAT & SUPPORT GP, 255-4250, 255-4251, 255-4252 SEAT GP-SUSPENSION

AN ATTACHMENT

SMCS-7307, 7312

i04415578

NOTE	REF NO	GRAPHIC REF	PART NUMBER	QTY	PART NAME 1 2 3 4 5 6 (PRODUCT LEVEL)	SEE PAGE
	1	1	**253-8798**	2	KNOB	
	2	1	**268-9378**	1	BRACKET	
	3	1	**282-2035**	1	CUSHION AS (LH)	
	4	1	**282-2036**	1	CUSHION AS	
	5	1	**282-6690**	1	COVER	
	6	1	**282-6692**	1	COVER (LH)	
	7	1	**282-6702**	1	BRACKET AS (LH)	
	8	1	**282-6708**	1	BRACKET AS	
	9	1	**282-6710**	1	BRACKET AS	
Y	10	1	*284-7059*	1	SUPPORT GP-STEERING CONTROL (LH)	848
	11	1	**284-7649**	1	BRACKET	
M	12	1	**127-2170**	9	SCREW-TRUSS HEAD (M8X1.25X20-MM)	
	13	1	**7X-0578**	2	WASHER-HARD (10.2X32X2.5-MM THK)	
M	14	1	**7X-2546**	1	BOLT (M10X1.5X180-MM)	
	15	1	**8T-4121**	4	WASHER-HARD (11X21X2.5-MM THK)	
M	16	1	**8T-4178**	2	BOLT (M10X1.5X90-MM)	
M	17	1	**8T-6685**	1	BOLT (M10X1.5X110-MM)	
M	18	1	**9X-2041**	1	SCREW-TRUSS HEAD (M10X1.5X20-MM)	
M	19	1	**9X-2042**	4	SCREW-TRUSS HEAD (M6X1X12-MM)	
M	20	1	**9X-2043**	2	SCREW-TRUSS HEAD (M6X1X14-MM)	
M	21	1	**9X-2044**	4	SCREW-TRUSS HEAD (M6X1X16-MM)	
M	22	1	**9X-2045**	2	SCREW-TRUSS HEAD (M6X1X20-MM)	

M - METRIC PART
Y - SEPARATE ILLUSTRATION

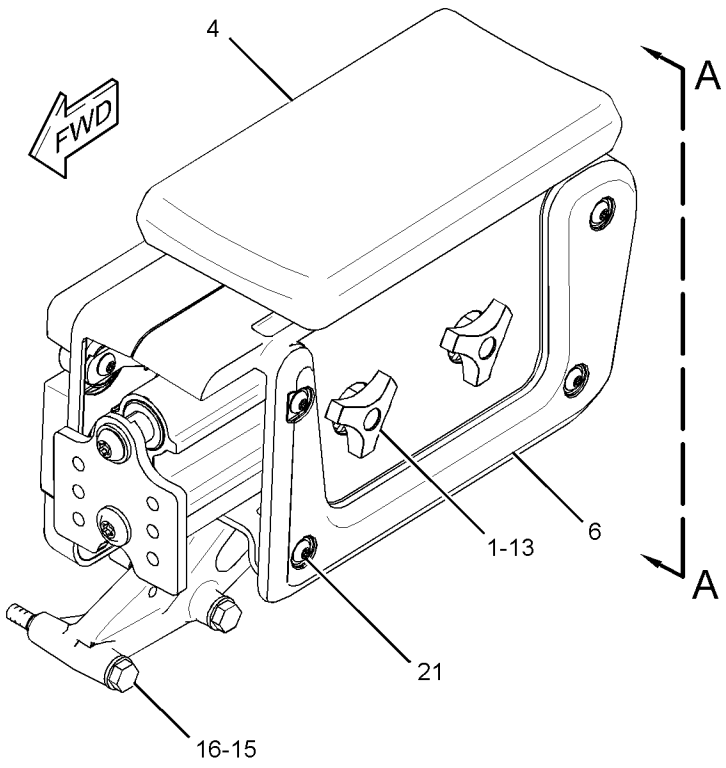

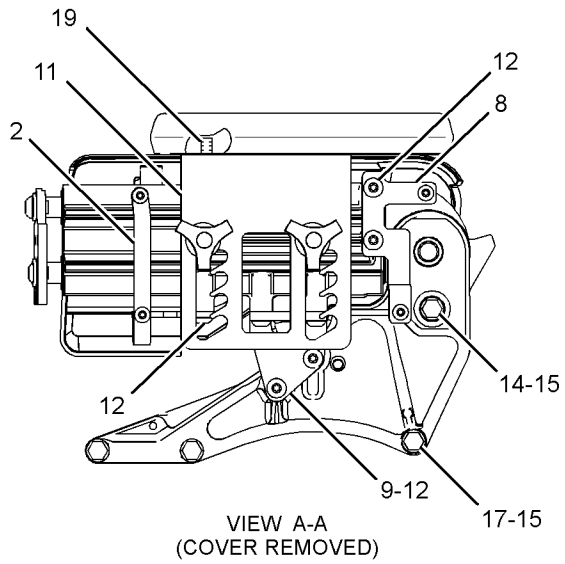

VIEW A-A
(COVER REMOVED)

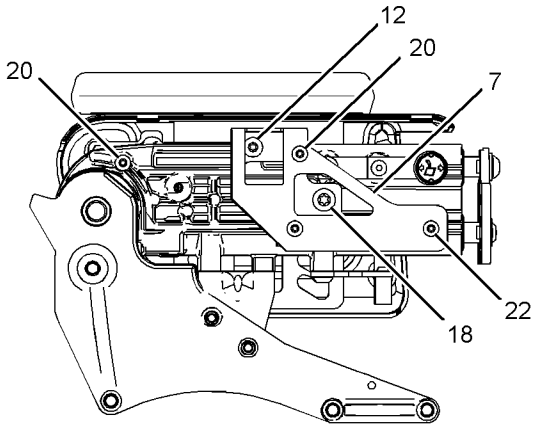

VIEW B-B
(COVER REMOVED)

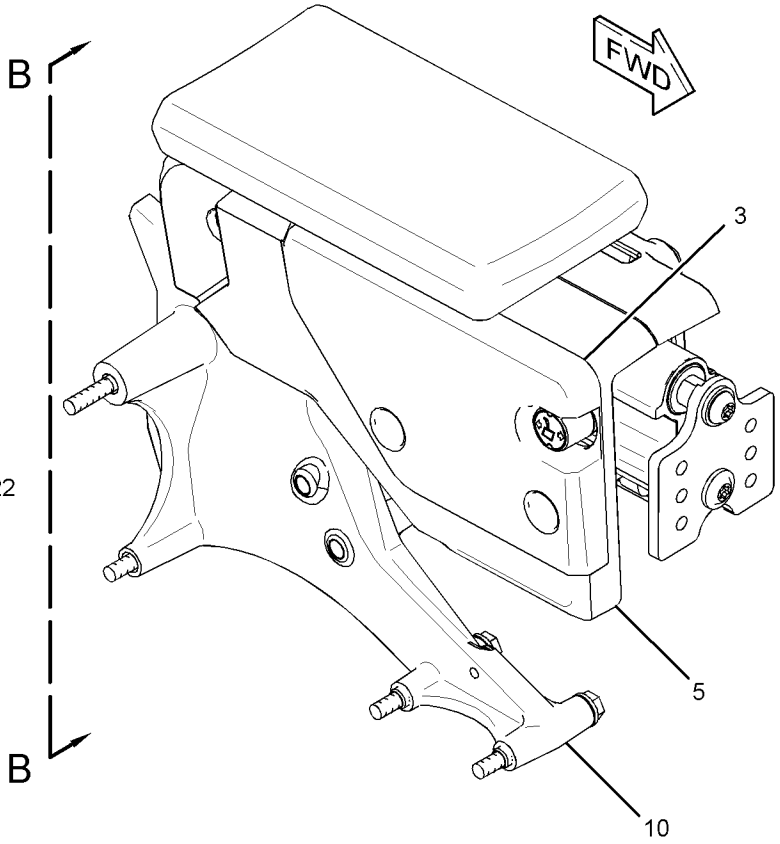

GRAPHIC #1 **<END>** g01304612

284-7054 ARMREST GP–RH

S/N: MMM1-UP; RRR1-UP

PART OF 255-4242 SEAT & SUPPORT GP, 255-4250, 255-4251, 255-4252 SEAT GP-SUSPENSION

AN ATTACHMENT

SMCS-7307, 7312

i04776636

NOTE	REF NO	GRAPHIC REF	PART NUMBER	QTY	PART NAME 1 2 3 4 5 6 (PRODUCT LEVEL)	SEE PAGE
	1	1	**253-8798**	2	KNOB (ARMREST ADJUSTMENT)	
	2	1	**268-9382**	1	BRACKET	
	3	1	**282-2034**	1	CUSHION AS (RH)	
	4	1	**282-2036**	1	CUSHION AS	
	5	1	**282-6689**	1	COVER	
	6	1	**282-6691**	1	COVER (RH)	
	7	1	**282-6701**	1	BRACKET AS (RH)	
	8	1	**282-6707**	1	BRACKET AS	
	9	1	**282-6709**	1	BRACKET AS	
Y	10	1	**284-7055**	1	SUPPORT GP-HYDRAULIC CONTROL (RH)	846
	11	1	**284-7648**	1	BRACKET	
M	12	1	**127-2170**	9	SCREW-TRUSS HEAD (M8X1.25X20-MM)	
	13	1	**7X-0578**	2	WASHER-HARD (10.2X32X2.5-MM THK)	
M	14	1	**7X-2546**	1	BOLT (M10X1.5X180-MM)	
	15	1	**8T-4121**	4	WASHER-HARD (11X21X2.5-MM THK)	
M	16	1	**8T-4178**	2	BOLT (M10X1.5X90-MM)	
M	17	1	**8T-6685**	1	BOLT (M10X1.5X110-MM)	
M	18	1	**9X-2041**	1	SCREW-TRUSS HEAD (M10X1.5X20-MM)	
M	19	1	**9X-2042**	4	SCREW-TRUSS HEAD (M6X1X12-MM)	
M	20	1	**9X-2043**	2	SCREW-TRUSS HEAD (M6X1X14-MM)	
M	21	1	**9X-2044**	4	SCREW-TRUSS HEAD (M6X1X16-MM)	
M	22	1	**9X-2045**	2	SCREW-TRUSS HEAD (M6X1X20-MM)	

M - METRIC PART
Y - SEPARATE ILLUSTRATION

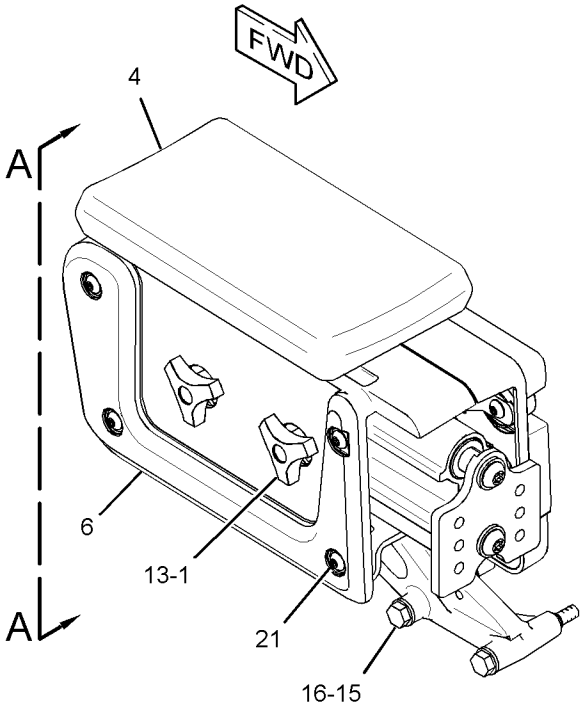

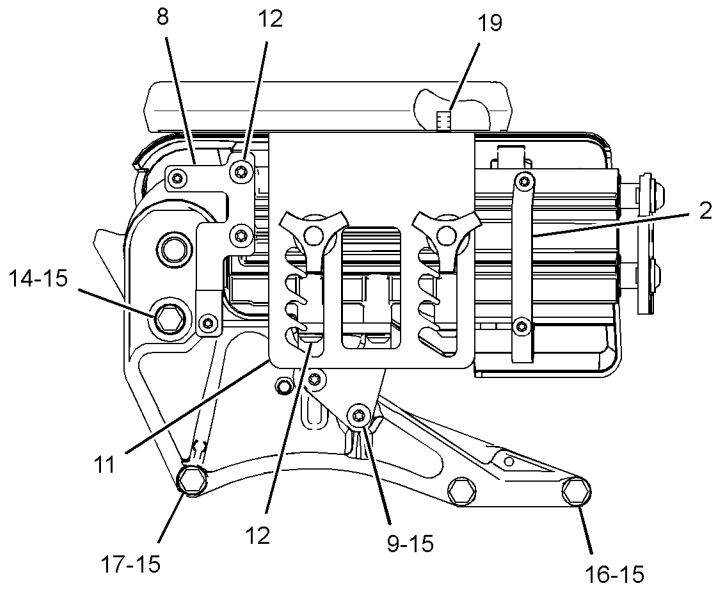

VIEW A-A
(COVER REMOVED)

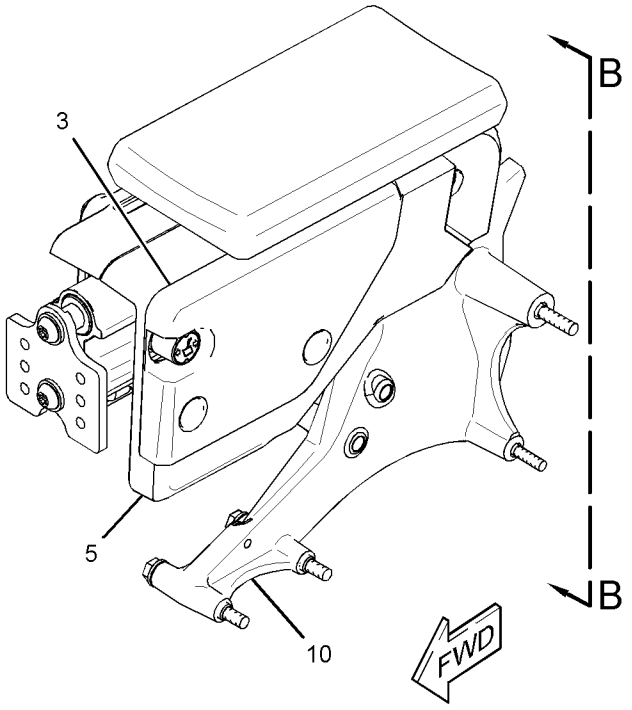

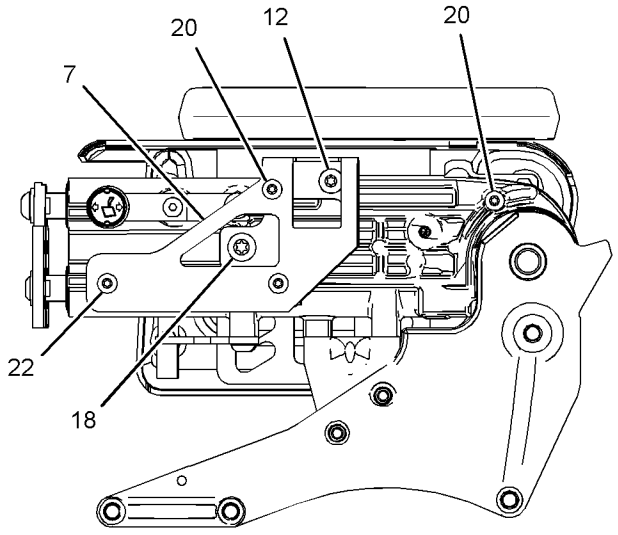

VIEW B-B
(COVER REMOVED)

GRAPHIC #1 **<END>** g02880776

322-5908 CABLE GP-CONTROL—FIRE PLOW—FUEL SHUTOFF

S/N: MMM1-UP; RRR1-UP
PART OF 322-5920 SHUTOFF GP-MANUAL
AN ATTACHMENT

SMCS-5154 **i03701442**

NOTE	REF NO	GRAPHIC REF	PART NUMBER	QTY	PART NAME 1 2 3 4 5 6 (PRODUCT LEVEL)	SEE PAGE
	1	1	**322-5909**	1	CABLE AS	
		1	**8T-4742**	1	END-YOKE ROD	
		1	**8T-4744**	1	PIN AS-SPRING	
	2	1	**326-9195**	1	KNOB GP (PUSH-PULL)	
		1	**292-2437**	1	NUT	
		1	**292-2438**	1	SEAL	

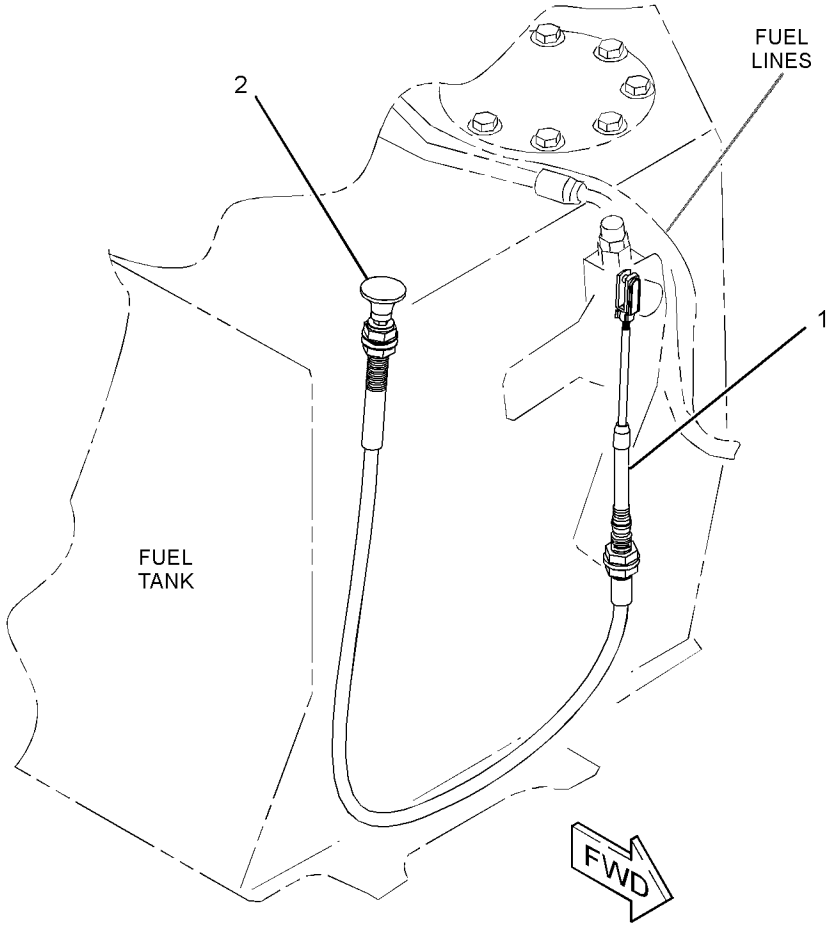

GRAPHIC #1 **<END>** g02024576

255-3696 COMPRESSOR & MTG GP-REFRIG

S/N: MMM1-UP; RRR1-UP

PART OF 254-3210 AIR CONDITIONER & MOUNTING GP

AN ATTACHMENT

SMCS-1802 **i02678237**

NOTE	REF NO	GRAPHIC REF	PART NUMBER	QTY	PART NAME 1 2 3 4 5 6 (PRODUCT LEVEL)	SEE PAGE
Y	1	1	**178-9570**	1	COMPRESSOR GP-REFRIGERANT	686
	2	1	**261-0372**	1	BRACKET	
	3	1	**261-0373**	1	BRACKET	
M	4	1	**7X-2538**	4	BOLT (M8X1.25X100-MM)	
M	5	1	**7X-2553**	2	BOLT (M16X2X40-MM)	
	6	1	**8T-4121**	2	WASHER-HARD (11X21X2.5-MM THK)	
M	7	1	**8T-4136**	1	BOLT (M10X1.5X25-MM)	
M	8	1	**8T-4195**	1	BOLT (M10X1.5X30-MM)	
	9	1	**8T-4224**	4	WASHER-HARD (8.8X16X2-MM THK)	
	10	1	**9X-8257**	2	WASHER (17.5X30X3.5-MM THK)	

M - METRIC PART
Y - SEPARATE ILLUSTRATION

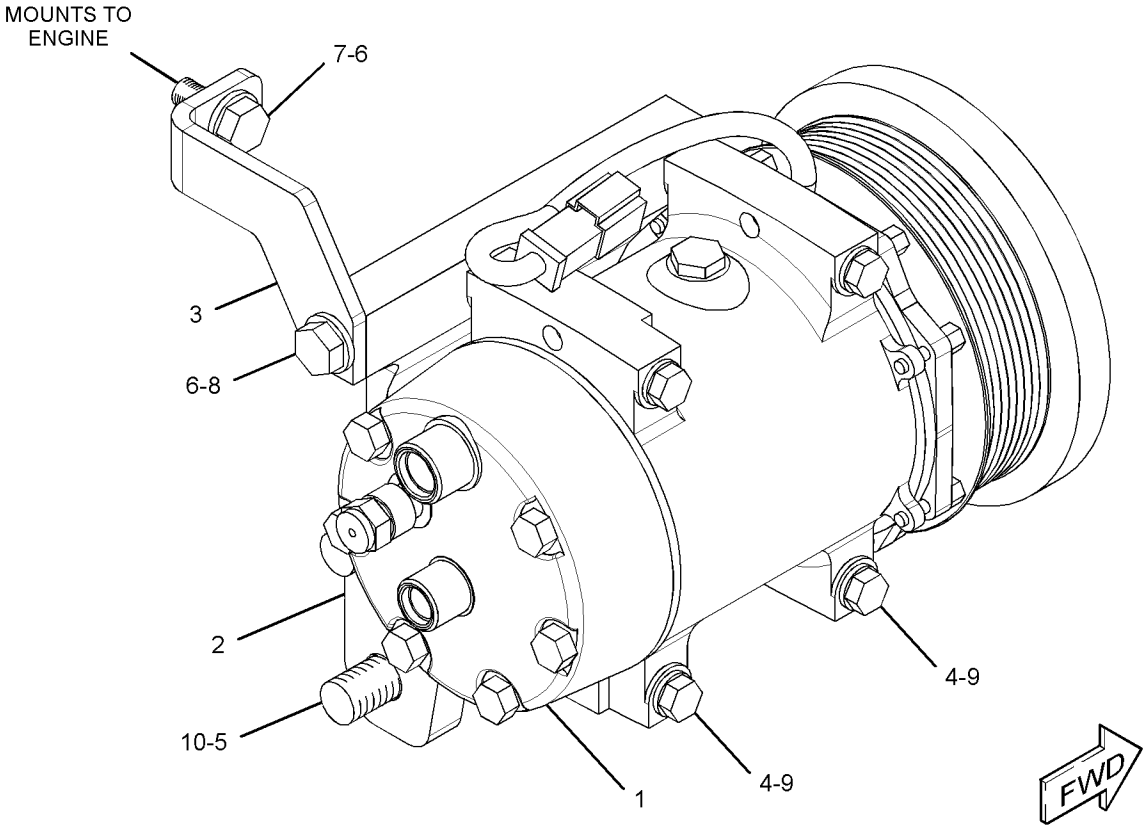

GRAPHIC #1 **<END>** g01348437

178-9570 COMPRESSOR GP-REFRIGERANT

S/N: MMM1-UP; RRR1-UP
PART OF 255-3696 COMPRESSOR & MTG GP-REFRIG
AN ATTACHMENT

SMCS-1802 **i05336942**

NOTE	REF NO	GRAPHIC REF	PART NUMBER	QTY	PART NAME 1 2 3 4 5 6 (PRODUCT LEVEL)	SEE PAGE
	1	1	**102-8802**	1	KIT-RECEPTACLE (2-PIN)	
					(INCLUDES RECEPTACLE AS & WEDGE)	
	2	1	**7T-4532**	1	PLUG AS	
	3	1	**314-4018**	1	VALVE AS-PRESSURE RELIEF (REFRIGERANT COMPRESSOR)	
	4	1	**180-9339**	2	PIN-CONNECTOR (14-GA TO 18-GA)	

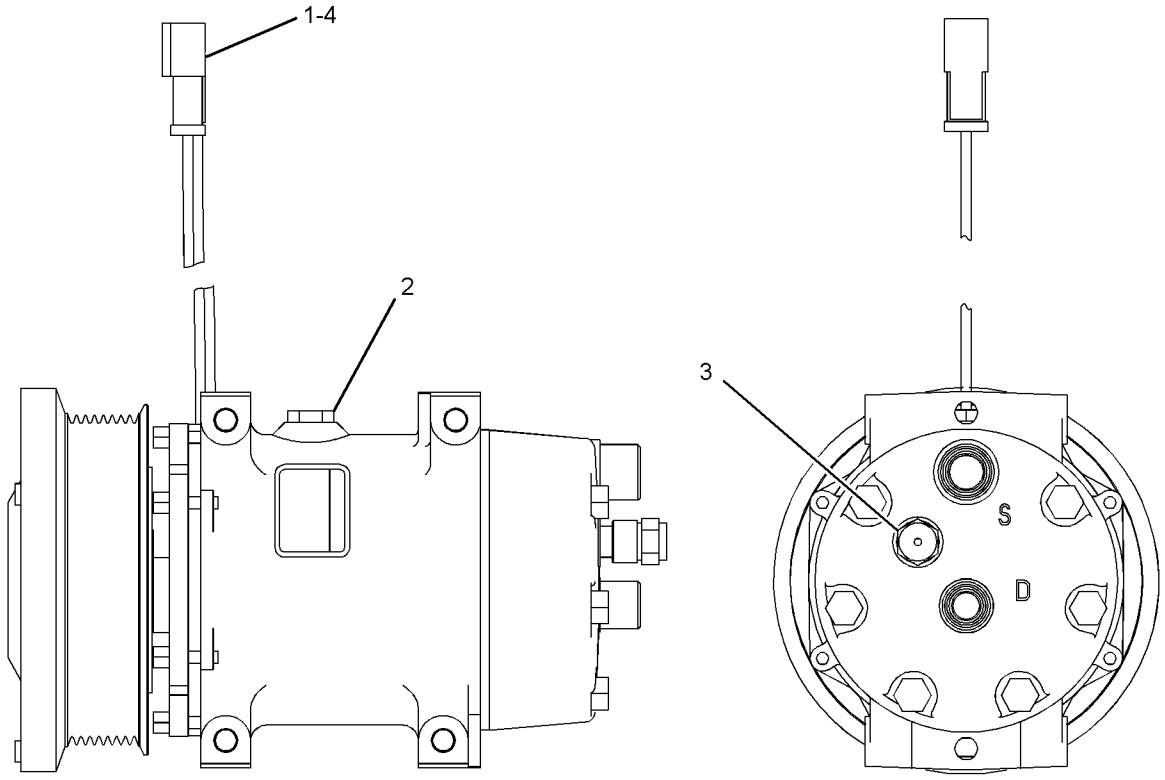

GRAPHIC #1 **<END>** g02749997

180-5927 CONDENSER GP-REFRIGERANT

S/N: MMM1-UP; RRR1-UP
PART OF 254-3210 AIR CONDITIONER & MOUNTING GP
AN ATTACHMENT

SMCS-1805 **i05192272**

NOTE	REF NO	GRAPHIC REF	PART NUMBER	QTY	PART NAME 1 2 3 4 5 6 (PRODUCT LEVEL)	SEE PAGE
	1	1	**7K-1181**	1	STRAP-CABLE	
	2	1	**8C-3756**	1	FILM-IDENTIFICATION (GROUP NO., SEQUENCE NO.)	
	3	1	**115-1615**	2	RELAY AS (12-VOLT) (CONDENSER FAN)	
	4	1	**175-2539**	1	CASE AS	
	6	1	**320-0440**	2	FAN AS (5-BLADE)	
					(EACH INCLUDES)	
		1	**177-9645**	1	KIT-RECEPTACLE (2-PIN)	
					(INCLUDES RECEPTACLE AS & WEDGE)	
	7	1	**185-4303**	1	HARNESS AS-MOTOR (CONDENSER FAN)	
		1	**102-8802**	1	KIT-RECEPTACLE (2-PIN)	
					(INCLUDES RECEPTACLE AS & WEDGE)	
		1	**7T-0093**	4	PIN-CONNECTOR (12-GA TO 14-GA)	
		1	**7T-0094**	4	SOCKET-CONNECTOR (12-GA TO 14-GA)	
		1	**8T-8737**	1	PLUG-SEAL	
		1	**9X-1054**	2	PLUG AS-CONNECTOR (4-PIN)	
		1	**9X-1055**	4	TERMINAL-RECEPTACLE (12-GA)	
		1	**9X-1056**	4	TERMINAL-RECEPTACLE (14-GA TO 16-GA)	
		1	**189-3158**	1	SUPPRESSOR-ARC	
		1	**9X-3402**	2	SOCKET-CONNECTOR (16-GA TO 18-GA)	
					—OR—	
		1	**126-1768**	2	SOCKET-CONNECTOR (14-GA TO 16-GA)	
		1	**9X-3401**	1	PIN-CONNECTOR (16-GA TO 18-GA)	
					—OR—	
		1	**126-1767**	1	PIN-CONNECTOR (14-GA TO 16-GA)	
		1	**155-2270**	1	KIT-CONNECTING PLUG (2-PIN)	
		1	**177-9648**	2	KIT-CONNECTING PLUG (2-PIN)	
					(EACH PLUG KIT INCLUDES PLUG AS, WEDGE & INTERFACE SEAL)	
		1	**177-9653**	1	KIT-RECEPTACLE (4-PIN)	
					(INCLUDES RECEPTACLE AS & WEDGE)	
	8	1	**199-7698**	1	COIL AS (CONDENSER)	
M	9	1	**5C-2890**	1	NUT (M6X1-THD)	
M	10	1	**8T-4138**	1	BOLT (M6X1X20-MM)	
	11	1	**8T-4224**	8	WASHER-HARD (8.8X16X2-MM THK)	
	12	1	**8T-4121**	6	WASHER-HARD (11X21X2.5-MM THK)	
M	13	1	**8T-4137**	6	BOLT (M10X1.5X20-MM)	
	14	1	**8T-4205**	2	WASHER-HARD (7.2X14.5X2-MM THK)	
M	15	1	**8T-4908**	8	BOLT (M8X1.25X25-MM)	
D	16	1	**5P-5673**		SEAL (0.8-M EACH)	
D	16A	1	**5P-5673**		SEAL (0.2-M EACH)	
E	17	1	**126-8472**		SEAL (79-CM)	

D - ORDER BY THE METER
E - ORDER BY THE CENTIMETER
M - METRIC PART

180-5927 **CONDENSER GP-REFRIGERANT (*contd.*)** **i05192272**

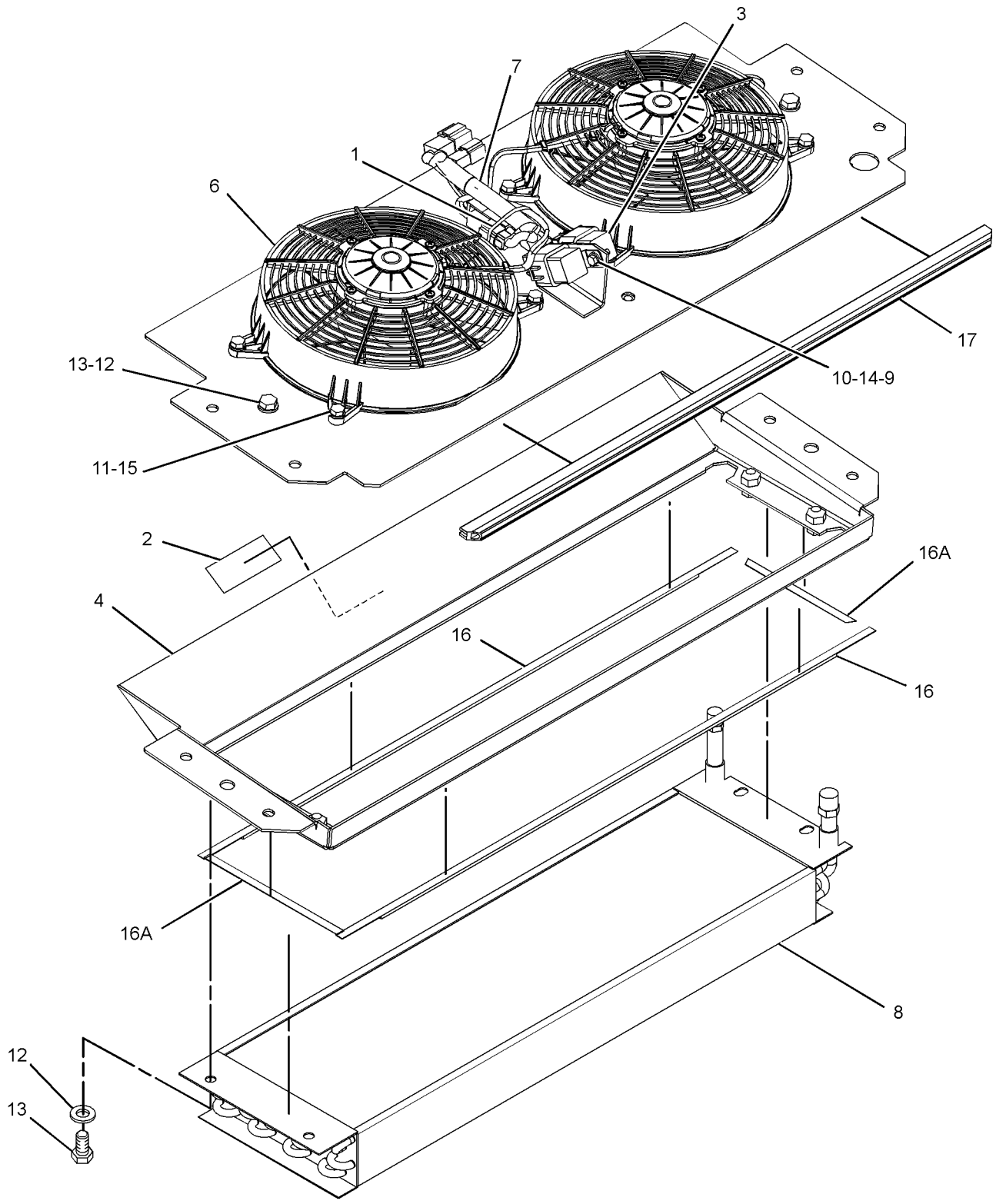

GRAPHIC #1 **<END>** g03371133

314-3003 CONSOLE GP–LH

S/N: MMM1-UP; RRR1-UP
PART OF 255-4231, 285-0331 COVER GP-CAB
AN ATTACHMENT

SMCS-5258 **i04402167**

NOTE	REF NO	GRAPHIC REF	PART NUMBER	QTY	PART NAME 1 2 3 4 5 6 (PRODUCT LEVEL)	SEE PAGE
	1	1	**188-8846**	1	LATCH AS (COMPRESSION)	
	2	1	**258-6387**	1	HINGE AS	
	3	1	**297-1464**	11	INSERT-THREADED (M4X0.7-THD)	
M	4	1	**297-1466**	3	INSERT-THREADED (M6X1-THD)	
	5	1	**314-3005**	1	CONSOLE (LH)	
	6	1	**314-3007**	1	DOOR	
M	7	1	**138-8454**	11	SCREW-TRUSS HEAD (M4X0.7X10-MM)	

M - METRIC PART

314-3003 **CONSOLE GP (*contd.*)** **i04402167**

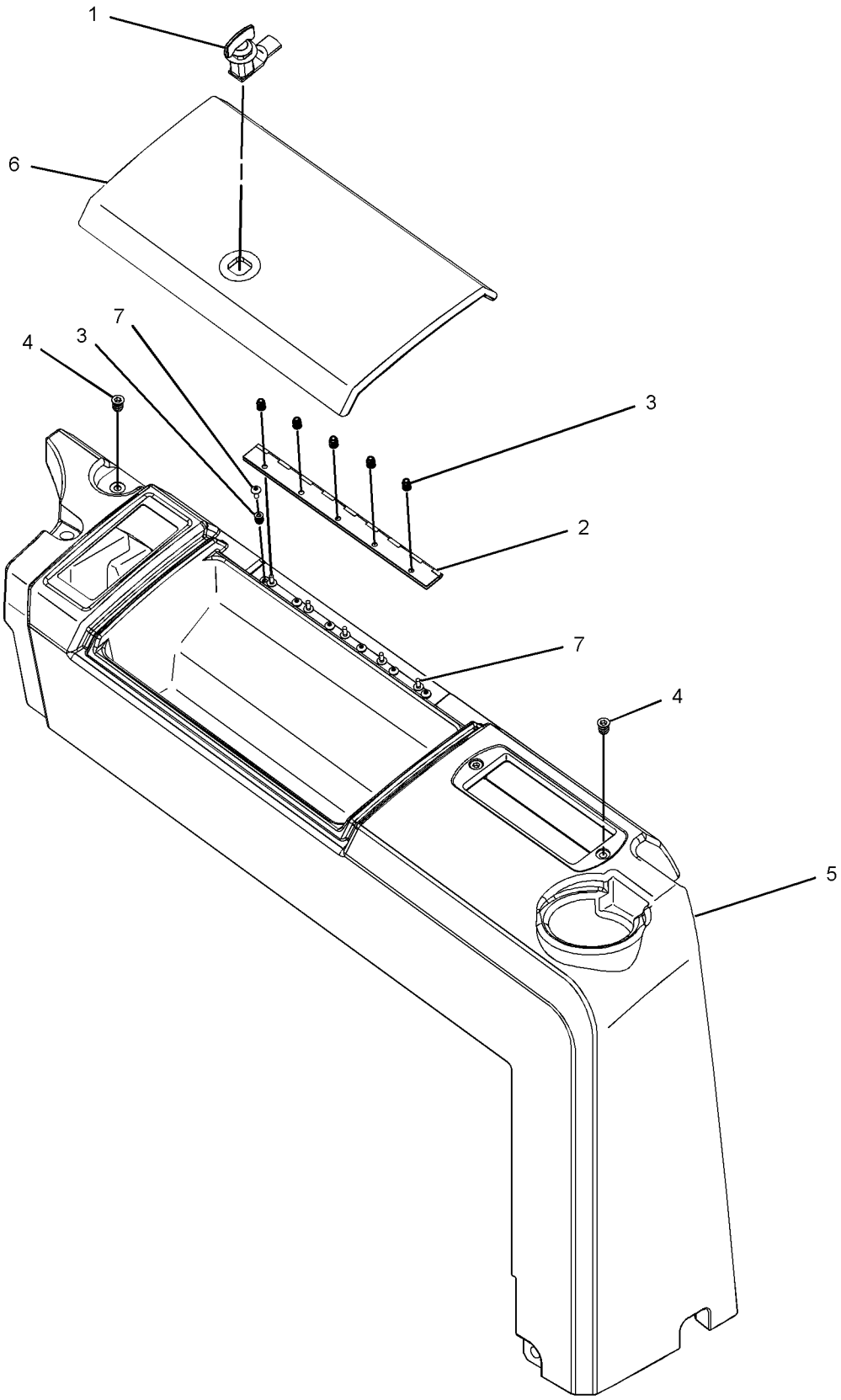

GRAPHIC #1 **<END>** g01423643

314-3004 CONSOLE GP–LH

S/N: MMM1-UP; RRR1-UP
PART OF 255-4230 COVER GP-CAB, 285-0330 COVER GP-CONSOLE
AN ATTACHMENT

SMCS-5258 **i02890496**

NOTE	REF NO	GRAPHIC REF	PART NUMBER	QTY	PART NAME 1 2 3 4 5 6 (PRODUCT LEVEL)	SEE PAGE
	1	1	**188-8846**	1	LATCH AS	
	2	1	**258-6387**	1	HINGE AS	
	3	1	**297-1464**	11	INSERT-THREADED (M4X0.7-THD)	
M	4	1	**297-1466**	3	INSERT-THREADED (M6X1-THD)	
	6	1	**314-3007**	1	DOOR	
M	7	1	**138-8454**	11	SCREW-TRUSS HEAD (M4X0.7X10-MM)	

M - METRIC PART

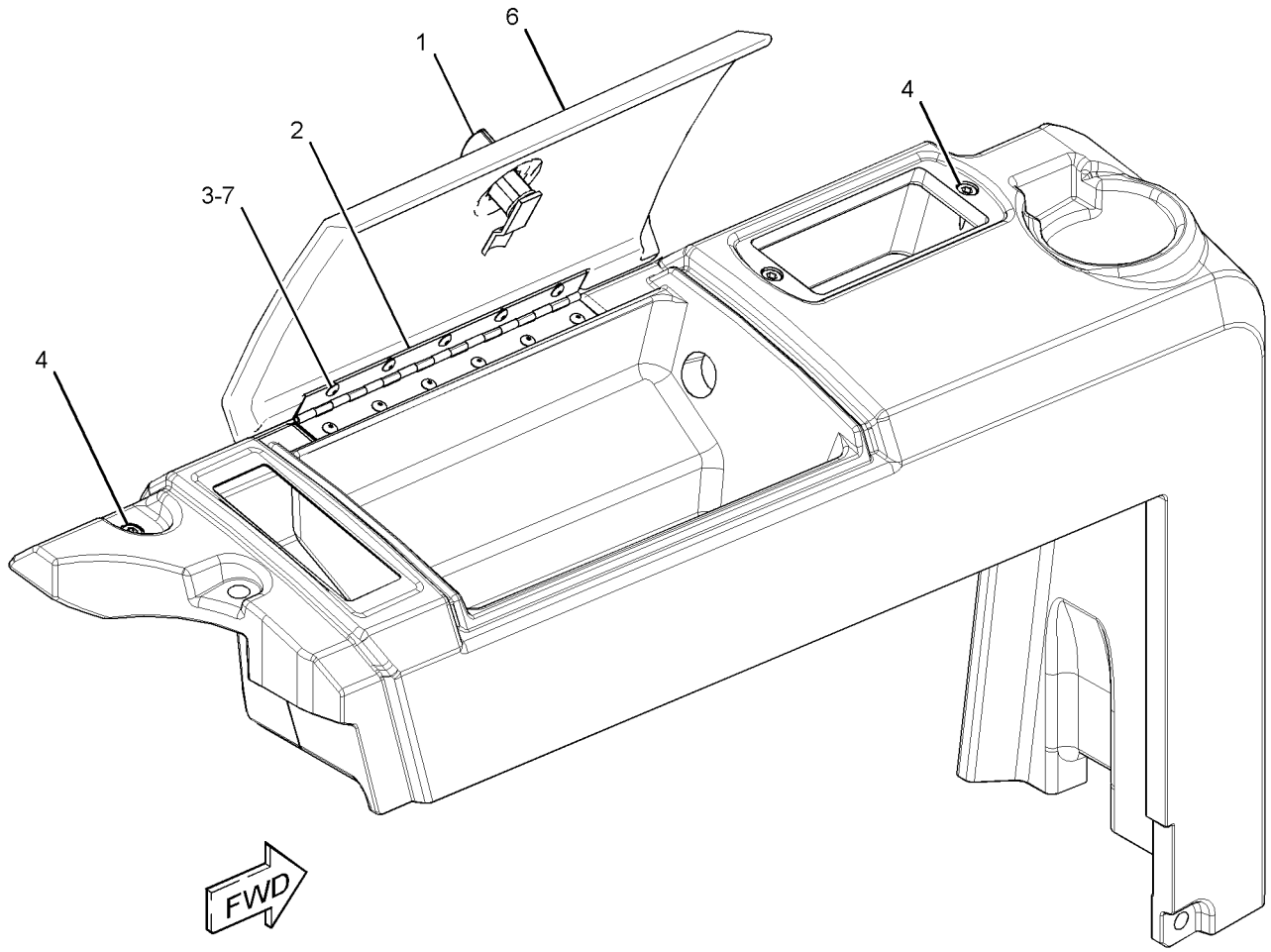

GRAPHIC #1 **<END>** g01447659

OPERATOR STATION

268-9351 CONSOLE GP-OPERATOR–RH

S/N: MMM1-UP; RRR1-UP

PART OF 255-4242 SEAT & SUPPORT GP, 255-4250, 255-4251, 255-4252 SEAT GP-SUSPENSION AN ATTACHMENT

SMCS-5258, 7451 **i02685626**

NOTE	REF NO	GRAPHIC REF	PART NUMBER	QTY	PART NAME 1 2 3 4 5 6 (PRODUCT LEVEL)	SEE PAGE
	1	1	**280-9440**	1	CUSHION AS	
	2	1	**280-9680**	1	BRACKET AS	
	3	1	**280-9896**	1	COVER AS	
M	4	1	**6V-3940**	4	BOLT (M8X1.25X25-MM)	
	5	1	**7X-0578**	1	WASHER-HARD (10.2X32X2.5-MM THK)	
	6	1	**9M-1974**	4	WASHER-HARD (8.8X16X2-MM THK)	
M	7	1	**9X-2043**	10	SCREW-TRUSS HEAD (M6X1X14-MM)	
D	8	1	**6V-3987**		SEAL (0.1-M EACH)	
	9	1	**280-9441**	1	BRACKET	
	10	1	**280-9442**	1	BRACKET AS	
	11	1	**280-9444**	1	KNOB	
	12	1	**280-9897**	1	COVER	

D - ORDER BY THE METER
M - METRIC PART

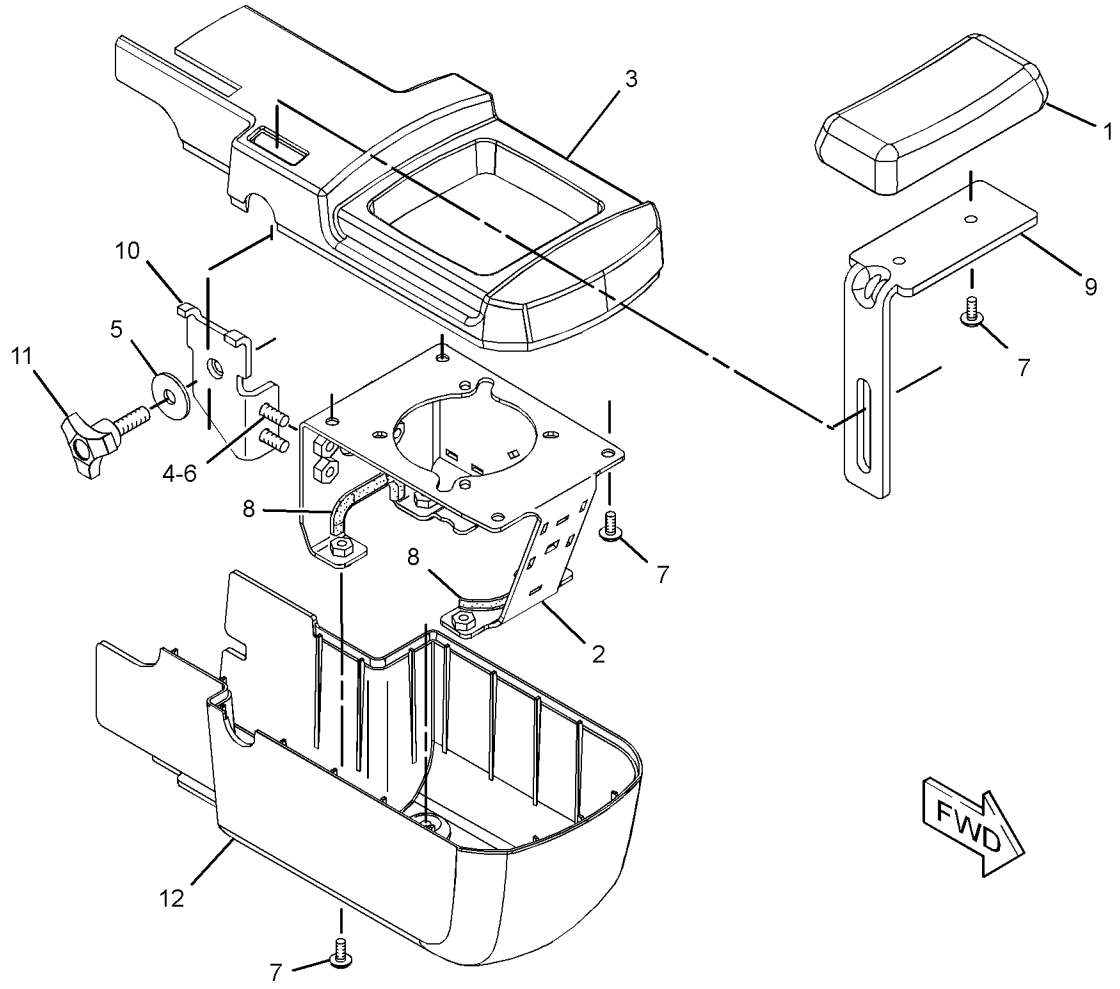

GRAPHIC #1 **<END>** g01314510

268-9352 CONSOLE GP-OPERATOR–LH

S/N: MMM1-UP; RRR1-UP

PART OF 255-4242 SEAT & SUPPORT GP, 255-4250, 255-4251, 255-4252 SEAT GP-SUSPENSION AN ATTACHMENT

SMCS-5258, 7451 **i04415576**

NOTE	REF NO	GRAPHIC REF	PART NUMBER	QTY	PART NAME 1 2 3 4 5 6 (PRODUCT LEVEL)	SEE PAGE
	1	1	**280-9440**	1	CUSHION AS	
	2	1	**280-9441**	1	BRACKET	
	3	1	**280-9443**	1	BRACKET AS	
M		1	**8T-3490**	1	NUT-WELD (M10X1.5-THD)	
	4	1	**280-9444**	1	KNOB	
	5	1	**280-9898**	1	BRACKET AS	
	6	1	**280-9899**	1	COVER AS	
	7	1	**280-9900**	1	COVER	
M	8	1	**6V-3940**	4	BOLT (M8X1.25X25-MM)	
	9	1	**7X-0578**	1	WASHER-HARD (10.2X32X2.5-MM THK)	
	10	1	**9M-1974**	4	WASHER-HARD (8.8X16X2-MM THK)	
M	11	1	**9X-2043**	10	SCREW-TRUSS HEAD (M6X1X14-MM)	
D	12	1	**6V-3987**		SEAL (0.7-M EACH)	

D - ORDER BY THE METER
M - METRIC PART

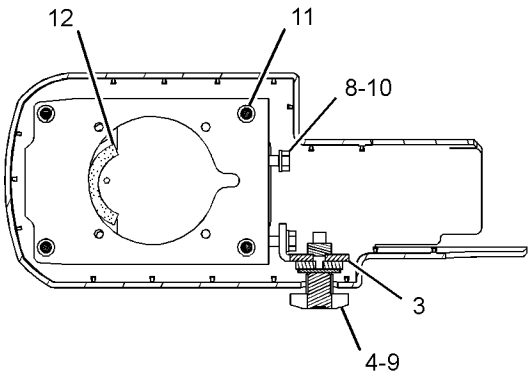

SECTION A-A

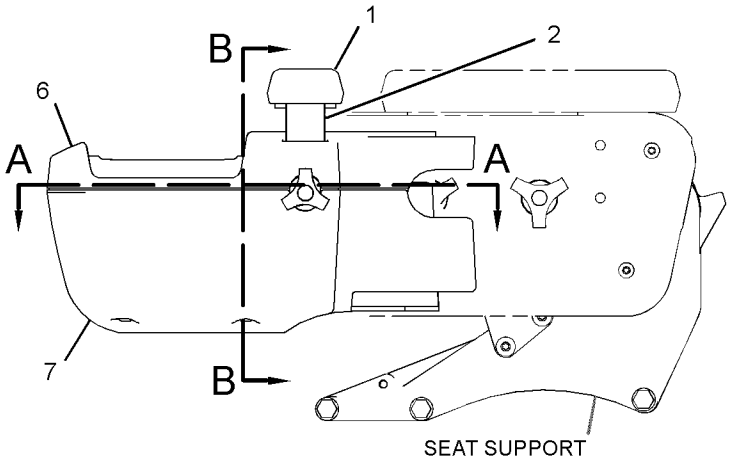

SEAT SUPPORT

LEFT SIDE VIEW

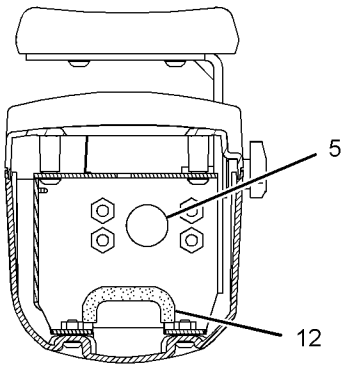

SECTION B-B

GRAPHIC #1 **<END>** g02615595

341-9851 CONSOLE GP-OPERATOR–RH

S/N: MMM874-UP; RRR671-UP
PART OF 255-4250 SEAT GP-SUSPENSION
AN ATTACHMENT

SMCS-5258, 7451

i05363373

NOTE	REF NO	GRAPHIC REF	PART NUMBER	QTY	PART NAME 1 2 3 4 5 6 (PRODUCT LEVEL)	SEE PAGE
	1	1	**258-3727**	4	SCREW-TRUSS HEAD (SPECIAL)	
	2	1	**342-0153**	1	BRACKET AS	
M		1	**6V-9632**	7	NUT-WELD (M6X1-THD)	
	3	1	**349-2592**	1	COVER	
	4	1	**349-2594**	1	COVER AS	
	5	1	**349-2599**	1	CUSHION AS-SEAT	
		1	**205-7048**	4	INSERT-THREADED (M6X1-THD)	
	6	1	**349-2600**	1	ADJUSTER GP-CONTROL	
M		1	**131-3987**	2	SCREW (M4X0.7X12-MM)	
		1	**349-2593**	1	HANDLE	
M	7	1	**5C-7261**	3	NUT (M8X1.25-THD)	
M	8	1	**8T-4138**	3	BOLT (M6X1X20-MM)	
	9	1	**8T-4224**	3	WASHER (8.8X16X2-MM THK)	
M	10	1	**9X-2045**	8	SCREW-TRUSS HEAD (M6X1X20-MM)	
	11	1	**9X-6165**	7	WASHER (6.5X22X2.5-MM THK)	

M - METRIC PART

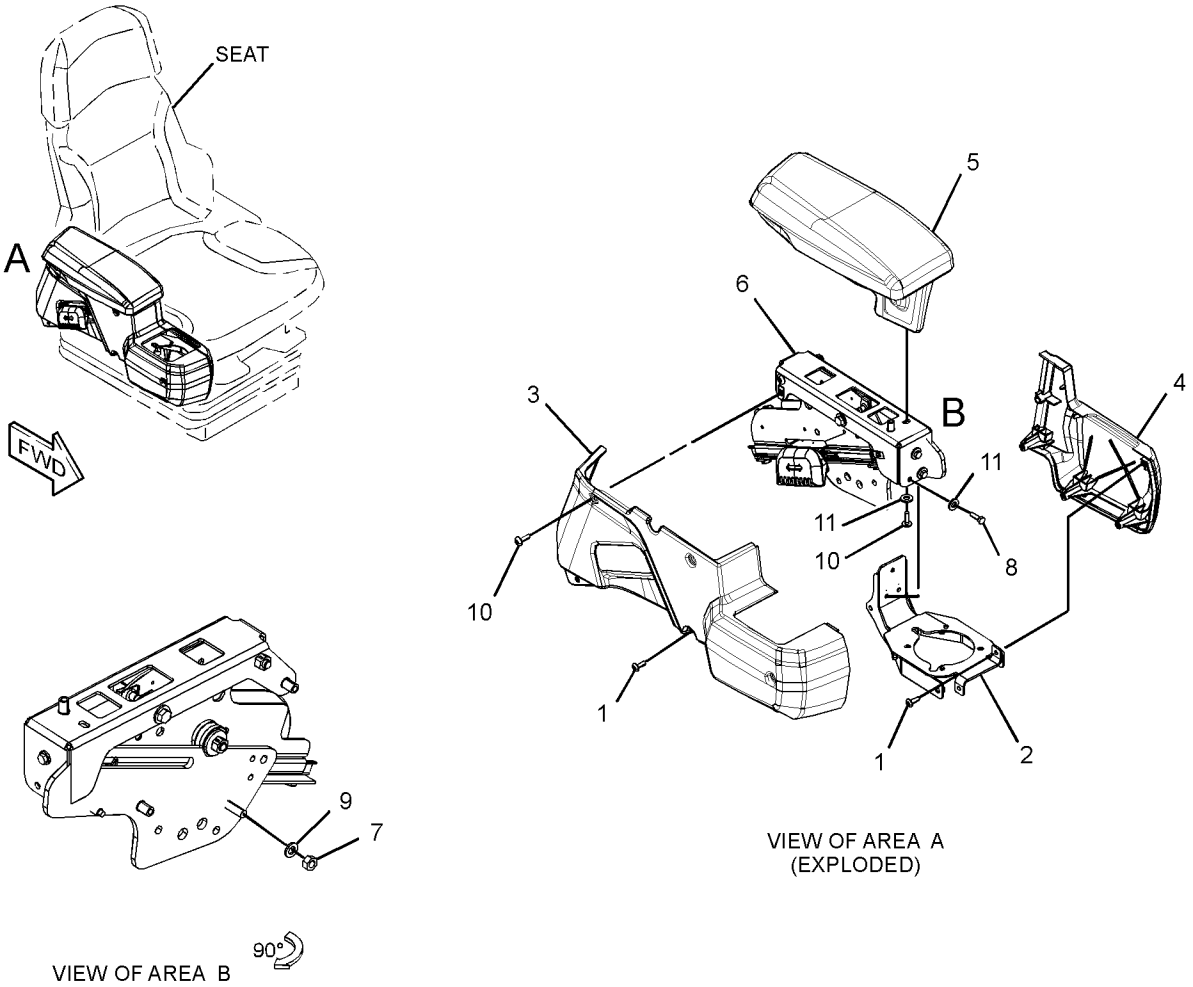

GRAPHIC #1

<END>

g02811677

341-9852 CONSOLE GP-OPERATOR–LH

S/N: MMM874-UP; RRR671-UP
PART OF 255-4250 SEAT GP-SUSPENSION
AN ATTACHMENT

SMCS-5258, 7451 **i05363377**

NOTE	REF NO	GRAPHIC REF	PART NUMBER	QTY	PART NAME 1 2 3 4 5 6 (PRODUCT LEVEL)	SEE PAGE
	1	1	**258-3727**	4	SCREW-TRUSS HEAD (SPECIAL)	
	2	1	**342-0153**	1	BRACKET AS	
M		1	**6V-9632**	7	NUT-WELD (M6X1-THD)	
	3	1	**349-2595**	1	COVER AS	
	4	1	**349-2596**	1	COVER	
	5	1	**349-2598**	1	CUSHION AS	
		1	**205-7048**	4	INSERT-THREADED (M6X1-THD)	
	6	1	**349-2601**	1	ADJUSTER AS-SEAT	
M		1	**131-3987**	2	SCREW (M4X0.7X12-MM)	
		1	**349-2593**	1	HANDLE	
M	7	1	**5C-7261**	3	NUT (M8X1.25-THD)	
M	8	1	**8T-4138**	3	BOLT (M6X1X20-MM)	
	9	1	**8T-4224**	3	WASHER-HARD (8.8X16X2-MM THK)	
M	10	1	**9X-2045**	8	SCREW-TRUSS HEAD (M6X1X20-MM)	
	11	1	**9X-6165**	7	WASHER (6.5X22X2.5-MM THK)	

M - METRIC PART

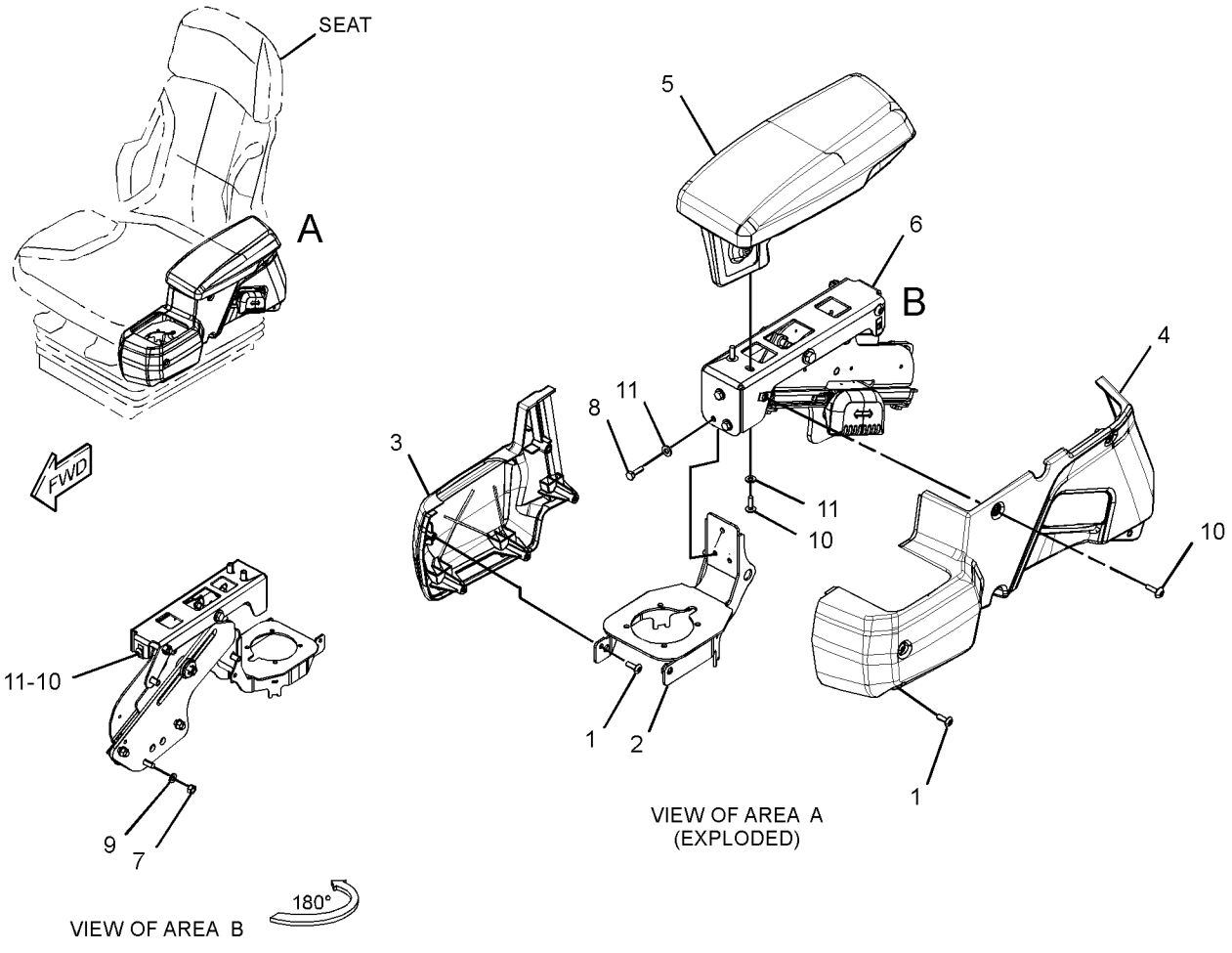

GRAPHIC #1 **<END>** g02810697

247-6506 CONTROL & MTG GP-PEDAL–GOVERNOR, BRAKE

S/N: MMM1-UP

PART OF 244-7378 CHASSIS AR

SMCS-5462 **i02648042**

NOTE	REF NO	GRAPHIC REF	PART NUMBER	QTY	PART NAME 1 2 3 4 5 6 (PRODUCT LEVEL)	SEE PAGE
Y	1	1	*253-2439*	1	PEDAL GP-GOVERNOR & BRAKE	803
	2	1	**7X-7729**	3	WASHER (11X25X3-MM THK)	
M	3	1	**8T-4133**	3	NUT (M10X1.5-THD)	

M - METRIC PART
Y - SEPARATE ILLUSTRATION

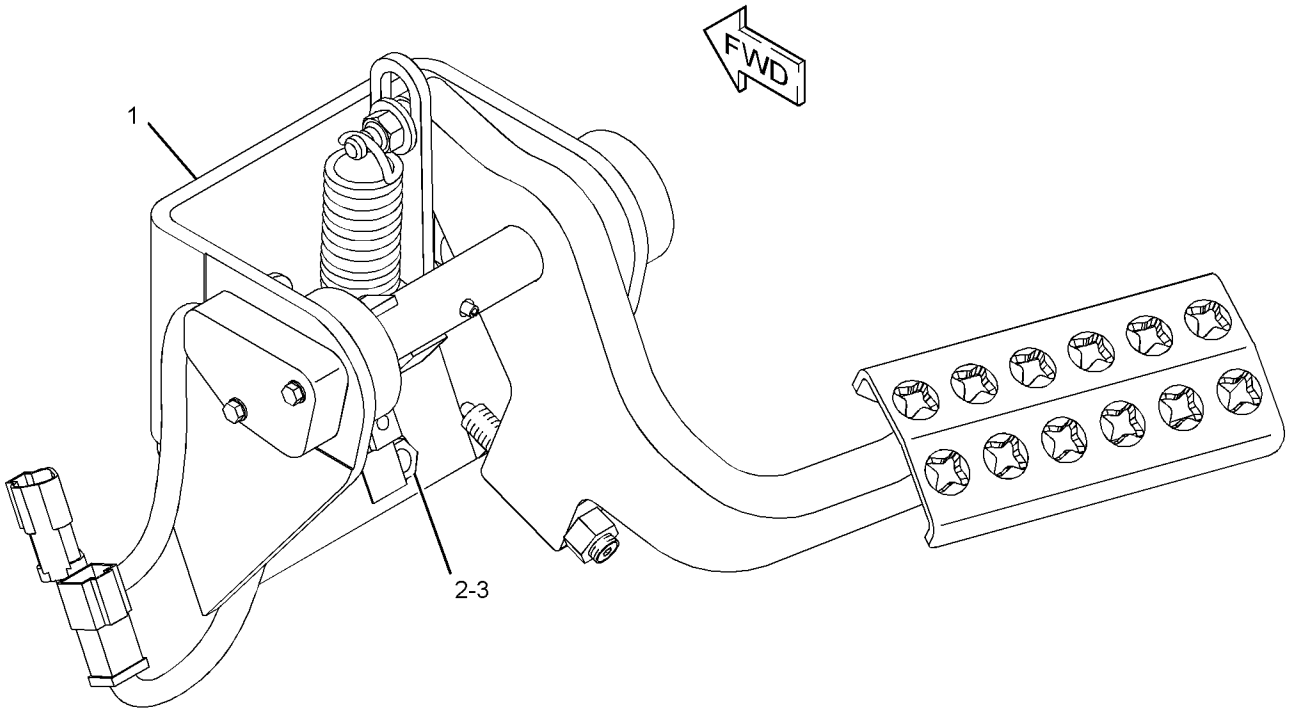

GRAPHIC #1 **<END>** g01202348

324-0670 CONTROL & MTG GP-PEDAL–GOVERNOR, BRAKE

S/N: MMM1-873; RRR1-670

PART OF 244-7378, 244-7379 CHASSIS AR

SMCS-5462 **i02970961**

NOTE	REF NO	GRAPHIC REF	PART NUMBER	QTY	PART NAME 1 2 3 4 5 6 (PRODUCT LEVEL)	SEE PAGE
Y	1	1	*324-0669*	1	PEDAL GP-GOVERNOR & BRAKE	807
	2	1	**7X-7729**	3	WASHER (11X25X3-MM THK)	
M	3	1	**8T-4133**	3	NUT (M10X1.5-THD)	

M - METRIC PART
Y - SEPARATE ILLUSTRATION

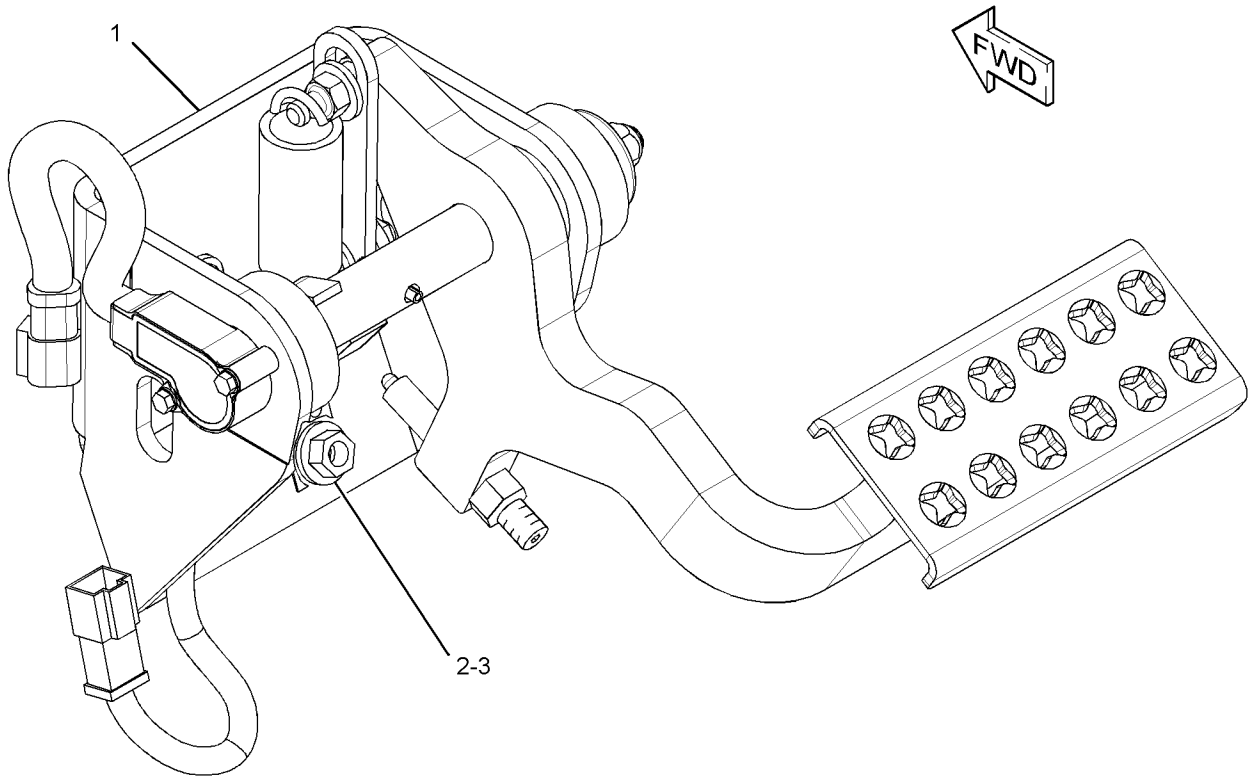

GRAPHIC #1 **<END>** g01618459

343-3502 CONTROL & MTG GP-PEDAL–GOVERNOR, BRAKE

S/N: MMM874-UP; RRR671-UP

PART OF 244-7378, 244-7379 CHASSIS AR

SMCS-5462 **i05343557**

NOTE	REF NO	GRAPHIC REF	PART NUMBER	QTY	PART NAME 1 2 3 4 5 6 (PRODUCT LEVEL)	SEE PAGE
Y	1	1	*343-3503*	1	PEDAL GP-GOVERNOR & BRAKE	809
	2	1	**7X-7729**	3	WASHER (11X25X3-MM THK)	
M	3	1	**8T-4133**	3	NUT (M10X1.5-THD)	

M - METRIC PART
Y - SEPARATE ILLUSTRATION

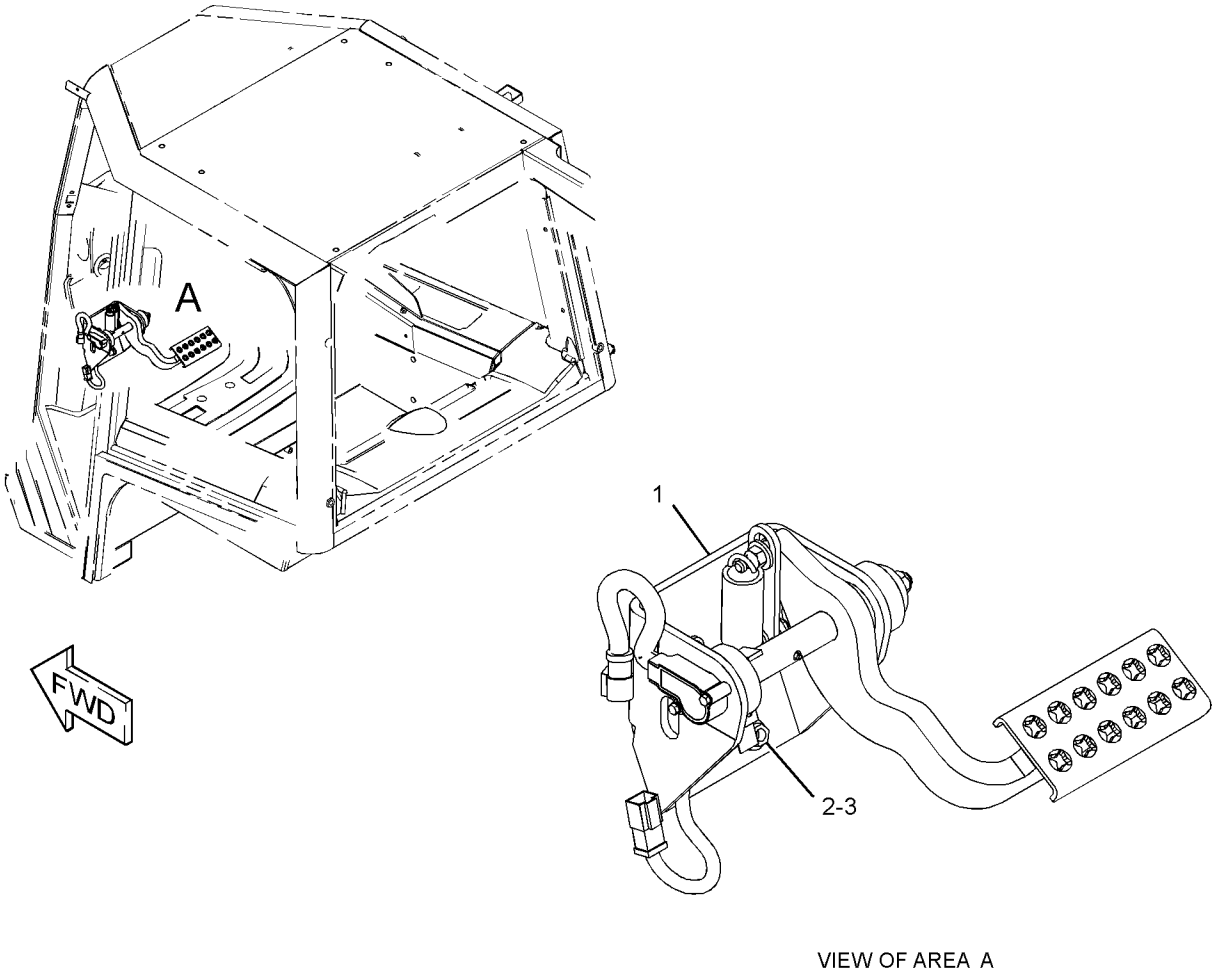

VIEW OF AREA A

GRAPHIC #1 **<END>** g02770196

252-4559 CONTROL GP-HANDLE–WINCH–RIPPER

S/N: MMM1-130; RRR1-134
FIELD REPLACEMENT FOR 307-4673 CONTROL GP-HANDLE
PART OF 244-7504 CONTROL GP-WINCH
AN ATTACHMENT

SMCS-5063, 5705 **i03408142**

NOTE	REF NO	GRAPHIC REF	PART NUMBER	QTY	PART NAME 1 2 3 4 5 6 (PRODUCT LEVEL)	SEE PAGE
	1	1	**151-9274**	1	KIT-RECEPTACLE (4-PIN)	
					(INCLUDES RECEPTACLE AS & WEDGE)	
	2	1	**278-8974**	1	KNOB	
	3	1	**278-8965**	1	BOOT	
	4	1	**278-8967**	1	RETAINER-BOOT	
M	5	1	**278-8970**	4	SCREW (M3X0.5X6-MM)	

M - METRIC PART

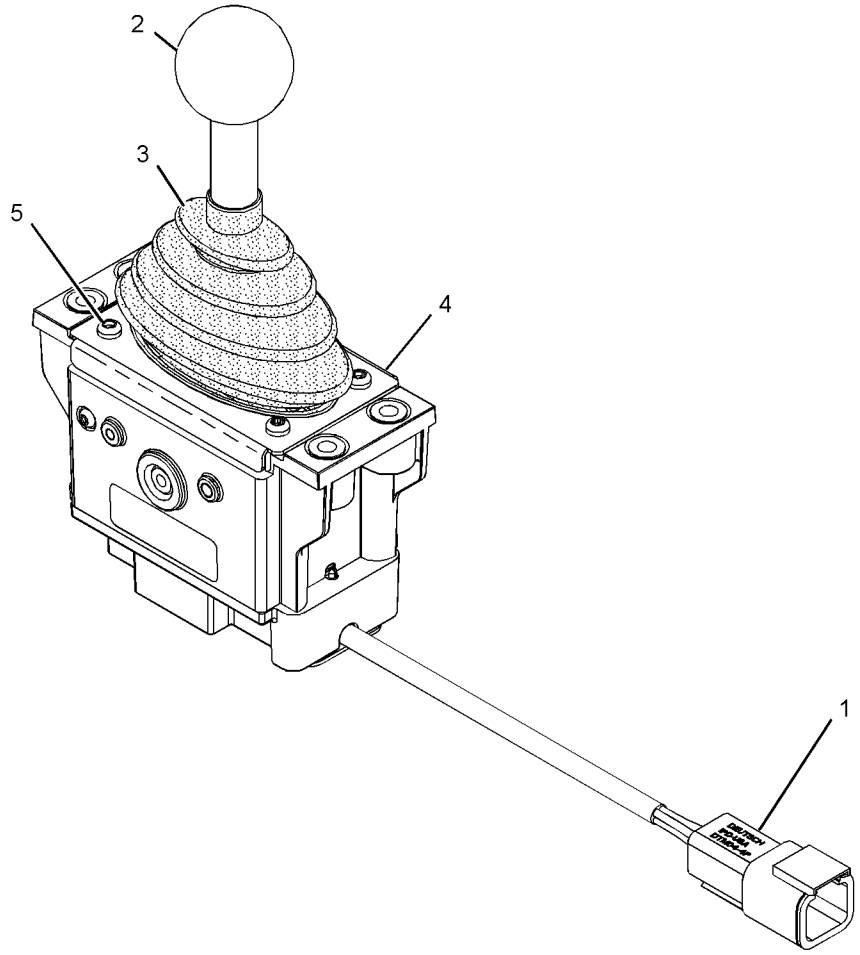

GRAPHIC #1 **<END>** g01195083

266-7631 CONTROL GP-HANDLE—GRADE CONTROL, RH

S/N: MMM1-UP; RRR1-UP

PART OF 274-4646, 328-0895 CONTROL GP-JOYSTICK

AN ATTACHMENT

SMCS-5063, 5705 **i04554056**

NOTE	REF NO	GRAPHIC REF	PART NUMBER	QTY	PART NAME 1 2 3 4 5 6 (PRODUCT LEVEL)	SEE PAGE
M	1	1	**299-2214**	2	SETSCREW (M6X1X12-MM)	
	2	1	**260-6728**	1	RECEPTACLE AS-CONNECTOR (12-PIN)	
	3	1	**8T-8729**	7	PIN-CONNECTOR (16-GA TO 18-GA)	
	4	1	**8T-8737**	5	PLUG-SEAL	
	5	1	**144-0331**	1	CAP-PUSH BUTTON (YELLOW)	

M - METRIC PART

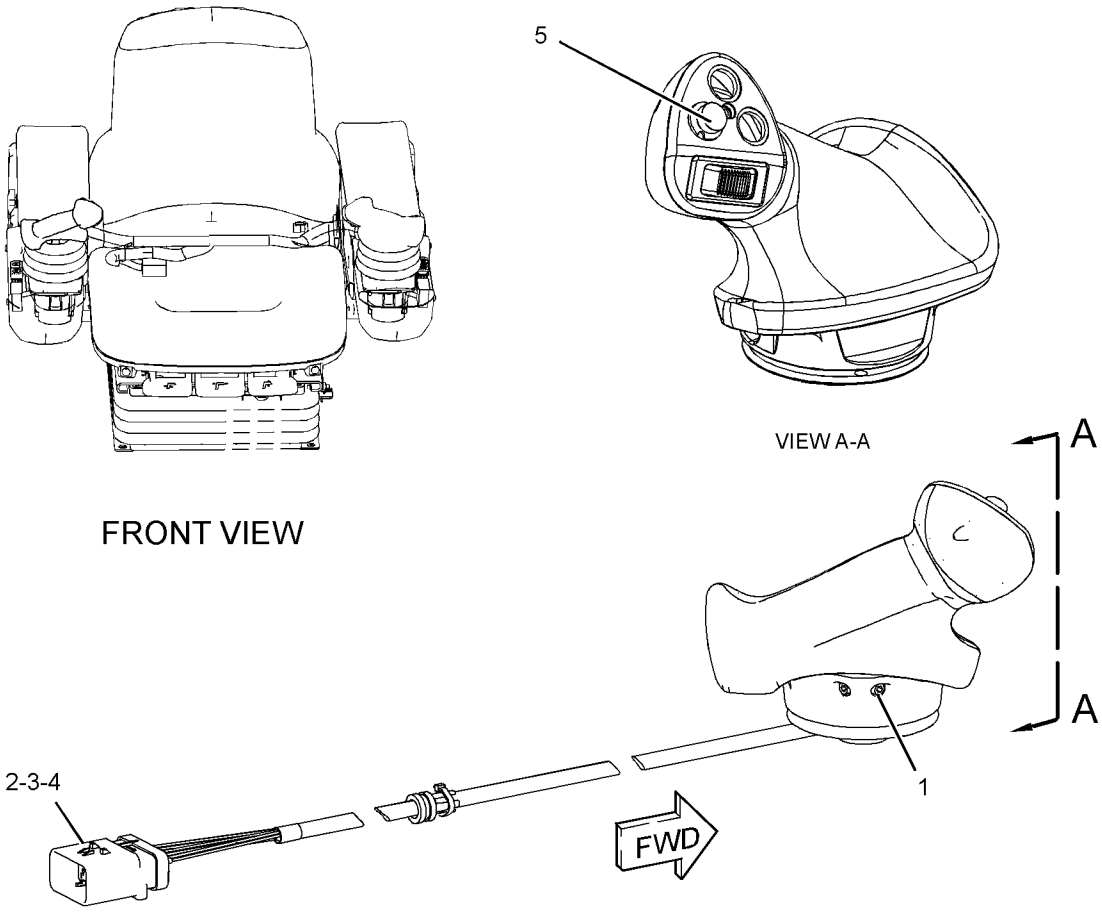

GRAPHIC #1 **<END>** g01863293

266-7632 CONTROL GP-HANDLE—GRADE CONTROL, RH

S/N: MMM1-UP; RRR1-UP

PART OF 274-4645, 328-0894 CONTROL GP-JOYSTICK, 355-2386 KIT-RETROFIT AN ATTACHMENT

SMCS-5063, 5705

i04607437

NOTE	REF NO	GRAPHIC REF	PART NUMBER	QTY	PART NAME 1 2 3 4 5 6 (PRODUCT LEVEL)	SEE PAGE
M	1	1	**299-2214**	2	SETSCREW (M6X1X12-MM)	
	2	1	**260-6728**	1	RECEPTACLE AS-CONNECTOR (12-PIN)	
	3	1	**8T-8729**	11	PIN-CONNECTOR (16-GA TO 18-GA)	
	4	1	**8T-8737**	1	PLUG-SEAL	
	5	1	**144-0331**	1	CAP-PUSH BUTTON (YELLOW)	
	6	1	**220-8355**	2	CAP-PUSH BUTTON (BLACK)	

M - METRIC PART

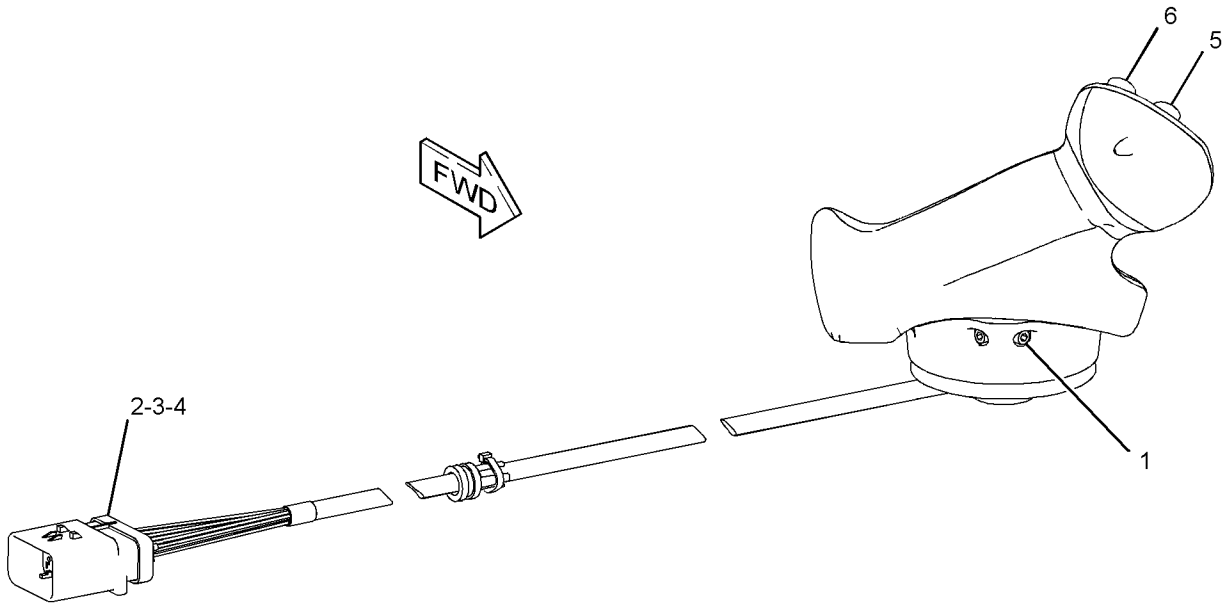

GRAPHIC #1

<END>

g01893133

266-7634 CONTROL GP-HANDLE—STEERING

S/N: MMM1-UP; RRR1-UP

PART OF 290-4835, 343-3676 CONTROL GP-JOYSTICK

SMCS-5063, 5705 **i04281732**

NOTE	REF NO	GRAPHIC REF	PART NUMBER	QTY	PART NAME 1 2 3 4 5 6 (PRODUCT LEVEL)	SEE PAGE
	1	1	**260-6728**	1	RECEPTACLE AS-CONNECTOR (12-PIN)	
	2	1	**8T-8729**	8	PIN-CONNECTOR (16-GA TO 18-GA)	
	3	1	**8T-8737**	4	PLUG-SEAL	
M	4	1	**299-2214**	2	SETSCREW (M6X1X12-MM)	
	5	1	**144-0331**	1	CAP-PUSH BUTTON (YELLOW)	
	6	1	**220-8355**	1	CAP-PUSH BUTTON (BLACK)	

M - METRIC PART

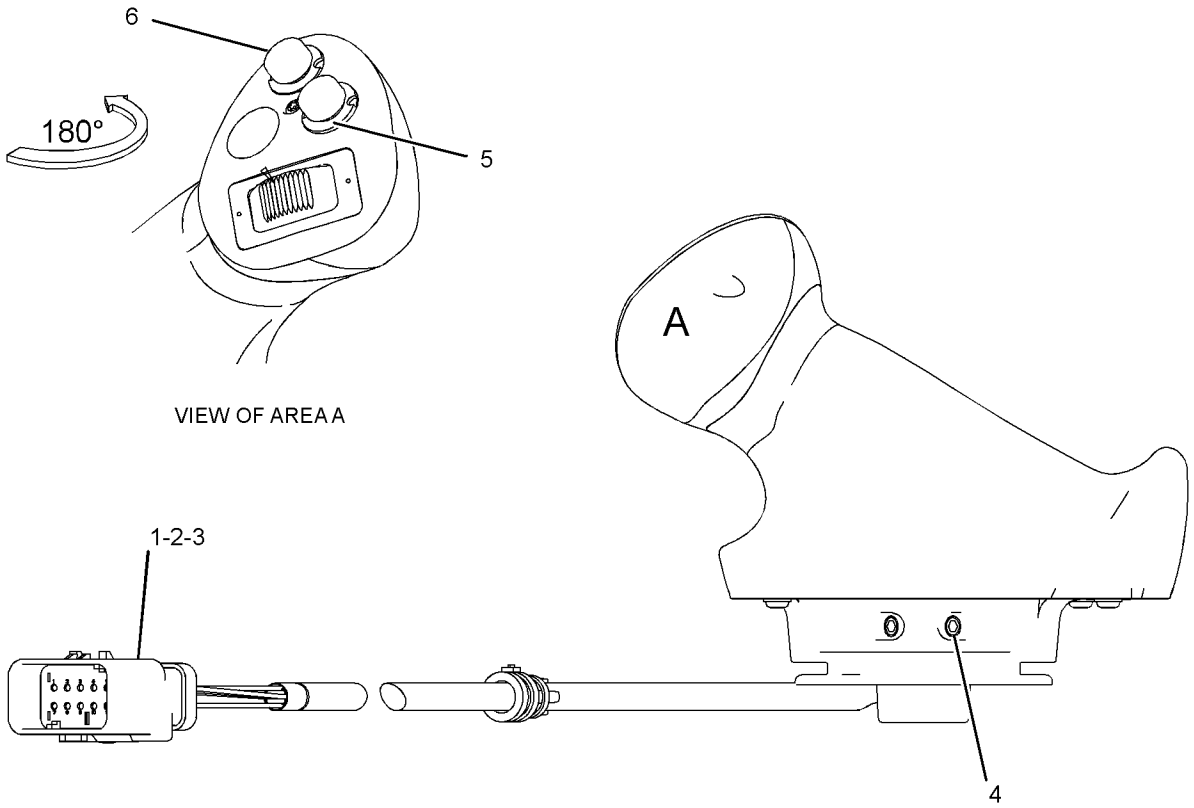

FRONT VIEW

GRAPHIC #1 **<END>** g01869054

307-4673 CONTROL GP-HANDLE–IMPLEMENT

S/N: MMM1-UP; RRR1-UP
PART OF 318-6109, 318-6111 CONTROL GP-HYDRAULIC, 249-9051 CONTROL GP-RIPPER, 244-7504, 318-6108, 318-6112 CONTROL GP-WINCH
AN ATTACHMENT

SMCS-5063, 5705 **i02707095**

NOTE	REF NO	GRAPHIC REF	PART NUMBER	QTY	PART NAME 1 2 3 4 5 6 (PRODUCT LEVEL)	SEE PAGE
	1	1	**151-9274**	1	KIT-RECEPTACLE (4-PIN)	
					(INCLUDES RECEPTACLE AS & WEDGE)	
	2	1	**278-8974**	1	KNOB	
	3	1	**278-8965**	1	BOOT	
	4	1	**278-8967**	1	RETAINER-BOOT	
M	5	1	**278-8970**	4	SCREW (M3X10X6-MM)	

M - METRIC PART

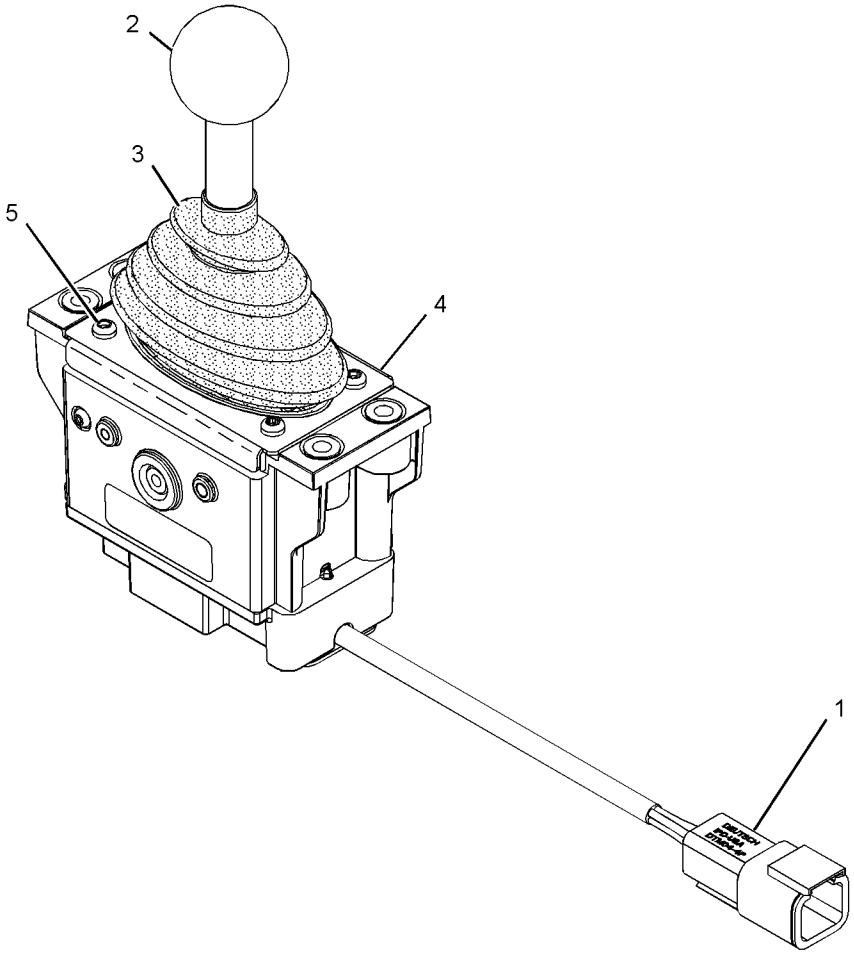

GRAPHIC #1 **<END>** g01195083

318-6109 CONTROL GP-HYDRAULIC—4TH VALVE, FLOAT

S/N: MMM1-UP; RRR1-UP
PART OF 325-6523 HYDRAULIC AR
AN ATTACHMENT

SMCS-5063 **i04599914**

NOTE	REF NO	GRAPHIC REF	PART NUMBER	QTY	PART NAME 1 2 3 4 5 6 (PRODUCT LEVEL)	SEE PAGE
	1	1	**6I-1418**	4	SPACER (8.2X12.7X28.7-MM THK)	
	2	1	**7K-1181**	9	STRAP-CABLE	
	3	1	**9N-0869**	4	WASHER-HARD (8.8X25.5X2-MM THK)	
	4	1	**155-0576**	8	MOUNT-ISOLATION	
	5	1	**165-0311**	3	PLUG	
	6	1	**178-7539**	1	RECEPTACLE AS (POWER SUPPLY)	
	7	1	**269-7666**	1	PLATE AS	
Y	8	1	**307-4673**	1	CONTROL GP-HANDLE (IMPLEMENT)	703
	9	1	**377-4710**	1	CONTROL GP-UNPROGRAMMED (MACHINE)	
	10	1	**311-0296**	1	BRACKET	
	11	1	**311-7069**	1	SWITCH AS-ROCKER (4TH VALVE, FLOAT)	
		1	**111-7899**	1	GASKET	
	12	1	**318-6123**	1	FILM-INSTRUCTION (AUXILIARY CONTROL VALVE)	
	13	1	**327-6134**	1	HARNESS AS-CONTROL (WINCH)	
B		1	**268-4412**		TAPE-INSULATOR	
		1	**311-0302**	1	HARNESS AS-CONTROL (WINCH)	
		1	**126-1774**	1	COVER-CONNECTOR	
		1	**8T-8729**	3	PIN-CONNECTOR (16-GA TO 18-GA)	
		1	**9W-0852**	1	PIN-CONNECTOR (14-GA TO 16-GA)	
		1	**155-2265**	1	KIT-CONNECTING PLUG (8-PIN)	
		1	**155-2270**	2	KIT-CONNECTING PLUG (2-PIN)	
		1	**155-2274**	1	KIT-CONNECTING PLUG (6-PIN)	
					(EACH PLUG KIT INCLUDES PLUG AS, WEDGE & INTERFACE SEAL)	
		1	**160-7689**	1	PLUG AS-CONNECTOR (70-PIN)	
		1	**159-9322**	1	SEAL-O-RING	
		1	**8T-8737**	61	PLUG-SEAL	
		1	**102-8802**	2	KIT-RECEPTACLE (2-PIN)	
		1	**102-8805**	1	KIT-RECEPTACLE (6-PIN)	
		1	**102-8806**	1	KIT-RECEPTACLE (8-PIN)	
					(EACH RECEPTACLE KIT INCLUDES RECEPTACLE AS & WEDGE)	
		1	**8T-8730**	1	SOCKET-CONNECTOR (16-GA TO 18-GA)	
		1	**9W-0844**	1	SOCKET-CONNECTOR (14-GA TO 16-GA)	
		1	**9X-3402**	24	SOCKET-CONNECTOR (16-GA TO 18-GA)	
		1	**180-9340**	15	SOCKET-CONNECTOR (14-GA TO 18-GA)	
		1	**8L-8413**	2	STRAP-CABLE	
E		1	**119-3662**		TUBE-HEAT SHRINK (10.85-MM DIA) (7-CM)	
E		1	**125-7874**		TUBE-HEAT SHRINK (5.72-MM DIA) (5-CM)	
	14	1	**3S-2093**	5	STRAP-CABLE	
M	15	1	**5C-7261**	4	NUT (M8X1.25-THD)	
M	16	1	**8T-4138**	2	BOLT (M6X1X20-MM)	
M	17	1	**9X-2045**	8	SCREW-TRUSS HEAD (M6X1X20-MM)	
	18	1	**9X-8256**	2	WASHER (6.6X12X2-MM THK)	
E	19	1	**2Q-0604**		INSULATION (9-CM)	
E	20	1	**324-9707**		INSULATION (12-CM EACH)	

B - USE AS REQUIRED
E - ORDER BY THE CENTIMETER
M - METRIC PART
Y - SEPARATE ILLUSTRATION

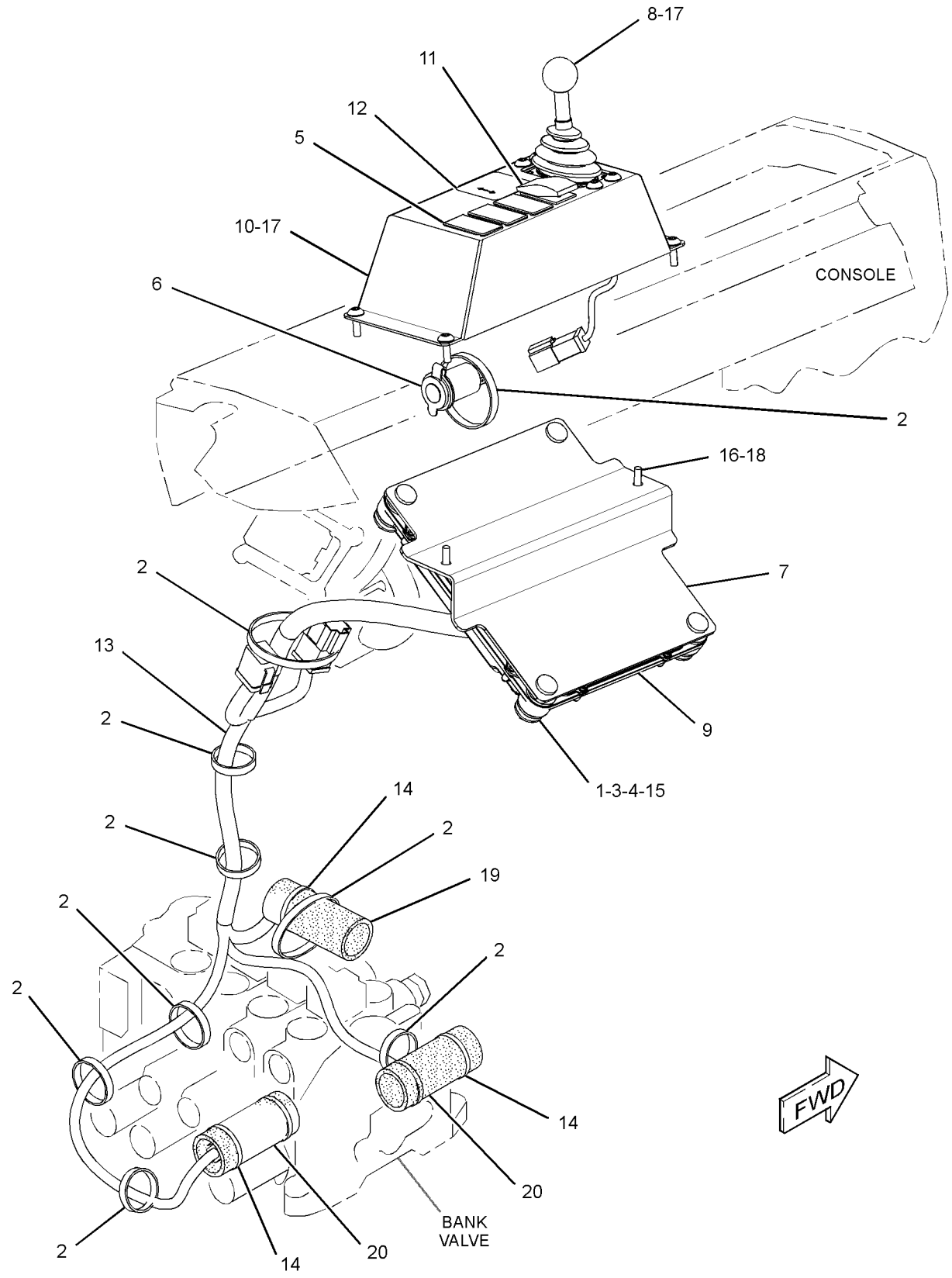

GRAPHIC #1 **<END>** g02293773

OPERATOR STATION

318-6111 CONTROL GP-HYDRAULIC—FIRE PLOW

S/N: MMM1-UP; RRR1-UP
PART OF 325-6529 HYDRAULIC AR
AN ATTACHMENT

SMCS-5063 **i04599918**

NOTE	REF NO	GRAPHIC REF	PART NUMBER	QTY	PART NAME 1 2 3 4 5 6 (PRODUCT LEVEL)	SEE PAGE
	1	1	**6I-1418**	4	SPACER (8.2X12.7X28.7-MM THK)	
	2	1	**7K-1181**	8	STRAP-CABLE	
	3	1	**9N-0869**	4	WASHER-HARD (8.8X25.5X2-MM THK)	
	4	1	**155-0576**	8	MOUNT-ISOLATION	
	5	1	**165-0311**	3	PLUG	
	6	1	**178-7539**	1	RECEPTACLE AS (POWER SUPPLY)	
	7	1	**269-7666**	1	PLATE AS	
Y	8	1	**307-4673**	2	CONTROL GP-HANDLE (IMPLEMENT)	703
	9	1	**377-4710**	1	CONTROL GP-UNPROGRAMMED (RIPPER, WINCH)	
	10	1	**311-7069**	1	SWITCH AS-ROCKER (4TH VALVE, FLOAT)	
	10A	1	**311-7069**	1	SWITCH AS-ROCKER (5TH VALVE, FLOAT)	
					(EACH SWITCH AS INCLUDES)	
		1	**111-7899**	1	GASKET	
	11	1	**318-6101**	1	BRACKET	
	12	1	**318-6106**	1	HARNESS AS-VALVE	
B		1	**268-4412**		TAPE-INSULATOR	
		1	**155-2270**	2	KIT-CONNECTING PLUG (2-PIN)	
					(EACH PLUG KIT INCLUDES PLUG AS, WEDGE & INTERFACE SEAL)	
		1	**9X-3402**	4	SOCKET-CONNECTOR (16-GA TO 18-GA)	
		1	**180-9340**	4	SOCKET-CONNECTOR (14-GA TO 18-GA)	
	13	1	**318-6123**	2	FILM-INSTRUCTION (AUXILIARY CONTROL VALVE)	
	14	1	**327-6134**	1	HARNESS AS-CONTROL (WINCH)	
B		1	**268-4412**		TAPE-INSULATOR	
		1	**311-0302**	1	HARNESS AS-CONTROL (WINCH)	
		1	**8T-8737**	61	PLUG-SEAL	
		1	**126-1774**	1	COVER-CONNECTOR	
		1	**8T-8729**	3	PIN-CONNECTOR (16-GA TO 18-GA)	
		1	**9W-0852**	1	PIN-CONNECTOR (14-GA TO 16-GA)	
		1	**155-2265**	1	KIT-CONNECTING PLUG (8-PIN)	
		1	**155-2270**	2	KIT-CONNECTING PLUG (2-PIN)	
		1	**155-2274**	1	KIT-CONNECTING PLUG (6-PIN)	
					(EACH PLUG KIT INCLUDES PLUG AS, WEDGE & INTERFACE SEAL)	
		1	**160-7689**	1	PLUG AS-CONNECTOR (70-PIN)	
		1	**159-9322**	1	SEAL-O-RING	
		1	**8T-8730**	1	SOCKET-CONNECTOR (16-GA TO 18-GA)	
		1	**102-8802**	2	KIT-RECEPTACLE (2-PIN)	
		1	**102-8805**	1	KIT-RECEPTACLE (6-PIN)	
		1	**102-8806**	1	KIT-RECEPTACLE (8-PIN)	
					(EACH RECEPTACLE KIT INCLUDES RECEPTACLE AS & WEDGE)	
		1	**186-3736**	1	SOCKET-CONNECTOR (16-GA TO 18-GA)	
		1	**9W-0844**	1	SOCKET-CONNECTOR (14-GA TO 16-GA)	
		1	**9X-3402**	24	SOCKET-CONNECTOR (16-GA TO 18-GA)	
		1	**180-9340**	15	SOCKET-CONNECTOR (14-GA TO 18-GA)	
		1	**8L-8413**	2	STRAP-CABLE	
E		1	**119-3662**		TUBE-HEAT SHRINK (10.85-MM DIA) (7-CM)	
E		1	**125-7874**		TUBE-HEAT SHRINK (5.72-MM DIA) (5-CM)	
	15	1	**3S-2093**	9	STRAP-CABLE	
M	16	1	**5C-7261**	4	NUT (M8X1.25-THD)	
M	17	1	**8T-4138**	2	BOLT (M6X1X20-MM)	
M	18	1	**9X-2045**	12	SCREW-TRUSS HEAD (M6X1X20-MM)	
	19	1	**9X-8256**	2	WASHER (6.6X12X2-MM THK)	
E	20	1	**2Q-0604**		INSULATION (9-CM)	
E	21	1	**324-9707**		INSULATION (12-CM EACH)	

318-6111 **CONTROL GP-HYDRAULIC (*contd.*)** **i04599918**

NOTE	REF NO	GRAPHIC REF	PART NUMBER	QTY	PART NAME 1 2 3 4 5 6 (PRODUCT LEVEL)	SEE PAGE

B - USE AS REQUIRED
E - ORDER BY THE CENTIMETER
M - METRIC PART
Y - SEPARATE ILLUSTRATION

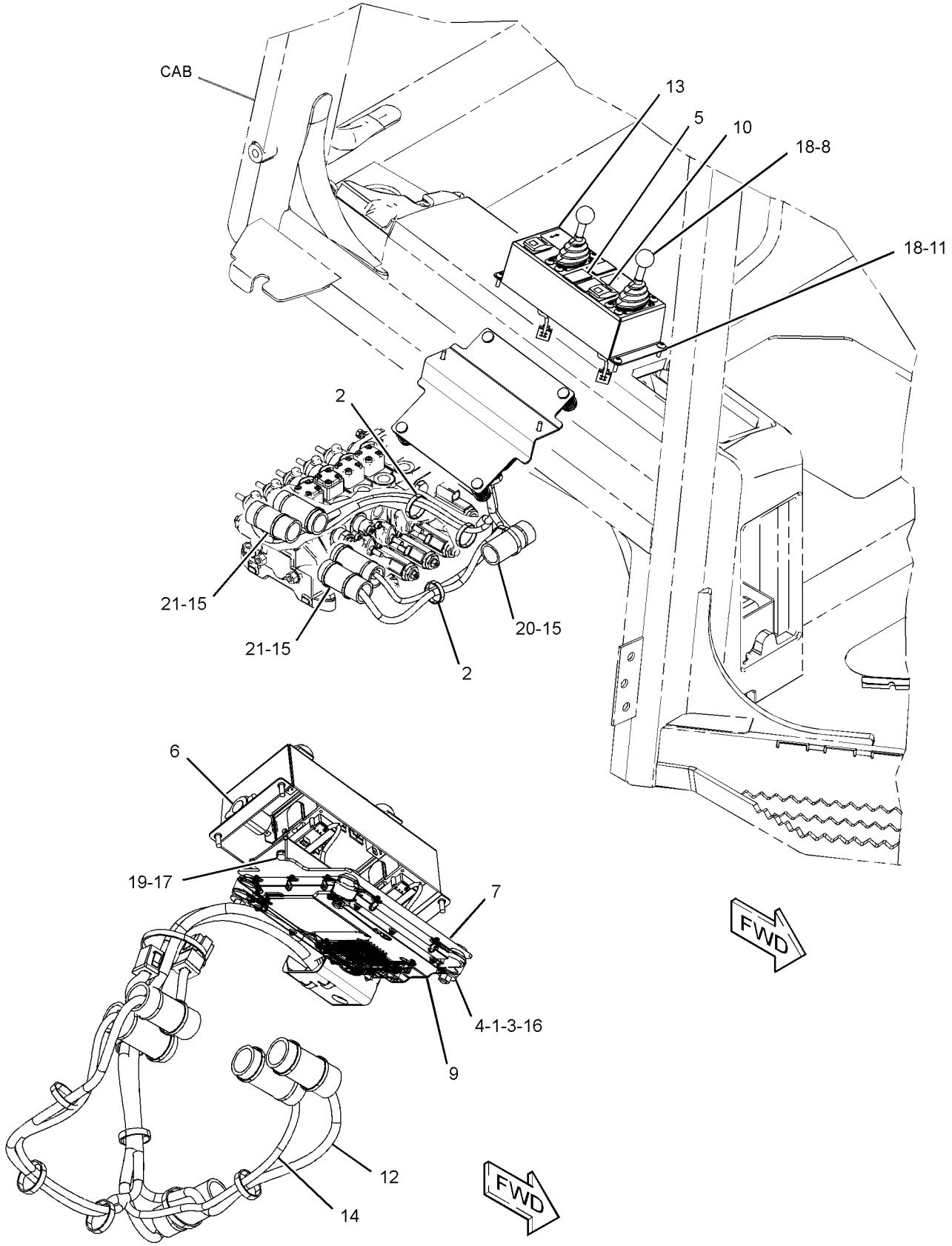

GRAPHIC #1 **<END>** g02293753

274-4645 CONTROL GP-JOYSTICK—GRADE CONTROL, RH

S/N: MMM1-UP; RRR1-UP
FIELD REPLACEMENT ORDER 328-0894—PAGE: 712
PART OF 296-5753, 296-5754, 296-5755, 296-5756 GRADE CONTROL AR
AN ATTACHMENT

SMCS-5705 **i04415579**

NOTE	REF NO	GRAPHIC REF	PART NUMBER	QTY	PART NAME 1 2 3 4 5 6 (PRODUCT LEVEL)	SEE PAGE
	1	1	**328-0893**	1	SENSOR AS-POSITION (BULLDOZER CONTROL)	
	1A	1	**230-5011**	1	RECEPTACLE AS-CONNECTOR (6-PIN)	
	1B	1	**8T-8729**	6	PIN-CONNECTOR (16-GA TO 18-GA)	
Y	2	1	**266-7632**	1	CONTROL GP-HANDLE (GRADE CONTROL, RH)	701
	3	1	**285-0151**	1	BOOT	
	5	1	**8T-8729**	11	PIN-CONNECTOR (16-GA TO 18-GA)	
	6	1	**260-6728**	1	RECEPTACLE AS-CONNECTOR (12-PIN)	
	7	1	**8T-8737**	1	PLUG-SEAL	
M	8	1	**299-2214**	2	SETSCREW (M6X1X12-MM)	
	9	1	**8L-8413**	3	STRAP-CABLE	

M - METRIC PART
Y - SEPARATE ILLUSTRATION

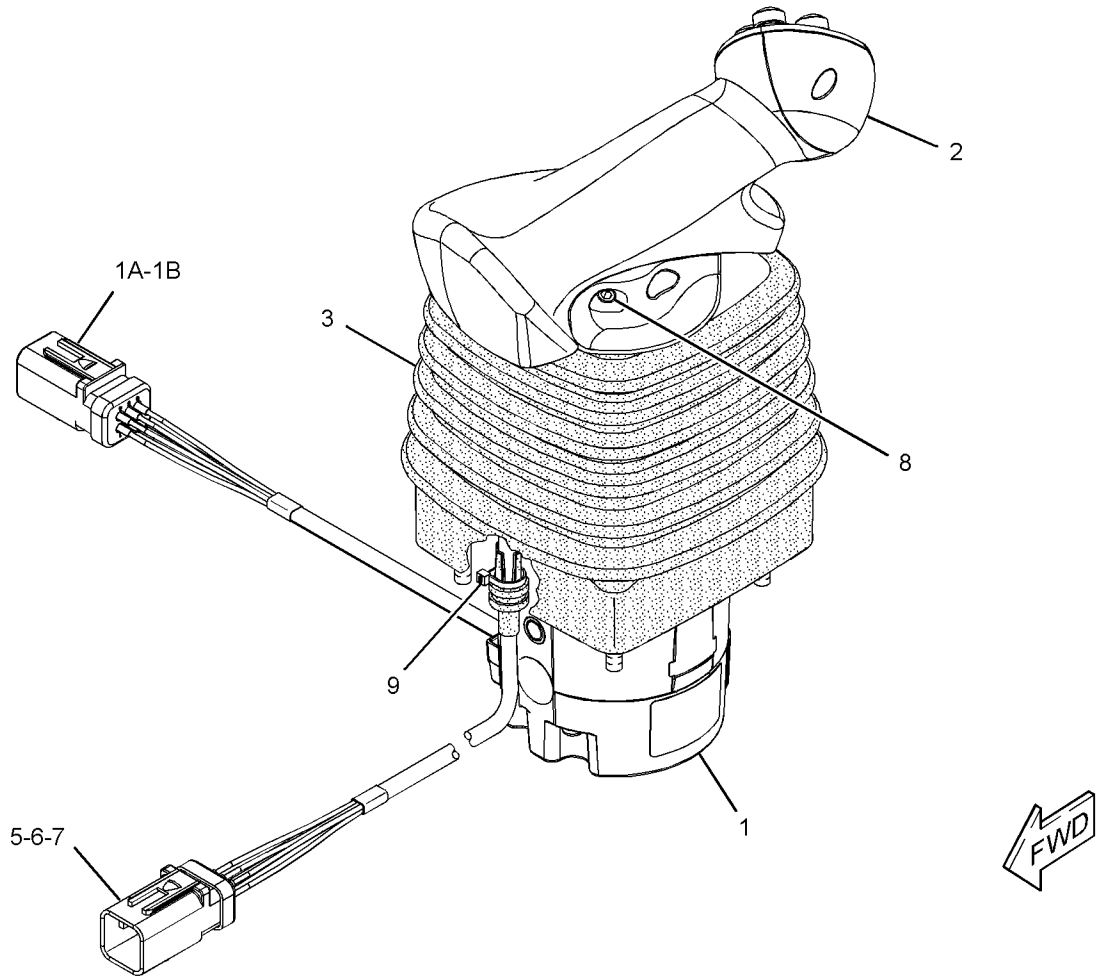

GRAPHIC #1 **<END>** g01414464

274-4646 CONTROL GP-JOYSTICK–BULLDOZER, RH

S/N: MMM1-UP; RRR1-UP
PART OF 296-5751, 296-5752 GRADE CONTROL AR
AN ATTACHMENT

SMCS-5705 **i04419314**

NOTE	REF NO	GRAPHIC REF	PART NUMBER	QTY	PART NAME 1 2 3 4 5 6 (PRODUCT LEVEL)	SEE PAGE
	1	1	**328-0893**	1	SENSOR AS-POSITION (BULLDOZER CONTROL)	
	1A	1	**8T-8729**	6	PIN-CONNECTOR (16-GA TO 18-GA)	
	1B	1	**230-5011**	1	RECEPTACLE AS-CONNECTOR (6-PIN)	
Y	2	1	**266-7631**	1	CONTROL GP-HANDLE (GRADE CONTROL, RH)	700
	3	1	**285-0151**	1	BOOT	
	5	1	**8T-8729**	7	PIN-CONNECTOR (16-GA TO 18-GA)	
	6	1	**260-6728**	1	RECEPTACLE AS-CONNECTOR (12-PIN)	
	7	1	**8T-8737**	5	PLUG-SEAL	
M	8	1	**299-2214**	2	SETSCREW (M6X1X12-MM)	
	9	1	**8L-8413**	3	STRAP-CABLE	

M - METRIC PART
Y - SEPARATE ILLUSTRATION

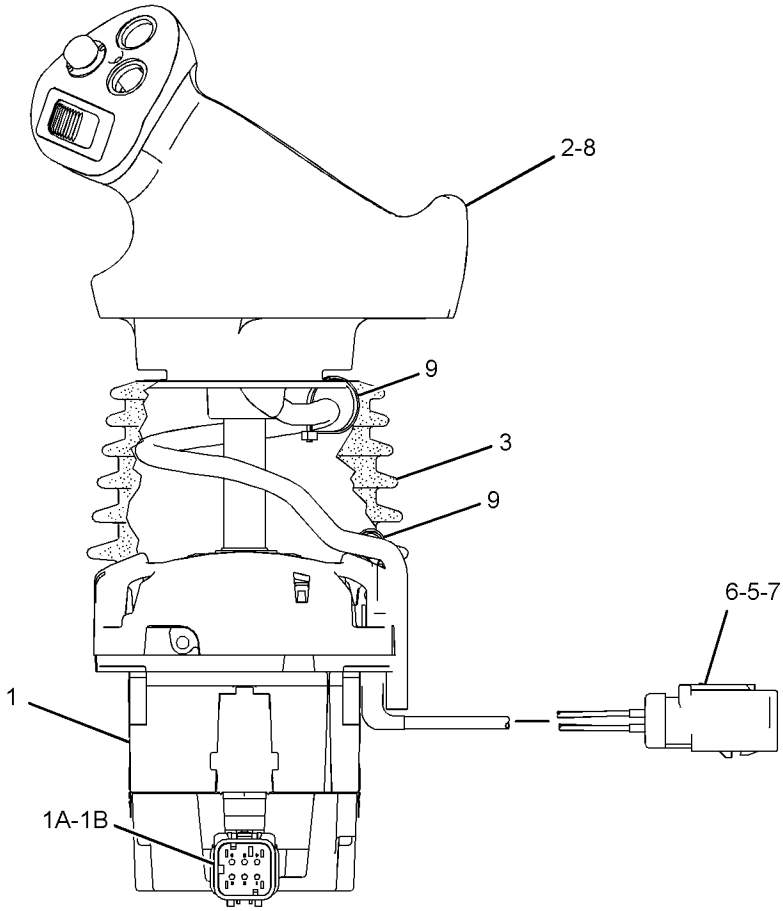

REAR VIEW

GRAPHIC #1 **<END>** g01422964

290-4835 CONTROL GP-JOYSTICK–STEERING, LH

S/N: MMM1-1000; RRR1-800

PART OF 245-6027 WIRING GP-ELECTROHYDRAULIC

SMCS-5705 **i04074390**

NOTE	REF NO	GRAPHIC REF	PART NUMBER	QTY	PART NAME 1 2 3 4 5 6 (PRODUCT LEVEL)	SEE PAGE
Y	1	1	**266-7634**	1	CONTROL GP-HANDLE (LH) (STEERING, TRANSMISSION)	702
Y	2	1	**284-8207**	1	SENSOR GP-POSITION (STEERING, TRANSMISSION)	236
	3	1	**285-0151**	1	BOOT	
	4	1	**286-2968**	1	BRACKET AS	
M		1	**6V-9632**	4	NUT-WELD (M6X1-THD)	
M	5	1	**299-2214**	2	SETSCREW (M6X1X12-MM)	
	6	1	**260-6728**	1	RECEPTACLE AS-CONNECTOR (12-PIN)	
	7	1	**102-8805**	1	KIT-RECEPTACLE (6-PIN)	
					(INCLUDES RECEPTACLE AS & WEDGE)	
	8	1	**8T-8729**	14	PIN-CONNECTOR (16-GA TO 18-GA)	
	9	1	**8T-8737**	4	PLUG-SEAL	
	10	1	**284-8208**	1	SHAFT-ADAPTER	
	11	1	**8L-8413**	1	STRAP-CABLE	
	12	1	**144-0331**	1	CAP-PUSH BUTTON (YELLOW)	
	13	1	**220-8355**	1	CAP-PUSH BUTTON (BLACK)	

M - METRIC PART
Y - SEPARATE ILLUSTRATION

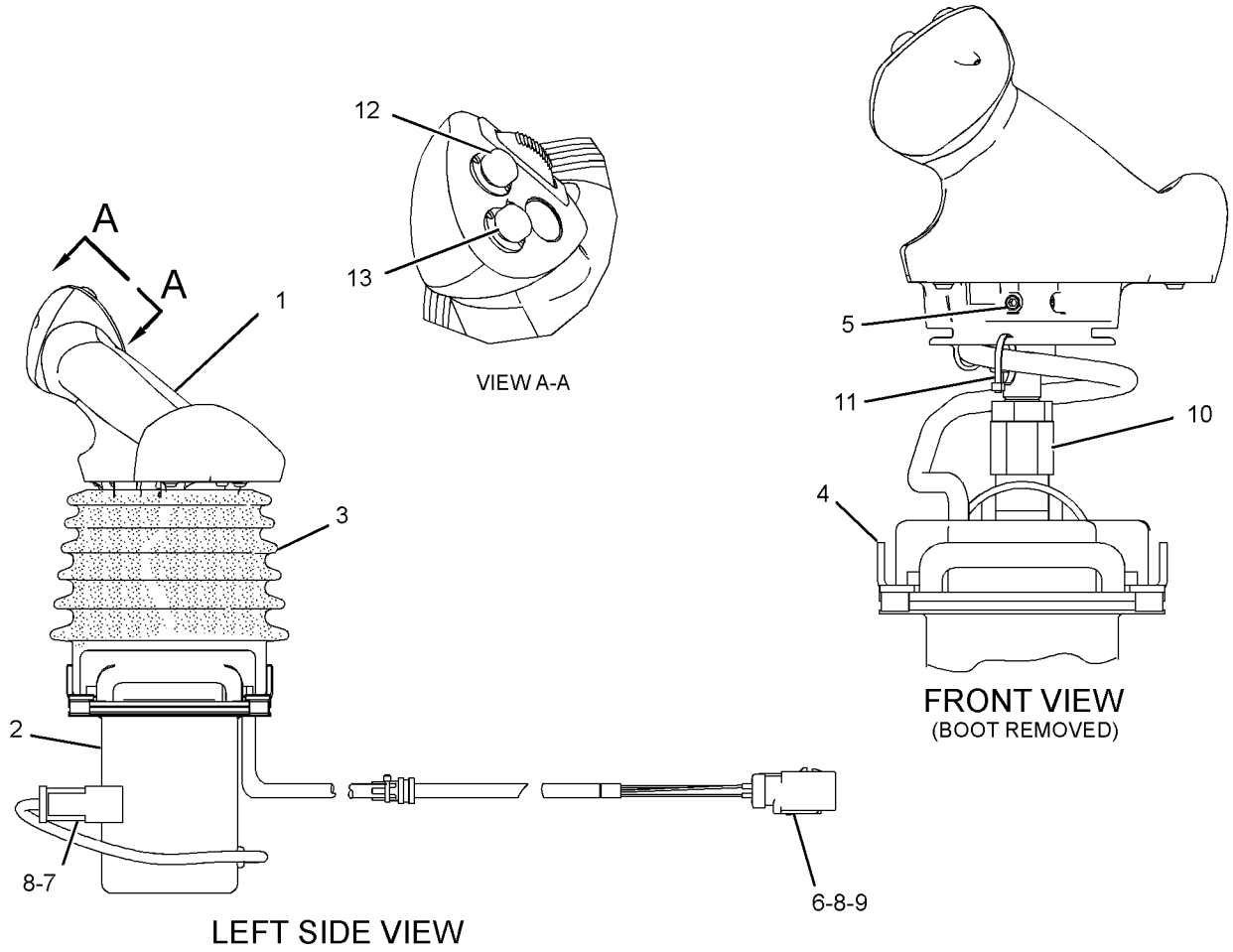

GRAPHIC #1 **<END>** g01900800

328-0894 CONTROL GP-JOYSTICK–GRADE CONTROL, RH

S/N: MMM1-UP; RRR1-UP
FIELD REPLACEMENT FOR 274-4645–PAGE: 709
PART OF 296-5753, 296-5754, 296-5755, 296-5756 GRADE CONTROL AR
AN ATTACHMENT

SMCS-5705 **i04607452**

NOTE	REF NO	GRAPHIC REF	PART NUMBER	QTY	PART NAME 1 2 3 4 5 6 (PRODUCT LEVEL)	SEE PAGE
	1	1	**328-0893**	1	SENSOR AS-POSITION (BULLDOZER CONTROL)	
		1	**186-3735**	6	PIN-CONNECTOR (16-GA TO 18-GA)	
		1	**230-5011**	1	RECEPTACLE AS-CONNECTOR (6-PIN)	
Y	2	1	**266-7632**	1	CONTROL GP-HANDLE (RH)	701
	3	1	**285-0151**	1	BOOT	
	4	1	**230-5011**	1	RECEPTACLE AS-CONNECTOR (6-PIN)	
	5	1	**8T-8729**	17	PIN-CONNECTOR (16-GA TO 18-GA)	
	6	1	**260-6728**	1	RECEPTACLE AS-CONNECTOR (12-PIN)	
	7	1	**8T-8737**	1	PLUG-SEAL	
M	8	1	**299-2214**	2	SETSCREW (M6X1X12-MM)	
	9	1	**8L-8413**	3	STRAP-CABLE	
	10	1	**144-0331**	1	CAP-PUSH BUTTON (YELLOW)	
	11	1	**220-8355**	2	CAP-PUSH BUTTON (BLACK)	

M - METRIC PART
Y - SEPARATE ILLUSTRATION

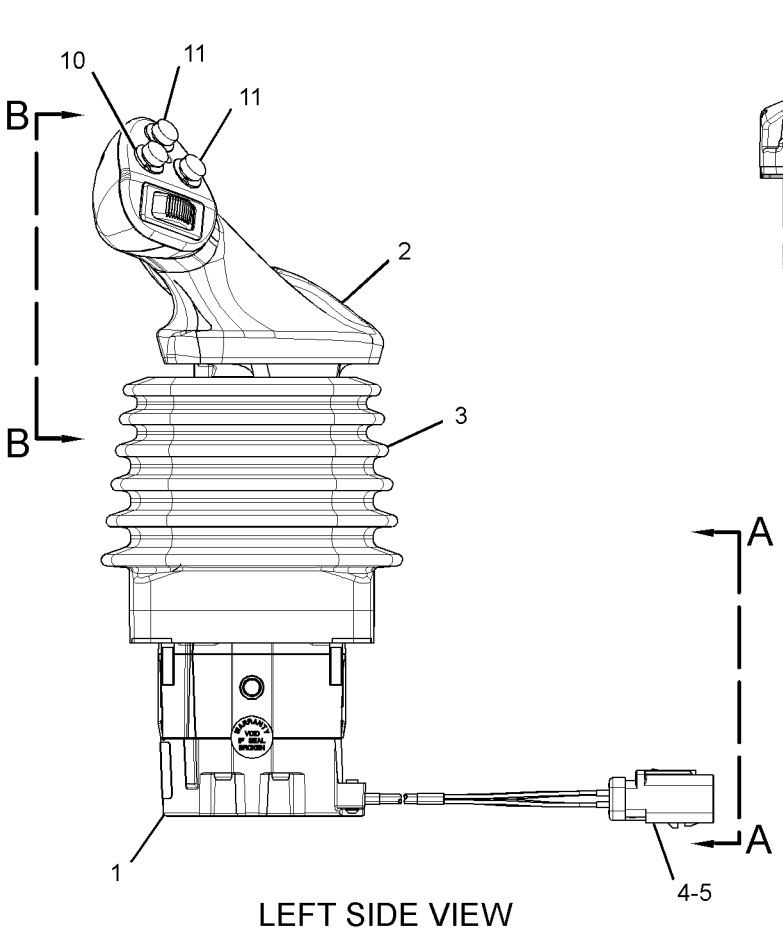

LEFT SIDE VIEW

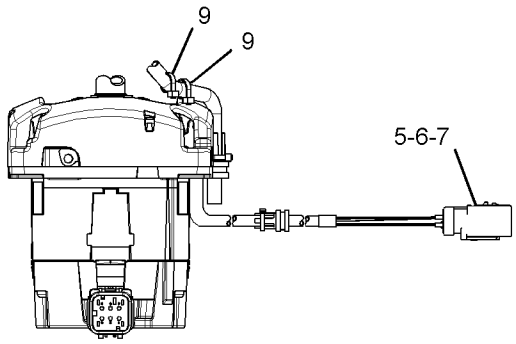

VIEW A-A
(BOOT REMOVED FOR CLARITY)

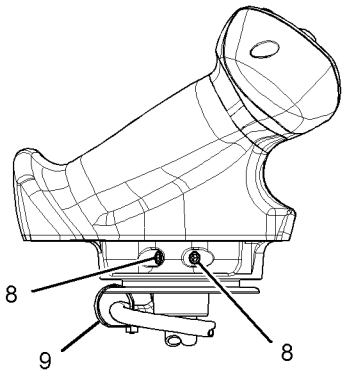

VIEW B-B
(BOOT REMOVED FOR CLARITY)

GRAPHIC #1 **<END>** g01622556

328-0895 CONTROL GP-JOYSTICK—BULLDOZER, RH

S/N: MMM1-UP; RRR1-UP
PART OF 296-5751, 296-5752 GRADE CONTROL AR
AN ATTACHMENT

SMCS-5705 **i04634393**

NOTE	REF NO	GRAPHIC REF	PART NUMBER	QTY	PART NAME 1 2 3 4 5 6 (PRODUCT LEVEL)	SEE PAGE
	1	1	**328-0893**	1	SENSOR AS-POSITION (BULLDOZER CONTROL)	
		1	**8T-8729**	6	PIN-CONNECTOR (16-GA TO 18-GA)	
		1	**230-5011**	1	RECEPTACLE AS-CONNECTOR (6-PIN)	
Y	2	1	**266-7631**	1	CONTROL GP-HANDLE (BULLDOZER)	700
	3	1	**285-0151**	1	BOOT	
	4	1	**230-5011**	1	RECEPTACLE AS-CONNECTOR (6-PIN)	
	5	1	**8T-8729**	7	PIN-CONNECTOR (16-GA TO 18-GA)	
	6	1	**260-6728**	1	RECEPTACLE AS-CONNECTOR (12-PIN)	
	7	1	**8T-8737**	5	PLUG-SEAL	
M	8	1	**299-2214**	2	SETSCREW (M6X1X12-MM)	
	9	1	**8L-8413**	3	STRAP-CABLE	
	10	1	**144-0331**	1	CAP-PUSH BUTTON (YELLOW)	

M - METRIC PART
Y - SEPARATE ILLUSTRATION

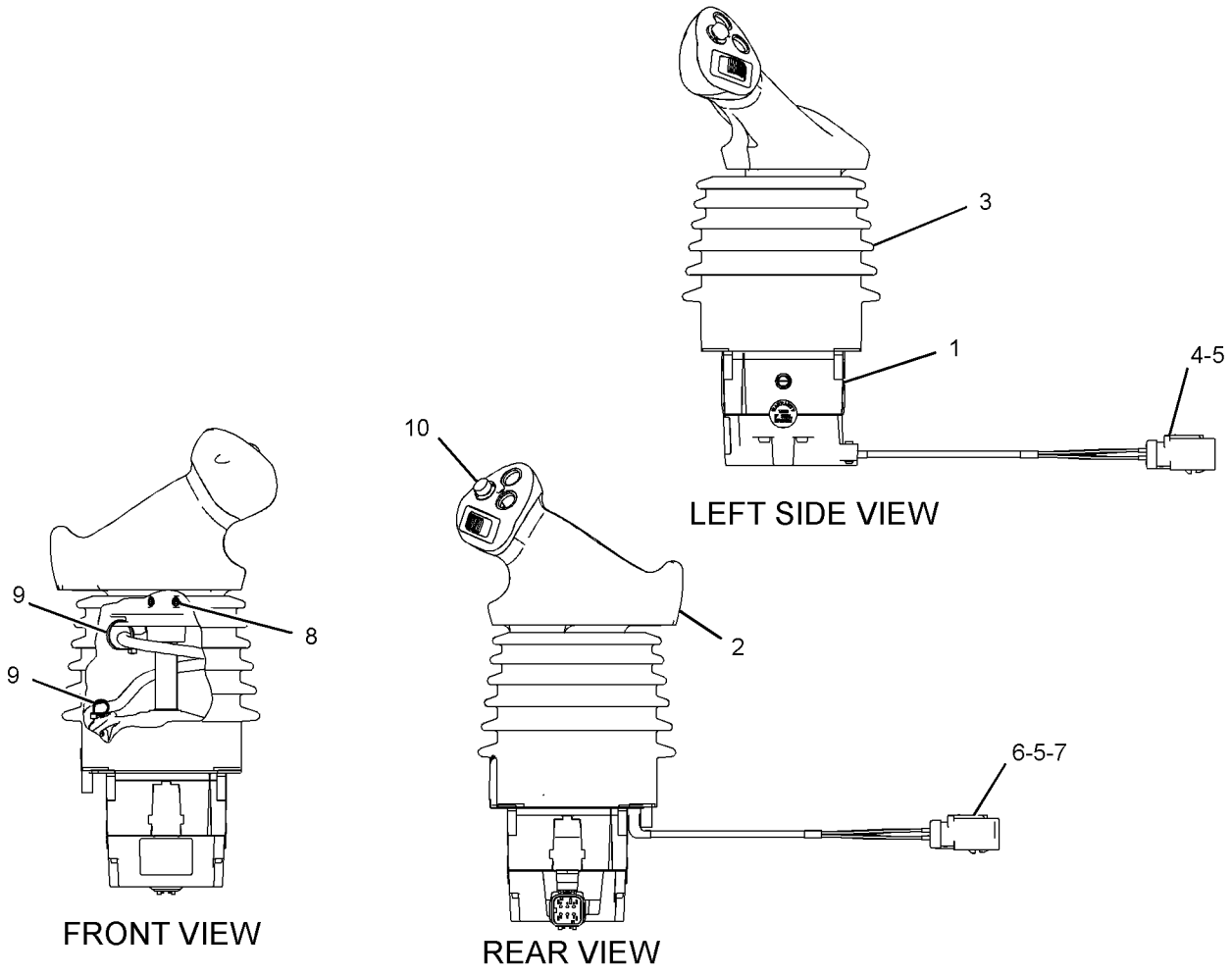

GRAPHIC #1 **<END>** g01622537

343-3676 CONTROL GP-JOYSTICK—STEERING, TRANSMISSION

S/N: MMM1001-UP; RRR801-UP

PART OF 245-6027 WIRING GP-ELECTROHYDRAULIC

SMCS-5705 **i05317103**

NOTE	REF NO	GRAPHIC REF	PART NUMBER	QTY	PART NAME 1 2 3 4 5 6 (PRODUCT LEVEL)	SEE PAGE
Y	1	1	**266-7634**	1	CONTROL GP-HANDLE (LH) (STEERING, TRANSMISSION)	702
	2	1	**343-3677**	1	BASE AS	
	2A	1	**102-8805**	1	KIT-RECEPTACLE (6-PIN)	
					(INCLUDES RECEPTACLE AS & WEDGE)	
	2B	1	**284-8208**	1	SHAFT-ADAPTER	
		1	**8T-8729**	4	PIN-CONNECTOR (16-GA TO 18-GA)	
		1	**8T-8737**	2	PLUG-SEAL	
	3	1	**285-0151**	1	BOOT	
	4	1	**343-3527**	1	BRACKET AS	
M	5	1	**299-2214**	2	SETSCREW (M6X1X12-MM)	
	6	1	**260-6728**	1	RECEPTACLE AS-CONNECTOR (12-PIN)	
	7	1	**220-8355**	1	CAP-PUSH BUTTON (BLACK)	
	8	1	**8T-8729**	8	PIN-CONNECTOR (16-GA TO 18-GA)	
	9	1	**8T-8737**	4	PLUG-SEAL	
	10	1	**144-0331**	1	CAP-PUSH BUTTON (YELLOW)	
	11	1	**8L-8413**	1	STRAP-CABLE	

M - METRIC PART
Y - SEPARATE ILLUSTRATION

343-3676 **CONTROL GP-JOYSTICK (*contd.*)** **i05317103**

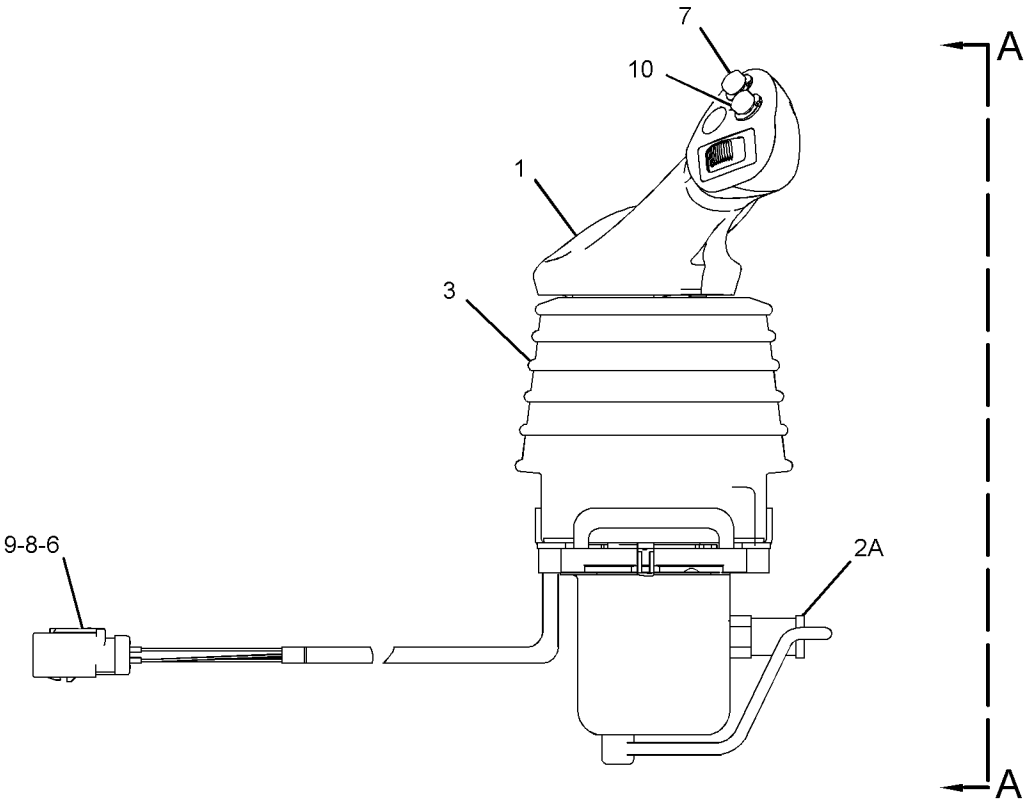

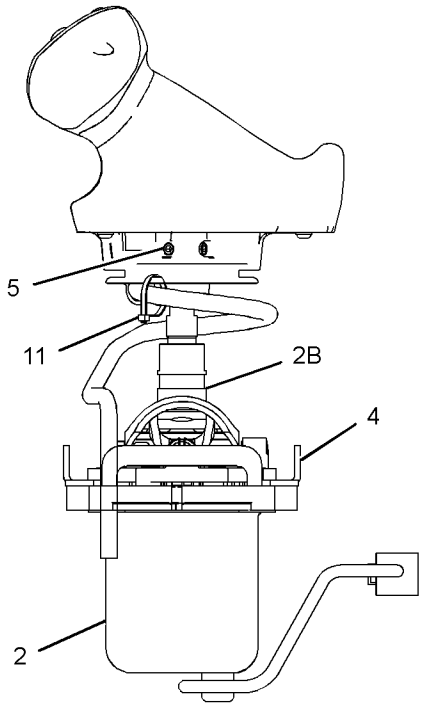

VIEW A-A
(BOOT REMOVED FOR CLARITY)

GRAPHIC #1 **<END>** g02789355

249-9051 CONTROL GP-RIPPER

S/N: MMM1-584; RRR1-417
PART OF 264-4551 HYDRAULIC AR
AN ATTACHMENT

SMCS-5357 **i04415563**

NOTE	REF NO	GRAPHIC REF	PART NUMBER	QTY	PART NAME 1 2 3 4 5 6 (PRODUCT LEVEL)	SEE PAGE
	1	1	**7K-1181**	10	STRAP-CABLE	
	2	1	**165-0311**	4	PLUG	
	3	1	**249-9079**	1	PLATE AS	
	4	1	**266-9005**	1	FILM-INSTRUCTION (RIPPER CONTROL)	
	5	1	**269-7697**	1	HARNESS AS-WORK TOOL (RIPPER)	
		1	**274-3777**	1	CAP-CONNECTOR	
		1	**9X-3401**	7	PIN-CONNECTOR (16-GA TO 18-GA)	
					—OR—	
		1	**126-1767**	7	PIN-CONNECTOR (14-GA TO 16-GA)	
		1	**155-2265**	1	KIT-CONNECTING PLUG (8-PIN)	
		1	**155-2270**	2	KIT-CONNECTING PLUG (2-PIN)	
		1	**155-2274**	1	KIT-CONNECTING PLUG (6-PIN)	
					(EACH PLUG KIT INCLUDES PLUG AS, WEDGE & INTERFACE SEAL)	
		1	**230-4009**	2	PLUG AS-CONNECTOR (12-PIN)	
					(EACH INCLUDES)	
		1	**264-7034**	1	SEAL-CONNECTOR	
		1	**231-2296**	2	PLUG AS-CONNECTOR (8-PIN)	
					(EACH INCLUDES)	
		1	**264-7033**	1	SEAL-CONNECTOR	
		1	**8T-8737**	51	PLUG-SEAL	
		1	**102-8802**	2	KIT-RECEPTACLE (2-PIN)	
		1	**102-8806**	1	KIT-RECEPTACLE (8-PIN)	
					(EACH RECEPTACLE KIT INCLUDES RECEPTACLE AS & WEDGE)	
		1	**230-4010**	2	RECEPTACLE AS-CONNECTOR (12-PIN)	
		1	**231-2301**	1	RECEPTACLE AS-CONNECTOR (8-PIN)	
		1	**186-3736**	1	SOCKET-CONNECTOR (16-GA TO 18-GA)	
		1	**9W-0844**	2	SOCKET-CONNECTOR (14-GA TO 16-GA)	
		1	**9X-3402**	26	SOCKET-CONNECTOR (16-GA TO 18-GA)	
		1	**180-9340**	15	SOCKET-CONNECTOR (14-GA TO 18-GA)	
E		1	**125-7874**		TUBE-HEAT SHRINK (5.72-MM DIA) (25-CM)	
Y	6	1	**307-4673**	1	CONTROL GP-HANDLE (RIPPER, WINCH)	703
	7	1	**311-0296**	1	BRACKET	
	8	1	**156-6175**	2	CLIP	
R	9	1	**300-3631**	1	CONTROL GP-UNPROGRAMMED (RIPPER)	
M	10	1	**7X-2534**	2	BOLT (M6X1X50-MM)	
M	11	1	**8T-4138**	2	BOLT (M6X1X20-MM)	
M	12	1	**9X-2045**	8	SCREW-TRUSS HEAD (M6X1X20-MM)	
	13	1	**9X-8256**	4	WASHER (6.6X12X2-MM THK)	

E - ORDER BY THE CENTIMETER
M - METRIC PART
R - REMFG PART MAY BE AVAILABLE
Y - SEPARATE ILLUSTRATION

249-9051 **CONTROL GP-RIPPER (*contd.*)** **i04415563**

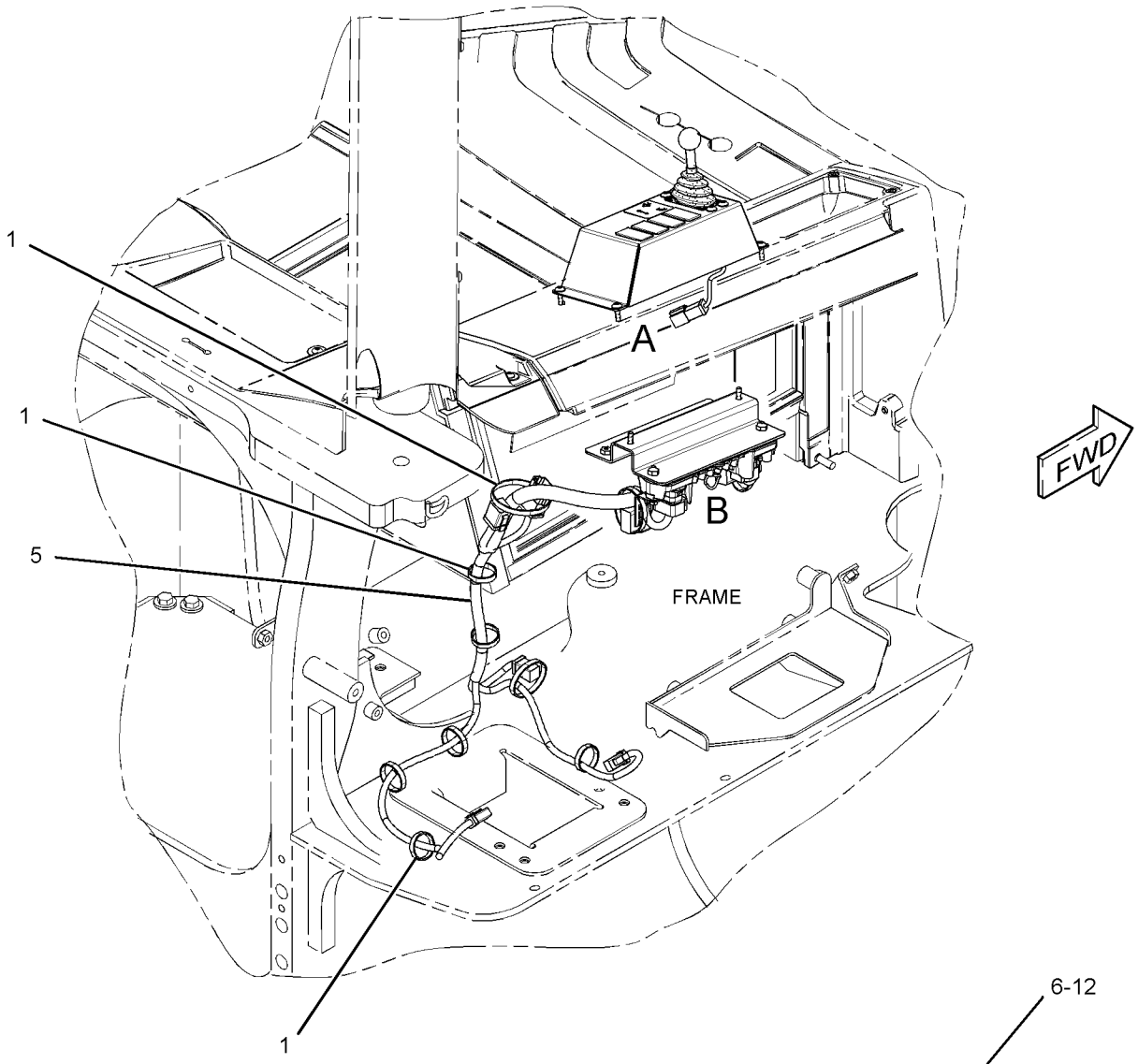

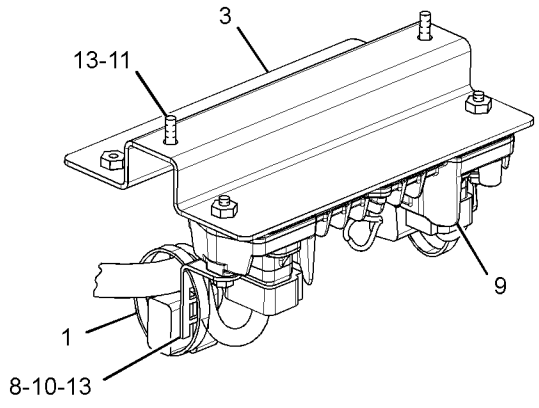

VIEW OF AREA B

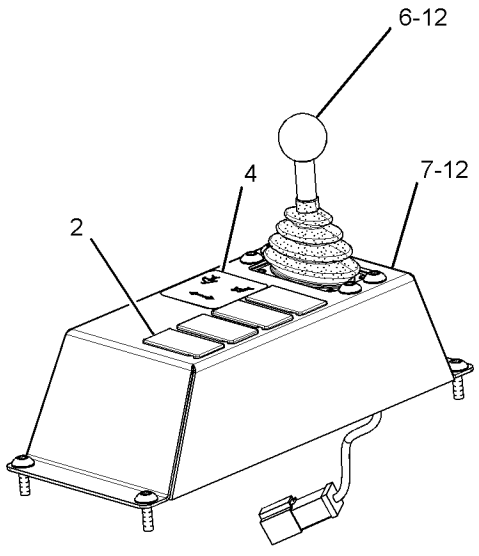

VIEW OF AREA A

GRAPHIC #1 **<END>** g01441539

OPERATOR STATION

249-9051 CONTROL GP-RIPPER

S/N: MMM585-UP; RRR418-UP
PART OF 264-4551 HYDRAULIC AR
AN ATTACHMENT

SMCS-5357 **i04560257**

NOTE	REF NO	GRAPHIC REF	PART NUMBER	QTY	PART NAME 1 2 3 4 5 6 (PRODUCT LEVEL)	SEE PAGE
	1	1	**6I-1418**	4	SPACER (8.2X12.7X28.7-MM THK)	
	2	1	**7K-1181**	8	STRAP-CABLE	
	3	1	**9N-0869**	4	WASHER-HARD (8.8X25.5X2-MM THK)	
	4	1	**155-0576**	8	MOUNT-ISOLATION	
	5	1	**165-0311**	4	PLUG	
	6	1	**266-9005**	1	FILM-INSTRUCTION (RIPPER CONTROL)	
	7	1	**269-7666**	1	PLATE AS	
Y	8	1	**307-4673**	1	CONTROL GP-HANDLE (RIPPER, WINCH)	703
	9	1	**377-4710**	1	CONTROL GP-UNPROGRAMMED (RIPPER)	
	10	1	**311-0296**	1	BRACKET	
	11	1	**311-0302**	1	HARNESS AS-CONTROL	
		1	**126-1774**	1	COVER-CONNECTOR	
		1	**8T-8729**	3	PIN-CONNECTOR (16-GA TO 18-GA)	
		1	**9W-0852**	1	PIN-CONNECTOR (14-GA TO 16-GA)	
		1	**155-2265**	1	KIT-CONNECTING PLUG (8-PIN)	
		1	**155-2270**	2	KIT-CONNECTING PLUG (2-PIN)	
		1	**155-2274**	1	KIT-CONNECTING PLUG (6-PIN)	
					(EACH PLUG KIT INCLUDES PLUG AS, WEDGE & INTERFACE SEAL)	
		1	**160-7689**	1	PLUG AS-CONNECTOR (70-PIN)	
		1	**159-9322**	1	SEAL-O-RING	
		1	**8T-8737**	61	PLUG-SEAL	
		1	**102-8802**	2	KIT-RECEPTACLE (2-PIN)	
		1	**102-8805**	1	KIT-RECEPTACLE (6-PIN)	
		1	**102-8806**	1	KIT-RECEPTACLE (8-PIN)	
					(EACH RECEPTACLE KIT INCLUDES RECEPTACLE AS & WEDGE)	
		1	**8T-8730**	1	SOCKET-CONNECTOR (16-GA TO 18-GA)	
		1	**9W-0844**	1	SOCKET-CONNECTOR (14-GA TO 16-GA)	
		1	**9X-3402**	24	SOCKET-CONNECTOR (16-GA TO 18-GA)	
		1	**180-9340**	15	SOCKET-CONNECTOR (14-GA TO 18-GA)	
		1	**8L-8413**	2	STRAP-CABLE	
E		1	**119-3662**		TUBE-HEAT SHRINK (10.85-MM DIA) (7-CM)	
E		1	**125-7874**		TUBE-HEAT SHRINK (5.72-MM DIA) (5-CM)	
M	12	1	**5C-7261**	4	NUT (M8X1.25-THD)	
M	13	1	**8T-4138**	2	BOLT (M6X1X20-MM)	
M	14	1	**9X-2045**	8	SCREW-TRUSS HEAD (M6X1X20-MM)	
	15	1	**9X-8256**	2	WASHER (6.6X12X2-MM THK)	

E - ORDER BY THE CENTIMETER
M - METRIC PART
Y - SEPARATE ILLUSTRATION

249-9051 **CONTROL GP-RIPPER (*contd.*)** **i04560257**

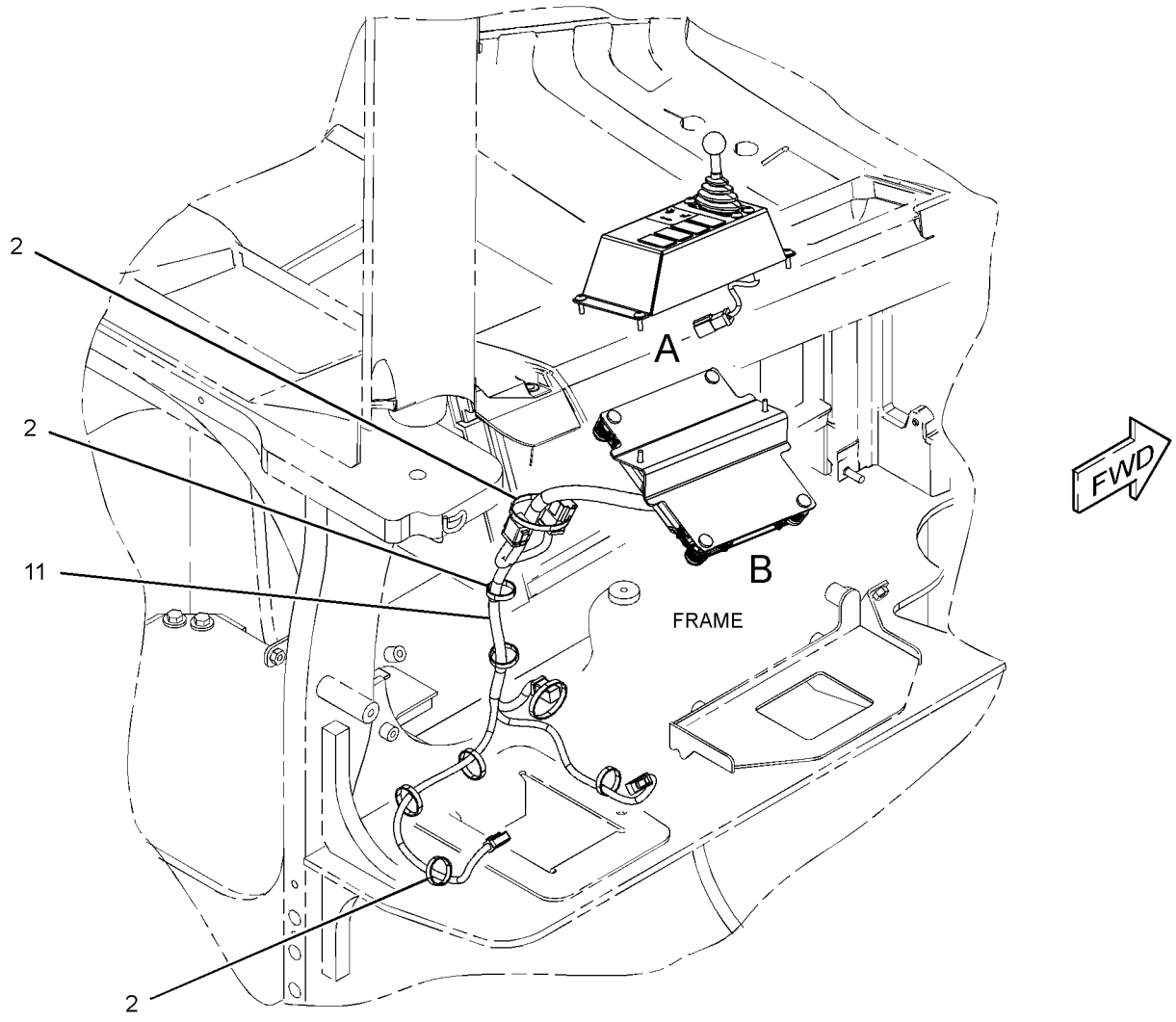

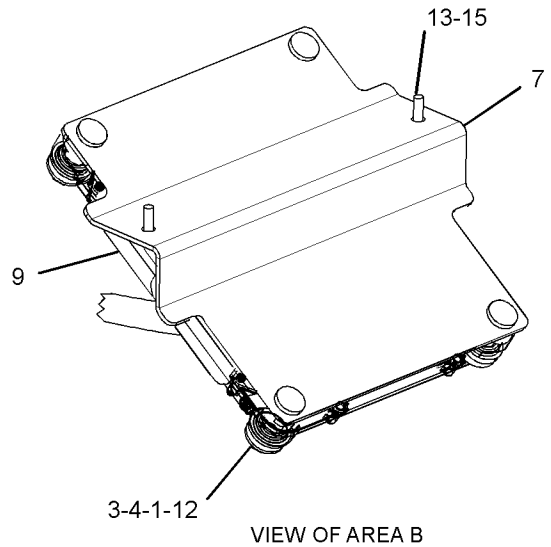

VIEW OF AREA B

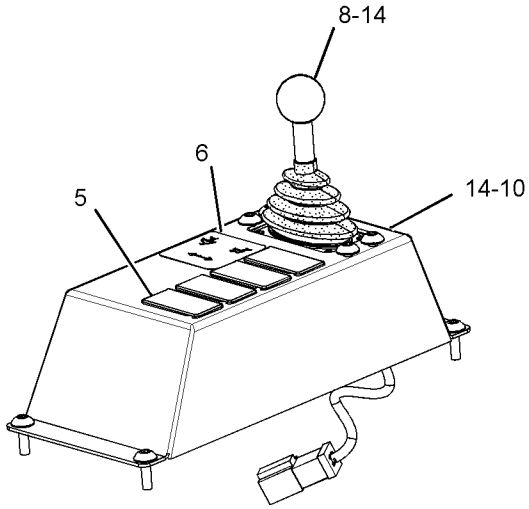

VIEW OF AREA A

GRAPHIC #1 **<END>** g02284454

255-4230 COVER GP-CAB—OROPS

S/N: MMM1-UP; RRR1-UP
PART OF 296-5751, 296-5753 GRADE CONTROL AR
AN ATTACHMENT
TYPE 1

SMCS-7301 **i03292470**

NOTE	REF NO	GRAPHIC REF	PART NUMBER	QTY	PART NAME 1 2 3 4 5 6 (PRODUCT LEVEL)	SEE PAGE
	1	1	**164-0850**	1	LEVER	
	2	1	**164-8474**	4	LOUVER AS-VENT	
M	3	1	**225-3322**	1	SCREW-TRUSS HEAD (M6X1X10-MM)	
	4	1	**226-0331**	1	CAM-LOCK	
	5	1	**270-7881**	1	FILM-INSTRUCTION (BULLDOZER CONTROL)	
	6	1	**281-3964**	1	TREAD-RUBBER	
	7	1	**281-3965**	1	TREAD-RUBBER	
	8	1	**281-4004**	1	HEADLINER	
	9	1	**281-4007**	1	BRACKET AS	
	10	1	**283-9902**	1	HANDLE AS	
	11	1	**283-9909**	1	MIRROR AS	
	12	1	**284-3754**	1	FLOOR MAT-FRONT	
	13	1	**288-0884**	1	COVER-POST	
	14	1	**311-5950**	1	FLOOR MAT-REAR	
	15	1	**314-3001**	1	DASH AS	
M		1	**297-1465**	9	INSERT-THREADED (M5X0.8-THD)	
M		1	**297-1466**	14	INSERT-THREADED (M6X1-THD)	
	16	1	**314-3002**	1	CONSOLE AS (RH)	
M		1	**297-1466**	11	INSERT-THREADED (M6X1-THD)	
Y	17	1	**314-3004**	1	CONSOLE GP (LH)	691
	18	1	**314-3009**	1	PLATE	
	19	1	**314-3016**	1	PLATE	
	20	1	**314-3017**	1	PLATE	
	21	1	**314-3019**	1	GUARD GP-VANDALISM	
	22	1	**314-3020**	1	PLATE	
	23	1	**314-3021**	1	PLATE	
	24	1	**314-3025**	2	SCREW-THUMB (M6X1X16-MM)	
M	25	1	**128-2136**	4	SCREW-TRUSS HEAD (M6X1X16-MM)	
	26	1	**198-9706**	4	SCREW-TRUSS HEAD (M5X0.8X16-MM)	
	27	1	**275-6710**	2	RETAINER (PUSH ON)	
M	28	1	**5C-9553**	4	BOLT (M6X1X16-MM)	
	29	1	**5P-4115**	4	WASHER-HARD (7.2X19X2-MM THK)	
J	30	1	**5P-9000**	1	LOCK AS-CYLINDER	
	31	1	**7X-7729**	13	WASHER (11X25X3-MM THK)	
	32	1	**8T-4121**	1	WASHER-HARD (11X21X2.5-MM THK)	
M	33	1	**8T-4133**	2	NUT (M10X1.5-THD)	
M	34	1	**8T-4186**	7	BOLT (M10X1.5X40-MM)	
	35	1	**8T-4205**	1	WASHER-HARD (7.2X14.5X2-MM THK)	
	36	1	**8T-4223**	1	WASHER-HARD (13.5X25.5X3-MM THK)	
M	37	1	**9X-2040**	7	SCREW-TRUSS HEAD (M10X1.5X25-MM)	
M	38	1	**9X-2042**	7	SCREW-TRUSS HEAD (M6X1X12-MM)	
M	39	1	**9X-2045**	6	SCREW-TRUSS HEAD (M6X1X20-MM)	
	40	1	**9X-6165**	2	WASHER (6.5X22X2.5-MM THK)	
E	41	1	**3E-3892**		SEAL (28-CM)	
E	42	1	**8C-7332**		TRIM-EDGE (29-CM)	
	43	1	**325-0701**	1	BRACKET	

E - ORDER BY THE CENTIMETER
J - REQUIRES CORPORATE KEY
M - METRIC PART
Y - SEPARATE ILLUSTRATION

255-4230 **COVER GP-CAB (*contd.*)** **i03292470**

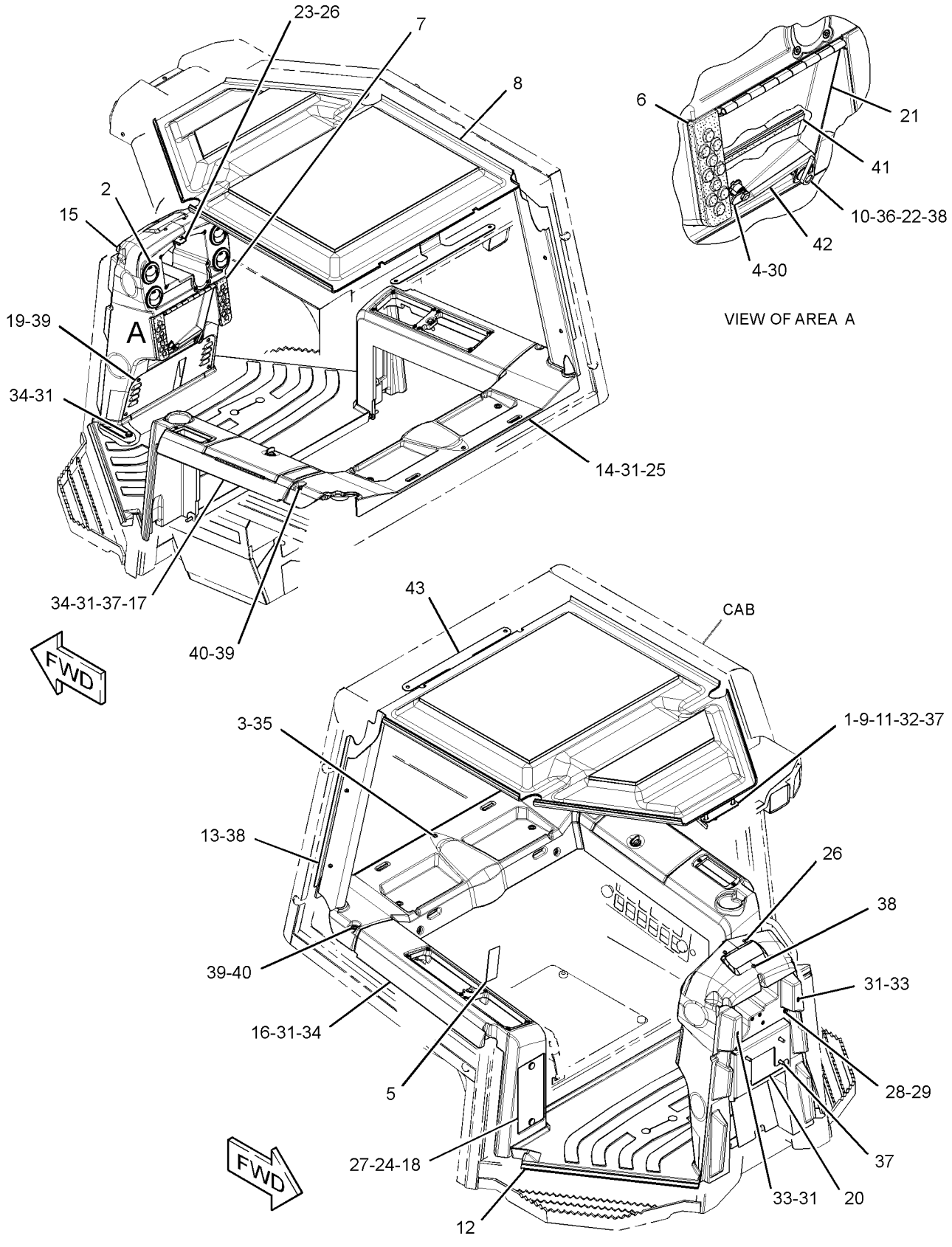

GRAPHIC #1

<END>

g01733073

255-4230 COVER GP-CAB–OROPS

S/N: MMM1-UP; RRR1-UP
PART OF 296-5751, 296-5753 GRADE CONTROL AR
AN ATTACHMENT
TYPE 2

SMCS-7301 **i04396504**

NOTE	REF NO	GRAPHIC REF	PART NUMBER	QTY	PART NAME 1 2 3 4 5 6 (PRODUCT LEVEL)	SEE PAGE
	1	1	**164-0850**	1	LEVER	
	2	1	**164-8474**	4	LOUVER AS-VENT	
M	3	1	**225-3322**	1	SCREW-TRUSS HEAD (M6X1X10-MM)	
	4	1	**226-0331**	1	CAM-LOCK	
	5	1	**270-7881**	1	FILM-INSTRUCTION (BULLDOZER CONTROL)	
	6	1	**281-3964**	1	TREAD-RUBBER	
	7	1	**281-3965**	1	TREAD-RUBBER	
	8	1	**281-4004**	1	HEADLINER	
	9	1	**281-4007**	1	BRACKET AS	
	10	1	**283-9902**	1	HANDLE AS	
	11	1	**283-9909**	1	MIRROR AS	
	12	1	**284-3754**	1	FLOOR MAT-FRONT	
	13	1	**288-0884**	1	COVER-POST	
	14	1	**311-5950**	1	FLOOR MAT-REAR	
	15	1	**314-3001**	1	DASH AS	
M		1	**297-1465**	9	INSERT-THREADED (M5X0.8-THD)	
M		1	**297-1466**	14	INSERT-THREADED (M6X1-THD)	
C	16	1	**343-3566**	1	CONSOLE AS (RH)	
M		1	**297-1466**	11	INSERT-THREADED (M6X1-THD)	
Y	17	1	**314-3004**	1	CONSOLE GP (LH)	691
C	18	1	**343-3567**	1	PLATE	
	19	1	**314-3016**	1	PLATE	
	20	1	**314-3017**	1	PLATE	
	21	1	**314-3019**	1	GUARD GP-VANDALISM	
	22	1	**314-3020**	1	PLATE	
	23	1	**314-3021**	1	PLATE	
	24	1	**314-3025**	2	SCREW-THUMB (M6X1X16-MM)	
M	25	1	**128-2136**	4	SCREW-TRUSS HEAD (M6X1X16-MM)	
C	26	1	**198-9706**	2	SCREW-TRUSS HEAD (M5X0.8X16-MM)	
	27	1	**275-6710**	2	RETAINER (PUSH ON)	
M	28	1	**5C-9553**	4	BOLT (M6X1X16-MM)	
	29	1	**5P-4115**	4	WASHER-HARD (7.2X19X2-MM THK)	
J	30	1	**5P-9000**	1	LOCK AS-CYLINDER	
	31	1	**7X-7729**	13	WASHER (11X25X3-MM THK)	
	32	1	**8T-4121**	1	WASHER-HARD (11X21X2.5-MM THK)	
M	33	1	**8T-4133**	2	NUT (M10X1.5-THD)	
M	34	1	**8T-4186**	7	BOLT (M10X1.5X40-MM)	
	35	1	**8T-4205**	1	WASHER-HARD (7.2X14.5X2-MM THK)	
	36	1	**8T-4223**	1	WASHER-HARD (13.5X25.5X3-MM THK)	
M	37	1	**9X-2040**	7	SCREW-TRUSS HEAD (M10X1.5X25-MM)	
M	38	1	**9X-2042**	7	SCREW-TRUSS HEAD (M6X1X12-MM)	
M	39	1	**9X-2045**	6	SCREW-TRUSS HEAD (M6X1X20-MM)	
	40	1	**9X-6165**	2	WASHER (6.5X22X2.5-MM THK)	
E	41	1	**3E-3892**		SEAL (28-CM)	
E	42	1	**8C-7332**		TRIM-EDGE (29-CM)	
	43	1	**325-0701**	1	BRACKET	
CM	44	1	**271-9408**	2	SCREW-TRUSS HEAD (M5X0.8X10-MM)	

C - CHANGE FROM PREVIOUS TYPE
E - ORDER BY THE CENTIMETER
J - REQUIRES CORPORATE KEY
M - METRIC PART
Y - SEPARATE ILLUSTRATION

255-4230 **COVER GP-CAB (*contd.*)** **i04396504**

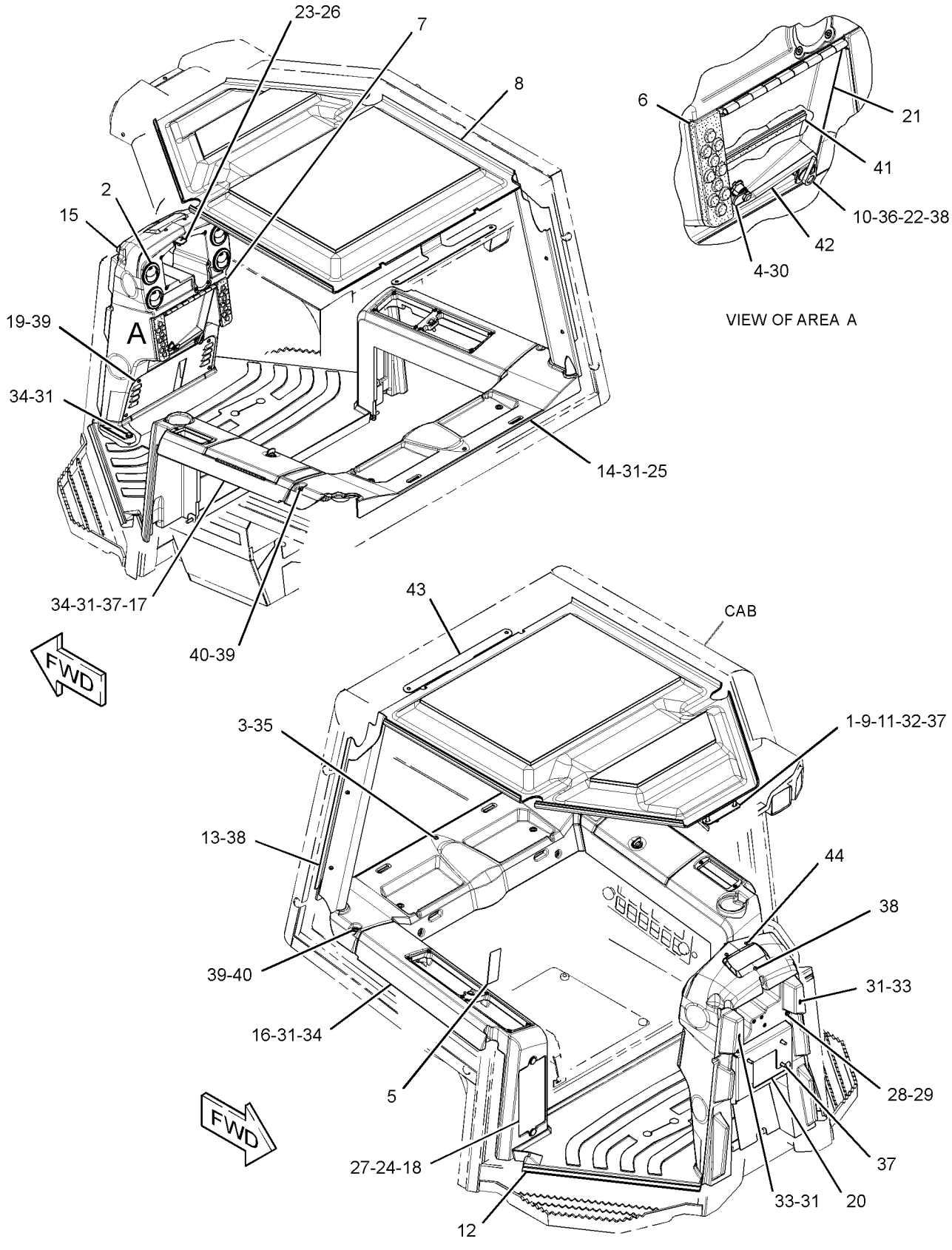

GRAPHIC #1

<END>

g02550438

OPERATOR STATION

255-4231 COVER GP-CAB—EROPS

S/N: MMM1-571; RRR1-412
PART OF 296-5752, 296-5754 GRADE CONTROL AR
AN ATTACHMENT

SMCS-7301 **i04403716**

NOTE	REF NO	GRAPHIC REF	PART NUMBER	QTY	PART NAME 1 2 3 4 5 6 (PRODUCT LEVEL)	SEE PAGE
	1	1	**110-0885**	1	BUMPER	
	2	1	**154-7951**	12	SPACER	
	3	1	**164-0850**	1	LEVER	
	4	1	**164-8474**	8	LOUVER AS-VENT	
	5	1	**188-8846**	1	LATCH AS (COMPRESSION)	
M	6	1	**225-3322**	1	SCREW-TRUSS HEAD (M6X1X10-MM)	
	9	1	**254-3206**	1	FLOOR MAT-REAR	
	10	1	**255-4233**	1	HEADLINER	
	11	1	**255-8384**	1	COVER-RADIO	
	12	1	**255-8386**	1	COVER	
	13	1	**270-7881**	1	FILM-INSTRUCTION (BULLDOZER CONTROL)	
	14	1	**281-3964**	1	TREAD-RUBBER	
	15	1	**281-3965**	1	TREAD-RUBBER	
	16	1	**281-4007**	1	BRACKET AS	
	17	1	**283-9909**	1	MIRROR AS (REAR VIEW)	
	18	1	**284-3753**	1	MAT-REAR	
	19	1	**284-3754**	1	FLOOR MAT-FRONT	
	20	1	**288-0884**	1	COVER-POST	
	21	1	**314-3000**	1	DASH AS	
M		1	**297-1465**	7	INSERT-THREADED (M5X0.8-THD)	
M		1	**297-1466**	14	INSERT-THREADED (M6X1-THD)	
	22	1	**314-3002**	1	CONSOLE AS (RH)	
M		1	**297-1466**	11	INSERT-THREADED (M6X1-THD)	
Y	23	1	**314-3003**	1	CONSOLE GP (LH)	689
	24	1	**314-3009**	1	PLATE	
	25	1	**314-3016**	1	PLATE	
	26	1	**314-3017**	1	PLATE	
	27	1	**314-3018**	1	BOX AS	
	28	1	**314-3022**	1	BOX AS-STORAGE	
	29	1	**314-3023**	1	PLATE AS	
M		1	**8T-3612**	1	NUT-WELD (M8X1.25-THD)	
	30	1	**314-3025**	2	SCREW-THUMB (M6X1X16-MM)	
M	31	1	**127-2170**	15	SCREW-TRUSS HEAD (M8X1.25X20-MM)	
M	32	1	**128-2136**	6	SCREW-TRUSS HEAD (M6X1X16-MM)	
	33	1	**275-6710**	2	RETAINER (PUSH ON)	
M	34	1	**5C-9553**	4	BOLT (M6X1X16-MM)	
	35	1	**5P-4115**	4	WASHER-HARD (7.2X19X2-MM THK)	
	36	1	**7X-7729**	15	WASHER (11X25X3-MM THK)	
	37	1	**8T-4121**	1	WASHER-HARD (11X21X2.5-MM THK)	
M	38	1	**8T-4133**	2	NUT (M10X1.5-THD)	
M	39	1	**8T-4186**	7	BOLT (M10X1.5X40-MM)	
	40	1	**8T-4205**	1	WASHER-HARD (7.2X14.5X2-MM THK)	
	41	1	**104-2091**	4	SCREW-FLAT HEAD (6-20X0.5-IN)	
M	42	1	**9X-2040**	7	SCREW-TRUSS HEAD (M10X1.5X25-MM)	
M	43	1	**9X-2042**	10	SCREW-TRUSS HEAD (M6X1X12-MM)	
M	44	1	**9X-2045**	11	SCREW-TRUSS HEAD (M6X1X20-MM)	
	45	1	**9X-6165**	2	WASHER (6.5X22X2.5-MM THK)	
D	46	1	**5P-5639**		SEAL (0.1-M)	
D	47	1	**5P-5969**		SEAL (0.3-M)	
	48	1	**198-9706**	2	SCREW-TRUSS HEAD (M5X0.8X16-MM)	
	49	1	**8Y-6388**	2	LOUVER AS-VENT	

D - ORDER BY THE METER
M - METRIC PART
Y - SEPARATE ILLUSTRATION

255-4231 **COVER GP-CAB (*contd.*)** **i04403716**

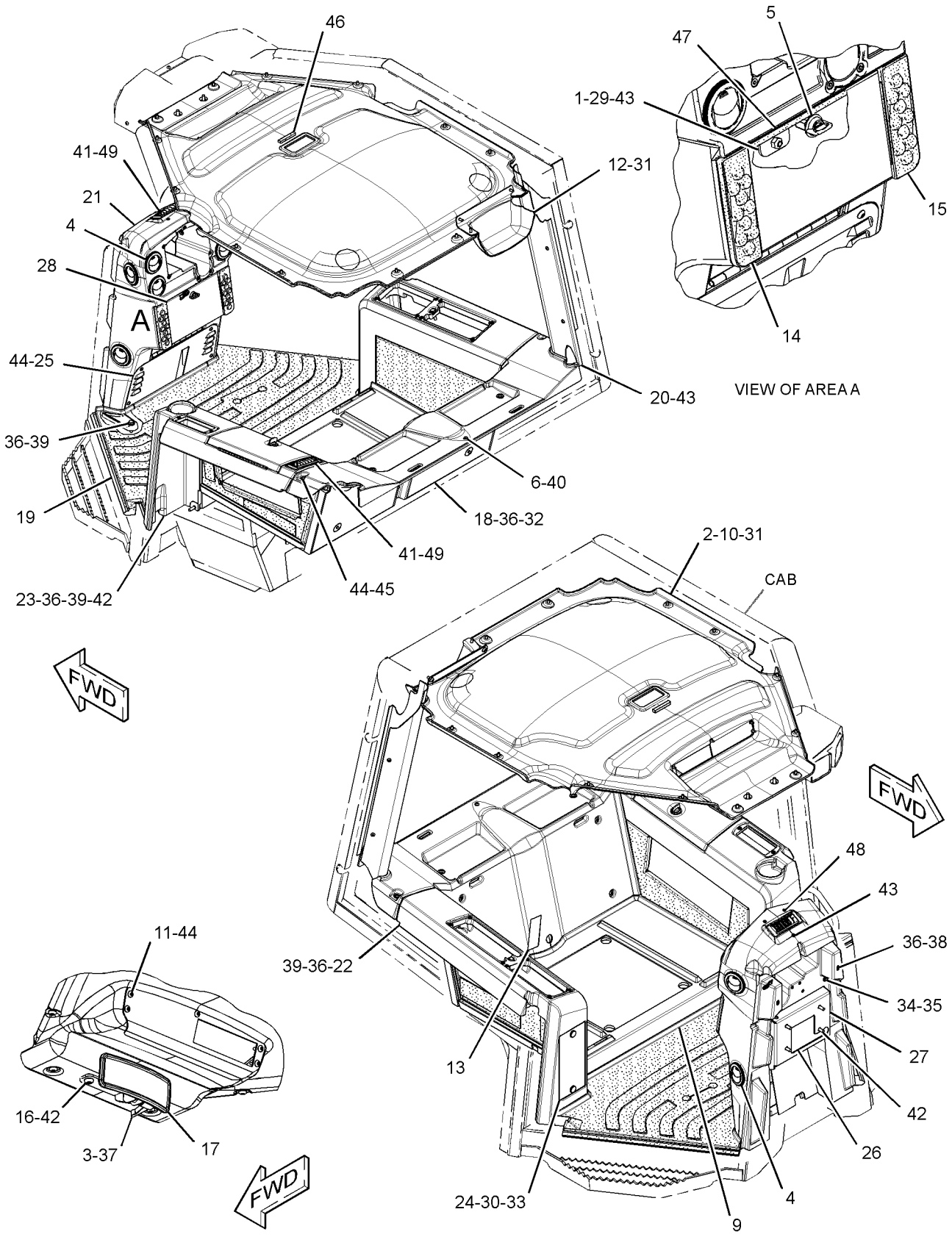

GRAPHIC #1

<END>

g01864003

OPERATOR STATION

255-4231 COVER GP-CAB—EROPS

S/N: MMM572-UP; RRR413-UP
PART OF 296-5752, 296-5754 GRADE CONTROL AR
AN ATTACHMENT
TYPE 1

SMCS-7301 **i03893490**

NOTE	REF NO	GRAPHIC REF	PART NUMBER	QTY	PART NAME 1 2 3 4 5 6 (PRODUCT LEVEL)	SEE PAGE
	1	1	**110-0885**	1	BUMPER	
	2	1	**154-7951**	12	SPACER	
	3	1	**164-0850**	1	LEVER	
	4	1	**164-8474**	8	LOUVER AS-VENT	
	5	1	**188-8846**	1	LATCH AS	
M	6	1	**225-3322**	1	SCREW-TRUSS HEAD (M6X1X10-MM)	
	10	1	**255-4233**	1	HEADLINER	
	11	1	**255-8384**	1	COVER-RADIO	
	12	1	**255-8386**	1	COVER	
	13	1	**270-7881**	1	FILM-INSTRUCTION (BULLDOZER CONTROL)	
	14	1	**281-3964**	1	TREAD-RUBBER	
	15	1	**281-3965**	1	TREAD-RUBBER	
	16	1	**281-4007**	1	BRACKET AS	
	17	1	**283-9909**	1	MIRROR AS	
	18	1	**284-3754**	1	FLOOR MAT-FRONT	
C	19	1	**311-5950**	1	FLOOR MAT-REAR	
	20	1	**288-0884**	1	COVER-POST	
	21	1	**314-3000**	1	DASH AS	
M		1	**297-1465**	7	INSERT-THREADED (M5X0.8-THD)	
M		1	**297-1466**	14	INSERT-THREADED (M6X1-THD)	
	22	1	**314-3002**	1	CONSOLE AS (RH)	
M		1	**297-1466**	11	INSERT-THREADED (M6X1-THD)	
Y	23	1	**314-3003**	1	CONSOLE GP (LH)	689
	24	1	**314-3009**	1	PLATE	
	25	1	**314-3016**	1	PLATE	
	26	1	**314-3017**	1	PLATE	
	27	1	**314-3018**	1	BOX AS	
	28	1	**314-3022**	1	BOX AS-STORAGE	
	29	1	**314-3023**	1	PLATE AS	
	30	1	**314-3025**	2	SCREW-THUMB (M6X1X16-MM)	
M	31	1	**127-2170**	15	SCREW-TRUSS HEAD (M8X1.25X20-MM)	
CM	32	1	**128-2136**	4	SCREW-TRUSS HEAD (M6X1X16-MM)	
	33	1	**275-6710**	2	RETAINER	
M	34	1	**5C-9553**	4	BOLT (M6X1X16-MM)	
	35	1	**5P-4115**	4	WASHER-HARD (7.2X19X2-MM THK)	
C	36	1	**7X-7729**	13	WASHER (11X25X3-MM THK)	
	37	1	**8T-4121**	1	WASHER-HARD (11X21X2.5-MM THK)	
M	38	1	**8T-4133**	2	NUT (M10X1.5-THD)	
M	39	1	**8T-4186**	7	BOLT (M10X1.5X40-MM)	
	40	1	**8T-4205**	1	WASHER-HARD (7.2X14.5X2-MM THK)	
	41	1	**104-2091**	4	SCREW-FLAT HEAD (6-20X0.5-IN)	
M	42	1	**9X-2040**	7	SCREW-TRUSS HEAD (M10X1.5X25-MM)	
M	43	1	**9X-2042**	10	SCREW-TRUSS HEAD (M6X1X12-MM)	
M	44	1	**9X-2045**	11	SCREW-TRUSS HEAD (M6X1X20-MM)	
	45	1	**9X-6165**	2	WASHER (6.5X22X2.5-MM THK)	
D	46	1	**5P-5639**		SEAL (0.1-M)	
D	47	1	**5P-5969**		SEAL (0.3-M)	
	48	1	**198-9706**	2	SCREW-TRUSS HEAD (M5X0.8X16-MM)	
	49	1	**8Y-6388**	2	LOUVER AS-VENT	

C - CHANGE FROM PREVIOUS TYPE
D - ORDER BY THE METER
M - METRIC PART
Y - SEPARATE ILLUSTRATION

255-4231 **COVER GP-CAB (*contd.*)** **i03893490**

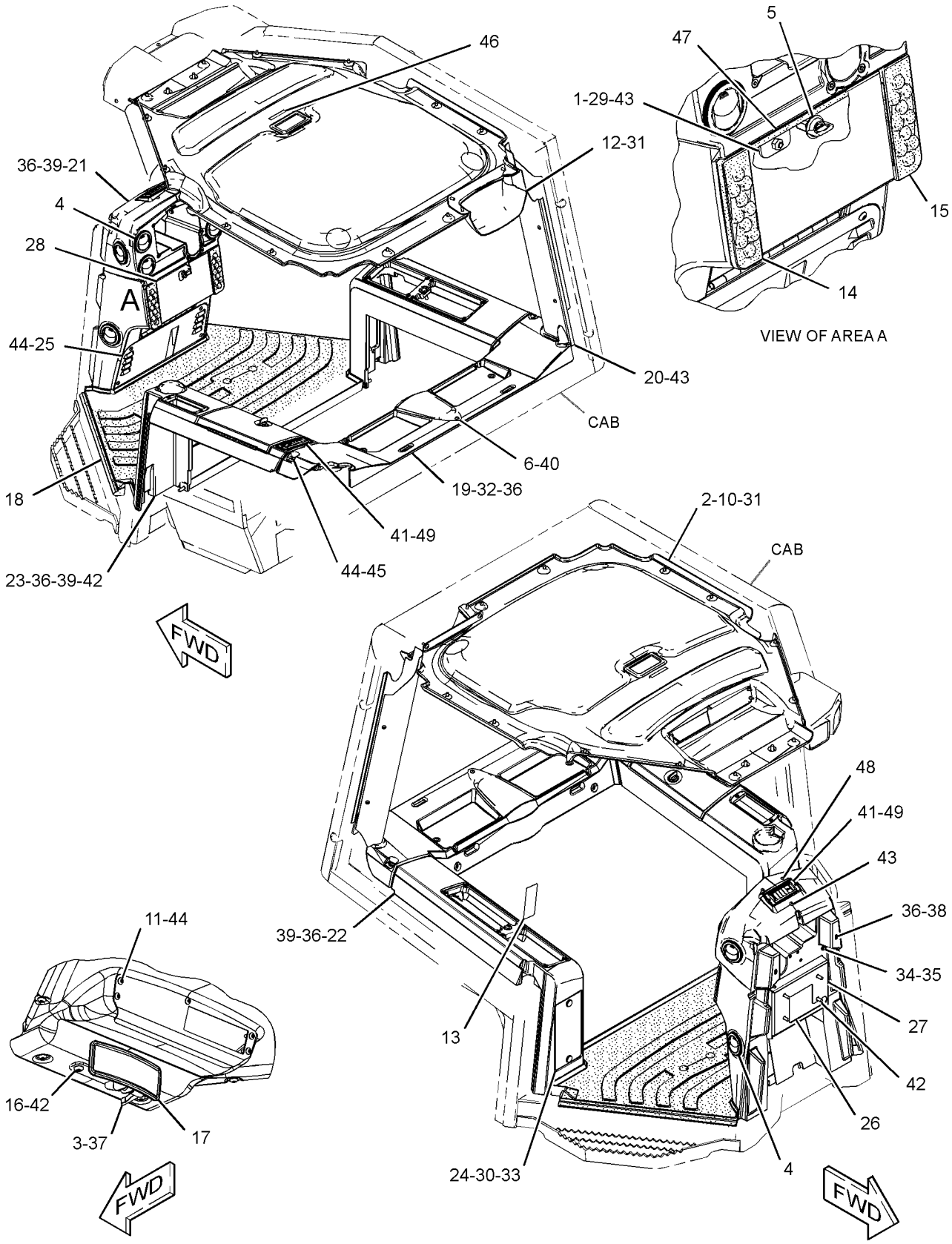

GRAPHIC #1

<END>

g02283654

OPERATOR STATION

255-4231 COVER GP-CAB—EROPS

S/N: MMM572-UP; RRR413-UP
PART OF 296-5752, 296-5754 GRADE CONTROL AR
AN ATTACHMENT
TYPE 2

SMCS-7301 **i04396498**

NOTE	REF NO	GRAPHIC REF	PART NUMBER	QTY	PART NAME 1 2 3 4 5 6 (PRODUCT LEVEL)	SEE PAGE
	1	1	**110-0885**	1	BUMPER	
	2	1	**154-7951**	12	SPACER	
	3	1	**164-0850**	1	LEVER	
	4	1	**164-8474**	8	LOUVER AS-VENT	
	5	1	**188-8846**	1	LATCH AS	
M	6	1	**225-3322**	1	SCREW-TRUSS HEAD (M6X1X10-MM)	
	10	1	**255-4233**	1	HEADLINER	
	11	1	**255-8384**	1	COVER-RADIO	
	12	1	**255-8386**	1	COVER	
	13	1	**270-7881**	1	FILM-INSTRUCTION (BULLDOZER CONTROL)	
	14	1	**281-3964**	1	TREAD-RUBBER	
	15	1	**281-3965**	1	TREAD-RUBBER	
	16	1	**281-4007**	1	BRACKET AS	
	17	1	**283-9909**	1	MIRROR AS	
	18	1	**284-3754**	1	FLOOR MAT-FRONT	
	19	1	**311-5950**	1	FLOOR MAT-REAR	
	20	1	**288-0884**	1	COVER-POST	
	21	1	**314-3000**	1	DASH AS	
M		1	**297-1465**	7	INSERT-THREADED (M5X0.8-THD)	
M		1	**297-1466**	14	INSERT-THREADED (M6X1-THD)	
C	22	1	**343-3566**	1	CONSOLE AS (RH)	
M		1	**297-1466**	11	INSERT-THREADED (M6X1-THD)	
Y	23	1	**314-3003**	1	CONSOLE GP (LH)	689
C	24	1	**343-3567**	1	PLATE	
	25	1	**314-3016**	1	PLATE	
	26	1	**314-3017**	1	PLATE	
	27	1	**314-3018**	1	BOX AS	
	28	1	**314-3022**	1	BOX AS-STORAGE	
	29	1	**314-3023**	1	PLATE AS	
	30	1	**314-3025**	2	SCREW-THUMB (M6X1X16-MM)	
M	31	1	**127-2170**	15	SCREW-TRUSS HEAD (M8X1.25X20-MM)	
M	32	1	**128-2136**	4	SCREW-TRUSS HEAD (M6X1X16-MM)	
	33	1	**275-6710**	2	RETAINER	
M	34	1	**5C-9553**	4	BOLT (M6X1X16-MM)	
	35	1	**5P-4115**	4	WASHER-HARD (7.2X19X2-MM THK)	
	36	1	**7X-7729**	13	WASHER (11X25X3-MM THK)	
	37	1	**8T-4121**	1	WASHER-HARD (11X21X2.5-MM THK)	
M	38	1	**8T-4133**	2	NUT (M10X1.5-THD)	
M	39	1	**8T-4186**	7	BOLT (M10X1.5X40-MM)	
	40	1	**8T-4205**	1	WASHER-HARD (7.2X14.5X2-MM THK)	
	41	1	**104-2091**	4	SCREW-FLAT HEAD (6-20X0.5-IN)	
M	42	1	**9X-2040**	7	SCREW-TRUSS HEAD (M10X1.5X25-MM)	
M	43	1	**9X-2042**	10	SCREW-TRUSS HEAD (M6X1X12-MM)	
M	44	1	**9X-2045**	11	SCREW-TRUSS HEAD (M6X1X20-MM)	
	45	1	**9X-6165**	2	WASHER (6.5X22X2.5-MM THK)	
D	46	1	**5P-5639**		SEAL (0.1-M)	
D	47	1	**5P-5969**		SEAL (0.3-M)	
CM	48	1	**271-9408**	2	SCREW-TRUSS HEAD (M5X0.8X10-MM)	
	49	1	**8Y-6388**	2	LOUVER AS-VENT	

C - CHANGE FROM PREVIOUS TYPE
D - ORDER BY THE METER
M - METRIC PART
Y - SEPARATE ILLUSTRATION

255-4231 **COVER GP-CAB (*contd.*)** **i04396498**

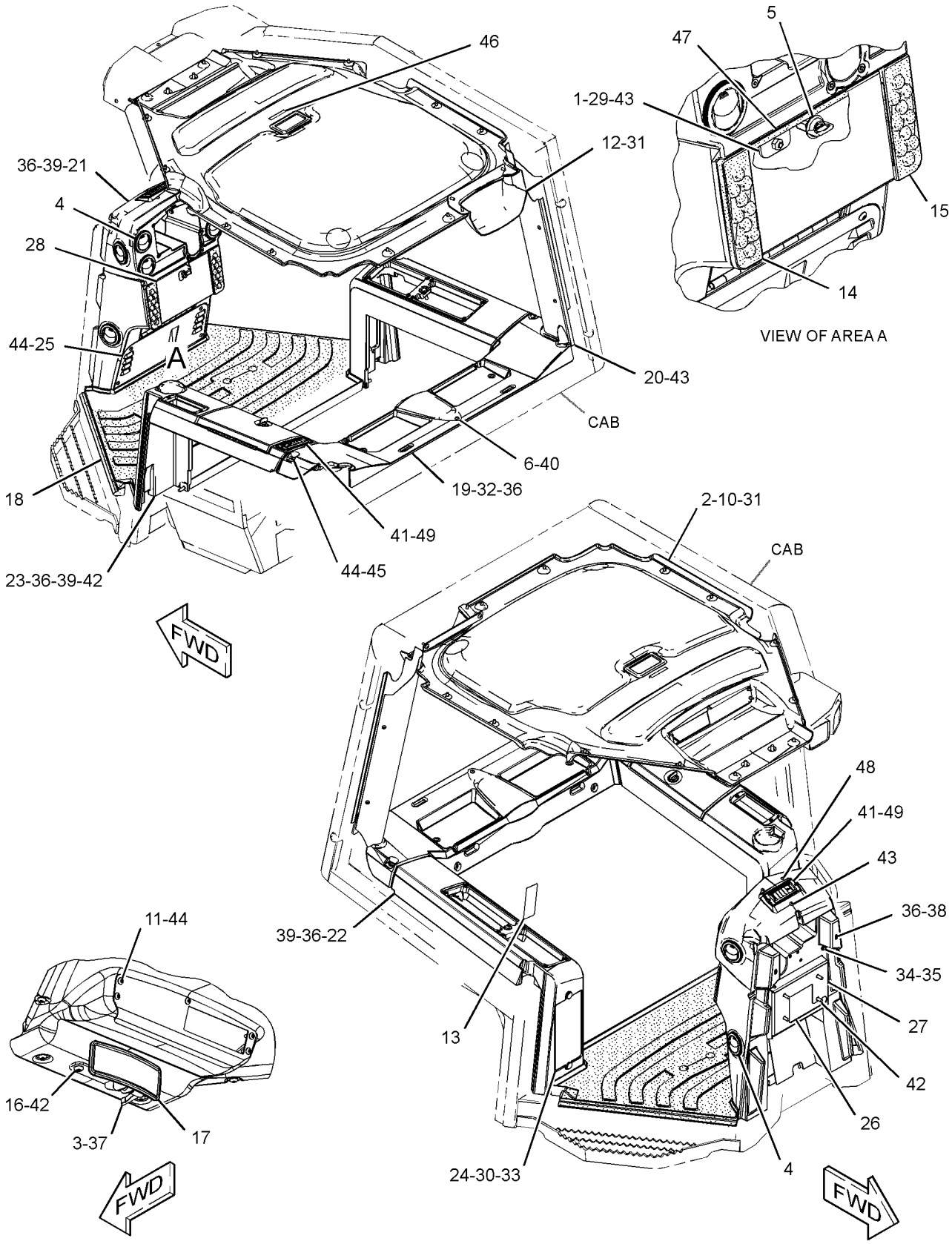

GRAPHIC #1

<END>

g02582797

285-0331 COVER GP-CAB—EROPS

S/N: MMM1-UP; RRR1-UP
PART OF 296-5756 GRADE CONTROL AR
AN ATTACHMENT
TYPE 1

SMCS-7301 **i04402171**

NOTE	REF NO	GRAPHIC REF	PART NUMBER	QTY	PART NAME 1 2 3 4 5 6 (PRODUCT LEVEL)	SEE PAGE
	1	1	**154-7951**	12	SPACER	
	2	2	**164-8474**	8	LOUVER AS-VENT	
M	3	1	**225-3322**	1	SCREW-TRUSS HEAD (M6X1X10-MM)	
	4	1	**314-3009**	1	PLATE	
	5	2	**198-9706**	2	SCREW-TRUSS HEAD (M5X0.8X16-MM)	
	6	1,2	**104-2091**	4	SCREW-FLAT HEAD (6-20X0.5-IN)	
	7	1	**254-3206**	1	FLOOR MAT-REAR	
	8	1	**255-4233**	1	HEADLINER	
	9	2	**255-8384**	1	COVER-RADIO	
	10	1	**255-8386**	1	COVER (WIPER)	
	11	1	**272-5584**	1	FILM-INSTRUCTION (BULLDOZER CONTROL)	
	12	2	**314-3016**	1	PLATE	
	13	1	**314-3017**	1	PLATE	
	14	2	**314-3018**	1	BOX AS	
	15	2	**314-3024**	1	PLATE	
	16	1	**314-3002**	1	CONSOLE AS (RH)	
M		1	**297-1466**	11	INSERT-THREADED (M6X1-THD)	
Y	17	1	**314-3003**	1	CONSOLE GP (LH)	689
	18	1	**284-3753**	1	MAT-REAR	
	19	1	**284-3754**	1	FLOOR MAT-FRONT	
	20	1	**288-0884**	1	COVER-POST	
	21	2	**281-4007**	1	BRACKET AS	
	22	1	**314-3025**	2	SCREW-THUMB (M6X1X16-MM)	
	23	2	**314-3000**	1	DASH AS	
M		2	**297-1465**	7	INSERT-THREADED (M5X0.8-THD)	
M		2	**297-1466**	14	INSERT-THREADED (M6X1-THD)	
M	24	1	**127-2170**	15	SCREW-TRUSS HEAD (M8X1.25X20-MM)	
M	25	1	**128-2136**	6	SCREW-TRUSS HEAD (M6X1X16-MM)	
	26	1	**275-6710**	2	RETAINER	
	27	1	**9X-6165**	2	WASHER (6.5X22X2.5-MM THK)	
	28	1,2	**7X-7729**	15	WASHER (11X25X3-MM THK)	
	29	2	**283-9909**	1	MIRROR AS (REAR VIEW)	
M	30	1	**8T-4133**	2	NUT (M10X1.5-THD)	
M	31	1,2	**8T-4186**	7	BOLT (M10X1.5X40-MM)	
M	32	1	**5C-9553**	4	BOLT (M6X1X16-MM)	
	33	1	**5P-4115**	4	WASHER-HARD (7.2X19X2-MM THK)	
	34	1,2	**8Y-6388**	2	LOUVER AS-VENT	
M	35	1,2	**9X-2040**	7	SCREW-TRUSS HEAD (M10X1.5X25-MM)	
M	36	1,2	**9X-2042**	7	SCREW-TRUSS HEAD (M6X1X12-MM)	
M	37	1,2	**9X-2045**	11	SCREW-TRUSS HEAD (M6X1X20-MM)	
D	38	1	**5P-5639**		SEAL (0.1-M)	
E	39	2	**8C-7332**		TRIM-EDGE (28-CM EACH)	
	40	2	**164-0850**	1	LEVER	
	41	2	**8T-4121**	1	WASHER-HARD (11X21X2.5-MM THK)	
	42	1	**8T-4205**	1	WASHER-HARD (7.2X14.5X2-MM THK)	

D - ORDER BY THE METER
E - ORDER BY THE CENTIMETER
M - METRIC PART
Y - SEPARATE ILLUSTRATION

285-0331 **COVER GP-CAB (*contd.*)** **i04402171**

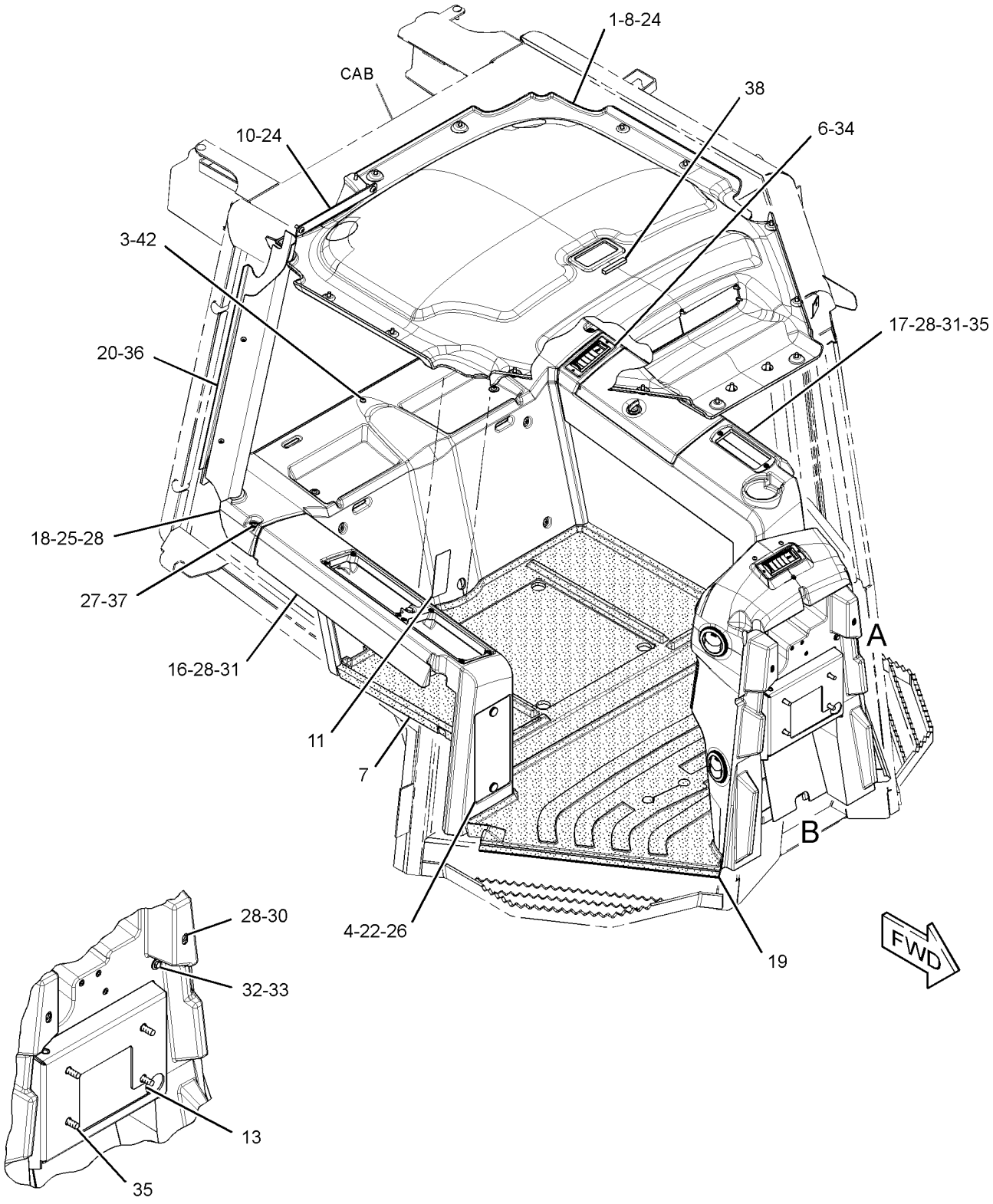

VIEW OF AREA A

REFER TO ALL ILLUSTRATIONS OF THIS GROUP FOR AUXILIARY VIEWS

GRAPHIC #1

g01743053

285-0331 **COVER GP-CAB (*contd.*)** **i04402171**

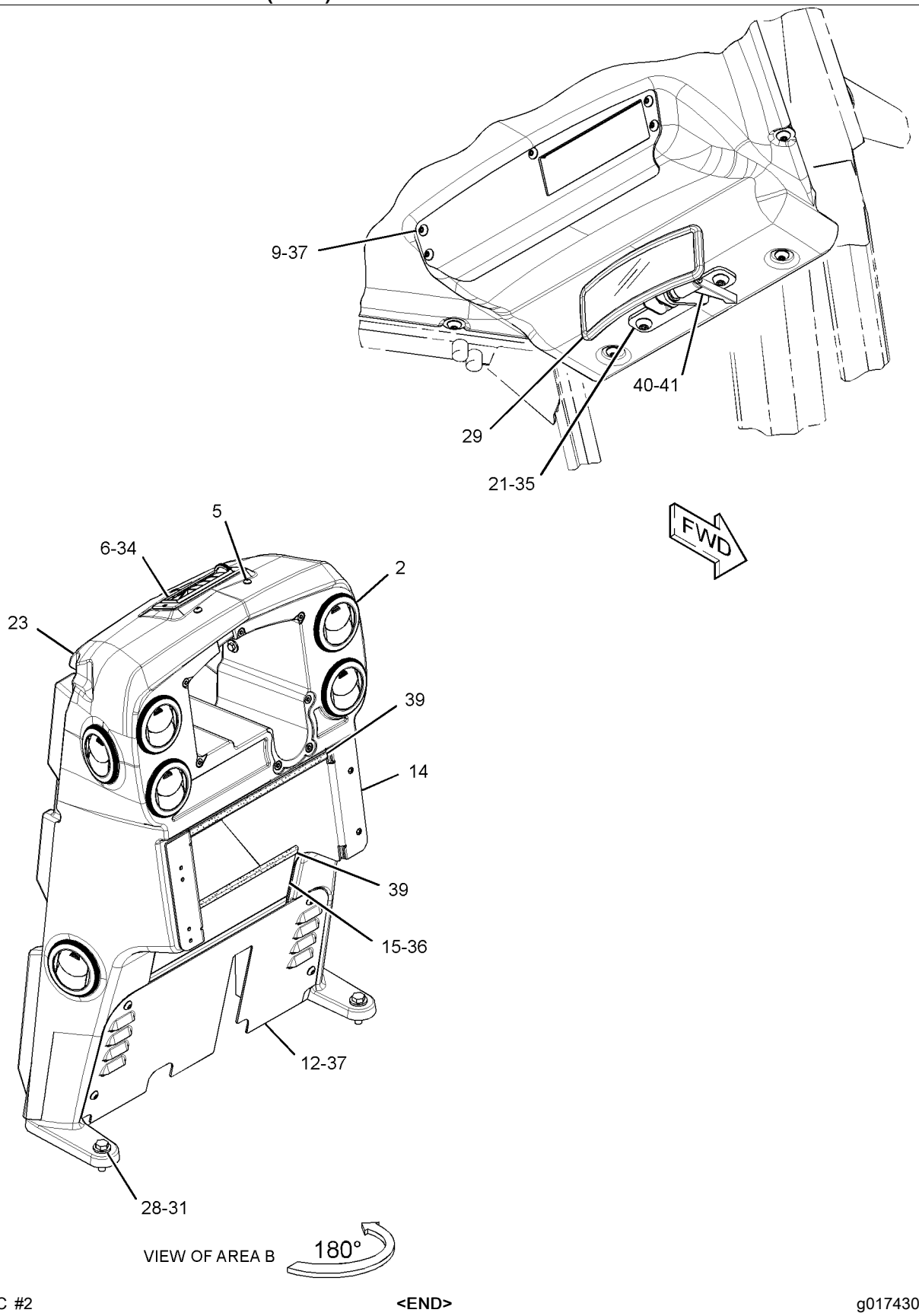

GRAPHIC #2 **<END>** g01743075

285-0331 COVER GP-CAB—EROPS

S/N: MMM1-UP; RRR1-UP
PART OF 296-5756 GRADE CONTROL AR
AN ATTACHMENT
TYPE 2

SMCS-7301 **i03742281**

NOTE	REF NO	GRAPHIC REF	PART NUMBER	QTY	PART NAME 1 2 3 4 5 6 (PRODUCT LEVEL)	SEE PAGE
	1	1	**154-7951**	12	SPACER	
	2	2	**164-8474**	8	LOUVER AS-VENT	
M	3	1	**225-3322**	1	SCREW-TRUSS HEAD (M6X1X10-MM)	
	4	1	**314-3009**	1	PLATE	
	5	2	**198-9706**	2	SCREW-TRUSS HEAD (M5X0.8X16-MM)	
	6	1,2	**104-2091**	4	SCREW-FLAT HEAD (6-20X0.5-IN)	
	8	1	**255-4233**	1	HEADLINER	
	9	2	**255-8384**	1	COVER-RADIO	
	10	1	**255-8386**	1	COVER (WIPER)	
	11	1	**272-5584**	1	FILM-INSTRUCTION (BULLDOZER CONTROL)	
	12	2	**314-3016**	1	PLATE	
	13	1	**314-3017**	1	PLATE	
	14	2	**314-3018**	1	BOX AS	
	15	2	**314-3024**	1	PLATE	
	16	1	**314-3002**	1	CONSOLE AS (RH)	
M		1	**297-1466**	11	INSERT-THREADED (M6X1-THD)	
Y	17	1	**314-3003**	1	CONSOLE GP (LH)	689
C	18	1	**311-5950**	1	FLOOR MAT-REAR	
	19	1	**284-3754**	1	FLOOR MAT-FRONT	
	20	1	**288-0884**	1	COVER-POST	
	21	2	**281-4007**	1	BRACKET AS	
	22	1	**314-3025**	2	SCREW-THUMB (M6X1X16-MM)	
	23	2	**314-3000**	1	DASH AS	
M		2	**297-1465**	7	INSERT-THREADED (M5X0.8-THD)	
M		2	**297-1466**	14	INSERT-THREADED (M6X1-THD)	
M	24	1	**127-2170**	15	SCREW-TRUSS HEAD (M8X1.25X20-MM)	
CM	25	1	**128-2136**	4	SCREW-TRUSS HEAD (M6X1X16-MM)	
	26	1	**275-6710**	2	RETAINER	
	27	1	**9X-6165**	2	WASHER (6.5X22X2.5-MM THK)	
C	28	1,2	**7X-7729**	13	WASHER (11X25X3-MM THK)	
	29	2	**283-9909**	1	MIRROR AS	
M	30	1	**8T-4133**	2	NUT (M10X1.5-THD)	
M	31	1,2	**8T-4186**	7	BOLT (M10X1.5X40-MM)	
M	32	1	**5C-9553**	4	BOLT (M6X1X16-MM)	
	33	1	**5P-4115**	4	WASHER-HARD (7.2X19X2-MM THK)	
	34	1,2	**8Y-6388**	2	LOUVER AS-VENT	
M	35	1,2	**9X-2040**	7	SCREW-TRUSS HEAD (M10X1.5X25-MM)	
M	36	1,2	**9X-2042**	7	SCREW-TRUSS HEAD (M6X1X12-MM)	
M	37	1,2	**9X-2045**	11	SCREW-TRUSS HEAD (M6X1X20-MM)	
D	38	1	**5P-5639**		SEAL (0.1-M)	
E	39	2	**8C-7332**		TRIM-EDGE (28-CM EACH)	
	40	2	**164-0850**	1	LEVER	
	41	2	**8T-4121**	1	WASHER-HARD (11X21X2.5-MM THK)	
	42	1	**8T-4205**	1	WASHER-HARD (7.2X14.5X2-MM THK)	

C - CHANGE FROM PREVIOUS TYPE
D - ORDER BY THE METER
E - ORDER BY THE CENTIMETER
M - METRIC PART
Y - SEPARATE ILLUSTRATION

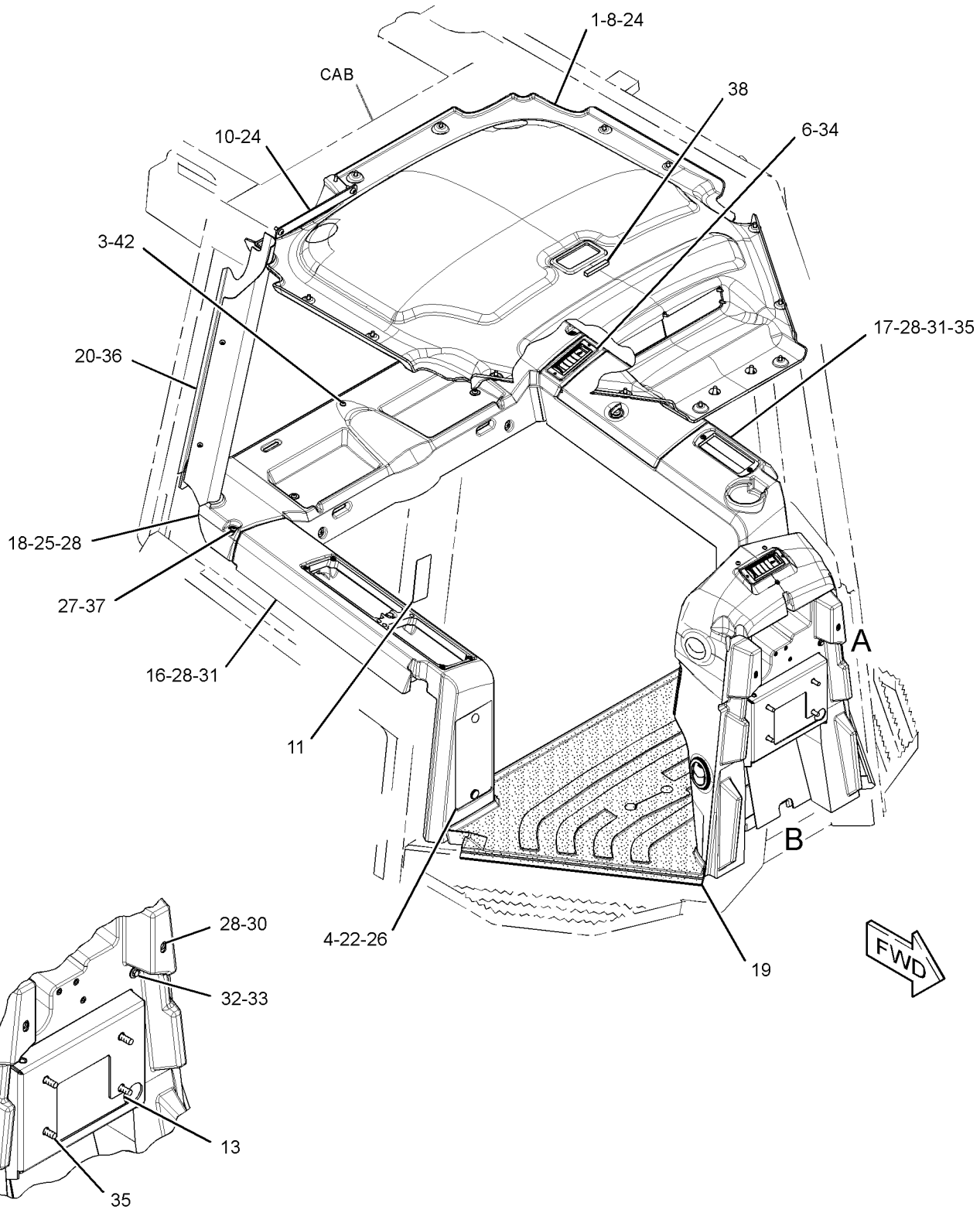

VIEW OF AREA A

REFER TO ALL ILLUSTRATIONS OF THIS GROUP FOR AUXILIARY VIEWS

GRAPHIC #1

g02014294

285-0331 **COVER GP-CAB (*contd.*)** **i03742281**

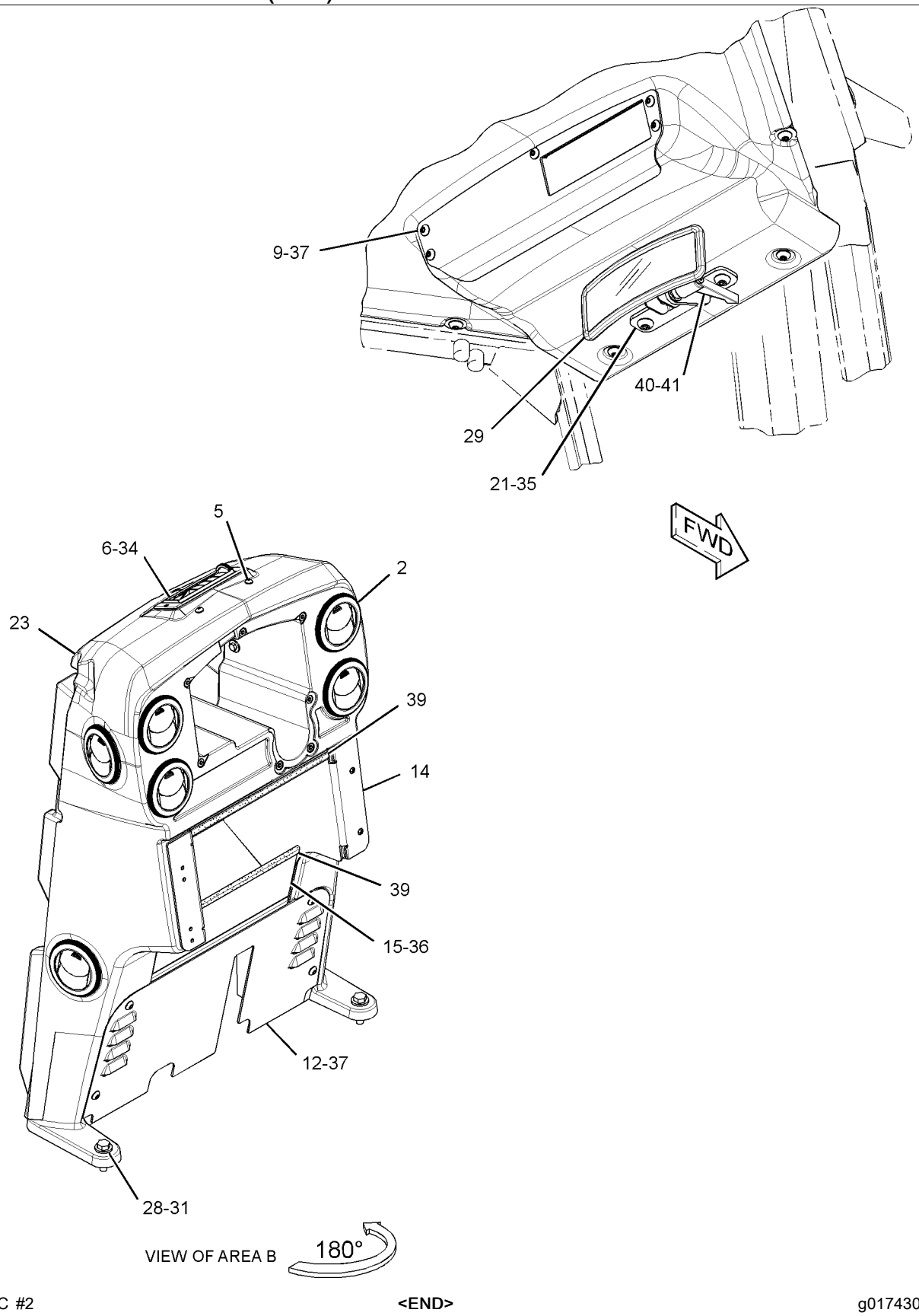

GRAPHIC #2 **<END>** g01743075

OPERATOR STATION

285-0331 COVER GP-CAB—EROPS

S/N: MMM1-860; RRR1-662
PART OF 296-5756 GRADE CONTROL AR
AN ATTACHMENT

SMCS-7301 **i04395772**

NOTE	REF NO	GRAPHIC REF	PART NUMBER	QTY	PART NAME 1 2 3 4 5 6 (PRODUCT LEVEL)	SEE PAGE
	1	1	**154-7951**	12	SPACER	
	2	2	**164-8474**	8	LOUVER AS-VENT	
M	3	1	**225-3322**	1	SCREW-TRUSS HEAD (M6X1X10-MM)	
C	4	1	**343-3567**	1	PLATE	
	6	1,2	**104-2091**	4	SCREW-FLAT HEAD (6-20X0.5-IN)	
	8	1	**255-4233**	1	HEADLINER	
	9	2	**255-8384**	1	COVER-RADIO	
	10	1	**255-8386**	1	COVER (WIPER)	
	11	1	**272-5584**	1	FILM-INSTRUCTION (BULLDOZER CONTROL)	
	12	2	**314-3016**	1	PLATE	
	13	1	**314-3017**	1	PLATE	
	14	2	**314-3018**	1	BOX AS	
	15	2	**314-3024**	1	PLATE	
C	16	1	**343-3566**	1	CONSOLE AS (RH)	
M		1	**297-1466**	11	INSERT-THREADED (M6X1-THD)	
Y	17	1	**314-3003**	1	CONSOLE GP (LH)	689
	18	1	**311-5950**	1	FLOOR MAT-REAR	
	19	1	**284-3754**	1	FLOOR MAT-FRONT	
	20	1	**288-0884**	1	COVER-POST	
	21	2	**281-4007**	1	BRACKET AS	
	22	1	**314-3025**	2	SCREW-THUMB (M6X1X16-MM)	
	23	2	**314-3000**	1	DASH AS	
M		2	**297-1465**	7	INSERT-THREADED (M5X0.8-THD)	
M		2	**297-1466**	14	INSERT-THREADED (M6X1-THD)	
M	24	1	**127-2170**	15	SCREW-TRUSS HEAD (M8X1.25X20-MM)	
M	25	1	**128-2136**	4	SCREW-TRUSS HEAD (M6X1X16-MM)	
	26	1	**275-6710**	2	RETAINER	
	27	1	**9X-6165**	2	WASHER (6.5X22X2.5-MM THK)	
	28	1,2	**7X-7729**	13	WASHER (11X25X3-MM THK)	
	29	2	**283-9909**	1	MIRROR AS	
M	30	1	**8T-4133**	2	NUT (M10X1.5-THD)	
M	31	1,2	**8T-4186**	7	BOLT (M10X1.5X40-MM)	
M	32	1	**5C-9553**	4	BOLT (M6X1X16-MM)	
	33	1	**5P-4115**	4	WASHER-HARD (7.2X19X2-MM THK)	
	34	1,2	**8Y-6388**	2	LOUVER AS-VENT	
M	35	1,2	**9X-2040**	7	SCREW-TRUSS HEAD (M10X1.5X25-MM)	
M	36	1,2	**9X-2042**	7	SCREW-TRUSS HEAD (M6X1X12-MM)	
M	37	1,2	**9X-2045**	11	SCREW-TRUSS HEAD (M6X1X20-MM)	
D	38	1	**5P-5639**		SEAL (0.1-M)	
E	39	2	**8C-7332**		TRIM-EDGE (28-CM EACH)	
	40	2	**164-0850**	1	LEVER	
	41	2	**8T-4121**	1	WASHER-HARD (11X21X2.5-MM THK)	
	42	1	**8T-4205**	1	WASHER-HARD (7.2X14.5X2-MM THK)	

C - CHANGE FROM PREVIOUS TYPE
D - ORDER BY THE METER
E - ORDER BY THE CENTIMETER
M - METRIC PART
Y - SEPARATE ILLUSTRATION

285-0331 **COVER GP-CAB (*contd.*)** **i04395772**

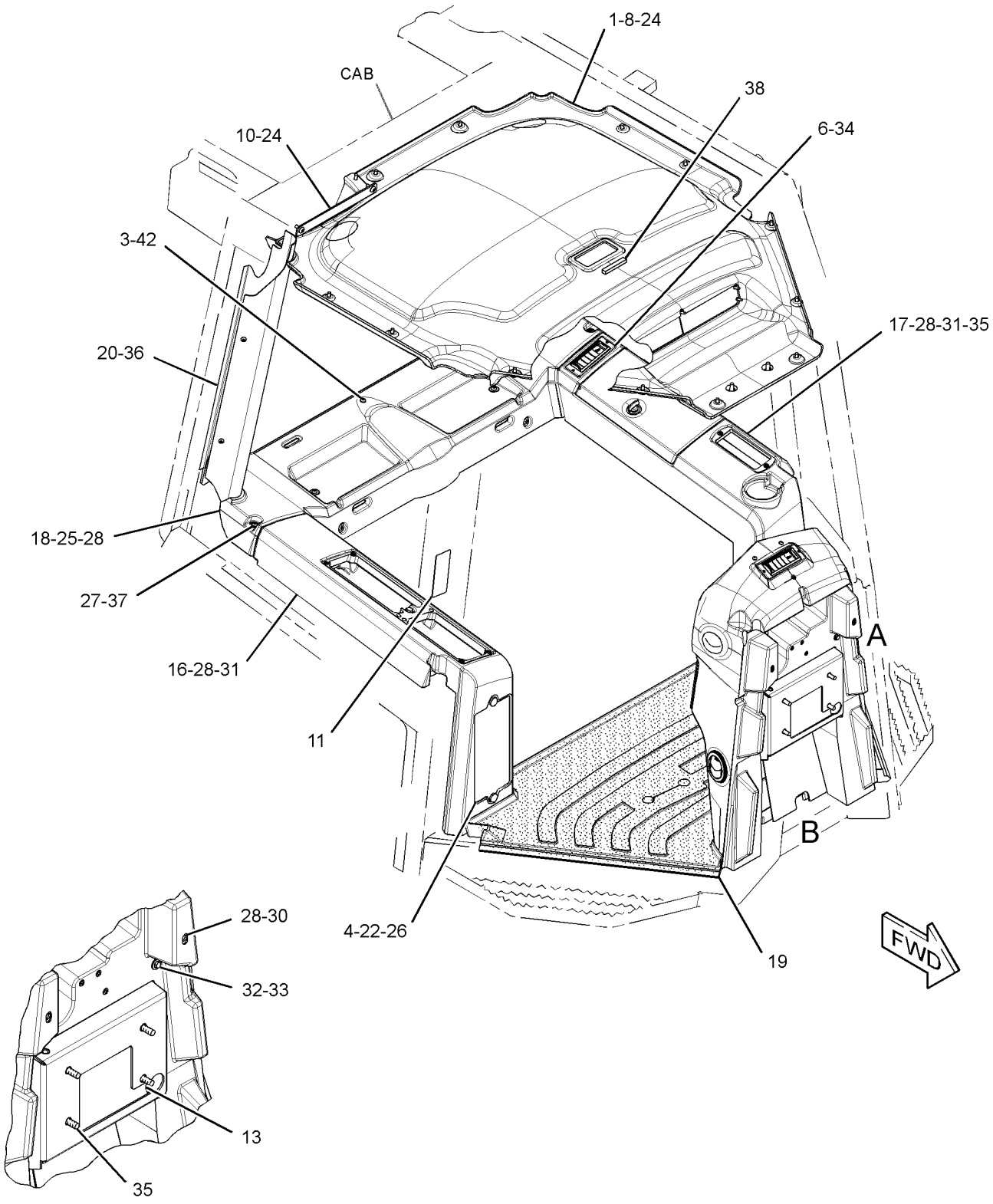

VIEW OF AREA A

REFER TO ALL ILLUSTRATIONS OF THIS GROUP FOR AUXILIARY VIEWS

GRAPHIC #1

g02545876

285-0331 **COVER GP-CAB (*contd.*)** **i04395772**

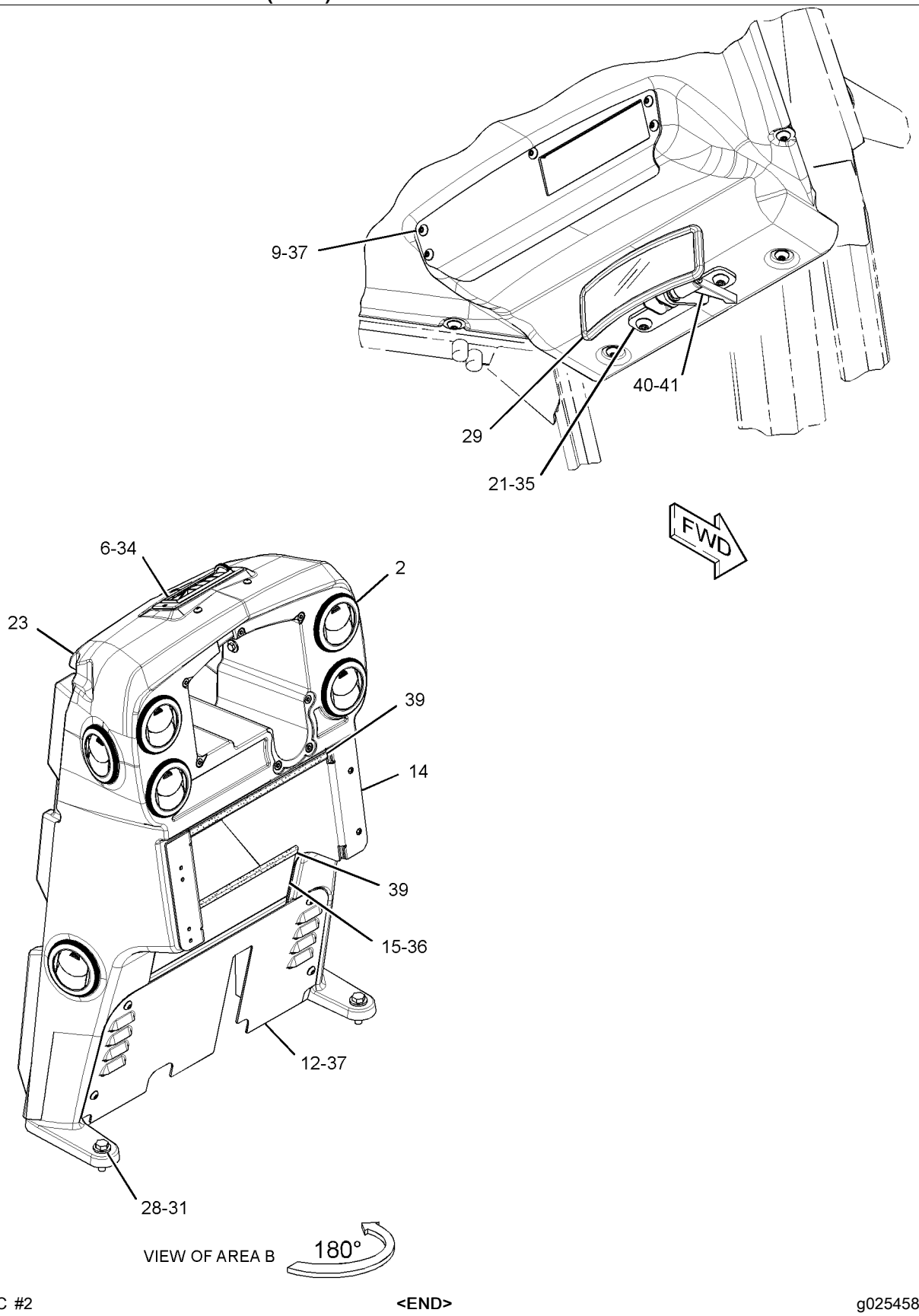

GRAPHIC #2 **<END>** g02545877

285-0331 COVER GP-CAB—EROPS

S/N: MMM861-UP; RRR663-UP
PART OF 296-5756 GRADE CONTROL AR
AN ATTACHMENT

SMCS-7301 **i04916640**

NOTE	REF NO	GRAPHIC REF	PART NUMBER	QTY	PART NAME 1 2 3 4 5 6 (PRODUCT LEVEL)	SEE PAGE
	1	1	**154-7951**	12	SPACER	
	2	2	**164-8474**	8	LOUVER AS-VENT	
M	3	1	**225-3322**	1	SCREW-TRUSS HEAD (M6X1X10-MM)	
	4	1	**343-3567**	1	PLATE	
	6	1,2	**104-2091**	4	SCREW-FLAT HEAD (6-20X0.5-IN)	
	8	1	**255-4233**	1	HEADLINER	
	9	2	**255-8384**	1	COVER-RADIO	
	10	1	**255-8386**	1	COVER (WIPER)	
C	11	1	**346-9780**	1	FILM-INSTRUCTION (BULLDOZER CONTROL)	
	12	2	**314-3016**	1	PLATE	
	13	1	**314-3017**	1	PLATE	
	14	2	**314-3018**	1	BOX AS	
	15	2	**314-3024**	1	PLATE	
	16	1	**343-3566**	1	CONSOLE AS (RH)	
M		1	**297-1466**	11	INSERT-THREADED (M6X1-THD)	
Y	17	1	**314-3003**	1	CONSOLE GP (LH)	689
	18	1	**311-5950**	1	FLOOR MAT-REAR	
	19	1	**284-3754**	1	FLOOR MAT-FRONT	
	20	1	**288-0884**	1	COVER-POST	
	21	2	**281-4007**	1	BRACKET AS	
	22	1	**314-3025**	2	SCREW-THUMB (M6X1X16-MM)	
	23	2	**314-3000**	1	DASH AS	
M		2	**297-1465**	7	INSERT-THREADED (M5X0.8-THD)	
M		2	**297-1466**	14	INSERT-THREADED (M6X1-THD)	
M	24	1	**127-2170**	15	SCREW-TRUSS HEAD (M8X1.25X20-MM)	
M	25	1	**128-2136**	4	SCREW-TRUSS HEAD (M6X1X16-MM)	
	26	1	**275-6710**	2	RETAINER	
	27	1	**9X-6165**	2	WASHER (6.5X22X2.5-MM THK)	
	28	1,2	**7X-7729**	13	WASHER (11X25X3-MM THK)	
	29	2	**283-9909**	1	MIRROR AS	
M	30	1	**8T-4133**	2	NUT (M10X1.5-THD)	
M	31	1,2	**8T-4186**	7	BOLT (M10X1.5X40-MM)	
M	32	1	**5C-9553**	4	BOLT (M6X1X16-MM)	
	33	1	**5P-4115**	4	WASHER-HARD (7.2X19X2-MM THK)	
	34	1,2	**8Y-6388**	2	LOUVER AS-VENT	
M	35	1,2	**9X-2040**	7	SCREW-TRUSS HEAD (M10X1.5X25-MM)	
M	36	1,2	**9X-2042**	7	SCREW-TRUSS HEAD (M6X1X12-MM)	
M	37	1,2	**9X-2045**	11	SCREW-TRUSS HEAD (M6X1X20-MM)	
D	38	1	**5P-5639**		SEAL (0.1-M)	
E	39	2	**8C-7332**		TRIM-EDGE (28-CM EACH)	
	40	2	**164-0850**	1	LEVER	
	41	2	**8T-4121**	1	WASHER-HARD (11X21X2.5-MM THK)	
	42	1	**8T-4205**	1	WASHER-HARD (7.2X14.5X2-MM THK)	
C	43	1	**347-2729**	1	FILM-INSTRUCTION (BULLDOZER CONTROL)	

C - CHANGE FROM PREVIOUS TYPE
D - ORDER BY THE METER
E - ORDER BY THE CENTIMETER
M - METRIC PART
Y - SEPARATE ILLUSTRATION

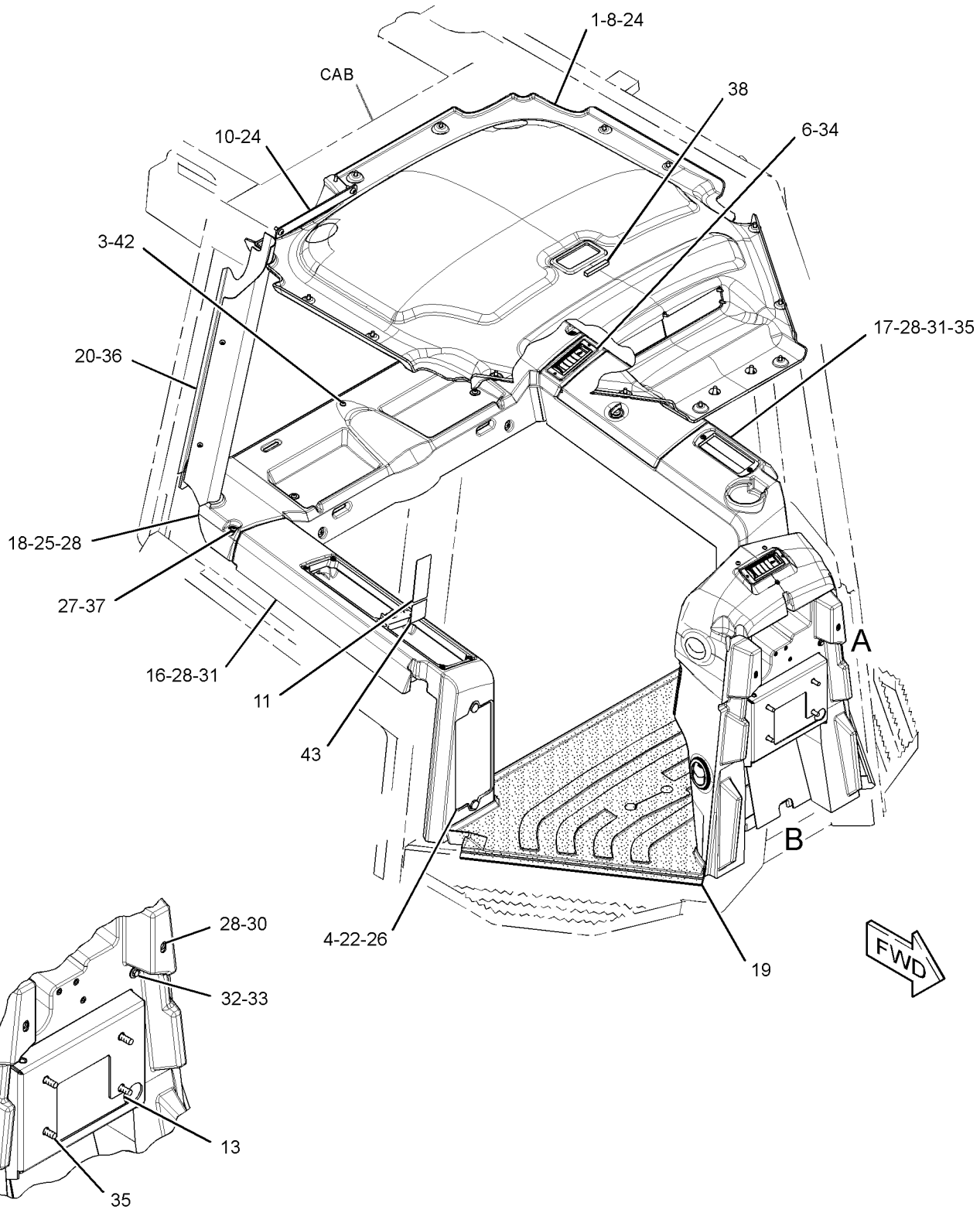

VIEW OF AREA A

REFER TO ALL ILLUSTRATIONS OF THIS GROUP FOR AUXILIARY VIEWS

GRAPHIC #1

g03167759

285-0331 **COVER GP-CAB (*contd.*)** **i04916640**

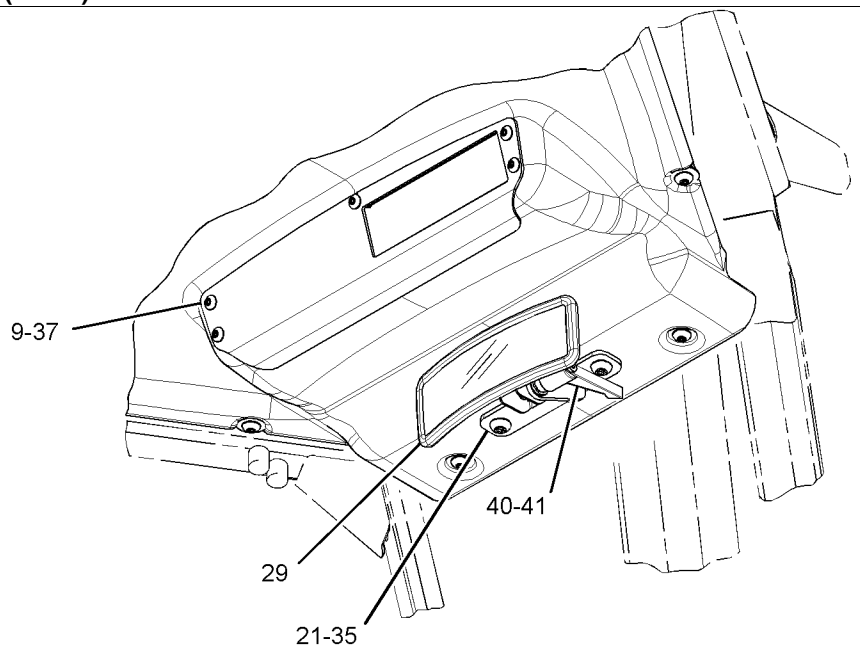

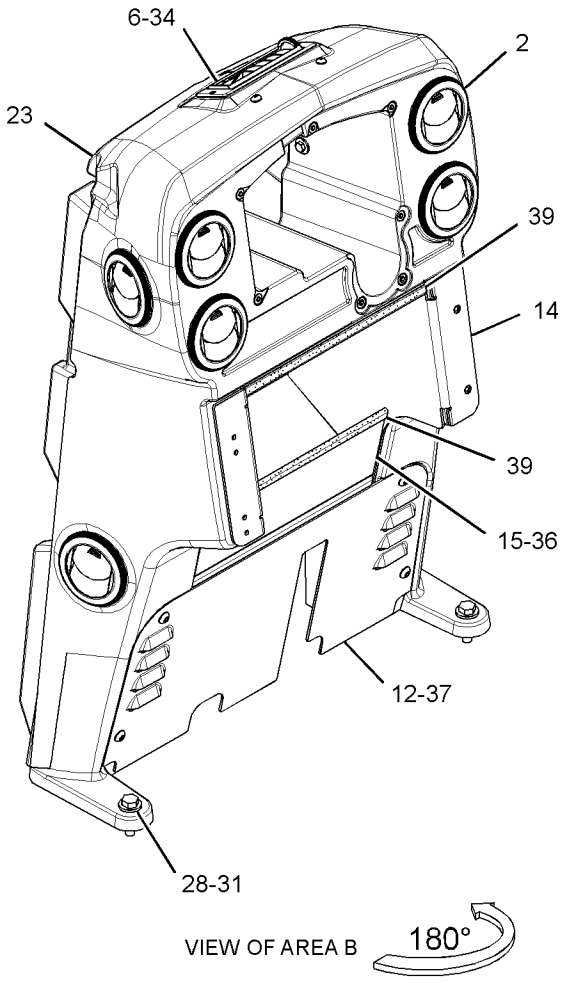

GRAPHIC #2 **<END>** g03167757

269-7665 COVER GP-CONSOLE–STANDARD

S/N: MMM1-UP; RRR1-UP
PART OF 264-4550 HYDRAULIC AR
AN ATTACHMENT

SMCS-5258 **i03630961**

NOTE	REF NO	GRAPHIC REF	PART NUMBER	QTY	PART NAME 1 2 3 4 5 6 (PRODUCT LEVEL)	SEE PAGE
	1	1	**251-4056**	1	PLATE	
M	2	1	**9X-2045**	4	SCREW-TRUSS HEAD (M6X1X20-MM)	

M - METRIC PART

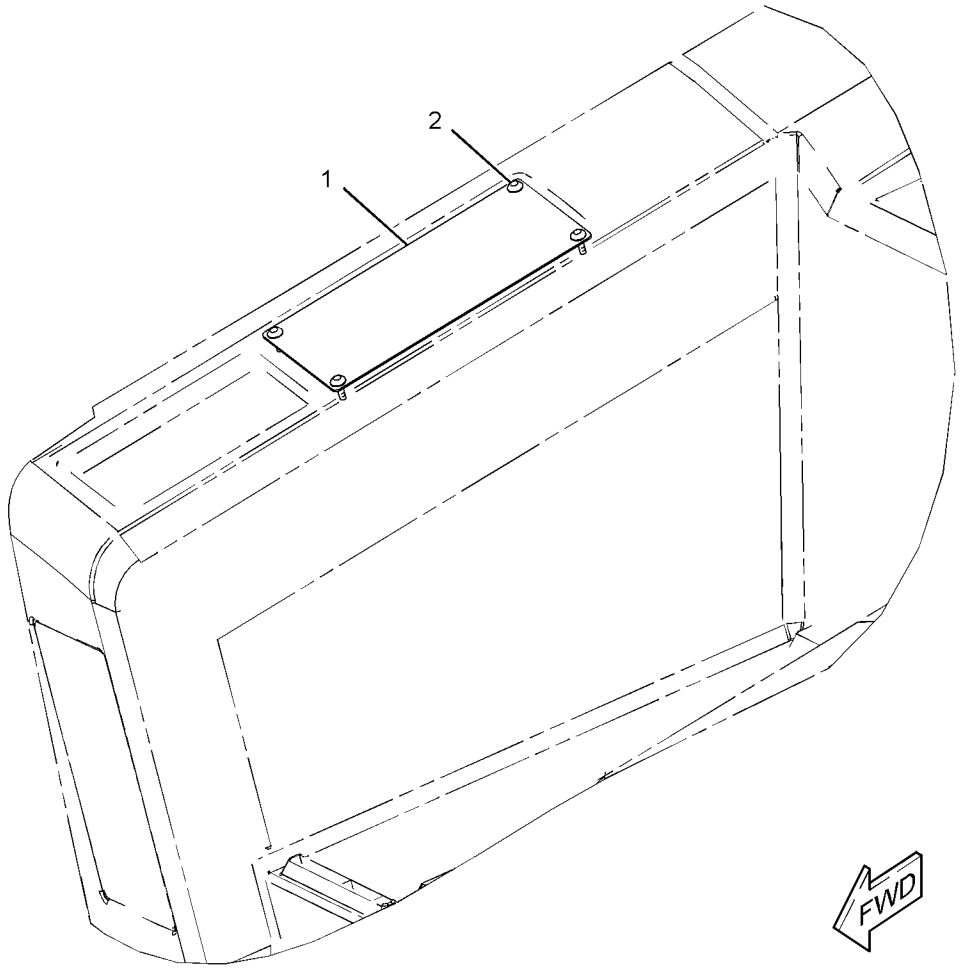

GRAPHIC #1 **<END>** g01948602

285-0330 COVER GP-CONSOLE—OROPS

S/N: MMM1-UP; RRR1-UP
PART OF 296-5755 GRADE CONTROL AR
AN ATTACHMENT

SMCS-5258 **i03603120**

NOTE	REF NO	GRAPHIC REF	PART NUMBER	QTY	PART NAME 1 2 3 4 5 6 (PRODUCT LEVEL)	SEE PAGE
	1	1	**164-0850**	1	LEVER	
	2	1	**164-8474**	4	LOUVER AS-VENT	
M	3	1	**225-3322**	1	SCREW-TRUSS HEAD (M6X1X10-MM)	
	4	1	**226-0331**	1	CAM-LOCK	
	5	1	**314-3009**	1	PLATE	
	7	1	**314-3015**	1	PLATE	
	8	1	**272-5584**	1	FILM-INSTRUCTION (BULLDOZER CONTROL)	
	9	1	**314-3016**	1	PLATE	
	10	1	**314-3017**	1	PLATE	
	11	1	**314-3019**	1	GUARD GP-VANDALISM	
	12	1	**314-3021**	1	PLATE	
	13	1	**281-4004**	1	HEADLINER	
	14	1	**281-4007**	1	BRACKET AS	
	15	1	**283-9902**	1	HANDLE AS	
	16	1	**283-9909**	1	MIRROR AS	
	17	1	**314-3002**	1	CONSOLE AS (RH)	
M		1	**297-1466**	11	INSERT-THREADED (M6X1-THD)	
	18	1	**311-5950**	1	FLOOR MAT-REAR	
	19	1	**284-3754**	1	FLOOR MAT-FRONT	
	20	1	**288-0884**	1	COVER-POST	
	21	1	**314-3025**	2	THUMBSCREW (M6X1X16-MM)	
Y	22	1	**314-3004**	1	CONSOLE GP (LH)	691
	23	1	**314-3001**	1	DASH AS	
M		1	**297-1465**	11	INSERT-THREADED (M5X0.8-THD)	
M		1	**297-1466**	13	INSERT-THREADED (M6X1-THD)	
M	24	1	**128-2136**	4	SCREW-TRUSS HEAD (M6X1X16-MM)	
	25	1	**198-9706**	4	SCREW-TRUSS HEAD (M5X0.8X16-MM)	
	26	1	**275-6710**	2	RETAINER	
M	28	1	**5C-9553**	4	BOLT (M6X1X16-MM)	
	29	1	**5P-4115**	4	WASHER-HARD (7.2X19X2-MM THK)	
J	30	1	**5P-9000**	1	LOCK AS-CYLINDER	
	31	1	**7X-7729**	13	WASHER (11X25X3-MM THK)	
	32	1	**8T-4121**	1	WASHER-HARD (11X21X2.5-MM THK)	
M	33	1	**8T-4133**	2	NUT (M10X1.5-THD)	
M	34	1	**8T-4186**	7	BOLT (M10X1.5X40-MM)	
	35	1	**8T-4223**	1	WASHER-HARD (13.5X25.5X3-MM THK)	
M	36	1	**9X-2040**	7	SCREW-TRUSS HEAD (M10X1.5X25-MM)	
M	37	1	**9X-2042**	7	SCREW-TRUSS HEAD (M6X1X12-MM)	
M	38	1	**9X-2045**	6	SCREW-TRUSS HEAD (M6X1X20-MM)	
E	39	1	**8C-7332**		TRIM-EDGE (29-CM)	
	40	1	**9X-6165**	2	WASHER (6.5X22X2.5-MM THK)	
	41	1	**8T-4205**	1	WASHER-HARD (7.2X14.5X2-MM THK)	
	42	1	**325-0701**	1	BRACKET	

E - ORDER BY THE CENTIMETER
J - REQUIRES CORPORATE KEY
M - METRIC PART
Y - SEPARATE ILLUSTRATION

285-0330 **COVER GP-CONSOLE (*contd.*)** **i03603120**

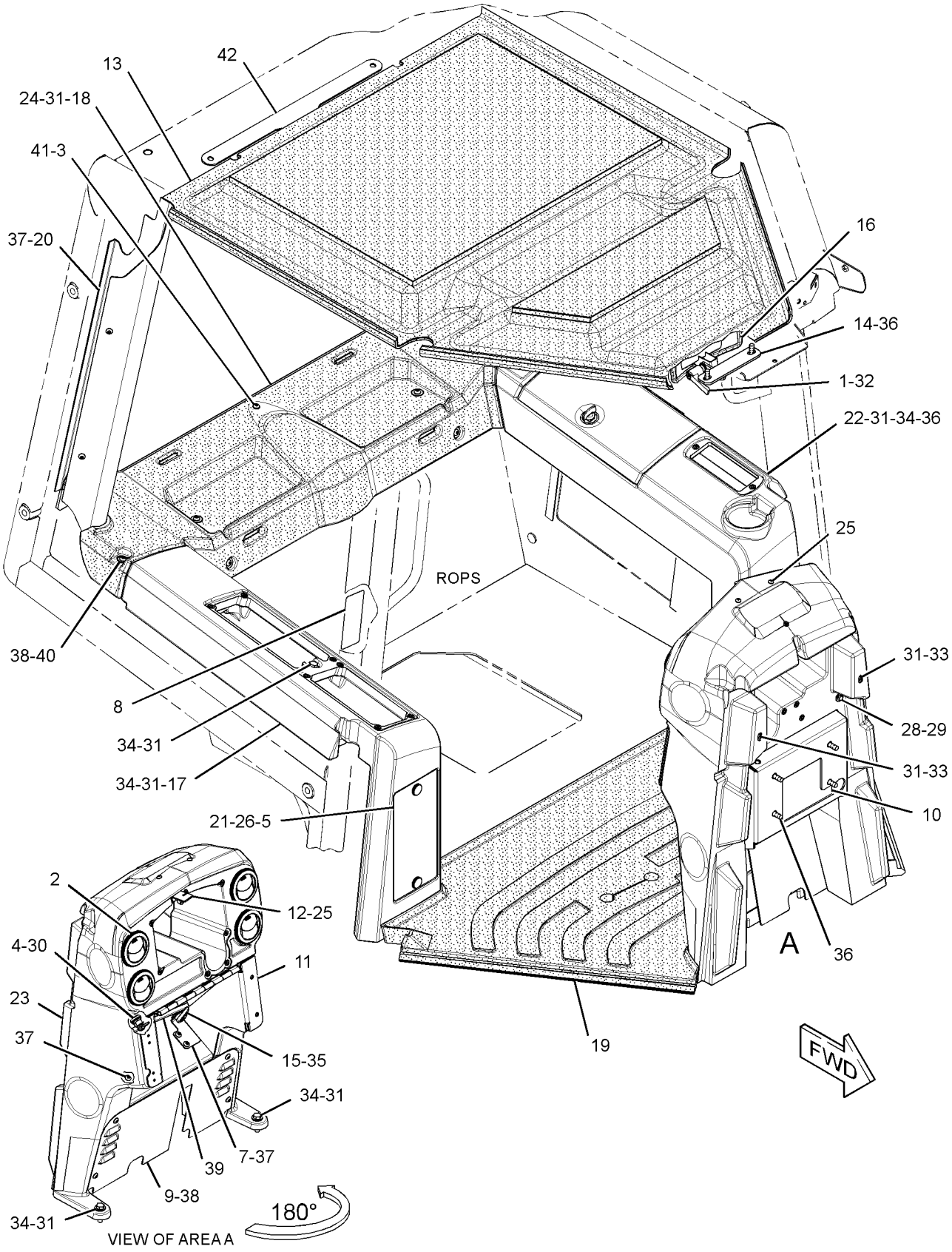

GRAPHIC #1 **<END>** g01734914

285-0330 COVER GP-CONSOLE–OROPS

S/N: MMM1-860; RRR1-662
PART OF 296-5755 GRADE CONTROL AR
AN ATTACHMENT

SMCS-5258 **i04395790**

NOTE	REF NO	GRAPHIC REF	PART NUMBER	QTY	PART NAME 1 2 3 4 5 6 (PRODUCT LEVEL)	SEE PAGE
	1	1	**164-0850**	1	LEVER	
	2	1	**164-8474**	4	LOUVER AS-VENT	
M	3	1	**225-3322**	1	SCREW-TRUSS HEAD (M6X1X10-MM)	
	4	1	**226-0331**	1	CAM-LOCK	
C	5	1	**343-3567**	1	PLATE	
	7	1	**314-3015**	1	PLATE	
	8	1	**272-5584**	1	FILM-INSTRUCTION (BULLDOZER CONTROL)	
	9	1	**314-3016**	1	PLATE	
	10	1	**314-3017**	1	PLATE	
	11	1	**314-3019**	1	GUARD GP-VANDALISM	
	12	1	**314-3021**	1	PLATE	
	13	1	**281-4004**	1	HEADLINER	
	14	1	**281-4007**	1	BRACKET AS	
	15	1	**283-9902**	1	HANDLE AS	
	16	1	**283-9909**	1	MIRROR AS	
C	17	1	**343-3566**	1	CONSOLE AS (RH)	
M		1	**297-1466**	11	INSERT-THREADED (M6X1-THD)	
	18	1	**311-5950**	1	FLOOR MAT-REAR	
	19	1	**284-3754**	1	FLOOR MAT-FRONT	
	20	1	**288-0884**	1	COVER-POST	
	21	1	**314-3025**	2	SCREW-THUMB (M6X1X16-MM)	
Y	22	1	**314-3004**	1	CONSOLE GP (LH)	691
	23	1	**314-3001**	1	DASH AS	
M		1	**297-1465**	9	INSERT-THREADED (M5X0.8-THD)	
M		1	**297-1466**	14	INSERT-THREADED (M6X1-THD)	
M	24	1	**128-2136**	4	SCREW-TRUSS HEAD (M6X1X16-MM)	
C	25	1	**198-9706**	2	SCREW-TRUSS HEAD (M5X0.8X16-MM)	
	26	1	**275-6710**	2	RETAINER	
M	28	1	**5C-9553**	4	BOLT (M6X1X16-MM)	
	29	1	**5P-4115**	4	WASHER-HARD (7.2X19X2-MM THK)	
J	30	1	**5P-9000**	1	LOCK AS-CYLINDER	
	31	1	**7X-7729**	13	WASHER (11X25X3-MM THK)	
	32	1	**8T-4121**	1	WASHER-HARD (11X21X2.5-MM THK)	
M	33	1	**8T-4133**	2	NUT (M10X1.5-THD)	
M	34	1	**8T-4186**	7	BOLT (M10X1.5X40-MM)	
	35	1	**8T-4223**	1	WASHER-HARD (13.5X25.5X3-MM THK)	
M	36	1	**9X-2040**	7	SCREW-TRUSS HEAD (M10X1.5X25-MM)	
M	37	1	**9X-2042**	7	SCREW-TRUSS HEAD (M6X1X12-MM)	
M	38	1	**9X-2045**	6	SCREW-TRUSS HEAD (M6X1X20-MM)	
E	39	1	**8C-7332**		TRIM-EDGE (29-CM)	
	40	1	**9X-6165**	2	WASHER (6.5X22X2.5-MM THK)	
	41	1	**8T-4205**	1	WASHER-HARD (7.2X14.5X2-MM THK)	
	42	1	**325-0701**	1	BRACKET	

C - CHANGE FROM PREVIOUS TYPE
E - ORDER BY THE CENTIMETER
J - REQUIRES CORPORATE KEY
M - METRIC PART
Y - SEPARATE ILLUSTRATION

285-0330 **COVER GP-CONSOLE (*contd.*)** **i04395790**

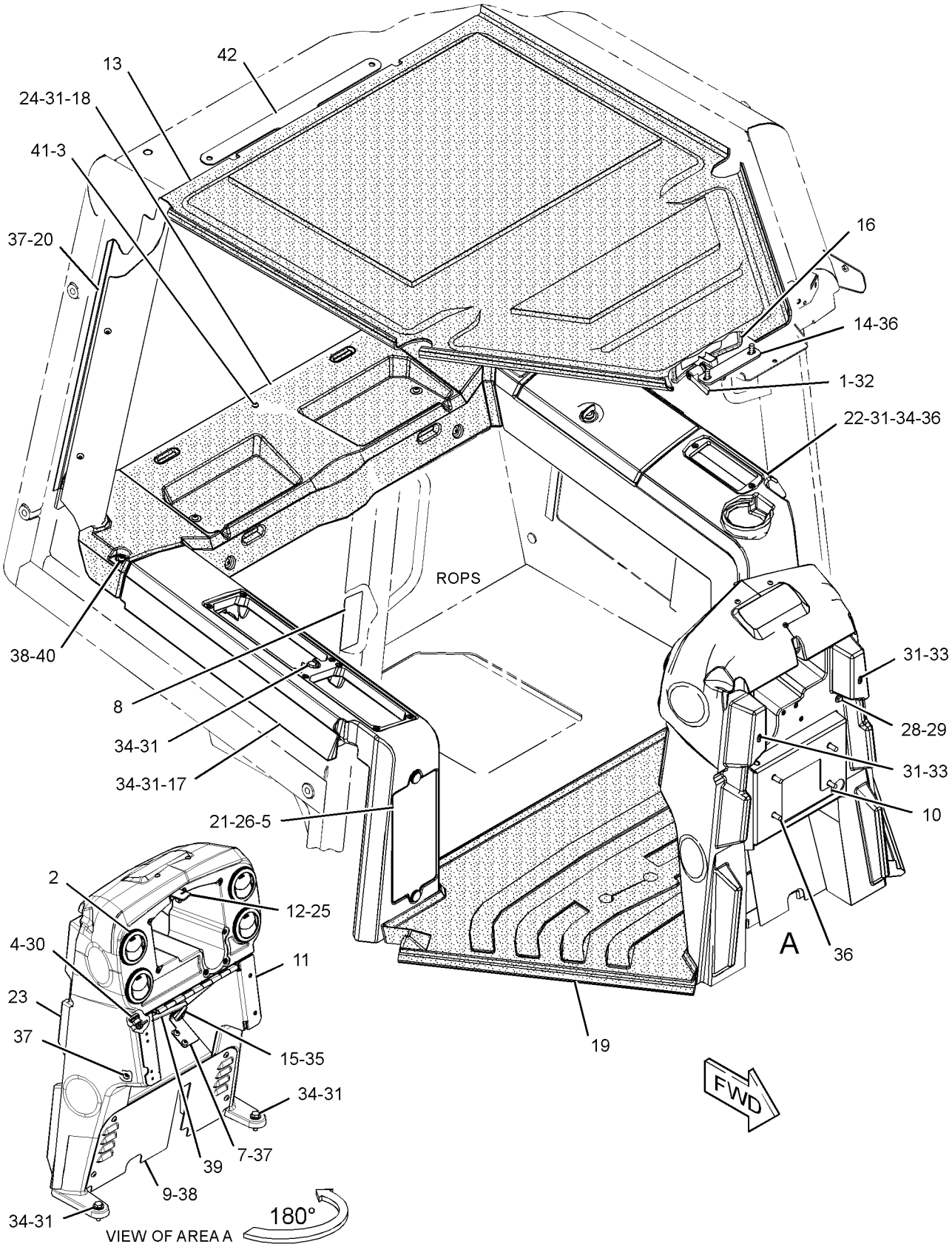

GRAPHIC #1 **<END>** g02545560

285-0330 COVER GP-CONSOLE—OROPS

S/N: MMM861-UP; RRR663-UP
PART OF 296-5755 GRADE CONTROL AR
AN ATTACHMENT

SMCS-5258 **i04916606**

NOTE	REF NO	GRAPHIC REF	PART NUMBER	QTY	PART NAME 1 2 3 4 5 6 (PRODUCT LEVEL)	SEE PAGE
	1	1	**164-0850**	1	LEVER	
	2	1	**164-8474**	4	LOUVER AS-VENT	
M	3	1	**225-3322**	1	SCREW-TRUSS HEAD (M6X1X10-MM)	
	4	1	**226-0331**	1	CAM-LOCK	
	5	1	**343-3567**	1	PLATE	
	7	1	**314-3015**	1	PLATE	
C	8	1	**346-9780**	1	FILM-INSTRUCTION (BULLDOZER CONTROL)	
	9	1	**314-3016**	1	PLATE	
	10	1	**314-3017**	1	PLATE	
	11	1	**314-3019**	1	GUARD GP-VANDALISM	
	12	1	**314-3021**	1	PLATE	
	13	1	**281-4004**	1	HEADLINER	
	14	1	**281-4007**	1	BRACKET AS	
	15	1	**283-9902**	1	HANDLE AS	
	16	1	**283-9909**	1	MIRROR AS	
	17	1	**343-3566**	1	CONSOLE AS (RH)	
M		1	**297-1466**	11	INSERT-THREADED (M6X1-THD)	
	18	1	**311-5950**	1	FLOOR MAT-REAR	
	19	1	**284-3754**	1	FLOOR MAT-FRONT	
	20	1	**288-0884**	1	COVER-POST	
	21	1	**314-3025**	2	SCREW-THUMB (M6X1X16-MM)	
Y	22	1	**314-3004**	1	CONSOLE GP (LH)	691
	23	1	**314-3001**	1	DASH AS	
M		1	**297-1465**	9	INSERT-THREADED (M5X0.8-THD)	
M		1	**297-1466**	14	INSERT-THREADED (M6X1-THD)	
M	24	1	**128-2136**	4	SCREW-TRUSS HEAD (M6X1X16-MM)	
	25	1	**198-9706**	2	SCREW-TRUSS HEAD (M5X0.8X16-MM)	
	26	1	**275-6710**	2	RETAINER	
M	28	1	**5C-9553**	4	BOLT (M6X1X16-MM)	
	29	1	**5P-4115**	4	WASHER-HARD (7.2X19X2-MM THK)	
J	30	1	**5P-9000**	1	LOCK AS-CYLINDER	
	31	1	**7X-7729**	13	WASHER (11X25X3-MM THK)	
	32	1	**8T-4121**	1	WASHER-HARD (11X21X2.5-MM THK)	
M	33	1	**8T-4133**	2	NUT (M10X1.5-THD)	
M	34	1	**8T-4186**	7	BOLT (M10X1.5X40-MM)	
	35	1	**8T-4223**	1	WASHER-HARD (13.5X25.5X3-MM THK)	
M	36	1	**9X-2040**	7	SCREW-TRUSS HEAD (M10X1.5X25-MM)	
M	37	1	**9X-2042**	7	SCREW-TRUSS HEAD (M6X1X12-MM)	
M	38	1	**9X-2045**	6	SCREW-TRUSS HEAD (M6X1X20-MM)	
E	39	1	**8C-7332**		TRIM-EDGE (29-CM)	
	40	1	**9X-6165**	2	WASHER (6.5X22X2.5-MM THK)	
	41	1	**8T-4205**	1	WASHER-HARD (7.2X14.5X2-MM THK)	
	42	1	**325-0701**	1	BRACKET	
C	43	1	**347-2729**	1	FILM-INSTRUCTION (BULLDOZER CONTROL)	

C - CHANGE FROM PREVIOUS TYPE
E - ORDER BY THE CENTIMETER
J - REQUIRES CORPORATE KEY
M - METRIC PART
Y - SEPARATE ILLUSTRATION

285-0330 **COVER GP-CONSOLE (*contd.*)** **i04916606**

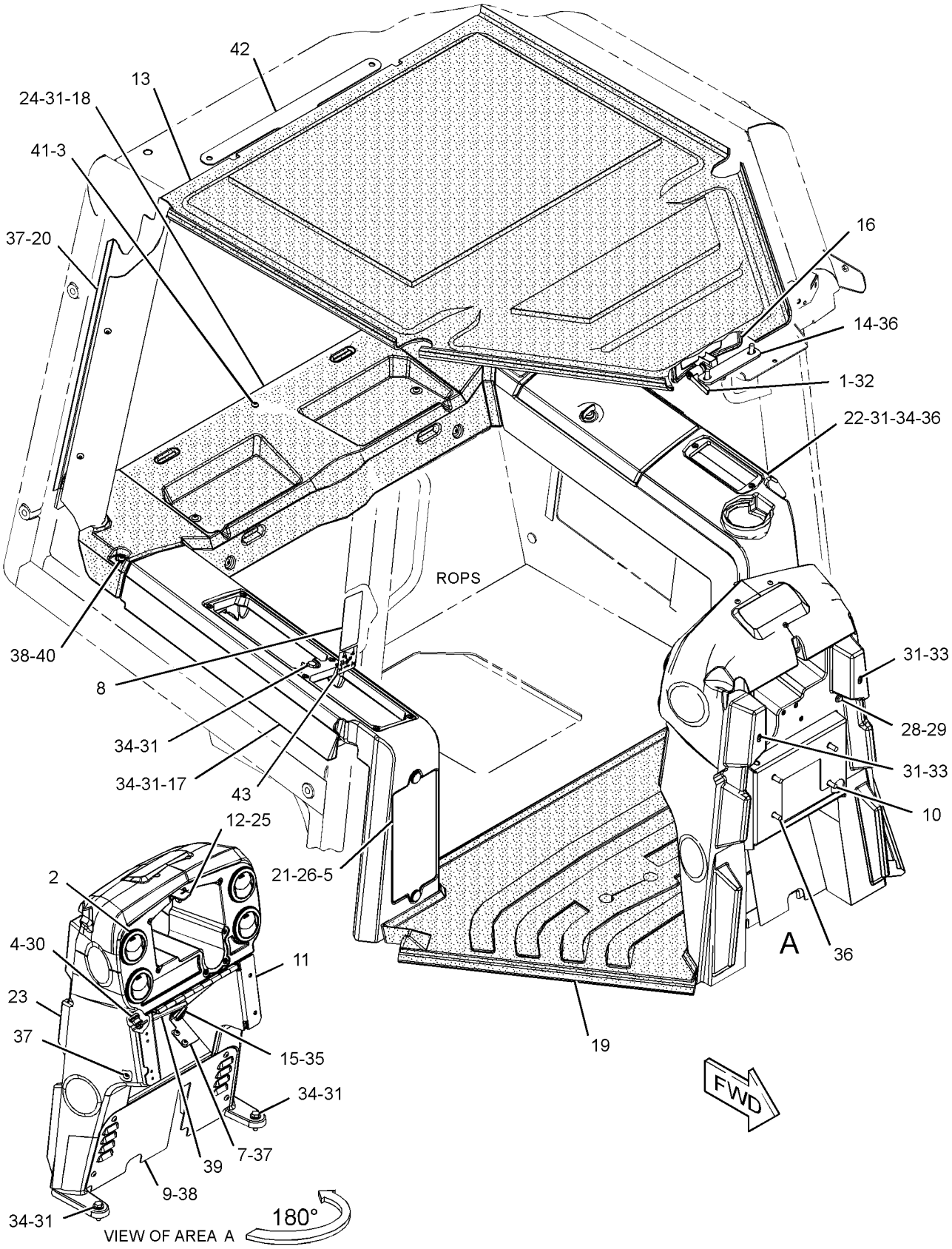

GRAPHIC #1 **<END>** g03166023

286-0134 DISPLAY GP-MONITOR—CD700

S/N: MMM1-UP; RRR1-UP

PART OF 317-6527 GRADE CONTROL AR, 290-5570, 290-5571, 292-0280, 347-0915, 347-0916 GRADE CONTROL AR-SATELLITE

SMCS-7490 **i04036776**

NOTE	PART NUMBER	QTY	PART NAME 1 2 3 4 5 6 (PRODUCT LEVEL)	SEE PAGE
R	**244-1716**	1	DISPLAY GP-MONITOR (CD700C)	
	283-4426	1	CARD AS-MEMORY (FLASH)	
	194-8031	1	ADAPTER (COMPACT)	
M	**8T-4171**	6	BOLT (M6X1X12-MM)	
	292-0311	1	CASE-CARRYING	
M	**8T-0285**	6	SCREW-MACHINE (M4X0.7X12-MM)	
	9X-8256	6	WASHER (6.6X12X2-MM THK)	
	096-6166	6	WASHER-HARD (4.5X9X1-MM THK)	

M - METRIC PART
R - REMFG PART MAY BE AVAILABLE

<END>

286-9124 DISPLAY GP-MONITOR—LIGHT BAR

S/N: MMM1-UP; RRR1-UP

PART OF 317-6527 GRADE CONTROL AR, 290-5570, 290-5571, 292-0280, 347-0915, 347-0916 GRADE CONTROL AR-SATELLITE

SMCS-7490 **i02618892**

NOTE	REF NO	GRAPHIC REF	PART NUMBER	QTY	PART NAME 1 2 3 4 5 6 (PRODUCT LEVEL)	SEE PAGE
	1	1	**230-5009**	1	RECEPTACLE AS-CONNECTOR (4-PIN)	
	2	1	**9X-3402**	3	SOCKET-CONNECTOR (16-GA TO 18-GA)	
	3	1	**8T-8737**	1	PLUG-SEAL	

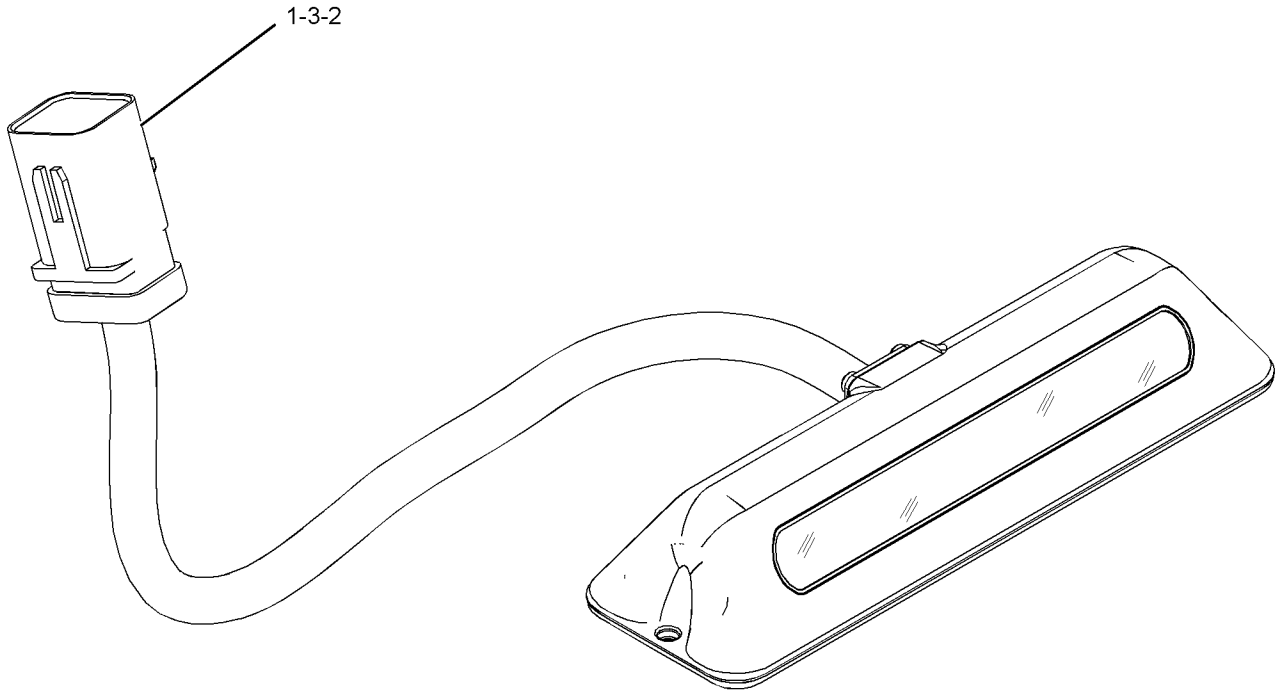

GRAPHIC #1 **<END>** g01313338

292-0309 DISPLAY GP-MONITOR—CD610

S/N: MMM1-UP; RRR1-UP

PART OF 292-0293, 292-0312 GRADE CONTROL AR-LASER

SMCS-7490 **i04025329**

NOTE	PART NUMBER	QTY	PART NAME 1 2 3 4 5 6 (PRODUCT LEVEL)	SEE PAGE
	283-9530	1	DISPLAY GP-MONITOR (CD610)	
	346-4372	1	SOFTWARE	
M	**7X-2619**	6	BOLT (M6X1X10-MM)	
	292-0311	1	CASE-CARRYING	
	8T-4205	6	WASHER-HARD (7.2X14.5X2-MM THK)	

M - METRIC PART

<END>

255-4271 DOOR GP-CAB–RH

S/N: MMM1-640; RRR1-485
PART OF 244-7475 ROPS AR, 282-4898 ROPS AR-ENCLOSED
AN ATTACHMENT

SMCS-7308 **i04403717**

NOTE	REF NO	GRAPHIC REF	PART NUMBER	QTY	PART NAME 1 2 3 4 5 6 (PRODUCT LEVEL)	SEE PAGE
	1	1	**320-8448**	2	CAP-NUT	
	2	1	**249-9061**	1	HARNESS AS-SWITCH (DOOR, RH)	
		1	**9W-0852**	4	PIN-CONNECTOR (14-GA TO 16-GA)	
		1	**230-5008**	1	PLUG AS-CONNECTOR (4-PIN)	
		1	**264-7031**	1	SEAL-CONNECTOR	
		1	**9X-3402**	4	SOCKET-CONNECTOR (16-GA TO 18-GA)	
J	3	1	**252-1862**	1	HANDLE AS (PULL)	
	4	1	**252-1863**	1	GASKET	
	5	1	**255-4256**	1	STRIKER AS (RH)	
Y	6	1	**261-7993**	1	MOTOR GP-WINDOW WIPER	797
	7	1	**262-1997**	1	ARM GP-WINDOW WIPER (DOOR, RH)	
		1	**305-9192**	1	NOZZLE AS-WASHER	
	8	1	**266-9299**	1	FRAME AS-DOOR (RH)	
M		1	**6V-9632**	6	NUT-WELD (M6X1-THD)	
M		1	**8T-3597**	6	NUT-WELD (M12X1.75-THD)	
	9	1	**266-9303**	1	COVER	
	10	1	**269-2887**	1	LATCH AS-DOOR (ROTARY)	
	11	1	**269-2890**	1	CLEVIS	
	12	1	**269-2892**	2	PIN	
	13	1	**272-1622**	1	ROD AS	
		1	**108-5471**	1	CLEVIS	
	14	1	**272-1623**	1	BELLCRANK AS	
E	15	1	**133-3234**		SEAL (420-CM)	
	16	1	**281-4002**	1	PLUG	
	17	1	**281-4136**	1	COVER-LATCH (RH)	
	18	1	**281-4140**	1	WINDOW (DOOR, RH)	
	19	1	**287-0548**	1	STICKER-DOOR SEAL (RH)	
	20	1	**125-8175**	1	BLADE AS-WIPER (450-MM) (DOOR, RH)	
M	21	1	**131-3540**	2	LOCKNUT (M8X1.25-THD)	
	22	1	**102-8804**	1	KIT-RECEPTACLE (4-PIN)	
					(INCLUDES RECEPTACLE AS & WEDGE)	
	24	1	**4D-0012**	1	GROMMET	
	25	1	**4E-1384**	1	BUMPER-CONICAL (STUD)	
M	26	1	**5C-7261**	1	NUT (M8X1.25-THD)	
	27	1	**5P-1076**	6	WASHER-HARD (13.5X30X4-MM THK)	
	28	1	**5P-8441**	1	GROMMET	
	29	1	**6V-7636**	1	PIN AS-SPRING	
M	30	1	**8C-6802**	4	SCREW-FLAT HEAD (6X1X26.3-MM)	
M	31	1	**8T-4183**	6	BOLT (M12X1.75X40-MM)	
	32	1	**8T-4224**	2	WASHER-HARD (8.8X16X2-MM THK)	
M	33	1	**8T-4971**	3	BOLT (M6X1X30-MM)	
	34	1	**8T-5400**	1	CONNECTOR AS	
	35	1	**8T-6902**	2	CLIP	
M	36	1	**9X-2042**	3	SCREW-TRUSS HEAD (M6X1X12-MM)	
M	37	1	**9X-2045**	5	SCREW-TRUSS HEAD (M6X1X20-MM)	
	38	1	**9X-8267**	3	WASHER (6.6X12X2-MM THK)	
E	39	1	**144-0195**		HOSE (26-CM)	
	40	1	**7K-1181**	1	STRAP-CABLE	

E - ORDER BY THE CENTIMETER
J - REQUIRES CORPORATE KEY
M - METRIC PART
Y - SEPARATE ILLUSTRATION

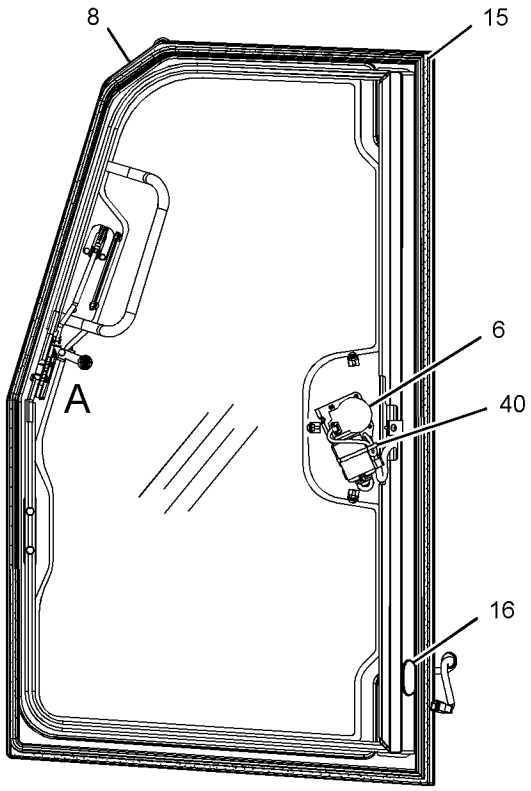

LEFT SIDE VIEW
(COVERS REMOVED FOR CLARITY)

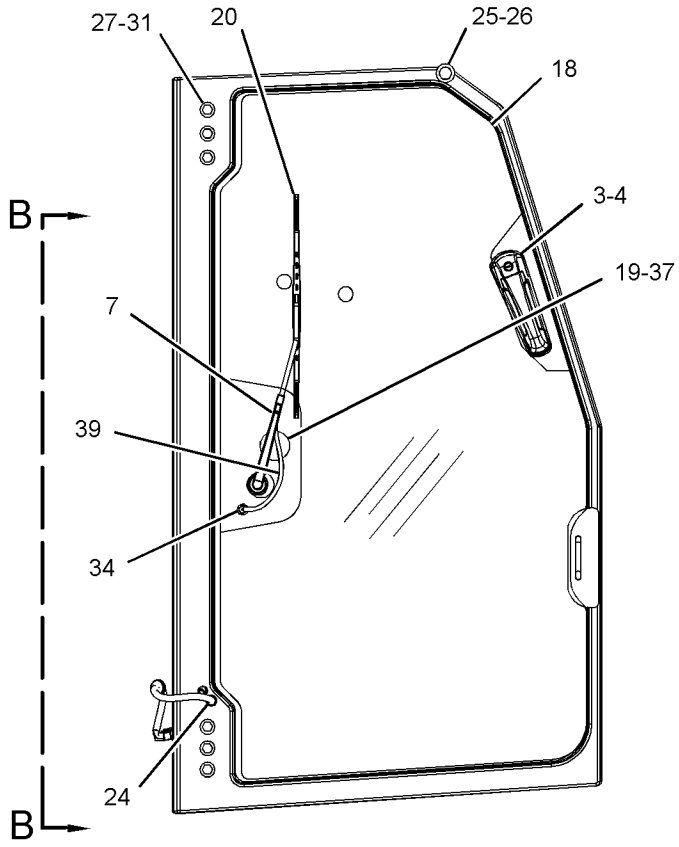

RIGHT SIDE VIEW

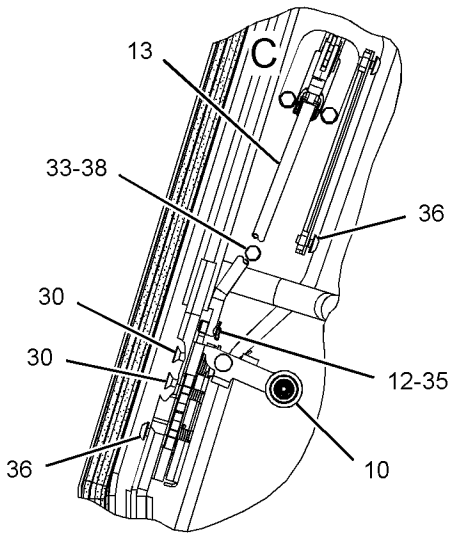

VIEW OF AREA A

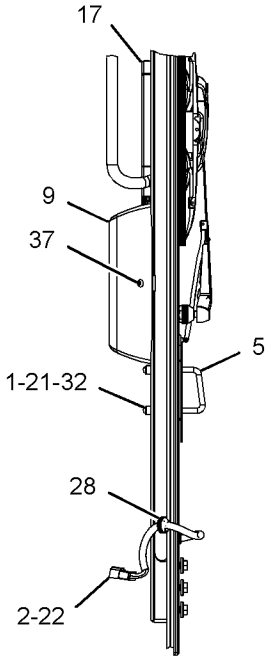

VIEW B-B

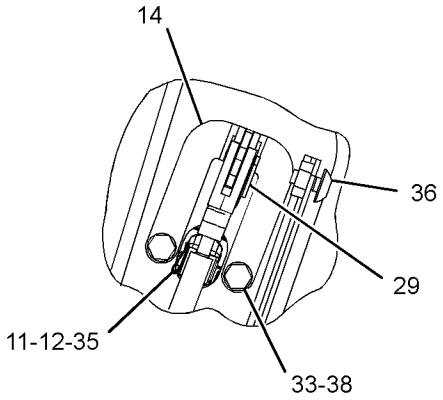

VIEW OF AREA C

GRAPHIC #1

<END>

g01657556

OPERATOR STATION

255-4271 DOOR GP-CAB—RH

S/N: MMM641-1004; RRR486-800
PART OF 244-7475 ROPS AR, 282-4898 ROPS AR-ENCLOSED
AN ATTACHMENT

SMCS-7308 **i04349113**

NOTE	REF NO	GRAPHIC REF	PART NUMBER	QTY	PART NAME 1 2 3 4 5 6 (PRODUCT LEVEL)	SEE PAGE
	1	1	**320-8448**	2	CAP-NUT	
	2	1	**249-9061**	1	HARNESS AS-SWITCH (DOOR, RH)	
		1	**9W-0852**	4	PIN-CONNECTOR (14-GA TO 16-GA)	
		1	**230-5008**	1	PLUG AS-CONNECTOR (4-PIN)	
		1	**264-7031**	1	SEAL-CONNECTOR	
		1	**9X-3402**	4	SOCKET-CONNECTOR (16-GA TO 18-GA)	
J	3	1	**252-1862**	1	HANDLE AS (PULL)	
	4	1	**252-1863**	1	GASKET	
	5	1	**255-4256**	1	STRIKER AS (RH)	
Y	6	1	**261-7993**	1	MOTOR GP-WINDOW WIPER	797
	7	1	**262-1997**	1	ARM GP-WINDOW WIPER (DOOR, RH)	
		1	**305-9192**	1	NOZZLE AS-WASHER	
	8	1	**266-9299**	1	FRAME AS-DOOR (RH)	
M		1	**6V-9632**	6	NUT-WELD (M6X1-THD)	
M		1	**8T-3597**	6	NUT-WELD (M12X1.75-THD)	
	9	1	**266-9303**	1	COVER	
	10	1	**269-2887**	1	LATCH AS-DOOR (ROTARY)	
C	11	1	**355-7354**	1	CLEVIS	
C	12	1	**269-2892**	1	PIN	
C	14	1	**323-6147**	1	LINKAGE AS (RH)	
E	15	1	**133-3234**		SEAL (430-CM)	
	16	1	**281-4002**	1	PLUG	
	17	1	**281-4136**	1	COVER-LATCH (RH)	
	18	1	**281-4140**	1	WINDOW (DOOR, RH)	
	19	1	**287-0548**	1	STICKER-DOOR SEAL	
	20	1	**125-8175**	1	BLADE AS-WIPER (450-MM) (DOOR, RH)	
M	21	1	**131-3540**	2	LOCKNUT (M8X1.25-THD)	
	22	1	**102-8804**	1	KIT-RECEPTACLE (4-PIN)	
					(INCLUDES RECEPTACLE AS & WEDGE)	
	24	1	**4D-0012**	1	GROMMET	
	25	1	**4E-1384**	1	BUMPER-CONICAL (STUD)	
M	26	1	**5C-7261**	1	NUT (M8X1.25-THD)	
	27	1	**5P-1076**	6	WASHER-HARD (13.5X30X4-MM THK)	
	28	1	**5P-8441**	1	GROMMET	
M	30	1	**8C-6802**	4	SCREW-FLAT HEAD (6X1X26.3-MM)	
M	31	1	**8T-4183**	6	BOLT (M12X1.75X40-MM)	
	32	1	**8T-4224**	2	WASHER-HARD (8.8X16X2-MM THK)	
CM	33	1	**8T-4971**	2	BOLT (M6X1X30-MM)	
	34	1	**8T-5400**	1	CONNECTOR AS	
C	35	1	**8T-6902**	1	CLIP	
M	36	1	**9X-2042**	3	SCREW-TRUSS HEAD (M6X1X12-MM)	
M	37	1	**9X-2045**	5	SCREW-TRUSS HEAD (M6X1X20-MM)	
C	38	1	**9X-8267**	2	WASHER (6.6X12X2-MM THK)	
E	39	1	**144-0195**		HOSE (26-CM)	
	40	1	**7K-1181**	1	STRAP-CABLE	
CM	41	1	**136-1613**	1	BOLT-SOCKET HEAD (M6X1X30-MM)	

C - CHANGE FROM PREVIOUS TYPE
E - ORDER BY THE CENTIMETER
J - REQUIRES CORPORATE KEY
M - METRIC PART
Y - SEPARATE ILLUSTRATION

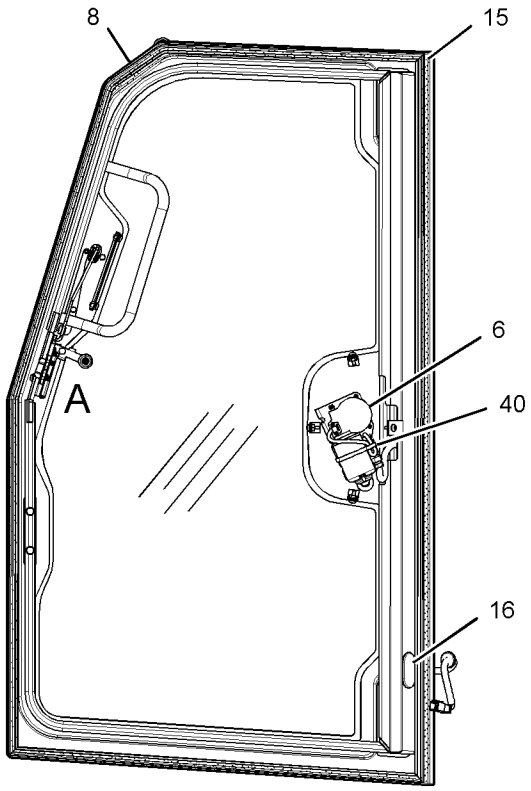

LEFT SIDE VIEW
(COVERS REMOVED FOR CLARITY)

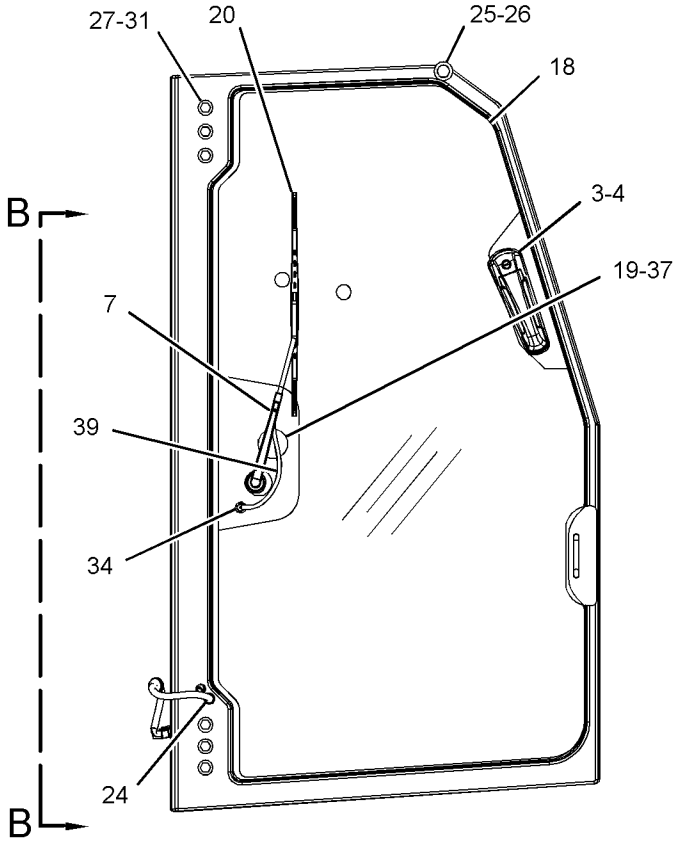

RIGHT SIDE VIEW

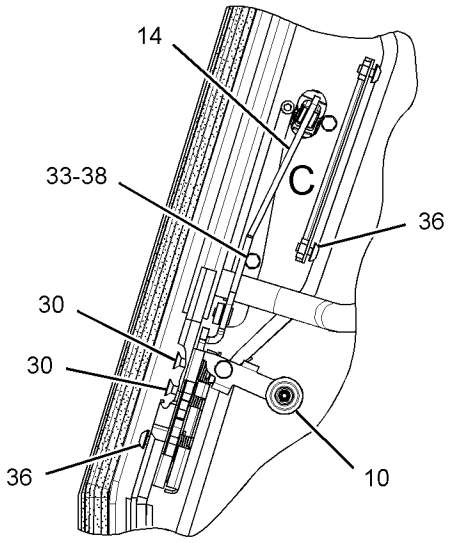

VIEW OF AREA A

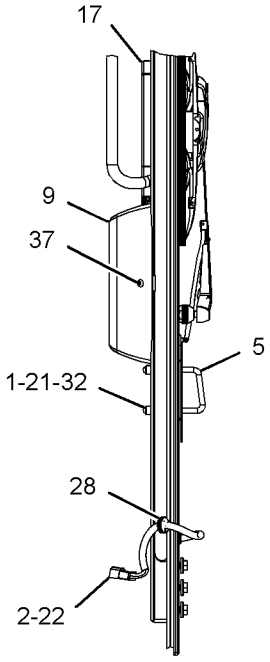

VIEW B-B

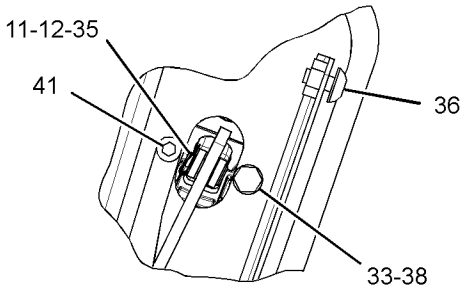

VIEW OF AREA C

GRAPHIC #1

<END>

g02509778

255-4272 DOOR GP-CAB—LH

S/N: MMM1-UP; RRR1-UP
PART OF 244-7475 ROPS AR, 282-4898 ROPS AR-ENCLOSED
AN ATTACHMENT
TYPE 1

SMCS-7308 **i03635054**

NOTE	REF NO	GRAPHIC REF	PART NUMBER	QTY	PART NAME 1 2 3 4 5 6 (PRODUCT LEVEL)	SEE PAGE
	1	1	**320-8448**	2	CAP-NUT	
	2	2	**247-6613**	1	FRAME AS-DOOR (LH)	
M		1	**6V-9632**	6	NUT-WELD (M6X1-THD)	
M		1	**8T-3597**	6	NUT-WELD (M12X1.75-THD)	
	3	2	**249-9060**	1	HARNESS AS-SWITCH (DOOR, LH)	
		2	**9W-0852**	4	PIN-CONNECTOR (14-GA TO 16-GA)	
		2	**230-5008**	1	PLUG AS-CONNECTOR (4-PIN)	
		2	**264-7031**	1	SEAL-CONNECTOR	
		2	**9X-3402**	4	SOCKET-CONNECTOR (16-GA TO 18-GA)	
J	4	1	**252-1862**	1	HANDLE AS (PULL)	
	5	1	**252-1863**	1	GASKET	
	6	1	**255-4255**	1	STRIKER AS (LH)	
Y	7	2	**261-7992**	1	MOTOR GP-WINDOW WIPER	796
	8	1	**262-1998**	1	ARM GP-WINDOW WIPER (DOOR, LH)	
		1	**305-9192**	1	NOZZLE AS-WASHER	
	9	2	**266-9303**	1	COVER	
	10	2	**269-2888**	1	LINK GP-ADJUSTABLE	
		2	**108-5471**	1	CLEVIS	
	11	2	**269-2890**	1	CLEVIS	
	12	2	**269-2892**	2	PIN	
	13	2	**272-1623**	1	BELLCRANK AS	
	14	2	**133-3234**	1	SEAL	
	15	2	**281-4002**	1	PLUG	
	16	2	**281-4137**	1	COVER-LATCH	
	17	1	**281-4141**	1	WINDOW	
	18	1	**287-0548**	1	STICKER-DOOR SEAL	
	19	1	**125-8175**	1	BLADE AS-WIPER (450-MM) (DOOR, LH)	
M	20	1	**131-3540**	2	LOCKNUT (M8X1.25-THD)	
	21	2	**269-2886**	1	LATCH AS-DOOR (ROTARY)	
	22	2	**102-8804**	1	KIT-RECEPTACLE (4-PIN)	
					(INCLUDES RECEPTACLE AS & WEDGE)	
	24	1	**4D-0012**	1	GROMMET	
	25	2	**4E-1384**	1	BUMPER-CONICAL	
M	26	2	**5C-7261**	1	NUT (M8X1.25-THD)	
	27	1	**5P-1076**	6	WASHER-HARD (13.5X30X4-MM THK)	
	28	2	**5P-8441**	1	GROMMET	
	29	2	**6V-7636**	1	PIN AS-SPRING	
M	30	2	**8C-6802**	4	SCREW-FLAT HEAD (6X1X26.3-MM)	
M	31	1	**8T-4183**	6	BOLT (M12X1.75X40-MM)	
	32	1	**8T-4224**	2	WASHER-HARD (8.8X16X2-MM THK)	
M	33	2	**8T-4971**	3	BOLT (M6X1X30-MM)	
	34	1	**8T-5400**	1	CONNECTOR AS	
	35	2	**8T-6902**	2	CLIP	
M	36	2	**9X-2042**	3	SCREW-TRUSS HEAD (M6X1X12-MM)	
M	37	1,2	**9X-2045**	5	SCREW-TRUSS HEAD (M6X1X20-MM)	
	38	2	**9X-8267**	3	WASHER (6.6X12X2-MM THK)	
E	39	1	**144-0195**		HOSE (26-CM)	
	40	2	**7K-1181**	1	STRAP-CABLE	

E - ORDER BY THE CENTIMETER
J - REQUIRES CORPORATE KEY
M - METRIC PART
Y - SEPARATE ILLUSTRATION

255-4272 **DOOR GP-CAB (*contd.*)** **i03635054**

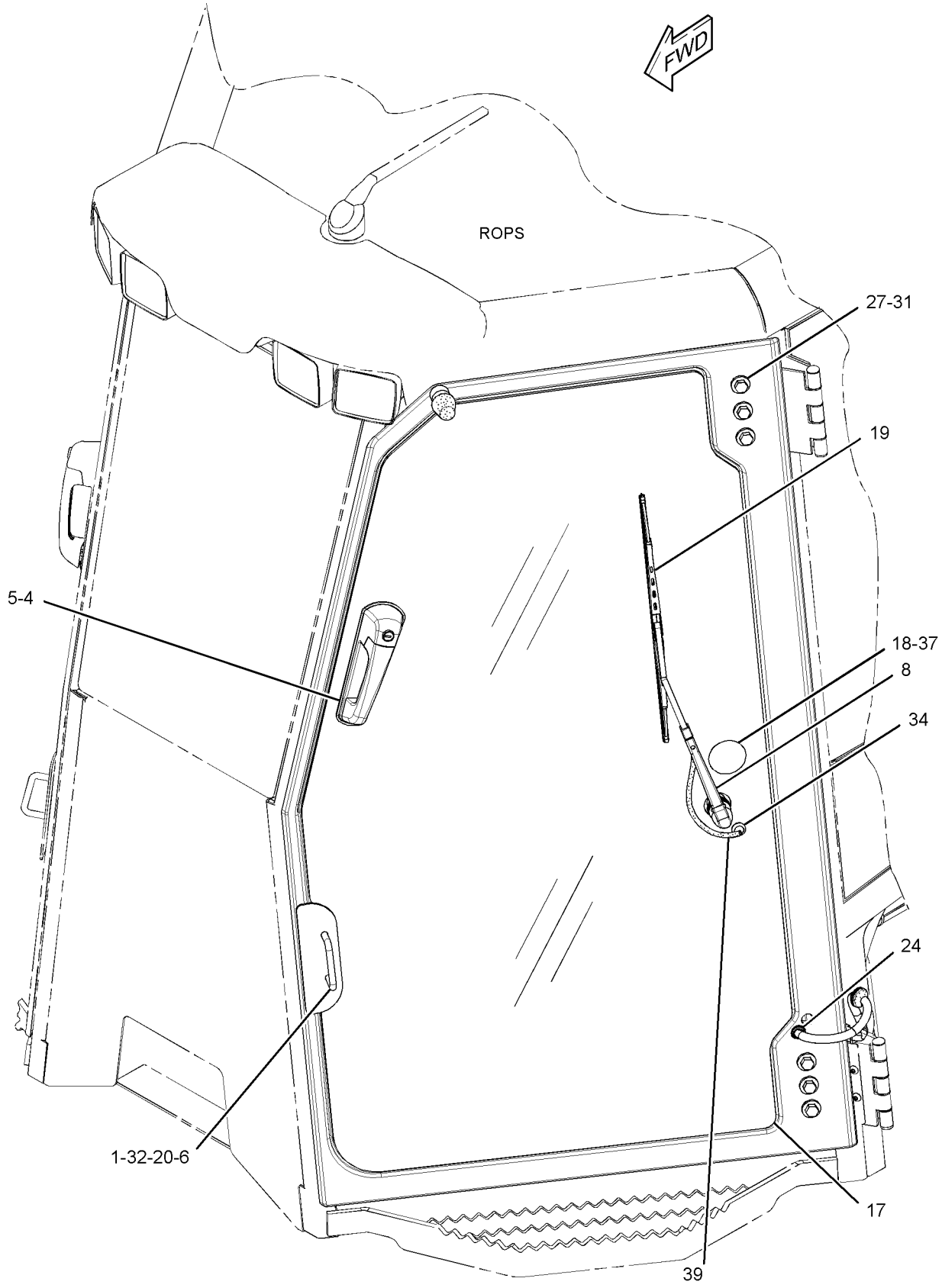

GRAPHIC #1 g01369456

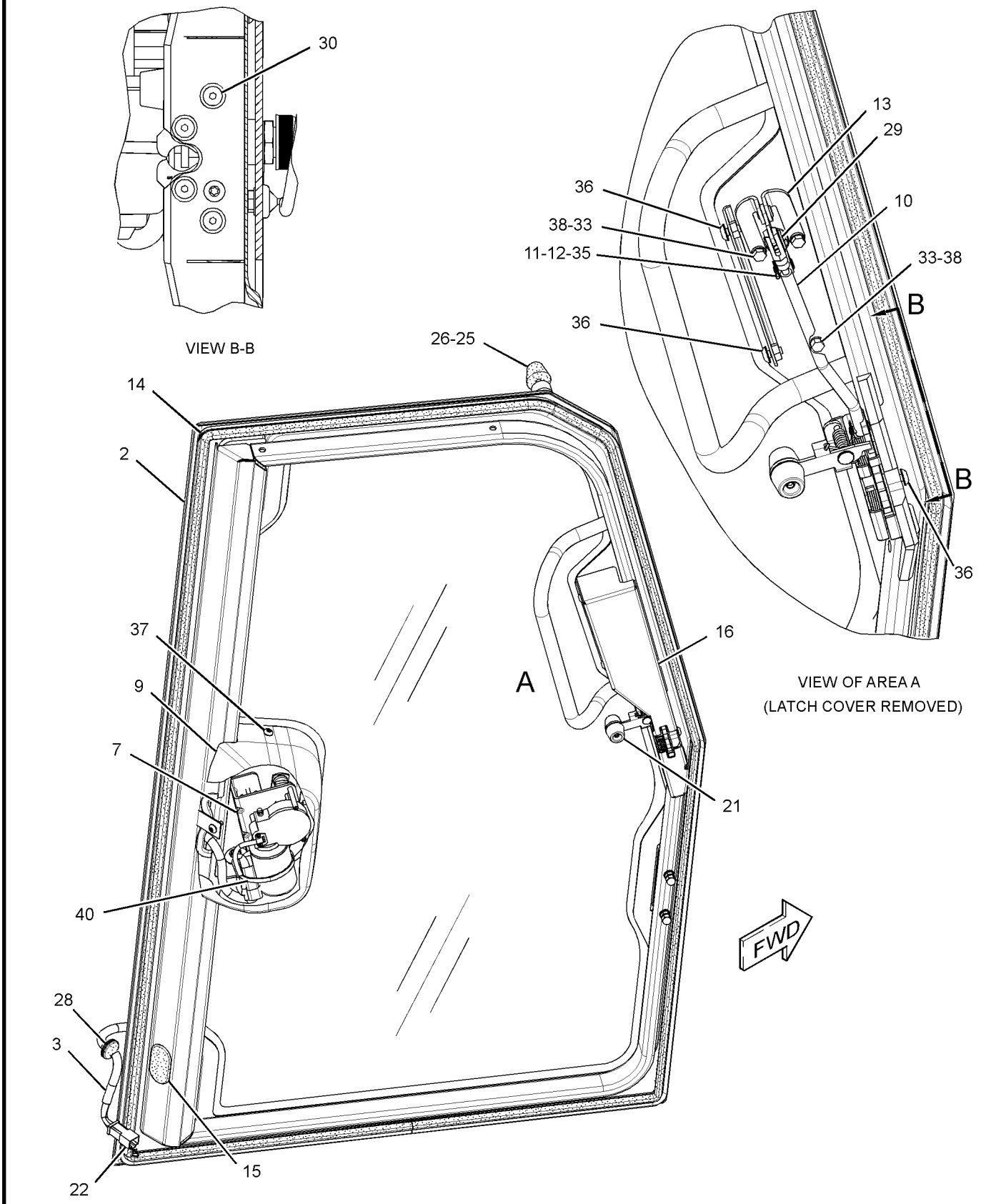

GRAPHIC #2 **<END>** g01376422

255-4272 DOOR GP-CAB—LH

S/N: MMM1-UP; RRR1-UP
PART OF 244-7475 ROPS AR, 282-4898 ROPS AR-ENCLOSED
AN ATTACHMENT
TYPE 2

SMCS-7308 **i04349074**

NOTE	REF NO	GRAPHIC REF	PART NUMBER	QTY	PART NAME 1 2 3 4 5 6 (PRODUCT LEVEL)	SEE PAGE
	1	1	**320-8448**	2	CAP-NUT	
	2	2	**247-6613**	1	FRAME AS-DOOR (LH)	
M		2	**6V-9632**	6	NUT-WELD (M6X1-THD)	
M		2	**8T-3597**	6	NUT-WELD (M12X1.75-THD)	
	3	2	**249-9060**	1	HARNESS AS-SWITCH (DOOR, LH)	
		2	**9W-0852**	4	PIN-CONNECTOR (14-GA TO 16-GA)	
		2	**230-5008**	1	PLUG AS-CONNECTOR (4-PIN)	
		2	**264-7031**	1	SEAL-CONNECTOR	
		2	**9X-3402**	4	SOCKET-CONNECTOR (16-GA TO 18-GA)	
J	4	1	**252-1862**	1	HANDLE AS (PULL)	
	5	1	**252-1863**	1	GASKET	
	6	1	**255-4255**	1	STRIKER AS (LH)	
Y	7	2	**261-7992**	1	MOTOR GP-WINDOW WIPER	796
	8	1	**262-1998**	1	ARM GP-WINDOW WIPER (DOOR, LH)	
		1	**305-9192**	1	NOZZLE AS-WASHER	
	9	2	**266-9303**	1	COVER	
C	11	2	**355-7354**	1	CLEVIS	
C	12	2	**269-2892**	1	PIN	
C	13	2	**323-6148**	1	LINKAGE AS (LH)	
E	14	2	**133-3234**		SEAL (425-CM)	
	15	2	**281-4002**	1	PLUG	
	16	2	**281-4137**	1	COVER-LATCH	
	17	1	**281-4141**	1	WINDOW	
	18	1	**287-0548**	1	STICKER-DOOR SEAL (LH)	
	19	1	**125-8175**	1	BLADE AS-WIPER (450-MM) (DOOR, LH)	
M	20	1	**131-3540**	2	LOCKNUT (M8X1.25-THD)	
	21	2	**269-2886**	1	LATCH AS-DOOR (ROTARY)	
	22	2	**102-8804**	1	KIT-RECEPTACLE (4-PIN)	
					(INCLUDES RECEPTACLE AS & WEDGE)	
	24	1	**4D-0012**	1	GROMMET	
	25	2	**4E-1384**	1	BUMPER-CONICAL	
M	26	2	**5C-7261**	1	NUT (M8X1.25-THD)	
	27	1	**5P-1076**	6	WASHER-HARD (13.5X30X4-MM THK)	
	28	2	**5P-8441**	1	GROMMET	
M	30	2	**8C-6802**	4	SCREW-FLAT HEAD (6X1X26.3-MM)	
M	31	1	**8T-4183**	6	BOLT (M12X1.75X40-MM)	
	32	1	**8T-4224**	2	WASHER-HARD (8.8X16X2-MM THK)	
CM	33	2	**8T-4971**	2	BOLT (M6X1X30-MM)	
	34	1	**8T-5400**	1	CONNECTOR AS	
C	35	2	**8T-6902**	1	CLIP	
M	36	2	**9X-2042**	3	SCREW-TRUSS HEAD (M6X1X12-MM)	
M	37	1,2	**9X-2045**	5	SCREW-TRUSS HEAD (M6X1X20-MM)	
C	38	2	**9X-8267**	2	WASHER (6.6X12X2-MM THK)	
E	39	1	**144-0195**		HOSE (26-CM)	
	40	2	**7K-1181**	1	STRAP-CABLE	
CM	41	2	**136-1613**	1	BOLT-SOCKET HEAD (M6X1X30-MM)	

C - CHANGE FROM PREVIOUS TYPE
E - ORDER BY THE CENTIMETER
J - REQUIRES CORPORATE KEY
M - METRIC PART
Y - SEPARATE ILLUSTRATION

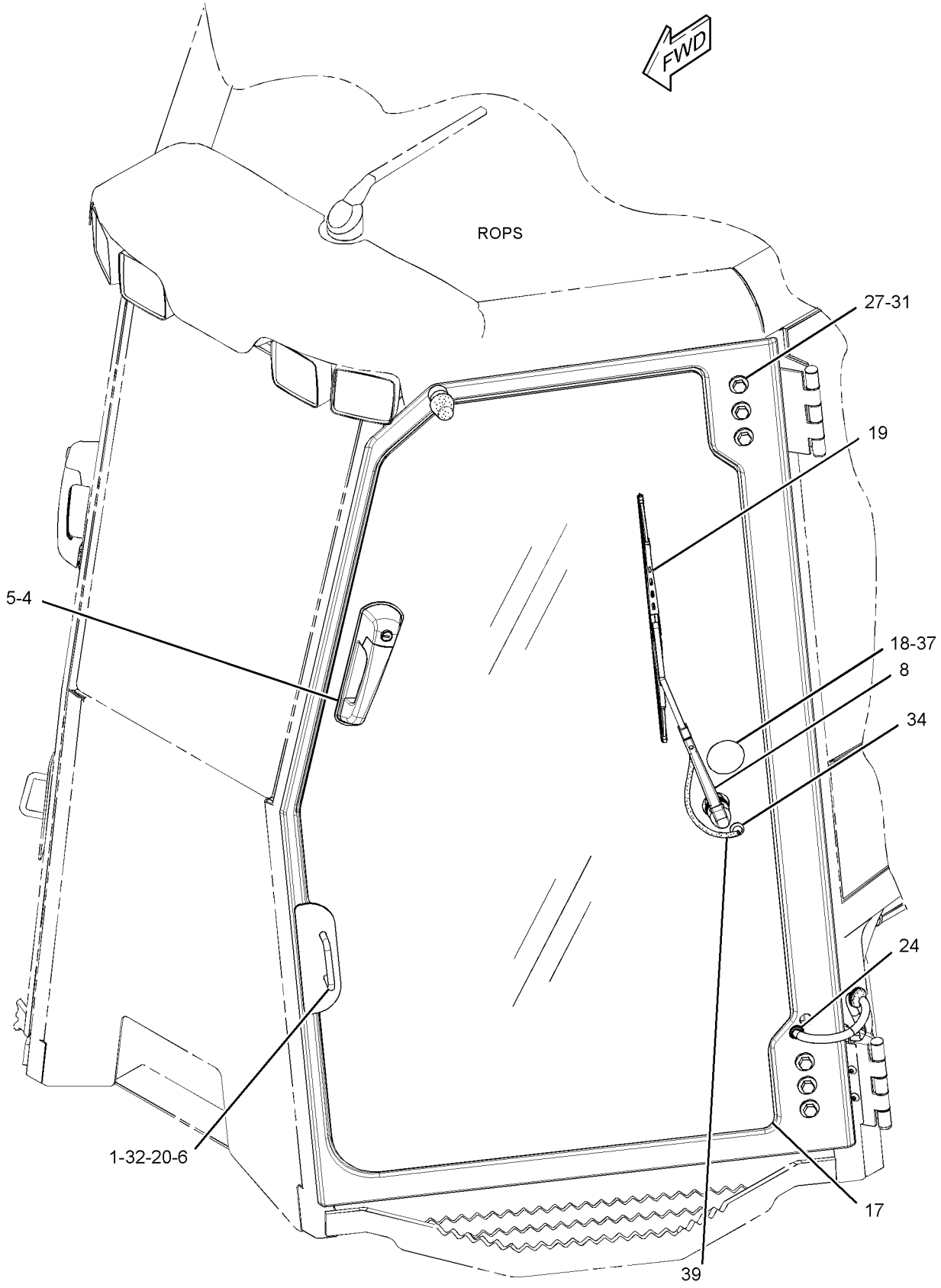

GRAPHIC #1 g02512865

255-4272 **DOOR GP-CAB (*contd.*)** **i04349074**

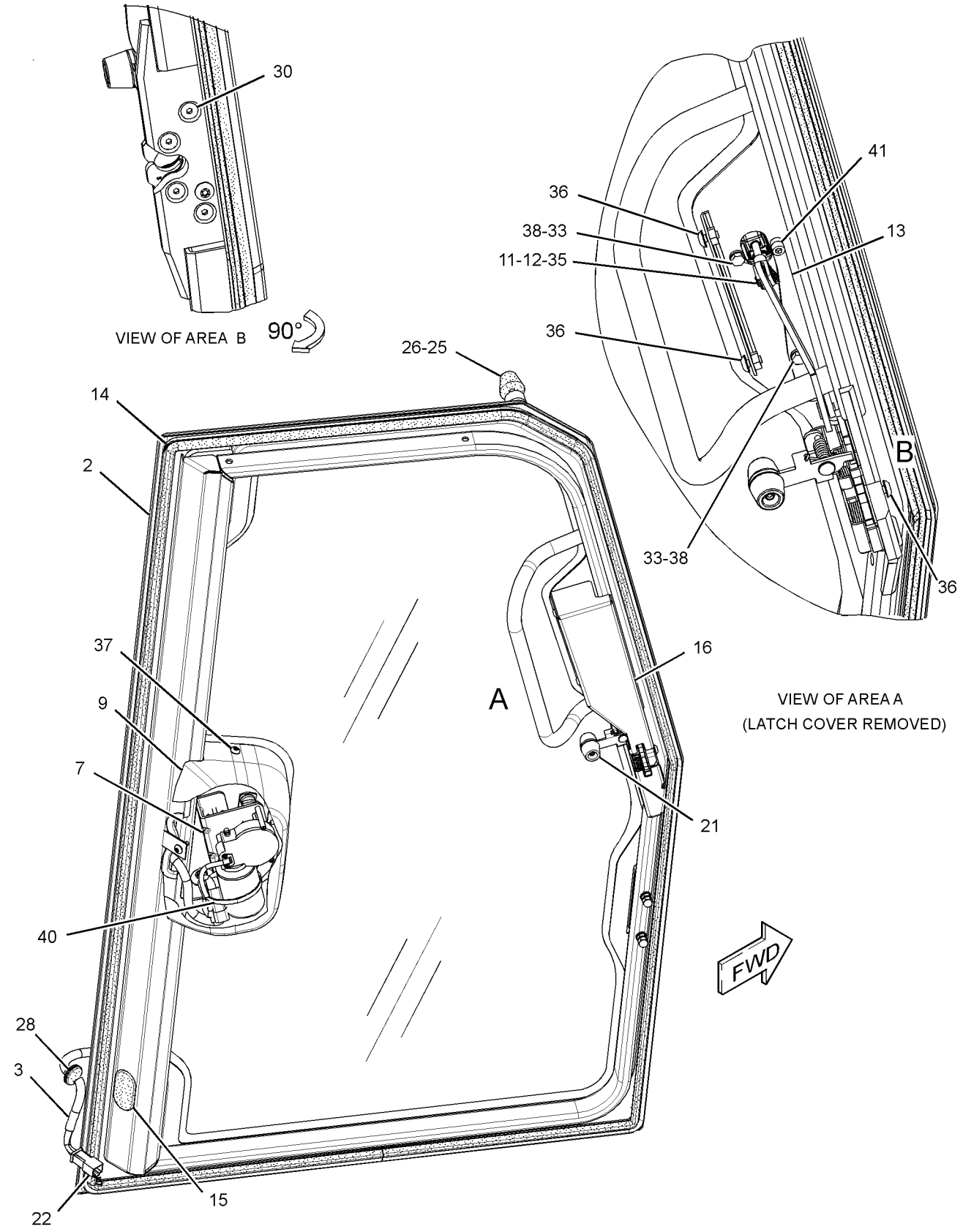

GRAPHIC #2 **<END>** g02512864

OPERATOR STATION

255-4273 DOOR GP-CAB–RH

S/N: MMM1-UP; RRR1-UP
PART OF 244-7476 ROPS AR, 282-4899 ROPS AR-ENCLOSED
AN ATTACHMENT
TYPE 1

SMCS-7308 **i04102871**

NOTE	REF NO	GRAPHIC REF	PART NUMBER	QTY	PART NAME 1 2 3 4 5 6 (PRODUCT LEVEL)	SEE PAGE
	1	1	**223-9818**	1	FILM-INSTRUCTION (WINDOW CLEANING, READ OMM)	
	2	1	**249-9061**	1	HARNESS AS-SWITCH (DOOR, RH)	
		1	**9W-0852**	4	PIN-CONNECTOR (14-GA TO 16-GA)	
		1	**230-5008**	1	PLUG AS-CONNECTOR (4-PIN)	
		1	**264-7031**	1	SEAL-CONNECTOR	
		1	**9X-3402**	4	SOCKET-CONNECTOR (16-GA TO 18-GA)	
J	3	1	**252-1862**	1	HANDLE AS (PULL)	
	4	1	**252-1863**	1	GASKET	
	5	1	**255-4256**	1	STRIKER AS (RH)	
Y	6	1	**261-7993**	1	MOTOR GP-WINDOW WIPER	797
	7	1	**262-1997**	1	ARM GP-WINDOW WIPER (RH)	
		1	**305-9192**	1	NOZZLE AS-WASHER	
	8	1	**266-9299**	1	FRAME AS-DOOR (RH)	
M		1	**6V-9632**	6	NUT-WELD (M6X1-THD)	
M		1	**8T-3597**	6	NUT-WELD (M12X1.75-THD)	
	9	1	**266-9303**	1	COVER	
	10	1	**269-2887**	1	LATCH AS-DOOR (ROTARY)	
	11	1	**269-2890**	1	CLEVIS	
	12	1	**269-2892**	2	PIN	
E	13	1	**133-3234**	1	SEAL (425-CM)	
	14	1	**281-4002**	1	PLUG	
	15	1	**281-4136**	1	COVER-LATCH (RH)	
	16	1	**343-3798**	1	WINDOW-RH	
	17	1	**287-0548**	1	STICKER-DOOR SEAL (RH)	
	18	1	**290-6180**	3	SPACER (7X11X5-MM THK)	
	19	1	**125-8175**	1	BLADE AS-WIPER (450-MM) (DOOR, RH)	
M	20	1	**131-3540**	2	LOCKNUT (M8X1.25-THD)	
	21	1	**272-1622**	1	ROD AS	
		1	**108-5471**	1	CLEVIS	
	22	1	**272-1623**	1	BELLCRANK AS	
	23	1	**102-8804**	1	KIT-RECEPTACLE (4-PIN)	
					(INCLUDES RECEPTACLE AS & WEDGE)	
	24	1	**9X-8267**	3	WASHER (6.6X12X2-MM THK)	
	25	1	**4D-0012**	1	GROMMET	
	26	1	**4E-1384**	1	BUMPER-CONICAL	
	27	1	**4I-4872**	2	SPACER (8.6X18X5-MM THK)	
M	28	1	**5C-7261**	1	NUT (M8X1.25-THD)	
	29	1	**5P-1076**	6	WASHER-HARD (13.5X30X4-MM THK)	
	30	1	**5P-8441**	1	GROMMET	
	31	1	**6V-7636**	1	PIN AS-SPRING	
M	32	1	**7X-2533**	3	BOLT (M6X1X35-MM)	
M	33	1	**8C-6802**	4	SCREW-FLAT HEAD (6X1X26.3-MM)	
M	34	1	**8T-4183**	6	BOLT (M12X1.75X40-MM)	
	35	1	**8T-4224**	2	WASHER-HARD (8.8X16X2-MM THK)	
	36	1	**8T-6902**	2	CLIP	
M	37	1	**9X-2042**	3	SCREW-TRUSS HEAD (M6X1X12-MM)	
M	38	1	**9X-2045**	5	SCREW-TRUSS HEAD (M6X1X20-MM)	
E	39	1	**144-0195**		HOSE (26-CM)	
	40	1	**8T-5400**	1	CONNECTOR AS	
	41	1	**7K-1181**	1	STRAP-CABLE	
	42	1	**320-8448**	2	CAP-NUT	

E - ORDER BY THE CENTIMETER
J - REQUIRES CORPORATE KEY
M - METRIC PART
Y - SEPARATE ILLUSTRATION

255-4273 **DOOR GP-CAB (*contd.*)** **i04102871**

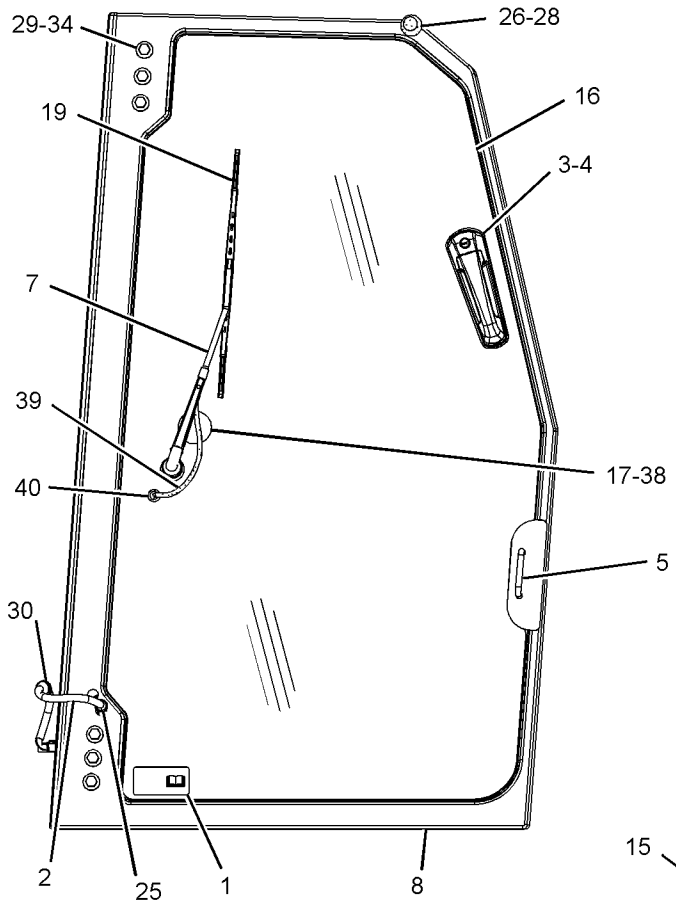

RIGHT SIDE VIEW

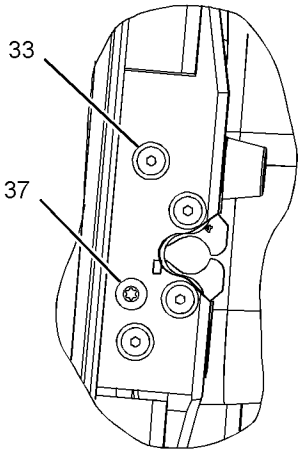

SECTION B-B

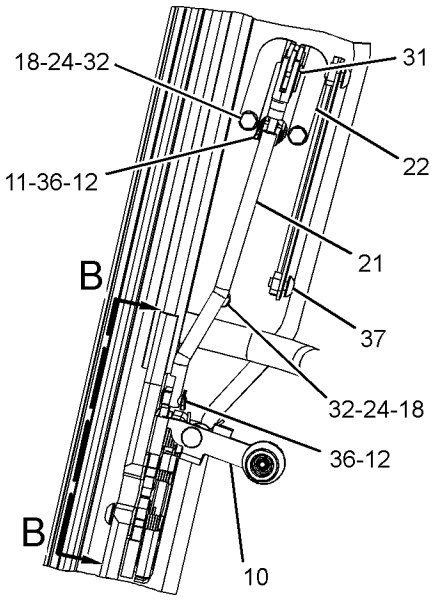

VIEW OF AREA A
(LATCH COVER REMOVED
FOR CLARITY)

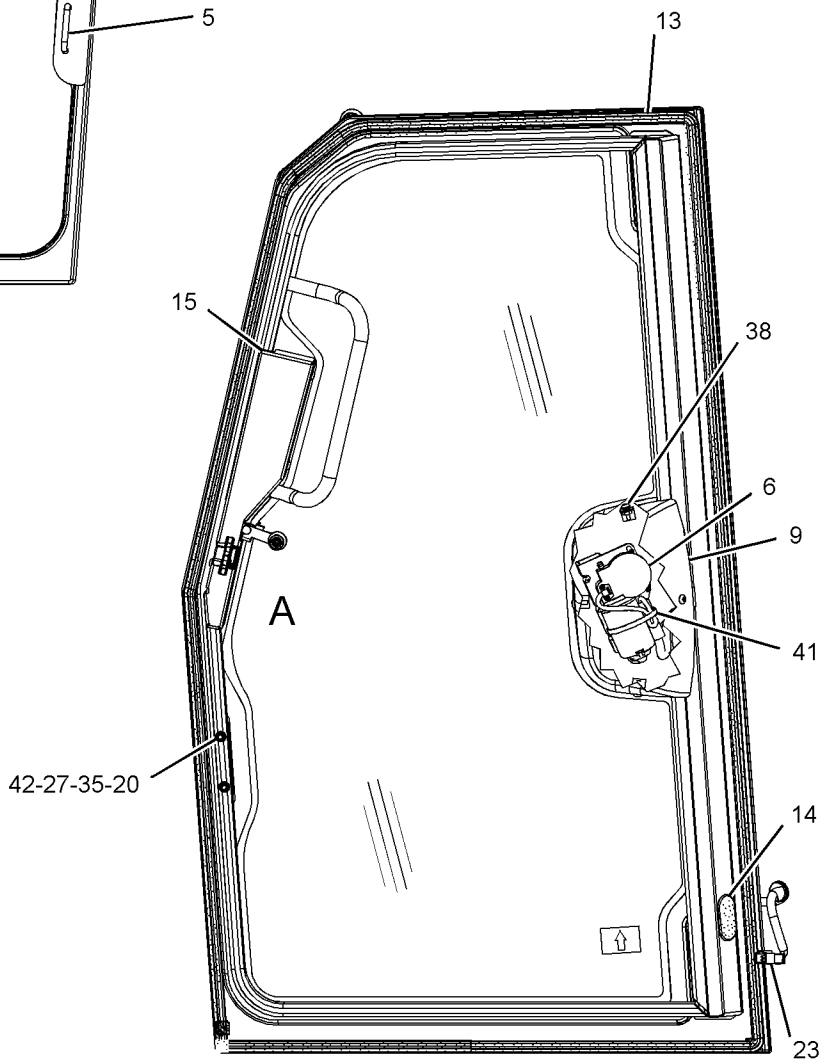

LEFT SIDE VIEW
(INSIDE DOOR)

GRAPHIC #1 **<END>** g01700893

255-4273 DOOR GP-CAB–RH

S/N: MMM1-UP; RRR1-UP
PART OF 244-7476 ROPS AR, 282-4899 ROPS AR-ENCLOSED
AN ATTACHMENT
TYPE 2

SMCS-7308 **i04349029**

NOTE	REF NO	GRAPHIC REF	PART NUMBER	QTY	PART NAME 1 2 3 4 5 6 (PRODUCT LEVEL)	SEE PAGE
	1	1	**223-9818**	1	FILM-INSTRUCTION (WINDOW CLEANING, READ OMM)	
	2	1	**249-9061**	1	HARNESS AS-SWITCH (DOOR, RH)	
		1	**9W-0852**	4	PIN-CONNECTOR (14-GA TO 16-GA)	
		1	**230-5008**	1	PLUG AS-CONNECTOR (4-PIN)	
		1	**264-7031**	1	SEAL-CONNECTOR	
		1	**9X-3402**	4	SOCKET-CONNECTOR (16-GA TO 18-GA)	
J	3	1	**252-1862**	1	HANDLE AS (PULL)	
	4	1	**252-1863**	1	GASKET	
	5	1	**255-4256**	1	STRIKER AS (RH)	
Y	6	2	**261-7993**	1	MOTOR GP-WINDOW WIPER	797
	7	1	**262-1997**	1	ARM GP-WINDOW WIPER (RH)	
		1	**305-9192**	1	NOZZLE AS-WASHER	
	8	1	**266-9299**	1	FRAME AS-DOOR (RH)	
M		1	**6V-9632**	6	NUT-WELD (M6X1-THD)	
M		1	**8T-3597**	6	NUT-WELD (M12X1.75-THD)	
	9	2	**266-9303**	1	COVER	
	10	2	**269-2887**	1	LATCH AS-DOOR (ROTARY)	
C	11	2	**355-7354**	1	CLEVIS	
C	12	2	**269-2892**	1	PIN	
E	13	2	**133-3234**		SEAL (425-CM)	
	14	2	**281-4002**	1	PLUG	
	15	2	**281-4136**	1	COVER-LATCH (RH)	
	16	1	**343-3798**	1	WINDOW-RH	
	17	1	**287-0548**	1	STICKER-DOOR SEAL (RH)	
	18	2	**290-6180**	3	SPACER (7X11X5-MM THK)	
	19	1	**125-8175**	1	BLADE AS-WIPER (450-MM) (DOOR, RH)	
M	20	2	**131-3540**	2	LOCKNUT (M8X1.25-THD)	
C	22	2	**323-6147**	1	LINKAGE AS (RH)	
	23	2	**102-8804**	1	KIT-RECEPTACLE (4-PIN)	
					(INCLUDES RECEPTACLE AS & WEDGE)	
C	24	2	**9X-8267**	2	WASHER (6.6X12X2-MM THK)	
	25	1	**4D-0012**	1	GROMMET	
	26	2	**4E-1384**	1	BUMPER-CONICAL	
	27	2	**4I-4872**	2	SPACER (8.6X18X5-MM THK)	
M	28	2	**5C-7261**	1	NUT (M8X1.25-THD)	
	29	1	**5P-1076**	6	WASHER-HARD (13.5X30X4-MM THK)	
	30	1	**5P-8441**	1	GROMMET	
CM	32	2	**7X-2533**	2	BOLT (M6X1X35-MM)	
M	33	2	**8C-6802**	4	SCREW-FLAT HEAD (6X1X26.3-MM)	
M	34	1	**8T-4183**	6	BOLT (M12X1.75X40-MM)	
	35	2	**8T-4224**	2	WASHER-HARD (8.8X16X2-MM THK)	
C	36	2	**8T-6902**	1	CLIP	
M	37	2	**9X-2042**	3	SCREW-TRUSS HEAD (M6X1X12-MM)	
M	38	1,2	**9X-2045**	5	SCREW-TRUSS HEAD (M6X1X20-MM)	
E	39	1	**144-0195**		HOSE (26-CM)	
	40	1	**8T-5400**	1	CONNECTOR AS	
	41	2	**7K-1181**	1	STRAP-CABLE	
	42	2	**320-8448**	2	CAP-NUT	
CM	43	2	**136-4192**	1	BOLT (M6X1X35-MM)	

C - CHANGE FROM PREVIOUS TYPE
E - ORDER BY THE CENTIMETER
J - REQUIRES CORPORATE KEY
M - METRIC PART
Y - SEPARATE ILLUSTRATION

255-4273 **DOOR GP-CAB (*contd.*)** **i04349029**

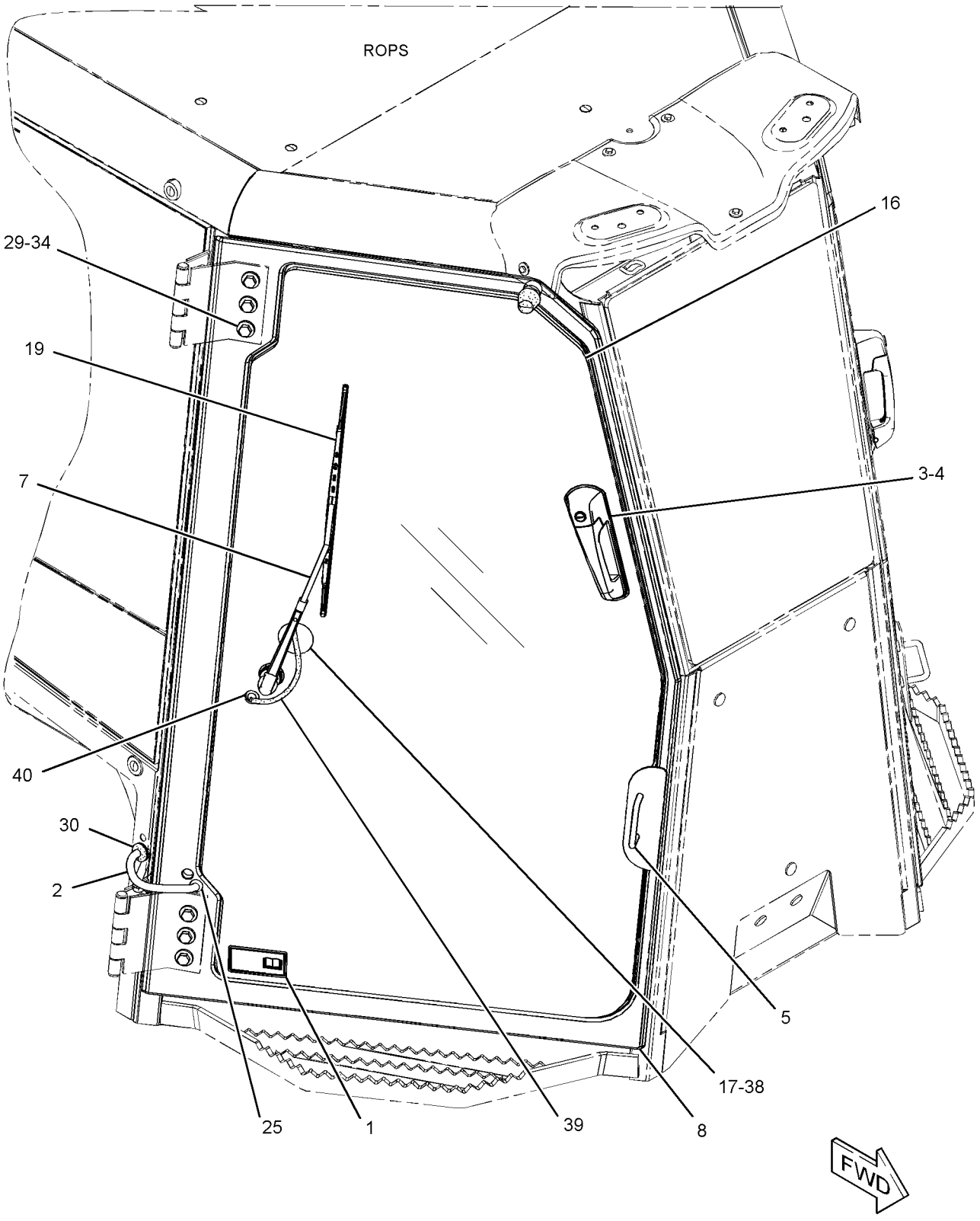

GRAPHIC #1 g02514196

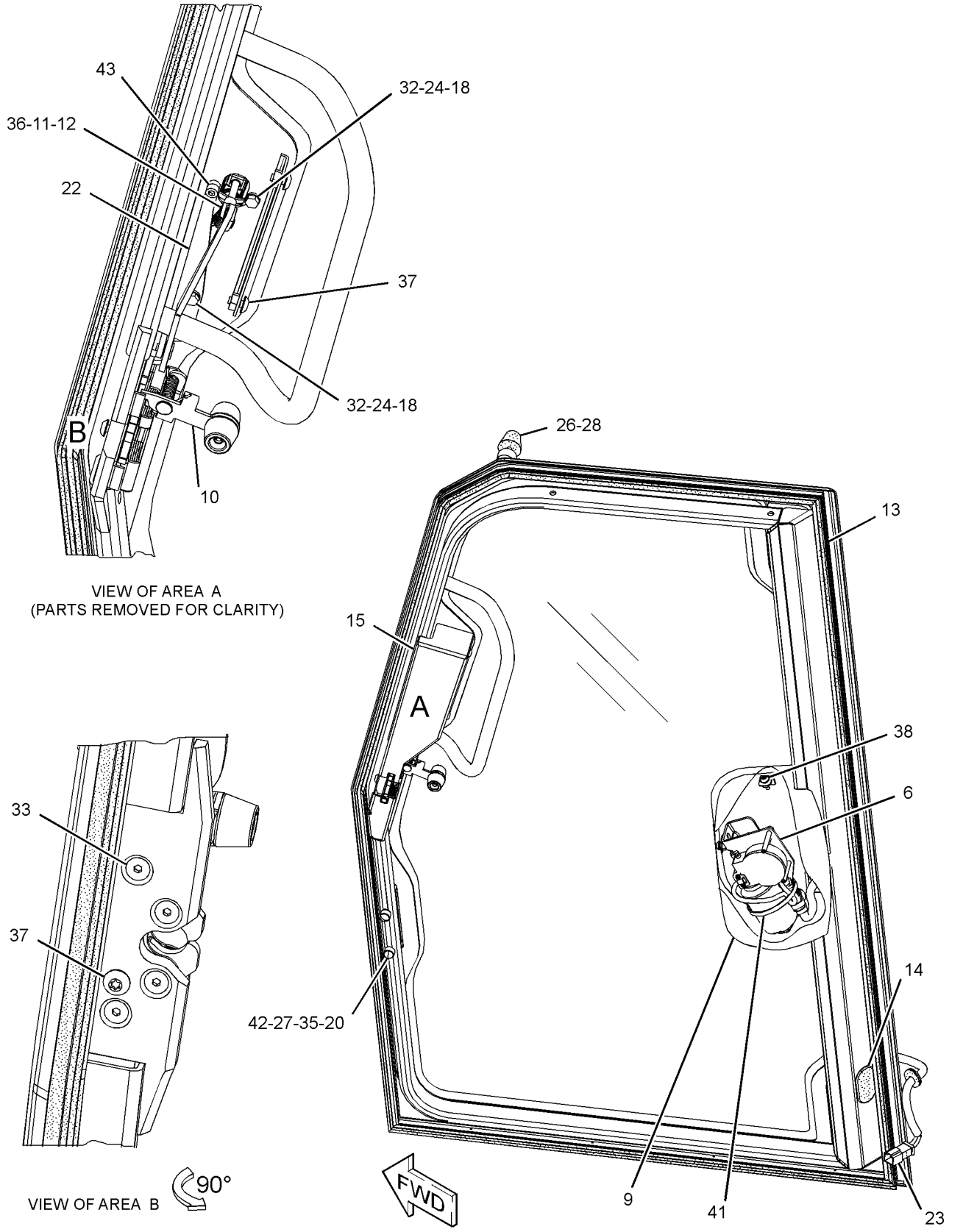

GRAPHIC #2

<END>

g02514896

OPERATOR STATION

255-4274 DOOR GP-CAB—LH

S/N: MMM1-UP; RRR1-UP
PART OF 244-7476 ROPS AR, 282-4899 ROPS AR-ENCLOSED
AN ATTACHMENT
TYPE 1

SMCS-7308 **i04403718**

NOTE	REF NO	GRAPHIC REF	PART NUMBER	QTY	PART NAME 1 2 3 4 5 6 (PRODUCT LEVEL)	SEE PAGE
	1	1	**223-9818**	1	FILM-INSTRUCTION (WINDOW CLEANING, READ OMM)	
	2	1	**247-6613**	1	FRAME AS-DOOR (LH)	
M		1	**6V-9632**	6	NUT-WELD (M6X1-THD)	
M		1	**8T-3597**	6	NUT-WELD (M12X1.75-THD)	
	3	1	**249-9060**	1	HARNESS AS-SWITCH (DOOR, LH)	
		1	**9W-0852**	4	PIN-CONNECTOR (14-GA TO 16-GA)	
		1	**230-5008**	1	PLUG AS-CONNECTOR (4-PIN)	
		1	**264-7031**	1	SEAL-CONNECTOR	
		1	**9X-3402**	4	SOCKET-CONNECTOR (16-GA TO 18-GA)	
		1	**230-5008**	1	PLUG AS-CONNECTOR (4-PIN)	
J	4	1	**252-1862**	1	HANDLE AS (PULL)	
	5	1	**252-1863**	1	GASKET	
	6	1	**255-4255**	1	STRIKER AS (LH)	
Y	7	1	**261-7992**	1	MOTOR GP-WINDOW WIPER	796
	8	1	**262-1998**	1	ARM GP-WINDOW WIPER (DOOR, LH)	
		1	**305-9192**	1	NOZZLE AS-WASHER	
	9	1	**266-9303**	1	COVER	
	10	1	**269-2890**	1	CLEVIS	
	11	1	**269-2892**	2	PIN	
E	12	1	**133-3234**		SEAL (425-CM)	
	13	1	**281-4002**	1	PLUG	
	14	1	**281-4137**	1	COVER-LATCH (LH)	
	15	1	**343-3799**	1	WINDOW-LH	
	16	1	**287-0548**	1	STICKER-DOOR SEAL (LH)	
	17	1	**290-6180**	3	SPACER (7X11X5-MM THK)	
	18	1	**125-8175**	1	BLADE AS-WIPER (450-MM) (DOOR, LH)	
M	19	1	**131-3540**	2	LOCKNUT (M8X1.25-THD)	
	20	1	**269-2886**	1	LATCH AS-DOOR (ROTARY)	
	21	1	**269-2888**	1	LINK GP-ADJUSTABLE	
		1	**108-5471**	1	CLEVIS	
	22	1	**272-1623**	1	BELLCRANK AS	
	23	1	**102-8804**	1	KIT-RECEPTACLE (4-PIN)	
					(INCLUDES RECEPTACLE AS & WEDGE)	
	24	1	**9X-8267**	3	WASHER (6.6X12X2-MM THK)	
	25	1	**4D-0012**	1	GROMMET	
	26	1	**4E-1384**	1	BUMPER-CONICAL	
	27	1	**4I-4872**	2	SPACER (8.6X18X5-MM THK)	
M	28	1	**5C-7261**	1	NUT (M8X1.25-THD)	
	29	1	**5P-1076**	6	WASHER-HARD (13.5X30X4-MM THK)	
	30	1	**5P-8441**	1	GROMMET	
	31	1	**6V-7636**	1	PIN AS-SPRING	
M	32	1	**7X-2533**	3	BOLT (M6X1X35-MM)	
M	33	1	**8C-6802**	4	SCREW-FLAT HEAD (6X1X26.3-MM)	
M	34	1	**8T-4183**	6	BOLT (M12X1.75X40-MM)	
	35	1	**8T-4224**	2	WASHER-HARD (8.8X16X2-MM THK)	
	36	1	**8T-6902**	2	CLIP	
M	37	1	**9X-2042**	3	SCREW-TRUSS HEAD (M6X1X12-MM)	
M	38	1	**9X-2045**	5	SCREW-TRUSS HEAD (M6X1X20-MM)	
	39	1	**7K-1181**	1	STRAP-CABLE	
	40	1	**8T-5400**	1	CONNECTOR AS	
E	41	1	**144-0195**		HOSE (26-CM)	
	42	1	**320-8448**	2	CAP-NUT	

E - ORDER BY THE CENTIMETER
J - REQUIRES CORPORATE KEY
M - METRIC PART
Y - SEPARATE ILLUSTRATION

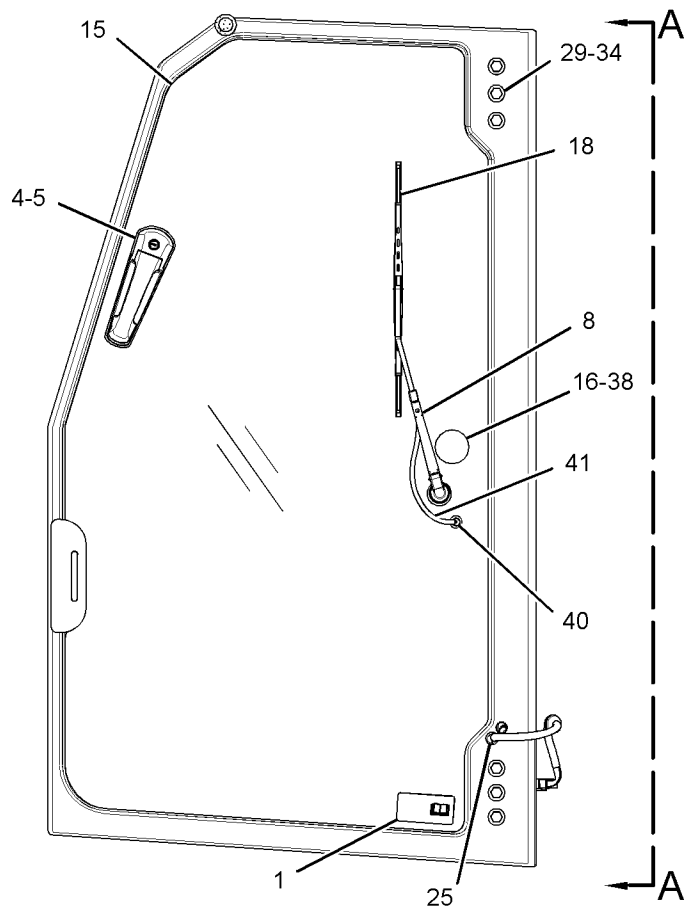

LEFT SIDE VIEW

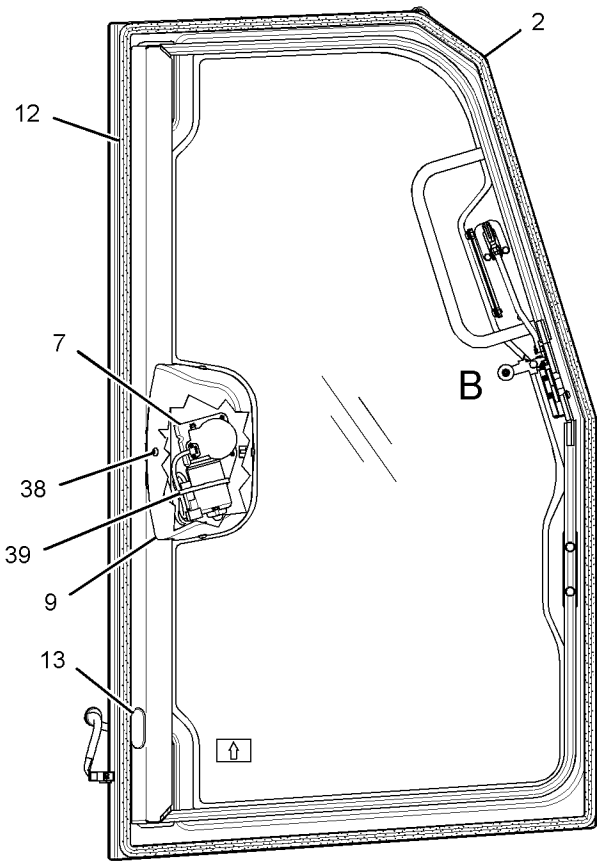

RIGHT SIDE VIEW
(LATCH COVER REMOVED FOR CLARITY)

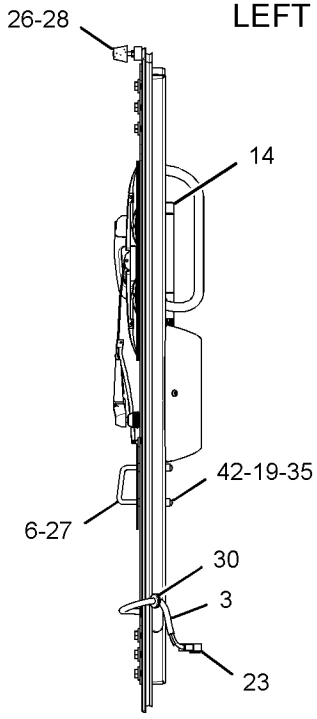

VIEW A-A

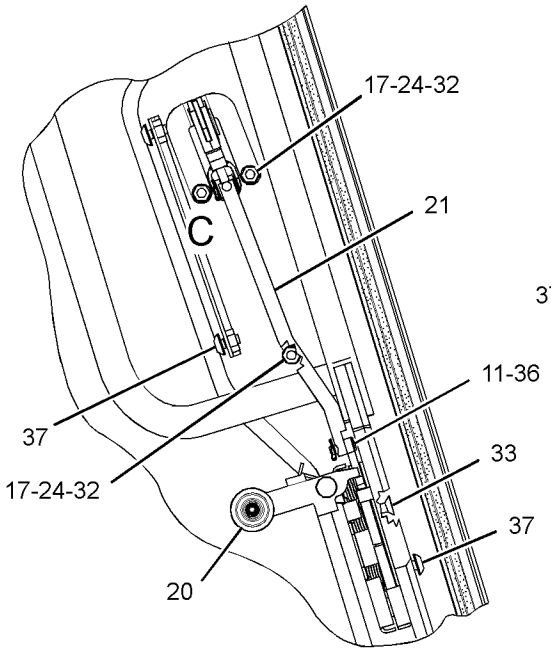

VIEW OF AREA B

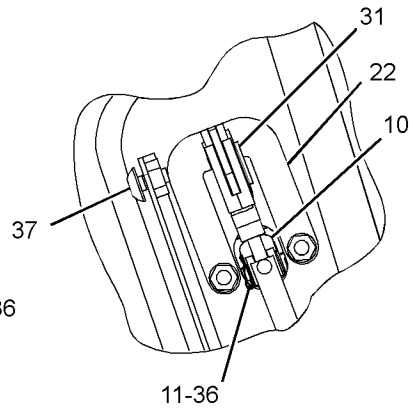

VIEW OF AREA C

GRAPHIC #1

<END>

g01736477

255-4274 DOOR GP-CAB—LH

S/N: MMM1-UP; RRR1-UP
PART OF 244-7476 ROPS AR, 282-4899 ROPS AR-ENCLOSED
AN ATTACHMENT
TYPE 2

SMCS-7308 **i04348953**

NOTE	REF NO	GRAPHIC REF	PART NUMBER	QTY	PART NAME 1 2 3 4 5 6 (PRODUCT LEVEL)	SEE PAGE
	1	1	**223-9818**	1	FILM-INSTRUCTION (WINDOW CLEANING, READ OMM)	
	2	1	**247-6613**	1	FRAME AS-DOOR (LH)	
M		1	**6V-9632**	6	NUT-WELD (M6X1-THD)	
M		1	**8T-3597**	6	NUT-WELD (M12X1.75-THD)	
	3	1	**249-9060**	1	HARNESS AS-SWITCH (DOOR, LH)	
		1	**9W-0852**	4	PIN-CONNECTOR (14-GA TO 16-GA)	
		1	**230-5008**	1	PLUG AS-CONNECTOR (4-PIN)	
		1	**264-7031**	1	SEAL-CONNECTOR	
		1	**9X-3402**	4	SOCKET-CONNECTOR (16-GA TO 18-GA)	
J	4	1	**252-1862**	1	HANDLE AS (PULL)	
	5	1	**252-1863**	1	GASKET	
	6	1	**255-4255**	1	STRIKER AS (LH)	
Y	7	1	**261-7992**	1	MOTOR GP-WINDOW WIPER	796
	8	1	**262-1998**	1	ARM GP-WINDOW WIPER (DOOR, LH)	
		1	**305-9192**	1	NOZZLE AS-WASHER	
	9	1	**266-9303**	1	COVER	
C	10	1	**355-7354**	1	CLEVIS	
C	11	1	**269-2892**	1	PIN	
E	12	1	**133-3234**		SEAL (425-CM)	
	13	1	**281-4002**	1	PLUG	
	14	1	**281-4137**	1	COVER-LATCH	
	15	1	**343-3799**	1	WINDOW-LH	
	16	1	**287-0548**	1	STICKER-DOOR SEAL (LH)	
	17	1	**290-6180**	3	SPACER (7X11X5-MM THK)	
	18	1	**125-8175**	1	BLADE AS-WIPER (450-MM) (DOOR, LH)	
M	19	1	**131-3540**	2	LOCKNUT (M8X1.25-THD)	
	20	1	**269-2886**	1	LATCH AS-DOOR (ROTARY)	
C	22	1	**323-6148**	1	LINKAGE AS (LH)	
	23	1	**102-8804**	1	KIT-RECEPTACLE (4-PIN)	
					(INCLUDES RECEPTACLE AS & WEDGE)	
C	24	1	**9X-8267**	2	WASHER (6.6X12X2-MM THK)	
	25	1	**4D-0012**	1	GROMMET	
	26	1	**4E-1384**	1	BUMPER-CONICAL	
	27	1	**4I-4872**	2	SPACER (8.6X18X5-MM THK)	
M	28	1	**5C-7261**	1	NUT (M8X1.25-THD)	
	29	1	**5P-1076**	6	WASHER-HARD (13.5X30X4-MM THK)	
	30	1	**5P-8441**	1	GROMMET	
CM	32	1	**7X-2533**	2	BOLT (M6X1X35-MM)	
M	33	1	**8C-6802**	4	SCREW-FLAT HEAD (6X1X26.3-MM)	
M	34	1	**8T-4183**	6	BOLT (M12X1.75X40-MM)	
	35	1	**8T-4224**	2	WASHER-HARD (8.8X16X2-MM THK)	
C	36	1	**8T-6902**	1	CLIP	
M	37	1	**9X-2042**	3	SCREW-TRUSS HEAD (M6X1X12-MM)	
M	38	1	**9X-2045**	5	SCREW-TRUSS HEAD (M6X1X20-MM)	
	39	1	**7K-1181**	1	STRAP-CABLE	
	40	1	**8T-5400**	1	CONNECTOR AS	
E	41	1	**144-0195**		HOSE (26-CM)	
	42	1	**320-8448**	2	CAP-NUT	
CM	43	1	**136-4192**	1	BOLT (M6X1X35-MM)	

C - CHANGE FROM PREVIOUS TYPE
E - ORDER BY THE CENTIMETER
J - REQUIRES CORPORATE KEY
M - METRIC PART
Y - SEPARATE ILLUSTRATION

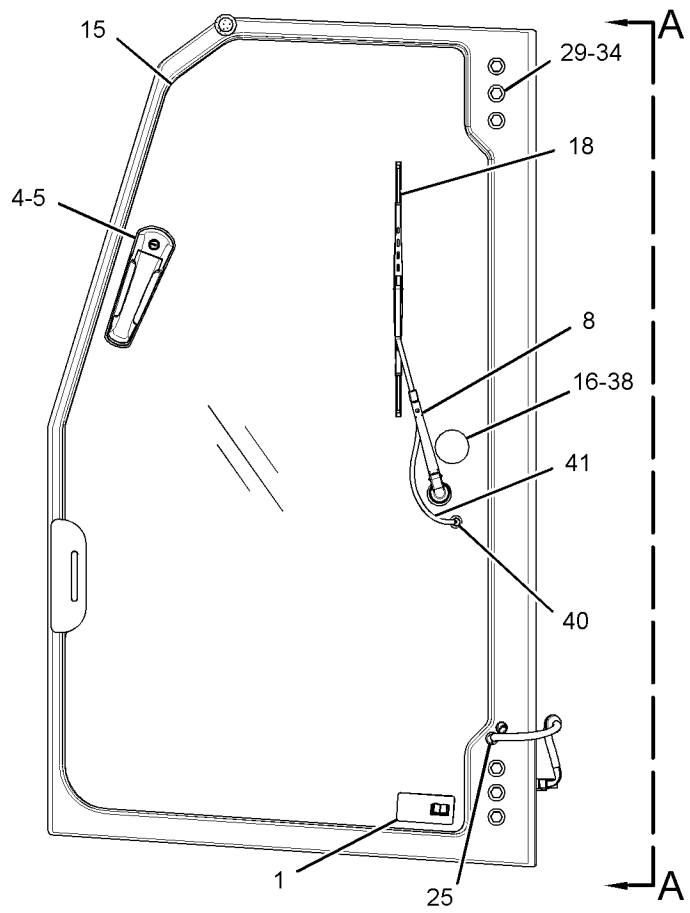

LEFT SIDE VIEW

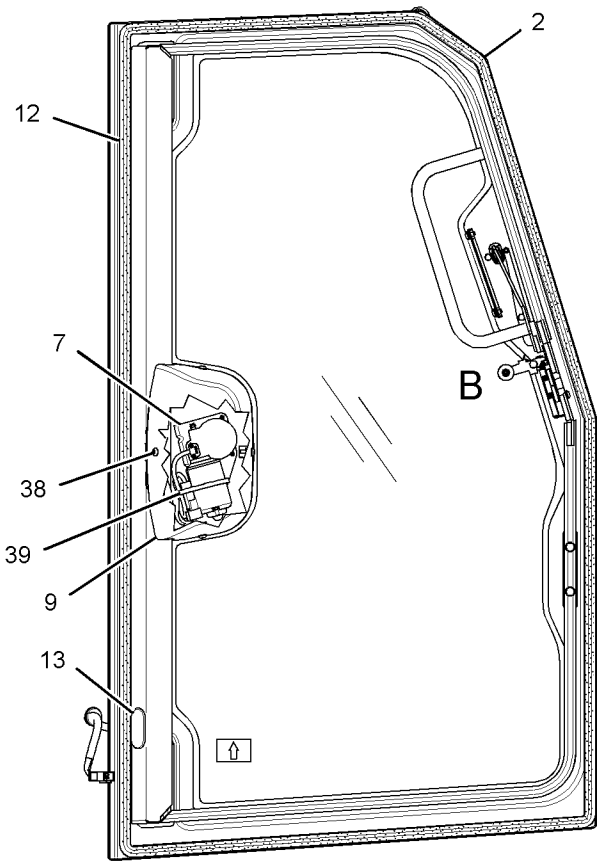

RIGHT SIDE VIEW
(LATCH COVER REMOVED FOR CLARITY)

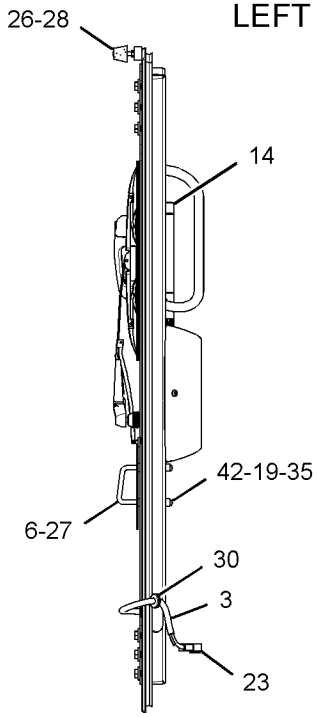

VIEW A-A

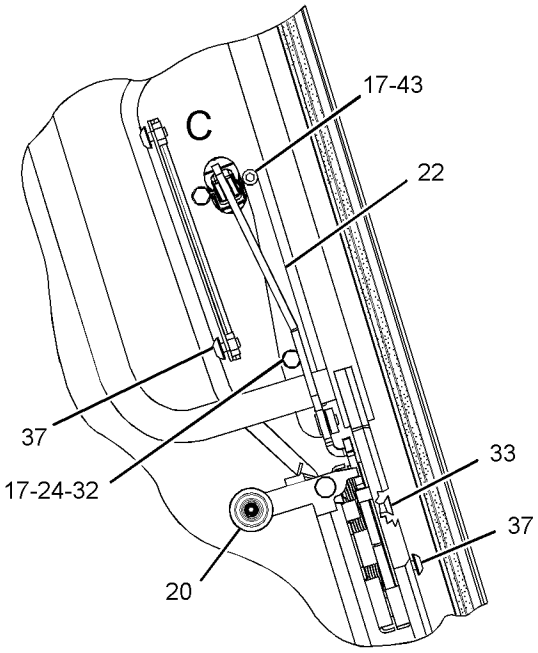

VIEW OF AREA B

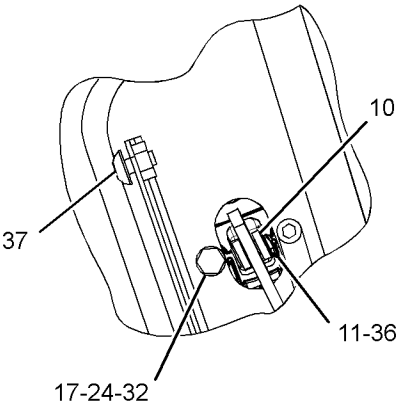

VIEW OF AREA C

GRAPHIC #1

<END>

g02519106

252-4504 HEATER GP-CAB

S/N: MMM1-UP; RRR1-UP
PART OF 254-3190 HEATER GP-CAB
AN ATTACHMENT
TYPE 1

SMCS-7304 **i03776850**

NOTE	REF NO	GRAPHIC REF	PART NUMBER	QTY	PART NAME 1 2 3 4 5 6 (PRODUCT LEVEL)	SEE PAGE
	1	2	**289-2134**	1	PLATE AS	
	2	2	**3S-2093**	3	STRAP-CABLE	
	3	2	**8C-3756**	1	FILM-IDENTIFICATION (GROUP NO., SEQUENCE NO.) (HEATER)	
	4	2	**111-4015**	1	GROMMET	
	5	2	**4P-7581**	1	CLIP	
	6	2	**131-3093**	1	BUSHING	
	7	2	**134-3518**	2	TIE-PUSH MOUNT	
	8	1	**151-5650**	2	PLUG	
	9	2	**248-6772**	2	SCREW-MACHINE (8-16X7.75-IN)	
	10	2	**256-0761**	1	CASE AS-AIR CONDITIONER	
	11	2	**256-0768**	1	PLATE AS	
M		2	**6V-9632**	6	NUT-WELD (M6X1-THD)	
M		2	**9X-2032**	2	NUT-WELD (M4X0.7-THD)	
J	12	2	**262-2815**	1	GASKET	
	13	2	**265-9620**	1	ACTUATOR (ELECTRONIC)	
	14	1,2	**275-6707**	2	GROMMET	
	15	2	**276-4299**	1	HARNESS AS-MOTOR (BLOWER)	
		2	**6T-6505**	7	HOUSING-RECEPTACLE (BLADE, POSITIVE LOCK)	
		2	**7T-0093**	4	PIN-CONNECTOR (12-GA TO 14-GA)	
		2	**8T-8729**	3	PIN-CONNECTOR (16-GA TO 18-GA)	
		2	**9W-0852**	1	PIN-CONNECTOR (14-GA TO 16-GA)	
		2	**155-2271**	1	KIT-CONNECTING PLUG (4-PIN)	
					(INCLUDES PLUG AS, WEDGE & INTERFACE SEAL)	
		2	**177-9648**	1	KIT-CONNECTING PLUG (2-PIN)	
					(INCLUDES PLUG AS & WEDGE)	
		2	**8T-8737**	1	PLUG-SEAL	
		2	**102-8804**	1	KIT-RECEPTACLE (4-PIN)	
		2	**177-9653**	1	KIT-RECEPTACLE (4-PIN)	
					(EACH RECEPTACLE KIT INCLUDES RECEPTACLE AS & WEDGE)	
		2	**9X-3402**	3	SOCKET-CONNECTOR (16-GA TO 18-GA)	
		2	**7T-0094**	2	SOCKET-CONNECTOR (12-GA TO 14-GA)	
		2	**8T-9850**	3	TERMINAL-BLADE	
		2	**6T-6506**	4	TERMINAL-BLADE (14-GA TO 18-GA)	
E		2	**125-7875**		TUBE-HEAT SHRINK (7.44-MM DIA) (5-CM)	
	16	2	**277-7112**	1	PLATE	
	17	2	**277-7114**	2	PLUG	
	18	2	**277-7115**	1	BLOWER AS	
J	19	2	**277-9958**	1	GASKET	
J	20	2	**277-9959**	1	GASKET	
J	21	2	**277-9960**	1	GASKET	
J	22	2	**277-9962**	1	GASKET	
J	23	2	**277-9964**	1	GASKET	
	24	2	**318-0815**	1	PLATE AS	
	25	2	**278-3354**	1	FILM-INSTRUCTION (HVAC WATER, DRAINING, FILLING)	
	26	2	*282-3475*	1	RESISTOR GP	
		2	**280-9453**	3	SCREW-SELF-TAPPING (6X0.375-IN)	
		2	**282-3481**	1	PLATE AS	
		2	**284-8773**	1	RESISTOR AS	
	27	2	**282-3653**	1	BRACKET	
M	28	2	**283-8651**	7	BOLT (M4X0.7X10-MM)	
	29	1	**285-7974**	1	PLATE AS	
	30	1	**289-4795**	1	PLATE AS	
	31	2	**096-6166**	4	WASHER-HARD (4.5X9X1-MM THK)	

252-4504 **HEATER GP-CAB (*contd.*)** **i03776850**

NOTE	REF NO	GRAPHIC REF	PART NUMBER	QTY	PART NAME 1 2 3 4 5 6 (PRODUCT LEVEL)	SEE PAGE
J	32	1	**285-8548**	1	GASKET	
Y	33	1	*289-2123*	1	HEATER GP-CAB	779
	34	1	**300-4098**	4	CAP	
M	35	1,2	**5C-9553**	16	BOLT (M6X1X16-MM)	
	36	2	**8T-4121**	1	WASHER-HARD (11X21X2.5-MM THK)	
M	37	2	**8T-4137**	1	BOLT (M10X1.5X20-MM)	
	38	1,2	**8T-4205**	16	WASHER-HARD (7.2X14.5X2-MM THK)	
D	39	1	**6V-2496**		SEAL (0.27-M EACH)	
D	39A	1	**6V-2496**		SEAL (0.04-M)	
D	39B	1	**6V-2496**		SEAL (0.26-M)	
D	39C	2	**6V-2496**		SEAL (0.15-M EACH)	
J	40	2	**153-6932**	1	GASKET	
					AVAILABLE REPAIR KIT(S):	
J			**285-8554**	1	KIT-SEAL (HEATER)	

D - ORDER BY THE METER
E - ORDER BY THE CENTIMETER
J - KIT MARKED J SERVICES PARTS MARKED J
M - METRIC PART
Y - SEPARATE ILLUSTRATION

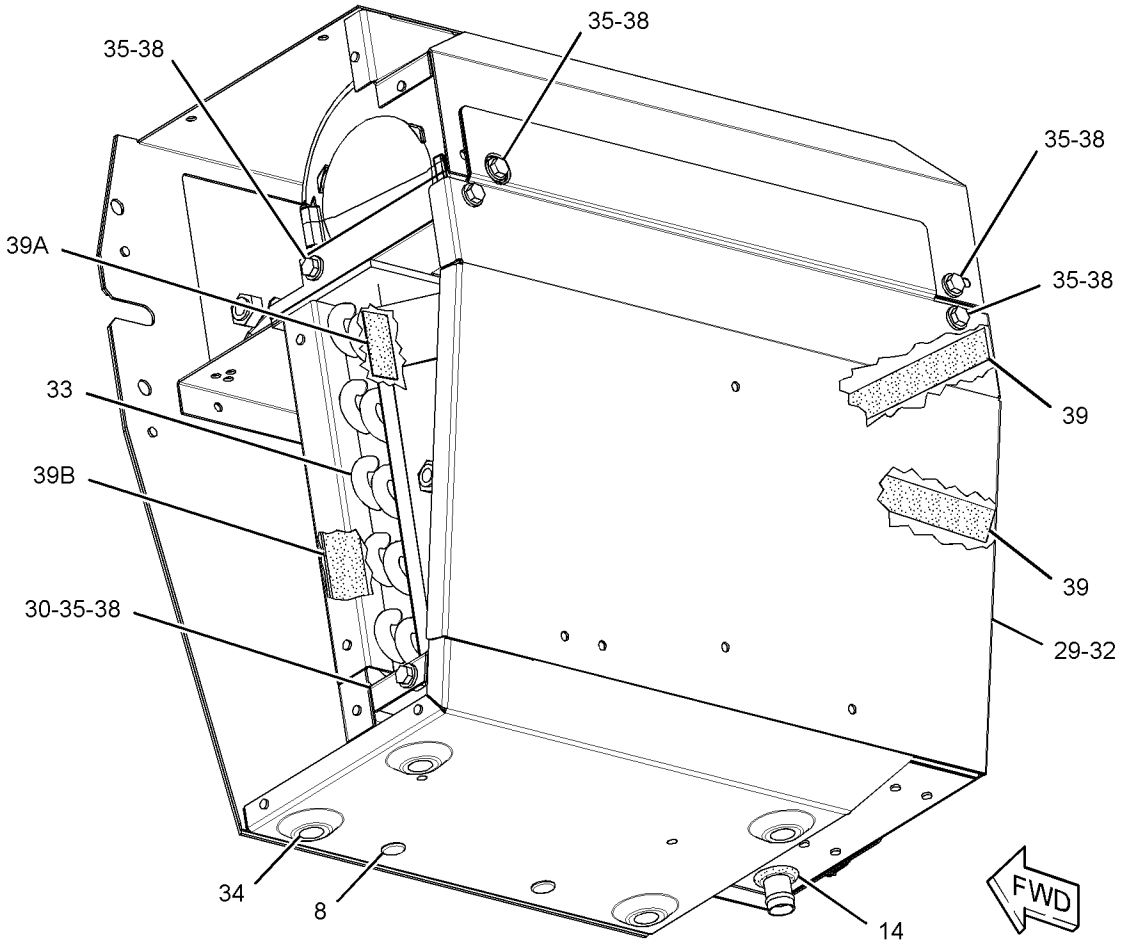

(COVER REMOVED FOR CLARITY)

GRAPHIC #1 g01733294

252-4504 **HEATER GP-CAB (*contd.*)** **i03776850**

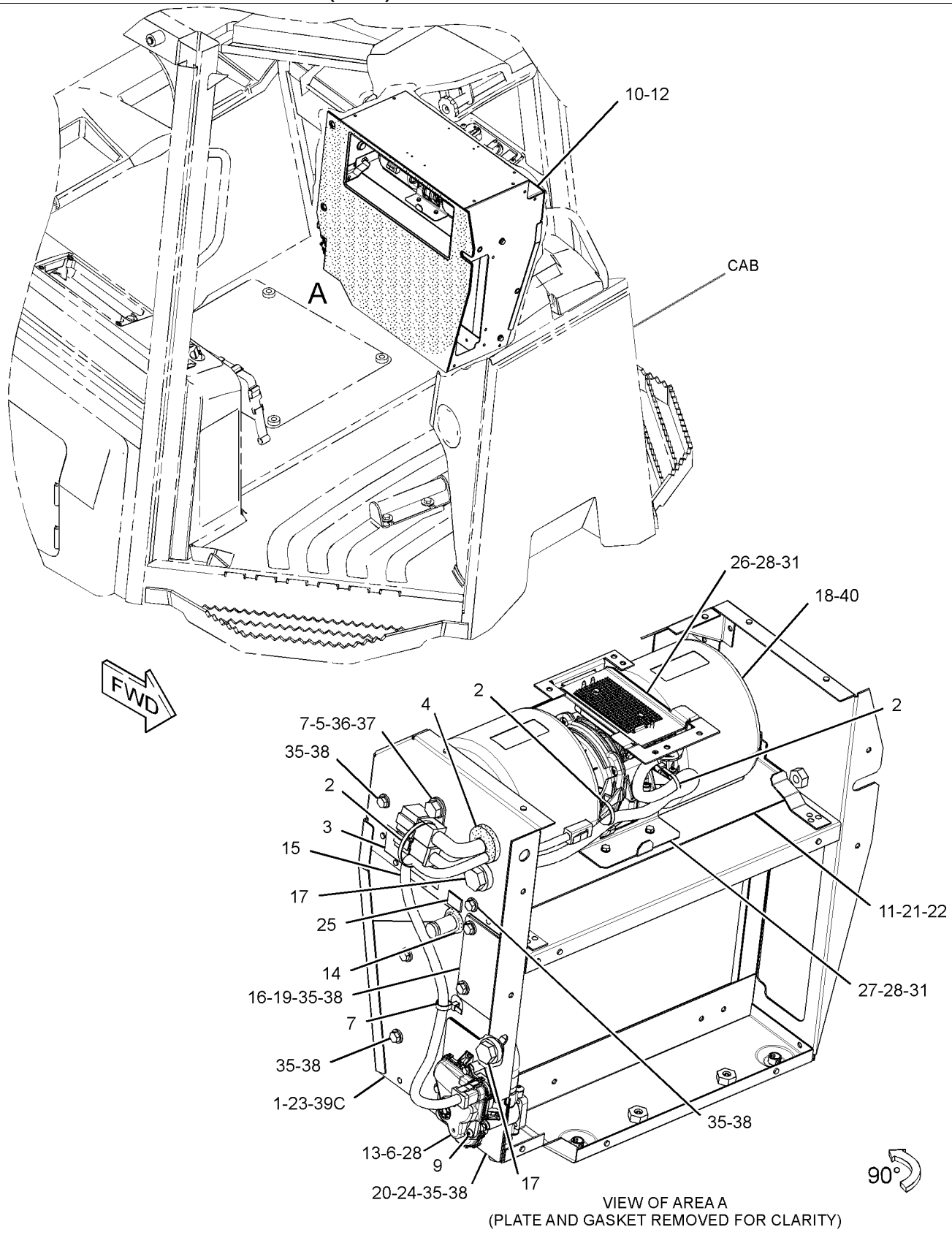

VIEW OF AREA A
(PLATE AND GASKET REMOVED FOR CLARITY)

GRAPHIC #2 **<END>** g01733295

252-4504 HEATER GP-CAB

S/N: MMM1-UP; RRR1-UP
PART OF 254-3190 HEATER GP-CAB
AN ATTACHMENT
TYPE 2

SMCS-7304 **i05170215**

NOTE	REF NO	GRAPHIC REF	PART NUMBER	QTY	PART NAME 1 2 3 4 5 6 (PRODUCT LEVEL)	SEE PAGE
	1	2	**289-2134**	1	PLATE AS	
	2	2	**3S-2093**	3	STRAP-CABLE	
	3	2	**8C-3756**	1	FILM-IDENTIFICATION (GROUP NO., SEQUENCE NO.)	
	4	2	**111-4015**	1	GROMMET	
	5	2	**4P-7581**	1	CLIP	
	6	2	**131-3093**	1	BUSHING	
C	7	2	**134-3518**	3	TIE-PUSH MOUNT	
	8	2	**151-5650**	2	PLUG	
	9	2	**248-6772**	2	SCREW-MACHINE (8-16X7.75-IN)	
	10	1	**256-0761**	1	CASE AS-AIR CONDITIONER	
	11	2	**256-0768**	1	PLATE AS	
M		2	**6V-9632**	6	NUT-WELD (M6X1-THD)	
M		2	**9X-2032**	2	NUT-WELD (M4X0.7-THD)	
J	12	2	**262-2815**	1	GASKET	
	13	2	**265-9620**	1	ACTUATOR (ELECTRONIC)	
	14	2	**275-6707**	2	GROMMET	
C	15	2	**364-6136**	1	HARNESS AS-MOTOR (BLOWER)	
		2	**6T-6505**	3	HOUSING-RECEPTACLE (BLADE, POSITIVE LOCK)	
		2	**7T-0093**	4	PIN-CONNECTOR (12-GA TO 14-GA)	
		2	**8T-8729**	3	PIN-CONNECTOR (16-GA TO 18-GA)	
		2	**9W-0852**	1	PIN-CONNECTOR (14-GA TO 16-GA)	
		2	**155-2271**	1	KIT-CONNECTING PLUG (4-PIN)	
					(INCLUDES PLUG AS, WEDGE & INTERFACE SEAL)	
		2	**177-9648**	1	KIT-CONNECTING PLUG (2-PIN)	
					(INCLUDES PLUG AS & WEDGE)	
		2	**8T-8737**	1	PLUG-SEAL	
		2	**102-8804**	1	KIT-RECEPTACLE (4-PIN)	
		2	**177-9653**	1	KIT-RECEPTACLE (4-PIN)	
					(EACH RECEPTACLE KIT INCLUDES RECEPTACLE AS & WEDGE)	
		2	**126-1768**	3	SOCKET-CONNECTOR (14-GA TO 16-GA)	
		2	**192-2112**	2	SOCKET-TERMINAL	
		2	**5P-5618**	2	TERMINAL-BLADE (10-GA TO 12-GA)	
		2	**6T-6506**	3	TERMINAL-BLADE (14-GA TO 18-GA)	
E		2	**125-7875**		TUBE-HEAT SHRINK (7.44-MM DIA) (10-CM)	
	16	2	**277-7112**	1	PLATE	
	17	2	**277-7114**	2	PLUG	
	18	2	**277-7115**	1	BLOWER AS	
J	19	2	**277-9958**	1	GASKET	
J	20	2	**277-9959**	1	GASKET	
J	21	2	**277-9960**	1	GASKET	
J	22	2	**277-9962**	1	GASKET	
J	23	2	**277-9964**	1	GASKET	
	24	2	**318-0815**	1	PLATE AS	
	25	2	**278-3354**	1	FILM-INSTRUCTION (HVAC WATER, DRAINING, FILLING)	
C	26	2	*363-5992*	1	RESISTOR GP	
		2	**363-5991**	1	BRACKET AS	
		2	**133-9012**	1	FUSE (15-AMPERE)	
		2	**354-1384**	1	RESISTOR GP	
		2	**9X-2185**	3	SCREW (8-15X0.44-IN)	
	27	2	**282-3653**	1	BRACKET	
M	28	2	**116-6952**	7	BOLT (M4X0.7X10-MM)	
	29	2	**285-7974**	1	PLATE AS	
	30	2	**289-4795**	1	PLATE AS	
	31	2	**096-6166**	4	WASHER-HARD (4.5X9X1-MM THK)	

252-4504 **HEATER GP-CAB (*contd.*)** **i05170215**

NOTE	REF NO	GRAPHIC REF	PART NUMBER	QTY	PART NAME 1 2 3 4 5 6 (PRODUCT LEVEL)	SEE PAGE
J	32	2	**285-8548**	1	GASKET	
Y	33	2	*289-2123*	1	HEATER GP-CAB	779
	34	2	**300-4098**	4	CAP	
M	35	2	**5C-9553**	16	BOLT (M6X1X16-MM)	
	36	2	**8T-4121**	1	WASHER-HARD (11X21X2.5-MM THK)	
M	37	2	**8T-4137**	1	BOLT (M10X1.5X20-MM)	
	38	2	**8T-4205**	16	WASHER-HARD (7.2X14.5X2-MM THK)	
D	39	2	**6V-2496**		SEAL (0.3-M EACH)	
D	39A	2	**6V-2496**		SEAL (0.1-M)	
D	39B	2	**6V-2496**		SEAL (0.2-M EACH)	
J	40	2	**153-6932**	1	GASKET	
					AVAILABLE REPAIR KIT(S):	
J			**285-8554**	1	KIT-SEAL (HEATER)	

C - CHANGE FROM PREVIOUS TYPE
D - ORDER BY THE METER
E - ORDER BY THE CENTIMETER
J - KIT MARKED J SERVICES PARTS MARKED J
M - METRIC PART
Y - SEPARATE ILLUSTRATION

REFER TO ALL ILLUSTRATIONS OF THIS GROUP FOR AUXILIARY VIEWS

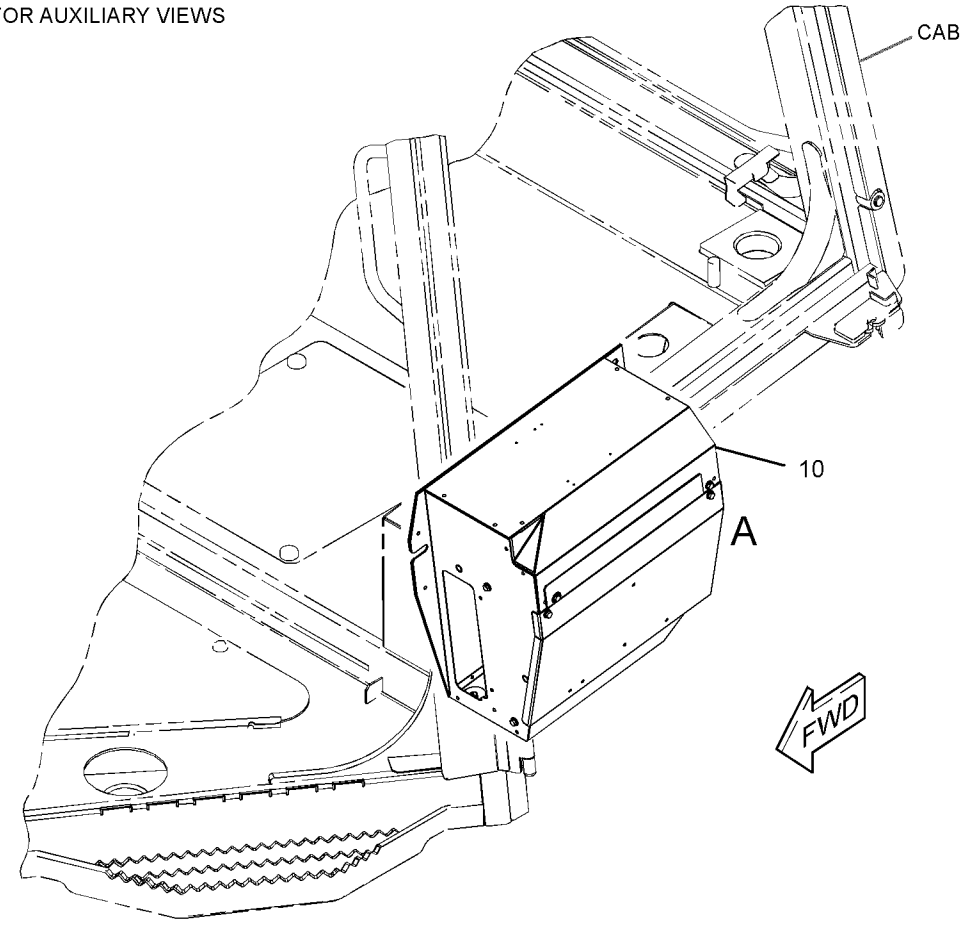

GRAPHIC #1 g02503716

252-4504 **HEATER GP-CAB (*contd.*)** **i05170215**

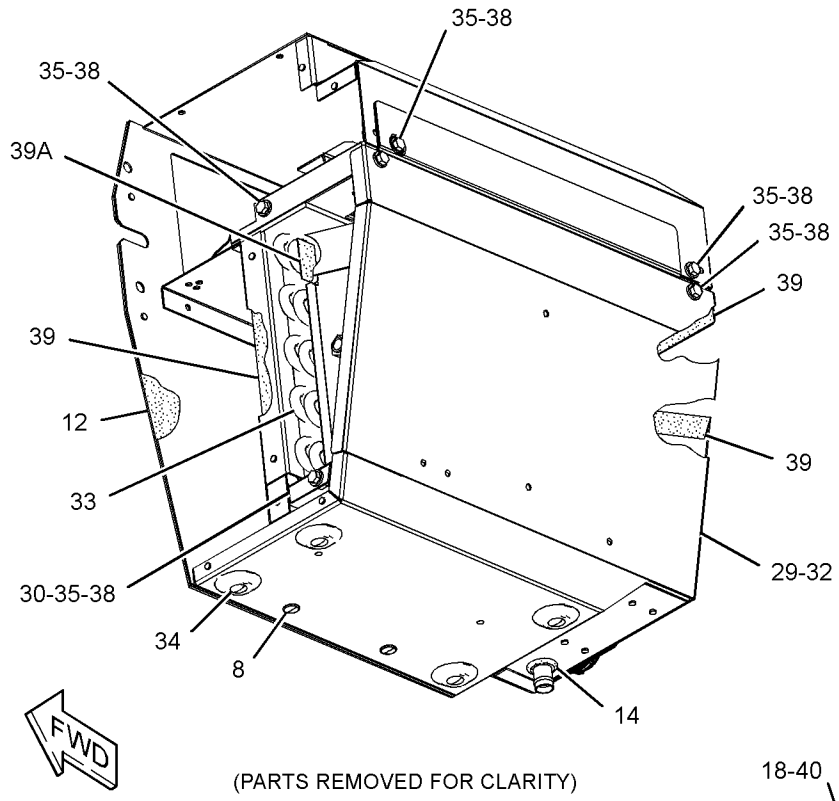

(PARTS REMOVED FOR CLARITY)

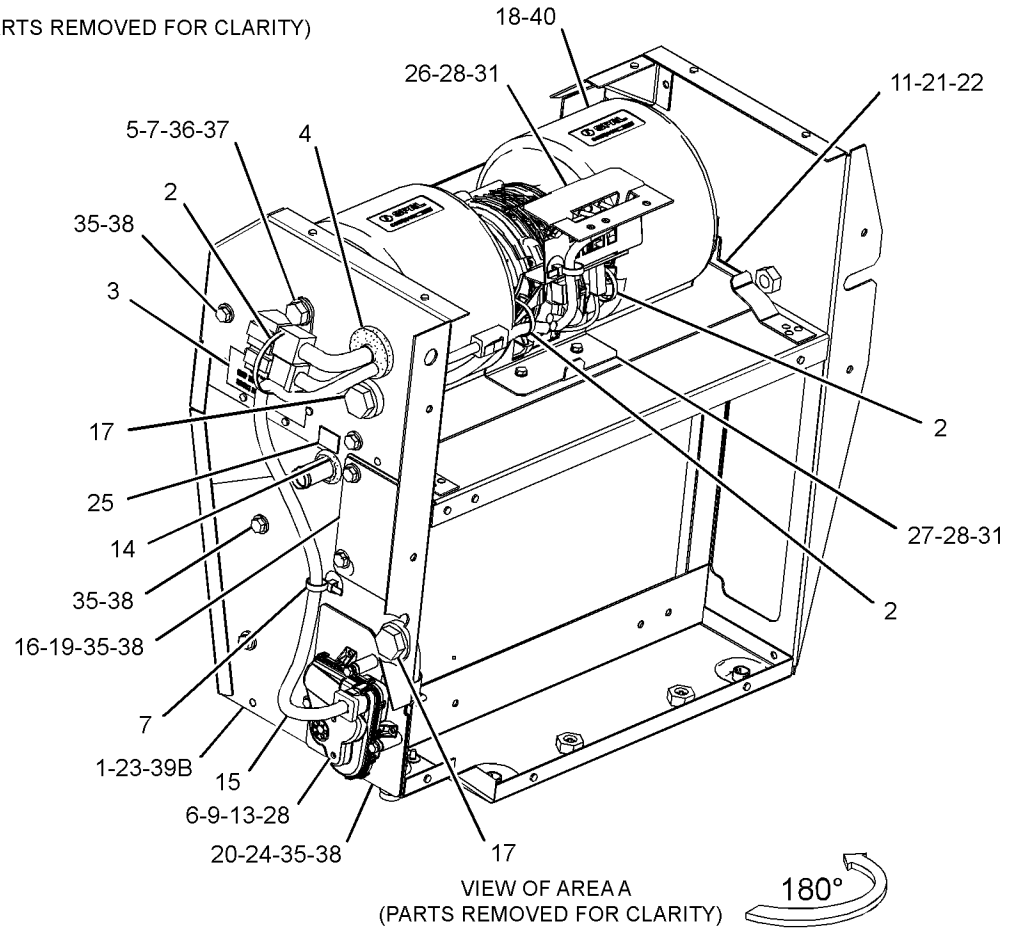

VIEW OF AREA A
(PARTS REMOVED FOR CLARITY)

GRAPHIC #2 **<END>** g02507101

254-3190 HEATER GP-CAB

S/N: MMM1-UP; RRR1-UP
PART OF 282-4897 ROPS AR
AN ATTACHMENT

SMCS-7304 **i03413680**

NOTE	REF NO	GRAPHIC REF	PART NUMBER	QTY	PART NAME 1 2 3 4 5 6 (PRODUCT LEVEL)	SEE PAGE
	1	1	**121-2761**	1	GRILL-AIR FILTER (CAB)	
Y	2	1	*252-4504*	1	HEATER GP-CAB	771
	3	1	**254-3196**	1	HOSE	
	4	1	**254-3199**	1	HOSE	
	5	1	**254-3200**	1	GASKET	
	6	1	**254-3201**	1	DUCT AS-AIR	
		1	**6C-3680**	4	RIVET-POP	
	7	1	**287-8437**	1	PLATE AS	
M		1	**6V-9632**	4	NUT-WELD (M6X1-THD)	
M	8	1	**288-3663**	4	SCREW-THUMB (M6X1X25-MM)	
	9	1	**5P-0599**	4	CLAMP-BAND	
M	10	1	**6V-7744**	3	LOCKNUT (M10X1.5-THD)	
	11	1	**7X-7729**	6	WASHER (11X25X3-MM THK)	
M	12	1	**8T-4137**	3	BOLT (M10X1.5X20-MM)	
M	13	1	**9X-2042**	2	SCREW-TRUSS HEAD (M6X1X12-MM)	
D	14	1	**5P-5639**		SEAL (1.4-M)	

D - ORDER BY THE METER
M - METRIC PART
Y - SEPARATE ILLUSTRATION

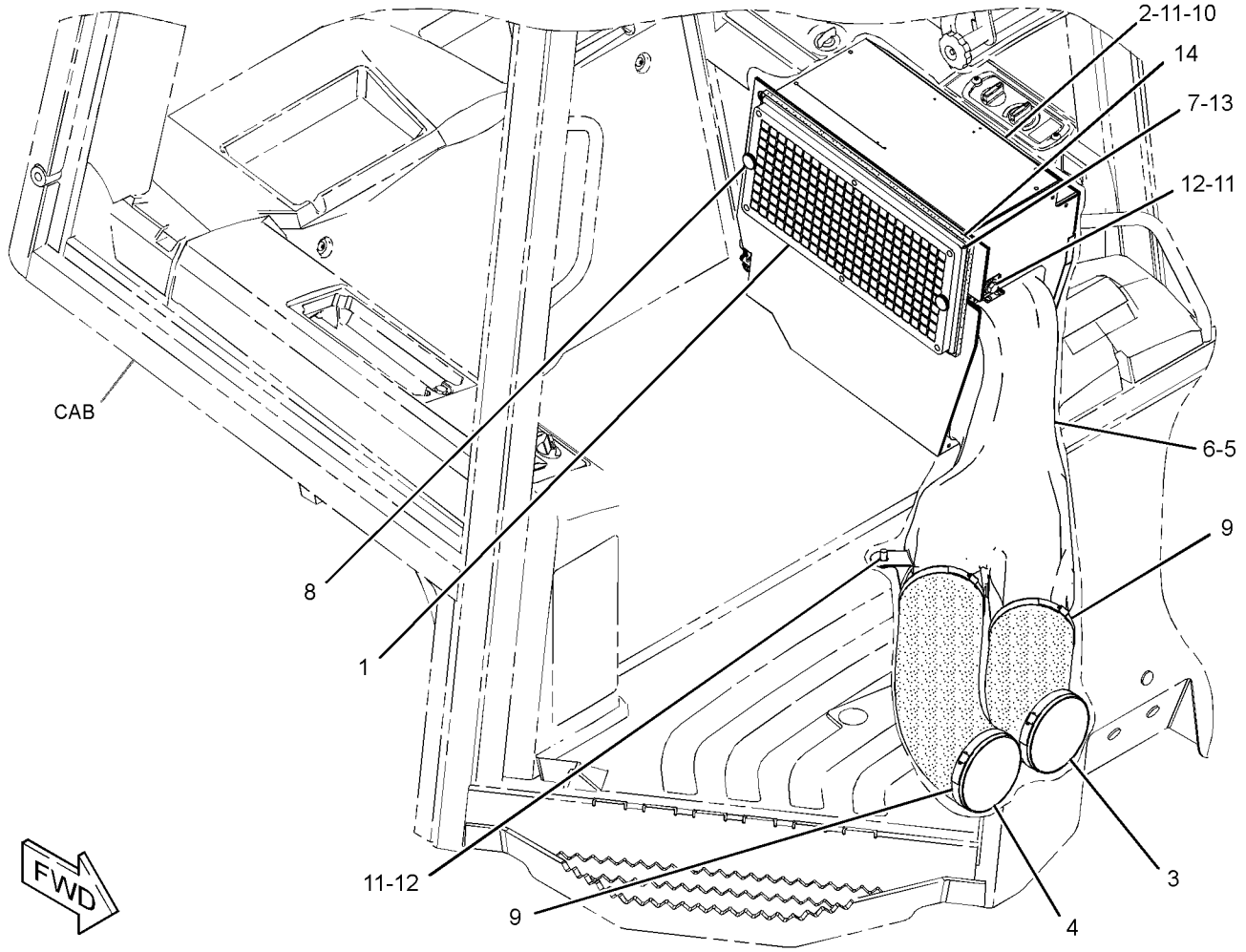

GRAPHIC #1

<END>

g01341608

277-9969 HEATER GP-CAB

S/N: MMM1-UP; RRR1-UP
PART OF 252-4502 AIR CONDITIONER GP
AN ATTACHMENT

SMCS-7304 **i05195752**

NOTE	REF NO	GRAPHIC REF	PART NUMBER	QTY	PART NAME 1 2 3 4 5 6 (PRODUCT LEVEL)	SEE PAGE
	1	1	**235-9014**	2	CLAMP-SPRING	
	2	1	**420-3511**	1	VALVE GP-CAB HEATER (WATER)	
	3	1	**287-6657**	1	COIL AS-HEATER	
	4	1	**291-3803**	1	HOSE	

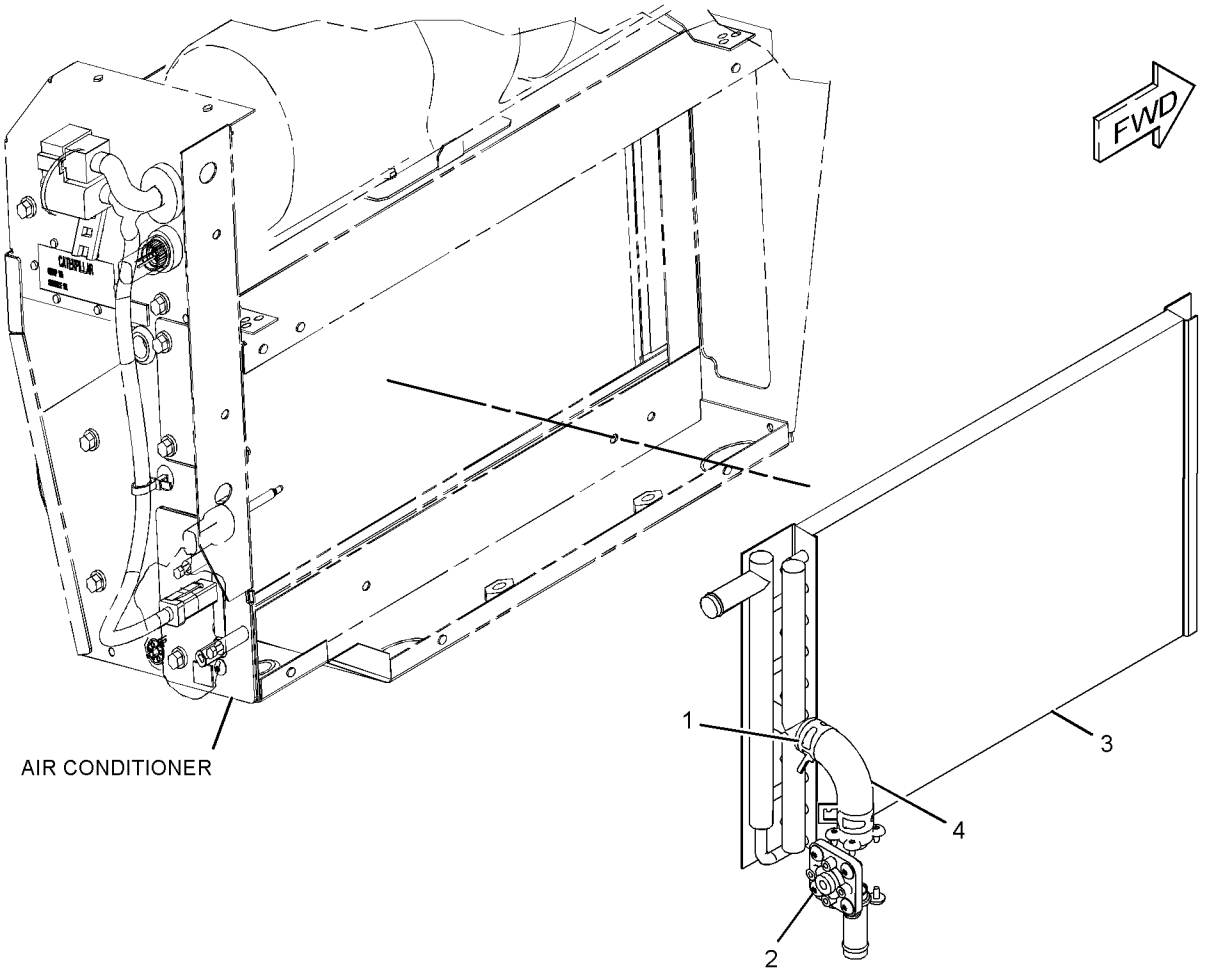

GRAPHIC #1 **<END>** g03330186

289-2123 HEATER GP-CAB

S/N: MMM1-UP; RRR1-UP
PART OF 252-4504 HEATER GP-CAB
AN ATTACHMENT

SMCS-7304 **i05265844**

NOTE	REF NO	GRAPHIC REF	PART NUMBER	QTY	PART NAME 1 2 3 4 5 6 (PRODUCT LEVEL)	SEE PAGE
	1	1	**235-9014**	2	CLAMP-SPRING	
	2	1	**420-3511**	1	VALVE GP-CAB HEATER	
	3	1	**289-2122**	1	COIL AS-HEATER	
	4	1	**291-3803**	1	HOSE	

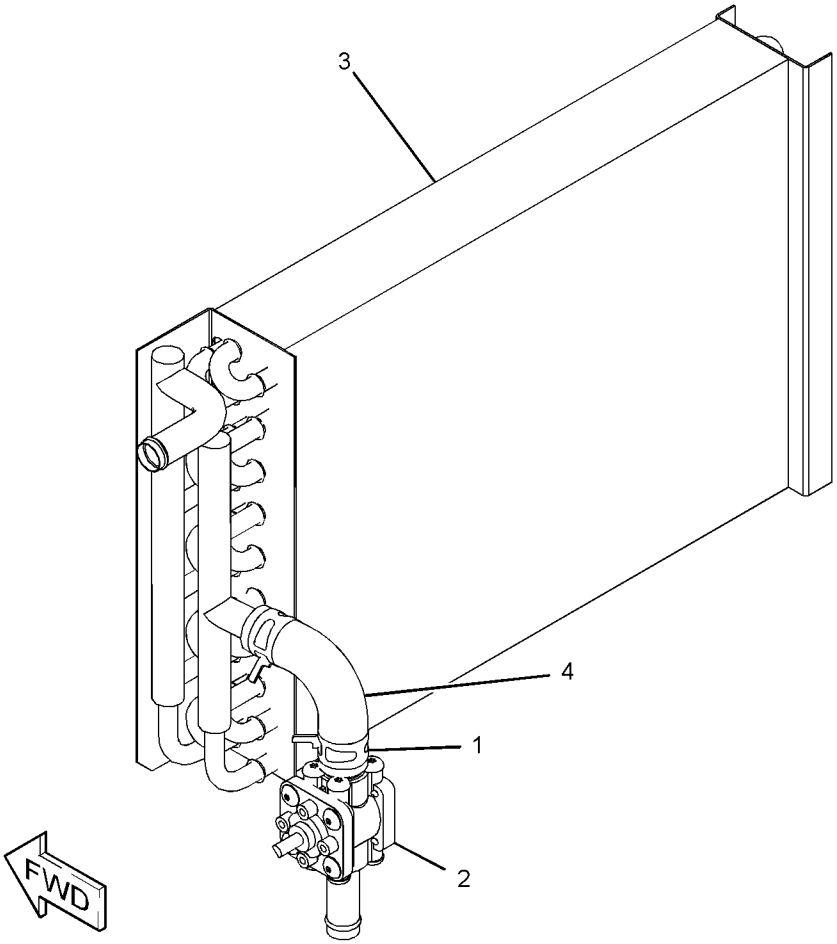

GRAPHIC #1 **<END>** g03354007

247-6505 INSTALLATION GP-RADIO

S/N: MMM1-UP; RRR1-UP

PART OF 244-7475, 244-7476 ROPS AR, 282-4898, 282-4899 ROPS AR-ENCLOSED AN ATTACHMENT

SMCS-7338 **i03841951**

NOTE	REF NO	GRAPHIC REF	PART NUMBER	QTY	PART NAME 1 2 3 4 5 6 (PRODUCT LEVEL)	SEE PAGE
	1	1	**6C-3431**	1	ANTENNA	
	2	1	**6T-7695**	2	SPEAKER AS-RADIO	
	3	1	**7K-1181**	3	STRAP-CABLE	
	4	1	**9U-8263**	1	COVER	
	5	1	**226-0150**	1	WASHER-RUBBER	
	6	1	**226-0151**	1	SPACER	
	7	1	**6C-9081**	2	LOCKWASHER	
M	8	1	**138-8454**	8	SCREW-TRUSS HEAD (M4X0.7X10-MM)	
M	9	1	**160-8754**	1	BOLT (M5X0.8X40-MM)	
M	10	1	**5C-2874**	1	NUT (M5X0.8-THD)	
	11	1	**8K-1433**	1	GROMMET	
	12	1	**140-4722**	1	NUT (M5X0.8-THD)	

M - METRIC PART

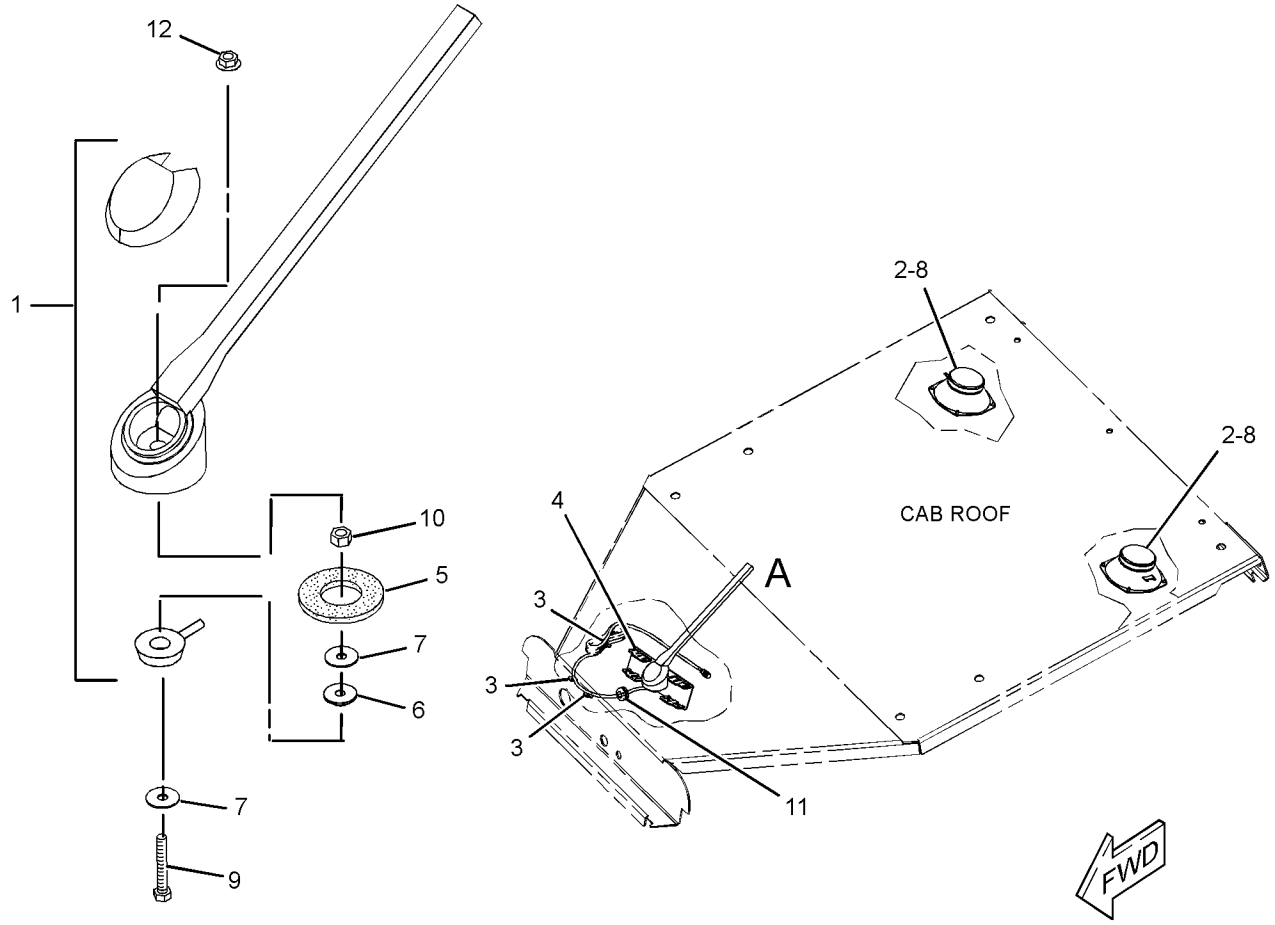

VIEW OF AREA A

GRAPHIC #1 **<END>** g02102235

245-6022 INSTRUMENT GP–OROPS

S/N: MMM1-UP; RRR1-UP
PART OF 282-4897 ROPS AR
AN ATTACHMENT

SMCS-7450, 7451

i03872997

NOTE	REF NO	GRAPHIC REF	PART NUMBER	QTY	PART NAME 1 2 3 4 5 6 (PRODUCT LEVEL)	SEE PAGE
Y	1	1	**106-0107**	1	SWITCH GP-ROTARY (THROTTLE POSITION)	246
	2	1	**110-6109**	1	KNOB-CONTROL (THROTTLE SWITCH)	
	3	1	**110-7887**	1	SWITCH AS-START (KEY)	
		1	**7T-6799**	1	NUT-MOUNTING (1-32-THD)	
		1	**102-8804**	1	KIT-RECEPTACLE (4-PIN)	
					(INCLUDES RECEPTACLE AS & WEDGE)	
		1	**186-3735**	4	PIN-CONNECTOR (16-GA TO 18-GA)	
	4	1	**165-0311**	2	PLUG	
	5	1	**178-7539**	1	RECEPTACLE AS (POWER SUPPLY)	
	6	1	**180-6615**	1	SWITCH AS (WORK LIGHTS)	
		1	**111-7899**	1	GASKET	
	7	1	**341-7478**	1	SWITCH AS-ROCKER (PARKING BRAKE)	
		1	**111-7899**	1	GASKET	
B	8	1	**218-0651**	1	FILM-INSTRUCTION (KEY START SWITCH)	
	9	1	**232-1792**	1	HORN (ALARM)	
	10	1	**245-6033**	1	SWITCH AS-ROCKER (IMPLEMENT LOCKOUT)	
		1	**111-7899**	1	GASKET	
	11	1	**254-4091**	1	MONITOR GP-OPERATOR (INSTRUMENT CLUSTER)	
	12	1	**311-0299**	1	PLATE-SWITCH	
	13	1	**311-0303**	1	FILM-PANEL (OPEN ROPS)	
	14	1	**269-7675**	1	BRACKET	
	15	1	**314-3010**	1	PLATE	
M	16	1	**263-5928**	5	SCREW-TRUSS HEAD (M5X0.8X25-MM)	
	17	1	**267-5239**	1	PANEL AS (AIR CONDITIONER, HEATER CONT) (TEMPERATURE)	
		1	**271-7312**	1	KNOB (TEMPERATURE CONTROL)	
		1	**285-7415**	1	KNOB (BLOWER FAN SPEED)	
	18	1	**8T-4121**	1	WASHER-HARD (11X21X2.5-MM THK)	
M	19	1	**8T-4136**	1	BOLT (M10X1.5X25-MM)	
M	20	1	**9X-2045**	8	SCREW-TRUSS HEAD (M6X1X20-MM)	

B - USE AS REQUIRED
M - METRIC PART
Y - SEPARATE ILLUSTRATION

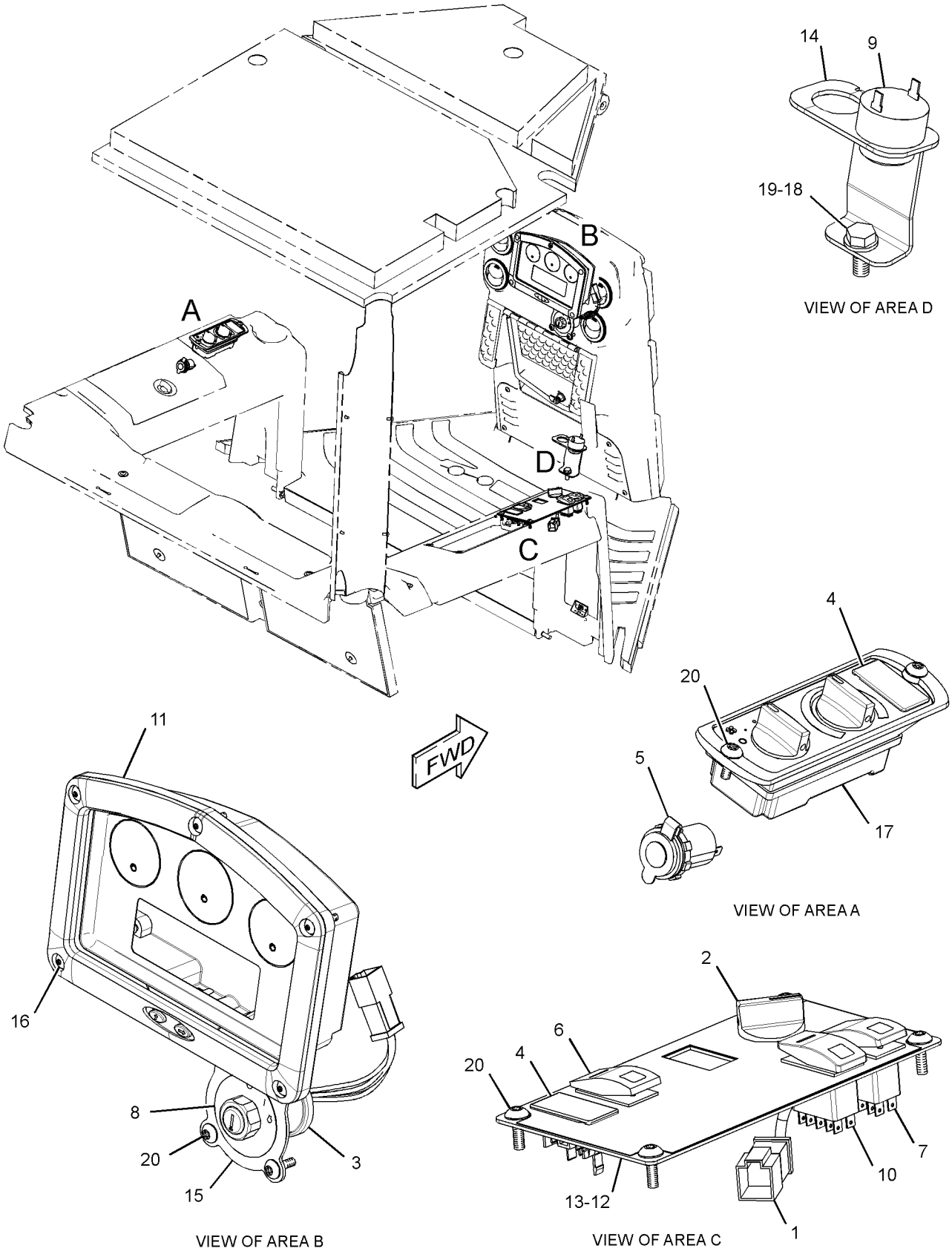

GRAPHIC #1 **<END>** g01422587

245-6039 INSTRUMENT GP–EROPS

S/N: MMM1-UP; RRR1-UP

PART OF 244-7475, 244-7476 ROPS AR, 282-4898, 282-4899 ROPS AR-ENCLOSED AN ATTACHMENT

SMCS-7450, 7451

i03721421

NOTE	REF NO	GRAPHIC REF	PART NUMBER	QTY	PART NAME 1 2 3 4 5 6 (PRODUCT LEVEL)	SEE PAGE
Y	1	1	**106-0107**	1	SWITCH GP-ROTARY (THROTTLE POSITION)	246
	2	1	**110-6109**	1	KNOB-CONTROL (THROTTLE SWITCH)	
	3	1	**110-7887**	1	SWITCH AS-START (KEY)	
		1	**7T-6799**	1	NUT-MOUNTING (1-32-THD)	
		1	**102-8804**	1	KIT-RECEPTACLE (4-PIN)	
					(INCLUDES RECEPTACLE AS & WEDGE)	
		1	**186-3735**	4	PIN-CONNECTOR (16-GA TO 18-GA)	
	4	1	**178-7539**	1	RECEPTACLE AS (POWER SUPPLY)	
	5	1	**180-6615**	1	SWITCH AS (WORK LIGHTS)	
	6	1	**341-7478**	1	SWITCH AS-ROCKER (PARKING BRAKE)	
	7	1	**202-2284**	1	SWITCH AS-ROCKER (AIR CONDITIONER)	
					(EACH SWITCH AS INCLUDES)	
		1	**111-7899**	1	GASKET	
	8	1	**232-1792**	1	HORN	
B	9	1	**218-0651**	1	FILM-INSTRUCTION (KEY START SWITCH)	
	10	1	**237-9154**	1	SWITCH AS-ROCKER (FRONT WIPER)	
	11	1	**237-9157**	1	SWITCH AS-ROCKER (REAR WIPER)	
					(EACH SWITCH AS-ROCKER INCLUDES)	
		1	**111-7899**	1	GASKET	
M	12	1	**9X-2045**	8	SCREW-TRUSS HEAD (M6X1X20-MM)	
	13	1	**245-6033**	1	SWITCH AS-ROCKER (IMPLEMENT LOCKOUT)	
		1	**111-7899**	1	GASKET	
	14	1	**254-4091**	1	MONITOR GP-OPERATOR (INSTRUMENT CLUSTER)	
	15	1	**311-0299**	1	PLATE-SWITCH	
	16	1	**311-0304**	1	FILM-PANEL (ENCLOSED ROPS)	
	17	1	**269-7675**	1	BRACKET	
	18	1	**314-3010**	1	PLATE	
M	19	1	**263-5928**	5	SCREW-TRUSS HEAD (M5X0.8X25-MM)	
	20	1	**267-5239**	1	PANEL AS (AIR CONDITIONER, HEATER CONT)	
		1	**271-7312**	1	KNOB (TEMPERATURE CONTROL)	
		1	**285-7415**	1	KNOB (BLOWER FAN SPEED)	
	21	1	**8T-4121**	1	WASHER-HARD (11X21X2.5-MM THK)	
M	22	1	**8T-4136**	1	BOLT (M10X1.5X25-MM)	
	23	1	**237-9158**	1	SWITCH AS-ROCKER (SIDE WIPER, LEFT)	
	23A	1	**237-9158**	1	SWITCH AS-ROCKER (SIDE WIPER, RIGHT)	
					(EACH SWITCH AS-ROCKER INCLUDES)	
		1	**111-7899**	1	GASKET	
	25	1	**165-0311**	1	PLUG	

B - USE AS REQUIRED
M - METRIC PART
Y - SEPARATE ILLUSTRATION

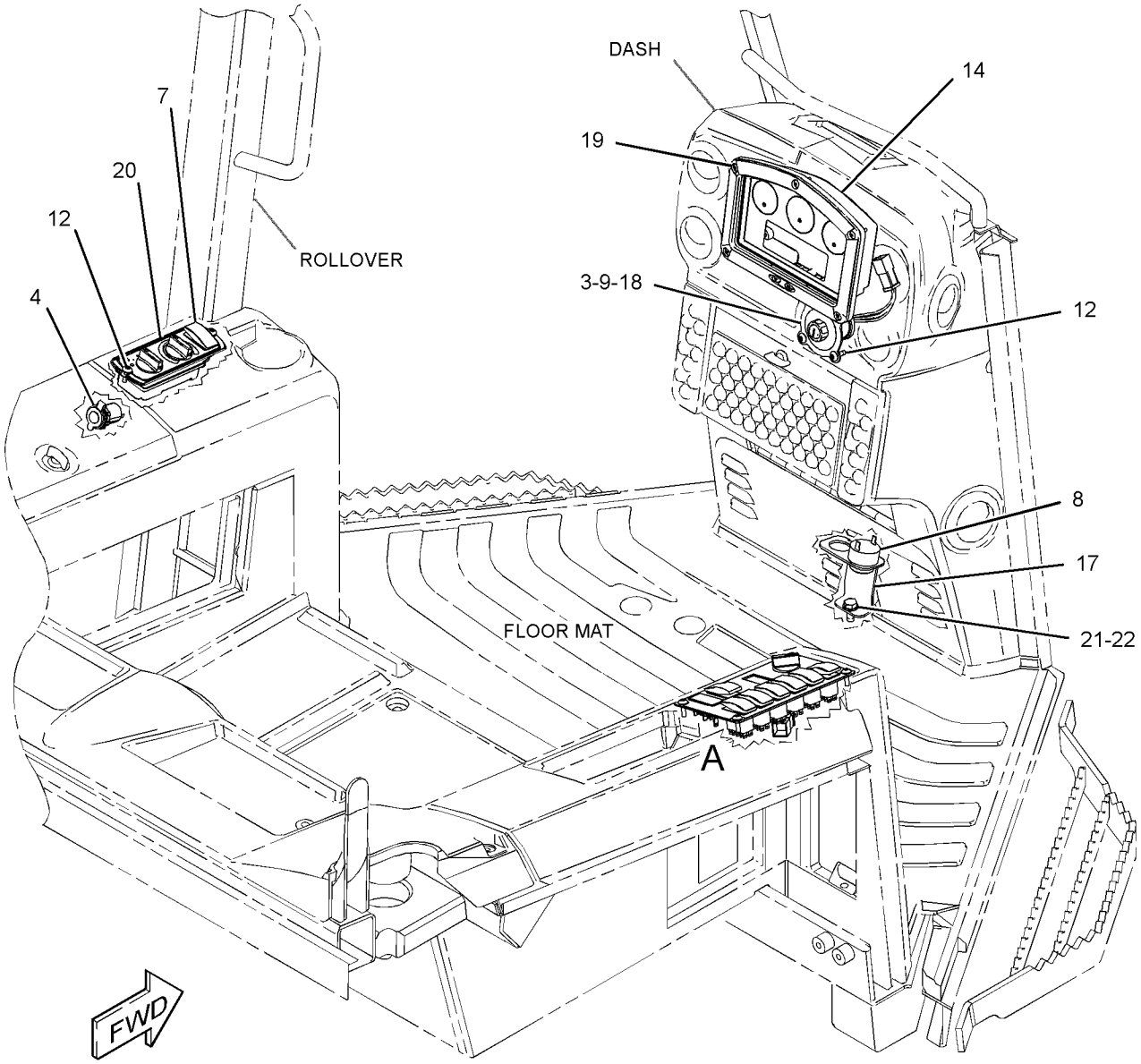

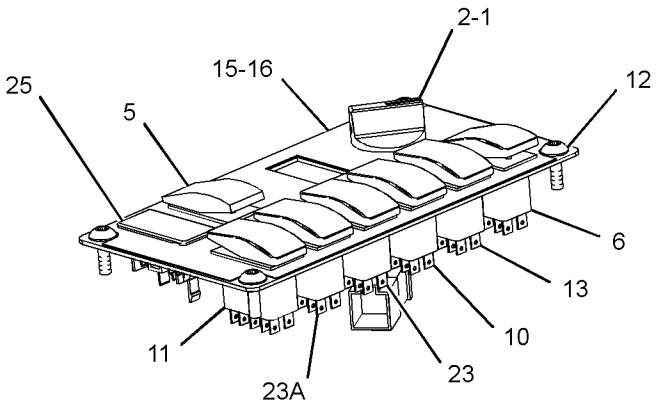

VIEW OF AREA A

GRAPHIC #1 **<END>** g01471693

310-1676 KIT-CUSHION

S/N: MMM1-UP; RRR1-UP

FIELD INSTALLATION

SMCS-7312 **i05425463**

NOTE	REF NO	GRAPHIC REF	PART NUMBER	QTY	PART NAME 1 2 3 4 5 6 (PRODUCT LEVEL)	SEE PAGE
M	1	1	**112-6646**	6	LOCKNUT (M6X1-THD)	
	2	1	**305-3458**	2	CUSHION	

M - METRIC PART

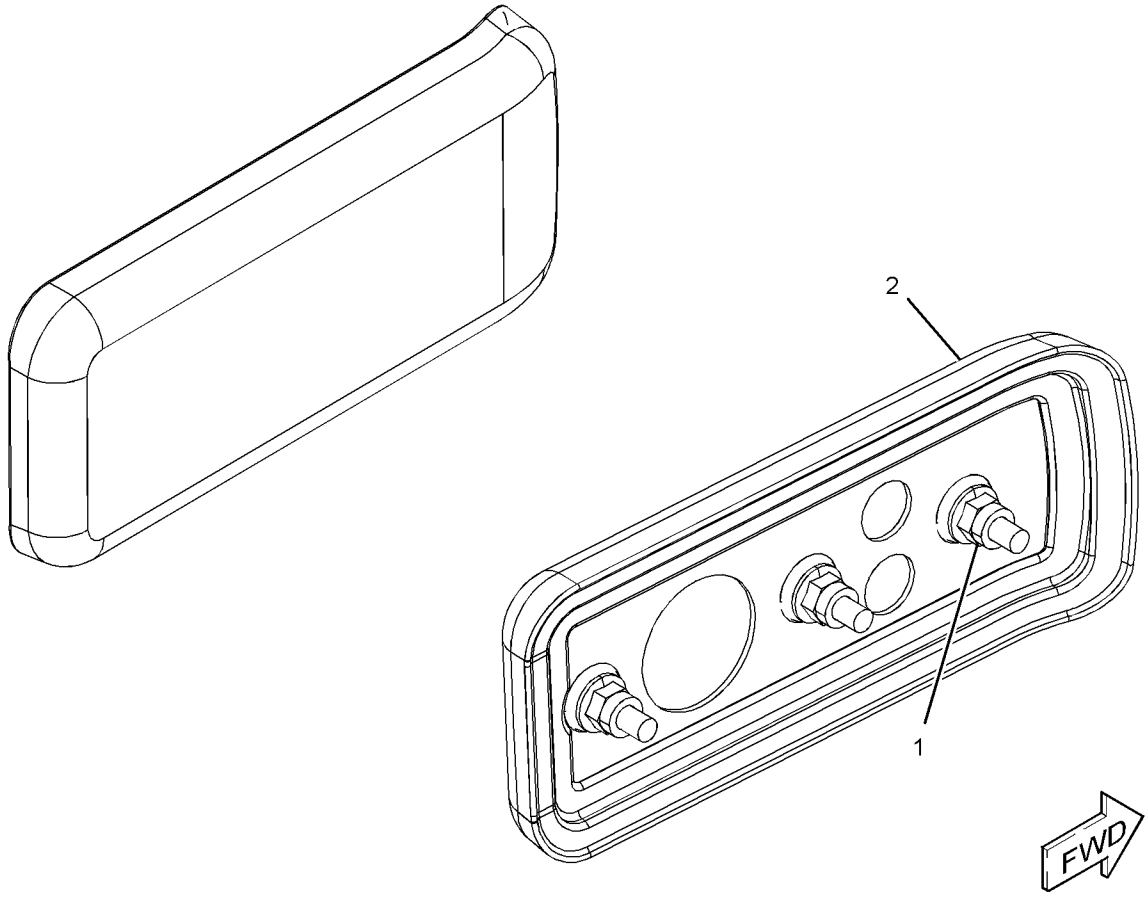

GRAPHIC #1 **<END>** g03456696

OPERATOR STATION

257-9819 LINES GP-AIR CONDITIONER

S/N: MMM1-526; RRR1-379

PART OF 254-3210 AIR CONDITIONER & MOUNTING GP

AN ATTACHMENT

SMCS-1808 **i04415558**

NOTE	REF NO	GRAPHIC REF	PART NUMBER	QTY	PART NAME 1 2 3 4 5 6 (PRODUCT LEVEL)	SEE PAGE
	1	1	**3E-6909**	1	CLIP	
	2	1	**5P-3928**	1	COUPLING AS-REFRIGERANT (SELF-SEALING)	
		1	**107-4395**	1	VALVE AS	
		1	**107-4396**	1	GASKET	
	3	1	**5P-3929**	1	COUPLING AS-REFRIGERANT (SELF-SEALING) (SELF SEALING)	
		1	**8F-9206**	1	SEAL-O-RING	
		1	**107-4397**	1	VALVE AS (LOW SIDE)	
	4	1	**5P-3948**	1	COUPLING AS-REFRIGERANT (SELF-SEALING) (SELF SEALING)	
		1	**7F-8607**	1	SEAL-O-RING	
		1	**107-4399**	1	VALVE AS (HIGH SIDE)	
	5	1	**5P-4106**	1	NUT (1-7/16-16-THD)	
	6	1	**6P-5239**	1	SPACER (0.5X0.688X1.92-IN THK)	
	7	1	**7K-1181**	3	STRAP-CABLE	
	8	1	**7K-3176**	1	COUPLING AS-REFRIGERANT (SELF-SEALING)	
		1	**107-4393**	1	VALVE AS (AIR CONDITIONER REFRIGERANT)	
		1	**107-4394**	1	GASKET	
	9	1	**7K-3304**	1	NUT-JAM (1-20-THD)	
	10	1	**101-8296**	2	CLIP	
Y	11	1	*186-6190*	1	ACCUMULATOR GP-REFRIGERANT (CHARGED)	663
	12	1	**102-7886**	2	SLEEVE	
I	13	1	**260-9505**	1	HOSE AS	
I	14	1	**260-9506**	1	HOSE AS	
	15	1	**261-8090**	1	TUBE AS-ORIFICE	
		1	**189-1707**	1	ORIFICE AS-AIR CONDITIONER	
	16	1	**301-6061**	1	BRACKET	
	17	1	**301-6062**	1	HOSE AS	
I	18	1	**301-6063**	1	HOSE AS	
I	19	1	**301-6064**	1	HOSE AS	
	20	1	**301-6065**	1	TUBE AS	
	21	1	**301-6066**	1	TUBE AS	
	22	1	**174-5907**	1	CLIP	
	24	1	**5P-4107**	1	WASHER (38.48X63.5X1.4-MM THK)	
	25	1	**6D-1641**	1	CLIP	
	26	1	**6D-4246**	2	CLIP	
	27	1	**6K-8178**	1	CLIP	
	28	1	**7B-1598**	1	CLIP	
	29	1	**8T-4121**	11	WASHER-HARD (11X21X2.5-MM THK)	
M	30	1	**8T-4133**	1	NUT (M10X1.5-THD)	
M	31	1	**8T-4137**	4	BOLT (M10X1.5X20-MM)	
M	32	1	**8T-4198**	2	BOLT (M10X1.5X100-MM)	
M	33	1	**8T-5005**	1	BOLT (M10X1.5X70-MM)	
	34	1	**9M-8406**	1	CLIP	
	35	1	**9X-7380**	1	SEAL-O-RING	
	36	1	**9X-7381**	5	SEAL-O-RING	
	37	1	**9X-7382**	2	SEAL-O-RING	
	38	1	**9X-7383**	4	SEAL-O-RING	
	39	1	**9X-7384**	2	SEAL-O-RING	
	40	1	**9X-8250**	3	CLIP	
D	41	1	**6V-5817**		CONDUIT-FLEXIBLE (26.1-MM ID, SPLIT) (0.6-M)	
D	41A	1	**6V-5817**		CONDUIT-FLEXIBLE (26.1-MM ID, SPLIT) (0.7-M)	
D	41B	1	**6V-5817**		CONDUIT-FLEXIBLE (26.1-MM ID, SPLIT) (0.8-M)	
D	42	1	**6V-5818**		CONDUIT-FLEXIBLE (18.62-MM ID, SPLIT) (0.6-M)	
D	42A	1	**6V-5818**		CONDUIT-FLEXIBLE (18.62-MM ID, SPLIT) (2.2-M)	
D	42B	1	**6V-5818**		CONDUIT-FLEXIBLE (18.62-MM ID, SPLIT) (2.1-M)	
D	43	1	**6V-2495**		SEAL (0.3-M)	

257-9819 **LINES GP-AIR CONDITIONER (*contd.*)** **i04415558**

NOTE	REF NO	GRAPHIC REF	PART NUMBER	QTY	PART NAME 1 2 3 4 5 6 (PRODUCT LEVEL)	SEE PAGE
	44	1	**307-1592**	1	PLATE AS	
M	45	1	**8T-4136**	3	BOLT (M10X1.5X25-MM)	

D - ORDER BY THE METER
I - REFER TO HYDRAULIC INFORMATION SYSTEM
M - METRIC PART
Y - SEPARATE ILLUSTRATION

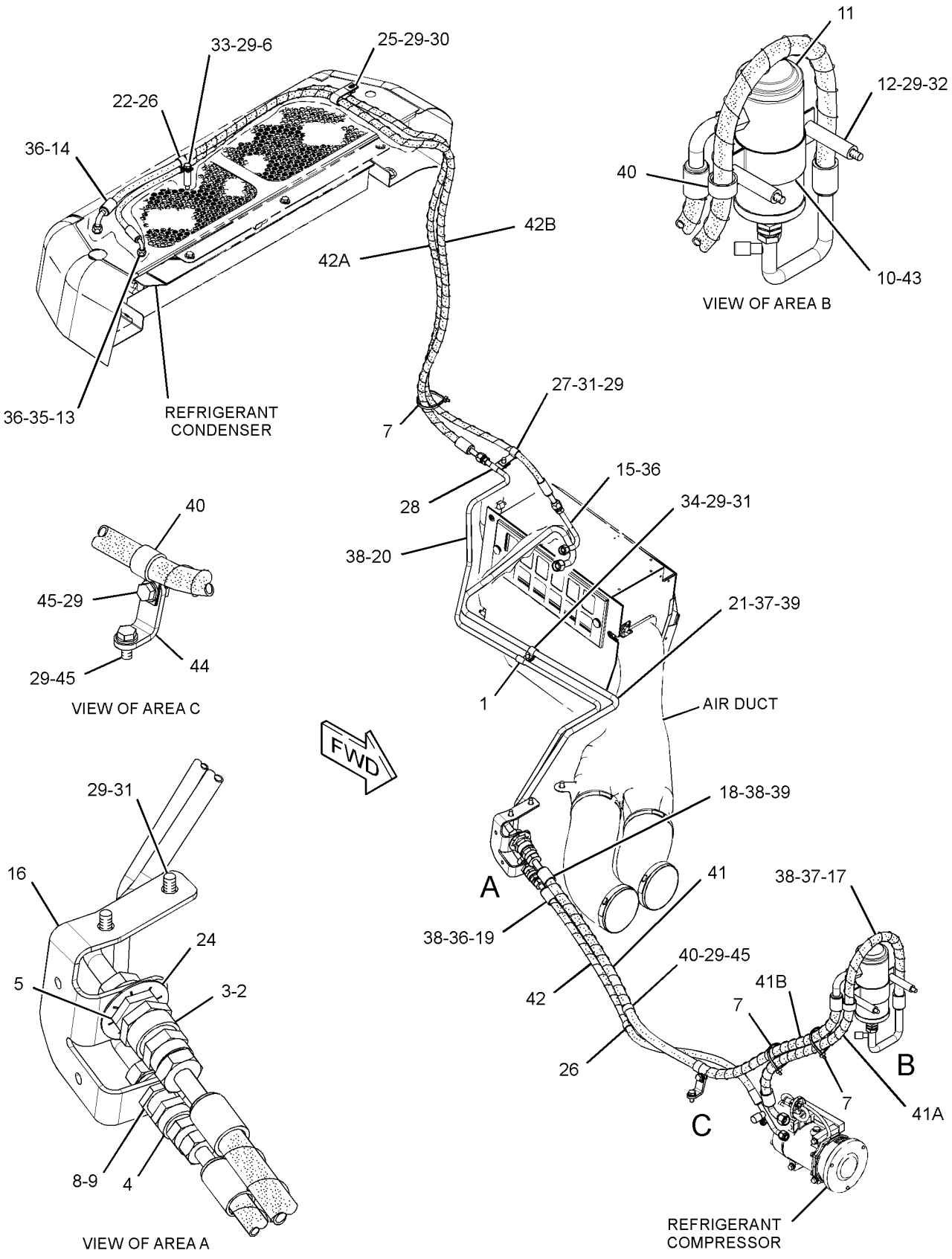

GRAPHIC #1 **<END>** g01637376

257-9819 LINES GP-AIR CONDITIONER

S/N: MMM527-UP; RRR380-UP
PART OF 254-3210 AIR CONDITIONER & MOUNTING GP
AN ATTACHMENT

SMCS-1808 **i04000239**

NOTE	REF NO	GRAPHIC REF	PART NUMBER	QTY	PART NAME 1 2 3 4 5 6 (PRODUCT LEVEL)	SEE PAGE
C	1	1	**3E-6909**	2	CLIP	
	2	1	**6P-5239**	1	SPACER (0.5X0.688X1.92-IN THK)	
	3	1	**7K-1181**	3	STRAP-CABLE	
	4	1	**101-8296**	2	CLIP	
	5	1	**102-7886**	2	SLEEVE	
Y	6	1	*186-6190*	1	ACCUMULATOR GP-REFRIGERANT (CHARGED)	663
I	7	1	**260-9505**	1	HOSE AS	
I	8	1	**260-9506**	1	HOSE AS	
	9	1	**261-8090**	1	TUBE AS-ORIFICE	
		1	**189-1707**	1	ORIFICE AS-AIR CONDITIONER	
	10	1	**301-6062**	1	HOSE AS	
	11	1	**307-1592**	1	PLATE AS	
C	12	1	**347-2282**	1	BRACKET AS	
CI	13	1	**347-2283**	1	HOSE AS	
CI	14	1	**347-2284**	1	HOSE AS	
C	15	1	**347-2285**	1	TUBE AS	
C	16	1	**347-2286**	1	TUBE AS	
	17	1	**174-5907**	1	CLIP	
	18	1	**6D-1641**	1	CLIP	
	19	1	**6D-4246**	2	CLIP	
	20	1	**6K-8178**	1	CLIP	
	21	1	**7B-1598**	1	CLIP	
C	22	1	**8T-4121**	12	WASHER-HARD (11X21X2.5-MM THK)	
M	23	1	**8T-4133**	1	NUT (M10X1.5-THD)	
M	24	1	**8T-4136**	3	BOLT (M10X1.5X25-MM)	
CM	25	1	**8T-4137**	5	BOLT (M10X1.5X20-MM)	
M	26	1	**8T-4198**	2	BOLT (M10X1.5X100-MM)	
M	27	1	**8T-5005**	1	BOLT (M10X1.5X70-MM)	
C	28	1	**9M-8406**	2	CLIP	
	29	1	**9X-7380**	1	SEAL-O-RING	
C	30	1	**9X-7381**	6	SEAL-O-RING	
C	31	1	**9X-7382**	3	SEAL-O-RING	
C	32	1	**9X-7383**	2	SEAL-O-RING	
	33	1	**9X-8250**	3	CLIP	
D	34	1	**6V-5817**		CONDUIT-FLEXIBLE (26.1-MM ID, SPLIT) (0.6-M)	
D	34A	1	**6V-5817**		CONDUIT-FLEXIBLE (26.1-MM ID, SPLIT) (0.7-M)	
D	34B	1	**6V-5817**		CONDUIT-FLEXIBLE (26.1-MM ID, SPLIT) (0.8-M)	
D	35	1	**6V-5818**		CONDUIT-FLEXIBLE (18.62-MM ID, SPLIT) (0.6-M)	
D	35A	1	**6V-5818**		CONDUIT-FLEXIBLE (18.62-MM ID, SPLIT) (2.2-M)	
D	35B	1	**6V-5818**		CONDUIT-FLEXIBLE (18.62-MM ID, SPLIT) (2.1-M)	
D	36	1	**6V-2495**		SEAL (0.3-M)	

C - CHANGE FROM PREVIOUS TYPE
D - ORDER BY THE METER
I - REFER TO HYDRAULIC INFORMATION SYSTEM
M - METRIC PART
Y - SEPARATE ILLUSTRATION

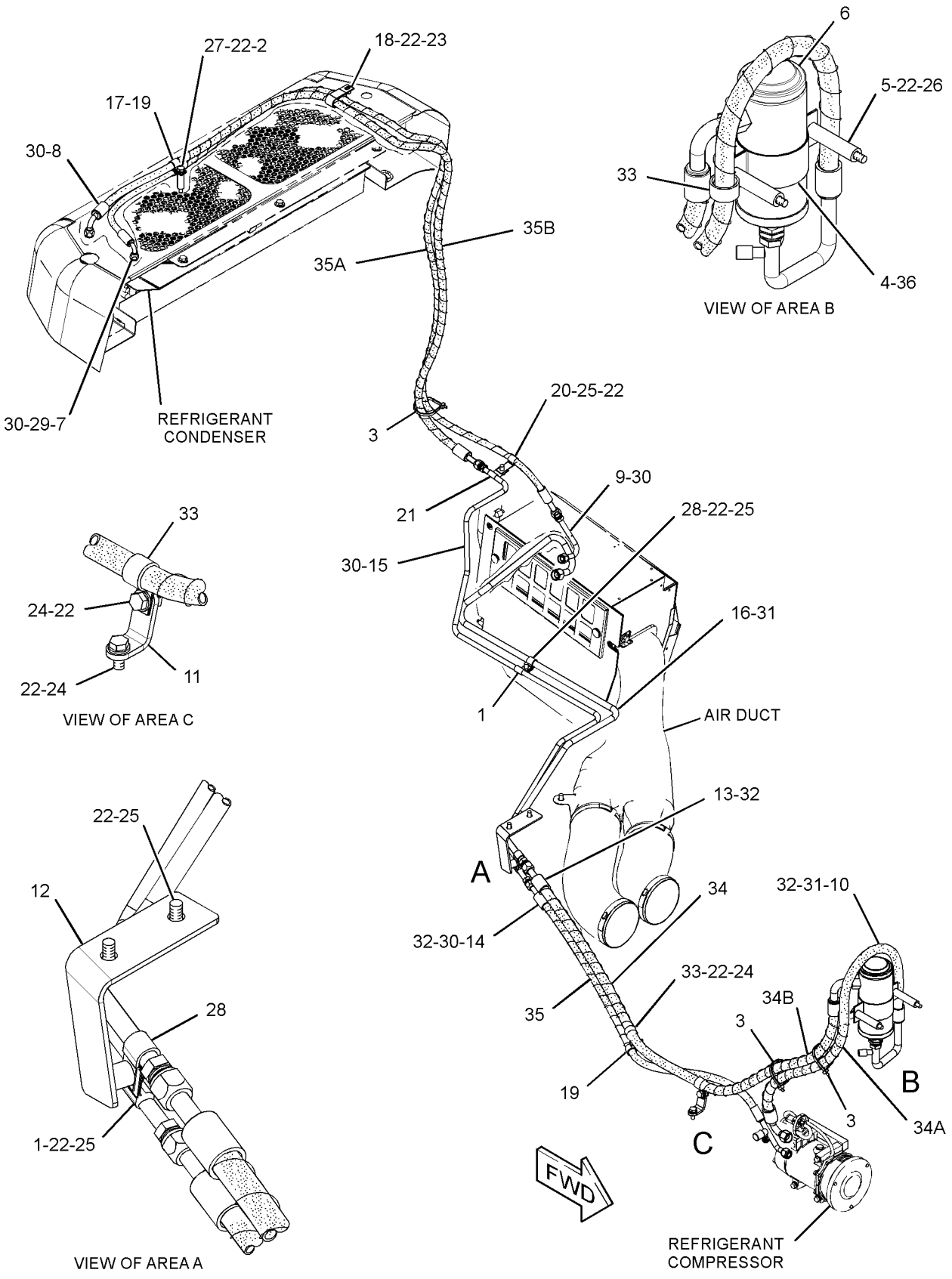

GRAPHIC #1 **<END>** g02351642

255-4241 LINES GP-HEATER

S/N: MMM1-UP; RRR1-UP

PART OF 244-7378, 244-7379 CHASSIS AR

SMCS-7304 **i04705533**

NOTE	REF NO	GRAPHIC REF	PART NUMBER	QTY	PART NAME 1 2 3 4 5 6 (PRODUCT LEVEL)	SEE PAGE
	1	1	**5D-1026**	6	CLAMP-BAND	
	2	1	**260-9285**	1	TUBE	
	3	1	**260-9286**	1	TUBE	
	4	1	**307-1590**	1	HOSE	
	5	1	**307-1591**	1	PLATE AS	
	6	1	**2B-0941**	1	SPACER (10.5X19X19-MM THK)	
	7	1	**3E-4321**	5	CLIP	
	8	1	**7M-8798**	1	CLIP	
	9	1	**7X-7729**	1	WASHER (11X25X3-MM THK)	
	10	1	**8T-4121**	7	WASHER-HARD (11X21X2.5-MM THK)	
M	11	1	**8T-4136**	5	BOLT (M10X1.5X25-MM)	
M	12	1	**8T-4137**	2	BOLT (M10X1.5X20-MM)	
M	13	1	**8T-4186**	1	BOLT (M10X1.5X40-MM)	
M	14	1	**8T-4189**	1	BOLT (M8X1.25X20-MM)	
	15	1	**8T-4224**	1	WASHER-HARD (8.8X16X2-MM THK)	
	16	1	**9M-8406**	7	CLIP	
	17	1	**9X-2488**	2	CLAMP-HOSE	
D	18	1	**6V-5817**		CONDUIT-FLEXIBLE (26.1-MM ID, SPLIT) (0.2-M)	
D	18A	1	**6V-5817**		CONDUIT-FLEXIBLE (26.1-MM ID, SPLIT) (0.1-M)	
E	19	1	**5P-0767**		HOSE (149-CM)	
E	19A	1	**5P-0767**		HOSE (127.3-CM)	
E	19B	1	**5P-0767**		HOSE (42.4-CM)	

D - ORDER BY THE METER
E - ORDER BY THE CENTIMETER
M - METRIC PART

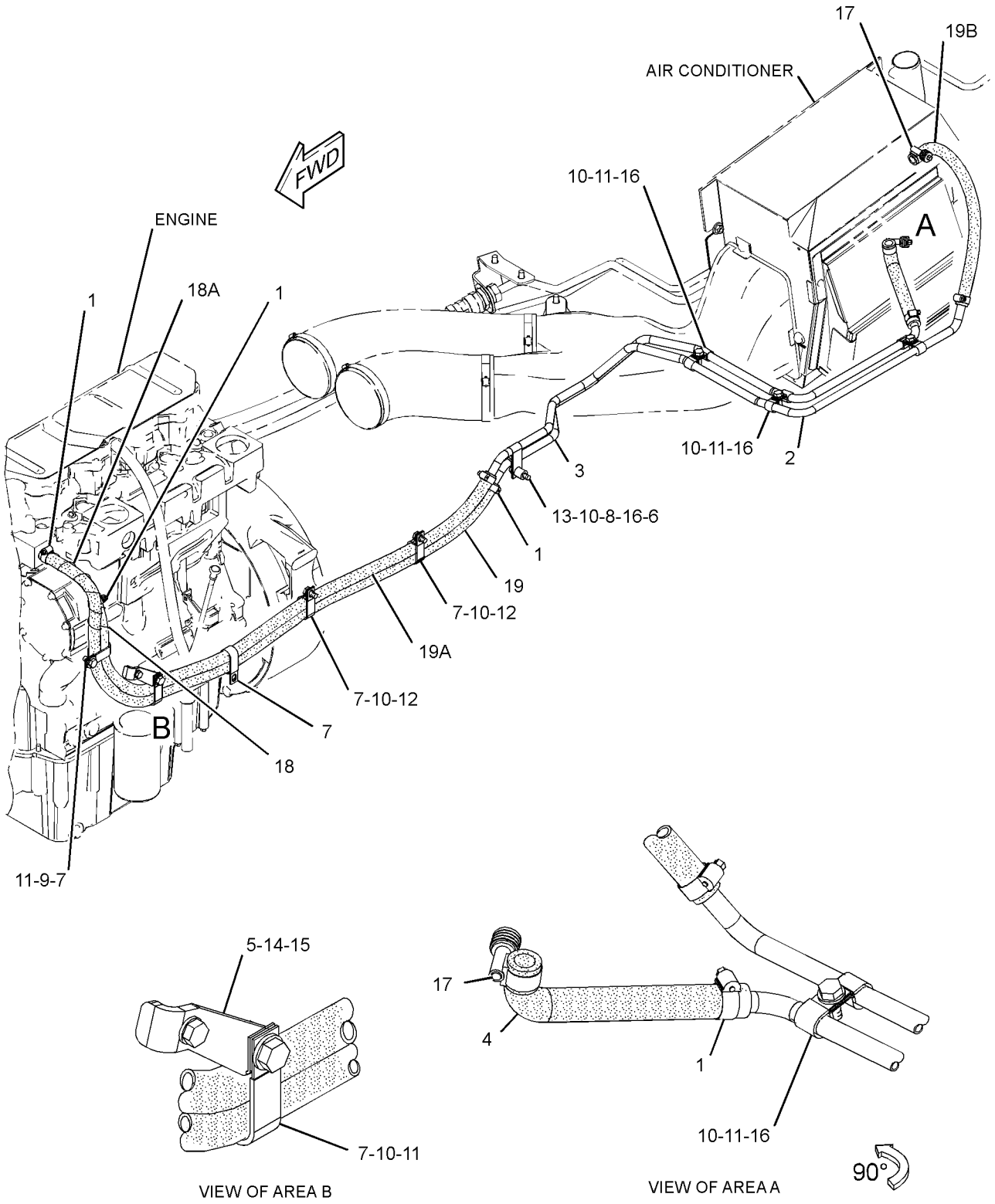

GRAPHIC #1 **<END>** g02975936

327-7684 LINES GP-HEATER

S/N: MMM1-UP; RRR1-UP
PART OF 325-6543, 325-6544 MODIFICATION AR
AN ATTACHMENT

SMCS-7304 **i03657545**

NOTE	REF NO	GRAPHIC REF	PART NUMBER	QTY	PART NAME 1 2 3 4 5 6 (PRODUCT LEVEL)	SEE PAGE
	1	1	**130-9984**	4	CLIP	
	2	1	**328-8624**	1	HOSE AS	
	3	1	**7X-7958**	2	CLAMP-HOSE	
	4	1	**8T-1117**	6	CLAMP-HOSE	
E	5	1	**324-9705**		INSULATION (122-CM)	
E	5A	1	**324-9705**		INSULATION (144-CM)	
E	5B	1	**324-9705**		INSULATION (38-CM)	
E	6	1	**268-4412**		TAPE-INSULATOR (50-CM EACH)	
E	7	1	**5P-0767**		HOSE (127-CM)	
E	7A	1	**5P-0767**		HOSE (153-CM)	
E	7B	1	**5P-0767**		HOSE (42-CM)	

E - ORDER BY THE CENTIMETER

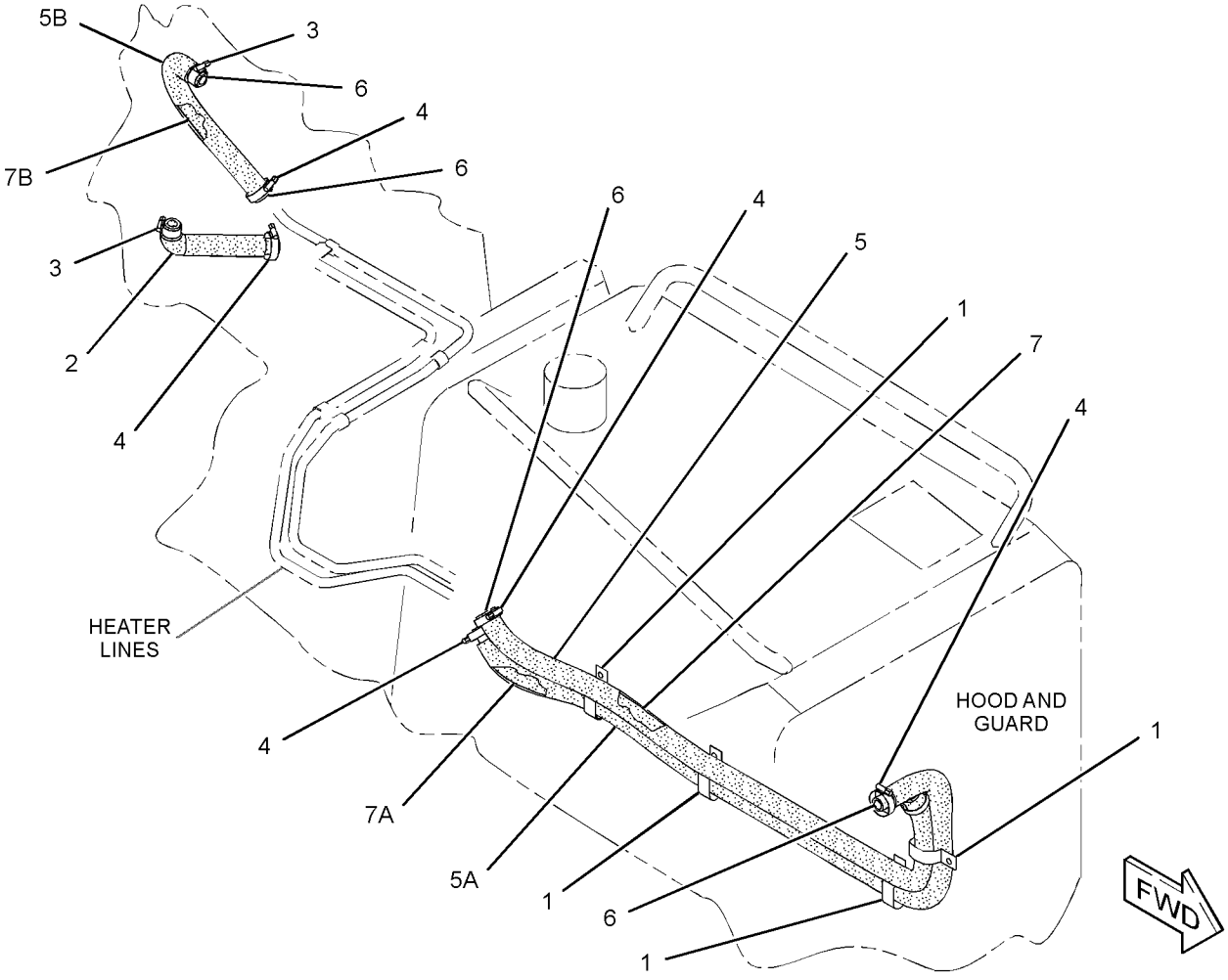

GRAPHIC #1 **<END>** g02010637

OPERATOR STATION

6V-1971 LITERATURE GP—ENCLOSED, OPEN ROPS

S/N: MMM1-UP; RRR1-UP

PART OF 244-7508, 286-5017, 286-5018 PLATE & FILM GP

AN ATTACHMENT

SMCS-7300, 7400

i02485092

NOTE	PART NUMBER	QTY	PART NAME 1 2 3 4 5 6 (PRODUCT LEVEL)	SEE PAGE
	246-2641	1	PADLOCK GP (LITERATURE COMPARTMENT)	
	5P-8500	2	KEY	

<END>

281-3997 MIRROR GP-REAR VIEW–LH

S/N: MMM1-UP; RRR1-UP
PART OF 325-6517 DRIVE AR-PUMP, 271-9180 DRIVE AR-WINCH, 264-4551, 325-6523, 325-6529 HYDRAULIC AR
AN ATTACHMENT

SMCS-7319 **i02819620**

NOTE	REF NO	GRAPHIC REF	PART NUMBER	QTY	PART NAME 1 2 3 4 5 6 (PRODUCT LEVEL)	SEE PAGE
	1	1	**281-3998**	1	MIRROR AS	
M	2	1	**3E-8020**	1	SCREW-TRUSS HEAD (M6X1X25-MM)	

M - METRIC PART

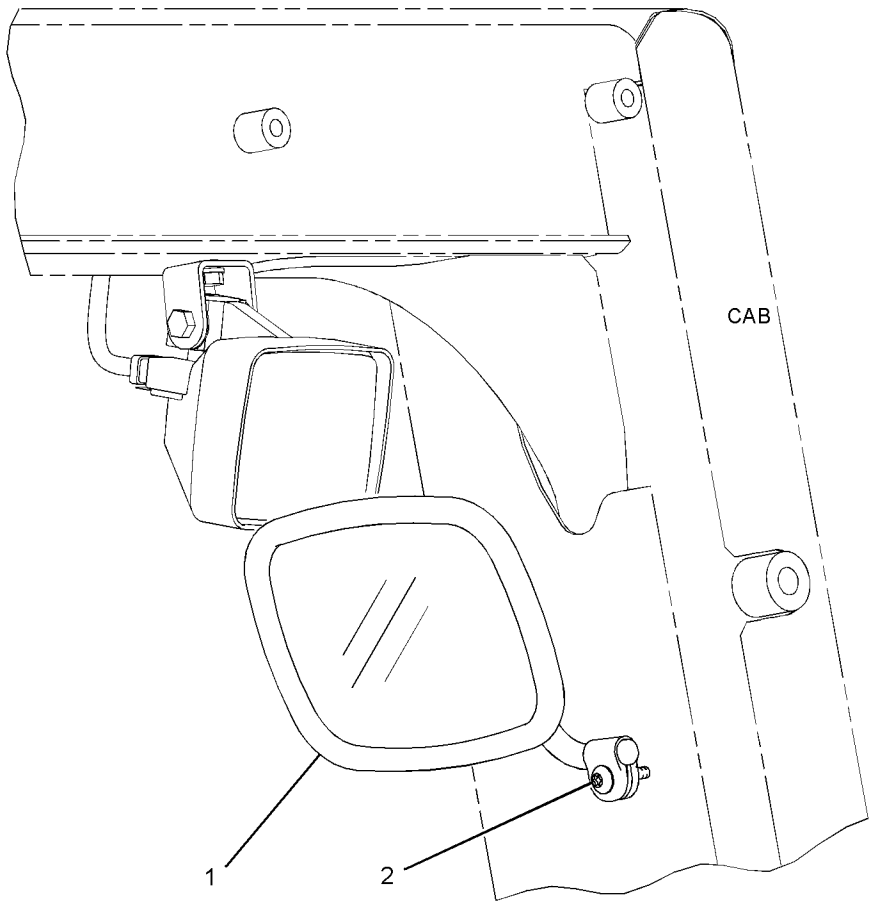

REAR VIEW
(LOWER LEFT)

GRAPHIC #1 **<END>** g01373435

261-7992 MOTOR GP-WINDOW WIPER–DOOR, LH

S/N: MMM1-UP; RRR1-UP
12-VOLT
PART OF 255-4272, 255-4274 DOOR GP-CAB
AN ATTACHMENT

SMCS-7305 **i04419074**

NOTE	REF NO	GRAPHIC REF	PART NUMBER	QTY	PART NAME 1 2 3 4 5 6 (PRODUCT LEVEL)	SEE PAGE
	1	1	**206-5823**	1	CAP	
	2	1	**270-1907**	1	MOTOR GP-WINDOW WIPER (DOOR, LH)	
		1	**8T-8729**	4	PIN-CONNECTOR (16-GA TO 18-GA)	
		1	**230-5009**	1	RECEPTACLE AS-CONNECTOR (4-PIN)	
	3	1	**3F-9556**	1	LOCKWASHER	
M	4	1	**5C-7261**	1	NUT (M8X1.25-THD)	

M - METRIC PART

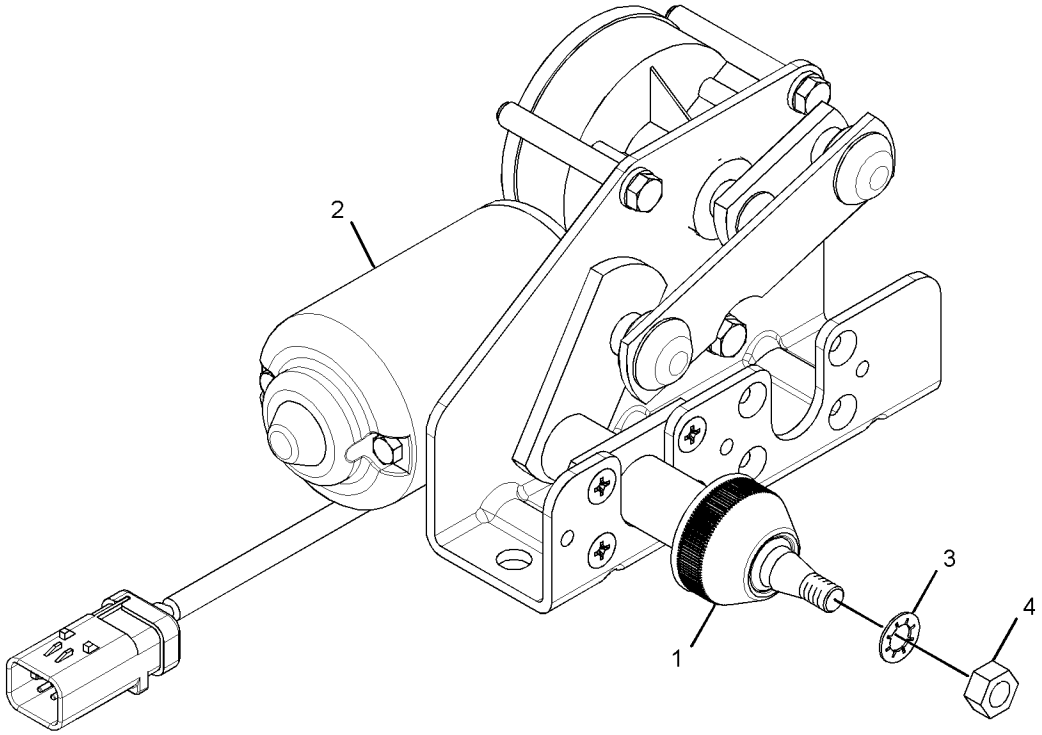

GRAPHIC #1 **<END>** g01354070

261-7993 MOTOR GP-WINDOW WIPER

S/N: MMM1-UP; RRR1-UP
12-VOLT
PART OF 255-4271, 255-4273 DOOR GP-CAB
AN ATTACHMENT

SMCS-7305 **i05282574**

NOTE	REF NO	GRAPHIC REF	PART NUMBER	QTY	PART NAME 1 2 3 4 5 6 (PRODUCT LEVEL)	SEE PAGE
	1	1	**206-5823**	1	CAP	
	2	1	**270-1907**	1	MOTOR GP-WINDOW WIPER (DOOR, RH)	
		1	**8T-8729**	4	PIN-CONNECTOR (16-GA TO 18-GA)	
		1	**230-5009**	1	RECEPTACLE AS-CONNECTOR (4-PIN)	
	3	1	**3F-9556**	1	LOCKWASHER	
M	4	1	**5C-7261**	1	NUT (M8X1.25-THD)	

M - METRIC PART

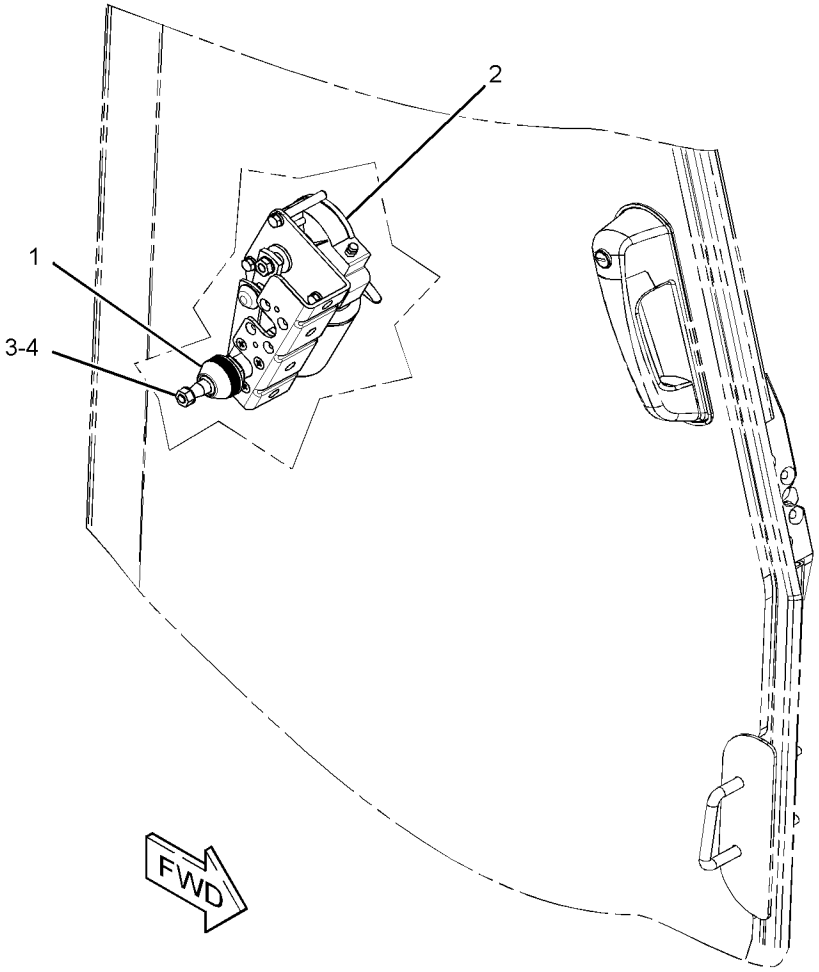

GRAPHIC #1 **<END>** g01375962

330-5019 MOTOR GP-WINDOW WIPER–REAR

S/N: MMM1-UP; RRR1-UP
12-VOLT
PART OF 255-4228 WIPER GP-WINDOW
AN ATTACHMENT

SMCS-7305 **i04049371**

NOTE	REF NO	GRAPHIC REF	PART NUMBER	QTY	PART NAME 1 2 3 4 5 6 (PRODUCT LEVEL)	SEE PAGE
	1	1	**8T-8729**	4	PIN-CONNECTOR (16-GA TO 18-GA)	
	2	1	**230-5009**	1	RECEPTACLE AS-CONNECTOR (4-PIN)	
	3	1	**263-3823**	1	CAP-WIPER	
	4	1	**3F-9556**	1	LOCKWASHER	
M	5	1	**5C-7261**	1	NUT (M8X1.25-THD)	

M - METRIC PART

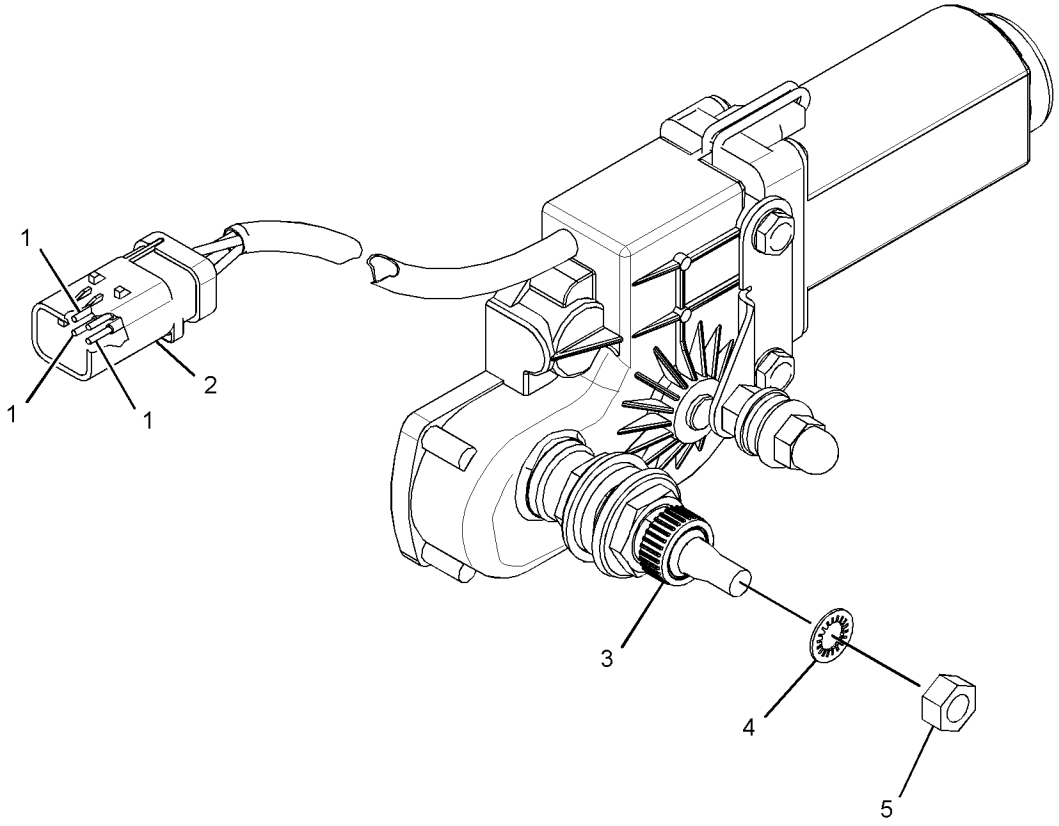

GRAPHIC #1 **<END>** g02493201

330-5020 MOTOR GP-WINDOW WIPER–FRONT

S/N: MMM1-UP; RRR1-UP
12-VOLT
PART OF 255-4228 WIPER GP-WINDOW
AN ATTACHMENT

SMCS-7305 **i04049389**

NOTE	REF NO	GRAPHIC REF	PART NUMBER	QTY	PART NAME 1 2 3 4 5 6 (PRODUCT LEVEL)	SEE PAGE
	1	1	**8T-8729**	4	PIN-CONNECTOR (16-GA TO 18-GA)	
	2	1	**230-5009**	1	RECEPTACLE AS-CONNECTOR (4-PIN)	
	3	1	**263-3823**	1	CAP-WIPER	
	4	1	**3F-9556**	1	LOCKWASHER	
M	5	1	**5C-7261**	1	NUT (M8X1.25-THD)	

M - METRIC PART

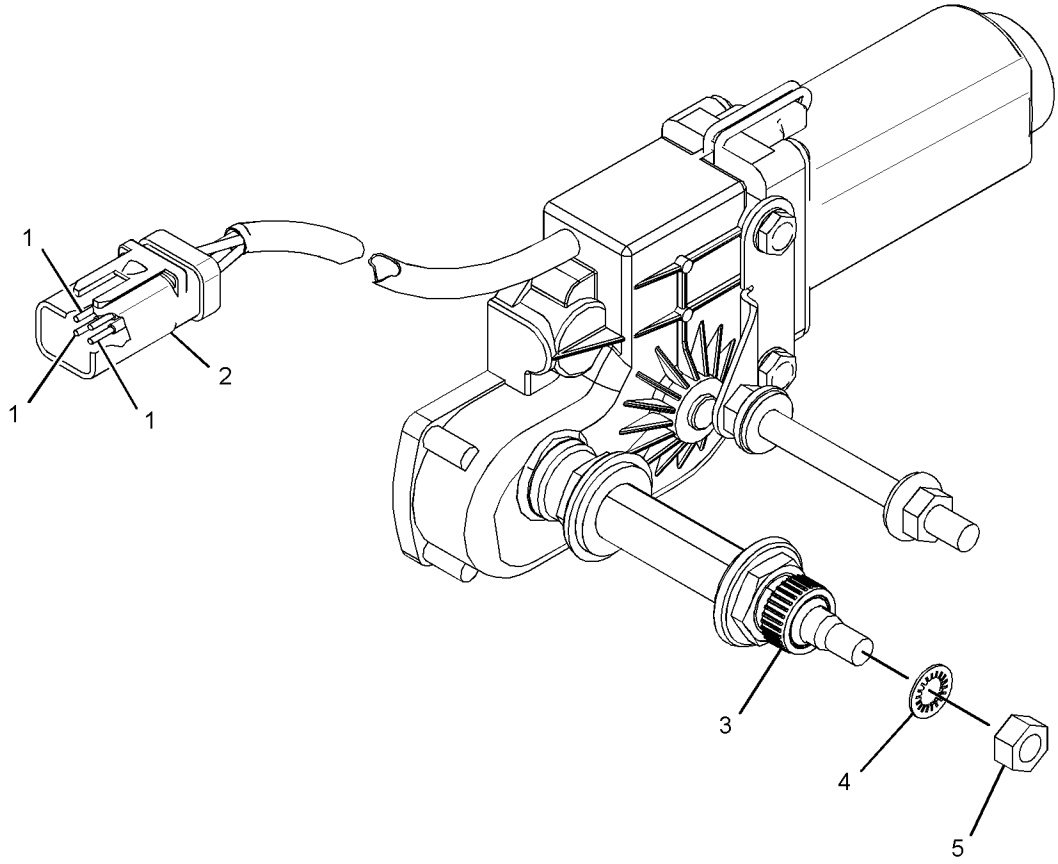

GRAPHIC #1 **<END>** g02493036

254-3169 MOUNTING GP-CAB

S/N: MMM1-UP; RRR1-UP

PART OF 244-7378, 244-7379 CHASSIS AR

SMCS-7266, 7301 **i02819622**

NOTE	REF NO	GRAPHIC REF	PART NUMBER	QTY	PART NAME 1 2 3 4 5 6 (PRODUCT LEVEL)	SEE PAGE
	1	1	**117-8131**	8	MOUNT AS (CAB)	
	2	1	**255-4280**	4	WASHER (25X134X12-MM THK)	
	3	1	**3E-4898**	4	SLEEVE	
M	4	1	**7X-2465**	2	BOLT (M24X3X180-MM)	
M	5	1	**8C-3290**	2	BOLT (M24X3X150-MM)	
	6	1	**126-8928**	4	WASHER-HARD (26X40X8-MM THK)	

M - METRIC PART

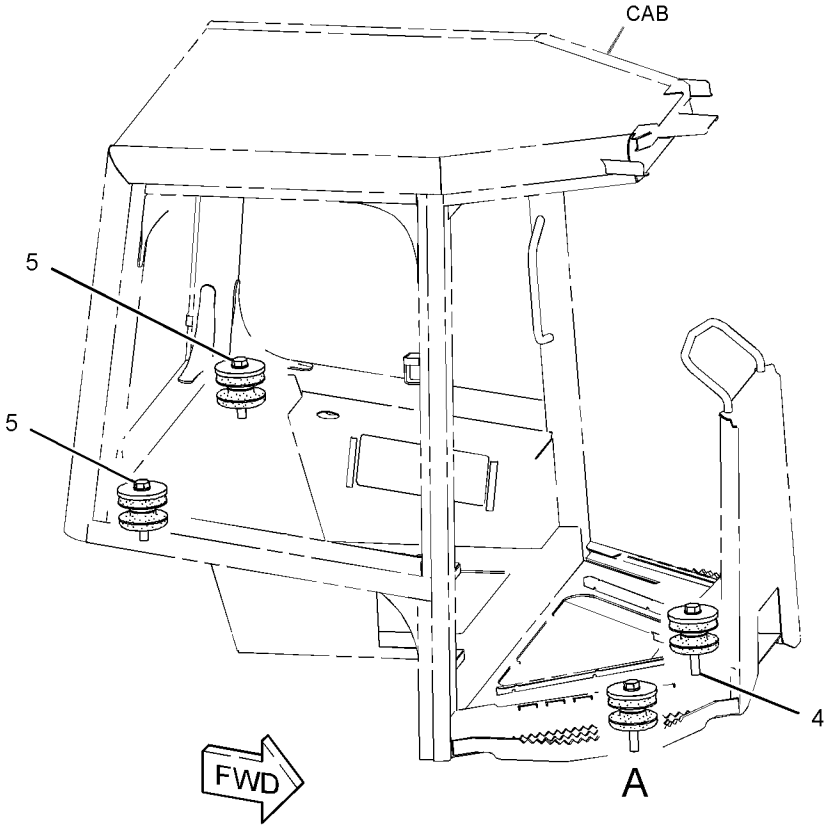

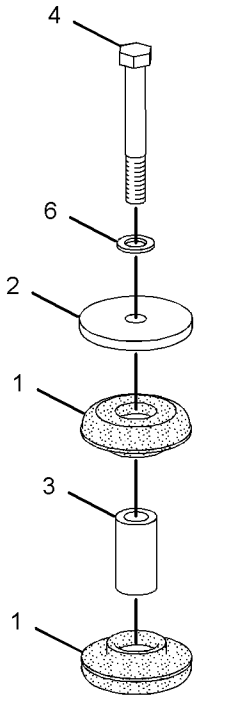

VIEW OF AREA A
(EXPLODED)

GRAPHIC #1 **<END>** g01330632

259-4746 MOUNTING GP-RADIO—GRADE CONTROL

S/N: MMM1-UP; RRR1-UP

PART OF 292-0296 MOUNTING GP-GRADE CONTROL

SMCS-7338 **i02514096**

NOTE	REF NO	GRAPHIC REF	PART NUMBER	QTY	PART NAME 1 2 3 4 5 6 (PRODUCT LEVEL)	SEE PAGE
	1	1	**8C-5607**	6	MOUNT-ISOLATION	
	2	1	**8C-5608**	3	SPACER (6.5X9.5X25.4-MM THK)	
	3	1	**140-7480**	1	BRACKET-MOUNTING	
	4	1	**167-8610**	1	BRACKET AS	
	5	1	**5S-7349**	2	BOLT (1/4-20X0.5-IN)	
	6	1	**8T-4205**	2	WASHER-HARD (7.2X14.5X2-MM THK)	
M	7	1	**9X-2480**	3	BOLT (M6X1X45-MM)	
	8	1	**9X-6165**	3	WASHER (6.5X22X2.5-MM THK)	
BJM	9	1	**7X-2533**	3	BOLT (M6X1X35-MM)	

B - USE AS REQUIRED
J - TO BE USED ON HYDRAULIC EXCAVATOR
M - METRIC PART

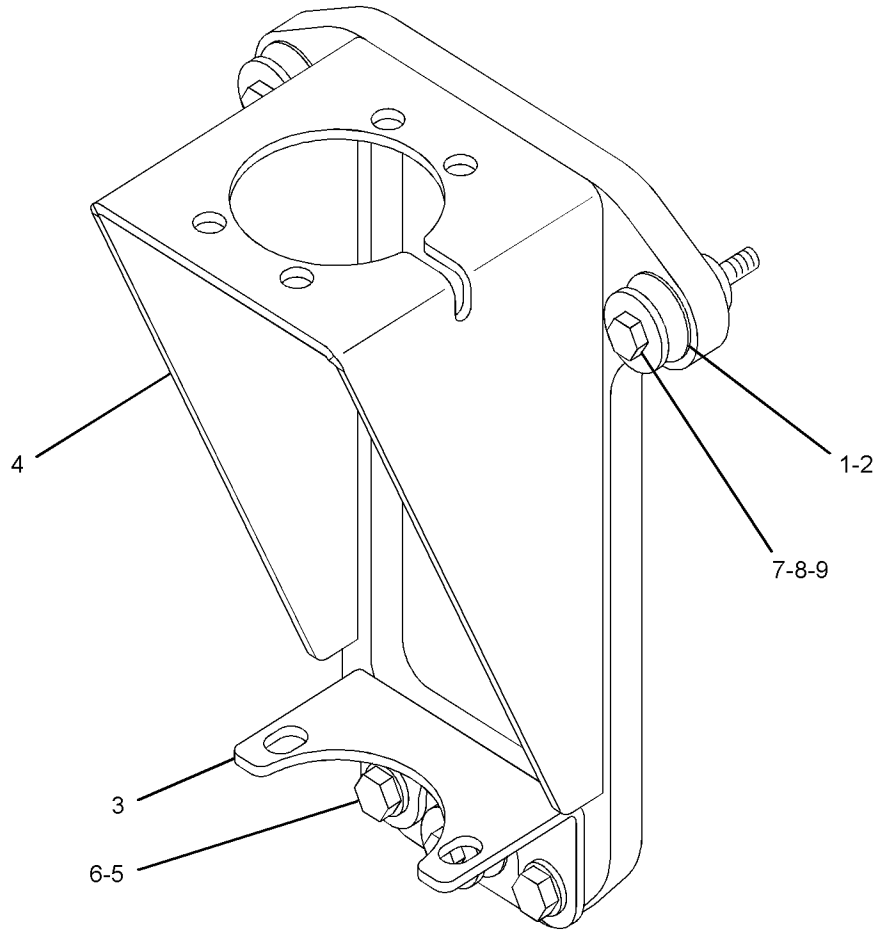

GRAPHIC #1 **<END>** g01259563

292-6402 PAN GP-BACKREST–LUMBAR

S/N: MMM1-UP; RRR1-UP

PART OF 295-4433, 295-4434, 295-4436, 301-0147, 351-1965 SEAT GP

AN ATTACHMENT

SMCS-7312 **i03095783**

NOTE	REF NO	GRAPHIC REF	PART NUMBER	QTY	PART NAME 1 2 3 4 5 6 (PRODUCT LEVEL)	SEE PAGE
	1	1	**5P-7957**	1	LANYARD	
	2	1	**136-1543**	1	PLATE AS-LUMBAR	
	3	1	**173-2052**	1	RETAINER	
	4	1	**178-7907**	1	HOLDER	
	5	1	**261-5694**	1	PAN AS-BACKREST	
	6	1	**322-3161**	1	SPRING	
	7	1	**4K-9429**	8	RIVET-POP	

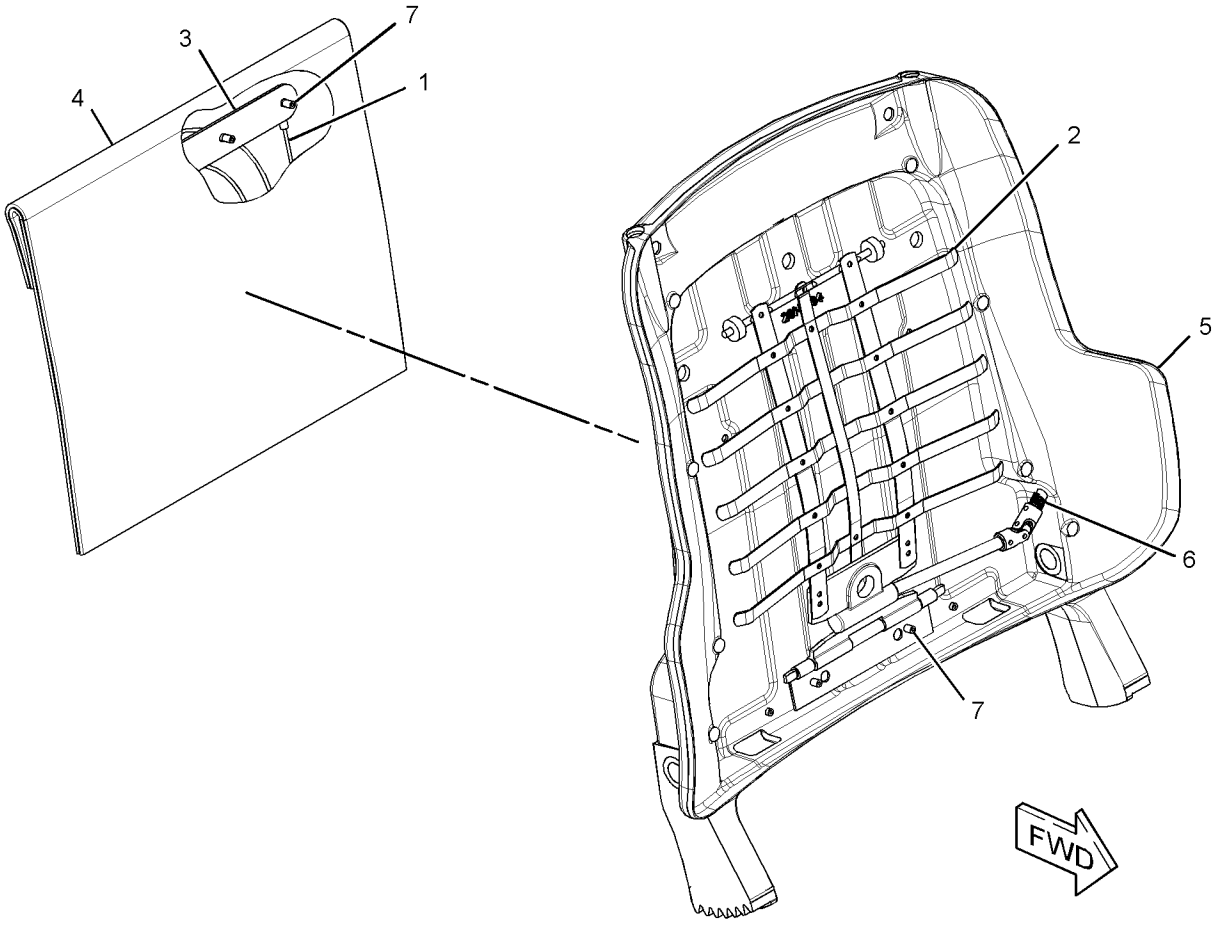

GRAPHIC #1 **<END>** g01577333

253-2439 PEDAL GP-GOVERNOR & BRAKE

S/N: MMM1-UP

PART OF 247-6506 CONTROL & MTG GP-PEDAL

TYPE 1

SMCS-4122 **i03897494**

NOTE	REF NO	GRAPHIC REF	PART NUMBER	QTY	PART NAME 1 2 3 4 5 6 (PRODUCT LEVEL)	SEE PAGE
	1	1	**5P-9209**	2	BEARING AS-NEEDLE	
	2	1	**111-3780**	1	SPRING	
	3	1	**111-3781**	2	BOLT-ANCHOR (M10X1.5X23-MM)	
	4	1	**145-3405**	2	SPACER (10.3X16.7X8-MM THK)	
	5	1	**191-3587**	1	SWITCH AS-LIMIT (SERVICE BRAKE)	
		1	**102-8804**	1	KIT-RECEPTACLE (4-PIN)	
					(INCLUDES RECEPTACLE AS & WEDGE)	
		1	**186-3735**	3	PIN-CONNECTOR (16-GA TO 18-GA)	
		1	**9G-3695**	1	PLUG-SEAL	
	6	1	**252-8930**	1	SUPPORT AS-PEDAL	
	7	1	**252-8933**	1	SHAFT	
	8	1	**267-5639**	1	LINK	
	9	1	**287-2169**	1	PAD (FRICTION)	
	10	1	**296-9891**	1	PEDAL AS	
	11	1	**096-6166**	4	WASHER-HARD (4.5X9X1-MM THK)	
	12	1	**138-1645**	1	PIN-SPRING	
Y	13	1	**224-5530**	1	SENSOR GP-POSITION (GOVERNOR, BRAKE PEDAL)	233
M	14	1	**3C-6969**	2	NUT (M3X0.5-THD)	
	15	1	**3W-3321**	1	PLUNGER AS	
	16	1	**5D-0998**	6	SPRING-DISC	
	17	1	**6S-3859**	2	WASHER (0.562X1.75X0.063-IN THK)	
	18	1	**6V-0894**	1	SEAL-O-RING	
M	19	1	**6V-2314**	2	BOLT (M5X0.8X35-MM)	
M	20	1	**6V-7687**	1	LOCKNUT (M12X1.75-THD)	
	21	1	**6V-8188**	1	NUT (1/2-13-THD)	
M	22	1	**6V-9325**	2	SCREW-MACHINE (M3X0.5X30-MM)	
	23	1	**7X-7729**	3	WASHER (11X25X3-MM THK)	
	24	1	**8T-0328**	2	WASHER-HARD (5.5X10X1-MM THK)	
M	25	1	**8T-4133**	1	NUT (M10X1.5-THD)	
	26	1	**8T-7971**	1	WASHER-HARD (13.5X25.5X5-MM THK)	

M - METRIC PART
Y - SEPARATE ILLUSTRATION

253-2439 **PEDAL GP-GOVERNOR & BRAKE (*contd.*)** **i03897494**

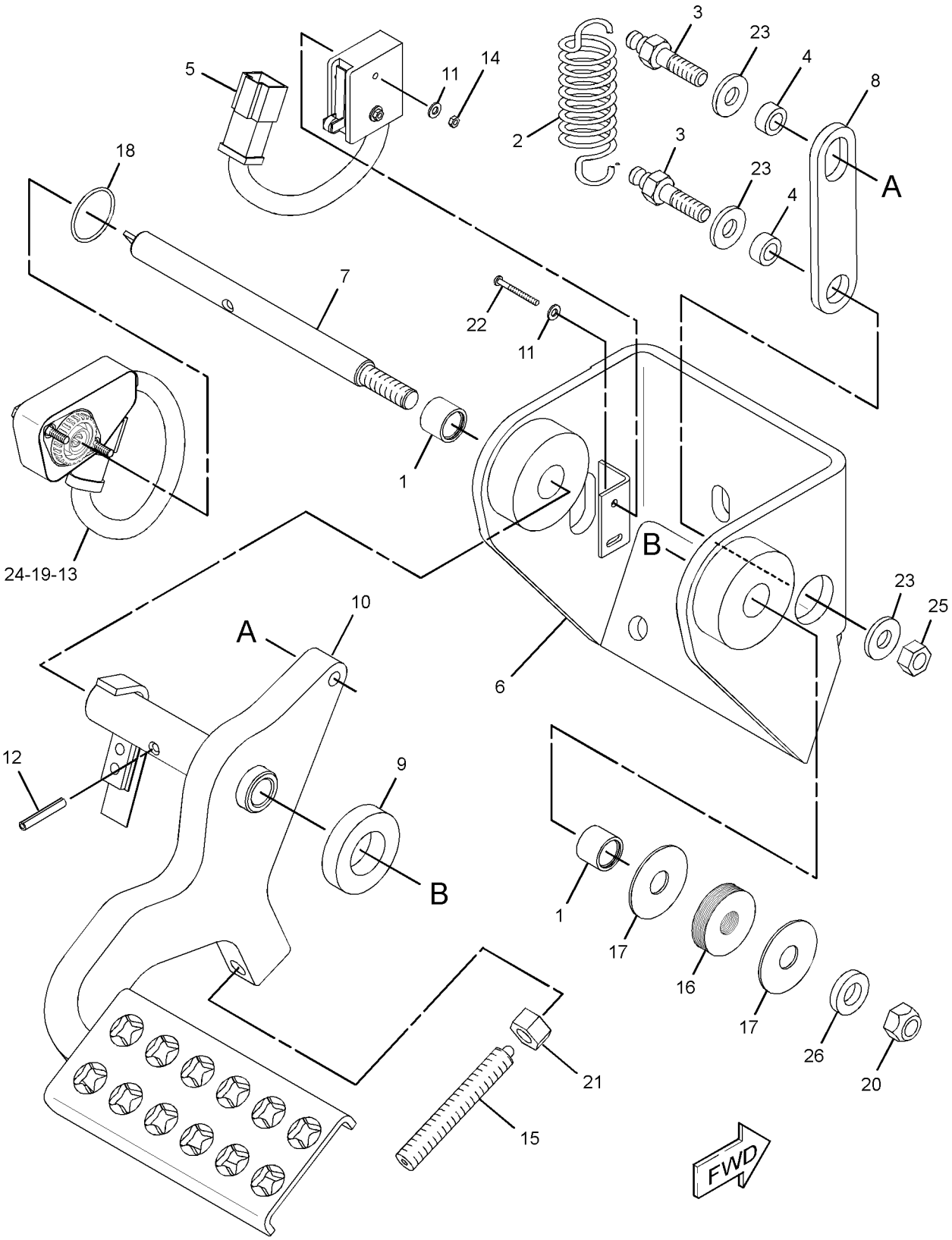

GRAPHIC #1 **<END>** g01516921

253-2439 PEDAL GP-GOVERNOR & BRAKE

S/N: MMM1-UP

PART OF 247-6506 CONTROL & MTG GP-PEDAL

TYPE 2

SMCS-4122 **i04634450**

NOTE	REF NO	GRAPHIC REF	PART NUMBER	QTY	PART NAME 1 2 3 4 5 6 (PRODUCT LEVEL)	SEE PAGE
	1	1	**5P-9209**	2	BEARING AS-NEEDLE	
	2	1	**111-3780**	1	SPRING	
	3	1	**111-3781**	2	BOLT-ANCHOR (M10X1.5X23-MM)	
	4	1	**145-3405**	2	SPACER (10.3X16.7X8-MM THK)	
	5	1	**191-3587**	1	SWITCH AS-LIMIT (GOVERNOR, BRAKE PEDAL)	
		1	**102-8804**	1	KIT-RECEPTACLE (4-PIN)	
					(INCLUDES RECEPTACLE AS & WEDGE)	
		1	**186-3735**	3	PIN-CONNECTOR (16-GA TO 18-GA)	
		1	**9G-3695**	1	PLUG-SEAL	
	6	1	**252-8930**	1	SUPPORT AS-PEDAL	
	7	1	**252-8933**	1	SHAFT	
	8	1	**267-5639**	1	LINK	
	9	1	**287-2169**	1	PAD (FRICTION)	
	10	1	**296-9891**	1	PEDAL AS	
	11	1	**096-6166**	4	WASHER-HARD (4.5X9X1-MM THK)	
	12	1	**138-1645**	1	PIN-SPRING	
CY	13	1	**266-1467**	1	SENSOR GP-POSITION (ROTARY) (DECELERATOR)	234
M	14	1	**3C-6969**	2	NUT (M3X0.5-THD)	
	15	1	**3W-3321**	1	PLUNGER AS	
	16	1	**5D-0998**	6	SPRING-DISC	
	17	1	**6S-3859**	2	WASHER (0.562X1.75X0.063-IN THK)	
	18	1	**6V-0894**	1	SEAL-O-RING	
M	19	1	**6V-2314**	2	BOLT (M5X0.8X35-MM)	
M	20	1	**6V-7687**	1	LOCKNUT (M12X1.75-THD)	
	21	1	**6V-8188**	1	NUT (1/2-13-THD)	
M	22	1	**6V-9325**	2	SCREW-MACHINE (M3X0.5X30-MM)	
	23	1	**7X-7729**	3	WASHER (11X25X3-MM THK)	
	24	1	**8T-0328**	2	WASHER-HARD (5.5X10X1-MM THK)	
M	25	1	**8T-4133**	1	NUT (M10X1.5-THD)	
	26	1	**8T-7971**	1	WASHER-HARD (13.5X25.5X5-MM THK)	

C - CHANGE FROM PREVIOUS TYPE
M - METRIC PART
Y - SEPARATE ILLUSTRATION

253-2439 **PEDAL GP-GOVERNOR & BRAKE (*contd.*)** **i04634450**

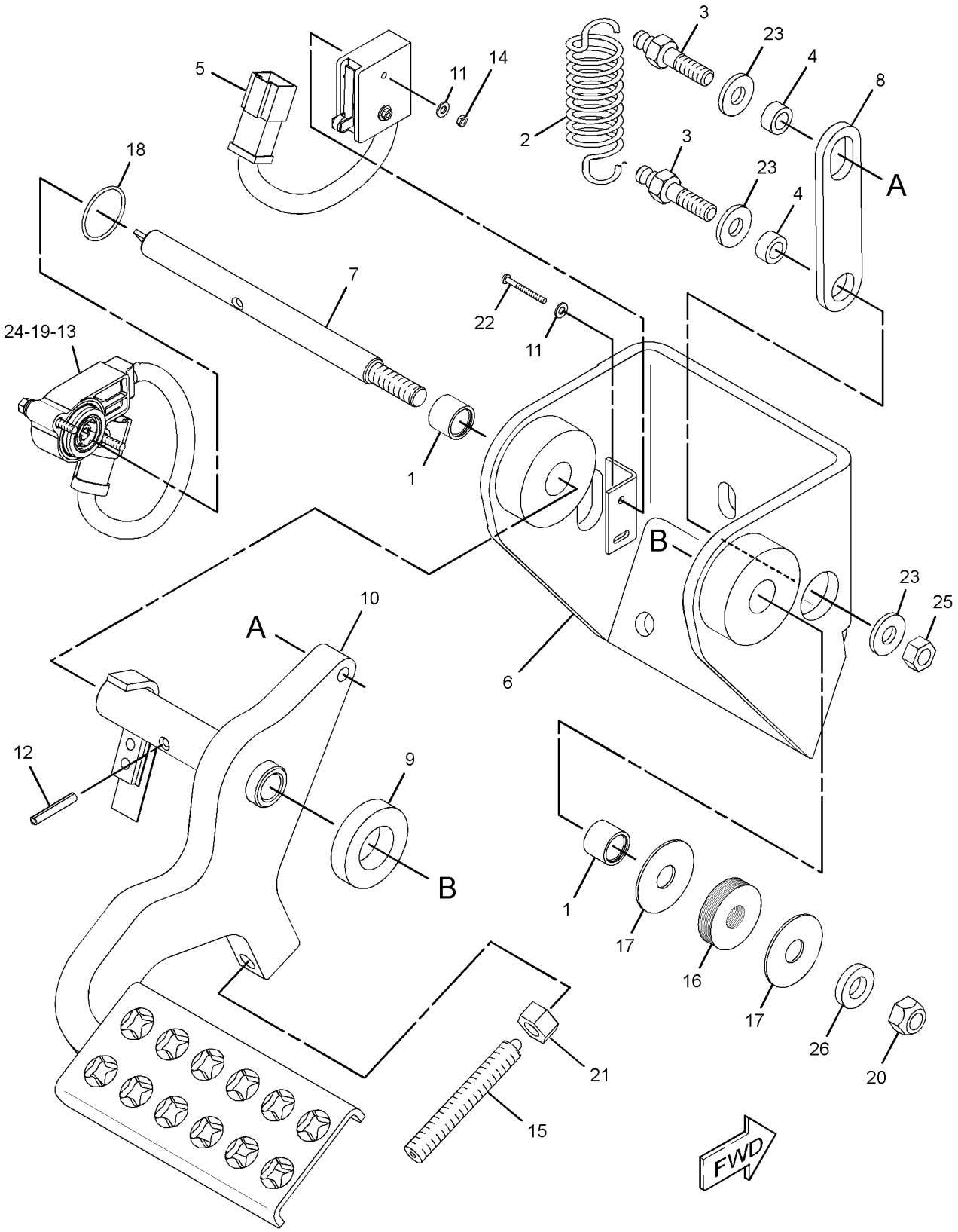

GRAPHIC #1 **<END>** g01519813

324-0669 PEDAL GP-GOVERNOR & BRAKE

S/N: MMM1-873; RRR1-670

PART OF 324-0670 CONTROL & MTG GP-PEDAL

SMCS-4122 **i03896325**

NOTE	REF NO	GRAPHIC REF	PART NUMBER	QTY	PART NAME 1 2 3 4 5 6 (PRODUCT LEVEL)	SEE PAGE
	1	1	**5P-9209**	2	BEARING AS-NEEDLE	
	2	1	**111-3780**	1	SPRING	
	3	1	**111-3781**	2	BOLT-ANCHOR (M10X1.5X23-MM)	
	4	1	**145-3405**	2	SPACER (10.3X16.7X8-MM THK)	
	5	1	**191-3587**	1	SWITCH AS-LIMIT (GOVERNOR, BRAKE PEDAL)	
		1	**9G-3695**	1	PLUG-SEAL	
		1	**102-8804**	1	KIT-RECEPTACLE (4-PIN)	
					(INCLUDES RECEPTACLE AS & WEDGE)	
		1	**186-3735**	3	PIN-CONNECTOR (16-GA TO 18-GA)	
	6	1	**252-8930**	1	SUPPORT AS-PEDAL	
	7	1	**252-8933**	1	SHAFT	
	8	1	**267-5639**	1	LINK	
	9	1	**287-2169**	1	PAD	
	10	1	**296-9891**	1	PEDAL AS	
		1	**4S-8264**	2	RIVET-POP	
		1	**148-2714**	1	SPRING	
	11	1	**096-6166**	4	WASHER-HARD (4.5X9X1-MM THK)	
	12	1	**138-1645**	1	PIN-SPRING	
Y	13	1	**266-1470**	1	SENSOR GP-POSITION (STEERING)	235
M	14	1	**3C-6969**	2	NUT (M3X0.5-THD)	
	15	1	**3W-3321**	1	PLUNGER AS	
	16	1	**5D-0998**	6	SPRING-DISC	
	17	1	**6S-3859**	1	WASHER (0.562X1.75X0.063-IN THK)	
	18	1	**6V-0894**	1	SEAL-O-RING	
M	19	1	**6V-2314**	2	BOLT (M5X0.8X35-MM)	
M	20	1	**6V-7687**	1	LOCKNUT (M12X1.75-THD)	
	21	1	**6V-8188**	1	NUT (1/2-13-THD)	
M	22	1	**6V-9325**	2	SCREW-MACHINE (M3X0.5X30-MM)	
	23	1	**7X-7729**	3	WASHER (11X25X3-MM THK)	
	24	1	**8T-0328**	2	WASHER-HARD (5.5X10X1-MM THK)	
M	25	1	**8T-4133**	1	NUT (M10X1.5-THD)	
	26	1	**8T-7971**	1	WASHER-HARD (13.5X25.5X5-MM THK)	
	27	1	**6S-3900**	1	SEAT	

M - METRIC PART
Y - SEPARATE ILLUSTRATION

324-0669 **PEDAL GP-GOVERNOR & BRAKE (*contd.*)** **i03896325**

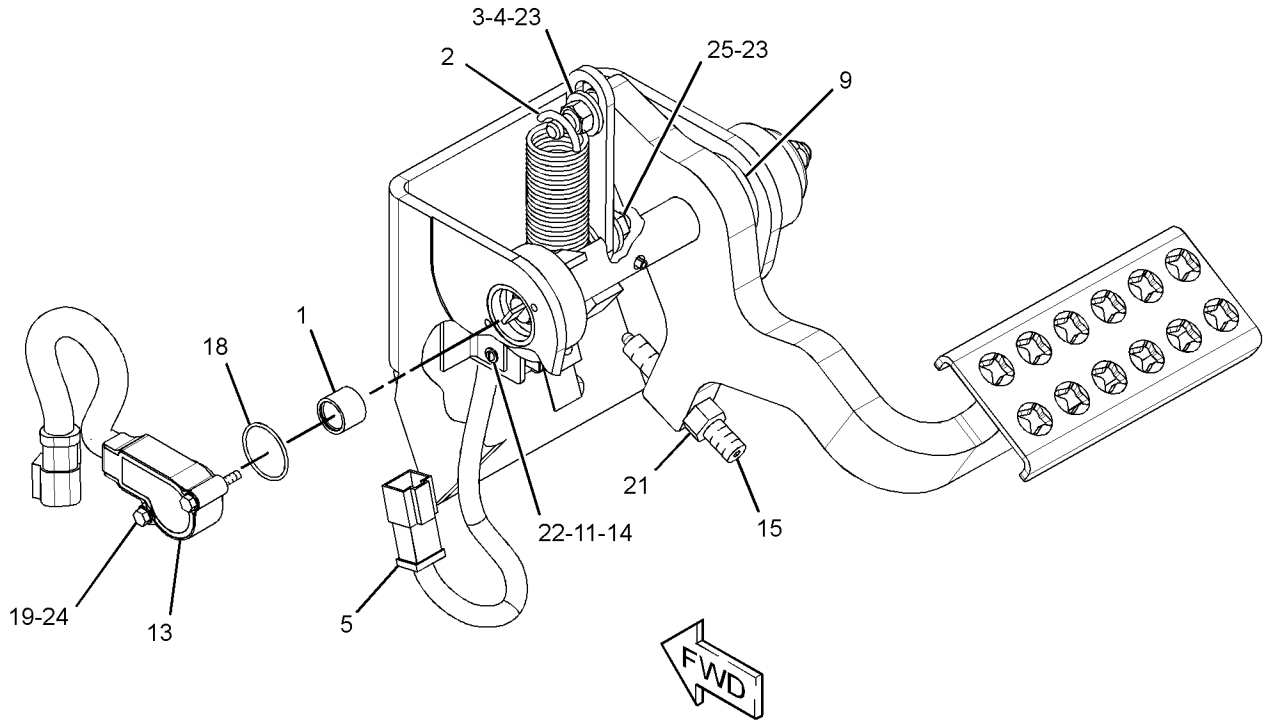

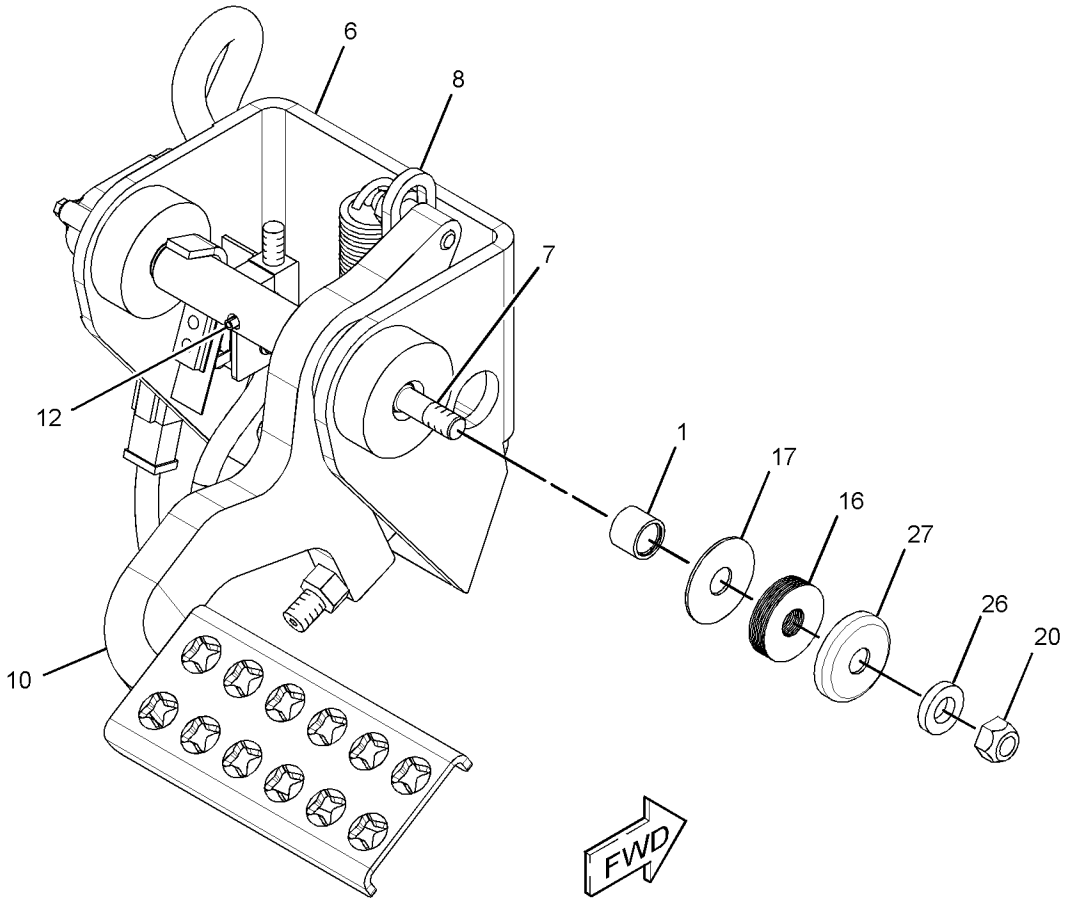

GRAPHIC #1 **<END>** g01711437

343-3503 PEDAL GP-GOVERNOR & BRAKE

S/N: MMM874-UP; RRR671-UP

PART OF 343-3502 CONTROL & MTG GP-PEDAL

SMCS-4122 **i05343559**

NOTE	REF NO	GRAPHIC REF	PART NUMBER	QTY	PART NAME 1 2 3 4 5 6 (PRODUCT LEVEL)	SEE PAGE
	1	1	**111-3780**	1	SPRING	
	2	1	**111-3781**	2	BOLT-ANCHOR (M10X1.5X23-MM)	
	3	1	**145-3405**	2	SPACER (10.3X16.7X8-MM THK)	
	4	1	**191-3587**	1	SWITCH AS-LIMIT (GOVERNOR, BRAKE PEDAL)	
		1	**9G-3695**	1	PLUG-SEAL	
		1	**102-8804**	1	KIT-RECEPTACLE (4-PIN)	
					(INCLUDES RECEPTACLE AS & WEDGE)	
		1	**8T-8729**	3	PIN-CONNECTOR (16-GA TO 18-GA)	
	5	1	**252-8933**	1	SHAFT	
Y	6	1	**266-1470**	1	SENSOR GP-POSITION (STEERING)	235
	7	1	**267-5639**	1	LINK	
	8	1	**287-2169**	1	PAD	
	9	1	**343-3581**	1	PEDAL AS	
		1	**4S-8264**	2	RIVET-POP	
		1	**148-2714**	1	SPRING	
	10	1	**377-1434**	1	SUPPORT AS	
	11	1	**096-6166**	4	WASHER-HARD (4.5X9X1-MM THK)	
	12	1	**138-1645**	1	PIN-SPRING	
M	13	1	**3C-6969**	2	NUT (M3X0.5-THD)	
	14	1	**5D-0998**	6	SPRING-DISC	
	15	1	**5P-9209**	2	BEARING AS-NEEDLE	
	16	1	**6S-3859**	1	WASHER (0.562X1.75X0.063-IN THK)	
	17	1	**6S-3900**	1	SEAT	
	18	1	**6V-0894**	1	SEAL-O-RING	
M	19	1	**6V-2314**	2	BOLT (M5X0.8X35-MM)	
M	20	1	**6V-7687**	1	LOCKNUT (M12X1.75-THD)	
M	21	1	**6V-9325**	2	SCREW-MACHINE (M3X0.5X30-MM)	
	22	1	**7X-7729**	3	WASHER (11X25X3-MM THK)	
	23	1	**8T-0328**	2	WASHER-HARD (5.5X10X1-MM THK)	
M	24	1	**8T-4133**	1	NUT (M10X1.5-THD)	
	25	1	**8T-7971**	1	WASHER-HARD (13.5X25.5X5-MM THK)	

M - METRIC PART
Y - SEPARATE ILLUSTRATION

343-3503 **PEDAL GP-GOVERNOR & BRAKE (*contd.*)** **i05343559**

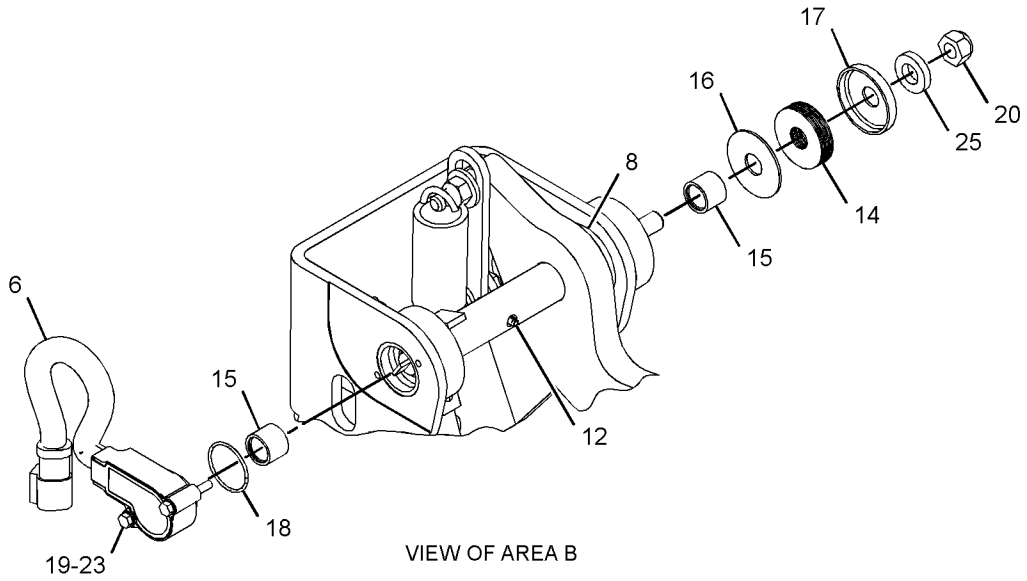

VIEW OF AREA B

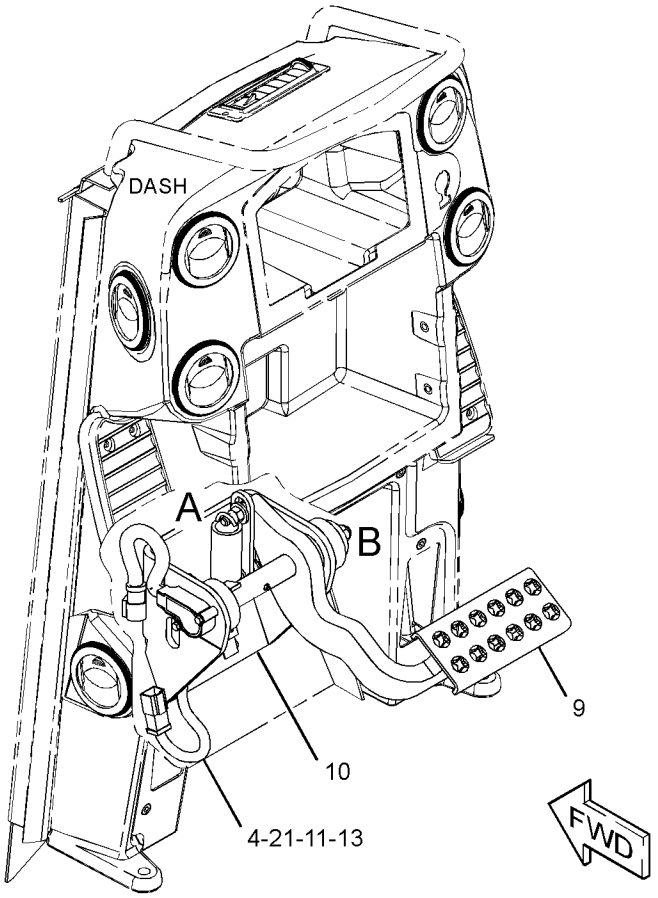

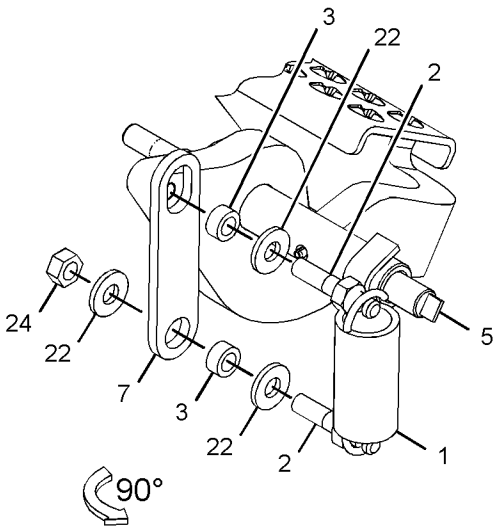

VIEW OF AREA A
(PARTS REMOVED FOR CLARITY)

GRAPHIC #1 **<END>** g02798210

OPERATOR STATION

244-7475 ROPS AR–EROPS

S/N: MMM1-UP; RRR1-UP
AN ATTACHMENT

SMCS-7177 **i05395396**

NOTE	PART NUMBER	QTY	PART NAME 1 2 3 4 5 6 (PRODUCT LEVEL)	SEE PAGE
Y	*255-4239*	1	ACCESSORY GP-CAB	654
Y	*254-3210*	1	AIR CONDITIONER & MOUNTING GP	664
Y	*260-9294*	1	BELT TENSIONER GP (FAN)	8
Y	*255-4271*	1	DOOR GP-CAB (RH)	752
Y	*255-4272*	1	DOOR GP-CAB (LH)	756
Y	**247-6505**	1	INSTALLATION GP-RADIO	780
Y	*245-6039*	1	INSTRUMENT GP	783
Y	*255-4229*	1	WASHER GP-WINDOW	854
Y	*255-4239*	1	ACCESSORY GP-CAB	654
Y	*247-6503*	1	WINDOW GP-CAB	856
			S/N: MMM1-61 ; RRR1-464	
Y	*324-0667*	1	WINDOW GP-CAB	861
			S/N: MMM62-UP ; RRR465-UP	
Y	*255-4228*	1	WIPER GP-WINDOW	868
Y	*245-6021*	1	WIRING GP-CAB	252
	254-3180	1	ROLLOVER AS	

Y - SEPARATE ILLUSTRATION

<END>

244-7476 ROPS AR–EROPS

S/N: MMM1-UP; RRR1-UP
360 DEGREE GUARDING
AN ATTACHMENT

SMCS-7177 **i03920909**

NOTE	PART NUMBER	QTY	PART NAME 1 2 3 4 5 6 (PRODUCT LEVEL)	SEE PAGE
Y	*255-4239*	1	ACCESSORY GP-CAB	654
Y	*254-3210*	1	AIR CONDITIONER & MOUNTING GP	664
Y	*260-9294*	1	BELT TENSIONER GP (FAN)	8
Y	*255-4273*	1	DOOR GP-CAB (RH)	762
Y	*255-4274*	1	DOOR GP-CAB (LH)	767
Y	**247-6505**	1	INSTALLATION GP-RADIO	780
Y	*245-6039*	1	INSTRUMENT GP	783
Y	*250-1699*	1	SCREEN GP-PROTECTION (SIDES)	815
Y	*272-9780*	1	SCREEN GP-PROTECTION (REAR)	816
Y	*255-4229*	1	WASHER GP-WINDOW	854
Y	*255-4275*	1	WINDOW GP-CAB	858
Y	*255-4228*	1	WIPER GP-WINDOW	868
Y	*245-6021*	1	WIRING GP-CAB	252
	254-3180	1	ROLLOVER AS	

Y - SEPARATE ILLUSTRATION

<END>

OPERATOR STATION

282-4897 ROPS AR–OROPS

S/N: MMM1-UP; RRR1-UP

AN ATTACHMENT

SMCS-7177 **i03415604**

NOTE	PART NUMBER	QTY	PART NAME 1 2 3 4 5 6 (PRODUCT LEVEL)	SEE PAGE
Y	*255-4240*	1	ACCESSORY GP-CAB (OROPS)	658
Y	*261-0369*	1	BELT TENSIONER GP	10
Y	*254-3190*	1	HEATER GP-CAB	777
Y	*245-6022*	1	INSTRUMENT GP (OROPS)	781
Y	*245-6047*	1	WIRING GP-CAB (OROPS)	262
	254-3170	1	ROLLOVER AS (OROPS)	

Y - SEPARATE ILLUSTRATION

<END>

282-4898 ROPS AR-ENCLOSED–EROPS

S/N: MMM1-UP; RRR1-UP

AN ATTACHMENT

SMCS-7301 **i05395391**

NOTE	PART NUMBER	QTY	PART NAME 1 2 3 4 5 6 (PRODUCT LEVEL)	SEE PAGE
Y	*255-4239*	1	ACCESSORY GP-CAB (EROPS)	654
Y	*254-3210*	1	AIR CONDITIONER & MOUNTING GP	664
Y	*260-9295*	1	BELT TENSIONER GP	9
Y	*255-4271*	1	DOOR GP-CAB (RH)	752
Y	*255-4272*	1	DOOR GP-CAB (LH)	756
Y	**247-6505**	1	INSTALLATION GP-RADIO	780
Y	*245-6039*	1	INSTRUMENT GP	783
Y	*255-4229*	1	WASHER GP-WINDOW	854
Y	*247-6503*	1	WINDOW GP-CAB	856
			S/N: MMM1-61 ; RRR1-464	
Y	*324-0667*	1	WINDOW GP-CAB	861
			S/N: MMM62-UP ; RRR465-UP	
Y	*255-4228*	1	WIPER GP-WINDOW	868
Y	*245-6021*	1	WIRING GP-CAB	252
	254-3180	1	ROLLOVER AS	

Y - SEPARATE ILLUSTRATION

<END>

282-4899 ROPS AR-ENCLOSED–EROPS

S/N: MMM1-UP; RRR1-UP
360 DEGREE GUARDING
AN ATTACHMENT

SMCS-7301 **i02834132**

NOTE	PART NUMBER	QTY	PART NAME 1 2 3 4 5 6 (PRODUCT LEVEL)	SEE PAGE
Y	*255-4239*	1	ACCESSORY GP-CAB (EROPS)	654
Y	*254-3210*	1	AIR CONDITIONER & MOUNTING GP	664
Y	*260-9295*	1	BELT TENSIONER GP	9
Y	*255-4273*	1	DOOR GP-CAB (RH)	762
Y	*255-4274*	1	DOOR GP-CAB (LH)	767
Y	**247-6505**	1	INSTALLATION GP-RADIO	780
Y	*245-6039*	1	INSTRUMENT GP	783
Y	*250-1699*	1	SCREEN GP-PROTECTION (SIDES)	815
Y	*272-9780*	1	SCREEN GP-PROTECTION	816
Y	*255-4229*	1	WASHER GP-WINDOW	854
Y	*255-4275*	1	WINDOW GP-CAB	858
Y	*255-4228*	1	WIPER GP-WINDOW	868
Y	*245-6021*	1	WIRING GP-CAB	252
	254-3180	1	ROLLOVER AS	

Y - SEPARATE ILLUSTRATION

<END>

272-9770 SCREEN GP-CAB–OROPS

S/N: MMM1-UP; RRR1-UP
REAR
FOR USE WITH CANOPY, ROPS
AN ATTACHMENT

SMCS-7165, 7301 **i04921385**

NOTE	REF NO	GRAPHIC REF	PART NUMBER	QTY	PART NAME 1 2 3 4 5 6 (PRODUCT LEVEL)	SEE PAGE
	1	1	**377-1448**	1	SCREEN AS-CAB	
M	2	1	**7X-2552**	4	BOLT (M16X2X30-MM)	
	3	1	**8T-4122**	4	WASHER-HARD (17X32X3.5-MM THK)	

M - METRIC PART

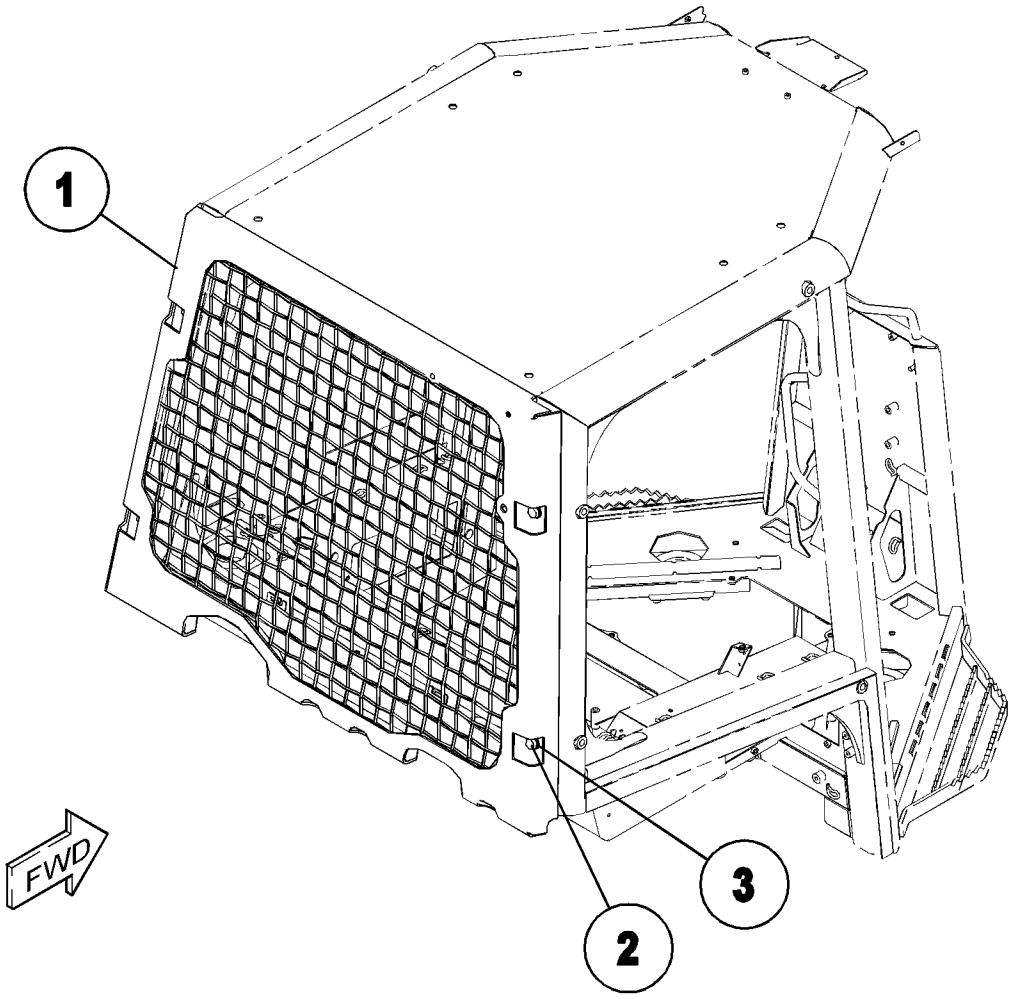

GRAPHIC #1 **<END>** g03137796

250-1699 SCREEN GP-PROTECTION—SIDES

S/N: MMM1-UP; RRR1-UP
PART OF 244-7476 ROPS AR, 282-4899 ROPS AR-ENCLOSED
AN ATTACHMENT

SMCS-7165 **i03635050**

NOTE	REF NO	GRAPHIC REF	PART NUMBER	QTY	PART NAME 1 2 3 4 5 6 (PRODUCT LEVEL)	SEE PAGE
	1	1	**252-0552**	1	SCREEN AS (RH)	
	2	1	**252-0553**	1	SCREEN AS (LH)	
					(EACH SCREEN AS INCLUDES)	
M		1	**8T-3597**	4	NUT-WELD (M12X1.75-THD)	
M	3	1	**7X-2553**	6	BOLT (M16X2X40-MM)	
M	4	1	**7X-2554**	2	BOLT (M16X2X70-MM)	
	5	1	**9X-8257**	8	WASHER (17.5X30X3.5-MM THK)	

M - METRIC PART

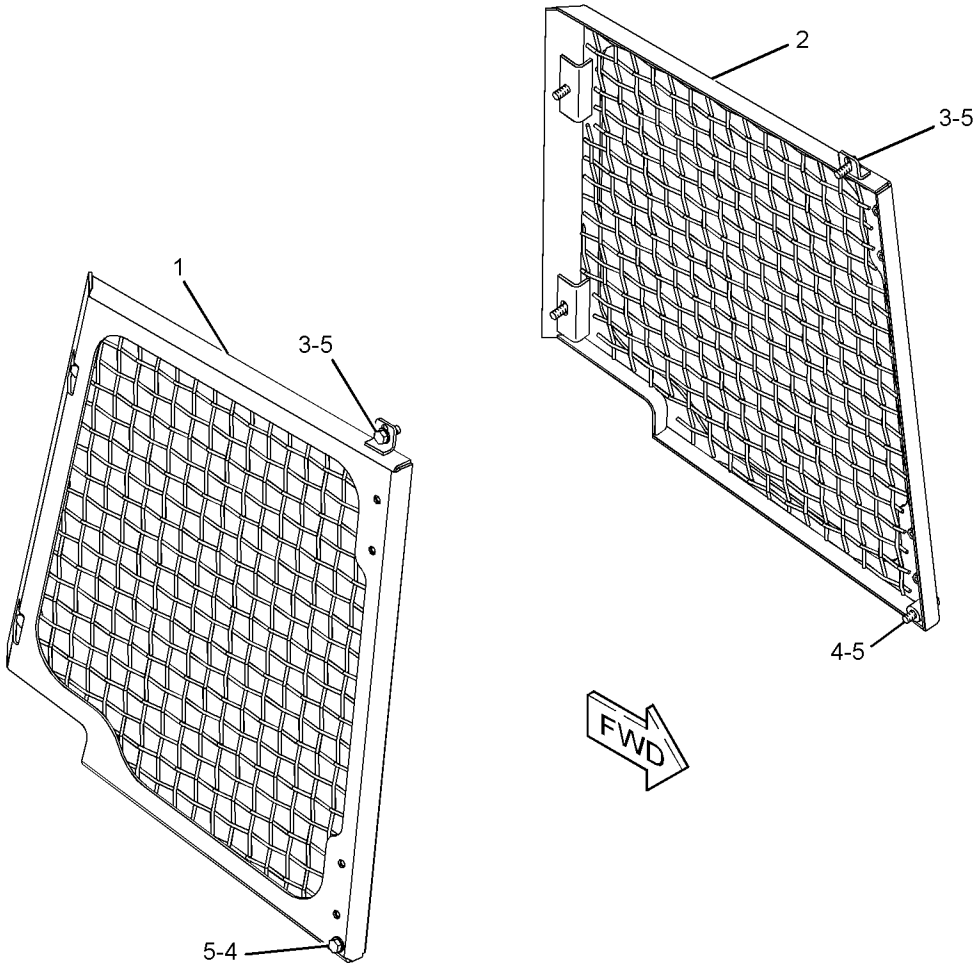

GRAPHIC #1 **<END>** g01202762

272-9780 SCREEN GP-PROTECTION

S/N: MMM1-UP; RRR1-UP
FOR USE WITH CABS, ROPS
PART OF 244-7476 ROPS AR, 282-4899 ROPS AR-ENCLOSED
AN ATTACHMENT

SMCS-7165 **i04246429**

NOTE	REF NO	GRAPHIC REF	PART NUMBER	QTY	PART NAME 1 2 3 4 5 6 (PRODUCT LEVEL)	SEE PAGE
	1	1	**5P-0372**	3	LOCK PIN	
	2	1	**8E-7840**	1	CLIP	
	3	1	**9M-5732**	1	RIVET-POP	
	4	1	**252-5459**	1	ROD AS	
		1	**7X-0599**	1	WASHER-HARD (13X20X2-MM THK)	
	5	1	**252-6803**	2	HINGE	
	6	1	**302-5323**	1	SCREEN AS-CAB	
	7	1	**6S-9277**	2	PIN	
M	8	1	**7X-2552**	4	BOLT (M16X2X30-MM)	
	9	1	**8T-4122**	4	WASHER-HARD (17X32X3.5-MM THK)	
	10	1	**171-3396**	1	GROMMET	

M - METRIC PART

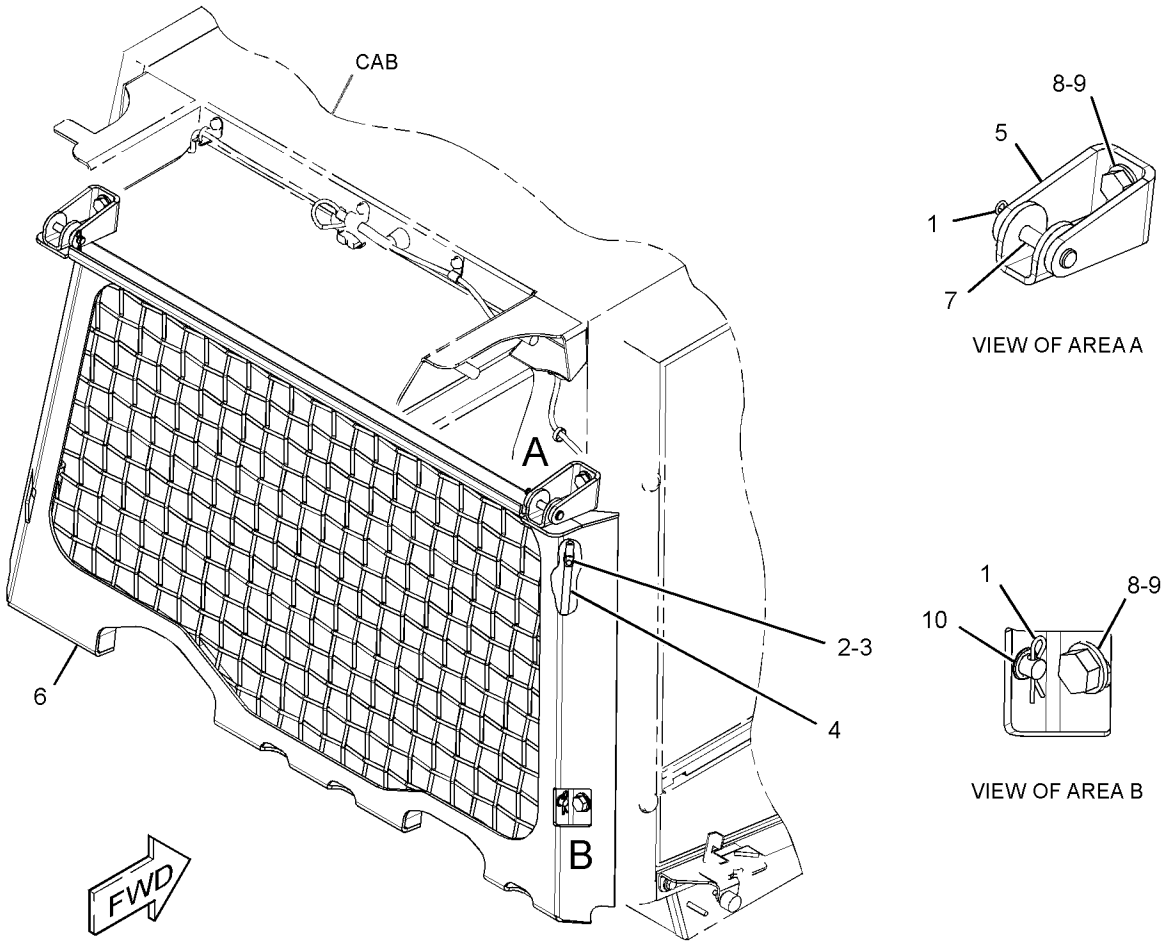

GRAPHIC #1 **<END>** g02492660

255-4242 SEAT & SUPPORT GP—VINYL, HEATED

S/N: MMM1-UP; RRR1-UP

CANNOT BE USED WITH 255-4250—PAGE: 837, 255-4251—PAGE: 839, 255-4252—PAGE: 840 AN ATTACHMENT

SMCS-7312 **i02834136**

NOTE	REF NO	GRAPHIC REF	PART NUMBER	QTY	PART NAME 1 2 3 4 5 6 (PRODUCT LEVEL)	SEE PAGE
Y	1	1	*268-9351*	1	CONSOLE GP-OPERATOR (RH)	692
Y	2	1	*268-9352*	1	CONSOLE GP-OPERATOR (LH)	693
Y	3	1	*280-9679*	1	ARMREST GP (LH)	680
Y	4	1	*284-7054*	1	ARMREST GP (RH)	682
Y	5	1	*301-0148*	1	SEAT GP-SUSPENSION (VINYL, HEATED)	844
	6	1	**7X-7729**	4	WASHER (11X25X3-MM THK)	
M	7	1	**8T-4186**	4	BOLT (M10X1.5X40-MM)	

M - METRIC PART
Y - SEPARATE ILLUSTRATION

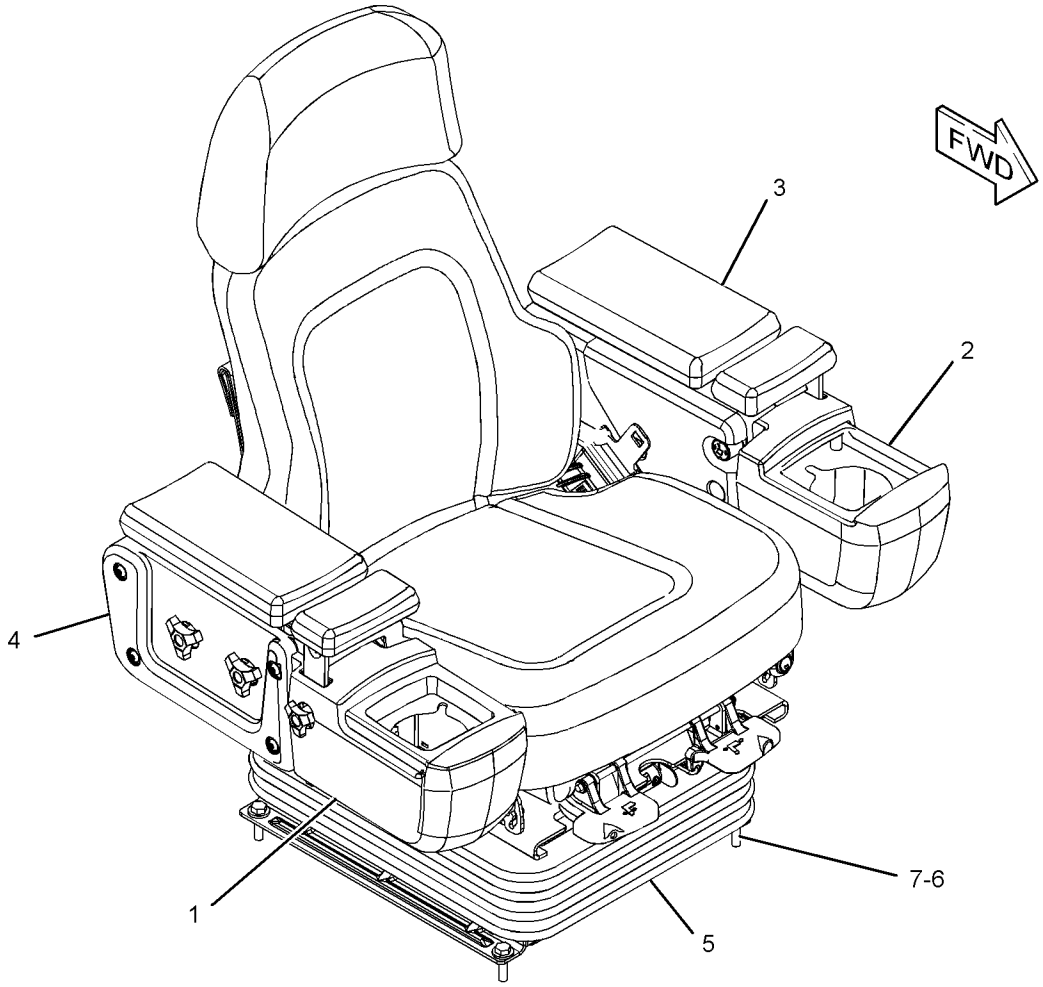

GRAPHIC #1 **<END>** g01354437

258-8373 SEAT BELT GP–RETRACTABLE

S/N: MMM1-UP; RRR1-UP
PART OF 318-6107 CONVERSION GP-ELECTRICAL
AN ATTACHMENT

SMCS-7327 **i03434903**

NOTE	REF NO	GRAPHIC REF	PART NUMBER	QTY	PART NAME 1 2 3 4 5 6 (PRODUCT LEVEL)	SEE PAGE
					(NO SERVICED PARTS)	

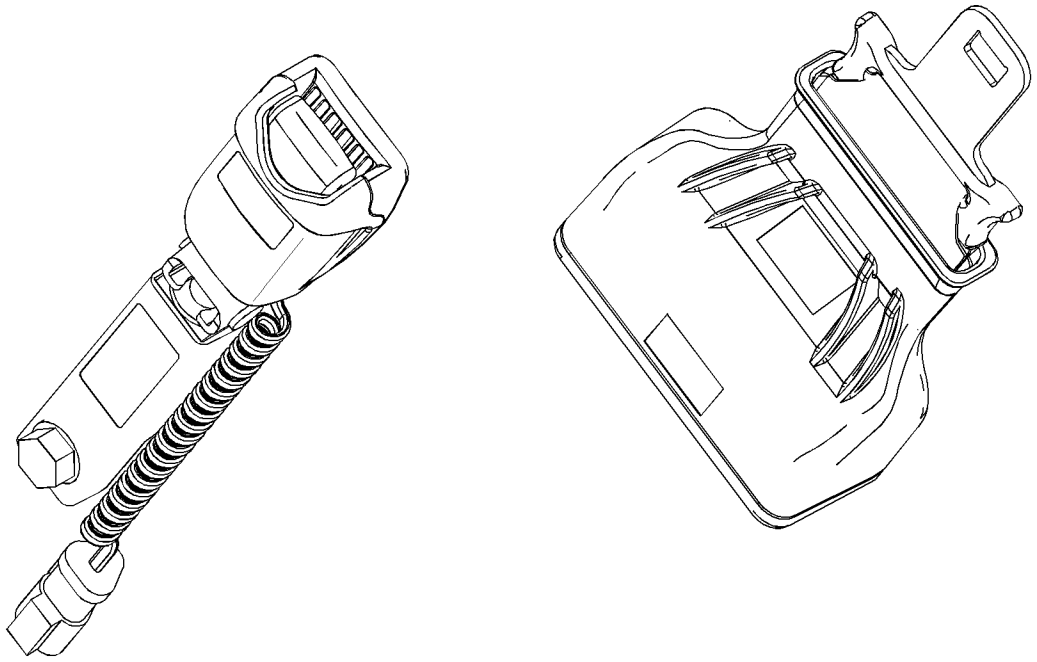

GRAPHIC #1 **<END>** g01756993

272-2272 SEAT BELT GP–RETRACTABLE

S/N: MMM1-UP; RRR1-UP
3-IN
PART OF 255-8846, 257-4959, 272-8111, 301-0148, 351-1960 SEAT GP-SUSPENSION
AN ATTACHMENT

SMCS-7327 **i05319559**

NOTE	REF NO	GRAPHIC REF	PART NUMBER	QTY	PART NAME 1 2 3 4 5 6 (PRODUCT LEVEL)	SEE PAGE
	1	1	**275-7803**	1	SPACER (11.7X19.8X25.4-MM THK)	
	2	1	**0T-0489**	2	BOLT (7/16-20X2-IN)	
	3	1	**8T-5360**	1	WASHER (12X22.5X2.5-MM THK)	

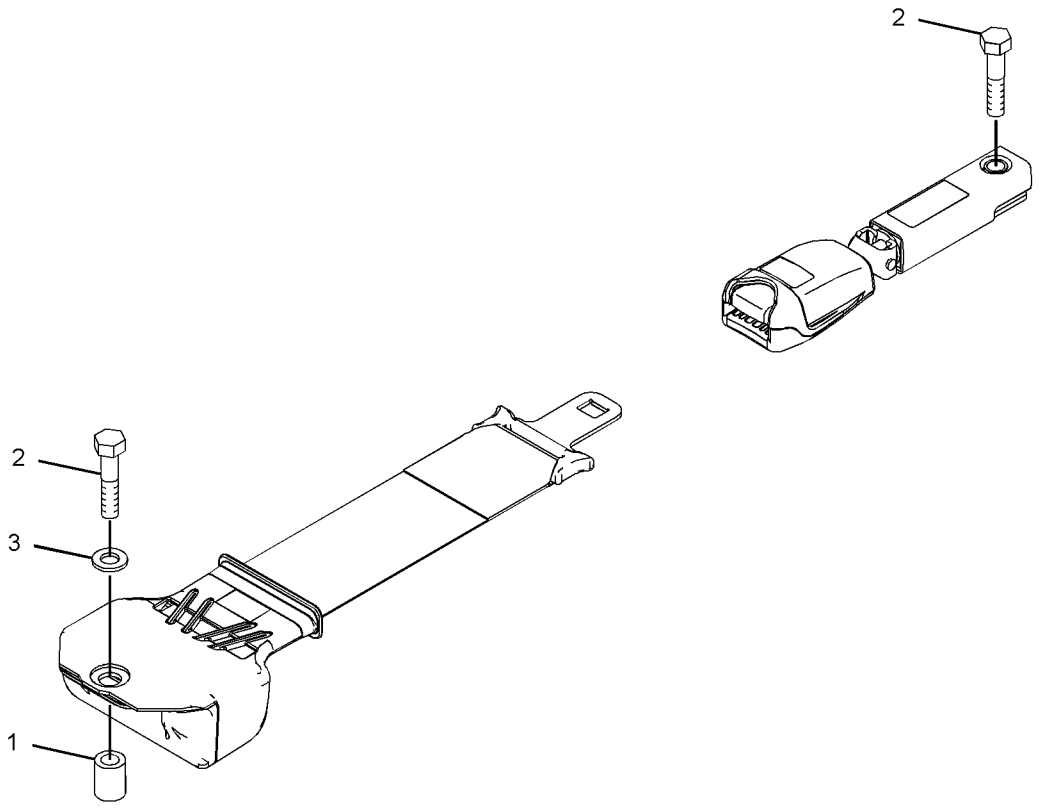

GRAPHIC #1 **<END>** g03370031

295-4433 SEAT GP–CLOTH, HEATED

S/N: MMM1-UP; RRR1-UP
PART OF 272-8111 SEAT GP-SUSPENSION
AN ATTACHMENT

SMCS-7312 **i03776969**

NOTE	REF NO	GRAPHIC REF	PART NUMBER	QTY	PART NAME 1 2 3 4 5 6 (PRODUCT LEVEL)	SEE PAGE
	1	1	**4V-8256**	2	SPRING	
	2	2	**132-0338**	4	WASHER-PLASTIC (13X31.7X0.8-MM THK)	
	3	1	**143-1288**	6	LOCKNUT-FLANGE (3/8-16-THD)	
	4	1	**164-4883**	1	KNOB-LUMBAR	
	5	1	**171-1230**	6	SCREW-BUTTON HEAD (3/8-16X1-IN)	
	6	2	**216-0814**	1	SWITCH AS-LIMIT (SEAT ADJUSTMENT)	
	7	1	**218-2529**	3	PLUG	
	8	1	**229-1494**	1	EXTENSION GP-BACKREST (CLOTH)	
		1	**117-4491**	1	ROD	
	9	2	**249-2844**	2	WASHER (12.7X31.7X1-MM THK)	
	10	1	**262-0767**	1	BRACKET AS (LH)	
	11	1	**262-0769**	1	BRACKET AS (RH)	
	12	2	**262-0772**	1	SHAFT GP-RECLINER	
		2	**2K-9111**	2	PIN-SPRING	
		2	**3E-4333**	1	KEY-WOODRUFF	
		2	**8T-0277**	1	PIN-SPRING	
		2	**256-4959**	1	SLIDER AS	
		2	**262-0789**	1	CABLE AS	
	13	1	**262-0779**	1	LATCH (LH)	
	14	1	**262-0780**	1	LATCH (RH)	
	15	1	**262-0781**	1	ROD	
	16	2	**262-0785**	1	LEVER (RH)	
	17	2	**262-0786**	2	BOLT-SPECIAL	
	18	2	**262-0787**	1	ROD	
	19	2	**267-5147**	2	BRACKET	
	20	2	**267-5159**	1	SPRING	
	21	2	**267-5160**	1	PLATE	
	22	1	**267-9319**	1	STOP	
	23	2	**276-3642**	1	SHAFT	
	24	2	**276-3644**	1	NUT-SPECIAL	
	25	1	**282-0554**	1	SWITCH (12-VOLT) (SEAT HEATER ON, OFF)	
	26	1	**282-0558**	1	CUSHION AS-SEAT (CLOTH, HEATED)	
	27	1	**282-0561**	1	CUSHION AS-BACK (CLOTH, HEATED)	
	28	1	**285-2372**	1	HARNESS AS-SWITCH (HEATED SEAT)	
		1	**102-8803**	1	KIT-RECEPTACLE (3-PIN) (INCLUDES RECEPTACLE AS & WEDGE)	
		1	**9X-3401**	3	PIN-CONNECTOR (16-GA TO 18-GA)	
		1	**113-9807**	1	TERMINAL-RECEPTACLE	
		1	**122-4395**	3	TERMINAL	
Y	29	1	*292-6402*	1	PAN GP-BACKREST (LUMBAR)	802
	30	2	**293-2915**	1	LEVER (LH)	
	31	2	**293-9379**	1	ROD	
	32	1	**293-9380**	1	ROD	
	33	1	**293-9381**	1	PLATE AS	
	34	2	**293-9665**	2	SPRING	
	35	2	**294-7139**	1	PAN GP-SEAT	
M		2	**5C-7261**	6	NUT (M8X1.25-THD)	
		2	**8T-4224**	6	WASHER-HARD (8.8X16X2-MM THK)	
M		2	**127-2170**	6	SCREW-TRUSS HEAD (M8X1.25X20-MM)	
	36	2	**295-6472**	4	WASHER (7X19X2-MM THK)	
	40	1	**031-0214**	1	BOLT-LOCKING (1/4-20X0.5-IN)	
	41	1	**101-2867**	1	WASHER-HARD (7.2X25X2-MM THK)	
M	42	1	**238-0251**	8	SCREW-BUTTON HEAD (M10X1.5X25-MM)	
	43	2	**5T-7486**	2	RETAINER-SPRING	
	44	2	**5V-1496**	2	RETAINER	
	45	1	**6V-8969**	2	SCREW-BUTTON HEAD (1/4-20X0.5-IN)	

295-4433 **SEAT GP (*contd.*)** **i03776969**

NOTE	REF NO	GRAPHIC REF	PART NUMBER	QTY	PART NAME 1 2 3 4 5 6 (PRODUCT LEVEL)	SEE PAGE
	46	2	**7Y-0468**	2	PIN-SPRING	
M	47	2	**7Y-7388**	6	SCREW-BUTTON HEAD (M5X0.8X12-MM)	
M	48	2	**8T-4133**	1	NUT (M10X1.5-THD)	
	49	1	**8T-4205**	2	WASHER-HARD (7.2X14.5X2-MM THK)	
	50	1	**8T-7566**	1	PIN-SPRING	
	51	2	**9F-5975**	1	BOLT (5/16-18X0.75-IN)	
	52	2	**9T-5241**	4	WASHER (9.53X18X1-MM THK)	

M - METRIC PART
Y - SEPARATE ILLUSTRATION

295-4433 **SEAT GP (*contd.*)** **i03776969**

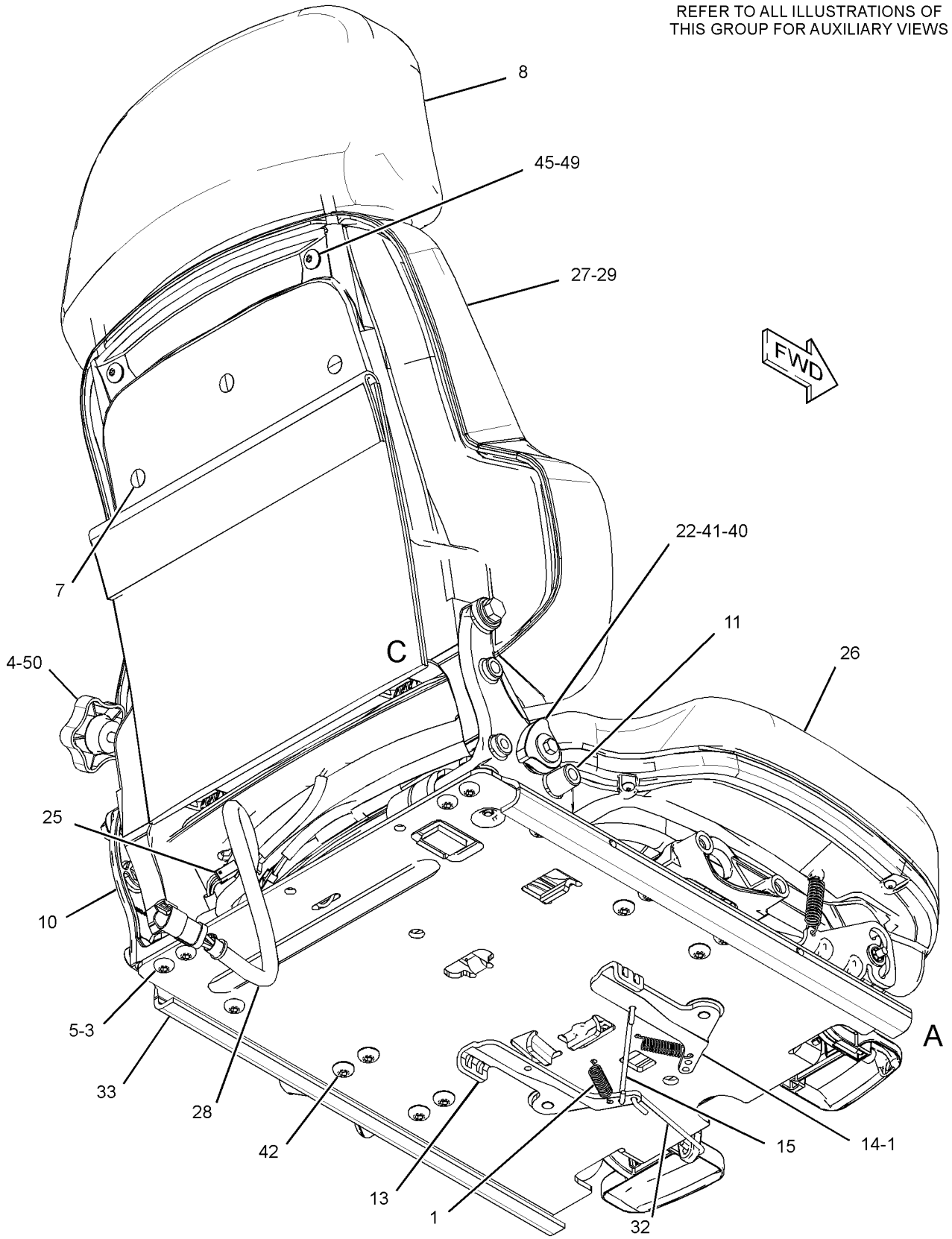

GRAPHIC #1 g01954058

295-4433 **SEAT GP (*contd.*)** **i03776969**

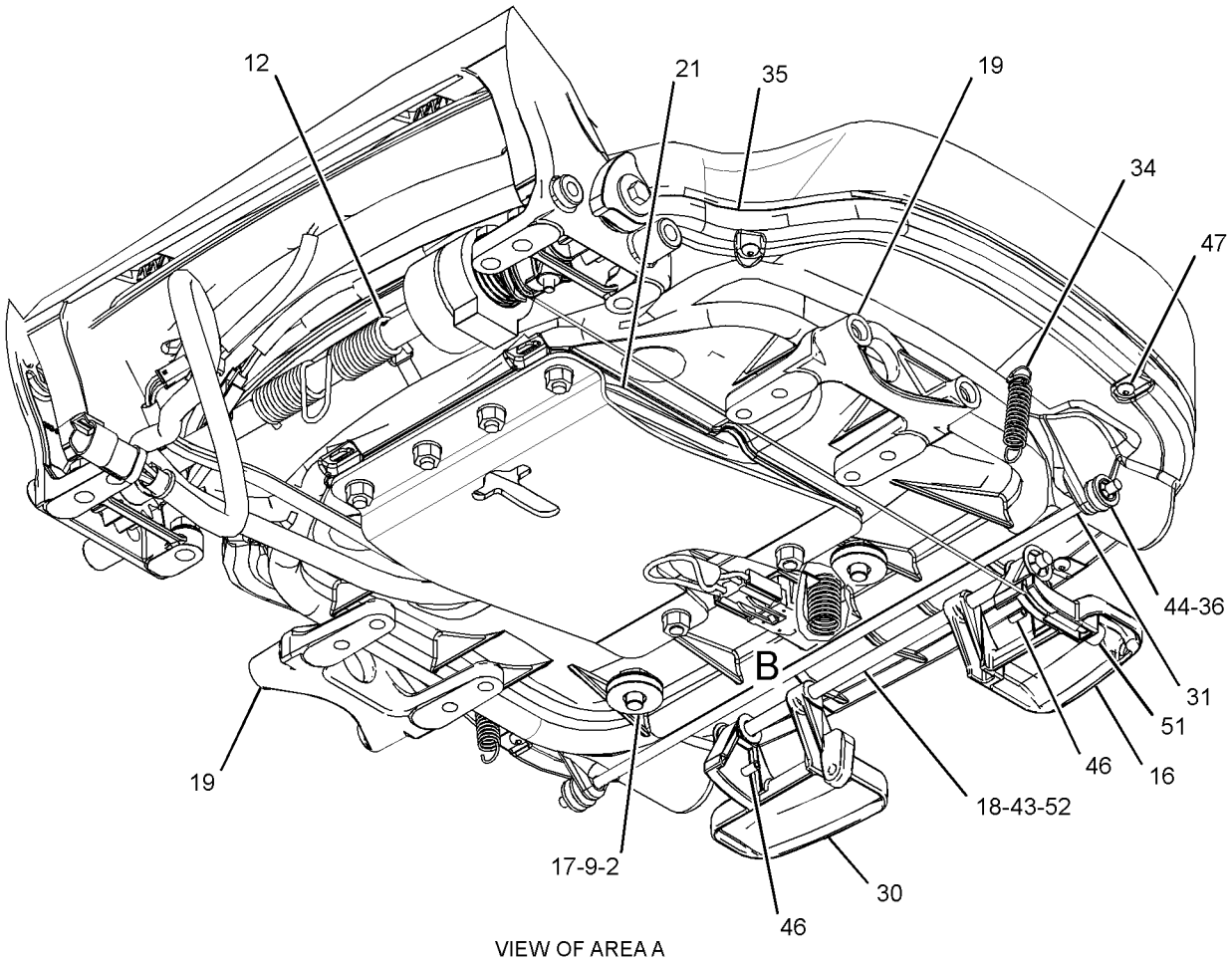

VIEW OF AREA A
(PLATE REMOVED FOR CLARITY)

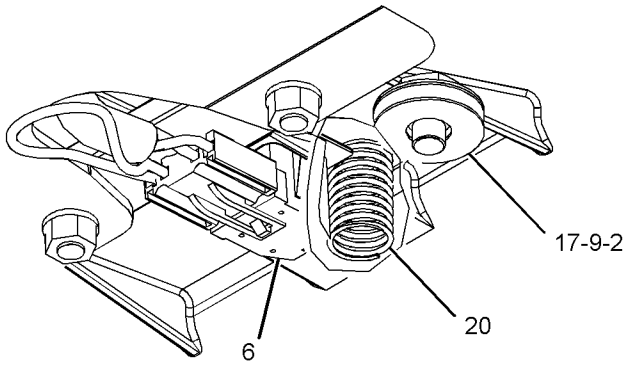

VIEW OF AREA B

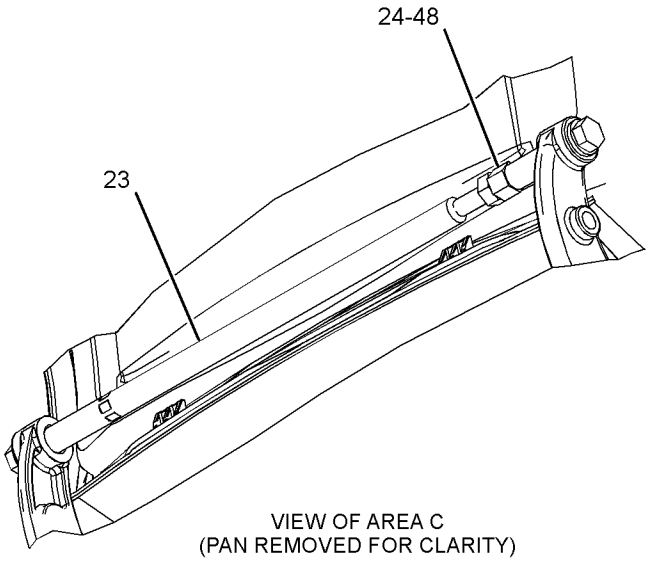

VIEW OF AREA C
(PAN REMOVED FOR CLARITY)

GRAPHIC #2 **<END>** g01954059

OPERATOR STATION

295-4434 SEAT GP—CLOTH

S/N: MMM1-UP; RRR1-UP
PART OF 255-8846 SEAT GP-SUSPENSION
AN ATTACHMENT

SMCS-7312 **i04574419**

NOTE	REF NO	GRAPHIC REF	PART NUMBER	QTY	PART NAME 1 2 3 4 5 6 (PRODUCT LEVEL)	SEE PAGE
	1	1	**4V-8256**	2	SPRING	
	2	1	**132-0338**	4	WASHER-PLASTIC (13X31.7X0.8-MM THK)	
	3	1	**143-1288**	6	LOCKNUT-FLANGE (3/8-16-THD)	
	4	1	**164-4883**	1	KNOB-LUMBAR	
	5	1	**171-1230**	6	SCREW-BUTTON HEAD (3/8-16X1-IN)	
	6	1	**216-0814**	1	SWITCH AS-LIMIT (SEAT ADJUSTMENT)	
	7	1	**218-2529**	3	PLUG	
	8	1	**229-1494**	1	EXTENSION GP-BACKREST (CLOTH)	
		1	**117-4491**	1	ROD	
	9	1	**249-2844**	2	WASHER (12.7X31.7X1-MM THK)	
	10	1	**262-0767**	1	BRACKET AS (LH)	
	11	1	**314-5162**	1	BRACKET AS (RH)	
	12	1	**262-0772**	1	SHAFT GP-RECLINER (RECLINER)	
		1	**2K-9111**	2	PIN-SPRING	
		1	**3E-4333**	1	KEY-WOODRUFF	
		1	**8T-0277**	1	PIN-SPRING	
		1	**256-4959**	1	SLIDER AS	
		1	**262-0789**	1	CABLE AS	
	13	1	**262-0779**	1	LATCH (LH)	
	14	1	**262-0780**	1	LATCH (RH)	
	15	1	**262-0781**	1	ROD	
	16	1	**262-0785**	1	LEVER (RH)	
	17	1	**262-0786**	2	BOLT-SPECIAL	
	18	1	**262-0787**	1	ROD	
	19	1	**267-5147**	2	BRACKET	
	20	1	**267-5159**	1	SPRING	
	21	1	**267-5160**	1	PLATE	
	22	1	**267-9319**	1	STOP	
	23	1	**276-3642**	1	SHAFT	
	24	1	**276-3644**	1	NUT-SPECIAL	
	25	1	**277-8103**	1	PLUG	
	26	1	**277-8589**	1	CUSHION AS-SEAT (CLOTH)	
	27	1	**278-7528**	1	CUSHION AS-BACK (CLOTH)	
	28	1	**285-2372**	1	HARNESS AS-SWITCH (HEATED SEAT)	
		1	**9X-3401**	3	PIN-CONNECTOR (16-GA TO 18-GA)	
		1	**102-8803**	1	KIT-RECEPTACLE (3-PIN)	
					(INCLUDES RECEPTACLE AS & WEDGE)	
		1	**122-4395**	3	TERMINAL	
		1	**113-9807**	1	TERMINAL-RECEPTACLE	
Y	29	1	*292-6402*	1	PAN GP-BACKREST (LUMBAR)	802
	30	1	**293-2915**	1	LEVER (LH)	
	31	1	**293-9379**	1	ROD	
	32	1	**293-9380**	1	ROD	
	33	1	**293-9381**	1	PLATE AS	
	34	1	**293-9665**	2	SPRING	
	35	1	**294-7139**	1	PAN GP-SEAT	
	36	1	**295-6472**	4	WASHER (7X19X2-MM THK)	
	40	1	**031-0214**	1	BOLT-LOCKING (1/4-20X0.5-IN)	
	41	1	**101-2867**	1	WASHER-HARD (7.2X25X2-MM THK)	
M	42	1	**238-0251**	8	SCREW-BUTTON HEAD (M10X1.5X25-MM)	
M	43	1	**8T-4133**	1	NUT (M10X1.5-THD)	
	44	1	**8T-4205**	2	WASHER-HARD (7.2X14.5X2-MM THK)	
	45	1	**5T-7486**	2	RETAINER-SPRING	
	46	1	**5V-1496**	2	RETAINER	
	47	1	**6V-8969**	2	SCREW-BUTTON HEAD (1/4-20X0.5-IN)	
	48	1	**7Y-0468**	2	PIN-SPRING	
M	49	1	**7Y-7388**	6	SCREW-BUTTON HEAD (M5X0.8X12-MM)	

295-4434 **SEAT GP (*contd.*)** **i04574419**

NOTE	REF NO	GRAPHIC REF	PART NUMBER	QTY	PART NAME 1 2 3 4 5 6 (PRODUCT LEVEL)	SEE PAGE
	50	1	**8T-7566**	1	PIN-SPRING	
	51	1	**9F-5975**	1	BOLT (5/16-18X0.75-IN)	
	52	1	**9T-5241**	4	WASHER (9.53X18X1-MM THK)	

M - METRIC PART
Y - SEPARATE ILLUSTRATION

295-4434 **SEAT GP** (*contd.*) **i04574419**

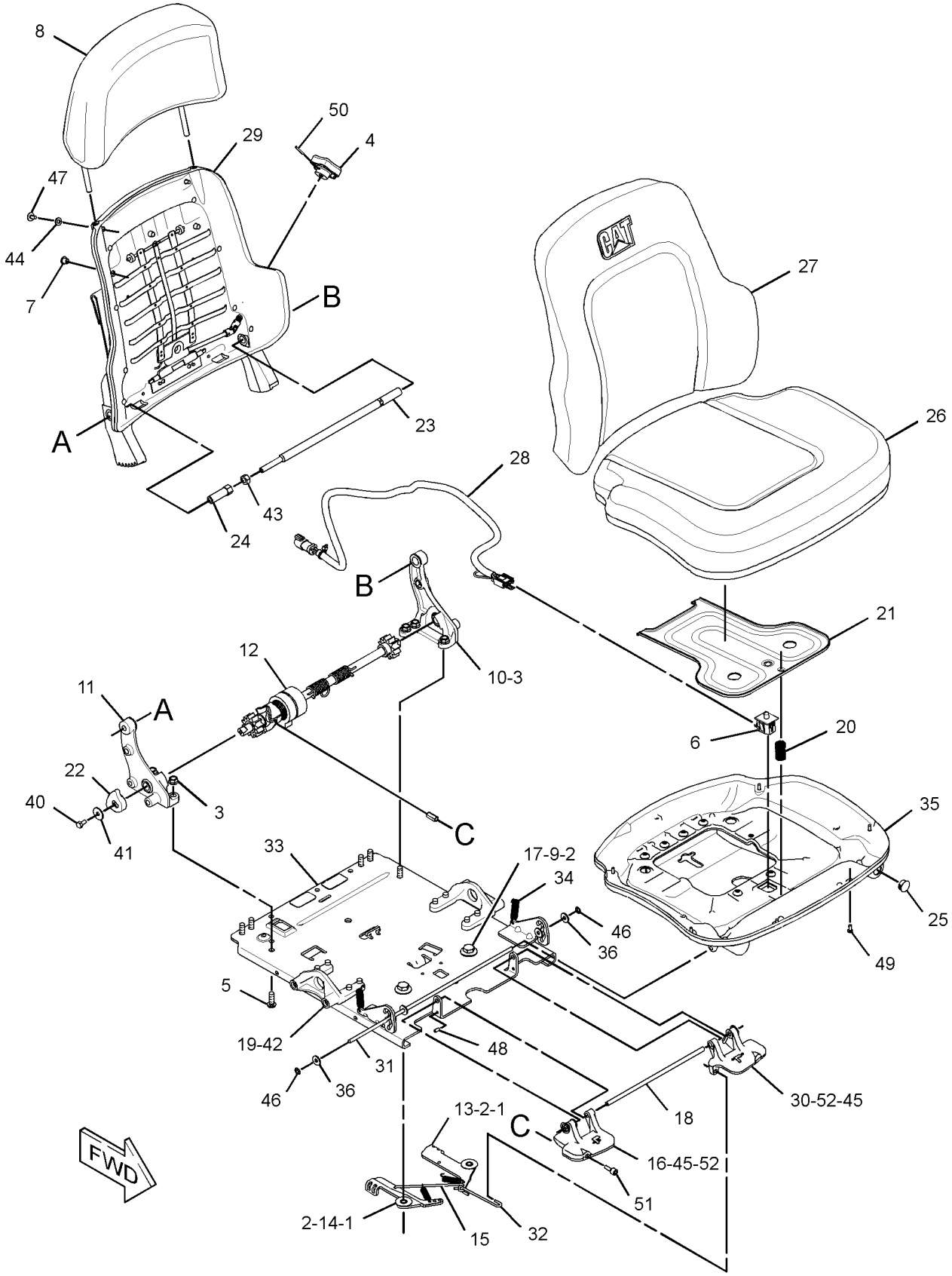

GRAPHIC #1 **<END>** g01812203

295-4436 SEAT GP–VINYL

S/N: MMM1-873; RRR1-670
MANUAL TILT
PART OF 257-4959 SEAT GP-SUSPENSION
AN ATTACHMENT

SMCS-7312 **i04552378**

NOTE	REF NO	GRAPHIC REF	PART NUMBER	QTY	PART NAME 1 2 3 4 5 6 (PRODUCT LEVEL)	SEE PAGE
	1	1	**4V-8256**	2	SPRING	
	2	1	**132-0338**	4	WASHER-PLASTIC (13X31.7X0.8-MM THK)	
	3	1	**143-1288**	6	LOCKNUT-FLANGE (3/8-16-THD)	
	4	1	**164-4883**	1	KNOB-LUMBAR	
	5	1	**171-1230**	6	SCREW-BUTTON HEAD (3/8-16X1-IN)	
	6	1	**173-3083**	1	EXTENSION GP-BACKREST (VINYL)	
	7	1	**216-0814**	1	SWITCH AS-LIMIT (OPERATOR PRESENT)	
	8	1	**218-2529**	3	PLUG	
	9	1	**249-2844**	2	WASHER (12.7X31.7X1-MM THK)	
	10	1	**262-0767**	1	BRACKET AS (LH)	
	11	1	**314-5162**	1	BRACKET AS (RH)	
	12	1	**262-0772**	1	SHAFT GP-RECLINER	
		1	**2K-9111**	2	PIN-SPRING	
		1	**3E-4333**	1	KEY-WOODRUFF	
		1	**8T-0277**	1	PIN-SPRING	
		1	**256-4959**	1	SLIDER AS	
		1	**262-0789**	1	CABLE AS	
	13	1	**262-0779**	1	LATCH (LH)	
	14	1	**262-0780**	1	LATCH (RH)	
	15	1	**262-0781**	1	ROD	
	16	1	**262-0785**	1	LEVER (RH)	
	17	1	**262-0786**	2	BOLT-SPECIAL	
	18	1	**262-0787**	1	ROD	
	19	1	**267-5147**	2	BRACKET	
	20	1	**267-5159**	1	SPRING	
	21	1	**267-5160**	1	PLATE	
	22	1	**267-9319**	1	STOP	
	23	1	**276-3642**	1	SHAFT	
	24	1	**276-3644**	1	NUT-SPECIAL	
	25	1	**277-8103**	1	PLUG	
	26	1	**278-6935**	1	CUSHION AS-BACKREST (VINYL)	
	27	1	**278-6936**	1	CUSHION AS-SEAT (VINYL)	
	28	1	**285-2372**	1	HARNESS AS-SWITCH (HEATED SEAT)	
		1	**9X-3401**	3	PIN-CONNECTOR (16-GA TO 18-GA)	
		1	**102-8803**	1	KIT-RECEPTACLE (3-PIN)	
					(INCLUDES RECEPTACLE AS & WEDGE)	
		1	**122-4395**	3	TERMINAL	
		1	**113-9807**	1	TERMINAL-RECEPTACLE	
Y	29	1	*292-6402*	1	PAN GP-BACKREST (LUMBAR)	802
	30	1	**293-2915**	1	LEVER (LH)	
	31	1	**293-9379**	1	ROD	
	32	1	**293-9380**	1	ROD	
	33	1	**293-9381**	1	PLATE AS	
	34	1	**293-9665**	2	SPRING	
	35	1	**294-7139**	1	PAN GP-SEAT	
M		1	**5C-7261**	6	NUT (M8X1.25-THD)	
		1	**8T-4224**	6	WASHER-HARD (8.8X16X2-MM THK)	
M		1	**127-2170**	6	SCREW-TRUSS HEAD (M8X1.25X20-MM)	
	36	1	**295-6472**	4	WASHER (7X19X2-MM THK)	
	40	1	**031-0214**	1	BOLT-LOCKING (1/4-20X0.5-IN)	
	41	1	**101-2867**	1	WASHER-HARD (7.2X25X2-MM THK)	
M	42	1	**238-0251**	8	SCREW-BUTTON HEAD (M10X1.5X25-MM)	
	43	1	**5T-7486**	2	RETAINER-SPRING	
	44	1	**5V-1496**	2	RETAINER	
	45	1	**6V-8969**	2	SCREW-BUTTON HEAD (1/4-20X0.5-IN)	

295-4436 **SEAT GP (*contd.*)** **i04552378**

NOTE	REF NO	GRAPHIC REF	PART NUMBER	QTY	PART NAME 1 2 3 4 5 6 (PRODUCT LEVEL)	SEE PAGE
	46	1	**7Y-0468**	2	PIN-SPRING	
M	47	1	**7Y-7388**	6	SCREW-BUTTON HEAD (M5X0.8X12-MM)	
M	48	1	**8T-4133**	1	NUT (M10X1.5-THD)	
	49	1	**8T-4205**	2	WASHER-HARD (7.2X14.5X2-MM THK)	
	50	1	**8T-7566**	1	PIN-SPRING	
	51	1	**9F-5975**	1	BOLT (5/16-18X0.75-IN)	
	52	1	**9T-5241**	4	WASHER (9.53X18X1-MM THK)	

M - METRIC PART
Y - SEPARATE ILLUSTRATION

295-4436 **SEAT GP (*contd.*)** **i04552378**

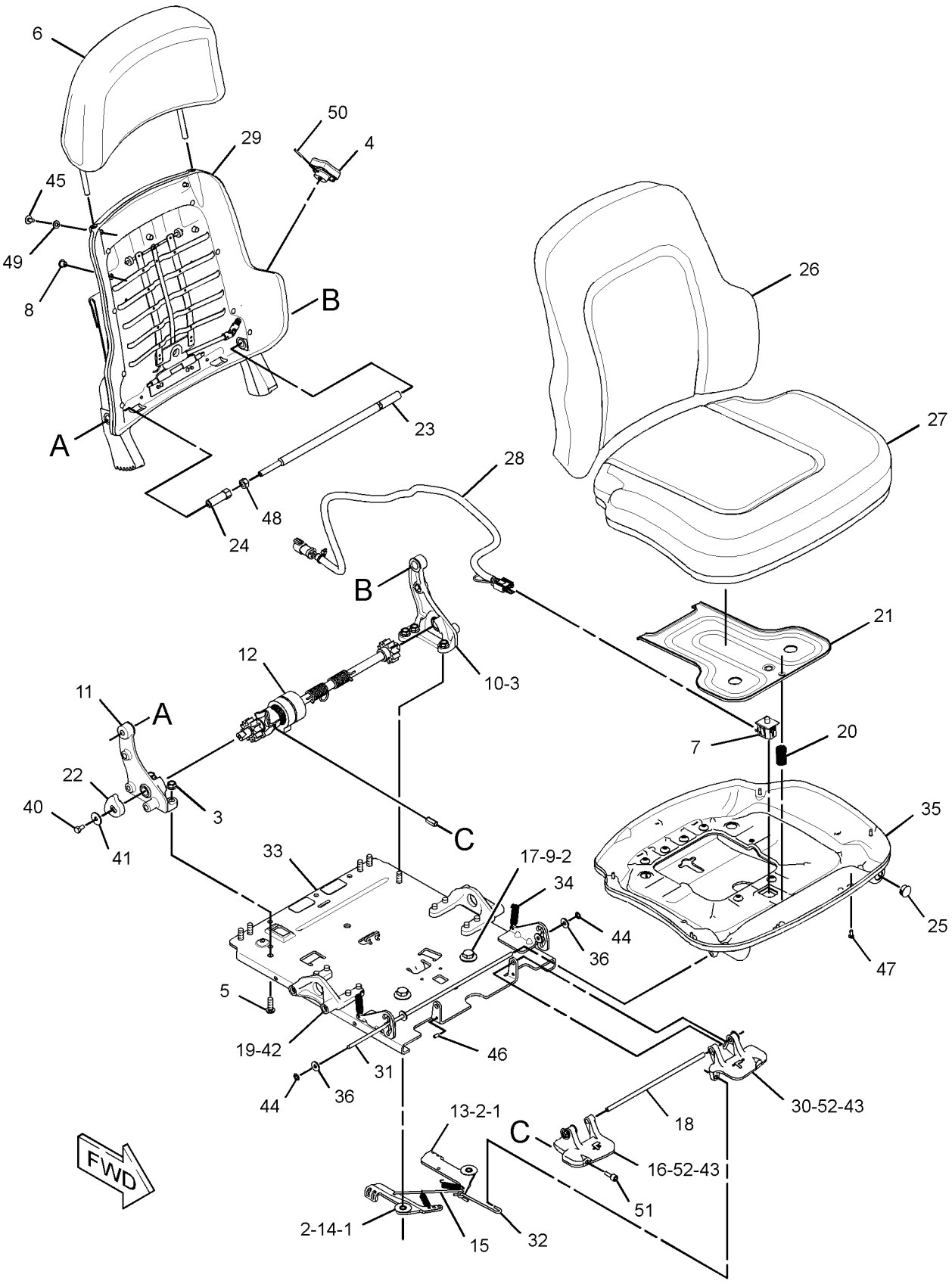

GRAPHIC #1 **<END>** g01812005

OPERATOR STATION

301-0147 SEAT GP–HEATED SEAT

S/N: MMM1-UP; RRR1-UP
PART OF 301-0148 SEAT GP-SUSPENSION
AN ATTACHMENT

SMCS-7312 **i04574420**

NOTE	REF NO	GRAPHIC REF	PART NUMBER	QTY	PART NAME 1 2 3 4 5 6 (PRODUCT LEVEL)	SEE PAGE
	1	1	**4V-8256**	2	SPRING	
	2	2	**132-0338**	4	WASHER-PLASTIC (13X31.7X0.8-MM THK)	
	3	1	**143-1288**	6	LOCKNUT-FLANGE (3/8-16-THD)	
	4	1	**164-4883**	1	KNOB-LUMBAR	
	5	1	**171-1230**	6	SCREW-BUTTON HEAD (3/8-16X1-IN)	
	6	1	**173-3083**	1	EXTENSION GP-BACKREST (VINYL)	
		1	**117-4491**	1	ROD	
	7	2	**216-0814**	1	SWITCH AS-LIMIT (SEAT ADJUSTMENT)	
	8	1	**218-2529**	3	PLUG	
	9	2	**249-2844**	2	WASHER (12.7X31.7X1-MM THK)	
	10	1	**262-0767**	1	BRACKET AS (LH)	
	11	1	**314-5162**	1	BRACKET AS (RH)	
	12	2	**262-0772**	1	SHAFT GP-RECLINER (RECLINER)	
		2	**2K-9111**	2	PIN-SPRING	
		2	**3E-4333**	1	KEY-WOODRUFF	
		2	**8T-0277**	1	PIN-SPRING	
		2	**256-4959**	1	SLIDER AS	
		2	**262-0789**	1	CABLE AS	
	13	1	**262-0779**	1	LATCH (LH)	
	14	1	**262-0780**	1	LATCH (RH)	
	15	1	**262-0781**	1	ROD	
	16	2	**262-0785**	1	LEVER (RH)	
	17	2	**262-0786**	2	BOLT-SPECIAL	
	18	2	**262-0787**	1	ROD	
	19	2	**267-5147**	2	BRACKET	
	20	2	**267-5159**	1	SPRING	
	21	2	**267-5160**	1	PLATE	
	22	1	**267-9319**	1	STOP	
	23	2	**276-3642**	1	SHAFT	
	24	2	**276-3644**	1	NUT-SPECIAL	
	25	1	**285-2372**	1	HARNESS AS-SWITCH (HEATED SEAT)	
		1	**102-8803**	1	KIT-RECEPTACLE (3-PIN)	
					(INCLUDES RECEPTACLE AS & WEDGE)	
		1	**9X-3401**	3	PIN-CONNECTOR (16-GA TO 18-GA)	
		1	**113-9807**	1	TERMINAL-RECEPTACLE	
		1	**122-4395**	3	TERMINAL	
Y	26	1	*292-6402*	1	PAN GP-BACKREST (LUMBAR)	802
	27	2	**293-2915**	1	LEVER (LH)	
	28	2	**293-9379**	1	ROD	
	29	1	**293-9380**	1	ROD	
	30	1	**293-9381**	1	PLATE AS	
	31	2	**293-9665**	2	SPRING	
	32	2	**294-7139**	1	PAN GP-SEAT	
	33	2	**295-6472**	4	WASHER (7X19X2-MM THK)	
	34	1	**301-0145**	1	CUSHION AS-BACK	
	35	1	**301-0146**	1	CUSHION AS-SEAT	
	36	1	**320-5176**	1	SWITCH (12-VOLT, 24-VOLT)	
	40	1	**031-0214**	1	BOLT-LOCKING (1/4-20X0.5-IN)	
	41	1	**101-2867**	1	WASHER-HARD (7.2X25X2-MM THK)	
M	42	1	**238-0251**	8	SCREW-BUTTON HEAD (M10X1.5X25-MM)	
	43	2	**5T-7486**	2	RETAINER-SPRING	
	44	2	**5V-1496**	2	RETAINER	
	45	1	**6V-8969**	2	SCREW-BUTTON HEAD (1/4-20X0.5-IN)	
	46	2	**7Y-0468**	2	PIN-SPRING	
M	47	2	**7Y-7388**	6	SCREW-BUTTON HEAD (M5X0.8X12-MM)	
M	48	2	**8T-4133**	1	NUT (M10X1.5-THD)	
	49	1	**8T-4205**	2	WASHER-HARD (7.2X14.5X2-MM THK)	

301-0147 **SEAT GP (*contd.*)** **i04574420**

NOTE	REF NO	GRAPHIC REF	PART NUMBER	QTY	PART NAME 1 2 3 4 5 6 (PRODUCT LEVEL)	SEE PAGE
	50	1	**8T-7566**	1	PIN-SPRING	
	51	2	**9F-5975**	1	BOLT (5/16-18X0.75-IN)	
	52	2	**9T-5241**	4	WASHER (9.53X18X1-MM THK)	

M - METRIC PART
Y - SEPARATE ILLUSTRATION

REFER TO ALL ILLUSTRATIONS OF
THIS GROUP FOR AUXILIARY VIEWS

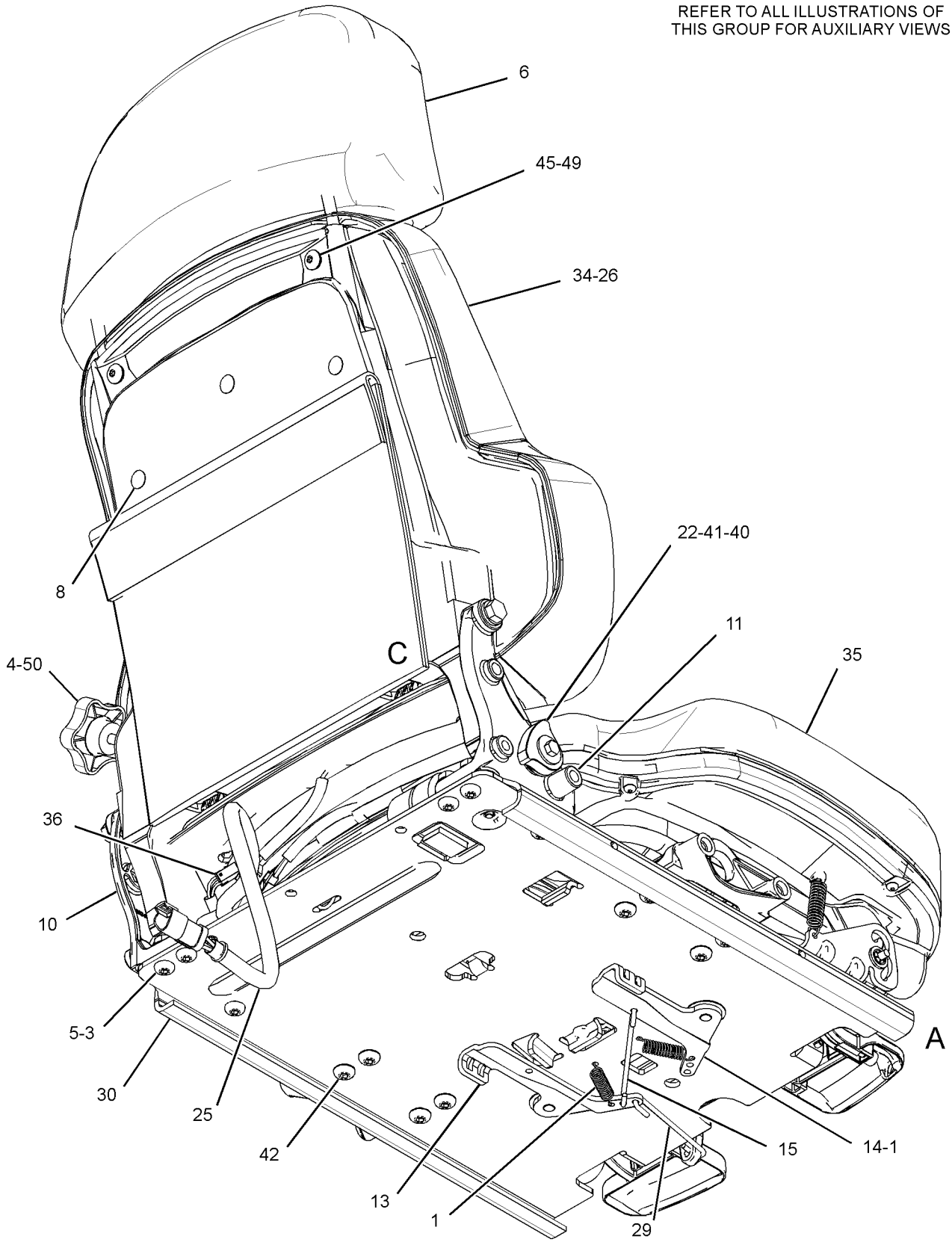

GRAPHIC #1 g01954034

301-0147 **SEAT GP (*contd.*)** **i04574420**

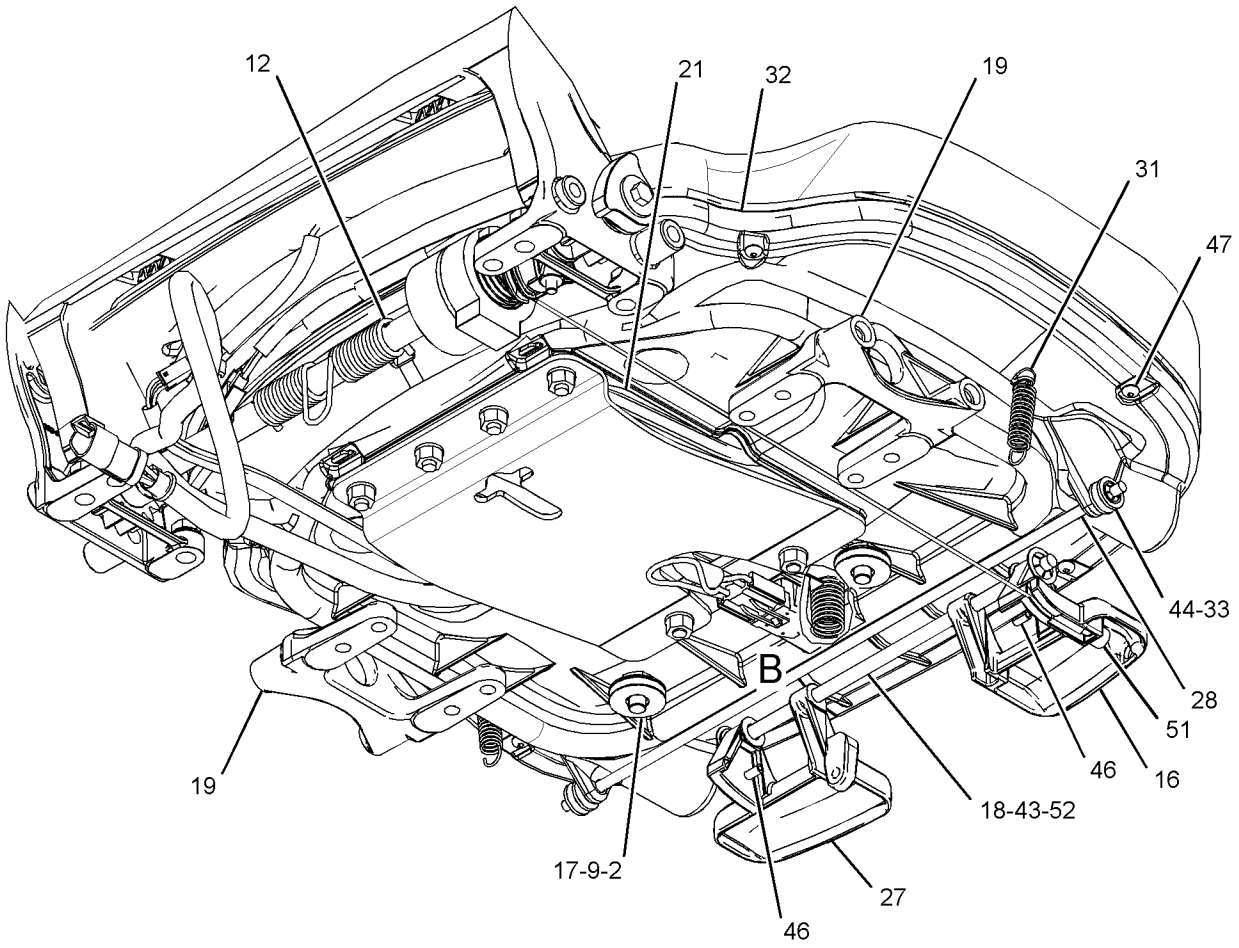

VIEW OF AREA A
(PLATE REMOVED FOR CLARITY)

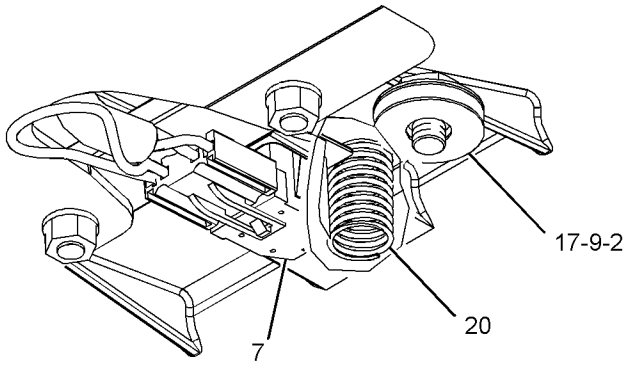

VIEW OF AREA B

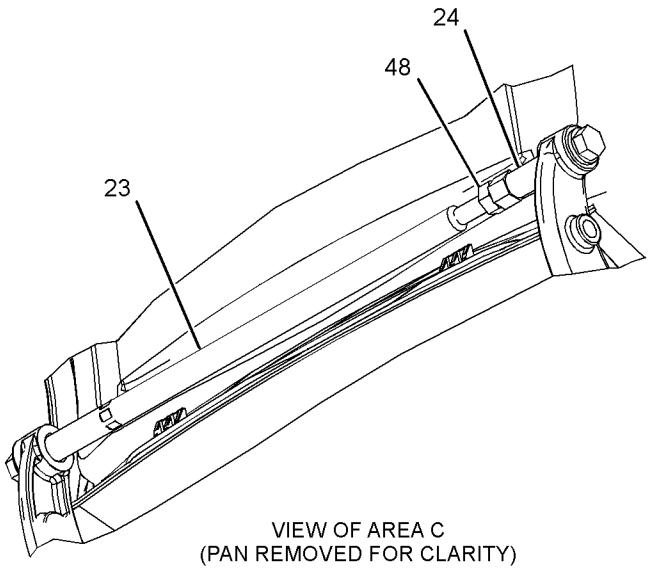

VIEW OF AREA C
(PAN REMOVED FOR CLARITY)

GRAPHIC #2 **<END>** g01954035

351-1965 SEAT GP—VINYL

S/N: MMM874-UP; RRR671-UP
PART OF 351-1960 SEAT GP-SUSPENSION
AN ATTACHMENT

SMCS-7312 **i05363391**

NOTE	REF NO	GRAPHIC REF	PART NUMBER	QTY	PART NAME 1 2 3 4 5 6 (PRODUCT LEVEL)	SEE PAGE
	1	2	**4V-8256**	2	SPRING	
	2	2	**132-0338**	4	WASHER-PLASTIC (13X31.7X0.8-MM THK)	
	3	1,2	**143-1288**	8	LOCKNUT-FLANGE (3/8-16-THD)	
	4	1	**164-4883**	1	KNOB-LUMBAR	
	5	1,2	**171-1230**	8	SCREW-BUTTON HEAD (3/8-16X1-IN)	
	6	1	**218-2529**	3	PLUG	
	7	1	**173-3083**	1	EXTENSION GP-BACKREST (VINYL)	
	8	2	**249-2844**	2	WASHER (12.7X31.7X1-MM THK)	
	9	1	**262-0767**	1	BRACKET AS (LH)	
	10	2	**262-0779**	1	LATCH (LH)	
	11	2	**262-0780**	1	LATCH (RH)	
	12	2	**262-0781**	1	ROD	
	13	2	**262-0785**	1	LEVER (RH)	
	14	2	**262-0786**	2	BOLT-SPECIAL	
	15	2	**262-0787**	1	ROD	
	16	1	**267-5159**	1	SPRING	
	17	2	**276-3642**	1	SHAFT	
	18	2	**276-3644**	1	NUT-SPECIAL	
	19	1	**277-8103**	1	PLUG	
Y	20	1	*292-6402*	1	PAN GP-BACKREST (LUMBAR)	802
	21	1	**293-2915**	1	LEVER (LH)	
	22	2	**293-9379**	1	ROD	
	23	2	**293-9380**	1	ROD	
	24	2	**293-9665**	2	SPRING	
	25	1	**294-7139**	1	PAN GP-SEAT	
M		1	**5C-7261**	6	NUT (M8X1.25-THD)	
		1	**8T-4224**	6	WASHER-HARD (8.8X16X2-MM THK)	
M		1	**127-2170**	6	SCREW-TRUSS HEAD (M8X1.25X20-MM)	
	26	1,2	**295-6472**	4	WASHER (7X19X2-MM THK)	
	27	1	**314-5162**	1	BRACKET AS (RH)	
	28	1	**319-4168**	6	SCREW-PAN HEAD (1/4-15X0.5-IN)	
	29	2	**9T-5241**	4	WASHER (9.53X18X1-MM THK)	
	30	1	**330-3860**	1	BRACKET AS	
	31	2	**349-2602**	1	BRACKET AS	
	32	2	**355-3016**	1	PLATE AS	
	33	2	**355-3018**	1	SHAFT AS	
	34	1	**357-5161**	1	CUSHION AS-SEAT	
	35	1	**357-5167**	1	CUSHION AS	
	36	1	**369-9004**	1	CABLE AS	
M	37	2	**238-0251**	8	SCREW-BUTTON HEAD (M10X1.5X25-MM)	
	38	1,2	**271-7649**	4	BOLT (M10X1.5X95-MM)	
	39	1	**5P-0537**	2	WASHER-HARD (7.2X14.5X2-MM THK)	
	40	2	**5T-7486**	2	RETAINER-SPRING	
	41	1,2	**5V-1496**	2	RETAINER	
M	42	2	**6V-7744**	8	LOCKNUT (M10X1.5-THD)	
	43	1	**6V-8969**	2	SCREW-BUTTON HEAD (1/4-20X0.5-IN)	
	44	2	**7Y-0468**	2	PIN-SPRING	
	45	1,2	**8T-4121**	12	WASHER-HARD (11X21X2.5-MM THK)	
M	46	2	**8T-4133**	1	NUT (M10X1.5-THD)	
	47	1	**8T-7566**	1	PIN-SPRING	
	48	2	**9F-5975**	1	BOLT (5/16-18X0.75-IN)	

M - METRIC PART
Y - SEPARATE ILLUSTRATION

REFER TO ALL ILLUSTRATIONS OF THIS GROUP FOR AUXILIARY VIEWS

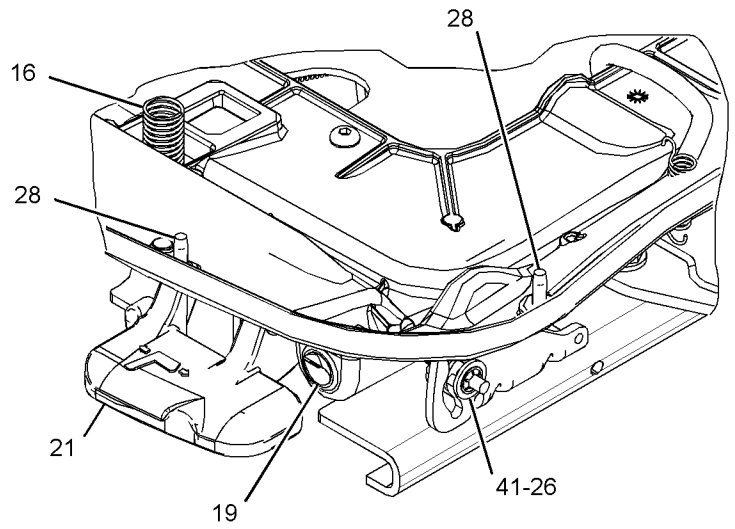

VIEW OF AREA A
(SEAT CUSHION REMOVED FOR CLARITY)

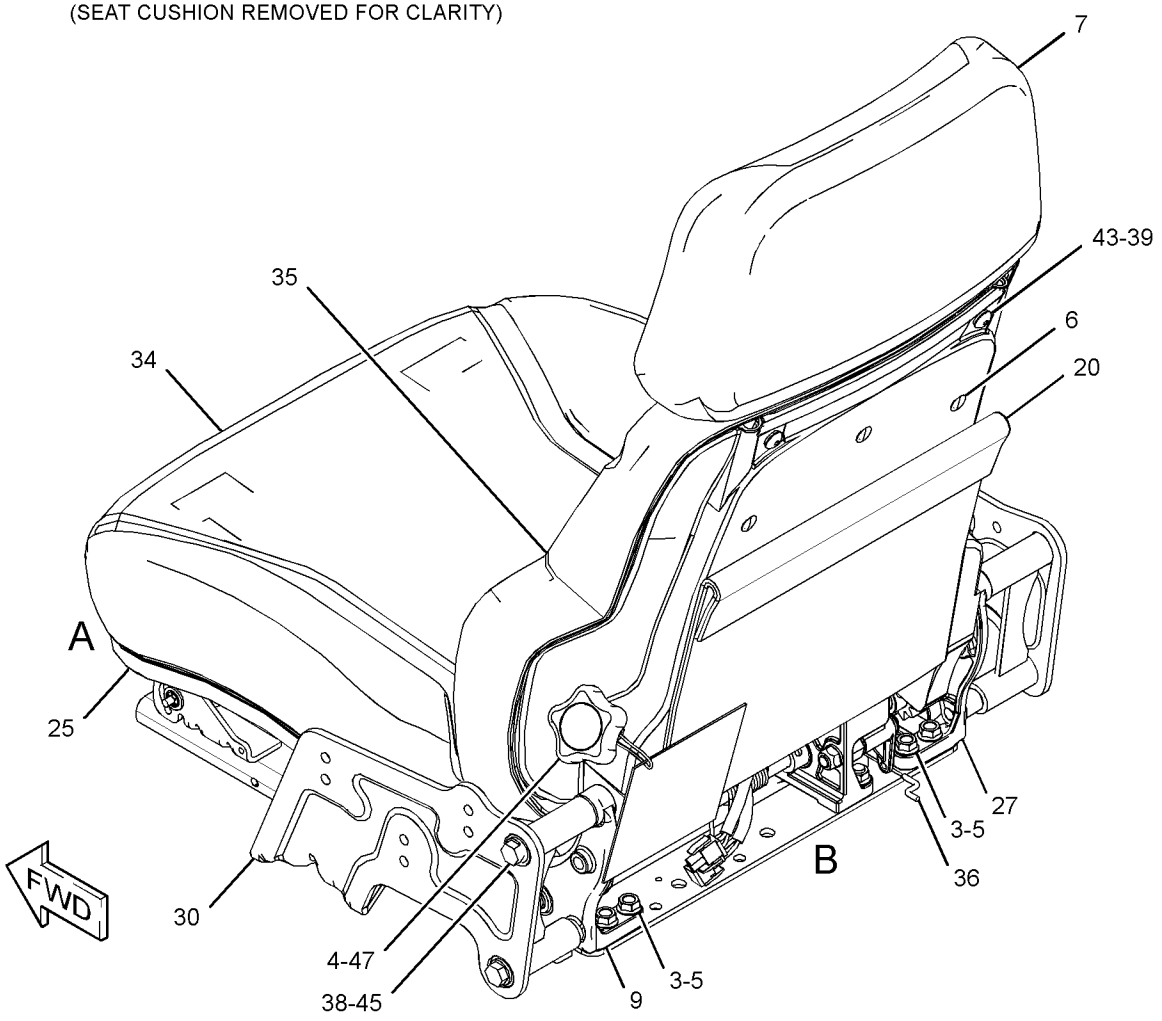

GRAPHIC #1 g03168020

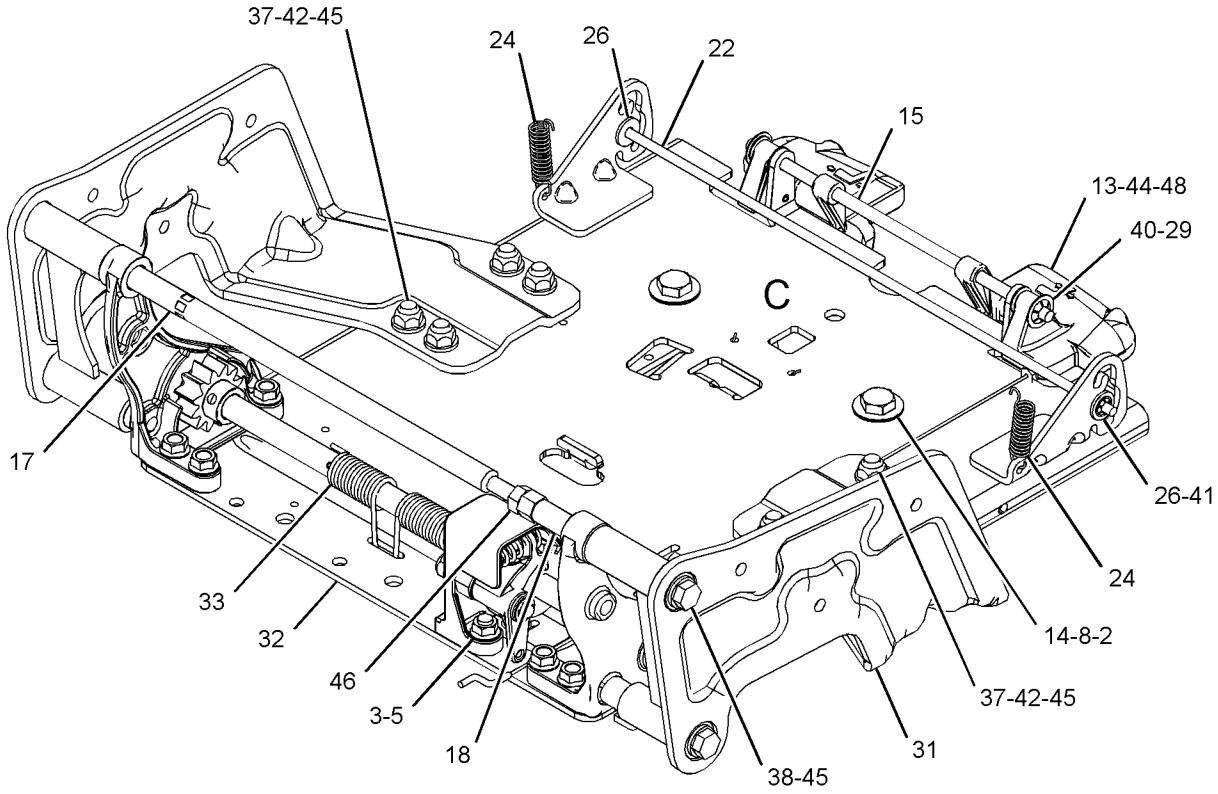

VIEW OF AREA B
(PARTS REMOVED FOR CLARITY)

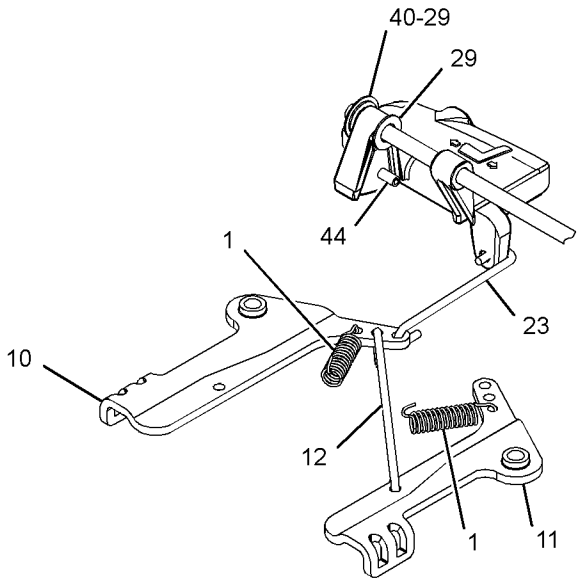

VIEW OF AREA C
(PLATE REMOVED FOR CLARITY)

GRAPHIC #2 **<END>** g02815937

255-4250 SEAT GP-SUSPENSION–VINYL

S/N: MMM1-873; RRR1-670

AN ATTACHMENT

SMCS-7321, 7324, 7336 **i03408221**

NOTE	REF NO	GRAPHIC REF	PART NUMBER	QTY	PART NAME 1 2 3 4 5 6 (PRODUCT LEVEL)	SEE PAGE
Y	1	1	*257-4959*	1	SEAT GP-SUSPENSION (VINYL)	842
Y	2	1	*268-9351*	1	CONSOLE GP-OPERATOR (RH)	692
Y	3	1	*268-9352*	1	CONSOLE GP-OPERATOR (LH)	693
Y	4	1	*280-9679*	1	ARMREST GP (LH)	680
Y	5	1	*284-7054*	1	ARMREST GP (RH)	682
	6	1	**7X-7729**	4	WASHER (11X25X3-MM THK)	
M	7	1	**8T-4186**	4	BOLT (M10X1.5X40-MM)	

M - METRIC PART
Y - SEPARATE ILLUSTRATION

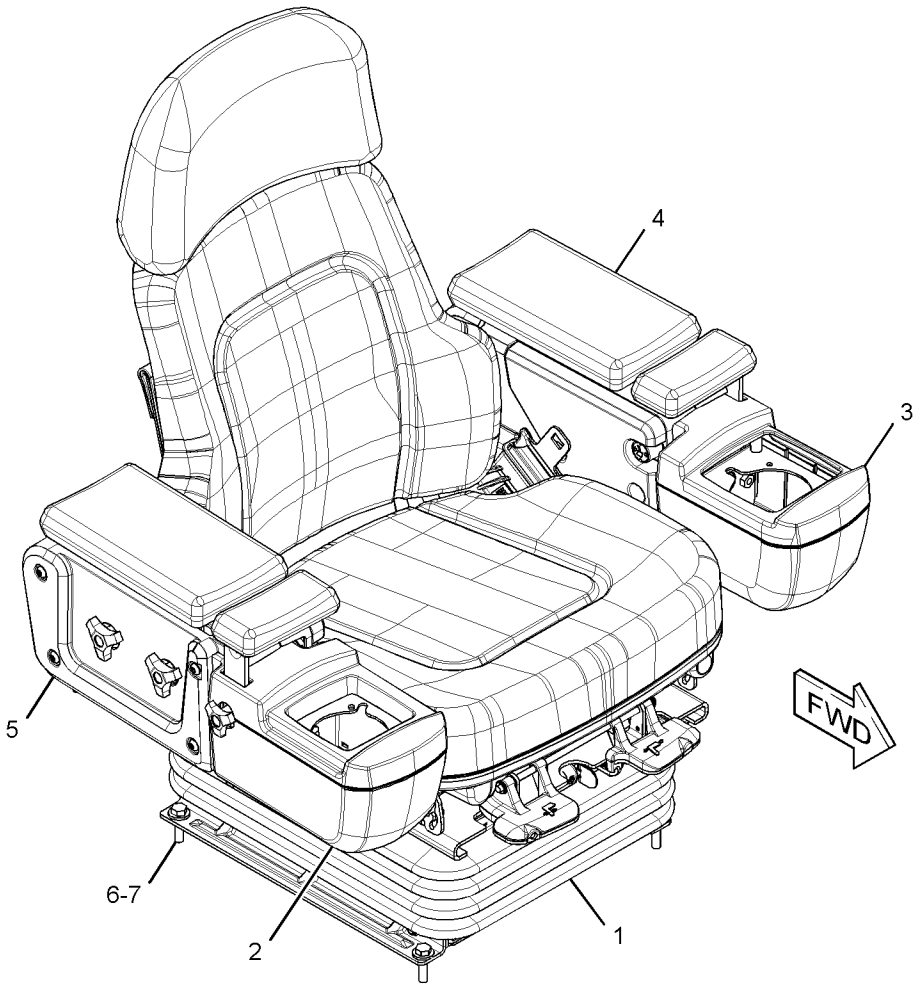

GRAPHIC #1 **<END>** g01365748

255-4250 SEAT GP-SUSPENSION–VINYL

S/N: MMM874-UP; RRR671-UP

AN ATTACHMENT

SMCS-7321, 7324, 7336 **i05363350**

NOTE	REF NO	GRAPHIC REF	PART NUMBER	QTY	PART NAME 1 2 3 4 5 6 (PRODUCT LEVEL)	SEE PAGE
CY	1	1	**351-1960**	1	SEAT GP-SUSPENSION (VINYL) (VINYL)	845
	2	1	**7X-7729**	4	WASHER (11X25X3-MM THK)	
CM	3	1	**8T-4195**	4	BOLT (M10X1.5X30-MM)	
CY	4	1	*341-9852*	1	CONSOLE GP-OPERATOR (LH)	695
CY	5	1	*341-9851*	1	CONSOLE GP-OPERATOR (RH)	694

C - CHANGE FROM PREVIOUS TYPE
M - METRIC PART
Y - SEPARATE ILLUSTRATION

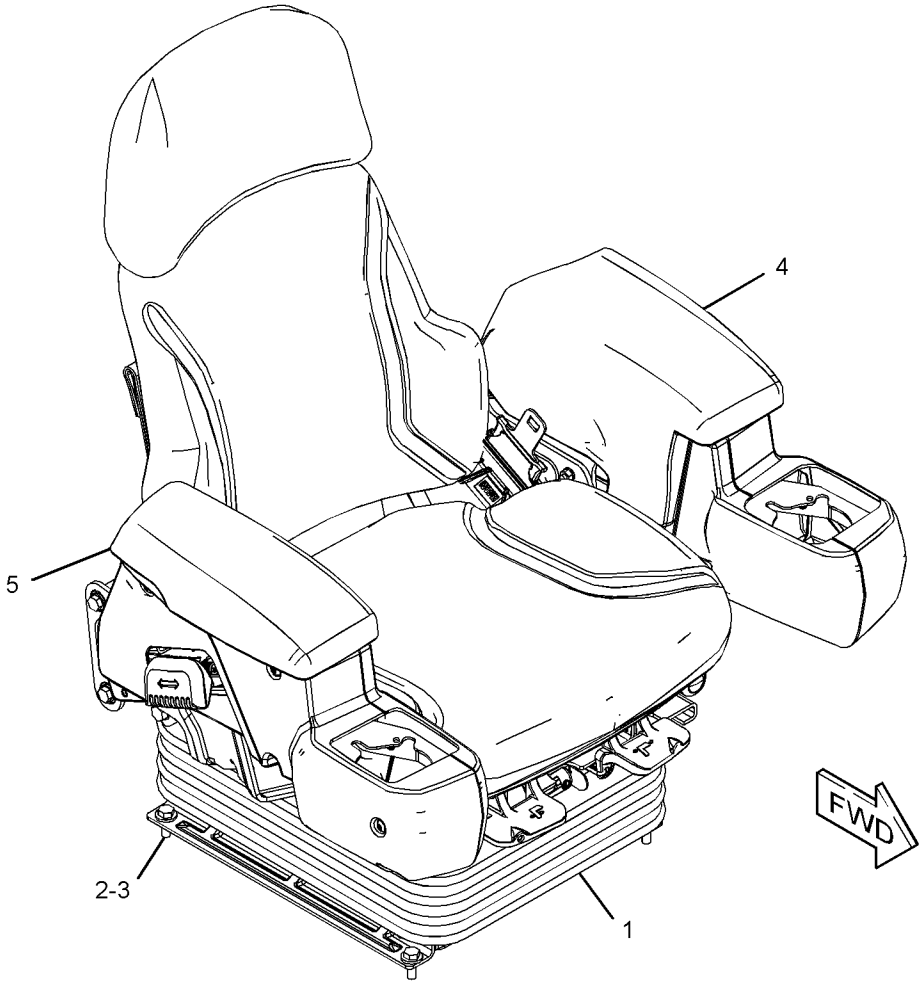

GRAPHIC #1 **<END>** g03414483

255-4251 SEAT GP-SUSPENSION—CLOTH

S/N: MMM1-UP; RRR1-UP
FOR USE WITH 244-7475—PAGE: 811, 244-7476—PAGE: 811, ENCLOSED ROPS
CANNOT BE USED WITH ANY OTHER SEAT GROUP
AN ATTACHMENT

SMCS-7321, 7324, 7336 **i03408224**

NOTE	REF NO	GRAPHIC REF	PART NUMBER	QTY	PART NAME 1 2 3 4 5 6 (PRODUCT LEVEL)	SEE PAGE
Y	1	1	*255-8846*	1	SEAT GP-SUSPENSION (CLOTH)	841
Y	2	1	*268-9351*	1	CONSOLE GP-OPERATOR (RH)	692
Y	3	1	*268-9352*	1	CONSOLE GP-OPERATOR (LH)	693
Y	4	1	*280-9679*	1	ARMREST GP (LH)	680
Y	5	1	*284-7054*	1	ARMREST GP (RH)	682
	6	1	**7X-7729**	4	WASHER (11X25X3-MM THK)	
M	7	1	**8T-4195**	4	BOLT (M10X1.5X30-MM)	

M - METRIC PART
Y - SEPARATE ILLUSTRATION

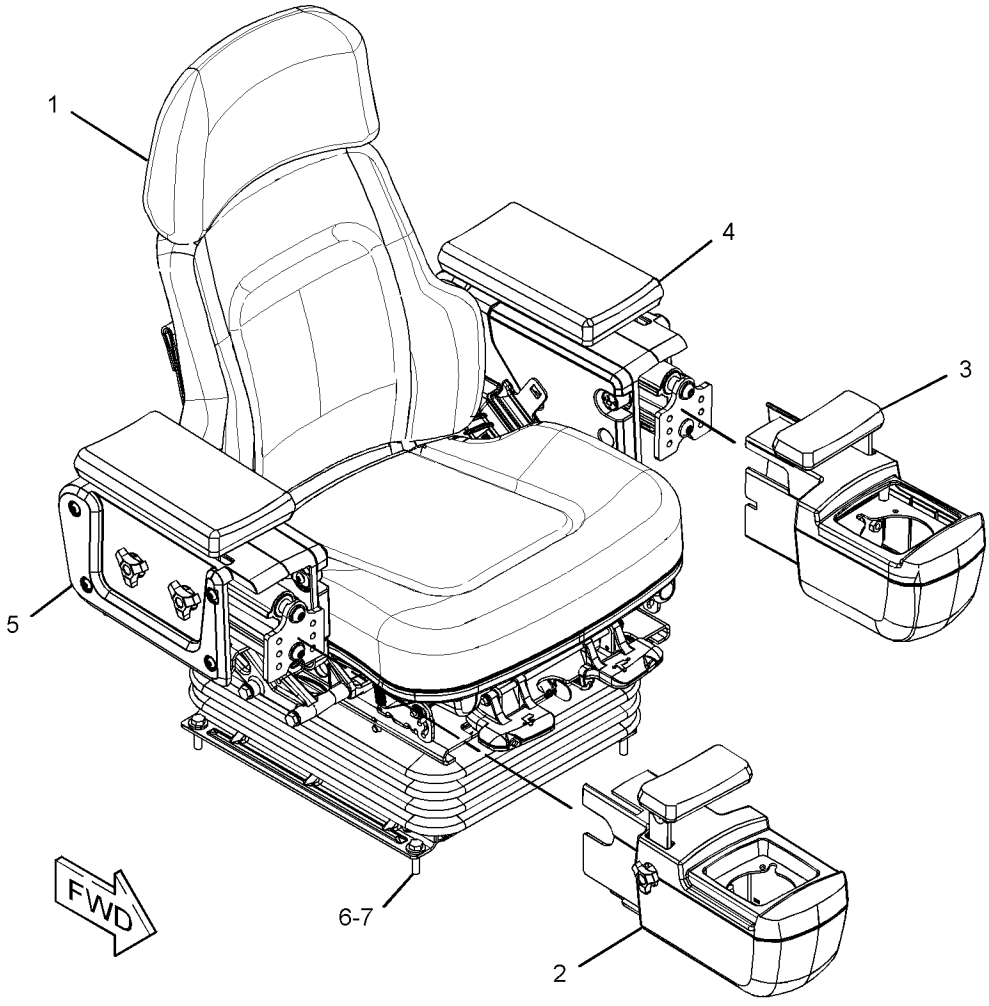

GRAPHIC #1 **<END>** g01352919

255-4252 SEAT GP-SUSPENSION—CLOTH, HEATED

S/N: MMM1-UP; RRR1-UP

FOR USE WITH 244-7475—PAGE: 811, 244-7476—PAGE: 811, ENCLOSED ROPS

CANNOT BE USED WITH ANY OTHER SEAT GROUP

AN ATTACHMENT

SMCS-7321, 7324, 7336 **i03408228**

NOTE	REF NO	GRAPHIC REF	PART NUMBER	QTY	PART NAME 1 2 3 4 5 6 (PRODUCT LEVEL)	SEE PAGE
Y	1	1	*268-9351*	1	CONSOLE GP-OPERATOR (RH)	692
Y	2	1	*268-9352*	1	CONSOLE GP-OPERATOR (LH)	693
Y	3	1	*272-8111*	1	SEAT GP-SUSPENSION (CLOTH, HEATED)	843
Y	4	1	*280-9679*	1	ARMREST GP (LH)	680
Y	5	1	*284-7054*	1	ARMREST GP (RH)	682
	6	1	**7X-7729**	4	WASHER (11X25X3-MM THK)	
M	7	1	**8T-4186**	4	BOLT (M10X1.5X40-MM)	

M - METRIC PART
Y - SEPARATE ILLUSTRATION

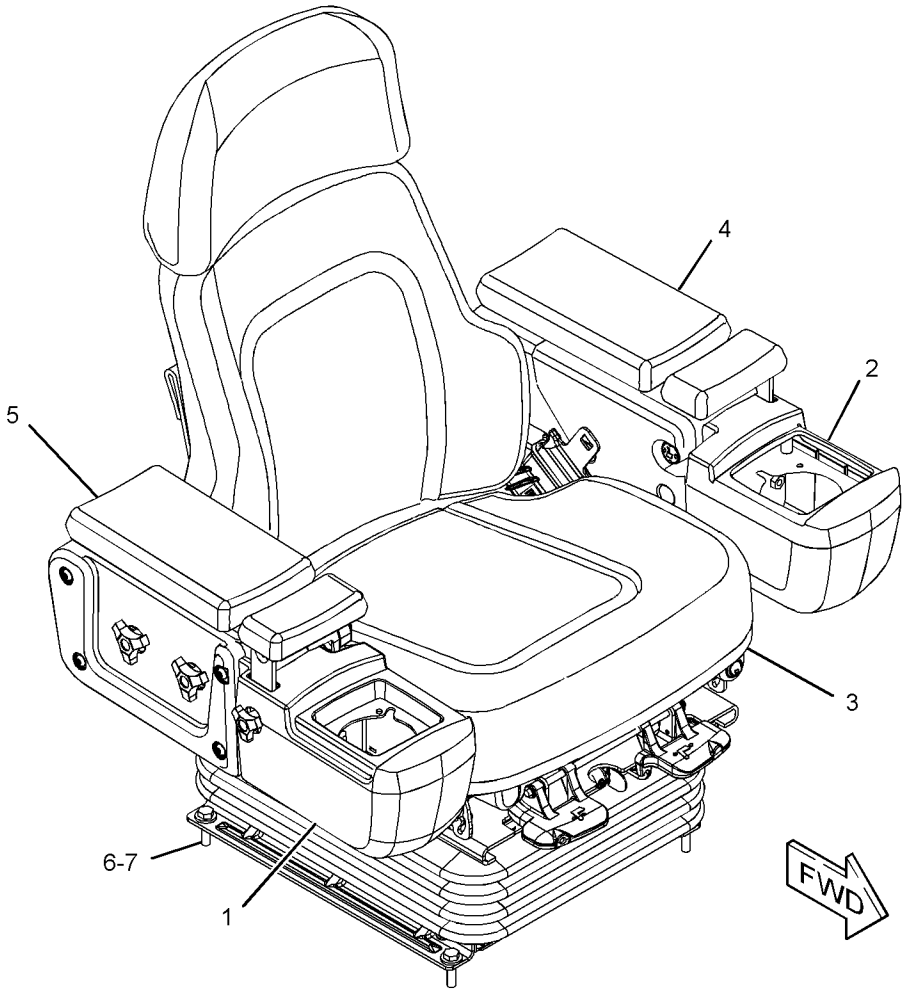

GRAPHIC #1 **<END>** g01366871

255-8846 SEAT GP-SUSPENSION—CLOTH

S/N: MMM1-UP; RRR1-UP
PART OF 255-4251 SEAT GP-SUSPENSION
AN ATTACHMENT

SMCS-7321, 7324, 7336 **i03301089**

NOTE	REF NO	GRAPHIC REF	PART NUMBER	QTY	PART NAME 1 2 3 4 5 6 (PRODUCT LEVEL)	SEE PAGE
J	1	1	**161-9289**	4	BLOCK-SLIDER	
J	2	1	**173-5787**	4	SETSCREW (1/4-20-THD)	
J	3	1	**203-7703**	2	WASHER-HARD (10.2X22.22X2.38-MM THK)	
	4	1	**8L-8413**	1	STRAP-CABLE (PLASTIC)	
Y	5	1	**272-2272**	1	SEAT BELT GP (RETRACTABLE, 3-IN)	819
Y	6	1	**295-4434**	1	SEAT GP (CLOTH)	824
Y	7	1	*316-8368*	1	SUSPENSION GP-SEAT	850
J	8	1	**4F-4879**	1	BOLT (3/8-16X0.5-IN)	
					AVAILABLE REPAIR KIT(S):	
J			**173-7035**	1	KIT-SLIDER BLOCK (SUSPENSION SEAT)	

J - KIT MARKED J SERVICES PARTS MARKED J
Y - SEPARATE ILLUSTRATION

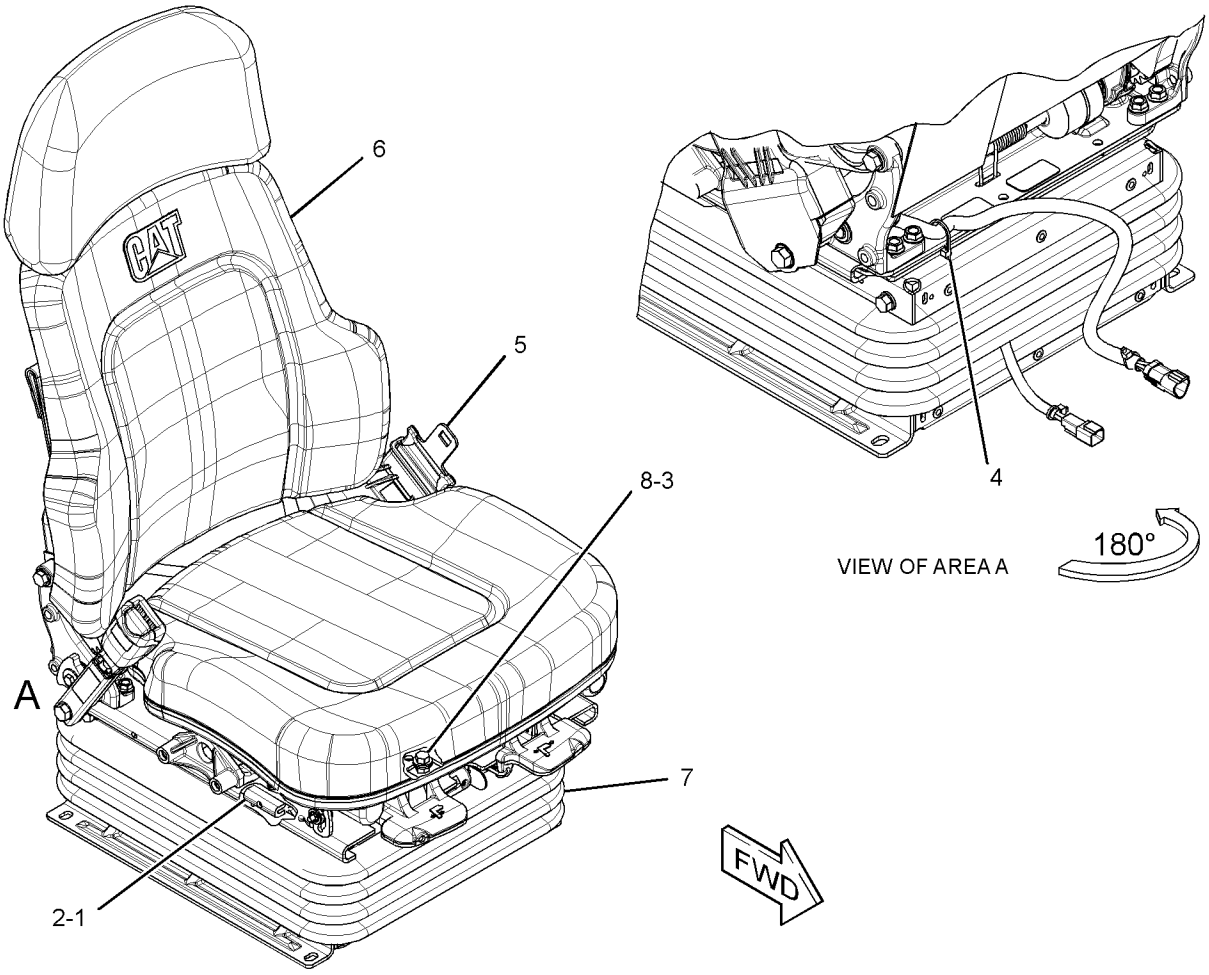

GRAPHIC #1 **<END>** g01716635

257-4959 SEAT GP-SUSPENSION—VINYL

S/N: MMM1-873; RRR1-670
PART OF 255-4250 SEAT GP-SUSPENSION
AN ATTACHMENT

SMCS-7321, 7324, 7336 **i03160843**

NOTE	REF NO	GRAPHIC REF	PART NUMBER	QTY	PART NAME 1 2 3 4 5 6 (PRODUCT LEVEL)	SEE PAGE
	1	1	**8L-8413**	1	STRAP-CABLE	
J	2	1	**173-5787**	4	SETSCREW (1/4-20-THD)	
J	3	1	**203-7703**	2	WASHER-HARD (10.2X22.22X2.38-MM THK)	
Y	4	1	**272-2272**	1	SEAT BELT GP (RETRACTABLE, 3-IN)	819
Y	5	1	*295-4436*	1	SEAT GP (VINYL)	827
Y	6	1	*316-8368*	1	SUSPENSION GP-SEAT	850
J	7	1	**4F-4879**	1	BOLT (3/8-16X0.5-IN)	
					AVAILABLE REPAIR KIT(S):	
J			**173-7035**	1	KIT-SLIDER BLOCK (SUSPENSION SEAT)	
					(INCLUDES BLOCK)	

J - KIT MARKED J SERVICES PARTS MARKED J
Y - SEPARATE ILLUSTRATION

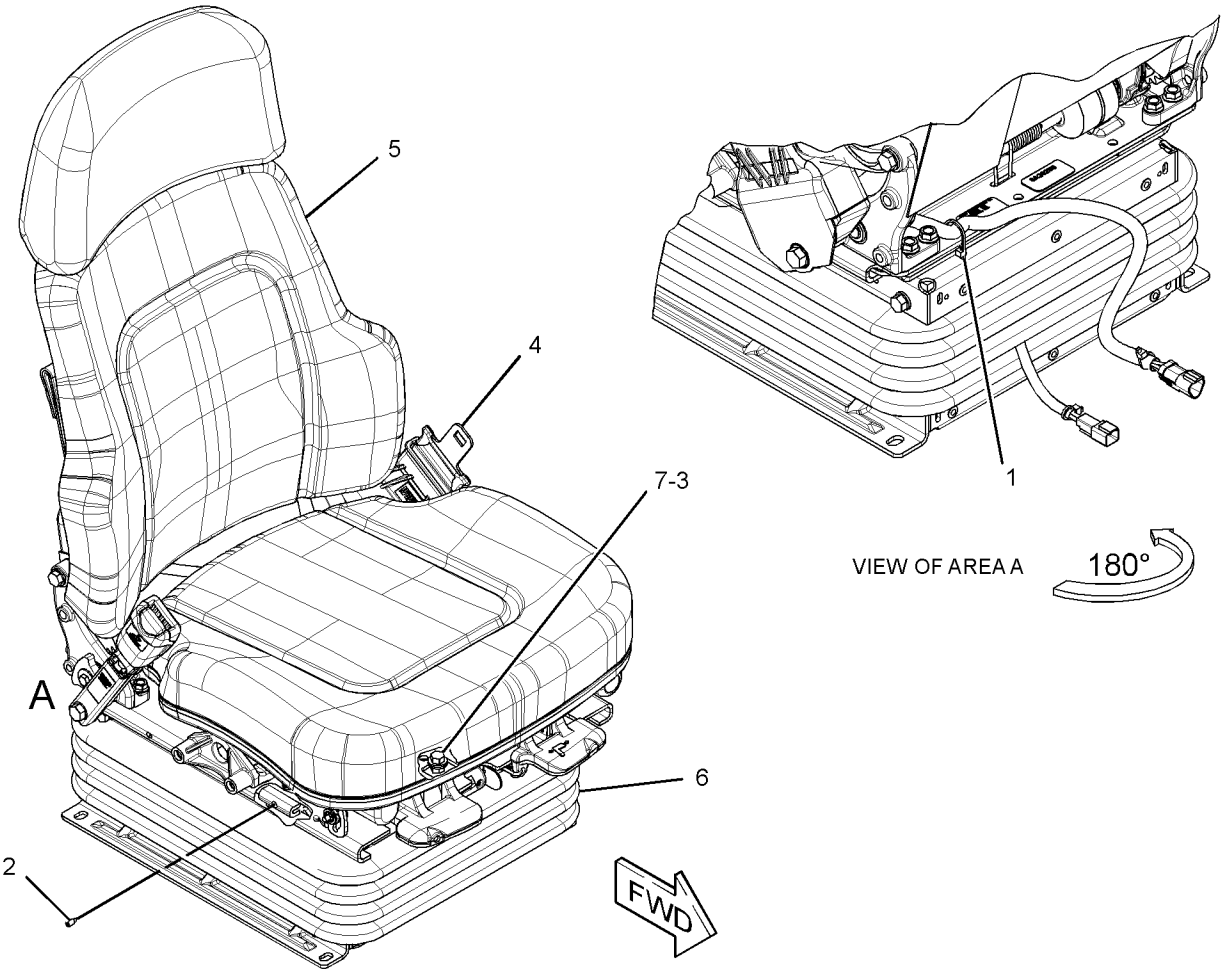

GRAPHIC #1 **<END>** g01707266

272-8111 SEAT GP-SUSPENSION—CLOTH, HEATED

S/N: MMM1-UP; RRR1-UP
PART OF 255-4252 SEAT GP-SUSPENSION
AN ATTACHMENT

SMCS-7321, 7324, 7336 **i03587865**

NOTE	REF NO	GRAPHIC REF	PART NUMBER	QTY	PART NAME 1 2 3 4 5 6 (PRODUCT LEVEL)	SEE PAGE
	1	1	**241-5786**	1	HARNESS AS-HEATER (SEAT)	
J	2	1	**173-5787**	4	SETSCREW (1/4-20-THD)	
J	3	1	**203-7703**	2	WASHER-HARD (10.2X22.22X2.38-MM THK)	
	4	1	**8L-8413**	1	STRAP-CABLE	
Y	5	1	**272-2272**	1	SEAT BELT GP (RETRACTABLE, 3-IN)	819
Y	6	1	*295-4433*	1	SEAT GP (CLOTH, HEATED)	820
Y	7	1	*316-8368*	1	SUSPENSION GP-SEAT	850
J	8	1	**4F-4879**	1	BOLT (3/8-16X0.5-IN)	
					AVAILABLE REPAIR KIT(S):	
J			**173-7035**	1	KIT-SLIDER BLOCK (SUSPENSION SEAT)	
					(ALSO INCLUDES SLIDER BLOCKS)	

J - KIT MARKED J SERVICES PARTS MARKED J
Y - SEPARATE ILLUSTRATION

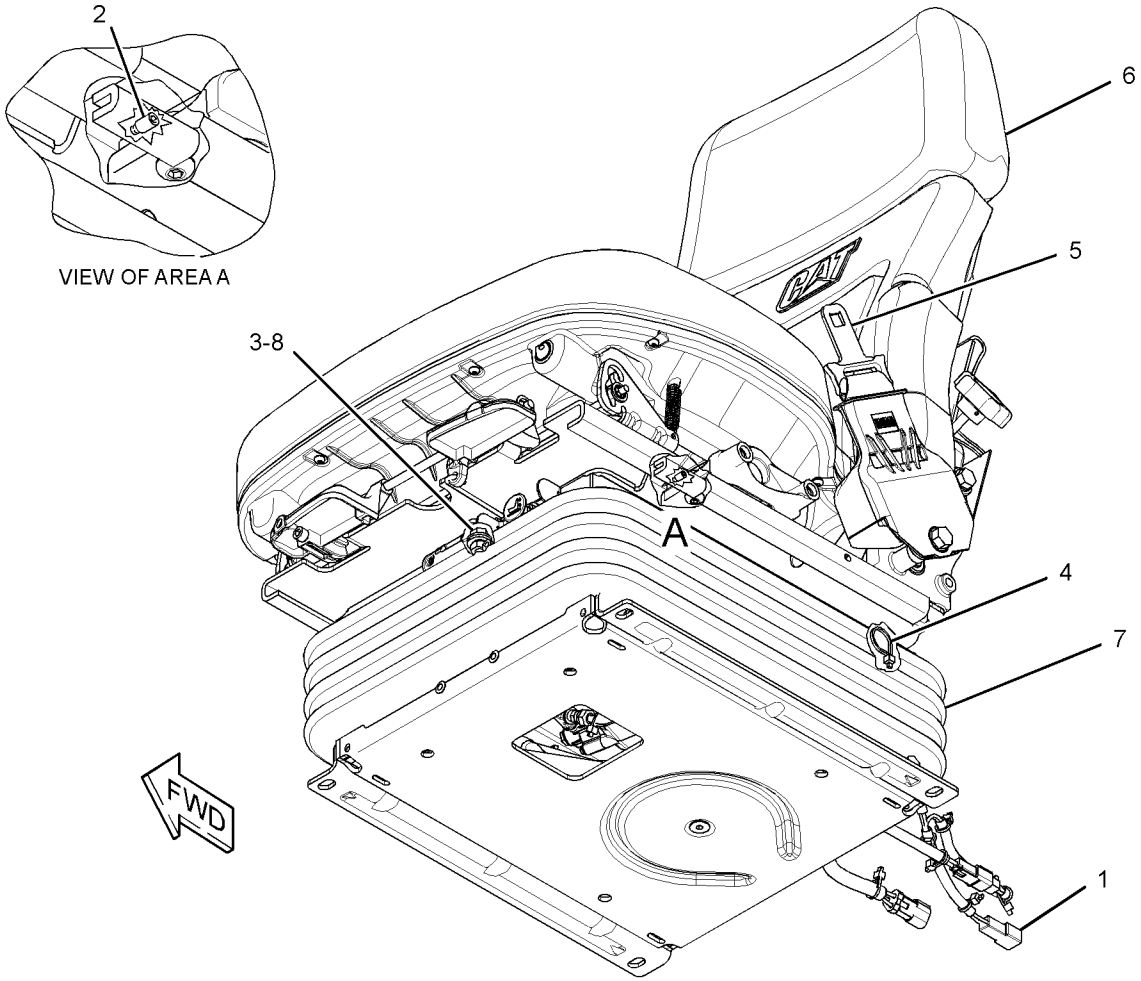

GRAPHIC #1 **<END>** g01919173

301-0148 SEAT GP-SUSPENSION–VINYL, HEATED

S/N: MMM1-UP; RRR1-UP
PART OF 255-4242 SEAT & SUPPORT GP
AN ATTACHMENT

SMCS-7321, 7324, 7336 **i04402169**

NOTE	REF NO	GRAPHIC REF	PART NUMBER	QTY	PART NAME 1 2 3 4 5 6 (PRODUCT LEVEL)	SEE PAGE
	1	1	**8L-8413**	1	STRAP-CABLE	
	2	1	**241-5786**	1	HARNESS AS-HEATER (SEAT)	
J	3	1	**173-5787**	4	SETSCREW (1/4-20-THD)	
J	4	1	**203-7703**	2	WASHER-HARD (10.2X22.22X2.38-MM THK)	
Y	5	1	**272-2272**	1	SEAT BELT GP (RETRACTABLE, 3-IN)	819
Y	6	1	*316-8368*	1	SUSPENSION GP-SEAT	850
Y	7	1	**301-0147**	1	SEAT GP (HEATED SEAT)	830
J	8	1	**4F-4879**	1	BOLT (3/8-16X0.5-IN)	
					AVAILABLE REPAIR KIT(S):	
J			**173-7035**	1	KIT-SLIDER BLOCK (SUSPENSION SEAT)	
					(ALSO INCLUDES SLIDER BLOCKS)	

J - KIT MARKED J SERVICES PARTS MARKED J
Y - SEPARATE ILLUSTRATION

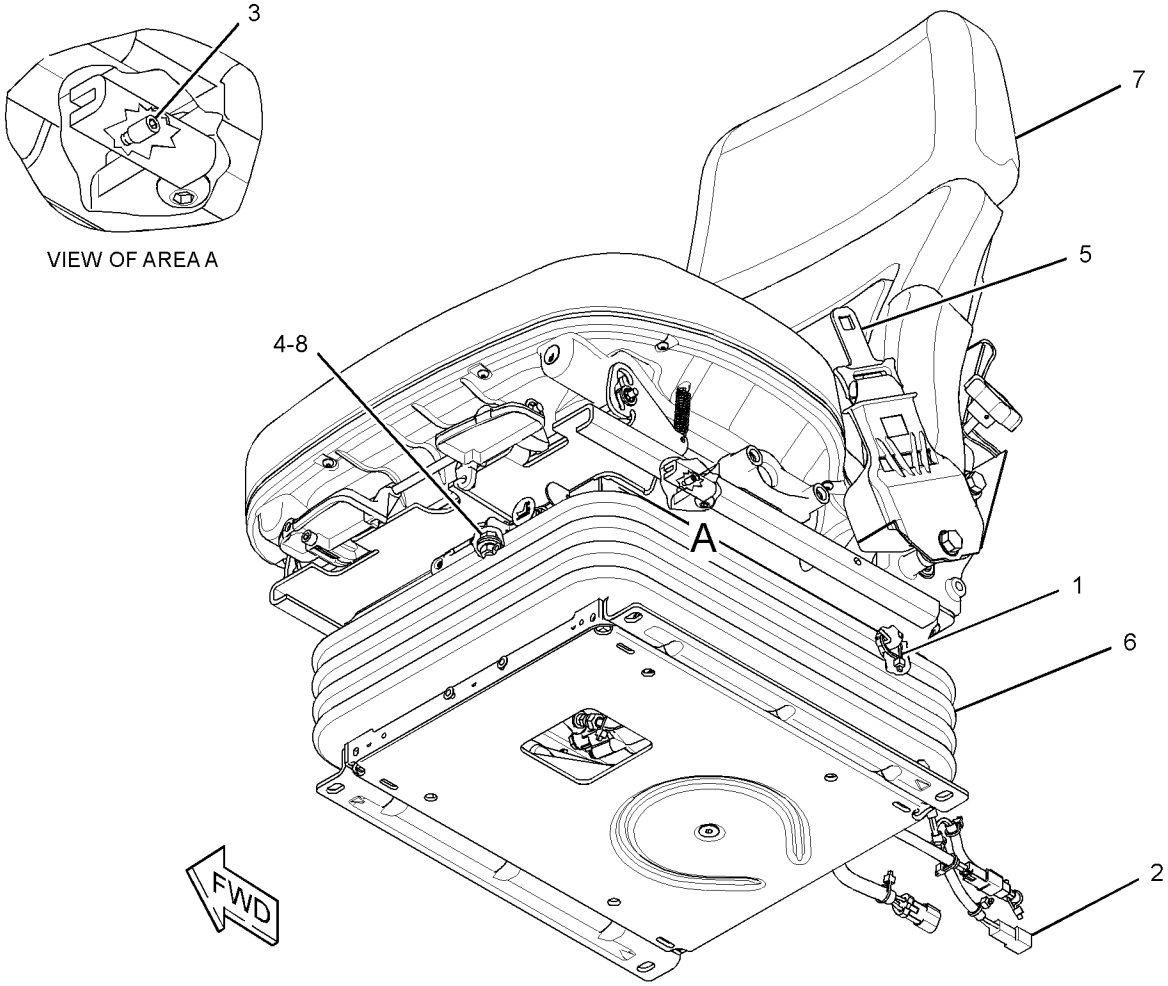

GRAPHIC #1 **<END>** g01919397

351-1960 SEAT GP-SUSPENSION—VINYL

S/N: MMM874-UP; RRR671-UP
PART OF 255-4250 SEAT GP-SUSPENSION
AN ATTACHMENT

SMCS-7321, 7324, 7336 **i05363382**

NOTE	REF NO	GRAPHIC REF	PART NUMBER	QTY	PART NAME 1 2 3 4 5 6 (PRODUCT LEVEL)	SEE PAGE
	1	1	**4F-4879**	1	BOLT (3/8-16X0.5-IN)	
J	2	1	**161-9289**	2	BLOCK-SLIDER	
J	3	1	**173-5787**	2	SETSCREW (1/4-20-THD)	
	4	1	**203-7703**	2	WASHER-HARD (10.2X22.22X2.38-MM THK)	
Y	5	1	**272-2272**	1	SEAT BELT GP (RETRACTABLE, 3-IN)	819
Y	6	1	**316-8368**	1	SUSPENSION GP-SEAT	850
Y	7	1	**351-1965**	1	SEAT GP (VINYL)	834
					AVAILABLE REPAIR KIT(S):	
J			**161-9744**	1	KIT-SLIDER BLOCK (SEAT ADJUSTMENT)	
					(ALSO INCLUDES SLIDER BLOCK)	

J - KIT MARKED J SERVICES PARTS MARKED J
Y - SEPARATE ILLUSTRATION

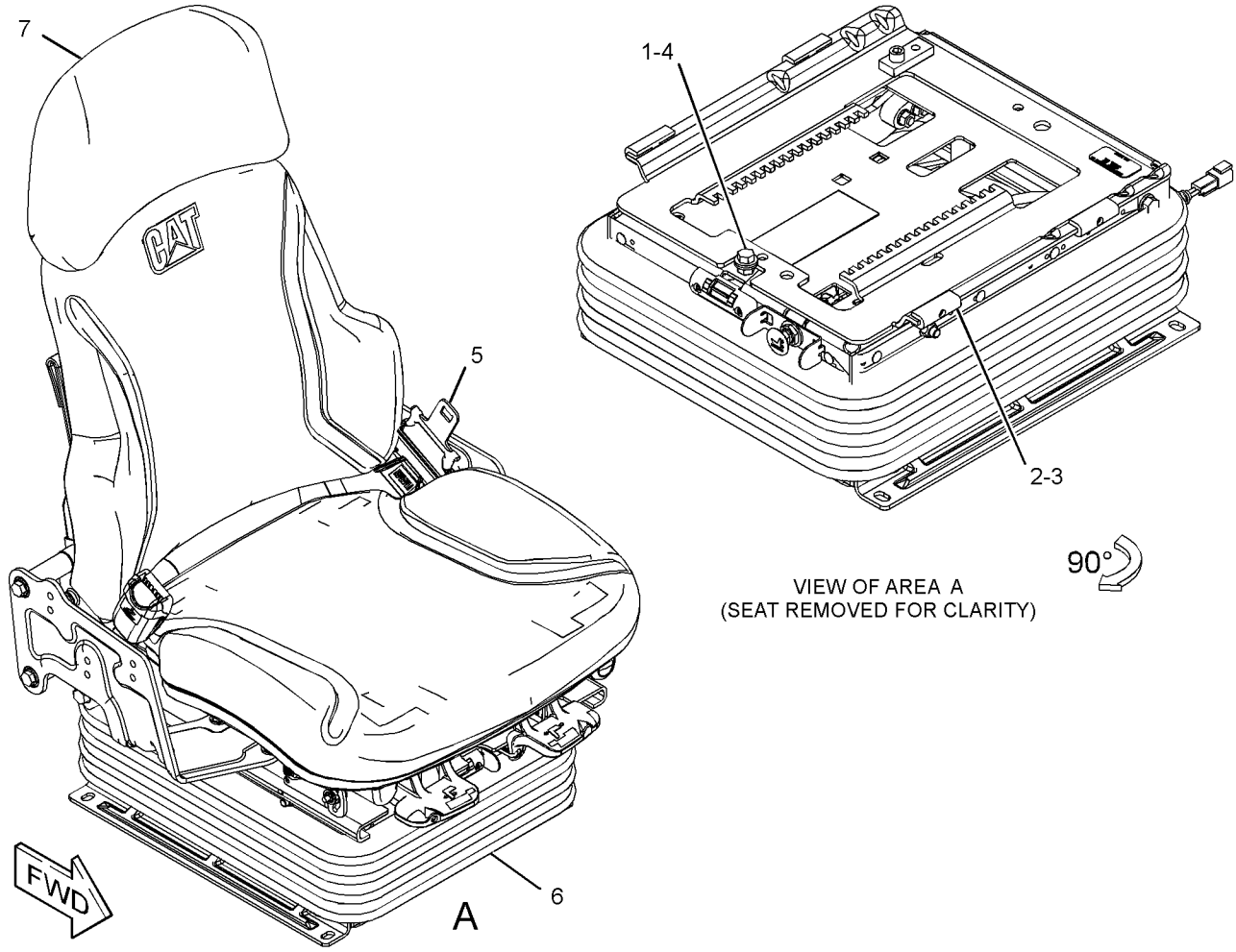

GRAPHIC #1 **<END>** g02791959

284-7055 SUPPORT GP-HYDRAULIC CONTROL—RH

S/N: MMM1-873; RRR1-670
PART OF 284-7054 ARMREST GP
AN ATTACHMENT

SMCS-5258 **i05283034**

NOTE	REF NO	GRAPHIC REF	PART NUMBER	QTY	PART NAME 1 2 3 4 5 6 (PRODUCT LEVEL)	SEE PAGE
	1	1	**1W-7117**	2	DOWEL-HOLLOW	
	2	1	**161-2398**	2	SEAL-LIP TYPE	
	3	1	**244-2095**	1	ROD	
	4	1	**244-2109**	1	ROD-ADJUSTMENT	
	5	1	**244-2115**	1	PIN	
	6	1	**266-3214**	1	PIN (ADJUSTMENT)	
	7	1	**267-9552**	2	SPACER (19X76X.8-MM THK)	
	8	1	**267-9553**	1	SPACER (7X12.5X6.5-MM THK)	
	9	1	**267-9554**	2	BEARING	
	10	1	**267-9555**	2	BEARING	
	11	1	**267-9556**	2	BEARING	
	12	1	**267-9834**	1	PLATE	
	13	1	**280-3512**	1	HOUSING (ADJUSTER)	
	14	1	**280-3514**	1	SUPPORT-ARM	
	15	1	**6F-9974**	2	PLUG-CORE	
	16	1	**282-2033**	1	BUTTON-PUSH	
	17	1	**282-6695**	1	BRACKET	
	18	1	**289-2073**	1	FILM-INFORMATION (ARMREST ADJUSTMENT)	
	19	1	**3E-4353**	2	WASHER-HARD (11X25X3-MM THK)	
	20	1	**7D-7453**	1	SETSCREW (1/4-20-THD)	
	21	1	**7D-9708**	1	BOLT-SPECIAL	
M	22	1	**9X-2040**	2	SCREW-TRUSS HEAD (M10X1.5X25-MM)	
M	23	1	**9X-2043**	1	SCREW-TRUSS HEAD (M6X1X14-MM)	

M - METRIC PART

284-7055 **SUPPORT GP-HYDRAULIC CONTROL (*contd.*)** **i05283034**

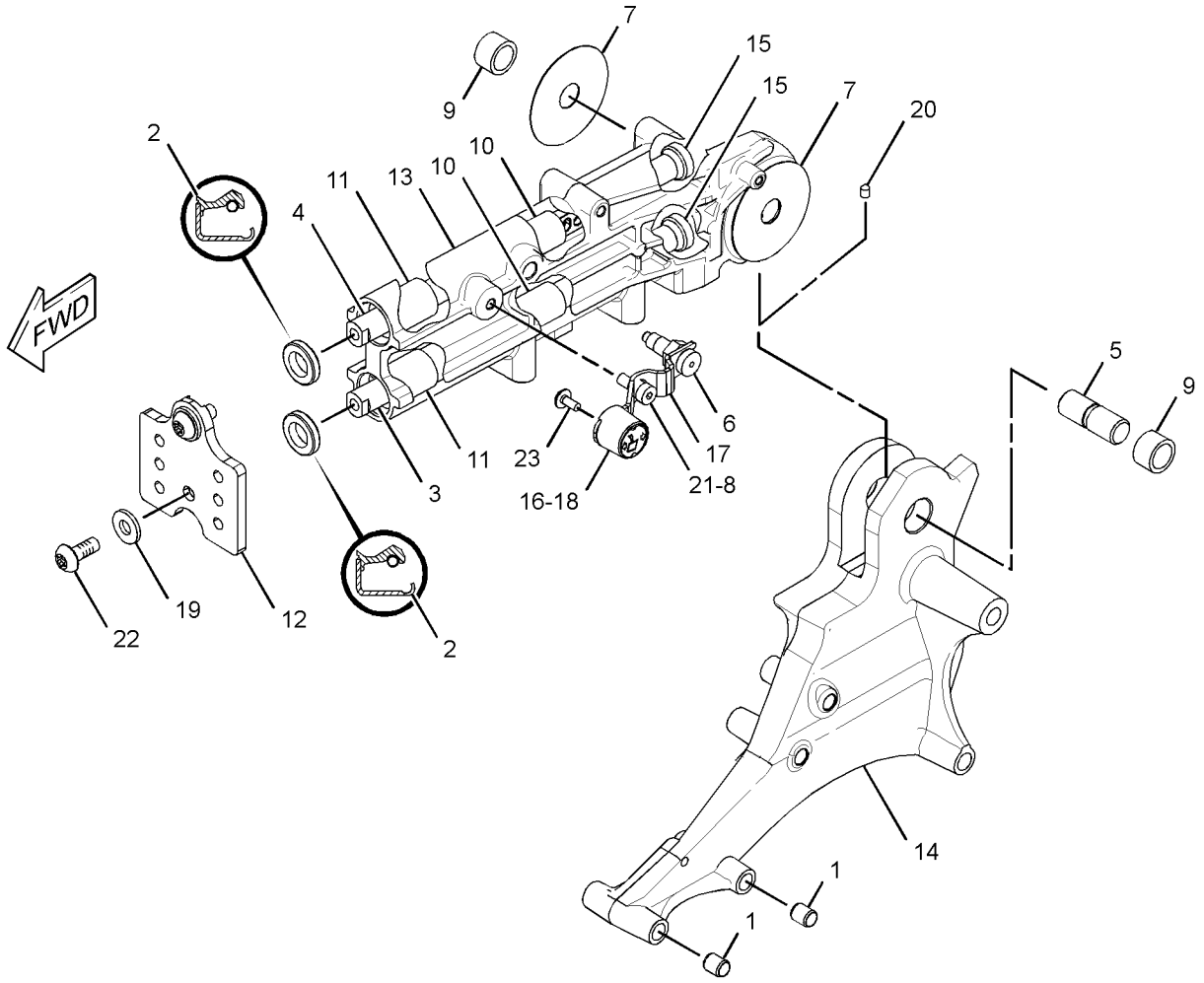

GRAPHIC #1 **<END>** g01662613

284-7059 SUPPORT GP-STEERING CONTROL—LH

S/N: MMM1-873; RRR1-670
PART OF 280-9679 ARMREST GP
AN ATTACHMENT

SMCS-5258 **i03301501**

NOTE	REF NO	GRAPHIC REF	PART NUMBER	QTY	PART NAME 1 2 3 4 5 6 (PRODUCT LEVEL)	SEE PAGE
	1	1	**1W-7117**	2	DOWEL-HOLLOW	
	2	1	**161-2398**	2	SEAL-LIP TYPE	
	3	1	**244-2095**	1	ROD	
	4	1	**244-2109**	1	ROD-ADJUSTMENT	
	5	1	**244-2115**	1	PIN	
	6	1	**266-3214**	1	PIN	
	7	1	**267-9552**	2	SPACER (19X76X.8-MM THK)	
	8	1	**267-9553**	1	SPACER (7X12.5X6.5-MM THK)	
	9	1	**267-9554**	2	BEARING	
	10	1	**267-9555**	2	BEARING	
	11	1	**267-9556**	2	BEARING	
	12	1	**267-9834**	1	PLATE	
	13	1	**280-3513**	1	HOUSING	
	14	1	**280-3515**	1	SUPPORT-ARM (LH)	
	15	1	**6F-9974**	2	PLUG-CORE	
	16	1	**282-2033**	1	BUTTON-PUSH	
	17	1	**282-6695**	1	BRACKET	
	18	1	**289-2073**	1	FILM-INFORMATION (ARMREST ADJUSTMENT)	
	19	1	**3E-4353**	2	WASHER-HARD (11X25X3-MM THK)	
	20	1	**7D-7453**	1	SETSCREW (1/4-20-THD)	
	21	1	**7D-9708**	1	BOLT-SHOULDER (5/16-18X0.88-IN)	
M	22	1	**9X-2040**	2	SCREW-TRUSS HEAD (M10X1.5X25-MM)	
M	23	1	**9X-2043**	1	SCREW-TRUSS HEAD (M6X1X14-MM)	

M - METRIC PART

284-7059 **SUPPORT GP-STEERING CONTROL (*contd.*)** **i03301501**

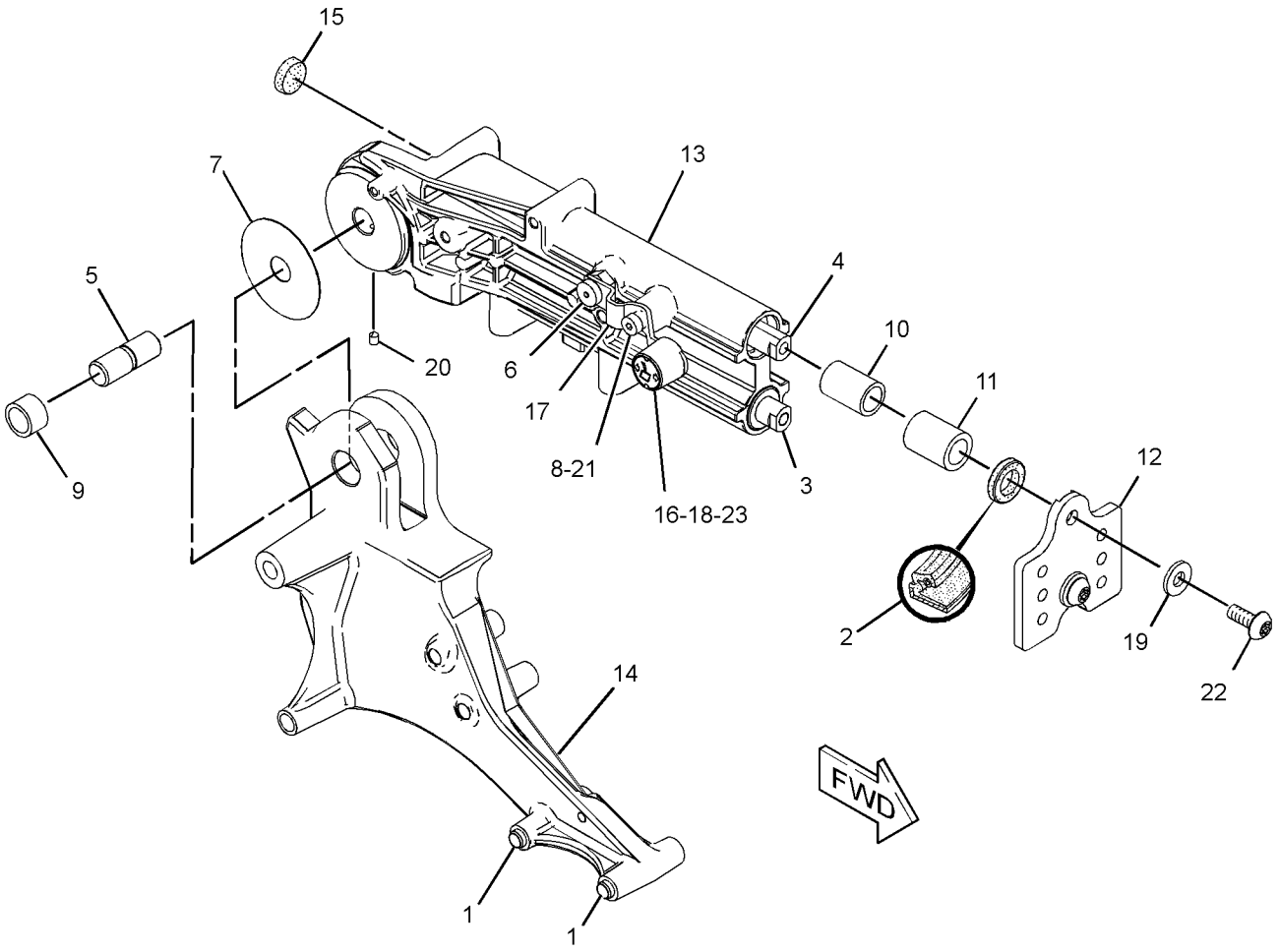

GRAPHIC #1 **<END>** g01303992

OPERATOR STATION

316-8368 SUSPENSION GP-SEAT

S/N: MMM1-UP; RRR1-UP

PART OF 255-8846, 257-4959, 272-8111, 301-0148, 351-1960 SEAT GP-SUSPENSION

AN ATTACHMENT

SMCS-7324 **i04893839**

NOTE	REF NO	GRAPHIC REF	PART NUMBER	QTY	PART NAME 1 2 3 4 5 6 (PRODUCT LEVEL)	SEE PAGE
	1	2	**3P-9900**	1	WASHER (10.5X30X3-MM THK)	
	2	2	**4V-8577**	8	BEARING	
	3	1	**7L-0688**	2	BOLT-SOCKET HEAD (10-24X1.2-IN)	
	4	1	**8L-8413**	9	STRAP-CABLE	
	5	1	**031-0249**	2	LOCKNUT (10-24-THD)	
	6	1	**101-0003**	22	FASTENER	
	7	1	**145-0326**	1	FILM-INSTRUCTION (SEAT ADJUSTMENT)	
	8	1	**164-1234**	1	PLATE	
	9	1	**169-7380**	1	BOLT-SOCKET HEAD (3/8-16X0.375-IN)	
	10	1	**186-5107**	2	SCREW-DRIVE (NO 8-16X1.25-IN)	
	11	1	**192-7795**	1	BOOT	
	13	1	**192-7805**	1	HARNESS AS-VALVE (SEAT AIR COMPRESSOR)	
E		1	**211-5358**		CONDUIT-FLEXIBLE (64-CM)	
		1	**8T-8729**	2	PIN-CONNECTOR (16-GA TO 18-GA)	
		1	**102-8802**	1	KIT-RECEPTACLE (2-PIN)	
					(INCLUDES RECEPTACLE AS & WEDGE)	
		1	**5P-4571**	2	TERMINAL-BLADE (14-GA TO 16-GA)	
	14	1	**192-7810**	1	SPRING AS-AIR	
		1	**5P-4423**	1	ELBOW	
		1	**163-1135**	1	SPRING	
	15	2	**192-7820**	1	BUMPER	
	17	2	**213-5167**	1	ROD	
	18	1	**213-5168**	1	ARM-INDICATOR	
	19	1	**213-5169**	1	HOUSING	
	20	2	**218-7252**	1	RETAINER	
	21	1	**372-2158**	1	BRACKET-MOUNTING	
	22	2	**251-2360**	1	TOGGLE AS (LOWER)	
	23	2	**251-2362**	1	TOGGLE AS (UPPER)	
	24	1	**372-2154**	1	AIR COMPRESSOR GP-SEAT (SUSPENSION)	
	25	1	**291-7972**	1	HOUSING AS	
Y	26	2	*291-7980*	1	ARM GP-SEAT SUSPENSION (CENTER)	677
	27	1	**291-7993**	3	WASHER (20X40X2-MM THK)	
Y	28	1	*291-8004*	1	ARM GP-SEAT SUSPENSION (OUTER, RH)	678
	29	1	**291-8010**	2	BEARING	
Y	30	1	*291-8011*	1	ARM GP-SEAT SUSPENSION (OUTER, LH)	679
	31	1	**291-8014**	1	HOUSING AS	
	32	2	**291-8019**	2	SHAFT	
	33	1	**291-8026**	1	SHAFT	
	34	1	**291-8027**	4	BLOCK	
	35	2	**291-8028**	4	BLOCK	
	36	1	**291-8031**	1	SPACER (19.3X25.4X212.4-MM THK)	
	37	2	**291-8032**	1	BUMPER	
	38	2	**308-3554**	1	SPACER (9.9X28.4X3.2-MM THK)	
	39	2	**308-3555**	1	SPACER (7.1X25.4X1.4-MM THK)	
	40	1	**308-8642**	1	FILM-IDENTIFICATION (SERIAL NUMBER)	
	41	2	**314-5274**	1	SHAFT (INNER)	
	42	2	**314-5275**	1	SHAFT (OUTER)	
	43	1	**108-4311**	1	SCREW-MACHINE (3/8-16X0.75-IN)	
J	44	1,2	**2K-4973**	8	LOCKNUT (3/8-16-THD)	
	45	2	**3E-9865**	2	LOCKNUT (1/4-20-THD)	
	46	1	**4D-7794**	1	CLIP	
	47	1	**4L-6454**	4	BOLT (3/8-16X1-IN)	
M	48	2	**5C-2890**	2	NUT (M6X1-THD)	
	49	1,2	**8T-4224**	16	WASHER-HARD (8.8X16X2-MM THK)	
	50	1,2	**8T-4896**	12	WASHER-HARD (10.2X18.5X2.5-MM THK)	
M	51	1,2	**8T-7547**	16	BOLT (M8X1.25X30-MM)	

316-8368 **SUSPENSION GP-SEAT (*contd.*)** **i04893839**

NOTE	REF NO	GRAPHIC REF	PART NUMBER	QTY	PART NAME 1 2 3 4 5 6 (PRODUCT LEVEL)	SEE PAGE
	52	1	**8T-9371**	1	BOLT (3/8-16X0.5-IN)	
E	53	1	**211-5358**		CONDUIT-FLEXIBLE (58-CM)	
D	54	1	**5P-6010**		TUBE	
	55	1	**387-0314**	1	WIRE AS (16-GA, ORANGE)	
	56	1	**387-0317**	1	WIRE AS (16-GA, BLACK)	
					AVAILABLE REPAIR KIT(S):	
			192-7799	1	KIT-AIR VALVE (SEAT)	
					(INCLUDES FITTING, LOCKWASHER, NUT, VALVE & KNOB AS)	
J			**192-7848**	2	KIT-SHOCK ABSORBER (SUSPENSION SEAT)	
					(EACH KIT INCLUDES PARTS MARKED J IN GRAPHICS)	
			351-1881	1	KIT-WASHER	
					(INCLUDES WASHERS & SHIMS)	

D - ORDER BY THE METER
E - ORDER BY THE CENTIMETER
J - KIT MARKED J SERVICES PARTS MARKED J
M - METRIC PART
Y - SEPARATE ILLUSTRATION

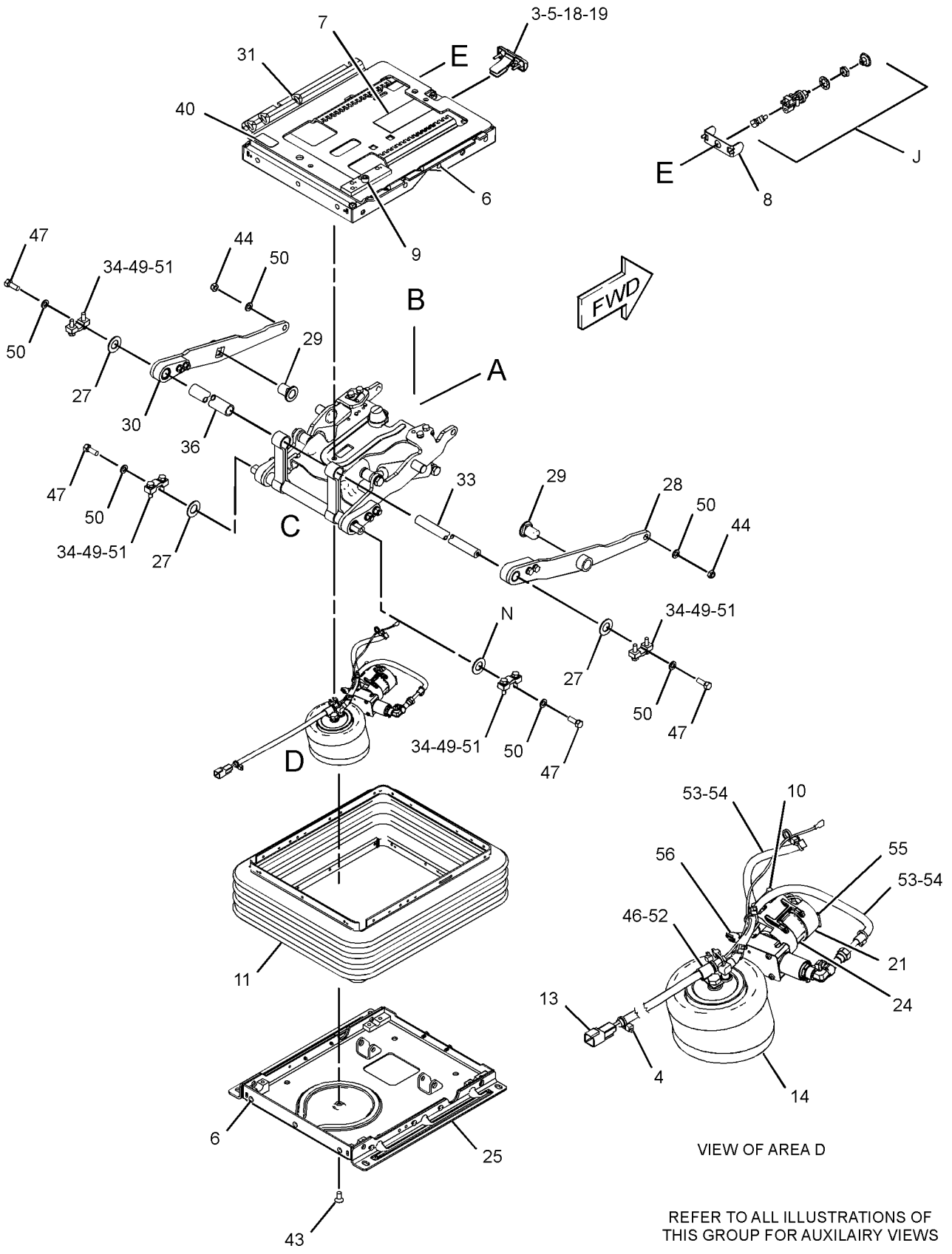

VIEW OF AREA D

REFER TO ALL ILLUSTRATIONS OF THIS GROUP FOR AUXILAIRY VIEWS

GRAPHIC #1

g03052958

316-8368 **SUSPENSION GP-SEAT (*contd.*)** **i04893839**

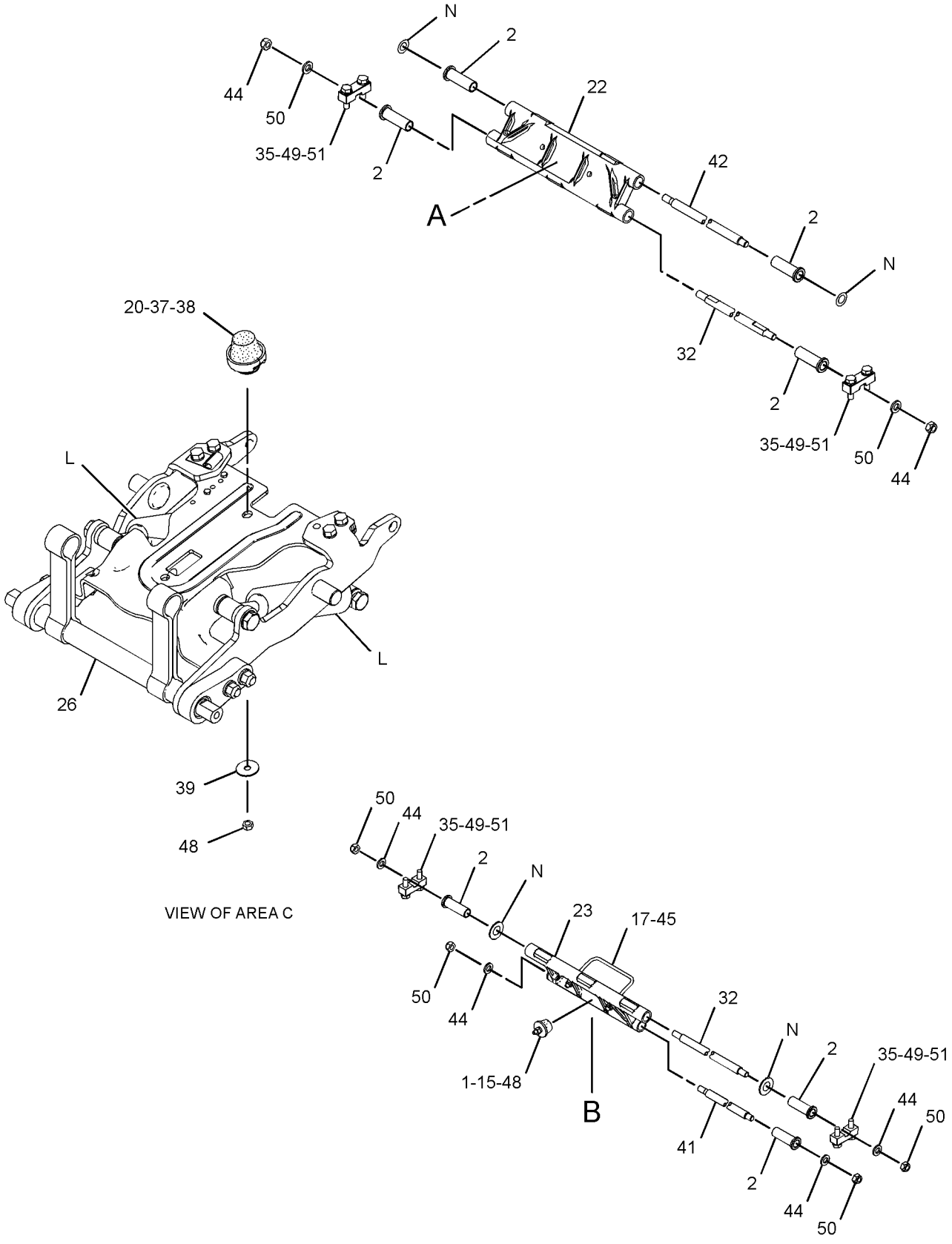

GRAPHIC #2 **<END>** g02140699

255-4229 WASHER GP-WINDOW

S/N: MMM1-UP; RRR1-UP

PART OF 244-7475, 244-7476 ROPS AR, 282-4898, 282-4899 ROPS AR-ENCLOSED

AN ATTACHMENT

SMCS-7306 **i03595841**

NOTE	REF NO	GRAPHIC REF	PART NUMBER	QTY	PART NAME 1 2 3 4 5 6 (PRODUCT LEVEL)	SEE PAGE
	1	1	**7K-1181**	3	STRAP-CABLE	
B	2	1	**7X-7927**		TAPE-IDENTIFICATION (LETTER A)	
B	3	1	**7X-7928**		TAPE-IDENTIFICATION (LETTER B)	
B	4	1	**7X-7929**		TAPE-IDENTIFICATION (LETTER C)	
B	5	1	**7X-7930**		TAPE-IDENTIFICATION (LETTER D)	
	6	1	**249-9062**	1	HARNESS AS-PUMP (WINDOW WASHER)	
		1	**123-7615**	4	CONNECTOR	
		1	**186-3735**	5	PIN-CONNECTOR (16-GA TO 18-GA)	
		1	**8T-8737**	1	PLUG-SEAL	
		1	**102-8805**	1	KIT-RECEPTACLE (6-PIN)	
					(INCLUDES RECEPTACLE AS & WEDGE)	
		1	**6V-0491**	8	TERMINAL-BLADE (14-GA TO 18-GA)	
E		1	**125-7875**		TUBE-HEAT SHRINK (7.44-MM DIA) (5-CM)	
	7	1	**251-5977**	1	BRACKET	
	8	1	**280-9162**	1	TANK GP-WINDOW WASHER	
	8A	1	**209-4481**	4	PUMP AS	
	8B	1	**209-4482**	1	CAP-VENTED (WINDOW WASHER TANK)	
	9	1	**3S-2093**	2	STRAP-CABLE	
	10	1	**8T-4121**	2	WASHER-HARD (11X21X2.5-MM THK)	
M	11	1	**8T-4137**	2	BOLT (M10X1.5X20-MM)	
E	12	1	**144-0195**		HOSE (30-CM)	
E	12A	1	**144-0195**		HOSE (25-CM)	
E	12B	1	**144-0195**		HOSE (20-CM)	
E	12C	1	**144-0195**		HOSE (16-CM)	
D	13	1	**6V-2496**		SEAL (0.4-M)	
D	13A	1	**6V-2496**		SEAL (0.25-M EACH)	

B - USE AS REQUIRED
D - ORDER BY THE METER
E - ORDER BY THE CENTIMETER
M - METRIC PART

255-4229 **WASHER GP-WINDOW (*contd.*)** **i03595841**

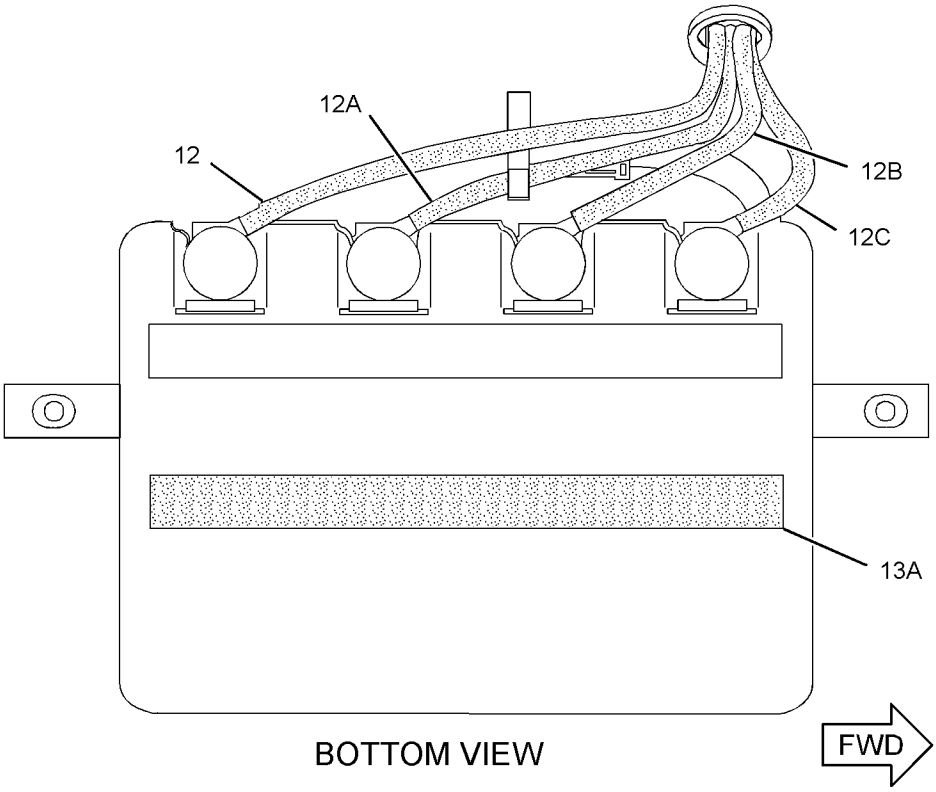

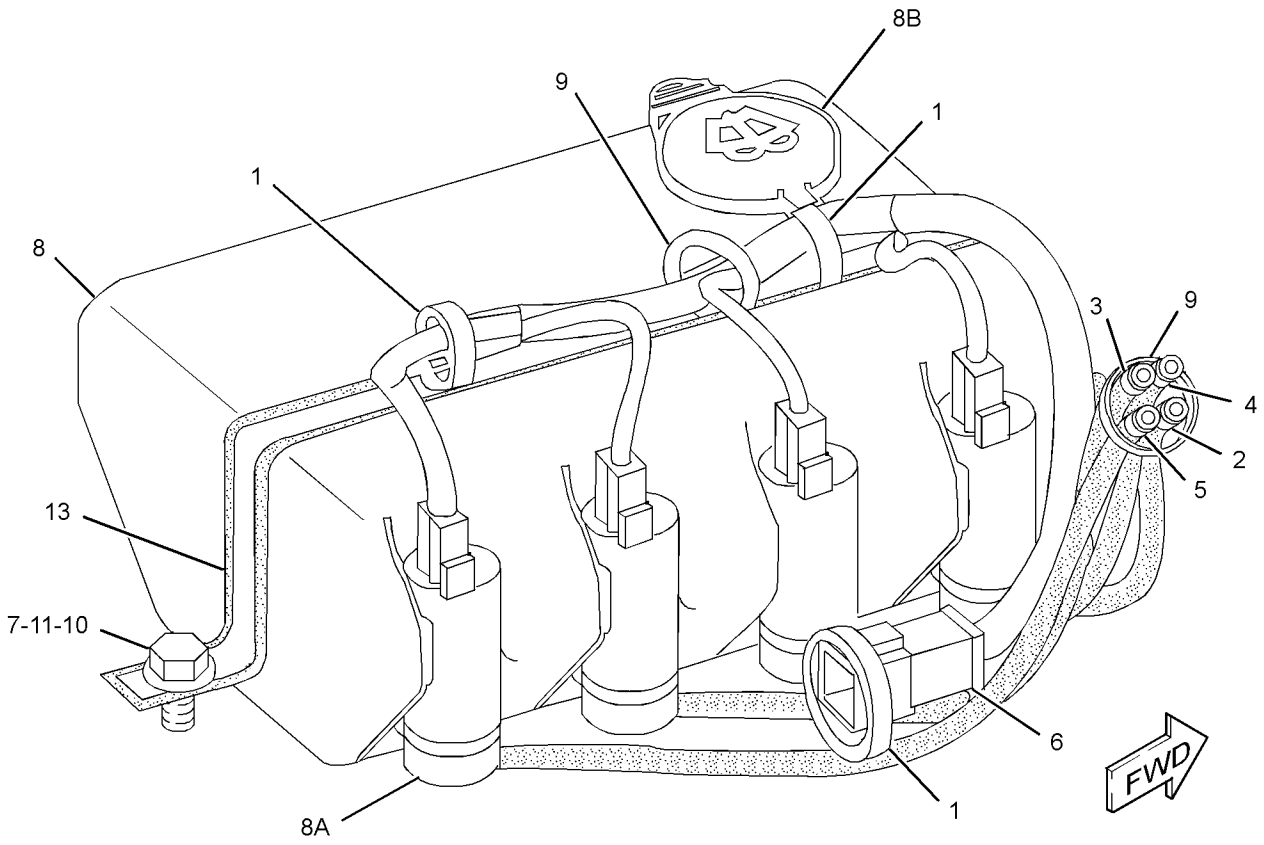

GRAPHIC #1 **<END>** g01730974

OPERATOR STATION

247-6503 WINDOW GP-CAB

S/N: MMM1-UP; RRR1-UP
PART OF 244-7475 ROPS AR, 282-4898 ROPS AR-ENCLOSED
AN ATTACHMENT

SMCS-7310 **i03776834**

NOTE	REF NO	GRAPHIC REF	PART NUMBER	QTY	PART NAME 1 2 3 4 5 6 (PRODUCT LEVEL)	SEE PAGE
	1	1	**247-6582**	1	GLASS-FRONT	
	2	1	**247-6583**	1	GLASS-REAR	
Y	3	1	*259-4405*	1	WINDOW GP-CAB (LH)	860
Y	4	1	*259-4403*	1	WINDOW GP-CAB (RH)	859

Y - SEPARATE ILLUSTRATION

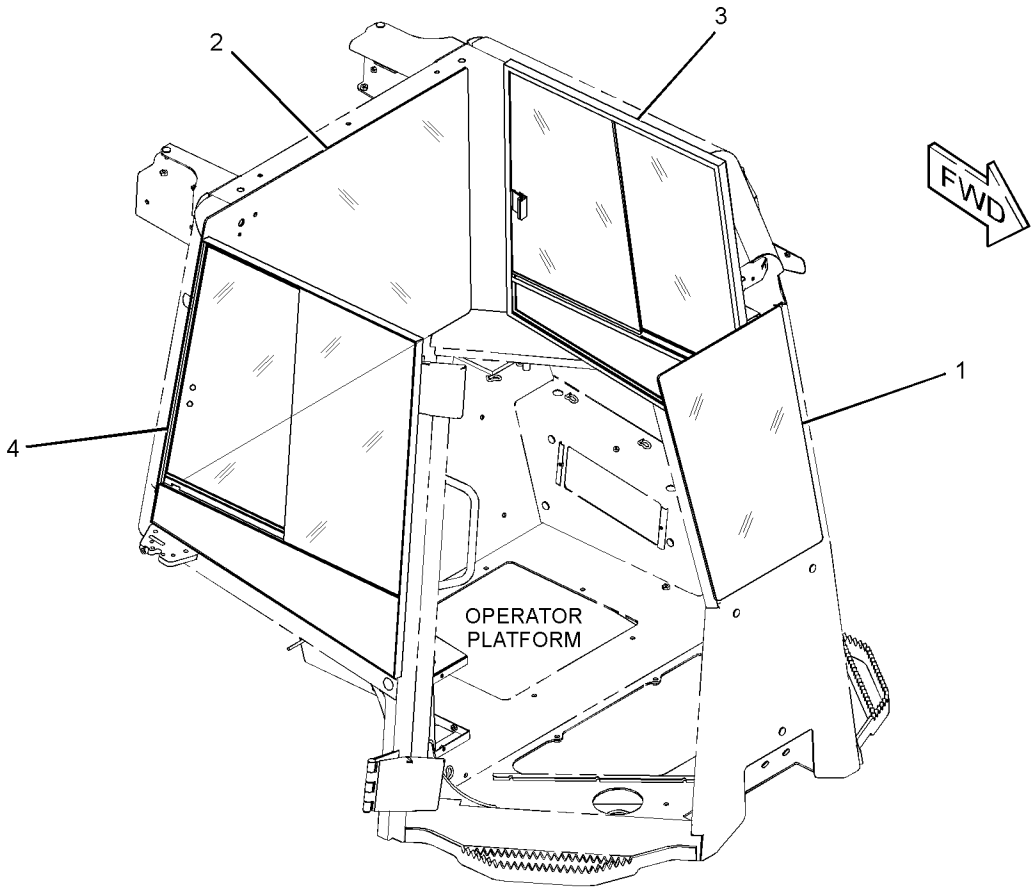

GRAPHIC #1 **<END>** g01301019

247-6503 WINDOW GP-CAB

S/N: MMM1-61; RRR1-464
PART OF 244-7475 ROPS AR, 282-4898 ROPS AR-ENCLOSED
AN ATTACHMENT

SMCS-7310 **i04102853**

NOTE	REF NO	GRAPHIC REF	PART NUMBER	QTY	PART NAME 1 2 3 4 5 6 (PRODUCT LEVEL)	SEE PAGE
	1	1	**364-6583**	1	GLASS-FRONT	
	2	1	**247-6583**	1	GLASS-REAR	
CY	3	1	**333-2732**	1	WINDOW GP-SLIDING (RH)	864
CY	4	1	**333-2733**	1	WINDOW GP-SLIDING (LH)	866

C - CHANGE FROM PREVIOUS TYPE
Y - SEPARATE ILLUSTRATION

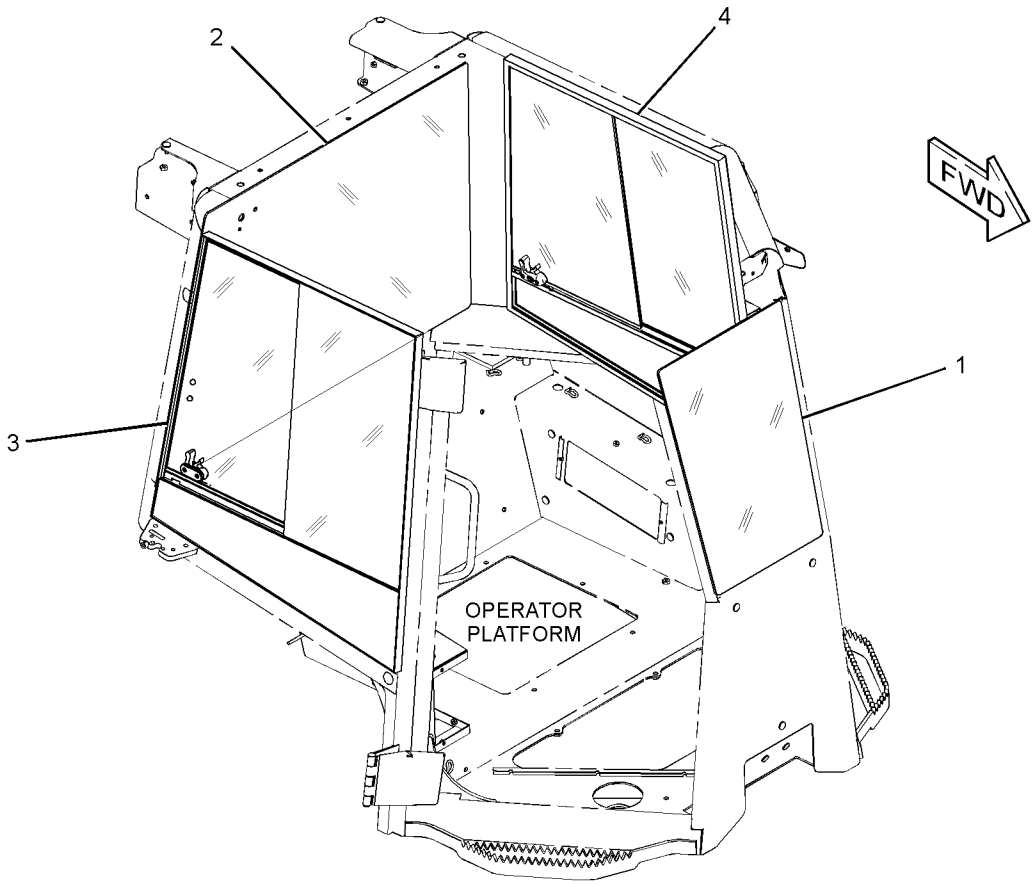

GRAPHIC #1 **<END>** g02125810

255-4275 WINDOW GP-CAB

S/N: MMM1-UP; RRR1-UP
PART OF 244-7476 ROPS AR, 282-4899 ROPS AR-ENCLOSED
AN ATTACHMENT

SMCS-7310 **i03781050**

NOTE	REF NO	GRAPHIC REF	PART NUMBER	QTY	PART NAME 1 2 3 4 5 6 (PRODUCT LEVEL)	SEE PAGE
	1	1	**247-6583**	1	GLASS-REAR	
	2	1	**343-3797**	1	WINDOW-FRONT (POLYCARBONATE)	
Y	3	1	**259-4403**	1	WINDOW GP-CAB (RH)	859
Y	4	1	**259-4405**	1	WINDOW GP-CAB (LH)	860

Y - SEPARATE ILLUSTRATION

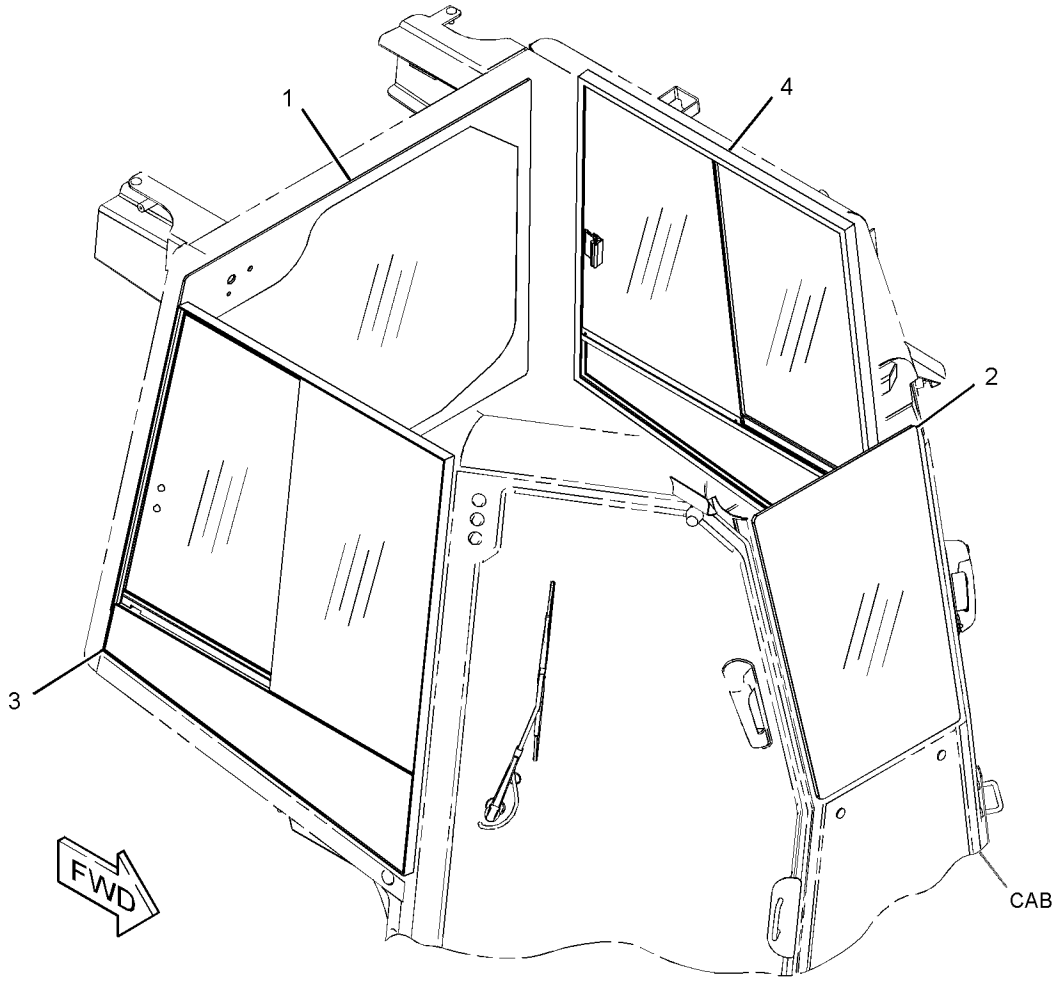

GRAPHIC #1 **<END>** g01380929

259-4403 WINDOW GP-CAB—RH

S/N: MMM1-UP; RRR1-UP
FIELD REPLACEMENT ORDER 333-2732—PAGE: 864
PART OF 247-6503, 255-4275 WINDOW GP-CAB
AN ATTACHMENT

SMCS-7310 **i02994803**

NOTE	REF NO	GRAPHIC REF	PART NUMBER	QTY	PART NAME 1 2 3 4 5 6 (PRODUCT LEVEL)	SEE PAGE
	1	1	**6C-4016**	1	CAP	
	2	1	**212-4219**	1	KNOB	
	3	1	**302-2136**	1	CATCH AS	
E	4	1	**137-2170**		SEAL (77-CM)	
E	4A	1	**137-2170**		SEAL (78-CM)	
E	5	1	**191-3040**		SEAL (8-CM)	
	6	1	**301-5701**	1	GLASS	
	7	1	**264-8899**	1	GLASS	
	8	1	**264-8900**	1	GLASS	
	9	1	**295-4039**	2	BLOCK-SLIDER	
E	10	1	**264-8901**		SEAL (47-CM)	
E	11	1	**286-4407**		WEATHERSTRIP (75-CM EACH)	
	12	1	**145-9087**	1	CUSHION	
M	13	1	**5C-2874**	2	NUT (M5X0.8-THD)	
	14	1	**8R-0275**	2	CAP	
	15	1	**9R-4024**	2	BUSHING-TERMINAL	

E - ORDER BY THE CENTIMETER
M - METRIC PART

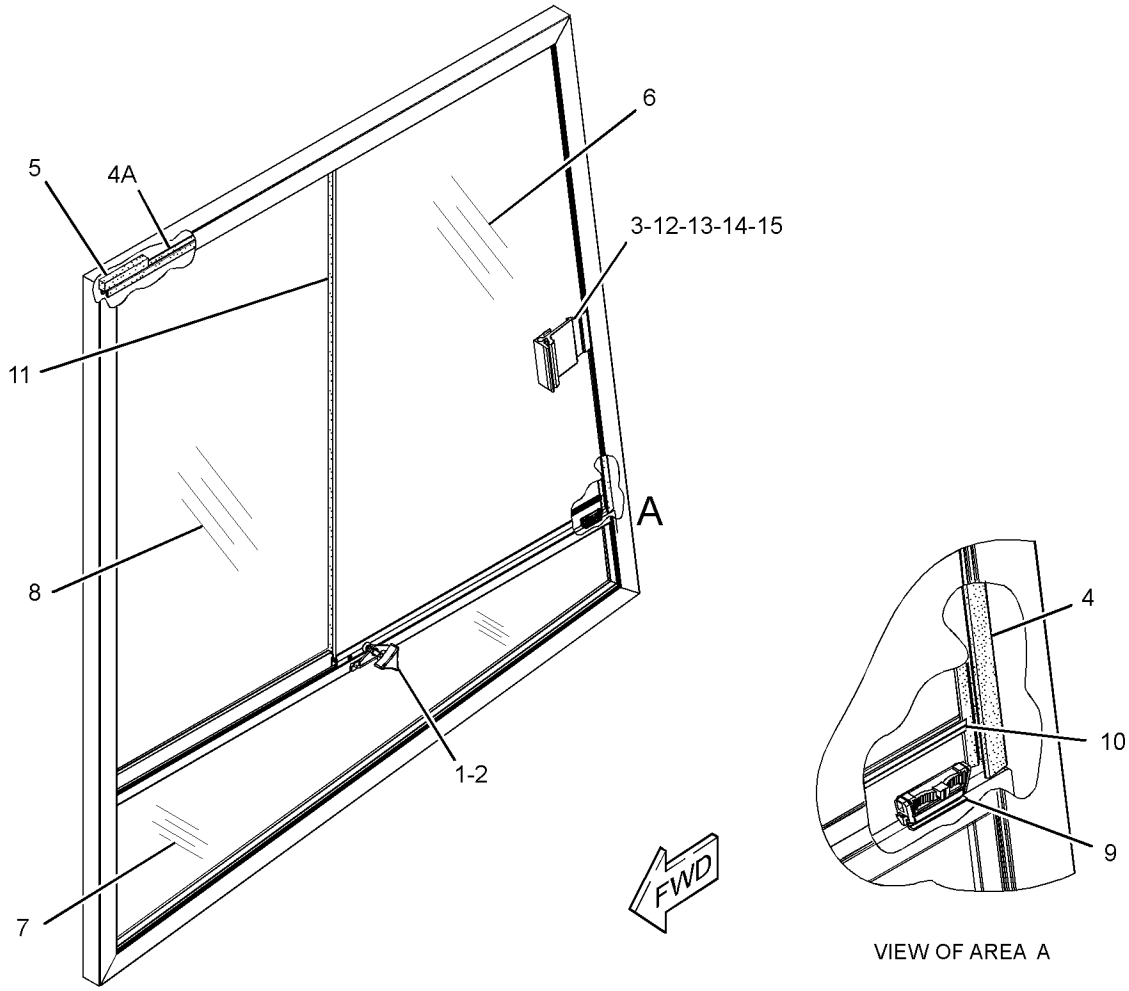

GRAPHIC #1 **<END>** g01520280

259-4405 WINDOW GP-CAB—LH

S/N: MMM1-UP; RRR1-UP
FIELD REPLACEMENT ORDER 333-2733—PAGE: 866
PART OF 247-6503, 255-4275 WINDOW GP-CAB
AN ATTACHMENT

SMCS-7310 **i02994503**

NOTE	REF NO	GRAPHIC REF	PART NUMBER	QTY	PART NAME 1 2 3 4 5 6 (PRODUCT LEVEL)	SEE PAGE
	1	1	**6C-4016**	1	CAP	
	2	1	**212-4219**	1	KNOB	
	3	1	**302-2136**	1	CATCH AS	
E	4	1	**137-2170**		SEAL (77-CM)	
E	4A	1	**137-2170**		SEAL (78-CM)	
E	5	1	**191-3040**		SEAL (8-CM)	
	6	1	**301-5700**	1	GLASS	
	7	1	**295-4037**	1	GLASS (LH)	
	8	1	**264-8900**	1	GLASS	
	9	1	**295-4039**	2	BLOCK-SLIDER	
E	10	1	**264-8901**		SEAL (47-CM)	
E	11	1	**286-4407**		WEATHERSTRIP (75-CM EACH)	
	12	1	**145-9087**	1	CUSHION	
M	13	1	**5C-2874**	2	NUT (M5X0.8-THD)	
	14	1	**8R-0275**	2	CAP	
	15	1	**9R-4024**	2	BUSHING-TERMINAL	

E - ORDER BY THE CENTIMETER
M - METRIC PART

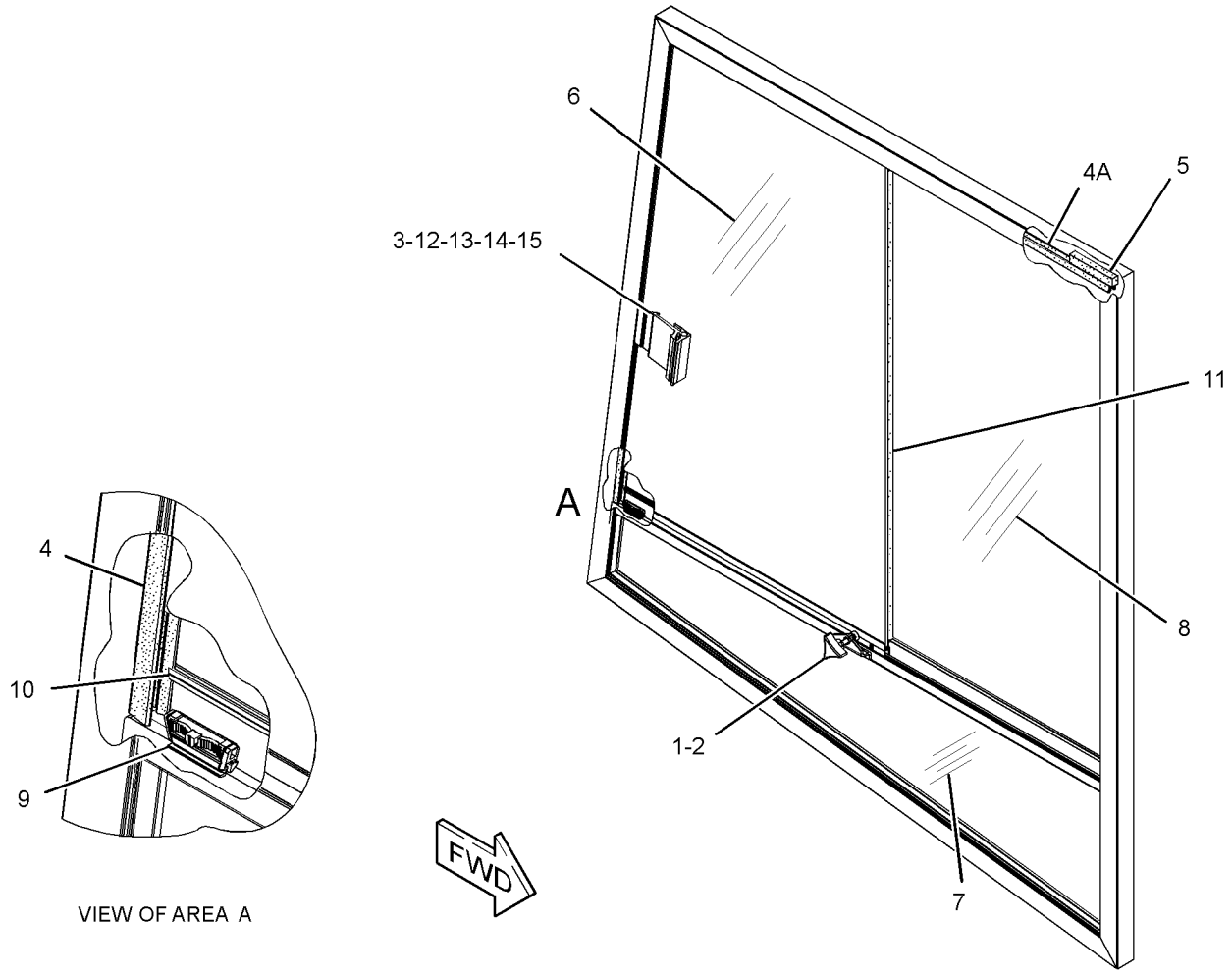

GRAPHIC #1 **<END>** g01519939

324-0667 WINDOW GP-CAB

S/N: MMM62-UP; RRR465-UP
PART OF 244-7475 ROPS AR, 282-4898 ROPS AR-ENCLOSED
AN ATTACHMENT

SMCS-7310 **i05395405**

NOTE	REF NO	GRAPHIC REF	PART NUMBER	QTY	PART NAME 1 2 3 4 5 6 (PRODUCT LEVEL)	SEE PAGE
	1	1	**247-6583**	1	GLASS-REAR	
Y	2	1	**338-9767**	1	WINDOW GP-CAB (RH)	862
Y	3	1	**338-9768**	1	WINDOW GP-CAB (LH)	863
	4	1	**364-6583**	1	GLASS-FRONT	

Y - SEPARATE ILLUSTRATION

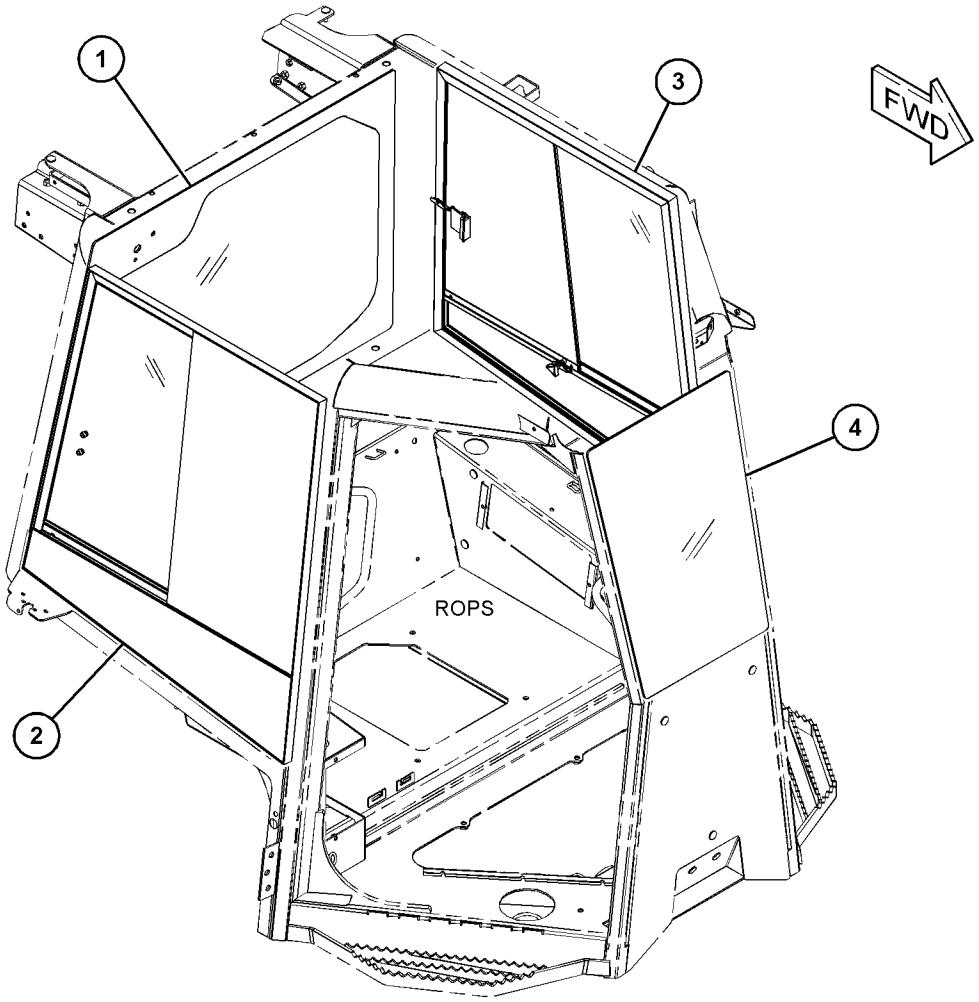

GRAPHIC #1 **<END>** g03410894

338-9767 WINDOW GP-CAB–RH

S/N: MMM62-UP; RRR465-UP
PART OF 324-0667 WINDOW GP-CAB
AN ATTACHMENT

SMCS-7310 **i05395431**

NOTE	REF NO	GRAPHIC REF	PART NUMBER	QTY	PART NAME 1 2 3 4 5 6 (PRODUCT LEVEL)	SEE PAGE
	1	1	**264-8899**	1	GLASS (RH)	
	2	1	**264-8900**	1	GLASS	
	3	1	**301-5701**	1	GLASS	
	4	1	**302-2136**	1	CATCH AS	
	5	1	**352-4897**	1	LOCK AS	
	6	1	**356-6447**	1	KIT-SEAL (CAB WINDOW, REAR)	
					(INCLUDES SLIDE BLOCKS, BRUSHES, BUMBER & SEAL)	
	7	1	**356-6449**	1	PILLAR	
	8	1	**359-5488**	1	RAIL	

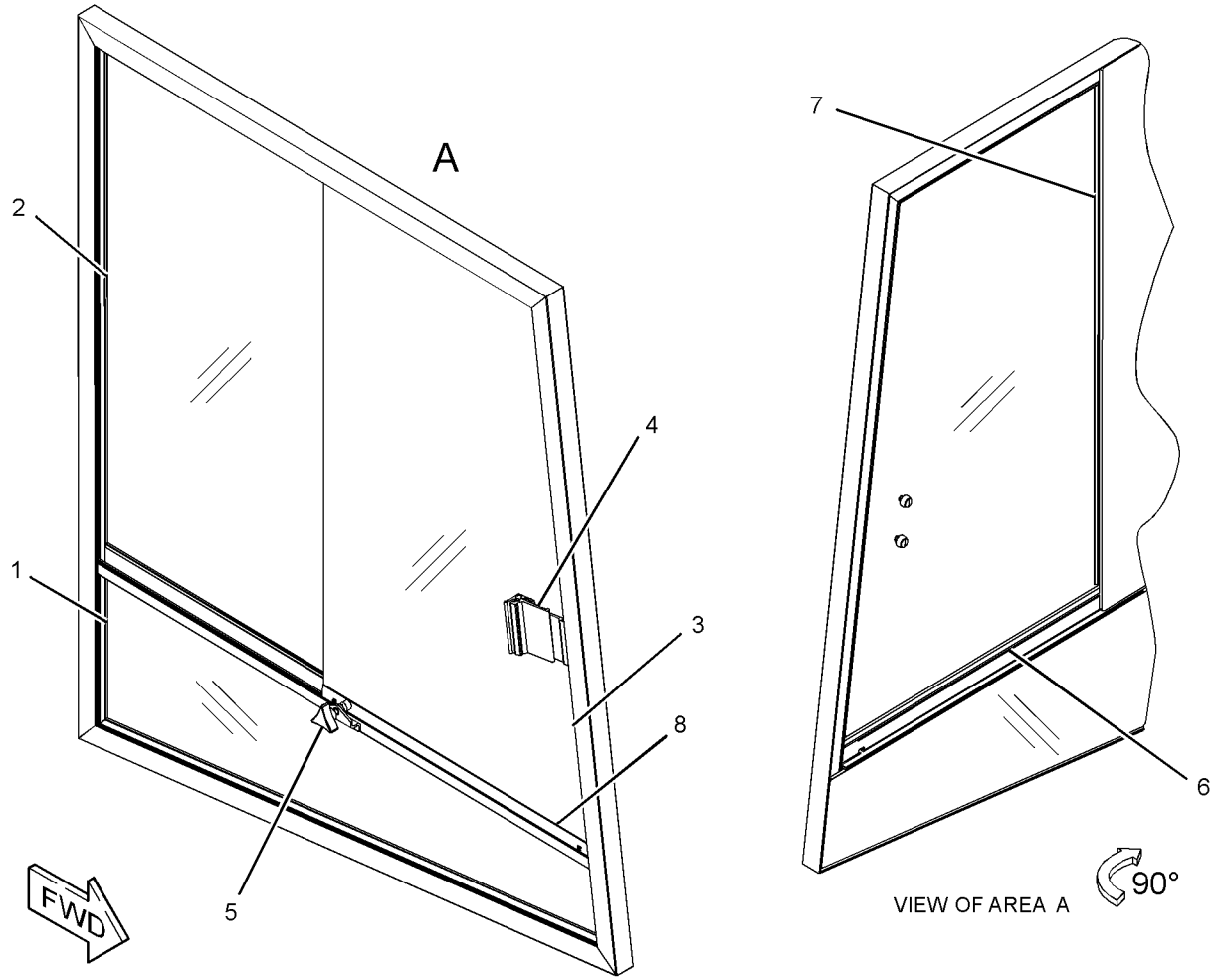

GRAPHIC #1

<END>

g02760917

338-9768 WINDOW GP-CAB–LH

S/N: MMM62-UP; RRR465-UP
PART OF 324-0667 WINDOW GP-CAB
AN ATTACHMENT

SMCS-7310 **i05395437**

NOTE	REF NO	GRAPHIC REF	PART NUMBER	QTY	PART NAME 1 2 3 4 5 6 (PRODUCT LEVEL)	SEE PAGE
	1	1	**264-8900**	1	GLASS	
	2	1	**295-4037**	1	GLASS (LH)	
	3	1	**301-5700**	1	GLASS (LH)	
	4	1	**302-2136**	1	CATCH AS	
	5	1	**352-4897**	1	LOCK AS	
	6	1	**356-6447**	1	KIT-SEAL (CAB WINDOW)	
					(INCLUDES SLIDE BLOCKS, BRUSHES, BUMPER & SEAL)	
	7	1	**356-6449**	1	PILLAR	
	8	1	**356-6450**	1	RAIL	

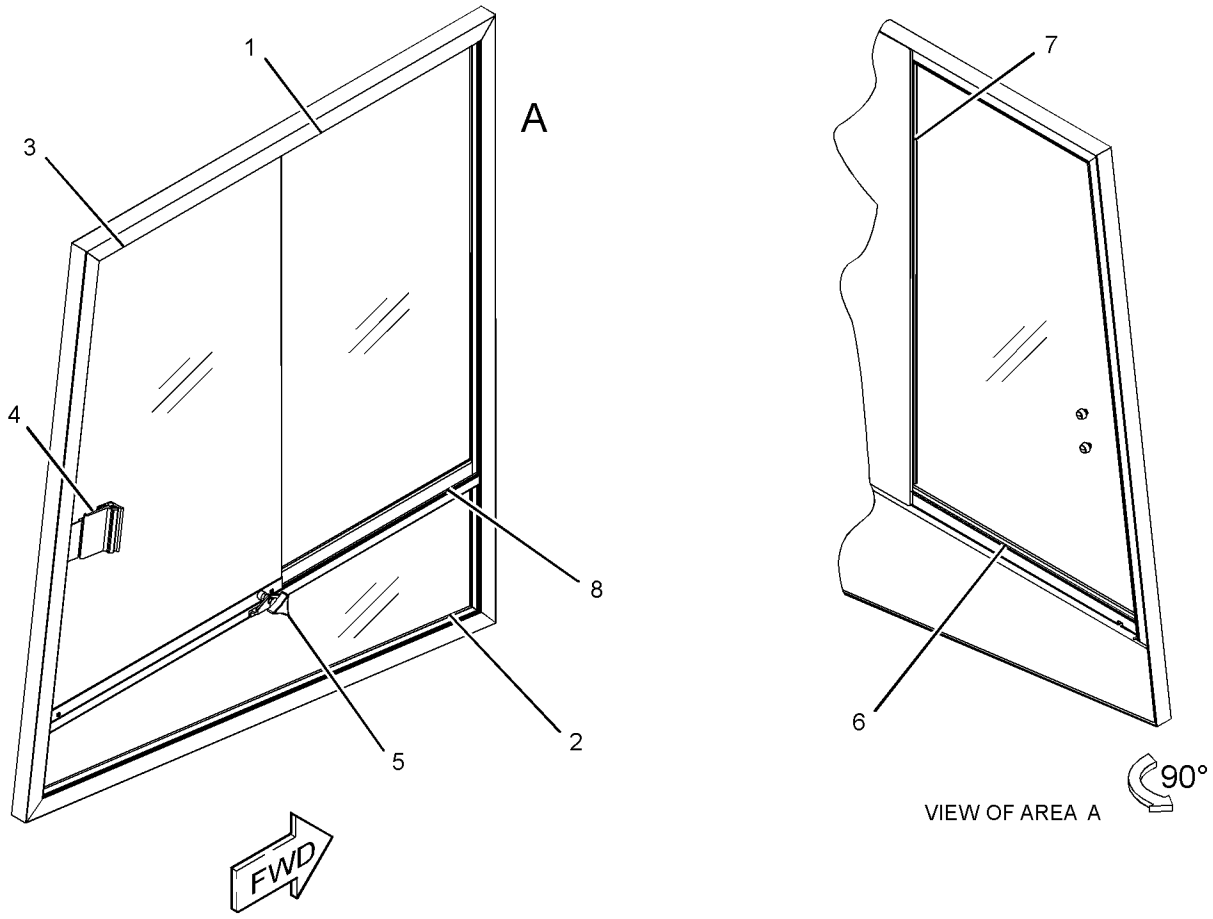

GRAPHIC #1

<END>

g02765456

333-2732 WINDOW GP-SLIDING—RH

S/N: MMM1-UP; RRR1-UP
FIELD REPLACEMENT FOR 259-4403—PAGE: 859
PART OF 247-6503 WINDOW GP-CAB
AN ATTACHMENT

SMCS-7310 **i03879143**

NOTE	REF NO	GRAPHIC REF	PART NUMBER	QTY	PART NAME 1 2 3 4 5 6 (PRODUCT LEVEL)	SEE PAGE
	1	1	**264-8899**	1	GLASS (RH)	
	2	1	**264-8900**	1	GLASS	
	3	1	**286-8868**	1	STOP	
	4	1	**286-8871**	1	LATCH	
	5	1	**348-7782**	1	SEAL-WINDOW	
	6	1	**348-7783**	1	KIT-SEAL	
	7	1	**348-7784**	1	KIT-GLASS (SLIDING)	
E	8	1	**226-4872**		SEAL (76-CM EACH)	

E - ORDER BY THE CENTIMETER

333-2732 **WINDOW GP-SLIDING (*contd.*)** **i03879143**

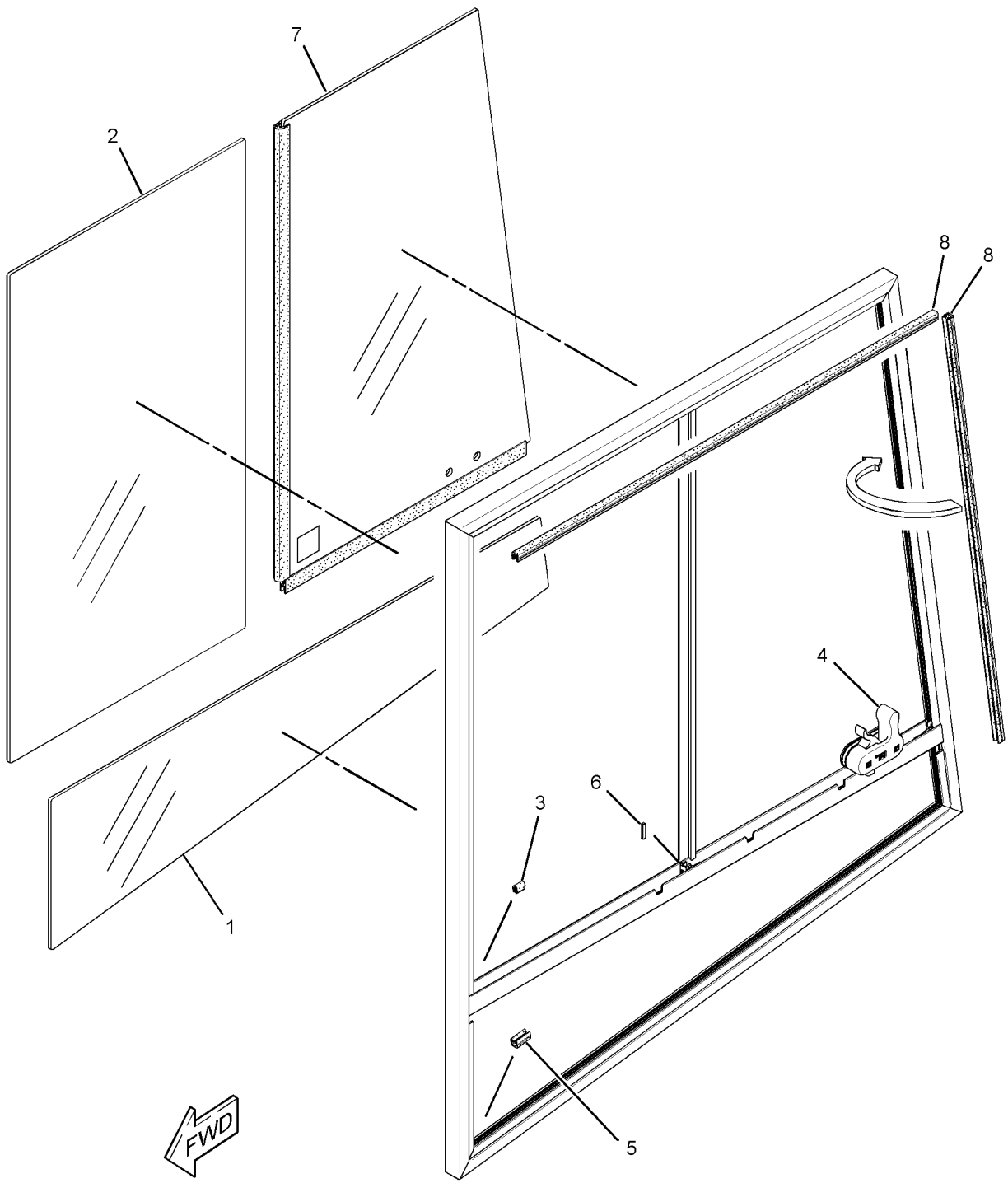

GRAPHIC #1 **<END>** g02126511

333-2733 WINDOW GP-SLIDING—LH

S/N: MMM1-UP; RRR1-UP
FIELD REPLACEMENT FOR 259-4405—PAGE: 860
PART OF 247-6503 WINDOW GP-CAB
AN ATTACHMENT

SMCS-7310 **i04403744**

NOTE	REF NO	GRAPHIC REF	PART NUMBER	QTY	PART NAME 1 2 3 4 5 6 (PRODUCT LEVEL)	SEE PAGE
	1	1	**295-4037**	1	GLASS (LH)	
	2	1	**264-8900**	1	GLASS	
	3	1	**286-8868**	1	STOP	
	4	1	**348-7781**	1	LATCH AS (LH)	
	5	1	**348-7782**	1	SEAL-WINDOW	
	6	1	**348-7783**	1	KIT-SEAL	
	7	1	**348-7785**	1	KIT-GLASS (SLIDING)	
E	8	1	**226-4872**		SEAL (76-CM EACH)	

E - ORDER BY THE CENTIMETER

333-2733 **WINDOW GP-SLIDING (*contd.*)** **i04403744**

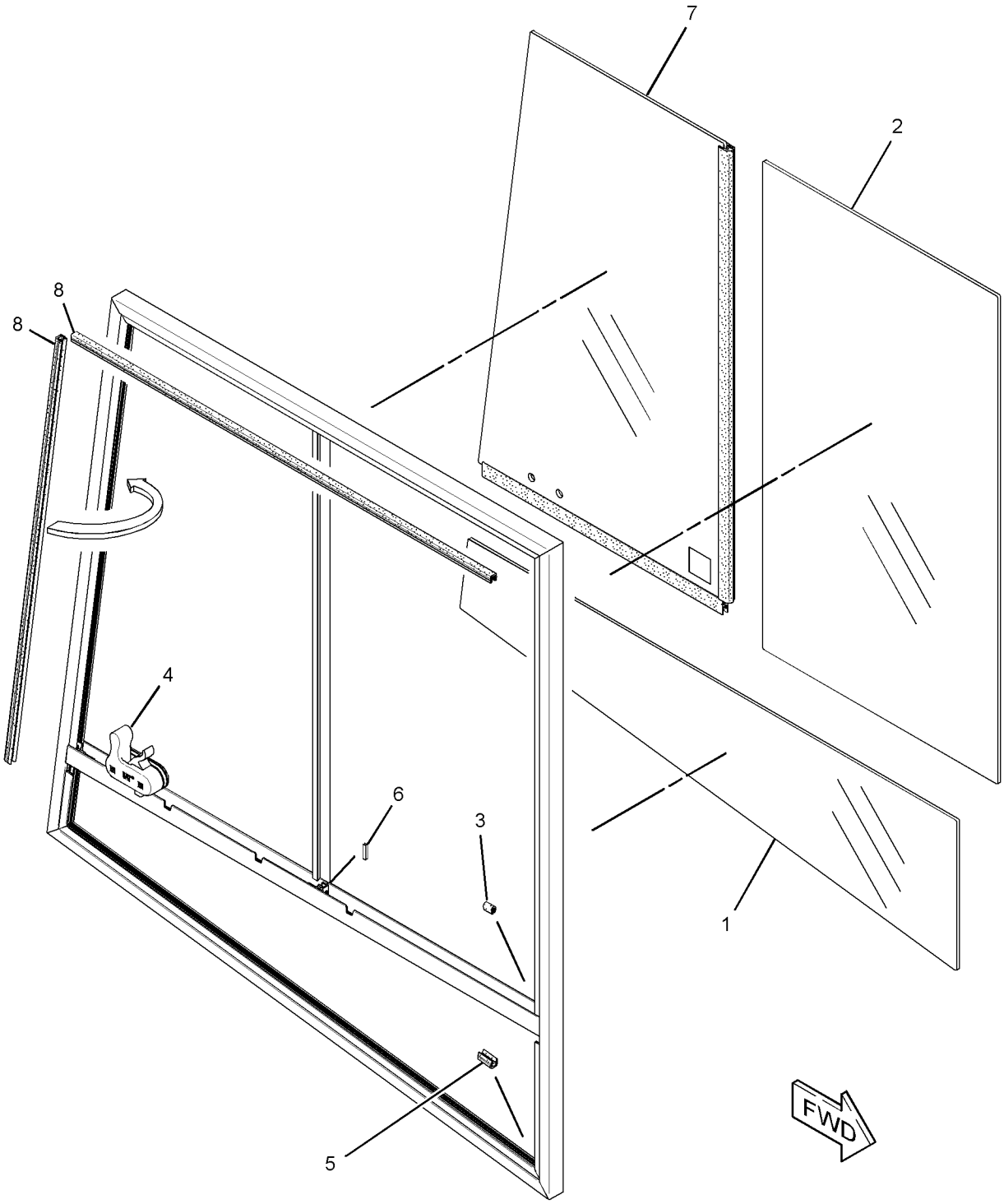

GRAPHIC #1 **<END>** g02126159

255-4228 WIPER GP-WINDOW

S/N: MMM1-UP; RRR1-UP

PART OF 244-7475, 244-7476 ROPS AR, 282-4898, 282-4899 ROPS AR-ENCLOSED AN ATTACHMENT

SMCS-7305 **i04348629**

NOTE	REF NO	GRAPHIC REF	PART NUMBER	QTY	PART NAME 1 2 3 4 5 6 (PRODUCT LEVEL)	SEE PAGE
Y	1	1	**330-5019**	1	MOTOR GP-WINDOW WIPER (REAR)	798
Y	2	1	**330-5020**	1	MOTOR GP-WINDOW WIPER (FRONT)	799
	3	1	**263-2135**	1	ARM GP-WINDOW WIPER (FRONT)	
		1	**240-8666**	2	CLIP	
		1	**136-3191**	1	NOZZLE AS-WASHER	
E		1	**194-5171**		HOSE (60-CM)	
	4	1	**266-3701**	1	ARM GP-WINDOW WIPER (REAR)	
		1	**305-9192**	1	NOZZLE AS-WASHER	
E		1	**194-5171**		HOSE (50-CM)	
	5	1	**3S-2093**	20	STRAP-CABLE	
	6	1	**317-5316**	2	GROMMET	
	7	1	**5C-8811**	1	BLADE AS-WIPER (500-MM) (FRONT)	
	8	1	**7Y-3474**	4	VALVE AS-CHECK (WINDOW WASHER)	
	9	1	**8T-5400**	2	CONNECTOR AS	
	10	1	**9D-8508**	4	GROMMET	
B	11	1	**7X-7927**		TAPE-IDENTIFICATION (LETTER A)	
B	12	1	**7X-7928**		TAPE-IDENTIFICATION (LETTER B)	
B	13	1	**7X-7929**		TAPE-IDENTIFICATION (LETTER C)	
B	14	1	**7X-7930**		TAPE-IDENTIFICATION (LETTER D)	
E	15	1	**144-0195**		HOSE (212-CM)	
E	15A	1	**144-0195**		HOSE (302-CM)	
E	15B	1	**144-0195**		HOSE (400-CM)	
E	15C	1	**144-0195**		HOSE (550-CM)	
	16	1	**146-6433**	1	BLADE AS-WIPER (500-MM) (REAR)	

B - USE AS REQUIRED
E - ORDER BY THE CENTIMETER
Y - SEPARATE ILLUSTRATION

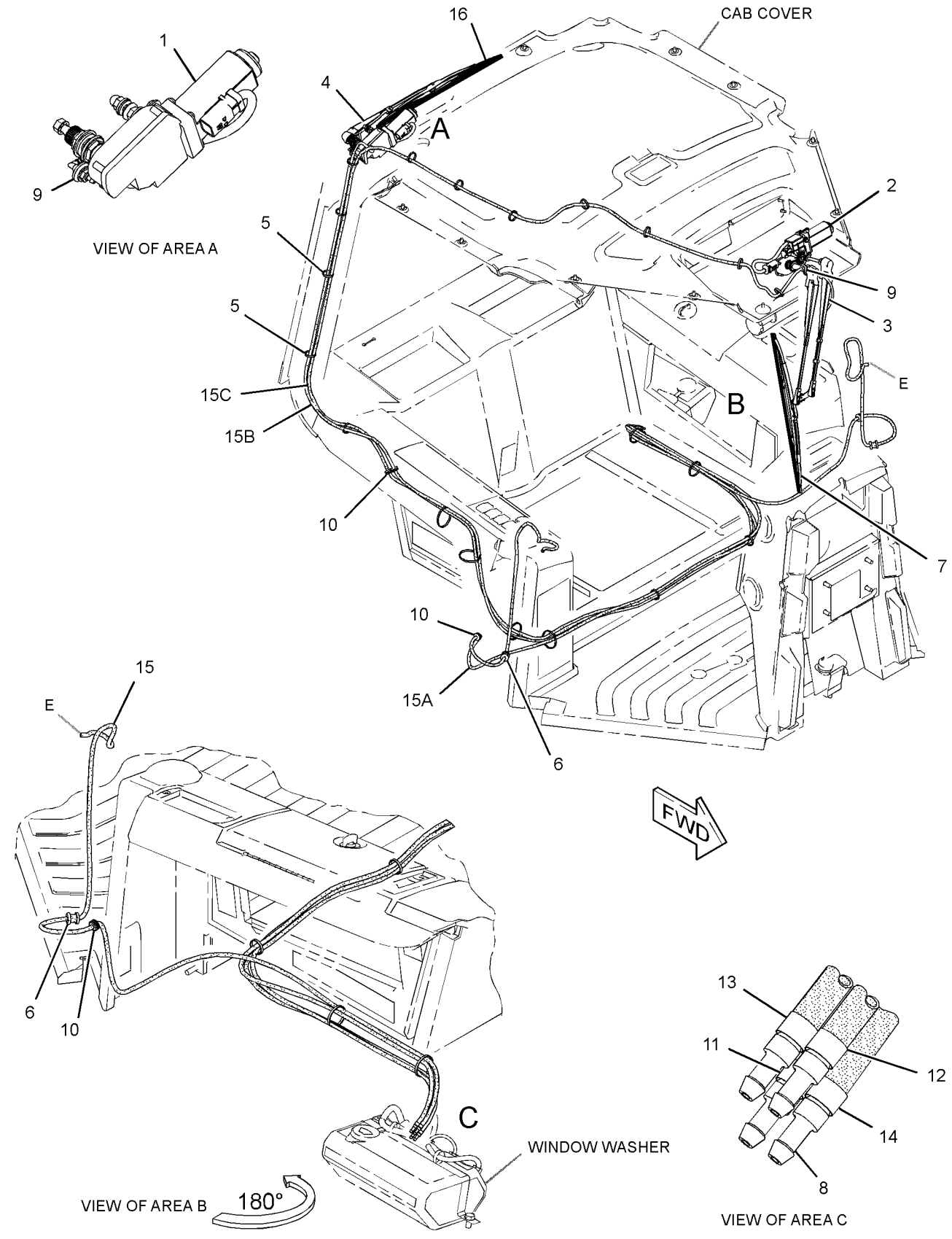

GRAPHIC #1

<END>

g02495239

255-1355 BLADE AR-PWR ANGLE & TILT–LGP

S/N: MMM1-UP; RRR1-UP
3149-MM (124-IN)
AN ATTACHMENT

SMCS-6050 **i04544110**

NOTE	PART NUMBER	QTY	PART NAME 1 2 3 4 5 6 (PRODUCT LEVEL)	SEE PAGE
Y	*255-1362*	1	BLADE GP-ANGLING (LOW GROUND PRESSURE)	875

Y - SEPARATE ILLUSTRATION

<END>

255-1394 BLADE AR-PWR ANGLE & TILT–XL

S/N: MMM1-UP; RRR1-UP
2646-MM (104.2-IN)
AN ATTACHMENT

SMCS-6050 **i04544106**

NOTE	PART NUMBER	QTY	PART NAME 1 2 3 4 5 6 (PRODUCT LEVEL)	SEE PAGE
Y	*255-1395*	1	BLADE GP-ANGLING (XL GRADE CONTROL)	876

Y - SEPARATE ILLUSTRATION

<END>

255-1413 BLADE AR-PWR ANGLE & TILT–LGP

S/N: MMM1-UP; RRR1-UP
3149-MM (124-IN)
AN ATTACHMENT

SMCS-6050 **i04544103**

NOTE	PART NUMBER	QTY	PART NAME 1 2 3 4 5 6 (PRODUCT LEVEL)	SEE PAGE
Y	*255-1414*	1	BLADE GP-ANGLING (LOW GROUND PRESSURE)	877

Y - SEPARATE ILLUSTRATION

<END>

255-1425 BLADE AR-PWR ANGLE & TILT–XL

S/N: MMM1-UP; RRR1-UP
2782-MM (109.5-IN)
AN ATTACHMENT

SMCS-6050 **i04544101**

NOTE	PART NUMBER	QTY	PART NAME 1 2 3 4 5 6 (PRODUCT LEVEL)	SEE PAGE
Y	*255-1427*	1	BLADE GP-ANGLING (XL GRADE CONTROL)	878

Y - SEPARATE ILLUSTRATION

<END>

255-1470 BLADE AR-PWR ANGLE & TILT–LGP

S/N: MMM1-UP; RRR1-UP
3220-MM (126.8-IN)
AN ATTACHMENT

SMCS-6050 **i04544099**

NOTE	PART NUMBER	QTY	PART NAME 1 2 3 4 5 6 (PRODUCT LEVEL)	SEE PAGE
Y	*255-1471*	1	BLADE GP-ANGLING (LOW GROUND PRESSURE)	879

Y - SEPARATE ILLUSTRATION

<END>

255-1486 BLADE AR-PWR ANGLE & TILT

S/N: MMM1-UP; RRR1-UP
2921-MM (115-IN)
AN ATTACHMENT

SMCS-6050 **i04544096**

NOTE	PART NUMBER	QTY	PART NAME 1 2 3 4 5 6 (PRODUCT LEVEL)	SEE PAGE
Y	*255-1487*	1	BLADE GP-ANGLING	880

Y - SEPARATE ILLUSTRATION

<END>

255-1502 BLADE AR-PWR ANGLE & TILT–XL

S/N: MMM1-UP; RRR1-UP
2886-MM (113.6-IN)
AN ATTACHMENT

SMCS-6050 **i04708552**

NOTE	PART NUMBER	QTY	PART NAME 1 2 3 4 5 6 (PRODUCT LEVEL)	SEE PAGE
Y	*255-1503*	1	BLADE GP-ANGLING (XL GRADE CONTROL)	881

Y - SEPARATE ILLUSTRATION

<END>

255-2368 BLADE AR-PWR ANGLE & TILT–LGP

S/N: MMM1-UP; RRR1-UP
3145.6-MM (123.8-IN)
AN ATTACHMENT

SMCS-6050 **i04560261**

NOTE	PART NUMBER	QTY	PART NAME 1 2 3 4 5 6 (PRODUCT LEVEL)	SEE PAGE
Y	*255-2370*	1	BLADE GP-ANGLING	882

Y - SEPARATE ILLUSTRATION

<END>

255-2372 BLADE AR-PWR ANGLE & TILT–XL

S/N: MMM1-UP; RRR1-UP
2646-MM (104.2-IN)
AN ATTACHMENT

SMCS-6050 **i04560263**

NOTE	PART NUMBER	QTY	PART NAME 1 2 3 4 5 6 (PRODUCT LEVEL)	SEE PAGE
Y	*255-2373*	1	BLADE GP-ANGLING	883

Y - SEPARATE ILLUSTRATION

<END>

255-2375 BLADE AR-PWR ANGLE & TILT–LGP

S/N: MMM1-UP; RRR1-UP
3149-MM(124-IN)
AN ATTACHMENT

SMCS-6050 **i04560267**

NOTE	PART NUMBER	QTY	PART NAME 1 2 3 4 5 6 (PRODUCT LEVEL)	SEE PAGE
Y	*255-2376*	1	BLADE GP-ANGLING	884

Y - SEPARATE ILLUSTRATION

<END>

255-2378 BLADE AR-PWR ANGLE & TILT–XL

S/N: MMM1-UP; RRR1-UP
2782-MM (109.5-IN)
AN ATTACHMENT

SMCS-6050 **i04560271**

NOTE	PART NUMBER	QTY	PART NAME 1 2 3 4 5 6 (PRODUCT LEVEL)	SEE PAGE
Y	*255-2379*	1	BLADE GP-ANGLING	885

Y - SEPARATE ILLUSTRATION

<END>

255-2381 BLADE AR-PWR ANGLE & TILT–LGP

S/N: MMM1-UP; RRR1-UP
3220-MM (126.8-IN)
AN ATTACHMENT

SMCS-6050 **i04560274**

NOTE	PART NUMBER	QTY	PART NAME 1 2 3 4 5 6 (PRODUCT LEVEL)	SEE PAGE
Y	*255-2383*	1	BLADE GP-ANGLING	886

Y - SEPARATE ILLUSTRATION

<END>

255-2385 BLADE AR-PWR ANGLE & TILT

S/N: MMM1-UP; RRR1-UP
2921-MM (115-IN)
AN ATTACHMENT

SMCS-6050 **i04560273**

NOTE	PART NUMBER	QTY	PART NAME 1 2 3 4 5 6 (PRODUCT LEVEL)	SEE PAGE
Y	*255-2386*	1	BLADE GP-ANGLING	887

Y - SEPARATE ILLUSTRATION

<END>

255-2390 BLADE AR-PWR ANGLE & TILT–XL

S/N: MMM1-UP; RRR1-UP
2886-MM (113.6-IN)
AN ATTACHMENT

SMCS-6050 **i04560281**

NOTE	PART NUMBER	QTY	PART NAME 1 2 3 4 5 6 (PRODUCT LEVEL)	SEE PAGE
Y	*255-2391*	1	BLADE GP-ANGLING	888

Y - SEPARATE ILLUSTRATION

<END>

255-2393 BLADE AR-PWR ANGLE & TILT–FORESTRY

S/N: MMM1-UP; RRR1-UP
2886-MM (113.6-IN)
AN ATTACHMENT

SMCS-6050 **i04560280**

NOTE	PART NUMBER	QTY	PART NAME 1 2 3 4 5 6 (PRODUCT LEVEL)	SEE PAGE
Y	*255-2394*	1	BLADE GP-ANGLING (FORESTRY)	890

Y - SEPARATE ILLUSTRATION

<END>

312-8350 BLADE AR-PWR ANGLE & TILT

S/N: MMM1-UP; RRR1-UP
2921-MM(115-IN)
AN ATTACHMENT

SMCS-6050 **i04586433**

NOTE	PART NUMBER	QTY	PART NAME 1 2 3 4 5 6 (PRODUCT LEVEL)	SEE PAGE
Y	*312-8351*	1	BLADE GP-ANGLING	891

Y - SEPARATE ILLUSTRATION

<END>

312-8360 BLADE AR-PWR ANGLE & TILT

S/N: MMM1-UP; RRR1-UP
2921-MM(115-IN)
AN ATTACHMENT

SMCS-6050 **i04586432**

NOTE	PART NUMBER	QTY	PART NAME 1 2 3 4 5 6 (PRODUCT LEVEL)	SEE PAGE
Y	*312-8361*	1	BLADE GP-ANGLING (GRADE CONTROL)	892

Y - SEPARATE ILLUSTRATION

<END>

255-1362 BLADE GP-ANGLING—LOW GROUND PRESSURE

S/N: MMM1-UP; RRR1-UP
PART OF 255-1355 BLADE AR-PWR ANGLE & TILT
AN ATTACHMENT

SMCS-6052, 6060, 6701 **i04544107**

NOTE	REF NO	GRAPHIC REF	PART NUMBER	QTY	PART NAME 1 2 3 4 5 6 (PRODUCT LEVEL)	SEE PAGE
	1	1	**6Y-1421**	3	PIN	
Y	2	1	*6Y-5838*	1	EDGE GP-BIT & CUTTING	915
	3	1	**8J-0729**	3	RETAINER	
	4	1	**150-0351**	2	SPACER (38.3X44.45X20.8-MM THK)	
	5	1	**150-0352**	4	SPACER (38.30X44.45X27.3-MM THK)	
	6	1	**179-5755**	1	CAP-BEARING	
B	7	1	**183-5297**	26	SHIM (0.8-MM THK)	
	8	1	**255-1365**	1	BLADE AS-ANGLING	
	9	1	**225-0098**	4	BOLT (M20X2.5X140-MM)	
	10	1	**8T-3282**	4	WASHER-HARD (22X35X3.5-MM THK)	
M	11	1	**8T-4195**	3	BOLT (M10X1.5X30-MM)	
	12	1	**7D-1649**	1	WASHER-HARD (13.5X32X5-MM THK)	
	13	1	**7I-3930**	1	BOSS	
M	14	1	**8T-4194**	1	BOLT (M12X1.75X50-MM)	

B - USE AS REQUIRED
M - METRIC PART
Y - SEPARATE ILLUSTRATION

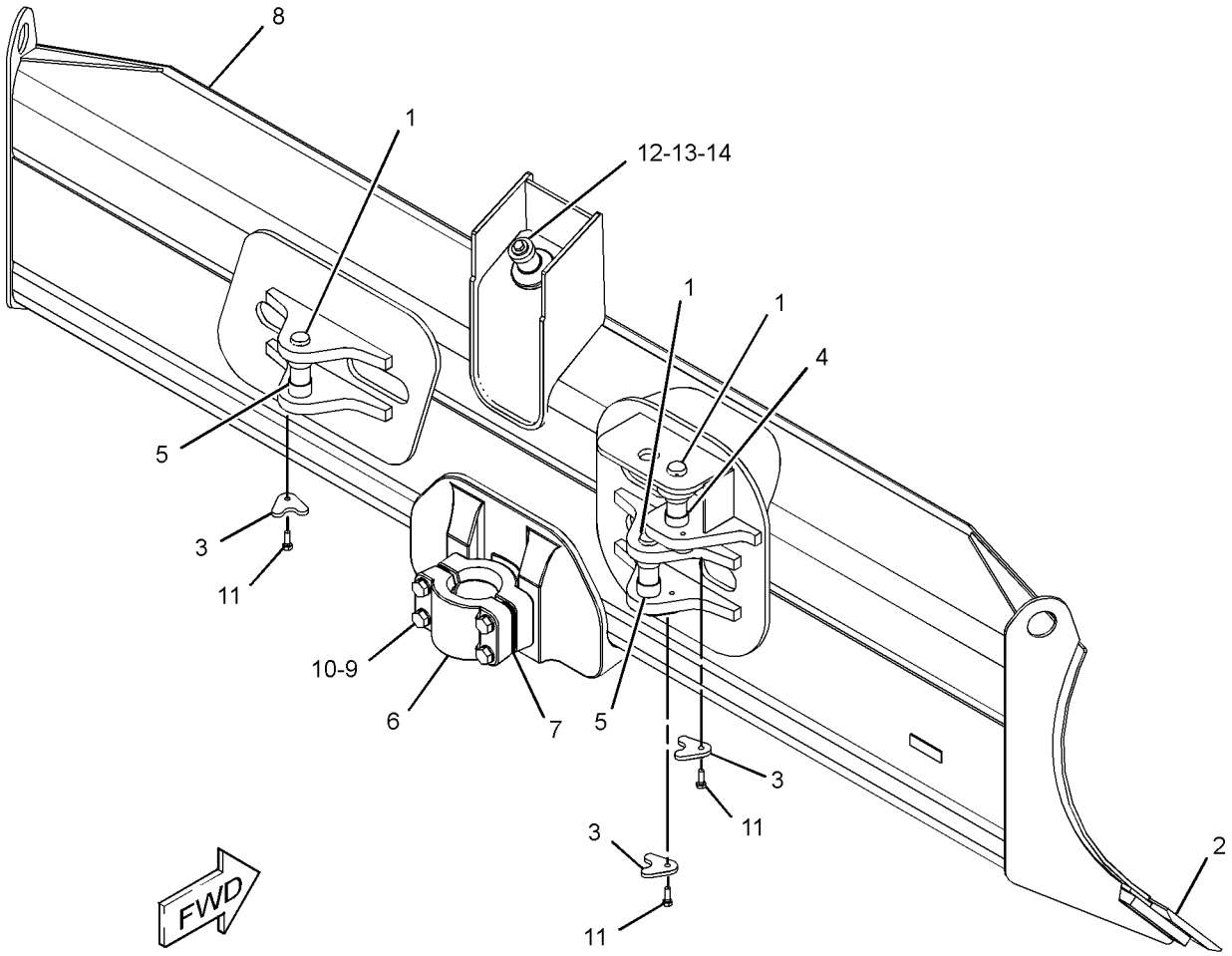

GRAPHIC #1 **<END>** g02759637

255-1395 BLADE GP-ANGLING–XL GRADE CONTROL

S/N: MMM1-UP; RRR1-UP
PART OF 255-1394 BLADE AR-PWR ANGLE & TILT
AN ATTACHMENT

SMCS-6052, 6060, 6701 **i04544105**

NOTE	REF NO	GRAPHIC REF	PART NUMBER	QTY	PART NAME 1 2 3 4 5 6 (PRODUCT LEVEL)	SEE PAGE
	1	1	**6Y-1421**	3	PIN	
	2	1	**8J-0729**	3	RETAINER	
	3	1	**150-0351**	2	SPACER (38.3X44.45X20.8-MM THK)	
	4	1	**150-0352**	4	SPACER (38.30X44.45X27.3-MM THK)	
	5	1	**179-5755**	1	CAP-BEARING	
B	6	1	**183-5297**	26	SHIM (0.8-MM THK)	
	7	1	**255-1397**	1	BLADE AS-ANGLING	
Y	8	1	*255-1426*	1	EDGE GP-BIT & CUTTING (LEVEL CUT)	917
	9	1	**225-0098**	4	BOLT (M20X2.5X140-MM)	
	10	1	**8T-3282**	4	WASHER-HARD (22X35X3.5-MM THK)	
M	11	1	**8T-4195**	3	BOLT (M10X1.5X30-MM)	
	12	1	**7D-1649**	1	WASHER-HARD (13.5X32X5-MM THK)	
	13	1	**7I-3930**	1	BOSS	
M	14	1	**8T-4194**	1	BOLT (M12X1.75X50-MM)	

B - USE AS REQUIRED
M - METRIC PART
Y - SEPARATE ILLUSTRATION

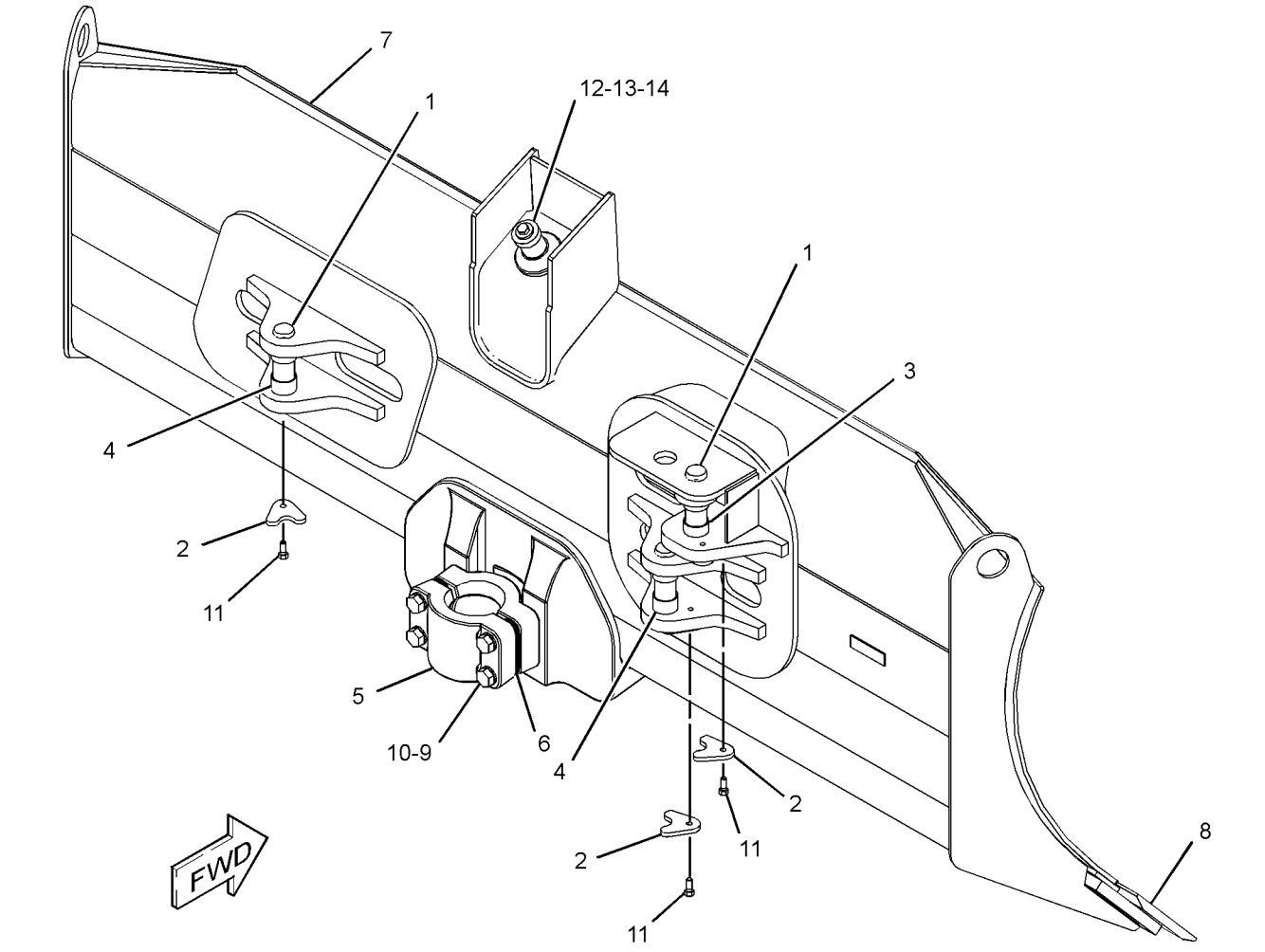

GRAPHIC #1 **<END>** g02760417

255-1414 BLADE GP-ANGLING—LOW GROUND PRESSURE

S/N: MMM1-UP; RRR1-UP

PART OF 255-1413 BLADE AR-PWR ANGLE & TILT

AN ATTACHMENT

SMCS-6052, 6060, 6701 **i04544102**

NOTE	REF NO	GRAPHIC REF	PART NUMBER	QTY	PART NAME 1 2 3 4 5 6 (PRODUCT LEVEL)	SEE PAGE
	1	1	**6Y-1421**	3	PIN	
Y	2	1	*6Y-5838*	1	EDGE GP-BIT & CUTTING	915
	3	1	**8J-0729**	3	RETAINER	
	4	1	**150-0351**	2	SPACER (38.3X44.45X20.8-MM THK)	
	5	1	**150-0352**	4	SPACER (38.30X44.45X27.3-MM THK)	
	6	1	**179-5755**	1	CAP-BEARING	
B	7	1	**183-5297**	26	SHIM (0.8-MM THK)	
	8	1	**255-1415**	1	BLADE AS-ANGLING	
	9	1	**225-0098**	4	BOLT (M20X2.5X140-MM)	
	10	1	**8T-3282**	4	WASHER-HARD (22X35X3.5-MM THK)	
M	11	1	**8T-4195**	3	BOLT (M10X1.5X30-MM)	
	12	1	**7D-1649**	1	WASHER-HARD (13.5X32X5-MM THK)	
	13	1	**7I-3930**	1	BOSS	
M	14	1	**8T-4194**	1	BOLT (M12X1.75X50-MM)	

B - USE AS REQUIRED
M - METRIC PART
Y - SEPARATE ILLUSTRATION

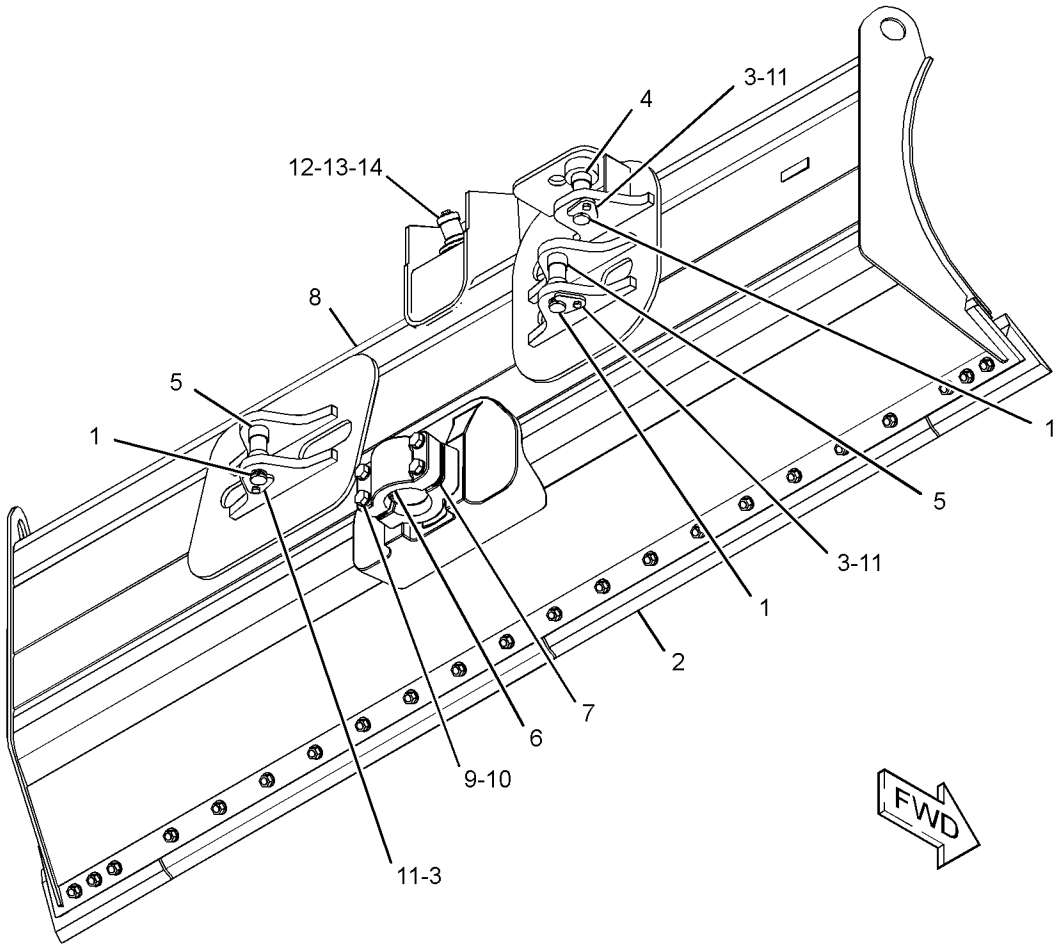

GRAPHIC #1 **<END>** g02764057

255-1427 BLADE GP-ANGLING–XL GRADE CONTROL

S/N: MMM1-UP; RRR1-UP

PART OF 255-1425 BLADE AR-PWR ANGLE & TILT

AN ATTACHMENT

SMCS-6052, 6060, 6701 **i04544100**

NOTE	REF NO	GRAPHIC REF	PART NUMBER	QTY	PART NAME 1 2 3 4 5 6 (PRODUCT LEVEL)	SEE PAGE
	1	1	**6Y-1421**	3	PIN	
	2	1	**8J-0729**	3	RETAINER	
	3	1	**150-0351**	2	SPACER (38.3X44.45X20.8-MM THK)	
	4	1	**150-0352**	4	SPACER (38.30X44.45X27.3-MM THK)	
	5	1	**179-5755**	1	CAP-BEARING	
B	6	1	**183-5297**	26	SHIM (0.8-MM THK)	
Y	7	1	*255-1428*	1	EDGE GP-BIT & CUTTING (LEVEL CUT)	917
	8	1	**255-1430**	1	BLADE AS-ANGLING	
	9	1	**225-0098**	4	BOLT (M20X2.5X140-MM)	
	10	1	**8T-3282**	4	WASHER-HARD (22X35X3.5-MM THK)	
M	11	1	**8T-4195**	3	BOLT (M10X1.5X30-MM)	
	12	1	**7D-1649**	1	WASHER-HARD (13.5X32X5-MM THK)	
	13	1	**7I-3930**	1	BOSS	
M	14	1	**8T-4194**	1	BOLT (M12X1.75X50-MM)	

B - USE AS REQUIRED
M - METRIC PART
Y - SEPARATE ILLUSTRATION

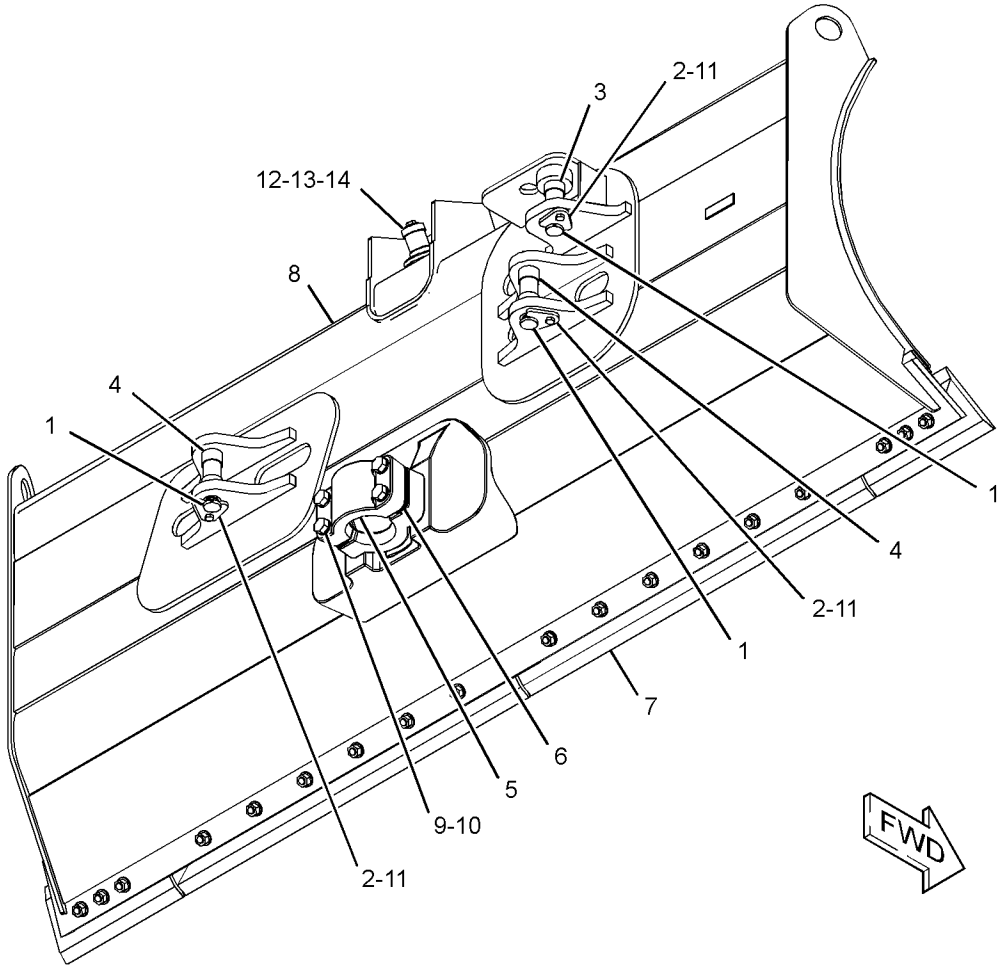

GRAPHIC #1 **<END>** g02760538

255-1471 BLADE GP-ANGLING—LOW GROUND PRESSURE

S/N: MMM1-UP; RRR1-UP
PART OF 255-1470 BLADE AR-PWR ANGLE & TILT
AN ATTACHMENT

SMCS-6052, 6060, 6701 **i04544098**

NOTE	REF NO	GRAPHIC REF	PART NUMBER	QTY	PART NAME 1 2 3 4 5 6 (PRODUCT LEVEL)	SEE PAGE
	1	1	**6Y-1421**	3	PIN	
	2	1	**8J-0729**	3	RETAINER	
	3	1	**150-0351**	2	SPACER (38.3X44.45X20.8-MM THK)	
	4	1	**150-0352**	4	SPACER (38.30X44.45X27.3-MM THK)	
	5	1	**179-5755**	1	CAP-BEARING	
B	6	1	**183-5297**	26	SHIM (0.8-MM THK)	
Y	7	1	*255-1472*	1	EDGE GP-BIT & CUTTING (LEVEL CUT)	917
	8	1	**255-1475**	1	BLADE AS-ANGLING	
	9	1	**225-0098**	4	BOLT (M20X2.5X140-MM)	
	10	1	**8T-3282**	4	WASHER-HARD (22X35X3.5-MM THK)	
M	11	1	**8T-4195**	3	BOLT (M10X1.5X30-MM)	
	12	1	**7D-1649**	1	WASHER-HARD (13.5X32X5-MM THK)	
	13	1	**7I-3930**	1	BOSS	
M	14	1	**8T-4194**	1	BOLT (M12X1.75X50-MM)	

B - USE AS REQUIRED
M - METRIC PART
Y - SEPARATE ILLUSTRATION

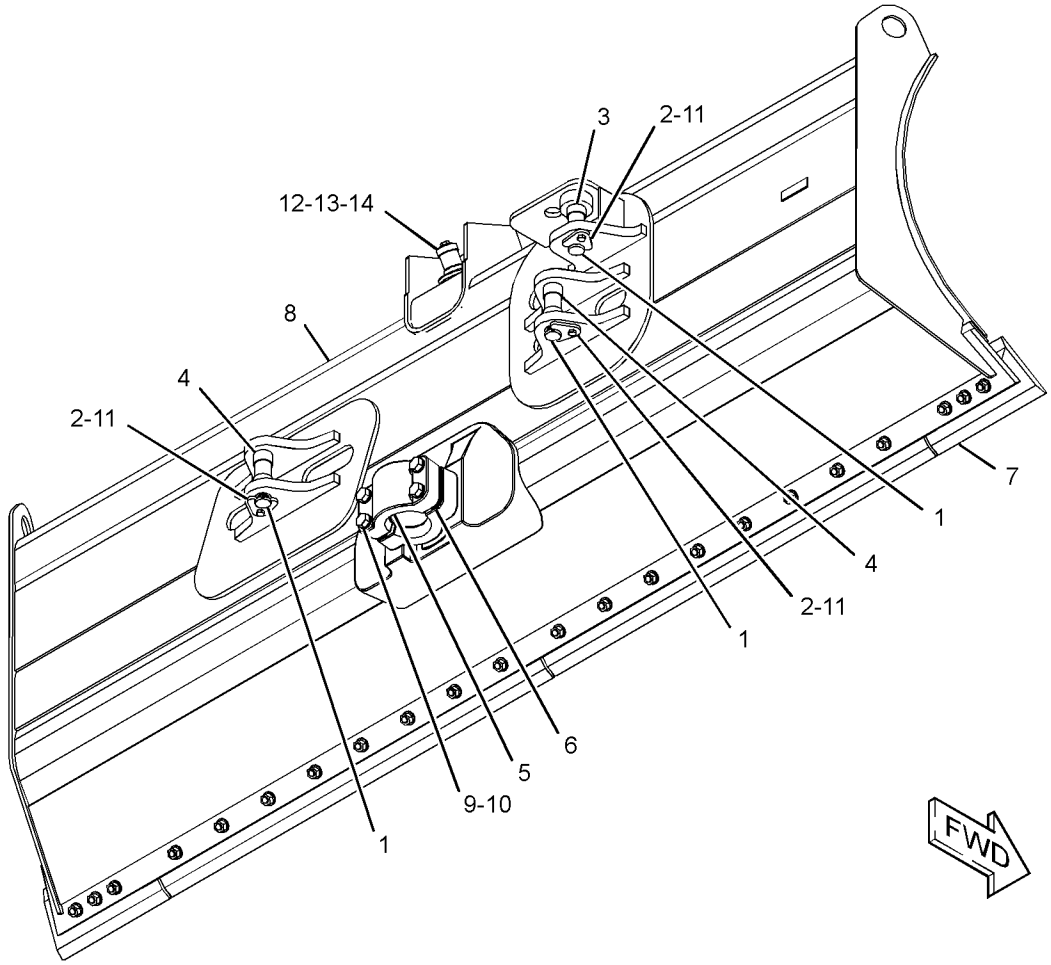

GRAPHIC #1 **<END>** g02760638

255-1487 BLADE GP-ANGLING–XL GRADE CONTROL

S/N: MMM1-UP; RRR1-UP
PART OF 255-1486 BLADE AR-PWR ANGLE & TILT
AN ATTACHMENT

SMCS-6052, 6060, 6701 **i04546127**

NOTE	REF NO	GRAPHIC REF	PART NUMBER	QTY	PART NAME 1 2 3 4 5 6 (PRODUCT LEVEL)	SEE PAGE
	1	1	**6Y-1421**	3	PIN	
	2	1	**8J-0729**	3	RETAINER	
	3	1	**150-0351**	2	SPACER (38.3X44.45X20.8-MM THK)	
	4	1	**150-0352**	4	SPACER (38.30X44.45X27.3-MM THK)	
Y	5	1	*179-2897*	1	EDGE GP-BIT & CUTTING	916
	6	1	**179-5755**	1	CAP-BEARING	
B	7	1	**183-5297**	26	SHIM (0.8-MM THK)	
	8	1	**255-1490**	1	BLADE AS-ANGLING	
	9	1	**225-0098**	4	BOLT (M20X2.5X140-MM)	
	10	1	**8T-3282**	4	WASHER-HARD (22X35X3.5-MM THK)	
M	11	1	**8T-4195**	3	BOLT (M10X1.5X30-MM)	
	12	1	**7D-1649**	1	WASHER-HARD (13.5X32X5-MM THK)	
	13	1	**7I-3930**	1	BOSS	
M	14	1	**8T-4194**	1	BOLT (M12X1.75X50-MM)	

B - USE AS REQUIRED
M - METRIC PART
Y - SEPARATE ILLUSTRATION

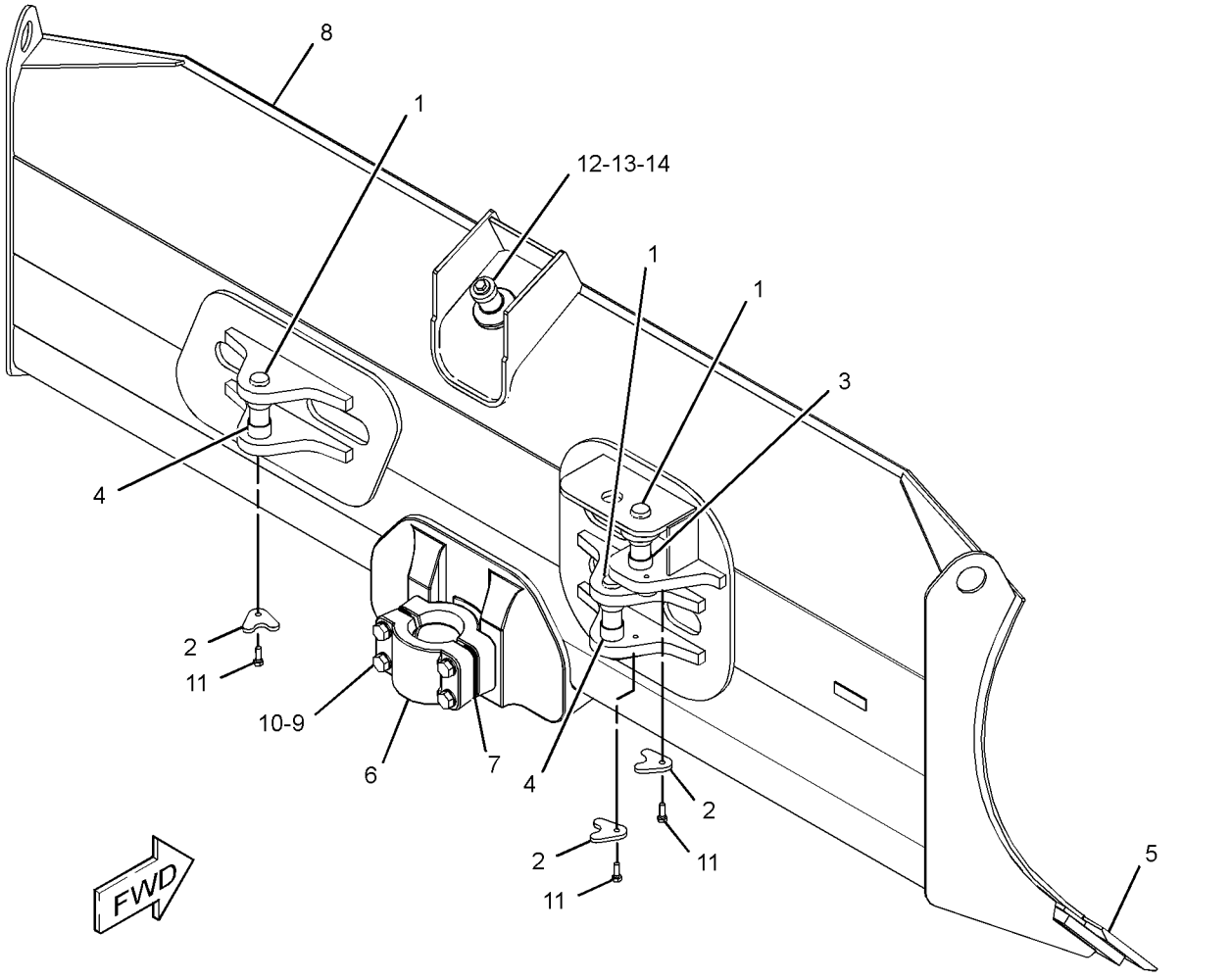

GRAPHIC #1 **<END>** g02760736

255-1503 BLADE GP-ANGLING—XL GRADE CONTROL

S/N: MMM1-UP; RRR1-UP

PART OF 255-1502 BLADE AR-PWR ANGLE & TILT

AN ATTACHMENT

SMCS-6052, 6060, 6701 **i04546126**

NOTE	REF NO	GRAPHIC REF	PART NUMBER	QTY	PART NAME 1 2 3 4 5 6 (PRODUCT LEVEL)	SEE PAGE
	1	1	**6Y-1421**	3	PIN	
	2	1	**8J-0729**	3	RETAINER	
	3	1	**150-0351**	2	SPACER (38.3X44.45X20.8-MM THK)	
	4	1	**150-0352**	4	SPACER (38.30X44.45X27.3-MM THK)	
	5	1	**179-5755**	1	CAP-BEARING	
B	6	1	**183-5297**	26	SHIM (0.8-MM THK)	
Y	7	1	*255-1501*	1	EDGE GP-BIT & CUTTING	918
	8	1	**331-0163**	1	BLADE AS-ANGLING	
	9	1	**225-0098**	4	BOLT (M20X2.5X140-MM)	
	10	1	**8T-3282**	4	WASHER-HARD (22X35X3.5-MM THK)	
M	11	1	**8T-4195**	3	BOLT (M10X1.5X30-MM)	
	12	1	**7D-1649**	1	WASHER-HARD (13.5X32X5-MM THK)	
	13	1	**7I-3930**	1	BOSS	
M	14	1	**8T-4194**	1	BOLT (M12X1.75X50-MM)	

B - USE AS REQUIRED
M - METRIC PART
Y - SEPARATE ILLUSTRATION

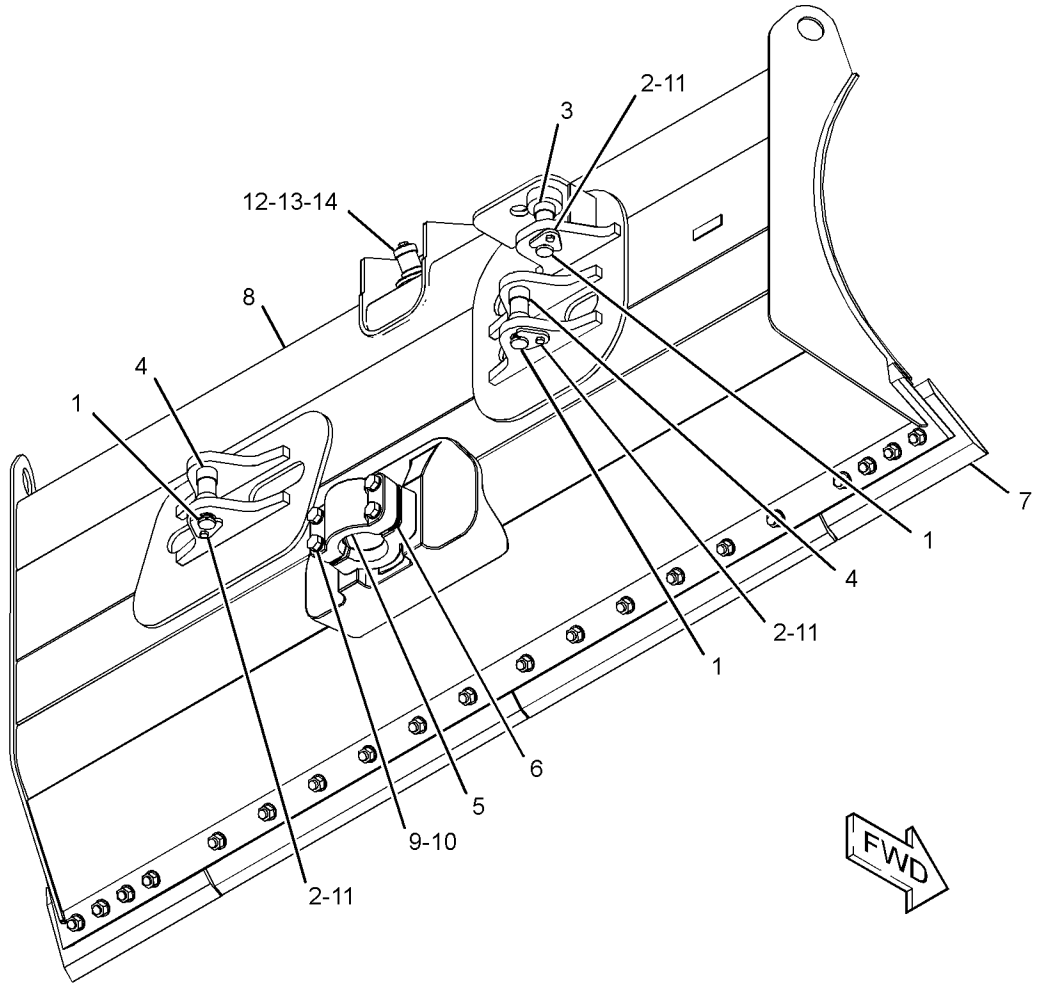

GRAPHIC #1 **<END>** g02760796

255-2370 BLADE GP-ANGLING—LOW GROUND PRESSURE

S/N: MMM1-UP; RRR1-UP
PART OF 255-2368 BLADE AR-PWR ANGLE & TILT
AN ATTACHMENT

SMCS-6052, 6060, 6701 **i04561305**

NOTE	REF NO	GRAPHIC REF	PART NUMBER	QTY	PART NAME 1 2 3 4 5 6 (PRODUCT LEVEL)	SEE PAGE
	1	1	**6Y-1421**	3	PIN	
Y	2	1	*6Y-5838*	1	EDGE GP-BIT & CUTTING	915
	3	1	**8J-0729**	3	RETAINER	
	4	1	**150-0351**	2	SPACER (38.3X44.45X20.8-MM THK)	
	5	1	**150-0352**	4	SPACER (38.30X44.45X27.3-MM THK)	
	6	1	**179-5755**	1	CAP-BEARING	
B	7	1	**183-5297**	26	SHIM (0.8-MM THK)	
	8	1	**255-2371**	1	BLADE AS-ANGLING	
	9	1	**225-0098**	4	BOLT (M20X2.5X140-MM)	
	10	1	**8T-3282**	4	WASHER-HARD (22X35X3.5-MM THK)	
M	11	1	**8T-4195**	3	BOLT (M10X1.5X30-MM)	
M	12	1	**5C-9553**	4	BOLT (M6X1X16-MM)	
	13	1	**9X-8256**	4	WASHER (6.6X12X2-MM THK)	
	14	1	**7D-1649**	1	WASHER-HARD (13.5X32X5-MM THK)	
	15	1	**7I-3930**	1	BOSS	
M	16	1	**8T-4194**	1	BOLT (M12X1.75X50-MM)	

B - USE AS REQUIRED
M - METRIC PART
Y - SEPARATE ILLUSTRATION

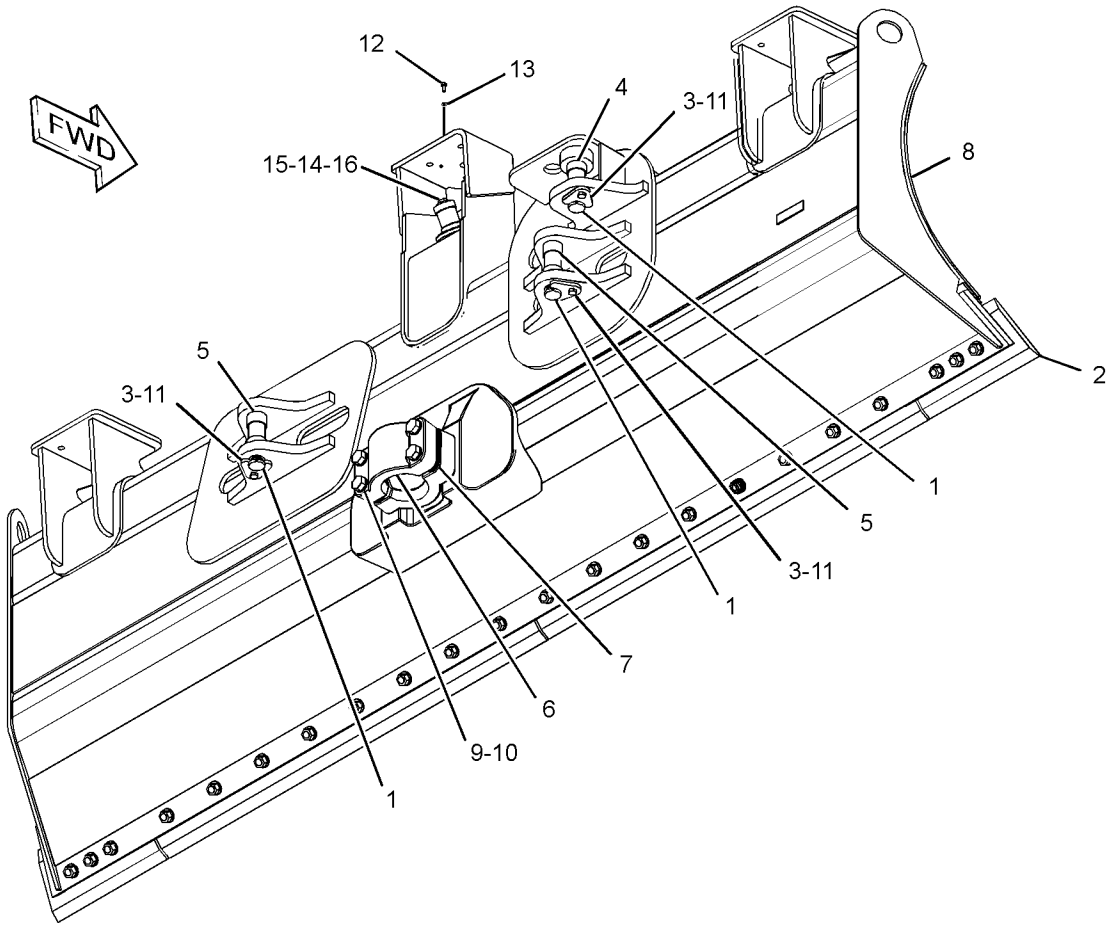

GRAPHIC #1 **<END>** g02764636

255-2373 BLADE GP-ANGLING—XL GRADE CONTROL

S/N: MMM1-UP; RRR1-UP
PART OF 255-2372 BLADE AR-PWR ANGLE & TILT
AN ATTACHMENT

SMCS-6052, 6060, 6701 **i04560917**

NOTE	REF NO	GRAPHIC REF	PART NUMBER	QTY	PART NAME 1 2 3 4 5 6 (PRODUCT LEVEL)	SEE PAGE
	1	1	**6Y-1421**	3	PIN	
	2	1	**8J-0729**	3	RETAINER	
	3	1	**150-0351**	2	SPACER (38.3X44.45X20.8-MM THK)	
	4	1	**150-0352**	4	SPACER (38.30X44.45X27.3-MM THK)	
	5	1	**179-5755**	1	CAP-BEARING	
B	6	1	**183-5297**	26	SHIM (0.8-MM THK)	
Y	7	1	*255-1426*	1	EDGE GP-BIT & CUTTING (LEVEL CUT)	917
	8	1	**255-2374**	1	BLADE AS-ANGLING	
	9	1	**225-0098**	4	BOLT (M20X2.5X140-MM)	
	10	1	**8T-3282**	4	WASHER-HARD (22X35X3.5-MM THK)	
M	11	1	**8T-4195**	3	BOLT (M10X1.5X30-MM)	
M	12	1	**5C-9553**	4	BOLT (M6X1X16-MM)	
	13	1	**9X-8256**	4	WASHER (6.6X12X2-MM THK)	
	14	1	**7D-1649**	1	WASHER-HARD (13.5X32X5-MM THK)	
	15	1	**7I-3930**	1	BOSS	
M	16	1	**8T-4194**	1	BOLT (M12X1.75X50-MM)	

B - USE AS REQUIRED
M - METRIC PART
Y - SEPARATE ILLUSTRATION

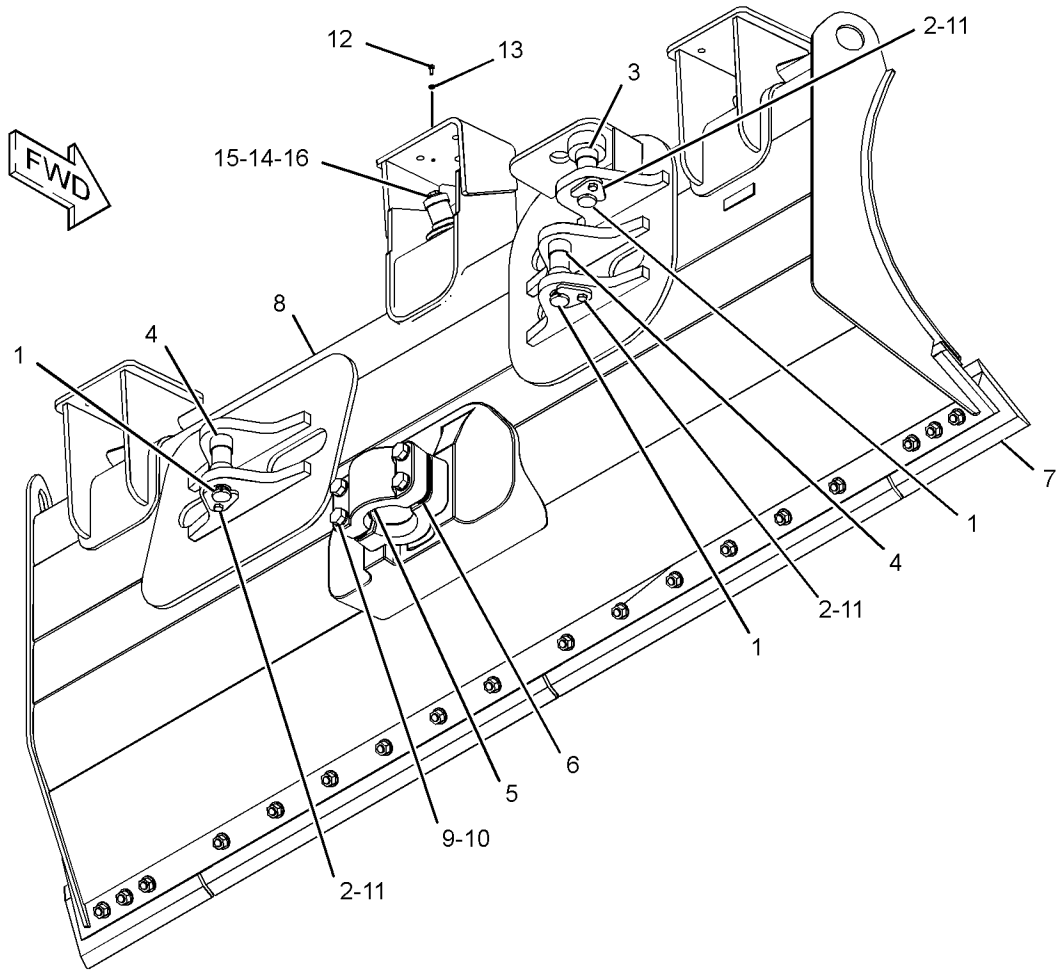

GRAPHIC #1 **<END>** g02765058

255-2376 BLADE GP-ANGLING—LOW GROUND PRESSURE

S/N: MMM1-UP; RRR1-UP
PART OF 255-2375 BLADE AR-PWR ANGLE & TILT
AN ATTACHMENT

SMCS-6052, 6060, 6701 **i04560916**

NOTE	REF NO	GRAPHIC REF	PART NUMBER	QTY	PART NAME 1 2 3 4 5 6 (PRODUCT LEVEL)	SEE PAGE
	1	1	**6Y-1421**	3	PIN	
Y	2	1	*6Y-5838*	1	EDGE GP-BIT & CUTTING	915
	3	1	**8J-0729**	3	RETAINER	
	4	1	**150-0351**	2	SPACER (38.3X44.45X20.8-MM THK)	
	5	1	**150-0352**	4	SPACER (38.30X44.45X27.3-MM THK)	
	6	1	**179-5755**	1	CAP-BEARING	
B	7	1	**183-5297**	26	SHIM (0.8-MM THK)	
	8	1	**255-2377**	1	BLADE AS-ANGLING	
	9	1	**225-0098**	4	BOLT (M20X2.5X140-MM)	
	10	1	**8T-3282**	4	WASHER-HARD (22X35X3.5-MM THK)	
M	11	1	**8T-4195**	3	BOLT (M10X1.5X30-MM)	
M	12	1	**5C-9553**	4	BOLT (M6X1X16-MM)	
	13	1	**9X-8256**	4	WASHER (6.6X12X2-MM THK)	
	14	1	**7D-1649**	1	WASHER-HARD (13.5X32X5-MM THK)	
	15	1	**7I-3930**	1	BOSS	
M	16	1	**8T-4194**	1	BOLT (M12X1.75X50-MM)	

B - USE AS REQUIRED
M - METRIC PART
Y - SEPARATE ILLUSTRATION

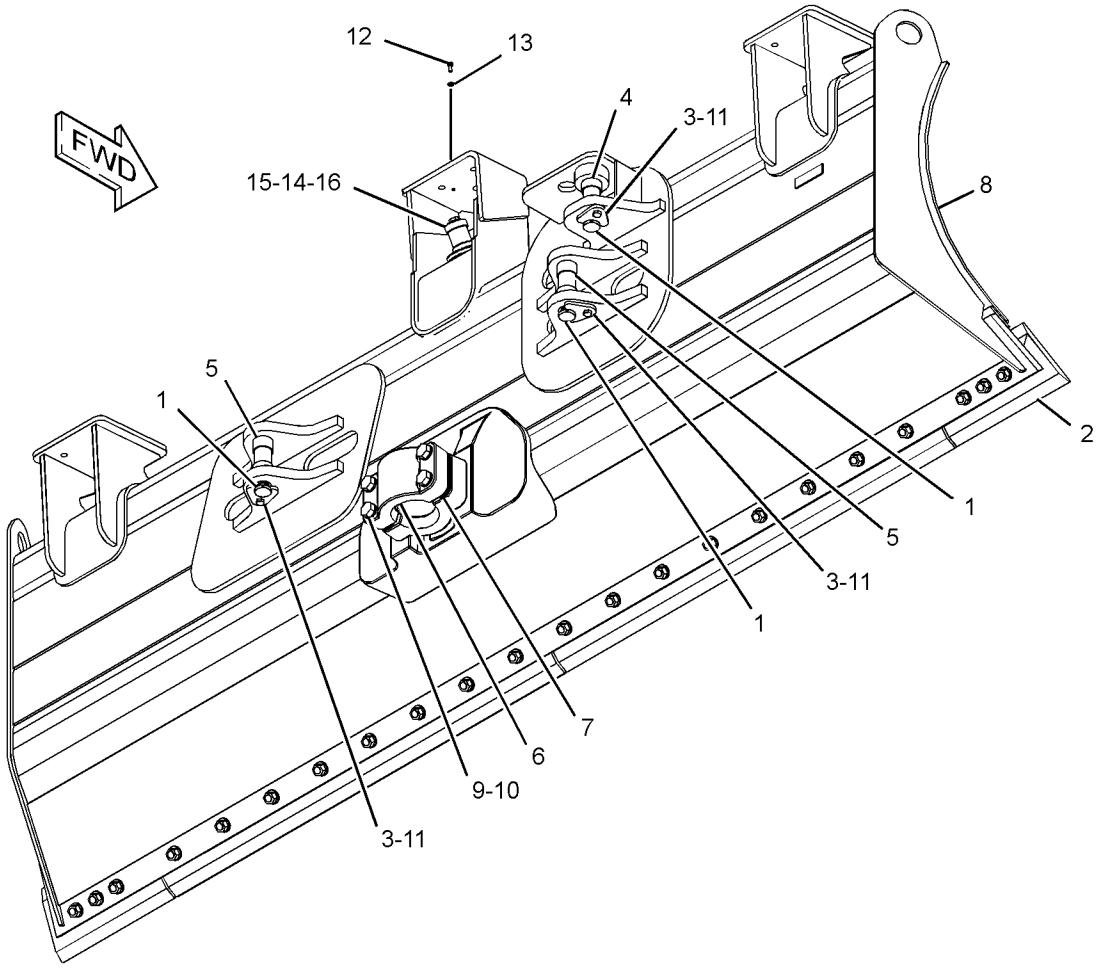

GRAPHIC #1 **<END>** g02765078

255-2379 BLADE GP-ANGLING—XL GRADE CONTROL

S/N: MMM1-UP; RRR1-UP
PART OF 255-2378 BLADE AR-PWR ANGLE & TILT
AN ATTACHMENT

SMCS-6052, 6060, 6701 **i04560915**

NOTE	REF NO	GRAPHIC REF	PART NUMBER	QTY	PART NAME 1 2 3 4 5 6 (PRODUCT LEVEL)	SEE PAGE
	1	1	**6Y-1421**	3	PIN	
	2	1	**8J-0729**	3	RETAINER	
	3	1	**150-0351**	2	SPACER (38.3X44.45X20.8-MM THK)	
	4	1	**150-0352**	4	SPACER (38.30X44.45X27.3-MM THK)	
	5	1	**179-5755**	1	CAP-BEARING	
B	6	1	**183-5297**	26	SHIM (0.8-MM THK)	
Y	7	1	*255-1428*	1	EDGE GP-BIT & CUTTING (LEVEL CUT)	917
	8	1	**255-2380**	1	BLADE AS-ANGLING	
	9	1	**225-0098**	4	BOLT (M20X2.5X140-MM)	
	10	1	**8T-3282**	4	WASHER-HARD (22X35X3.5-MM THK)	
M	11	1	**8T-4195**	3	BOLT (M10X1.5X30-MM)	
M	12	1	**5C-9553**	4	BOLT (M6X1X16-MM)	
	13	1	**9X-8256**	4	WASHER (6.6X12X2-MM THK)	
	14	1	**7D-1649**	1	WASHER-HARD (13.5X32X5-MM THK)	
	15	1	**7I-3930**	1	BOSS	
M	16	1	**8T-4194**	1	BOLT (M12X1.75X50-MM)	

B - USE AS REQUIRED
M - METRIC PART
Y - SEPARATE ILLUSTRATION

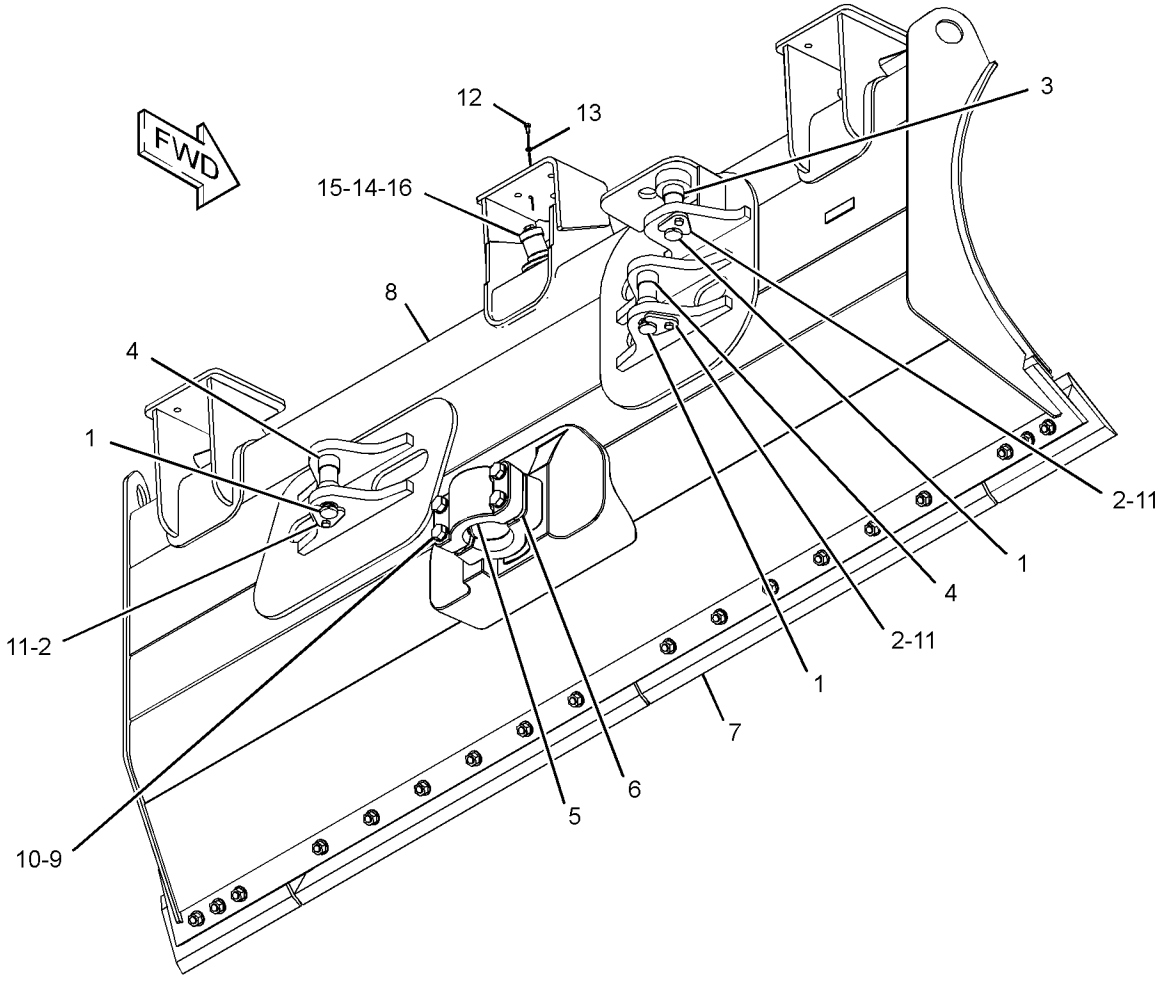

GRAPHIC #1 **<END>** g02765097

255-2383 BLADE GP-ANGLING—LOW GROUND PRESSURE

S/N: MMM1-UP; RRR1-UP
PART OF 255-2381 BLADE AR-PWR ANGLE & TILT
AN ATTACHMENT

SMCS-6052, 6060, 6701 **i04560914**

NOTE	REF NO	GRAPHIC REF	PART NUMBER	QTY	PART NAME 1 2 3 4 5 6 (PRODUCT LEVEL)	SEE PAGE
	1	1	**6Y-1421**	3	PIN	
	2	1	**8J-0729**	3	RETAINER	
	3	1	**150-0351**	2	SPACER (38.3X44.45X20.8-MM THK)	
	4	1	**150-0352**	4	SPACER (38.30X44.45X27.3-MM THK)	
	5	1	**179-5755**	1	CAP-BEARING	
B	6	1	**183-5297**	26	SHIM (0.8-MM THK)	
Y	7	1	*255-1472*	1	EDGE GP-BIT & CUTTING (LEVEL CUT)	917
	8	1	**255-2384**	1	BLADE AS-ANGLING	
	9	1	**225-0098**	4	BOLT (M20X2.5X140-MM)	
	10	1	**8T-3282**	4	WASHER-HARD (22X35X3.5-MM THK)	
M	11	1	**8T-4195**	3	BOLT (M10X1.5X30-MM)	
M	12	1	**5C-9553**	4	BOLT (M6X1X16-MM)	
	13	1	**9X-8256**	4	WASHER (6.6X12X2-MM THK)	
	14	1	**7D-1649**	1	WASHER-HARD (13.5X32X5-MM THK)	
	15	1	**7I-3930**	1	BOSS	
M	16	1	**8T-4194**	1	BOLT (M12X1.75X50-MM)	

B - USE AS REQUIRED
M - METRIC PART
Y - SEPARATE ILLUSTRATION

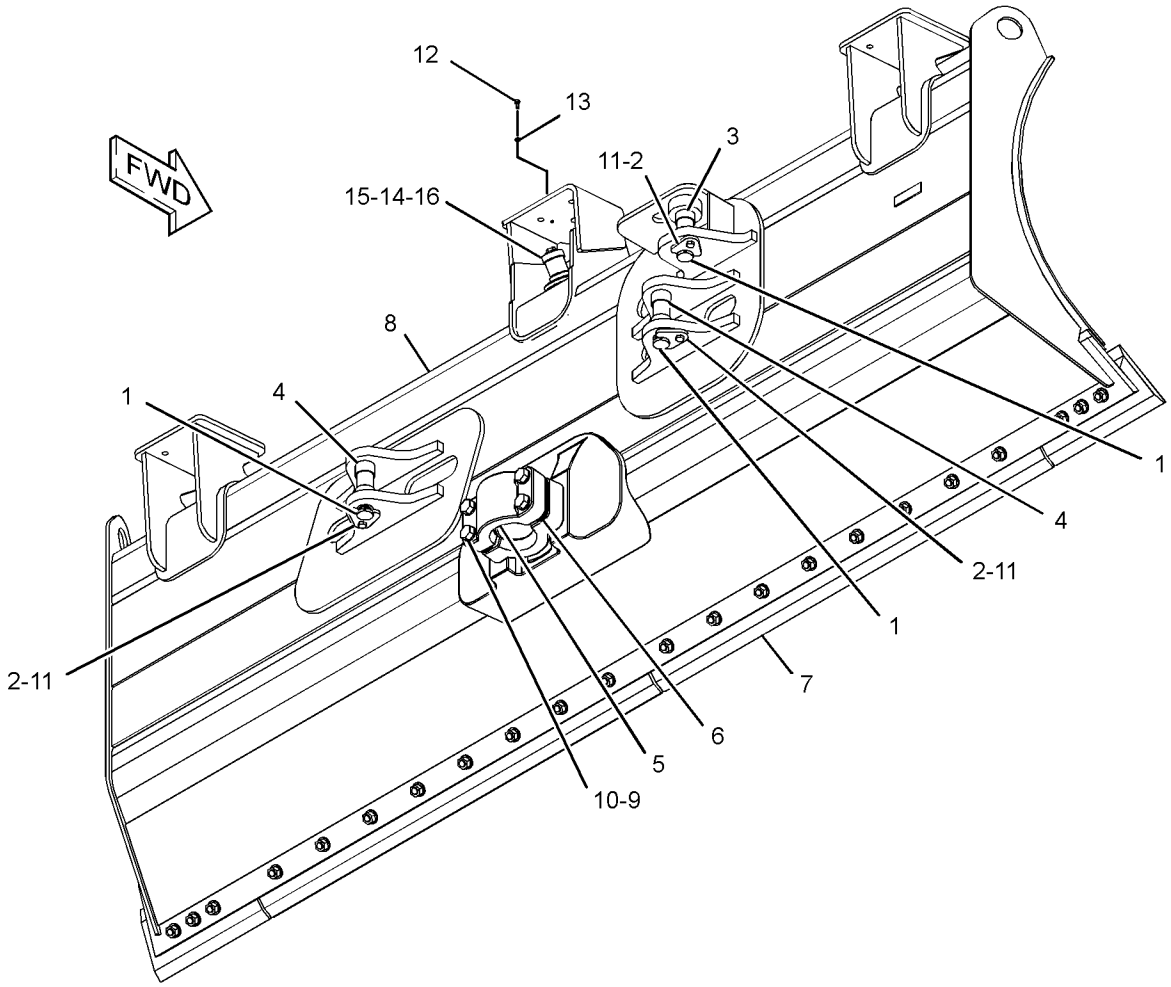

GRAPHIC #1 **<END>** g02765116

255-2386 BLADE GP-ANGLING—XL GRADE CONTROL

S/N: MMM1-UP; RRR1-UP
PART OF 255-2385 BLADE AR-PWR ANGLE & TILT
AN ATTACHMENT

SMCS-6052, 6060, 6701 **i04560913**

NOTE	REF NO	GRAPHIC REF	PART NUMBER	QTY	PART NAME 1 2 3 4 5 6 (PRODUCT LEVEL)	SEE PAGE
	1	1	**6Y-1421**	3	PIN	
	2	1	**8J-0729**	3	RETAINER	
	3	1	**150-0351**	2	SPACER (38.3X44.45X20.8-MM THK)	
	4	1	**150-0352**	4	SPACER (38.30X44.45X27.3-MM THK)	
Y	5	1	*179-2897*	1	EDGE GP-BIT & CUTTING	916
	6	1	**179-5755**	1	CAP-BEARING	
B	7	1	**183-5297**	26	SHIM (0.8-MM THK)	
	8	1	**255-2387**	1	BLADE AS-ANGLING	
	9	1	**225-0098**	4	BOLT (M20X2.5X140-MM)	
	10	1	**8T-3282**	4	WASHER-HARD (22X35X3.5-MM THK)	
M	11	1	**8T-4195**	3	BOLT (M10X1.5X30-MM)	
M	12	1	**5C-9553**	4	BOLT (M6X1X16-MM)	
	13	1	**9X-8256**	4	WASHER (6.6X12X2-MM THK)	
	14	1	**7D-1649**	1	WASHER-HARD (13.5X32X5-MM THK)	
	15	1	**7I-3930**	1	BOSS	
M	16	1	**8T-4194**	1	BOLT (M12X1.75X50-MM)	

B - USE AS REQUIRED
M - METRIC PART
Y - SEPARATE ILLUSTRATION

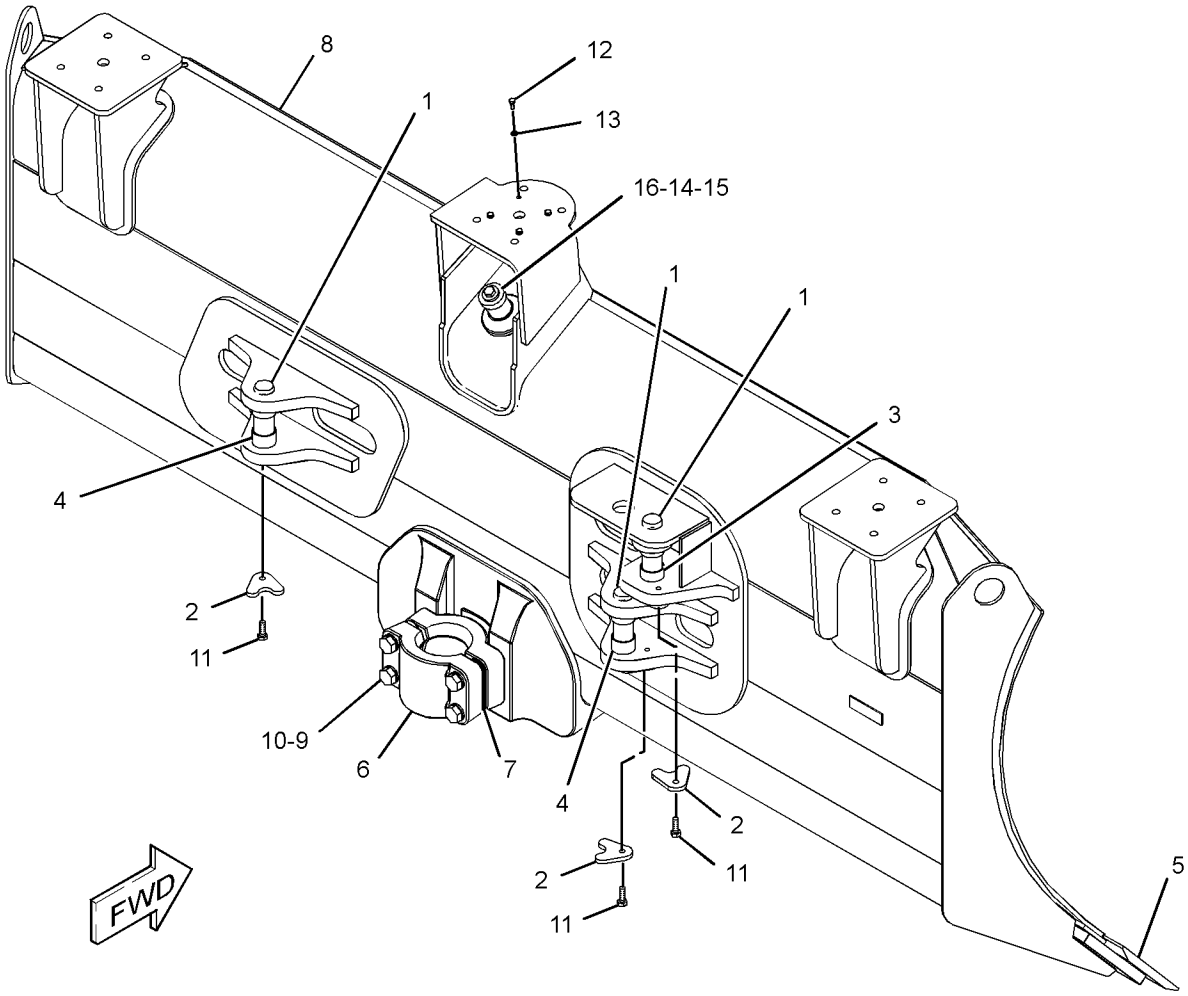

GRAPHIC #1 **<END>** g02765176

255-2391 BLADE GP-ANGLING—XL GRADE CONTROL

S/N: MMM1-UP; RRR1-UP
PART OF 255-2390 BLADE AR-PWR ANGLE & TILT
AN ATTACHMENT

SMCS-6052, 6060, 6701

i04560912

NOTE	REF NO	GRAPHIC REF	PART NUMBER	QTY	PART NAME 1 2 3 4 5 6 (PRODUCT LEVEL)	SEE PAGE
	1	1	**6Y-1421**	3	PIN	
	2	1	**8J-0729**	3	RETAINER	
	3	1	**150-0351**	2	SPACER (38.3X44.45X20.8-MM THK)	
	4	1	**150-0352**	4	SPACER (38.30X44.45X27.3-MM THK)	
	5	1	**179-5755**	1	CAP-BEARING	
B	6	1	**183-5297**	26	SHIM (0.8-MM THK)	
Y	7	1	*255-1501*	1	EDGE GP-BIT & CUTTING (ANGLE BLADE)	918
	8	1	**331-0177**	1	BLADE AS-ANGLING	
		1	**8P-9770**	1	PLATE	
		1	**331-0163**	1	BLADE AS-ANGLING	
	9	1	**225-0098**	4	BOLT (M20X2.5X140-MM)	
	10	1	**8T-3282**	4	WASHER-HARD (22X35X3.5-MM THK)	
M	11	1	**8T-4195**	3	BOLT (M10X1.5X30-MM)	
M	12	1	**5C-9553**	4	BOLT (M6X1X16-MM)	
	13	1	**9X-8256**	4	WASHER (6.6X12X2-MM THK)	
	14	1	**7D-1649**	1	WASHER-HARD (13.5X32X5-MM THK)	
	15	1	**7I-3930**	1	BOSS	
M	16	1	**8T-4194**	1	BOLT (M12X1.75X50-MM)	

B - USE AS REQUIRED
M - METRIC PART
Y - SEPARATE ILLUSTRATION

255-2391 **BLADE GP-ANGLING (*contd.*)** **i04560912**

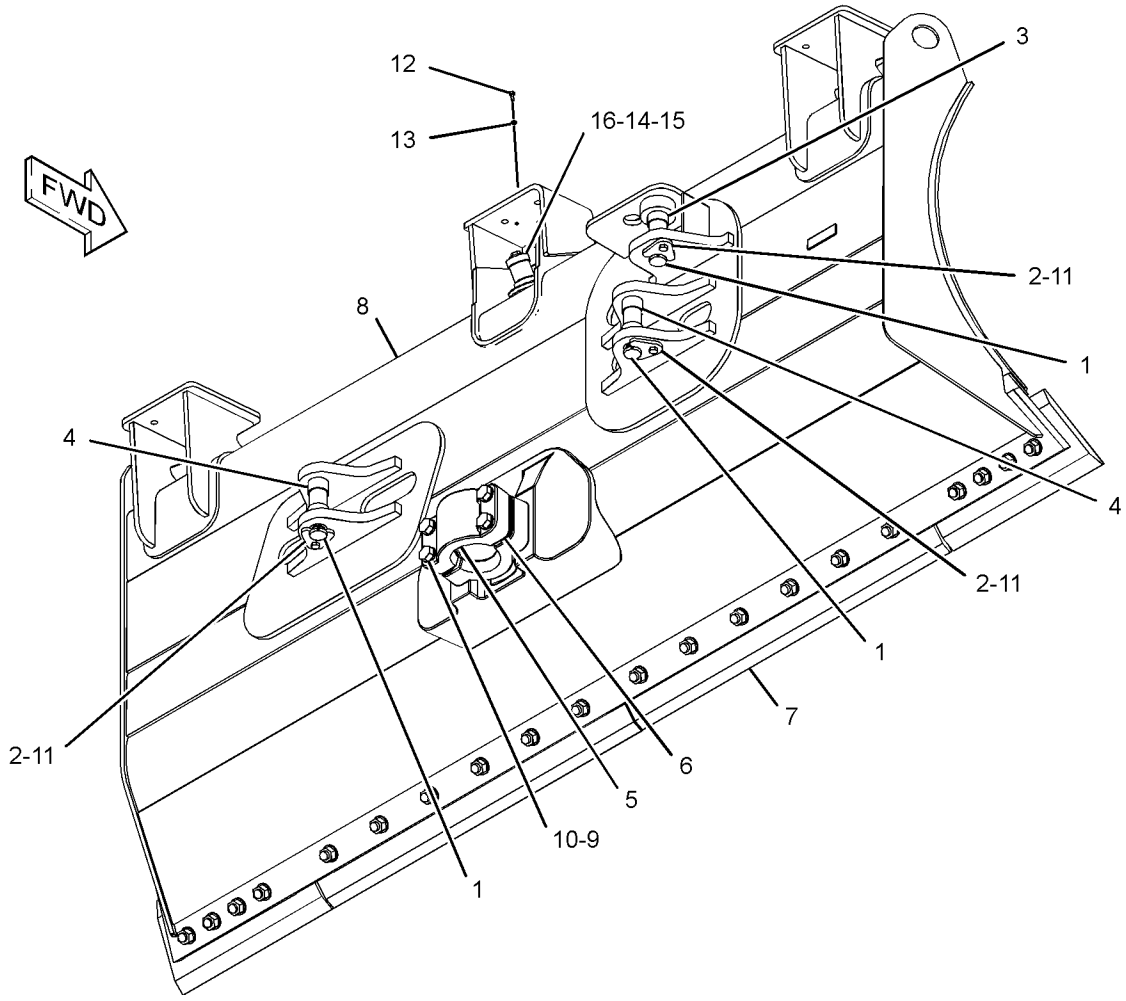

GRAPHIC #1 **<END>** g02765256

255-2394 BLADE GP-ANGLING—FORESTRY

S/N: MMM1-UP; RRR1-UP

PART OF 255-2393 BLADE AR-PWR ANGLE & TILT

AN ATTACHMENT

SMCS-6052, 6060, 6701 **i04560949**

NOTE	REF NO	GRAPHIC REF	PART NUMBER	QTY	PART NAME 1 2 3 4 5 6 (PRODUCT LEVEL)	SEE PAGE
	1	1	**6Y-1421**	3	PIN	
	2	1	**8J-0729**	3	RETAINER	
	3	1	**150-0351**	2	SPACER (38.3X44.45X20.8-MM THK)	
	4	1	**150-0352**	4	SPACER (38.30X44.45X27.3-MM THK)	
	5	1	**179-5755**	1	CAP-BEARING	
B	6	1	**183-5297**	26	SHIM (0.8-MM THK)	
Y	7	1	*255-1501*	1	EDGE GP-BIT & CUTTING (ANGLE BLADE)	918
	8	1	**331-0180**	1	BLADE AS-ANGLING	
	9	1	**225-0098**	4	BOLT (M20X2.5X140-MM)	
	10	1	**8T-3282**	4	WASHER-HARD (22X35X3.5-MM THK)	
M	11	1	**8T-4195**	3	BOLT (M10X1.5X30-MM)	
	12	1	**7D-1649**	1	WASHER-HARD (13.5X32X5-MM THK)	
	13	1	**7I-3930**	1	BOSS	
M	14	1	**8T-4194**	1	BOLT (M12X1.75X50-MM)	

B - USE AS REQUIRED
M - METRIC PART
Y - SEPARATE ILLUSTRATION

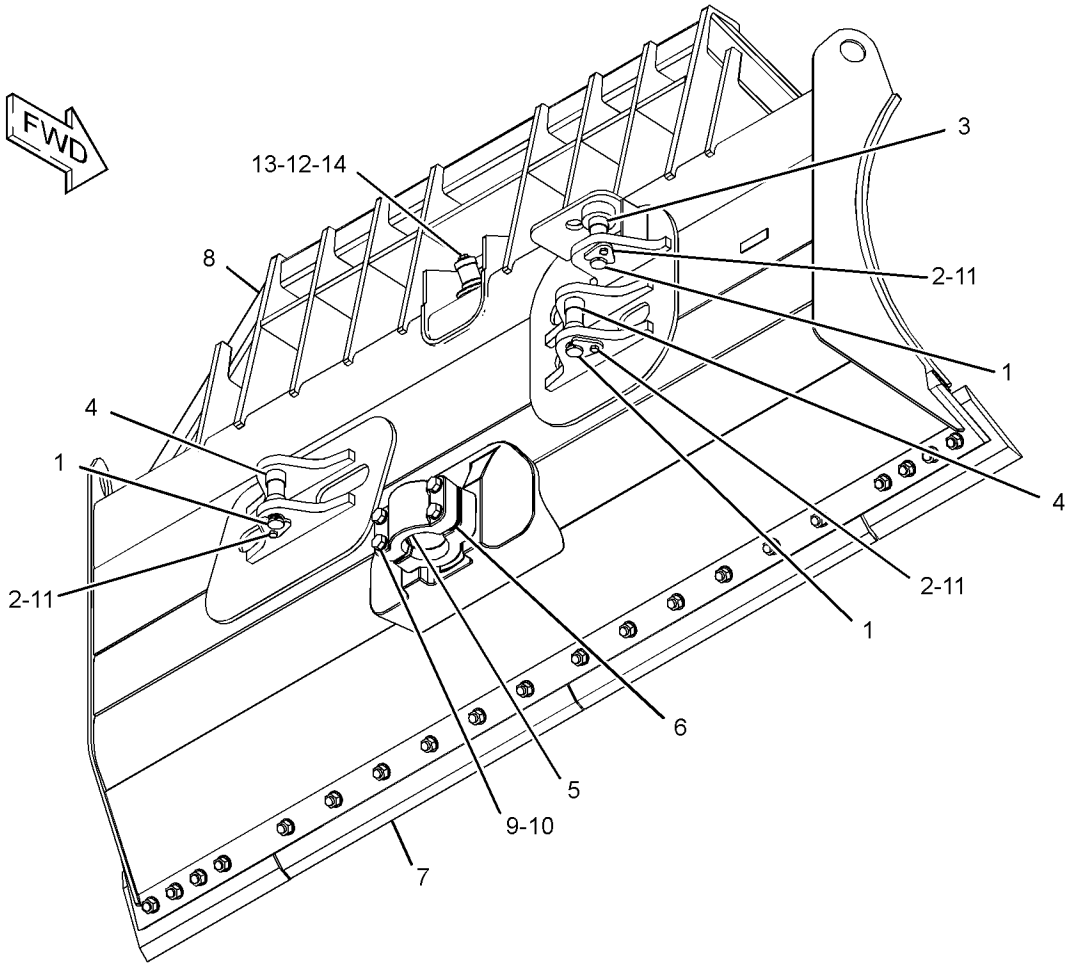

GRAPHIC #1 **<END>** g02767276

312-8351 BLADE GP-ANGLING

S/N: MMM1-UP; RRR1-UP
PART OF 312-8350 BLADE AR-PWR ANGLE & TILT
AN ATTACHMENT

SMCS-6052, 6060, 6701 **i04561320**

NOTE	REF NO	GRAPHIC REF	PART NUMBER	QTY	PART NAME 1 2 3 4 5 6 (PRODUCT LEVEL)	SEE PAGE
	1	1	**6Y-1421**	3	PIN	
	2	1	**8J-0729**	3	RETAINER	
	3	1	**150-0351**	2	SPACER (38.3X44.45X20.8-MM THK)	
	4	1	**150-0352**	4	SPACER (38.30X44.45X27.3-MM THK)	
Y	5	1	*179-2897*	1	EDGE GP-BIT & CUTTING	916
B	7	1	**183-5297**	26	SHIM (0.8-MM THK)	
	8	1	**312-8352**	1	BLADE AS-ANGLING	
	8A	1	**179-5755**	1	CAP-BEARING	
	8B	1	**8P-9770**	1	PLATE	
	9	1	**225-0098**	4	BOLT (M20X2.5X140-MM)	
	10	1	**8T-3282**	4	WASHER-HARD (22X35X3.5-MM THK)	
M	11	1	**8T-4195**	3	BOLT (M10X1.5X30-MM)	
	12	1	**7D-1649**	1	WASHER-HARD (13.5X32X5-MM THK)	
	13	1	**7I-3930**	1	BOSS	
M	14	1	**8T-4194**	1	BOLT (M12X1.75X50-MM)	

B - USE AS REQUIRED
M - METRIC PART
Y - SEPARATE ILLUSTRATION

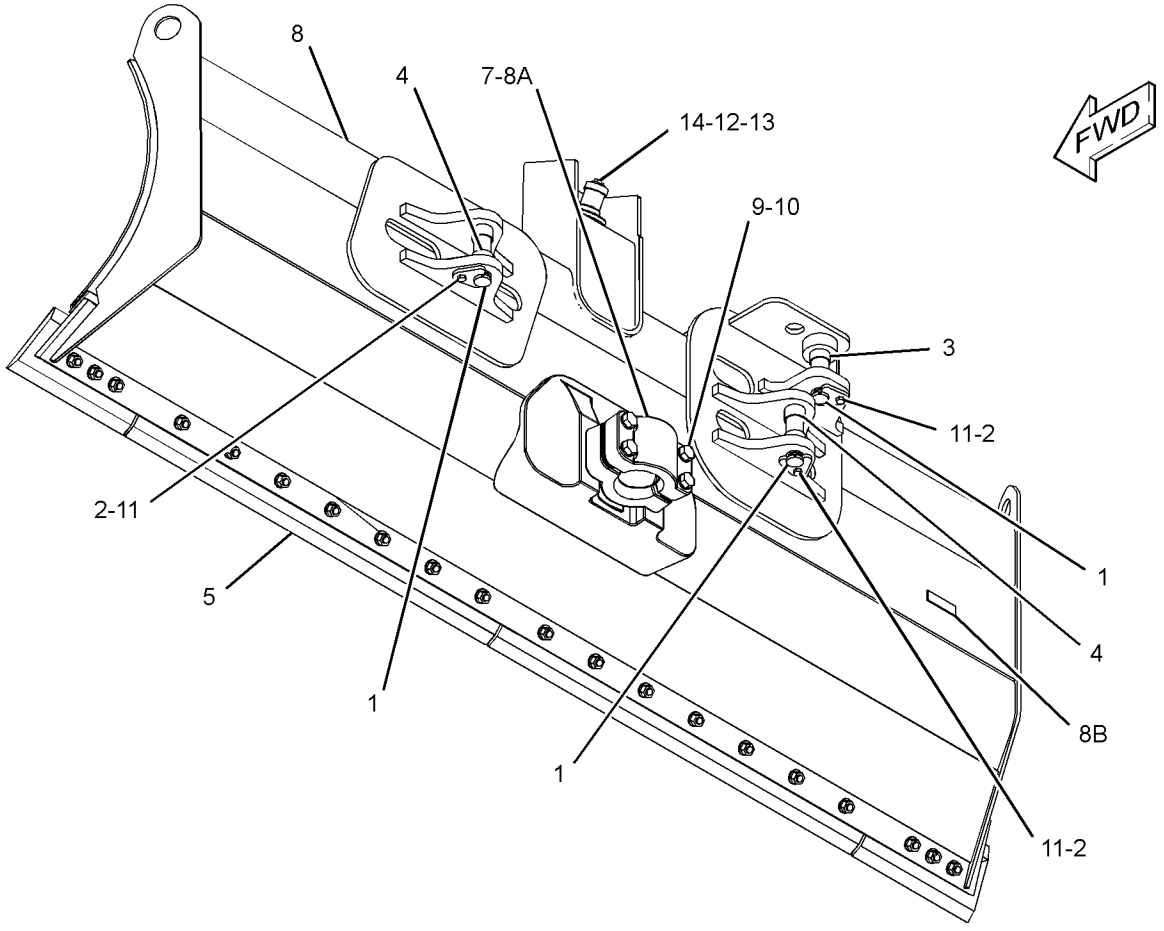

GRAPHIC #1 **<END>** g02767316

312-8361 BLADE GP-ANGLING—GRADE CONTROL

S/N: MMM1-UP; RRR1-UP
PART OF 312-8360 BLADE AR-PWR ANGLE & TILT
AN ATTACHMENT

SMCS-6052, 6060, 6701 **i04561319**

NOTE	REF NO	GRAPHIC REF	PART NUMBER	QTY	PART NAME 1 2 3 4 5 6 (PRODUCT LEVEL)	SEE PAGE
	1	1	**6Y-1421**	3	PIN	
	2	1	**8J-0729**	3	RETAINER	
	3	1	**150-0351**	2	SPACER (38.3X44.45X20.8-MM THK)	
	4	1	**150-0352**	4	SPACER (38.30X44.45X27.3-MM THK)	
Y	5	1	*179-2897*	1	EDGE GP-BIT & CUTTING	916
	6	1	**179-5755**	1	CAP-BEARING	
B	7	1	**183-5297**	26	SHIM (0.8-MM THK)	
	8	1	**312-8362**	1	BLADE AS-ANGLING	
	9	1	**225-0098**	4	BOLT (M20X2.5X140-MM)	
M	10	1	**5C-9553**	4	BOLT (M6X1X16-MM)	
	11	1	**8T-3282**	4	WASHER-HARD (22X35X3.5-MM THK)	
M	12	1	**8T-4195**	3	BOLT (M10X1.5X30-MM)	
	13	1	**9X-8256**	4	WASHER (6.6X12X2-MM THK)	
	14	1	**7D-1649**	1	WASHER-HARD (13.5X32X5-MM THK)	
	15	1	**7I-3930**	1	BOSS	
M	16	1	**8T-4194**	1	BOLT (M12X1.75X50-MM)	

B - USE AS REQUIRED
M - METRIC PART
Y - SEPARATE ILLUSTRATION

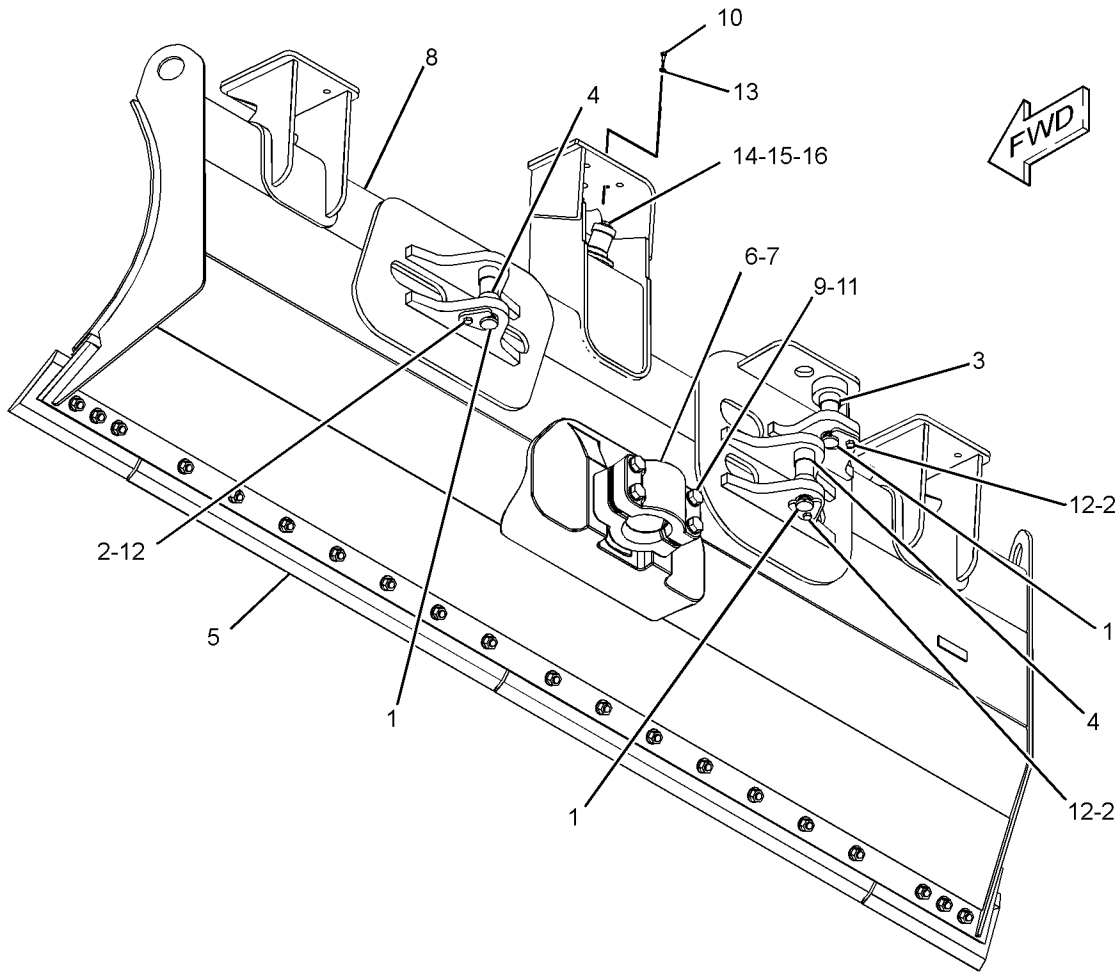

GRAPHIC #1 **<END>** g02767356

309-5090 BRAKE & PLANETARY GP-WINCH

S/N: MMM1-UP; RRR1-UP
PART OF 256-3738 WINCH AR
AN ATTACHMENT

SMCS-5165 **i02718222**

NOTE	REF NO	GRAPHIC REF	PART NUMBER	QTY	PART NAME 1 2 3 4 5 6 (PRODUCT LEVEL)	SEE PAGE
	1	1	**149-5461**	2	SEAL-O-RING	
Y	2	1	*309-5091*	1	BRAKE & PLANETARY GP-WINCH	894
	3	1	**3K-0360**	1	SEAL-O-RING	
	4	1	**7X-0288**	7	BOLT (3/8-16X1.625-IN)	
	5	1	**8T-4896**	7	WASHER-HARD (10.2X18.5X2.5-MM THK)	
	6	1	**9S-8005**	1	PLUG-O-RING	

Y - SEPARATE ILLUSTRATION

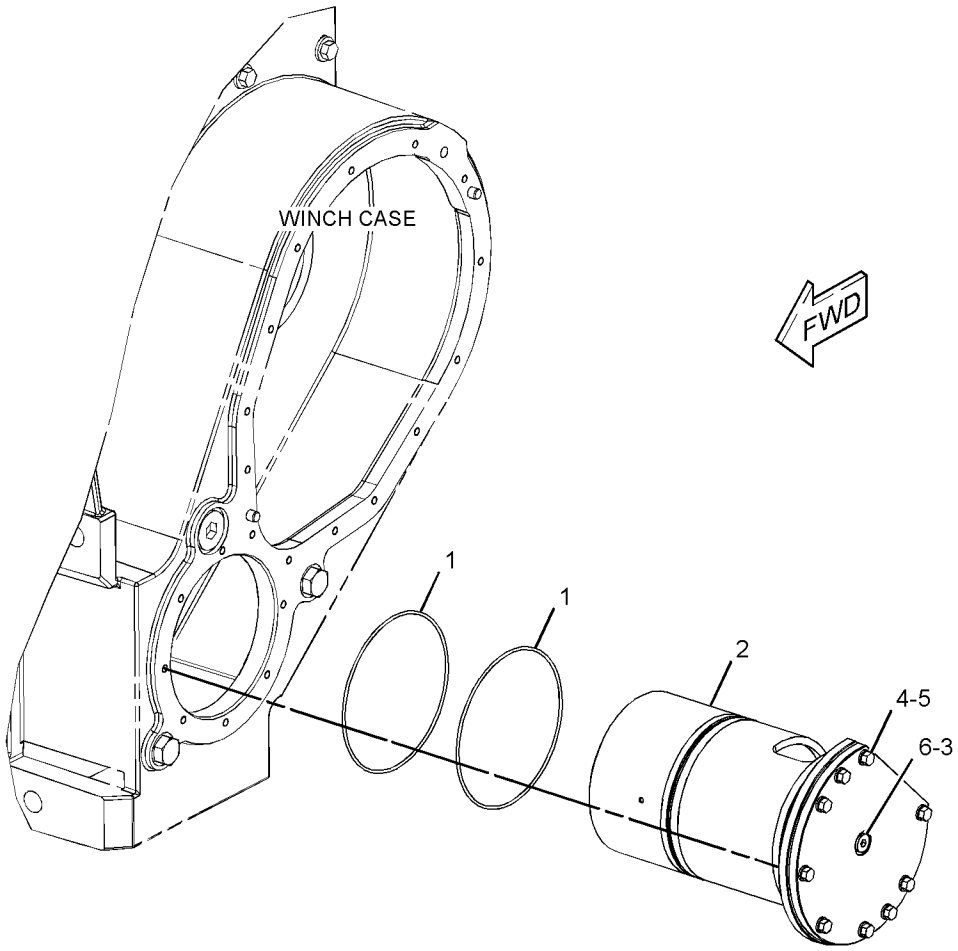

GRAPHIC #1 **<END>** g01378942

309-5091 BRAKE & PLANETARY GP-WINCH

S/N: MMM1-UP; RRR1-UP

PART OF 309-5090 BRAKE & PLANETARY GP-WINCH

AN ATTACHMENT

SMCS-5165 **i02718215**

NOTE	REF NO	GRAPHIC REF	PART NUMBER	QTY	PART NAME 1 2 3 4 5 6 (PRODUCT LEVEL)	SEE PAGE
	1	1	**8C-3312**	1	RING-RETAINING	
	2	1	**203-6631**	1	SHAFT	
Y	3	1	*211-8169*	1	PLANETARY GP-WINCH	934
Y	4	1	*211-8171*	1	GEAR GP-WINCH TRANSFER	924
	5	1	**211-8753**	1	COUPLING-MOTOR	
	6	1	**211-8754**	1	RING-THRUST	
Y	7	1	*309-5075*	1	BRAKE GP-SERVICE & PARKING	529
	8	1	**4L-6454**	2	BOLT (3/8-16X1-IN)	
	9	1	**8T-4896**	2	WASHER-HARD (10.2X18.5X2.5-MM THK)	

Y - SEPARATE ILLUSTRATION

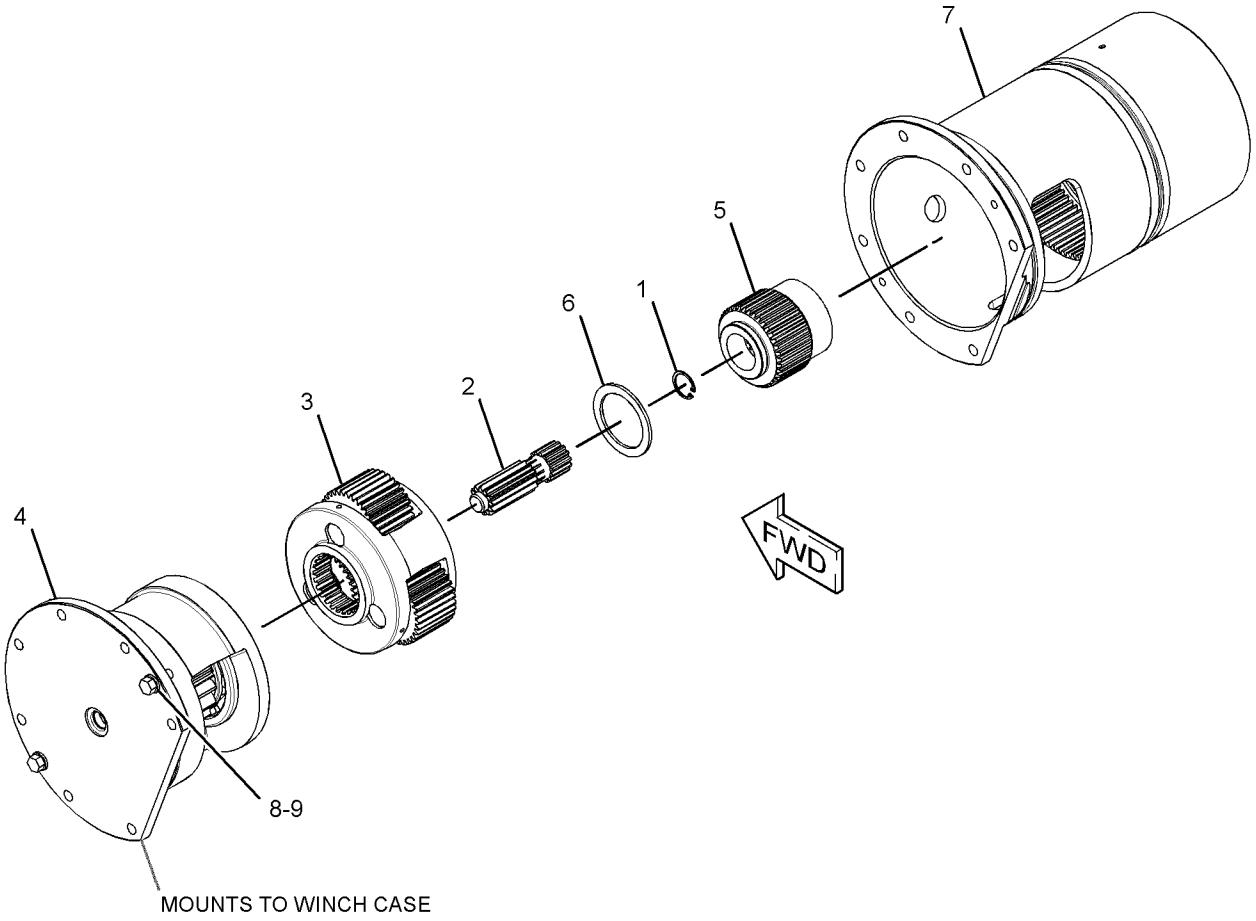

GRAPHIC #1 **<END>** g01374600

208-5546 CASE GP-WINCH

S/N: MMM1-UP; RRR1-UP
PART OF 256-3738 WINCH AR
AN ATTACHMENT

SMCS-5163 **i02719597**

NOTE	REF NO	GRAPHIC REF	PART NUMBER	QTY	PART NAME 1 2 3 4 5 6 (PRODUCT LEVEL)	SEE PAGE
C	1	1	**5P-9436**	2	PLUG	
	2	1	**8C-6868**	1	CONNECTOR	
	3	1	**203-6608**	1	BLOCK	
	4	1	**203-6609**	1	BLOCK	
C	5	1	**293-0777**	1	TUBE AS	
C	6	1	**293-0778**	1	CASE AS	
	7	1	**053-1578**	2	DOWEL	
C	8	1	**3D-2824**	2	SEAL-O-RING	
	9	1	**5P-1076**	4	WASHER-HARD (13.5X30X4-MM THK)	
	10	1	**6V-8397**	4	SEAL-O-RING	
	11	1	**6V-8994**	1	UNION (BULKHEAD)	
	12	1	**6V-9850**	1	ELBOW (SWIVEL)	
	13	1	**7J-9108**	1	SEAL-O-RING	
	14	1	**8T-8919**	4	BOLT (1/2-13X1.75-IN)	
C	15	1	**9S-8010**	1	PLUG	
C	16	1	**2S-4078**	1	SEAL-O-RING	

C - CHANGE FROM PREVIOUS TYPE

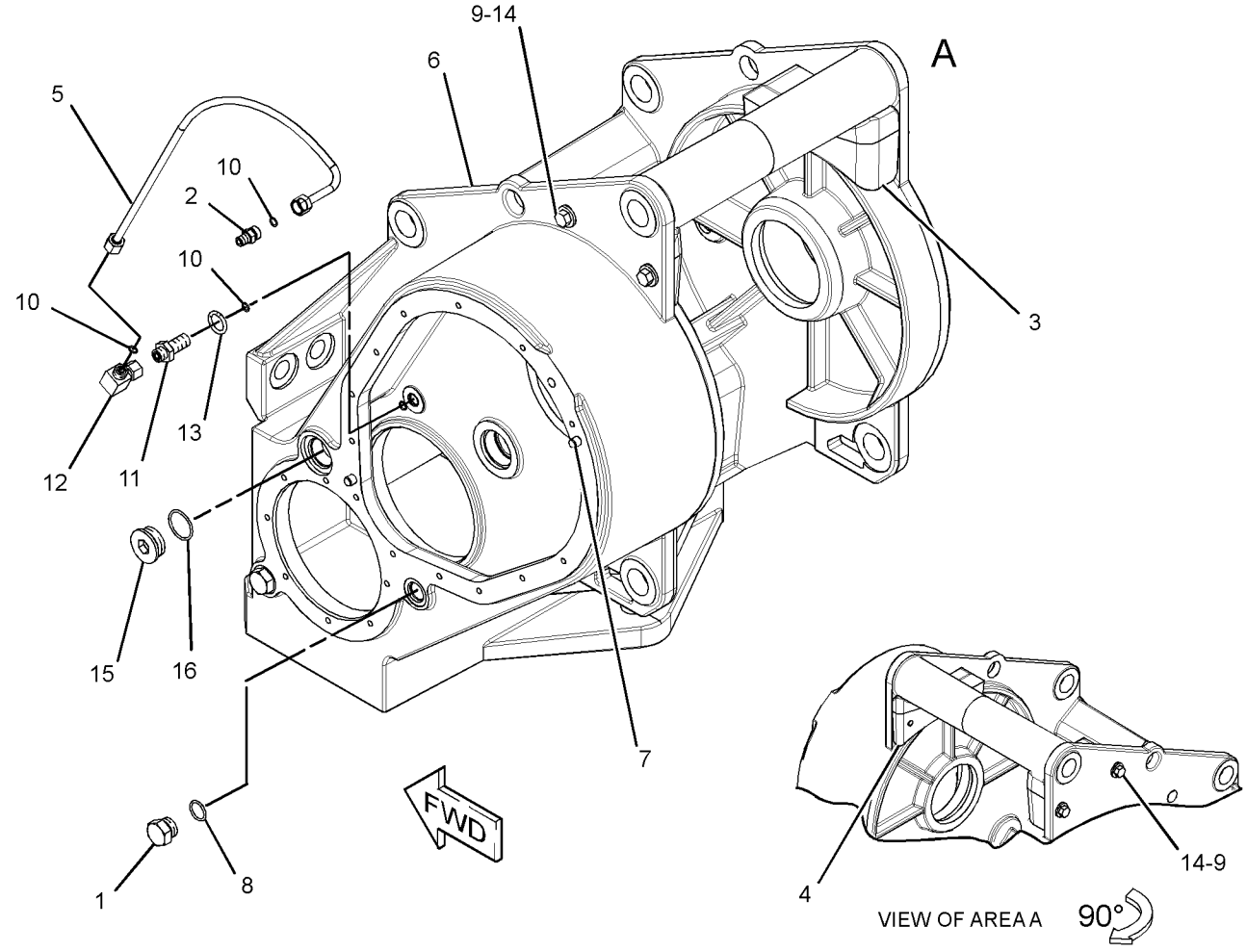

GRAPHIC #1 **<END>** g01378935

208-5552 CLUTCH & GEAR GP-WINCH

S/N: MMM1-UP; RRR1-UP
PART OF 256-3738 WINCH AR
AN ATTACHMENT

SMCS-5167 **i03380332**

NOTE	REF NO	GRAPHIC REF	PART NUMBER	QTY	PART NAME 1 2 3 4 5 6 (PRODUCT LEVEL)	SEE PAGE
	1	1	**6U-1989**	1	VALVE-RELIEF (WINCH)	
	2	1	**161-6422**	1	CLUTCH-FREESPOOL (34-TEETH)	
	3	1	**162-0175**	1	SPRING	
	4	1	**162-0180**	1	RING	
	5	1	**162-2766**	1	RING-BACKUP	
	6	1	**172-0307**	1	PISTON AS	
	7	1	**203-6640**	1	GASKET	
	8	1	**211-1856**	1	COVER-GEAR	
	9	1	**3B-8489**	1	FITTING-GREASE	
	10	1	**3H-3385**	1	SEAL-O-RING	
	11	1	**3J-7354**	1	SEAL-O-RING	
	12	1	**8M-4986**	1	SEAL-O-RING	
	13	1	**8T-4896**	14	WASHER-HARD (10.2X18.5X2.5-MM THK)	
	14	1	**9B-7237**	14	BOLT (3/8-16X1.25-IN)	
	15	1	**9S-8002**	1	PLUG-O-RING	

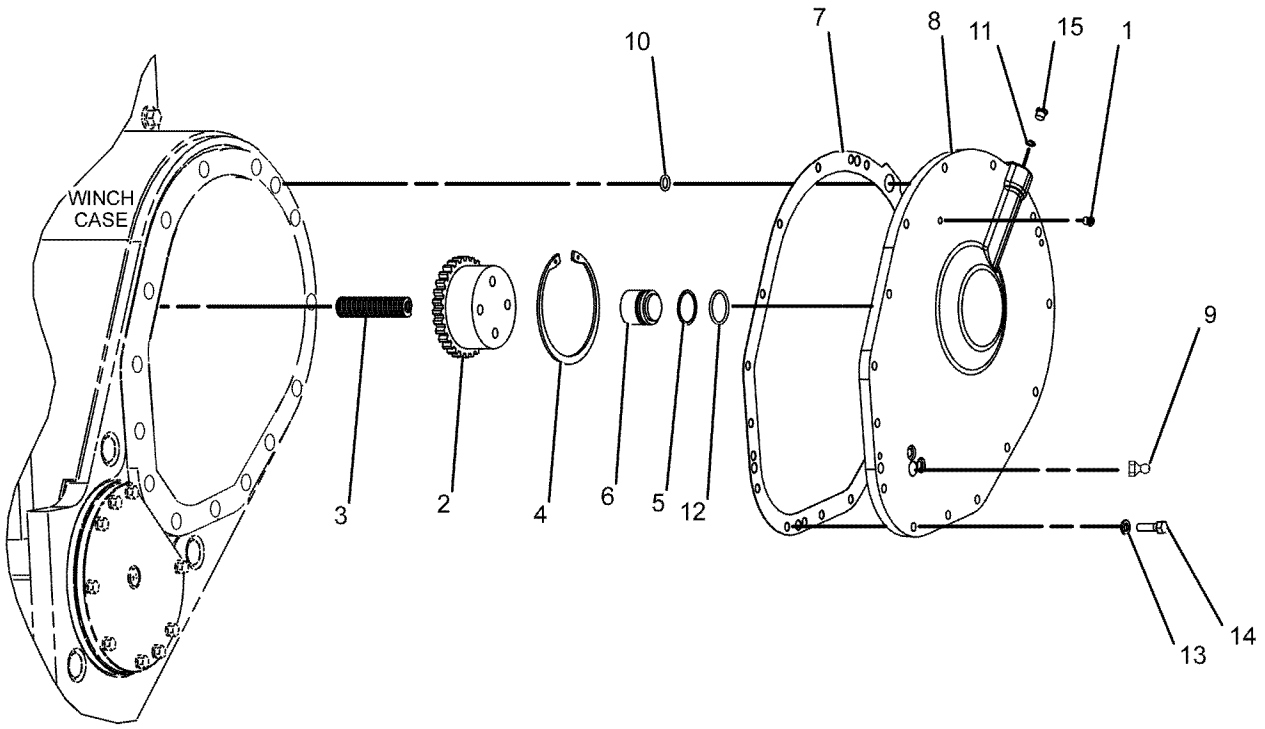

GRAPHIC #1 **<END>** g01009246

244-7504 CONTROL GP-WINCH

S/N: MMM1-130; RRR1-134
PART OF 271-9180 DRIVE AR-WINCH
AN ATTACHMENT

SMCS-5161, 5170

i03590460

NOTE	REF NO	GRAPHIC REF	PART NUMBER	QTY	PART NAME 1 2 3 4 5 6 (PRODUCT LEVEL)	SEE PAGE
	1	1	**7K-1181**	29	STRAP-CABLE	
	2	1	**165-0311**	1	PLUG	
	3	1	**249-9065**	1	HARNESS AS-WORK TOOL (WINCH)	
		1	**9X-3401**	6	PIN-CONNECTOR (16-GA TO 18-GA)	
		1	**155-2270**	3	KIT-CONNECTING PLUG (2-PIN)	
					(EACH INCLUDES PLUG AS, WEDGE & INTERFACE SEAL)	
		1	**8T-8737**	6	PLUG-SEAL	
		1	**102-8802**	3	KIT-RECEPTACLE (2-PIN)	
		1	**102-8805**	1	KIT-RECEPTACLE (6-PIN)	
					(EACH RECEPTACLE KIT INCLUDES RECEPTACLE AS & WEDGE)	
		1	**9X-3402**	6	SOCKET-CONNECTOR (16-GA TO 18-GA)	
	4	1	**249-9067**	1	WIRE AS	
	5	1	**266-9006**	1	FILM-INSTRUCTION (WINCH CONTROL)	
	6	1	**269-7667**	1	HARNESS AS-PUMP (WINCH)	
		1	**9X-3401**	10	PIN-CONNECTOR (16-GA TO 18-GA)	
		1	**155-2270**	2	KIT-CONNECTING PLUG (2-PIN)	
					(EACH INCLUDES PLUG AS, WEDGE & INTERFACE SEAL)	
		1	**8T-8737**	1	PLUG-SEAL	
		1	**102-8803**	1	KIT-RECEPTACLE (3-PIN)	
		1	**102-8806**	1	KIT-RECEPTACLE (8-PIN)	
					(EACH RECEPTACLE KIT INCLUDES RECEPTACLE AS & WEDGE)	
		1	**9X-3402**	4	SOCKET-CONNECTOR (16-GA TO 18-GA)	
	7	1	**269-7668**	1	BRACKET	
	8	1	**269-7677**	1	PLATE	
	9	1	**156-6175**	2	CLIP	
Y	10	1	**214-6863**	1	SENSOR GP-PRESSURE (WINCH OIL)	237
	11	1	**249-9037**	1	SWITCH AS-ROCKER (12-VOLT) (WINCH FREE SPOOL)	
	12	1	**249-9047**	1	SWITCH AS-ROCKER (12-VOLT) (WINCH BRAKE OFF)	
					(EACH SWITCH AS-ROCKER INCLUDES)	
		1	**111-7899**	1	GASKET	
Y	13	1	*252-4559*	1	CONTROL GP-HANDLE (WINCH)	699
	14	1	**269-7683**	1	HARNESS AS-WORK TOOL (PLATFORM)	
		1	**155-2270**	2	KIT-CONNECTING PLUG (2-PIN)	
		1	**155-2265**	1	KIT-CONNECTING PLUG (8-PIN)	
		1	**155-2274**	1	KIT-CONNECTING PLUG (6-PIN)	
					(EACH PLUG KIT INCLUDES PLUG AS, WEDGE & INTERFACE SEAL)	
		1	**230-4009**	2	PLUG AS-CONNECTOR (12-PIN)	
					(EACH INCLUDES)	
		1	**264-7034**	1	SEAL-CONNECTOR	
		1	**231-2296**	2	PLUG AS-CONNECTOR (8-PIN)	
					(EACH INCLUDES)	
		1	**264-7033**	1	SEAL-CONNECTOR	
		1	**102-8805**	2	KIT-RECEPTACLE (6-PIN)	
					(EACH INCLUDES RECEPTACLE AS & WEDGE)	
		1	**230-4010**	2	RECEPTACLE AS-CONNECTOR (12-PIN)	
		1	**231-2301**	1	RECEPTACLE AS-CONNECTOR (8-PIN)	
		1	**9X-3401**	7	PIN-CONNECTOR (16-GA TO 18-GA)	
					-OR-	
		1	**126-1767**	7	PIN-CONNECTOR (14-GA TO 16-GA)	
		1	**8T-8737**	51	PLUG-SEAL	
		1	**9X-3402**	26	SOCKET-CONNECTOR (16-GA TO 18-GA)	

244-7504 **CONTROL GP-WINCH (*contd.*)** **i03590460**

NOTE	REF NO	GRAPHIC REF	PART NUMBER	QTY	PART NAME 1 2 3 4 5 6 (PRODUCT LEVEL)	SEE PAGE
		1	**180-9340**	15	SOCKET-CONNECTOR (14-GA TO 18-GA)	
		1	**186-3736**	1	SOCKET-CONNECTOR (16-GA TO 18-GA)	
		1	**9W-0844**	2	SOCKET-CONNECTOR (14-GA TO 16-GA)	
E		1	**125-7874**		TUBE-HEAT SHRINK (5.72-MM DIA) (25-CM)	
R	15	1	**300-3631**	1	CONTROL GP-UNPROGRAMMED	
	16	1	**3J-1907**	1	SEAL-O-RING	
	17	1	**3J-7354**	1	SEAL-O-RING	
	18	1	**3S-2093**	2	STRAP-CABLE	
M	19	1	**7X-2534**	2	BOLT (M6X1X50-MM)	
M	20	1	**7X-2548**	1	BOLT (M12X1.75X16-MM)	
	21	1	**8T-2353**	1	ADAPTER (STRAIGHT THREAD O-RING)	
	22	1	**8T-4223**	1	WASHER-HARD (13.5X25.5X3-MM THK)	
M	23	1	**9X-2045**	8	SCREW-TRUSS HEAD (M6X1X20-MM)	
	24	1	**9X-8256**	2	WASHER (6.6X12X2-MM THK)	

E - ORDER BY THE CENTIMETER
M - METRIC PART
R - REMFG PART MAY BE AVAILABLE
Y - SEPARATE ILLUSTRATION

244-7504 **CONTROL GP-WINCH (*contd.*)** **i03590460**

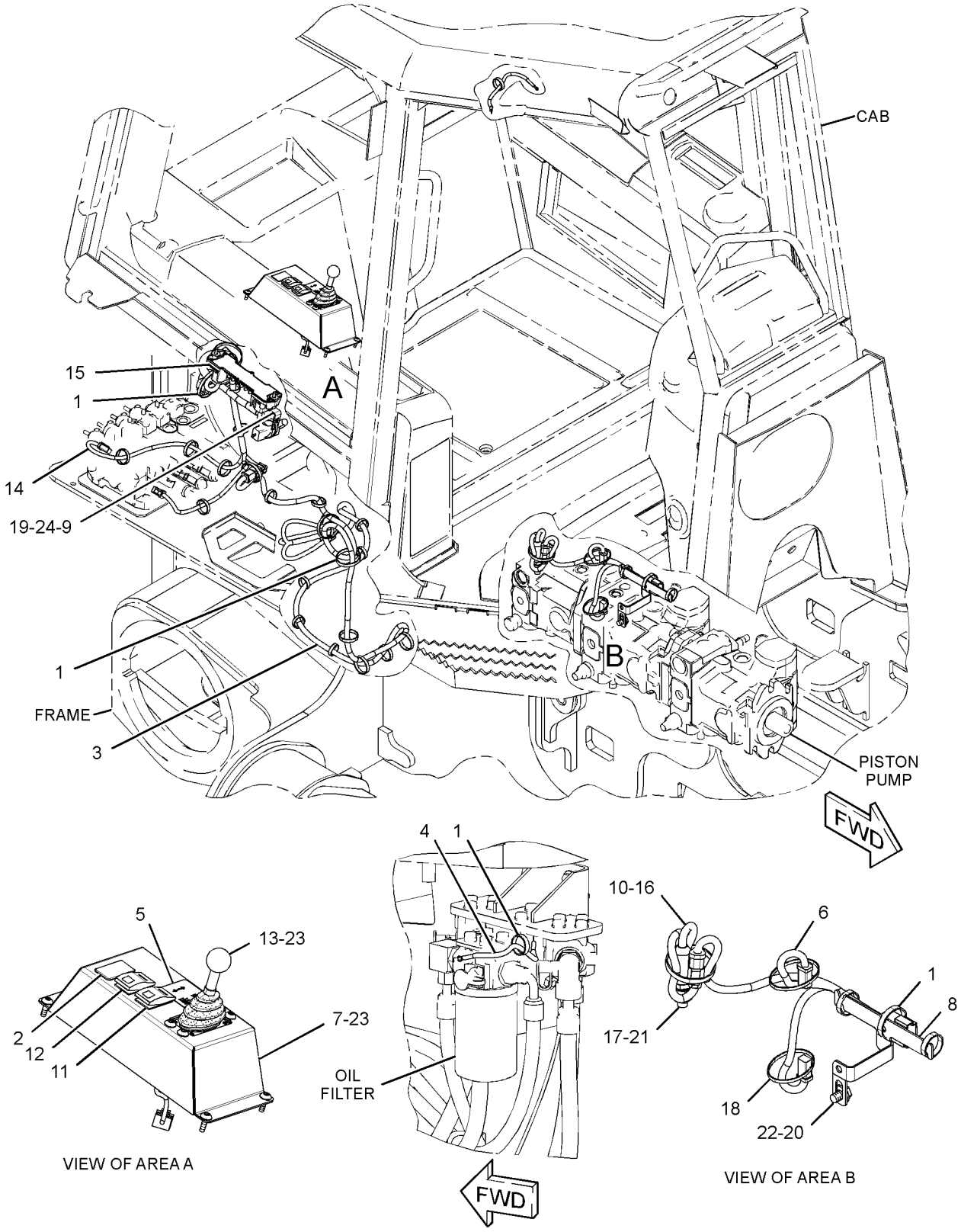

GRAPHIC #1 **<END>** g01378559

244-7504 CONTROL GP-WINCH

S/N: MMM131-UP; RRR135-UP
PART OF 271-9180 DRIVE AR-WINCH
AN ATTACHMENT

SMCS-5161, 5170 **i03590500**

NOTE	REF NO	GRAPHIC REF	PART NUMBER	QTY	PART NAME 1 2 3 4 5 6 (PRODUCT LEVEL)	SEE PAGE
	1	1	**7K-1181**	29	STRAP-CABLE	
C	2	1	**165-0311**	2	PLUG	
	3	1	**249-9065**	1	HARNESS AS-WORK TOOL (WINCH)	
		1	**9X-3401**	6	PIN-CONNECTOR (16-GA TO 18-GA)	
		1	**155-2270**	3	KIT-CONNECTING PLUG (2-PIN)	
					(EACH INCLUDES PLUG AS, WEDGE & INTERFACE SEAL)	
		1	**8T-8737**	6	PLUG-SEAL	
		1	**102-8802**	3	KIT-RECEPTACLE (2-PIN)	
		1	**102-8805**	1	KIT-RECEPTACLE (6-PIN)	
					(EACH RECEPTACLE KIT INCLUDES RECEPTACLE AS & WEDGE)	
		1	**9X-3402**	6	SOCKET-CONNECTOR (16-GA TO 18-GA)	
	4	1	**249-9067**	1	WIRE AS	
	5	1	**266-9006**	1	FILM-INSTRUCTION (WINCH CONTROL)	
	6	1	**269-7667**	1	HARNESS AS-PUMP (WINCH)	
		1	**9X-3401**	10	PIN-CONNECTOR (16-GA TO 18-GA)	
		1	**155-2270**	2	KIT-CONNECTING PLUG (2-PIN)	
					(EACH INCLUDES PLUG AS, WEDGE & INTERFACE SEAL)	
		1	**8T-8737**	1	PLUG-SEAL	
		1	**102-8803**	1	KIT-RECEPTACLE (3-PIN)	
		1	**102-8806**	1	KIT-RECEPTACLE (8-PIN)	
					(EACH RECEPTACLE KIT INCLUDES RECEPTACLE AS & WEDGE)	
		1	**9X-3402**	4	SOCKET-CONNECTOR (16-GA TO 18-GA)	
C	7	1	**311-0296**	1	BRACKET	
	8	1	**269-7677**	1	PLATE	
	9	1	**156-6175**	2	CLIP	
Y	10	1	**214-6863**	1	SENSOR GP-PRESSURE (WINCH OIL)	237
	11	1	**249-9037**	1	SWITCH AS-ROCKER (12-VOLT) (WINCH FREE SPOOL)	
	12	1	**249-9047**	1	SWITCH AS-ROCKER (12-VOLT) (WINCH BRAKE OFF)	
					(EACH SWITCH AS-ROCKER INCLUDES)	
		1	**111-7899**	1	GASKET	
CY	13	1	**307-4673**	1	CONTROL GP-HANDLE (WINCH)	703
C	14	1	**269-7697**	1	HARNESS AS-WORK TOOL (PLATFORM)	
		1	**274-3777**	1	CAP-CONNECTOR	
		1	**155-2270**	2	KIT-CONNECTING PLUG (2-PIN)	
		1	**155-2265**	1	KIT-CONNECTING PLUG (8-PIN)	
		1	**155-2274**	1	KIT-CONNECTING PLUG (6-PIN)	
					(EACH PLUG KIT INCLUDES PLUG AS, WEDGE & INTERFACE SEAL)	
		1	**230-4009**	2	PLUG AS-CONNECTOR (12-PIN)	
					(EACH INCLUDES)	
		1	**264-7034**	1	SEAL-CONNECTOR	
		1	**231-2296**	2	PLUG AS-CONNECTOR (8-PIN)	
					(EACH INCLUDES)	
		1	**264-7033**	1	SEAL-CONNECTOR	
		1	**102-8802**	2	KIT-RECEPTACLE (2-PIN)	
		1	**102-8806**	2	KIT-RECEPTACLE (8-PIN)	
					(EACH RECEPTACLE KIT INCLUDES RECEPTACLE AS & WEDGE)	
		1	**230-4010**	2	RECEPTACLE AS-CONNECTOR (12-PIN)	
		1	**231-2301**	1	RECEPTACLE AS-CONNECTOR (8-PIN)	
		1	**9X-3401**	7	PIN-CONNECTOR (16-GA TO 18-GA)	
					-OR-	

244-7504 **CONTROL GP-WINCH (*contd.*)** **i03590500**

NOTE	REF NO	GRAPHIC REF	PART NUMBER	QTY	PART NAME 1 2 3 4 5 6 (PRODUCT LEVEL)	SEE PAGE
		1	**126-1767**	7	PIN-CONNECTOR (14-GA TO 16-GA)	
		1	**8T-8737**	51	PLUG-SEAL	
		1	**9X-3402**	26	SOCKET-CONNECTOR (16-GA TO 18-GA)	
		1	**180-9340**	15	SOCKET-CONNECTOR (14-GA TO 18-GA)	
		1	**186-3736**	1	SOCKET-CONNECTOR (16-GA TO 18-GA)	
		1	**9W-0844**	2	SOCKET-CONNECTOR (14-GA TO 16-GA)	
E		1	**125-7874**		TUBE-HEAT SHRINK (5.72-MM DIA) (25-CM)	
R	15	1	**300-3631**	1	CONTROL GP-UNPROGRAMMED	
	16	1	**3J-1907**	1	SEAL-O-RING	
	17	1	**3J-7354**	1	SEAL-O-RING	
	18	1	**3S-2093**	2	STRAP-CABLE	
M	19	1	**7X-2534**	2	BOLT (M6X1X50-MM)	
M	20	1	**7X-2548**	1	BOLT (M12X1.75X16-MM)	
	21	1	**8T-2353**	1	ADAPTER	
	22	1	**8T-4223**	1	WASHER-HARD (13.5X25.5X3-MM THK)	
M	23	1	**9X-2045**	8	SCREW-TRUSS HEAD (M6X1X20-MM)	
	24	1	**9X-8256**	4	WASHER (6.6X12X2-MM THK)	
	25	1	**249-9079**	1	PLATE AS	
M	26	1	**8T-4138**	2	BOLT (M6X1X20-MM)	

C - CHANGE FROM PREVIOUS TYPE
E - ORDER BY THE CENTIMETER
M - METRIC PART
R - REMFG PART MAY BE AVAILABLE
Y - SEPARATE ILLUSTRATION

244-7504 **CONTROL GP-WINCH (*contd.*)** **i03590500**

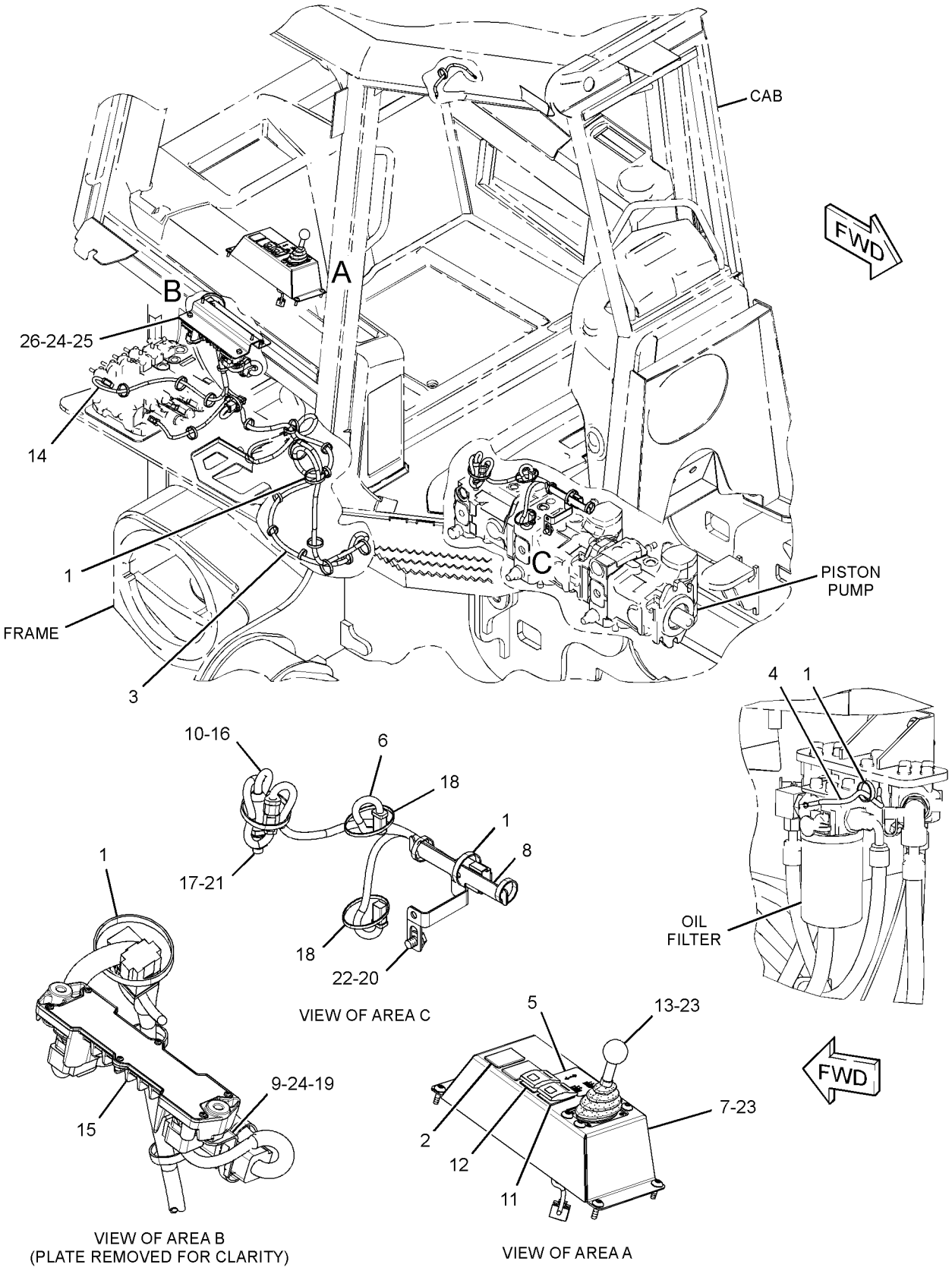

GRAPHIC #1 **<END>** g01502582

244-7504 CONTROL GP-WINCH

S/N: MMM131-584; RRR135-417
PART OF 271-9180 DRIVE AR-WINCH
AN ATTACHMENT

SMCS-5161, 5170

i04560255

NOTE	REF NO	GRAPHIC REF	PART NUMBER	QTY	PART NAME 1 2 3 4 5 6 (PRODUCT LEVEL)	SEE PAGE
	1	1	**7K-1181**	27	STRAP-CABLE	
	2	1	**165-0311**	2	PLUG	
	3	1	**249-9065**	1	HARNESS AS-WORK TOOL (WINCH)	
		1	**9X-3401**	6	PIN-CONNECTOR (16-GA TO 18-GA)	
		1	**155-2270**	3	KIT-CONNECTING PLUG (2-PIN)	
					(EACH PLUG KIT INCLUDES PLUG AS, WEDGE & INTERFACE SEAL)	
		1	**8T-8737**	6	PLUG-SEAL	
		1	**102-8802**	3	KIT-RECEPTACLE (2-PIN)	
		1	**102-8805**	1	KIT-RECEPTACLE (6-PIN)	
					(EACH RECEPTACLE KIT INCLUDES RECEPTACLE AS & WEDGE)	
		1	**9X-3402**	6	SOCKET-CONNECTOR (16-GA TO 18-GA)	
	4	1	**249-9067**	1	WIRE AS	
	5	1	**266-9006**	1	FILM-INSTRUCTION (WINCH CONTROL)	
	6	1	**269-7667**	1	HARNESS AS-PUMP (WINCH)	
		1	**9X-3401**	10	PIN-CONNECTOR (16-GA TO 18-GA)	
		1	**155-2270**	2	KIT-CONNECTING PLUG (2-PIN)	
					(EACH PLUG KIT INCLUDES PLUG AS, WEDGE & INTERFACE SEAL)	
		1	**8T-8737**	1	PLUG-SEAL	
		1	**102-8803**	1	KIT-RECEPTACLE (3-PIN)	
		1	**102-8806**	1	KIT-RECEPTACLE (8-PIN)	
					(EACH RECEPTACLE KIT INCLUDES RECEPTACLE AS & WEDGE)	
		1	**9X-3402**	4	SOCKET-CONNECTOR (16-GA TO 18-GA)	
	7	1	**311-0296**	1	BRACKET	
	8	1	**269-7677**	1	PLATE	
	9	1	**155-0576**	8	MOUNT-ISOLATION	
Y	10	1	**214-6863**	1	SENSOR GP-PRESSURE (WINCH OIL)	237
	11	1	**249-9037**	1	SWITCH AS-ROCKER (12-VOLT) (WINCH FREESPOOL)	
	12	1	**249-9047**	1	SWITCH AS-ROCKER (12-VOLT) (DRIVE AWAY)	
					(EACH SWITCH AS INCLUDES)	
		1	**111-7899**	1	GASKET	
Y	13	1	**307-4673**	1	CONTROL GP-HANDLE (WINCH)	703
	14	1	**311-0302**	1	HARNESS AS-CONTROL (PLATFORM)	
		1	**126-1774**	1	COVER-CONNECTOR	
		1	**8T-8729**	3	PIN-CONNECTOR (16-GA TO 18-GA)	
		1	**9W-0852**	1	PIN-CONNECTOR (14-GA TO 16-GA)	
		1	**8L-8413**	2	STRAP-CABLE	
E		1	**119-3662**		TUBE-HEAT SHRINK (10.85-MM DIA) (11-CM)	
		1	**155-2270**	2	KIT-CONNECTING PLUG (2-PIN)	
		1	**155-2265**	1	KIT-CONNECTING PLUG (8-PIN)	
		1	**155-2274**	1	KIT-CONNECTING PLUG (6-PIN)	
					(EACH PLUG KIT INCLUDES PLUG AS, WEDGE & INTERFACE SEAL)	
		1	**160-7689**	1	PLUG AS-CONNECTOR (70-PIN)	
					(EACH INCLUDES)	
		1	**159-9322**	1	SEAL-O-RING	
		1	**102-8802**	2	KIT-RECEPTACLE (2-PIN)	
		1	**102-8806**	1	KIT-RECEPTACLE (8-PIN)	
		1	**102-8805**	1	KIT-RECEPTACLE (6-PIN)	
					(EACH RECEPTACLE KIT INCLUDES RECEPTACLE AS & WEDGE)	
		1	**8T-8737**	61	PLUG-SEAL	
		1	**9X-3402**	24	SOCKET-CONNECTOR (16-GA TO 18-GA)	

244-7504 **CONTROL GP-WINCH (*contd.*)** **i04560255**

NOTE	REF NO	GRAPHIC REF	PART NUMBER	QTY	PART NAME 1 2 3 4 5 6 (PRODUCT LEVEL)	SEE PAGE
		1	**180-9340**	15	SOCKET-CONNECTOR (14-GA TO 18-GA)	
		1	**8T-8730**	1	SOCKET-CONNECTOR (16-GA TO 18-GA)	
		1	**9W-0844**	2	SOCKET-CONNECTOR (14-GA TO 16-GA)	
E		1	**125-7874**		TUBE-HEAT SHRINK (5.72-MM DIA) (5-CM)	
	15	1	**377-4710**	1	CONTROL GP-UNPROGRAMMED (WINCH)	
	16	1	**3J-1907**	1	SEAL-O-RING	
	17	1	**3J-7354**	1	SEAL-O-RING	
	18	1	**3S-2093**	2	STRAP-CABLE	
M	19	1	**5C-7261**	4	NUT (M8X1.25-THD)	
M	20	1	**191-7503**	1	BOLT (M12X1.75X16-MM)	
	21	1	**8T-2353**	1	ADAPTER	
	22	1	**8T-4223**	1	WASHER-HARD (13.5X25.5X3-MM THK)	
M	23	1	**9X-2045**	8	SCREW-TRUSS HEAD (M6X1X20-MM)	
	24	1	**9X-8256**	2	WASHER (6.6X12X2-MM THK)	
	25	1	**269-7666**	1	PLATE AS	
M	26	1	**8T-4138**	2	BOLT (M6X1X20-MM)	
	27	1	**9N-0869**	4	WASHER-HARD (8.8X25.5X2-MM THK)	
	28	1	**6I-1418**	4	SPACER (8.2X12.7X28.7-MM THK)	

E - ORDER BY THE CENTIMETER
M - METRIC PART
Y - SEPARATE ILLUSTRATION

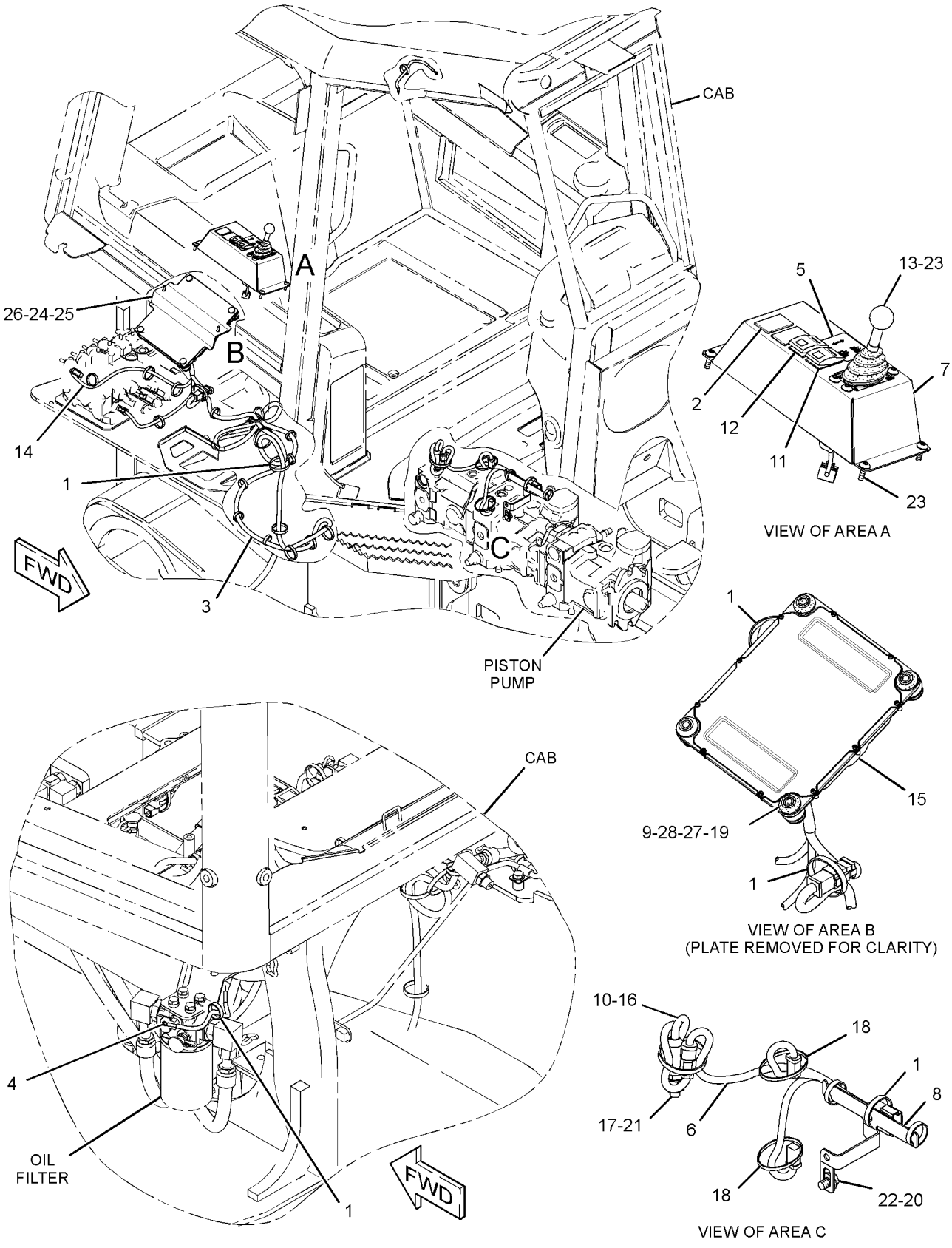

GRAPHIC #1

<END>

g01739715

249-9052 CONTROL GP-WINCH

S/N: MMM1-UP; RRR1-UP
PART OF 264-4552 HYDRAULIC AR
AN ATTACHMENT
TYPE 1

SMCS-5161, 5170 **i03603530**

NOTE	REF NO	GRAPHIC REF	PART NUMBER	QTY	PART NAME 1 2 3 4 5 6 (PRODUCT LEVEL)	SEE PAGE
	1	1	**249-9079**	1	PLATE AS	
	2	1	**156-6175**	2	CLIP	
	3	1	**249-9022**	1	SWITCH AS-ROCKER (4TH VALVE)	
		1	**111-7899**	1	GASKET	
R	4	1	**300-3631**	1	CONTROL GP-UNPROGRAMMED (WINCH)	
M	5	1	**7X-2534**	2	BOLT (M6X1X50-MM)	
M	6	1	**8T-4138**	2	BOLT (M6X1X20-MM)	
	7	1	**9X-8256**	4	WASHER (6.6X12X2-MM THK)	
	8	1	**165-0311**	1	PLUG	

M - METRIC PART
R - REMFG PART MAY BE AVAILABLE

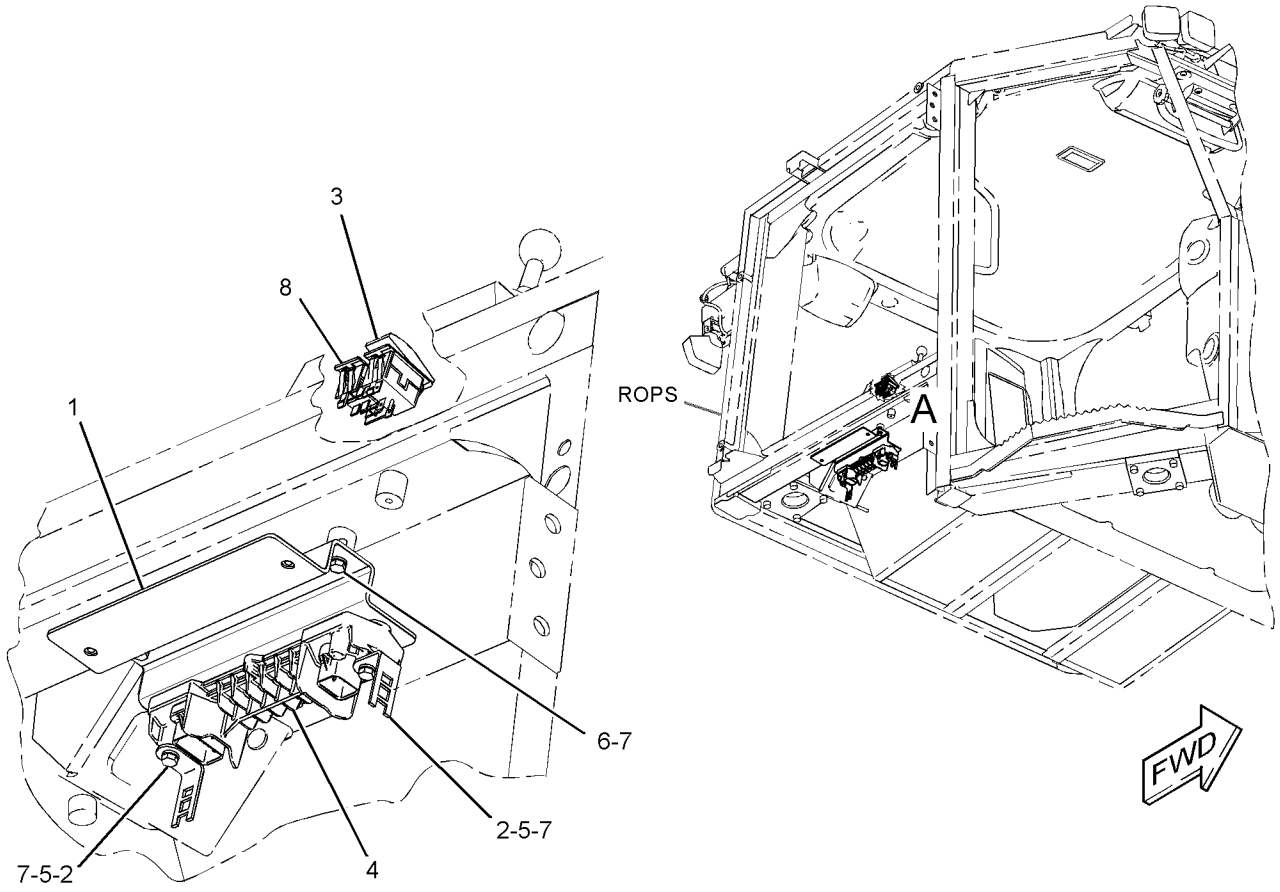

VIEW OF AREA A

GRAPHIC #1 **<END>** g01406890

249-9052 CONTROL GP-WINCH

S/N: MMM1-UP; RRR1-UP
PART OF 264-4552 HYDRAULIC AR
AN ATTACHMENT
TYPE 2

SMCS-5161, 5170 **i03603562**

NOTE	REF NO	GRAPHIC REF	PART NUMBER	QTY	PART NAME 1 2 3 4 5 6 (PRODUCT LEVEL)	SEE PAGE
	1	1	**249-9022**	1	SWITCH AS-ROCKER (4TH VALVE)	
		1	**111-7899**	1	GASKET	

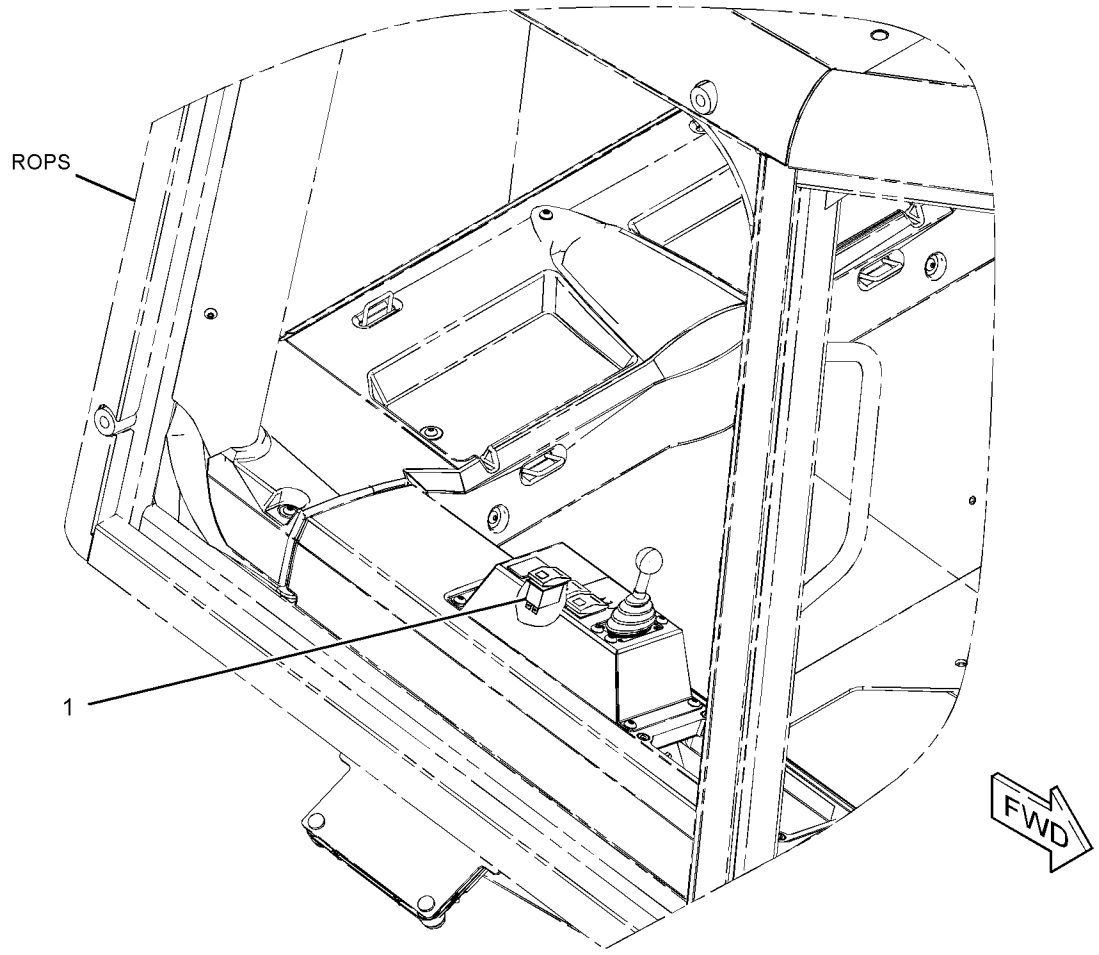

GRAPHIC #1 **<END>** g01617893

318-6108 CONTROL GP-WINCH

S/N: MMM1-UP; RRR1-UP
PART OF 325-6517 DRIVE AR-PUMP
AN ATTACHMENT

SMCS-5161, 5170

i04574421

NOTE	REF NO	GRAPHIC REF	PART NUMBER	QTY	PART NAME 1 2 3 4 5 6 (PRODUCT LEVEL)	SEE PAGE
	1	1	**6I-1418**	4	SPACER (8.2X12.7X28.7-MM THK)	
	2	1	**7K-1181**	28	STRAP-CABLE	
	3	1	**9N-0869**	4	WASHER-HARD (8.8X25.5X2-MM THK)	
	4	1	**155-0576**	8	MOUNT-ISOLATION	
	5	1	**165-0311**	2	PLUG	
	6	1	**178-7539**	1	RECEPTACLE AS (POWER SUPPLY)	
M	7	1	**191-7503**	1	BOLT (M12X1.75X16-MM)	
	8	1	**266-9006**	1	FILM-INSTRUCTION (WINCH CONTROL)	
	9	1	**269-7666**	1	PLATE AS	
	10	1	**269-7677**	1	PLATE	
Y	11	1	**307-4673**	1	CONTROL GP-HANDLE (WINCH)	703
	12	1	**377-4710**	1	CONTROL GP-UNPROGRAMMED (RIPPER, WINCH)	
	13	1	**311-0296**	1	BRACKET	
	14	1	**318-6124**	1	HARNESS AS-PUMP (WINCH)	
B		1	**268-4412**		TAPE-INSULATOR	
		1	**269-7667**	1	HARNESS AS-PUMP (WINCH)	
		1	**9X-3401**	10	PIN-CONNECTOR (16-GA TO 18-GA)	
		1	**155-2270**	2	KIT-CONNECTING PLUG (2-PIN)	
					(EACH INCLUDES PLUG AS, WEDGE & INTERFACE SEAL)	
		1	**8T-8737**	1	PLUG-SEAL	
		1	**102-8803**	1	KIT-RECEPTACLE (3-PIN)	
		1	**102-8806**	1	KIT-RECEPTACLE (8-PIN)	
					(EACH RECEPTACLE KIT INCLUDES RECEPTACLE AS & WEDGE)	
		1	**9X-3402**	4	SOCKET-CONNECTOR (16-GA TO 18-GA)	
	15	1	**318-6125**	1	HARNESS AS-WORK TOOL (WINCH)	
B		1	**268-4412**		TAPE-INSULATOR	
		1	**249-9065**	1	HARNESS AS-WORK TOOL (WINCH)	
		1	**9X-3401**	6	PIN-CONNECTOR (16-GA TO 18-GA)	
		1	**155-2270**	3	KIT-CONNECTING PLUG (2-PIN)	
					(EACH INCLUDES PLUG AS, WEDGE & INTERFACE SEAL)	
		1	**8T-8737**	6	PLUG-SEAL	
		1	**102-8802**	3	KIT-RECEPTACLE (2-PIN)	
		1	**102-8805**	1	KIT-RECEPTACLE (6-PIN)	
					(EACH RECEPTACLE KIT INCLUDES RECEPTACLE AS & WEDGE)	
		1	**9X-3402**	6	SOCKET-CONNECTOR (16-GA TO 18-GA)	
	16	1	**318-6127**	1	WIRE AS	
	17	1	**327-6134**	1	HARNESS AS-CONTROL (WINCH)	
B		1	**268-4412**		TAPE-INSULATOR	
		1	**311-0302**	1	HARNESS AS-CONTROL (WINCH)	
		1	**126-1766**	24	SOCKET-CONNECTOR (14-GA TO 18-GA)	
		1	**126-1774**	1	COVER-CONNECTOR	
		1	**186-3735**	3	PIN-CONNECTOR (16-GA TO 18-GA)	
		1	**9W-0852**	1	PIN-CONNECTOR (14-GA TO 16-GA)	
		1	**155-2265**	1	KIT-CONNECTING PLUG (8-PIN)	
		1	**155-2270**	2	KIT-CONNECTING PLUG (2-PIN)	
		1	**155-2274**	1	KIT-CONNECTING PLUG (6-PIN)	
					(EACH PLUG KIT INCLUDES PLUG AS, WEDGE & INTERFACE SEAL)	
		1	**160-7689**	1	PLUG AS-CONNECTOR (70-PIN)	
		1	**159-9322**	1	SEAL-O-RING	
		1	**8T-8737**	61	PLUG-SEAL	
		1	**102-8802**	2	KIT-RECEPTACLE (2-PIN)	

318-6108 **CONTROL GP-WINCH (*contd.*)** **i04574421**

NOTE	REF NO	GRAPHIC REF	PART NUMBER	QTY	PART NAME 1 2 3 4 5 6 (PRODUCT LEVEL)	SEE PAGE
		1	**102-8805**	1	KIT-RECEPTACLE (6-PIN)	
		1	**102-8806**	1	KIT-RECEPTACLE (8-PIN)	
					(EACH RECEPTACLE KIT INCLUDES RECEPTACLE AS & WEDGE)	
		1	**186-3736**	1	SOCKET-CONNECTOR (16-GA TO 18-GA)	
		1	**9W-0844**	1	SOCKET-CONNECTOR (14-GA TO 16-GA)	
		1	**180-9340**	15	SOCKET-CONNECTOR (14-GA TO 18-GA)	
		1	**8L-8413**	2	STRAP-CABLE	
E		1	**119-3662**		TUBE-HEAT SHRINK (10.85-MM DIA) (7-CM)	
E		1	**125-7874**		TUBE-HEAT SHRINK (5.72-MM DIA) (5-CM)	
Y	18	1	**214-6863**	1	SENSOR GP-PRESSURE (WINCH)	237
	19	1	**249-9037**	1	SWITCH AS-ROCKER (12-VOLT) (WINCH FREESPOOL)	
	20	1	**249-9047**	1	SWITCH AS-ROCKER (12-VOLT) (WINCH BRAKE)	
					(EACH SWITCH AS INCLUDES)	
		1	**111-7899**	1	GASKET	
	21	1	**3J-1907**	1	SEAL-O-RING	
	22	1	**3J-7354**	1	SEAL-O-RING	
	23	1	**3S-2093**	14	STRAP-CABLE	
M	24	1	**5C-7261**	4	NUT (M8X1.25-THD)	
	25	1	**8T-2353**	1	ADAPTER	
M	26	1	**8T-4138**	2	BOLT (M6X1X20-MM)	
	27	1	**8T-4223**	1	WASHER-HARD (13.5X25.5X3-MM THK)	
M	28	1	**9X-2045**	8	SCREW-TRUSS HEAD (M6X1X20-MM)	
	29	1	**9X-8256**	2	WASHER (6.6X12X2-MM THK)	
E	30	1	**324-9707**		INSULATION (5-CM)	
E	30A	1	**324-9707**		INSULATION (9-CM)	
E	30B	1	**324-9707**		INSULATION (12-CM EACH)	
E	31	1	**2Q-0604**		INSULATION (9-CM EACH)	

B - USE AS REQUIRED
E - ORDER BY THE CENTIMETER
M - METRIC PART
Y - SEPARATE ILLUSTRATION

318-6108 **CONTROL GP-WINCH (*contd.*)** **i04574421**

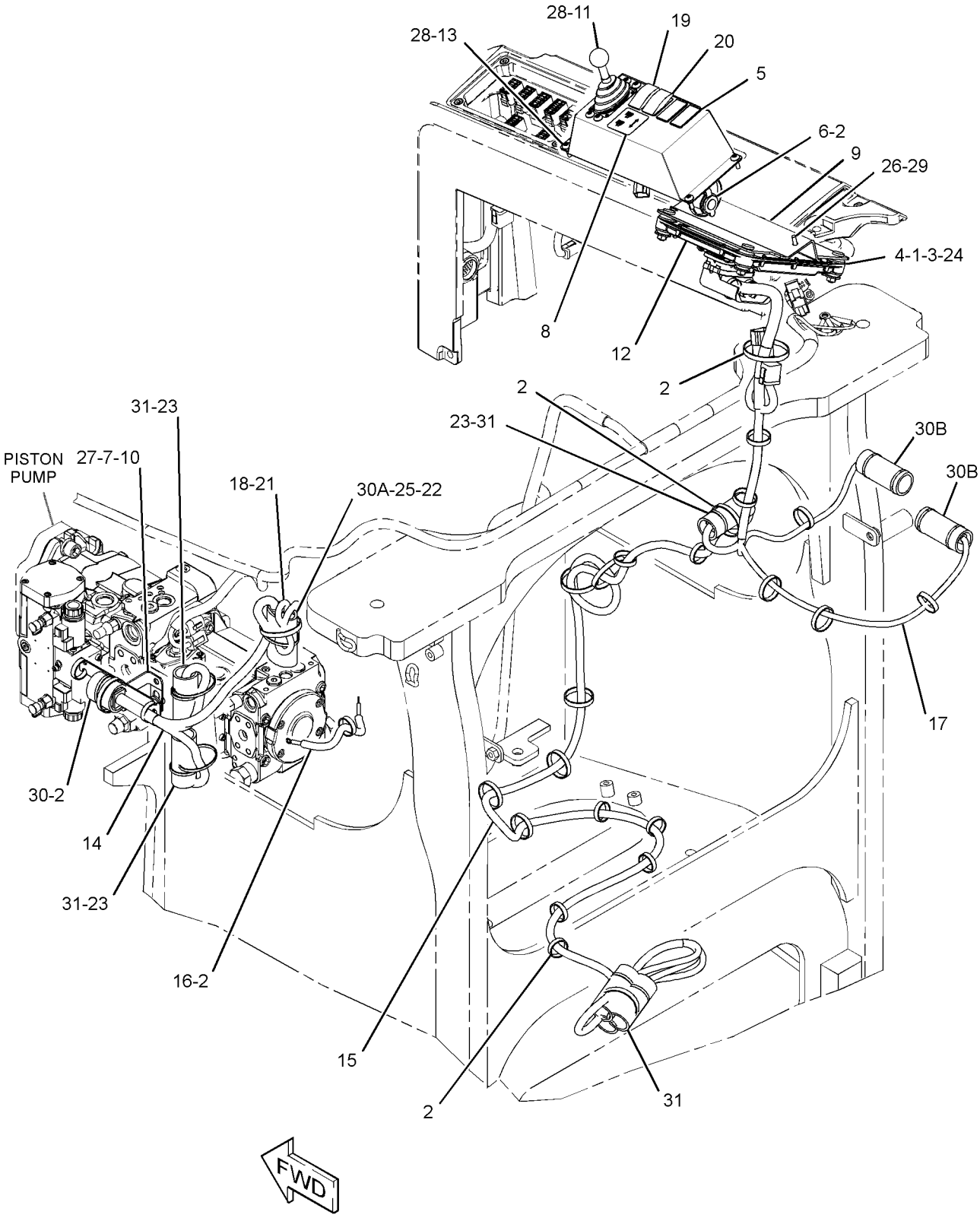

GRAPHIC #1 **<END>** g02306895

318-6110 CONTROL GP-WINCH—4TH VALVE, FLOAT

S/N: MMM1-UP; RRR1-UP
PART OF 325-6526 HYDRAULIC AR
AN ATTACHMENT

SMCS-5161, 5170

i03726465

NOTE	REF NO	GRAPHIC REF	PART NUMBER	QTY	PART NAME 1 2 3 4 5 6 (PRODUCT LEVEL)	SEE PAGE
	1	1	**311-7069**	1	SWITCH AS-ROCKER (4TH VALVE, FLOAT)	
	2	1	**249-9022**	1	SWITCH AS-ROCKER (4TH VALVE)	
					(EACH SWITCH AS-ROCKER INCLUDES)	
		1	**111-7899**	1	GASKET	

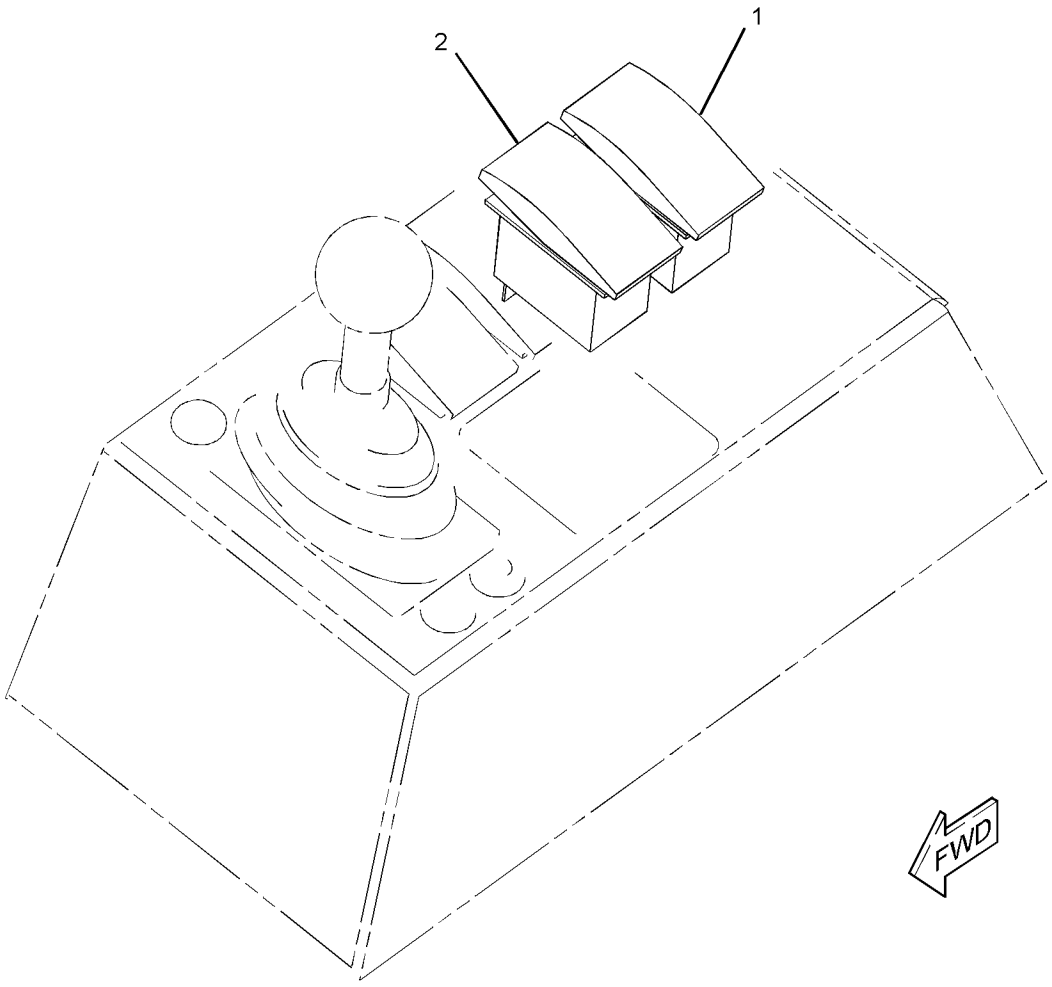

GRAPHIC #1

<END>

g02017197

318-6112 CONTROL GP-WINCH—4TH & 5TH VALVE, FLOAT

S/N: MMM1-UP; RRR1-UP
PART OF 325-6531 HYDRAULIC AR
AN ATTACHMENT

SMCS-5161, 5170

i04039324

NOTE	REF NO	GRAPHIC REF	PART NUMBER	QTY	PART NAME 1 2 3 4 5 6 (PRODUCT LEVEL)	SEE PAGE
Y	1	1	**307-4673**	1	CONTROL GP-HANDLE (WINCH)	703
	2	1	**311-7069**	1	SWITCH AS-ROCKER (4TH VALVE, FLOAT)	
	2A	1	**311-7069**	1	SWITCH AS-ROCKER (5TH VALVE, FLOAT)	
					(EACH SWITCH AS-ROCKER INCLUDES)	
		1	**111-7899**	1	GASKET	
	3	1	**318-6101**	1	BRACKET	
	4	1	**318-6106**	1	HARNESS AS-VALVE	
		1	**155-2270**	2	KIT-CONNECTING PLUG (2-PIN)	
					(EACH INCLUDES PLUG AS, WEDGE & INTERFACE SEAL)	
		1	**9X-3402**	4	SOCKET-CONNECTOR (16-GA TO 18-GA)	
		1	**180-9340**	4	SOCKET-CONNECTOR (14-GA TO 18-GA)	
B		1	**268-4412**		TAPE-INSULATOR	
	5	1	**318-6123**	1	FILM-INSTRUCTION (AUXILIARY CONTROL VALVE)	
	6	1	**249-9022**	1	SWITCH AS-ROCKER (4TH VALVE, FLOAT)	
		1	**111-7899**	1	GASKET	
	7	1	**3S-2093**	4	STRAP-CABLE	
M	8	1	**9X-2045**	4	SCREW-TRUSS HEAD (M6X1X20-MM)	
E	9	1	**324-9707**		INSULATION (12-CM EACH)	

B - USE AS REQUIRED
E - ORDER BY THE CENTIMETER
M - METRIC PART
Y - SEPARATE ILLUSTRATION

318-6112 **CONTROL GP-WINCH (*contd.*)** **i04039324**

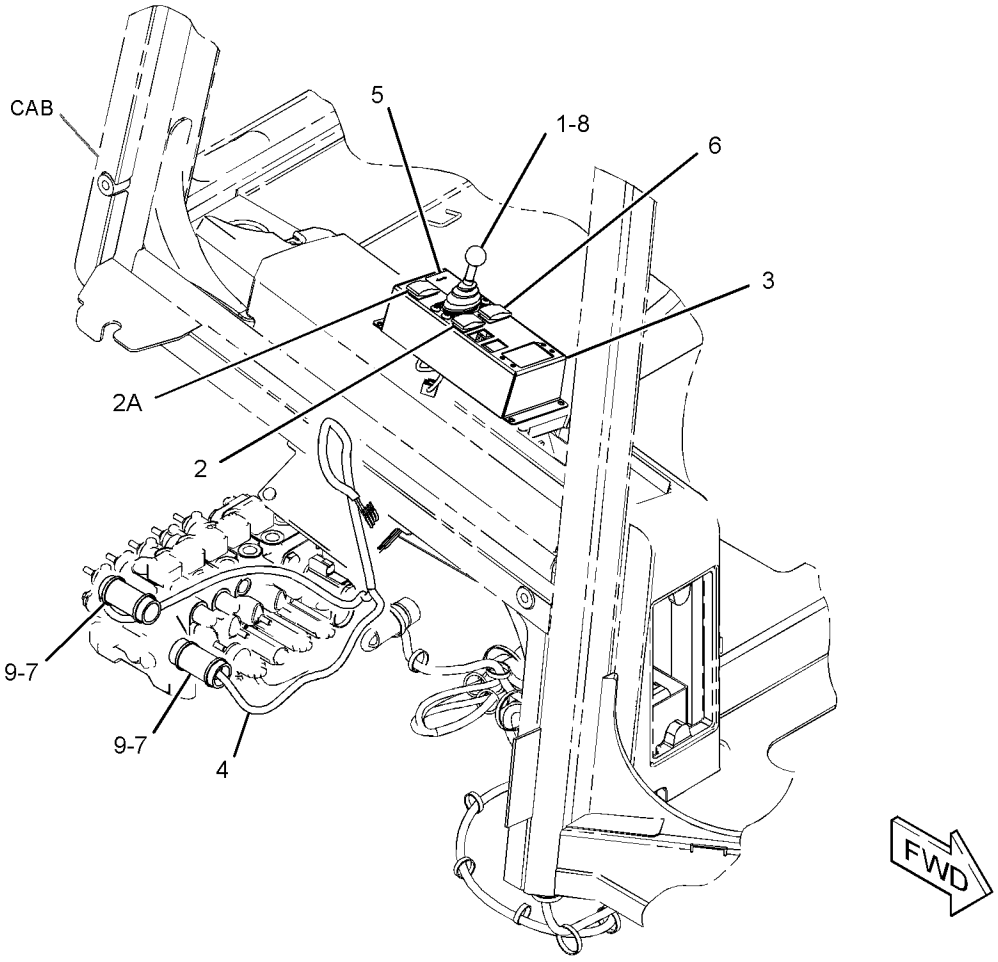

GRAPHIC #1 **<END>** g02492736

271-9180 DRIVE AR-WINCH—HYDRAULIC

S/N: MMM1-UP; RRR1-UP

FOR USE WITH 244-7517—PAGE: 933, REQUIRES ONE OF THE FOLLOWING SECTIONS, 282-4899, 272-9770, 272-9780.

CANNOT BE USED WITH 264-4551—PAGE: 545, 244-7433—PAGE: 428, 244-7434—PAGE: 462, 262-4407—PAGE: 935

AN ATTACHMENT

SMCS-5165 **i03415583**

NOTE	PART NUMBER	QTY	PART NAME 1 2 3 4 5 6 (PRODUCT LEVEL)	SEE PAGE
Y	*244-7504*	1	CONTROL GP-WINCH	897
Y	*244-7412*	1	LINES GP-HYDROSTATIC	330
Y	*284-0970*	1	LINES GP-WINCH	601
Y	*281-3997*	1	MIRROR GP-REAR VIEW (LH)	795
Y	*217-2004*	1	MOUNTING GP-PUMP	928
Y	**254-1377**	1	PUMP GP-PISTON (HYDROSTATIC DRIVE)	369
Y	**254-1379**	1	PUMP GP-PISTON (WINCH)	371
Y	*274-7516*	1	SUPPORT GP-PUMP DRIVE	616
	311-0300	1	BATTERY GP	
	9X-3404	2	BATTERY (12-VOLT, MAINTENANCE FREE, WET)	

Y - SEPARATE ILLUSTRATION

<END>

6Y-5838 EDGE GP-BIT & CUTTING

S/N: MMM1-UP; RRR1-UP

PART OF 255-1362, 255-1414, 255-2370, 255-2376 BLADE GP-ANGLING

AN ATTACHMENT

SMCS-6801, 6804 **i02826960**

NOTE	REF NO	GRAPHIC REF	PART NUMBER	QTY	PART NAME 1 2 3 4 5 6 (PRODUCT LEVEL)	SEE PAGE
	1	1	**6Y-5839**	1	BIT-END (RH) (RH)	
	2	1	**4T-6232**	2	EDGE-CUTTING	
	3	1	**3F-5108**	22	BOLT-PLOW (5/8-11X2.25-IN)	
	4	1	**5P-8247**	22	WASHER-HARD (17X32X3.5-MM THK)	
	5	1	**4K-0367**	22	NUT-FULL (5/8-11-THD)	
	6	1	**6Y-5840**	1	BIT-END (LH) (LH)	

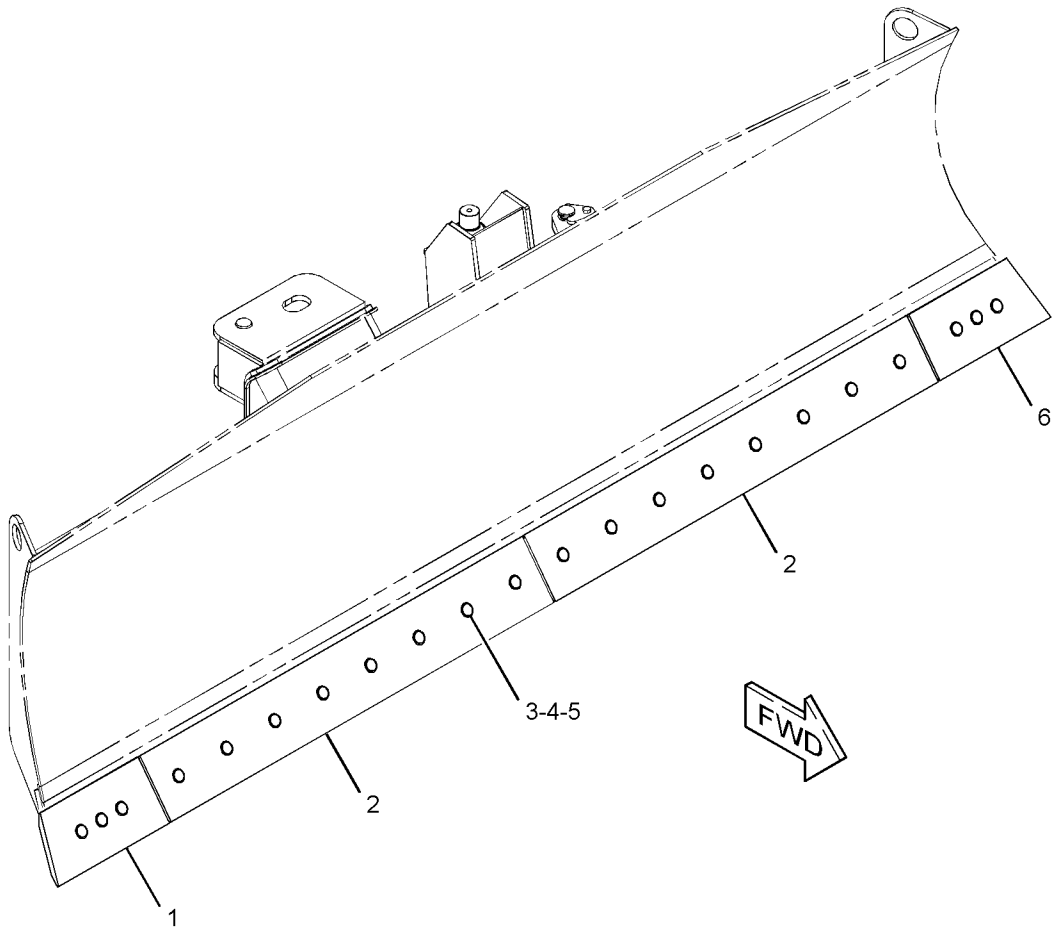

GRAPHIC #1 **<END>** g01410733

179-2897 EDGE GP-BIT & CUTTING

S/N: MMM1-UP; RRR1-UP

PART OF 255-1487, 255-2386, 312-8351, 312-8361 BLADE GP-ANGLING

AN ATTACHMENT

SMCS-6801, 6804

i02826961

NOTE	REF NO	GRAPHIC REF	PART NUMBER	QTY	PART NAME 1 2 3 4 5 6 (PRODUCT LEVEL)	SEE PAGE
	1	1	**6Y-5839**	1	BIT-END (RH) (RH)	
	2	1	**6Y-5840**	1	BIT-END (LH) (LH)	
	3	1	**3F-5108**	20	BOLT-PLOW (5/8-11X2.25-IN)	
	4	1	**157-7338**	2	EDGE-CUTTING	
	5	1	**4K-0367**	20	NUT-FULL (5/8-11-THD)	
	6	1	**5P-8247**	20	WASHER-HARD (17X32X3.5-MM THK)	

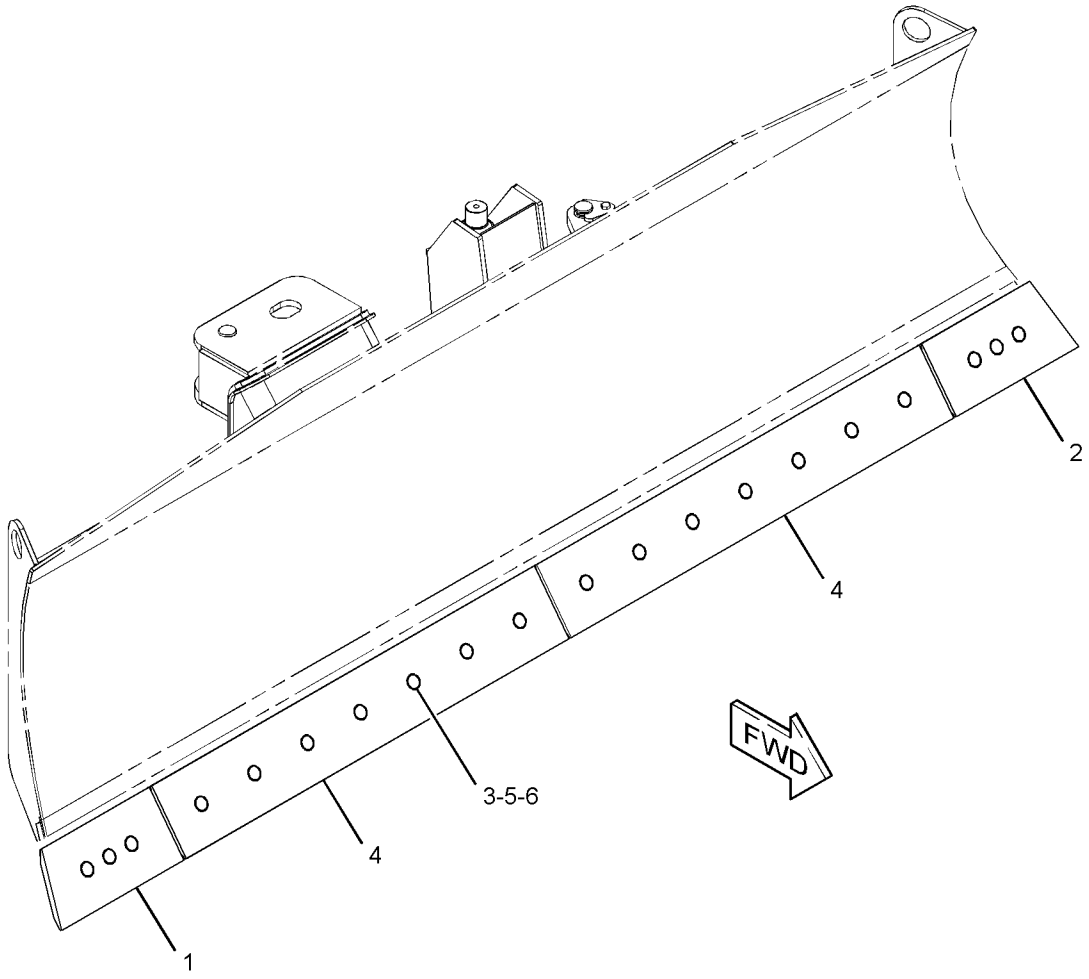

GRAPHIC #1

<END>

g01410711

255-1426 EDGE GP-BIT & CUTTING—LEVEL CUT

S/N: MMM1-UP; RRR1-UP
PART OF 255-1395, 255-2373 BLADE GP-ANGLING
AN ATTACHMENT

SMCS-6801, 6804 **i02636077**

NOTE	PART NUMBER	QTY	PART NAME 1 2 3 4 5 6 (PRODUCT LEVEL)	SEE PAGE
	6Y-5839	1	BIT-END (RH) (RH)	
	6Y-5840	1	BIT-END (LH) (LH)	
	3F-5108	18	BOLT-PLOW (5/8-11X2.25-IN)	
	140-6836	2	EDGE-CUTTING	
	4K-0367	18	NUT-FULL (5/8-11-THD)	
	5P-8247	18	WASHER-HARD (17X32X3.5-MM THK)	

<END>

255-1428 EDGE GP-BIT & CUTTING—LEVEL CUT

S/N: MMM1-UP; RRR1-UP
PART OF 255-1427, 255-2379 BLADE GP-ANGLING
AN ATTACHMENT

SMCS-6801, 6804 **i02638119**

NOTE	PART NUMBER	QTY	PART NAME 1 2 3 4 5 6 (PRODUCT LEVEL)	SEE PAGE
	6Y-5839	1	BIT-END (RH) (RH)	
	6Y-5840	1	BIT-END (LH) (LH)	
	3F-5108	18	BOLT-PLOW (5/8-11X2.25-IN)	
	255-1429	2	EDGE-CUTTING	
	4K-0367	18	NUT-FULL (5/8-11-THD)	
	5P-8247	18	WASHER-HARD (17X32X3.5-MM THK)	

<END>

255-1472 EDGE GP-BIT & CUTTING—LEVEL CUT

S/N: MMM1-UP; RRR1-UP
PART OF 255-1471, 255-2383 BLADE GP-ANGLING
AN ATTACHMENT

SMCS-6801, 6804 **i02638912**

NOTE	PART NUMBER	QTY	PART NAME 1 2 3 4 5 6 (PRODUCT LEVEL)	SEE PAGE
	6Y-5839	1	BIT-END (RH) (RH)	
	6Y-5840	1	BIT-END (LH) (LH)	
	3F-5108	22	BOLT-PLOW (5/8-11X2.25-IN)	
	255-1474	2	EDGE-CUTTING	
	4K-0367	22	NUT-FULL (5/8-11-THD)	
	5P-8247	22	WASHER-HARD (17X32X3.5-MM THK)	

<END>

255-1501 EDGE GP-BIT & CUTTING

S/N: MMM1-UP; RRR1-UP
PART OF 255-1503, 255-2391, 255-2394 BLADE GP-ANGLING
AN ATTACHMENT
TYPE 1

SMCS-6801, 6804 **i04585909**

NOTE	REF NO	GRAPHIC REF	PART NUMBER	QTY	PART NAME 1 2 3 4 5 6 (PRODUCT LEVEL)	SEE PAGE
	1	1	**8E-7078**	1	BIT-END (LH)	
	2	1	**8E-7079**	1	BIT-END (RH)	
	3	1	**255-1505**	2	EDGE-CUTTING	
	4	1	**2J-3506**	20	NUT-FULL (3/4-10-THD)	
	5	1	**5J-4771**	20	BOLT-PLOW (3/4-10X2.75-IN)	
	6	1	**5P-8248**	20	WASHER-HARD (20X36.5X3.5-MM THK)	

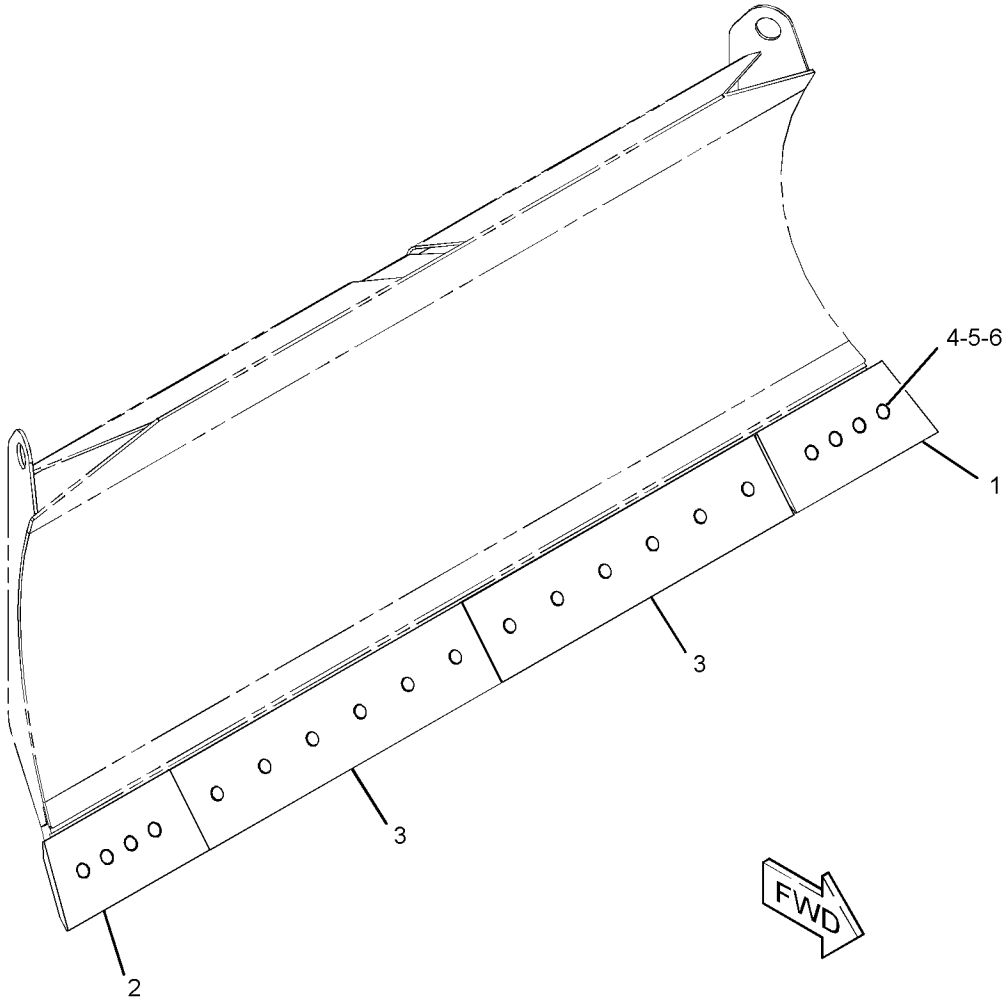

GRAPHIC #1 **<END>** g02360921

255-1501 EDGE GP-BIT & CUTTING

S/N: MMM1-UP; RRR1-UP
PART OF 255-1503, 255-2391, 255-2394 BLADE GP-ANGLING
AN ATTACHMENT
TYPE 2

SMCS-6801, 6804 **i04585933**

NOTE	REF NO	GRAPHIC REF	PART NUMBER	QTY	PART NAME 1 2 3 4 5 6 (PRODUCT LEVEL)	SEE PAGE
	1	1	**8E-7078**	1	BIT-END (LH)	
	2	1	**8E-7079**	1	BIT-END (RH)	
C	3	1	**331-0162**	2	EDGE-CUTTING	
	4	1	**2J-3506**	20	NUT-FULL (3/4-10-THD)	
	5	1	**5J-4771**	20	BOLT-PLOW (3/4-10X2.75-IN)	
	6	1	**5P-8248**	20	WASHER-HARD (20X36.5X3.5-MM THK)	

C - CHANGE FROM PREVIOUS TYPE

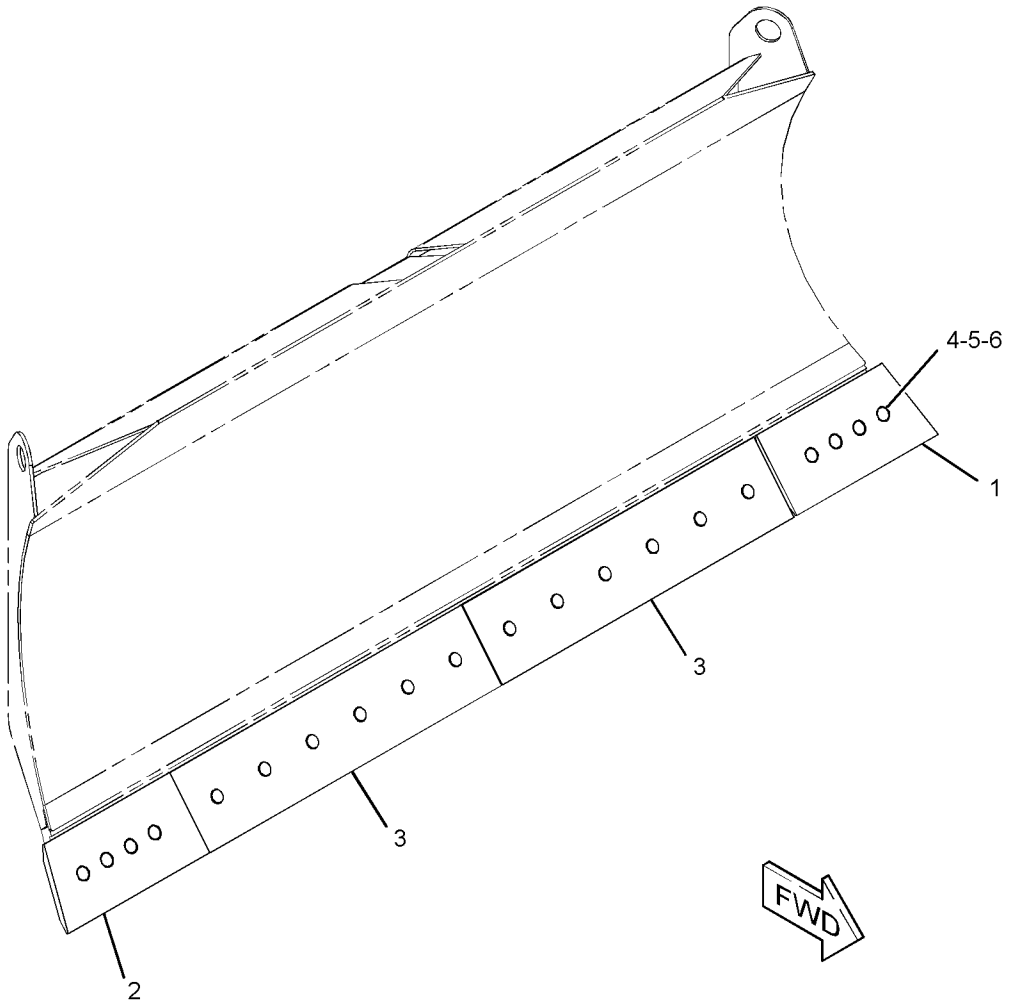

GRAPHIC #1 **<END>** g02360921

WORK TOOLS

255-1505 EDGE-CUTTING

S/N: MMM1-UP; RRR1-UP

AN ATTACHMENT

SMCS-6801 **i02688955**

NOTE	PART NUMBER	QTY	PART NAME 1 2 3 4 5 6 (PRODUCT LEVEL)	SEE PAGE
			(NO SERVICED PARTS)	

<END>

201-2744 FILTER GP-OIL—HYDRAULIC

S/N: MMM1-UP; RRR1-UP
PART OF 284-0970, 325-7269 LINES GP-WINCH
AN ATTACHMENT

SMCS-5068, 5177

i03577307

NOTE	REF NO	GRAPHIC REF	PART NUMBER	QTY	PART NAME 1 2 3 4 5 6 (PRODUCT LEVEL)	SEE PAGE
	1	1	**6V-0852**	1	CAP-DUST	
	2	1	**6V-3965**	1	FITTING (QUICK DISCONNECT)	
	3	1	**134-0404**	1	SWITCH AS-PRESSURE (HYDRAULIC OIL FILTER)	
	4	1	**144-6691**	1	FILTER-OIL (ADVANCED EFFICIENCY)	
	5	1	**3J-1907**	2	SEAL-O-RING	

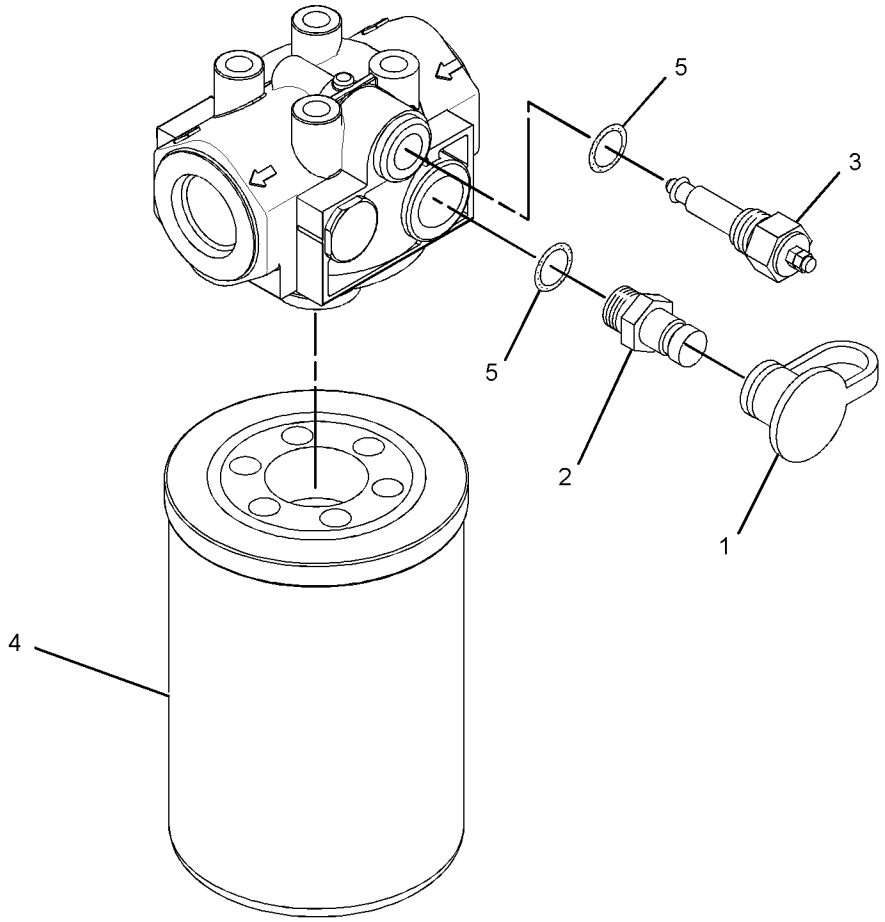

GRAPHIC #1

<END>

g01910473

208-5551 GEAR GP-WINCH

S/N: MMM1-UP; RRR1-UP
PART OF 256-3738 WINCH AR
AN ATTACHMENT

SMCS-5165 **i03577309**

NOTE	REF NO	GRAPHIC REF	PART NUMBER	QTY	PART NAME 1 2 3 4 5 6 (PRODUCT LEVEL)	SEE PAGE
	1	1	**5S-6174**	3	BEARING	
	2	1	**119-1616**	1	RING	
	3	1	**119-2195**	1	RING	
	4	1	**123-4410**	2	SPACER (2X2.75X0.125-IN THK) (3.18MM THK)	
	5	1	**129-7301**	1	SEAL-O-RING	
	6	1	**161-6424**	1	GEAR	
	7	1	**161-6425**	1	GEAR	
	8	1	**161-6427**	1	GEAR	
	9	1	**161-8041**	1	WASHER (100.5X125X3.5-MM THK)	
	10	1	**162-0178**	2	BALL BEARING	
	11	1	**162-0179**	1	RING	
	12	1	**162-2772**	1	RING	
	13	1	**172-2437**	1	BEARING AS-NEEDLE	
	14	1	**203-6639**	1	SHAFT-GEAR	
	15	1	**1M-7914**	1	RING-RETAINING	
	16	1	**4L-9337**	2	BOLT (3/8-16X1.5-IN)	
	17	1	**8T-4896**	2	WASHER-HARD (10.2X18.5X2.5-MM THK)	

208-5551 **GEAR GP-WINCH (*contd.*)** **i03577309**

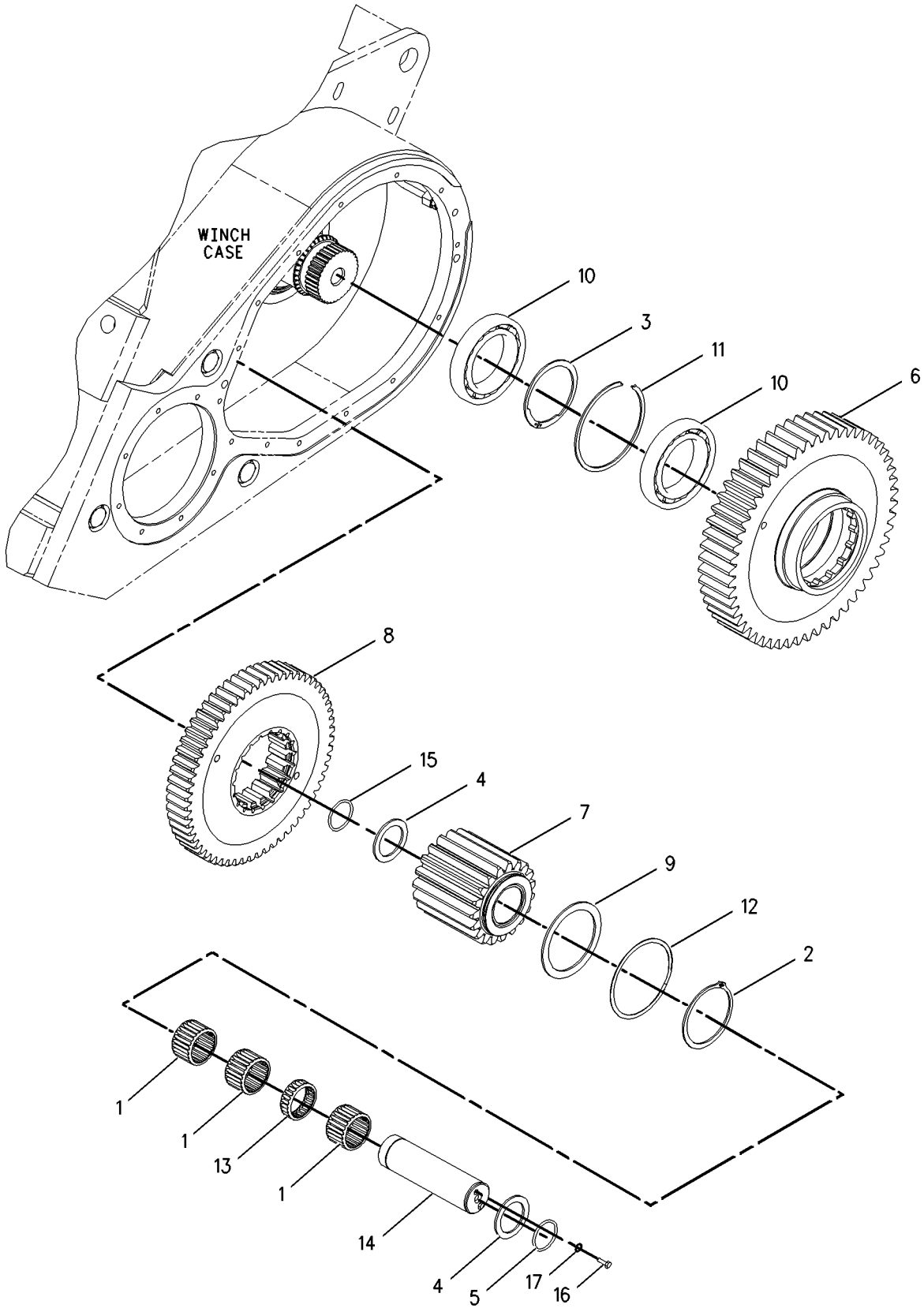

GRAPHIC #1 **<END>** g00826409

211-8171 GEAR GP-WINCH TRANSFER

S/N: MMM1-UP; RRR1-UP
PART OF 309-5091 BRAKE & PLANETARY GP-WINCH
AN ATTACHMENT

SMCS-5165 **i01921731**

NOTE	REF NO	GRAPHIC REF	PART NUMBER	QTY	PART NAME 1 2 3 4 5 6 (PRODUCT LEVEL)	SEE PAGE
	1	1	**1F-2771**	1	BALL BEARING	
	2	1	**1S-3743**	1	BALL BEARING	
	3	1	**203-6632**	1	CARRIER-BEARING	
	4	1	**203-6633**	1	GEAR-PINION (16-TEETH)	
	5	1	**9F-1399**	1	SEAL-O-RING	

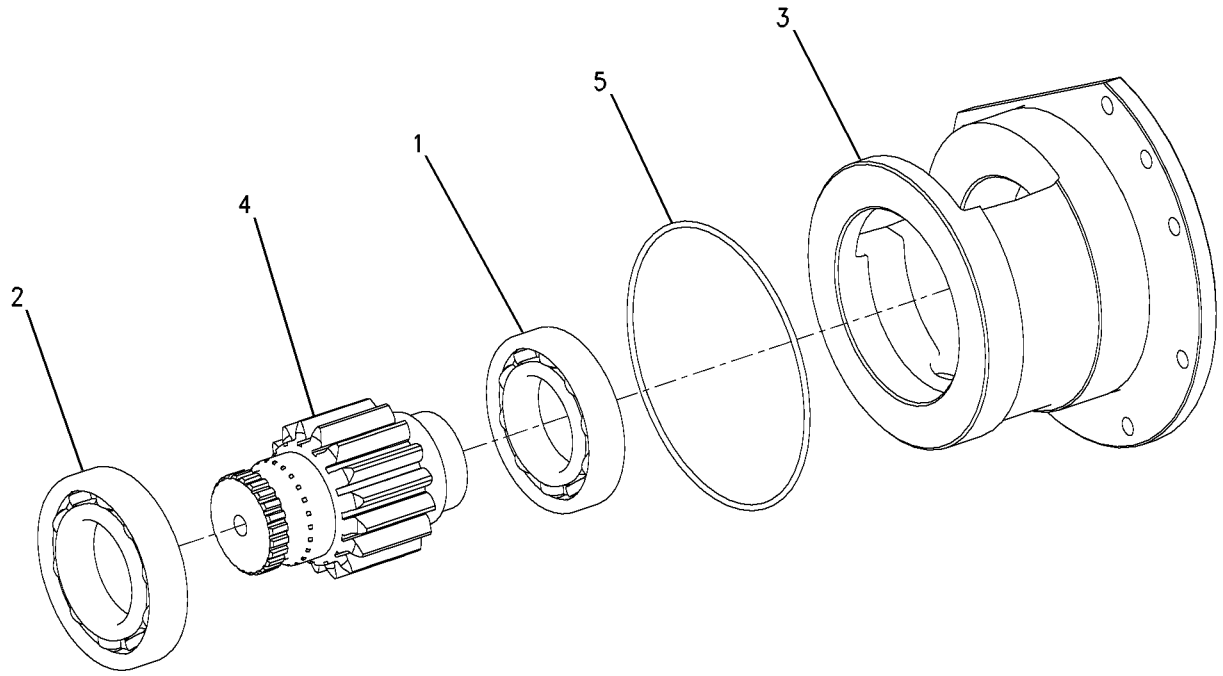

GRAPHIC #1 **<END>** g00833216

208-5549 MOTOR & MTG GP-WINCH

S/N: MMM1-UP; RRR1-UP
PART OF 256-3738 WINCH AR
AN ATTACHMENT

SMCS-5058, 5163

i03603601

NOTE	REF NO	GRAPHIC REF	PART NUMBER	QTY	PART NAME 1 2 3 4 5 6 (PRODUCT LEVEL)	SEE PAGE
Y	1	1	**200-1729**	1	MOTOR GP-PISTON (WINCH)	361
	2	1	**3D-2824**	1	SEAL-O-RING	
	3	1	**3H-8430**	1	SETSCREW (3/8-16X0.75-IN)	
	4	1	**4S-5898**	1	SEAL-O-RING	
	5	1	**6V-8637**	1	CONNECTOR	
	6	1	**6V-9746**	1	SEAL-O-RING	
	7	1	**8T-4223**	4	WASHER-HARD (13.5X25.5X3-MM THK)	
	8	1	**8T-8919**	4	BOLT (1/2-13X1.75-IN)	

Y - SEPARATE ILLUSTRATION

208-5549 **MOTOR & MTG GP-WINCH (*contd.*)** **i03603601**

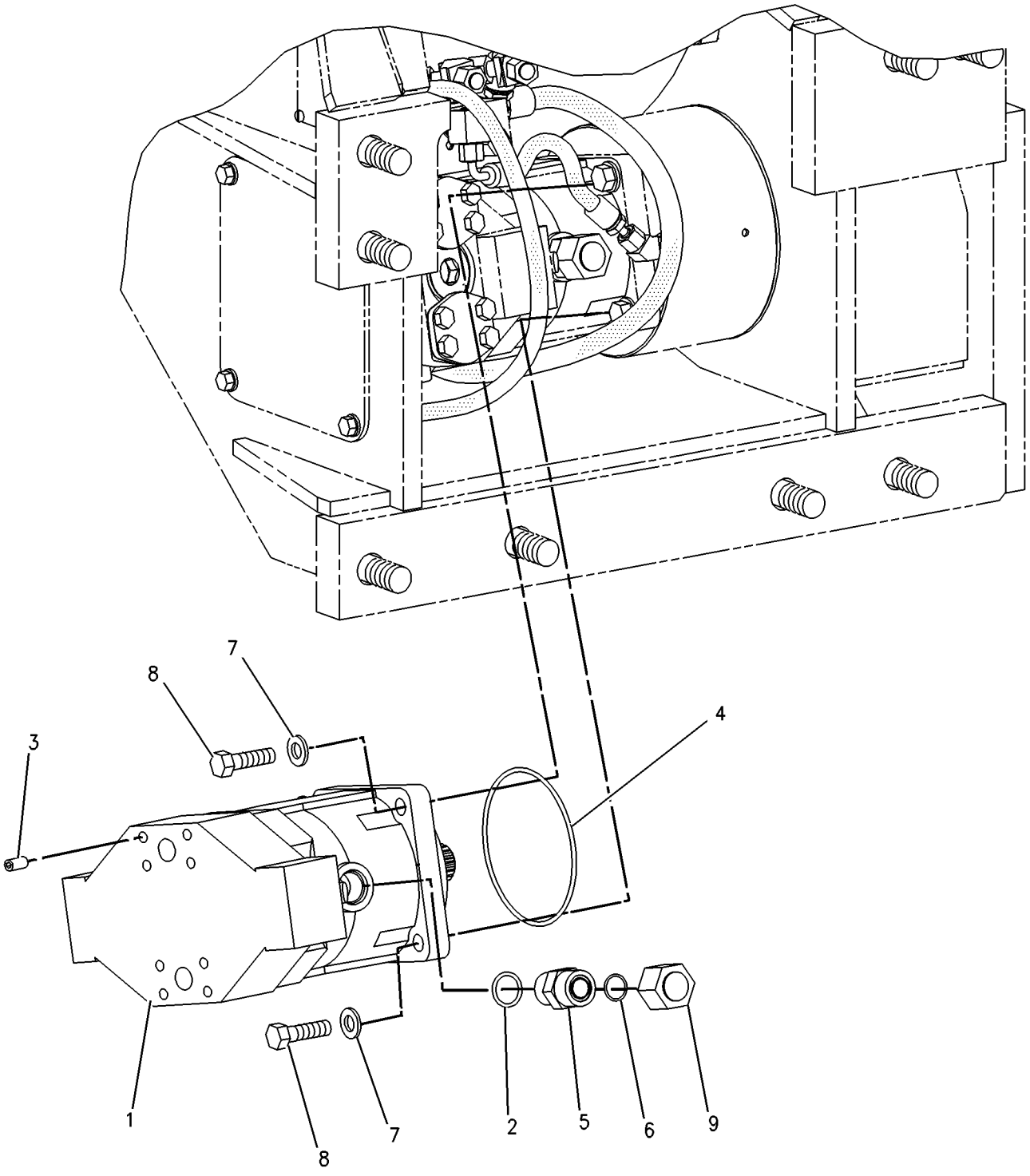

GRAPHIC #1 **<END>** g00833026

292-0302 MOUNTING GP-MAST—LASER RECEIVER

S/N: MMM1-UP; RRR1-UP

PART OF 317-6527 GRADE CONTROL AR, 292-0293, 292-0312 GRADE CONTROL AR-LASER

SMCS-79NS **i02622638**

NOTE	PART NUMBER	QTY	PART NAME 1 2 3 4 5 6 (PRODUCT LEVEL)	SEE PAGE
M	**8T-4648**	4	BOLT (M12X1.75X70-MM)	
	237-7552	3	FILM-WARNING (LASER TRANSMITTER)	
	252-8744	1	FILM-WARNING (BLADE, DO NOT CLIMB, READ OMM)	
M	**8T-4244**	4	NUT (M12X1.75-THD)	
	8T-4223	8	WASHER-HARD (13.5X25.5X3-MM THK)	

M - METRIC PART

<END>

292-0303 MOUNTING GP-MAST—SATELLITE RECEIVER

S/N: MMM1-UP; RRR1-UP

PART OF 290-5571, 292-0280, 347-0915, 347-0916 GRADE CONTROL AR-SATELLITE, 292-0290 MAST GP

SMCS-79NS **i03128391**

NOTE	PART NUMBER	QTY	PART NAME 1 2 3 4 5 6 (PRODUCT LEVEL)	SEE PAGE
M	**8T-4648**	4	BOLT (M12X1.75X70-MM)	
	252-8744	1	FILM-WARNING (BLADE, DO NOT CLIMB, READ OMM)	
M	**8T-4244**	4	NUT (M12X1.75-THD)	
	8T-4223	8	WASHER-HARD (13.5X25.5X3-MM THK)	

M - METRIC PART

<END>

217-2004 MOUNTING GP-PUMP

S/N: MMM1-UP; RRR1-UP
PART OF 325-6517 DRIVE AR-PUMP, 271-9180 DRIVE AR-WINCH
AN ATTACHMENT

SMCS-5084 **i01937074**

NOTE	REF NO	GRAPHIC REF	PART NUMBER	QTY	PART NAME 1 2 3 4 5 6 (PRODUCT LEVEL)	SEE PAGE
	1	1	**3E-4356**	2	WASHER-HARD (17.5X30X6-MM THK)	
	2	1	**7J-6285**	1	SEAL-O-RING	
M	3	1	**8T-7338**	2	BOLT (M16X2X45-MM)	

M - METRIC PART

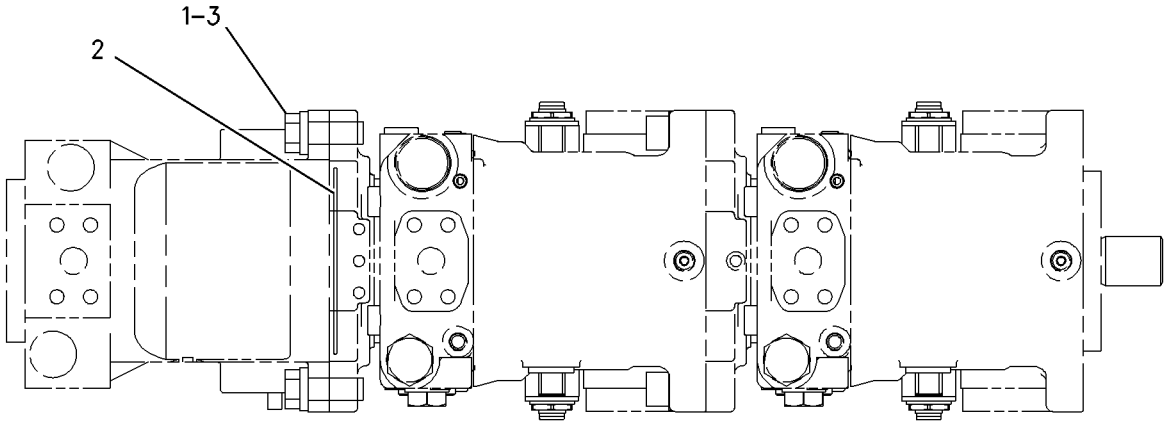

GRAPHIC #1 **<END>** g00876400

258-4961 MOUNTING GP-RIPPER

S/N: MMM1-UP; RRR1-UP
PART OF 262-4407 RIPPER AR
AN ATTACHMENT

SMCS-6165, 6310, 6324

i04895815

NOTE	REF NO	GRAPHIC REF	PART NUMBER	QTY	PART NAME 1 2 3 4 5 6 (PRODUCT LEVEL)	SEE PAGE
	1	1	**7P-2358**	2	PIN	
	2	1	**170-6631**	4	BAR	
	3	1	**188-3538**	4	PIN	
	4	1	**254-8859**	1	PLATE AS	
	5	1	**258-4962**	1	PLATE AS	
	6	1	**258-4971**	1	PLATE	
	7	1	**198-4782**	14	WASHER-HARD (26X47X12-MM THK)	
	8	1	**5P-1076**	2	WASHER-HARD (13.5X30X4-MM THK)	
M	9	1	**6V-7687**	2	LOCKNUT (M12X1.75-THD)	
M	10	1	**7X-2550**	2	BOLT (M12X1.75X110-MM)	
M	11	1	**7X-2577**	14	BOLT (M24X3X90-MM)	
	12	1	**8T-4121**	4	WASHER-HARD (11X21X2.5-MM THK)	
M	13	1	**8T-4136**	4	BOLT (M10X1.5X25-MM)	
M	14	1	**8T-4139**	2	BOLT (M12X1.75X30-MM)	
M	15	1	**8T-4192**	8	BOLT (M12X1.75X25-MM)	
	16	1	**8T-4223**	8	WASHER-HARD (13.5X25.5X3-MM THK)	
	17	1	**5P-8837**	1	LOCK PIN	
	18	1	**161-9570**	1	PIN	
E	19	1	**9X-2092**		TRIM-EDGE (70-CM)	

E - ORDER BY THE CENTIMETER
M - METRIC PART

258-4961 **MOUNTING GP-RIPPER (*contd.*)** **i04895815**

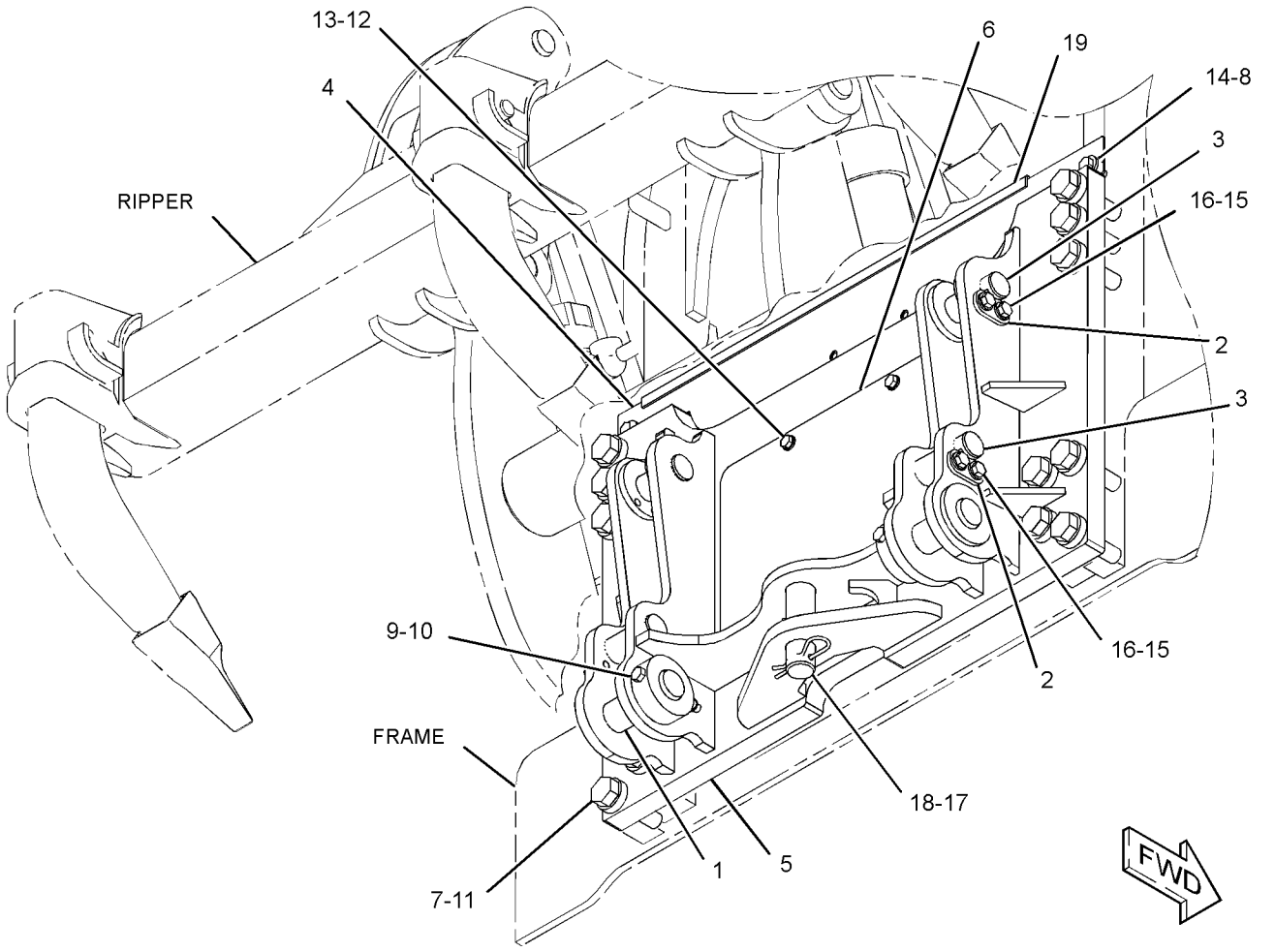

GRAPHIC #1 **<END>** g02788748

208-5553 MOUNTING GP-WINCH

S/N: MMM1-UP; RRR1-UP
PART OF 256-3738 WINCH AR
AN ATTACHMENT

SMCS-5163 **i01923450**

NOTE	REF NO	GRAPHIC REF	PART NUMBER	QTY	PART NAME 1 2 3 4 5 6 (PRODUCT LEVEL)	SEE PAGE
	1	1	**3B-4641**	2	PIN-COTTER	
	2	1	**138-2456**	1	PLATE	
	3	1	**212-4757**	1	PIN-DRAWBAR	
	4	1	**7H-4543**	4	SCREW-TAPPING (10-16X0.375-IN)	
	5	1	**8T-4167**	8	WASHER-HARD (26X44X4-MM THK)	
M	6	1	**8T-5878**	8	BOLT (M24X3X80-MM)	

M - METRIC PART

208-5553 **MOUNTING GP-WINCH (*contd.*)** **i01923450**

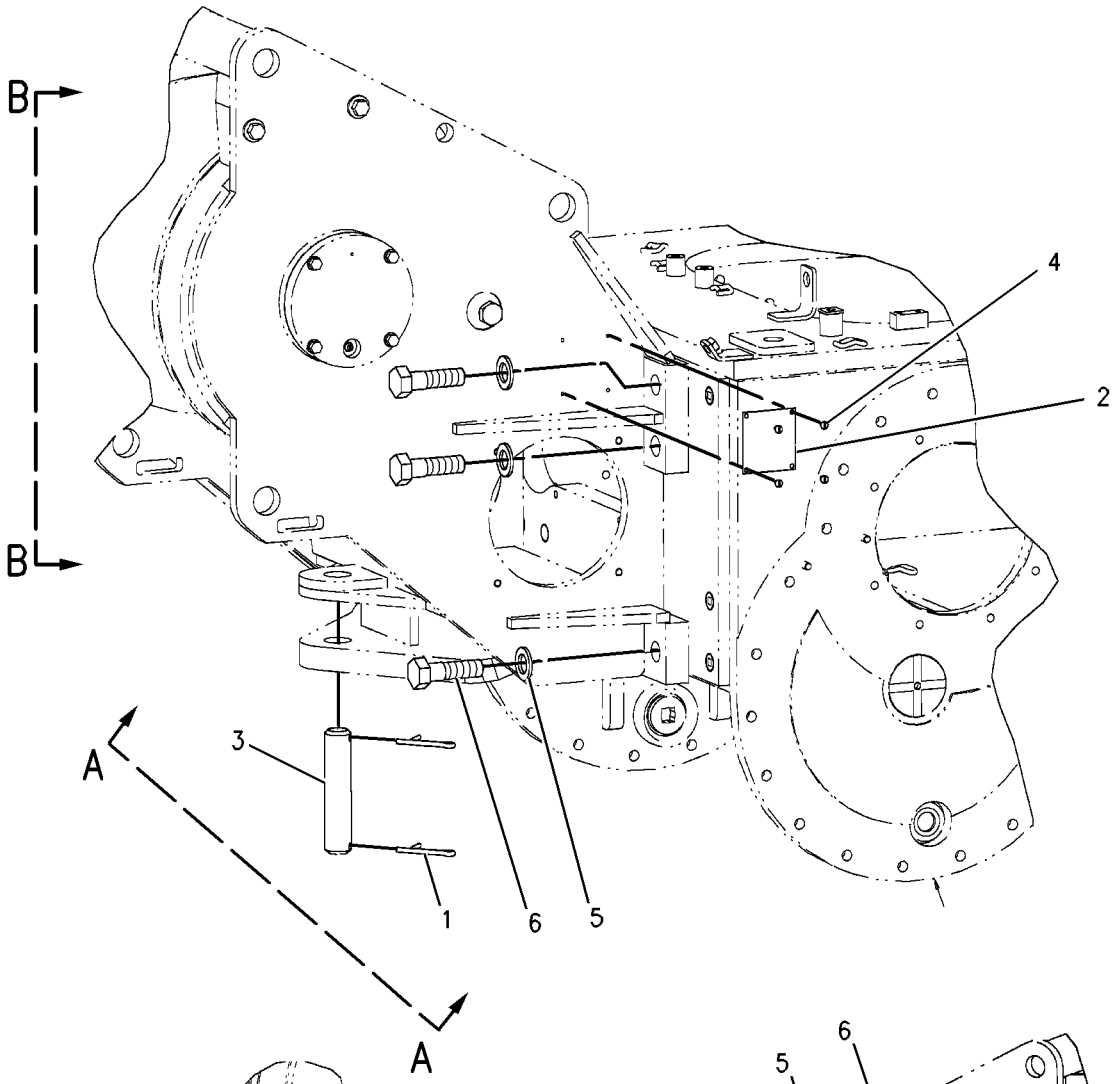

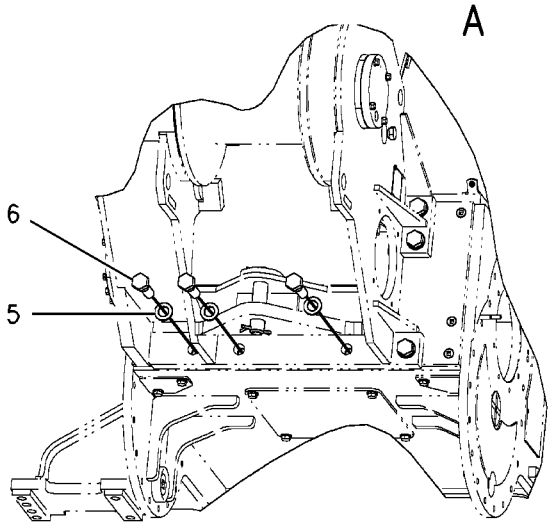

VIEW A-A

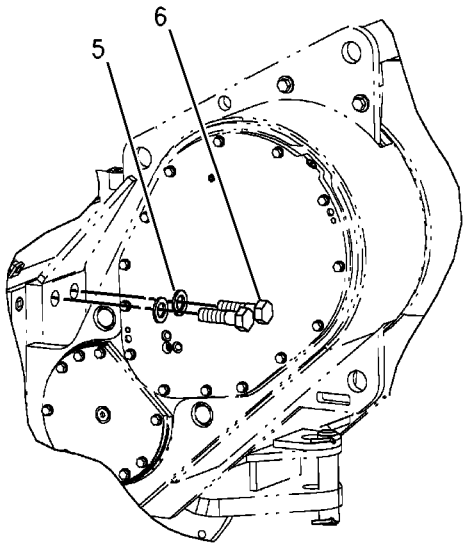

VIEW B-B

GRAPHIC #1 **<END>** g00833294

244-7517 MOUNTING GP-WINCH

S/N: MMM1-UP; RRR1-UP

CANNOT BE USED WITH 244-7433–PAGE: 428, 244-7434–PAGE: 462, 262-4407–PAGE: 935 AN ATTACHMENT

SMCS-5163 **i02710524**

NOTE	REF NO	GRAPHIC REF	PART NUMBER	QTY	PART NAME 1 2 3 4 5 6 (PRODUCT LEVEL)	SEE PAGE
	1	1	**198-0918**	8	PLUG	
	2	1	**244-7518**	1	PLATE AS	
	4	1	**254-8859**	1	PLATE AS	
	5	1	**198-4782**	14	WASHER-HARD (26X47X12-MM THK)	
	6	1	**5P-1076**	2	WASHER-HARD (13.5X30X4-MM THK)	
M	7	1	**7X-2577**	14	BOLT (M24X3X90-MM)	
	8	1	**8T-4121**	8	WASHER-HARD (11X21X2.5-MM THK)	
M	9	1	**8T-4137**	8	BOLT (M10X1.5X20-MM)	
M	10	1	**8T-4139**	2	BOLT (M12X1.75X30-MM)	
	11	1	**303-6582**	1	PLATE	
	12	1	**299-8874**	1	PLATE AS	

M - METRIC PART

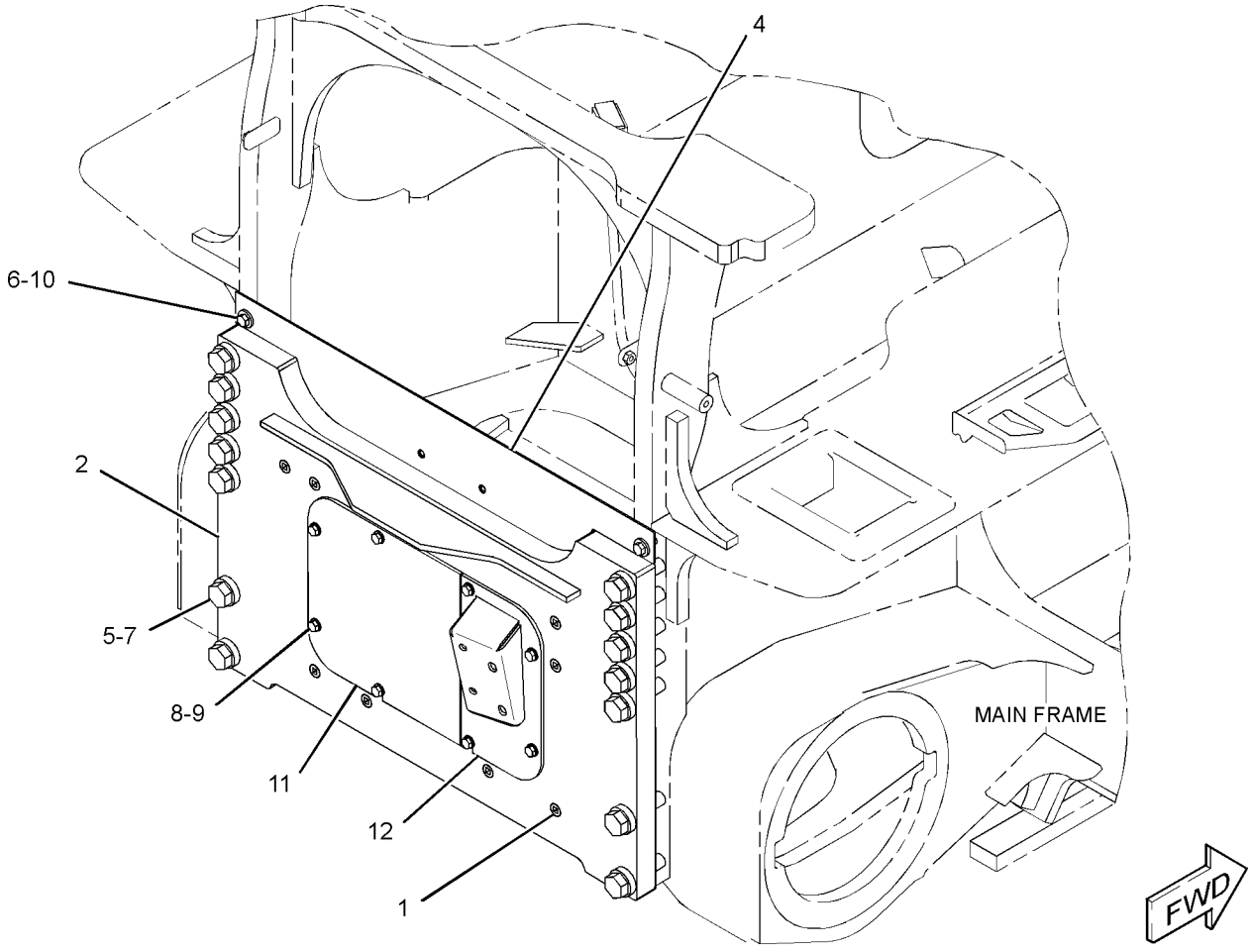

GRAPHIC #1 **<END>** g01364263

211-8169 PLANETARY GP-WINCH

S/N: MMM1-UP; RRR1-UP
PART OF 309-5091 BRAKE & PLANETARY GP-WINCH
AN ATTACHMENT

SMCS-5165 **i02833721**

NOTE	REF NO	GRAPHIC REF	PART NUMBER	QTY	PART NAME 1 2 3 4 5 6 (PRODUCT LEVEL)	SEE PAGE
	1	1	**129-7286**	6	BEARING	
	2	1	**129-7307**	6	RACE	
	3	1	**203-6629**	1	CARRIER-PLANETARY	
	4	1	**203-6630**	3	GEAR-PLANETARY (34-TEETH)	
	5	1	**211-9023**	3	SPACER-BEARING	
	6	1	**211-9024**	3	SHAFT	
	7	1	**4H-8380**	3	PIN-SPRING	

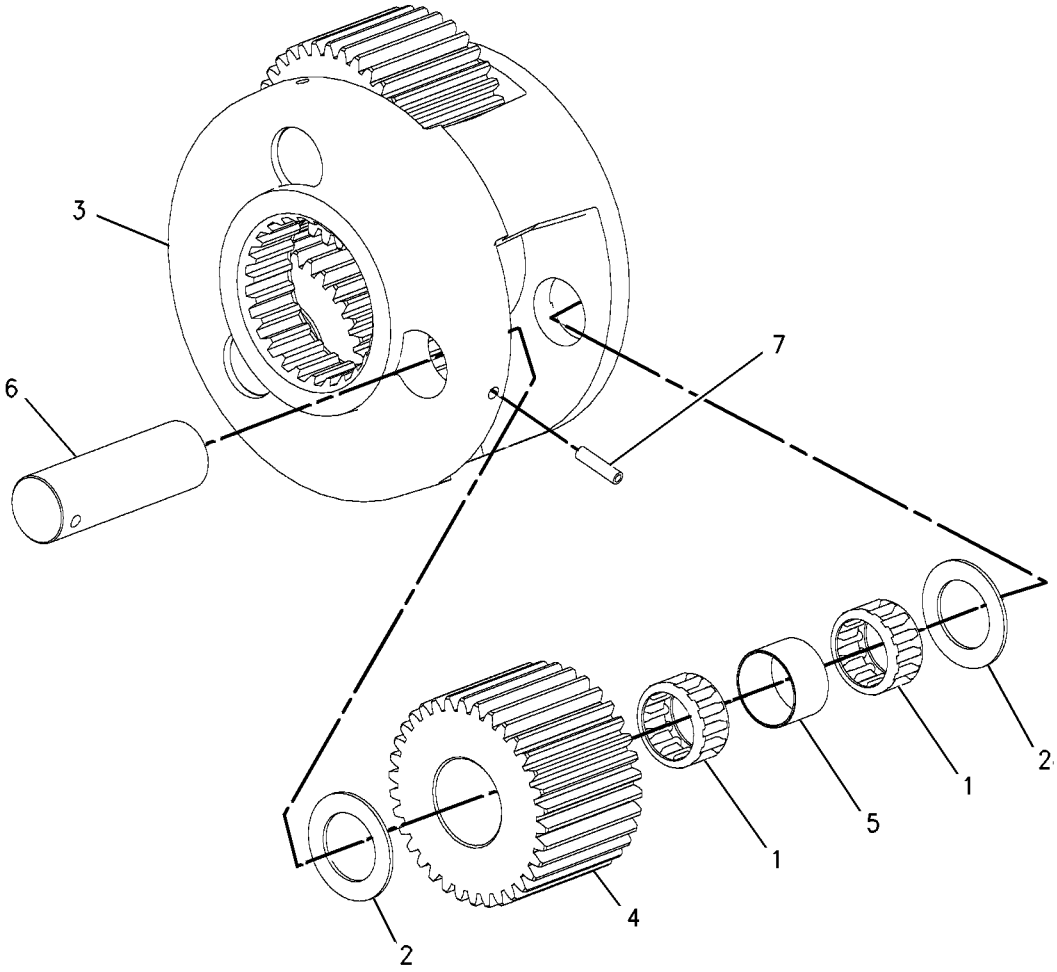

GRAPHIC #1 **<END>** g00833226

262-4407 RIPPER AR

S/N: MMM1-UP; RRR1-UP

CANNOT BE USED WITH 244-7433–PAGE: 428, 244-7434–PAGE: 462, 244-7517–PAGE: 933 AN ATTACHMENT

SMCS-6310 **i04415556**

NOTE	PART NUMBER	QTY	PART NAME 1 2 3 4 5 6 (PRODUCT LEVEL)	SEE PAGE
Y	**262-4415**	1	CYLINDER GP-RIPPER (RH)	538
Y	**262-4418**	1	CYLINDER GP-RIPPER (LH)	540
Y	*263-3323*	1	LINES GP-RIPPER	597
Y	*258-4961*	1	MOUNTING GP-RIPPER	929
Y	*262-4408*	1	RIPPER GP	936
	4B-4158	2	SCREW-DRIVE (NO 4X0.25-IN)	
	8T-7516	1	PLATE-SERIAL NUMBER	

Y - SEPARATE ILLUSTRATION

<END>

262-4408 RIPPER GP

S/N: MMM1-UP; RRR1-UP
PART OF 262-4407 RIPPER AR
AN ATTACHMENT

SMCS-6310, 6325 **i02650132**

NOTE	REF NO	GRAPHIC REF	PART NUMBER	QTY	PART NAME 1 2 3 4 5 6 (PRODUCT LEVEL)	SEE PAGE
	1	1	**5G-5069**	4	PIN	
	2	1	**8J-7008**	2	PIN	
Y	3	1	*9J-1137*	3	TOOTH GP-RIPPER	939
	4	1	**170-6631**	4	BAR	
	5	1	**186-6529**	2	LINK	
	6	1	**262-4409**	1	LINK AS	
	7	1	**262-4411**	1	CARRIAGE AS	
	8	1	**3B-8489**	8	FITTING-GREASE	
M	9	1	**6V-7744**	2	LOCKNUT (M10X1.5-THD)	
M	10	1	**8T-4192**	8	BOLT (M12X1.75X25-MM)	
	11	1	**8T-4223**	8	WASHER-HARD (13.5X25.5X3-MM THK)	
M	12	1	**8T-6685**	2	BOLT (M10X1.5X110-MM)	

M - METRIC PART
Y - SEPARATE ILLUSTRATION

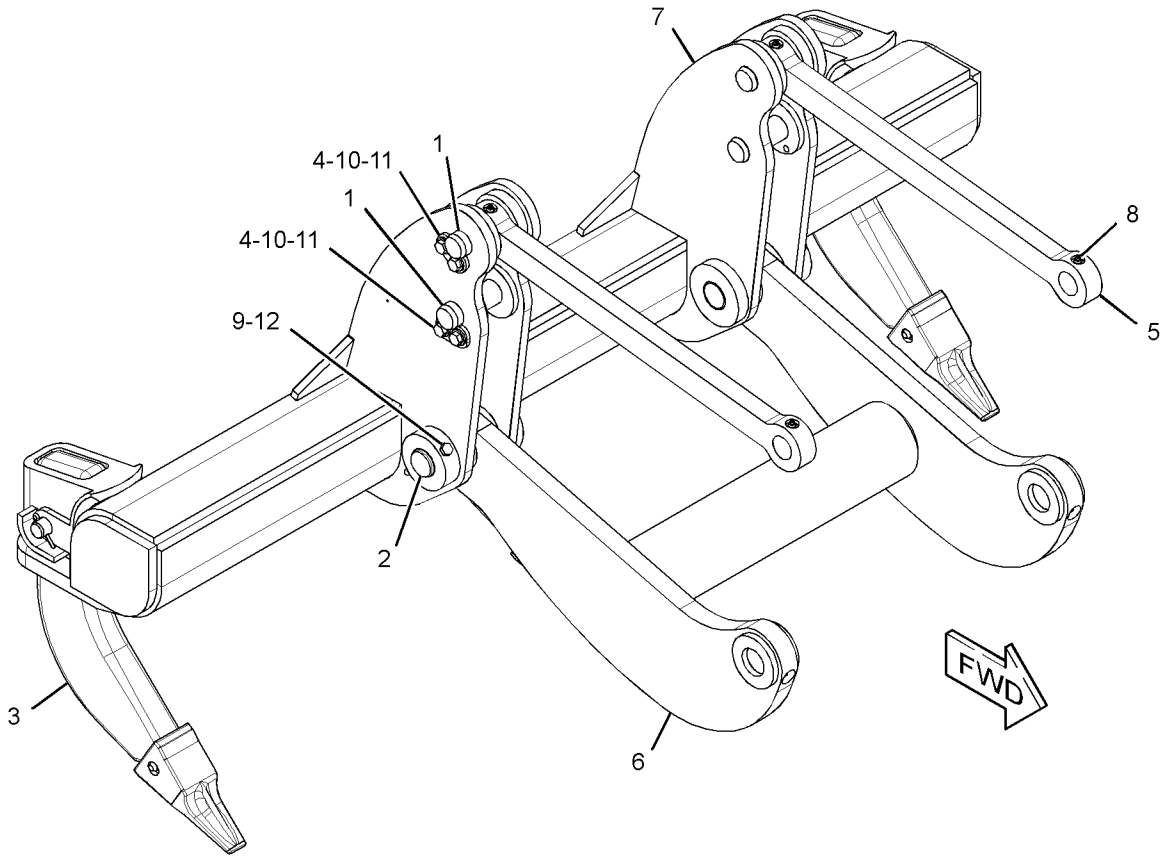

GRAPHIC #1 **<END>** g01333623

208-5547 SHAFT GP-WINCH DRUM

S/N: MMM1-UP; RRR1-UP
PART OF 256-3738 WINCH AR
AN ATTACHMENT

SMCS-5165 **i01921229**

NOTE	REF NO	GRAPHIC REF	PART NUMBER	QTY	PART NAME 1 2 3 4 5 6 (PRODUCT LEVEL)	SEE PAGE
	1	1	**1J-4034**	2	SEAL-LIP TYPE	
	2	1	**1P-3934**	2	CUP-BEARING	
	3	1	**1P-3935**	2	CONE-BEARING	
	4	1	**2H-3786**	1	NUT-JAM (1-14-THD)	
	5	1	**161-6417**	1	DISC-BRAKE	
	6	1	**203-6610**	1	DRUM-CABLE	
	7	1	**203-6612**	1	BUSHING	
	8	1	**203-6614**	1	SHAFT-DRUM	
	9	1	**203-6615**	1	GASKET	
	10	1	**203-6637**	1	HOUSING-SPRING	
	11	1	**203-6641**	1	SPRING	
	12	1	**211-0388**	1	COVER-BEARING	
	13	1	**211-0394**	1	BOLT (5/16-18X0.4-IN)	
	14	1	**211-0395**	1	LOCKNUT-BEARING	
	15	1	**211-0396**	2	WASHER	
	16	1	**211-0397**	1	KEY	
	17	1	**3B-8489**	1	FITTING-GREASE	
	18	1	**4L-9337**	4	BOLT (3/8-16X1.5-IN)	
	19	1	**7F-2122**	1	SEAL-O-RING	
	20	1	**8T-4896**	4	WASHER-HARD (10.2X18.5X2.5-MM THK)	
	21	1	**219-7935**	1	PLATE	
	22	1	**5M-3062**	1	BOLT (3/8-16X0.75-IN)	

208-5547 **SHAFT GP-WINCH DRUM (*contd.*)** **i01921229**

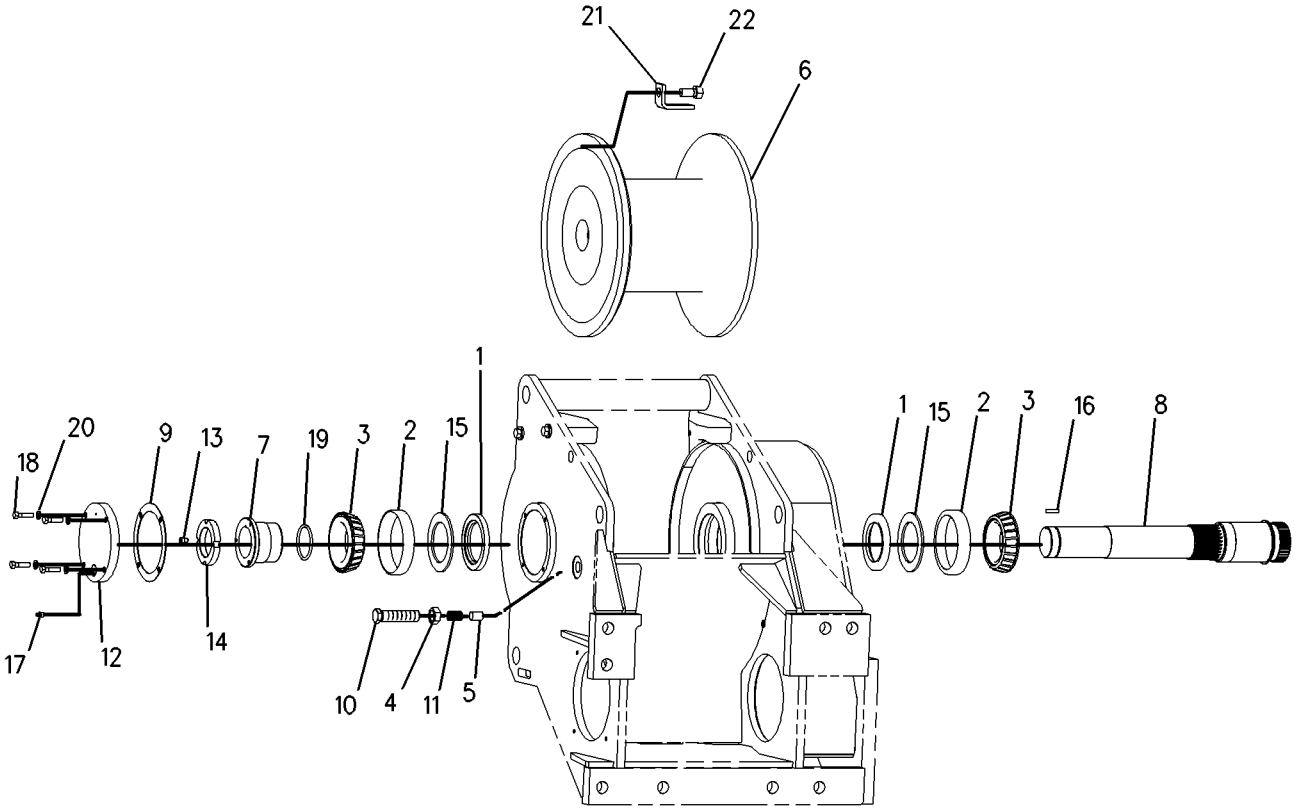

GRAPHIC #1 **<END>** g01005331

9J-1137 TOOTH GP-RIPPER

S/N: MMM1-UP; RRR1-UP
PART OF 262-4408 RIPPER GP
AN ATTACHMENT

SMCS-6808, 6810

i01925355

NOTE	REF NO	GRAPHIC REF	PART NUMBER	QTY	PART NAME 1 2 3 4 5 6 (PRODUCT LEVEL)	SEE PAGE
	1	1	**3B-4630**	2	PIN-COTTER	
	2	1	**3G-6049**	1	PIN	
	3	1	**1U-1257**	1	SHANK-RIPPER	
	4	1	**149-5733**	1	RETAINER AS (G.E.T.)	
	5	1	**9J-4259**	1	TIP-PENETRATION	
	6	1	**132-4763**	1	PIN	

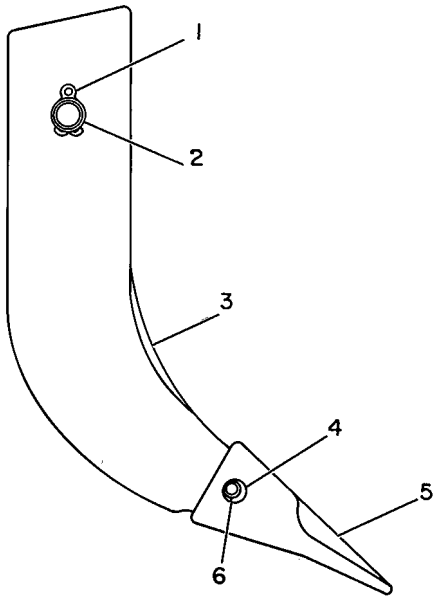

GRAPHIC #1

<END>

g00145703

256-3739 VALVE & LINES GP-WINCH

S/N: MMM1-UP; RRR1-UP
PART OF 256-3738 WINCH AR
AN ATTACHMENT

SMCS-5163 **i04002672**

NOTE	REF NO	GRAPHIC REF	PART NUMBER	QTY	PART NAME 1 2 3 4 5 6 (PRODUCT LEVEL)	SEE PAGE
	1	1	**8T-4896**	4	WASHER-HARD (10.2X18.5X2.5-MM THK)	
	2	1	**122-1951**	2	COVER	
I	3	1	**152-8368**	1	HOSE AS	
I	4	1	**152-8369**	1	HOSE AS	
	5	1	**152-9105**	1	HOSE AS	
	6	1	**200-1311**	1	VALVE GP-FLOW CONTROL (WINCH)	
	7	1	**212-6023**	1	COVER	
I	8	1	**212-6989**	1	HOSE AS	
Y	9	1	**264-3709**	1	VALVE GP-SOLENOID (WINCH)	647
	10	1	*148-8316*	1	CONNECTOR AS	
		1	**3J-7354**	1	SEAL-O-RING	
		1	**4J-5477**	1	SEAL-O-RING	
		1	**6V-8647**	1	CONNECTOR	
	11	1	*148-8336*	1	CONNECTOR AS	
		1	**3J-1907**	1	SEAL-O-RING	
		1	**6V-8397**	1	SEAL-O-RING	
		1	**6V-8636**	1	CONNECTOR	
	12	1	*148-8368*	2	ELBOW AS	
					(EACH INCLUDES)	
		1	**3J-1907**	1	SEAL-O-RING	
		1	**4J-5477**	1	SEAL-O-RING	
		1	**6V-8627**	1	ELBOW	
	13	1	*148-8369*	1	ELBOW AS	
		1	**3J-7354**	1	SEAL-O-RING	
		1	**4J-5477**	1	SEAL-O-RING	
		1	**6V-8628**	1	ELBOW	
	14	1	*148-8378*	2	ELBOW AS	
					(EACH INCLUDES)	
		1	**3J-1907**	1	SEAL-O-RING	
		1	**6V-8397**	1	SEAL-O-RING	
		1	**6V-8724**	1	ELBOW	
	15	1	*148-8385*	1	ELBOW AS	
		1	**3J-7354**	1	SEAL-O-RING	
		1	**4J-5477**	1	SEAL-O-RING	
		1	**6V-9000**	1	ELBOW	
	16	1	*205-3692*	1	ELBOW AS	
		1	**2M-9780**	1	SEAL-O-RING	
		1	**6V-8397**	1	SEAL-O-RING	
		1	**9X-2134**	1	ELBOW	
	17	1	**1Y-7574**	3	BOLT-HEAD (3/8-16X2.5-IN)	
	18	1	**4J-5267**	1	SEAL-O-RING	
	19	1	**4L-6454**	4	BOLT (3/8-16X1-IN)	
	20	1	**4S-9002**	6	BOLT-12 POINT HEAD (3/8-16X3-IN)	
	21	1	**5F-1678**	2	SEAL-O-RING	
	22	1	**6V-9829**	1	CAP AS	
M	23	1	**8T-4137**	8	BOLT (M10X1.5X20-MM)	

I - REFER TO HYDRAULIC INFORMATION SYSTEM
M - METRIC PART
Y - SEPARATE ILLUSTRATION

256-3739 **VALVE & LINES GP-WINCH (*contd.*)** **i04002672**

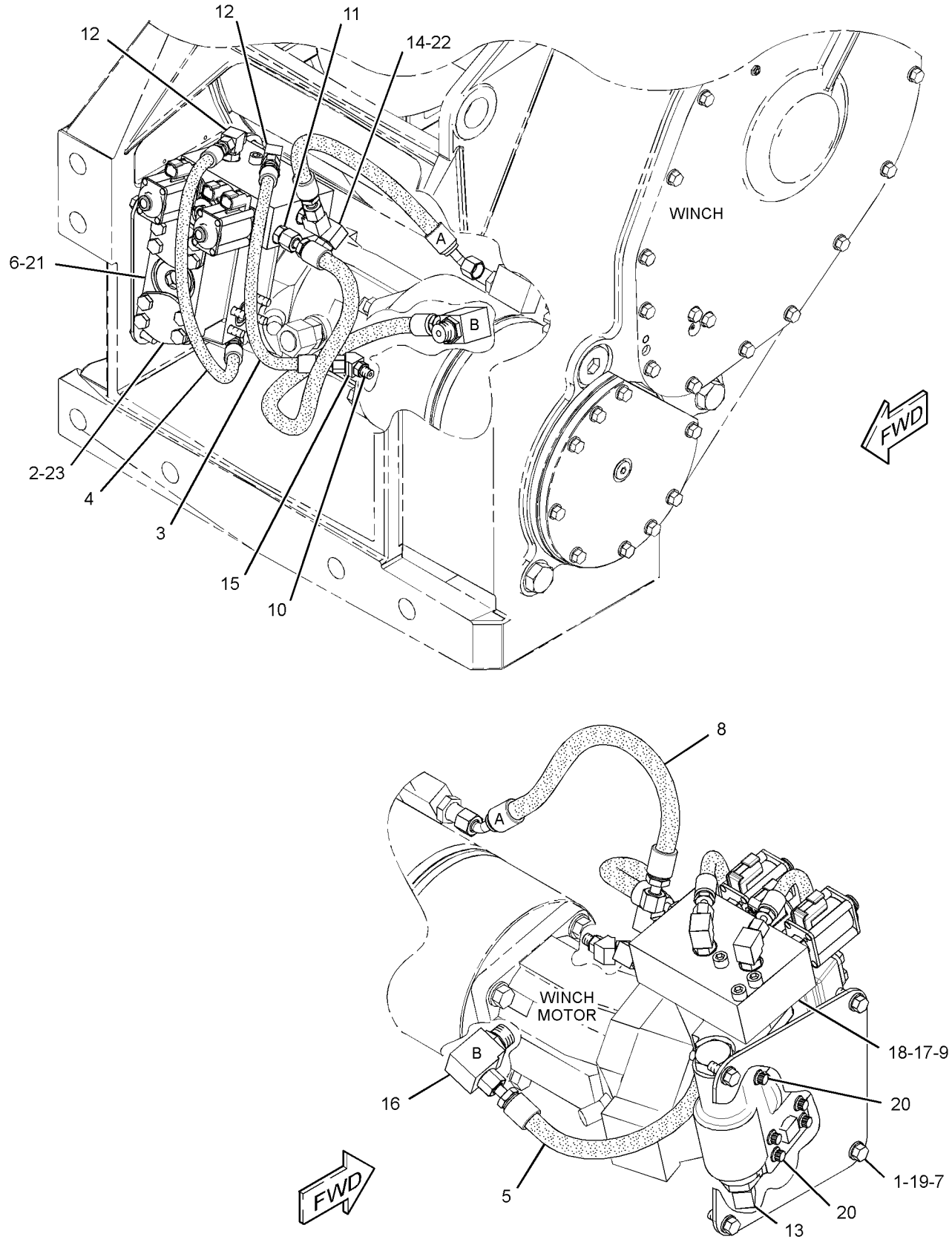

GRAPHIC #1 **<END>** g01330403

WORK TOOLS

256-3738 WINCH AR

S/N: MMM1-UP; RRR1-UP

FOR USE WITH 244-7517—PAGE: 933, 271-9180—PAGE: 914

AN ATTACHMENT

SMCS-5163 **i02718216**

NOTE	PART NUMBER	QTY	PART NAME 1 2 3 4 5 6 (PRODUCT LEVEL)	SEE PAGE
Y	*309-5090*	1	BRAKE & PLANETARY GP-WINCH	893
Y	*208-5546*	1	CASE GP-WINCH	895
Y	*208-5552*	1	CLUTCH & GEAR GP-WINCH	896
Y	*208-5551*	1	GEAR GP-WINCH	922
Y	*208-5549*	1	MOTOR & MTG GP-WINCH	925
Y	*208-5553*	1	MOUNTING GP-WINCH	931
Y	*208-5547*	1	SHAFT GP-WINCH DRUM	937
Y	*256-3739*	1	VALVE & LINES GP-WINCH	940

Y - SEPARATE ILLUSTRATION

<END>

244-7390 FILM GP

S/N: MMM1-UP

PART OF 244-7378 CHASSIS AR

SMCS-7000 **i05044332**

NOTE	REF NO	GRAPHIC REF	PART NUMBER	QTY	PART NAME 1 2 3 4 5 6 (PRODUCT LEVEL)	SEE PAGE
	1	1	**299-3238**	1	FILM-IDENTIFICATION (CAT, RH)	
	2	1	**299-3237**	1	FILM-IDENTIFICATION (CAT, LH)	
	3	1	**299-3251**	1	FILM-IDENTIFICATION (D4K XL, RH)	
	4	1	**299-3250**	1	FILM-IDENTIFICATION (D4K XL, LH)	
	5	1	**277-8365**	1	FILM-IDENTIFICATION (CATERPILLAR)	
	6	1	**299-3240**	1	FILM-IDENTIFICATION (CAT)	
	7	1	**253-0861**	2	FILM-INFORMATION (CAT POWER, ACERT TECHNOLOGY)	

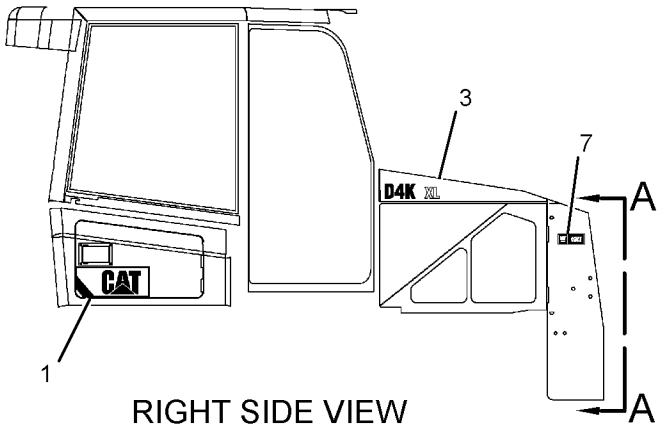

RIGHT SIDE VIEW

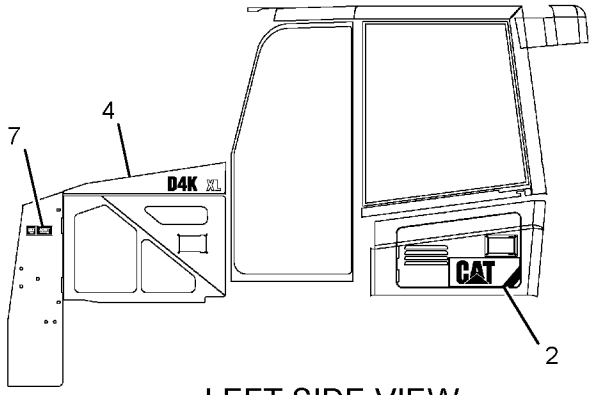

LEFT SIDE VIEW

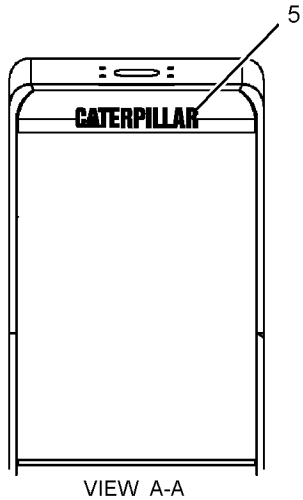

VIEW A-A

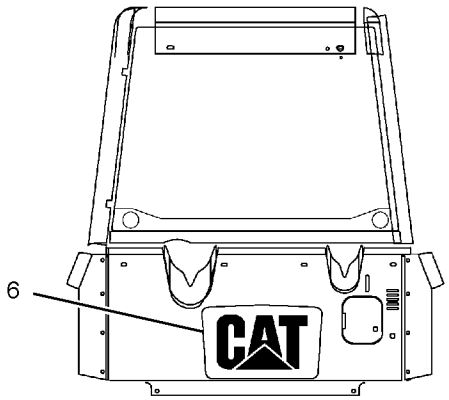

REAR VIEW

GRAPHIC #1 **<END>** g01339159

SERVICE EQUIPMENT AND SUPPLIES

244-7485 FILM GP

S/N: RRR1-UP

PART OF 244-7379 CHASSIS AR

SMCS-7000 **i05044335**

NOTE	REF NO	GRAPHIC REF	PART NUMBER	QTY	PART NAME 1 2 3 4 5 6 (PRODUCT LEVEL)	SEE PAGE
	1	1	**299-3238**	1	FILM-IDENTIFICATION (CAT, RH)	
	2	1	**299-3237**	1	FILM-IDENTIFICATION (CAT, LH)	
	3	1	**299-3248**	1	FILM-IDENTIFICATION (D4K LGP, RH)	
	4	1	**299-3247**	1	FILM-IDENTIFICATION (D4K LGP, LH)	
	5	1	**277-8365**	1	FILM-IDENTIFICATION (CATERPILLAR)	
	6	1	**299-3240**	1	FILM-IDENTIFICATION (CAT)	
	7	1	**253-0861**	2	FILM-INFORMATION (CAT POWER, ACERT TECHNOLOGY)	

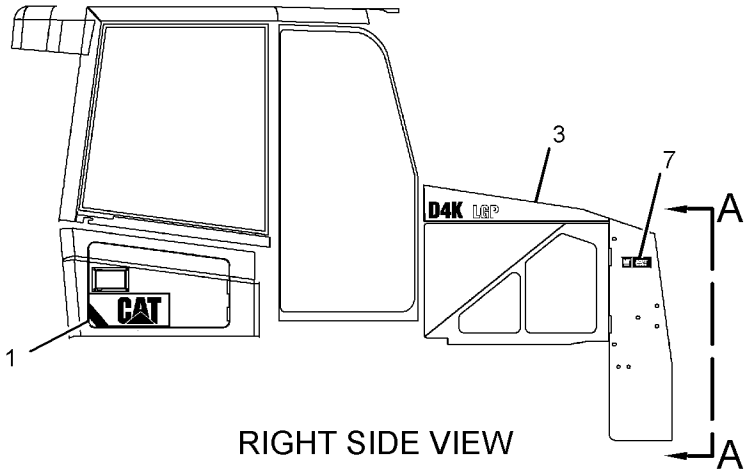

RIGHT SIDE VIEW

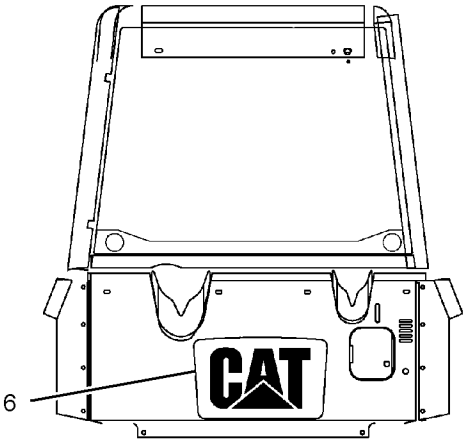

REAR VIEW

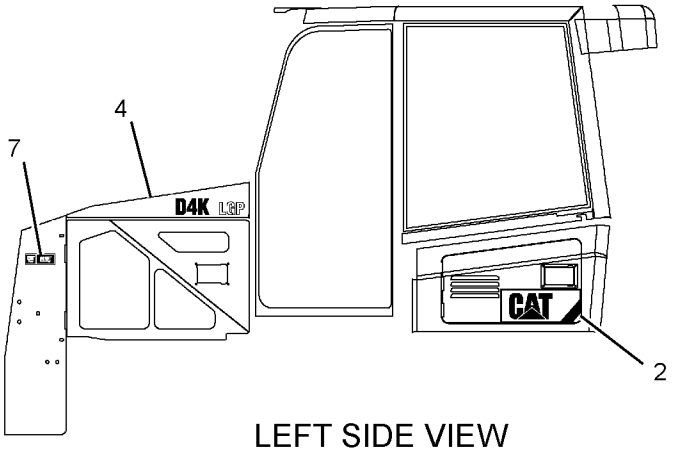

LEFT SIDE VIEW

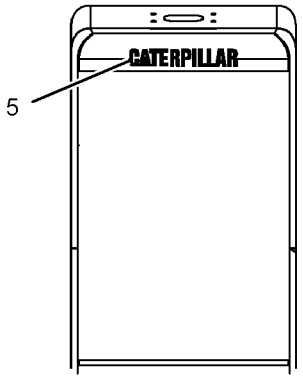

VIEW A-A

GRAPHIC #1 **<END>** g01345205

260-9502 LOCK GP-VANDALISM

S/N: MMM1-UP; RRR1-UP
PART OF 244-7508, 286-5017, 286-5018 PLATE & FILM GP
AN ATTACHMENT

SMCS-7315 **i02647770**

NOTE	REF NO	GRAPHIC REF	PART NUMBER	QTY	PART NAME 1 2 3 4 5 6 (PRODUCT LEVEL)	SEE PAGE
	1	1	**5D-1911**	1	COVER-HYDRAULIC CAP	
	2	1	**246-2641**	2	PADLOCK GP	
					(EACH INCLUDES)	
		1	**5P-8500**	1	KEY	
	3	1	**9M-7394**	1	LEVER	
	4	1	**1L-5072**	1	DOWEL	
	5	1	**2J-7761**	1	RING-RETAINING	

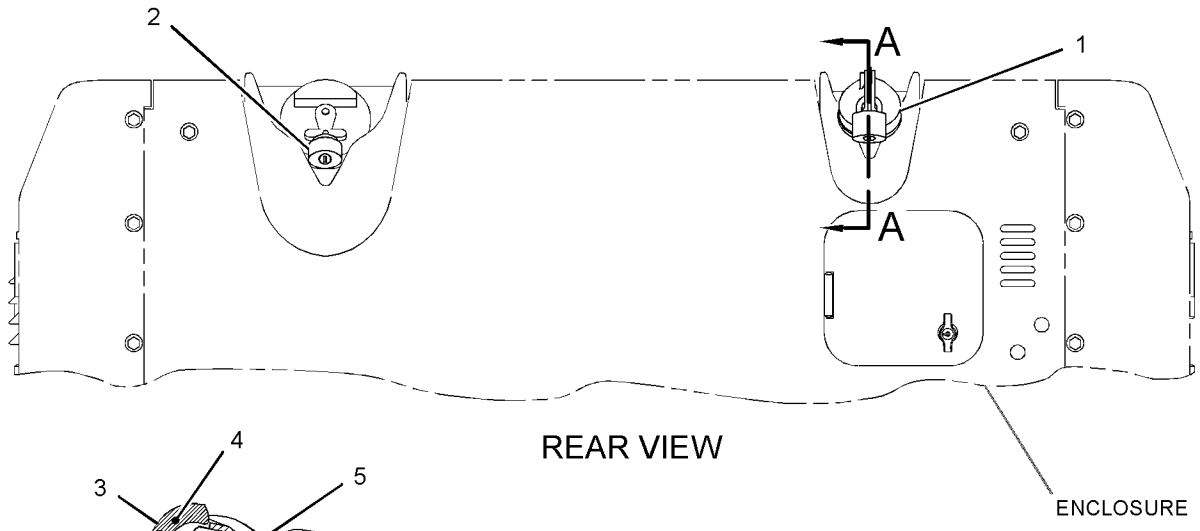

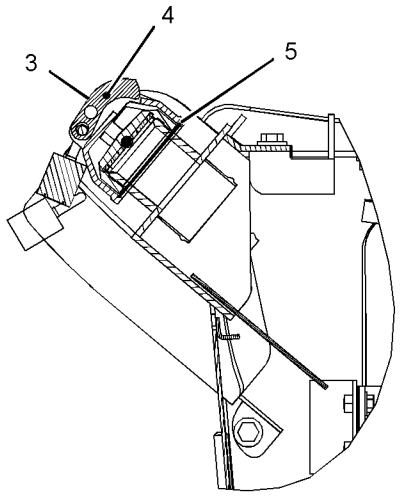

SECTION A-A

GRAPHIC #1 **<END>** g01330314

244-7508 PLATE & FILM GP

S/N: MMM1-UP; RRR1-UP

AN ATTACHMENT

SMCS-7557, 7563 **i04527119**

NOTE	PART NUMBER	QTY	PART NAME 1 2 3 4 5 6 (PRODUCT LEVEL)	SEE PAGE
Y	*6V-1971*	1	LITERATURE GP	794
			(IN POCKET ON BACK OF SEAT)	
Y	*260-9502*	1	LOCK GP-VANDALISM	945
	239-6987	1	PLATE-SERIAL NUMBER (MACHINE) (CASE, FRAME)	
			(ON OUTSIDE OF LH PLATE OF FRAME NEAR REAR OF MACHINE)	
	239-6989	1	PLATE-SERIAL NUMBER (MACHINE) (PRODUCT IDENTIFICATION)	
			(ON OUTSIDE OF LH PLATE OF FRAME NEAR REAR OF MACHINE)	
	291-4256	4	PLATE-WARNING (HIGH PRESS CYLINDER, READ OMM)	
			(ON TRACK ADJUST COVER PLATES)	
	169-2876	1	FILM-IDENTIFICATION (POWER RECEPTACLE, 12-VOLT)	
			(ON INSIDE OF REAR RH SIDE ENCLOSURE DOOR NEAR DOOR HINGE)	
	287-2016	1	FILM-IDENTIFICATION (TEST PORT, READ OMM)	
			(ON THE TEST PORT PLATE NEAR THE HYSTAT PUMPS)	
	286-8141	1	FILM-IDENTIFICATION (COMPACT INSTRUMENT CLUSTER)	
			(ON INSIDE OF GLOVEBOX DOOR)	
	334-4603	1	FILM-INFORMATION (HYDO ADVANCED 10)	
			(ON REAR ENCLOSURE BELOW HYDRAULIC TANK FILLER NECK)	
	7E-2700	4	FILM-INFORMATION (LIFT EYE LOCATION)	
			(2-ON TRACK ROLLER FRAME, BETWEEN FRONT IDLER & FRONT ROLLER	
			2-ON TRACK ROLLER FRAME, BETWEEN REAR SPROCKET & LAST ROLLER)	
	7X-7644	5	FILM-IDENTIFICATION (TIE-DOWN)	
			(2-ON TRACK ROLLER FRAME, BETWEEN FRONT IDLER & FRONT ROLLER	
			2-ON TRACK ROLLER FRAME, BETWEEN REAR SPROCKET & LAST ROLLER	
			1-ABOVE RETRIEVAL HITCH)	
	134-7258	1	FILM-INFORMATION (EXTENDED LIFE COOLANT)	
			(ON UNDERSIDE OF RADIATOR FILL DOOR)	
	291-4261	1	FILM-INSTRUCTION (DUAL BATTERY, READ OMM)	
			(ON INSIDE OF REAR RH SIDE ENCLOSURE DOOR NEAR DOOR HINGE)	
	167-7270	2	FILM-INSTRUCTION (NO STEP)	
			(CENTER ON TOP OF BOTH ANGLE CYLINDERS)	
	291-1094	1	FILM-INSTRUCTION (SERVICE POINTS)	
			(ON INSIDE OF REAR LH SIDE ENCLOSURE DOOR)	
	190-5386	2	FILM-STRIPE (ROUND RED REFLECTIVE)	
			(ON GUSSETS NEXT TO REAR ROPS POSTS ON OROPS OR ON LOWER CORNERS OF REAR WINDOW ON EROPS OR ON LOWER CORNERS OF REAR	
			SCREEN IF INSTALLED)	
	219-0305	1	FILM-WARNING (NO WELD, NO DRILL, READ OMM)	
			(ON LH SIDE REAR ROPS "C" POST)	
	224-8945	1	FILM-WARNING (DO NOT USE ETHER, U.S.)	
			(ON AIR CLEANER BODY NEAR AIR INLET)	
	225-0313	1	FILM-WARNING (JUMP START, READ OMM, U.S.)	
			(ON INSIDE OF REAR RH SIDE ENCLOSURE DOOR NEAR DOOR HINGE)	

244-7508 **PLATE & FILM GP (*contd.*)** **i04527119**

NOTE	PART NUMBER	QTY	PART NAME 1 2 3 4 5 6 (PRODUCT LEVEL)	SEE PAGE
	227-7391	1	FILM-WARNING (SEAT BELT, INTERNATIONAL)	
			(ON REAR SURFACE OF LH SIDE ROPS "B" POST ABOVE THE JOYSTICK CONTROL FILM)	
	228-2615	1	FILM-WARNING (UNIVERSAL, U.S.)	
			(ON REAR SURFACE OF RH SIDE ROPS "B" POST ABOVE JOYSTICK CONTROL FILM)	
	259-4401	1	FILM-WARNING (HOT FLUID UND PRESS, READ OMM)	
			(ON SHUNT BOTTLE CAP)	
	262-7082	1	FILM-WARNING (ROPS, FOPS, READ OMM)	
			(ON LH SIDE REAR ROPS "C" POST)	

Y - SEPARATE ILLUSTRATION

<END>

286-5017 PLATE & FILM GP

S/N: MMM1-UP

AN ATTACHMENT

SMCS-7557, 7563 **i02682070**

NOTE	PART NUMBER	QTY	PART NAME 1 2 3 4 5 6 (PRODUCT LEVEL)	SEE PAGE
Y	*6V-1971*	1	LITERATURE GP	794
			(PLACE IN POCKET ON BACK OF SEAT)	
Y	*260-9502*	1	LOCK GP-VANDALISM	945
	239-6989	1	PLATE-SERIAL NUMBER (MACHINE)	
			(ON OUTSIDE OF LH PLATE OF FRAME NEAR REAR OF MACHINE)	
	291-4256	4	PLATE-WARNING (HIGH PRESS CYLINDER, READ OMM)	
			(ON TRACK ADJUST COVER PLATES; FASTEN TO COVER PLATE WITH RIVETS IN COVER GP)	
	287-2016	1	FILM-IDENTIFICATION (TEST PORT, READ OMM)	
			(ON THE TEST PORT PLATE NEAR THE HYDROSTATIC PUMPS)	
	169-2876	1	FILM-IDENTIFICATION (POWER RECEPTACLE, 12-VOLT)	
			(ON INSIDE OF REAR RH SIDE ENCLOSURE DOOR NEAR DOOR HINGE)	
	190-5386	2	FILM-STRIPE (ROUND RED REFLECTIVE)	
			(ON GUSSETS NEXT TO REAR ROPS POSTS ON OROPS OR ON LOWER CORNERS OR REAR WINDOW ON EROPS OR ON LOWER CORNERS OF REAR	
			SCREEN IF INSTALLED)	
	287-2017	1	FILM-IDENTIFICATION (TEST PORT, READ OMM)	
			(ON TEST PORT PLATE IN REAR RH SIDE ENCLOSURE)	
	286-8141	1	FILM-IDENTIFICATION (COMPACT INSTRUMENT CLUSTER)	
			(ON INSIDE OF GLOVEBOX DOOR)	
	1P-2807	4	FILM-IDENTIFICATION (LIFT EYE LOCATION)	
			(4 - 2 EACH SIDE ON TRACK ROLLER FRAME, BETWEEN FRONT IDLER & FRONT ROLLER & BETWEEN REAR SPROCKET & LAST ROLLER)	
	7X-7644	5	FILM-IDENTIFICATION (TIE-DOWN)	
			(4 - 2 EACH SIDE ON TRACK ROLLER FRAME, BETWEEN FRONT IDLER & FRONT ROLLER & BETWEEN REAR SPROCKET & LAST ROLLER)	
			(1 - ABOVE RETRIEVAL HITCH)	
	134-7258	1	FILM-INFORMATION (EXTENDED LIFE COOLANT)	
			(ON UNDERSIDE OF RADIATOR FILL DOOR)	
	158-7864	1	FILM-IDENTIFICATION (HYDRAULIC OIL)	
			(ON THE REAR ENCLOSURE BELOW HYDRAULIC TANK FILLER NECK)	
	167-7270	2	FILM-INSTRUCTION (NO STEP)	
			(CENTERED ON TOP OF BOTH ANGLE CYLINDERS)	
	291-4261	1	FILM-INSTRUCTION (DUAL BATTERY, READ OMM)	
			(ON INSIDE OF REAR RH SIDE ENCLOSURE DOOR NEAR DOOR HINGE)	
	291-1094	1	FILM-INSTRUCTION (SERVICE POINTS)	
			(ON INSIDE OF REAR LH SIDE ENCLOSURE DOOR)	
	219-0305	1	FILM-WARNING (NO WELD, NO DRILL, READ OMM)	
			(ON LH SIDE REAR ROPS "C" POST)	
	224-8946	1	FILM-WARNING (NO ETHER SPRAY/AIR INTK, INTL)	
			(ON AIR CLEANER BODY NEAR AIR INLET)	
	225-0312	1	FILM-WARNING (JUMP START, READ OMM, INTL)	
			(ON INSIDE OF REAR RH SIDE ENCLOSURE DOOR NEAR DOOR HINGE)	
	227-7391	1	FILM-WARNING (SEAT BELT, INTERNATIONAL)	

286-5017 **PLATE & FILM GP (*contd.*)** **i02682070**

NOTE	PART NUMBER	QTY	PART NAME 1 2 3 4 5 6 (PRODUCT LEVEL)	SEE PAGE
			(ON THE REAR SURFACE OF THE LH SIDE ROPS "B" POST ABOVE THE JOYSTICK CONTROL FILM)	
	228-2616	1	FILM-WARNING (UNIVERSAL, READ OMM)	
			(ON REAR SURFACE OF RH SIDE ROPS "B" POST ABOVE JOYSTICK CONTROL FILM)	
	259-4402	1	FILM-WARNING (HOT FLUID UNDER PRESSURE)	
			(ON SHUNT BOTTLE CAP)	
	262-7082	1	FILM-WARNING (ROPS, FOPS, READ OMM)	
			(ON LH SIDE REAR ROPS "C" POST)	
Y - SEPARATE ILLUSTRATION				

<END>

286-5018 PLATE & FILM GP

S/N: MMM1-UP; RRR1-UP

AN ATTACHMENT

SMCS-7557, 7563 **i05253170**

NOTE	PART NUMBER	QTY	PART NAME 1 2 3 4 5 6 (PRODUCT LEVEL)	SEE PAGE
Y	*6V-1971*	1	LITERATURE GP	794
			(IN POCKET ON BACK OF SEAT)	
Y	*260-9502*	1	LOCK GP-VANDALISM	945
	239-6989	1	PLATE-SERIAL NUMBER (MACHINE)	
			(ON OUTSIDE OF LH PLATE OF FRAME NEAR REAR OF MACHINE)	
	239-6987	1	PLATE-SERIAL NUMBER (MACHINE)	
			(ON OUTSIDE OF LH PLATE OF FRAME NEAR REAR OF MACHINE)	
	291-4256	4	PLATE-WARNING (HIGH PRESS CYLINDER, READ OMM)	
			(ON TRACK ADJUST COVER PLATES)	
	287-2016	1	FILM-IDENTIFICATION (TEST PORT, READ OMM)	
			(ON THE TEST PORT PLATE NEAR THE HYDROSTATIC PUMPS)	
	169-2876	1	FILM-IDENTIFICATION (POWER RECEPTACLE, 12-VOLT)	
			(ON INSIDE OF REAR RH SIDE ENCLOSURE DOOR NEAR DOOR HINGE)	
	286-8141	1	FILM-IDENTIFICATION (COMPACT INSTRUMENT CLUSTER)	
			(ON INSIDE OF GLOVEBOX DOOR)	
	334-4603	1	FILM-INFORMATION (HYDO ADVANCED 10)	
			(ON REAR ENCLOSURE BELOW HYDRAULIC TANK FILLER NECK)	
	7E-2700	4	FILM-INFORMATION (LIFT EYE LOCATION)	
			(2- EACH SIDE ON TRACK ROLLER FRAME, BETWEEN FRONT IDLER & FRONT ROLLER & BETWEEN REAR SPROCKET & LAST ROLLER)	
	7X-7644	5	FILM-IDENTIFICATION (TIE-DOWN)	
			(2- EACH SIDE ON TRACK ROLLER FRAME, BETWEEN FRONT IDLER & FRONT ROLLER & BETWEEN REAR SPROCKET & LAST ROLLER	
			1 - ABOVE RETRIEVAL HITCH)	
	134-7258	1	FILM-INFORMATION (EXTENDED LIFE COOLANT)	
			(ON UNDERSIDE OF RADIATOR FILL DOOR)	
	326-9055	2	FILM-INSTRUCTION (NO STEP)	
			(CENTERED ON TOP OF BOTH ANGLE CYLINDERS)	
	291-4261	1	FILM-INSTRUCTION (DUAL BATTERY, READ OMM)	
			(ON INSIDE OF REAR RH SIDE ENCLOSURE DOOR NEAR DOOR HINGE)	
	291-1094	1	FILM-INSTRUCTION (SERVICE POINTS)	
			(ON INSIDE OF REAR LH SIDE ENCLOSURE DOOR)	
	190-5386	2	FILM-STRIPE (ROUND RED REFLECTIVE)	
			(ON GUSSETS NEXT TO REAR ROPS POSTS ON OROPS OR ON LOWER CORNERS OF REAR WINDOW ON EROPS OR ON LOWER CORNERS OF REAR	
			SCREEN IF INSTALLED)	
	219-0305	1	FILM-WARNING (NO WELD, NO DRILL, READ OMM)	
			(ON LH SIDE REAR ROPS "C" POST)	
	224-8946	1	FILM-WARNING (NO ETHER SPRAY/AIR INTK, INTL)	
			(ON AIR CLEANER BODY NEAR AIR INLET)	
	225-0312	1	FILM-WARNING (JUMP START, READ OMM, INTL)	
			(ON INSIDE OF REAR RH SIDE ENCLOSURE DOOR NEAR DOOR HINGE)	
	227-7391	1	FILM-WARNING (SEAT BELT, INTERNATIONAL)	
			(ON THE REAR SURFACE OF THE LH SIDE ROPS "B" POST ABOVE THE JOYSTICK CONTROL FILM)	

286-5018 **PLATE & FILM GP (*contd.*)** **i05253170**

NOTE	PART NUMBER	QTY	PART NAME 1 2 3 4 5 6 (PRODUCT LEVEL)	SEE PAGE
	228-2616	1	FILM-WARNING (UNIVERSAL, READ OMM)	
			(ON REAR SURFACE OF RH SIDE ROPS "B" POST ABOVE JOYSTICK CONTROL FILM)	
	259-4402	1	FILM-WARNING (HOT FLUID UNDER PRESSURE)	
			(ON SHUNT BOTTLE CAP)	
	262-7082	1	FILM-WARNING (ROPS, FOPS, READ OMM)	
			(ON LH SIDE REAR ROPS "C" POST)	

Y - SEPARATE ILLUSTRATION

<END>

PART NUMBER INDEX

Part	Page
0	
0L-1351	511
0S-1603	31
0T-0489	819
1	
1B-8736	17
1F-2771	924
1G-3176	371
	373
1G-3410	382
	383
1G-8878	326
	351
1H-3244	232
	279
1H-7339	532
	538
	540
1H-9696	500
	501
	511
1J-4034	937
1L-4775	542
1L-5072	945
1L-5081	279
1L-9062	325
1M-4291	511
1M-6119	156
	160
	163
	167
	177
1M-6120	156
	160
	163
	167
	177
1M-7914	511
	922
1M-7918	511
1M-8735	511
1M-8736	511
1M-9011	323
1P-0810	156
	160
	167
	188
	250
	278
1P-2807	948
1P-3702	328
	330
	348
	602
	606
	610
1P-3703	328
	330
	348
1P-3934	937
1P-3935	937
1P-4278	80
	82
	617
	619
	621
1S-0994	548
	553
	557
1S-3743	924
1S-7251	157
	161
	164
	168
	177
	178
1S-7252	156
	157
	160
	161
	163
	164
	167
	168
	177
1U-1257	939
1U-8846	323
1V-6688	253
	256
	259
1W-7117	846
	848
1Y-3818	575
1Y-7574	940
2	
2A-2677	190
	192
2B-0858	26
	44
2B-0941	791
2B-2695	677
2D-0388	198
	288
	293
	298
	303
	307
2H-0435	388
	391
	394
	397
	400
	403
	405
	408
	411
	414
	417
	548
	553
	563
	566
	643
2H-3786	937
2H-3922	245
2H-3931	534
	536
	542
2H-5549	542
	652
2H-9247	361
2J-3506	918
	919
2J-7761	945
2K-4973	850
2K-9111	820
	824
	827
	830
2L-8051	175
	278
2L-8052	177
	219
	222
	253
	255
	258
2L-8066	175
	259
	268
	278
2L-8067	175
	225
	279
2L-8068	175
	225
	278
2L-8069	175
	252
	256
	259
	262
	266
	268
	272
	279
2L-8076	225
2L-8079	175
	177
	252
	253
	255
	256
	258
	259
	262
	266
	268
	272
	279
	312
	315
2M-9780	371
	373
	563
	566
	591
	593
	595
	597
	599
	601
	605
	610
	627
	940
2P-1279	572
	602
	606
	610
2P-6470	344
	346
2P-6471	344
	346
2Q-0604	174
	704
	706
	909
2S-3440	71
2S-4078	349
	351
	354
	483
	575
	577
	579
	581
	583
	585
	587
	601
	605
	610
	895
2S-5926	483
	484
2S-6251	202
2V-3216	103
2V-8259	216
2W-1145	362
2Y-5429	216
3	
3B-4501	668
	671
	674
3B-4506	511
3B-4508	217
3B-4512	217
3B-4630	939
3B-4641	931
3B-7942	73
3B-8489	532
	534
	536
	538
	540
	542
	548
	553
	557
	652
	896
	936
	937
3B-8822	548
	553
	557
3C-6969	803
	805
	807
	809
3D-2824	69
	323
	332
	334
	336
	338
	340
	342
	349
	351
	354
	485
	575
	577
	579
	581
	583
	585
	587
	601
	602
	605

► **PRIMARY REFERENCE**

PART NUMBER INDEX

Part	Page
	606
	610
	895
	925
3E-2345	351
3E-3371	233
3E-3377	13
3E-3805	446
	457
3E-3892	212
	214
	676
	720
	722
3E-4091	623
	624
	625
3E-4313	202
	212
	214
3E-4321	82
	344
	346
	566
	791
3E-4333	820
	824
	827
	830
3E-4353	846
	848
3E-4356	325
	928
3E-4898	800
3E-5464	667
	670
	673
3E-6600	194
	253
	256
	259
	288
	293
	298
	303
	307
	446
	457
	463
	466
	469
	471
3E-6909	786
	789
3E-7443	349
	354
3E-8020	274
	795
3E-8320	156
	160
	163
	167
3E-9865	850
3F-5108	915
	916
	917
3F-9556	796
	797
	798
	799
3G-3259	483
	484
	485
3G-6049	939
3H-3385	896
3H-8430	925
3J-1907	79
	151
	157
	161
	164
	168
	326
	351
	371
	373
	386
	387
	388
	391
	394
	395
	397
	400
	403
	405
	408
	411
	414
	417
	424
	547
	548
	552
	553
	556
	572
	575
	577
	579
	581
	583
	585
	587
	601
	602
	605
	606
	609
	610
	638
	643
	898
	901
	904
	909
	921
	940
3J-5696	157
	161
	164
3J-7354	326
	327
	371
	373
	375
	376
	377
	572
	601
	605
	610
	623
	624
	625
	896
	898
	901
	904
	909
	940
3K-0360	51
	69
	332
	334
	336
	338
	340
	342
	351
	388
	391
	394
	397
	400
	403
	405
	408
	411
	414
	417
	547
	552
	556
	563
	566
	575
	577
	579
	581
	583
	585
	587
	601
	602
	605
	606
	610
	643
	648
	649
	893
3L-6513	156
	160
	163
	167
	177
3P-9900	850
3R-9965	201
	286
	291
	296
	301
	306
	309
3S-2093	71
	156
	157
	160
	161
	163
	164
	167
	168
	176
	177
	178
	241
	269
	272
	279
	664
	667
	670
	673
	704
	706
	771
	774
	854
	868
	898
	901
	904
	909
	912
3T-4283	515
	518
	519
3T-4696	175
	262
	265
	268
	271
	312
	315
3V-9244	73
	480
	481
	482
3W-3321	803
	805
	807
3Y-9267	529

4

Part	Page
4B-2043	250
4B-4158	935
4B-4274	144
	148
4B-4863	216
4B-8774	76
4B-9782	429
	431
	433
4D-0012	752
	754
	756
	759
	762
	764
	767
	769
4D-0298	532
	542
4D-4431	652
4D-7794	850
4E-1384	453
	752
	754
	756
	759
	762
	764
	767
	769
4E-5724	219
	222
	225
4F-2294	219
	222
	225
4F-4879	841

PART NUMBER INDEX

Part	Page
	842
	843
	844
	845
4H-7655	332
	334
	336
	338
	340
	342
	575
	577
	579
	581
	583
	585
	587
4H-8380	934
4H-9527	511
4H-9628	511
4I-4872	762
	764
	767
	769
4J-5267	940
4J-5268	147
	485
4J-5477	388
	391
	394
	397
	400
	403
	405
	408
	411
	414
	417
	572
	601
	602
	605
	606
	609
	610
	643
	940
4J-9224	534
	536
	542
4K-0367	915
	916
	917
4K-2039	648
	649
4K-7038	525
	527
4K-9429	802
4L-6454	850
	894
	940
4L-9337	922
	937
4M-6425	217
4M-7470	463
	466
	469
	471
4P-7428	274
	279
4P-7429	279
4P-7581	157
	161
	164
	168
	189
	253
	256
	259
	263
	266
	269
	272
	274
	276
	279
	312
	315
	602
	606
	610
	668
	671
	674
	771
	774
4P-8134	198
	251
	253
	256
	259
	263
	266
	269
	272
	279
	293
	298
	303
	312
	315
4S-5898	925
4S-8264	807
	809
4S-9002	940
4T-5613	483
	484
	485
4T-6232	915
4T-6780	532
	534
	536
	538
	540
	542
4T-8054	534
	536
	542
4V-8256	820
	824
	827
	830
	834
4V-8577	850
4Y-1214	198

5

Part	Page
5A-3187	525
	527
5A-3604	106
	107
	141
	142
5C-2874	279
	780
	859
	860
5C-2890	73
	202
	212
	214
	216
	220
	223
	226
	232
	276
	279
	429
	431
	433
	451
	463
	466
	469
	471
	660
	687
	850
5C-7261	157
	161
	164
	168
	232
	274
	276
	279
	312
	315
	451
	453
	455
	597
	599
	654
	656
	678
	679
	694
	695
	704
	706
	718
	752
	754
	756
	759
	762
	764
	767
	769
	796
	797
	798
	799
	820
	827
	834
	904
	909
5C-8312	202
	212
	214
	660
5C-8811	868
5C-9553	198
	253
	256
	259
	263
	266
	269
	272
	276
	293
	298
	303
	483
	484
	619
	668
	671
	674
	720
	722
	724
	726
	728
	730
	733
	736
	739
	743
	745
	747
	772
	775
	882
	883
	884
	885
	886
	887
	888
	892
5D-0718	332
	334
	336
	338
	340
	342
	351
5D-0998	803
	805
	807
	809
5D-1026	13
	71
	791
5D-1911	945
5D-8159	473
5E-8178	320
	321
5E-9091	73
5F-1678	940
5G-0792	428
	462
5G-2247	503
5G-5069	936
5G-6504	458
5G-8871	451
5H-8848	532
	538
	540
5H-8853	388
	391
	394
	397
	400
	405
	408
	411
	414

► **PRIMARY REFERENCE**

PART NUMBER INDEX

Part	Page
5I-6125	526
5J-3886	327
5J-4771	918
	919
5K-5338	332
	334
	336
	338
	340
	342
5K-8451	80
	82
	157
	161
	164
	168
5K-9090	349
	354
5M-3062	937
5M-6214	652
5P-0372	455
	816
5P-0537	834
5P-0597	664
5P-0598	72
5P-0599	664
	777
5P-0743	619
5P-0747	157
	163
	164
	177
5P-0761	163
	164
	177
	178
5P-0767	791
	793
5P-1076	145
	428
	436
	438
	440
	446
	448
	449
	450
	451
	453
	456
	457
	462
	490
	494
	495
	496
	497
	654
	656
	752
	754
	756
	759
	762
	764
	767
	769
	895
	929
	933
5P-1420	80
5P-1442	80
	617
	619
	621
5P-1476	156
	160
	163
	167
	176
5P-2321	199
	286
	292
	297
	302
	306
	309
5P-3455	278
5P-3864	323
5P-3928	786
5P-3929	786
5P-3948	786
5P-4106	786
5P-4107	786
5P-4115	247
	253
	256
	259
	263
	266
	269
	272
	720
	722
	724
	726
	728
	730
	733
	736
	739
	743
	745
	747
5P-4116	61
	71
	72
	80
	82
	105
	157
	161
	164
	168
	249
	259
	272
	313
	315
	429
	431
	433
	446
	451
	463
	466
	469
	471
	572
	616
5P-4423	850
5P-4571	177
	252
	253
	255
	256
	258
	259
	262
	263
	265
	266
	268
	269
	271
	272
	850
5P-4683	527
5P-4868	72
5P-5618	670
	673
	774
5P-5623	156
	249
5P-5630	241
5P-5639	724
	726
	728
	730
	733
	736
	739
	777
5P-5673	687
5P-5677	196
5P-5923	259
	269
	272
5P-5931	446
	457
5P-5969	724
	726
	728
5P-6006	175
	279
5P-6010	851
5P-6442	145
5P-6718	51
5P-7462	388
	391
	394
	397
	400
	403
	405
	408
	411
	414
	417
	548
	553
	557
	599
	643
5P-7463	388
	391
	394
	397
	400
	403
	405
	408
	411
	414
	417
	548
	553
	557
	599
	643
5P-7464	599
5P-7465	599
5P-7466	328
	602
	606
5P-7467	328
	602
	606
5P-7468	610
5P-7469	610
5P-7483	463
	466
	469
	471
5P-7506	351
5P-7957	802
5P-8112	328
	602
	606
5P-8245	31
5P-8246	384
	385
5P-8247	509
	510
	915
	916
	917
5P-8248	918
	919
5P-8250	538
	540
5P-8309	69
5P-8439	279
5P-8441	752
	754
	756
	759
	762
	764
	767
	769
5P-8444	610
5P-8500	458
	794
	945
5P-8837	428
	462
	929
5P-9000	720
	722
	743
	745
	747
5P-9085	80
	82
5P-9209	803
	805
	807
	809
5P-9297	557
	575
	577
	579
	581
	583
	585
	587
	602
	606
	610
	617
5P-9436	895
5S-6174	922
5S-7349	801
5T-7486	820
	824

PART NUMBER INDEX

Part	Page
	827
	830
	834
5V-0500	480
	481
5V-1496	820
	824
	827
	830
	834
5W-1437	217
	365

6

Part	Page
6C-3431	780
6C-3680	664
	777
6C-4016	859
	860
6C-9081	780
6D-0692	323
6D-1004	615
6D-1641	602
	606
	610
	786
	789
6D-3479	157
	161
	164
	168
	602
	606
6D-4246	561
	786
	789
6D-5257	201
	286
	291
	296
	301
	306
	309
6D-7889	106
	107
6E-1607	419
6E-3283	362
6E-4350	371
	373
	375
	376
	377
6E-4404	420
6E-5063	361
6F-4718	362
6F-7045	245
6F-9974	846
	848
6H-3586	279
6H-3587	279
6H-3592	219
	222
	225
6H-3616	36
6H-3957	7
6H-5139	429
	431
	433
6H-9691	151
	424
6I-0217	32
	50
	57
	60
	63
	65
	67
	76
	91
	94
	97
	103
6I-0254	50
	63
	65
	67
6I-0260	37
	57
	60
	76
	91
	94
	97
	103
	108
	112
	116
	121
	126
	131
	136
	153
	155
6I-0292	37
6I-0363	37
6I-0364	75
6I-0423	34
6I-0455	108
	112
	116
	121
	126
	131
	136
6I-0501	29
6I-0563	75
	76
6I-0572	57
	59
	108
	112
	116
	121
	126
	131
	136
6I-0593	8
	9
	10
	76
	100
	101
	102
	103
	153
6I-0594	243
	244
6I-0645	23
	25
	32
	57
	59
6I-0646	7
	23
	25
6I-0650	32
	153
	155
6I-0654	35
	76
6I-0817	76
6I-0839	67
6I-0846	13
	37
6I-1090	57
	60
6I-1418	312
	315
	704
	706
	718
	904
	908
6I-1497	37
6I-4200	76
6I-4374	50
6I-4709	91
	94
	103
6J-1972	532
	538
	540
6J-2245	238
	239
6J-3134	151
	424
6J-5730	532
6J-5731	532
	538
	540
6J-5733	532
	538
	540
6K-8178	786
	789
6K-8179	572
6K-9860	511
6K-9861	511
6M-5062	648
	649
6P-2216	469
	471
6P-5239	786
	789
6S-3171	515
	516
	517
	518
	519
	520
	521
	522
6S-3172	515
	516
	517
	518
	519
	520
	521
	522
6S-3284	500
	501
	517
	518
	521
6S-3285	500
	501
	517
	518
	521
	522
6S-3495	501
	515
	516
	517
	518
	519
	520
	521
	522
6S-3609	►511
	514
6S-3721	515
	516
	517
6S-3722	519
	520
	521
6S-3859	803
	805
	807
	809
6S-3900	807
	809
6S-7038	519
	520
	521
6S-7040	515
	516
	517
6S-7715	500
	501
	515
	516
	517
	518
	519
	520
	521
	522
6S-8620	82
6S-9049	503
6S-9102	527
6S-9115	527
6S-9277	455
	816
6T-0465	157
	160
	163
	167
	177
6T-6505	667
	670
	673
	771
	774
6T-6506	667
	670
	673
	771
	774
6T-7695	780
6U-1989	896
6V-0330	323
6V-0400	328
	330
	348
6V-0491	854
6V-0681	79
6V-0683	388
	391
	394
	397

► **PRIMARY REFERENCE**

PART NUMBER INDEX

Part	Page
	400
	403
	405
	408
	411
	414
	417
	548
	553
	557
	643
6V-0852	351
	572
	601
	605
	609
	921
6V-0894	803
	805
	807
	809
6V-1249	599
6V-1250	387
6V-1359	174
	278
	288
	293
	298
	303
6V-1889	561
	589
6V-1971	►794
	946
	948
	950
6V-2314	803
	805
	807
	809
6V-2315	190
	192
6V-2495	145
	617
	619
	621
	786
	789
6V-2496	668
	671
	674
	772
	775
	854
6V-3940	692
	693
6V-3965	351
	572
	602
	606
	610
	921
6V-3987	692
	693
6V-4298	212
6V-4495	529
6V-4589	361
	623
6V-4791	511
6V-5049	361
6V-5050	361
6V-5258	349
	354
6V-5326	327
	371
	373
	423
6V-5586	419
6V-5817	786
	789
	791
6V-5818	786
	789
6V-6715	196
6V-7238	51
	69
	577
	579
	581
	583
	585
	587
6V-7357	276
	476
6V-7636	476
	752
	756
	762
	767
6V-7687	803
	805
	807
	809
	929
6V-7743	73
6V-7744	208
	209
	664
	777
	834
	936
6V-7978	220
	223
	226
6V-8076	572
6V-8185	247
	476
6V-8188	217
	803
	805
	807
6V-8189	677
6V-8200	362
6V-8201	369
	370
6V-8351	386
6V-8352	420
	422
6V-8378	258
	268
6V-8397	80
	82
	332
	334
	336
	338
	340
	342
	388
	391
	394
	397
	400
	403
	405
	408
	411
	414
	417
	547
	548
	552
	553
	556
	557
	572
	575
	577
	579
	581
	583
	585
	587
	601
	602
	605
	606
	610
	643
	895
	940
6V-8398	332
	334
	336
	338
	340
	342
	388
	391
	394
	397
	400
	403
	405
	408
	411
	414
	417
	547
	548
	552
	553
	563
	566
	591
	593
	595
	597
	599
	643
6V-8400	601
	602
	605
	610
6V-8624	563
	566
6V-8625	332
	334
	336
	338
	340
	342
6V-8626	563
	566
6V-8627	388
	391
	394
	397
	400
	403
	405
	408
	411
	414
	417
	643
	940
6V-8628	572
	601
	605
	610
	940
6V-8632	351
	563
	566
	601
	605
	610
6V-8634	332
	338
	547
	552
	556
6V-8636	144
	148
	388
	391
	394
	397
	400
	403
	405
	408
	411
	414
	417
	547
	552
	575
	577
	579
	581
	583
	585
	587
	601
	605
	610
	643
	940
6V-8637	349
	354
	575
	577
	579
	581
	583
	585
	587
	591
	593
	595
	597
	599
6V-8638	563
	566
	591
	593
	595
	597
	599
6V-8639	563
	566
6V-8641	403
	417
	643
6V-8642	563
	566
	597
	601
	605

► PRIMARY REFERENCE

PART NUMBER INDEX

Part	Page
	610
6V-8647	103
	940
6V-8713	601
	605
	610
6V-8714	349
	354
6V-8721	591
	593
	595
6V-8723	548
	553
	556
	579
	585
6V-8724	144
	388
	391
	394
	397
	400
	403
	405
	408
	411
	414
	417
	556
	643
	940
6V-8774	403
	417
	572
	643
6V-8778	349
	354
6V-8782	332
	334
	336
	338
	340
	342
6V-8801	677
6V-8936	548
	553
6V-8969	820
	824
	827
	830
	834
6V-8978	360
6V-8981	591
	593
	595
	597
	599
6V-8994	895
6V-9000	940
6V-9001	103
6V-9007	351
	575
	577
	579
	581
	583
	585
	587
6V-9008	349
	354
6V-9009	601
	605
	610
6V-9023	219
	222
	225
6V-9028	157
	161
	164
	168
6V-9169	591
	593
	595
	597
	599
6V-9171	349
	354
6V-9189	203
6V-9325	803
	805
	807
	809
6V-9508	602
	606
	610
6V-9511	602
	606
	610
6V-9632	198
	667
	670
	673
	694
	695
	711
	752
	754
	756
	759
	762
	764
	767
	769
	771
	774
	777
6V-9746	332
	334
	336
	338
	340
	342
	349
	351
	354
	575
	577
	579
	581
	583
	585
	587
	602
	606
	610
	925
6V-9829	940
6V-9830	591
	593
	595
6V-9832	349
	354
6V-9836	388
	391
	397
	400
	405
	408
	411
	414
	602
	606
	610
6V-9843	388
	403
6V-9844	597
	599
6V-9849	572
6V-9850	572
	581
	583
	585
	601
	895
6V-9852	563
6V-9854	349
	354
6V-9873	388
	391
	394
	397
	400
	403
	405
	408
	411
	414
	417
	643
6V-9876	334
	336
	340
	342
6Y-0473	503
	504
	505
	506
6Y-0859	323
6Y-0935	503
6Y-0936	503
6Y-0937	503
6Y-0938	503
6Y-0939	503
6Y-0940	503
6Y-1198	503
6Y-1421	875
	876
	877
	878
	879
	880
	881
	882
	883
	884
	885
	886
	887
	888
	890
	891
	892
6Y-4744	501
	515
	516
	517
	518
	519
	520
	521
	522
6Y-5838	875
	877
	882
	884
	915
6Y-5839	915
	916
	917
6Y-5840	915
	916
	917

7

Part	Page
7B-1598	786
	789
7B-3028	427
7C-0351	37
7C-1224	37
7C-1281	13
7C-4616	32
7D-1553	356
	357
7D-1649	652
	875
	876
	877
	878
	879
	880
	881
	882
	883
	884
	885
	886
	887
	888
	890
	891
	892
7D-7453	846
	848
7D-9708	846
	848
7D-9749	515
	516
	517
	518
	519
	520
	521
	522
7E-2700	946
	950
7F-2122	937
7F-8267	623
	625
7F-8607	786
7G-1060	312
	315
7G-3832	328
	330
	348
7G-3833	328
	330
	348
7G-3834	328
	330
	348
7G-4824	654
	656
	658

► **PRIMARY REFERENCE**

PART NUMBER INDEX

Part	Page
7G-5984	331
7G-5985	331
7G-8839	69
7H-1447	429
	431
	433
7H-3171	512
7H-4543	931
7I-2272	198
	212
	214
7I-2273	214
7I-3930	875
	876
	877
	878
	879
	880
	881
	882
	883
	884
	885
	886
	887
	888
	890
	891
	892
7I-7439	280
7J-5639	534
	536
	538
	540
	542
7J-6285	323
	366
	367
	371
	373
	928
7J-9108	351
	548
	553
	557
	563
	566
	597
	601
	602
	605
	606
	610
	895
7J-9885	534
	536
	542
7J-9886	534
	536
	542
7J-9887	534
	536
	542
7K-1181	80
	82
	105
	148
	156
	160
	163
	167
	174
	189
	190
	192
	194
	196
	202
	219
	222
	225
	251
	252
	255
	258
	262
	265
	268
	271
	274
	276
	278
	286
	291
	296
	301
	306
	309
	312
	315
	460
	601
	605
	609
	617
	619
	621
	687
	704
	706
	716
	718
	752
	754
	756
	759
	762
	764
	767
	769
	780
	786
	789
	854
	897
	900
	903
	908
7K-2017	525
	527
7K-3176	786
7K-3304	786
7K-6365	538
	540
7K-9206	650
7L-0688	850
7M-4672	247
7M-8485	323
	332
	334
	336
	338
	340
	342
	349
	351
	354
	360
	484
	575
	577
	579
	581
	583
	585
	587
	602
	605
	610
7M-8798	791
7N-0296	241
7N-0718	156
	160
	163
	167
	245
7N-0808	73
7N-9017	176
	279
7N-9801	241
7P-2358	929
7R-3029	198
	288
	293
	298
	303
7R-8872	366
	367
7S-4992	73
7S-8920	561
7S-8921	561
7T-0093	667
	670
	673
	687
	771
	774
7T-0094	667
	670
	673
	687
	771
7T-1099	446
7T-4532	686
7T-6799	781
	783
7T-8894	252
	255
	258
7T-8895	252
	255
	258
	262
	265
	268
	271
7T-9105	556
7W-1176	34
7W-2326	51
	52
7W-2632	108
	112
	116
	121
	126
	131
	136
7W-4540	243
	244
7W-4634	29
7W-4642	34
7W-4669	44
7X-0288	893
7X-0289	677
7X-0345	247
7X-0513	455
7X-0515	495
7X-0550	496
	497
7X-0578	680
	682
	692
	693
7X-0579	279
7X-0584	486
	488
	498
	499
7X-0590	436
	438
	440
	448
	449
	450
7X-0591	148
7X-0599	816
7X-0603	474
	475
7X-0818	203
7X-1553	361
7X-2459	388
	391
	394
	397
	400
	403
	405
	408
	411
	414
	417
	643
7X-2465	800
7X-2533	73
	196
	762
	764
	767
	769
	801
7X-2534	157
	161
	164
	168
	716
	898
	901
	906
7X-2535	190
	192
	591
	593
	595
7X-2536	164
	168
	279
	572
7X-2537	650
7X-2538	685
7X-2539	61
7X-2541	602
7X-2543	351
	388
	391
	394
	397

PART NUMBER INDEX

Part	Page
	400
	403
	405
	408
	411
	414
	417
	458
	643
7X-2546	680
	682
7X-2548	220
	223
	226
	898
	901
7X-2549	458
7X-2550	929
7X-2552	481
	814
	816
7X-2553	198
	288
	293
	298
	303
	455
	480
	650
	685
	815
7X-2554	815
7X-2555	480
	481
7X-2556	490
	494
	495
7X-2568	323
7X-2576	428
7X-2577	929
	933
7X-2619	212
	751
7X-6315	173
7X-7644	946
	948
	950
7X-7729	69
	75
	148
	157
	161
	164
	168
	279
	303
	332
	334
	336
	338
	340
	342
	352
	429
	431
	433
	436
	438
	440
	444
	445
	460
	461
	463
	466
	469
	471
	486
	488
	548
	553
	557
	563
	566
	575
	577
	597
	599
	606
	610
	617
	619
	621
	624
	654
	656
	658
	664
	696
	697
	698
	720
	722
	724
	726
	728
	730
	733
	736
	739
	743
	745
	747
	777
	791
	803
	805
	807
	809
	817
	837
	838
	839
	840
7X-7927	854
	868
7X-7928	854
	868
7X-7929	854
	868
7X-7930	854
	868
7X-7945	572
	601
	605
	609
7X-7958	349
	354
	793
7X-9261	320
	321
7Y-0223	323
7Y-0225	323
7Y-0468	821
	824
	828
	830
	834
7Y-1433	323
7Y-1434	323
7Y-1558	323
7Y-3474	868
7Y-5074	293
	298
	303
7Y-5219	419
7Y-5458	246
7Y-5464	246
7Y-7388	821
	824
	828
	830
7Y-9099	259
	272
8	
8B-9424	597
	599
8C-3056	156
	160
	163
	167
	177
	178
	279
8C-3076	141
8C-3095	196
8C-3210	194
8C-3290	800
8C-3312	894
8C-3364	602
	605
	610
8C-3445	54
8C-3446	326
8C-3451	326
8C-3681	71
8C-3756	667
	670
	673
	687
	771
	774
8C-5063	82
8C-5607	190
	192
	196
	247
	286
	291
	801
8C-5608	190
	192
	196
	247
	286
	291
	801
8C-6354	198
	225
	287
	291
	296
	301
8C-6802	752
	754
	756
	759
	762
	764
	767
	769
8C-6868	895
8C-6920	351
8C-6965	151
	424
8C-7332	212
	214
	720
	722
	730
	733
	736
	739
	743
	745
	747
8C-7581	148
8C-8451	288
	293
8C-8514	668
	671
	674
8E-7078	918
	919
8E-7079	918
	919
8E-7791	654
	656
	658
8E-7840	816
8F-1434	258
	268
	279
8F-9206	786
8H-5303	245
8H-5306	245
8H-5724	384
	385
8I-6686	351
8J-0553	538
	540
8J-0729	650
	875
	876
	877
	878
	879
	880
	881
	882
	883
	884
	885
	886
	887
	888
	890
	891
	892
8J-0928	650
8J-7008	936
8J-7415	534
	536
	542
8K-1433	780
8L-2779	141
	142
8L-5008	548
	553
	557
8L-8413	174
	200

► **PRIMARY REFERENCE**

PART NUMBER INDEX

Part	Page
	252
	253
	255
	258
	263
	265
	269
	271
	312
	315
	704
	706
	709
	710
	711
	712
	713
	714
	718
	841
	842
	843
	844
	850
	903
	909
8M-2773	403
	417
	575
	577
	579
	581
	583
	585
	587
	643
8M-4704	529
8M-4986	896
8N-0869	156
	157
	160
	161
	163
	164
	167
	168
	177
	178
8P-6188	512
8P-9770	888
	891
8R-0275	859
	860
8R-1803	228
	229
	230
	247
8S-0948	557
8S-9378	69
8T-0072	323
8T-0088	509
8T-0122	219
	222
	225
8T-0197	332
	334
	336
	338
	340
	342
8T-0269	638
	640
	641
	642
	645
8T-0277	820
	824
	827
	830
8T-0285	144
	749
8T-0286	198
	214
8T-0287	144
	148
8T-0288	623
	625
8T-0315	575
	577
	579
	581
	583
	585
	587
8T-0318	451
8T-0328	145
	148
	157
	161
	164
	168
	202
	214
	258
	268
	279
	623
	625
	803
	805
	807
	809
8T-0338	387
8T-0357	510
8T-0404	602
	606
	610
8T-0643	73
8T-0722	493
8T-1117	793
8T-1158	360
8T-1683	575
	577
	581
	583
	587
8T-1718	351
8T-1779	548
	553
	557
8T-1885	548
	553
8T-1886	548
	553
8T-1887	160
	163
	167
	349
	354
	575
	577
	579
	581
	583
	585
	587
8T-1888	160
	163
	167
	349
	354
	575
	577
	579
	581
	583
	585
	587
8T-1895	597
8T-1896	597
8T-2173	619
8T-2353	898
	901
	904
	909
8T-2659	216
8T-2920	561
8T-2922	151
	424
8T-3282	875
	876
	877
	878
	879
	880
	881
	882
	883
	884
	885
	886
	887
	888
	890
	891
	892
8T-3425	156
	161
	164
	168
	278
8T-3426	288
	293
	298
	303
	446
	457
8T-3490	201
	442
	443
	446
	453
	458
	561
	693
8T-3597	442
	443
	446
	449
	450
	451
	453
	486
	488
	490
	494
	495
	654
	656
	752
	754
	756
	759
	762
	764
	767
	769
	815
8T-3612	202
	446
	451
	724
8T-3613	352
8T-4121	69
	71
	72
	73
	75
	80
	82
	105
	145
	157
	161
	164
	168
	189
	202
	208
	209
	220
	223
	253
	256
	259
	263
	266
	269
	272
	279
	288
	293
	298
	303
	313
	315
	325
	328
	330
	332
	334
	336
	338
	340
	342
	348
	349
	352
	354
	388
	391
	394
	397
	400
	403
	405
	408
	411
	414
	417
	428
	446
	451
	453
	457
	462

PART NUMBER INDEX

Part	Page	Part	Page	Part	Page	Part	Page
	473		486		783		789
	485		488		787		791
	493		602		789		854
	548		606		791		933
	553		610		929		940
	557		627	8T-4137	69	8T-4138	82
	563		630		72		211
	566		632		80		220
	572		634		82		223
	575		636		105		226
	577		696		157		250
	579		697		161		253
	581		698		164		256
	583		720		168		259
	585		722		198		263
	587		724		279		266
	597		726		293		269
	599		728		298		272
	602		730		303		455
	606		733		332		458
	610		736		334		463
	615		739		336		466
	617		743		338		469
	627		745		340		471
	643		747		342		654
	668		786		349		656
	671		789		352		660
	674		803		354		687
	680		805		428		694
	682		807		429		695
	685		809		431		704
	687		821		433		706
	720		824		436		716
	722		828		438		718
	724		830		440		901
	726		834		446		904
	728	8T-4136	71		457		906
	730		73		460		909
	733		80		461	8T-4139	211
	736		82		462		428
	739		148		463		436
	743		279		466		438
	745		332		469		440
	747		334		471		446
	772		336		548		451
	775		338		553		453
	781		340		557		457
	783		342		564		460
	786		352		566		461
	789		453		575		462
	791		548		577		486
	834		553		579		488
	854		557		581		490
	929		564		583		494
	933		566		585		495
8T-4122	202		572		587		496
	288		575		602		497
	293		577		606		654
	298		579		610		656
	303		581		617		929
	490		583		619		933
	494		585		621	8T-4140	482
	814		587		654	8T-4167	428
	816		597		656		931
8T-4123	323		599		658	8T-4171	198
8T-4132	323		602		664		214
8T-4133	73		606		668		220
	75		610		671		223
	161		617		674		226
	164		619		687		453
	168		621		772		654
	313		624		775		656
	316		685		777		658
	473		781		786		749

► **PRIMARY REFERENCE**

PART NUMBER INDEX

Part	Page
8T-4173	480
	481
8T-4174	47
	73
	480
	481
8T-4175	480
8T-4176	496
	497
8T-4178	680
	682
8T-4179	145
	157
	436
	438
	440
	446
	457
	460
	461
8T-4180	476
8T-4182	328
	330
	348
	602
	606
	610
	626
	627
	628
	629
8T-4183	328
	330
	348
	446
	449
	450
	458
	480
	481
	496
	497
	602
	606
	611
	752
	754
	756
	759
	762
	764
	767
	769
8T-4184	328
	330
	348
	486
	488
	498
	499
	513
	514
8T-4185	69
	198
	293
	298
	303
8T-4186	73
	157
	161
	164
	198
	280
	288
	293
	298
	303
	445
	458
	463
	466
	469
	471
	548
	553
	557
	602
	606
	611
	720
	722
	724
	726
	728
	730
	733
	736
	739
	743
	745
	747
	791
	817
	837
	840
8T-4189	61
	69
	72
	144
	206
	207
	208
	209
	241
	253
	263
	349
	354
	446
	451
	463
	466
	469
	471
	474
	475
	572
	616
	664
	791
8T-4191	157
	161
	164
	168
	220
	223
	253
	256
	259
	263
	266
	269
	272
	279
	313
	316
	403
	417
	548
	553
	557
	564
	566
	575
	577
	579
	581
	583
	585
	587
	619
	621
	643
8T-4192	279
	325
	486
	488
	498
	499
	650
	929
	936
8T-4194	323
	491
	492
	496
	497
	498
	499
	652
	875
	876
	877
	878
	879
	880
	881
	882
	883
	884
	885
	886
	887
	888
	890
	891
	892
8T-4195	73
	75
	80
	82
	148
	164
	168
	189
	198
	203
	288
	293
	298
	303
	352
	389
	391
	394
	397
	400
	403
	406
	408
	411
	414
	417
	429
	431
	433
	451
	460
	461
	463
	466
	469
	471
	485
	486
	488
	548
	553
	557
	566
	599
	602
	606
	611
	643
	650
	664
	685
	838
	839
	875
	876
	877
	878
	879
	880
	881
	882
	883
	884
	885
	886
	887
	888
	890
	891
	892
8T-4196	168
	280
	325
	436
	438
	440
	444
	557
	564
	567
8T-4197	678
	679
8T-4198	786
	789
8T-4199	279
8T-4200	71
	80
	82
	105
	106
	107
	141
	142
	157
	161
	198
	249
	288
	293

PART NUMBER INDEX

Part	Page	Part	Page	Part	Page	Part	Page
	298		720	8T-4742	684		606
	303		722	8T-4744	684		611
	307		743	8T-4778	446	8T-6685	680
	310		745	8T-4896	677		682
	349		747		850		936
	354		898		893	8T-6703	617
	485		901		894		619
	623		904		896		621
	625		909		922	8T-6725	80
8T-4205	220		925		937		82
	223		927		940	8T-6850	80
	226		929	8T-4908	198		82
	232		936		274	8T-6868	69
	276	8T-4224	69		276		211
	288		144		288		426
	293		157		293	8T-6876	547
	668		161		298		552
	671		164		303	8T-6902	752
	674		168		307		754
	687		202		310		756
	720		206		597		759
	722		207		599		762
	724		208		687		764
	726		209	8T-4910	69		767
	728		232		513		769
	730		241		514	8T-7000	319
	733		253	8T-4956	436	8T-7038	442
	736		263		438		443
	739		274		440	8T-7329	606
	743		276		448		611
	745		280		456	8T-7338	928
	747		288		458	8T-7516	935
	751		293		486	8T-7547	206
	772		298		488		253
	775		303		498		429
	801		307		499		431
	821		310		616		433
	824		349	8T-4970	147		453
	828		354	8T-4971	280		850
	830		451		752	8T-7566	821
8T-4222	428		485		754		825
	462		597		756		828
	463		599		759		831
	466		602	8T-4983	349		834
	469		606		352	8T-7852	660
	471		616		354	8T-7934	389
	654		623	8T-4984	351		391
	656		625		617		394
	658		650		619		397
8T-4223	144		664		621		400
	157		678	8T-5001	498		403
	211		679		499		406
	220		685	8T-5005	458		408
	223		687		786		411
	226		694		789		414
	279		695	8T-5041	426		417
	325		752	8T-5346	219		561
	328		754		222		626
	330		756	8T-5360	819		627
	348		759	8T-5372	429		628
	460		762		446		629
	461		764		457		643
	478		767	8T-5400	752	8T-7971	144
	486		769		754		148
	488		791		756		803
	498		820		759		805
	499		827		762		807
	513		834		764		809
	514		850		767	8T-8729	157
	602	8T-4244	328		769		161
	606		451		868		167
	611		611	8T-5878	462		168
	616		927		931		175
	650	8T-4648	927	8T-6466	602		196

► **PRIMARY REFERENCE**

PART NUMBER INDEX

Part	Page
	200
	219
	222
	225
	233
	236
	241
	249
	250
	252
	253
	255
	256
	258
	259
	262
	265
	268
	269
	271
	278
	286
	287
	288
	291
	292
	296
	297
	301
	302
	306
	309
8T-8730	156
	157
	160
	161
	167
	168
	196
	200
	219
	222
	225
	251
	252
	253
	255
	256
	258
	259
	262
	263
	265
	266
	268
	269
	271
	272
	286
	287
	288
	291
	292
	296
	297
	301
	302
	306
	315
	704
	706
	718
	904
8T-8736	198
	287
	292
	297
	302
	307
	309
8T-8737	156
	157
	160
	161
	163
	167
	168
	174
	175
	176
	177
	188
	190
	192
	194
	196
	198
	199
	200
	201
	202
	216
	219
	222
	225
	236
	246
	252
	253
	255
	256
	258
	259
	262
	265
	268
	269
	271
	274
	278
	286
	287
	288
	291
	292
	293
	296
	297
	298
	301
	302
	303
	306
	309
	310
	312
	315
	667
	670
	673
	687
	700
	701
	702
	704
	706
	709
	710
	711
	712
	713
	714
	716
	718
	750
	771
	774
	854
	897
	900
	901
	903
	908
8T-8799	278
8T-8827	156
	160
	163
	167
	177
8T-8902	388
	391
	394
	397
	400
	405
	408
	411
	414
8T-8919	895
	925
8T-8985	575
	577
	579
	581
	583
	585
	587
8T-9023	332
	334
	336
	338
	340
	342
8T-9041	547
	552
	556
8T-9368	247
8T-9371	851
8T-9383	217
8T-9388	228
	229
	230
8T-9402	619
8T-9403	328
	330
	348
	602
	606
	611
8T-9597	379
8T-9598	361
8T-9655	312
	315
8T-9850	667
	771
8W-6047	405
	408
	411
8W-8909	164
	168
8X-5489	160
	163
	167
8Y-3465	446
8Y-4501	476
8Y-6388	724
	726
	728
	730
	733
	736
	739
8Y-7520	388
	391
	394
	397
	569
9	
9B-0453	217
9B-7237	896
9C-2413	575
	577
	579
	581
	583
	585
	587
	589
9D-3768	253
9D-8508	868
9F-1399	924
9F-2247	320
	321
	500
	501
	515
	516
	517
	518
	519
	520
	521
	522
9F-3965	219
	222
9F-5644	232
	245

PART NUMBER INDEX

Part	Page
9F-5975	821
	825
	828
	831
	834
9G-1642	504
	505
	506
9G-3186	250
9G-3695	803
	805
	807
	809
9H-6454	429
	431
	433
9J-1137	936
	939
9J-4259	939
9J-9812	532
	542
9M-1974	692
	693
9M-4995	105
9M-5617	212
9M-5732	816
9M-6738	145
	148
9M-7394	945
9M-8406	82
	786
	789
	791
9M-9162	548
	553
	557
	564
	567
9N-0869	704
	706
	718
	904
	908
9R-0699	632
	634
9R-1004	597
9R-1005	597
9R-4024	859
	860
9R-9442	253
	255
	258
9R-9925	617
	619
	621
9S-4183	485
9S-4190	627
9S-4191	79
	556
	638
9S-5282	677
9S-6130	351
9S-8002	327
	371
	373
	375
	376
	377
	896
9S-8004	148
	151
	361
	371
	373
	386
	387
	424
9S-8005	893
9S-8006	361
	371
	373
9S-8008	323
	361
9S-8010	483
	895
9S-9334	323
	484
9T-3726	371
	373
9T-3853	387
9T-3928	371
	373
	375
	376
	377
9T-4367	387
9T-5241	821
	825
	828
	831
	834
9U-7000	349
	351
9U-8263	780
9V-4460	652
9V-6589	601
	605
	609
9W-0607	203
	204
	205
9W-0844	174
	175
	177
	198
	199
	200
	201
	219
	222
	225
	252
	255
	256
	258
	259
	262
	265
	266
	268
	271
	272
	278
	279
	286
	287
	291
	292
	293
	296
	297
	298
	301
	302
	303
	306
	307
	309
	310
	312
	315
	704
	706
	716
	718
	898
	901
	904
	909
9W-0852	174
	176
	198
	199
	200
	201
	219
	222
	225
	251
	252
	255
	256
	258
	259
	262
	265
	268
	271
	279
	286
	287
	291
	292
	296
	297
	301
	302
	306
	309
	312
	315
	667
	670
	673
	704
	706
	718
	752
	754
	756
	759
	762
	764
	767
	769
	771
	774
	903
	908
9W-1951	219
	222
	225
9W-5224	512
9W-7216	511
9W-9265	384
	385
9W-9915	47
9W-9952	47
9W-9953	47
9X-1046	216
9X-1054	175
	176
	219
	222
	225
	252
	256
	259
	262
	265
	268
	271
	279
	687
9X-1055	176
	252
	256
	259
	262
	266
	268
	272
	279
	687
9X-1056	176
	219
	222
	225
	252
	256
	259
	262
	266
	268
	272
	279
	687
9X-1386	278
9X-1813	156
	233
	235
	249
9X-2032	198
	214
	667
	670
	673
	771
	774
9X-2040	720
	722
	724
	726
	728
	730
	733
	736
	739
	743
	745
	747
	846
	848
9X-2041	680
	682
9X-2042	202
	212
	214
	223
	226
	680
	682
	720
	722
	724
	726

► **PRIMARY REFERENCE**

PART NUMBER INDEX

Part	Page
	728
	730
	733
	736
	739
	743
	745
	747
	752
	754
	756
	759
	762
	764
	767
	769
	777
9X-2043	220
	276
	680
	682
	692
	693
	846
	848
9X-2044	680
	682
9X-2045	654
	680
	682
	694
	695
	704
	706
	716
	718
	720
	722
	724
	726
	728
	730
	733
	736
	739
	742
	743
	745
	747
	752
	754
	756
	759
	762
	764
	767
	769
	781
	783
	898
	901
	904
	909
	912
9X-2092	428
	453
	462
	929
9X-2133	71
9X-2134	940
9X-2185	671
	674
	774
9X-2480	280
	801
9X-2488	791
9X-3401	157
	161
	164
	168
	174
	176
	188
	190
	192
	198
	199
	200
	201
	219
	222
	225
	246
	252
	256
	259
	262
	265
	268
	271
	274
	278
	286
	287
	291
	292
	296
	297
	301
	302
	306
	309
	312
	315
	687
	716
	820
	824
	827
	830
	897
	900
	903
	908
9X-3402	156
	160
	163
	167
	174
	175
	176
	177
	188
	190
	192
	198
	199
	200
	201
	216
	252
	253
	255
	258
	263
	265
	269
	271
	274
	278
	286
	287
	288
	291
	292
	293
	296
	297
	298
	301
	302
	303
	306
	307
	309
	312
	315
	667
	670
	673
	687
	704
	706
	716
	718
	750
	752
	754
	756
	759
	762
	764
	767
	769
	771
	897
	900
	901
	903
	908
	912
9X-3404	156
	322
	544
	914
9X-4244	204
	205
9X-4813	194
9X-6032	615
9X-6165	190
	192
	196
	247
	276
	453
	654
	656
	658
	694
	695
	720
	722
	724
	726
	728
	730
	733
	736
	739
	743
	745
	747
	801
9X-6269	47
9X-6772	175
	312
	315
9X-7345	253
	256
	259
	263
	266
	269
	272
9X-7378	251
9X-7380	786
	789
9X-7381	786
	789
9X-7382	786
	789
9X-7383	786
	789
9X-7384	786
9X-8250	567
	786
	789
9X-8256	73
	82
	147
	157
	161
	164
	168
	194
	202
	211
	212
	214
	216
	220
	223
	226
	250
	253
	256
	259
	263
	266
	269
	272
	280
	293
	298
	303
	429
	431
	433
	455
	458
	463
	466
	469
	471
	476
	483
	484
	591
	593
	595
	619
	654
	656
	660
	704
	706

PART NUMBER INDEX

Part	Page
	716
	718
	749
	882
	883
	884
	885
	886
	887
	888
	892
	898
	901
	904
	906
	909
9X-8257	47
	323
	369
	370
	446
	650
	685
	815
9X-8259	523
9X-8267	752
	754
	756
	759
	762
	764
	767
	769
9X-8482	362
9X-8483	362
9Y-9381	76

0

Part	Page
027-3873	500
	501
031-0214	820
	824
	827
	830
031-0249	850
032-8047	76
032-8191	76
032-9090	17
	19
	20
032-9091	17
	19
	20
033-4818	288
	293
	298
	303
033-6039	150
033-7687	31
033-8248	547
	552
	556
035-8014	76
035-8017	108
	112
	116
	121
	126
	131
	136
035-8063	23
	25
	54
035-8068	23
053-1578	895
067-3045	609
067-6002	23
067-6006	23
067-6043	23
067-6135	11
	16
	20
067-6179	32
067-6213	37
067-6265	108
	112
	116
	121
	126
	131
	136
067-6873	17
	19
	20
067-6874	17
	19
	20
069-4269	69
081-3698	383
084-4277	252
	255
	258
085-7539	151
	424
087-4772	371
	373
087-8799	73
091-0081	280
091-2436	177
	252
	256
	259
	262
	266
	268
	272
091-9035	601
	605
	609
092-3635	388
	391
	394
	397
	400
	403
	405
	408
	411
	414
	417
	643
094-0611	323
094-0616	323
094-1528	323
095-0658	320
	321
095-0736	145
	148
	157
	161
	164
	168
095-0891	323
095-1207	453
095-1277	323
095-1574	630
	632
	634
	636
095-1582	638
	640
	641
	642
	645
095-1586	630
	632
	634
	636
095-1590	630
	632
	634
	636
	638
095-1750	638
	640
	641
	642
	645
096-0001	368
096-1349	276
096-4885	73
	480
096-4900	361
096-5962	202
	288
	293
	298
	303
096-6166	660
	668
	671
	674
	749
	771
	774
	803
	805
	807
	809
097-7234	177
099-0169	323
099-0822	151
	424
099-2374	638
	640
	641
	642
	645
099-5217	523

1

Part	Page
100-3751	32
	60
100-4336	547
	552
	556
100-4461	53
100-4830	32
	76
	94
	108
	112
	116
	121
	126
	131
	136
100-4841	23
	25
	97
	103
100-5041	177
100-5805	194
100-6674	251
101-0003	850
101-2867	820
	824
	827
	830
101-2987	36
101-3617	34
101-3771	57
101-3895	32
	108
	112
	116
	121
	126
	131
	136
101-8296	786
	789
102-2073	7
102-2075	7
102-2076	7
102-2078	7
102-7886	786
	789
102-8705	601
	605
	609
102-8801	157
	161
	164
	168
	174
	176
	190
	192
	194
	198
	199
	200
	201
	252
	253
	255
	256
	258
	259
	262
	263
	265
	268
	269
	271
	274
	286
	287
	288
	291
	292
	293
	296
	297
	298
	301
	302
	303
	306

► **PRIMARY REFERENCE**

PART NUMBER INDEX

Part	Page
	307
	309
	310
	312
	315
102-8802	156
	174
	175
	194
	196
	219
	222
	225
	241
	249
	250
	251
	262
	265
	268
	271
	278
	279
	312
	315
	686
	687
	704
	706
	716
	718
	850
	897
	900
	903
	908
102-8803	174
	233
	234
	235
	312
	315
	820
	824
	827
	830
	897
	900
	903
	908
102-8804	177
	200
	201
	252
	256
	259
	262
	265
	268
	271
	287
	291
	292
	296
	297
	301
	302
	667
	670
	673
	752
	754
	756
	759
	762
	764
	767
	769
	771
	774
	781
	783
	803
	805
	807
	809
102-8805	156
	160
	163
	167
	176
	236
	246
	704
	706
	711
	714
	718
	854
	897
	900
	903
	908
	909
102-8806	174
	175
	177
	196
	198
	200
	201
	252
	253
	255
	256
	258
	259
	263
	265
	269
	271
	278
	287
	291
	292
	296
	297
	301
	302
	306
	309
	312
	315
	704
	706
	716
	718
	897
	900
	903
	908
	909
102-9941	29
	45
103-2135	76
103-2543	220
103-5705	97
103-6131	31
104-1995	177
	252
	256
	259
	262
	266
	268
	272
104-2091	216
	724
	726
	728
	730
	733
	736
	739
105-1866	356
	357
105-4593	360
106-0107	►246
	781
	783
106-0210	246
106-0699	371
	373
106-8916	76
	97
	103
106-9187	501
107-2348	76
107-3117	386
107-4393	786
107-4394	786
107-4395	786
107-4396	786
107-4397	786
107-4399	786
107-4749	157
	161
	164
	168
108-2949	636
108-3565	380
	382
	383
108-3819	371
	373
108-4311	850
108-5471	476
	752
	756
	762
	767
109-2013	288
	293
	298
110-0885	724
	726
	728
110-1010	148
	624
110-1011	148
110-6109	781
	783
110-6969	446
110-7887	781
	783
111-0859	30
111-3780	803
	805
	807
	809
111-3781	803
	805
	807
	809
	252
	256
111-4015	667
	670
	673
	771
	774
111-4627	660
111-4837	572
111-4838	574
111-7899	174
	477
	478
	704
	706
	781
	783
	897
	900
	903
	906
	907
	909
	911
	912
111-8222	12
112-1817	144
	148
112-4629	371
	373
112-4640	371
	373
112-4645	420
112-4647	420
112-4851	417
112-6646	274
	785
113-0693	228
	229
	230
	247
113-1504	50
113-4419	378
113-4630	13
113-5100	219
	222
	225
113-6349	153
	155
113-8129	63
	65
	67
113-8216	323
113-8490	174
	219
	222
	225
113-8491	219
	222
	225
113-8492	219
	222
	225
113-9769	323
113-9807	820
	824
	827
	830
114-2579	12
114-4363	34
114-9284	451
	656
115-1050	198
	199

► PRIMARY REFERENCE

PART NUMBER INDEX

Part	Page
	200
	201
115-1051	200
	201
115-1052	198
	199
	200
	201
115-1053	198
	199
	200
	201
115-1615	178
	220
	223
	226
	253
	256
	259
	263
	266
	269
	272
	279
	687
115-3799	601
	605
	609
116-4160	219
	222
	225
116-4161	219
	222
	225
116-6680	278
116-6952	671
	674
	774
116-7471	219
	222
	225
117-1385	106
	107
	141
	142
	168
117-4491	820
	824
	830
117-6952	288
	293
	298
	303
117-7236	371
	373
117-7242	382
117-7251	380
	382
117-7252	382
117-7273	318
117-7278	327
	365
	366
	367
	368
117-7279	327
117-7280	327
117-7322	365
117-8131	800
118-4977	325
119-1616	922
119-2195	922
119-3662	175
	176
	177
	200
	252
	253
	255
	256
	258
	259
	262
	266
	268
	272
	279
	287
	291
	296
	301
	312
	315
	667
	704
	706
	718
	903
	909
119-5708	80
	82
	575
	577
	579
	587
119-5917	351
120-4394	327
	362
121-0883	34
121-2761	777
122-1951	601
	605
	609
	940
122-3606	358
122-4395	820
	824
	827
	830
122-9068	382
122-9363	419
122-9718	371
	373
	375
	376
	377
123-0380	451
123-2016	362
123-2899	55
	56
123-3827	436
	438
	440
	660
123-4038	76
123-4363	630
123-4410	922
123-5782	362
123-5787	362
123-5800	362
123-7575	327
123-7576	327
123-7583	151
123-7598	366
	367
	368
123-7615	854
123-9769	387
124-0174	157
	161
124-3536	39
	41
124-3815	12
	32
	37
	91
	94
	97
	108
	112
	116
	121
	126
	131
	136
	283
	284
124-9636	219
	222
	225
124-9637	219
	222
	225
124-9904	386
124-9905	386
124-9906	386
124-9908	386
124-9913	362
124-9914	362
124-9932	378
124-9933	378
124-9934	378
124-9935	378
124-9936	378
124-9937	378
124-9940	362
125-7874	156
	157
	160
	161
	163
	164
	167
	168
	175
	176
	177
	188
	190
	192
	194
	198
	199
	200
	201
	219
	222
	225
	251
	252
	253
	255
	256
	258
	259
	262
	263
	265
	266
	268
	269
	271
	272
	274
	279
	286
	287
	288
	291
	292
	293
	296
	297
	298
	301
	302
	303
	306
	307
	309
	312
	315
	704
	706
	716
	718
	898
	901
	904
	909
125-7875	156
	157
	160
	161
	163
	164
	167
	168
	175
	176
	177
	198
	199
	200
	219
	222
	225
	251
	252
	253
	255
	258
	259
	262
	265
	268
	269
	271
	272
	274
	279
	286
	287
	288
	291
	292
	293
	296
	297
	298
	301
	302
	303
	307
	309
	312
	315

► **PRIMARY REFERENCE**

PART NUMBER INDEX

Part	Page
	667
	670
	673
	771
	774
	854
125-7876	279
125-8175	752
	754
	756
	759
	762
	764
	767
	769
125-9134	382
126-1766	190
	192
	199
	200
	667
	908
126-1767	188
	199
	200
	201
	246
	278
	292
	297
	309
	312
	687
	716
	897
	901
126-1768	188
	199
	200
	201
	687
	774
126-1774	174
	312
	315
	704
	706
	718
	903
	908
126-2743	174
126-3212	7
126-5632	379
126-5633	379
126-5637	383
126-5638	379
126-5639	379
126-5640	383
126-5641	379
126-5642	379
126-5643	383
126-5676	371
	373
126-5677	371
	373
126-5678	371
	373
126-5709	365
126-7574	173
126-8472	687
126-8921	323
126-8928	800
127-2170	312
	680
	682
	724
	726
	728
	730
	733
	736
	739
	820
	827
	834
127-4195	379
127-4196	379
127-4197	379
127-4198	379
127-4471	72
127-8165	76
128-0164	338
	344
128-1599	243
	244
128-2136	720
	722
	724
	726
	728
	730
	733
	736
	739
	743
	745
	747
128-4168	219
	222
	225
	278
128-4175	219
	222
128-4178	175
	278
128-4249	175
	219
	222
	226
	312
	315
128-5531	156
	160
	163
	167
128-8423	249
128-8981	362
129-3181	386
129-7286	934
129-7301	922
129-7307	934
129-7321	529
130-0165	189
130-5300	198
	200
	291
	296
	301
	312
	315
130-5301	200
130-9888	50
130-9984	560
	793
131-1474	199
131-1488	175
	279
131-1490	175
131-1497	225
131-3093	667
	670
	673
	771
	774
131-3539	202
131-3540	752
	754
	756
	759
	762
	764
	767
	769
131-3987	694
	695
132-0338	820
	824
	827
	830
	834
132-1805	278
132-2250	198
132-3056	623
	625
132-4763	939
132-5789	190
	192
	198
	253
	256
	259
	263
	266
	269
	272
	274
	276
	288
	293
	298
	303
	307
	310
	312
	315
132-7551	601
	605
	609
132-8487	202
	286
	291
	296
	301
133-1011	32
133-3234	752
	754
	756
	759
	762
	764
	767
	769
133-3413	189
133-6517	189
133-6934	202
	293
	298
	303
133-8714	667
	670
	673
133-9012	671
	674
	774
133-9469	76
134-0404	326
	351
	921
134-2540	175
	199
	200
	253
	255
	258
	263
	265
	269
	271
	278
	286
	287
	291
	292
	296
	297
	301
	302
	306
	309
134-3518	667
	670
	673
	771
	774
134-3856	44
134-4126	173
134-7258	946
	948
	950
135-7193	388
	391
	394
	397
	400
	403
	405
	408
	411
	414
	417
	530
	569
	643
136-1543	802
136-1613	754
	759
136-1955	145
	148
136-3191	868
136-4192	764
	769
137-2170	859
	860
138-1645	803
	805
	807
	809
138-2456	931
138-4181	362
138-4182	362
138-8381	615
138-8454	202
	214
	689
	691

PART NUMBER INDEX

Part	Page
	780
139-1398	349
	354
140-1739	383
140-4722	780
140-4765	145
	148
140-4829	69
140-6836	917
140-7480	801
140-8783	153
	155
141-0305	361
141-8061	190
	192
	198
	199
	200
	259
	268
	287
	292
	293
	297
	298
	302
	303
	307
	309
141-8584	108
	112
	116
	121
	126
	131
	136
143-1288	820
	824
	827
	830
	834
143-6020	216
144-0195	752
	754
	756
	759
	762
	764
	767
	769
	854
	868
144-0331	700
	701
	702
	711
	712
	713
	714
144-1636	200
	201
144-6691	921
145-0326	850
145-2237	388
	391
	394
	397
	400
	405
	408
	411
	414
	601
	605
	609
145-3405	803
	805
	807
	809
145-3812	318
145-3813	318
145-5181	496
	497
	507
	508
145-9087	859
	860
146-3728	648
146-6433	868
147-1076	451
147-1444	200
	288
	292
	297
	302
147-1445	174
	312
	315
147-1446	174
	312
	315
147-5553	76
148-2714	807
	809
148-8315	563
	566
	597
	601
	605
	609
148-8316	940
148-8317	349
	354
148-8318	332
	338
	547
	552
	556
148-8325	403
	417
	643
148-8327	349
	354
	575
	577
	579
	581
	583
	585
	587
148-8336	388
	391
	394
	397
	400
	403
	405
	408
	411
	414
	417
	547
	552
	575
	577
	579
	581
	583
	585
	587
148-8340	563
	566
148-8341	601
	605
	610
148-8342	351
	563
	566
	601
	605
	610
148-8345	563
	566
	591
	593
	595
	597
	599
148-8347	351
	575
	577
	579
	581
	583
	585
148-8351	572
148-8352	349
	354
148-8356	601
	605
	610
148-8357	349
	354
148-8358	563
	566
148-8363	334
	336
	340
	342
148-8364	332
	334
	336
	338
	340
	342
148-8365	547
	552
148-8367	572
	581
	583
	585
	601
148-8368	388
	391
	394
	397
	400
	403
	405
	408
	411
	414
	417
	643
	940
148-8369	572
	585
	587
	601
	605
	610
148-8373	601
	605
	610
148-8374	547
	552
	556
	579
	585
148-8375	591
	593
	595
	597
	599
148-8378	388
	391
	394
	397
	400
	403
	405
	408
	411
	414
	602
	606
	610
148-8382	602
	605
	610
148-8383	575
	577
	581
	583
	585
	587
148-8385	940
148-8390	563
	566
148-8393	563
148-8406	484
148-8407	556
148-8424	388
	391
	394
	397
	400
	405
	408
	411
	414
148-8428	332
	334
	336
	338
	340
	342
148-8433	388
	391
	397
	400
	405
	408
	411
	414
	602
	606
	610
148-8439	403
	417
	572

► **PRIMARY REFERENCE**

PART NUMBER INDEX

Part	Page
	643
148-8443	388
	391
	394
	403
	405
	417
	643
148-8450	349
	354
148-9364	591
	593
	595
149-5461	893
149-5733	939
150-0351	875
	876
	877
	878
	879
	880
	881
	882
	883
	884
	885
	886
	887
	888
	890
	891
	892
150-0352	875
	876
	877
	878
	879
	880
	881
	882
	883
	884
	885
	886
	887
	888
	890
	891
	892
150-0353	650
150-3035	351
150-4037	597
	599
150-4043	388
	391
	394
	397
	400
	403
	405
	408
	411
	414
	417
	643
150-4044	548
	553
	556
150-5123	652
150-6215	652
151-2110	145
	148
	156
	160
	163
	167
151-5650	667
	670
	673
	771
	774
151-9274	699
	703
152-6730	37
152-8368	940
152-8369	940
152-9105	940
153-6242	332
	334
	336
	338
	340
	342
153-6932	667
	670
	772
	775
153-7299	547
	552
	560
154-2302	168
	198
154-4891	606
	609
154-7951	724
	726
	728
	730
	733
	736
	739
154-7986	▶203
	208
	209
154-9445	371
	373
	▶419
155-0576	108
	704
	706
	718
	903
	908
155-2255	156
	160
	163
	167
	174
	176
	190
	192
	194
	199
	200
	201
	252
	256
	259
	262
	265
	268
	271
	286
	287
	288
	291
	292
	293
	296
	297
	298
	301
	302
	303
	306
	309
	310
	312
	315
155-2256	252
	256
	259
	262
	265
	268
	271
	286
	288
	306
155-2257	156
	160
	163
	167
	176
	199
	292
	297
	302
	309
155-2260	174
	175
	199
	237
	253
	255
	256
	258
	259
	262
	265
	268
	269
	271
	278
	286
	287
	291
	292
	296
	297
	301
	302
	306
	309
	312
	315
155-2265	174
	175
	176
	196
	199
	252
	253
	255
	256
	258
	259
	262
	265
	269
	271
	278
	286
	287
	288
	291
	292
	293
	296
	297
	298
	301
	302
	303
	306
	309
	310
	312
	315
155-2256	252
	256
	259
	262
	265
	268
	271
	286
	288
	306
155-2257	156
	160
	163
	167
	176
	199
	292
	297
	302
	309
155-2260	174
	175
	199
	237
	253
	255
	256
	258
	259
	262
	265
	268
	269
	271
	278
	286
	287
	291
	292
	296
	297
	301
	302
	306
	309
	312
	315
155-2265	174
	175
	176
	196
	199
	252
	253
	255
	256
	258
	259
	262
	265
	269
	271
	278
	286
	287
	288
	291
	292
	293
	296
	297
	298
	301
	302
	303
	306
	309
	310
	312
	315
155-2270	156
	157
	160
	161
	163
	167
	168
	174
	175
	176
	190
	192
	196
	219
	222
	225
	251
	252
	255
	256
	258
	259
	262
	265
	268
	269
	271
	278
	286
	287
	288
	291
	292
	296
	297
	298
	301
	302
	303
	306
	309
	310
	312
	315
155-2271	156
	160
	163
	167
	176
	199
	253
	255
	256
	258
	259
	262
	265
	269
	271
	278
	286
	287
	288
	291
	292
	293
	296
	297
	298
	301
	302
	303
	306
	309
	310
	312
	315

► PRIMARY REFERENCE

PART NUMBER INDEX

Part	Page
	269
	271
	287
	291
	296
	301
	667
	670
	673
	771
	774
155-2274	156
	160
	163
	167
	176
	188
	256
	259
	262
	265
	268
	271
	274
	704
	706
	716
	718
	897
	900
	903
	908
155-5354	203
155-5355	203
155-7327	388
	391
	394
	397
	400
	405
	408
	411
	414
156-6175	194
	276
	716
	897
	900
	906
156-9791	602
	606
	610
157-7338	916
158-0851	349
	354
158-7864	458
	948
159-0186	72
159-5255	51
159-5901	403
	643
159-8049	156
	157
	160
	161
	167
	168
159-8050	156
	160
	161
	167
	168
159-8246	319
159-8247	319
159-9322	174
	200
	292
	297
	302
	312
	315
	704
	706
	718
	903
	908
160-0162	108
	112
	116
	121
	126
	131
	136
160-4641	405
	408
160-7689	704
	706
	718
	903
	908
160-7690	174
	190
	192
	312
	315
160-8493	327
160-8744	145
160-8754	780
161-2398	846
	848
161-6154	371
	373
	638
	640
	641
	642
	645
161-6417	937
161-6422	896
161-6424	922
161-6425	922
161-6427	922
161-8041	922
161-9289	841
	845
161-9570	929
161-9744	845
162-0175	896
162-0178	922
162-0179	922
162-0180	896
162-1565	13
162-2766	896
162-2772	922
163-1135	850
163-4520	575
	577
	579
	587
	589
163-8811	344
	346
	530
	560
	561
	569
	589
	595
	609
163-8812	331
	344
	346
	356
	357
	358
	560
	571
	589
	609
163-8813	356
	357
164-0850	720
	722
	724
	726
	728
	730
	733
	736
	739
	743
	745
	747
164-1234	850
164-4883	820
	824
	827
	830
	834
164-5567	351
164-5581	602
	606
	610
164-5616	351
164-6858	349
	354
164-6863	351
164-7556	204
	205
164-8474	720
	722
	724
	726
	728
	730
	733
	736
	739
	743
	745
	747
164-9425	279
164-9640	388
	391
	394
	397
	400
	405
	408
	411
	414
	601
	605
	609
165-0311	704
	706
	716
	718
	781
	783
	897
	900
	903
	906
	908
165-4632	388
	391
165-4934	602
	606
	610
167-2186	532
	534
	536
	538
	540
	542
167-2294	532
	534
	536
	538
	540
	542
167-3692	174
	312
	315
167-3693	175
	278
167-6805	371
	373
	375
	376
	377
167-7270	946
	948
167-7713	327
	423
167-7715	420
167-8610	801
167-8712	198
	286
	291
	296
	301
	306
	309
167-8987	200
	286
	293
	298
	303
	306
	310
168-4999	251
169-2876	946
	948
	950
169-7380	850
170-0950	250
170-5715	386
170-6631	929
	936
171-1230	820
	824
	827
	830
	834
171-2039	365
171-2212	219
	222
	225
171-3396	816
171-5349	278
172-0160	511
172-0307	896
172-2384	476
172-2385	476

► **PRIMARY REFERENCE**

PART NUMBER INDEX

Part	Page
172-2437	922
172-4325	76
172-4863	219
	222
	225
173-2052	802
173-3083	827
	830
	834
173-3175	219
	222
173-3323	351
173-5787	841
	842
	843
	844
	845
173-7035	841
	842
	843
	844
174-5907	786
	789
174-8131	202
	212
	214
175-2539	687
175-4614	147
176-1477	175
	278
176-1521	278
176-3900	▶662
177-7122	371
	▶420
177-7747	420
177-9645	687
177-9648	667
	670
	673
	687
	771
	774
177-9651	667
177-9653	667
	670
	673
	687
	771
	774
177-9656	176
	252
	255
	256
	258
	259
	265
	268
	271
178-2593	455
	654
178-7539	704
	706
	781
	783
	908
178-7907	802
178-9570	685
	▶686
179-0464	366
	367
	368
179-2897	880
	887
	891
	892
	▶916
179-5755	875
	876
	877
	878
	879
	880
	881
	882
	883
	884
	885
	886
	887
	888
	890
	891
	892
179-8232	652
180-0613	225
180-0614	174
180-3153	455
	654
	656
180-3154	455
	654
	656
180-5305	288
180-5927	664
	▶687
180-6615	174
	781
	783
180-9339	13
	199
	234
	235
	686
180-9340	156
	160
	163
	167
	174
	175
	176
	199
	200
	237
	256
	259
	274
	278
	292
	293
	297
	298
	302
	303
	309
	310
	312
	315
	704
	706
	716
	718
	898
	901
	904
	909
	912
183-1176	650
183-1178	650
183-4584	156
	160
	▶238
183-5297	875
	876
	877
	878
	879
	880
	881
	882
	883
	884
	885
	886
	887
	888
	890
	891
	892
184-1137	547
	552
	556
184-1138	547
	552
	556
185-0884	23
185-3166	388
	391
	394
	397
	400
	403
	405
	408
	411
	414
	417
	530
	569
	643
185-4303	687
185-6627	12
185-7149	37
186-3735	156
	163
	164
	174
	176
	190
	192
	194
	292
	312
	712
	781
	783
	803
	805
	807
	854
	908
186-3736	163
	164
	174
	175
	176
	177
	190
	192
	194
	222
	278
	312
	706
	716
	898
	901
	909
186-5107	850
186-6190	▶663
	786
	789
186-6529	936
187-0413	451
187-0555	37
187-3547	572
187-5086	619
187-8001	371
	373
	375
	376
	377
187-9008	572
188-3538	929
188-4653	617
	621
188-6246	503
188-8846	201
	214
	689
	691
	724
	726
	728
189-1707	786
	789
189-3158	175
	251
	278
	687
190-2830	556
190-5386	478
	946
	948
	950
190-7614	274
	286
	288
	306
190-7615	174
	199
	200
	201
	291
	293
	296
	297
	298
	301
	302
	303
	309
	312
	315
190-8609	483
	484
	485
191-0286	429
	431
	433
191-3040	859
	860
191-3539	361
191-3587	803
	805
	807
	809

PART NUMBER INDEX

Part	Page
191-6159	532
	538
	540
191-7503	279
	904
	908
191-8920	157
	161
	164
	168
	220
	223
	226
191-9247	649
192-2112	670
	673
	774
192-4744	512
192-7795	850
192-7799	851
192-7805	850
192-7810	850
192-7820	850
192-7848	851
193-1546	538
	540
193-3973	572
193-6911	62
	344
	346
	530
	569
	589
	609
194-0627	597
194-0628	597
194-1983	380
	382
194-3750	547
	560
194-4864	623
194-5171	868
194-5226	188
194-5227	188
194-5390	76
194-8031	749
195-2136	36
195-2221	36
196-1803	351
196-3940	575
	577
	579
	581
	583
	585
	587
	589
196-4253	151
	424
196-4254	151
	424
196-7007	156
	160
	163
	167
197-0145	638
197-7259	219
	222
	225
197-7261	174
	312
	315
197-7610	624
197-7611	351
198-0918	933
198-2914	649
198-4767	426
198-4777	69
	458
	463
	466
	469
	471
198-4778	458
	491
	492
198-4781	650
198-4782	462
	929
	933
198-5389	196
198-6989	525
198-6990	525
198-6991	525
198-6992	525
198-9706	202
	212
	214
	720
	722
	724
	726
	730
	733
	743
	745
	747
199-1088	362
	▶378
199-6225	▶318
	375
	376
	377
199-6928	47
199-7698	687
199-9252	108
	112
	116
	121
	126
	131
	136
199-9267	108
	112
	116
	121
	126
	131
	136
199-9751	26
	43

2

Part	Page
200-1311	940
200-1729	▶361
	925
200-3106	351
	358
200-6345	601
	605
	609
201-1024	312
	315
201-2744	601
	605
	609
	▶921
202-2284	783
202-6611	204
202-6614	205
202-7704	371
	373
203-1926	332
	334
	336
	338
	340
	342
	344
	346
203-4604	508
203-6608	895
203-6609	895
203-6610	937
203-6612	937
203-6614	937
203-6615	937
203-6618	529
203-6620	529
203-6621	529
203-6623	529
203-6626	529
203-6629	934
203-6630	934
203-6631	894
203-6632	924
203-6633	924
203-6637	937
203-6639	922
203-6640	896
203-6641	937
203-7703	841
	842
	843
	844
	845
204-2281	168
	278
	574
204-8000	279
205-0826	196
205-3692	940
205-4132	575
	577
	579
	581
	583
	585
	587
205-7048	694
	695
205-8257	196
206-0452	601
	605
	609
206-2423	80
	82
206-5162	196
206-5203	196
206-5823	796
	797
207-2554	61
207-5271	196
208-5546	▶895
	942
208-5547	▶937
	942
208-5549	▶925
	942
208-5551	▶922
	942
208-5552	▶896
	942
208-5553	▶931
	942
209-3565	151
	424
209-4481	854
209-4482	854
209-8217	667
	670
	673
209-9219	21
	22
210-6964	79
210-8754	252
	255
	258
211-0052	174
	219
	222
	225
	312
	315
211-0388	937
211-0394	937
211-0395	937
211-0396	937
211-0397	937
211-1084	202
211-1856	896
211-5358	241
	850
	851
211-5941	436
	438
	440
	448
211-8169	894
	▶934
211-8171	894
	▶924
211-8215	529
211-8216	529
211-8217	529
211-8753	894
211-8754	894
211-9023	934
211-9024	934
212-4219	859
	860
212-4483	380
	382
212-4757	931
212-6023	940
212-6603	360
212-6679	327
	373
	▶422
212-6989	940
212-7032	▶319
	371
	373
212-7035	371
	373
	▶423
212-7037	▶365
	371
	373
212-7044	383
212-9363	▶326
	351
213-0139	174

▶ **PRIMARY REFERENCE**

PART NUMBER INDEX

Part	Page
	176
	252
	255
	256
	258
	259
	265
	268
	271
	312
	315
213-5167	850
213-5168	850
213-5169	850
213-7315	259
	269
214-3203	7
	23
	25
214-4208	256
	259
	266
	268
	272
214-6863	▶237
	897
	900
	903
	909
214-7457	69
214-7566	103
214-7568	103
	144
	148
	351
	649
215-2901	507
	508
215-7697	420
215-8010	151
	424
215-8011	151
	424
215-9509	91
	94
	97
215-9513	80
	82
215-9515	80
	82
216-0143	429
	431
	433
216-0814	820
	824
	827
	830
216-2956	515
	516
	519
	520
216-2957	515
	516
	519
	520
216-4251	652
216-8314	16
	17
216-8634	32
216-8716	378
216-9633	54
217-0099	108
	112
	116
	121
	126
	131
	136
217-2004	544
	914
	▶928
217-3875	151
	387
	424
217-5807	480
	481
217-6359	512
217-8477	108
	112
	116
	121
	283
217-9039	13
	283
	284
218-0404	196
218-0651	781
	783
218-1755	103
218-2148	351
218-2529	820
	824
	827
	830
	834
218-7252	850
219-0305	946
	948
	950
219-3273	189
219-6314	196
219-7935	937
220-0230	156
	249
220-7163	76
220-8355	701
	702
	711
	712
	714
220-8631	34
220-8678	84
221-0375	534
	536
	542
223-0189	69
223-9818	762
	764
	767
	769
224-5530	▶233
	803
224-5917	82
224-8945	946
224-8946	948
	950
224-9476	72
225-0098	875
	876
	877
	878
	879
	880
	881
	882
	883
	884
	885
	886
	887
	888
	890
	891
	892
225-0312	948
	950
225-0313	946
225-3322	660
	720
	722
	724
	726
	728
	730
	733
	736
	739
	743
	745
	747
225-3854	256
	259
	265
	268
	271
225-3861	219
	222
	225
225-5438	39
	41
225-5439	39
225-5441	39
225-5451	39
225-5453	39
225-5454	39
225-5458	39
225-5459	39
225-5501	28
225-6005	37
225-6522	32
225-7650	▶512
	513
225-7738	63
	65
	67
225-7772	17
225-7944	57
	59
225-8019	63
	65
	67
225-8329	53
225-8524	76
225-8526	76
225-8533	76
225-8534	76
225-8858	23
226-0150	780
226-0151	780
226-0331	720
	722
	743
	745
	747
226-2333	184
	185
	▶210
226-4872	864
	866
226-8202	532
	534
	536
	538
	540
	542
226-8766	32
226-8767	32
226-9169	201
	286
	291
	296
	301
	306
	309
227-7391	947
	948
	950
227-7446	72
227-7449	72
228-0172	141
	142
228-0463	403
	643
228-2615	947
228-2616	949
	951
228-2775	358
228-3323	201
	287
	292
	297
	302
228-5009	103
228-5856	176
	255
	259
	265
	268
	271
228-7088	103
228-7089	103
	105
	144
	148
228-7100	103
	106
	107
	141
	142
228-7102	103
	116
	121
229-1494	820
	824
229-4995	547
	552
	560
229-8377	258
	268
230-4009	188
	253
	255
	258
	262
	265
	269
	271
	274
	716
	897
	900
230-4010	188
	716
	897
	900
230-4011	156

▶ PRIMARY REFERENCE

PART NUMBER INDEX

Part	Page
	160
	163
	167
	175
	176
	278
230-4012	157
	161
	164
	168
230-5008	177
	199
	216
	252
	255
	258
	286
	292
	297
	302
	306
	309
	752
	754
	756
	759
	762
	764
	767
	769
230-5009	199
	286
	292
	297
	302
	306
	309
	750
	796
	797
	798
	799
230-5010	188
	274
230-5011	709
	710
	712
	713
230-7254	199
	200
	286
	292
	293
	297
	298
	302
	303
	306
230-8094	37
230-8989	108
	112
	116
	121
	126
	131
	136
231-0070	483
	484
	485
231-2296	716
	897
	900
231-2301	716
	897
231-3052	189
231-3054	189
232-1115	91
	94
232-1322	26
	43
232-1792	781
	783
232-3149	108
	112
	116
	121
	126
	131
	136
232-3666	32
232-3751	57
	59
232-7440	23
232-7449	21
	22
232-7596	23
232-7597	23
232-7599	23
233-3784	17
233-3785	17
233-3786	17
	19
	20
233-4065	147
233-5621	327
233-7970	547
	552
	560
233-9408	23
	25
233-9744	383
234-3030	76
234-3063	91
	94
234-9970	184
	185
	▶217
235-1061	7
235-1063	7
235-2558	526
235-4587	185
235-9014	778
	779
236-2507	75
236-4545	241
236-5157	151
	424
236-6923	251
236-8013	241
236-8826	198
	286
	291
	296
	301
237-0227	156
	160
	163
	167
	176
237-2598	591
	593
	595
237-4132	217
237-4133	217
237-4134	217
237-4135	217
237-7252	217
237-7552	927
237-9154	783
237-9157	783
237-9158	783
238-0112	157
	160
	163
	167
238-0120	106
	107
	116
	121
	131
	136
	141
	142
238-0251	820
	824
	827
	830
	834
238-1844	80
	82
238-4626	646
238-8292	76
238-9397	175
	278
239-2170	532
239-6987	946
	950
239-6989	946
	948
	950
239-7357	188
239-9950	185
	▶228
239-9954	▶173
	240
240-0101	▶204
	206
	207
	252
	262
240-0102	▶205
	206
	207
	208
	209
	253
	263
240-0124	204
	205
240-8666	868
241-4194	241
241-5786	843
	844
241-6215	572
241-6228	602
	606
	610
241-8367	219
	222
	225
241-8494	512
242-0262	150
242-3291	279
242-3294	178
242-4885	664
243-2693	526
243-3277	507
	▶518
243-3278	518
	522
243-5027	278
244-1516	323
244-1518	323
244-1522	323
244-1524	323
244-1529	▶323
	364
244-1716	749
244-1717	228
244-1719	248
244-2095	846
	848
244-2109	846
	848
244-2115	846
	848
244-7372	▶2
244-7373	▶2
244-7378	▶1
	2
244-7379	▶1
	2
244-7385	2
	▶544
244-7386	2
	▶6
244-7387	2
	▶181
244-7390	1
	▶943
244-7394	▶527
244-7398	1
	▶436
	442
244-7399	1
	▶438
	▶440
	443
244-7408	1
	▶145
244-7409	▶325
	364
244-7411	322
	▶328
244-7412	322
	▶330
	544
	914
244-7418	▶486
	527
244-7424	▶490
	528
244-7426	544
	▶619
	▶621
244-7427	6
	▶72
244-7428	6
	▶61
244-7430	6
	▶69
244-7431	6
	▶47
244-7433	▶428
244-7434	▶462
244-7436	▶444
244-7437	▶445
244-7440	619
	▶623
244-7441	▶332
	▶334
	▶336
	364
244-7442	364
	▶388

▶ **PRIMARY REFERENCE**

PART NUMBER INDEX

Part	Page
	▶391
	▶394
	▶397
	▶400
244-7443	▶349
	364
244-7446	2
	▶364
244-7449	▶528
244-7450	▶322
244-7452	544
	▶615
244-7467	▶480
	▶481
244-7468	▶482
244-7475	▶811
244-7476	▶811
244-7479	▶477
244-7482	1
	▶80
	▶82
244-7483	2
	▶364
244-7485	1
	▶944
244-7488	▶478
244-7491	▶479
244-7498	▶474
	▶475
	478
	479
244-7500	▶498
	528
244-7503	▶456
244-7504	▶897
	▶900
	▶903
	914
244-7508	▶946
244-7512	1
	▶429
	▶431
	▶433
244-7516	▶426
244-7517	▶933
244-7518	933
244-7524	▶496
244-7616	▶320
	▶321
	364
245-1042	175
	278
245-1044	175
	278
245-1045	175
	278
245-1047	175
245-1048	175
	278
245-1181	360
245-1912	360
245-4747	210
245-5082	351
245-6017	1
	▶156
	▶160
	▶163
	▶167
245-6019	1
	▶278
245-6020	1
	▶312
	▶315
245-6021	▶252
	▶255
	▶258
	811
	812
	813
245-6022	▶781
	812
245-6023	262
245-6024	▶251
	664
245-6026	▶241
245-6027	1
	▶274
	▶276
245-6028	▶196
245-6029	184
	▶286
	▶291
	▶296
	▶301
245-6030	286
	306
245-6032	262
	265
	268
	271
245-6033	781
	783
245-6034	219
	222
245-6036	219
	222
	225
245-6037	156
	160
	163
	167
	176
245-6039	▶783
	811
	812
	813
245-6040	175
	278
245-6042	252
245-6043	252
	255
	258
245-6044	253
	255
	258
	262
	265
	269
	271
245-6047	▶262
	▶265
	▶268
	▶271
	812
246-2641	458
	794
	945
246-4960	75
246-5804	366
	367
	368
246-6190	323
246-6314	556
247-1385	71
247-1459	323
247-6019	107
	141
	142
247-6020	106
247-6503	811
	812
	▶856
	▶857
247-6505	▶780
	811
	812
	813
247-6506	1
	▶696
247-6582	856
247-6583	856
	857
	858
	861
247-6613	756
	759
	767
	769
247-6648	664
247-7054	151
	424
247-7954	69
247-9730	72
248-0732	323
248-1066	106
	107
	141
	142
248-1500	186
	187
	210
248-6772	667
	670
	673
	771
	774
249-0974	57
	59
249-2844	820
	824
	827
	830
	834
249-5656	320
249-5661	320
249-5663	320
	321
249-5665	320
249-5666	320
	321
249-5670	320
249-9017	156
	160
	163
	167
	177
249-9018	156
	160
	163
	167
	177
249-9019	157
249-9020	219
249-9021	219
	222
	225
249-9022	906
	907
	911
	912
249-9023	▶219
	▶222
	259
	312
249-9024	157
	160
	163
	167
	176
249-9025	286
	306
249-9026	219
249-9028	196
249-9029	▶190
	▶192
249-9030	201
	286
	291
	296
	301
	306
	309
249-9031	199
	286
	291
	296
	301
249-9032	199
	286
	291
	296
	301
249-9033	198
	287
	291
	296
	301
	306
	309
249-9034	201
	287
	292
	297
	302
249-9035	190
	192
249-9037	897
	900
	903
	909
249-9040	183
	▶306
	▶309
249-9042	156
	160
	163
	167
	177
249-9047	897
	900
	903
	909
249-9048	251
249-9049	201
	287
	292
	297
	302
249-9050	201
	287
	292
	297
	302
249-9051	545
	▶716
	▶718

PART NUMBER INDEX

Part	Page
249-9052	545
	▶906
	▶907
249-9060	756
	759
	767
	769
249-9061	752
	754
	762
	764
249-9062	854
249-9065	897
	900
	903
	908
249-9067	897
	900
	903
249-9068	190
	192
	▶194
249-9069	194
249-9072	177
	279
249-9074	157
	161
	164
	168
249-9077	202
	287
	292
	297
	302
	307
	309
249-9079	716
	901
	906
250-1699	811
	813
	▶815
250-4002	503
251-1752	380
	382
251-1803	380
	382
251-2360	850
251-2362	850
251-2437	30
251-3227	71
251-4056	742
251-4336	32
251-5977	854
252-0552	815
252-0553	815
252-1862	752
	754
	756
	759
	762
	764
	767
	769
252-1863	752
	754
	756
	759
	762
	764
	767
	769
252-4502	664
	▶667
	▶670
	▶673
252-4504	▶771
	▶774
252-4559	▶699
	897
252-4734	360
252-5459	816
252-6318	23
	25
252-6596	660
252-6803	816
252-8744	248
	927
252-8930	803
	805
	807
252-8933	803
	805
	807
	809
252-9628	228
	229
	230
	247
253-0861	943
	944
253-1218	69
253-2111	219
	222
	225
253-2439	696
	▶803
	▶805
253-2695	199
	287
	291
	296
	301
	306
	309
253-5391	▶189
253-6168	189
253-8798	680
	682
253-8967	217
253-8969	217
253-8981	217
254-0228	502
	526
254-0589	498
	499
254-0590	498
	499
254-0591	499
254-0593	▶499
	527
254-0601	483
	484
254-0603	498
	499
	▶523
254-0614	499
	▶500
254-0623	523
254-0634	500
	501
254-0644	500
	501
254-0648	523
254-0656	483
	484
	485
254-0662	523
254-0664	▶483
	484
	485
	498
	499
254-0684	498
	▶501
254-1087	72
254-1090	72
254-1354	▶362
	364
254-1366	▶351
	364
254-1371	364
	▶572
254-1377	322
	▶369
	544
	914
254-1378	322
	▶370
254-1379	▶371
	▶373
	544
	914
254-1386	544
	▶628
254-1450	628
	▶630
254-1451	629
	▶632
254-1457	545
	▶629
254-1460	545
	▶591
	▶593
254-3169	1
	▶800
254-3170	812
254-3180	660
	811
	812
	813
254-3183	654
	656
254-3190	▶777
	812
254-3196	664
	777
254-3199	664
	777
254-3200	664
	777
254-3201	664
	777
254-3204	654
254-3206	724
	730
254-3210	▶664
	811
	812
	813
254-3256	6
	▶71
254-3257	72
254-4091	781
	783
254-7757	1
	▶457
254-7760	457
254-7761	463
	466
	469
	471
254-8045	446
	457
254-8752	436
254-8753	438
	440
254-8858	448
254-8859	929
	933
254-8880	436
	438
	440
254-8895	157
	460
254-8901	1
	▶448
254-8904	448
254-8906	448
254-8919	456
254-8954	6
	▶75
254-9136	185
254-9233	2
	▶5
255-0939	228
	229
	231
255-1152	617
	619
	621
255-1155	623
255-1204	75
255-1343	62
	69
255-1344	62
	69
255-1355	▶870
255-1357	650
	▶652
255-1359	652
255-1361	652
255-1362	870
	▶875
255-1365	875
255-1394	▶870
255-1395	870
	▶876
255-1397	876
255-1413	▶870
255-1414	870
	▶877
255-1415	877
255-1425	▶870
255-1426	876
	883
	▶917
255-1427	870
	▶878
255-1428	878
	885
	▶917
255-1429	917
255-1430	878
255-1431	▶463
	▶466
	477
255-1433	463
	466
255-1450	463
	466
255-1452	▶469
	▶471
	478
	479

▶ **PRIMARY REFERENCE**

PART NUMBER INDEX

Part	Page
255-1453	469
	471
255-1455	463
	466
255-1470	▶871
255-1471	871
	▶879
255-1472	879
	886
	▶917
255-1474	917
255-1475	879
255-1486	▶871
255-1487	871
	▶880
255-1490	880
255-1501	881
	888
	890
	▶918
	▶919
255-1502	▶871
255-1503	871
	▶881
255-1505	918
	▶920
255-1539	463
	466
	469
	471
255-2098	1
	▶650
255-2100	650
255-2102	650
255-2114	650
255-2122	650
255-2130	650
255-2368	▶871
255-2370	871
	▶882
255-2371	882
255-2372	▶872
255-2373	872
	▶883
255-2374	883
255-2375	▶872
255-2376	872
	▶884
255-2377	884
255-2378	▶872
255-2379	872
	▶885
255-2380	885
255-2381	▶872
255-2383	872
	▶886
255-2384	886
255-2385	▶873
255-2386	873
	▶887
255-2387	887
255-2390	▶873
255-2391	873
	▶888
255-2393	▶873
255-2394	873
	▶890
255-3696	664
	▶685
255-4228	811
	812
	813
	▶868
255-4229	811
	812
	813
	▶854
255-4230	183
	▶720
	▶722
255-4231	183
	▶724
	▶726
	▶728
255-4233	724
	726
	728
	730
	733
	736
	739
255-4235	654
	656
255-4236	654
	656
255-4239	▶654
	▶656
	811
	812
	813
255-4240	▶658
	812
255-4241	1
	▶791
255-4242	▶817
255-4250	▶837
	▶838
255-4251	▶839
255-4252	▶840
255-4255	756
	759
	767
	769
255-4256	752
	754
	762
	764
255-4258	654
	656
	658
255-4260	184
	▶212
	▶214
255-4261	201
	212
	214
255-4271	▶752
	▶754
	811
	812
255-4272	▶756
	▶759
	811
	812
255-4273	▶762
	▶764
	811
	813
255-4274	▶767
	▶769
	811
	813
255-4275	811
	813
	▶858
255-4276	▶451
255-4280	800
255-5153	664
255-6210	667
	670
	673
255-6642	469
	471
255-6644	469
	471
255-8384	724
	726
	728
	730
	733
	736
	739
255-8386	724
	726
	728
	730
	733
	736
	739
255-8846	839
	▶841
256-0761	667
	670
	673
	771
	774
256-0762	667
	670
	673
	771
	774
256-0768	667
	670
	673
	771
	774
256-0770	667
	670
	673
256-2268	145
256-2269	436
	438
	440
256-2271	429
	431
	433
256-2272	429
	431
	433
256-2907	▶247
	248
256-3738	▶942
256-3739	▶940
	942
256-4579	210
256-4580	210
256-4581	210
256-4582	210
256-4959	820
	824
	827
	830
256-5719	210
256-5720	210
256-5721	210
256-5722	210
256-5732	210
256-7752	623
	625
256-7753	563
256-7754	351
	358
256-7755	351
	358
256-7756	351
	358
256-7757	351
	358
256-7758	351
256-7761	351
	358
256-7765	575
	577
	579
	581
	583
	585
	587
	589
256-8796	426
257-1096	563
	566
257-1099	563
	566
257-1105	349
	354
	356
	357
257-1108	575
257-1729	228
257-2381	141
257-2382	141
257-4959	837
	▶842
257-7501	202
	287
	292
	297
	302
257-8924	157
	161
	164
	168
257-9819	664
	▶786
	▶789
258-0129	362
258-2111	426
258-3727	694
	695
258-4961	▶929
	935
258-4962	929
258-4971	929
258-6387	689
	691
258-8149	141
258-8373	178
	▶818
258-9787	385
258-9789	▶385
	527
258-9982	69
259-0122	591
	593
	595
259-1060	654
259-2384	174
259-4401	947
259-4402	949
	951
259-4403	856
	858
	▶859
259-4405	856
	858
	▶860
259-4746	216

PART NUMBER INDEX

Part	Page
	▶801
259-8194	▶646
	647
259-8704	660
260-0083	145
260-0088	429
	431
	433
260-0089	460
	461
260-0631	72
260-0633	71
260-0634	72
260-3718	108
260-3719	108
260-3939	108
	112
	116
	121
	126
	131
	136
	174
260-6478	210
260-6480	210
260-6728	700
	701
	702
	709
	710
	711
	712
	713
	714
260-6740	502
	506
	526
260-7652	194
260-7653	194
260-9155	103
260-9171	547
	552
	556
260-9285	791
260-9286	791
260-9289	480
260-9290	480
260-9291	480
260-9293	482
260-9294	▶8
	811
260-9295	▶9
	812
	813
260-9502	▶945
	946
	948
	950
260-9505	786
	789
260-9506	786
	789
261-0166	211
261-0369	▶10
	812
261-0372	685
261-0373	685
261-0420	157
	161
	164
261-0428	8
	9
261-1108	332
	334
	336
	338
	340
	342
	344
	346
261-4271	330
	331
261-4272	330
	331
261-4273	330
	331
261-4274	330
	331
261-4275	328
261-4276	328
261-4277	328
261-4278	328
261-4473	500
261-4747	325
261-5694	802
261-7992	756
	759
	767
	769
	▶796
261-7993	752
	754
	762
	764
	▶797
261-8090	786
	789
261-8095	480
261-8096	480
261-8495	556
261-8501	332
	334
	336
	338
	340
	342
261-8502	332
	334
	336
	338
	340
	342
261-8503	601
261-8504	601
	605
	609
261-8505	575
	577
	579
	581
	583
	585
	587
261-8506	575
	577
	579
261-8507	417
261-8513	572
	574
261-8514	572
	574
261-8515	572
	574
261-8523	349
	354
	356
	357
262-0481	351
262-0482	351
262-0767	820
	824
	827
	830
	834
262-0769	820
262-0772	820
	824
	827
	830
262-0779	820
	824
	827
	830
	834
262-0780	820
	824
	827
	830
	834
262-0781	820
	824
	827
	830
	834
262-0785	820
	824
	827
	830
	834
262-0786	820
	824
	827
	830
	834
262-0787	820
	824
	827
	830
	834
262-0789	820
	824
	827
	830
	834
262-1408	312
262-1997	752
	754
	762
	764
262-1998	756
	759
	767
	769
262-2814	667
	670
	673
262-2815	771
	774
262-2816	676
262-2923	451
	▶476
262-2925	451
262-2930	451
262-3104	650
262-4324	469
	471
262-4325	469
	471
262-4326	469
	471
262-4328	469
	471
262-4329	469
	471
262-4407	▶935
262-4408	935
	▶936
262-4409	936
262-4411	936
262-4415	▶538
	935
262-4416	538
262-4418	▶540
	935
262-5866	436
	438
	440
262-5867	427
262-5868	▶427
	436
	438
	440
262-5874	▶488
	528
262-7082	947
	949
	951
262-7686	650
262-9151	219
	222
262-9253	540
262-9276	474
	475
262-9277	474
	475
262-9278	474
	475
262-9279	474
	475
262-9786	72
263-0971	572
	574
263-0975	351
263-1431	80
	82
263-1432	80
	82
263-2135	868
263-3013	654
	656
	658
263-3181	534
	536
263-3323	▶597
	▶599
	935
263-3483	469
	471
263-3745	▶532
	544
263-3746	532
263-3748	532
263-3798	526
263-3823	798
	799
263-4068	▶534
	544
263-4069	534
263-4072	534
	536
263-4154	547
	552
	556
	560
263-4157	▶354
	364
263-4158	349

▶ **PRIMARY REFERENCE**

PART NUMBER INDEX

Part	Page
	354
	356
	357
263-4159	354
263-4914	547
	552
	556
263-4915	547
	552
	556
263-5008	▶542
	544
263-5009	542
263-5013	542
263-5376	76
263-5385	524
	▶525
263-5928	781
	783
263-7360	451
263-7803	349
263-8325	490
	494
263-8337	490
	494
263-8355	490
263-8356	490
263-8363	490
	494
263-8364	490
	494
263-9560	360
263-9561	360
263-9700	544
	545
	546
	▶547
	▶552
263-9710	544
	545
	546
	▶563
	▶566
263-9720	575
	577
	579
	581
	583
	585
	587
264-3010	463
	466
	469
	471
264-3011	463
	466
	469
	471
264-3014	463
	466
	469
	471
264-3017	463
	466
	469
	471
264-3019	469
	471
264-3171	247
264-3709	▶647
	940
264-3888	597
	599
264-3889	597
	599
264-3890	597
	599
264-3891	597
	599
264-4510	287
	292
264-4550	▶544
264-4551	▶545
264-4552	▶545
264-5003	474
	475
264-5004	474
	475
264-5005	474
	475
264-5007	474
	475
264-5009	474
	475
264-5010	474
	475
264-5011	474
	475
264-5014	513
	514
264-5425	219
	222
	225
264-6941	597
	599
264-7029	156
	160
	163
	167
	175
	176
	278
264-7030	156
	160
	163
	167
	176
264-7031	177
	199
	216
	252
	255
	258
	286
	302
	752
	754
	756
	759
	762
	764
	767
	769
264-7032	188
	274
264-7033	716
	897
	900
264-7034	188
	253
	255
	258
	262
	265
	269
	271
	274
	716
	897
	900
264-8899	859
	862
	864
264-8900	859
	860
	862
	863
	864
	866
264-8901	859
	860
264-9767	▶504
	505
264-9772	▶505
265-2166	601
	605
	609
265-5644	624
	625
265-9620	667
	670
	673
	771
	774
266-1467	▶234
	805
266-1470	▶235
	807
	809
266-3214	846
	848
266-3701	868
266-7092	76
266-7145	667
	670
	673
266-7631	▶700
	710
	713
266-7632	198
	▶701
	709
	712
266-7634	▶702
	711
	714
266-7765	664
266-9005	716
	718
266-9006	897
	900
	903
	908
266-9299	752
	754
	762
	764
266-9303	752
	754
	756
	759
	762
	764
	767
267-5147	820
	824
	827
	830
267-5159	820
	824
	827
	830
267-5160	820
	824
	827
	830
267-5211	232
267-5213	232
267-5239	781
	783
267-5639	803
	805
	807
	809
267-7207	175
	278
267-7208	175
	278
267-8655	476
267-8958	211
267-9319	820
	824
	827
	830
267-9552	846
	848
267-9553	846
	848
267-9554	846
	848
267-9555	846
	848
267-9556	846
	848
267-9572	278
267-9834	846
	848
268-1506	575
	577
	579
	581
	583
	585
	587
268-1507	575
	577
	579
	581
	583
	585
	587
268-4412	176
	177
	356
	357
	358
	574
	704
	706
	793
	908
	912
268-4698	240
268-4699	190
	▶240
268-6677	108
	112
	116
	121
	126
	131
	136
	174
268-6678	108

▶ PRIMARY REFERENCE

PART NUMBER INDEX

Part	Page
	112
	116
	121
	126
	131
	136
268-6705	667
	670
	673
268-9351	▶692
	817
	837
	839
	840
268-9352	▶693
	817
	837
	839
	840
268-9378	680
268-9382	682
269-0004	615
269-1084	630
	632
	634
	636
	▶638
269-1085	630
	632
	634
	636
	▶640
269-1086	632
	▶641
269-1087	▶614
	630
	632
	634
	636
269-2886	756
	759
	767
	769
269-2887	752
	754
	762
	764
269-2888	756
	767
269-2890	752
	756
	762
	767
269-2892	752
	754
	756
	759
	762
	764
	767
	769
269-4669	151
	387
	424
269-4676	150
269-7647	219
269-7648	279
269-7650	194
269-7652	279
269-7653	157
269-7654	219
	222
	225
269-7656	274
269-7657	274
269-7658	157
	161
	164
	168
	178
269-7661	220
	223
	226
269-7662	219
	223
	225
269-7664	288
	292
269-7665	544
	▶742
269-7666	704
	706
	718
	904
	908
269-7667	897
	900
	903
	908
269-7668	897
269-7669	279
269-7674	157
	161
	164
	168
269-7675	781
	783
269-7676	288
269-7677	279
	897
	900
	903
	908
269-7678	157
	161
	164
	168
269-7680	157
	161
	164
	168
	177
269-7683	897
269-7686	250
269-7687	288
269-7690	220
	223
	225
269-7695	▶206
	▶207
269-7696	▶208
	▶209
269-7697	716
	900
270-1907	796
	797
270-7881	720
	722
	724
	726
	728
270-7882	274
	276
271-2734	436
	438
	440
271-2773	654
	656
	658
271-2774	654
	656
	658
271-7312	781
	783
271-7649	834
271-7780	323
271-9178	364
	▶403
	▶405
	▶408
	▶411
	▶414
271-9180	▶914
271-9408	722
	728
272-0343	591
	593
	595
272-1622	752
	762
272-1623	752
	756
	762
	767
272-2272	▶819
	841
	842
	843
	844
	845
272-2317	323
272-3022	556
272-3535	388
	391
	394
	397
	403
	405
	408
	411
	417
	643
272-3537	332
	334
	338
	340
272-3540	563
	566
272-3545	601
	605
	609
272-5584	730
	733
	736
	743
	745
272-8111	840
	▶843
272-9770	▶814
272-9780	811
	813
	▶816
273-3143	278
273-5070	241
274-1639	89
	90
	112
	116
	121
	126
	131
	136
274-1923	429
	431
	463
	469
274-3774	176
	252
	255
	258
	262
	265
	268
	271
274-3777	716
	900
274-3778	177
	252
	255
	258
274-4645	183
	184
	▶709
274-4646	183
	▶710
274-4990	175
	278
274-6747	▶360
	388
	391
	394
	397
	400
	403
	405
	408
	411
	414
	417
	643
274-7516	322
	544
	▶616
	914
274-7990	428
	462
274-9872	232
274-9877	232
275-0490	▶232
	279
275-0571	429
	431
	433
275-0572	429
	431
	433
275-3376	248
275-3378	247
275-4012	247
275-6707	667
	670
	673
	771
	774
275-6710	720
	722
	724
	726
	728
	730

▶ **PRIMARY REFERENCE**

PART NUMBER INDEX

Part	Page
	733
	736
	739
	743
	745
	747
275-7803	819
275-9883	37
276-0062	451
276-0063	451
276-0764	228
	248
276-1243	429
	431
	433
276-1754	491
276-2430	438
276-2431	438
276-2817	547
	552
	561
276-3642	820
	824
	827
	830
	834
276-3644	820
	824
	827
	830
	834
276-4299	667
	771
276-4667	▶536
	544
276-4668	536
276-4672	547
	552
	560
276-4679	601
	605
	609
276-4680	545
	546
	▶575
	▶577
	▶579
276-4836	72
276-5605	23
	25
276-6146	184
	186
	187
276-6596	241
276-6597	241
276-7394	15
	16
276-7476	39
	41
276-8116	26
276-8117	26
276-8123	26
276-8133	26
276-8181	601
	605
	609
276-8206	375
	▶380
276-9200	46
276-9201	46
276-9206	46
276-9207	46
276-9230	46
277-1873	157
	161
	164
	168
277-1949	107
277-1950	107
277-2923	63
	65
	67
277-2925	63
	65
	67
277-3012	32
277-5031	13
277-5064	13
277-5065	13
277-5067	13
277-6165	91
	94
	97
277-6624	366
	367
	368
277-6631	151
	424
277-7091	575
	577
	579
	581
	583
	585
	587
277-7112	771
	774
277-7113	667
	670
277-7114	667
	670
	673
	771
	774
277-7115	668
	670
	673
	771
	774
277-8103	824
	827
	834
277-8365	943
	944
277-8589	824
277-9958	771
	774
277-9959	771
	774
277-9960	771
	774
277-9962	771
	774
277-9964	771
	774
277-9966	668
	670
277-9969	668
	670
	673
	▶778
278-0316	76
278-0361	76
278-2355	384
278-2356	384
278-2357	▶384
	528
278-3242	63
278-3354	668
	670
	673
	771
	774
278-4138	85
	87
	88
	91
	94
	97
	100
	101
	102
	108
	112
	116
	121
	126
	131
	136
278-5111	46
278-5112	46
278-5113	46
278-5168	108
	112
	116
	121
	126
	131
	136
278-5170	108
	112
	116
	121
	126
	131
	136
278-5203	108
	112
	116
	121
	126
	131
	136
278-5225	108
	112
	116
	121
	126
	131
	136
278-5226	108
	112
	116
	121
	126
	131
	136
278-5227	108
278-5228	108
278-5273	108
	112
	116
	121
	126
	131
	136
278-5307	108
	112
	116
	121
	126
	131
	136
278-5308	108
278-5309	108
278-5684	429
278-6469	331
278-6935	827
278-6936	827
278-7528	824
278-8965	699
	703
278-8967	699
	703
278-8970	699
	703
278-8974	699
	703
279-6529	647
	▶648
279-9651	35
279-9876	429
	431
	433
280-1430	50
280-1912	46
280-1913	46
280-1914	46
280-3512	846
280-3513	848
280-3514	846
280-3515	848
280-7343	▶379
	383
280-9162	854
280-9440	692
	693
280-9441	692
	693
280-9442	692
280-9443	693
280-9444	692
	693
280-9453	668
	771
280-9679	▶680
	817
	837
	839
	840
280-9680	692
280-9896	692
280-9897	692
280-9898	693
280-9899	693
280-9900	693
281-2711	79
281-3964	720
	722
	724
	726
	728
281-3965	720
	722
	724
	726
	728
281-3974	451
281-3986	654
	656
	658
281-3997	544
	545
	546
	▶795
	914
281-3998	795

▶ **PRIMARY REFERENCE**

PART NUMBER INDEX

Part	Page
281-4002	752
	754
	756
	759
	762
	764
	767
	769
281-4004	720
	722
	743
	745
	747
281-4005	664
281-4007	720
	722
	724
	726
	728
	730
	733
	736
	739
	743
	745
	747
281-4136	752
	754
	762
	764
281-4137	756
	759
	767
	769
281-4140	752
	754
281-4141	756
	759
281-7631	654
	656
281-8338	508
	▶515
281-8339	508
	▶519
281-8744	55
	56
282-0554	820
282-0558	820
282-0561	820
282-2033	846
	848
282-2034	682
282-2035	680
282-2036	680
	682
282-2170	453
282-3475	668
	771
282-3481	668
	771
282-3653	668
	671
	674
	771
	774
282-3664	▶491
282-3669	492
282-3674	▶492
282-3684	▶497
282-3703	▶493
	527
282-3714	▶494
	▶495
	527
282-4897	▶812
282-4898	▶812
282-4899	▶813
282-5062	601
	605
	609
282-5064	575
	577
	579
282-5066	601
	605
	609
282-5072	601
	605
282-5074	601
282-6689	682
282-6690	680
282-6691	682
282-6692	680
282-6695	846
	848
282-6701	682
282-6702	680
282-6707	682
282-6708	680
282-6709	682
282-6710	680
282-7665	548
	552
	561
282-8804	▶507
	527
282-8814	▶508
	528
282-9045	524
	▶525
283-2271	▶107
	108
283-3426	6
	▶51
283-3436	157
	161
	164
	168
	178
283-3513	544
	▶581
	▶583
	▶585
283-3515	581
	583
	585
283-3516	581
	583
	585
283-4148	8
283-4426	749
283-4929	403
	643
283-4935	556
283-4936	417
283-4939	332
	346
283-4942	556
283-4943	332
	334
	346
283-4947	349
	354
283-6370	597
283-7697	650
283-8651	668
	771
283-9530	751
283-9797	572
283-9900	212
283-9901	198
	212
	214
283-9902	720
	722
	743
	745
	747
283-9909	720
	722
	724
	726
	728
	730
	733
	736
	739
	743
	745
	747
284-0825	▶181
284-0970	▶601
	▶605
	914
284-1026	9
	10
284-2885	617
	619
	621
284-3705	623
	625
284-3753	724
	730
284-3754	660
	720
	722
	724
	726
	728
	730
	733
	736
	739
	743
	745
	747
284-7054	▶682
	817
	837
	839
	840
284-7055	682
	▶846
284-7059	680
	▶848
284-7648	682
284-7649	680
284-7832	490
284-7833	490
284-8207	▶236
	711
284-8208	236
	711
	714
284-8773	668
	771
285-0151	709
	710
	711
	712
	713
	714
285-0330	184
	▶743
	▶745
	▶747
285-0331	184
	▶730
	▶733
	▶736
	▶739
285-1133	173
285-1973	13
285-2372	820
	824
	827
	830
285-3329	241
285-3772	388
	391
	394
	397
	400
	403
	405
	408
	411
	414
	417
	530
	569
	643
285-4312	563
285-4313	563
	566
	571
285-4314	563
	566
	571
285-6627	69
285-6704	145
	148
285-7415	781
	783
285-7974	771
	774
285-8548	772
	775
285-8553	668
	674
285-8554	772
	775
286-0134	184
	185
	186
	187
	▶749
286-0137	185
	▶228
286-1840	497
286-1845	496
286-1846	496
286-1850	497
286-2890	103
286-2968	711
286-3017	229
	230
286-4304	▶524
286-4309	▶524
286-4314	▶524
286-4319	▶524
286-4407	859
	860
286-5017	▶948
286-5018	▶950
286-7848	29

▶ **PRIMARY REFERENCE**

PART NUMBER INDEX

Part	Page
	45
286-8141	946
	948
	950
286-8868	864
	866
286-8871	864
286-9124	184
	185
	186
	187
	▶750
287-0548	752
	754
	756
	759
	762
	764
	767
	769
287-1962	145
	▶147
287-1965	147
287-2016	946
	948
	950
287-2017	948
287-2169	803
	805
	807
	809
287-2654	157
287-4021	494
287-4022	494
287-4023	494
	495
287-4024	494
	495
287-6657	778
287-7430	63
287-7637	89
	90
287-8437	777
287-8597	34
288-0422	32
288-0526	283
288-0884	720
	722
	724
	726
	728
	730
	733
	736
	739
	743
	745
	747
288-3657	664
288-3663	777
289-0099	556
289-0100	547
	552
	556
289-0101	556
289-0102	547
	552
	556
289-0103	556
289-0120	354
289-0246	348
289-0247	348
289-0248	348
289-0249	348
289-0254	322
	▶348
289-0600	87
289-2073	846
	848
289-2122	779
289-2123	772
	775
	▶779
289-2134	771
	774
289-2478	97
289-3057	502
	▶506
289-3059	▶502
	526
289-3065	524
	▶526
289-3066	524
	▶526
289-4795	771
	774
289-5883	323
289-5884	523
289-6385	369
	370
	▶375
289-6386	369
	▶376
289-6387	370
	▶377
289-8449	228
	229
	230
	247
290-3391	486
	488
290-4835	274
	▶711
290-5570	▶185
290-5571	▶186
290-6180	762
	764
	767
	769
291-1094	946
	948
	950
291-1915	247
291-3803	778
	779
291-4256	946
	948
	950
291-4261	946
	948
	950
291-5095	▶322
291-5205	▶322
291-5505	75
291-7972	850
291-7980	▶677
	850
291-7981	677
291-7984	677
291-7986	677
291-7989	677
291-7990	677
	678
	679
291-7992	677
291-7993	850
291-8004	▶678
	850
291-8005	678
291-8008	678
	679
291-8010	850
291-8011	▶679
	850
291-8012	679
291-8014	850
291-8019	850
291-8026	850
291-8027	850
291-8028	850
291-8030	677
291-8031	850
291-8032	850
291-9247	619
291-9310	677
292-0280	▶186
292-0285	185
	▶228
292-0290	185
	▶210
292-0291	186
	▶229
292-0292	186
	▶229
292-0293	▶185
292-0294	▶171
292-0296	184
	185
	186
	187
	▶216
292-0302	184
	185
	▶927
292-0303	186
	187
	210
	▶927
292-0309	185
	▶751
292-0311	749
	751
292-0312	▶185
292-2208	547
	552
	556
	560
292-2209	547
	552
	556
	560
292-2332	547
	552
	556
	560
292-2333	547
	552
	556
	560
292-2437	684
292-2438	684
292-2558	196
292-3462	182
292-3480	591
292-3778	▶89
	108
	112
292-6402	▶802
	820
	824
	827
	830
	834
293-0249	106
	107
	141
293-0777	895
293-0778	895
293-0886	201
	214
293-2915	820
	824
	827
	830
	834
293-3820	547
	552
	556
293-3821	547
	552
	556
293-4053	72
293-4381	62
	71
293-5438	▶366
	375
293-5439	▶367
	376
293-5440	▶368
	377
293-5442	362
	▶387
293-5444	376
	377
	▶382
293-5445	371
	373
	▶383
293-5448	362
	▶386
293-5450	▶151
	371
	373
293-5451	375
	376
	377
	▶424
293-6144	438
	440
293-6145	436
293-9150	483
	484
293-9379	820
	824
	827
	830
	834
293-9380	820
	824
	827
	830
	834
293-9381	820
	824
	827
	830
293-9665	820
	824
	827
	830
	834
294-1061	354
	357
294-1064	349
	356
294-1066	575

PART NUMBER INDEX

Part	Page
	577
	579
	581
	583
	585
	587
	589
294-1070	349
294-3014	103
294-3031	141
294-3032	141
294-7139	820
	824
	827
	830
	834
294-7375	76
295-0189	141
295-1042	13
295-1711	32
295-4037	860
	863
	866
295-4039	859
	860
295-4433	▶820
	843
295-4434	▶824
	841
295-4436	▶827
	842
295-4670	91
	94
	97
	103
295-4695	591
295-4801	106
	141
	142
295-6472	820
	824
	827
	830
	834
295-6661	26
295-8930	210
295-9125	▶106
	112
295-9265	388
	403
295-9880	184
	▶248
296-3542	106
	141
	142
296-5751	▶183
296-5752	▶183
296-5753	▶183
296-5754	▶183
296-5755	▶184
296-5756	▶184
296-6705	151
	424
296-6707	▶327
	375
	376
	377
296-9891	803
	805
	807
297-1464	689
	691
297-1465	720
	722
	724
	726
	728
	730
	733
	736
	739
	743
	745
	747
297-1466	689
	691
	720
	722
	724
	726
	728
	730
	733
	736
	739
	743
	745
	747
297-3272	476
297-3273	476
297-3274	476
297-3275	476
298-4524	17
298-4526	▶26
	28
298-4527	26
298-4528	26
298-4530	26
298-4533	▶46
	48
298-4535	108
	112
	116
	121
	126
	131
	136
298-4536	108
	112
	116
	121
298-4537	108
	112
298-4538	108
	112
298-4539	108
	112
298-4540	108
	112
298-4541	108
	112
298-4542	108
	112
	116
	121
	126
	131
	136
298-4543	108
	112
	116
	121
	126
	131
	136
298-4544	108
298-4546	13
298-4547	13
298-4548	13
298-4549	13
298-4550	13
298-4551	13
298-4552	13
298-4553	57
298-4558	57
	60
298-4559	57
298-4560	57
	60
298-4570	76
298-4576	76
298-4603	87
298-4604	35
298-4605	283
298-4606	283
298-4607	283
298-5099	5
	▶57
	▶59
298-5100	5
	▶52
298-5105	5
	▶63
	▶65
	▶67
298-5110	5
	▶32
298-5112	5
	▶53
298-5123	5
	▶87
	▶88
298-5127	5
	▶35
298-5129	5
	▶43
298-5874	8
298-5880	9
299-2214	700
	701
	702
	709
	710
	711
	712
	713
	714
299-3237	943
	944
299-3238	943
	944
299-3240	458
	943
	944
299-3247	944
299-3248	944
299-3250	943
299-3251	943
299-3902	428
299-3903	428
	462
299-4116	462
299-5092	5
	▶283
	▶284
299-5511	26
299-7704	650
299-8229	85
	88
	103
299-8874	933

3

Part	Page
300-2121	547
	552
300-3631	716
	898
	901
	906
300-3665	664
300-4098	772
	775
300-4415	243
	244
300-6520	76
300-6714	112
	116
	121
	126
	131
	136
301-0096	516
	517
	520
	521
	522
301-0145	830
301-0146	830
301-0147	▶830
	844
301-0148	817
	▶844
301-0589	194
301-0650	510
	▶516
	▶517
301-0652	510
	▶520
	▶521
301-0654	509
	▶522
301-4302	526
301-5700	860
	863
301-5701	859
	862
301-6061	786
301-6062	786
	789
301-6063	786
301-6064	786
301-6065	786
301-6066	786
301-7299	460
	461
301-7301	429
301-7302	429
	431
	433
301-7303	429
	431
	433
301-7305	482
301-7890	▶150
	362
301-8243	5
	▶55
301-9281	563
301-9282	563
	566
301-9283	563
	566
301-9288	563
301-9289	563
301-9293	563

PART NUMBER INDEX

Part	Page
	566
301-9294	563
	566
301-9295	547
	552
	560
301-9300	547
	552
	560
301-9819	279
302-2136	859
	860
	862
	863
302-5323	816
302-5722	510
302-6802	446
302-6804	▶509
	527
302-6814	▶510
	528
302-8726	351
	358
303-0461	523
303-0462	320
	321
303-0463	323
303-0464	321
303-0465	321
303-0467	473
303-1890	547
	552
303-1891	575
	577
	581
303-1892	547
	552
303-1893	547
	552
303-1894	563
303-1895	563
303-1896	563
	571
303-1897	563
	571
303-2116	76
303-4221	181
303-4685	▶181
303-5767	5
	▶34
303-5770	5
	▶30
303-5774	5
	▶153
303-5775	5
	▶7
303-5781	13
303-5786	76
303-5787	76
303-5788	76
303-5792	76
303-5793	76
303-6576	547
	556
303-6577	547
	556
303-6578	547
	556
303-6579	547
	556
303-6582	933
303-6594	▶338
	▶340
	▶342
	364
303-6596	338
	340
	344
303-6597	575
	577
	579
	581
	583
	585
	587
303-9455	503
304-1139	630
	632
	634
	636
	▶642
304-1140	638
304-1141	638
304-1142	638
	640
	641
	645
304-1143	642
304-1144	638
304-1145	640
	641
	642
	645
304-1147	638
	640
	641
	642
	645
304-1149	638
304-1150	638
	640
	641
	642
	645
304-1151	640
	641
	642
	645
304-1152	641
	645
304-1153	638
304-1154	630
	632
	634
	636
304-1155	638
304-1156	638
	640
	641
	642
	645
304-3641	5
	▶21
	▶22
304-3642	5
	▶15
	▶16
304-3643	5
	▶39
	▶41
304-3645	5
	▶28
304-3647	5
	▶48
304-3648	5
	▶11
304-3649	5
	▶108
	▶112
	▶116
	▶121
	▶126
	▶131
	▶136
304-3650	5
	▶172
304-3654	5
	▶31
304-3655	5
	▶243
304-3656	5
	▶37
304-3657	5
	▶76
304-3658	5
	▶12
304-3659	5
	▶91
	▶94
	▶97
304-3660	5
	▶182
304-3661	5
	▶36
304-3662	5
	▶100
	101
	102
304-3663	5
	▶44
304-3687	108
304-3688	108
	112
	116
	121
304-3689	108
	112
	116
	121
	126
	131
	136
304-3692	37
304-3693	37
304-3695	37
304-3698	37
304-3702	76
304-3706	91
	94
304-3707	91
	94
304-3708	91
	94
304-3711	36
304-3713	100
	101
304-5165	177
	284
304-5617	5
	▶54
304-5687	315
305-1439	488
305-1442	488
305-1443	486
	488
305-1446	486
	488
305-1448	488
305-1449	488
305-1450	488
305-1451	486
305-1453	486
305-1454	486
305-1455	486
305-3458	785
305-5014	405
	530
305-5017	388
	391
	394
	397
	400
	569
305-5291	116
	121
	126
	131
	136
	143
305-5362	251
305-7398	50
305-7954	601
	605
	609
305-7955	601
305-8452	5
305-9192	752
	754
	756
	759
	762
	764
	767
	769
	868
306-2094	394
	569
306-2337	50
306-4998	429
	431
	433
306-5053	480
	481
306-5054	480
	481
306-5911	37
306-8855	▶29
306-8857	29
306-8892	480
	481
307-0047	194
307-1590	791
307-1591	791
307-1592	787
	789
307-1593	▶446
307-1599	446
307-1600	446
307-2242	8
	9
307-4442	667
	670
	673
307-4673	▶703
	704
	706
	716
	718
	900
	903
	908
	912
307-9843	63
308-1845	483
	484
	485

PART NUMBER INDEX

Part	Page
308-3554	850
308-3555	850
308-7298	84
	86
308-7571	91
	94
	97
	103
308-7576	86
308-7677	575
	577
	579
	581
	583
	585
	587
308-8425	108
	112
308-8642	850
309-5075	▶529
	894
309-5090	▶893
	942
309-5091	893
	▶894
309-6678	26
309-8006	112
	116
	121
	126
	131
	136
310-1676	▶785
310-2392	194
310-5912	84
	86
310-7502	493
310-7503	493
310-8520	28
310-9269	39
	41
311-0292	255
311-0293	265
311-0294	174
	312
	315
311-0295	199
	292
	297
	302
	309
311-0296	704
	716
	718
	900
	903
	908
311-0297	200
	292
	297
	302
311-0298	293
311-0299	781
	783
311-0300	322
	544
	914
311-0301	322
311-0302	704
	706
	718
	903
	908
311-0303	781
311-0304	783
311-0305	200
	293
	298
	303
	310
311-0306	161
	164
	168
311-0307	161
	164
	168
	177
311-0311	198
	297
	302
311-0312	220
311-2376	88
311-3858	112
	116
	121
	126
	131
	136
311-4862	186
	187
311-4863	171
311-4864	184
	186
	187
311-5950	720
	722
	726
	728
	733
	736
	739
	743
	745
	747
311-6180	502
	526
311-6342	112
	116
	121
	126
	131
	136
311-6631	116
311-7069	704
	706
	911
	912
311-7070	174
	477
	478
	479
311-8305	458
311-8306	458
311-8307	458
311-8376	192
311-8643	458
311-8644	▶458
311-8646	449
	450
312-1035	▶460
	▶461
312-8350	▶873
312-8351	873
	▶891
312-8352	891
312-8360	▶874
312-8361	874
	▶892
312-8362	892
313-1663	84
	86
313-2455	112
	116
	121
	126
	131
313-2794	677
313-7225	605
	609
313-7226	605
	609
314-2573	198
	212
	214
314-2574	212
314-2892	91
	94
314-3000	724
	726
	728
	730
	733
	736
	739
	743
	745
	747
314-3001	720
	722
	743
	745
	747
314-3002	720
	724
	726
	730
	733
	743
314-3003	▶689
	724
	726
	728
	730
	733
	736
	739
314-3004	▶691
	720
	722
	743
	745
	747
314-3005	689
314-3007	689
	691
314-3009	720
	724
	726
	730
	733
	743
314-3010	781
	783
314-3011	198
	212
	214
314-3012	198
	212
	214
314-3013	212
314-3014	212
314-3015	202
	743
	745
	747
314-3016	720
	722
	724
	726
	728
	730
	733
	736
	739
314-3017	720
	722
	724
	726
	728
	730
	733
	736
	739
314-3018	724
	726
	728
	730
	733
	736
	739
314-3019	720
	722
	743
	745
	747
314-3020	720
	722
314-3021	720
	722
	743
	745
	747
314-3022	724
	726
	728
314-3023	724
	726
	728
314-3024	202
	730
	733
	736
	739
314-3025	720
	722
	724
	726
	728
	730
	733
	736
	739
314-3026	202
	212
	214
314-3956	50
314-3957	50
314-3960	5
	▶50
314-4018	686

▶ **PRIMARY REFERENCE**

PART NUMBER INDEX

Part	Page
314-5162	824
	827
	830
	834
314-5274	850
314-5275	850
314-9768	619
315-3384	11
315-6735	664
315-6737	664
315-6738	664
315-9854	394
	397
	400
	405
	408
	411
	414
315-9855	391
	394
	397
	400
	405
	408
	411
	414
	417
	643
316-0446	10
316-0468	76
316-0625	605
	609
316-1441	61
316-8368	841
	842
	843
	844
	845
	▶850
316-9351	13
317-0657	181
317-3144	112
	116
	121
	126
	131
	136
317-3775	50
317-5316	868
317-6527	▶184
317-8476	91
	94
	97
317-9299	50
317-9763	449
	450
317-9764	449
	450
317-9767	435
317-9776	5
	▶155
318-0815	668
	670
	673
	771
	774
318-2394	121
	126
	131
318-6093	259
318-6094	268
318-6095	222
318-6096	223
318-6097	174
318-6098	175
318-6099	176
318-6100	176
318-6101	706
	912
318-6104	176
318-6105	176
318-6106	706
	912
318-6107	2
	3
	4
	▶174
318-6108	544
	▶908
318-6109	545
	▶704
318-6110	546
	▶911
318-6111	546
	▶706
318-6112	546
	▶912
318-6113	178
318-6114	177
318-6115	177
318-6116	177
318-6117	177
318-6118	177
318-6119	177
318-6120	178
318-6121	▶225
	271
318-6122	225
318-6123	704
	706
	912
318-6124	908
318-6125	908
318-6126	177
318-6127	908
318-6128	226
318-6129	461
318-6522	458
318-7190	667
	670
	673
318-8063	▶84
	100
318-8135	▶249
	460
318-8136	168
	▶250
319-1824	593
	595
319-4168	834
319-6491	164
	168
	▶239
319-6909	593
	595
319-8103	2
	3
	4
	▶148
319-8108	148
319-8110	625
319-8113	2
	3
	4
	▶617
319-8114	617
	▶624
319-8115	624
319-8426	11
319-8820	621
	▶625
319-8832	625
319-9514	▶525
320-0440	687
320-0677	▶90
	116
	121
	126
	131
	136
320-1332	5
	▶85
320-1702	556
320-1703	556
320-1704	▶556
320-2360	13
320-2361	13
320-2362	13
320-2369	5
	▶13
320-5176	830
320-6195	525
	▶527
320-8448	752
	754
	756
	759
	762
	764
	767
	769
320-9921	13
321-7854	504
	505
	506
322-0304	323
322-3161	802
322-3744	116
	121
322-3745	116
	121
	126
	131
	136
322-3746	116
	121
	126
	131
	136
322-3747	116
322-3748	116
322-5895	105
322-5896	105
322-5897	105
322-5898	103
322-5900	2
	3
	4
	▶103
322-5904	2
	3
	4
	▶105
322-5906	103
322-5908	144
	▶684
322-5909	684
322-5910	103
322-5911	103
322-5912	103
322-5913	103
322-5914	103
322-5915	144
322-5916	144
322-5917	144
	148
322-5920	105
	▶144
322-6482	▶449
322-6483	▶450
322-6486	660
322-6491	450
322-6493	449
	450
322-6494	449
	450
322-6495	449
322-6506	▶643
322-6507	▶417
322-8499	660
322-9662	65
322-9703	623
	624
	625
323-3515	32
323-6147	754
	764
323-6148	759
	769
323-7319	435
323-7320	2
	3
	4
	▶435
323-8150	626
	▶634
323-8151	627
	▶636
323-8755	▶503
	525
	527
323-9312	41
324-0444	32
324-0532	116
	121
	126
	136
	▶141
324-0667	811
	812
	▶861
324-0669	697
	▶807
324-0670	1
	▶697
324-1481	91
	94
324-1482	91
	94
324-9704	560
324-9705	560
	561
	571
	574
	609
	793
324-9706	177
	178
	331
	344
	346
	356
	357
	358
	560
	571

PART NUMBER INDEX

Part	Page
	589
	609
324-9707	174
	356
	357
	704
	706
	909
	912
324-9708	174
	356
	357
325-0494	530
	569
325-0495	530
325-0496	530
	569
325-0497	530
	569
325-0500	569
325-0505	569
325-0506	569
325-0524	344
	346
325-0525	344
	346
325-0701	720
	722
	743
	745
	747
325-1323	3
	▶530
325-1324	4
	▶569
325-6498	▶2
325-6499	▶3
325-6506	2
	4
	▶442
325-6507	3
	▶443
325-6517	▶544
325-6523	▶545
325-6526	▶546
325-6529	▶546
325-6531	▶546
325-6543	▶3
325-6544	▶4
325-7265	2
	3
	4
	▶660
325-7266	2
	3
	4
	▶473
325-7267	2
	3
	4
	▶73
325-7269	544
	▶609
325-7271	545
	546
	▶626
325-7272	546
	▶627
325-7273	545
	546
	▶595
325-7275	546
	▶587
326-1880	30
326-3563	62
326-3566	530
	569
326-3567	571
	595
326-3568	62
	589
	609
326-3569	358
326-3570	62
	358
326-5208	648
	649
326-8172	660
326-8173	660
326-8178	676
326-8179	676
326-8180	▶676
326-8749	634
	636
	▶645
326-9055	950
326-9195	684
326-9197	211
326-9262	446
327-0939	444
327-0948	445
327-2127	103
327-3393	3
	4
	▶589
327-3395	589
327-4444	47
327-4552	442
	443
327-6133	199
	298
	303
327-6134	704
	706
	908
327-6138	222
	226
327-6139	222
	226
327-6147	271
327-6173	▶188
	276
327-6174	▶188
	276
327-6347	▶79
	103
327-6742	587
327-6743	587
327-7666	3
	▶344
327-7667	4
	▶346
327-7673	344
327-7674	344
327-7675	346
327-7676	346
327-7684	3
	4
	▶793
327-8880	3
	4
	▶331
327-8881	331
327-8882	331
327-8883	331
327-8884	331
327-8892	571
327-8893	571
327-8895	3
	4
	▶571
327-8896	571
327-8897	571
327-8915	589
327-8916	589
328-0893	709
	710
	712
	713
328-0894	183
	184
	▶712
328-0895	183
	▶713
328-8600	3
	4
	▶574
328-8603	3
	4
	▶560
328-8614	574
328-8615	574
328-8616	574
328-8617	574
328-8622	358
328-8623	358
328-8624	793
328-8626	589
328-8627	589
329-1197	97
	103
329-1321	3
	▶356
329-1323	356
	357
329-1325	356
	357
329-1920	357
329-1921	356
329-1922	4
	▶357
329-1923	356
	357
329-1925	358
329-1934	358
329-1938	3
	4
	▶358
329-1939	358
329-1940	358
329-1941	358
329-3846	560
329-3847	560
329-3848	560
329-3849	560
329-3850	560
329-3851	560
329-3852	560
329-3855	560
329-3856	560
329-3858	560
329-3859	560
329-3860	560
329-3861	560
329-4986	73
329-4996	73
329-5347	577
	579
	581
	583
	585
	587
329-5632	3
	4
	▶62
329-8873	561
330-1736	15
	▶17
330-3518	595
330-3519	595
330-3520	595
330-3860	834
330-4789	21
	▶23
330-5019	▶798
	868
330-5020	▶799
	868
330-5410	62
330-5411	62
330-5412	62
330-7301	609
331-0162	919
331-0163	881
	888
331-0177	888
331-0180	890
331-7540	172
332-1074	609
332-1075	609
332-1076	609
332-1082	609
332-1083	609
332-1084	609
332-1085	609
332-1086	609
332-8576	103
333-2732	857
	▶864
333-2733	857
	▶866
333-4732	121
	126
	131
	136
333-4733	121
	126
	131
	136
333-5435	84
	86
333-9693	84
	86
333-9694	84
	86
334-0808	▶86
	101
	102
	103
334-1573	547
	552
334-1574	547
	552
334-2314	5
	▶56
334-2932	141
	142
334-4603	946
	950
334-9334	45
335-5321	168
335-5782	94
335-8266	126
	131
	136
336-3545	194

PART NUMBER INDEX

Part	Page
	▶228
336-4116	455
336-4119	455
336-4123	455
336-4125	▶453
336-4126	▶455
336-4132	455
336-4134	455
337-3573	126
	131
	136
337-3574	103
	126
	131
	136
337-5633	61
338-0841	181
338-8069	97
338-8070	97
338-8071	97
338-8072	97
338-8075	97
338-8085	102
338-9767	861
	▶862
338-9768	861
	▶863
339-0103	453
339-0104	453
339-0112	453
339-0113	453
339-0114	453
339-0115	453
339-0116	453
339-0117	453
339-0118	453
339-5256	153
	155
339-8780	16
	17
339-9637	26
340-4528	431
	433
340-7270	453
340-7271	453
341-0083	395
	397
	400
	408
	411
	414
341-0660	561
341-3334	561
341-4028	15
	16
341-7478	781
	783
341-9215	▶649
341-9851	▶694
	838
341-9852	▶695
	838
342-0153	694
	695
342-5337	408
	411
	414
342-9559	228
342-9788	481
342-9789	481
342-9790	481
343-3502	1
	▶698
343-3503	698
	▶809
343-3527	714
343-3549	656
	658
343-3566	722
	728
	736
	739
	745
	747
343-3567	722
	728
	736
	739
	745
	747
343-3581	809
343-3676	276
	▶714
343-3677	714
343-3682	82
343-3683	82
343-3684	80
	82
343-3688	198
	214
343-3689	202
	214
343-3690	198
	214
343-3697	201
	214
343-3698	202
	214
343-3797	858
343-3798	762
	764
343-3799	767
	769
343-7104	85
	103
343-8096	13
344-7614	▶4
345-9583	495
345-9584	495
345-9587	495
345-9588	495
345-9597	495
345-9598	495
345-9623	397
	400
345-9624	340
	342
345-9625	411
	414
	530
345-9626	334
	336
346-0007	25
346-1449	284
346-4372	751
346-4709	48
346-9745	566
346-9746	566
346-9780	739
	747
346-9800	▶211
347-0911	▶230
	231
347-0912	187
	▶231
347-0913	187
	▶231
347-0915	▶187
347-0916	▶187
347-2282	789
347-2283	789
347-2284	789
347-2285	789
347-2286	789
347-2719	616
347-2729	198
	739
	747
348-5483	4
348-5660	4
348-6651	660
348-7781	866
348-7782	864
	866
348-7783	864
	866
348-7784	864
348-7785	866
348-8149	8
	9
349-2592	694
349-2593	694
	695
349-2594	694
349-2595	695
349-2596	695
349-2598	695
349-2599	694
349-2600	694
349-2601	695
349-2602	834
349-3261	10
	153
349-4589	660
349-6992	481
349-6993	481
351-1881	851
351-1885	198
	199
	201
351-1886	201
351-1960	838
	▶845
351-1965	▶834
	845
351-2799	142
352-3968	276
352-4897	862
	863
352-6584	131
	▶142
352-8169	325
352-8170	325
353-2205	20
353-2206	20
353-2207	20
353-2208	20
353-2794	229
353-5793	485
353-5795	485
353-6188	485
353-7423	19
	20
353-7424	19
	20
353-7425	19
	20
353-7426	20
353-7715	60
353-7717	59
	▶60
353-9667	19
354-1384	671
	674
	774
354-1621	360
354-4754	67
355-2386	▶198
355-3016	834
355-3018	834
355-7354	754
	759
	764
	769
356-5272	▶513
	527
356-5273	▶514
	528
356-6447	862
	863
356-6449	862
	863
356-6450	863
357-5161	834
357-5167	834
358-0921	433
	466
	471
358-6632	136
358-6633	▶143
359-0716	16
	▶19
359-0719	41
359-0720	41
359-0721	41
359-0722	41
359-0723	41
359-0724	41
359-0737	5
359-0750	45
359-5488	862
359-9666	153
	155
360-7345	5
	▶45
360-9630	566
360-9631	566
360-9636	552
360-9637	552
360-9638	552
360-9639	552
360-9641	552
360-9652	566
360-9653	566
360-9654	566
360-9655	566
361-3049	498
361-9874	182
363-1761	579
	583
	585
	587
363-1762	336
	342
363-1763	530
363-3907	22
	▶25
363-3908	25
363-4971	50
363-5991	671
	674
	774
363-5992	671
	673
	774
363-9700	76

PART NUMBER INDEX

Part	Page
364-0856	429
	431
	433
364-1102	136
364-2829	►20
364-6136	670
	673
	774
364-6583	857
	861
365-3308	108
	112
	116
	121
	126
	131
	136
365-9563	566
365-9587	414
	530
365-9588	342
365-9589	400
365-9590	336
365-9591	400
	414
366-3348	530
367-1818	56
367-1819	55
368-3147	182
369-4706	599
369-4707	599
369-9004	834
371-4587	80
	82
372-2154	850
372-2158	850
375-9272	34
377-0399	26
377-0400	26
377-1434	809
377-1448	814
377-4710	704
	706
	718
	904
	908
377-9082	10
	153
377-9087	8
	9
380-2065	39
	41
380-2073	26
380-9484	532
	538
	540
383-2557	153
	155
384-4127	530
387-0314	851
387-0317	851
387-5249	5
	►244
388-7012	75
390-3315	181
390-7340	153
	155
393-3608	534
	536
	542
394-1399	11
396-4482	39
	41

4

Part	Page
420-3511	778
	779
423-1981	82
423-1982	82
428-7409	673
428-7410	673
433-2861	674
433-2862	674
434-1356	228
435-1677	►6
436-0206	148
436-2856	148

► **PRIMARY REFERENCE**

MEMORANDA



©2013 Caterpillar
All Rights Reserved
Printed in Japan

CAT, CATERPILLAR, their respective logos, “Caterpillar Yellow”, and the POWER EDGE trade dress as well as corporate and product identity used herein, are trademarks of Caterpillar and may not be used without permission.