RUTHZIL TRATOR COMERCIAL DE PEÇAS LTDA 11 97083-6812 ROLANDO CITRANGULO

M0107417-00 (en-us)
October 2019

Parts Manual

D5 Track Type Tractor

Z2K1-UP (Machine)
Z2N1-UP (Machine)
4501-UP (Engine)
E7A1-UP (Engine)
4501-UP (Engine)
E7A1-UP (Engine)
D5H1-UP (Transmission)
D6M1-UP (Transmission)
D7M1-UP (Transmission)
D9M1-UP (Transmission)
D5H1-UP (Transmission)
D6M1-UP (Transmission)
D7M1-UP (Transmission)
D9M1-UP (Transmission)
H9Z1-UP (Ripper)
1RZ1-UP (Torque Converter)
TC31-UP (Torque Converter)
1RZ1-UP (Torque Converter)
TC31-UP (Torque Converter)
AA91-UP (Angle Blade)
AA31-UP (Angle Blade)

Powered By C7.1 Engine

Product and Dealer Information

Note: For product identification plate locations, see the section “Product Identification Information” in the Operation and Maintenance Manual.

Delivery Date: _____

Product Information

Model: _____

Product Identification Number: _____

Engine Serial Number: _____

Transmission Serial Number: _____

Generator Serial Number: _____

Attachment Serial Numbers: _____

Attachment Information: _____

Customer Equipment Number: _____

Dealer Equipment Number: _____

Dealer Information

Name: _____ Branch: _____

Address: _____

_____

_____

	Dealer Contact	Phone Number	Hours
Sales:	_____	_____	_____
Parts:	_____	_____	_____
Service:	_____	_____	_____

MEMORANDA

TABLE OF CONTENTS

NAME PAGE

GENERAL INFORMATION. A5

REPAIR ALTERNATIVES. A8

SUPPLEMENTAL COOLANT ADDITIVES. A9

MAINTENANCE PARTS A10

INDEX A13

MACHINE ARRANGEMENT 1
- CHASSIS AR. 1
- COLD WEATHER AR 1
- COMMON AR 2
- CONFIGURATION AR. 2
- DISTRIBUTION AR 3
- FORESTRY AR. 5
- WASTE HANDLING AR 5

ENGINE ARRANGEMENT 6
- ENGINE AR-COMPLETE 6
- ENGINE AR-PRIMARY 6
- INSTALLATION AR-ENGINE 8

BASIC ENGINE 9
- BELT TENSIONER GP. 9
- CAMSHAFT GP 10
- CONNECTING ROD GP 11
- COVER GP-VALVE MECHANISM 12
- CRANKSHAFT GP. 13
- CYLINDER BLOCK AS. 15
- CYLINDER BLOCK GP 16
- CYLINDER BLOCK GP-SHORT 17
- CYLINDER HEAD AS 19
- CYLINDER HEAD GP. 20
- DRAIN GP-ENGINE OIL. 24
- DRIVE GP-FAN. 25
- FASTENER GP-DAMPER & PULLEY 26
- FLYWHEEL GP. 27
- HOUSING GP-FLYWHEEL. 28
- HOUSING GP-FRONT 29
- JET GP-PISTON COOLING 31
- LIFTING GP-ENGINE 32
- MOUNTING GP-ALTERNATOR 33
- MOUNTING GP-ENGINE 34
- MOUNTING GP-ENGINE & XMSN 35
- PAN GP-OIL 36
- PISTON & ROD GP 38
- PISTON GP 42
- PLUG GP-CYLINDER BLOCK 44
- PLUG GP-ENGINE. 45
- PULLEY GP-CRANKSHAFT 46
- ROCKER ARM GP 47

LUBRICATION SYSTEM 51
- FILLER GP-ENGINE OIL 51
- FILTER GP-ENGINE OIL 52
- GAUGE GP-OIL LEVEL (DIPSTICK) 53
- LINES GP-FAN DRIVE. 55
- LINES GP-TURBOCHARGER OIL. 57
- OIL CHANGE GP-HIGH SPEED 58
- PUMP GP-ENGINE OIL 59
- VALVE GP-FLUID SAMPLING 60

COOLING SYSTEM. 61
- BASE GP-OIL COOLER & FILTER 61
- CONNECTION GP-WATER 62
- COOLER GP-ENGINE OIL 63
- COOLING AR 64
- COOLING GP 64
- FAN & MOTOR GP. 69
- FAN GP-SUCTION. 70
- LINES GP-WATER. 71
- PUMP GP-WATER. 73

AIR INLET AND EXHAUST SYSTEM 74
- AIR CLEANER GP. 74
- DUST EJECTOR GP. 78
- LINES GP-AIR. 80
- LINES GP-TURBOCHARGER AIR. 82
- MANIFOLD GP-EXHAUST 83
- MANIFOLD GP-INLET. 84
- MUFFLER GP 85
- PIPE GP-EXHAUST. 87
- PRECLEANER GP 88
- TURBOCHARGER GP 89

FUEL SYSTEM. 90
- ADAPTER GP-FAST FILL FUEL 90
- COVER GP-FUEL TRANSFER. 92
- FILTER GP-FUEL. 93
- FILTER GP-WATER SEP & FUEL 96
- INJECTOR GP-FUEL. 97
- LINES GP-FUEL 99
- LINES GP-FUEL FILTER 108
- LINES GP-FUEL INJECTION 110
- PUMP GP-FUEL INJECTION 112
- PUMP GP-FUEL TRANSFER 114
- RAIL GP-FUEL 117
- TANK & MTG GP-FUEL 118
- TANK GP-FUEL 122
- VALVE GP-REFUELING. 124

ELECTRICAL AND STARTING SYSTEM 125
- ALTERNATOR GP-CHARGING 125
- BATTERY & WIRING GP 128
- BOX GP-JUNCTION 133
- BRACKET GP-MOUNTING 134
- CAMERA & MOUNTING GP. 140

TABLE OF CONTENTS

NAME	PAGE
CONTROL & MTG GP-ELECTRONIC	141
CONTROL GP-COMMUNICATION	143
CONTROL GP-ELECTRONIC	144
CONTROL GP-UNPROGRAMMED	144
ELECTRICAL AR	144
ELECTRONICS AR-MACHINE	144
ELECTRONICS GP-ENGINE	145
ELECTRONICS GP-IMPLEMENT	145
ELECTRONICS GP-MACHINE	145
ELECTRONICS GP-MONITOR	145
GRADE CONTROL AR	147
GUARD GP-ALTERNATOR	151
HARNESS AS-CAB	152
HARNESS AS-CHASSIS	159
HARNESS AS-CONTROL	161
HARNESS AS-ENGINE	164
HARNESS AS-FRONT	166
HARNESS AS-HEATER & AIR COND	169
HARNESS AS-HYDRAULIC TANK	170
HARNESS AS-LIGHTING	170
HARNESS AS-MONITOR	171
HARNESS AS-RADIO	171
HARNESS AS-SENSOR	172
HARNESS AS-SOLENOID	172
HARNESS AS-STEERING	173
HARNESS AS-TRANSMISSION	173
HARNESS AS-VALVE	174
HARNESS AS-WIRING	175
HEATER GP-JACKET WATER	176
INSTALLATION GP-COMMUNICATION	178
LAMP GP-FLOOD	183
LIGHTING AR-FLOOD	185
LIGHTING GP-AUXILIARY	187
LIGHTING GP-FLOOD	190
LIGHTING GP-WARNING BEACON	196
METER & MONITOR GP-SERVICE	197
MOUNTING GP-ELECTRONIC CONTROL	198
SENSOR GP-ENGINE	199
SENSOR GP-POSITION	200
SENSOR GP-SPEED	207
SENSOR GP-TEMPERATURE	210
STARTING AID GP	211
STARTING AID GP-ETHER	212
STARTING AR-ELECTRIC	214
STARTING MOTOR GP-ELECTRIC	215
SWITCH GP-PRESSURE	217
SWITCH GP-PUSH BUTTON	218
SWITCH GP-ROTARY	219
SWITCH GP-START	220
SWITCH GP-TOGGLE	221
SWITCH GP-WIPER	222
VALVE GP-ETHER STARTING	223
WIRING GP-AIR CONDITIONER	224
WIRING GP-CAB	225
WIRING GP-CHASSIS	240
WIRING GP-ENGINE	246
WIRING GP-FENDER	251
WIRING GP-FRONT	255
WIRING GP-GRADE CONTROL	257
WIRING GP-HOOD	265
WIRING GP-SEAT	266
WIRING GP-WINCH	267
POWER TRAIN	268
ACCUMULATOR GP	268
AXLE GP	270
BRAKE & DIFFERENTIAL DRIVE GP	272
BRAKE & PLANETARY GP	276
CASE GP-TRANSMISSION	278
CONTROL GP-TRANSMISSION HYD	279
DRAIN GP-ECOLOGY	281
DRIVE AR-FINAL	282
DRIVE GP-FINAL	292
FILTER GP-OIL	302
GEAR GP-BEVEL & TRANSFER	304
LINES GP-POWER TRAIN OIL	308
MOUNTING GP-FINAL DRIVE	315
MOUNTING GP-TORQUE CONVERTER	316
MOUNTING GP-TRANSMISSION	318
PLANETARY GP-TRANSMISSION	319
POWER TRAIN AR	326
PUMP GP-GEAR	327
SEGMENT GP-SPROCKET	329
SHAFT GP-DRIVE	330
TORQUE CONVERTER & HOUSING GP	331
TORQUE CONVERTER GP	333
TRANSMISSION AR	335
VALVE GP-RELIEF	336
FRAME AND BODY	340
BAFFLE GP-RADIATOR	340
BAR AR-STRIKER	342
BAR GP-STRIKER	343
CASE & FRAME AS	345
CASE & FRAME GP	347
COVER GP-ACCESS	348
COVER GP-FENDER	356
DOOR GP-ACCESS	357
DRAWBAR AR	364
DRAWBAR GP	365
ENCLOSURE AR	366
ENCLOSURE GP-FENDER	367
FENDER GP	372
GRILL GP-RADIATOR	374
GUARD AR-BOTTOM	376
GUARD GP-BOTTOM	377

TABLE OF CONTENTS

NAME	PAGE
GUARD GP-FRONT	383
GUARD GP-FUEL TANK	386
GUARD GP-LIGHTING	387
GUARD GP-LINES	388
GUARD GP-RADIATOR	389
GUARD GP-REAR	391
HANDHOLD GP	393
HOOD GP-ENGINE	395
LADDER AR	399
LADDER GP	400
LATCH GP	406
PANEL GP-HOOD	407
PLUG GP	408
PLUG GP-CASE FRAME	410
SCREEN GP-PROTECTION	412
SEAL GP-WASTE HANDLING	413
SUPPORT GP-HOOD	414
SWEEP AR	415
SWEEP GP	416
UNDERCARRIAGE	421
BAR GP-EQUALIZER	421
CAP GP-TRACK IDLER	425
FRAME GP-TRACK ROLLER	431
FRAME GP-UNDERCARRIAGE	439
GUARD GP-TRACK GUIDE	460
GUARD GP-TRACK ROLLER	469
IDLER GP-TRACK	473
LINK AS-TRACK	477
LINK AS-TRACK BOX	482
MOUNTING GP-CARRIER ROLLER	484
PIVOT BAR GP	485
ROLLER GP-TRACK	488
ROLLER GP-TRACK CARRIER	489
ROLLER GP-TRACK-DOUBLE FLANGE	490
ROLLER GP-TRACK-SINGLE FLANGE	494
STRIKER GP	498
TRACK ADJUSTER & RECOIL GP	499
TRACK AR	503
TRACK GP	520
UNDERCARRIAGE AR	537
STEERING AND BRAKING SYSTEM	541
BARREL GP-MOTOR	541
BARREL GP-PUMP	542
BRAKE GP-STEERING	543
CONTROL GP-STEERING & XMSN	544
FILTER GP-OIL	545
LINES GP-STEERING	546
MOTOR GP-PISTON	550
PUMP GP-PISTON	551
VALVE & MTG GP-CONTROL	556
VALVE GP-BRAKE CONTROL	557
VALVE GP-SOLENOID	559
HYDRAULIC SYSTEM	561
ACCUMULATOR GP-HYDRAULIC	561
CONTROL AR-HYDRAULIC	563
CYLINDER GP-ANGLING	564
CYLINDER GP-BULLDOZER LIFT	566
CYLINDER GP-BULLDOZER TILT	567
CYLINDER GP-RIPPER	569
FLANGE GP	571
HOUSING GP-MOTOR	572
HYDRAULIC AR	573
LINES GP-ANGLE & TILT	574
LINES GP-HYDRAULIC FAN	583
LINES GP-LIFT CYLINDER	588
LINES GP-PUMP	593
LINES GP-RIPPER	598
MANIFOLD GP-HYDRAULIC	601
MOTOR GP-GEAR	602
PLUG GP-HYDRAULIC LINES	604
PUMP GP-PISTON	605
ROTATING GP-PUMP	608
SHAFT GP-HYDRAULIC MOTOR	609
TANK & FILTER GP-HYDRAULIC	611
TANK & MTG GP-HYDRAULIC	613
VALVE & MTG GP-CONTROL	614
VALVE GP-BANK 4	615
VALVE GP-PUMP CONTROL	616
VALVE GP-SOLENOID	617
IMPLEMENTS	618
C-FRAME GP-POWER ANGLING	618
COVER GP-TRUNNION	620
INSTALLATION AR-BULLDOZER	621
LINES GP-GREASE	623
LINK GP-PITCH	626
PIN GP	627
OPERATOR STATION	629
ADJUSTER GP-CONTROL	629
AIR CONDITIONER & MOUNTING GP	633
AIR CONDITIONER AR	635
AIR CONDITIONER GP	636
CAB AR	638
CAB GP	641
COMPRESSOR & MTG GP-REFRIG	644
COMPRESSOR GP-REFRIGERANT	645
CONDENSER & MTG GP-REFRIGERANT	646
CONTROL GP-HANDLE	648
CONTROL GP-JOYSTICK	653
CONTROL GP-RIPPER	658
COVER GP-ACCESS	660
COVER GP-CAB	663
DISPLAY AR-MONITOR	669
DISPLAY GP-MONITOR	671
DOOR GP-ACCESS	673

TABLE OF CONTENTS

NAME	PAGE
DOOR GP-CAB	674
FILTER GP-CAB AIR	677
HANDHOLD AR	680
HANDHOLD GP	681
HOLDER GP-CUP	682
HOUSING GP-SEAT SUSPENSION	683
INSTALLATION AR-CAB	686
INSTALLATION GP-CAB	687
KIT-HANDLE	688
LATCH GP	689
LINER GP-CAB	691
LINES GP-AIR CONDITIONER	696
LINES GP-HEATER	702
LINES GP-HEATER & AIR COND	707
MIRROR GP-REAR VIEW	709
MODULE GP-DISPLAY	710
MOTOR GP-WINDOW WIPER	711
MOUNTING GP-CAB	715
MOUNTING GP-CONTROL	723
MOUNTING GP-MONITOR	729
MOUNTING GP-PLATFORM	731
MOUNTING GP-ROPS	733
NET GP-STORAGE	735
PEDAL GP-BRAKE	736
PEDAL GP-GOVERNOR & BRAKE	737
PRECLEANER GP-CAB AIR	738
RADIO GP	740
RETAINER GP-DOOR	742
ROPS GP-ENCLOSED	744
SCREEN GP-PROTECTION	745
SEAL GP-CAB	754
SEAT & MOUNTING GP	755
SEAT BELT GP	759
SEAT GP	760
SEAT GP-SUSPENSION	762
SUSPENSION GP-SEAT	768
VALVE GP-WATER	774
WASHER GP-WINDOW	775
WINDOW GP-CAB	777
WIPER GP-WINDOW	782
WORK TOOLS	785
BLADE & EDGE GP-ANGLING	785
BLADE & EDGE GP-STRAIGHT	791
BLADE AR-ANGLING	795
BLADE AR-STRAIGHT	797
BLADE AS-ANGLING	798
BLADE AS-STRAIGHT	799
BLADE GP-ANGLING	801
CONTROL GP-WINCH	804
EDGE GP-BIT & CUTTING	805
GUARD GP-WINCH	809
MOUNTING GP-RIPPER	810
RIPPER AR	811
RIPPER GP	812
TOOTH GP-RIPPER	814
WINCH AR-TOWING	818
SERVICE EQUIPMENT AND SUPPLIES	819
FILM GP	819
FILM GP-INTERNATIONAL	828
FILM-INFORMATION	829
KIT-SEAL	830
LINES GP-DIAGNOSTIC	831
PLATE & FILM GP	835
PLATE GP-CERTIFICATION	837
PLUG GP	838
PART NUMBER INDEX	B1

1. MACHINE IDENTIFICATION

Cat machines are identified by Product Identification Numbers (PIN). Some components included in a machine may be identified by Serial Numbers (S/N). Typical components that will be serialized include engines, transmissions, bulldozers, and rippers. The machine and engine are further identified by arrangement numbers and in some cases modification numbers. These numbers are shown on the product identification plate(s) and on the master plate in the operator's compartment.

Cat dealers need all of these numbers to determine accurate parts identification.

Effective First Quarter 2001 the Cat Product Identification Number (PIN) changed from 8 to 17 characters. In an effort to provide uniform equipment identification, Caterpillar and other construction equipment manufacturers are moving to comply with the latest version of the product identification numbering standard. Non-road machine PINs are defined by ISO 10261. The new PIN format will apply to all Cat machines and generator sets. The PIN plates and frame marking will display the 17 character PIN. The new format will look like the following:

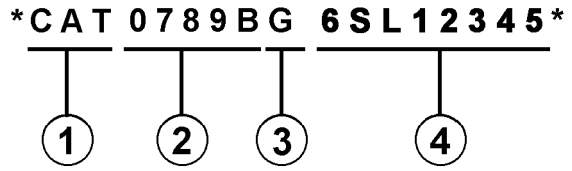

Where:

1. Caterpillar's World Manufacturing Code (characters 1-3)

2. Machine Descriptor (characters 4-8)

3. Check Character (character 9)

4. Machine Indicator Section (MIS) or Product Sequence Number (characters 10-17). These were previously referred to as the Serial Number.

Machines and generator sets produced before First Quarter 2001 will maintain their 8 character PIN format.

Components such as engines, transmissions, axles, etc. and work tools will continue to use an 8 character Serial Number (S/N).

2. ORDERING PARTS

⚠ WARNING

When replacement parts are required for this product Caterpillar recommends using Caterpillar replacement parts or parts with equivalent specifications including, but not limited to, physical dimensions, type, strength and material.

Failure to heed this warning can lead to premature failures, product damage, personal injury or death.

Quality Cat replacement parts are available from Cat dealers throughout the world. Their parts inventories are up to date and include all parts normally required to protect your investment in Cat machines. Dealers may offer repair kits or remanufactured parts to allow selection of the most effective repair alternative for a particular situation. When ordering parts, your order should specify the quantity, part number, part name, and the serial number/product identification number of the machine for which the parts are needed.

3. PARTS MANUAL ORGANIZATION

Product information in this manual is presented as "information elements" that represent all of the components for the specific model. Engine Arrangement and Seat Group are examples of information elements. The information elements are organized alphabetically by part name and secondarily by part number within each major section of the manual.

4. TABLE OF CONTENTS

A table of contents (TOC) is found at the beginning of the manual. The TOC lists each section of the manual with a complete list of all information elements organized as they appear in the manual. Page numbers are provided for quick reference to detailed parts identification illustrations and serviceable consist lists.

5. MAINTENANCE PARTS INDEX

The Maintenance Parts Index, located near the beginning of the manual, references most frequently used maintenance part numbers, providing description, quantity, usage and page number. This information is organized alphabetically by part description.

6. INDEX

The index located near the front of the manual is an alphabetical listing of all information elements included in the manual. Page numbers are provided for quick reference to detailed parts identification illustrations and serviceable consist lists.

7. PART NUMBER INDEX

A numerical index listing all part numbers and the corresponding page number(s) appears at the back of the manual.

8. CAPTIONS

Captions located at the beginning of each information element identify the part number and part name along with additional descriptive information. PIN and S/N information found in each caption should be used to select correct information for a specific machine. Field replacement options, identification of optional attachment components, and where used ("part of") information is also provided.

The first line of a caption is shown in larger type font to indicate the beginning of an information element. Captions for additional pages that may be required to illustrate an information element will be shown in standard type font and will include the term (contd.).

9. NON-SERVICED PARTS

In some instances it is necessary to display non-serviced parts that are a link to a lower level serviceable consist lists. These non-serviced part numbers are shown in italic type indicating that they are not available.

10. PARTS LIST REFERENCE NUMBERS

Numbers shown in the Ref No column correspond to numbers used in the associated graphic(s). An alphabetic suffix may be added to a reference number to identify lower level consist items. Numbers shown in the Graphic Ref column refer to the graphic number identifier displayed in the lower left corner of each illustration. The Graphic Ref number may be used in combination with the item Ref No to determine the correct part number. There may be intentional omission of a Ref No in a consist list as information is updated to reflect the latest serviceable part numbers.

11. INDENTED PART NAMES

When a part name is indented in a parts list, it is part of (included in) the group or assembly under which it is indented.

12. ILLUSTRATION REFERENCE LETTERS

When necessary, illustrations contain reference letters (A, B, C etc.) that are intended to track lines and harnesses from one point to another. They are also used to show where to reconnect illustrations that have been separated.

13. ABBREVIATIONS AND SYMBOLS

O.D. – Outside Diameter
I.D. – Inside Diameter
A – Not Part Of This Group
B – Use As Required
C – Change From Previous Type
D – Order By The Meter
E – Order By The Centimeter
F – Not Shown
G – Order By The Inch
I – Refer To Hydraulic Information System
M – Metric Part
R – Remfg Part May Be Available
Y – Separate Illustration
Z – Not Serviced Separately

14. DESCRIPTION OF TYPE CHANGES

Type - A type is defined as any configuration change that requires an additional Information Element for an Arrangement, Group, or Assembly. If serial number breaks for types are not available, a type # (Type 1, Type 2, etc.) will be displayed in the caption. These "type" changes are identified with a "C" note (change from previous type) in the Parts List. Only the "types" that apply to this Parts Manual will be included. Additional types may exist causing "C" notes to appear on an Information Element when no other types are shown.

15.<END>

This symbol indicates the end of an information element.

NOTE:

Continuing improvement and advancement of product design may cause changes to your machine which may not be included in this publication. Whenever a question arises regarding your Cat product or this publication, please consult your Cat dealer for the latest available information.

FRAME AND BODY

8E-3299 PLATFORM GP-CAB

PIN 38K1-99999

8MC6-7283 100090751

NOTE	REF NO	GRAPHIC REF	PART NUMBER	QTY	PART NAME (1 2 3 4 5 6 PRODUCT LEVEL)	SEE PAGE
	1	1	3T-3963	1	PLATE AS	
	2	1	5H-2062	25	BOLT (3/8-16X.750IN)	
	3	1	6P-1075	41	WASHER-HARD (3MM THK)	
	4	1	9P-1444	2	SUPPORT AS-FOOT	
	5	1	5P-2229	19	BOLT (1/2-13X1IN)	
		1	9J-[illegible]	19	WASHER-HARD (4MM THK)	
	6	1	9E-8139	1	COVER AS-LH	
		1	8F-2979	6	NUT-WELD (3/8-16 THD)	
		1	1F-9189	1	CLIP	
	7	1	7S-2411	4	COVER	
	8	1	5J-0468	19	SCREW-HEAD (3/8-16X.87SIN)	
	9	1	[illegible]074	1	COVER	
		1	9E-8[illegible]	1	GASKET	
	10	1	9E-3248	1	[illegible]	
		1	9E-3250	1	GASKET	
	11	1	3T-3930	1	HANDHOLD	
	12	1	9E-8078	1	COVER AS	
		1	9F-2979	6	NUT-WELD (3/8-16 THD)	
		1	9E-8079	1	GASKET	
	13	1	7T-0131	1	FLOORPLATE AS	
		1	1F-0748	4	NUT-WELD (1/2-13 THD)	
	14	1	7V-8067	1	PLUG-BUTTON	
	15	1	7T-0136	1	PLATE AS	
		1	9F-2978	5	NUT-WELD (3/8-16 THD)	
	16	1	7T-5066	1	COVER	
		1	7T-0779	1	GASKET	
	17	1	3T-3951	1	PLATE AS	
	18	1	9T-9364	4	BOLT (1/4-20X.62SIN)	
M		1	9T-4236	4	WASHER-HARD (2MM THK)	
	19	1	6I-9464	1	FLOOR MAT	
	20	1	9E-8946	1	MODULE AS-OPERATOR	
	21	1	3T-3934	1	HANDHOLD	
	22	1	9P-8571	2	PLUG	
	23	2	9T-9364	4	BOLT (1/4-20X.62SIN)	
M		2	9T-4236	4	WASHER-HARD (2MM THK)	
	24	2	5H-2062	17	BOLT (3/8-16X.750IN)	
	25	2	6P-1075	21	WASHER-HARD (3MM THK)	
	26	2	7T-0136	1	SEAL	
	27	2	7X-0375	2	BOLT (3/4-10X5IN)	
		2	7X-0682	2	WASHER-HARD (6MM THK)	
	28	2	3T-3482	2	PLATE	
	29	2	3T-5290	1	PLATE AS	
		2	7S-4028	6	SPACER	
	30	2	3T-5281	1	SEAL	
	31	2	7S-8017	1	GASKET	
	32	2	7S-8016	1	COVER AS	
		2	2R-2376	2	WASHER	
		2	6P-0626	2	SCREW-KNURLED	
	33	2	9W-3429	1	COVER	
	34	2	8E-9697	1	COVER	
	35	2	9D-3091	8	SCREW-SOCKET HEAD	
	36	2	9W-3142	8	MOUNTING	
	37	2	9W-9527	2	PLATE	
	38	2	7X-0990	2	BOLT (7/8-9X6IN)	
		2	7X-0672	2	WASHER-HARD	
	39	2	4L-6454	4	BOLT (3/8-16X1.0IN)	
	40	2	3T-4788	1	COVER	

12 FRAME AND BODY 1 of 4 SELP4570-01

FRAME AND BODY

8E-3299 PLATFORM GP-CAB (contd.)

100090751

NOTE	REF NO	GRAPHIC REF	PART NUMBER	QTY	PART NAME (1 2 3 4 5 6 PRODUCT LEVEL)	SEE PAGE
	41	2	8E-2515	1	COVER	
	42	2	7T-0134	1	PLATE	
	43	2	7T-0128	1	GASKET	
	44	2	7S-8724	1	GASKET	
	45	2	7S-8723	1	COVER	
	46	2	6V-1960	2	PLUG-BUTTON	

M-METRIC PART

SELP4570-01 2 of 4 FRAME AND BODY 13

FRAME AND BODY

8E-3299 PLATFORM GP-CAB (contd.)

100090751

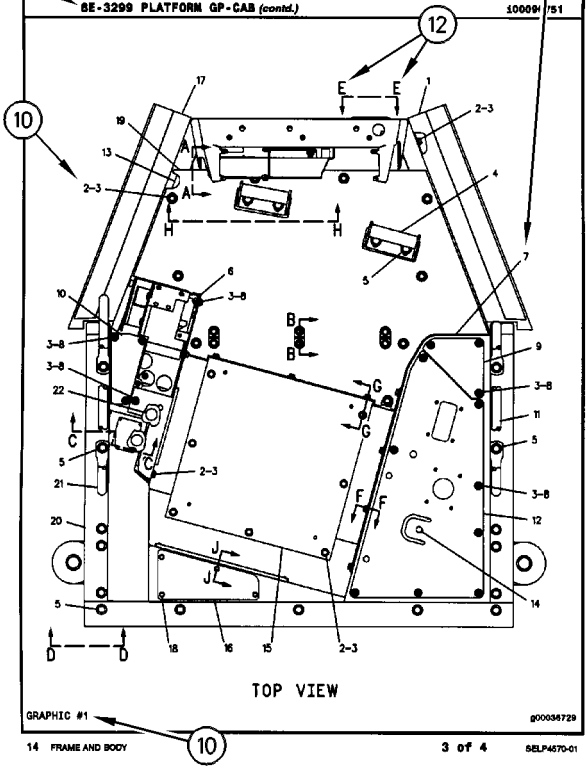

GRAPHIC #1 g00036729

14 FRAME AND BODY 3 of 4 SELP4570-01

FRAME AND BODY

8E-3299 PLATFORM GP-CAB (contd.)

100090751

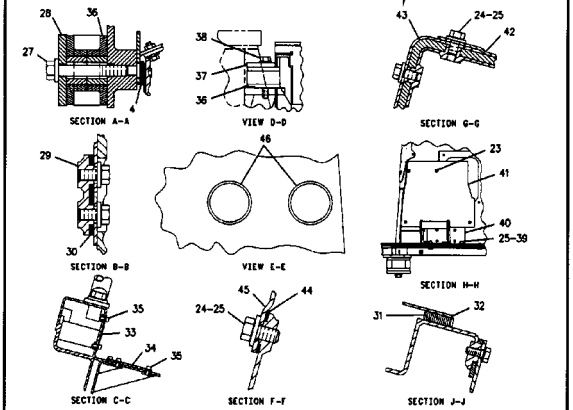

GRAPHIC #2 g00105874

SELP4570-01 4 of 4 FRAME AND BODY 15

REMANUFACTURED COMPONENTS

As an option when making repairs consider Cat Remanufactured Components. Components that are available through the Cat Remanufactured Program are identified three ways in the parts book:

- with the letter R in the note field of the parts list
- with an R* at the beginning of the first line of the caption
- with an *R at the end of the first line of the caption

Typical components included in the Remanufacturing Program include:

ALTERNATORS
CONNECTING RODS
CRANKSHAFTS - UNDERSIZE
CRANKSHAFTS - UPGRADE TO NEW
CYLINDER HEADS
ELECTRONIC CONTROL MODULES (ECM)
ELECTRONIC SENSORS
FUEL INJECTORS
FUEL NOZZLES
FUEL PUMPS
GOVERNORS
OIL PUMPS
PISTONS
SHORT BLOCKS
STARTERS
TURBOCHARGERS - COMPLETE
TURBOCHARGER CARTRIDGES
WATER PUMPS

Cat Remanufactured engines for many engine arrangements are also available.

SUPPLEMENTAL COOLANT ADDITIVES

CUSTOMER BENEFITS:

Protects against cavitation, foam, erosion, corrosion, and scale buildup in cooling systems.

- Provides measured coolant conditioner.

DESCRIPTION:

Additives deplete from the coolant with normal operation. For this reason, Supplemental Coolant Additives (SCA) must be added to all heavy duty coolants at regular intervals. In addition, when not using a fully formulated, pre-charged antifreeze, like Cat DEAC, an initial charge of SCA must be added to the cooling system. The amount of SCA added to the system is dependent on the capacity of the system.

The SCA for initial fill is provided as a liquid. SCA's for maintenance intervals are available in liquid form and as a spin-on element. (No Spin-on available for 3600 Family of Engines)

NOTE:

The amount of SCA added at initial fill is not the same as the amount added at maintenance intervals.

The coolant additive elements can be used with any ethylene or propylene glycol type antifreeze which meets ASTM D4985 or ASTM D5345 Specifications.

NOTE:

For use with standard heavy duty coolant only, not for use with Extended Life Coolant.

PARTS NEEDED:

Cooling System Capacity		Liquid SCA at Initial Fill	Liquid SCA at Maintenance*	Spin-on SCA Maintenance Element*
Liters	Gallons			
22-30	(6-8)	3P-2044 (1)	6V-3542 (1)	111-2370 (1)
30-38	(8-10)	3P-2044 (1) 6V-3542 (1)	111-2372 (1)	111-2369 (1)
38-49	(10-13)	3P-2044 (1) 8T-1589 (1)	111-2372 (1)	111-2369 (1)
49-64	(13-17)	3P-2044 (2)	8T-1589 (1)	9N-3368 (1)
64-83	(17-22)	3P-2044 (2) 8T-1589 (1)	111-2372 (1) 6V-3542 (1)	111-2371 (1)
83-114	(22-30)	3P-2044 (3) 8T-1589 (1)	3P-2044 (1)	9N-3718 (1)
114-163	(30-43)	3P-2044 (5)	3P-2044 (1) 6V-3542 (1)	111-2371 (2)
163-242	(43-64)	3P-2044 (8)	3P-2044 (2)	9N-3718 (2)

* Normal maintenance period is 250 hrs. See your Operation and Maintenance Manual for complete coolant maintenance instructions.

( ) Indicates quantity required.

MAINTENANCE PARTS

DESCRIPTION	PART NUMBER	QTY	WHERE USED	PAGE
AIR INLET AND EXHAUST SYSTEM				
ELEMENT (PRIMARY)	479-8989	1	AIR CLEANER GP	74
ELEMENT (SECONDARY)	479-8991	1	AIR CLEANER GP	74
BASIC ENGINE				
KEY-WOODRUFF	067-6135	1	CAMSHAFT GP	10
		1	CRANKSHAFT GP	13
COOLING SYSTEM				
CAP AS-COOLANT TANK	345-1237	1	COOLING GP	65
GASKET-FILTER (ENGINE OIL)	277-2526	1	BASE GP-OIL COOLER & FILTER	61
GASKET-WATER REGULATOR (TEMPERATURE)	281-8744	1	CONNECTION GP-WATER	62
REGULATOR AS-WATER TEMPERATURE (INCLUDES CONNECTOR)	417-7782	1	CONNECTION GP-WATER	62
ELECTRICAL AND STARTING SYSTEM				
BELT-SERPENTINE (ALTERNATOR)	350-8742	1	ALTERNATOR GP-CHARGING	127
CAP AS-FILLER	461-5232	6	BATTERY & WIRING GP	128
CAP AS-FILLER (7/8-9-THD)	123-1373	6	BATTERY & WIRING GP	128
CIRCUIT BREAKER AS (15-AMPERE, MANUAL RESET)	280-2709	3	HARNESS AS-CAB	155
FILTER (ETHER)	160-8761	1	STARTING AID GP-ETHER	212
FILTER & GASKET AS (ETHER STARTING AID)	9X-7138	1	STARTING AID GP-ETHER	212
FUSE (10-AMPERE)	113-8490	15	HARNESS AS-CAB	154
	9W-1442	1	HARNESS AS-CHASSIS	160
FUSE (15-AMPERE)	113-8491	24	HARNESS AS-CAB	154
GLOW PLUG (24-VOLT)	462-2235	6	STARTING AID GP	211
LAMP GP-FLOOD	564-2699	2	LIGHTING GP-FLOOD	190
LAMP GP-FLOOD (9-32-VOLT)	548-1921	4	LIGHTING GP-FLOOD	193
LAMP GP-WARNING BEACON (STROBE)	543-5298	3	LIGHTING GP-WARNING BEACON	196
PLUG-BUTTON	3D-9872	1	LIGHTING AR-FLOOD	185
FRAME AND BODY				
PLUG-DRAIN	106-8187	1	CASE & FRAME GP	347
FUEL SYSTEM				
CAP AS-FUEL (LOCKABLE, VENTED)	349-7059	1	TANK GP-FUEL	122
FILTER AS-WATER SEP & FUEL	439-5037	1	FILTER GP-WATER SEP & FUEL	96
FILTER ELEMENT-FUEL	360-8960	1	FILTER GP-FUEL	93
PLUG AS-DRAIN	101-4639	1	TANK & MTG GP-FUEL	118
STRAINER (REFUELING)	451-6724	1	VALVE GP-REFUELING	124
STRAINER-FUEL	9P-7121	1	TANK GP-FUEL	122
HYDRAULIC SYSTEM				
BREATHER AS (HYDRAULIC OIL)	507-0646	1	TANK & FILTER GP-HYDRAULIC	611
CAP-FILLER (HYDRAULIC TANK)	7H-1447	1	TANK & FILTER GP-HYDRAULIC	611

MAINTENANCE PARTS

DESCRIPTION	PART NUMBER	QTY	WHERE USED	PAGE
ELEMENT (HYDRAULIC OIL)	532-3902	1	TANK & FILTER GP-HYDRAULIC	611
	532-3903	1	TANK & FILTER GP-HYDRAULIC	611
PLUG-DRAIN (HYDRAULIC TANK)	9J-7031	1	TANK & FILTER GP-HYDRAULIC	611
STRAINER (PLASTIC) (HYDRAULIC TANK FILL)	492-6794	1	TANK & FILTER GP-HYDRAULIC	611
LUBRICATION SYSTEM				
CAP AS	8W-3214	1	OIL CHANGE GP-HIGH SPEED	58
CAP AS-OIL FILLER	369-3867	1	FILLER GP-ENGINE OIL	51
FILTER-ENGINE OIL	462-1171	1	FILTER GP-ENGINE OIL	52
MACHINE ARRANGEMENT				
KEY	5P-8500	1	CHASSIS AR	1
OPERATOR STATION				
BLADE AS-WIPER	471-3357	1	WIPER GP-WINDOW	782
BLADE AS-WIPER (330-MM)	128-5040	4	WIPER GP-WINDOW	782
BLADE AS-WIPER (400-MM) (FRONT)	6V-5851	1	WIPER GP-WINDOW	782
CAP AS-VENTED (WASHER TANK)	488-1568	1	WASHER GP-WINDOW	775
DRYER AS-REFRIGERANT	355-1793	1	LINES GP-AIR CONDITIONER	696
FILTER AS-AIR	457-2836	1	PRECLEANER GP-CAB AIR	739
FILTER AS-AIR (ACTIVATED CHARCOAL)	472-7939	1	PRECLEANER GP-CAB AIR	739
FILTER AS-AIR (HIGH EFFICIENCY PARTICULATE AIR)	457-3049	1	PRECLEANER GP-CAB AIR	739
FILTER-CAB AIR	545-8339	1	FILTER GP-CAB AIR	677
		1	PRECLEANER GP-CAB AIR	738
SEAL-INTEGRAL (1/2-IN)	327-0282	1	AIR CONDITIONER GP	636
		5	LINES GP-AIR CONDITIONER	696 698
		2	LINES GP-HEATER	705
		1	LINES GP-HEATER & AIR COND	707
SEAL-INTEGRAL (3/4-IN)	327-0283	1	AIR CONDITIONER GP	636
		1	LINES GP-AIR CONDITIONER	696 698
		2	LINES GP-HEATER	705
		1	LINES GP-HEATER & AIR COND	707
SEAT BELT GP	485-3445	1	INSTALLATION AR-CAB	686
POWER TRAIN				
BREATHER (ATMOSPHERIC) (POWER TRAIN)	9G-5127	1	LINES GP-POWER TRAIN OIL	309
FILTER ELEMENT AS-OIL (TRANSMISSION) (POWER TRAIN)	337-5270	1	FILTER GP-OIL	303
FILTER-MAGNETIC (POWER TRAIN OIL)	8S-9129	1	LINES GP-POWER TRAIN OIL	308
GASKET-COVER	8P-0058	1	PLANETARY GP-TRANSMISSION	321
PLUG-DRAIN (POWER TRAIN)	4B-7739	1	DRAIN GP-ECOLOGY	281
PLUG-MAGNETIC (FINAL DRIVE, OIL CHECK, FILL)	6V-0439	1	DRIVE GP-FINAL	292

MAINTENANCE PARTS

DESCRIPTION	PART NUMBER	QTY	WHERE USED	PAGE
PLUG-MAGNETIC (FINAL DRIVE)	6V-0439	1	DRIVE GP-FINAL	294
SCREEN AS (TORQUE CONVERTER)	3T-6471	1	TORQUE CONVERTER & HOUSING GP	331
SCREEN-SUCTION (POWER TRAIN)	8S-9130	1	LINES GP-POWER TRAIN OIL	308
SERVICE EQUIPMENT AND SUPPLIES				
KEY	5P-8500	1	PLATE & FILM GP	837
STEERING AND BRAKING SYSTEM				
FILTER ELEMENT AS-OIL	389-1076	1	FILTER GP-OIL	545
UNDERCARRIAGE				
KEY	5P-8500	1	STRIKER GP	498

INDEX

NAME PAGE

A

ACCUMULATOR GP (BRAKE) 557
ACCUMULATOR GP (CHARGED) 310
ACCUMULATOR GP-HYDRAULIC–CHARGED . . . 561
ACCUMULATOR GP-HYDRAULIC–UNCHARGED 562
ACCUMULATOR GP–CHARGED 268
ACCUMULATOR GP–UNCHARGED 269
ADAPTER GP-FAST FILL FUEL 90
ADJUSTER GP-CONTROL 629
631
AIR CLEANER GP 74
75
76
77
AIR CONDITIONER & MOUNTING GP 633
634
AIR CONDITIONER AR 635
AIR CONDITIONER GP 636
ALTERNATOR GP-CHARGING 125
127
ARM GP-WINDOW WIPER (LOWER LH) 782
ARM GP-WINDOW WIPER (LOWER RH) 782
ARM GP-WINDOW WIPER (UPPER LH) 782
ARM GP-WINDOW WIPER (UPPER RH) 782
AXLE GP 270
271

B

BAFFLE GP-RADIATOR 340
342
BAR AR-STRIKER 342
BAR GP-EQUALIZER 421
422
423
424
BAR GP-STRIKER 343
BARREL GP-MOTOR 541
BARREL GP-PUMP 542
BASE GP-OIL COOLER & FILTER 61
BATTERY & WIRING GP 128
130
BATTERY GP (12-VOLT, MAINTENANCE FREE, WET) 128
130
BELT TENSIONER GP 9
BELT-SERPENTINE (ALTERNATOR) 127
BLADE & EDGE GP-ANGLING 785
787
789
BLADE & EDGE GP-STRAIGHT 791
793
BLADE AR-ANGLING 795
796
BLADE AR-STRAIGHT 797
BLADE AS-ANGLING 798
BLADE AS-STRAIGHT 799
800

NAME PAGE

BLADE AS-WIPER 782
BLADE AS-WIPER (330-MM) 782
BLADE AS-WIPER (400-MM) (FRONT) 782
BLADE GP-ANGLING 801
BOX GP-JUNCTION 133
BRACKET GP-MOUNTING 134
135
137
138
139
BRAKE & DIFFERENTIAL DRIVE GP 272
BRAKE & PLANETARY GP 276
BRAKE GP-STEERING 543
BREATHER (ATMOSPHERIC) (POWER TRAIN) 309
BREATHER AS (HYDRAULIC OIL) 611
BRIDGE GP-VALVE 49

C

C-FRAME GP-POWER ANGLING 618
619
CAB AR 638
639
640
CAB GP 641
642
643
CAMERA & MOUNTING GP 140
CAMERA GP (12-VOLT) (ETHERNET) 140
CAMSHAFT GP 10
CAP AS 58
CAP AS-COOLANT TANK 65
67
CAP AS-FILLER 128
131
CAP AS-FILLER (7/8-9-THD) 128
CAP AS-FUEL (LOCKABLE, VENTED) 122
123
CAP AS-OIL FILLER 51
CAP AS-VENTED (WASHER TANK) 775
CAP GP-TRACK IDLER 425
426
427
428
CAP GP-TRACK IDLER–SYSTEMONE 429
430
CAP-FILLER (HYDRAULIC TANK) 611
CASE & FRAME AS 345
CASE & FRAME GP 347
CASE GP-TRANSMISSION 278
CHASSIS AR 1
CIRCUIT BREAKER AS (15-AMPERE, MANUAL RESET) 155
157
CLIP 47
COLD WEATHER AR 1
COMMON AR 2
COMPRESSOR & MTG GP-REFRIG 644
COMPRESSOR GP-REFRIGERANT 645

INDEX

NAME PAGE

CONDENSER & MTG GP-REFRIGERANT 646
CONFIGURATION AR 2
CONNECTING ROD GP 11
38
40
CONNECTION GP-AIR 84
CONNECTION GP-FUEL 104
CONNECTION GP-WATER 62
CONTROL & MTG GP-ELECTRONIC 141
142
CONTROL AR-HYDRAULIC–DUAL 563
CONTROL GP-COMMUNICATION–ELECTRONIC 143
CONTROL GP-ELECTRONIC 142
CONTROL GP-ELECTRONIC (COMMUNICATION) 233
CONTROL GP-ELECTRONIC–PL641I CELLULAR 144
CONTROL GP-HANDLE 648
649
651
652
655
CONTROL GP-JOYSTICK 653
654
655
656
CONTROL GP-JOYSTICK–RH 657
CONTROL GP-RIPPER 658
659
CONTROL GP-STEERING & XMSN 544
CONTROL GP-TRANSMISSION HYD 279
CONTROL GP-UNPROGRAMMED 141
144
225
CONTROL GP-UNPROGRAMMED (MACHINE) 233
CONTROL GP-WINCH 804
COOLER GP-ENGINE OIL 63
COOLING AR 64
COOLING GP 64
65
67
CORE AS-AFTERCOOLER 67
CORE AS-CONDENSER 646
CORE AS-OIL COOLER 65
67
CORE AS-RADIATOR 67
COVER GP-ACCESS 319
348
349
350
351
352
354
355
660
661
662
COVER GP-ACCESS–HEAVY-DUTY 353

NAME PAGE

COVER GP-CAB 663
664
666
668
COVER GP-FENDER 356
COVER GP-FUEL TRANSFER 92
COVER GP-TRUNNION 620
COVER GP-VALVE MECHANISM 12
CRANKSHAFT GP 13
CYLINDER BLOCK AS 15
CYLINDER BLOCK GP 16
CYLINDER BLOCK GP-SHORT 17
18
CYLINDER GP-ANGLING 564
CYLINDER GP-BULLDOZER LIFT 566
CYLINDER GP-BULLDOZER TILT 567
CYLINDER GP-RIPPER–LIFT 569
CYLINDER HEAD AS 19
CYLINDER HEAD GP 20
21
22
23

D

DISPLAY AR-MONITOR 669
670
DISPLAY GP-MONITOR 671
672
DISTRIBUTION AR 3
4
DOOR GP-ACCESS 357
359
361
362
673
DOOR GP-CAB 674
DRAIN GP-ECOLOGY 281
DRAIN GP-ENGINE OIL 24
DRAWBAR AR 364
DRAWBAR GP 365
DRIVE AR-FINAL 282
284
285
287
288
289
290
291
DRIVE AR-FINAL–COLD WEATHER 283
DRIVE AR-FINAL–WITH GUARDS 286
DRIVE GP-FAN 25
DRIVE GP-FINAL 294
296
298
DRIVE GP-FINAL–COLD WEATHER 292
DRIVE GP-FINAL–WITH GUARDS 300
DRYER AS-REFRIGERANT 696
DUST EJECTOR GP 78
79

INDEX

NAME PAGE

E

EDGE GP-BIT & CUTTING. 805
806
807
808
ELECTRICAL AR 144
ELECTRONICS AR-MACHINE 144
ELECTRONICS GP-ENGINE. 145
ELECTRONICS GP-IMPLEMENT. 145
ELECTRONICS GP-MACHINE 145
ELECTRONICS GP-MONITOR. 145
146
147
ELEMENT (HYDRAULIC OIL). 611
ELEMENT (PRIMARY) 74
75
ELEMENT (SECONDARY). 74
75
ENCLOSURE AR. 366
ENCLOSURE GP-FENDER. 367
368
369
370
ENGINE AR-COMPLETE 6
ENGINE AR-PRIMARY. 6
7
EXTENSION GP-BACKREST (VINYL) 765

F

FAN & MOTOR GP (5-BLADE). 739
FAN & MOTOR GP–5-BLADE 69
FAN GP-SUCTION. 70
FASTENER GP-DAMPER & PULLEY 26
FENDER GP 372
FILLER GP-ENGINE OIL. 51
FILM GP. 147
148
820
821
823
825
826
827
FILM GP-INTERNATIONAL 828
FILM GP–INTERNATIONAL. 819
FILM-IDENTIFICATION (ARMREST ADJUSTMENT) 723
725
727
FILM-IDENTIFICATION (ARMREST ADJUSTMENT) (LH) 724
FILM-IDENTIFICATION (BATTERY DISCONNECT, READ OMM) 836
FILM-IDENTIFICATION (BELT ROUTING) 151
FILM-IDENTIFICATION (CAT). 823
836
FILM-IDENTIFICATION (CAT) (FRONT) 821
FILM-IDENTIFICATION (CAT) (LH). 821

NAME PAGE

FILM-IDENTIFICATION (CAT) (REAR). 821
FILM-IDENTIFICATION (CAT) (RH) 821
FILM-IDENTIFICATION (CONSOLE JOYSTICK). 629
631
FILM-IDENTIFICATION (D5) 823
FILM-IDENTIFICATION (D5) (LH) 821
FILM-IDENTIFICATION (D5) (RH). 821
FILM-IDENTIFICATION (DIAGNOSTIC) 832
FILM-IDENTIFICATION (ENGINE STOP, RUN) 836
FILM-IDENTIFICATION (FUSE/RELAY PANEL) 148
149
150
669
670
FILM-IDENTIFICATION (HYDRAULIC & XMSN OIL FILTER). 546
FILM-IDENTIFICATION (HYDRAULIC OIL) 836
FILM-IDENTIFICATION (IGNITION SWITCH) 819
FILM-IDENTIFICATION (JACKET WATER HEATER) 176
FILM-IDENTIFICATION (LGP). 823
FILM-IDENTIFICATION (LIFT EYE, TIE-DOWN LOCATION) 836
FILM-IDENTIFICATION (LUBRICATION POINTS) 825
826
FILM-IDENTIFICATION (ROUND RED REFLECTIVE) 836
FILM-IDENTIFICATION (SHOVEL). 137
FILM-IDENTIFICATION (TIE-DOWN). 408
811
836
FILM-IDENTIFICATION (WINDOW WIPER CONTROLS) 819
FILM-IDENTIFICATION (WORK LIGHT). 187
194
FILM-INFORMATION 829
FILM-INFORMATION (BRAZIL). 820
FILM-INFORMATION (DRAWBAR, READ OMM). 408
FILM-INFORMATION (ENGINE COOLANT) 836
FILM-INFORMATION (EXTENDED LIFE COOLANT). 836
FILM-INFORMATION (FRANCE) 811
FILM-INFORMATION (HYDO ADVANCED 10) . . 829
FILM-INFORMATION (HYDRAULIC ACCUMULATOR) 268
269
FILM-INFORMATION (LOW SULFUR DIESEL FUEL) 828
FILM-INFORMATION (PRODUCT LINK, READ OMM). 819
FILM-INFORMATION (READ OMM, STEERING) 723
725
FILM-INFORMATION (TRANSMISSION FILTER). 310

INDEX

NAME PAGE

FILM-INSTRUCTION (ENGINE OIL) 836
FILM-INSTRUCTION (GRADE, SLOPE). 819
FILM-INSTRUCTION (GREASE, READ OMM). . . 836
FILM-INSTRUCTION (IMPLEMENT) 147
148
FILM-INSTRUCTION (JOYSTICK) 820
FILM-INSTRUCTION (RIPPER CONTROL). 659
FILM-INSTRUCTION (RIPPER, WINCH) 563
FILM-INSTRUCTION (SEAT ADJUSTMENT) 768
FILM-NOTICE (SHIPPING) 825
826
FILM-ROPS 744
FILM-WARNING (DO NOT LIFT, READ OMM). 391
419
FILM-WARNING (DO NOT LIFT). 836
FILM-WARNING (DO NOT OPERATE, READ OMM). 819
FILM-WARNING (ELECTRICAL SHOCK HAZARD) 828
FILM-WARNING (ELECTROCUTION HAZARD, READ OMM) 836
FILM-WARNING (FALL HAZARD, LANYARD, READ OMM). 828
FILM-WARNING (HIGH PRESS CYLINDER, READ OMM). 828
FILM-WARNING (HIGH PRESSURE CYLINDER) 562
FILM-WARNING (HIGH PRESSURE FUEL LINES). 828
FILM-WARNING (HIGH PRESSURE, READ OMM, INTL) 828
FILM-WARNING (HOT FLUID UNDER PRESS). 828
FILM-WARNING (NO ETHER SPRAY/AIR INTK, INTL) 828
FILM-WARNING (NO STEP). 828
FILM-WARNING (NO WELD, NO DRILL, READ OMM). 819
FILM-WARNING (PRODUCT LINK, READ OMM). 819
FILM-WARNING (RECOIL SPRING). 431
433
435
437
FILM-WARNING (ROTATING FAN, ENTANGLEMENT) 828
FILM-WARNING (SEAT BELT). 819
FILM-WARNING (UNIVERSAL, READ OMM). . . . 828
FILTER (ETHER) 212
FILTER & GASKET AS (ETHER STARTING AID) 212
FILTER AS-AIR. 739
FILTER AS-AIR (ACTIVATED CHARCOAL) 739
FILTER AS-AIR (HIGH EFFICIENCY PARTICULATE AIR) 739
FILTER AS-WATER SEP & FUEL 96
FILTER ELEMENT AS-OIL 545
FILTER ELEMENT AS-OIL (TRANSMISSION) (POWER TRAIN) 303
FILTER ELEMENT-FUEL 93

NAME PAGE

FILTER GP-CAB AIR 677
678
679
FILTER GP-ENGINE OIL. 52
FILTER GP-FUEL. 93
94
95
FILTER GP-OIL 302
303
545
FILTER GP-OIL (HYDRAULIC). 611
FILTER GP-WATER SEP & FUEL 96
FILTER-CAB AIR 677
738
FILTER-ENGINE OIL. 52
FILTER-MAGNETIC (POWER TRAIN OIL) 308
FITTING GP-HYDRAULIC 309
FLANGE GP 571
FLOOR MAT AS 664
719
720
731
FLYWHEEL GP 27
FORESTRY AR 5
FRAME GP-TRACK ROLLER. 435
437
FRAME GP-TRACK ROLLER–HEAVY-DUTY 431
433
FRAME GP-UNDERCARRIAGE 441
442
447
448
449
450
455
456
457
459
FRAME GP-UNDERCARRIAGE–HEAVY-DUTY. 439
440
FRAME GP-UNDERCARRIAGE–RH, SYSTEMONE. 443
FRAME GP-UNDERCARRIAGE–SYSTEMONE . . 451
453
FRAME GP-UNDERCARRIAGE–SYSTEMONE, LH. 445
FUSE (10-AMPERE) 154
157
160
FUSE (15-AMPERE) 154
157

G

GASKET-COVER 321
GASKET-FILTER (ENGINE OIL) 61
GASKET-WATER REGULATOR (TEMPERATURE). 62
GAUGE AS-OIL LEVEL (DIPSTICK). 54

INDEX

NAME PAGE

GAUGE GP-OIL LEVEL (DIPSTICK) 53
54
GAUGE GP-OIL LEVEL (DIPSTICK)
(TRANSMISSION OIL) 311
GAUGE-SIGHT (COOLANT) 65
67
GAUGE-SIGHT (HYDRAULIC OIL) 611
GEAR GP-BEVEL & TRANSFER 304
GLOW PLUG (24-VOLT) 211
GRADE CONTROL AR 147
148
149
150
GRILL GP-RADIATOR 374
375
GUARD AR-BOTTOM 376
GUARD GP-ALTERNATOR 151
GUARD GP-BOTTOM 377
379
380
381
382
GUARD GP-BOTTOM–HEAVY-DUTY 378
GUARD GP-FRONT 383
384
GUARD GP-FUEL TANK 386
GUARD GP-LIGHTING 387
GUARD GP-LINES 388
GUARD GP-RADIATOR 389
390
GUARD GP-REAR–SEMI-UNIVERSAL 391
GUARD GP-TRACK GUIDE 460
466
GUARD GP-TRACK GUIDE–HEAVY-DUTY 461
462
GUARD GP-TRACK GUIDE–SYSTEMONE 463
464
465
467
468
GUARD GP-TRACK ROLLER–HEAVY-DUTY 469
470
GUARD GP-TRACK ROLLER–SYSTEMONE 471
472
GUARD GP-WINCH 809

H

HANDHOLD AR 680
HANDHOLD GP 393
394
681
HARDWARE GP-MOUNTING 711
712
782
HARNESS AS-CAB 152
153
154
157
HARNESS AS-CHASSIS 159
160
240
HARNESS AS-CONTROL 161
162
163
HARNESS AS-ENGINE 164
165
HARNESS AS-FRONT 166
167
168
HARNESS AS-HEATER & AIR COND 169
HARNESS AS-HYDRAULIC TANK 170
HARNESS AS-LIGHTING 170
HARNESS AS-MONITOR–DISPLAY 171
HARNESS AS-RADIO 171
226
HARNESS AS-RADIO (BLUETOOTH) 225
HARNESS AS-RADIO (FLANGE) 740
HARNESS AS-RADIO (USB PORT) 226
HARNESS AS-SENSOR 172
HARNESS AS-SENSOR (ACCELEROMETER) . . 225
HARNESS AS-SENSOR (INCLINATION) 233
HARNESS AS-SOLENOID 172
HARNESS AS-STARTING AID 211
HARNESS AS-STEERING 173
HARNESS AS-TRANSMISSION 173
174
HARNESS AS-VALVE 174
HARNESS AS-WIRING 164
HARNESS AS-WIRING–ENGINE 175
HEATER GP-JACKET WATER 176
HOLDER GP-CUP 682
HOOD GP-ENGINE 395
HOUSING GP-FLYWHEEL 28
HOUSING GP-FRONT 29
HOUSING GP-LEVER 651
HOUSING GP-LEVER (JOYSTICK) 649
HOUSING GP-MOTOR 572
HOUSING GP-SEAT SUSPENSION 683
HYDRAULIC AR 573

I

IDLER GP-TRACK–HEAVY-DUTY 473
474
IDLER GP-TRACK–SYSTEMONE 476
INJECTOR GP-FUEL 97
98
INSTALLATION AR-BULLDOZER 621
622
INSTALLATION AR-CAB 686
INSTALLATION AR-ENGINE 8
INSTALLATION GP-CAB 687
INSTALLATION GP-COMMUNICATION 178
180
181
182
INSTALLATION GP-COMMUNICATION–PL243
CELLULAR 179

INDEX

NAME PAGE

J

JET GP-PISTON COOLING 31

K

KEY 1
498
837
KEY-WOODRUFF 10
13
KIT-HANDLE 688
KIT-SEAL–HYDRAULIC CYLINDER. 830

L

LADDER AR 399
LADDER GP 400
402
403
404
LAMP GP-DOME (24-VOLT). 225
233
LAMP GP-FLOOD 183
190
LAMP GP-FLOOD (9-32-VOLT) 193
LAMP GP-FLOOD (9-VOLT TO 32-VOLT, LED). 190
191
195
LAMP GP-INDICATOR (AMBER, LED, 24-VOLT) 187
LAMP GP-WARNING BEACON (STROBE) 196
LATCH GP. 406
689
690
LIFTING GP-ENGINE 32
LIGHTING AR-FLOOD 185
186
LIGHTING AR-FLOOD–VPAT 185
LIGHTING GP-AUXILIARY. 187
189
LIGHTING GP-FLOOD 190
191
192
193
194
195
LIGHTING GP-WARNING BEACON 196
LINER GP-CAB. 691
695
LINES GP-AIR 80
LINES GP-AIR CONDITIONER 696
698
699
700
LINES GP-ANGLE & TILT. 574
577
580

NAME PAGE

LINES GP-DIAGNOSTIC 831
LINES GP-FAN DRIVE. 55
LINES GP-FUEL. 99
100
101
102
104
107
108
LINES GP-FUEL FILTER. 108
LINES GP-FUEL INJECTION 110
111
LINES GP-GREASE 623
625
LINES GP-HEATER. 702
703
705
LINES GP-HEATER & AIR COND 707
LINES GP-HYDRAULIC FAN 583
585
586
LINES GP-HYDRAULIC FAN–REVERSING 585
LINES GP-LIFT CYLINDER. 588
589
591
LINES GP-POWER TRAIN OIL 308
LINES GP-PUMP 593
LINES GP-RIPPER 598
600
LINES GP-STEERING. 546
LINES GP-TURBOCHARGER AIR 82
LINES GP-TURBOCHARGER OIL. 57
LINES GP-WATER. 71
LINK AS-TRACK. 481
LINK AS-TRACK BOX–LINK BOX. 483
LINK AS-TRACK BOX–SYSTEMONE. 482
LINK AS-TRACK–HEAVY-DUTY. 479
LINK AS-TRACK–SYSTEMONE 477
478
LINK GP-PITCH 626
LINKAGE GP-WIPER (LH) 782
LINKAGE GP-WIPER (RH) 782
LITERATURE GP. 1

M

MANIFOLD GP-EXHAUST. 83
MANIFOLD GP-HYDRAULIC. 601
MANIFOLD GP-INLET. 84
METER & MONITOR GP-SERVICE 197
MIRROR GP-REAR VIEW–INTERIOR 709
MODULE GP-CONTROL 248
MODULE GP-DISPLAY. 710
MODULE GP-KEYPAD 226
234
MONITOR GP-OPERATOR. 672
MOTOR GP-GEAR 602
603
MOTOR GP-PISTON. 550

INDEX

NAME PAGE

MOTOR GP-WINDOW WIPER 711
712
713
714
MOUNTING GP-ALTERNATOR 33
MOUNTING GP-CAB 715
716
717
718
719
720
721
MOUNTING GP-CARRIER ROLLER 484
MOUNTING GP-CONTROL 723
724
725
727
MOUNTING GP-ELECTRONIC CONTROL 198
MOUNTING GP-ENGINE 34
MOUNTING GP-ENGINE & XMSN 35
MOUNTING GP-FINAL DRIVE 315
MOUNTING GP-MONITOR 729
MOUNTING GP-PLATFORM 731
MOUNTING GP-RIPPER 810
MOUNTING GP-ROPS 733
MOUNTING GP-TORQUE CONVERTER 316
MOUNTING GP-TRANSMISSION 318
MUFFLER GP 85

N

NET GP-STORAGE 735

O

OIL CHANGE GP-HIGH SPEED 58

P

PADLOCK GP 1
498
837
PAN GP-OIL 17
36
37
PANEL GP-HOOD 407
PEDAL GP-BRAKE 736
PEDAL GP-GOVERNOR & BRAKE 737
PIN GP 627
PIPE GP-EXHAUST 87
PISTON & ROD GP 38
40
PISTON GP 38
42
PIVOT BAR GP 485
486
487
PLANETARY GP-TRANSMISSION 319

NAME PAGE

PLATE & FILM GP 785
787
789
791
793
801
811
835
836
837
PLATE GP-CERTIFICATION 837
PLATE GP-IDENTIFICATION 835
PLATE-IDENTIFICATION (SERVICE INFORMATION NUMBERS) 837
PLATE-SERIAL NUMBER 801
PLATE-SERIAL NUMBER (BLADE) 785
787
789
791
793
PLATE-SERIAL NUMBER (RIPPER) 811
PLATE-WARNING (RECOIL SPRING) 431
433
PLUG AS-DRAIN 118
120
PLUG GP 185
342
408
409
695
838
PLUG GP-CASE FRAME 410
411
PLUG GP-CONNECTOR (64-PIN) 164
PLUG GP-CYLINDER BLOCK 44
PLUG GP-ENGINE 45
PLUG GP-HYDRAULIC LINES 551
604
PLUG-BUTTON 185
PLUG-DRAIN 347
PLUG-DRAIN (HYDRAULIC TANK) 611
PLUG-DRAIN (POWER TRAIN) 281
PLUG-MAGNETIC (FINAL DRIVE, OIL CHECK, FILL) 292
298
300
PLUG-MAGNETIC (FINAL DRIVE) 294
296
POWER TRAIN AR 326
PRECLEANER GP-CAB AIR 738
739
PRECLEANER GP–TURBINE 88
PULLEY GP-CRANKSHAFT 46
PUMP GP-ENGINE OIL 59
PUMP GP-FUEL INJECTION 112
113
PUMP GP-FUEL TRANSFER 114
115
PUMP GP-GEAR 327
PUMP GP-GEAR (HYDRAULIC FAN) 55

NAME PAGE

PUMP GP-PISTON 551
605
PUMP GP-WATER. 73

R

RADIO GP 740
741
RADIO GP (AM/FM/USB/BLUETOOTH). 740
RAIL GP-FUEL 117
RECEIVER GP-SATELLITE (GPS) 263
REGULATOR AS-WATER TEMPERATURE (INCLUDES CONNECTOR). 62
RELAY AS (24-VOLT) 155
RELAY AS (24-VOLT) (SUPPRESSION). 158
RELAY AS (MAIN POWER) 226
234
RELAY AS-TIMER (24-VDC). 226
RELAY AS-TIMER (24-VDC) (ACCESS LIGHTS) 233
RETAINER GP-DOOR 742
743
RIPPER AR 811
RIPPER AR–CURVED 811
RIPPER GP. 812
ROCKER ARM GP 47
49
50
ROLLER GP-TRACK. 488
ROLLER GP-TRACK CARRIER. 489
ROLLER GP-TRACK-DOUBLE FLANGE–HEAVY-DUTY. 490
491
492
493
ROLLER GP-TRACK-SINGLE FLANGE. 496
497
ROLLER GP-TRACK-SINGLE FLANGE–SYSTEMONE. 494
495
ROPS GP-ENCLOSED 744
ROTATING GP-PUMP 608

S

SCREEN AS (TORQUE CONVERTER). 331
SCREEN GP-PROTECTION 412
745
746
748
749
750
752
SCREEN-SUCTION (POWER TRAIN) 308
SEAL GP-CAB 754
SEAL GP-WASTE HANDLING 413
SEAL-CRANKSHAFT (REAR) 28

NAME PAGE

SEAL-INTEGRAL (1/2-IN). 636
696
698
699
700
705
707
SEAL-INTEGRAL (3/4-IN). 636
696
698
699
700
705
707
SEAT & MOUNTING GP. 755
757
SEAT & MOUNTING GP–CONVERTER 756
SEAT BELT GP 686
759
SEAT GP 761
SEAT GP-SUSPENSION 764
765
767
SEAT GP-SUSPENSION–CLOTH, AIR. 763
SEAT GP-SUSPENSION–VINYL 762
SEAT GP–CLOTH, AIR 760
SEGMENT GP-SPROCKET. 329
SENSOR (FUEL RAIL PRESSURE). 117
SENSOR AS-FUEL LEVEL 118
120
SENSOR AS-INERTIAL (ACCELERATION, ANGLE). 225
233
SENSOR AS-INERTIAL (SLOPE CONTROL). . . . 205
SENSOR GP-ENGINE 7
199
SENSOR GP-GRADE (GRADE CONTROL). 260
SENSOR GP-LIQUID LEVEL 96
SENSOR GP-POSITION. 201
202
204
205
SENSOR GP-POSITION (DECELERATOR) 204
SENSOR GP-POSITION (ROTARY) (DECELERATOR, SERVICE BRAKE). 736
SENSOR GP-POSITION (ROTARY) (STEERING). 544
SENSOR GP-POSITION (STEERING) 544
SENSOR GP-POSITION–ROTARY 200
SENSOR GP-PRESSURE (AIR FILTER). 265
SENSOR GP-PRESSURE (ENGINE OIL) 199
SENSOR GP-PRESSURE (INLET AIR). 696
SENSOR GP-PRESSURE (INLET MANIFOLD AIR) 199
SENSOR GP-PRESSURE (OUTLET AIR). 696
SENSOR GP-SPEED 207
208
209
SENSOR GP-SPEED (ENGINE) 199

INDEX

NAME PAGE

SENSOR GP-SPEED (MAGNETIC, HIGH OUTPUT) . . . 304
SENSOR GP-SPEED (STEERING MOTOR) 240
SENSOR GP-SPEED (TORQUE CONVERTER OUTPUT) . . . 331
SENSOR GP-TEMPERATURE . . . 210
SENSOR GP-TEMPERATURE (2-PIN) (AIR INLET) . . . 265
SENSOR GP-TEMPERATURE (EVAPORATOR) . . . 636
SENSOR GP-TEMPERATURE (HYDRAULIC OIL) . . . 240
SENSOR GP-TEMPERATURE (TRANSMISSION OIL) . . . 247
310
SENSOR-PRESSURE (HYDRAULIC PUMP) 240
SENSOR-PRESSURE (SWING DRIVE OIL) (STEERING) . . . 247
SENSOR-TEMPERATURE (2-PIN) . . . 210
SENSOR-TEMPERATURE (2-PIN) (AIR CLEANER) . . . 225
SENSOR-TEMPERATURE (2-PIN) (AIR INLET MANIFOLD) . . . 199
SENSOR-TEMPERATURE (2-PIN) (AIR) . . . 233
SENSOR-TEMPERATURE (2-PIN) (COOLANT) . . . 199
SHAFT GP-DRIVE . . . 330
SHAFT GP-HYDRAULIC MOTOR . . . 609
SOFTWARE GP-ENGINE . . . 145
SOFTWARE GP-ENGINE (FAN CONTROL) 248
SOFTWARE GP-IMPLEMENT . . . 145
SOFTWARE GP-MACHINE . . . 145
SOFTWARE GP-MONITOR . . . 144
145
146
147
205
729
SOFTWARE GP-MONITOR (CELLULAR) . . . 144
SOFTWARE GP-MONITOR (GPS RECEIVER) . . . 263
SOFTWARE GP-MONITOR (NETWORK MANAGER) . . . 146
SOFTWARE GP-MONITOR (VIMS CONFIGURATION) . . . 146
SOLENOID . . . 84
SPRING AS-GAS . . . 367
369
STARTING AID GP . . . 211
STARTING AID GP-ETHER . . . 212
STARTING AR-ELECTRIC . . . 214
STARTING MOTOR GP-ELECTRIC . . . 215
216
STRAINER (PLASTIC) (HYDRAULIC TANK FILL) . . . 611
STRAINER (REFUELING) . . . 124
STRAINER-FUEL . . . 122
123
STRIKER GP . . . 498
SUPPORT GP-HOOD . . . 414
SUPPORT GP-LINES . . . 108

NAME PAGE

SUSPENSION GP-SEAT . . . 768
772
SUSPENSION GP-SEAT–AIR . . . 770
SWEEP AR . . . 415
SWEEP GP . . . 416
417
418
419
SWITCH AS-DISCONNECT (MASTER) (ENGINE SHUTDOWN) . . . 251
SWITCH AS-LIMIT (SERVICE BRAKE PEDAL) . . . 736
SWITCH AS-PRESSURE (OIL) . . . 545
SWITCH AS-PUSH BUTTON . . . 649
SWITCH AS-ROCKER (24-VOLT) (AIR CONDITIONER) . . . 226
234
SWITCH AS-ROCKER (24-VOLT) (IMPLEMENT LOCKOUT) . . . 234
SWITCH AS-ROCKER (24-VOLT) (IMPLEMENT, FRONT) . . . 226
SWITCH AS-ROCKER (24-VOLT) (PARKING BRAKE) . . . 226
234
SWITCH AS-ROCKER (24-VOLT) (WINCH LOCKOUT) . . . 804
SWITCH AS-TOGGLE (DOOR RELEASE, REMOTE) . . . 221
SWITCH GP-LIQUID LEVEL (FUEL) . . . 115
SWITCH GP-PRESSURE . . . 217
SWITCH GP-PRESSURE (HYDRAULIC FILTER) . . . 611
SWITCH GP-PUSH BUTTON . . . 218
SWITCH GP-PUSH BUTTON (24-VOLT) (HORN) . . . 225
233
SWITCH GP-ROTARY . . . 219
SWITCH GP-START . . . 220
SWITCH GP-TOGGLE . . . 221
SWITCH GP-TOGGLE (ACCESS LIGHTS) . . . 251
SWITCH GP-TOGGLE (WORK LIGHT) . . . 187
SWITCH GP-WIPER (24-VOLT) . . . 225
SWITCH GP-WIPER–CAB . . . 222

T

TANK & FILTER GP-HYDRAULIC . . . 611
TANK & MTG GP-FUEL . . . 120
TANK & MTG GP-FUEL–FAST FILL . . . 118
TANK & MTG GP-HYDRAULIC . . . 613
TANK GP-FUEL . . . 123
TANK GP-FUEL–FAST FILL . . . 122
TANK GP-WINDOW WASHER . . . 775
TOOTH GP-RIPPER . . . 816
TOOTH GP-RIPPER–CURVED . . . 815
817
TOOTH GP-RIPPER–STRAIGHT . . . 814
TORQUE CONVERTER & HOUSING GP . . . 331
TORQUE CONVERTER GP . . . 333

INDEX

NAME PAGE

TRACK ADJUSTER & RECOIL GP 499
501
TRACK AR–HEAVY-DUTY. 503
504
505
506
507
508
509
510
518
519
TRACK AR–SYSTEMONE 511
512
513
514
515
516
517
TRACK GP–2-REQUIRED, HEAVY-DUTY. 527
528
529
530
531
532
533
534
535
536
TRACK GP–2-REQUIRED, SYSTEMONE 520
521
522
523
524
525
526
TRANSMISSION AR 335
TURBOCHARGER GP 89

U

UNDERCARRIAGE AR. 537
538
539
540
UNDERCARRIAGE AR–HEAVY-DUTY 537
538
UNDERCARRIAGE AR–SYSTEMONE 538
UNIVERSAL JOINT GP 330

V

VALVE & MTG GP-CONTROL. 556
614
VALVE AS-PRESSURE RELIEF (REFRIGERANT COMPRESSOR) 645
VALVE GP-BANK 4. 615
VALVE GP-BRAKE CONTROL. 557
VALVE GP-CHECK 546

NAME PAGE

VALVE GP-CONTROL 551
VALVE GP-CONTROL (IMPLEMENT, STEERING, BRAKE). 557
VALVE GP-ETHER STARTING 223
VALVE GP-FLUID SAMPLING 60
VALVE GP-PRESSURE REDUCING (BRAKE) . . 557
VALVE GP-PUMP CONTROL–PRESSURE, FLOW COMPENSATOR 616
VALVE GP-REFUELING. 124
VALVE GP-RELIEF 336
338
551
615
VALVE GP-SOLENOID. 559
560
VALVE GP-SOLENOID (12-VDC) (HYDRAULIC FAN) 583
VALVE GP-SOLENOID (24-VDC) 615
VALVE GP-SOLENOID (HYDRAULIC FAN). 583
586
VALVE GP-SOLENOID (SHIFT). 279
VALVE GP-SOLENOID (TORQUE CONVERTER). 331
VALVE GP-SOLENOID–24-VDC. 617
VALVE GP-WATER. 774
VALVE-SOLENOID (12-VDC) 615

W

WASHER GP-WINDOW 775
WASTE HANDLING AR 5
WINCH AR-TOWING. 818
WINDOW GP-CAB. 777
778
779
780
781
WIPER GP-WINDOW 782
WIRING GP-AIR CONDITIONER. 224
WIRING GP-CAB 225
232
233
WIRING GP-CHASSIS 240
244
WIRING GP-ENGINE 246
247
WIRING GP-FENDER. 251
253
WIRING GP-FRONT 255
WIRING GP-GRADE CONTROL 257
258
259
260
262
263
WIRING GP-HOOD 265
WIRING GP-SEAT. 266
WIRING GP-WINCH 267

MACHINE ARRANGEMENT

510-9705 CHASSIS AR

S/N: Z2K1-UP; Z2N1-UP
VPAT
PART OF 532-9781 CONFIGURATION AR
AN ATTACHMENT

SMCS-7000 **i07819232**

NOTE	PART NUMBER	QTY	PART NAME 1 2 3 4 5 6 (PRODUCT LEVEL)	SEE PAGE
Y	*507-3673*	1	CASE & FRAME GP	347
Y	*507-8561*	1	GRILL GP-RADIATOR	374
Y	*507-8560*	1	GUARD GP-RADIATOR	390
Y	*508-1350*	1	HOOD GP-ENGINE	395

Y - SEPARATE ILLUSTRATION

<END>

559-5990 CHASSIS AR

S/N: Z2K1-UP; Z2N1-UP
PART OF 532-9780 COMMON AR
AN ATTACHMENT

SMCS-7000 **i07816821**

NOTE	PART NUMBER	QTY	PART NAME 1 2 3 4 5 6 (PRODUCT LEVEL)	SEE PAGE
Y	*559-1512*	1	BRACKET GP-MOUNTING	137
Y	*565-6671*	1	BRACKET GP-MOUNTING	138
Y	*508-1620*	1	FENDER GP	372
Y	*507-6027*	1	MOUNTING GP-ROPS	733
Y	*515-6192*	1	SUPPORT GP-HOOD	414
	6V-1971	1	LITERATURE GP	
	246-2641	1	PADLOCK GP	
	5P-8500	1	KEY	

Y - SEPARATE ILLUSTRATION

<END>

575-9704 COLD WEATHER AR

S/N: Z2K1-UP; Z2N1-UP
220-VOLT. HEAVY-DUTY
AN ATTACHMENT

SMCS-7000 **i07848631**

NOTE	PART NUMBER	QTY	PART NAME 1 2 3 4 5 6 (PRODUCT LEVEL)	SEE PAGE
Y	*515-4400*	1	BATTERY & WIRING GP	128
Y	*561-3220*	1	HEATER GP-JACKET WATER	176
Y	*567-2688*	1	STARTING AID GP-ETHER	212
Y	*557-5447*	1	STARTING MOTOR GP-ELECTRIC	216

Y - SEPARATE ILLUSTRATION

<END>

MACHINE ARRANGEMENT

532-9780 COMMON AR

S/N: Z2K1-UP; Z2N1-UP
AN ATTACHMENT

SMCS-7000 **i07816143**

NOTE	PART NUMBER	QTY	PART NAME 1 2 3 4 5 6 (PRODUCT LEVEL)	SEE PAGE
Y	*559-5990*	1	CHASSIS AR	1
Y	*559-5996*	1	ELECTRICAL AR	144
Y	*575-9703*	1	ELECTRONICS AR-MACHINE	144
Y	*575-9700*	1	HYDRAULIC AR	573
Y	*559-5994*	1	INSTALLATION AR-ENGINE	8
Y	*559-6006*	1	PLATE & FILM GP	837
Y	*510-9710*	1	POWER TRAIN AR	326

Y - SEPARATE ILLUSTRATION

<END>

532-9781 CONFIGURATION AR

S/N: Z2K1-UP; Z2N1-UP
POWER SHIFT TRANSMISSION, VPAT
PART OF 532-9803 CONFIGURATION AR
AN ATTACHMENT

SMCS-7000 **i07828523**

NOTE	PART NUMBER	QTY	PART NAME 1 2 3 4 5 6 (PRODUCT LEVEL)	SEE PAGE
Y	*568-5303*	1	BAFFLE GP-RADIATOR	342
Y	*510-9705*	1	CHASSIS AR	1
Y	*510-9713*	1	HYDRAULIC AR	573

Y - SEPARATE ILLUSTRATION

<END>

532-9803 CONFIGURATION AR

S/N: Z2K1-UP; Z2N1-UP
VPAT
CANNOT BE USED WITH 505-5309—PAGE: 835, 532-9781—PAGE: 2, 550-9960—PAGE: 820, 579-5780—PAGE: 827
PART OF 532-9851, 532-9856 DISTRIBUTION AR
AN ATTACHMENT

SMCS-7000 **i07840360**

NOTE	PART NUMBER	QTY	PART NAME 1 2 3 4 5 6 (PRODUCT LEVEL)	SEE PAGE
Y	*532-9780*	1	COMMON AR	2
Y	*532-9781*	1	CONFIGURATION AR	2

Y - SEPARATE ILLUSTRATION

<END>

MACHINE ARRANGEMENT

532-9851 DISTRIBUTION AR

S/N: Z2K1-UP

AN ATTACHMENT

SMCS-7000 **i07839960**

NOTE	PART NUMBER	QTY	PART NAME 1 2 3 4 5 6 (PRODUCT LEVEL)	SEE PAGE
Y	*521-4270*	1	AIR CLEANER GP	77
Y	*575-9697*	1	AIR CONDITIONER AR	635
Y	*536-6469*	1	CAB AR	639
Y	*577-8623*	1	CAMERA & MOUNTING GP	140
Y	*532-9803*	1	CONFIGURATION AR	2
Y	**435-5759**	1	CONTROL GP-JOYSTICK	654
Y	*515-7372*	1	CONTROL GP-RIPPER	659
Y	*559-6007*	1	COOLING AR	64
Y	*523-3958*	1	COVER GP-ACCESS	350
Y	*579-5778*	1	COVER GP-CAB	668
Y	*510-9717*	1	DRIVE AR-FINAL	287
Y	*532-9793*	1	ENCLOSURE AR	366
Y	*575-9708*	1	ENGINE AR-COMPLETE	6
Y	*525-1198*	1	FILM GP	820
Y	*579-5780*	1	FILM GP (BRAZILIAN MARKET)	827
Y	*441-9252*	1	FILTER GP-CAB AIR	677
Y	*550-5571*	1	GRADE CONTROL AR	147
Y	*550-5575*	1	GRADE CONTROL AR (CAB)	148
Y	*550-5585*	1	GUARD AR-BOTTOM	376
Y	*384-7413*	1	GUARD GP-TRACK GUIDE	466
Y	*515-3737*	1	INSTALLATION AR-BULLDOZER	621
Y	*505-5306*	1	LADDER AR	399
Y	*575-5507*	1	LIGHTING AR-FLOOD	185
Y	*575-5503*	1	LIGHTING GP-AUXILIARY	189
Y	*575-9705*	1	LINES GP-FUEL	107
Y	*510-1530*	1	LINES GP-HYDRAULIC FAN	585
Y	*577-7750*	1	METER & MONITOR GP-SERVICE	197
Y	*543-1114*	1	MOUNTING GP-CAB	720
Y	*568-5979*	1	OIL CHANGE GP-HIGH SPEED	58
Y	*505-5308*	1	PLATE & FILM GP	835
Y	*550-5600*	1	FILM-INFORMATION	829
Y	*575-9699*	1	PLATE GP-CERTIFICATION	837
Y	*470-7252*	1	SEAT & MOUNTING GP	755
Y	*550-5561*	1	STARTING AR-ELECTRIC	214
Y	*508-1609*	1	TANK & MTG GP-FUEL	118
Y	*575-7733*	1	TRACK AR	503
Y	*523-9388*	1	UNDERCARRIAGE AR	537

Y - SEPARATE ILLUSTRATION

<END>

MACHINE ARRANGEMENT

532-9856 DISTRIBUTION AR

S/N: Z2K1-UP
BRAZIL, HEAVY-DUTY, VPAT, XL
AN ATTACHMENT

SMCS-7000 **i07861433**

NOTE	PART NUMBER	QTY	PART NAME 1 2 3 4 5 6 (PRODUCT LEVEL)	SEE PAGE
Y	*521-4270*	1	AIR CLEANER GP	77
Y	*575-9695*	1	AIR CONDITIONER AR	635
Y	*536-6467*	1	CAB AR	638
Y	*532-9803*	1	CONFIGURATION AR	2
Y	*435-5757*	1	CONTROL GP-JOYSTICK	653
Y	*559-6007*	1	COOLING AR	64
Y	*579-5778*	1	COVER GP-CAB	668
Y	*577-1292*	1	DISPLAY AR-MONITOR	669
Y	*510-9717*	1	DRIVE AR-FINAL	287
Y	*532-9793*	1	ENCLOSURE AR	366
Y	*575-9708*	1	ENGINE AR-COMPLETE	6
Y	*525-1198*	1	FILM GP	820
Y	*550-5570*	1	FILM GP	820
Y	*579-5780*	1	FILM GP	827
Y	*441-9252*	1	FILTER GP-CAB AIR	677
Y	*550-5585*	1	GUARD AR-BOTTOM	376
Y	*384-7413*	1	GUARD GP-TRACK GUIDE	466
Y	*515-3737*	1	INSTALLATION AR-BULLDOZER	621
Y	*505-5306*	1	LADDER AR	399
Y	*575-5505*	1	LIGHTING AR-FLOOD	185
Y	*565-5309*	1	LINER GP-CAB	695
Y	*575-9705*	1	LINES GP-FUEL	107
Y	*510-1530*	1	LINES GP-HYDRAULIC FAN	585
Y	*543-1113*	1	MOUNTING GP-CAB	719
Y	*505-5308*	1	PLATE & FILM GP	835
Y	*550-5600*	1	FILM-INFORMATION	829
Y	*575-9699*	1	PLATE GP-CERTIFICATION	837
Y	*569-2068*	1	SEAT & MOUNTING GP	757
Y	*550-5561*	1	STARTING AR-ELECTRIC	214
Y	*508-1610*	1	TANK & MTG GP-FUEL	120
Y	*575-7733*	1	TRACK AR	503
Y	*523-9388*	1	UNDERCARRIAGE AR	537

Y - SEPARATE ILLUSTRATION

<END>

532-9795 FORESTRY AR

S/N: Z2K1-UP; Z2N1-UP
HEAVY-DUTY, VPAT
FOR USE WITH 550-5566—PAGE: 92, 550-5567—PAGE: 354, 515-3719—PAGE: 342
AN ATTACHMENT

SMCS-7000 **i07848566**

NOTE	PART NUMBER	QTY	PART NAME 1 2 3 4 5 6 (PRODUCT LEVEL)	SEE PAGE
Y	*548-1192*	1	DUST EJECTOR GP	79
Y	*528-9537*	1	ENCLOSURE GP-FENDER	369
Y	*550-5587*	1	GUARD AR-BOTTOM	376
Y	*575-5630*	1	GUARD GP-LIGHTING	387
Y	*575-5509*	1	LIGHTING AR-FLOOD	186
Y	*550-5583*	1	SWEEP GP	418
Y	*559-2709*	1	SEAL GP-WASTE HANDLING	413

Y - SEPARATE ILLUSTRATION

<END>

532-9797 WASTE HANDLING AR

S/N: Z2K1-UP; Z2N1-UP
HEAVY-DUTY, VPAT
AN ATTACHMENT

SMCS-7000 **i07882692**

NOTE	PART NUMBER	QTY	PART NAME 1 2 3 4 5 6 (PRODUCT LEVEL)	SEE PAGE
Y	*533-7734*	1	DUST EJECTOR GP	78
Y	*528-9537*	1	ENCLOSURE GP-FENDER	369
Y	*550-5587*	1	GUARD AR-BOTTOM	376
Y	*575-5630*	1	GUARD GP-LIGHTING (FRONT)	387
Y	*550-5579*	1	HANDHOLD AR	680
Y	*575-5509*	1	LIGHTING AR-FLOOD	186
Y	*559-2709*	1	SEAL GP-WASTE HANDLING	413

Y - SEPARATE ILLUSTRATION

<END>

575-3346 ENGINE AR-COMPLETE

S/N: Z2K1-UP; Z2N1-UP
PART OF 566-7452 ENGINE AR-PRIMARY
AN ATTACHMENT

SMCS-1000 **i07840026**

NOTE	PART NUMBER	QTY	PART NAME 1 2 3 4 5 6 (PRODUCT LEVEL)	SEE PAGE
Y	*451-8385*	1	CYLINDER BLOCK GP-SHORT	18
Y	*452-6582*	1	CYLINDER HEAD GP (SHORT)	21
Y	**569-0811**	1	ENGINE AR-PRIMARY	7

Y - SEPARATE ILLUSTRATION

<END>

575-9708 ENGINE AR-COMPLETE

S/N: Z2K1-UP; Z2N1-UP
PART OF 532-9851, 532-9856 DISTRIBUTION AR
AN ATTACHMENT

SMCS-1000 **i07840286**

NOTE	PART NUMBER	QTY	PART NAME 1 2 3 4 5 6 (PRODUCT LEVEL)	SEE PAGE
Y	*566-3122*	1	ELECTRONICS GP-ENGINE	145
Y	*566-7452*	1	ENGINE AR-PRIMARY	6

Y - SEPARATE ILLUSTRATION

<END>

566-7452 ENGINE AR-PRIMARY

S/N: Z2K1-UP; Z2N1-UP
PART OF 575-9708 ENGINE AR-COMPLETE
AN ATTACHMENT

SMCS-1000 **i07840030**

NOTE	PART NUMBER	QTY	PART NAME 1 2 3 4 5 6 (PRODUCT LEVEL)	SEE PAGE
Y	**575-3346**	1	ENGINE AR-COMPLETE	6

Y - SEPARATE ILLUSTRATION

<END>

569-0811 ENGINE AR-PRIMARY

S/N: 4501-UP

PART OF 575-3346 ENGINE AR-COMPLETE

AN ATTACHMENT

SMCS-1000 **i07840010**

NOTE	PART NUMBER	QTY	PART NAME 1 2 3 4 5 6 (PRODUCT LEVEL)	SEE PAGE
Y	*346-0099*	1	BASE GP-OIL COOLER & FILTER	61
Y	*376-1108*	1	BELT TENSIONER GP	9
Y	*433-6938*	1	BRACKET GP-MOUNTING (BREATHER)	134
Y	*396-2615*	1	CAMSHAFT GP	10
Y	*374-7094*	1	COMPRESSOR & MTG GP-REFRIG	644
Y	*373-3607*	1	CONNECTION GP-WATER	62
Y	*495-3105*	1	CONTROL & MTG GP-ELECTRONIC	141
Y	*389-3346*	1	COVER GP-VALVE MECHANISM	12
Y	*374-6300*	1	CRANKSHAFT GP	13
Y	*390-0854*	1	CYLINDER BLOCK GP	16
Y	*385-2572*	1	CYLINDER HEAD GP	20
Y	*378-8166*	1	DRAIN GP-ENGINE OIL	24
Y	*375-3937*	1	DRIVE GP-FAN	25
Y	*375-0098*	1	FASTENER GP-DAMPER & PULLEY	26
Y	*419-6603*	1	FILLER GP-ENGINE OIL	51
Y	*346-0220*	1	FILTER GP-ENGINE OIL	52
Y	*453-7163*	1	FILTER GP-FUEL	95
Y	*345-9030*	1	FLYWHEEL GP	27
Y	*378-0625*	1	GAUGE GP-OIL LEVEL (DIPSTICK)	53
Y	*345-8846*	1	HOUSING GP-FLYWHEEL	28
Y	*371-2716*	1	HOUSING GP-FRONT	29
Y	*371-2483*	1	INJECTOR GP-FUEL	97
Y	*371-2478*	1	JET GP-PISTON COOLING	31
Y	*371-2740*	1	LIFTING GP-ENGINE	32
Y	*432-6484*	1	LINES GP-FUEL FILTER	108
Y	*393-7694*	1	MANIFOLD GP-EXHAUST	83
Y	*391-5523*	1	MANIFOLD GP-INLET	84
Y	*371-2558*	1	MOUNTING GP-ALTERNATOR	33
Y	*395-0112*	1	MOUNTING GP-ELECTRONIC CONTROL	198
Y	*346-1510*	1	MOUNTING GP-ENGINE	34
Y	*371-2544*	1	PAN GP-OIL	36
Y	*486-3208*	1	PISTON & ROD GP	40
Y	*374-9295*	1	PLUG GP-CYLINDER BLOCK	44
Y	*346-2908*	1	PLUG GP-ENGINE	45
Y	*371-2554*	1	PULLEY GP-CRANKSHAFT	46
Y	*462-6685*	1	PUMP GP-ENGINE OIL	59
Y	*391-4811*	1	PUMP GP-FUEL INJECTION	113
Y	*372-2297*	1	PUMP GP-WATER	73
Y	*394-9639*	1	RAIL GP-FUEL	117
Y	*371-2480*	1	ROCKER ARM GP	49
Y	*395-0110*	1	SENSOR GP-ENGINE	199
Y	*395-0114*	1	STARTING AID GP	211
Y	*371-2720*	1	TURBOCHARGER GP	89
Y	*371-2745*	1	VALVE GP-FLUID SAMPLING	60
Y	*395-0113*	1	WIRING GP-ENGINE	246

569-0811 **ENGINE AR-PRIMARY (**contd.**)** **i07840010**

NOTE	PART NUMBER	QTY	PART NAME 1 2 3 4 5 6 (PRODUCT LEVEL)	SEE PAGE
Y - SEPARATE ILLUSTRATION				

<END>

559-5994 INSTALLATION AR-ENGINE

S/N: Z2K1-UP; Z2N1-UP
PART OF 532-9780 COMMON AR
AN ATTACHMENT

SMCS-1000 **i07817541**

NOTE	PART NUMBER	QTY	PART NAME 1 2 3 4 5 6 (PRODUCT LEVEL)	SEE PAGE
Y	*566-1884*	1	ALTERNATOR GP-CHARGING	127
Y	*507-8263*	1	FAN GP-SUCTION	70
Y	*528-4814*	1	GUARD GP-ALTERNATOR	151
Y	*561-5159*	1	LINES GP-AIR	80
Y	*561-4259*	1	LINES GP-HEATER	703
Y	*561-2381*	1	LINES GP-WATER	71
Y	*508-2572*	1	MOUNTING GP-ENGINE & XMSN	35
Y	*565-3057*	1	MUFFLER GP	85
Y - SEPARATE ILLUSTRATION				

<END>

376-1108 BELT TENSIONER GP

S/N: 4501-UP
PART OF 569-0811 ENGINE AR-PRIMARY
AN ATTACHMENT

SMCS-1358 **i05330735**

NOTE	REF NO	GRAPHIC REF	PART NUMBER	QTY	PART NAME 1 2 3 4 5 6 (PRODUCT LEVEL)	SEE PAGE
	1	1	**369-1255**	1	TENSIONER	

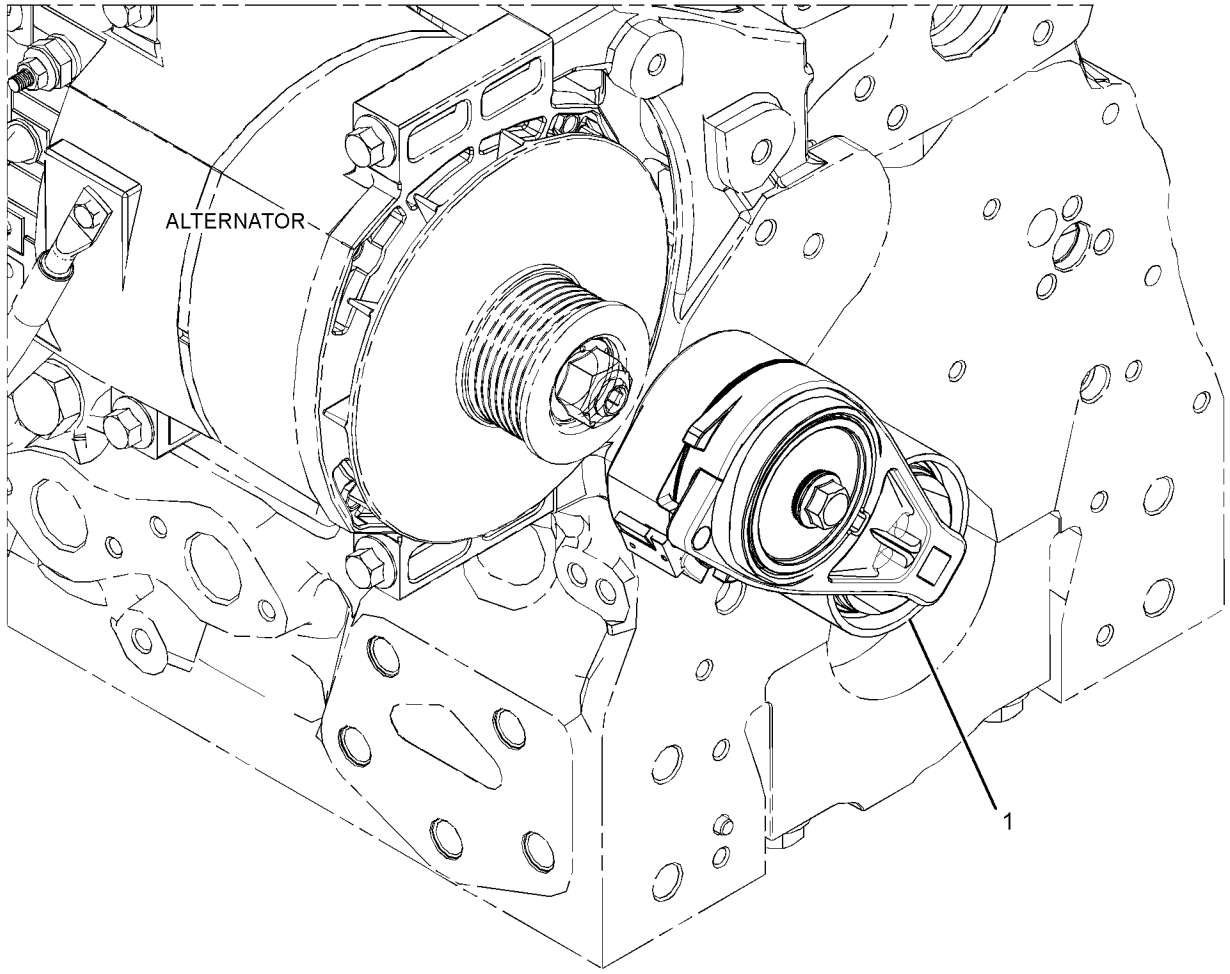

GRAPHIC #1 <END> g02514017

396-2615 CAMSHAFT GP

S/N: 4501-UP
PART OF 569-0811 ENGINE AR-PRIMARY
AN ATTACHMENT

SMCS-1210 **i05330842**

NOTE	REF NO	GRAPHIC REF	PART NUMBER	QTY	PART NAME 1 2 3 4 5 6 (PRODUCT LEVEL)	SEE PAGE
	1	1	**278-5125**	12	TAPPET	
	2	1	**396-8795**	1	CAMSHAFT GP	
	2A	1	**067-6135**	1	KEY-WOODRUFF	
	3	1	**319-8426**	12	PUSHROD	

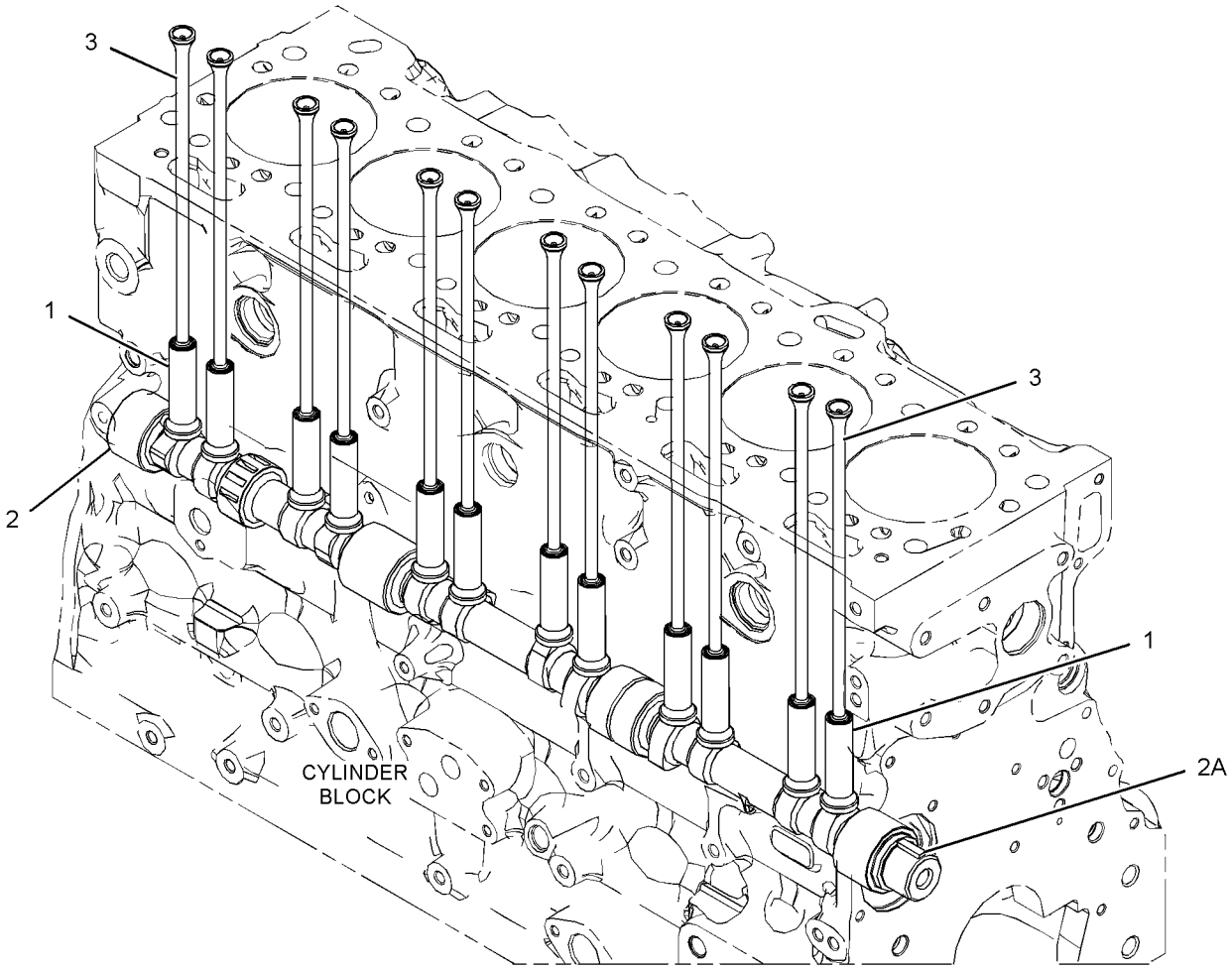

GRAPHIC #1 <END> g03380150

331-0290 CONNECTING ROD GP

S/N: Z2K1-UP; Z2N1-UP
PART OF 369-7304 PISTON & ROD GP
AN ATTACHMENT

SMCS-1218 **i06951990**

NOTE	REF NO	GRAPHIC REF	PART NUMBER	QTY	PART NAME 1 2 3 4 5 6 (PRODUCT LEVEL)	SEE PAGE
	1	1	**276-7478**	1	BUSHING	
M	2	1	**323-9312**	2	BOLT (M10X1X50-MM)	

M - METRIC PART

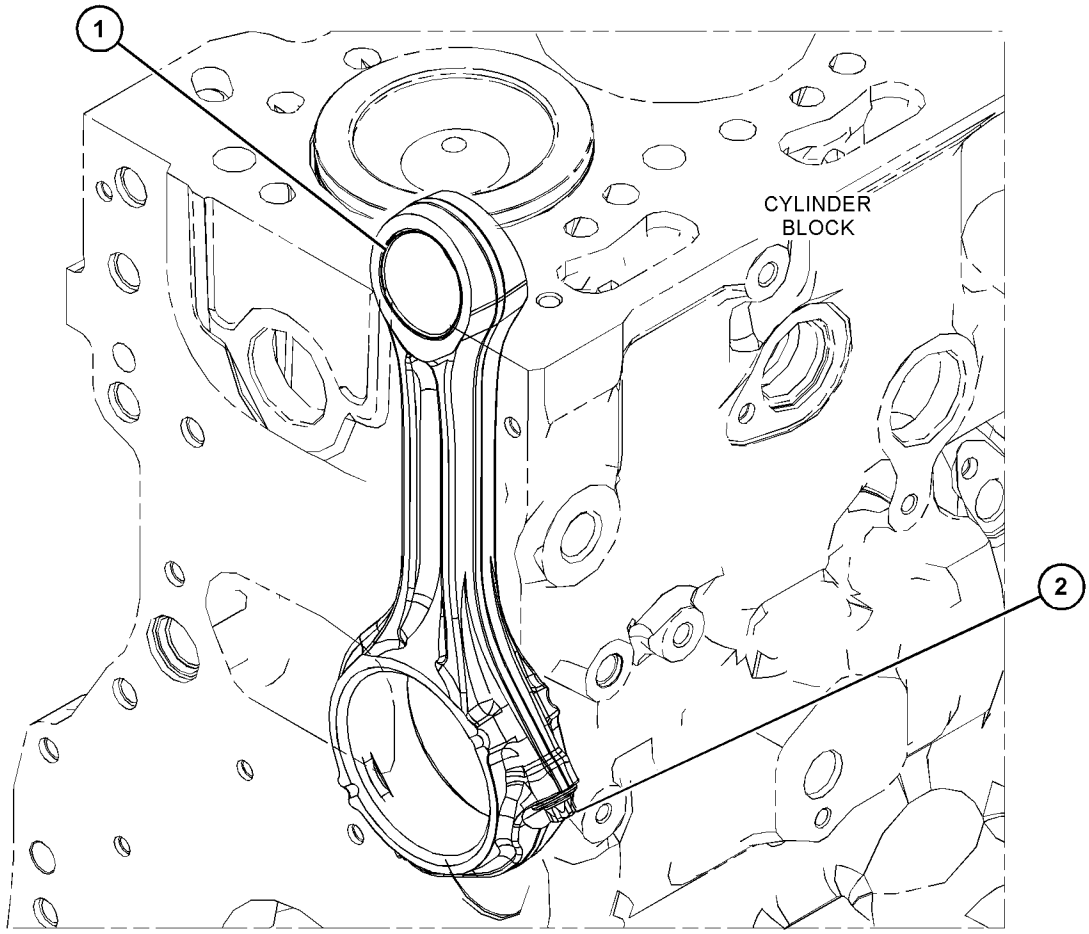

GRAPHIC #1 <END> g03551985

389-3346 COVER GP-VALVE MECHANISM

S/N: 4501-UP
PART OF 569-0811 ENGINE AR-PRIMARY
AN ATTACHMENT

SMCS-1107 **i07636240**

NOTE	REF NO	GRAPHIC REF	PART NUMBER	QTY	PART NAME 1 2 3 4 5 6 (PRODUCT LEVEL)	SEE PAGE
M	1	1	**101-3895**	9	BOLT (M8X1.25X35-MM)	
M	2	1	**103-5705**	6	BOLT (M8X1.25X110-MM)	
C	3	1	**527-1637**	1	COVER GP-VALVE MECHANISM	
M	3A	1	**195-9245**	3	SCREW (M4X0.7X10-MM)	
	3B	1	**527-1641**	1	SEAL	
	3C	1	**380-9615**	1	BREATHER	
		1	**326-7289**	1	SEAL-O-RING	
	4	1	**566-7931**	1	GASKET	
	5	1	**383-1388**	1	COVER-BASE	
M	6	1	**6I-0217**	14	BOLT (M8X1.25X20-MM)	

C - CHANGE FROM PREVIOUS TYPE
M - METRIC PART

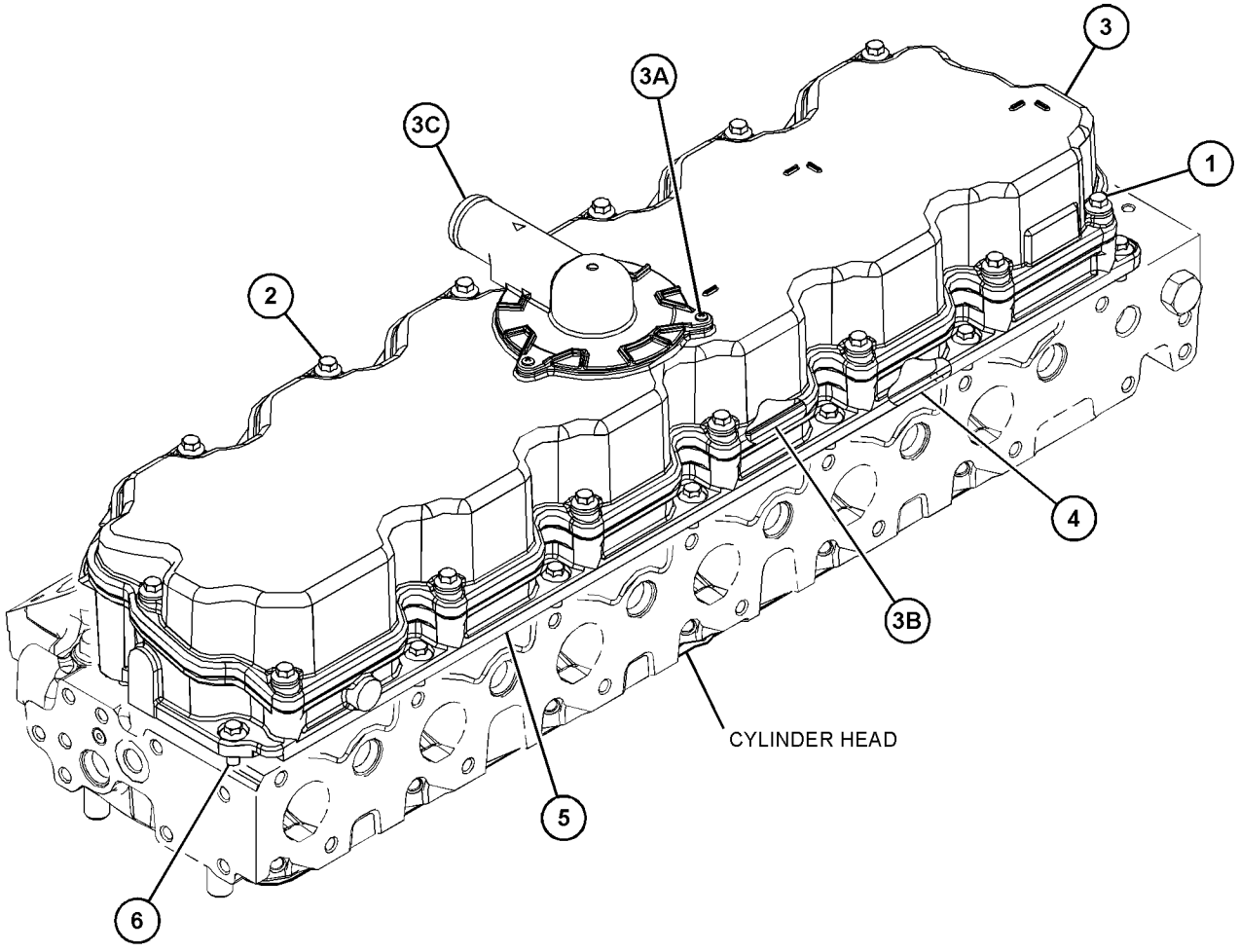

GRAPHIC #1 <END> g06145214

374-6300 CRANKSHAFT GP

S/N: 4501-UP; Z2K1-UP; Z2N1-UP

PART OF 451-1222 CYLINDER BLOCK GP-SHORT, 569-0811 ENGINE AR-PRIMARY

AN ATTACHMENT

SMCS-1202 **i06990996**

NOTE	REF NO	GRAPHIC REF	PART NUMBER	QTY	PART NAME 1 2 3 4 5 6 (PRODUCT LEVEL)	SEE PAGE
	1	1	**067-6135**	1	KEY-WOODRUFF	
	2	1	**276-7391**	1	GEAR (34-TEETH)	
M	3	1	**276-7394**	3	SCREW (M6X1XX12-MM)	
	4	1	**339-8780**	1	DOWEL	
J	5	1	*363-0559*	2	WASHER-THRUST	
	6	1	**376-4074**	1	CRANKSHAFT	
	7	1	**376-4078**	1	DISC-TIMING	
CP	8	1	*470-8101*	7	BEARING-CRANKSHAFT (STANDARD-UPPER)	
CP	9	1	*470-8171*	7	BEARING-CRANKSHAFT (STANDARD-LOWER)	
					AVAILABLE REPAIR KIT(S):	
P			**448-4217**	1	KIT-BEARING (STANDARD)	
					(INCLUDES BEARINGS)	
AB			**448-4218**		KIT-BEARING (0.254-MM US)	
					(INCLUDES BEARINGS)	
AB			**448-4220**		KIT-BEARING (0.508-MM US)	
					(INCLUDES BEARINGS)	
AB			**448-4222**		KIT-BEARING (0.762-MM US)	
					(INCLUDES BEARINGS)	
J			**364-5145**	1	KIT-WASHER (STANDARD)	
					(INCLUDES WASHERS)	
AB			**448-4227**		KIT-WASHER (0.20-MM US)	
					(INCLUDES WASHERS)	

A - NOT PART OF THIS GROUP
B - USE AS REQUIRED
C - CHANGE FROM PREVIOUS TYPE
J - KIT MARKED J SERVICES PART(S) MARKED J
M - METRIC PART
P - KIT MARKED P SERVICES PART(S) MARKED P

374-6300 **CRANKSHAFT GP (**contd.**)** **i06990996**

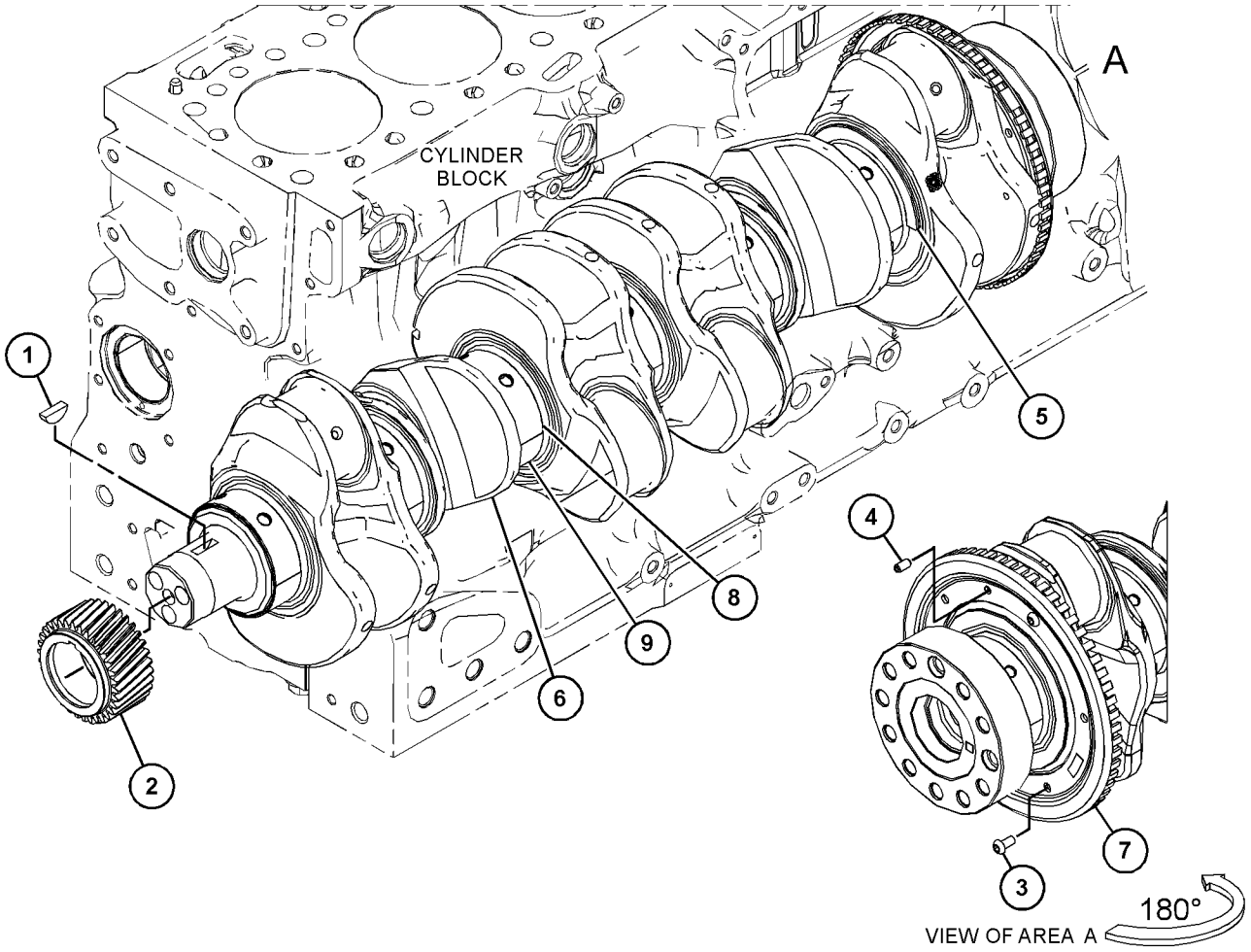

GRAPHIC #1 <END> g06188935

383-3581 CYLINDER BLOCK AS

S/N: 4501-UP; Z2K1-UP; Z2N1-UP
PART OF 390-0854 CYLINDER BLOCK GP
AN ATTACHMENT

SMCS-1201 **i07383704**

NOTE	REF NO	GRAPHIC REF	PART NUMBER	QTY	PART NAME 1 2 3 4 5 6 (PRODUCT LEVEL)	SEE PAGE
	1	1	**232-7597**	2	PLUG	
	2	1	**276-5602**	2	PLUG-CORE	
	3	1	**232-7596**	1	PLUG	
	4	1	**067-6043**	7	PLUG-SIDE	
	5	1	**067-6823**	1	PLUG	
	6	1	**185-0884**	2	DOWEL	
	7	1	**225-8858**	2	PLUG	
	8	1	**232-7599**	2	PLUG	
	9	1	**276-5600**	14	BOLT-SPECIAL (BEARING CAP)	
	10	1	**331-6835**	2	PLUG-SEAL	
F			**370-6545**	1	BUSHING-CAMSHAFT	

F - NOT SHOWN

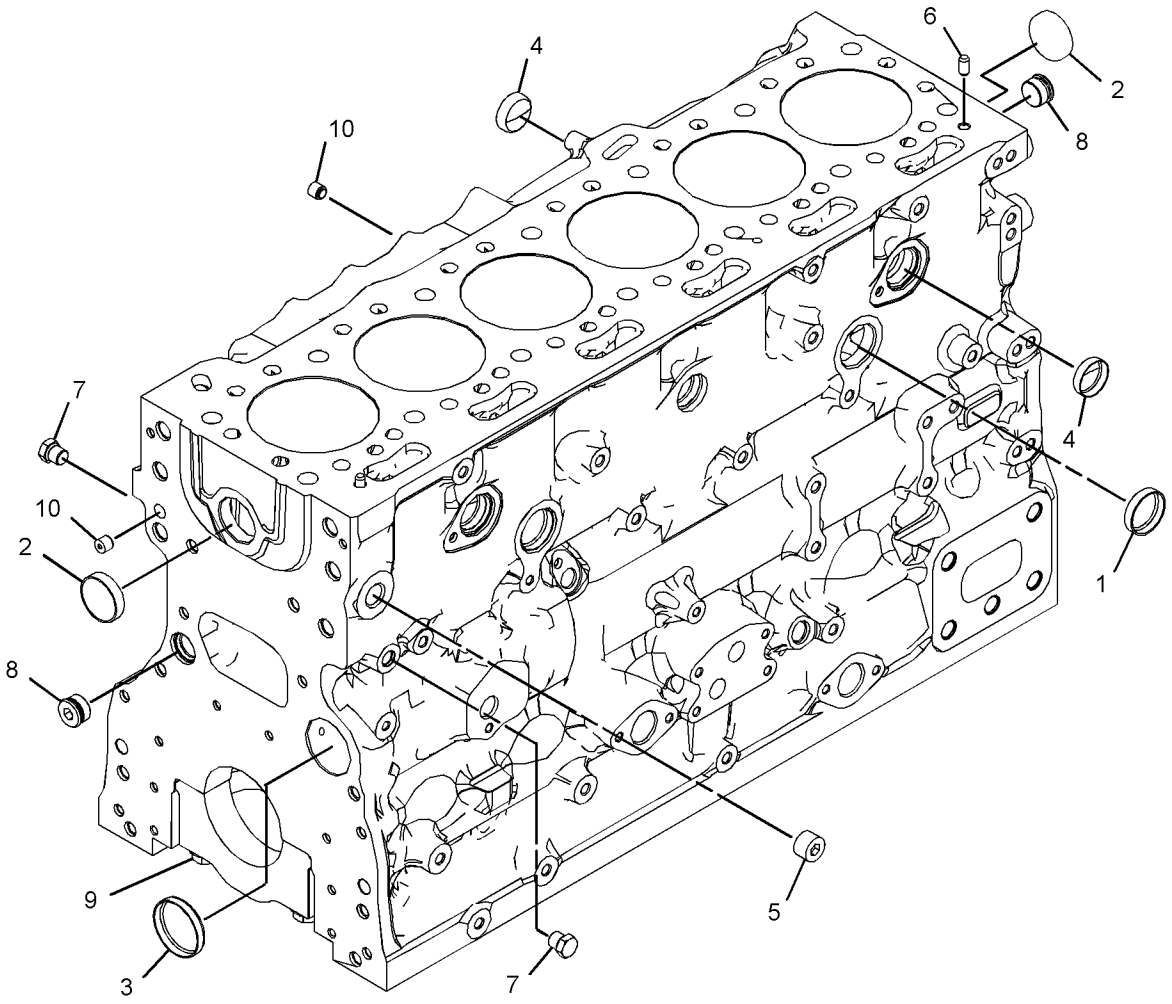

GRAPHIC #1 <END> g03351937

390-0854 CYLINDER BLOCK GP

S/N: 4501-UP; Z2K1-UP; Z2N1-UP
PART OF 451-1222 CYLINDER BLOCK GP-SHORT, 569-0811 ENGINE AR-PRIMARY
AN ATTACHMENT

SMCS-1201 **i06547930**

NOTE	REF NO	GRAPHIC REF	PART NUMBER	QTY	PART NAME 1 2 3 4 5 6 (PRODUCT LEVEL)	SEE PAGE
	1	1	**276-5603**	1	SEAL-O-RING	
Y	2	1	*383-3581*	1	CYLINDER BLOCK AS	15
M	3	1	**209-9219**	10	BOLT (M8X1.25X16-MM)	
	4	1	**232-7449**	1	HOUSING AS	
	5	1	**232-1322**	1	PLUG	

M - METRIC PART
Y - SEPARATE ILLUSTRATION

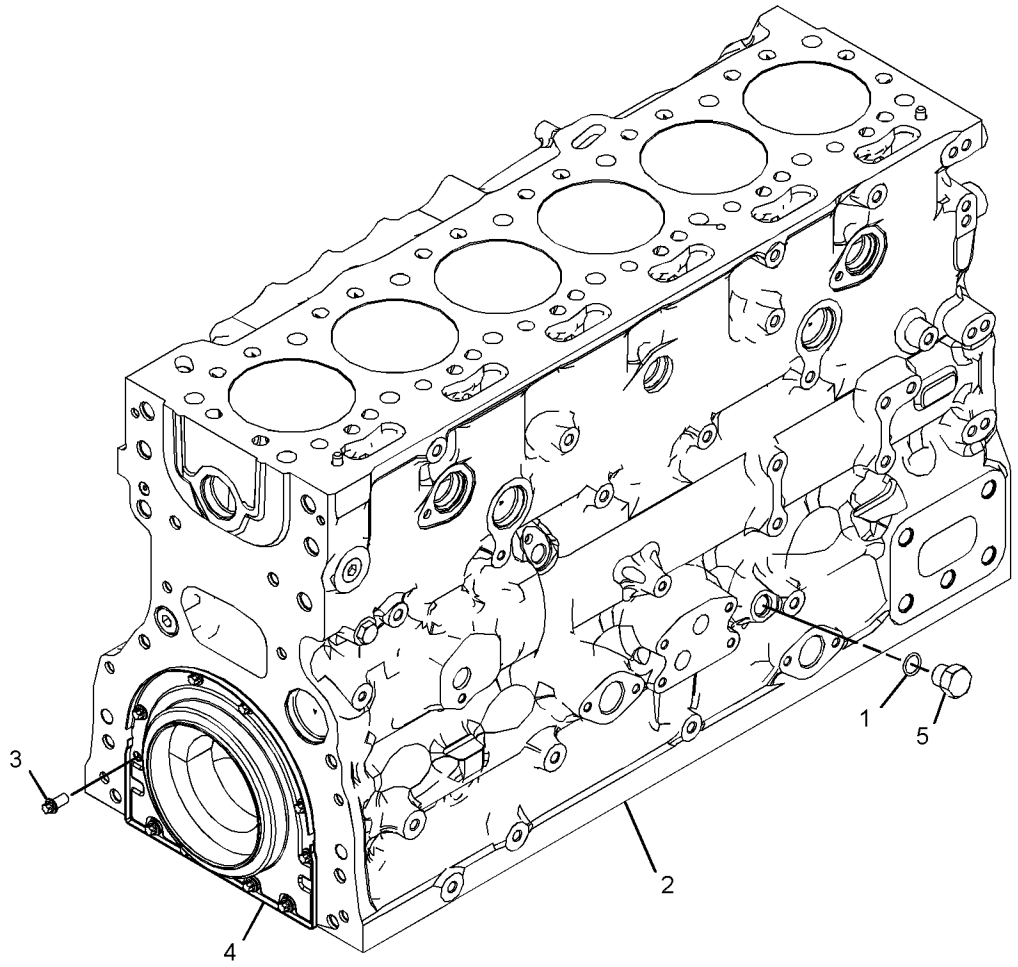

GRAPHIC #1 <END> g03384924

451-1222 CYLINDER BLOCK GP-SHORT

S/N: Z2K1-UP; Z2N1-UP
PART OF 451-8385 CYLINDER BLOCK GP-SHORT
AN ATTACHMENT

SMCS-1200 **i07270810**

NOTE	REF NO	GRAPHIC REF	PART NUMBER	QTY	PART NAME 1 2 3 4 5 6 (PRODUCT LEVEL)	SEE PAGE
Y	1	1	*369-7304*	1	PISTON & ROD GP	38
Y	2	1	*371-2478*	1	JET GP-PISTON COOLING	31
Y	3	1	*374-6300*	1	CRANKSHAFT GP	13
	4	1	*451-8317*	1	PAN GP-OIL	
M	4A	1	**8T-0269**	2	BOLT-SOCKET HEAD (M6X1X20-MM)	
	4B	1	**230-8094**	1	BRIDGE	
Y	5	1	*390-0854*	1	CYLINDER BLOCK GP	16

M - METRIC PART
Y - SEPARATE ILLUSTRATION

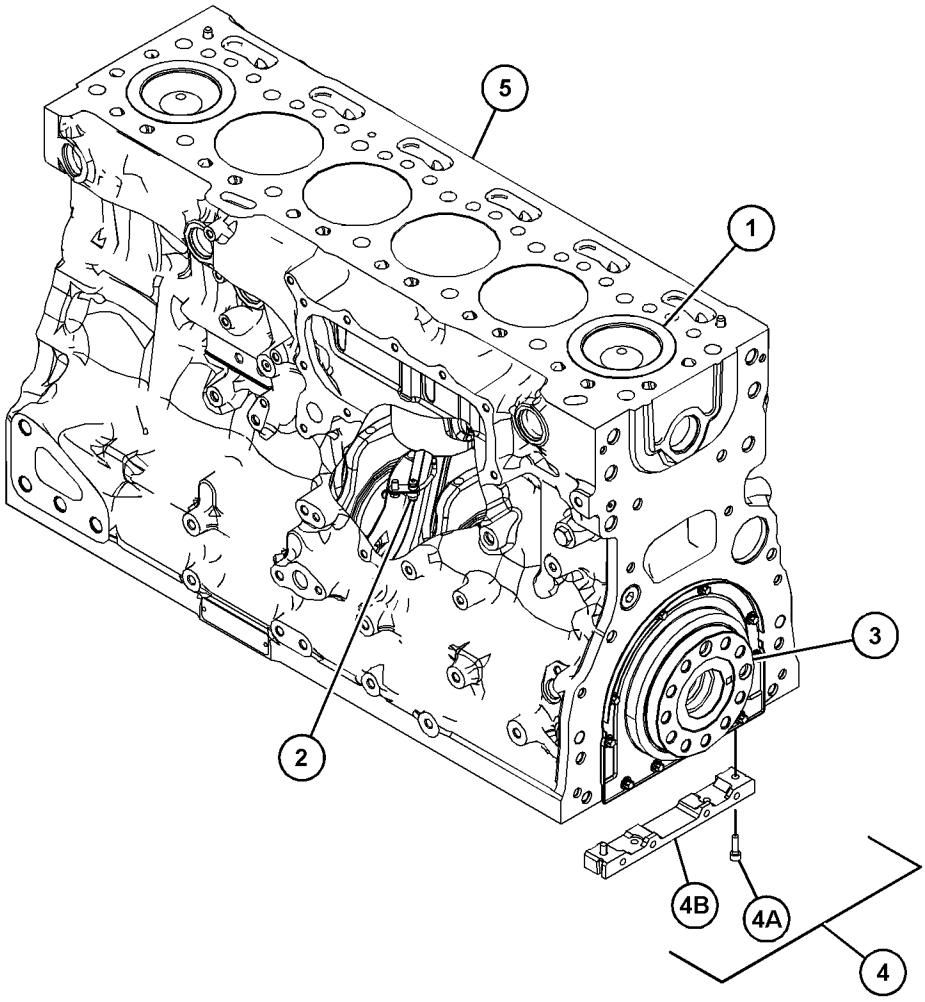

GRAPHIC #1 <END> g03733390

451-8385 CYLINDER BLOCK GP-SHORT

S/N: Z2K1-UP; Z2N1-UP
PART OF 575-3346 ENGINE AR-COMPLETE
AN ATTACHMENT

SMCS-1200 **i05906121**

NOTE	REF NO	GRAPHIC REF	PART NUMBER	QTY	PART NAME 1 2 3 4 5 6 (PRODUCT LEVEL)	SEE PAGE
Y	1	1	**451-1222**	1	CYLINDER BLOCK GP-SHORT	17

Y - SEPARATE ILLUSTRATION

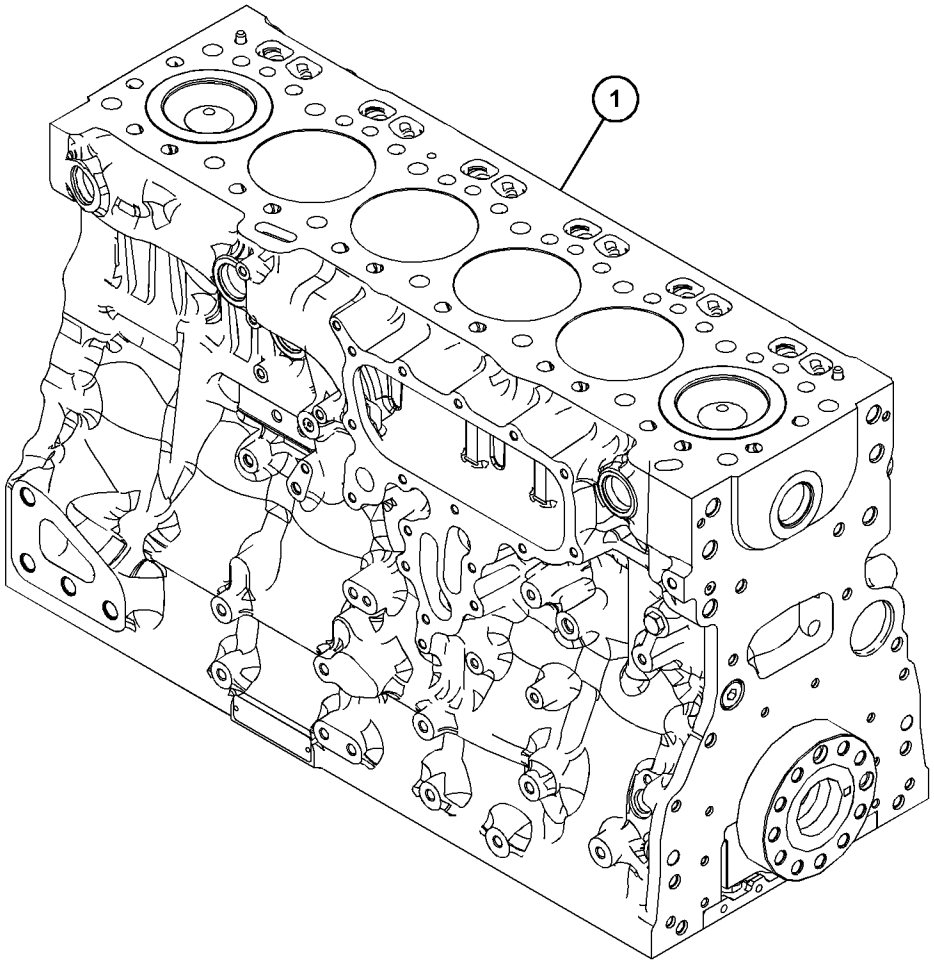

GRAPHIC #1 <END> g03697536

384-5313 CYLINDER HEAD AS

S/N: 4501-UP; Z2K1-UP; Z2N1-UP
PART OF 385-2572, 452-6586 CYLINDER HEAD GP
AN ATTACHMENT

SMCS-1100, 1101

i05330860

NOTE	REF NO	GRAPHIC REF	PART NUMBER	QTY	PART NAME 1 2 3 4 5 6 (PRODUCT LEVEL)	SEE PAGE
	1	1	**276-8116**	6	PLUG-CORE	
	2	1	**377-0400**	12	INSERT-VALVE SEAT (EXHAUST)	
	3	1	**377-0399**	12	INSERT-VALVE SEAT (INTAKE)	
	4	1	**276-8117**	13	PLUG-CORE	

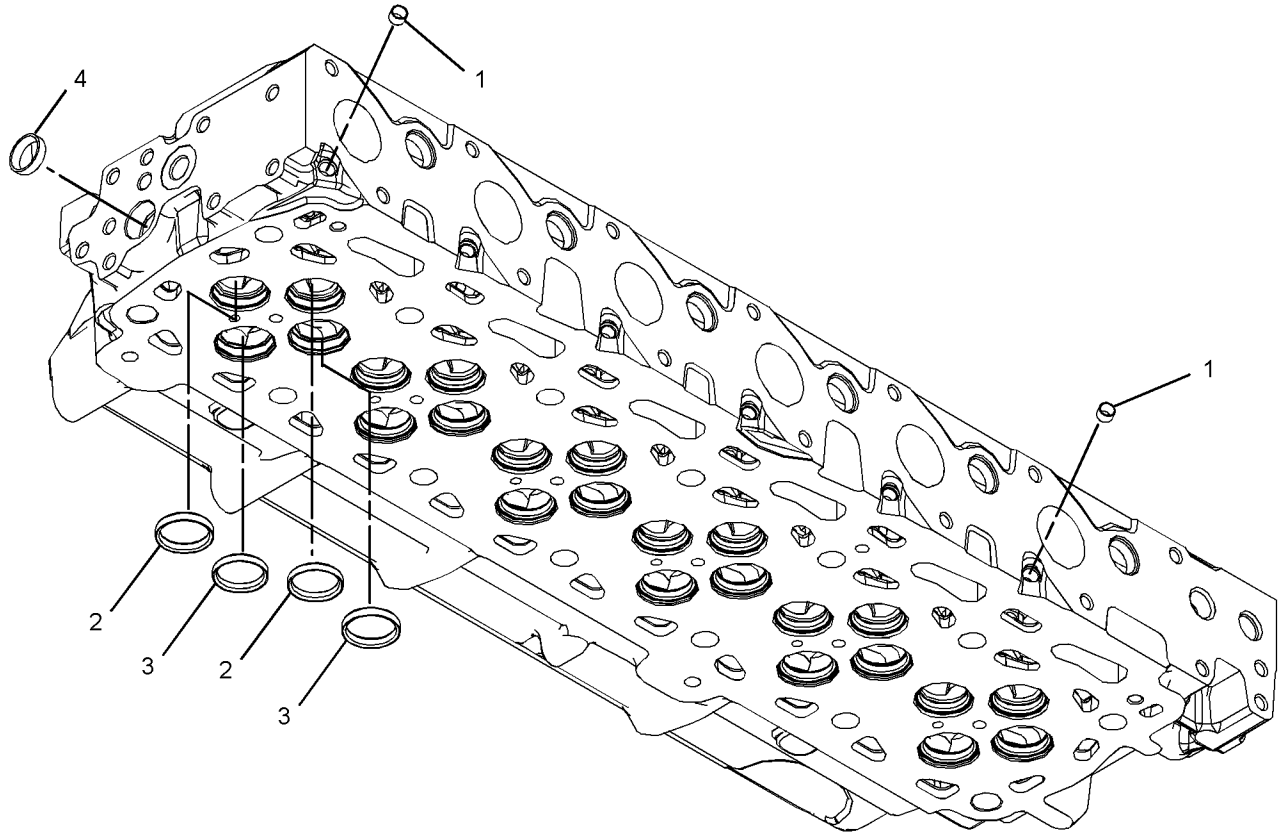

GRAPHIC #1 <END> g03379426

385-2572 CYLINDER HEAD GP

S/N: 4501-UP
PART OF 569-0811 ENGINE AR-PRIMARY
AN ATTACHMENT

SMCS-1100 **i05330848**

NOTE	REF NO	GRAPHIC REF	PART NUMBER	QTY	PART NAME 1 2 3 4 5 6 (PRODUCT LEVEL)	SEE PAGE
	1	1	**199-9751**	1	SEAL-O-RING	
Y	2	1	**384-5313**	1	CYLINDER HEAD AS	19
	3	1	**388-4707**	1	GASKET-CYLINDER HEAD	
	4	1	**232-1322**	1	PLUG	
	5	1	**276-8134**	14	BOLT-SPECIAL (CYLINDER HEAD)	
	6	1	**277-4302**	2	DOWEL	
	7	1	**295-6661**	1	PLUG	

Y - SEPARATE ILLUSTRATION

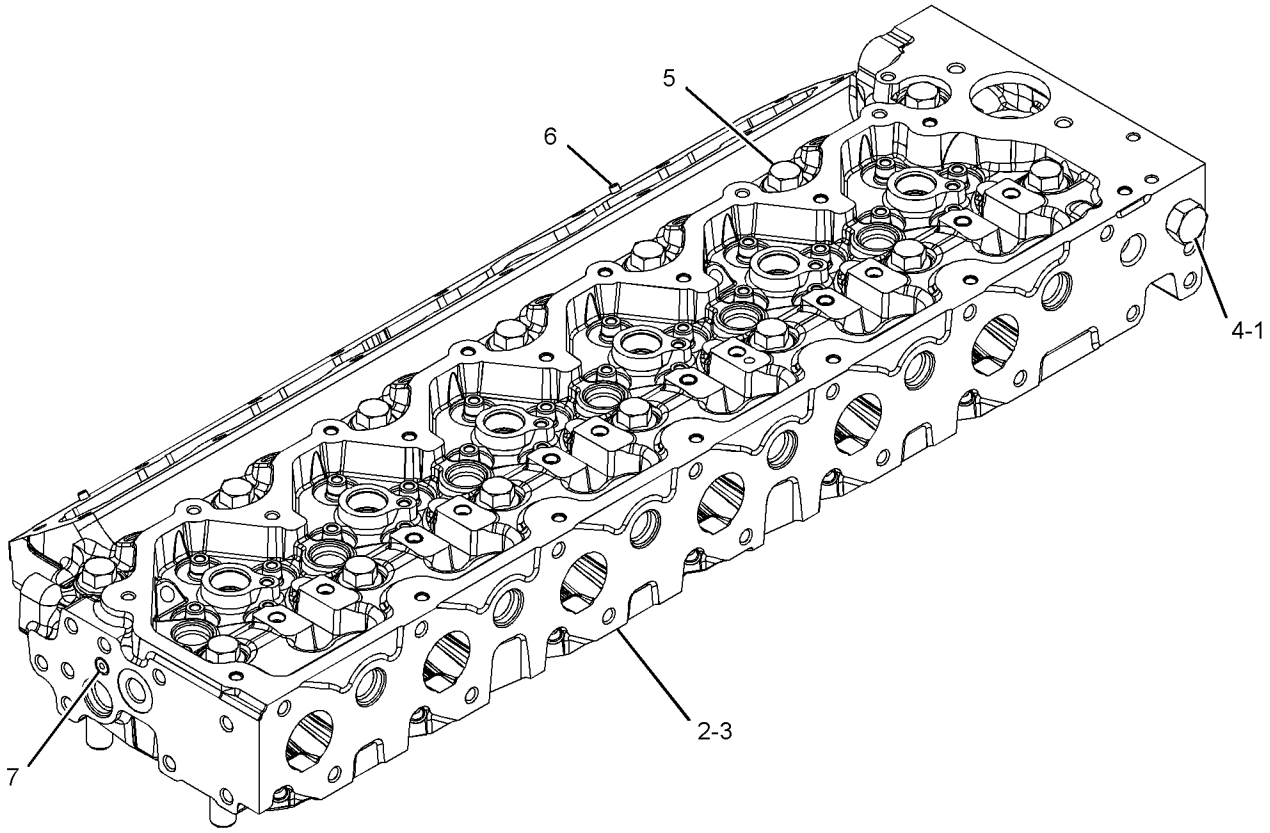

GRAPHIC #1 <END> g03379427

452-6582 CYLINDER HEAD GP

S/N: Z2K1-UP; Z2N1-UP
PART OF 575-3346 ENGINE AR-COMPLETE
AN ATTACHMENT

SMCS-1100 **i05906125**

NOTE	REF NO	GRAPHIC REF	PART NUMBER	QTY	PART NAME 1 2 3 4 5 6 (PRODUCT LEVEL)	SEE PAGE
Y	1	1	**452-6584**	1	CYLINDER HEAD GP (SHORT)	22

Y - SEPARATE ILLUSTRATION

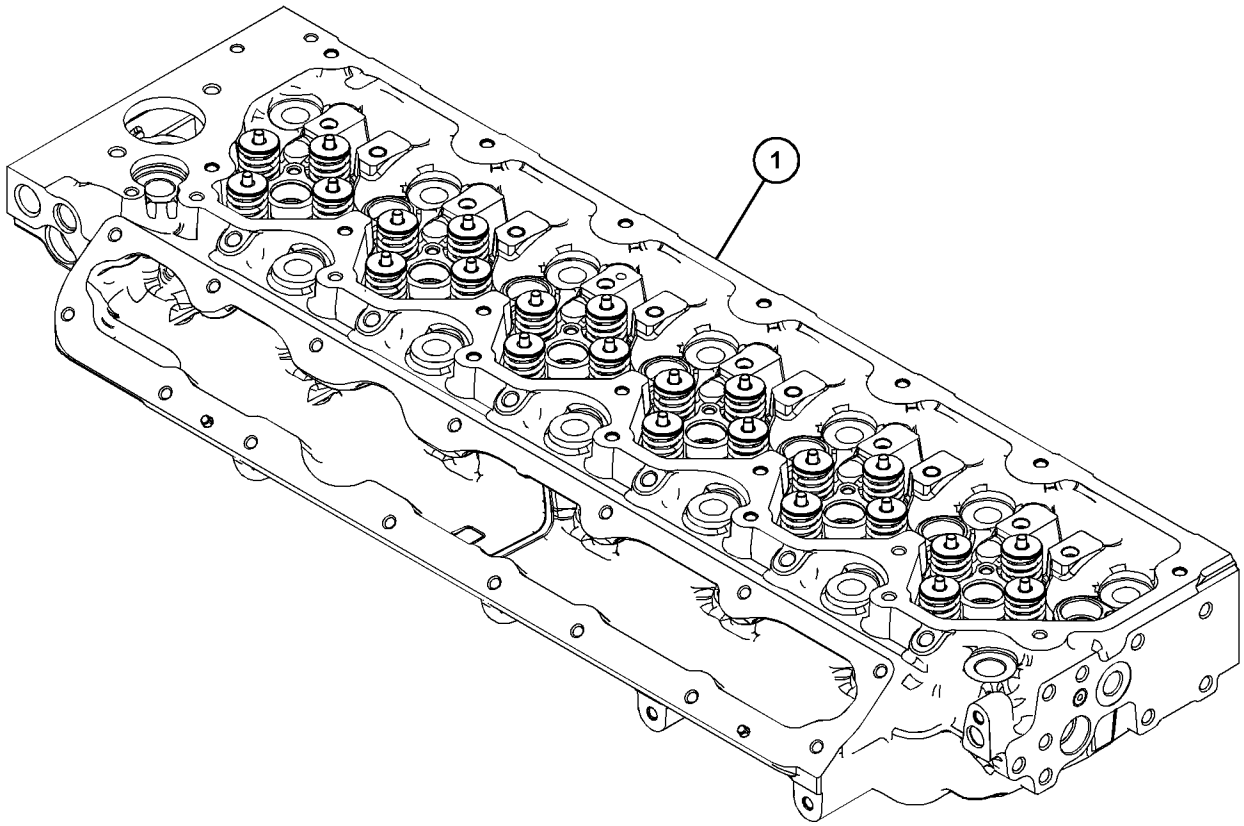

GRAPHIC #1 <END> g03697902

452-6584 CYLINDER HEAD GP

S/N: Z2K1-UP; Z2N1-UP
PART OF 452-6582 CYLINDER HEAD GP
AN ATTACHMENT

SMCS-1100 **i07270811**

NOTE	REF NO	GRAPHIC REF	PART NUMBER	QTY	PART NAME 1 2 3 4 5 6 (PRODUCT LEVEL)	SEE PAGE
Y	1	1	*452-6585*	1	ROCKER ARM GP	50
Y	2	1	*452-6586*	1	CYLINDER HEAD GP	23

Y - SEPARATE ILLUSTRATION

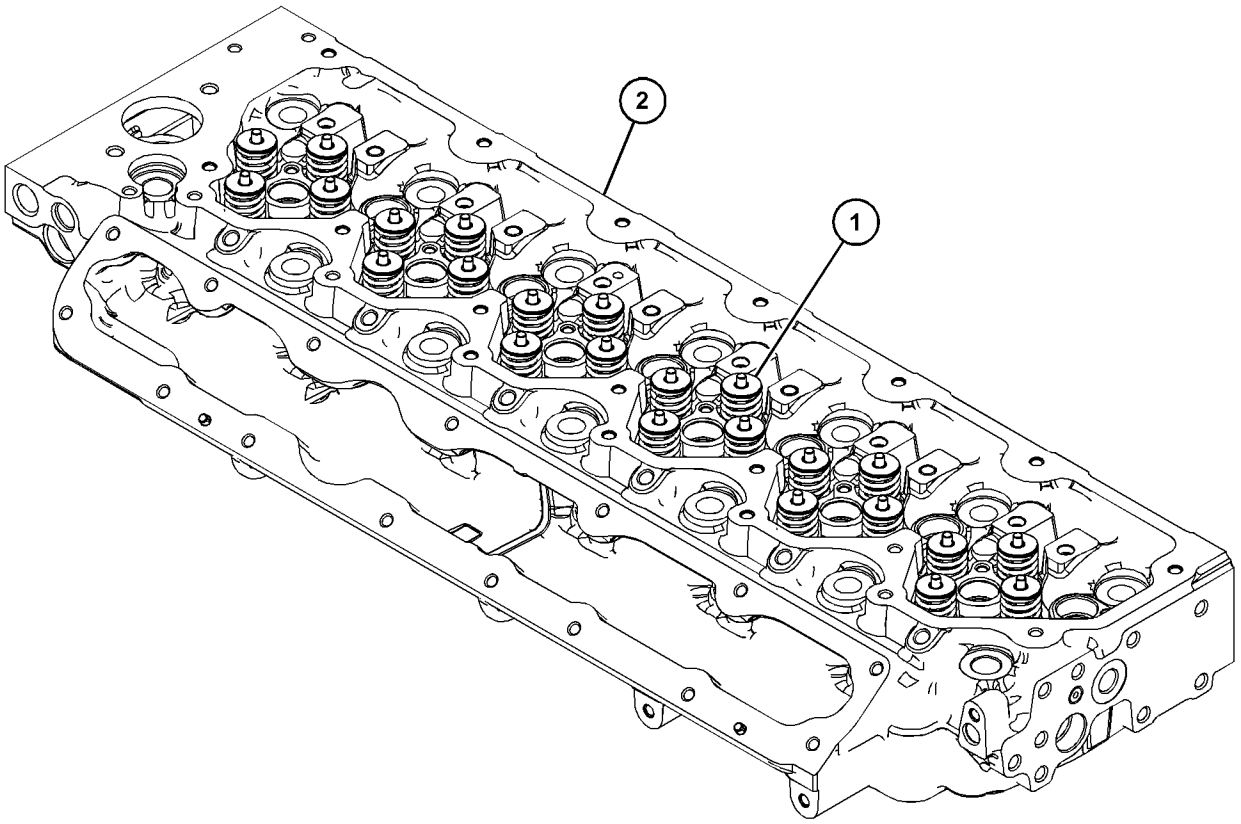

GRAPHIC #1 <END> g03674499

452-6586 CYLINDER HEAD GP

S/N: Z2K1-UP; Z2N1-UP
PART OF 452-6584 CYLINDER HEAD GP
AN ATTACHMENT

SMCS-1100 **i05883716**

NOTE	REF NO	GRAPHIC REF	PART NUMBER	QTY	PART NAME 1 2 3 4 5 6 (PRODUCT LEVEL)	SEE PAGE
	1	1	**199-9751**	1	SEAL-O-RING	
	2	1	**277-4302**	2	DOWEL	
	3	1	**295-6661**	1	PLUG	
	4	1	**232-1322**	1	PLUG	
Y	5	1	*384-5313*	1	CYLINDER HEAD AS	19

Y - SEPARATE ILLUSTRATION

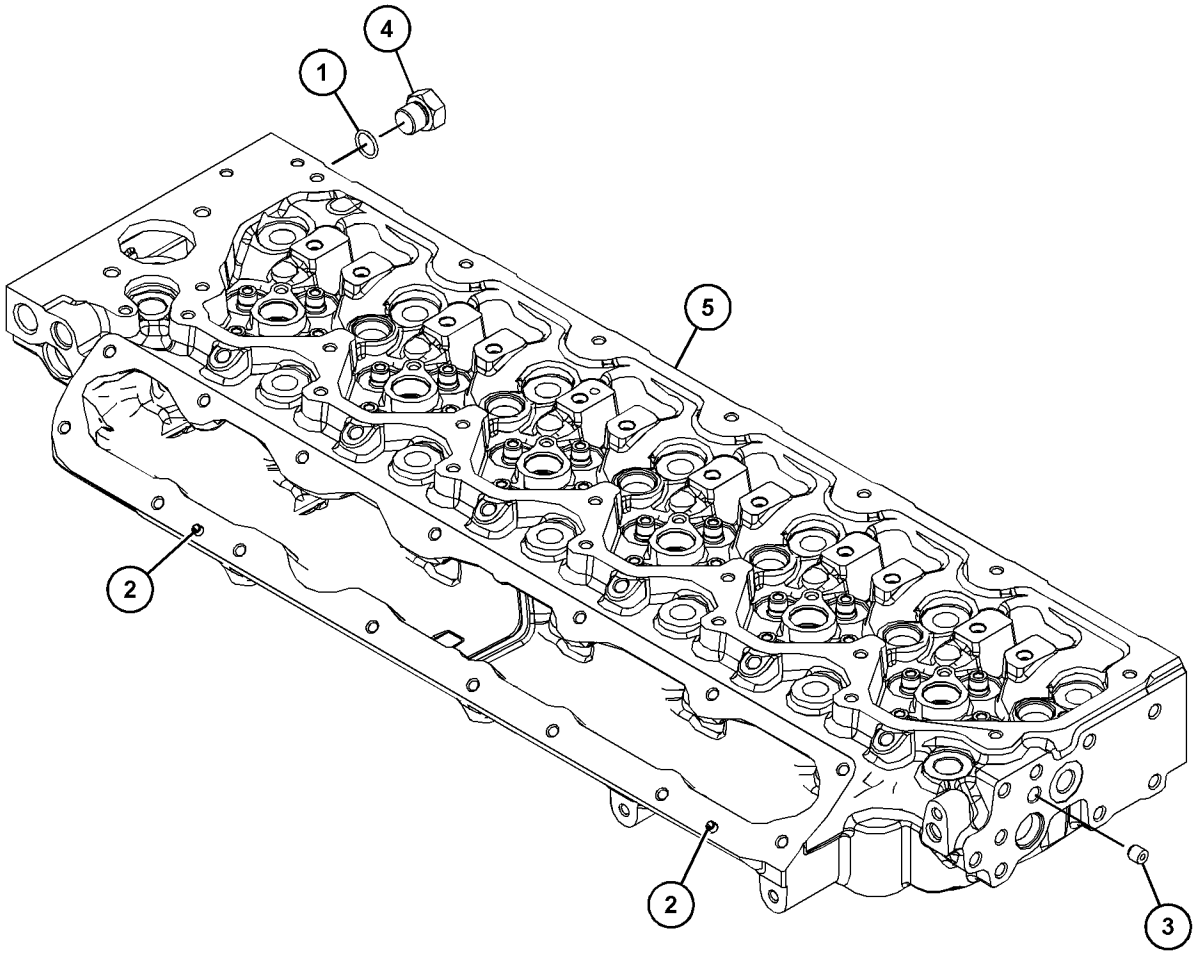

GRAPHIC #1 <END> g03714865

378-8166 DRAIN GP-ENGINE OIL

S/N: 4501-UP

PART OF 569-0811 ENGINE AR-PRIMARY

AN ATTACHMENT

SMCS-1302 **i05892196**

NOTE	REF NO	GRAPHIC REF	PART NUMBER	QTY	PART NAME 1 2 3 4 5 6 (PRODUCT LEVEL)	SEE PAGE
	1	1	**6V-7238**	1	VALVE-SHUTOFF	
	2	1	**3K-0360**	1	SEAL-O-RING	

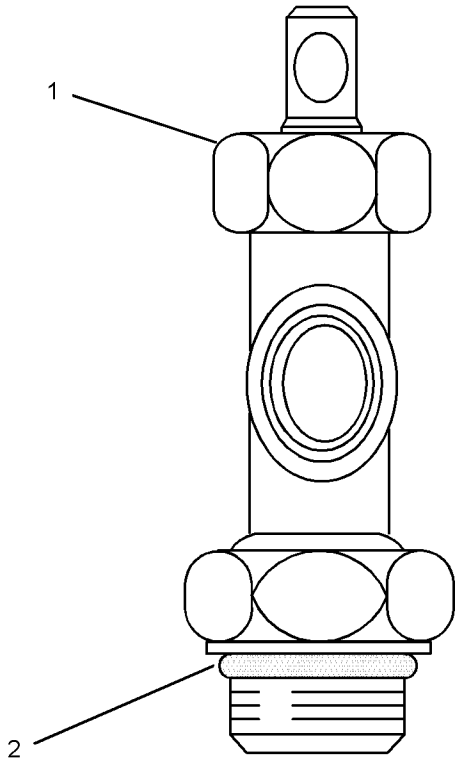

GRAPHIC #1 <END> g03457400

375-3937 DRIVE GP-FAN

S/N: 4501-UP
PART OF 569-0811 ENGINE AR-PRIMARY
AN ATTACHMENT

SMCS-1359 **i07382388**

NOTE	REF NO	GRAPHIC REF	PART NUMBER	QTY	PART NAME 1 2 3 4 5 6 (PRODUCT LEVEL)	SEE PAGE
	1	1	**371-8298**	1	BRACKET	
	2	1	**377-9255**	1	PULLEY AS (8-GROOVE)	
M		1	**423-7576**	1	BOLT (M10X1.5X50-MM)	
M	3	1	**111-0859**	2	BOLT (M10X1.5X35-MM)	

M - METRIC PART

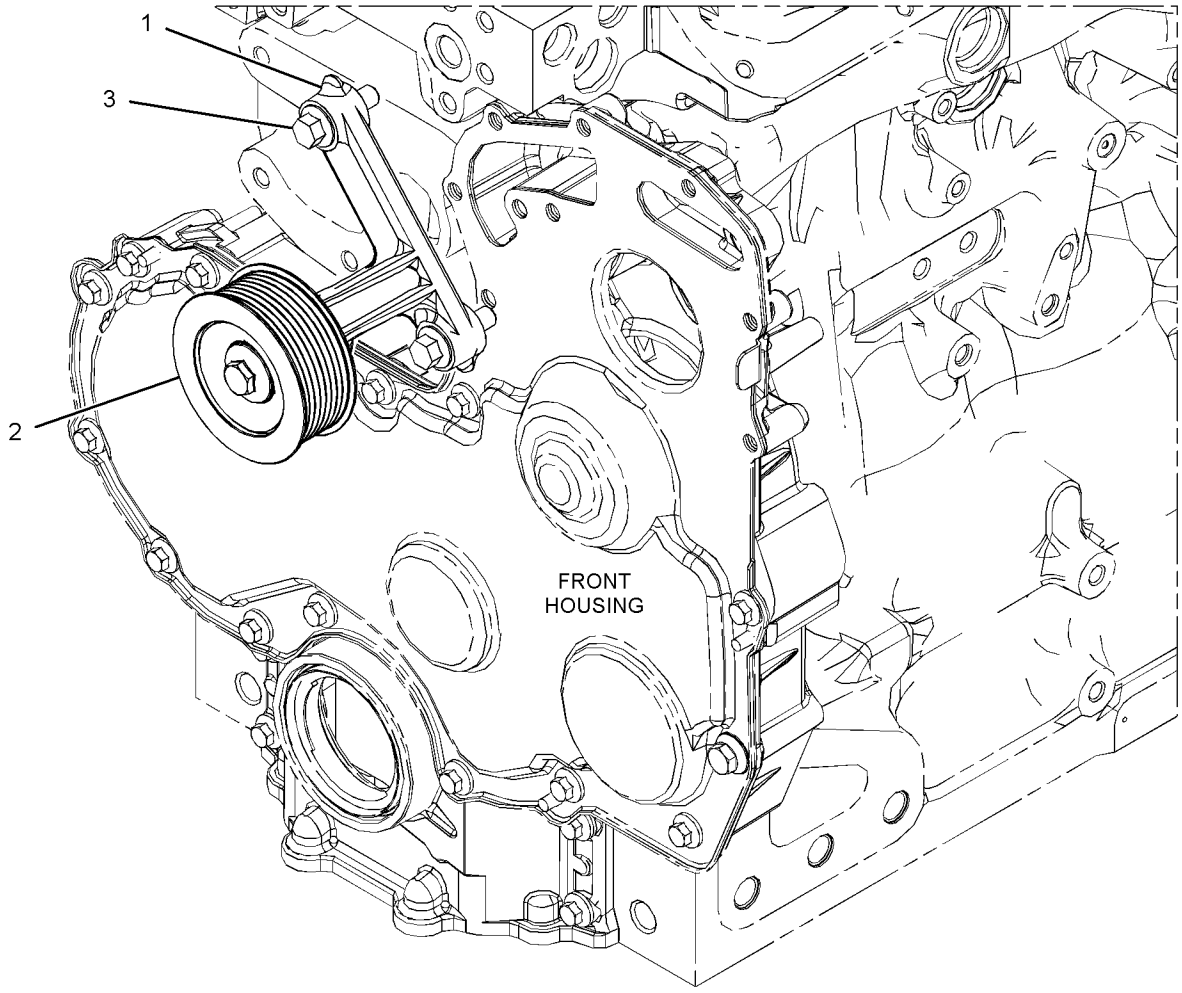

GRAPHIC #1 <END> g03108922

375-0098 FASTENER GP-DAMPER & PULLEY

S/N: 4501-UP
PART OF 569-0811 ENGINE AR-PRIMARY
AN ATTACHMENT

SMCS-1205 **i05332368**

NOTE	REF NO	GRAPHIC REF	PART NUMBER	QTY	PART NAME 1 2 3 4 5 6 (PRODUCT LEVEL)	SEE PAGE
M	1	1	**274-1935**	6	BOLT (M12X1.75X30-MM)	

M - METRIC PART

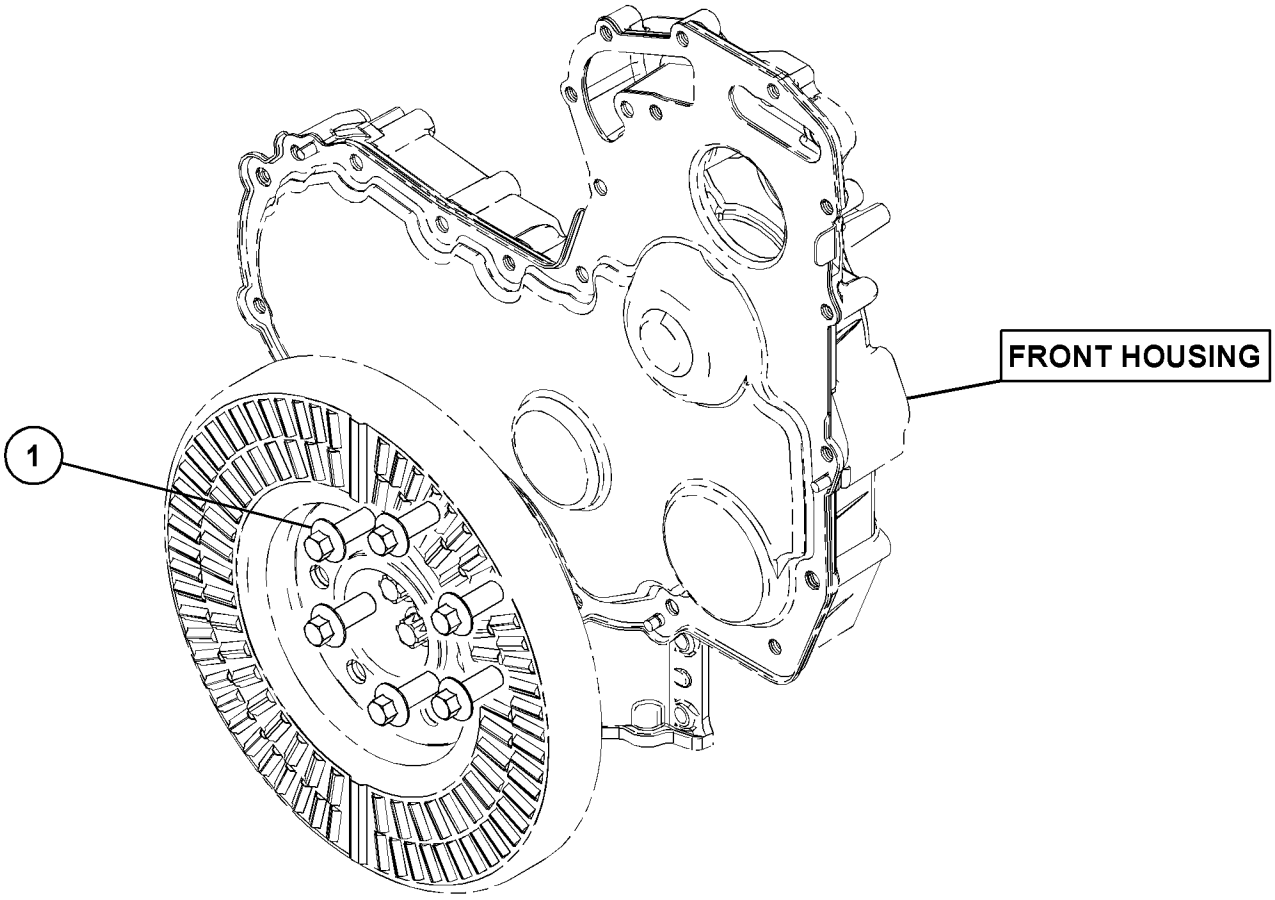

GRAPHIC #1 <END> g03172177

345-9030 FLYWHEEL GP

S/N: 4501-UP
PART OF 569-0811 ENGINE AR-PRIMARY
AN ATTACHMENT

SMCS-1156 **i07865317**

NOTE	REF NO	GRAPHIC REF	PART NUMBER	QTY	PART NAME 1 2 3 4 5 6 (PRODUCT LEVEL)	SEE PAGE
	1	1	**145-4911**	12	WASHER	
	2	1	**279-9254**	12	BOLT	
	3	1	**561-5392**	1	FLYWHEEL AS (134-TEETH)	

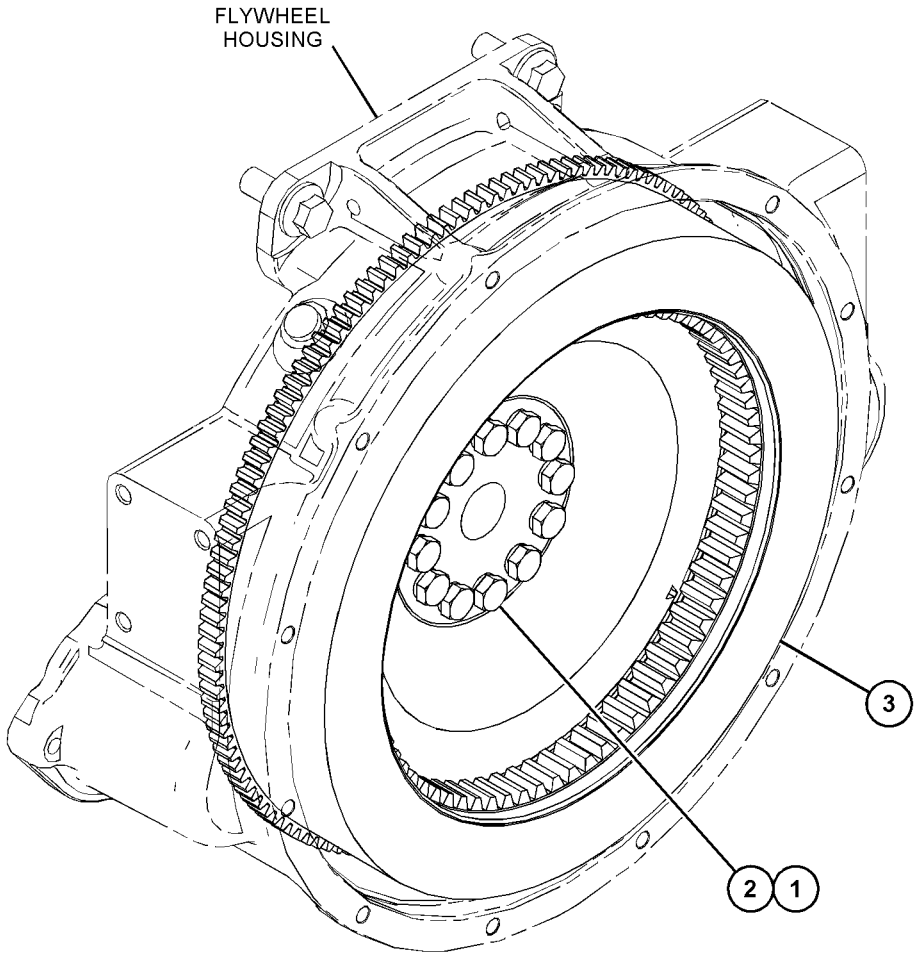

GRAPHIC #1 <END> g06034642

345-8846 HOUSING GP-FLYWHEEL

S/N: 4501-UP

PART OF 569-0811 ENGINE AR-PRIMARY

AN ATTACHMENT

SMCS-1157 **i07891581**

NOTE	REF NO	GRAPHIC REF	PART NUMBER	QTY	PART NAME 1 2 3 4 5 6 (PRODUCT LEVEL)	SEE PAGE
	1	1	**277-0116**	1	SEAL-CRANKSHAFT (REAR)	
M	2	1	**283-4662**	2	BOLT-FLANGE HEAD (M12X1.75X55-MM)	
	3	1	**287-8597**	2	DOWEL	
M	4	1	**288-6974**	4	BOLT (M10X1.5X50-MM)	
M	5	1	**288-6975**	2	BOLT (M16X2X40-MM)	
	6	1	**302-6112**	1	GASKET	
	7	1	**354-8322**	2	PLUG	
C	8	1	**366-6614**	1	HOUSING-FLYWHEEL	
	9	1	**393-4006**	1	GASKET	
	10	1	**1W-6735**	1	COVER-FLYWHEEL HOUSING	
M	11	1	**7E-7606**	4	BOLT (M10X1.5X16-MM)	

C - CHANGE FROM PREVIOUS TYPE
M - METRIC PART

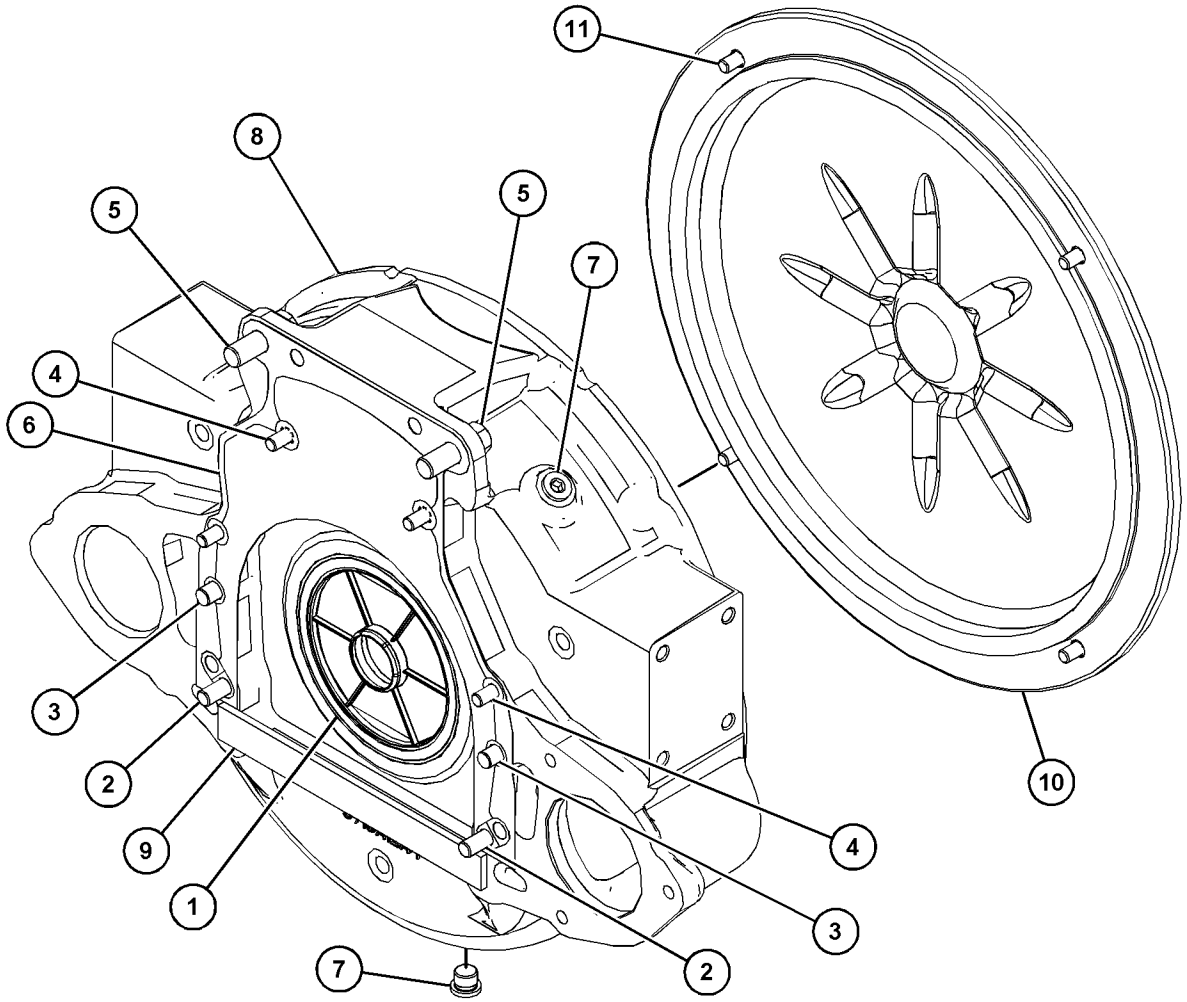

GRAPHIC #1 <END> g06482998

371-2716 HOUSING GP-FRONT

S/N: 4501-UP
PART OF 569-0811 ENGINE AR-PRIMARY
AN ATTACHMENT

SMCS-1151, 1162, 1206 **i06909393**

NOTE	REF NO	GRAPHIC REF	PART NUMBER	QTY	PART NAME 1 2 3 4 5 6 (PRODUCT LEVEL)	SEE PAGE
M	1	1	**6I-0217**	6	BOLT (M8X1.25X20-MM)	
M	2	1	**6I-0645**	4	BOLT (M8X1.25X25-MM)	
M	3	1	**6I-0650**	3	BOLT (M10X1.5X65-MM)	
M	4	1	**7C-4616**	1	BOLT (M12X1.75X45-MM)	
	5	1	**067-6179**	1	DOWEL	
M	6	1	**100-3751**	5	BOLT (M8X1.25X65-MM)	
M	7	1	**101-3895**	2	BOLT (M8X1.25X35-MM)	
M	8	1	**124-3815**	10	BOLT (M8X1.25X16-MM)	
	9	1	**133-1011**	1	WASHER	
	10	1	**425-7103**	1	GEAR (68-TEETH)	
	11	1	**232-3657**	1	COVER AS-FRONT	
	11A	1	**225-8287**	1	GASKET	
	12	1	**232-3666**	1	WASHER-THRUST	
	13	1	**277-3012**	1	GASKET-COVER	
	14	1	**277-3013**	1	SEAL	
	15	1	**324-0444**	1	HUB-IDLER GEAR	
	16	1	**346-0407**	1	GEAR-IDLER	
	17	1	**346-0408**	1	PLATE	
	18	1	**386-2112**	1	CASE-GEAR	

M - METRIC PART

371-2716 **HOUSING GP-FRONT (**contd.**)** **i06909393**

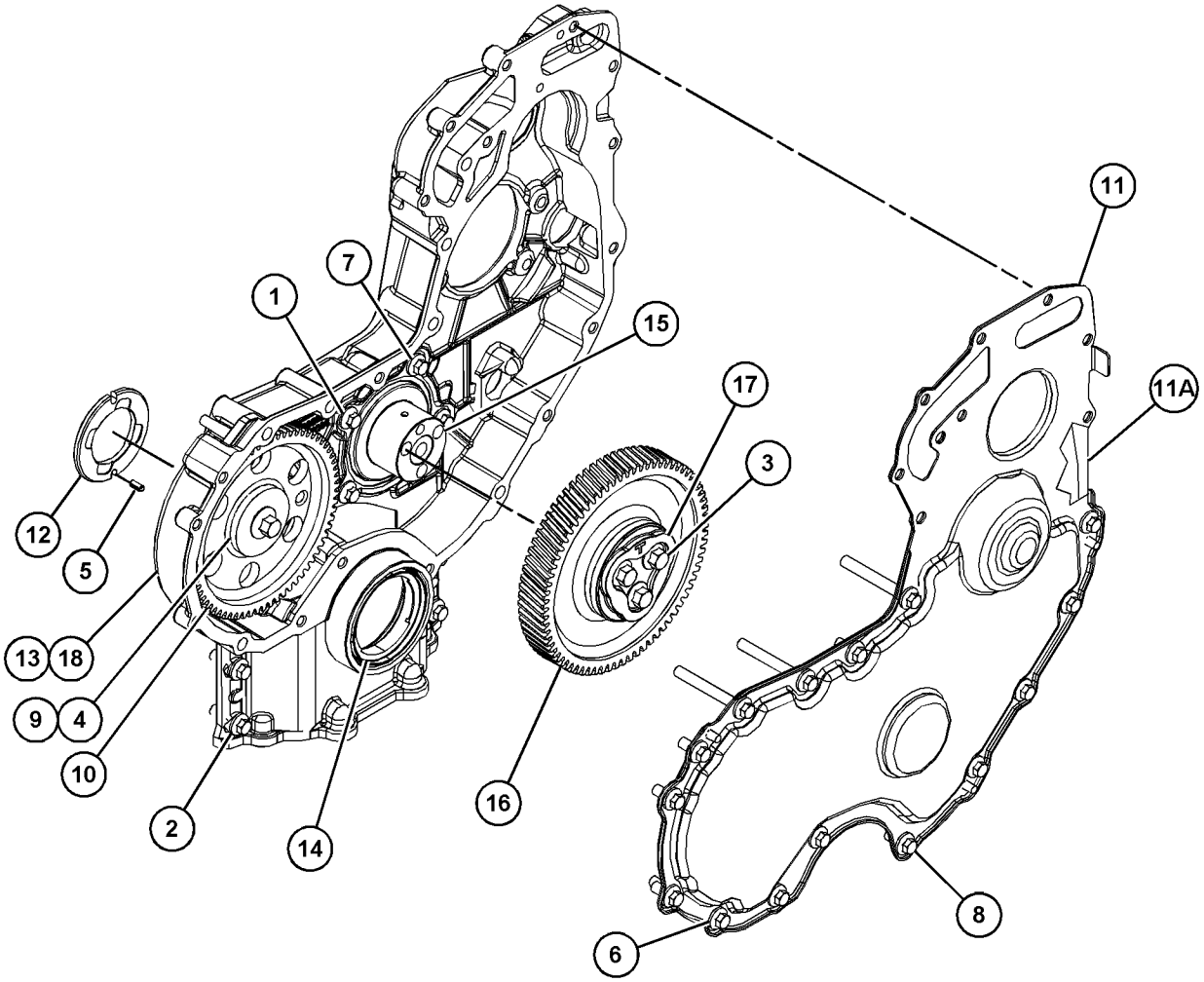

GRAPHIC #1 <END> g03483004

371-2478 JET GP-PISTON COOLING

S/N: 4501-UP; Z2K1-UP; Z2N1-UP

PART OF 451-1222 CYLINDER BLOCK GP-SHORT, 569-0811 ENGINE AR-PRIMARY

AN ATTACHMENT

SMCS-1331 **i05331889**

NOTE	REF NO	GRAPHIC REF	PART NUMBER	QTY	PART NAME 1 2 3 4 5 6 (PRODUCT LEVEL)	SEE PAGE
M	1	1	**100-4841**	6	BOLT (M6X1X10-MM)	
	2	1	**329-3796**	6	TUBE AS-OIL JET	

M - METRIC PART

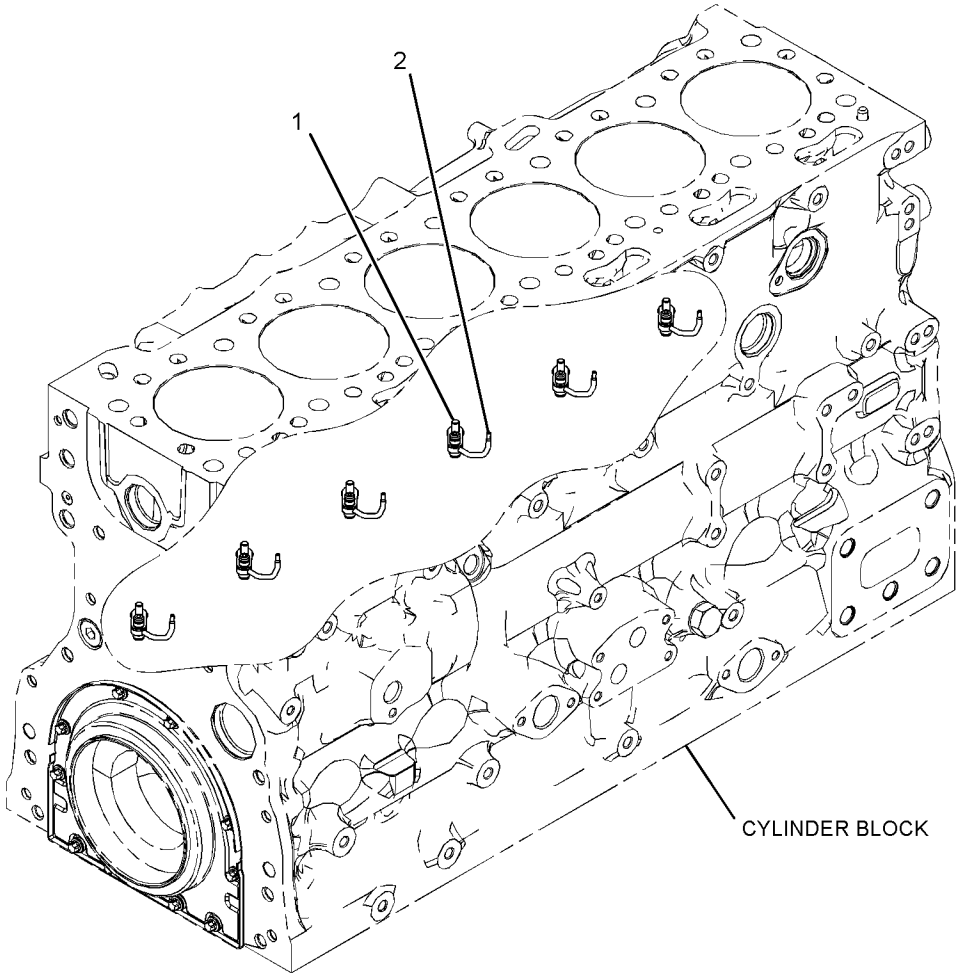

GRAPHIC #1 <END> g03378569

371-2740 LIFTING GP-ENGINE

S/N: 4501-UP
PART OF 569-0811 ENGINE AR-PRIMARY
AN ATTACHMENT

SMCS-1122 **i05496035**

NOTE	REF NO	GRAPHIC REF	PART NUMBER	QTY	PART NAME 1 2 3 4 5 6 (PRODUCT LEVEL)	SEE PAGE
	1	1	**279-9651**	1	PLATE-LIFTING	
	2	1	**304-5062**	1	BRACKET	
M	3	1	**6I-0654**	2	BOLT (M10X1.5X25-MM)	
M	4	1	**123-2899**	4	BOLT (M10X1.5X40-MM)	
	5	1	**415-1604**	1	BRACKET-LIFTING	

M - METRIC PART

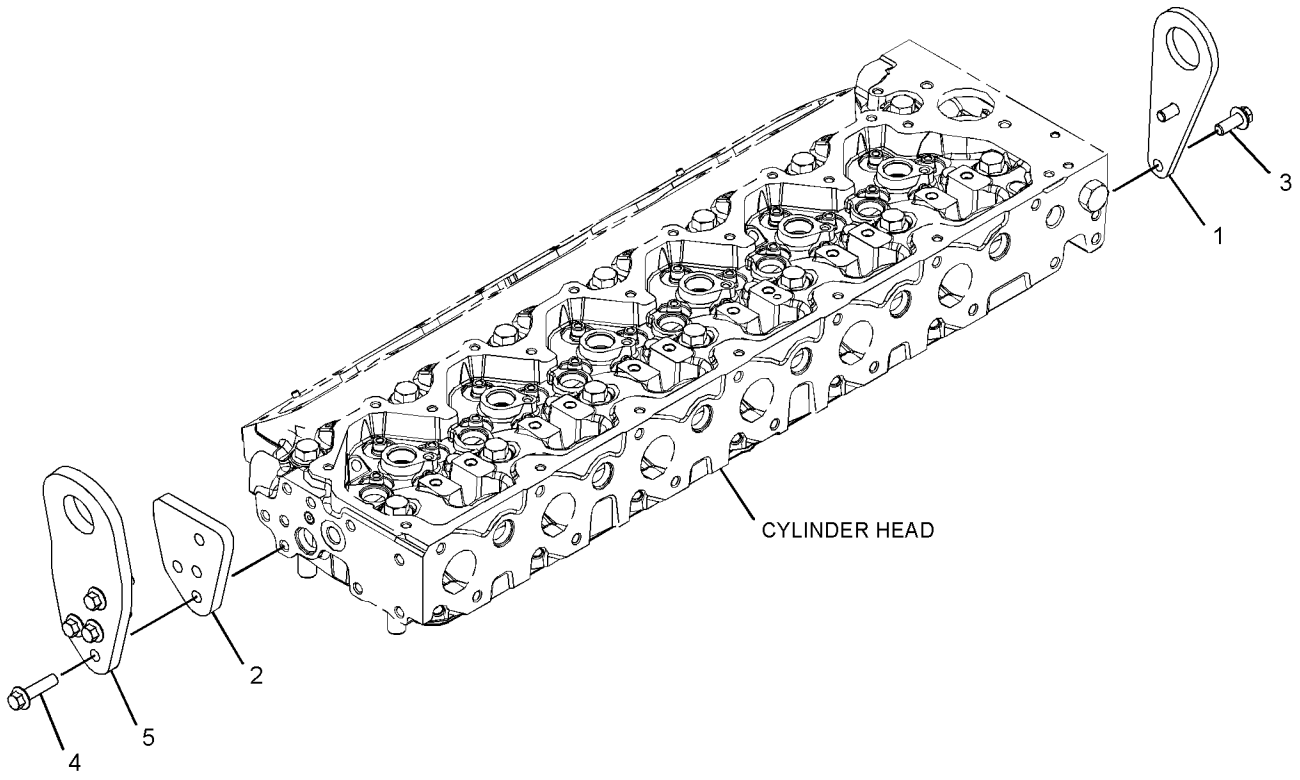

GRAPHIC #1 <END> g03456846

371-2558 MOUNTING GP-ALTERNATOR

S/N: 4501-UP

PART OF 569-0811 ENGINE AR-PRIMARY

AN ATTACHMENT

SMCS-1405 **i05331892**

NOTE	REF NO	GRAPHIC REF	PART NUMBER	QTY	PART NAME 1 2 3 4 5 6 (PRODUCT LEVEL)	SEE PAGE
M	1	1	**111-0859**	4	BOLT (M10X1.5X35-MM)	
	2	1	**394-4451**	1	BRACKET AS	
		1	**161-9820**	2	PIN	

M - METRIC PART

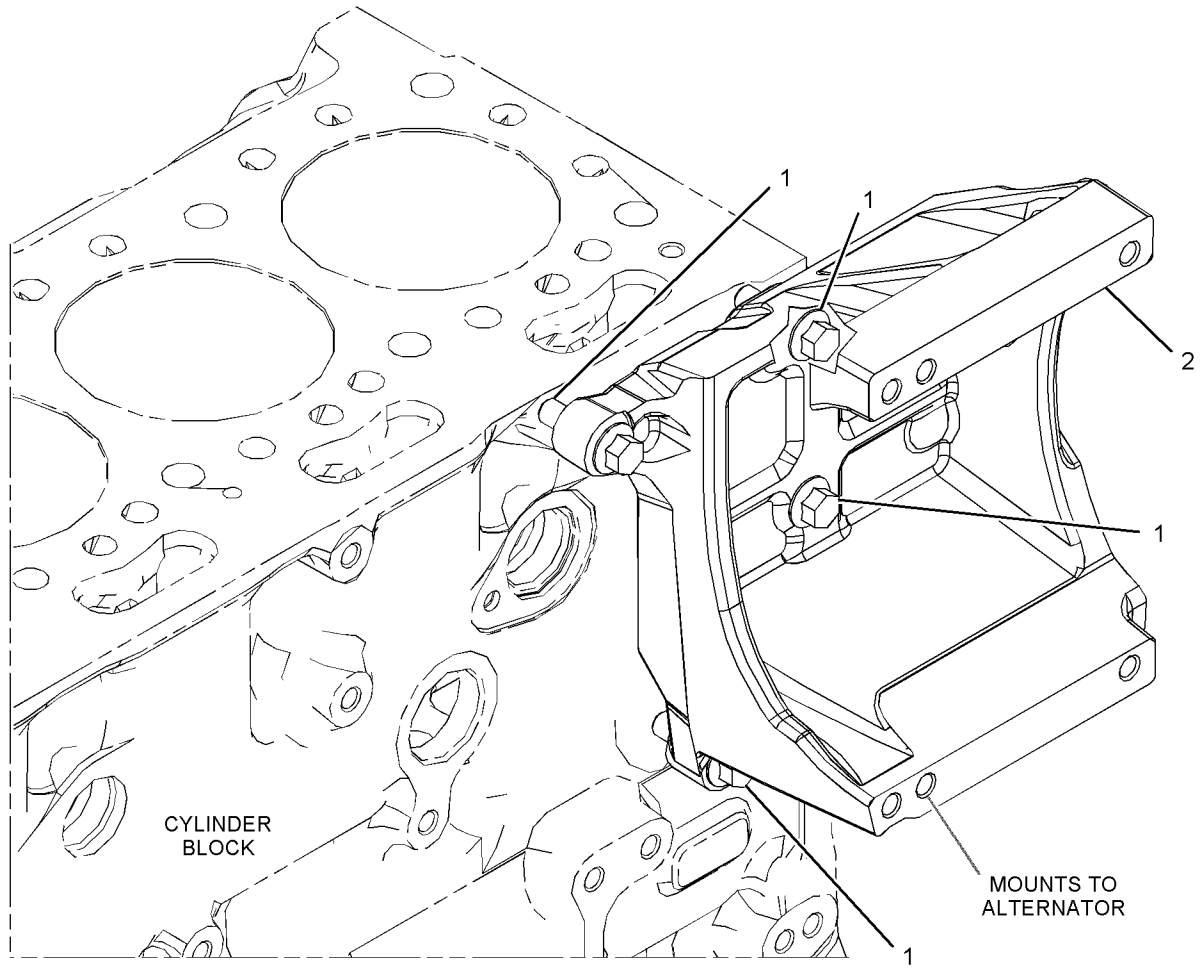

GRAPHIC #1 <END> g03378855

346-1510 MOUNTING GP-ENGINE

S/N: 4501-UP

PART OF 569-0811 ENGINE AR-PRIMARY

AN ATTACHMENT

SMCS-1152, 1153, 1154

i05892206

NOTE	REF NO	GRAPHIC REF	PART NUMBER	QTY	PART NAME 1 2 3 4 5 6 (PRODUCT LEVEL)	SEE PAGE
M	1	1	**283-8301**	2	BOLT (M16X2X60-MM)	
M	2	1	**283-8302**	6	BOLT (M16X2X80-MM)	
	3	1	**277-4490**	2	BRACKET-MOUNTING	

M - METRIC PART

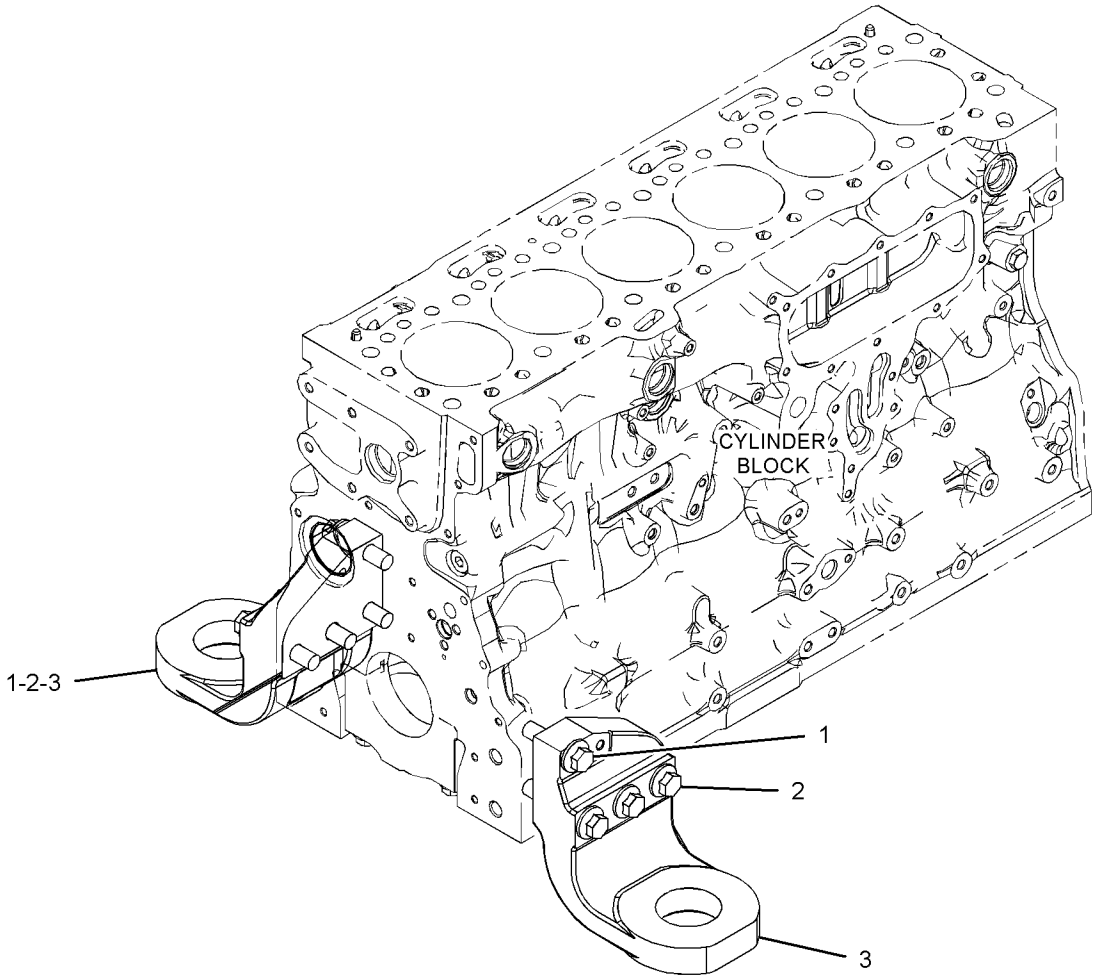

GRAPHIC #1 <END> g03507641

508-2572 MOUNTING GP-ENGINE & XMSN

S/N: Z2K1-UP; Z2N1-UP
PART OF 559-5994 INSTALLATION AR-ENGINE
AN ATTACHMENT

SMCS-1152, 1154, 3082 **i07817889**

NOTE	REF NO	GRAPHIC REF	PART NUMBER	QTY	PART NAME 1 2 3 4 5 6 (PRODUCT LEVEL)	SEE PAGE
M	1	1	**8C-3290**	2	BOLT (M24X3X150-MM)	
M	2	1	**8T-6381**	2	BOLT (M20X2.5X120-MM)	
	3	1	**8T-4123**	2	WASHER (22X35X3.5-MM THK)	
	4	1	**8T-4167**	2	WASHER-HARD (26X44X4-MM THK)	
	5	1	**9W-6582**	2	SLEEVE	
	6	1	**9W-6584**	2	WASHER (20.5X114X10-MM THK)	
	7	1	**9W-7385**	2	SLEEVE	
	8	1	**9W-9930**	2	MOUNT AS	
	9	1	**9W-9940**	2	MOUNT AS	
M	10	1	**189-6123**	8	BOLT-12 POINT HEAD (M12X1.75X60-MM)	
	11	1	**252-0080**	2	WASHER (25X144X12-MM THK)	
	12	1	**508-7772**	2	SUPPORT-ENGINE	

M - METRIC PART

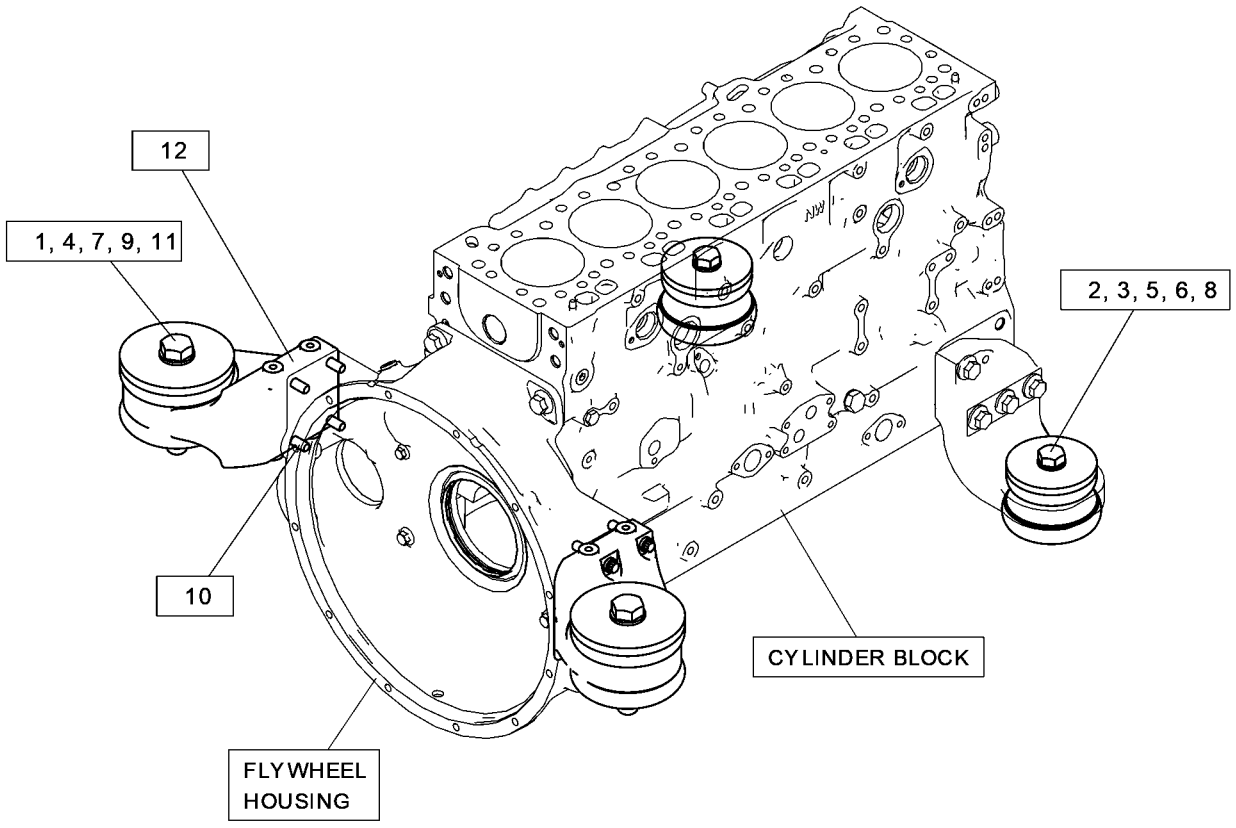

GRAPHIC #1 <END> g06451068

371-2544 PAN GP-OIL

S/N: 4501-UP
PART OF 569-0811 ENGINE AR-PRIMARY
AN ATTACHMENT

SMCS-1302 **i05331983**

NOTE	REF NO	GRAPHIC REF	PART NUMBER	QTY	PART NAME 1 2 3 4 5 6 (PRODUCT LEVEL)	SEE PAGE
	1	1	**230-8094**	1	BRIDGE	
M	2	1	**6I-0217**	29	BOLT (M8X1.25X20-MM)	
M	3	1	**6I-0260**	2	BOLT (M8X1.25X25-MM)	
M	4	1	**6I-0363**	2	BOLT (M6X1X20-MM)	
M	5	1	**6I-0572**	2	BOLT (M8X1.25X20-MM)	
	6	1	**351-4749**	1	GASKET-OIL PAN	
Y	7	1	**377-4718**	1	PAN GP-OIL	37
M	8	1	**6I-0654**	1	BOLT (M10X1.5X25-MM)	
	9	1	**275-9897**	1	BRACKET	
	10	1	**280-1384**	1	TUBE AS-OIL SUCTION	
	10A	1	**236-5511**	1	CLIP-PIPE	
	11	1	**6I-4681**	1	GASKET	

M - METRIC PART
Y - SEPARATE ILLUSTRATION

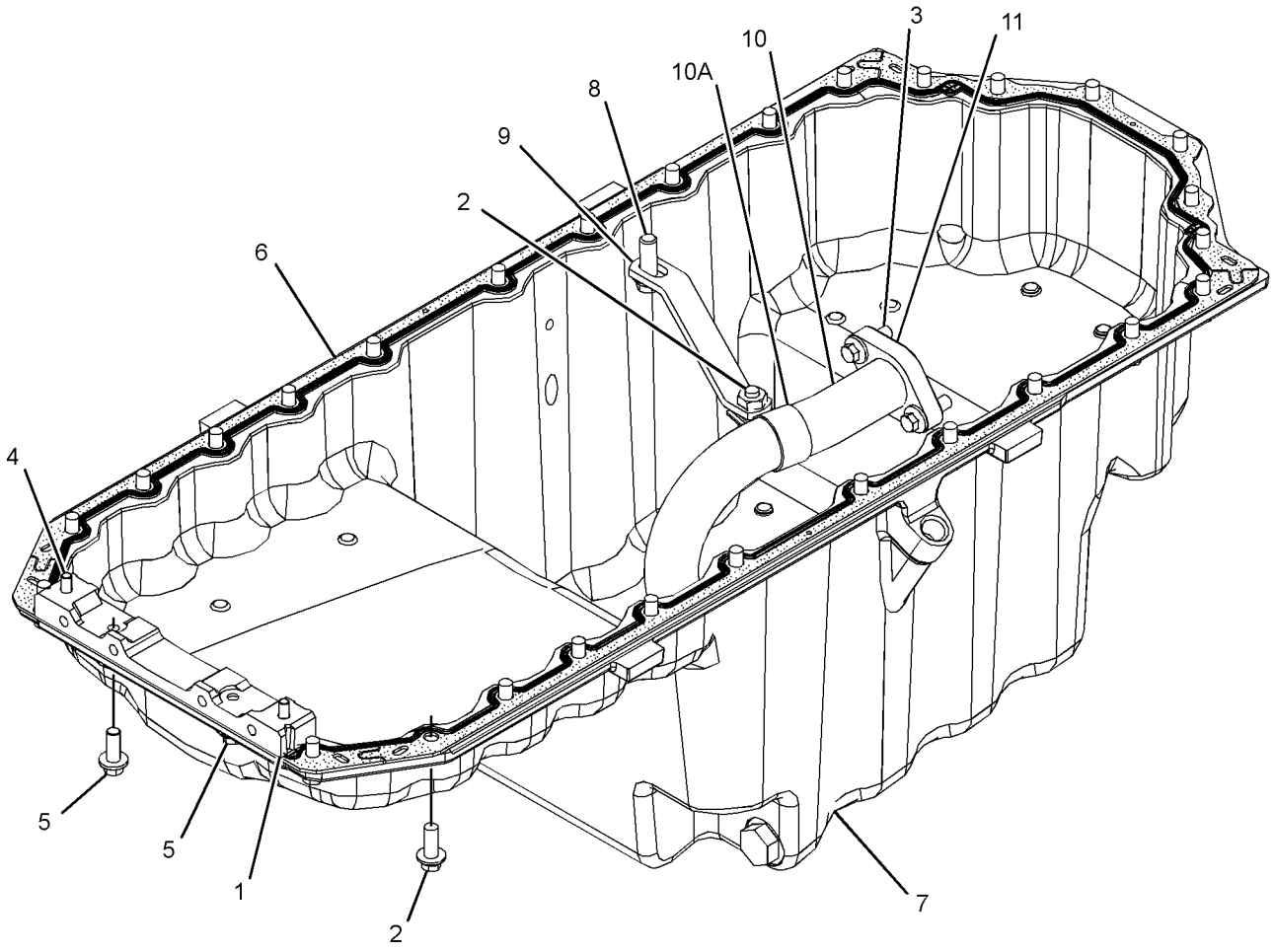

GRAPHIC #1 <END> g03110796

377-4718 PAN GP-OIL

S/N: 4501-UP
PART OF 371-2544 PAN GP-OIL
AN ATTACHMENT

SMCS-1302 **i05596643**

NOTE	REF NO	GRAPHIC REF	PART NUMBER	QTY	PART NAME 1 2 3 4 5 6 (PRODUCT LEVEL)	SEE PAGE
	1	1	**8L-2786**	2	SEAL-O-RING	
	2	1	**9S-4185**	2	PLUG (3/4-16-THD)	

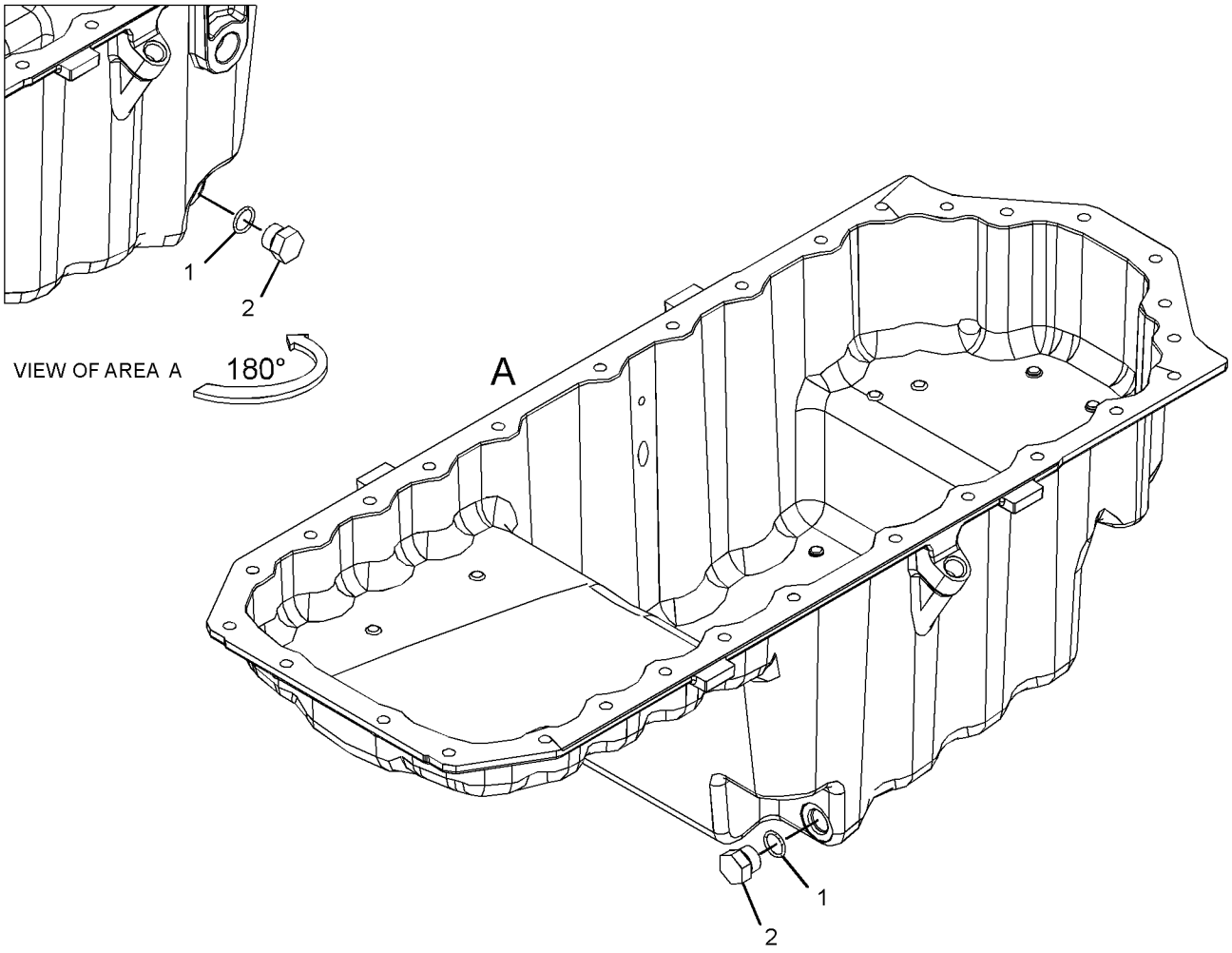

GRAPHIC #1 <END> g03371776

369-7304 PISTON & ROD GP

S/N: Z2K1-UP; Z2N1-UP
PART OF 451-1222 CYLINDER BLOCK GP-SHORT
AN ATTACHMENT

SMCS-1225 **i07053235**

NOTE	REF NO	GRAPHIC REF	PART NUMBER	QTY	PART NAME 1 2 3 4 5 6 (PRODUCT LEVEL)	SEE PAGE
Y	1	1	**331-0290**	6	CONNECTING ROD GP	11
CPTY	2	1	*504-2903*	6	PISTON GP	42
J	3	1	*317-5482*	6	BEARING	
J	4	1	*470-8038*	6	BEARING	
PQS	5	1	**124-3536**	12	RING-RETAINING	
					AVAILABLE REPAIR KIT(S):	
BJ			**436-7781**		KIT-BEARING (CONNECTING ROD)	
					(INCLUDES BEARINGS)	
AB			**480-4489**		KIT-BEARING (0.254-MM US)	
					(INCLUDES BEARINGS)	
AB			**480-4490**		KIT-BEARING (0.51-MM US)	
					(INCLUDES BEARINGS)	
AB			**480-4491**		KIT-BEARING (0.762-MM US)	
					(INCLUDES BEARINGS)	
BP			**443-9475**	1	KIT-PISTON (STANDARD)	
					(KIT INCLUDES RETAINING RING, PIN, PISTON RINGS & PISTON)	
ABQ			**443-9898**		KIT-PISTON (0.5-MM OS)	
					(KIT INCLUDES RETAINING RING, PIN, PISTON RINGS & PISTON)	
ABS			**443-9919**		KIT-PISTON (1-MM OS)	
					(KIT INCLUDES RETAINING RING, PIN, PISTON RINGS & PISTON)	
T			**276-7476**	1	KIT-PISTON RING	
					(INCLUDES PISTON RINGS)	
AB			**380-2065**		KIT-PISTON RING (0.5-MM OS)	
					(INCLUDES PISTON RINGS)	
AB			**466-4849**		KIT-PISTON RING (1-MM OS)	
					(INCLUDES PISTON RINGS)	

A - NOT PART OF THIS GROUP
B - USE AS REQUIRED
C - CHANGE FROM PREVIOUS TYPE
J - KIT MARKED J SERVICES PART(S) MARKED J
P - KIT MARKED P SERVICES PART(S) MARKED P
Q - KIT MARKED Q SERVICES PART(S) MARKED Q
S - KIT MARKED S SERVICES PART(S) MARKED S
T - KIT MARKED T SERVICES PART(S) MARKED T
Y - SEPARATE ILLUSTRATION

369-7304 **PISTON & ROD GP (**contd.**)** **i07053235**

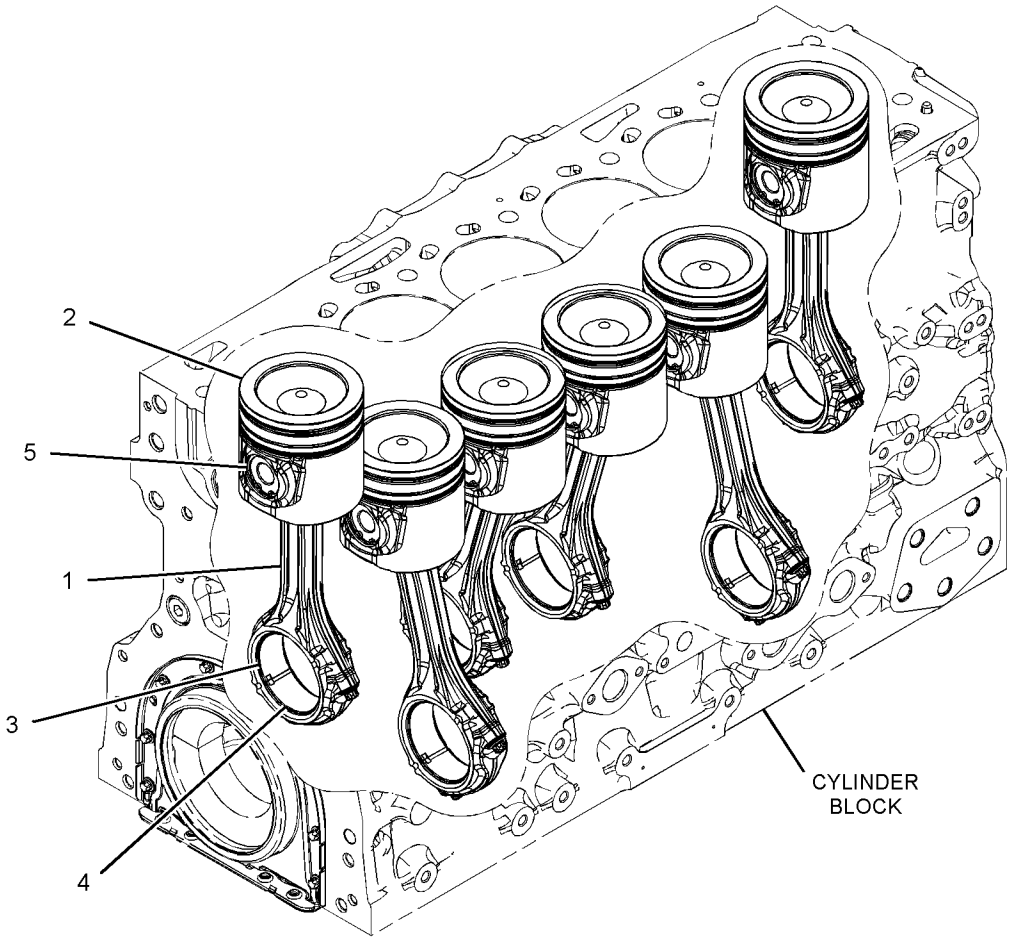

GRAPHIC #1 <END> g03532656

486-3208 PISTON & ROD GP

S/N: 4501-UP
PART OF 569-0811 ENGINE AR-PRIMARY
AN ATTACHMENT

SMCS-1225 **i06945068**

NOTE	REF NO	GRAPHIC REF	PART NUMBER	QTY	PART NAME 1 2 3 4 5 6 (PRODUCT LEVEL)	SEE PAGE
L	1	1	**124-3536**	12	RING-RETAINING	
J	2	1	*317-5482*	6	BEARING	
	3	1	**331-0290**	6	CONNECTING ROD GP	
					(EACH INCLUDES)	
	3A	1	**276-7478**	1	BUSHING	
M	3B	1	**323-9312**	2	BOLT (M10X1X50-MM)	
L	4	1	*473-1373*	6	PISTON GP	
AB		1	**391-3732**		PISTON GP (0.5-MM OS)	
AB		1	**391-3735**		PISTON GP (1-MM OS)	
CT	5	1	*470-8038*	6	BEARING	
					PARTS SHOWN IN GRAPHIC(S) WITHOUT A REFERENCE NUMBER ARE NOT SERVICED SEPARATELY	
					AVAILABLE REPAIR KIT(S):	
J			**360-1564**	1	KIT-BEARING (CONNECTING ROD)	
					(INCLUDES BEARINGS)	
AB			**458-7918**		KIT-BEARING (0.25-MM US)	
					(INCLUDES BEARINGS)	
AB			**458-7939**		KIT-BEARING (0.50-MM US)	
					(INCLUDES BEARINGS)	
AB			**458-7940**		KIT-BEARING (0.75-MM US)	
					(INCLUDES BEARINGS)	
T			**436-7781**	1	KIT-BEARING (CONNECTING ROD)	
					(INCLUDES BEARINGS)	
AB			**480-4489**		KIT-BEARING (0.254-MM US)	
					(INCLUDES BEARINGS)	
AB			**480-4490**		KIT-BEARING (0.51-MM US)	
					(INCLUDES BEARINGS)	
AB			**480-4491**		KIT-BEARING (0.762-MM US)	
					(INCLUDES BEARINGS)	
L			**443-9543**	1	KIT-RING (STANDARD)	
					(INCLUDES PISTON RINGS)	
AB			**380-2065**		KIT-PISTON RING (0.5-MM OS)	
					(INCLUDES PISTON RINGS)	
AB			**466-4849**		KIT-PISTON RING (1-MM OS)	
					(INCLUDES PISTON RINGS)	
L			**444-2190**	1	KIT-PISTON	
					(INCLUDES PISTON RINGS, RETAINING RINGS, PISTON & PIN)	

A - NOT PART OF THIS GROUP
B - USE AS REQUIRED
C - CHANGE FROM PREVIOUS TYPE
J - KIT MARKED J SERVICES PART(S) MARKED J
L - KIT MARKED L SERVICES PART(S) MARKED L
M - METRIC PART
T - KIT MARKED T SERVICES PART(S) MARKED T

486-3208 **PISTON & ROD GP (**contd.**)** **i06945068**

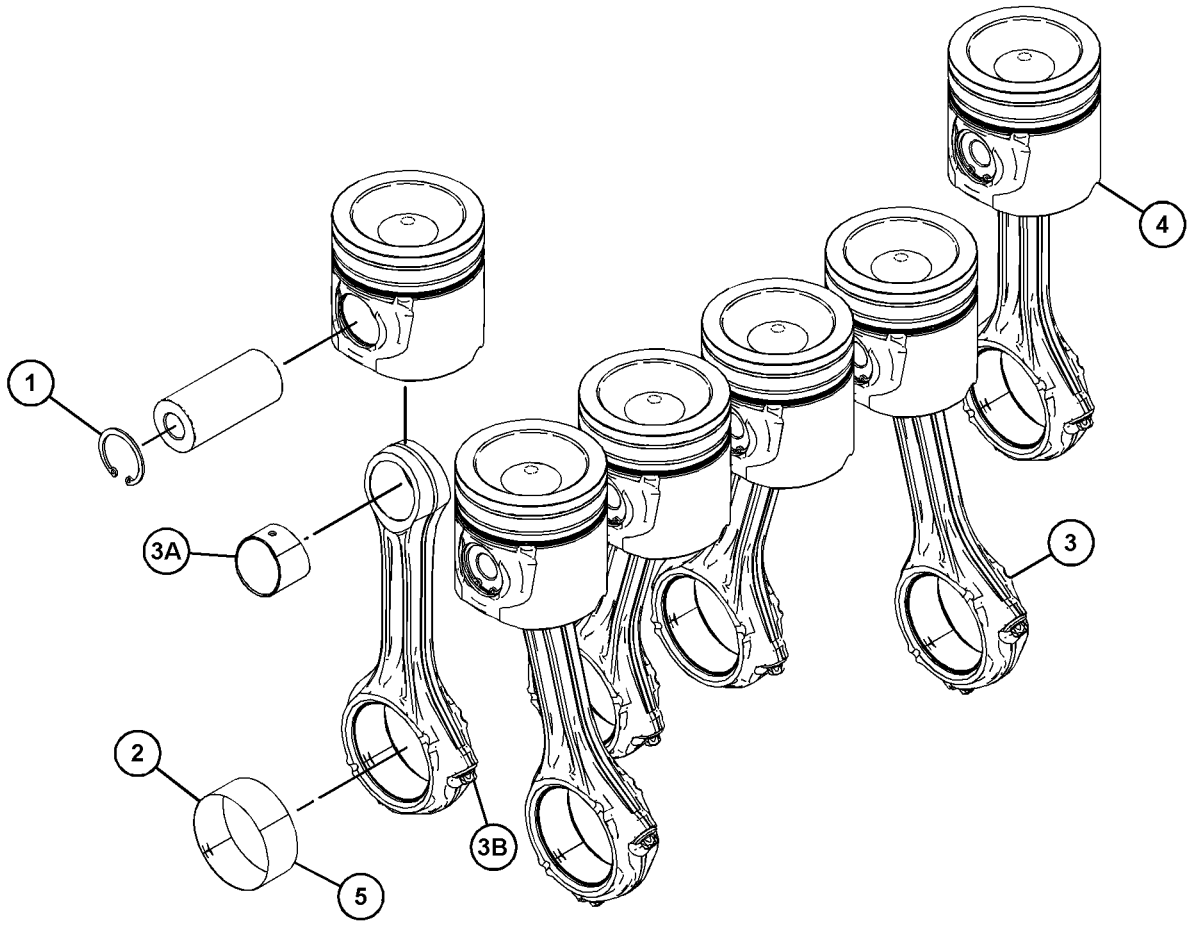

GRAPHIC #1 <END> g06160700

504-2903 PISTON GP

S/N: Z2K1-UP; Z2N1-UP
PART OF 369-7304 PISTON & ROD GP
AN ATTACHMENT

SMCS-1214 **i07157641**

NOTE	REF NO	GRAPHIC REF	PART NUMBER	QTY	PART NAME 1 2 3 4 5 6 (PRODUCT LEVEL)	SEE PAGE
PQT	1	1	**317-6214**	1	PIN	
P	2	1	*369-3188*	1	PISTON	
JP	3	1	*454-9560*	1	RING-PISTON	
JP	4	1	*454-9569*	1	RING-PISTON	
JP	5	1	*454-9573*	1	RING-OIL	
					AVAILABLE REPAIR KIT(S):	
J			**276-7476**	1	KIT-PISTON RING (STANDARD)	
					(INCLUDES RINGS)	
AB			**380-2065**		KIT-PISTON RING (0.5-MM OS)	
					(INCLUDES RINGS)	
AB			**466-4849**		KIT-PISTON RING (1-MM OS)	
					(INCLUDES RINGS)	
P			**443-9475**	1	KIT-PISTON (STANDARD)	
					(INCLUDES PIN, PISTON RINGS, RETAINING RINGS & PISTON)	
ABQ			**443-9898**		KIT-PISTON (0.5-MM OS)	
					(INCLUDES PIN, PISTON RINGS, RETAINING RINGS & PISTON)	
ABT			**443-9919**		KIT-PISTON (1-MM OS)	
					(INCLUDES PIN, PISTON RINGS, RETAINING RINGS & PISTON)	

A - NOT PART OF THIS GROUP
B - USE AS REQUIRED
J - KIT MARKED J SERVICES PART(S) MARKED J
P - KIT MARKED P SERVICES PART(S) MARKED P
Q - KIT MARKED Q SERVICES PART(S) MARKED Q
T - KIT MARKED T SERVICES PART(S) MARKED T

504-2903 **PISTON GP (**contd.**)** **i07157641**

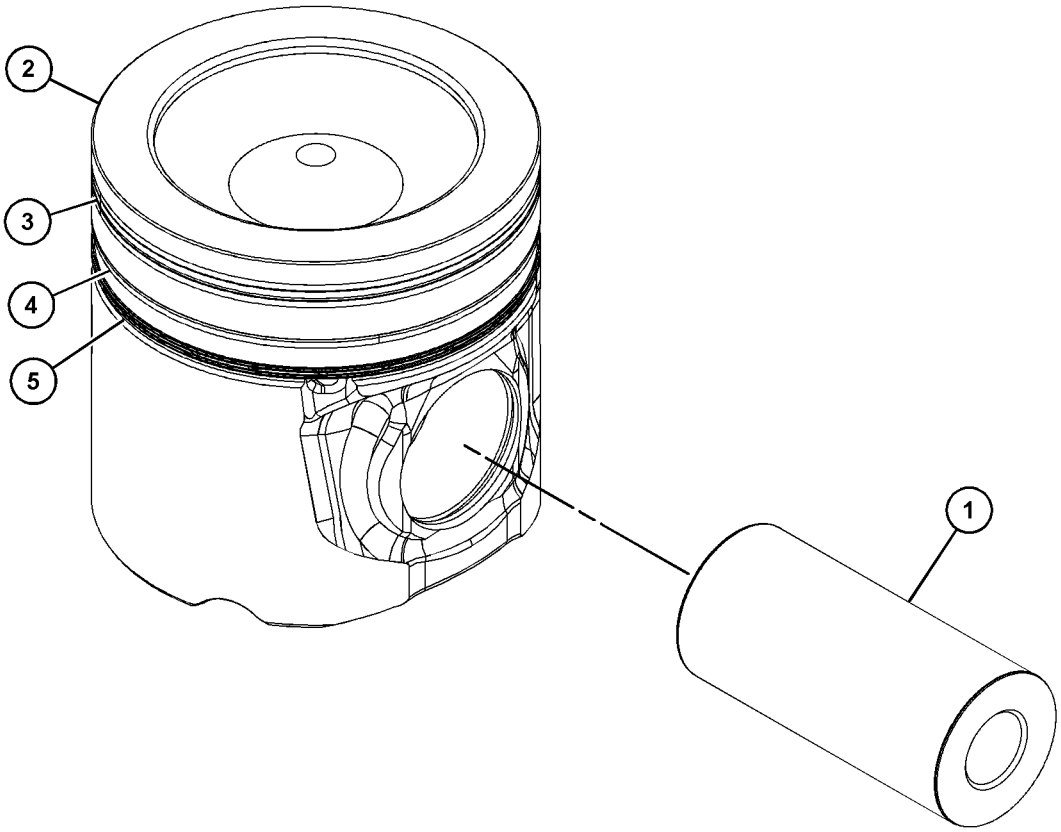

GRAPHIC #1 <END> g06238431

374-9295 PLUG GP-CYLINDER BLOCK

S/N: 4501-UP
PART OF 569-0811 ENGINE AR-PRIMARY
AN ATTACHMENT

SMCS-1201 **i05498259**

NOTE	REF NO	GRAPHIC REF	PART NUMBER	QTY	PART NAME 1 2 3 4 5 6 (PRODUCT LEVEL)	SEE PAGE
	1	1	**277-4223**	1	PLUG	

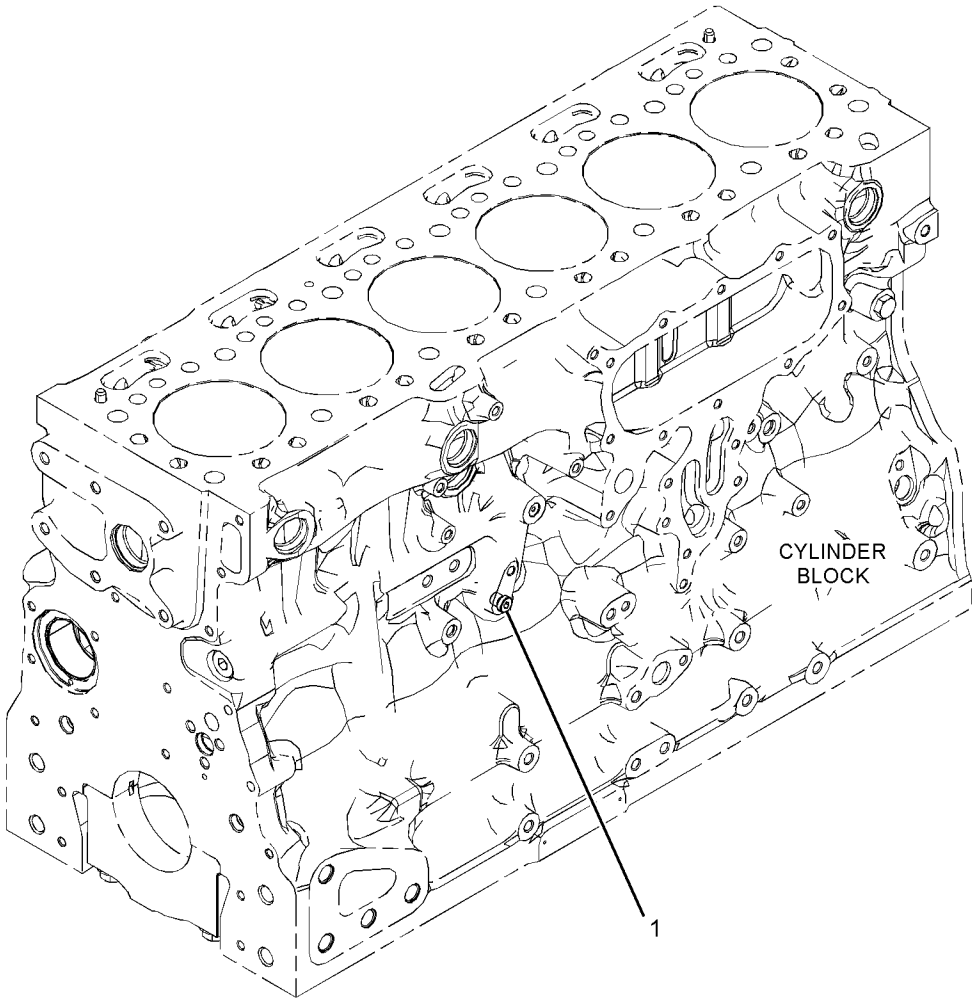

GRAPHIC #1 <END> g03483538

346-2908 PLUG GP-ENGINE

S/N: 4501-UP
PART OF 569-0811 ENGINE AR-PRIMARY
AN ATTACHMENT

SMCS-1000 **i05335667**

NOTE	REF NO	GRAPHIC REF	PART NUMBER	QTY	PART NAME 1 2 3 4 5 6 (PRODUCT LEVEL)	SEE PAGE
	1	1	**067-6823**	3	PLUG	

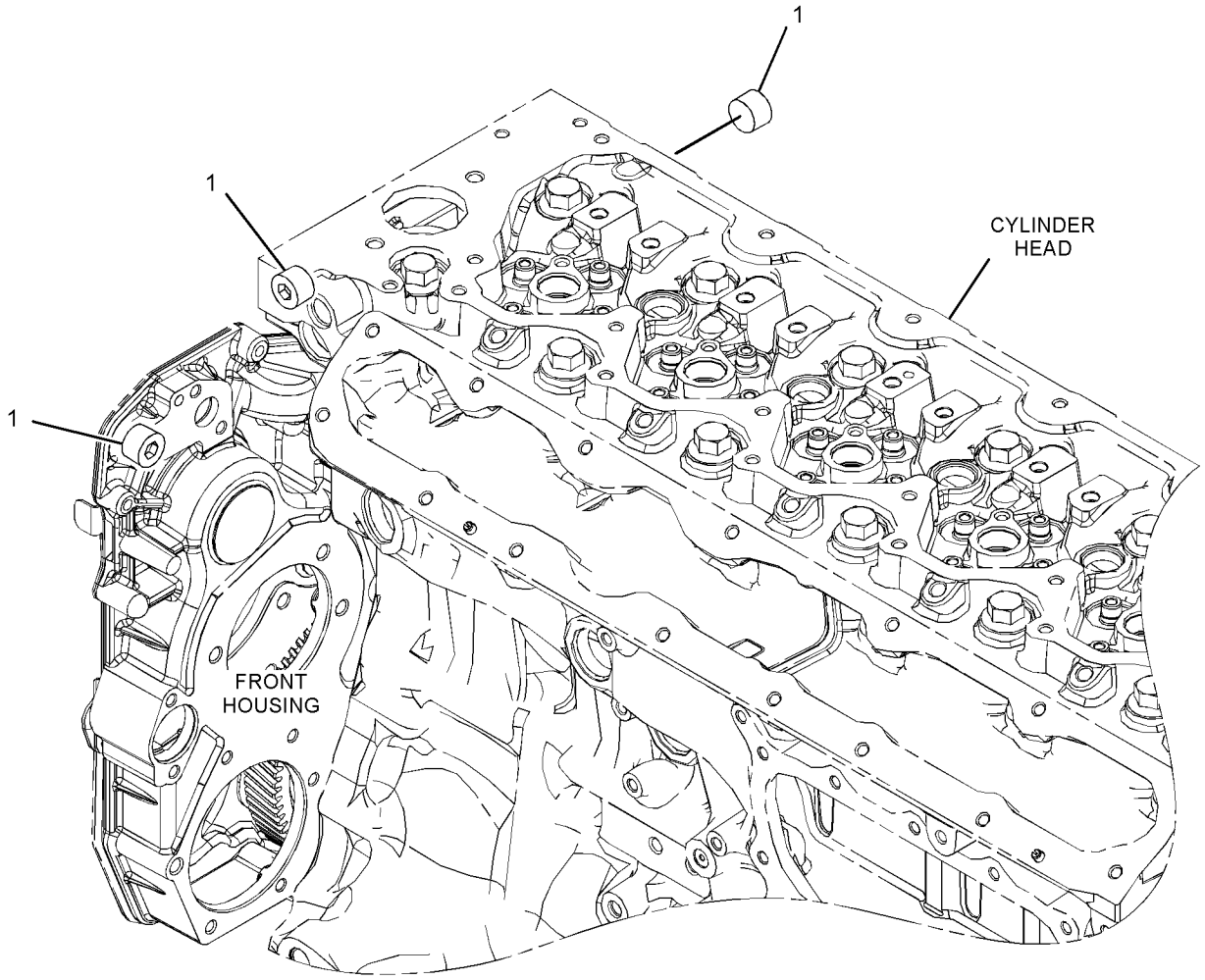

GRAPHIC #1 <END> g03380722

371-2554 PULLEY GP-CRANKSHAFT

S/N: 4501-UP
PART OF 569-0811 ENGINE AR-PRIMARY
AN ATTACHMENT

SMCS-1205 **i05332376**

NOTE	REF NO	GRAPHIC REF	PART NUMBER	QTY	PART NAME 1 2 3 4 5 6 (PRODUCT LEVEL)	SEE PAGE
	1	1	**274-1931**	1	PULLEY (8-GROOVE)	
	2	1	**342-6502**	1	ADAPTER	
M	3	1	**342-6510**	3	BOLT-TORX (M14X1.5X70-MM)	
	4	1	**351-1724**	1	DAMPER	

M - METRIC PART

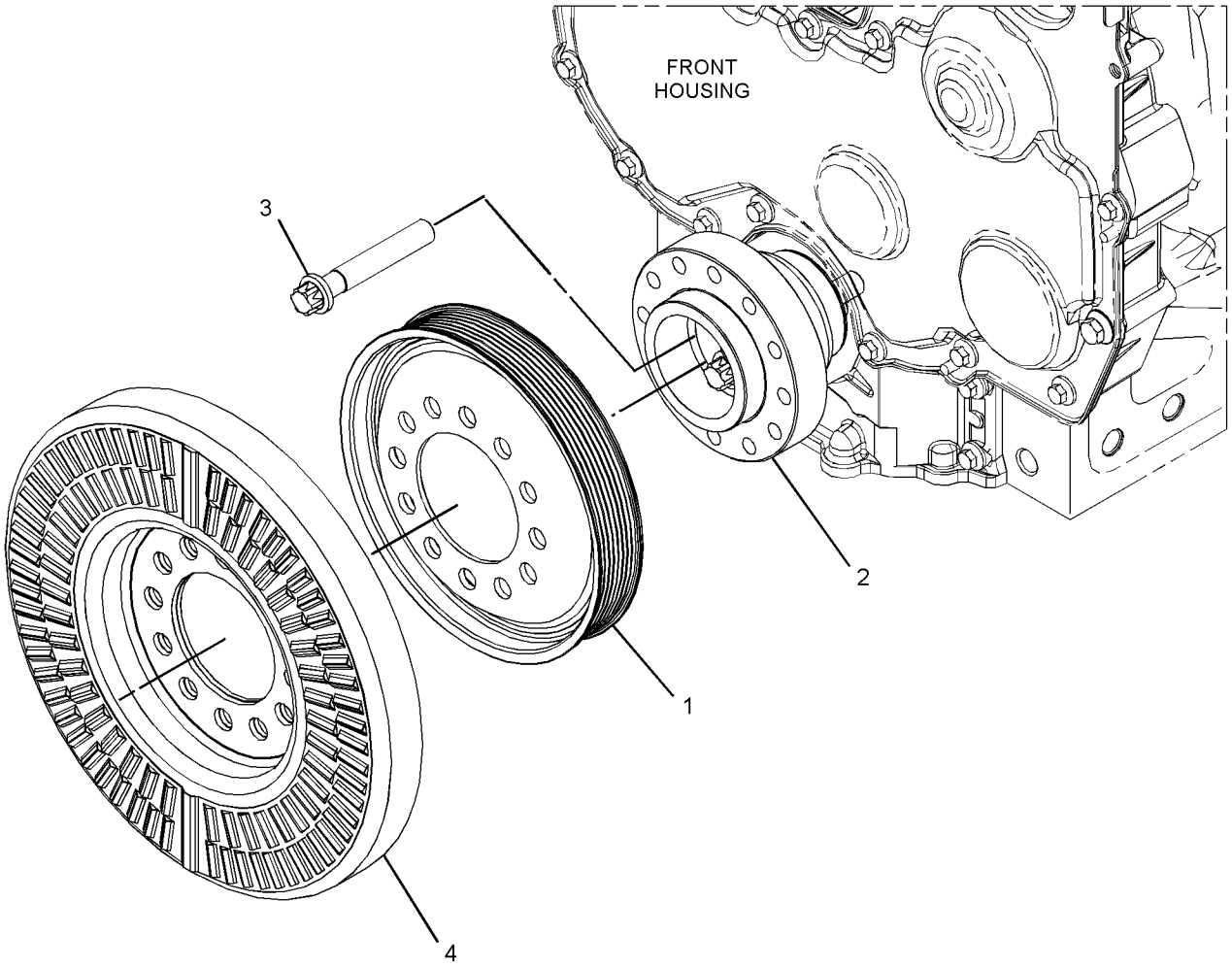

GRAPHIC #1 <END> g03110077

280-1911 ROCKER ARM GP

S/N: 4501-UP
PART OF 371-2480 ROCKER ARM GP
AN ATTACHMENT

SMCS-1123 **i02752423**

NOTE	REF NO	GRAPHIC REF	PART NUMBER	QTY	PART NAME 1 2 3 4 5 6 (PRODUCT LEVEL)	SEE PAGE
	1	1	**276-9201**	1	CLIP	
	2	1	**276-9206**	5	SPRING-SHAFT	
	3	1	**276-9207**	1	SPRING-SHAFT	
	4	1	**277-5307**	1	SHAFT AS-ROCKER ARM	
	4A	1	**276-9200**	1	PLUG-SHAFT END	
	5	1	**278-5111**	6	ROCKER ARM AS	
					(EACH INCLUDES)	
	5A	1	**276-9230**	1	NUT	
	5B	1	**278-5113**	1	SCREW-ADJUSTING (TORX)	
	6	1	**278-5112**	6	ROCKER ARM AS	
					(EACH INCLUDES)	
	6A	1	**276-9230**	1	NUT	
	6B	1	**278-5113**	1	SCREW-ADJUSTING (TORX)	
	7	1	**280-1912**	6	BRACKET	
	8	1	**280-1913**	6	RETAINER	
	9	1	**280-1914**	12	BOLT (M8X1.25X55-MM)	

280-1911 **ROCKER ARM GP** (contd.) **i02752423**

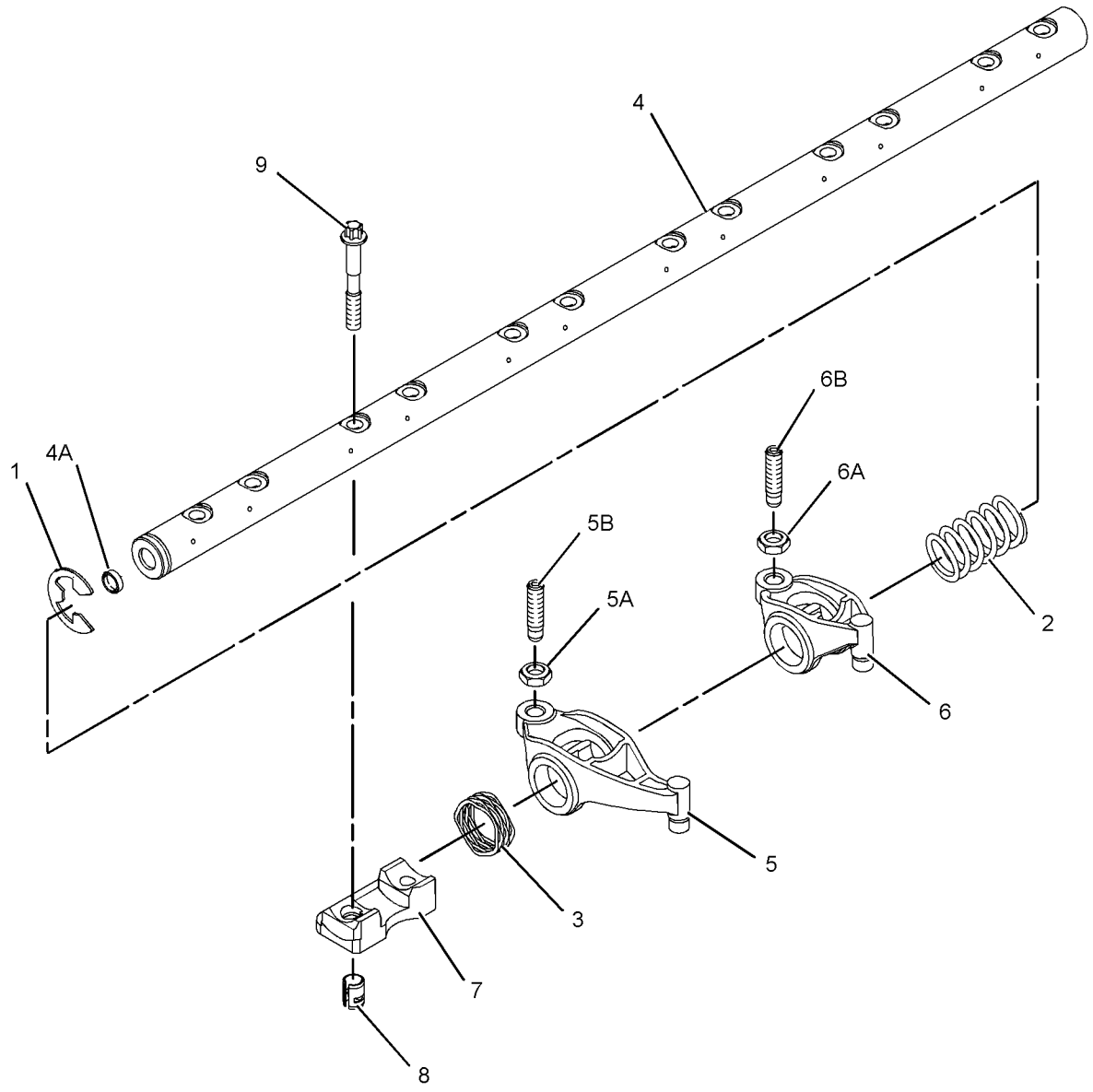

GRAPHIC #1 <END> g01235750

371-2480 ROCKER ARM GP

S/N: 4501-UP
PART OF 569-0811 ENGINE AR-PRIMARY
AN ATTACHMENT

SMCS-1123 **i05773127**

NOTE	REF NO	GRAPHIC REF	PART NUMBER	QTY	PART NAME 1 2 3 4 5 6 (PRODUCT LEVEL)	SEE PAGE
	1	1	**436-0521**	24	SPRING-VALVE	
	2	1	**346-4709**	12	BRIDGE GP-VALVE	
	3	1	**276-8123**	48	COTTER-CAP	
	4	1	**276-8133**	24	CAP-VALVE	
Y	5	1	**280-1911**	1	ROCKER ARM GP	47
	6	1	**299-5511**	24	SEAL-VALVE STEM	
	7	1	**309-6678**	12	VALVE-INLET	
	8	1	**339-9637**	12	VALVE-EXHAUST	

Y - SEPARATE ILLUSTRATION

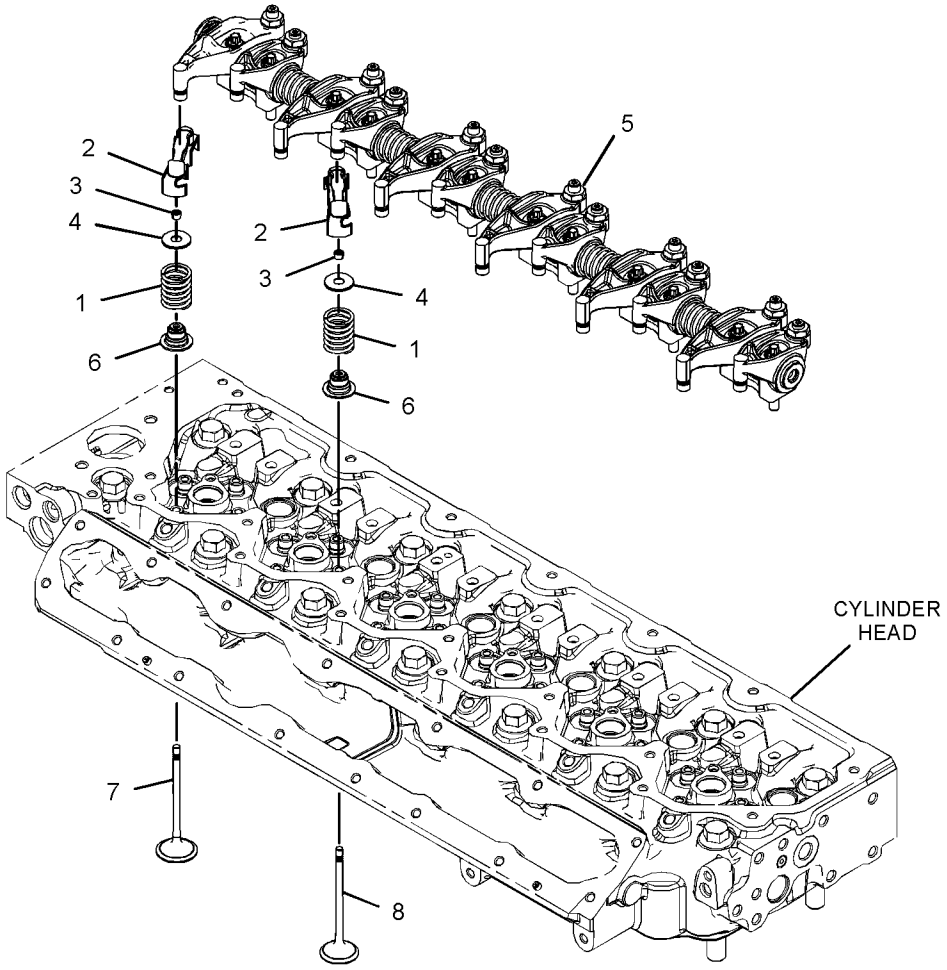

GRAPHIC #1 <END> g03103178

452-6585 ROCKER ARM GP

S/N: Z2K1-UP; Z2N1-UP
PART OF 452-6584 CYLINDER HEAD GP
AN ATTACHMENT

SMCS-1123 **i06041076**

NOTE	REF NO	GRAPHIC REF	PART NUMBER	QTY	PART NAME 1 2 3 4 5 6 (PRODUCT LEVEL)	SEE PAGE
	1	1	**436-0521**	24	SPRING-VALVE	
	2	1	**276-8133**	24	CAP-VALVE	
	3	1	**276-8123**	48	COTTER-CAP	
	4	1	**299-5511**	24	SEAL-VALVE STEM	
	5	1	**309-6678**	12	VALVE-INLET	
	6	1	**339-9637**	12	VALVE-EXHAUST	

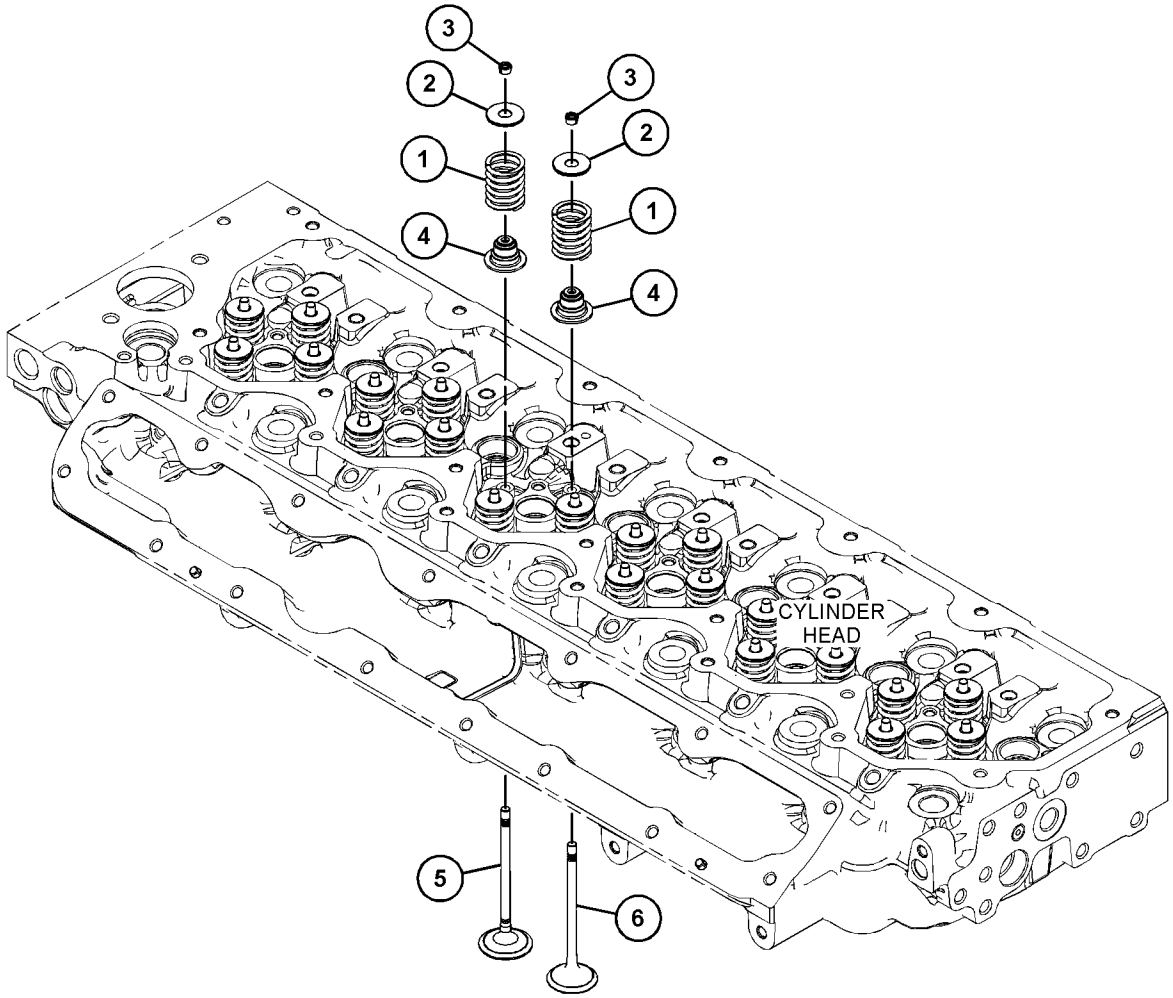

GRAPHIC #1 <END> g03674542

419-6603 FILLER GP-ENGINE OIL

S/N: 4501-UP
PART OF 569-0811 ENGINE AR-PRIMARY
AN ATTACHMENT

SMCS-1316 **i05892200**

NOTE	REF NO	GRAPHIC REF	PART NUMBER	QTY	PART NAME 1 2 3 4 5 6 (PRODUCT LEVEL)	SEE PAGE
M	1	1	**6I-4374**	1	BOLT (M8X1.25X60-MM)	
M	2	1	**124-3815**	1	BOLT (M8X1.25X16-MM)	
	3	1	**225-6524**	1	PLUG-CUP	
	4	1	**416-9520**	1	BRACKET AS	
	5	1	*419-0384*	1	FILLER GP-ENGINE OIL	
	5A	1	**306-2337**	1	SEAL-O-RING	
	5B	1	**369-3867**	1	CAP AS-OIL FILLER	
M	6	1	**6I-0217**	2	BOLT (M8X1.25X20-MM)	
M	7	1	**6I-1090**	1	BOLT (M8X1.25X40-MM)	
	8	1	**277-1974**	1	PLATE AS	
	8A	1	**277-1975**	1	SEAL-O-RING	

M - METRIC PART

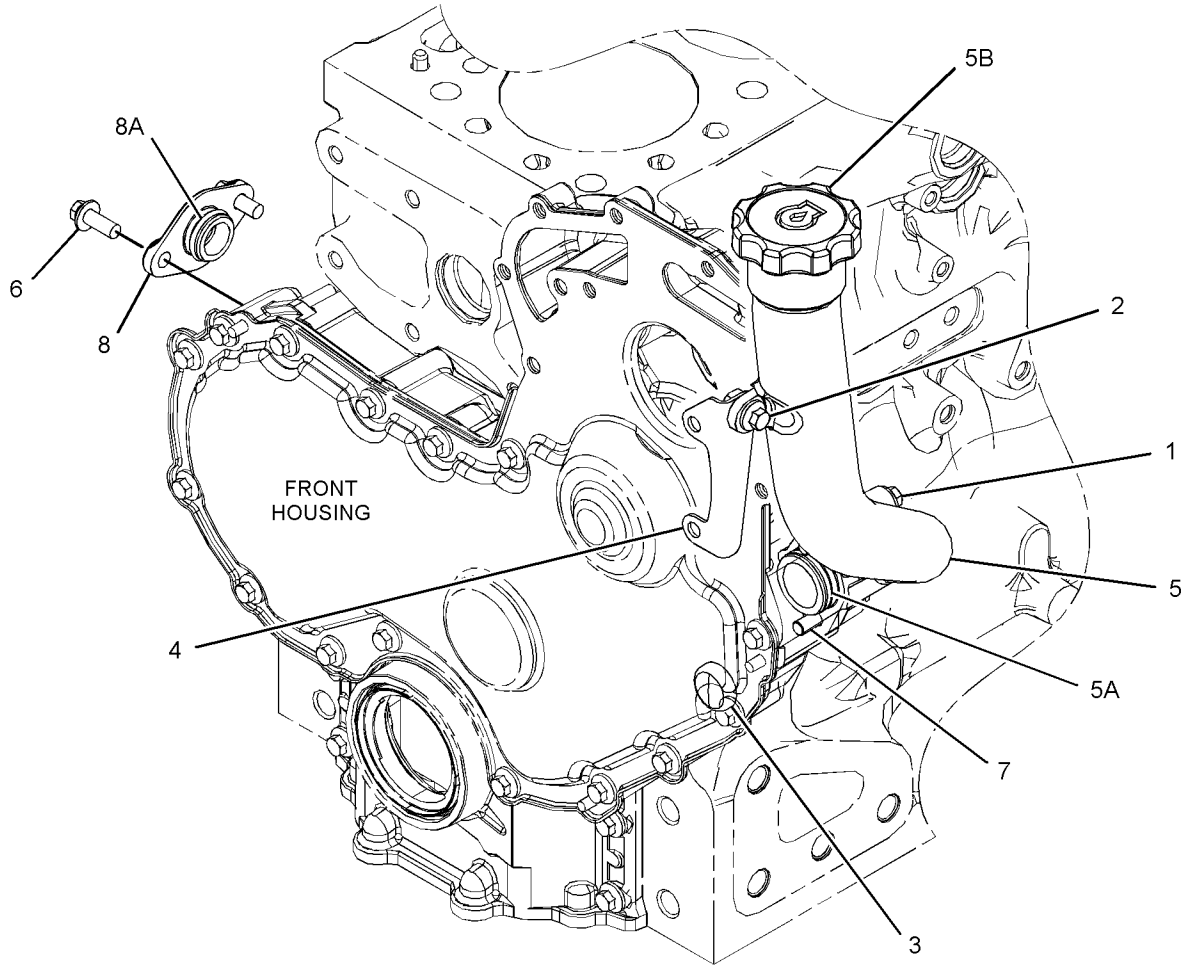

GRAPHIC #1 <END> g03556805

346-0220 FILTER GP-ENGINE OIL

S/N: 4501-UP
PART OF 569-0811 ENGINE AR-PRIMARY
AN ATTACHMENT

SMCS-1306, 1308

i05882505

NOTE	REF NO	GRAPHIC REF	PART NUMBER	QTY	PART NAME 1 2 3 4 5 6 (PRODUCT LEVEL)	SEE PAGE
	1	1	**462-1171**	1	FILTER-ENGINE OIL	

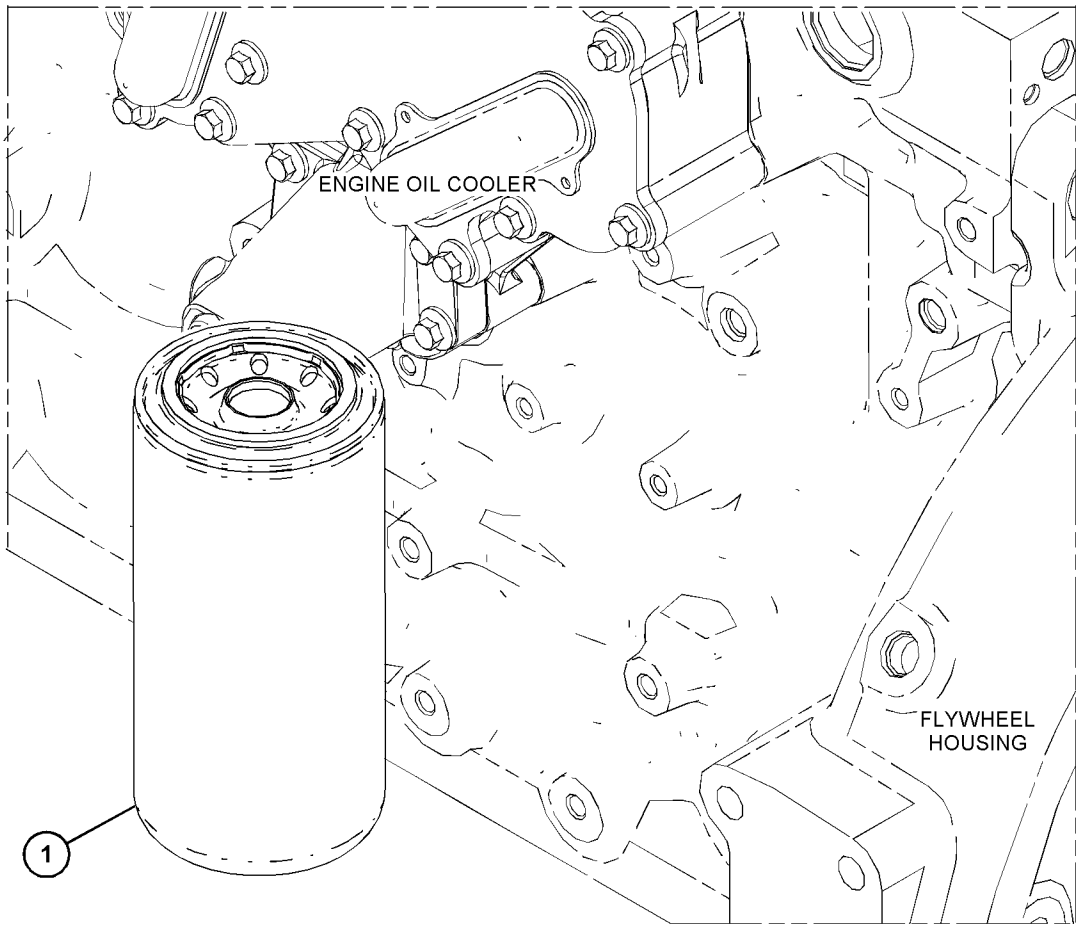

GRAPHIC #1 <END> g03710180

378-0625 GAUGE GP-OIL LEVEL (DIPSTICK)

S/N: 4501-UP
PART OF 569-0811 ENGINE AR-PRIMARY
AN ATTACHMENT

SMCS-1326 **i07724424**

NOTE	REF NO	GRAPHIC REF	PART NUMBER	QTY	PART NAME 1 2 3 4 5 6 (PRODUCT LEVEL)	SEE PAGE
	1	1	**6I-1497**	1	SEAL	
	2	1	**6I-0289**	1	PLUG	
Y	3	1	**420-4129**	1	GAUGE GP-OIL LEVEL (DIPSTICK)	54
	4	1	**420-4143**	1	SPACER	
M	5	1	**6I-0293**	1	BOLT (M8X1.25X80-MM)	

M - METRIC PART
Y - SEPARATE ILLUSTRATION

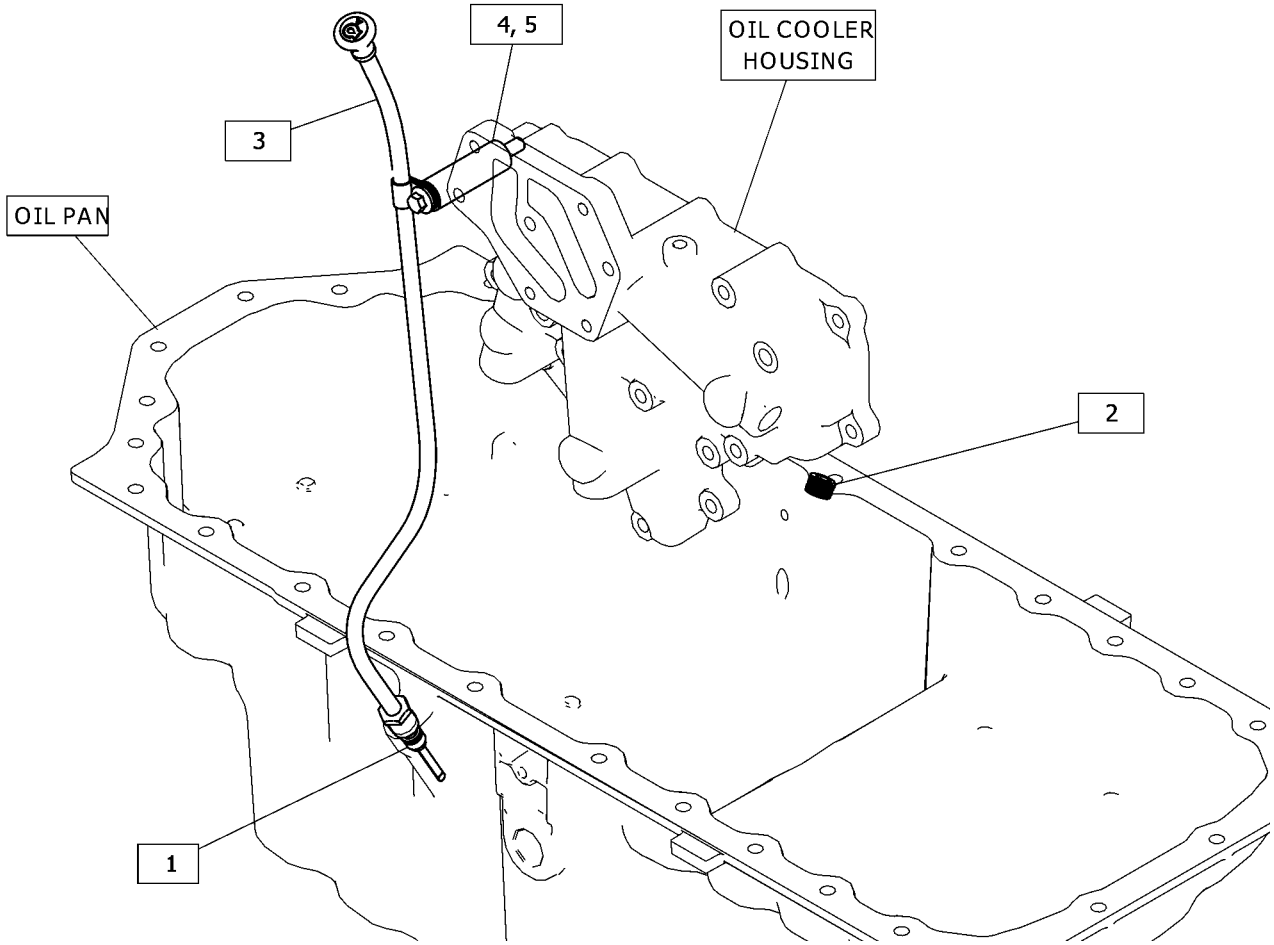

GRAPHIC #1 <END> g06404314

420-4129 GAUGE GP-OIL LEVEL (DIPSTICK)

S/N: 4501-UP

PART OF 378-0625 GAUGE GP-OIL LEVEL (DIPSTICK)

AN ATTACHMENT

SMCS-1326 **i07724413**

NOTE	REF NO	GRAPHIC REF	PART NUMBER	QTY	PART NAME 1 2 3 4 5 6 (PRODUCT LEVEL)	SEE PAGE
	1	1	*420-4133*	1	TUBE AS-OIL GAUGE	
	1A	1	**123-2933**	1	CLIP	
	1B	1	**228-7089**	1	SEAL-O-RING	
	2	1	*420-4136*	1	GAUGE AS-OIL LEVEL (DIPSTICK)	
	2A	1	**275-9891**	2	SEAL-O-RING	

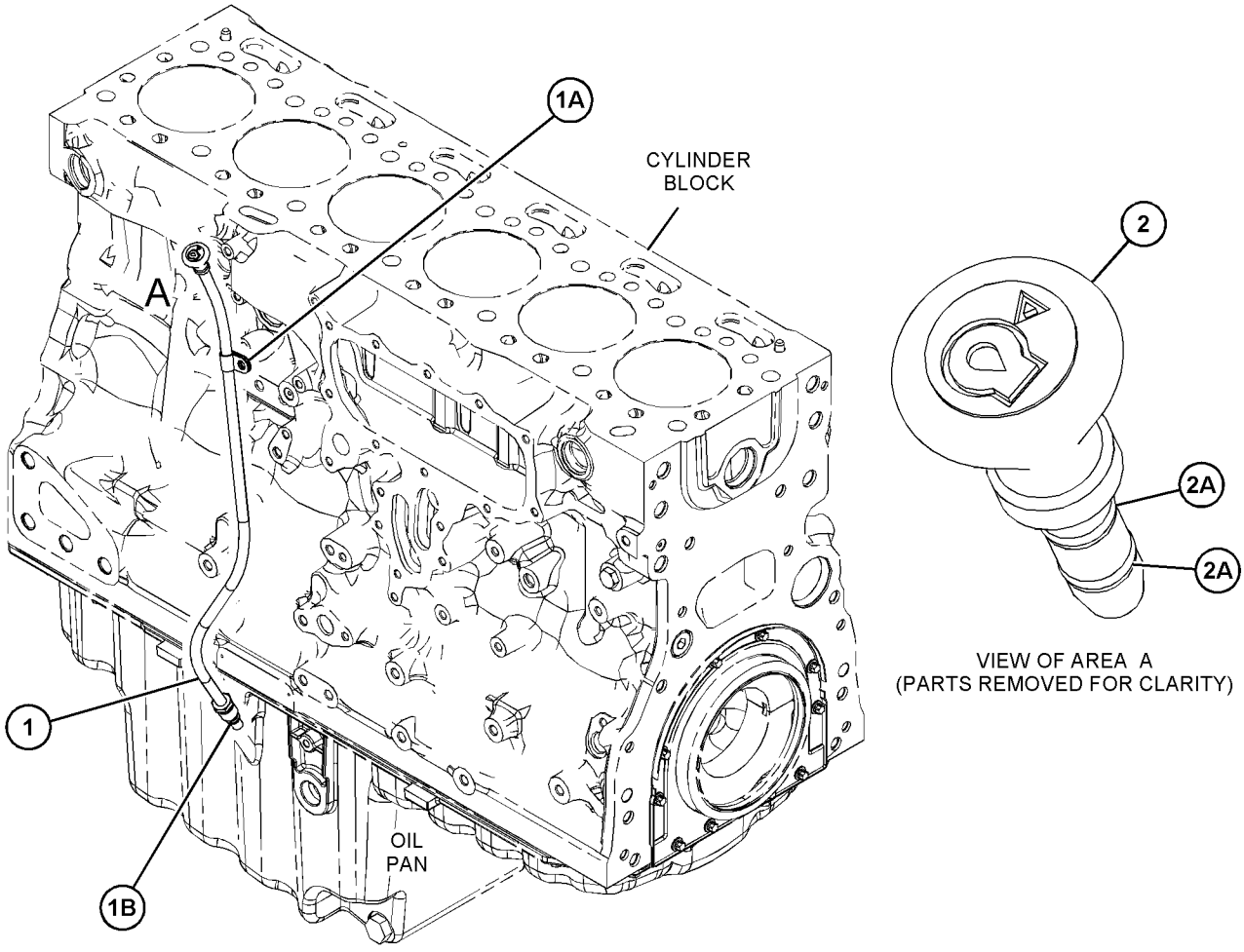

GRAPHIC #1 <END> g06465542

531-1959 LINES GP-FAN DRIVE

S/N: Z2K1-UP; Z2N1-UP
PART OF 510-9713 HYDRAULIC AR
AN ATTACHMENT

SMCS-1307, 1359 **i07819328**

NOTE	REF NO	GRAPHIC REF	PART NUMBER	QTY	PART NAME 1 2 3 4 5 6 (PRODUCT LEVEL)	SEE PAGE
M	1	1	**8T-4182**	1	BOLT (M10X1.5X45-MM)	
M	2	1	**8T-4185**	1	BOLT (M10X1.5X50-MM)	
	3	1	**2P-1293**	2	LOCKNUT (1-3/16-12-THD)	
	4	1	**5P-7466**	1	CLIP (SLOT)	
	5	1	**5P-7467**	1	CLIP (TAB)	
	6	1	**8T-4121**	5	WASHER-HARD (11X21X2.5-MM THK)	
	7	1	**091-9035**	1	SPACER (11X25X20-MM THK)	
	8	1	*148-8388*	1	ELBOW AS	
		1	**2M-9780**	1	SEAL-O-RING	
		1	**6V-8629**	1	ELBOW	
		1	**6V-9746**	1	SEAL-O-RING	
	9	1	*164-5606*	1	CONNECTOR AS	
		1	**3D-2824**	1	SEAL-O-RING	
		1	**6V-9746**	1	SEAL-O-RING	
		1	**8T-0078**	1	CONNECTOR	
	10	1	*165-4933*	2	ELBOW AS	
					(EACH INCLUDES)	
		1	**6V-8990**	1	ELBOW	
		1	**6V-9746**	2	SEAL-O-RING	
	11	1	**302-3908**	1	SPACER (11X20X30-MM THK)	
	12	1	**320-6553**	1	BRACKET AS	
M		1	**171-2419**	1	STUD-WELD (M10X1.5X35-MM)	
	13	1	**488-3971**	2	BOLT AS	
	14	1	**529-6539**	4	BOLT AS	
	15	1	**533-4159**	2	BOLT AS	
	16	1	**541-6633**	8	CLIP (LOOP)	
	17	1	**574-9280**	1	BRACKET AS	
M	18	1	**344-5675**	3	NUT (M10X1.5-THD)	
	19	1	**422-8724**	1	BRACKET	
M	20	1	**479-2171**	3	BOLT AS	
M	21	1	**479-2172**	1	BOLT AS	
	22	1	**516-7946**	1	BRACKET AS	
M		1	**8T-3490**	2	NUT-WELD (M10X1.5-THD)	
	23	1	**552-9981**	1	BRACKET AS	
M		1	**8T-3490**	1	NUT-WELD (M10X1.5-THD)	
J	24	1	**556-3891**	1	PUMP GP-GEAR (HYDRAULIC FAN)	
		1	**5J-2974**	1	SEAL-O-RING	
I	25	1	**573-0362**	1	HOSE AS	
I	26	1	**581-1751**	1	HOSE AS	
	27	1	**5P-8112**	1	GROMMET	
					AVAILABLE REPAIR KIT(S):	
J			**565-4173**	1	KIT-SEAL	
					(INCLUDES BACK UP RINGS & SEALS)	

I - REFER TO HYDRAULIC INFORMATION SYSTEM
J - KIT MARKED J SERVICES PART(S) MARKED J
M - METRIC PART

531-1959 **LINES GP-FAN DRIVE (**contd.**)** **i07819328**

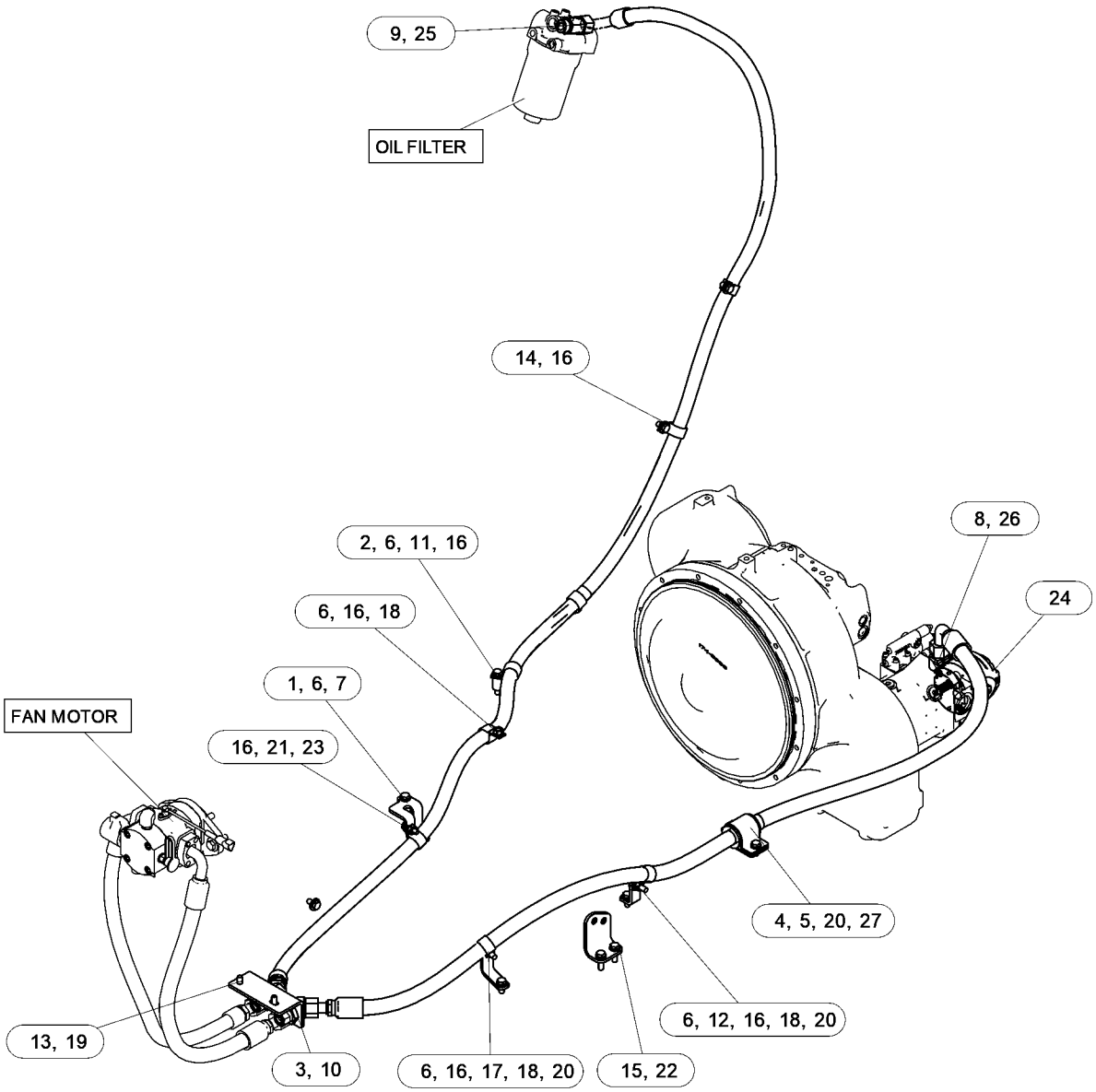

GRAPHIC #1 <END> g06446445

368-8559 LINES GP-TURBOCHARGER OIL

S/N: 4501-UP
PART OF 371-2720 TURBOCHARGER GP
AN ATTACHMENT

SMCS-1052, 1307

i04838031

NOTE	REF NO	GRAPHIC REF	PART NUMBER	QTY	PART NAME 1 2 3 4 5 6 (PRODUCT LEVEL)	SEE PAGE
	1	1	**277-9938**	1	BOLT-SPECIAL (BANJO)	
	2	1	**277-9940**	1	SEAL-O-RING	
	3	1	**365-5823**	2	WASHER	

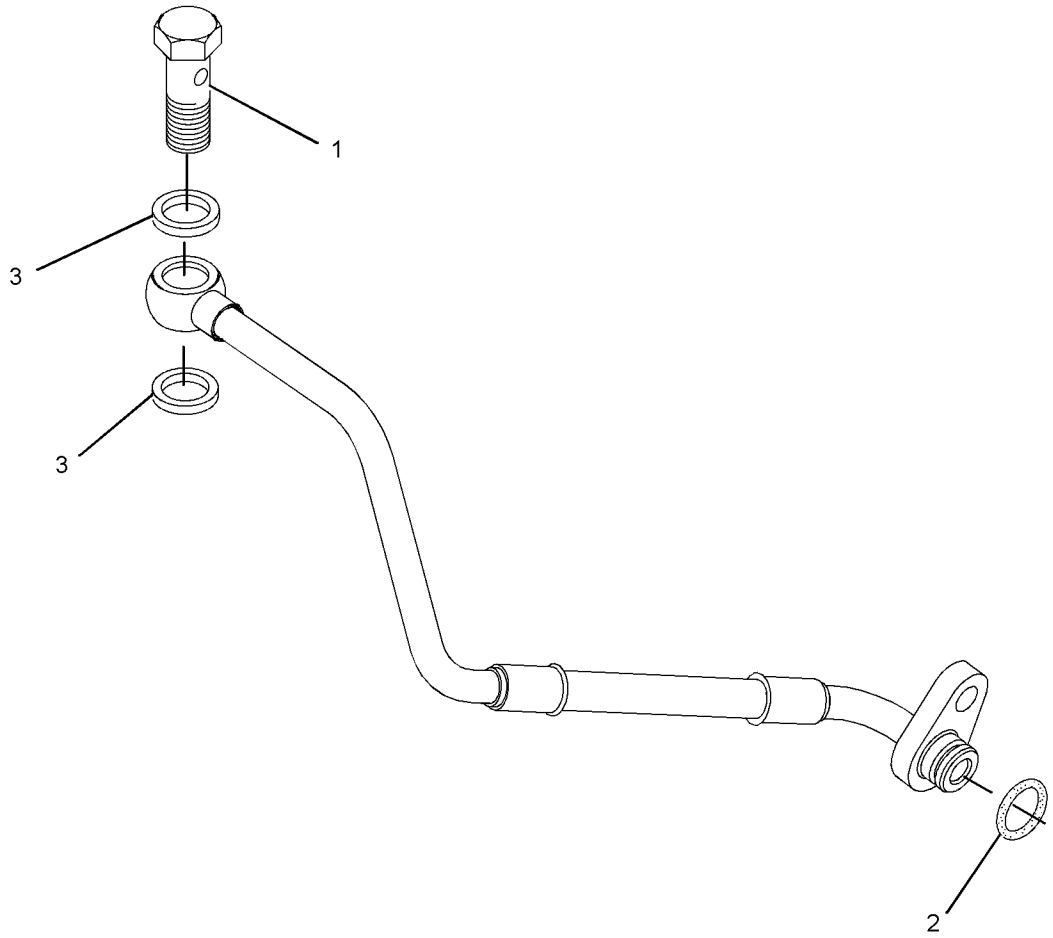

GRAPHIC #1 <END> g02400339

568-5979 OIL CHANGE GP-HIGH SPEED

S/N: Z2K1-UP; Z2N1-UP
PART OF 532-9851 DISTRIBUTION AR
AN ATTACHMENT

SMCS-1325 **i07840004**

NOTE	REF NO	GRAPHIC REF	PART NUMBER	QTY	PART NAME 1 2 3 4 5 6 (PRODUCT LEVEL)	SEE PAGE
	1	1	*148-8324*	1	CONNECTOR AS	
		1	**3K-0360**	1	SEAL-O-RING	
		1	**6V-9746**	1	SEAL-O-RING	
		1	**6V-9874**	1	CONNECTOR (STRAIGHT)	
	2	1	**2P-1293**	1	LOCKNUT (1-3/16-12-THD)	
I	3	1	**568-7464**	1	HOSE AS	
	4	1	**6V-9746**	1	SEAL-O-RING	
	5	1	**8T-5373**	1	COUPLER-MALE	
	6	1	**8W-3214**	1	CAP AS	

I - REFER TO HYDRAULIC INFORMATION SYSTEM

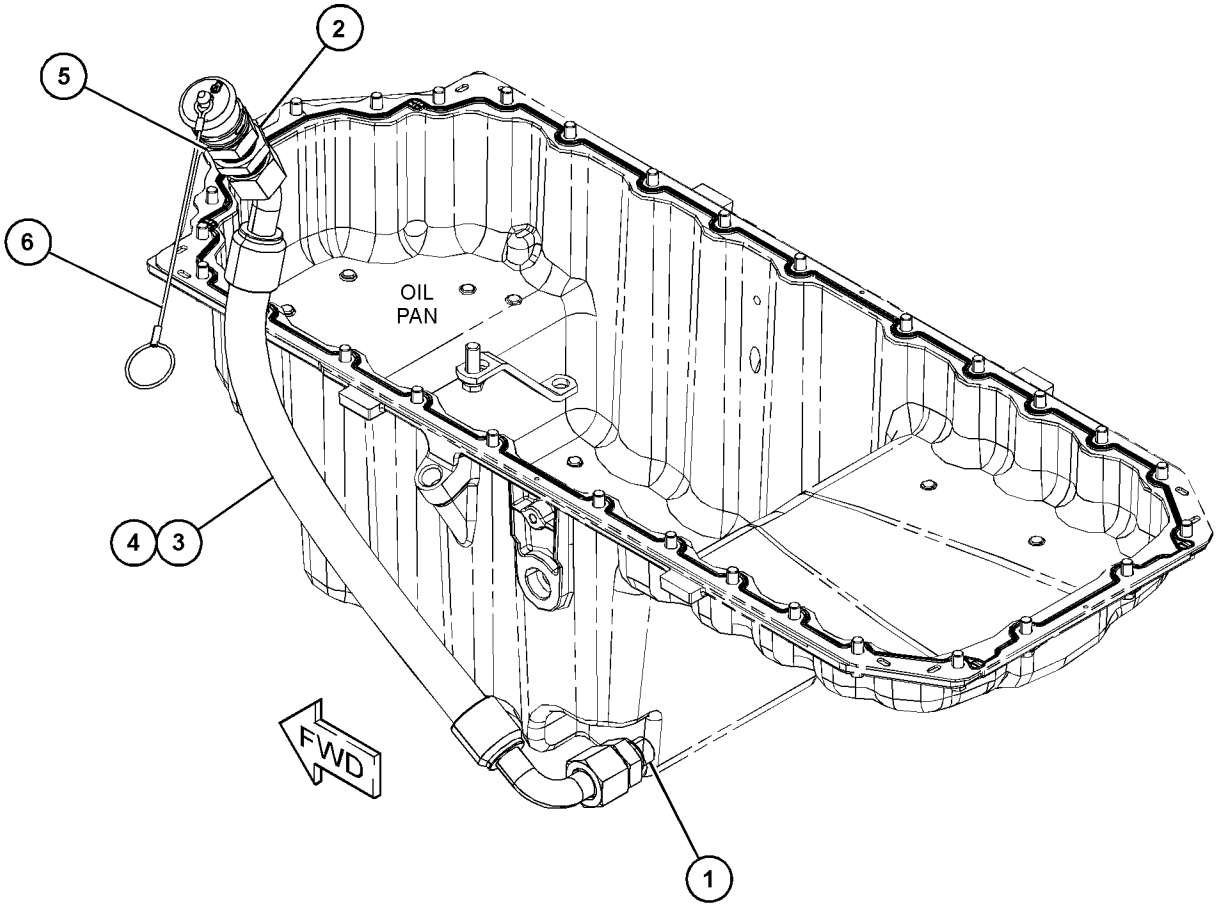

GRAPHIC #1 <END> g06456228

462-6685 PUMP GP-ENGINE OIL

S/N: 4501-UP

PART OF 569-0811 ENGINE AR-PRIMARY

AN ATTACHMENT

SMCS-1304, 1315

i07025307

NOTE	REF NO	GRAPHIC REF	PART NUMBER	QTY	PART NAME 1 2 3 4 5 6 (PRODUCT LEVEL)	SEE PAGE
	1	1	**420-0454**	1	PUMP AS-OIL	
M	2	1	**6I-1090**	4	BOLT (M8X1.25X40-MM)	

M - METRIC PART

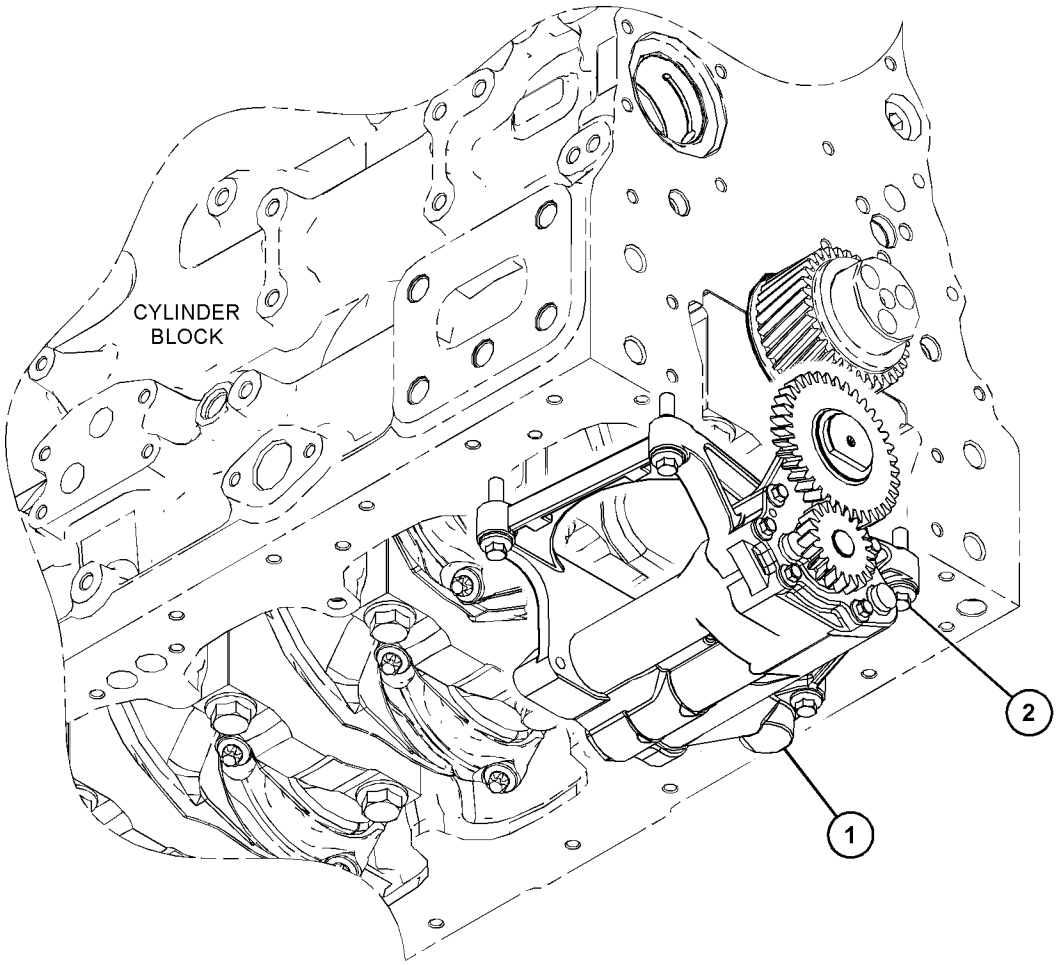

GRAPHIC #1 <END> g03797853

371-2745 VALVE GP-FLUID SAMPLING

S/N: 4501-UP
PART OF 569-0811 ENGINE AR-PRIMARY
AN ATTACHMENT

SMCS-7542 **i05331565**

NOTE	REF NO	GRAPHIC REF	PART NUMBER	QTY	PART NAME 1 2 3 4 5 6 (PRODUCT LEVEL)	SEE PAGE
	1	1	**216-9633**	1	VALVE AS-FLUID SAMPLING	
	2	1	**8C-3445**	1	CAP-DUST	

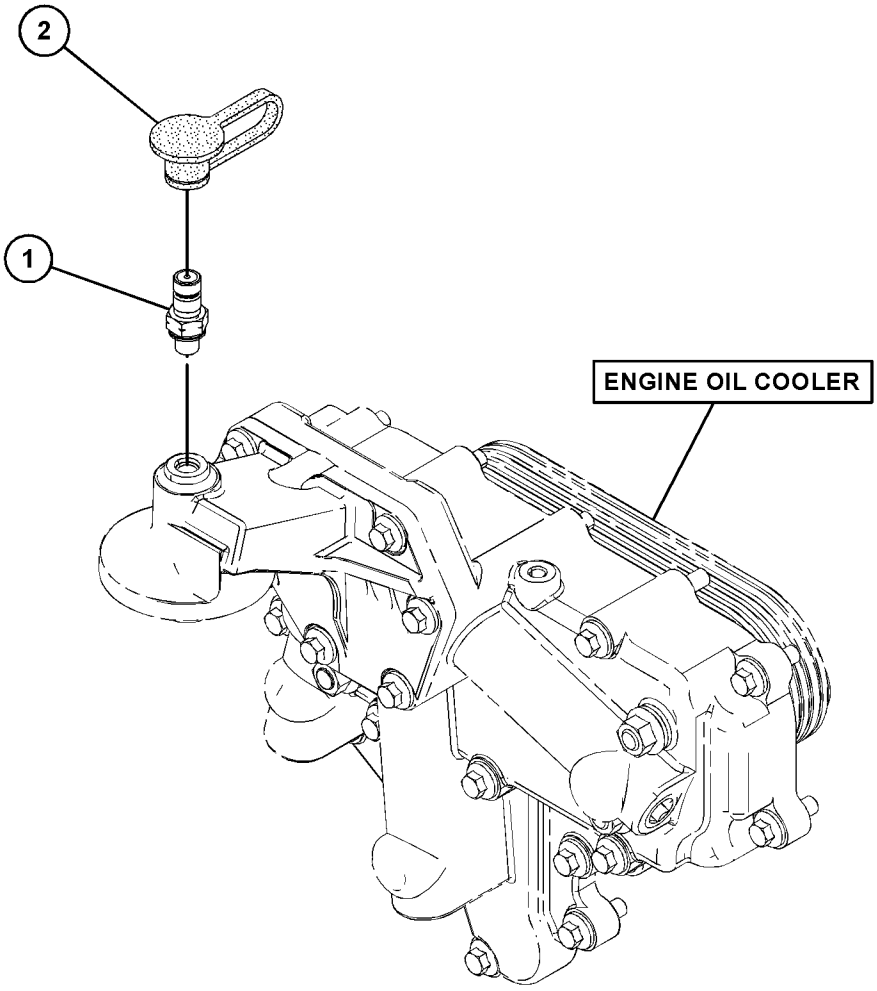

GRAPHIC #1 <END> g03178016

346-0099 BASE GP-OIL COOLER & FILTER

S/N: 4501-UP
PART OF 569-0811 ENGINE AR-PRIMARY
AN ATTACHMENT

SMCS-1306, 1378

i06910465

NOTE	REF NO	GRAPHIC REF	PART NUMBER	QTY	PART NAME 1 2 3 4 5 6 (PRODUCT LEVEL)	SEE PAGE
M	1	1	**100-3751**	5	BOLT (M8X1.25X65-MM)	
	2	1	**225-7944**	1	GASKET	
	3	1	**232-3751**	1	PLATE	
	4	1	**277-2525**	1	HEAD AS-OIL FILTER	
	5	1	**277-2526**	1	GASKET-FILTER (ENGINE OIL)	
	6	1	**277-2537**	1	PLATE	
Y	8	1	**295-8610**	1	COOLER GP-ENGINE OIL	63
M	9	1	**6I-0217**	6	BOLT (M8X1.25X20-MM)	
M	10	1	**6I-0260**	8	BOLT (M8X1.25X25-MM)	
M	11	1	**6I-4709**	3	BOLT (M8X1.25X100-MM)	

M - METRIC PART
Y - SEPARATE ILLUSTRATION

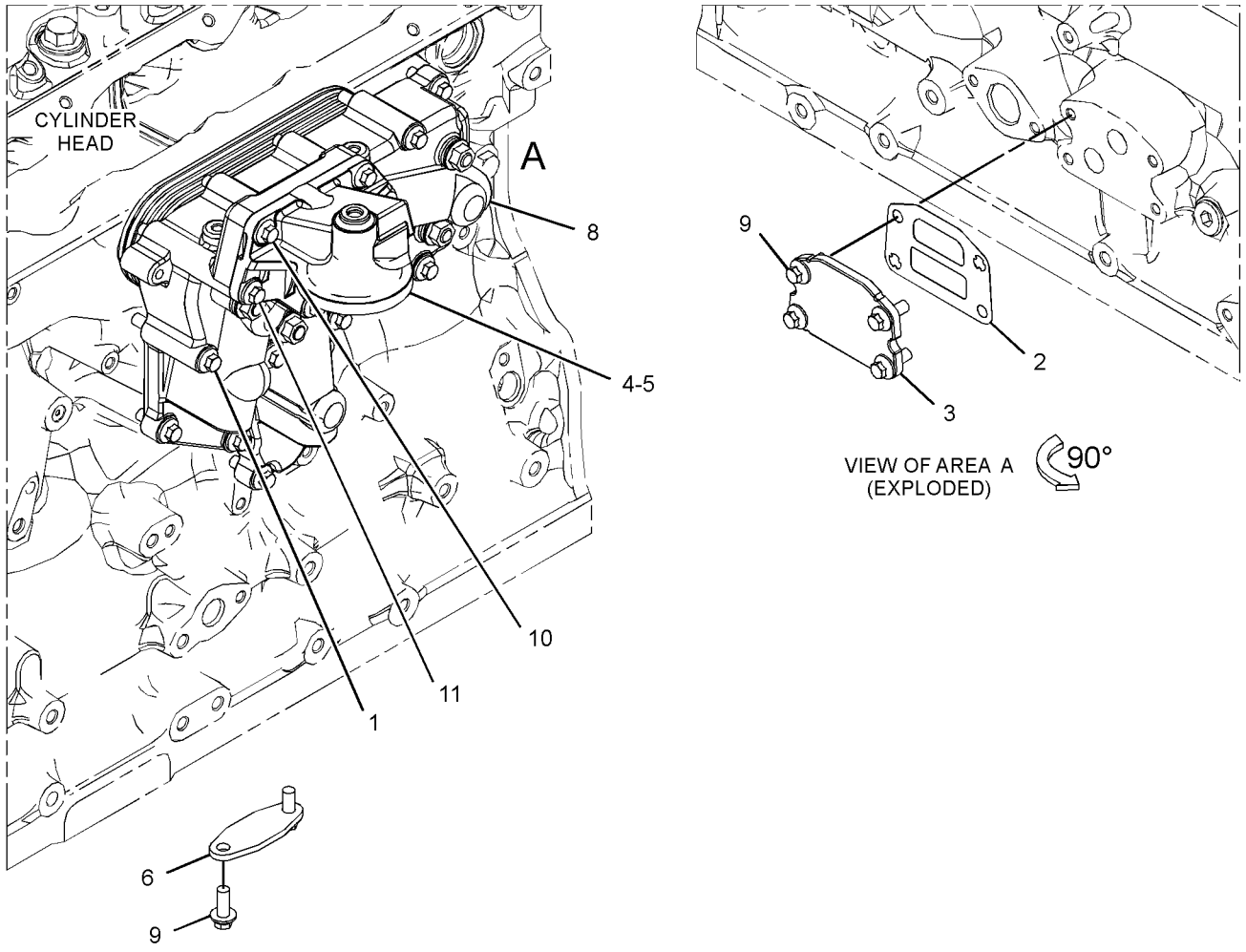

GRAPHIC #1 <END> g06161854

373-3607 CONNECTION GP-WATER

S/N: 4501-UP

PART OF 569-0811 ENGINE AR-PRIMARY

AN ATTACHMENT

SMCS-1380 **i05331563**

NOTE	REF NO	GRAPHIC REF	PART NUMBER	QTY	PART NAME 1 2 3 4 5 6 (PRODUCT LEVEL)	SEE PAGE
M	1	1	**123-2899**	2	BOLT (M10X1.5X40-MM)	
	2	1	**417-7782**	1	REGULATOR AS-WATER TEMPERATURE (INCLUDES CONNECTOR)	
	3	1	**281-8744**	1	GASKET-WATER REGULATOR (TEMPERATURE)	

M - METRIC PART

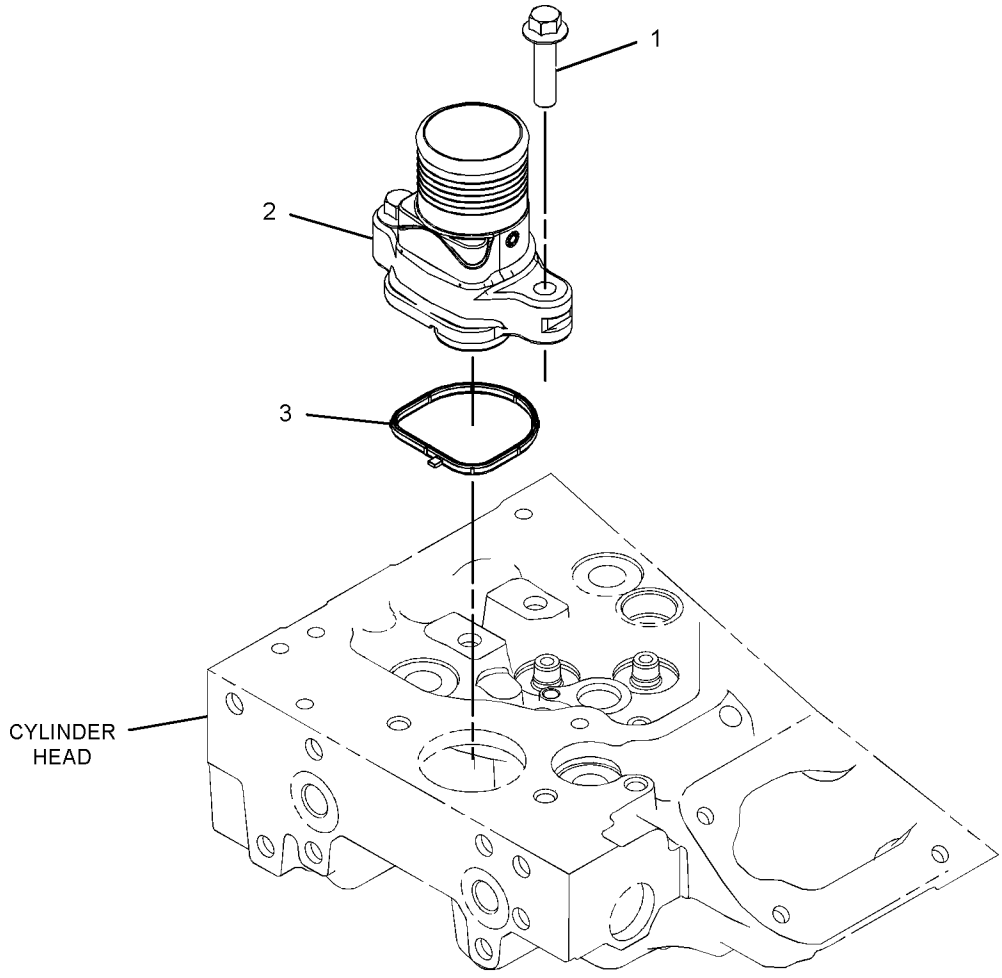

GRAPHIC #1 <END> g03341487

295-8610 COOLER GP-ENGINE OIL

S/N: 4501-UP

PART OF 346-0099 BASE GP-OIL COOLER & FILTER

AN ATTACHMENT

SMCS-1378 **i06300691**

NOTE	REF NO	GRAPHIC REF	PART NUMBER	QTY	PART NAME 1 2 3 4 5 6 (PRODUCT LEVEL)	SEE PAGE
M	1	1	**6I-0260**	3	BOLT (M8X1.25X25-MM)	
M	2	1	**6I-0594**	4	NUT (M10X1.5-THD)	
	3	1	**101-3917**	4	WASHER (10.5X21X2-MM THK)	
	4	1	**101-7547**	4	LOCKWASHER	
	5	1	**231-1455**	2	STUD	
	6	1	**277-2500**	1	GASKET	
	7	1	**277-2502**	2	STUD	
	8	1	**277-2503**	3	PLUG	
	9	1	**295-8613**	1	COOLER-OIL (ENGINE)	
	10	1	**295-8615**	2	GASKET	
					PARTS SHOWN IN GRAPHIC(S) WITHOUT A REFERENCE NUMBER ARE NOT SERVICED SEPARATELY	

M - METRIC PART

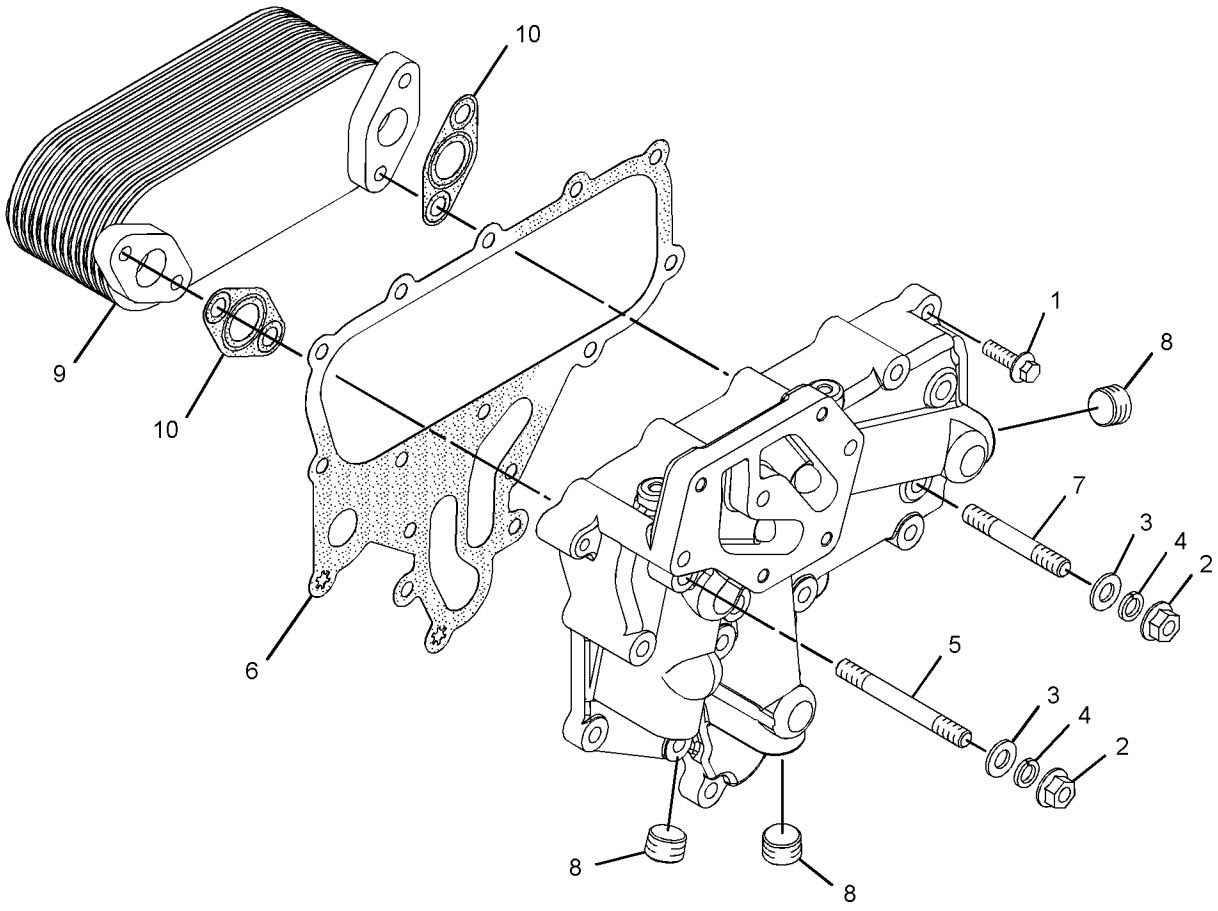

GRAPHIC #1 <END> g03105899

559-6007 COOLING AR

S/N: Z2K1-UP; Z2N1-UP
PART OF 532-9851, 532-9856 DISTRIBUTION AR
AN ATTACHMENT

SMCS-1350 **i07828376**

NOTE	PART NUMBER	QTY	PART NAME 1 2 3 4 5 6 (PRODUCT LEVEL)	SEE PAGE
Y	*562-2915*	1	COOLING GP	65

Y - SEPARATE ILLUSTRATION

<END>

559-6008 COOLING GP

S/N: Z2K1-UP; Z2N1-UP
DEBRIS RESISTANT
AN ATTACHMENT

SMCS-1350, 1353 **i07845005**

NOTE	PART NUMBER	QTY	PART NAME 1 2 3 4 5 6 (PRODUCT LEVEL)	SEE PAGE
Y	*570-4086*	1	COOLING GP	67

Y - SEPARATE ILLUSTRATION

<END>

562-2915 COOLING GP

S/N: Z2K1-UP; Z2N1-UP
PART OF 559-6007 COOLING AR
AN ATTACHMENT

SMCS-1350, 1353 **i07828379**

NOTE	REF NO	GRAPHIC REF	PART NUMBER	QTY	PART NAME 1 2 3 4 5 6 (PRODUCT LEVEL)	SEE PAGE
	1	1	**505-5758**	1	CORE AS-OIL COOLER	
		1	**476-8834**	1	VALVE AS-CONTROL	
		1	**238-5085**	1	SEAL-O-RING	
	2	1	**562-2916**	1	CORE AS-RADIATOR	
		1	**7M-8485**	1	SEAL-O-RING	
		1	**9Y-9236**	1	GAUGE-SIGHT (COOLANT)	
		1	**345-1237**	1	CAP AS-COOLANT TANK	
	3	1	**562-2917**	1	CORE AS-AFTERCOOLER	
	4	1	**562-2919**	1	CORE AS-OIL COOLER	
	5	1	**562-2920**	1	PLATE AS-RADIATOR	
	6	1	**562-2921**	1	PLATE AS-RADIATOR	
	7	1	**198-4778**	4	WASHER-HARD (13.5X30X12-MM THK)	
M	8	1	**259-2627**	4	BOLT (M12X1.75X40-MM)	
M	9	1	**8T-4195**	24	BOLT (M10X1.5X30-MM)	
	10	1	**9M-6527**	24	WASHER-HARD (10.2X25.5X5-MM THK)	
E	11	1	**392-0610**		SEAL (36-CM)	
E	11A	1	**392-0610**		SEAL (19-CM EACH)	
E	11B	1	**392-0610**		SEAL (100-CM EACH)	

E - ORDER BY THE CENTIMETER
M - METRIC PART

562-2915 **COOLING GP (**contd.**)** **i07828379**

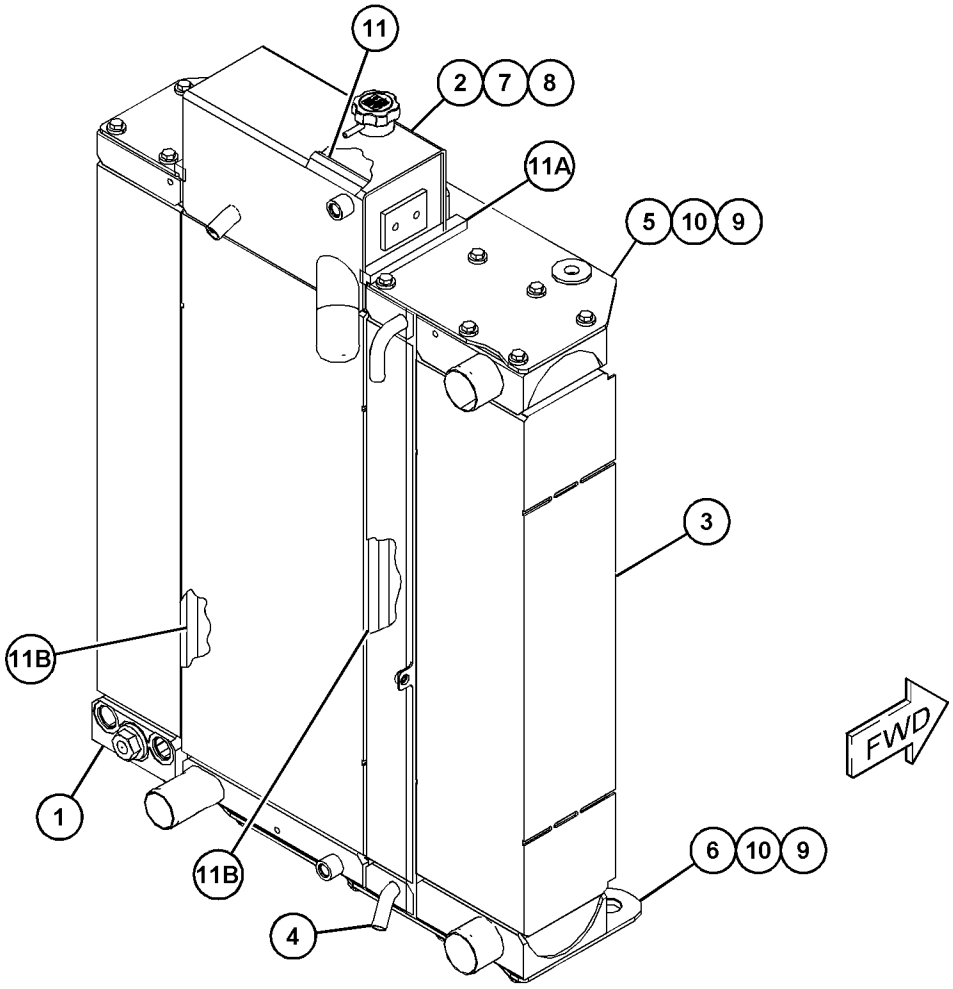

GRAPHIC #1 <END> g06452931

570-4086 COOLING GP

S/N: Z2K1-UP; Z2N1-UP
PART OF 559-6008 COOLING GP
AN ATTACHMENT

SMCS-1350, 1353 **i07845140**

NOTE	REF NO	GRAPHIC REF	PART NUMBER	QTY	PART NAME 1 2 3 4 5 6 (PRODUCT LEVEL)	SEE PAGE
	1	1	**562-2920**	1	PLATE AS-RADIATOR (TOP)	
	2	1	**562-2921**	1	PLATE AS-RADIATOR (BOTTOM)	
	3	1	**564-0798**	1	CORE AS-OIL COOLER	
		1	**476-8834**	1	VALVE AS-CONTROL	
		1	**238-5085**	1	SEAL-O-RING	
	4	1	**570-4087**	1	CORE AS-RADIATOR	
		1	**7M-8485**	1	SEAL-O-RING	
		1	**9Y-9236**	1	GAUGE-SIGHT (COOLANT)	
		1	**345-1237**	1	CAP AS-COOLANT TANK	
	5	1	**570-4090**	1	CORE AS-AFTERCOOLER	
	6	1	**570-4091**	1	CORE AS-OIL COOLER	
	7	1	**198-4778**	4	WASHER-HARD (13.5X30X12-MM THK)	
M	8	1	**259-2627**	4	BOLT (M12X1.75X40-MM)	
M	9	1	**8T-4195**	24	BOLT (M10X1.5X30-MM)	
	10	1	**9M-6527**	24	WASHER-HARD (10.2X25.5X5-MM THK)	
E	11	1	**392-0610**		SEAL (100-CM EACH)	
E	11A	1	**392-0610**		SEAL (19-CM EACH)	
E	11B	1	**392-0610**		SEAL (36-CM)	

E - ORDER BY THE CENTIMETER
M - METRIC PART

570-4086 **COOLING GP (**contd.**)** **i07845140**

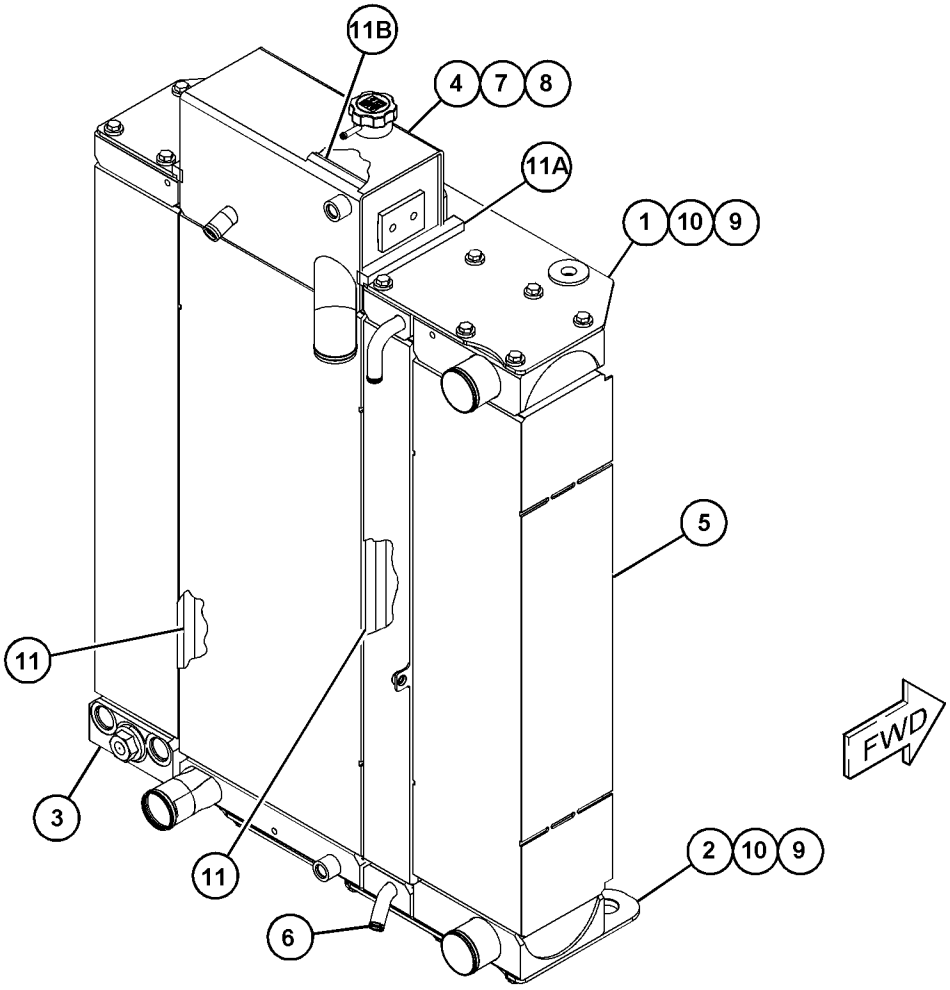

GRAPHIC #1 <END> g06457887

464-8457 FAN & MOTOR GP–5-BLADE

S/N: Z2K1-UP; Z2N1-UP
PART OF 540-8689 PRECLEANER GP-CAB AIR
AN ATTACHMENT

SMCS-1356, 1386

i07281518

NOTE	REF NO	GRAPHIC REF	PART NUMBER	QTY	PART NAME 1 2 3 4 5 6 (PRODUCT LEVEL)	SEE PAGE
	1	1	**385-7511**	1	MOTOR AS-BLOWER (24-VOLT, CAB AIR)	
		1	**9W-0852**	2	PIN-CONNECTOR (14-GA TO 16-GA)	
		1	**102-8802**	1	KIT-RECEPTACLE (2-PIN)	
					(INCLUDES RECEPTACLE AS & WEDGE)	
	2	1	**4L-1250**	2	LOCKNUT (10-32-THD)	
	3	1	**8T-0328**	2	WASHER-HARD (5.5X10X1-MM THK)	

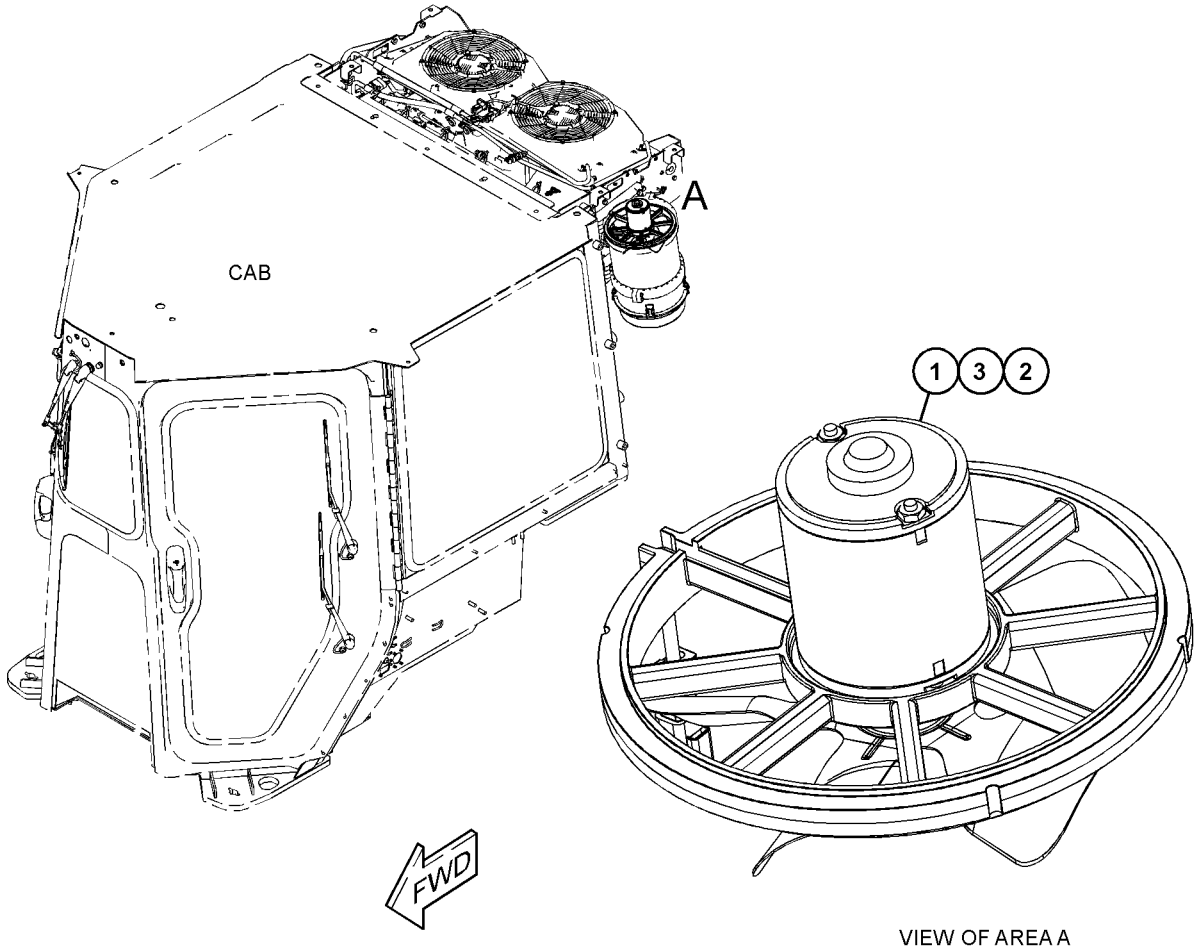

VIEW OF AREA A

GRAPHIC #1

<END>

g06272899

507-8263 FAN GP-SUCTION

S/N: Z2K1-UP; Z2N1-UP
HEAVY-DUTY
PART OF 559-5994 INSTALLATION AR-ENGINE
AN ATTACHMENT

SMCS-1356 **i07835679**

NOTE	REF NO	GRAPHIC REF	PART NUMBER	QTY	PART NAME 1 2 3 4 5 6 (PRODUCT LEVEL)	SEE PAGE
M	1	1	**7X-2549**	4	BOLT (M12X1.75X100-MM)	
M	2	1	**5W-9419**	1	NUT (M12X1.5-THD)	
	3	1	**7X-3392**	1	WASHER-HARD (13.5X22.5X3-MM THK)	
	4	1	**8T-4223**	4	WASHER-HARD (13.5X25.5X3-MM THK)	
	5	1	**307-5172**	4	SPACER (13.5X25X60-MM THK)	
M	6	1	**479-2172**	6	BOLT AS	
	7	1	**576-0011**	1	SPIDER AS-FAN (6-BLADE)	
	8	1	**576-1937**	1	ADAPTER	
	9	1	**582-2965**	1	SUPPORT AS	
M		1	**8T-3490**	3	NUT-WELD (M10X1.5-THD)	
M		1	**8T-3597**	2	NUT-WELD (M12X1.75-THD)	

M - METRIC PART

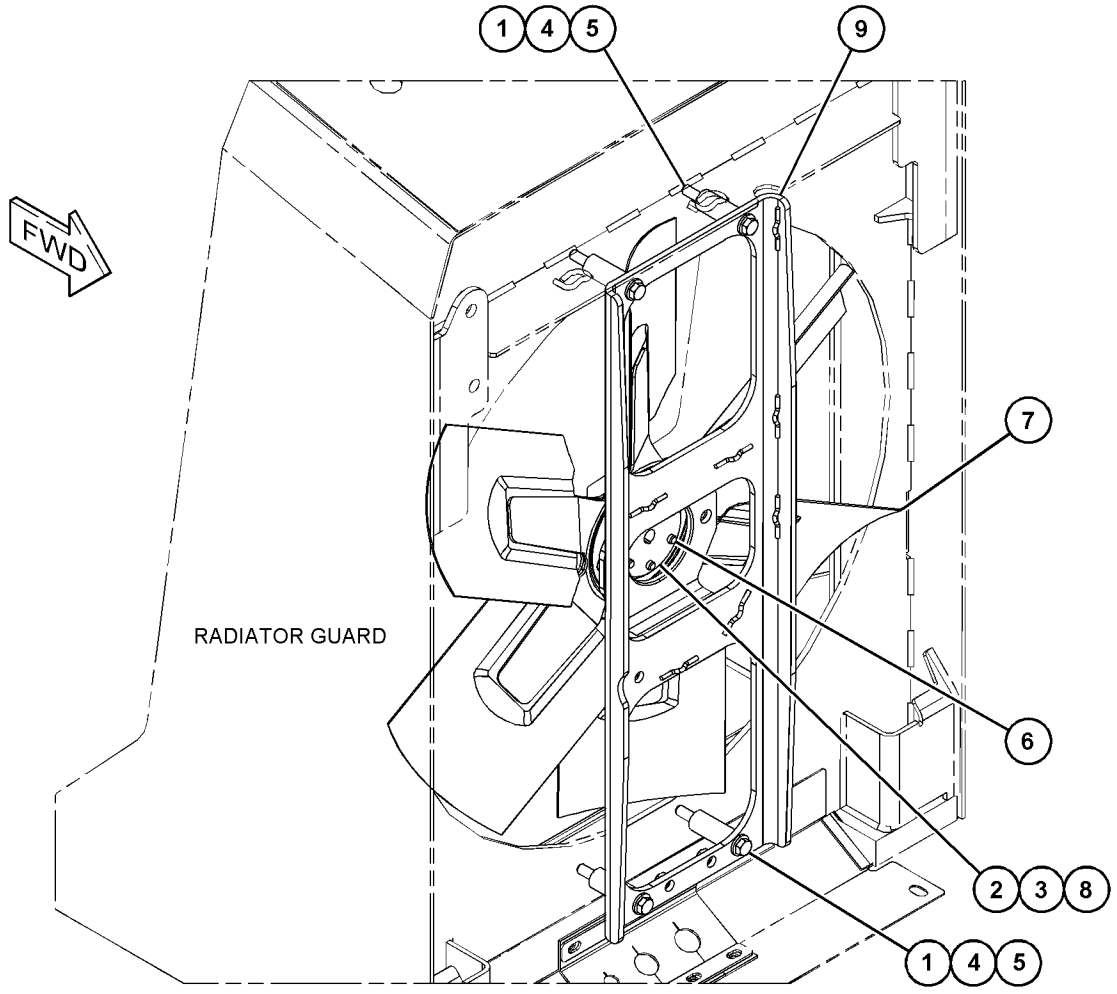

GRAPHIC #1 <END> g06457640

561-2381 LINES GP-WATER

S/N: Z2K1-UP; Z2N1-UP
PART OF 559-5994 INSTALLATION AR-ENGINE
AN ATTACHMENT

SMCS-1380 **i07817943**

NOTE	REF NO	GRAPHIC REF	PART NUMBER	QTY	PART NAME 1 2 3 4 5 6 (PRODUCT LEVEL)	SEE PAGE
	1	1	**204-2281**	2	STRAP-CABLE	
	2	1	**154-9024**	1	VALVE-SAMPLING	
	3	1	**157-0670**	1	CAP-DUST	
	4	1	*165-2273*	1	VALVE AS-SHUTOFF	
		1	**3K-0360**	1	SEAL-O-RING	
		1	**6V-7238**	1	VALVE-SHUTOFF	
	5	1	*194-2903*	1	ELBOW AS	
		1	**3K-0360**	1	SEAL-O-RING	
		1	**8T-0119**	1	ELBOW	
	6	1	**1P-4278**	2	CLAMP-HOSE	
	7	1	**200-6345**	5	SADDLE-MOUNTING (DUAL SWIVEL)	
	8	1	*225-0311*	1	TEE AS	
		1	**3K-0360**	1	SEAL-O-RING	
		1	**168-3332**	1	TEE-ADAPTER	
	9	1	**287-0427**	1	TUBE AS	
	10	1	**288-4513**	1	HOSE	
	11	1	**2D-9155**	1	ELBOW	
	12	1	**3B-7255**	1	BUSHING-REDUCER	
	13	1	*426-4167*	1	ELBOW AS	
		1	**6V-9027**	1	SEAL-O-RING	
		1	**426-4147**	1	ADAPTER-ELBOW	
	14	1	*482-4108*	1	ADAPTER AS	
		1	**3K-0360**	1	SEAL-O-RING	
		1	**515-4951**	1	ADAPTER	
	15	1	**561-2376**	1	HOSE	
	16	1	**561-2380**	1	HOSE	
	17	1	**562-1927**	1	BOLT AS	
	18	1	**574-4833**	1	HOSE	
	19	1	**7K-1181**	10	STRAP-CABLE	
	20	1	**7X-7958**	2	CLAMP-HOSE	
	21	1	**8M-2770**	1	CLIP (LOOP)	
	22	1	**8T-4984**	6	CLAMP-HOSE	
E	23	1	**5P-0767**		HOSE (41.4-CM)	
E	24	1	**5P-1465**		HOSE (68-CM)	
E	25	1	**8C-3681**		HOSE (145.2-CM)	

E - ORDER BY THE CENTIMETER

561-2381 **LINES GP-WATER (**contd.**)** **i07817943**

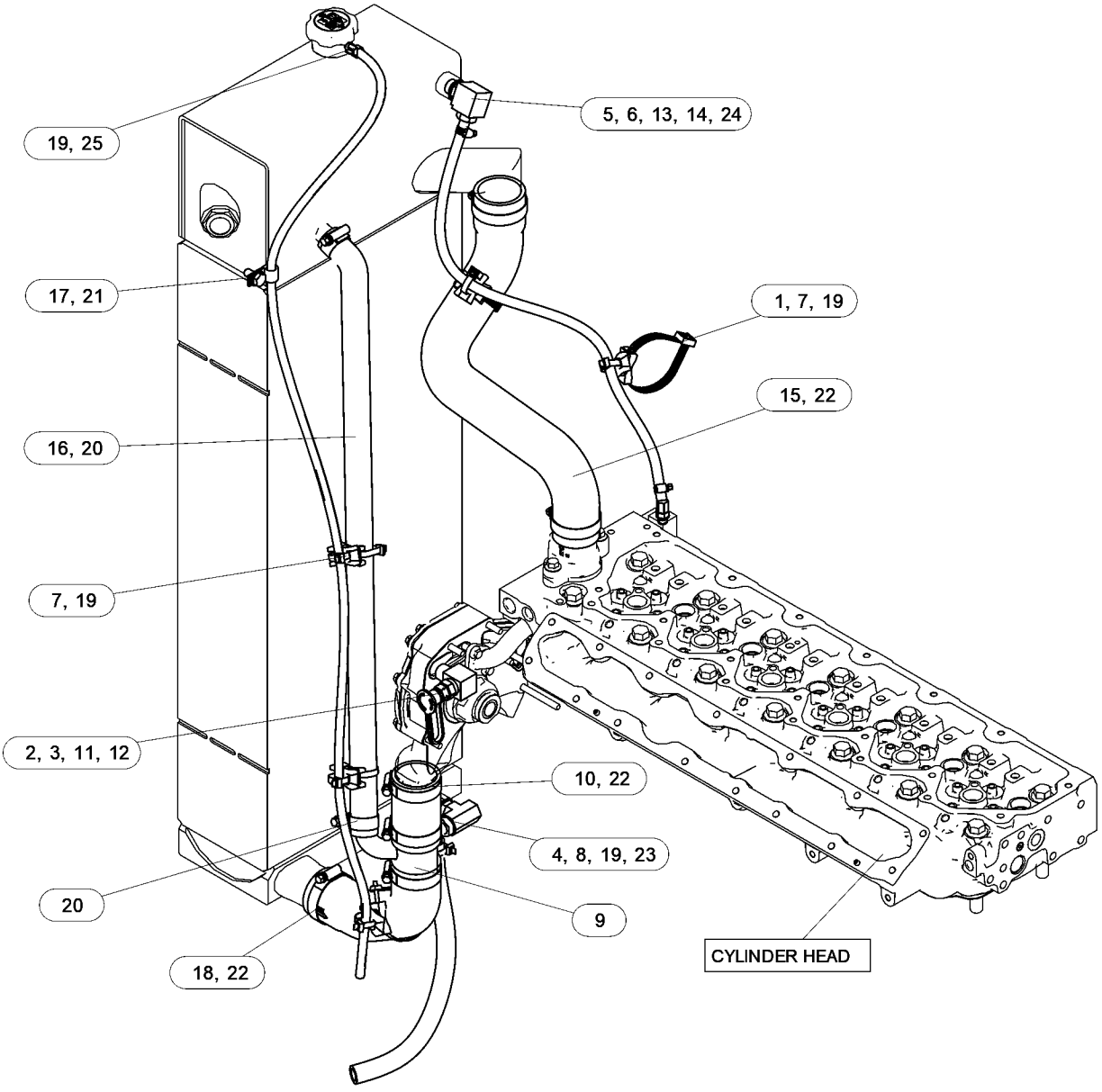

GRAPHIC #1 <END> g06453312

372-2297 PUMP GP-WATER

S/N: 4501-UP
PART OF 569-0811 ENGINE AR-PRIMARY
AN ATTACHMENT

SMCS-1361 **i06928393**

NOTE	REF NO	GRAPHIC REF	PART NUMBER	QTY	PART NAME 1 2 3 4 5 6 (PRODUCT LEVEL)	SEE PAGE
M	1	1	**6I-0217**	2	BOLT (M8X1.25X20-MM)	
J	2	1	*485-4894*	1	PUMP GP-WATER	
	2A	1	**278-3242**	3	BOLT-FLANGE HEAD (M8X1.25X18-MM)	
	2B	1	**374-4419**	1	GASKET	
M	3	1	**113-8129**	2	BOLT (M8X1.25X75-MM)	
	4	1	**225-8019**	1	GASKET	
	5	1	**277-2925**	1	CONNECTION AS	
	5A	1	**225-7738**	1	SEAL-O-RING	
	5B	1	**277-2923**	1	GASKET	
M	6	1	**6I-0254**	2	BOLT (M8X1.25X30-MM)	
M	7	1	**6I-0839**	5	BOLT (M8X1.25X70-MM)	
FJ			**485-4895**	1	PUMP GP-WATER	

F - NOT SHOWN
J - PART MARKED J SERVICES 485-4894
M - METRIC PART

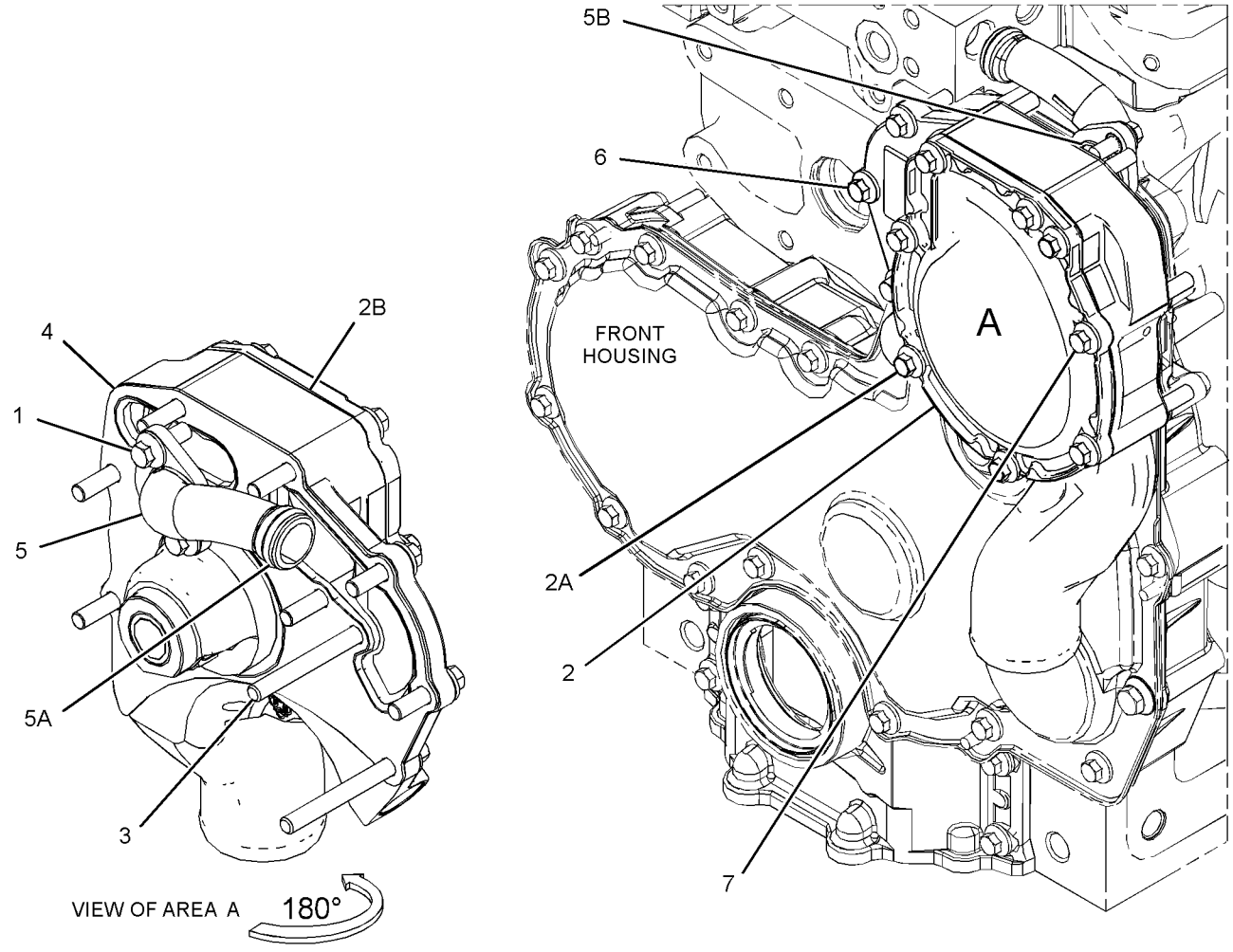

GRAPHIC #1 <END> g06129592

479-8987 AIR CLEANER GP

S/N: Z2K1-UP; Z2N1-UP
PART OF 521-4270 AIR CLEANER GP
AN ATTACHMENT

SMCS-1051, 1054 **i07360816**

NOTE	REF NO	GRAPHIC REF	PART NUMBER	QTY	PART NAME 1 2 3 4 5 6 (PRODUCT LEVEL)	SEE PAGE
	1	1	**479-8989**	1	ELEMENT (PRIMARY)	
	2	1	**479-8991**	1	ELEMENT (SECONDARY)	
	3	1	**479-8993**	1	COVER AS-AIR CLEANER	
		1	**479-8995**	2	COVER-LATCH	
		1	**505-3564**	1	SEAL	

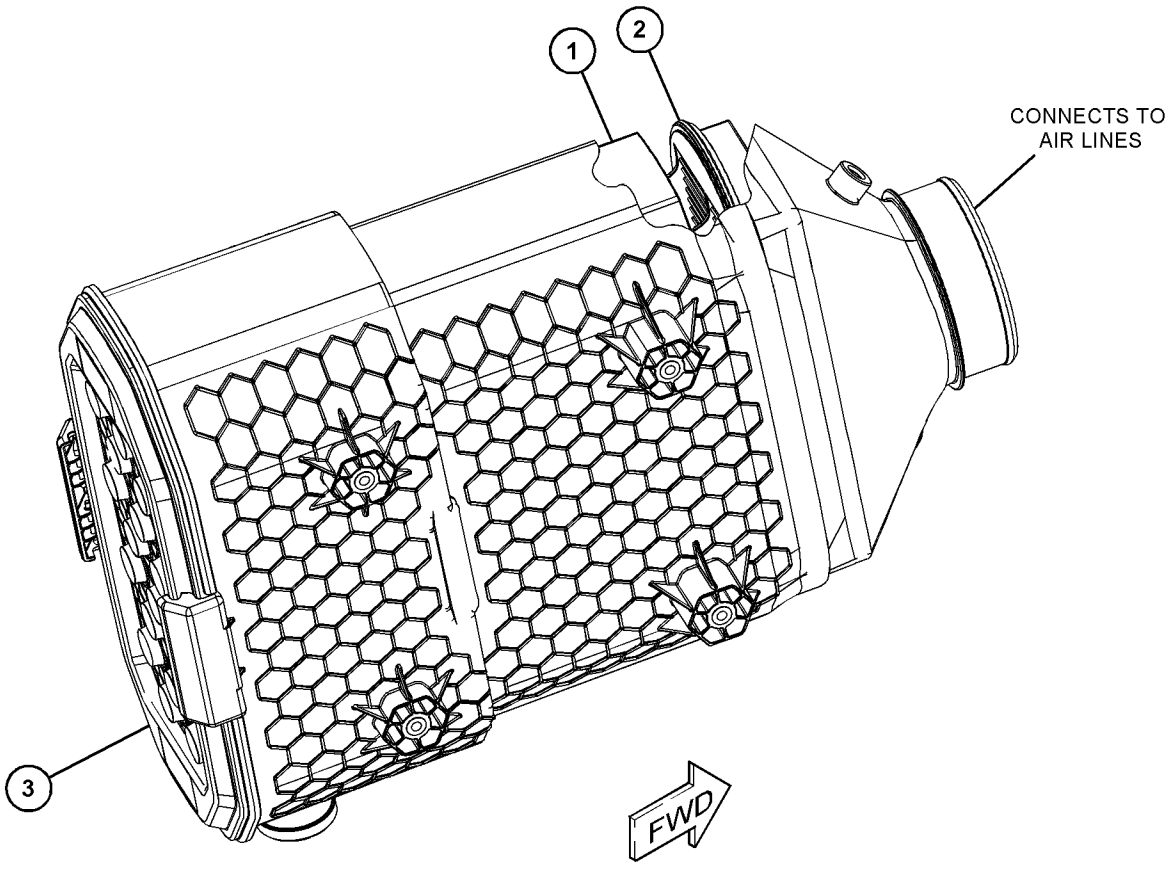

GRAPHIC #1 <END> g06233615

513-7940 AIR CLEANER GP

S/N: Z2K1-UP; Z2N1-UP
PART OF 521-3388 AIR CLEANER GP
AN ATTACHMENT

SMCS-1051, 1054

i07816184

NOTE	REF NO	GRAPHIC REF	PART NUMBER	QTY	PART NAME 1 2 3 4 5 6 (PRODUCT LEVEL)	SEE PAGE
	1	1	**479-8989**	1	ELEMENT (PRIMARY)	
	2	1	**479-8991**	1	ELEMENT (SECONDARY)	
	3	1	**513-7941**	1	COVER AS-AIR CLEANER	
		1	**479-8995**	2	COVER-LATCH	
		1	**505-3564**	1	SEAL	

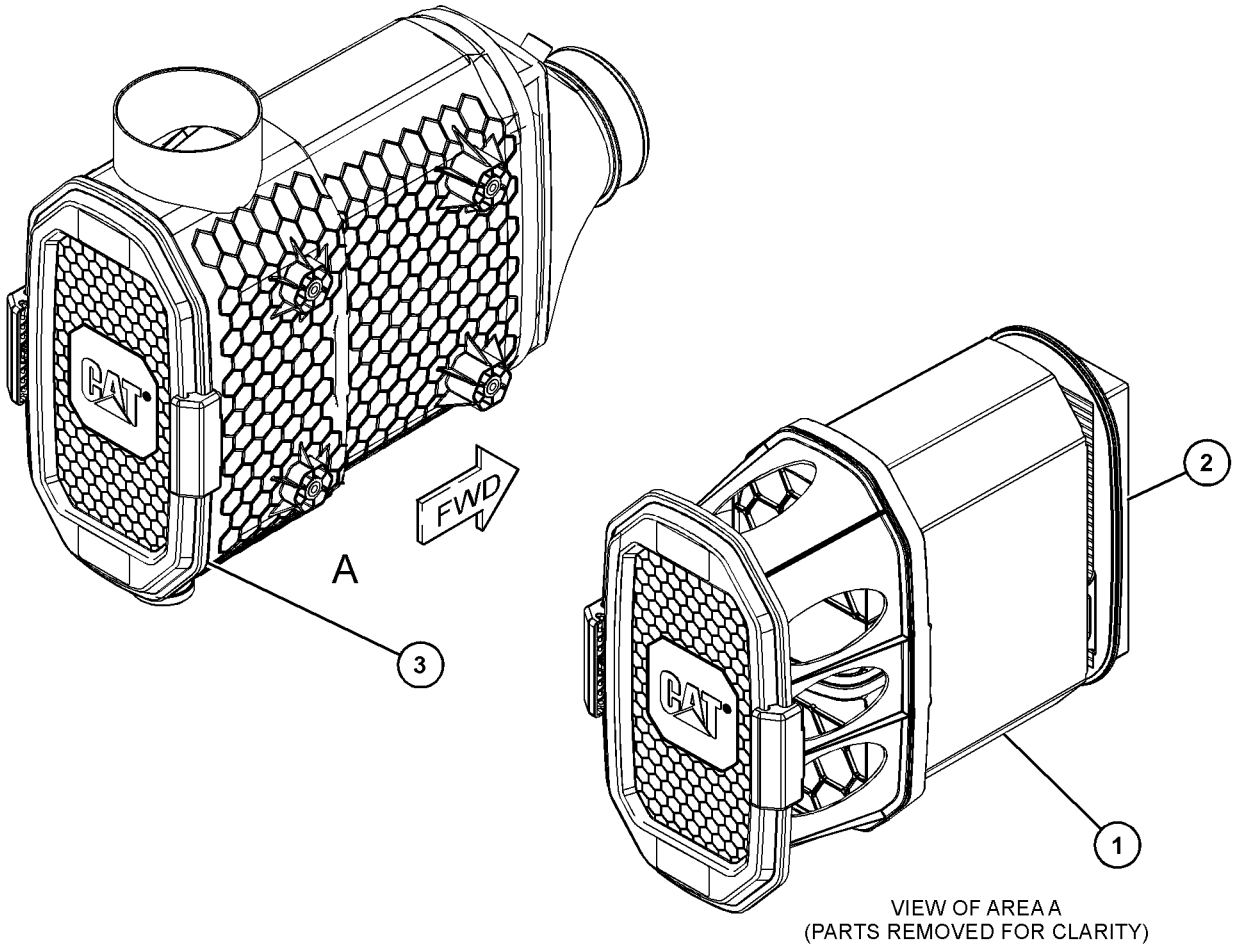

VIEW OF AREA A
(PARTS REMOVED FOR CLARITY)

GRAPHIC #1 <END> g06447189

521-3388 AIR CLEANER GP

S/N: Z2K1-UP; Z2N1-UP

AN ATTACHMENT

SMCS-1051, 1054 **i07825645**

NOTE	REF NO	GRAPHIC REF	PART NUMBER	QTY	PART NAME 1 2 3 4 5 6 (PRODUCT LEVEL)	SEE PAGE
M	1	1	**8T-4189**	2	BOLT (M8X1.25X20-MM)	
	2	1	**5P-4116**	2	WASHER-HARD (8.8X20.5X2-MM THK)	
Y	3	1	*256-3455*	1	PRECLEANER GP (TURBINE)	88
M	4	1	**479-2171**	8	BOLT AS	
Y	5	1	**513-7940**	1	AIR CLEANER GP	75
	6	1	**526-8407**	1	ADAPTER AS	
	7	1	**581-1621**	1	PLATE AS	
H	8	1	**348-5409**		SEAL (4-DM)	

H - ORDER BY THE DECIMETER
M - METRIC PART
Y - SEPARATE ILLUSTRATION

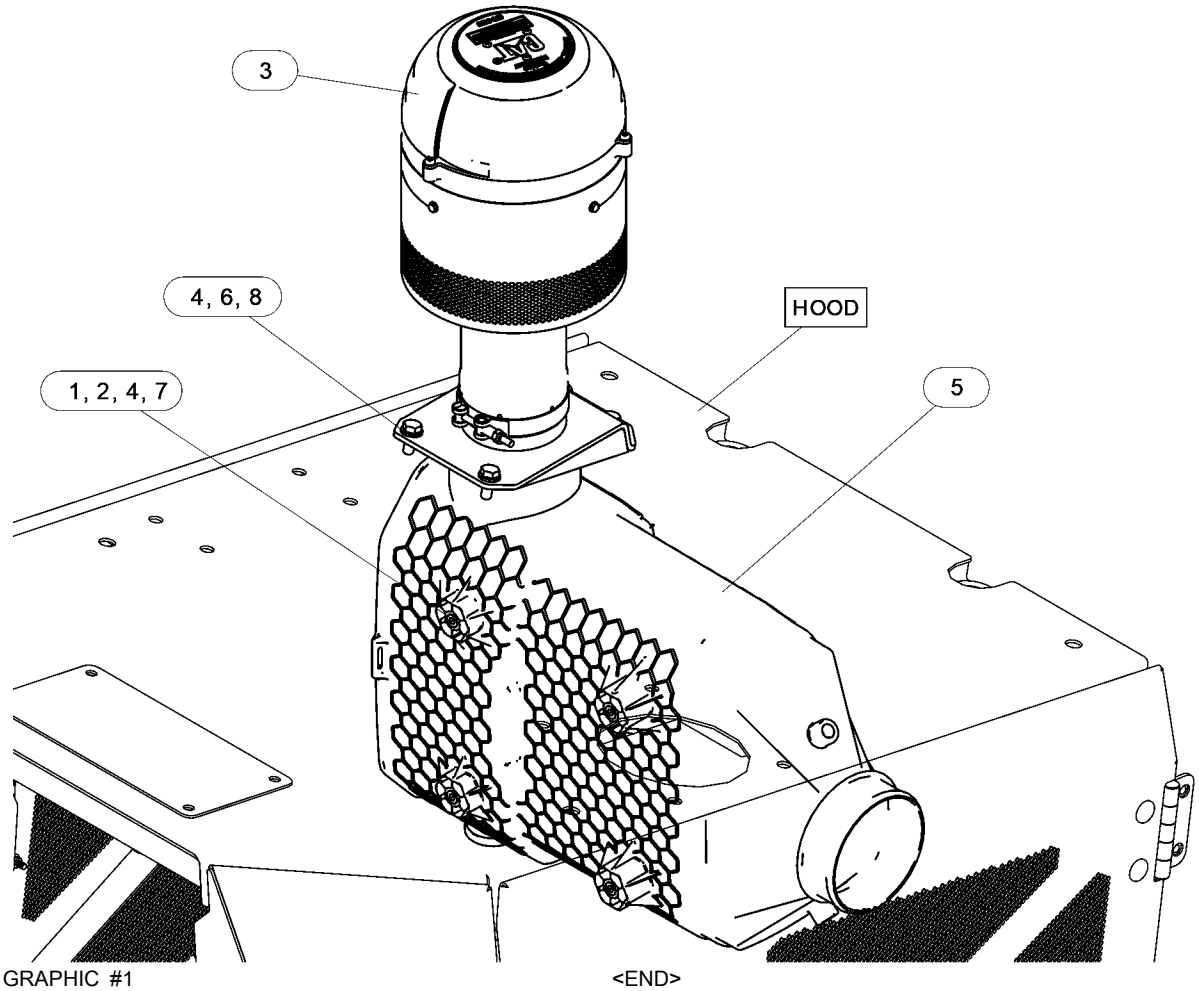

GRAPHIC #1 <END> g06447896

521-4270 AIR CLEANER GP

S/N: Z2K1-UP; Z2N1-UP
PART OF 532-9851, 532-9856 DISTRIBUTION AR
AN ATTACHMENT

SMCS-1051, 1054 **i07831548**

NOTE	REF NO	GRAPHIC REF	PART NUMBER	QTY	PART NAME 1 2 3 4 5 6 (PRODUCT LEVEL)	SEE PAGE
M	1	1	**8T-4189**	2	BOLT (M8X1.25X20-MM)	
	2	1	**5P-4116**	2	WASHER-HARD (8.8X20.5X2-MM THK)	
	3	1	**581-1621**	1	PLATE AS	
		1	**7T-1099**	1	LINK	
M		1	**171-2419**	2	STUD-WELD (M10X1.5X35-MM)	
M	4	1	**479-2171**	8	BOLT AS	
Y	5	1	**479-8987**	1	AIR CLEANER GP	74
	6	1	**526-8420**	1	PLATE	

M - METRIC PART
Y - SEPARATE ILLUSTRATION

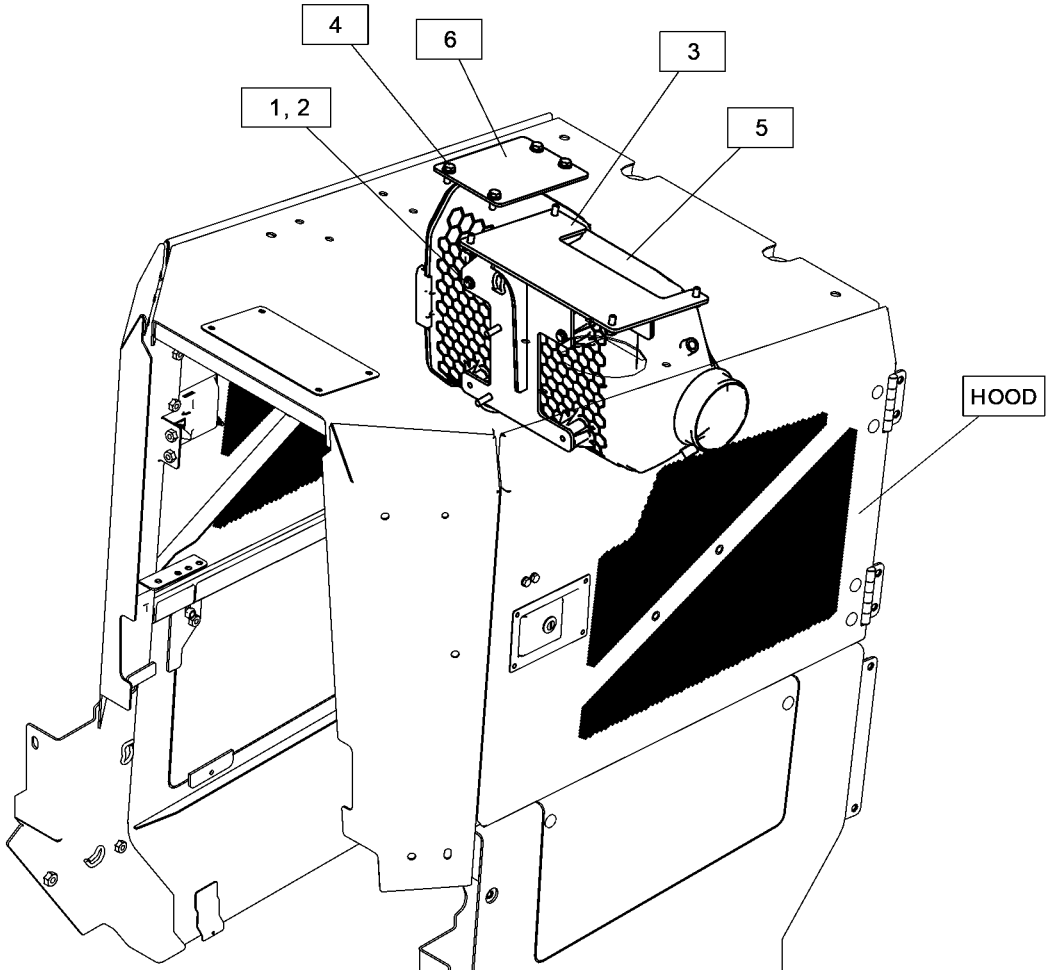

GRAPHIC #1 <END> g06449549

533-7734 DUST EJECTOR GP

S/N: Z2K1-UP; Z2N1-UP

PART OF 532-9793 ENCLOSURE AR, 532-9797 WASTE HANDLING AR

AN ATTACHMENT

SMCS-1068 **i07819914**

NOTE	REF NO	GRAPHIC REF	PART NUMBER	QTY	PART NAME 1 2 3 4 5 6 (PRODUCT LEVEL)	SEE PAGE
Y	1	1	*418-7612*	1	PIPE GP-EXHAUST (EXTENSION)	87
	2	1	**488-3971**	4	BOLT AS	
	3	1	**552-7547**	1	STACK AS-EXHAUST	

Y - SEPARATE ILLUSTRATION

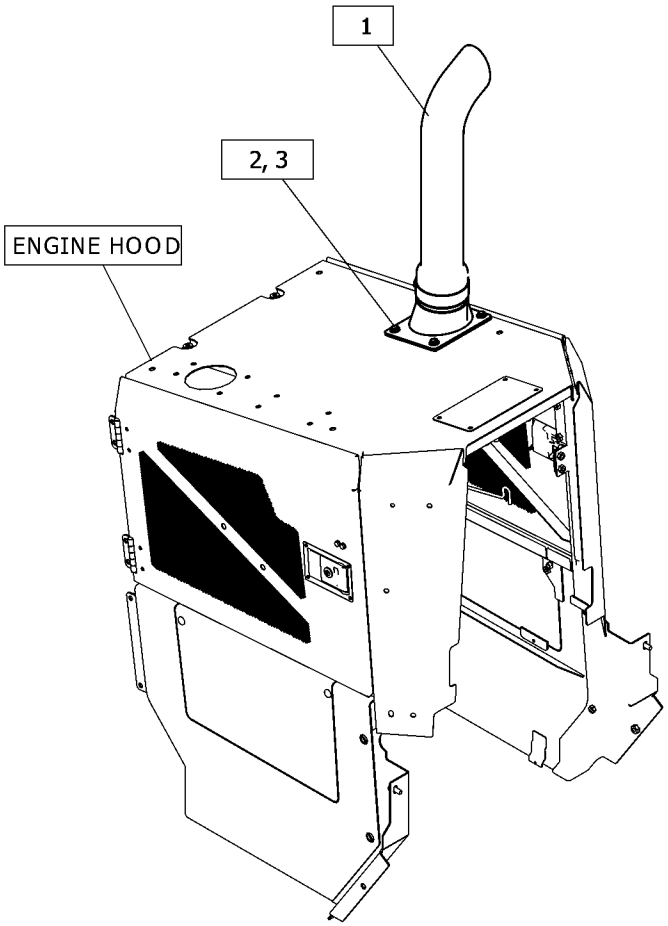

GRAPHIC #1 <END> g06446864

548-1192 DUST EJECTOR GP

S/N: Z2K1-UP; Z2N1-UP
PART OF 532-9795 FORESTRY AR, 532-9799 SWEEP AR
AN ATTACHMENT

SMCS-1068 **i07839766**

NOTE	REF NO	GRAPHIC REF	PART NUMBER	QTY	PART NAME 1 2 3 4 5 6 (PRODUCT LEVEL)	SEE PAGE
	1	1	**388-9525**	1	CLAMP-BENT BOLT	
	2	1	**474-9959**	1	PIPE	
	3	1	**488-3971**	4	BOLT AS	
	4	1	**552-7547**	1	STACK AS-EXHAUST	

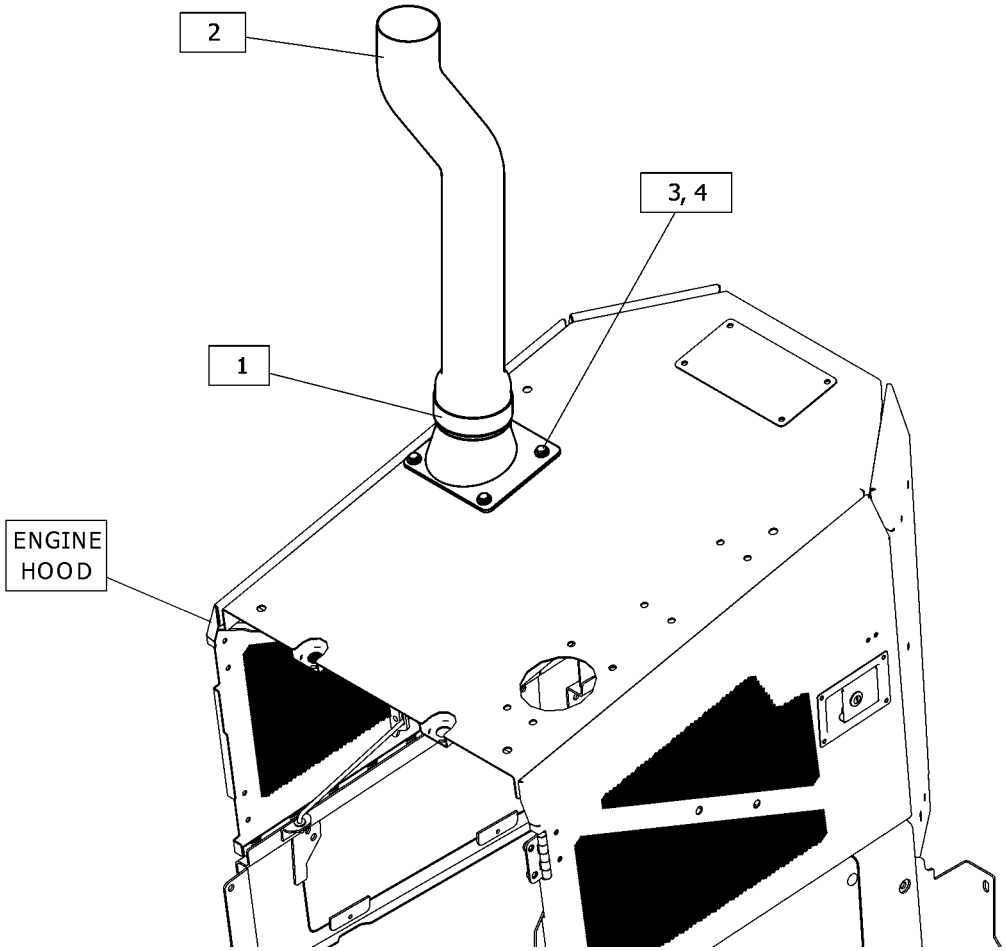

GRAPHIC #1 <END> g06449514

561-5159 LINES GP-AIR

S/N: Z2K1-UP; Z2N1-UP
PART OF 559-5994 INSTALLATION AR-ENGINE
AN ATTACHMENT

SMCS-1071 **i07818142**

NOTE	REF NO	GRAPHIC REF	PART NUMBER	QTY	PART NAME 1 2 3 4 5 6 (PRODUCT LEVEL)	SEE PAGE
	1	1	**6V-1868**	1	CLIP (TAB)	
M	2	1	**8T-4182**	1	BOLT (M10X1.5X45-MM)	
	3	1	**561-5155**	1	TUBE	
M	4	1	**8T-4198**	1	BOLT (M10X1.5X100-MM)	
M	5	1	**8T-6685**	2	BOLT (M10X1.5X110-MM)	
	6	1	**3E-4096**	10	CAP	
	7	1	**6V-1581**	2	CLIP (SLOT)	
	8	1	**6V-1582**	2	CLIP (TAB)	
	9	1	**6V-1867**	1	CLIP (SLOT)	
	10	1	**8G-5258**	2	SPACER (17X35X20-MM THK)	
M	11	1	**8T-1158**	2	BOLT-SOCKET HEAD (M8X1.25X20-MM)	
	12	1	**8T-4121**	1	WASHER-HARD (11X21X2.5-MM THK)	
	13	1	**8T-4224**	2	WASHER-HARD (8.8X16X2-MM THK)	
	14	1	**8T-4987**	1	CLAMP-HOSE	
	15	1	**8T-7934**	2	WASHER-HARD (11X21X5-MM THK)	
	16	1	**8U-4791**	2	WASHER (11X21X8-MM THK)	
	17	1	**9X-2201**	1	CLAMP-HOSE	
	18	1	**198-4777**	1	WASHER-HARD (11X25X10-MM THK)	
	19	1	**209-4573**	3	CLAMP-T BOLT	
	20	1	**209-4582**	3	CLAMP-T BOLT	
	21	1	**215-4012**	1	CLAMP-T BOLT	
	22	1	**216-4983**	3	CLAMP-T BOLT	
	23	1	**299-3424**	2	WASHER-HARD (17.5X30X6-MM THK)	
	24	1	**309-0572**	1	ELBOW	
	25	1	**342-2631**	1	HOSE	
	26	1	**421-7677**	1	HOSE	
	27	1	**533-4159**	2	BOLT AS	
M	28	1	**099-0169**	2	BOLT (M16X2X55-MM)	
	29	1	**507-7082**	1	DUCT	
	30	1	**507-7083**	1	HOSE	
	31	1	**513-1126**	1	TUBE	
	32	1	**561-4852**	1	BRACKET AS	
M		1	**8T-3490**	1	NUT-WELD (M10X1.5-THD)	
	33	1	**561-4973**	1	DUCT	
	34	1	**561-4982**	1	TUBE	
	35	1	**561-5059**	1	BRACKET AS	
M		1	**8T-3490**	1	NUT-WELD (M10X1.5-THD)	
	36	1	**573-7310**	1	BRACKET AS	
M		1	**8T-3490**	2	NUT-WELD (M10X1.5-THD)	

M - METRIC PART

561-5159 **LINES GP-AIR (**contd.**)** **i07818142**

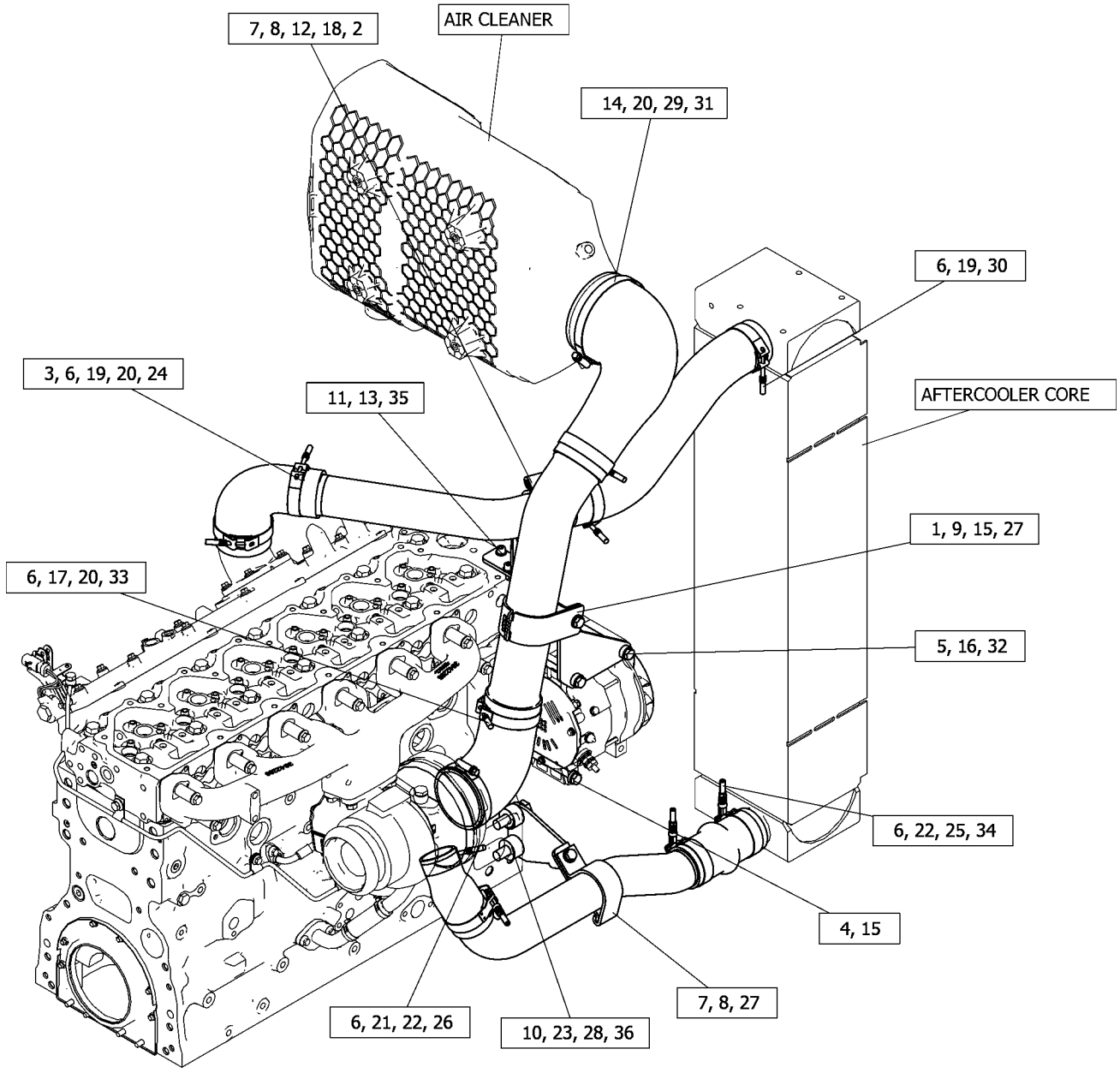

GRAPHIC #1 <END> g06452357

377-2877 LINES GP-TURBOCHARGER AIR

S/N: 4501-UP
PART OF 371-2720 TURBOCHARGER GP
AN ATTACHMENT

SMCS-1052, 1071 **i05333394**

NOTE	REF NO	GRAPHIC REF	PART NUMBER	QTY	PART NAME 1 2 3 4 5 6 (PRODUCT LEVEL)	SEE PAGE
	1	1	**225-8526**	2	WASHER (10.4X13.75X1.37-MM THK)	
	2	1	**133-9469**	1	CLIP	
	3	1	**225-8524**	1	BOLT-SPECIAL	
	4	1	**335-8611**	2	CLIP	
	5	1	**377-2876**	1	TUBE AS	
	6	1	**422-7715**	1	HOSE-TURBOCHARGER	
	7	1	**107-2348**	2	CLIP	

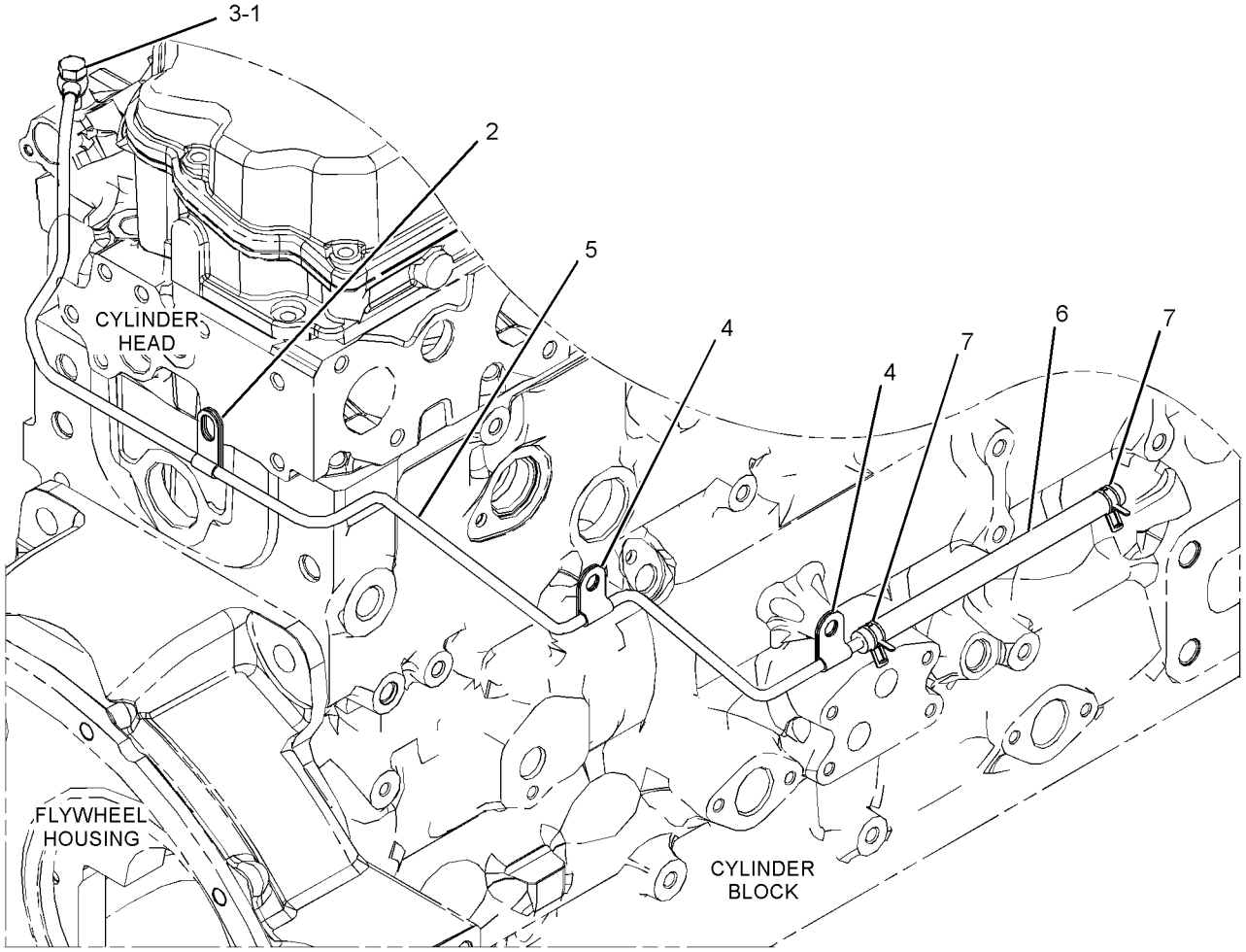

GRAPHIC #1 <END> g03380817

393-7694 MANIFOLD GP-EXHAUST

S/N: 4501-UP

PART OF 569-0811 ENGINE AR-PRIMARY

AN ATTACHMENT

SMCS-1059 **i05331885**

NOTE	REF NO	GRAPHIC REF	PART NUMBER	QTY	PART NAME 1 2 3 4 5 6 (PRODUCT LEVEL)	SEE PAGE
	1	1	**238-8292**	12	BOLT-FLANGE HEAD	
	2	1	**286-7851**	12	SPACER	
	3	1	**367-3340**	4	STUD	
	4	1	**384-2286**	1	MANIFOLD	
	5	1	**416-7727**	2	GASKET	

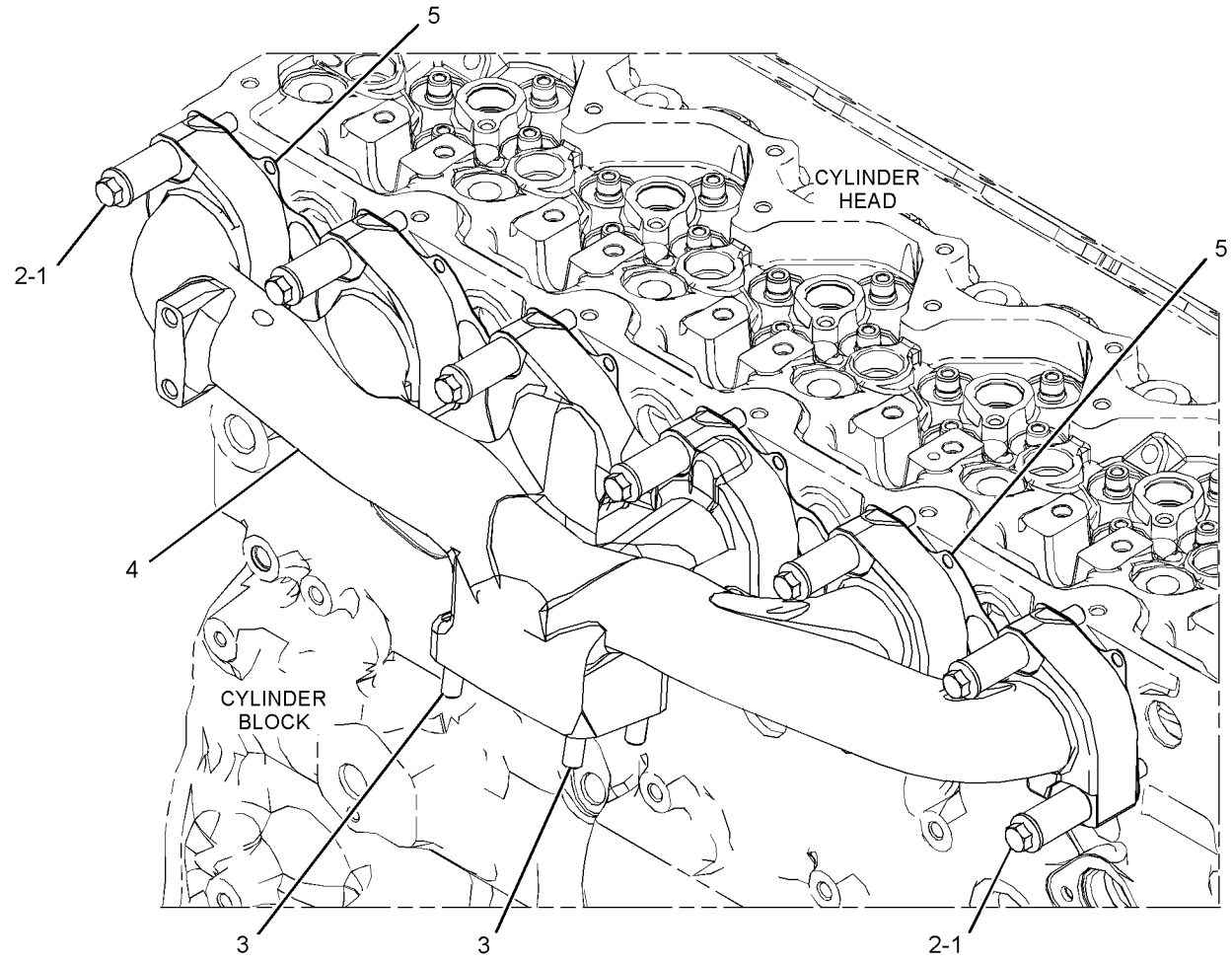

GRAPHIC #1 <END> g03379009

391-5523 MANIFOLD GP-INLET

S/N: 4501-UP
PART OF 569-0811 ENGINE AR-PRIMARY
AN ATTACHMENT

SMCS-1058, 1090

i05832948

NOTE	REF NO	GRAPHIC REF	PART NUMBER	QTY	PART NAME 1 2 3 4 5 6 (PRODUCT LEVEL)	SEE PAGE
M	1	1	**6I-0917**	2	BOLT (M6X1X25-MM)	
M	2	1	**105-2740**	12	BOLT (M8X1.25X40-MM)	
	3	1	**369-1658**	1	SOLENOID	
	4	1	**452-9704**	1	COVER (CYLINDER HEAD)	
M	5	1	**6I-0260**	4	BOLT (M8X1.25X25-MM)	
	6	1	**390-7626**	1	CONNECTION GP-AIR	
		1	**238-8288**	1	GASKET-INLET	
		1	**292-3462**	1	PLUG-PIPE	

M - METRIC PART

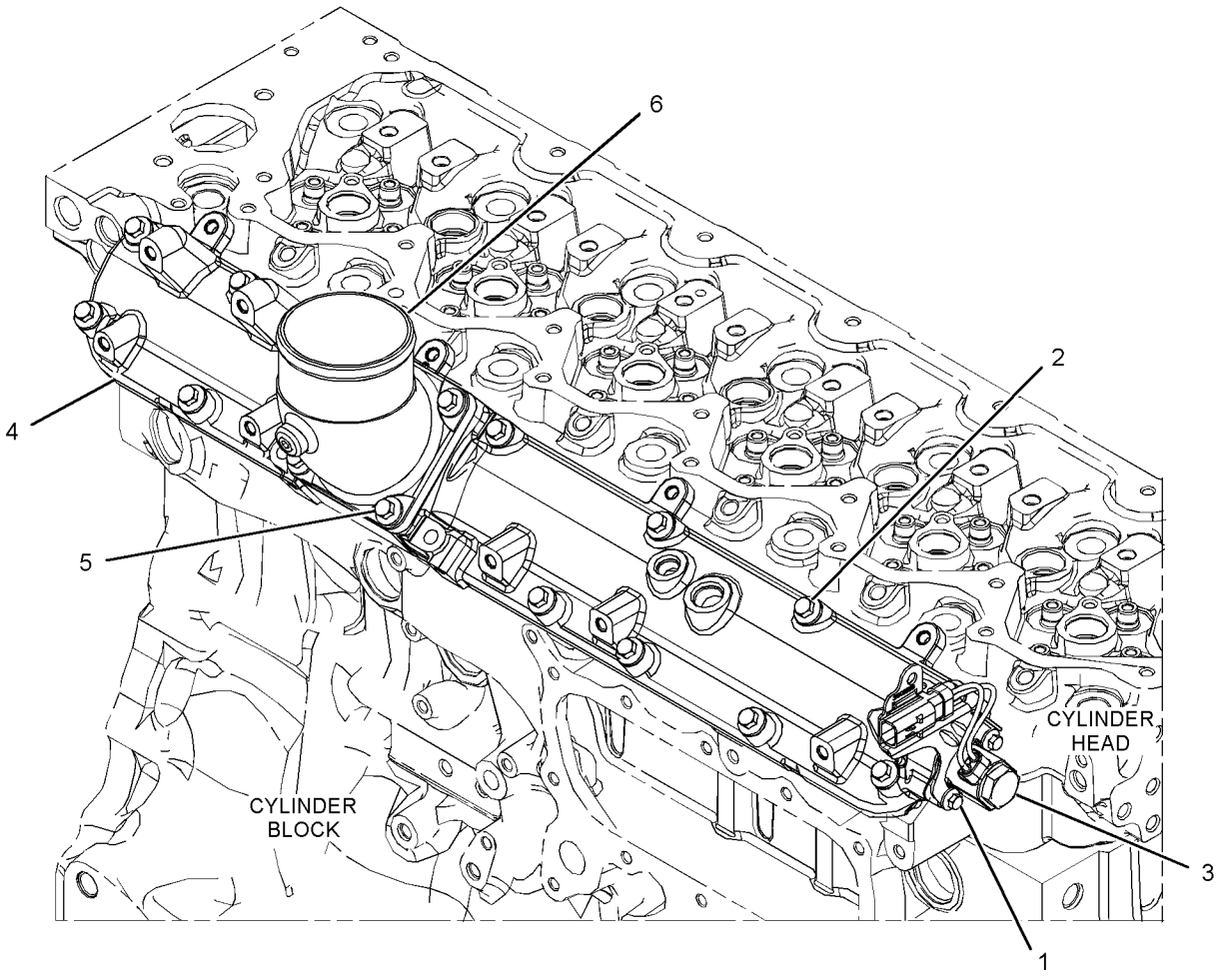

GRAPHIC #1 <END> g03476304

565-3057 MUFFLER GP

S/N: Z2K1-UP; Z2N1-UP
PART OF 559-5994 INSTALLATION AR-ENGINE
AN ATTACHMENT

SMCS-1062 **i07818195**

NOTE	REF NO	GRAPHIC REF	PART NUMBER	QTY	PART NAME 1 2 3 4 5 6 (PRODUCT LEVEL)	SEE PAGE
	1	1	**139-1398**	1	CLIP (LOOP)	
	2	1	**247-9730**	1	VALVE AS-CHECK	
	3	1	**260-0634**	1	TUBE	
	4	1	**277-9463**	1	CLAMP	
	5	1	**337-7325**	3	CLAMP-BAND	
	6	1	**346-0334**	1	CLAMP-BAND	
	7	1	**348-5113**	1	HOSE	
	8	1	**354-6778**	1	BELLOWS AS	
		1	**034-1432**	2	STRAP-CABLE	
		1	**337-7325**	1	CLAMP-BAND	
M	9	1	**479-2172**	3	BOLT AS	
	10	1	**533-4159**	1	BOLT AS	
	11	1	**546-4993**	1	MUFFLER AS	
	12	1	**559-1415**	1	TUBE AS	
	13	1	**566-1095**	1	BRACKET AS	
M		1	**8T-3490**	1	NUT-WELD (M10X1.5-THD)	
	14	1	**567-1252**	1	HOSE	
Y	15	1	*570-5540*	1	BRACKET GP-MOUNTING	139
	16	1	**571-7344**	1	TUBE AS	
	17	1	**571-7642**	1	TUBE AS	
	18	1	**575-9893**	1	TUBE AS	
	19	1	**6V-6782**	1	CLIP (SLOT)	
	20	1	**6V-6783**	1	CLIP (TAB)	
	21	1	**8T-4983**	3	CLAMP-HOSE	
	22	1	**8T-6703**	1	CLAMP-HOSE	
	23	1	**9M-7959**	1	CLAMP-HOSE	

M - METRIC PART
Y - SEPARATE ILLUSTRATION

565-3057 **MUFFLER GP** (contd.) **i07818195**

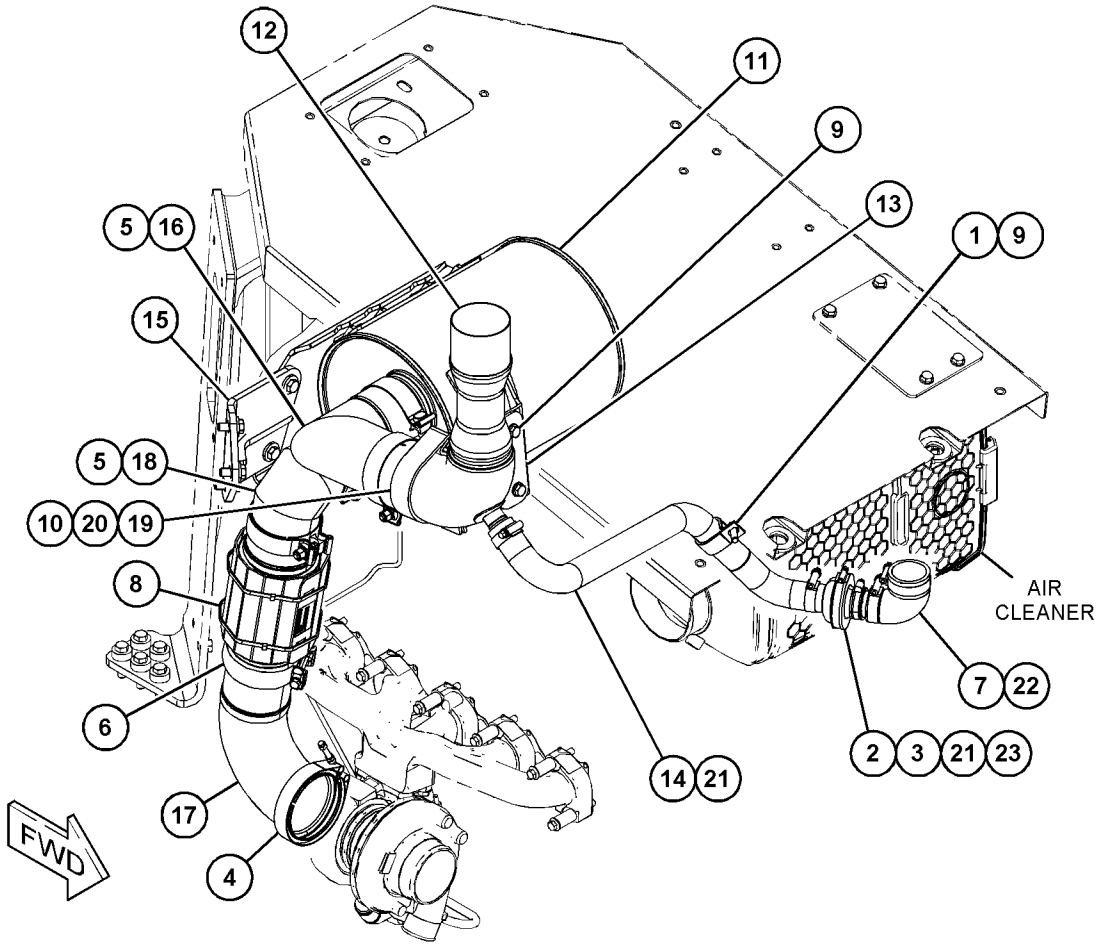

GRAPHIC #1 <END> g06453534

418-7612 PIPE GP-EXHAUST

S/N: Z2K1-UP; Z2N1-UP
PART OF 533-7734 DUST EJECTOR GP
AN ATTACHMENT

SMCS-1061 **i07204183**

NOTE	REF NO	GRAPHIC REF	PART NUMBER	QTY	PART NAME 1 2 3 4 5 6 (PRODUCT LEVEL)	SEE PAGE
	1	1	**243-2158**	1	PIPE-EXHAUST	
	2	1	**388-9525**	1	CLAMP-BENT BOLT	

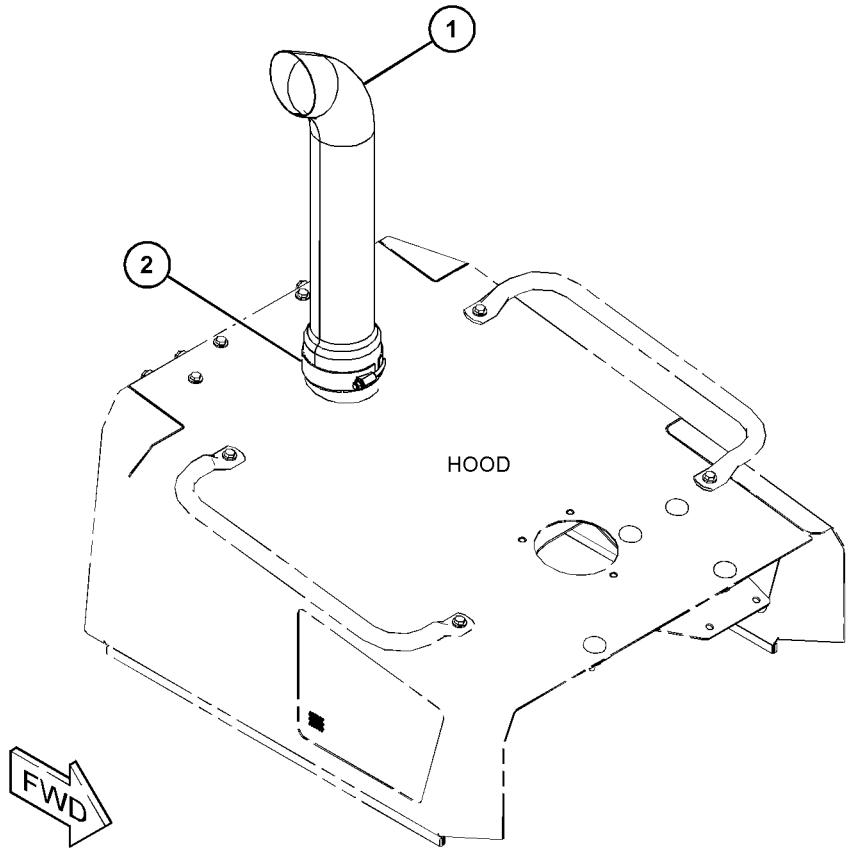

GRAPHIC #1 <END> g06253180

256-3455 PRECLEANER GP–TURBINE

S/N: Z2K1-UP; Z2N1-UP
PART OF 521-3388 AIR CLEANER GP
AN ATTACHMENT

SMCS-1055 **i06702885**

NOTE	PART NUMBER	QTY	PART NAME 1 2 3 4 5 6 (PRODUCT LEVEL)	SEE PAGE
	070-0195	1	PRECLEANER AS	
	174-5414	1	CLAMP	
	153-1276	1	KIT-SCREEN (TURBINE PRECLEANER)	
			(INCLUDES SCREEN, CLAMP, SCREWS & TUBE)	
			<END>	

371-2720 TURBOCHARGER GP

S/N: 4501-UP
PART OF 569-0811 ENGINE AR-PRIMARY
AN ATTACHMENT

SMCS-1052, 1053 **i07452512**

NOTE	REF NO	GRAPHIC REF	PART NUMBER	QTY	PART NAME 1 2 3 4 5 6 (PRODUCT LEVEL)	SEE PAGE
M	1	1	**100-4830**	1	BOLT (M10X1.5X20-MM)	
M	2	1	**124-3815**	2	BOLT (M8X1.25X16-MM)	
	3	1	**437-4170**	1	GASKET	
	4	1	**278-0017**	1	GASKET	
C	5	1	**458-8357**	1	TURBOCHARGER AS	
		1	**560-7640**	1	KIT-AIR ACTUATOR	
Y	6	1	**368-8559**	1	LINES GP-TURBOCHARGER OIL	57
Y	7	1	**377-2877**	1	LINES GP-TURBOCHARGER AIR	82
	8	1	**420-2371**	1	LINE AS	
M	9	1	**6I-0217**	5	BOLT (M8X1.25X20-MM)	
M	10	1	**6I-0563**	4	NUT (M10X1.5-THD)	

C - CHANGE FROM PREVIOUS TYPE
M - METRIC PART
Y - SEPARATE ILLUSTRATION

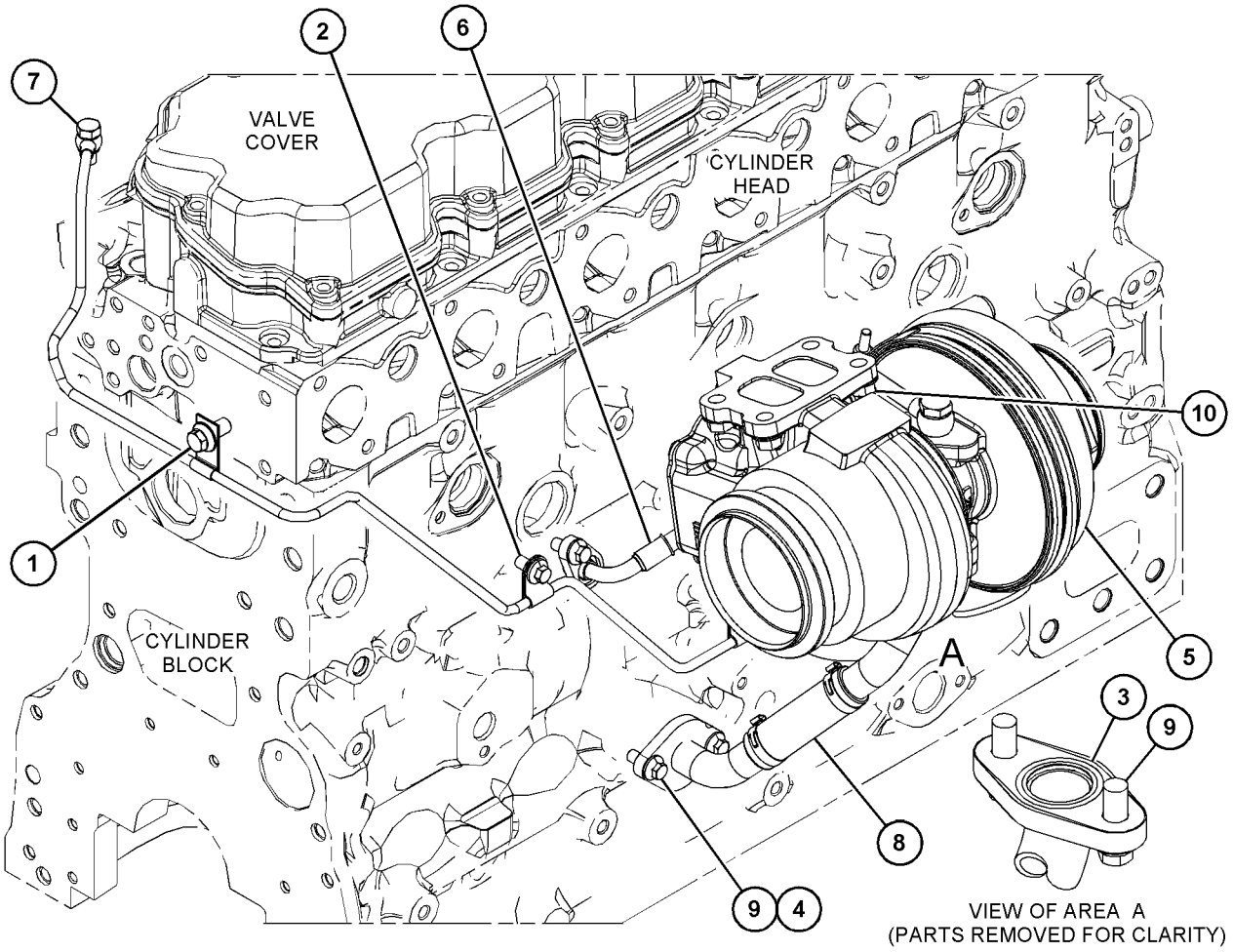

GRAPHIC #1 <END> g06328741

523-3959 ADAPTER GP-FAST FILL FUEL

S/N: Z2K1-UP
FOR USE WITH 508-1609—PAGE: 118
CANNOT BE USED WITH 523-3955—PAGE: 115, 523-3958—PAGE: 350
AN ATTACHMENT

SMCS-1273, 1710 **i07787474**

NOTE	REF NO	GRAPHIC REF	PART NUMBER	QTY	PART NAME 1 2 3 4 5 6 (PRODUCT LEVEL)	SEE PAGE
M	1	1	**8T-4185**	2	BOLT (M10X1.5X50-MM)	
M	2	1	**8T-4648**	4	BOLT (M12X1.75X70-MM)	
	3	1	**3E-6773**	1	SEAL-O-RING	
	4	1	**5P-2618**	2	CONNECTOR	
	5	1	**5P-7814**	2	SEAL-O-RING	
	6	1	**447-7206**	1	SEAL-O-RING	
	7	1	**7X-7729**	2	WASHER (11X25X3-MM THK)	
	8	1	**8T-4121**	6	WASHER-HARD (11X21X2.5-MM THK)	
	9	1	**8T-4223**	4	WASHER-HARD (13.5X25.5X3-MM THK)	
	10	1	**9X-7287**	1	SEAL-O-RING	
M	11	1	**105-3484**	6	BOLT-SOCKET HEAD (M10X1.5X25-MM)	
	12	1	*148-8410*	2	PLUG AS	
					(EACH INCLUDES)	
		1	**2M-9780**	1	SEAL-O-RING	
		1	**9S-4190**	1	PLUG-O-RING (7/8-14-THD)	
	13	1	**193-1598**	1	ELBOW	
	14	1	**252-5806**	1	VALVE AS-SHUTOFF (FAST FILL FUEL)	
	15	1	**355-2924**	1	VENT AS-FUEL TANK	
	16	1	**388-4327**	1	CAP-DUST	
	17	1	**466-6951**	1	GUARD AS	
	18	1	**471-8197**	1	ADAPTER-FAST FILL FUEL	
I	19	1	**439-6487**	1	HOSE AS	
M	20	1	**479-2172**	6	BOLT AS	

I - REFER TO HYDRAULIC INFORMATION SYSTEM
M - METRIC PART

523-3959 **ADAPTER GP-FAST FILL FUEL** (contd.) **i07787474**

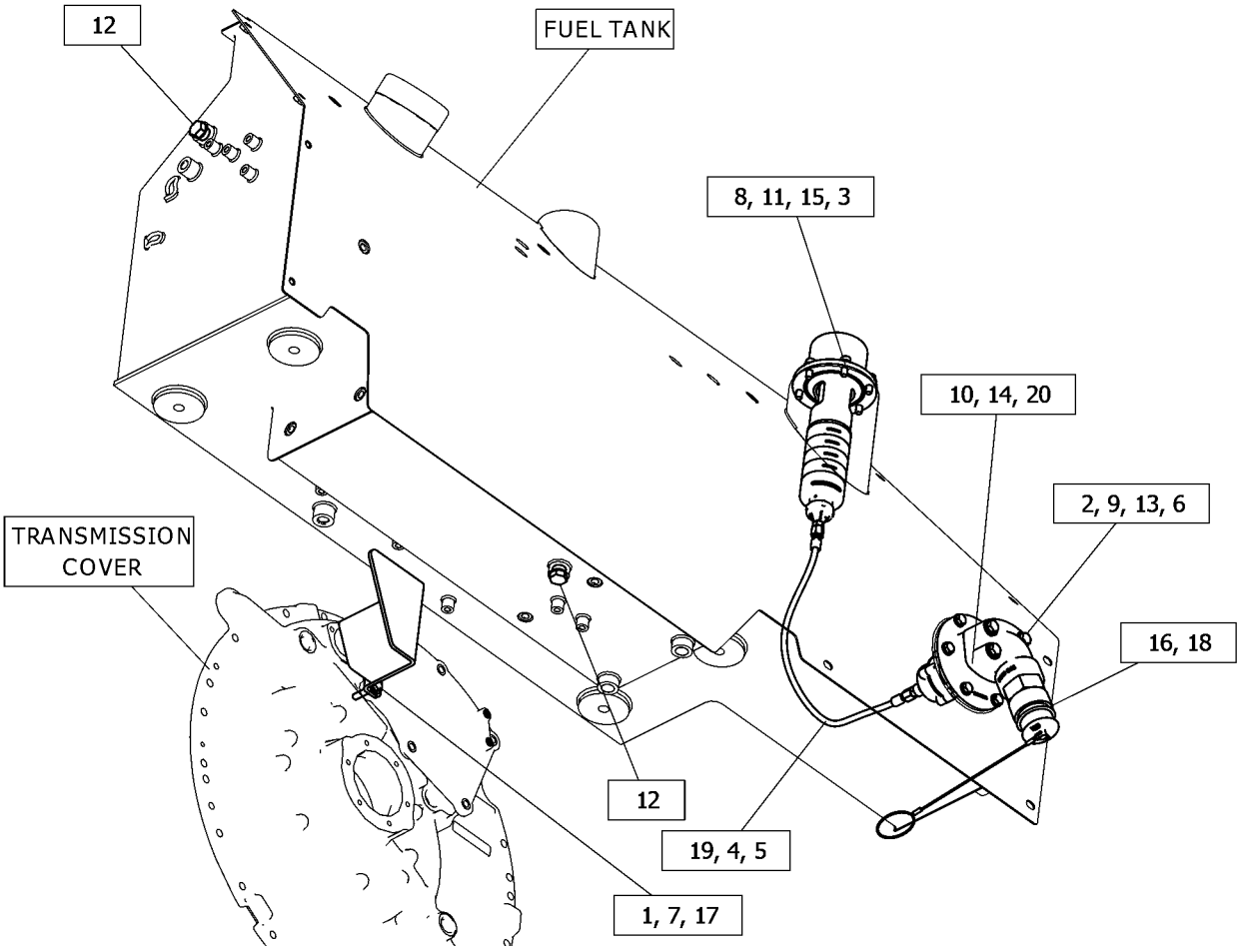

GRAPHIC #1 <END> g06439194

550-5566 COVER GP-FUEL TRANSFER

S/N: Z2K1-UP; Z2N1-UP

FOR USE WITH 550-5587—PAGE: 376, 550-5565—PAGE: 353, 508-1609—PAGE: 118, 523-3955—PAGE: 115

AN ATTACHMENT

SMCS-1256 **i07824650**

NOTE	REF NO	GRAPHIC REF	PART NUMBER	QTY	PART NAME 1 2 3 4 5 6 (PRODUCT LEVEL)	SEE PAGE
	1	1	**523-3956**	1	PLATE	
	2	1	**540-2307**	1	GUARD AS	

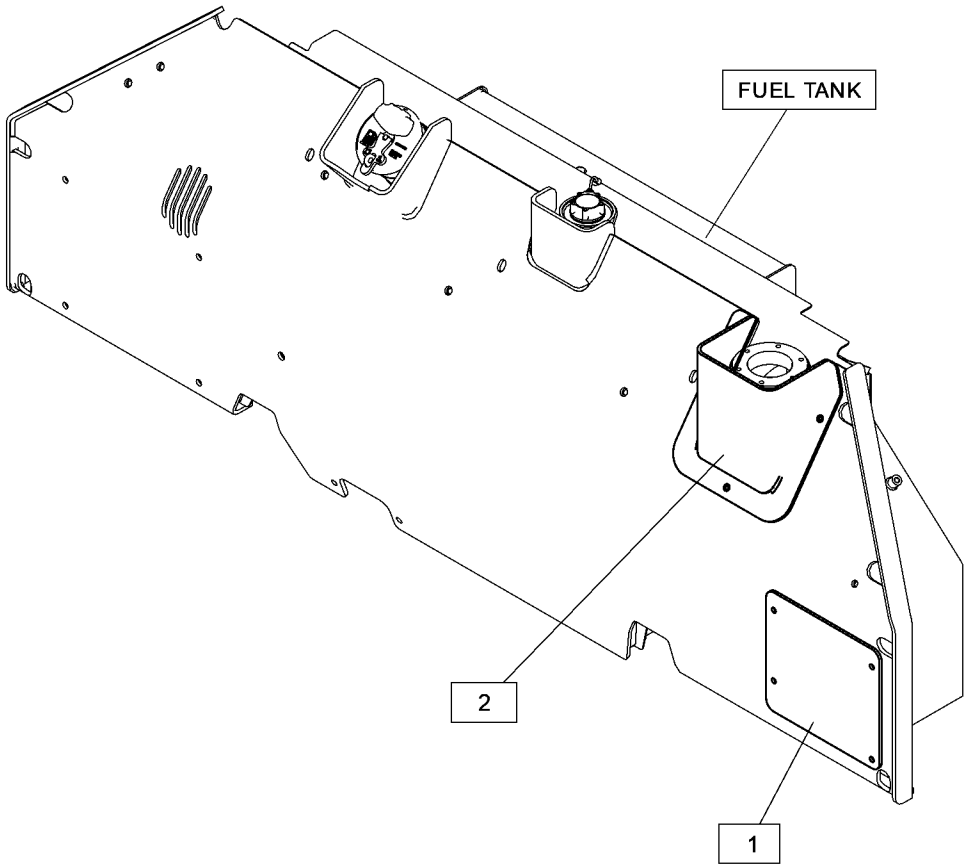

GRAPHIC #1 <END> g06448296

360-8958 FILTER GP-FUEL

S/N: 4501-UP
PART OF 452-8547 FILTER GP-FUEL
AN ATTACHMENT

SMCS-1261 **i06791520**

NOTE	REF NO	GRAPHIC REF	PART NUMBER	QTY	PART NAME 1 2 3 4 5 6 (PRODUCT LEVEL)	SEE PAGE
	1	1	**360-8960**	1	FILTER ELEMENT-FUEL	
					AVAILABLE REPAIR KIT(S):	
			362-5412	1	KIT-DRAIN (FUEL FILTER)	
					(INCLUDES DRAIN, KNOB, & SEALS)	
			370-8376	1	KIT-FUEL SYSTEM PARTS	

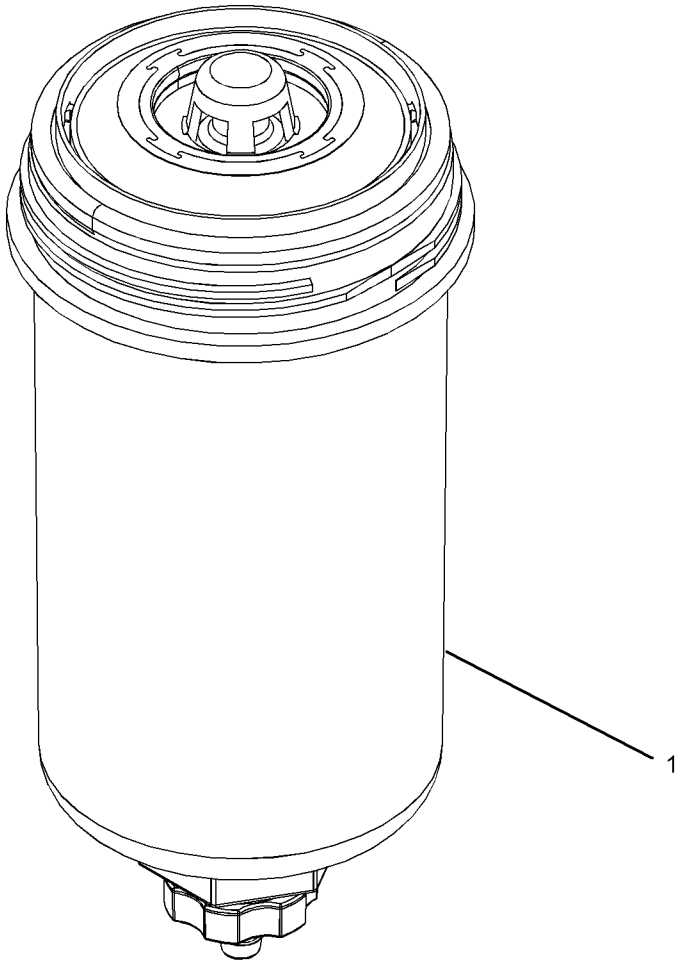

GRAPHIC #1 <END> g03173178

452-8547 FILTER GP-FUEL

S/N: 4501-UP
PART OF 453-7163 FILTER GP-FUEL
AN ATTACHMENT

SMCS-1261 **i05856598**

NOTE	REF NO	GRAPHIC REF	PART NUMBER	QTY	PART NAME 1 2 3 4 5 6 (PRODUCT LEVEL)	SEE PAGE
Y	1	1	**360-8958**	2	FILTER GP-FUEL	93
	2	1	**362-9689**	2	SCREW-SPECIAL	
					AVAILABLE REPAIR KIT(S):	
			362-5412	2	KIT-DRAIN	
					(EACH KIT INCLUDES DRAIN, KNOB & SEAL)	

Y - SEPARATE ILLUSTRATION

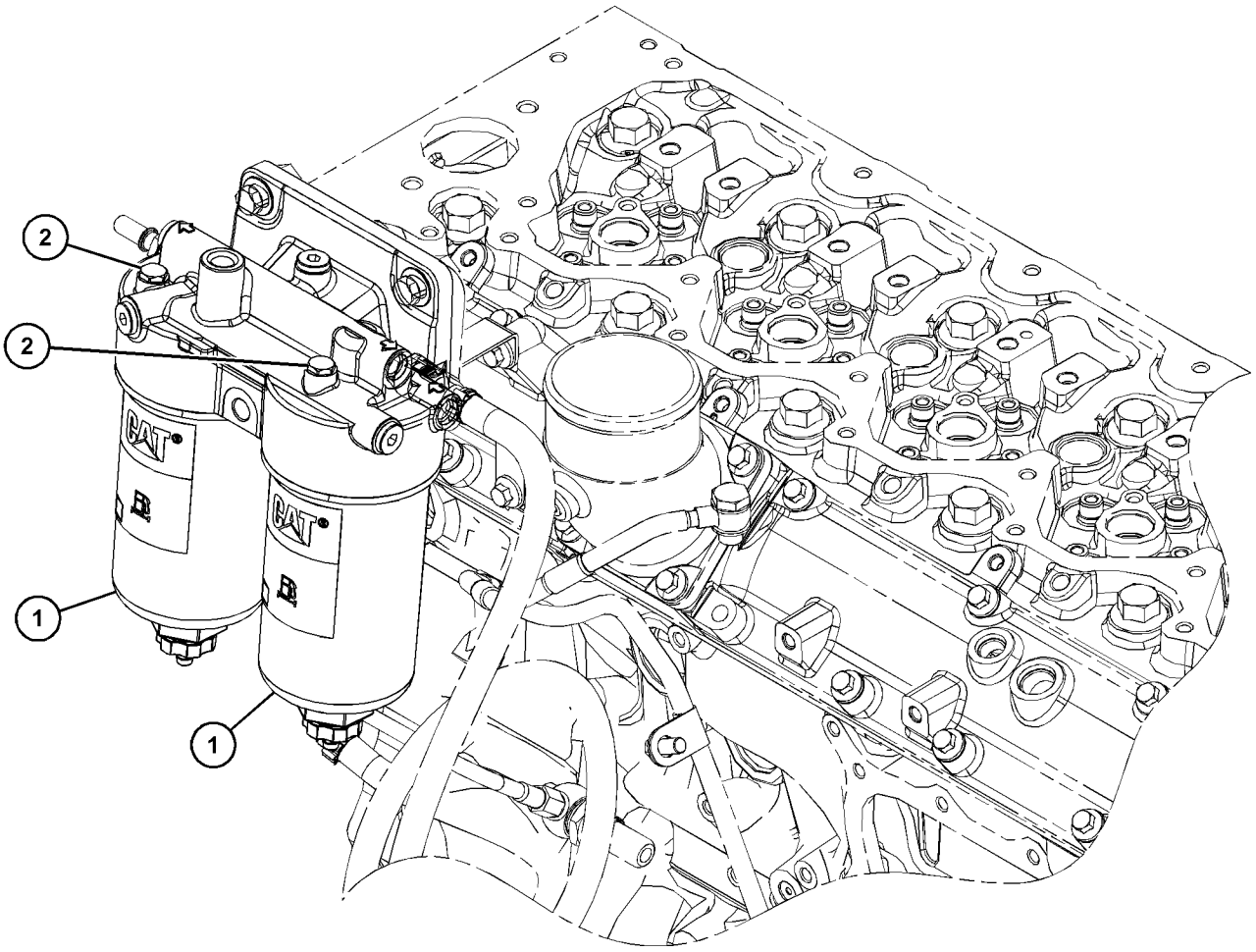

GRAPHIC #1 <END> g03701881

453-7163 FILTER GP-FUEL

S/N: 4501-UP
PART OF 569-0811 ENGINE AR-PRIMARY
AN ATTACHMENT

SMCS-1261 **i05856596**

NOTE	REF NO	GRAPHIC REF	PART NUMBER	QTY	PART NAME 1 2 3 4 5 6 (PRODUCT LEVEL)	SEE PAGE
Y	1	1	**452-8547**	1	FILTER GP-FUEL	94

Y - SEPARATE ILLUSTRATION

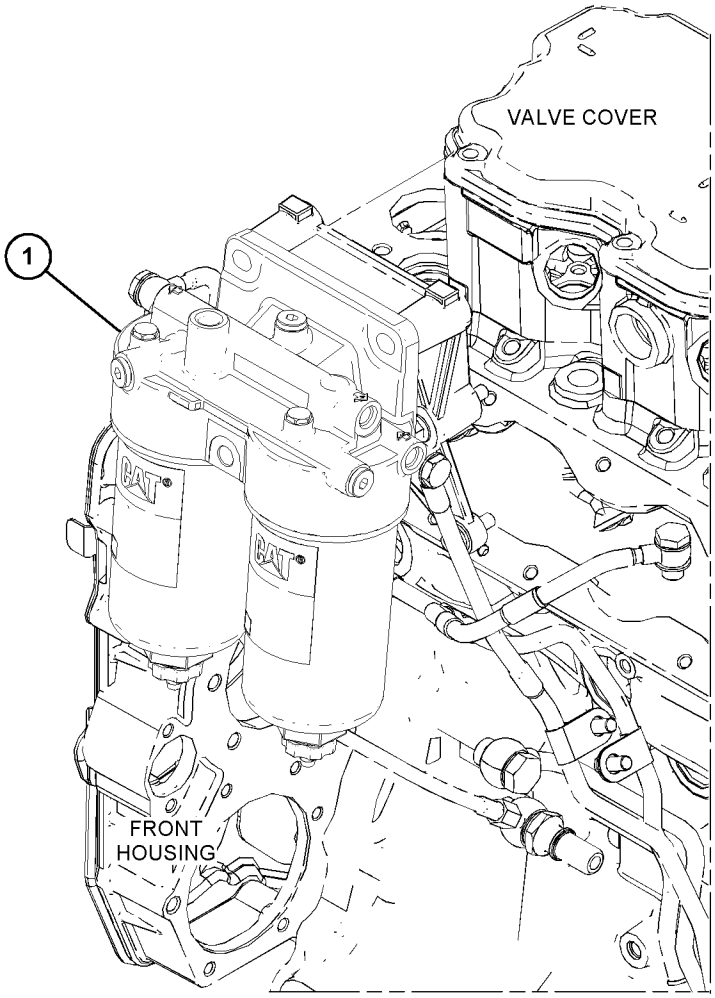

GRAPHIC #1 <END> g03695817

444-5022 FILTER GP-WATER SEP & FUEL

S/N: Z2K1-UP; Z2N1-UP
PART OF 560-7813 LINES GP-FUEL
AN ATTACHMENT

SMCS-1261, 1263

i07377449

NOTE	REF NO	GRAPHIC REF	PART NUMBER	QTY	PART NAME 1 2 3 4 5 6 (PRODUCT LEVEL)	SEE PAGE
	1	1	**192-9207**	2	PLUG AS	
					(EACH INCLUDES)	
	1A	1	**126-9093**	1	SEAL	
	2	1	**439-5037**	1	FILTER AS-WATER SEP & FUEL	
	3	1	**439-5039**	1	SENSOR GP-LIQUID LEVEL	
	4	1	**439-5040**	1	BOWL AS	
	5	1	**446-0105**	1	MODULE AS	
	6	1	**445-5511**	1	VALVE AS	

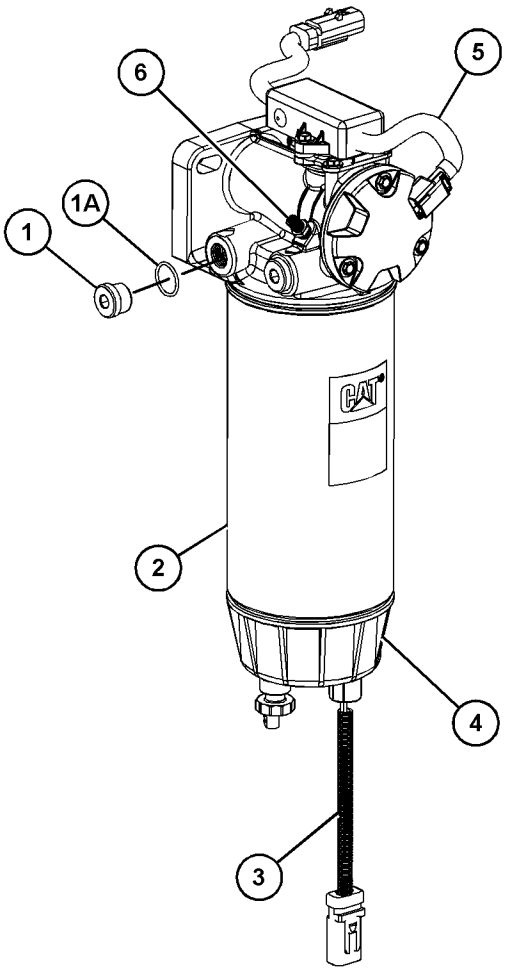

GRAPHIC #1 <END> g03651397

371-2483 INJECTOR GP-FUEL

S/N: 4501-UP
PART OF 569-0811 ENGINE AR-PRIMARY
AN ATTACHMENT

SMCS-1251, 1254, 1290

i06928408

NOTE	REF NO	GRAPHIC REF	PART NUMBER	QTY	PART NAME 1 2 3 4 5 6 (PRODUCT LEVEL)	SEE PAGE
	1	1	**278-5170**	6	BOLT	
	2	1	**369-7799**	6	CLAMP-INJECTOR	
YR	3	1	**371-3974**	6	INJECTOR GP-FUEL	98
	4	1	**517-8243**	6	SLEEVE-INJECTOR	

R - REMANUFACTURED PART MAY BE AVAILABLE
Y - SEPARATE ILLUSTRATION

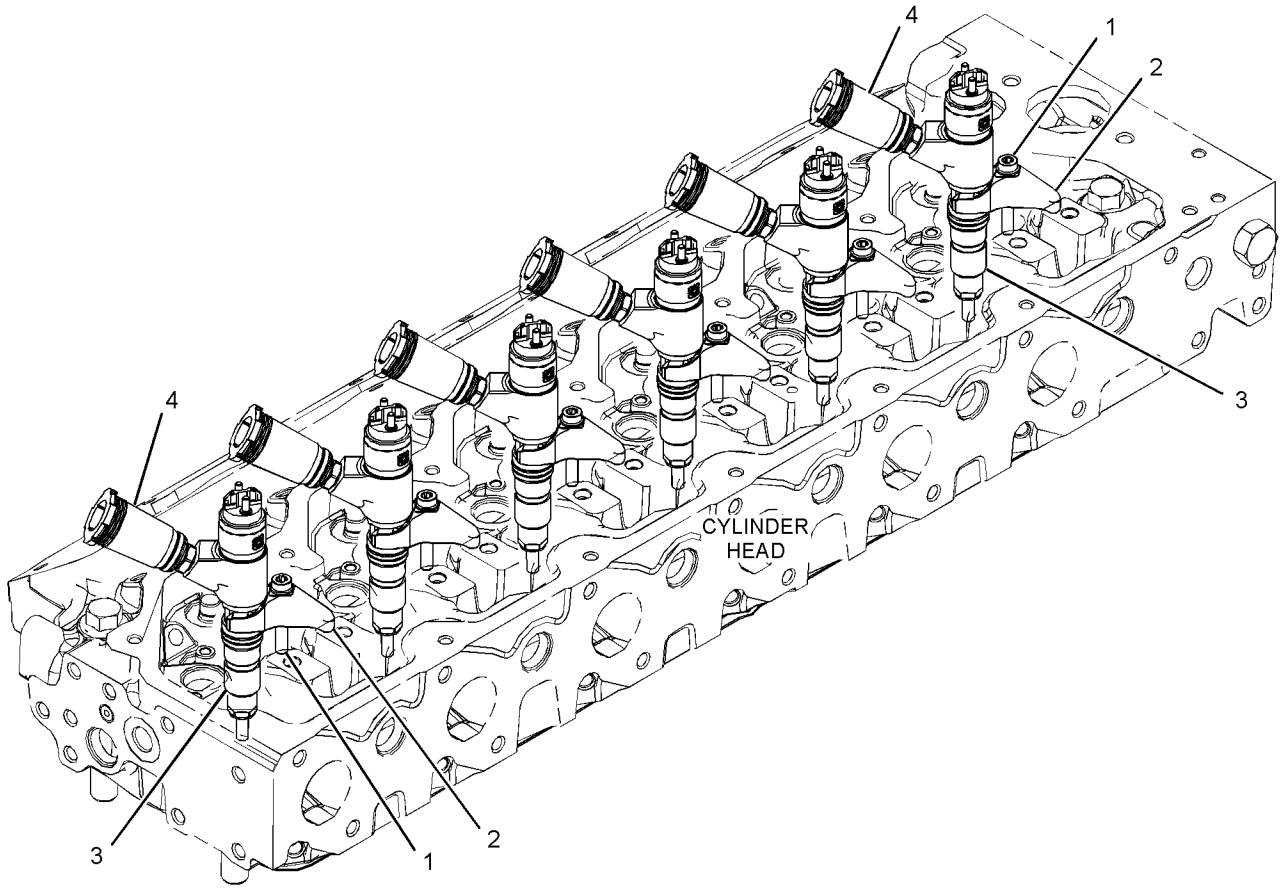

GRAPHIC #1 <END> g03378802

371-3974 INJECTOR GP-FUEL*R

S/N: 4501-UP

PART OF 371-2483 INJECTOR GP-FUEL

AN ATTACHMENT

SMCS-1251, 1254, 1290

i07426454

NOTE	REF NO	GRAPHIC REF	PART NUMBER	QTY	PART NAME 1 2 3 4 5 6 (PRODUCT LEVEL)	SEE PAGE
	1	1	**376-6403**	1	WASHER-SEALING	
	2	1	**376-6405**	1	SEAL-O-RING	

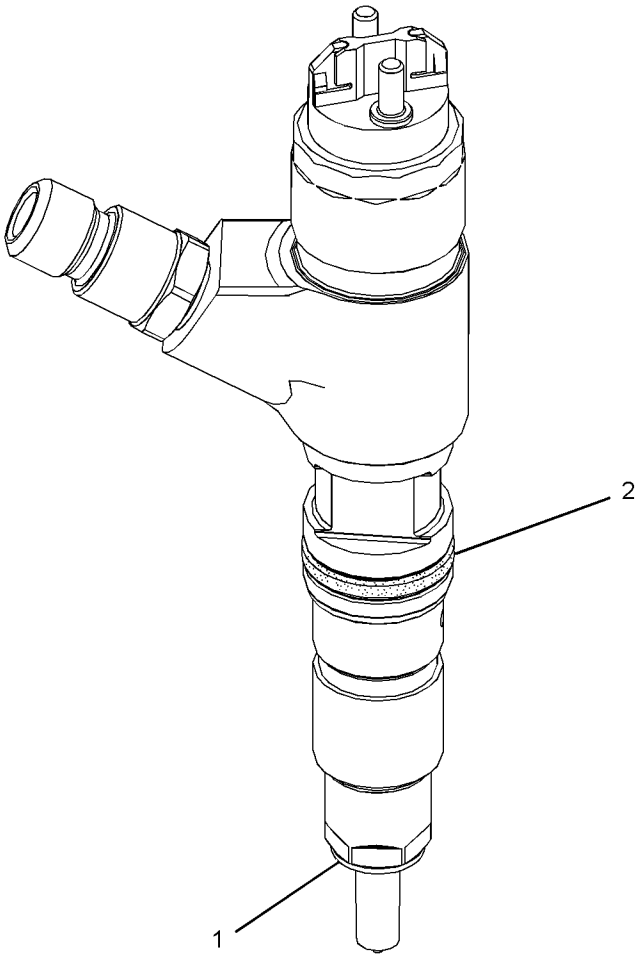

GRAPHIC #1 <END> g03110876

416-1069 LINES GP-FUEL

S/N: 4501-UP
PART OF 432-6484 LINES GP-FUEL FILTER
AN ATTACHMENT

SMCS-1274 **i05892214**

NOTE	REF NO	GRAPHIC REF	PART NUMBER	QTY	PART NAME 1 2 3 4 5 6 (PRODUCT LEVEL)	SEE PAGE
	1	1	**286-2890**	2	WASHER	
	2	1	**377-5988**	1	BOLT	
	3	1	**416-1065**	1	LINE AS-FUEL	
	4	1	**277-4993**	1	SEAL-O-RING	

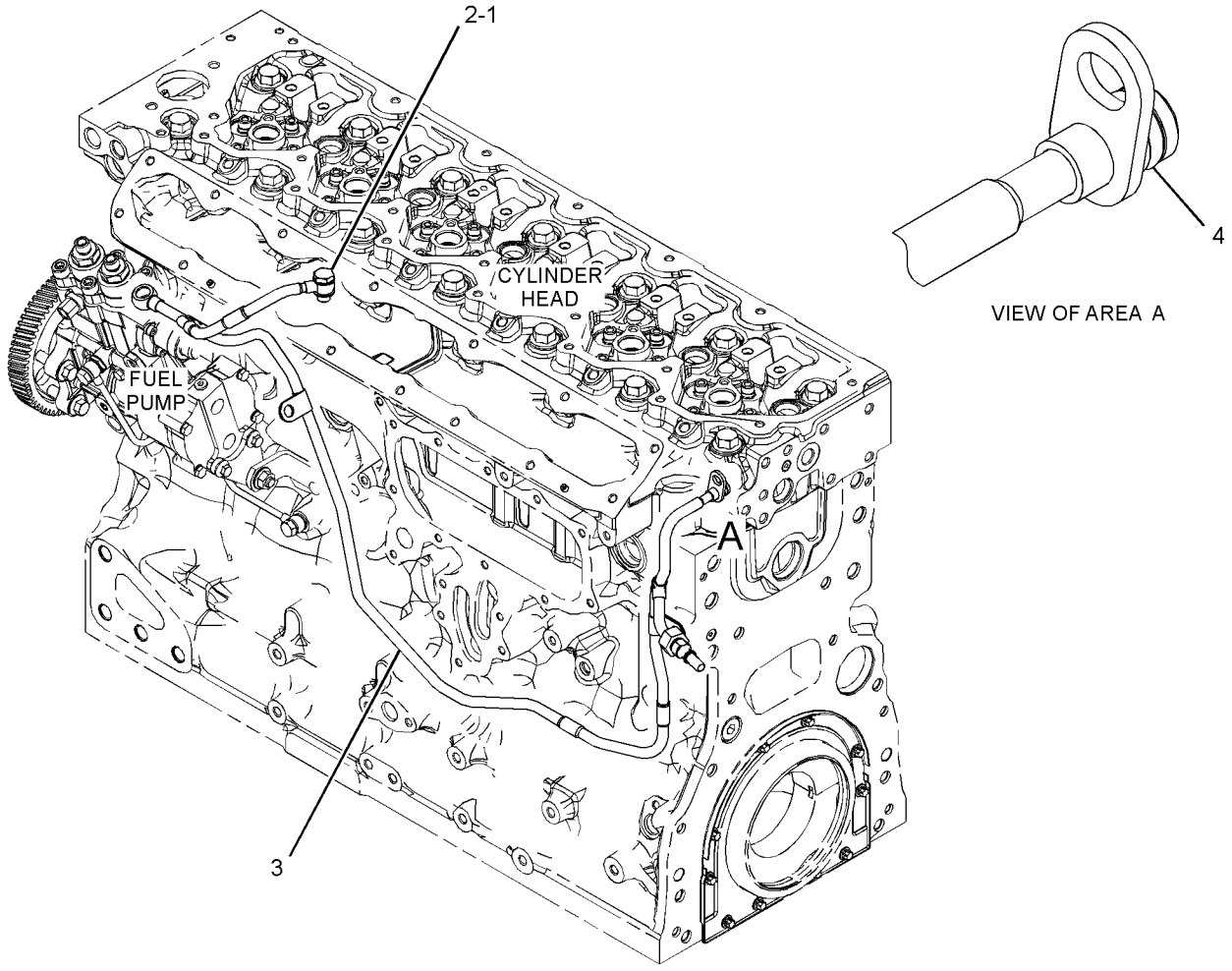

GRAPHIC #1 <END> g03564543

433-1316 LINES GP-FUEL

S/N: 4501-UP
PART OF 432-6484 LINES GP-FUEL FILTER
AN ATTACHMENT

SMCS-1274 **i07163829**

NOTE	REF NO	GRAPHIC REF	PART NUMBER	QTY	PART NAME 1 2 3 4 5 6 (PRODUCT LEVEL)	SEE PAGE
	1	1	**246-4361**	2	WASHER (10.5X14X1.5-MM THK)	
	2	1	**385-1398**	1	CONNECTION-FUEL	
	3	1	**386-1864**	1	BOLT-BANJO	
	4	1	**247-4928**	2	WASHER (16.5X20.5X1.6-MM THK)	
	5	1	**433-0190**	1	LINE AS-FUEL	

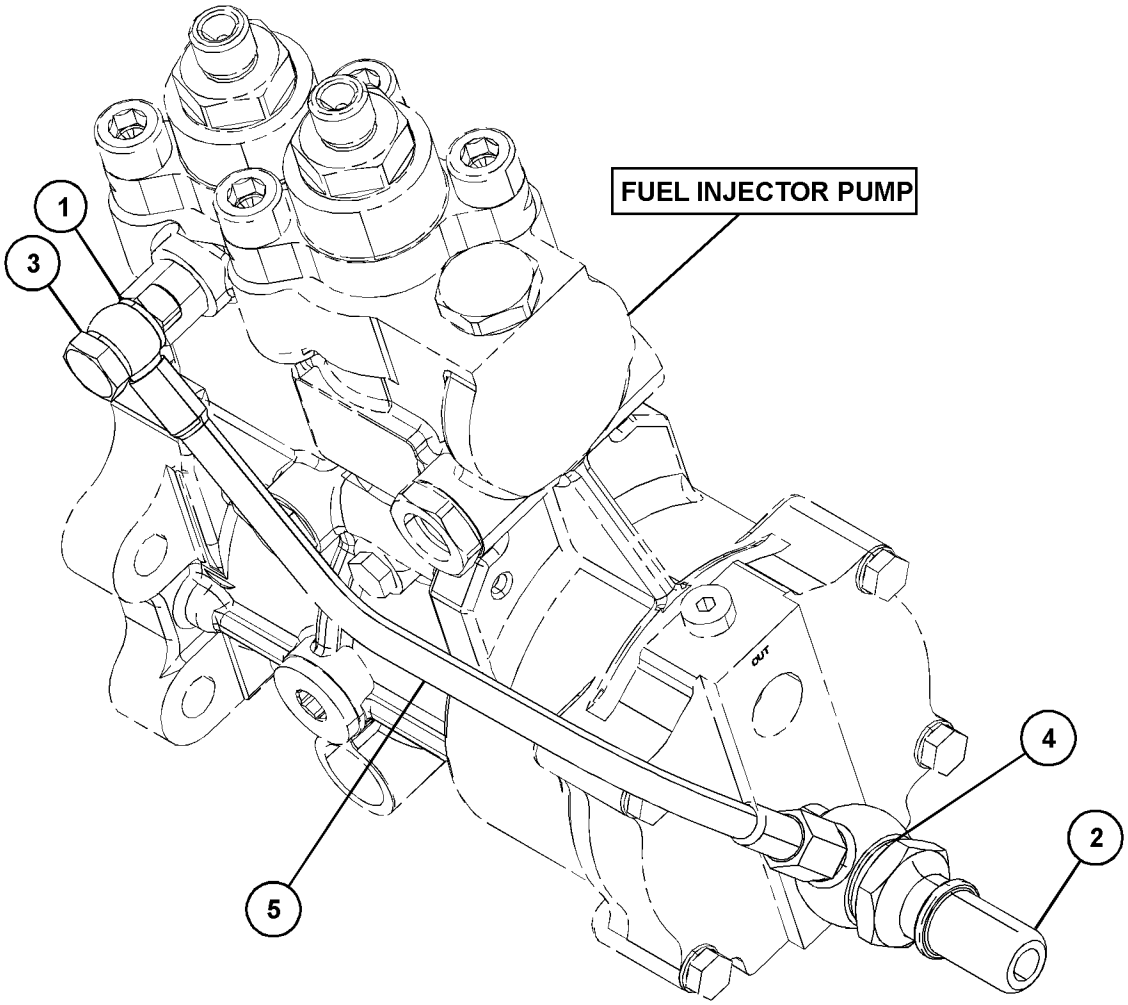

GRAPHIC #1 <END> g06240340

442-8465 LINES GP-FUEL

S/N: 4501-UP
PART OF 432-6484 LINES GP-FUEL FILTER
AN ATTACHMENT

SMCS-1274 **i07107150**

NOTE	REF NO	GRAPHIC REF	PART NUMBER	QTY	PART NAME 1 2 3 4 5 6 (PRODUCT LEVEL)	SEE PAGE
	1	1	**277-9938**	1	BOLT-SPECIAL (BANJO)	
	2	1	**286-2890**	2	WASHER	
	3	1	**295-4670**	1	BOLT-SPECIAL (BANJO)	
	4	1	**348-0495**	2	WASHER	

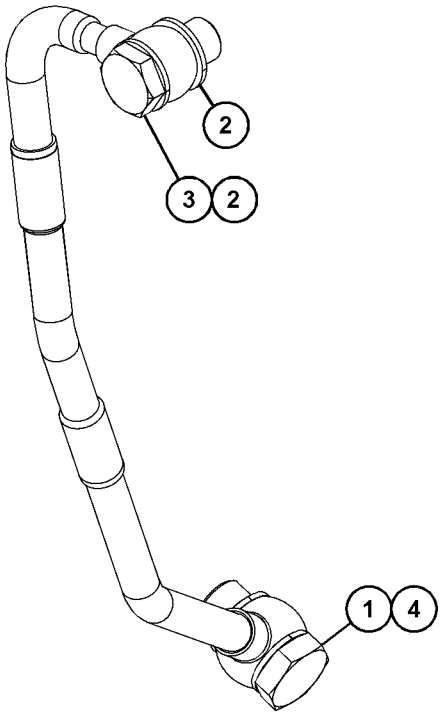

VIEW OF AREA A

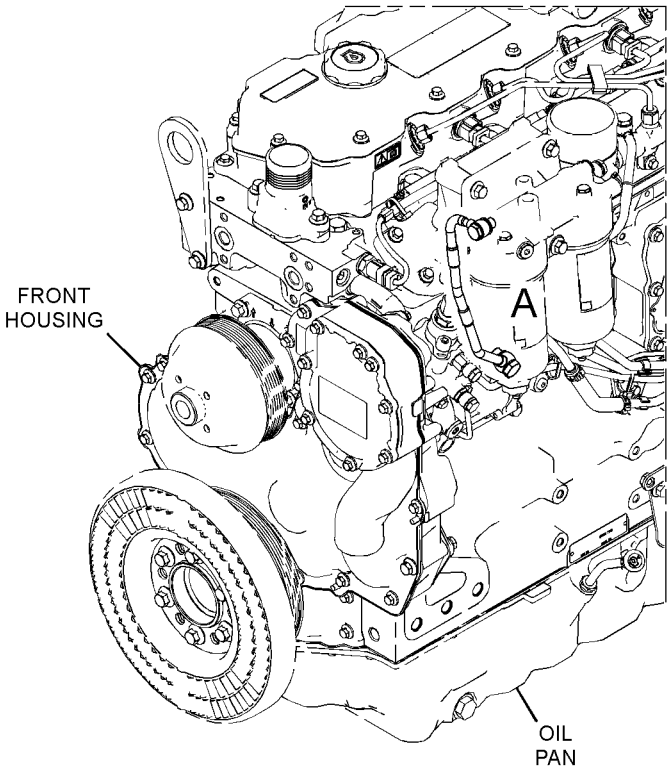

GRAPHIC #1 <END> g06240240

484-7200 LINES GP-FUEL

S/N: 4501-UP

PART OF 432-6484 LINES GP-FUEL FILTER

AN ATTACHMENT

SMCS-1274 **i07418499**

NOTE	REF NO	GRAPHIC REF	PART NUMBER	QTY	PART NAME 1 2 3 4 5 6 (PRODUCT LEVEL)	SEE PAGE
	1	1	**247-4928**	2	WASHER (16.5X20.5X1.6-MM THK)	
	2	1	**286-2890**	2	WASHER	
	3	1	**295-4670**	1	BOLT-SPECIAL (BANJO)	
M	4	1	**386-2737**	1	BOLT-BANJO (M16X1.5X27-MM)	
	5	1	*396-2102*	1	LINE AS-FUEL	
E		1	**347-8645**		HOSE (28-CM)	

E - ORDER BY THE CENTIMETER
M - METRIC PART

484-7200 **LINES GP-FUEL (**contd.**)** **i07418499**

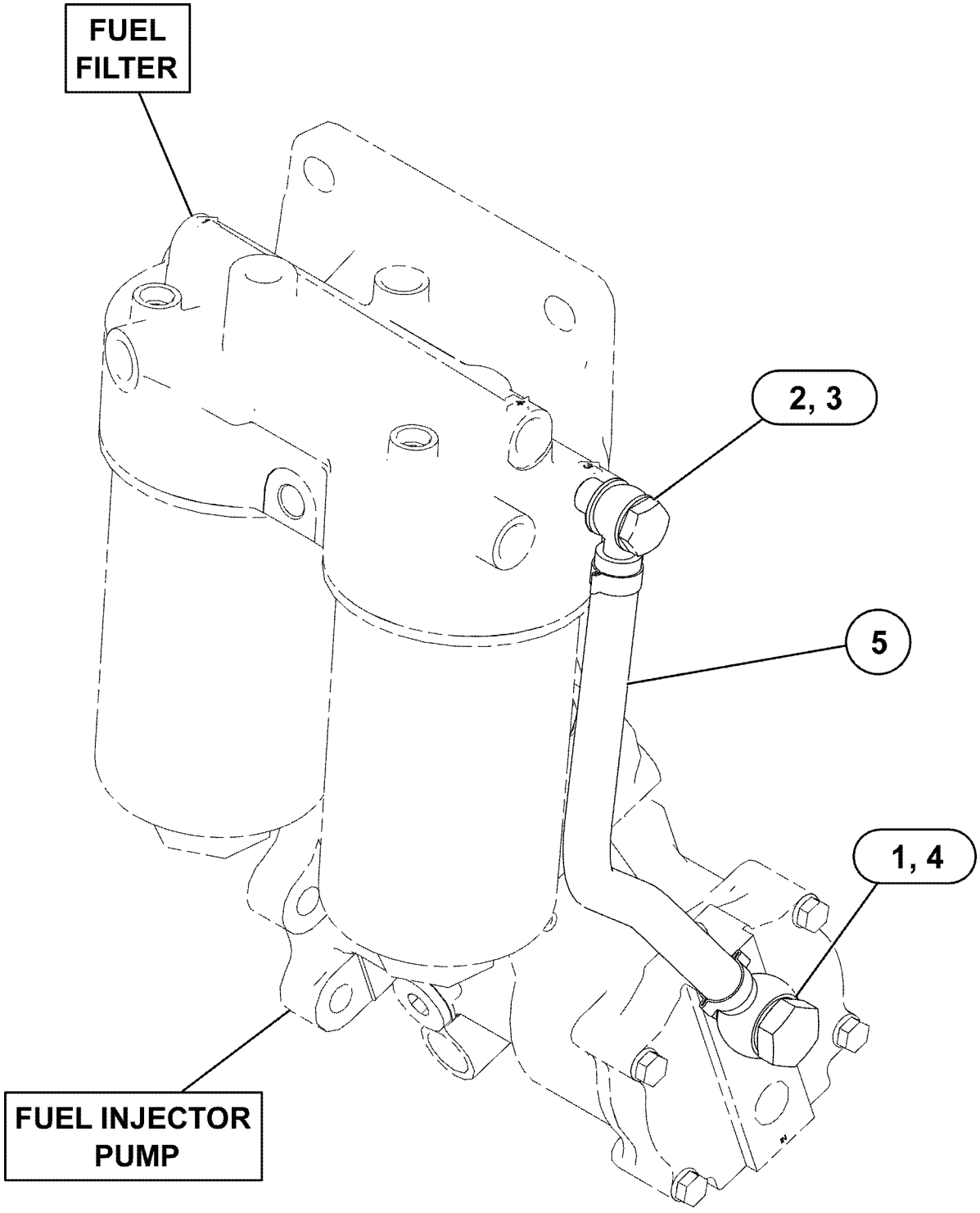

GRAPHIC #1 <END> g06227787

560-7813 LINES GP-FUEL

S/N: Z2K1-UP; Z2N1-UP
PART OF 575-9705 LINES GP-FUEL
AN ATTACHMENT

SMCS-1274 **i07828318**

NOTE	REF NO	GRAPHIC REF	PART NUMBER	QTY	PART NAME 1 2 3 4 5 6 (PRODUCT LEVEL)	SEE PAGE
	1	1	**204-2281**	2	STRAP-CABLE	
M	2	1	**8T-4198**	1	BOLT (M10X1.5X100-MM)	
	3	1	**1P-4278**	3	CLAMP-HOSE	
	4	1	**3S-2093**	1	STRAP-CABLE	
	5	1	**4D-7735**	2	CLIP	
	6	1	**5D-1026**	4	CLAMP-BAND	
	7	1	**5P-4116**	2	WASHER-HARD (8.8X20.5X2-MM THK)	
	8	1	**5P-4961**	2	CLAMP-HOSE	
	9	1	**8T-4121**	7	WASHER-HARD (11X21X2.5-MM THK)	
	10	1	**8T-7934**	2	WASHER-HARD (11X21X5-MM THK)	
	11	1	**8T-7971**	1	WASHER-HARD (13.5X25.5X5-MM THK)	
	12	1	**9X-8250**	1	CLIP (LOOP)	
M	13	1	**124-3815**	4	BOLT (M8X1.25X16-MM)	
	14	1	**177-2215**	1	STRAP-DUAL CLAMP	
	15	1	*195-2037*	1	FITTING AS	
		1	**3K-0360**	1	SEAL-O-RING	
		1	**034-3679**	1	ADAPTER	
	16	1	**200-6345**	1	SADDLE-MOUNTING (DUAL SWIVEL)	
	17	1	**203-3847**	1	BRACKET AS	
	18	1	**204-8000**	1	MOUNTING-CABLE TIE	
	19	1	*264-3517*	2	CONNECTION GP-FUEL	
					(EACH INCLUDES)	
		1	**264-3518**	1	CONNECTOR-RECEPTACLE	
		1	**264-3519**	1	CAP	
		1	**264-3520**	1	PLUG	
M	20	1	**274-9988**	2	SETSCREW-SOCKET (M10X1.5X110-MM)	
	21	1	**278-0518**	3	SPACER (10.5X20X62.3-MM THK)	
	22	1	**301-2722**	1	CONNECTOR-HOSE	
	23	1	**302-3908**	1	SPACER (11X20X30-MM THK)	
	24	1	*332-8591*	1	ELBOW AS	
		1	**9X-3982**	1	ELBOW	
		1	**238-5080**	1	SEAL-O-RING	
	25	1	*332-8593*	1	VALVE AS-BALL	
		1	**156-2525**	1	VALVE-SHUTOFF	
		1	**238-5080**	1	SEAL-O-RING	
	26	1	**397-9301**	1	WASHER-HARD (11.5X20X15-MM THK)	
	27	1	*421-6190*	1	ELBOW AS	
		1	**238-5081**	1	SEAL-O-RING	
		1	**305-6991**	1	ELBOW	
	28	1	**425-2633**	1	CONNECTOR-SPECIAL	
	29	1	*442-1579*	1	FITTING AS	
		1	**126-9093**	1	SEAL	
		1	**439-1840**	1	FITTING	
	30	1	*529-7524*	1	FITTING AS	
		1	**126-9093**	1	SEAL	
		1	**529-7523**	1	FITTING	
	31	1	**533-4159**	3	BOLT AS	

560-7813 **LINES GP-FUEL (**contd.**)** **i07828318**

NOTE	REF NO	GRAPHIC REF	PART NUMBER	QTY	PART NAME 1 2 3 4 5 6 (PRODUCT LEVEL)	SEE PAGE
M	32	1	**101-3129**	2	STUD (M10X1.5-THD)	
M	33	1	**234-9525**	1	STUD (M10X1.5-THD)	
	34	1	**245-8842**	1	CLIP (LOOP)	
	35	1	**313-9198**	4	CLIP	
M	36	1	**344-5675**	4	NUT (M10X1.5-THD)	
	37	1	**363-7498**	2	CLIP	
	38	1	**363-7502**	3	CLIP	
Y	39	1	**444-5022**	1	FILTER GP-WATER SEP & FUEL	96
M	40	1	**479-2171**	5	BOLT AS	
M	41	1	**479-2172**	6	BOLT AS	
	42	1	**566-8123**	1	BRACKET AS	
	43	1	**566-8924**	1	BRACKET AS	
M		1	**8T-3490**	2	NUT-WELD (M10X1.5-THD)	
	44	1	**579-3031**	1	BRACKET AS	
M		1	**6V-9632**	2	NUT-WELD (M6X1-THD)	
M		1	**8T-3490**	1	NUT-WELD (M10X1.5-THD)	
	45	1	**579-3034**	1	BRACKET AS	
M		1	**8T-3490**	3	NUT-WELD (M10X1.5-THD)	
M		1	**8T-3612**	1	NUT-WELD (M8X1.25-THD)	
	46	1	**579-3035**	1	BRACKET AS	
M		1	**8T-3490**	1	NUT-WELD (M10X1.5-THD)	
	47	1	**579-3036**	1	BRACKET AS	
M		1	**8T-3490**	1	NUT-WELD (M10X1.5-THD)	
M	48	1	**8T-4908**	2	BOLT (M8X1.25X25-MM)	
	49	1	**9M-4995**	1	CLIP	
	50	1	**9M-8406**	2	CLIP (LOOP)	
D	51	1	**5P-5991**		HOSE (0.4-M EACH)	
D	51A	1	**5P-5991**		HOSE (0.3-M)	
E	52	1	**347-8647**		HOSE (122-CM)	
E	53	1	**347-8645**		HOSE (176-CM)	
E	54	1	**347-8646**		HOSE (344-CM)	

D - ORDER BY THE METER
E - ORDER BY THE CENTIMETER
M - METRIC PART
Y - SEPARATE ILLUSTRATION

560-7813 **LINES GP-FUEL (**contd.**)** **i07828318**

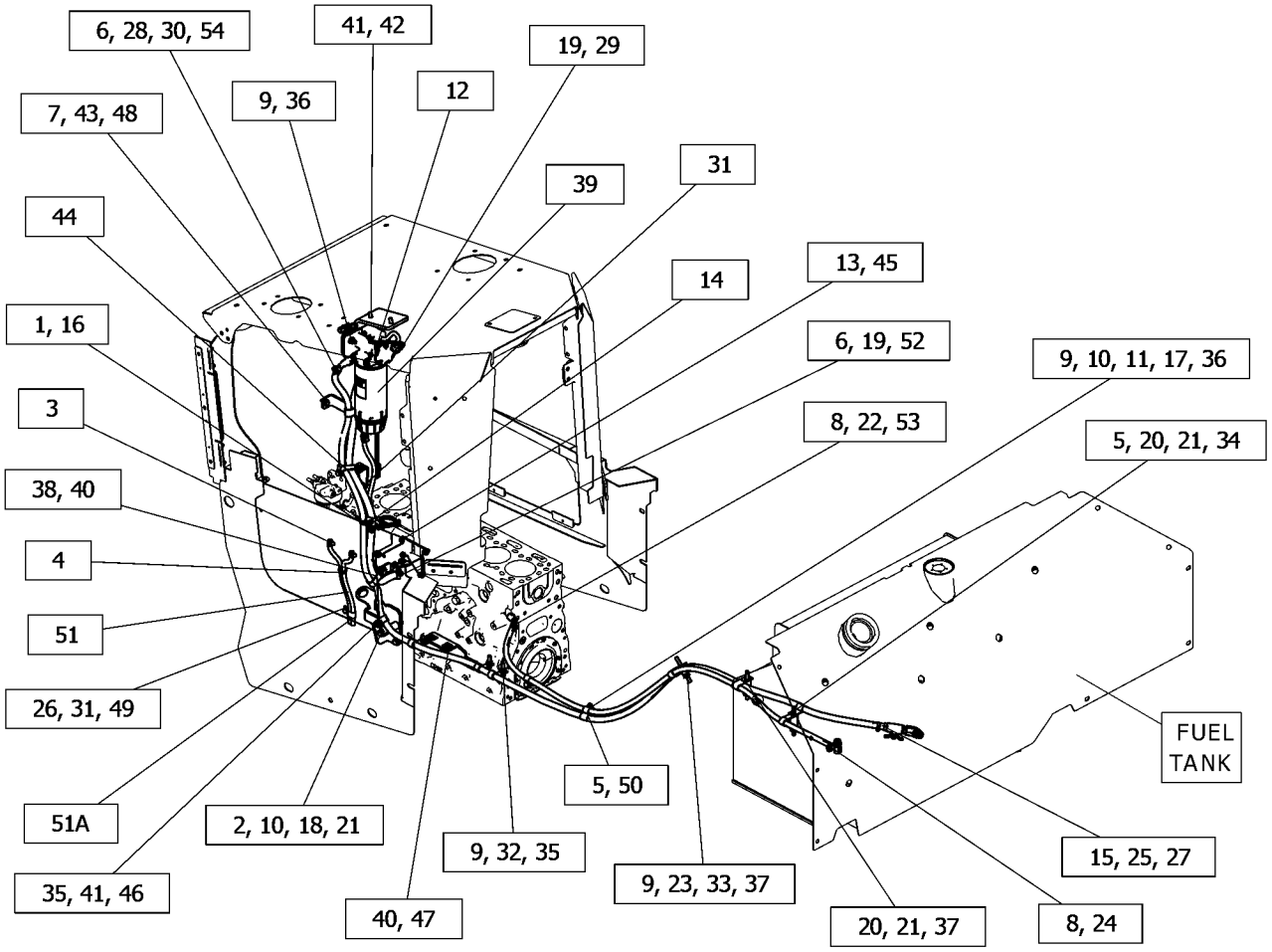

GRAPHIC #1 <END> g06453426

575-9705 LINES GP-FUEL

S/N: Z2K1-UP; Z2N1-UP
PART OF 532-9851, 532-9856 DISTRIBUTION AR
AN ATTACHMENT

SMCS-1274 **i07840298**

NOTE	PART NUMBER	QTY	PART NAME 1 2 3 4 5 6 (PRODUCT LEVEL)	SEE PAGE
Y	*560-7813*	1	LINES GP-FUEL	104

Y - SEPARATE ILLUSTRATION

<END>

432-6484 LINES GP-FUEL FILTER

S/N: 4501-UP
PART OF 569-0811 ENGINE AR-PRIMARY
AN ATTACHMENT

SMCS-1261, 1274 **i07171676**

NOTE	REF NO	GRAPHIC REF	PART NUMBER	QTY	PART NAME 1 2 3 4 5 6 (PRODUCT LEVEL)	SEE PAGE
M	1	1	**6I-0593**	2	BOLT (M10X1.5X30-MM)	
M	2	1	**6I-4200**	2	BOLT (M10X1.5X16-MM)	
M	3	1	**100-4458**	1	BOLT (M8X1.25X14-MM)	
M	4	1	**124-3815**	1	BOLT (M8X1.25X16-MM)	
M	5	1	**164-7468**	1	BOLT (M10X1.5X95-MM)	
	6	1	**387-3577**	1	SUPPORT GP-LINES	
		1	**366-9373**	4	CLIP	
	7	1	**389-5775**	1	BRACKET	
	8	1	**389-5784**	1	BRACKET-FILTER	
	9	1	**391-1817**	1	SUPPORT GP-LINES	
		1	**366-9373**	2	CLIP	
Y	10	1	**416-1069**	1	LINES GP-FUEL	99
	11	1	**432-8723**	1	BRACKET AS	
Y	12	1	**433-1316**	1	LINES GP-FUEL	100
Y	13	1	**442-8465**	1	LINES GP-FUEL	101
Y	14	1	**484-7200**	1	LINES GP-FUEL	102
	15	1	**442-8569**	1	CLIP-PIPE	
M	16	1	**6I-0217**	1	BOLT (M8X1.25X20-MM)	
M	17	1	**6I-0260**	3	BOLT (M8X1.25X25-MM)	
M	18	1	**208-9287**	2	BOLT-FLANGE HEAD (M8X1.25X50-MM)	
	19	1	*330-9723*	2	PLUG AS	
					(EACH INCLUDES)	
		1	**228-7100**	1	SEAL-O-RING	
		1	**241-6157**	1	PLUG	

M - METRIC PART
Y - SEPARATE ILLUSTRATION

432-6484 **LINES GP-FUEL FILTER (**contd.**)** **i07171676**

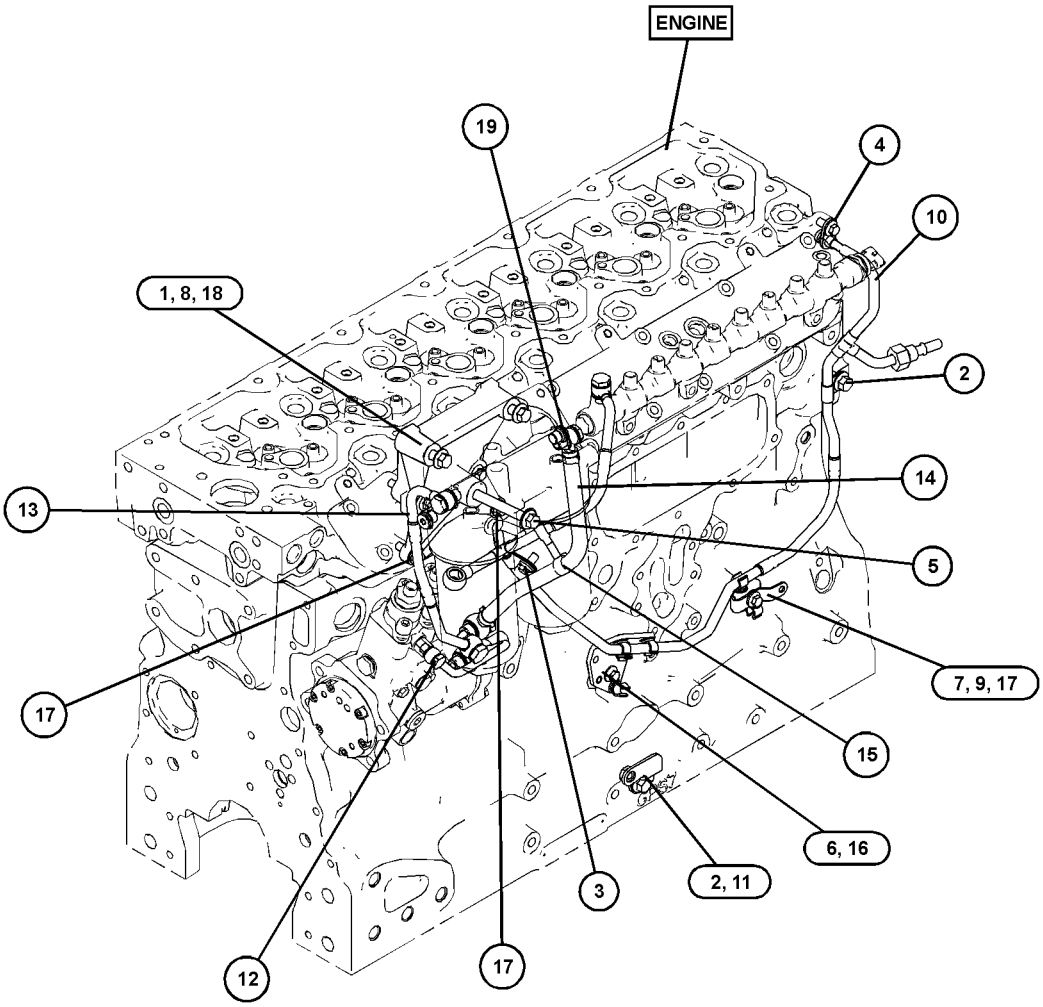

GRAPHIC #1 <END> g06241564

370-5520 LINES GP-FUEL INJECTION

S/N: 4501-UP
PART OF 394-9639 RAIL GP-FUEL
AN ATTACHMENT

SMCS-1252, 1254 **i07175141**

NOTE	REF NO	GRAPHIC REF	PART NUMBER	QTY	PART NAME 1 2 3 4 5 6 (PRODUCT LEVEL)	SEE PAGE
	1	1	**395-1633**	1	BRACKET AS	
M		1	**6I-0631**	1	BOLT (M6X1X12-MM)	
	2	1	**370-5516**	1	LINE AS-FUEL INJECTION	
	3	1	**370-5517**	1	LINE AS-FUEL INJECTION	
	4	1	**370-5518**	1	LINE AS-FUEL INJECTION	

M - METRIC PART

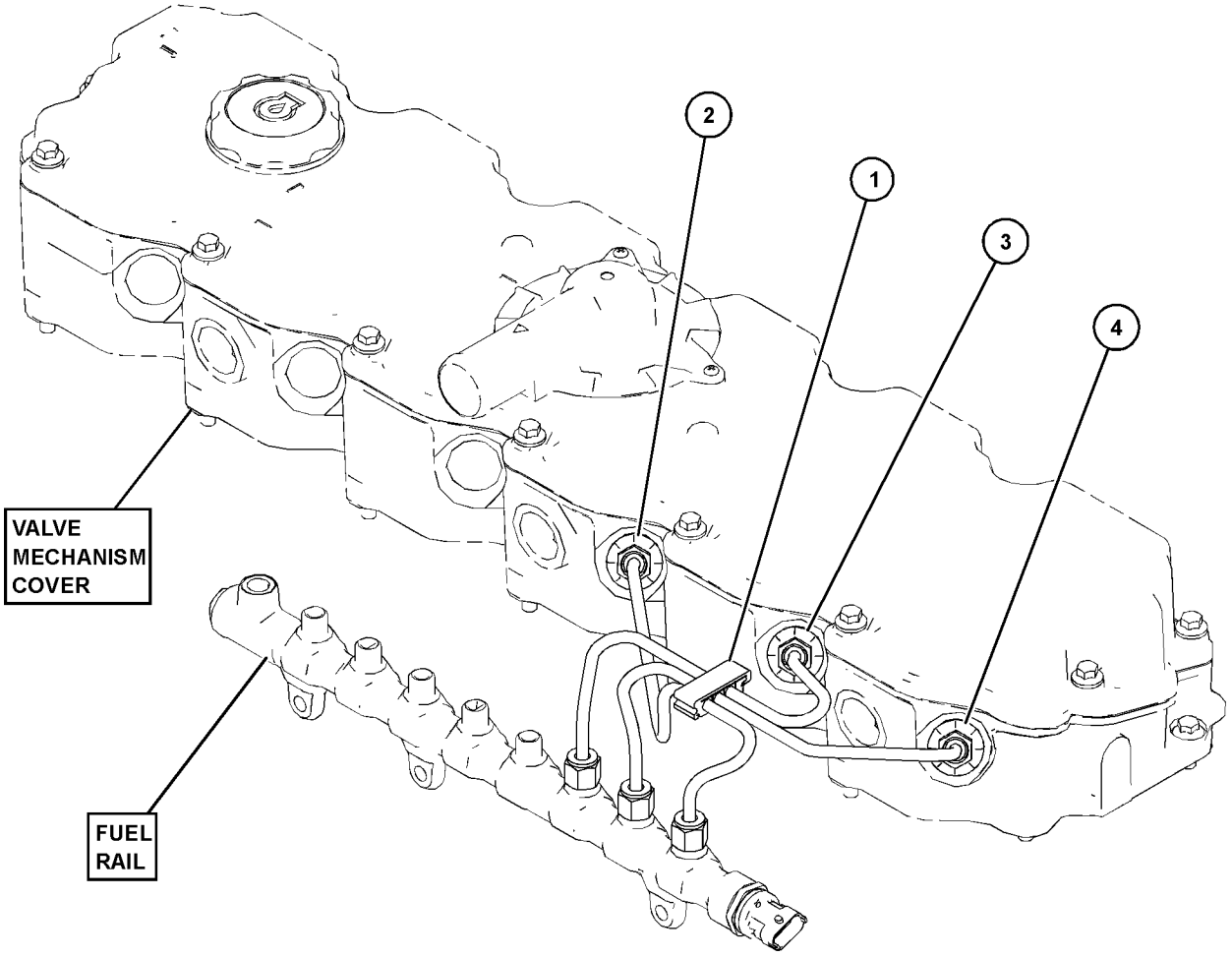

GRAPHIC #1 <END> g06238838

394-0525 LINES GP-FUEL INJECTION

S/N: 4501-UP
PART OF 394-9639 RAIL GP-FUEL
AN ATTACHMENT

SMCS-1252, 1254

i07107179

NOTE	REF NO	GRAPHIC REF	PART NUMBER	QTY	PART NAME 1 2 3 4 5 6 (PRODUCT LEVEL)	SEE PAGE
	1	1	**395-1633**	1	BRACKET AS	
M	1A	1	**6I-0631**	1	BOLT (M6X1X12-MM)	
	2	1	**370-5513**	1	LINE AS-FUEL	
	3	1	**393-5467**	1	LINE AS-FUEL	
	4	1	**393-5468**	1	LINE AS-FUEL	

M - METRIC PART

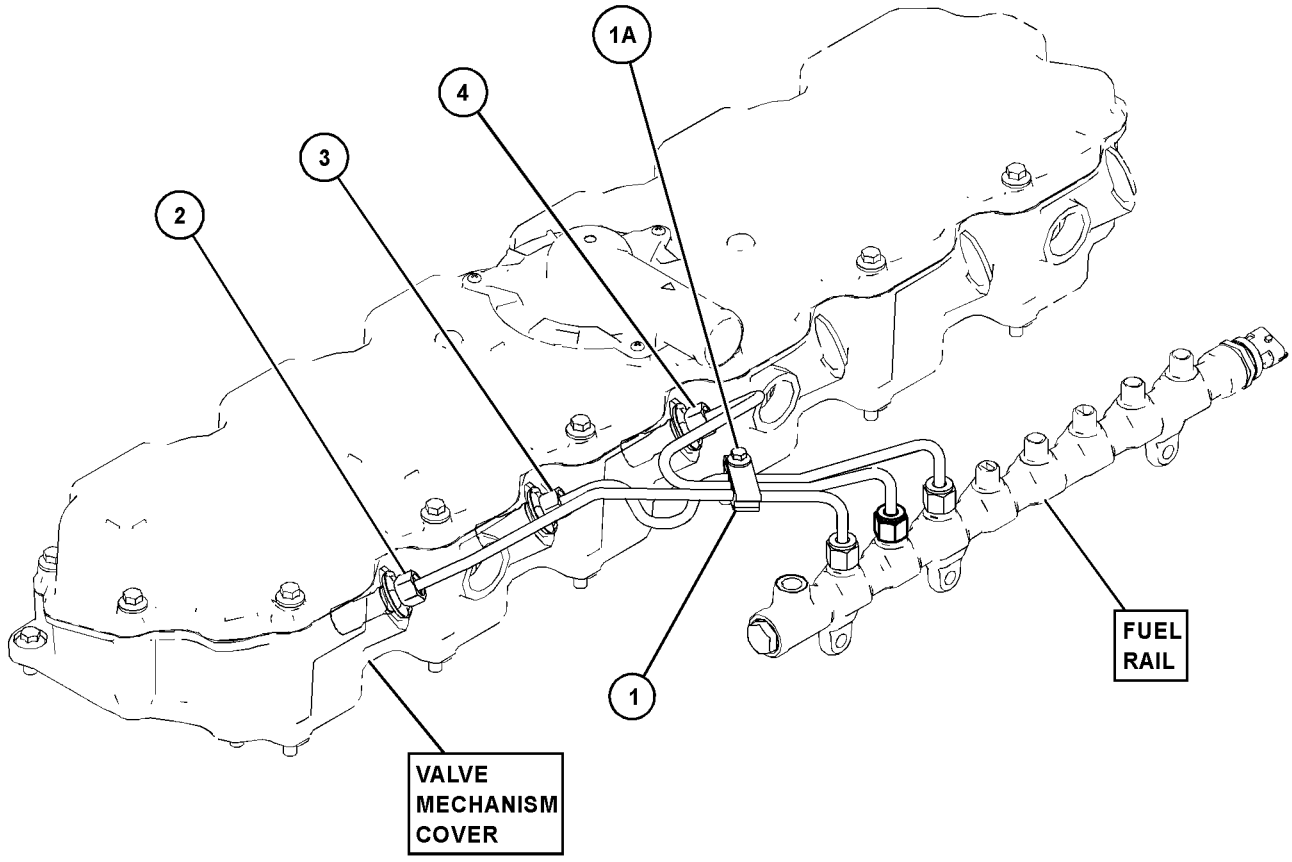

GRAPHIC #1 <END> g06241117

375-2647 PUMP GP-FUEL INJECTION*R

S/N: 4501-UP

PART OF 391-4811 PUMP GP-FUEL INJECTION

AN ATTACHMENT

SMCS-1251, 1290

i07351531

NOTE	REF NO	GRAPHIC REF	PART NUMBER	QTY	PART NAME 1 2 3 4 5 6 (PRODUCT LEVEL)	SEE PAGE
	1	1	**386-3819**	1	KEY-SHAFT	
	2	1	**375-8254**	1	VALVE	
	3	1	**376-6409**	1	SEAL	
	4	1	**376-6410**	1	RETAINER-WASHER	
	5	1	**376-6411**	1	NUT-SHAFT	
	6	1	**386-2971**	2	WASHER	
	7	1	**386-2976**	2	WASHER	
	8	1	**453-0790**	3	BOLT	
	9	1	**454-5109**	1	BOLT-BANJO	

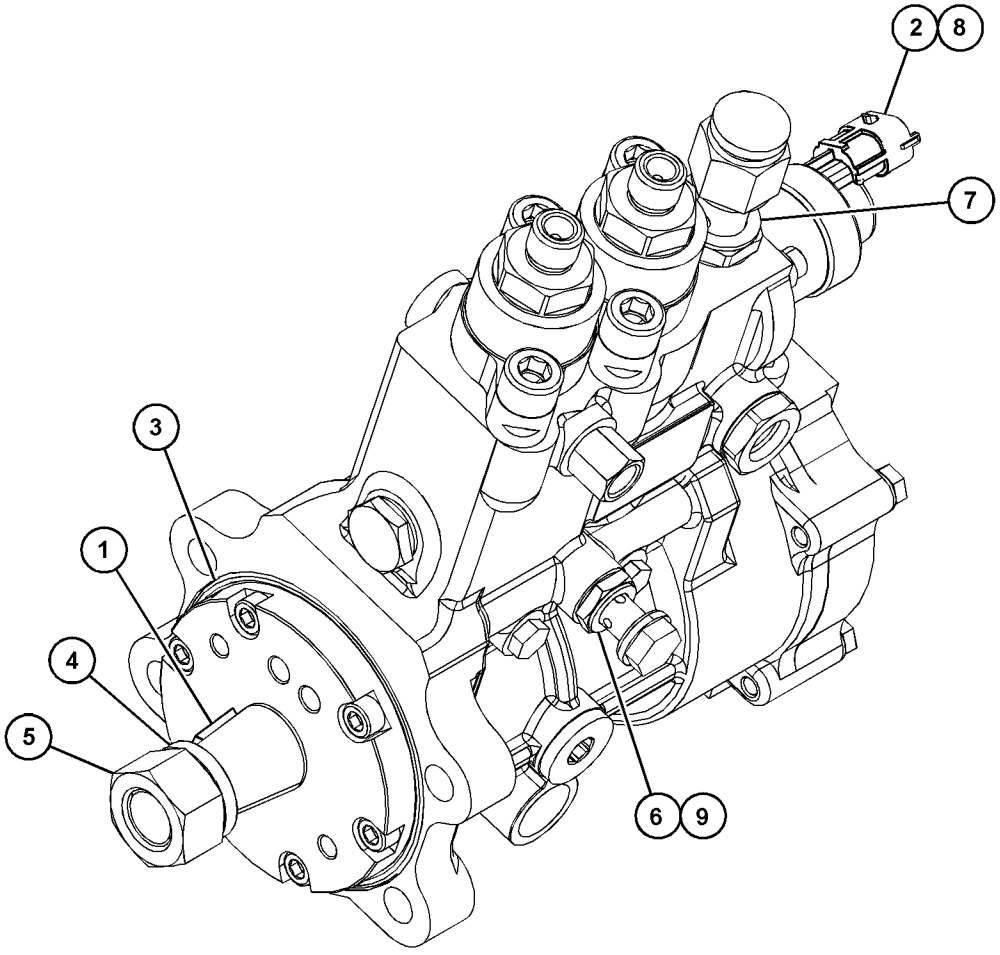

GRAPHIC #1 <END> g06182840

391-4811 PUMP GP-FUEL INJECTION

S/N: 4501-UP

PART OF 569-0811 ENGINE AR-PRIMARY

AN ATTACHMENT

SMCS-1251, 1290 **i07377581**

NOTE	REF NO	GRAPHIC REF	PART NUMBER	QTY	PART NAME 1 2 3 4 5 6 (PRODUCT LEVEL)	SEE PAGE
M	1	1	**286-0123**	4	BOLT (M10X1.5X35-MM THK)	
M	2	1	**6I-0654**	3	BOLT (M10X1.5X25-MM)	
	3	1	**371-2684**	1	BRACKET	
	4	1	**371-2691**	1	BRACKET	
	5	1	**371-7263**	1	LINE AS-FUEL	
YR	6	1	**375-2647**	1	PUMP GP-FUEL INJECTION	112
	7	1	**476-2947**	1	GEAR-FUEL PUMP (68-TEETH)	
M	8	1	**6I-0217**	2	BOLT (M8X1.25X20-MM)	
	9	1	**346-0006**	1	BOLT-SPECIAL	
	10	1	**346-0007**	2	WASHER	
M	11	1	**6I-0594**	1	NUT (M10X1.5-THD)	

M - METRIC PART
R - REMANUFACTURED PART MAY BE AVAILABLE
Y - SEPARATE ILLUSTRATION

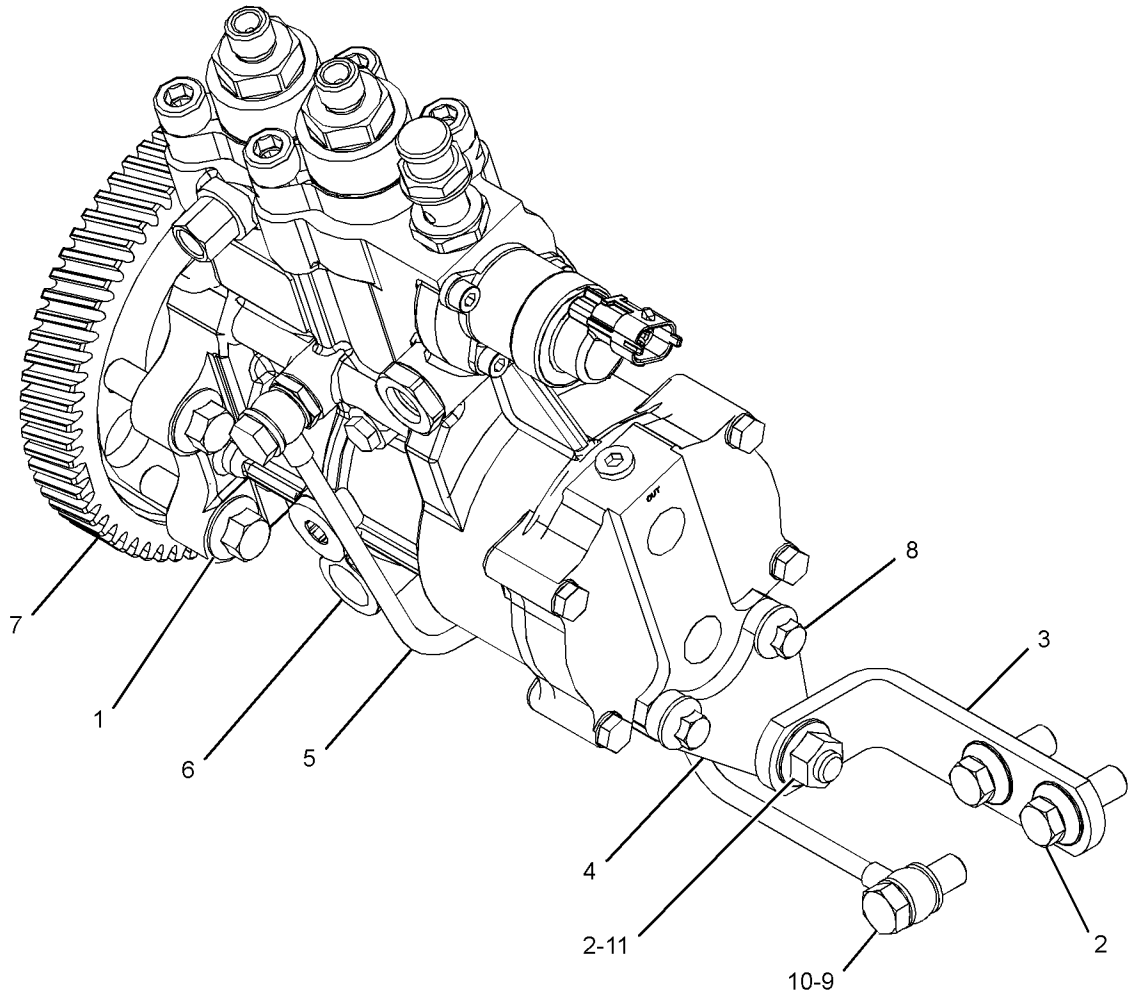

GRAPHIC #1 <END> g03378913

380-0415 PUMP GP-FUEL TRANSFER

S/N: Z2K1-UP; Z2N1-UP

PART OF 523-3955 PUMP GP-FUEL TRANSFER

AN ATTACHMENT

SMCS-1256 **i06704268**

NOTE	REF NO	GRAPHIC REF	PART NUMBER	QTY	PART NAME 1 2 3 4 5 6 (PRODUCT LEVEL)	SEE PAGE
	1	1	**9W-0852**	3	PIN-CONNECTOR (14-GA TO 16-GA)	
	2	1	**243-4506**	1	RECEPTACLE AS-CONNECTOR (3-PIN)	
	3	1	**380-4696**	1	PUMP	
	4	1	**272-0710**	1	CONTROL-REFUELING PUMP	
	5	1	**7Y-3963**	2	TERMINAL-BULLET (FEMALE)	
	6	1	**7Y-3962**	2	TERMINAL-BULLET (MALE)	
	7	1	**7Y-3964**	2	TUBE	
	8	1	**7Y-3965**	2	TUBE	
E	9	1	**125-7876**		TUBE-HEAT SHRINK (17.78-MM DIA) (7-CM)	

E - ORDER BY THE CENTIMETER

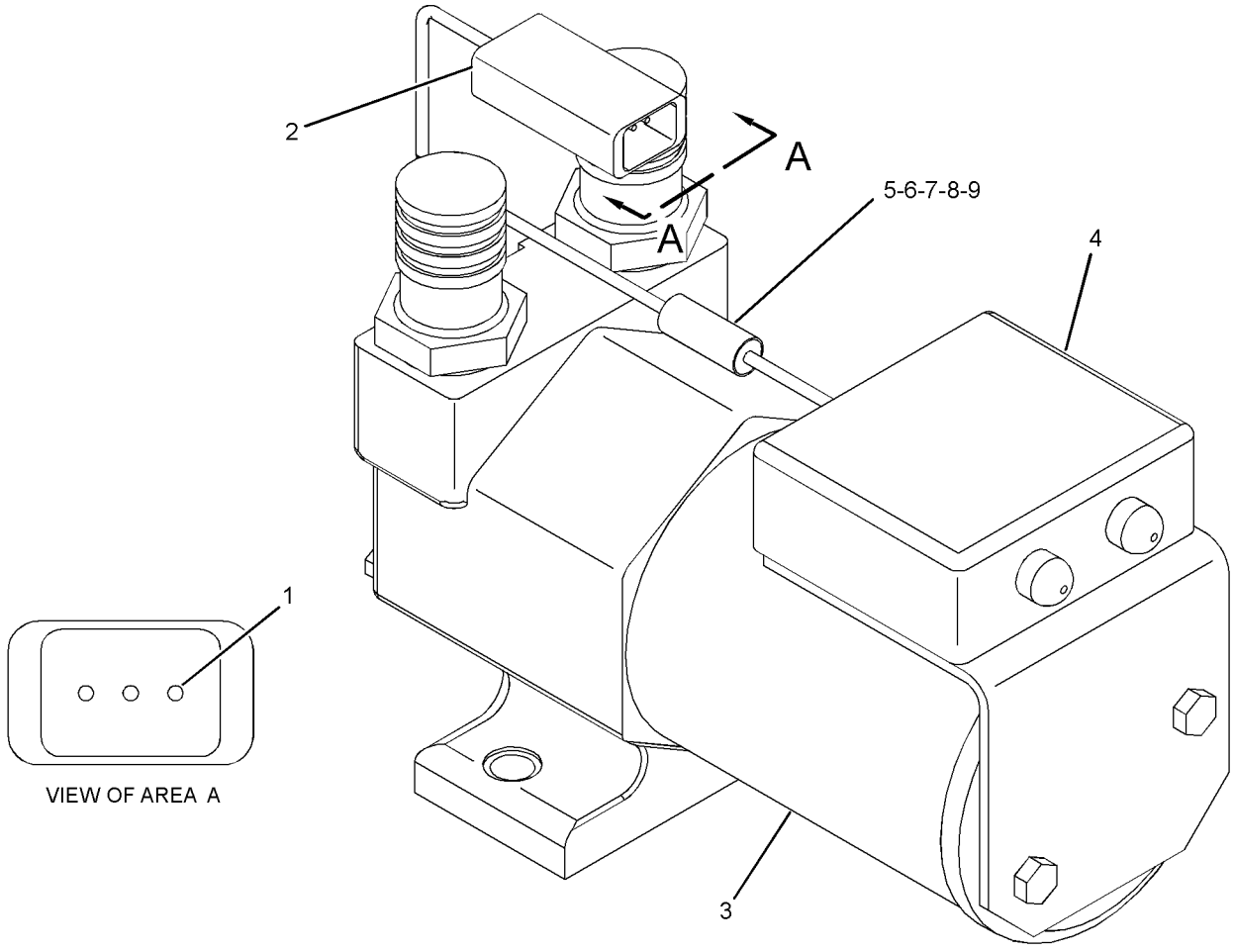

GRAPHIC #1 <END> g01364000

523-3955 PUMP GP-FUEL TRANSFER

S/N: Z2K1-UP; Z2N1-UP
FOR USE WITH 508-1609—PAGE: 118
CANNOT BE USED WITH 523-3959—PAGE: 90, 550-5565—PAGE: 353
AN ATTACHMENT

SMCS-1256 **i07850331**

NOTE	REF NO	GRAPHIC REF	PART NUMBER	QTY	PART NAME 1 2 3 4 5 6 (PRODUCT LEVEL)	SEE PAGE
	1	1	**2M-9780**	1	SEAL-O-RING	
	2	1	**3E-0105**	1	MOUNT	
	3	1	**3E-6773**	1	SEAL-O-RING	
	4	1	**3S-2093**	1	STRAP-CABLE	
	5	1	**7G-7053**	1	GROMMET	
	6	1	**8T-4121**	4	WASHER-HARD (11X21X2.5-MM THK)	
M	7	1	**8T-4186**	2	BOLT (M10X1.5X40-MM)	
	8	1	**9X-7287**	1	SEAL-O-RING	
	9	1	**135-8575**	4	BOLT AS	
	10	1	**156-2525**	1	VALVE-SHUTOFF	
	11	1	*163-4300*	1	ADAPTER AS	
		1	**3K-0360**	1	SEAL-O-RING	
		1	**377-9605**	1	ADAPTER	
	12	1	**164-3417**	1	COVER	
	13	1	**187-1679**	1	COVER	
	14	1	**238-5080**	1	SEAL-O-RING	
	15	1	*268-1531*	1	ELBOW AS	
		1	**2M-9780**	1	SEAL-O-RING	
		1	**268-1530**	1	ELBOW	
M	16	1	**344-5675**	2	NUT (M10X1.5-THD)	
Y	17	1	**380-0415**	1	PUMP GP-FUEL TRANSFER	114
	18	1	**418-6597**	1	SWITCH GP-LIQUID LEVEL (FUEL)	
		1	**102-8802**	1	KIT-RECEPTACLE (2-PIN)	
					(INCLUDES RECEPTACLE AS & WEDGE)	
		1	**9X-3401**	2	PIN-CONNECTOR (16-GA TO 18-GA)	
M	19	1	**479-2171**	12	BOLT AS	
Y	20	1	**501-4187**	1	VALVE GP-REFUELING (FOOT)	124
	21	1	*523-3954*	1	BOX GP-FUEL TRANSFER	
		1	**371-6432**	1	PAWL	
J		1	**465-6593**	1	LATCH AS	
		1	**523-3953**	1	COVER AS-BOX	
	22	1	**8T-0154**	4	CLAMP-HOSE	
E	23	1	**579-4881**		HOSE (300-CM)	
E	23A	1	**579-4881**		HOSE (37.2-CM)	

E - ORDER BY THE CENTIMETER
J - REQUIRES CORPORATE KEY
M - METRIC PART
Y - SEPARATE ILLUSTRATION

523-3955 **PUMP GP-FUEL TRANSFER (**contd.**)** **i07850331**

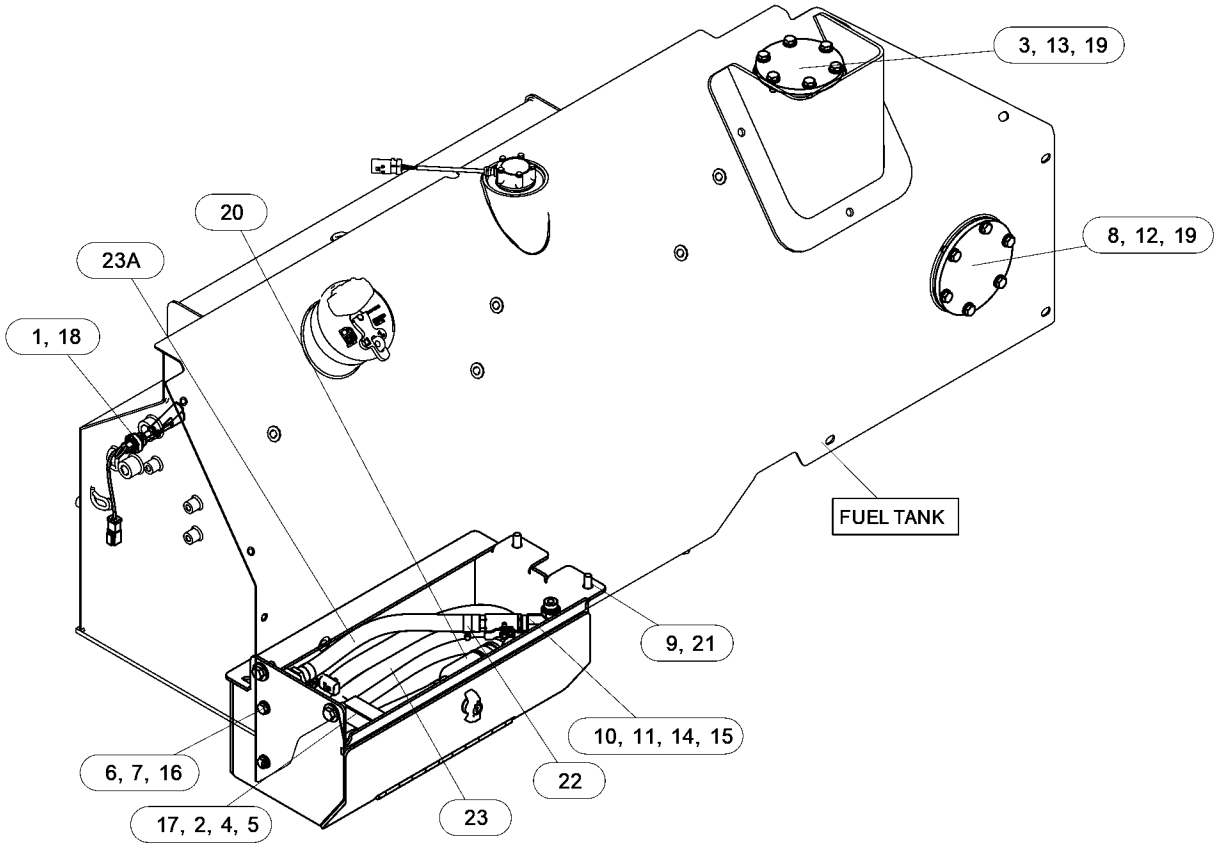

GRAPHIC #1 <END> g06454447

394-9639 RAIL GP-FUEL

S/N: 4501-UP
PART OF 569-0811 ENGINE AR-PRIMARY
AN ATTACHMENT

SMCS-1288 **i05489964**

NOTE	REF NO	GRAPHIC REF	PART NUMBER	QTY	PART NAME 1 2 3 4 5 6 (PRODUCT LEVEL)	SEE PAGE
M	1	1	**6I-0260**	3	BOLT (M8X1.25X25-MM)	
M	2	1	**099-6418**	1	NUT (M6X1-THD)	
	3	1	**206-1826**	2	BOLT	
Y	4	1	*370-5520*	1	LINES GP-FUEL INJECTION	110
	5	1	**375-0482**	4	CLAMP-PIPE	
	6	1	**375-0483**	2	INSERT-CLAMP	
	7	1	**375-2649**	1	RAIL GP-FUEL	
		1	**375-6988**	1	SENSOR (FUEL RAIL PRESSURE)	
		1	**398-6226**	1	VALVE (FUEL RAIL PRESSURE)	
	8	1	**393-2034**	1	LINE AS-FUEL	
	9	1	**393-2035**	1	LINE AS-FUEL	
Y	10	1	**394-0525**	1	LINES GP-FUEL INJECTION	111

M - METRIC PART
Y - SEPARATE ILLUSTRATION

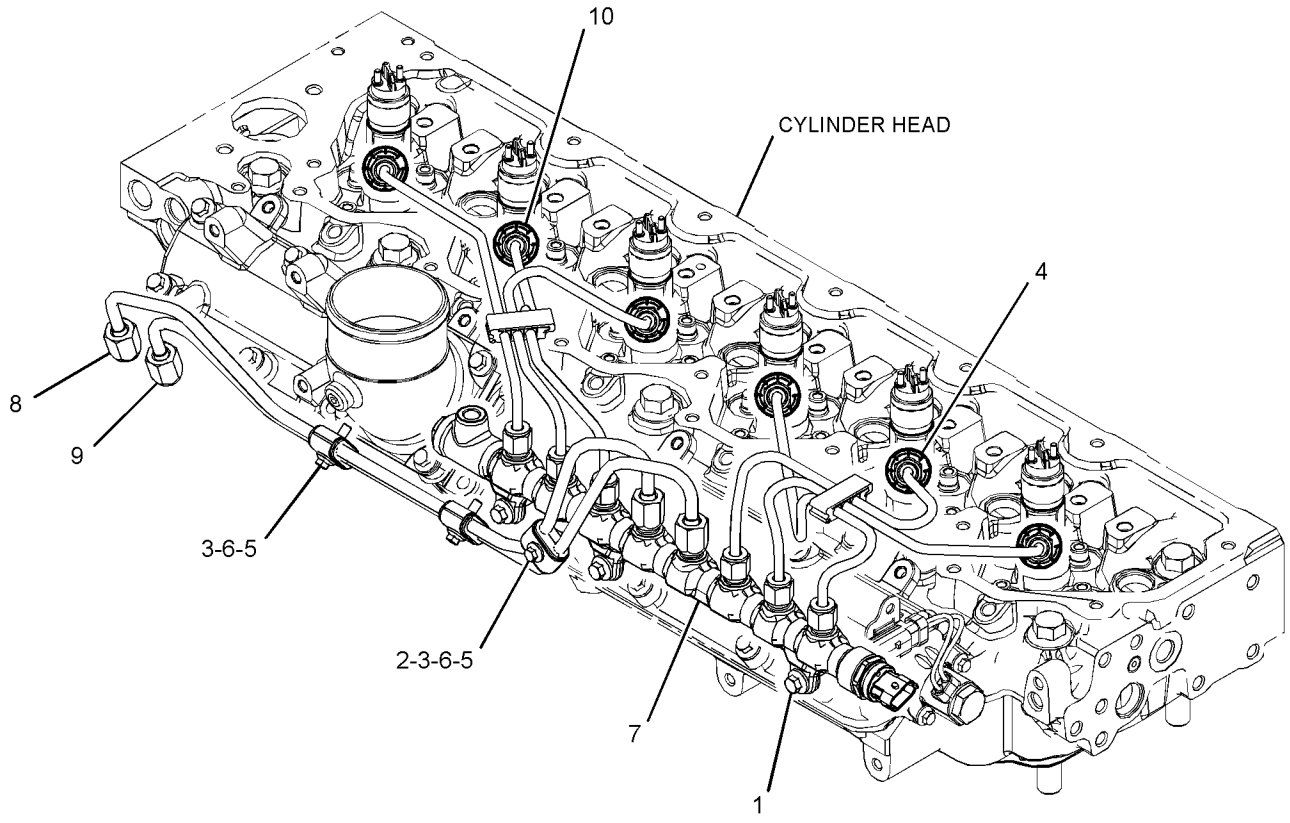

GRAPHIC #1 <END> g03380177

508-1609 TANK & MTG GP-FUEL—FAST FILL

S/N: Z2K1-UP; Z2N1-UP
320-L (84.5-US GAL)
PART OF 532-9851 DISTRIBUTION AR
AN ATTACHMENT

SMCS-1273 **i07805552**

NOTE	REF NO	GRAPHIC REF	PART NUMBER	QTY	PART NAME 1 2 3 4 5 6 (PRODUCT LEVEL)	SEE PAGE
M	1	1	**8T-4141**	4	BOLT (M20X2.5X70-MM)	
	2	1	**2M-9780**	1	SEAL-O-RING	
M	3	1	**6V-2314**	5	BOLT (M5X0.8X35-MM)	
	4	1	**8T-0328**	5	WASHER-HARD (5.5X10X1-MM THK)	
	5	1	**9D-8508**	1	GROMMET	
	6	1	**101-4639**	1	PLUG AS-DRAIN	
	7	1	**159-3727**	1	TUBE AS-DRAIN	
	8	1	**160-9192**	2	CLIP	
	9	1	**198-4781**	4	WASHER-HARD (22X40X10-MM THK)	
	10	1	**475-7048**	1	SENSOR AS-FUEL LEVEL	
		1	**9X-3401**	3	PIN-CONNECTOR (16-GA TO 18-GA)	
		1	**230-4014**	1	RECEPTACLE AS-CONNECTOR (3-PIN)	
		1	**363-4123**	1	GASKET	
Y	11	1	**508-1607**	1	TANK GP-FUEL	122

M - METRIC PART
Y - SEPARATE ILLUSTRATION

508-1609 **TANK & MTG GP-FUEL (**contd.**)** **i07805552**

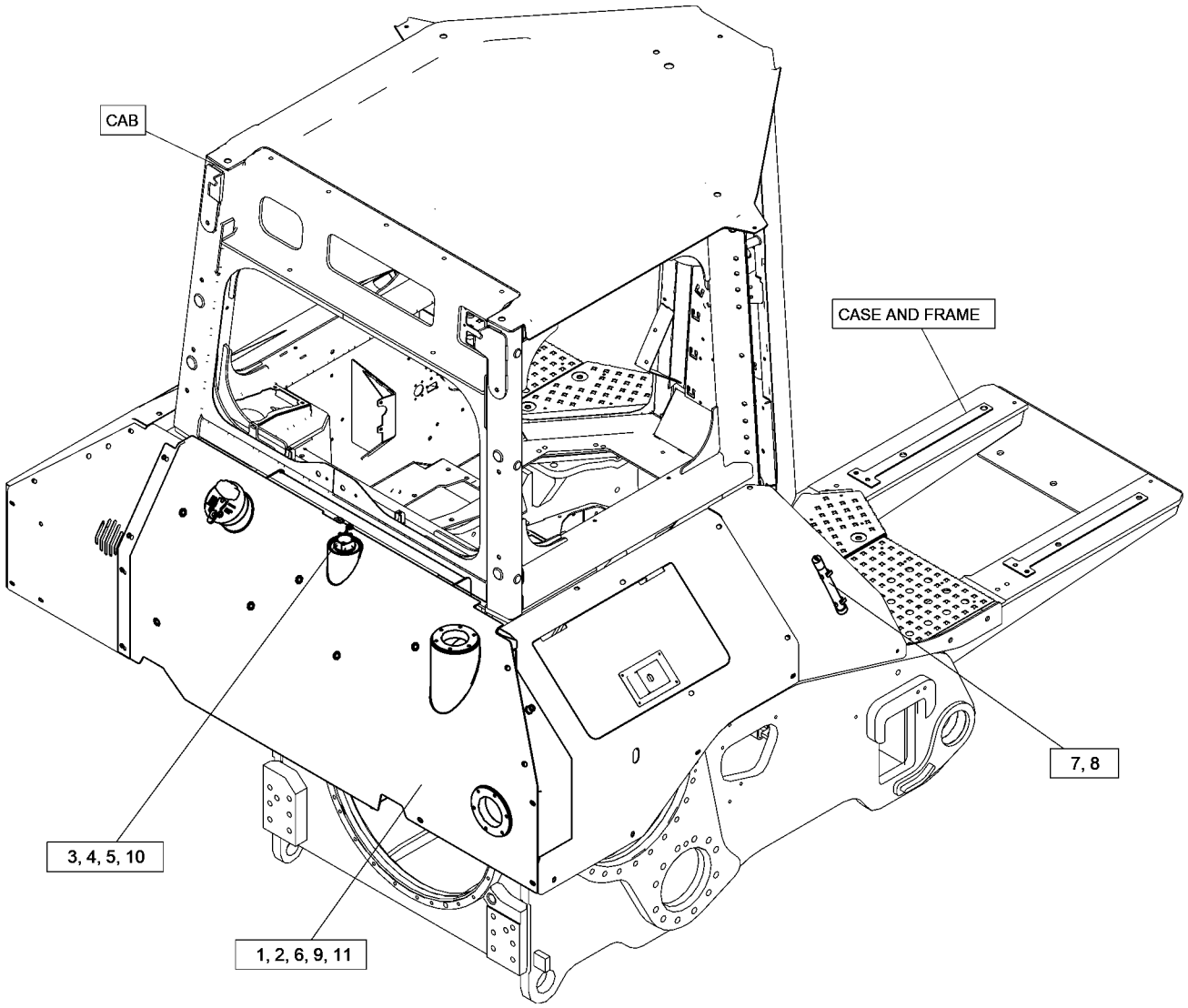

GRAPHIC #1 <END> g06441939

508-1610 TANK & MTG GP-FUEL

S/N: Z2K1-UP; Z2N1-UP
320-L (84.5-US GAL)
PART OF 532-9856 DISTRIBUTION AR
AN ATTACHMENT

SMCS-1273 **i07806171**

NOTE	REF NO	GRAPHIC REF	PART NUMBER	QTY	PART NAME 1 2 3 4 5 6 (PRODUCT LEVEL)	SEE PAGE
M	1	1	**8T-4185**	2	BOLT (M10X1.5X50-MM)	
M	2	1	**8T-4141**	4	BOLT (M20X2.5X70-MM)	
	3	1	**2M-9780**	1	SEAL-O-RING	
	4	1	**7X-7729**	2	WASHER (11X25X3-MM THK)	
	5	1	**8T-0328**	5	WASHER-HARD (5.5X10X1-MM THK)	
	6	1	**9D-8508**	1	GROMMET	
	7	1	**101-4639**	1	PLUG AS-DRAIN	
	8	1	**159-3727**	1	TUBE AS-DRAIN	
	9	1	**160-9192**	2	CLIP	
	10	1	**198-4781**	4	WASHER-HARD (22X40X10-MM THK)	
	11	1	**466-6951**	1	GUARD AS	
	12	1	**475-7048**	1	SENSOR AS-FUEL LEVEL	
		1	**9X-3401**	3	PIN-CONNECTOR (16-GA TO 18-GA)	
		1	**230-4014**	1	RECEPTACLE AS-CONNECTOR (3-PIN)	
		1	**363-4123**	1	GASKET	
Y	13	1	**508-1611**	1	TANK GP-FUEL	123
M	14	1	**6V-2314**	5	BOLT (M5X0.8X35-MM)	

M - METRIC PART
Y - SEPARATE ILLUSTRATION

508-1610 **TANK & MTG GP-FUEL (**contd.**)** **i07806171**

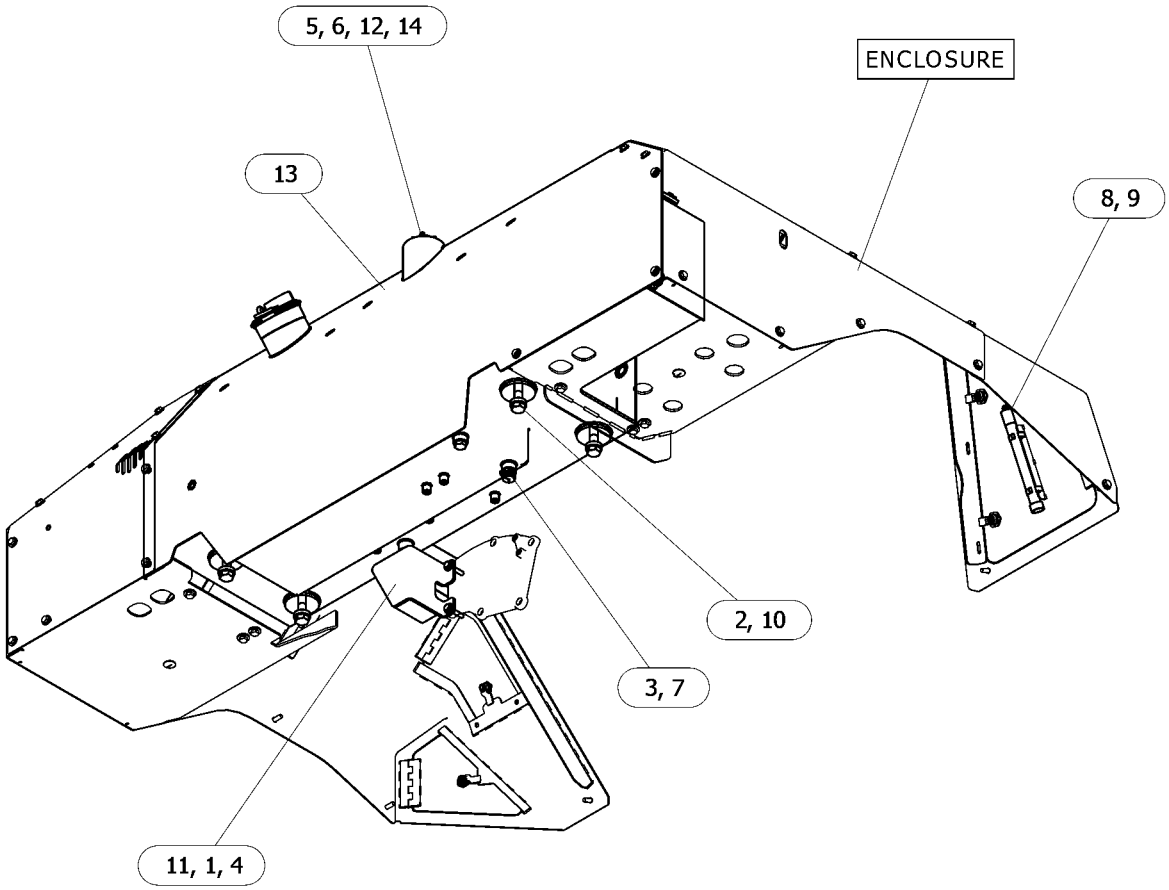

GRAPHIC #1 <END> g06441945

508-1607 TANK GP-FUEL—FAST FILL

S/N: Z2K1-UP; Z2N1-UP
320-L (84.5-US GAL)
PART OF 508-1609 TANK & MTG GP-FUEL
AN ATTACHMENT

SMCS-1273 **i07805641**

NOTE	REF NO	GRAPHIC REF	PART NUMBER	QTY	PART NAME 1 2 3 4 5 6 (PRODUCT LEVEL)	SEE PAGE
	1	1	**6V-5063**	1	SEAL-O-RING	
	2	1	**9P-7121**	1	STRAINER-FUEL	
	3	1	**9S-4183**	1	PLUG (1-1/16-12-THD)	
	4	1	*148-8410*	1	PLUG AS	
		1	**2M-9780**	1	SEAL-O-RING	
		1	**9S-4190**	1	PLUG-O-RING (7/8-14-THD)	
	5	1	**349-7059**	1	CAP AS-FUEL (LOCKABLE, VENTED)	
		1	**350-7735**	1	KIT-CAP FILTER (FUEL TANK)	
					(INCLUDES BODY BREATHER, GASKET BREATHER, SCREWS & WASHERS)	
	6	1	**508-1606**	1	TANK AS-FUEL	

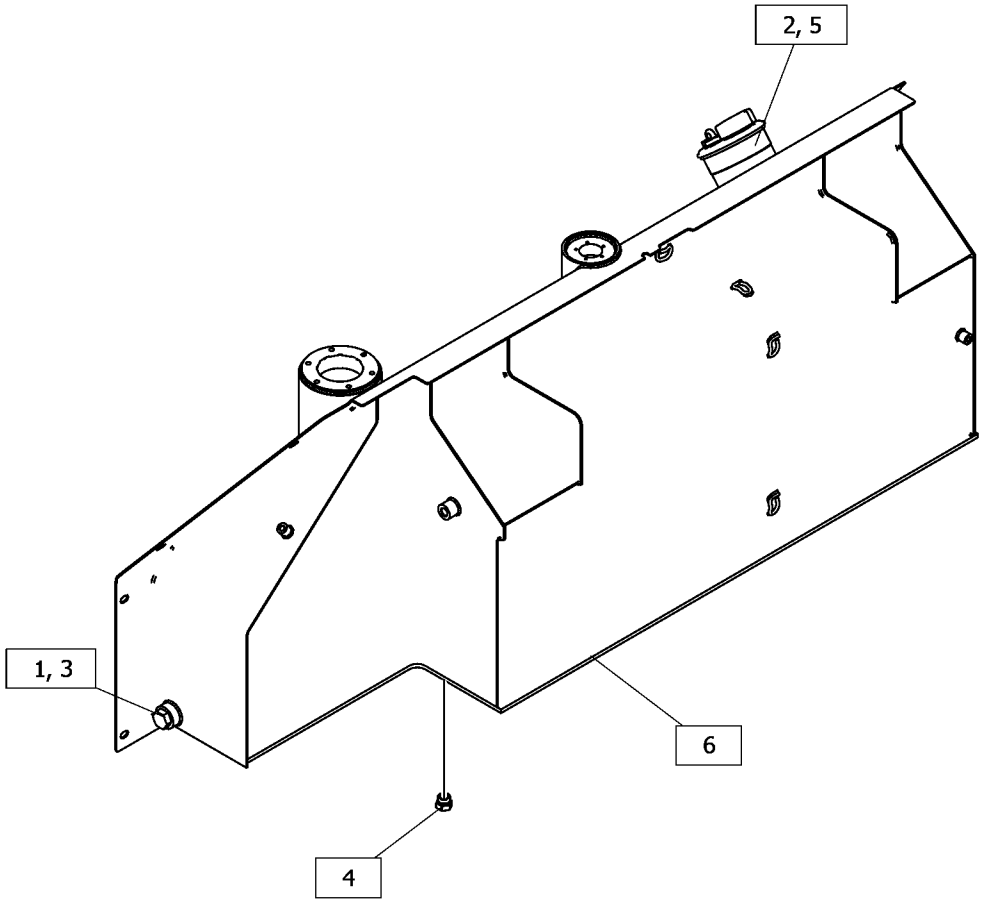

GRAPHIC #1 <END> g06442854

508-1611 TANK GP-FUEL

S/N: Z2K1-UP; Z2N1-UP
320-L (84.5-US GAL)
PART OF 508-1610 TANK & MTG GP-FUEL
AN ATTACHMENT

SMCS-1273 **i07806198**

NOTE	REF NO	GRAPHIC REF	PART NUMBER	QTY	PART NAME 1 2 3 4 5 6 (PRODUCT LEVEL)	SEE PAGE
	1	1	**6V-5063**	1	SEAL-O-RING	
M	2	1	**8T-4138**	4	BOLT (M6X1X20-MM)	
	3	1	**9P-7121**	1	STRAINER-FUEL	
	4	1	**9S-4183**	1	PLUG (1-1/16-12-THD)	
	5	1	**9X-8256**	4	WASHER (6.6X12X2-MM THK)	
	6	1	**033-6031**	1	SEAL-O-RING	
	7	1	*148-8410*	1	PLUG AS	
		1	**2M-9780**	1	SEAL-O-RING	
		1	**9S-4190**	1	PLUG-O-RING (7/8-14-THD)	
	8	1	**349-7059**	1	CAP AS-FUEL (LOCKABLE, VENTED)	
		1	**350-7735**	1	KIT-CAP FILTER (FUEL TANK)	
					(INCLUDES BREATHER, GASKET, SCREWS & WASHERS)	
	9	1	**494-1760**	1	COVER	

M - METRIC PART

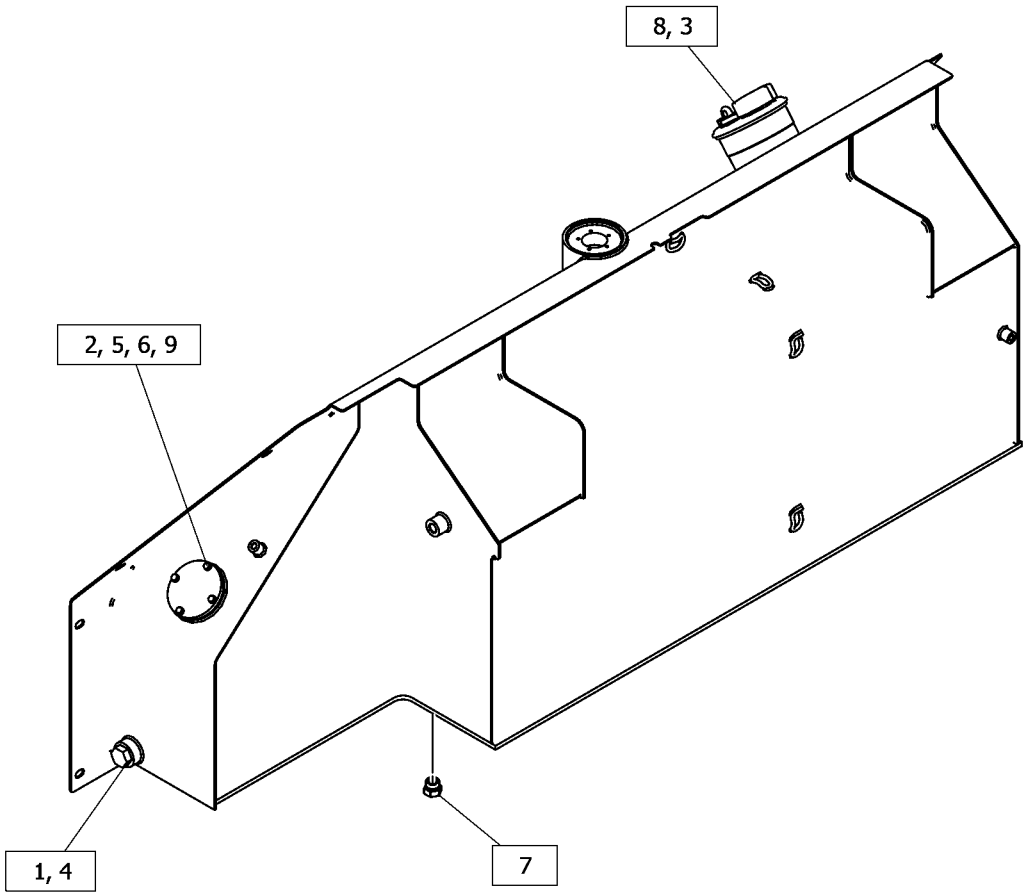

GRAPHIC #1 <END> g06442862

501-4187 VALVE GP-REFUELING

S/N: Z2K1-UP; Z2N1-UP
PART OF 523-3955 PUMP GP-FUEL TRANSFER
AN ATTACHMENT

SMCS-1256 **i07432449**

NOTE	REF NO	GRAPHIC REF	PART NUMBER	QTY	PART NAME 1 2 3 4 5 6 (PRODUCT LEVEL)	SEE PAGE
	1	1	**451-6724**	1	STRAINER (REFUELING)	
	2	1	**451-6726**	1	SPRING (STRAINER)	
	3	1	**451-6728**	1	SPRING	
	4	1	**501-4188**	1	KIT-VALVE (FOOT)	
					(INCLUDES CAP & SEAL)	
					PARTS SHOWN IN GRAPHIC(S) WITHOUT A REFERENCE NUMBER ARE NOT SERVICED SEPARATELY	

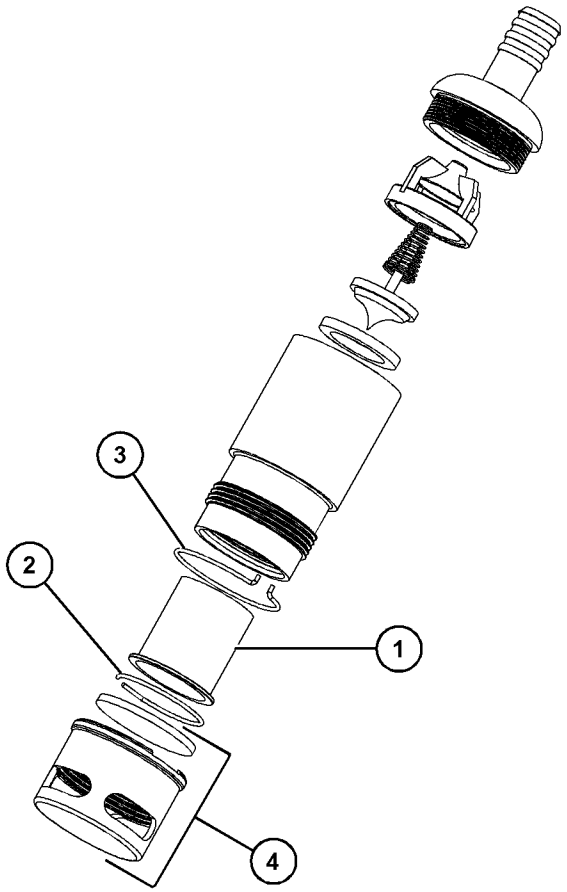

GRAPHIC #1 <END> g03700843

561-3001 ALTERNATOR GP-CHARGING

S/N: Z2K1-UP; Z2N1-UP
PART OF 566-1884 ALTERNATOR GP-CHARGING
AN ATTACHMENT

SMCS-1405 **i07831625**

NOTE	REF NO	GRAPHIC REF	PART NUMBER	QTY	PART NAME 1 2 3 4 5 6 (PRODUCT LEVEL)	SEE PAGE
	1	1	**228-9656**	1	FRAME AS-DRIVE END	
	2	1	**5S-7349**	1	BOLT (1/4-20X0.5-IN)	
	3	1	**185-2639**	1	FAN AS (ALTERNATOR AIR)	
	4	1	**1H-3244**	1	LOCKWASHER	
	5	1	**228-9655**	1	FRAME AS-ALTERNATOR	
	6	1	**2K-4821**	1	LOCKNUT (5/8-18-THD)	
	7	1	**5P-8247**	1	WASHER-HARD (17X32X3.5-MM THK)	
	8	1	**228-9657**	1	COVER AS	
	9	1	**8T-4205**	1	WASHER-HARD (7.2X14.5X2-MM THK)	
	10	1	**185-2647**	1	GROMMET	
	11	1	**9L-6770**	1	CAP-DUST	
	12	1	**205-0626**	1	STATOR AS-ALTERNATOR	
	13	1	**185-2638**	2	COLLAR	
	14	1	**185-2654**	1	PLATE	
	15	1	**185-2650**	1	ROTOR AS	
	16	1	**185-2644**	1	COIL AS	
	17	1	**561-3457**	1	REGULATOR AS	
	18	1	**6V-8189**	1	NUT (5/16-18-THD)	
	19	1	**8T-4224**	1	WASHER-HARD (8.8X16X2-MM THK)	
	20	1	**3F-9556**	1	LOCKWASHER	
	21	1	**185-2655**	1	KIT-BEARING (ALTERNATOR)	
					(INCLUDES BEARINGS)	
	22	1	**199-8436**	1	KIT-TERMINAL (ALTERNATOR AIR)	
					(INCLUDES HOLDER AS, PLATE, INSULATOR, PIN, BOLT KIT, GROMMET, & NUT)	
	23	1	**199-7891**	1	KIT-TERMINAL (ALTERNATOR AIR)	
					(INCLUDES INSULATORS, WASHERS, & NUTS)	
	24	1	**185-2658**	1	KIT-HARDWARE (ALTERNATOR AIR)	
					(INCLUDES BOLTS & BOLT KITS)	

561-3001 **ALTERNATOR GP-CHARGING (**contd.**)** **i07831625**

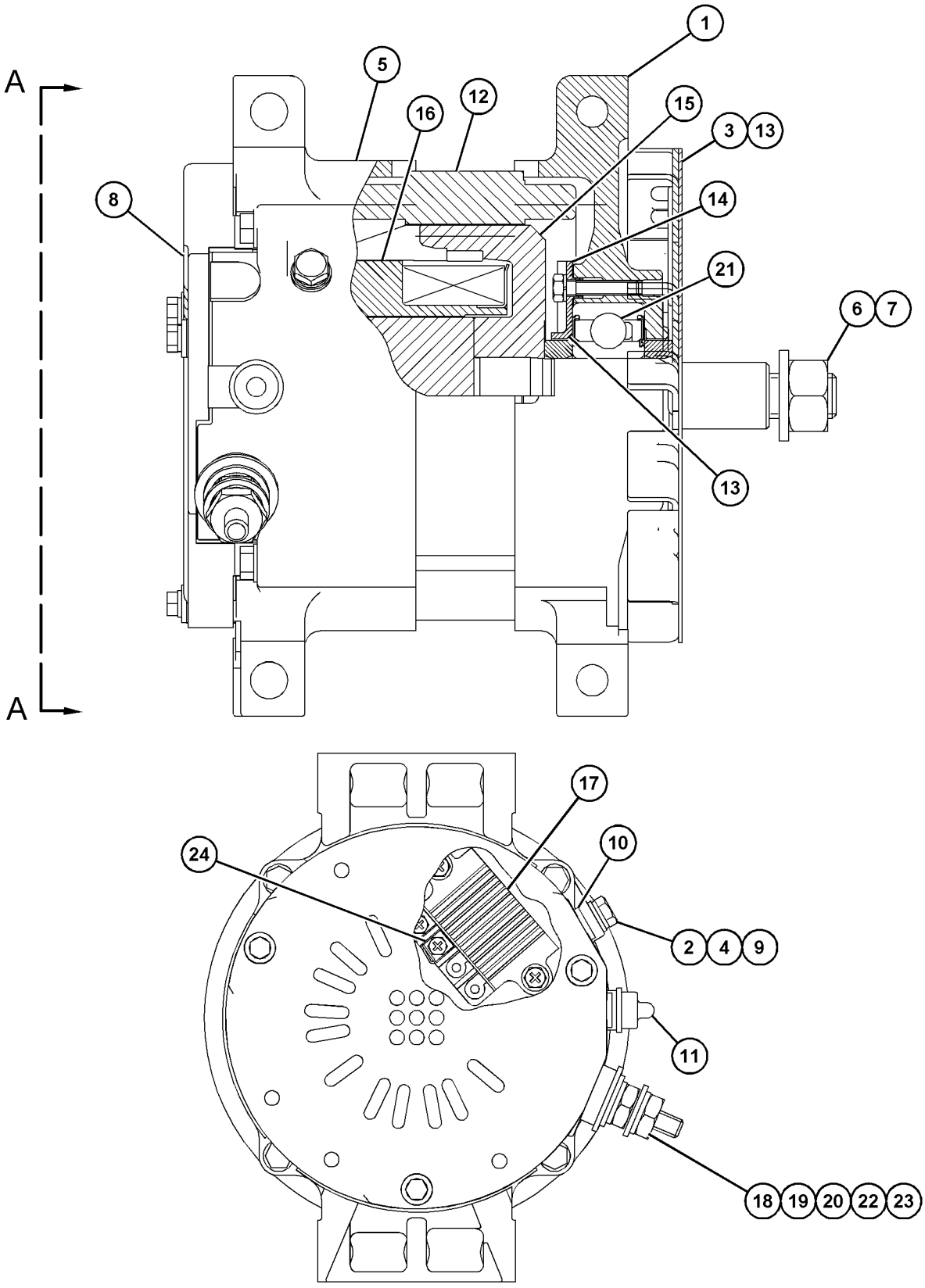

VIEW A-A

GRAPHIC #1 <END> g06399301

566-1884 ALTERNATOR GP-CHARGING

S/N: Z2K1-UP; Z2N1-UP
PART OF 559-5994 INSTALLATION AR-ENGINE
AN ATTACHMENT

SMCS-1405 **i07818508**

NOTE	REF NO	GRAPHIC REF	PART NUMBER	QTY	PART NAME 1 2 3 4 5 6 (PRODUCT LEVEL)	SEE PAGE
	1	1	**337-6324**	1	PULLEY (8-GROOVE)	
	2	1	**350-8742**	1	BELT-SERPENTINE (ALTERNATOR)	
Y	3	1	**561-3001**	1	ALTERNATOR GP-CHARGING (24-VOLT, 95-AMPERE)	125

Y - SEPARATE ILLUSTRATION

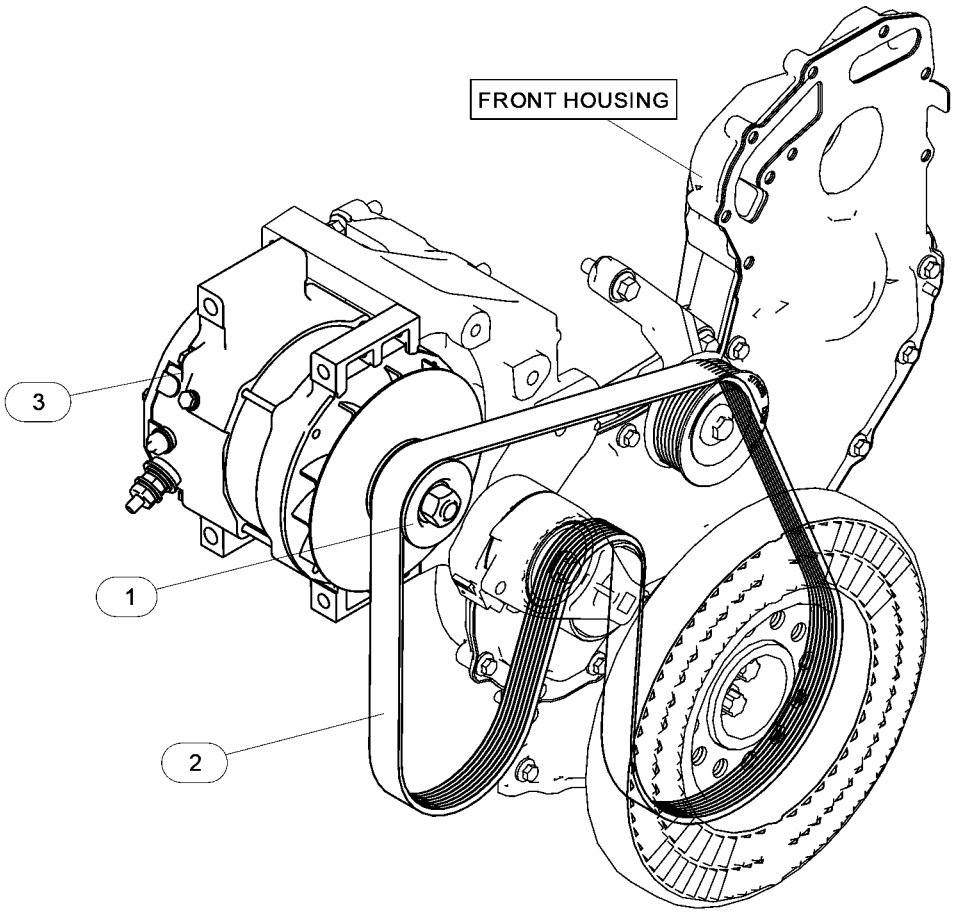

GRAPHIC #1 <END> g06451280

515-4400 BATTERY & WIRING GP

S/N: Z2K1-UP; Z2N1-UP
HEAVY-DUTY
PART OF 575-9704 COLD WEATHER AR, 550-5562 STARTING AR-ELECTRIC
AN ATTACHMENT

SMCS-1401, 1402, 1408 **i07818623**

NOTE	REF NO	GRAPHIC REF	PART NUMBER	QTY	PART NAME 1 2 3 4 5 6 (PRODUCT LEVEL)	SEE PAGE
M	1	1	**8T-4179**	1	BOLT (M12X1.75X20-MM)	
M	2	1	**8T-4189**	2	BOLT (M8X1.25X20-MM)	
	3	1	**153-5710**	2	BATTERY GP (12-VOLT, MAINTENANCE FREE, WET)	
					(EACH INCLUDES)	
		1	**123-1373**	6	CAP AS-FILLER (7/8-9-THD)	
		1	**461-5232**	6	CAP AS-FILLER	
	4	1	**306-8526**	2	GROMMET	
	5	1	**321-1291**	1	HOLD-DOWN AS	
M	6	1	**340-3690**	2	STUD (M10X1.5X295-MM)	
M	7	1	**344-5675**	2	NUT (M10X1.5-THD)	
	8	1	**399-2842**	1	CABLE AS	
		1	**8C-5918**	1	TERMINAL AS-BATTERY (NEGATIVE)	
		1	**8T-9756**	1	TERMINAL AS-BATTERY (POSITIVE)	
					(EACH TERMINAL AS INCLUDES)	
		1	**1M-6119**	1	BOLT (5/16-18X1.375-IN)	
		1	**1M-6120**	1	NUT (5/16-18-THD)	
		1	**9G-0002**	1	COVER AS-TERMINAL (RED)	
		1	**9G-0005**	1	COVER AS-TERMINAL (BLACK)	
					(EACH COVER AS INCLUDES)	
		1	**8L-8413**	1	STRAP-CABLE (WHITE)	
E		1	**159-8049**		CABLE (00-GA, RED) (17-CM)	
	9	1	**3S-2093**	6	STRAP-CABLE	
	10	1	**428-8308**	1	PLATE	
M	11	1	**479-2171**	1	BOLT AS	
	12	1	**518-1367**	1	CABLE AS	
		1	**3S-6050**	1	TERMINAL AS-BATTERY (NEGATIVE)	
		1	**1M-6119**	1	BOLT (5/16-18X1.375-IN)	
		1	**1M-6120**	1	NUT (5/16-18-THD)	
		1	**7N-5274**	1	COVER AS-TERMINAL (BLACK)	
		1	**8L-8413**	1	STRAP-CABLE (WHITE)	
E		1	**159-8050**		CABLE (00-GA, BLACK) (94-CM)	
		1	**276-7278**	1	TERMINAL-RING	
		1	**299-6083**	1	COVER-TERMINAL	
	13	1	**581-3703**	1	CABLE AS	
		1	**1S-7251**	1	TERMINAL-CABLE (00-GA, 1/2-IN SCREW)	
		1	**3S-6049**	1	TERMINAL AS-BATTERY (POSITIVE)	
		1	**1M-6119**	1	BOLT (5/16-18X1.375-IN)	
		1	**1M-6120**	1	NUT (5/16-18-THD)	
		1	**8N-0869**	1	COVER-TERMINAL (RED)	
		1	**8N-1725**	1	COVER AS-TERMINAL (RED)	
		1	**8L-8413**	1	STRAP-CABLE (WHITE)	
E		1	**159-8049**		CABLE (00-GA, RED) (64-CM)	
M	14	1	**8T-0389**	2	LOCKNUT (M10X1.5-THD)	
	15	1	**8T-1889**	2	CLIP (SLOT)	
	16	1	**8T-1890**	2	CLIP (TAB)	
	17	1	**8T-4121**	2	WASHER-HARD (11X21X2.5-MM THK)	

515-4400 **BATTERY & WIRING GP (**contd.**)** **i07818623**

NOTE	REF NO	GRAPHIC REF	PART NUMBER	QTY	PART NAME 1 2 3 4 5 6 (PRODUCT LEVEL)	SEE PAGE
	18	1	**8T-4223**	1	WASHER-HARD (13.5X25.5X3-MM THK)	
	19	1	**8T-4224**	2	WASHER-HARD (8.8X16X2-MM THK)	

E - ORDER BY THE CENTIMETER
M - METRIC PART

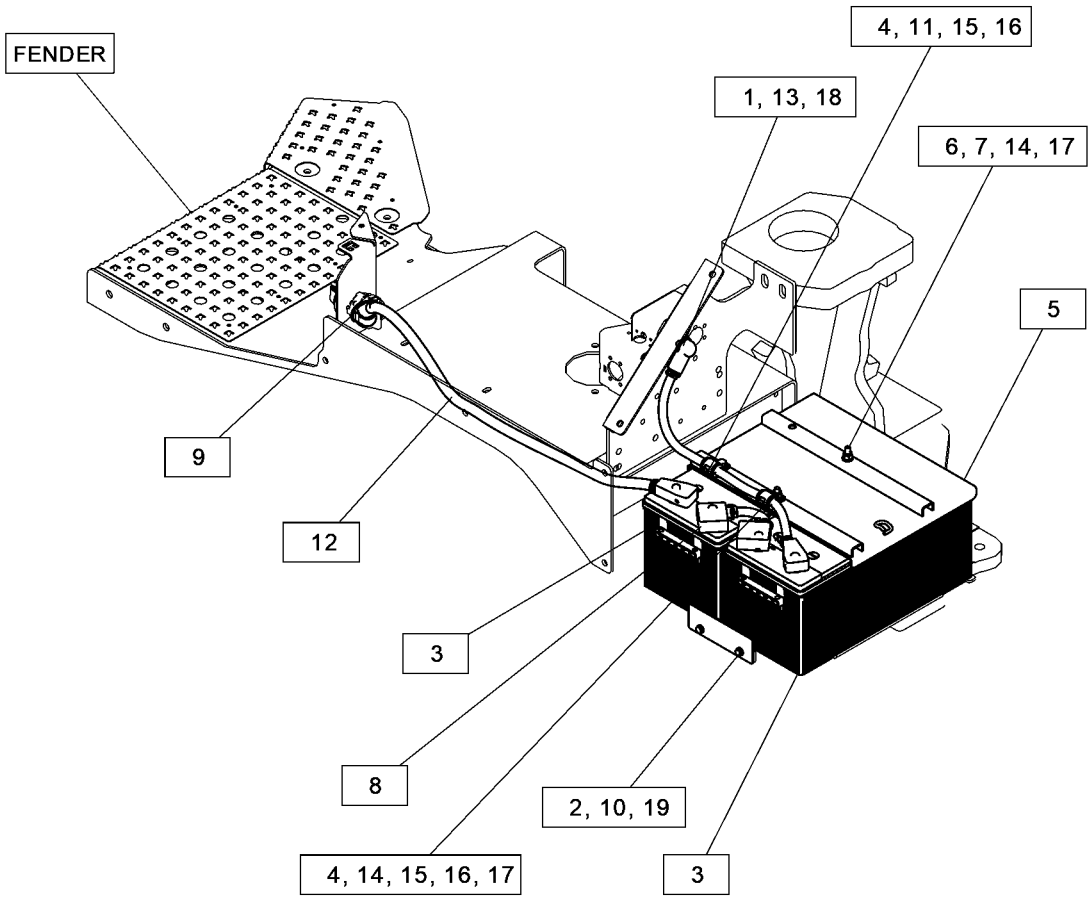

GRAPHIC #1 <END> g06447360

515-4415 BATTERY & WIRING GP

S/N: Z2K1-UP; Z2N1-UP
PART OF 550-5561 STARTING AR-ELECTRIC
AN ATTACHMENT

SMCS-1401, 1402, 1408 **i07820083**

NOTE	REF NO	GRAPHIC REF	PART NUMBER	QTY	PART NAME 1 2 3 4 5 6 (PRODUCT LEVEL)	SEE PAGE
M	1	1	**8T-4179**	1	BOLT (M12X1.75X20-MM)	
M	2	1	**8T-4189**	2	BOLT (M8X1.25X20-MM)	
	3	1	**195-1117**	2	BRACKET	
	4	1	**252-6922**	1	COVER	
M	5	1	**340-3690**	1	STUD (M10X1.5X295-MM)	
M	6	1	**344-5675**	1	NUT (M10X1.5-THD)	
	7	1	**3S-2093**	6	STRAP-CABLE	
	8	1	**422-5316**	1	CABLE AS	
		1	**8C-5918**	1	TERMINAL AS-BATTERY (NEGATIVE)	
		1	**1M-6119**	1	BOLT (5/16-18X1.375-IN)	
		1	**1M-6120**	1	NUT (5/16-18-THD)	
		1	**8T-9756**	1	TERMINAL AS-BATTERY (POSITIVE)	
		1	**1M-6119**	1	BOLT (5/16-18X1.375-IN)	
		1	**1M-6120**	1	NUT (5/16-18-THD)	
		1	**9G-0002**	1	COVER AS-TERMINAL (RED)	
		1	**8L-8413**	1	STRAP-CABLE (WHITE)	
		1	**9G-0005**	1	COVER AS-TERMINAL (BLACK)	
		1	**8L-8413**	1	STRAP-CABLE (WHITE)	
E		1	**159-8049**		CABLE (00-GA, RED) (32-CM)	
M	9	1	**479-2171**	1	BOLT AS	
	10	1	**507-8880**	1	CLIP	
	11	1	**528-7313**	1	CABLE AS	
		1	**3S-6050**	1	TERMINAL AS-BATTERY (NEGATIVE)	
		1	**1M-6119**	1	BOLT (5/16-18X1.375-IN)	
		1	**1M-6120**	1	NUT (5/16-18-THD)	
		1	**7N-5274**	1	COVER AS-TERMINAL (BLACK)	
		1	**8L-8413**	1	STRAP-CABLE (WHITE)	
E		1	**159-8050**		CABLE (00-GA, BLACK) (121-CM)	
		1	**276-7278**	1	TERMINAL-RING	
		1	**299-6083**	1	COVER-TERMINAL	
	12	1	**581-3708**	1	CABLE AS	
		1	**1S-7251**	1	TERMINAL-CABLE (00-GA, 1/2-IN SCREW)	
		1	**3S-6049**	1	TERMINAL AS-BATTERY (POSITIVE)	
		1	**1M-6119**	1	BOLT (5/16-18X1.375-IN)	
		1	**1M-6120**	1	NUT (5/16-18-THD)	
		1	**8N-0869**	1	COVER-TERMINAL (RED)	
		1	**8N-1725**	1	COVER AS-TERMINAL (RED)	
		1	**8L-8413**	1	STRAP-CABLE (WHITE)	
E		1	**159-8049**		CABLE (00-GA, RED) (35-CM)	
	13	1	**5P-4116**	2	WASHER-HARD (8.8X20.5X2-MM THK)	
	14	1	**6W-6005**	1	HOLD-DOWN-BATTERY	
M	15	1	**8T-0389**	1	LOCKNUT (M10X1.5-THD)	
	16	1	**8T-4223**	1	WASHER-HARD (13.5X25.5X3-MM THK)	
	17	1	**8T-4226**	2	WASHER-PLATED (10.5X45X3-MM THK)	
	18	1	**9X-3404**	2	BATTERY GP (12-VOLT, MAINTENANCE FREE, WET)	

515-4415 **BATTERY & WIRING GP (**contd.**)** **i07820083**

NOTE	REF NO	GRAPHIC REF	PART NUMBER	QTY	PART NAME 1 2 3 4 5 6 (PRODUCT LEVEL)	SEE PAGE
					(EACH INCLUDES)	
		1	**461-5232**	6	CAP AS-FILLER	

E - ORDER BY THE CENTIMETER
M - METRIC PART

515-4415 **BATTERY & WIRING GP** (contd.) **i07820083**

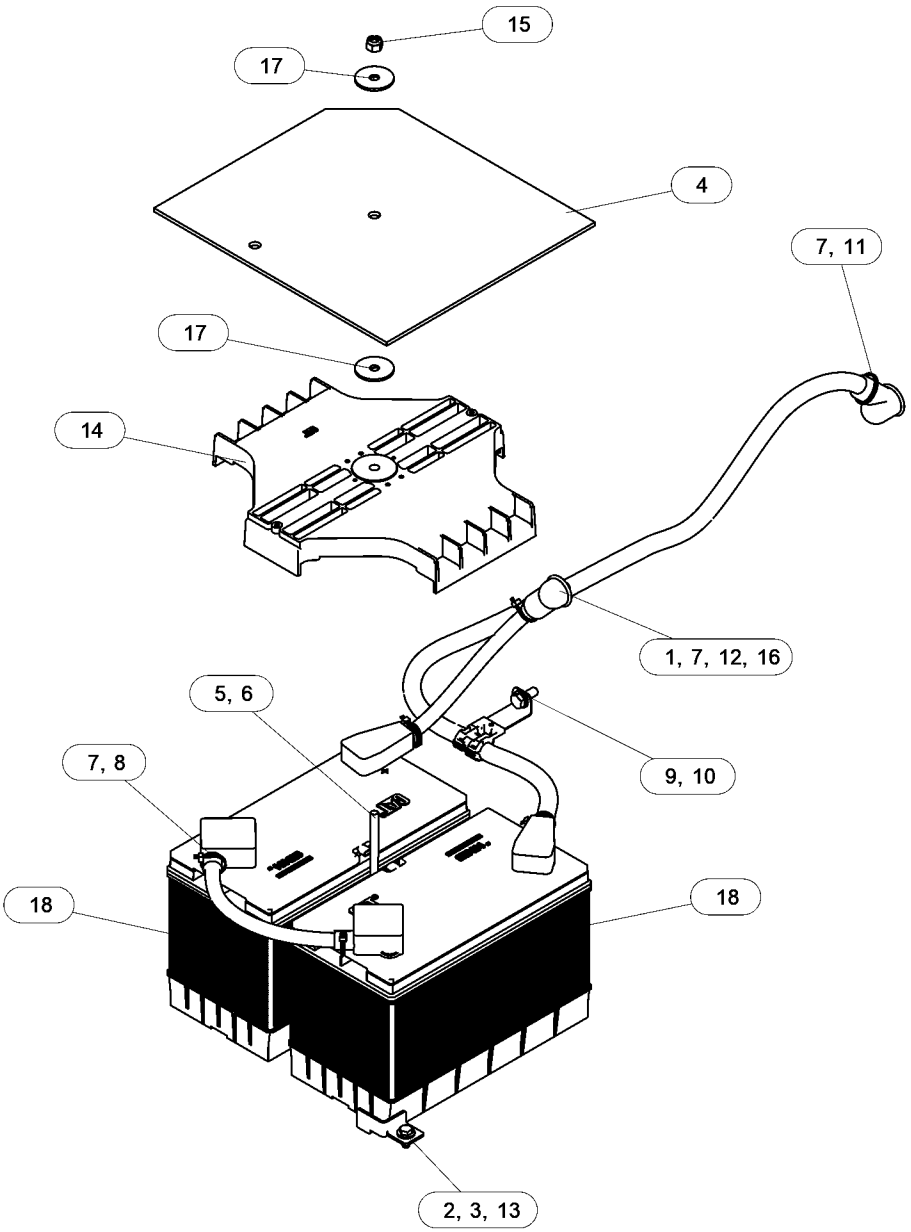

GRAPHIC #1 <END> g06449119

509-8118 BOX GP-JUNCTION

S/N: Z2K1-UP; Z2N1-UP
PART OF 524-9008 WIRING GP-GRADE CONTROL
AN ATTACHMENT

SMCS-1408 **i07828350**

NOTE	REF NO	GRAPHIC REF	PART NUMBER	QTY	PART NAME 1 2 3 4 5 6 (PRODUCT LEVEL)	SEE PAGE
	1	1	**509-8119**	1	BRACKET AS	
	2	1	**509-8120**	1	COVER	
M	3	1	**8T-4186**	4	BOLT (M10X1.5X40-MM)	
	4	1	**8C-3206**	2	FLANGE-HALF	
	5	1	**8T-4121**	4	WASHER-HARD (11X21X2.5-MM THK)	
M	6	1	**479-2171**	7	BOLT AS	

M - METRIC PART

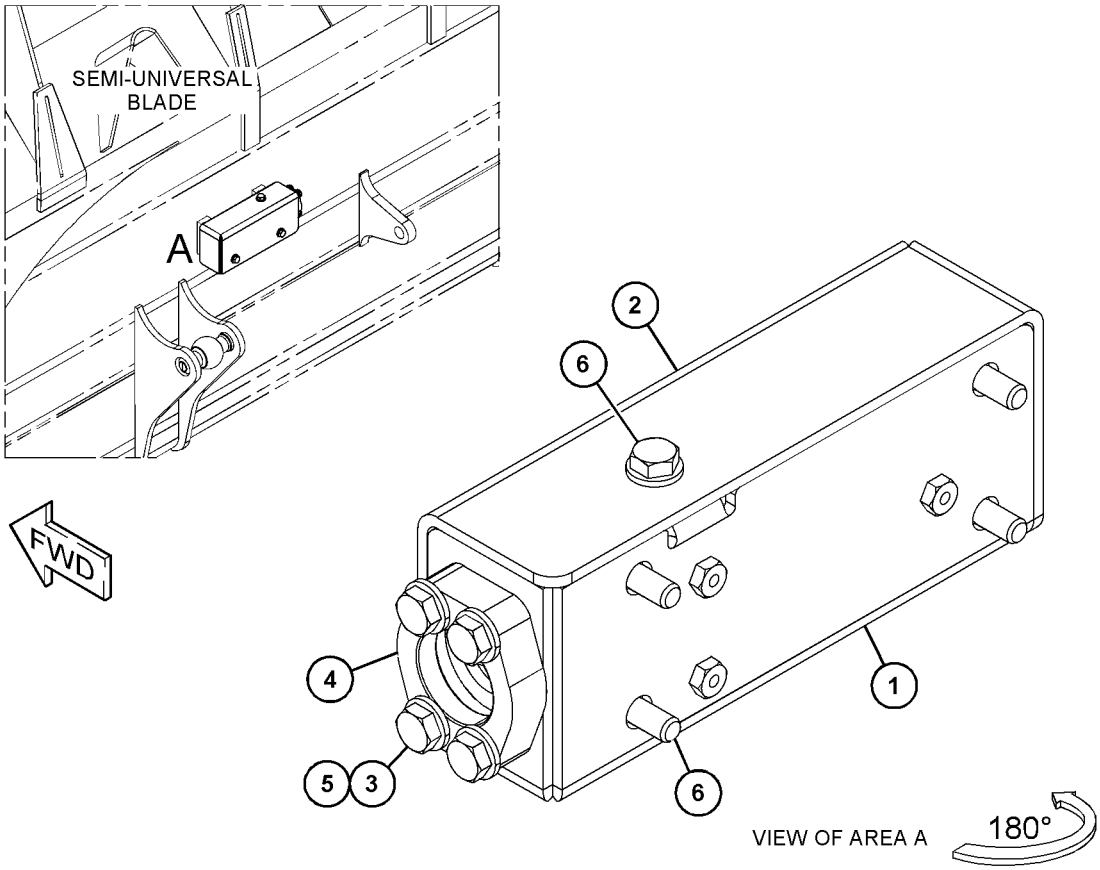

GRAPHIC #1 <END> g06355903

433-6938 BRACKET GP-MOUNTING

S/N: 4501-UP

PART OF 569-0811 ENGINE AR-PRIMARY

AN ATTACHMENT

SMCS-1408, 7010 **i05892195**

NOTE	REF NO	GRAPHIC REF	PART NUMBER	QTY	PART NAME 1 2 3 4 5 6 (PRODUCT LEVEL)	SEE PAGE
M	1	1	**105-2740**	3	BOLT (M8X1.25X40-MM)	
M	2	1	**124-3815**	3	BOLT (M8X1.25X16-MM)	
	3	1	**428-7042**	1	BRACKET	

M - METRIC PART

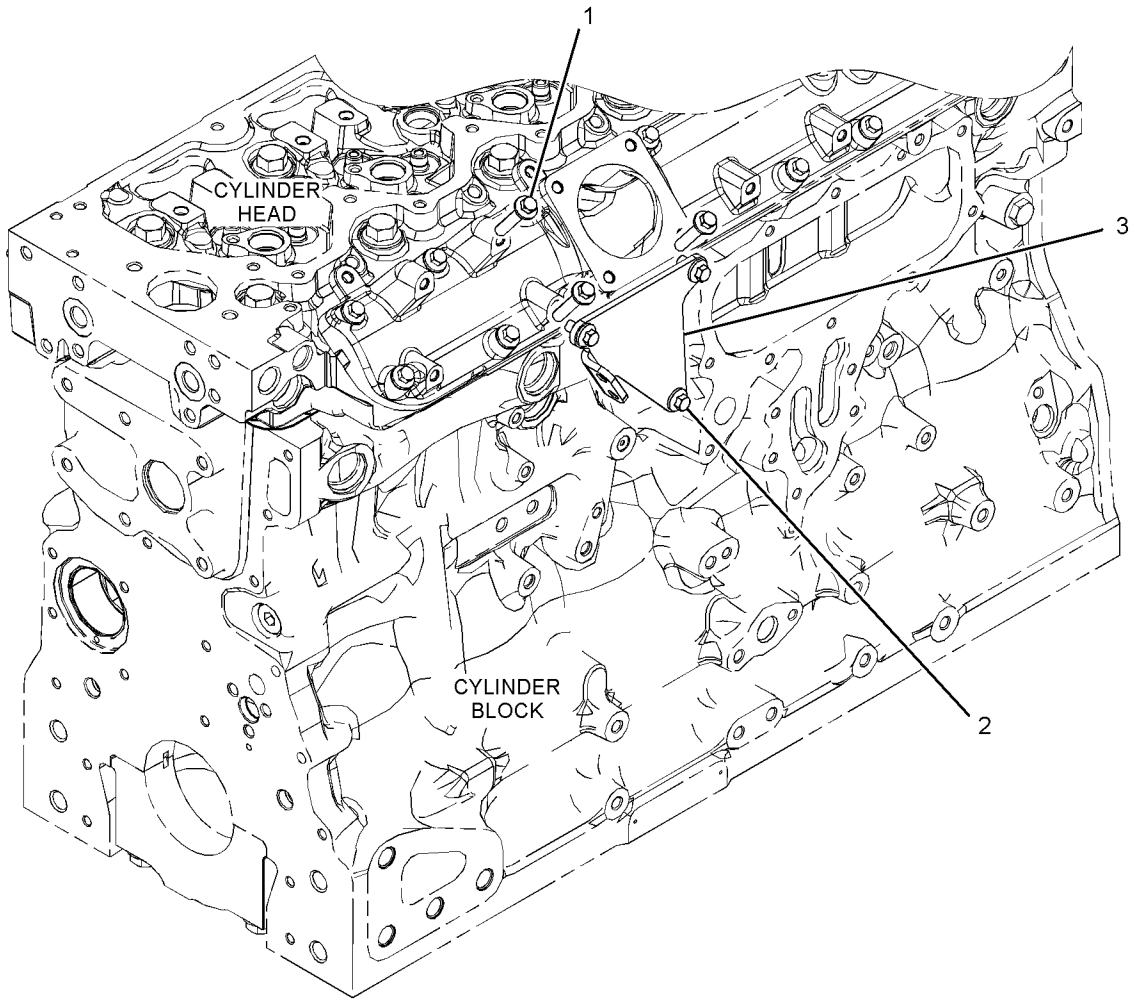

GRAPHIC #1 <END> g03578440

523-3946 BRACKET GP-MOUNTING

S/N: Z2K1-UP
PART OF 523-3945, 528-6202 LADDER GP
AN ATTACHMENT

SMCS-1408, 7010

i07786870

NOTE	REF NO	GRAPHIC REF	PART NUMBER	QTY	PART NAME 1 2 3 4 5 6 (PRODUCT LEVEL)	SEE PAGE
	1	1	**2M-5795**	2	PIN-CLEVIS	
	2	1	**3B-4607**	2	PIN-COTTER	
M	3	1	**3T-0852**	2	LOCKNUT (M8X1.25-THD)	
	4	1	**9M-3835**	2	LATCH-RUBBER	
	5	1	**132-3421**	2	BUMPER	
	6	1	**570-7534**	1	BRACKET AS	

M - METRIC PART

523-3946 **BRACKET GP-MOUNTING (**contd.**)** **i07786870**

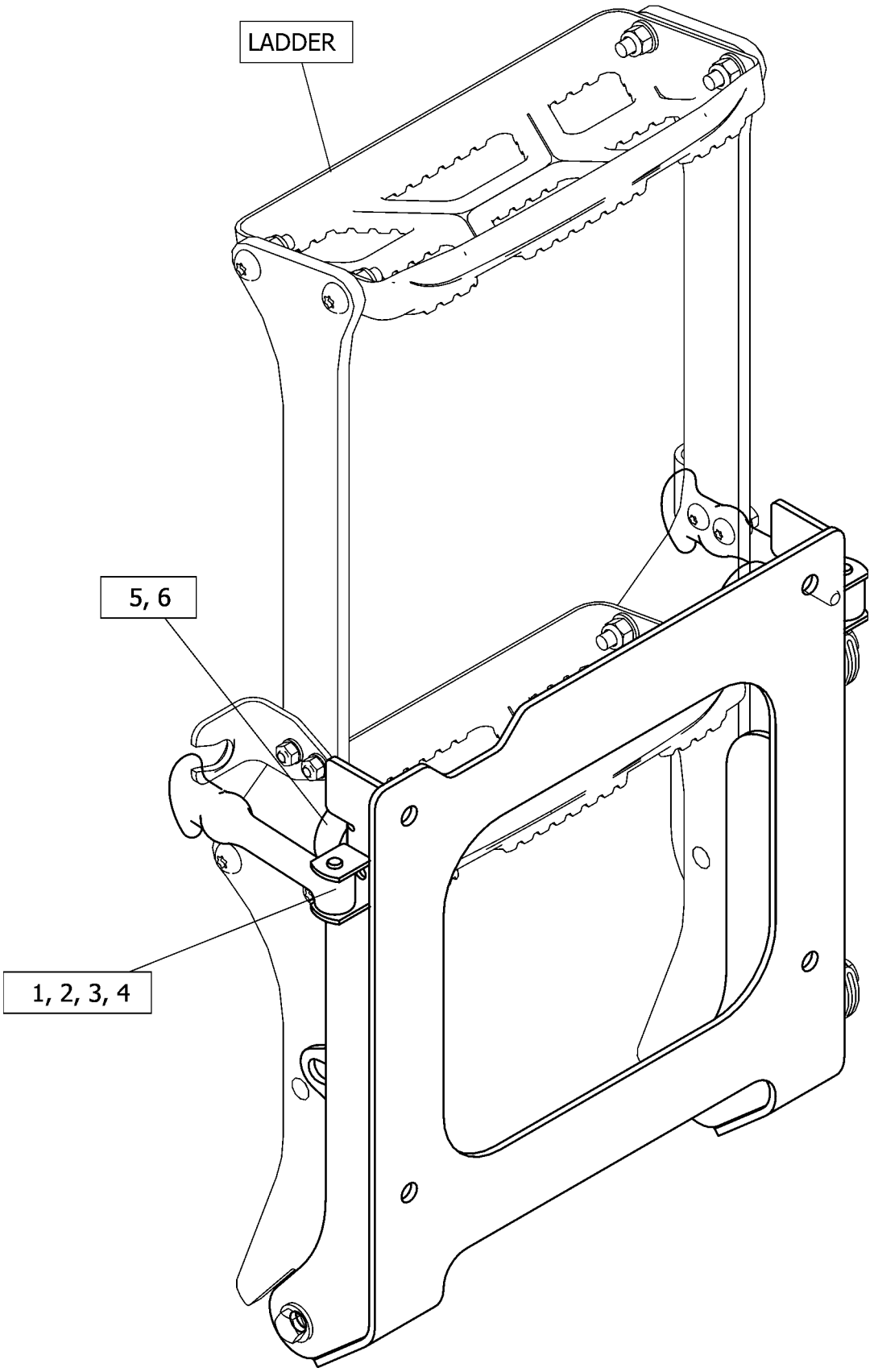

GRAPHIC #1 <END> g06438796

559-1512 BRACKET GP-MOUNTING

S/N: Z2K1-UP; Z2N1-UP
PART OF 559-5990 CHASSIS AR
AN ATTACHMENT

SMCS-1408, 7010

i07817517

NOTE	REF NO	GRAPHIC REF	PART NUMBER	QTY	PART NAME 1 2 3 4 5 6 (PRODUCT LEVEL)	SEE PAGE
	1	1	**5P-1076**	2	WASHER-HARD (13.5X30X4-MM THK)	
M	2	1	**8T-6868**	2	BOLT (M12X1.75X80-MM)	
	3	1	**561-8783**	1	BRACKET GP-MOUNTING	
		1	**2M-5795**	2	PIN-CLEVIS	
		1	**3B-4607**	2	PIN-COTTER	
		1	**9M-3835**	2	LATCH-RUBBER	
		1	**561-8751**	1	FILM-IDENTIFICATION (SHOVEL)	
	4	1	**562-1927**	2	BOLT AS	
	5	1	**563-0549**	2	SPACER (13.8X30X50-MM THK)	
	6	1	**577-2233**	1	PLATE AS	
M		1	**8T-3490**	2	NUT-WELD (M10X1.5-THD)	

M - METRIC PART

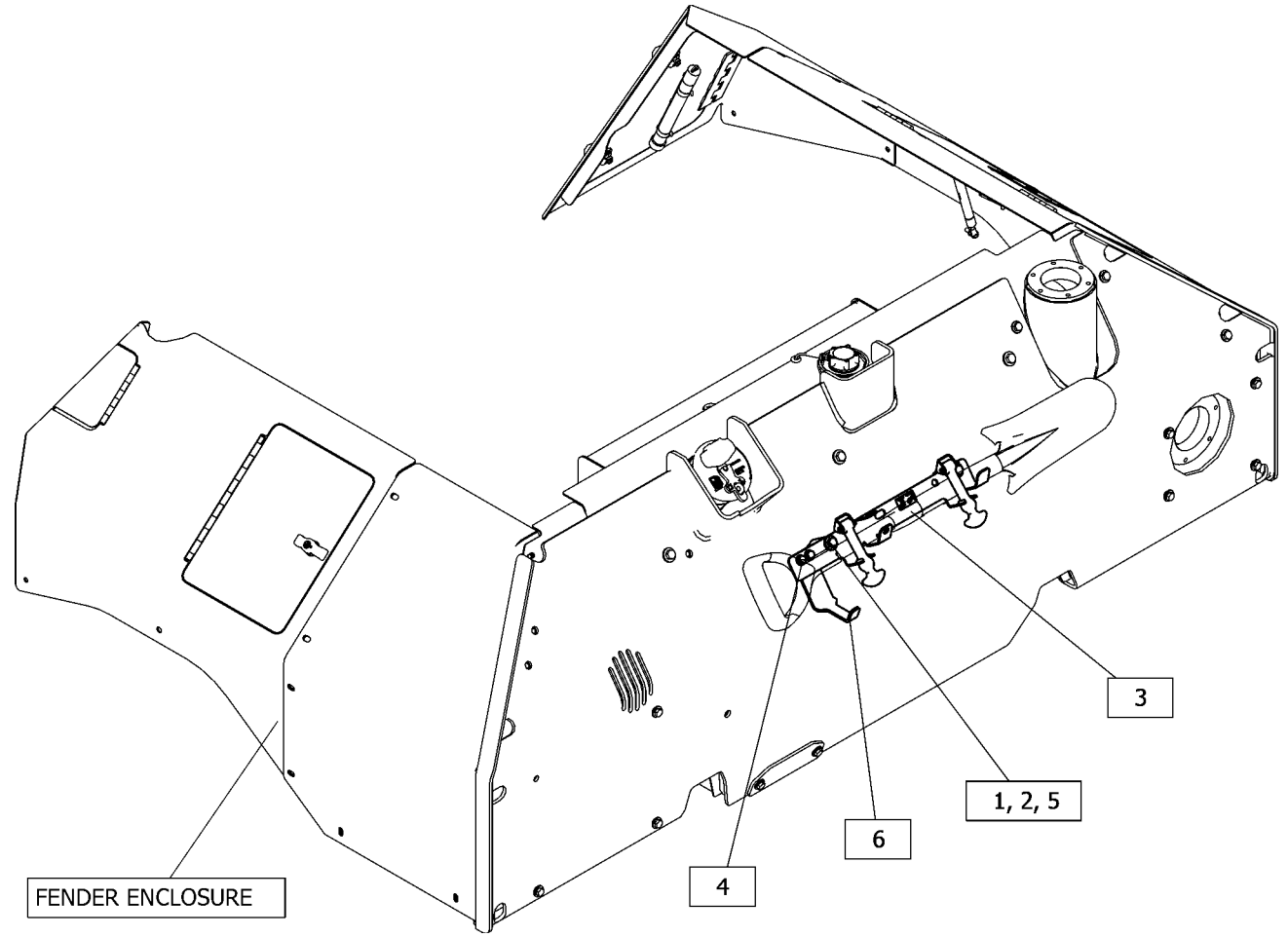

GRAPHIC #1 <END> g06450830

565-6671 BRACKET GP-MOUNTING

S/N: Z2K1-UP; Z2N1-UP
PART OF 559-5990 CHASSIS AR
AN ATTACHMENT

SMCS-1408, 7010

i07817526

NOTE	REF NO	GRAPHIC REF	PART NUMBER	QTY	PART NAME 1 2 3 4 5 6 (PRODUCT LEVEL)	SEE PAGE
	1	1	**8T-4121**	2	WASHER-HARD (11X21X2.5-MM THK)	
	2	1	**488-3971**	4	BOLT AS	
M	3	1	**344-5675**	2	NUT (M10X1.5-THD)	
M	4	1	**479-2172**	6	BOLT AS	
	5	1	**584-3325**	1	BOX AS	
M		1	**8T-3490**	6	NUT-WELD (M10X1.5-THD)	
	6	1	**585-2954**	1	BRACKET AS	
M		1	**8T-3490**	3	NUT-WELD (M10X1.5-THD)	
E	7	1	**3E-3805**		SEAL (19-CM)	

E - ORDER BY THE CENTIMETER
M - METRIC PART

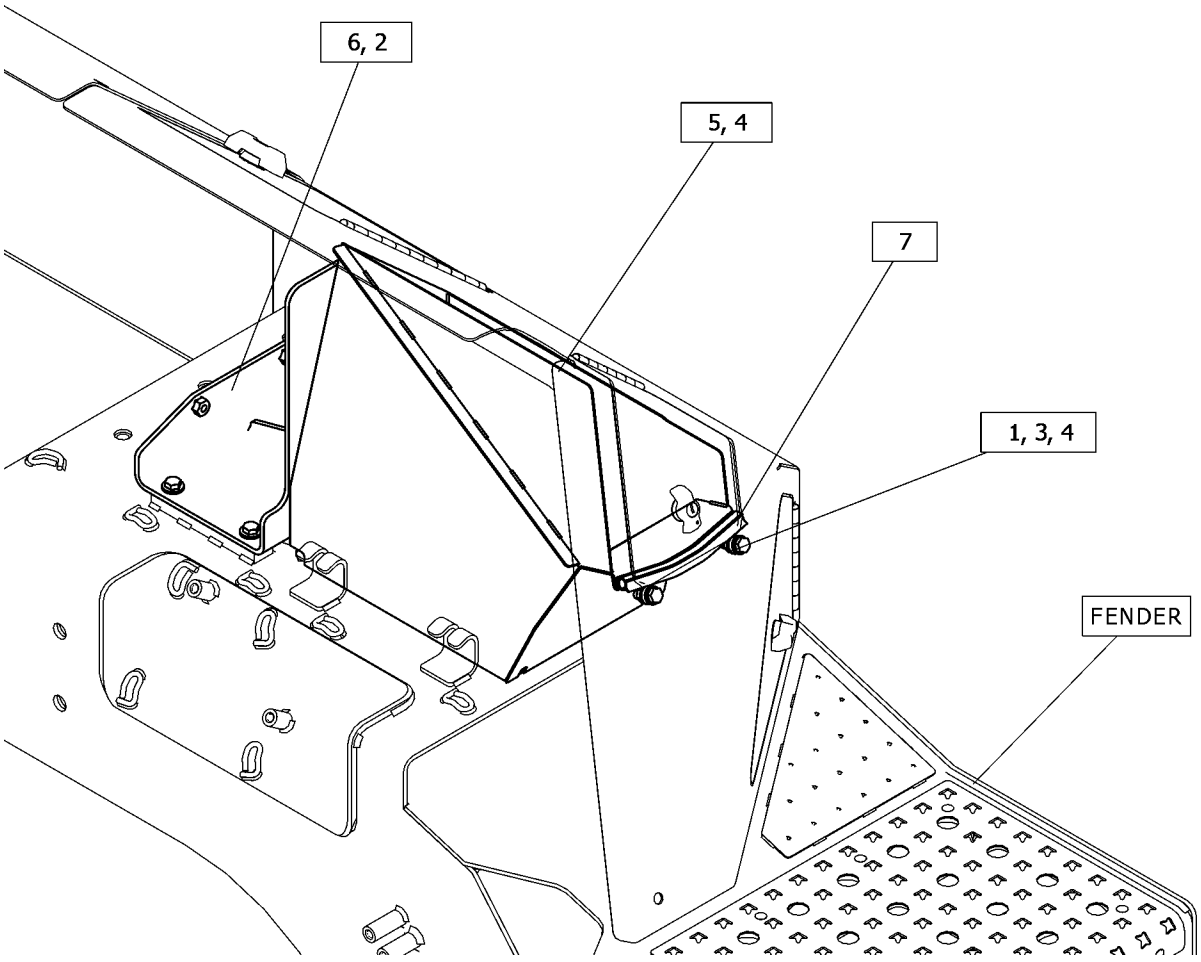

GRAPHIC #1 <END> g06451016

570-5540 BRACKET GP-MOUNTING

S/N: Z2K1-UP; Z2N1-UP
PART OF 565-3057 MUFFLER GP
AN ATTACHMENT

SMCS-1408, 7010

i07838167

NOTE	REF NO	GRAPHIC REF	PART NUMBER	QTY	PART NAME 1 2 3 4 5 6 (PRODUCT LEVEL)	SEE PAGE
	1	1	**135-8575**	6	BOLT AS	
	2	1	**135-8577**	4	BOLT AS	
	3	1	**488-3974**	4	BOLT AS	
	4	1	**582-7310**	1	BRACKET AS	
M		1	**8T-3490**	4	NUT-WELD (M10X1.5-THD)	
	5	1	**582-7312**	1	BRACKET AS	
	6	1	**582-7316**	1	BRACKET AS	

M - METRIC PART

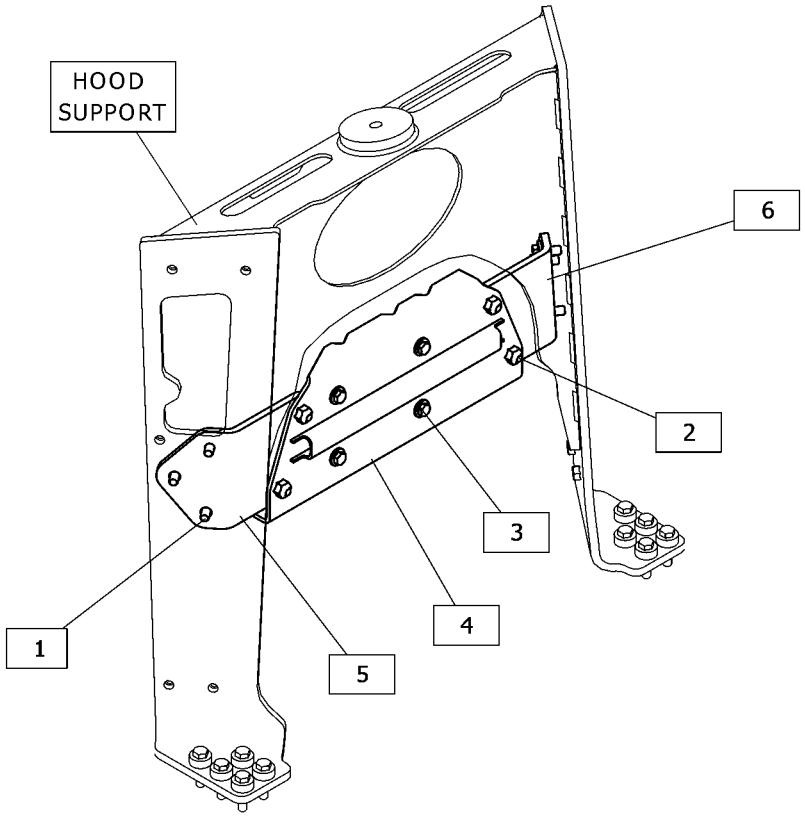

GRAPHIC #1 <END> g06455141

577-8623 CAMERA & MOUNTING GP

S/N: Z2K1-UP; Z2N1-UP
PART OF 532-9851 DISTRIBUTION AR
AN ATTACHMENT

SMCS-7348 **i07816781**

NOTE	REF NO	GRAPHIC REF	PART NUMBER	QTY	PART NAME 1 2 3 4 5 6 (PRODUCT LEVEL)	SEE PAGE
M	1	1	**306-5048**	2	SCREW-PAN HEAD (M4X0.7X10-MM)	
	2	1	**488-9163**	1	CAMERA GP (12-VOLT) (ETHERNET)	
		1	**490-0572**	1	RECEPTACLE AS (2-PIN)	
		1	**490-0582**	1	RECEPTACLE AS (2-PIN)	
	3	1	**577-8099**	1	BRACKET AS	
M		1	**6V-9632**	2	NUT-WELD (M6X1-THD)	
	4	1	**7K-1181**	5	STRAP-CABLE	
M	5	1	**9X-2044**	2	SCREW-TRUSS HEAD (M6X1X16-MM)	

M - METRIC PART

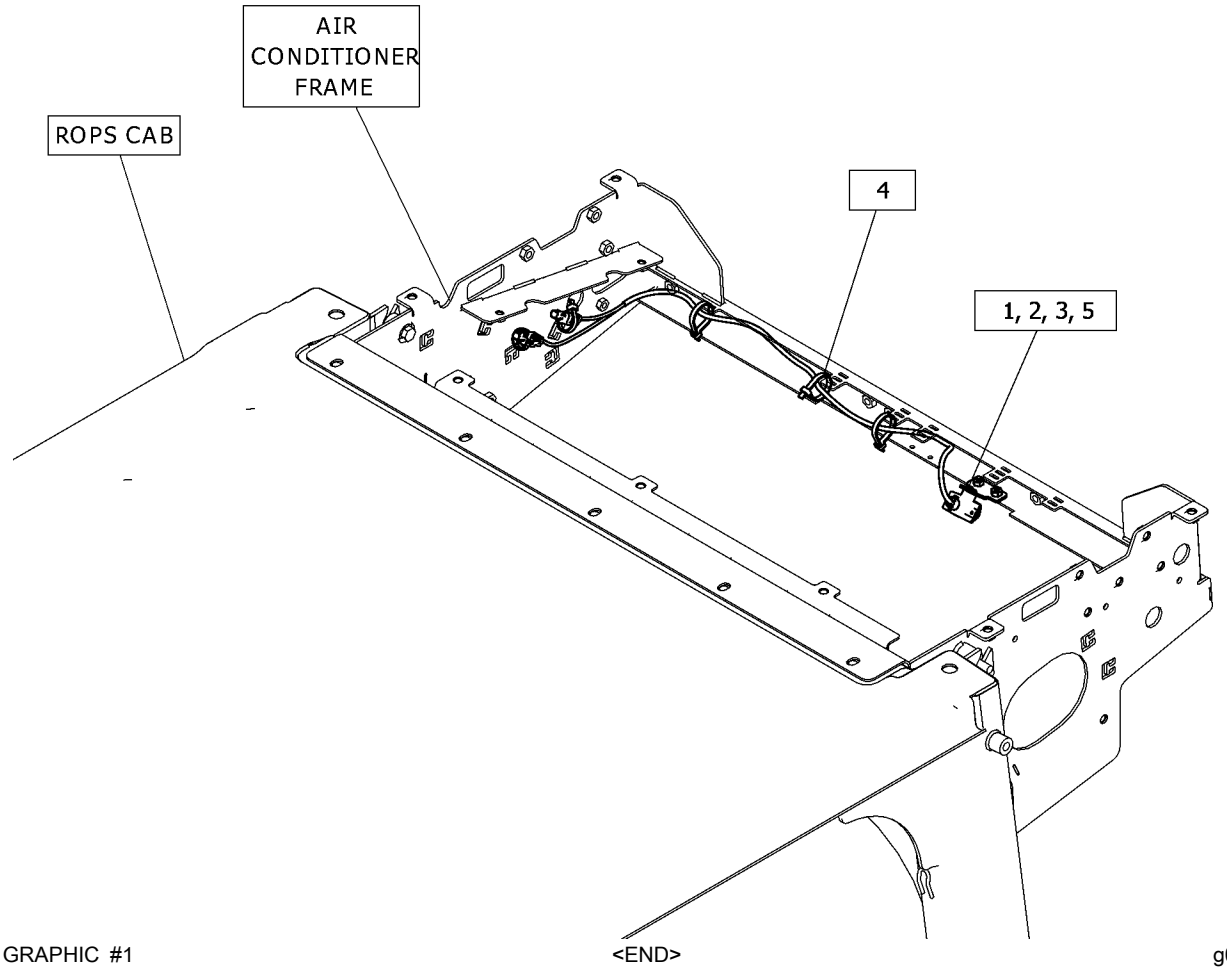

GRAPHIC #1 <END> g06420513

495-3105 CONTROL & MTG GP-ELECTRONIC

S/N: 4501-UP
PART OF 569-0811 ENGINE AR-PRIMARY
AN ATTACHMENT

SMCS-1901, 3168 **i07561447**

NOTE	REF NO	GRAPHIC REF	PART NUMBER	QTY	PART NAME 1 2 3 4 5 6 (PRODUCT LEVEL)	SEE PAGE
	1	1	**155-0576**	8	MOUNT-ISOLATION	
	2	1	**495-1742**	1	CONTROL GP-UNPROGRAMMED	
	3	1	**7W-2632**	1	WASHER (8.5X16.8X1.6-MM THK)	
	4	1	**217-0099**	4	SPACER (8.2X25X2-MM THK)	
	5	1	**278-5203**	4	SPACER	
M	6	1	**6I-0456**	4	BOLT (M8X1.25X45-MM)	

M - METRIC PART

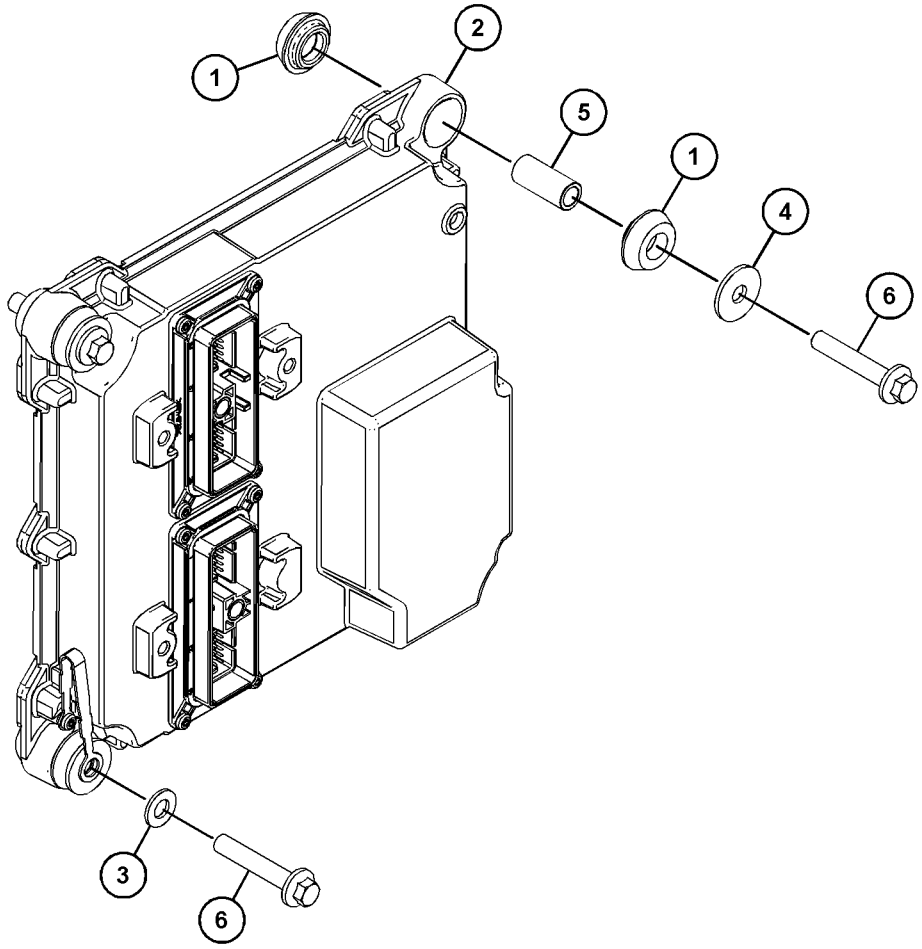

GRAPHIC #1 <END> g06366973

562-7887 CONTROL & MTG GP-ELECTRONIC

S/N: Z2K1-UP; Z2N1-UP
SLOPE & GRADE
PART OF 550-5571, 550-5572 GRADE CONTROL AR
AN ATTACHMENT

SMCS-1901, 3168 **i07826962**

NOTE	REF NO	GRAPHIC REF	PART NUMBER	QTY	PART NAME 1 2 3 4 5 6 (PRODUCT LEVEL)	SEE PAGE
M	1	1	**289-9555**	4	BOLT-SOCKET HEAD (M8X1.25X30-MM)	
	2	1	**554-8937**	1	CONTROL GP-ELECTRONIC	
		1	**552-3289**	1	PAD	
	3	1	**8T-4224**	4	WASHER-HARD (8.8X16X2-MM THK)	

M - METRIC PART

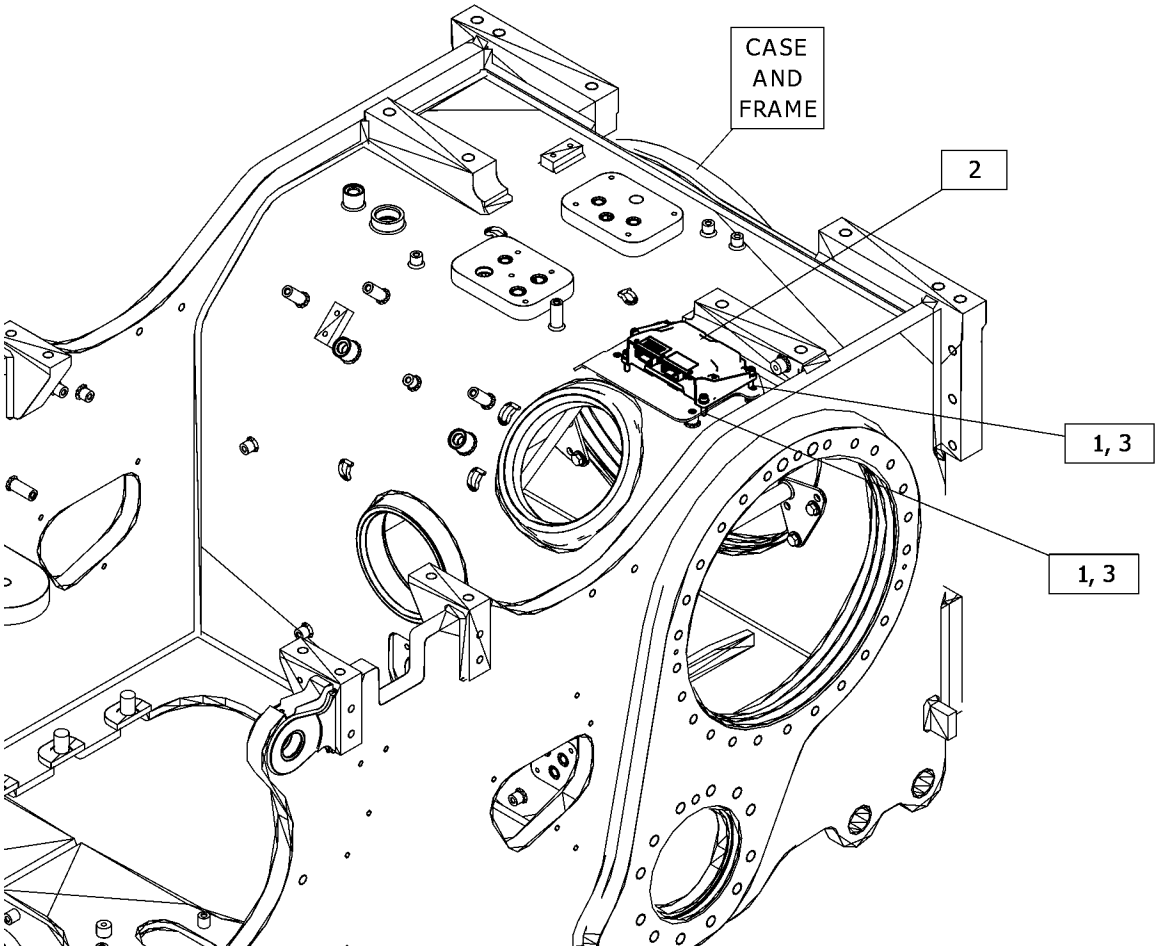

GRAPHIC #1 <END> g06449563

494-6472 CONTROL GP-COMMUNICATION–ELECTRONIC*R

S/N: Z2K1-UP; Z2N1-UP
PART OF 526-7919 WIRING GP-CAB
AN ATTACHMENT

SMCS-7610, 7620

i07775832

NOTE	REF NO	GRAPHIC REF	PART NUMBER	QTY	PART NAME 1 2 3 4 5 6 (PRODUCT LEVEL)	SEE PAGE
	1	1	**7X-6315**	1	STRAP AS-GROUND	

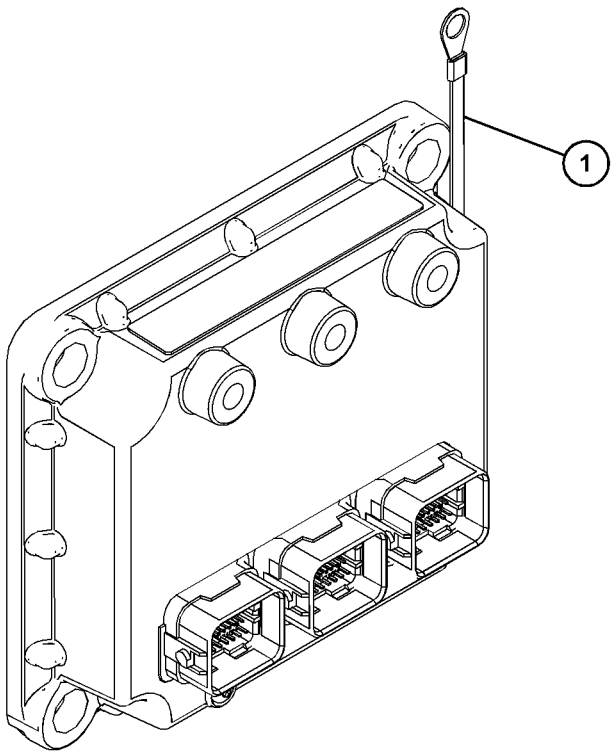

GRAPHIC #1 <END> g06323360

440-2104 CONTROL GP-ELECTRONIC—PL641I CELLULAR*R

S/N: Z2K1-UP; Z2N1-UP
PART OF 581-6213 INSTALLATION GP-COMMUNICATION
AN ATTACHMENT

SMCS-7490 **i07715121**

NOTE	PART NUMBER	QTY	PART NAME 1 2 3 4 5 6 (PRODUCT LEVEL)	SEE PAGE
	568-5111	1	SOFTWARE GP-MONITOR (CELLULAR)	

<END>

514-7505 CONTROL GP-UNPROGRAMMED

S/N: Z2K1-UP; Z2N1-UP
CELLULAR
PART OF 545-7813 INSTALLATION GP-COMMUNICATION
AN ATTACHMENT

SMCS-7610 **i07829262**

NOTE	PART NUMBER	QTY	PART NAME 1 2 3 4 5 6 (PRODUCT LEVEL)	SEE PAGE
	576-5029	1	SOFTWARE GP-MONITOR	

<END>

559-5996 ELECTRICAL AR

S/N: Z2K1-UP; Z2N1-UP
PART OF 532-9780 COMMON AR
AN ATTACHMENT

SMCS-1400 **i07818621**

NOTE	PART NUMBER	QTY	PART NAME 1 2 3 4 5 6 (PRODUCT LEVEL)	SEE PAGE
Y	*560-5946*	1	WIRING GP-ENGINE	247
Y	*560-5951*	1	WIRING GP-FENDER (LH)	251
Y	*565-7287*	1	WIRING GP-HOOD	265
Y	*580-9714*	1	WIRING GP-CHASSIS	244

Y - SEPARATE ILLUSTRATION

<END>

575-9703 ELECTRONICS AR-MACHINE

S/N: Z2K1-UP; Z2N1-UP
PART OF 532-9780 COMMON AR
AN ATTACHMENT

SMCS-7610, 7620 **i07827409**

NOTE	PART NUMBER	QTY	PART NAME 1 2 3 4 5 6 (PRODUCT LEVEL)	SEE PAGE
Y	*558-8921*	1	ELECTRONICS GP-IMPLEMENT	145
Y	*558-8919*	1	ELECTRONICS GP-MACHINE	145

Y - SEPARATE ILLUSTRATION

<END>

566-3122 ELECTRONICS GP-ENGINE

S/N: Z2K1-UP; Z2N1-UP
PART OF 575-9708 ENGINE AR-COMPLETE
AN ATTACHMENT

SMCS-1901, 1920 **i07840291**

NOTE	PART NUMBER	QTY	PART NAME 1 2 3 4 5 6 (PRODUCT LEVEL)	SEE PAGE
	566-3123	1	SOFTWARE GP-ENGINE	

<END>

558-8921 ELECTRONICS GP-IMPLEMENT

S/N: Z2K1-UP; Z2N1-UP
PART OF 575-9703 ELECTRONICS AR-MACHINE
AN ATTACHMENT

SMCS-5701, 7610, 7620 **i07820628**

NOTE	PART NUMBER	QTY	PART NAME 1 2 3 4 5 6 (PRODUCT LEVEL)	SEE PAGE
	567-0371	1	SOFTWARE GP-IMPLEMENT	

<END>

558-8919 ELECTRONICS GP-MACHINE

S/N: Z2K1-UP; Z2N1-UP
PART OF 575-9703 ELECTRONICS AR-MACHINE
AN ATTACHMENT

SMCS-7610, 7620 **i07817896**

NOTE	PART NUMBER	QTY	PART NAME 1 2 3 4 5 6 (PRODUCT LEVEL)	SEE PAGE
	566-7771	1	SOFTWARE GP-MACHINE	

<END>

470-3673 ELECTRONICS GP-MONITOR

S/N: Z2K1-UP; Z2N1-UP
HOUR METER
PART OF 577-7750 METER & MONITOR GP-SERVICE
AN ATTACHMENT

SMCS-7490, 7601, 7603, 7610, 7620 **i07827348**

NOTE	PART NUMBER	QTY	PART NAME 1 2 3 4 5 6 (PRODUCT LEVEL)	SEE PAGE
	572-6059	1	SOFTWARE GP-MONITOR	

<END>

505-6759 ELECTRONICS GP-MONITOR

S/N: Z2K1-UP; Z2N1-UP
PRIMARY
PART OF 577-1293 DISPLAY AR-MONITOR, 550-5575, 577-1295, 577-1296 GRADE CONTROL AR
AN ATTACHMENT

SMCS-7490, 7601, 7603, 7610, 7620 **i07820558**

NOTE	PART NUMBER	QTY	PART NAME 1 2 3 4 5 6 (PRODUCT LEVEL)	SEE PAGE
	505-6762	1	SOFTWARE GP-MONITOR	

<END>

519-6970 ELECTRONICS GP-MONITOR

S/N: Z2K1-UP; Z2N1-UP
PART OF 490-5874 MODULE GP-DISPLAY
AN ATTACHMENT

SMCS-7490, 7601, 7603, 7610, 7620 **i07420887**

NOTE	PART NUMBER	QTY	PART NAME 1 2 3 4 5 6 (PRODUCT LEVEL)	SEE PAGE
	557-3629	1	SOFTWARE GP-MONITOR	

<END>

558-8922 ELECTRONICS GP-MONITOR

S/N: Z2K1-UP; Z2N1-UP
VIMS
PART OF 577-1293 DISPLAY AR-MONITOR, 550-5575, 577-1295, 577-1296 GRADE CONTROL AR
AN ATTACHMENT

SMCS-7490, 7601, 7603, 7610, 7620 **i07927833**

NOTE	PART NUMBER	QTY	PART NAME 1 2 3 4 5 6 (PRODUCT LEVEL)	SEE PAGE
	584-7378	1	SOFTWARE GP-MONITOR (NETWORK MANAGER)	
	574-5257	1	SOFTWARE GP-MONITOR (VIMS CONFIGURATION)	

<END>

562-1812 ELECTRONICS GP-MONITOR

S/N: Z2K1-UP; Z2N1-UP
GRADE CONTROL
PART OF 577-1295, 577-1296 GRADE CONTROL AR
AN ATTACHMENT

SMCS-7490, 7601, 7603, 7610, 7620 **i07925172**

NOTE	PART NUMBER	QTY	PART NAME 1 2 3 4 5 6 (PRODUCT LEVEL)	SEE PAGE
	540-8953	1	SOFTWARE GP-MONITOR	
	561-2947	1	SOFTWARE GP-MONITOR	
	564-2798	1	SOFTWARE GP-MONITOR	

<END>

562-1817 ELECTRONICS GP-MONITOR

S/N: Z2K1-UP; Z2N1-UP
GRADE, SLOPE
PART OF 550-5575 GRADE CONTROL AR
AN ATTACHMENT

SMCS-7490, 7601, 7603, 7610, 7620 **i07831683**

NOTE	PART NUMBER	QTY	PART NAME 1 2 3 4 5 6 (PRODUCT LEVEL)	SEE PAGE
	540-8952	1	SOFTWARE GP-MONITOR	
	561-2941	1	SOFTWARE GP-MONITOR	
	564-2798	1	SOFTWARE GP-MONITOR	

<END>

575-4738 ELECTRONICS GP-MONITOR

S/N: Z2K1-UP; Z2N1-UP
PRIMARY DISPLAY
PART OF 577-1292 DISPLAY AR-MONITOR
AN ATTACHMENT

SMCS-7490, 7601, 7603, 7610, 7620 **i07843474**

NOTE	PART NUMBER	QTY	PART NAME 1 2 3 4 5 6 (PRODUCT LEVEL)	SEE PAGE
	575-4745	1	SOFTWARE GP-MONITOR	

<END>

575-8486 ELECTRONICS GP-MONITOR

S/N: Z2K1-UP; Z2N1-UP
NETWORK MANAGER
PART OF 577-1292 DISPLAY AR-MONITOR
AN ATTACHMENT

SMCS-7490, 7601, 7603, 7610, 7620 **i07843433**

NOTE	PART NUMBER	QTY	PART NAME 1 2 3 4 5 6 (PRODUCT LEVEL)	SEE PAGE
	552-6088	1	SOFTWARE GP-MONITOR	

<END>

550-5571 GRADE CONTROL AR

S/N: Z2K1-UP
PART OF 532-9851 DISTRIBUTION AR
AN ATTACHMENT

SMCS-7220 **i07839547**

NOTE	PART NUMBER	QTY	PART NAME 1 2 3 4 5 6 (PRODUCT LEVEL)	SEE PAGE
Y	*562-7887*	1	CONTROL & MTG GP-ELECTRONIC	142
Y	*521-7609*	1	SENSOR GP-POSITION	205
Y	*509-8959*	1	WIRING GP-GRADE CONTROL (RADIATOR GUARD)	258
Y	*510-6064*	1	WIRING GP-GRADE CONTROL (C-FRAME)	259
Y	*524-9008*	1	WIRING GP-GRADE CONTROL (BLADE)	260
	577-2146	1	FILM GP	
	511-8776	1	FILM-INSTRUCTION (IMPLEMENT)	
			(ON RH LINER INSIDE CAB CLOSE TO JOYSTICK, IN DEDICATED SHALLOW RECESS)	

Y - SEPARATE ILLUSTRATION

<END>

550-5572 GRADE CONTROL AR

S/N: Z2N1-UP
VPAT
AN ATTACHMENT

SMCS-7220 **i07820102**

NOTE	PART NUMBER	QTY	PART NAME 1 2 3 4 5 6 (PRODUCT LEVEL)	SEE PAGE
Y	*562-7887*	1	CONTROL & MTG GP-ELECTRONIC	142
Y	*524-9008*	1	WIRING GP-GRADE CONTROL (LGP)	260
Y	*521-7609*	1	SENSOR GP-POSITION (INERTIAL)	205
Y	*507-6853*	1	WIRING GP-GRADE CONTROL (LGP)	257
Y	*509-8959*	1	WIRING GP-GRADE CONTROL (ACCUGRADE READY)	258
	577-2146	1	FILM GP	
	511-8776	1	FILM-INSTRUCTION (IMPLEMENT)	
			(ON RH LINER INSIDE CAB CLOSE TO JOYSTICK, IN DEDICATED SHALLOW RECESS)	

Y - SEPARATE ILLUSTRATION

<END>

550-5575 GRADE CONTROL AR

S/N: Z2K1-UP; Z2N1-UP
CAB
PART OF 532-9851 DISTRIBUTION AR
AN ATTACHMENT

SMCS-7220 **i07820552**

NOTE	PART NUMBER	QTY	PART NAME 1 2 3 4 5 6 (PRODUCT LEVEL)	SEE PAGE
Y	*537-3141*	1	COVER GP-ACCESS	660
Y	*511-5453*	1	DISPLAY GP-MONITOR	671
Y	*505-6759*	1	ELECTRONICS GP-MONITOR (PRIMARY)	145
Y	*558-8922*	1	ELECTRONICS GP-MONITOR (VIMS)	146
Y	*562-1817*	1	ELECTRONICS GP-MONITOR (GRADE, SLOPE)	146
Y	*574-0148*	1	DOOR GP-ACCESS	362
Y	*575-4390*	1	WIRING GP-GRADE CONTROL	262
	582-1729	1	FILM-IDENTIFICATION (FUSE/RELAY PANEL)	
			(ON INSIDE SURFACE OF FUSE PANEL COVER, INSIDE CAB)	

Y - SEPARATE ILLUSTRATION

<END>

577-1295 GRADE CONTROL AR

S/N: Z2K1-UP; Z2N1-UP

FOR USE WITH 536-6468—PAGE: 638, 536-6469—PAGE: 639, 536-6470—PAGE: 639, 435-5759—PAGE: 654

AN ATTACHMENT

SMCS-7220 **i07848555**

NOTE	REF NO	GRAPHIC REF	PART NUMBER	QTY	PART NAME 1 2 3 4 5 6 (PRODUCT LEVEL)	SEE PAGE
	1	1	**582-1729**	1	FILM-IDENTIFICATION (FUSE/RELAY PANEL)	
Y	2	1	*511-5453*	1	DISPLAY GP-MONITOR	671
Y	3	1	*575-4391*	1	WIRING GP-GRADE CONTROL (SATELLITE RECEIVER)	263
Y	4	1	*575-4390*	1	WIRING GP-GRADE CONTROL (CAB)	262
Y	5	1	*574-0149*	1	MOUNTING GP-MONITOR	729
Y	6	1	*561-6674*	1	COVER GP-ACCESS	662
FY			*505-6759*	1	ELECTRONICS GP-MONITOR (PRIMARY)	145
FY			*558-8922*	1	ELECTRONICS GP-MONITOR (VIMS)	146
FY			*562-1812*	1	ELECTRONICS GP-MONITOR (GRADE CONTROL)	146
FJ			*513-5980*	1	CONFIGURATION-PREMIUM	

F - NOT SHOWN
J - SEE DEALER FOR PRICING, INSTALLATION, AND ACTIVATION OF PREMIUM SOFTWARE
Y - SEPARATE ILLUSTRATION

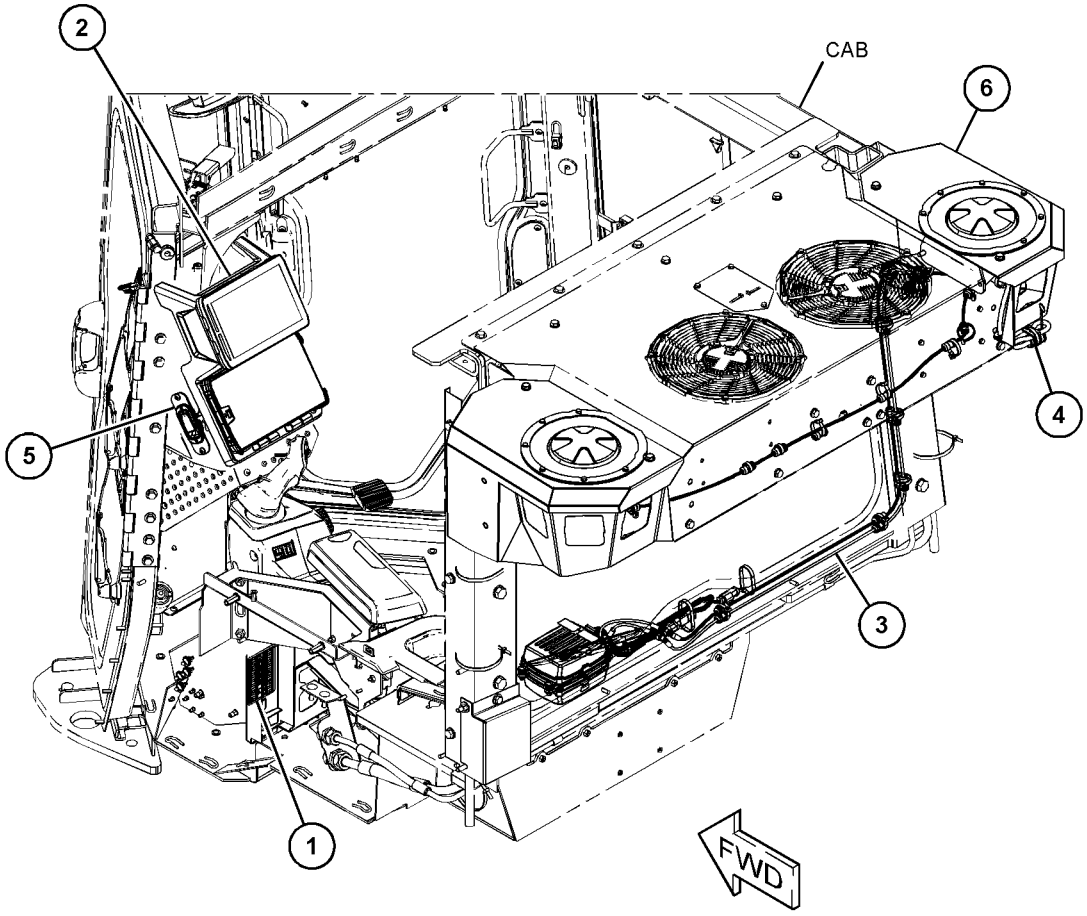

GRAPHIC #1 <END> g06454146

577-1296 GRADE CONTROL AR

S/N: Z2K1-UP; Z2N1-UP
SWEEPS
FOR USE WITH 536-6468—PAGE: 638, 536-6469—PAGE: 639, 536-6470—PAGE: 639
AN ATTACHMENT

SMCS-7220 **i07843939**

NOTE	REF NO	GRAPHIC REF	PART NUMBER	QTY	PART NAME 1 2 3 4 5 6 (PRODUCT LEVEL)	SEE PAGE
	1	1	**582-1729**	1	FILM-IDENTIFICATION (FUSE/RELAY PANEL)	
Y	2	1	*541-1192*	1	MOUNTING GP-CAB	718
Y	3	1	*575-4391*	1	WIRING GP-GRADE CONTROL (SATELLITE RECEIVER)	263
Y	4	1	*575-4390*	1	WIRING GP-GRADE CONTROL (CAB)	262
Y	5	1	*511-5453*	1	DISPLAY GP-MONITOR	671
Y	6	1	*574-0149*	1	MOUNTING GP-MONITOR	729
Y	7	1	*561-6674*	1	COVER GP-ACCESS	662
FY			*505-6759*	1	ELECTRONICS GP-MONITOR (PRIMARY)	145
FY			*558-8922*	1	ELECTRONICS GP-MONITOR (VIMS)	146
FY			*562-1812*	1	ELECTRONICS GP-MONITOR (GRADE CONTROL)	146
FJ			*513-5980*	1	CONFIGURATION-PREMIUM	

F - NOT SHOWN
J - SEE DEALER FOR PRICING, INSTALLATION, AND ACTIVATION OF PREMIUM SOFTWARE
Y - SEPARATE ILLUSTRATION

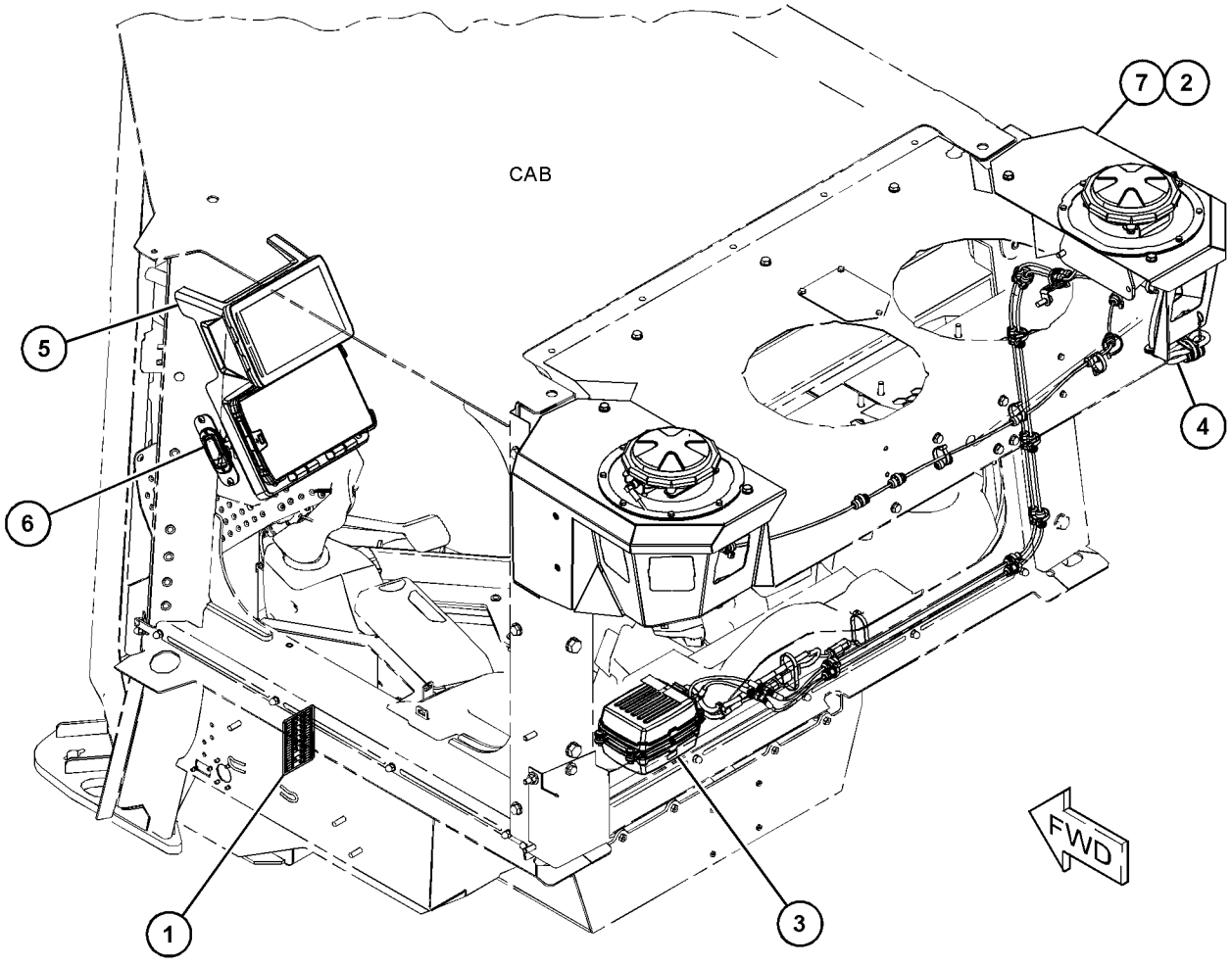

GRAPHIC #1 <END> g06452541

528-4814 GUARD GP-ALTERNATOR

S/N: Z2K1-UP; Z2N1-UP
PART OF 559-5994 INSTALLATION AR-ENGINE
AN ATTACHMENT

SMCS-7168 **i07817931**

NOTE	REF NO	GRAPHIC REF	PART NUMBER	QTY	PART NAME 1 2 3 4 5 6 (PRODUCT LEVEL)	SEE PAGE
M	1	1	**7X-2543**	1	BOLT (M10X1.5X120-MM)	
	2	1	**089-7365**	1	WASHER (7X24X10-MM THK)	
	3	1	**348-5034**	1	FILM-IDENTIFICATION (BELT ROUTING)	
	4	1	**4P-7481**	1	SPACER (6.6X25X21-MM THK)	
	5	1	**561-7221**	1	GUARD AS-ALTERNATOR	
M		1	**8T-3490**	2	NUT-WELD (M10X1.5-THD)	
	6	1	**7X-0563**	2	WASHER-HARD (12X35X8-MM THK)	
	7	1	**7X-0613**	1	WASHER-HARD (8.8X25.5X5-MM THK)	
	8	1	**7X-7729**	1	WASHER (11X25X3-MM THK)	
M	9	1	**8T-4908**	1	BOLT (M8X1.25X25-MM)	
M	10	1	**9X-2480**	1	BOLT (M6X1X45-MM)	

M - METRIC PART

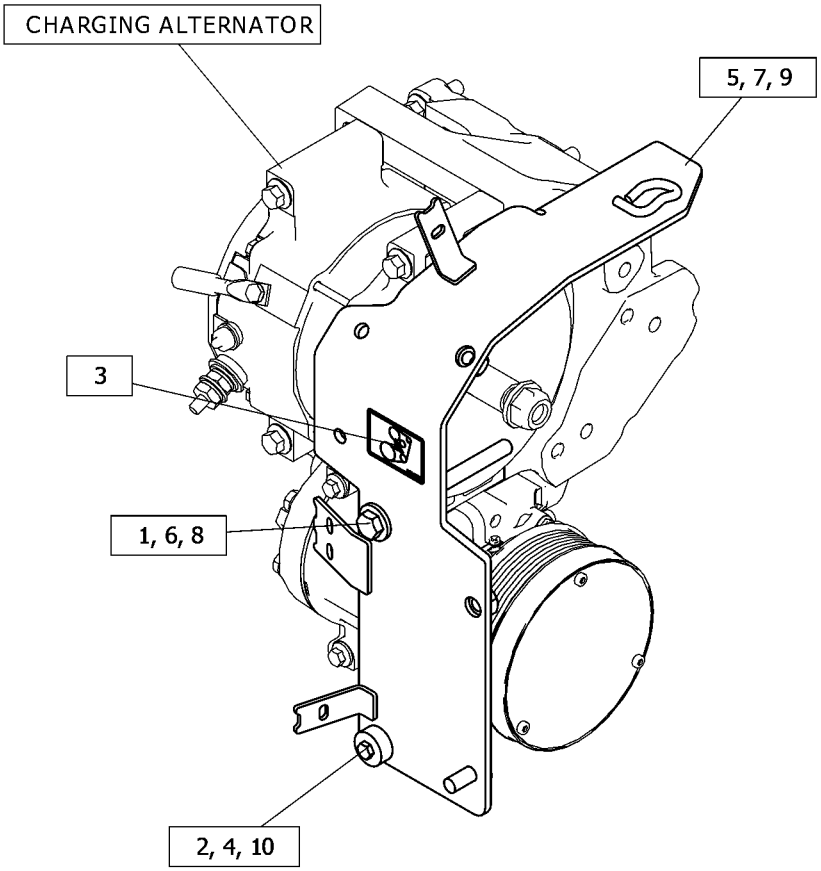

GRAPHIC #1 <END> g06451027

533-5453 HARNESS AS-CAB

S/N: Z2K1-UP; Z2N1-UP
WINDOW WASHER PUMP
PART OF 526-7919, 565-8666 WIRING GP-CAB
AN ATTACHMENT

SMCS-1408 **i07814278**

NOTE	PART NUMBER	QTY	PART NAME 1 2 3 4 5 6 (PRODUCT LEVEL)	SEE PAGE
	8T-8737	6	PLUG-SEAL	
	8T-8730	14	SOCKET-CONNECTOR (16-GA TO 18-GA)	
E	**125-7874**		TUBE-HEAT SHRINK (5.72-MM DIA) (10-CM)	
	155-2255	1	KIT-CONNECTING PLUG (12-PIN)	
	155-2270	4	KIT-CONNECTING PLUG (2-PIN)	
			(EACH PLUG KIT INCLUDES PLUG AS, WEDGE, & INTERFACE SEAL)	
B	**329-3734**		TAPE-ELECTRICAL	

B - USE AS REQUIRED
E - ORDER BY THE CENTIMETER

<END>

533-5458 HARNESS AS-CAB

S/N: Z2K1-UP; Z2N1-UP
PART OF 545-7815 WIRING GP-CAB
AN ATTACHMENT

SMCS-1408 **i07899058**

NOTE	PART NUMBER	QTY	PART NAME 1 2 3 4 5 6 (PRODUCT LEVEL)	SEE PAGE
	374-7463	1	CAP-SEAL	
	155-2260	1	KIT-CONNECTING PLUG (3-PIN)	
			(INCLUDES PLUG AS, WEDGES & INTERFACE SEAL)	
	155-2270	1	KIT-CONNECTING PLUG (2-PIN)	
	155-2271	1	KIT-CONNECTING PLUG (4-PIN)	
			(EACH PLUG KIT INCLUDES PLUG AS, WEDGE, & INTERFACE SEAL)	
	102-8803	1	KIT-RECEPTACLE (3-PIN)	
			(INCLUDES RECEPTACLE AS & WEDGE)	
	8T-8737	3	PLUG-SEAL	
	9W-0844	5	SOCKET-CONNECTOR (14-GA TO 16-GA)	
	9X-3402	4	SOCKET-CONNECTOR (16-GA TO 18-GA)	
E	**125-7874**		TUBE-HEAT SHRINK (5.72-MM DIA) (5-CM)	

E - ORDER BY THE CENTIMETER

<END>

533-5461 HARNESS AS-CAB

S/N: Z2K1-UP; Z2N1-UP
PART OF 575-4388 WIRING GP-SEAT
AN ATTACHMENT

SMCS-1408 **i07821086**

NOTE	PART NUMBER	QTY	PART NAME 1 2 3 4 5 6 (PRODUCT LEVEL)	SEE PAGE
	155-2255	1	KIT-CONNECTING PLUG (12-PIN)	
	155-2260	1	KIT-CONNECTING PLUG (3-PIN)	
	155-2271	1	KIT-CONNECTING PLUG (4-PIN)	
			(EACH PLUG KIT INCLUDES PLUG AS, WEDGE(S) & INTERFACE SEAL)	
	8T-8737	5	PLUG-SEAL	
	9W-0844	4	SOCKET-CONNECTOR (14-GA TO 16-GA)	
	9X-3402	10	SOCKET-CONNECTOR (16-GA TO 18-GA)	
B	**1P-0810**		TAPE-ELECTRICAL	
B	**329-3734**		TAPE-ELECTRICAL	

B - USE AS REQUIRED

<END>

559-2195 HARNESS AS-CAB

S/N: Z2K1-UP; Z2N1-UP
PART OF 545-7815 WIRING GP-CAB
AN ATTACHMENT

SMCS-1408 **i07831972**

NOTE	PART NUMBER	QTY	PART NAME 1 2 3 4 5 6 (PRODUCT LEVEL)	SEE PAGE
E	**144-0195**		HOSE (68-CM)	
	155-2274	2	KIT-CONNECTING PLUG (6-PIN)	
			(EACH INCLUDES PLUG AS, WEDGE, & INTERFACE SEAL)	
	8T-8737	2	PLUG-SEAL	
	9X-3402	10	SOCKET-CONNECTOR (16-GA TO 18-GA)	
B	**329-3734**		TAPE-ELECTRICAL	

B - USE AS REQUIRED
E - ORDER BY THE CENTIMETER

<END>

566-2020 HARNESS AS-CAB

S/N: Z2K1-UP; Z2N1-UP
MAIN
PART OF 526-7919 WIRING GP-CAB
AN ATTACHMENT

SMCS-1408 **i07859841**

NOTE	PART NUMBER	QTY	PART NAME 1 2 3 4 5 6 (PRODUCT LEVEL)	SEE PAGE
	102-8802	3	KIT-RECEPTACLE (2-PIN)	
	102-8804	3	KIT-RECEPTACLE (4-PIN)	
	102-8805	3	KIT-RECEPTACLE (6-PIN)	
	102-8801	2	KIT-RECEPTACLE (12-PIN)	
			(EACH RECEPTACLE KIT INCLUDES RECEPTACLE AS & WEDGE)	
	3S-2093	8	STRAP-CABLE	
	6V-0491	4	TERMINAL-BLADE (14-GA TO 18-GA)	
	6V-0891	1	PLUG AS-CONNECTOR	
	7R-2751	20	PLUG-CONNECTOR (1-PIN)	
	8T-8737	240	PLUG-SEAL	
	9W-0844	87	SOCKET-CONNECTOR (14-GA TO 16-GA)	
	9W-0852	21	PIN-CONNECTOR (14-GA TO 16-GA)	
	9X-3401	94	PIN-CONNECTOR (16-GA TO 18-GA)	
	9X-3402	477	SOCKET-CONNECTOR (16-GA TO 18-GA)	
	196-2412	25	TERMINAL AS (16-GA)	
	113-8490	15	FUSE (10-AMPERE)	
	113-8491	24	FUSE (15-AMPERE)	
E	**119-3662**		TUBE-HEAT SHRINK (10.85-MM DIA) (221-CM)	
	122-4376	3	TERMINAL	
	123-7615	2	CONNECTOR (1-PIN)	
E	**125-7874**		TUBE-HEAT SHRINK (5.72-MM DIA) (475-CM)	
E	**125-7875**		TUBE-HEAT SHRINK (7.44-MM DIA) (25-CM)	
	126-1774	4	COVER-CONNECTOR	
	128-5016	76	SEAL-CABLE	
	5P-4571	2	TERMINAL-BLADE (14-GA TO 16-GA)	
	097-7234	4	TERMINAL-BLADE (18-GA TO 22-GA)	
	2L-8069	16	TERMINAL-RING (2-GA TO 10-GA, 3/8-IN SCREW)	
	2L-8079	2	TERMINAL-RING (14-GA TO 16-GA, 3/8-IN SCREW)	
	134-2540	4	RECEPTACLE AS-CONNECTOR (3-PIN)	
	147-1445	2	PLUG AS-CONNECTOR (70-PIN)	
			(EACH INCLUDES)	
	159-9322	1	SEAL-O-RING	
	147-1446	2	PLUG AS-CONNECTOR (70-PIN)	
			(EACH INCLUDES)	
	159-9322	1	SEAL-O-RING	
	155-2255	2	KIT-CONNECTING PLUG (12-PIN)	
	155-2265	8	KIT-CONNECTING PLUG (8-PIN)	
	155-2270	5	KIT-CONNECTING PLUG (2-PIN)	
	155-2271	3	KIT-CONNECTING PLUG (4-PIN)	
	155-2274	9	KIT-CONNECTING PLUG (6-PIN)	
	155-2260	10	KIT-CONNECTING PLUG (3-PIN)	
			(EACH PLUG KT INCL PLUG AS, WEDGE(S), SEAL)	
B	**1P-0810**		TAPE-ELECTRICAL	
	166-5229	2	KIT-RECEPTACLE (12-PIN)	
			(INCLUDES RECEPTACLE AS & WEDGE)	
	196-2413	47	TERMINAL AS (12-GA)	

566-2020 **HARNESS AS-CAB (**contd.**)** **i07859841**

NOTE	PART NUMBER	QTY	PART NAME 1 2 3 4 5 6 (PRODUCT LEVEL)	SEE PAGE
	185-1860	16	SEAL-WIRE	
	185-1861	2	SEAL-WIRE	
	188-2128	1	PLUG AS	
	8T-8737	2	PLUG-SEAL	
	155-2270	1	KIT-CONNECTING PLUG (2-PIN)	
			(INCLUDES PLUG AS, WEDGE, & INTERFACE SEAL)	
	9G-9435	1	TERMINAL-RING (18-GA TO 22-GA, 3/8-IN SCREW)	
	202-0314	4	TERMINAL AS (14-GA)	
	202-5397	12	PLUG	
	204-1297	16	TERMINAL AS-BLADE (18-GA TO 20-GA)	
			(EACH INCLUDES)	
	235-4123	1	TERMINAL (18-GA TO 20-GA)	
	214-4208	1	RECEPTACLE AS-CONNECTOR (70-PIN)	
	245-7434	3	KIT-CONNECTING PLUG (10-PIN)	
			(EACH INCLUDES PLUGS & WIRE AS)	
	288-7146	2	WIRE AS (16-GA)	
	230-4009	1	PLUG AS-CONNECTOR (12-PIN)	
	455-0709	1	SEAL-CONNECTOR	
	230-4011	2	PLUG AS-CONNECTOR (2-PIN)	
			(EACH INCLUDES)	
	455-0704	1	SEAL-CONNECTOR	
	230-4013	1	PLUG AS-CONNECTOR (3-PIN)	
	455-0705	1	SEAL-CONNECTOR	
	230-5010	2	PLUG AS-CONNECTOR (6-PIN)	
			(EACH INCLUDES)	
	455-0707	1	SEAL-CONNECTOR	
	242-1555	1	PULLER-FUSE	
	248-2841	8	RELAY AS (24-VOLT)	
	264-5732	2	PLUG AS-CONNECTOR (120-PIN)	
			(EACH INCLUDES)	
	288-7324	1	SEAL-CONNECTOR	
	280-2709	3	CIRCUIT BREAKER AS (15-AMPERE, MANUAL RESET)	
	281-8811	1	PLUG AS-CONNECTOR (6-PIN)	
	455-0707	1	SEAL-CONNECTOR	
B	**329-3734**		TAPE-ELECTRICAL	
	331-4931	1	PLUG AS	
	8T-8737	12	PLUG-SEAL	
	155-2255	1	KIT-CONNECTING PLUG (12-PIN)	
			(INCLUDES PLUG AS, WEDGE, & INTERFACE SEAL)	
	342-2976	1	CAP-CONNECTOR (12-PIN)	
E	**370-1739**		TUBE (119-CM)	
	374-7463	1	CAP-SEAL	
	374-7464	5	CAP-SEAL	
	374-7466	5	CAP-SEAL	
	374-7467	4	CAP-SEAL	
	391-2898	1	BLOCK AS-FUSE	
	451-8019	1	RECEPTACLE AS-CONNECTOR (14-PIN)	
	483-2761	1	PLUG AS-CONNECTOR (44-PIN)	
	483-2762	2	PLUG AS-CONNECTOR (44-PIN)	
	483-2763	1	PLUG AS-CONNECTOR (44-PIN)	
	483-2765	11	TERMINAL AS (20-GA)	
	483-2767	29	TERMINAL AS (18-GA)	

566-2020 **HARNESS AS-CAB (**contd.**)** **i07859841**

NOTE	PART NUMBER	QTY	PART NAME 1 2 3 4 5 6 (PRODUCT LEVEL)	SEE PAGE
	483-2768	136	PLUG-SEAL	
	483-2777	4	COVER-CONNECTOR	
	490-0571	4	PLUG AS-CONNECTOR (2-PIN)	
	490-0578	3	PLUG AS-CONNECTOR (2-PIN)	
	490-0586	7	BACKSHELL	

B - USE AS REQUIRED
E - ORDER BY THE CENTIMETER

<END>

583-4667 HARNESS AS-CAB

S/N: Z2K1-UP
MAIN
PART OF 565-8666 WIRING GP-CAB
AN ATTACHMENT

SMCS-1408 **i07814389**

NOTE	PART NUMBER	QTY	PART NAME 1 2 3 4 5 6 (PRODUCT LEVEL)	SEE PAGE
	490-0586	5	BACKSHELL	
	391-2898	1	BLOCK AS-FUSE	
J	**467-2859**		CABLE (89-DM)	
	342-2976	1	CAP-CONNECTOR (12-PIN)	
	374-7464	4	CAP-SEAL	
	374-7466	2	CAP-SEAL	
	374-7467	1	CAP-SEAL	
	280-2709	3	CIRCUIT BREAKER AS (15-AMPERE, MANUAL RESET)	
	123-7615	2	CONNECTOR (1-PIN)	
	483-2777	3	COVER-CONNECTOR	
	126-1774	4	COVER-CONNECTOR	
	113-8490	13	FUSE (10-AMPERE)	
	113-8491	21	FUSE (15-AMPERE)	
	155-2255	3	KIT-CONNECTING PLUG (12-PIN)	
	155-2265	5	KIT-CONNECTING PLUG (8-PIN)	
	155-2260	8	KIT-CONNECTING PLUG (3-PIN)	
	155-2270	4	KIT-CONNECTING PLUG (2-PIN)	
	155-2271	3	KIT-CONNECTING PLUG (4-PIN)	
	155-2274	7	KIT-CONNECTING PLUG (6-PIN)	
			(EACH PLUG KIT INCLUDES PLUG AS, WEDGE(S) & INTERFACE SEAL)	
	245-7434	3	KIT-CONNECTING PLUG (10-PIN)	
			(EACH INCLUDES CONNECTOR, TERMINAL & PLUG)	
	102-8802	3	KIT-RECEPTACLE (2-PIN)	
	102-8804	3	KIT-RECEPTACLE (4-PIN)	
	102-8805	3	KIT-RECEPTACLE (6-PIN)	
	102-8801	2	KIT-RECEPTACLE (12-PIN)	
	166-5229	2	KIT-RECEPTACLE (12-PIN)	
			(EACH RECEPTACLE KIT INCLUDES RECEPTACLE AS & WEDGE)	
	192-3258	1	LOCK	
	9W-0852	15	PIN-CONNECTOR (14-GA TO 16-GA)	
	9X-3401	85	PIN-CONNECTOR (16-GA TO 18-GA)	
	202-5397	12	PLUG	
	6V-0891	1	PLUG AS-CONNECTOR	
	147-1445	2	PLUG AS-CONNECTOR (70-PIN)	
	147-1446	2	PLUG AS-CONNECTOR (70-PIN)	
			(EACH PLUG AS-CONN INCLUDES)	
	159-9322	1	SEAL-O-RING	
	230-4009	1	PLUG AS-CONNECTOR (12-PIN)	
	455-0709	1	SEAL-CONNECTOR	
	230-4011	2	PLUG AS-CONNECTOR (2-PIN)	
			(EACH INCLUDES)	
	455-0704	1	SEAL-CONNECTOR	
	230-4013	1	PLUG AS-CONNECTOR (3-PIN)	
	455-0705	1	SEAL-CONNECTOR	
	230-5010	2	PLUG AS-CONNECTOR (6-PIN)	

583-4667 **HARNESS AS-CAB (**contd.**)** **i07814389**

NOTE	PART NUMBER	QTY	PART NAME 1 2 3 4 5 6 (PRODUCT LEVEL)	SEE PAGE
			(EACH INCLUDES)	
	455-0707	1	SEAL-CONNECTOR	
	264-5732	2	PLUG AS-CONNECTOR (120-PIN)	
			(EACH INCLUDES)	
	288-7324	1	SEAL-CONNECTOR	
	281-8811	1	PLUG AS-CONNECTOR (6-PIN)	
	455-0707	1	SEAL-CONNECTOR	
	483-2762	2	PLUG AS-CONNECTOR (44-PIN)	
	483-2763	1	PLUG AS-CONNECTOR (44-PIN)	
	490-0571	3	PLUG AS-CONNECTOR (2-PIN)	
	490-0578	2	PLUG AS-CONNECTOR (2-PIN)	
	7R-2751	69	PLUG-CONNECTOR (1-PIN)	
	8T-8737	313	PLUG-SEAL	
	483-2768	108	PLUG-SEAL	
	242-1555	1	PULLER-FUSE	
	134-2540	3	RECEPTACLE AS-CONNECTOR (3-PIN)	
	214-4208	1	RECEPTACLE AS-CONNECTOR (70-PIN)	
	451-8019	1	RECEPTACLE AS-CONNECTOR (14-PIN)	
	248-2841	7	RELAY AS (24-VOLT) (SUPPRESSION)	
	128-5016	75	SEAL-CABLE	
	185-1860	16	SEAL-WIRE	
	185-1861	2	SEAL-WIRE	
	9W-0844	66	SOCKET-CONNECTOR (14-GA TO 16-GA)	
	9X-3402	406	SOCKET-CONNECTOR (16-GA TO 18-GA)	
B	**1P-0810**	1	TAPE-ELECTRICAL (41-CM)	
BE	**329-3734**		TAPE-ELECTRICAL	
	122-4376	3	TERMINAL	
	196-2412	22	TERMINAL AS (16-GA)	
	196-2413	41	TERMINAL AS (12-GA)	
	202-0314	4	TERMINAL AS (14-GA)	
	483-2765	4	TERMINAL AS (20-GA)	
	483-2767	20	TERMINAL AS (18-GA)	
	204-1297	16	TERMINAL AS-BLADE (18-GA TO 20-GA)	
			(EACH INCLUDES)	
	235-4123	1	TERMINAL (18-GA TO 20-GA)	
	097-7234	4	TERMINAL-BLADE (18-GA TO 22-GA)	
	5P-4571	2	TERMINAL-BLADE (14-GA TO 16-GA)	
	6V-0491	4	TERMINAL-BLADE (14-GA TO 18-GA)	
	9G-9435	1	TERMINAL-RING (18-GA TO 22-GA, 3/8-IN SCREW)	
	2L-8069	13	TERMINAL-RING (2-GA TO 10-GA, 3/8-IN SCREW)	
	2L-8079	5	TERMINAL-RING (14-GA TO 16-GA, 3/8-IN SCREW)	
E	**125-7874**		TUBE-HEAT SHRINK (5.72-MM DIA) (510-CM)	
E	**125-7875**		TUBE-HEAT SHRINK (7.44-MM DIA) (25-CM)	
	288-7146	2	WIRE AS (16-GA)	

B - USE AS REQUIRED
E - ORDER BY THE CENTIMETER
J - ORDER BY THE DECIMETER

<END>

580-0726 HARNESS AS-CHASSIS

S/N: Z2K1-UP; Z2N1-UP
REAR
PART OF 543-4745 WIRING GP-CHASSIS
AN ATTACHMENT

SMCS-1408 **i07824406**

NOTE	PART NUMBER	QTY	PART NAME 1 2 3 4 5 6 (PRODUCT LEVEL)	SEE PAGE
	211-6807	1	COVER-CONNECTOR	
	155-2255	2	KIT-CONNECTING PLUG (12-PIN)	
	155-2265	1	KIT-CONNECTING PLUG (8-PIN)	
	155-2260	3	KIT-CONNECTING PLUG (3-PIN)	
	155-2270	3	KIT-CONNECTING PLUG (2-PIN)	
	155-2271	2	KIT-CONNECTING PLUG (4-PIN)	
	155-2274	1	KIT-CONNECTING PLUG (6-PIN)	
			(EACH PLUG KIT INCLUDES PLUG AS, WEDGE(S) & INTERFACE SEAL)	
	102-8804	1	KIT-RECEPTACLE (4-PIN)	
	102-8801	1	KIT-RECEPTACLE (12-PIN)	
			(EACH RECEPTACLE KIT INCLUDES RECEPTACLE AS & WEDGE)	
	180-9339	98	PIN-CONNECTOR (14-GA TO 18-GA)	
	253-8110	1	PLUG (12-PIN)	
	253-8111	1	PLUG (12-PIN)	
	230-4011	1	PLUG AS-CONNECTOR (2-PIN)	
	455-0704	1	SEAL-CONNECTOR	
	230-4013	2	PLUG AS-CONNECTOR (3-PIN)	
			(EACH INCLUDES)	
	455-0705	1	SEAL-CONNECTOR	
	230-5008	1	PLUG AS-CONNECTOR (4-PIN)	
	455-0706	1	SEAL-CONNECTOR	
	576-8851	1	PLUG AS-CONNECTOR	
	8T-8737	66	PLUG-SEAL	
	312-4626	1	RECEPTACLE AS (12-PIN)	
	312-8811	1	KIT-RECEPTACLE (12-PIN)	
			(INCLUDES RECEPTACLE AS & WEDGE)	
	134-2540	3	RECEPTACLE AS-CONNECTOR (3-PIN)	
	230-4014	1	RECEPTACLE AS-CONNECTOR (3-PIN)	
	324-5680	1	RECEPTACLE AS-CONNECTOR (120-PIN)	
	324-5681	1	SEAL	
	435-9861	1	RECEPTACLE AS-CONNECTOR (12-PIN)	
	169-0705	28	PLUG-SEAL	
	283-8106	20	SOCKET-CONNECTOR (20-GA)	
			—OR—	
	374-8372	20	SOCKET-CONNECTOR (16-GA TO 18-GA)	
B	**329-3734**		TAPE-ELECTRICAL	
	2L-8069	1	TERMINAL-RING (2-GA TO 10-GA, 3/8-IN SCREW)	
	2L-8079	2	TERMINAL-RING (14-GA TO 16-GA, 3/8-IN SCREW)	
E	**119-3662**		TUBE-HEAT SHRINK (10.85-MM DIA) (20-CM)	
E	**125-7874**		TUBE-HEAT SHRINK (5.72-MM DIA) (25-CM)	
	253-8113	2	WEDGE (12-PIN)	
	194-5226	48	TERMINAL AS (16-GA)	
			—OR—	
	194-5227	48	TERMINAL AS (14-GA)	

580-0726 **HARNESS AS-CHASSIS (**contd.**)** **i07824406**

NOTE	PART NUMBER	QTY	PART NAME 1 2 3 4 5 6 (PRODUCT LEVEL)	SEE PAGE

B - USE AS REQUIRED
E - ORDER BY THE CENTIMETER

<END>

581-3681 HARNESS AS-CHASSIS

S/N: Z2K1-UP; Z2N1-UP
LH
PART OF 560-5951 WIRING GP-FENDER
AN ATTACHMENT

SMCS-1408 **i07820487**

NOTE	PART NUMBER	QTY	PART NAME 1 2 3 4 5 6 (PRODUCT LEVEL)	SEE PAGE
	107-0803	1	CAP-FUSE HOLDER	
	9W-1442	1	FUSE (10-AMPERE)	
	155-2260	2	KIT-CONNECTING PLUG (3-PIN)	
	155-2270	5	KIT-CONNECTING PLUG (2-PIN)	
	155-2271	1	KIT-CONNECTING PLUG (4-PIN)	
	155-2274	1	KIT-CONNECTING PLUG (6-PIN)	
			(EACH PLUG KIT INCLUDES PLUG AS, WEDGE(S) & INTERFACE SEAL)	
	102-8802	2	KIT-RECEPTACLE (2-PIN)	
	102-8803	2	KIT-RECEPTACLE (3-PIN)	
	102-8805	1	KIT-RECEPTACLE (6-PIN)	
	102-8801	1	KIT-RECEPTACLE (12-PIN)	
	177-9653	1	KIT-RECEPTACLE (4-PIN)	
	190-7615	1	KIT-RECEPTACLE (12-PIN)	
			(EACH RECEPTACLE KIT INCLUDES RECEPTACLE AS & WEDGE)	
	180-9339	13	PIN-CONNECTOR (14-GA TO 18-GA)	
	8T-8737	33	PLUG-SEAL	
	361-6052	1	RESISTOR AS	
	8T-8729	2	PIN-CONNECTOR (16-GA TO 20-GA)	
	102-8802	1	KIT-RECEPTACLE (2-PIN)	
			(INCLUDES RECEPTACLE AS & WEDGE)	
B	**329-3734**		TAPE-ELECTRICAL	
	9X-1056	2	TERMINAL-RECEPTACLE (14-GA TO 16-GA)	
	2L-8078	1	TERMINAL-RING (14-GA TO 16-GA, 5/16-IN SCREW)	
	2L-8050	1	TERMINAL-RING (6-GA, 1/4-IN SCREW)	
			—OR—	
	2L-8058	1	TERMINAL-RING (8-GA, 1/4-IN SCREW)	
	2L-8069	1	TERMINAL-RING (2-GA TO 10-GA, 3/8-IN SCREW)	
	2L-8079	2	TERMINAL-RING (14-GA TO 16-GA, 3/8-IN SCREW)	
E	**125-7874**		TUBE-HEAT SHRINK (5.72-MM DIA) (20-CM)	
	194-5226	21	TERMINAL AS (16-GA)	
			—OR—	
	194-5227	21	TERMINAL AS (14-GA)	

B - USE AS REQUIRED
E - ORDER BY THE CENTIMETER

<END>

523-2364 HARNESS AS-CONTROL

S/N: Z2K1-UP; Z2N1-UP
PART OF 435-5769 CONTROL GP-WINCH
AN ATTACHMENT

SMCS-1408 **i07816179**

NOTE	PART NUMBER	QTY	PART NAME 1 2 3 4 5 6 (PRODUCT LEVEL)	SEE PAGE
	155-2255	1	KIT-CONNECTING PLUG (12-PIN)	
	155-2274	1	KIT-CONNECTING PLUG (6-PIN)	
			(EACH PLUG KIT INCLUDES PLUG AS, WEDGE, & INTERFACE SEAL)	
	245-7434	1	KIT-CONNECTING PLUG (10-PIN)	
			(INCLUDES WIRE AS & PLUGS)	
	202-5397	3	PLUG	
	230-4009	1	PLUG AS-CONNECTOR (12-PIN)	
	455-0709	1	SEAL-CONNECTOR	
	230-5010	1	PLUG AS-CONNECTOR (6-PIN)	
	455-0707	1	SEAL-CONNECTOR	
	8T-8737	18	PLUG-SEAL	
	185-1861	7	SEAL-WIRE	
	8T-8730	2	SOCKET-CONNECTOR (16-GA TO 18-GA)	
	9X-3402	16	SOCKET-CONNECTOR (16-GA TO 18-GA)	
B	**329-3734**		TAPE-ELECTRICAL	
	204-1297	7	TERMINAL AS-BLADE (18-GA TO 20-GA)	
			(EACH INCLUDES)	
	235-4123	1	TERMINAL (18-GA TO 20-GA)	
E	**125-7874**		TUBE-HEAT SHRINK (5.72-MM DIA) (15-CM)	

B - USE AS REQUIRED
E - ORDER BY THE CENTIMETER

<END>

540-2510 HARNESS AS-CONTROL

S/N: Z2K1-UP; Z2N1-UP
AIR CONDITIONER
PART OF 575-4390 WIRING GP-GRADE CONTROL
AN ATTACHMENT

SMCS-1408 **i07820604**

NOTE	PART NUMBER	QTY	PART NAME 1 2 3 4 5 6 (PRODUCT LEVEL)	SEE PAGE
	490-6042	1	CAP AS-CONNECTOR	
	102-8804	1	KIT-RECEPTACLE (4-PIN)	
			(INCLUDES RECEPTACLE AS & WEDGE)	
	9X-3401	4	PIN-CONNECTOR (16-GA TO 18-GA)	

<END>

575-4392 HARNESS AS-CONTROL

S/N: Z2K1-UP; Z2N1-UP
PART OF 575-4391 WIRING GP-GRADE CONTROL
AN ATTACHMENT

SMCS-1408 **i07868162**

NOTE	PART NUMBER	QTY	PART NAME 1 2 3 4 5 6 (PRODUCT LEVEL)	SEE PAGE
	155-2255	2	KIT-CONNECTING PLUG (12-PIN)	
	155-2260	2	KIT-CONNECTING PLUG (3-PIN)	
			(EACH PLUG KIT INCLUDES PLUG AS, WEDGE(S) & INTERFACE SEAL)	
	102-8805	1	KIT-RECEPTACLE (6-PIN)	
			(INCLUDES RECEPTACLE AS & WEDGE)	
	9W-0852	2	PIN-CONNECTOR (14-GA TO 16-GA)	
	9X-3401	4	PIN-CONNECTOR (16-GA TO 18-GA)	
	8T-8737	13	PLUG-SEAL	
	134-2540	2	RECEPTACLE AS-CONNECTOR (3-PIN)	
	9W-0844	5	SOCKET-CONNECTOR (14-GA TO 16-GA)	
	9X-3402	12	SOCKET-CONNECTOR (16-GA TO 18-GA)	
B	**329-3734**		TAPE-ELECTRICAL	
E	**119-3662**		TUBE-HEAT SHRINK (10.85-MM DIA) (13-CM)	
E	**125-7874**		TUBE-HEAT SHRINK (5.72-MM DIA) (20-CM)	

B - USE AS REQUIRED
E - ORDER BY THE CENTIMETER

<END>

577-7699 HARNESS AS-CONTROL

S/N: Z2K1-UP; Z2N1-UP
PRODUCT LINK
PART OF 577-7697, 577-7698 INSTALLATION GP-COMMUNICATION
AN ATTACHMENT

SMCS-1408 **i07816804**

NOTE	PART NUMBER	QTY	PART NAME 1 2 3 4 5 6 (PRODUCT LEVEL)	SEE PAGE
	155-2255	1	KIT-CONNECTING PLUG (12-PIN)	
	155-2260	1	KIT-CONNECTING PLUG (3-PIN)	
	155-2271	1	KIT-CONNECTING PLUG (4-PIN)	
			(EACH PLUG KIT INCLUDES PLUG AS, WEDGE(S) & INTERFACE SEAL)	
	8T-8737	5	PLUG-SEAL	
	9X-3402	14	SOCKET-CONNECTOR (16-GA TO 18-GA)	

<END>

580-3608 HARNESS AS-CONTROL

S/N: Z2K1-UP; Z2N1-UP
GRADE CONTROL
PART OF 509-8959 WIRING GP-GRADE CONTROL
AN ATTACHMENT

SMCS-1408 **i07828153**

NOTE	PART NUMBER	QTY	PART NAME 1 2 3 4 5 6 (PRODUCT LEVEL)	SEE PAGE
	228-3323	2	CLIP-SPRING	
	155-2260	3	KIT-CONNECTING PLUG (3-PIN)	
			(EACH INCLUDES PLUG AS, WEDGES & INTERFACE SEAL)	
	102-8804	1	KIT-RECEPTACLE (4-PIN)	
			(INCLUDES RECEPTACLE AS & WEDGE)	
	9W-0852	2	PIN-CONNECTOR (14-GA TO 16-GA)	
	180-9339	2	PIN-CONNECTOR (14-GA TO 18-GA)	
	8T-8737	3	PLUG-SEAL	
	134-2540	3	RECEPTACLE AS-CONNECTOR (3-PIN)	
E	**125-7874**		TUBE-HEAT SHRINK (5.72-MM DIA) (45-CM)	
E	**125-7875**		TUBE-HEAT SHRINK (7.44-MM DIA) (5-CM)	
	194-5226	6	TERMINAL AS (16-GA)	
			—OR—	
	194-5227	6	TERMINAL AS (14-GA)	

E - ORDER BY THE CENTIMETER

<END>

582-9860 HARNESS AS-CONTROL

S/N: Z2K1-UP; Z2N1-UP
PRODUCT LINK, JUMPER
PART OF 581-6213 INSTALLATION GP-COMMUNICATION
AN ATTACHMENT

SMCS-1408 **i07848828**

NOTE	PART NUMBER	QTY	PART NAME 1 2 3 4 5 6 (PRODUCT LEVEL)	SEE PAGE
	155-2255	1	KIT-CONNECTING PLUG (12-PIN)	
	155-2256	1	KIT-CONNECTING PLUG (12-PIN)	
			(EACH PLUG KIT INCLUDES PLUG AS, WEDGE, & INTERFACE SEAL)	
	8T-8737	10	PLUG-SEAL	
	9X-3402	14	SOCKET-CONNECTOR (16-GA TO 18-GA)	

<END>

385-5997 HARNESS AS-ENGINE

S/N: 4501-UP

PART OF 395-0113 WIRING GP-ENGINE

AN ATTACHMENT

SMCS-1408 **i07383493**

NOTE	PART NUMBER	QTY	PART NAME 1 2 3 4 5 6 (PRODUCT LEVEL)	SEE PAGE
	377-6932	1	COVER	
E	**292-2896**		CONDUIT (16.9-MM ID) (45-CM)	
	155-2271	3	KIT-CONNECTING PLUG (4-PIN)	
			(EACH INCLUDES PLUG AS, WEDGE, & INTERFACE SEAL)	
	245-1044	2	LOCK-CONNECTOR	
	316-9351	7	MOUNTING-CABLE TIE	
	230-4011	2	PLUG AS-CONNECTOR (2-PIN)	
			(EACH INCLUDES)	
	264-7029	1	SEAL-CONNECTOR	
	238-8245	1	PLUG AS-CONNECTOR (2-PIN)	
	455-0704	1	SEAL-CONNECTOR	
	238-8247	2	PLUG AS-CONNECTOR (2-PIN)	
			(EACH INCLUDES)	
	455-0704	1	SEAL-CONNECTOR	
	245-1043	1	PLUG GP-CONNECTOR (64-PIN)	
	267-7208	1	RING-RETAINING	
	274-4990	1	SEAL	
M	**267-7207**	1	BOLT-SPECIAL (M6X1-THD)	
	281-8804	2	PLUG AS-CONNECTOR (3-PIN)	
			(EACH INCLUDES)	
	455-0705	1	SEAL-CONNECTOR	
	536-7946	1	PLUG AS-CONNECTOR	
	444-7604	2	SOCKET-CONNECTOR	
	536-7945	1	HARNESS AS-WIRING	
	444-7604	3	SOCKET-CONNECTOR	
	245-1048	33	PLUG-CONNECTOR (1-PIN)	
	185-1860	5	SEAL-WIRE	
	267-9572	31	SOCKET-CONNECTION (18-GA)	
	9X-3402	16	SOCKET-CONNECTOR (16-GA TO 18-GA)	
			—OR—	
	126-1768	16	SOCKET-CONNECTOR (14-GA TO 16-GA)	
	217-9039	6	STRAP-CABLE	
	356-1219	1	STRAP-CABLE	
	206-1345	14	STRAP-CABLE	
E	**125-7874**		TUBE-HEAT SHRINK (5.72-MM DIA) (10-CM)	
	194-5226	12	TERMINAL AS (16-GA)	
			—OR—	
	194-5227	12	TERMINAL AS (14-GA)	

E - ORDER BY THE CENTIMETER
M - METRIC PART

<END>

581-3677 HARNESS AS-ENGINE

S/N: Z2K1-UP; Z2N1-UP
PART OF 560-5946 WIRING GP-ENGINE
AN ATTACHMENT

SMCS-1408 **i07820275**

NOTE	PART NUMBER	QTY	PART NAME 1 2 3 4 5 6 (PRODUCT LEVEL)	SEE PAGE
	245-1045	1	COVER	
	211-6807	1	COVER-CONNECTOR	
	155-2255	2	KIT-CONNECTING PLUG (12-PIN)	
	155-2256	1	KIT-CONNECTING PLUG (12-PIN)	
	155-2257	1	KIT-CONNECTING PLUG (12-PIN)	
	155-2260	2	KIT-CONNECTING PLUG (3-PIN)	
	155-2270	6	KIT-CONNECTING PLUG (2-PIN)	
	155-2271	1	KIT-CONNECTING PLUG (4-PIN)	
	177-9656	1	KIT-CONNECTING PLUG (4-PIN)	
			(EACH PLUG KIT INCLUDES PLUG AS, WEDGE(S) & INTERFACE SEAL)	
	102-8802	2	KIT-RECEPTACLE (2-PIN)	
	102-8804	1	KIT-RECEPTACLE (4-PIN)	
			(EACH RECEPTACLE KIT INCLUDES RECEPTACLE AS & WEDGE)	
	245-1044	2	LOCK-CONNECTOR	
	180-9339	45	PIN-CONNECTOR (14-GA TO 18-GA)	
	230-4011	3	PLUG AS-CONNECTOR (2-PIN)	
			(EACH INCLUDES)	
	455-0704	1	SEAL-CONNECTOR	
	230-4013	1	PLUG AS-CONNECTOR (3-PIN)	
	237-0227	2	PLUG AS-CONNECTOR (3-PIN)	
			(EACH PLUG AS INCLUDES)	
	455-0705	1	SEAL-CONNECTOR	
	245-1042	1	PLUG AS-CONNECTOR (64-PIN)	
M	**267-7207**	1	BOLT-SPECIAL (M6X1-THD)	
	281-3395	1	PLUG AS-CONNECTOR (12-PIN)	
	455-0709	1	SEAL-CONNECTOR	
	245-1048	36	PLUG-CONNECTOR (1-PIN)	
	8T-8737	102	PLUG-SEAL	
	134-2540	2	RECEPTACLE AS-CONNECTOR (3-PIN)	
	324-5680	1	RECEPTACLE AS-CONNECTOR (120-PIN)	
	324-5681	1	SEAL	
	267-9572	28	SOCKET-CONNECTION (18-GA)	
	3E-5226	3	SOCKET-CONNECTOR (12-GA TO 14-GA)	
B	**329-3734**		TAPE-ELECTRICAL	
	2L-8069	4	TERMINAL-RING (2-GA TO 10-GA, 3/8-IN SCREW)	
E	**119-3662**		TUBE-HEAT SHRINK (10.85-MM DIA) (20-CM)	
E	**125-7874**		TUBE-HEAT SHRINK (5.72-MM DIA) (98-CM)	
E	**125-7875**		TUBE-HEAT SHRINK (7.44-MM DIA) (13-CM)	
	194-5226	75	TERMINAL AS (16-GA)	
			—OR—	
	194-5227	75	TERMINAL AS (14-GA)	

B - USE AS REQUIRED
E - ORDER BY THE CENTIMETER
M - METRIC PART

<END>

580-0725 HARNESS AS-FRONT

S/N: Z2K1-UP; Z2N1-UP
RADIATOR
PART OF 510-6812 WIRING GP-FRONT
AN ATTACHMENT

SMCS-1408 **i07819721**

NOTE	PART NUMBER	QTY	PART NAME 1 2 3 4 5 6 (PRODUCT LEVEL)	SEE PAGE
	155-2260	1	KIT-CONNECTING PLUG (3-PIN)	
	155-2270	7	KIT-CONNECTING PLUG (2-PIN)	
			(EACH PLUG KIT INCLUDES PLUG AS, WEDGE(S) & INTERFACE SEAL)	
	102-8802	3	KIT-RECEPTACLE (2-PIN)	
	102-8801	1	KIT-RECEPTACLE (12-PIN)	
			(EACH RECEPTACLE KIT INCLUDES RECEPTACLE AS & WEDGE)	
	9X-3401	11	PIN-CONNECTOR (16-GA TO 18-GA)	
			—OR—	
	126-1767	11	PIN-CONNECTOR (14-GA TO 16-GA)	
	8T-8737	7	PLUG-SEAL	
B	**329-3734**		TAPE-ELECTRICAL	
E	**119-3662**		TUBE-HEAT SHRINK (10.85-MM DIA) (26-CM)	
	194-5226	17	TERMINAL AS (16-GA)	
			—OR—	
	194-5227	17	TERMINAL AS (14-GA)	

B - USE AS REQUIRED
E - ORDER BY THE CENTIMETER

<END>

581-3674 HARNESS AS-FRONT

S/N: Z2K1-UP
C-FRAME, XL
PART OF 510-6064 WIRING GP-GRADE CONTROL
AN ATTACHMENT

SMCS-1408 **i07849118**

NOTE	PART NUMBER	QTY	PART NAME 1 2 3 4 5 6 (PRODUCT LEVEL)	SEE PAGE
	3E-4071	1	CLIP-GUARD	
	124-2100	1	COUPLING-PERMANENT	
E	**6V-0744**		GUARD-HOSE (200-CM)	
E	**456-8429**		HOSE (283-CM)	
	180-9339	8	PIN-CONNECTOR (14-GA TO 18-GA)	
	155-2260	1	KIT-CONNECTING PLUG (3-PIN)	
	155-2271	1	KIT-CONNECTING PLUG (4-PIN)	
			(EACH PLUG KIT INCLUDES PLUG AS, WEDGE(S) & INTERFACE SEAL)	
	8T-8737	1	PLUG-SEAL	
	102-8804	2	KIT-RECEPTACLE (4-PIN)	
			(EACH INCLUDES RECEPTACLE AS & WEDGE)	
	134-2540	1	RECEPTACLE AS-CONNECTOR (3-PIN)	
E	**329-0419**		SLEEVE (49-CM)	
	194-5226	6	TERMINAL AS (16-GA)	
			—OR—	
	194-5227	6	TERMINAL AS (14-GA)	
E	**119-3662**		TUBE-HEAT SHRINK (10.85-MM DIA) (26-CM)	
E	**210-8958**		TUBE-HEAT SHRINK (24-MM DIA) (10-CM)	

E - ORDER BY THE CENTIMETER

<END>

581-3702 HARNESS AS-FRONT

S/N: Z2K1-UP; Z2N1-UP
PART OF 565-7287 WIRING GP-HOOD
AN ATTACHMENT

SMCS-1408 **i07820579**

NOTE	PART NUMBER	QTY	PART NAME 1 2 3 4 5 6 (PRODUCT LEVEL)	SEE PAGE
	155-2255	1	KIT-CONNECTING PLUG (12-PIN)	
	155-2260	1	KIT-CONNECTING PLUG (3-PIN)	
	155-2270	1	KIT-CONNECTING PLUG (2-PIN)	
	155-2271	1	KIT-CONNECTING PLUG (4-PIN)	
			(EACH PLUG KIT INCLUDES PLUG AS, WEDGE(S) & INTERFACE SEAL)	
	102-8802	1	KIT-RECEPTACLE (2-PIN)	
	102-8803	1	KIT-RECEPTACLE (3-PIN)	
	102-8804	1	KIT-RECEPTACLE (4-PIN)	
	102-8801	1	KIT-RECEPTACLE (12-PIN)	
	190-7614	1	KIT-RECEPTACLE (12-PIN)	
			(EACH RECEPTACLE KIT INCLUDES RECEPTACLE AS & WEDGE)	
	180-9339	21	PIN-CONNECTOR (14-GA TO 18-GA)	
	230-4011	1	PLUG AS-CONNECTOR (2-PIN)	
	455-0704	1	SEAL-CONNECTOR	
	281-8803	1	PLUG AS-CONNECTOR (3-PIN)	
	455-0705	1	SEAL-CONNECTOR	
	8T-8737	14	PLUG-SEAL	
B	**329-3734**		TAPE-ELECTRICAL	
E	**125-7874**		TUBE-HEAT SHRINK (5.72-MM DIA) (5-CM)	
	194-5226	24	TERMINAL AS (16-GA)	
			—OR—	
	194-5227	24	TERMINAL AS (14-GA)	

B - USE AS REQUIRED
E - ORDER BY THE CENTIMETER

<END>

575-4389 HARNESS AS-HEATER & AIR COND

S/N: Z2K1-UP; Z2N1-UP
PART OF 577-0177 WIRING GP-AIR CONDITIONER
AN ATTACHMENT

SMCS-1408 **i07814509**

NOTE	PART NUMBER	QTY	PART NAME 1 2 3 4 5 6 (PRODUCT LEVEL)	SEE PAGE
	274-3774	1	CAP-CONNECTOR	
	374-7463	1	CAP-SEAL	
	374-7464	2	CAP-SEAL	
	374-7465	2	CAP-SEAL	
	374-7467	1	CAP-SEAL	
	155-2265	1	KIT-CONNECTING PLUG (8-PIN)	
	155-2260	2	KIT-CONNECTING PLUG (3-PIN)	
	155-2270	2	KIT-CONNECTING PLUG (2-PIN)	
	155-2271	8	KIT-CONNECTING PLUG (4-PIN)	
			(EACH PLUG KIT INCLUDES PLUG AS, WEDGE(S) & INTERFACE SEAL)	
	102-8804	2	KIT-RECEPTACLE (4-PIN)	
			(EACH INCLUDES RECEPTACLE AS & WEDGE)	
	9W-0852	1	PIN-CONNECTOR (14-GA TO 16-GA)	
	9X-3401	7	PIN-CONNECTOR (16-GA TO 18-GA)	
	160-7689	1	PLUG AS-CONNECTOR (70-PIN)	
	159-9322	1	SEAL-O-RING	
	230-4011	1	PLUG AS-CONNECTOR (2-PIN)	
	455-0704	1	SEAL-CONNECTOR	
	230-4013	1	PLUG AS-CONNECTOR (3-PIN)	
	237-0227	1	PLUG AS-CONNECTOR (3-PIN)	
			(EACH PLUG AS INCLUDES)	
	455-0705	1	SEAL-CONNECTOR	
	8T-8737	37	PLUG-SEAL	
	9W-0844	33	SOCKET-CONNECTOR (14-GA TO 16-GA)	
	9X-3402	58	SOCKET-CONNECTOR (16-GA TO 18-GA)	
B	**329-3734**		TAPE-ELECTRICAL	
E	**125-7874**		TUBE-HEAT SHRINK (5.72-MM DIA) (30-CM)	

B - USE AS REQUIRED
E - ORDER BY THE CENTIMETER

<END>

559-4330 HARNESS AS-HYDRAULIC TANK

S/N: Z2K1-UP; Z2N1-UP
PART OF 543-4745 WIRING GP-CHASSIS
AN ATTACHMENT

SMCS-1408 **i07824398**

NOTE	PART NUMBER	QTY	PART NAME 1 2 3 4 5 6 (PRODUCT LEVEL)	SEE PAGE
	155-2270	2	KIT-CONNECTING PLUG (2-PIN)	
			(EACH INCLUDES PLUG AS, WEDGE, & INTERFACE SEAL)	
	102-8805	1	KIT-RECEPTACLE (6-PIN)	
			(INCLUDES RECEPTACLE AS & WEDGE)	
	9X-3401	5	PIN-CONNECTOR (16-GA TO 18-GA)	
	230-4011	1	PLUG AS-CONNECTOR (2-PIN)	
	455-0704	1	SEAL-CONNECTOR	
	8T-8737	1	PLUG-SEAL	
	9X-3402	6	SOCKET-CONNECTOR (16-GA TO 18-GA)	
E	**125-7874**		TUBE-HEAT SHRINK (5.72-MM DIA) (5-CM)	

E - ORDER BY THE CENTIMETER

<END>

564-6737 HARNESS AS-LIGHTING

S/N: Z2K1-UP; Z2N1-UP
HVAC
PART OF 503-0097 LIGHTING GP-FLOOD
AN ATTACHMENT

SMCS-1408 **i07824628**

NOTE	PART NUMBER	QTY	PART NAME 1 2 3 4 5 6 (PRODUCT LEVEL)	SEE PAGE
	374-7463	2	CAP-SEAL	
	155-2270	3	KIT-CONNECTING PLUG (2-PIN)	
	155-2271	1	KIT-CONNECTING PLUG (4-PIN)	
			(EACH PLUG KIT INCLUDES PLUG AS, WEDGE, & INTERFACE SEAL)	
	8T-8737	1	PLUG-SEAL	
	8T-8730	8	SOCKET-CONNECTOR (16-GA TO 18-GA)	
	9W-0844	1	SOCKET-CONNECTOR (14-GA TO 16-GA)	
B	**329-3734**		TAPE-ELECTRICAL	
E	**119-3662**		TUBE-HEAT SHRINK (10.85-MM DIA) (7-CM)	
E	**125-7875**		TUBE-HEAT SHRINK (7.44-MM DIA) (5-CM)	

B - USE AS REQUIRED
E - ORDER BY THE CENTIMETER

<END>

510-4915 HARNESS AS-MONITOR–DISPLAY

S/N: Z2K1-UP; Z2N1-UP
PART OF 575-4390 WIRING GP-GRADE CONTROL
AN ATTACHMENT

SMCS-1408 **i07482926**

NOTE	PART NUMBER	QTY	PART NAME 1 2 3 4 5 6 (PRODUCT LEVEL)	SEE PAGE
	374-7465	1	CAP-SEAL	
	155-2271	1	KIT-CONNECTING PLUG (4-PIN)	
			(INCLUDES PLUG AS, WEDGE, & INTERFACE SEAL)	
	102-8806	1	KIT-RECEPTACLE (8-PIN)	
			(INCLUDES RECEPTACLE AS & WEDGE)	
	9W-0852	2	PIN-CONNECTOR (14-GA TO 16-GA)	
	9X-3401	6	PIN-CONNECTOR (16-GA TO 18-GA)	
	167-8987	1	PLUG AS-CONNECTOR (8-PIN)	
	9W-0844	2	SOCKET-CONNECTOR (14-GA TO 16-GA)	
	9X-3402	2	SOCKET-CONNECTOR (16-GA TO 18-GA)	
E	**125-7874**		TUBE-HEAT SHRINK (5.72-MM DIA) (10-CM)	
	3E-3389	1	WEDGE-RECEPTACLE LOCK (8-PIN)	

E - ORDER BY THE CENTIMETER

<END>

200-5728 HARNESS AS-RADIO

S/N: Z2K1-UP; Z2N1-UP
4 FLANGE
PART OF 487-5821 RADIO GP
AN ATTACHMENT

SMCS-1408 **i05716252**

NOTE	PART NUMBER	QTY	PART NAME 1 2 3 4 5 6 (PRODUCT LEVEL)	SEE PAGE
	172-8037	1	CONNECTOR (RADIO)	
	160-3518	1	KIT-RECEPTACLE (8-PIN)	
			(INCLUDES RECEPTACLE AS & WEDGE)	
	8T-8729	7	PIN-CONNECTOR (16-GA TO 20-GA)	
	8T-8737	1	PLUG-SEAL	
	172-8039	11	TERMINAL (RADIO)	

<END>

581-3676 HARNESS AS-SENSOR

S/N: Z2N1-UP
GRADE CONTROL
PART OF 507-6853 WIRING GP-GRADE CONTROL
AN ATTACHMENT

SMCS-1408 **i07820480**

NOTE	PART NUMBER	QTY	PART NAME 1 2 3 4 5 6 (PRODUCT LEVEL)	SEE PAGE
	3E-4071	1	CLIP-GUARD	
	124-2100	1	COUPLING-PERMANENT	
E	**6V-0744**		GUARD-HOSE (240-CM)	
E	**456-8429**		HOSE (320-CM)	
	155-2260	1	KIT-CONNECTING PLUG (3-PIN)	
	155-2271	1	KIT-CONNECTING PLUG (4-PIN)	
			(EACH PLUG KIT INCLUDES PLUG AS, WEDGE(S) & INTERFACE SEAL)	
	102-8804	2	KIT-RECEPTACLE (4-PIN)	
			(EACH INCLUDES RECEPTACLE AS & WEDGE)	
	180-9339	8	PIN-CONNECTOR (14-GA TO 18-GA)	
	8T-8737	1	PLUG-SEAL	
	134-2540	1	RECEPTACLE AS-CONNECTOR (3-PIN)	
E	**329-0419**		SLEEVE (48-CM)	
E	**119-3662**		TUBE-HEAT SHRINK (10.85-MM DIA) (26-CM)	
E	**210-8958**		TUBE-HEAT SHRINK (24-MM DIA) (10-CM)	
	194-5226	6	TERMINAL AS (16-GA)	
			—OR—	
	194-5227	6	TERMINAL AS (14-GA)	

E - ORDER BY THE CENTIMETER

<END>

525-7915 HARNESS AS-SOLENOID

S/N: Z2K1-UP; Z2N1-UP
WINCH
PART OF 526-4250 WIRING GP-WINCH
AN ATTACHMENT

SMCS-1408 **i07839867**

NOTE	PART NUMBER	QTY	PART NAME 1 2 3 4 5 6 (PRODUCT LEVEL)	SEE PAGE
	1U-9458	1	CONNECTOR (31-PIN)	
	155-2255	1	KIT-CONNECTING PLUG (12-PIN)	
	155-2271	1	KIT-CONNECTING PLUG (4-PIN)	
			(EACH PLUG KIT INCLUDES PLUG AS, WEDGE, & INTERFACE SEAL)	
	8T-8737	13	PLUG-SEAL	
E	**125-7874**		TUBE-HEAT SHRINK (5.72-MM DIA) (5-CM)	
	194-5226	34	TERMINAL AS (16-GA)	
			—OR—	
	194-5227	34	TERMINAL AS (14-GA)	

E - ORDER BY THE CENTIMETER

<END>

526-0868 HARNESS AS-STEERING

S/N: Z2K1-UP; Z2N1-UP
PART OF 526-7919, 565-8666 WIRING GP-CAB
AN ATTACHMENT

SMCS-1408 **i07814260**

NOTE	PART NUMBER	QTY	PART NAME 1 2 3 4 5 6 (PRODUCT LEVEL)	SEE PAGE
	253-8110	1	PLUG (12-PIN)	
	155-2274	1	KIT-CONNECTING PLUG (6-PIN)	
			(INCLUDES PLUG AS, WEDGE, & INTERFACE SEAL)	
	102-8801	1	KIT-RECEPTACLE (12-PIN)	
			(INCLUDES RECEPTACLE AS & WEDGE)	
	9X-3402	6	SOCKET-CONNECTOR (16-GA TO 18-GA)	
	283-8106	12	SOCKET-CONNECTOR (20-GA)	
			—OR—	
	374-8372	12	SOCKET-CONNECTOR (16-GA TO 18-GA)	
B	**329-3734**		TAPE-ELECTRICAL	
E	**125-7874**		TUBE-HEAT SHRINK (5.72-MM DIA) (5-CM)	
E	**125-7875**		TUBE-HEAT SHRINK (7.44-MM DIA) (5-CM)	
	253-8113	1	WEDGE (12-PIN)	

B - USE AS REQUIRED
E - ORDER BY THE CENTIMETER

<END>

445-6133 HARNESS AS-TRANSMISSION

S/N: D5H1-UP; D6M1-UP; D7M1-UP; D9M1-UP
PART OF 394-2666 CONTROL GP-TRANSMISSION HYD
AN ATTACHMENT

SMCS-1408, 3030 **i06708699**

NOTE	PART NUMBER	QTY	PART NAME 1 2 3 4 5 6 (PRODUCT LEVEL)	SEE PAGE
Y	*445-6134*	1	HARNESS AS-TRANSMISSION	174
	132-5789	5	CLIP (LADDER)	
	352-3964	1	CLIP	
	3S-2093	6	STRAP-CABLE	

Y - SEPARATE ILLUSTRATION

<END>

445-6134 HARNESS AS-TRANSMISSION

S/N: D5H1-UP; D6M1-UP; D7M1-UP; D9M1-UP
PART OF 445-6133 HARNESS AS-TRANSMISSION
AN ATTACHMENT

SMCS-1408, 3030 **i06708700**

NOTE	PART NUMBER	QTY	PART NAME 1 2 3 4 5 6 (PRODUCT LEVEL)	SEE PAGE
E	**8T-6342**		TUBE-HEAT SHRINK (3.2-MM DIA) (39-CM)	
E	**125-7874**		TUBE-HEAT SHRINK (5.72-MM DIA) (10-CM)	
	9X-3402	14	SOCKET-CONNECTOR (16-GA TO 18-GA)	
			—OR—	
	126-1768	14	SOCKET-CONNECTOR (14-GA TO 16-GA)	
	331-4226	7	KIT-CONNECTING PLUG (2-PIN)	
			(EACH INCLUDES PLUG AS, WEDGE & INTERFACE SEAL)	

E - ORDER BY THE CENTIMETER

<END>

580-0727 HARNESS AS-VALVE

S/N: Z2K1-UP; Z2N1-UP
PART OF 543-4745 WIRING GP-CHASSIS
AN ATTACHMENT

SMCS-1408 **i07824432**

NOTE	PART NUMBER	QTY	PART NAME 1 2 3 4 5 6 (PRODUCT LEVEL)	SEE PAGE
	155-2270	11	KIT-CONNECTING PLUG (2-PIN)	
			(EACH INCLUDES PLUG AS, WEDGE, & INTERFACE SEAL)	
	102-8806	1	KIT-RECEPTACLE (8-PIN)	
	102-8801	1	KIT-RECEPTACLE (12-PIN)	
			(EACH RECEPTACLE KIT INCLUDES RECEPTACLE AS & WEDGE)	
	180-9339	18	PIN-CONNECTOR (14-GA TO 18-GA)	
	230-4013	1	PLUG AS-CONNECTOR (3-PIN)	
	455-0705	1	SEAL-CONNECTOR	
	8T-8737	2	PLUG-SEAL	
B	**329-3734**		TAPE-ELECTRICAL	
E	**119-3662**		TUBE-HEAT SHRINK (10.85-MM DIA) (13-CM)	
E	**125-7874**		TUBE-HEAT SHRINK (5.72-MM DIA) (5-CM)	
	194-5226	25	TERMINAL AS (16-GA)	
			—OR—	
	194-5227	25	TERMINAL AS (14-GA)	

B - USE AS REQUIRED
E - ORDER BY THE CENTIMETER

<END>

375-8407 HARNESS AS-WIRING–ENGINE

S/N: 4501-UP

PART OF 395-0113 WIRING GP-ENGINE

AN ATTACHMENT

SMCS-1408 **i05333790**

NOTE	PART NUMBER	QTY	PART NAME 1 2 3 4 5 6 (PRODUCT LEVEL)	SEE PAGE
	102-8804	1	KIT-RECEPTACLE (4-PIN)	
			(INCLUDES RECEPTACLE AS & WEDGE)	
	113-4630	1	RECEPTACLE AS-CONNECTOR (4-PIN)	
	9X-3401	4	PIN-CONNECTOR (16-GA TO 18-GA)	
			–OR–	
	126-1767	4	PIN-CONNECTOR (14-GA TO 16-GA)	
	332-7865	1	TIE-CABLE	
			<END>	

561-3220 HEATER GP-JACKET WATER

S/N: Z2K1-UP; Z2N1-UP
240-VOLT, 1000-WATT
PART OF 575-9704 COLD WEATHER AR
AN ATTACHMENT

SMCS-1383 **i07818627**

NOTE	REF NO	GRAPHIC REF	PART NUMBER	QTY	PART NAME 1 2 3 4 5 6 (PRODUCT LEVEL)	SEE PAGE
	1	1	**352-3968**	1	CLIP (LADDER)	
M	2	1	**8T-4189**	1	BOLT (M8X1.25X20-MM)	
M	3	1	**8T-4198**	1	BOLT (M10X1.5X100-MM)	
	4	1	**3S-2093**	9	STRAP-CABLE	
	5	1	**8T-4121**	1	WASHER-HARD (11X21X2.5-MM THK)	
	6	1	**8T-4224**	1	WASHER-HARD (8.8X16X2-MM THK)	
	7	1	**096-6166**	4	WASHER-HARD (4.5X9X1-MM THK)	
M	8	1	**170-5632**	4	BOLT (M4X0.7X16-MM)	
	9	1	**260-1556**	1	ELEMENT AS-JACKET WATER HEATER (240-VOLT, 1000-WATT)	
		1	**3D-2824**	1	SEAL-O-RING	
	10	1	**261-0634**	1	FILM-IDENTIFICATION (JACKET WATER HEATER)	
	11	1	**303-4649**	1	CLIP (LADDER)	
	12	1	**395-3268**	1	RECEPTACLE AS (HEATER)	
	13	1	**352-3970**	1	CLIP (LADDER)	
M	14	1	**479-2171**	1	BOLT AS	
	15	1	**4P-8134**	1	CLIP (LADDER)	
	16	1	**540-3800**	1	CORD AS-HEATER	
BF			**1P-0810**		TAPE-ELECTRICAL	

B - USE AS REQUIRED
F - NOT SHOWN
M - METRIC PART

561-3220 **HEATER GP-JACKET WATER (**contd.**)** **i07818627**

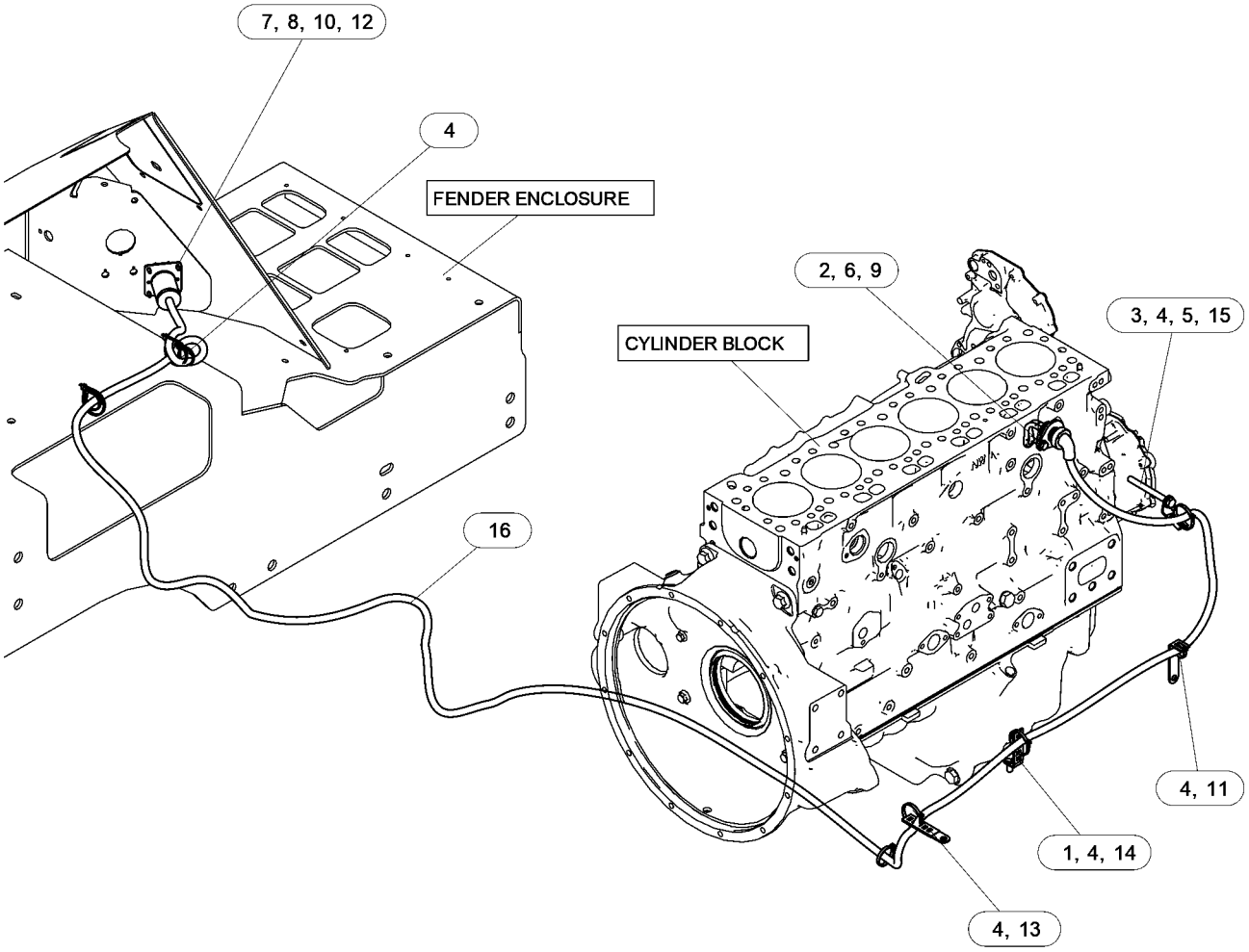

GRAPHIC #1 <END> g06446317

545-7813 INSTALLATION GP-COMMUNICATION

S/N: Z2K1-UP; Z2N1-UP
PL042 CELLULAR
AN ATTACHMENT

SMCS-7606 **i07820016**

NOTE	REF NO	GRAPHIC REF	PART NUMBER	QTY	PART NAME 1 2 3 4 5 6 (PRODUCT LEVEL)	SEE PAGE
Y	1	1	**514-7505**	1	CONTROL GP-UNPROGRAMMED (PL042 CELLULAR)	144
	2	1	**7K-1181**	3	STRAP-CABLE	

Y - SEPARATE ILLUSTRATION

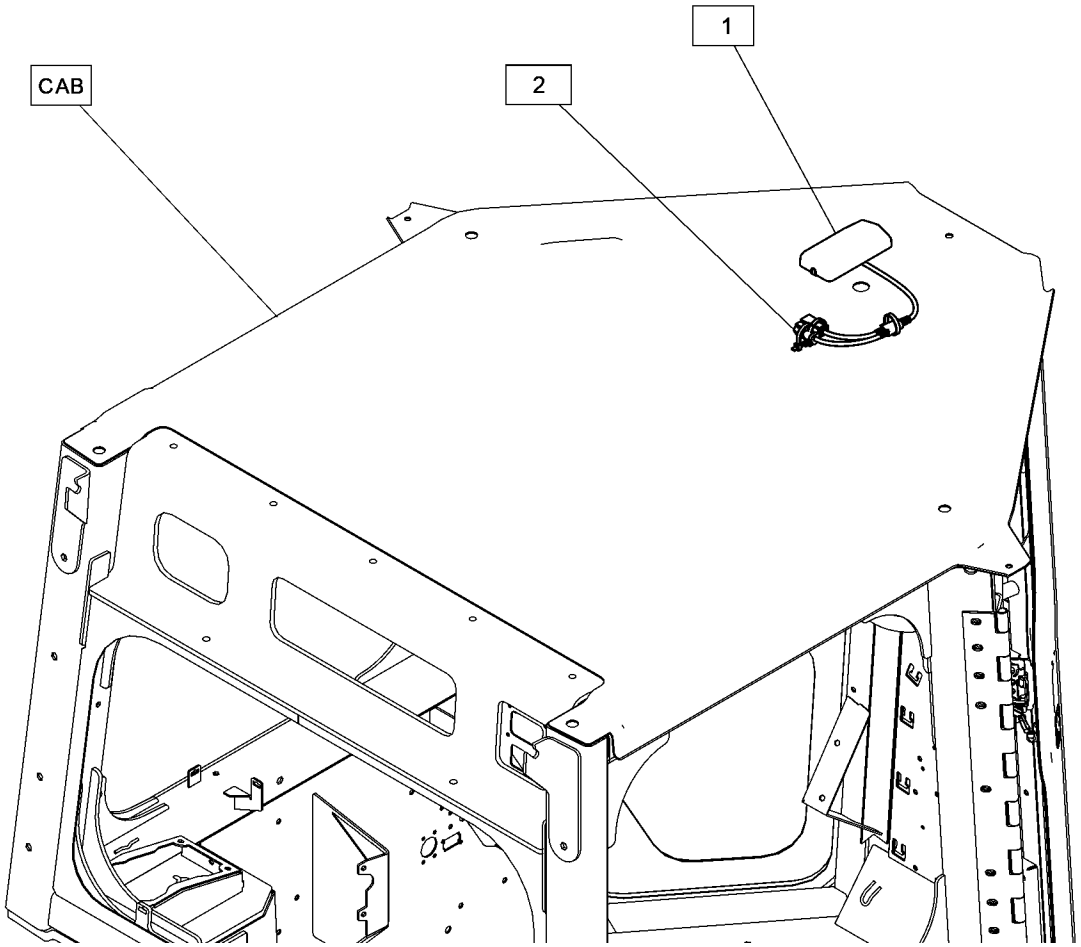

GRAPHIC #1 <END> g06453068

577-7697 INSTALLATION GP-COMMUNICATION–PL243 CELLULAR

S/N: Z2K1-UP; Z2N1-UP

AN ATTACHMENT

SMCS-7606 **i07865757**

NOTE	REF NO	GRAPHIC REF	PART NUMBER	QTY	PART NAME 1 2 3 4 5 6 (PRODUCT LEVEL)	SEE PAGE
	1	1	*433-6515*	1	PLUG AS	
		1	**8T-8737**	6	PLUG-SEAL	
		1	**155-2274**	1	KIT-CONNECTING PLUG (6-PIN)	
	2	1	**550-3269**	1	CONTROL GP-COMMUNICATION (PL243 CELLULAR)	
Y	3	1	**577-7699**	1	HARNESS AS-CONTROL (PRODUCT LINK)	162
	4	1	**7K-1181**	7	STRAP-CABLE	

Y - SEPARATE ILLUSTRATION

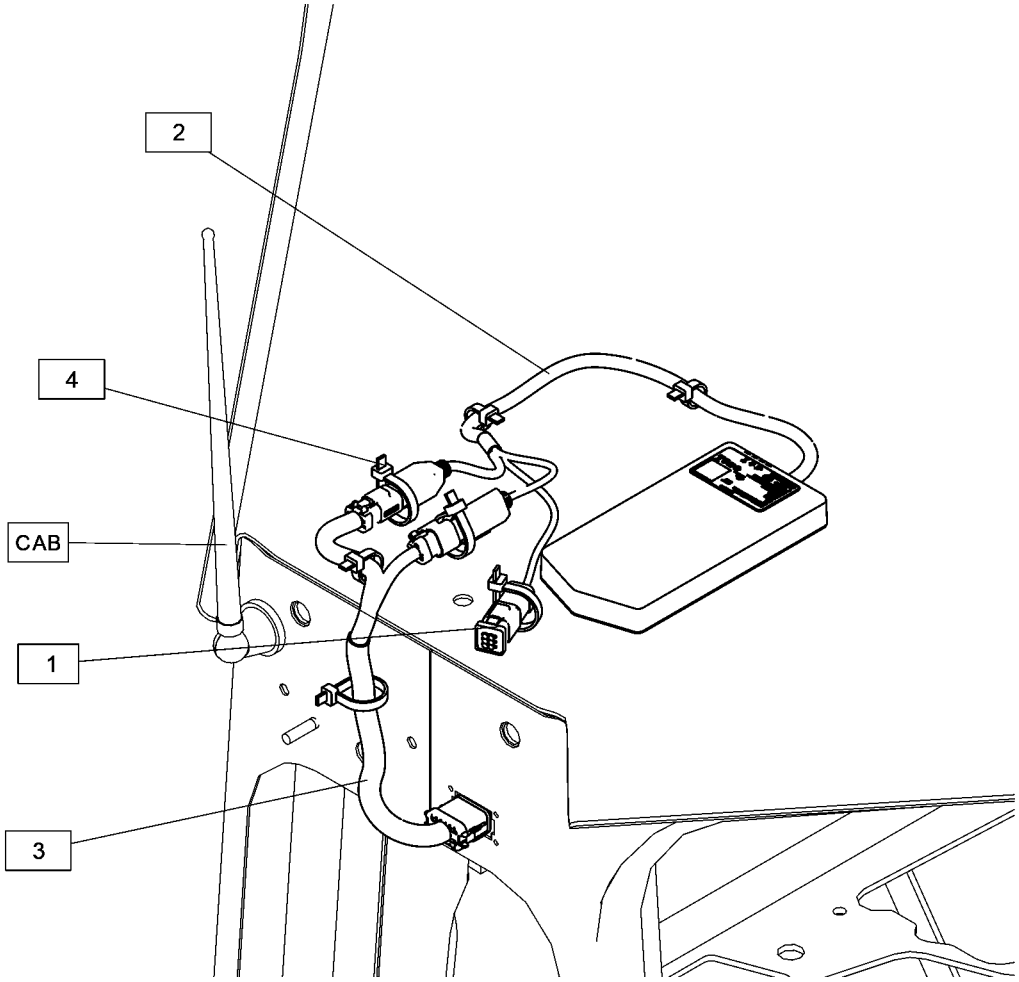

GRAPHIC #1 <END> g06422449

577-7698 INSTALLATION GP-COMMUNICATION

S/N: Z2K1-UP; Z2N1-UP

PL083

AN ATTACHMENT

SMCS-7606 **i07816809**

NOTE	REF NO	GRAPHIC REF	PART NUMBER	QTY	PART NAME 1 2 3 4 5 6 (PRODUCT LEVEL)	SEE PAGE
	1	1	*433-6515*	1	PLUG AS	
		1	**155-2274**	1	KIT-CONNECTING PLUG (6-PIN)	
					(INCLUDES PLUG AS, WEDGE, & INTERFACE SEAL)	
		1	**8T-8737**	6	PLUG-SEAL	
	2	1	**545-3987**	1	CONTROL GP-COMMUNICATION (DUAL)	
Y	3	1	**577-7699**	1	HARNESS AS-CONTROL (PRODUCT LINK)	162
	4	1	**7K-1181**	7	STRAP-CABLE	

Y - SEPARATE ILLUSTRATION

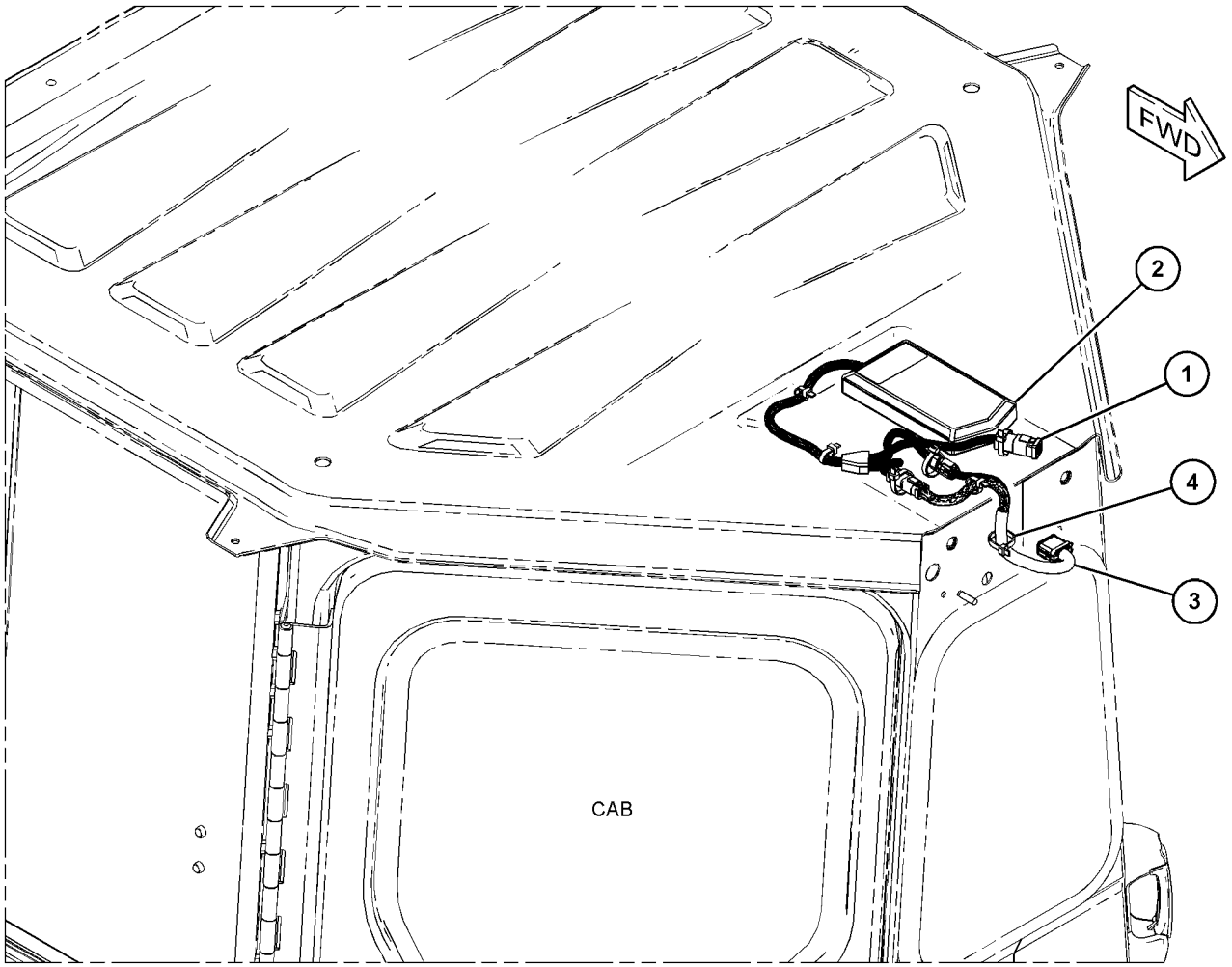

GRAPHIC #1 <END> g06423202

579-5636 INSTALLATION GP-COMMUNICATION

S/N: Z2K1-UP; Z2N1-UP
PL641 CELLULAR
AN ATTACHMENT

SMCS-7606 **i07834677**

NOTE	PART NUMBER	QTY	PART NAME 1 2 3 4 5 6 (PRODUCT LEVEL)	SEE PAGE
Y	*581-6213*	1	INSTALLATION GP-COMMUNICATION (PL641 CELLULAR)	182

Y - SEPARATE ILLUSTRATION

<END>

581-6213 INSTALLATION GP-COMMUNICATION

S/N: Z2K1-UP; Z2N1-UP
PL641 CELLULAR
PART OF 579-5636 INSTALLATION GP-COMMUNICATION
AN ATTACHMENT

SMCS-7606 **i07848793**

NOTE	REF NO	GRAPHIC REF	PART NUMBER	QTY	PART NAME 1 2 3 4 5 6 (PRODUCT LEVEL)	SEE PAGE
YR	1	1	**440-2104**	1	CONTROL GP-ELECTRONIC (PL641I CELLULAR)	144
Y	2	1	**582-9860**	1	HARNESS AS-CONTROL	163
	3	1	**583-6928**	1	BRACKET AS	
	4	1	**5P-1076**	3	WASHER-HARD (13.5X30X4-MM THK)	
M	5	1	**6V-8225**	4	NUT (M6X1-THD)	
	6	1	**7K-1181**	4	STRAP-CABLE	
M	7	1	**8T-4183**	3	BOLT (M12X1.75X40-MM)	
	8	1	**9X-8256**	4	WASHER (6.6X12X2-MM THK)	

M - METRIC PART
R - REMANUFACTURED PART MAY BE AVAILABLE
Y - SEPARATE ILLUSTRATION

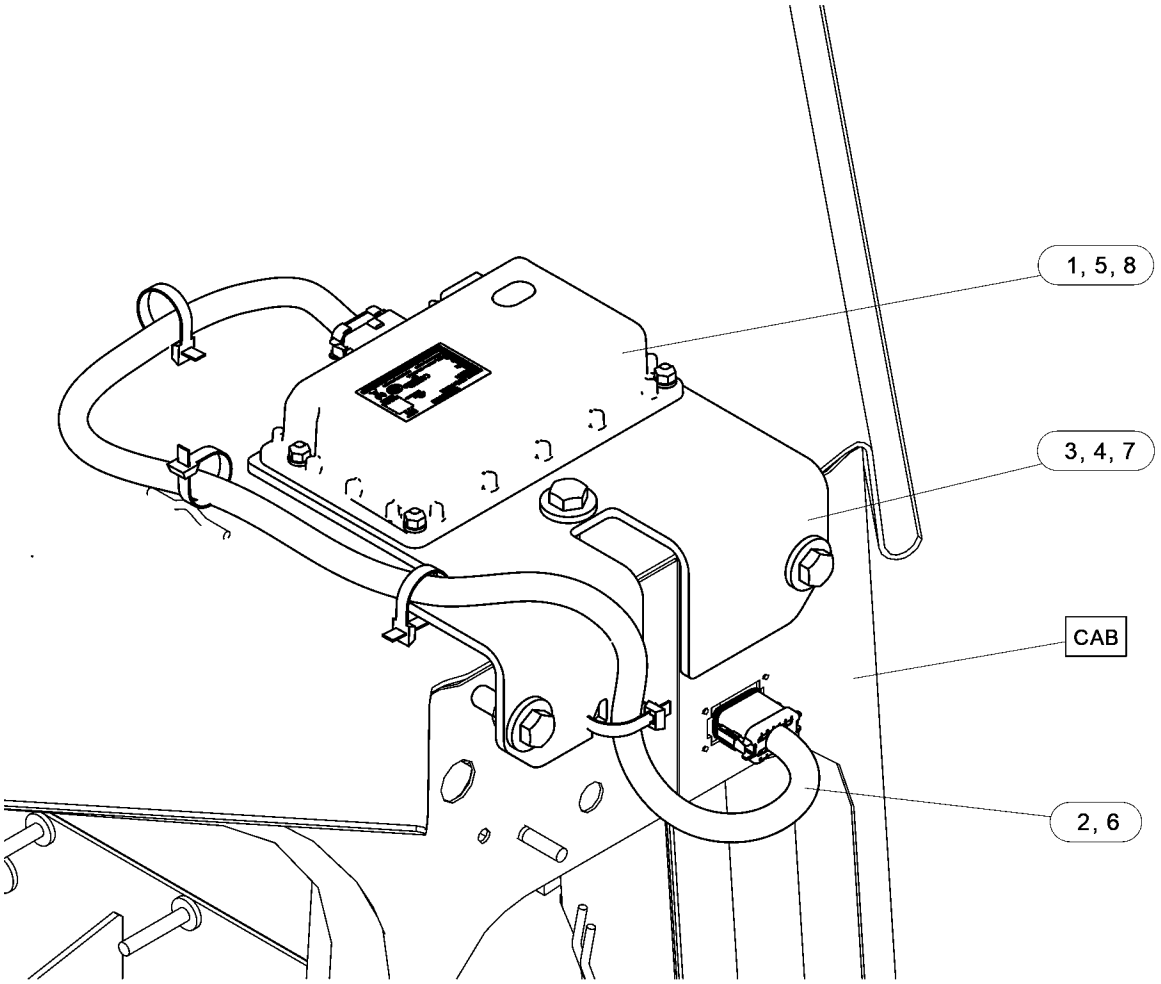

GRAPHIC #1 <END> g06453615

564-2666 LAMP GP-FLOOD

S/N: Z2K1-UP; Z2N1-UP
PART OF 555-1263 LIGHTING GP-FLOOD
AN ATTACHMENT

SMCS-1434 **i07819975**

NOTE	REF NO	GRAPHIC REF	PART NUMBER	QTY	PART NAME 1 2 3 4 5 6 (PRODUCT LEVEL)	SEE PAGE
	1	1	**548-3254**	1	BRACKET AS	

564-2666 **LAMP GP-FLOOD** (contd.) **i07819975**

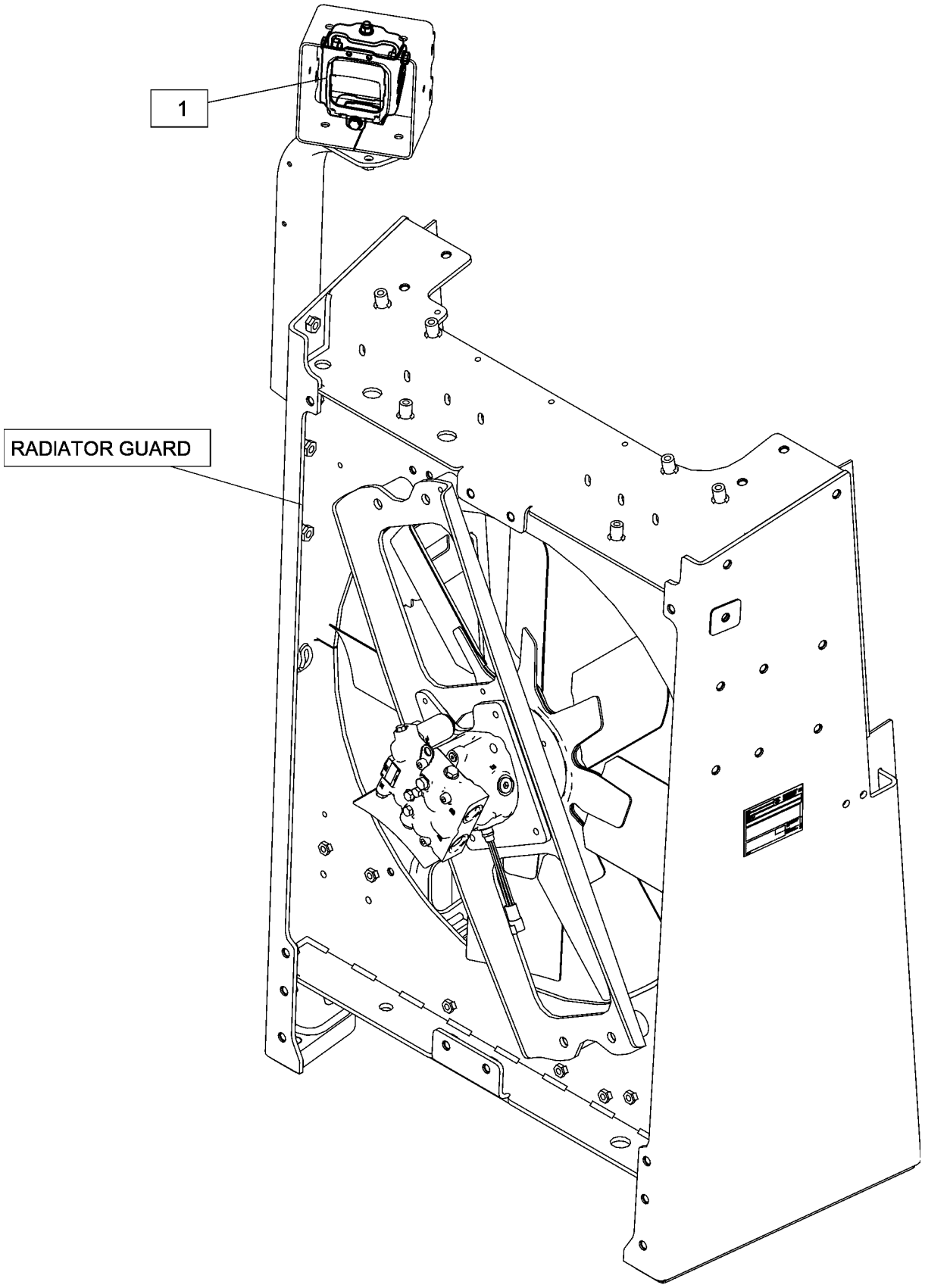

GRAPHIC #1 <END> g06350236

575-5502 LIGHTING AR-FLOOD

S/N: Z2K1-UP; Z2N1-UP
CAB, RADIATOR GUARD
PART OF 575-5505, 575-5507, 575-5509 LIGHTING AR-FLOOD
AN ATTACHMENT

SMCS-1434 **i07840250**

NOTE	PART NUMBER	QTY	PART NAME 1 2 3 4 5 6 (PRODUCT LEVEL)	SEE PAGE
Y	*503-0097*	1	LIGHTING GP-FLOOD (CAB, REAR)	191
Y	*571-6188*	1	LIGHTING GP-FLOOD (FRONT)	195

Y - SEPARATE ILLUSTRATION

<END>

575-5505 LIGHTING AR-FLOOD–VPAT

S/N: Z2K1-UP; Z2N1-UP
PART OF 532-9856 DISTRIBUTION AR
AN ATTACHMENT

SMCS-1434 **i07840677**

NOTE	PART NUMBER	QTY	PART NAME 1 2 3 4 5 6 (PRODUCT LEVEL)	SEE PAGE
Y	*575-5502*	1	LIGHTING AR-FLOOD (FRONT, REAR)	185
	575-1114	1	PLUG GP	
	3D-9872	1	PLUG-BUTTON	
			(INSIDE GROUND LEVEL SERVICE CENTER, TO PLUG THE HOLE INTENDED FOR B-POST LIGHTS SWITCH)	
	577-2145	1	PLUG GP	
	278-5921	1	PLUG	
			(ON TOP OF RADIATOR GUARD, TO PLUG THE HOLE ON LH UPPER FACE INTENDED FOR PREMIUM LIGHTS)	

Y - SEPARATE ILLUSTRATION

<END>

575-5507 LIGHTING AR-FLOOD

S/N: Z2K1-UP; Z2N1-UP
CAB, RADIATOR GUARD
PART OF 532-9851 DISTRIBUTION AR
AN ATTACHMENT

SMCS-1434 **i07876692**

NOTE	PART NUMBER	QTY	PART NAME 1 2 3 4 5 6 (PRODUCT LEVEL)	SEE PAGE
Y	*575-5502*	1	LIGHTING AR-FLOOD (CAB, RADIATOR GUARD)	185
Y	*570-0376*	1	LIGHTING GP-FLOOD (CAB)	194
	577-2145	1	PLUG GP	
	278-5921	1	PLUG	
			(ON TOP OF RADIATOR GUARD, TO PLUG HOLE ON LH UPPER FACE INTENDED FOR PREMIUM LIGHTS)	

Y - SEPARATE ILLUSTRATION

<END>

575-5509 LIGHTING AR-FLOOD

S/N: Z2K1-UP; Z2N1-UP

PART OF 532-9795 FORESTRY AR, 532-9797 WASTE HANDLING AR

AN ATTACHMENT

SMCS-1434 **i07876036**

NOTE	PART NUMBER	QTY	PART NAME 1 2 3 4 5 6 (PRODUCT LEVEL)	SEE PAGE
Y	*575-5502*	1	LIGHTING AR-FLOOD (CAB, RADIATOR GUARD)	185
Y	*555-1263*	1	LIGHTING GP-FLOOD (RADIATOR GUARD)	192
Y	*566-3386*	1	LIGHTING GP-FLOOD (CAB, REAR)	193
Y	*570-0376*	1	LIGHTING GP-FLOOD (CAB)	194

Y - SEPARATE ILLUSTRATION

<END>

533-6467 LIGHTING GP-AUXILIARY

S/N: Z2K1-UP; Z2N1-UP
UNDERHOOD
PART OF 575-5503 LIGHTING GP-AUXILIARY
AN ATTACHMENT

SMCS-1429 **i07820006**

NOTE	REF NO	GRAPHIC REF	PART NUMBER	QTY	PART NAME 1 2 3 4 5 6 (PRODUCT LEVEL)	SEE PAGE
	1	1	**130-5300**	2	CLIP	
M	2	1	**7X-2536**	2	BOLT (M8X1.25X14-MM)	
	3	1	**4P-7581**	1	CLIP (LADDER)	
	4	1	**7K-1181**	1	STRAP-CABLE	
	5	1	**8T-4224**	2	WASHER-HARD (8.8X16X2-MM THK)	
M	6	1	**153-8003**	2	BOLT-SOCKET HEAD (M4X0.7X30-MM)	
	7	1	**248-6862**	1	FILM-IDENTIFICATION (WORK LIGHT)	
	8	1	**353-4515**	1	SWITCH GP-TOGGLE (WORK LIGHT)	
		1	**102-8803**	1	KIT-RECEPTACLE (3-PIN)	
					(INCLUDES RECEPTACLE AS & WEDGE)	
		1	**3E-3390**	3	PIN-CONNECTOR (16-GA TO 18-GA)	
	9	1	**418-5545**	1	LAMP GP-INDICATOR (AMBER, LED, 24-VOLT)	
		1	**8T-8729**	2	PIN-CONNECTOR (16-GA TO 20-GA)	
		1	**102-8802**	1	KIT-RECEPTACLE (2-PIN)	
					(INCLUDES RECEPTACLE AS & WEDGE)	
M	10	1	**446-8945**	2	NUT (M4X0.7-THD)	
M	11	1	**479-2171**	1	BOLT AS	
	12	1	**533-6468**	1	BRACKET AS	
		1	**198-4777**	2	WASHER-HARD (11X25X10-MM THK)	

M - METRIC PART

533-6467 **LIGHTING GP-AUXILIARY (**contd.**)** **i07820006**

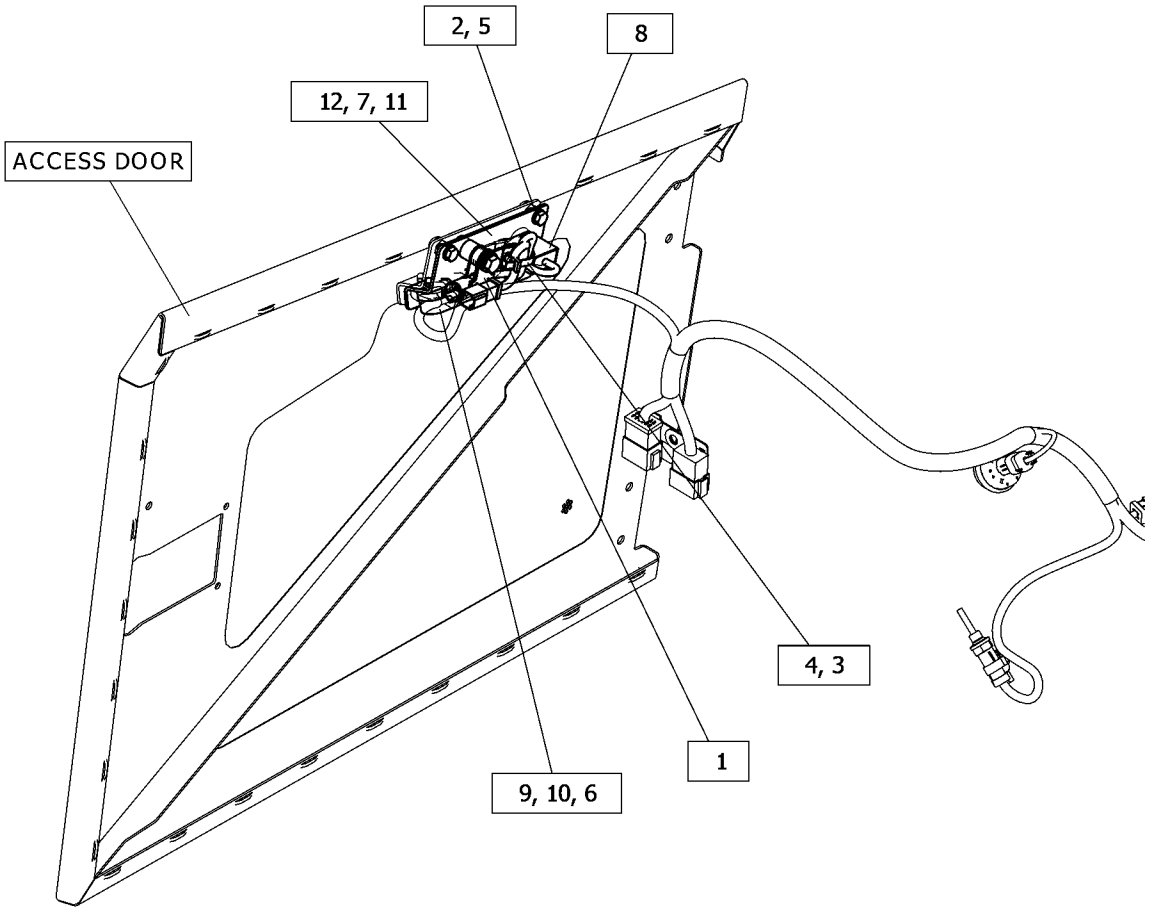

GRAPHIC #1 <END> g06453088

575-5503 LIGHTING GP-AUXILIARY

S/N: Z2K1-UP; Z2N1-UP
UNDERHOOD
PART OF 532-9851 DISTRIBUTION AR
AN ATTACHMENT

SMCS-1429 **i07840008**

NOTE	PART NUMBER	QTY	PART NAME 1 2 3 4 5 6 (PRODUCT LEVEL)	SEE PAGE
Y	*533-6467*	1	LIGHTING GP-AUXILIARY (UNDERHOOD)	187

Y - SEPARATE ILLUSTRATION

<END>

503-0096 LIGHTING GP-FLOOD

S/N: Z2K1-UP; Z2N1-UP
CAB
PART OF 570-0376 LIGHTING GP-FLOOD
AN ATTACHMENT

SMCS-1434 **i07816773**

NOTE	REF NO	GRAPHIC REF	PART NUMBER	QTY	PART NAME 1 2 3 4 5 6 (PRODUCT LEVEL)	SEE PAGE
	1	1	**4P-7581**	2	CLIP (LADDER)	
	2	1	*564-2699*	2	LAMP GP-FLOOD	
					(EACH INCLUDES)	
		1	**539-5524**	1	LAMP GP-FLOOD (9-VOLT TO 32-VOLT, LED)	
		1	**548-3254**	1	BRACKET AS	
		1	**8T-4121**	1	WASHER-HARD (11X21X2.5-MM THK)	
M		1	**344-5675**	1	NUT (M10X1.5-THD)	
	3	1	**7K-1181**	2	STRAP-CABLE	

M - METRIC PART

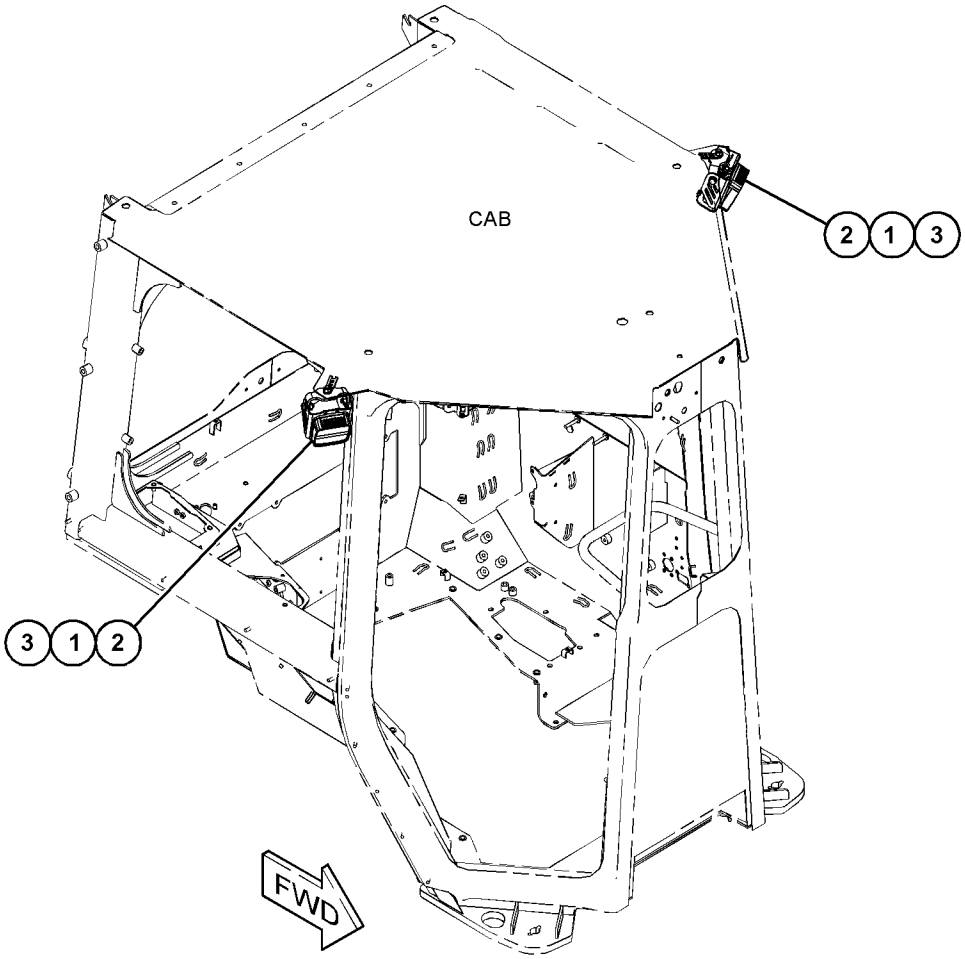

GRAPHIC #1 <END> g06347106

503-0097 LIGHTING GP-FLOOD

S/N: Z2K1-UP; Z2N1-UP
CAB
PART OF 575-5502 LIGHTING AR-FLOOD
AN ATTACHMENT

SMCS-1434 **i07824626**

NOTE	REF NO	GRAPHIC REF	PART NUMBER	QTY	PART NAME 1 2 3 4 5 6 (PRODUCT LEVEL)	SEE PAGE
Y	1	1	**564-6737**	2	HARNESS AS-LIGHTING	170
	2	1	**539-5524**	2	LAMP GP-FLOOD (9-VOLT TO 32-VOLT, LED)	
	3	1	**7K-1181**	8	STRAP-CABLE	

Y - SEPARATE ILLUSTRATION

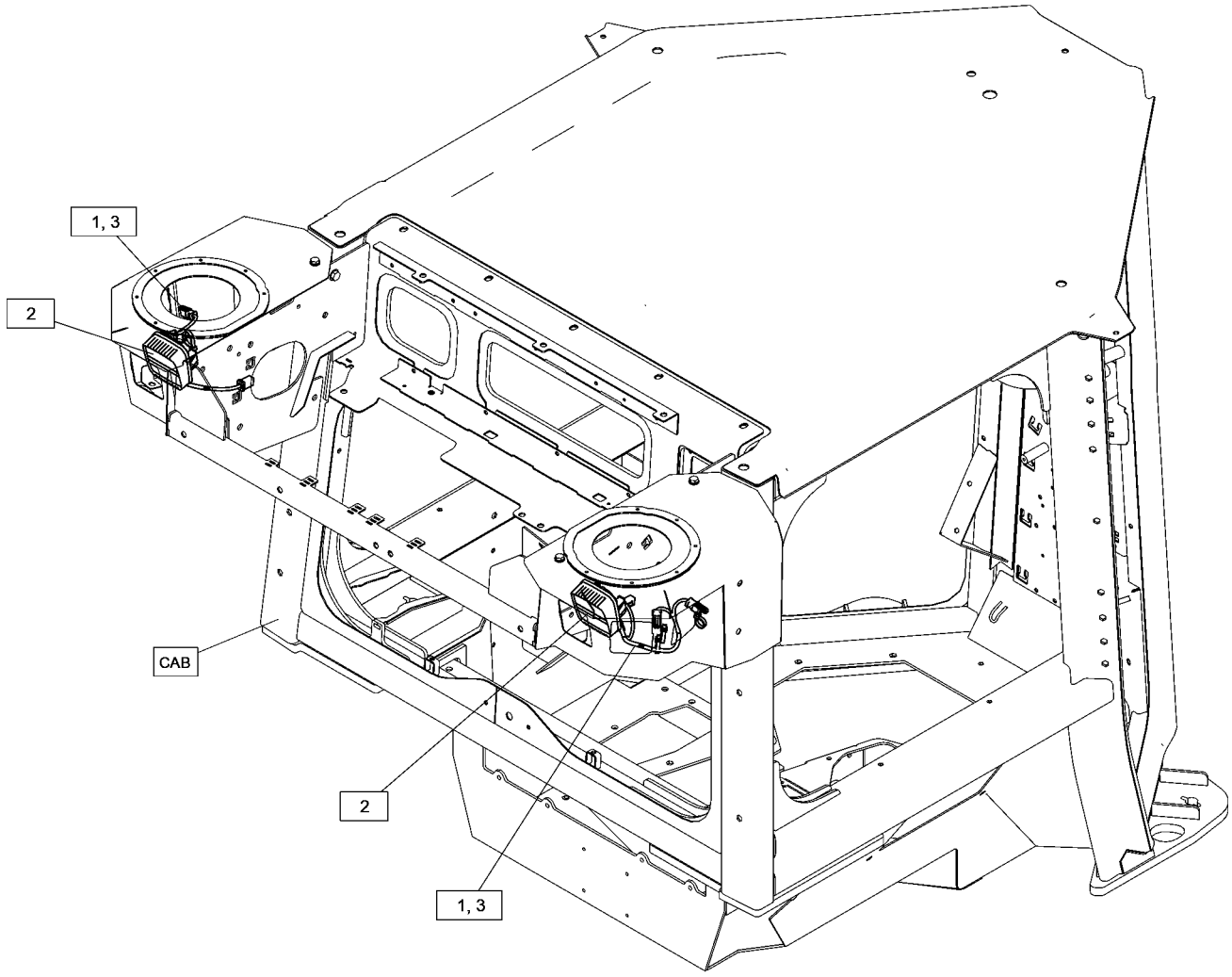

GRAPHIC #1 <END> g06354625

555-1263 LIGHTING GP-FLOOD

S/N: Z2K1-UP; Z2N1-UP
RADIATOR GUARD
PART OF 575-5509 LIGHTING AR-FLOOD
AN ATTACHMENT

SMCS-1434 **i07819960**

NOTE	REF NO	GRAPHIC REF	PART NUMBER	QTY	PART NAME 1 2 3 4 5 6 (PRODUCT LEVEL)	SEE PAGE
M	1	1	**344-5675**	4	NUT (M10X1.5-THD)	
M	2	1	**479-2171**	4	BOLT AS	
	3	1	**525-8504**	2	GUARD	
Y	4	1	*564-2666*	2	LAMP GP-FLOOD	183
	5	1	**582-9275**	2	BRACKET AS	
	6	1	**5P-6264**	2	GROMMET	
	7	1	**7K-1181**	6	STRAP-CABLE	
	8	1	**8T-4121**	4	WASHER-HARD (11X21X2.5-MM THK)	

M - METRIC PART
Y - SEPARATE ILLUSTRATION

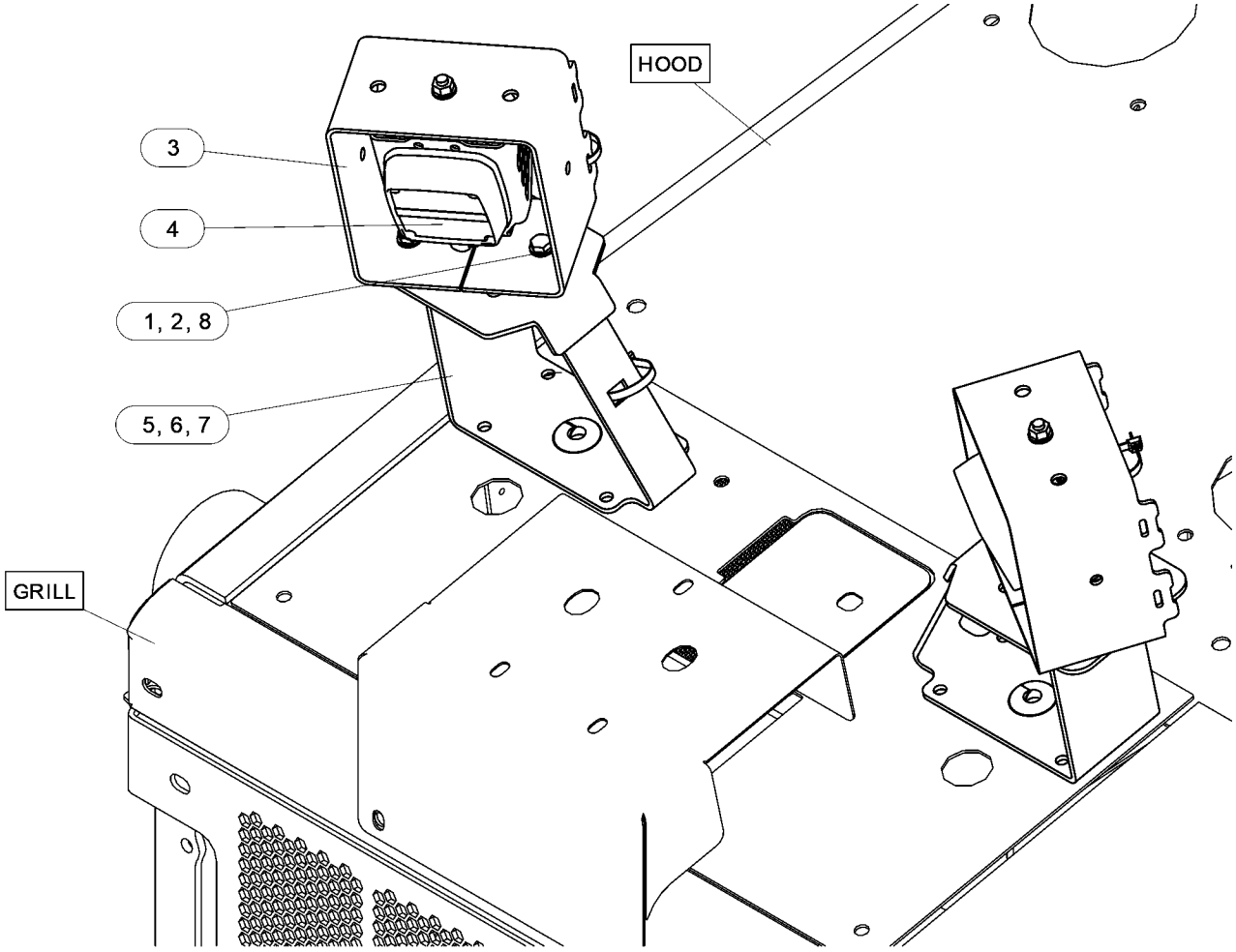

GRAPHIC #1 <END> g06448505

566-3386 LIGHTING GP-FLOOD

S/N: Z2K1-UP; Z2N1-UP
CAB, REAR
PART OF 575-5509 LIGHTING AR-FLOOD
AN ATTACHMENT

SMCS-1434 **i07870063**

NOTE	REF NO	GRAPHIC REF	PART NUMBER	QTY	PART NAME 1 2 3 4 5 6 (PRODUCT LEVEL)	SEE PAGE
	1	1	**548-1921**	4	LAMP GP-FLOOD (9-32-VOLT)	

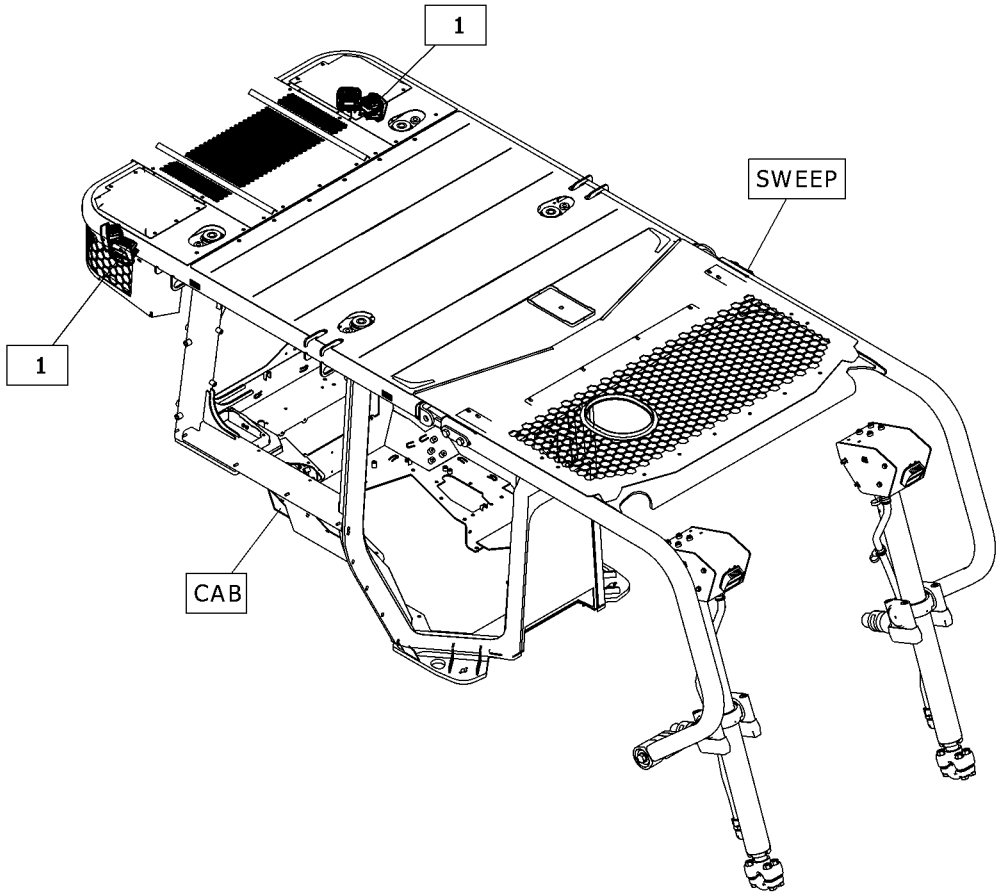

GRAPHIC #1 <END> g06357808

570-0376 LIGHTING GP-FLOOD

S/N: Z2K1-UP; Z2N1-UP
CAB
PART OF 575-5507, 575-5509 LIGHTING AR-FLOOD
AN ATTACHMENT

SMCS-1434 **i07870162**

NOTE	REF NO	GRAPHIC REF	PART NUMBER	QTY	PART NAME 1 2 3 4 5 6 (PRODUCT LEVEL)	SEE PAGE
	1	1	**248-6862**	1	FILM-IDENTIFICATION (WORK LIGHT)	
Y	2	1	**260-5864**	1	SWITCH GP-TOGGLE (WORK LIGHT)	221
Y	3	1	*503-0096*	1	LIGHTING GP-FLOOD (CAB)	190

Y - SEPARATE ILLUSTRATION

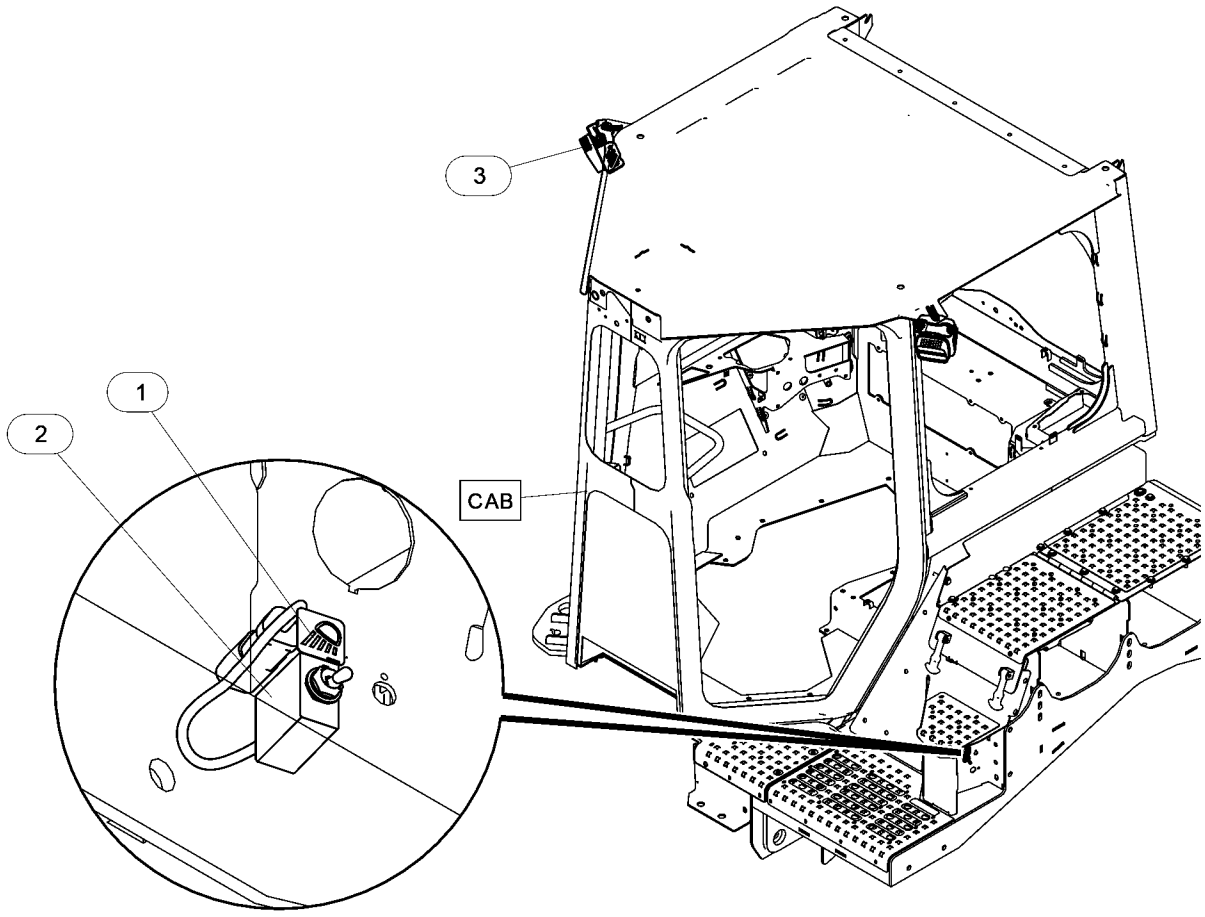

GRAPHIC #1 <END> g06448119

571-6188 LIGHTING GP-FLOOD

S/N: Z2K1-UP; Z2N1-UP
RADIATOR GUARD
PART OF 575-5502 LIGHTING AR-FLOOD
AN ATTACHMENT

SMCS-1434 **i07840279**

NOTE	REF NO	GRAPHIC REF	PART NUMBER	QTY	PART NAME 1 2 3 4 5 6 (PRODUCT LEVEL)	SEE PAGE
	1	1	*581-6369*	2	LAMP GP-FLOOD	
					(EACH INCLUDES)	
		1	**4B-4863**	4	WASHER (4.7X11X1.2-MM THK)	
M		1	**138-8454**	4	SCREW-TRUSS HEAD (M4X0.7X10-MM)	
		1	**539-5524**	1	LAMP GP-FLOOD (9-VOLT TO 32-VOLT, LED)	

M - METRIC PART

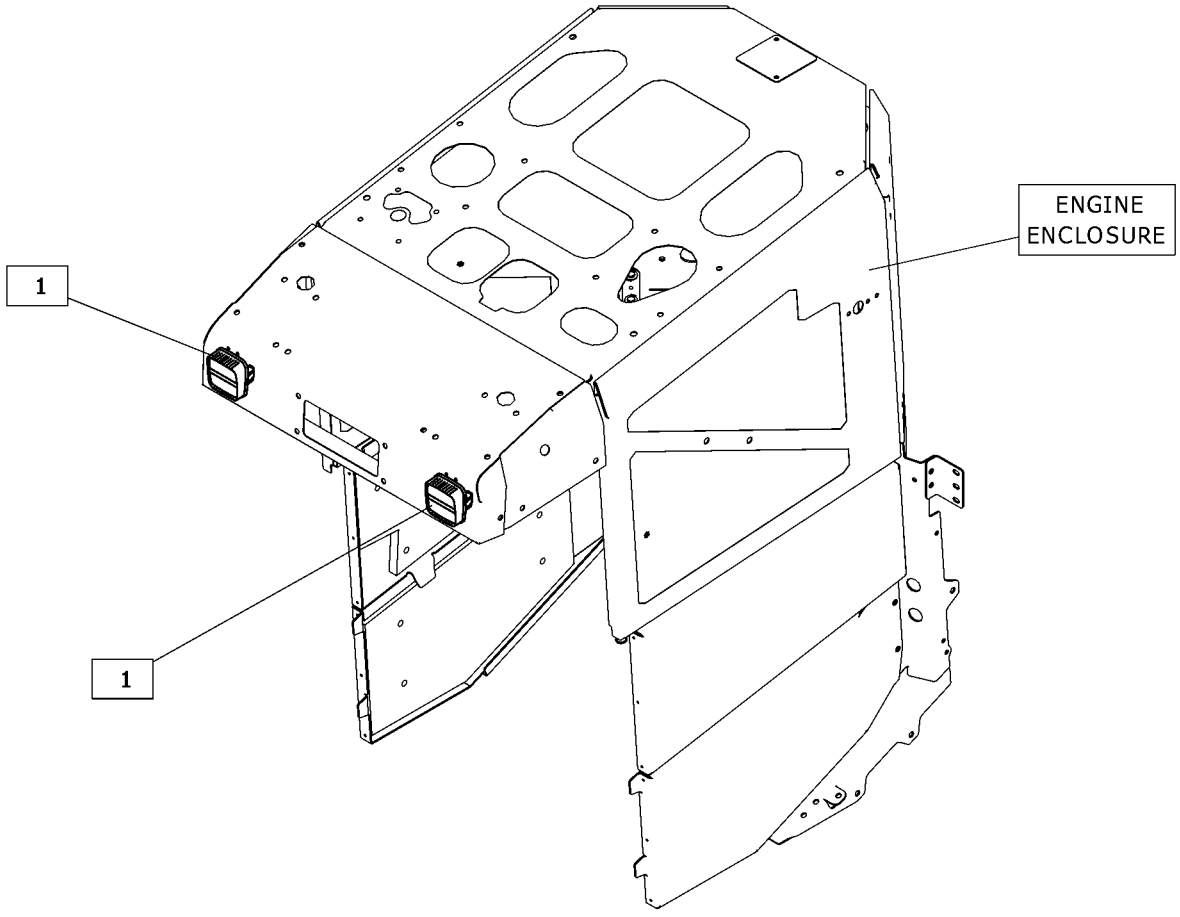

GRAPHIC #1 <END> g06450745

472-5584 LIGHTING GP-WARNING BEACON

S/N: Z2K1-UP; Z2N1-UP

AN ATTACHMENT

SMCS-1431 **i07805217**

NOTE	REF NO	GRAPHIC REF	PART NUMBER	QTY	PART NAME 1 2 3 4 5 6 (PRODUCT LEVEL)	SEE PAGE
	1	1	**342-9023**	2	SCREW-PAN HEAD	
	2	1	**488-3971**	4	BOLT AS	
	3	1	**582-1585**	2	BRACKET AS	
					(EACH INCLUDES)	
M		1	**8T-3490**	2	NUT-WELD (M10X1.5-THD)	
	4	1	**543-5298**	3	LAMP GP-WARNING BEACON (STROBE)	
					(EACH INCLUDES)	
		1	**8T-8729**	3	PIN-CONNECTOR (16-GA TO 20-GA)	
		1	**102-8803**	1	KIT-RECEPTACLE (3-PIN)	
					(INCLUDES RECEPTACLE AS & WEDGE)	
	5	1	**7K-1181**	5	STRAP-CABLE	
M	6	1	**120-9027**	4	SCREW-PAN HEAD (M3X0.5X16-MM)	
M	7	1	**8T-2658**	4	LOCKNUT (M3X0.5-THD)	

M - METRIC PART

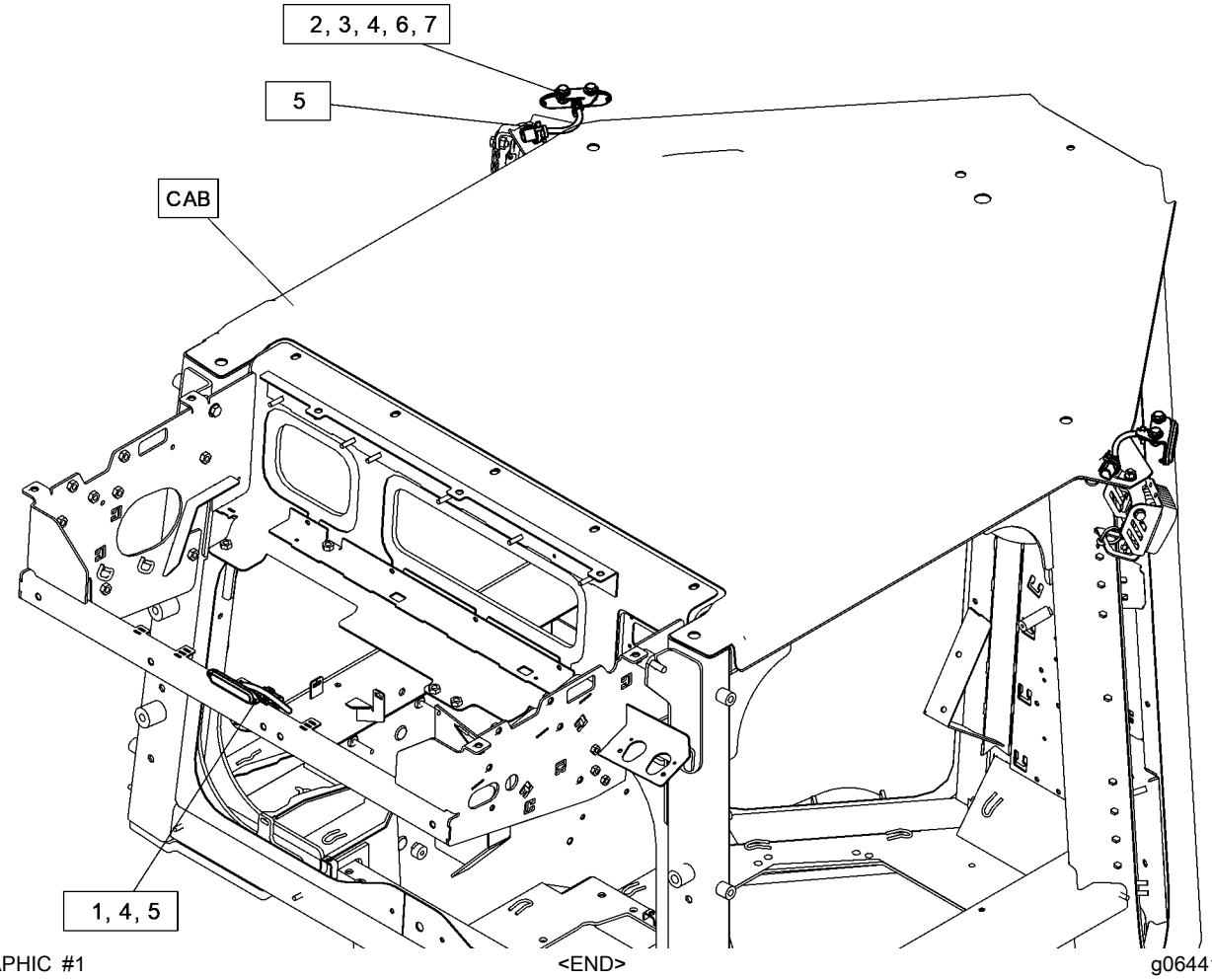

GRAPHIC #1 <END> g06441981

577-7750 METER & MONITOR GP-SERVICE

S/N: Z2K1-UP; Z2N1-UP
HOUR METER
PART OF 532-9851 DISTRIBUTION AR
AN ATTACHMENT

SMCS-7478 **i07827345**

NOTE	REF NO	GRAPHIC REF	PART NUMBER	QTY	PART NAME 1 2 3 4 5 6 (PRODUCT LEVEL)	SEE PAGE
Y	1	1	*470-3673*	1	ELECTRONICS GP-MONITOR (HOUR METER)	145
	2	1	**363-7544**	1	METER-SERVICE (INDICATOR)	

Y - SEPARATE ILLUSTRATION

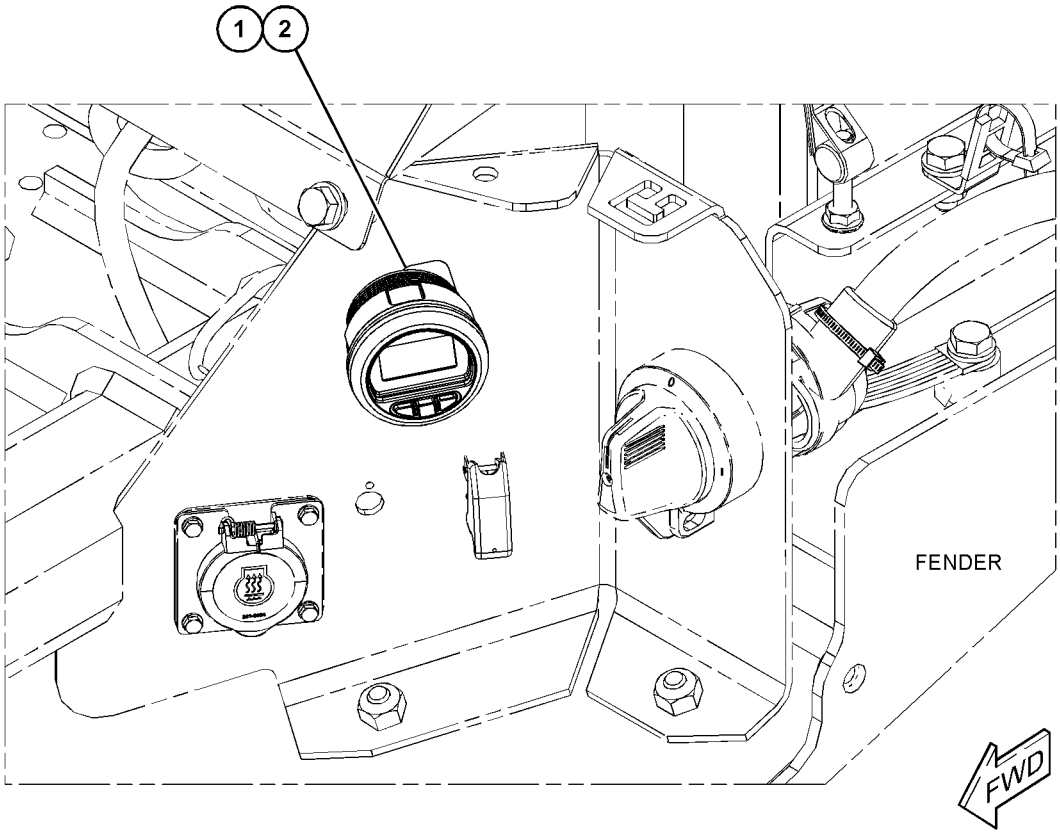

GRAPHIC #1 <END> g06452152

395-0112 MOUNTING GP-ELECTRONIC CONTROL

S/N: 4501-UP
PART OF 569-0811 ENGINE AR-PRIMARY
AN ATTACHMENT

SMCS-1901, 7610

i06554274

NOTE	REF NO	GRAPHIC REF	PART NUMBER	QTY	PART NAME 1 2 3 4 5 6 (PRODUCT LEVEL)	SEE PAGE
	1	1	**446-1268**	1	BRACKET AS	
M	2	1	**6I-0292**	2	BOLT (M8X1.25X140-MM)	
M	3	1	**6I-0293**	2	BOLT (M8X1.25X80-MM)	

M - METRIC PART

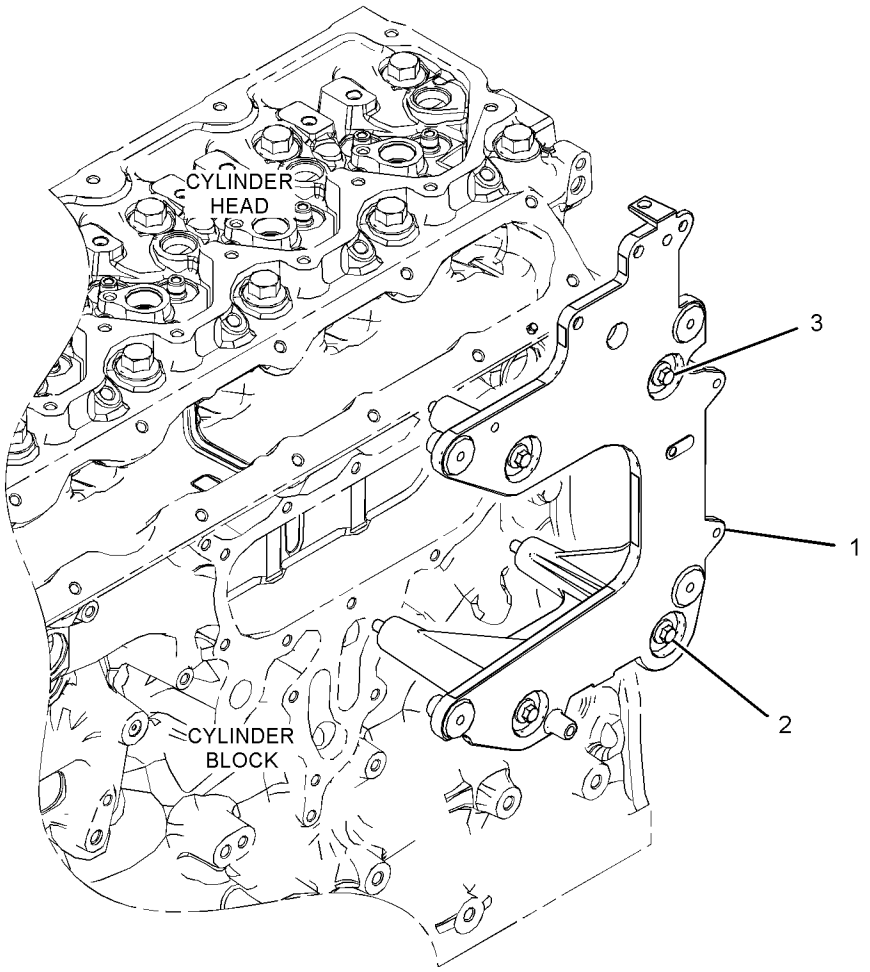

GRAPHIC #1 <END> g06032947

395-0110 SENSOR GP-ENGINE

S/N: 4501-UP
PART OF 569-0811 ENGINE AR-PRIMARY
AN ATTACHMENT

SMCS-1718, 1906, 1907, 1912, 1917, 1923, 1924, 1925, 1928, 1929, 7400, 7422

i06828458

NOTE	REF NO	GRAPHIC REF	PART NUMBER	QTY	PART NAME 1 2 3 4 5 6 (PRODUCT LEVEL)	SEE PAGE
M	1	1	**124-3815**	2	BOLT (M8X1.25X16-MM)	
	2	1	**199-9252**	1	SEAL-O-RING	
	3	1	**199-9267**	1	SEAL-O-RING	
	4	1	**199-9751**	1	SEAL-O-RING	
	5	1	**384-3888**	2	SENSOR GP-SPEED (ENGINE)	
	6	1	**256-6454**	1	SENSOR-TEMPERATURE (2-PIN) (AIR INLET MANIFOLD)	
	6A	1	**256-6454**	1	SENSOR-TEMPERATURE (2-PIN) (COOLANT)	
	7	1	**276-5603**	1	SEAL-O-RING	
	8	1	**320-3060**	1	SENSOR GP-PRESSURE (ENGINE OIL)	
	9	1	**320-3062**	1	SENSOR GP-PRESSURE (INLET MANIFOLD AIR)	
	10	1	**228-4947**	2	SEAL-O-RING	

M - METRIC PART

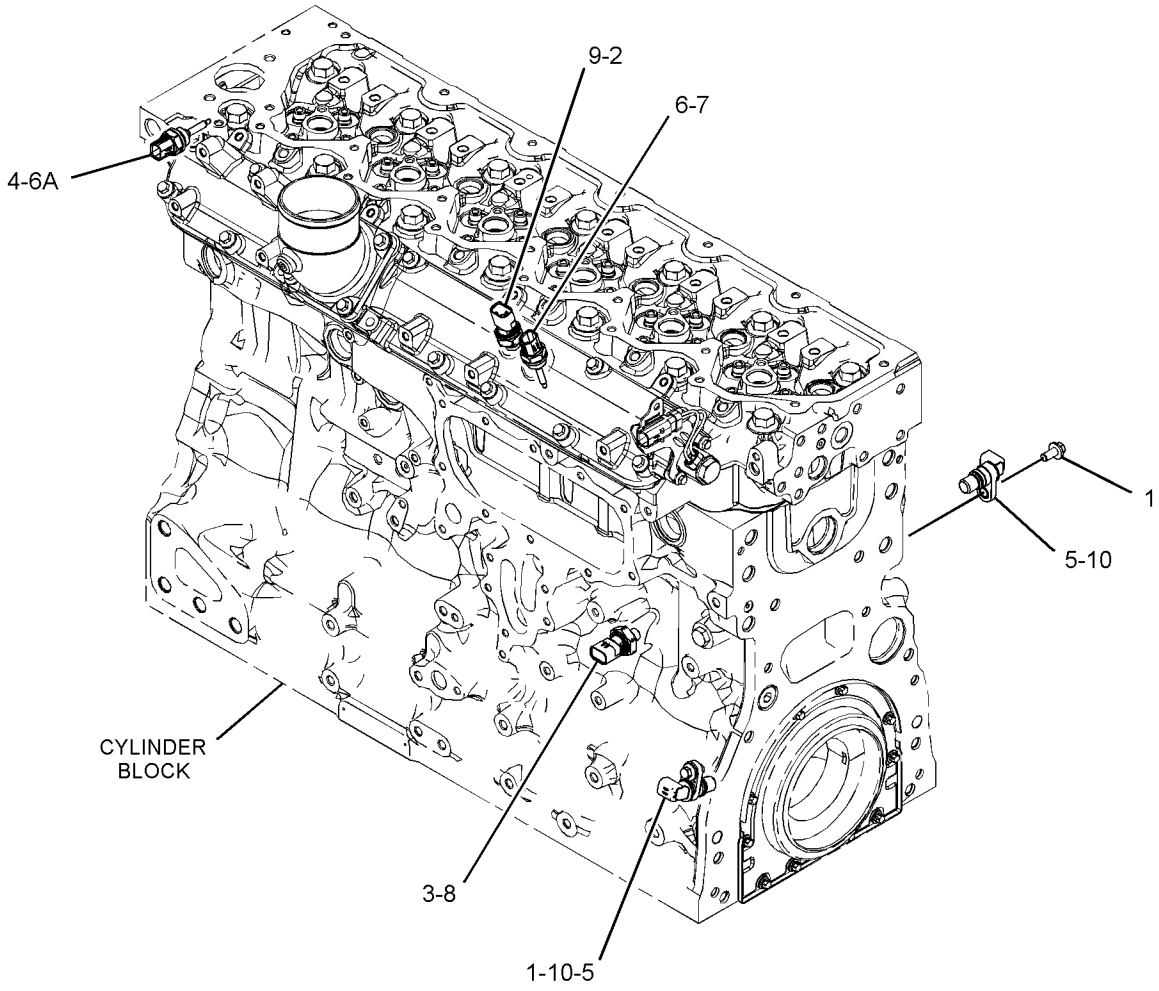

GRAPHIC #1

<END>

g03380662

266-1467 SENSOR GP-POSITION–ROTARY

S/N: Z2K1-UP; Z2N1-UP
PART OF 486-3160 PEDAL GP-BRAKE
AN ATTACHMENT

SMCS-1408, 1439 **i07284646**

NOTE	REF NO	GRAPHIC REF	PART NUMBER	QTY	PART NAME 1 2 3 4 5 6 (PRODUCT LEVEL)	SEE PAGE
	1	1	**9X-3401**	3	PIN-CONNECTOR (16-GA TO 18-GA)	
					–OR–	
		1	**126-1767**	3	PIN-CONNECTOR (14-GA TO 16-GA)	
	2	1	**102-8803**	1	KIT-RECEPTACLE (3-PIN)	
					(INCLUDES RECEPTACLE AS & WEDGE)	
E	3	1	**3E-9375**		CONDUIT (14-CM)	

E - ORDER BY THE CENTIMETER

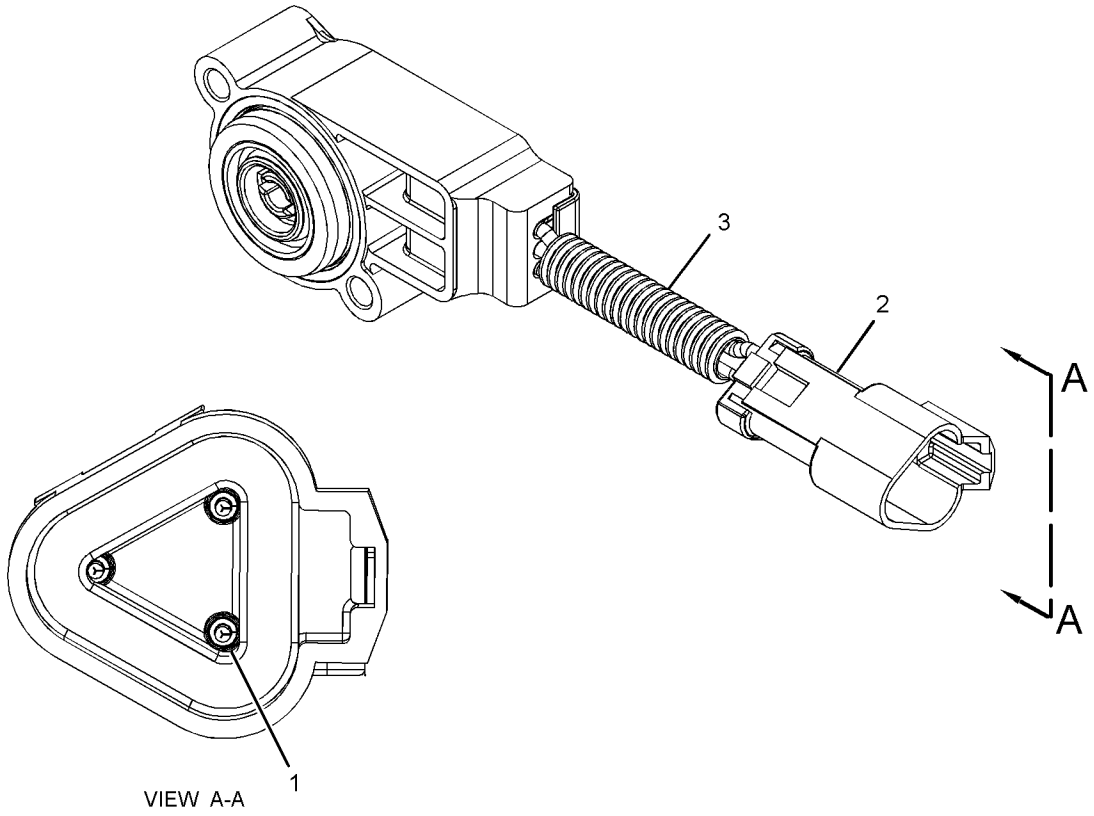

VIEW A-A

GRAPHIC #1 <END> g03547699

269-1981 SENSOR GP-POSITION

S/N: Z2K1-UP; Z2N1-UP
PART OF 486-3161 SENSOR GP-POSITION
AN ATTACHMENT

SMCS-1408, 1439

i04199134

NOTE	REF NO	GRAPHIC REF	PART NUMBER	QTY	PART NAME 1 2 3 4 5 6 (PRODUCT LEVEL)	SEE PAGE
	1	1	**230-4014**	2	RECEPTACLE AS-CONNECTOR (3-PIN)	
	2	1	**9X-3401**	6	PIN-CONNECTOR (16-GA TO 18-GA)	
					–OR–	
			126-1767	6	PIN-CONNECTOR (14-GA TO 16-GA)	

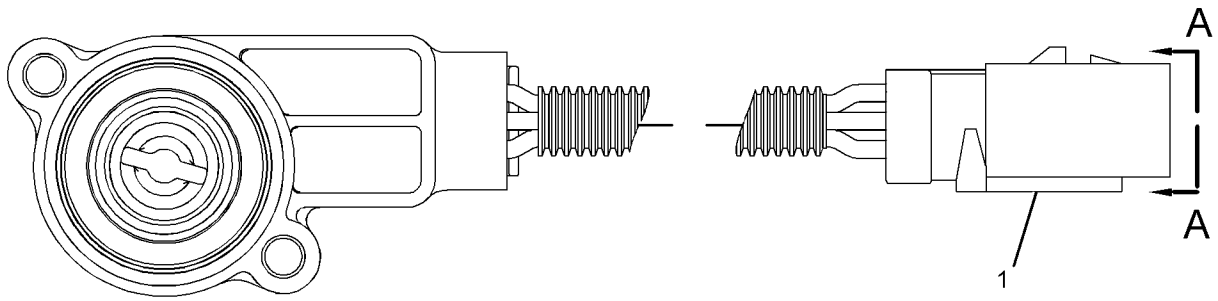

GRAPHIC #1 <END> g01391032

360-5122 SENSOR GP-POSITION

S/N: Z2K1-UP; Z2N1-UP
PART OF 488-1756 CONTROL GP-STEERING & XMSN
AN ATTACHMENT

SMCS-1408, 1439

i07021951

NOTE	REF NO	GRAPHIC REF	PART NUMBER	QTY	PART NAME 1 2 3 4 5 6 (PRODUCT LEVEL)	SEE PAGE
	1	1	**7P-4190**	2	BEARING-ROLLER	
	2	1	**237-0145**	1	SPACER (19.5X58X3.5-MM THK)	
	3	1	**292-1357**	1	SPRING	
	4	1	**9X-8256**	4	WASHER (6.6X12X2-MM THK)	
	5	1	**8T-4994**	1	WASHER-HARD (20X36.5X3.5-MM THK)	
	6	1	**360-5120**	1	CAM AS	
		1	**3H-0702**	1	DOWEL	
	7	1	**1B-8706**	1	KEY-WOODRUFF	
	8	1	**1W-6448**	3	DOWEL	
	9	1	**2H-9445**	1	PIN-SPRING	
	10	1	**2J-6356**	2	RING-RETAINING	
	11	1	**5M-1179**	1	PIN-SPRING	
	12	1	**8F-7702**	2	SEAL-LIP TYPE	
M	13	1	**8T-0640**	4	BOLT (M6X1X30-MM)	

PARTS SHOWN IN GRAPHIC(S) WITHOUT A REFERENCE NUMBER ARE NOT SERVICED SEPARATELY

M - METRIC PART

360-5122 **SENSOR GP-POSITION (**contd.**)** **i07021951**

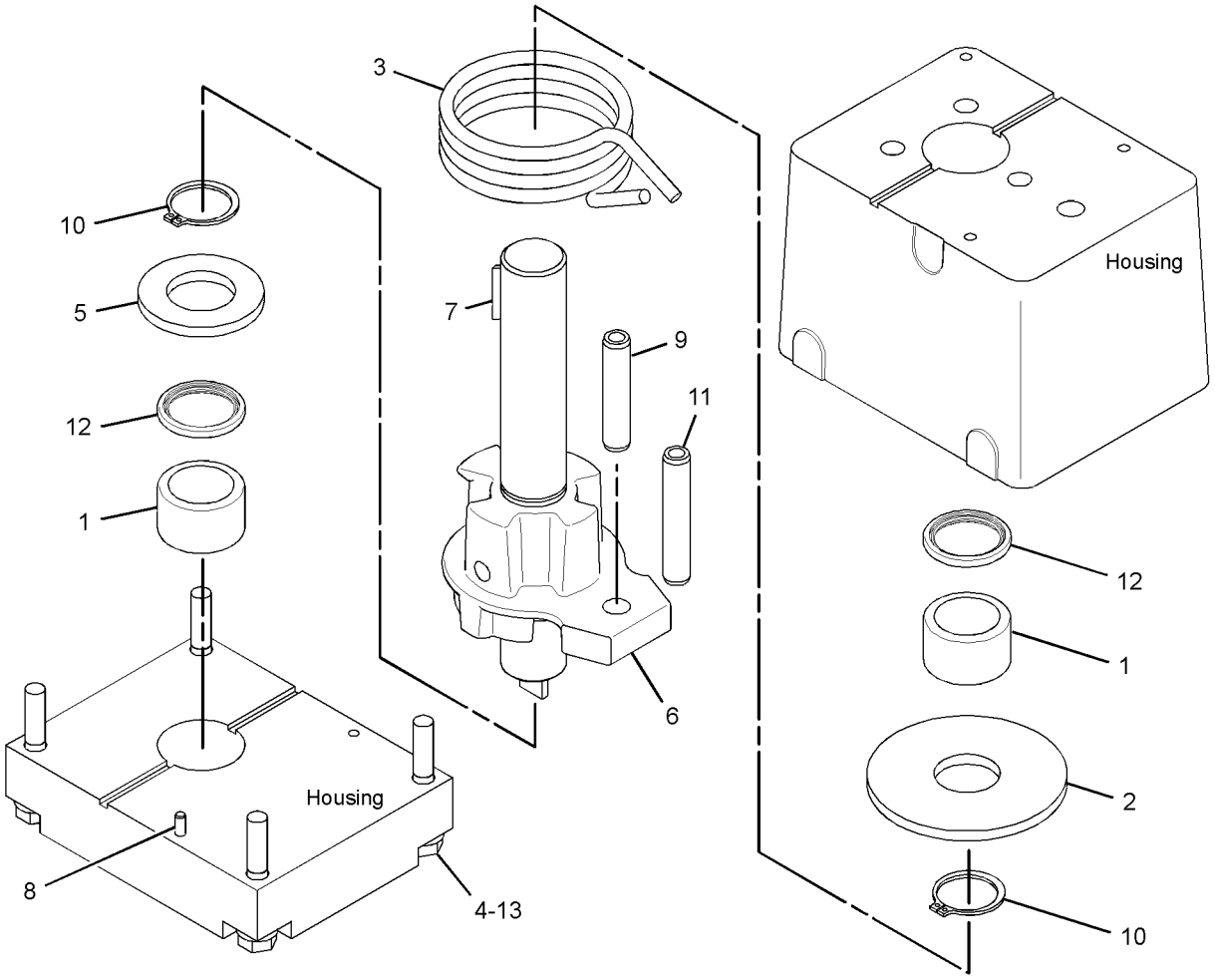

GRAPHIC #1 <END> g06199117

486-3161 SENSOR GP-POSITION

S/N: Z2K1-UP; Z2N1-UP
DECELERATOR
PART OF 435-5734 PEDAL GP-GOVERNOR & BRAKE
AN ATTACHMENT

SMCS-1408, 1439 **i07793242**

NOTE	REF NO	GRAPHIC REF	PART NUMBER	QTY	PART NAME 1 2 3 4 5 6 (PRODUCT LEVEL)	SEE PAGE
Y	1	1	**269-1981**	1	SENSOR GP-POSITION (DECELERATOR)	201

Y - SEPARATE ILLUSTRATION

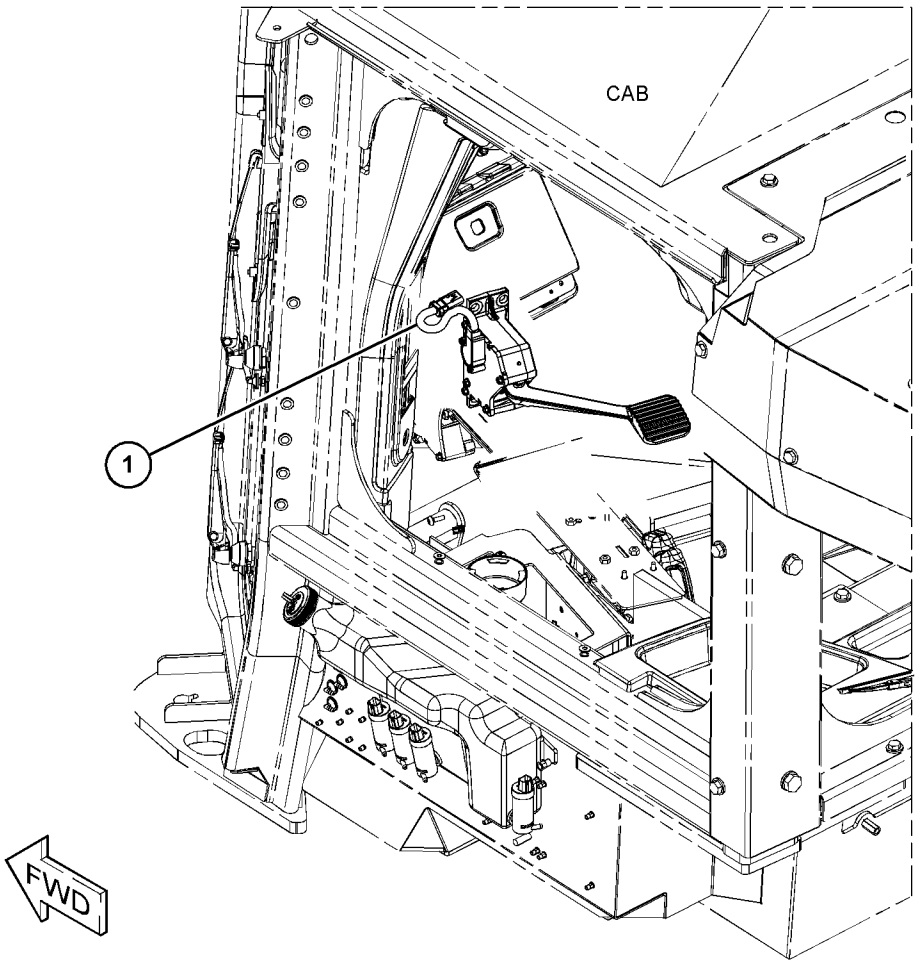

GRAPHIC #1 <END> g06345159

521-7609 SENSOR GP-POSITION

S/N: Z2K1-UP; Z2N1-UP
INERTIAL
PART OF 550-5571, 550-5572 GRADE CONTROL AR
AN ATTACHMENT

SMCS-1408, 1439

i07820526

NOTE	REF NO	GRAPHIC REF	PART NUMBER	QTY	PART NAME 1 2 3 4 5 6 (PRODUCT LEVEL)	SEE PAGE
M	1	1	**5C-9553**	3	BOLT (M6X1X16-MM)	
	2	1	**171-7077**	2	ROD-THREADED	
	3	1	**277-1873**	1	CLIP	
M	4	1	**344-5675**	2	NUT (M10X1.5-THD)	
	5	1	**4P-7581**	1	CLIP (LADDER)	
	6	1	**552-6116**	1	SENSOR AS-INERTIAL (SLOPE CONTROL)	
		1	**528-6793**	1	SOFTWARE GP-MONITOR	
	7	1	**562-3500**	1	BRACKET AS	
M		1	**6V-9632**	3	NUT-WELD (M6X1-THD)	
	8	1	**8T-7934**	2	WASHER-HARD (11X21X5-MM THK)	
	9	1	**9X-8256**	3	WASHER (6.6X12X2-MM THK)	

M - METRIC PART

521-7609 **SENSOR GP-POSITION** (contd.) **i07820526**

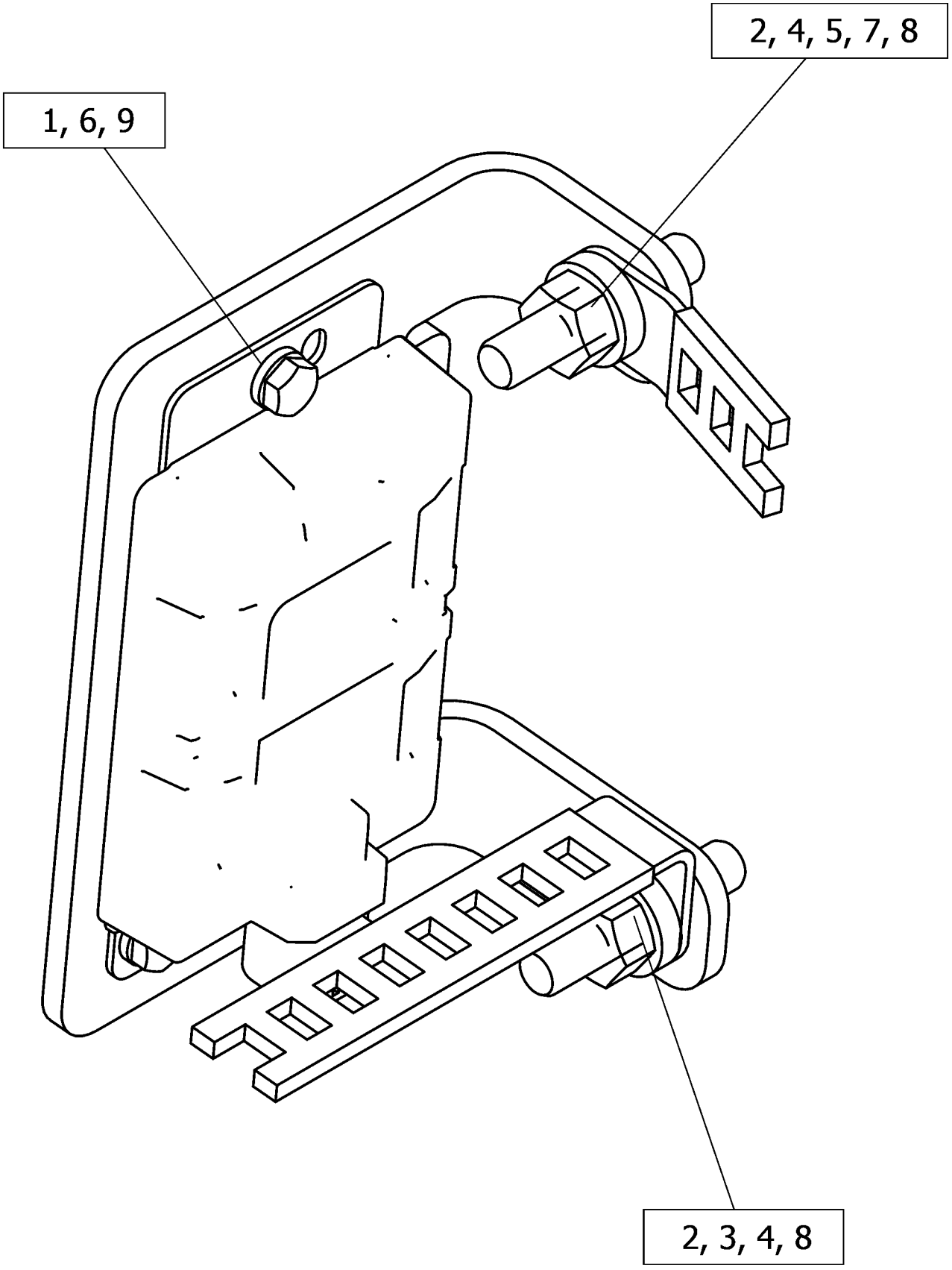

GRAPHIC #1 <END> g06451154

290-5792 SENSOR GP-SPEED

S/N: Z2K1-UP; Z2N1-UP
PART OF 528-9635 TORQUE CONVERTER & HOUSING GP
AN ATTACHMENT

SMCS-1907 **i03645015**

NOTE	REF NO	GRAPHIC REF	PART NUMBER	QTY	PART NAME 1 2 3 4 5 6 (PRODUCT LEVEL)	SEE PAGE
	1	1	**171-5349**	1	STRAP-MARKER	
	2	1	**102-8802**	1	KIT-RECEPTACLE (2-PIN)	
					(INCLUDES RECEPTACLE AS & WEDGE)	
	3	1	**144-1636**	2	PIN-CONNECTOR (14-GA TO 18-GA)	
E	4	1	**9X-1813**		SLEEVE (14-CM)	

E - ORDER BY THE CENTIMETER

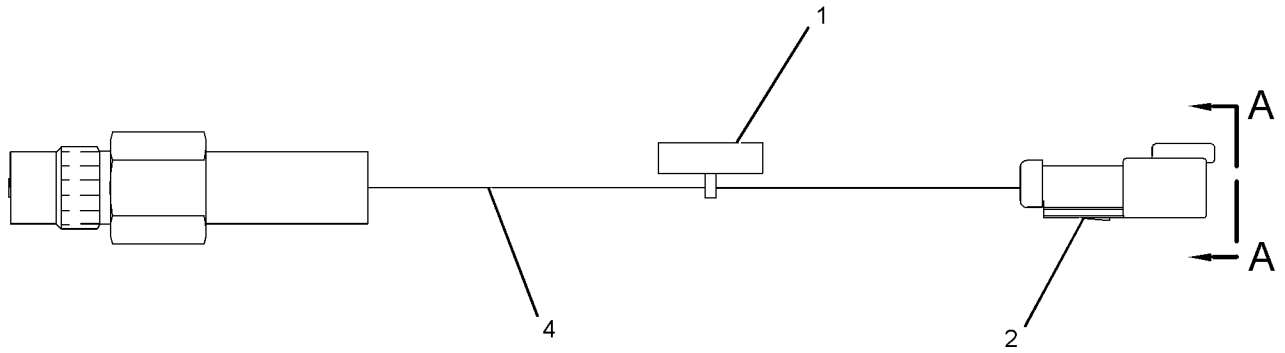

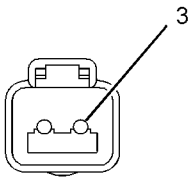

VIEW A-A

GRAPHIC #1 <END> g01409880

318-1179 SENSOR GP-SPEED

S/N: D5H1-UP; D6M1-UP; D7M1-UP; D9M1-UP
MAGNETIC. HIGH OUTPUT
PART OF 419-6899 GEAR GP-BEVEL & TRANSFER
AN ATTACHMENT

SMCS-1907 **i05366097**

NOTE	REF NO	GRAPHIC REF	PART NUMBER	QTY	PART NAME 1 2 3 4 5 6 (PRODUCT LEVEL)	SEE PAGE
	1	1	**171-5349**	1	STRAP-MARKER	
	2	1	**102-8802**	1	KIT-RECEPTACLE (2-PIN)	
					(INCLUDES RECEPTACLE AS & WEDGE)	
	3	1	**9X-3401**	2	PIN-CONNECTOR (16-GA TO 18-GA)	
					–OR–	
		1	**126-1767**	2	PIN-CONNECTOR (14-GA TO 16-GA)	
E	4	1	**329-0418**		SLEEVE (14-CM)	

E - ORDER BY THE CENTIMETER

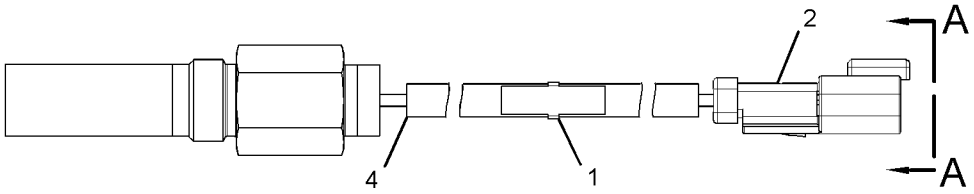

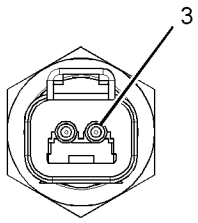

VIEW A-A

GRAPHIC #1 <END> g03177638

358-2399 SENSOR GP-SPEED

S/N: Z2K1-UP; Z2N1-UP
PART OF 543-4745 WIRING GP-CHASSIS
AN ATTACHMENT

SMCS-1907 **i06707363**

NOTE	REF NO	GRAPHIC REF	PART NUMBER	QTY	PART NAME 1 2 3 4 5 6 (PRODUCT LEVEL)	SEE PAGE
					(NO SERVICED PARTS)	

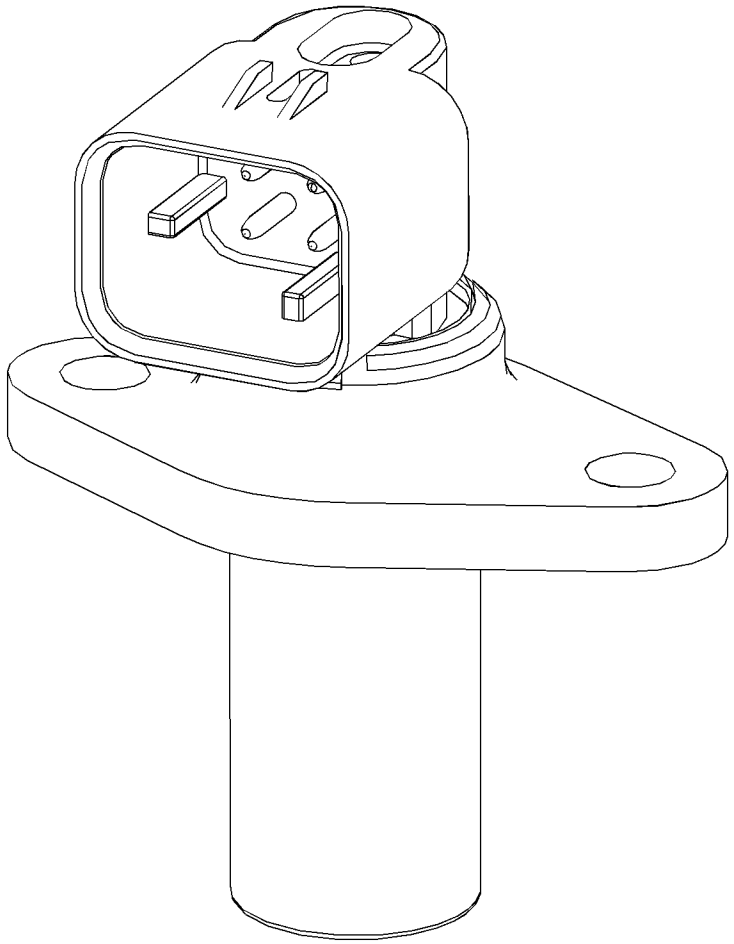

GRAPHIC #1 <END> g03348192

234-5013 SENSOR GP-TEMPERATURE

S/N: Z2K1-UP; Z2N1-UP
AMPSEAL CONNECTOR
PART OF 509-3799 LINES GP-POWER TRAIN OIL, 543-4745 WIRING GP-CHASSIS, 560-5946 WIRING GP-ENGINE
AN ATTACHMENT

SMCS-1906, 1919, 1921, 1922, 1928, 1929 **i03645027**

NOTE	REF NO	GRAPHIC REF	PART NUMBER	QTY	PART NAME 1 2 3 4 5 6 (PRODUCT LEVEL)	SEE PAGE
	1	1	**256-6453**	1	SENSOR-TEMPERATURE (2-PIN)	
	2	1	**238-5080**	1	SEAL-O-RING	

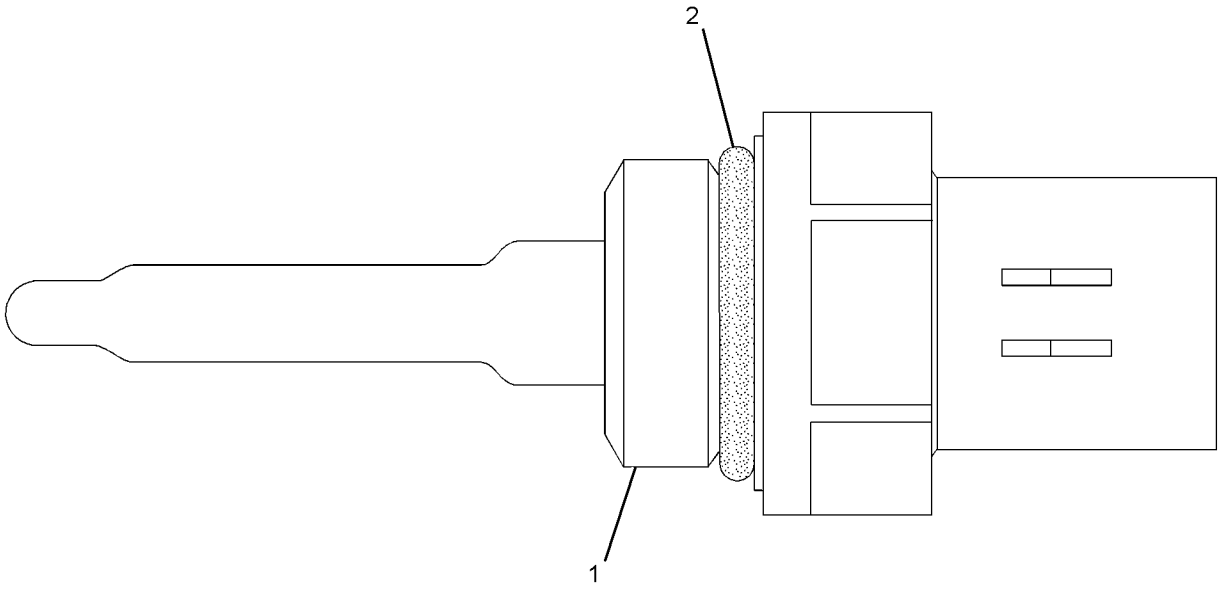

GRAPHIC #1 <END> g01164268

395-0114 STARTING AID GP

S/N: 4501-UP
PART OF 569-0811 ENGINE AR-PRIMARY
AN ATTACHMENT

SMCS-1090 **i07383456**

NOTE	REF NO	GRAPHIC REF	PART NUMBER	QTY	PART NAME 1 2 3 4 5 6 (PRODUCT LEVEL)	SEE PAGE
M	1	1	**112-7704**	1	BOLT (M6X1X30-MM)	
M	2	1	**5C-2890**	2	NUT (M6X1-THD)	
	3	1	**217-9039**	1	STRAP-CABLE	
	4	1	**462-2235**	6	GLOW PLUG (24-VOLT)	
	5	1	**368-3145**	1	BUS BAR AS	
	6	1	**384-7567**	1	HARNESS AS-STARTING AID	
E		1	**292-2893**		CONDUIT (10.1-MM ID) (4-CM)	
		1	**2L-8050**	2	TERMINAL-RING (6-GA, 1/4-IN SCREW)	
					—OR—	
		1	**2L-8058**	2	TERMINAL-RING (8-GA, 1/4-IN SCREW)	
		1	**427-9771**	1	TIE	
M	7	1	**208-8469**	1	LOCKNUT (M6X1-THD)	
	8	1	**275-2428**	1	INSULATOR	
	9	1	**277-4409**	1	CAP	
	10	1	**067-6070**	1	WASHER	
	11	1	**275-2431**	1	WASHER	

E - ORDER BY THE CENTIMETER
M - METRIC PART

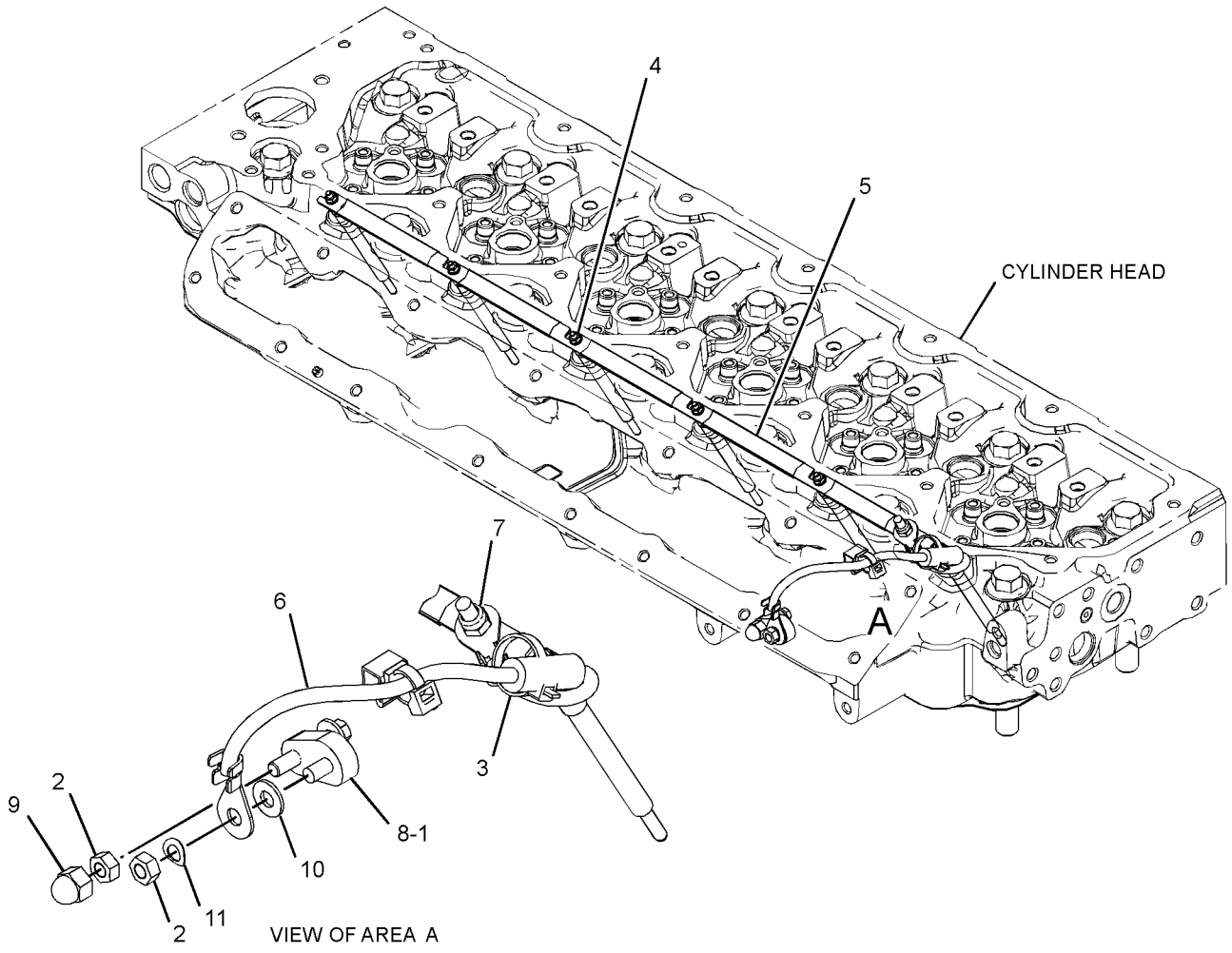

GRAPHIC #1 <END> g06032380

567-2688 STARTING AID GP-ETHER

S/N: Z2K1-UP; Z2N1-UP
PART OF 575-9704 COLD WEATHER AR
AN ATTACHMENT

SMCS-1456 **i07848635**

NOTE	REF NO	GRAPHIC REF	PART NUMBER	QTY	PART NAME 1 2 3 4 5 6 (PRODUCT LEVEL)	SEE PAGE
M	1	1	**8T-4189**	3	BOLT (M8X1.25X20-MM)	
	2	1	**3S-2093**	5	STRAP-CABLE	
	3	1	**5P-4115**	2	WASHER-HARD (7.2X19X2-MM THK)	
	4	1	**6V-2686**	2	CLIP	
	5	1	**7X-0613**	1	WASHER-HARD (8.8X25.5X5-MM THK)	
	6	1	**8T-4121**	4	WASHER-HARD (11X21X2.5-MM THK)	
M	7	1	**8T-4138**	2	BOLT (M6X1X20-MM)	
	8	1	**8T-4224**	4	WASHER-HARD (8.8X16X2-MM THK)	
M	9	1	**8T-7547**	2	BOLT (M8X1.25X30-MM)	
	10	1	**160-8763**	1	FITTING AS	
		1	**160-8761**	1	FILTER (ETHER)	
	11	1	**175-1367**	2	SPACER (8.8X16X10-MM THK)	
	12	1	**252-1607**	1	ATOMIZER AS	
		1	**236-4545**	1	NUT-SLEEVE (5/16-24-THD)	
	13	1	**206-2423**	2	SADDLE-MOUNTING	
M	14	1	**344-5675**	1	NUT (M10X1.5-THD)	
	15	1	**384-4858**	1	CLAMP	
Y	16	1	**447-5581**	1	VALVE GP-ETHER STARTING (24-VOLT)	223
	17	1	**4P-7581**	4	CLIP (LADDER)	
	18	1	**561-8689**	1	BRACKET AS	
M		1	**8T-3612**	5	NUT-WELD (M8X1.25-THD)	
	19	1	**7K-1181**	3	STRAP-CABLE	
M	20	1	**8T-6466**	3	BOLT (M10X1.5X60-MM)	
D	21	1	**5P-5630**		TUBE (1-M)	
AFH			**7X-1062**	1	CYLINDER AS-ETHER	
AFH			**9X-7138**	1	FILTER & GASKET AS (ETHER STARTING AID)	

A - NOT PART OF THIS GROUP
D - ORDER BY THE METER
F - NOT SHOWN
H - MUST BE PROCURED LOCALLY FROM YOUR CAT DEALER
M - METRIC PART
Y - SEPARATE ILLUSTRATION

567-2688 **STARTING AID GP-ETHER** (contd.) **i07848635**

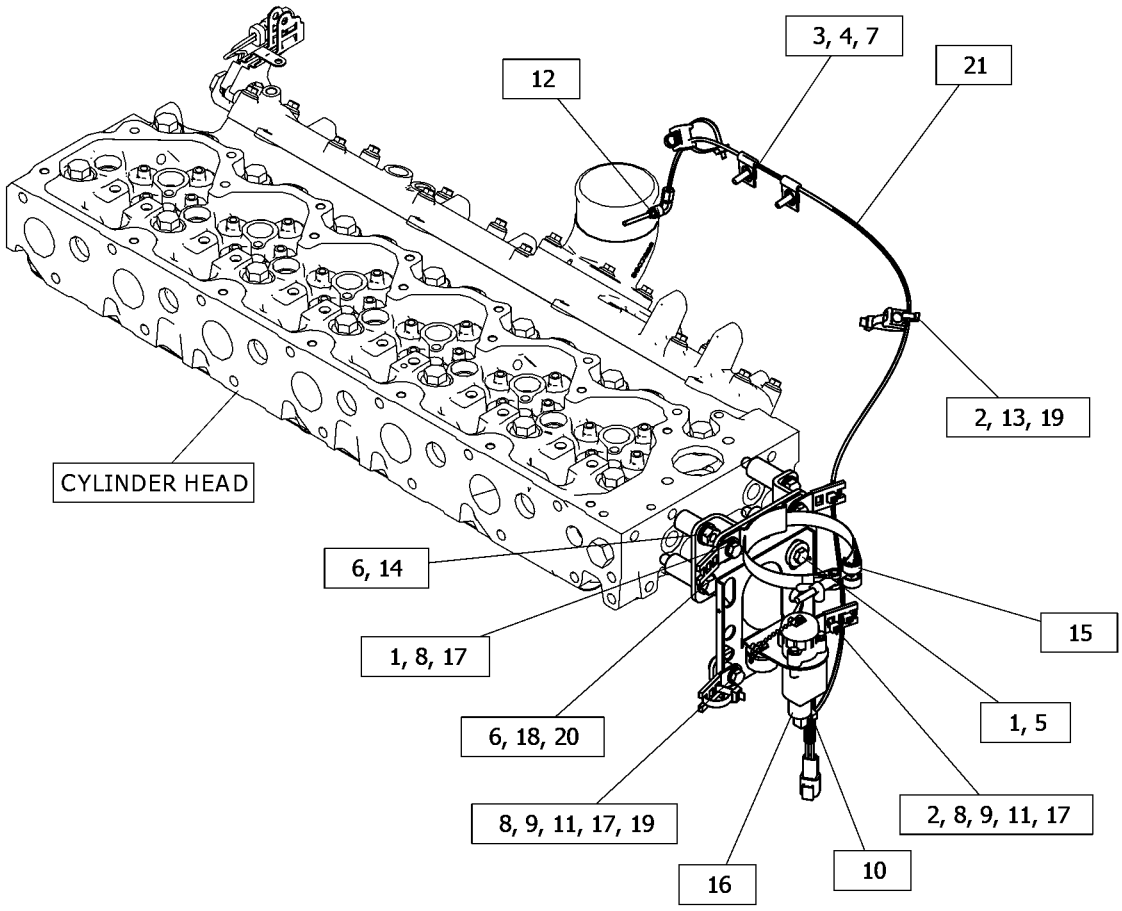

GRAPHIC #1 <END> g06457331

550-5561 STARTING AR-ELECTRIC

S/N: Z2K1-UP; Z2N1-UP
LIGHT-DUTY
PART OF 532-9851, 532-9856 DISTRIBUTION AR
AN ATTACHMENT

SMCS-1450 **i07820060**

NOTE	PART NUMBER	QTY	PART NAME 1 2 3 4 5 6 (PRODUCT LEVEL)	SEE PAGE
Y	*515-4415*	1	BATTERY & WIRING GP	130
Y	*562-0250*	1	PLUG GP (SERVICE CENTER)	838
Y	*348-5129*	1	STARTING MOTOR GP-ELECTRIC	215

Y - SEPARATE ILLUSTRATION

<END>

550-5562 STARTING AR-ELECTRIC

S/N: Z2K1-UP; Z2N1-UP
AN ATTACHMENT

SMCS-1450 **i07828409**

NOTE	PART NUMBER	QTY	PART NAME 1 2 3 4 5 6 (PRODUCT LEVEL)	SEE PAGE
Y	*515-4400*	1	BATTERY & WIRING GP	128
Y	*562-0250*	1	PLUG GP (SERVICE CENTER)	838
Y	*348-5129*	1	STARTING MOTOR GP-ELECTRIC	215

Y - SEPARATE ILLUSTRATION

<END>

348-5129 STARTING MOTOR GP-ELECTRIC

S/N: Z2K1-UP; Z2N1-UP
24-VOLT
PART OF 550-5561, 550-5562 STARTING AR-ELECTRIC
AN ATTACHMENT

SMCS-1453 **i07828315**

NOTE	REF NO	GRAPHIC REF	PART NUMBER	QTY	PART NAME 1 2 3 4 5 6 (PRODUCT LEVEL)	SEE PAGE
M	1	1	**184-0983**	3	NUT-HEX FLANGE (M12X1.75-THD)	
	2	1	**183-1343**	3	STUD	
R	3	1	**387-9639**	1	STARTING MOTOR GP-ELECTRIC	
		1	**230-4012**	1	RECEPTACLE AS-CONNECTOR (2-PIN)	
	4	1	**399-5260**	1	GASKET	

M - METRIC PART
R - REMANUFACTURED PART MAY BE AVAILABLE

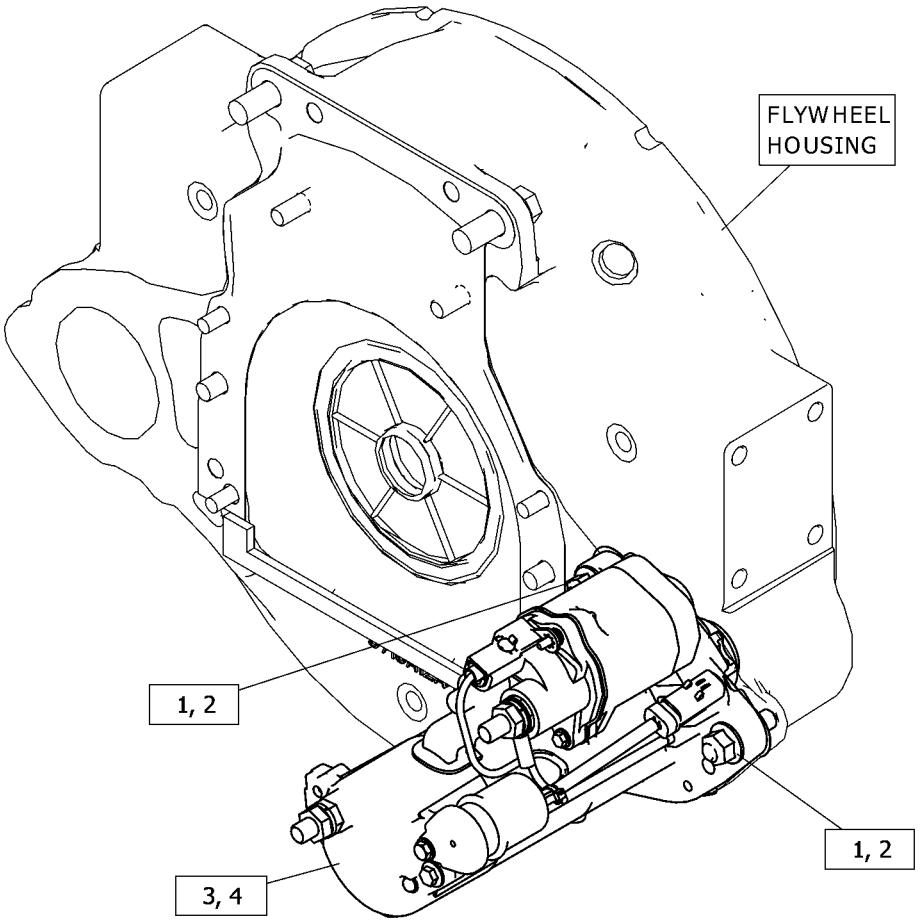

GRAPHIC #1 <END> g06449479

557-5447 STARTING MOTOR GP-ELECTRIC

S/N: Z2K1-UP; Z2N1-UP
HEAVY-DUTY, 24-VOLT
PART OF 575-9704 COLD WEATHER AR
AN ATTACHMENT

SMCS-1453 **i07818626**

NOTE	REF NO	GRAPHIC REF	PART NUMBER	QTY	PART NAME 1 2 3 4 5 6 (PRODUCT LEVEL)	SEE PAGE
M	1	1	**184-0983**	3	NUT-HEX FLANGE (M12X1.75-THD)	
	2	1	**183-1343**	3	STUD	
	3	1	**516-2856**	1	STARTING MOTOR GP-ELECTRIC	
		1	**230-4012**	1	RECEPTACLE AS-CONNECTOR (2-PIN)	
		1	**423-9049**	1	SEAL-O-RING	

M - METRIC PART

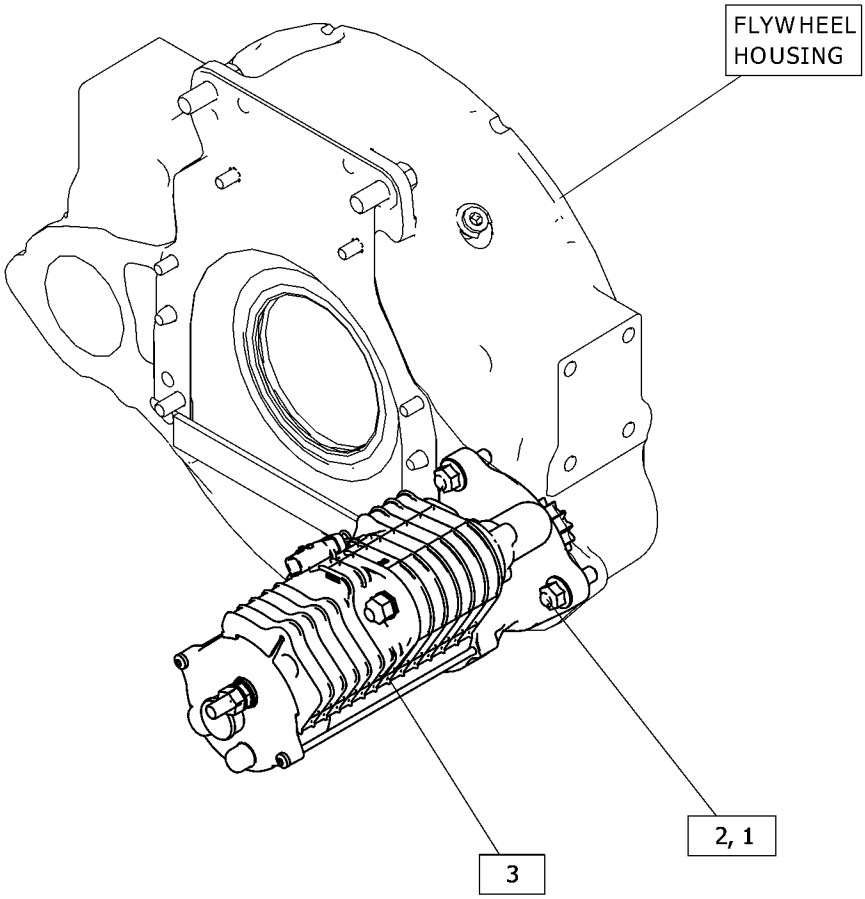

GRAPHIC #1 <END> g06445604

440-0257 SWITCH GP-PRESSURE

S/N: Z2K1-UP; Z2N1-UP
PART OF 332-8833 FILTER GP-OIL
AN ATTACHMENT

SMCS-7400, 7421

i05979712

NOTE	REF NO	GRAPHIC REF	PART NUMBER	QTY	PART NAME 1 2 3 4 5 6 (PRODUCT LEVEL)	SEE PAGE
	1	1	**102-8802**	1	KIT-RECEPTACLE (2-PIN)	
					(INCLUDES RECEPTACLE AS & WEDGE)	
	2	1	**033-6033**	1	SEAL-O-RING	
	3	1	**8T-8729**	2	PIN-CONNECTOR (16-GA TO 20-GA)	
E	4	1	**9X-1813**		SLEEVE (28-CM)	
	5	1	**206-9295**	1	SEAL-O-RING	

E - ORDER BY THE CENTIMETER

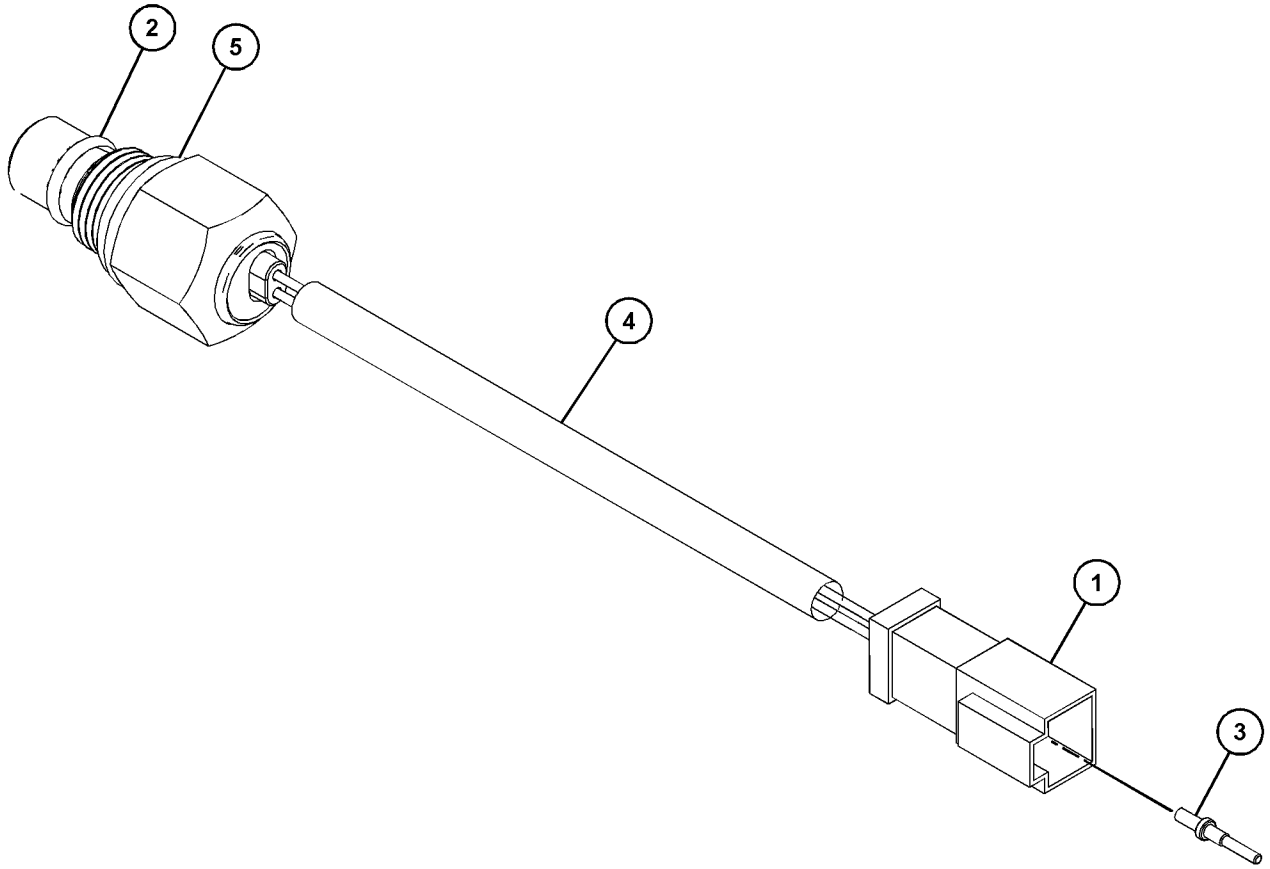

GRAPHIC #1 <END> g03688962

158-6632 SWITCH GP-PUSH BUTTON

S/N: Z2K1-UP; Z2N1-UP
PART OF 526-7919, 565-8666 WIRING GP-CAB
AN ATTACHMENT

SMCS-1435, 7332 **i01837970**

NOTE	REF NO	GRAPHIC REF	PART NUMBER	QTY	PART NAME 1 2 3 4 5 6 (PRODUCT LEVEL)	SEE PAGE
	1	1	**9X-0199**	1	BOOT-SWITCH	
	2	1	**7T-9515**	1	KNOB-HORN	
	3	1	**5L-7200**	1	SCREW (8-32X0.375-IN)	
	4	1	**3B-4501**	1	LOCKWASHER	
	5	1	**6V-8370**	1	NUT-HEX (3/4-32-THD)	
	6	1	**2H-3922**	1	LOCKWASHER	
	7	1	**102-8802**	1	KIT-RECEPTACLE (2-PIN)	
					(INCLUDES RECEPTACLE AS & WEDGE)	
	8	1	**9X-3401**	2	PIN-CONNECTOR (16-GA TO 18-GA)	
	9	1	**3E-3365**	1	WEDGE-RECEPTACLE LOCK (2-PIN)	

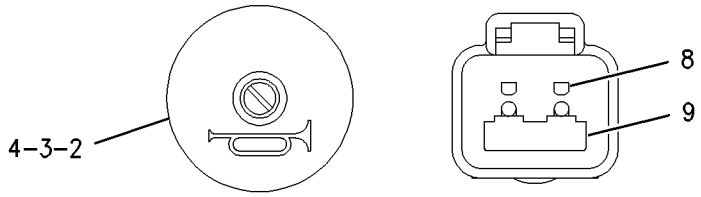

VIEW A-A VIEW B-B

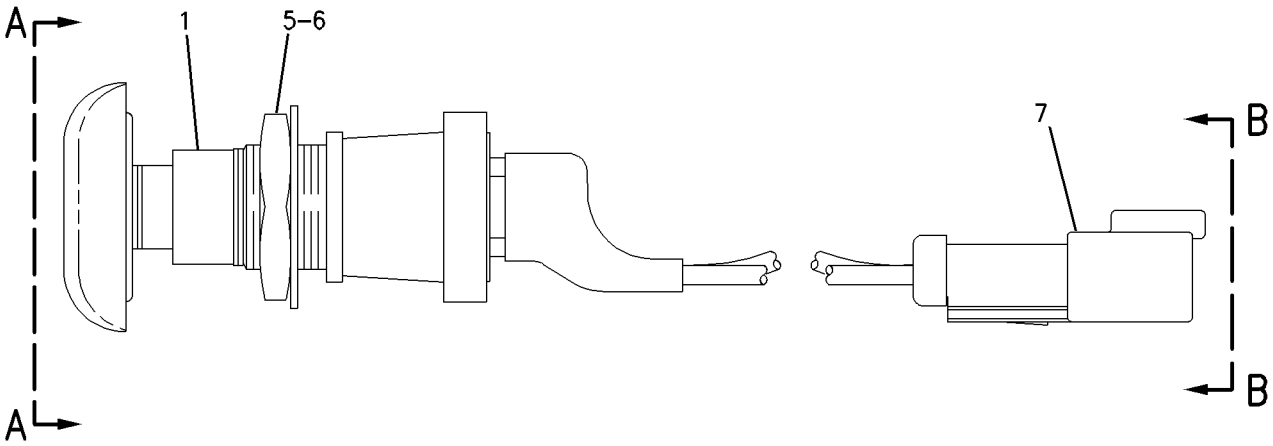

GRAPHIC #1 <END> g00942674

112-6174 SWITCH GP-ROTARY

S/N: Z2K1-UP
PART OF 565-8666 WIRING GP-CAB
AN ATTACHMENT

SMCS-7332 **i05864930**

NOTE	REF NO	GRAPHIC REF	PART NUMBER	QTY	PART NAME 1 2 3 4 5 6 (PRODUCT LEVEL)	SEE PAGE
	1	1	**6V-8369**	1	NUT (7/16-28-THD)	
	2	1	**2H-3920**	1	LOCKWASHER	
	3	1	**102-8806**	1	KIT-RECEPTACLE (8-PIN)	
					(INCLUDES RECEPTACLE AS & WEDGE)	
	4	1	**8T-8737**	2	PLUG-SEAL	
	5	1	**8T-8729**	6	PIN-CONNECTOR (16-GA TO 20-GA)	

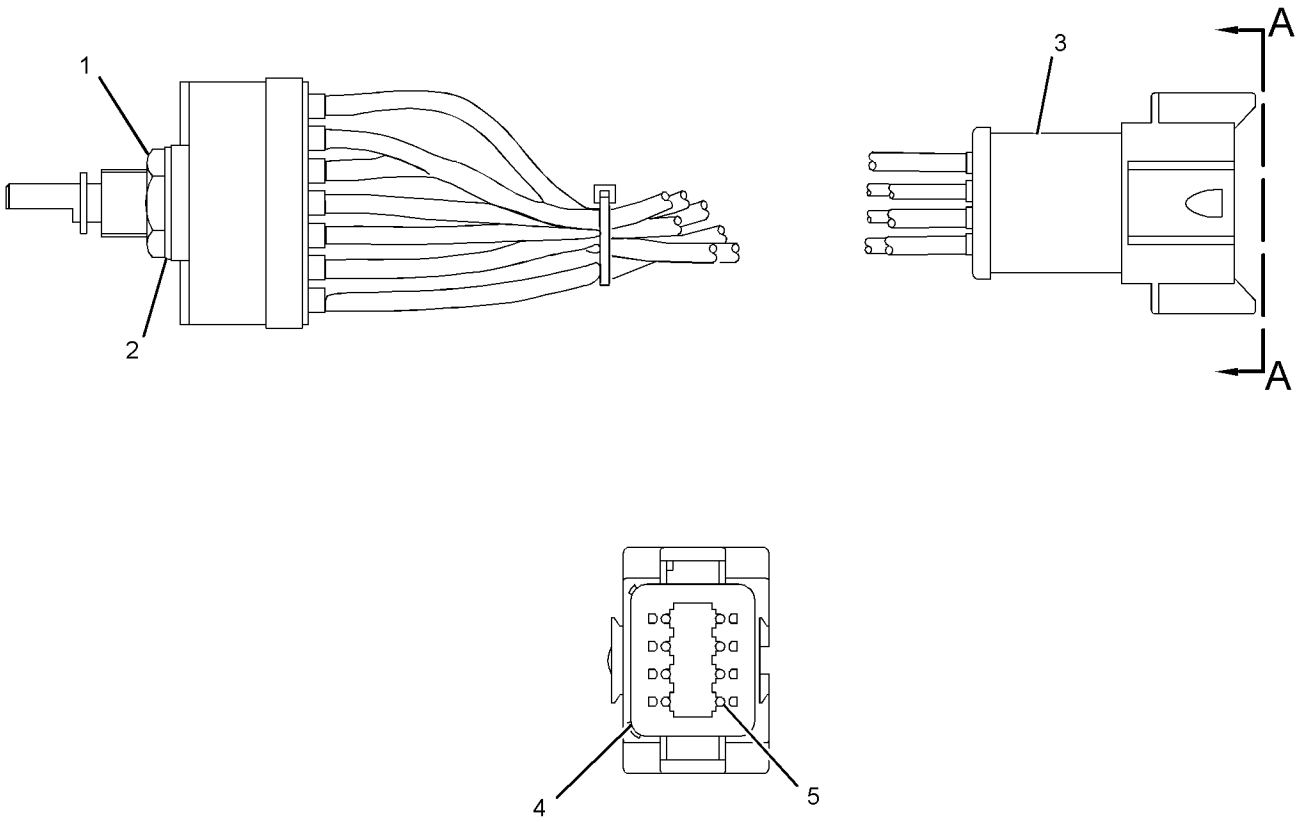

VIEW A-A

GRAPHIC #1 <END> g03197518

255-2752 SWITCH GP-START

S/N: Z2K1-UP; Z2N1-UP
PART OF 526-7919, 565-8666 WIRING GP-CAB
AN ATTACHMENT

SMCS-1416 **i05909865**

NOTE	REF NO	GRAPHIC REF	PART NUMBER	QTY	PART NAME 1 2 3 4 5 6 (PRODUCT LEVEL)	SEE PAGE
	1	1	**7T-6799**	1	NUT-MOUNTING (1-32-THD)	
	2	1	**102-8805**	1	KIT-RECEPTACLE (6-PIN)	
					'(INCLUDES RECEPTACLE AS & WEDGE)	
	3	1	**8T-8729**	5	PIN-CONNECTOR (16-GA TO 20-GA)	
	4	1	**8T-8737**	1	PLUG-SEAL	

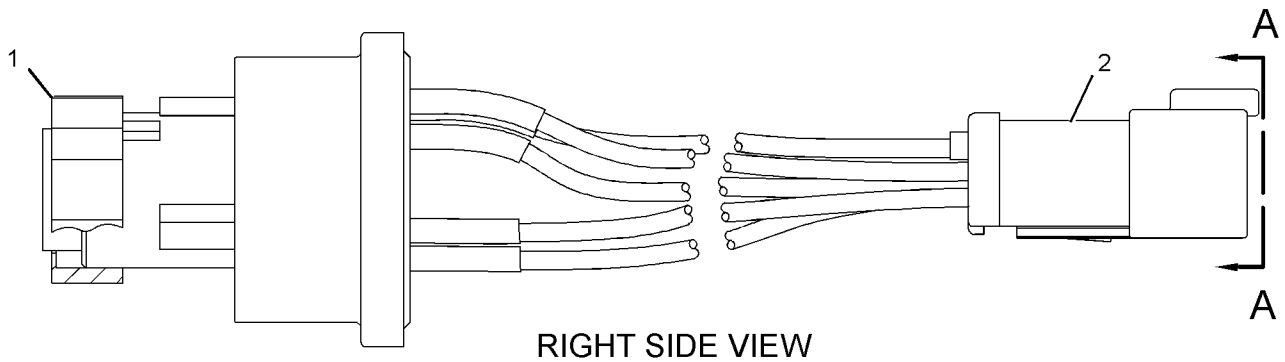

RIGHT SIDE VIEW

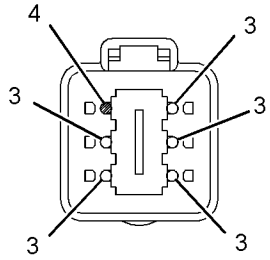

VIEW A-A

GRAPHIC #1 <END> g02255874

260-5864 SWITCH GP-TOGGLE

S/N: Z2K1-UP; Z2N1-UP
PART OF 570-0376 LIGHTING GP-FLOOD
AN ATTACHMENT

SMCS-7332 **i07840246**

NOTE	REF NO	GRAPHIC REF	PART NUMBER	QTY	PART NAME 1 2 3 4 5 6 (PRODUCT LEVEL)	SEE PAGE
	1	1	**102-8803**	1	KIT-RECEPTACLE (3-PIN)	
					(INCLUDES RECEPTACLE AS & WEDGE)	
	2	1	*271-2180*	1	SWITCH AS-TOGGLE (DOOR RELEASE, REMOTE)	
		1	**6T-3631**	2	NUT-HEX (15/32-32-THD)	
		1	**6T-3632**	1	LOCKWASHER	
		1	**6T-3633**	1	RING-LOCKING	
	3	1	**8T-8729**	3	PIN-CONNECTOR (16-GA TO 20-GA)	
E	4	1	**112-4550**		SLEEVE (21-CM)	
BD	5	1	**5P-5677**		WIRE (18-GA, BLACK)	

B - USE AS REQUIRED
D - ORDER BY THE METER
E - ORDER BY THE CENTIMETER

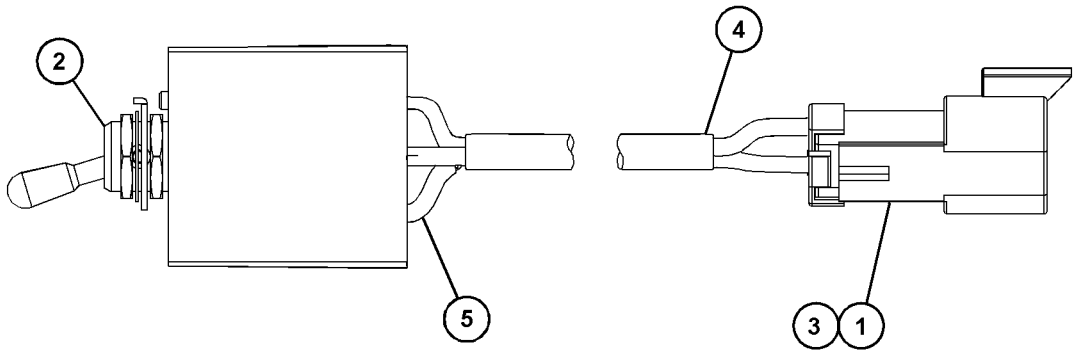

GRAPHIC #1 <END> g06455613

275-7741 SWITCH GP-WIPER–CAB

S/N: Z2K1-UP; Z2N1-UP
24-VOLT, INTERMITTENT
PART OF 526-7919 WIRING GP-CAB
AN ATTACHMENT

SMCS-7305, 7332 **i07523601**

NOTE	REF NO	GRAPHIC REF	PART NUMBER	QTY	PART NAME 1 2 3 4 5 6 (PRODUCT LEVEL)	SEE PAGE
	1	1	**6V-8369**	1	NUT (7/16-28-THD)	
	2	1	**2H-3920**	1	LOCKWASHER	
	3	1	**8T-8737**	2	PLUG-SEAL	
	4	1	**186-3735**	6	PIN-CONNECTOR (16-GA TO 18-GA)	
	5	1	**102-8806**	1	KIT-RECEPTACLE (8-PIN)	
					(INCLUDES RECEPTACLE AS & WEDGE)	

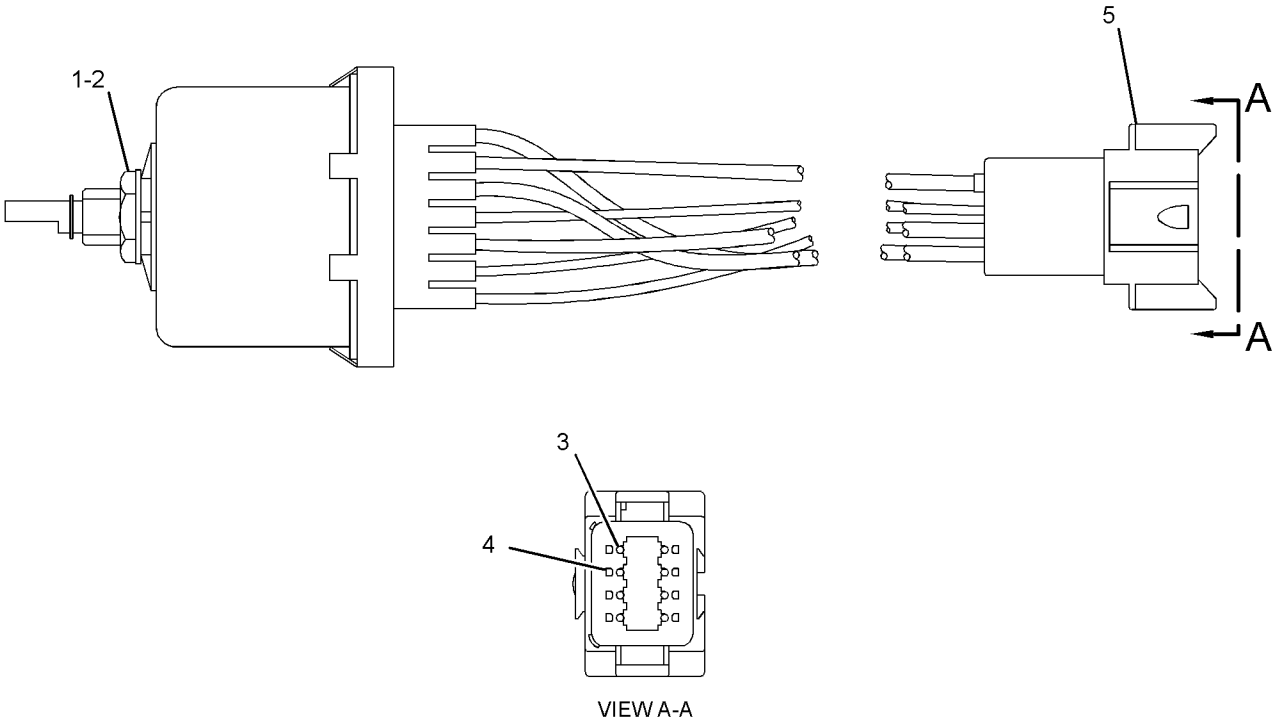

GRAPHIC #1 <END> g01445891

447-5581 VALVE GP-ETHER STARTING

S/N: Z2K1-UP; Z2N1-UP
PART OF 567-2688 STARTING AID GP-ETHER
AN ATTACHMENT

SMCS-1456 **i07729973**

NOTE	REF NO	GRAPHIC REF	PART NUMBER	QTY	PART NAME 1 2 3 4 5 6 (PRODUCT LEVEL)	SEE PAGE
	1	1	**102-8802**	1	KIT-RECEPTACLE (2-PIN)	
					(INCLUDES RECEPTACLE AS & WEDGE)	
	2	1	**8T-8729**	2	PIN-CONNECTOR (16-GA TO 20-GA)	

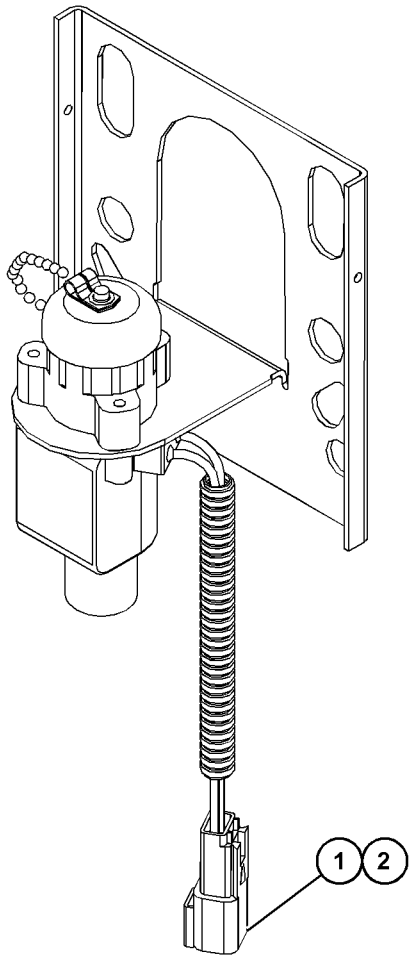

GRAPHIC #1 <END> g06412350

577-0177 WIRING GP-AIR CONDITIONER

S/N: Z2K1-UP; Z2N1-UP
PART OF 577-0168 AIR CONDITIONER & MOUNTING GP
AN ATTACHMENT

SMCS-1408, 7320 **i07814494**

NOTE	REF NO	GRAPHIC REF	PART NUMBER	QTY	PART NAME 1 2 3 4 5 6 (PRODUCT LEVEL)	SEE PAGE
	1	1	**7K-1181**	27	STRAP-CABLE	
	2	1	**387-5691**	1	INSULATION	
	3	1	**277-1873**	2	CLIP	
	4	1	**352-3967**	1	CLIP (LADDER)	
	5	1	**3D-5279**	3	GROMMET	
	6	1	**4P-7581**	1	CLIP (LADDER)	
	7	1	**575-0404**	1	BRACKET	
Y	8	1	**575-4389**	1	HARNESS AS-HEATER & AIR COND	169
M	9	1	**6V-7357**	2	BOLT (M6X1X25-MM)	
	10	1	**8T-4121**	1	WASHER-HARD (11X21X2.5-MM THK)	
M	11	1	**8T-4136**	1	BOLT (M10X1.5X25-MM)	
M	12	1	**8T-4189**	2	BOLT (M8X1.25X20-MM)	
	13	1	**8T-4224**	2	WASHER-HARD (8.8X16X2-MM THK)	
	14	1	**9X-8256**	2	WASHER (6.6X12X2-MM THK)	

M - METRIC PART
Y - SEPARATE ILLUSTRATION

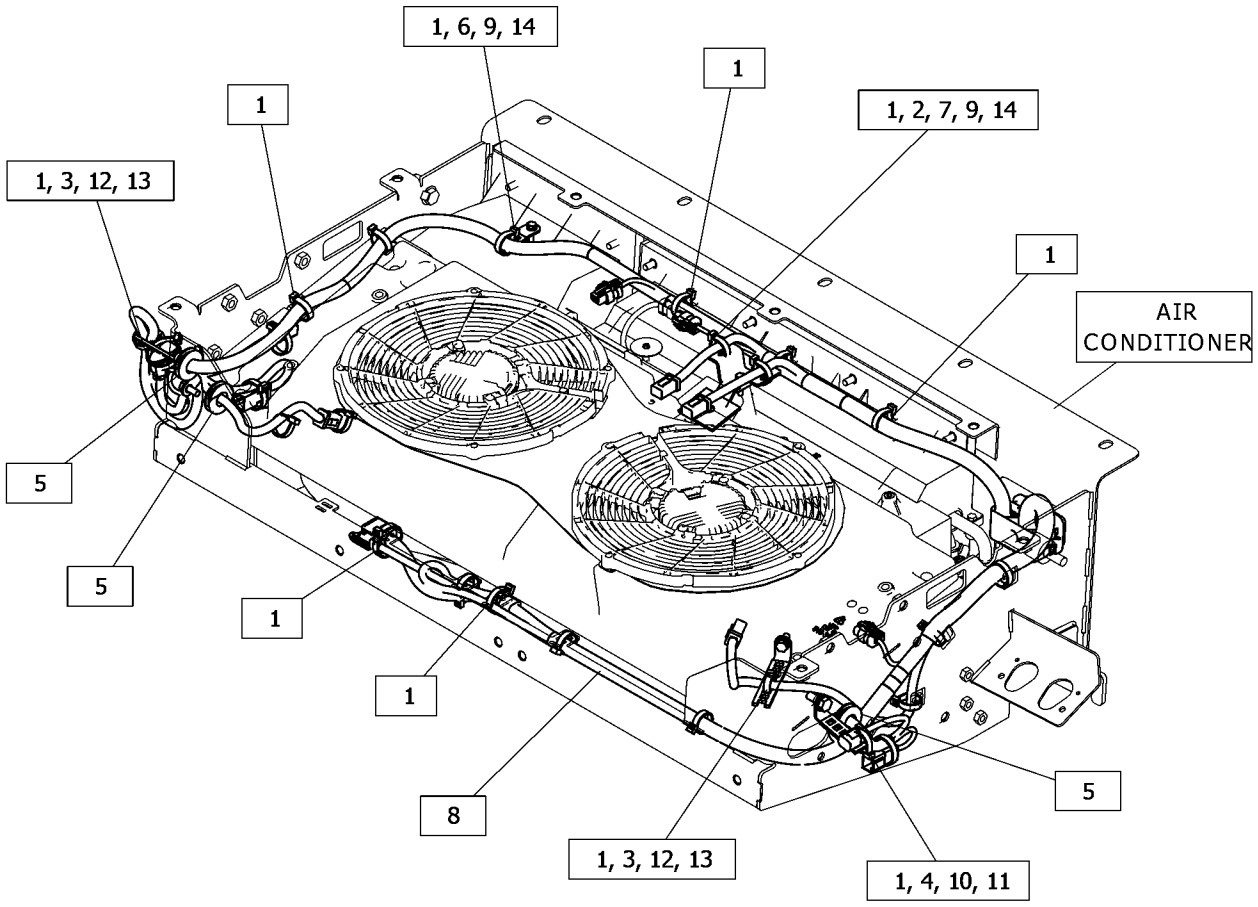

GRAPHIC #1 <END> g06446516

526-7919 WIRING GP-CAB

S/N: Z2K1-UP; Z2N1-UP
PART OF 536-6468, 536-6469, 536-6470, 579-6887 CAB AR
AN ATTACHMENT

SMCS-1408, 7301 **i07821075**

NOTE	REF NO	GRAPHIC REF	PART NUMBER	QTY	PART NAME 1 2 3 4 5 6 (PRODUCT LEVEL)	SEE PAGE
	1	2,3	**286-0323**	2	GASKET	
	2	2	**346-0663**	1	BRACKET	
	3	3	**491-6843**	2	CONTROL GP-UNPROGRAMMED	
YR	4	1	**494-6472**	1	CONTROL GP-COMMUNICATION (ELECTRONIC)	143
	5	1,3,4	**130-5300**	6	CLIP	
	6	2,4	**133-6934**	2	SPACER (11X20X25-MM THK)	
Y	7	1	**158-6632**	1	SWITCH GP-PUSH BUTTON (24-VOLT) (HORN)	218
	8	1	**187-8675**	1	GASKET	
M	9	3	**198-9706**	4	SCREW-TRUSS HEAD (M5X0.8X16-MM)	
M	10	1	**200-1131**	4	SCREW-TRUSS HEAD (M4X0.7X20-MM)	
	11	3	**203-9007**	1	NUT (1-1/2-18-THD)	
	12	1	**204-8000**	1	MOUNTING-CABLE TIE	
	13	2	**228-6089**	3	PLUG (ROCKER SWITCH)	
	14	2	**234-5925**	1	GASKET	
Y	15	4	**255-2752**	1	SWITCH GP-START (IGNITION)	220
	16	1,2	**256-6454**	2	SENSOR-TEMPERATURE (2-PIN) (AIR CLEANER)	
	17	3	**270-2679**	1	LOCKWASHER	
	18	1	**272-7239**	1	BLOCK AS	
Y	19	4	**275-7741**	3	SWITCH GP-WIPER (24-VOLT)	222
	20	2	**277-1873**	1	CLIP	
	21	4	**278-2145**	1	STRAP AS-GROUND	
	22	2	**285-1204**	1	RETAINER	
	23	1	**2V-3216**	1	CLIP (LOOP)	
	24	4	**307-0649**	4	KNOB	
	25	4	**333-8538**	1	SENSOR AS-INERTIAL (ACCELERATION, ANGLE)	
		4	**386-0444**	1	HARNESS AS-SENSOR (ACCELEROMETER)	
		4	**9X-3401**	6	PIN-CONNECTOR (16-GA TO 18-GA)	
		4	**151-9275**	1	KIT-RECEPTACLE (6-PIN)	
		4	**102-8805**	1	KIT-RECEPTACLE (6-PIN)	
					(INCLUDES RECEPTACLE AS & WEDGE)	
E		4	**112-4550**		SLEEVE (20-CM)	
	26	1	**335-2252**	3	MOUNTING-CABLE TIE	
	27	3,4	**335-5365**	2	SOCKET-AUXILIARY POWER (12-VOLT)	
M	28	1	**342-9290**	1	SCREW-PAN HEAD (M4X0.7X10-MM)	
M	29	3	**344-5674**	4	NUT (M8X1.25-THD)	
	30	2	**347-0794**	1	LAMP GP-DOME (24-VOLT)	
	31	2	**348-7842**	1	CONVERTER-POWER (24-VOLT TO 12-VOLT)	
	32	2	**353-1634**	1	HARNESS AS-RADIO (BLUETOOTH)	
	33	4	**381-2621**	1	MOUNTING-CABLE TIE	
	34	4	**382-4473**	1	SWITCH GP-WIPER (24-VOLT)	
		4	**2H-3920**	1	LOCKWASHER	
		4	**6V-8369**	1	NUT (7/16-28-THD)	
		4	**8T-8729**	6	PIN-CONNECTOR (16-GA TO 20-GA)	
		4	**8T-8737**	2	PLUG-SEAL	
		4	**102-8806**	1	KIT-RECEPTACLE (8-PIN)	
					(INCLUDES RECEPTACLE AS & WEDGE)	
M	35	1,2	**3E-8020**	6	SCREW-TRUSS HEAD (M6X1X25-MM)	

526-7919 **WIRING GP-CAB (**contd.**)** **i07821075**

NOTE	REF NO	GRAPHIC REF	PART NUMBER	QTY	PART NAME 1 2 3 4 5 6 (PRODUCT LEVEL)	SEE PAGE
	36	3	**3F-9556**	2	LOCKWASHER	
	37	1,2	**3S-2093**	19	STRAP-CABLE	
	38	2	**441-3637**	1	RELAY AS-TIMER (24-VDC)	
	39	3	**455-9568**	1	CAP AS	
	40	2	**461-7396**	1	PANEL AS	
		2	**271-7312**	2	KNOB	
	41	3	**490-4245**	4	WASHER-CONICAL	
	42	3	**4B-4277**	4	WASHER (8.8X17.5X1.6-MM THK)	
	43	1	**4B-4863**	1	WASHER (4.7X11X1.2-MM THK)	
	44	2	**4P-7581**	1	CLIP (LADDER)	
	45	2	**4P-8134**	1	CLIP (LADDER)	
	46	1,3	**4S-1962**	4	CLIP (LOOP)	
	47	2	**501-3885**	1	HARNESS AS-RADIO	
	48	4	*506-2390*	1	MODULE GP-KEYPAD	
		4	**8F-1326**	2	WASHER (4.2X9.5X0.8-MM THK)	
M		4	**8T-2659**	2	LOCKNUT (M4X0.7-THD)	
	49	2	**514-6437**	1	HARNESS AS-RADIO (USB PORT)	
	50	3	**525-7217**	1	BRACKET AS	
M		3	**6V-9632**	1	NUT-WELD (M6X1-THD)	
M		3	**8T-3490**	1	NUT-WELD (M10X1.5-THD)	
Y	51	3	**526-0868**	1	HARNESS AS-STEERING (LH)	173
	52	3	**526-1511**	1	PLATE	
	53	4	**526-3825**	1	SWITCH AS-ROCKER (24-VOLT) (PARKING BRAKE)	
	54	4	**526-3826**	1	SWITCH AS-ROCKER (24-VOLT) (IMPLEMENT, FRONT)	
	55	2	**526-3828**	1	SWITCH AS-ROCKER (24-VOLT) (AIR CONDITIONER)	
	56	2	**526-7925**	1	GROMMET	
	57	3	**533-5449**	1	CABLE AS	
		3	**6T-5598**	1	TERMINAL-RING (1-GA TO 2-GA, 5/16-IN SCREW)	
E		3	**8C-3056**		CABLE (2-GA, RED) (40-CM)	
E		3	**125-7876**		TUBE-HEAT SHRINK (17.78-MM DIA) (4-CM)	
		3	*291-6819*	1	TERMINAL AS-RING	
E		3	**125-7876**		TUBE-HEAT SHRINK (17.78-MM DIA) (4-CM)	
		3	**299-6082**	1	COVER-TERMINAL (RED)	
	58	3	**533-5450**	1	CABLE AS	
D		3	**6V-2369**		CABLE (4-GA, BLACK) (0.2-M)	
		3	**229-7367**	1	COVER-TERMINAL	
		3	**316-5240**	1	COVER-TERMINAL	
		3	*284-8481*	1	TERMINAL AS-RING	
E		3	**119-3662**		TUBE-HEAT SHRINK (10.85-MM DIA) (4-CM)	
		3	*289-1502*	1	TERMINAL AS-RING	
E		3	**125-7876**		TUBE-HEAT SHRINK (17.78-MM DIA) (4-CM)	
		3	**316-5240**	1	COVER-TERMINAL	
	59	3	**533-5451**	1	CABLE AS	
D		3	**6V-2369**		CABLE (4-GA, BLACK) (0.3-M)	
		3	**229-7367**	1	COVER-TERMINAL	
		3	**283-6447**	1	TERMINAL-RING	
		3	*289-1502*	1	TERMINAL AS-RING	
E		3	**125-7876**		TUBE-HEAT SHRINK (17.78-MM DIA) (4-CM)	
Y	60	1	**533-5453**	1	HARNESS AS-CAB (WINDOW WASHER PUMP)	152
	61	3	**542-3264**	1	RELAY AS (MAIN POWER)	
		3	**8T-8730**	2	SOCKET-CONNECTOR (16-GA TO 18-GA)	

526-7919 **WIRING GP-CAB (**contd.**)** **i07821075**

NOTE	REF NO	GRAPHIC REF	PART NUMBER	QTY	PART NAME 1 2 3 4 5 6 (PRODUCT LEVEL)	SEE PAGE
		3	**155-2270**	1	KIT-CONNECTING PLUG (2-PIN)	
					(INCLUDES PLUG AS, WEDGE, & INTERFACE SEAL)	
	62	2	**542-5471**	1	BASE	
	63	4	**560-3061**	1	BRACKET AS	
M		4	**6V-9632**	2	NUT-WELD (M6X1-THD)	
Y	64	1	**566-2020**	1	HARNESS AS-CAB	154
	65	3	**575-4387**	1	BRACKET AS	
M		3	**6V-9632**	3	NUT-WELD (M6X1-THD)	
M	66	3	**5C-7261**	4	NUT (M8X1.25-THD)	
	67	3	**5P-4115**	2	WASHER-HARD (7.2X19X2-MM THK)	
	68	3	**6I-1418**	8	SPACER (8.2X12.7X28.7-MM THK)	
	69	2	**6T-7695**	2	SPEAKER AS-RADIO	
	70	1,3	**6V-0826**	4	GROMMET	
M	71	4	**6V-7357**	2	BOLT (M6X1X25-MM)	
M	72	1,2	**6V-8227**	2	NUT (M18X1.5-THD)	
	73	1,2,3,4	**7K-1181**	103	STRAP-CABLE	
	74	1	**8C-5607**	8	MOUNT-ISOLATION	
	75	1	**8C-5608**	4	SPACER (6.5X9.5X25.4-MM THK)	
M	76	1,3	**8C-8451**	6	BOLT (M6X1X40-MM)	
	77	3	**8J-1256**	1	CLIP	
	78	1	**8T-0328**	4	WASHER-HARD (5.5X10X1-MM THK)	
	79	1,2,3,4	**8T-4121**	20	WASHER-HARD (11X21X2.5-MM THK)	
M	80	1,3	**8T-4136**	4	BOLT (M10X1.5X25-MM)	
M	81	2,3,4	**8T-4137**	13	BOLT (M10X1.5X20-MM)	
M	82	1	**8T-4179**	1	BOLT (M12X1.75X20-MM)	
M	83	2	**8T-4182**	1	BOLT (M10X1.5X45-MM)	
M	84	4	**8T-4185**	1	BOLT (M10X1.5X50-MM)	
M	85	3	**8T-4195**	1	BOLT (M10X1.5X30-MM)	
M	86	3	**8T-4197**	4	BOLT (M8X1.25X40-MM)	
	87	1	**8T-4223**	1	WASHER-HARD (13.5X25.5X3-MM THK)	
	88	3	**8T-7934**	1	WASHER-HARD (11X21X5-MM THK)	
	89	3	**8T-9655**	16	MOUNT-ISOLATION	
	90	3	**9N-0869**	10	WASHER-HARD (8.8X25.5X2-MM THK)	
M	91	1,2,3	**9X-1046**	22	SCREW (M4X0.7X18-MM)	
	92	1,2,3	**9X-2038**	4	WASHER (7X19X2-MM THK)	
M	93	3	**9X-2044**	3	SCREW-TRUSS HEAD (M6X1X16-MM)	
M	94	2,3	**9X-2045**	5	SCREW-TRUSS HEAD (M6X1X20-MM)	
	95	1	**9X-6165**	4	WASHER (6.5X22X2.5-MM THK)	
	96	4	**9X-8256**	2	WASHER (6.6X12X2-MM THK)	

D - ORDER BY THE METER
E - ORDER BY THE CENTIMETER
M - METRIC PART
R - REMANUFACTURED PART MAY BE AVAILABLE
Y - SEPARATE ILLUSTRATION

526-7919 **WIRING GP-CAB (**contd.**)** **i07821075**

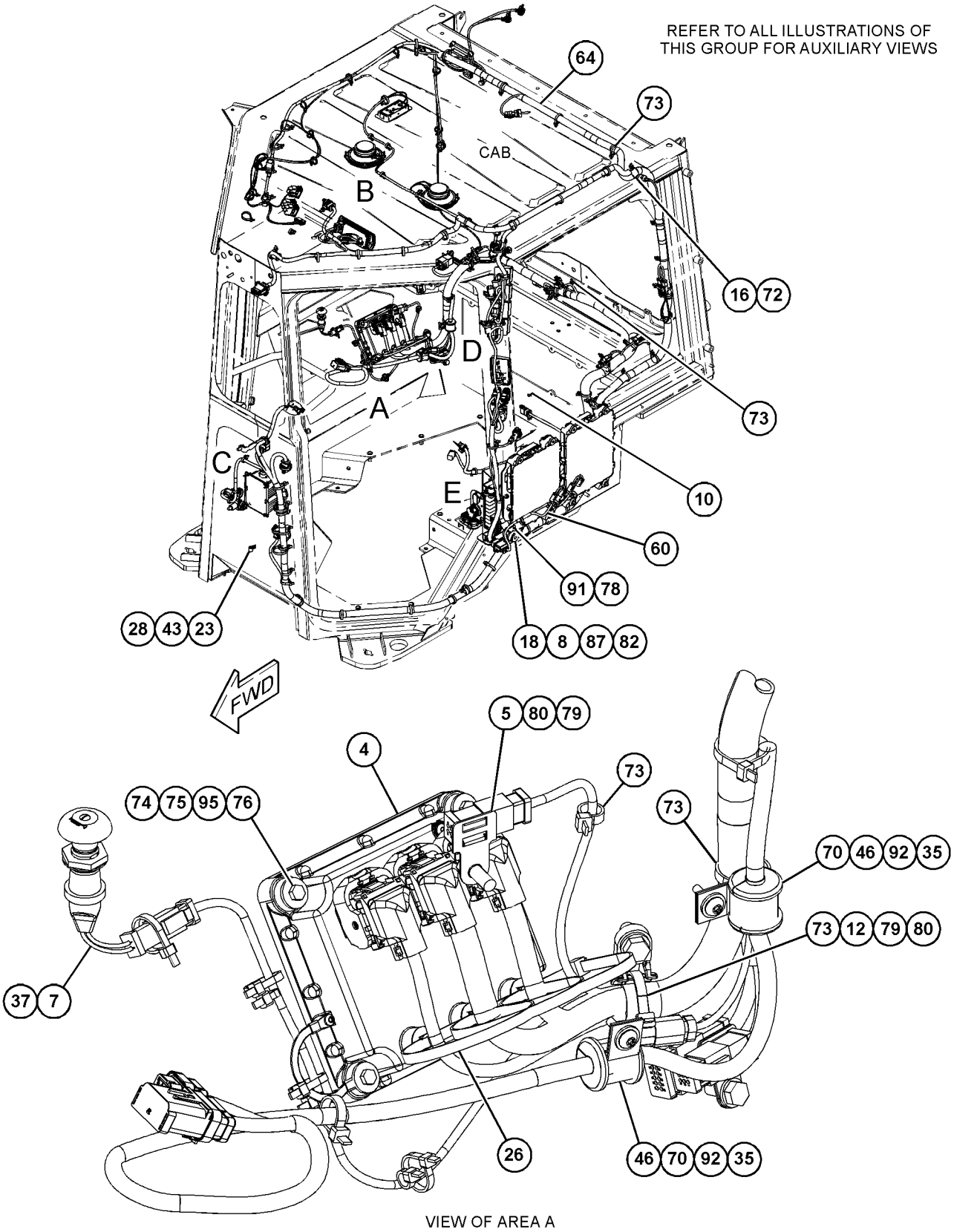

VIEW OF AREA A

GRAPHIC #1 g06462202

526-7919 **WIRING GP-CAB (**contd.**)** **i07821075**

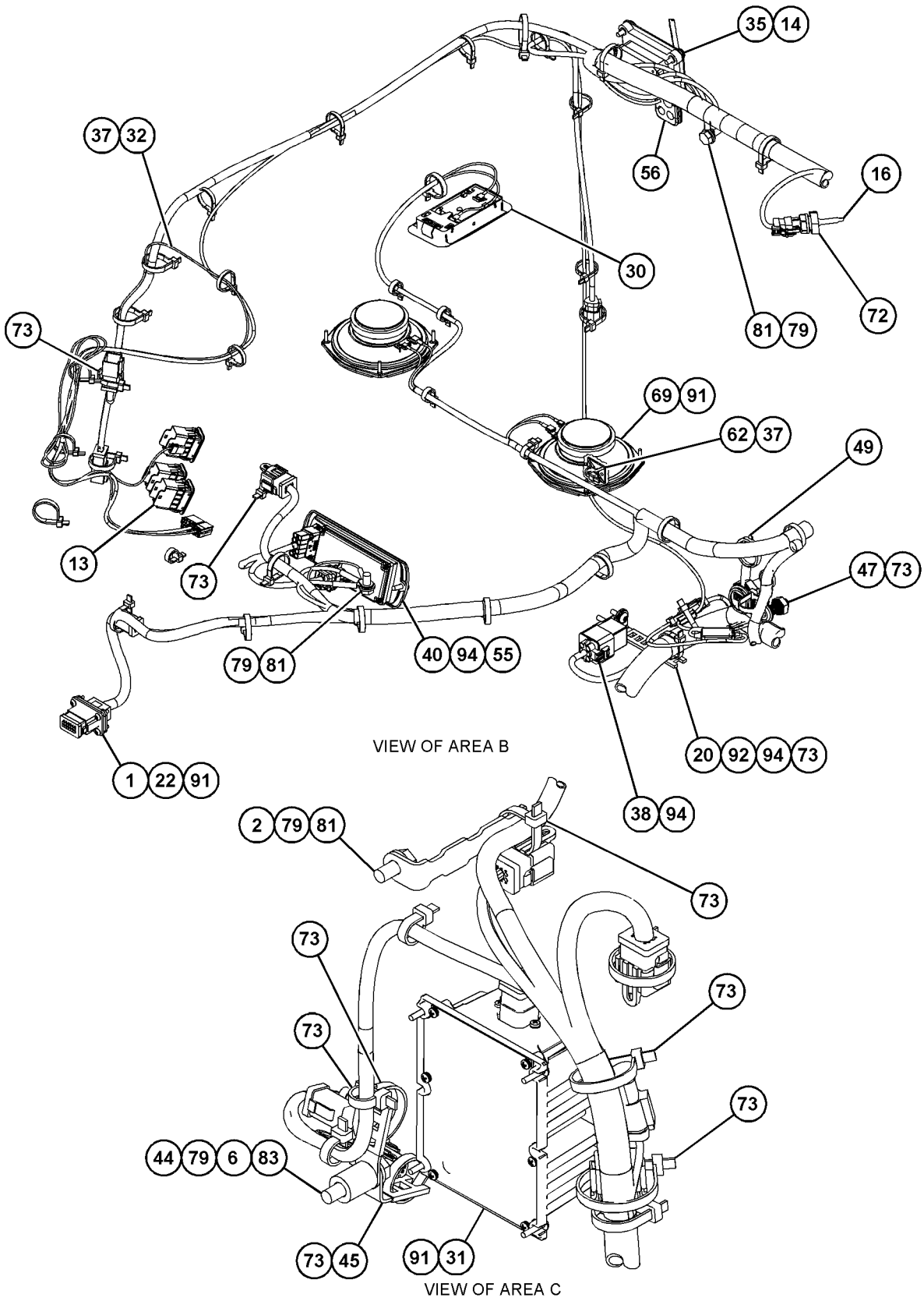

GRAPHIC #2 g06462203

526-7919 **WIRING GP-CAB (**contd.**)** **i07821075**

REFER TO ALL ILLUSTRATIONS OF
THIS GROUP FOR AUXILIARY VIEWS

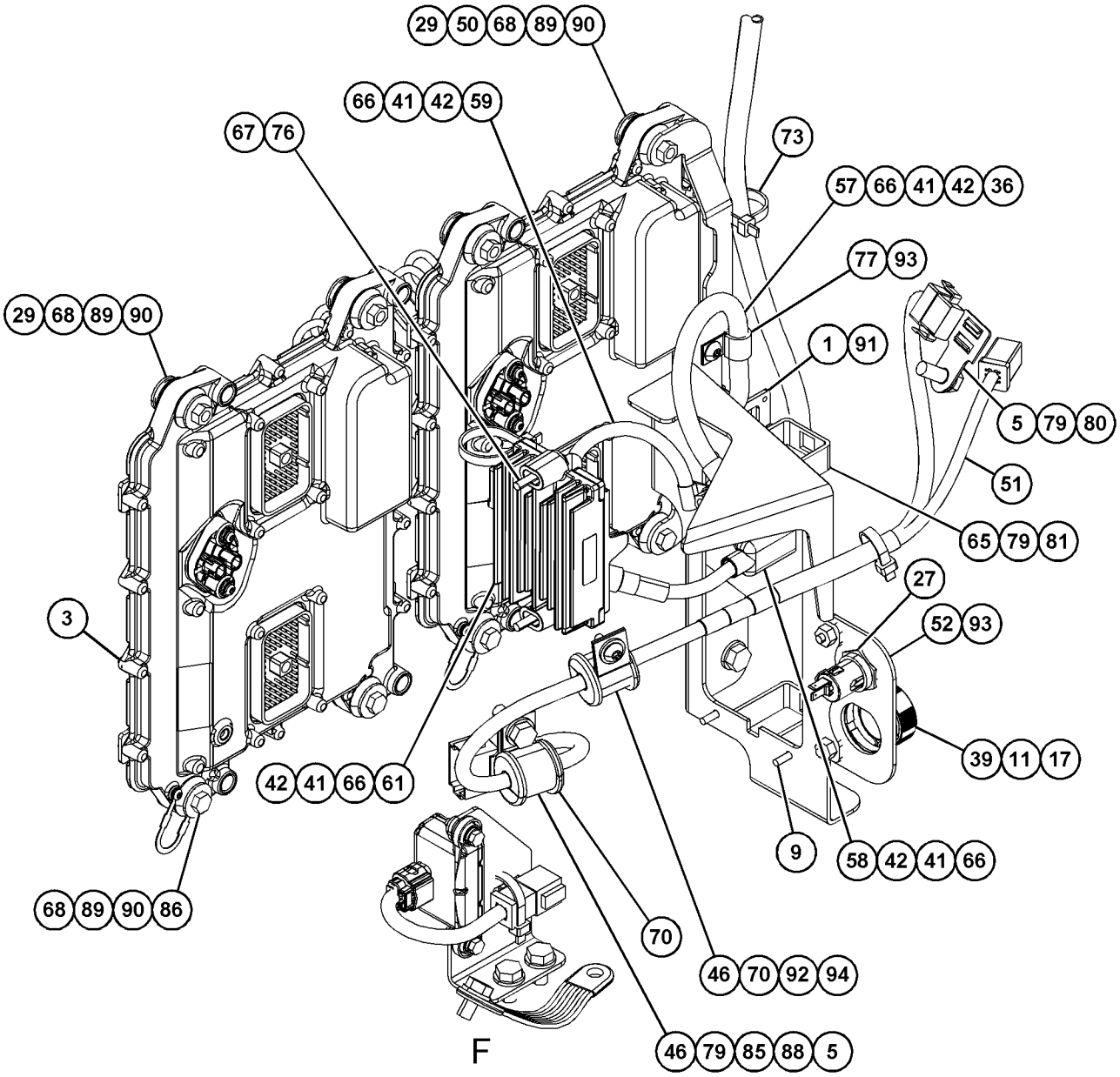

VIEW OF AREA E
(PARTS REMOVED FOR CLARITY) 180°

GRAPHIC #3 g06462206

526-7919 **WIRING GP-CAB (**contd.**)** **i07821075**

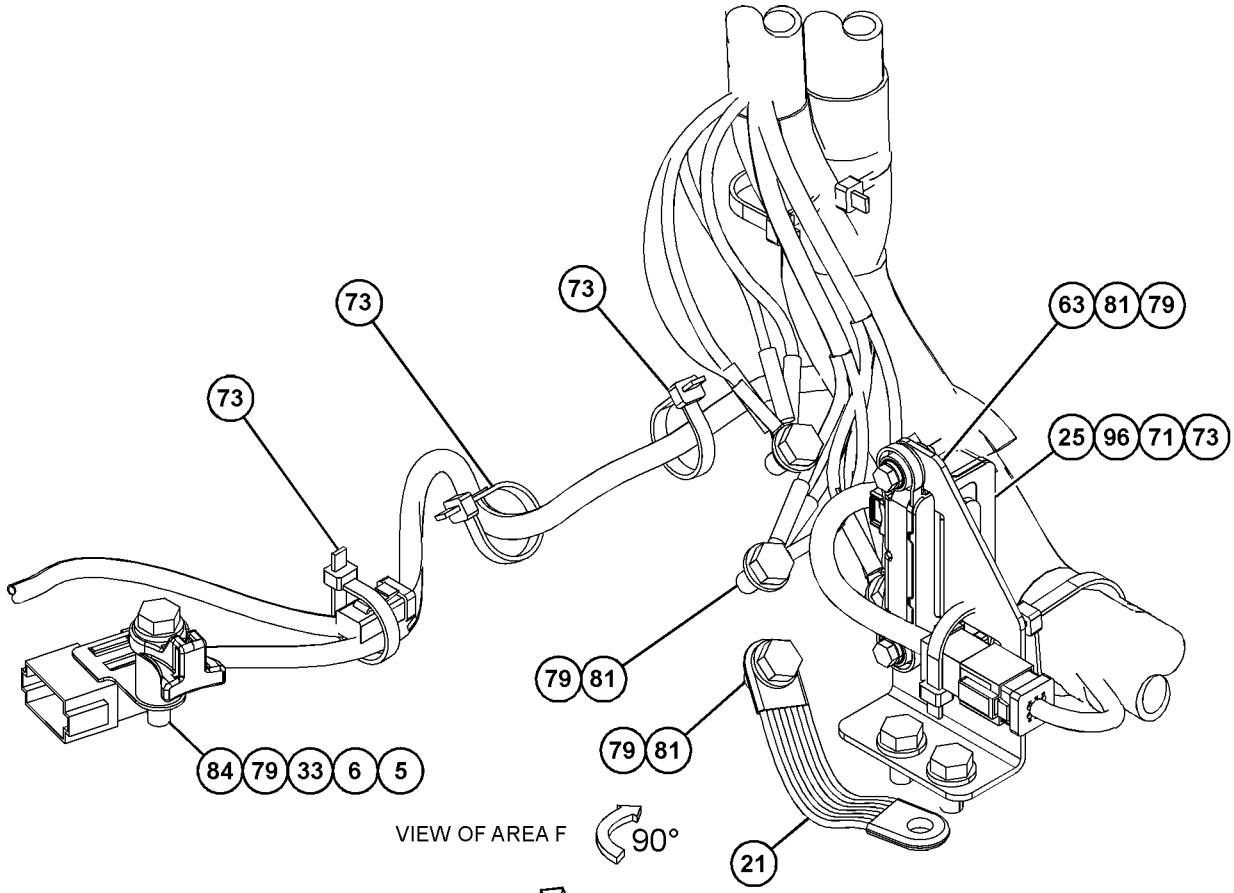

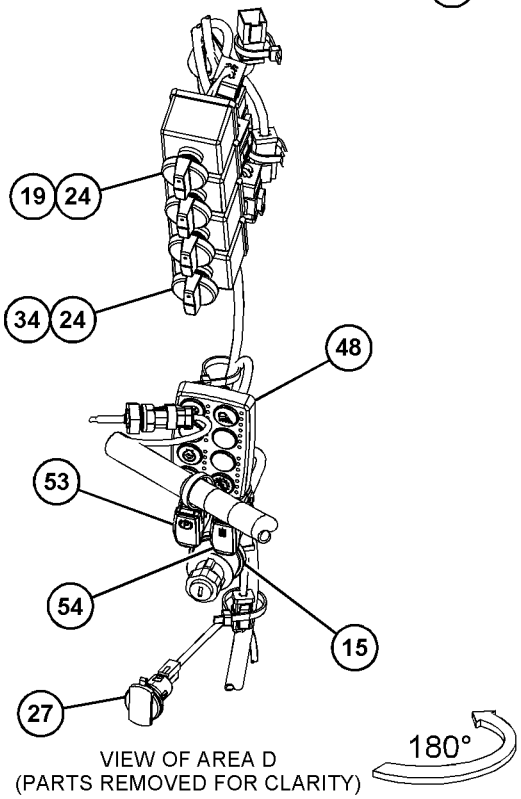

GRAPHIC #4 <END> g06462207

545-7815 WIRING GP-CAB

S/N: Z2K1-UP; Z2N1-UP
PART OF 536-6476, 536-6478, 579-6896 CAB GP
AN ATTACHMENT

SMCS-1408, 7301 **i07805179**

NOTE	REF NO	GRAPHIC REF	PART NUMBER	QTY	PART NAME 1 2 3 4 5 6 (PRODUCT LEVEL)	SEE PAGE
	1	1	**3V-4694**	2	PLUG-BUTTON	
	2	1	**8D-2388**	2	GROMMET	
	3	1	**8E-1118**	1	ANTENNA AS	
	4	1	**118-3509**	2	GROMMET	
	5	1	**209-7253**	1	CABLE AS	
	6	1	**3S-2093**	2	STRAP-CABLE	
	7	1	**4V-5090**	2	BUMPER	
Y	8	1	**533-5458**	2	HARNESS AS-CAB (DOORS)	152
Y	9	1	**559-2195**	2	HARNESS AS-CAB (WIPER, RH DOOR)	153
	10	1	**7G-7053**	2	GROMMET	
	11	1	**7K-1181**	12	STRAP-CABLE	

Y - SEPARATE ILLUSTRATION

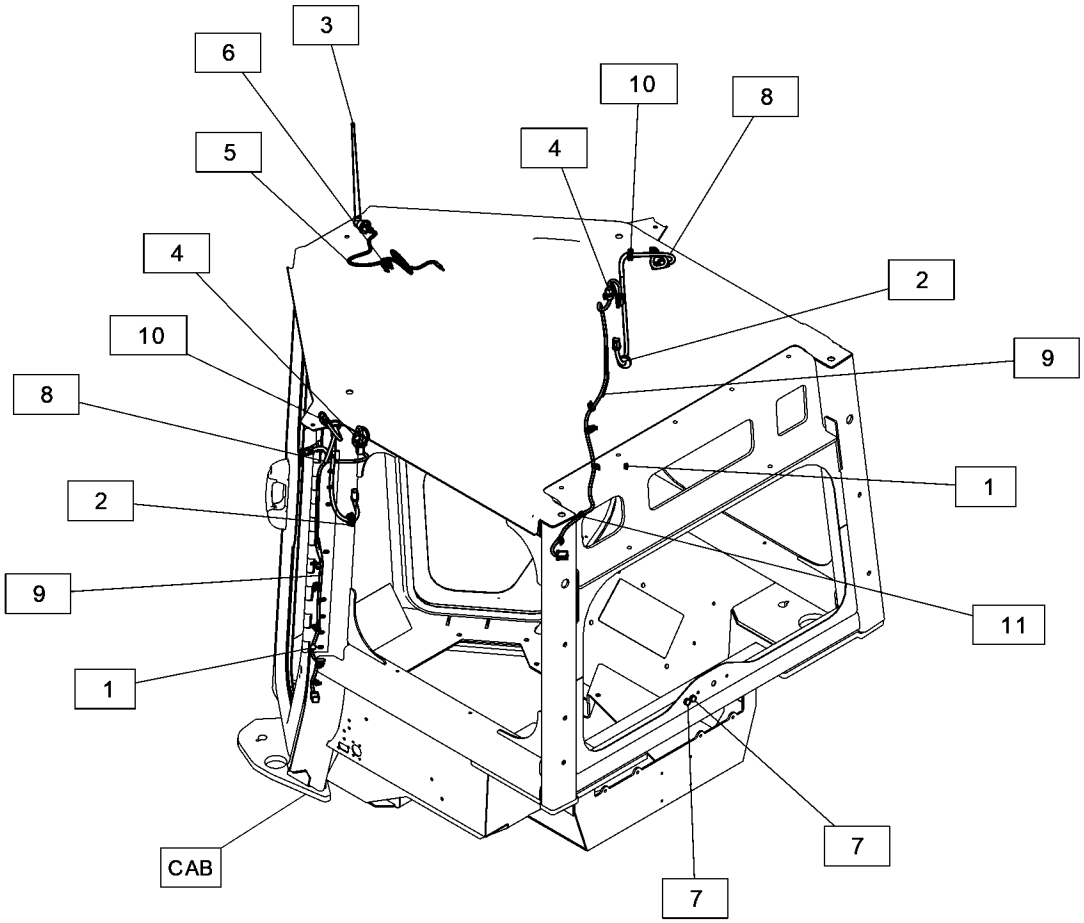

GRAPHIC #1 <END> g06449852

565-8666 WIRING GP-CAB

S/N: Z2K1-UP
PART OF 536-6467 CAB AR
AN ATTACHMENT

SMCS-1408, 7301 **i07813892**

NOTE	REF NO	GRAPHIC REF	PART NUMBER	QTY	PART NAME 1 2 3 4 5 6 (PRODUCT LEVEL)	SEE PAGE
	1	2,3	**286-0323**	2	GASKET	
	2	2	**346-0663**	1	BRACKET	
	3	3	**491-6843**	2	CONTROL GP-UNPROGRAMMED (MACHINE)	
	4	1	**517-4512**	1	CONTROL GP-ELECTRONIC (COMMUNICATION)	
		1	**7X-6315**	1	STRAP AS-GROUND	
Y	5	4	**112-6174**	4	SWITCH GP-ROTARY (WIPER, WASHER)	219
	6	1,3,4	**130-5300**	6	CLIP	
	7	2,4	**133-6934**	2	SPACER (11X20X25-MM THK)	
Y	8	1	**158-6632**	1	SWITCH GP-PUSH BUTTON (24-VOLT) (HORN)	218
	9	1	**187-8675**	1	GASKET	
M	10	1	**200-1131**	4	SCREW-TRUSS HEAD (M4X0.7X20-MM)	
	11	3	**203-9007**	1	NUT (1-1/2-18-THD)	
	12	1	**204-2281**	8	STRAP-CABLE	
	13	1	**204-8000**	1	MOUNTING-CABLE TIE	
	14	2	**228-6089**	4	PLUG (ROCKER SWITCH)	
	15	2	**234-5925**	1	GASKET	
Y	16	4	**255-2752**	1	SWITCH GP-START (IGNITION)	220
	17	1,2	**256-6454**	2	SENSOR-TEMPERATURE (2-PIN) (AIR)	
	18	3	**270-2679**	1	LOCKWASHER	
M	19	3	**271-9408**	4	SCREW-TRUSS HEAD (M5X0.8X10-MM)	
	20	1	**272-7239**	1	BLOCK AS	
	21	2	**277-1873**	1	CLIP	
	22	4	**278-2145**	1	STRAP AS-GROUND	
	23	2	**285-1204**	1	RETAINER	
	24	1	**290-5562**	1	MOUNT (DUAL SWIVEL)	
	25	1	**2V-1771**	1	GROMMET	
	26	1	**2V-3216**	1	CLIP (LOOP)	
	27	4	**307-0649**	4	KNOB	
	28	4	**333-8538**	1	SENSOR AS-INERTIAL (ACCELERATION, ANGLE)	
		4	*386-0444*	1	HARNESS AS-SENSOR (INCLINATION)	
		4	**9X-3401**	6	PIN-CONNECTOR (16-GA TO 18-GA)	
		4	**151-9275**	1	KIT-RECEPTACLE (6-PIN)	
					(INCLUDES RECEPTACLE AS & WEDGE)	
E		4	**112-4550**		SLEEVE (20-CM)	
	29	1	**335-2252**	2	MOUNTING-CABLE TIE	
	30	3,4	**335-5365**	2	SOCKET-AUXILIARY POWER (12-VOLT)	
M	31	1	**296-4285**	1	SCREW-PAN HEAD (M4X0.7X10-MM)	
M	32	3	**344-5674**	4	NUT (M8X1.25-THD)	
	33	2	**347-0794**	1	LAMP GP-DOME (24-VOLT)	
	34	2	**348-7842**	1	CONVERTER-POWER (24-VOLT TO 12-VOLT)	
	35	4	**381-2621**	1	MOUNTING-CABLE TIE	
M	36	1,2	**3E-8020**	6	SCREW-TRUSS HEAD (M6X1X25-MM)	
	37	3	**3F-9556**	2	LOCKWASHER	
	38	1,3,4	**3S-2093**	37	STRAP-CABLE	
	39	2	**441-3637**	1	RELAY AS-TIMER (24-VDC) (ACCESS LIGHTS)	
	40	3	**455-9568**	1	CAP AS	

565-8666 **WIRING GP-CAB (**contd.**)** **i07813892**

NOTE	REF NO	GRAPHIC REF	PART NUMBER	QTY	PART NAME 1 2 3 4 5 6 (PRODUCT LEVEL)	SEE PAGE
		3	**424-4322**	1	COVER-CONNECTOR	
	41	2	**461-7396**	1	PANEL AS	
		2	**271-7312**	2	KNOB (BLOWER, TEMPERATURE CONTROL)	
	42	3	**490-4245**	4	WASHER-CONICAL	
	43	3	**4B-4277**	4	WASHER (8.8X17.5X1.6-MM THK)	
	44	1	**4B-4863**	1	WASHER (4.7X11X1.2-MM THK)	
	45	2	**4P-7581**	1	CLIP (LADDER)	
	46	2	**4P-8134**	1	CLIP (LADDER)	
	47	1,3	**4S-1962**	3	CLIP (LOOP)	
	48	2	**4V-5090**	1	BUMPER	
	49	4	**506-2390**	1	MODULE GP-KEYPAD	
		4	**8F-1326**	2	WASHER (4.2X9.5X0.8-MM THK)	
M		4	**8T-2659**	2	LOCKNUT (M4X0.7-THD)	
	50	3	**525-7217**	1	BRACKET AS	
M		3	**6V-9632**	1	NUT-WELD (M6X1-THD)	
M		3	**8T-3490**	1	NUT-WELD (M10X1.5-THD)	
Y	51	3	**526-0868**	1	HARNESS AS-STEERING	173
	52	3	**526-1511**	1	PLATE	
	53	4	**526-3825**	1	SWITCH AS-ROCKER (24-VOLT) (PARKING BRAKE)	
	54	4	**526-3826**	1	SWITCH AS-ROCKER (24-VOLT) (IMPLEMENT LOCKOUT)	
	55	2	**526-3828**	1	SWITCH AS-ROCKER (24-VOLT) (AIR CONDITIONER)	
	56	2	**526-7925**	1	GROMMET	
	57	3	**533-5449**	1	CABLE AS	
		3	**6T-5598**	1	TERMINAL-RING (1-GA TO 2-GA, 5/16-IN SCREW)	
E		3	**8C-3056**		CABLE (2-GA, RED) (40-CM)	
E		3	**125-7876**		TUBE-HEAT SHRINK (17.78-MM DIA) (4-CM)	
		3	**299-6082**	1	COVER-TERMINAL (RED)	
		3	*291-6819*	1	TERMINAL AS-RING	
E		3	**125-7876**		TUBE-HEAT SHRINK (17.78-MM DIA) (4-CM)	
Y	58	1	**533-5453**	1	HARNESS AS-CAB (WINDOW WASHER PUMP)	152
	59	3	**542-3264**	1	RELAY AS (MAIN POWER)	
		3	**8T-8730**	2	SOCKET-CONNECTOR (16-GA TO 18-GA)	
		3	**155-2270**	1	KIT-CONNECTING PLUG (2-PIN)	
					(INCLUDES PLUG AS, WEDGE, & INTERFACE SEAL)	
	60	4	**560-3061**	1	BRACKET AS	
M		4	**6V-9632**	2	NUT-WELD (M6X1-THD)	
	61	3	**575-4387**	1	BRACKET AS	
M		3	**6V-9632**	3	NUT-WELD (M6X1-THD)	
	62	3	**582-2335**	1	CABLE AS	
D		3	**6V-2369**		CABLE (4-GA, BLACK) (0.2-M)	
		3	*284-8481*	1	TERMINAL AS-RING	
E		3	**119-3662**		TUBE-HEAT SHRINK (10.85-MM DIA) (4-CM)	
		3	*289-1502*	1	TERMINAL AS-RING	
E		3	**125-7876**		TUBE-HEAT SHRINK (17.78-MM DIA) (4-CM)	
		3	**301-0091**	1	COVER-TERMINAL (RED)	
		3	**316-5240**	1	COVER-TERMINAL	
	63	3	**582-2336**	1	CABLE AS	
D		3	**6V-2369**		CABLE (4-GA, BLACK) (0.3-M)	
		3	**283-6447**	1	TERMINAL-RING	
		3	*289-1502*	1	TERMINAL AS-RING	

565-8666 **WIRING GP-CAB (**contd.**)** **i07813892**

NOTE	REF NO	GRAPHIC REF	PART NUMBER	QTY	PART NAME 1 2 3 4 5 6 (PRODUCT LEVEL)	SEE PAGE
E		3	**125-7876**		TUBE-HEAT SHRINK (17.78-MM DIA) (4-CM)	
		3	**301-0091**	2	COVER-TERMINAL (RED)	
Y	64	1	**583-4667**	1	HARNESS AS-CAB (MAIN)	157
M	65	3	**5C-7261**	4	NUT (M8X1.25-THD)	
	66	3	**5P-4115**	2	WASHER-HARD (7.2X19X2-MM THK)	
	67	3	**6I-1418**	8	SPACER (8.2X12.7X28.7-MM THK)	
	68	2	**6T-7695**	2	SPEAKER AS-RADIO	
	69	1,3	**6V-0826**	3	GROMMET	
M	70	4	**6V-7357**	2	BOLT (M6X1X25-MM)	
M	71	1,2	**6V-8227**	2	NUT (M18X1.5-THD)	
	72	1,2,3,4	**7K-1181**	75	STRAP-CABLE	
	73	1	**8C-5607**	8	MOUNT-ISOLATION	
	74	1	**8C-5608**	4	SPACER (6.5X9.5X25.4-MM THK)	
M	75	1,3	**8C-8451**	6	BOLT (M6X1X40-MM)	
	76	3	**8J-1256**	1	CLIP	
	77	1	**8S-0948**	1	CLIP	
	78	1	**8T-0328**	4	WASHER-HARD (5.5X10X1-MM THK)	
	79	1,2,3,4	**8T-4121**	20	WASHER-HARD (11X21X2.5-MM THK)	
M	80	1,3	**8T-4136**	4	BOLT (M10X1.5X25-MM)	
M	81	2,3,4	**8T-4137**	13	BOLT (M10X1.5X20-MM)	
M	82	1	**8T-4179**	1	BOLT (M12X1.75X20-MM)	
M	83	2	**8T-4182**	1	BOLT (M10X1.5X45-MM)	
M	84	4	**8T-4185**	1	BOLT (M10X1.5X50-MM)	
M	85	3	**8T-4195**	1	BOLT (M10X1.5X30-MM)	
M	86	3	**8T-4197**	4	BOLT (M8X1.25X40-MM)	
	87	3	**8T-4223**	1	WASHER-HARD (13.5X25.5X3-MM THK)	
	88	3	**8T-7934**	1	WASHER-HARD (11X21X5-MM THK)	
	89	3	**8T-9655**	16	MOUNT-ISOLATION	
	90	2	**8V-6990**	1	GROMMET	
	91	3	**9N-0869**	10	WASHER-HARD (8.8X25.5X2-MM THK)	
M	92	1,2,3	**9X-1046**	22	SCREW (M4X0.7X18-MM)	
	93	1,2,3	**9X-2038**	4	WASHER (7X19X2-MM THK)	
M	94	3	**9X-2044**	3	SCREW-TRUSS HEAD (M6X1X16-MM)	
M	95	2,3	**9X-2045**	5	SCREW-TRUSS HEAD (M6X1X20-MM)	
	96	1	**9X-6165**	4	WASHER (6.5X22X2.5-MM THK)	
	97	4	**9X-8256**	2	WASHER (6.6X12X2-MM THK)	

D - ORDER BY THE METER
E - ORDER BY THE CENTIMETER
M - METRIC PART
Y - SEPARATE ILLUSTRATION

565-8666 **WIRING GP-CAB (**contd.**)** **i07813892**

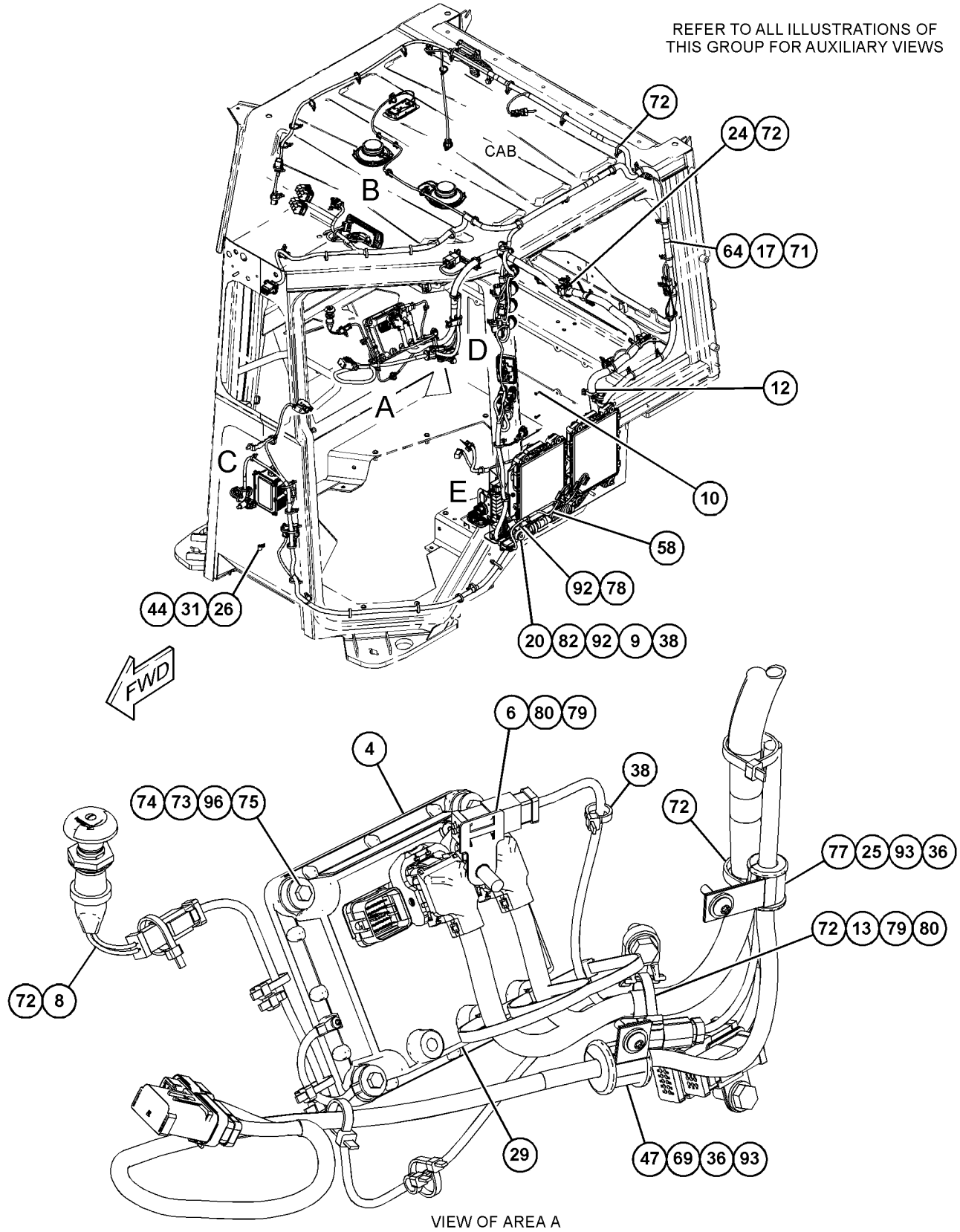

VIEW OF AREA A

GRAPHIC #1 g06457162

565-8666 **WIRING GP-CAB (**contd.**)** **i07813892**

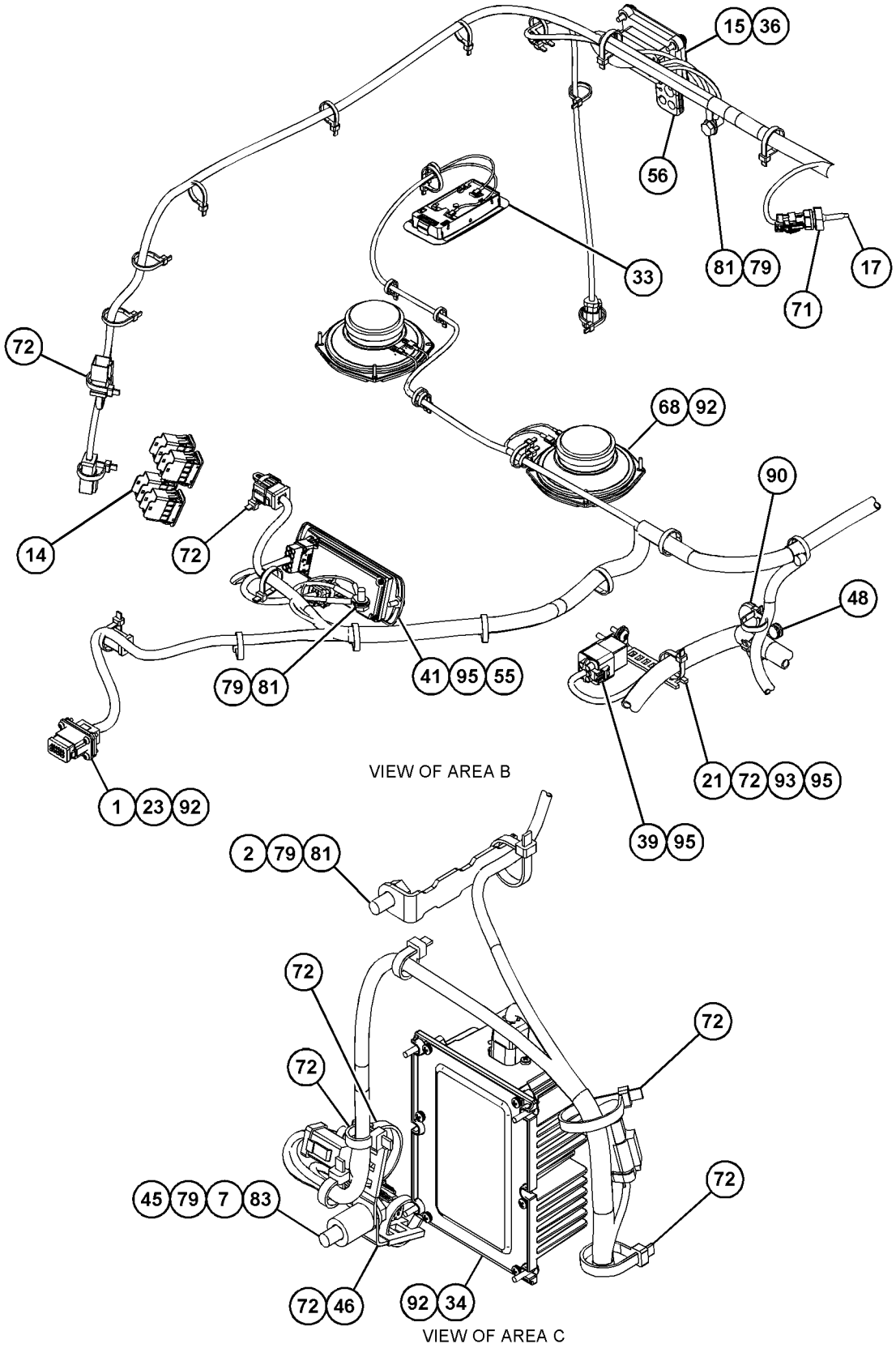

GRAPHIC #2 g06457164

565-8666 **WIRING GP-CAB (**contd.**)** **i07813892**

REFER TO ALL ILLUSTRATIONS OF
THIS GROUP FOR AUXILIARY VIEWS

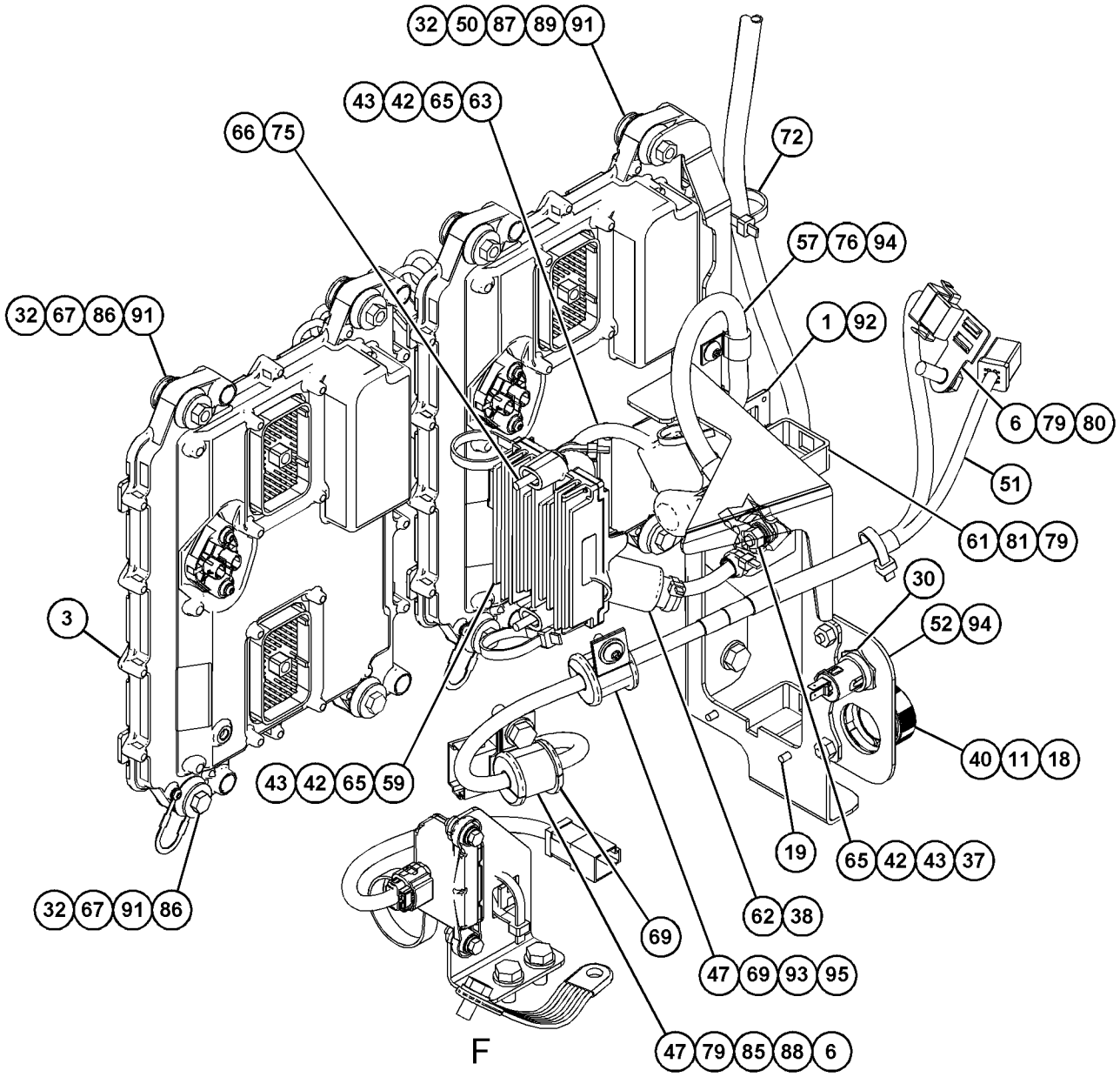

VIEW OF AREA E
(PARTS REMOVED FOR CLARITY) 180°

GRAPHIC #3 g06457165

565-8666 **WIRING GP-CAB (**contd.**)** **i07813892**

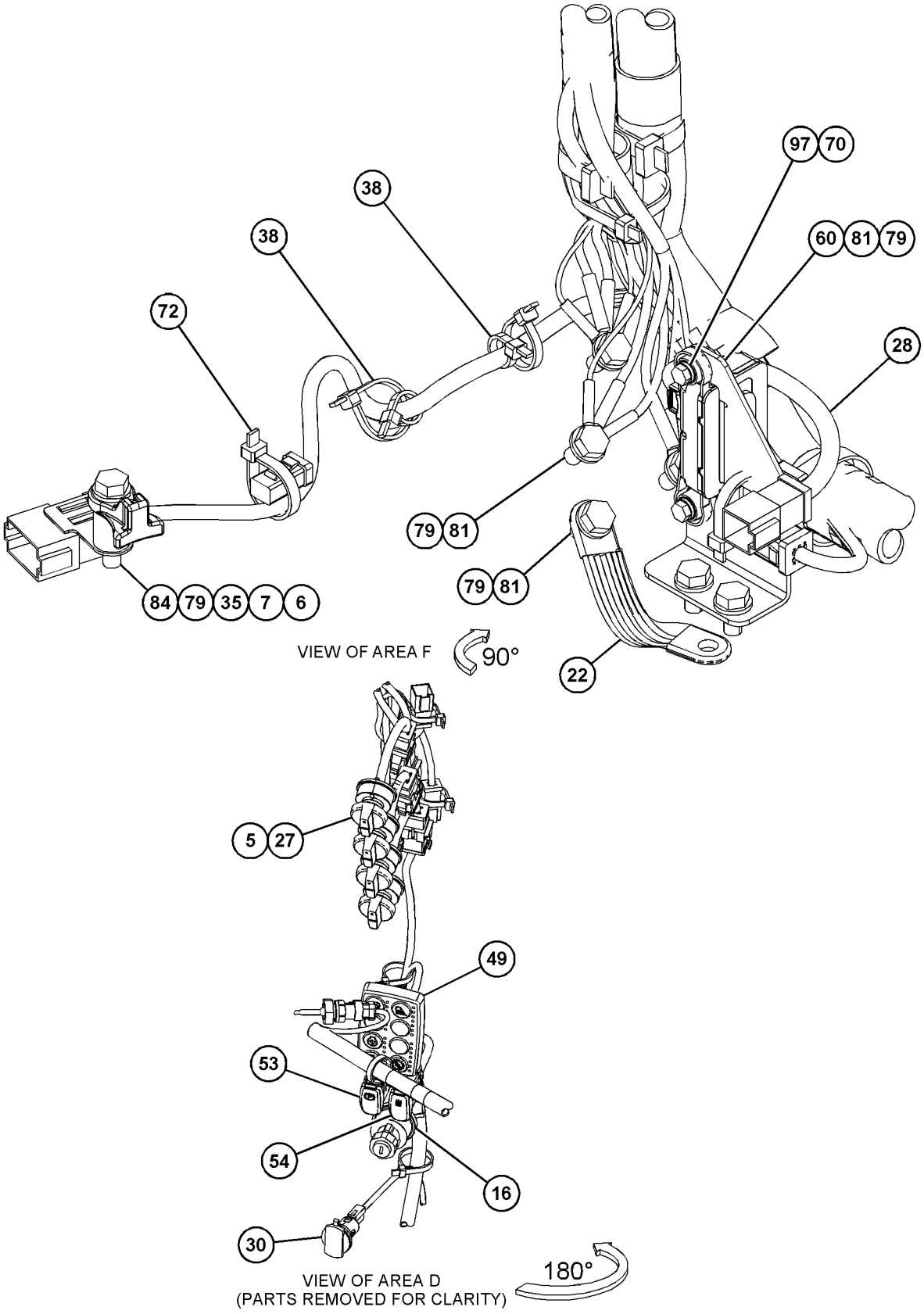

GRAPHIC #4

<END>

g06454863

543-4745 WIRING GP-CHASSIS

S/N: Z2K1-UP; Z2N1-UP
REAR
PART OF 580-9714 WIRING GP-CHASSIS
AN ATTACHMENT

SMCS-1408 **i07820644**

NOTE	REF NO	GRAPHIC REF	PART NUMBER	QTY	PART NAME 1 2 3 4 5 6 (PRODUCT LEVEL)	SEE PAGE
	1	2	**130-5300**	1	CLIP	
	2	1,2	**204-2281**	2	STRAP-CABLE	
	3	1	**352-3968**	1	CLIP (LADDER)	
	4	1	**8T-1895**	3	CLIP (SLOT)	
M	5	2	**8T-4191**	1	BOLT (M10X1.5X16-MM)	
M	6	1	**101-3129**	1	STUD (M10X1.5-THD)	
	7	2	**116-0118**	1	CLIP	
	8	2	**132-1805**	1	STRAP AS-GROUND	
M	9	1	**133-7810**	1	STUD-TAPERLOCK (M10X1.5X45-MM)	
	10	2	**138-7500**	1	SPACER (11X25X50-MM THK)	
	11	2	**204-8000**	2	MOUNTING-CABLE TIE	
	12	2	**206-2423**	1	SADDLE-MOUNTING	
	13	2	**220-5946**	1	CLIP	
	14	1	**230-7732**	1	MOUNTING-CABLE TIE	
Y	15	1	*234-5013*	1	SENSOR GP-TEMPERATURE (HYDRAULIC OIL)	210
M	16	2	**303-9449**	1	STUD (M10X1.5-THD)	
M	17	1	**329-3356**	1	NUT (M12X1.75-THD)	
M	18	1,2	**344-5675**	10	NUT (M10X1.5-THD)	
	19	2	**344-7391**	1	SENSOR-PRESSURE (HYDRAULIC PUMP)	
	20	2	**351-1904**	1	SEAL-O-RING	
	21	1	**353-7952**	4	GROMMET	
Y	22	2	**358-2399**	1	SENSOR GP-SPEED (STEERING MOTOR)	209
	23	1	**380-8401**	1	STUD-SPECIAL	
	24	1	**383-2629**	1	HARNESS AS-CHASSIS	
		1	**9X-3401**	3	PIN-CONNECTOR (16-GA TO 18-GA)	
		1	**230-4013**	1	PLUG AS-CONNECTOR (3-PIN)	
		1	**455-0705**	1	SEAL-CONNECTOR	
		1	**230-4014**	1	RECEPTACLE AS-CONNECTOR (3-PIN)	
		1	**9X-3402**	3	SOCKET-CONNECTOR (16-GA TO 18-GA)	
	25	2	**3J-1907**	1	SEAL-O-RING	
	26	1,2	**3S-2093**	37	STRAP-CABLE	
M	27	2	**479-2171**	5	BOLT AS	
M	28	2	**479-2172**	2	BOLT AS	
	29	1	**488-3974**	1	BOLT AS	
	30	2	**490-0579**	1	ADAPTER AS	
	31	2	**490-0588**	1	NUT	
	32	2	**4P-7581**	4	CLIP (LADDER)	
	33	2	**4P-8134**	3	CLIP (LADDER)	
	34	2	**507-8882**	1	CLIP	
	35	2	**516-6853**	1	BRACKET AS	
M		2	**8T-3612**	4	NUT-WELD (M8X1.25-THD)	
	36	1,2	**529-6539**	6	BOLT AS	
	37	1	**533-4159**	1	BOLT AS	
	38	2	**559-2193**	1	PLATE AS	
Y	39	1	**559-4330**	1	HARNESS AS-HYDRAULIC TANK	170
	40	1	**562-6488**	1	PLATE AS	

543-4745 **WIRING GP-CHASSIS (**contd.**)** **i07820644**

NOTE	REF NO	GRAPHIC REF	PART NUMBER	QTY	PART NAME 1 2 3 4 5 6 (PRODUCT LEVEL)	SEE PAGE
M		1	**8T-3490**	1	NUT-WELD (M10X1.5-THD)	
	41	2	**562-6802**	1	GASKET	
Y	42	1	**580-0726**	1	HARNESS AS-CHASSIS	159
Y	43	2	**580-0727**	1	HARNESS AS-VALVE	174
	44	1	**581-3713**	1	CABLE AS	
		1	**1S-7251**	1	TERMINAL-CABLE (00-GA, 1/2-IN SCREW)	
E		1	**5P-0695**		CONDUIT (512-CM)	
		1	**6T-5598**	1	TERMINAL-RING (1-GA TO 2-GA, 5/16-IN SCREW)	
E		1	**8C-3056**		CABLE (2-GA, RED) (274-CM)	
		1	**8T-8827**	1	BOOT (RED)	
E		1	**159-8049**		CABLE (00-GA, RED) (239-CM)	
		1	**301-0091**	1	COVER-TERMINAL (RED)	
		1	**353-0297**	1	TERMINAL-RING	
		1	**368-9752**	1	BOOT	
	45	2	**582-4725**	1	BRACKET	
	46	2	**5P-7464**	1	CLIP (SLOT)	
	47	2	**5P-7465**	1	CLIP (TAB)	
	48	1,2	**7K-1181**	45	STRAP-CABLE	
M	49	2	**8T-0267**	2	BOLT-SOCKET HEAD (M6X1X12-MM)	
	50	1	**8T-1896**	3	CLIP (TAB)	
	51	1	**8T-1897**	1	CLIP (SLOT)	
	52	1	**8T-1898**	1	CLIP (TAB)	
	53	2	**8T-2920**	1	GROMMET (27-MM ID)	
	54	1,2	**8T-4121**	13	WASHER-HARD (11X21X2.5-MM THK)	
	55	1	**8T-4223**	2	WASHER-HARD (13.5X25.5X3-MM THK)	
M	56	2	**9X-2043**	4	SCREW-TRUSS HEAD (M6X1X14-MM)	

E - ORDER BY THE CENTIMETER
M - METRIC PART
Y - SEPARATE ILLUSTRATION

543-4745 **WIRING GP-CHASSIS (**contd.**)** **i07820644**

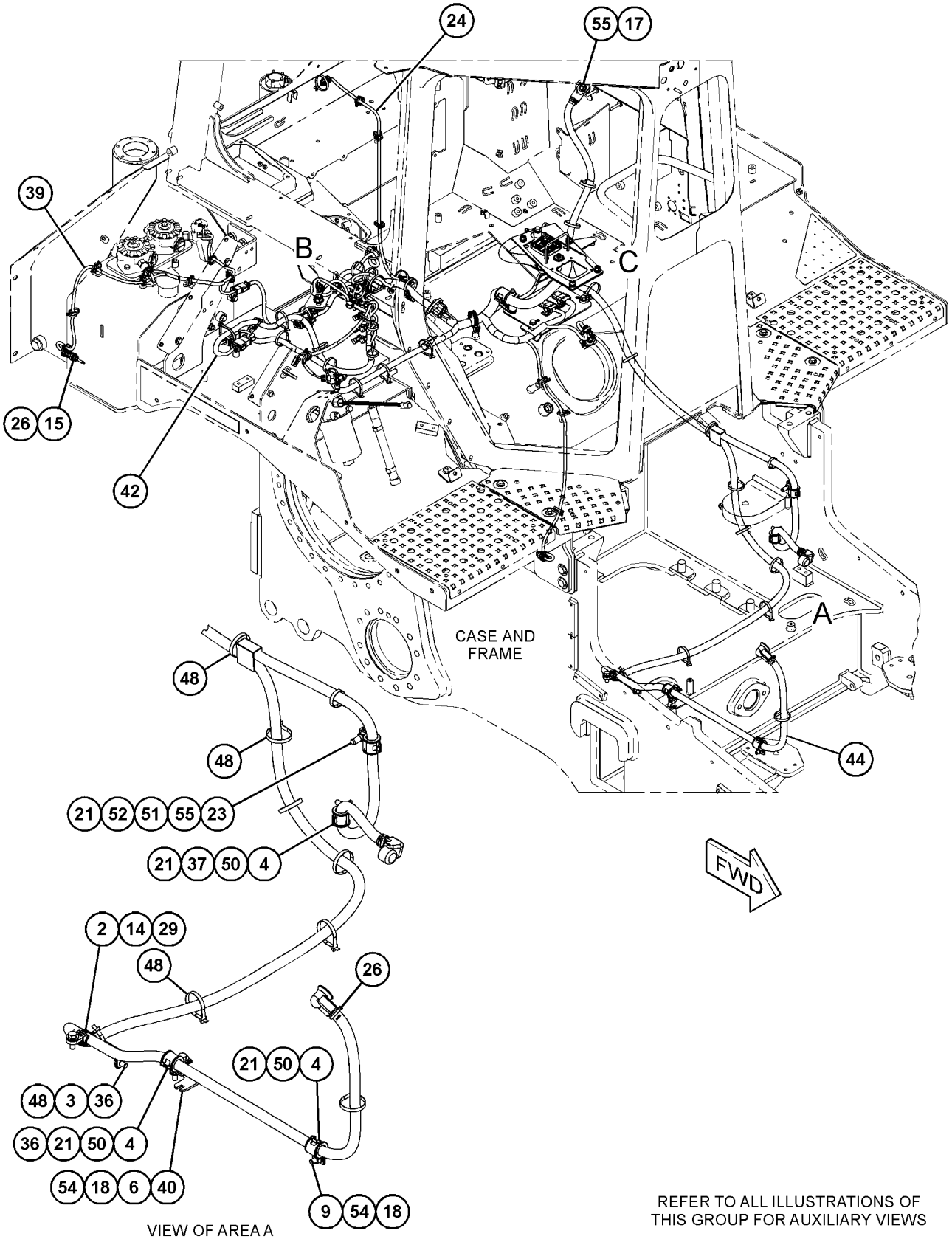

REFER TO ALL ILLUSTRATIONS OF
THIS GROUP FOR AUXILIARY VIEWS

GRAPHIC #1

g06453583

543-4745 **WIRING GP-CHASSIS (**contd.**)** **i07820644**

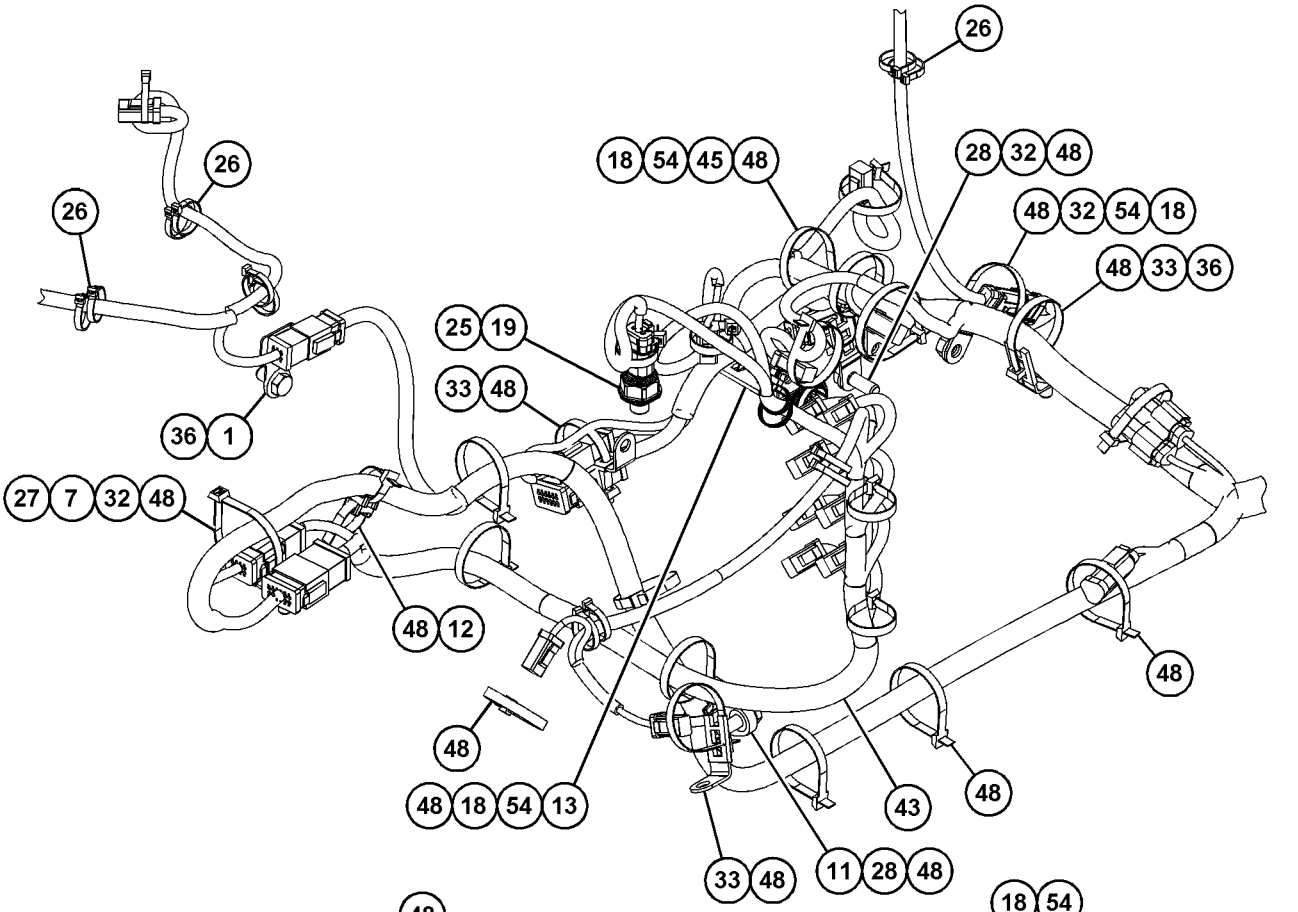

VIEW OF AREA B

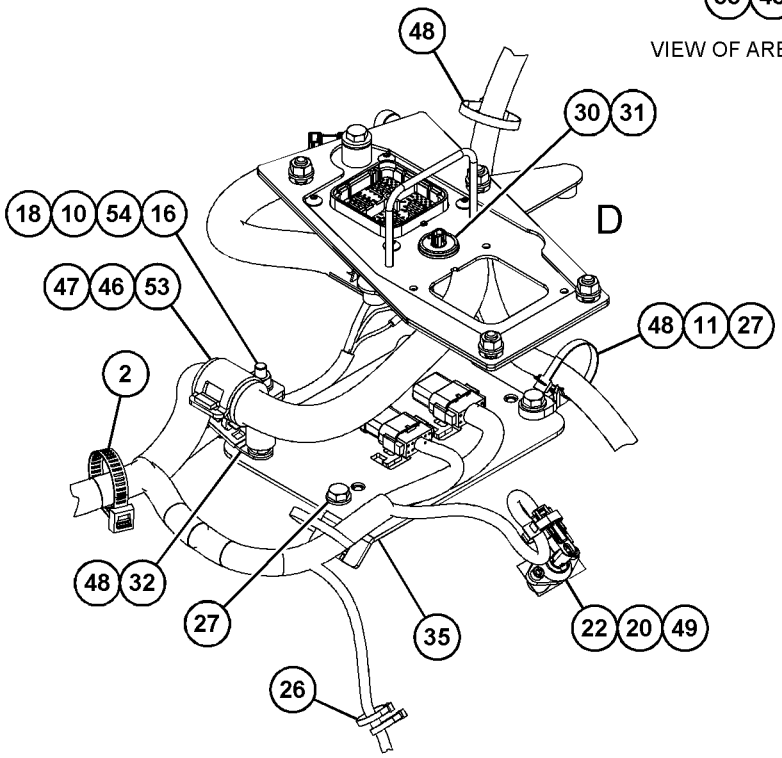

VIEW OF AREA C

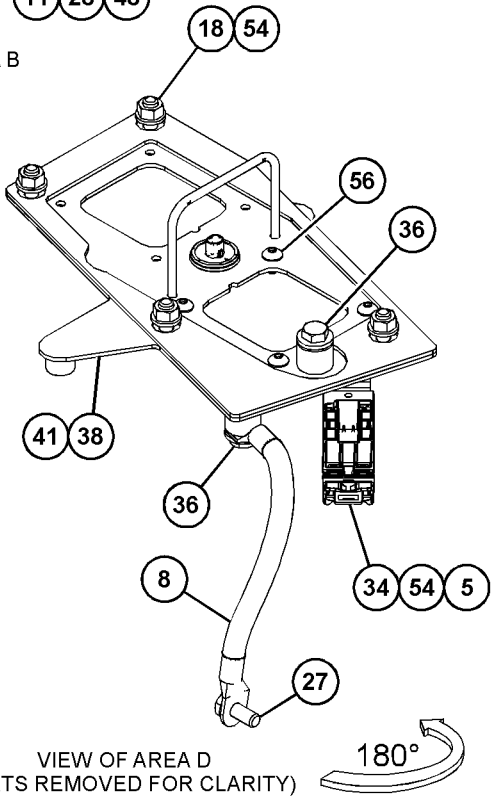

VIEW OF AREA D
(PARTS REMOVED FOR CLARITY)

GRAPHIC #2 <END> g06453585

580-9714 WIRING GP-CHASSIS

S/N: Z2K1-UP; Z2N1-UP
PART OF 559-5996 ELECTRICAL AR
AN ATTACHMENT

SMCS-1408 **i07820601**

NOTE	REF NO	GRAPHIC REF	PART NUMBER	QTY	PART NAME 1 2 3 4 5 6 (PRODUCT LEVEL)	SEE PAGE
Y	1	1	*543-4745*	1	WIRING GP-CHASSIS	240
	2	1	**585-4449**	1	BRACKET AS	
		1	**7T-1099**	1	LINK	
M		1	**8T-3490**	2	NUT-WELD (M10X1.5-THD)	
	3	1	**102-8802**	1	KIT-RECEPTACLE (2-PIN)	
					(INCLUDES RECEPTACLE AS & WEDGE)	
	4	1	**7X-7729**	2	WASHER (11X25X3-MM THK)	
M	5	1	**8T-6466**	2	BOLT (M10X1.5X60-MM)	

M - METRIC PART
Y - SEPARATE ILLUSTRATION

580-9714 **WIRING GP-CHASSIS (**contd.**)** **i07820601**

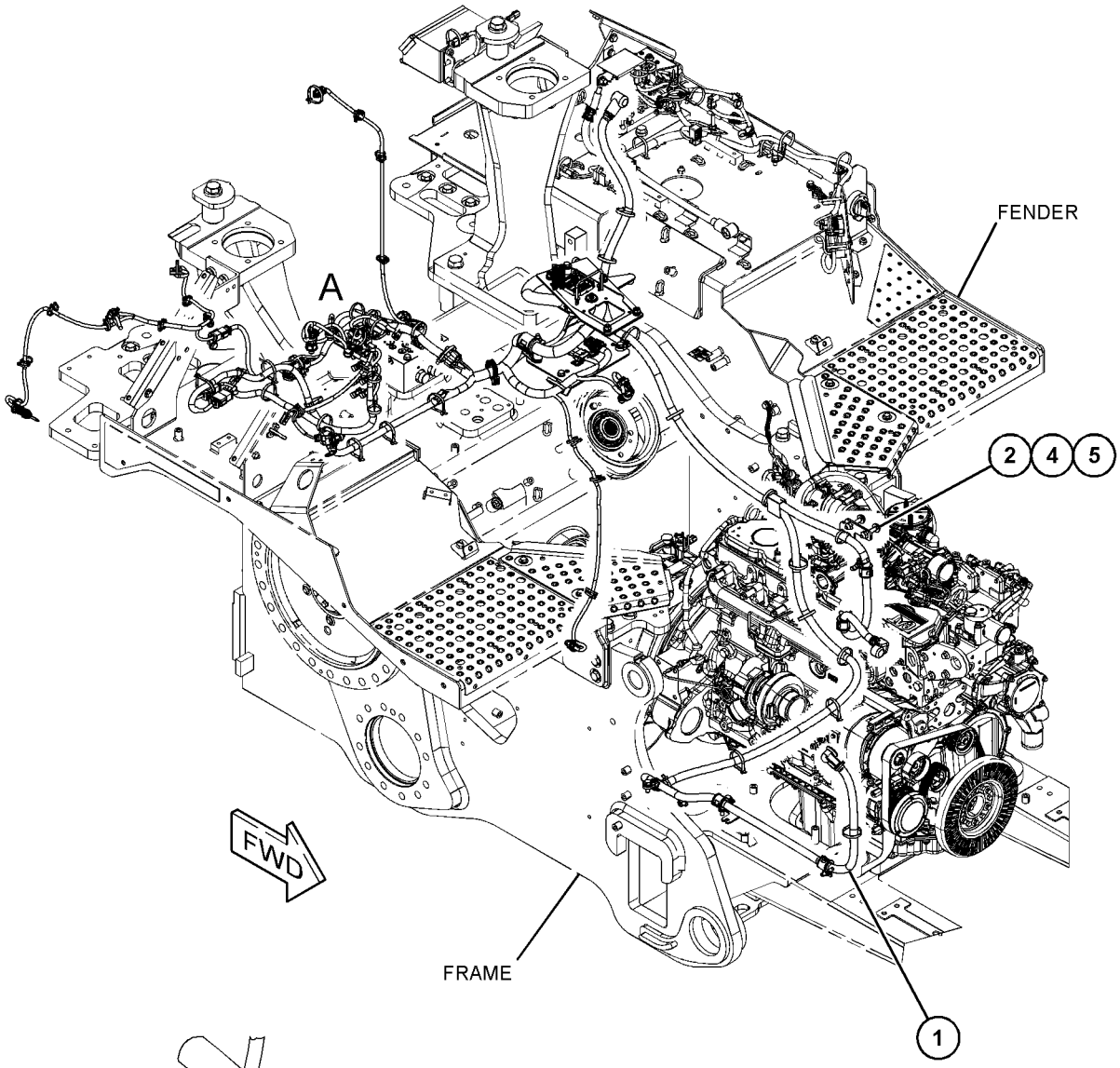

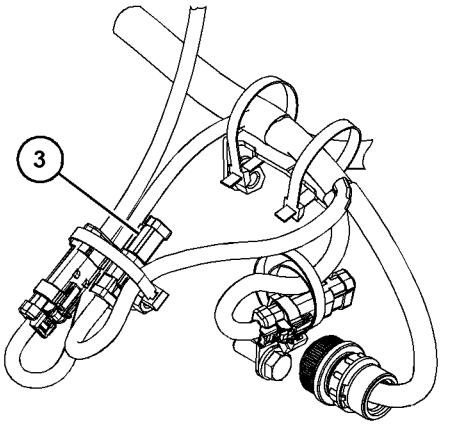

VIEW OF AREA A 180°

GRAPHIC #1 <END> g06453879

395-0113 WIRING GP-ENGINE

S/N: 4501-UP
PART OF 569-0811 ENGINE AR-PRIMARY
AN ATTACHMENT

SMCS-1403, 1408 **i06997746**

NOTE	REF NO	GRAPHIC REF	PART NUMBER	QTY	PART NAME 1 2 3 4 5 6 (PRODUCT LEVEL)	SEE PAGE
C	1	1	**033-6034**	3	SEAL-O-RING	
C	2	1	**277-5065**	3	CLIP	
M	3	1	**124-3815**	4	BOLT (M8X1.25X16-MM)	
	4	1	**217-9039**	1	STRAP-CABLE	
	5	1	**348-4637**	1	BOLT	
CY	6	1	**375-8407**	3	HARNESS AS-WIRING (INJECTOR)	175
	7	1	**377-1293**	1	BRACKET	
Y	8	1	**385-5997**	1	HARNESS AS-ENGINE	164
	9	1	**389-3863**	1	BRACKET	
	10	1	**392-2780**	1	BRACKET	
	11	1	**132-5789**	1	CLIP (LADDER)	
M	12	1	**232-1693**	1	BOLT-FLANGE HEAD (M6X1X35-MM)	

C - CHANGE FROM PREVIOUS TYPE
M - METRIC PART
Y - SEPARATE ILLUSTRATION

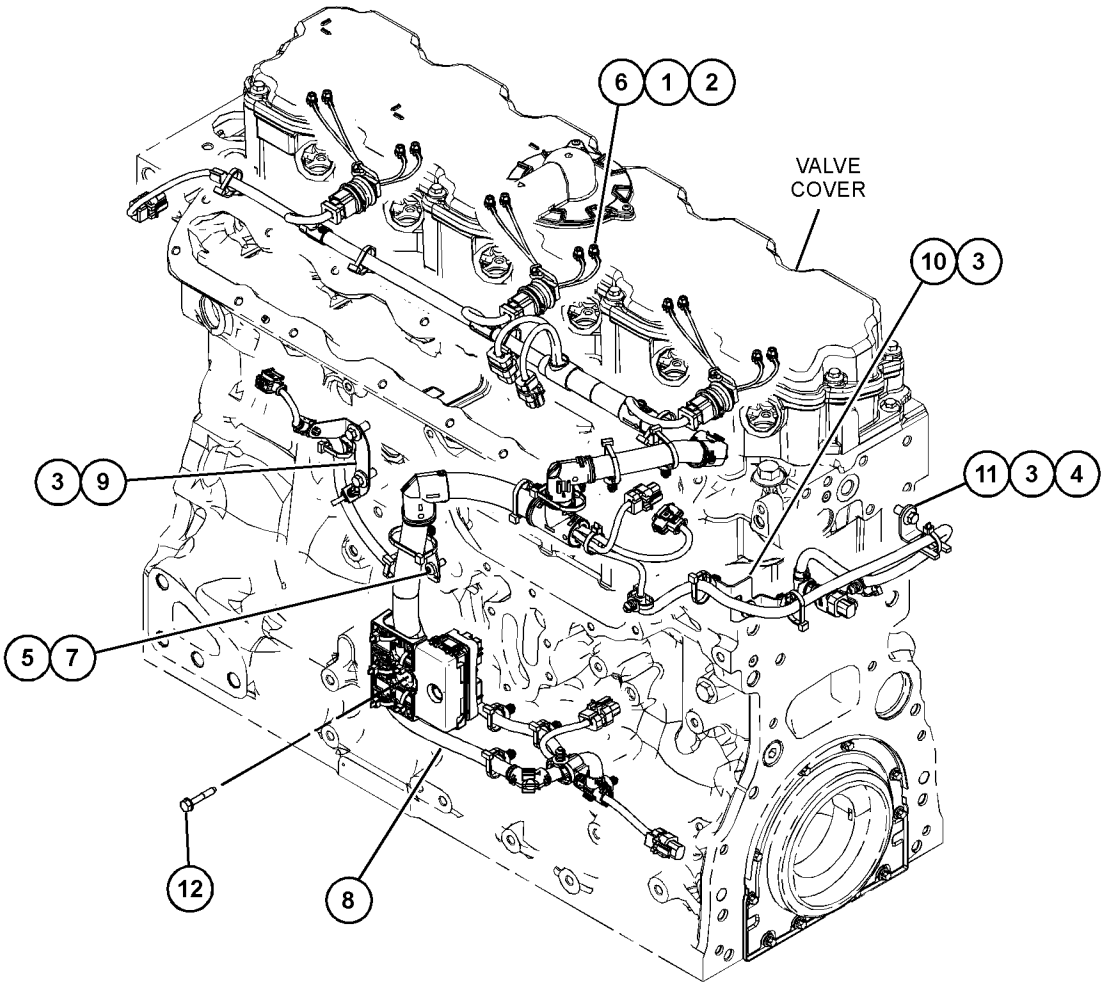

GRAPHIC #1 <END> g06177895

560-5946 WIRING GP-ENGINE

S/N: Z2K1-UP; Z2N1-UP
PART OF 559-5996 ELECTRICAL AR
AN ATTACHMENT

SMCS-1403, 1408 **i07818649**

NOTE	REF NO	GRAPHIC REF	PART NUMBER	QTY	PART NAME 1 2 3 4 5 6 (PRODUCT LEVEL)	SEE PAGE
	1	2	**204-2281**	3	STRAP-CABLE	
	2	2	**352-3968**	1	CLIP (LADDER)	
M	3	1	**8T-4191**	1	BOLT (M10X1.5X16-MM)	
	4	2	**5P-4116**	1	WASHER-HARD (8.8X20.5X2-MM THK)	
	5	2	**5T-6374**	1	SPACER (11X20X40-MM THK)	
M	6	2	**8T-6869**	1	BOLT (M8X1.25X60-MM)	
	7	2	**132-5789**	5	CLIP (LADDER)	
	8	2	**133-6934**	1	SPACER (11X20X25-MM THK)	
	9	1	*148-8307*	1	ADAPTER AS	
		1	**3J-1907**	1	SEAL-O-RING	
		1	**5P-8874**	1	ADAPTER	
	10	2	**156-6175**	1	CLIP (LADDER)	
M	11	2	**175-9079**	2	ROD-LINK	
	12	2	**177-2215**	1	STRAP-DUAL CLAMP	
	13	2	**178-1780**	1	CLIP	
M	14	2	**197-7481**	1	STUD (M10X1.5X83-MM)	
	15	2	**198-4776**	1	WASHER-HARD (8.8X20X8-MM THK)	
	16	2	**198-4777**	2	WASHER-HARD (11X25X10-MM THK)	
	17	2	**204-8000**	1	MOUNTING-CABLE TIE	
	18	1	**206-2423**	1	SADDLE-MOUNTING	
M	19	1	**227-6715**	2	STUD (M10X1.5X30-MM)	
Y	20	1	*234-5013*	1	SENSOR GP-TEMPERATURE (TRANSMISSION OIL)	210
	21	2	**277-1873**	1	CLIP	
M	22	2	**287-3049**	1	STUD (M10X1.5X50-MM)	
	23	1	**2T-3019**	1	CLIP (LOOP)	
	24	1	**303-4649**	1	CLIP (LADDER)	
	25	2	**306-6687**	2	STRAP AS	
	26	2	**9X-8256**	4	WASHER (6.6X12X2-MM THK)	
M	27	2	**344-5673**	4	NUT (M6X1-THD)	
M	28	1,2	**344-5675**	11	NUT (M10X1.5-THD)	
	29	1	**349-1178**	2	SENSOR-PRESSURE (SWING DRIVE OIL) (STEERING)	
	30	2	**352-3970**	1	CLIP (LADDER)	
	31	2	**353-7953**	2	GROMMET (19-MM ID)	
	32	2	**381-2621**	2	MOUNTING-CABLE TIE	
	33	1	**3J-1907**	2	SEAL-O-RING	
	34	1	**3S-2093**	3	STRAP-CABLE	
	35	2	**449-5872**	1	WIRE AS	
M	36	2	**479-2171**	5	BOLT AS	
M	37	2	**479-2172**	2	BOLT AS	
	38	1	**490-0590**	1	CAP-RECEPTACLE	
	39	1	**4B-4274**	1	WASHER (5.5X13X1.2-MM THK)	
	40	1	**4P-7581**	1	CLIP (LADDER)	
	41	1	**507-8882**	1	CLIP	
	42	1	**514-6421**	1	CABLE AS	
D		1	**5P-5689**		WIRE (8-GA, BLACK) (2.2-M)	
		1	**2L-8051**	1	TERMINAL-RING (6-GA, 5/16-IN SCREW)	
					—OR—	

560-5946 **WIRING GP-ENGINE (**contd.**)** **i07818649**

NOTE	REF NO	GRAPHIC REF	PART NUMBER	QTY	PART NAME 1 2 3 4 5 6 (PRODUCT LEVEL)	SEE PAGE
		1	**5P-3455**	1	TERMINAL-RING (8-GA, 5/16-IN SCREW)	
		1	**8N-1545**	1	SOCKET-CONNECTOR (8-GA)	
		1	**127-5485**	1	PLUG AS-CONNECTOR (1-PIN)	
		1	**131-3201**	1	BOOT	
	43	1,2	**523-7808**	3	GROMMET	
	44	2	**523-7899**	1	PLATE AS	
M		2	**8T-3490**	2	NUT-WELD (M10X1.5-THD)	
	45	2	**524-5487**	1	BRACKET AS	
M		2	**8T-3490**	1	NUT-WELD (M10X1.5-THD)	
	46	1,2	**525-7037**	2	GROMMET	
	47	1,2	**527-5872**	4	BRACKET	
	48	2	**529-6957**	1	BRACKET AS	
	49	1,2	**529-7641**	5	BRACKET	
	50	2	**533-4159**	2	BOLT AS	
	51	2	**562-1927**	1	BOLT AS	
	52	2	**579-4147**	1	BRACKET AS	
M		2	**8T-3490**	2	NUT-WELD (M10X1.5-THD)	
Y	53	1	**581-3677**	1	HARNESS AS-ENGINE	165
	54	2	**584-6132**	1	BRACKET AS	
M		2	**8T-3490**	1	NUT-WELD (M10X1.5-THD)	
	55	2	*584-7747*	1	MODULE GP-CONTROL	
		2	**478-2338**	1	SOFTWARE GP-ENGINE (FAN CONTROL)	
R		2	**370-9478**	1	MODULE GP-CONTROL	
M	56	1	**5C-2874**	1	NUT (M5X0.8-THD)	
	57	1,2	**7K-1181**	36	STRAP-CABLE	
	58	2	**8T-1889**	2	CLIP (SLOT)	
	59	2	**8T-1890**	2	CLIP (TAB)	
	60	1,2	**8T-4121**	26	WASHER-HARD (11X21X2.5-MM THK)	
	61	2	**8T-4224**	3	WASHER-HARD (8.8X16X2-MM THK)	
M	62	2	**8T-4908**	2	BOLT (M8X1.25X25-MM)	
M	63	2	**8T-7547**	1	BOLT (M8X1.25X30-MM)	
M	64	1	**9X-2043**	4	SCREW-TRUSS HEAD (M6X1X14-MM)	

D - ORDER BY THE METER
M - METRIC PART
R - REMANUFACTURED PART MAY BE AVAILABLE
Y - SEPARATE ILLUSTRATION

560-5946 **WIRING GP-ENGINE (**contd.**)** **i07818649**

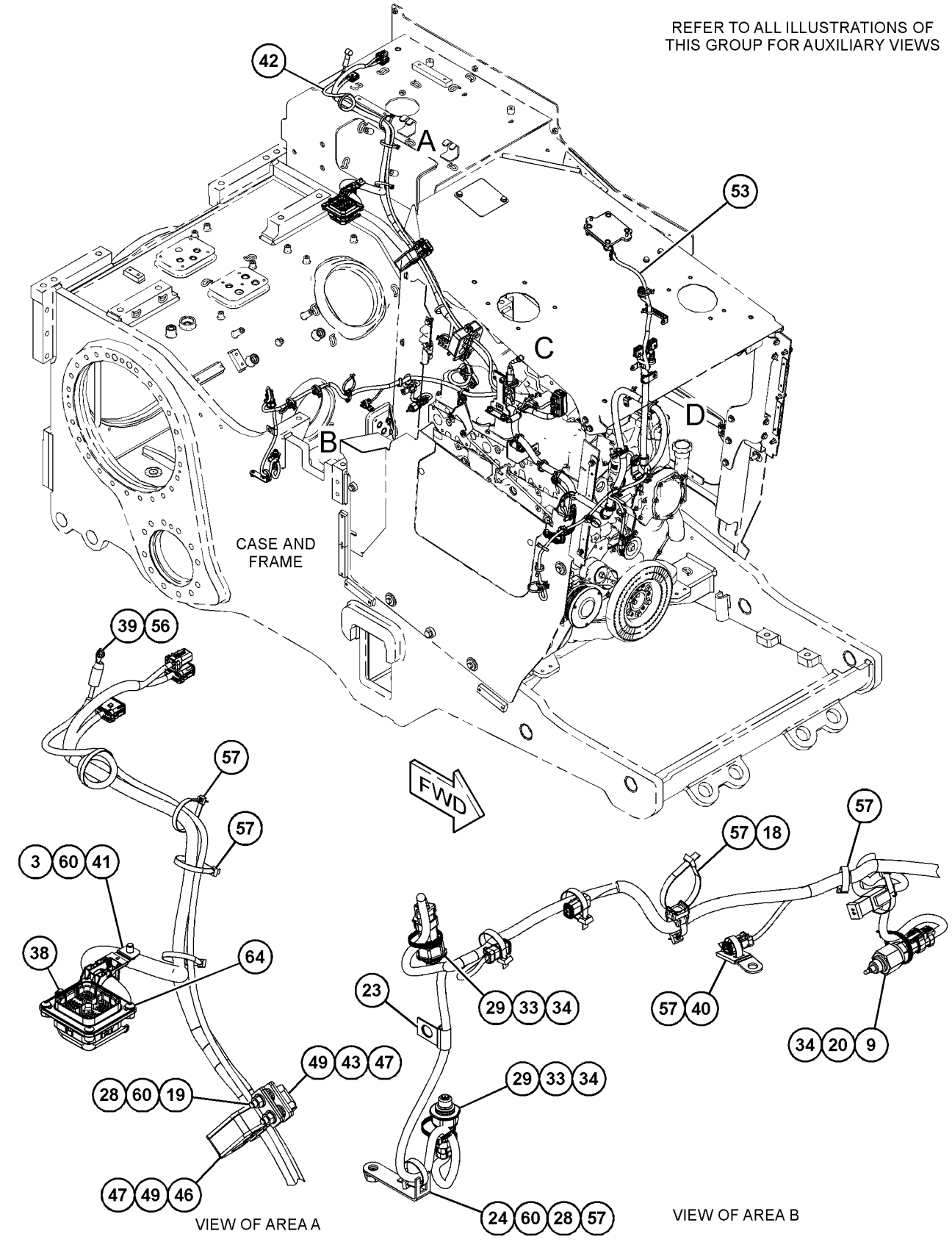

GRAPHIC #1 g06454617

560-5946 **WIRING GP-ENGINE (**contd.**)** **i07818649**

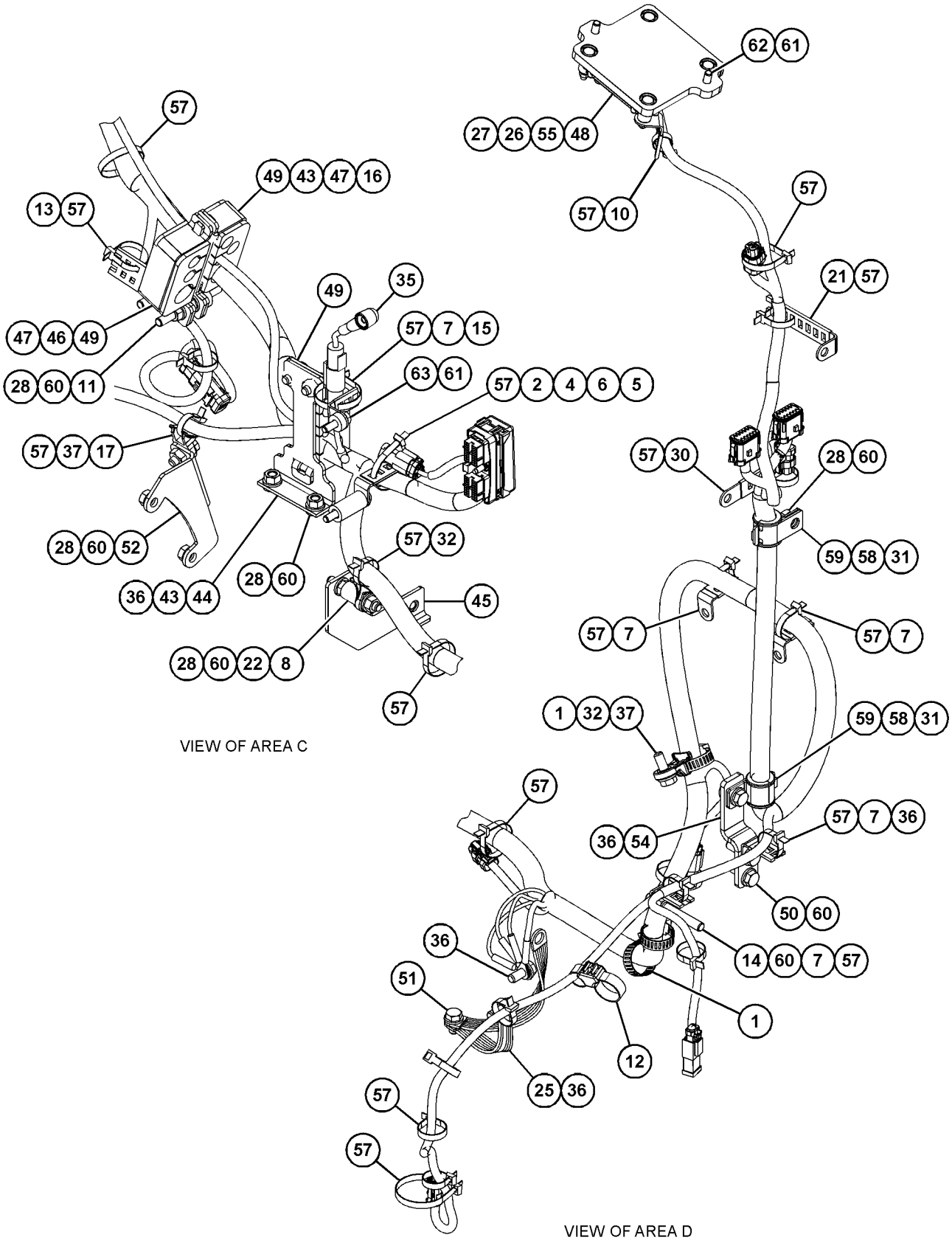

GRAPHIC #2 <END> g06454618

560-5951 WIRING GP-FENDER

S/N: Z2K1-UP; Z2N1-UP
LH
PART OF 559-5996 ELECTRICAL AR
AN ATTACHMENT

SMCS-1408 **i07820304**

NOTE	REF NO	GRAPHIC REF	PART NUMBER	QTY	PART NAME 1 2 3 4 5 6 (PRODUCT LEVEL)	SEE PAGE
	1	1	**131-3201**	1	BOOT	
	2	1	**132-5789**	2	CLIP (LADDER)	
	3	1	**1L-6561**	1	PLUG	
	4	1	**277-1873**	1	CLIP	
	5	1	**301-2979**	1	SWITCH GP-TOGGLE (ACCESS LIGHTS)	
		1	**102-8804**	1	KIT-RECEPTACLE (4-PIN)	
					(INCLUDES RECEPTACLE AS & WEDGE)	
		1	**3E-3390**	3	PIN-CONNECTOR (16-GA TO 18-GA)	
		1	**6T-3631**	2	NUT-HEX (15/32-32-THD)	
		1	**6T-3632**	1	LOCKWASHER	
		1	**6T-3633**	1	RING-LOCKING	
	6	1	**369-4098**	1	SWITCH AS-DISCONNECT (MASTER) (ENGINE SHUTDOWN)	
		1	**2H-3922**	1	LOCKWASHER	
		1	**6F-7045**	2	NUT-FULL (3/8-24-THD)	
		1	**8H-5303**	2	NUT (3/4-16-THD)	
		1	**449-8192**	1	KIT-KNOB (DISCONNECT SWITCH)	
					(INCLUDES BEZEL, KNOB, NUTS & LOCKWASHER)	
	7	1	**381-2621**	1	MOUNTING-CABLE TIE	
	8	1	**3E-5169**	1	GUARD-SWITCH	
M	9	1	**479-2171**	4	BOLT AS	
M	10	1	**479-2172**	1	BOLT AS	
	11	1	**4P-8134**	2	CLIP (LADDER)	
Y	12	1	*570-8524*	1	WIRING GP-FENDER	253
Y	13	1	**581-3681**	1	HARNESS AS-CHASSIS	160
	14	1	**7K-1181**	15	STRAP-CABLE	

M - METRIC PART
Y - SEPARATE ILLUSTRATION

560-5951 **WIRING GP-FENDER (**contd.**)** **i07820304**

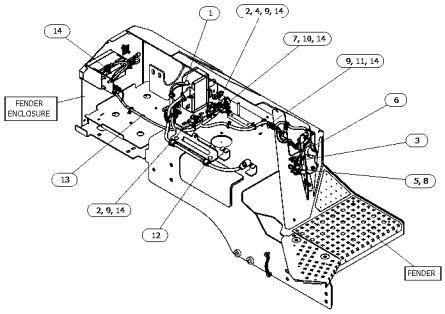

GRAPHIC #1 <END> g06453655

570-8524 WIRING GP-FENDER

S/N: Z2K1-UP; Z2N1-UP
PART OF 560-5951 WIRING GP-FENDER
AN ATTACHMENT

SMCS-1408 **i07827331**

NOTE	REF NO	GRAPHIC REF	PART NUMBER	QTY	PART NAME 1 2 3 4 5 6 (PRODUCT LEVEL)	SEE PAGE
M	1	1	**8T-4179**	1	BOLT (M12X1.75X20-MM)	
J	2	1	**201-4066**		SEAL (2-DM EACH)	
J	2A	1	**201-4066**		SEAL (0.4-DM EACH)	
J	2B	1	**201-4066**		SEAL (0.8-DM EACH)	
	3	1	**9G-1307**	1	GROMMET	
	4	1	**133-6934**	1	SPACER (11X20X25-MM THK)	
	5	1	**198-4776**	3	WASHER-HARD (8.8X20X8-MM THK)	
	6	1	**220-0229**	1	ALARM AS (BACKUP)	
		1	**102-8802**	1	KIT-RECEPTACLE (2-PIN)	
					(INCLUDES RECEPTACLE AS & WEDGE)	
J		1	**6A-3361**		WIRE-ELECTRICAL (16-GA, BLACK) (4-DM)	
		1	**8T-8729**	2	PIN-CONNECTOR (16-GA TO 20-GA)	
E		1	**9X-1813**		SLEEVE (29-CM)	
M	7	1	**259-7140**	1	STUD-TAPERLOCK (M10X1.5X80-MM)	
	8	1	**306-6688**	2	STRAP AS	
	9	1	**306-8526**	3	GROMMET	
M	10	1	**329-3356**	1	NUT (M12X1.75-THD)	
M	11	1	**344-5674**	3	NUT (M8X1.25-THD)	
M	12	1	**344-5675**	7	NUT (M10X1.5-THD)	
	13	1	**381-2621**	1	MOUNTING-CABLE TIE	
	14	1	**3S-2093**	4	STRAP-CABLE	
M	15	1	**479-2171**	6	BOLT AS	
M	16	1	**479-2172**	1	BOLT AS	
	17	1	**488-3971**	2	BOLT AS	
	18	1	**562-1927**	2	BOLT AS	
	19	1	**580-0643**	1	BOX GP-JUNCTION	
	20	1	**581-3714**	1	CABLE AS	
		1	**1M-4986**	2	TERMINAL-RING (0-GA, 1/2-IN SCREW)	
E		1	**159-8047**		CABLE-ELECTRICAL (0-GA, RED) (101-CM)	
		1	**301-0091**	2	COVER-TERMINAL (RED)	
	21	1	**581-3755**	1	BRACKET AS	
M		1	**171-2419**	3	STUD-WELD (M10X1.5X35-MM)	
	22	1	**581-3756**	1	COVER	
	23	1	**582-2157**	1	PLATE AS	
M		1	**8T-3490**	2	NUT-WELD (M10X1.5-THD)	
M		1	**9X-2032**	4	NUT-WELD (M4X0.7-THD)	
	24	1	**582-2158**	1	BRACKET AS	
M		1	**8T-5413**	2	STUD-WELD (M10X1.5X25-MM)	
	25	1	**582-2159**	1	BRACKET AS	
		1	**7T-1099**	2	LINK	
M	26	1	**5C-2874**	1	NUT (M5X0.8-THD)	
	27	1	**7K-1181**	10	STRAP-CABLE	
	28	1	**8T-0328**	1	WASHER-HARD (5.5X10X1-MM THK)	
	29	1	**8T-1889**	3	CLIP (SLOT)	
	30	1	**8T-1890**	3	CLIP (TAB)	
	31	1	**8T-4121**	6	WASHER-HARD (11X21X2.5-MM THK)	
	32	1	**8T-4222**	1	WASHER-PLATED (11X32X2.5-MM THK)	

570-8524 **WIRING GP-FENDER (**contd.**)** **i07827331**

NOTE	REF NO	GRAPHIC REF	PART NUMBER	QTY	PART NAME 1 2 3 4 5 6 (PRODUCT LEVEL)	SEE PAGE
	33	1	**8T-4223**	2	WASHER-HARD (13.5X25.5X3-MM THK)	
	34	1	**8T-4224**	3	WASHER-HARD (8.8X16X2-MM THK)	

E - ORDER BY THE CENTIMETER
J - ORDER BY THE DECIMETER
M - METRIC PART

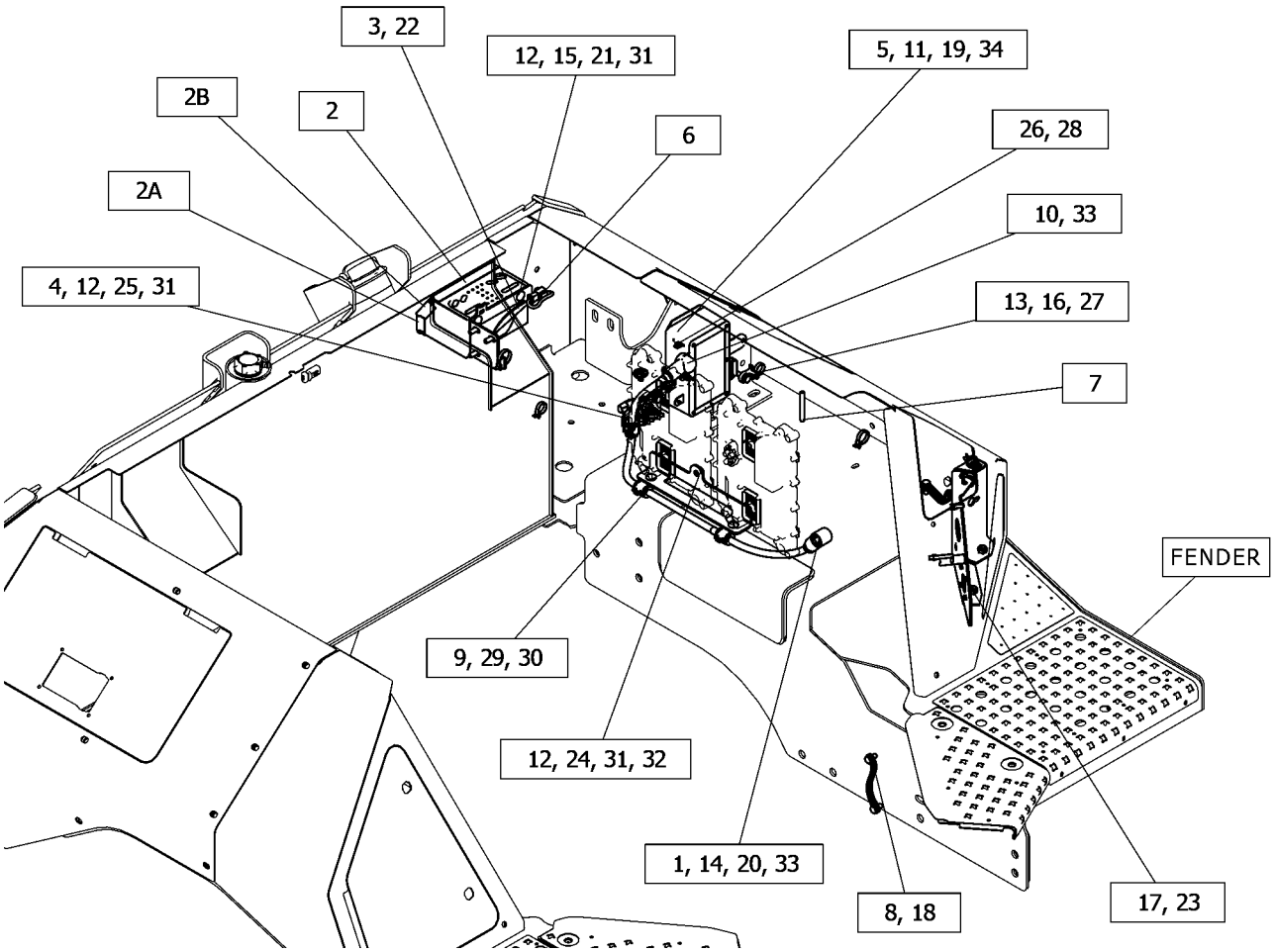

GRAPHIC #1 <END> g06451819

510-6812 WIRING GP-FRONT

S/N: Z2K1-UP; Z2N1-UP
RADIATOR
PART OF 568-5303 BAFFLE GP-RADIATOR
AN ATTACHMENT

SMCS-1408 **i07819719**

NOTE	REF NO	GRAPHIC REF	PART NUMBER	QTY	PART NAME 1 2 3 4 5 6 (PRODUCT LEVEL)	SEE PAGE
M	1	1	**8T-6912**	1	BOLT (M8X1.25X50-MM)	
	2	1	**3S-2093**	1	STRAP-CABLE	
	3	1	**5P-4116**	1	WASHER-HARD (8.8X20.5X2-MM THK)	
	4	1	**131-7546**	1	GROMMET	
	5	1	**164-0150**	1	SPACER (9X20X20-MM THK)	
	6	1	**183-4274**	1	BRACKET	
	7	1	**2M-3433**	1	GROMMET	
	8	1	**352-3964**	1	CLIP	
	9	1	**562-1927**	2	BOLT AS	
	10	1	**576-1032**	1	HORN AS (24-VOLT, LOW TONE)	
		1	**8T-8729**	2	PIN-CONNECTOR (16-GA TO 20-GA)	
E		1	**9X-1813**		SLEEVE (13-CM)	
		1	**102-8802**	1	KIT-RECEPTACLE (2-PIN)	
					(INCLUDES RECEPTACLE AS & WEDGE)	
Y	11	1	**580-0725**	1	HARNESS AS-FRONT	166
	12	1	**7K-1181**	12	STRAP-CABLE	

E - ORDER BY THE CENTIMETER
M - METRIC PART
Y - SEPARATE ILLUSTRATION

510-6812 **WIRING GP-FRONT (**contd.**)** **i07819719**

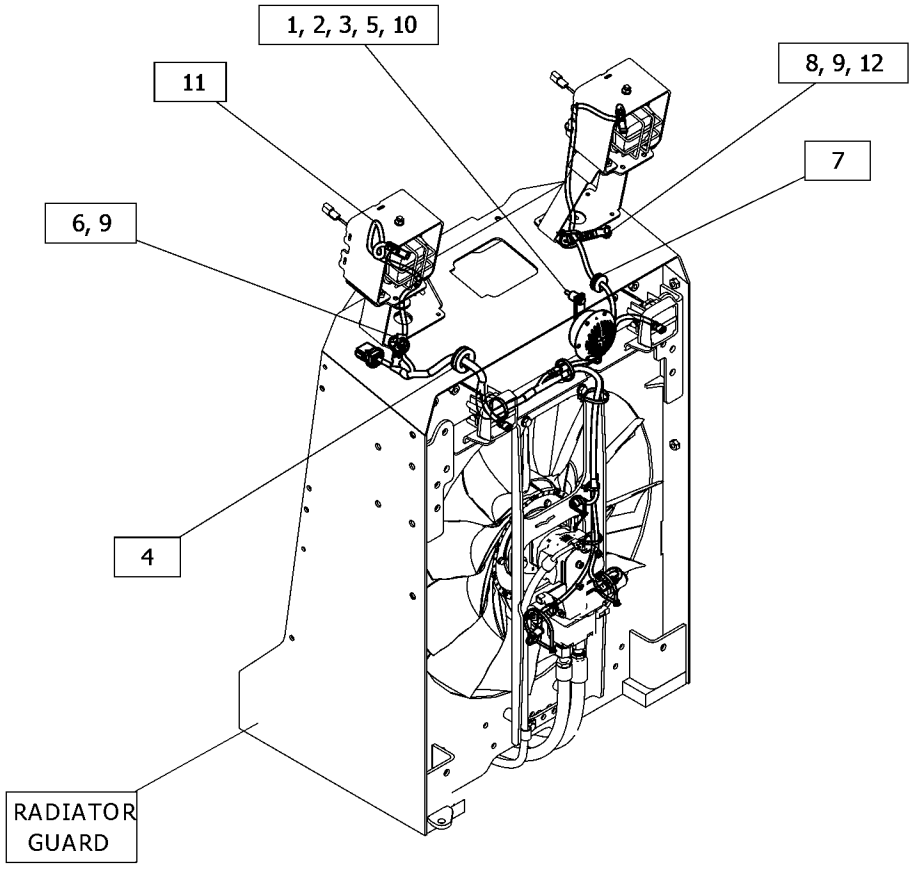

GRAPHIC #1 <END> g06451089

507-6853 WIRING GP-GRADE CONTROL

S/N: Z2N1-UP
BULLDOZER, LGP
PART OF 550-5572 GRADE CONTROL AR
AN ATTACHMENT

SMCS-1408 **i07820441**

NOTE	REF NO	GRAPHIC REF	PART NUMBER	QTY	PART NAME 1 2 3 4 5 6 (PRODUCT LEVEL)	SEE PAGE
	1	1	**124-1479**	1	CLIP (LOOP)	
	2	1	**198-4777**	1	WASHER-HARD (11X25X10-MM THK)	
	3	1	**3S-2093**	2	STRAP-CABLE	
M	4	1	**479-2171**	1	BOLT AS	
M	5	1	**479-2172**	1	BOLT AS	
	6	1	**4P-7581**	1	CLIP (LADDER)	
Y	7	1	**581-3676**	1	HARNESS AS-SENSOR	172
	8	1	**5P-7462**	1	CLIP (SLOT)	
	9	1	**5P-7463**	1	CLIP (TAB)	
	10	1	**7K-1181**	3	STRAP-CABLE	
	11	1	**7X-7729**	1	WASHER (11X25X3-MM THK)	
	12	1	**8S-7583**	1	GROMMET	
	13	1	**8T-4121**	1	WASHER-HARD (11X21X2.5-MM THK)	
M	14	1	**8T-4196**	1	BOLT (M10X1.5X35-MM)	

M - METRIC PART
Y - SEPARATE ILLUSTRATION

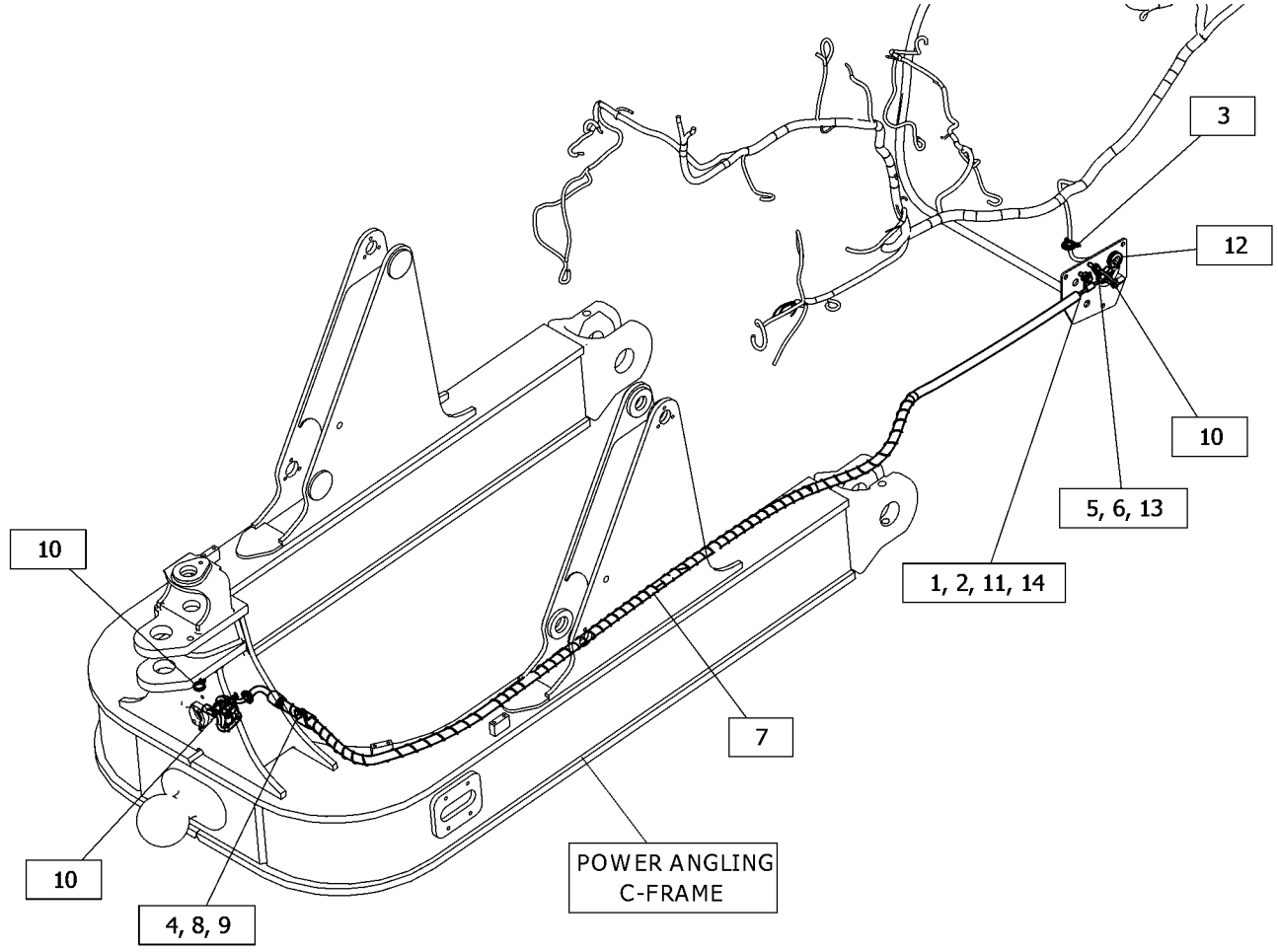

GRAPHIC #1 <END> g06449038

509-8959 WIRING GP-GRADE CONTROL

S/N: Z2K1-UP; Z2N1-UP
RADIATOR GUARD, ACCUGRADE READY
PART OF 550-5571, 550-5572 GRADE CONTROL AR
AN ATTACHMENT

SMCS-1408 **i07836060**

NOTE	REF NO	GRAPHIC REF	PART NUMBER	QTY	PART NAME 1 2 3 4 5 6 (PRODUCT LEVEL)	SEE PAGE
	1	1	**132-8487**	2	NUT-RING	
M	2	1	**210-8236**	2	SCREW (M8X1.25X35-MM)	
	3	1	**258-4819**	2	BOSS	
	4	1	**278-5921**	1	PLUG	
M	5	1	**479-2171**	1	BOLT AS	
	6	1	**519-9809**	1	BRACKET AS	
M		1	**8T-3490**	1	NUT-WELD (M10X1.5-THD)	
	7	1	**533-0464**	1	BRACKET AS	
M		1	**8T-3612**	2	NUT-WELD (M8X1.25-THD)	
Y	8	1	**580-3608**	1	HARNESS AS-CONTROL (GRADE CONTROL)	163
	9	1	**6D-3033**	8	SCREW-SOCKET HEAD (4-40X0.5-IN)	
	10	1	**7K-1181**	6	STRAP-CABLE	
	11	1	**7M-3361**	1	GROMMET	
	12	1	**7R-3029**	2	CAP-DUST	

M - METRIC PART
Y - SEPARATE ILLUSTRATION

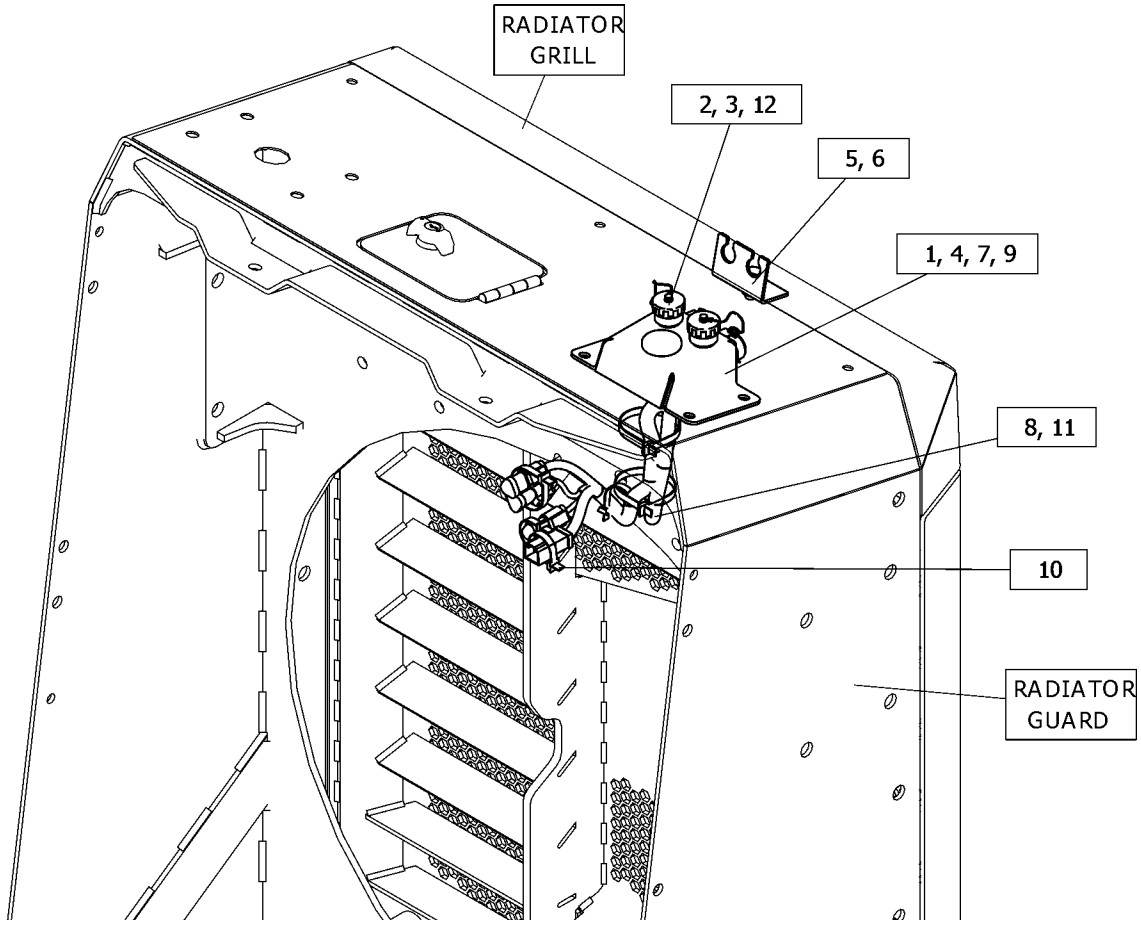

GRAPHIC #1 <END> g06451908

510-6064 WIRING GP-GRADE CONTROL

S/N: Z2K1-UP
C-FRAME, XL
PART OF 550-5571 GRADE CONTROL AR
AN ATTACHMENT

SMCS-1408 **i07849117**

NOTE	REF NO	GRAPHIC REF	PART NUMBER	QTY	PART NAME 1 2 3 4 5 6 (PRODUCT LEVEL)	SEE PAGE
	1	1	**124-1479**	1	CLIP (LOOP)	
	2	1	**198-4777**	1	WASHER-HARD (11X25X10-MM THK)	
	3	1	**3S-2093**	2	STRAP-CABLE	
M	4	1	**479-2171**	1	BOLT AS	
M	5	1	**479-2172**	1	BOLT AS	
	6	1	**4P-7581**	1	CLIP (LADDER)	
Y	7	1	**581-3674**	1	HARNESS AS-FRONT	167
	8	1	**5P-7462**	1	CLIP (SLOT)	
	9	1	**5P-7463**	1	CLIP (TAB)	
	10	1	**7K-1181**	2	STRAP-CABLE	
	11	1	**7X-7729**	1	WASHER (11X25X3-MM THK)	
	12	1	**8S-7583**	1	GROMMET	
	13	1	**8T-4121**	1	WASHER-HARD (11X21X2.5-MM THK)	
M	14	1	**8T-4196**	1	BOLT (M10X1.5X35-MM)	

M - METRIC PART
Y - SEPARATE ILLUSTRATION

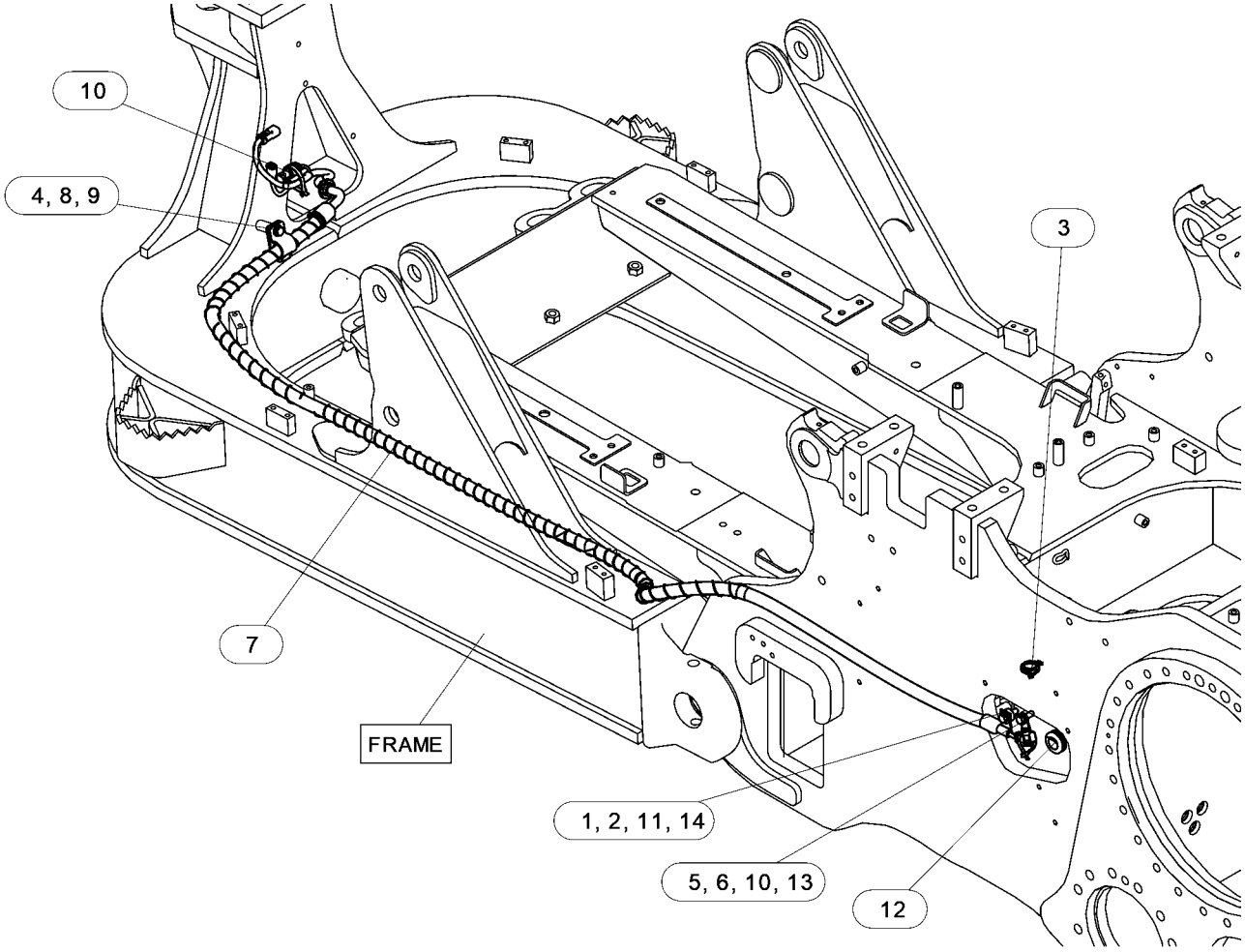

GRAPHIC #1 <END> g06453344

524-9008 WIRING GP-GRADE CONTROL

S/N: Z2K1-UP; Z2N1-UP
LOW GROUND PRESSURE, BLADE
PART OF 550-5571, 550-5572 GRADE CONTROL AR
AN ATTACHMENT

SMCS-1408 **i07820533**

NOTE	REF NO	GRAPHIC REF	PART NUMBER	QTY	PART NAME 1 2 3 4 5 6 (PRODUCT LEVEL)	SEE PAGE
M	1	1	**8T-4182**	2	BOLT (M10X1.5X45-MM)	
	2	1	**7K-1181**	1	STRAP-CABLE	
	3	1	**8E-6334**	2	CLIP (TAB)	
	4	1	**8T-4121**	2	WASHER-HARD (11X21X2.5-MM THK)	
	5	1	**8T-7934**	2	WASHER-HARD (11X21X5-MM THK)	
	6	1	**470-4959**	1	SENSOR GP-GRADE (GRADE CONTROL)	
		1	**552-3288**	1	PAD	
M	7	1	**479-2171**	1	BOLT AS	
Y	8	1	*509-8118*	1	BOX GP-JUNCTION	133
	9	1	**574-8683**	1	PLATE AS	
M		1	**8T-3490**	2	NUT-WELD (M10X1.5-THD)	
	10	1	**581-3701**	1	HARNESS AS-SENSOR (BLADE)	
		1	**9X-3402**	4	SOCKET-CONNECTOR (16-GA TO 18-GA)	
I		1	**563-8309**	1	HOSE AS	
		1	**155-2271**	1	KIT-CONNECTING PLUG (4-PIN)	
					(INCLUDES PLUG AS, WEDGE, & INTERFACE SEAL)	
	11	1	**5P-8112**	2	GROMMET	
M	12	1	**6V-7357**	3	BOLT (M6X1X25-MM)	
	13	1	**8E-6332**	2	CLIP (SLOT)	
	14	1	**8T-1897**	1	CLIP (SLOT)	
	15	1	**8T-1898**	1	CLIP (TAB)	
M	16	1	**8T-4195**	2	BOLT (M10X1.5X30-MM)	
	17	1	**9X-8256**	3	WASHER (6.6X12X2-MM THK)	

I - REFER TO HYDRAULIC INFORMATION SYSTEM
M - METRIC PART
Y - SEPARATE ILLUSTRATION

524-9008 **WIRING GP-GRADE CONTROL** (contd.) **i07820533**

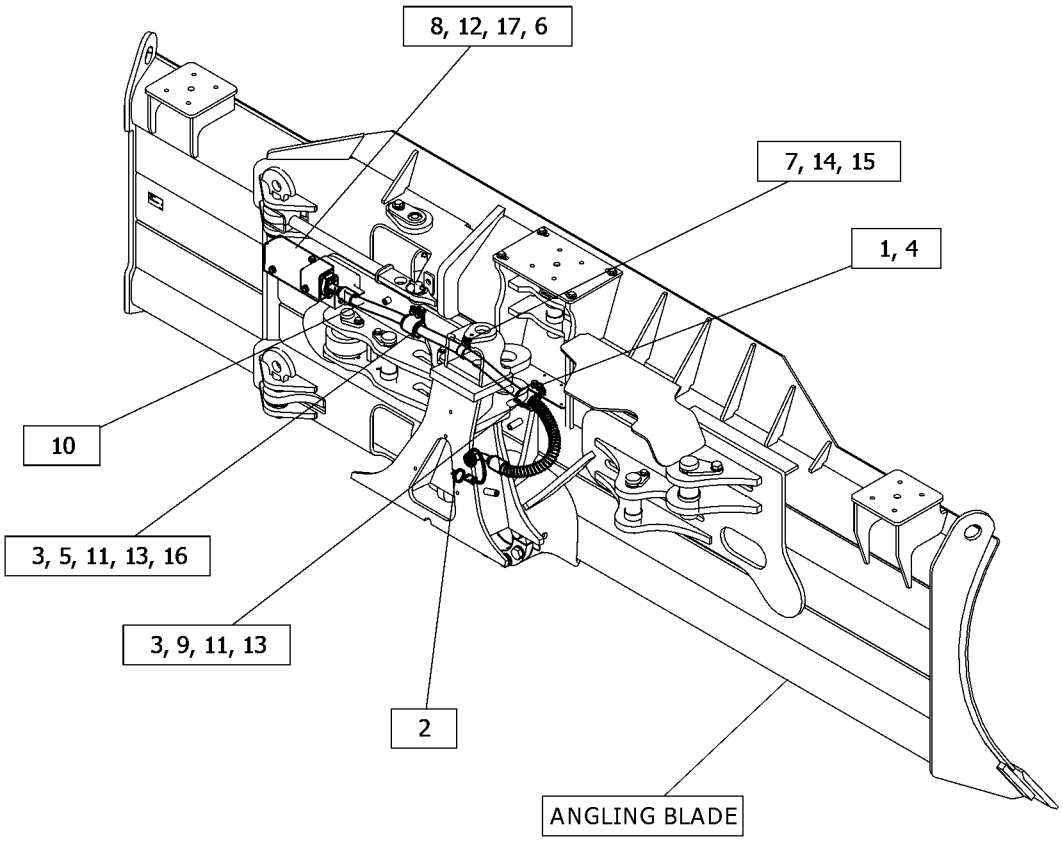

GRAPHIC #1 <END> g06449588

575-4390 WIRING GP-GRADE CONTROL

S/N: Z2K1-UP; Z2N1-UP
CAB
PART OF 550-5575, 577-1295, 577-1296 GRADE CONTROL AR
AN ATTACHMENT

SMCS-1408 **i07820597**

NOTE	REF NO	GRAPHIC REF	PART NUMBER	QTY	PART NAME 1 2 3 4 5 6 (PRODUCT LEVEL)	SEE PAGE
	1	1	**4P-7581**	1	CLIP (LADDER)	
Y	2	1	**510-4915**	1	HARNESS AS-MONITOR (DISPLAY)	171
Y	3	1	**540-2510**	1	HARNESS AS-CONTROL (RADIO)	161
	4	1	**5P-8440**	1	GROMMET	
	5	1	**7K-1181**	3	STRAP-CABLE	
	6	1	**9F-6656**	1	RING-RETAINING	

Y - SEPARATE ILLUSTRATION

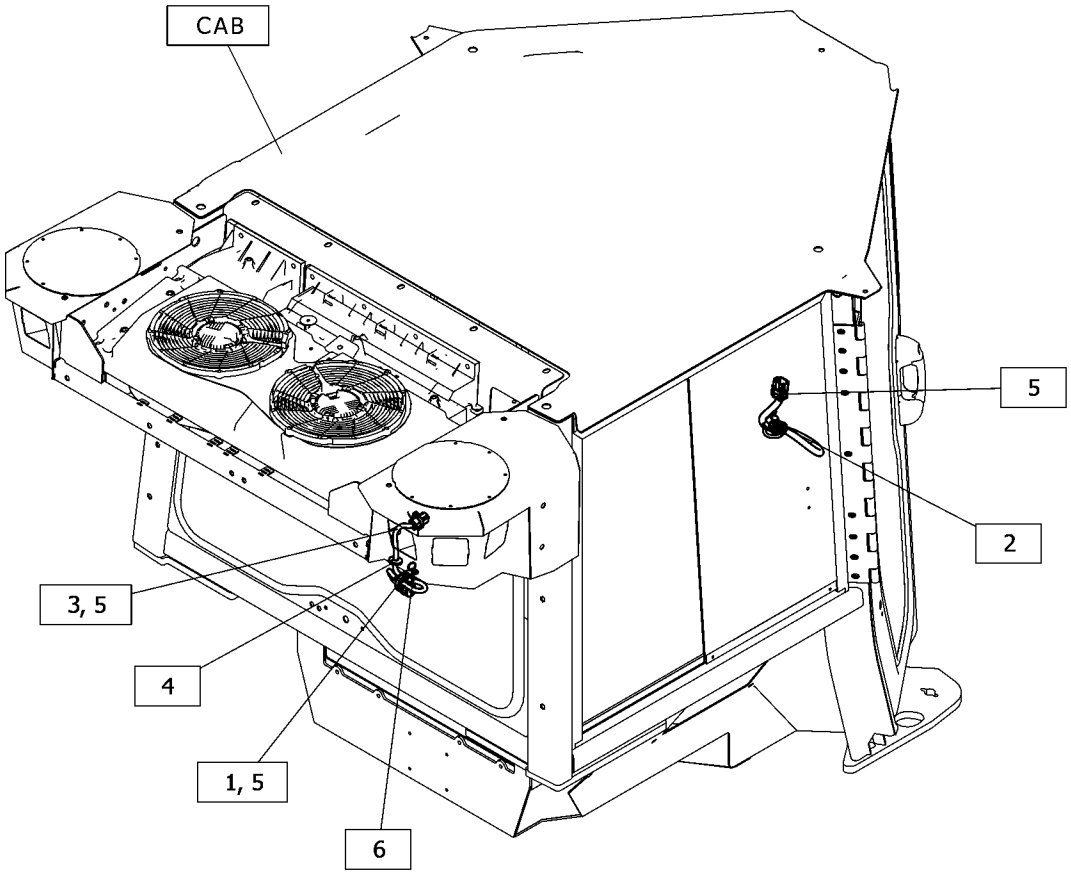

GRAPHIC #1 <END> g06449735

575-4391 WIRING GP-GRADE CONTROL

S/N: Z2K1-UP; Z2N1-UP
PART OF 577-1295, 577-1296 GRADE CONTROL AR
AN ATTACHMENT

SMCS-1408 **i07848556**

NOTE	REF NO	GRAPHIC REF	PART NUMBER	QTY	PART NAME 1 2 3 4 5 6 (PRODUCT LEVEL)	SEE PAGE
	1	1	**117-6512**	22	GROMMET	
M	2	1	**111-4627**	4	SCREW-MACHINE (M6X1X30-MM)	
	3	1	**316-9351**	2	MOUNTING-CABLE TIE	
M	4	1	**344-5673**	4	NUT (M6X1-THD)	
	5	1	**352-3968**	1	CLIP (LADDER)	
	6	1	**450-6214**	2	RECEIVER GP-SATELLITE (GPS)	
					(EACH INCLUDES)	
		1	**569-8077**	1	SOFTWARE GP-MONITOR (GPS RECEIVER)	
M	7	1	**479-2171**	7	BOLT AS	
	8	1	**492-7319**	2	ANTENNA (GPS)	
	9	1	**510-1477**	1	PLATE AS	
	10	1	**510-1478**	1	PLATE AS	
Y	11	1	**575-4392**	1	HARNESS AS-CONTROL	162
	12	1	**575-4393**	1	CABLE AS	
	13	1	**575-4394**	1	CABLE AS	
	14	1	**575-4396**	1	CABLE AS	
	15	1	**575-4397**	1	CABLE AS	
	16	1	**7K-1181**	18	STRAP-CABLE	
	17	1	**8T-4121**	1	WASHER-HARD (11X21X2.5-MM THK)	
M	18	1	**8T-4136**	1	BOLT (M10X1.5X25-MM)	
M	19	1	**8T-4200**	8	BOLT (M8X1.25X16-MM)	
	20	1	**8T-4224**	8	WASHER-HARD (8.8X16X2-MM THK)	
	21	1	**9X-8256**	4	WASHER (6.6X12X2-MM THK)	

M - METRIC PART
Y - SEPARATE ILLUSTRATION

575-4391 **WIRING GP-GRADE CONTROL (**contd.**)** **i07848556**

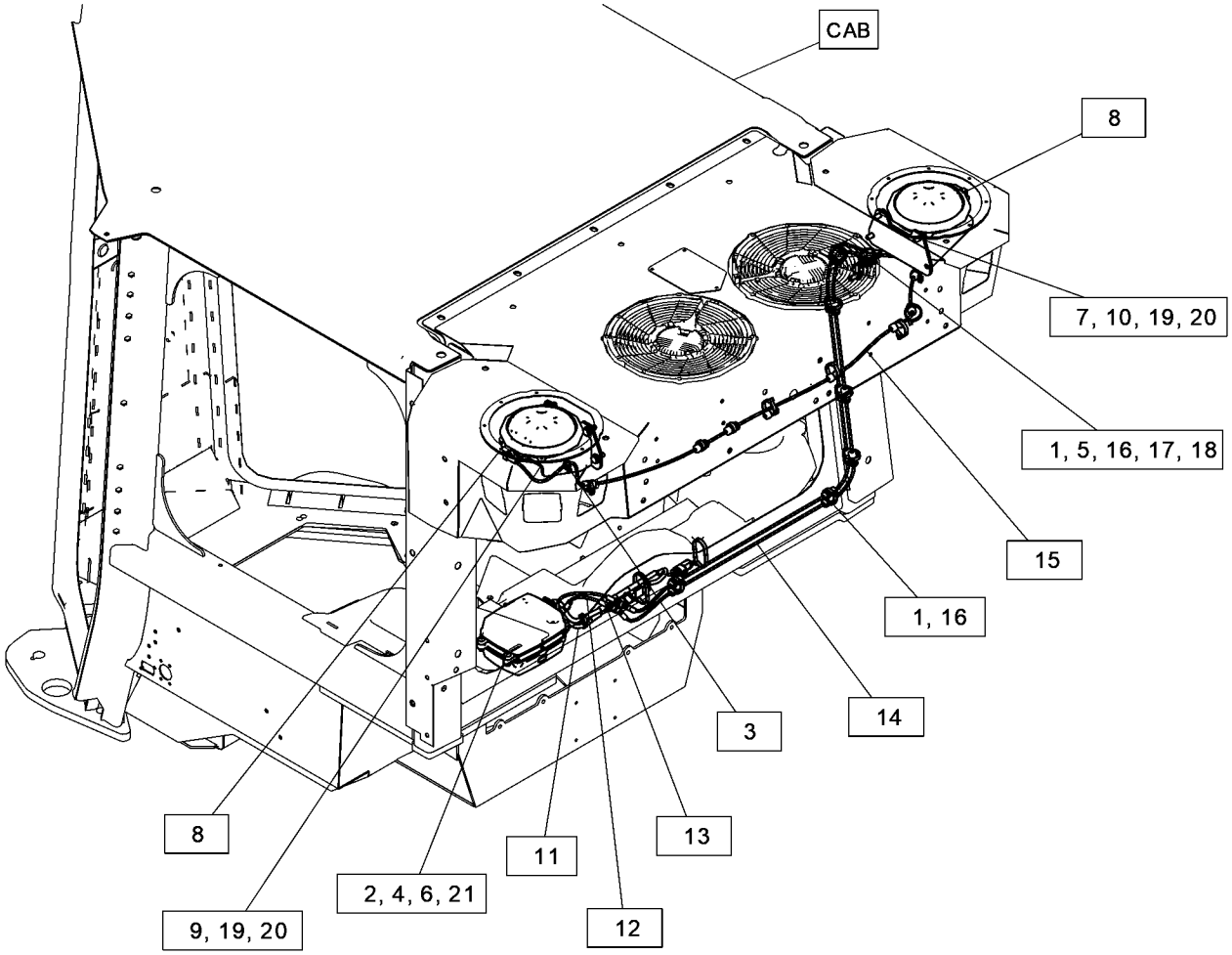

GRAPHIC #1 <END> g06455170

565-7287 WIRING GP-HOOD

S/N: Z2K1-UP; Z2N1-UP
PART OF 559-5996 ELECTRICAL AR
AN ATTACHMENT

SMCS-1408 **i07820535**

NOTE	REF NO	GRAPHIC REF	PART NUMBER	QTY	PART NAME 1 2 3 4 5 6 (PRODUCT LEVEL)	SEE PAGE
	1	1	**228-7100**	1	SEAL-O-RING	
M	2	1	**8T-4176**	2	BOLT (M12X1.75X90-MM)	
	3	1	**132-5789**	1	CLIP (LADDER)	
	4	1	**169-5414**	1	CLIP	
	5	1	**198-4777**	1	WASHER-HARD (11X25X10-MM THK)	
	6	1	**219-0669**	1	SEAL-O-RING	
	7	1	**238-0112**	1	SENSOR GP-TEMPERATURE (2-PIN) (AIR INLET)	
	8	1	**320-3063**	1	SENSOR GP-PRESSURE (AIR FILTER)	
M	9	1	**344-5675**	1	NUT (M10X1.5-THD)	
	10	1	**356-9301**	2	SPACER (13.8X30X60-MM THK)	
	11	1	**4P-7581**	1	CLIP (LADDER)	
	12	1	**554-8761**	1	BRACKET	
Y	13	1	**581-3702**	1	HARNESS AS-FRONT	168
	14	1	**5P-1076**	2	WASHER-HARD (13.5X30X4-MM THK)	
	15	1	**7K-1181**	8	STRAP-CABLE	
	16	1	**8T-4121**	1	WASHER-HARD (11X21X2.5-MM THK)	

M - METRIC PART
Y - SEPARATE ILLUSTRATION

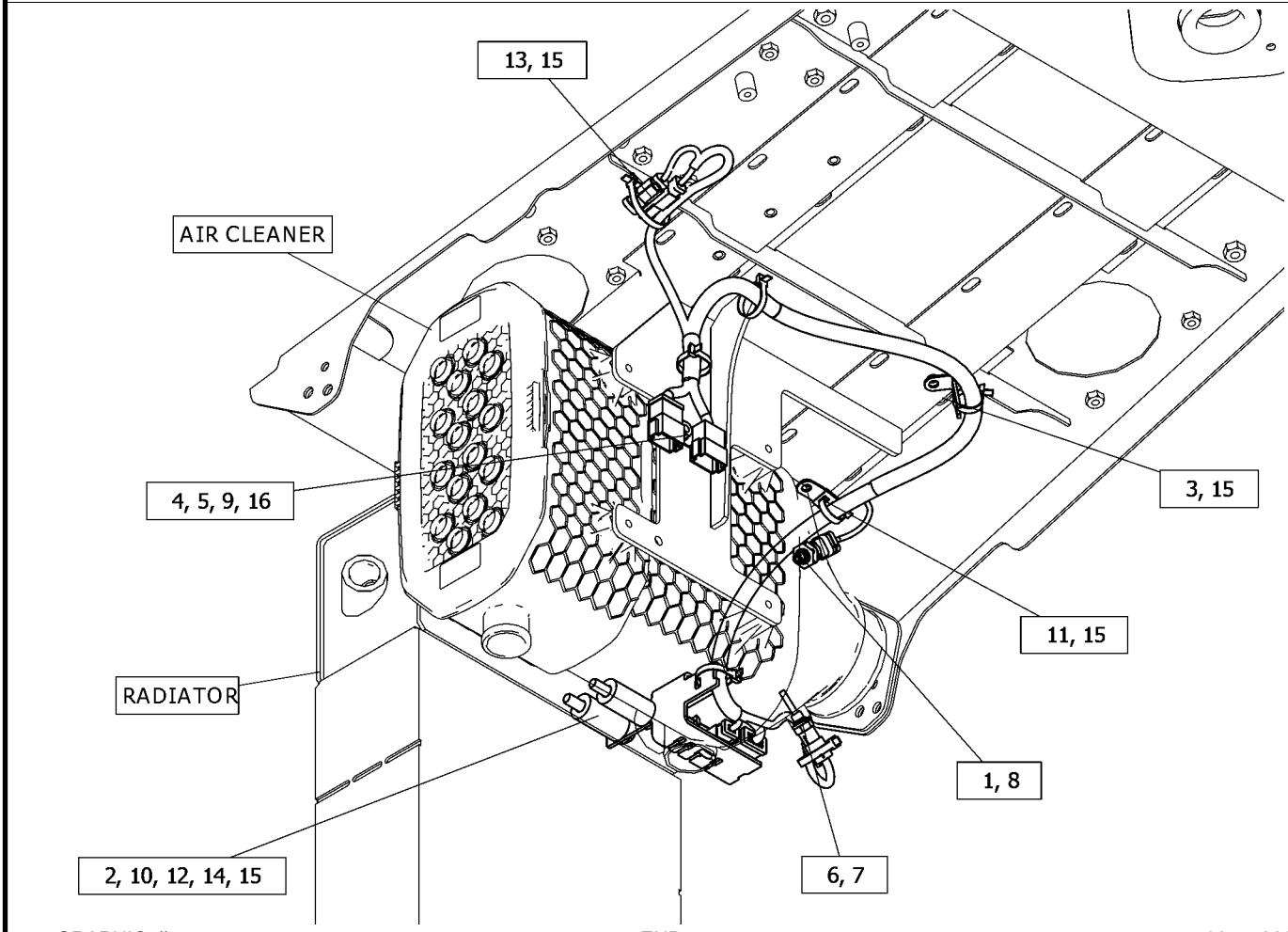

GRAPHIC #1 <END> g06451860

575-4388 WIRING GP-SEAT

S/N: Z2K1-UP; Z2N1-UP
PART OF 568-7695, 568-7696 INSTALLATION AR-CAB
AN ATTACHMENT

SMCS-1408 **i07852805**

NOTE	REF NO	GRAPHIC REF	PART NUMBER	QTY	PART NAME 1 2 3 4 5 6 (PRODUCT LEVEL)	SEE PAGE
	1	1	**352-3968**	1	CLIP (LADDER)	
Y	2	1	**533-5461**	1	HARNESS AS-CAB (SEAT)	153
	3	1	**7K-1181**	3	STRAP-CABLE	
M	4	1	**8T-4200**	1	BOLT (M8X1.25X16-MM)	
	5	1	**8T-4224**	1	WASHER-HARD (8.8X16X2-MM THK)	

M - METRIC PART
Y - SEPARATE ILLUSTRATION

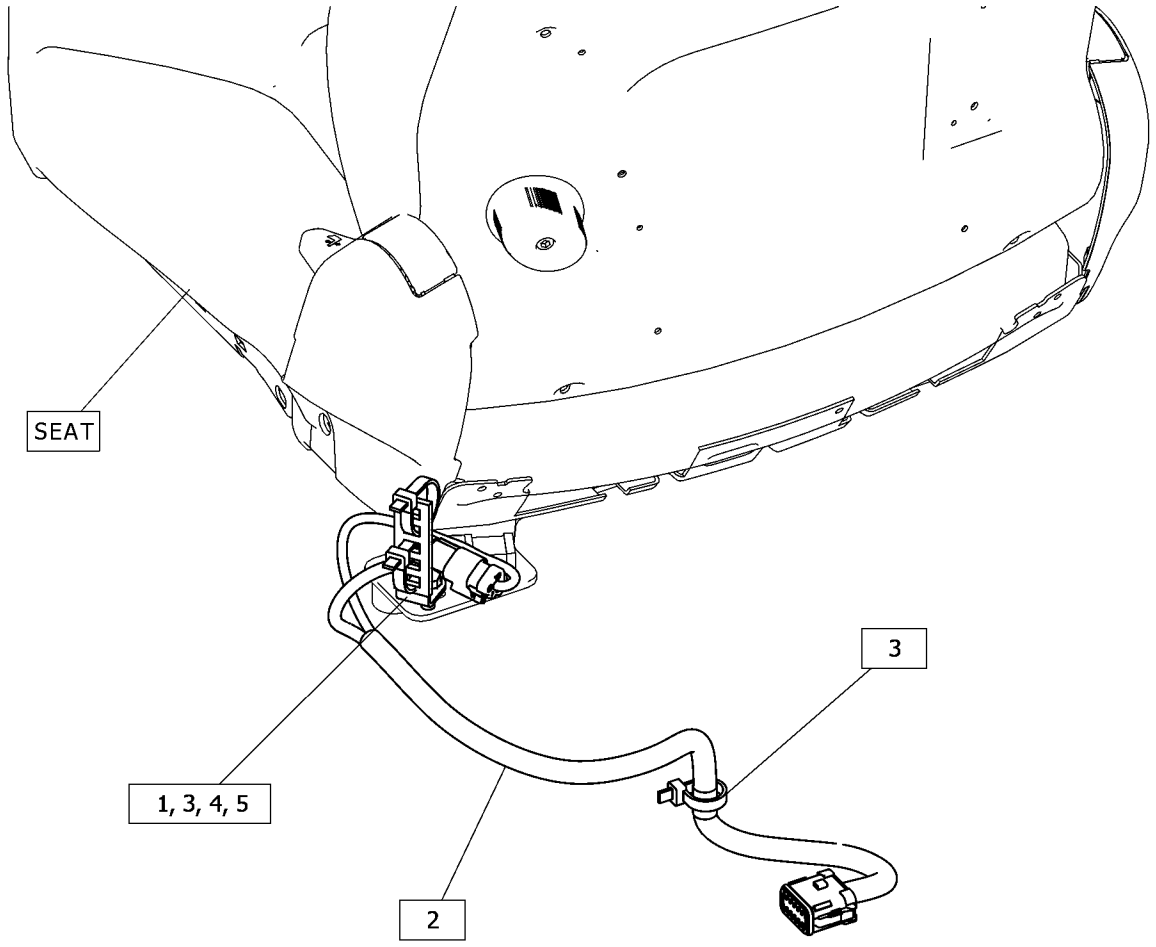

GRAPHIC #1 <END> g06461151

526-4250 WIRING GP-WINCH

S/N: Z2K1-UP; Z2N1-UP
PART OF 515-3713, 515-3714 WINCH AR-TOWING
AN ATTACHMENT

SMCS-1408, 5163 **i07839865**

NOTE	REF NO	GRAPHIC REF	PART NUMBER	QTY	PART NAME 1 2 3 4 5 6 (PRODUCT LEVEL)	SEE PAGE
Y	1	1	**525-7915**	1	HARNESS AS-SOLENOID	172
	2	1	**7K-1181**	2	STRAP-CABLE	

Y - SEPARATE ILLUSTRATION

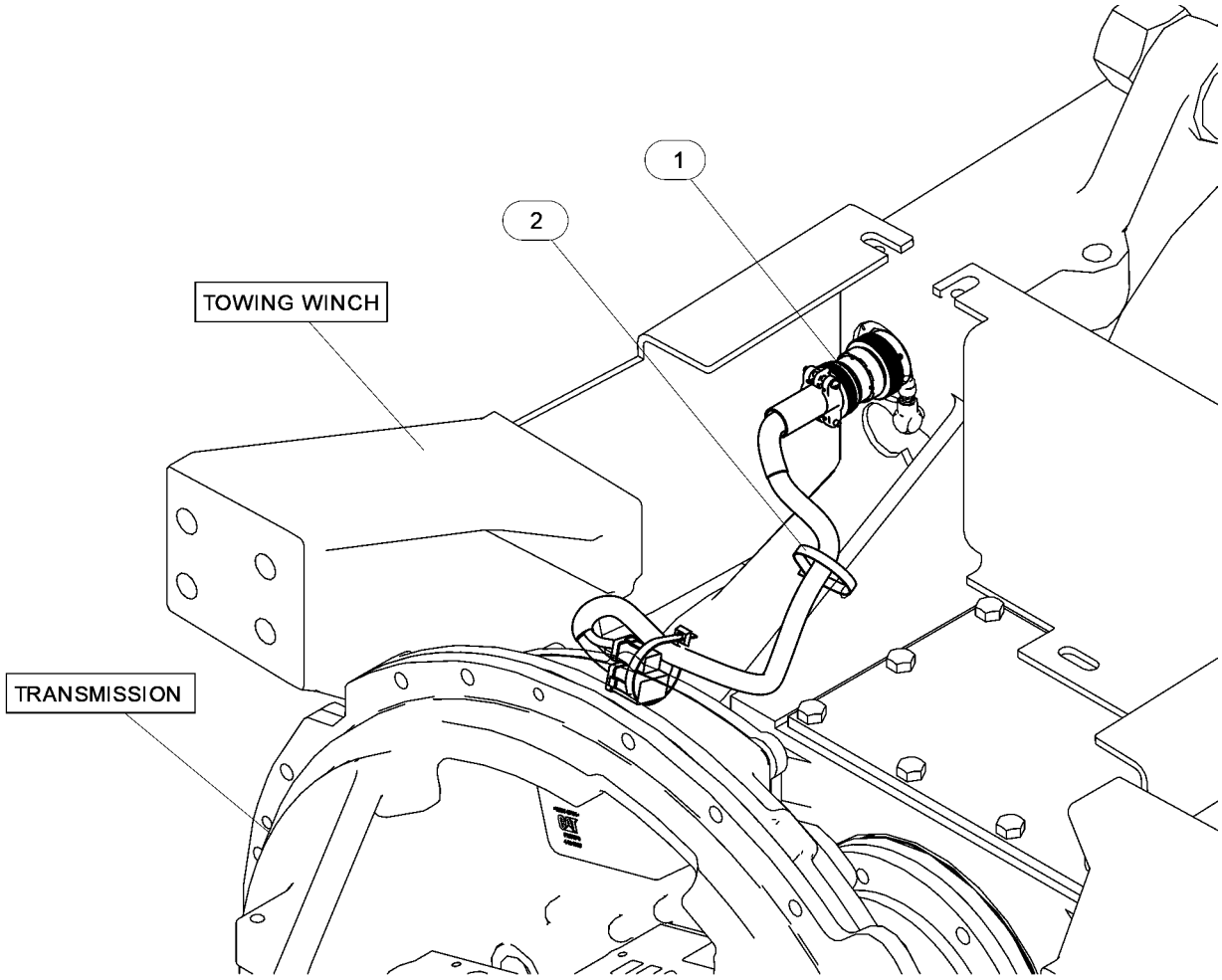

GRAPHIC #1 <END> g06452295

243-4398 ACCUMULATOR GP–CHARGED

S/N: Z2K1-UP; Z2N1-UP
FIELD REPLACEMENT ORDER 250-0393–PAGE: 269
PART OF 509-3799 LINES GP-POWER TRAIN OIL
AN ATTACHMENT

SMCS-5077 **i03996941**

NOTE	REF NO	GRAPHIC REF	PART NUMBER	QTY	PART NAME 1 2 3 4 5 6 (PRODUCT LEVEL)	SEE PAGE
	1	1	**224-5152**	1	VALVE-GAS (STEERING ACCUMULATOR)	
	2	1	**224-5132**	1	CAP (GAS VALVE)	
	3	1	**3J-7354**	1	SEAL-O-RING	
	4	1	**1J-9671**	1	SEAL-O-RING	
	5	1	**241-0037**	1	FILM-INFORMATION (HYDRAULIC ACCUMULATOR)	

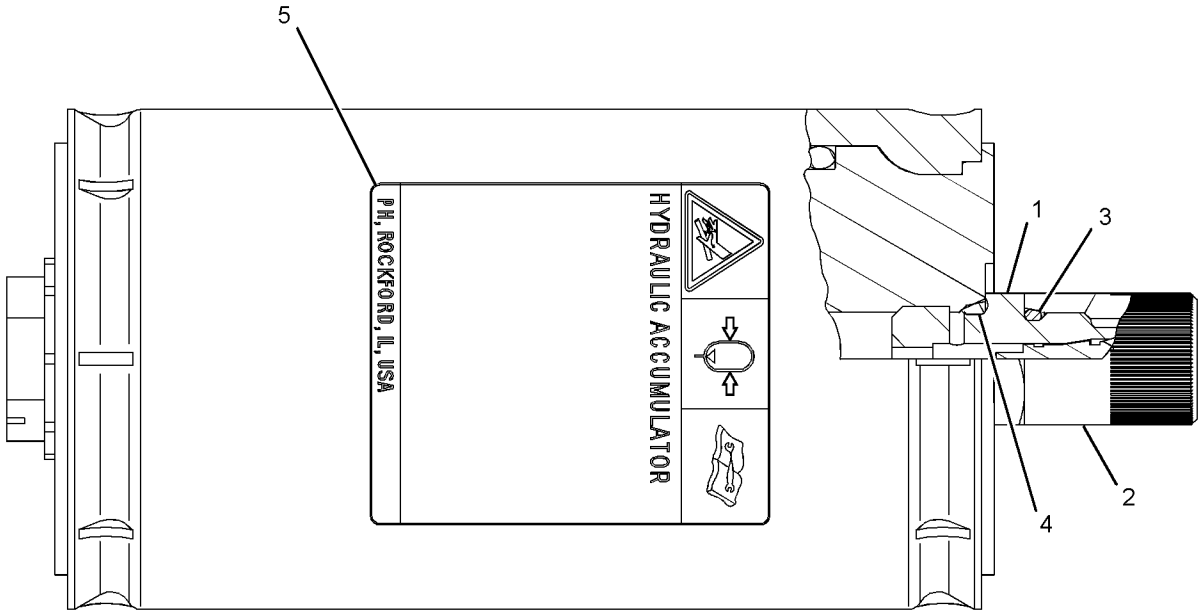

GRAPHIC #1 <END> g02178050

250-0393 ACCUMULATOR GP–UNCHARGED

S/N: Z2K1-UP; Z2N1-UP

FIELD REPLACEMENT FOR 243-4398–PAGE: 268

SMCS-5077 **i04024728**

NOTE	REF NO	GRAPHIC REF	PART NUMBER	QTY	PART NAME 1 2 3 4 5 6 (PRODUCT LEVEL)	SEE PAGE
	1	1	**241-0037**	1	FILM-INFORMATION (HYDRAULIC ACCUMULATOR)	
	2	1	**224-5152**	1	VALVE-GAS	
	3	1	**224-5132**	1	CAP (GAS VALVE)	
	4	1	**3J-7354**	1	SEAL-O-RING	
	5	1	**1J-9671**	1	SEAL-O-RING	

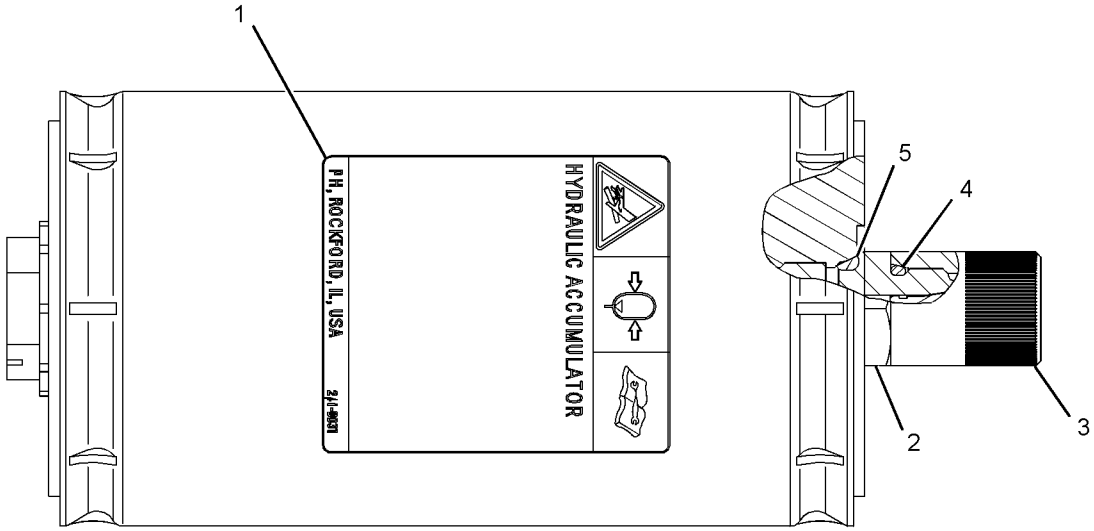

GRAPHIC #1 <END> g02207893

193-7361 AXLE GP

S/N: Z2K1-UP

PART OF 458-3587, 458-3589, 478-7557 DRIVE AR-FINAL

AN ATTACHMENT

SMCS-3282 **i07419608**

NOTE	REF NO	GRAPHIC REF	PART NUMBER	QTY	PART NAME 1 2 3 4 5 6 (PRODUCT LEVEL)	SEE PAGE
	1	1	**191-4916**	1	SHAFT-SUN GEAR (34-TEETH)	
	2	1	**193-7365**	1	SHAFT	
	3	1	**193-7366**	1	SHAFT-SUN GEAR (34-TEETH)	

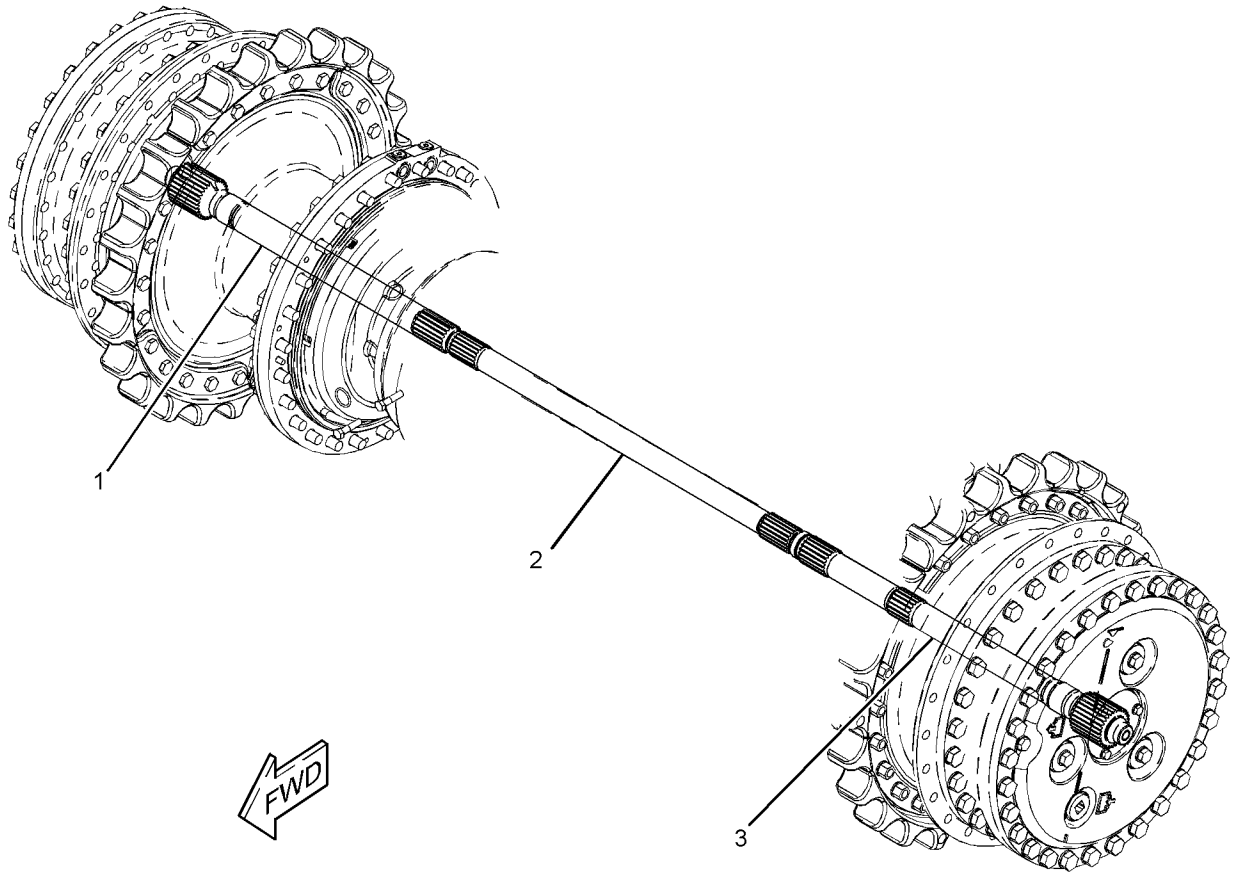

GRAPHIC #1 <END> g02410477

193-7362 AXLE GP

S/N: Z2N1-UP
PART OF 458-3590, 478-7558 DRIVE AR-FINAL
AN ATTACHMENT

SMCS-3282 **i07286978**

NOTE	REF NO	GRAPHIC REF	PART NUMBER	QTY	PART NAME 1 2 3 4 5 6 (PRODUCT LEVEL)	SEE PAGE
	1	1	**191-4917**	1	SHAFT-SUN GEAR (34-TEETH)	
	2	1	**193-7365**	1	SHAFT	
	3	1	**193-7367**	1	SHAFT-SUN GEAR (34-TEETH)	

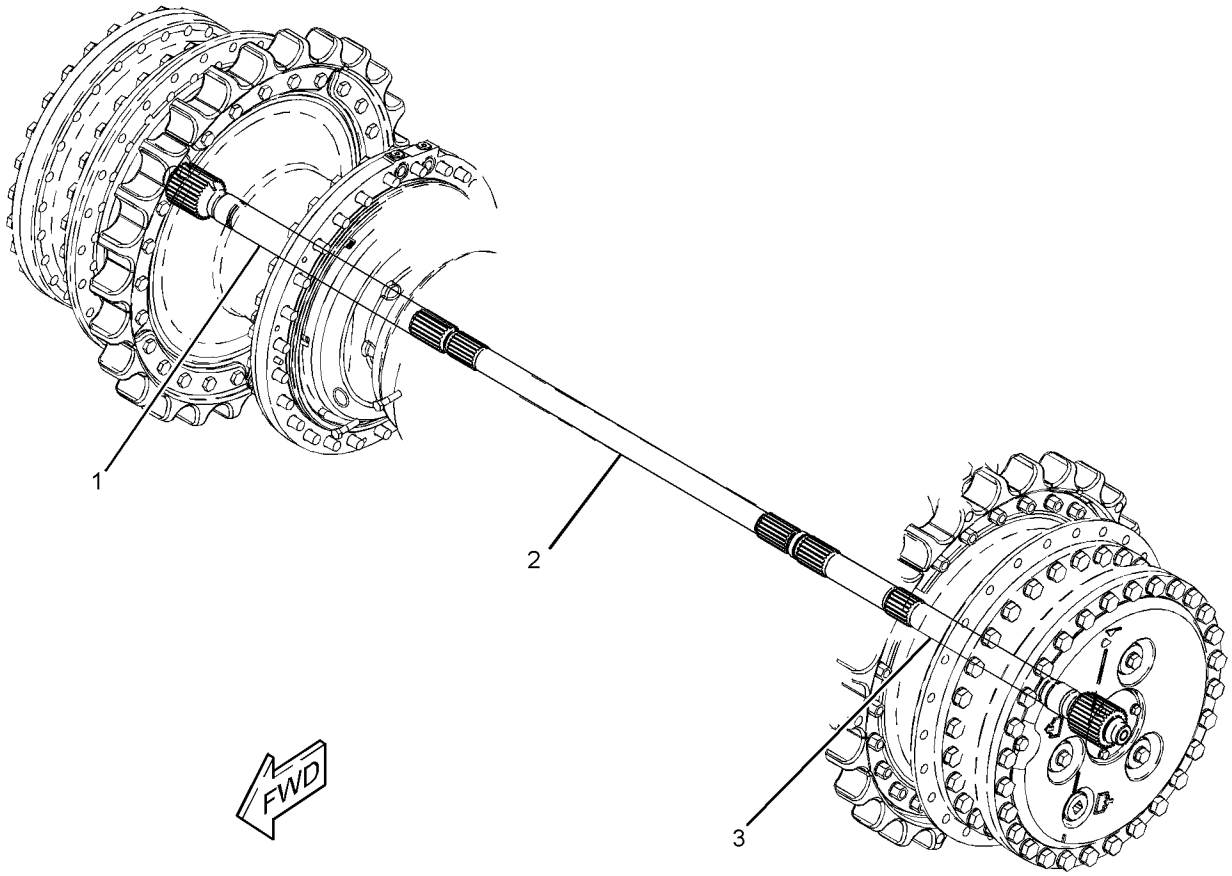

GRAPHIC #1 <END> g02410441

526-0846 BRAKE & DIFFERENTIAL DRIVE GP

S/N: Z2K1-UP; Z2N1-UP
PART OF 509-3795 BRAKE GP-STEERING
AN ATTACHMENT

SMCS-4131 **i07816679**

NOTE	REF NO	GRAPHIC REF	PART NUMBER	QTY	PART NAME 1 2 3 4 5 6 (PRODUCT LEVEL)	SEE PAGE
	1	1	**536-5248**	1	GEAR AS-SUN (24-TEETH)	
		1	**290-9849**	1	RING-RETAINING	
		1	**442-0013**	1	SPACER	
	2	1	**6Y-2704**	1	SPRING-DISC	
	3	1	**3T-4568**	3	SHAFT-PLANETARY	
	4	1	**3T-4824**	4	GEAR-PLANETARY (30-TEETH)	
	5	1	**3T-6963**	1	SEAL-RING	
B	6	2	**3T-9272**	1	SHIM PACK (INCLUDES 8-SHIMS)	
	7	1	**6I-8724**	1	RING-LOCK	
	8	1	**6T-0062**	1	PLATE	
	9	1	**6T-0064**	4	SHAFT-PLANETARY	
	10	2	**6T-0850**	2	WASHER-THRUST (255X287.25X2.75-MM THK)	
	11	1	**6Y-0926**	3	GEAR-PLANETARY (23-TEETH)	
	12	1	**6Y-0984**	1	GEAR-RING (75-TEETH)	
	13	1	**7G-1596**	1	RING-RETAINING	
	14	2	**7T-1885**	1	RING	
	15	2	**7T-6994**	3	PLATE-CLUTCH & BRAKE	
	16	1	**7T-8130**	1	RING-RETAINING	
	17	2	**7T-9832**	1	RETAINER	
	18	2	**7T-9837**	1	PLATE	
	19	1	**8E-8307**	6	DISC-THRUST	
	20	1	**8E-8310**	8	DISC-THRUST	
	21	1	**9W-1571**	1	SLINGER	
B	22	1	**9W-2853**	1	SHIM PACK (INCLUDES 21-SHIMS)	
	23	1	**9W-6102**	1	GEAR-RING (84-TEETH)	
	24	1	**136-1595**	1	HOUSING-ROTATING	
	25	1	**191-0938**	1	CARRIER-PLANETARY	
	26	1	**191-0940**	1	CARRIER-PLANETARY	
	27	2	**193-7405**	1	HUB	
	28	2	**214-3573**	1	PISTON	
	29	2	**216-7431**	1	CARRIER	
	30	2	**217-2293**	1	RETAINER	
	31	1	**227-2451**	1	HOUSING AS	
		1	**1A-1460**	12	BOLT (1/2-13X2-IN)	
		1	**1A-2223**	2	DOWEL	
		1	**5P-8245**	12	WASHER-HARD (13.5X25.5X3-MM THK)	
	32	2	**255-9267**	4	DISC-FRICTION	
	33	1	**440-9567**	1	RING-THRUST	
	34	1	**502-3927**	1	GEAR SET-BEVEL	
					(INCLUDES BEVEL GEAR & BEVEL PINION)	
	35	2	**005-4834**	2	BEARING AS-TAPERED ROLLER	
	36	1	**030-2135**	4	BOLT-LOCKING (5/16-18X0.625-IN)	
	37	1	**0L-1143**	21	BOLT (3/8-16X2.5-IN)	
	38	1	**0S-1614**	3	BOLT (1/4-20X0.5-IN)	
	39	2	**1A-1460**	6	BOLT (1/2-13X2-IN)	
	40	2	**1A-2029**	6	BOLT (3/8-16X1.125-IN)	
	41	2	**2A-4639**	1	BOLT (3/8-16X1.625-IN)	

526-0846 **BRAKE & DIFFERENTIAL DRIVE GP (**contd.**)** **i07816679**

NOTE	REF NO	GRAPHIC REF	PART NUMBER	QTY	PART NAME 1 2 3 4 5 6 (PRODUCT LEVEL)	SEE PAGE
	42	1	**2K-5069**	1	CUP-BEARING (TAPERED ROLLER)	
	43	2	**2K-9295**	1	BEARING AS-TAPERED ROLLER	
	44	2	**3B-4124**	1	CUP-BEARING (TAPERED ROLLER)	
	45	1	**3K-0360**	2	SEAL-O-RING	
	46	1	**3S-2708**	7	PIN-SPRING	
	47	1	**5K-9107**	3	BOLT-LOCKING (3/8-16X0.75-IN)	
	48	1	**5M-0578**	3	BEARING AS-ROLLER	
	49	2	**5M-2894**	7	WASHER-HARD (10.2X18.5X2.5-MM THK)	
	50	1	**5M-7925**	4	BEARING AS-ROLLER	
	51	2	**5P-8245**	6	WASHER-HARD (13.5X25.5X3-MM THK)	
	52	2	**6P-1735**	1	LOCKWASHER	
	53	2	**6P-1736**	1	WASHER (55.17X76.2X2.67-MM THK)	
	54	2	**6P-5317**	1	RING-SEAL (EXTERNAL)	
	55	2	**7H-4566**	2	CUP-BEARING (TAPERED ROLLER)	
	56	1	**104-5604**	3	WASHER (7.2X25X2-MM THK)	
	57	1	**7W-6534**	4	PLUG-PIPE	
	58	1	**8M-4438**	1	SEAL-O-RING	
	59	1	**8P-8357**	1	RING-SEAL (INTERNAL)	
	60	1	**8T-0072**	1	CONE-BEARING	
	61	2	**9B-0576**	1	LOCKNUT-BEARING	
	62	1	**9L-9132**	3	WASHER-HARD (10.2X25.5X2.5-MM THK)	
	63	1	**9S-8005**	2	PLUG (3/4-16-THD)	
BF			**1U-8846**		SEALANT-GASKET	

B - USE AS REQUIRED
F - NOT SHOWN

526-0846 **BRAKE & DIFFERENTIAL DRIVE GP** (contd.) **i07816679**

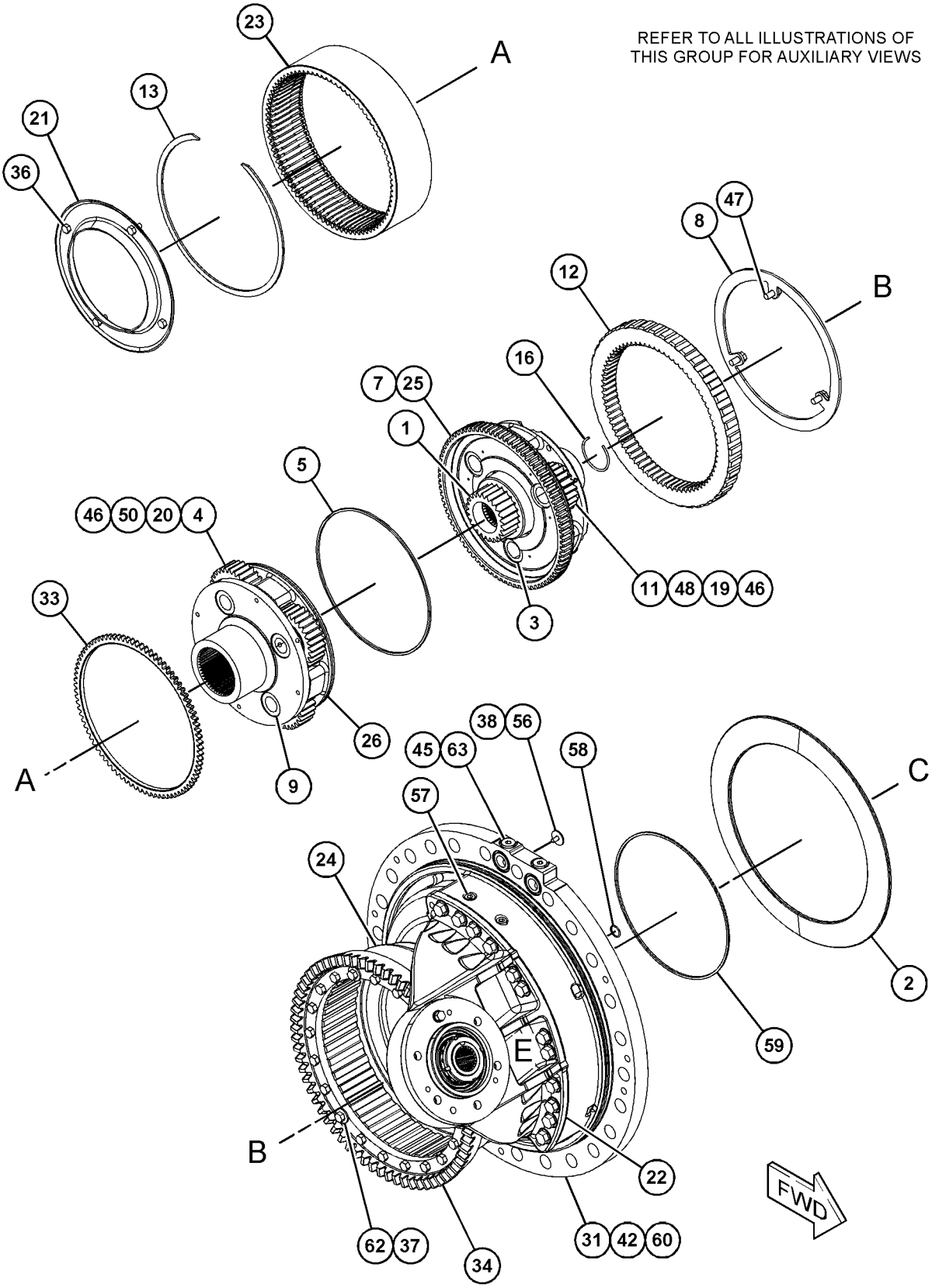

GRAPHIC #1 g06454979

526-0846 **BRAKE & DIFFERENTIAL DRIVE GP (**contd.**)** **i07816679**

REFER TO ALL ILLUSTRATIONS OF
THIS GROUP FOR AUXILIARY VIEWS

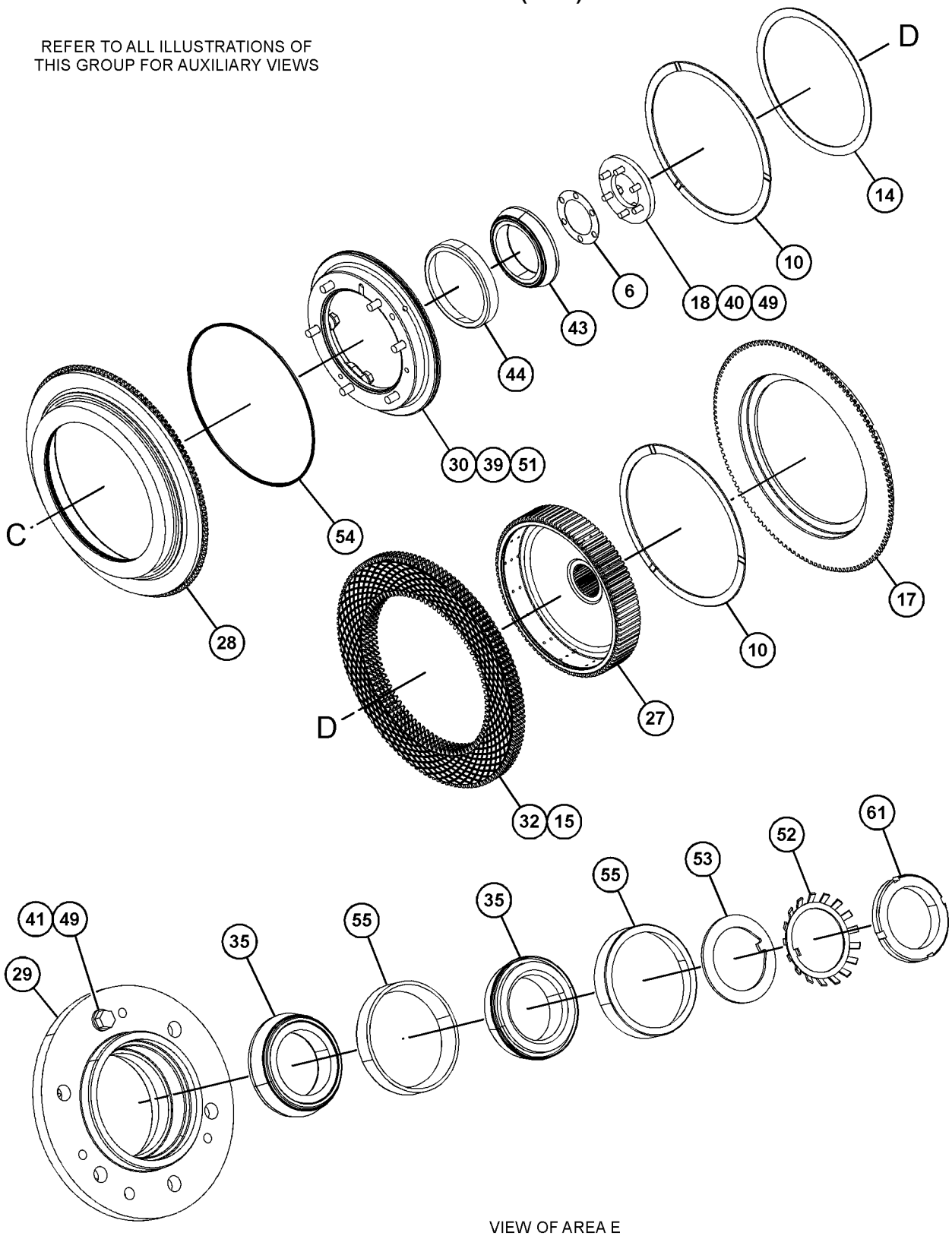

VIEW OF AREA E
(PARTS REMOVED FOR CLARITY)

GRAPHIC #2 <END> g06454978

526-0847 BRAKE & PLANETARY GP

S/N: Z2K1-UP; Z2N1-UP
PART OF 509-3795 BRAKE GP-STEERING
AN ATTACHMENT

SMCS-4011, 4132, 4255 **i07816740**

NOTE	REF NO	GRAPHIC REF	PART NUMBER	QTY	PART NAME 1 2 3 4 5 6 (PRODUCT LEVEL)	SEE PAGE
	1	1	**6Y-2704**	1	SPRING-DISC	
	2	1	**3T-5807**	1	SLINGER	
	3	1	**7T-1885**	1	RING	
	4	1	**7T-6994**	3	PLATE-CLUTCH & BRAKE	
	5	1	**7T-8136**	3	SHAFT-PLANETARY	
	6	1	**7T-9031**	1	GEAR-RING (75-TEETH)	
	7	1	**7T-9837**	1	PLATE	
	8	1	**8E-8307**	6	DISC-THRUST	
	9	1	**205-5314**	1	HOUSING	
	10	1	**214-3573**	1	PISTON	
	11	1	**446-4935**	1	RETAINER AS	
		1	**8S-0527**	1	PLUG-CUP	
	12	1	**244-2310**	3	GEAR-PLANETARY (23-TEETH)	
	13	1	**255-9267**	4	DISC-FRICTION	
	14	1	**305-2418**	1	GEAR AS-SUN (30-TEETH)	
		1	**3E-4354**	2	BALL	
	15	1	**523-8662**	1	CARRIER-PLANETARY	
	16	1	**0S-1585**	12	BOLT (1/2-13X1.5-IN)	
	17	1	**1A-1460**	6	BOLT (1/2-13X2-IN)	
	18	1	**1A-2029**	6	BOLT (3/8-16X1.125-IN)	
	19	1	**1C-0569**	6	BOLT (5/16-18X0.5-IN)	
	20	1	**3K-0360**	2	SEAL-O-RING	
	21	1	**3S-2708**	3	PIN-SPRING	
	22	1	**5M-0578**	6	BEARING AS-ROLLER	
	23	1	**5M-2894**	6	WASHER-HARD (10.2X18.5X2.5-MM THK)	
	24	1	**5P-8245**	18	WASHER-HARD (13.5X25.5X3-MM THK)	
	25	1	**6P-5317**	1	RING-SEAL (EXTERNAL)	
	26	1	**8M-4438**	1	SEAL-O-RING	
	27	1	**8P-8357**	1	RING-SEAL (INTERNAL)	
	28	1	**9S-8005**	2	PLUG (3/4-16-THD)	
	29	1	**2K-9295**	2	BEARING AS-TAPERED ROLLER	
	30	1	**3B-4124**	2	CUP-BEARING (TAPERED ROLLER)	
BF			**8C-8422**		SEALANT	

B - USE AS REQUIRED
F - NOT SHOWN

526-0847 **BRAKE & PLANETARY GP** (contd.) **i07816740**

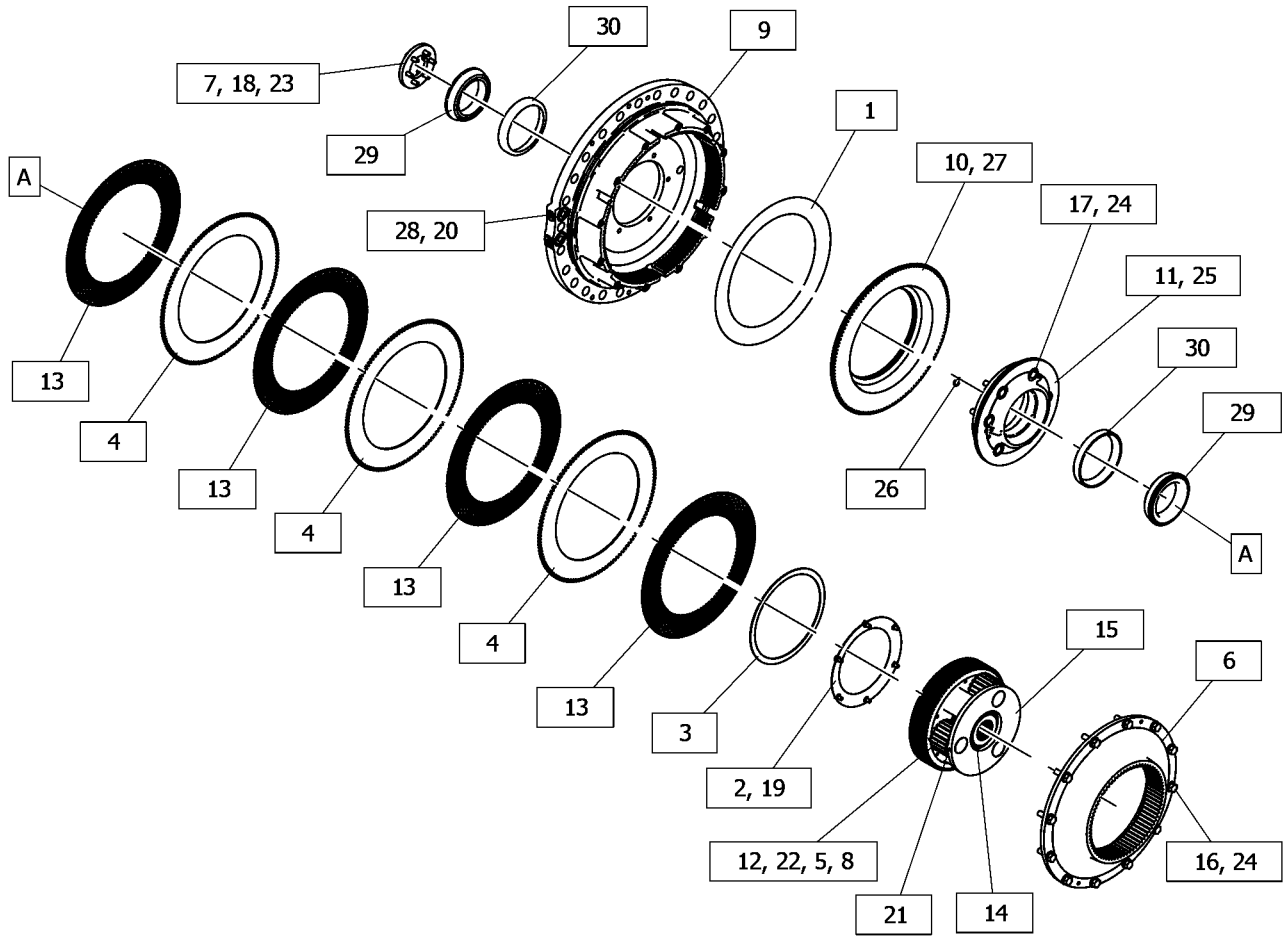

GRAPHIC #1 <END> g06454549

434-4496 CASE GP-TRANSMISSION

S/N: D5H1-UP; D6M1-UP; D7M1-UP; D9M1-UP
PART OF 419-6899 GEAR GP-BEVEL & TRANSFER
AN ATTACHMENT

SMCS-3064 **i06708692**

NOTE	REF NO	GRAPHIC REF	PART NUMBER	QTY	PART NAME 1 2 3 4 5 6 (PRODUCT LEVEL)	SEE PAGE
	1	1	**7T-9356**	1	PLUG-CUP	
	2	1	**434-4497**	1	CASE AS-TRANSMISSION	
		1	**0S-1585**	18	BOLT (1/2-13X1.5-IN)	
		1	**5H-6202**	2	PIN	
	3	1	**2A-3576**	1	PIN	

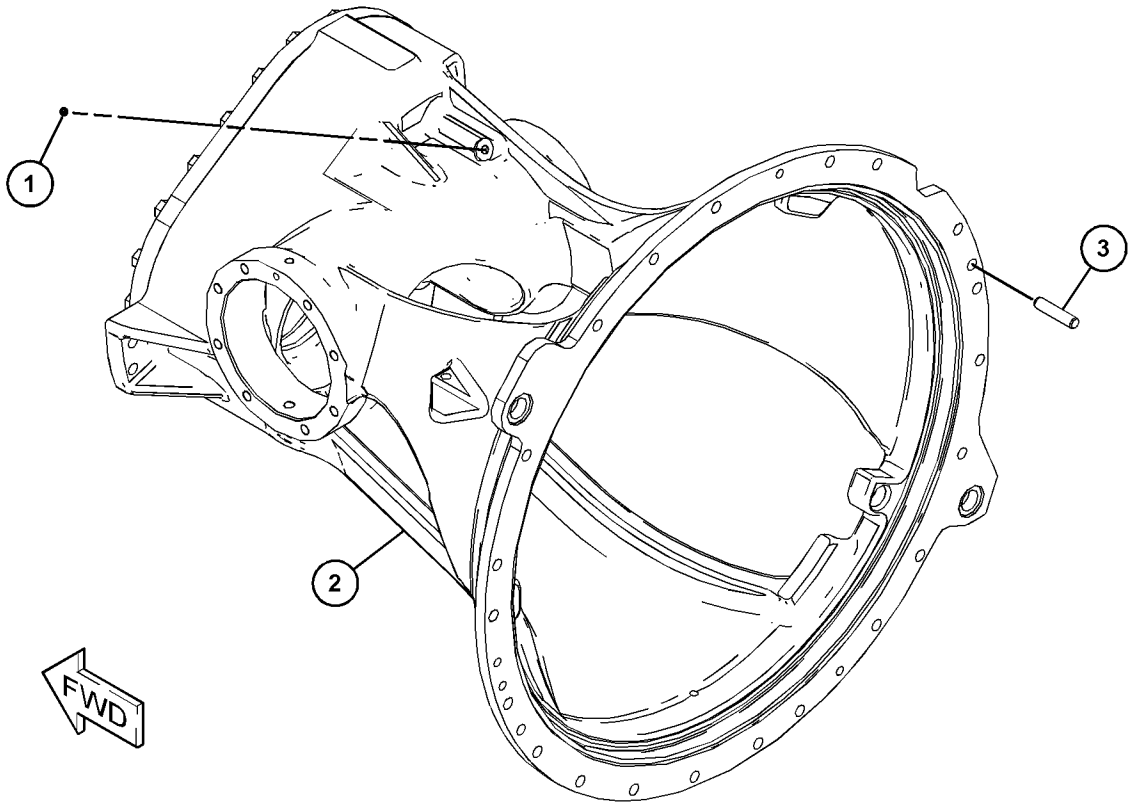

GRAPHIC #1 <END> g03877093

394-2666 CONTROL GP-TRANSMISSION HYD

S/N: D5H1-UP; D6M1-UP; D7M1-UP; D9M1-UP
PART OF 549-8359 TRANSMISSION AR
AN ATTACHMENT

SMCS-3073, 3167 **i07609732**

NOTE	REF NO	GRAPHIC REF	PART NUMBER	QTY	PART NAME 1 2 3 4 5 6 (PRODUCT LEVEL)	SEE PAGE
	1	1	**104-6729**	1	RETAINER	
	2	1	**169-5414**	1	CLIP	
Y	3	1	**365-6807**	1	VALVE GP-RELIEF (TRANSMISSION)	336
	4	1	**448-2859**	2	DRAIN	
	5	1	**372-3740**	5	BODY	
J	6	1	**518-5072**	5	VALVE GP-SOLENOID (SHIFT)	
Y	7	1	**445-6133**	1	HARNESS AS-TRANSMISSION	173
	8	1	**0S-0509**	1	BOLT (3/8-16X0.75-IN)	
	9	1	**104-6730**	1	GASKET	
M	10	1	**162-2165**	10	BOLT-SOCKET HEAD (M4X0.7X16-MM)	
	11	1	*164-5567*	5	COUPLER AS-QUICK DISCONNECT (MALE)	
					(EACH INCLUDES)	
		1	**6V-3965**	1	FITTING (QUICK DISCONNECT)	
		1	**214-7568**	1	SEAL-O-RING	
	12	1	**1D-4540**	14	BOLT (5/16-18X2.75-IN)	
	13	1	**5M-2894**	1	WASHER-HARD (10.2X18.5X2.5-MM THK)	
M	14	1	**8T-4136**	2	BOLT (M10X1.5X25-MM)	
	15	1	**9M-1974**	14	WASHER-HARD (8.8X16X2-MM THK)	
	16	1	**3S-2093**	2	STRAP-CABLE	
	18	1	**125-5341**	1	NUT (1-1/4-18-THD)	
	19	1	**5P-8065**	1	SEAL-O-RING	
					AVAILABLE REPAIR KIT(S):	
J			**387-2867**	1	KIT-SEAL	
					(INCLUDES O-RINGS)	

J - KIT MARKED J SERVICES PART(S) MARKED J
M - METRIC PART
Y - SEPARATE ILLUSTRATION

394-2666 **CONTROL GP-TRANSMISSION HYD (**contd.**)** **i07609732**

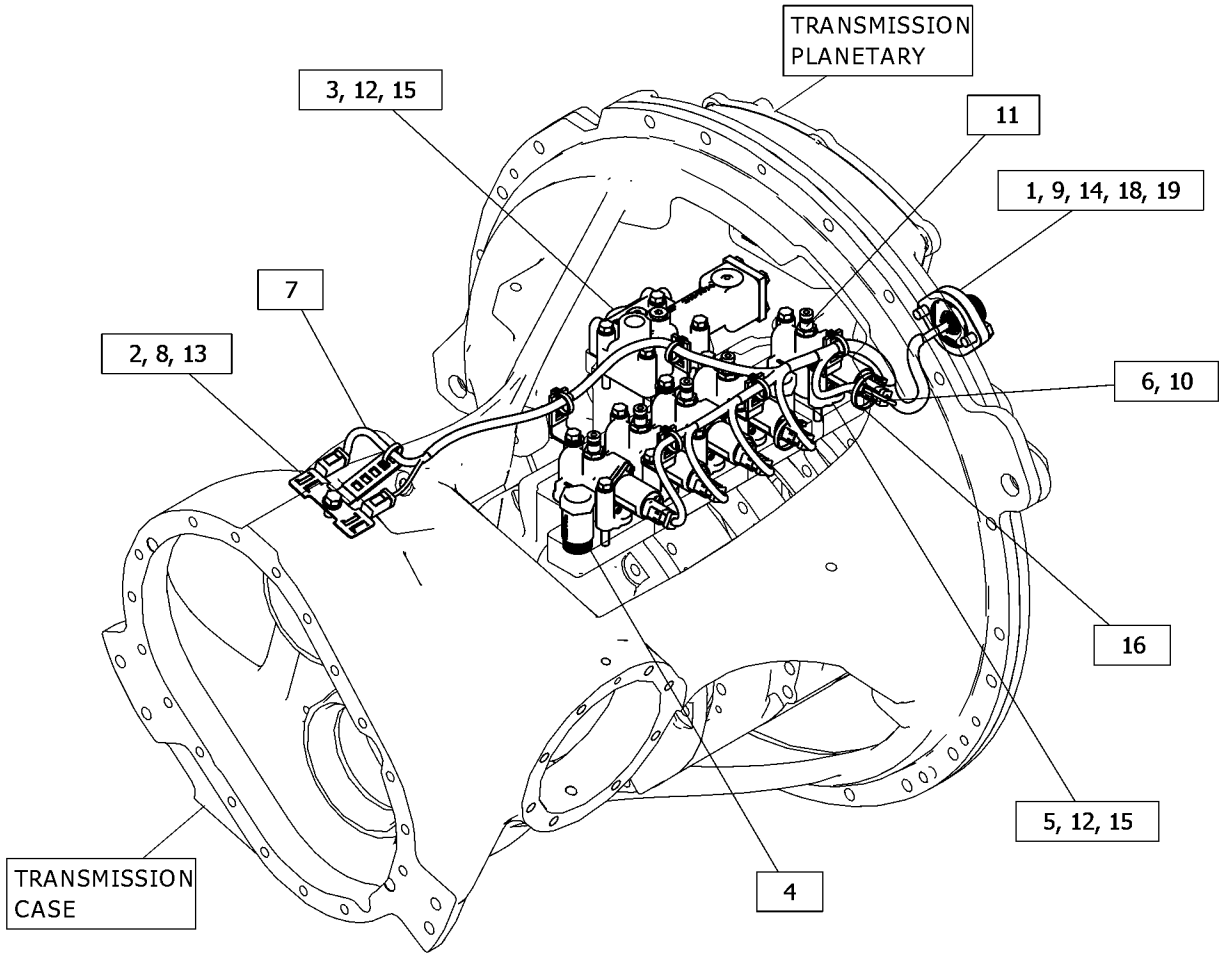

GRAPHIC #1 <END> g06378601

487-6297 DRAIN GP-ECOLOGY

S/N: Z2K1-UP; Z2N1-UP
PART OF 509-3797 MOUNTING GP-TORQUE CONVERTER
AN ATTACHMENT

SMCS-3100 **i07360110**

NOTE	REF NO	GRAPHIC REF	PART NUMBER	QTY	PART NAME 1 2 3 4 5 6 (PRODUCT LEVEL)	SEE PAGE
	1	1	**4B-7739**	1	PLUG-DRAIN (POWER TRAIN)	
	2	1	**8H-9819**	1	ADAPTER-PLUG	
	3	1	**2B-0858**	1	PLUG-PIPE	
	4	1	**8H-9818**	1	GASKET	
M	5	1	**479-2172**	2	BOLT AS	

M - METRIC PART

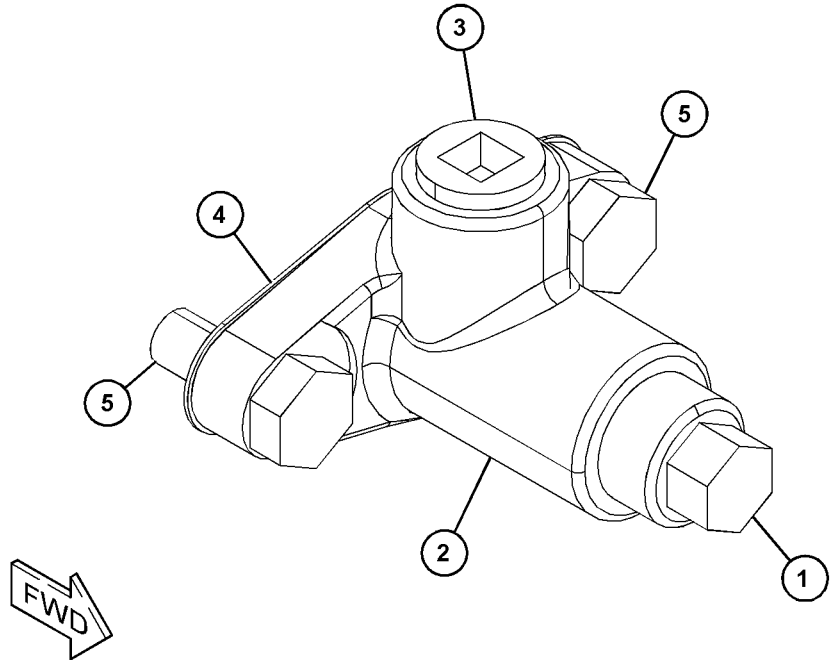

GRAPHIC #1 <END> g06143913

458-3587 DRIVE AR-FINAL

S/N: Z2K1-UP
PART OF 510-9717 DRIVE AR-FINAL
AN ATTACHMENT

SMCS-4050 **i07023446**

NOTE	REF NO	GRAPHIC REF	PART NUMBER	QTY	PART NAME 1 2 3 4 5 6 (PRODUCT LEVEL)	SEE PAGE
Y	1	1	*193-7361*	1	AXLE GP	270
Y	2	1	**448-1167**	2	DRIVE GP-FINAL	294
Y	3	1	*449-0302*	1	MOUNTING GP-FINAL DRIVE	315

Y - SEPARATE ILLUSTRATION

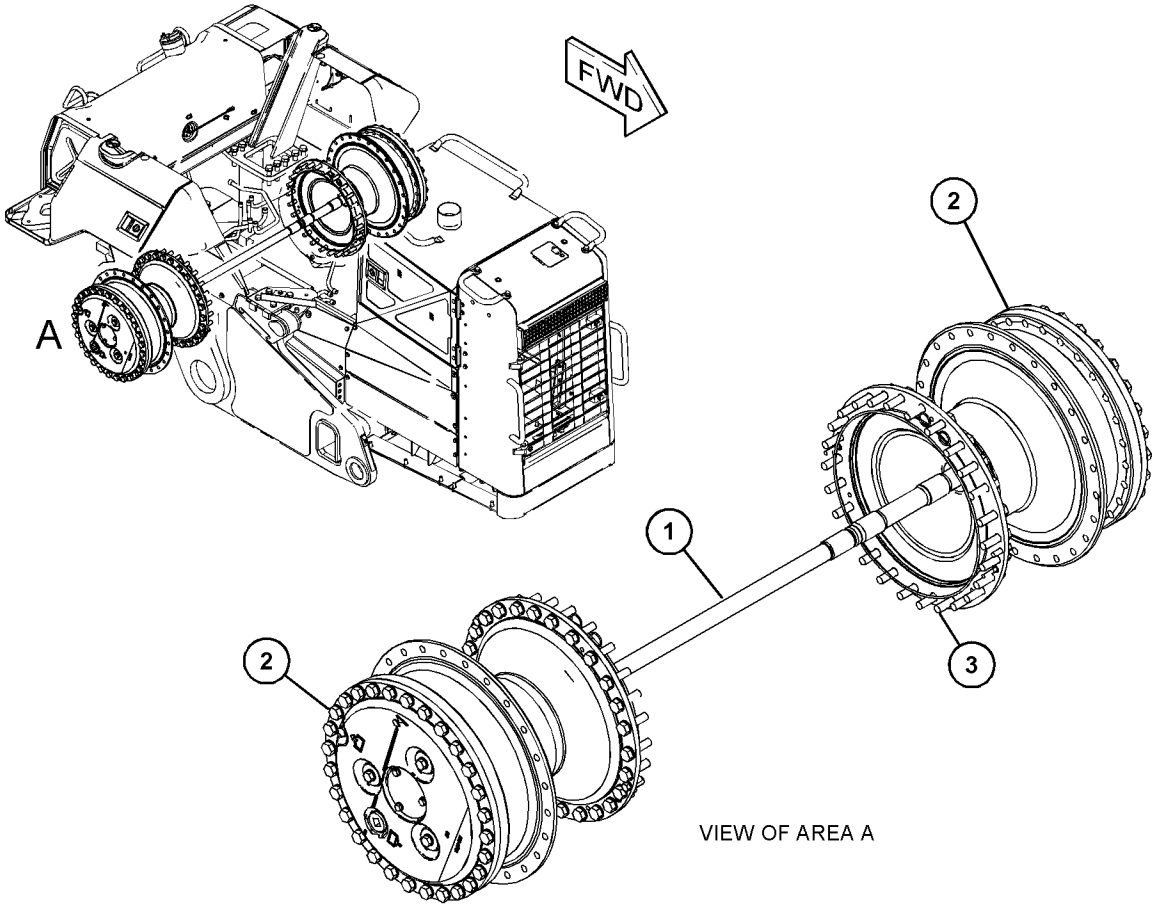

GRAPHIC #1 <END> g03785786

458-3589 DRIVE AR-FINAL—COLD WEATHER

S/N: Z2K1-UP
XL
PART OF 510-9723 DRIVE AR-FINAL
AN ATTACHMENT

SMCS-4050 **i07849681**

NOTE	REF NO	GRAPHIC REF	PART NUMBER	QTY	PART NAME 1 2 3 4 5 6 (PRODUCT LEVEL)	SEE PAGE
Y	1	1	*193-7361*	1	AXLE GP	270
Y	2	1	*443-6917*	2	DRIVE GP-FINAL	292
Y	3	1	*449-0302*	1	MOUNTING GP-FINAL DRIVE	315

Y - SEPARATE ILLUSTRATION

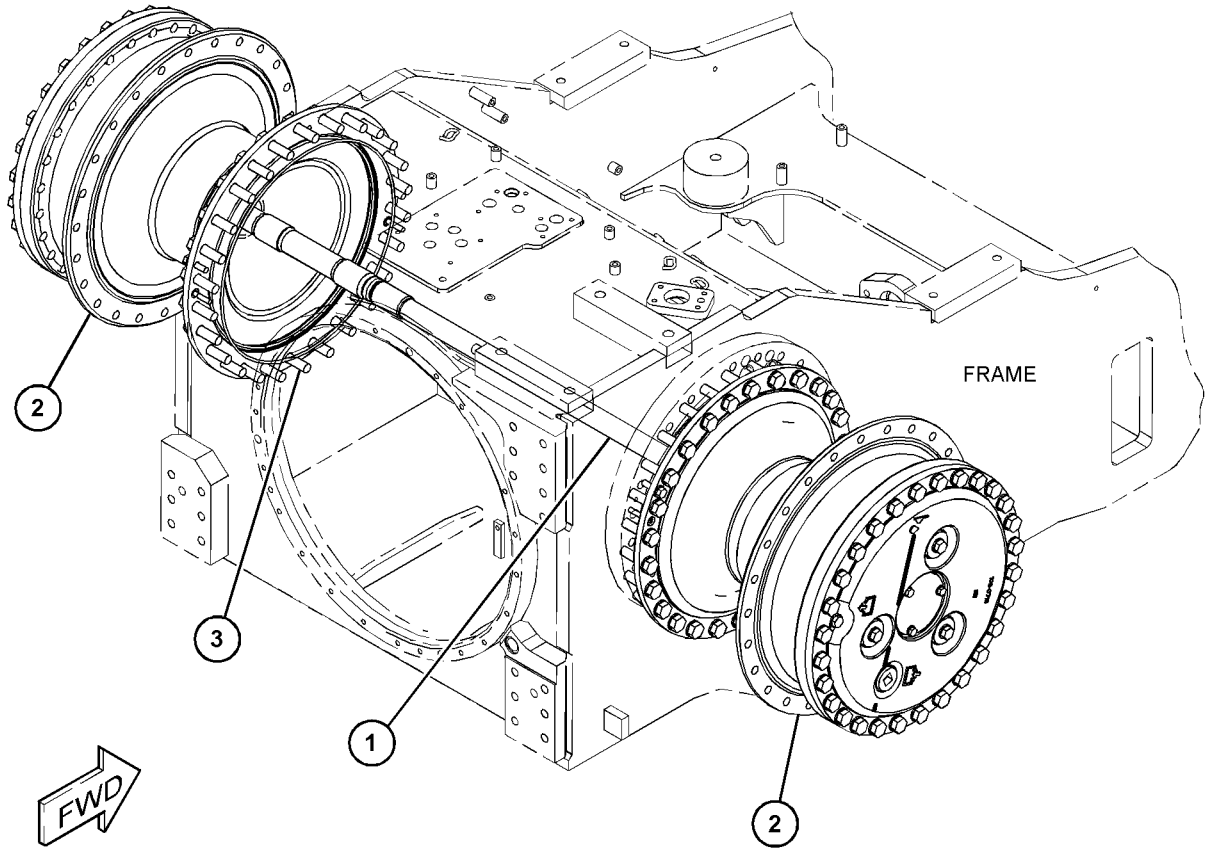

GRAPHIC #1 <END> g06024820

458-3590 DRIVE AR-FINAL

S/N: Z2N1-UP

PART OF 510-9718 DRIVE AR-FINAL

AN ATTACHMENT

SMCS-4050 **i06704476**

NOTE	REF NO	GRAPHIC REF	PART NUMBER	QTY	PART NAME 1 2 3 4 5 6 (PRODUCT LEVEL)	SEE PAGE
Y	1	1	*193-7362*	1	AXLE GP	271
Y	2	1	**448-1230**	2	DRIVE GP-FINAL	296
Y	3	1	*449-0302*	1	MOUNTING GP-FINAL DRIVE	315

Y - SEPARATE ILLUSTRATION

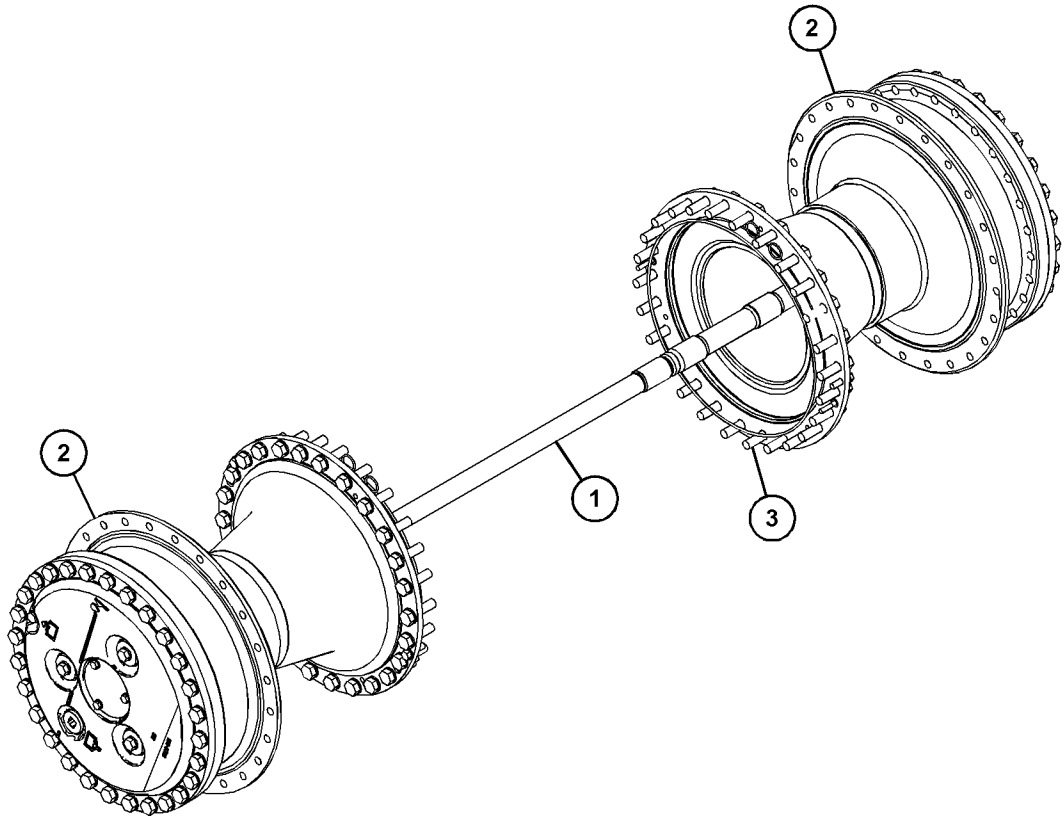

GRAPHIC #1 <END> g03784799

478-7557 DRIVE AR-FINAL

S/N: Z2K1-UP
GUARDED
PART OF 510-9719 DRIVE AR-FINAL
AN ATTACHMENT

SMCS-4050 **i06918788**

NOTE	REF NO	GRAPHIC REF	PART NUMBER	QTY	PART NAME 1 2 3 4 5 6 (PRODUCT LEVEL)	SEE PAGE
Y	1	1	**478-7555**	2	DRIVE GP-FINAL	298
Y	2	1	*193-7361*	1	AXLE GP	270
Y	3	1	*449-0302*	1	MOUNTING GP-FINAL DRIVE	315

Y - SEPARATE ILLUSTRATION

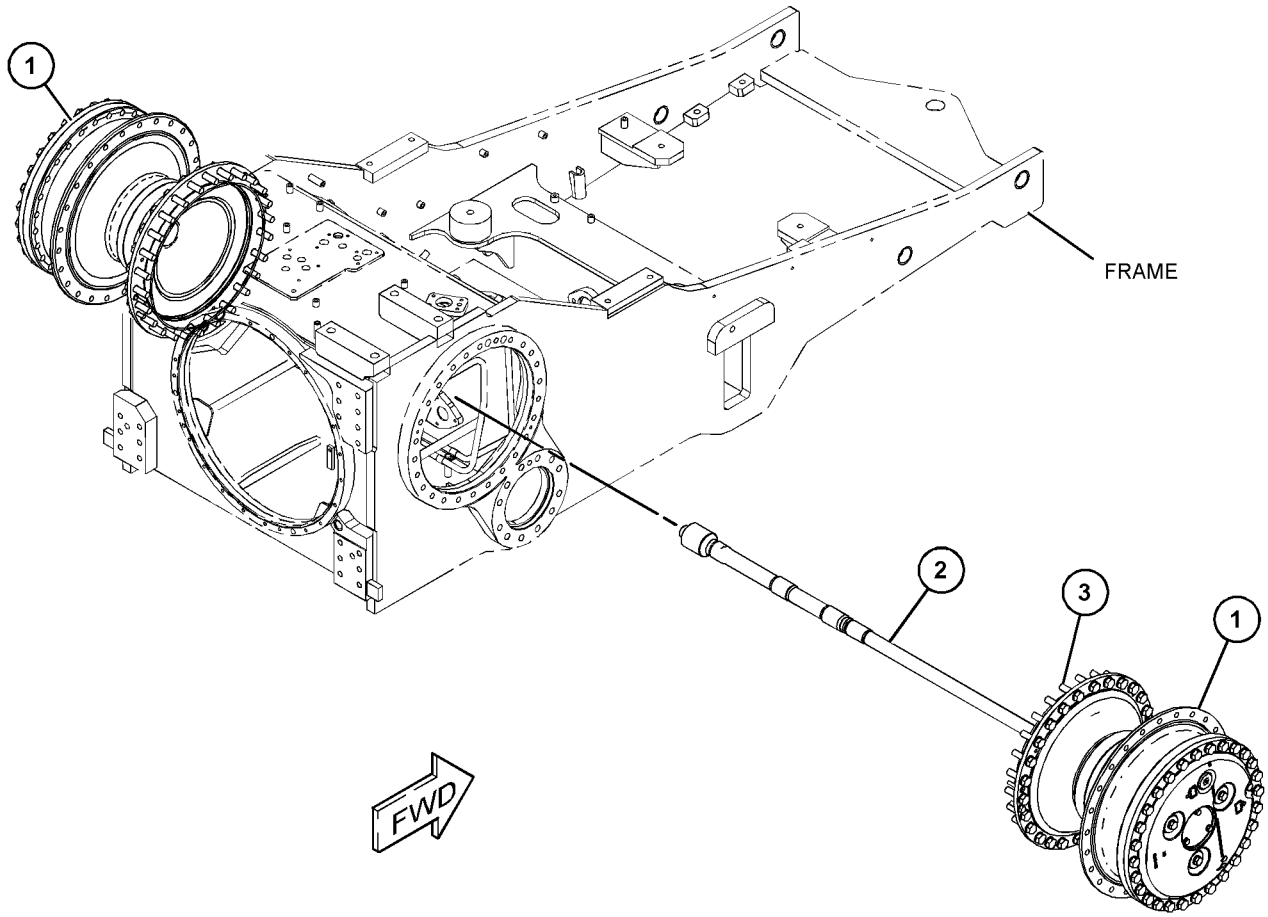

GRAPHIC #1 <END> g06027964

478-7558 DRIVE AR-FINAL—WITH GUARDS

S/N: Z2N1-UP

PART OF 510-9720 DRIVE AR-FINAL

AN ATTACHMENT

SMCS-4050 **i07026275**

NOTE	REF NO	GRAPHIC REF	PART NUMBER	QTY	PART NAME 1 2 3 4 5 6 (PRODUCT LEVEL)	SEE PAGE
Y	1	1	*193-7362*	1	AXLE GP	271
Y	2	1	*478-7556*	2	DRIVE GP-FINAL	300
Y	3	1	*449-0302*	1	MOUNTING GP-FINAL DRIVE	315

Y - SEPARATE ILLUSTRATION

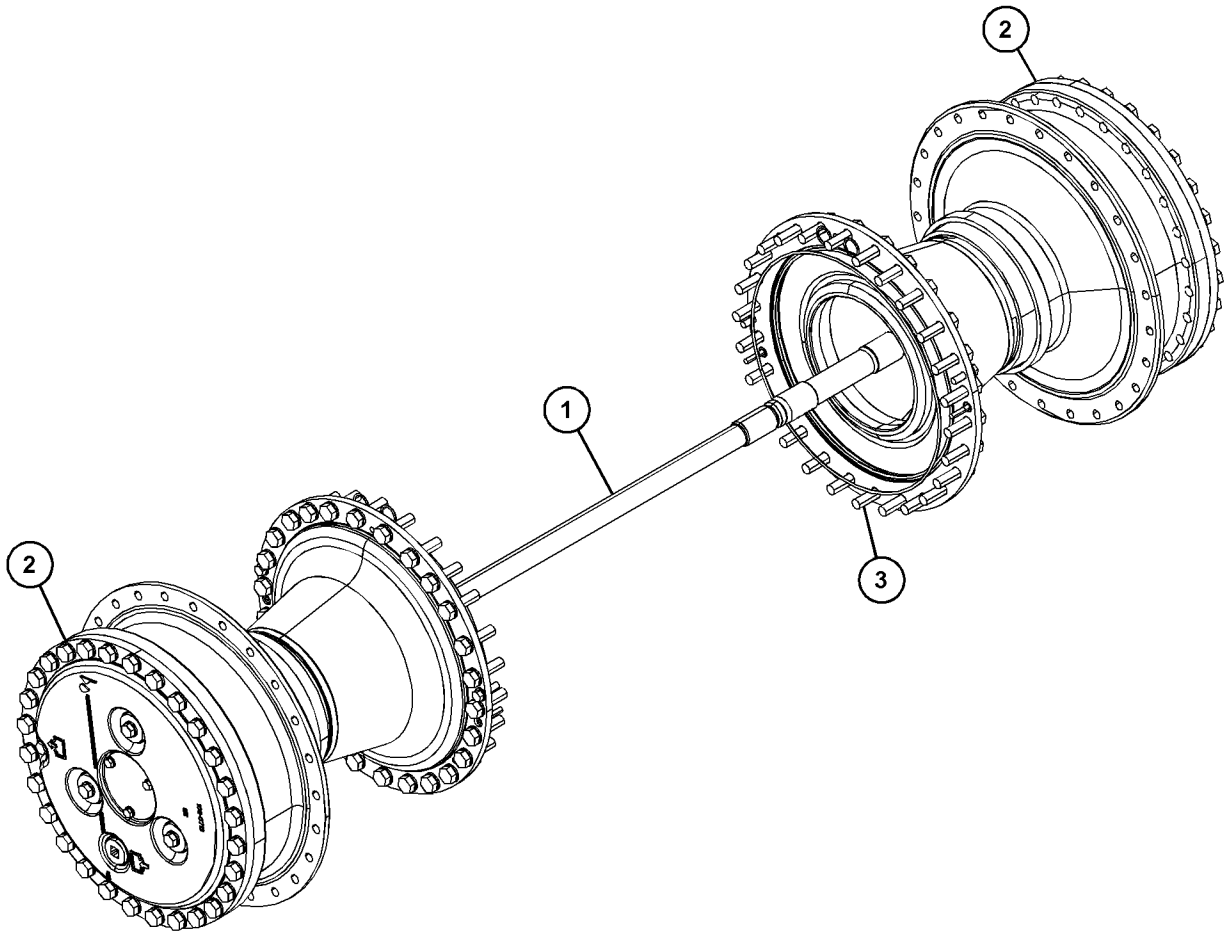

GRAPHIC #1 <END> g06200820

510-9717 DRIVE AR-FINAL

S/N: Z2K1-UP
1890-MM (74-IN)
PART OF 532-9851, 532-9856 DISTRIBUTION AR
AN ATTACHMENT

SMCS-4050 **i07813858**

NOTE	REF NO	GRAPHIC REF	PART NUMBER	QTY	PART NAME 1 2 3 4 5 6 (PRODUCT LEVEL)	SEE PAGE
Y	1	1	*6I-8078*	2	SEGMENT GP-SPROCKET	329
Y	2	1	*458-3587*	1	DRIVE AR-FINAL	282

Y - SEPARATE ILLUSTRATION

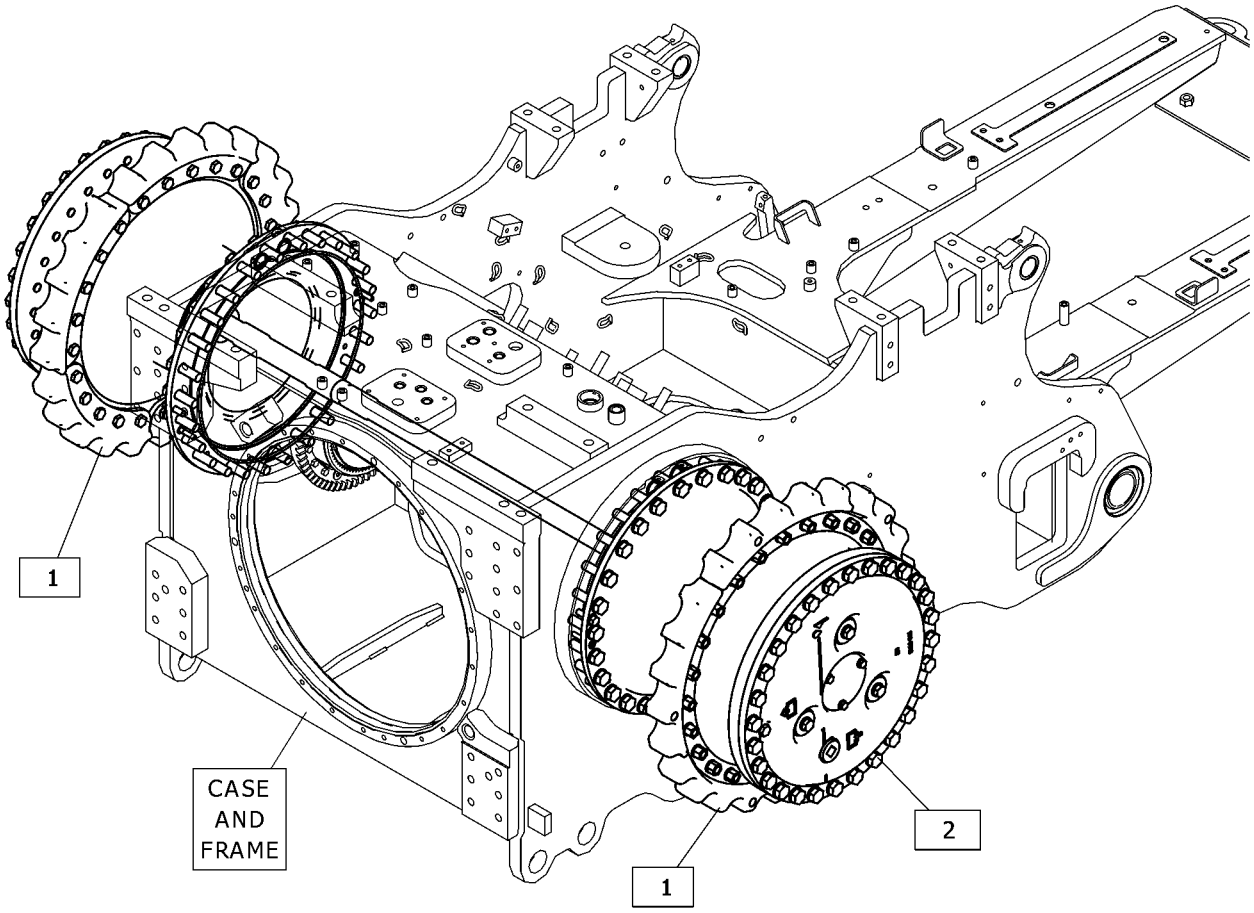

GRAPHIC #1 <END> g06444040

510-9718 DRIVE AR-FINAL

S/N: Z2N1-UP
2160-MM (85-IN). LGP
AN ATTACHMENT

SMCS-4050 **i07827787**

NOTE	REF NO	GRAPHIC REF	PART NUMBER	QTY	PART NAME 1 2 3 4 5 6 (PRODUCT LEVEL)	SEE PAGE
Y	1	1	*6I-8078*	2	SEGMENT GP-SPROCKET	329
Y	2	1	*458-3590*	1	DRIVE AR-FINAL	284

Y - SEPARATE ILLUSTRATION

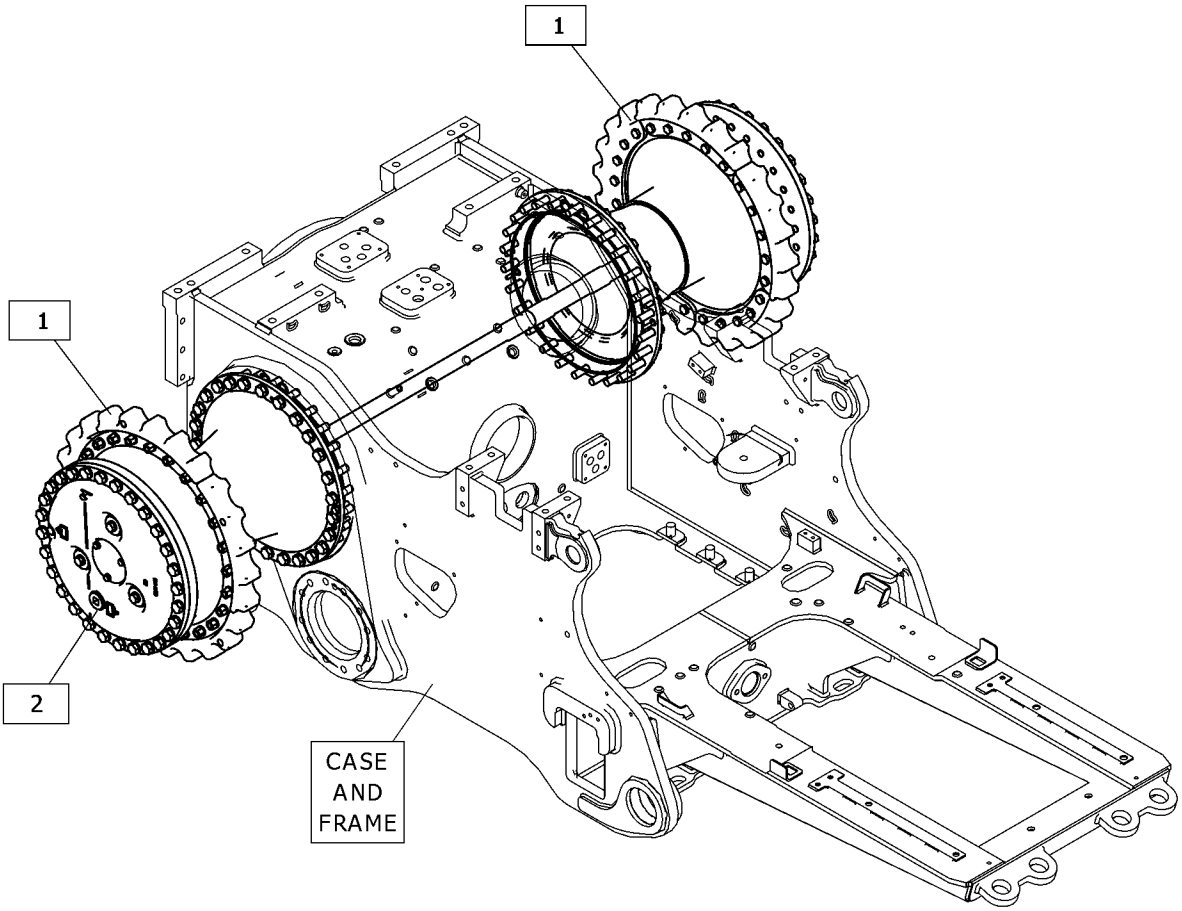

GRAPHIC #1 <END> g06452173

510-9719 DRIVE AR-FINAL

S/N: Z2K1-UP
1890-MM (74-IN). WASTE HANDLING
AN ATTACHMENT

SMCS-4050 **i07822040**

NOTE	REF NO	GRAPHIC REF	PART NUMBER	QTY	PART NAME 1 2 3 4 5 6 (PRODUCT LEVEL)	SEE PAGE
Y	1	1	*6I-8078*	2	SEGMENT GP-SPROCKET	329
Y	2	1	*478-7557*	1	DRIVE AR-FINAL	285

Y - SEPARATE ILLUSTRATION

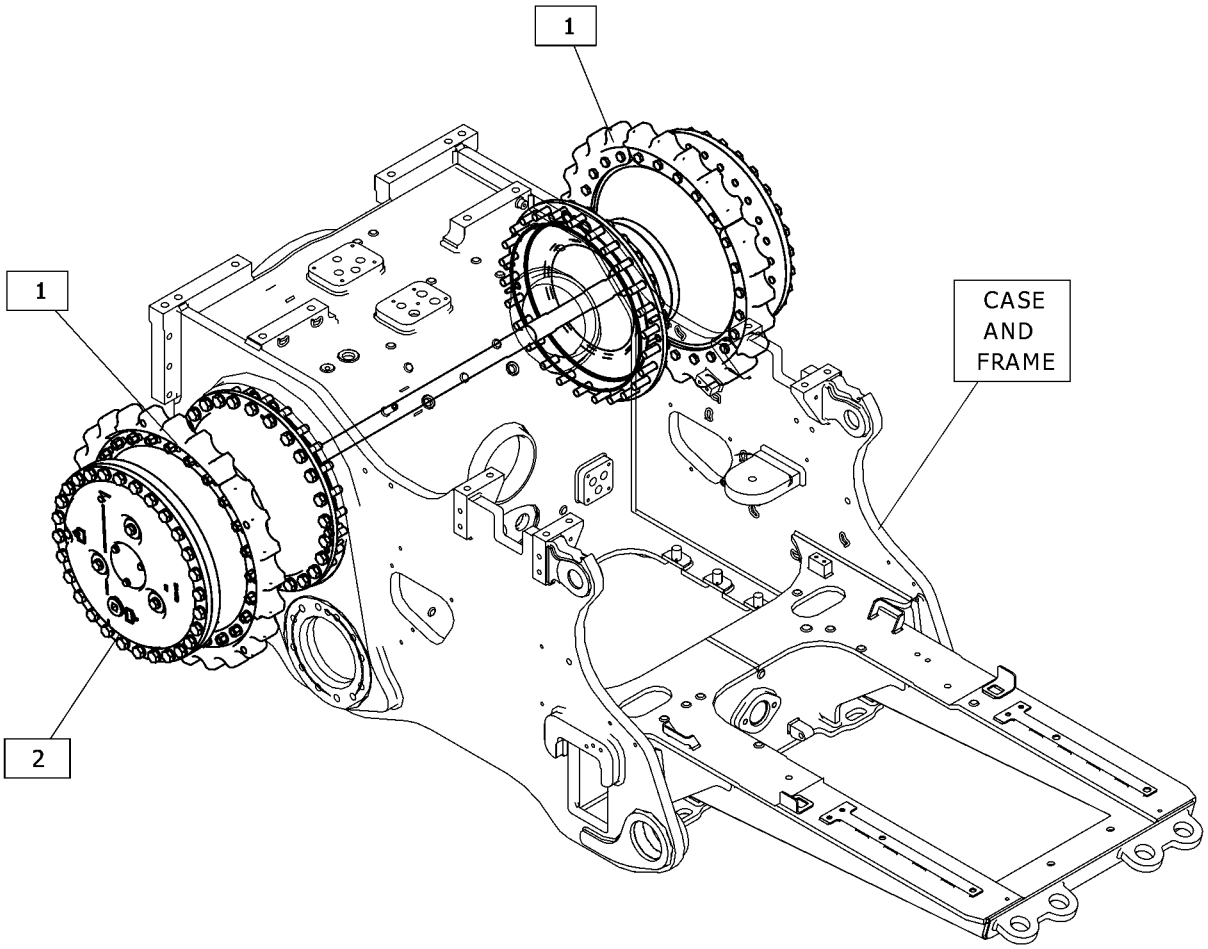

GRAPHIC #1 <END> g06450477

510-9720 DRIVE AR-FINAL

S/N: Z2N1-UP
2160-MM (85-IN). WASTE HANDLING
AN ATTACHMENT

SMCS-4050 **i07827834**

NOTE	REF NO	GRAPHIC REF	PART NUMBER	QTY	PART NAME 1 2 3 4 5 6 (PRODUCT LEVEL)	SEE PAGE
Y	1	1	*6I-8078*	2	SEGMENT GP-SPROCKET	329
Y	2	1	*478-7558*	1	DRIVE AR-FINAL	286

Y - SEPARATE ILLUSTRATION

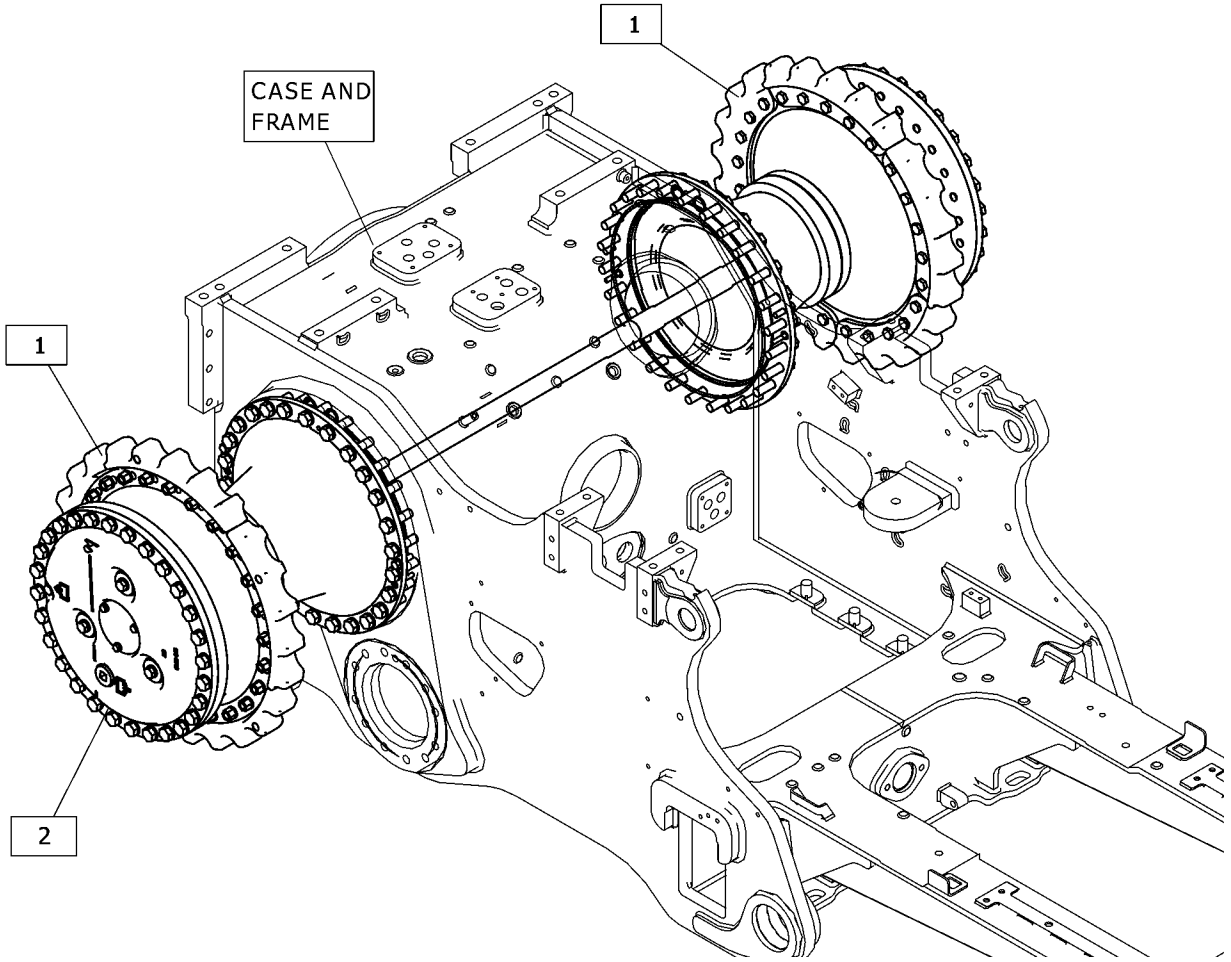

GRAPHIC #1 <END> g06453696

510-9723 DRIVE AR-FINAL

S/N: Z2K1-UP
1890-MM (74-IN). COLD WEATHER. XL
AN ATTACHMENT

SMCS-4050 **i07849065**

NOTE	PART NUMBER	QTY	PART NAME 1 2 3 4 5 6 (PRODUCT LEVEL)	SEE PAGE
Y	*458-3589*	1	DRIVE AR-FINAL	283
Y	*6I-8078*	2	SEGMENT GP-SPROCKET	329

Y - SEPARATE ILLUSTRATION

<END>

443-6917 DRIVE GP-FINAL—COLD WEATHER

S/N: Z2K1-UP

PART OF 458-3589 DRIVE AR-FINAL

AN ATTACHMENT

SMCS-4050 **i07849667**

NOTE	REF NO	GRAPHIC REF	PART NUMBER	QTY	PART NAME 1 2 3 4 5 6 (PRODUCT LEVEL)	SEE PAGE
	1	1	**6Y-6277**	1	SEAL GP-DUO-CONE	
	2	1	**8E-3075**	3	RETAINER	
	3	1	**8G-4565**	3	GEAR-PLANETARY (30-TEETH)	
	4	1	**8G-4566**	1	PLATE	
	5	1	**8G-4568**	1	GEAR-RING (74-TEETH)	
	6	1	**9G-4876**	1	RETAINER	
	7	1	**106-0713**	1	CARRIER	
	8	1	**107-1763**	1	HUB-SPROCKET	
	9	1	**178-6854**	1	HUB-RING GEAR	
	10	1	**179-6707**	3	SHAFT	
	11	1	**9X-8257**	3	WASHER (17.5X30X3.5-MM THK)	
	12	1	**191-4923**	1	SPINDLE	
	13	1	**480-6340**	1	SEAL-LIP TYPE	
	14	1	**1B-3978**	6	CUP-BEARING (TAPERED ROLLER)	
	15	1	**1B-3980**	6	CONE-BEARING (TAPERED ROLLER)	
	16	1	**1H-8128**	1	SEAL-O-RING	
	17	1	**1H-9696**	3	SEAL-O-RING	
	18	1	**2S-4078**	1	SEAL-O-RING	
	19	1	**3K-0360**	1	SEAL-O-RING	
	20	1	**8H-0901**	1	CUP-BEARING (TAPERED ROLLER)	
	21	1	**8H-0902**	1	CONE-BEARING (TAPERED ROLLER)	
	22	1	**2K-5066**	1	CONE-BEARING (TAPERED ROLLER)	
	23	1	**6V-0330**	1	CUP-BEARING (TAPERED ROLLER)	
	24	1	**6V-0439**	1	PLUG-MAGNETIC (FINAL DRIVE, OIL CHECK, FILL)	
M	25	1	**7X-2563**	28	BOLT (M20X2.5X60-MM)	
M	26	1	**8C-8729**	9	BOLT-SOCKET HEAD (M12X1.75X80-MM)	
	27	1	**8D-4771**	1	SEAL-O-RING	
	28	1	**8G-4569**	1	RING	
	29	1	**8T-4121**	3	WASHER-HARD (11X21X2.5-MM THK)	
	30	1	**8T-4123**	28	WASHER (22X35X3.5-MM THK)	
M	31	1	**8T-4136**	3	BOLT (M10X1.5X25-MM)	
M	32	1	**8T-4193**	3	BOLT (M16X2X50-MM)	
	33	1	**8T-4223**	9	WASHER-HARD (13.5X25.5X3-MM THK)	
	34	1	**9S-4185**	1	PLUG (3/4-16-THD) (FINAL DRIVE OIL DRAIN)	

M - METRIC PART

443-6917 **DRIVE GP-FINAL (**contd.**)** **i07849667**

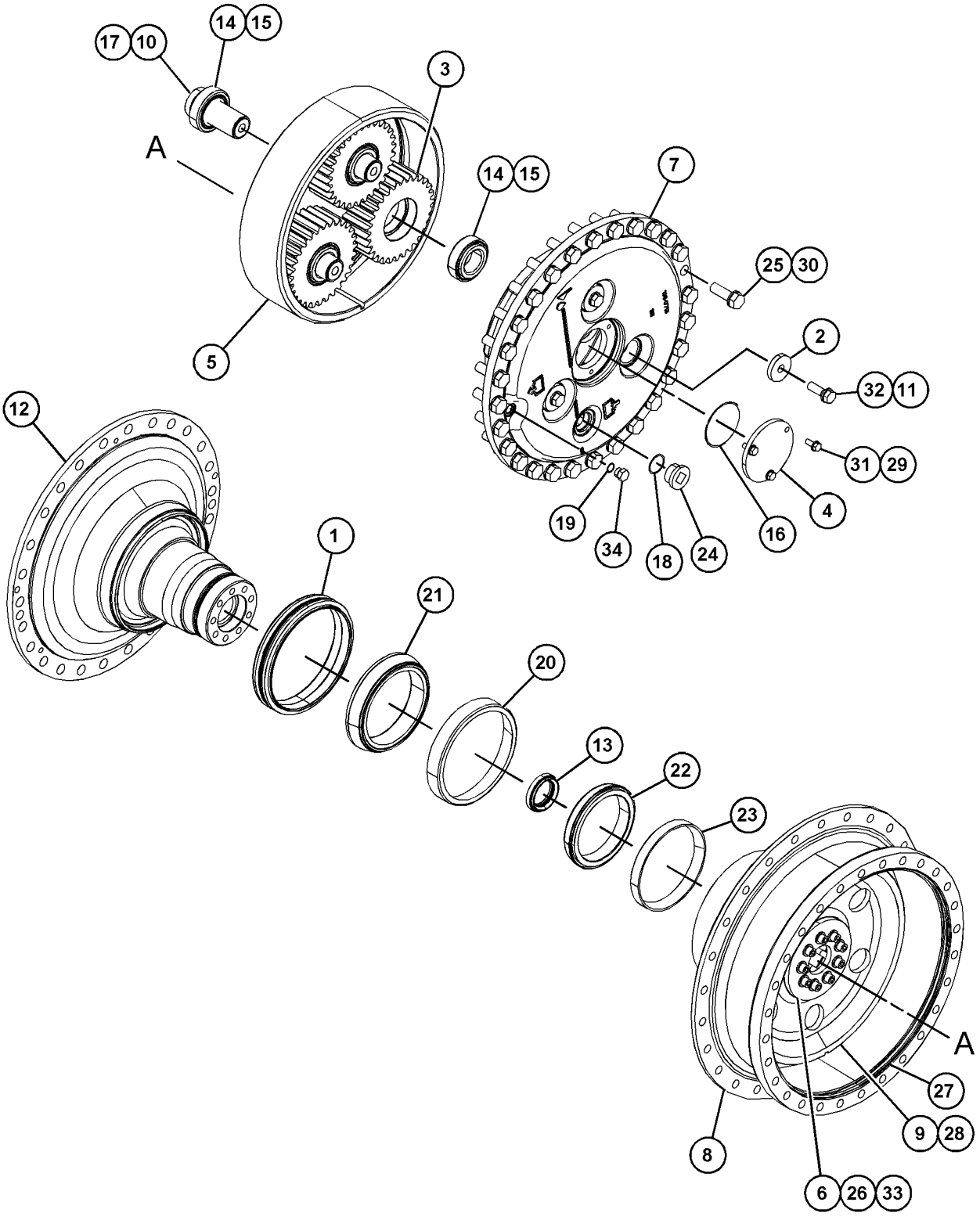

GRAPHIC #1 <END> g06025836

448-1167 DRIVE GP-FINAL

S/N: Z2K1-UP

PART OF 458-3587 DRIVE AR-FINAL

AN ATTACHMENT

SMCS-4050 **i07432499**

NOTE	REF NO	GRAPHIC REF	PART NUMBER	QTY	PART NAME 1 2 3 4 5 6 (PRODUCT LEVEL)	SEE PAGE
	1	1	**6Y-0859**	1	SEAL GP-DUO-CONE	
		1	**1M-9011**	2	RING-TORIC	
	2	1	**8E-3075**	3	RETAINER	
	3	1	**8G-4565**	3	GEAR-PLANETARY (30-TEETH)	
	4	1	**8G-4566**	1	PLATE	
	5	1	**8G-4568**	1	GEAR-RING (74-TEETH)	
	6	1	**9G-4876**	1	RETAINER	
	7	1	**106-0713**	1	CARRIER	
	8	1	**107-1763**	1	HUB-SPROCKET	
	9	1	**178-6854**	1	HUB-RING GEAR	
	10	1	**179-6707**	3	SHAFT	
	12	1	**191-4923**	1	SPINDLE	
	13	1	**460-4832**	1	SEAL-LIP TYPE	
	14	1	**1B-3978**	6	CUP-BEARING (TAPERED ROLLER)	
	15	1	**1B-3980**	6	CONE-BEARING (TAPERED ROLLER)	
	16	1	**1H-8128**	1	SEAL-O-RING	
	17	1	**1H-9696**	3	SEAL-O-RING	
	18	1	**2S-4078**	1	SEAL-O-RING	
	19	1	**3K-0360**	1	SEAL-O-RING	
	20	1	**8H-0901**	1	CUP-BEARING (TAPERED ROLLER)	
	21	1	**8H-0902**	1	CONE-BEARING (TAPERED ROLLER)	
	22	1	**2K-5066**	1	CONE-BEARING (TAPERED ROLLER)	
	23	1	**6V-0330**	1	CUP-BEARING (TAPERED ROLLER)	
	24	1	**6V-0439**	1	PLUG-MAGNETIC (FINAL DRIVE)	
M	25	1	**7X-2563**	28	BOLT (M20X2.5X60-MM)	
M	26	1	**8C-8729**	9	BOLT-SOCKET HEAD (M12X1.75X80-MM)	
	27	1	**8D-4771**	1	SEAL-O-RING	
	28	1	**8G-4569**	1	RING	
	29	1	**8T-4121**	3	WASHER-HARD (11X21X2.5-MM THK)	
	30	1	**8T-4123**	28	WASHER (22X35X3.5-MM THK)	
M	31	1	**8T-4136**	3	BOLT (M10X1.5X25-MM)	
M	32	1	**8T-4193**	3	BOLT (M16X2X50-MM)	
	33	1	**8T-4223**	9	WASHER-HARD (13.5X25.5X3-MM THK)	
	34	1	**9S-4185**	1	PLUG (3/4-16-THD)	
	35	1	**9X-8257**	3	WASHER (17.5X30X3.5-MM THK)	

M - METRIC PART

448-1167 **DRIVE GP-FINAL (**contd.**)** **i07432499**

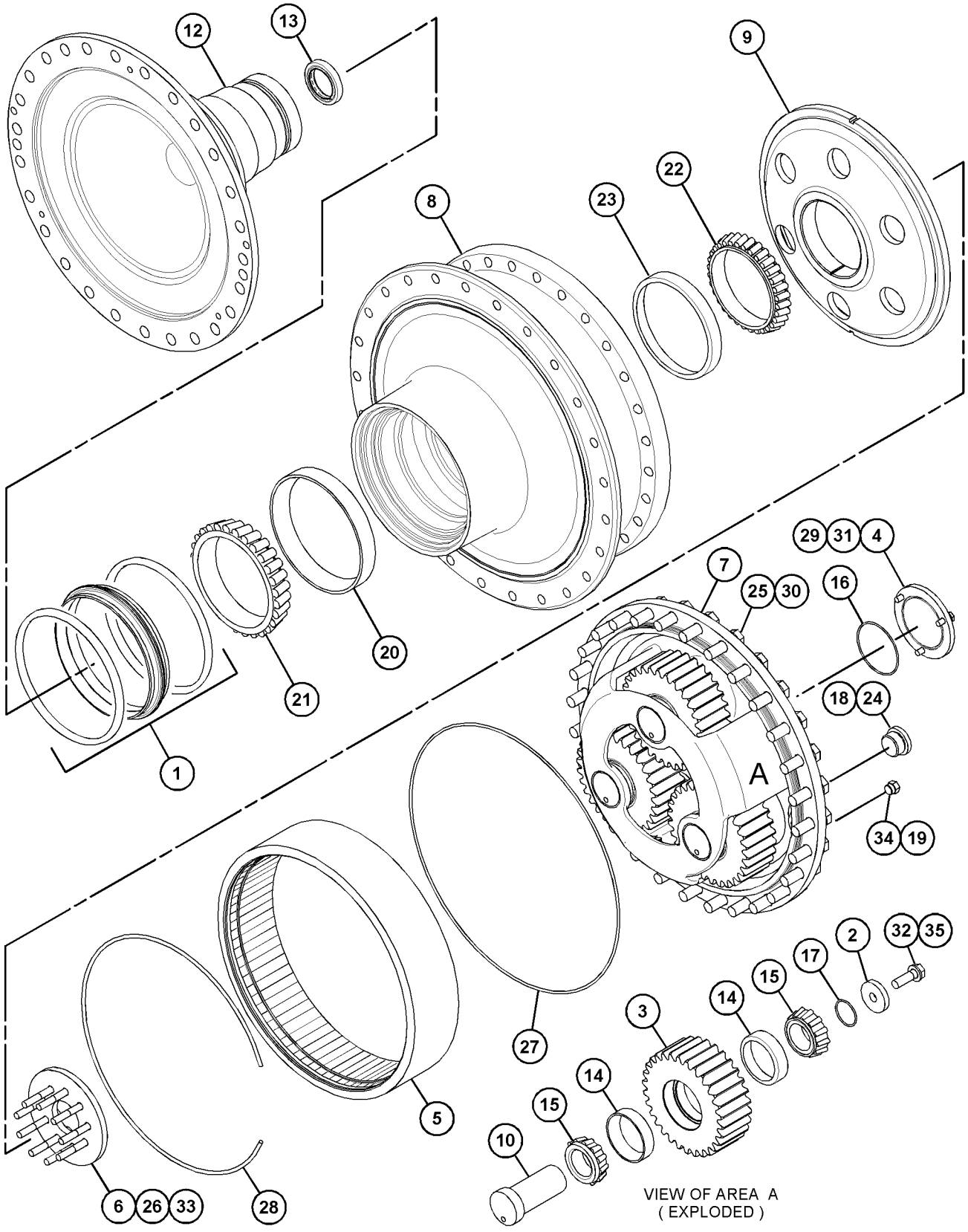

GRAPHIC #1 <END> g06059211

448-1230 DRIVE GP-FINAL

S/N: Z2N1-UP
PART OF 458-3590 DRIVE AR-FINAL
AN ATTACHMENT

SMCS-4050 **i07424356**

NOTE	REF NO	GRAPHIC REF	PART NUMBER	QTY	PART NAME 1 2 3 4 5 6 (PRODUCT LEVEL)	SEE PAGE
	1	1	**6V-0439**	1	PLUG-MAGNETIC (FINAL DRIVE)	
	2	1	**6Y-0859**	1	SEAL GP-DUO-CONE	
	3	1	**8E-3075**	3	RETAINER	
	4	1	**8G-4565**	3	GEAR-PLANETARY (30-TEETH)	
	5	1	**8G-4566**	1	PLATE	
	6	1	**8G-4568**	1	GEAR-RING (74-TEETH)	
	7	1	**9G-4876**	1	RETAINER	
	8	1	**106-0713**	1	CARRIER	
	9	1	**107-1763**	1	HUB-SPROCKET	
	10	1	**178-6854**	1	HUB-RING GEAR	
	11	1	**179-6707**	3	SHAFT	
	13	1	**191-4925**	1	SPINDLE	
	14	1	**460-4832**	1	SEAL-LIP TYPE	
	15	1	**1B-3978**	6	CUP-BEARING (TAPERED ROLLER)	
	16	1	**1B-3980**	6	CONE-BEARING (TAPERED ROLLER)	
	17	1	**1H-8128**	1	SEAL-O-RING	
	18	1	**1H-9696**	3	SEAL-O-RING	
	19	1	**2S-4078**	1	SEAL-O-RING	
	20	1	**3K-0360**	1	SEAL-O-RING	
	21	1	**8H-0901**	1	CUP-BEARING (TAPERED ROLLER)	
	22	1	**8H-0902**	1	CONE-BEARING (TAPERED ROLLER)	
	23	1	**2K-5066**	1	CONE-BEARING (TAPERED ROLLER)	
	24	1	**6V-0330**	1	CUP-BEARING (TAPERED ROLLER)	
M	25	1	**7X-2563**	28	BOLT (M20X2.5X60-MM)	
M	26	1	**8C-8729**	9	BOLT-SOCKET HEAD (M12X1.75X80-MM)	
	27	1	**8D-4771**	1	SEAL-O-RING	
	28	1	**8G-4569**	1	RING	
	29	1	**8T-4121**	3	WASHER-HARD (11X21X2.5-MM THK)	
	30	1	**8T-4123**	28	WASHER (22X35X3.5-MM THK)	
M	31	1	**8T-4136**	3	BOLT (M10X1.5X25-MM)	
M	32	1	**8T-4193**	3	BOLT (M16X2X50-MM)	
	33	1	**8T-4223**	9	WASHER-HARD (13.5X25.5X3-MM THK)	
	34	1	**9S-4185**	1	PLUG (3/4-16-THD)	
	35	1	**9X-8257**	3	WASHER (17.5X30X3.5-MM THK)	

M - METRIC PART

448-1230 **DRIVE GP-FINAL (**contd.**)** **i07424356**

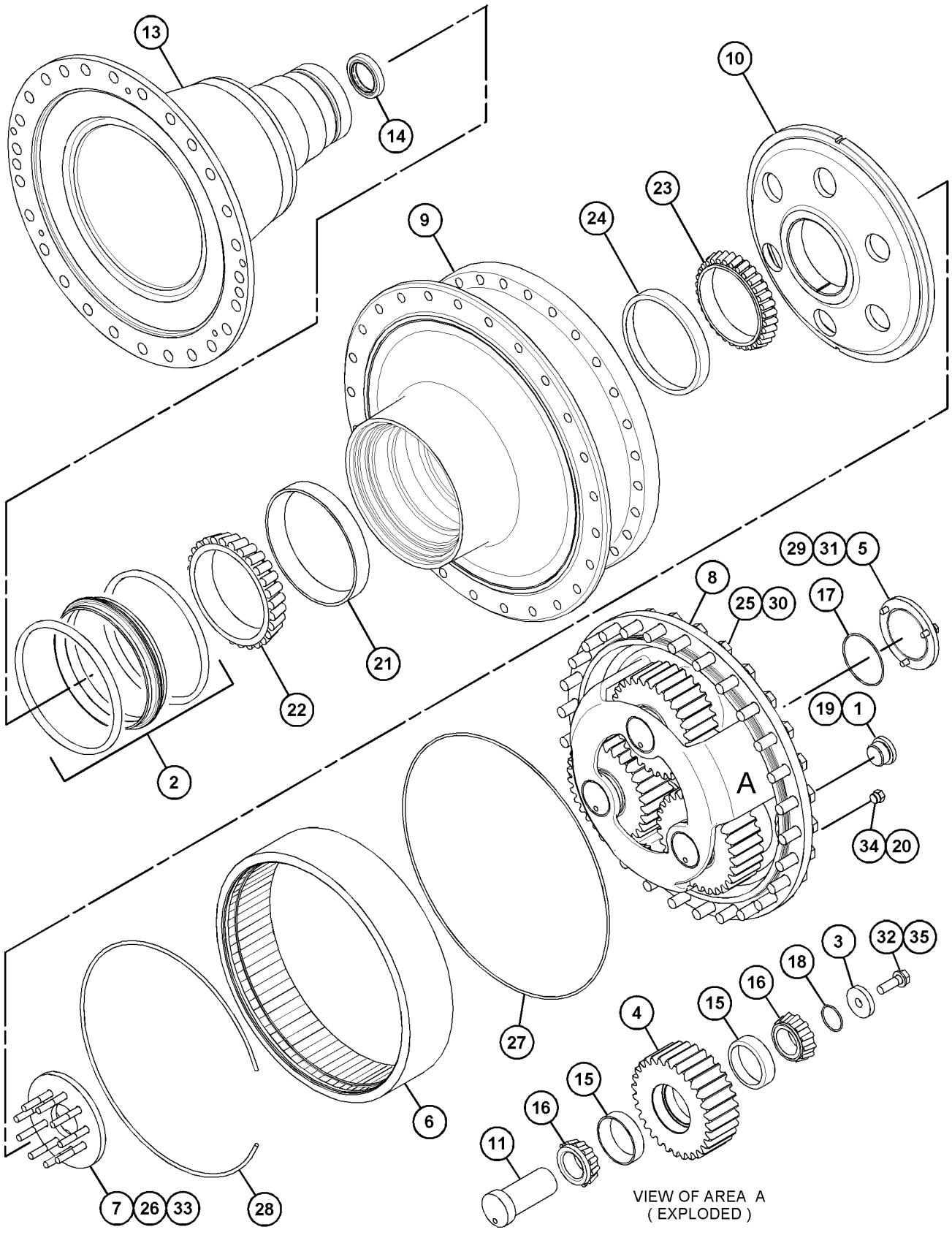

GRAPHIC #1 <END> g06059839

478-7555 DRIVE GP-FINAL

S/N: Z2K1-UP
WITH GUARD
PART OF 478-7557 DRIVE AR-FINAL
AN ATTACHMENT

SMCS-4050 **i07756888**

NOTE	REF NO	GRAPHIC REF	PART NUMBER	QTY	PART NAME 1 2 3 4 5 6 (PRODUCT LEVEL)	SEE PAGE
	1	1	**1B-3978**	6	CUP-BEARING (TAPERED ROLLER)	
	2	1	**1B-3980**	6	CONE-BEARING (TAPERED ROLLER)	
	3	1	**460-4832**	1	SEAL-LIP TYPE	
	4	1	**8H-0901**	1	CUP-BEARING (TAPERED ROLLER)	
	5	1	**8H-0902**	1	CONE-BEARING (TAPERED ROLLER)	
	6	1	**2K-5066**	1	CONE-BEARING (TAPERED ROLLER)	
	7	1	**6V-0330**	1	CUP-BEARING (TAPERED ROLLER)	
	8	1	**5Q-7578**	1	HUB AS	
		1	**1Q-4230**	1	GUARD	
	9	1	**6V-0439**	1	PLUG-MAGNETIC (FINAL DRIVE, OIL CHECK, FILL)	
	10	1	**8E-3075**	3	RETAINER	
	11	1	**8G-4565**	3	GEAR-PLANETARY (30-TEETH)	
	12	1	**8G-4566**	1	PLATE	
	13	1	**8G-4568**	1	GEAR-RING (74-TEETH)	
	14	1	**9G-4876**	1	RETAINER	
	15	1	**106-0713**	1	CARRIER	
	16	1	**178-6854**	1	HUB-RING GEAR	
	17	1	**179-6707**	3	SHAFT	
	18	1	**226-1416**	1	SPINDLE AS	
	19	1	**1H-8128**	1	SEAL-O-RING	
	20	1	**1H-9696**	3	SEAL-O-RING	
	21	1	**2S-4078**	1	SEAL-O-RING	
	22	1	**3K-0360**	1	SEAL-O-RING	
	23	1	**6Y-0859**	1	SEAL GP-DUO-CONE	
M	24	1	**7X-2563**	28	BOLT (M20X2.5X60-MM)	
M	25	1	**8C-8729**	9	BOLT-SOCKET HEAD (M12X1.75X80-MM)	
	26	1	**8D-4771**	1	SEAL-O-RING	
	27	1	**8G-4569**	1	RING	
	28	1	**8T-4121**	3	WASHER-HARD (11X21X2.5-MM THK)	
	29	1	**8T-4123**	28	WASHER (22X35X3.5-MM THK)	
M	30	1	**8T-4136**	3	BOLT (M10X1.5X25-MM)	
M	31	1	**8T-4193**	3	BOLT (M16X2X50-MM)	
	32	1	**8T-4223**	9	WASHER-HARD (13.5X25.5X3-MM THK)	
	33	1	**9S-4185**	1	PLUG (3/4-16-THD) (FINAL DRIVE OIL DRAIN)	
	34	1	**9X-8257**	3	WASHER (17.5X30X3.5-MM THK)	

M - METRIC PART

478-7555 **DRIVE GP-FINAL (**contd.**)** **i07756888**

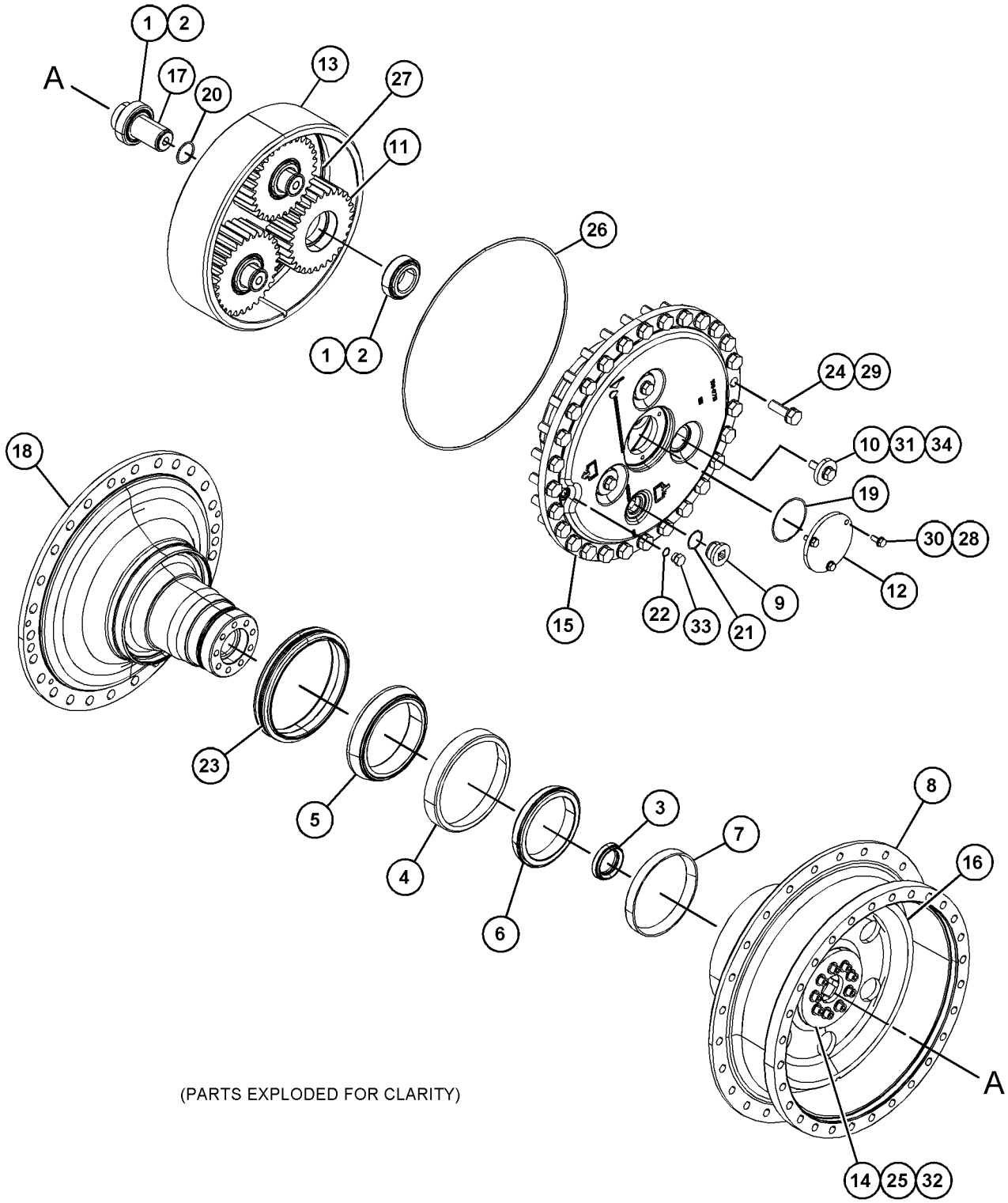

(PARTS EXPLODED FOR CLARITY)

GRAPHIC #1 <END> g06029210

478-7556 DRIVE GP-FINAL—WITH GUARDS

S/N: Z2N1-UP

PART OF 478-7558 DRIVE AR-FINAL

AN ATTACHMENT

SMCS-4050 **i07785961**

NOTE	REF NO	GRAPHIC REF	PART NUMBER	QTY	PART NAME 1 2 3 4 5 6 (PRODUCT LEVEL)	SEE PAGE
	1	1	**1B-3978**	6	CUP-BEARING (TAPERED ROLLER)	
	2	1	**1B-3980**	6	CONE-BEARING (TAPERED ROLLER)	
	3	1	**460-4832**	1	SEAL-LIP TYPE	
	4	1	**6V-0327**	1	CUP-BEARING (TAPERED ROLLER)	
	5	1	**8H-0902**	1	CONE-BEARING (TAPERED ROLLER)	
	6	1	**2K-5066**	1	CONE-BEARING (TAPERED ROLLER)	
	7	1	**6V-0330**	1	CUP-BEARING (TAPERED ROLLER)	
	8	1	**6V-0439**	1	PLUG-MAGNETIC (FINAL DRIVE, OIL CHECK, FILL)	
	9	1	**5Q-7578**	1	HUB AS	
		1	**1Q-4230**	1	GUARD	
		1	**107-1763**	1	HUB-SPROCKET	
	10	1	**8E-3075**	3	RETAINER	
	11	1	**8G-4565**	3	GEAR-PLANETARY (30-TEETH)	
	12	1	**8G-4566**	1	PLATE	
	13	1	**8G-4568**	1	GEAR-RING (74-TEETH)	
	14	1	**9G-4876**	1	RETAINER	
	15	1	**106-0713**	1	CARRIER	
	16	1	**178-6854**	1	HUB-RING GEAR	
	17	1	**179-6707**	3	SHAFT	
	18	1	**228-8811**	1	SPINDLE AS	
	19	1	**1H-8128**	1	SEAL-O-RING	
	20	1	**1H-9696**	3	SEAL-O-RING	
	21	1	**2S-4078**	1	SEAL-O-RING	
	22	1	**3K-0360**	1	SEAL-O-RING	
	23	1	**6Y-0859**	1	SEAL GP-DUO-CONE	
M	24	1	**7X-2563**	28	BOLT (M20X2.5X60-MM)	
M	25	1	**8C-8729**	9	BOLT-SOCKET HEAD (M12X1.75X80-MM)	
	26	1	**8D-4771**	1	SEAL-O-RING	
	27	1	**8G-4569**	1	RING	
	28	1	**8T-4121**	3	WASHER-HARD (11X21X2.5-MM THK)	
	29	1	**8T-4123**	28	WASHER (22X35X3.5-MM THK)	
M	30	1	**8T-4136**	3	BOLT (M10X1.5X25-MM)	
M	31	1	**8T-4193**	3	BOLT (M16X2X50-MM)	
	32	1	**8T-4223**	9	WASHER-HARD (13.5X25.5X3-MM THK)	
	33	1	**9S-4185**	1	PLUG (3/4-16-THD) (FINAL DRIVE OIL DRAIN)	
	34	1	**9X-8257**	3	WASHER (17.5X30X3.5-MM THK)	

M - METRIC PART

478-7556 **DRIVE GP-FINAL (**contd.**)** **i07785961**

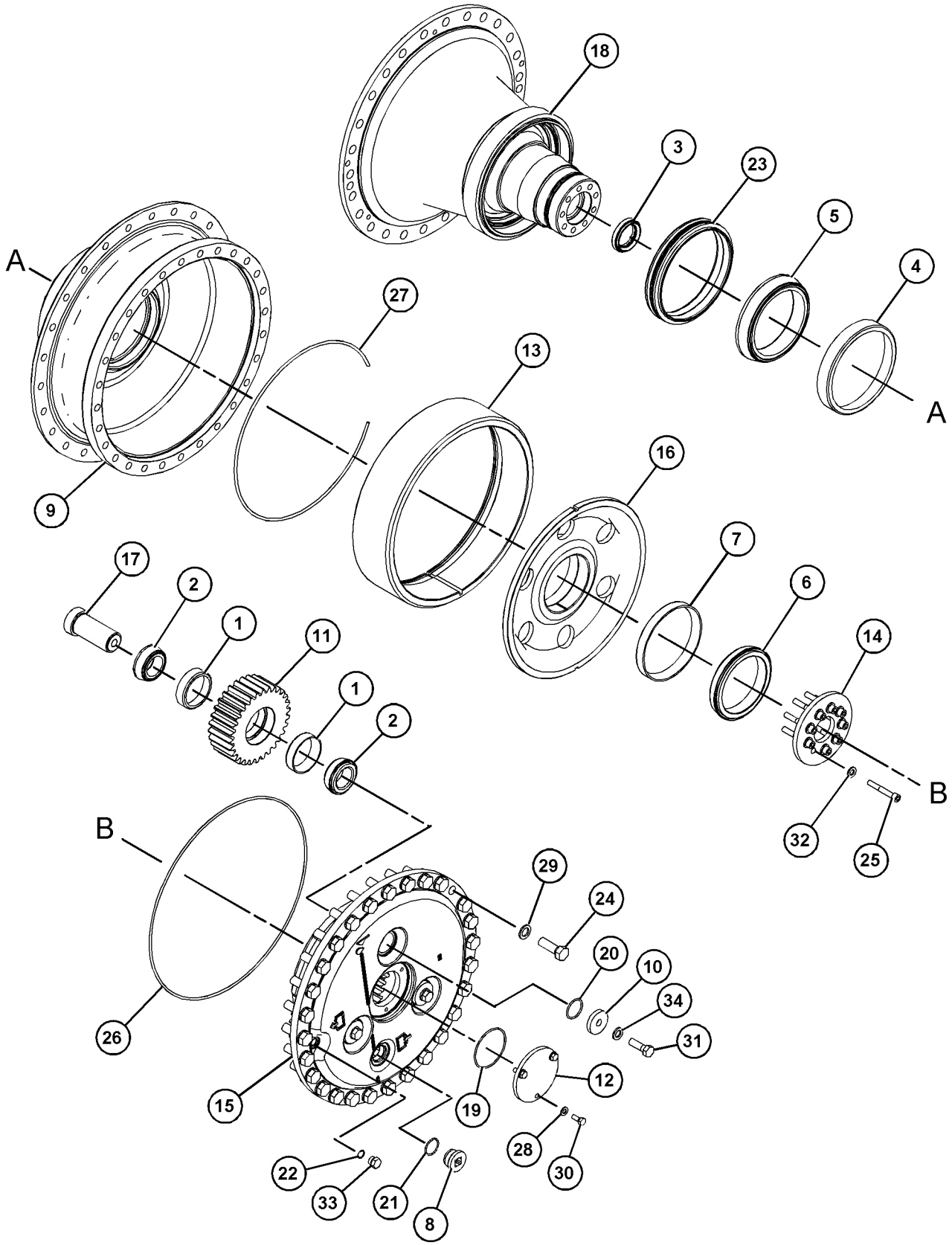

GRAPHIC #1 <END> g06060708

332-8833 FILTER GP-OIL

S/N: Z2K1-UP; Z2N1-UP
PART OF 509-3799 LINES GP-POWER TRAIN OIL
AN ATTACHMENT

SMCS-3004, 3067 **i05822872**

NOTE	REF NO	GRAPHIC REF	PART NUMBER	QTY	PART NAME 1 2 3 4 5 6 (PRODUCT LEVEL)	SEE PAGE
	1	1	**332-8832**	1	BASE AS-OIL FILTER	
		1	**5P-7701**	1	SEAL-O-RING	
		1	**9S-4181**	1	PLUG (1-5/16-12-THD)	
		1	**114-0561**	1	PLUG	
		1	**206-9292**	1	SEAL-O-RING	
Y	2	1	**440-0257**	1	SWITCH GP-PRESSURE (POWER TRAIN OIL)	217
Y	3	1	**353-4688**	1	FILTER GP-OIL (POWER TRAIN)	303

Y - SEPARATE ILLUSTRATION

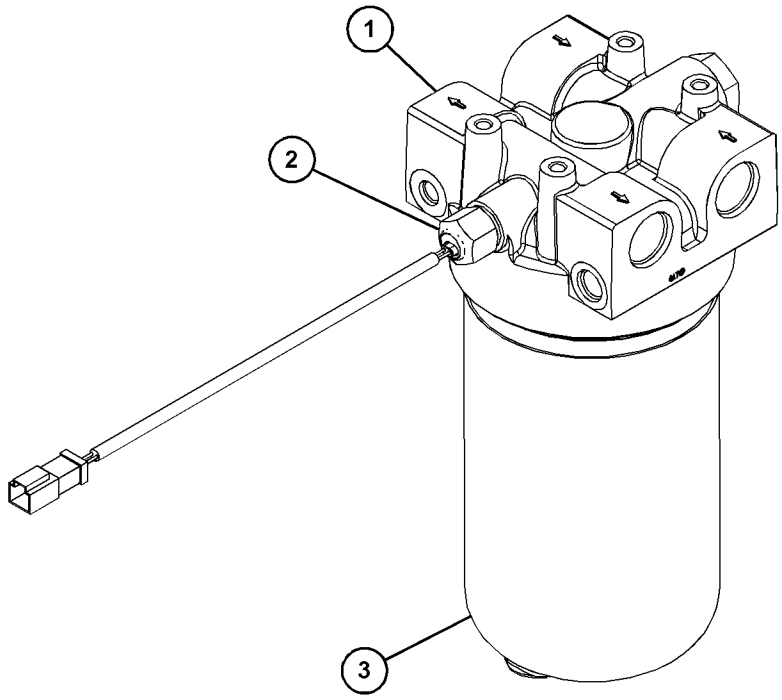

GRAPHIC #1 <END> g03687729

353-4688 FILTER GP-OIL

S/N: Z2K1-UP; Z2N1-UP
PART OF 332-8833 FILTER GP-OIL
AN ATTACHMENT

SMCS-3004, 3067

i05412736

NOTE	REF NO	GRAPHIC REF	PART NUMBER	QTY	PART NAME 1 2 3 4 5 6 (PRODUCT LEVEL)	SEE PAGE
	1	1	**9S-8005**	1	PLUG (3/4-16-THD)	
	2	1	**337-5270**	1	FILTER ELEMENT AS-OIL (TRANSMISSION) (POWER TRAIN)	
	2A	1	**095-1678**	1	SEAL-O-RING	
	3	1	**347-7407**	1	TUBE-CENTER	
	4	1	**8L-2786**	1	SEAL-O-RING	
					PARTS SHOWN IN GRAPHIC(S) WITHOUT A REFERENCE NUMBER ARE NOT SERVICED SEPARATELY	

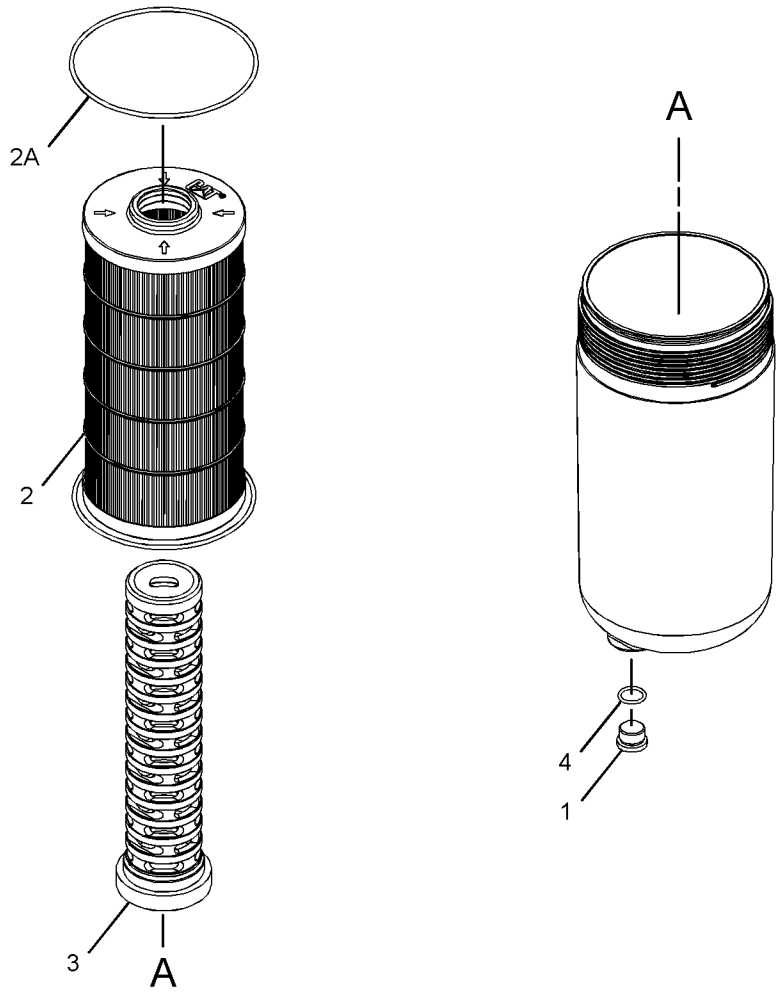

GRAPHIC #1

<END>

g02308153

419-6899 GEAR GP-BEVEL & TRANSFER

S/N: D5H1-UP; D6M1-UP; D7M1-UP; D9M1-UP
PART OF 549-8359 TRANSMISSION AR
AN ATTACHMENT

SMCS-3011 **i07290534**

NOTE	REF NO	GRAPHIC REF	PART NUMBER	QTY	PART NAME 1 2 3 4 5 6 (PRODUCT LEVEL)	SEE PAGE
	1	2	**2S-8983**	2	RING-SEAL	
B	2	2	**3T-9819**	1	SHIM PACK (INCLUDES 19-SHIMS)	
	3	1	**6T-7995**	1	TUBE AS	
	4	1	**6T-7996**	1	TUBE AS	
	5	1	**8D-0071**	1	TEE-FLARED	
	6	2	**108-8250**	1	CARRIER-SEAL	
	7	1	**198-9162**	1	TUBE AS	
	8	1	**198-9163**	1	TUBE AS	
B	9	2	**200-8644**	2	SHIM PACK (INCLUDES 24-SHIMS)	
	10	2	**201-1281**	1	COVER	
B	11	2	**201-1282**	1	SHIM PACK (INCLUDES 25-SHIMS)	
	12	2	**203-4786**	1	CARRIER	
	13	1	**204-5341**	1	TEE	
	14	2	**204-9092**	1	SHAFT	
	15	2	*204-9096*	1	CAGE AS	
		2	**124-6657**	1	ORIFICE	
		2	**204-8981**	1	CAGE-BEARING	
	16	1	**206-2080**	1	TUBE AS	
	17	1	**206-2963**	1	TUBE AS	
	18	2	**265-2109**	1	SET-BEVEL GEAR (31, 14-TEETH)	
	19	2	**317-8261**	1	CAGE-BEARING	
Y	20	1	**318-1179**	2	SENSOR GP-SPEED (MAGNETIC, HIGH OUTPUT)	208
	21	2	**419-6901**	1	GEAR (38-TEETH)	
	22	2	**419-6903**	1	GEAR (46-TEETH)	
Y	23	1	**434-4496**	1	CASE GP-TRANSMISSION	278
	24	1	**032-1267**	1	CONNECTOR (STRAIGHT)	
	25	1	**032-1268**	1	CONNECTOR (90-DEG)	
	26	1	**052-0572**	1	TEE-SWIVEL	
	27	1	**0S-0509**	1	BOLT (3/8-16X0.75-IN)	
	28	2	**0S-1595**	19	BOLT (1/2-13X1.25-IN)	
	29	2	**0S-1599**	1	BOLT (1/2-20X2.75-IN)	
	30	1	**0S-1614**	2	BOLT (1/4-20X0.5-IN)	
	31	1	**1A-5350**	2	CLIP	
	32	2	**1L-6957**	1	LOCKNUT-BEARING	
	33	1	**1T-0720**	3	BOLT-12 POINT HEAD (3/8-16X1.25-IN)	
	34	2	**205-7396**	1	CONE-BEARING (TAPERED ROLLER)	
	35	2	**205-7397**	1	CONE-BEARING (TAPERED ROLLER)	
	36	2	**205-7398**	1	CUP-BEARING (TAPERED ROLLER)	
	37	1	**2B-2404**	1	CLIP	
	38	2	**2D-8009**	1	SEAL-O-RING	
	39	2	**2J-6362**	1	BEARING	
	40	1	**2N-1287**	1	ELBOW-FLARED	
	41	2	**318-0106**	1	SEAL-LIP TYPE	
	42	2	**3B-1915**	6	BOLT (3/8-16X1.375-IN)	
	43	2	**3L-9410**	1	CONE-BEARING	
	44	2	**3T-9674**	1	RETAINER	

419-6899 **GEAR GP-BEVEL & TRANSFER (**contd.**)** **i07290534**

NOTE	REF NO	GRAPHIC REF	PART NUMBER	QTY	PART NAME 1 2 3 4 5 6 (PRODUCT LEVEL)	SEE PAGE
	45	2	**5B-0841**	20	BOLT (5/8-18X1.75-IN)	
	46	1	**5M-2894**	1	WASHER-HARD (10.2X18.5X2.5-MM THK)	
	47	1	**5P-0537**	2	WASHER-HARD (7.2X14.5X2-MM THK)	
	48	2	**5P-4920**	1	RACE & ROLLER AS	
	49	2	**5P-4921**	1	RACE-BEARING OUTER	
	50	2	**6K-8328**	3	CUP-BEARING	
	51	2	**6K-8329**	3	CONE-BEARING	
	52	2	**6V-1864**	1	CUP-BEARING	
	53	2	**6V-2404**	1	LOCKWASHER-BEARING	
	54	2	**7T-8859**	1	CUP-BEARING	
	55	1	**8L-6557**	1	CONNECTOR	
M	56	2	**8T-4136**	4	BOLT (M10X1.5X25-MM)	
	57	2	**9P-7072**	1	WASHER (90.6X115X2.5-MM THK)	
					PARTS SHOWN IN GRAPHIC(S) WITHOUT A REFERENCE NUMBER ARE NOT SERVICED SEPARATELY	

B - USE AS REQUIRED
M - METRIC PART
Y - SEPARATE ILLUSTRATION

419-6899 **GEAR GP-BEVEL & TRANSFER (**contd.**)** **i07290534**

REFER TO ALL ILLUSTRATIONS OF
THIS GROUP FOR AUXILIARY VIEWS

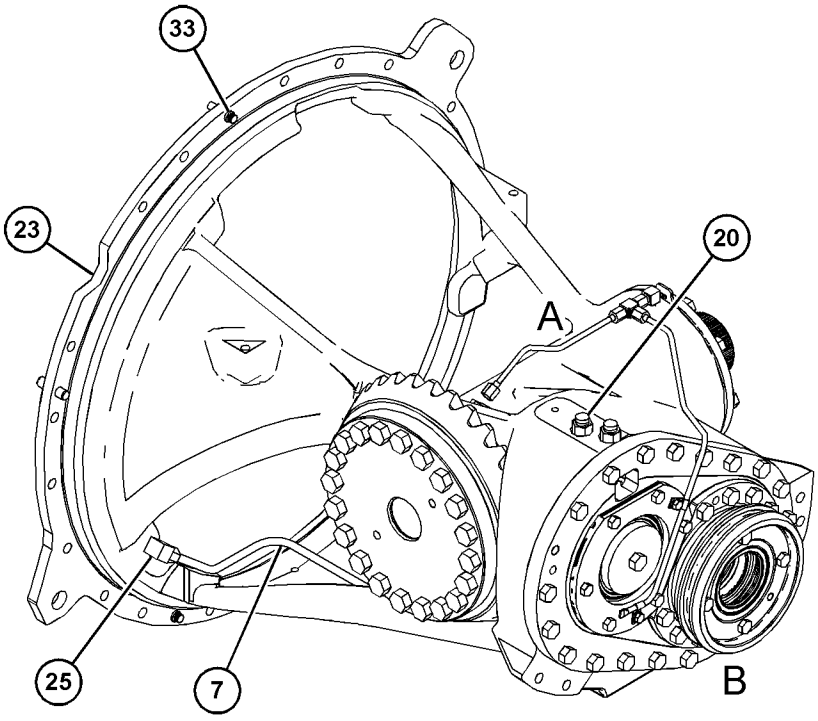

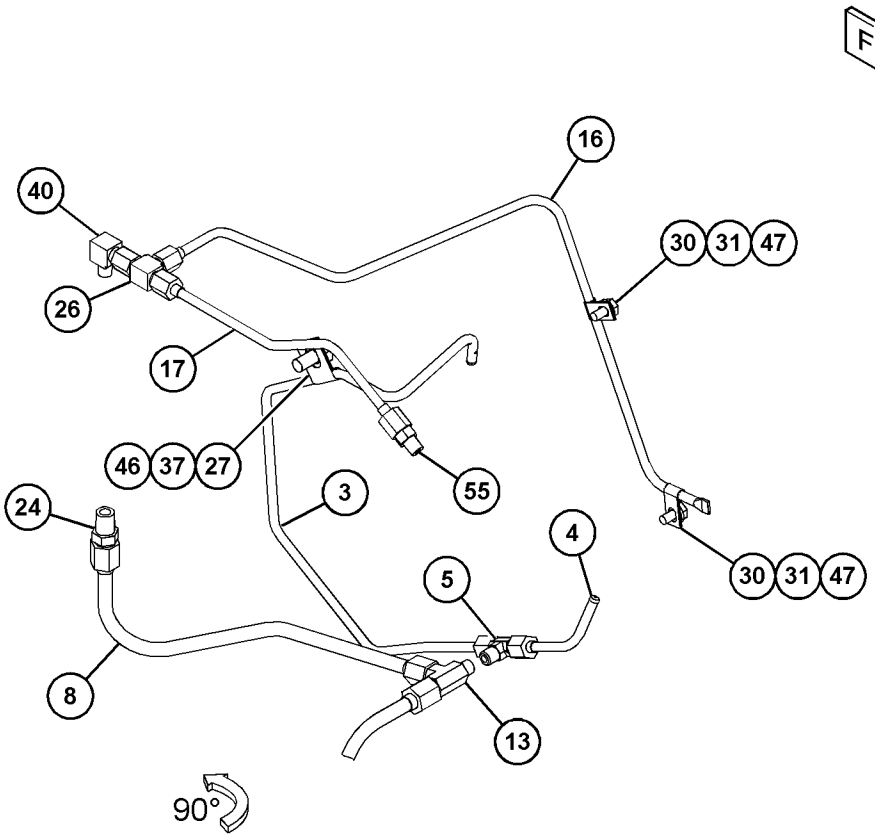

VIEW OF AREA A
(PARTS REMOVED FOR CLARITY)

GRAPHIC #1 g03878685

419-6899 **GEAR GP-BEVEL & TRANSFER (**contd.**)** **i07290534**

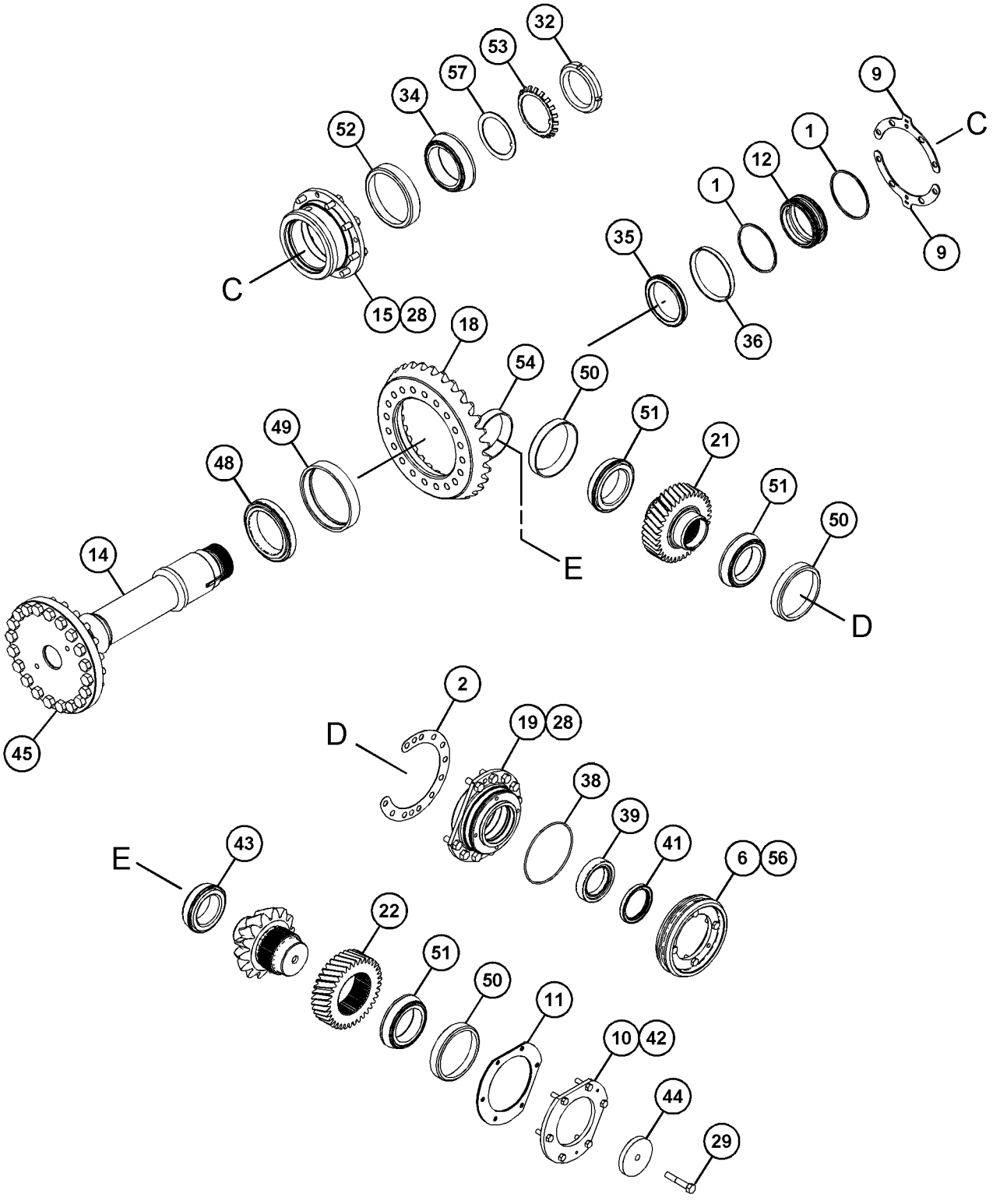

VIEW OF AREA B
(PARTS REMOVED FOR CLARITY AND EXPLODED)

GRAPHIC #2 <END> g03878694

509-3799 LINES GP-POWER TRAIN OIL

S/N: Z2K1-UP; Z2N1-UP
PART OF 575-9700 HYDRAULIC AR
AN ATTACHMENT

SMCS-3016 **i07827347**

NOTE	REF NO	GRAPHIC REF	PART NUMBER	QTY	PART NAME 1 2 3 4 5 6 (PRODUCT LEVEL)	SEE PAGE
	1	1	**175-7904**	1	SEAL-O-RING	
	2	2	**5K-1770**	1	SEAL-O-RING	
	3	2	**6L-5359**	1	SEAL-O-RING	
	4	3	**8M-5249**	1	SEAL-O-RING	
	5	3	**8M-5254**	3	SEAL-O-RING	
M	6	1	**8T-4183**	4	BOLT (M12X1.75X40-MM)	
M	7	3	**8T-4184**	1	BOLT (M12X1.75X45-MM)	
M	8	1	**8T-4186**	1	BOLT (M10X1.5X40-MM)	
M	9	3	**8T-4196**	8	BOLT (M10X1.5X35-MM)	
M	10	1	**8T-5005**	1	BOLT (M10X1.5X70-MM)	
M	11	2	**7X-2549**	4	BOLT (M12X1.75X100-MM)	
M	12	3	**8T-4172**	7	BOLT (M10X1.5X80-MM)	
	13	3	**1P-4578**	2	FLANGE-HALF	
	14	1	**1P-4582**	2	FLANGE-HALF	
	15	3	**3G-8054**	2	CLIP (TAB)	
	16	3	**3G-8057**	2	CLIP (SLOT)	
	17	1	**3H-1461**	1	SEAL-O-RING	
	18	2	**3S-2093**	2	STRAP-CABLE	
	19	1,3	**4J-0520**	3	SEAL-O-RING	
	20	1,3	**4J-0522**	3	SEAL-O-RING	
	21	1,2	**4J-0527**	2	SEAL-O-RING	
	22	3	**4J-5267**	1	SEAL-O-RING	
	23	1,3	**5P-4961**	4	CLAMP-HOSE	
	24	3	**5P-7466**	1	CLIP (SLOT)	
	25	3	**5P-7467**	1	CLIP (TAB)	
	26	2	**6H-3977**	1	SEAL-O-RING	
	27	2	**6V-1572**	2	CLIP (SLOT)	
	28	2	**6V-1573**	2	CLIP (TAB)	
	29	2	**6V-9169**	1	NUT (13/16-16-THD)	
	30	2	**7S-3916**	1	CLIP (TAB)	
	31	2	**7S-3919**	1	CLIP (SLOT)	
	32	1,2,3	**7X-3392**	16	WASHER-HARD (13.5X22.5X3-MM THK)	
	33	3	**7X-7729**	4	WASHER (11X25X3-MM THK)	
	34	3	**8C-3205**	2	FLANGE-HALF	
	35	1,3	**8C-3206**	6	FLANGE-HALF	
	36	2	**8S-9129**	1	FILTER-MAGNETIC (POWER TRAIN OIL)	
	37	2	**8S-9130**	1	SCREEN-SUCTION (POWER TRAIN)	
	38	1	**8T-1885**	1	CLIP (SLOT)	
	39	1	**8T-1886**	1	CLIP (TAB)	
	40	2	**8T-1899**	1	CLIP (SLOT)	
	41	2	**8T-1900**	1	CLIP (TAB)	
	42	2,3	**8T-4121**	13	WASHER-HARD (11X21X2.5-MM THK)	
M	43	2	**8T-4136**	4	BOLT (M10X1.5X25-MM)	
M	44	2	**8T-4139**	4	BOLT (M12X1.75X30-MM)	
	45	2	**8T-4223**	4	WASHER-HARD (13.5X25.5X3-MM THK)	
M	46	1,3	**8T-4956**	7	BOLT (M12X1.75X35-MM)	

509-3799 **LINES GP-POWER TRAIN OIL (**contd.**)** **i07827347**

NOTE	REF NO	GRAPHIC REF	PART NUMBER	QTY	PART NAME 1 2 3 4 5 6 (PRODUCT LEVEL)	SEE PAGE
	47	2	**8T-4983**	2	CLAMP-HOSE	
	48	2,3	**8T-7934**	7	WASHER-HARD (11X21X5-MM THK)	
	49	2	**9G-5127**	1	BREATHER (ATMOSPHERIC) (POWER TRAIN)	
	50	2	*9U-6995*	1	FITTING GP-HYDRAULIC	
		2	**034-2151**	1	CONNECTOR	
		2	**2S-4078**	1	SEAL-O-RING	
	51	3	**9X-4609**	1	SEAL-O-RING	
M	52	1	**085-8091**	1	BOLT (M10X1.5X55-MM)	
	53	2	**135-8578**	2	BOLT AS	
	54	3	**148-1928**	1	VALVE-RELIEF	
	55	1,3	*148-8339*	3	CONNECTOR AS	
					(EACH INCLUDES)	
		1,3	**6V-8716**	1	CONNECTOR (STRAIGHT)	
		1,3	**6V-9746**	1	SEAL-O-RING	
		1,3	**7M-8485**	1	SEAL-O-RING	
	56	2	*148-8355*	1	ELBOW AS	
		2	**5K-9090**	1	SEAL-O-RING	
		2	**6V-9005**	1	ELBOW	
		2	**7M-8485**	1	SEAL-O-RING	
	57	3	*148-8364*	1	ELBOW AS	
		3	**3K-0360**	1	SEAL-O-RING	
		3	**6V-8398**	1	SEAL-O-RING	
		3	**6V-8625**	1	ELBOW	
	58	2	*148-8395*	1	PLUG AS	
		2	**3K-0360**	1	SEAL-O-RING	
		2	**9S-8005**	1	PLUG (3/4-16-THD)	
	59	2	*148-8428*	1	TEE AS	
		2	**3K-0360**	1	SEAL-O-RING	
		2	**6V-8398**	2	SEAL-O-RING	
		2	**6V-8782**	1	TEE	
	60	1,3	*150-3026*	2	ELBOW AS	
					(EACH INCLUDES)	
		1,3	**3K-0360**	1	SEAL-O-RING	
		1,3	**6V-4292**	1	ELBOW	
	61	2	*150-4049*	1	ELBOW AS	
		2	**6V-9746**	1	SEAL-O-RING	
		2	**7M-8485**	1	SEAL-O-RING	
		2	**8T-4149**	1	ELBOW	
	62	2	*153-6252*	1	CONNECTOR AS	
		2	**6V-8398**	1	SEAL-O-RING	
		2	**7M-8485**	1	SEAL-O-RING	
		2	**9X-8408**	1	CONNECTOR	
	63	2	*162-0177*	2	PLUG AS	
					(EACH INCLUDES)	
		2	**3J-1907**	1	SEAL-O-RING	
		2	**9S-8004**	1	PLUG (9/16-18-THD)	
	64	2	**162-9523**	2	GROMMET	
	65	2	*164-5608*	1	CONNECTOR AS	
		2	**3K-0360**	1	SEAL-O-RING	
		2	**6V-8398**	1	SEAL-O-RING	
		2	**8T-1687**	1	CONNECTOR	

509-3799 **LINES GP-POWER TRAIN OIL (**contd.**)** **i07827347**

NOTE	REF NO	GRAPHIC REF	PART NUMBER	QTY	PART NAME 1 2 3 4 5 6 (PRODUCT LEVEL)	SEE PAGE
	66	3	*164-5624*	1	ELBOW AS	
		3	**3J-1907**	1	SEAL-O-RING	
		3	**6V-8398**	1	SEAL-O-RING	
		3	**9X-2085**	1	ELBOW	
	67	3	**175-7896**	1	SEAL-O-RING	
	68	3	*195-2037*	2	FITTING AS	
					(EACH INCLUDES)	
		3	**3K-0360**	1	SEAL-O-RING	
		3	**034-3679**	1	ADAPTER	
	69	1,3	**197-3295**	4	FLANGE-HALF	
	70	1,2	**198-4777**	4	WASHER-HARD (11X25X10-MM THK)	
YR	71	1	**202-4364**	1	PUMP GP-GEAR (POWER TRAIN OIL)	327
	72	2	**203-3847**	1	BRACKET AS	
	73	1	**203-4600**	1	HOSE	
Y	74	2	*234-5013*	1	SENSOR GP-TEMPERATURE (TRANSMISSION OIL)	210
Y	75	2	*243-4398*	1	ACCUMULATOR GP (CHARGED)	268
Y	76	2	*332-8833*	1	FILTER GP-OIL (MEDIUM PRESSURE) (HYDRAULIC, TRANSMISSION)	302
	77	2	**344-7132**	1	FILM-INFORMATION (TRANSMISSION FILTER)	
	78	2	*365-0587*	1	ADAPTER AS	
		2	**228-7090**	1	SEAL-O-RING	
		2	**365-0588**	1	ADAPTER	
	79	3	**447-0748**	1	HOSE	
	80	2	**472-4434**	1	SPOUT	
	81	3	**479-0017**	2	GROMMET	
	82	2	**527-9750**	1	HOSE	
	83	1,3	**533-4159**	16	BOLT AS	
	84	1,2	**541-6633**	3	CLIP (LOOP)	
	85	1,2	**139-1398**	2	CLIP (LOOP)	
	86	1	**1S-0994**	1	CLIP (LOOP)	
	87	2	**206-2423**	1	SADDLE-MOUNTING	
	88	2	**344-5360**	1	CLIP (LOOP)	
M	89	2	**344-5675**	5	NUT (M10X1.5-THD)	
M	90	1,2	**479-2171**	6	BOLT AS	
M	91	1,2,3	**479-2172**	10	BOLT AS	
	92	3	**509-3805**	1	FLANGE	
	93	2	**509-3811**	1	HOUSING	
I	94	1	**512-8093**	1	HOSE AS	
	95	3	**515-3745**	1	MANIFOLD AS	
		3	*148-8406*	1	PLUG AS	
		3	**7M-8485**	1	SEAL-O-RING	
		3	**9S-9334**	1	PLUG (1-5/16-12-THD)	
		3	**217-2730**	1	ORIFICE	
		3	**515-3746**	1	MANIFOLD	
I	96	1	**516-7941**	1	HOSE AS	
	97	1	**516-7942**	1	HOSE AS	
I	98	2	**516-7944**	1	HOSE AS	
I	99	1	**516-7945**	1	HOSE AS	
I	100	1	**517-0033**	1	HOSE AS	
	101	1	**517-2426**	1	TUBE AS	
	102	2	**524-2296**	1	HOSE	

509-3799 **LINES GP-POWER TRAIN OIL (**contd.**)** **i07827347**

NOTE	REF NO	GRAPHIC REF	PART NUMBER	QTY	PART NAME 1 2 3 4 5 6 (PRODUCT LEVEL)	SEE PAGE
	103	1	**529-6295**	1	TUBE	
I	104	2	**529-7050**	1	HOSE AS	
	105	2	**550-3491**	1	TUBE AS	
	106	2	**550-4389**	1	COVER AS	
I	107	1	**555-9632**	1	HOSE AS	
	108	1	**562-1927**	2	BOLT AS	
	109	2	**571-3530**	1	BRACKET	
I	110	2	**571-3546**	1	HOSE AS	
	111	2	**579-2103**	1	BRACKET AS	
M		2	**8T-3490**	1	NUT-WELD (M10X1.5-THD)	
	112	2	**581-1098**	1	GAUGE GP-OIL LEVEL (DIPSTICK) (TRANSMISSION OIL)	
	113	3	**5P-8112**	1	GROMMET	
Y	114	3	**6Y-8473**	1	VALVE GP-RELIEF (POWER TRAIN OIL)	338
	115	1	**7K-1181**	1	STRAP-CABLE	
	116	2	**8M-2770**	1	CLIP (LOOP)	
	117	2	**8T-6703**	2	CLAMP-HOSE	

I - REFER TO HYDRAULIC INFORMATION SYSTEM
M - METRIC PART
R - REMANUFACTURED PART MAY BE AVAILABLE
Y - SEPARATE ILLUSTRATION

509-3799 **LINES GP-POWER TRAIN OIL (**contd.**)** **i07827347**

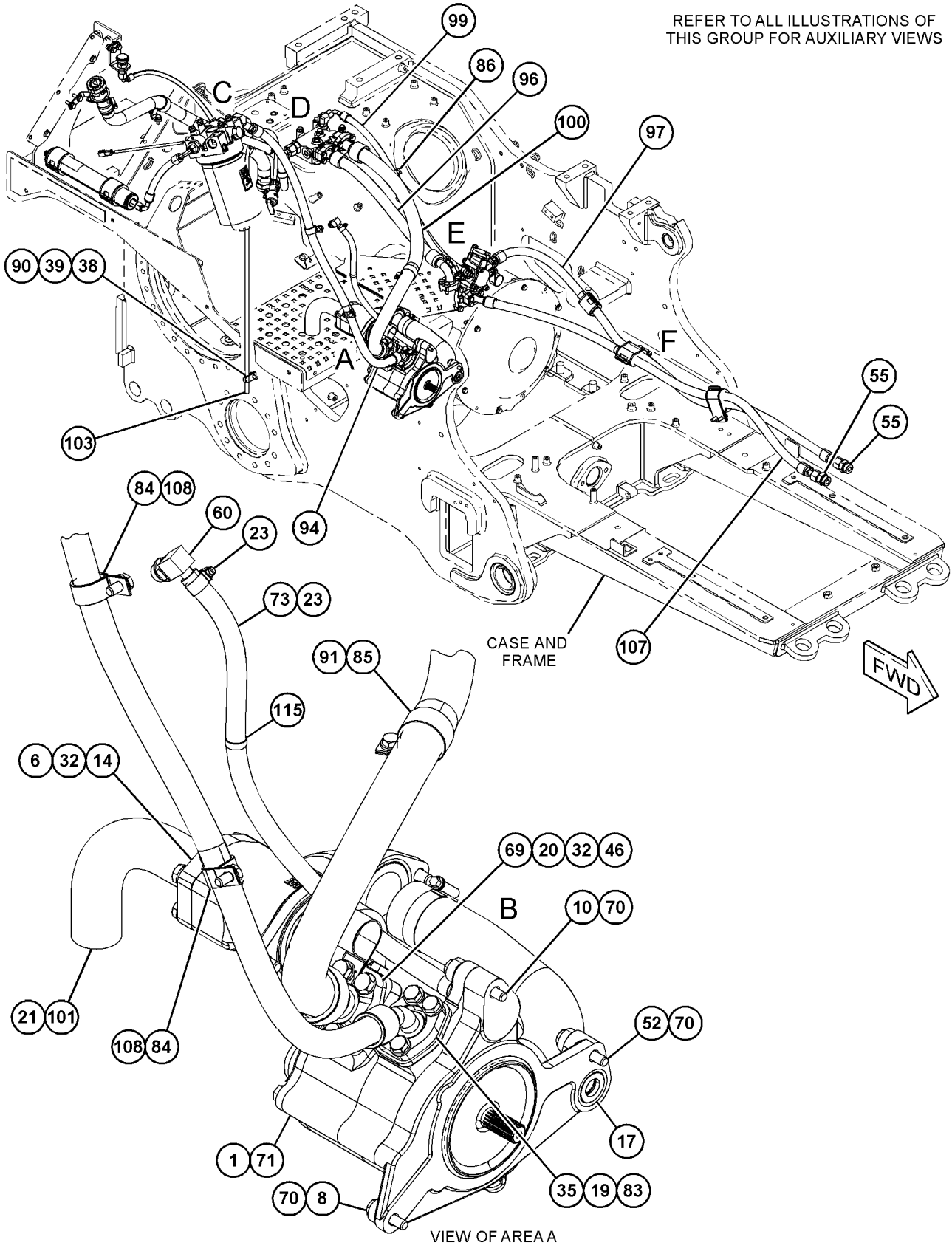

GRAPHIC #1 g06452737

509-3799 **LINES GP-POWER TRAIN OIL (**contd.**)** **i07827347**

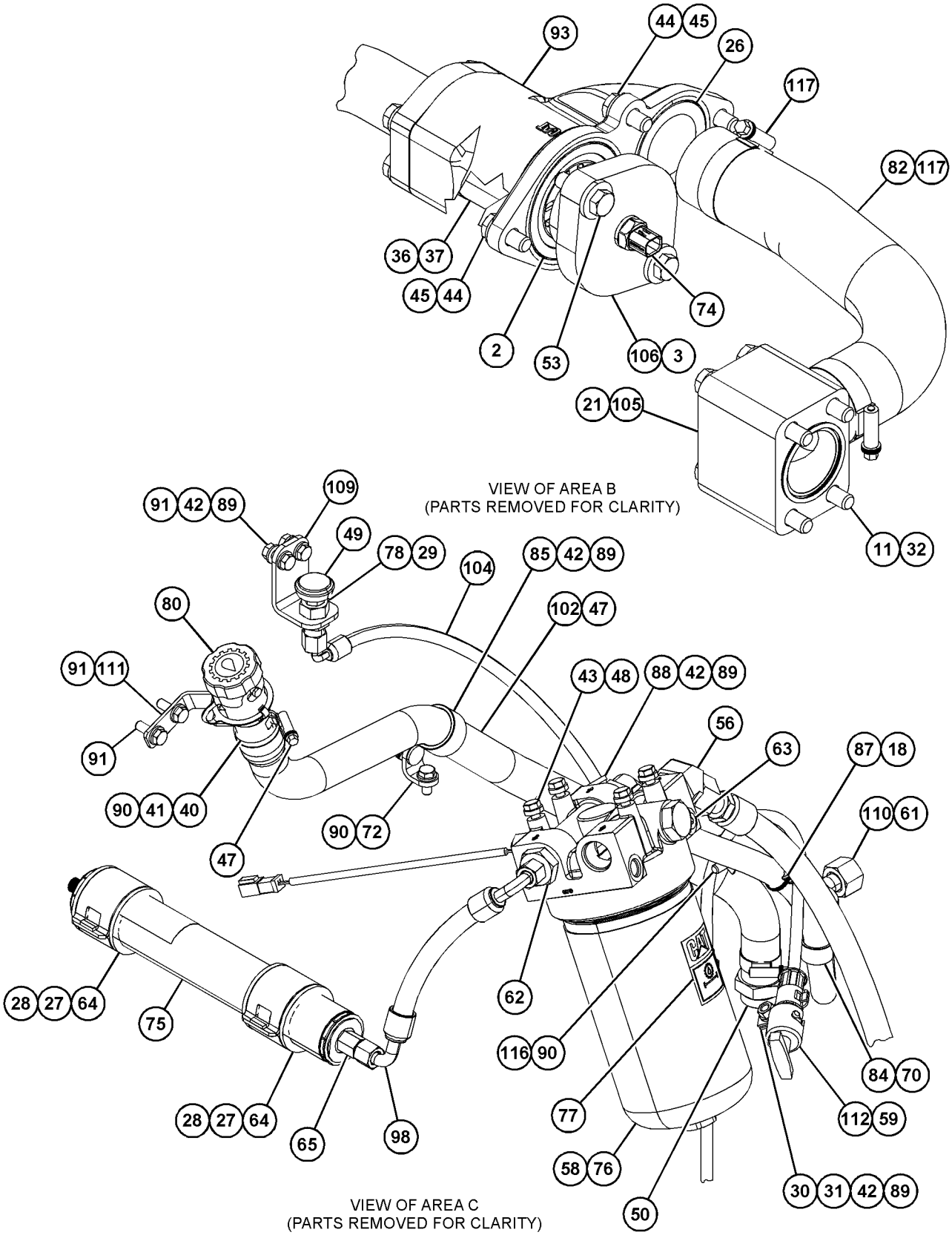

GRAPHIC #2 g06452743

509-3799 **LINES GP-POWER TRAIN OIL (**contd.**)** **i07827347**

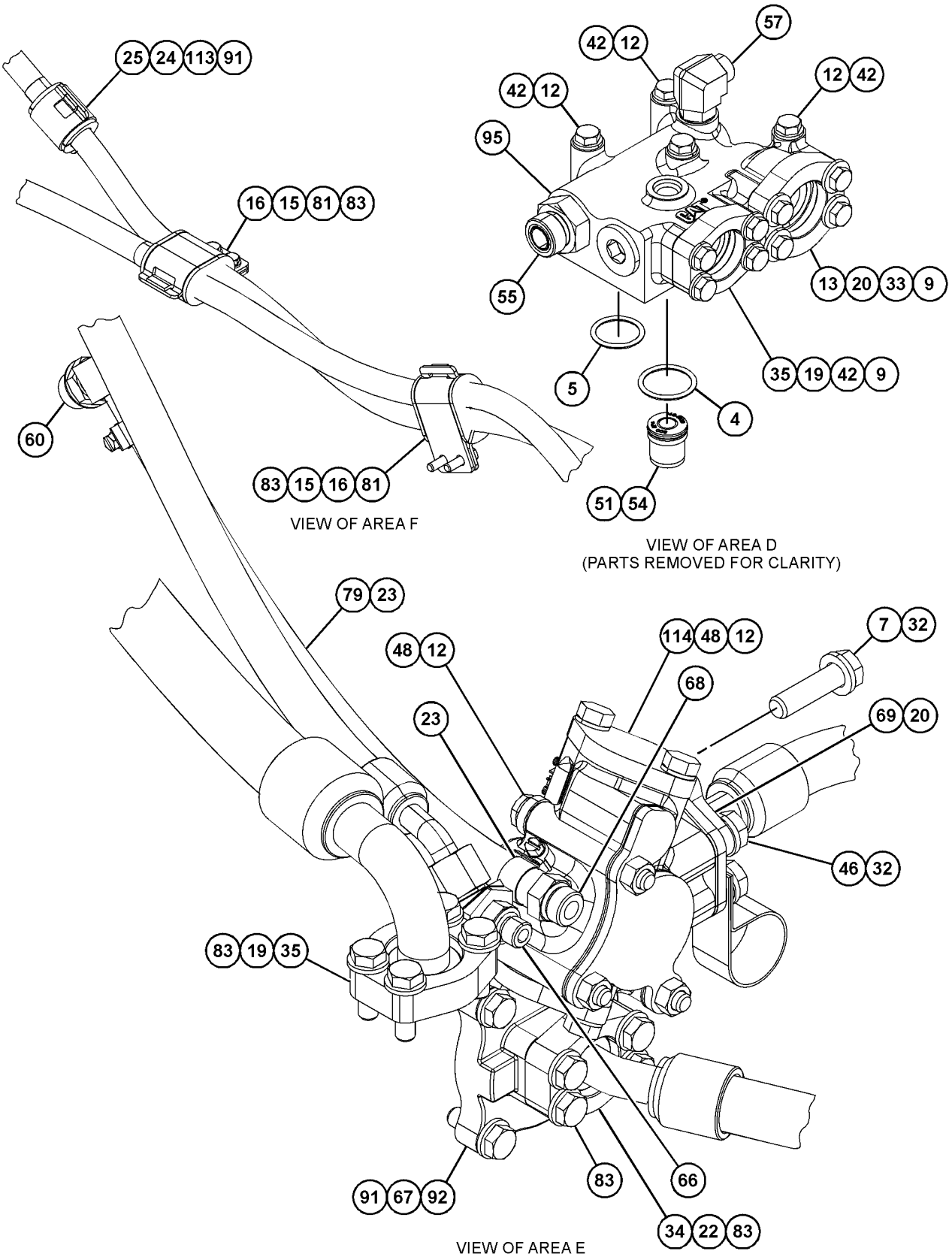

GRAPHIC #3 <END> g06452744

449-0302 MOUNTING GP-FINAL DRIVE

S/N: Z2K1-UP; Z2N1-UP

PART OF 458-3587, 458-3589, 458-3590, 478-7557, 478-7558 DRIVE AR-FINAL

AN ATTACHMENT

SMCS-4050 **i06704502**

NOTE	REF NO	GRAPHIC REF	PART NUMBER	QTY	PART NAME 1 2 3 4 5 6 (PRODUCT LEVEL)	SEE PAGE
	1	1	**2R-0098**	2	SEAL-O-RING	
	2	1	**6F-6673**	4	SEAL-O-RING	
	3	1	**8D-4771**	2	SEAL-O-RING	
M	4	1	**8T-2223**	4	BOLT-SOCKET HEAD (M10X1.5X45-MM)	
	5	1	**8T-4123**	52	WASHER (22X35X3.5-MM THK)	
M	6	1	**8T-4141**	52	BOLT (M20X2.5X70-MM)	
	7	1	**8T-4223**	4	WASHER-HARD (13.5X25.5X3-MM THK)	
	8	1	**8T-8919**	4	BOLT (1/2-13X1.75-IN)	
	9	1	**9X-2027**	4	WASHER (11X18X2-MM THK)	

M - METRIC PART

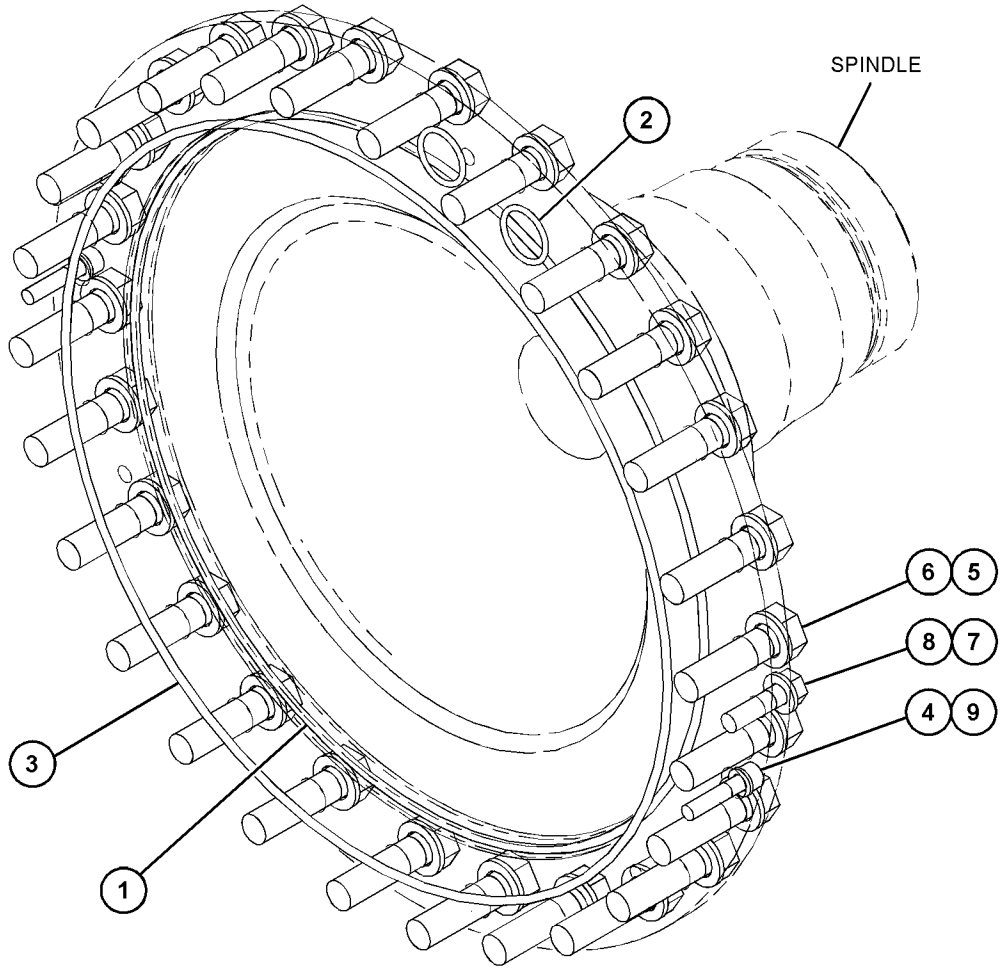

GRAPHIC #1 <END> g03787996

509-3797 MOUNTING GP-TORQUE CONVERTER

S/N: Z2K1-UP; Z2N1-UP
PART OF 510-9710 POWER TRAIN AR
AN ATTACHMENT

SMCS-3101 **i07816760**

NOTE	REF NO	GRAPHIC REF	PART NUMBER	QTY	PART NAME 1 2 3 4 5 6 (PRODUCT LEVEL)	SEE PAGE
M	1	1	**234-9525**	2	STUD (M10X1.5-THD)	
M	2	1	**249-6365**	8	STUD-TAPERLOCK (M10X1.5X79-MM)	
	3	1	**266-9180**	1	ADAPTER	
M	4	1	**344-5675**	8	NUT (M10X1.5-THD)	
Y	5	1	*487-6297*	1	DRAIN GP-ECOLOGY (TORQUE CONVERTER)	281
	6	1	**5P-9806**	1	SEAL-O-RING	
	7	1	**6V-0852**	1	CAP-DUST	
M	8	1	**8T-6466**	2	BOLT (M10X1.5X60-MM)	

M - METRIC PART
Y - SEPARATE ILLUSTRATION

509-3797 **MOUNTING GP-TORQUE CONVERTER (**contd.**)** **i07816760**

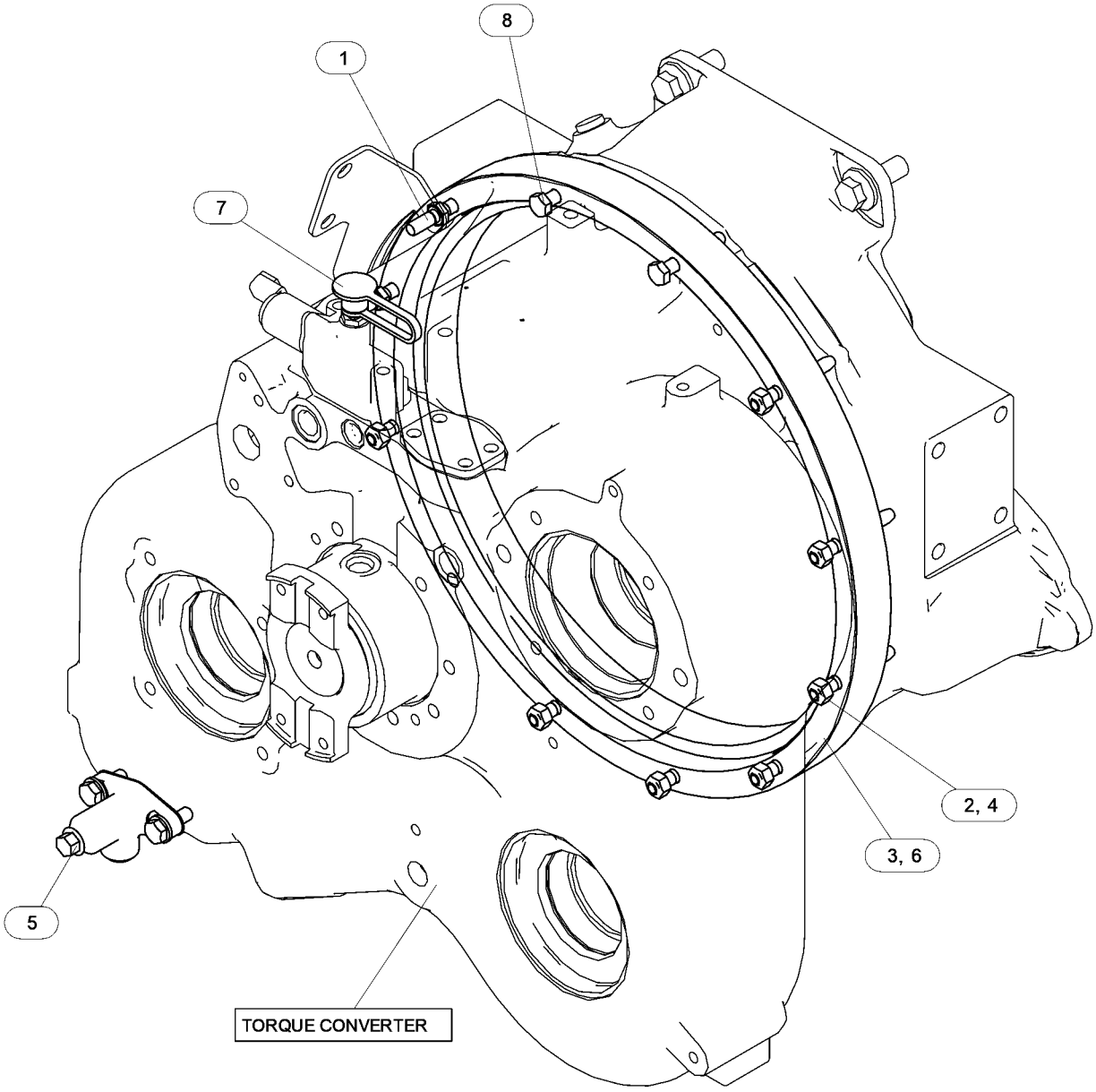

GRAPHIC #1 <END> g06451174

553-3782 MOUNTING GP-TRANSMISSION

S/N: Z2K1-UP; Z2N1-UP
PART OF 510-9710 POWER TRAIN AR
AN ATTACHMENT

SMCS-3082 **i07816812**

NOTE	REF NO	GRAPHIC REF	PART NUMBER	QTY	PART NAME 1 2 3 4 5 6 (PRODUCT LEVEL)	SEE PAGE
M	1	1	**8T-4191**	2	BOLT (M10X1.5X16-MM)	
M	2	1	**8T-4910**	18	BOLT (M12X1.75X60-MM)	
	3	1	**8T-4223**	2	WASHER-HARD (13.5X25.5X3-MM THK)	
	4	1	**112-5056**	1	BRACKET	
	5	1	**112-5057**	1	BRACKET AS	
M	6	1	**329-3356**	2	NUT (M12X1.75-THD)	
	7	1	**379-0067**	3	STUD	
	8	1	**3S-2093**	1	STRAP-CABLE	
	9	1	**3T-9315**	2	SPACER (13.5X19.05X29-MM THK)	
	10	1	**563-6608**	6	BOLT AS	
	11	1	**5D-7523**	1	SEAL-O-RING	
	12	1	**5V-0564**	2	SPACER (20X28.5X28-MM THK)	
	13	1	**7M-0475**	1	RING-SEALING	
	14	1	**8M-5254**	2	SEAL-O-RING	
M	15	1	**362-1320**	2	BOLT (M12X1.75X35-MM)	
	16	1	**8T-7934**	2	WASHER-HARD (11X21X5-MM THK)	
	17	1	**8T-7971**	23	WASHER-HARD (13.5X25.5X5-MM THK)	

M - METRIC PART

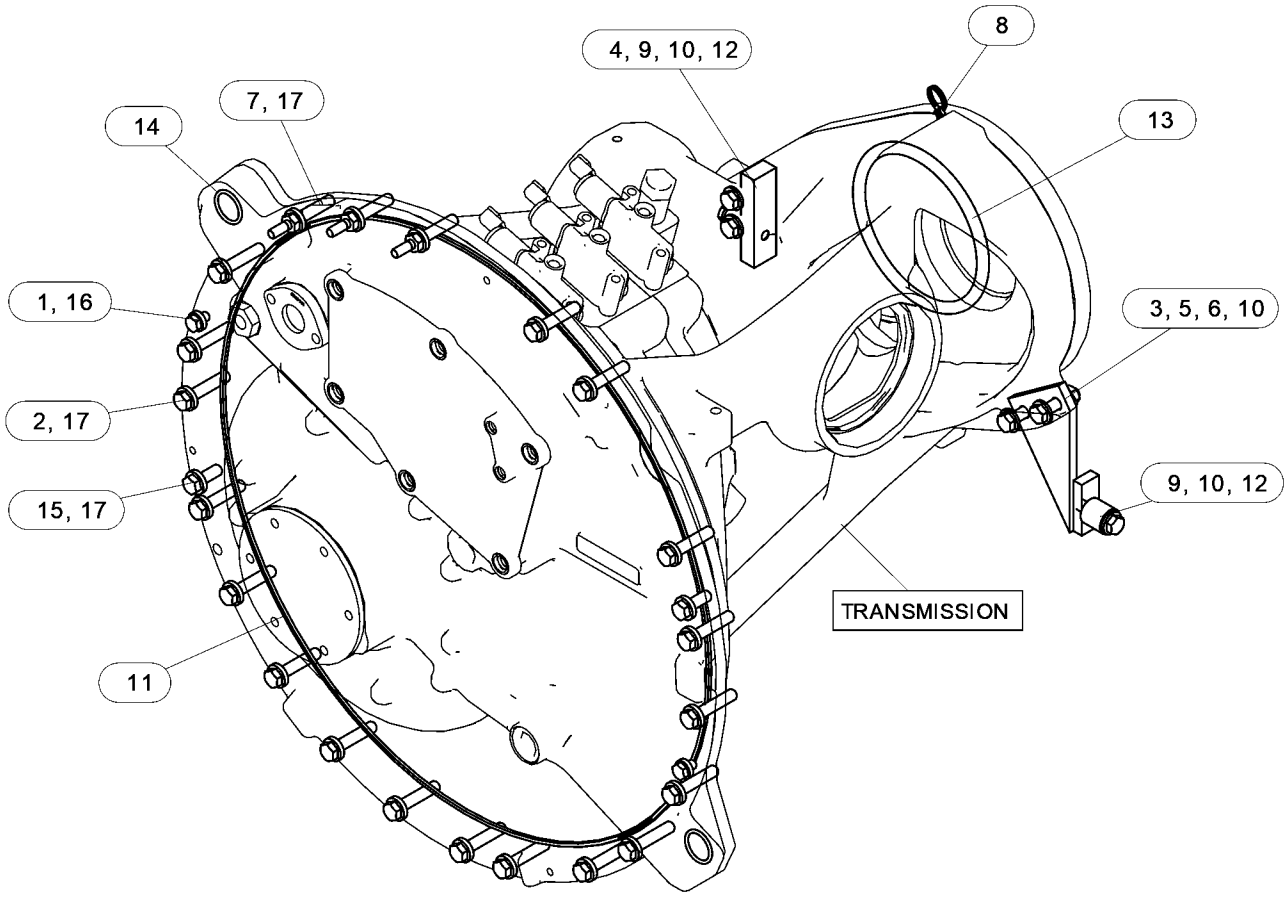

GRAPHIC #1 <END> g06451676

549-8381 PLANETARY GP-TRANSMISSION

S/N: D5H1-UP; D6M1-UP; D7M1-UP; D9M1-UP
PART OF 549-8359 TRANSMISSION AR
AN ATTACHMENT

SMCS-3160 **i07816488**

NOTE	REF NO	GRAPHIC REF	PART NUMBER	QTY	PART NAME 1 2 3 4 5 6 (PRODUCT LEVEL)	SEE PAGE
	1	2	**3P-7019**	2	SEAL-METAL	
	2	1	**3T-0810**	1	SLEEVE	
	3	3	**3T-3447**	1	GEAR AS-SUN (44-TEETH)	
		3	**8S-0527**	2	PLUG-CUP	
	4	3	**6I-8488**	1	GEAR-RING (82-TEETH)	
	5	4	**6P-2233**	3	GEAR-PLANETARY (20-TEETH)	
	6	3	**6P-4977**	1	SLEEVE	
	7	4	**6P-7742**	4	SHAFT-PLANETARY	
	8	4	**6P-7743**	4	SHAFT-PLANETARY	
	9	2	**113-9212**	1	DISC-THRUST	
	10	4	**6P-7985**	2	RING-SEAL	
	11	1	**6V-1720**	1	PLATE-SERIAL NUMBER (TRANSMISSION)	
	12	2	**7G-6061**	1	COUPLING	
	13	2,3	**7G-8121**	2	RING-LOCK	
	14	1	**8D-5096**	1	SEAL-O-RING	
	15	4	**8E-1484**	1	HOUSING AS-CLUTCH	
		4	**3S-8109**	1	PIN-SPRING	
		4	**4S-8537**	1	DOWEL	
	16	4	**8E-1666**	1	PLATE-RETAINER	
	17	2	**8E-8118**	1	CARRIER-RING	
	18	2	**8P-8950**	2	RING-METAL SEAL	
	19	4	**9G-1234**	5	SPRING-DISC	
	20	1	**9G-8615**	1	COVER	
	21	3	**9M-1503**	1	RING-METAL SEAL	
	22	2	**9P-5558**	1	RING-RETAINING	
	23	3	**108-5621**	1	CARRIER-PLANETARY	
	24	2	**144-0761**	1	CARRIER-PLANETARY	
	25	2	**177-4487**	1	GEAR-RING (71-TEETH)	
	26	2	**202-2380**	1	SHAFT AS-INPUT	
		2	**156-4406**	1	PLUG-PIPE	
	27	3	**213-3719**	1	PLATE-REACTION	
	28	4	**321-5715**	1	PISTON	
	29	1	*326-0319*	1	PLUG AS	
		1	**9S-4188**	1	PLUG	
		1	**238-5083**	1	SEAL-O-RING	
	30	2	*365-6805*	1	HOUSING AS	
		2	**204-7876**	1	ORIFICE	
		2	**365-6800**	1	HOUSING-CLUTCH	
	31	2	**366-8298**	2	PISTON	
	32	1	*448-1354*	1	COVER GP-ACCESS	
		1	**239-1139**	1	SEAL	
		1	**448-1367**	1	COVER AS	
	33	4	**035-3360**	1	RING-RETAINING	
	34	2	**108-5618**	1	GEAR-SUN (33-TEETH)	
	35	2	**108-5620**	1	CARRIER-PLANETARY	
	36	3	**108-5623**	1	GEAR-RING (71-TEETH)	

549-8381 **PLANETARY GP-TRANSMISSION** (contd.) **i07816488**

NOTE	REF NO	GRAPHIC REF	PART NUMBER	QTY	PART NAME 1 2 3 4 5 6 (PRODUCT LEVEL)	SEE PAGE
	37	3	**5P-8118**	2	SEAL-O-RING	
	38	1	*148-8309*	1	ADAPTER AS	
		1	**2P-8421**	1	ADAPTER-O-RING	
		1	**3D-2824**	1	SEAL-O-RING	
	39	1	*164-5567*	1	COUPLER AS-QUICK DISCONNECT (MALE)	
		1	**6V-3965**	1	FITTING (QUICK DISCONNECT)	
		1	**214-7568**	1	SEAL-O-RING	
M	40	1	**9X-2125**	6	BOLT-LOCKING (M10X1.5X25-MM)	
	41	2	**1M-8649**	1	RING-RETAINING	
	42	3	**2D-0516**	3	BOLT (1/2-13X8.75-IN)	
	43	1	*319-6231*	1	PLUG AS	
		1	**9S-4183**	1	PLUG (1-1/16-12-THD)	
		1	**238-5082**	1	SEAL-O-RING	
	44	2,3	**355-2617**	15	DISC-FRICTION	
	45	3	**355-2618**	4	DISC-FRICTION	
	46	3,4	**363-4541**	8	SPRING	
	47	1	**365-6798**	1	COVER	
	48	2	**365-6801**	1	PLATE	
	49	3	**365-6802**	1	HOUSING-CLUTCH	
	50	3	**365-6803**	1	HOUSING-CLUTCH	
	51	4	**365-6804**	1	HOUSING-SUPPORT	
	52	2	**3K-1432**	2	RING-METAL SEAL	
	53	4	**3P-3441**	1	RING-RETAINING	
	54	4	**3S-8109**	11	PIN-SPRING	
	55	2	**3T-4629**	1	GEAR-RING (80-TEETH)	
	56	4	**3T-6769**	4	GEAR-PLANETARY (24-TEETH)	
	57	2	**3T-7584**	4	SPRING	
	58	3	**458-3635**	2	PISTON-CLUTCH	
	59	4	**555-8382**	3	SHAFT	
	60	4	**556-4537**	8	GEAR-PLANETARY (20-TEETH)	
	61	2	**556-4538**	1	GEAR-SUN (33-TEETH)	
	62	2	**5J-3864**	1	RING-LOCK	
	63	2	**5K-9106**	1	RING-RETAINING	
	64	4	**5P-3131**	3	BEARING AS-ROLLER	
	65	4	**5P-3930**	8	BEARING AS-ROLLER	
	66	2,3,4	**5P-7530**	7	SEAL-O-RING	
	67	3	**6P-7983**	1	RING-RETAINING	
	68	1	**5P-8210**	2	SEAL-O-RING	
	69	3,4	**5P-8245**	9	WASHER-HARD (13.5X25.5X3-MM THK)	
	70	1	**5P-9186**	2	SEAL-O-RING	
	71	4	**6P-7772**	1	RING-SEAL	
	72	2,3	**6P-7773**	4	RING-SEAL	
	73	3	**6P-7968**	3	PLATE-CLUTCH	
	74	2	**6V-0834**	1	RING-RETAINING	
	75	3	**6V-0835**	1	RING-RETAINING	
	76	1	**6V-0852**	1	CAP-DUST	
	77	4	**6V-1586**	1	RING-RETAINING	
	78	2	**6V-1649**	2	BALL BEARING	
	79	4	**6V-7568**	6	BOLT (1/2-13X14.86-IN)	
	80	4	**6Y-3484**	1	BALL BEARING	
	81	2	**7B-7515**	1	BALL BEARING	

549-8381 **PLANETARY GP-TRANSMISSION (**contd.**)** **i07816488**

NOTE	REF NO	GRAPHIC REF	PART NUMBER	QTY	PART NAME 1 2 3 4 5 6 (PRODUCT LEVEL)	SEE PAGE
R	82	2,3	**7G-0437**	15	PLATE-CLUTCH	
	83	4	**7G-3710**	4	ROD	
	84	2,3	**7G-5675**	4	RING-SEAL	
	85	4	**7G-5730**	1	RING-SEAL	
	86	4	**7S-4534**	4	BEARING-CAGED	
	87	4	**7X-7608**	1	RING-RETAINING	
	88	4	**8E-8115**	1	SHAFT AS-OUTPUT	
	88A	4	**6Y-0306**	2	BUSHING	
		4	**8S-3426**	1	DOWEL	
	89	2	**8E-8117**	1	GEAR-SUN (32-TEETH)	
	90	4	**8E-8297**	6	DISC-THRUST	
	91	4	**8E-8299**	24	DISC-THRUST	
	92	1	**8P-0058**	1	GASKET-COVER	
M	93	1	**8T-4186**	6	BOLT (M10X1.5X40-MM)	
	94	4	**9G-1233**	1	COUPLING	
	95	4	**9H-5604**	1	RING-RETAINING	

M - METRIC PART
R - REMANUFACTURED PART MAY BE AVAILABLE

549-8381 **PLANETARY GP-TRANSMISSION** (contd.) **i07816488**

REFER TO ALL ILLUSTRATIONS OF
THIS GROUP FOR AUXILIARY VIEWS

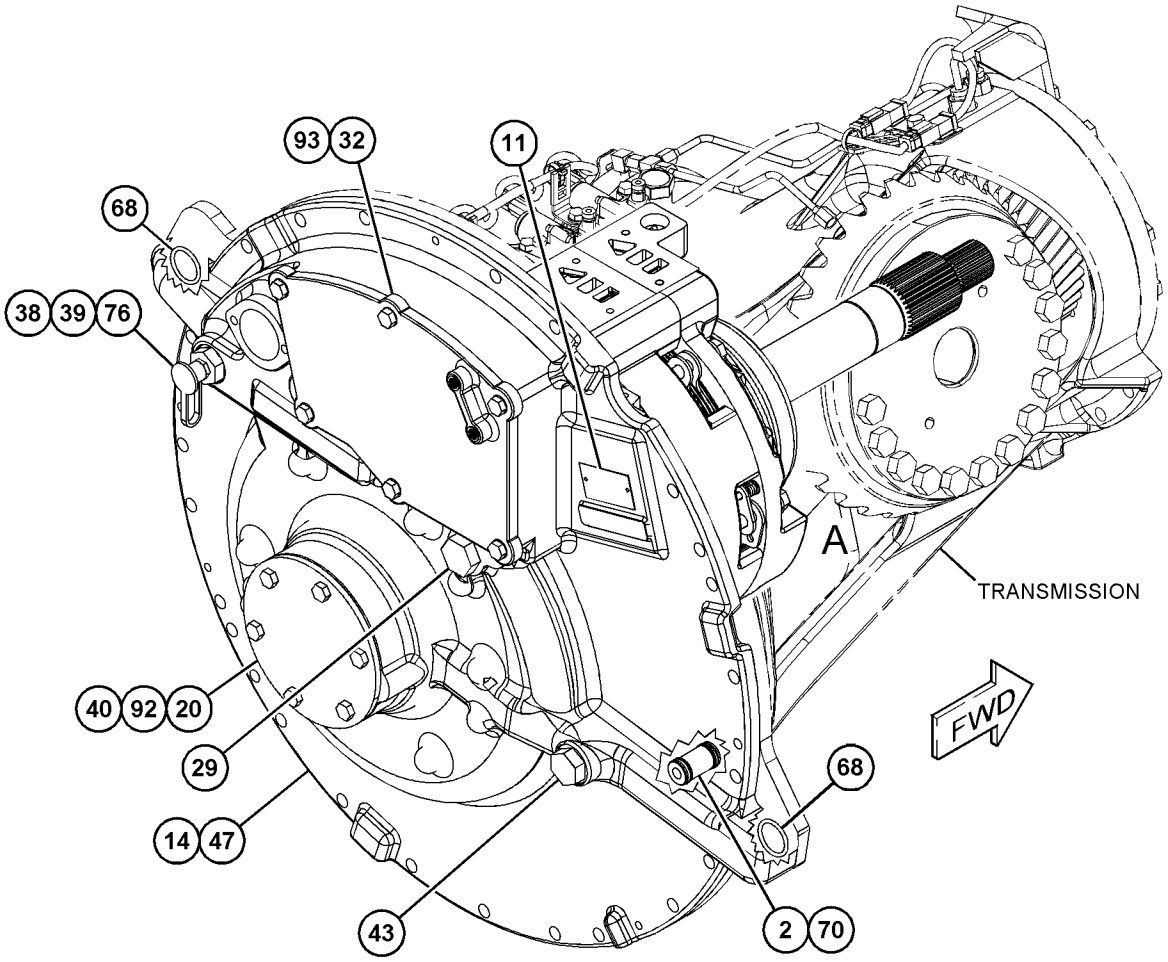

GRAPHIC #1 g06459421

549-8381 **PLANETARY GP-TRANSMISSION (**contd.**)** **i07816488**

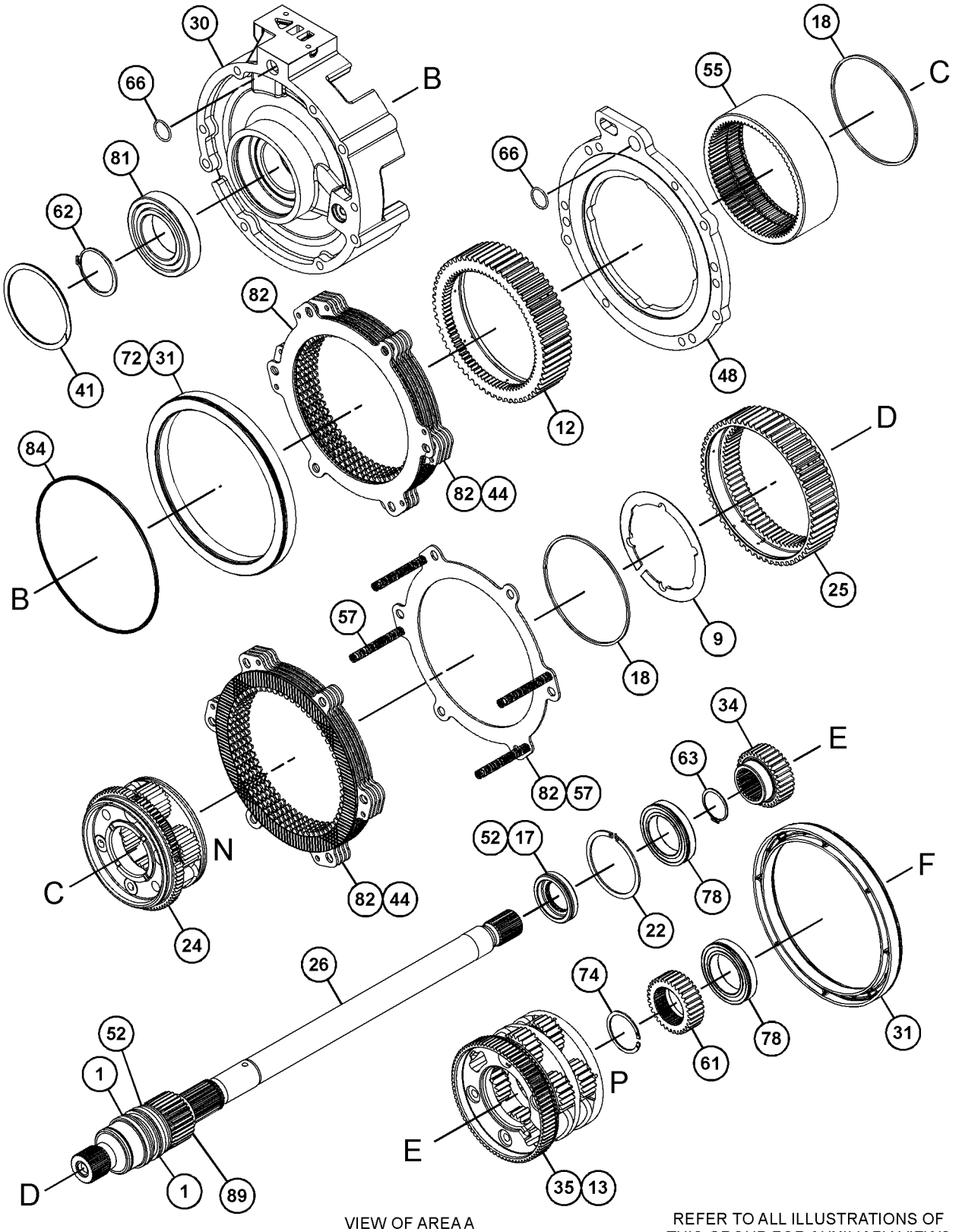

VIEW OF AREA A
(PARTS REMOVED FOR CLARITY)

REFER TO ALL ILLUSTRATIONS OF
THIS GROUP FOR AUXILIARY VIEWS

GRAPHIC #2

g06458920

549-8381 **PLANETARY GP-TRANSMISSION** (contd.) **i07816488**

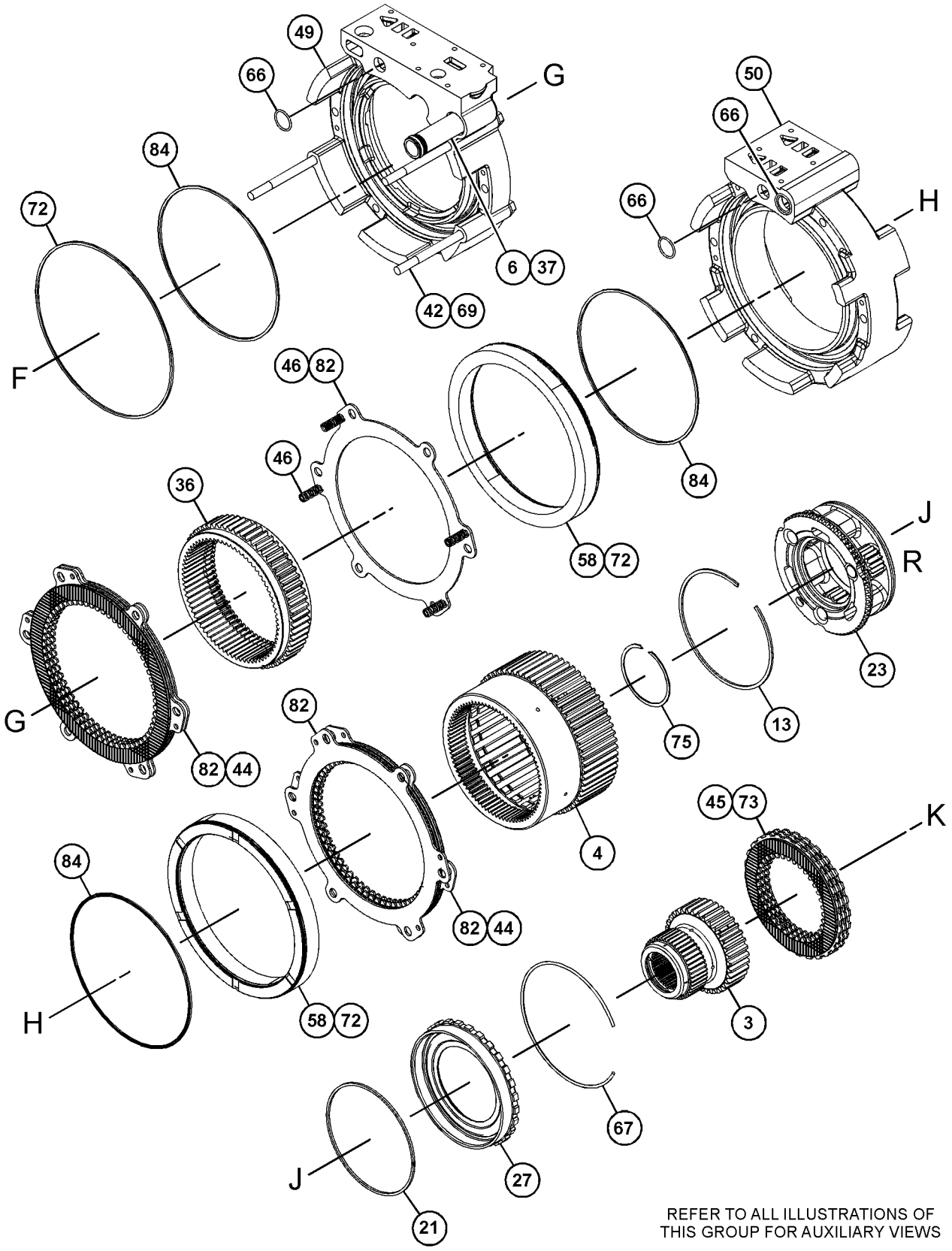

GRAPHIC #3 g06459424

549-8381 **PLANETARY GP-TRANSMISSION (**contd.**)** **i07816488**

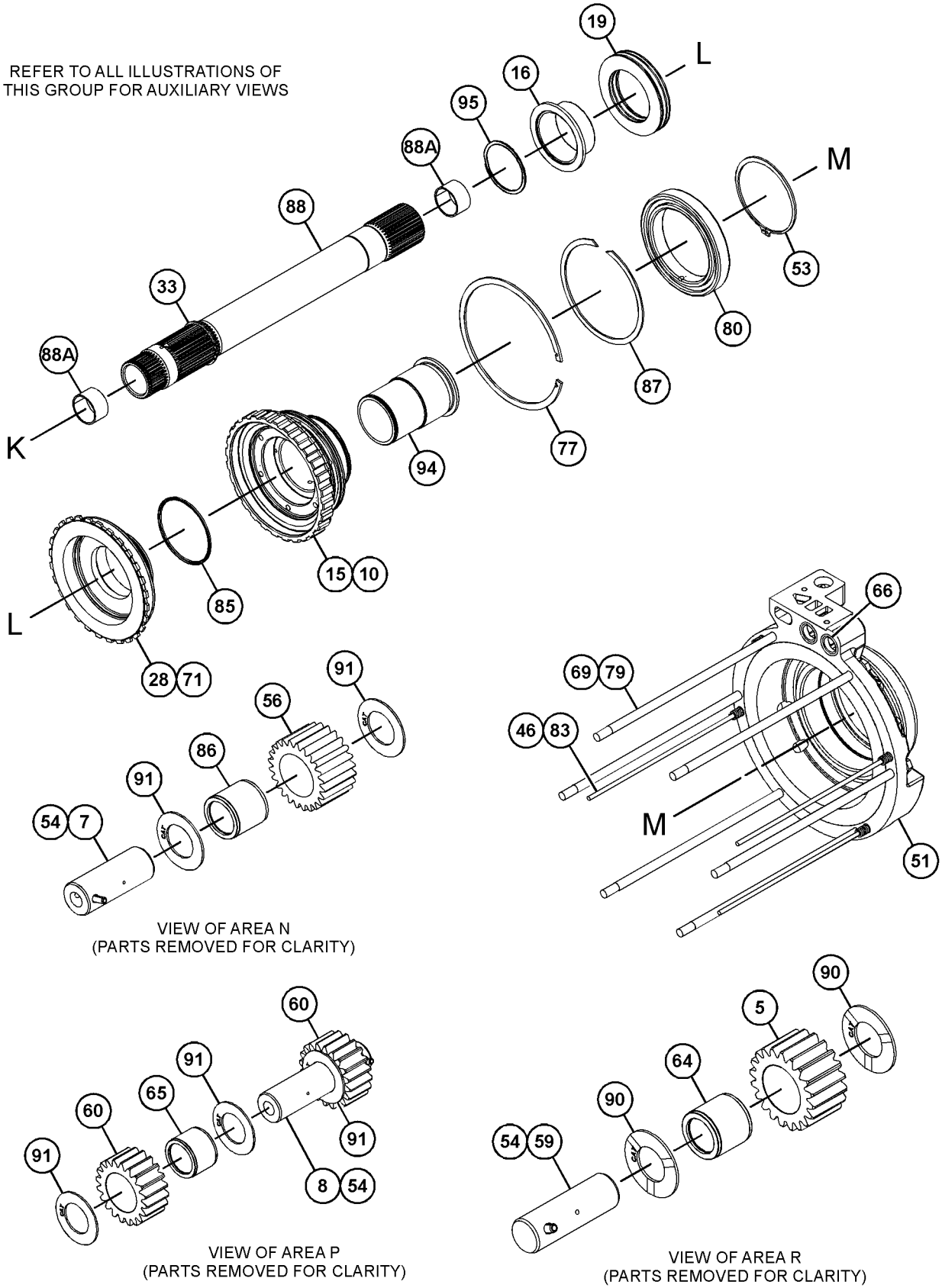

GRAPHIC #4 <END> g06459425

510-9710 POWER TRAIN AR

S/N: Z2K1-UP; Z2N1-UP
PART OF 532-9780 COMMON AR
AN ATTACHMENT

SMCS-3000, 4000

i07816167

NOTE	PART NUMBER	QTY	PART NAME 1 2 3 4 5 6 (PRODUCT LEVEL)	SEE PAGE
Y	*509-3795*	1	BRAKE GP-STEERING	543
Y	*509-3797*	1	MOUNTING GP-TORQUE CONVERTER	316
Y	*553-3782*	1	MOUNTING GP-TRANSMISSION	318
Y	*428-7687*	1	SHAFT GP-DRIVE	330
Y	*528-9635*	1	TORQUE CONVERTER & HOUSING GP	331
Y	**549-8359**	1	TRANSMISSION AR	335
Y	*509-3796*	1	VALVE & MTG GP-CONTROL	556

Y - SEPARATE ILLUSTRATION

<END>

202-4364 PUMP GP-GEAR*R

S/N: Z2K1-UP; Z2N1-UP
3 SECTION
PART OF 509-3799 LINES GP-POWER TRAIN OIL
AN ATTACHMENT

SMCS-3066, 3115, 5073 **i05091130**

NOTE	REF NO	GRAPHIC REF	PART NUMBER	QTY	PART NAME 1 2 3 4 5 6 (PRODUCT LEVEL)	SEE PAGE
	1	1	**202-6488**	1	BODY-OIL PUMP (CONVERTER SCAVENGE)	
	2	1	**178-9041**	1	BODY AS-OIL PUMP (TRANSMISSION CHARGING)	
	2A	1	**5M-3320**	2	BUSHING	
	2B	1	**8M-8489**	4	DOWEL	
	3	1	**202-0552**	1	BODY AS-OIL PUMP (CONVERTER/COOLER LUBRICATION)	
	3A	1	**131-0167**	2	BUSHING	
	3B	1	**8M-8489**	2	DOWEL	
M	4	1	**8T-5030**	2	BOLT (M10X1.5X120-MM)	
	5	1	**3S-0004**	6	WASHER (0.406X0.728X0.09-IN THK)	
	6	1	**1B-8736**	1	KEY-WOODRUFF	
	7	1	**133-1222**	1	COVER AS-OIL PUMP	
	7A	1	**131-0167**	2	BUSHING	
	8	1	**2D-8009**	3	SEAL-O-RING	
	9	1	**202-0551**	2	GEAR (12-TEETH)	
	10	1	**202-0549**	1	GEAR (12-TEETH)	
	11	1	**3T-8757**	2	GEAR (12-TEETH)	
	12	1	**202-0550**	1	GEAR (12-TEETH)	
	13	1	**1B-8705**	1	KEY-WOODRUFF	
	14	1	**3H-1461**	1	SEAL-O-RING	
	15	1	**9S-4191**	2	PLUG (9/16-18-THD)	
	16	1	**3J-1907**	2	SEAL-O-RING	
M	17	1	**8T-0356**	4	BOLT (M10X1.5X160-MM)	
	18	1	**6Y-5010**	8	WASHER (10.16X19X0.84-MM THK)	

M - METRIC PART

202-4364 **PUMP GP-GEAR** (contd.) **i05091130**

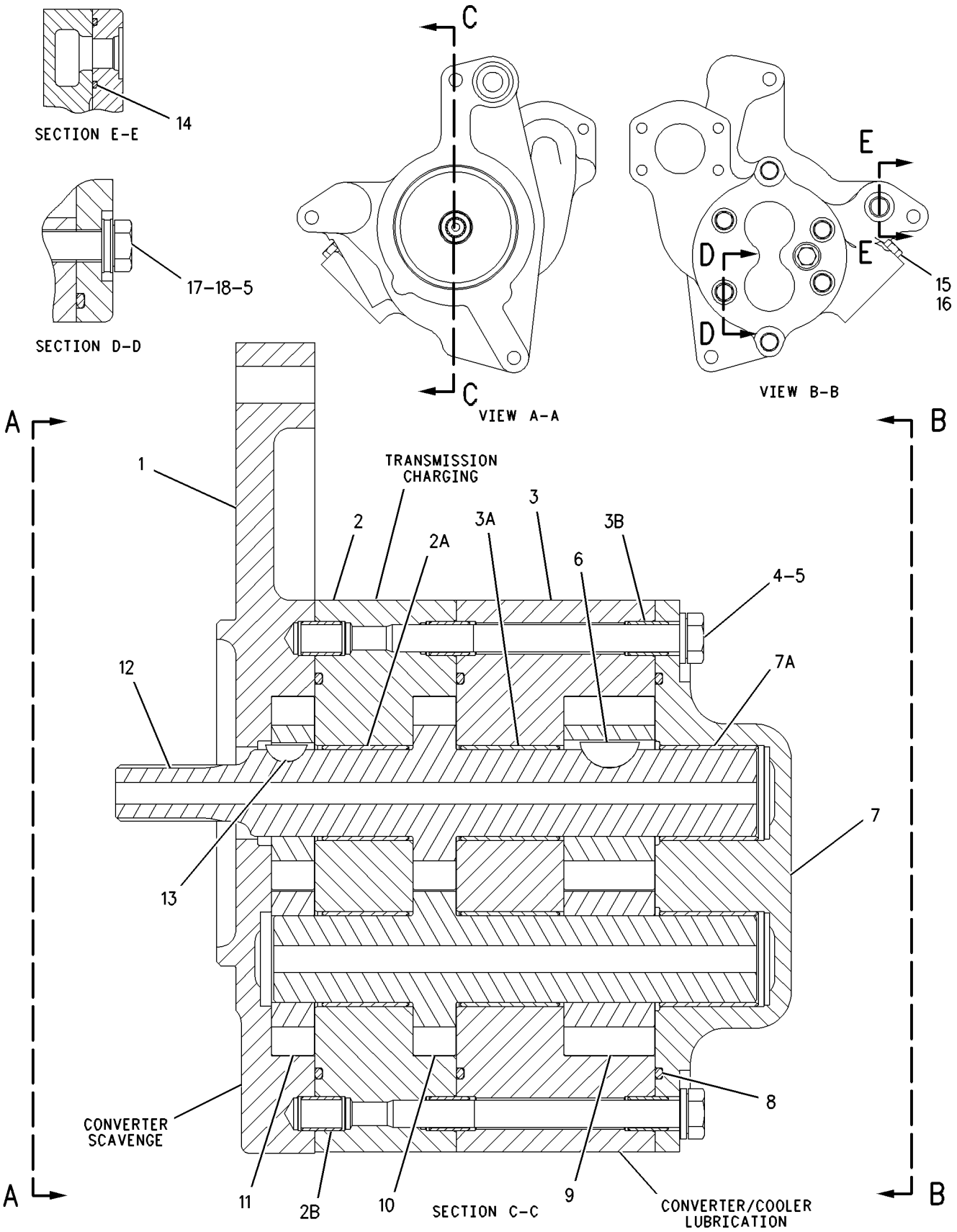

GRAPHIC #1 <END> g00778277

6I-8078 SEGMENT GP-SPROCKET

S/N: Z2K1-UP; Z2N1-UP

PART OF 510-9717, 510-9718, 510-9719, 510-9720, 510-9723 DRIVE AR-FINAL

AN ATTACHMENT

SMCS-4155 **i02875740**

NOTE	REF NO	GRAPHIC REF	PART NUMBER	QTY	PART NAME 1 2 3 4 5 6 (PRODUCT LEVEL)	SEE PAGE
	1	1	**6I-8077**	5	SEGMENT-SPROCKET	
	2	1	**2S-5658**	25	WASHER-HARD (17X29X3-MM THK)	
	3	1	**6V-0937**	25	BOLT (5/8-18X2.1-IN)	
	4	1	**7H-3607**	25	NUT (5/8-18-THD)	

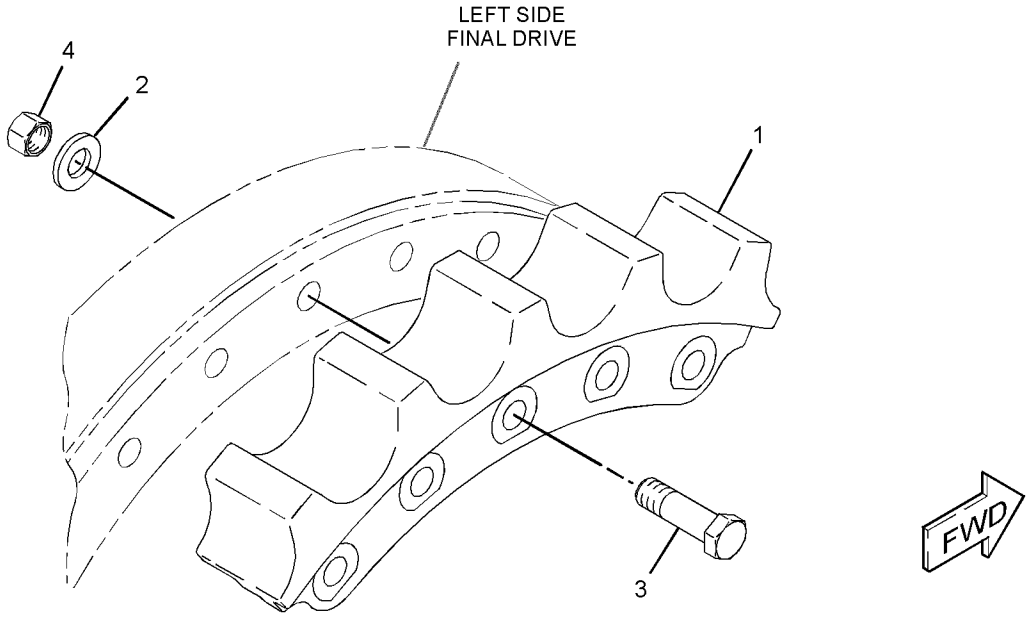

GRAPHIC #1 <END> g01432220

428-7687 SHAFT GP-DRIVE

S/N: Z2K1-UP; Z2N1-UP
PART OF 510-9710 POWER TRAIN AR
AN ATTACHMENT

SMCS-3253 **i06716314**

NOTE	REF NO	GRAPHIC REF	PART NUMBER	QTY	PART NAME 1 2 3 4 5 6 (PRODUCT LEVEL)	SEE PAGE
	1	1	**108-8296**	1	YOKE AS	
	1A	1	**7F-6935**	1	RACE-BEARING INNER	
		1	**4B-4098**	1	PLUG-CUP	
	2	1	**367-7644**	1	UNIVERSAL JOINT GP	
		1	**488-7916**	2	UNIVERSAL JOINT AS	
M		1	**6V-5843**	8	BOLT (M10X1.5X45-MM)	
M	3	1	**8T-4182**	8	BOLT (M10X1.5X45-MM)	

M - METRIC PART

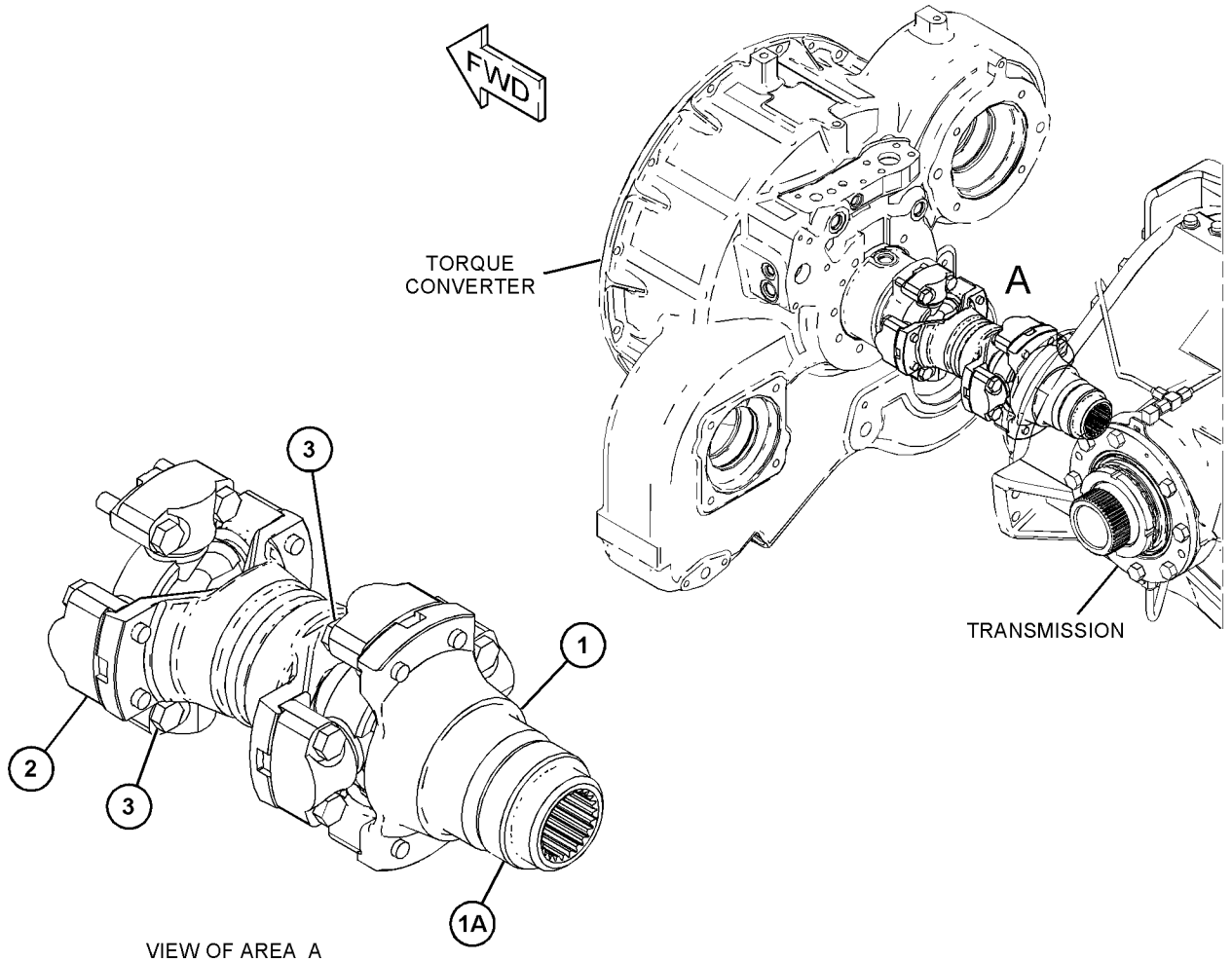

VIEW OF AREA A

GRAPHIC #1 <END> g03877315

528-9635 TORQUE CONVERTER & HOUSING GP

S/N: Z2K1-UP; Z2N1-UP
PART OF 510-9710 POWER TRAIN AR
AN ATTACHMENT

SMCS-3101, 3105

i07851947

NOTE	REF NO	GRAPHIC REF	PART NUMBER	QTY	PART NAME 1 2 3 4 5 6 (PRODUCT LEVEL)	SEE PAGE
	1	1	**1T-0034**	2	RING-LOCK	
	2	1	**1T-0933**	2	RING-RETAINING	
	3	1	**3T-6471**	1	SCREEN AS (TORQUE CONVERTER)	
		1	**3T-6469**	1	WASHER (19X26X1.6-MM THK)	
	4	1	**6D-7889**	1	SEAL-O-RING	
	5	1	**6Y-3164**	1	GEAR-PUMP DRIVE (77-TEETH)	
	6	1	**7X-7816**	1	PLATE-SERIAL NUMBER (TORQUE CONVERTER)	
	7	1	**9J-0461**	1	SPRING	
	8	1	**106-0721**	1	YOKE	
	9	1	**110-1211**	1	GEAR-PUMP DRIVE (77-TEETH)	
	10	1	**225-4286**	1	GEAR-PUMP DRIVE (68-TEETH)	
	11	1	**366-8968**	1	HOUSING	
	12	1	**372-3740**	1	BODY	
J	13	1	**518-5072**	1	VALVE GP-SOLENOID (TORQUE CONVERTER)	
Y	14	1	**290-5792**	1	SENSOR GP-SPEED (TORQUE CONVERTER OUTPUT)	207
Y	15	1	**528-9636**	1	TORQUE CONVERTER GP	333
	16	1	**293-9452**	1	MOUNTING-CABLE TIE	
M	17	1	**162-2165**	2	BOLT-SOCKET HEAD (M4X0.7X16-MM)	
	18	1	*164-5567*	1	COUPLER AS-QUICK DISCONNECT (MALE)	
		1	**6V-3965**	1	FITTING (QUICK DISCONNECT)	
		1	**214-7568**	1	SEAL-O-RING	
	19	1	**1T-0043**	1	BALL BEARING	
	20	1	**1T-0205**	1	RING-SNAP	
	21	1	**1T-1639**	1	RING	
	22	1	*307-2670*	2	PLUG AS	
					(EACH INCLUDES)	
		1	**9S-4185**	1	PLUG (3/4-16-THD)	
		1	**238-5080**	1	SEAL-O-RING	
	23	1	*326-0319*	1	PLUG AS	
		1	**9S-4188**	1	PLUG	
		1	**238-5083**	1	SEAL-O-RING	
	24	1	**238-5080**	1	SEAL-O-RING	
	25	1	**4B-3665**	2	BALL BEARING	
	26	1	**5P-5846**	1	SEAL-O-RING	
	27	1	**5P-9806**	1	SEAL-O-RING	
M	28	1	**8T-0100**	1	BOLT (M8X1.25X60-MM)	
	29	1	**7G-3496**	1	RETAINER	
	30	1	**8C-3229**	1	RING-RETAINING	
	31	1	**8T-4121**	8	WASHER-HARD (11X21X2.5-MM THK)	
M	32	1	**8T-4195**	8	BOLT (M10X1.5X30-MM)	
M	33	1	**8T-4910**	1	BOLT (M12X1.75X60-MM)	
	34	1	**9F-1399**	1	SEAL-O-RING	
	35	1	**9M-1974**	2	WASHER-HARD (8.8X16X2-MM THK)	
	36	1	**9X-7719**	1	SEAL-LIP TYPE	
	37	1	**7B-3028**	2	SCREW-DRIVE (NO 4X 3/16-IN)	
M	38	1	**8T-3647**	1	BOLT (M8X1.25X80-MM)	

528-9635 **TORQUE CONVERTER & HOUSING GP** (contd.) **i07851947**

NOTE	REF NO	GRAPHIC REF	PART NUMBER	QTY	PART NAME 1 2 3 4 5 6 (PRODUCT LEVEL)	SEE PAGE
	39	1	**267-4211**	1	SPACER (8.8X16X15-MM THK)	
					AVAILABLE REPAIR KIT(S):	
J			**387-2867**	1	KIT-SEAL	
					(INCLUDES O-RING SEALS)	

J - KIT MARKED J SERVICES PART(S) MARKED J
M - METRIC PART
Y - SEPARATE ILLUSTRATION

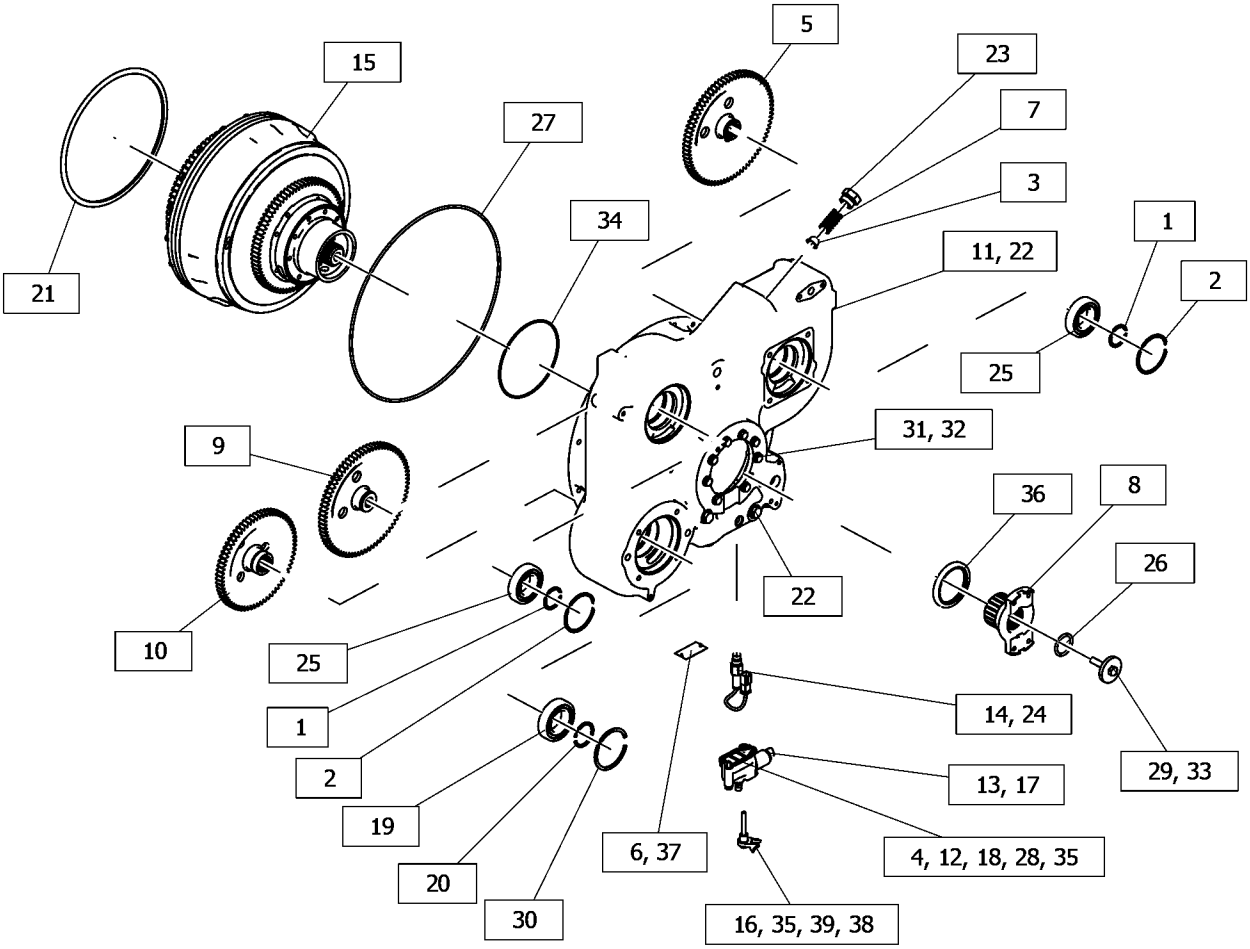

GRAPHIC #1 <END> g06455249

528-9636 TORQUE CONVERTER GP

S/N: TC31-UP; 1RZ1-UP

PART OF 528-9635 TORQUE CONVERTER & HOUSING GP

AN ATTACHMENT

SMCS-3101 **i07828399**

NOTE	REF NO	GRAPHIC REF	PART NUMBER	QTY	PART NAME 1 2 3 4 5 6 (PRODUCT LEVEL)	SEE PAGE
	1	1	**433-5968**	1	SEAL-O-RING	
	2	1	**1N-7057**	1	RING-SEAL	
	3	1	**331-7132**	1	RING-SEAL	
	4	1	**363-8109**	1	STATOR-CONVERTER	
	5	1	**8P-8555**	1	RACE-FREEWHEEL	
	6	1	**258-5652**	1	DISC-FRICTION	
	7	1	**268-5577**	1	TURBINE-CONVERTER	
	8	1	**274-4254**	1	RING-SEAL	
	9	1	**517-7206**	1	CAM-FREEWHEEL	
	10	1	**323-2092**	1	PLATE	
	11	1	**323-2093**	1	PLATE-SPLINED	
	12	1	**325-9335**	1	PLATE-SEPARATOR	
	13	1	**357-7450**	1	HUB-IMPELLER	
	14	1	**357-7451**	1	HUB	
	15	1	**357-9709**	1	PLATE	
	16	1	**361-6722**	2	WASHER-THRUST	
	17	1	**361-6725**	1	RACE-THRUST	
	18	1	**521-5446**	1	RING-RETAINING	
	19	1	**439-5274**	1	CARRIER-STATOR	
	20	1	**439-5272**	1	SHAFT-OUTPUT	
	21	1	**366-8971**	1	GEAR-DRIVE	
	22	1	**368-6505**	1	IMPELLER	
	23	1	**433-5967**	1	SEAL-O-RING	
	24	1	**527-0485**	18	SPRING-FREEWHEEL	
	25	1	**416-2583**	1	PISTON	
	26	1	**416-2585**	1	HOUSING AS-CLUTCH	
	26A	1	**392-9262**	1	BUSHING	
		1	**1T-0936**	1	PLUG-ORIFICE	
	27	1	**1J-6472**	1	RING-RETAINING	
	28	1	**1T-0043**	1	BALL BEARING	
	29	1	**304-2746**	2	BEARING-THRUST	
	30	1	**359-4894**	2	RING-RETAINING	
	31	1	**360-6838**	1	BEARING-THRUST	
	32	1	**5G-7636**	2	DOWEL	
	33	1	**5P-3629**	1	RING-RETAINING	
M	34	1	**6V-5230**	18	BOLT (M10X1.5X60-MM)	
	35	1	**9X-2027**	18	WASHER (11X18X2-MM THK)	
	36	1	**8M-2031**	1	BALL BEARING	
M	37	1	**105-3478**	8	BOLT-SOCKET HEAD (M10X1.5X35-MM)	
M	38	1	**101-7398**	16	BOLT-SOCKET HEAD (M10X1.5X40-MM)	
	39	1	**196-8548**	1	RING-SEAL	
	40	1	**3S-1281**	1	RING-SEAL	
	41	1	**265-5287**	1	RING-SEAL	
	42	1	**541-3260**	18	ROLLER-FREEWHEEL	

M - METRIC PART

528-9636 **TORQUE CONVERTER GP** (contd.) **i07828399**

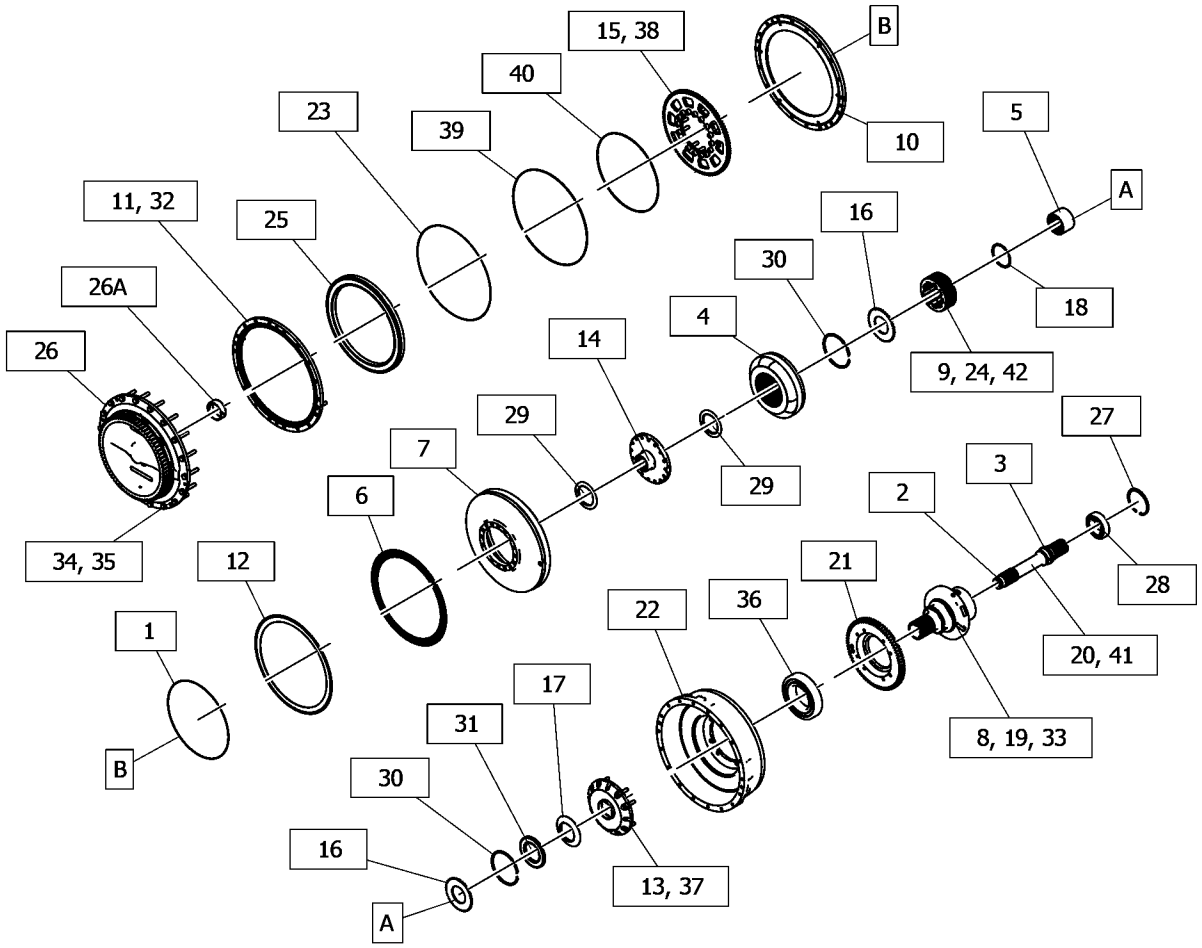

GRAPHIC #1 <END> g06451521

549-8359 TRANSMISSION AR

S/N: D5H1-UP; D6M1-UP; D7M1-UP; D9M1-UP
PART OF 510-9710 POWER TRAIN AR
AN ATTACHMENT

SMCS-3030 **i07816410**

NOTE	REF NO	GRAPHIC REF	PART NUMBER	QTY	PART NAME 1 2 3 4 5 6 (PRODUCT LEVEL)	SEE PAGE
Y	1	1	*549-8381*	1	PLANETARY GP-TRANSMISSION	319
Y	2	1	*394-2666*	1	CONTROL GP-TRANSMISSION HYD	279
Y	3	1	*419-6899*	1	GEAR GP-BEVEL & TRANSFER	304

Y - SEPARATE ILLUSTRATION

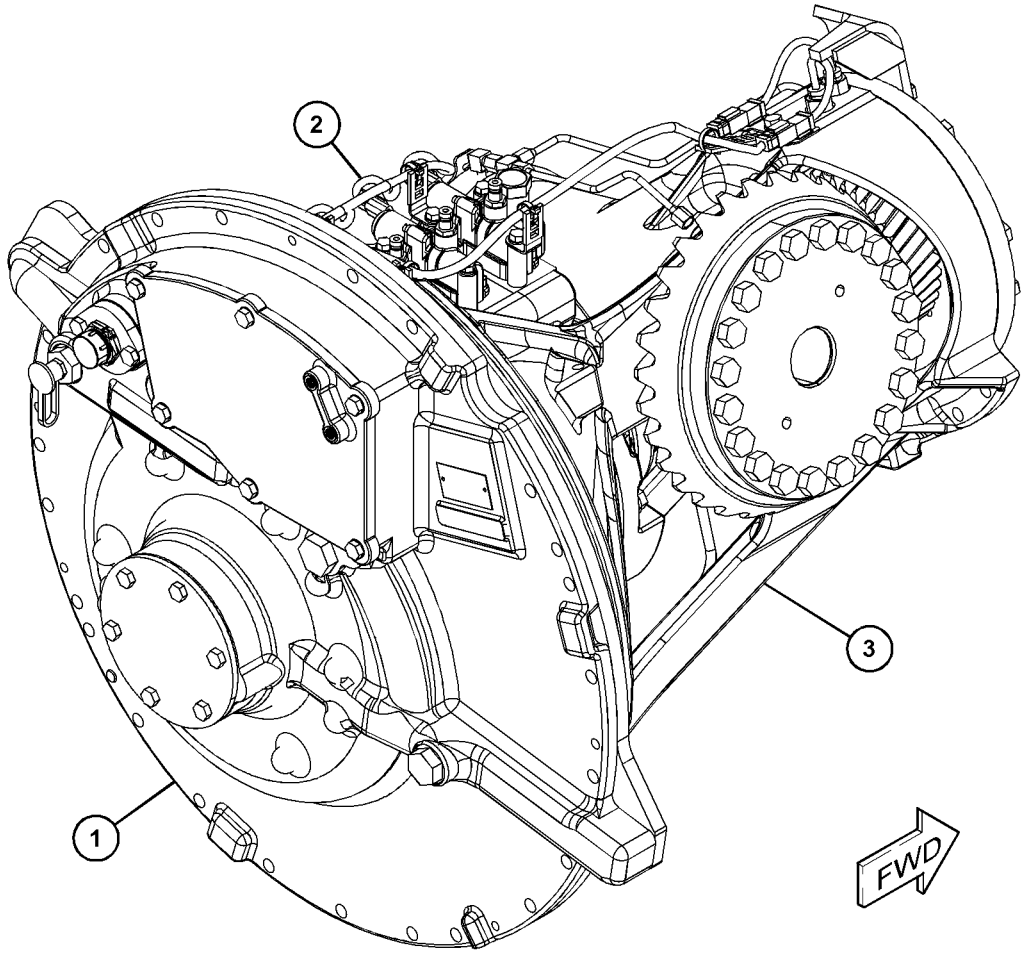

GRAPHIC #1 <END> g06452930

365-6807 VALVE GP-RELIEF

S/N: D5H1-UP; D6M1-UP; D7M1-UP; D9M1-UP
PART OF 394-2666 CONTROL GP-TRANSMISSION HYD
AN ATTACHMENT

SMCS-3133, 3182

i05381307

NOTE	REF NO	GRAPHIC REF	PART NUMBER	QTY	PART NAME 1 2 3 4 5 6 (PRODUCT LEVEL)	SEE PAGE
	1	1	**1M-9351**	1	SPRING	
	2	1	**2S-5835**	1	PISTON-LOAD	
	3	1	**8E-1143**	1	SLUG	
	4	1	**9U-8668**	1	SPOOL AS	
		1	**3D-8317**	1	RING-RETAINING	
		1	**4B-9880**	1	BALL	
		1	**4M-2381**	1	SPRING	
		1	**9U-8669**	1	RETAINER	
	5	1	**202-2005**	1	COVER	
	6	1	**355-2381**	1	SCREW-ADJUSTING (5/16-24X1.5-IN)	
	7	1	*162-0177*	2	PLUG AS	
					(EACH INCLUDES)	
		1	**3J-1907**	1	SEAL-O-RING	
		1	**9S-8004**	1	PLUG (9/16-18-THD)	
	8	1	**4F-2294**	1	NUT-JAM (5/16-24-THD)	
M	9	1	**6V-3940**	4	BOLT (M8X1.25X25-MM)	
	10	1	**9M-1974**	1	WASHER-HARD (8.8X16X2-MM THK)	

M - METRIC PART

365-6807 **VALVE GP-RELIEF (**contd.**)** **i05381307**

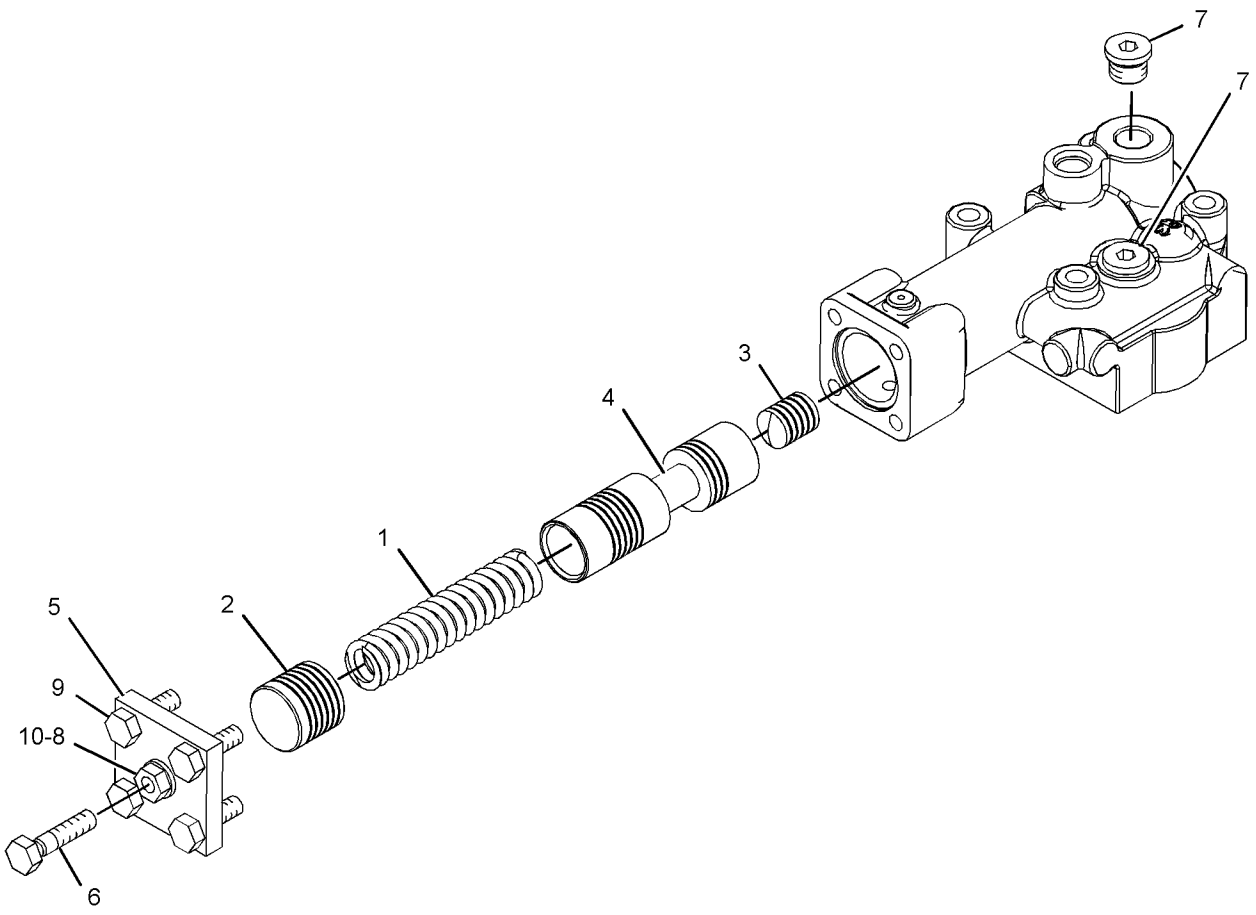

GRAPHIC #1 <END> g02416237

6Y-8473 VALVE GP-RELIEF

S/N: Z2K1-UP; Z2N1-UP
PART OF 509-3799 LINES GP-POWER TRAIN OIL
AN ATTACHMENT

SMCS-3133, 3182

i05378653

NOTE	REF NO	GRAPHIC REF	PART NUMBER	QTY	PART NAME 1 2 3 4 5 6 (PRODUCT LEVEL)	SEE PAGE
	1	1	**2S-1384**	1	SPOOL AS-RELIEF	
		1	**2S-1385**	1	SPOOL-RELIEF VALVE	
		1	**5M-9548**	1	SPRING	
		1	**7M-8592**	1	RING-RETAINING	
		1	**8M-2538**	1	POPPET	
		1	**8M-4409**	1	RETAINER	
	2	1	**9X-2027**	4	WASHER (11X18X2-MM THK)	
	3	1	**6Y-8475**	1	HOUSING-VALVE	
	4	1	**2S-1382**	1	SPRING	
	5	1	**3J-1907**	1	SEAL-O-RING	
B	6	1	**4M-1751**	3	SPACER (15.09X0.4-MM THK)	
	7	1	**4M-8239**	2	COVER	
B	8	1	**5S-7001**	5	SPACER (7.54X14.15X0.9-MM THK)	
	9	1	**6V-0852**	1	CAP-DUST	
	10	1	**6V-3965**	1	FITTING (QUICK DISCONNECT)	
	11	1	**6V-4365**	1	SEAL-O-RING	
M	12	1	**8T-4136**	4	BOLT (M10X1.5X25-MM)	
	13	1	**8M-4986**	3	SEAL-O-RING	

B - USE AS REQUIRED
M - METRIC PART

6Y-8473 **VALVE GP-RELIEF** (contd.) **i05378653**

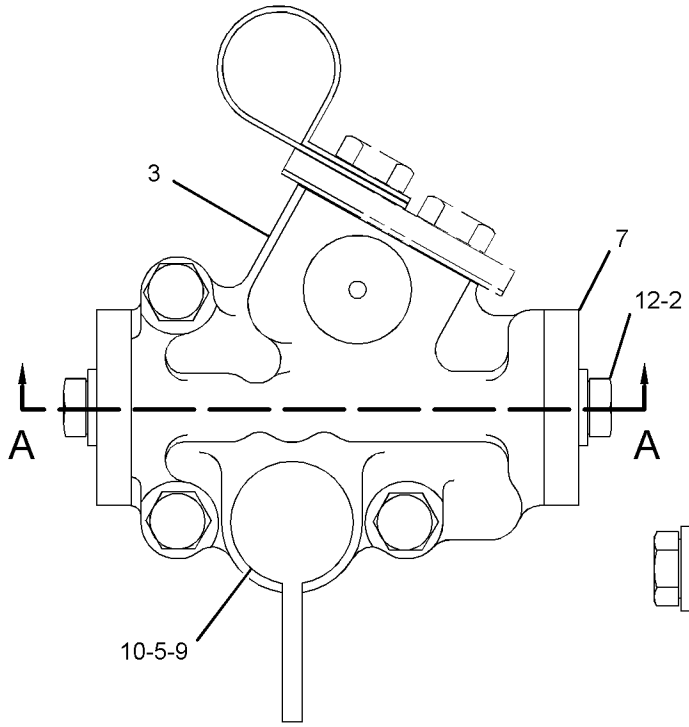

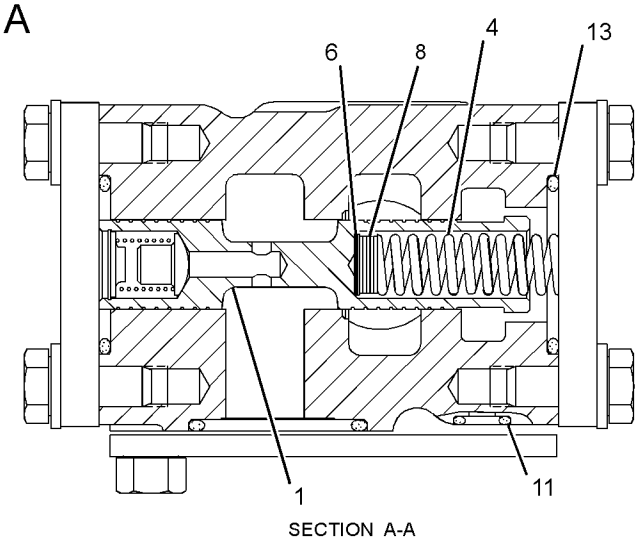

SECTION A-A

GRAPHIC #1 <END> g03404262

513-5066 BAFFLE GP-RADIATOR

S/N: Z2K1-UP; Z2N1-UP
PART OF 568-5303 BAFFLE GP-RADIATOR
AN ATTACHMENT

SMCS-1353, 1806

i07819728

NOTE	REF NO	GRAPHIC REF	PART NUMBER	QTY	PART NAME 1 2 3 4 5 6 (PRODUCT LEVEL)	SEE PAGE
	1	1	**187-7331**	8	MOUNT-RUBBER	
	2	1	**528-7140**	1	BAFFLE	
M	3	1	**7X-2554**	2	BOLT (M16X2X70-MM)	
M	4	1	**8T-4175**	2	BOLT (M16X2X90-MM)	
	5	1	**7X-0515**	4	WASHER-HARD (17X35X5-MM THK)	
	6	1	**7X-0607**	4	WASHER-HARD (20X55X8-MM THK)	
	7	1	**8T-4121**	5	WASHER-HARD (11X21X2.5-MM THK)	
	8	1	**135-8573**	2	BOLT AS	
	9	1	**198-4778**	4	WASHER-HARD (13.5X30X12-MM THK)	
	10	1	**433-8954**	1	STRIP	
	11	1	**386-6145**	2	PLATE	
M	12	1	**479-2171**	3	BOLT AS	
M	13	1	**479-2172**	13	BOLT AS	
	14	1	**513-5079**	2	PLATE AS	
					(EACH INCLUDES)	
M		1	**8T-3490**	4	NUT-WELD (M10X1.5-THD)	
	15	1	**518-0169**	1	PLATE AS	
M		1	**8T-3490**	3	NUT-WELD (M10X1.5-THD)	
	16	1	**563-9734**	1	STRIP	
M	17	1	**8T-4194**	4	BOLT (M12X1.75X50-MM)	
E	18	1	**222-5093**		SEAL (11.5-CM EACH)	
E	19	1	**233-6832**		SEAL (89-CM EACH)	
E	20	1	**398-1743**		SEAL (78.5-CM EACH)	
E	20A	1	**398-1743**		SEAL (7.5-CM EACH)	

E - ORDER BY THE CENTIMETER
M - METRIC PART

513-5066 **BAFFLE GP-RADIATOR** (contd.) **i07819728**

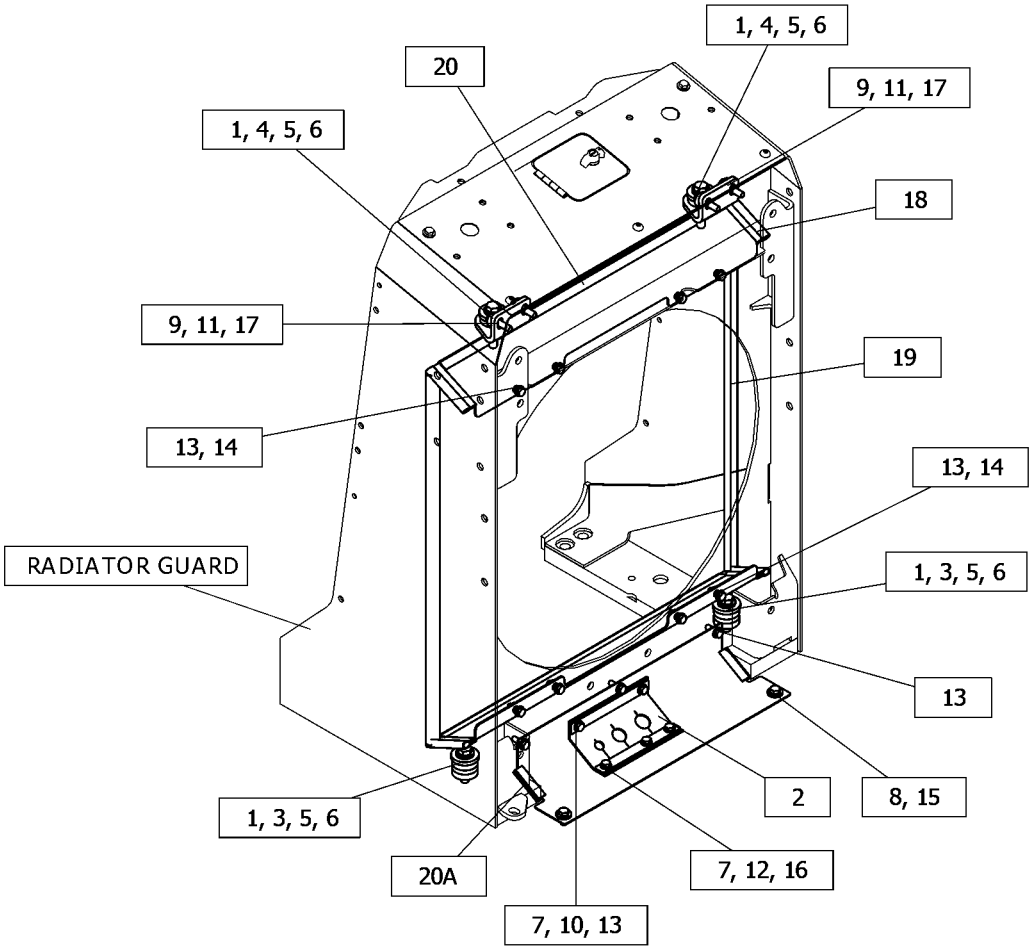

GRAPHIC #1 <END> g06450592

568-5303 BAFFLE GP-RADIATOR

S/N: Z2K1-UP; Z2N1-UP
VPAT
PART OF 532-9781 CONFIGURATION AR
AN ATTACHMENT

SMCS-1353, 1806 **i07819709**

NOTE	PART NUMBER	QTY	PART NAME 1 2 3 4 5 6 (PRODUCT LEVEL)	SEE PAGE
Y	*513-5066*	1	BAFFLE GP-RADIATOR	340
Y	*510-6812*	1	WIRING GP-FRONT	255

Y - SEPARATE ILLUSTRATION

<END>

515-3719 BAR AR-STRIKER

S/N: Z2K1-UP; Z2N1-UP
REAR
FOR USE WITH OPTION AR-FORESTRY
CANNOT BE USED WITH RIPPER AR, WINCH AR, PUMP GP-REFUELING
AN ATTACHMENT

SMCS-7180 **i07814530**

NOTE	PART NUMBER	QTY	PART NAME 1 2 3 4 5 6 (PRODUCT LEVEL)	SEE PAGE
Y	*559-4300*	1	STRIKER GP	498
	562-9032	1	PLUG GP	
B	**4E-9452**	4	PLUG	

B - USE AS REQUIRED
Y - SEPARATE ILLUSTRATION

<END>

559-4308 BAR GP-STRIKER

S/N: Z2K1-UP; Z2N1-UP
PART OF 559-4300 STRIKER GP
AN ATTACHMENT

SMCS-7180 **i07835078**

NOTE	REF NO	GRAPHIC REF	PART NUMBER	QTY	PART NAME 1 2 3 4 5 6 (PRODUCT LEVEL)	SEE PAGE
	1	1	**6F-8499**	2	SPRING	
	2	1	**1P-2841**	2	SPACER (0.531X1X0.69-IN THK)	
	3	1	**1Z-9932**	2	HINGE AS	
M	4	1	**5C-7261**	2	NUT (M8X1.25-THD)	
	5	1	**5P-1076**	4	WASHER-HARD (13.5X30X4-MM THK)	
	6	1	**8T-1579**	1	PLATE	
	7	1	**8T-4121**	3	WASHER-HARD (11X21X2.5-MM THK)	
M	8	1	**8T-4183**	8	BOLT (M12X1.75X40-MM)	
	9	1	**8T-4223**	8	WASHER-HARD (13.5X25.5X3-MM THK)	
	10	1	**8T-4224**	4	WASHER-HARD (8.8X16X2-MM THK)	
M	11	1	**8T-7547**	2	BOLT (M8X1.25X30-MM)	
	12	1	**8T-9496**	2	LOCKNUT (9/16-18-THD)	
Y	13	1	**8Y-6400**	1	LATCH GP (T-BAR, COMPARTMENT)	406
	14	1	**9Z-9214**	2	ROD AS	
	15	1	**201-2557**	2	HINGE AS	
	16	1	**559-4303**	1	BAR AS-STRIKER	
M		1	**8T-3490**	7	NUT-WELD (M10X1.5-THD)	
M		1	**8T-3612**	2	NUT-WELD (M8X1.25-THD)	
	17	1	**560-2035**	1	PLATE	
	18	1	**581-7275**	1	DOOR AS (RH)	
	19	1	**581-7276**	1	DOOR AS (LH)	
					(EACH DOOR AS INCLUDES)	
M		1	**8T-3597**	4	NUT-WELD (M12X1.75-THD)	
	20	1	**2K-8467**	4	PIN-SPRING	
M	21	1	**8T-4137**	3	BOLT (M10X1.5X20-MM)	
M	22	1	**8T-4908**	2	BOLT (M8X1.25X25-MM)	

M - METRIC PART
Y - SEPARATE ILLUSTRATION

559-4308 **BAR GP-STRIKER (**contd.**)** **i07835078**

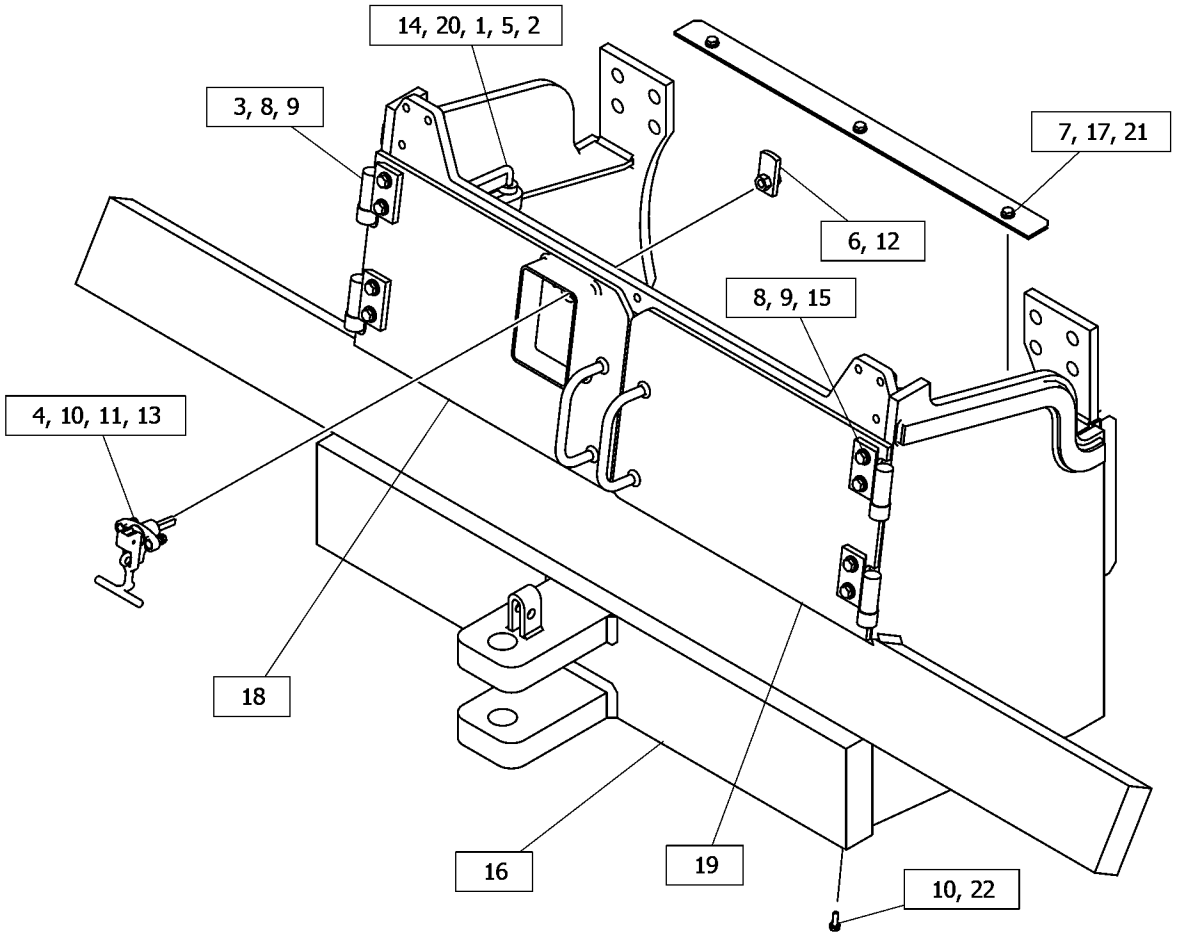

GRAPHIC #1 <END> g06451746

507-3678 CASE & FRAME AS

S/N: Z2K1-UP; Z2N1-UP
PART OF 507-3673 CASE & FRAME GP
AN ATTACHMENT

SMCS-7051 **i07832578**

NOTE	REF NO	GRAPHIC REF	PART NUMBER	QTY	PART NAME 1 2 3 4 5 6 (PRODUCT LEVEL)	SEE PAGE
	1	1	**8G-4386**	11	SLEEVE	
	2	1	**8G-5247**	4	SLEEVE	
	3	1	**8T-4121**	1	WASHER-HARD (11X21X2.5-MM THK)	
	4	1	**111-5009**	1	TUBE	
	5	1	**529-6539**	2	BOLT AS	
M	6	1	**344-5675**	1	NUT (M10X1.5-THD)	
M	7	1	**479-2172**	1	BOLT AS	
	8	1	*507-3679*	1	CASE AS	
	8A	1	**7P-6596**	2	BUSHING	
	9	1	**521-2750**	1	TUBE	
	10	1	**521-2751**	1	TUBE	
	11	1	**521-2752**	1	TUBE	
	12	1	**521-2753**	1	TUBE	
	13	1	**521-2754**	1	TUBE	
	14	1	**521-2755**	1	TUBE	
	15	1	**521-2756**	1	TUBE	
	16	1	**521-2757**	1	TUBE	
	17	1	**5K-9660**	3	CLIP (LOOP)	

M - METRIC PART

507-3678 **CASE & FRAME AS (**contd.**)** **i07832578**

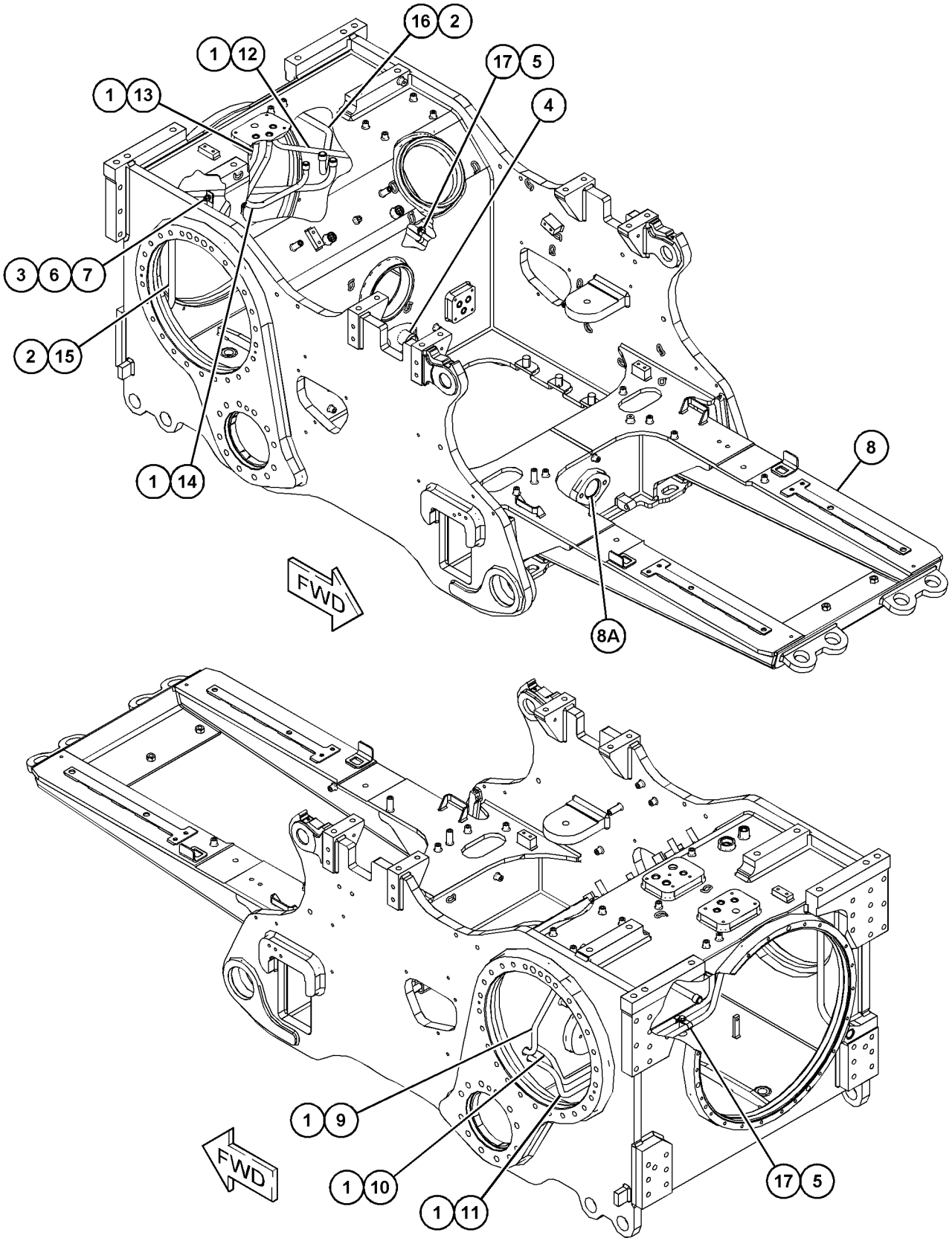

GRAPHIC #1 <END> g06452110

507-3673 CASE & FRAME GP

S/N: Z2K1-UP; Z2N1-UP
PART OF 510-9705 CHASSIS AR
AN ATTACHMENT

SMCS-7051 **i07819236**

NOTE	REF NO	GRAPHIC REF	PART NUMBER	QTY	PART NAME 1 2 3 4 5 6 (PRODUCT LEVEL)	SEE PAGE
	1	1	**6F-0711**	1	SEAL-O-RING	
	2	1	**106-8186**	1	VALVE AS-DRAIN (ECOLOGY)	
		1	**077-3241**	1	SEAL-O-RING	
	3	1	**106-8187**	1	PLUG-DRAIN	
	4	1	**107-8126**	2	BEARING	
	5	1	**109-0959**	4	RING	
Y	6	1	*507-3678*	1	CASE & FRAME AS	345
	7	1	**6E-5449**	2	BEARING	

Y - SEPARATE ILLUSTRATION

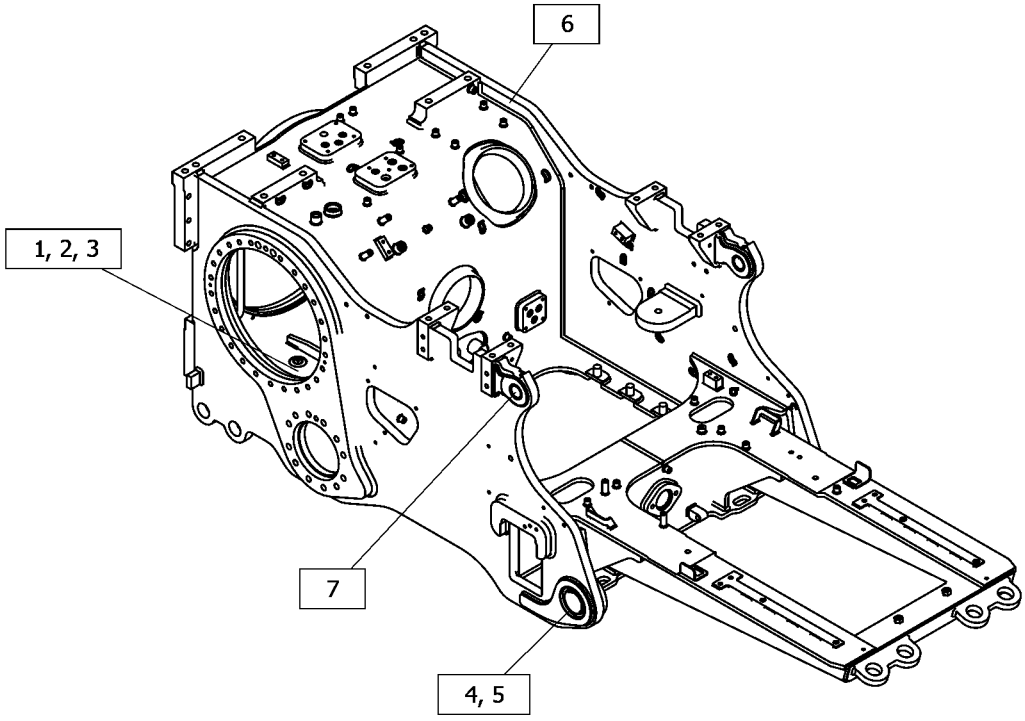

GRAPHIC #1 <END> g06454243

515-6179 COVER GP-ACCESS

S/N: Z2K1-UP; Z2N1-UP
LH
PART OF 523-3962 ENCLOSURE GP-FENDER
AN ATTACHMENT

SMCS-726A **i07819904**

NOTE	REF NO	GRAPHIC REF	PART NUMBER	QTY	PART NAME 1 2 3 4 5 6 (PRODUCT LEVEL)	SEE PAGE
	1	1	**275-0571**	2	CAM-LATCH	
	2	1	**293-3081**	1	CAM-LATCH	
J	3	1	**465-6593**	1	LATCH AS	
	4	1	**508-1623**	1	ENCLOSURE AS	
	5	1	**529-6131**	1	LATCH AS	
J	6	1	**543-0545**	1	LATCH AS	

J - REQUIRES CORPORATE KEY

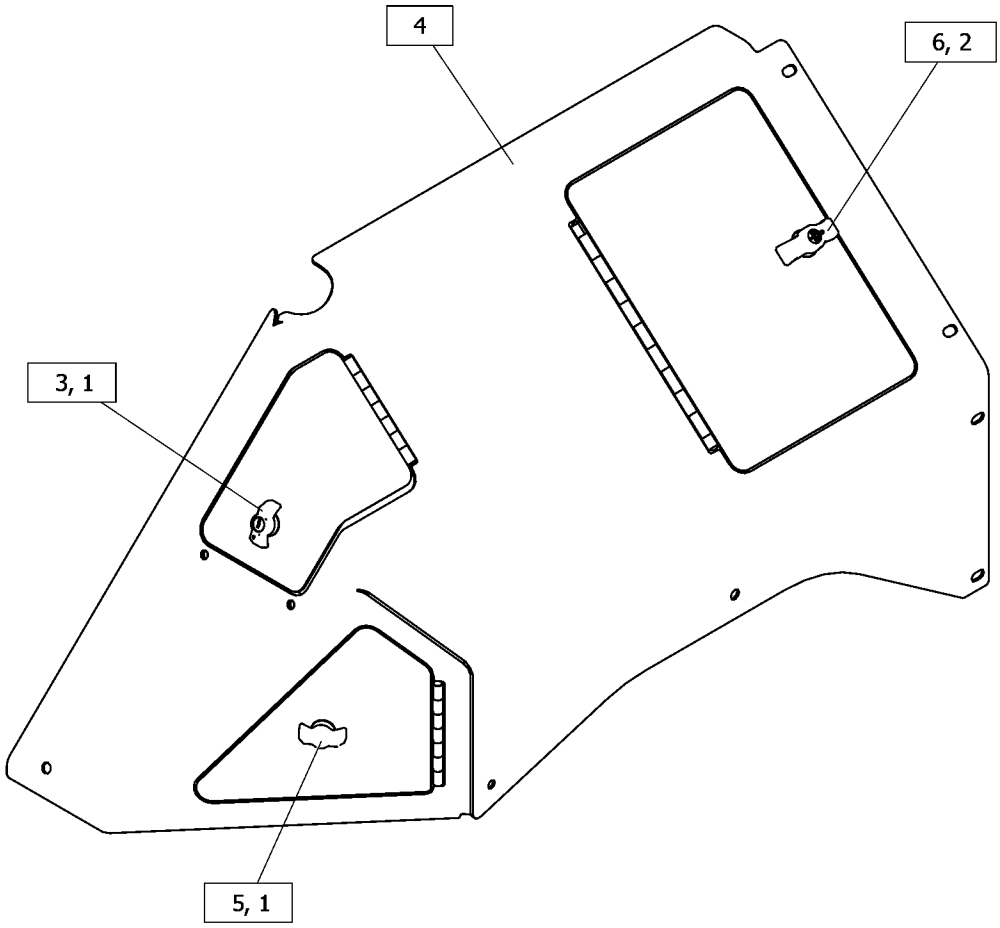

GRAPHIC #1 <END> g06448374

515-6198 COVER GP-ACCESS

S/N: Z2K1-UP; Z2N1-UP
RH
PART OF 523-3962 ENCLOSURE GP-FENDER
AN ATTACHMENT

SMCS-726A **i07820270**

NOTE	REF NO	GRAPHIC REF	PART NUMBER	QTY	PART NAME 1 2 3 4 5 6 (PRODUCT LEVEL)	SEE PAGE
M	1	1	**099-6418**	4	NUT (M6X1-THD)	
B	2	1	**216-0143**	2	SHIM (1-MM THK)	
J	3	1	**358-0921**	1	LATCH AS	
		1	**385-3458**	1	LOCK AS	
M	4	1	**479-2171**	6	BOLT AS	
	5	1	**508-1358**	1	DOOR AS-ACCESS	
		1	**8R-2566**	2	HINGE	
M		1	**8T-3612**	1	NUT-WELD (M8X1.25-THD)	
	6	1	**508-1367**	1	BRACKET	
	7	1	**508-1624**	1	ENCLOSURE AS	
M		1	**8T-3490**	8	NUT-WELD (M10X1.5-THD)	
H	8	1	**202-5293**		SEAL (3.9-DM)	
H	8A	1	**202-5293**		SEAL (1.4-DM)	

B - USE AS REQUIRED
H - ORDER BY THE DECIMETER
J - REQUIRES CORPORATE KEY
M - METRIC PART

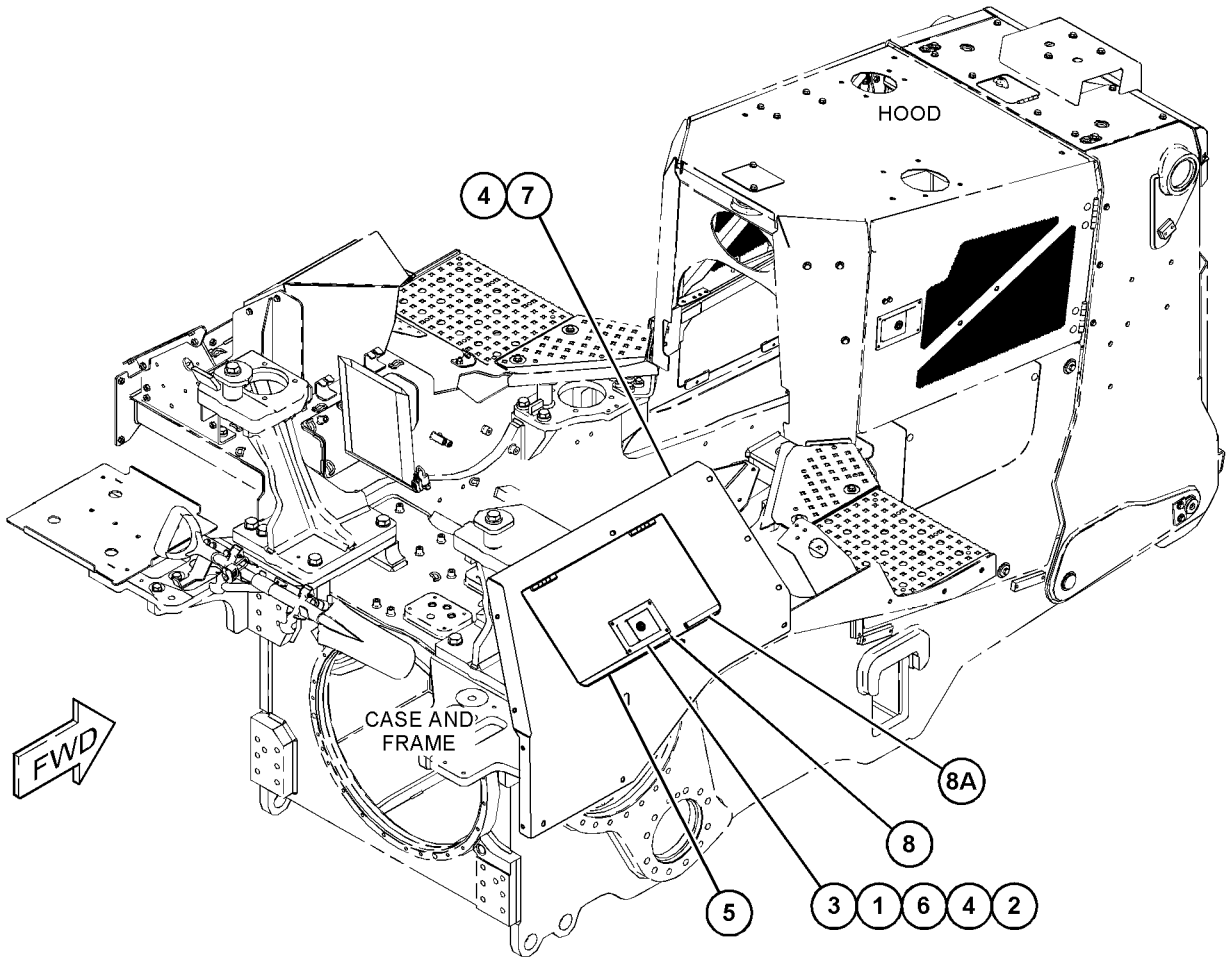

GRAPHIC #1 <END> g06451982

523-3958 COVER GP-ACCESS

S/N: Z2K1-UP; Z2N1-UP
FOR USE WITH 508-1609—PAGE: 118
CANNOT BE USED WITH 523-3959—PAGE: 90, 523-3955—PAGE: 115
PART OF 532-9851 DISTRIBUTION AR
AN ATTACHMENT

SMCS-726A **i07816186**

NOTE	REF NO	GRAPHIC REF	PART NUMBER	QTY	PART NAME 1 2 3 4 5 6 (PRODUCT LEVEL)	SEE PAGE
M	1	1	**8T-4185**	2	BOLT (M10X1.5X50-MM)	
	2	1	**3E-6773**	1	SEAL-O-RING	
	3	1	**7X-7729**	2	WASHER (11X25X3-MM THK)	
	4	1	**9X-7287**	1	SEAL-O-RING	
	5	1	*148-8410*	2	PLUG AS	
					(EACH INCLUDES)	
		1	**2M-9780**	1	SEAL-O-RING	
		1	**9S-4190**	1	PLUG-O-RING (7/8-14-THD)	
	6	1	**164-3417**	1	COVER	
	7	1	**187-1679**	1	COVER	
	8	1	**466-6951**	1	GUARD AS	
M	9	1	**479-2171**	12	BOLT AS	

M - METRIC PART

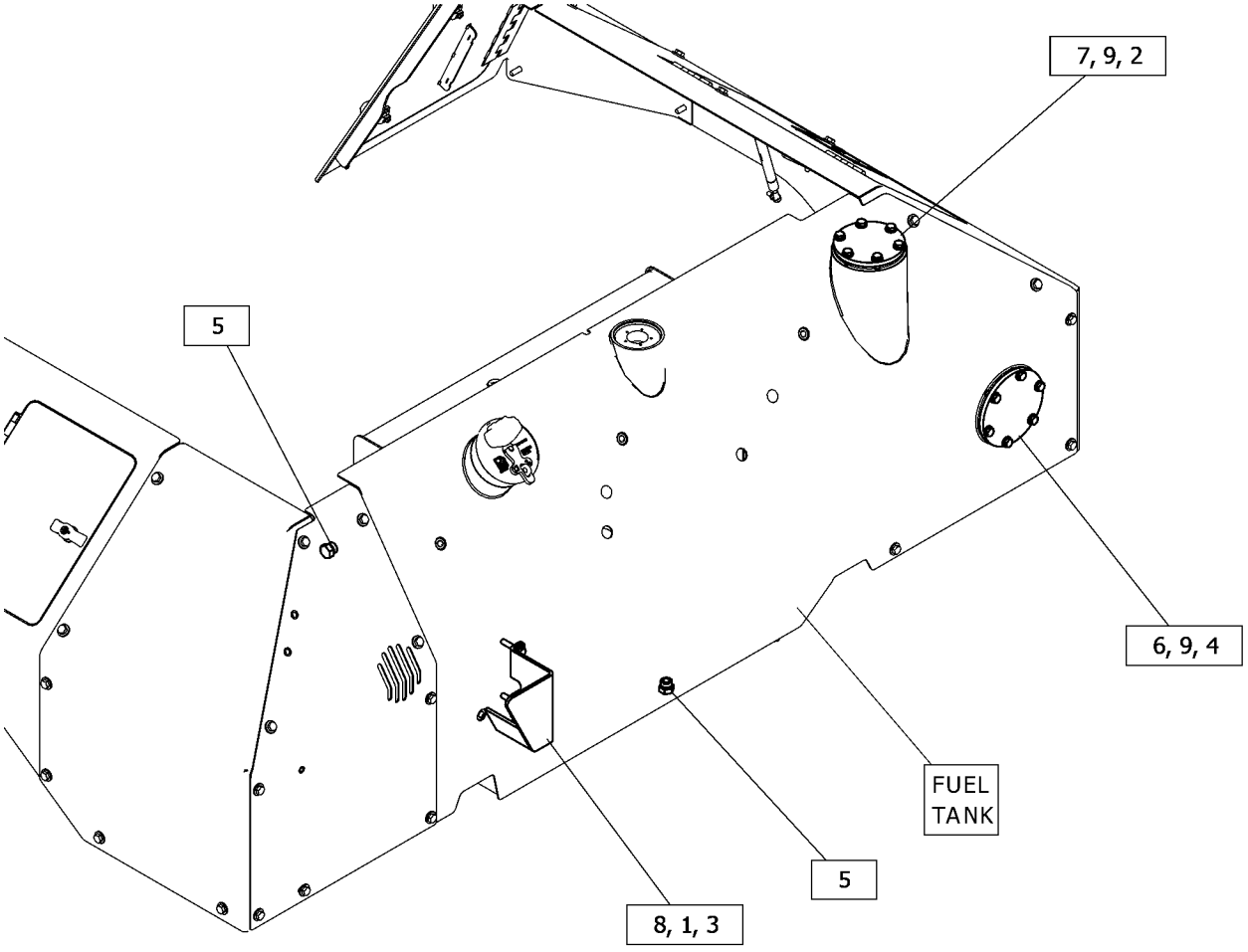

GRAPHIC #1 <END> g06444187

528-9547 COVER GP-ACCESS

S/N: Z2K1-UP; Z2N1-UP
LH
PART OF 548-4774 ENCLOSURE GP-FENDER
AN ATTACHMENT

SMCS-726A **i07831706**

NOTE	REF NO	GRAPHIC REF	PART NUMBER	QTY	PART NAME 1 2 3 4 5 6 (PRODUCT LEVEL)	SEE PAGE
	1	1	**293-3081**	1	CAM-LATCH	
	2	1	**319-2305**	2	CAM-LATCH	
J	3	1	**465-6593**	1	LATCH AS	
	4	1	**528-9549**	1	ENCLOSURE AS	
		1	**578-4915**	2	HINGE AS	
		1	**578-4916**	1	HINGE AS	
	5	1	**529-6131**	1	LATCH AS	
J	6	1	**543-0545**	1	LATCH AS	

J - REQUIRES CORPORATE KEY

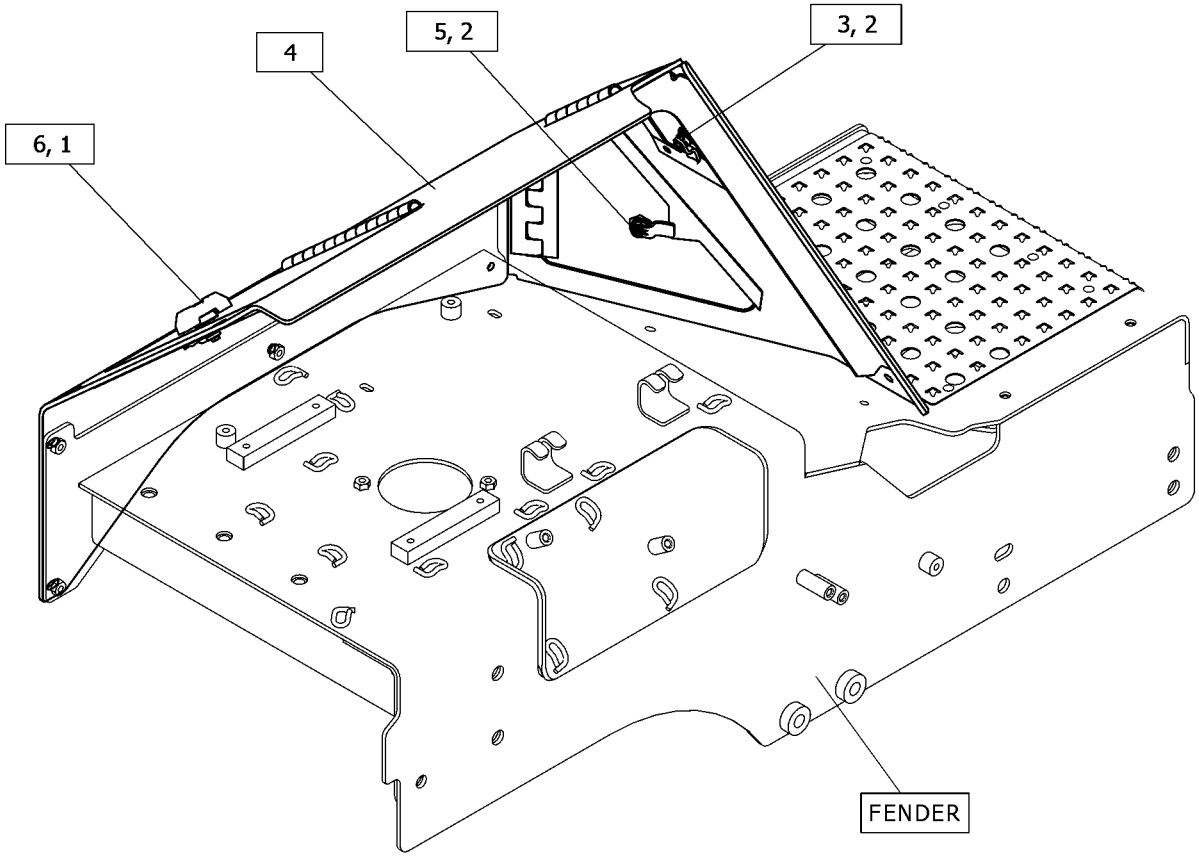

GRAPHIC #1 <END> g06451489

528-9550 COVER GP-ACCESS

S/N: Z2K1-UP; Z2N1-UP
RH
PART OF 548-4774 ENCLOSURE GP-FENDER
AN ATTACHMENT

SMCS-726A **i07831634**

NOTE	REF NO	GRAPHIC REF	PART NUMBER	QTY	PART NAME 1 2 3 4 5 6 (PRODUCT LEVEL)	SEE PAGE
M	1	1	**479-2171**	6	BOLT AS	
H	2	1	**202-5293**		SEAL (3.9-DM)	
H	2A	1	**202-5293**		SEAL (1.4-DM)	
	3	1	**528-9551**	1	ENCLOSURE AS	
M		1	**8T-3490**	4	NUT-WELD (M10X1.5-THD)	
M	4	1	**099-6418**	4	NUT (M6X1-THD)	
B	5	1	**216-0143**	2	SHIM (1-MM THK)	
J	6	1	**358-0921**	1	LATCH AS	
		1	**385-3458**	1	LOCK AS	
	7	1	**549-0463**	1	DOOR AS-ACCESS	
M		1	**8T-3612**	1	NUT-WELD (M8X1.25-THD)	
		1	**8R-2566**	2	HINGE	
	8	1	**508-1367**	1	BRACKET	

B - USE AS REQUIRED
H - ORDER BY THE DECIMETER
J - REQUIRES CORPORATE KEY
M - METRIC PART

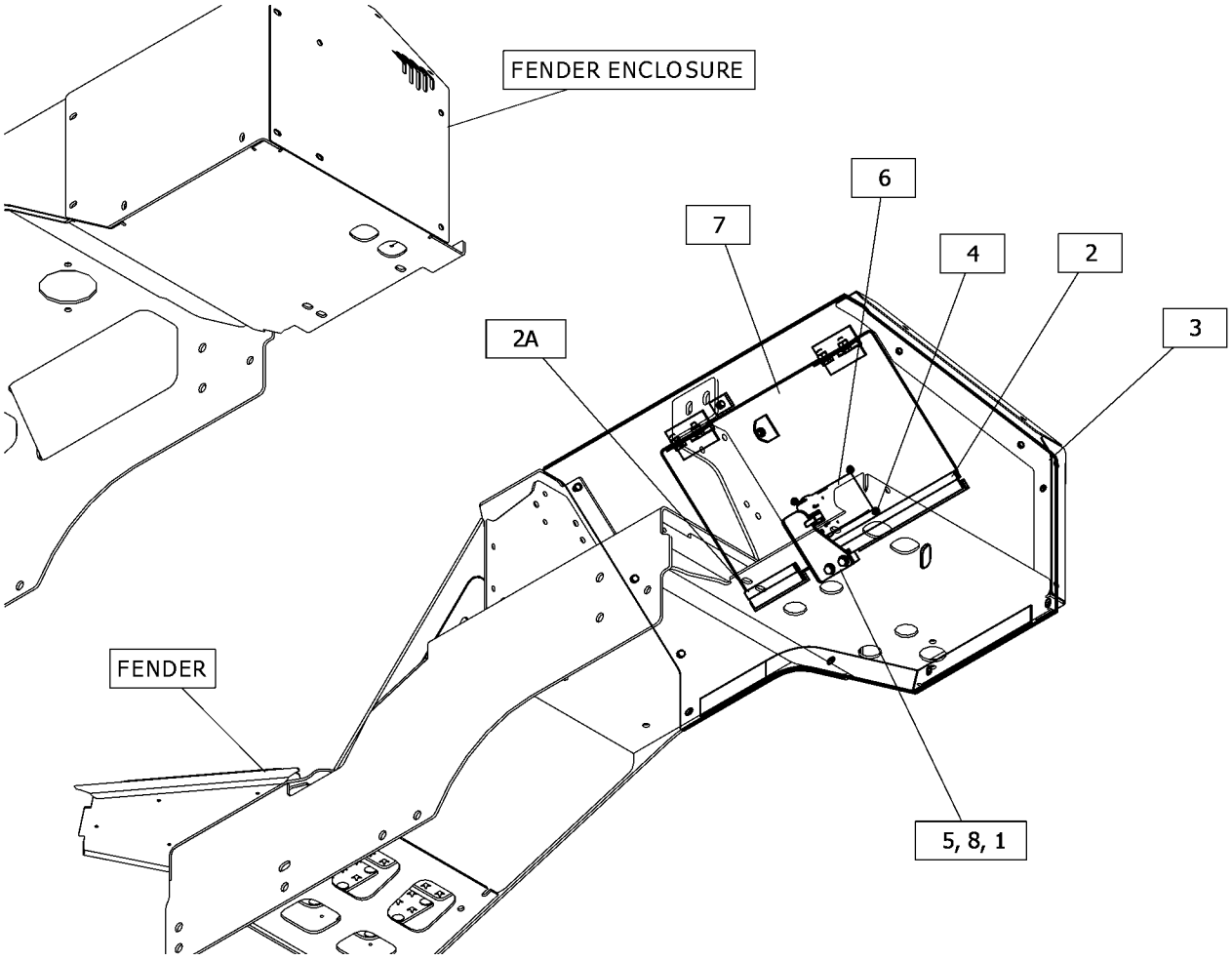

GRAPHIC #1 <END> g06451475

550-5565 COVER GP-ACCESS—HEAVY-DUTY

S/N: Z2K1-UP; Z2N1-UP

FOR USE WITH 508-1610—PAGE: 120, 550-5587—PAGE: 376

AN ATTACHMENT

SMCS-726A **i07817579**

NOTE	REF NO	GRAPHIC REF	PART NUMBER	QTY	PART NAME 1 2 3 4 5 6 (PRODUCT LEVEL)	SEE PAGE
	1	1	**523-3956**	1	PLATE	
	2	1	**529-6402**	1	PLATE	

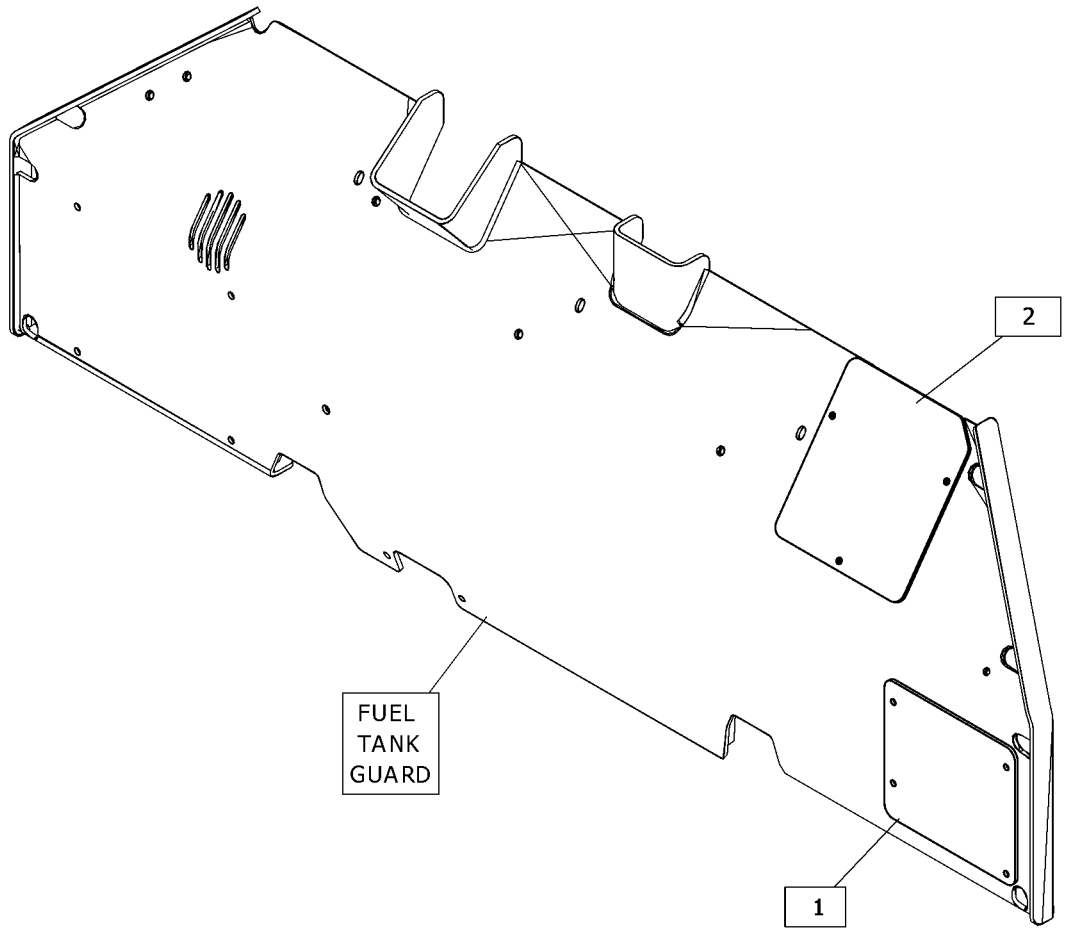

GRAPHIC #1 <END> g06445958

550-5567 COVER GP-ACCESS

S/N: Z2K1-UP; Z2N1-UP
FAST FILL
FOR USE WITH 550-5587—PAGE: 376, 523-3959—PAGE: 90, 508-1609—PAGE: 118
AN ATTACHMENT

SMCS-726A **i07818642**

NOTE	REF NO	GRAPHIC REF	PART NUMBER	QTY	PART NAME 1 2 3 4 5 6 (PRODUCT LEVEL)	SEE PAGE
	1	1	**523-3964**	1	GUARD AS	
	2	1	**540-2307**	1	GUARD AS	

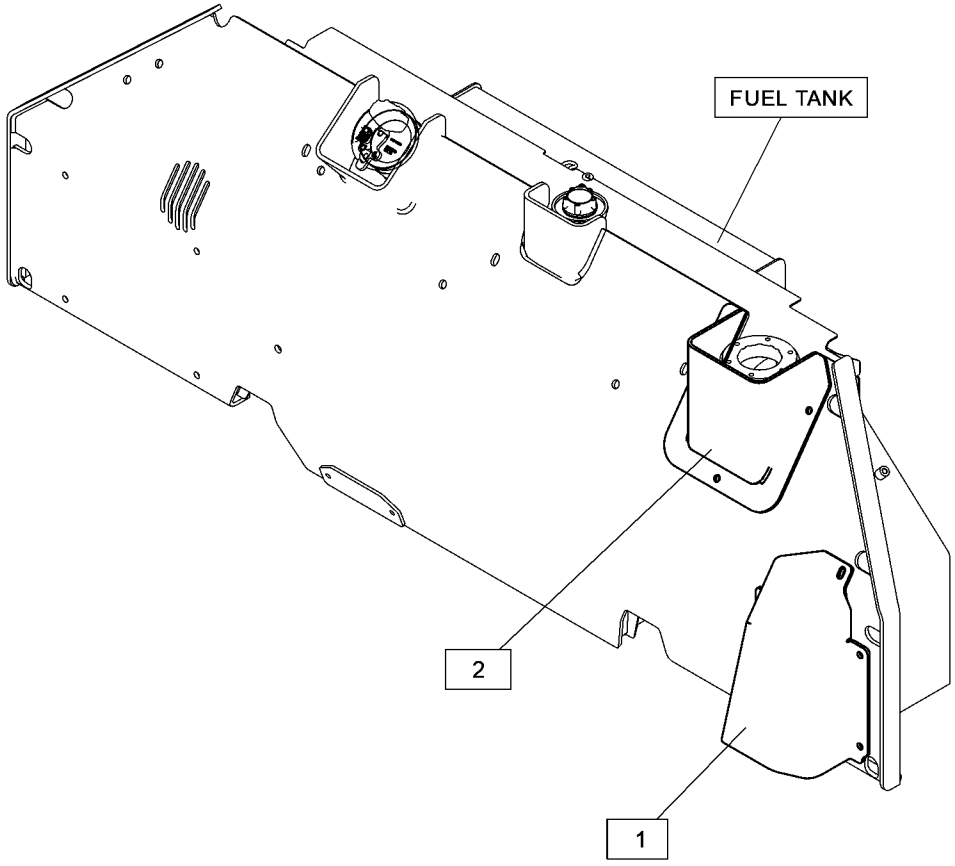

GRAPHIC #1 <END> g06445650

554-3767 COVER GP-ACCESS

S/N: Z2K1-UP; Z2N1-UP
PART OF 533-7717, 533-7718 INSTALLATION AR-BULLDOZER
AN ATTACHMENT

SMCS-726A **i07792345**

NOTE	REF NO	GRAPHIC REF	PART NUMBER	QTY	PART NAME 1 2 3 4 5 6 (PRODUCT LEVEL)	SEE PAGE
M	1	1	**8T-4186**	4	BOLT (M10X1.5X40-MM)	
	2	1	**1P-4576**	2	FLANGE-HALF	
	3	1	**8C-3206**	2	FLANGE-HALF	
	4	1	**8T-4121**	4	WASHER-HARD (11X21X2.5-MM THK)	
	5	1	**135-8575**	3	BOLT AS	
	6	1	**533-4159**	4	BOLT AS	
	7	1	**522-9007**	1	COVER AS-ACCESS	
M		1	**8T-3490**	4	NUT-WELD (M10X1.5-THD)	

M - METRIC PART

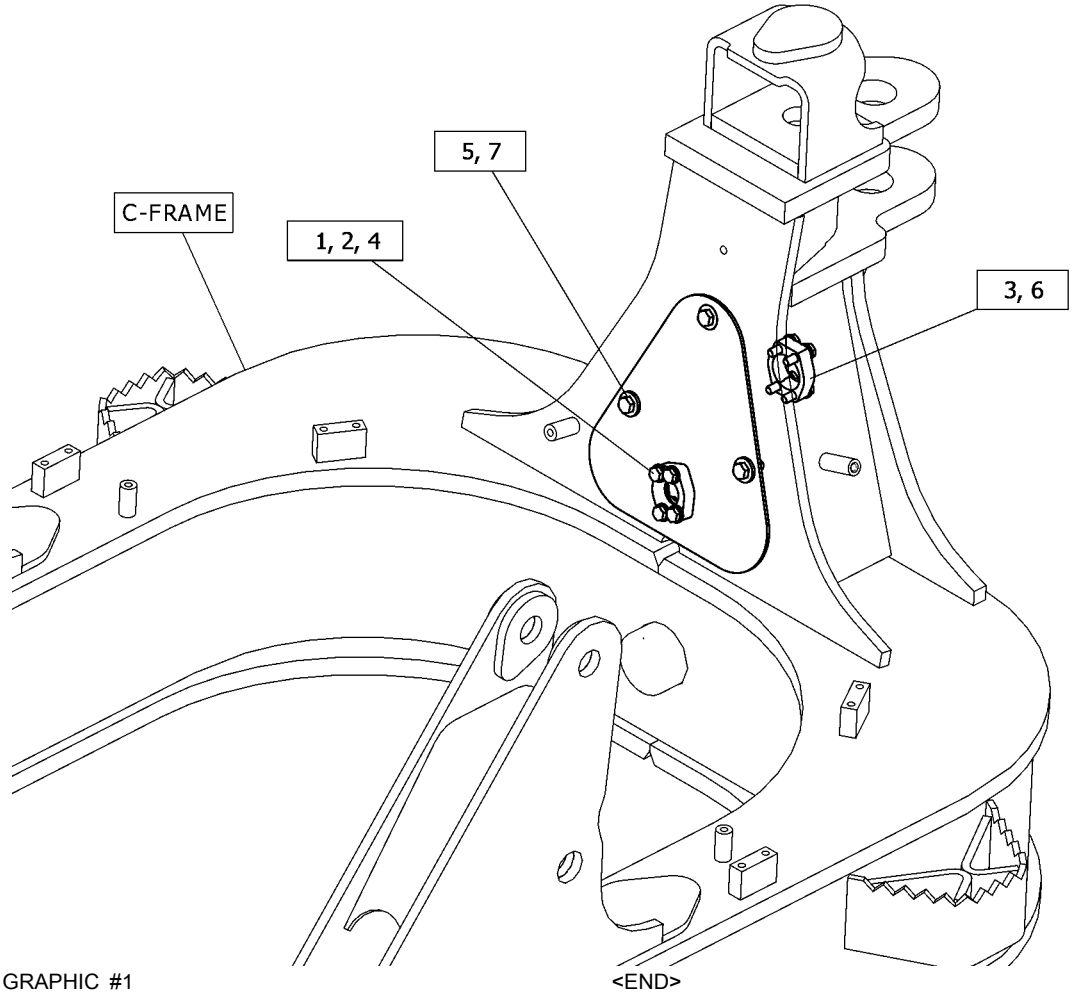

GRAPHIC #1 <END> g06441758

515-6180 COVER GP-FENDER

S/N: Z2K1-UP; Z2N1-UP
RH
PART OF 523-3962 ENCLOSURE GP-FENDER
AN ATTACHMENT

SMCS-7252 **i07825726**

NOTE	REF NO	GRAPHIC REF	PART NUMBER	QTY	PART NAME 1 2 3 4 5 6 (PRODUCT LEVEL)	SEE PAGE
	1	1	**293-3081**	2	CAM-LATCH	
	2	1	**508-1622**	1	ENCLOSURE AS	
J	3	1	**543-0545**	2	LATCH AS	

J - REQUIRES CORPORATE KEY

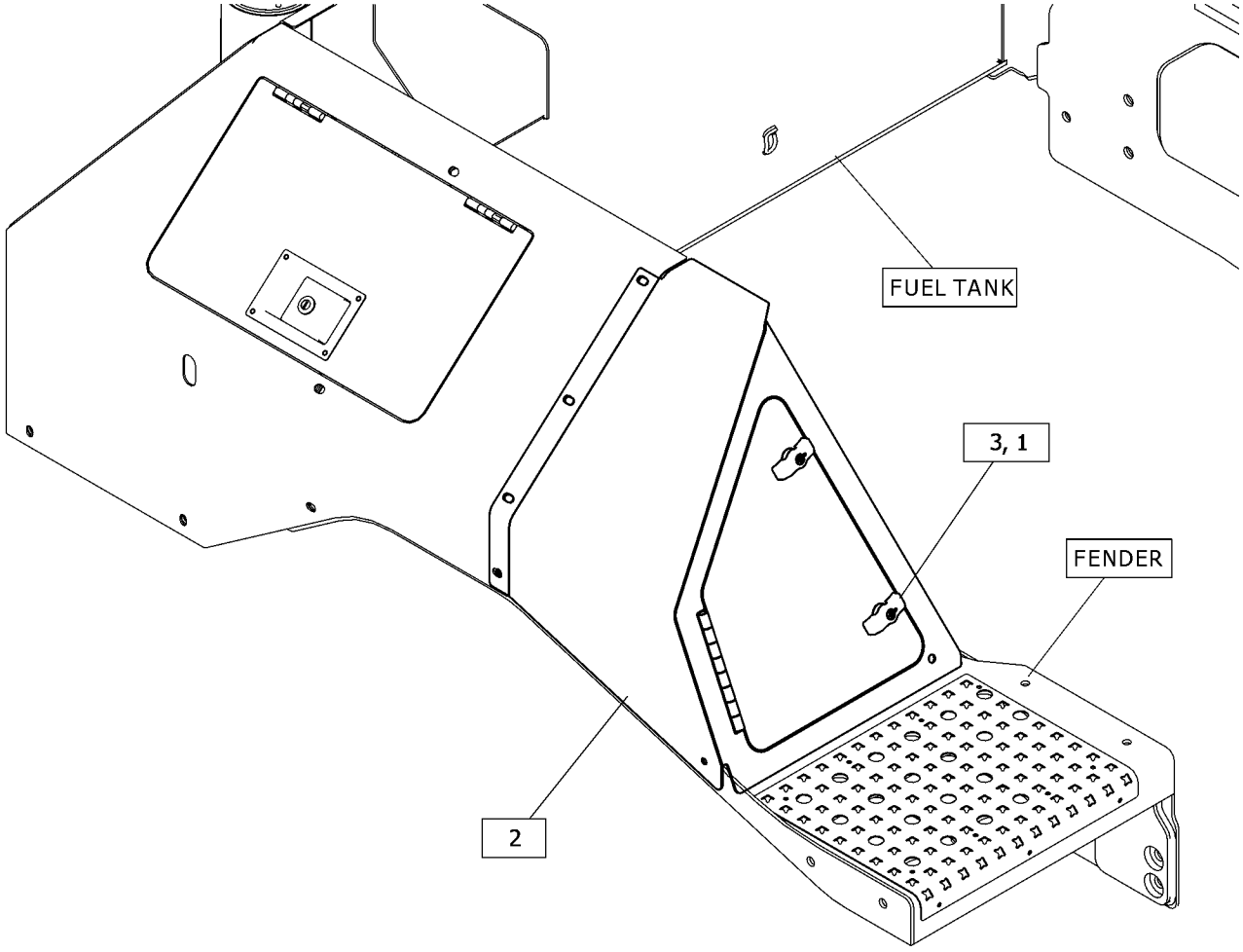

GRAPHIC #1 <END> g06449598

508-1352 DOOR GP-ACCESS

S/N: Z2K1-UP; Z2N1-UP
RH
PART OF 508-1360 DOOR GP-ACCESS
AN ATTACHMENT

SMCS-7273 **i07819318**

NOTE	REF NO	GRAPHIC REF	PART NUMBER	QTY	PART NAME 1 2 3 4 5 6 (PRODUCT LEVEL)	SEE PAGE
M	1	1	**8T-4189**	2	BOLT (M8X1.25X20-MM)	
	2	1	**7X-7729**	4	WASHER (11X25X3-MM THK)	
	3	1	**8T-4224**	2	WASHER-HARD (8.8X16X2-MM THK)	
M	4	1	**099-6418**	4	NUT (M6X1-THD)	
J	5	1	**358-0921**	1	LATCH AS	
		1	**385-3458**	1	LOCK AS	
	6	1	**378-9488**	1	GUIDE	
M	7	1	**344-5675**	4	NUT (M10X1.5-THD)	
	8	1	*508-1354*	1	DOOR AS-ACCESS (RH)	
M		1	**8T-3597**	2	NUT-WELD (M12X1.75-THD)	
M		1	**8T-3612**	2	NUT-WELD (M8X1.25-THD)	
	9	1	**523-3957**	2	PLATE	
	10	1	**528-6203**	2	HINGE AS	
					(EACH INCLUDES)	
M		1	**8T-3490**	2	NUT-WELD (M10X1.5-THD)	
D	11	1	**5P-7483**		SEAL (1-M EACH)	
D	11A	1	**5P-7483**		SEAL (7-M)	

D - ORDER BY THE METER
J - REQUIRES CORPORATE KEY
M - METRIC PART

508-1352 **DOOR GP-ACCESS (**contd.**)** **i07819318**

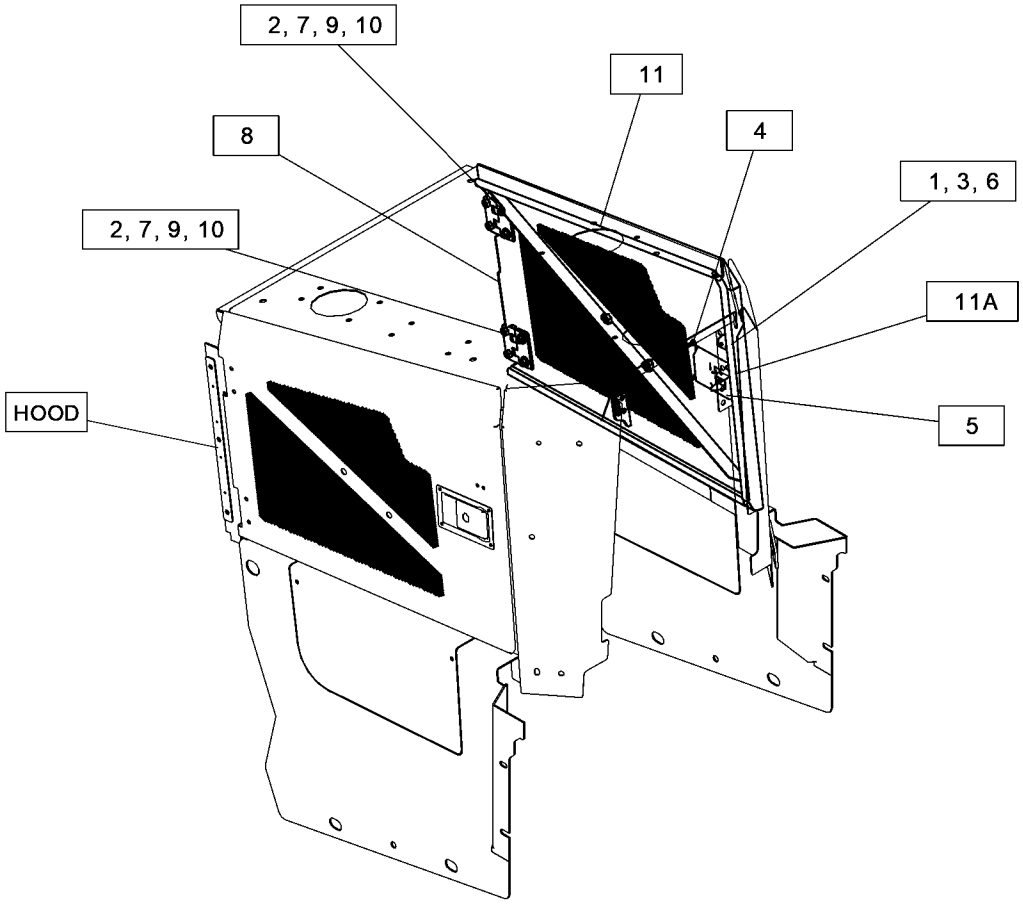

GRAPHIC #1 <END> g06451588

508-1353 DOOR GP-ACCESS

S/N: Z2K1-UP; Z2N1-UP
LH
PART OF 508-1360 DOOR GP-ACCESS
AN ATTACHMENT

SMCS-7273 **i07819319**

NOTE	REF NO	GRAPHIC REF	PART NUMBER	QTY	PART NAME 1 2 3 4 5 6 (PRODUCT LEVEL)	SEE PAGE
M	1	1	**8T-4189**	2	BOLT (M8X1.25X20-MM)	
	2	1	**7X-7729**	4	WASHER (11X25X3-MM THK)	
	3	1	**8T-4224**	2	WASHER-HARD (8.8X16X2-MM THK)	
M	4	1	**099-6418**	4	NUT (M6X1-THD)	
L	5	1	**358-0921**	1	LATCH AS	
		1	**385-3458**	1	LOCK AS	
	6	1	**378-9488**	1	GUIDE	
M	7	1	**344-5675**	4	NUT (M10X1.5-THD)	
	8	1	*508-1355*	1	DOOR AS-ACCESS	
M		1	**8T-3597**	2	NUT-WELD (M12X1.75-THD)	
M		1	**8T-3612**	2	NUT-WELD (M8X1.25-THD)	
	9	1	**523-3957**	2	PLATE	
	10	1	**528-6203**	2	HINGE AS	
					(EACH INCLUDES)	
M		1	**8T-3490**	2	NUT-WELD (M10X1.5-THD)	
D	11	1	**5P-7483**		SEAL (0.7-M)	
	11A	1	**5P-7483**		SEAL (0.9-M EACH)	

D - ORDER BY THE METER
L - REQUIRES CORPORATE KEY
M - METRIC PART

508-1353 **DOOR GP-ACCESS (**contd.**)** **i07819319**

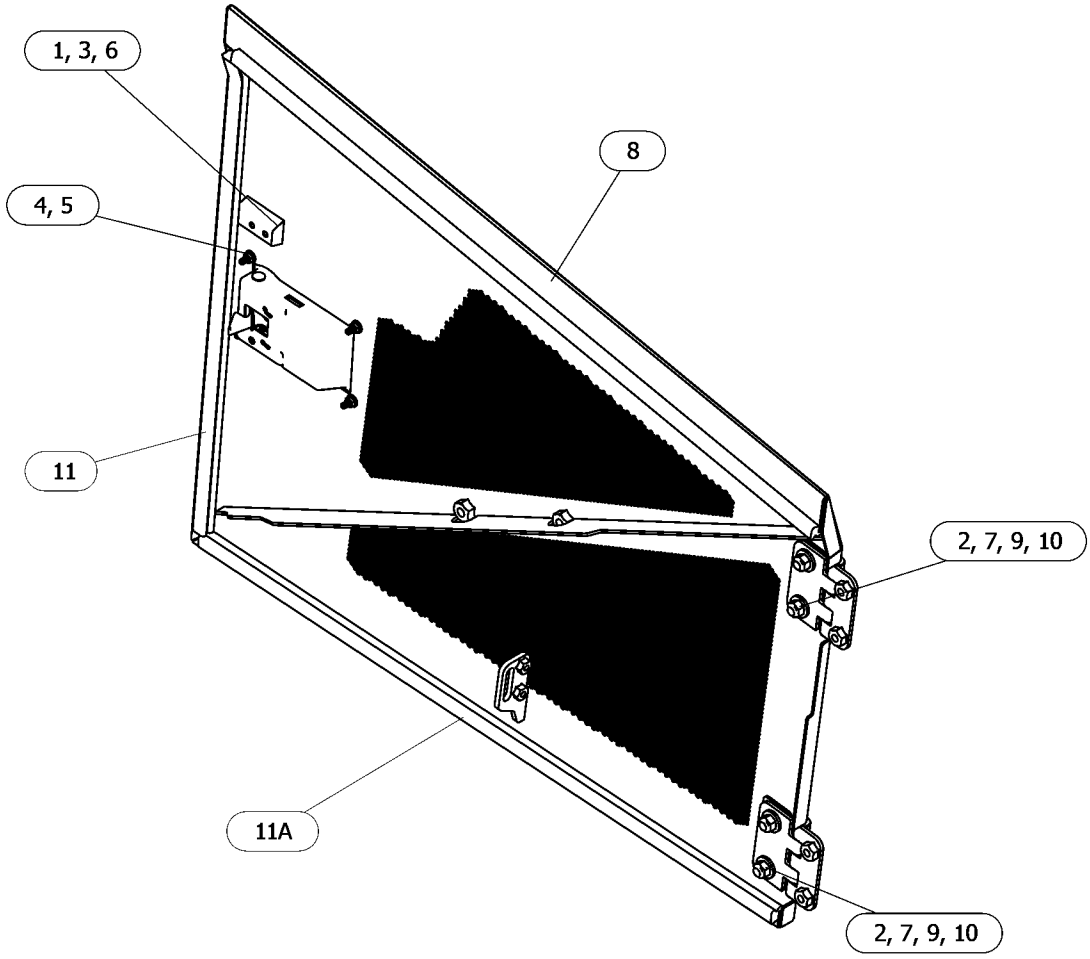

GRAPHIC #1 <END> g06456362

508-1360 DOOR GP-ACCESS

S/N: Z2K1-UP; Z2N1-UP
ENGINE
PART OF 508-1350 HOOD GP-ENGINE
AN ATTACHMENT

SMCS-7273 **i07819313**

NOTE	REF NO	GRAPHIC REF	PART NUMBER	QTY	PART NAME 1 2 3 4 5 6 (PRODUCT LEVEL)	SEE PAGE
Y	1	1	**508-1352**	1	DOOR GP-ACCESS (RH)	357
Y	2	1	**508-1353**	1	DOOR GP-ACCESS (LH)	359

Y - SEPARATE ILLUSTRATION

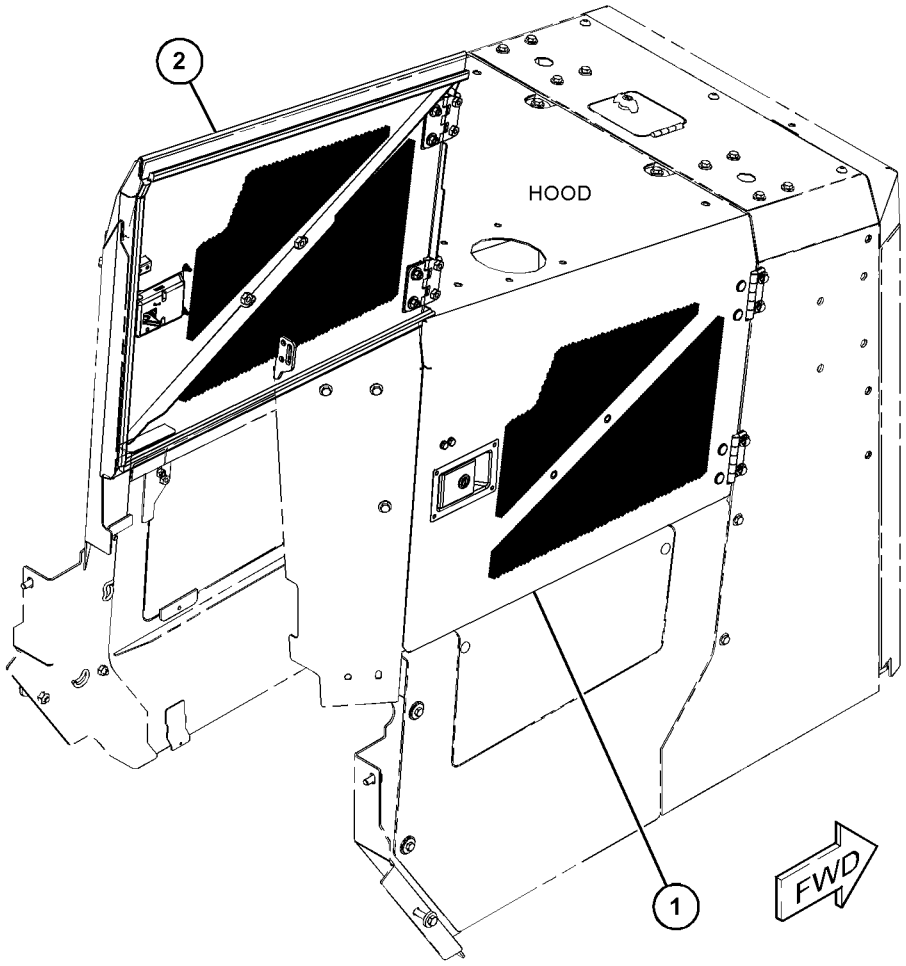

GRAPHIC #1 <END> g06452045

574-0148 DOOR GP-ACCESS

S/N: Z2K1-UP; Z2N1-UP
PART OF 550-5575 GRADE CONTROL AR
AN ATTACHMENT

SMCS-7273 **i07898950**

NOTE	REF NO	GRAPHIC REF	PART NUMBER	QTY	PART NAME 1 2 3 4 5 6 (PRODUCT LEVEL)	SEE PAGE
	1	1	**574-0150**	1	PLATE	
M	2	1	**121-9870**	2	SCREW-MACHINE (M6X1X40-MM)	
	3	1	**137-6723**	2	SCREW-FLAT HEAD (6-32X0.5-IN)	
	4	1	**367-5533**	1	LEVER AS	
	5	1	**393-2286**	1	LATCH AS	
M	6	1	**3E-8020**	4	SCREW-TRUSS HEAD (M6X1X25-MM)	
	7	1	**418-3925**	1	LATCH AS	
	8	1	**426-0972**	2	BUMPER	
	9	1	**427-5774**	2	HINGE AS	
	10	1	**489-5594**	1	DOOR AS-ACCESS	
	11	1	**503-6466**	1	PLATE	
	12	1	**503-7483**	1	CABLE AS	
	13	1	**503-7485**	1	PLATE	
	14	1	**574-0151**	1	PLATE	
	15	1	**574-0152**	1	STRIKER AS	
	16	1	**574-0153**	2	SPACER (6.6X12.7X13-MM THK)	
M	17	1	**7Y-7388**	12	SCREW-BUTTON HEAD (M5X0.8X12-MM)	
M	18	1	**7Y-7389**	4	SCREW (M5X0.8X16-MM)	
M	19	1	**9X-2042**	2	SCREW-TRUSS HEAD (M6X1X12-MM)	

M - METRIC PART

574-0148 **DOOR GP-ACCESS (**contd.**)** **i07898950**

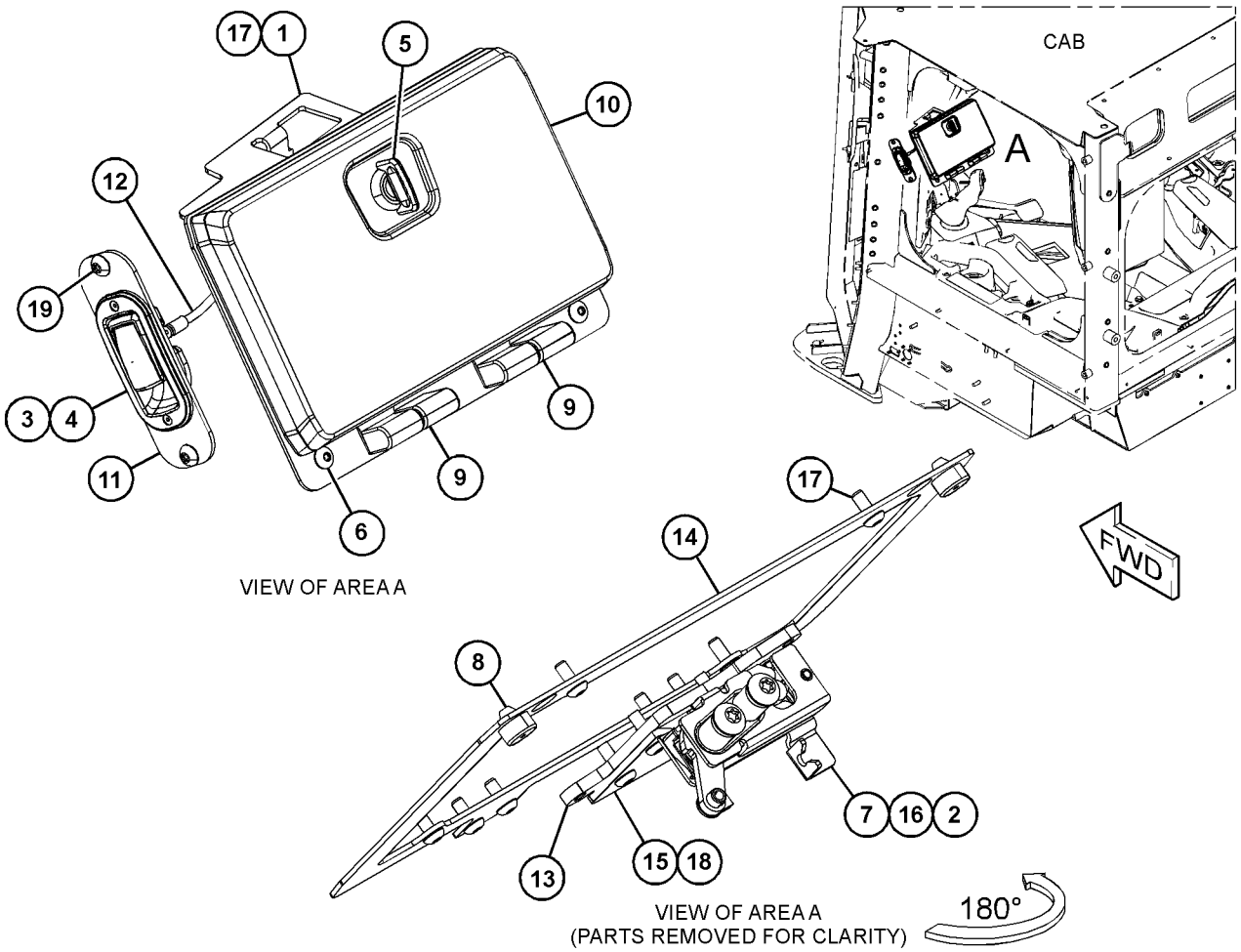

GRAPHIC #1 <END> g06482997

515-3712 DRAWBAR AR

S/N: Z2K1-UP; Z2N1-UP
CANNOT BE USED WITH RIPPER AR, WINCH AR, STRIKER AR
AN ATTACHMENT

SMCS-7105, 7119

i07814516

NOTE	PART NUMBER	QTY	PART NAME 1 2 3 4 5 6 (PRODUCT LEVEL)	SEE PAGE
Y	*556-1607*	1	DRAWBAR GP	365
Y	*509-3808*	1	PLUG GP	408

Y - SEPARATE ILLUSTRATION

<END>

556-1607 DRAWBAR GP

S/N: Z2K1-UP; Z2N1-UP
PART OF 515-3712 DRAWBAR AR
AN ATTACHMENT

SMCS-7105, 7119

i07814526

NOTE	REF NO	GRAPHIC REF	PART NUMBER	QTY	PART NAME 1 2 3 4 5 6 (PRODUCT LEVEL)	SEE PAGE
M	1	1	**7X-2565**	12	BOLT (M20X2.5X100-MM)	
M	2	1	**8T-4140**	1	BOLT (M16X2X60-MM)	
	3	1	**7B-0863**	1	LATCH-PIN	
	4	1	**8T-4123**	12	WASHER (22X35X3.5-MM THK)	
M	5	1	**8T-4778**	1	LOCKNUT (M16X2-THD)	
	6	1	**558-0716**	1	DRAWBAR AS	
	7	1	**8G-7085**	1	PIN AS	
		1	**7F-9543**	1	COLLAR	

M - METRIC PART

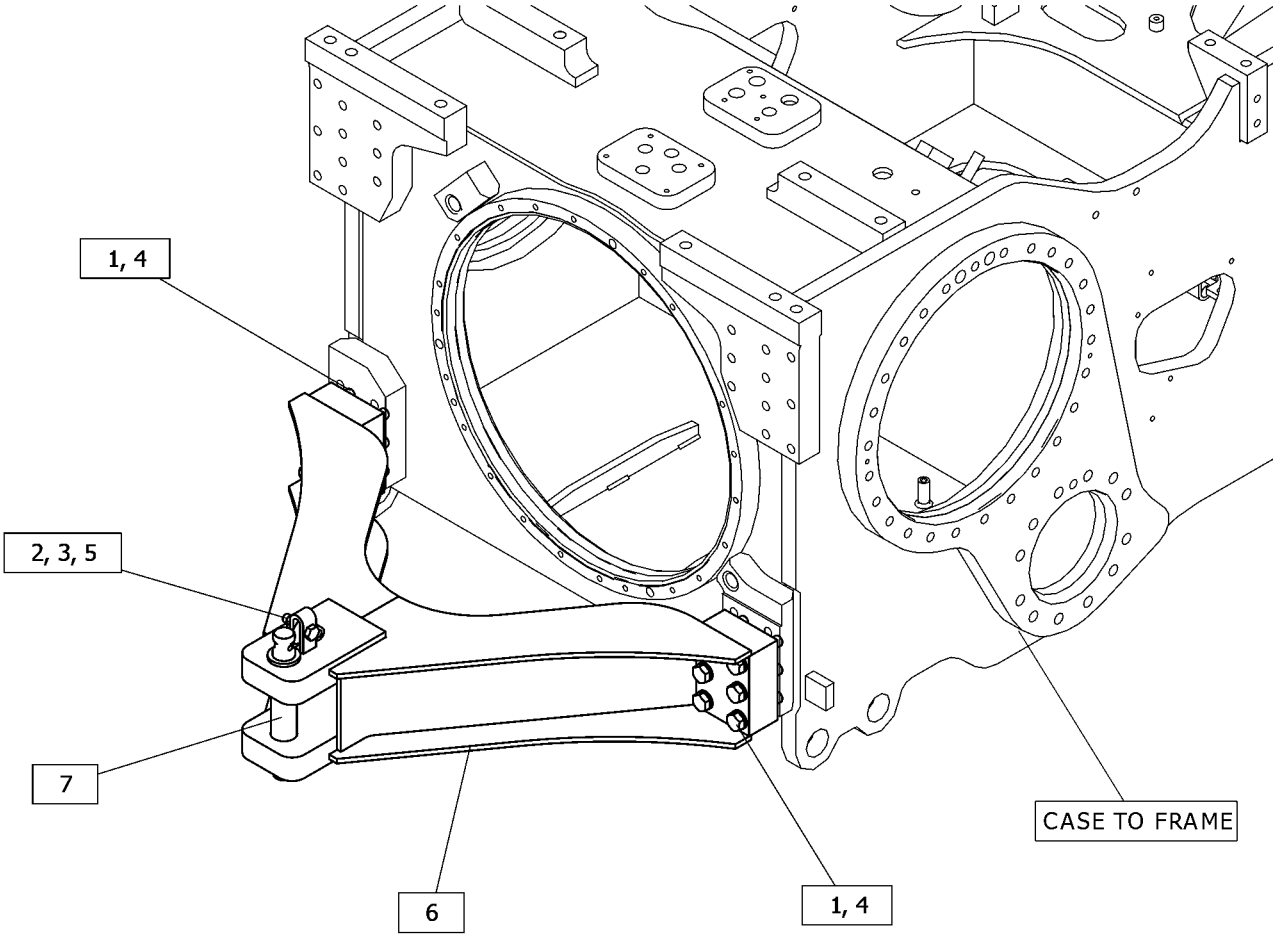

GRAPHIC #1 <END> g06443512

532-9793 ENCLOSURE AR

S/N: Z2K1-UP; Z2N1-UP
LIGHT-DUTY
PART OF 532-9851, 532-9856 DISTRIBUTION AR
AN ATTACHMENT

SMCS-7000, 7155, 7251, 7263 **i07819740**

NOTE	PART NUMBER	QTY	PART NAME 1 2 3 4 5 6 (PRODUCT LEVEL)	SEE PAGE
Y	*533-7734*	1	DUST EJECTOR GP	78
Y	*508-1621*	1	ENCLOSURE GP-FENDER	367
Y	*550-5579*	1	HANDHOLD AR	680

Y - SEPARATE ILLUSTRATION

<END>

508-1621 ENCLOSURE GP-FENDER

S/N: Z2K1-UP; Z2N1-UP
PART OF 532-9793 ENCLOSURE AR, 532-9799 SWEEP AR
AN ATTACHMENT

SMCS-7267 **i07819748**

NOTE	REF NO	GRAPHIC REF	PART NUMBER	QTY	PART NAME 1 2 3 4 5 6 (PRODUCT LEVEL)	SEE PAGE
	1	1	**135-8575**	6	BOLT AS	
	2	1	**488-3974**	34	BOLT AS	
	3	1	**508-1359**	1	SPRING AS-GAS	
Y	4	1	*523-3962*	1	ENCLOSURE GP-FENDER	368

Y - SEPARATE ILLUSTRATION

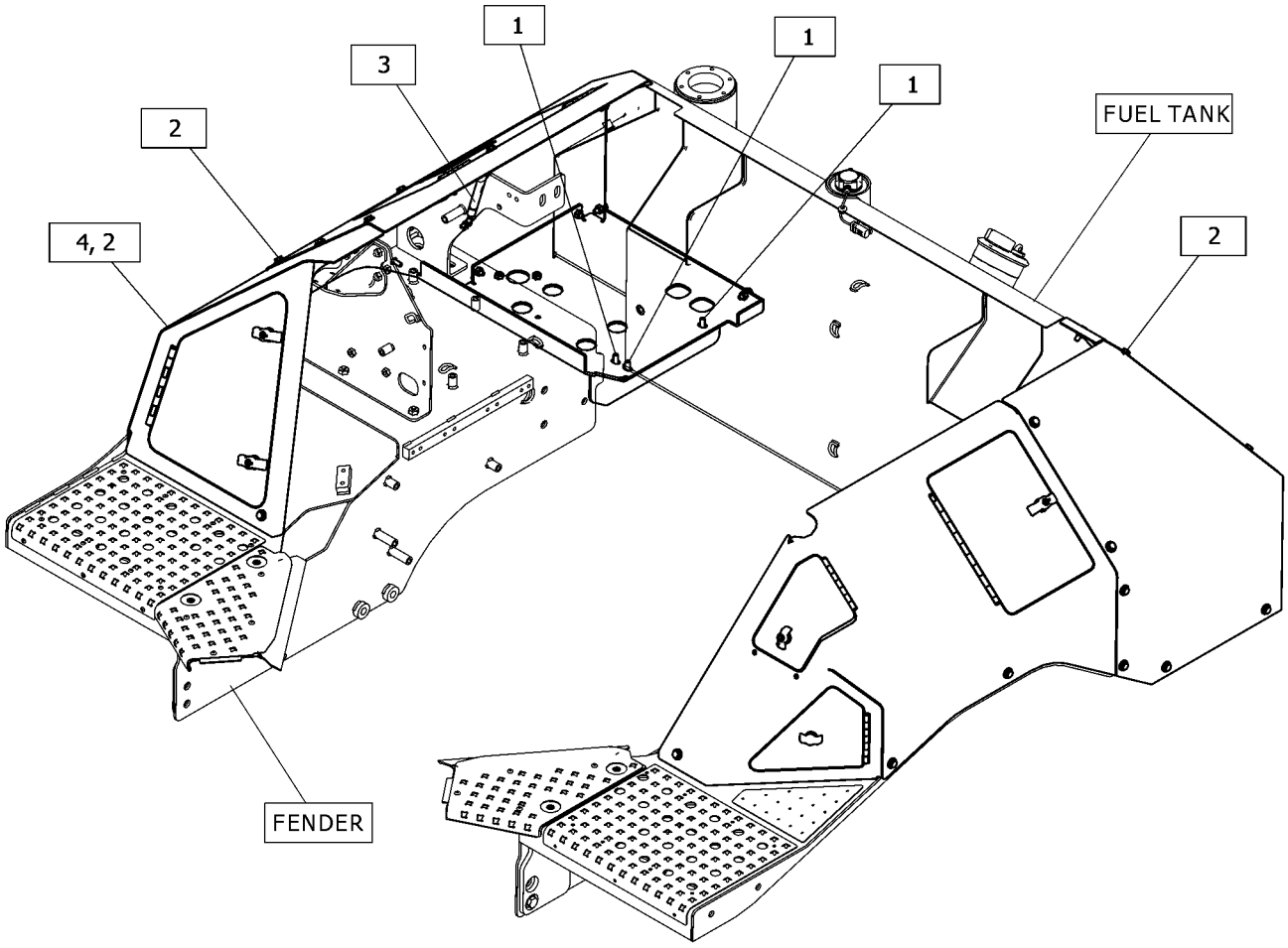

GRAPHIC #1 <END> g06449595

523-3962 ENCLOSURE GP-FENDER

S/N: Z2K1-UP; Z2N1-UP
PART OF 508-1621 ENCLOSURE GP-FENDER
AN ATTACHMENT

SMCS-7267 **i07819755**

NOTE	REF NO	GRAPHIC REF	PART NUMBER	QTY	PART NAME 1 2 3 4 5 6 (PRODUCT LEVEL)	SEE PAGE
M	1	1	**479-2171**	2	BOLT AS	
	2	1	**508-1613**	1	COVER AS	
M		1	**8T-3490**	4	NUT-WELD (M10X1.5-THD)	
	3	1	**508-1614**	1	COVER AS	
M		1	**8T-3490**	1	NUT-WELD (M10X1.5-THD)	
M		1	**8T-3597**	2	NUT-WELD (M12X1.75-THD)	
Y	4	1	*515-6179*	1	COVER GP-ACCESS (LH)	348
Y	5	1	*515-6180*	1	COVER GP-FENDER (RH)	356
	6	1	**515-6189**	1	PLATE AS	
M		1	**8T-3490**	3	NUT-WELD (M10X1.5-THD)	
	7	1	**515-6190**	1	PLATE AS	
M		1	**8T-3490**	5	NUT-WELD (M10X1.5-THD)	
Y	8	1	*515-6198*	1	COVER GP-ACCESS (RH)	349
	9	1	**580-0633**	1	PLATE	

M - METRIC PART
Y - SEPARATE ILLUSTRATION

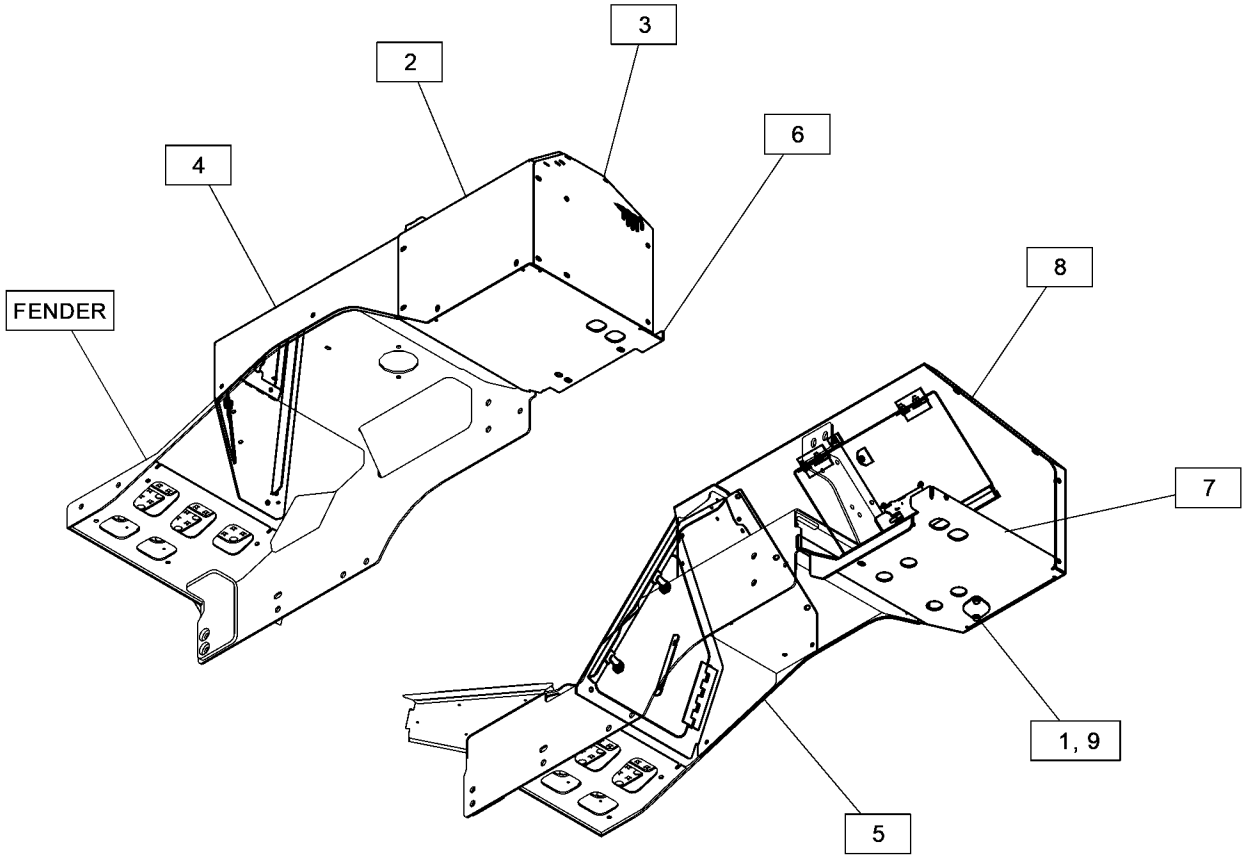

GRAPHIC #1 <END> g06451572

528-9537 ENCLOSURE GP-FENDER

S/N: Z2K1-UP; Z2N1-UP
PART OF 532-9795 FORESTRY AR, 532-9797 WASTE HANDLING AR
AN ATTACHMENT

SMCS-7267 **i07836436**

NOTE	REF NO	GRAPHIC REF	PART NUMBER	QTY	PART NAME 1 2 3 4 5 6 (PRODUCT LEVEL)	SEE PAGE
M	1	1	**8T-4196**	6	BOLT (M10X1.5X35-MM)	
	2	1	**7X-7729**	6	WASHER (11X25X3-MM THK)	
	3	1	**135-8575**	6	BOLT AS	
	4	1	**488-3974**	31	BOLT AS	
	5	1	**508-1359**	1	SPRING AS-GAS	
Y	6	1	*548-4774*	1	ENCLOSURE GP-FENDER	370
	7	1	**548-4775**	1	BRACKET AS	
M		1	**8T-3490**	7	NUT-WELD (M10X1.5-THD)	

M - METRIC PART
Y - SEPARATE ILLUSTRATION

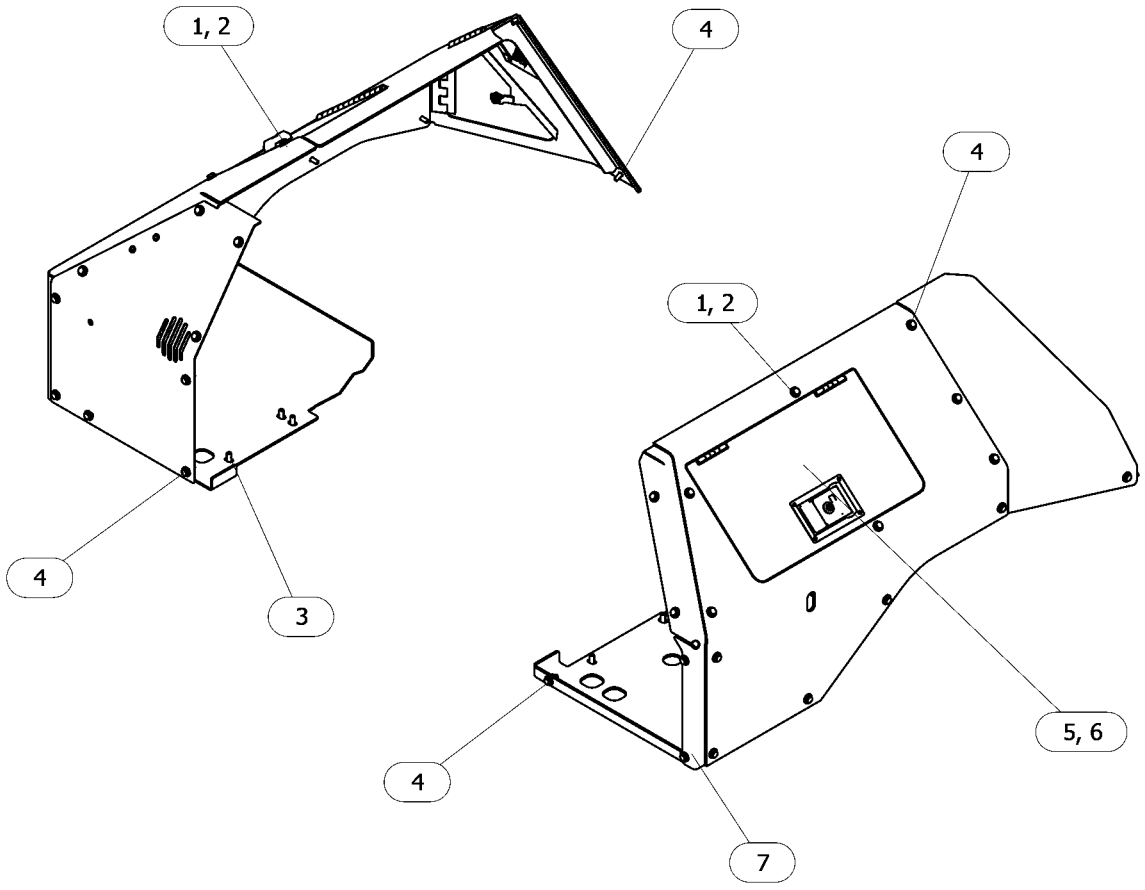

GRAPHIC #1 <END> g06456935

548-4774 ENCLOSURE GP-FENDER

S/N: Z2K1-UP; Z2N1-UP
PART OF 528-9537 ENCLOSURE GP-FENDER
AN ATTACHMENT

SMCS-7267 **i07851958**

NOTE	REF NO	GRAPHIC REF	PART NUMBER	QTY	PART NAME 1 2 3 4 5 6 (PRODUCT LEVEL)	SEE PAGE
	1	1	*528-9539*	1	COVER AS-ENCLOSURE (RH)	
		1	**293-3081**	2	CAM-LATCH	
		1	**528-9540**	1	ENCLOSURE AS	
		1	**578-4914**	1	HINGE AS	
J		1	**543-0545**	2	LATCH AS	
Y	2	1	*528-9547*	1	COVER GP-ACCESS (LH)	351
Y	3	1	*528-9550*	1	COVER GP-ACCESS (RH)	352
	4	1	**528-9552**	1	COVER AS	
M		1	**8T-3490**	4	NUT-WELD (M10X1.5-THD)	
	5	1	**508-1614**	1	COVER AS	
M		1	**8T-3490**	1	NUT-WELD (M10X1.5-THD)	
M		1	**8T-3597**	2	NUT-WELD (M12X1.75-THD)	
	6	1	**515-6189**	1	PLATE AS	
M		1	**8T-3490**	3	NUT-WELD (M10X1.5-THD)	
	7	1	**515-6190**	1	PLATE AS	
M		1	**8T-3490**	5	NUT-WELD (M10X1.5-THD)	
M	8	1	**479-2171**	2	BOLT AS	
	9	1	**580-0633**	1	PLATE	

J - REQUIRES CORPORATE KEY
M - METRIC PART
Y - SEPARATE ILLUSTRATION

548-4774 **ENCLOSURE GP-FENDER (**contd.**)** **i07851958**

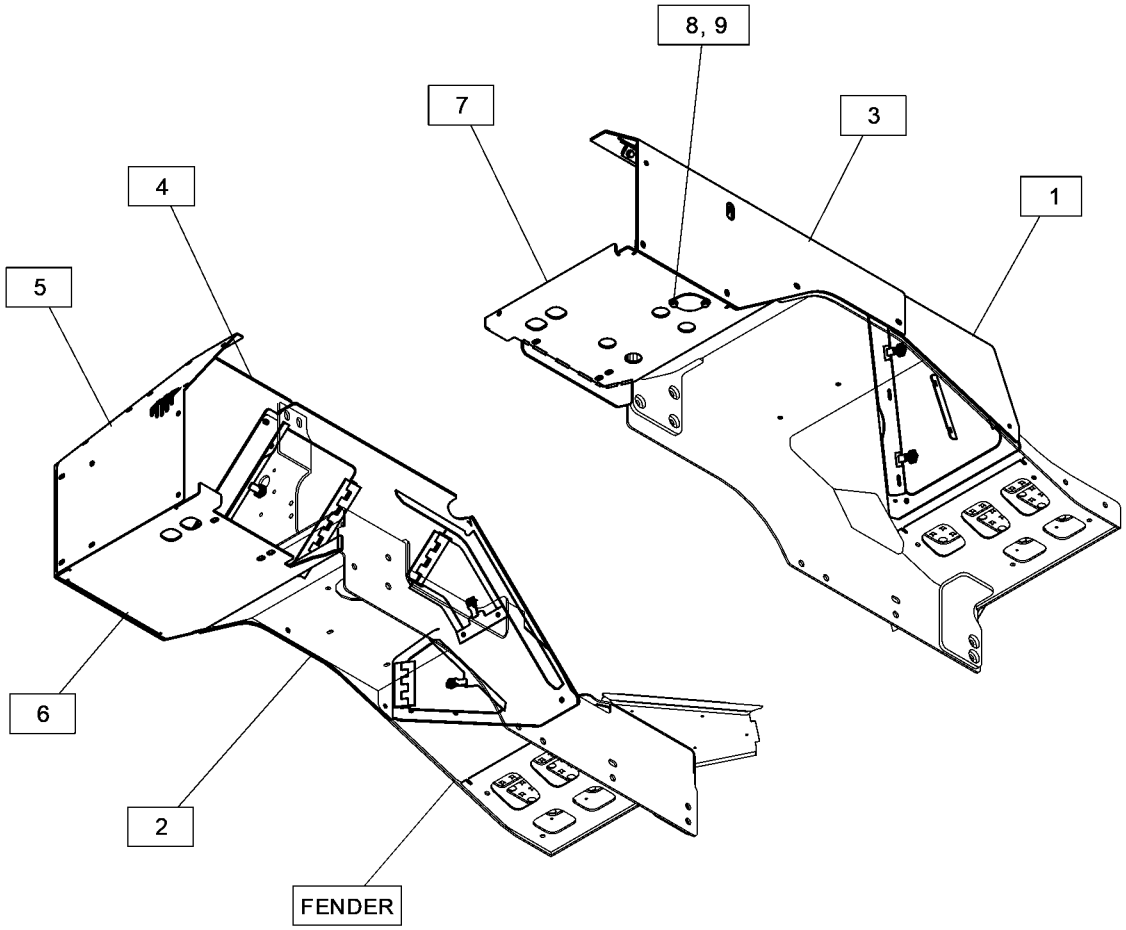

GRAPHIC #1 <END> g06454712

508-1620 FENDER GP

S/N: Z2K1-UP; Z2N1-UP
PART OF 559-5990 CHASSIS AR
AN ATTACHMENT

SMCS-7252 **i07817147**

NOTE	REF NO	GRAPHIC REF	PART NUMBER	QTY	PART NAME 1 2 3 4 5 6 (PRODUCT LEVEL)	SEE PAGE
M	1	1	**7X-2553**	23	BOLT (M16X2X40-MM)	
M	2	1	**8T-4140**	4	BOLT (M16X2X60-MM)	
	3	1	**8T-7934**	1	WASHER-HARD (11X21X5-MM THK)	
	4	1	**135-8575**	7	BOLT AS	
	5	1	**198-4780**	27	WASHER-HARD (17.5X32X8-MM THK)	
	6	1	**434-1217**	1	PLATE	
	7	1	**488-3971**	4	BOLT AS	
	8	1	**488-3974**	14	BOLT AS	
	9	1	**515-6196**	2	PLATE AS	
					(EACH INCLUDES)	
M		1	**8T-3490**	2	NUT-WELD (M10X1.5-THD)	
	10	1	**508-1626**	1	BRACKET	
	11	1	**515-6183**	1	STEP GP	
	12	1	**515-6186**	1	STEP GP	
	13	1	*527-0701*	1	FENDER GP	
		1	**515-6194**	1	FENDER GP (RH)	
		1	**515-6195**	1	FENDER GP (LH)	
					(EACH FENDER GP INCLUDES)	
		1	**6C-7875**	11	RIVET-POP	
	14	1	**569-0794**	1	BRACKET AS	
		1	**7T-1099**	4	LINK	
M		1	**8T-3490**	5	NUT-WELD (M10X1.5-THD)	
M		1	**8T-3597**	3	NUT-WELD (M12X1.75-THD)	
M		1	**178-7023**	1	BOSS (M10X1.5X30-MM)	
	15	1	**569-0796**	1	BRACKET AS	
M		1	**8T-3490**	2	NUT-WELD (M10X1.5-THD)	
	16	1	**576-1010**	1	BRACKET AS	
		1	**7T-1099**	1	LINK	
M		1	**8T-3490**	5	NUT-WELD (M10X1.5-THD)	
	17	1	**576-1011**	1	PLATE AS	
M		1	**8T-3490**	4	NUT-WELD (M10X1.5-THD)	
	18	1	**576-4212**	1	SUPPORT AS	
M		1	**8T-3490**	3	NUT-WELD (M10X1.5-THD)	
M		1	**8T-3612**	4	NUT-WELD (M8X1.25-THD)	
	19	1	**580-5698**	1	BRACKET AS	
M		1	**8T-3490**	5	NUT-WELD (M10X1.5-THD)	
M		1	**178-5457**	1	BOSS (M8X1.25X40-MM)	
	20	1	**580-5699**	2	PLATE AS	
					(EACH INCLUDES)	
M		1	**8T-3490**	3	NUT-WELD (M10X1.5-THD)	
M	21	1	**8T-4195**	1	BOLT (M10X1.5X30-MM)	

M - METRIC PART

508-1620 **FENDER GP** (contd.) **i07817147**

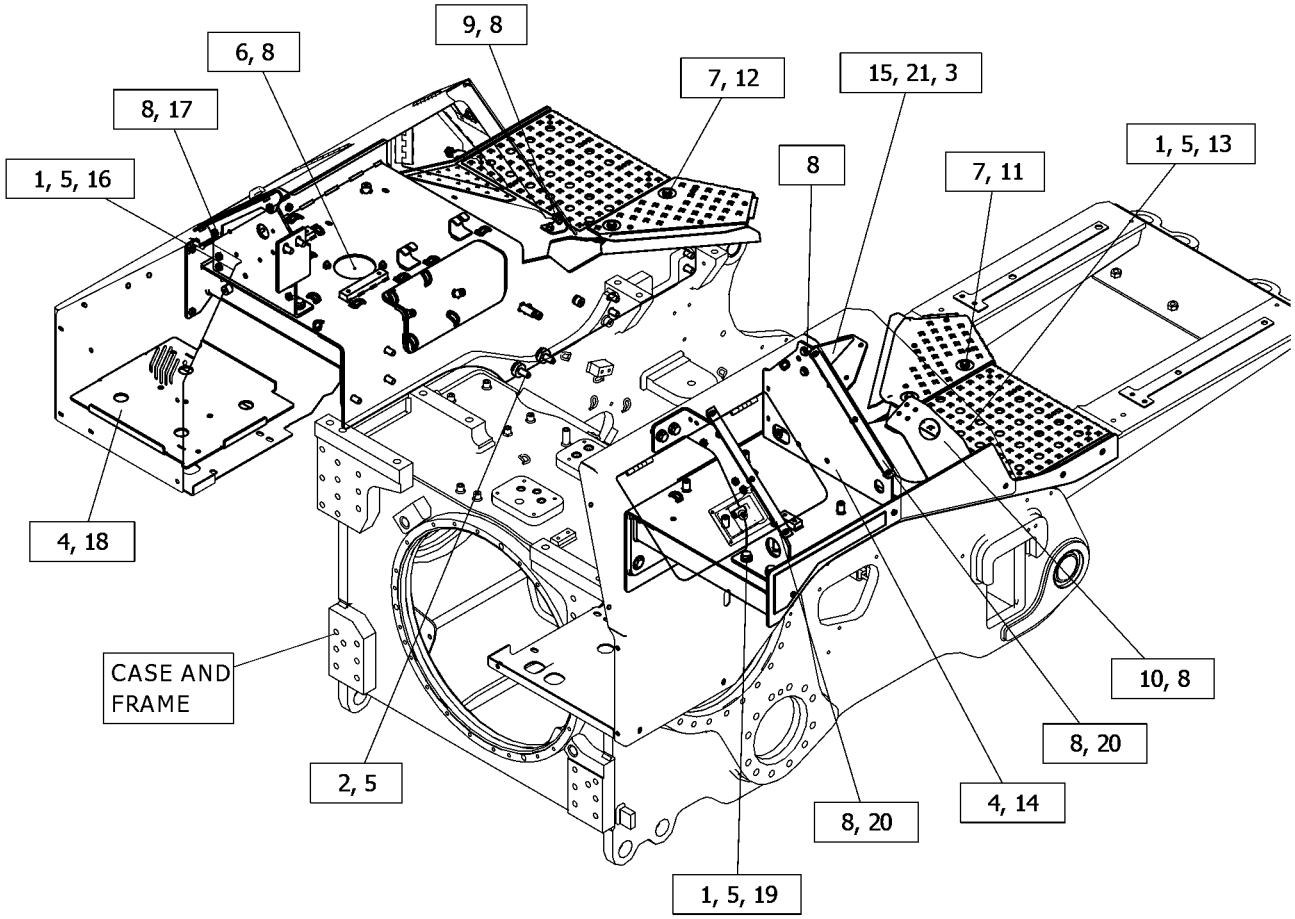

GRAPHIC #1 <END> g06454814

507-8561 GRILL GP-RADIATOR

S/N: Z2K1-UP; Z2N1-UP
PART OF 510-9705 CHASSIS AR
AN ATTACHMENT

SMCS-7170 **i07819248**

NOTE	REF NO	GRAPHIC REF	PART NUMBER	QTY	PART NAME 1 2 3 4 5 6 (PRODUCT LEVEL)	SEE PAGE
	1	1	**5P-1076**	1	WASHER-HARD (13.5X30X4-MM THK)	
M	2	1	**7X-2549**	4	BOLT (M12X1.75X100-MM)	
	3	1	**8T-4223**	2	WASHER-HARD (13.5X25.5X3-MM THK)	
M	4	1	**8T-5412**	2	BOLT (M12X1.75X140-MM)	
	5	1	**198-4778**	4	WASHER-HARD (13.5X30X12-MM THK)	
M	6	1	**479-2171**	2	BOLT AS	
Y	7	1	*561-3838*	1	GRILL GP-RADIATOR	375

M - METRIC PART
Y - SEPARATE ILLUSTRATION

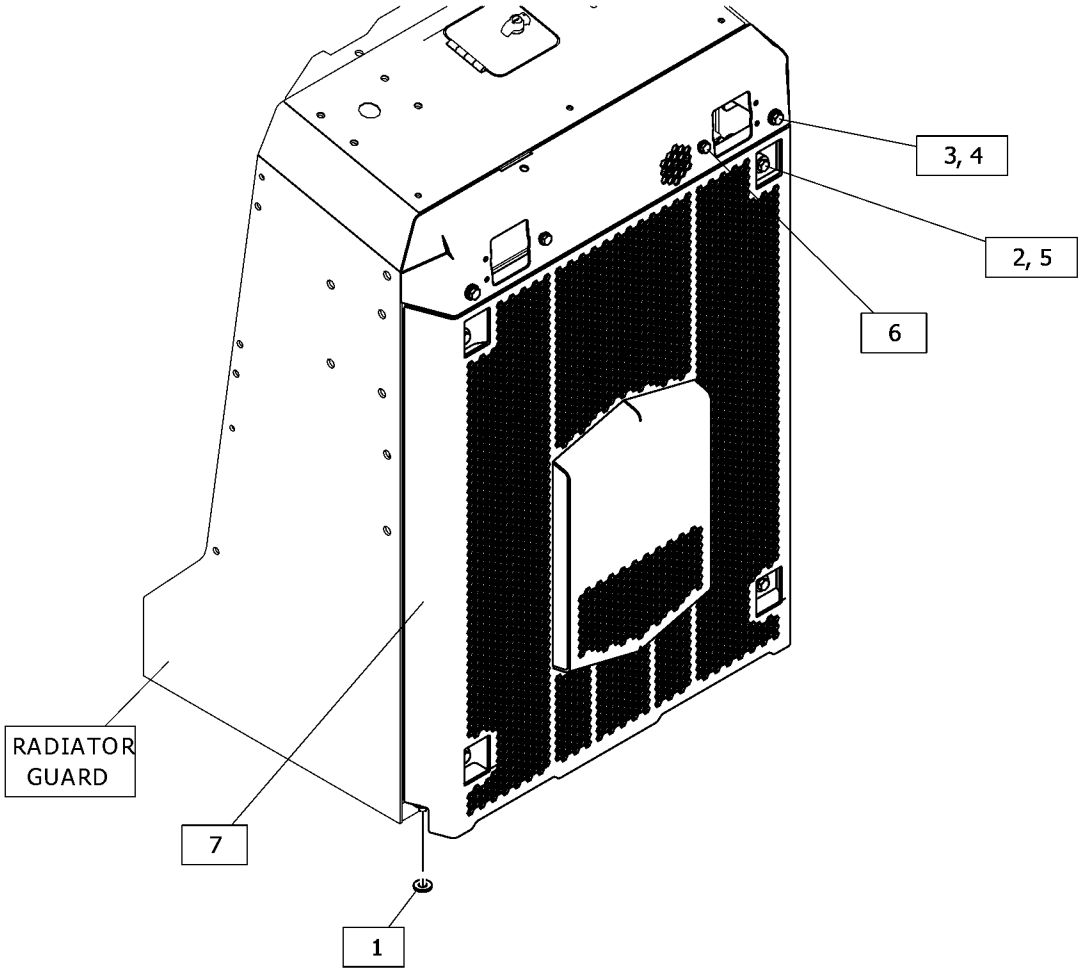

GRAPHIC #1 <END> g06448289

561-3838 GRILL GP-RADIATOR

S/N: Z2K1-UP; Z2N1-UP
PART OF 507-8561 GRILL GP-RADIATOR
AN ATTACHMENT

SMCS-7170 **i07819290**

NOTE	REF NO	GRAPHIC REF	PART NUMBER	QTY	PART NAME 1 2 3 4 5 6 (PRODUCT LEVEL)	SEE PAGE
	1	1	**507-8563**	1	GRILL AS-RADIATOR	
M		1	**8T-3490**	2	NUT-WELD (M10X1.5-THD)	
	2	1	**509-6606**	1	COVER AS	
M		1	**8T-3490**	2	NUT-WELD (M10X1.5-THD)	

M - METRIC PART

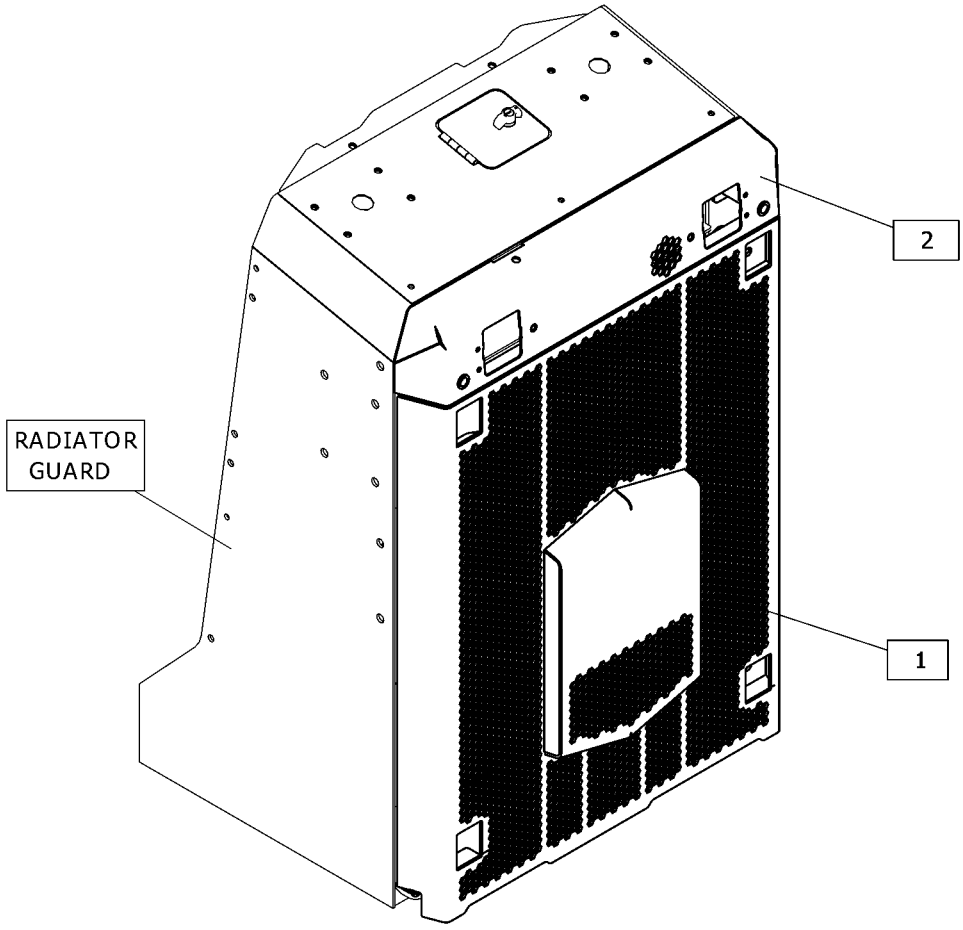

GRAPHIC #1 <END> g06448306

550-5585 GUARD AR-BOTTOM

S/N: Z2K1-UP; Z2N1-UP
LIGHT-DUTY, VPAT
PART OF 532-9851, 532-9856 DISTRIBUTION AR
AN ATTACHMENT

SMCS-7153 **i07816814**

NOTE	PART NUMBER	QTY	PART NAME 1 2 3 4 5 6 (PRODUCT LEVEL)	SEE PAGE
Y	*517-0093*	1	GUARD GP-BOTTOM	379
	559-3061	1	PLUG GP-FUEL TANK	
	125-7037	2	INSERT	
Y - SEPARATE ILLUSTRATION				

<END>

550-5587 GUARD AR-BOTTOM

S/N: Z2K1-UP; Z2N1-UP
HEAVY-DUTY, VPAT
CANNOT BE USED WITH 532-9797—PAGE: 5
PART OF 532-9795 FORESTRY AR, 532-9797 WASTE HANDLING AR
AN ATTACHMENT

SMCS-7153 **i07818651**

NOTE	PART NUMBER	QTY	PART NAME 1 2 3 4 5 6 (PRODUCT LEVEL)	SEE PAGE
Y	*517-0094*	1	GUARD GP-BOTTOM	380
Y	*532-5917*	1	GUARD GP-FUEL TANK	386
Y	*559-3063*	1	PLUG GP	409
Y - SEPARATE ILLUSTRATION				

<END>

480-8190 GUARD GP-BOTTOM

S/N: Z2K1-UP; Z2N1-UP
PART OF 517-0093 GUARD GP-BOTTOM
AN ATTACHMENT

SMCS-7153 **i06918831**

NOTE	REF NO	GRAPHIC REF	PART NUMBER	QTY	PART NAME 1 2 3 4 5 6 (PRODUCT LEVEL)	SEE PAGE
	1	1	**428-5968**	1	PLATE	
	2	1	**480-7724**	1	GUARD AS	
	3	1	**8T-4121**	2	WASHER-HARD (11X21X2.5-MM THK)	
M	4	1	**8T-4196**	2	BOLT (M10X1.5X35-MM)	

M - METRIC PART

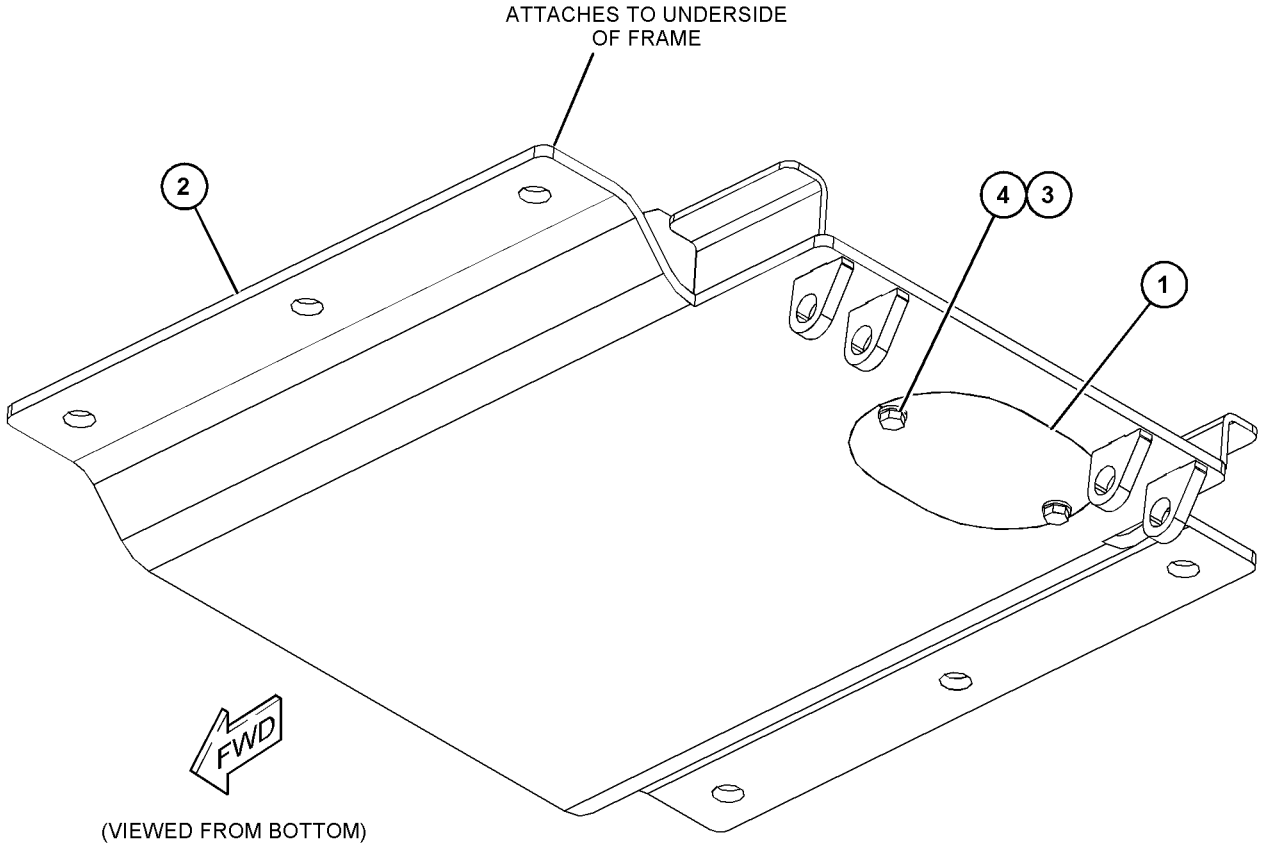

(VIEWED FROM BOTTOM)

GRAPHIC #1 <END> g06167356

480-8191 GUARD GP-BOTTOM—HEAVY-DUTY

S/N: Z2K1-UP; Z2N1-UP
PART OF 517-0094 GUARD GP-BOTTOM
AN ATTACHMENT

SMCS-7153 **i06918861**

NOTE	REF NO	GRAPHIC REF	PART NUMBER	QTY	PART NAME 1 2 3 4 5 6 (PRODUCT LEVEL)	SEE PAGE
	1	1	**428-5969**	1	PLATE	
	2	1	**480-7725**	1	GUARD AS	
	3	1	**8T-4121**	2	WASHER-HARD (11X21X2.5-MM THK)	
M	4	1	**8T-4186**	2	BOLT (M10X1.5X40-MM)	

M - METRIC PART

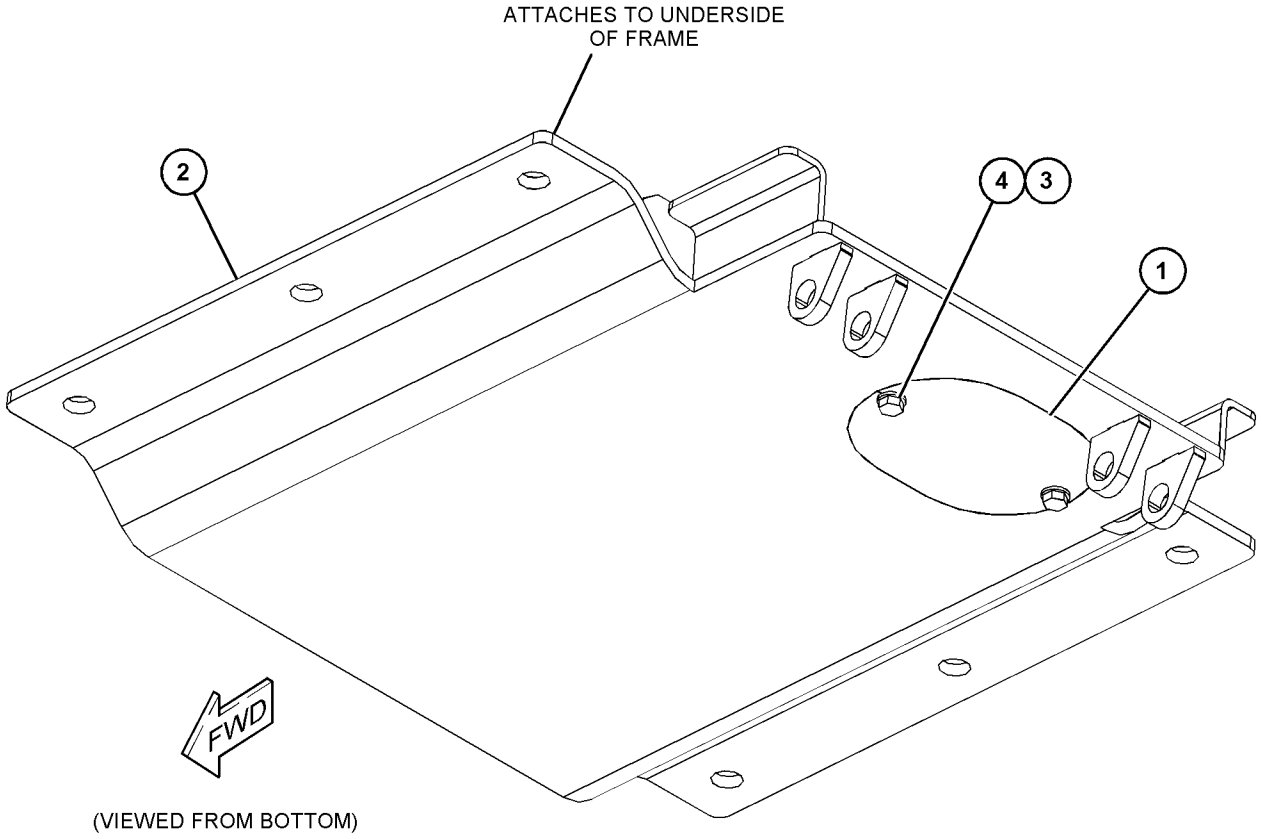

GRAPHIC #1 <END> g06167360

517-0093 GUARD GP-BOTTOM

S/N: Z2K1-UP; Z2N1-UP
VPAT
PART OF 550-5585 GUARD AR-BOTTOM
AN ATTACHMENT

SMCS-7153 **i07816858**

NOTE	REF NO	GRAPHIC REF	PART NUMBER	QTY	PART NAME 1 2 3 4 5 6 (PRODUCT LEVEL)	SEE PAGE
M	1	1	**8T-4193**	13	BOLT (M16X2X50-MM)	
	2	1	**3B-4617**	4	PIN-COTTER	
	3	1	**5P-1076**	8	WASHER-HARD (13.5X30X4-MM THK)	
	4	1	**7X-0515**	13	WASHER-HARD (17X35X5-MM THK)	
	5	1	**7X-0618**	12	WASHER-HARD (13.5X40X5-MM THK)	
	6	1	**345-7738**	4	PIN-CLEVIS	
Y	7	1	*480-8190*	1	GUARD GP-BOTTOM	377
	8	1	**517-3275**	1	GUARD AS-BOTTOM	
Y	9	1	*563-1588*	1	GUARD GP-BOTTOM	382
M	10	1	**8T-4194**	12	BOLT (M12X1.75X50-MM)	

M - METRIC PART
Y - SEPARATE ILLUSTRATION

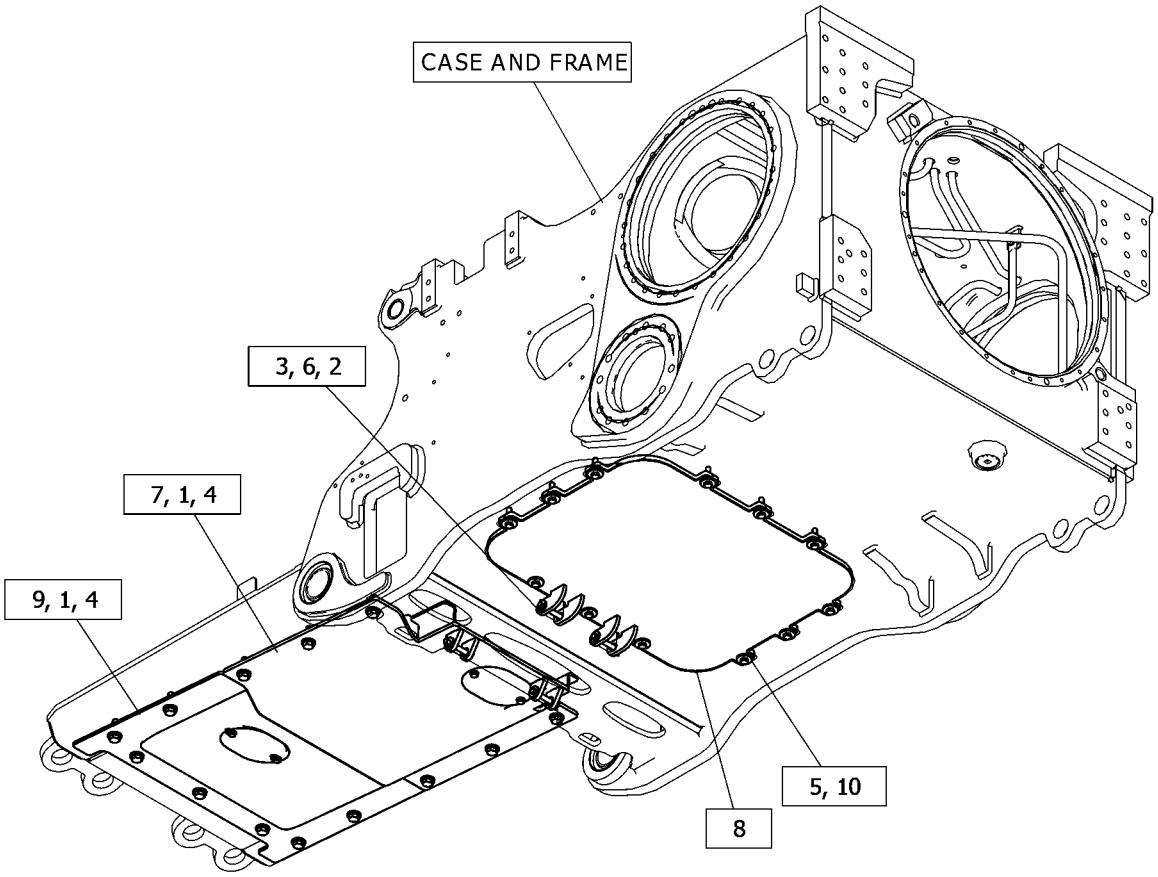

GRAPHIC #1 <END> g06446198

517-0094 GUARD GP-BOTTOM

S/N: Z2K1-UP; Z2N1-UP
HEAVY-DUTY, VPAT
PART OF 550-5587 GUARD AR-BOTTOM
AN ATTACHMENT

SMCS-7153 **i07876688**

NOTE	REF NO	GRAPHIC REF	PART NUMBER	QTY	PART NAME 1 2 3 4 5 6 (PRODUCT LEVEL)	SEE PAGE
M	1	1	**8T-4193**	13	BOLT (M16X2X50-MM)	
	2	1	**3B-4617**	4	PIN-COTTER	
	3	1	**5P-1076**	8	WASHER-HARD (13.5X30X4-MM THK)	
	4	1	**7X-0515**	13	WASHER-HARD (17X35X5-MM THK)	
	5	1	**7X-0618**	12	WASHER-HARD (13.5X40X5-MM THK)	
M	6	1	**8T-4194**	12	BOLT (M12X1.75X50-MM)	
	7	1	**345-7738**	4	PIN-CLEVIS	
Y	8	1	*480-8191*	1	GUARD GP-BOTTOM (HEAVY-DUTY)	378
	9	1	**517-3275**	1	GUARD AS-BOTTOM	
Y	10	1	*563-1588*	1	GUARD GP-BOTTOM (FRONT)	382

M - METRIC PART
Y - SEPARATE ILLUSTRATION

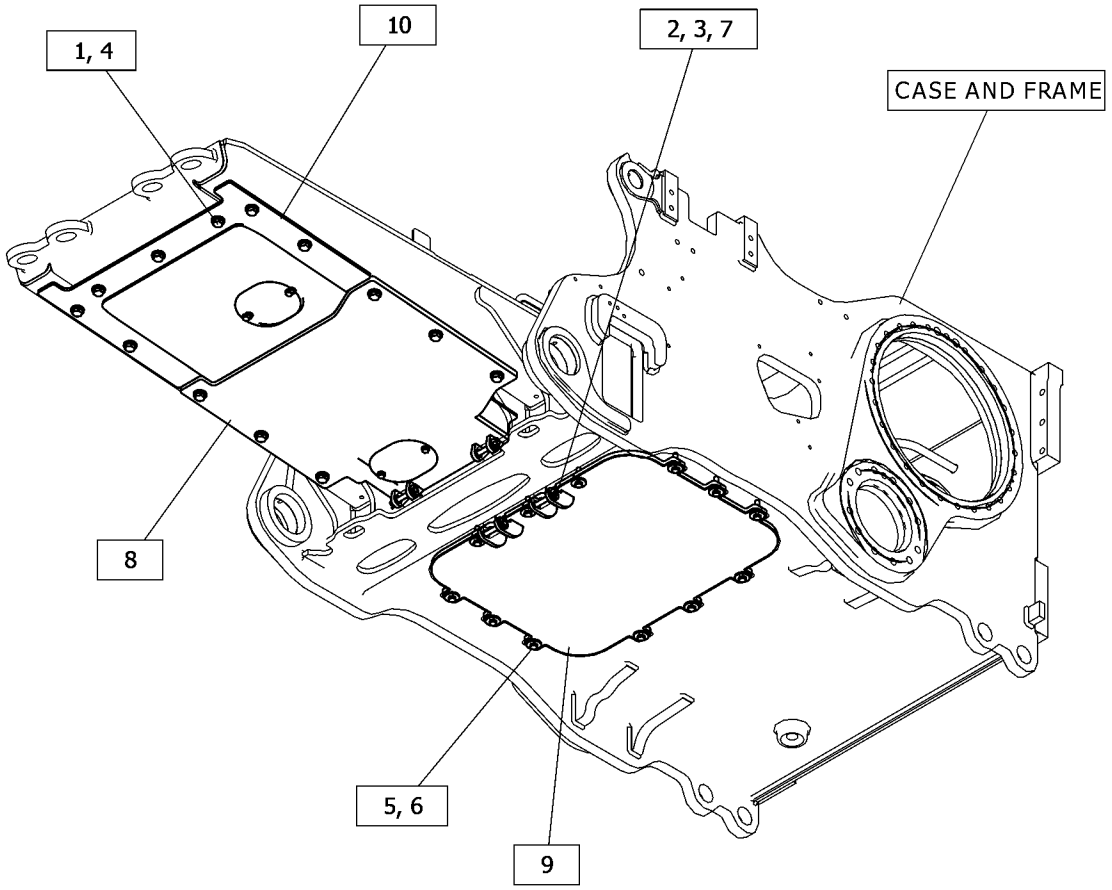

GRAPHIC #1 <END> g06445622

556-8474 GUARD GP-BOTTOM

S/N: Z2K1-UP; Z2N1-UP
FRONT, BRAZIL
PART OF 563-1588 GUARD GP-BOTTOM
AN ATTACHMENT

SMCS-7153 **i07818173**

NOTE	REF NO	GRAPHIC REF	PART NUMBER	QTY	PART NAME 1 2 3 4 5 6 (PRODUCT LEVEL)	SEE PAGE
M	1	1	**8T-4195**	2	BOLT (M10X1.5X30-MM)	
	2	1	**8T-4121**	2	WASHER-HARD (11X21X2.5-MM THK)	
	3	1	**422-7837**	1	PLATE	
	4	1	**556-8476**	1	GUARD AS-BOTTOM	
M		1	**8T-4133**	2	NUT (M10X1.5-THD)	

M - METRIC PART

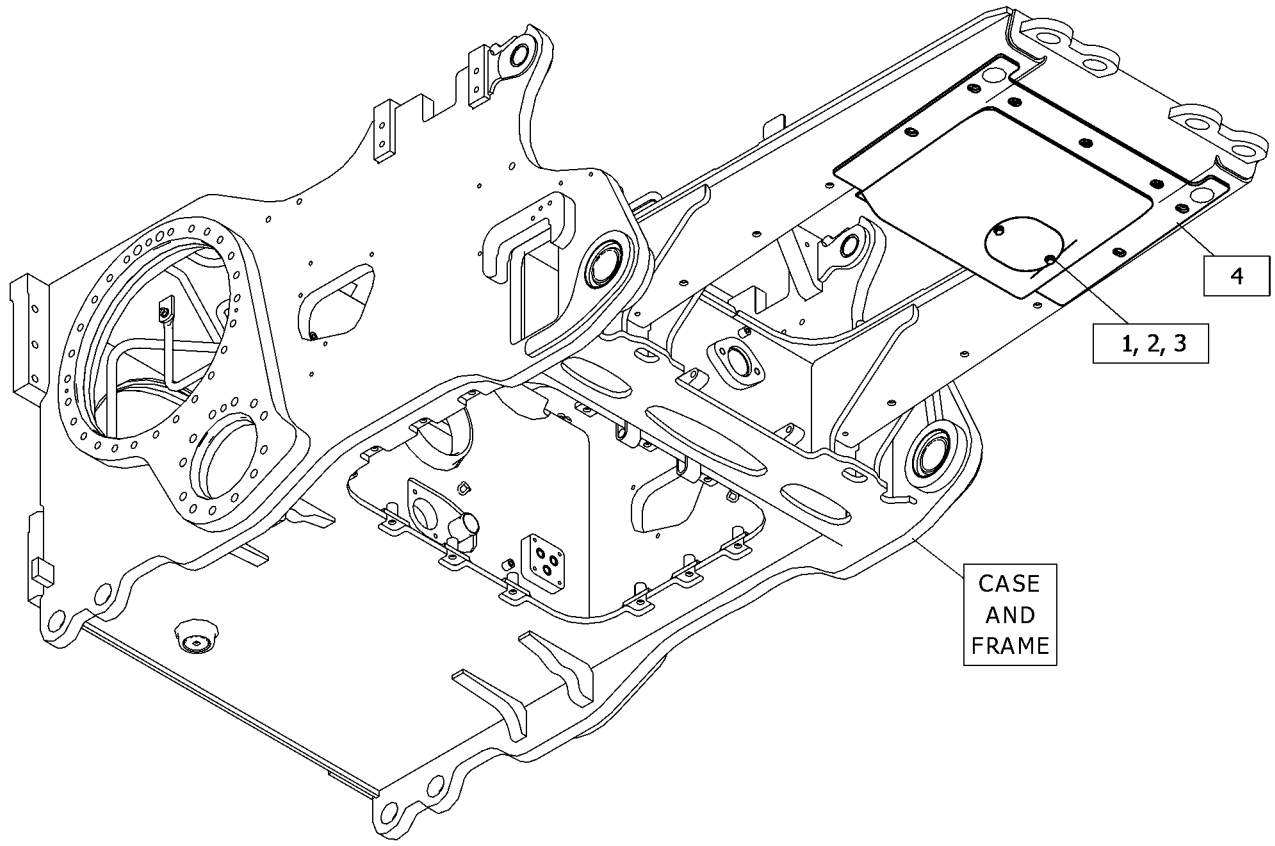

GRAPHIC #1 <END> g06445607

563-1588 GUARD GP-BOTTOM

S/N: Z2K1-UP; Z2N1-UP
FRONT
PART OF 517-0093, 517-0094 GUARD GP-BOTTOM
AN ATTACHMENT

SMCS-7153 **i07818170**

NOTE	PART NUMBER	QTY	PART NAME 1 2 3 4 5 6 (PRODUCT LEVEL)	SEE PAGE
Y	*556-8474*	1	GUARD GP-BOTTOM	381

Y - SEPARATE ILLUSTRATION

<END>

512-6096 GUARD GP-FRONT

S/N: Z2K1-UP; Z2N1-UP
FORESTRY
PART OF 512-6093 SWEEP GP
AN ATTACHMENT

SMCS-7167 **i07848583**

NOTE	REF NO	GRAPHIC REF	PART NUMBER	QTY	PART NAME 1 2 3 4 5 6 (PRODUCT LEVEL)	SEE PAGE
	1	1	**488-3971**	12	BOLT AS	
	2	1	**488-3974**	4	BOLT AS	
	3	1	**536-9109**	1	CANOPY AS	
Y	4	1	*580-7781*	1	GUARD GP-FRONT	384

Y - SEPARATE ILLUSTRATION

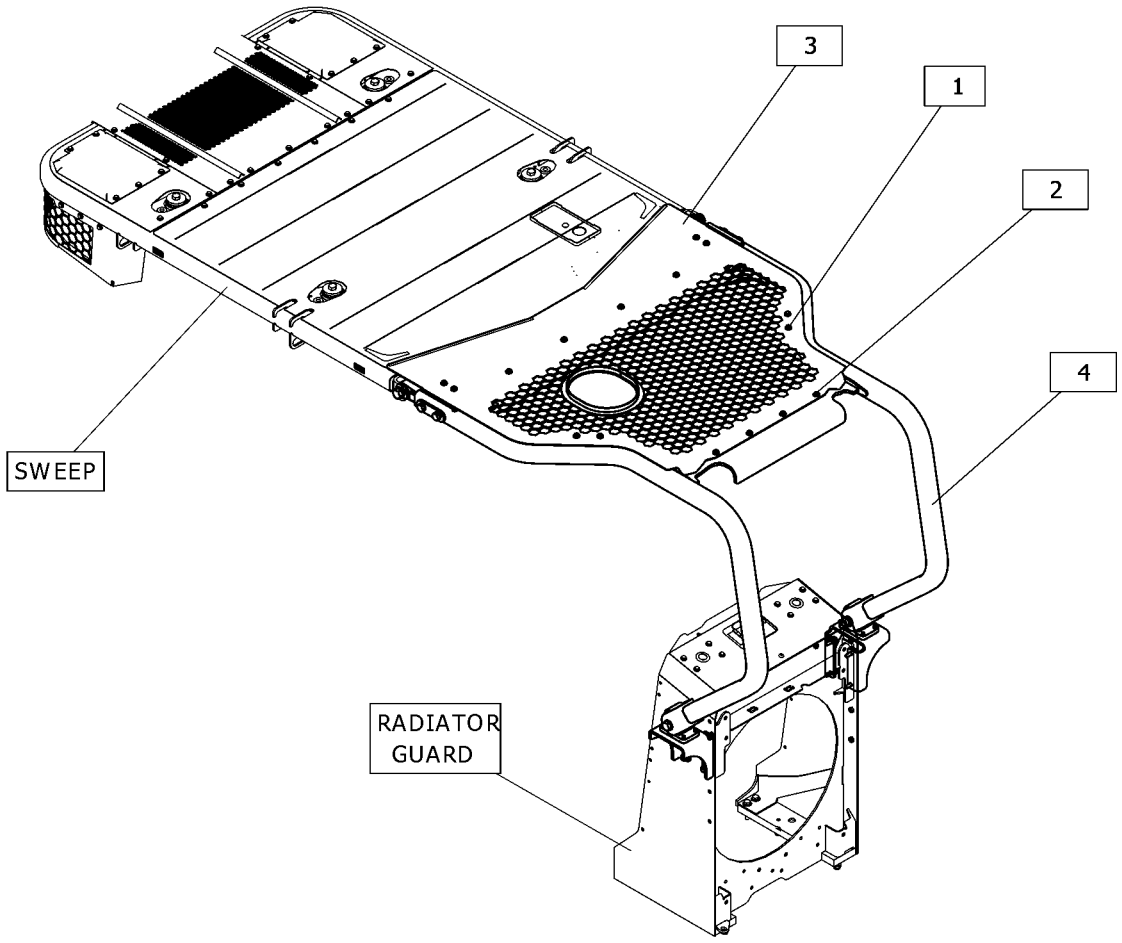

GRAPHIC #1 <END> g06453135

580-7781 GUARD GP-FRONT

S/N: Z2K1-UP; Z2N1-UP
PART OF 512-6096 GUARD GP-FRONT, 512-6094 SWEEP GP
AN ATTACHMENT

SMCS-7167 **i07836748**

NOTE	REF NO	GRAPHIC REF	PART NUMBER	QTY	PART NAME 1 2 3 4 5 6 (PRODUCT LEVEL)	SEE PAGE
M	1	1	**8C-8478**	4	BOLT (M20X2.5X140-MM)	
	2	1	**5P-1076**	8	WASHER-HARD (13.5X30X4-MM THK)	
	3	1	**6K-3632**	2	LOCKNUT (1-8-THD)	
	4	1	**8C-8844**	2	BOLT (1-8X5-IN)	
	5	1	**8P-5244**	4	WASHER (33.3X69.8X6.35-MM THK)	
	6	1	**8T-4123**	4	WASHER (22X35X3.5-MM THK)	
	7	1	**8T-4167**	4	WASHER-HARD (26X44X4-MM THK)	
	8	1	**8T-5361**	4	WASHER-HARD (28X49X5-MM THK)	
	9	1	**198-4778**	8	WASHER-HARD (13.5X30X12-MM THK)	
M	10	1	**317-1117**	2	LOCKNUT (M24X3-THD)	
	11	1	**337-7619**	2	MOUNT AS	
	12	1	**357-4339**	4	PLATE	
	13	1	**472-7499**	2	BRACKET	
	14	1	**513-8115**	2	PLATE	
	15	1	**544-0428**	2	PLATE	
	16	1	**512-6099**	1	GUARD AS-FRONT	
M		1	**8T-3490**	16	NUT-WELD (M10X1.5-THD)	
	17	1	**513-9227**	2	BRACKET AS	
					(EACH INCLUDES)	
		1	**9S-5187**	1	MOUNTING	
M	18	1	**7X-2567**	2	BOLT (M24X3X160-MM)	
M	19	1	**8T-4194**	16	BOLT (M12X1.75X50-MM)	

M - METRIC PART

580-7781 **GUARD GP-FRONT** (contd.) **i07836748**

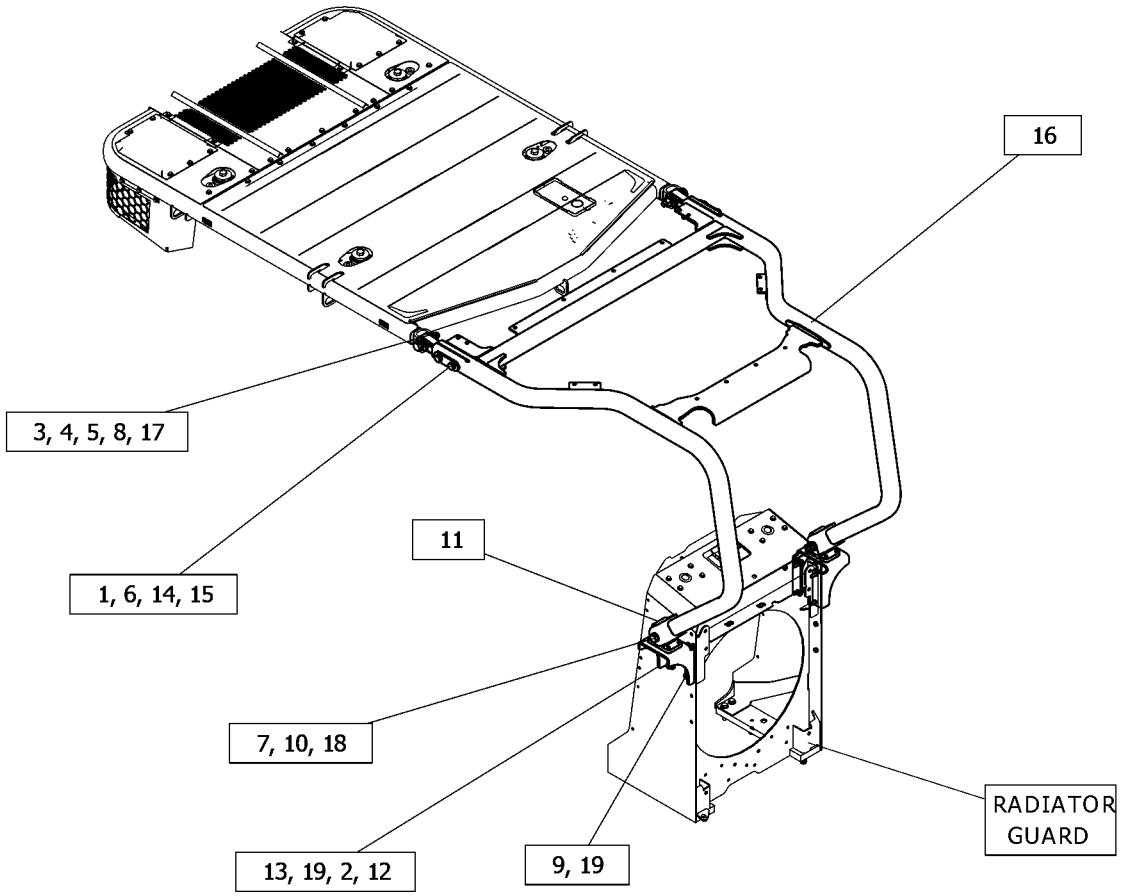

GRAPHIC #1 <END> g06453141

532-5917 GUARD GP-FUEL TANK

S/N: Z2K1-UP; Z2N1-UP
PART OF 550-5587 GUARD AR-BOTTOM
AN ATTACHMENT

SMCS-1273, 7150

i07820147

NOTE	REF NO	GRAPHIC REF	PART NUMBER	QTY	PART NAME 1 2 3 4 5 6 (PRODUCT LEVEL)	SEE PAGE
M	1	1	**8T-4184**	4	BOLT (M12X1.75X45-MM)	
M	2	1	**8T-4910**	3	BOLT (M12X1.75X60-MM)	
	3	1	**5P-1076**	3	WASHER-HARD (13.5X30X4-MM THK)	
	4	1	**488-3974**	13	BOLT AS	
	5	1	**523-3961**	1	GUARD AS-FUEL TANK	
M		1	**8T-3490**	14	NUT-WELD (M10X1.5-THD)	
M		1	**8T-3597**	6	NUT-WELD (M12X1.75-THD)	
	6	1	**540-2311**	1	PLATE	
	7	1	**7X-0618**	4	WASHER-HARD (13.5X40X5-MM THK)	

M - METRIC PART

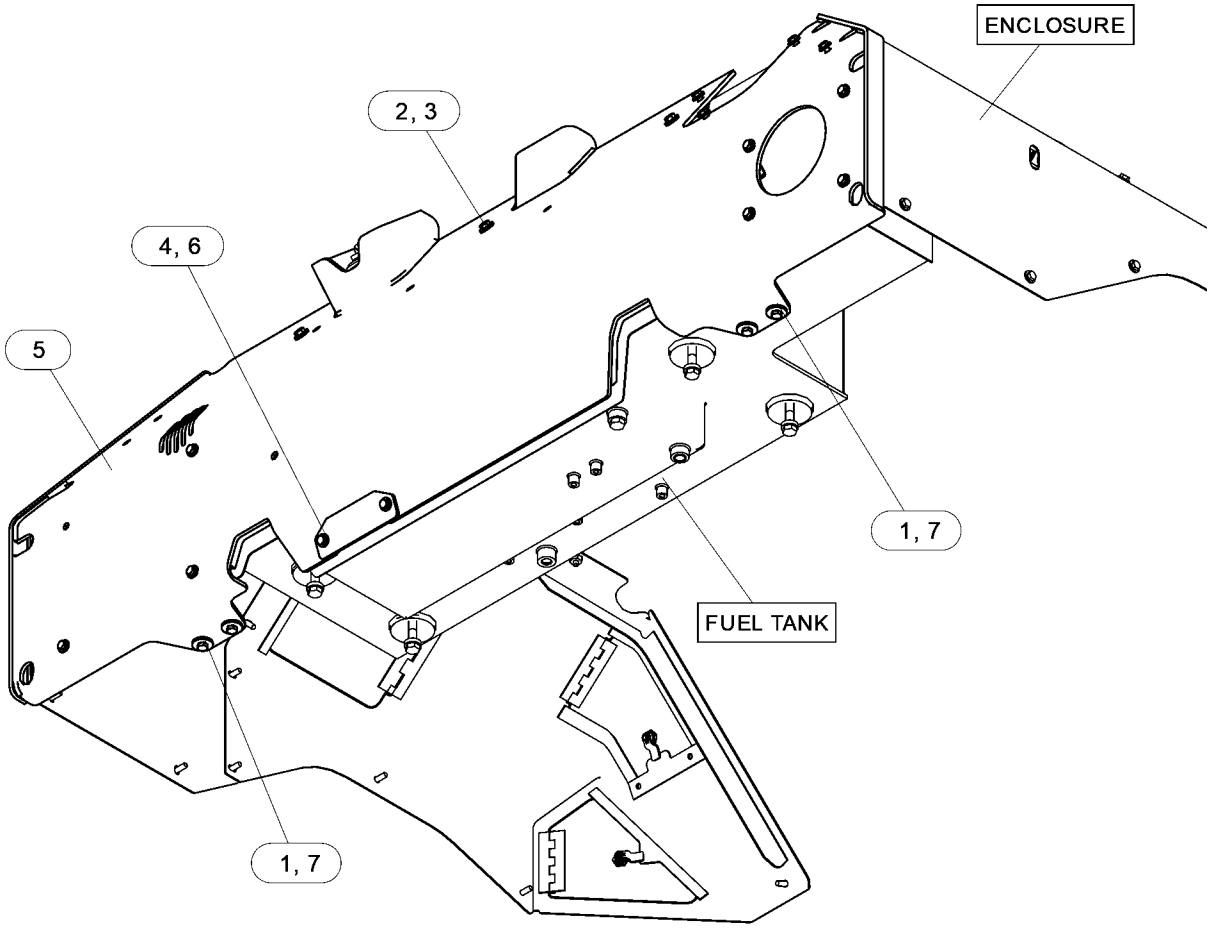

GRAPHIC #1

<END>

g06446288

575-5630 GUARD GP-LIGHTING

S/N: Z2K1-UP; Z2N1-UP
CAB, RADIATOR GUARD
FOR USE WITH 575-5509—PAGE: 186
PART OF 532-9795 FORESTRY AR, 532-9797 WASTE HANDLING AR
AN ATTACHMENT

SMCS-715L **i07844176**

NOTE	REF NO	GRAPHIC REF	PART NUMBER	QTY	PART NAME 1 2 3 4 5 6 (PRODUCT LEVEL)	SEE PAGE
	1	1	**507-2963**	4	GUARD AS-LIGHTING	
	2	1	**559-0352**	1	GUARD AS-LIGHTING	
	3	1	**561-3447**	1	GUARD AS-LIGHTING	

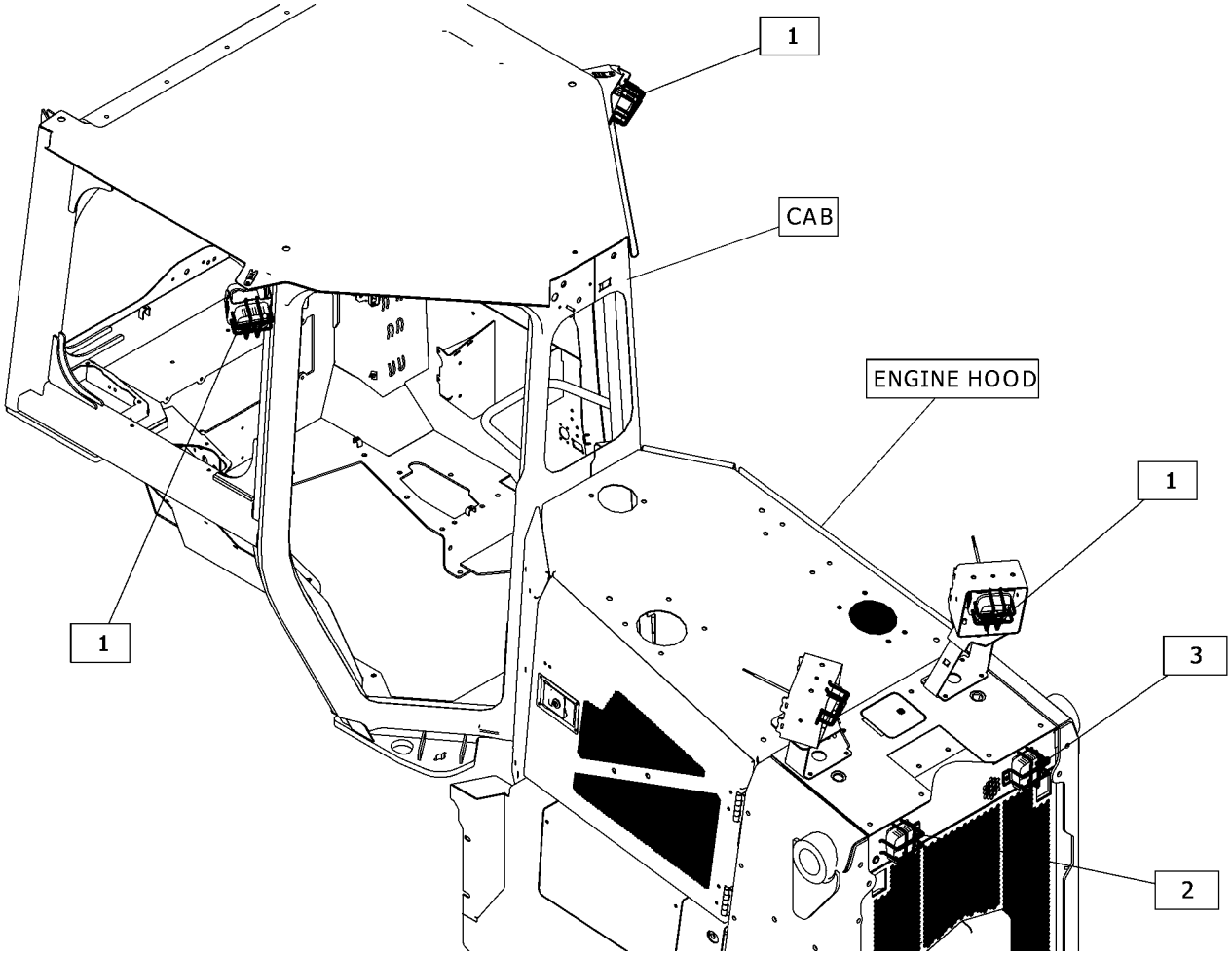

GRAPHIC #1 <END> g06449543

523-9933 GUARD GP-LINES

S/N: Z2K1-UP; Z2N1-UP
PART OF 533-7717, 533-7718 INSTALLATION AR-BULLDOZER
AN ATTACHMENT

SMCS-7167 **i07790520**

NOTE	REF NO	GRAPHIC REF	PART NUMBER	QTY	PART NAME 1 2 3 4 5 6 (PRODUCT LEVEL)	SEE PAGE
	1	1	**5I-8748**	2	SPACER (11X18X5-MM THK)	
	2	1	**8T-4222**	2	WASHER-PLATED (11X32X2.5-MM THK)	
	3	1	**488-3971**	8	BOLT AS	
	4	1	**488-3974**	4	BOLT AS	
	5	1	**529-6539**	4	BOLT AS	
	6	1	**532-9809**	1	BRACKET AS	
M		1	**8T-3490**	1	NUT-WELD (M10X1.5-THD)	
	7	1	**532-9810**	1	BRACKET AS	
M		1	**8T-3490**	1	NUT-WELD (M10X1.5-THD)	
	8	1	**533-6465**	1	COVER	
	9	1	**533-6466**	1	COVER	
	10	1	**580-8225**	1	COVER	
	11	1	**580-8226**	1	COVER	
M	12	1	**8T-4195**	2	BOLT (M10X1.5X30-MM)	

M - METRIC PART

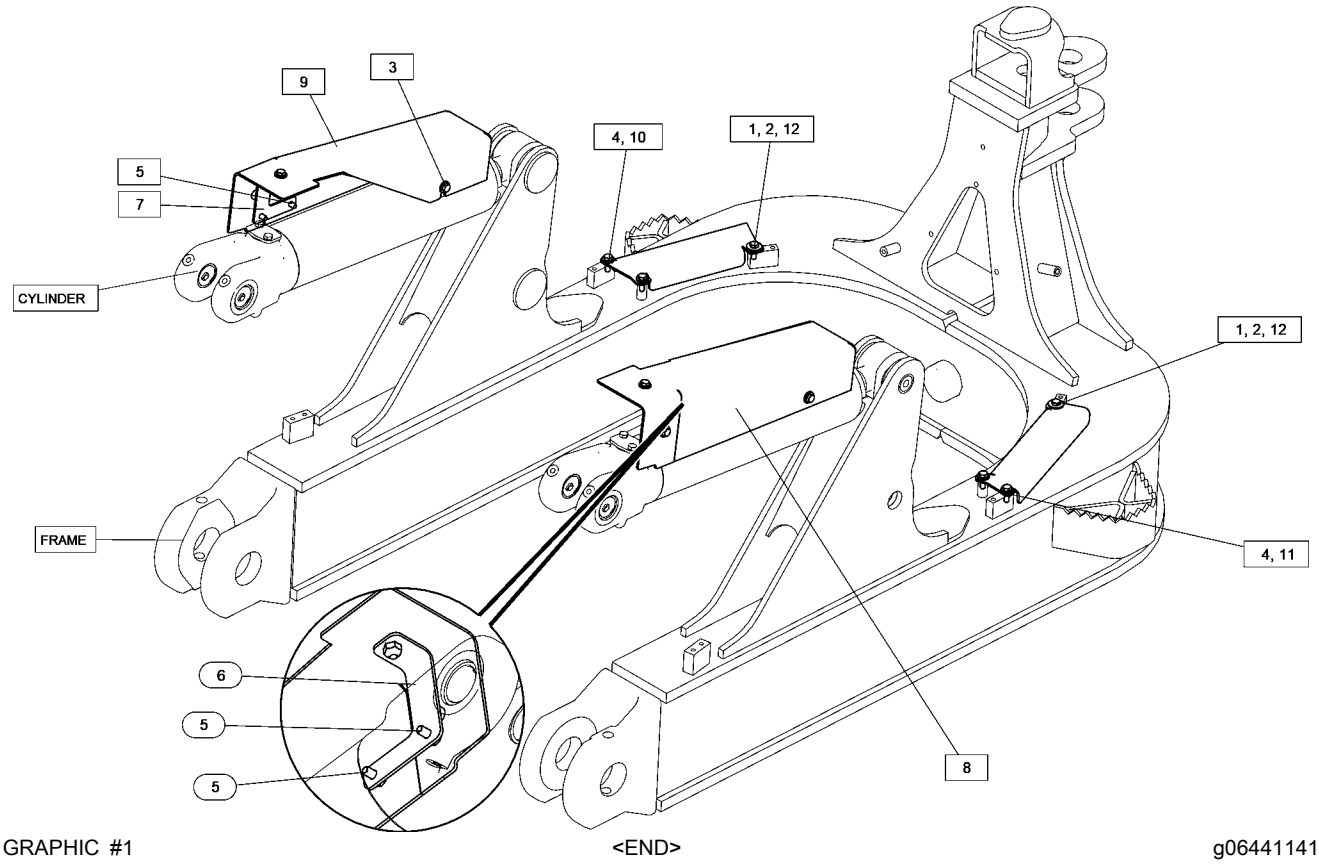

GRAPHIC #1 <END> g06441141

507-8559 GUARD GP-RADIATOR

S/N: Z2K1-UP; Z2N1-UP
PART OF 507-8560 GUARD GP-RADIATOR
AN ATTACHMENT

SMCS-7155 **i07819247**

NOTE	REF NO	GRAPHIC REF	PART NUMBER	QTY	PART NAME 1 2 3 4 5 6 (PRODUCT LEVEL)	SEE PAGE
M	1	1	**9X-2040**	3	SCREW-TRUSS HEAD (M10X1.5X25-MM)	
	2	1	**319-2305**	1	CAM-LATCH	
	3	1	**488-3974**	2	BOLT AS	
	4	1	**507-8557**	1	GUARD AS	
M		1	**8T-3490**	18	NUT-WELD (M10X1.5-THD)	
M		1	**8T-3597**	28	NUT-WELD (M12X1.75-THD)	
M		1	**8T-3612**	1	NUT-WELD (M8X1.25-THD)	
J	5	1	**465-6593**	1	LATCH AS	
	6	1	**540-2308**	1	PLATE AS	

J - REQUIRES CORPORATE KEY
M - METRIC PART

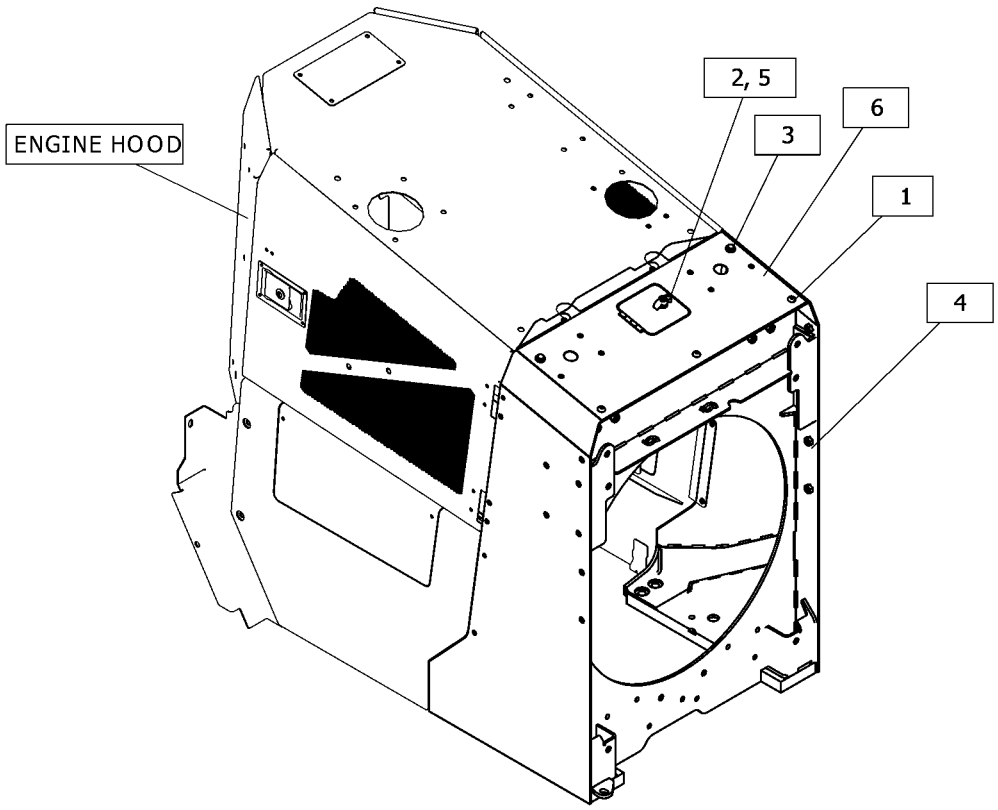

GRAPHIC #1 <END> g06446892

507-8560 GUARD GP-RADIATOR

S/N: Z2K1-UP; Z2N1-UP
PART OF 510-9705 CHASSIS AR
AN ATTACHMENT

SMCS-7155 **i07819239**

NOTE	REF NO	GRAPHIC REF	PART NUMBER	QTY	PART NAME 1 2 3 4 5 6 (PRODUCT LEVEL)	SEE PAGE
M	1	1	**7X-2555**	4	BOLT (M16X2X80-MM)	
M	2	1	**8T-4140**	4	BOLT (M16X2X60-MM)	
	3	1	**198-4780**	8	WASHER-HARD (17.5X32X8-MM THK)	
	4	1	**488-3974**	6	BOLT AS	
Y	5	1	*507-8559*	1	GUARD GP-RADIATOR	389

M - METRIC PART
Y - SEPARATE ILLUSTRATION

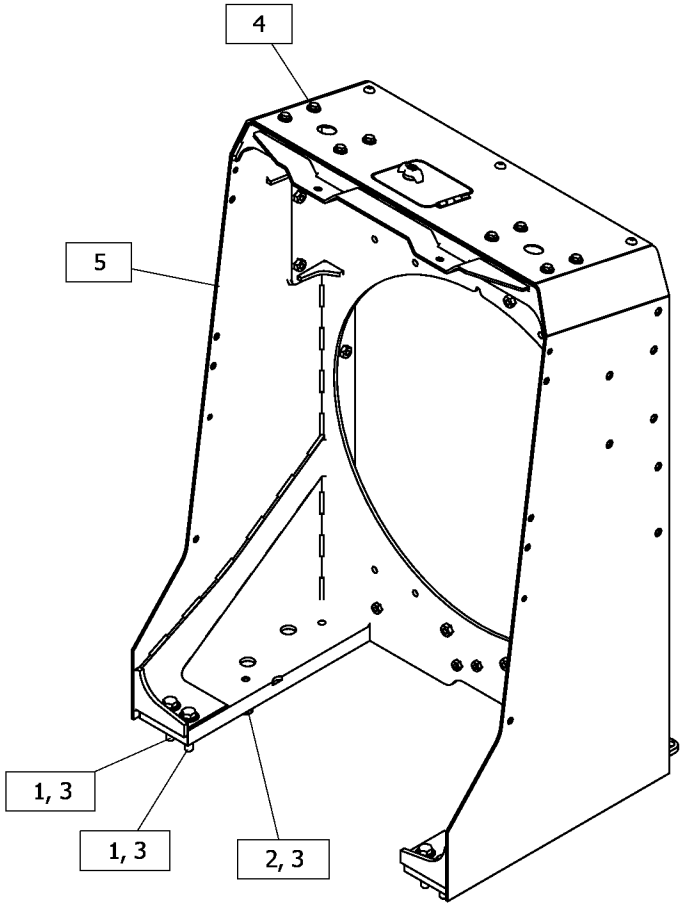

GRAPHIC #1 <END> g06445959

563-0545 GUARD GP-REAR—SEMI-UNIVERSAL

S/N: Z2K1-UP; Z2N1-UP
REAR
PART OF 512-6094 SWEEP GP
AN ATTACHMENT

SMCS-7187 **i07836730**

NOTE	REF NO	GRAPHIC REF	PART NUMBER	QTY	PART NAME 1 2 3 4 5 6 (PRODUCT LEVEL)	SEE PAGE
	1	1	**135-8575**	3	BOLT AS	
	2	1	**332-2788**	4	FILM-WARNING (DO NOT LIFT, READ OMM)	
	3	1	**488-3971**	14	BOLT AS	
	4	1	**241-2501**	8	WASHER (22X82.55X11-MM THK)	
	5	1	**577-2230**	1	GUARD AS	
	6	1	**4P-7581**	1	CLIP (LADDER)	
	7	1	**582-2453**	1	GUARD AS-REAR	
M		1	**8T-3490**	12	NUT-WELD (M10X1.5-THD)	
	8	1	**563-8759**	1	GUARD AS (RH)	
M		1	**8T-3490**	1	NUT-WELD (M10X1.5-THD)	
	9	1	**563-8760**	1	GUARD AS (LH)	
M		1	**8T-3490**	1	NUT-WELD (M10X1.5-THD)	
	10	1	**5P-8441**	1	GROMMET	
	11	1	**6T-1698**	8	MOUNT	
M	12	1	**7X-2565**	4	BOLT (M20X2.5X100-MM)	
	13	1	**9X-3994**	1	PLUG	
	14	1	**578-9044**	1	PLATE AS	

M - METRIC PART

563-0545 **GUARD GP-REAR (**contd.**)** **i07836730**

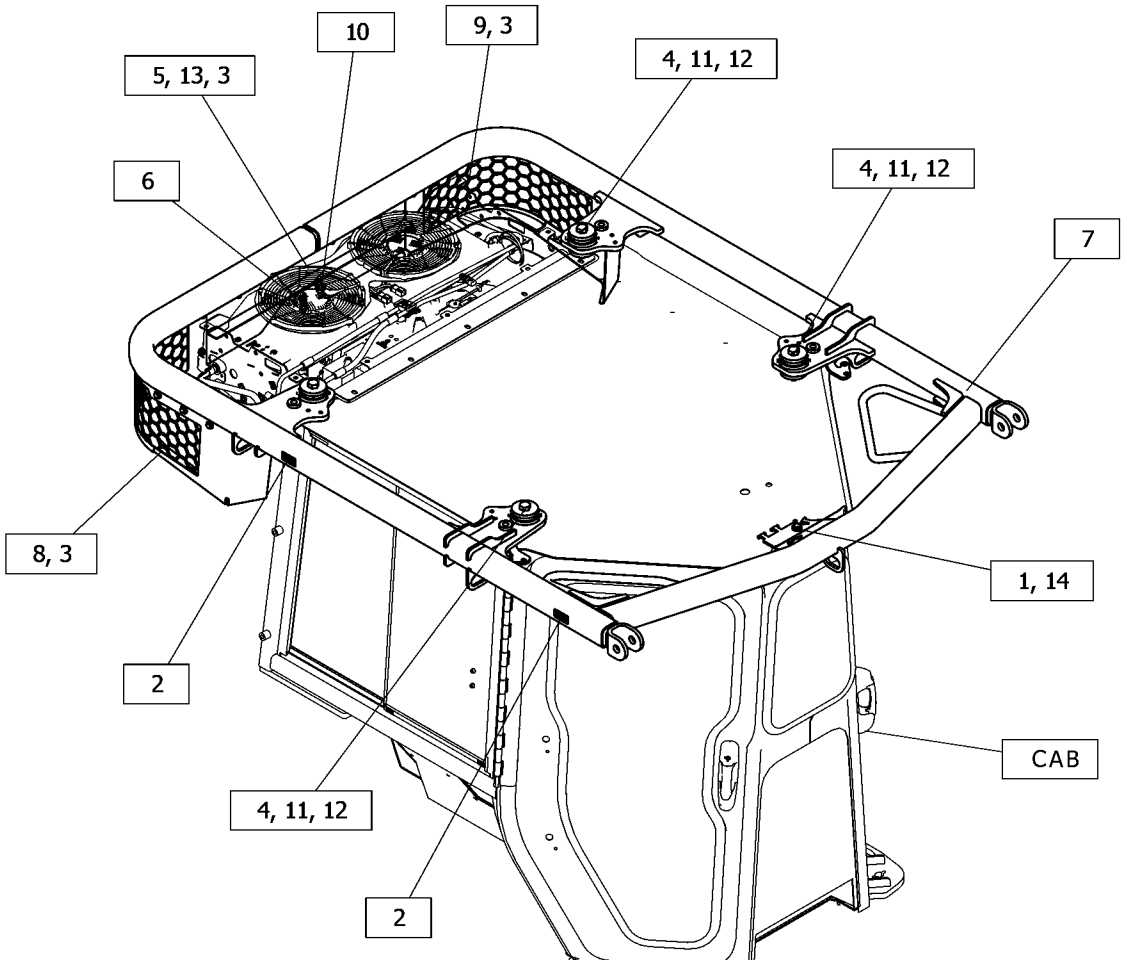

GRAPHIC #1 <END> g06447219

527-6683 HANDHOLD GP

S/N: Z2K1-UP
XL, VPAT
PART OF 505-5306 LADDER AR
AN ATTACHMENT

SMCS-7256 **i07787322**

NOTE	REF NO	GRAPHIC REF	PART NUMBER	QTY	PART NAME 1 2 3 4 5 6 (PRODUCT LEVEL)	SEE PAGE
M	1	1	**8T-4910**	4	BOLT (M12X1.75X60-MM)	
	2	1	**5P-1076**	4	WASHER-HARD (13.5X30X4-MM THK)	
	3	1	**125-7037**	10	INSERT	
	4	1	**135-8575**	4	BOLT AS	
	5	1	**332-8888**	4	SPACER (13.8X30X20-MM THK)	
	6	1	**378-9463**	2	HANDHOLD	
	7	1	**535-5961**	2	HANDLE	

M - METRIC PART

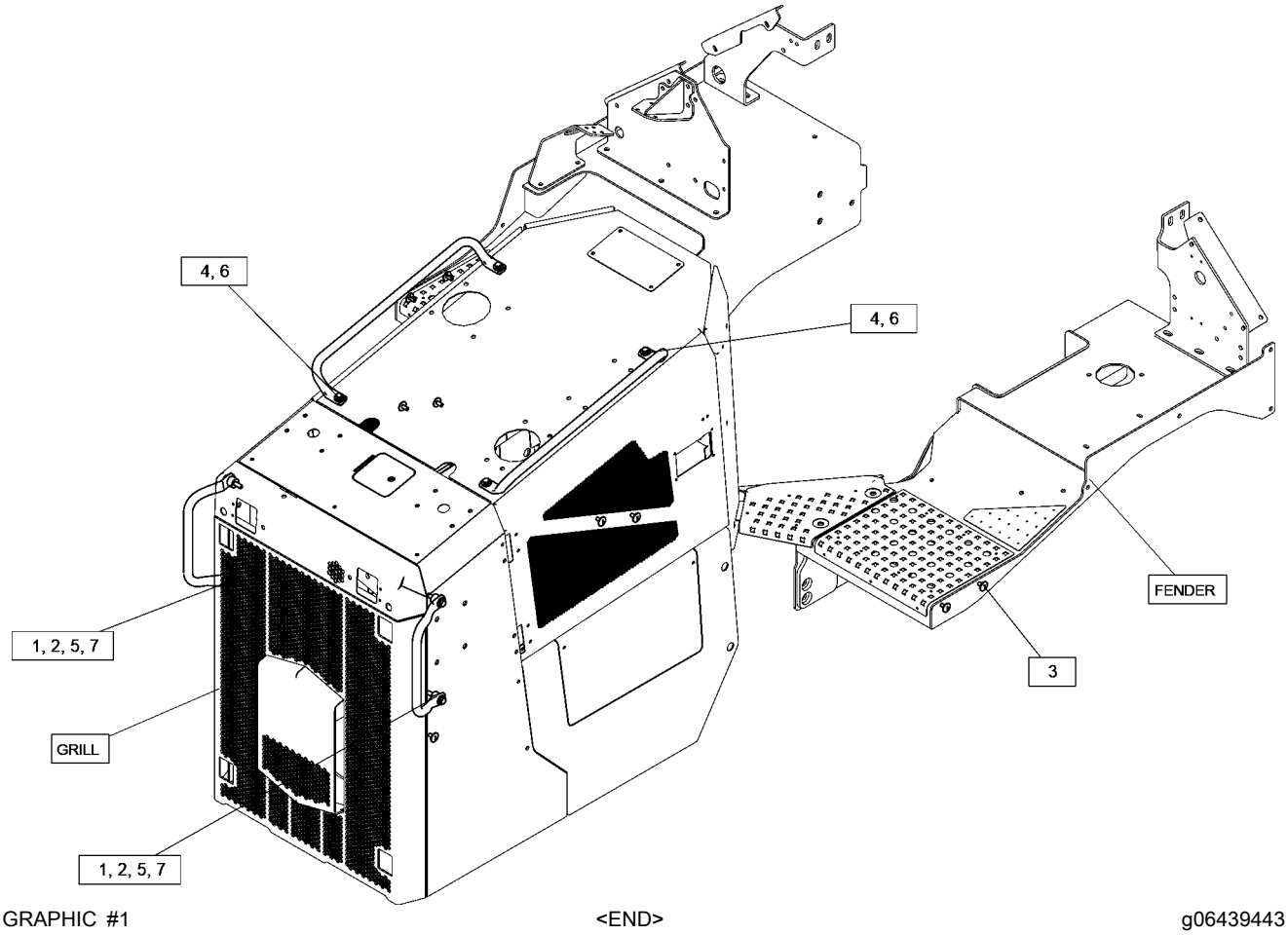

GRAPHIC #1 <END> g06439443

527-6684 HANDHOLD GP

S/N: Z2K1-UP
VPAT, LGP
PART OF 505-5307 LADDER AR
AN ATTACHMENT

SMCS-7256 **i07786775**

NOTE	REF NO	GRAPHIC REF	PART NUMBER	QTY	PART NAME 1 2 3 4 5 6 (PRODUCT LEVEL)	SEE PAGE
M	1	1	**8T-4910**	4	BOLT (M12X1.75X60-MM)	
	2	1	**5P-1076**	4	WASHER-HARD (13.5X30X4-MM THK)	
	3	1	**125-7037**	10	INSERT	
	4	1	**135-8575**	4	BOLT AS	
	5	1	**332-8888**	4	SPACER (13.8X30X20-MM THK)	
	6	1	**378-9463**	2	HANDHOLD	
	7	1	**535-5960**	2	HANDLE	

M - METRIC PART

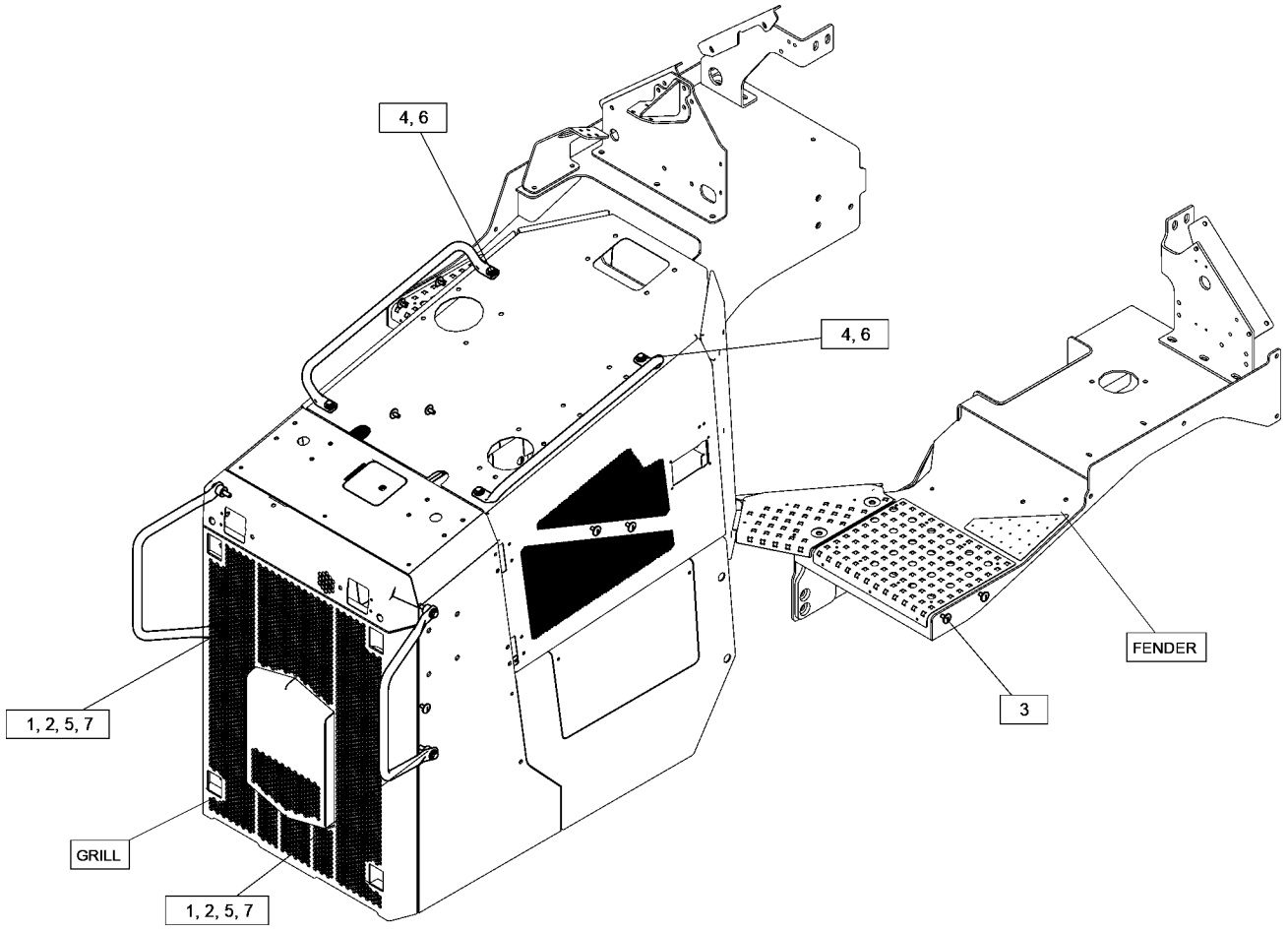

GRAPHIC #1 <END> g06439423

508-1350 HOOD GP-ENGINE

S/N: Z2K1-UP; Z2N1-UP
PART OF 510-9705 CHASSIS AR
AN ATTACHMENT

SMCS-7251 **i07819291**

NOTE	REF NO	GRAPHIC REF	PART NUMBER	QTY	PART NAME 1 2 3 4 5 6 (PRODUCT LEVEL)	SEE PAGE
	1	2	**4M-7470**	2	GROMMET	
	2	2	**5P-4116**	2	WASHER-HARD (8.8X20.5X2-MM THK)	
	3	2	**6P-8269**	1	WASHER (20.5X88X6-MM THK)	
M	4	2	**303-9441**	1	BOLT (M16X2X80-MM)	
	5	1	**7X-3391**	4	WASHER-HARD (13.5X32X6-MM THK)	
	6	1	**7X-7729**	2	WASHER (11X25X3-MM THK)	
	7	1	**7Y-2854**	4	SPACER (24X38X3-MM THK)	
	8	2	**8E-4832**	2	STRIKER	
M	9	1	**8T-4139**	2	BOLT (M12X1.75X30-MM)	
	10	1	**8T-4222**	4	WASHER-PLATED (11X32X2.5-MM THK)	
M	11	1	**8T-4910**	2	BOLT (M12X1.75X60-MM)	
	12	2	**9P-3066**	2	MOUNTING	
	13	1	**115-6433**	2	WASHER (11X50X6-MM THK)	
	14	2	**135-8573**	4	BOLT AS	
	15	1	**146-2282**	4	COLLAR	
B	16	2	**216-0143**	4	SHIM (1-MM THK)	
	17	1	**488-3971**	12	BOLT AS	
	18	1	**488-3974**	6	BOLT AS	
	19	2	**529-6539**	4	BOLT AS	
	20	2	**271-9247**	2	BRACKET	
	21	2	**6V-9197**	2	LOCK PIN	
	22	2	**378-9500**	2	ROD AS	
M	23	1	**479-2171**	8	BOLT AS	
M	24	2	**479-2172**	4	BOLT AS	
Y	25	1	*508-1360*	1	DOOR GP-ACCESS	361
	26	1	**508-1365**	1	PLATE AS-SIDE	
	27	1	**508-1366**	1	PLATE AS-SIDE	
					(EACH PLATE AS INCLUDES)	
M		1	**8T-3490**	2	NUT-WELD (M10X1.5-THD)	
M		1	**8T-3597**	1	NUT-WELD (M12X1.75-THD)	
	28	1	**570-4062**	1	HOOD AS	
M		1	**8T-3490**	22	NUT-WELD (M10X1.5-THD)	
M		1	**8T-3597**	4	NUT-WELD (M12X1.75-THD)	
	29	1	**570-4088**	1	COVER AS-HOOD	
	30	1	**570-4089**	1	COVER AS-HOOD	
					(EACH COVER AS INCLUDES)	
M		1	**8T-3490**	4	NUT-WELD (M10X1.5-THD)	
	31	2	**571-2065**	1	PLATE AS	
M		2	**8T-3597**	4	NUT-WELD (M12X1.75-THD)	
	32	1	**571-2066**	1	COVER	
Y	33	1	*579-0072*	1	PANEL GP-HOOD	407
	34	1	**6S-6251**	2	MOUNT	
M	35	1	**8T-4195**	4	BOLT (M10X1.5X30-MM)	
M	36	1	**8T-6466**	2	BOLT (M10X1.5X60-MM)	
	37	2	**9X-8257**	1	WASHER (17.5X30X3.5-MM THK)	
D	38	1	**5P-7483**		SEAL (0.3-M EACH)	

508-1350 **HOOD GP-ENGINE (**contd.**)** **i07819291**

NOTE	REF NO	GRAPHIC REF	PART NUMBER	QTY	PART NAME 1 2 3 4 5 6 (PRODUCT LEVEL)	SEE PAGE

B - USE AS REQUIRED
D - ORDER BY THE METER
M - METRIC PART
Y - SEPARATE ILLUSTRATION

508-1350 **HOOD GP-ENGINE (**contd.**)** **i07819291**

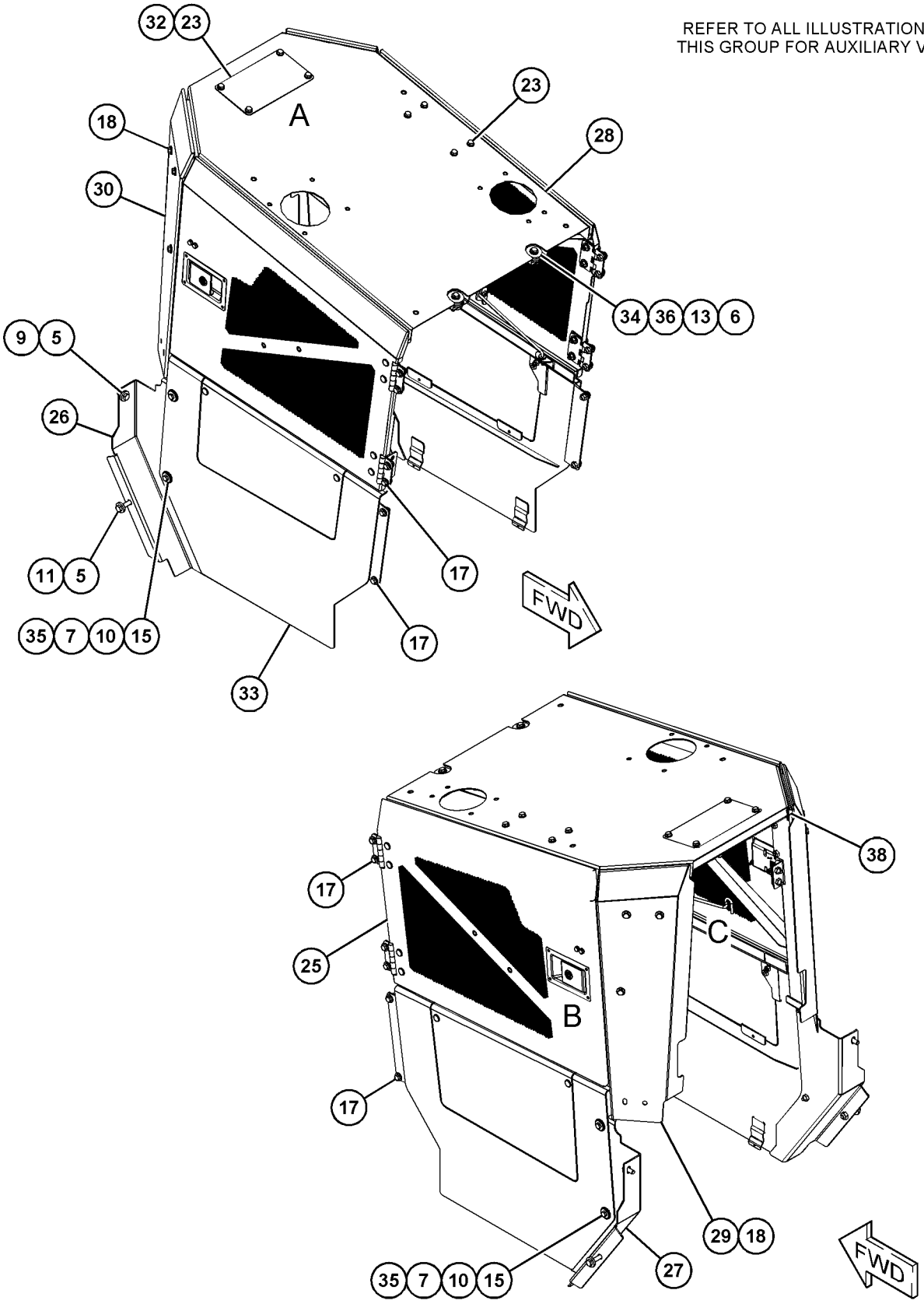

GRAPHIC #1

g06455260

508-1350 **HOOD GP-ENGINE (**contd.**)** **i07819291**

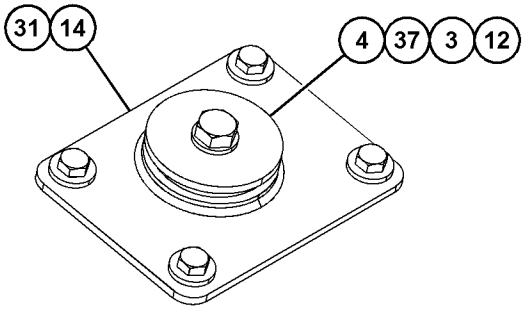

VIEW OF AREA A
(PARTS REMOVED FOR CLARITY)

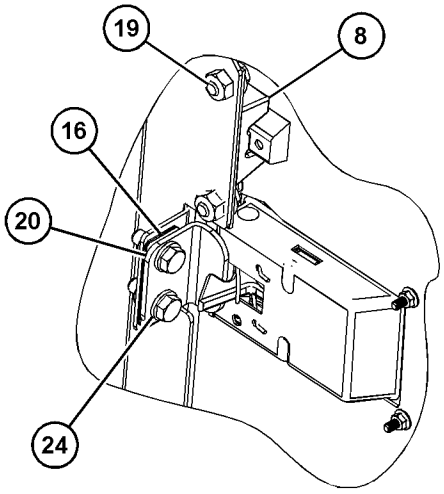

VIEW OF AREA B



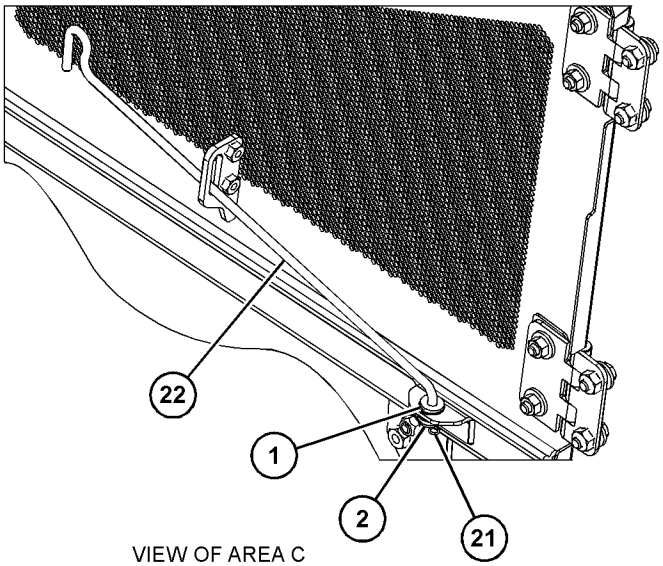

VIEW OF AREA C
(PARTS REMOVED FOR CLARITY)

GRAPHIC #2 <END> g06455261

505-5306 LADDER AR

S/N: Z2K1-UP
VPAT, XL
FOR USE WITH 515-3737—PAGE: 621, 515-3730—PAGE: 797, 515-3731—PAGE: 795
PART OF 532-9851, 532-9856 DISTRIBUTION AR
AN ATTACHMENT

SMCS-7254 **i07786911**

NOTE	PART NUMBER	QTY	PART NAME 1 2 3 4 5 6 (PRODUCT LEVEL)	SEE PAGE
Y	*527-6683*	1	HANDHOLD GP	393
Y	*523-3945*	1	LADDER GP	400

Y - SEPARATE ILLUSTRATION

<END>

505-5307 LADDER AR

S/N: Z2K1-UP
VPAT, LOW GROUND PRESSURE
FOR USE WITH 515-3734—PAGE: 795, 559-6020—PAGE: 795, 515-3733—PAGE: 797
AN ATTACHMENT

SMCS-7254 **i07786761**

NOTE	PART NUMBER	QTY	PART NAME 1 2 3 4 5 6 (PRODUCT LEVEL)	SEE PAGE
Y	*527-6684*	1	HANDHOLD GP	394
Y	*528-6202*	1	LADDER GP	403

Y - SEPARATE ILLUSTRATION

<END>

523-3945 LADDER GP

S/N: Z2K1-UP
XL
PART OF 505-5306 LADDER AR
AN ATTACHMENT

SMCS-7254 **i07787243**

NOTE	REF NO	GRAPHIC REF	PART NUMBER	QTY	PART NAME 1 2 3 4 5 6 (PRODUCT LEVEL)	SEE PAGE
M	1	1	**8T-4648**	2	BOLT (M12X1.75X70-MM)	
	2	1	**7X-7729**	2	WASHER (11X25X3-MM THK)	
	3	1	**8T-4223**	4	WASHER-HARD (13.5X25.5X3-MM THK)	
M	4	1	**8T-8549**	2	LOCKNUT (M12X1.75-THD)	
	5	1	**135-8575**	6	BOLT AS	
M	6	1	**344-5675**	2	NUT (M10X1.5-THD)	
	7	1	**366-2382**	4	WASHER-NYLON (12.2X25X2-MM THK)	
	8	1	**488-3974**	1	BOLT AS	
	9	1	**508-6279**	1	HANDLE-GRAB	
	10	1	**512-9202**	2	HANDLE AS	
Y	11	1	*523-3946*	1	BRACKET GP-MOUNTING	135
Y	12	1	*523-3949*	1	LADDER GP	402
	13	1	**540-2321**	1	HANDLE	

M - METRIC PART
Y - SEPARATE ILLUSTRATION

523-3945 **LADDER GP** (contd.) **i07787243**

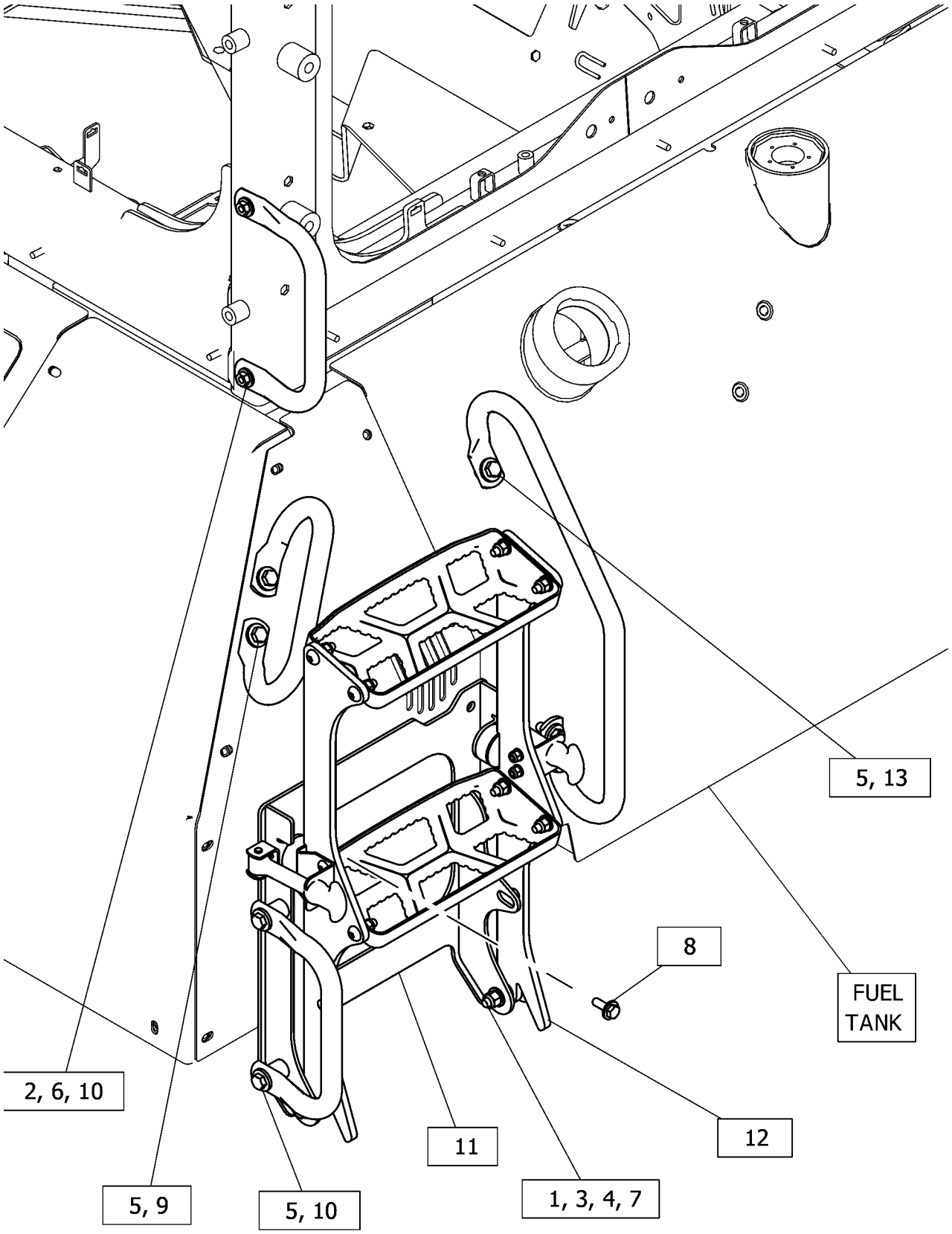

GRAPHIC #1 <END> g06439545

523-3949 LADDER GP

S/N: Z2K1-UP
XL
PART OF 523-3945 LADDER GP
AN ATTACHMENT

SMCS-7254 **i07786946**

NOTE	REF NO	GRAPHIC REF	PART NUMBER	QTY	PART NAME 1 2 3 4 5 6 (PRODUCT LEVEL)	SEE PAGE
M	1	1	**3T-0852**	4	LOCKNUT (M8X1.25-THD)	
M	2	1	**7Y-9099**	4	SCREW-TRUSS HEAD (M8X1.25X25-MM)	
M	3	1	**8T-0389**	8	LOCKNUT (M10X1.5-THD)	
	4	1	**8T-4121**	8	WASHER-HARD (11X21X2.5-MM THK)	
	5	1	**8T-4224**	4	WASHER-HARD (8.8X16X2-MM THK)	
M	6	1	**9X-2039**	8	SCREW-TRUSS HEAD (M10X1.5X35-MM)	
	7	1	**454-7797**	2	STEP	
	8	1	**570-6945**	2	PLATE	
	9	1	**570-6948**	2	BRACKET	

M - METRIC PART

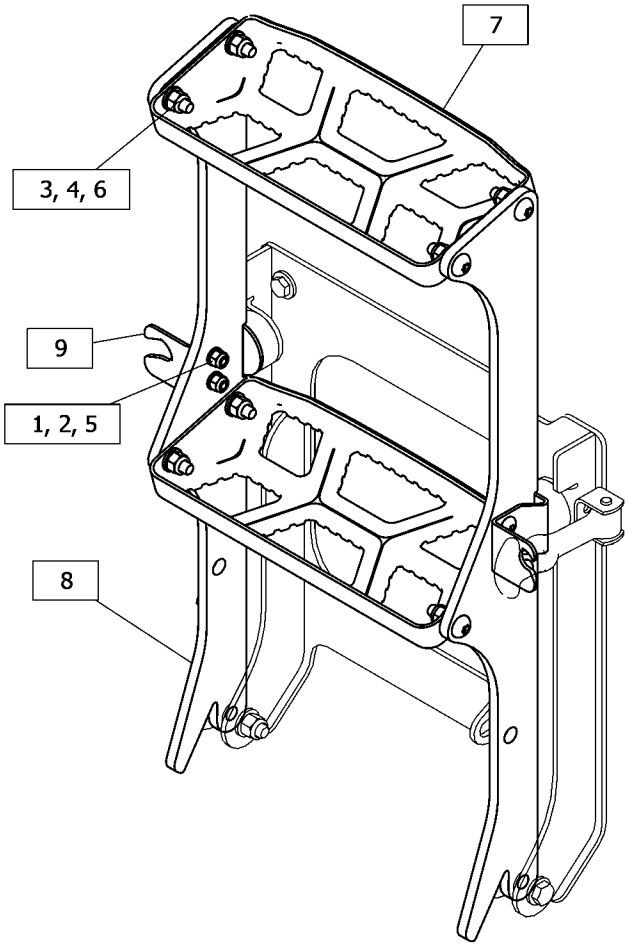

GRAPHIC #1 <END> g06439595

528-6202 LADDER GP

S/N: Z2K1-UP
LOW GROUND PRESSURE
PART OF 505-5307 LADDER AR
AN ATTACHMENT

SMCS-7254 **i07786811**

NOTE	REF NO	GRAPHIC REF	PART NUMBER	QTY	PART NAME 1 2 3 4 5 6 (PRODUCT LEVEL)	SEE PAGE
M	1	1	**8T-4648**	2	BOLT (M12X1.75X70-MM)	
	2	1	**7X-7729**	2	WASHER (11X25X3-MM THK)	
	3	1	**8T-4223**	4	WASHER-HARD (13.5X25.5X3-MM THK)	
M	4	1	**8T-8549**	2	LOCKNUT (M12X1.75-THD)	
	5	1	**135-8575**	6	BOLT AS	
M	6	1	**344-5675**	2	NUT (M10X1.5-THD)	
	7	1	**366-2382**	4	WASHER-NYLON (12.2X25X2-MM THK)	
	8	1	**488-3974**	1	BOLT AS	
	9	1	**508-6279**	1	HANDLE-GRAB	
	10	1	**512-9202**	2	HANDLE AS	
Y	11	1	*523-3946*	1	BRACKET GP-MOUNTING	135
	12	1	**540-2321**	1	HANDLE	
Y	13	1	*562-7044*	1	LADDER GP	404

M - METRIC PART
Y - SEPARATE ILLUSTRATION

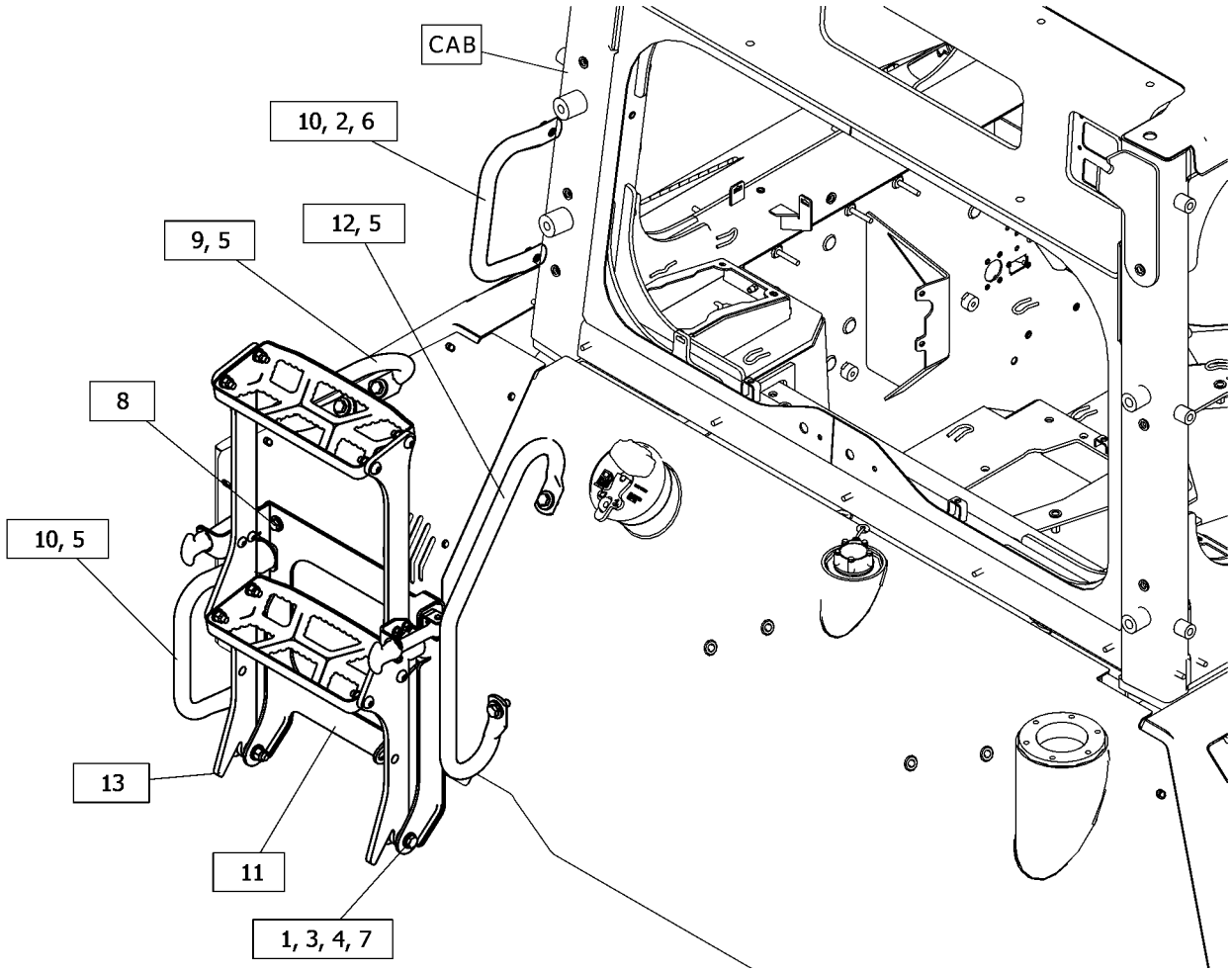

GRAPHIC #1 <END> g06441044

562-7044 LADDER GP

S/N: Z2K1-UP
LOW GROUND PRESSURE
PART OF 528-6202 LADDER GP
AN ATTACHMENT

SMCS-7254 **i07786883**

NOTE	REF NO	GRAPHIC REF	PART NUMBER	QTY	PART NAME 1 2 3 4 5 6 (PRODUCT LEVEL)	SEE PAGE
M	1	1	**3T-0852**	4	LOCKNUT (M8X1.25-THD)	
M	2	1	**7Y-9099**	4	SCREW-TRUSS HEAD (M8X1.25X25-MM)	
M	3	1	**8T-0389**	8	LOCKNUT (M10X1.5-THD)	
	4	1	**8T-4121**	8	WASHER-HARD (11X21X2.5-MM THK)	
	5	1	**8T-4224**	4	WASHER-HARD (8.8X16X2-MM THK)	
M	6	1	**9X-2039**	8	SCREW-TRUSS HEAD (M10X1.5X35-MM)	
	7	1	**454-7797**	2	STEP	
	8	1	**570-6946**	2	PLATE	
	9	1	**570-6948**	2	BRACKET	

M - METRIC PART

562-7044 **LADDER GP (**contd.**)** **i07786883**

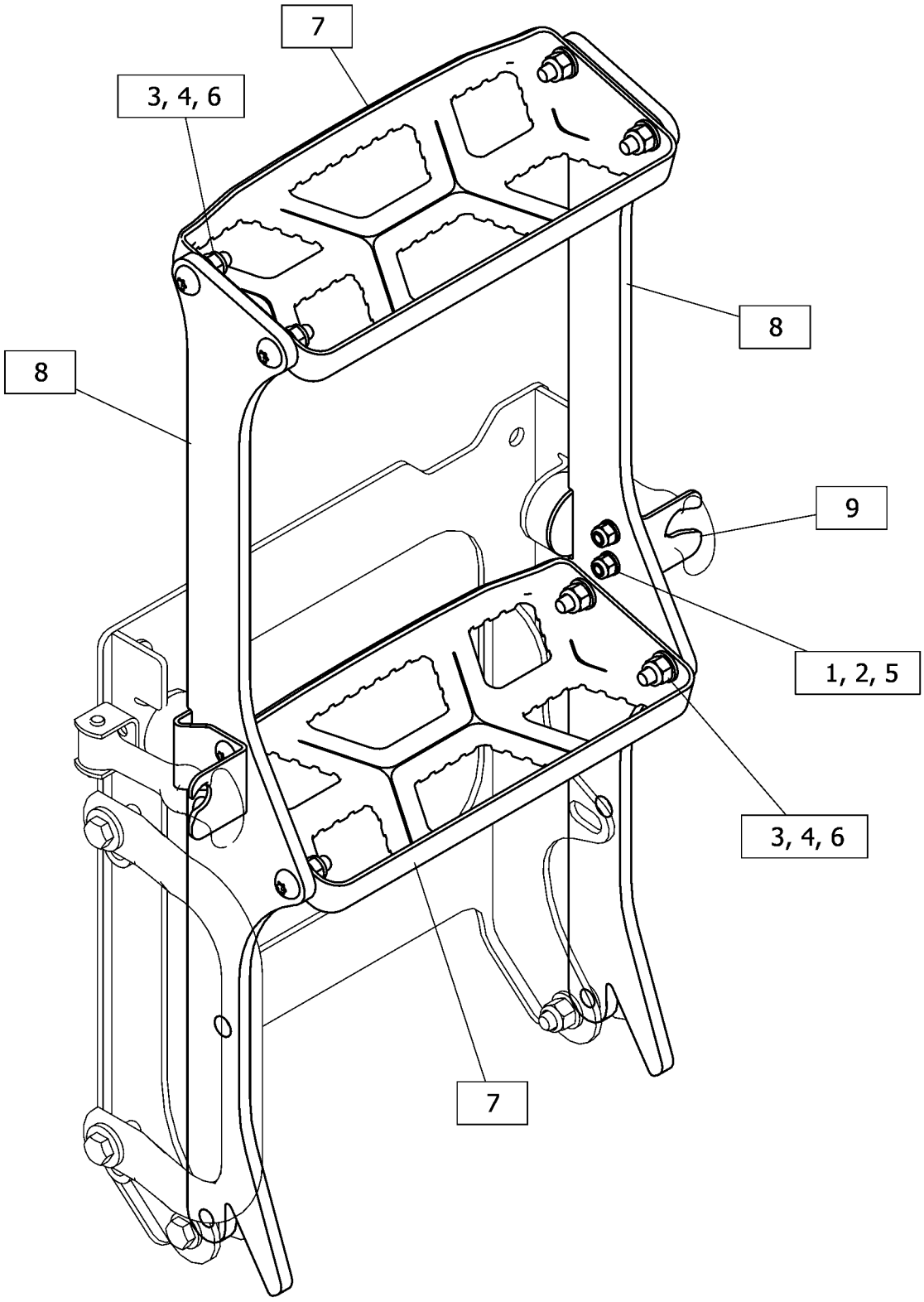

GRAPHIC #1 <END> g06439489

8Y-6400 LATCH GP

S/N: Z2K1-UP; Z2N1-UP
PART OF 559-4308 BAR GP-STRIKER
AN ATTACHMENT

SMCS-7251 **i02160253**

NOTE	REF NO	GRAPHIC REF	PART NUMBER	QTY	PART NAME 1 2 3 4 5 6 (PRODUCT LEVEL)	SEE PAGE
	1	1	**7X-0766**	1	SPRING-LATCH	
	2	1	**8Y-5747**	1	BRACKET-MOUNTING	
	3	1	**8Y-3998**	1	HANDLE-LATCH	
	4	1	**8Y-3966**	1	WASHER (14.7X35X1.57-MM THK)	
	5	1	**8Y-8306**	1	SHAFT-LATCH	
	6	1	**6H-3956**	1	PIN	

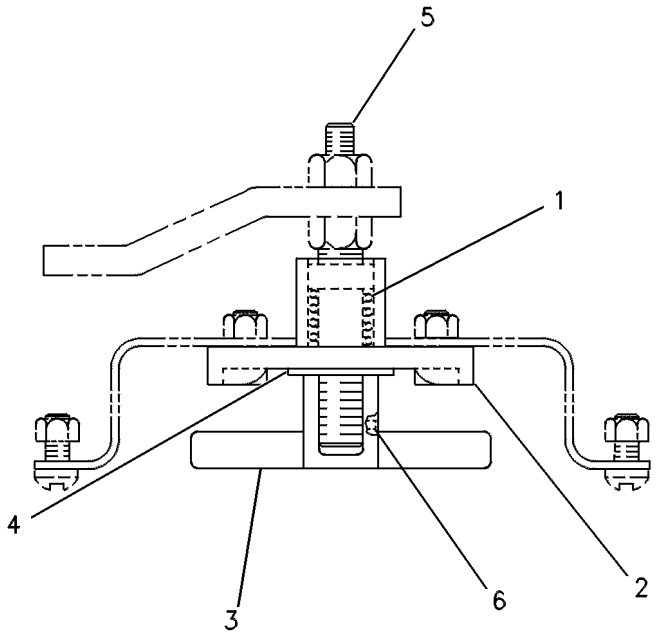

GRAPHIC #1 <END> g00236353

579-0072 PANEL GP-HOOD

S/N: Z2K1-UP; Z2N1-UP
PART OF 508-1350 HOOD GP-ENGINE
AN ATTACHMENT

SMCS-7251 **i07819310**

NOTE	REF NO	GRAPHIC REF	PART NUMBER	QTY	PART NAME 1 2 3 4 5 6 (PRODUCT LEVEL)	SEE PAGE
	1	1	**508-1357**	1	PANEL AS (RH)	
M		1	**8T-3490**	4	NUT-WELD (M10X1.5-THD)	
	2	1	**508-1356**	1	PANEL AS (LH)	
M		1	**8T-3490**	4	NUT-WELD (M10X1.5-THD)	
	3	1	**508-1363**	1	SHEET AS (LH)	
M		1	**6V-7744**	2	LOCKNUT (M10X1.5-THD)	
	4	1	**508-1364**	1	SHEET AS (RH)	
M		1	**6V-7744**	2	LOCKNUT (M10X1.5-THD)	

M - METRIC PART

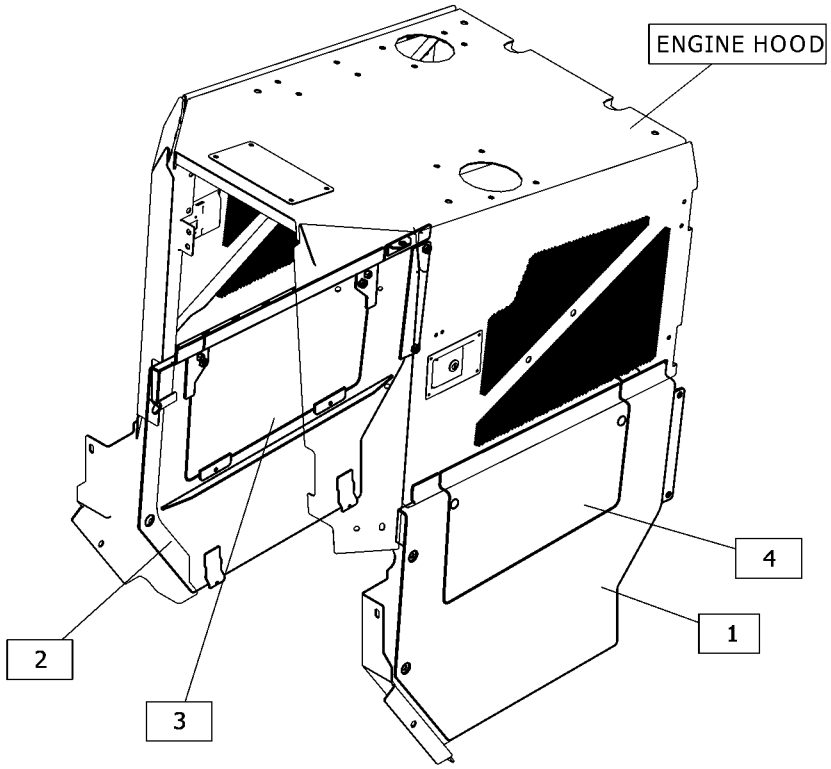

GRAPHIC #1 <END> g06446889

509-3808 PLUG GP

S/N: Z2K1-UP; Z2N1-UP
PART OF 515-3712 DRAWBAR AR
AN ATTACHMENT

SMCS-7051 **i07814524**

NOTE	REF NO	GRAPHIC REF	PART NUMBER	QTY	PART NAME 1 2 3 4 5 6 (PRODUCT LEVEL)	SEE PAGE
	1	1	**7X-7644**	1	FILM-IDENTIFICATION (TIE-DOWN)	
	2	1	**357-6890**	1	FILM-INFORMATION (DRAWBAR, READ OMM)	
B	3	1	**4E-9452**	14	PLUG	

B - USE AS REQUIRED

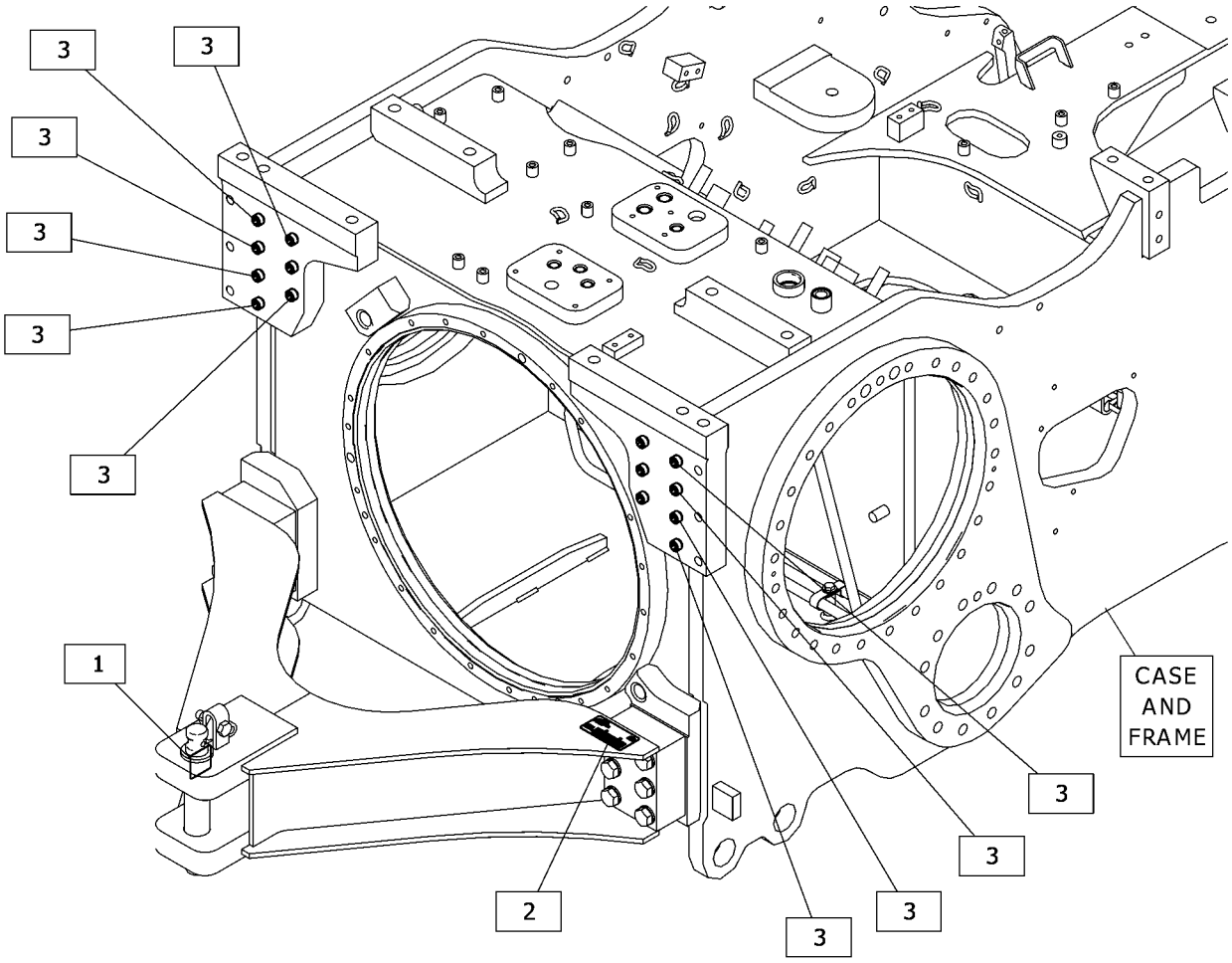

GRAPHIC #1 <END> g06444006

559-3063 PLUG GP

S/N: Z2K1-UP; Z2N1-UP
FUEL TANK GUARD
PART OF 550-5587 GUARD AR-BOTTOM
AN ATTACHMENT

SMCS-7051 **i07828371**

NOTE	REF NO	GRAPHIC REF	PART NUMBER	QTY	PART NAME 1 2 3 4 5 6 (PRODUCT LEVEL)	SEE PAGE
	1	1	**125-7037**	3	INSERT	
	2	1	**488-3974**	1	BOLT AS	

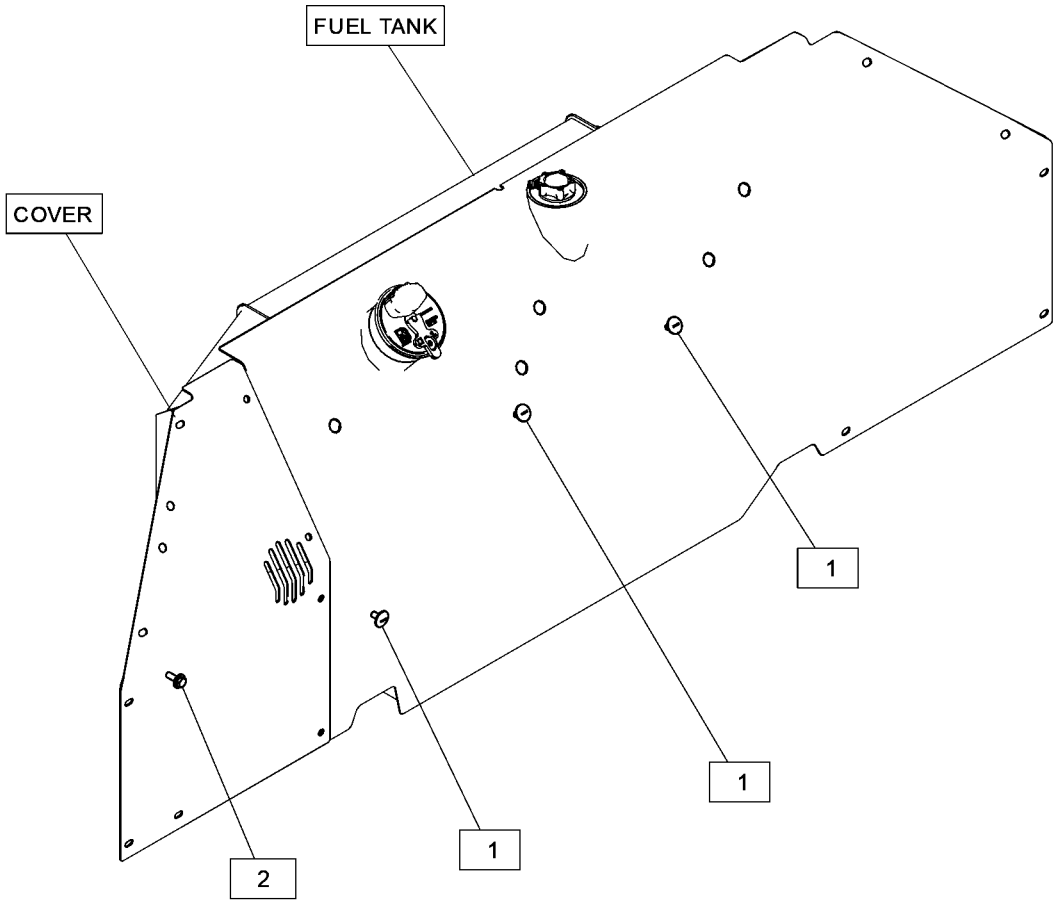

GRAPHIC #1 <END> g06449914

515-3711 PLUG GP-CASE FRAME

S/N: Z2K1-UP; Z2N1-UP
FOR USE WITH NO REAR WORK TOOLS OPTION
AN ATTACHMENT

SMCS-7051 **i07867109**

NOTE	PART NUMBER	QTY	PART NAME 1 2 3 4 5 6 (PRODUCT LEVEL)	SEE PAGE
Y	*568-5294*	1	PLUG GP-CASE FRAME	411

Y - SEPARATE ILLUSTRATION

<END>

568-5294 PLUG GP-CASE FRAME

S/N: Z2K1-UP; Z2N1-UP
FOR USE WITH NO REAR WORK TOOLS OPTION
PART OF 515-3711 PLUG GP-CASE FRAME
AN ATTACHMENT

SMCS-7051 **i07836314**

NOTE	REF NO	GRAPHIC REF	PART NUMBER	QTY	PART NAME 1 2 3 4 5 6 (PRODUCT LEVEL)	SEE PAGE
	1	1	**193-5917**	26	PLUG	

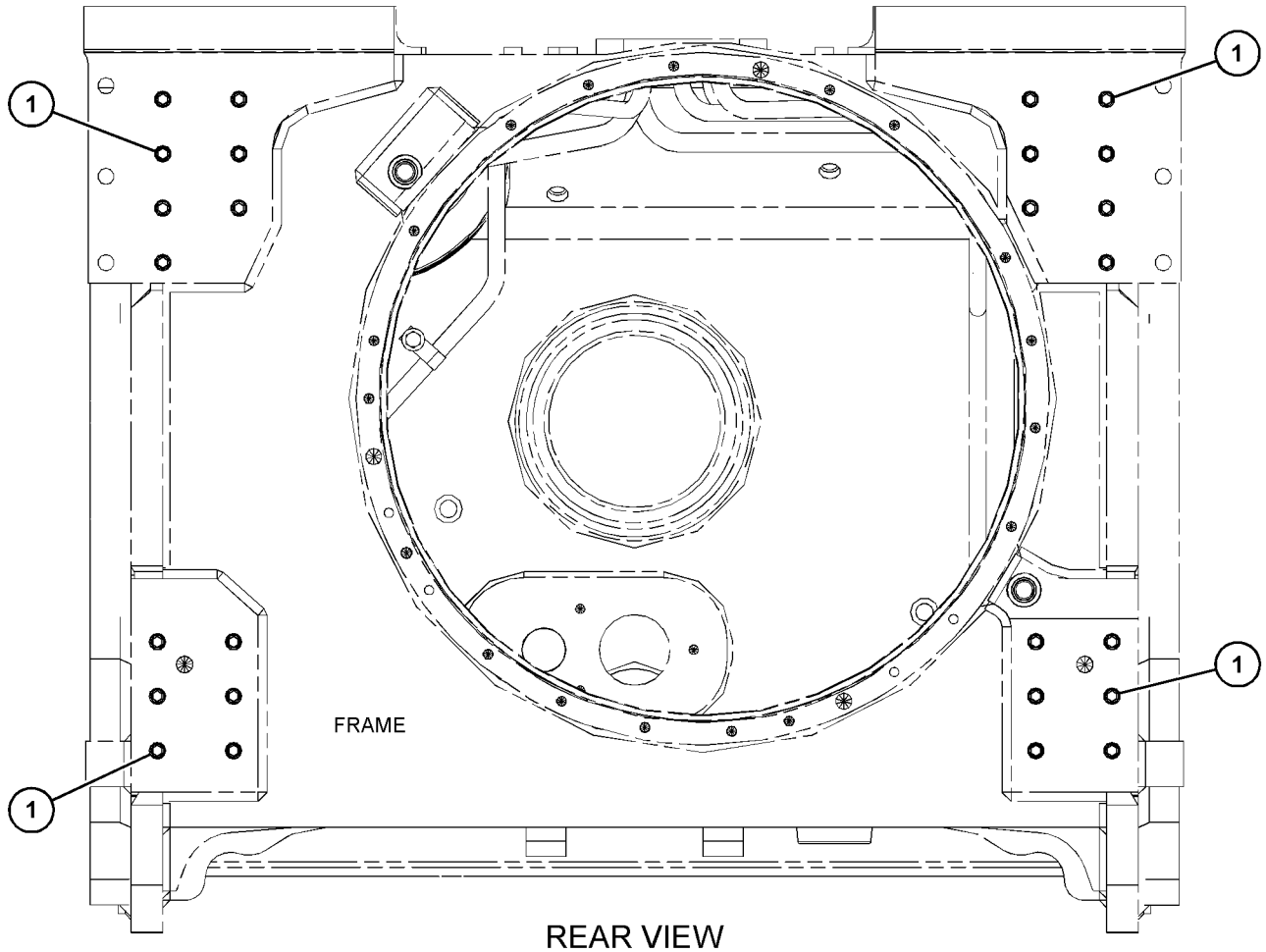

REAR VIEW

GRAPHIC #1 <END> g06452872

550-5589 SCREEN GP-PROTECTION

S/N: Z2K1-UP; Z2N1-UP
SIDE, REAR
CANNOT BE USED WITH 550-5581—PAGE: 418, 550-5579—PAGE: 680
PART OF 550-5583 SWEEP GP
AN ATTACHMENT

SMCS-7150 **i07820631**

NOTE	PART NUMBER	QTY	PART NAME 1 2 3 4 5 6 (PRODUCT LEVEL)	SEE PAGE
Y	*536-8780*	1	SCREEN GP-PROTECTION (REAR)	746
Y	*560-0311*	1	SCREEN GP-PROTECTION (CAB, SIDE)	752

Y - SEPARATE ILLUSTRATION

<END>

559-2709 SEAL GP-WASTE HANDLING

S/N: Z2K1-UP; Z2N1-UP
PART OF 532-9795 FORESTRY AR, 532-9797 WASTE HANDLING AR
AN ATTACHMENT

SMCS-7555 **i07819955**

NOTE	REF NO	GRAPHIC REF	PART NUMBER	QTY	PART NAME 1 2 3 4 5 6 (PRODUCT LEVEL)	SEE PAGE
	1	1	**488-3974**	8	BOLT AS	
	2	1	**562-7151**	1	PLATE AS	
	3	1	**562-7152**	1	PLATE AS	
E	4	1	**233-6832**		SEAL (55-CM EACH)	
D	5	1	**5P-5649**		SEAL-BULK (0.1-M EACH)	
D	5A	1	**5P-5649**		SEAL-BULK (0.8-M EACH)	
D	5B	1	**5P-5649**		SEAL-BULK (0.3-M EACH)	
E	6	1	**125-3518**		SEAL (80-CM EACH)	
E	6A	1	**125-3518**		SEAL (10-CM EACH)	
E	6B	1	**125-3518**		SEAL (41-CM)	
E	7	1	**3E-8082**		SEAL (54-CM EACH)	

D - ORDER BY THE METER
E - ORDER BY THE CENTIMETER

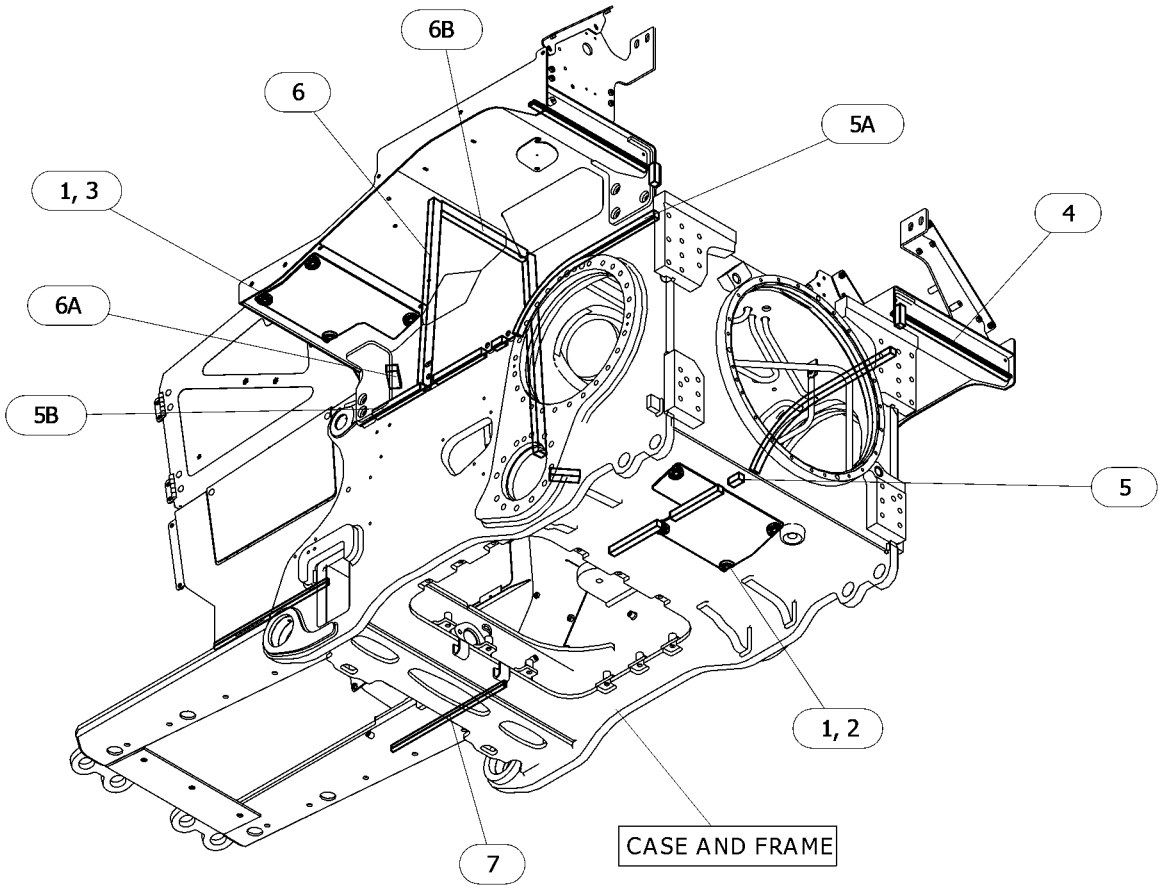

GRAPHIC #1 <END> g06463234

515-6192 SUPPORT GP-HOOD

S/N: Z2K1-UP; Z2N1-UP
PART OF 559-5990 CHASSIS AR
AN ATTACHMENT

SMCS-7251 **i07817218**

NOTE	REF NO	GRAPHIC REF	PART NUMBER	QTY	PART NAME 1 2 3 4 5 6 (PRODUCT LEVEL)	SEE PAGE
	1	1	**198-4778**	10	WASHER-HARD (13.5X30X12-MM THK)	
	2	1	**569-1973**	1	SUPPORT AS-HOOD	
M		1	**8T-3490**	10	NUT-WELD (M10X1.5-THD)	
M	3	1	**8T-4194**	10	BOLT (M12X1.75X50-MM)	

M - METRIC PART

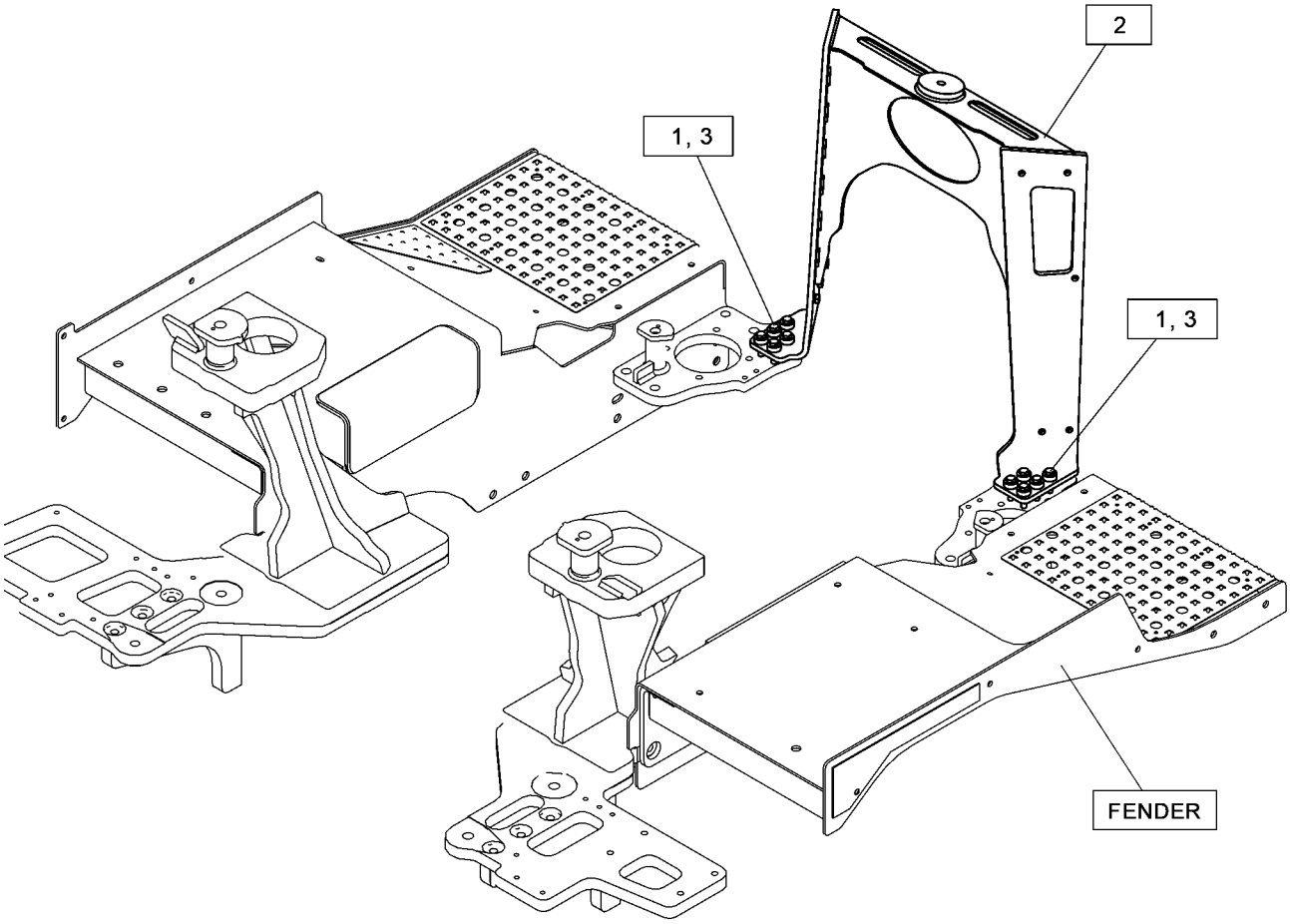

GRAPHIC #1 <END> g06452195

532-9799 SWEEP AR

S/N: Z2K1-UP; Z2N1-UP
VPAT, OPEN
AN ATTACHMENT

SMCS-7000 **i07839747**

NOTE	PART NUMBER	QTY	PART NAME 1 2 3 4 5 6 (PRODUCT LEVEL)	SEE PAGE
Y	*548-1192*	1	DUST EJECTOR GP	79
Y	*508-1621*	1	ENCLOSURE GP-FENDER	367
Y	*550-5581*	1	SWEEP GP	418

Y - SEPARATE ILLUSTRATION

<END>

512-6093 SWEEP GP

S/N: Z2K1-UP; Z2N1-UP
FORESTRY, VPAT
PART OF 550-5583 SWEEP GP
AN ATTACHMENT

SMCS-7162 **i07848570**

NOTE	REF NO	GRAPHIC REF	PART NUMBER	QTY	PART NAME 1 2 3 4 5 6 (PRODUCT LEVEL)	SEE PAGE
Y	1	1	*512-6096*	1	GUARD GP-FRONT	383
Y	2	1	*563-0542*	1	SWEEP GP	419

Y - SEPARATE ILLUSTRATION

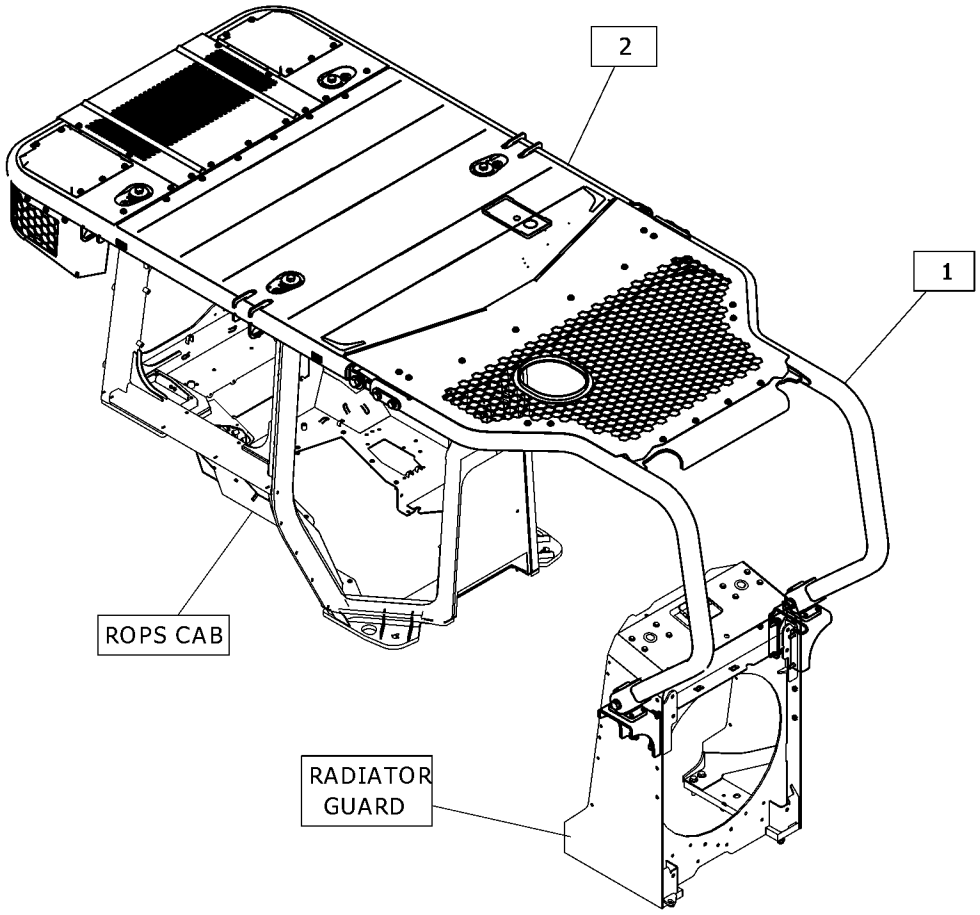

GRAPHIC #1 <END> g06451899

512-6094 SWEEP GP

S/N: Z2K1-UP; Z2N1-UP
PART OF 550-5581 SWEEP GP
AN ATTACHMENT

SMCS-7162 **i07836727**

NOTE	REF NO	GRAPHIC REF	PART NUMBER	QTY	PART NAME 1 2 3 4 5 6 (PRODUCT LEVEL)	SEE PAGE
Y	1	1	*563-0545*	1	GUARD GP-REAR	391
Y	2	1	*580-7781*	1	GUARD GP-FRONT	384

Y - SEPARATE ILLUSTRATION

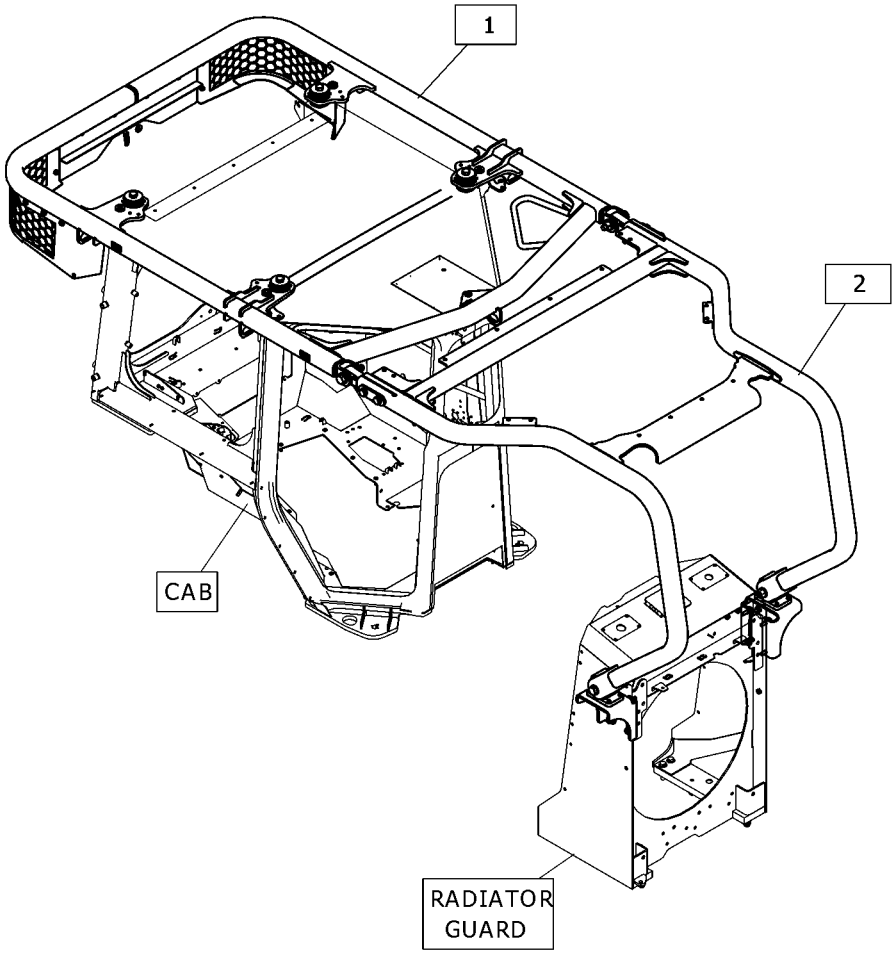

GRAPHIC #1 <END> g06454075

550-5581 SWEEP GP

S/N: Z2K1-UP; Z2N1-UP
PART OF 532-9799 SWEEP AR
AN ATTACHMENT

SMCS-7162 **i07826986**

NOTE	PART NUMBER	QTY	PART NAME 1 2 3 4 5 6 (PRODUCT LEVEL)	SEE PAGE
Y	*435-5755*	1	MOUNTING GP-CAB	717
Y	*512-6094*	1	SWEEP GP	417
	568-5281	1	PLUG GP-CAB	
	4E-9452	1	PLUG	
Y - SEPARATE ILLUSTRATION				

<END>

550-5583 SWEEP GP

S/N: Z2K1-UP; Z2N1-UP
VPAT
PART OF 532-9795 FORESTRY AR
AN ATTACHMENT

SMCS-7162 **i07848568**

NOTE	PART NUMBER	QTY	PART NAME 1 2 3 4 5 6 (PRODUCT LEVEL)	SEE PAGE
Y	*435-5755*	1	MOUNTING GP-CAB	717
Y	*550-5589*	1	SCREEN GP-PROTECTION	412
Y	*512-6093*	1	SWEEP GP	416
	568-5281	1	PLUG GP-CAB	
	4E-9452	4	PLUG	
			(IN UNUSED REAR CAB PROTECTION HOLES, AT TOP)	
Y - SEPARATE ILLUSTRATION				

<END>

563-0542 SWEEP GP

S/N: Z2K1-UP; Z2N1-UP
FORESTRY, SEMI-UNIVERSAL
PART OF 512-6093 SWEEP GP
AN ATTACHMENT

SMCS-7162 **i07848593**

NOTE	REF NO	GRAPHIC REF	PART NUMBER	QTY	PART NAME 1 2 3 4 5 6 (PRODUCT LEVEL)	SEE PAGE
	1	1	**565-3818**	1	COVER	
	2	1	**135-8573**	4	BOLT AS	
	3	1	**135-8575**	3	BOLT AS	
	4	1	**241-2501**	8	WASHER (22X82.55X11-MM THK)	
	5	1	**332-2788**	4	FILM-WARNING (DO NOT LIFT, READ OMM)	
	6	1	**374-6716**	1	COVER	
	7	1	**488-3971**	45	BOLT AS	
	8	1	**4P-7428**	1	CLIP (LADDER)	
	9	1	**4P-7581**	1	CLIP (LADDER)	
	10	1	**563-8759**	1	GUARD AS (RH)	
M		1	**8T-3490**	1	NUT-WELD (M10X1.5-THD)	
	11	1	**563-8760**	1	GUARD AS (LH)	
M		1	**8T-3490**	1	NUT-WELD (M10X1.5-THD)	
	12	1	**565-3813**	1	PLATE AS	
M		1	**8T-3490**	7	NUT-WELD (M10X1.5-THD)	
	13	1	**565-3814**	1	PLATE AS	
M		1	**8T-3490**	7	NUT-WELD (M10X1.5-THD)	
	14	1	**565-3816**	1	PLATE AS	
	15	1	**565-3819**	1	COVER	
	16	1	**565-3820**	1	PLATE AS	
M		1	**8T-3490**	15	NUT-WELD (M10X1.5-THD)	
	17	1	**577-2230**	1	GUARD AS	
	18	1	**582-2454**	1	GUARD AS-REAR	
		1	**7T-1099**	6	LINK	
M		1	**8T-3490**	4	NUT-WELD (M10X1.5-THD)	
		1	**582-2453**	1	GUARD AS-REAR	
M		1	**8T-3490**	12	NUT-WELD (M10X1.5-THD)	
	19	1	**5P-8441**	1	GROMMET	
	20	1	**6T-1698**	8	MOUNT	
	21	1	**6W-1594**	1	PLUG	
	22	1	**7K-1181**	1	STRAP-CABLE	
M	23	1	**7X-2565**	4	BOLT (M20X2.5X100-MM)	
	24	1	**7X-7729**	2	WASHER (11X25X3-MM THK)	
M	25	1	**8T-4182**	2	BOLT (M10X1.5X45-MM)	
	26	1	**9X-3994**	1	PLUG	
D	27	1	**5P-5637**		SEAL (0.7-M EACH)	

D - ORDER BY THE METER
M - METRIC PART

563-0542 **SWEEP GP** (contd.) **i07848593**

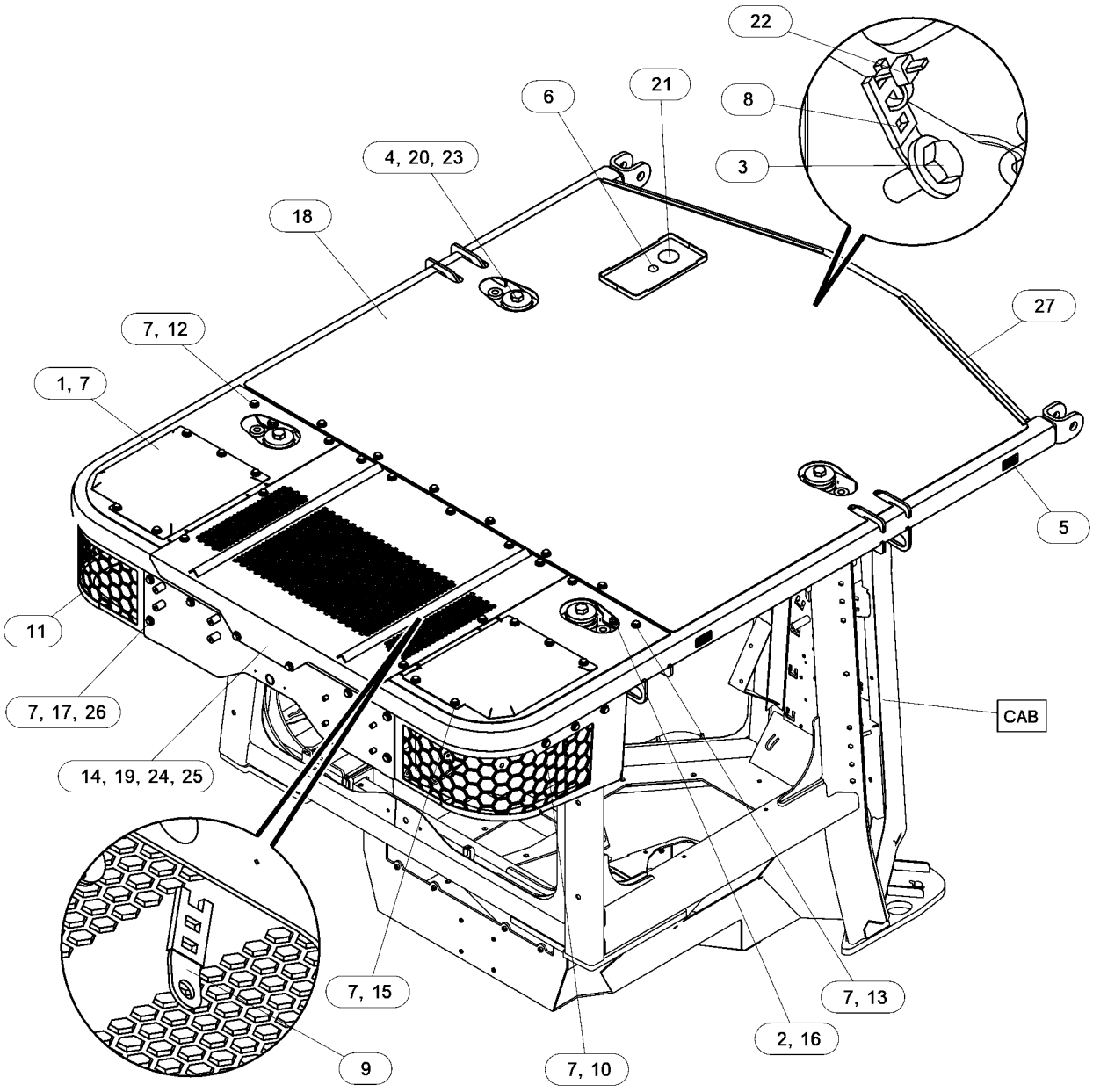

GRAPHIC #1 <END> g06453698

448-0181 BAR GP-EQUALIZER

S/N: Z2K1-UP; Z2N1-UP

PART OF 523-9388, 523-9389, 523-9390, 523-9394, 523-9395, 563-1027 UNDERCARRIAGE AR AN ATTACHMENT

SMCS-7206 **i06716843**

NOTE	REF NO	GRAPHIC REF	PART NUMBER	QTY	PART NAME 1 2 3 4 5 6 (PRODUCT LEVEL)	SEE PAGE
	1	1	**340-7503**	2	PIN AS	
	2	1	**346-2900**	2	COVER	
	3	1	**435-5614**	1	PIN	
Y	4	1	*448-0182*	1	BAR GP-EQUALIZER	422
	5	1	**3B-8489**	2	ADAPTER	
	6	1	**7X-0587**	2	WASHER-HARD (17X54X3-MM THK)	
	7	1	**8G-8316**	2	SPACER (64.7X85X7-MM THK)	
M	8	1	**8T-4190**	2	BOLT (M16X2X25-MM)	
M	9	1	**8T-7338**	4	BOLT (M16X2X45-MM)	
	10	1	**9X-8257**	4	WASHER (17.5X30X3.5-MM THK)	

M - METRIC PART
Y - SEPARATE ILLUSTRATION

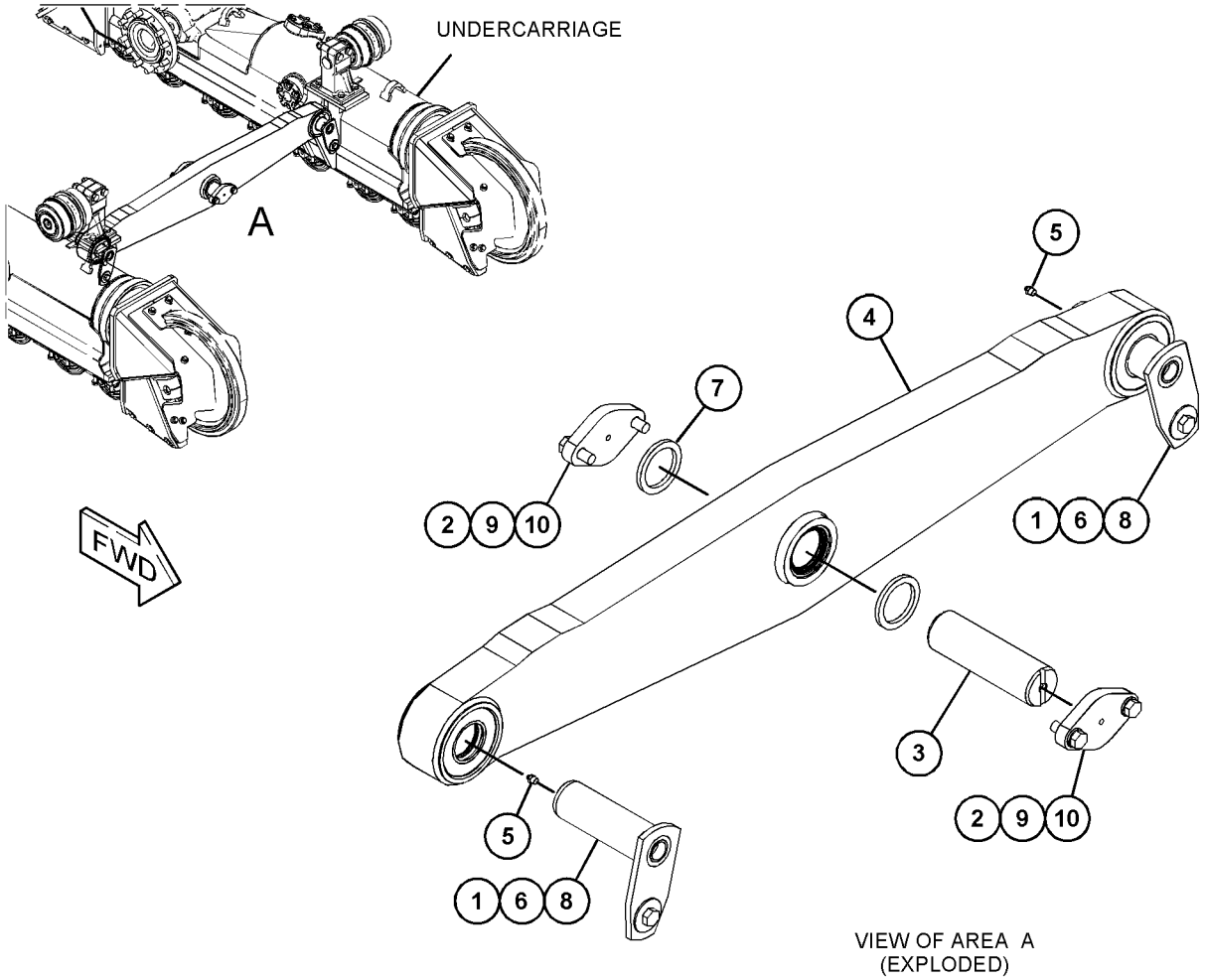

VIEW OF AREA A
(EXPLODED)

GRAPHIC #1 <END> g03890545

448-0182 BAR GP-EQUALIZER

S/N: Z2K1-UP; Z2N1-UP
PART OF 448-0181 BAR GP-EQUALIZER
AN ATTACHMENT

SMCS-7206 **i07572874**

NOTE	REF NO	GRAPHIC REF	PART NUMBER	QTY	PART NAME 1 2 3 4 5 6 (PRODUCT LEVEL)	SEE PAGE
	1	1	**448-0183**	1	BAR AS	
	2	1	**1J-6472**	4	RING-RETAINING	
	3	1	**7K-9205**	2	SEAL-LIP TYPE	
	4	1	**7P-6596**	1	BUSHING	
	5	1	**8G-4189**	2	BEARING-SELF-ALIGNING	
	6	1	**8G-4190**	4	SEAL	
	7	1	**8G-8311**	1	BUSHING	

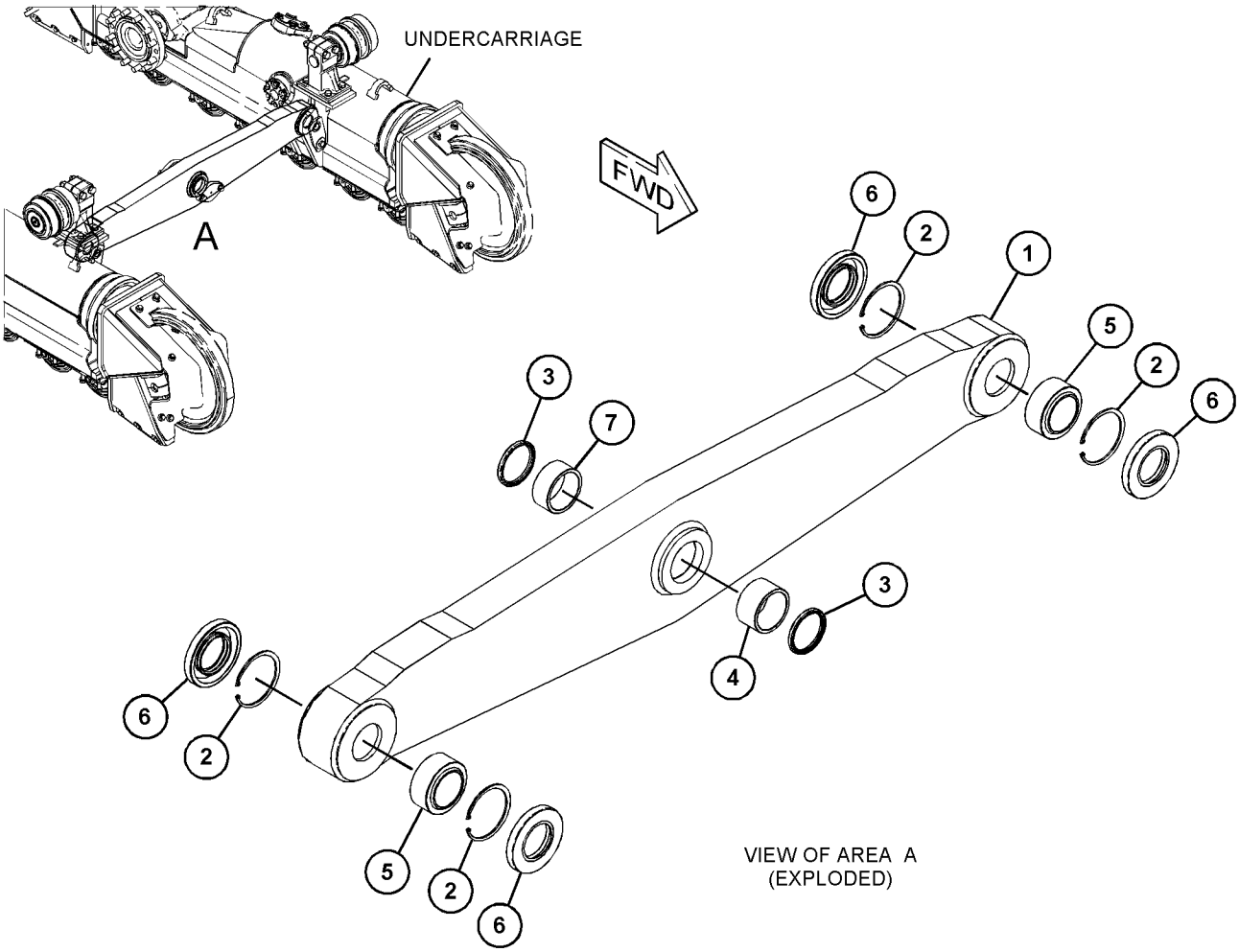

GRAPHIC #1 <END> g03890509

448-0185 BAR GP-EQUALIZER

S/N: Z2N1-UP

PART OF 523-9391, 523-9392, 523-9393, 563-1028 UNDERCARRIAGE AR

AN ATTACHMENT

SMCS-7206 **i06710155**

NOTE	REF NO	GRAPHIC REF	PART NUMBER	QTY	PART NAME 1 2 3 4 5 6 (PRODUCT LEVEL)	SEE PAGE
	1	1	**340-7503**	2	PIN AS	
	2	1	**346-2900**	2	COVER	
	3	1	**435-5614**	1	PIN	
Y	4	1	*448-0186*	1	BAR GP-EQUALIZER	424
	5	1	**3B-8489**	2	ADAPTER	
	6	1	**7X-0587**	2	WASHER-HARD (17X54X3-MM THK)	
	7	1	**8G-8316**	2	SPACER (64.7X85X7-MM THK)	
M	8	1	**8T-4190**	2	BOLT (M16X2X25-MM)	
M	9	1	**8T-7338**	4	BOLT (M16X2X45-MM)	
	10	1	**9X-8257**	4	WASHER (17.5X30X3.5-MM THK)	

M - METRIC PART
Y - SEPARATE ILLUSTRATION

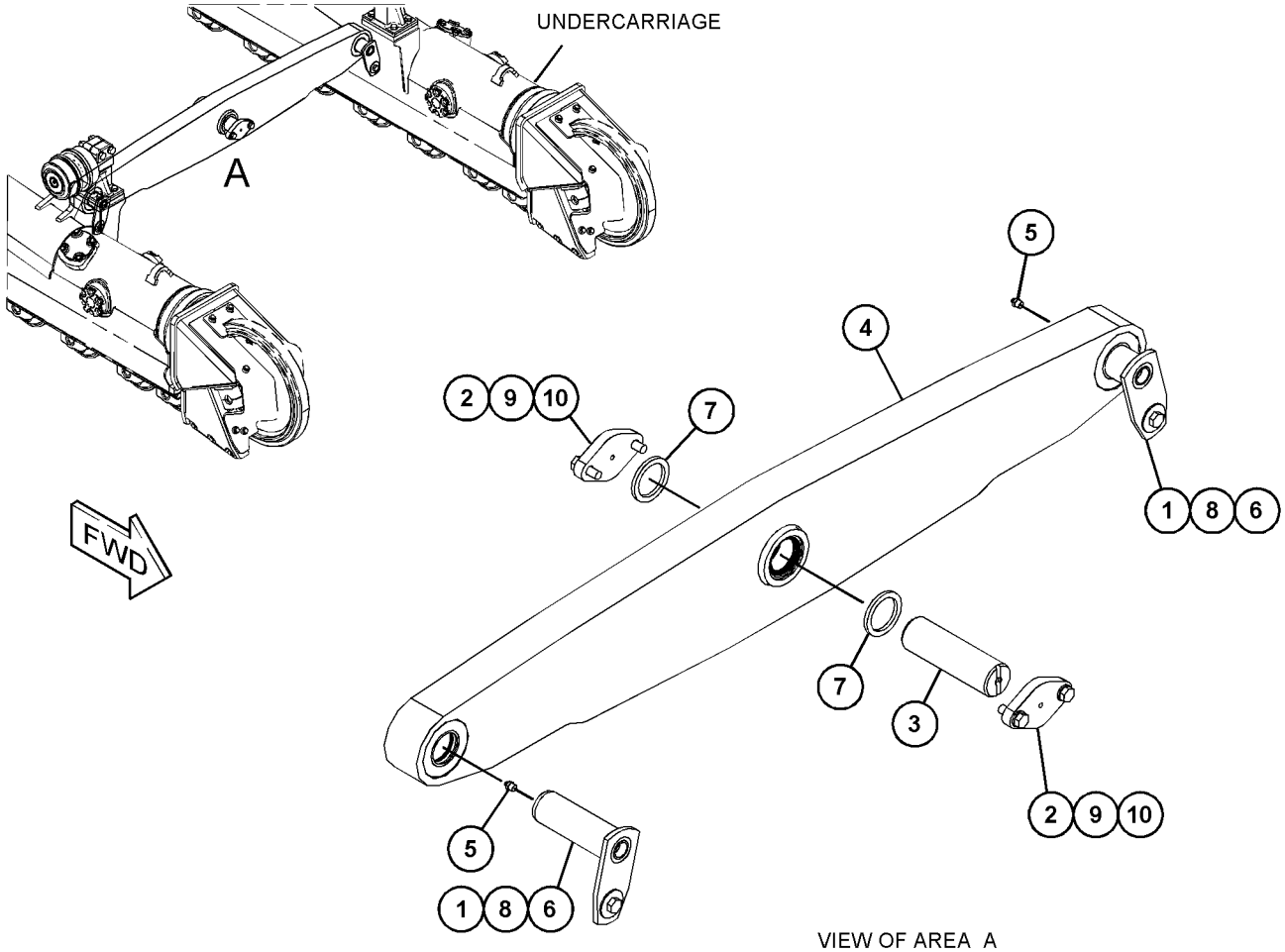

VIEW OF AREA A
(EXPLODED)

GRAPHIC #1 <END> g03890609

448-0186 BAR GP-EQUALIZER

S/N: Z2N1-UP
PART OF 448-0185 BAR GP-EQUALIZER
AN ATTACHMENT

SMCS-7206 **i06710158**

NOTE	REF NO	GRAPHIC REF	PART NUMBER	QTY	PART NAME 1 2 3 4 5 6 (PRODUCT LEVEL)	SEE PAGE
	1	1	**448-0187**	1	BAR AS	
	2	1	**1J-6472**	4	RING-RETAINING	
	3	1	**7K-9205**	2	SEAL-LIP TYPE	
	4	1	**7P-6596**	1	BUSHING	
	5	1	**8G-4189**	2	BEARING-SELF-ALIGNING	
	6	1	**8G-4190**	4	SEAL	
	7	1	**8G-8311**	1	BUSHING	

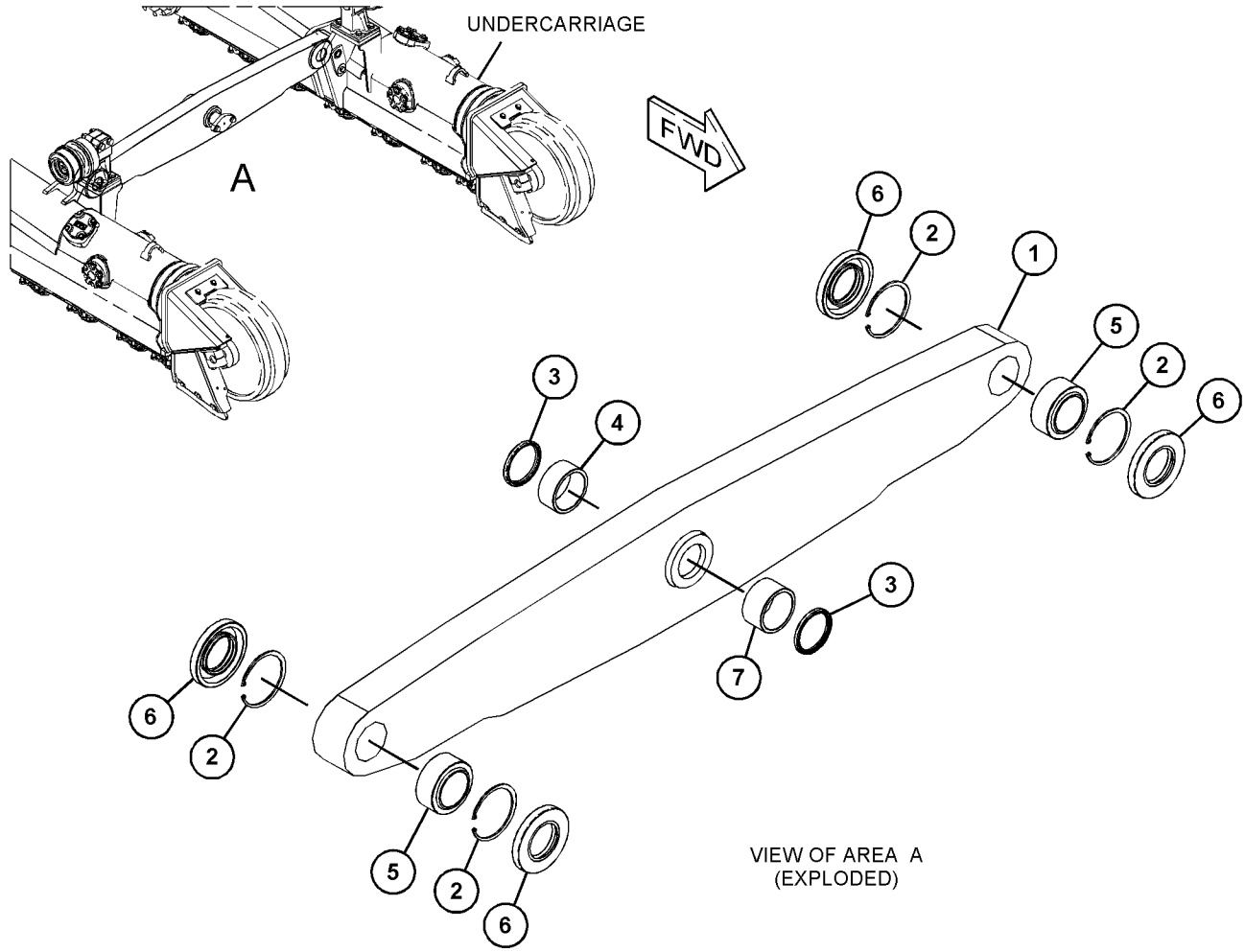

GRAPHIC #1 <END> g03890676

233-0367 CAP GP-TRACK IDLER

S/N: Z2K1-UP; Z2N1-UP

PART OF 523-9366, 523-9367, 523-9368, 523-9369, 523-9370, 523-9371, 523-9372, 523-9373, 523-9374, 523-9375, 523-9376, 523-9377, 563-1029, 563-1030, 563-1138, 563-1139 FRAME GP-UNDERCARRIAGE

AN ATTACHMENT

SMCS-4159 **i07784063**

NOTE	REF NO	GRAPHIC REF	PART NUMBER	QTY	PART NAME 1 2 3 4 5 6 (PRODUCT LEVEL)	SEE PAGE
	1	1	**571-6709**	1	CAP AS-TRACK IDLER	
		1	**6B-6863**	1	PIN-SPRING	
	2	1	**571-6705**	1	BLOCK-TRACK IDLER	
	3	1	**254-3929**	1	SHIM (10-MM THK)	
	4	1	**5P-8247**	2	WASHER-HARD (17X32X3.5-MM THK)	
M	5	1	**8T-0359**	2	BOLT (M16X2X130-MM)	

M - METRIC PART

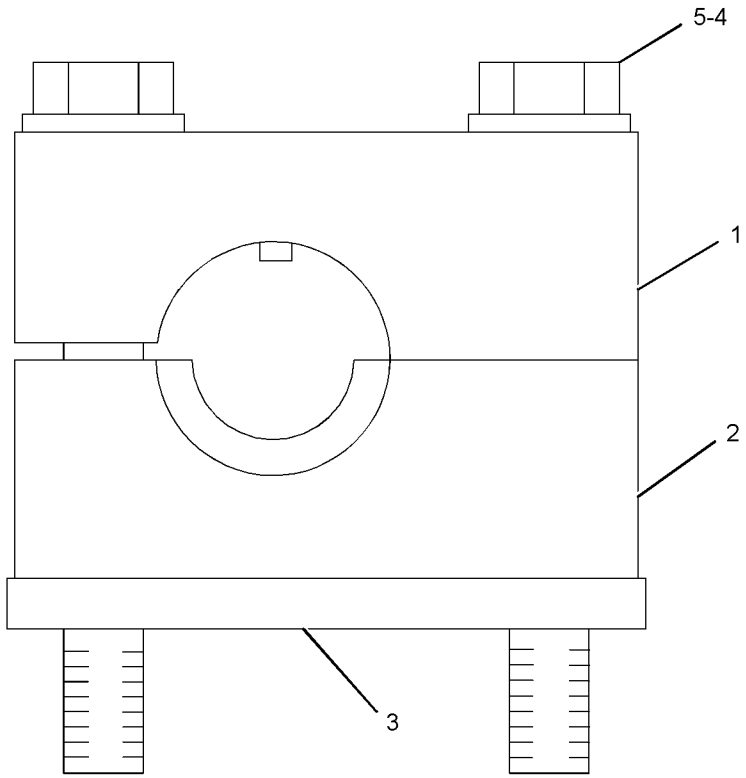

GRAPHIC #1 <END> g01240617

233-0854 CAP GP-TRACK IDLER

S/N: Z2K1-UP; Z2N1-UP

PART OF 523-9366, 523-9367, 523-9368, 523-9369, 523-9370, 523-9371, 523-9372, 523-9373, 523-9374, 523-9375, 523-9376, 523-9377, 563-1029, 563-1030, 563-1138, 563-1139 FRAME GP-UNDERCARRIAGE

AN ATTACHMENT

SMCS-4159 **i07784054**

NOTE	REF NO	GRAPHIC REF	PART NUMBER	QTY	PART NAME 1 2 3 4 5 6 (PRODUCT LEVEL)	SEE PAGE
	1	1	**571-6710**	1	CAP AS-TRACK IDLER	
		1	**6B-6863**	1	PIN-SPRING	
	2	1	**571-6706**	1	BLOCK-TRACK IDLER	
	3	1	**254-3929**	1	SHIM (10-MM THK)	
	4	1	**5P-8247**	2	WASHER-HARD (17X32X3.5-MM THK)	
M	5	1	**8T-0359**	2	BOLT (M16X2X130-MM)	

M - METRIC PART

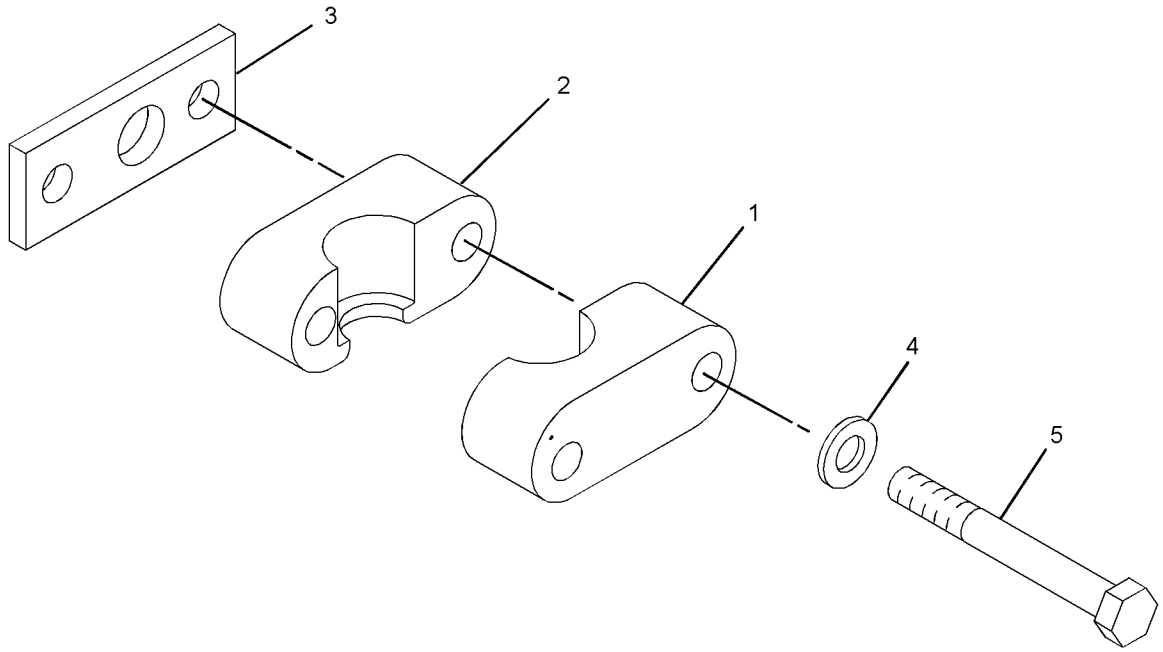

GRAPHIC #1 <END> g01239189

255-0045 CAP GP-TRACK IDLER

S/N: Z2K1-UP; Z2N1-UP

PART OF 523-9366, 523-9367, 523-9368, 523-9369, 523-9372, 523-9373, 523-9374, 523-9375, 563-1029, 563-1030, 563-1138, 563-1139 FRAME GP-UNDERCARRIAGE

AN ATTACHMENT

SMCS-4159 **i07833192**

NOTE	REF NO	GRAPHIC REF	PART NUMBER	QTY	PART NAME 1 2 3 4 5 6 (PRODUCT LEVEL)	SEE PAGE
	1	1	**571-6710**	1	CAP AS-TRACK IDLER	
		1	**6B-6863**	1	PIN-SPRING	
	2	1	**239-8090**	1	BLOCK-TRACK IDLER	
	3	1	**5P-8247**	2	WASHER-HARD (17X32X3.5-MM THK)	
M	4	1	**8T-0282**	2	BOLT (M16X2X120-MM)	

M - METRIC PART

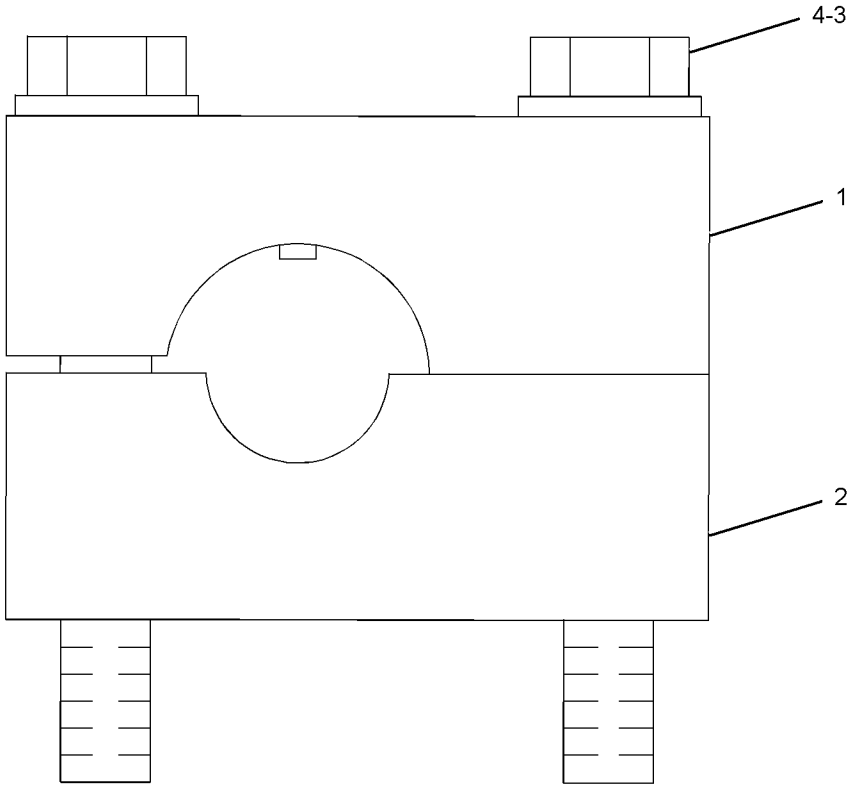

GRAPHIC #1 <END> g01294307

255-0046 CAP GP-TRACK IDLER

S/N: Z2K1-UP; Z2N1-UP

PART OF 523-9366, 523-9367, 523-9368, 523-9369, 523-9372, 523-9373, 523-9374, 523-9375, 563-1029, 563-1030, 563-1138, 563-1139 FRAME GP-UNDERCARRIAGE

AN ATTACHMENT

SMCS-4159 **i07838642**

NOTE	REF NO	GRAPHIC REF	PART NUMBER	QTY	PART NAME 1 2 3 4 5 6 (PRODUCT LEVEL)	SEE PAGE
	1	1	**571-6709**	1	CAP AS-TRACK IDLER	
		1	**6B-6863**	1	PIN-SPRING	
	2	1	**239-8091**	1	BLOCK-TRACK IDLER	
	3	1	**5P-8247**	2	WASHER-HARD (17X32X3.5-MM THK)	
M	4	1	**8T-0282**	2	BOLT (M16X2X120-MM)	

M - METRIC PART

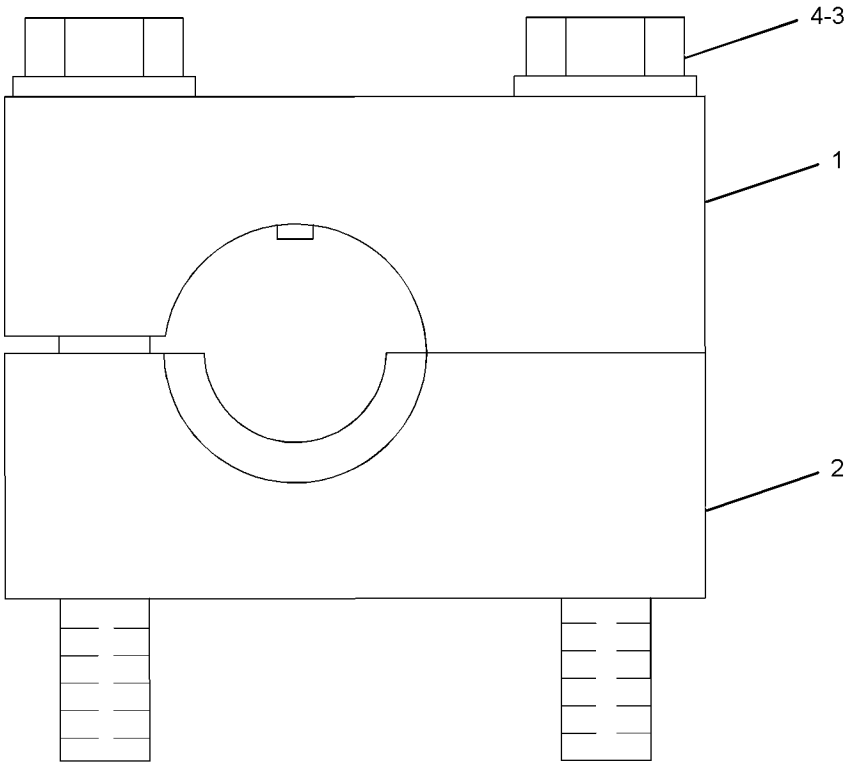

GRAPHIC #1 <END> g01294304

283-5745 CAP GP-TRACK IDLER–SYSTEMONE

S/N: Z2K1-UP; Z2N1-UP

PART OF 523-9370, 523-9371, 523-9376, 523-9377 FRAME GP-UNDERCARRIAGE

AN ATTACHMENT

SMCS-4159 **i06918871**

NOTE	REF NO	GRAPHIC REF	PART NUMBER	QTY	PART NAME 1 2 3 4 5 6 (PRODUCT LEVEL)	SEE PAGE
	1	1	**283-5746**	1	CAP AS-TRACK IDLER	
	1A	1	**6B-6863**	1	PIN-SPRING	
	2	1	**283-5748**	1	BLOCK-TRACK IDLER	
	3	1	**283-5753**	1	SHIM (5-MM THK)	
M	4	1	**146-5132**	2	BOLT (M16X2X135-MM)	
	5	1	**5P-8247**	2	WASHER-HARD (17X32X3.5-MM THK)	

M - METRIC PART

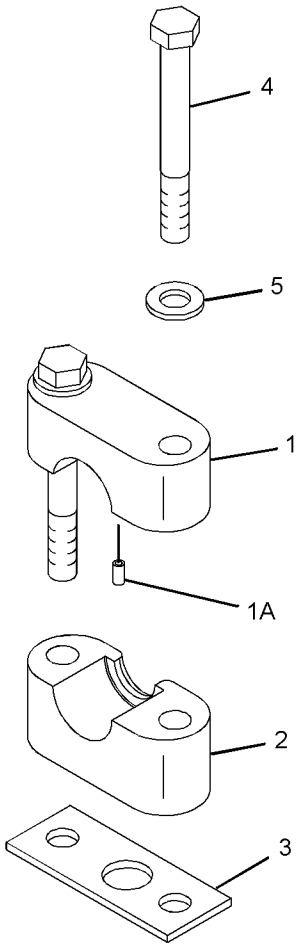

GRAPHIC #1 <END> g01291362

283-5749 CAP GP-TRACK IDLER–SYSTEMONE

S/N: Z2K1-UP; Z2N1-UP

PART OF 523-9370, 523-9371, 523-9376, 523-9377 FRAME GP-UNDERCARRIAGE

AN ATTACHMENT

SMCS-4159 **i02638770**

NOTE	REF NO	GRAPHIC REF	PART NUMBER	QTY	PART NAME 1 2 3 4 5 6 (PRODUCT LEVEL)	SEE PAGE
	1	1	**283-5750**	1	CAP AS-TRACK IDLER	
	1A	1	**6B-6863**	1	PIN-SPRING	
	2	1	**283-5752**	1	BLOCK-TRACK IDLER	
	3	1	**283-5753**	1	SHIM (5-MM THK)	
M	4	1	**146-5132**	2	BOLT (M16X2X135-MM)	
	5	1	**5P-8247**	2	WASHER-HARD (17X32X3.5-MM THK)	

M - METRIC PART

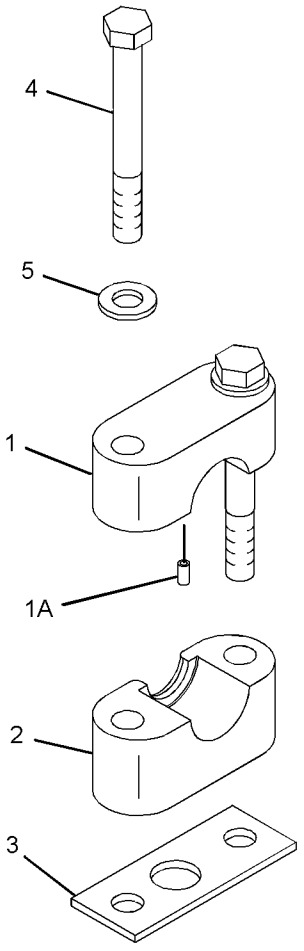

GRAPHIC #1 <END> g01291363

510-3810 FRAME GP-TRACK ROLLER—HEAVY-DUTY

S/N: Z2K1-UP; Z2N1-UP
RH
PART OF 523-9366, 523-9368, 523-9370, 563-1030 FRAME GP-UNDERCARRIAGE
AN ATTACHMENT

SMCS-4151 **i07851946**

NOTE	REF NO	GRAPHIC REF	PART NUMBER	QTY	PART NAME 1 2 3 4 5 6 (PRODUCT LEVEL)	SEE PAGE
	1	1	**9X-4580**	1	SEAL AS	
	2	1	**1B-5174**	1	PLUG-PIPE	
	3	1	**2D-8009**	1	SEAL-O-RING	
	4	1	**3K-0360**	1	SEAL-O-RING	
	5	1	**3W-2025**	1	RING-RETAINING	
	6	1	**8T-4121**	4	WASHER-HARD (11X21X2.5-MM THK)	
M	7	1	**8T-4136**	4	BOLT (M10X1.5X25-MM)	
	8	1	**8T-4223**	12	WASHER-HARD (13.5X25.5X3-MM THK)	
	9	1	**9S-4185**	1	PLUG (3/4-16-THD)	
	10	1	**9X-6562**	2	TACK	
	11	1	**221-3197**	1	BUSHING	
	12	1	*507-7656*	1	COVER AS	
		1	**7B-3028**	4	SCREW-DRIVE (NO 4X 3/16-IN)	
		1	**253-1346**	1	PLATE-WARNING (HIGH PRESSURE CYLINDER)	
		1	**389-7847**	1	PLATE	
	13	1	**421-4533**	1	BEARING-SLEEVE	
	14	1	**510-3812**	1	FRAME AS-UNDERCARRIAGE	
		1	**8K-0589**	2	DOWEL	
		1	**353-2172**	1	GUARD AS	
		1	**353-2173**	1	GUARD AS	
	15	1	**525-8332**	1	FRAME AS	
	15A	1	**8G-3202**	1	BUSHING	
		1	**8K-0589**	2	DOWEL	
		1	**8T-9530**	2	TACK (METAL)	
		1	**239-4989**	1	PLATE-WARNING (RECOIL SPRING)	
Y	16	1	*580-8200*	1	TRACK ADJUSTER & RECOIL GP	499
	17	1	**582-5249**	2	RETAINER AS	
					(EACH INCLUDES)	
		1	**3K-4025**	1	SEAL-O-RING	
		1	**241-3720**	1	FILM-WARNING (RECOIL SPRING)	
	18	1	**582-5252**	1	GAUGE-OIL LEVEL (RECOIL SPRING OIL)	
M	19	1	**8T-4956**	12	BOLT (M12X1.75X35-MM)	
	20	1	**9P-8899**	1	BEARING	

M - METRIC PART
Y - SEPARATE ILLUSTRATION

510-3810 **FRAME GP-TRACK ROLLER (**contd.**)** **i07851946**

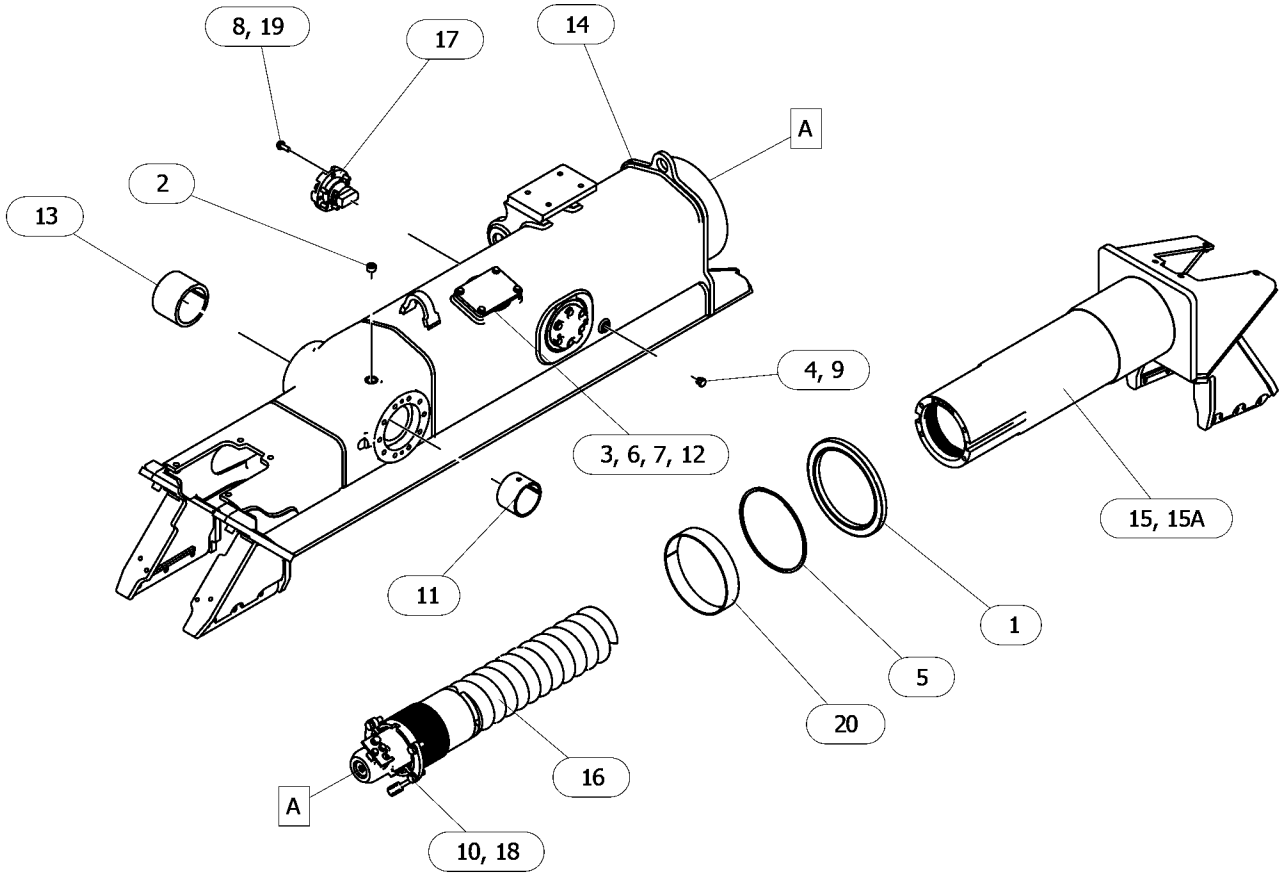

GRAPHIC #1 <END> g06457286

510-3811 FRAME GP-TRACK ROLLER—HEAVY-DUTY

S/N: Z2K1-UP; Z2N1-UP
LH, XL
PART OF 523-9367, 523-9369, 523-9371, 563-1029 FRAME GP-UNDERCARRIAGE
AN ATTACHMENT

SMCS-4151 **i07816720**

NOTE	REF NO	GRAPHIC REF	PART NUMBER	QTY	PART NAME 1 2 3 4 5 6 (PRODUCT LEVEL)	SEE PAGE
	1	1	**9X-4580**	1	SEAL AS	
	2	1	**1B-5174**	1	PLUG-PIPE	
	3	1	**2D-8009**	1	SEAL-O-RING	
	4	1	**3K-0360**	1	SEAL-O-RING	
	5	1	**3W-2025**	1	RING-RETAINING	
	6	1	**8T-4121**	4	WASHER-HARD (11X21X2.5-MM THK)	
M	7	1	**8T-4136**	4	BOLT (M10X1.5X25-MM)	
	8	1	**8T-4223**	12	WASHER-HARD (13.5X25.5X3-MM THK)	
	9	1	**9S-4185**	1	PLUG (3/4-16-THD)	
	10	1	**9X-6562**	2	TACK	
	11	1	**221-3197**	1	BUSHING	
	12	1	*507-7656*	1	COVER AS	
		1	**7B-3028**	4	SCREW-DRIVE (NO 4X 3/16-IN)	
		1	**253-1346**	1	PLATE-WARNING (HIGH PRESSURE CYLINDER)	
		1	**389-7847**	1	PLATE	
	13	1	**421-4533**	1	BEARING-SLEEVE	
	14	1	**510-3813**	1	FRAME AS-LOADER	
		1	**8K-0589**	2	DOWEL	
		1	**353-2172**	1	GUARD AS	
		1	**353-2173**	1	GUARD AS	
	15	1	**525-8332**	1	FRAME AS	
	15A	1	**8G-3202**	1	BUSHING	
		1	**8K-0589**	2	DOWEL	
		1	**8T-9530**	2	TACK (METAL)	
		1	**239-4989**	1	PLATE-WARNING (RECOIL SPRING)	
Y	16	1	*580-8200*	1	TRACK ADJUSTER & RECOIL GP	499
	17	1	**582-5249**	2	RETAINER AS	
		1	**3K-4025**	1	SEAL-O-RING	
		1	**241-3720**	1	FILM-WARNING (RECOIL SPRING)	
	18	1	**582-5252**	1	GAUGE-OIL LEVEL (RECOIL SPRING OIL)	
M	19	1	**8T-4956**	12	BOLT (M12X1.75X35-MM)	
	20	1	**9P-8899**	1	BEARING	

M - METRIC PART
Y - SEPARATE ILLUSTRATION

510-3811 **FRAME GP-TRACK ROLLER (**contd.**)** **i07816720**

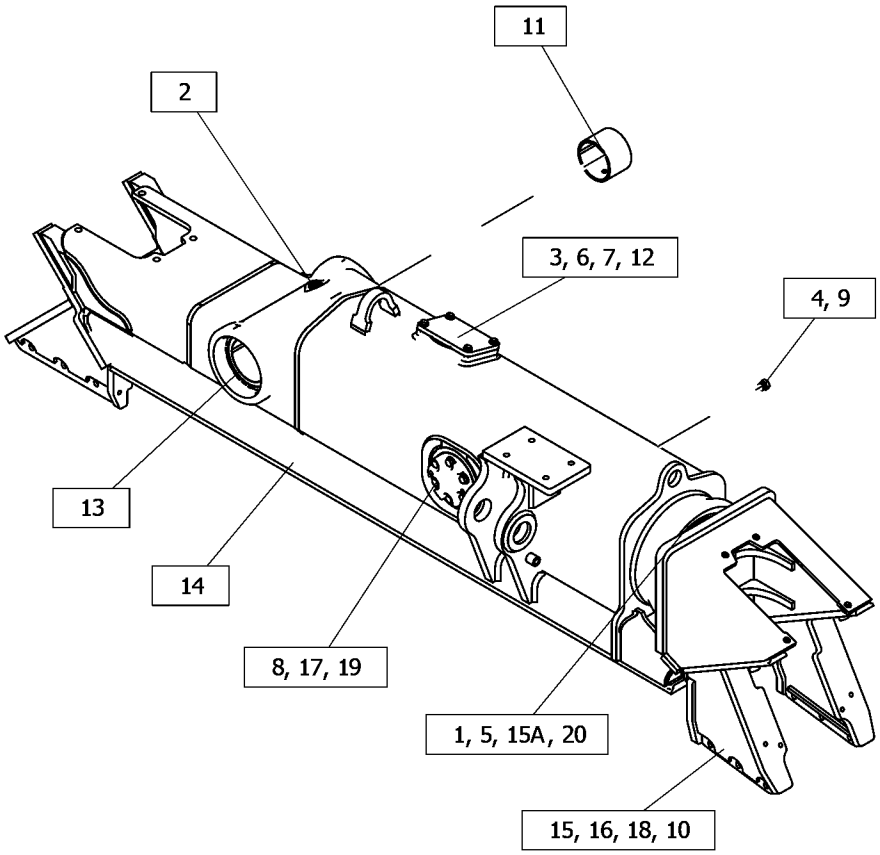

GRAPHIC #1 <END> g06457276

510-3820 FRAME GP-TRACK ROLLER

S/N: Z2K1-UP; Z2N1-UP
RH
PART OF 523-9372, 523-9374, 523-9376, 563-1138 FRAME GP-UNDERCARRIAGE
AN ATTACHMENT

SMCS-4151 **i07827851**

NOTE	REF NO	GRAPHIC REF	PART NUMBER	QTY	PART NAME 1 2 3 4 5 6 (PRODUCT LEVEL)	SEE PAGE
	1	1	**9X-4580**	1	SEAL AS	
	2	1	**1B-5174**	1	PLUG-PIPE	
	3	1	**2D-8009**	1	SEAL-O-RING	
	4	1	**3K-0360**	1	SEAL-O-RING	
	5	1	**3W-2025**	1	RING-RETAINING	
	6	1	**8T-4121**	4	WASHER-HARD (11X21X2.5-MM THK)	
M	7	1	**8T-4136**	4	BOLT (M10X1.5X25-MM)	
	8	1	**8T-4223**	12	WASHER-HARD (13.5X25.5X3-MM THK)	
	9	1	**9S-4185**	1	PLUG (3/4-16-THD)	
	10	1	**9X-6562**	2	TACK	
	11	1	**221-3197**	1	BUSHING	
	12	1	*507-7656*	1	COVER AS	
		1	**7B-3028**	4	SCREW-DRIVE (NO 4X 3/16-IN)	
		1	**253-1346**	1	PLATE-WARNING (HIGH PRESSURE CYLINDER)	
		1	**389-7847**	1	PLATE	
	13	1	**421-4533**	1	BEARING-SLEEVE	
	14	1	**510-3822**	1	FRAME AS-TRACK ROLLER	
	15	1	**536-1550**	1	FRAME AS-FRONT	
	15A	1	**8G-3202**	1	BUSHING	
Y	16	1	*580-8202*	1	TRACK ADJUSTER & RECOIL GP	501
	17	1	**582-5249**	2	RETAINER AS	
					(EACH INCLUDES)	
		1	**3K-4025**	1	SEAL-O-RING	
		1	**241-3720**	1	FILM-WARNING (RECOIL SPRING)	
	18	1	**582-5252**	1	GAUGE-OIL LEVEL	
M	19	1	**8T-4956**	12	BOLT (M12X1.75X35-MM)	
	20	1	**9P-8899**	1	BEARING	

M - METRIC PART
Y - SEPARATE ILLUSTRATION

510-3820 **FRAME GP-TRACK ROLLER (**contd.**)** **i07827851**

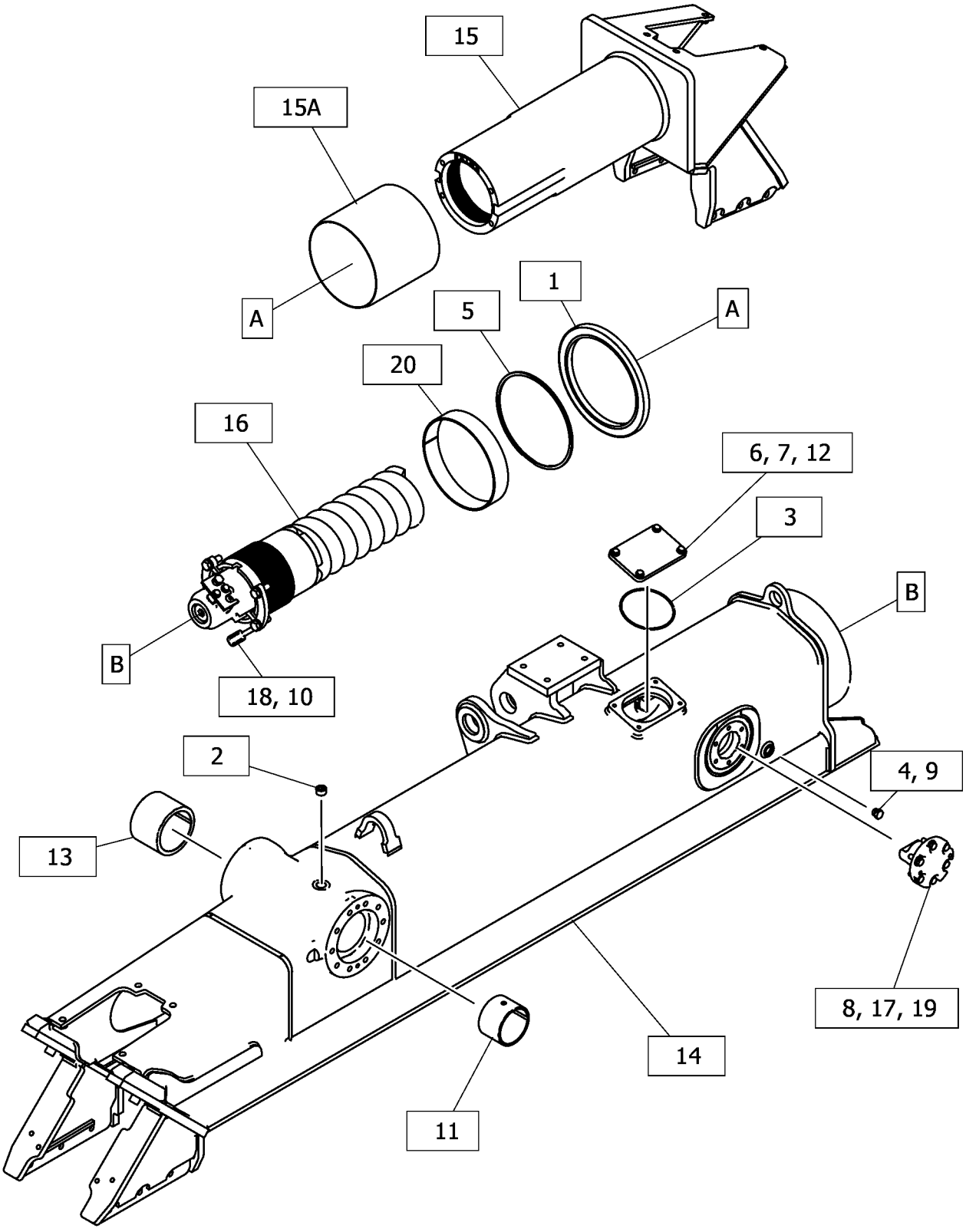

GRAPHIC #1 <END> g06451159

510-3821 FRAME GP-TRACK ROLLER

S/N: Z2K1-UP; Z2N1-UP
LH
PART OF 523-9373, 523-9375, 523-9377, 563-1139 FRAME GP-UNDERCARRIAGE
AN ATTACHMENT

SMCS-4151 **i07827859**

NOTE	REF NO	GRAPHIC REF	PART NUMBER	QTY	PART NAME 1 2 3 4 5 6 (PRODUCT LEVEL)	SEE PAGE
	1	1	**9X-4580**	1	SEAL AS	
	2	1	**1B-5174**	1	PLUG-PIPE	
	3	1	**2D-8009**	1	SEAL-O-RING	
	4	1	**3K-0360**	1	SEAL-O-RING	
	5	1	**3W-2025**	1	RING-RETAINING	
	6	1	**8T-4121**	4	WASHER-HARD (11X21X2.5-MM THK)	
M	7	1	**8T-4136**	4	BOLT (M10X1.5X25-MM)	
	8	1	**8T-4223**	12	WASHER-HARD (13.5X25.5X3-MM THK)	
	9	1	**9S-4185**	1	PLUG (3/4-16-THD)	
	10	1	**9X-6562**	2	TACK	
	11	1	**221-3197**	1	BUSHING	
	12	1	*507-7656*	1	COVER AS	
		1	**7B-3028**	4	SCREW-DRIVE (NO 4X 3/16-IN)	
		1	**253-1346**	1	PLATE-WARNING (HIGH PRESSURE CYLINDER)	
		1	**389-7847**	1	PLATE	
	13	1	**421-4533**	1	BEARING-SLEEVE	
	14	1	**510-3823**	1	FRAME AS-TRACK ROLLER	
	15	1	**536-1550**	1	FRAME AS-FRONT	
	15A	1	**8G-3202**	1	BUSHING	
Y	16	1	*580-8202*	1	TRACK ADJUSTER & RECOIL GP	501
	17	1	**582-5249**	2	RETAINER AS	
					(EACH INCLUDES)	
		1	**3K-4025**	1	SEAL-O-RING	
		1	**241-3720**	1	FILM-WARNING (RECOIL SPRING)	
	18	1	**582-5252**	1	GAUGE-OIL LEVEL	
M	19	1	**8T-4956**	12	BOLT (M12X1.75X35-MM)	
	20	1	**9P-8899**	1	BEARING	

M - METRIC PART
Y - SEPARATE ILLUSTRATION

510-3821 **FRAME GP-TRACK ROLLER** (contd.) **i07827859**

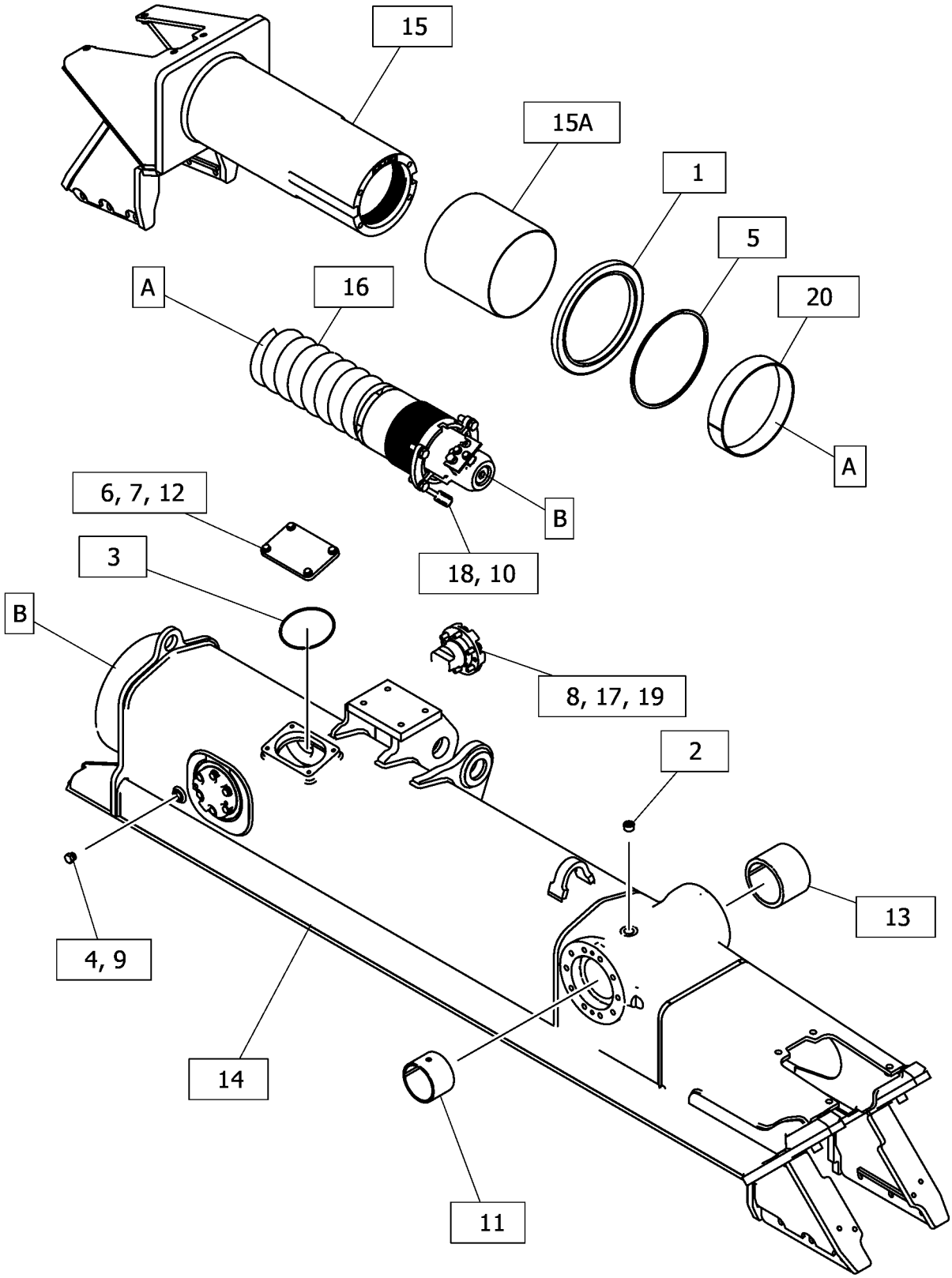

GRAPHIC #1 <END> g06451187

523-9366 FRAME GP-UNDERCARRIAGE–HEAVY-DUTY

S/N: Z2K1-UP; Z2N1-UP
RH, XL
PART OF 523-9388 UNDERCARRIAGE AR
AN ATTACHMENT

SMCS-4150 **i07816575**

NOTE	REF NO	GRAPHIC REF	PART NUMBER	QTY	PART NAME 1 2 3 4 5 6 (PRODUCT LEVEL)	SEE PAGE
Y	1	1	*510-3810*	1	FRAME GP-TRACK ROLLER	431
M	2	1	**8T-4183**	2	BOLT (M12X1.75X40-MM)	
M	3	1	**8T-4192**	12	BOLT (M12X1.75X25-MM)	
	4	1	**196-7074**	2	STRIP-WEAR (REAR)	
Y	5	1	*233-0367*	1	CAP GP-TRACK IDLER (FRONT, LH)	425
Y	6	1	*233-0854*	1	CAP GP-TRACK IDLER (FRONT, RH)	426
	7	1	**251-8601**	1	SCRAPER	
Y	8	1	*255-0045*	1	CAP GP-TRACK IDLER (REAR, RH)	427
Y	9	1	*255-0046*	1	CAP GP-TRACK IDLER (REAR, LH)	428
	10	1	**536-6332**	2	STRIP	
	11	1	**8T-4223**	14	WASHER-HARD (13.5X25.5X3-MM THK)	
Y	12	1	**190-1546**	2	IDLER GP-TRACK	473
Y	13	1	*358-7239*	4	ROLLER GP-TRACK-SINGLE FLANGE	497
Y	14	1	*358-8583*	3	ROLLER GP-TRACK-DOUBLE FLANGE	492

M - METRIC PART
Y - SEPARATE ILLUSTRATION

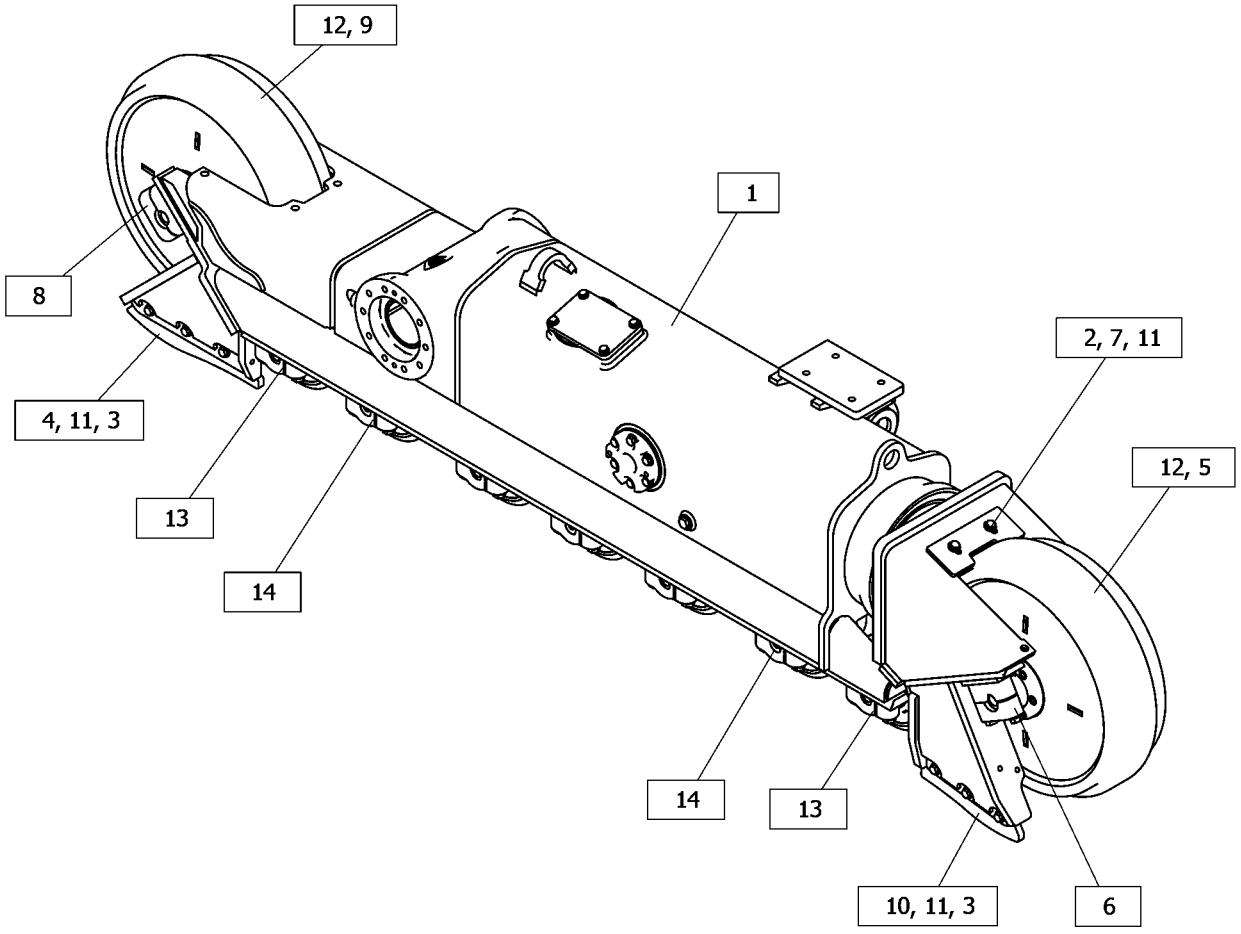

GRAPHIC #1 <END> g06450493

523-9367 FRAME GP-UNDERCARRIAGE–HEAVY-DUTY

S/N: Z2K1-UP; Z2N1-UP
LH, XL
PART OF 523-9388 UNDERCARRIAGE AR
AN ATTACHMENT

SMCS-4150 **i07816717**

NOTE	REF NO	GRAPHIC REF	PART NUMBER	QTY	PART NAME 1 2 3 4 5 6 (PRODUCT LEVEL)	SEE PAGE
Y	1	1	*510-3811*	1	FRAME GP-TRACK ROLLER	433
M	2	1	**8T-4183**	2	BOLT (M12X1.75X40-MM)	
M	3	1	**8T-4192**	12	BOLT (M12X1.75X25-MM)	
	4	1	**196-7074**	2	STRIP-WEAR (REAR)	
Y	5	1	*233-0367*	1	CAP GP-TRACK IDLER (FRONT, LH)	425
Y	6	1	*233-0854*	1	CAP GP-TRACK IDLER (FRONT, RH)	426
	7	1	**251-8601**	1	SCRAPER	
Y	8	1	*255-0045*	1	CAP GP-TRACK IDLER (REAR, RH)	427
Y	9	1	*255-0046*	1	CAP GP-TRACK IDLER (REAR, LH)	428
	10	1	**536-6332**	2	STRIP	
	11	1	**8T-4223**	14	WASHER-HARD (13.5X25.5X3-MM THK)	
Y	12	1	**190-1546**	2	IDLER GP-TRACK	473
Y	13	1	*358-7239*	4	ROLLER GP-TRACK-SINGLE FLANGE	497
Y	14	1	*358-8583*	3	ROLLER GP-TRACK-DOUBLE FLANGE	492

M - METRIC PART
Y - SEPARATE ILLUSTRATION

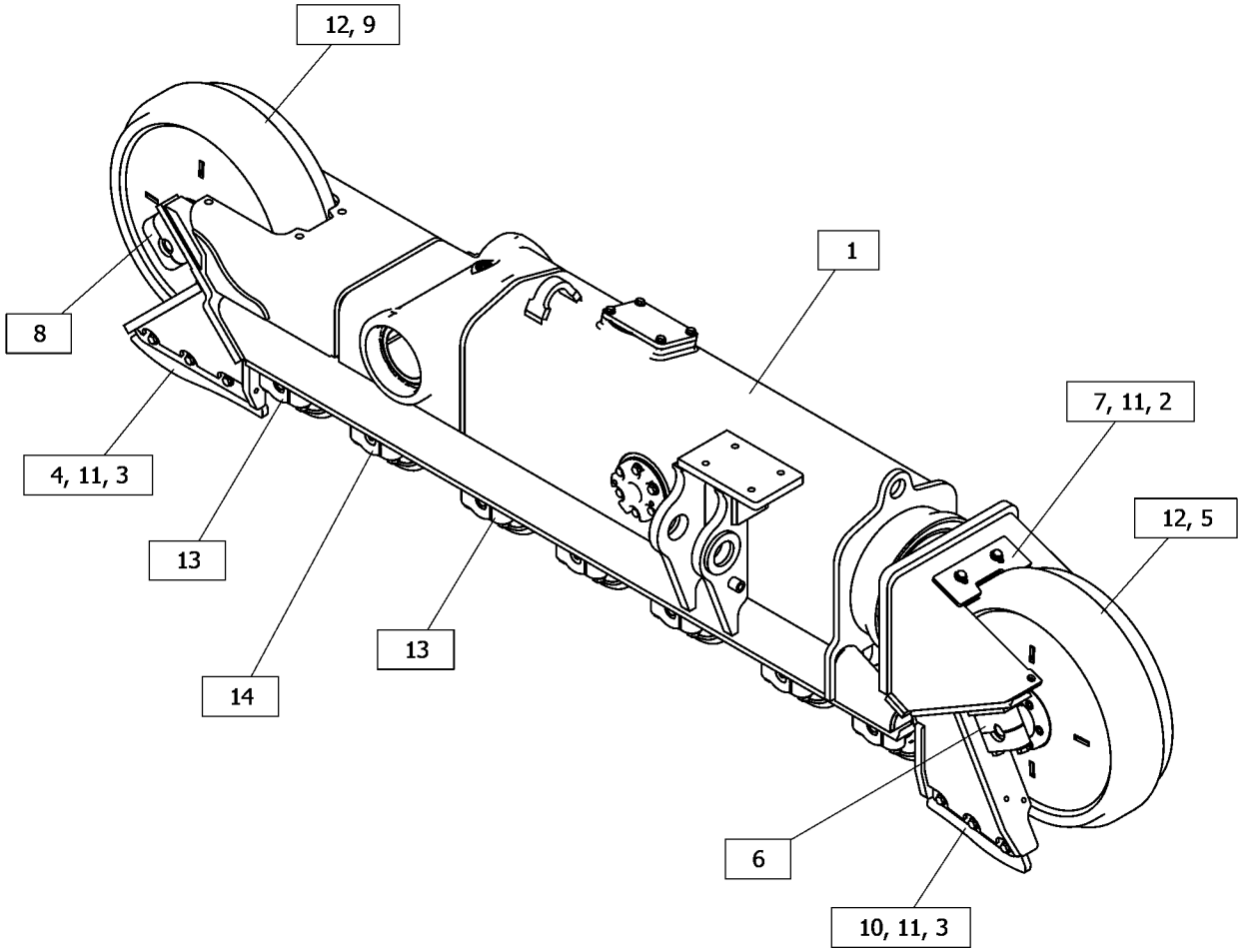

GRAPHIC #1 <END> g06450548

523-9368 FRAME GP-UNDERCARRIAGE

S/N: Z2K1-UP
HEAVY-DUTY, RH, DOUBLE FLANGE, XL
PART OF 523-9389 UNDERCARRIAGE AR
AN ATTACHMENT

SMCS-4150 **i07849922**

NOTE	REF NO	GRAPHIC REF	PART NUMBER	QTY	PART NAME 1 2 3 4 5 6 (PRODUCT LEVEL)	SEE PAGE
Y	1	1	*510-3810*	1	FRAME GP-TRACK ROLLER (RH)	431
M	2	1	**8T-4192**	12	BOLT (M12X1.75X25-MM)	
	3	1	**8T-4223**	14	WASHER-HARD (13.5X25.5X3-MM THK)	
	4	1	**196-7074**	2	STRIP-WEAR (REAR)	
	5	1	**251-8601**	1	SCRAPER	
Y	6	1	*233-0367*	1	CAP GP-TRACK IDLER (FRONT, LH)	425
Y	7	1	*233-0854*	1	CAP GP-TRACK IDLER (FRONT, RH)	426
Y	8	1	*255-0045*	1	CAP GP-TRACK IDLER (REAR, RH)	427
Y	9	1	*255-0046*	1	CAP GP-TRACK IDLER (REAR, LH)	428
	10	1	**536-6332**	2	STRIP	
M	11	1	**8T-4183**	2	BOLT (M12X1.75X40-MM)	
Y	12	1	*358-7239*	2	ROLLER GP-TRACK-SINGLE FLANGE	497
Y	13	1	*384-3275*	5	ROLLER GP-TRACK-DOUBLE FLANGE	493
Y	14	1	**190-1546**	2	IDLER GP-TRACK	473

M - METRIC PART
Y - SEPARATE ILLUSTRATION

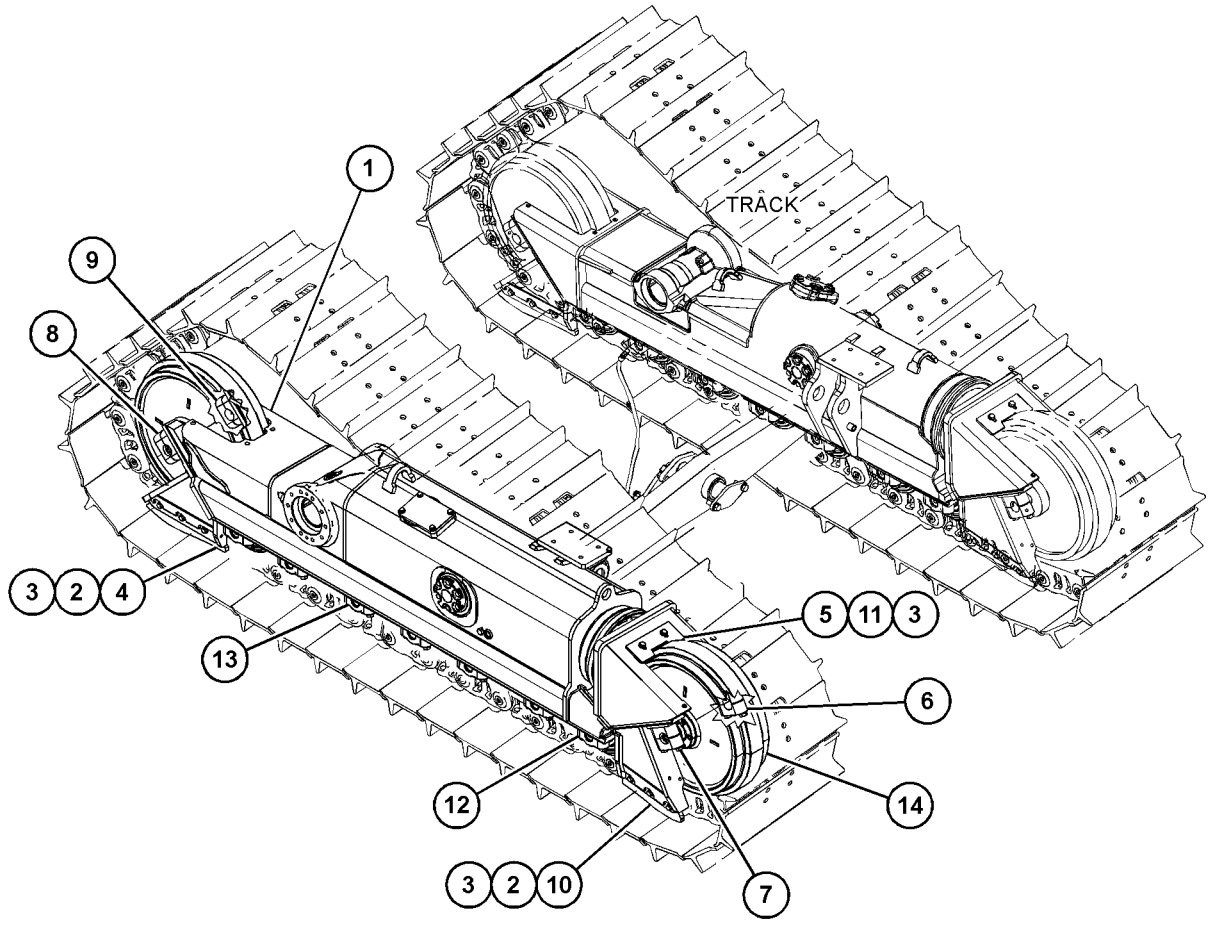

GRAPHIC #1 <END> g06456183

523-9369 FRAME GP-UNDERCARRIAGE

S/N: Z2K1-UP
HEAVY-DUTY, LH, DOUBLE FLANGE, XL
PART OF 523-9389 UNDERCARRIAGE AR
AN ATTACHMENT

SMCS-4150 **i07849125**

NOTE	REF NO	GRAPHIC REF	PART NUMBER	QTY	PART NAME 1 2 3 4 5 6 (PRODUCT LEVEL)	SEE PAGE
Y	1	1	*510-3811*	1	FRAME GP-TRACK ROLLER (LH)	433
M	2	1	**8T-4192**	12	BOLT (M12X1.75X25-MM)	
	3	1	**8T-4223**	14	WASHER-HARD (13.5X25.5X3-MM THK)	
	4	1	**196-7074**	2	STRIP-WEAR (REAR)	
	5	1	**251-8601**	1	SCRAPER	
Y	6	1	*233-0367*	1	CAP GP-TRACK IDLER (FRONT, LH)	425
Y	7	1	*233-0854*	1	CAP GP-TRACK IDLER (FRONT, RH)	426
Y	8	1	*255-0045*	1	CAP GP-TRACK IDLER (REAR, RH)	427
Y	9	1	*255-0046*	1	CAP GP-TRACK IDLER (REAR, LH)	428
	10	1	**536-6332**	2	STRIP	
M	11	1	**8T-4183**	2	BOLT (M12X1.75X40-MM)	
Y	12	1	*358-7239*	2	ROLLER GP-TRACK-SINGLE FLANGE	497
Y	13	1	*384-3275*	5	ROLLER GP-TRACK-DOUBLE FLANGE	493
Y	14	1	**190-1546**	2	IDLER GP-TRACK	473

M - METRIC PART
Y - SEPARATE ILLUSTRATION

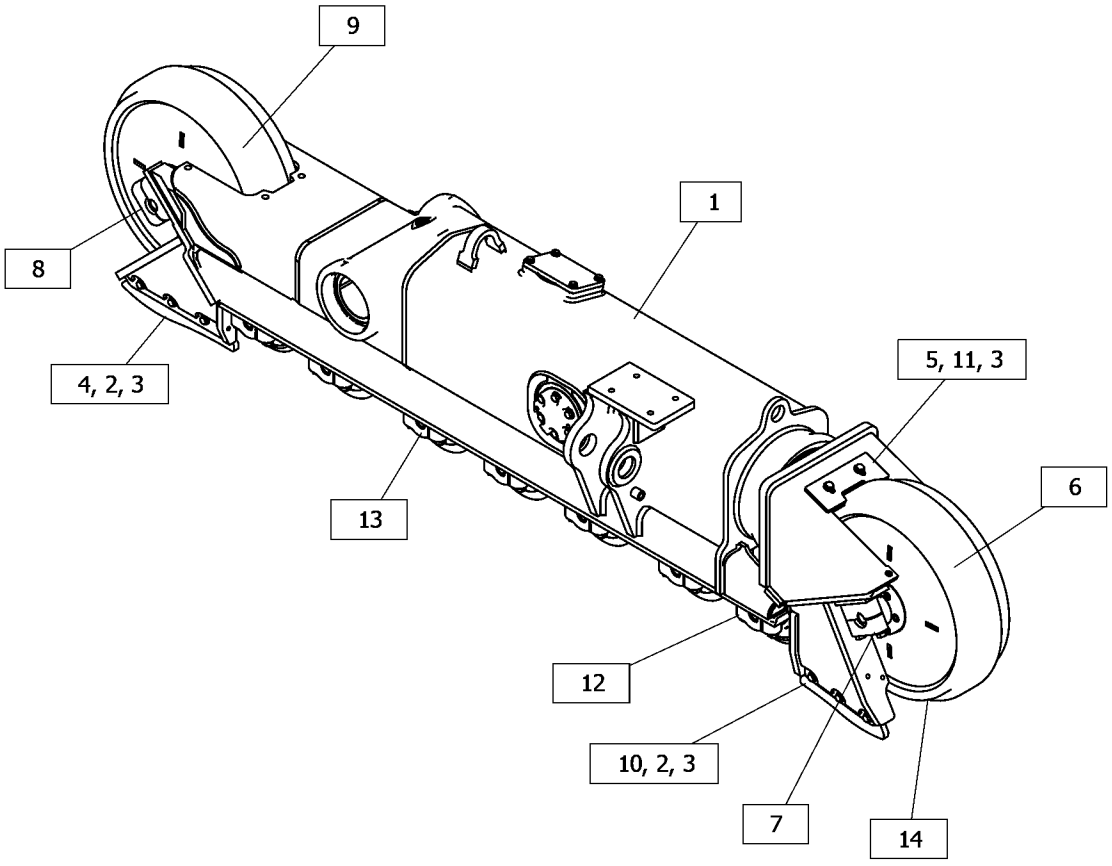

GRAPHIC #1 <END> g06454040

523-9370 FRAME GP-UNDERCARRIAGE–RH, SYSTEMONE

S/N: Z2K1-UP
PART OF 523-9390 UNDERCARRIAGE AR
AN ATTACHMENT

SMCS-4150 **i07816730**

NOTE	REF NO	GRAPHIC REF	PART NUMBER	QTY	PART NAME 1 2 3 4 5 6 (PRODUCT LEVEL)	SEE PAGE
Y	1	1	*510-3810*	1	FRAME GP-TRACK ROLLER	431
M	2	1	**8T-4910**	4	BOLT (M12X1.75X60-MM)	
M	3	1	**8T-4192**	12	BOLT (M12X1.75X25-MM)	
	4	1	**198-4778**	16	WASHER-HARD (13.5X30X12-MM THK)	
Y	5	1	*233-0367*	1	CAP GP-TRACK IDLER (FRONT, RH)	425
Y	6	1	*233-0854*	1	CAP GP-TRACK IDLER (FRONT, LH)	426
Y	7	1	*283-5745*	1	CAP GP-TRACK IDLER (RH) (REAR)	429
Y	8	1	*283-5749*	1	CAP GP-TRACK IDLER (LH) (REAR)	430
	9	1	**353-2187**	2	PLATE-WEAR (REAR)	
	10	1	**536-6333**	2	STRIP	
	11	1	**538-3651**	1	SCRAPER	
	12	1	**538-3652**	1	SCRAPER	
	13	1	**538-3656**	1	SCRAPER	
	14	1	**538-3657**	1	SCRAPER	
	15	1	**538-3658**	1	SCRAPER	
	16	1	**538-3659**	1	SCRAPER	
M	17	1	**8T-4194**	12	BOLT (M12X1.75X50-MM)	
	18	1	**8T-4223**	12	WASHER-HARD (13.5X25.5X3-MM THK)	
Y	19	1	*273-3989*	7	ROLLER GP-TRACK-SINGLE FLANGE (SYSTEMONE)	495
Y	20	1	**456-9904**	2	IDLER GP-TRACK (SYSTEMONE)	476

M - METRIC PART
Y - SEPARATE ILLUSTRATION

523-9370 **FRAME GP-UNDERCARRIAGE (**contd.**)** **i07816730**

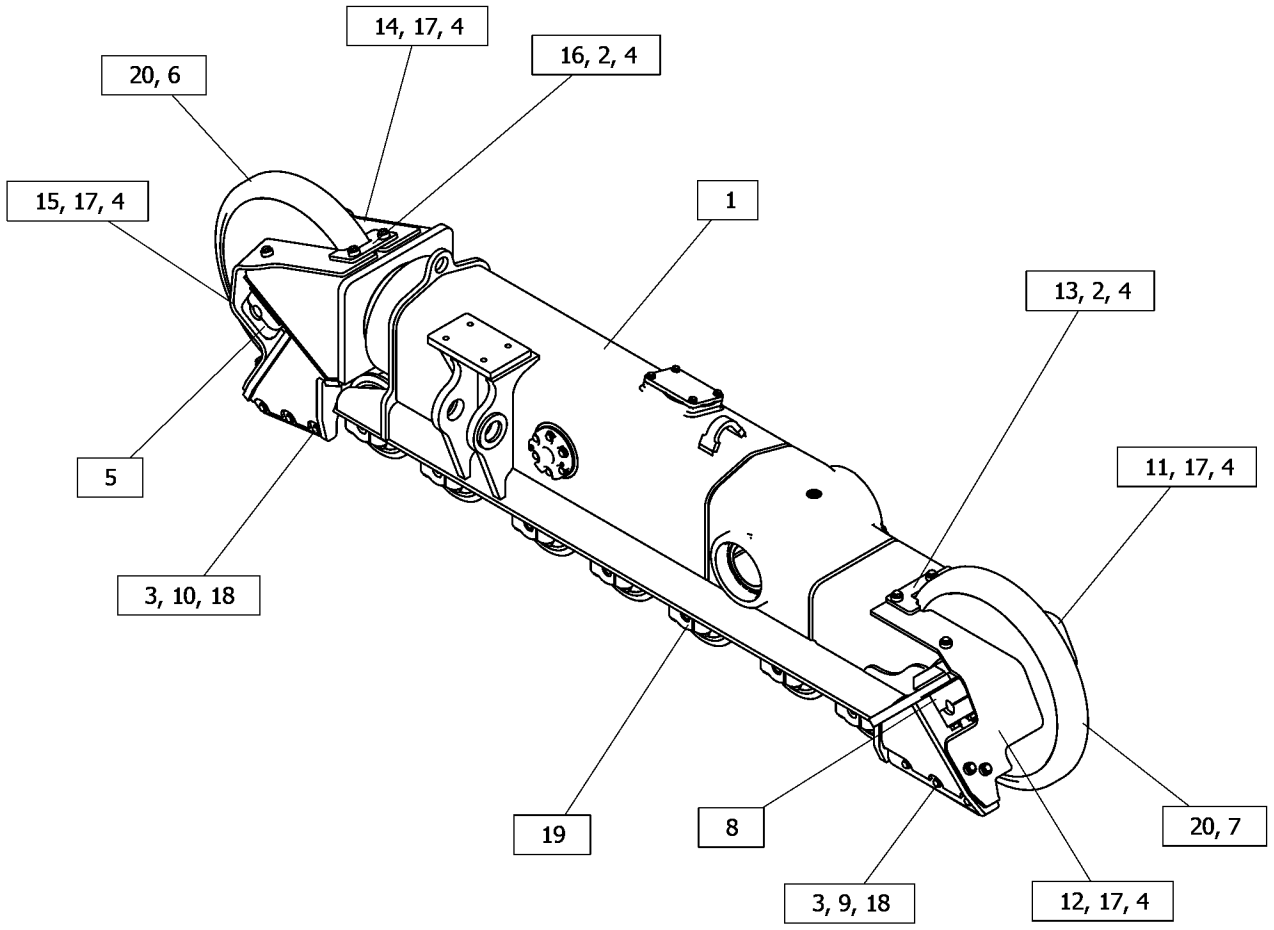

GRAPHIC #1 <END> g06450672

523-9371 FRAME GP-UNDERCARRIAGE–SYSTEMONE, LH

S/N: Z2K1-UP
PART OF 523-9390 UNDERCARRIAGE AR
AN ATTACHMENT

SMCS-4150 **i07816735**

NOTE	REF NO	GRAPHIC REF	PART NUMBER	QTY	PART NAME 1 2 3 4 5 6 (PRODUCT LEVEL)	SEE PAGE
Y	1	1	*510-3811*	1	FRAME GP-TRACK ROLLER	433
M	2	1	**8T-4910**	4	BOLT (M12X1.75X60-MM)	
M	3	1	**8T-4192**	12	BOLT (M12X1.75X25-MM)	
	4	1	**198-4778**	16	WASHER-HARD (13.5X30X12-MM THK)	
Y	5	1	*233-0367*	1	CAP GP-TRACK IDLER (FRONT, RH)	425
Y	6	1	*233-0854*	1	CAP GP-TRACK IDLER (FRONT, LH)	426
Y	7	1	*283-5745*	1	CAP GP-TRACK IDLER (RH) (REAR)	429
Y	8	1	*283-5749*	1	CAP GP-TRACK IDLER (LH) (REAR)	430
	9	1	**353-2187**	2	PLATE-WEAR (REAR)	
	10	1	**536-6333**	2	STRIP	
	11	1	**538-3651**	1	SCRAPER	
	12	1	**538-3652**	1	SCRAPER	
	13	1	**538-3656**	1	SCRAPER	
	14	1	**538-3657**	1	SCRAPER	
	15	1	**538-3658**	1	SCRAPER	
	16	1	**538-3659**	1	SCRAPER	
M	17	1	**8T-4194**	12	BOLT (M12X1.75X50-MM)	
	18	1	**8T-4223**	12	WASHER-HARD (13.5X25.5X3-MM THK)	
Y	19	1	*273-3989*	7	ROLLER GP-TRACK-SINGLE FLANGE (SYSTEMONE)	495
Y	20	1	**456-9904**	2	IDLER GP-TRACK (SYSTEMONE)	476

M - METRIC PART
Y - SEPARATE ILLUSTRATION

523-9371 **FRAME GP-UNDERCARRIAGE** (contd.) **i07816735**

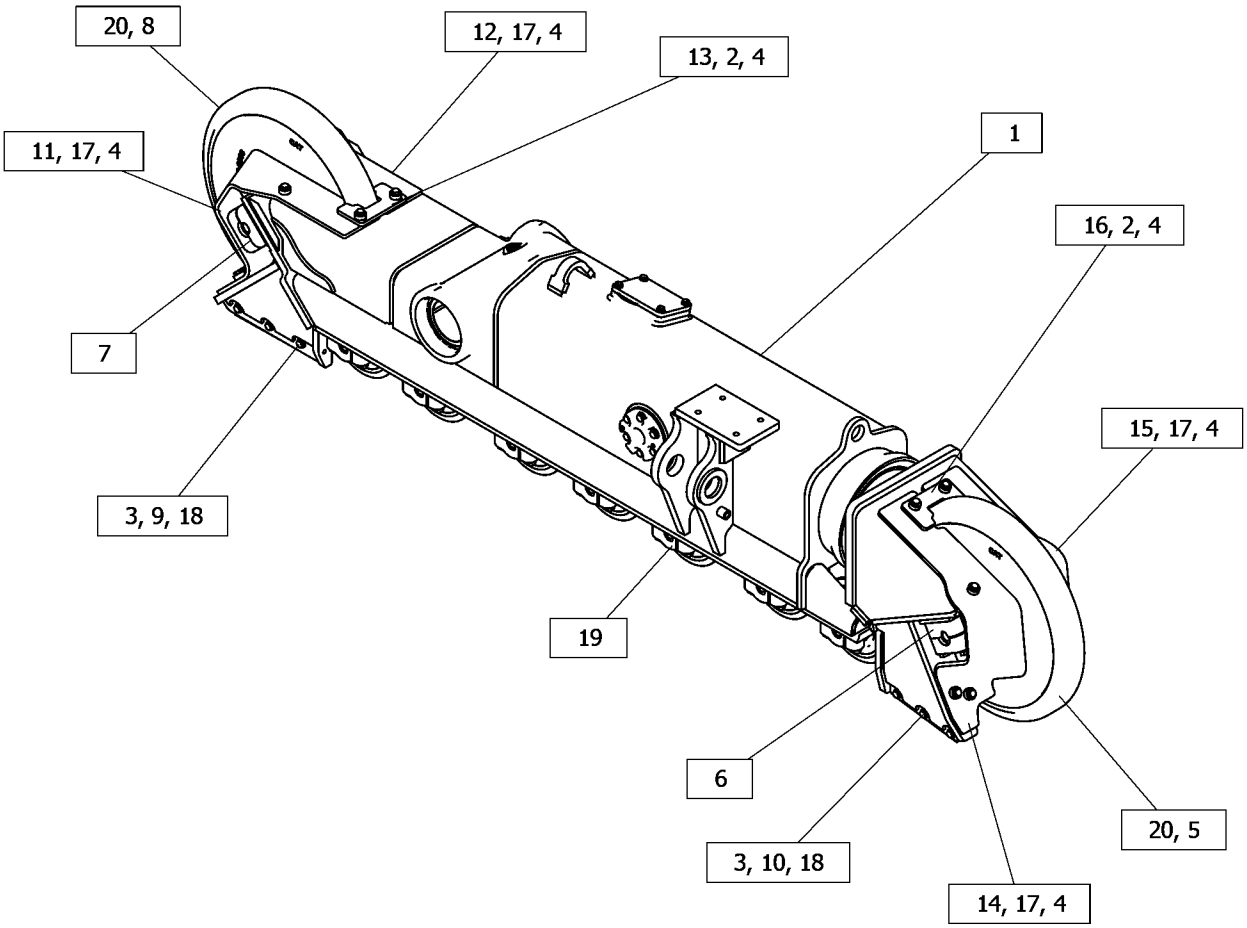

GRAPHIC #1 <END> g06450668

523-9372 FRAME GP-UNDERCARRIAGE

S/N: Z2K1-UP; Z2N1-UP
HEAVY-DUTY, RH, LGP
PART OF 523-9391, 523-9394 UNDERCARRIAGE AR
AN ATTACHMENT

SMCS-4150 **i07827848**

NOTE	REF NO	GRAPHIC REF	PART NUMBER	QTY	PART NAME 1 2 3 4 5 6 (PRODUCT LEVEL)	SEE PAGE
Y	1	1	*510-3820*	1	FRAME GP-TRACK ROLLER	435
M	2	1	**8T-4183**	2	BOLT (M12X1.75X40-MM)	
M	3	1	**8T-4192**	12	BOLT (M12X1.75X25-MM)	
	4	1	**196-7074**	2	STRIP-WEAR (REAR)	
Y	5	1	*233-0367*	1	CAP GP-TRACK IDLER (FRONT, LH)	425
Y	6	1	*233-0854*	1	CAP GP-TRACK IDLER (FRONT, RH)	426
	7	1	**251-8601**	1	SCRAPER	
Y	8	1	*255-0045*	1	CAP GP-TRACK IDLER (REAR, RH)	427
Y	9	1	*255-0046*	1	CAP GP-TRACK IDLER (REAR, LH)	428
	10	1	**536-6332**	2	STRIP	
	11	1	**8T-4223**	14	WASHER-HARD (13.5X25.5X3-MM THK)	
Y	12	1	**190-1546**	2	IDLER GP-TRACK	473
Y	13	1	*358-7239*	4	ROLLER GP-TRACK-SINGLE FLANGE	497
Y	14	1	*358-8583*	4	ROLLER GP-TRACK-DOUBLE FLANGE	492

M - METRIC PART
Y - SEPARATE ILLUSTRATION

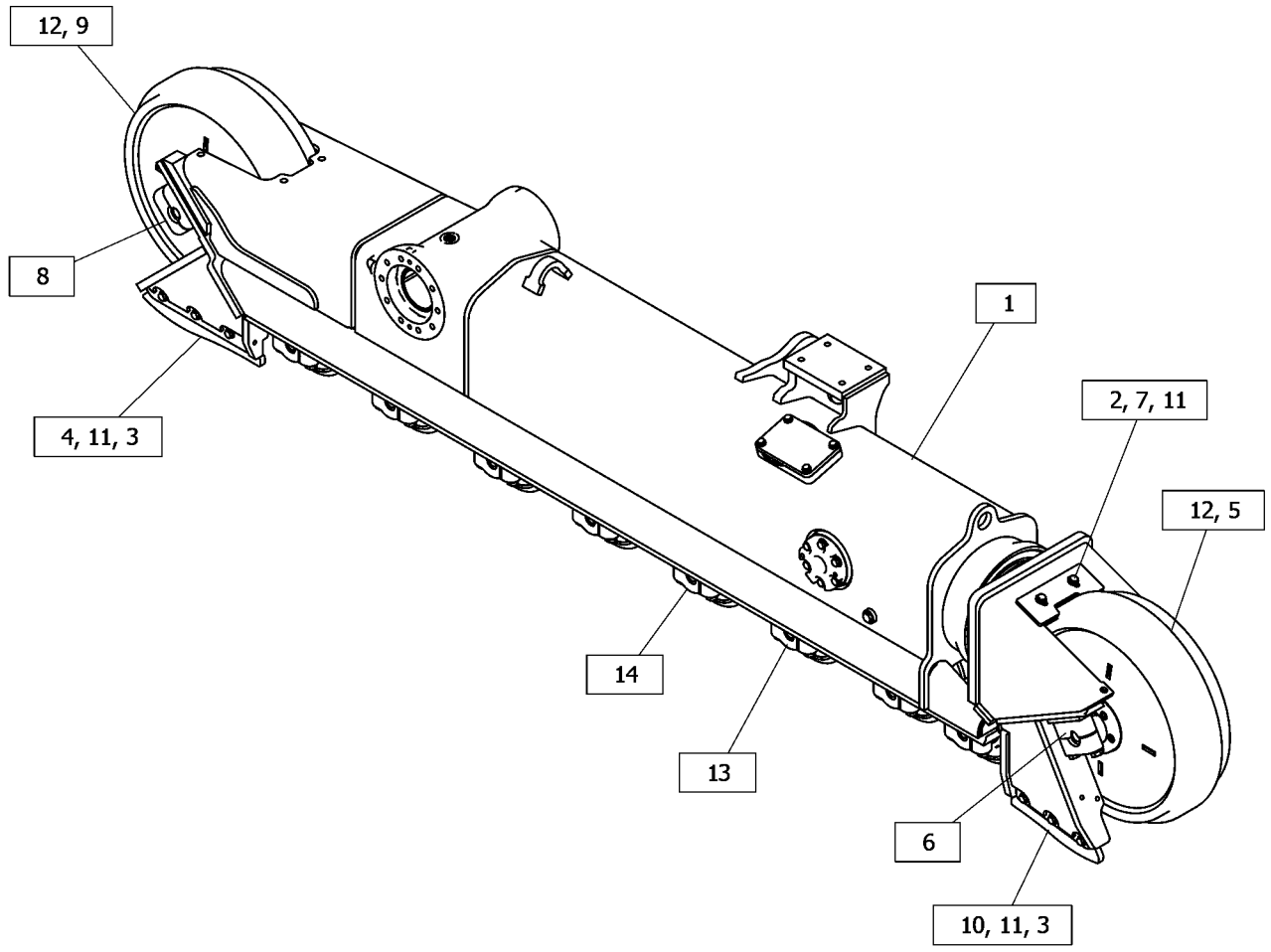

GRAPHIC #1 <END> g06451193

523-9373 FRAME GP-UNDERCARRIAGE

S/N: Z2K1-UP; Z2N1-UP
LH, HEAVY-DUTY, LGP
PART OF 523-9391, 523-9394 UNDERCARRIAGE AR
AN ATTACHMENT

SMCS-4150 **i07827856**

NOTE	REF NO	GRAPHIC REF	PART NUMBER	QTY	PART NAME 1 2 3 4 5 6 (PRODUCT LEVEL)	SEE PAGE
M	1	1	**8T-4183**	2	BOLT (M12X1.75X40-MM)	
Y	2	1	*510-3821*	1	FRAME GP-TRACK ROLLER	437
M	3	1	**8T-4192**	12	BOLT (M12X1.75X25-MM)	
	4	1	**8T-4223**	14	WASHER-HARD (13.5X25.5X3-MM THK)	
	5	1	**196-7074**	2	STRIP-WEAR (REAR)	
Y	6	1	*233-0367*	1	CAP GP-TRACK IDLER (FRONT, LH)	425
Y	7	1	*233-0854*	1	CAP GP-TRACK IDLER (FRONT, RH)	426
	8	1	**251-8601**	1	SCRAPER	
Y	9	1	*255-0045*	1	CAP GP-TRACK IDLER (REAR, RH)	427
Y	10	1	*255-0046*	1	CAP GP-TRACK IDLER (REAR, LH)	428
	11	1	**536-6332**	2	STRIP	
Y	12	1	*358-7239*	4	ROLLER GP-TRACK-SINGLE FLANGE	497
Y	13	1	*358-8583*	4	ROLLER GP-TRACK-DOUBLE FLANGE	492
Y	14	1	**190-1546**	2	IDLER GP-TRACK	473

M - METRIC PART
Y - SEPARATE ILLUSTRATION

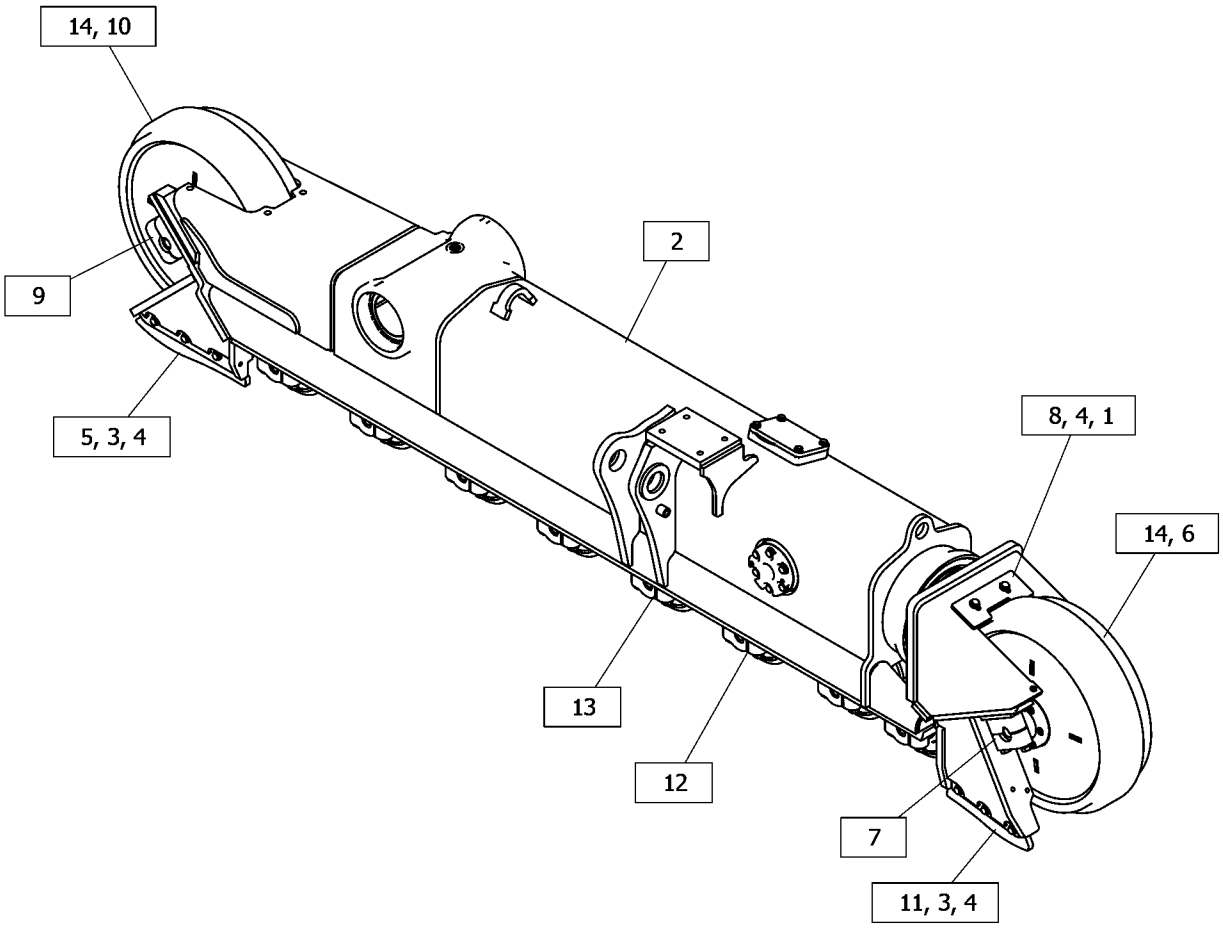

GRAPHIC #1 <END> g06451219

523-9374 FRAME GP-UNDERCARRIAGE

S/N: Z2N1-UP
HEAVY-DUTY, RH, DOUBLE FLANGE, LGP
PART OF 523-9392 UNDERCARRIAGE AR
AN ATTACHMENT

SMCS-4150 **i07848516**

NOTE	REF NO	GRAPHIC REF	PART NUMBER	QTY	PART NAME 1 2 3 4 5 6 (PRODUCT LEVEL)	SEE PAGE
Y	1	1	*510-3820*	1	FRAME GP-TRACK ROLLER (RH)	435
M	2	1	**8T-4192**	12	BOLT (M12X1.75X25-MM)	
	3	1	**8T-4223**	14	WASHER-HARD (13.5X25.5X3-MM THK)	
	4	1	**196-7074**	2	STRIP-WEAR (REAR)	
	5	1	**251-8601**	1	SCRAPER	
Y	6	1	*233-0367*	1	CAP GP-TRACK IDLER (FRONT, LH)	425
Y	7	1	*233-0854*	1	CAP GP-TRACK IDLER (FRONT, RH)	426
Y	8	1	*255-0045*	1	CAP GP-TRACK IDLER (REAR, RH)	427
Y	9	1	*255-0046*	1	CAP GP-TRACK IDLER (REAR, LH)	428
	10	1	**536-6332**	2	STRIP	
M	11	1	**8T-4183**	2	BOLT (M12X1.75X40-MM)	
Y	12	1	*358-7239*	2	ROLLER GP-TRACK-SINGLE FLANGE	497
Y	13	1	*384-3275*	6	ROLLER GP-TRACK-DOUBLE FLANGE	493
Y	14	1	**190-1546**	2	IDLER GP-TRACK	473

M - METRIC PART
Y - SEPARATE ILLUSTRATION

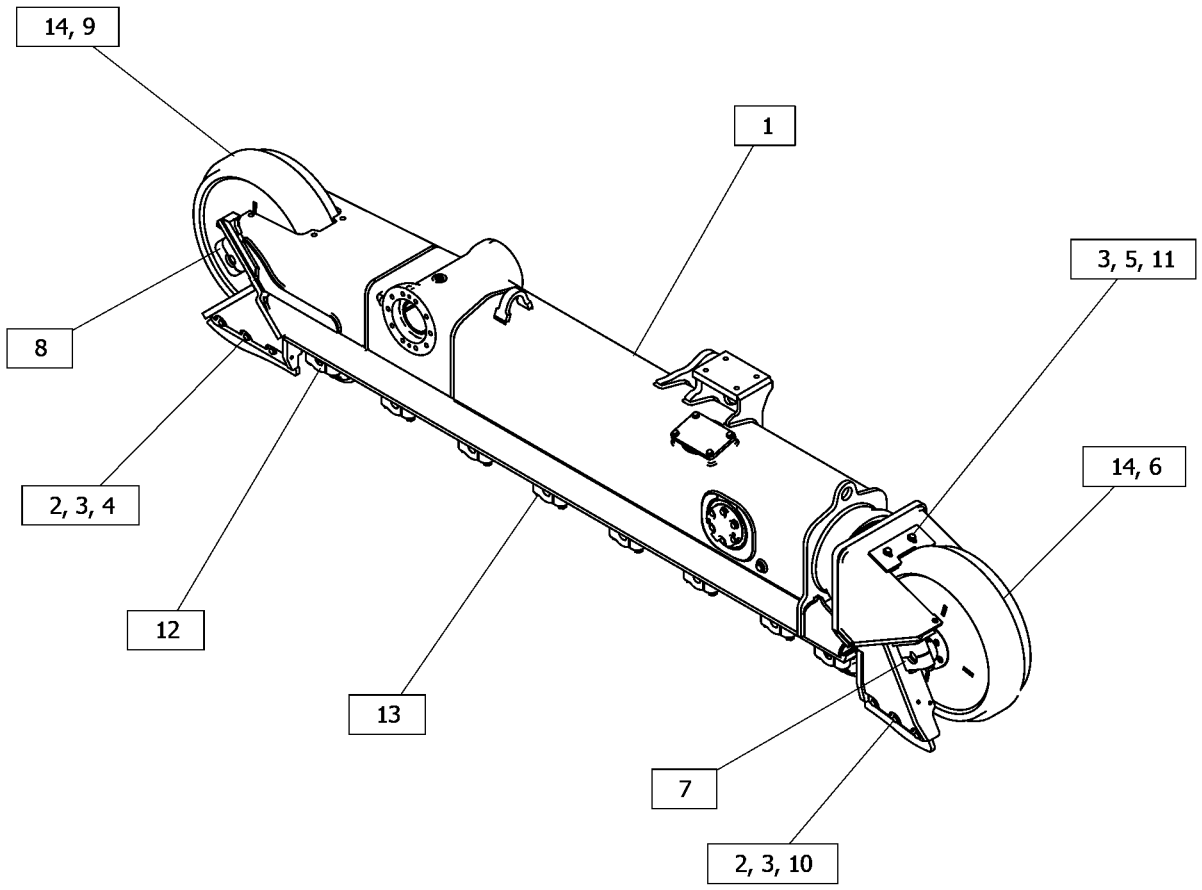

GRAPHIC #1 <END> g06453572

523-9375 FRAME GP-UNDERCARRIAGE

S/N: Z2N1-UP
HEAVY-DUTY, LH, DOUBLE FLANGE, LGP
PART OF 523-9392 UNDERCARRIAGE AR
AN ATTACHMENT

SMCS-4150 **i07848519**

NOTE	REF NO	GRAPHIC REF	PART NUMBER	QTY	PART NAME 1 2 3 4 5 6 (PRODUCT LEVEL)	SEE PAGE
Y	1	1	*510-3821*	1	FRAME GP-TRACK ROLLER (LH)	437
M	2	1	**8T-4192**	12	BOLT (M12X1.75X25-MM)	
	3	1	**8T-4223**	14	WASHER-HARD (13.5X25.5X3-MM THK)	
	4	1	**196-7074**	2	STRIP-WEAR (REAR)	
	5	1	**251-8601**	1	SCRAPER	
Y	6	1	*233-0367*	1	CAP GP-TRACK IDLER (FRONT, LH)	425
Y	7	1	*233-0854*	1	CAP GP-TRACK IDLER (FRONT, RH)	426
Y	8	1	*255-0045*	1	CAP GP-TRACK IDLER (REAR, RH)	427
Y	9	1	*255-0046*	1	CAP GP-TRACK IDLER (REAR, LH)	428
	10	1	**536-6332**	2	STRIP	
M	11	1	**8T-4183**	2	BOLT (M12X1.75X40-MM)	
Y	12	1	*358-7239*	2	ROLLER GP-TRACK-SINGLE FLANGE	497
Y	13	1	*384-3275*	6	ROLLER GP-TRACK-DOUBLE FLANGE	493
Y	14	1	**190-1546**	2	IDLER GP-TRACK	473

M - METRIC PART
Y - SEPARATE ILLUSTRATION

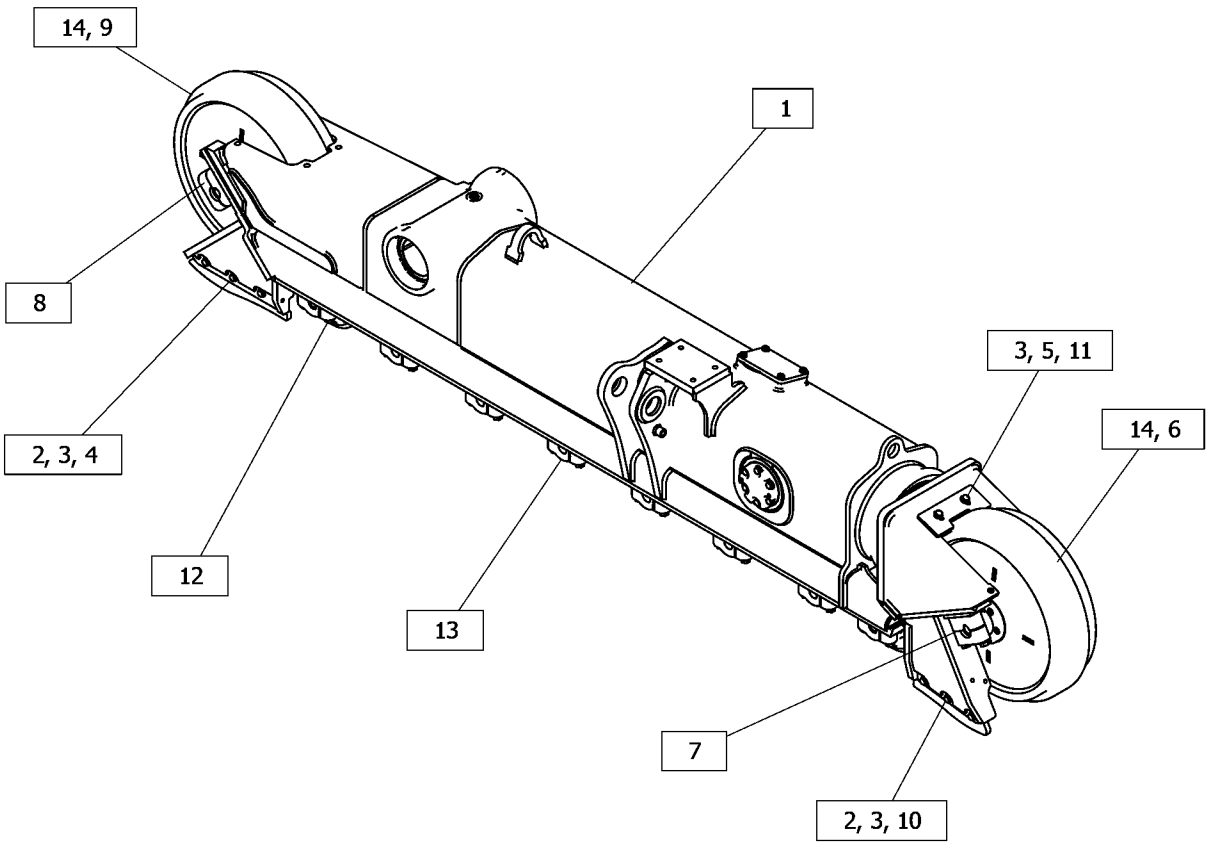

GRAPHIC #1 <END> g06453560

523-9376 FRAME GP-UNDERCARRIAGE–SYSTEMONE

S/N: Z2K1-UP; Z2N1-UP
RH, LGP
PART OF 523-9393, 523-9395 UNDERCARRIAGE AR
AN ATTACHMENT

SMCS-4150 **i07827875**

NOTE	REF NO	GRAPHIC REF	PART NUMBER	QTY	PART NAME 1 2 3 4 5 6 (PRODUCT LEVEL)	SEE PAGE
M	1	1	**8T-4910**	4	BOLT (M12X1.75X60-MM)	
Y	2	1	*510-3820*	1	FRAME GP-TRACK ROLLER	435
M	3	1	**8T-4192**	12	BOLT (M12X1.75X25-MM)	
M	4	1	**8T-4194**	12	BOLT (M12X1.75X50-MM)	
	5	1	**8T-4223**	12	WASHER-HARD (13.5X25.5X3-MM THK)	
	6	1	**198-4778**	16	WASHER-HARD (13.5X30X12-MM THK)	
Y	7	1	*233-0367*	1	CAP GP-TRACK IDLER (FRONT, LH)	425
Y	8	1	*233-0854*	1	CAP GP-TRACK IDLER (FRONT, RH)	426
Y	9	1	*283-5745*	1	CAP GP-TRACK IDLER (RH) (REAR)	429
Y	10	1	*283-5749*	1	CAP GP-TRACK IDLER (LH) (REAR)	430
	11	1	**353-2187**	2	PLATE-WEAR (REAR)	
	12	1	**536-6333**	2	STRIP	
	13	1	**538-3654**	1	SCRAPER	
	14	1	**538-3655**	1	SCRAPER	
	15	1	**538-3656**	1	SCRAPER	
	16	1	**538-3657**	1	SCRAPER	
	17	1	**538-3658**	1	SCRAPER	
	18	1	**538-3659**	1	SCRAPER	
Y	19	1	*273-3989*	8	ROLLER GP-TRACK-SINGLE FLANGE (SYSTEMONE)	495
Y	20	1	**456-9904**	2	IDLER GP-TRACK (SYSTEMONE)	476

M - METRIC PART
Y - SEPARATE ILLUSTRATION

523-9376 **FRAME GP-UNDERCARRIAGE** (contd.) **i07827875**

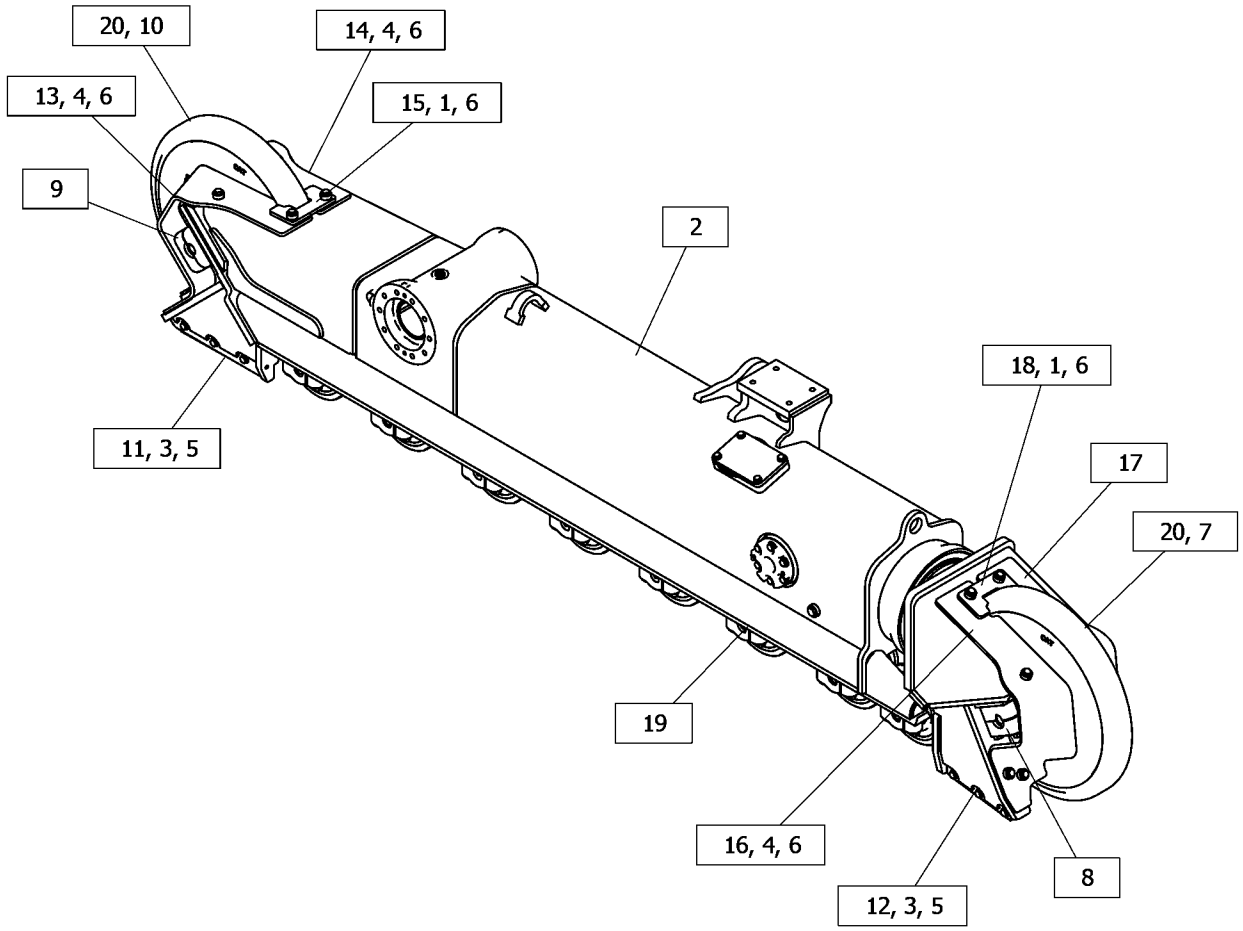

GRAPHIC #1 <END> g06451221

523-9377 FRAME GP-UNDERCARRIAGE—SYSTEMONE

S/N: Z2K1-UP; Z2N1-UP
LH, LGP
PART OF 523-9393, 523-9395 UNDERCARRIAGE AR
AN ATTACHMENT

SMCS-4150 **i07838003**

NOTE	REF NO	GRAPHIC REF	PART NUMBER	QTY	PART NAME 1 2 3 4 5 6 (PRODUCT LEVEL)	SEE PAGE
M	1	1	**8T-4910**	4	BOLT (M12X1.75X60-MM)	
Y	2	1	*510-3821*	1	FRAME GP-TRACK ROLLER	437
M	3	1	**8T-4192**	12	BOLT (M12X1.75X25-MM)	
M	4	1	**8T-4194**	12	BOLT (M12X1.75X50-MM)	
	5	1	**8T-4223**	12	WASHER-HARD (13.5X25.5X3-MM THK)	
	6	1	**198-4778**	16	WASHER-HARD (13.5X30X12-MM THK)	
Y	7	1	*233-0367*	1	CAP GP-TRACK IDLER (FRONT, LH)	425
Y	8	1	*233-0854*	1	CAP GP-TRACK IDLER (FRONT, RH)	426
Y	9	1	*283-5745*	1	CAP GP-TRACK IDLER (RH) (REAR)	429
Y	10	1	*283-5749*	1	CAP GP-TRACK IDLER (LH) (REAR)	430
	11	1	**353-2187**	2	PLATE-WEAR (REAR)	
	12	1	**536-6333**	2	STRIP	
	13	1	**538-3654**	1	SCRAPER	
	14	1	**538-3655**	1	SCRAPER	
	15	1	**538-3656**	1	SCRAPER	
	16	1	**538-3657**	1	SCRAPER	
	17	1	**538-3658**	1	SCRAPER	
	18	1	**538-3659**	1	SCRAPER	
Y	19	1	*273-3989*	8	ROLLER GP-TRACK-SINGLE FLANGE (SYSTEMONE)	495
Y	20	1	**456-9904**	2	IDLER GP-TRACK (SYSTEMONE)	476

M - METRIC PART
Y - SEPARATE ILLUSTRATION

523-9377 **FRAME GP-UNDERCARRIAGE** (contd.) **i07838003**

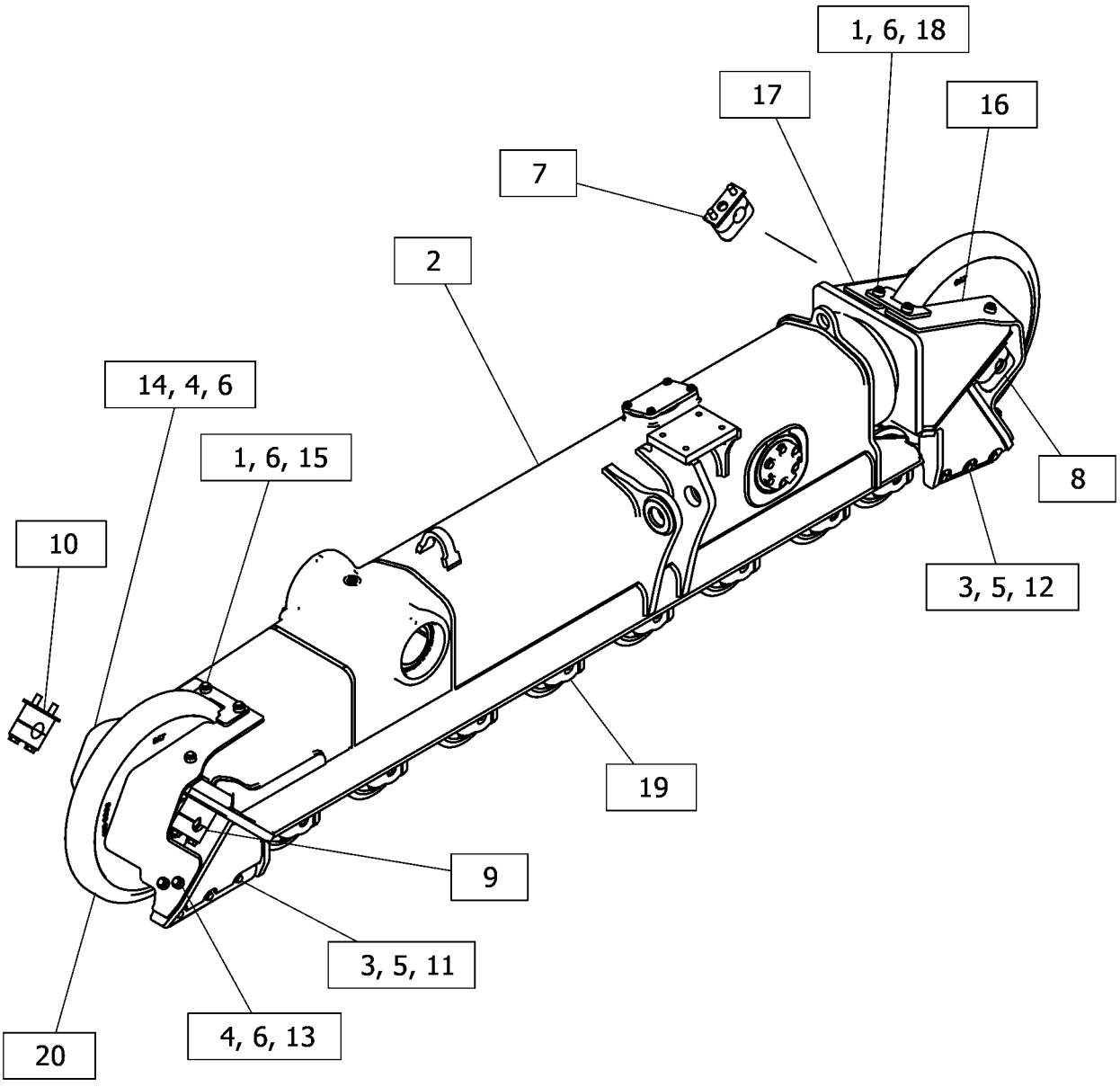

GRAPHIC #1 <END> g06451277

563-1029 FRAME GP-UNDERCARRIAGE

S/N: Z2K1-UP
LH, WASTE HANDLING, XL, HEAVY-DUTY
PART OF 563-1027 UNDERCARRIAGE AR
AN ATTACHMENT

SMCS-4150 **i07844475**

NOTE	REF NO	GRAPHIC REF	PART NUMBER	QTY	PART NAME 1 2 3 4 5 6 (PRODUCT LEVEL)	SEE PAGE
Y	1	1	*510-3811*	1	FRAME GP-TRACK ROLLER (LH)	433
M	2	1	**8T-4183**	2	BOLT (M12X1.75X40-MM)	
M	3	1	**8T-4192**	12	BOLT (M12X1.75X25-MM)	
	4	1	**196-7074**	2	STRIP-WEAR (REAR)	
Y	5	1	*233-0367*	1	CAP GP-TRACK IDLER (FRONT, LH)	425
Y	6	1	*233-0854*	1	CAP GP-TRACK IDLER (FRONT, RH)	426
	7	1	**251-8601**	1	SCRAPER	
Y	8	1	*255-0045*	1	CAP GP-TRACK IDLER (REAR, RH)	427
Y	9	1	*255-0046*	1	CAP GP-TRACK IDLER (REAR, LH)	428
	10	1	**536-6332**	2	STRIP	
	11	1	**8T-4223**	14	WASHER-HARD (13.5X25.5X3-MM THK)	
Y	12	1	**204-7266**	2	IDLER GP-TRACK (WASTE HANDLING)	474
Y	13	1	*358-7239*	4	ROLLER GP-TRACK-SINGLE FLANGE (HEAVY-DUTY)	497
Y	14	1	*358-8583*	3	ROLLER GP-TRACK-DOUBLE FLANGE	492

M - METRIC PART
Y - SEPARATE ILLUSTRATION

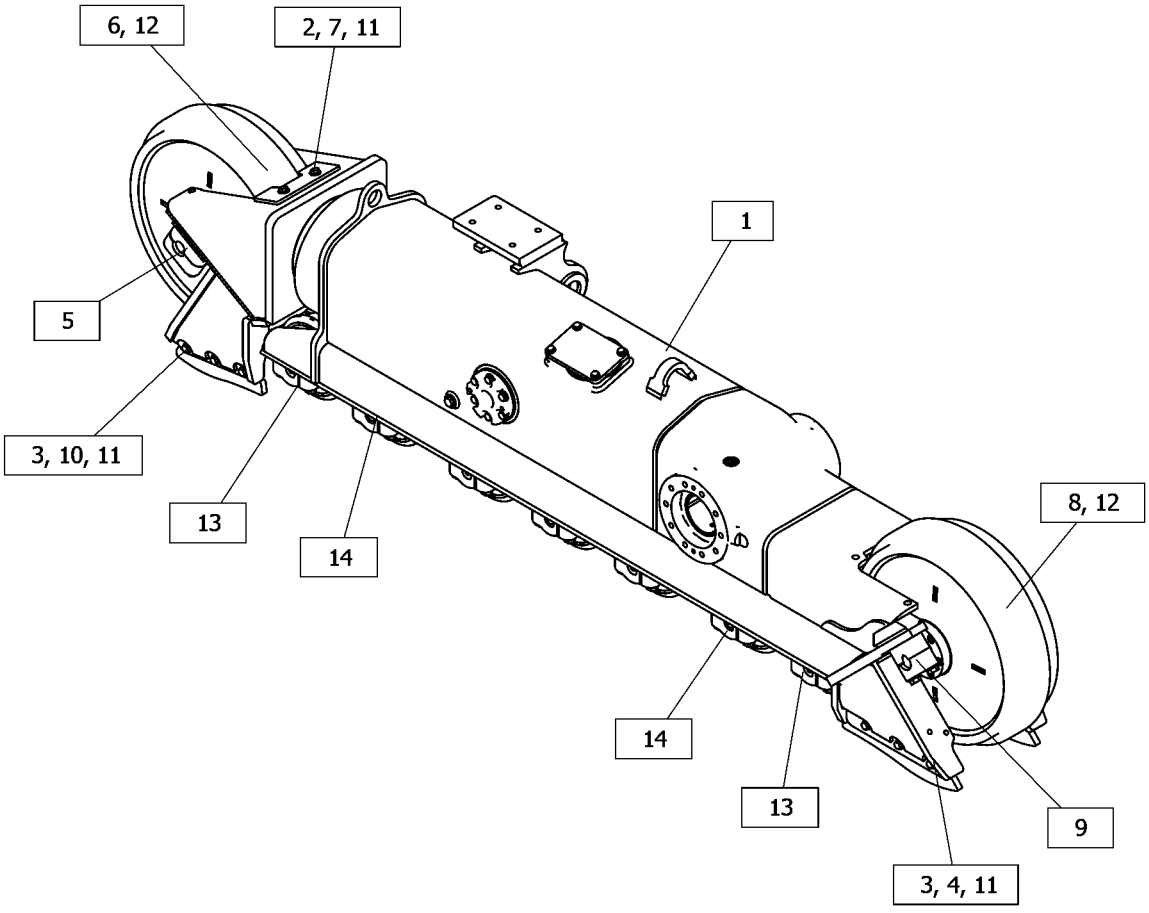

GRAPHIC #1 <END> g06454195

563-1030 FRAME GP-UNDERCARRIAGE

S/N: Z2K1-UP
RH, WASTE HANDLING, XL, HEAVY-DUTY
PART OF 563-1027 UNDERCARRIAGE AR
AN ATTACHMENT

SMCS-4150 **i07844502**

NOTE	REF NO	GRAPHIC REF	PART NUMBER	QTY	PART NAME 1 2 3 4 5 6 (PRODUCT LEVEL)	SEE PAGE
M	1	1	**8T-4183**	2	BOLT (M12X1.75X40-MM)	
Y	2	1	*510-3810*	1	FRAME GP-TRACK ROLLER (RH)	431
M	3	1	**8T-4192**	12	BOLT (M12X1.75X25-MM)	
	4	1	**8T-4223**	14	WASHER-HARD (13.5X25.5X3-MM THK)	
	5	1	**196-7074**	2	STRIP-WEAR (REAR)	
Y	6	1	*233-0367*	1	CAP GP-TRACK IDLER (FRONT, LH)	425
Y	7	1	*233-0854*	1	CAP GP-TRACK IDLER (FRONT, RH)	426
	8	1	**251-8601**	1	SCRAPER	
Y	9	1	*255-0045*	1	CAP GP-TRACK IDLER (REAR, RH)	427
Y	10	1	*255-0046*	1	CAP GP-TRACK IDLER (REAR, LH)	428
	11	1	**536-6332**	2	STRIP	
Y	12	1	*358-7239*	4	ROLLER GP-TRACK-SINGLE FLANGE	497
Y	13	1	*358-8583*	3	ROLLER GP-TRACK-DOUBLE FLANGE	492
Y	14	1	**204-7266**	2	IDLER GP-TRACK	474

M - METRIC PART
Y - SEPARATE ILLUSTRATION

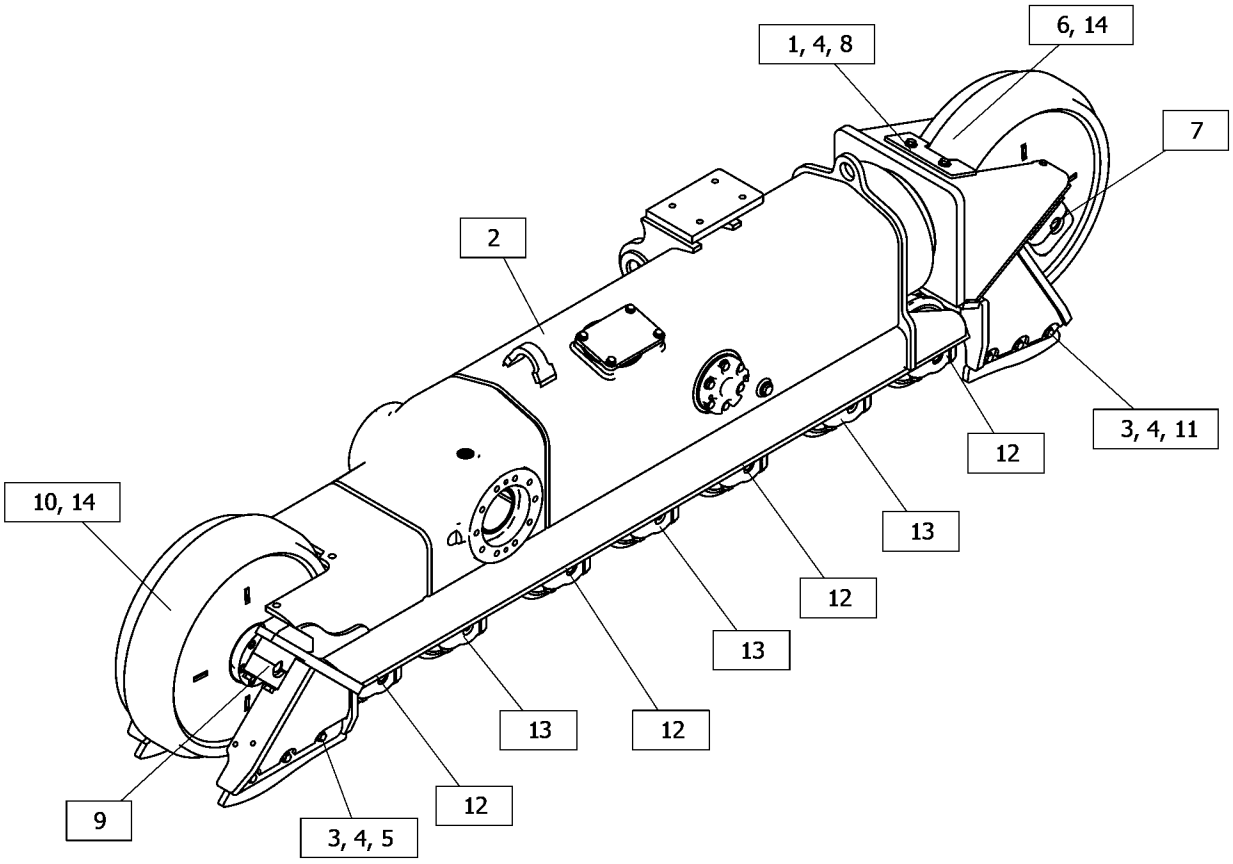

GRAPHIC #1 <END> g06454300

563-1138 FRAME GP-UNDERCARRIAGE

S/N: Z2N1-UP
RH, HEAVY-DUTY, LGP
PART OF 563-1028 UNDERCARRIAGE AR
AN ATTACHMENT

SMCS-4150 **i07837928**

NOTE	REF NO	GRAPHIC REF	PART NUMBER	QTY	PART NAME 1 2 3 4 5 6 (PRODUCT LEVEL)	SEE PAGE
M	1	1	**8T-4183**	2	BOLT (M12X1.75X40-MM)	
Y	2	1	*510-3820*	1	FRAME GP-TRACK ROLLER	435
M	3	1	**8T-4192**	12	BOLT (M12X1.75X25-MM)	
	4	1	**8T-4223**	14	WASHER-HARD (13.5X25.5X3-MM THK)	
	5	1	**196-7074**	2	STRIP-WEAR (REAR)	
Y	6	1	*233-0367*	1	CAP GP-TRACK IDLER (FRONT, LH)	425
Y	7	1	*233-0854*	1	CAP GP-TRACK IDLER (FRONT, RH)	426
	8	1	**251-8601**	1	SCRAPER	
Y	9	1	*255-0045*	1	CAP GP-TRACK IDLER (REAR, RH)	427
Y	10	1	*255-0046*	1	CAP GP-TRACK IDLER (REAR, LH)	428
	11	1	**536-6332**	2	STRIP	
Y	12	1	*358-7239*	4	ROLLER GP-TRACK-SINGLE FLANGE	497
Y	13	1	*358-8583*	4	ROLLER GP-TRACK-DOUBLE FLANGE	492
Y	14	1	**204-7266**	2	IDLER GP-TRACK	474

M - METRIC PART
Y - SEPARATE ILLUSTRATION

563-1138 **FRAME GP-UNDERCARRIAGE (**contd.**)** **i07837928**

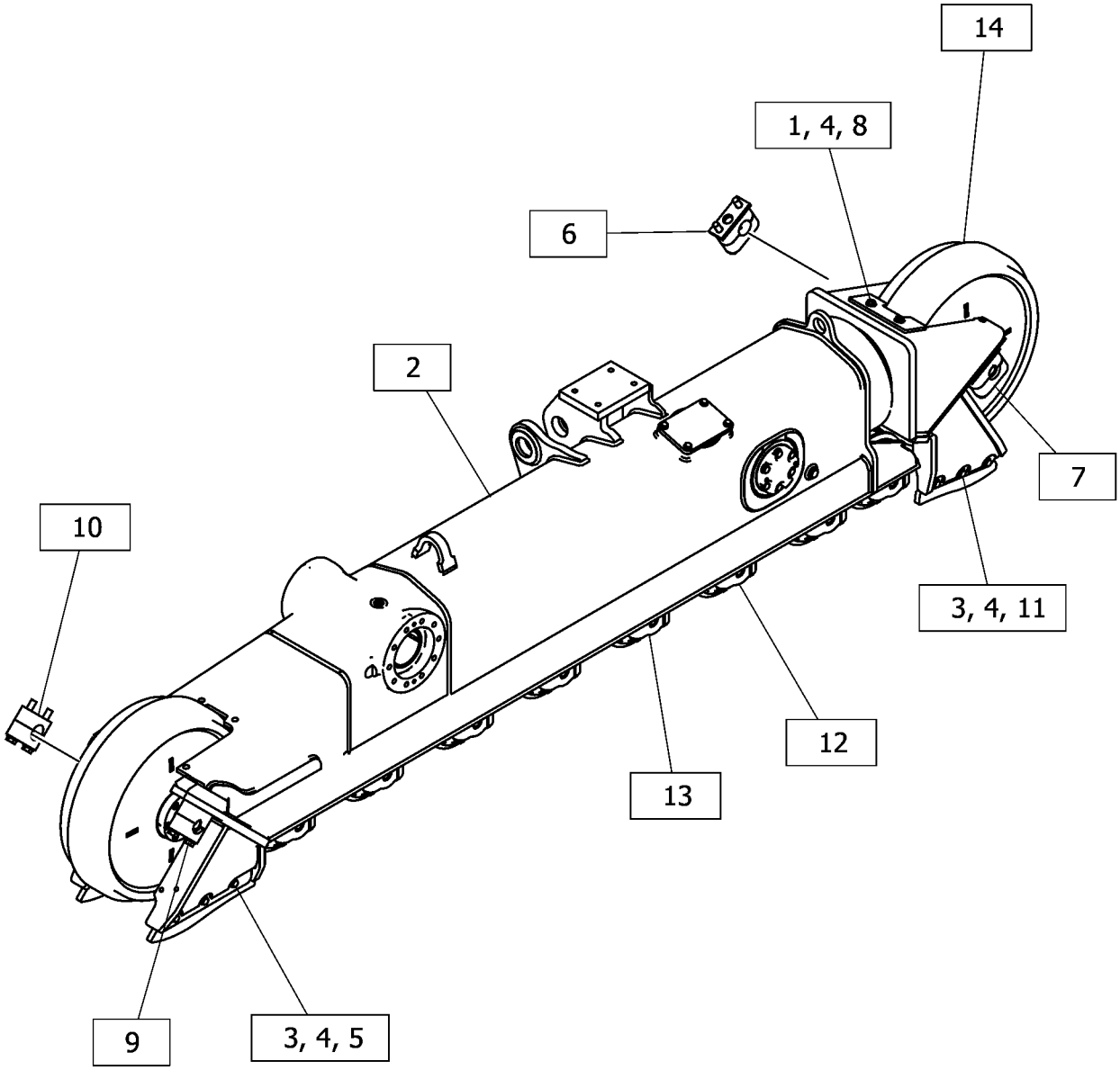

GRAPHIC #1 <END> g06451237

563-1139 FRAME GP-UNDERCARRIAGE

S/N: Z2N1-UP
LH, WASTE HANDLING, HEAVY-DUTY, LGP
PART OF 563-1028 UNDERCARRIAGE AR
AN ATTACHMENT

SMCS-4150 **i07827881**

NOTE	REF NO	GRAPHIC REF	PART NUMBER	QTY	PART NAME 1 2 3 4 5 6 (PRODUCT LEVEL)	SEE PAGE
M	1	1	**8T-4183**	2	BOLT (M12X1.75X40-MM)	
Y	2	1	*510-3821*	1	FRAME GP-TRACK ROLLER	437
M	3	1	**8T-4192**	12	BOLT (M12X1.75X25-MM)	
	4	1	**8T-4223**	14	WASHER-HARD (13.5X25.5X3-MM THK)	
	5	1	**196-7074**	2	STRIP-WEAR (REAR)	
Y	6	1	*233-0367*	1	CAP GP-TRACK IDLER (FRONT, LH)	425
Y	7	1	*233-0854*	1	CAP GP-TRACK IDLER (FRONT, RH)	426
	8	1	**251-8601**	1	SCRAPER	
Y	9	1	*255-0045*	1	CAP GP-TRACK IDLER (REAR, RH)	427
Y	10	1	*255-0046*	1	CAP GP-TRACK IDLER (REAR, LH)	428
	11	1	**536-6332**	2	STRIP	
Y	12	1	*358-7239*	4	ROLLER GP-TRACK-SINGLE FLANGE	497
Y	13	1	*358-8583*	4	ROLLER GP-TRACK-DOUBLE FLANGE	492
Y	14	1	**204-7266**	2	IDLER GP-TRACK	474

M - METRIC PART
Y - SEPARATE ILLUSTRATION

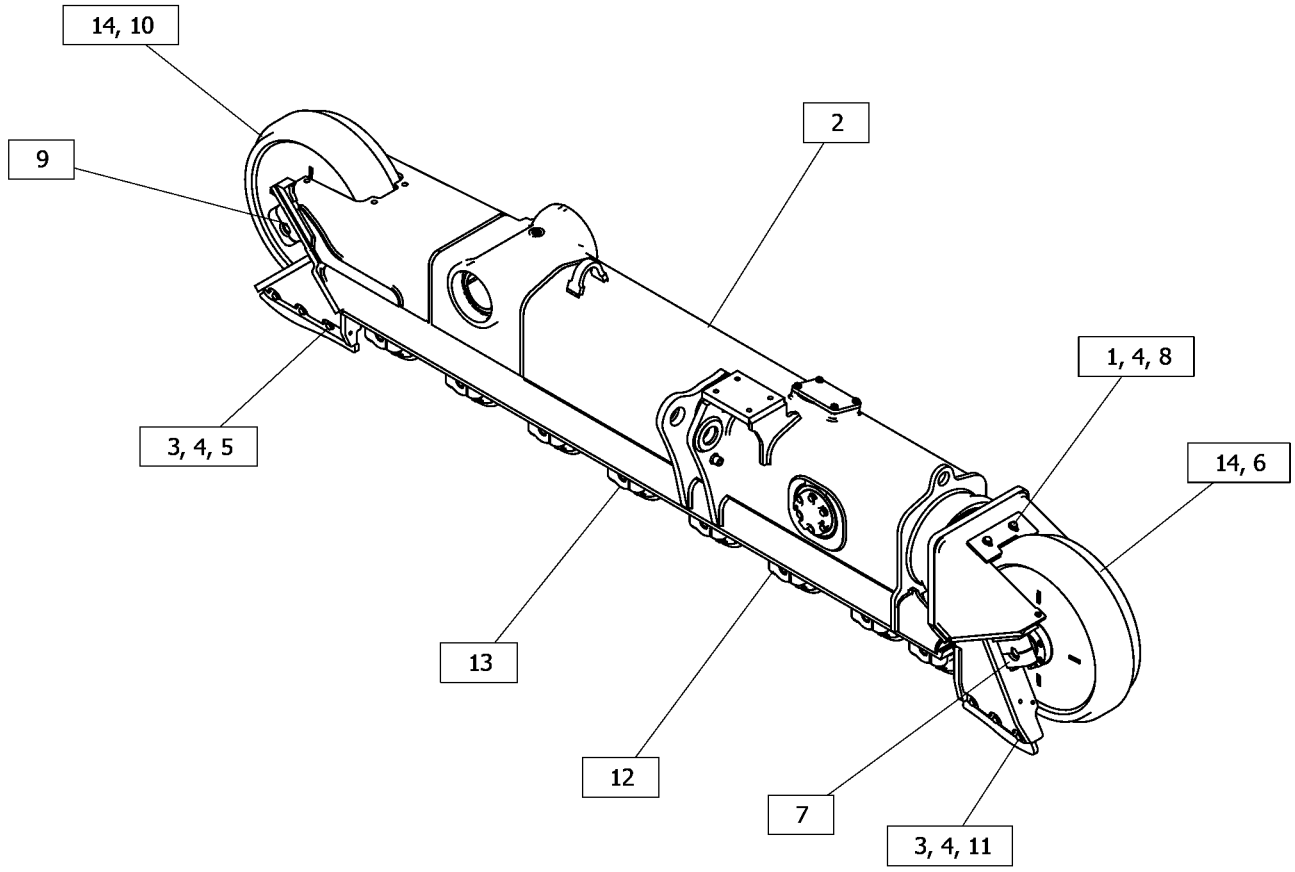

GRAPHIC #1 <END> g06451471

205-6127 GUARD GP-TRACK GUIDE

S/N: Z2K1-UP
DOUBLE SHORT GUARDS
AN ATTACHMENT

SMCS-4177 **i01830997**

NOTE	REF NO	GRAPHIC REF	PART NUMBER	QTY	PART NAME 1 2 3 4 5 6 (PRODUCT LEVEL)	SEE PAGE
	1	1	**204-6365**	16	SPACER (15-MM THK)	
	2	1	**205-6160**	4	GUIDE AS	
M	3	1	**8T-4140**	16	BOLT (M16X2X60-MM)	

M - METRIC PART

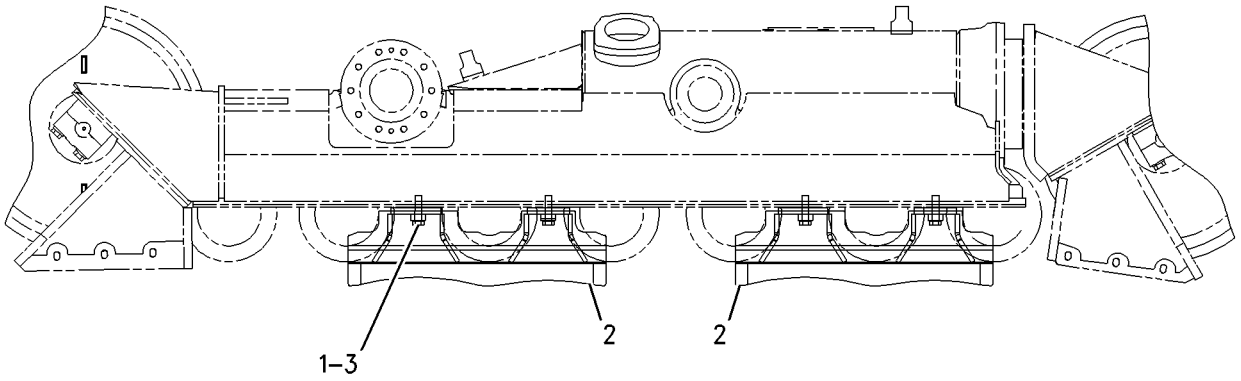

RIGHT SIDE VIEW

GRAPHIC #1 <END> g00899177

205-6129 GUARD GP-TRACK GUIDE—HEAVY-DUTY

S/N: Z2K1-UP; Z2N1-UP
SHORT
AN ATTACHMENT

SMCS-4177 **i06933635**

NOTE	REF NO	GRAPHIC REF	PART NUMBER	QTY	PART NAME 1 2 3 4 5 6 (PRODUCT LEVEL)	SEE PAGE
	1	1	**204-6365**	16	SPACER (15-MM THK)	
	2	1	**205-6165**	4	GUIDE AS	
M	3	1	**8T-4140**	16	BOLT (M16X2X60-MM)	

M - METRIC PART

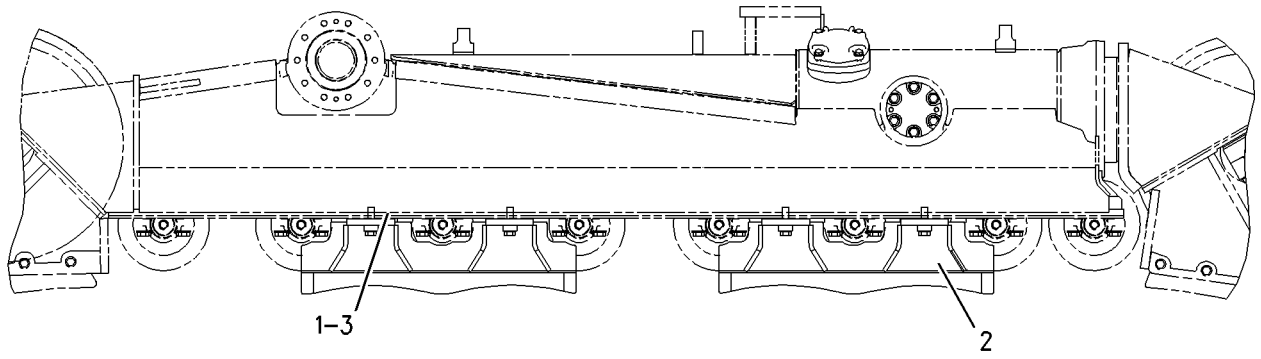

RIGHT SIDE VIEW

GRAPHIC #1 <END> g00899200

205-6131 GUARD GP-TRACK GUIDE–HEAVY-DUTY

S/N: Z2N1-UP
CENTER
AN ATTACHMENT

SMCS-4177 **i06701792**

NOTE	REF NO	GRAPHIC REF	PART NUMBER	QTY	PART NAME 1 2 3 4 5 6 (PRODUCT LEVEL)	SEE PAGE
	1	1	**204-6365**	12	SPACER (15-MM THK)	
	2	1	**205-6164**	2	GUIDE AS	
M	3	1	**8T-4140**	12	BOLT (M16X2X60-MM)	
					QUANTITIES SHOWN ARE THOSE REQUIRED FOR BOTH LH & RH SIDES	

M - METRIC PART

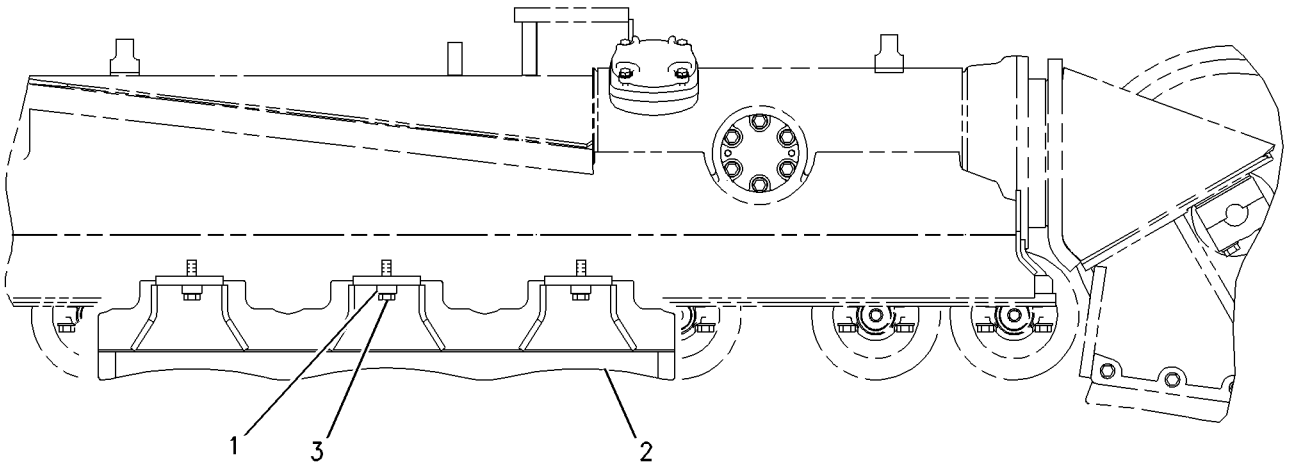

RIGHT SIDE VIEW

GRAPHIC #1 <END> g00938144

251-8569 GUARD GP-TRACK GUIDE–SYSTEMONE

S/N: Z2K1-UP; Z2N1-UP
PART OF 251-8616, 271-6164 GUARD GP-TRACK GUIDE
AN ATTACHMENT

SMCS-4177 **i03659573**

NOTE	REF NO	GRAPHIC REF	PART NUMBER	QTY	PART NAME 1 2 3 4 5 6 (PRODUCT LEVEL)	SEE PAGE
	1	1	**204-6365**	4	SPACER (15-MM THK)	
	2	1	**251-8570**	1	GUIDE AS	
M	3	1	**8T-4140**	4	BOLT (M16X2X60-MM)	

M - METRIC PART

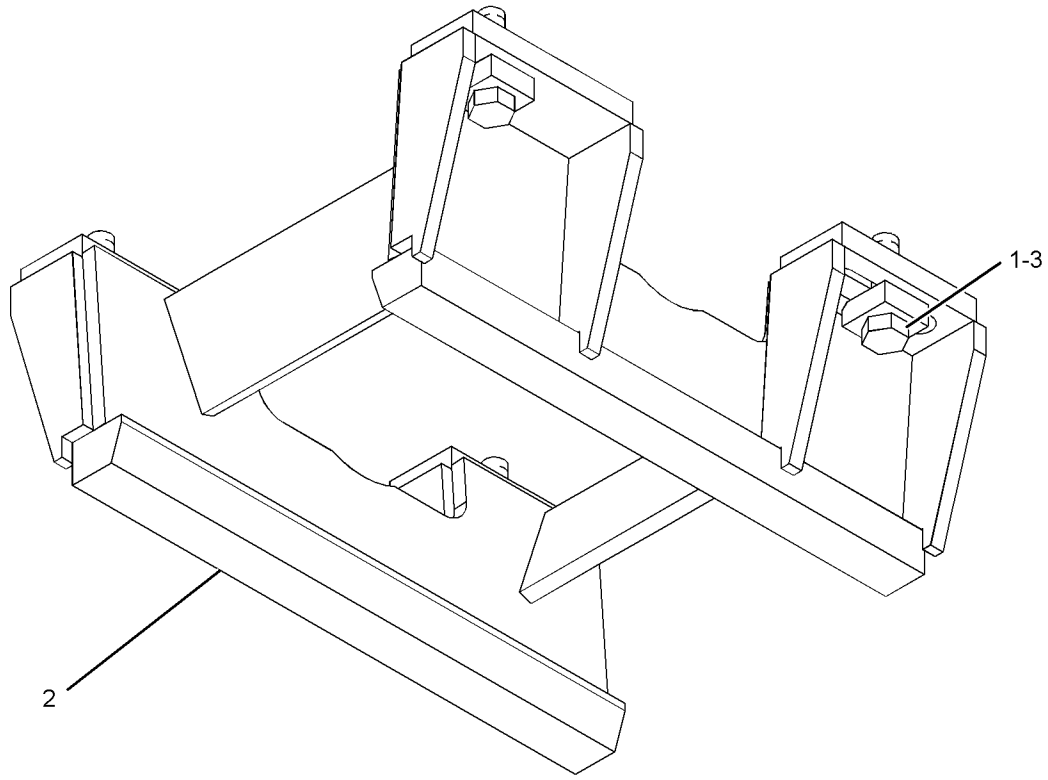

GRAPHIC #1 <END> g01943275

251-8616 GUARD GP-TRACK GUIDE–SYSTEMONE

S/N: Z2K1-UP

ALIGNS TO THE TRACK CHAIN RAILS INSTEAD OF TRACK CHAIN PIN BOSSES

CANNOT BE USED WITH 205-6127–PAGE: 460, 205-6128–PAGE: 469, 251-8619–PAGE: 471 AN ATTACHMENT

SMCS-4177 **i07792954**

NOTE	REF NO	GRAPHIC REF	PART NUMBER	QTY	PART NAME 1 2 3 4 5 6 (PRODUCT LEVEL)	SEE PAGE
Y	1	1	*251-8569*	4	GUARD GP-TRACK GUIDE (SYSTEMONE)	463

Y - SEPARATE ILLUSTRATION

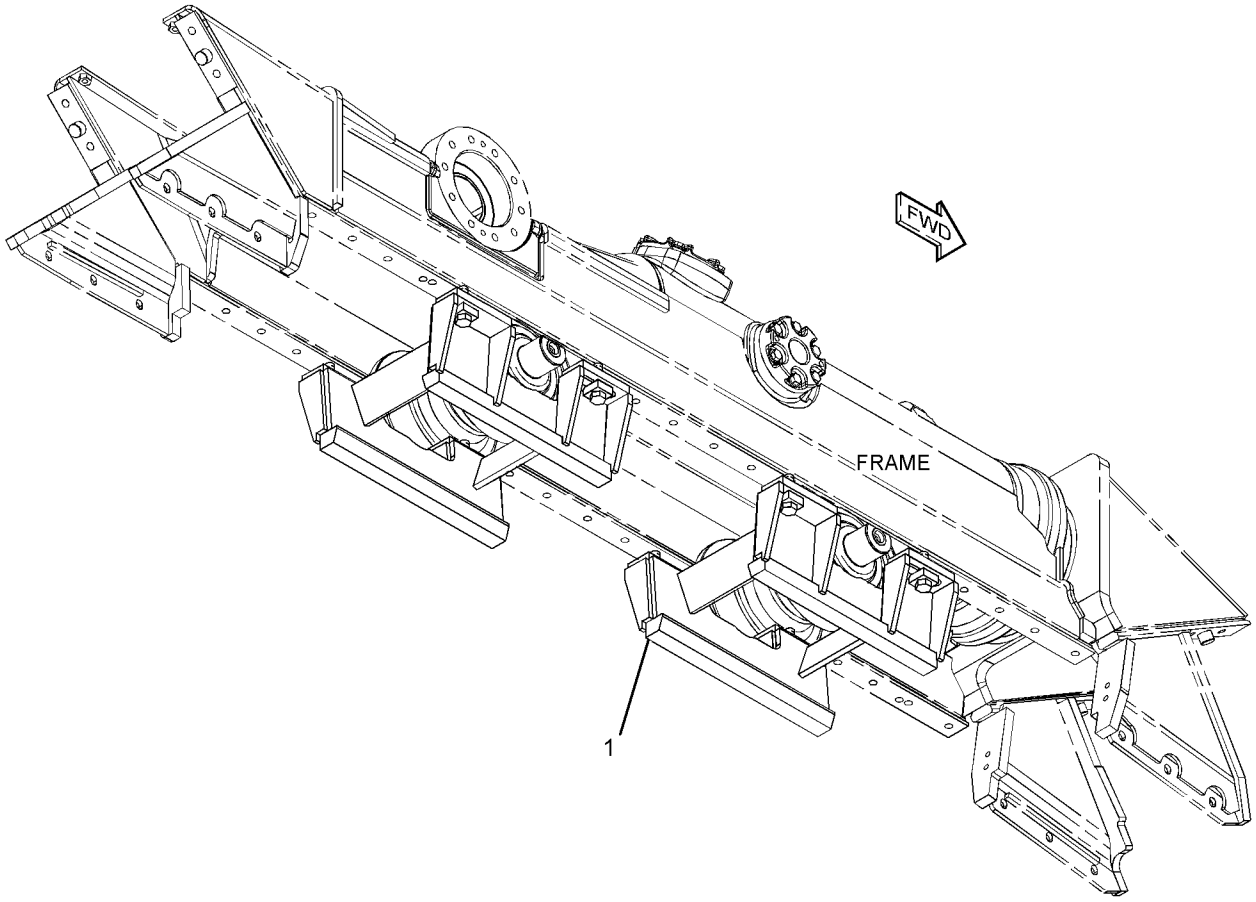

GRAPHIC #1 <END> g01287973

271-6164 GUARD GP-TRACK GUIDE—SYSTEMONE

S/N: Z2K1-UP; Z2N1-UP
MODERATE SERVICE, CENTER GUIDES THAT ALIGN WITH TRACK CHAIN RAILS
PART OF 394-7564 GUARD GP-TRACK GUIDE
AN ATTACHMENT

SMCS-4177 **i03626242**

NOTE	PART NUMBER	QTY	PART NAME 1 2 3 4 5 6 (PRODUCT LEVEL)	SEE PAGE
Y	*251-8569*	2	GUARD GP-TRACK GUIDE (SYSTEMONE)	463

Y - SEPARATE ILLUSTRATION

<END>

384-7413 GUARD GP-TRACK GUIDE

S/N: Z2K1-UP
CENTER GUARDS
PART OF 532-9851, 532-9856 DISTRIBUTION AR
AN ATTACHMENT

SMCS-4177 **i06918872**

NOTE	REF NO	GRAPHIC REF	PART NUMBER	QTY	PART NAME 1 2 3 4 5 6 (PRODUCT LEVEL)	SEE PAGE
	1	1	**204-6365**	8	SPACER (15-MM THK)	
	2	1	**205-6160**	2	GUIDE AS	
M	3	1	**8T-4140**	8	BOLT (M16X2X60-MM)	

M - METRIC PART

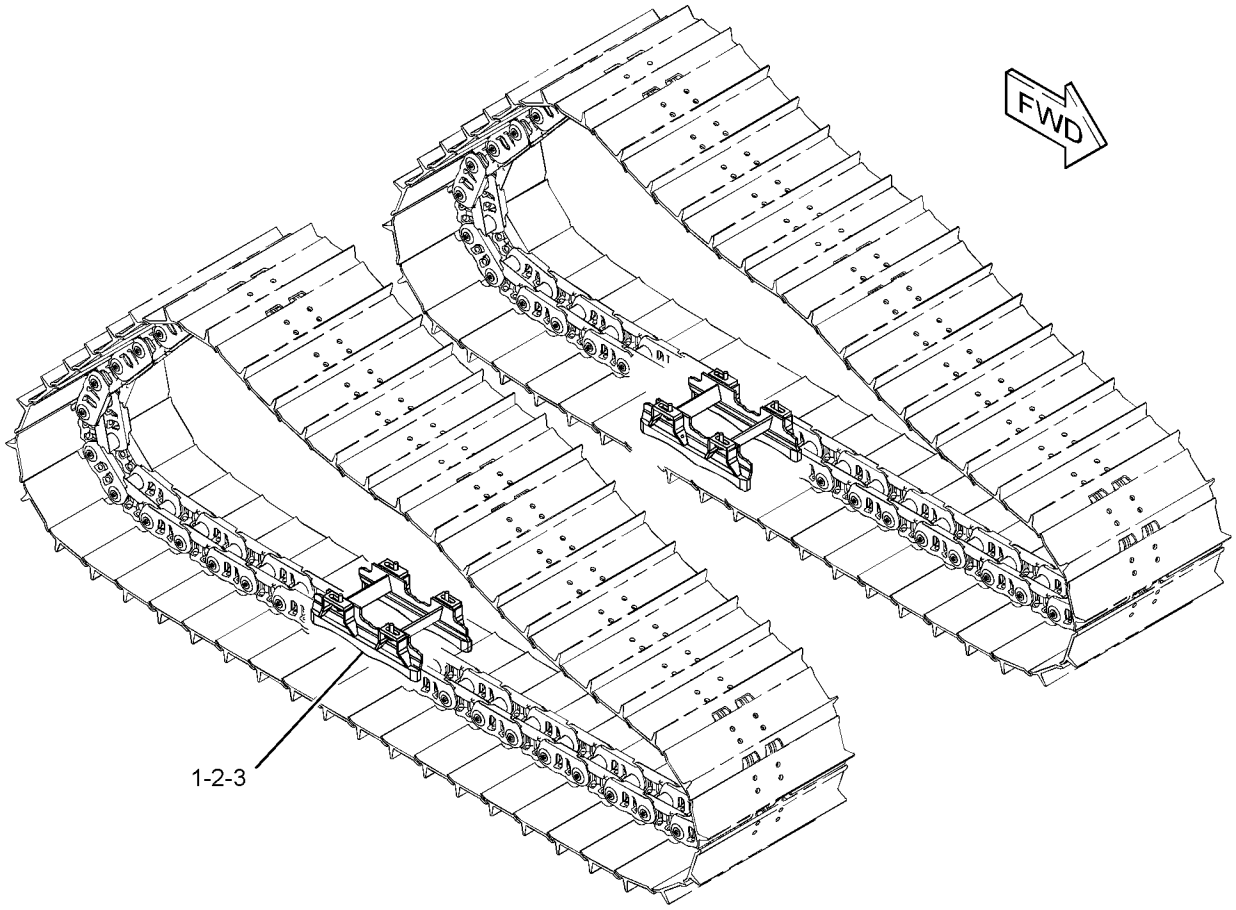

GRAPHIC #1 <END> g02795738

384-7414 GUARD GP-TRACK GUIDE—SYSTEMONE

S/N: Z2K1-UP; Z2N1-UP
MODERATE SERVICE
CANNOT BE USED WITH UNDERCARRIAGE AR (FINE GRADING), UNDERCARRIAGE AR (HEAVY-DUTY), UNDERCARRIAGE AR (HEAVY-DUTY, TALL,DOUBLE FLANGE ROLLERS)
AN ATTACHMENT

SMCS-4177 **i06702344**

NOTE	REF NO	GRAPHIC REF	PART NUMBER	QTY	PART NAME 1 2 3 4 5 6 (PRODUCT LEVEL)	SEE PAGE
	1	1	**204-6365**	16	SPACER (15-MM THK)	
	2	1	**251-8570**	2	GUIDE AS (REAR)	
	3	1	**271-5995**	2	GUIDE AS (FRONT)	
M	4	1	**8T-4140**	16	BOLT (M16X2X60-MM)	

M - METRIC PART

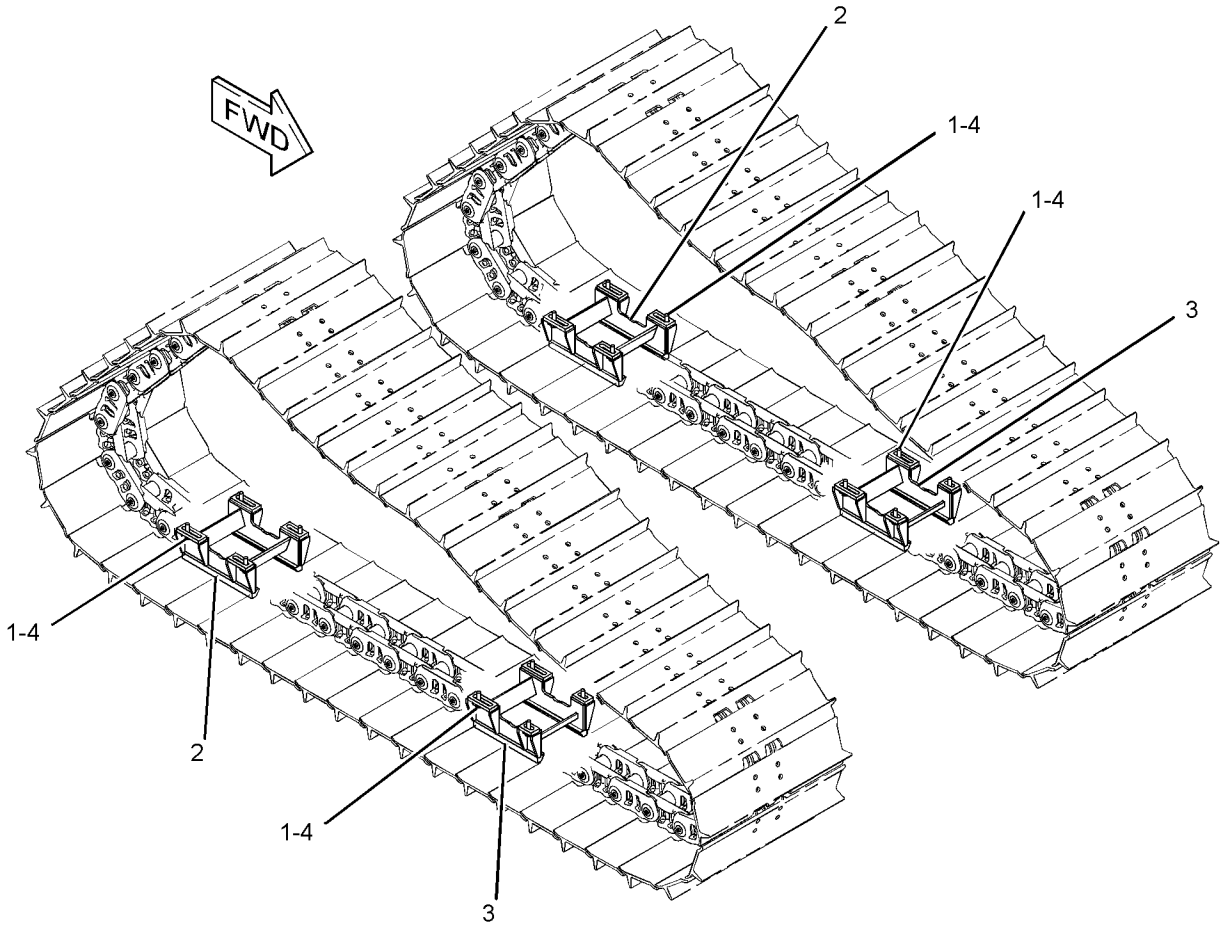

GRAPHIC #1 <END> g02817438

394-7564 GUARD GP-TRACK GUIDE—SYSTEMONE

S/N: Z2N1-UP

CENTER

CANNOT BE USED WITH UNDERCARRIAGE AR (HEAVY-DUTY), UNDERCARRIAGE AR (FINE GRADING), GUIDING AR (MODERATE SERVICE), GUIDING AR (EXTREME SERVICE), GUIDING GUIDING AR (HEAVY-DUTY, MODERATE SERVICE), GUIDING AR (HEAVY-DUTY, EXTREME SERVICE)

AN ATTACHMENT

SMCS-4177 **i06702418**

NOTE	PART NUMBER	QTY	PART NAME 1 2 3 4 5 6 (PRODUCT LEVEL)	SEE PAGE
Y	*271-6164*	1	GUARD GP-TRACK GUIDE	465

Y - SEPARATE ILLUSTRATION

<END>

205-6128 GUARD GP-TRACK ROLLER–HEAVY-DUTY

S/N: Z2K1-UP; Z2N1-UP
FULL GUARDS
AN ATTACHMENT

SMCS-7152 **i05936216**

NOTE	REF NO	GRAPHIC REF	PART NUMBER	QTY	PART NAME 1 2 3 4 5 6 (PRODUCT LEVEL)	SEE PAGE
	1	1	**204-6365**	24	SPACER (15-MM THK)	
	2	1	**205-6141**	8	TUBE	
	3	1	**205-6162**	2	GUARD AS (RH)	
	4	1	**205-6163**	2	GUARD AS (LH)	
M	5	1	**110-6969**	8	BOLT (M16X2X300-MM)	
C	6	1	**7X-0550**	4	WASHER-HARD (13.5X32X5-MM THK)	
B	7	1	**7X-0605**	4	WASHER-HARD (13X28X1.6-MM THK)	
M	8	1	**8T-4140**	24	BOLT (M16X2X60-MM)	
M	9	1	**8T-4194**	4	BOLT (M12X1.75X50-MM)	
M	10	1	**8T-4778**	8	LOCKNUT (M16X2-THD)	
	11	1	**9X-8257**	16	WASHER (17.5X30X3.5-MM THK)	

B - USE AS REQUIRED
C - CHANGE FROM PREVIOUS TYPE
M - METRIC PART

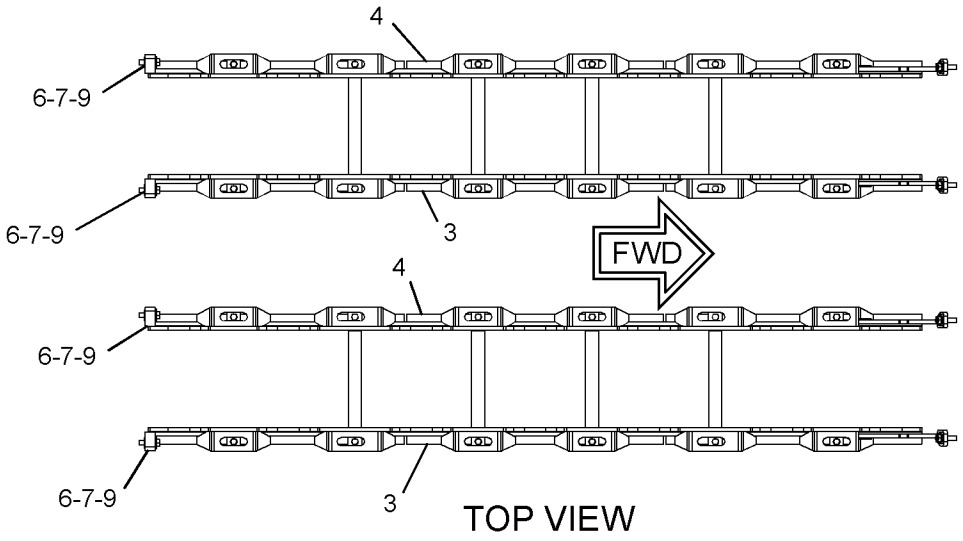

TOP VIEW

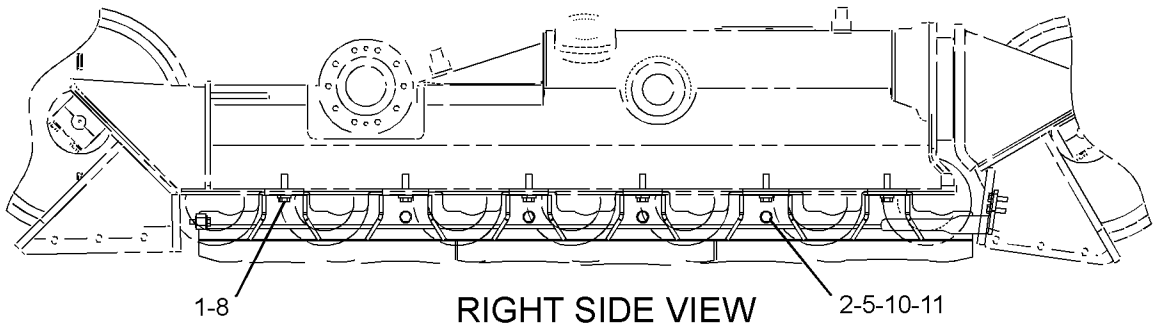

RIGHT SIDE VIEW

GRAPHIC #1 <END> g03729909

205-6130 GUARD GP-TRACK ROLLER–HEAVY-DUTY

S/N: Z2K1-UP; Z2N1-UP
FOR USE WITH UNDERCARRIAGE AR (HEAVY-DUTY, TALL,DOUBLE FLANGE ROLLERS)
CANNOT BE USED WITH UNDERCARRIAGE AR (SYSTEMONE)
AN ATTACHMENT

SMCS-7152 **i06701809**

NOTE	REF NO	GRAPHIC REF	PART NUMBER	QTY	PART NAME 1 2 3 4 5 6 (PRODUCT LEVEL)	SEE PAGE
	1	1	**204-6365**	28	SPACER (15-MM THK)	
	2	1	**205-6141**	10	TUBE	
	3	1	**205-6167**	2	GUARD AS (RH)	
	4	1	**205-6168**	2	GUARD AS (LH)	
M	5	1	**110-6969**	10	BOLT (M16X2X300-MM)	
	6	1	**7X-0550**	4	WASHER-HARD (13.5X32X5-MM THK)	
B	7	1	**7X-0605**	4	WASHER-HARD (13X28X1.6-MM THK)	
M	8	1	**8T-4140**	28	BOLT (M16X2X60-MM)	
M	9	1	**8T-4194**	4	BOLT (M12X1.75X50-MM)	
M	10	1	**8T-4778**	10	LOCKNUT (M16X2-THD)	
	11	1	**9X-8257**	20	WASHER (17.5X30X3.5-MM THK)	

B - USE AS REQUIRED
M - METRIC PART

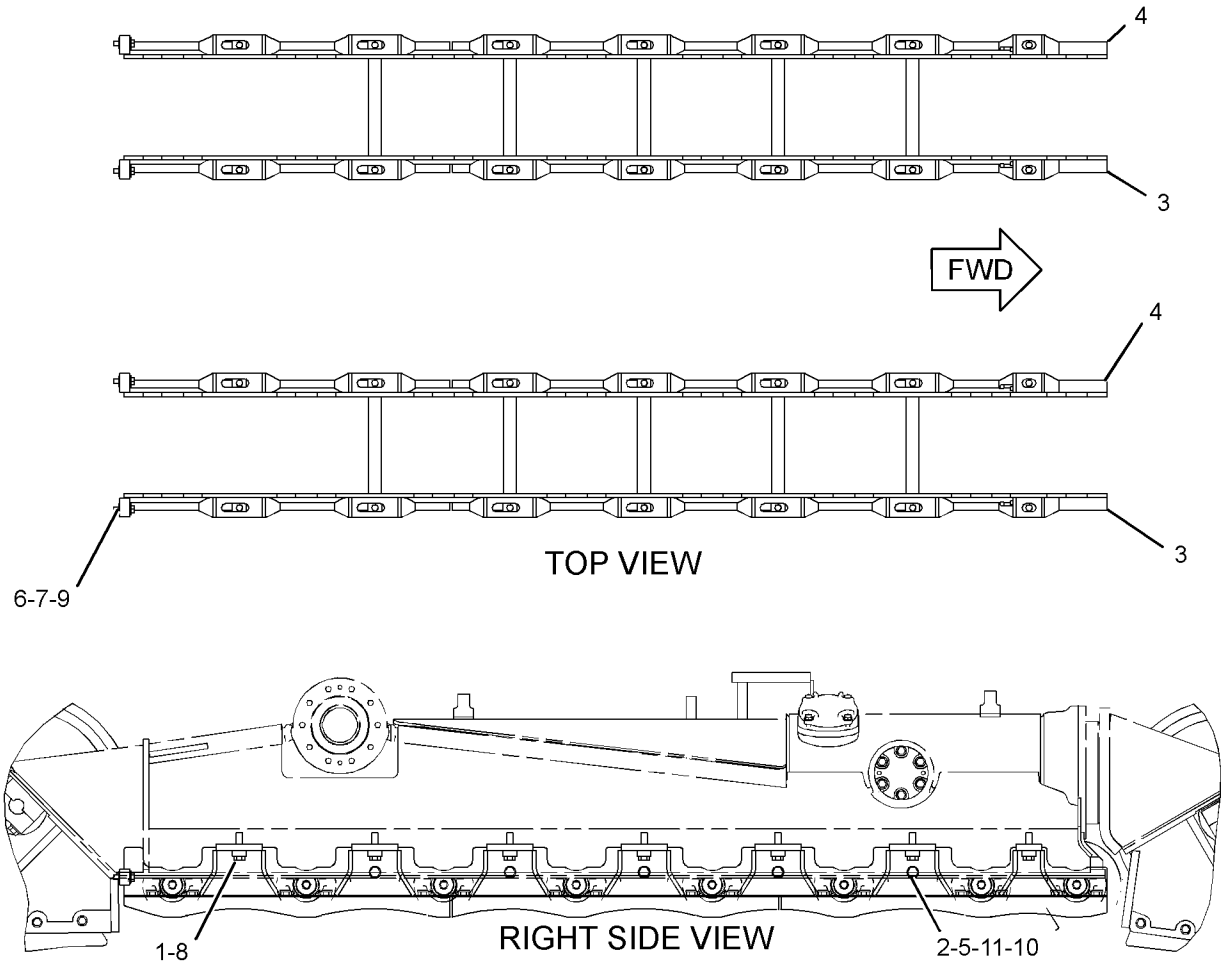

GRAPHIC #1 <END> g02915881

251-8619 GUARD GP-TRACK ROLLER–SYSTEMONE

S/N: Z2K1-UP
FULL GUARDS
CANNOT BE USED WITH 205-6127–PAGE: 460, 205-6128–PAGE: 469, 251-8616–PAGE: 464
AN ATTACHMENT

SMCS-7152 **i02795798**

NOTE	REF NO	GRAPHIC REF	PART NUMBER	QTY	PART NAME 1 2 3 4 5 6 (PRODUCT LEVEL)	SEE PAGE
	1	1	**204-6365**	24	SPACER (15-MM THK)	
	2	1	**205-6141**	12	TUBE	
	3	1	**261-2044**	4	GUARD AS	
M	4	1	**110-6969**	12	BOLT (M16X2X300-MM)	
M	5	1	**8T-4140**	24	BOLT (M16X2X60-MM)	
M	6	1	**8T-4778**	12	LOCKNUT (M16X2-THD)	
	7	1	**9X-8257**	24	WASHER (17.5X30X3.5-MM THK)	

M - METRIC PART

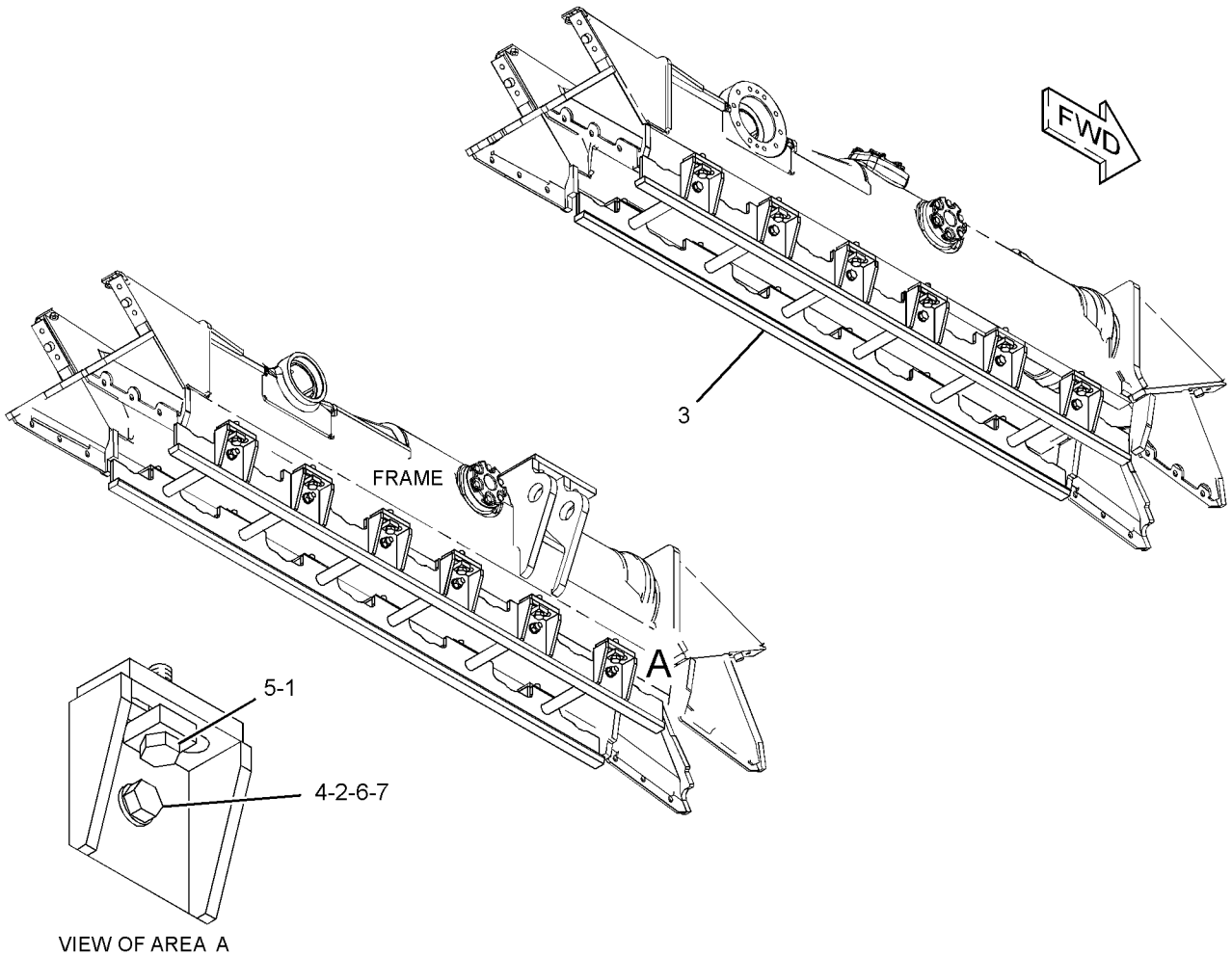

VIEW OF AREA A

GRAPHIC #1 <END> g01287985

384-7415 GUARD GP-TRACK ROLLER–SYSTEMONE

S/N: Z2K1-UP; Z2N1-UP

CANNOT BE USED WITH UNDERCARRIAGE AR (HEAVY-DUTY), UNDERCARRIAGE AR (FINE GRADING), UNDERCARRIAGE AR (HEAVY-DUTY, TALL, DOUBLE FLANGE ROLLERS) AN ATTACHMENT

SMCS-7152 **i06702404**

NOTE	REF NO	GRAPHIC REF	PART NUMBER	QTY	PART NAME 1 2 3 4 5 6 (PRODUCT LEVEL)	SEE PAGE
	1	1	**204-6365**	28	SPACER (15-MM THK)	
	2	1	**205-6141**	12	TUBE	
	3	1	**261-2046**	2	GUARD AS (RH)	
	4	1	**261-2047**	2	GUARD AS (LH)	
M	5	1	**110-6969**	12	BOLT (M16X2X300-MM)	
M	6	1	**8T-4140**	28	BOLT (M16X2X60-MM)	
M	7	1	**8T-4778**	12	LOCKNUT (M16X2-THD)	
	8	1	**9X-8257**	24	WASHER (17.5X30X3.5-MM THK)	

M - METRIC PART

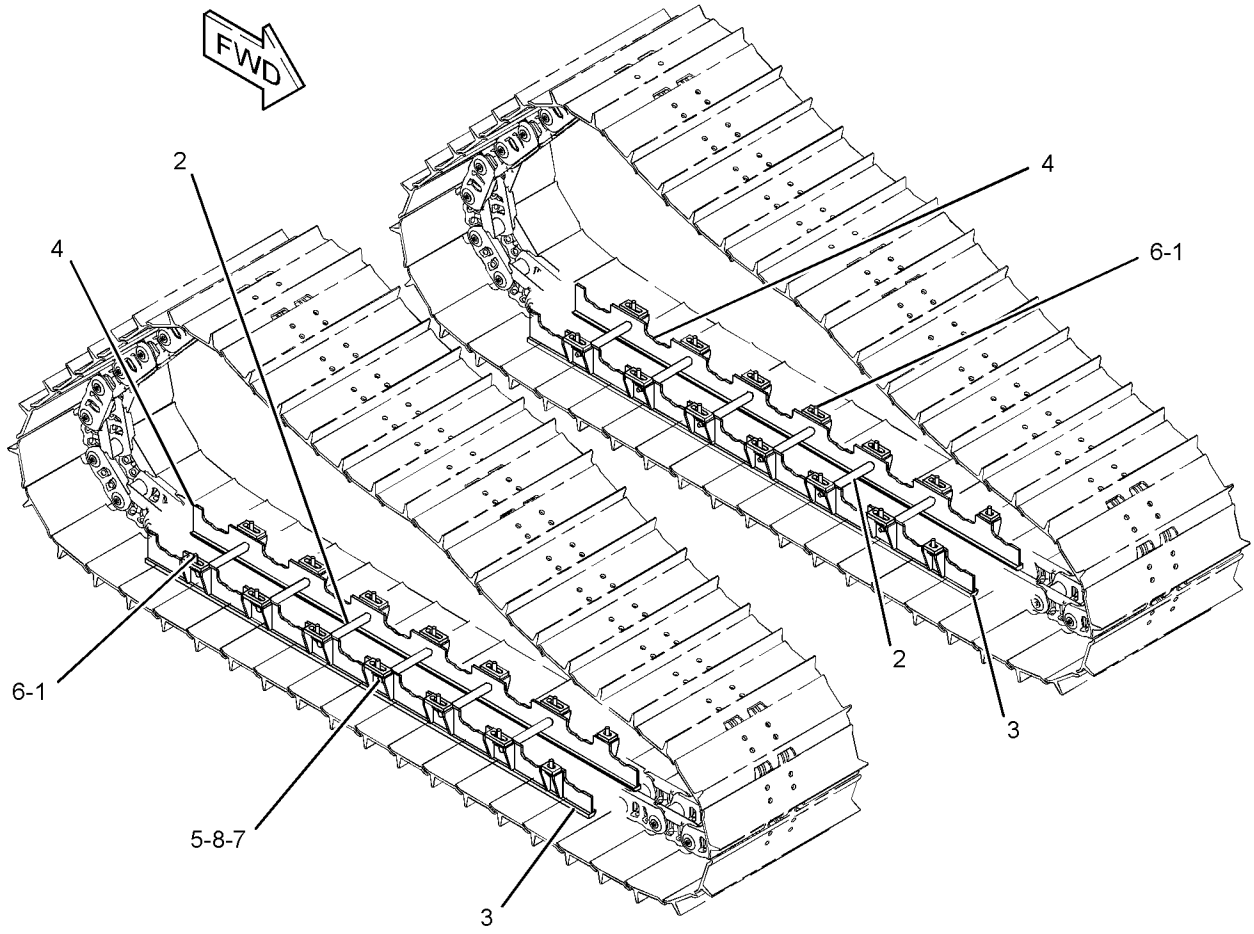

GRAPHIC #1 <END> g02817439

190-1546 IDLER GP-TRACK–HEAVY-DUTY

S/N: Z2K1-UP; Z2N1-UP

PART OF 523-9366, 523-9367, 523-9368, 523-9369, 523-9372, 523-9373, 523-9374, 523-9375 FRAME GP-UNDERCARRIAGE

AN ATTACHMENT

SMCS-4159 **i07833151**

NOTE	REF NO	GRAPHIC REF	PART NUMBER	QTY	PART NAME 1 2 3 4 5 6 (PRODUCT LEVEL)	SEE PAGE
	1	1	**8H-7521**	2	SEAL-O-RING	
	2	1	**3T-9536**	1	STOPPER-RUBBER	
	3	1	**5K-0216**	2	SEAL-O-RING	
	4	1	**6Y-0473**	1	PLUG-CLEAR	
	5	1	**110-3362**	2	WASHER-THRUST (74X101.65X4.52-MM THK)	
	6	1	**160-9756**	2	COLLAR	
	7	1	**473-1457**	2	SEAL GP-DUO-CONE	
					(EACH INCLUDES)	
		1	**161-7249**	2	RING-TORIC	
	8	1	**526-9282**	1	SHAFT-TRACK IDLER	
	9	1	**161-7550**	2	RETAINER	
	10	1	**190-1547**	1	IDLER & BEARING AS	
		1	**9P-1360**	2	BUSHING	
	11	1	**053-2294**	12	BOLT-12 POINT HEAD (3/8-16X1.75-IN)	
	12	1	**5M-2894**	12	WASHER-HARD (10.2X18.5X2.5-MM THK)	

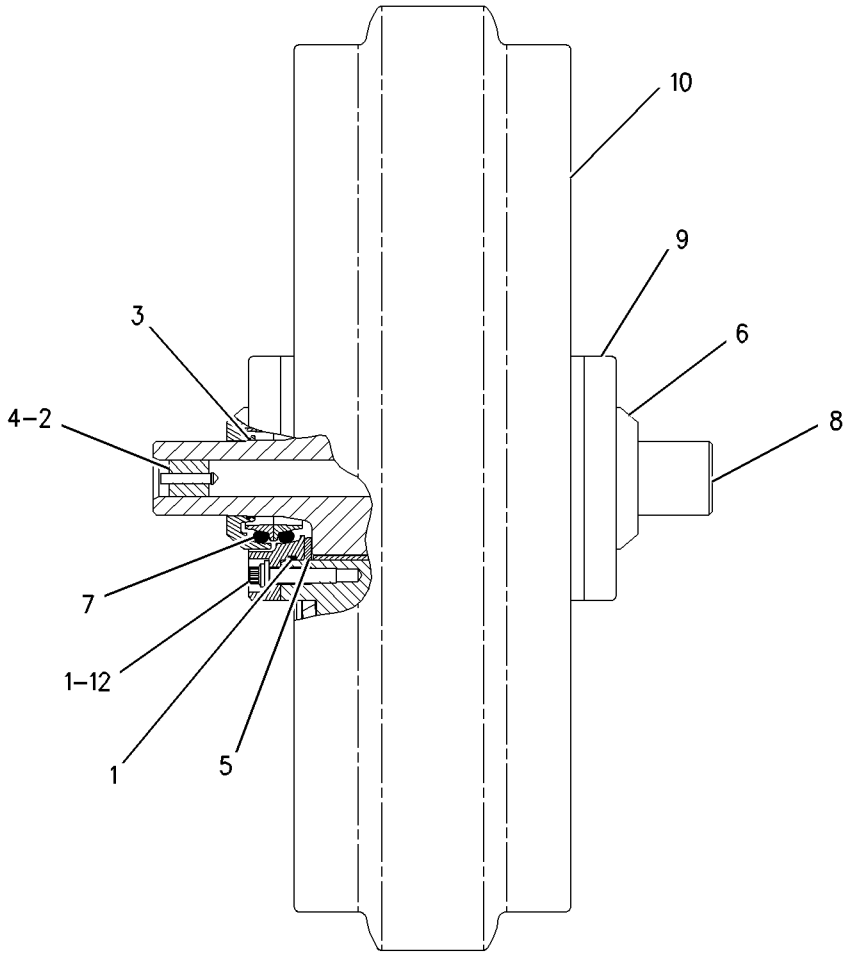

GRAPHIC #1 <END> g00807250

204-7266 IDLER GP-TRACK—HEAVY-DUTY

S/N: Z2K1-UP; Z2N1-UP
WASTE HANDLING
PART OF 563-1029, 563-1030, 563-1138, 563-1139 FRAME GP-UNDERCARRIAGE
AN ATTACHMENT

SMCS-4159 **i07833462**

NOTE	REF NO	GRAPHIC REF	PART NUMBER	QTY	PART NAME 1 2 3 4 5 6 (PRODUCT LEVEL)	SEE PAGE
	1	1	**3T-9536**	1	STOPPER-RUBBER	
	2	1	**6Y-0473**	1	PLUG-CLEAR	
	3	1	**110-3362**	2	WASHER-THRUST (74X101.65X4.52-MM THK)	
	4	1	**473-1457**	2	SEAL GP-DUO-CONE	
	5	1	**526-9282**	1	SHAFT-TRACK IDLER	
	6	1	**189-2164**	2	RETAINER	
	7	1	**189-2165**	2	RING	
	8	1	**189-2170**	2	COLLAR	
	9	1	**189-2171**	2	SEAL	
	10	1	*190-1547*	1	IDLER & BEARING AS	
	10A	1	**9P-1360**	2	BUSHING	
	11	1	**8H-7521**	2	SEAL-O-RING	
	12	1	**3S-1307**	12	BOLT-12 POINT HEAD (3/8-16X2-IN)	
	13	1	**5K-0216**	2	SEAL-O-RING	
	14	1	**8T-4896**	12	WASHER-HARD (10.2X18.5X2.5-MM THK)	

204-7266 **IDLER GP-TRACK (**contd.**)** **i07833462**

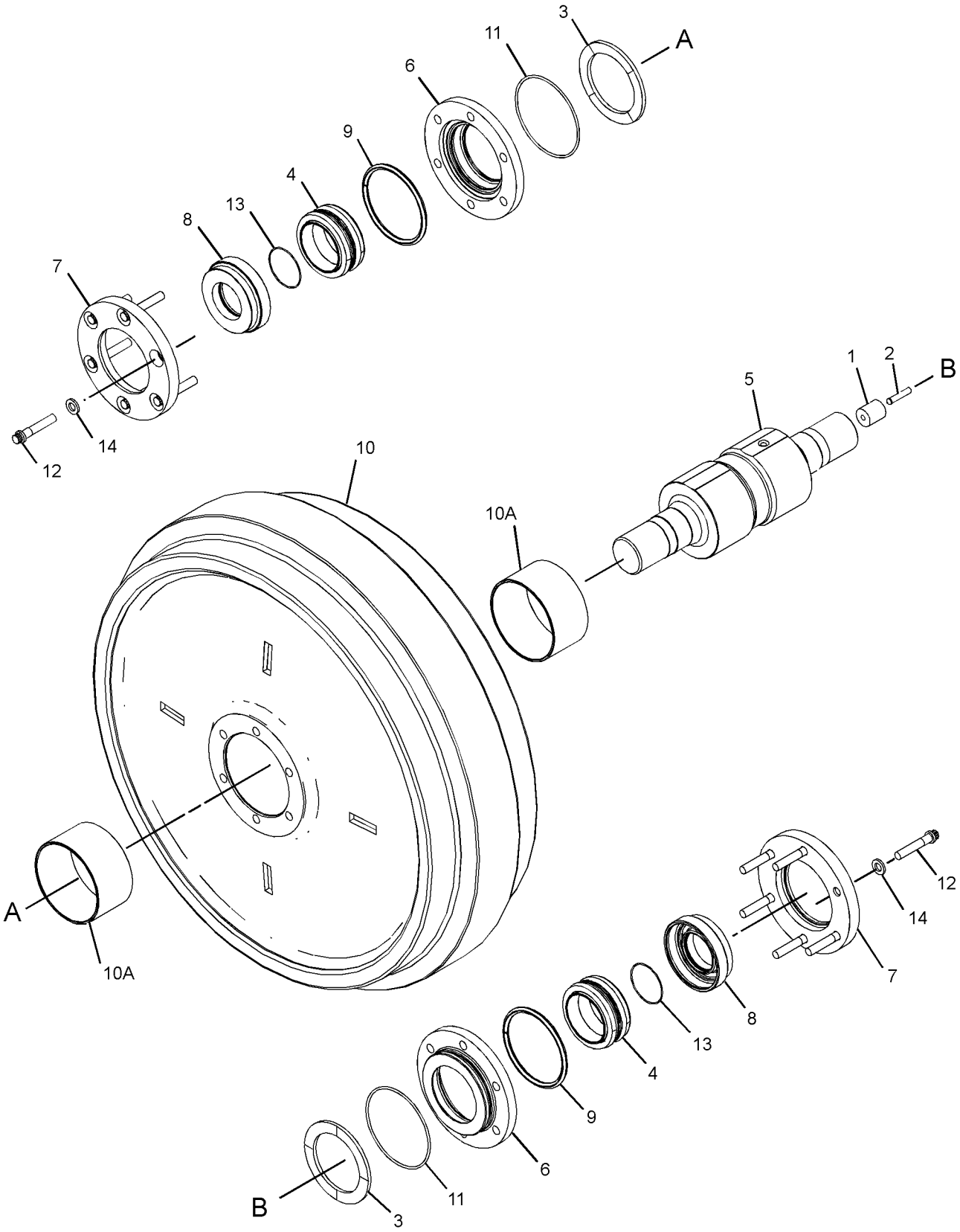

GRAPHIC #1 <END> g03353392

456-9904 IDLER GP-TRACK–SYSTEMONE

S/N: Z2K1-UP; Z2N1-UP

PART OF 523-9370, 523-9371, 523-9376, 523-9377 FRAME GP-UNDERCARRIAGE

AN ATTACHMENT

SMCS-4159 **i07850319**

NOTE	REF NO	GRAPHIC REF	PART NUMBER	QTY	PART NAME 1 2 3 4 5 6 (PRODUCT LEVEL)	SEE PAGE
M	1	1	**9X-8271**	12	BOLT-12 POINT HEAD (M10X1.5X45-MM)	
	2	1	**110-3362**	2	WASHER-THRUST (74X101.65X4.52-MM THK)	
	3	1	**160-9756**	2	COLLAR	
	4	1	**161-7247**	2	SEAL GP-DUO-CONE	
					(EACH INCLUDES)	
	4A	1	**161-7249**	2	RING-TORIC	
	5	1	**526-9282**	1	SHAFT-TRACK IDLER	
	6	1	**161-7550**	2	RETAINER	
	7	1	*323-6974*	1	STOP AS	
	7A	1	**3T-9536**	1	STOPPER-RUBBER	
	7B	1	**6Y-0473**	1	PLUG-CLEAR	
	8	1	*456-9905*	1	IDLER & BEARING AS	
	8A	1	**9P-1360**	2	BUSHING	
	9	1	**8H-7521**	2	SEAL-O-RING	
	10	1	**5K-0216**	2	SEAL-O-RING	
	11	1	**9X-2027**	12	WASHER (11X18X2-MM THK)	

M - METRIC PART

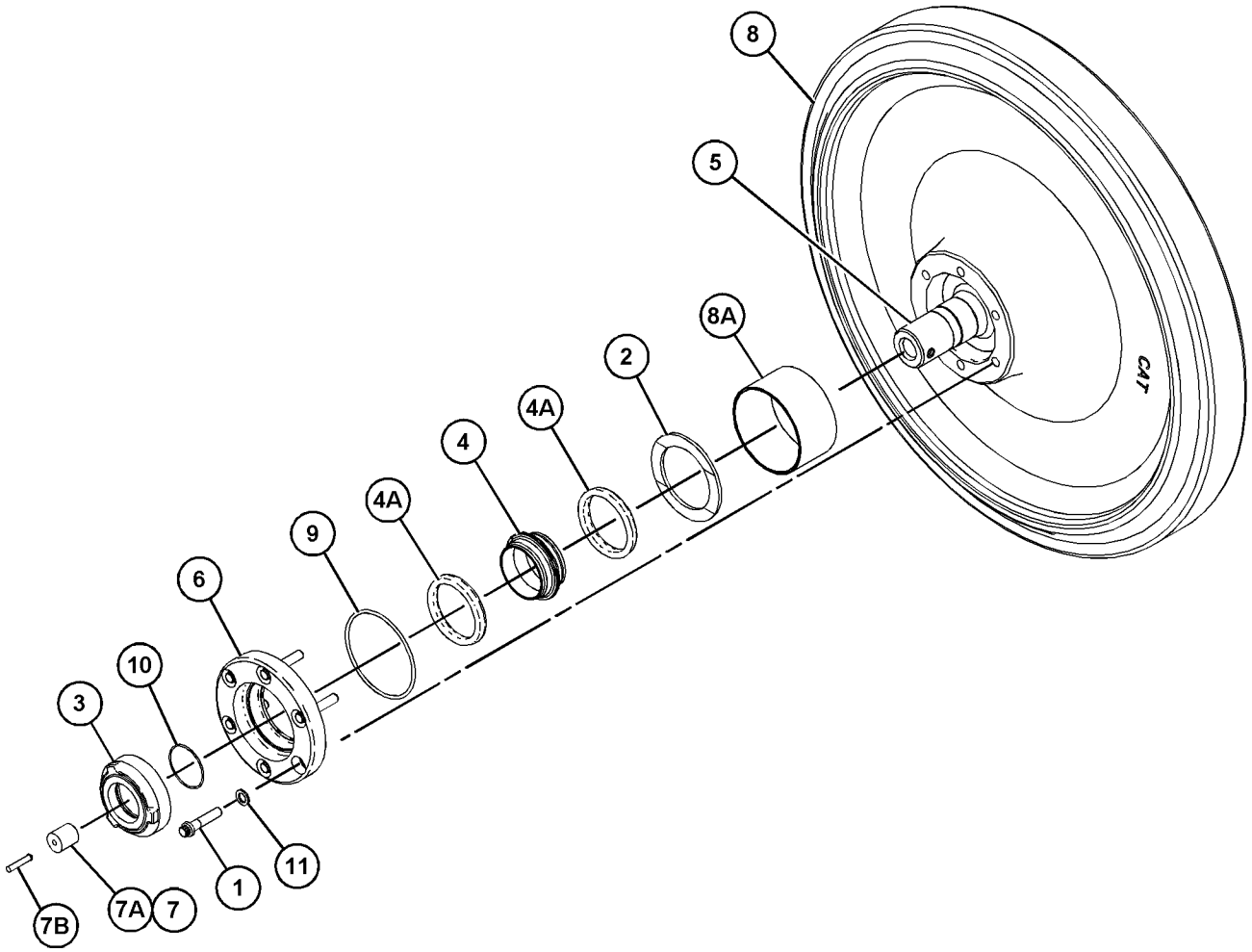

GRAPHIC #1 <END> g03891127

235-2511 LINK AS-TRACK–SYSTEMONE

S/N: Z2K1-UP
40-JOINTS. SEALED, LUBRICATED
FOR USE WITH SYSTEMONE ROLLERS, GUARDS, GUIDESTRIPS, & SHOES
PART OF 246-5759, 256-4873 TRACK GP
AN ATTACHMENT

SMCS-4169, 4171 **i07285961**

NOTE	REF NO	GRAPHIC REF	PART NUMBER	QTY	PART NAME 1 2 3 4 5 6 (PRODUCT LEVEL)	SEE PAGE
	1	1	**235-2501**	38	LINK-TRACK	
Y	2	1	**235-2509**	20	LINK AS-TRACK BOX	482

Y - SEPARATE ILLUSTRATION

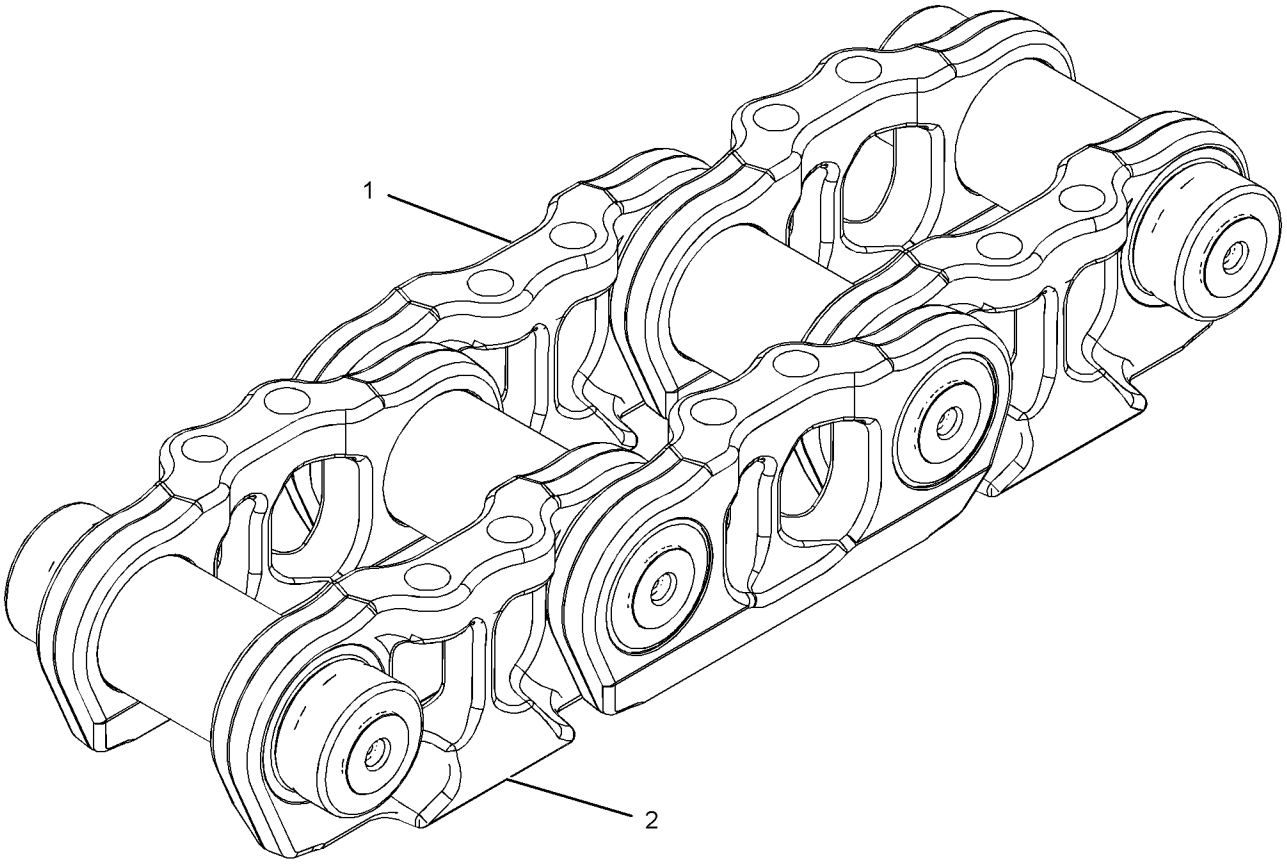

GRAPHIC #1 <END> g01193467

351-0961 LINK AS-TRACK—SYSTEMONE

S/N: Z2K1-UP; Z2N1-UP
46-JOINTS. SEALED, LUBRICATED
FOR USE WITH SYSTEMONE ROLLERS, GUARDS, GUIDESTRIPS, SHOES
PART OF 267-6097, 274-7646, 287-6106, 320-0360, 375-4607 TRACK GP
AN ATTACHMENT

SMCS-4169, 4171 **i07286059**

NOTE	PART NUMBER	QTY	PART NAME 1 2 3 4 5 6 (PRODUCT LEVEL)	SEE PAGE
Y	**351-0959**	23	LINK AS-TRACK BOX	483
	235-2501	44	LINK-TRACK	

Y - SEPARATE ILLUSTRATION

<END>

541-4629 LINK AS-TRACK—HEAVY-DUTY

S/N: Z2K1-UP

40-JOINTS. SEALED, LUBRICATED. POSITIVE PIN RETENTION

PART OF 558-6604, 558-9212, 558-9213, 575-7726, 575-7727 TRACK GP

AN ATTACHMENT

SMCS-4169, 4171

i07789917

NOTE	REF NO	GRAPHIC REF	PART NUMBER	QTY	PART NAME 1 2 3 4 5 6 (PRODUCT LEVEL)	SEE PAGE
	1	1	*6Y-1198*	40	STOP AS	
					(EACH INCLUDES)	
		1	**6Y-0473**	1	PLUG-CLEAR	
		1	**5G-2247**	1	STOPPER-RUBBER	
	2	1	**152-8070**	80	RING-THRUST	
	3	1	**250-3988**	80	SEAL AS	
	4	1	**541-4626**	39	LINK-TRACK (LH)	
	5	1	**541-4625**	39	LINK-TRACK (RH)	
	6	1	**541-4628**	1	LINK-MASTER (PIN END, LH)	
	7	1	**541-4627**	1	LINK-MASTER (PIN END, RH)	
	8	1	**106-1630**	1	LINK-TRACK MASTER (BUSHING END, LH)	
	9	1	**106-1629**	1	LINK-TRACK MASTER (BUSHING END, RH)	
	10	1	**106-1618**	40	BUSHING-TRACK	
	11	1	**541-4624**	40	PIN-TRACK	

541-4629 **LINK AS-TRACK (**contd.**)** **i07789917**

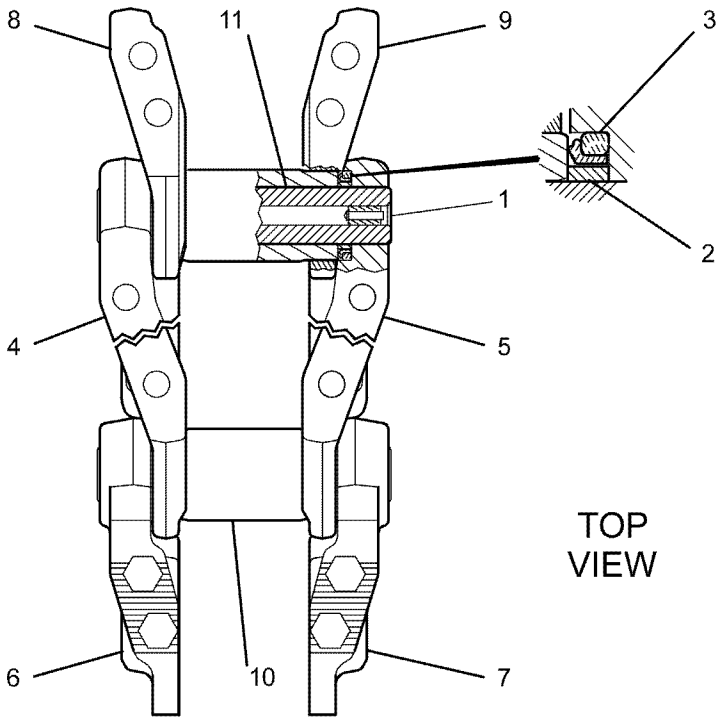

GRAPHIC #1 <END> g01088373

541-4630 LINK AS-TRACK

S/N: Z2K1-UP; Z2N1-UP
46-JOINTS. SEALED, LUBRICATED. POSITIVE PIN RETENTION
PART OF 558-9216, 558-9217, 575-7729, 575-7730, 576-4402 TRACK GP
AN ATTACHMENT

SMCS-4169, 4171 **i07680093**

NOTE	REF NO	GRAPHIC REF	PART NUMBER	QTY	PART NAME 1 2 3 4 5 6 (PRODUCT LEVEL)	SEE PAGE
	1	1	*6Y-1198*	46	STOP AS	
					(EACH INCLUDES)	
		1	**5G-2247**	1	STOPPER-RUBBER	
		1	**6Y-0473**	1	PLUG-CLEAR	
	2	1	**106-1618**	46	BUSHING-TRACK	
	3	1	**106-1629**	1	LINK-TRACK MASTER (BUSHING END, RH)	
	4	1	**106-1630**	1	LINK-TRACK MASTER (BUSHING END, LH)	
	5	1	**152-8070**	92	RING-THRUST	
	6	1	**250-3988**	92	SEAL AS	
	7	1	**541-4624**	46	PIN-TRACK	
	8	1	**541-4625**	45	LINK-TRACK (RH)	
	9	1	**541-4626**	45	LINK-TRACK (LH)	
	10	1	**541-4627**	1	LINK-MASTER (PIN END, RH)	
	11	1	**541-4628**	1	LINK-MASTER (PIN END, LH)	

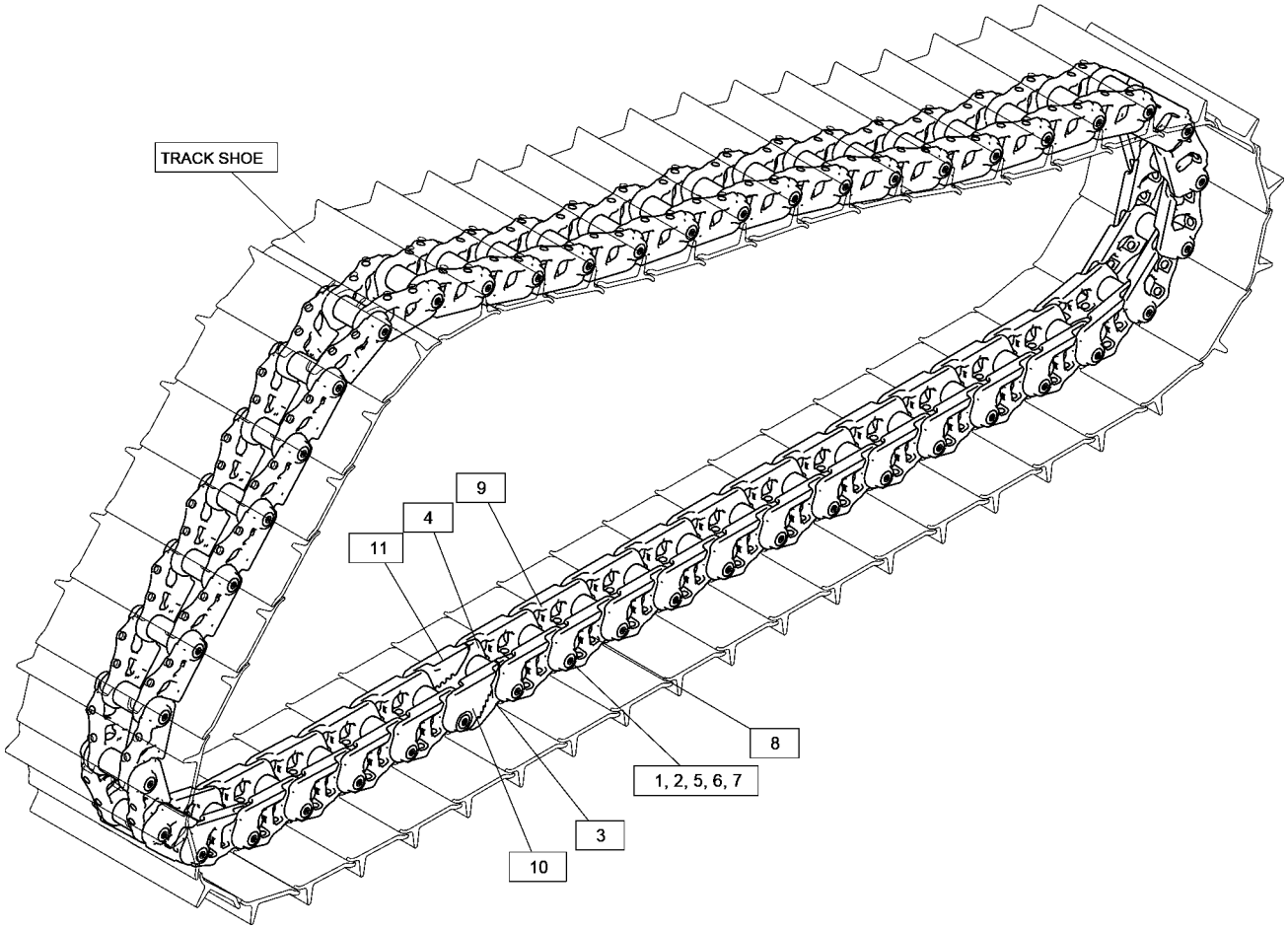

GRAPHIC #1 <END> g06434364

235-2509 LINK AS-TRACK BOX–SYSTEMONE

S/N: Z2K1-UP

SEALED, LUBRICATED, FOR FIELD REPLACEMENT OF LINK BOX THAT IS MORE THAN 40% WORN, ORDER 339-0264 LINK AS-TRACK BOX, FOR FIELD REPLACEMENT OF LINK BOX THAT IS LESS THAN 40% WORN, ORDER 351-0959 LINK AS-TRACK BOX

PART OF 235-2511 LINK AS-TRACK

AN ATTACHMENT

SMCS-4169 **i07756889**

NOTE	REF NO	GRAPHIC REF	PART NUMBER	QTY	PART NAME 1 2 3 4 5 6 (PRODUCT LEVEL)	SEE PAGE
	1	1	**235-2501**	2	LINK-TRACK	
	2	1	*447-9951*	2	CARTRIDGE AS-TRACK LINK	
					(EACH INCLUDES)	
		1	**6Y-0473**	2	PLUG-CLEAR	
		1	**9G-1642**	2	STOPPER-RUBBER	

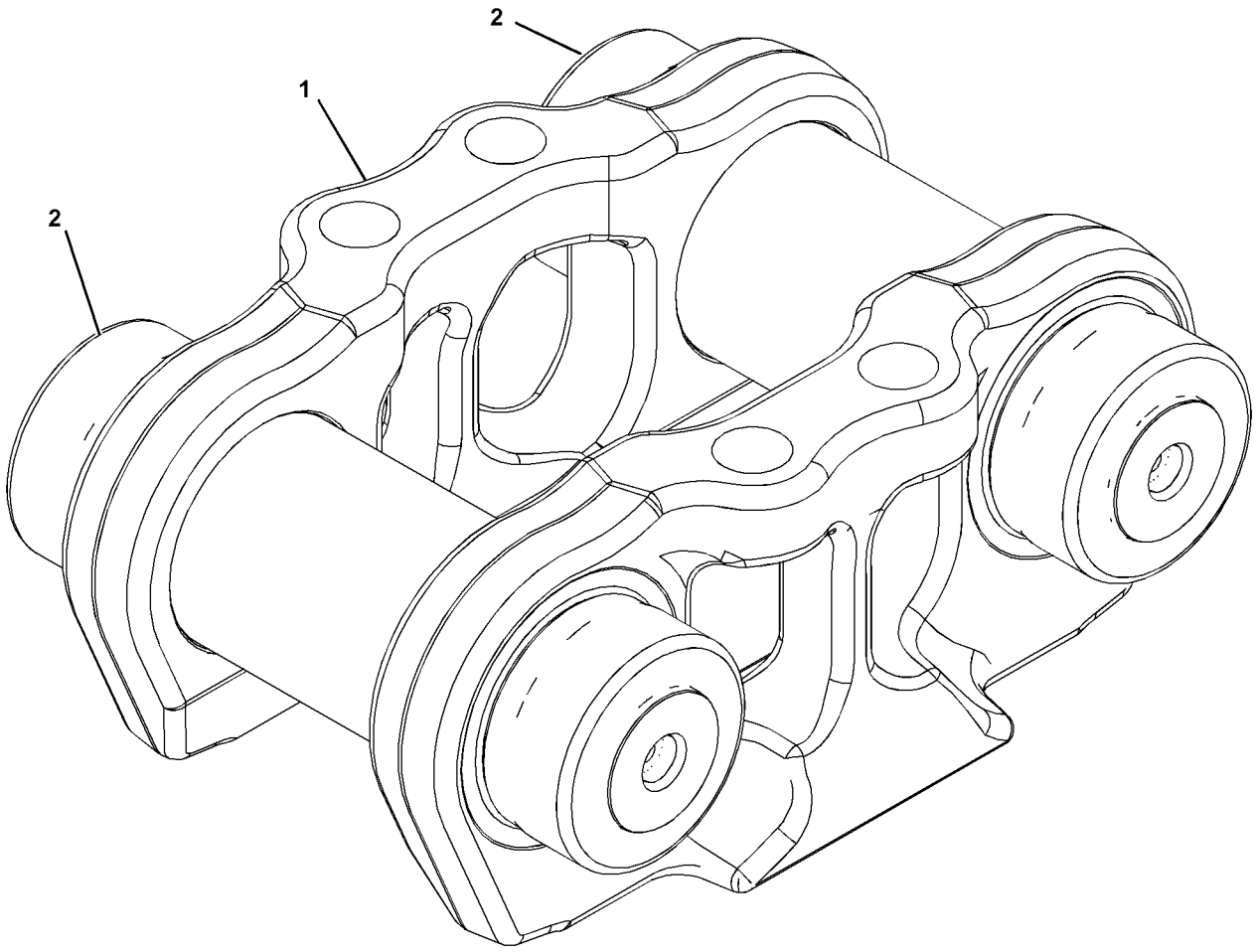

GRAPHIC #1 <END> g01378067

351-0959 LINK AS-TRACK BOX—LINK BOX

S/N: Z2K1-UP; Z2N1-UP
SEALED, LUBRICATED, FOR FIELD REPLACEMENT OF LINK BOX THAT IS MORE THAN 40% WORN, ORDER 339-0264 LINK AS
FIELD REPLACEMENT FOR 235-2509—PAGE: 482, LINK AS THAT IS LESS THAN 40% WORN
PART OF 351-0961 LINK AS-TRACK
AN ATTACHMENT

SMCS-4169 **i06754238**

NOTE	REF NO	GRAPHIC REF	PART NUMBER	QTY	PART NAME 1 2 3 4 5 6 (PRODUCT LEVEL)	SEE PAGE
	1	1	**235-2501**	2	LINK-TRACK	
	2	1	*447-9950*	2	CARTRIDGE AS	
					(EACH INCLUDES)	
		1	**6Y-0473**	2	PLUG-CLEAR	
		1	**9G-1642**	2	STOPPER-RUBBER	

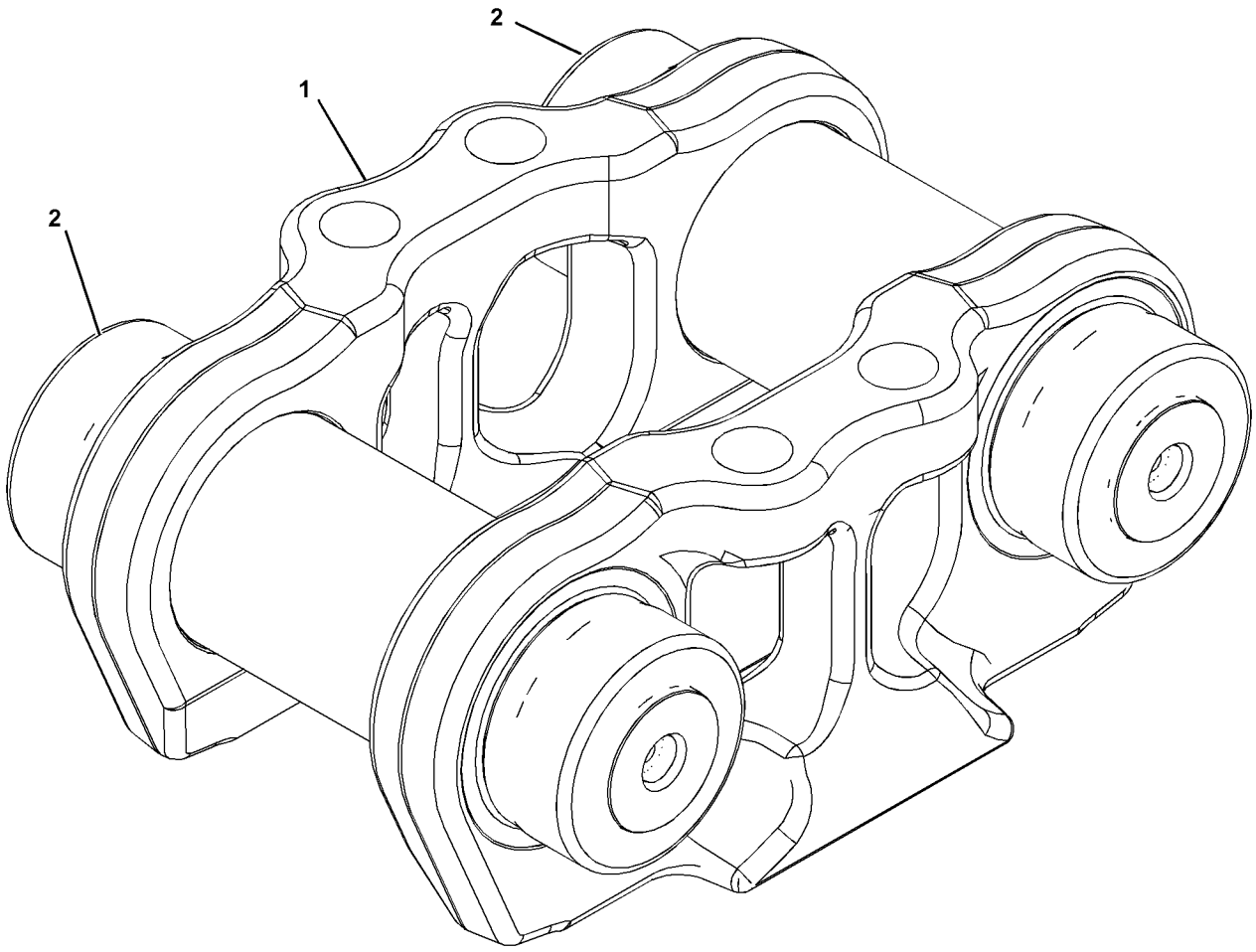

GRAPHIC #1 <END> g01378067

118-6345 MOUNTING GP-CARRIER ROLLER

S/N: Z2K1-UP; Z2N1-UP

PART OF 523-9388, 523-9389, 523-9390, 523-9391, 523-9392, 523-9393, 523-9394, 523-9395, 563-1027, 563-1028 UNDERCARRIAGE AR

AN ATTACHMENT

SMCS-4154 **i07432636**

NOTE	REF NO	GRAPHIC REF	PART NUMBER	QTY	PART NAME 1 2 3 4 5 6 (PRODUCT LEVEL)	SEE PAGE
	1	1	**6Y-3125**	2	BRACKET AS	
M	2	1	**7X-2532**	4	BOLT (M20X2.5X130-MM)	
	3	1	**8T-4123**	8	WASHER (22X35X3.5-MM THK)	
M	4	1	**8T-4131**	4	NUT (M20X2.5-THD)	
M	5	1	**8T-7338**	8	BOLT (M16X2X45-MM)	
	6	1	**9X-8257**	8	WASHER (17.5X30X3.5-MM THK)	
					QUANTITIES SHOWN ARE THOSE REQUIRED FOR BOTH LH & RH SIDES	

M - METRIC PART

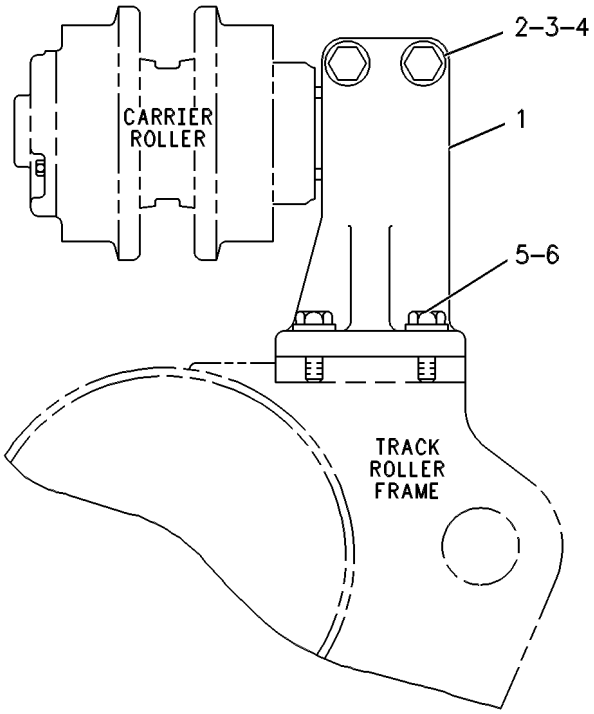

GRAPHIC #1 <END> g00252461

447-6844 PIVOT BAR GP

S/N: Z2K1-UP; Z2N1-UP

PART OF 523-9388, 523-9389, 523-9390, 523-9394, 523-9395, 563-1027 UNDERCARRIAGE AR AN ATTACHMENT

SMCS-4153 **i07845717**

NOTE	REF NO	GRAPHIC REF	PART NUMBER	QTY	PART NAME 1 2 3 4 5 6 (PRODUCT LEVEL)	SEE PAGE
M	1	1	**178-3707**	10	BOLT (M16X2X50-MM)	
	2	1	**198-0918**	4	PLUG	
	3	1	**421-4529**	2	SEAL	
	4	1	**435-5629**	2	PLATE	
	5	1	**447-6847**	2	SHAFT AS	
					(EACH INCLUDES)	
		1	**421-4525**	1	RING	
	6	1	**126-8928**	24	WASHER-HARD (26X40X8-MM THK)	
M	7	1	**8T-5878**	24	BOLT (M24X3X80-MM)	

M - METRIC PART

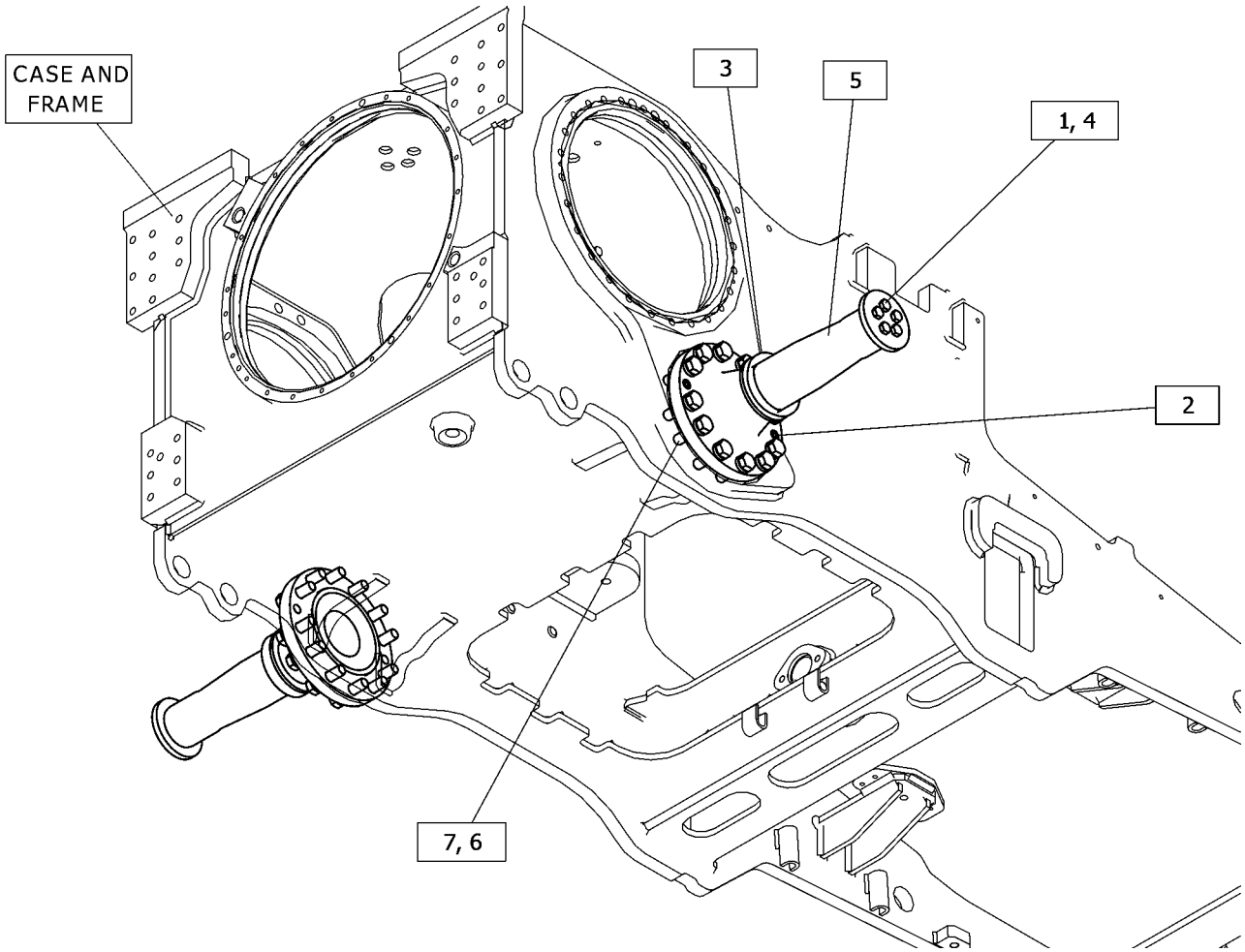

GRAPHIC #1 <END> g06449539

447-6845 PIVOT BAR GP

S/N: Z2N1-UP
STRAIGHT, LGP
PART OF 523-9391, 523-9392, 563-1028 UNDERCARRIAGE AR
AN ATTACHMENT

SMCS-4153 **i07827847**

NOTE	REF NO	GRAPHIC REF	PART NUMBER	QTY	PART NAME 1 2 3 4 5 6 (PRODUCT LEVEL)	SEE PAGE
M	1	1	**178-3707**	10	BOLT (M16X2X50-MM)	
	2	1	**198-0918**	4	PLUG	
	3	1	**421-4529**	2	SEAL	
	4	1	**435-5629**	2	PLATE	
	5	1	**447-6848**	2	SHAFT AS	
	6	1	**126-8928**	24	WASHER-HARD (26X40X8-MM THK)	
M	7	1	**8T-5878**	24	BOLT (M24X3X80-MM)	

M - METRIC PART

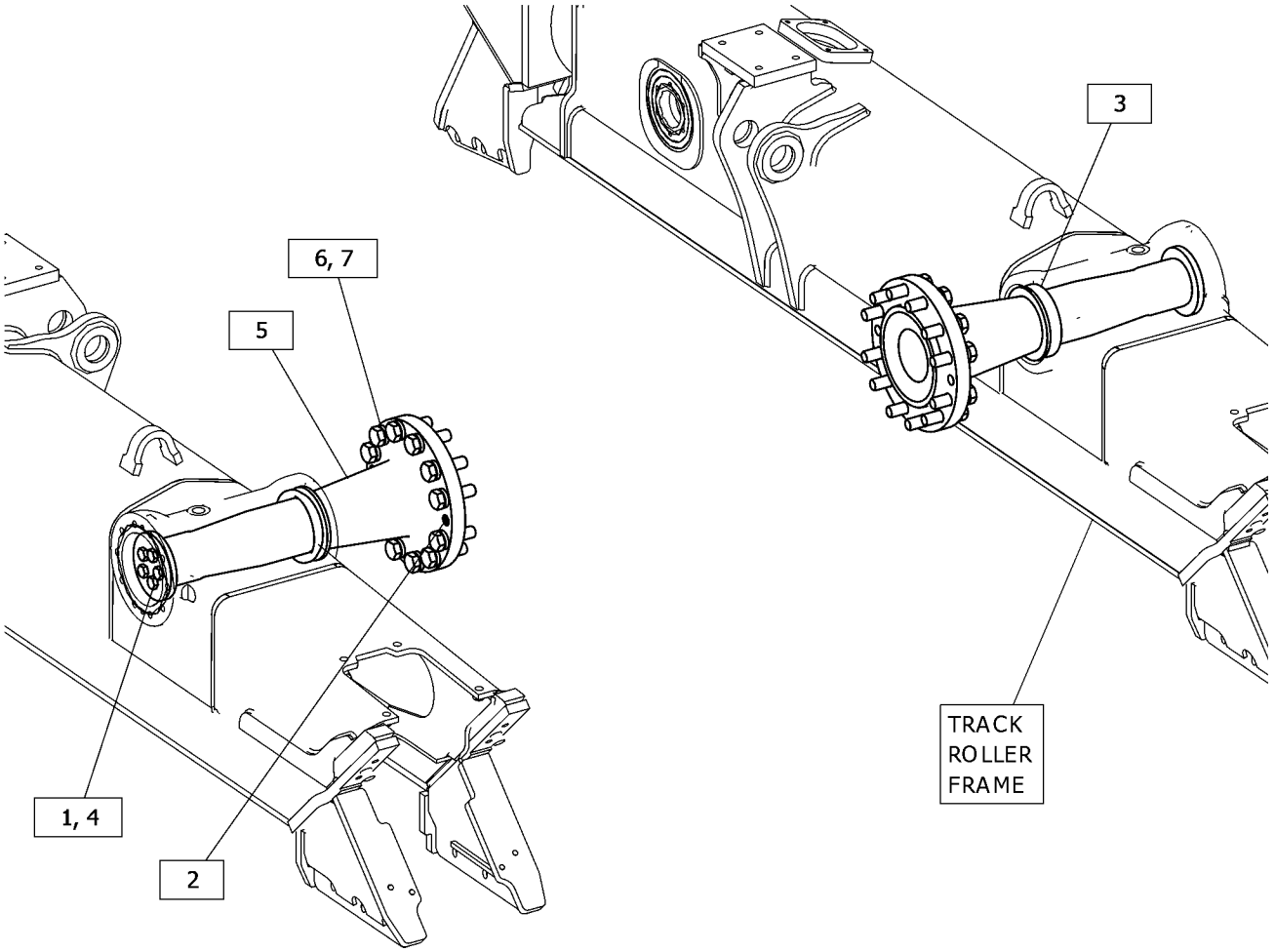

GRAPHIC #1 <END> g06448758

447-6846 PIVOT BAR GP

S/N: Z2N1-UP
LGP
PART OF 523-9393 UNDERCARRIAGE AR
AN ATTACHMENT

SMCS-4153 **i07827874**

NOTE	REF NO	GRAPHIC REF	PART NUMBER	QTY	PART NAME 1 2 3 4 5 6 (PRODUCT LEVEL)	SEE PAGE
M	1	1	**178-3707**	10	BOLT (M16X2X50-MM)	
	2	1	**198-0918**	4	PLUG	
	3	1	**421-4529**	2	SEAL	
	4	1	**435-5629**	2	PLATE	
	5	1	*447-6849*	2	SHAFT AS	
					(EACH INCLUDES)	
		1	**3E-5000**	1	PIN-SPRING	
		1	**421-4525**	1	RING	
	6	1	**126-8928**	24	WASHER-HARD (26X40X8-MM THK)	
M	7	1	**8T-5878**	24	BOLT (M24X3X80-MM)	

M - METRIC PART

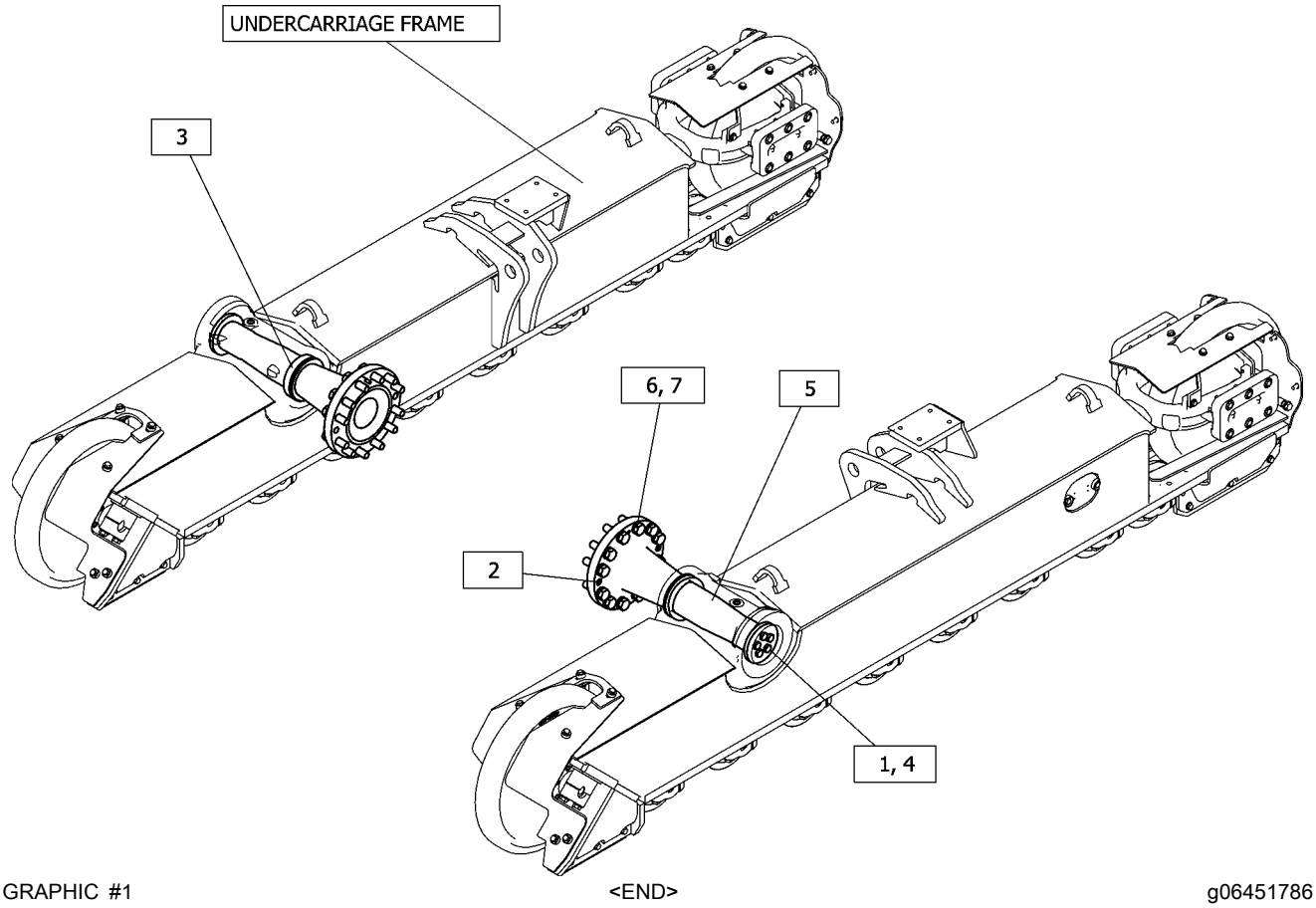

GRAPHIC #1 <END> g06451786

174-4770 ROLLER GP-TRACK

S/N: Z2K1-UP; Z2N1-UP

AN ATTACHMENT

SMCS-4180 **i07839953**

NOTE	REF NO	GRAPHIC REF	PART NUMBER	QTY	PART NAME 1 2 3 4 5 6 (PRODUCT LEVEL)	SEE PAGE
	1	1	**119-2174**	2	BEARING	
	2	1	**3K-3963**	2	CUP-BEARING	
	3	1	**118-5803**	2	GUARD AS	
	4	1	**124-0763**	1	ROLLER	
	5	1	**118-6604**	1	SHAFT AS	
	6	1	**119-2211**	1	WASHER	
	7	1	**5M-6667**	1	LOCKNUT (1-1/2-12-THD)	
	8	1	**8T-9383**	1	BOLT (1/2-13X0.75-IN)	
	9	1	**3B-8489**	1	ADAPTER	
	10	1	**120-7536**	1	SPACER	

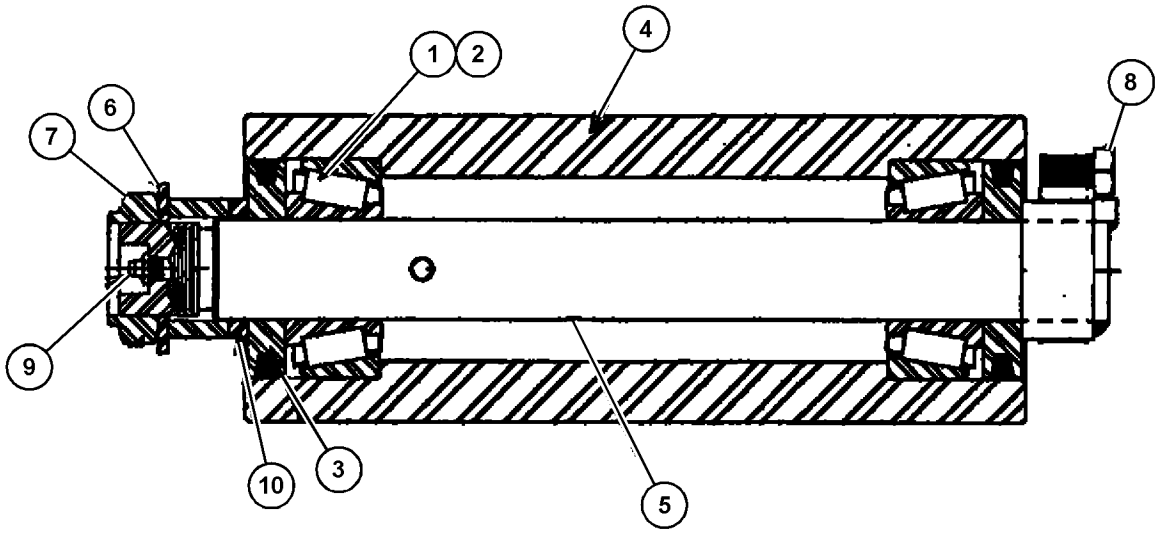

GRAPHIC #1 <END> g06164755

229-5446 ROLLER GP-TRACK CARRIER

S/N: Z2K1-UP; Z2N1-UP

PART OF 523-9388, 523-9389, 523-9390, 523-9391, 523-9392, 523-9393, 523-9394, 523-9395, 563-1027, 563-1028 UNDERCARRIAGE AR AN ATTACHMENT

SMCS-4154 **i04536648**

NOTE	REF NO	GRAPHIC REF	PART NUMBER	QTY	PART NAME 1 2 3 4 5 6 (PRODUCT LEVEL)	SEE PAGE
					(INDIVIDUAL PARTS ARE NOT SERVICED SEPARATELY)	

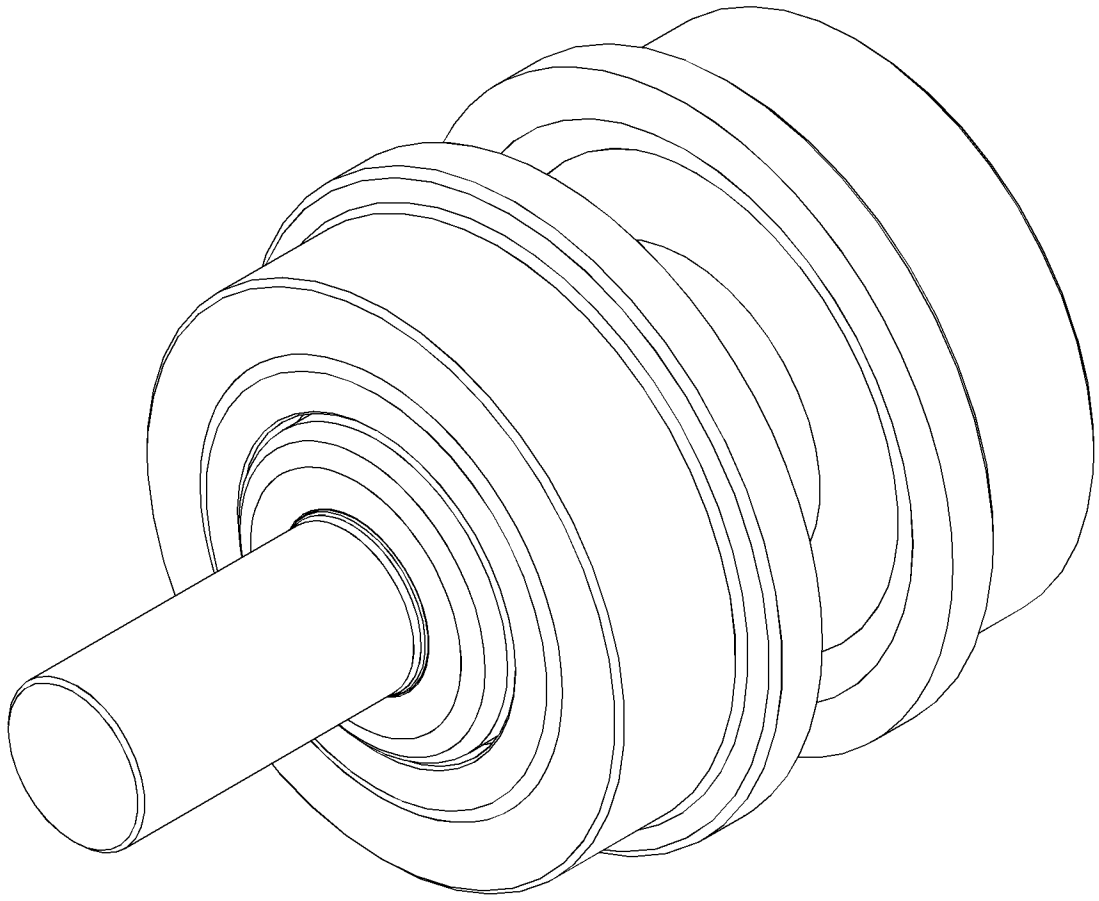

GRAPHIC #1 <END> g01395978

310-4915 ROLLER GP-TRACK-DOUBLE FLANGE—HEAVY-DUTY

S/N: Z2K1-UP; Z2N1-UP

PART OF 358-8583 ROLLER GP-TRACK-DOUBLE FLANGE

AN ATTACHMENT

SMCS-4180 **i07052827**

NOTE	REF NO	GRAPHIC REF	PART NUMBER	QTY	PART NAME 1 2 3 4 5 6 (PRODUCT LEVEL)	SEE PAGE
					(INDIVIDUAL PARTS ARE NOT SERVICED SEPARATELY)	

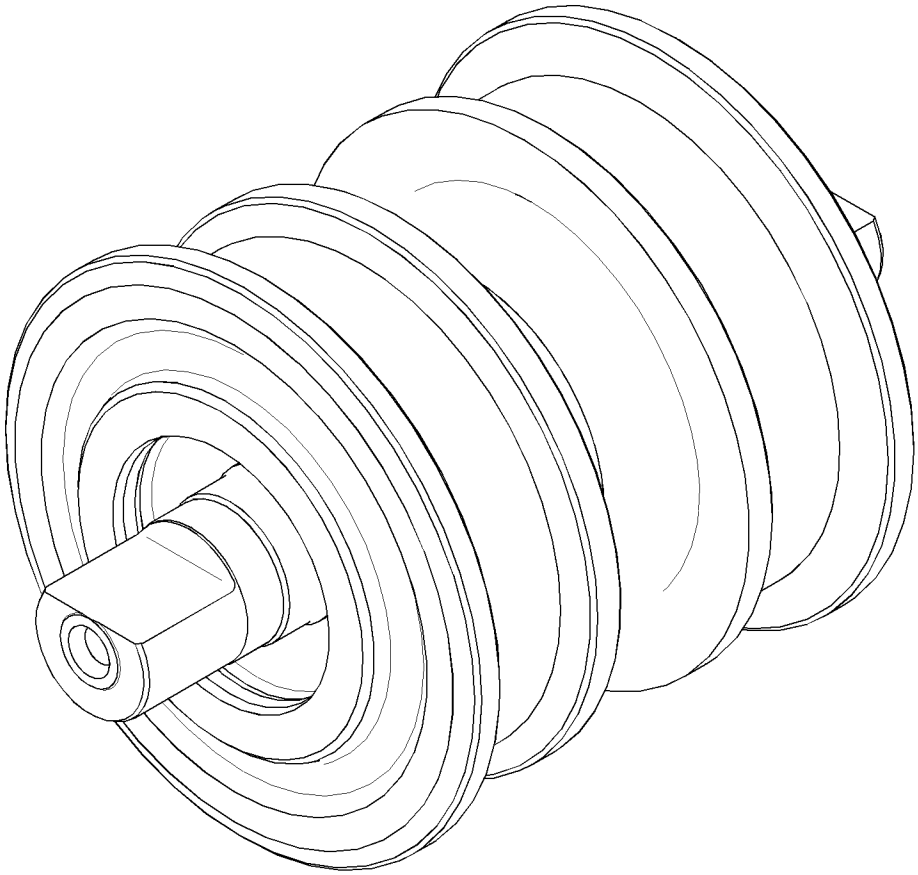

GRAPHIC #1 <END> g01972217

310-4918 ROLLER GP-TRACK-DOUBLE FLANGE—HEAVY-DUTY

S/N: Z2K1-UP; Z2N1-UP
TALL
PART OF 384-3275 ROLLER GP-TRACK-DOUBLE FLANGE
AN ATTACHMENT

SMCS-4180 **i07053166**

NOTE	REF NO	GRAPHIC REF	PART NUMBER	QTY	PART NAME 1 2 3 4 5 6 (PRODUCT LEVEL)	SEE PAGE
					(INDIVIDUAL PARTS ARE NOT SERVICED SEPARATELY)	

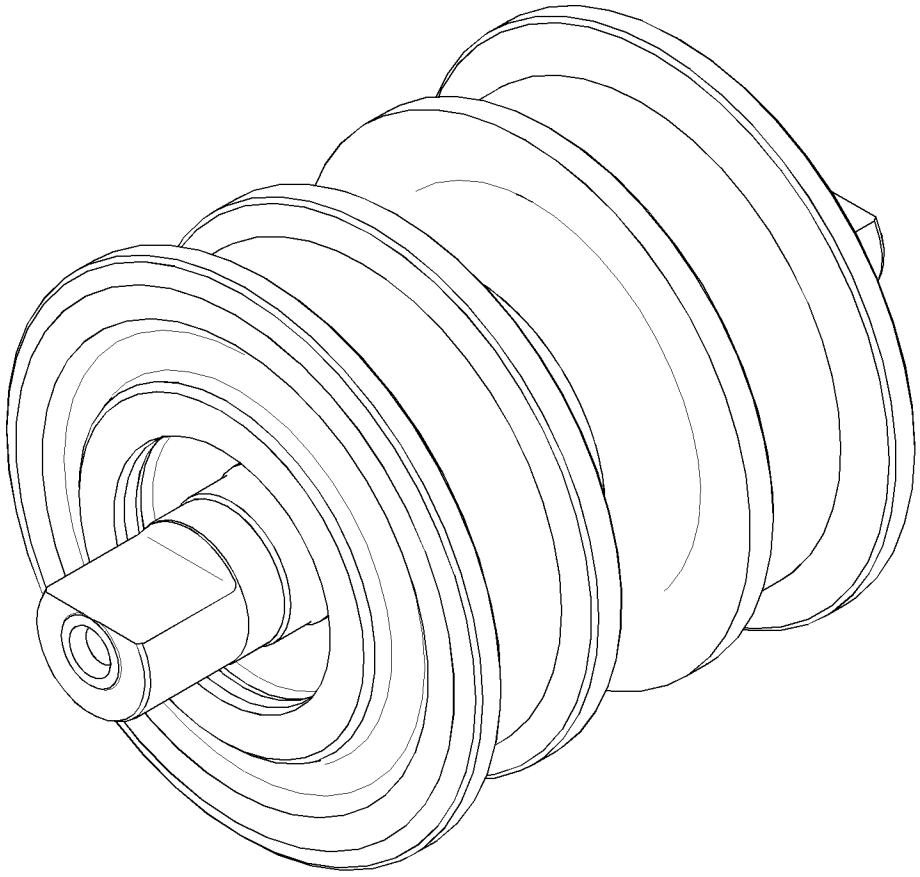

GRAPHIC #1 <END> g01972217

358-8583 ROLLER GP-TRACK-DOUBLE FLANGE—HEAVY-DUTY

S/N: Z2K1-UP; Z2N1-UP

PART OF 523-9366, 523-9367, 523-9372, 523-9373, 563-1029, 563-1030, 563-1138, 563-1139 FRAME GP-UNDERCARRIAGE

AN ATTACHMENT

SMCS-4180 **i04286130**

NOTE	REF NO	GRAPHIC REF	PART NUMBER	QTY	PART NAME 1 2 3 4 5 6 (PRODUCT LEVEL)	SEE PAGE
	1	1	**223-9110**	2	CAP-TRACK ROLLER	
Y	2	1	**310-4915**	1	ROLLER GP-TRACK-DOUBLE FLANGE	490
M	3	1	**8T-0281**	4	BOLT (M16X2X80-MM)	
	4	1	**9X-8268**	4	WASHER (17.5X30X3.5-MM THK)	

M - METRIC PART
Y - SEPARATE ILLUSTRATION

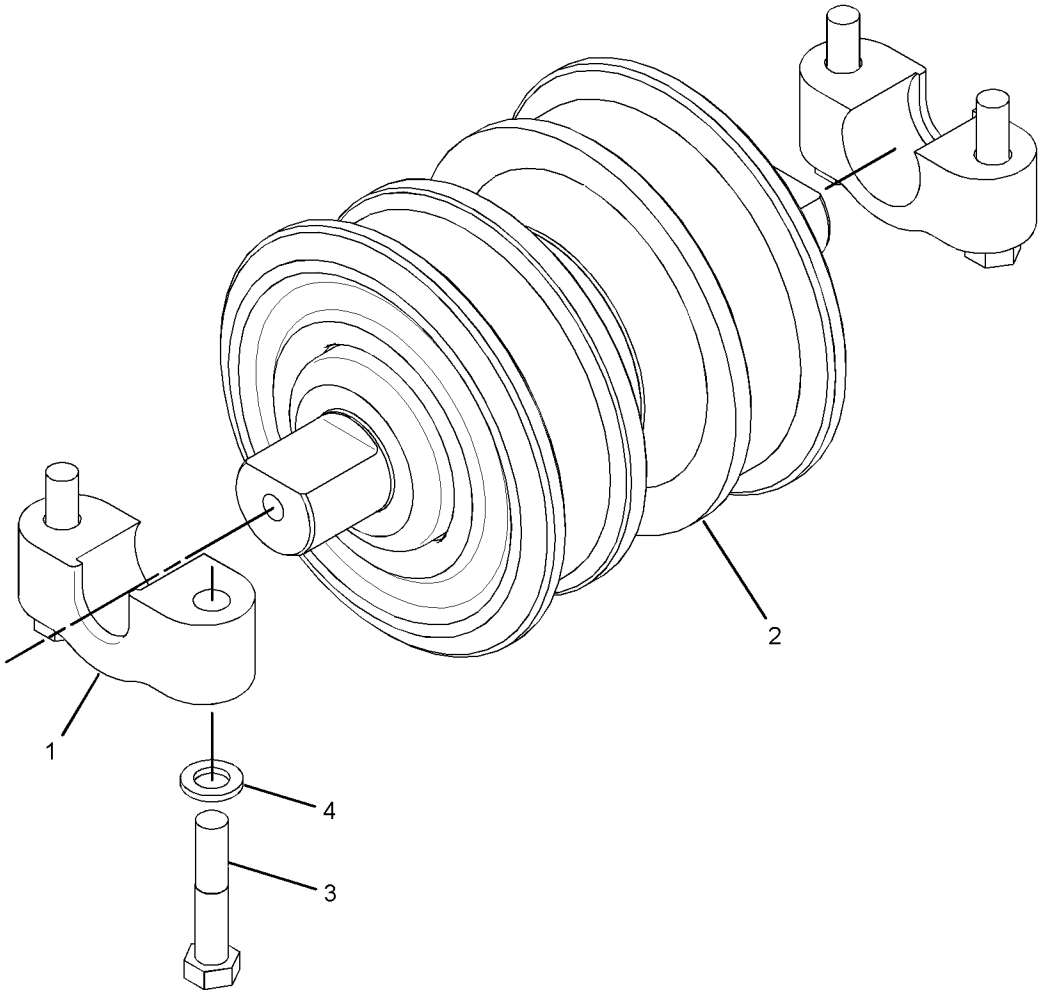

GRAPHIC #1 <END> g02323534

384-3275 ROLLER GP-TRACK-DOUBLE FLANGE—HEAVY-DUTY

S/N: Z2K1-UP; Z2N1-UP
TALL
PART OF 523-9368, 523-9369, 523-9374, 523-9375 FRAME GP-UNDERCARRIAGE
AN ATTACHMENT

SMCS-4180 **i06711571**

NOTE	REF NO	GRAPHIC REF	PART NUMBER	QTY	PART NAME 1 2 3 4 5 6 (PRODUCT LEVEL)	SEE PAGE
	1	1	**223-9110**	2	CAP-TRACK ROLLER	
Y	2	1	**310-4918**	1	ROLLER GP-TRACK-DOUBLE FLANGE	491
M	3	1	**8T-0281**	4	BOLT (M16X2X80-MM)	
	4	1	**9X-8268**	4	WASHER (17.5X30X3.5-MM THK)	

M - METRIC PART
Y - SEPARATE ILLUSTRATION

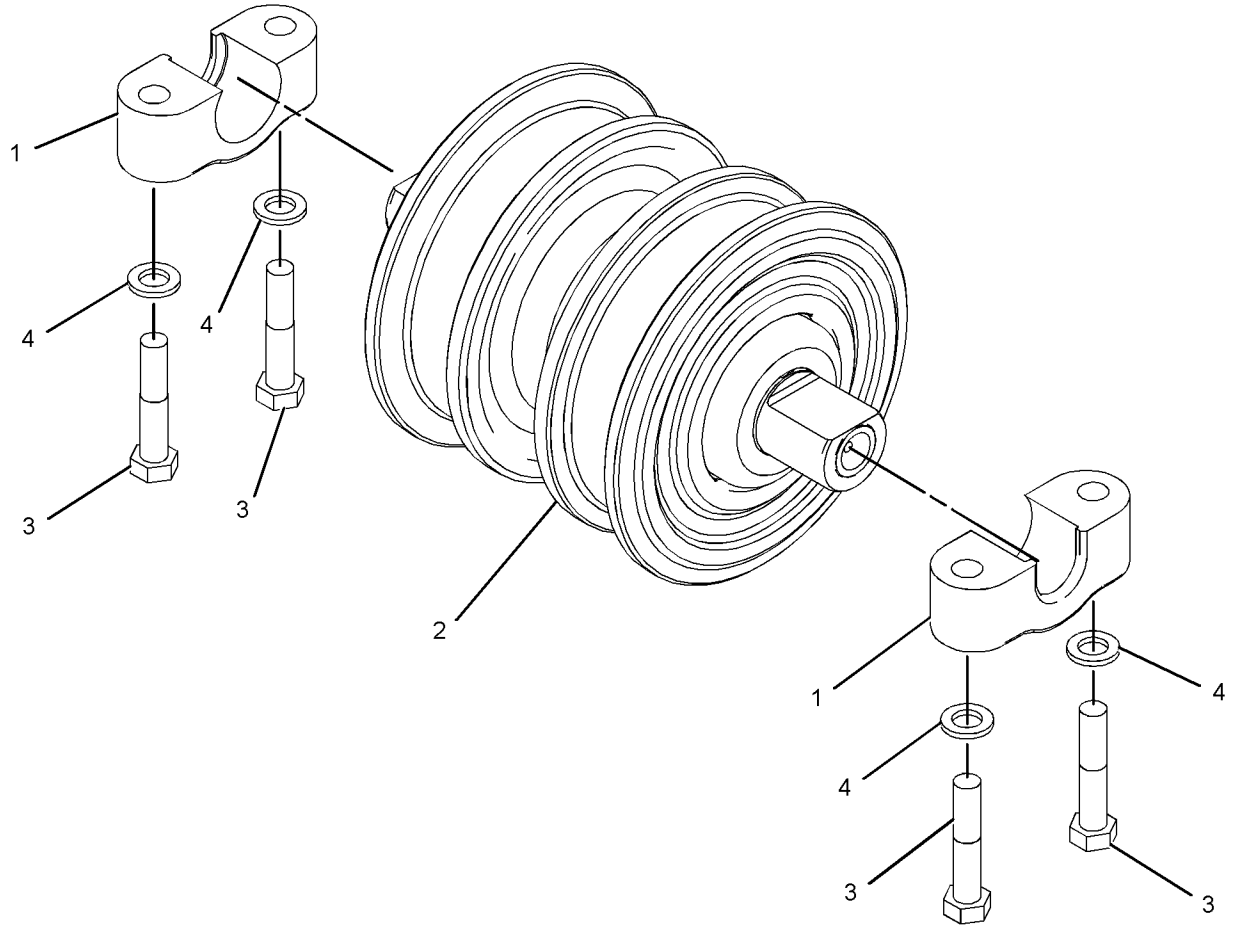

GRAPHIC #1 <END> g02806037

240-9557 ROLLER GP-TRACK-SINGLE FLANGE–SYSTEMONE

S/N: Z2K1-UP; Z2N1-UP

PART OF 273-3989 ROLLER GP-TRACK-SINGLE FLANGE

AN ATTACHMENT

SMCS-4180 **i07278807**

NOTE	REF NO	GRAPHIC REF	PART NUMBER	QTY	PART NAME 1 2 3 4 5 6 (PRODUCT LEVEL)	SEE PAGE
					(INDIVIDUAL PARTS ARE NOT SERVICED SEPARATELY)	

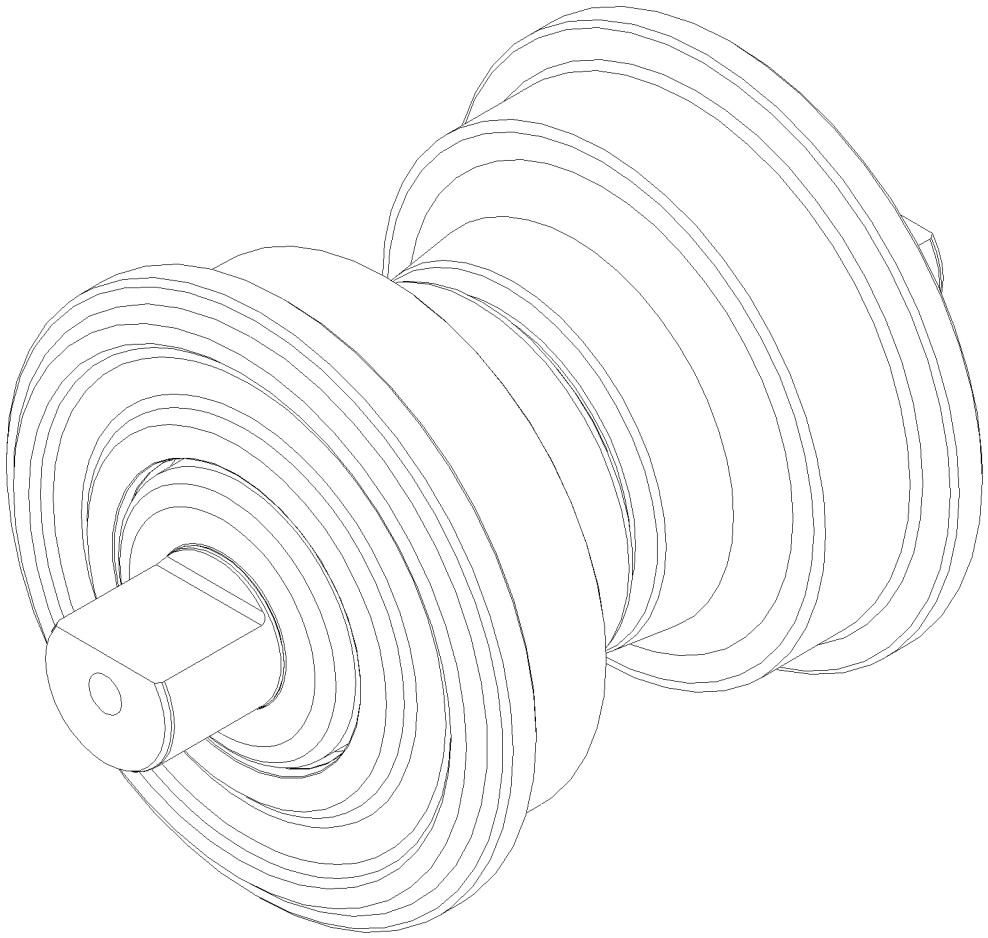

GRAPHIC #1 <END> g01395989

273-3989 ROLLER GP-TRACK-SINGLE FLANGE—SYSTEMONE

S/N: Z2K1-UP; Z2N1-UP

PART OF 523-9370, 523-9371, 523-9376, 523-9377 FRAME GP-UNDERCARRIAGE

AN ATTACHMENT

SMCS-4180 **i02798997**

NOTE	PART NUMBER	QTY	PART NAME 1 2 3 4 5 6 (PRODUCT LEVEL)	SEE PAGE
Y	**240-9557**	1	ROLLER GP-TRACK-SINGLE FLANGE (SYSTEMONE)	494
M	**8T-0281**	4	BOLT (M16X2X80-MM)	
	223-9110	2	CAP-TRACK ROLLER	
	9X-8268	4	WASHER (17.5X30X3.5-MM THK)	

M - METRIC PART
Y - SEPARATE ILLUSTRATION

<END>

310-4912 ROLLER GP-TRACK-SINGLE FLANGE

S/N: Z2K1-UP; Z2N1-UP

PART OF 358-7239 ROLLER GP-TRACK-SINGLE FLANGE

AN ATTACHMENT

SMCS-4180 **i07052842**

NOTE	REF NO	GRAPHIC REF	PART NUMBER	QTY	PART NAME 1 2 3 4 5 6 (PRODUCT LEVEL)	SEE PAGE
					(INDIVIDUAL PARTS ARE NOT SERVICED SEPARATELY)	

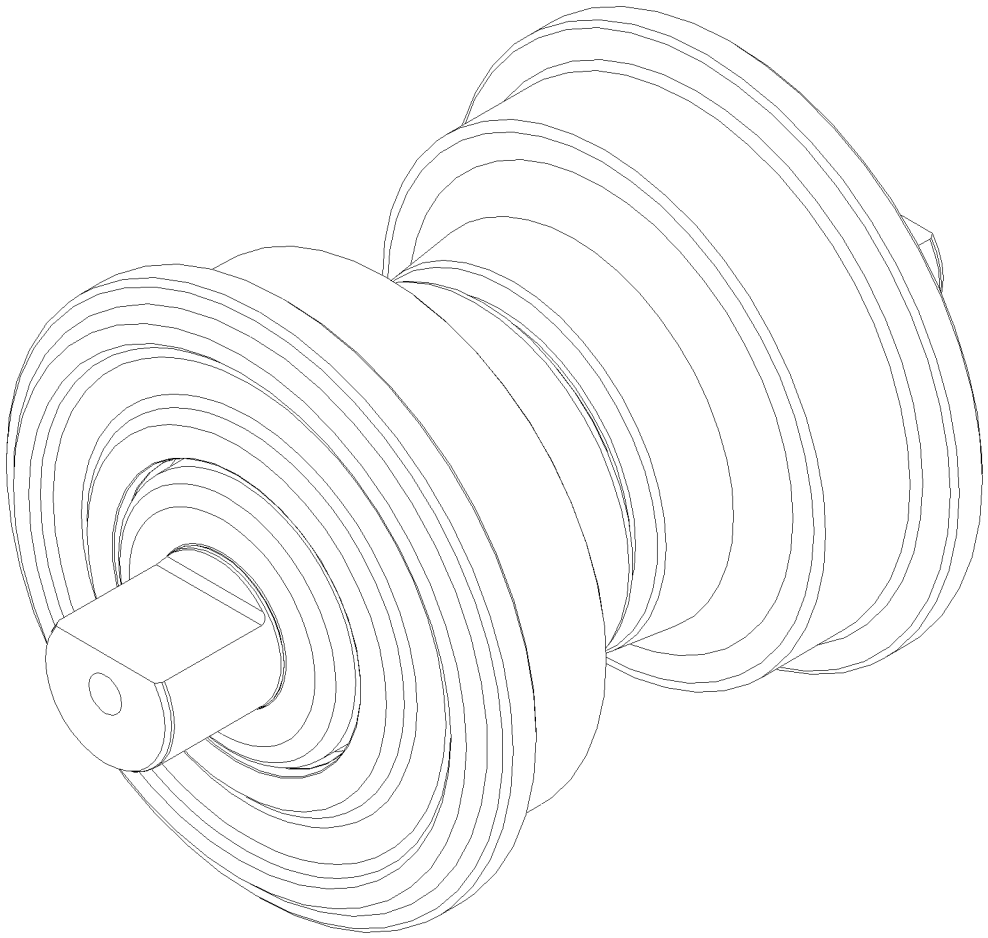

GRAPHIC #1 <END> g01395989

358-7239 ROLLER GP-TRACK-SINGLE FLANGE

S/N: Z2K1-UP; Z2N1-UP

PART OF 523-9366, 523-9367, 523-9368, 523-9369, 523-9372, 523-9373, 523-9374, 523-9375, 563-1029, 563-1030, 563-1138, 563-1139 FRAME GP-UNDERCARRIAGE AN ATTACHMENT

SMCS-4180 **i04286128**

NOTE	REF NO	GRAPHIC REF	PART NUMBER	QTY	PART NAME 1 2 3 4 5 6 (PRODUCT LEVEL)	SEE PAGE
	1	1	**223-9110**	2	CAP-TRACK ROLLER	
Y	2	1	**310-4912**	1	ROLLER GP-TRACK-SINGLE FLANGE	496
M	3	1	**8T-0281**	4	BOLT (M16X2X80-MM)	
	4	1	**9X-8268**	4	WASHER (17.5X30X3.5-MM THK)	

M - METRIC PART
Y - SEPARATE ILLUSTRATION

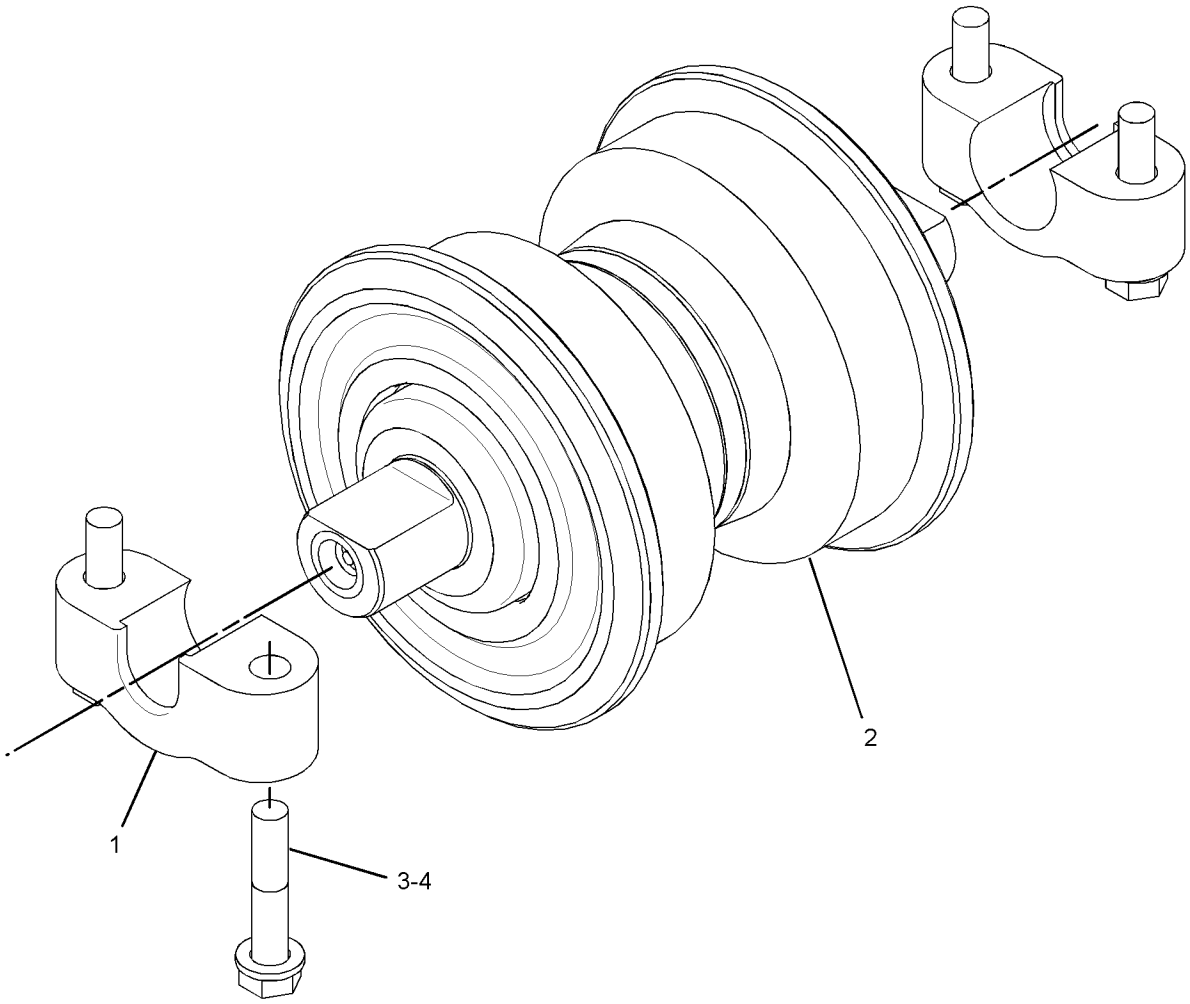

GRAPHIC #1 <END> g02323593

559-4300 STRIKER GP

S/N: Z2K1-UP; Z2N1-UP
REAR
PART OF 515-3719 BAR AR-STRIKER
AN ATTACHMENT

SMCS-4150 **i07814532**

NOTE	REF NO	GRAPHIC REF	PART NUMBER	QTY	PART NAME 1 2 3 4 5 6 (PRODUCT LEVEL)	SEE PAGE
	1	1	**246-2641**	1	PADLOCK GP	
		1	**5P-8500**	1	KEY	
	2	1	**7B-0863**	1	LATCH-PIN	
	3	1	**8G-7085**	1	PIN AS	
		1	**7F-9543**	1	COLLAR	
	4	1	**8T-4123**	20	WASHER (22X35X3.5-MM THK)	
M	5	1	**8T-4140**	1	BOLT (M16X2X60-MM)	
M	6	1	**8T-4778**	1	LOCKNUT (M16X2-THD)	
M	7	1	**8T-6430**	20	BOLT (M20X2.5X50-MM)	
Y	8	1	*559-4308*	1	BAR GP-STRIKER	343
E	9	1	**149-5933**		SEAL (10-CM EACH)	
E	9A	1	**149-5933**		SEAL (16-CM EACH)	
E	9B	1	**149-5933**		SEAL (89-CM)	
E	10	1	**247-5838**		SEAL (57-CM EACH)	

E - ORDER BY THE CENTIMETER
M - METRIC PART
Y - SEPARATE ILLUSTRATION

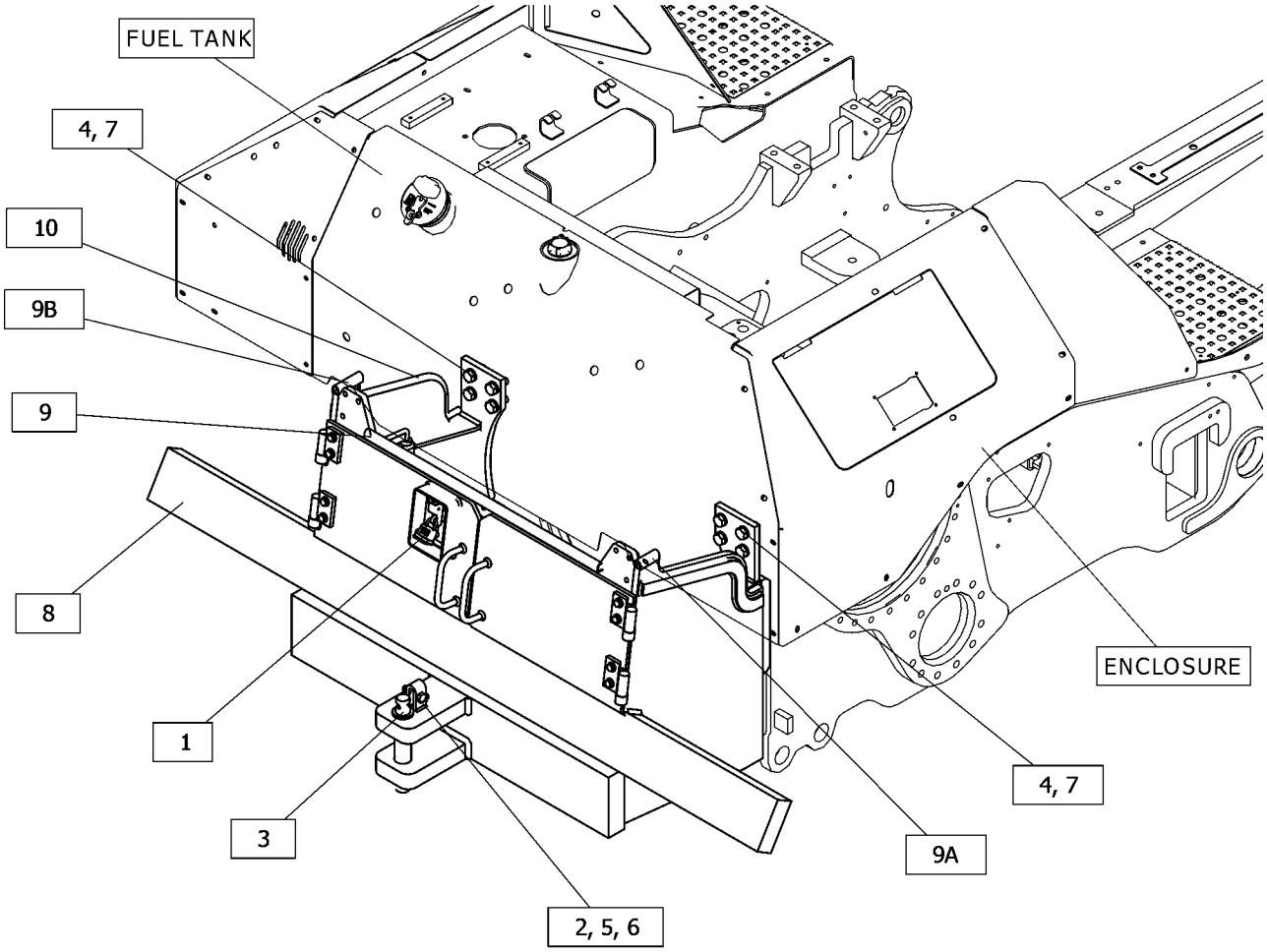

GRAPHIC #1 <END> g06444317

580-8200 TRACK ADJUSTER & RECOIL GP

S/N: Z2K1-UP; Z2N1-UP
PART OF 510-3810, 510-3811 FRAME GP-TRACK ROLLER
AN ATTACHMENT

SMCS-4157, 4158

i07816705

NOTE	REF NO	GRAPHIC REF	PART NUMBER	QTY	PART NAME 1 2 3 4 5 6 (PRODUCT LEVEL)	SEE PAGE
M	1	1	**8T-4182**	2	BOLT (M10X1.5X45-MM)	
	2	1	**580-8201**	1	CYLINDER	
	3	1	**2J-6274**	1	SEAL-O-RING	
	4	1	**2S-4078**	1	SEAL-O-RING	
	5	1	**2S-5926**	1	VALVE-RELIEF	
	6	1	**3W-2369**	1	PLATE AS	
	7	1	**8G-3102**	1	PISTON	
	8	1	**8G-4945**	1	SEAL AS	
	9	1	**8T-4121**	2	WASHER-HARD (11X21X2.5-MM THK)	
	10	1	**9S-8010**	1	PLUG	
	11	1	**9X-8268**	4	WASHER (17.5X30X3.5-MM THK)	
	12	1	**190-8609**	1	VALVE-FILL	
	13	1	**271-6185**	1	SPRING	
	14	1	**331-2427**	1	TUBE AS	
	15	1	**331-2430**	1	RETAINER	
	16	1	**582-1429**	2	PLATE-RETAINER	
M	17	1	**8T-0375**	4	BOLT (M16X2X45-MM)	

M - METRIC PART

580-8200 **TRACK ADJUSTER & RECOIL GP** (contd.) **i07816705**

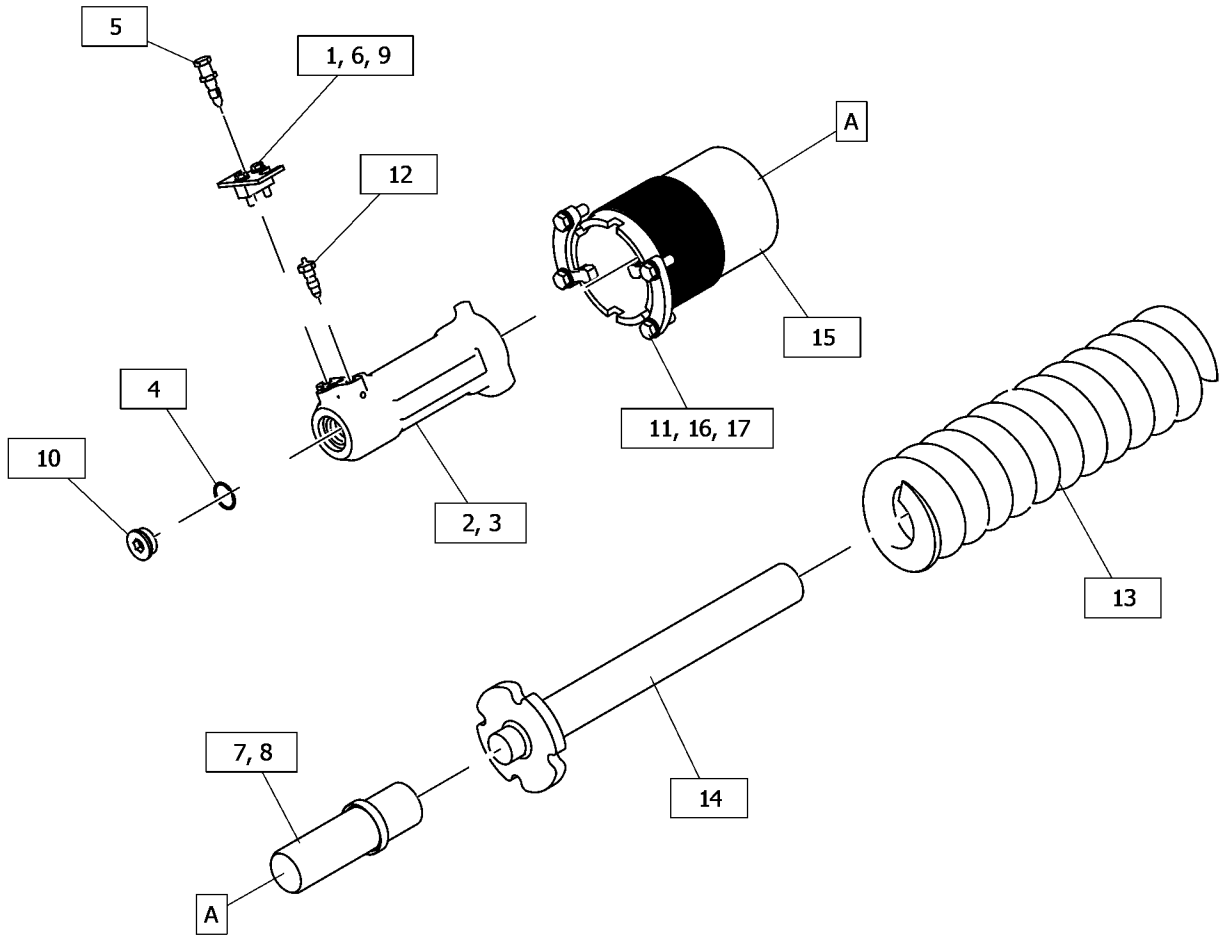

GRAPHIC #1 <END> g06453625

580-8202 TRACK ADJUSTER & RECOIL GP

S/N: Z2K1-UP; Z2N1-UP
LGP
PART OF 510-3820, 510-3821 FRAME GP-TRACK ROLLER
AN ATTACHMENT

SMCS-4157, 4158 **i07827853**

NOTE	REF NO	GRAPHIC REF	PART NUMBER	QTY	PART NAME 1 2 3 4 5 6 (PRODUCT LEVEL)	SEE PAGE
M	1	1	**8T-4182**	2	BOLT (M10X1.5X45-MM)	
	2	1	**580-8201**	1	CYLINDER	
	3	1	**2J-6274**	1	SEAL-O-RING	
	4	1	**2S-4078**	1	SEAL-O-RING	
	5	1	**2S-5926**	1	VALVE-RELIEF	
	6	1	**3W-2369**	1	PLATE AS	
	7	1	**8G-3102**	1	PISTON	
	8	1	**8G-4945**	1	SEAL AS	
	9	1	**8G-4960**	1	RETAINER	
	10	1	**8T-4121**	2	WASHER-HARD (11X21X2.5-MM THK)	
	11	1	**9S-8010**	1	PLUG	
	12	1	**9X-8268**	4	WASHER (17.5X30X3.5-MM THK)	
	13	1	**190-8609**	1	VALVE-FILL	
	14	1	**215-1594**	1	TUBE AS	
	15	1	**251-8609**	1	SPRING	
	16	1	**582-1429**	2	PLATE-RETAINER	
M	17	1	**8T-0375**	4	BOLT (M16X2X45-MM)	

M - METRIC PART

580-8202 **TRACK ADJUSTER & RECOIL GP** (contd.) **i07827853**

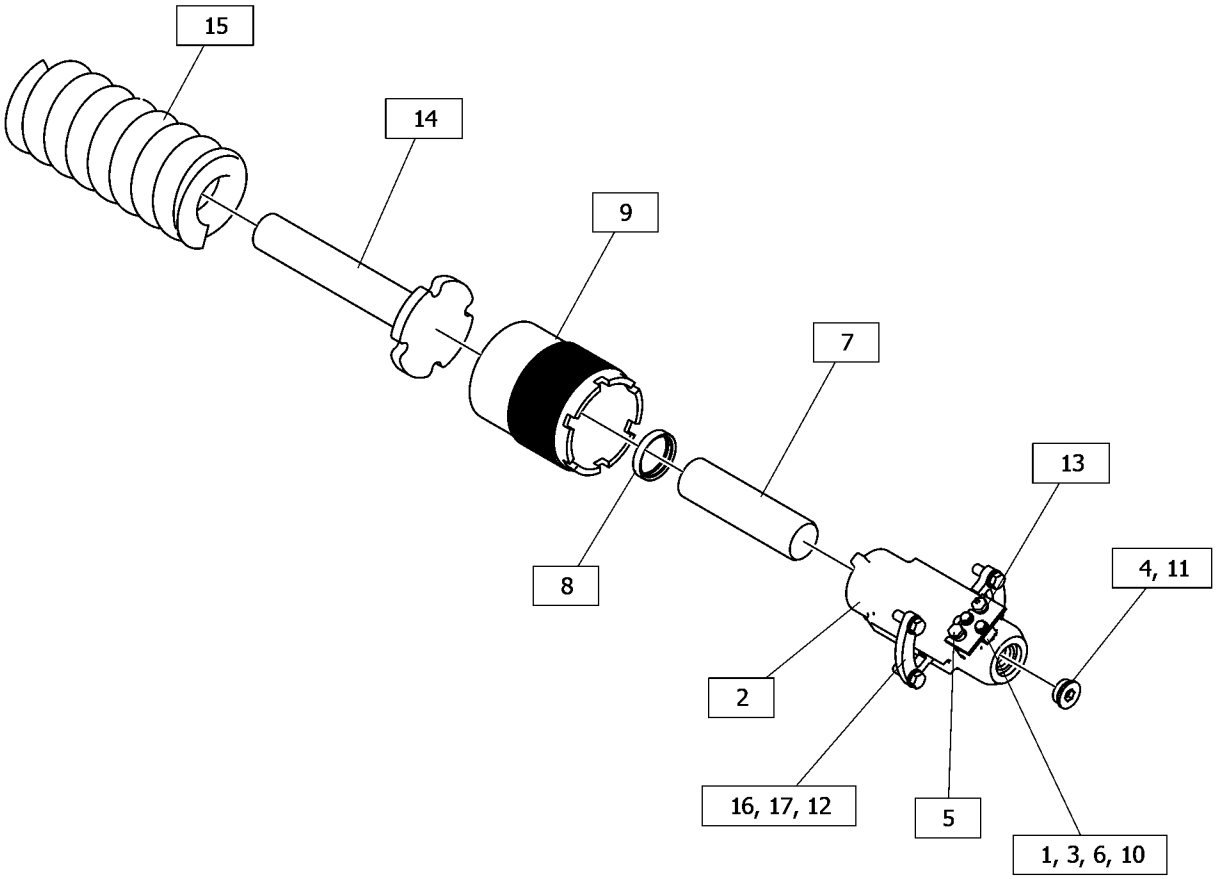

GRAPHIC #1 <END> g06449873

575-7733 TRACK AR—HEAVY-DUTY

S/N: Z2K1-UP

600-MM (23.62-IN) GROUSER SHOE. SEALED, LUBRICATED. EXTREME SERVICE. POSITIVE PIN RETENTION

FOR USE WITH HEAVY-DUTY ROLLERS, GUARDS, GUIDESTRIPS & CONVENTIONAL IDLERS

PART OF 532-9851, 532-9856 DISTRIBUTION AR

AN ATTACHMENT

SMCS-4170 **i07828406**

NOTE	REF NO	GRAPHIC REF	PART NUMBER	QTY	PART NAME 1 2 3 4 5 6 (PRODUCT LEVEL)	SEE PAGE
Y	1	1	*558-9213*	2	TRACK GP	529

Y - SEPARATE ILLUSTRATION

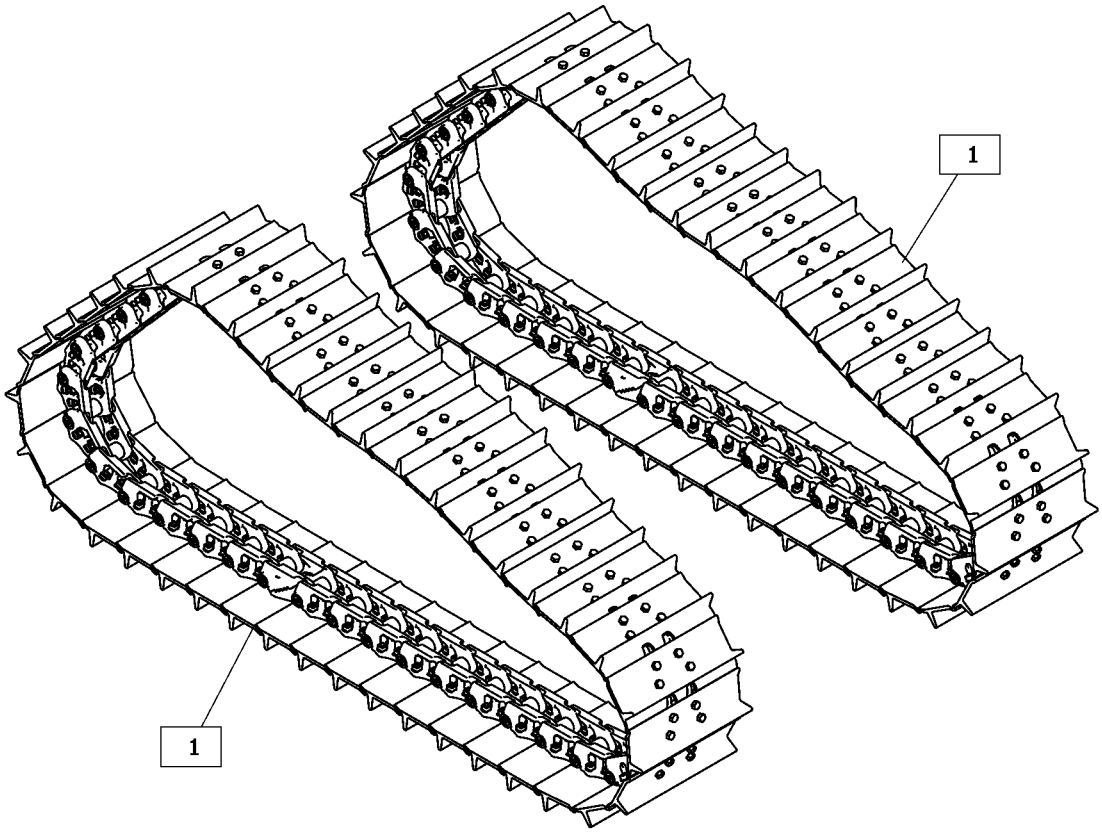

GRAPHIC #1 <END> g06449454

575-7734 TRACK AR–HEAVY-DUTY

S/N: Z2K1-UP

560-MM (22-IN) GROUSER SHOE. SEALED, LUBRICATED. EXTREME SERVICE. POSITIVE PIN RETENTION

FOR USE WITH HEAVY-DUTY ROLLERS, GUARDS, GUIDESTIPS & CONVENTIONAL IDLERS

AN ATTACHMENT

SMCS-4170 **i07828453**

NOTE	REF NO	GRAPHIC REF	PART NUMBER	QTY	PART NAME 1 2 3 4 5 6 (PRODUCT LEVEL)	SEE PAGE
Y	1	1	*575-7726*	2	TRACK GP	532

Y - SEPARATE ILLUSTRATION

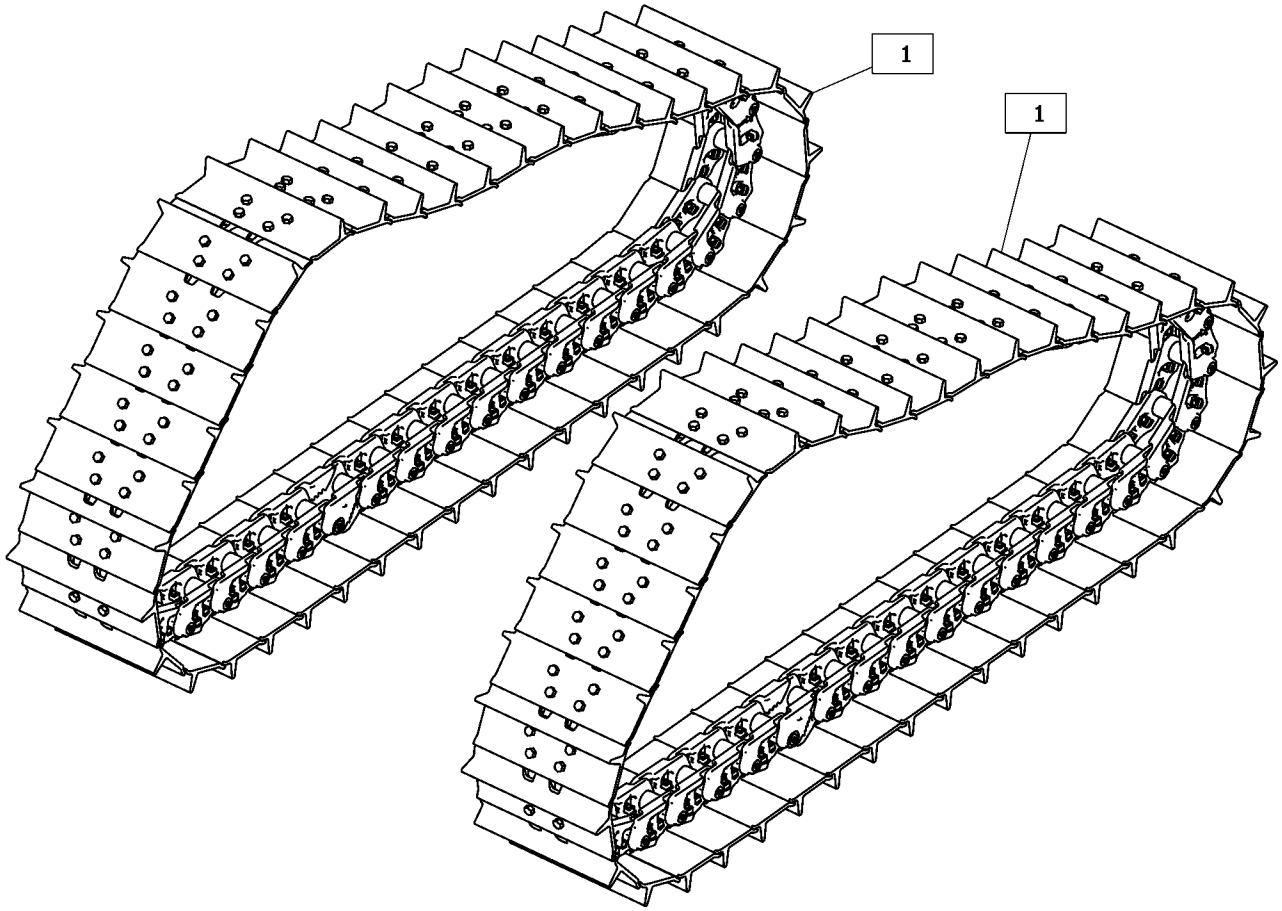

GRAPHIC #1 <END> g06450313

575-7735 TRACK AR—HEAVY-DUTY

S/N: Z2K1-UP

600-MM (23.62-IN) GROUSER SHOE. SEALED, LUBRICATED. EXTREME SERVICE. POSITIVE PIN RETENTION. TRAPEZOIDAL

FOR USE WITH HEAVY-DUTY ROLLERS, GUARDS, GUIDESTRIPS & CONVENTIONAL IDLERS

AN ATTACHMENT

SMCS-4170 **i07828685**

NOTE	REF NO	GRAPHIC REF	PART NUMBER	QTY	PART NAME 1 2 3 4 5 6 (PRODUCT LEVEL)	SEE PAGE
Y	1	1	*575-7727*	2	TRACK GP	533

Y - SEPARATE ILLUSTRATION

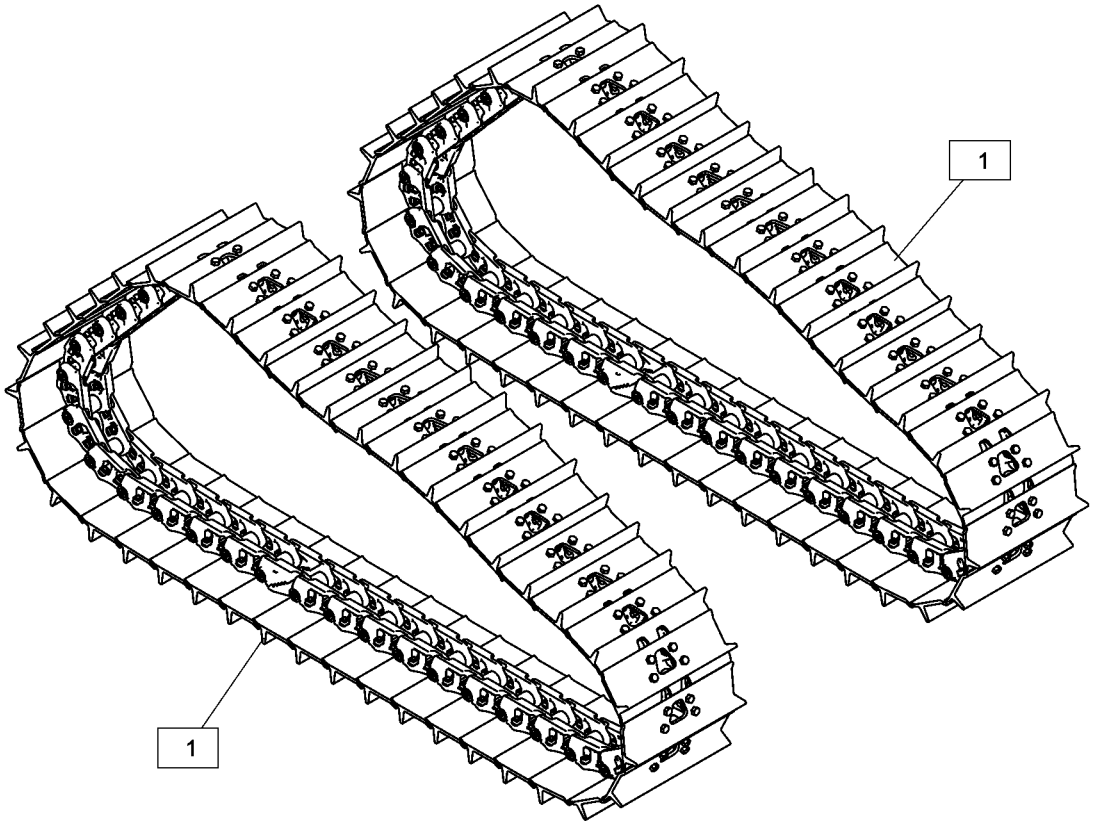

GRAPHIC #1 <END> g06450469

575-7736 TRACK AR–HEAVY-DUTY

S/N: Z2K1-UP

600-MM (23.62-IN) GROUSER SHOE. SEALED, LUBRICATED. MODERATE SERVICE. POSITIVE PIN RETENTION

FOR USE WITH HEAVY-DUTY ROLLERS, GUARDS, GUIDESTRIPS & CONVENTIONAL IDLERS

AN ATTACHMENT

SMCS-4170 **i07831063**

NOTE	REF NO	GRAPHIC REF	PART NUMBER	QTY	PART NAME 1 2 3 4 5 6 (PRODUCT LEVEL)	SEE PAGE
Y	1	1	*576-4402*	2	TRACK GP	536

Y - SEPARATE ILLUSTRATION

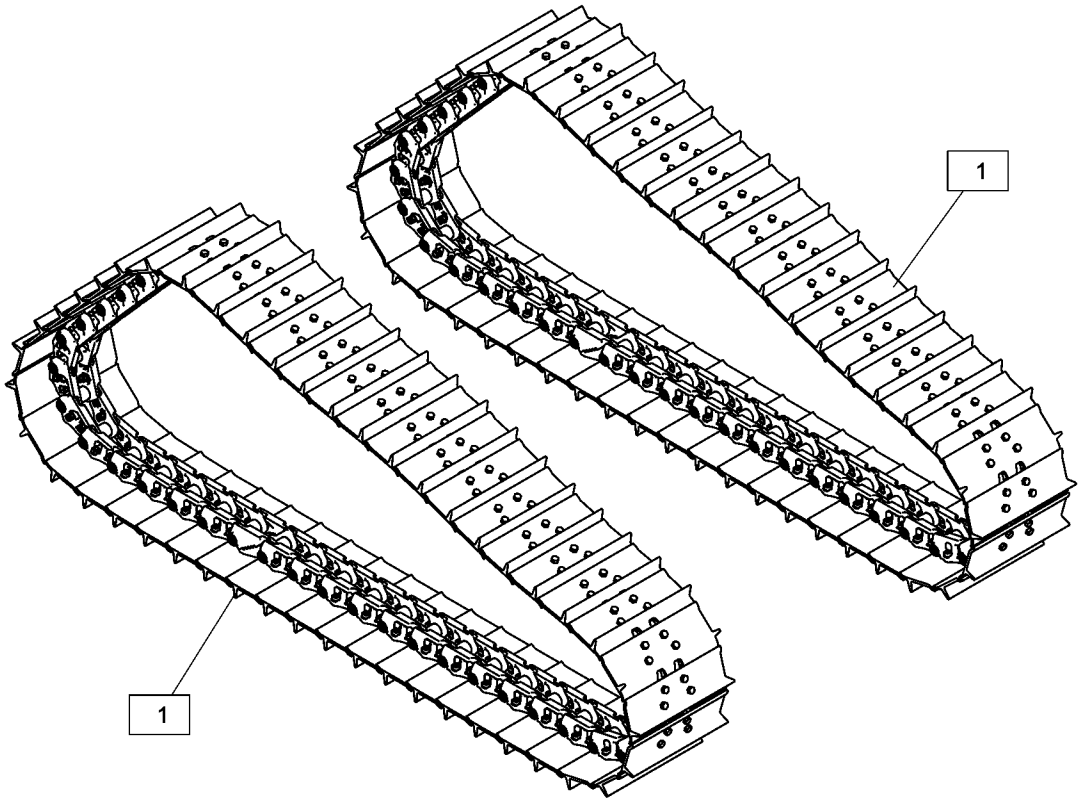

GRAPHIC #1 <END> g06450439

575-7738 TRACK AR—HEAVY-DUTY

S/N: Z2N1-UP

835-MM (32.87-IN) GROUSER SHOE. SEALED, LUBRICATED. EXTREME SERVICE. POSITIVE PIN RETENTION

FOR USE WITH HEAVY-DUTY ROLLERS, GUARDS, GUIDESTRIPS& CONVENTIONAL IDLERS AN ATTACHMENT

SMCS-4170 **i07828736**

NOTE	REF NO	GRAPHIC REF	PART NUMBER	QTY	PART NAME 1 2 3 4 5 6 (PRODUCT LEVEL)	SEE PAGE
Y	1	1	*558-9217*	2	TRACK GP	531

Y - SEPARATE ILLUSTRATION

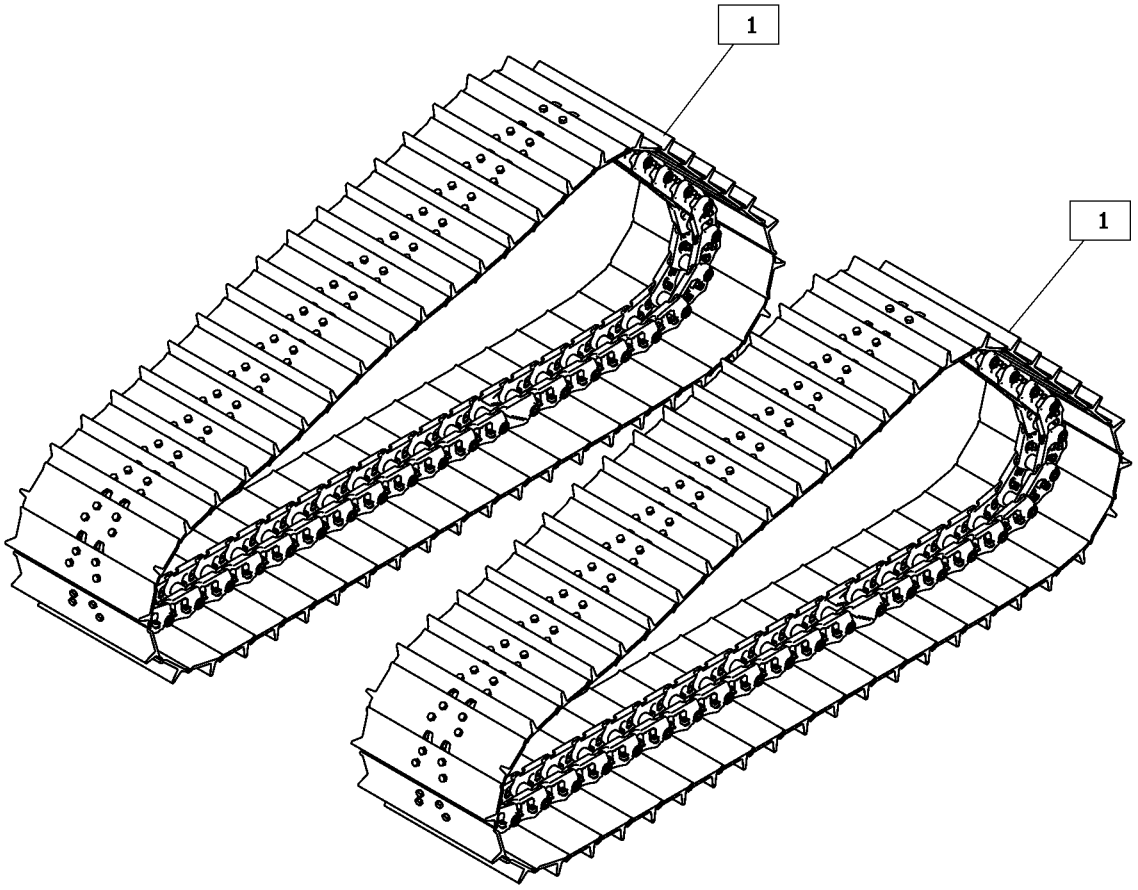

GRAPHIC #1 <END> g06454547

575-7739 TRACK AR–HEAVY-DUTY

S/N: Z2N1-UP

840-MM (33.1-IN) GROUSER SHOE. SEALED. LUBRICATED. EXTREME SERVICE. POSITIVE PIN RETENTION. TRAPEZOIDAL

FOR USE WITH HEAVY-DUTY ROLLERS, GUARDS, GUIDESTRIPS, CONVENTIONAL IDLERS AN ATTACHMENT

SMCS-4170 **i07828497**

NOTE	REF NO	GRAPHIC REF	PART NUMBER	QTY	PART NAME 1 2 3 4 5 6 (PRODUCT LEVEL)	SEE PAGE
Y	1	1	**575-7729**	2	TRACK GP	534

Y - SEPARATE ILLUSTRATION

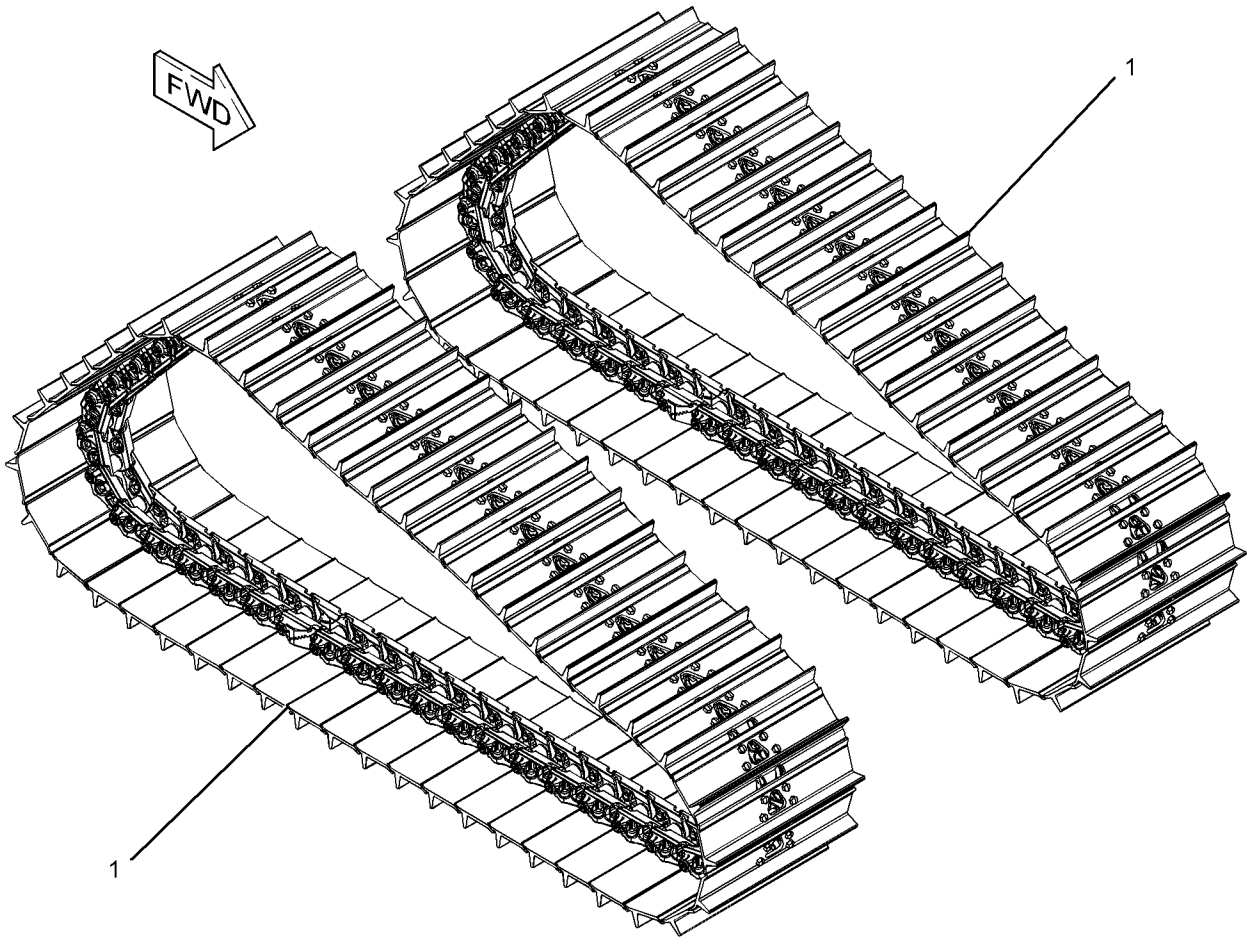

GRAPHIC #1 <END> g02812377

575-7740 TRACK AR—HEAVY-DUTY

S/N: Z2N1-UP

860-MM (33.9-IN) GROUSER SHOE. SEALED, LUBRICATED. EXTREME SERVICE. POSITIVE PIN RETENTION

FOR USE WITH HEAVY-DUTY ROLLERS, GUARDS, GUIDESTRIPS & CONVENTIONAL IDLERS

AN ATTACHMENT

SMCS-4170 **i07828732**

NOTE	REF NO	GRAPHIC REF	PART NUMBER	QTY	PART NAME 1 2 3 4 5 6 (PRODUCT LEVEL)	SEE PAGE
Y	1	1	**558-9216**	2	TRACK GP	530

Y - SEPARATE ILLUSTRATION

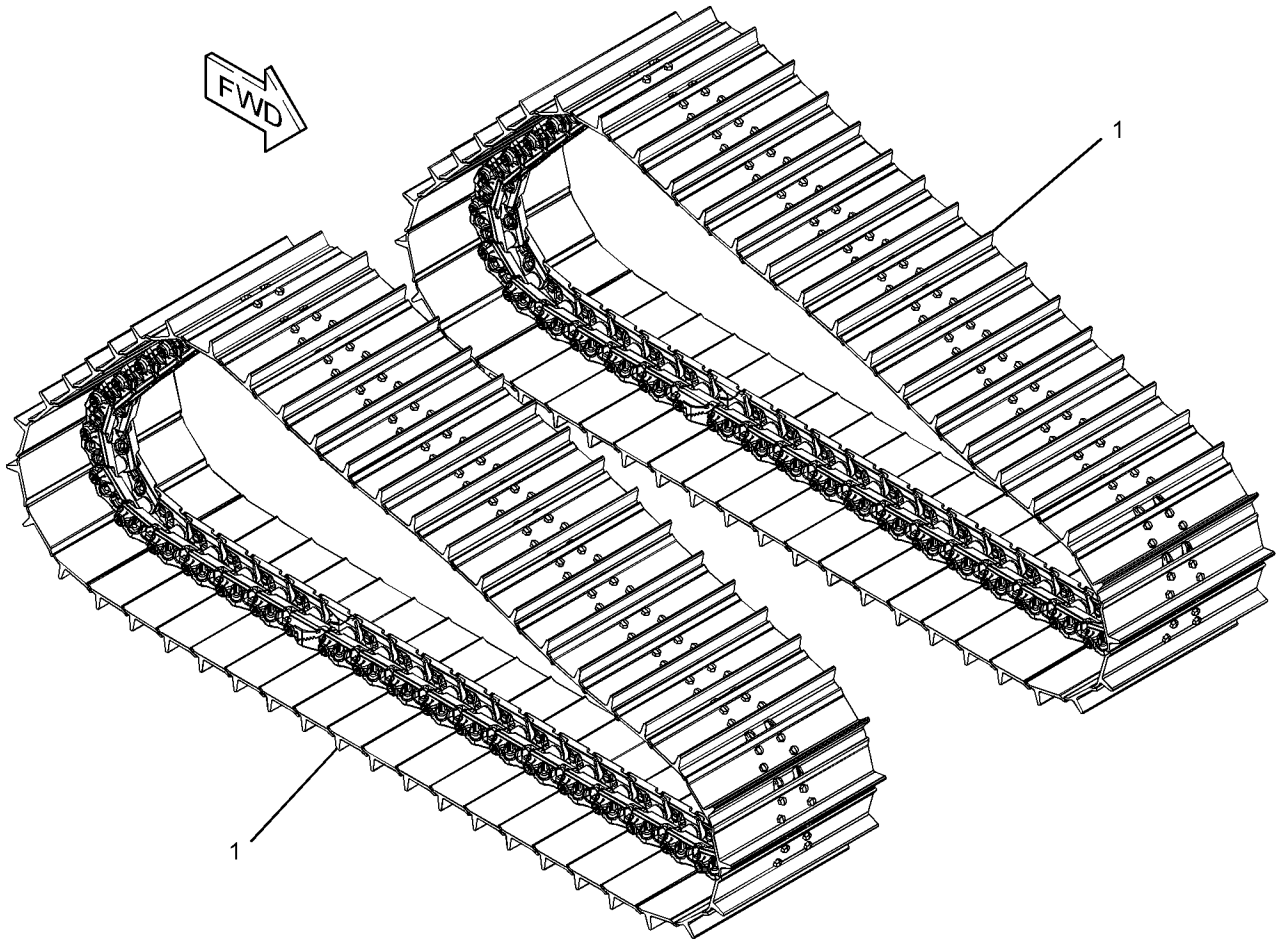

GRAPHIC #1 <END> g02814838

575-7741 TRACK AR–HEAVY-DUTY

S/N: Z2N1-UP

865-MM(34-IN) SELF CLEANING GROUSER SHOE. SEALED, LUBRICATED. POSITIVE PIN RETENTION

FOR USE WITH HEAVY-DUTY ROLLERS, GUARDS, GUIDESTRIPS & CONVENTIONAL IDLERS AN ATTACHMENT

SMCS-4170 **i07828771**

NOTE	REF NO	GRAPHIC REF	PART NUMBER	QTY	PART NAME 1 2 3 4 5 6 (PRODUCT LEVEL)	SEE PAGE
Y	1	1	**575-7730**	2	TRACK GP	535

Y - SEPARATE ILLUSTRATION

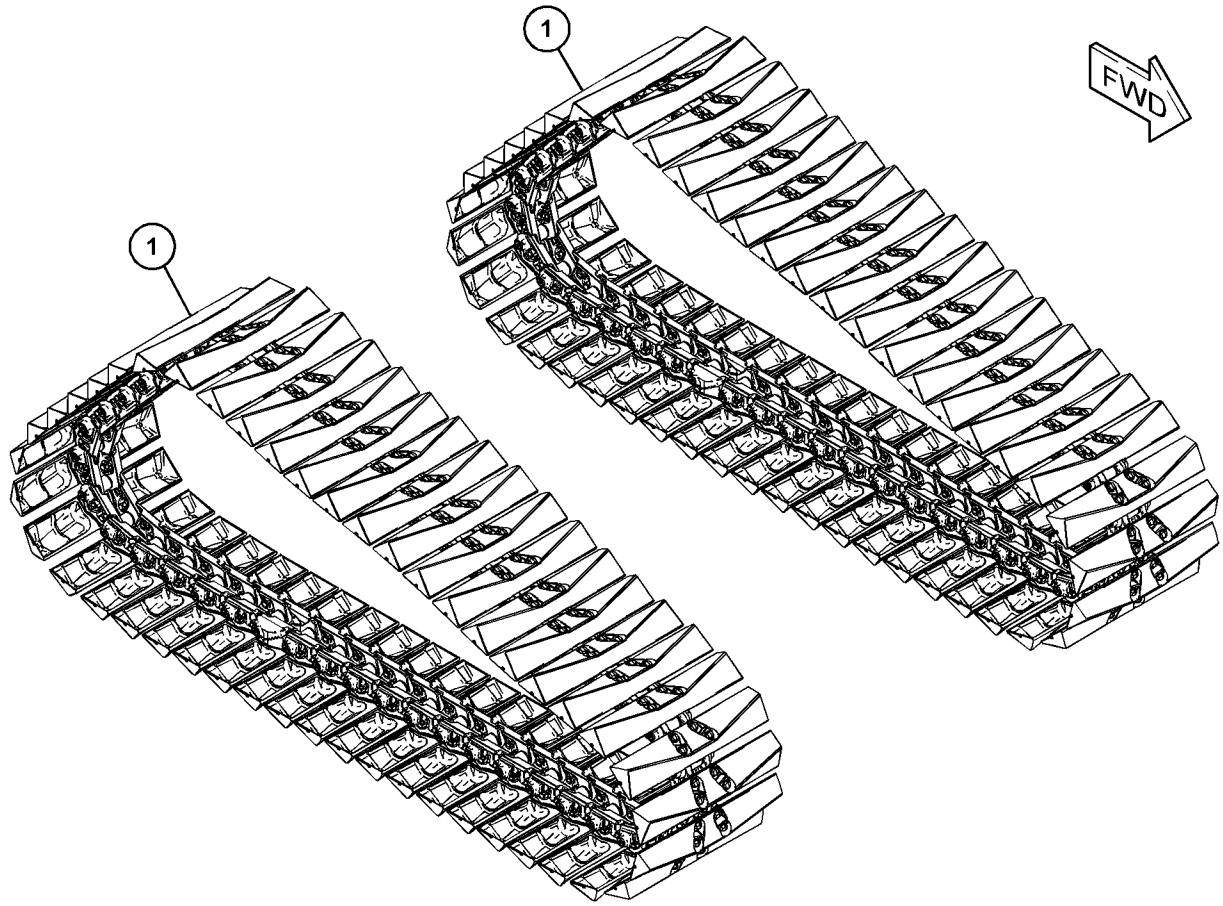

GRAPHIC #1 <END> g06172686

579-5770 TRACK AR–SYSTEMONE

S/N: Z2K1-UP

560-MM (22-IN) GROUSER SHOE. SEALED, LUBRICATED. EXTREME SERVICE

FOR USE WITH SYSTEMONE ROLLERS, GUARDS & GUIDESTRIPS

AN ATTACHMENT

SMCS-4170 **i07843996**

NOTE	REF NO	GRAPHIC REF	PART NUMBER	QTY	PART NAME 1 2 3 4 5 6 (PRODUCT LEVEL)	SEE PAGE
Y	1	1	*246-5759*	2	TRACK GP	520

Y - SEPARATE ILLUSTRATION

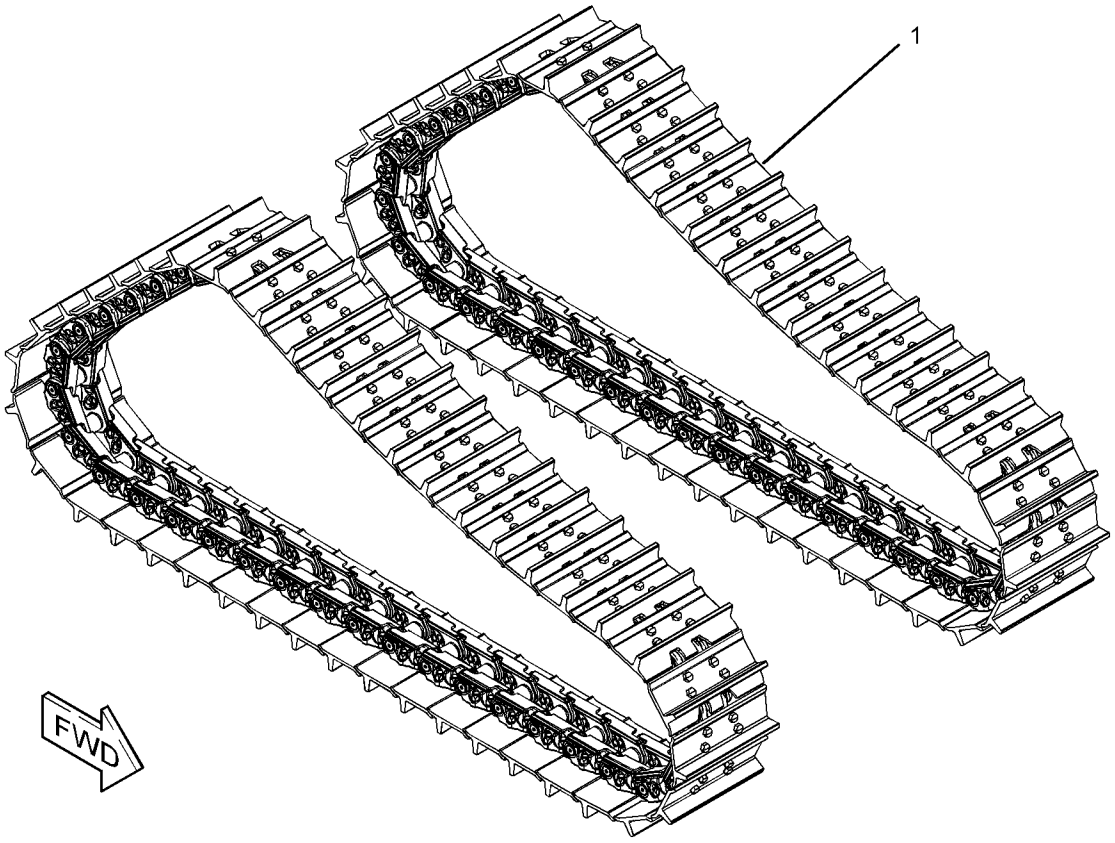

GRAPHIC #1 <END> g02723663

579-5771 TRACK AR–SYSTEMONE

S/N: Z2K1-UP
610-MM (24-IN) GROUSER SHOE. SEALED, LUBRICATED. EXTREME SERVICE
FOR USE WITH SYSTEMONE ROLLERS, GUARDS & GUIDESTRIPS
AN ATTACHMENT

SMCS-4170 **i07844007**

NOTE	REF NO	GRAPHIC REF	PART NUMBER	QTY	PART NAME 1 2 3 4 5 6 (PRODUCT LEVEL)	SEE PAGE
Y	1	1	*256-4873*	2	TRACK GP	521

Y - SEPARATE ILLUSTRATION

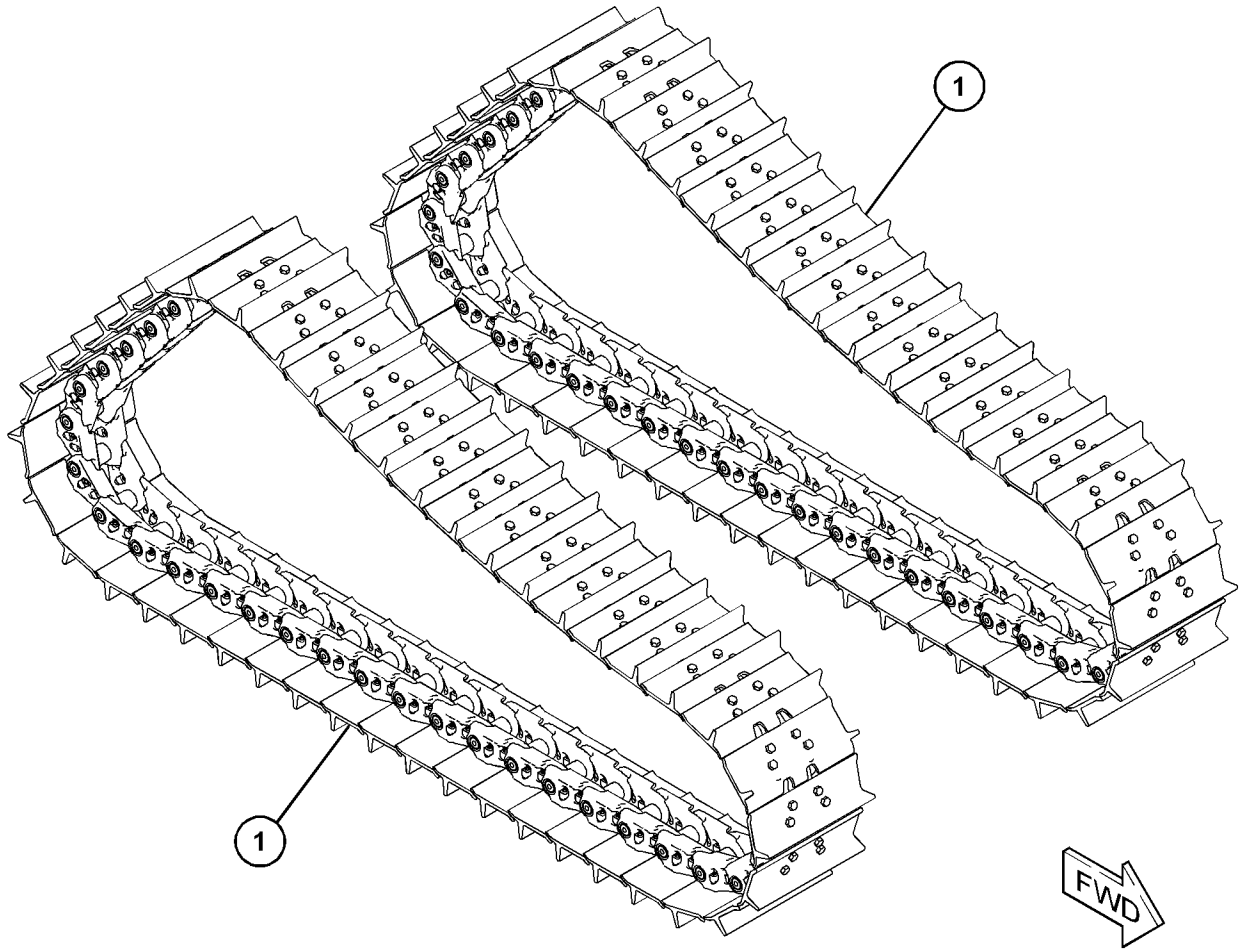

GRAPHIC #1 <END> g03246100

579-5773 TRACK AR–SYSTEMONE

S/N: Z2K1-UP

610-MM (24-IN) GROUSER SHOE. SEALED, LUBRICATED. MODERATE SERVICE FOR USE WITH SYSTEMONE ROLLERS, GUARDS, GUIDESTRIPS & CENTER TREAD IDLERS AN ATTACHMENT

SMCS-4170 **i07844019**

NOTE	REF NO	GRAPHIC REF	PART NUMBER	QTY	PART NAME 1 2 3 4 5 6 (PRODUCT LEVEL)	SEE PAGE
Y	1	1	*375-4607*	2	TRACK GP	526

Y - SEPARATE ILLUSTRATION

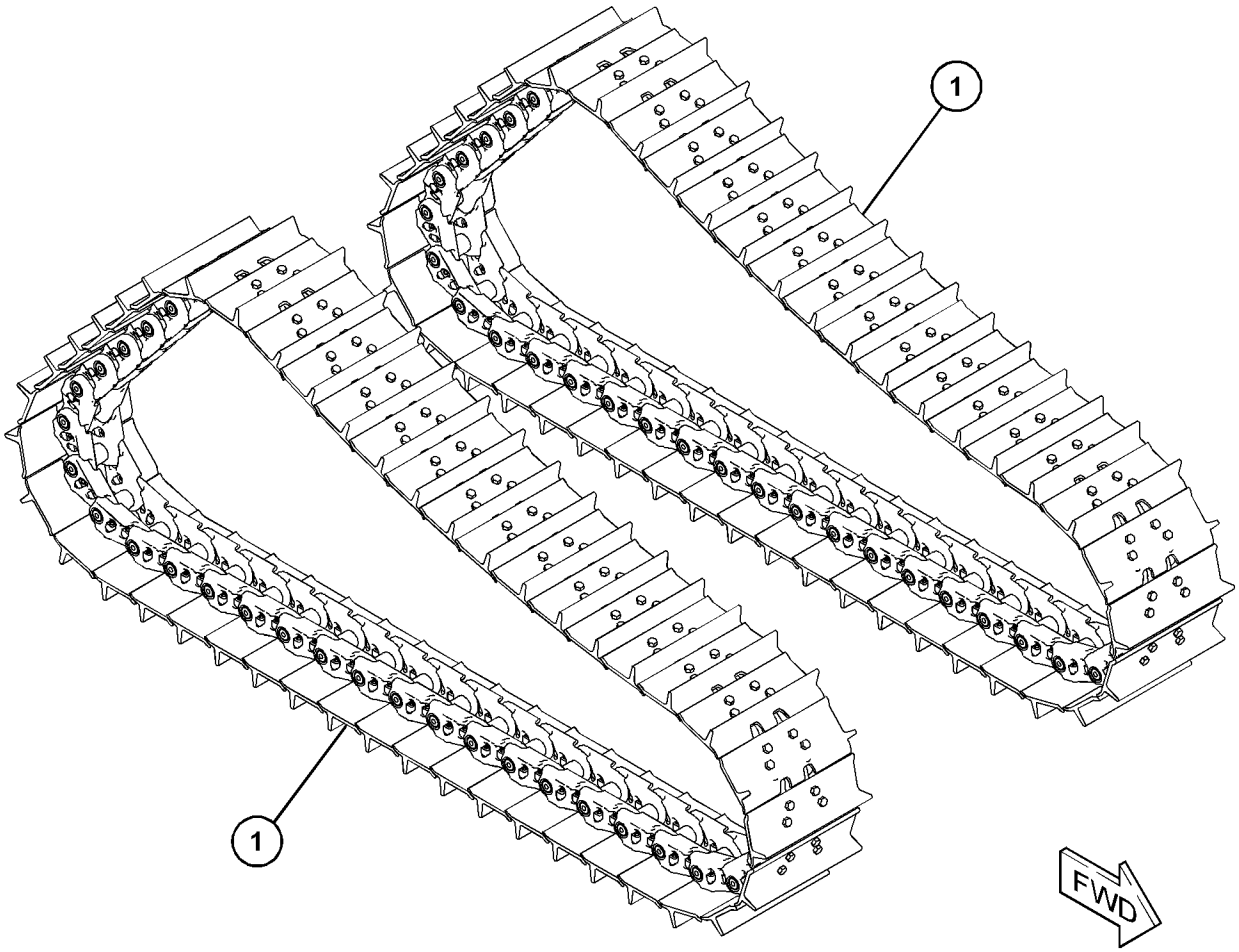

GRAPHIC #1 <END> g03246100

579-5774 TRACK AR–SYSTEMONE

S/N: Z2N1-UP

790-MM (31-IN) GROUSER SHOE. SEALED, LUBRICATED. EXTREME SERVICE

FOR USE WITH SYSTEMONE ROLLERS, GUARDS & GUIDESTRIPS

AN ATTACHMENT

SMCS-4170 **i07848559**

NOTE	REF NO	GRAPHIC REF	PART NUMBER	QTY	PART NAME 1 2 3 4 5 6 (PRODUCT LEVEL)	SEE PAGE
Y	1	1	*320-0360*	2	TRACK GP	525

Y - SEPARATE ILLUSTRATION

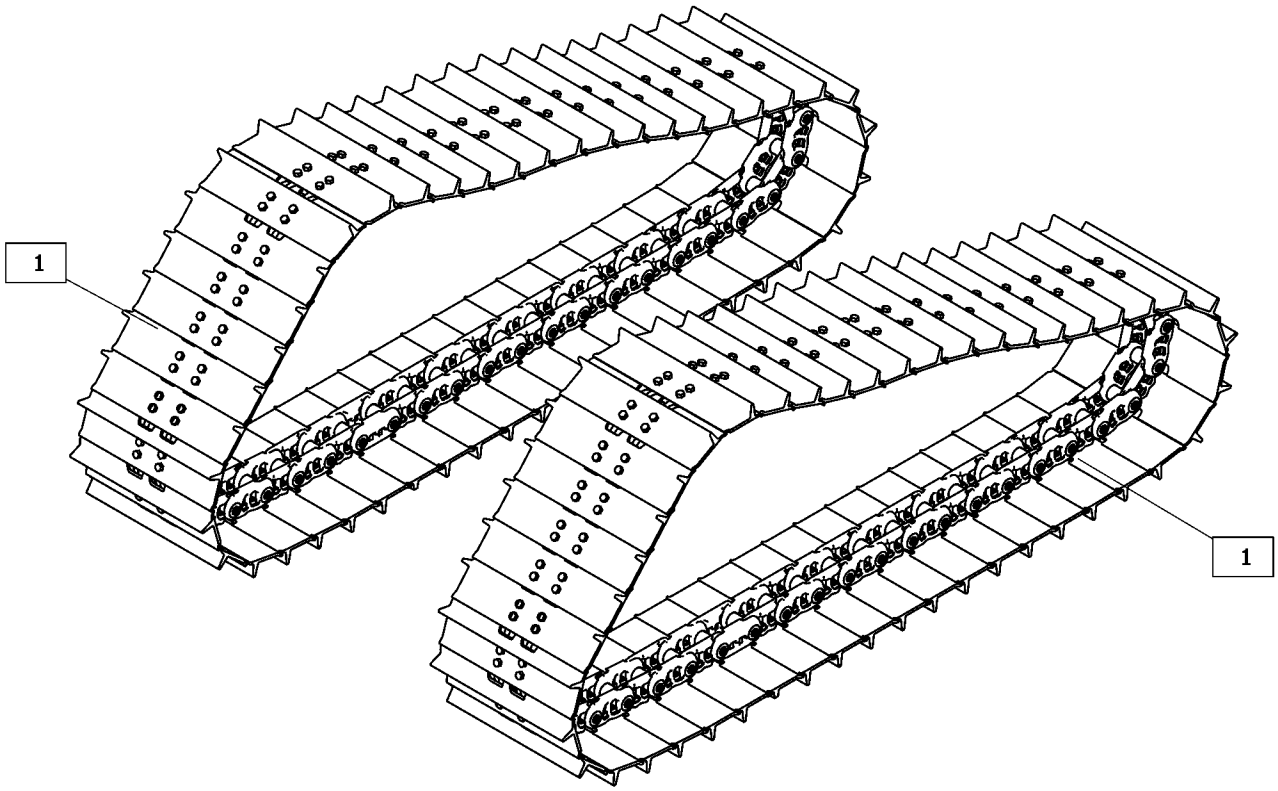

GRAPHIC #1 <END> g06453124

579-5775 TRACK AR–SYSTEMONE

S/N: Z2N1-UP

840-MM (33.1-IN) GROUSER SHOE. SEALED, LUBRICATED. EXTREME SERVICE
FOR USE WITH SYSTEMONE ROLLERS, GUARDS & GUIDESTRIPS
AN ATTACHMENT

SMCS-4170 **i07848562**

NOTE	REF NO	GRAPHIC REF	PART NUMBER	QTY	PART NAME 1 2 3 4 5 6 (PRODUCT LEVEL)	SEE PAGE
Y	1	1	*287-6106*	2	TRACK GP	524

Y - SEPARATE ILLUSTRATION

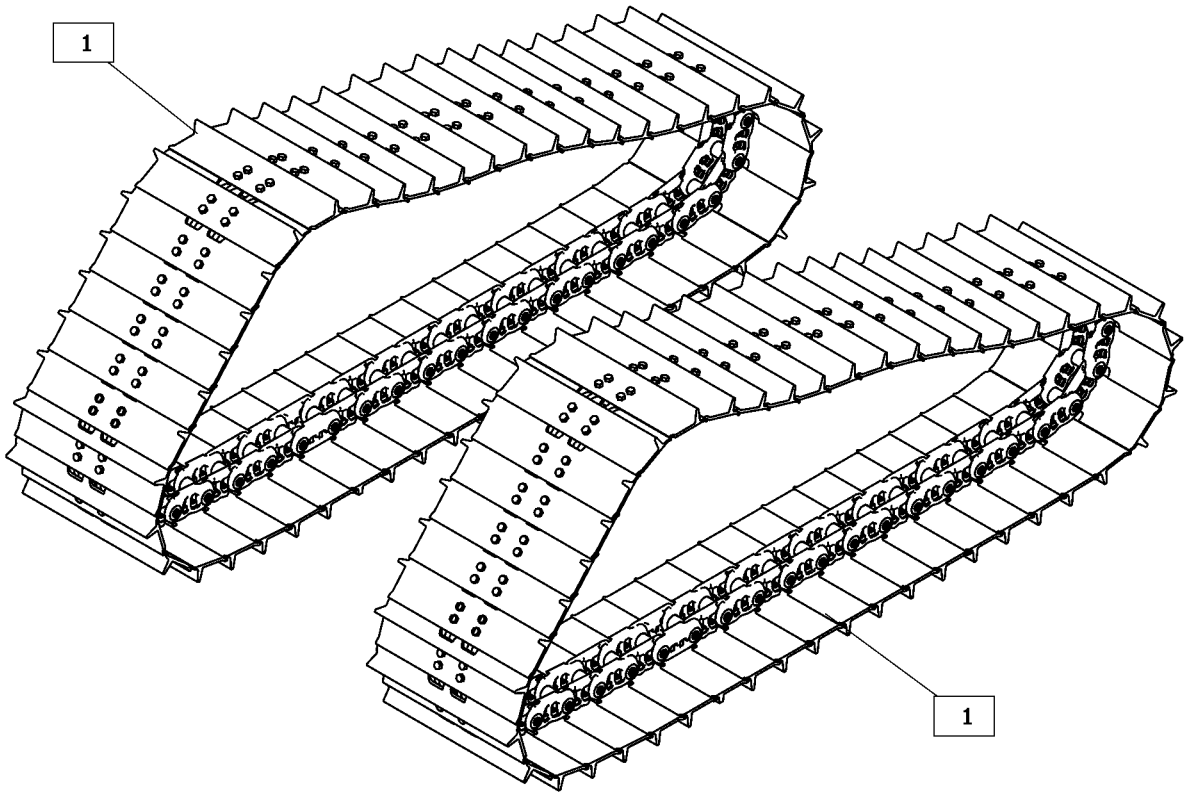

GRAPHIC #1 <END> g06453099

579-5776 TRACK AR–SYSTEMONE

S/N: Z2N1-UP

840-MM (33.1-IN) GROUSER SHOE. SEALED, LUBRICATED. MODERATE SERVICE

FOR USE WITH SYSTEMONE ROLLERS, GUARDS & GUIDESTRIPS

AN ATTACHMENT

SMCS-4170 **i07848563**

NOTE	REF NO	GRAPHIC REF	PART NUMBER	QTY	PART NAME 1 2 3 4 5 6 (PRODUCT LEVEL)	SEE PAGE
Y	1	1	*274-7646*	2	TRACK GP	523

Y - SEPARATE ILLUSTRATION

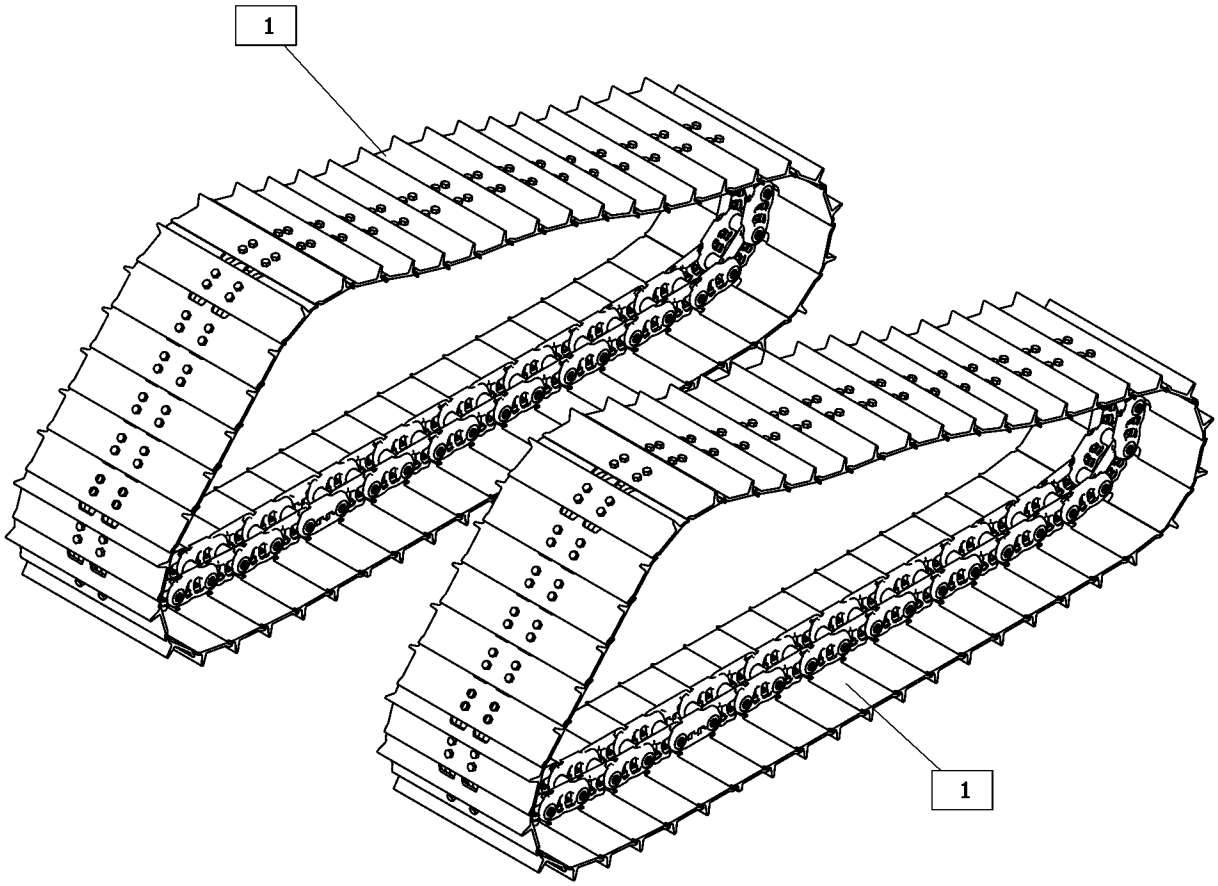

GRAPHIC #1 <END> g06453115

579-5777 TRACK AR–SYSTEMONE

S/N: Z2N1-UP

860-MM (33.9-IN) GROUSER SHOE. SEALED, LUBRICATED. EXTREME SERVICE

FOR USE WITH SYSTEMONE ROLLERS, GUARDS & GUIDESTRIPS

AN ATTACHMENT

SMCS-4170 **i07848565**

NOTE	REF NO	GRAPHIC REF	PART NUMBER	QTY	PART NAME 1 2 3 4 5 6 (PRODUCT LEVEL)	SEE PAGE
Y	1	1	*267-6097*	2	TRACK GP	522

Y - SEPARATE ILLUSTRATION

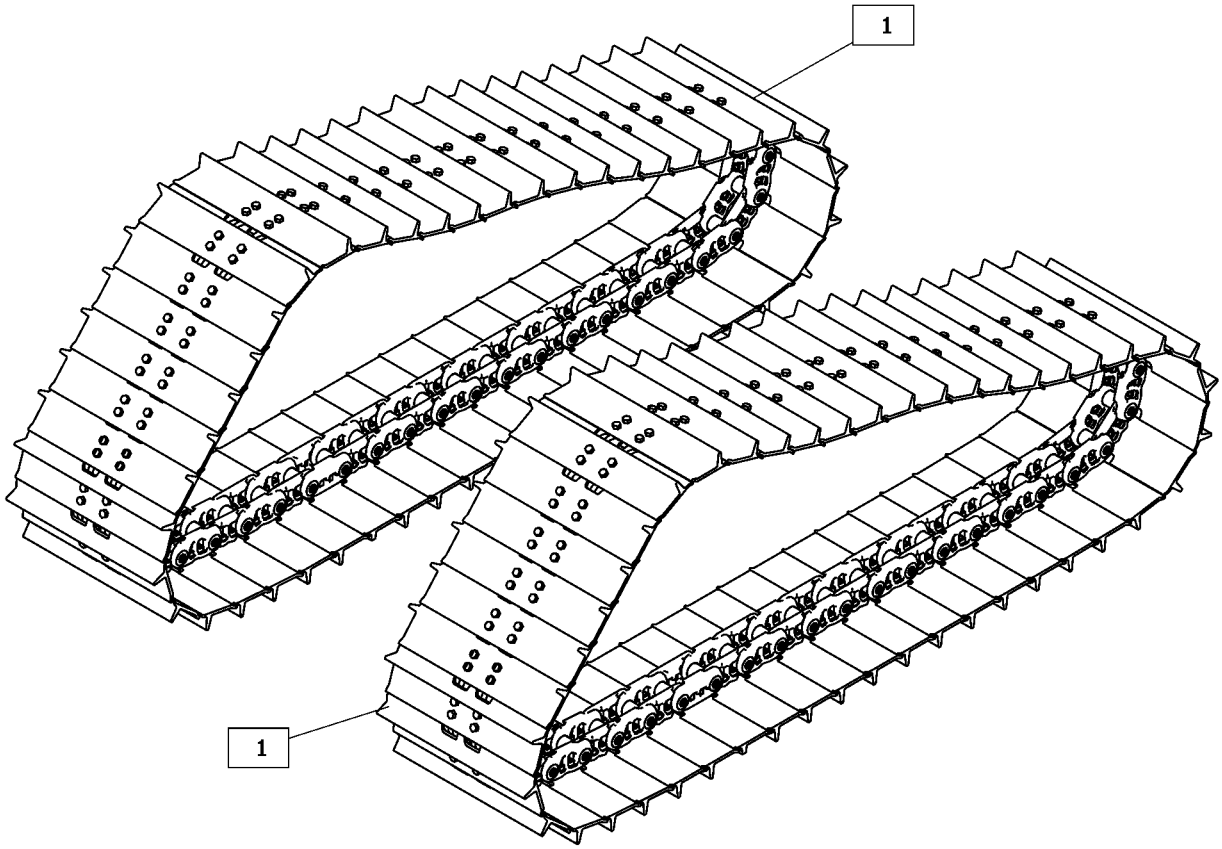

GRAPHIC #1 <END> g06453137

584-2192 TRACK AR–HEAVY-DUTY

S/N: Z2K1-UP

600-MM (23.62-IN) GROUSER SHOE. SEALED, LUBRICATED. MODERATE SERVICE. POSITIVE PIN RETENTION

FOR USE WITH HEAVY-DUTY ROLLERS, GUARDS, GUIDESTRIPS & CONVENTIONAL IDLERS

AN ATTACHMENT

SMCS-4170 **i07828807**

NOTE	REF NO	GRAPHIC REF	PART NUMBER	QTY	PART NAME 1 2 3 4 5 6 (PRODUCT LEVEL)	SEE PAGE
Y	1	1	**558-9212**	2	TRACK GP	528

Y - SEPARATE ILLUSTRATION

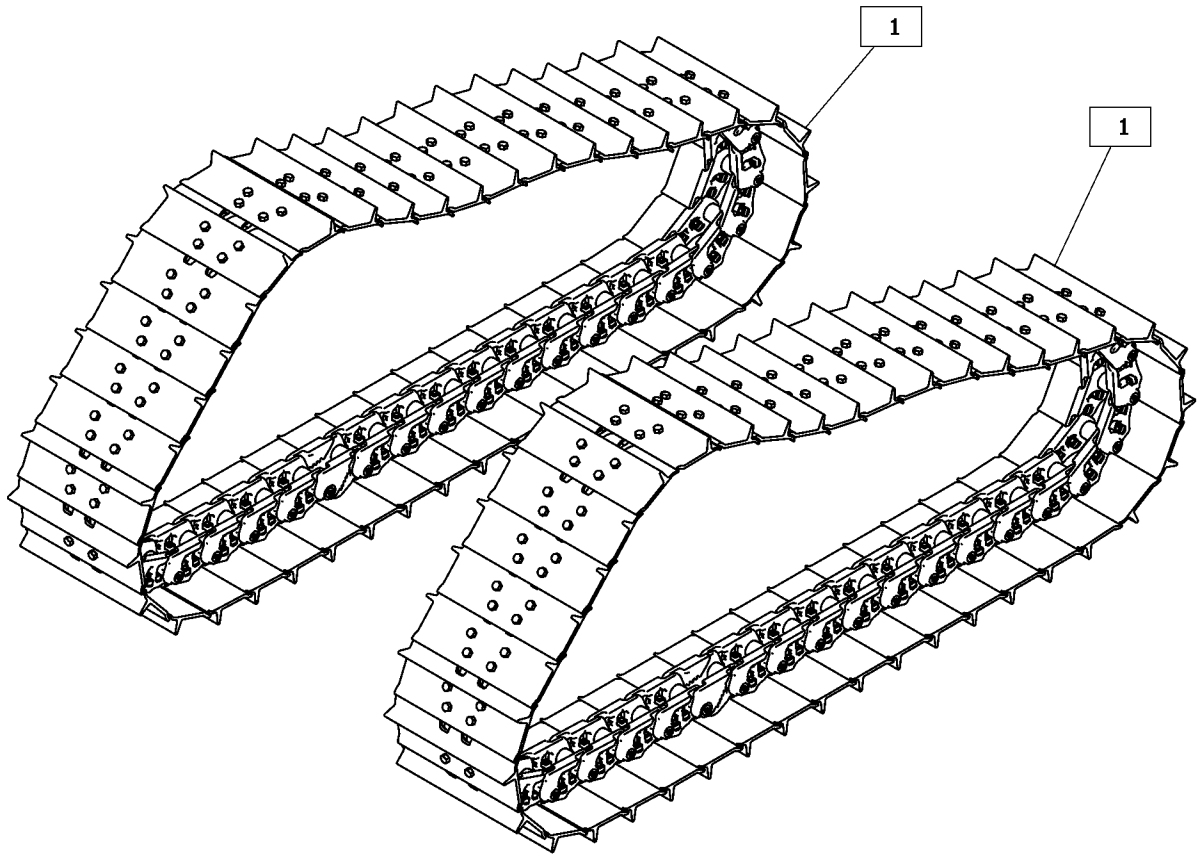

GRAPHIC #1 <END> g06450346

584-2193 TRACK AR—HEAVY-DUTY

S/N: Z2K1-UP

560-MM (22-IN) GROUSER SHOE. SEALED, LUBRICATED. MODERATE SERVICE. POSITIVE PIN RETENTION

FOR USE WITH HEAVY-DUTY ROLLERS, GUARDS, GUIDESTRIPS & CONVENTIONAL IDLERS AN ATTACHMENT

SMCS-4170 **i07828839**

NOTE	REF NO	GRAPHIC REF	PART NUMBER	QTY	PART NAME 1 2 3 4 5 6 (PRODUCT LEVEL)	SEE PAGE
Y	1	1	*558-6604*	2	TRACK GP	527

Y - SEPARATE ILLUSTRATION

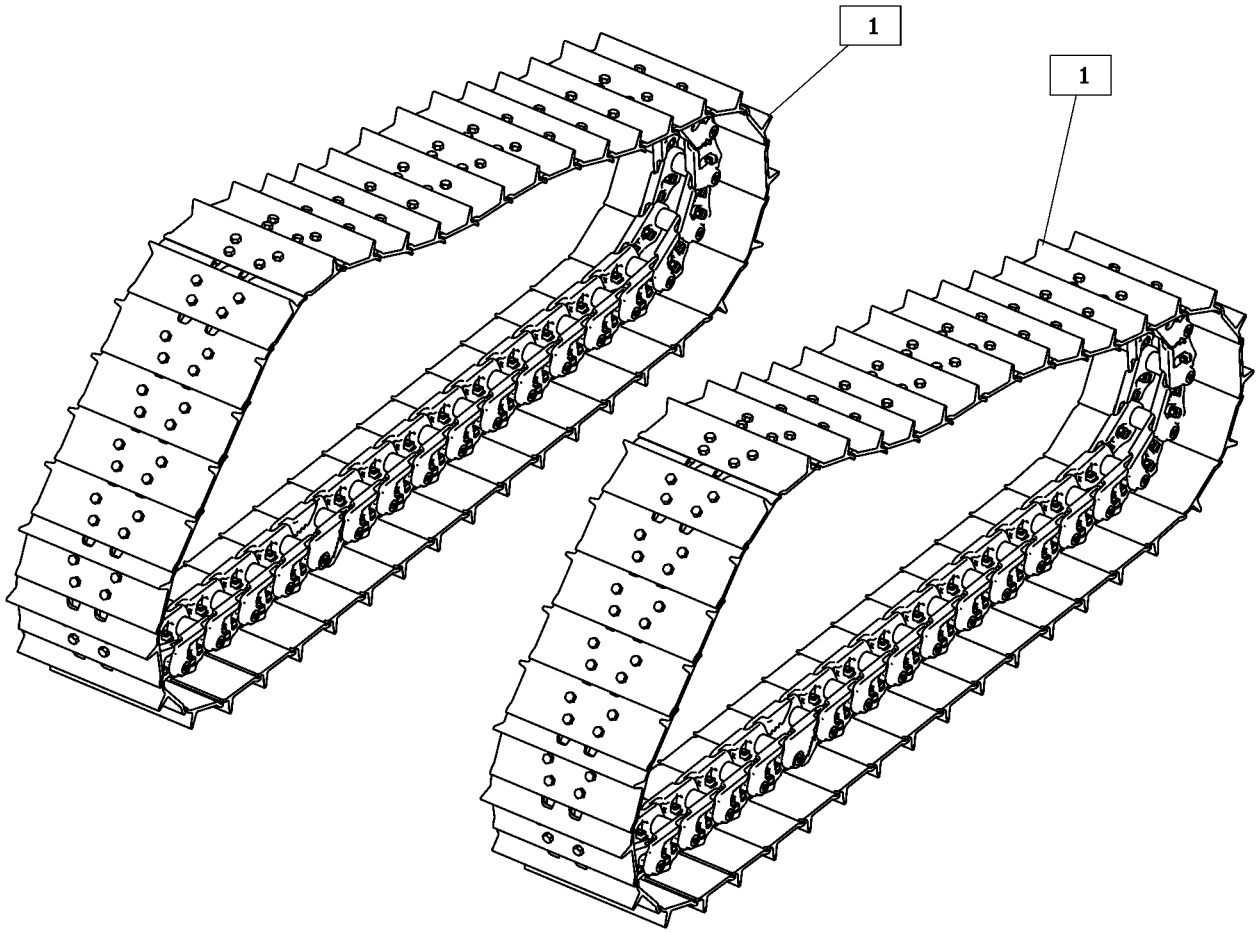

GRAPHIC #1 <END> g06450306

246-5759 TRACK GP—2-REQUIRED, SYSTEMONE

S/N: Z2K1-UP
560-MM (22-IN) GROUSER SHOE. SEALED, LUBRICATED. EXTREME SERVICE
FOR USE WITH SYSTEMONE ROLLERS, GUARDS, GUIDESTRIPS
PART OF 579-5770 TRACK AR
AN ATTACHMENT

SMCS-4170 **i05017433**

NOTE	PART NUMBER	QTY	PART NAME 1 2 3 4 5 6 (PRODUCT LEVEL)	SEE PAGE
Y	**235-2511**	1	LINK AS-TRACK (SYSTEMONE)	477
M	**6Y-0846**	156	BOLT-TRACK (M20X1.5X63-MM)	
M	**254-0225**	4	BOLT-TRACK MASTER (M20X1.5X101-MM)	
	318-2375	2	LINK-TRACK MASTER	
M	**9W-3361**	156	NUT-TRACK (M20X1.5-THD)	
	246-5748	39	SHOE-TRACK	
	254-9052	1	SHOE-TRACK MASTER	

M - METRIC PART
Y - SEPARATE ILLUSTRATION

<END>

256-4873 TRACK GP–2-REQUIRED, SYSTEMONE

S/N: Z2K1-UP

610-MM (24-IN) GROUSER SHOE. SEALED, LUBRICATED. EXTREME SERVICE. CLAMP MASTER FOR USE WITH SYSTEMONE ROLLERS, GUARDS, GUIDESTRIPS

PART OF 579-5771 TRACK AR

AN ATTACHMENT

SMCS-4170 **i04747954**

NOTE	REF NO	GRAPHIC REF	PART NUMBER	QTY	PART NAME 1 2 3 4 5 6 (PRODUCT LEVEL)	SEE PAGE
	1	1	**246-5747**	39	SHOE-TRACK	
Y	2	1	**235-2511**	1	LINK AS-TRACK (SYSTEMONE)	477
	3	1	**254-9050**	1	SHOE-TRACK MASTER	
	4	1	**318-2375**	2	LINK-TRACK MASTER	
M	5	1	**254-0225**	4	BOLT-TRACK MASTER (M20X1.5X101-MM)	
M	6	1	**6Y-0846**	156	BOLT-TRACK (M20X1.5X63-MM)	
M	7	1	**9W-3361**	156	NUT-TRACK (M20X1.5-THD)	

M - METRIC PART
Y - SEPARATE ILLUSTRATION

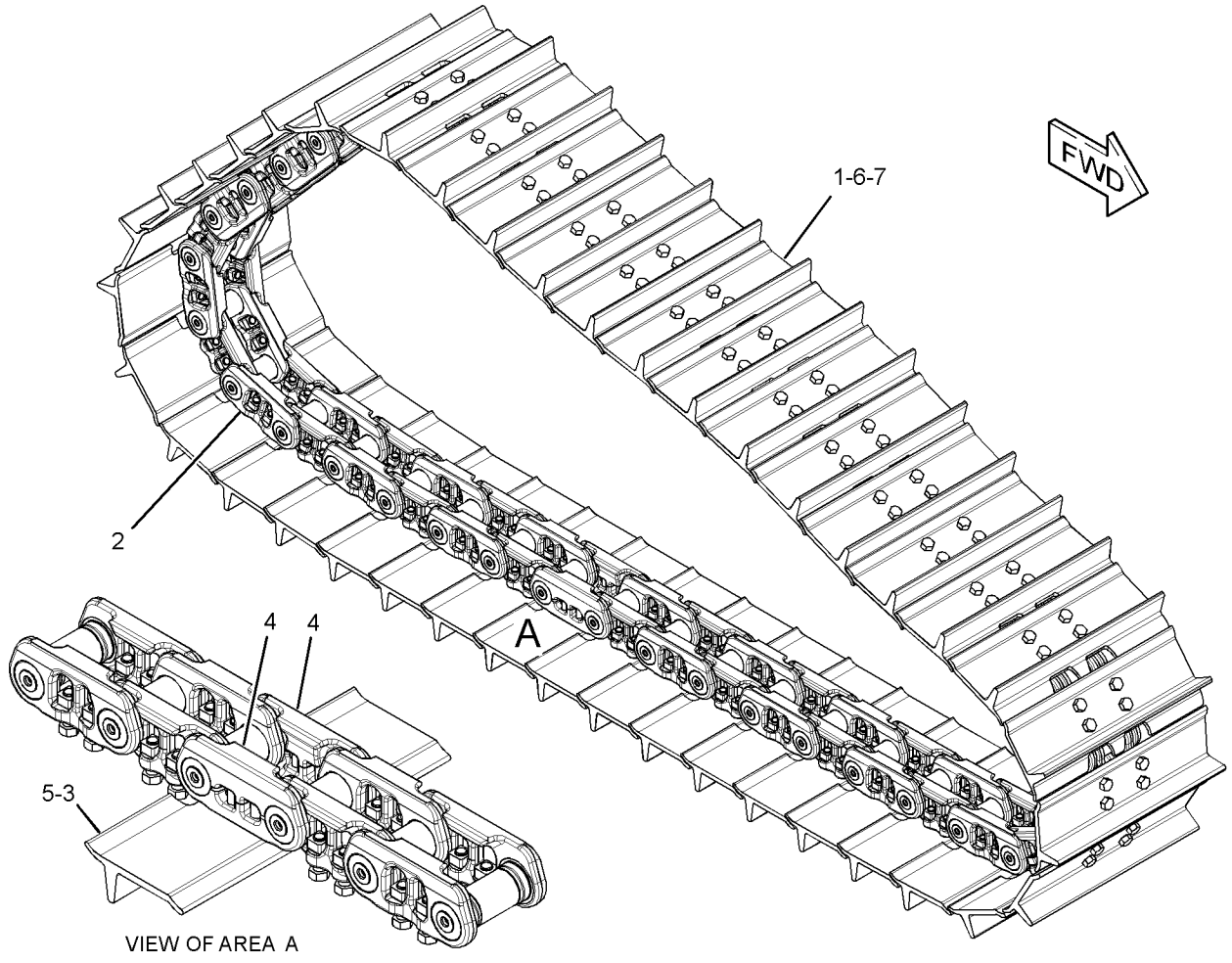

GRAPHIC #1 <END> g02912678

267-6097 TRACK GP–2-REQUIRED, SYSTEMONE

S/N: Z2N1-UP
860-MM (33.9-IN) GROUSER SHOE. SEALED, LUBRICATED, EXTREME SERVICE, CLAMP MASTER
FOR USE WITH SYSTEMONE ROLLERS, GUARDS, & GUIDESTRIPS
PART OF 579-5777 TRACK AR
AN ATTACHMENT

SMCS-4170 **i06701884**

NOTE	REF NO	GRAPHIC REF	PART NUMBER	QTY	PART NAME 1 2 3 4 5 6 (PRODUCT LEVEL)	SEE PAGE
	1	1	**267-6099**	45	SHOE-TRACK	
	2	1	**318-2375**	2	LINK-TRACK MASTER	
Y	3	1	**351-0961**	1	LINK AS-TRACK (SYSTEMONE)	478
	4	1	**294-4813**	1	SHOE-TRACK MASTER	
M	5	1	**254-0225**	4	BOLT-TRACK MASTER (M20X1.5X101-MM)	
M	6	1	**6Y-0846**	180	BOLT-TRACK (M20X1.5X63-MM)	
M	7	1	**9W-3361**	180	NUT-TRACK (M20X1.5-THD)	

M - METRIC PART
Y - SEPARATE ILLUSTRATION

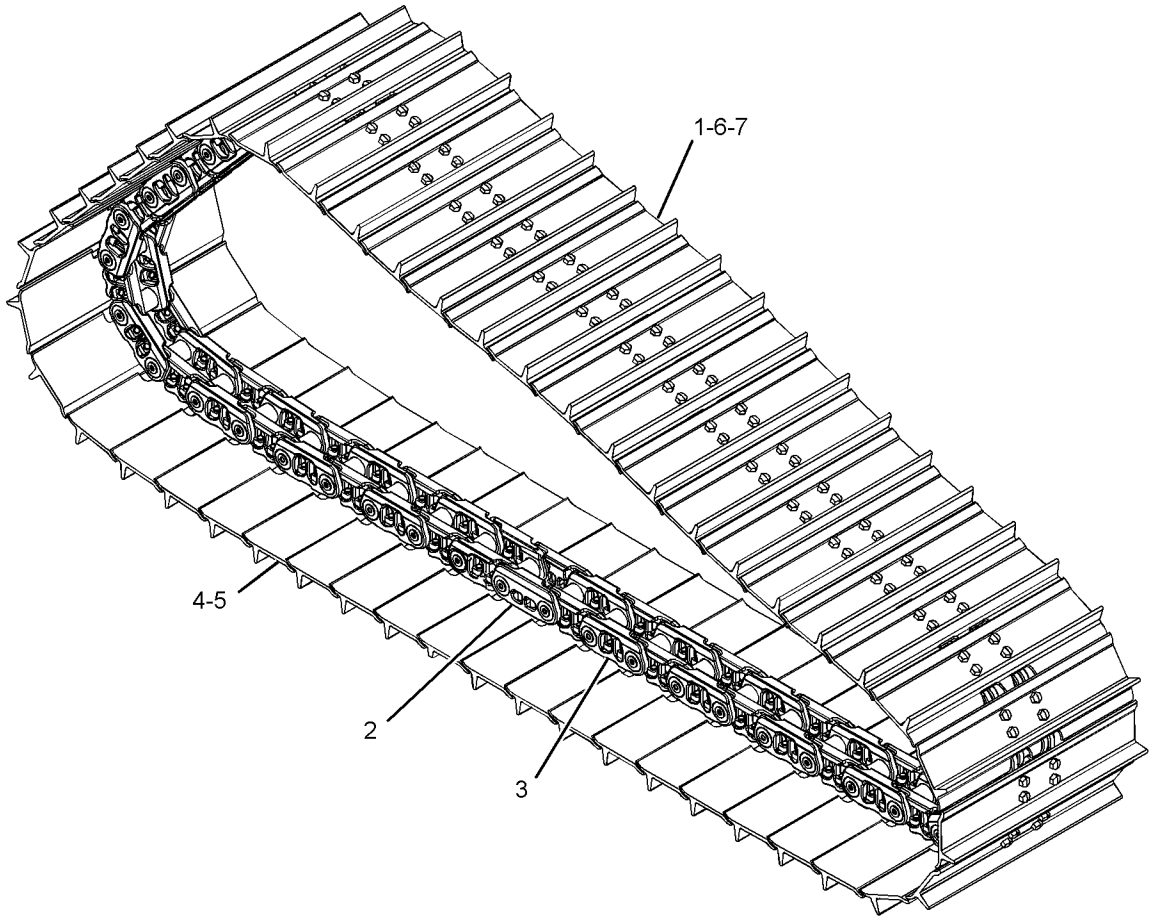

GRAPHIC #1 <END> g02815096

274-7646 TRACK GP–2-REQUIRED, SYSTEMONE

S/N: Z2N1-UP

840-MM (33.1-IN) GROUSER SHOE. SEALED, LUBRICATED, MODERATE SERVICE, CLAMP MASTER

FOR USE WITH SYSTEMONE ROLLERS, GUARDS & GUIDESTRIPS

PART OF 579-5776 TRACK AR

AN ATTACHMENT

SMCS-4170 **i06701999**

NOTE	REF NO	GRAPHIC REF	PART NUMBER	QTY	PART NAME 1 2 3 4 5 6 (PRODUCT LEVEL)	SEE PAGE
	1	1	**267-8910**	45	SHOE-TRACK	
	2	1	**318-2375**	2	LINK-TRACK MASTER	
Y	3	1	**351-0961**	1	LINK AS-TRACK (SYSTEMONE)	478
	4	1	**355-1651**	1	SHOE-TRACK MASTER	
M	5	1	**254-0225**	4	BOLT-TRACK MASTER (M20X1.5X101-MM)	
M	6	1	**6Y-0846**	180	BOLT-TRACK (M20X1.5X63-MM)	
M	7	1	**9W-3361**	180	NUT-TRACK (M20X1.5-THD)	

M - METRIC PART
Y - SEPARATE ILLUSTRATION

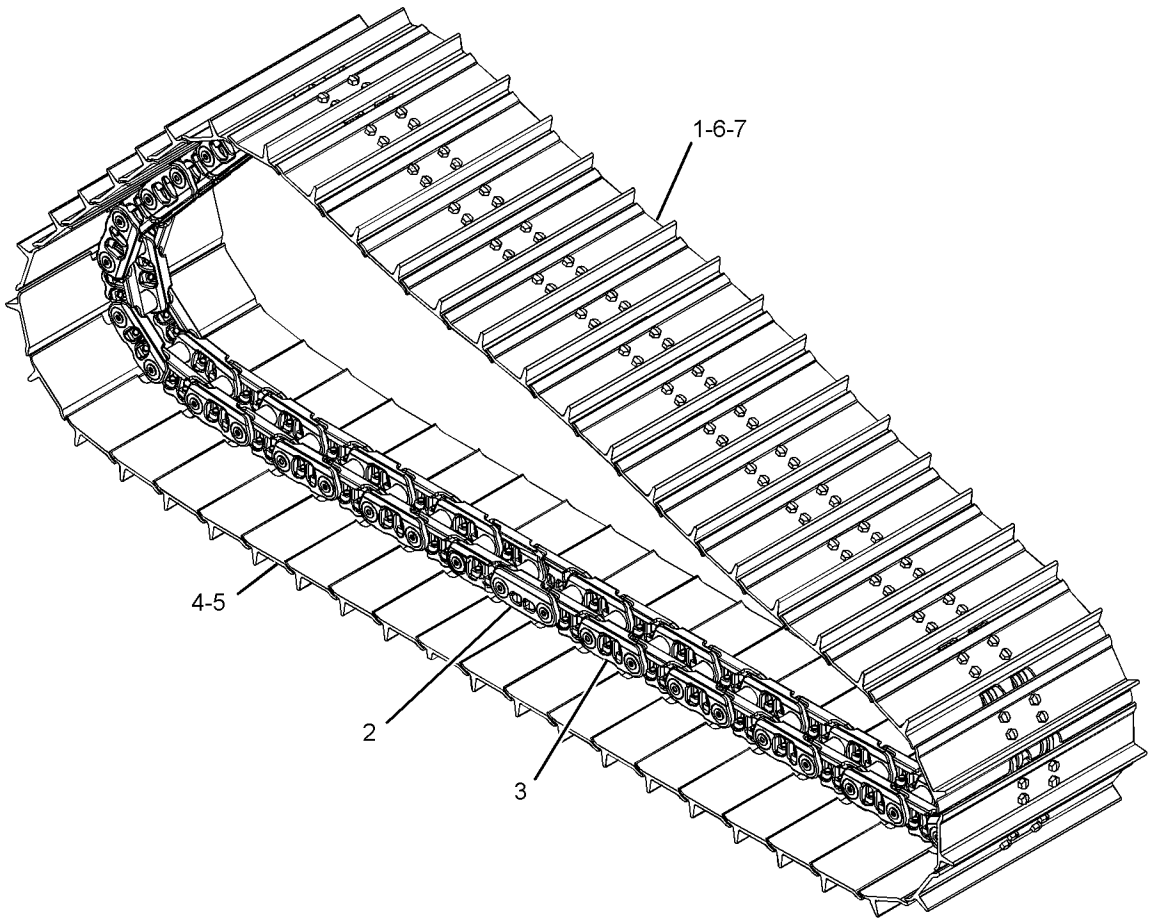

GRAPHIC #1 <END> g02815096

287-6106 TRACK GP–2-REQUIRED, SYSTEMONE

S/N: Z2N1-UP
840-MM (33.1-IN) GROUSER SHOE. SEALED, LUBRICATED, EXTREME SERVICE, CLAMP MASTER
FOR USE WITH SYSTEMONE ROLLERS, GUARDS, GUIDESTRIPS
PART OF 579-5775 TRACK AR
AN ATTACHMENT

SMCS-4170 **i07836192**

NOTE	REF NO	GRAPHIC REF	PART NUMBER	QTY	PART NAME 1 2 3 4 5 6 (PRODUCT LEVEL)	SEE PAGE
	1	1	**287-6104**	45	SHOE-TRACK	
	2	1	**313-4542**	1	SHOE-TRACK MASTER	
	3	1	**318-2375**	2	LINK-TRACK MASTER	
Y	4	1	**351-0961**	1	LINK AS-TRACK	478
M	5	1	**254-0225**	4	BOLT-TRACK MASTER (M20X1.5X101-MM)	
M	6	1	**6Y-0846**	180	BOLT-TRACK (M20X1.5X63-MM)	
M	7	1	**9W-3361**	180	NUT-TRACK (M20X1.5-THD)	

M - METRIC PART
Y - SEPARATE ILLUSTRATION

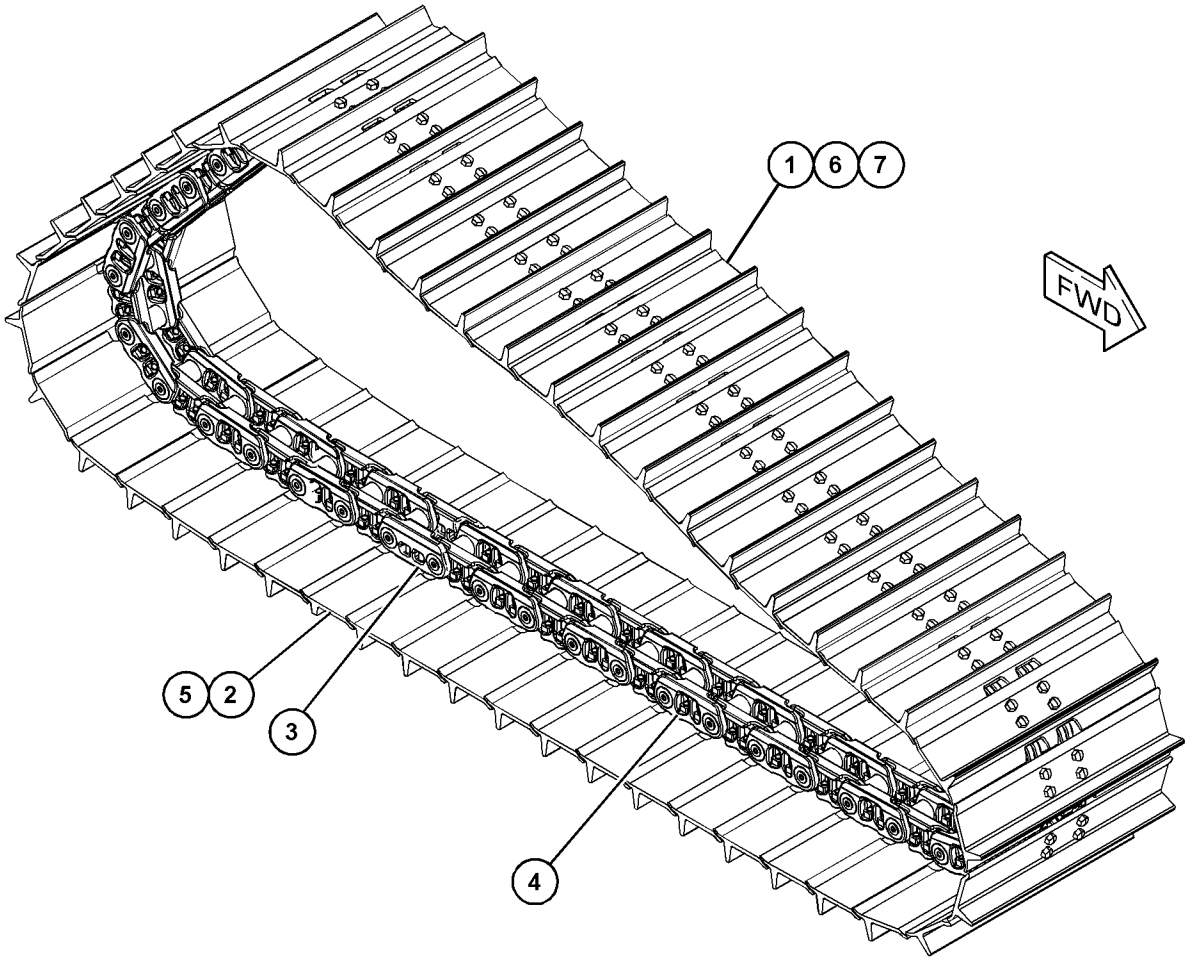

GRAPHIC #1 <END> g06022906

320-0360 TRACK GP—2-REQUIRED, SYSTEMONE

S/N: Z2N1-UP

790-MM (31-IN) GROUSER SHOE. SEALED, LUBRICATED. EXTREME SERVICE. CLAMP MASTER
FOR USE WITH SYSTEMONE ROLLERS, GUARDS, GUIDESTRIPS
PART OF 579-5774 TRACK AR
AN ATTACHMENT

SMCS-4170 **i07848560**

NOTE	REF NO	GRAPHIC REF	PART NUMBER	QTY	PART NAME 1 2 3 4 5 6 (PRODUCT LEVEL)	SEE PAGE
	1	1	**318-2375**	2	LINK-TRACK MASTER	
	2	1	**320-0361**	45	SHOE-TRACK	
Y	3	1	**351-0961**	1	LINK AS-TRACK	478
	4	1	**355-2290**	1	SHOE-TRACK MASTER	
M	5	1	**254-0225**	4	BOLT-TRACK MASTER (M20X1.5X101-MM)	
M	6	1	**6Y-0846**	180	BOLT-TRACK (M20X1.5X63-MM)	
M	7	1	**9W-3361**	180	NUT-TRACK (M20X1.5-THD)	

M - METRIC PART
Y - SEPARATE ILLUSTRATION

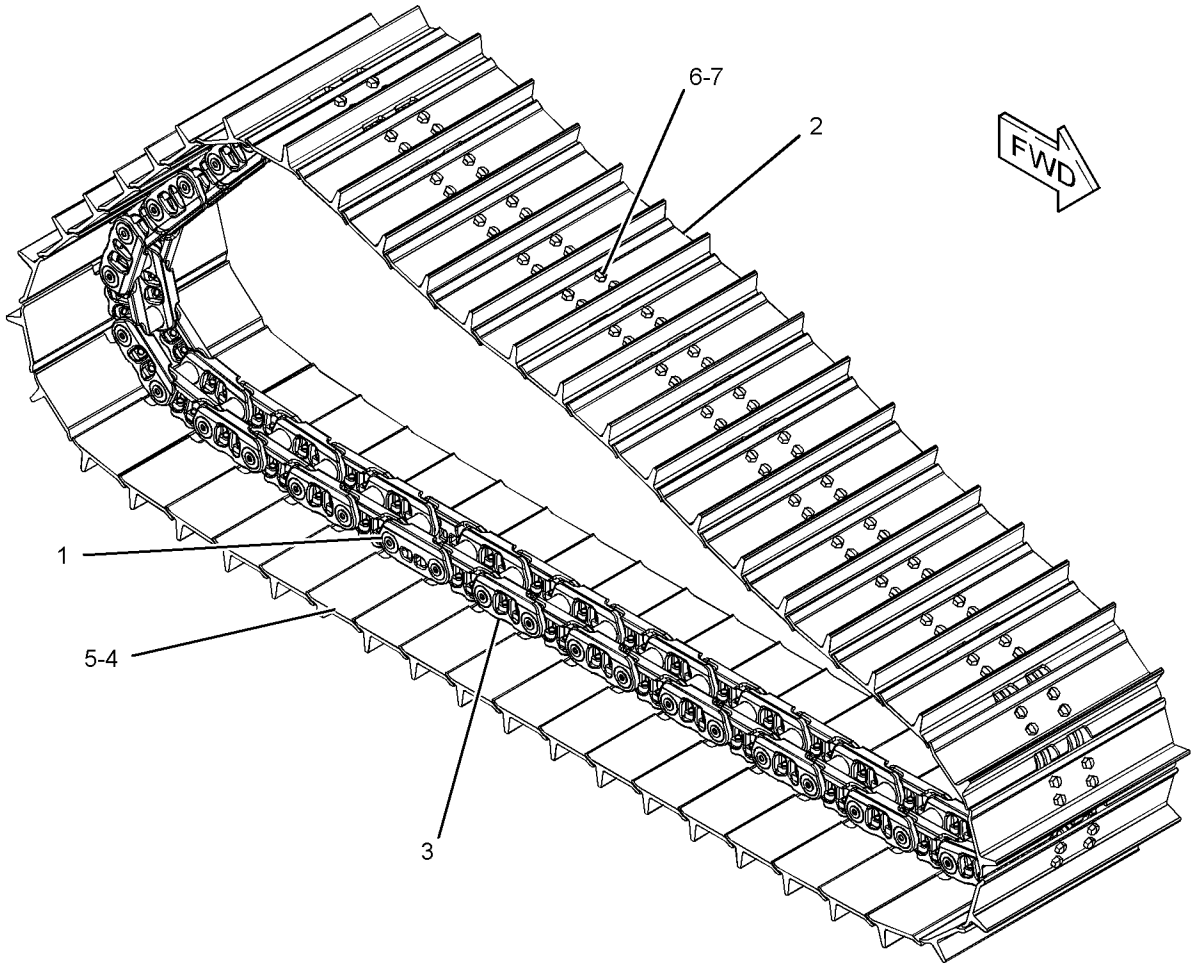

GRAPHIC #1 <END> g02812376

375-4607 TRACK GP–2-REQUIRED, SYSTEMONE

S/N: Z2K1-UP
610-MM (24-IN) GROUSER SHOE. SEALED, LUBRICATED, MODERATE SERVICE
FOR USE WITH SYSTEMONE ROLLERS, GUARDS, GUIDESTRIPS AND CENTER TREAD IDLERS
PART OF 579-5773 TRACK AR
AN ATTACHMENT

SMCS-4170 **i06717105**

NOTE	REF NO	GRAPHIC REF	PART NUMBER	QTY	PART NAME 1 2 3 4 5 6 (PRODUCT LEVEL)	SEE PAGE
	1	1	**235-2504**	45	SHOE-TRACK	
	2	1	**318-2375**	2	LINK-TRACK MASTER	
Y	3	1	**351-0961**	1	LINK AS-TRACK (SYSTEMONE)	478
	4	1	**254-9049**	1	SHOE-TRACK MASTER	
M	5	1	**254-0225**	4	BOLT-TRACK MASTER (M20X1.5X101-MM)	
M	6	1	**6Y-0846**	180	BOLT-TRACK (M20X1.5X63-MM)	
M	7	1	**9W-3361**	180	NUT-TRACK (M20X1.5-THD)	

M - METRIC PART
Y - SEPARATE ILLUSTRATION

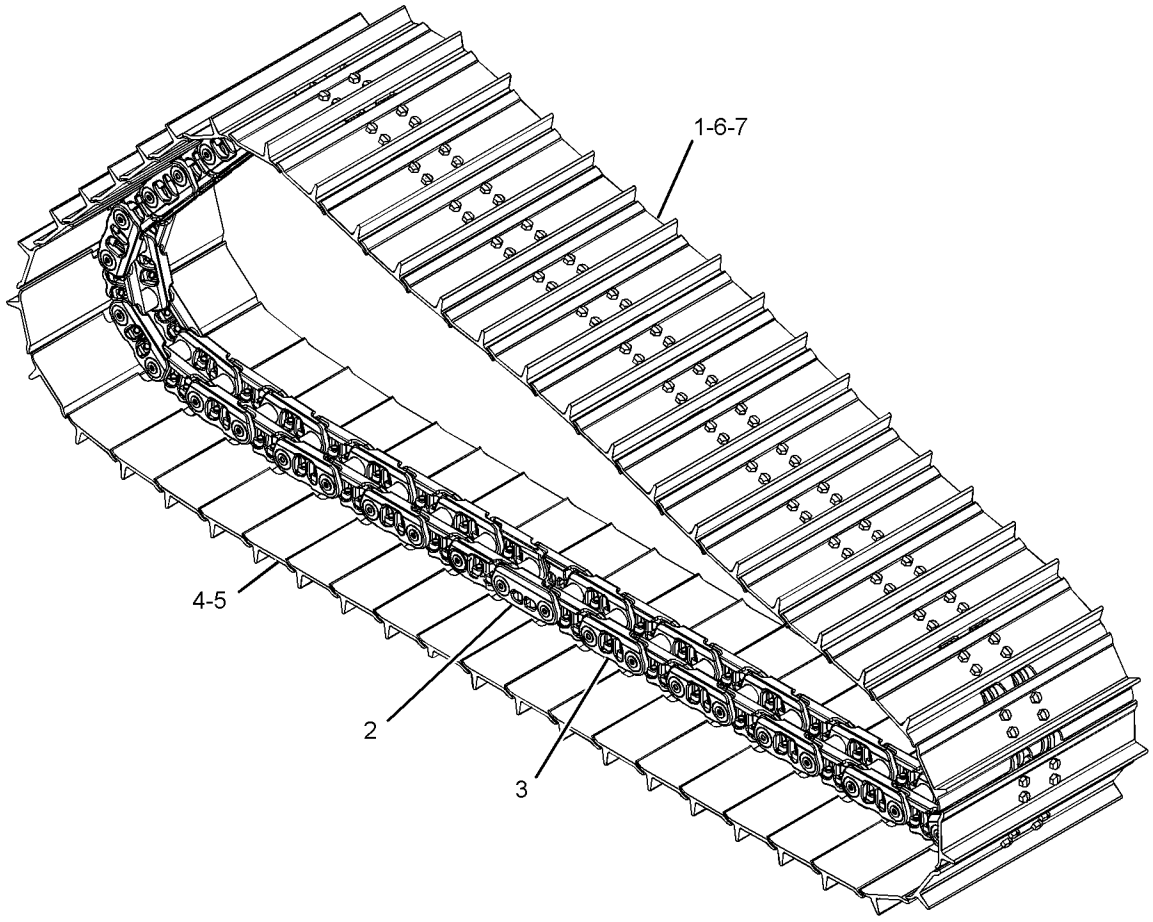

GRAPHIC #1 <END> g02815096

558-6604 TRACK GP–2-REQUIRED, HEAVY-DUTY

S/N: Z2K1-UP

560-MM (22-IN) GROUSER SHOE. MODERATE SERVICE. SEALED, LUBRICATED. POSITIVE PIN RETENTION

FOR USE WITH HEAVY-DUTY ROLLERS, GUARDS, GUIDESTRIPS & CONVENTIONAL IDLERS

PART OF 584-2193 TRACK AR

AN ATTACHMENT

SMCS-4170 **i07828885**

NOTE	REF NO	GRAPHIC REF	PART NUMBER	QTY	PART NAME 1 2 3 4 5 6 (PRODUCT LEVEL)	SEE PAGE
	1	1	**106-1607**	39	SHOE-TRACK	
	2	1	**106-1613**	1	SHOE-TRACK	
Y	3	1	**541-4629**	1	LINK AS-TRACK	479
	4	1	**106-1642**	2	BOLT-TRACK MASTER (3/4-16X2.9-IN)	
	5	1	**107-0719**	2	BOLT-TRACK MASTER (3/4-16X3.9-IN)	
	6	1	**1S-1860**	156	NUT-TRACK (3/4-16-THD)	
	7	1	**6V-1792**	156	BOLT-TRACK (3/4-16X2.4-IN)	

Y - SEPARATE ILLUSTRATION

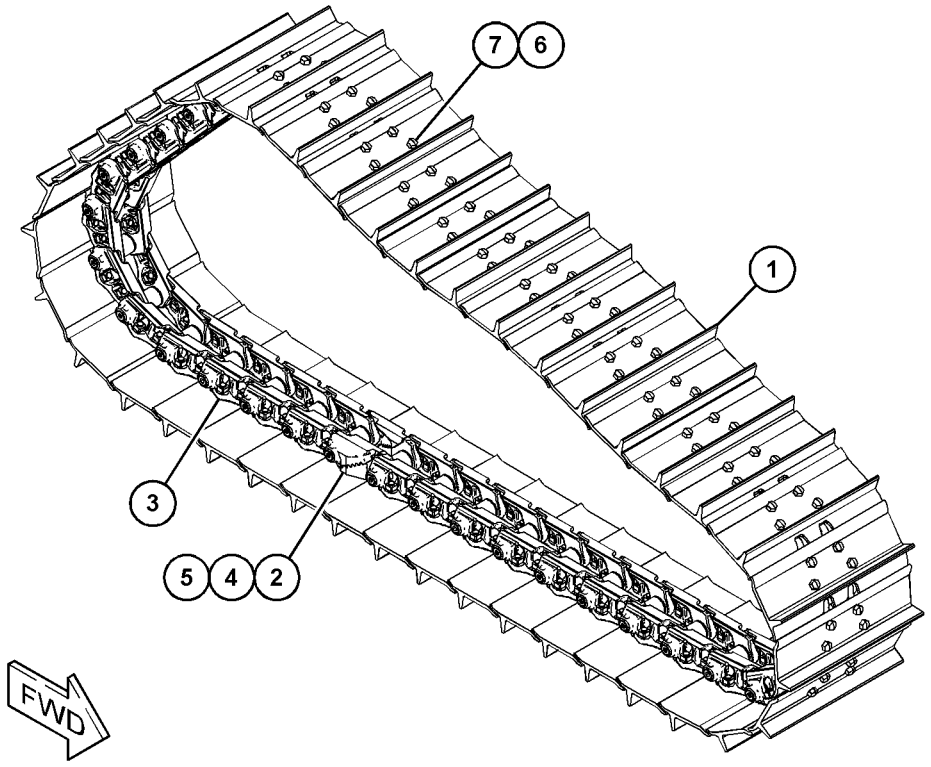

GRAPHIC #1 <END> g06034710

558-9212 TRACK GP–2-REQUIRED, HEAVY-DUTY

S/N: Z2K1-UP

600-MM (23.6-IN) GROUSER SHOE. SEALED, LUBRICATED. MODERATE SERVICE. POSITIVE PIN RETENTION

FOR USE WITH HEAVY DUTY ROLLERS, GUARDS, GUIDESTRIPS & CONVENTIONAL IDLERS

PART OF 584-2192 TRACK AR

AN ATTACHMENT

SMCS-4170 **i07789835**

NOTE	REF NO	GRAPHIC REF	PART NUMBER	QTY	PART NAME 1 2 3 4 5 6 (PRODUCT LEVEL)	SEE PAGE
	1	1	**117-0615**	39	SHOE-TRACK	
	2	1	**117-0616**	1	SHOE-TRACK MASTER	
Y	3	1	**541-4629**	1	LINK AS-TRACK	479
	4	1	**106-1642**	2	BOLT-TRACK MASTER (3/4-16X2.9-IN)	
	5	1	**107-0719**	2	BOLT-TRACK MASTER (3/4-16X3.9-IN)	
	6	1	**1S-1860**	156	NUT-TRACK (3/4-16-THD)	
	7	1	**6V-1792**	156	BOLT-TRACK (3/4-16X2.4-IN)	

Y - SEPARATE ILLUSTRATION

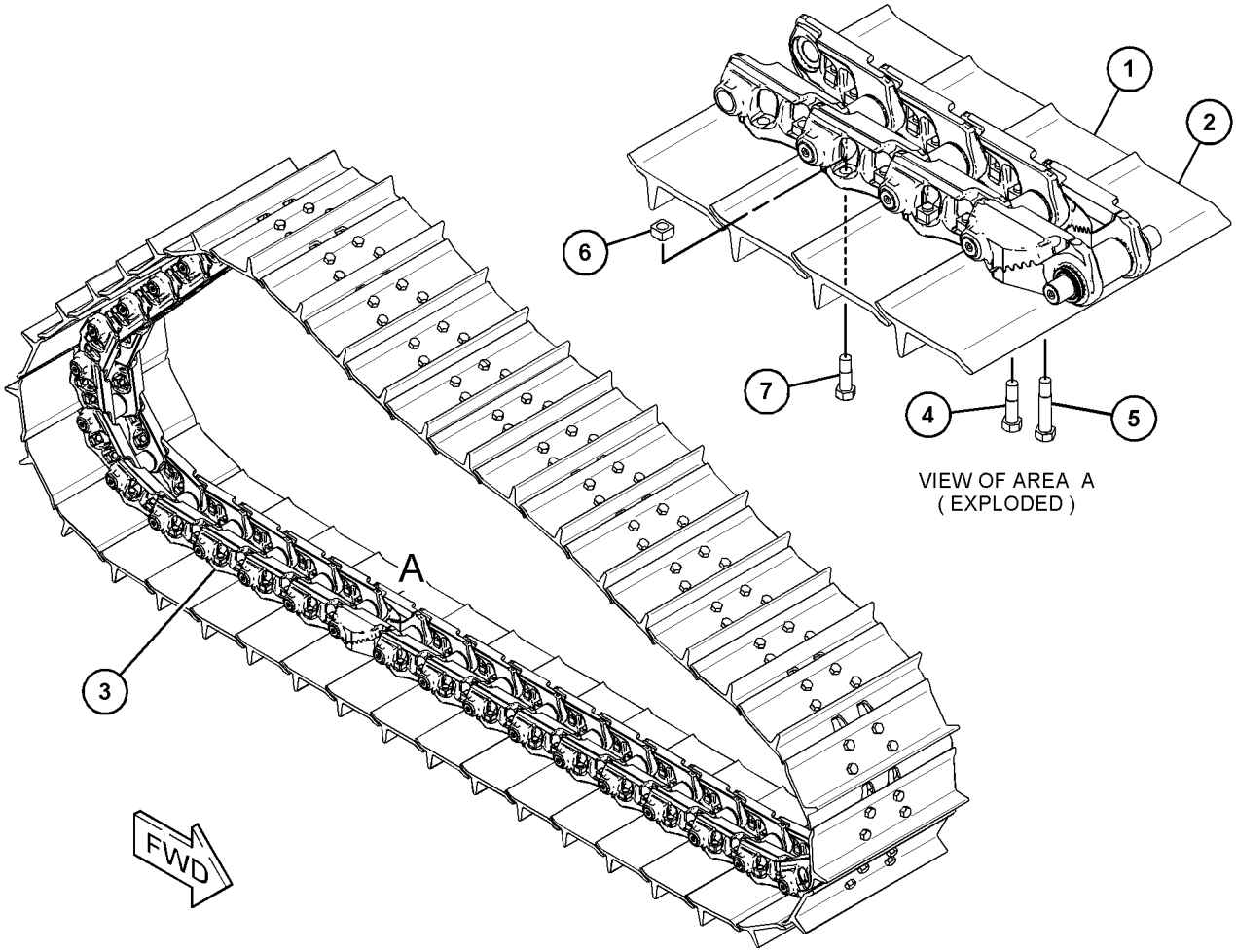

GRAPHIC #1 <END> g06033005

558-9213 TRACK GP–2-REQUIRED, HEAVY-DUTY

S/N: Z2K1-UP

600-MM (23.62-IN) GROUSER SHOE. SEALED, LUBRICATED. EXTREME SERVICE. POSITIVE PIN RETENTION

FOR USE WITH HEAVY-DUTY ROLLERS, GUARDS, GUIDESTRIPS & CONVENTIONAL IDLERS

PART OF 575-7733 TRACK AR

AN ATTACHMENT

SMCS-4170 **i07828413**

NOTE	REF NO	GRAPHIC REF	PART NUMBER	QTY	PART NAME 1 2 3 4 5 6 (PRODUCT LEVEL)	SEE PAGE
	1	1	**132-1334**	39	SHOE-TRACK	
	2	1	**132-1336**	1	SHOE-TRACK MASTER	
	3	1	**106-1642**	2	BOLT-TRACK MASTER (3/4-16X2.9-IN)	
	4	1	**107-0719**	2	BOLT-TRACK MASTER (3/4-16X3.9-IN)	
	5	1	**1S-1860**	156	NUT-TRACK (3/4-16-THD)	
Y	6	1	**541-4629**	1	LINK AS-TRACK	479
	7	1	**6V-1792**	156	BOLT-TRACK (3/4-16X2.4-IN)	

Y - SEPARATE ILLUSTRATION

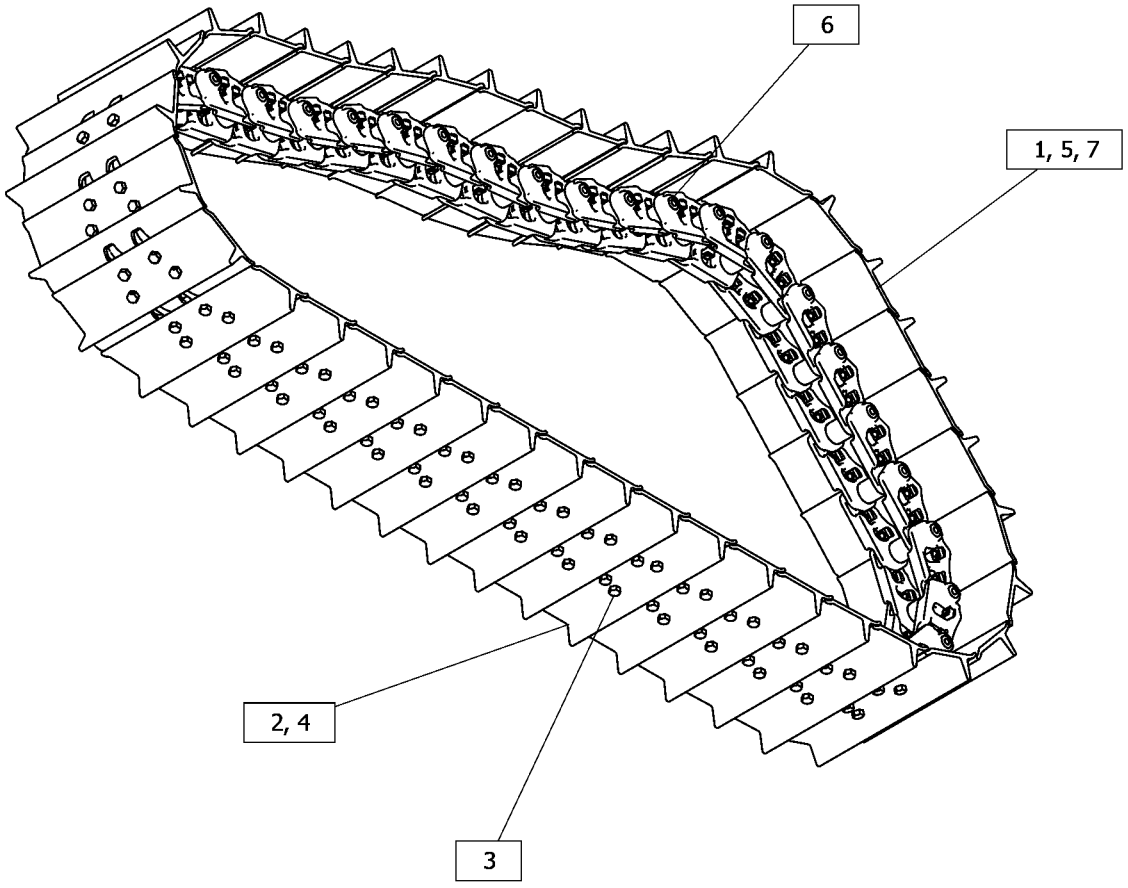

GRAPHIC #1 <END> g06450465

558-9216 TRACK GP–2-REQUIRED, HEAVY-DUTY

S/N: Z2N1-UP

860-MM (33.9-IN) SINGLE GROUSER SHOE. SEALED, LUBRICATED. EXTREME SERVICE. POSITIVE PIN RETENTION

FOR USE WITH HEAVY-DUTY ROLLERS, GUARDS, GUIDESTRIPS & CONVENTIONAL IDLERS

PART OF 575-7740 TRACK AR

AN ATTACHMENT

SMCS-4170 **i07708352**

NOTE	REF NO	GRAPHIC REF	PART NUMBER	QTY	PART NAME 1 2 3 4 5 6 (PRODUCT LEVEL)	SEE PAGE
	1	1	**222-1796**	45	SHOE-TRACK	
	2	1	**222-1797**	1	SHOE-TRACK MASTER	
	3	1	**106-1642**	2	BOLT-TRACK MASTER (3/4-16X2.9-IN)	
	4	1	**107-0719**	2	BOLT-TRACK MASTER (3/4-16X3.9-IN)	
	5	1	**1S-1860**	180	NUT-TRACK (3/4-16-THD)	
Y	6	1	**541-4630**	1	LINK AS-TRACK	481
	7	1	**6V-1792**	180	BOLT-TRACK (3/4-16X2.4-IN)	

Y - SEPARATE ILLUSTRATION

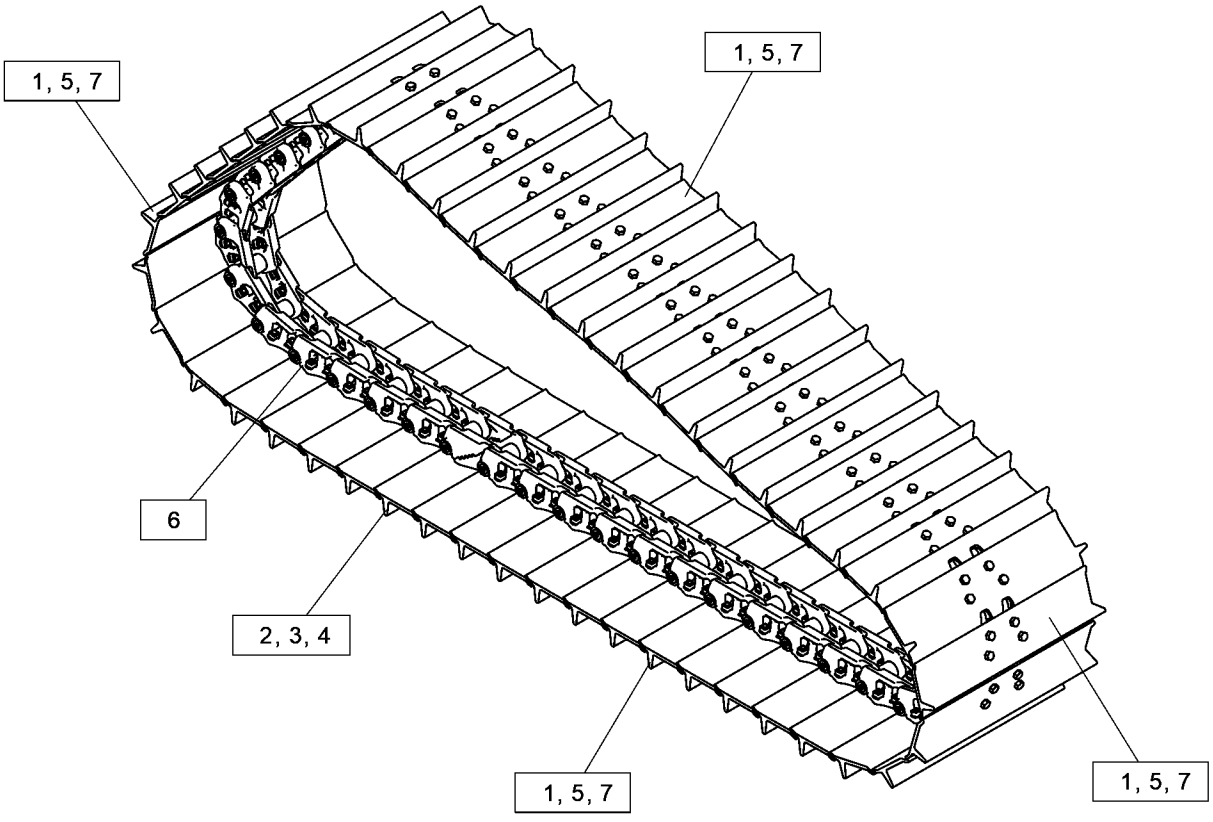

GRAPHIC #1 <END> g06447203

558-9217 TRACK GP–2-REQUIRED, HEAVY-DUTY

S/N: Z2N1-UP

835-MM (32.87-IN) GROUSER SHOE. SEALED, LUBRICATED. EXTREME SERVICE. POSITIVE PIN RETENTION

FOR USE WITH HEAVY-DUTY ROLLERS, GUARDS, GUIDESTRIPS & CONVENTIONAL IDLERS

PART OF 575-7738 TRACK AR

AN ATTACHMENT

SMCS-4170 **i07828744**

NOTE	REF NO	GRAPHIC REF	PART NUMBER	QTY	PART NAME 1 2 3 4 5 6 (PRODUCT LEVEL)	SEE PAGE
	1	1	**106-1642**	2	BOLT-TRACK MASTER (3/4-16X2.9-IN)	
	2	1	**107-0719**	2	BOLT-TRACK MASTER (3/4-16X3.9-IN)	
	3	1	**1S-1860**	180	NUT-TRACK (3/4-16-THD)	
	4	1	**356-3429**	45	SHOE-TRACK	
	5	1	**356-3430**	1	SHOE-TRACK MASTER	
Y	6	1	**541-4630**	1	LINK AS-TRACK	481
	7	1	**6V-1792**	180	BOLT-TRACK (3/4-16X2.4-IN)	

Y - SEPARATE ILLUSTRATION

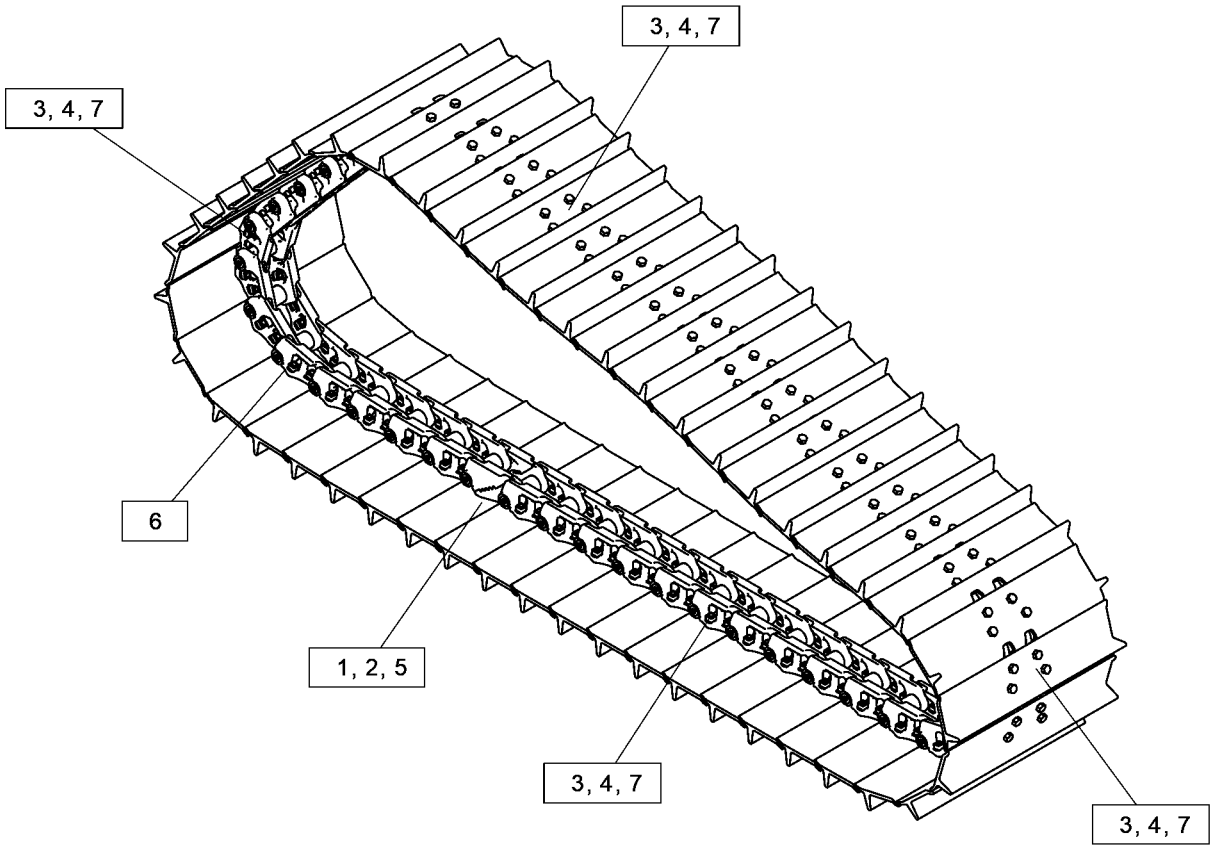

GRAPHIC #1 <END> g06451004

575-7726 TRACK GP–2-REQUIRED, HEAVY-DUTY

S/N: Z2K1-UP

560-MM (22-IN) GROUSER SHOE. SEALED, LUBRICATED. EXTREME SERVICE. POSITIVE PIN RETENTION

FOR USE WITH HEAVY-DUTY ROLLERS, GUARDS, GUIDESTRIPS & CONVENTIONAL IDLERS

PART OF 575-7734 TRACK AR

AN ATTACHMENT

SMCS-4170 **i07828468**

NOTE	REF NO	GRAPHIC REF	PART NUMBER	QTY	PART NAME 1 2 3 4 5 6 (PRODUCT LEVEL)	SEE PAGE
	1	1	**106-1642**	2	BOLT-TRACK MASTER (3/4-16X2.9-IN)	
	2	1	**107-0713**	39	SHOE-TRACK	
	3	1	**107-0714**	1	SHOE-TRACK MASTER	
	4	1	**107-0719**	2	BOLT-TRACK MASTER (3/4-16X3.9-IN)	
	5	1	**1S-1860**	156	NUT-TRACK (3/4-16-THD)	
Y	6	1	**541-4629**	1	LINK AS-TRACK	479
	7	1	**6V-1792**	156	BOLT-TRACK (3/4-16X2.4-IN)	

Y - SEPARATE ILLUSTRATION

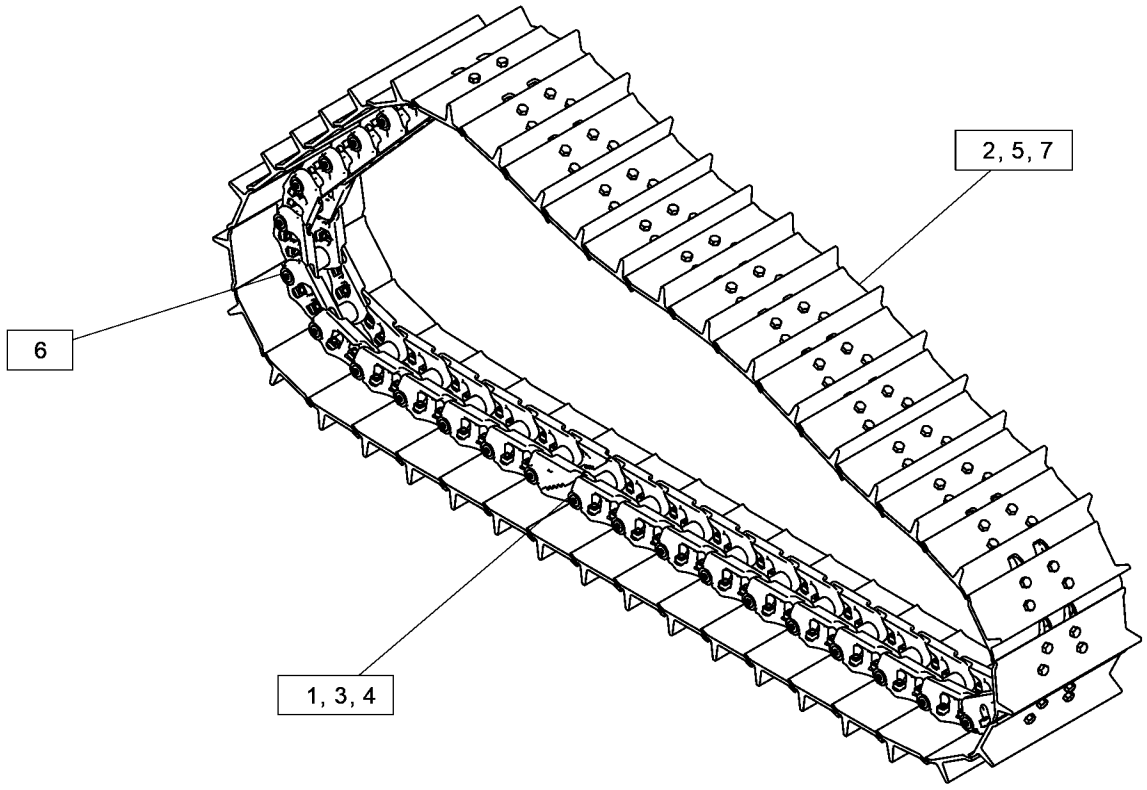

GRAPHIC #1 <END> g06449919

575-7727 TRACK GP–2-REQUIRED, HEAVY-DUTY

S/N: Z2K1-UP

600-MM (23.62-IN) GROUSER SHOE. SEALED, LUBRICATED. EXTREME SERVICE. POSITIVE PIN RETENTION. TRAPEZOIDAL

FOR USE WITH HEAVY-DUTY ROLLERS, GUARDS, GUIDESTRIPS & CONVENTIONAL IDLERS

PART OF 575-7735 TRACK AR

AN ATTACHMENT

SMCS-4170 **i07828691**

NOTE	REF NO	GRAPHIC REF	PART NUMBER	QTY	PART NAME 1 2 3 4 5 6 (PRODUCT LEVEL)	SEE PAGE
	1	1	**356-3427**	39	SHOE-TRACK	
	2	1	**356-3428**	1	SHOE-TRACK MASTER	
	3	1	**106-1642**	2	BOLT-TRACK MASTER (3/4-16X2.9-IN)	
	4	1	**107-0719**	2	BOLT-TRACK MASTER (3/4-16X3.9-IN)	
	5	1	**1S-1860**	156	NUT-TRACK (3/4-16-THD)	
Y	6	1	**541-4629**	1	LINK AS-TRACK	479
	7	1	**6V-1792**	156	BOLT-TRACK (3/4-16X2.4-IN)	

Y - SEPARATE ILLUSTRATION

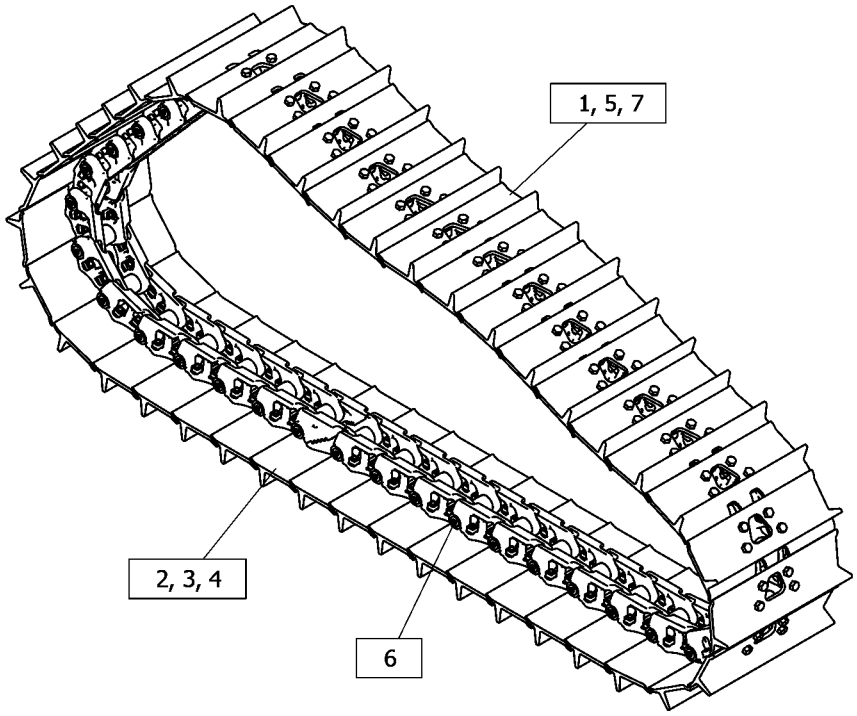

GRAPHIC #1 <END> g06451586

575-7729 TRACK GP–2-REQUIRED, HEAVY-DUTY

S/N: Z2N1-UP

840-MM (33.1-IN) GROUSER SHOE. SEALED, LUBRICATED. EXTREME SERVICE. POSITIVE PIN RETENTION. TRAPEZOIDAL

FOR USE WITH HEAVY-DUTY UNDERCARRIAGE, ROLLERS, GUARDS, GUIDESTRIPS, AND CONVENTIONAL IDLERS

PART OF 575-7739 TRACK AR

AN ATTACHMENT

SMCS-4170 **i07828702**

NOTE	REF NO	GRAPHIC REF	PART NUMBER	QTY	PART NAME 1 2 3 4 5 6 (PRODUCT LEVEL)	SEE PAGE
Y	1	1	**541-4630**	1	LINK AS-TRACK	481
	2	1	**356-3431**	45	SHOE-TRACK	
	3	1	**356-3432**	1	SHOE-TRACK MASTER	
	4	1	**106-1642**	2	BOLT-TRACK MASTER (3/4-16X2.9-IN)	
	5	1	**107-0719**	2	BOLT-TRACK MASTER (3/4-16X3.9-IN)	
	6	1	**1S-1860**	180	NUT-TRACK (3/4-16-THD)	
	7	1	**6V-1792**	180	BOLT-TRACK (3/4-16X2.4-IN)	

Y - SEPARATE ILLUSTRATION

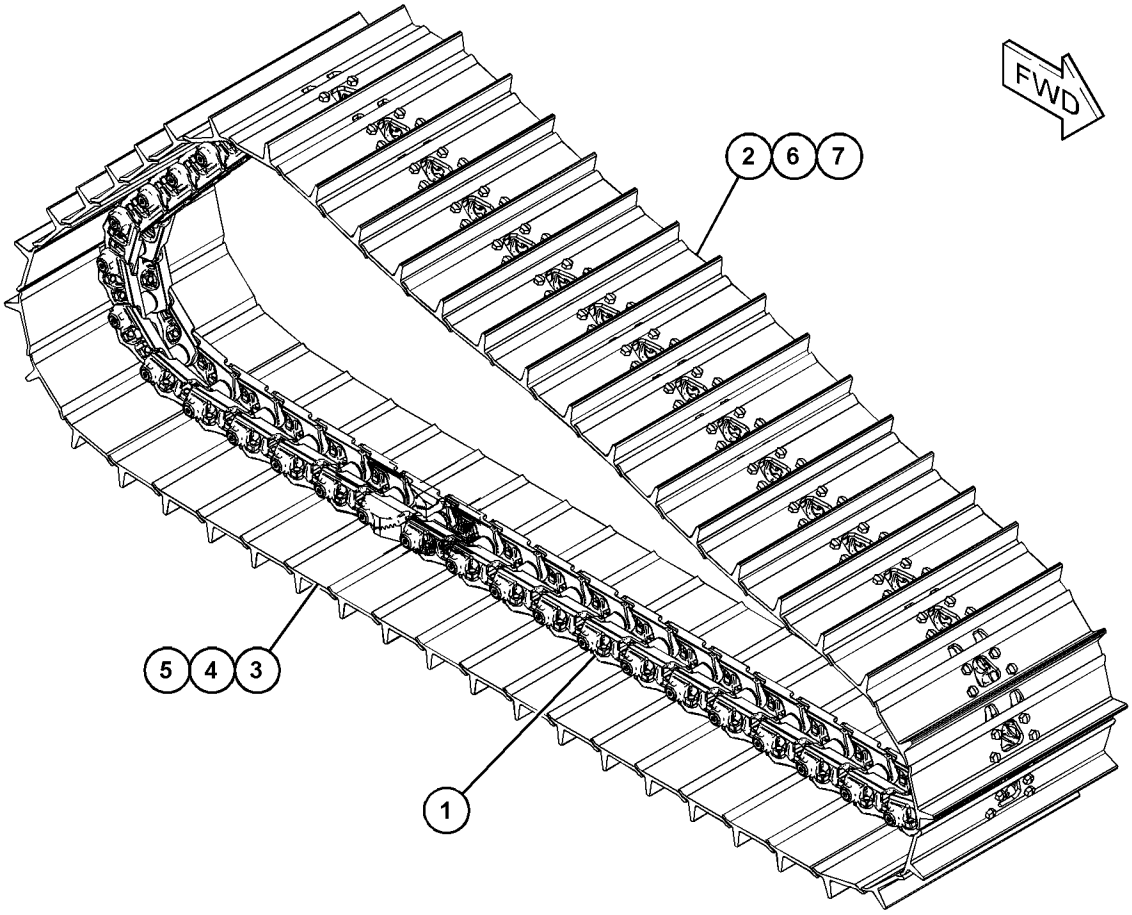

GRAPHIC #1 <END> g06022917

575-7730 TRACK GP–2-REQUIRED, HEAVY-DUTY

S/N: Z2N1-UP

865-MM (34-IN) SELF-CLEANING GROUSER SHOE. SEALED, LUBRICATED. POSITIVE PIN RETENTION

FOR USE WITH HEAVY-DUTY ROLLERS, GUARDS, GUIDESTRIPS & CONVENTIONAL IDLERS

PART OF 575-7741 TRACK AR

AN ATTACHMENT

SMCS-4170 **i07828790**

NOTE	REF NO	GRAPHIC REF	PART NUMBER	QTY	PART NAME 1 2 3 4 5 6 (PRODUCT LEVEL)	SEE PAGE
Y	1	1	**541-4630**	1	LINK AS-TRACK	481
	2	1	**107-0715**	45	SHOE-TRACK	
	3	1	**107-0716**	1	SHOE-TRACK MASTER	
	4	1	**107-0717**	2	BOLT-TRACK MASTER (3/4-16X4.29-IN)	
	5	1	**107-0718**	90	BOLT-TRACK	
	6	1	**107-0719**	2	BOLT-TRACK MASTER (3/4-16X3.9-IN)	
	7	1	**1S-1860**	180	NUT-TRACK (3/4-16-THD)	
	8	1	**6V-1792**	90	BOLT-TRACK (3/4-16X2.4-IN)	

Y - SEPARATE ILLUSTRATION

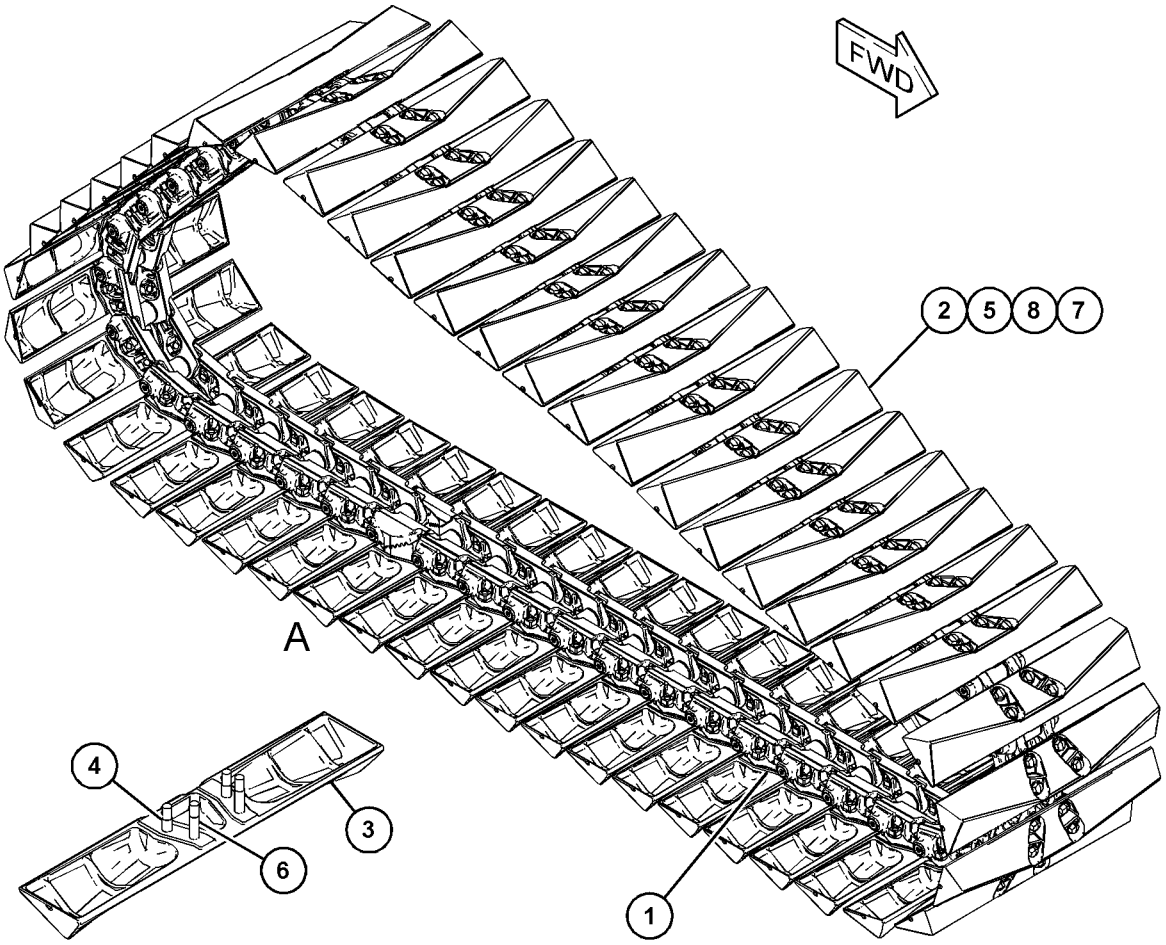

VIEW OF AREA A

GRAPHIC #1 <END> g06172681

576-4402 TRACK GP–2-REQUIRED, HEAVY-DUTY

S/N: Z2K1-UP

600-MM (23.62-IN) GROUSER SHOE. SEALED, LUBRICATED. MODERATE SERVICE. POSITIVE PIN RETENTION

FOR USE WITH HEAVY-DUTY ROLLERS, GUARDS, GUIDESTRIPS & CONVENTIONAL IDLERS

PART OF 575-7736 TRACK AR

AN ATTACHMENT

SMCS-4170 **i07828706**

NOTE	REF NO	GRAPHIC REF	PART NUMBER	QTY	PART NAME 1 2 3 4 5 6 (PRODUCT LEVEL)	SEE PAGE
	1	1	**117-0615**	45	SHOE-TRACK	
	2	1	**117-0616**	1	SHOE-TRACK MASTER	
	3	1	**106-1642**	2	BOLT-TRACK MASTER (3/4-16X2.9-IN)	
	4	1	**107-0719**	2	BOLT-TRACK MASTER (3/4-16X3.9-IN)	
	5	1	**1S-1860**	180	NUT-TRACK (3/4-16-THD)	
Y	6	1	**541-4630**	1	LINK AS-TRACK	481
	7	1	**6V-1792**	180	BOLT-TRACK (3/4-16X2.4-IN)	

Y - SEPARATE ILLUSTRATION

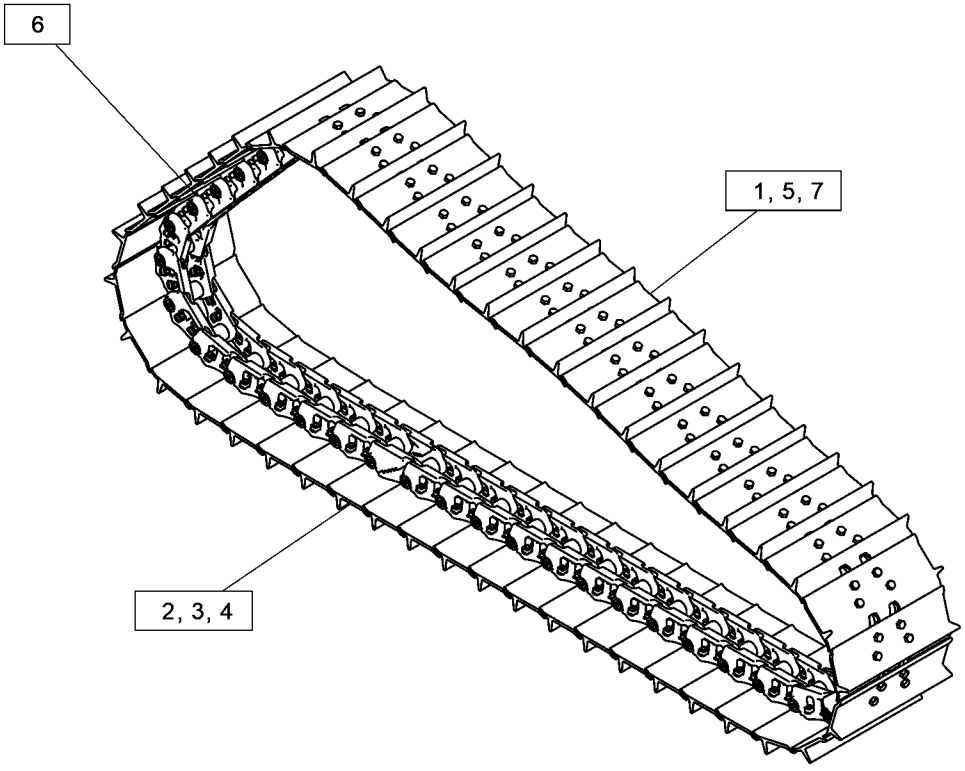

GRAPHIC #1 <END> g06450981

523-9388 UNDERCARRIAGE AR—HEAVY-DUTY

S/N: Z2K1-UP; Z2N1-UP
XL
PART OF 532-9851, 532-9856 DISTRIBUTION AR
AN ATTACHMENT

SMCS-4150 **i07816527**

NOTE	PART NUMBER	QTY	PART NAME 1 2 3 4 5 6 (PRODUCT LEVEL)	SEE PAGE
Y	*448-0181*	1	BAR GP-EQUALIZER	421
Y	*523-9366*	1	FRAME GP-UNDERCARRIAGE	439
Y	*523-9367*	1	FRAME GP-UNDERCARRIAGE	440
Y	*118-6345*	1	MOUNTING GP-CARRIER ROLLER	484
Y	*447-6844*	1	PIVOT BAR GP	485
Y	**229-5446**	2	ROLLER GP-TRACK CARRIER	489

Y - SEPARATE ILLUSTRATION

<END>

523-9389 UNDERCARRIAGE AR

S/N: Z2K1-UP
HEAVY-DUTY, DOUBLE FLANGE, XL
AN ATTACHMENT

SMCS-4150 **i07839343**

NOTE	PART NUMBER	QTY	PART NAME 1 2 3 4 5 6 (PRODUCT LEVEL)	SEE PAGE
Y	*448-0181*	1	BAR GP-EQUALIZER	421
Y	*523-9368*	1	FRAME GP-UNDERCARRIAGE (HEAVY-DUTY, RH)	441
Y	*523-9369*	1	FRAME GP-UNDERCARRIAGE (HEAVY-DUTY, LH)	442
Y	*118-6345*	1	MOUNTING GP-CARRIER ROLLER	484
Y	*447-6844*	1	PIVOT BAR GP	485
Y	**229-5446**	2	ROLLER GP-TRACK CARRIER (SYSTEMONE)	489

Y - SEPARATE ILLUSTRATION

<END>

523-9390 UNDERCARRIAGE AR

S/N: Z2K1-UP
SYSTEMONE
AN ATTACHMENT

SMCS-4150 **i07828452**

NOTE	PART NUMBER	QTY	PART NAME 1 2 3 4 5 6 (PRODUCT LEVEL)	SEE PAGE
Y	*448-0181*	1	BAR GP-EQUALIZER	421
Y	*523-9370*	1	FRAME GP-UNDERCARRIAGE (RH, SYSTEMONE)	443
Y	*523-9371*	1	FRAME GP-UNDERCARRIAGE (SYSTEMONE, LH)	445
Y	*118-6345*	1	MOUNTING GP-CARRIER ROLLER	484
Y	*447-6844*	1	PIVOT BAR GP	485
Y	**229-5446**	2	ROLLER GP-TRACK CARRIER	489

Y - SEPARATE ILLUSTRATION

<END>

523-9391 UNDERCARRIAGE AR—HEAVY-DUTY

S/N: Z2N1-UP
LGP
FOR USE WITH HEAVY-DUTY TRACK GP
AN ATTACHMENT

SMCS-4150 **i07827843**

NOTE	PART NUMBER	QTY	PART NAME 1 2 3 4 5 6 (PRODUCT LEVEL)	SEE PAGE
Y	*448-0185*	1	BAR GP-EQUALIZER	423
Y	*523-9372*	1	FRAME GP-UNDERCARRIAGE (RH)	447
Y	*523-9373*	1	FRAME GP-UNDERCARRIAGE (LH)	448
Y	*118-6345*	1	MOUNTING GP-CARRIER ROLLER	484
Y	*447-6845*	1	PIVOT BAR GP	486
Y	**229-5446**	2	ROLLER GP-TRACK CARRIER	489

Y - SEPARATE ILLUSTRATION

<END>

523-9392 UNDERCARRIAGE AR

S/N: Z2N1-UP
LGP, HEAVY-DUTY, DOUBLE FLANGE
FOR USE WITH HEAVY-DUTY TRACK GP, GUARD GP-HEAVY-DUTY
AN ATTACHMENT

SMCS-4150 **i07848507**

NOTE	PART NUMBER	QTY	PART NAME 1 2 3 4 5 6 (PRODUCT LEVEL)	SEE PAGE
Y	*448-0185*	1	BAR GP-EQUALIZER	423
Y	*523-9374*	1	FRAME GP-UNDERCARRIAGE (RH)	449
Y	*523-9375*	1	FRAME GP-UNDERCARRIAGE (LH)	450
Y	*118-6345*	1	MOUNTING GP-CARRIER ROLLER	484
Y	*447-6845*	1	PIVOT BAR GP	486
Y	**229-5446**	2	ROLLER GP-TRACK CARRIER	489

Y - SEPARATE ILLUSTRATION

<END>

523-9393 UNDERCARRIAGE AR—SYSTEMONE

S/N: Z2N1-UP
LGP
FOR USE WITH HEAVY-DUTY TRACK GP
AN ATTACHMENT

SMCS-4150 **i07827873**

NOTE	PART NUMBER	QTY	PART NAME 1 2 3 4 5 6 (PRODUCT LEVEL)	SEE PAGE
Y	*448-0185*	1	BAR GP-EQUALIZER	423
Y	*523-9376*	1	FRAME GP-UNDERCARRIAGE	451
Y	*523-9377*	1	FRAME GP-UNDERCARRIAGE	453
Y	*118-6345*	1	MOUNTING GP-CARRIER ROLLER	484
Y	*447-6846*	1	PIVOT BAR GP	487
Y	**229-5446**	2	ROLLER GP-TRACK CARRIER	489

Y - SEPARATE ILLUSTRATION

<END>

523-9394 UNDERCARRIAGE AR

S/N: Z2K1-UP
HEAVY DUTY
AN ATTACHMENT

SMCS-4150 **i07839444**

NOTE	PART NUMBER	QTY	PART NAME 1 2 3 4 5 6 (PRODUCT LEVEL)	SEE PAGE
Y	*448-0181*	1	BAR GP-EQUALIZER	421
Y	*523-9372*	1	FRAME GP-UNDERCARRIAGE (RH)	447
Y	*523-9373*	1	FRAME GP-UNDERCARRIAGE (LH)	448
Y	*118-6345*	1	MOUNTING GP-CARRIER ROLLER	484
Y	*447-6844*	1	PIVOT BAR GP	485
Y	**229-5446**	2	ROLLER GP-TRACK CARRIER	489

Y - SEPARATE ILLUSTRATION

<END>

523-9395 UNDERCARRIAGE AR

S/N: Z2K1-UP
SYSTEMONE
AN ATTACHMENT

SMCS-4150 **i07839519**

NOTE	PART NUMBER	QTY	PART NAME 1 2 3 4 5 6 (PRODUCT LEVEL)	SEE PAGE
Y	*448-0181*	1	BAR GP-EQUALIZER	421
Y	*523-9376*	1	FRAME GP-UNDERCARRIAGE (RH)	451
Y	*523-9377*	1	FRAME GP-UNDERCARRIAGE (LH)	453
Y	*118-6345*	1	MOUNTING GP-CARRIER ROLLER	484
Y	*447-6844*	1	PIVOT BAR GP	485
Y	**229-5446**	2	ROLLER GP-TRACK CARRIER	489

Y - SEPARATE ILLUSTRATION

<END>

563-1027 UNDERCARRIAGE AR

S/N: Z2K1-UP
WASTE HANDLING, HEAVY-DUTY, XL
FOR USE WITH TRACK GP (HEAVY-DUTY)
AN ATTACHMENT

SMCS-4150 **i07876653**

NOTE	PART NUMBER	QTY	PART NAME 1 2 3 4 5 6 (PRODUCT LEVEL)	SEE PAGE
Y	*448-0181*	1	BAR GP-EQUALIZER	421
Y	*563-1030*	1	FRAME GP-UNDERCARRIAGE (RH)	456
Y	*563-1029*	1	FRAME GP-UNDERCARRIAGE (LH)	455
Y	*118-6345*	1	MOUNTING GP-CARRIER ROLLER	484
Y	*447-6844*	1	PIVOT BAR GP	485
Y	**229-5446**	2	ROLLER GP-TRACK CARRIER	489

Y - SEPARATE ILLUSTRATION

<END>

563-1028 UNDERCARRIAGE AR

S/N: Z2N1-UP
WASTE HANDLING, HEAVY-DUTY, LGP
FOR USE WITH HEAVY-DUTY TRACK GP
AN ATTACHMENT

SMCS-4150 **i07834584**

NOTE	PART NUMBER	QTY	PART NAME 1 2 3 4 5 6 (PRODUCT LEVEL)	SEE PAGE
Y	*448-0185*	1	BAR GP-EQUALIZER	423
Y	*563-1139*	1	FRAME GP-UNDERCARRIAGE (LH)	459
Y	*563-1138*	1	FRAME GP-UNDERCARRIAGE (RH)	457
Y	*118-6345*	1	MOUNTING GP-CARRIER ROLLER	484
Y	*447-6845*	1	PIVOT BAR GP	486
Y	**229-5446**	2	ROLLER GP-TRACK CARRIER	489

Y - SEPARATE ILLUSTRATION

<END>

562-7339 BARREL GP-MOTOR

S/N: Z2K1-UP; Z2N1-UP
PART OF 509-5165 MOTOR GP-PISTON
AN ATTACHMENT

SMCS-5058 **i07827318**

NOTE	REF NO	GRAPHIC REF	PART NUMBER	QTY	PART NAME 1 2 3 4 5 6 (PRODUCT LEVEL)	SEE PAGE
	1	1	**562-7347**	1	BARREL	
	2	1	**562-7348**	1	PLATE-CONTROL	
	3	1	**558-1801**	1	PIN-CENTER	
	4	1	**562-7342**	7	PISTON AS	
	5	1	**558-1803**	1	SPRING	
B	6	1	**460-6047**	1	KIT-SHIM (INCLUDES 8-SHIMS)	

B - USE AS REQUIRED

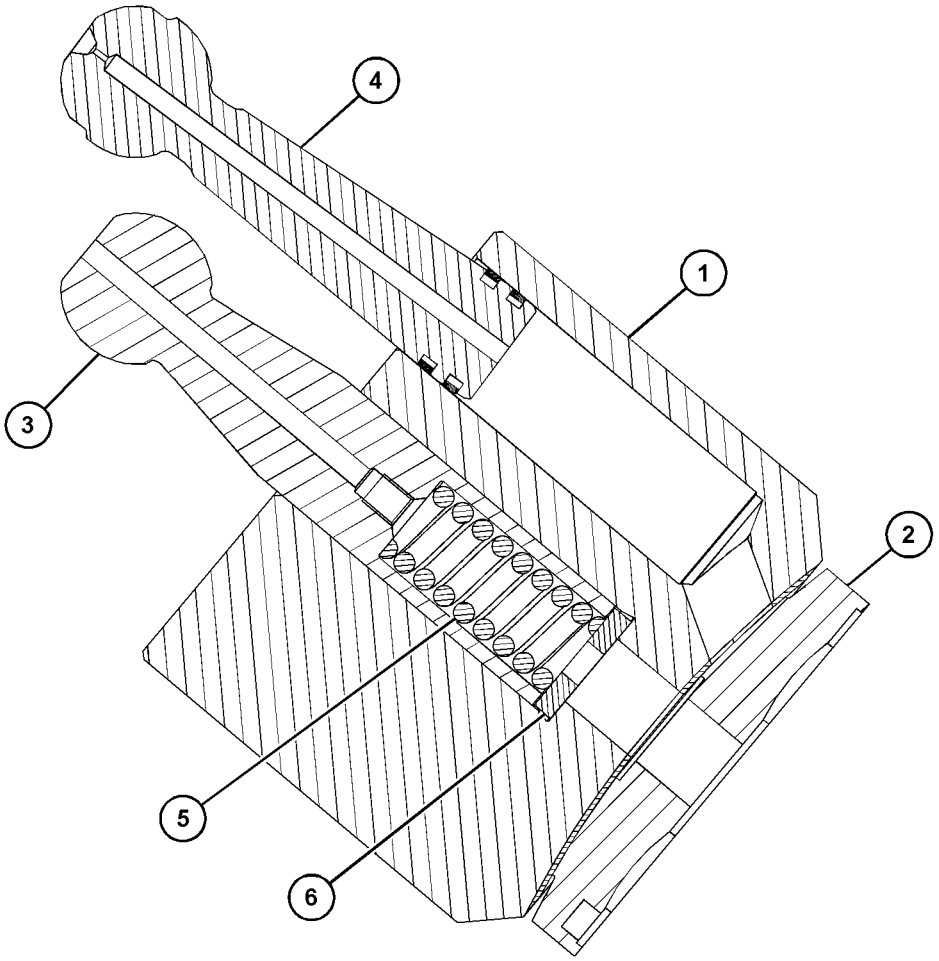

GRAPHIC #1 <END> g06451493

563-4606 BARREL GP-PUMP

S/N: Z2K1-UP; Z2N1-UP
PART OF 461-3125 PUMP GP-PISTON
AN ATTACHMENT

SMCS-5070 **i07826941**

NOTE	REF NO	GRAPHIC REF	PART NUMBER	QTY	PART NAME 1 2 3 4 5 6 (PRODUCT LEVEL)	SEE PAGE
	1	1	**485-9988**	1	KIT-PISTON	
	2	1	**485-9971**	1	PLATE-RETAINING	
	3	1	**563-4607**	1	RETAINER-BALL	
	4	1	**563-4608**	1	SPRING	
	5	1	**485-9973**	1	BARREL GP-PUMP	

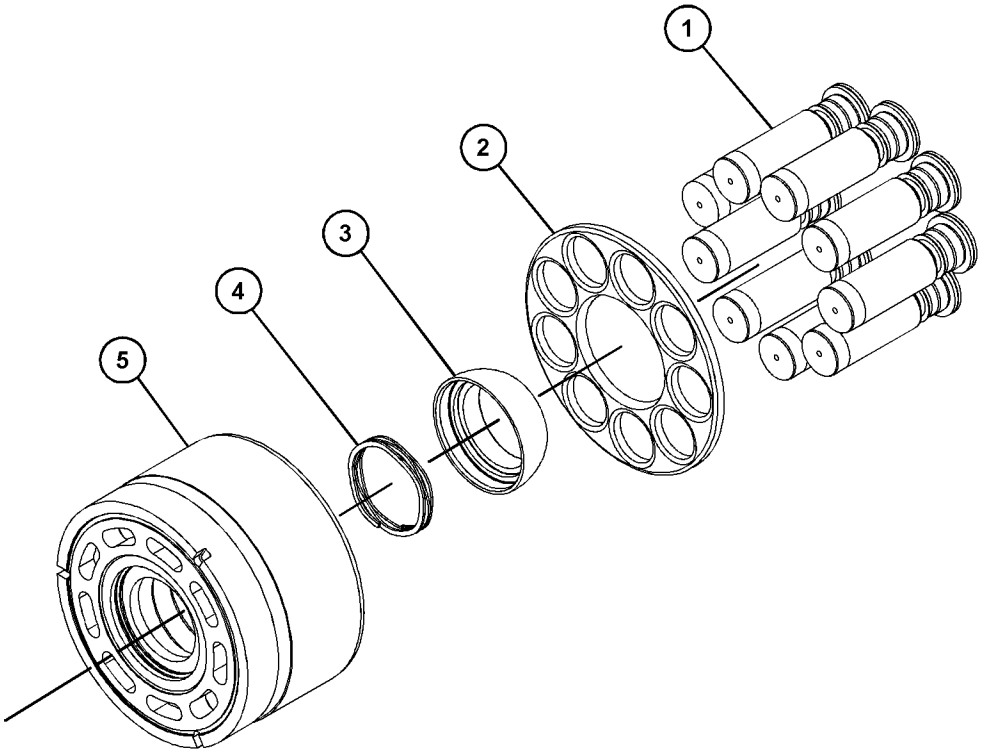

GRAPHIC #1 <END> g06453557

509-3795 BRAKE GP-STEERING

S/N: Z2K1-UP; Z2N1-UP
PART OF 510-9710 POWER TRAIN AR
AN ATTACHMENT

SMCS-4269 **i07816582**

NOTE	PART NUMBER	QTY	PART NAME 1 2 3 4 5 6 (PRODUCT LEVEL)	SEE PAGE
Y	*526-0846*	1	BRAKE & DIFFERENTIAL DRIVE GP	272
Y	*526-0847*	1	BRAKE & PLANETARY GP	276

Y - SEPARATE ILLUSTRATION

<END>

488-1756 CONTROL GP-STEERING & XMSN

S/N: Z2K1-UP; Z2N1-UP
PART OF 493-9035, 565-7935 MOUNTING GP-CONTROL
AN ATTACHMENT

SMCS-3033 **i07821007**

NOTE	REF NO	GRAPHIC REF	PART NUMBER	QTY	PART NAME 1 2 3 4 5 6 (PRODUCT LEVEL)	SEE PAGE
	1	1	**3S-2093**	2	STRAP-CABLE	
	2	1	**358-6190**	1	SENSOR GP-POSITION (ROTARY) (STEERING)	
Y	3	1	**360-5122**	1	SENSOR GP-POSITION (STEERING)	202
	4	1	**364-0147**	1	PLATE	
Y	5	1	**462-6407**	1	CONTROL GP-HANDLE (STEERING, TRANSMISSION)	652
	6	1	**488-8130**	1	BRACKET AS (LH)	
M	7	1	**127-2170**	3	SCREW-TRUSS HEAD (M8X1.25X20-MM)	
	8	1	**6V-0894**	1	SEAL-O-RING	
M	9	1	**6V-2314**	2	BOLT (M5X0.8X35-MM)	
M	10	1	**6V-7357**	4	BOLT (M6X1X25-MM)	
	11	1	**9X-8256**	2	WASHER (6.6X12X2-MM THK)	
	12	1	**198-4775**	4	WASHER-HARD (6.6X15X6-MM THK)	

M - METRIC PART
Y - SEPARATE ILLUSTRATION

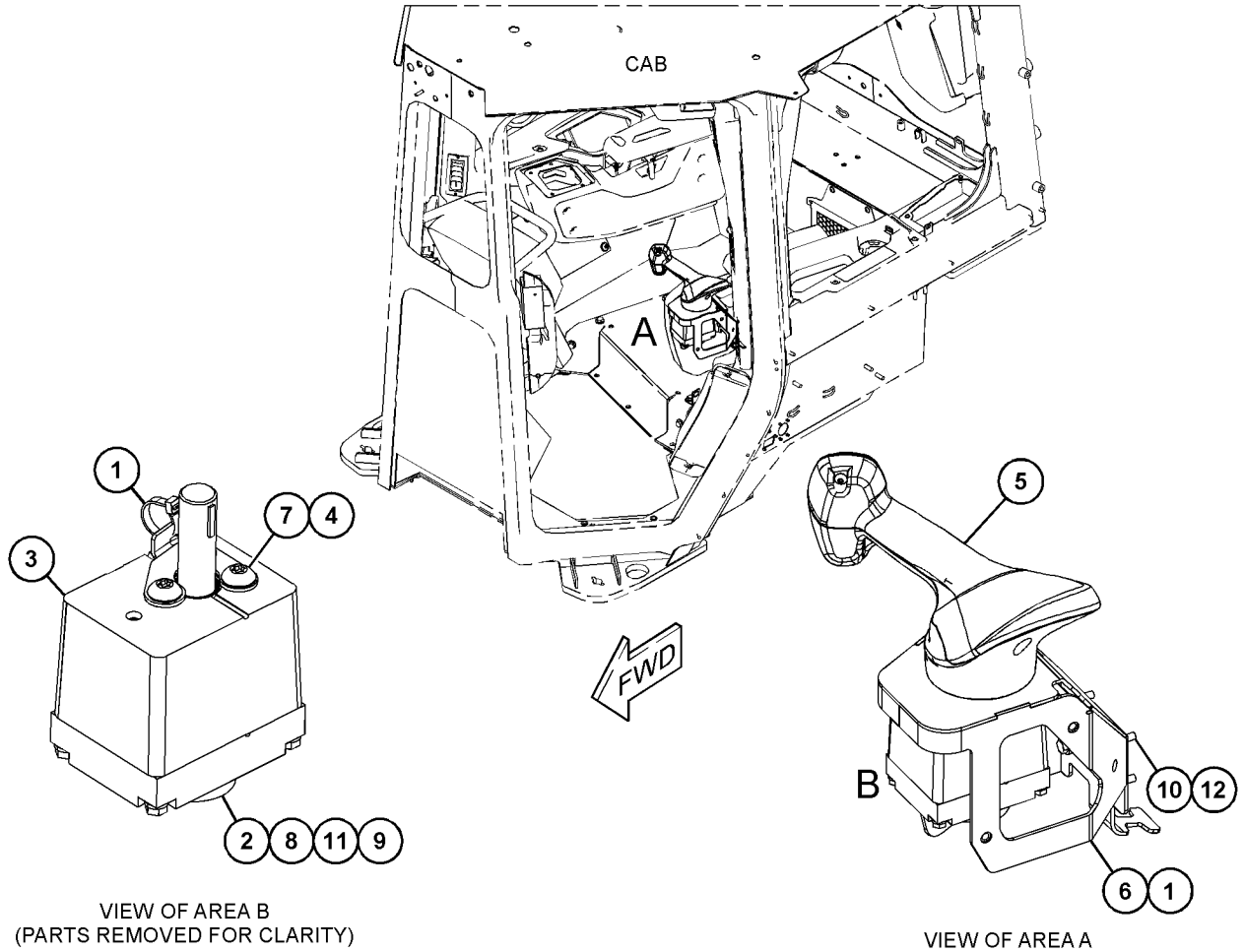

VIEW OF AREA B
(PARTS REMOVED FOR CLARITY)

VIEW OF AREA A

GRAPHIC #1 <END> g06358680

416-8305 FILTER GP-OIL

S/N: Z2K1-UP; Z2N1-UP
PART OF 507-7423 LINES GP-STEERING
AN ATTACHMENT

SMCS-5068 **i06145812**

NOTE	REF NO	GRAPHIC REF	PART NUMBER	QTY	PART NAME 1 2 3 4 5 6 (PRODUCT LEVEL)	SEE PAGE
	1	1	**349-6097**	1	SWITCH AS-PRESSURE (OIL)	
		1	**033-6033**	1	SEAL-O-RING	
		1	**206-9295**	1	SEAL-O-RING	
	2	1	**359-3609**	1	BASE AS-FILTER	
		1	**5P-7701**	1	SEAL-O-RING	
		1	**6V-5048**	1	SEAL-O-RING	
		1	**9S-4181**	1	PLUG (1-5/16-12-THD)	
		1	**9S-4182**	1	PLUG (7/16-20-THD)	
		1	**9S-4191**	1	PLUG (9/16-18-THD)	
		1	**214-7568**	1	SEAL-O-RING	
	3	1	**428-8644**	1	HOUSING AS-FILTER	
		1	**6V-5048**	1	SEAL-O-RING	
		1	**9S-8002**	1	PLUG (7/16-20-THD)	
		1	**095-1671**	1	SEAL-O-RING	
		1	**389-1076**	1	FILTER ELEMENT AS-OIL	
		1	**095-1671**	1	SEAL-O-RING	

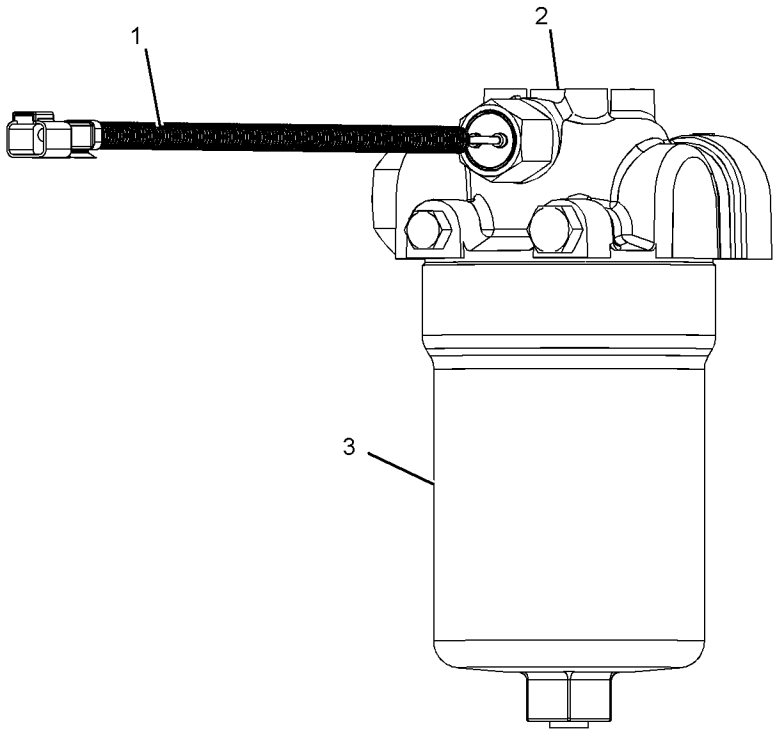

GRAPHIC #1 <END> g03783366

507-7423 LINES GP-STEERING

S/N: Z2K1-UP; Z2N1-UP
PART OF 575-9700 HYDRAULIC AR
AN ATTACHMENT

SMCS-4104, 4133, 4304 **i07826144**

NOTE	REF NO	GRAPHIC REF	PART NUMBER	QTY	PART NAME 1 2 3 4 5 6 (PRODUCT LEVEL)	SEE PAGE
	1	2	**175-7904**	1	SEAL-O-RING	
M	2	1	**8T-4184**	8	BOLT (M12X1.75X45-MM)	
M	3	1	**8T-4186**	2	BOLT (M10X1.5X40-MM)	
M	4	2	**8T-4910**	2	BOLT (M12X1.75X60-MM)	
	5	2	**8S-0024**	1	CLIP (TAB)	
M	6	1	**8T-4192**	4	BOLT (M12X1.75X25-MM)	
	7	1,2	**1P-3703**	4	SEAL-RECTANGULAR	
	8	1	**2K-2939**	1	SEAL-O-RING	
	9	1	**5P-7464**	1	CLIP (SLOT)	
	10	1	**5P-7465**	1	CLIP (TAB)	
	11	1,2	**6V-0400**	8	FLANGE-HALF	
	12	1	**7G-3832**	1	GROMMET	
	13	1	**7G-3833**	1	CLIP (TAB)	
	14	1	**7G-3834**	1	CLIP (SLOT)	
	15	1	**7K-6058**	6	BOLT-12 POINT HEAD (1/2-13X2.5-IN)	
	16	1,2	**8T-4121**	5	WASHER-HARD (11X21X2.5-MM THK)	
	17	1	**8T-4123**	2	WASHER (22X35X3.5-MM THK)	
M	18	1	**8T-4136**	4	BOLT (M10X1.5X25-MM)	
	19	1,2	**8T-4223**	20	WASHER-HARD (13.5X25.5X3-MM THK)	
	20	2	**8T-4983**	4	CLAMP-HOSE	
	21	1	**8T-7934**	4	WASHER-HARD (11X21X5-MM THK)	
	22	2	**8T-7971**	4	WASHER-HARD (13.5X25.5X5-MM THK)	
	23	1	**8T-9402**	4	CLAMP-HOSE	
	24	1	**5T-6374**	1	SPACER (11X20X40-MM THK)	
	25	2	*148-8390*	1	ELBOW AS	
		2	**2M-9780**	1	SEAL-O-RING	
		2	**6V-8626**	1	ELBOW	
		2	**7J-9108**	1	SEAL-O-RING	
	26	2	*164-5641*	1	TEE AS	
		2	**3D-2824**	1	SEAL-O-RING	
		2	**5K-9090**	1	SEAL-O-RING	
		2	**6V-9746**	1	SEAL-O-RING	
		2	**128-7625**	1	TEE	
	27	2	*260-9174*	1	CONNECTOR AS	
		2	**3D-2824**	1	SEAL-O-RING	
		2	**7J-1908**	1	SEAL	
		2	**109-5815**	1	CONNECTOR	
	28	2	*330-9751*	1	FITTING AS	
		2	**7M-8485**	1	SEAL-O-RING	
		2	**9X-3962**	1	FITTING	
M	29	1	**355-7217**	1	STUD (M10X1.5X90-MM)	
	30	2	**373-7039**	1	VALVE GP-CHECK	
		2	**3D-2824**	1	SEAL-O-RING	
	31	1	**389-5922**	1	FILM-IDENTIFICATION (HYDRAULIC & XMSN OIL FILTER)	
Y	32	1	**416-8305**	1	FILTER GP-OIL (HYDRAULIC, STEERING)	545
	33	2	*485-1325*	1	ELBOW AS	

507-7423 **LINES GP-STEERING (**contd.**)** **i07826144**

NOTE	REF NO	GRAPHIC REF	PART NUMBER	QTY	PART NAME 1 2 3 4 5 6 (PRODUCT LEVEL)	SEE PAGE
		2	**2M-9780**	1	SEAL-O-RING	
		2	**7J-1908**	1	SEAL	
		2	**7X-7933**	1	ADAPTER-ELBOW	
	34	2	**516-5804**	1	HOSE	
	35	1,2	**529-6539**	2	BOLT AS	
	36	1	**541-6633**	2	CLIP (LOOP)	
	37	2	**139-1398**	1	CLIP (LOOP)	
M	38	1	**344-5675**	2	NUT (M10X1.5-THD)	
	39	1	**391-8044**	1	CLIP (LOOP)	
	40	1	**3N-0759**	1	RING-SEALING	
Y	41	2	**461-3125**	1	PUMP GP-PISTON (STEERING)	551
M	42	1,2	**479-2171**	4	BOLT AS	
	43	1,2	**483-2517**	3	CLIP (LOOP)	
I	44	2	**508-1826**	1	HOSE AS	
I	45	2	**508-1827**	1	HOSE AS	
I	46	2	**508-1830**	1	HOSE AS	
Y	47	1	**509-5165**	1	MOTOR GP-PISTON (STEERING)	550
	48	2	**513-2374**	1	HOSE	
	49	2	**516-5819**	1	TUBE AS	
	50	1	**516-6869**	1	TUBE AS	
	51	1	**516-7947**	1	PLATE AS	
	52	1	**520-9790**	1	BRACKET AS	
M		1	**8T-3490**	2	NUT-WELD (M10X1.5-THD)	
	53	1	**526-3291**	1	ADAPTER	
I	54	1	**528-3856**	1	HOSE AS	
I	55	1	**528-3857**	1	HOSE AS	
I	56	2	**552-7563**	1	HOSE AS	
	57	1	**6V-7359**	1	GROMMET (25-MM ID, 37-MM OD)	
M	58	1	**106-4175**	2	BOLT (M20X2.5X60-MM)	
	59	2	**8S-0023**	1	CLIP (SLOT)	
M	60	2	**8T-4183**	4	BOLT (M12X1.75X40-MM)	
M	61	2	**8T-4194**	6	BOLT (M12X1.75X50-MM)	

I - REFER TO HYDRAULIC INFORMATION SYSTEM
M - METRIC PART
Y - SEPARATE ILLUSTRATION

507-7423 **LINES GP-STEERING (**contd.**)** **i07826144**

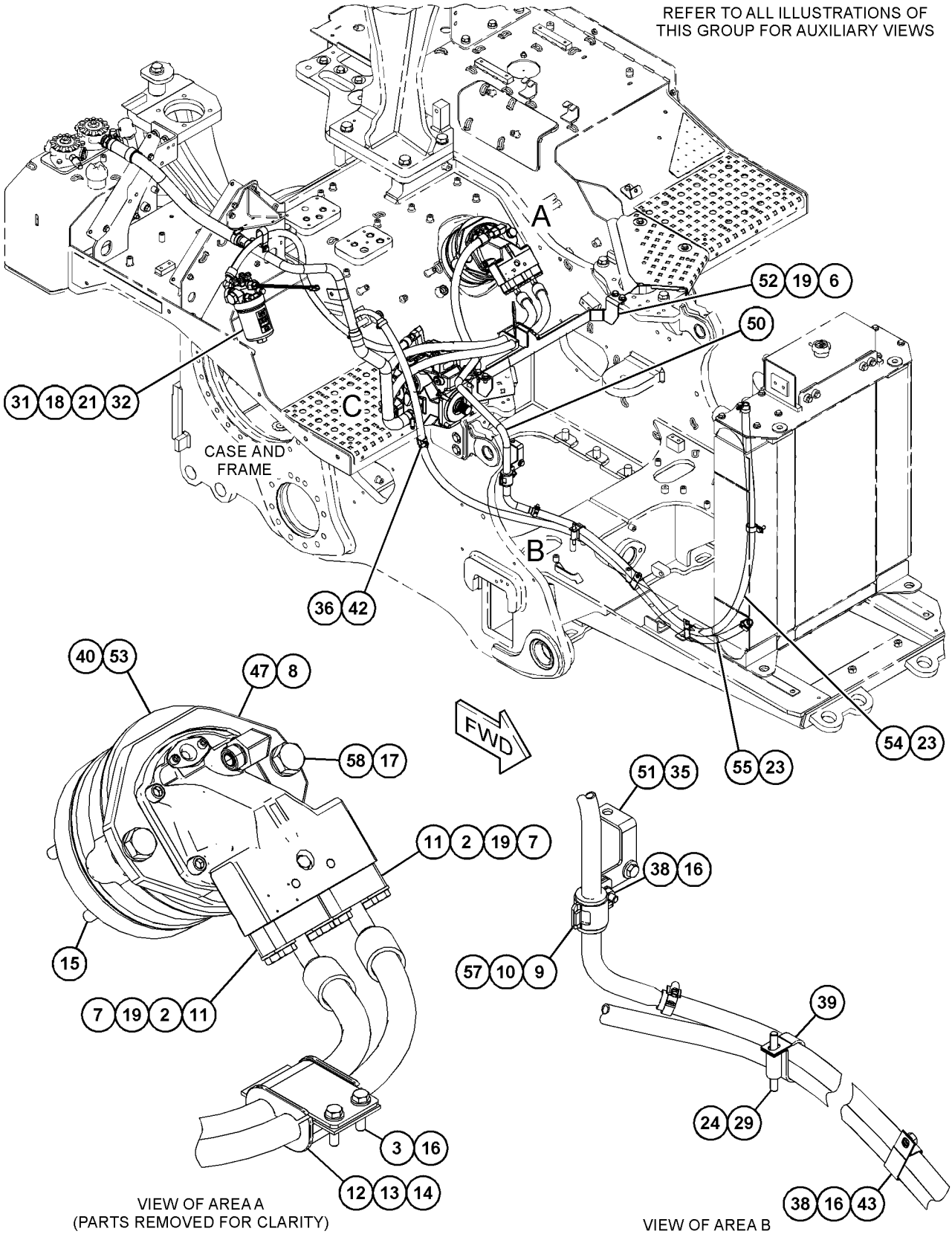

GRAPHIC #1 g06452554

507-7423 **LINES GP-STEERING (**contd.**)** **i07826144**

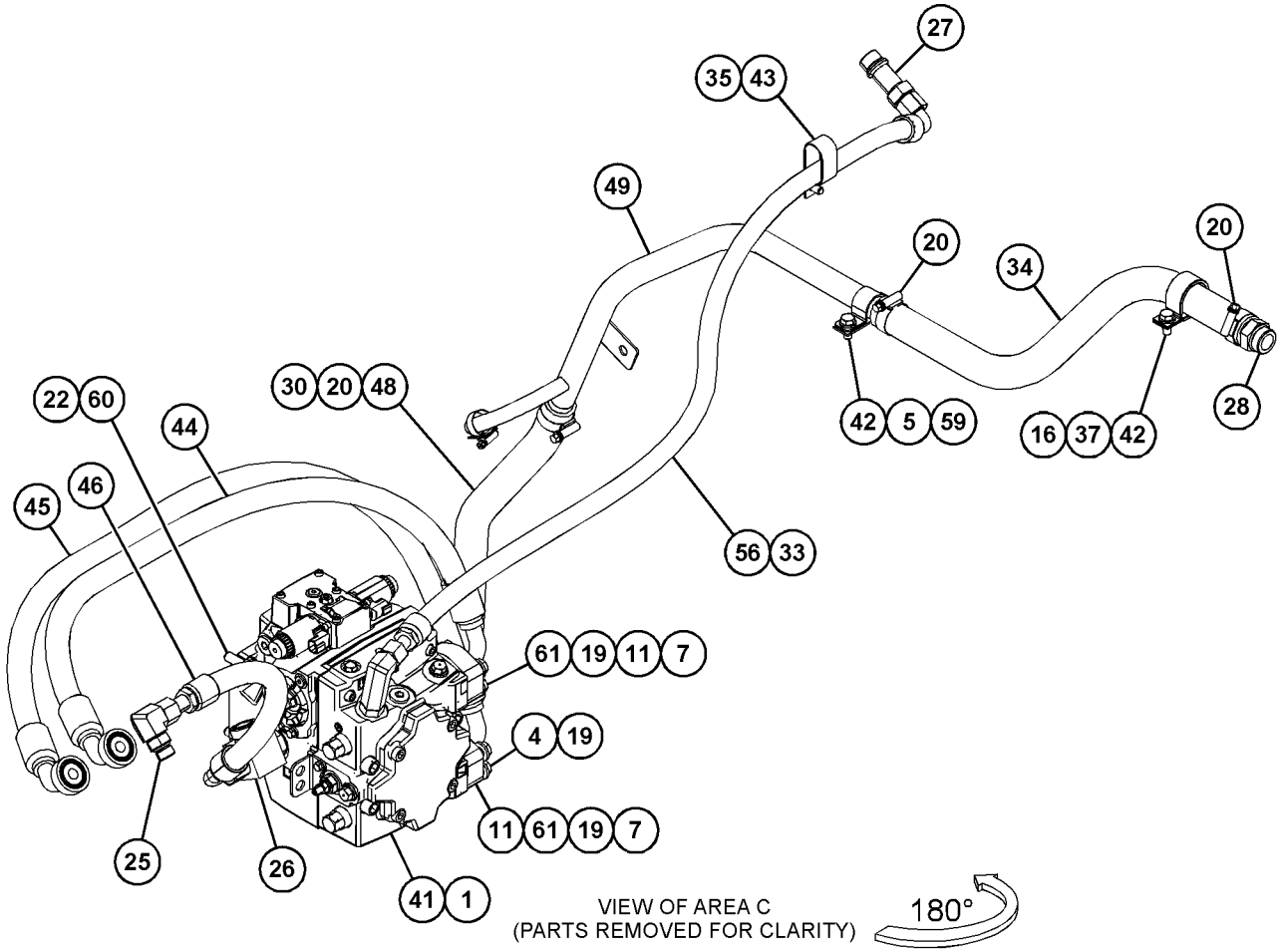

GRAPHIC #2 <END> g06452555

509-5165 MOTOR GP-PISTON

S/N: Z2K1-UP; Z2N1-UP
STEERING
PART OF 507-7423 LINES GP-STEERING
AN ATTACHMENT

SMCS-5058 **i07826965**

NOTE	REF NO	GRAPHIC REF	PART NUMBER	QTY	PART NAME 1 2 3 4 5 6 (PRODUCT LEVEL)	SEE PAGE
Y	1	1	**562-7337**	1	HOUSING GP-MOTOR	572
Y	2	1	**562-7338**	1	FLANGE GP	571
Y	3	1	**562-7339**	1	BARREL GP-MOTOR	541
M	4	1	**8T-3957**	4	BOLT-SOCKET HEAD (M12X1.75X30-MM)	
	5	1	**7X-2906**	2	PIN	

M - METRIC PART
Y - SEPARATE ILLUSTRATION

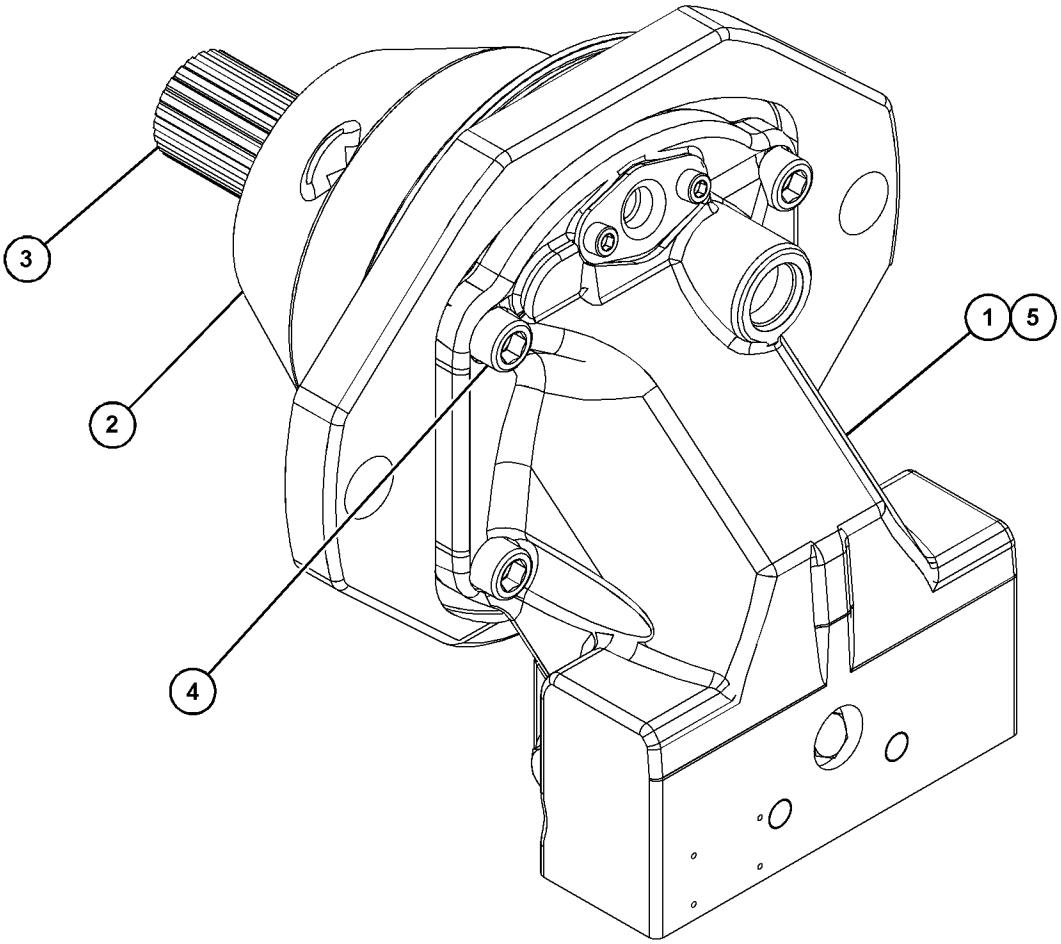

GRAPHIC #1 <END> g06453532

461-3125 PUMP GP-PISTON

S/N: Z2K1-UP; Z2N1-UP
STEERING
PART OF 507-7423 LINES GP-STEERING
AN ATTACHMENT

SMCS-5070 **i07826925**

NOTE	REF NO	GRAPHIC REF	PART NUMBER	QTY	PART NAME 1 2 3 4 5 6 (PRODUCT LEVEL)	SEE PAGE
	1	1,3	**077-8353**	4	PIN (SPRING)	
	2	1	**9S-8002**	2	PLUG (7/16-20-THD)	
	3	1,2	**9S-8006**	4	PLUG (7/8-14-THD)	
	4	1	**470-3528**	2	SOCKET-PLUG	
Y	5	1	**563-4606**	1	BARREL GP-PUMP	542
	6	3	**418-0199**	1	PIN	
	7	3	**489-3875**	1	PLATE-CONTROL	
	8	1	**485-9975**	1	SWASHPLATE	
	9	2	**563-4609**	1	LINK	
	10	2	**418-1411**	2	PIN-DOWEL	
	11	1	**485-9978**	1	KIT-PISTON	
	12	1	**485-9979**	2	KIT-CYLINDER	
	13	1	**418-1417**	2	PLATE-LOCK	
	14	1,3	**418-1418**	6	BOLT-FLANGE HEAD	
	15	1,2	**2M-9780**	4	SEAL-O-RING	
J	16	3	**485-9983**	1	GASKET-HEAD	
	17	3	**525-1038**	3	PLUG AS	
	18	3	**418-0176**	3	PLUG GP-HYDRAULIC LINES	
					(EACH INCLUDES)	
		3	**4J-7533**	1	SEAL-O-RING	
M	19	3	**395-6991**	4	SCREW (M14X2X90-MM)	
M	20	3	**8T-0338**	2	BOLT-SOCKET HEAD (M8X1.25X45-MM)	
	21	3	**9S-9334**	1	PLUG (1-5/16-12-THD)	
	22	3	**7R-5517**	1	BRACKET-LIFTING	
	23	1	**563-4611**	1	SHAFT	
	24	1	**485-9985**	1	BEARING-ROLLER	
	25	1	**212-4483**	2	RING-RETAINING	
J	26	1	**377-4687**	1	SEAL-LIP	
	27	1	**8T-4240**	1	RING-RETAINING	
	28	2	**311-8131**	1	COVER-ADAPTER	
J	29	2	**377-4690**	1	SEAL-ADAPTER	
	30	2	**489-3877**	1	SHAFT	
	31	2	**418-1428**	4	BOLT-SOCKET HEAD	
	32	2	**311-8132**	1	PLATE-THRUST	
	33	3	**442-5653**	2	VALVE GP-RELIEF	
					(EACH INCLUDES)	
		3	**160-5656**	1	SEAL-O-RING	
		3	**243-2709**	1	SEAL-O-RING	
	34	3	**489-3878**	2	PLUG AS	
	35	1	**485-9989**	1	KIT-BEARING	
	36	2	**311-0326**	1	VALVE GP-CONTROL	
M		2	**8C-6965**	6	BOLT-SOCKET HEAD (M6X1X45-MM)	
		2	**160-5656**	6	SEAL-O-RING	
		2	**243-2709**	2	SEAL-O-RING	
	37	2	**485-9990**	1	HOUSING	
	38	3	**311-0325**	1	KIT-RELIEF VALVE	

461-3125 **PUMP GP-PISTON (**contd.**)** **i07826925**

NOTE	REF NO	GRAPHIC REF	PART NUMBER	QTY	PART NAME 1 2 3 4 5 6 (PRODUCT LEVEL)	SEE PAGE
		3	**2M-9780**	1	SEAL-O-RING	
		3	**116-3883**	1	NUT-SEAL	
	39	3	**7M-8485**	1	SEAL-O-RING	
	40	1	**3J-7354**	2	SEAL-O-RING	
					AVAILABLE REPAIR KIT(S):	
J			**487-6212**	1	KIT-SEAL (PISTON)	
					(INCLUDES O-RINGS, GASKETS, NUTS & SEALS)	

J - KIT MARKED J SERVICES PART(S) MARKED J
M - METRIC PART
Y - SEPARATE ILLUSTRATION

461-3125 **PUMP GP-PISTON (**contd.**)** **i07826925**

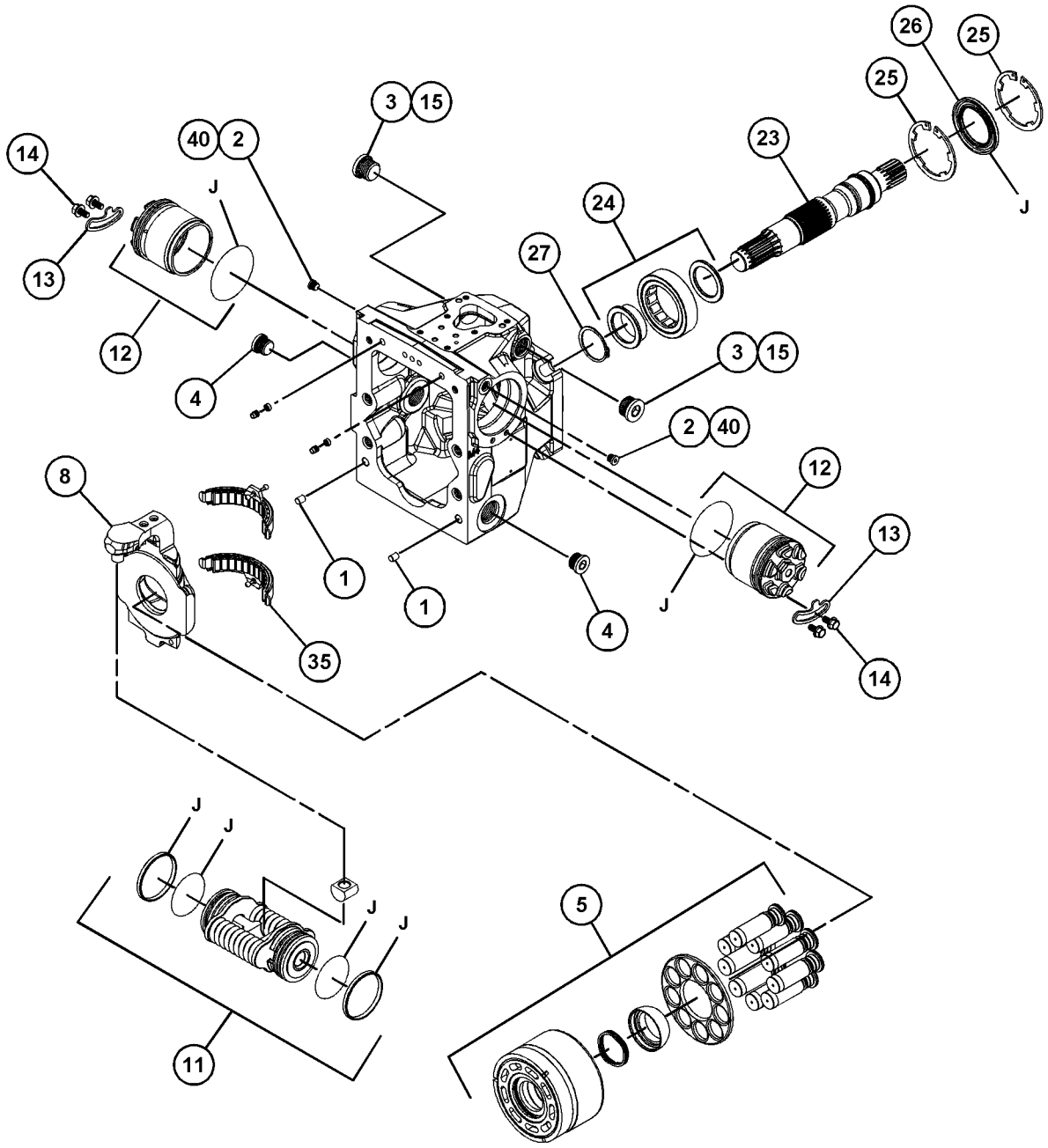

GRAPHIC #1 g06459811

461-3125 **PUMP GP-PISTON (**contd.**)** **i07826925**

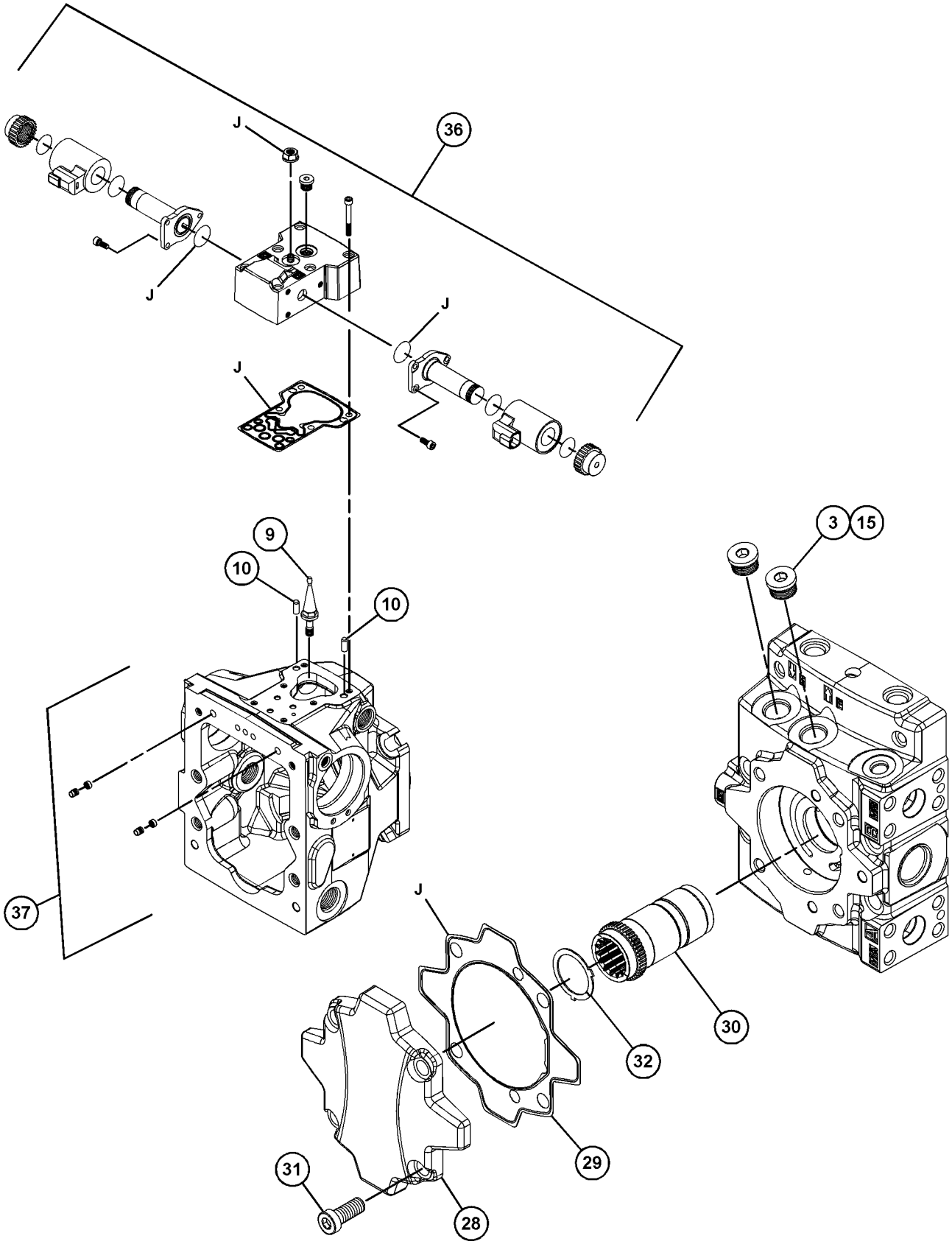

GRAPHIC #2 g06459831

461-3125 **PUMP GP-PISTON (**contd.**)** **i07826925**

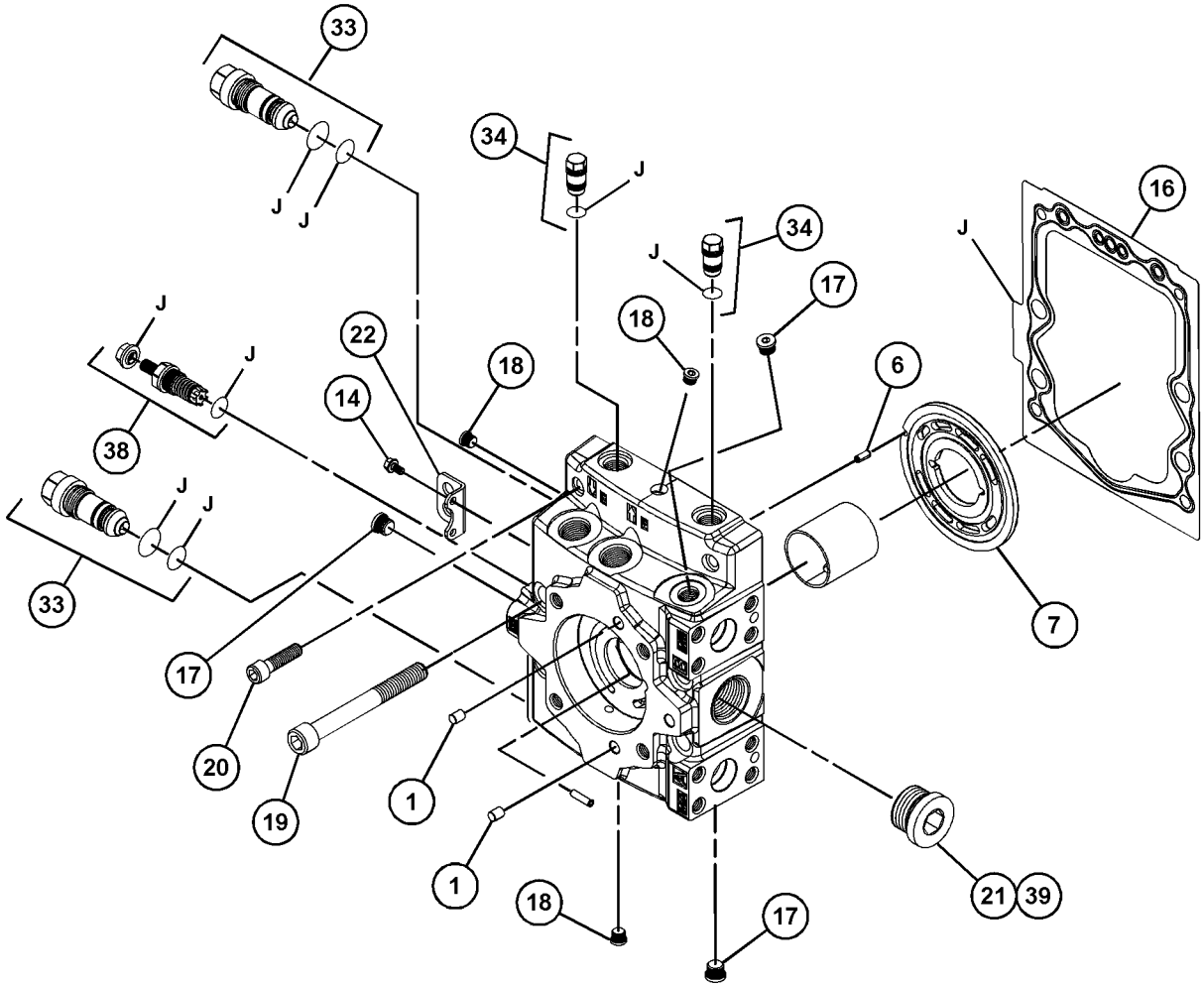

GRAPHIC #3 <END> g06459833

509-3796 VALVE & MTG GP-CONTROL

S/N: Z2K1-UP; Z2N1-UP
BRAKE
PART OF 510-9710 POWER TRAIN AR
AN ATTACHMENT

SMCS-5051 **i07816746**

NOTE	REF NO	GRAPHIC REF	PART NUMBER	QTY	PART NAME 1 2 3 4 5 6 (PRODUCT LEVEL)	SEE PAGE
	1	1	**8M-5254**	4	SEAL-O-RING	
M	2	1	**7X-2543**	4	BOLT (M10X1.5X120-MM)	
	3	1	**8T-4121**	4	WASHER-HARD (11X21X2.5-MM THK)	
	4	1	*148-8395*	1	PLUG AS	
		1	**3K-0360**	1	SEAL-O-RING	
		1	**9S-8005**	1	PLUG (3/4-16-THD)	
	5	1	*162-0177*	1	PLUG AS	
		1	**3J-1907**	1	SEAL-O-RING	
		1	**9S-8004**	1	PLUG (9/16-18-THD)	
Y	6	1	**485-5146**	1	VALVE GP-BRAKE CONTROL	557

M - METRIC PART
Y - SEPARATE ILLUSTRATION

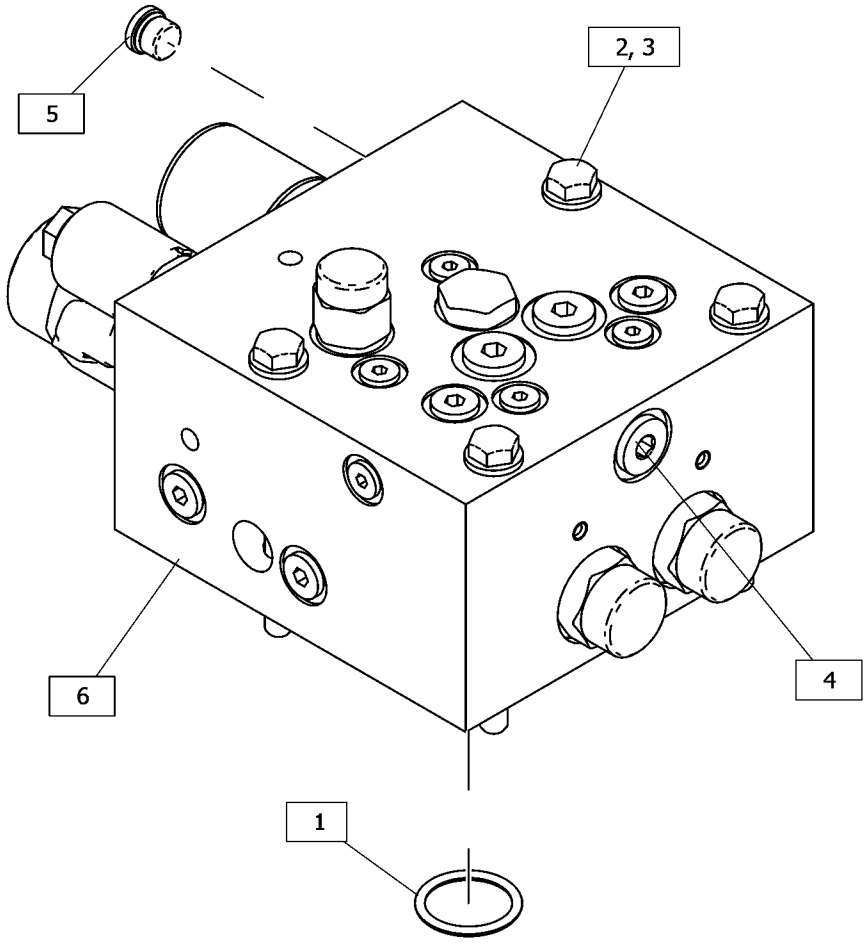

GRAPHIC #1 <END> g06451047

485-5146 VALVE GP-BRAKE CONTROL

S/N: Z2K1-UP; Z2N1-UP
PART OF 509-3796 VALVE & MTG GP-CONTROL
AN ATTACHMENT

SMCS-4265, 4282 **i07444201**

NOTE	REF NO	GRAPHIC REF	PART NUMBER	QTY	PART NAME 1 2 3 4 5 6 (PRODUCT LEVEL)	SEE PAGE
Y	1	1	**174-4909**	1	VALVE GP-SOLENOID (SERVICE BRAKE)	559
	2	1	**251-3269**	1	CARTRIDGE AS-VALVE (SCREEN)	
J	3	1	**382-0936**	2	VALVE GP-PRESSURE REDUCING (BRAKE)	
H	4	1	**382-0937**	1	ACCUMULATOR GP (BRAKE)	
	5	1	**382-0938**	1	VALVE GP-CONTROL (IMPLEMENT, STEERING, BRAKE)	
		1	**033-6027**	1	SEAL-O-RING	
		1	**033-6043**	1	SEAL-O-RING	
		1	**169-1616**	2	RING-BACKUP	
Y	6	1	**478-8207**	1	VALVE GP-SOLENOID (24-VOLT) (PARKING BRAKE DUMP)	560
	7	1	**3J-1907**	7	SEAL-O-RING	
	8	1	**3J-7354**	7	SEAL-O-RING	
	9	1	**3K-0360**	2	SEAL-O-RING	
	10	1	**9S-8002**	7	PLUG (7/16-20-THD)	
	11	1	**9S-8004**	7	PLUG (9/16-18-THD)	
	12	1	**9S-8005**	2	PLUG (3/4-16-THD)	
					AVAILABLE REPAIR KIT(S):	
J			**166-0321**	1	KIT-SEAL (CONTROL VALVE)	
					(INCLUDES SEALS)	
H			**172-7753**	1	KIT-SEAL	
					(INCLUDES SEALS & BACK UP RING)	

H - KIT MARKED H SERVICES PART(S) MARKED H
J - KIT MARKED J SERVICES PART(S) MARKED J
Y - SEPARATE ILLUSTRATION

485-5146 **VALVE GP-BRAKE CONTROL (**contd.**)** **i07444201**

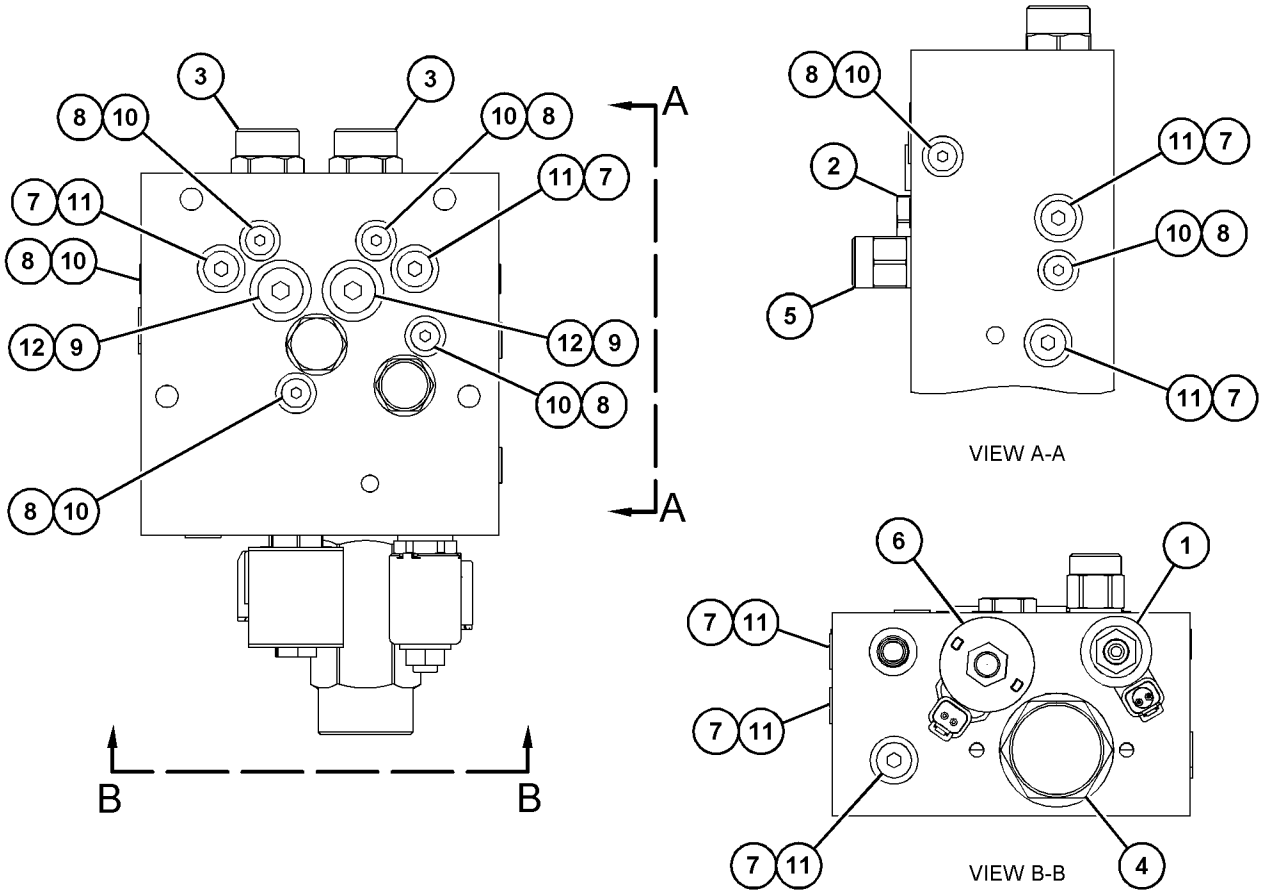

GRAPHIC #1 <END> g06023780

174-4909 VALVE GP-SOLENOID

S/N: Z2K1-UP; Z2N1-UP
24-VOLT
PART OF 485-5146 VALVE GP-BRAKE CONTROL
AN ATTACHMENT

SMCS-4804 **i03506725**

NOTE	REF NO	GRAPHIC REF	PART NUMBER	QTY	PART NAME 1 2 3 4 5 6 (PRODUCT LEVEL)	SEE PAGE
	1	1	**226-9622**	1	COIL AS-SOLENOID (24-VOLT)	
	2	1	**164-2108**	1	WASHER (13.03X25.4X2.38-MM THK)	
	3	1	**218-2373**	1	NUT (1/2-28-THD)	
F			**6V-4589**	1	SEAL-O-RING	
F			**8L-2746**	1	SEAL-O-RING	

F - NOT SHOWN

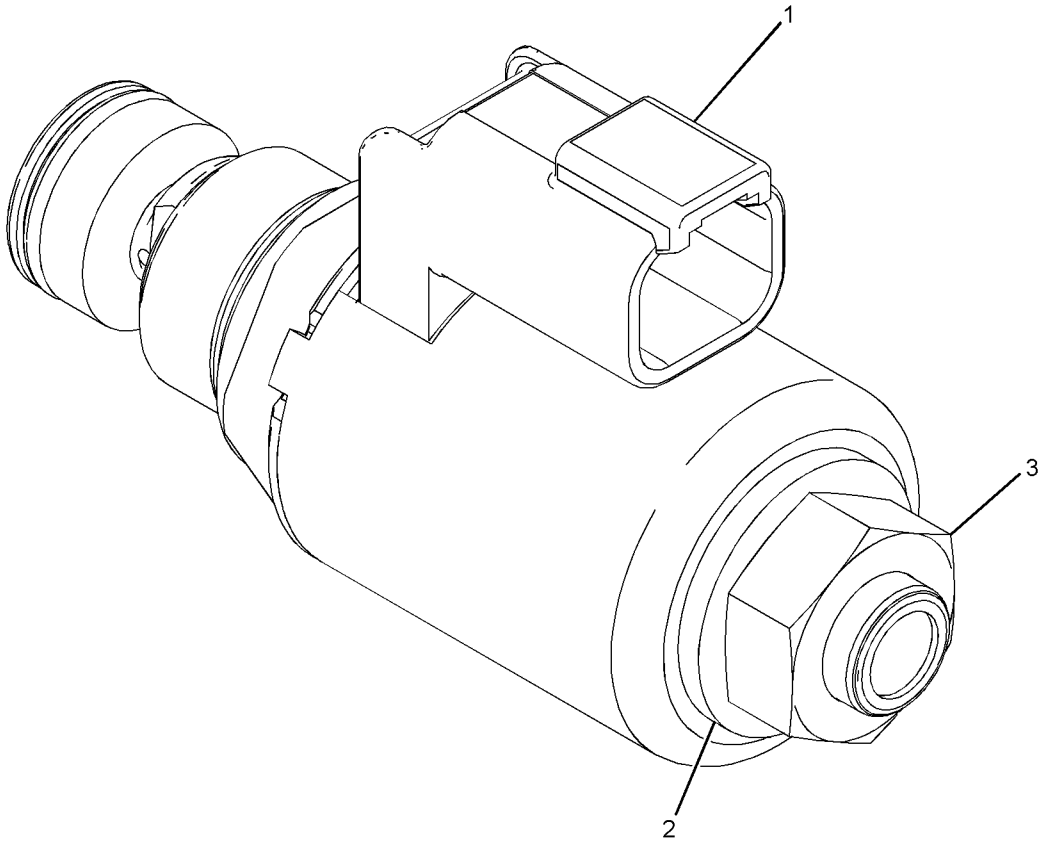

GRAPHIC #1 <END> g01139934

478-8207 VALVE GP-SOLENOID

S/N: Z2K1-UP; Z2N1-UP
24-VDC
PART OF 485-5146 VALVE GP-BRAKE CONTROL
AN ATTACHMENT

SMCS-4804 **i06543239**

NOTE	REF NO	GRAPHIC REF	PART NUMBER	QTY	PART NAME 1 2 3 4 5 6 (PRODUCT LEVEL)	SEE PAGE
	1	1	**254-0072**	1	COIL AS (24-VOLT)	
	2	1	**114-2772**	1	NUT (1/2-20-THD)	
					AVAILABLE REPAIR KIT(S):	
			277-8873	1	KIT-SEAL (SOLENOID VALVE)	
					(INCLUDES SEALS & BACKUP RINGS)	

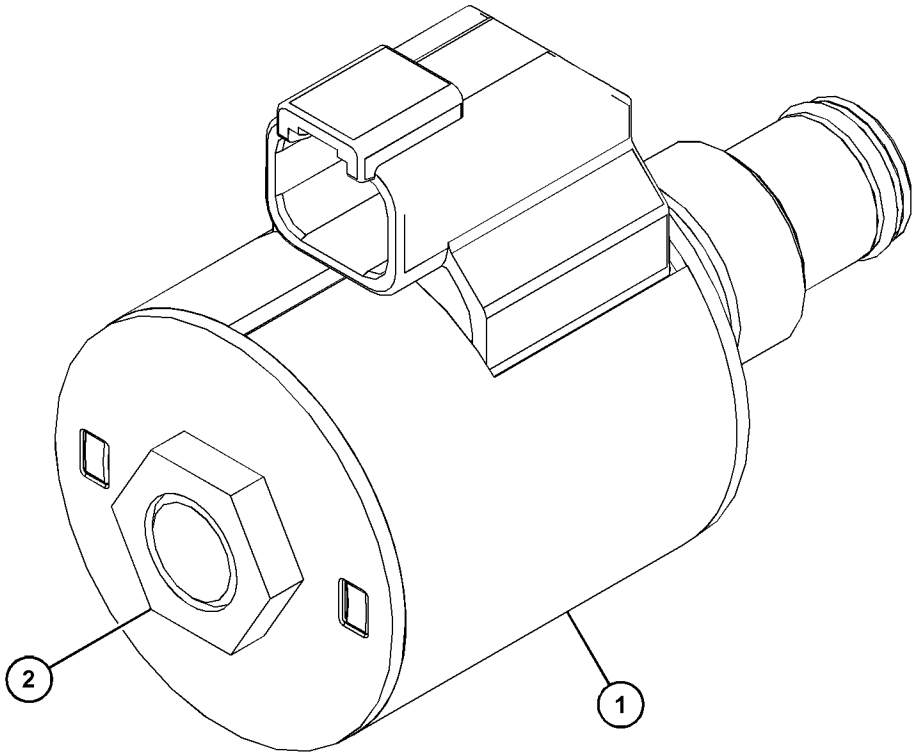

GRAPHIC #1 <END> g06015915

160-2669 ACCUMULATOR GP-HYDRAULIC—CHARGED

S/N: Z2K1-UP; Z2N1-UP
FIELD REPLACEMENT ORDER 180-9419—PAGE: 562
PART OF 507-7422 LINES GP-PUMP
AN ATTACHMENT

SMCS-5077 **i07452221**

NOTE	REF NO	GRAPHIC REF	PART NUMBER	QTY	PART NAME 1 2 3 4 5 6 (PRODUCT LEVEL)	SEE PAGE
	1	1	**512-8331**	1	FILM-IDENTIFICATION (HYDRAULIC ACCUMULATOR)	

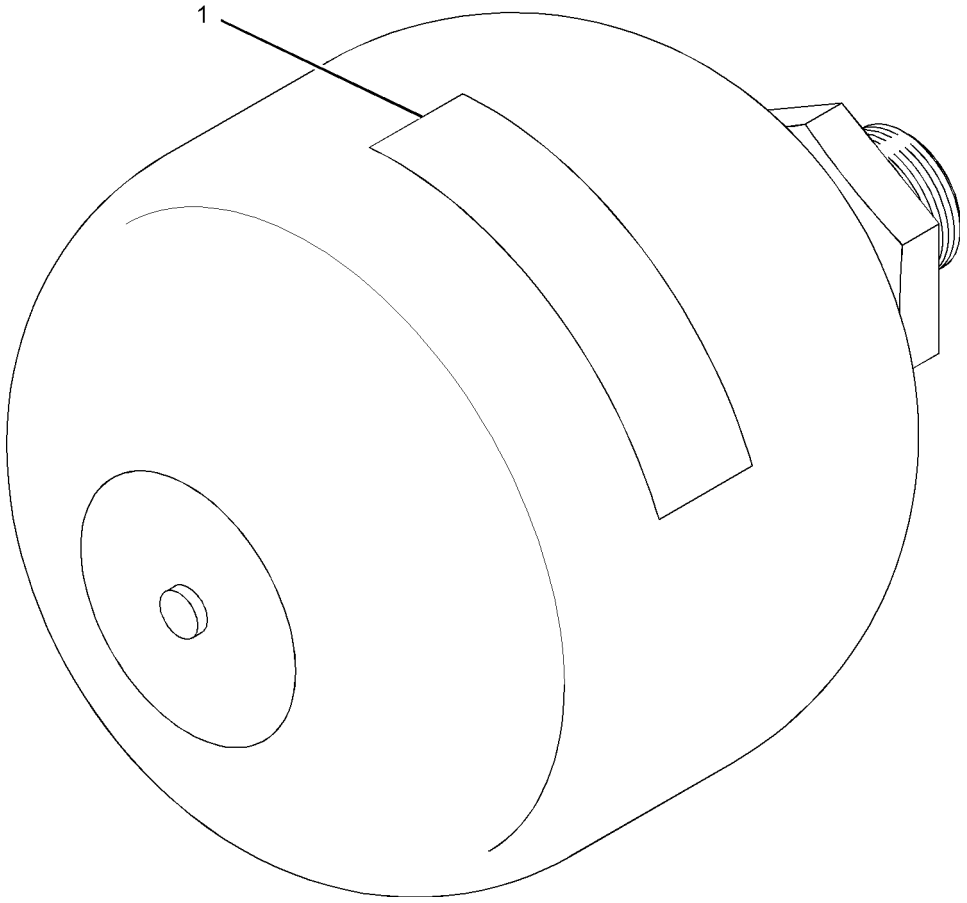

GRAPHIC #1 <END> g01034166

180-9419 ACCUMULATOR GP-HYDRAULIC—UNCHARGED

S/N: Z2K1-UP; Z2N1-UP

FIELD REPLACEMENT FOR 160-2669—PAGE: 561

SMCS-5077 **i03922093**

NOTE	REF NO	GRAPHIC REF	PART NUMBER	QTY	PART NAME 1 2 3 4 5 6 (PRODUCT LEVEL)	SEE PAGE
	1	1	**161-6879**	1	CAP	
	2	1	**159-4700**	1	FILM-WARNING (HIGH PRESSURE CYLINDER)	
	3	1	**161-6880**	1	CORE	

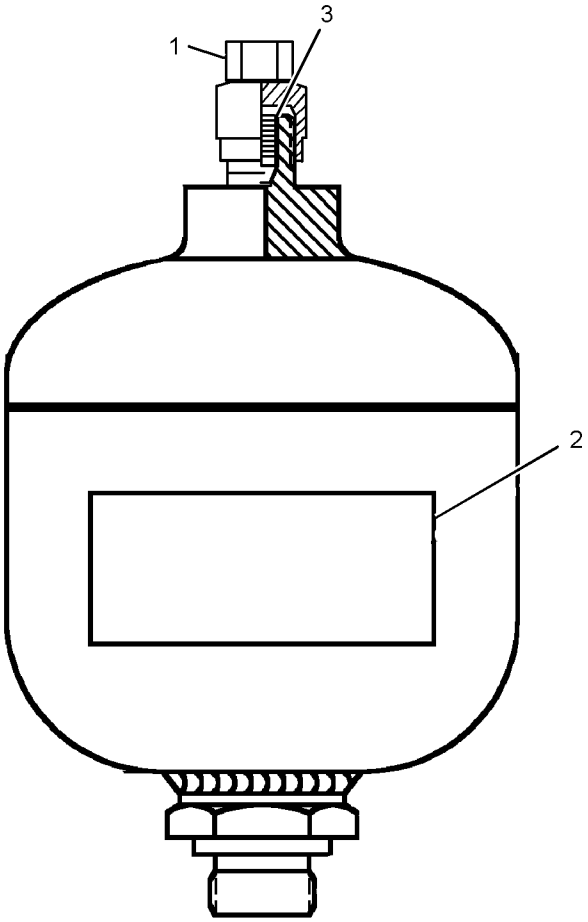

GRAPHIC #1 <END> g03053799

515-7373 CONTROL AR-HYDRAULIC—DUAL

S/N: Z2K1-UP; Z2N1-UP
RIPPER, WINCH
AN ATTACHMENT

SMCS-5057, 5170, 5357

i07816176

NOTE	PART NUMBER	QTY	PART NAME 1 2 3 4 5 6 (PRODUCT LEVEL)	SEE PAGE
Y	*435-5769*	1	CONTROL GP-WINCH	804
Y	*507-7434*	1	LINES GP-RIPPER	598
	511-8774	1	FILM-INSTRUCTION (RIPPER, WINCH)	

Y - SEPARATE ILLUSTRATION

<END>

379-3507 CYLINDER GP-ANGLING

S/N: Z2K1-UP; Z2N1-UP
101.6-MM (4-IN) BORE X 538-MM (21.2-IN) STROKE
PART OF 533-7717, 533-7718 INSTALLATION AR-BULLDOZER
AN ATTACHMENT

SMCS-5101 **i07835976**

NOTE	REF NO	GRAPHIC REF	PART NUMBER	QTY	PART NAME 1 2 3 4 5 6 (PRODUCT LEVEL)	SEE PAGE
	1	1	**135-7393**	1	HEAD AS	
		1	**308-1845**	1	SEAL-WIPER	
J	2	1	**289-2935**	1	SEAL AS-BUFFER	
	3	1	**358-6490**	1	PISTON AS	
		1	**8N-5083**	1	SPRING	
		1	**8C-9160**	1	SEAL AS	
	4	1	**358-6494**	1	WASHER (33X59X6-MM THK)	
	5	1	**379-5199**	1	CYLINDER AS-HYDRAULIC	
		1	**9T-7045**	1	ELBOW	
		1	**1J-6472**	2	RING-RETAINING	
	5A	1	**237-4860**	1	BEARING-SELF-ALIGNING	
	6	1	**379-5200**	1	ROD AS	
		1	**1J-6472**	2	RING-RETAINING	
	6A	1	**237-4860**	1	BEARING-SELF-ALIGNING	
J	7	1	**421-4023**	1	SEAL-U-CUP	
	8	1	**2J-6384**	1	NUT-SELF LOCKING (1-1/4-12-THD)	
J	9	1	**2K-6830**	1	RING-BACKUP	
J	10	1	**308-1845**	1	SEAL-WIPER	
J	11	1	**4T-5613**	1	RING-WEAR	
J	12	1	**6J-2797**	1	RING-WEAR	
J	13	1	**9X-4611**	1	SEAL-O-RING	
					AVAILABLE REPAIR KIT(S):	
J			**580-3600**	1	KIT-SEAL (HYDRAULIC CYLINDER)	
					(INCLUDES BACK UP RING, WEAR RINGS, SEAL AS & SEALS)	

J - KIT MARKED J SERVICES PART(S) MARKED J

379-3507 **CYLINDER GP-ANGLING (**contd.**)** **i07835976**

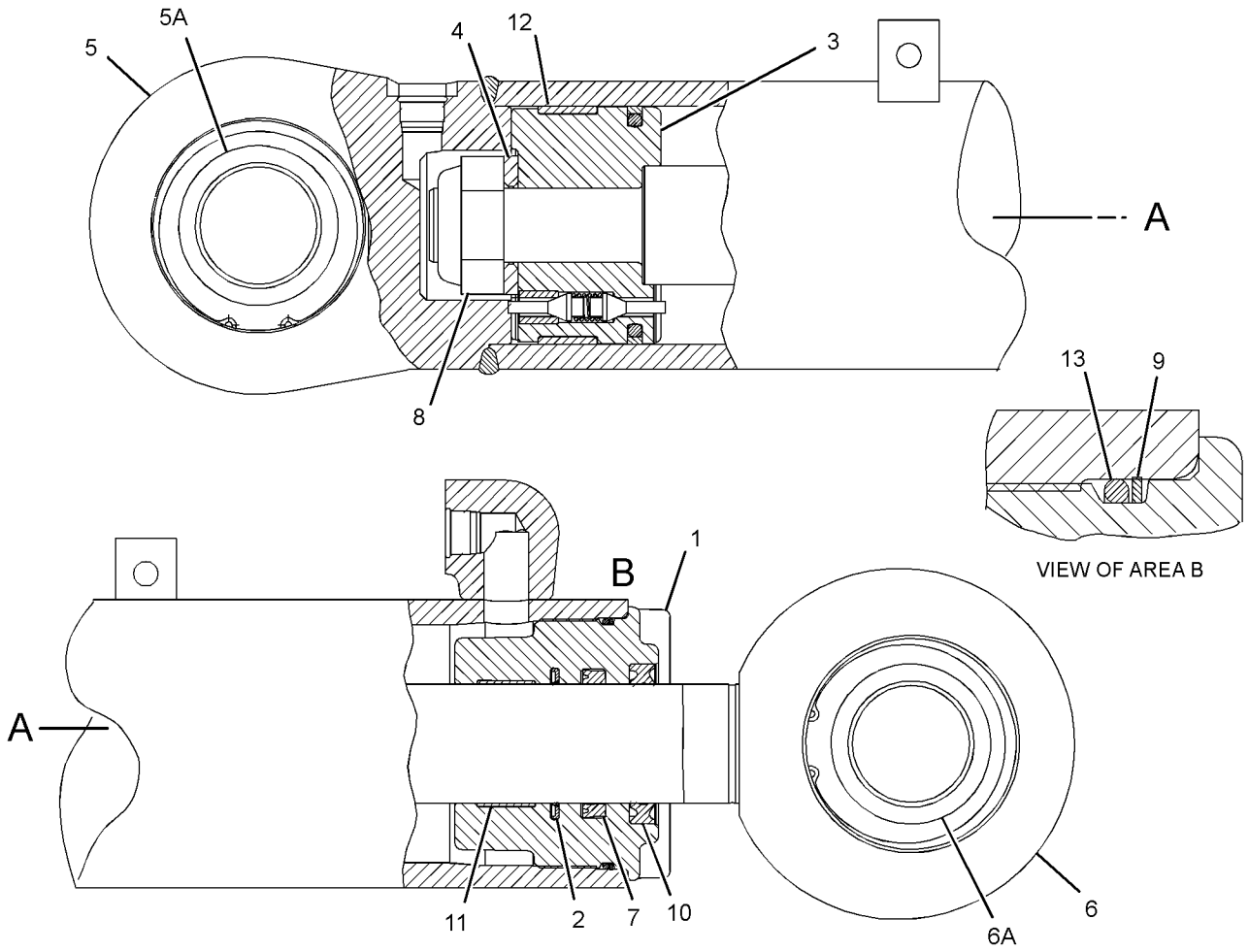

GRAPHIC #1 <END> g03586161

544-5051 CYLINDER GP-BULLDOZER LIFT

S/N: Z2K1-UP; Z2N1-UP
114.3-MM (4.5-IN) BORE X 445-MM (17.6-IN) STROKE
PART OF 533-7717, 533-7718 INSTALLATION AR-BULLDOZER
AN ATTACHMENT

SMCS-5102 **i07799867**

NOTE	REF NO	GRAPHIC REF	PART NUMBER	QTY	PART NAME 1 2 3 4 5 6 (PRODUCT LEVEL)	SEE PAGE
	1	1	**1K-7095**	1	RING-BACKUP	
	2	1	**4J-3745**	1	RING-WEAR	
	3	1	**6E-3569**	1	PISTON	
	4	1	**6E-3570**	1	HEAD	
	5	1	**8T-4958**	1	RING-WEAR	
	6	1	**9X-8399**	1	WASHER (33X56X6-MM THK)	
	7	1	**167-2200**	1	SEAL AS	
M	8	1	**173-9683**	1	BOLT (M30X3.5X90-MM)	
	9	1	**175-7902**	1	SEAL-O-RING	
	10	1	**231-3538**	1	SEAL-WIPER	
	11	1	**421-4024**	1	SEAL-U-CUP	
	12	1	**495-8197**	1	SEAL AS	
	13	1	**544-5052**	1	CYLINDER AS-LIFT	
	13A	1	**539-6535**	2	BEARING-SLEEVE	
	14	1	**544-5054**	1	ROD AS	
	14A	1	**6E-5449**	1	BEARING	

M - METRIC PART

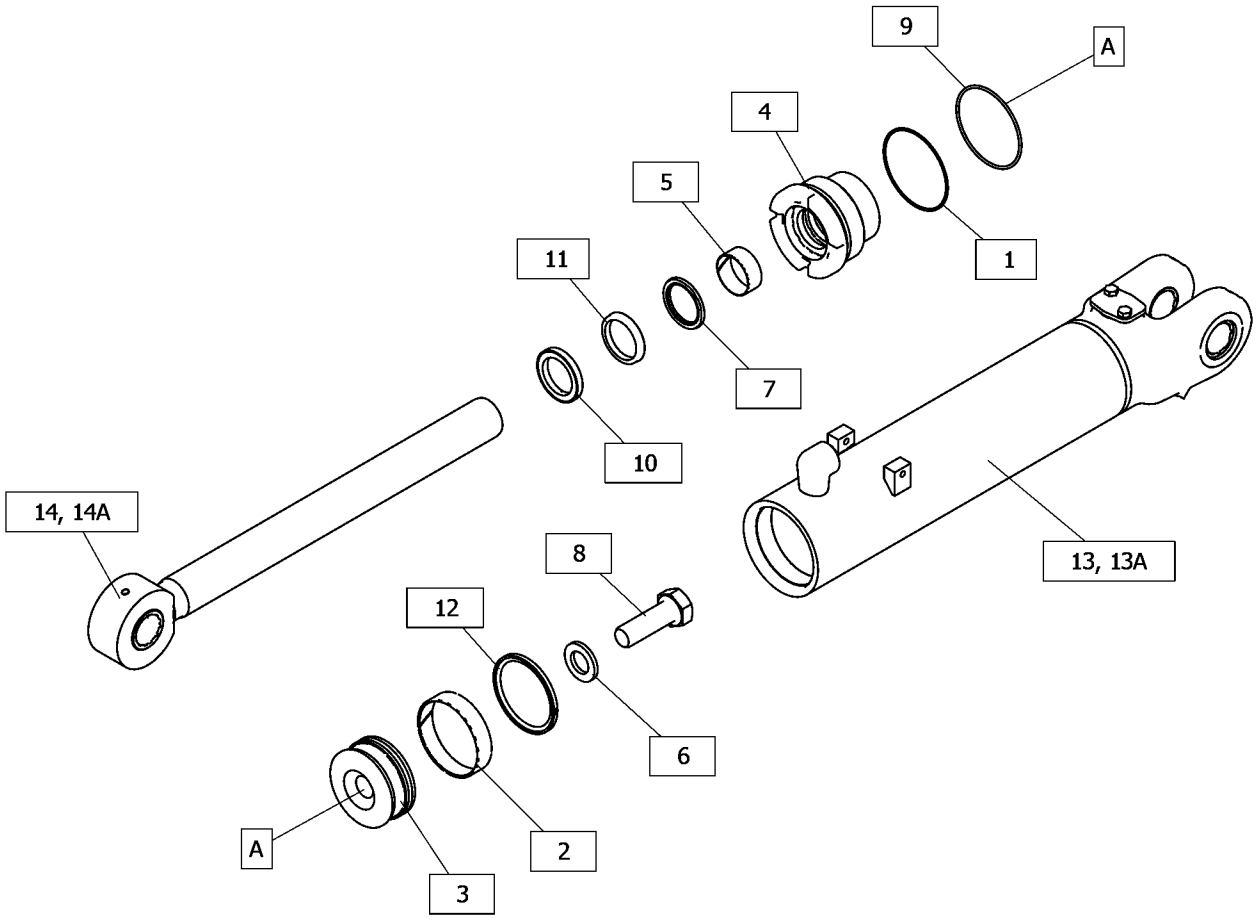

GRAPHIC #1 <END> g06453289

379-3506 CYLINDER GP-BULLDOZER TILT

S/N: Z2K1-UP; Z2N1-UP
120-MM (4.7-IN) BORE X 167-MM (6.6-IN) STROKE
PART OF 533-7717, 533-7718 INSTALLATION AR-BULLDOZER
AN ATTACHMENT

SMCS-5104 **i07329615**

NOTE	REF NO	GRAPHIC REF	PART NUMBER	QTY	PART NAME 1 2 3 4 5 6 (PRODUCT LEVEL)	SEE PAGE
	1	1	**1U-4049**	1	WASHER (51X73X12.7-MM THK)	
J	2	1	**9X-3592**	1	SEAL AS	
	3	1	**266-9983**	1	HEAD	
	4	1	**3J-9545**	1	LOCKNUT (2-12-THD)	
	5	1	**379-5189**	1	CYLINDER AS-TILT	
	5A	1	**7J-1309**	1	BEARING	
	5B	1	**1S-3311**	1	RING-RETAINING	
	6	1	**379-5190**	1	ROD AS	
	6A	1	**7J-1309**	1	BEARING	
	6B	1	**1S-3311**	1	RING-RETAINING	
J	7	1	**3E-6703**	1	SEAL-O-RING	
J	8	1	**146-0742**	1	RING-WEAR	
J	9	1	**167-2204**	1	SEAL AS-BUFFER	
J	10	1	**167-2314**	1	SEAL-U-CUP	
J	11	1	**227-1148**	1	SEAL-WIPER	
J	12	1	**2J-3961**	1	RING-BACKUP	
J	13	1	**310-2187**	1	SEAL-O-RING	
					AVAILABLE REPAIR KIT(S):	
J			**393-3605**	1	KIT-HYD CYLINDER SEAL	
					(INCLUDES BACK UP RING, SEALS, SEAL AS, WEAR RING & RING)	

J - KIT MARKED J SERVICES PART(S) MARKED J

379-3506 **CYLINDER GP-BULLDOZER TILT** (contd.) **i07329615**

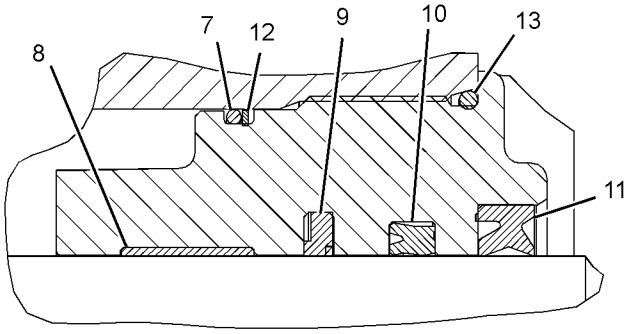

VIEW OF AREA A

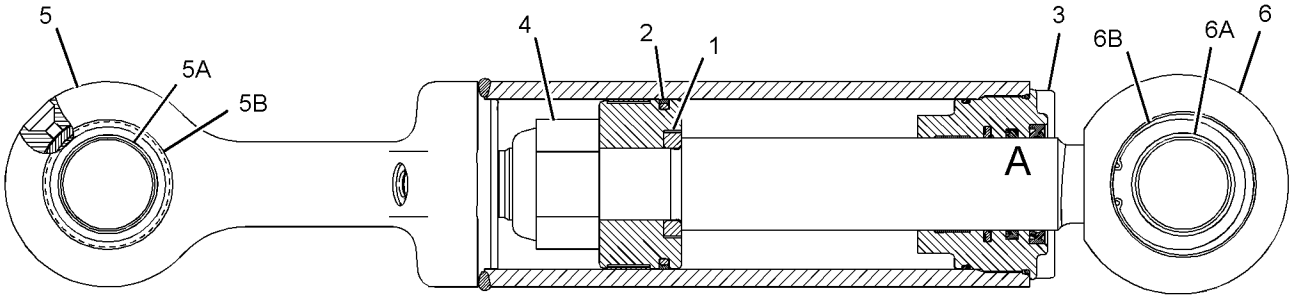

GRAPHIC #1 <END> g02794484

448-4913 CYLINDER GP-RIPPER–LIFT

S/N: Z2K1-UP; Z2N1-UP; H9Z1-UP
127-MM (5-IN) BORE X 362-MM (14.25-IN) STROKE
PART OF 533-7719 RIPPER AR
AN ATTACHMENT

SMCS-5352, 5356 **i05946022**

NOTE	REF NO	GRAPHIC REF	PART NUMBER	QTY	PART NAME 1 2 3 4 5 6 (PRODUCT LEVEL)	SEE PAGE
	1	1	**448-6997**	1	CYLINDER AS	
	1A	1	**4K-3128**	2	BUSHING	
	2	1	**2J-0564**	1	LOCKNUT (2-12-THD)	
	3	1	**3G-1753**	1	PISTON	
J	4	1	**4J-3420**	1	RING-WEAR	
J	5	1	**9X-7264**	1	SEAL AS	
	6	1	**3G-1757**	1	WASHER (50.95X82X12-MM THK)	
J	7	1	**2K-4096**	1	RING-BACKUP	
	8	1	**310-2189**	1	SEAL-O-RING	
	9	1	**230-4872**	1	HEAD	
	10	1	**9T-2714**	1	ROD AS	
	10A	1	**2K-4507**	1	BUSHING	
J	11	1	**8T-5668**	1	RING-WEAR	
J	12	1	**289-2937**	1	SEAL AS-BUFFER	
J	13	1	**289-2948**	1	SEAL-U-CUP	
J	14	1	**225-3281**	1	SEAL-WIPER	
	15	1	**6V-8237**	4	WASHER (26X44X4-MM THK)	
M	16	1	**173-9779**	4	BOLT (M24X3X80-MM)	
	17	1	**1P-4576**	4	FLANGE-HALF	
M	18	1	**8T-4186**	8	BOLT (M10X1.5X40-MM)	
	19	1	**8T-4121**	8	WASHER-HARD (11X21X2.5-MM THK)	
					AVAILABLE REPAIR KIT(S):	
J			**242-2542**	1	KIT-SEAL (HYDRAULIC CYLINDER)	
					(INCLUDES RINGS & SEALS) (FOR USE WITH REHS1392)	

J - KIT MARKED J SERVICES PART(S) MARKED J
M - METRIC PART

448-4913 **CYLINDER GP-RIPPER (**contd.**)** **i05946022**

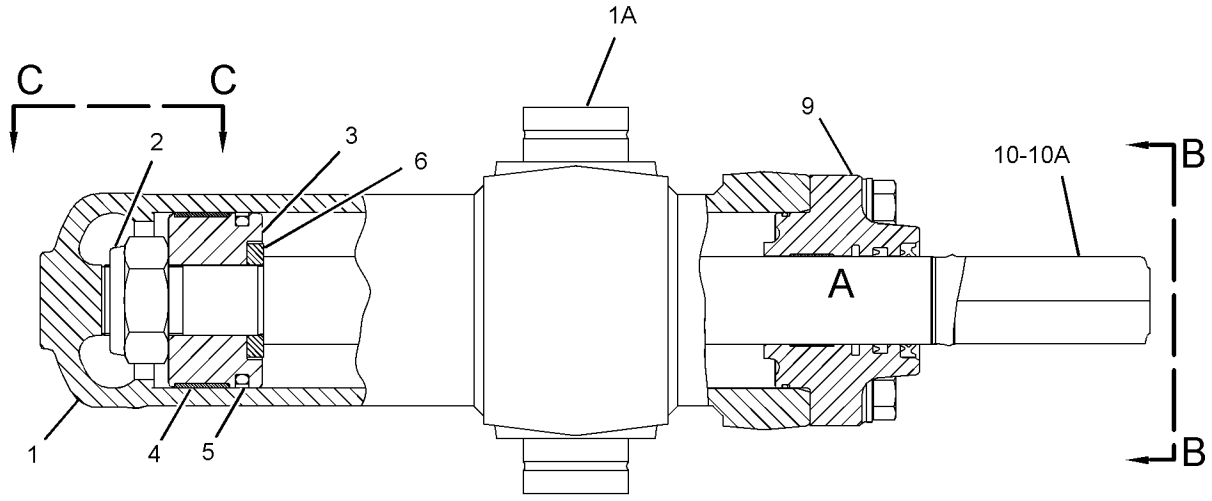

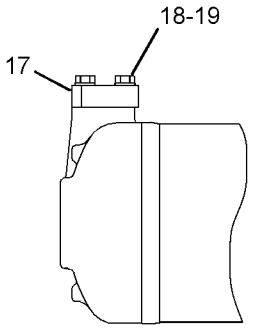

VIEW C-C

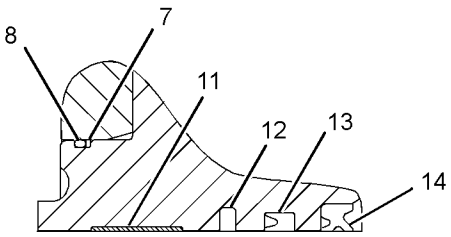

VIEW OF AREA A

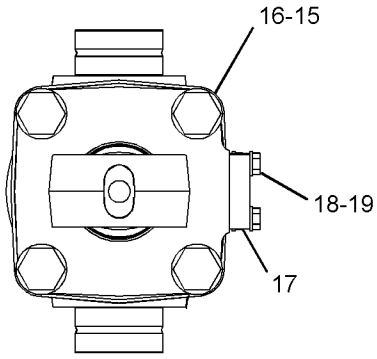

VIEW B-B

GRAPHIC #1 <END> g03733700

562-7338 FLANGE GP

S/N: Z2K1-UP; Z2N1-UP
PART OF 509-5165 MOTOR GP-PISTON
AN ATTACHMENT

SMCS-1386, 5058

i07827312

NOTE	REF NO	GRAPHIC REF	PART NUMBER	QTY	PART NAME 1 2 3 4 5 6 (PRODUCT LEVEL)	SEE PAGE
Y	1	1	**562-7341**	1	SHAFT GP-HYDRAULIC MOTOR	609
	2	1	**562-7346**	1	FLANGE-BEARING	
	3	1	**531-1124**	1	SEAL-SHAFT	
	4	1	**140-1739**	1	RING-RETAINING	
	5	1	**6V-1195**	1	SEAL-O-RING	

Y - SEPARATE ILLUSTRATION

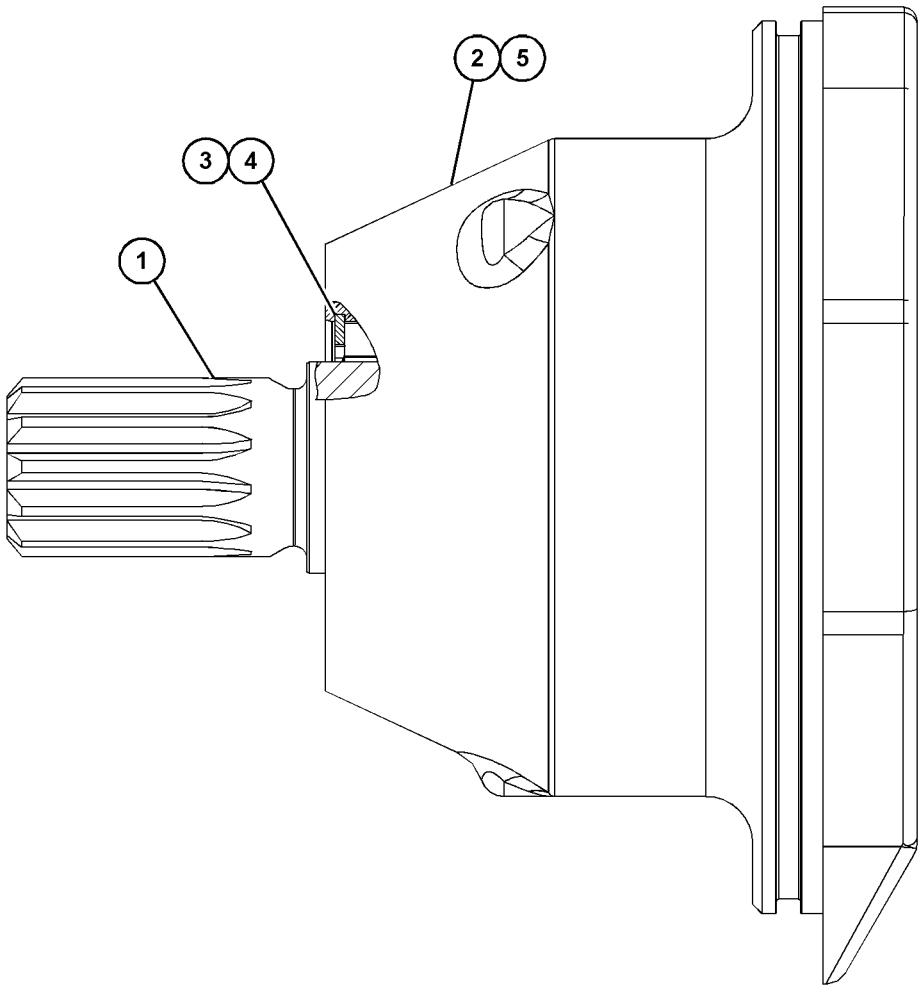

GRAPHIC #1 <END> g06453827

562-7337 HOUSING GP-MOTOR

S/N: Z2K1-UP; Z2N1-UP
PART OF 509-5165 MOTOR GP-PISTON
AN ATTACHMENT

SMCS-5058 **i07826970**

NOTE	REF NO	GRAPHIC REF	PART NUMBER	QTY	PART NAME 1 2 3 4 5 6 (PRODUCT LEVEL)	SEE PAGE
	1	1	**124-9960**	1	PISTON	
	2	1	**124-9899**	2	SPACER	
	3	1	**124-9900**	2	SPRING	
	4	1	**460-6052**	2	LOCKSCREW	
	5	1	**558-1782**	1	SHIM (0.6-MM THK)	
	6	1	**558-1783**	1	SPRING	
	7	1	**562-7344**	1	PISTON	
	8	1	**222-5693**	1	PLUG-O-RING	
	9	1	**214-7566**	1	SEAL-O-RING	
M	10	1	**8T-3957**	4	BOLT-SOCKET HEAD (M12X1.75X30-MM)	
	11	1	**7X-2906**	2	PIN	
	12	1	**8T-4231**	1	DOWEL	
	13	1	**464-7762**	2	SEAL-O-RING	
	14	1	**335-8230**	4	PLUG	
					PARTS SHOWN IN GRAPHIC(S) WITHOUT A REFERENCE NUMBER ARE NOT SERVICED SEPARATELY	

M - METRIC PART

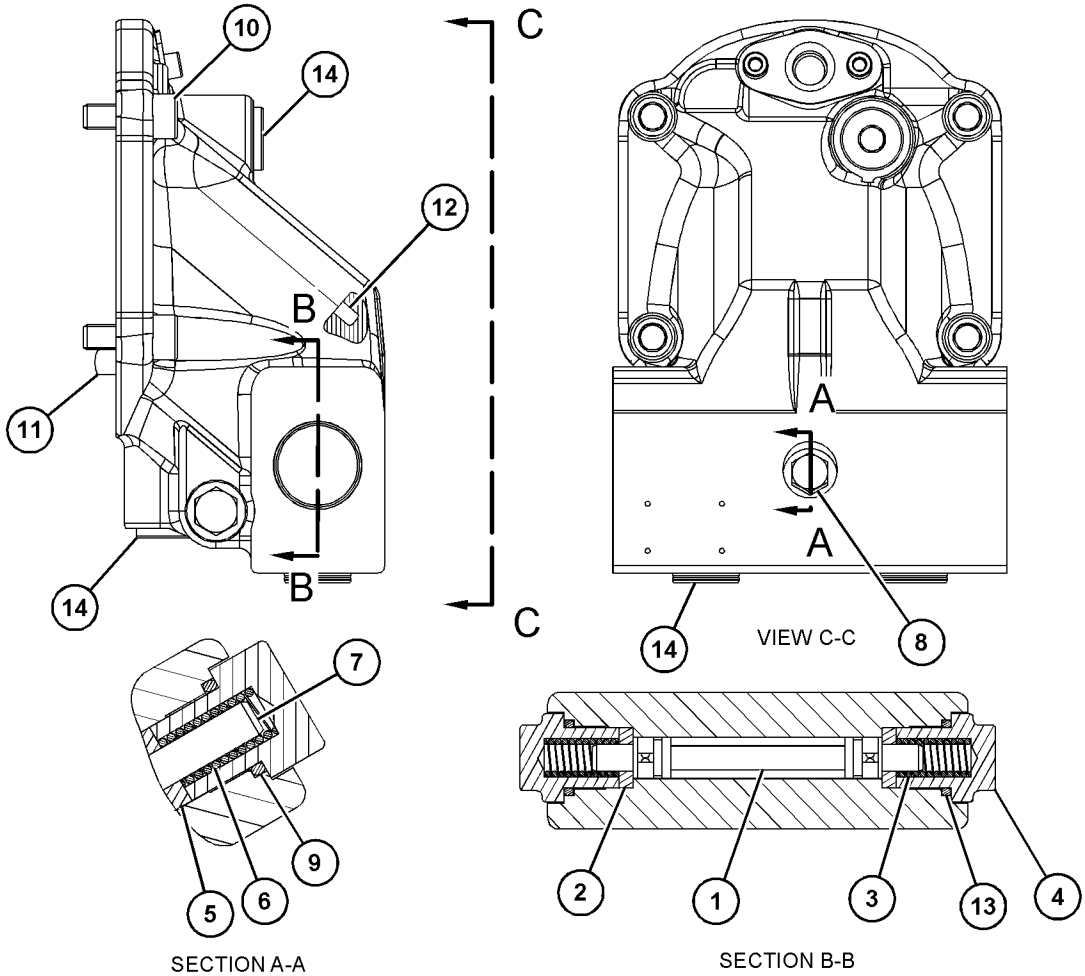

GRAPHIC #1 <END> g06451986

510-9713 HYDRAULIC AR

S/N: Z2K1-UP; Z2N1-UP
VPAT
PART OF 532-9781 CONFIGURATION AR
AN ATTACHMENT

SMCS-5050 **i07819321**

NOTE	PART NUMBER	QTY	PART NAME 1 2 3 4 5 6 (PRODUCT LEVEL)	SEE PAGE
Y	*507-7431*	1	LINES GP-ANGLE & TILT	574
Y	*531-1959*	1	LINES GP-FAN DRIVE	55
Y	*524-1773*	1	LINES GP-GREASE	623
Y	*507-7425*	1	LINES GP-LIFT CYLINDER	588

Y - SEPARATE ILLUSTRATION

<END>

575-9700 HYDRAULIC AR

S/N: Z2K1-UP; Z2N1-UP
PART OF 532-9780 COMMON AR
AN ATTACHMENT

SMCS-5050 **i07824601**

NOTE	PART NUMBER	QTY	PART NAME 1 2 3 4 5 6 (PRODUCT LEVEL)	SEE PAGE
Y	*507-7424*	1	LINES GP-DIAGNOSTIC	831
Y	*509-3799*	1	LINES GP-POWER TRAIN OIL	308
Y	*507-7422*	1	LINES GP-PUMP	593
Y	*507-7423*	1	LINES GP-STEERING	546
Y	*507-7404*	1	TANK & MTG GP-HYDRAULIC	613
Y	*507-7405*	1	VALVE & MTG GP-CONTROL	614

Y - SEPARATE ILLUSTRATION

<END>

507-7431 LINES GP-ANGLE & TILT

S/N: Z2K1-UP; Z2N1-UP
PART OF 510-9713 HYDRAULIC AR
AN ATTACHMENT

SMCS-5057, 5101, 5104 **i07819324**

NOTE	REF NO	GRAPHIC REF	PART NUMBER	QTY	PART NAME 1 2 3 4 5 6 (PRODUCT LEVEL)	SEE PAGE
M	1	1	**8T-4185**	1	BOLT (M10X1.5X50-MM)	
	2	1	**310-4947**	1	CLIP (SLOT)	
	3	1	**5P-7464**	2	CLIP (SLOT)	
	4	1	**5P-7465**	2	CLIP (TAB)	
	5	1	**6V-1249**	2	GROMMET (22-MM ID)	
	6	1	**6V-9169**	4	NUT (13/16-16-THD)	
	7	1	**6V-9170**	2	NUT-BULKHEAD (1-14-THD)	
	8	1	**8T-4121**	13	WASHER-HARD (11X21X2.5-MM THK)	
M	9	1	**085-8091**	2	BOLT (M10X1.5X55-MM)	
	10	1	**135-8574**	6	BOLT AS	
	11	1	*148-8327*	1	CONNECTOR AS	
		1	**3D-2824**	1	SEAL-O-RING	
		1	**6V-8637**	1	CONNECTOR	
		1	**6V-9746**	1	SEAL-O-RING	
	12	1	*148-8328*	1	CONNECTOR AS	
		1	**3D-2824**	1	SEAL-O-RING	
		1	**6V-8398**	1	SEAL-O-RING	
		1	**6V-8633**	1	CONNECTOR	
	13	1	*148-8370*	3	ELBOW AS	
					(EACH INCLUDES)	
		1	**6V-8398**	1	SEAL-O-RING	
		1	**6V-9851**	1	ELBOW	
	14	1	*148-8375*	4	ELBOW AS	
					(EACH INCLUDES)	
		1	**6V-8398**	2	SEAL-O-RING	
		1	**6V-8981**	1	ELBOW	
	15	1	*155-6258*	1	ELBOW AS	
		1	**3D-2824**	1	SEAL-O-RING	
		1	**6V-8398**	1	SEAL-O-RING	
		1	**127-1647**	1	ELBOW	
M	16	1	**274-9987**	4	SETSCREW-SOCKET (M10X1.5X120-MM)	
	17	1	*281-5969*	2	ELBOW AS	
					(EACH INCLUDES)	
		1	**6V-8398**	1	SEAL-O-RING	
		1	**6V-9796**	1	ELBOW	
		1	**7J-9108**	1	SEAL-O-RING	
	18	1	*286-6498*	1	CONNECTOR AS	
		1	**3D-2824**	1	SEAL-O-RING	
		1	**6V-9746**	1	SEAL-O-RING	
		1	**110-5897**	1	CONNECTOR	
	19	1	**294-5374**	1	PLATE	
M	20	1	**309-1905**	2	STUD-TAPERLOCK (M10X1.5X100-MM)	
	21	1	**310-4948**	1	CLIP (TAB)	
	22	1	**448-1398**	2	CLAMP AS	
	23	1	**476-0700**	2	PLATE	
	24	1	**519-6303**	1	CLAMP AS	
	25	1	**526-6691**	1	CLAMP AS	

507-7431 **LINES GP-ANGLE & TILT (**contd.**)** **i07819324**

NOTE	REF NO	GRAPHIC REF	PART NUMBER	QTY	PART NAME 1 2 3 4 5 6 (PRODUCT LEVEL)	SEE PAGE
	26	1	**526-7172**	1	PLATE	
	27	1	**529-6539**	1	BOLT AS	
	28	1	**536-7106**	1	GROMMET	
	29	1	**561-7171**	1	BRACKET AS	
I	30	1	**571-4816**	1	HOSE AS	
I	31	1	**571-4826**	1	HOSE AS	
I	32	1	**571-4832**	1	HOSE AS	
M	33	1	**344-5675**	8	NUT (M10X1.5-THD)	
M	34	1	**479-2171**	1	BOLT AS	
M	35	1	**479-2172**	1	BOLT AS	
	36	1	**483-2517**	1	CLIP (LOOP)	
	37	1	**556-1691**	1	PLATE AS	
M		1	**8T-3490**	2	NUT-WELD (M10X1.5-THD)	
	38	1	**556-1695**	1	PLATE	
I	39	1	**556-6623**	1	HOSE AS	
I	40	1	**556-6629**	1	HOSE AS	
I	41	1	**556-6631**	1	HOSE AS	
	42	1	*571-0032*	2	TEE AS	
					(EACH INCLUDES)	
		1	**6V-8398**	1	SEAL-O-RING	
		1	**6V-9746**	1	SEAL-O-RING	
		1	**571-0031**	1	TEE	
	43	1	**6D-4244**	1	CLIP (LOOP)	

I - REFER TO HYDRAULIC INFORMATION SYSTEM
M - METRIC PART

507-7431 **LINES GP-ANGLE & TILT** (contd.) **i07819324**

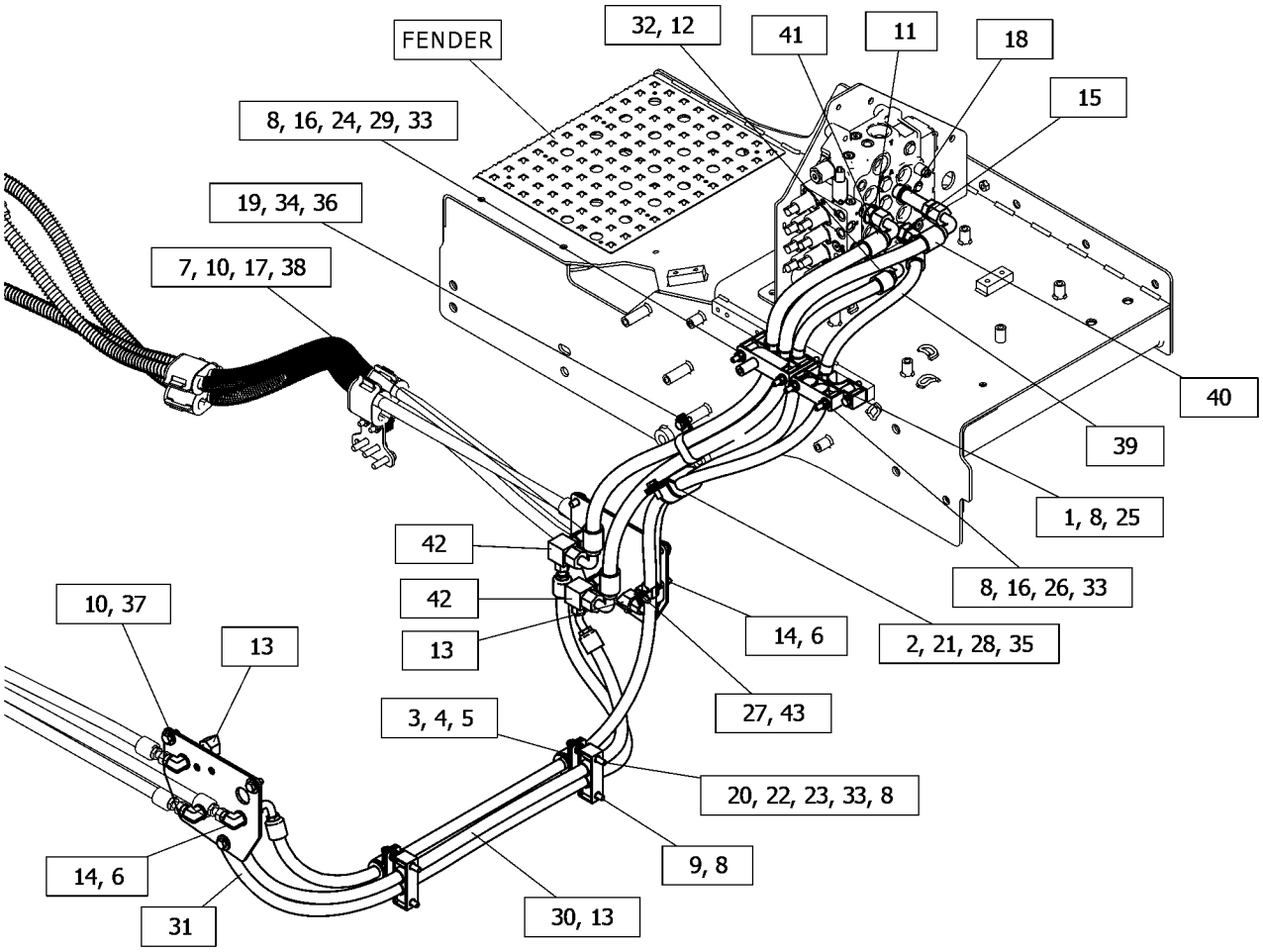

GRAPHIC #1 <END> g06447552

507-7432 LINES GP-ANGLE & TILT

S/N: Z2K1-UP

PART OF 533-7717 INSTALLATION AR-BULLDOZER AN ATTACHMENT

SMCS-5057, 5101, 5104 **i07863817**

NOTE	REF NO	GRAPHIC REF	PART NUMBER	QTY	PART NAME 1 2 3 4 5 6 (PRODUCT LEVEL)	SEE PAGE
M	1	1	**8T-4185**	8	BOLT (M10X1.5X50-MM)	
	2	2	**310-4947**	2	CLIP (SLOT)	
M	3	1	**8T-4184**	6	BOLT (M12X1.75X45-MM)	
	4	2	**3B-6552**	2	ELBOW-PIPE	
	5	1	**3B-8489**	4	ADAPTER	
	6	1	**3G-8047**	8	GROMMET	
	7	1	**3G-8054**	8	CLIP (TAB)	
	8	1	**3G-8057**	8	CLIP (SLOT)	
	9	2	**5P-0370**	2	LOCK PIN	
	10	2	**5P-7464**	4	CLIP (SLOT)	
	11	2	**5P-7465**	4	CLIP (TAB)	
	12	2	**6V-1249**	4	GROMMET (22-MM ID)	
	13	1	**7X-7729**	8	WASHER (11X25X3-MM THK)	
M	14	1,2	**8T-4139**	4	BOLT (M12X1.75X30-MM)	
	15	1,2	**8T-4223**	10	WASHER-HARD (13.5X25.5X3-MM THK)	
	16	2	**8T-4994**	2	WASHER-HARD (20X36.5X3.5-MM THK)	
	17	1,2	**9J-4782**	6	PROTECTOR	
	18	1	**135-8573**	8	BOLT AS	
	19	2	*148-8340*	6	CONNECTOR AS	
					(EACH INCLUDES)	
		2	**3K-0360**	1	SEAL-O-RING	
		2	**6V-8398**	1	SEAL-O-RING	
		2	**6V-8639**	1	CONNECTOR	
	20	2	**197-2477**	2	PIN	
	21	2	**310-4948**	2	CLIP (TAB)	
M	22	2	**479-2172**	2	BOLT AS	
	23	2	**488-3974**	4	BOLT AS	
	24	2	**530-1846**	2	GUARD	
	25	2	**536-7106**	2	GROMMET	
	26	2	**464-3454**	2	HOSE AS	
I	27	1	**521-9011**	1	HOSE AS	
I	28	1	**521-9012**	1	HOSE AS	
I	29	1	**521-9013**	1	HOSE AS	
I	30	1	**521-9014**	1	HOSE AS	
	31	2	**533-0021**	1	COVER AS	
	32	1	**557-1860**	2	COVER	
I	33	1	**537-6032**	1	HOSE AS	
I	34	1	**537-6033**	1	HOSE AS	
	35	1	**554-7029**	1	COVER AS	
	36	1	**574-3366**	2	PLATE AS	
					(EACH INCLUDES)	
M		1	**8T-3490**	2	NUT-WELD (M10X1.5-THD)	

I - REFER TO HYDRAULIC INFORMATION SYSTEM
M - METRIC PART

507-7432 **LINES GP-ANGLE & TILT (**contd.**)** **i07863817**

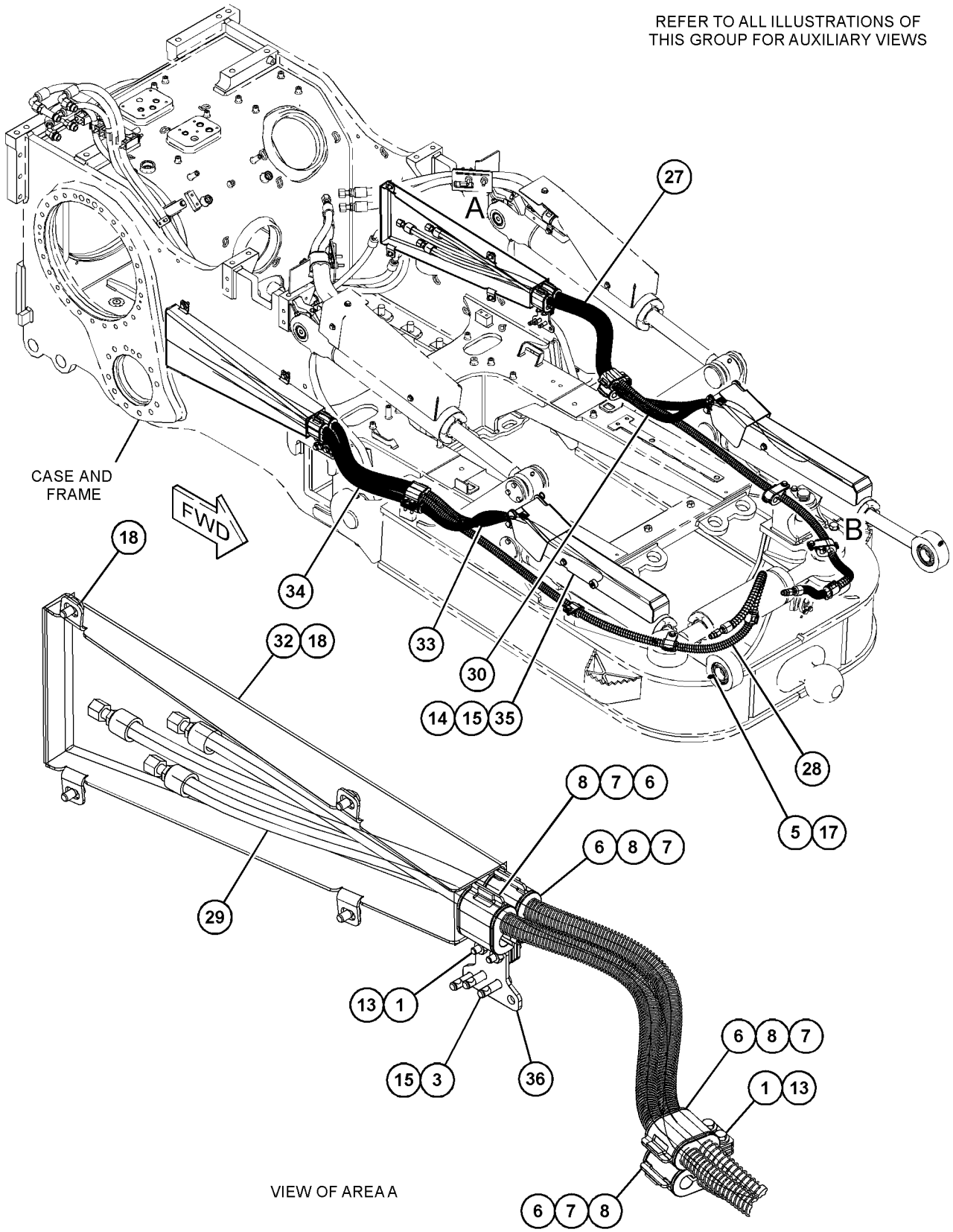

GRAPHIC #1 g06463689

507-7432 **LINES GP-ANGLE & TILT (**contd.**)** **i07863817**

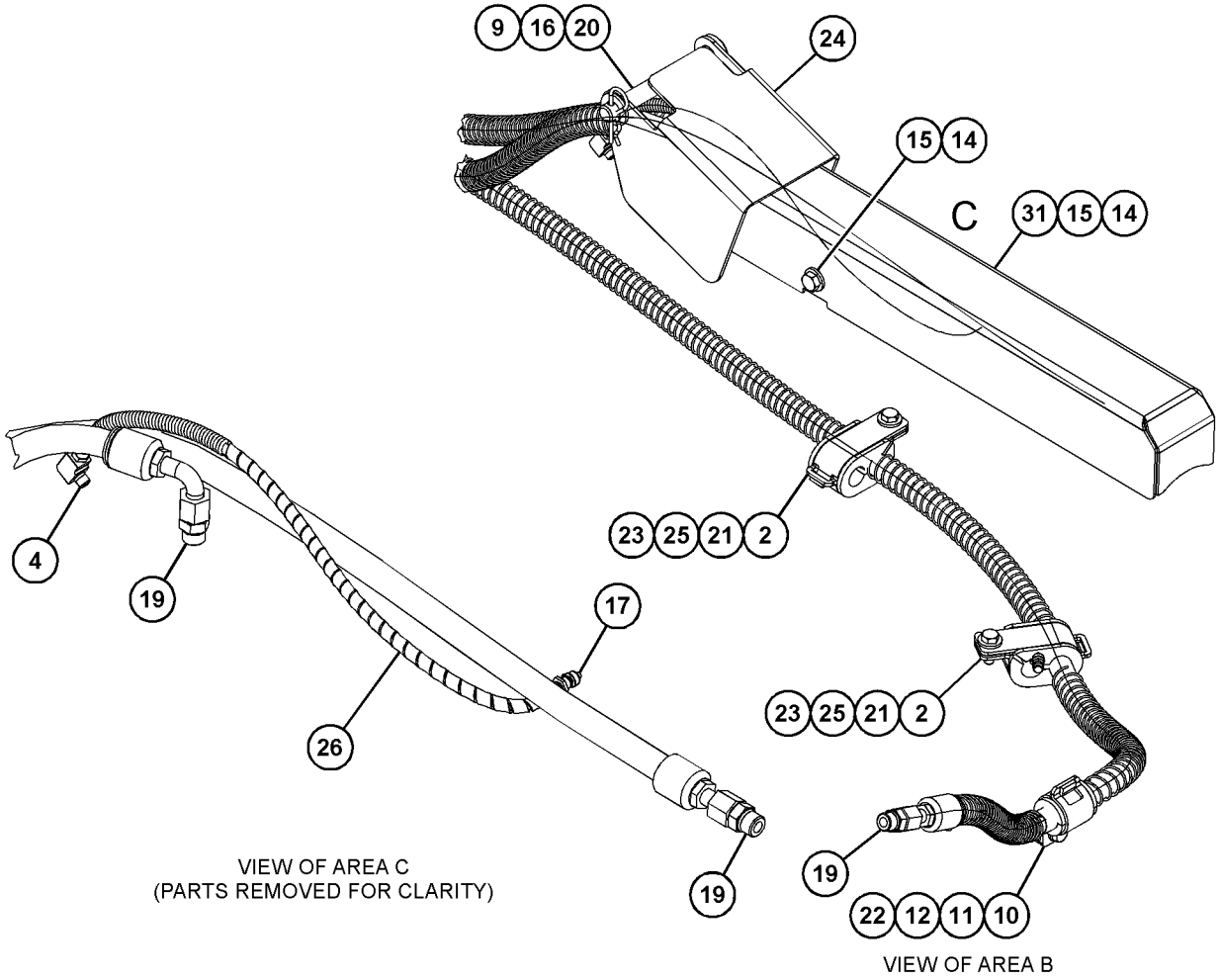

GRAPHIC #2 <END> g06463691

507-7433 LINES GP-ANGLE & TILT

S/N: Z2K1-UP; Z2N1-UP
PART OF 533-7718 INSTALLATION AR-BULLDOZER
AN ATTACHMENT

SMCS-5057, 5101, 5104 **i07815660**

NOTE	REF NO	GRAPHIC REF	PART NUMBER	QTY	PART NAME 1 2 3 4 5 6 (PRODUCT LEVEL)	SEE PAGE
M	1	1	**8T-4184**	6	BOLT (M12X1.75X45-MM)	
M	2	1	**8T-4185**	8	BOLT (M10X1.5X50-MM)	
	3	2	**310-4947**	2	CLIP (SLOT)	
	4	2	**533-0020**	2	GUARD	
	5	2	**3B-6552**	2	ELBOW-PIPE	
	6	1	**3B-8489**	4	ADAPTER	
	7	1	**3G-8047**	8	GROMMET	
	8	1	**3G-8054**	8	CLIP (TAB)	
	9	1	**3G-8057**	8	CLIP (SLOT)	
	10	2	**5P-0370**	2	LOCK PIN	
	11	2	**5P-7464**	4	CLIP (SLOT)	
	12	2	**5P-7465**	4	CLIP (TAB)	
	13	2	**6V-1249**	4	GROMMET (22-MM ID)	
	14	1	**7X-7729**	8	WASHER (11X25X3-MM THK)	
M	15	1,2	**8T-4139**	4	BOLT (M12X1.75X30-MM)	
	16	1,2	**8T-4223**	10	WASHER-HARD (13.5X25.5X3-MM THK)	
	17	2	**8T-4994**	2	WASHER-HARD (20X36.5X3.5-MM THK)	
	18	1,2	**9J-4782**	6	PROTECTOR	
	19	1	**135-8573**	8	BOLT AS	
	20	2	*148-8340*	6	CONNECTOR AS	
					(EACH INCLUDES)	
		2	**3K-0360**	1	SEAL-O-RING	
		2	**6V-8398**	1	SEAL-O-RING	
		2	**6V-8639**	1	CONNECTOR	
	21	2	**197-2477**	2	PIN	
	22	2	**310-4948**	2	CLIP (TAB)	
	23	2	**488-3974**	4	BOLT AS	
	24	2	**536-7106**	2	GROMMET	
	25	2	**464-3454**	2	HOSE AS	
M	26	2	**479-2172**	2	BOLT AS	
I	27	1	**532-3471**	1	HOSE AS	
I	28	1	**532-3472**	1	HOSE AS	
I	29	1	**532-3473**	1	HOSE AS	
I	30	1	**532-3474**	1	HOSE AS	
	31	2	**533-0021**	1	COVER AS	
I	32	1	**537-6034**	1	HOSE AS	
I	33	1	**537-6035**	1	HOSE AS	
	34	1	**554-7029**	1	COVER AS	
	35	1	**557-1860**	2	COVER	
	36	1	**574-3366**	2	PLATE AS	
					(EACH INCLUDES)	
M		1	**8T-3490**	2	NUT-WELD (M10X1.5-THD)	

I - REFER TO HYDRAULIC INFORMATION SYSTEM
M - METRIC PART

507-7433 **LINES GP-ANGLE & TILT (**contd.**)** **i07815660**

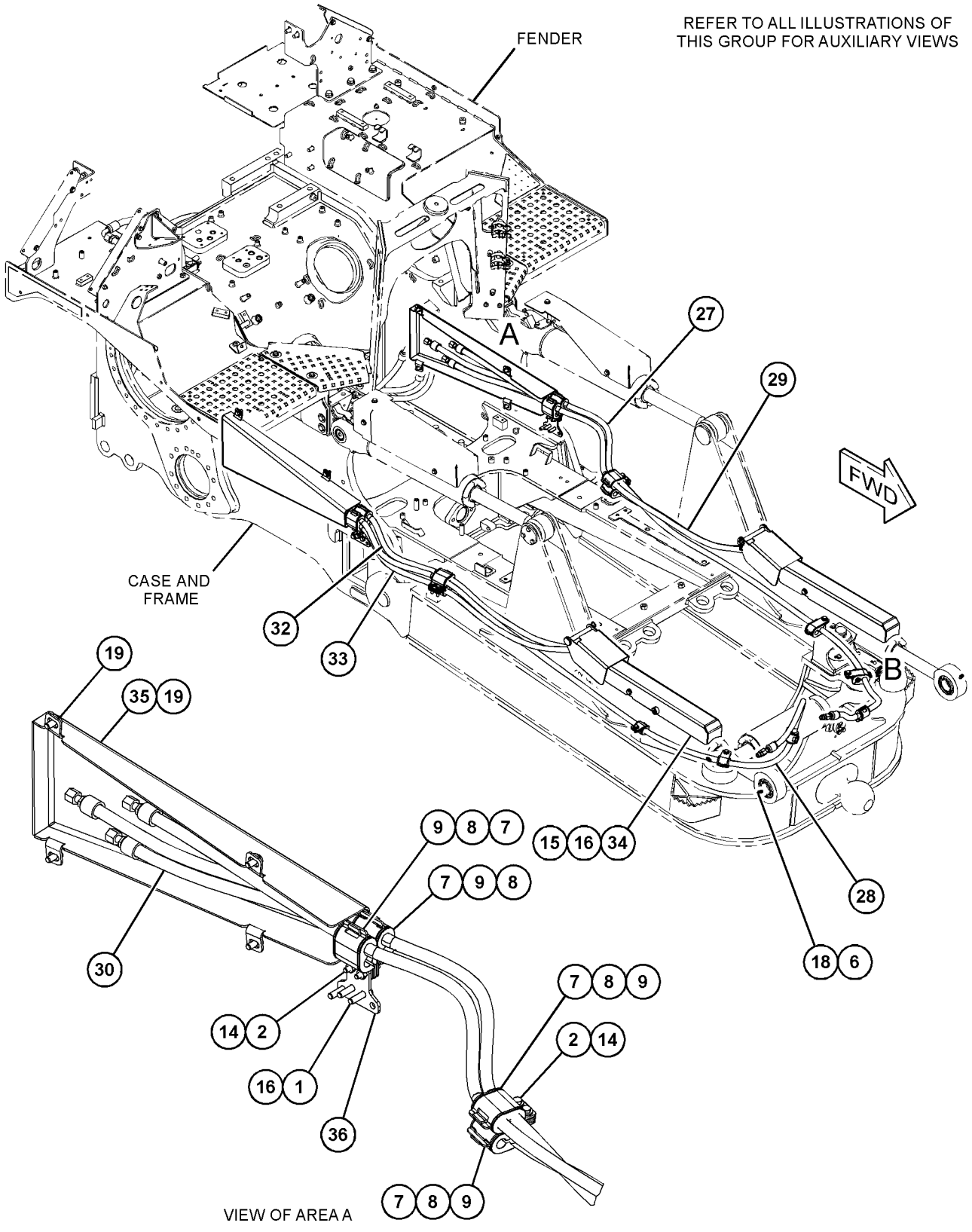

GRAPHIC #1 g06446313

507-7433 **LINES GP-ANGLE & TILT (**contd.**)** **i07815660**

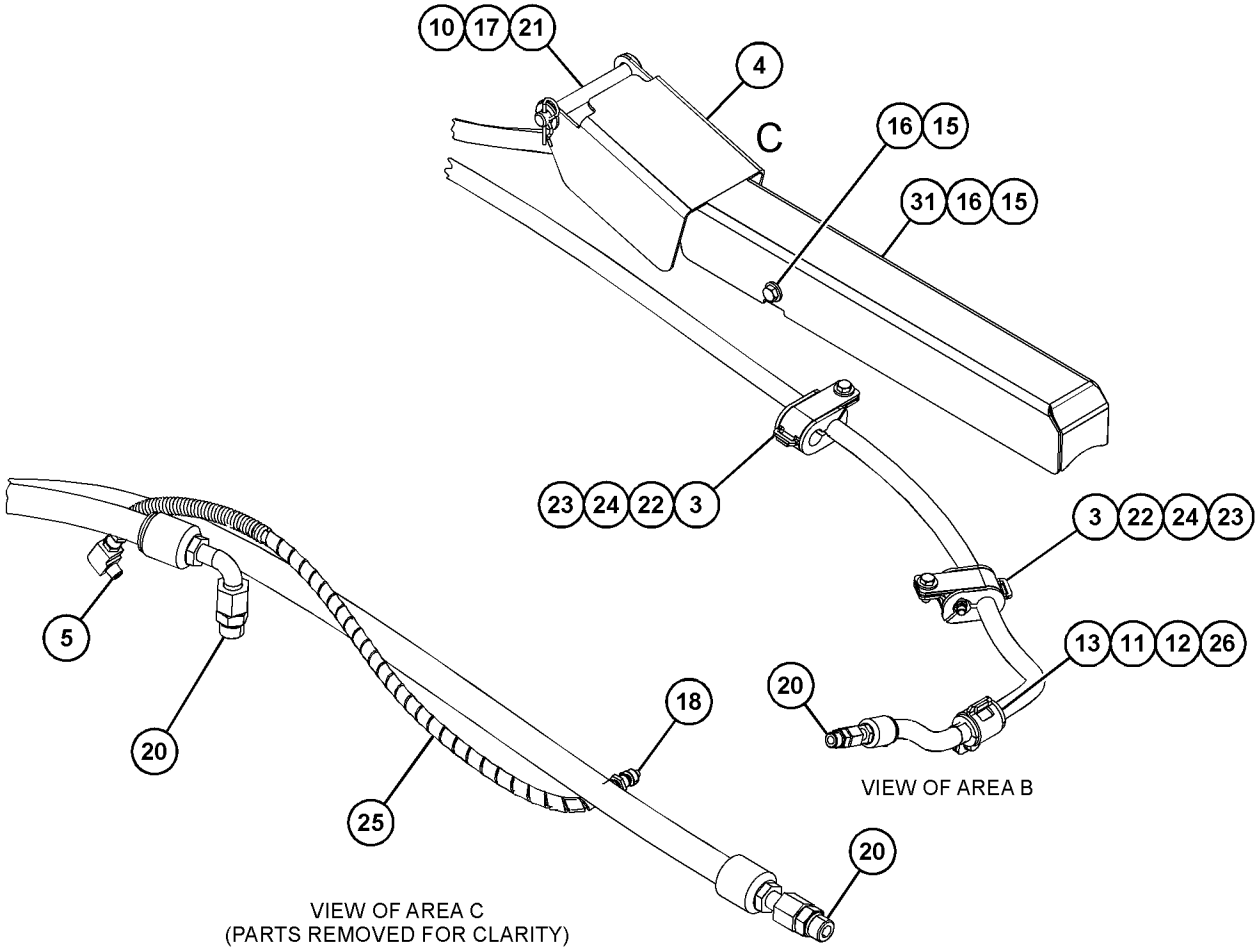

GRAPHIC #2 <END> g06446319

507-6716 LINES GP-HYDRAULIC FAN

S/N: Z2K1-UP; Z2N1-UP
REVERSING
PART OF 510-1532 LINES GP-HYDRAULIC FAN
AN ATTACHMENT

SMCS-1386, 1387, 5057 **i07813840**

NOTE	REF NO	GRAPHIC REF	PART NUMBER	QTY	PART NAME 1 2 3 4 5 6 (PRODUCT LEVEL)	SEE PAGE
	1	1	**5P-4295**	2	CLIP	
	2	1	**6V-0852**	1	CAP-DUST	
	3	1	**110-6349**	1	FITTING AS (QUICK DISCONNECT)	
		1	**3J-7354**	1	SEAL-O-RING	
	4	1	**135-8578**	2	BOLT AS	
	5	1	*148-8322*	1	CONNECTOR AS	
		1	**2M-9780**	1	SEAL-O-RING	
		1	**6V-8640**	1	CONNECTOR	
		1	**6V-9746**	1	SEAL-O-RING	
	6	1	*148-8361*	1	ELBOW AS (90-DEG)	
		1	**3J-7354**	1	SEAL-O-RING	
		1	**6V-8397**	1	SEAL-O-RING	
		1	**6V-9200**	1	ELBOW	
	7	1	*150-3036*	1	ELBOW AS	
		1	**3J-1907**	1	SEAL-O-RING	
		1	**6V-8397**	1	SEAL-O-RING	
		1	**8T-1905**	1	ELBOW	
	8	1	*150-4041*	1	CONNECTOR AS	
		1	**2M-9780**	1	SEAL-O-RING	
		1	**3E-7420**	1	CONNECTOR	
		1	**6V-9746**	1	SEAL-O-RING	
Y	9	1	**437-2846**	1	VALVE GP-SOLENOID (12-VDC) (HYDRAULIC FAN)	617
M	10	1	**479-2171**	1	BOLT AS	
I	11	1	**508-1822**	1	HOSE AS	
I	12	1	**508-1824**	1	HOSE AS	
Y	13	1	**509-5174**	1	MOTOR GP-GEAR (HYDRAULIC FAN)	603
I	14	1	**513-7595**	1	HOSE AS	
	15	1	**532-6139**	1	VALVE GP-SOLENOID (HYDRAULIC FAN)	
		1	**261-6728**	1	COIL AS (10-VOLT)	
		1	**261-6728**	1	COIL AS (10-VOLT)	

I - REFER TO HYDRAULIC INFORMATION SYSTEM
M - METRIC PART
Y - SEPARATE ILLUSTRATION

507-6716 **LINES GP-HYDRAULIC FAN (**contd.**)** **i07813840**

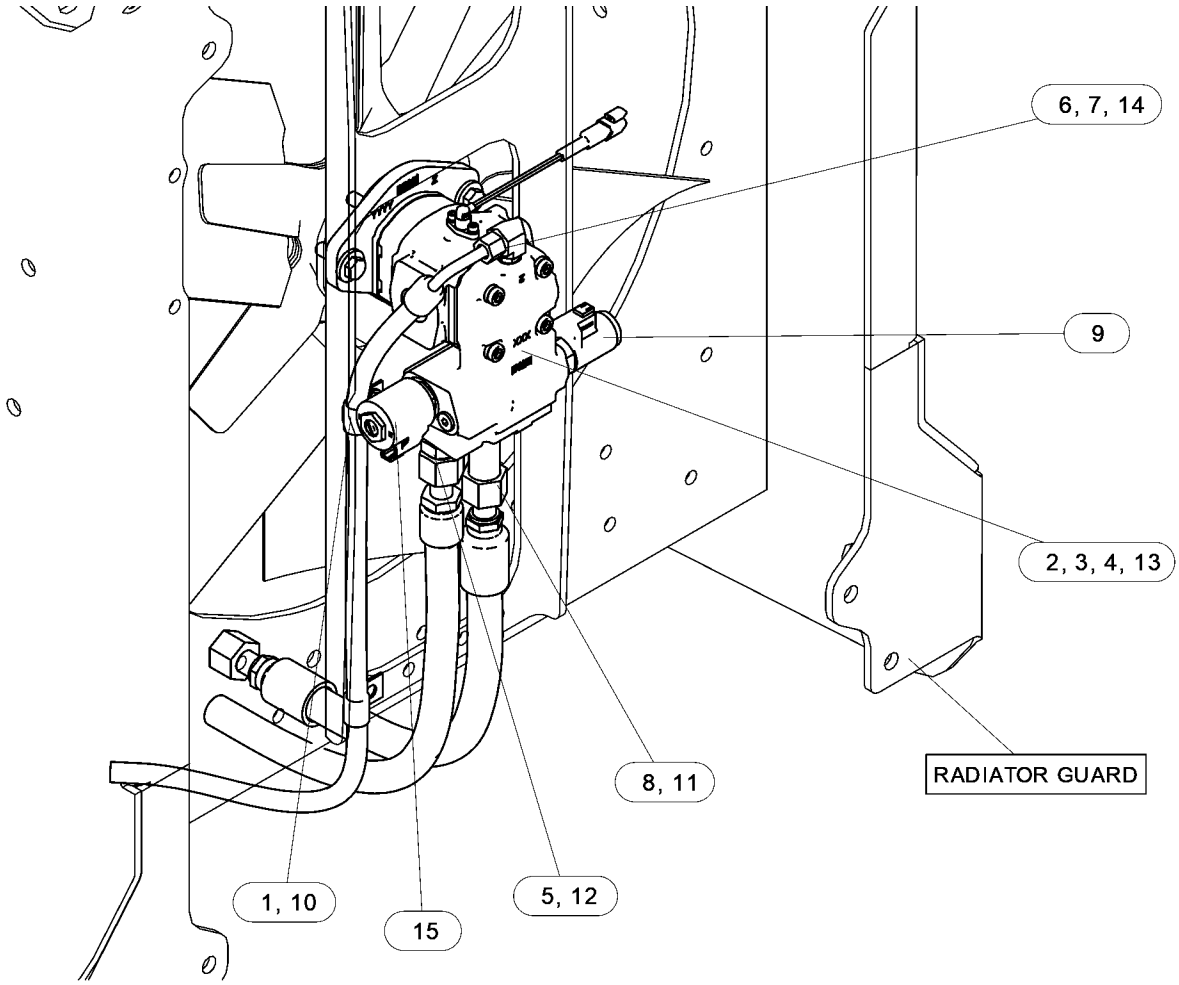

GRAPHIC #1 <END> g06444011

510-1530 LINES GP-HYDRAULIC FAN

S/N: Z2K1-UP; Z2N1-UP
PART OF 532-9851, 532-9856 DISTRIBUTION AR
AN ATTACHMENT

SMCS-1386, 1387, 5057 **i07819184**

NOTE	PART NUMBER	QTY	PART NAME 1 2 3 4 5 6 (PRODUCT LEVEL)	SEE PAGE
Y	*527-0210*	1	LINES GP-HYDRAULIC FAN	586

Y - SEPARATE ILLUSTRATION

<END>

510-1532 LINES GP-HYDRAULIC FAN—REVERSING

S/N: Z2K1-UP; Z2N1-UP
AN ATTACHMENT

SMCS-1386, 1387, 5057 **i07813836**

NOTE	PART NUMBER	QTY	PART NAME 1 2 3 4 5 6 (PRODUCT LEVEL)	SEE PAGE
Y	*507-6716*	1	LINES GP-HYDRAULIC FAN (REVERSING)	583

Y - SEPARATE ILLUSTRATION

<END>

527-0210 LINES GP-HYDRAULIC FAN

S/N: Z2K1-UP; Z2N1-UP
PART OF 510-1530 LINES GP-HYDRAULIC FAN
AN ATTACHMENT

SMCS-1386, 1387, 5057 **i07819191**

NOTE	REF NO	GRAPHIC REF	PART NUMBER	QTY	PART NAME 1 2 3 4 5 6 (PRODUCT LEVEL)	SEE PAGE
	1	1	**4J-5267**	2	SEAL-O-RING	
	2	1	**5P-4295**	2	CLIP	
	3	1	**6V-0852**	1	CAP-DUST	
	4	1	**8C-3205**	4	FLANGE-HALF	
	5	1	**8T-4121**	2	WASHER-HARD (11X21X2.5-MM THK)	
	6	1	**110-6349**	1	FITTING AS (QUICK DISCONNECT)	
		1	**3J-7354**	1	SEAL-O-RING	
	7	1	**135-8578**	2	BOLT AS	
	8	1	*148-8361*	1	ELBOW AS (90-DEG)	
		1	**3J-7354**	1	SEAL-O-RING	
		1	**6V-8397**	1	SEAL-O-RING	
		1	**6V-9200**	1	ELBOW	
	9	1	**149-7738**	1	CLIP (LOOP)	
	10	1	*150-3036*	1	ELBOW AS	
		1	**3J-1907**	1	SEAL-O-RING	
		1	**6V-8397**	1	SEAL-O-RING	
		1	**8T-1905**	1	ELBOW	
	11	1	**533-4159**	8	BOLT AS	
M	12	1	**344-5675**	2	NUT (M10X1.5-THD)	
M	13	1	**479-2171**	1	BOLT AS	
M	14	1	**479-2172**	2	BOLT AS	
Y	15	1	**509-5171**	1	MOTOR GP-GEAR (HYDRAULIC FAN)	602
I	16	1	**527-0308**	1	HOSE AS	
I	17	1	**527-0309**	1	HOSE AS	
I	18	1	**527-0310**	1	HOSE AS	
	19	1	**528-0213**	1	BRACKET AS	
	20	1	**532-6139**	1	VALVE GP-SOLENOID (HYDRAULIC FAN)	
		1	**261-6728**	1	COIL AS (10-VOLT)	
	21	1	**6V-1889**	1	CLIP (LOOP)	

I - REFER TO HYDRAULIC INFORMATION SYSTEM
M - METRIC PART
Y - SEPARATE ILLUSTRATION

527-0210 **LINES GP-HYDRAULIC FAN (**contd.**)** **i07819191**

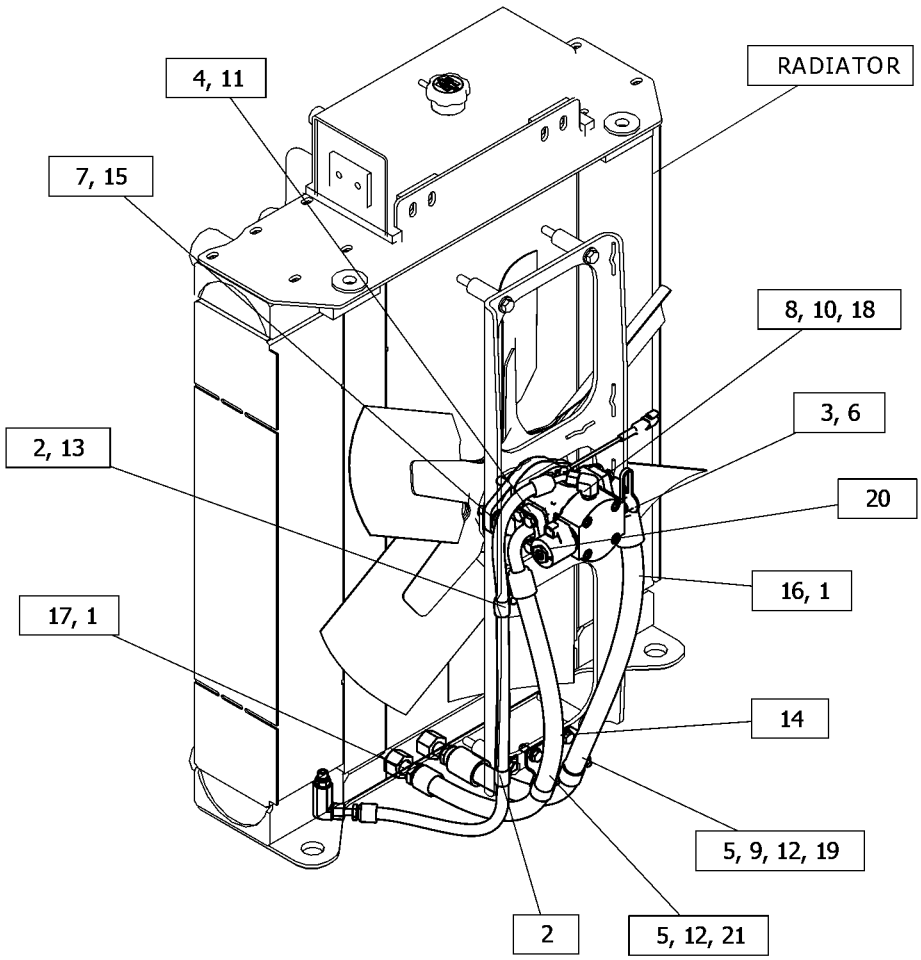

GRAPHIC #1 <END> g06447225

507-7425 LINES GP-LIFT CYLINDER

S/N: Z2K1-UP; Z2N1-UP
PART OF 510-9713 HYDRAULIC AR
AN ATTACHMENT

SMCS-5057, 5102 **i07819323**

NOTE	REF NO	GRAPHIC REF	PART NUMBER	QTY	PART NAME 1 2 3 4 5 6 (PRODUCT LEVEL)	SEE PAGE
	1	1	**6V-9170**	2	NUT-BULKHEAD (1-14-THD)	
	2	1	*148-8317*	2	CONNECTOR AS	
					(EACH INCLUDES)	
		1	**3D-2824**	1	SEAL-O-RING	
		1	**5K-9090**	1	SEAL-O-RING	
		1	**6V-8714**	1	CONNECTOR	
	3	1	*439-1867*	2	ADAPTER AS	
					(EACH INCLUDES)	
		1	**6V-9746**	1	SEAL-O-RING	
		1	**7J-9108**	2	SEAL-O-RING	
		1	**379-6986**	1	ADAPTER-TEE	
	4	1	**552-9082**	1	HOSE & TUBE AS	
	5	1	**552-9083**	1	HOSE & TUBE AS	

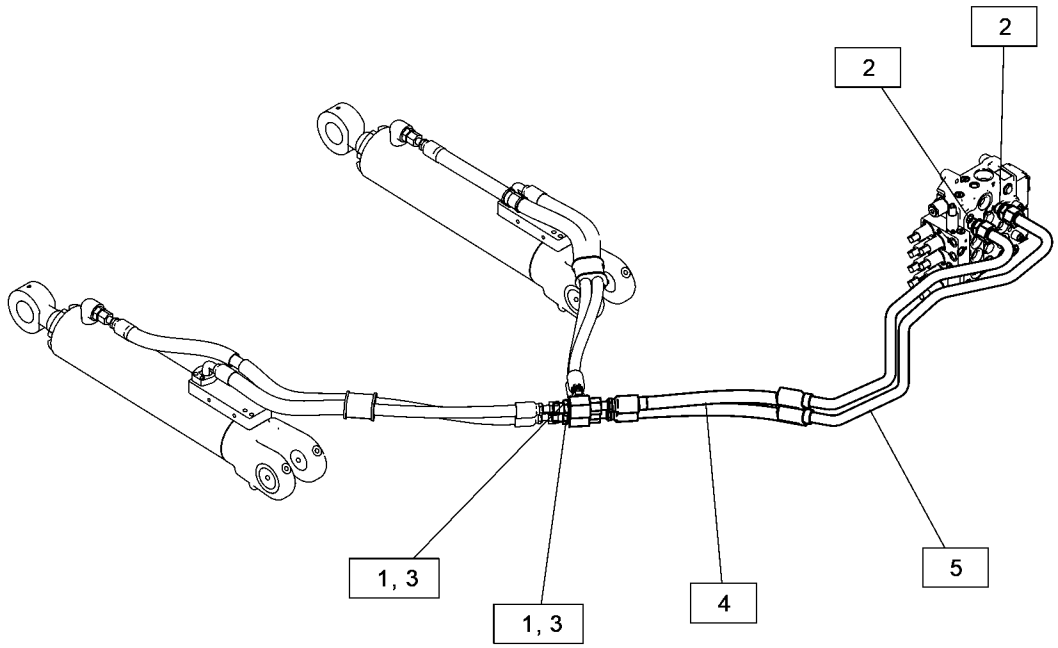

GRAPHIC #1 <END> g06447381

507-7426 LINES GP-LIFT CYLINDER

S/N: Z2K1-UP; Z2N1-UP
PART OF 533-7718 INSTALLATION AR-BULLDOZER
AN ATTACHMENT

SMCS-5057, 5102 **i07814598**

NOTE	REF NO	GRAPHIC REF	PART NUMBER	QTY	PART NAME 1 2 3 4 5 6 (PRODUCT LEVEL)	SEE PAGE
M	1	1	**8T-4182**	4	BOLT (M10X1.5X45-MM)	
M	2	1	**8T-4185**	8	BOLT (M10X1.5X50-MM)	
	3	1	**3B-8486**	2	FITTING-GREASE (1/8-27 PTF)	
	4	1	**3B-8489**	2	ADAPTER	
	5	1	**3G-8054**	2	CLIP (TAB)	
	6	1	**3G-8057**	2	CLIP (SLOT)	
	7	1	**4J-5267**	4	SEAL-O-RING	
	8	1	**5P-7464**	2	CLIP (SLOT)	
	9	1	**5P-7465**	2	CLIP (TAB)	
	10	1	**7X-7729**	10	WASHER (11X25X3-MM THK)	
	11	1	**8C-3205**	4	FLANGE-HALF	
	12	1	**8T-4121**	8	WASHER-HARD (11X21X2.5-MM THK)	
	13	1	**9J-4782**	4	PROTECTOR	
	14	1	*148-8341*	2	CONNECTOR AS	
					(EACH INCLUDES)	
		1	**3D-2824**	1	SEAL-O-RING	
		1	**6V-8713**	1	CONNECTOR	
		1	**7J-9108**	1	SEAL-O-RING	
	15	1	**479-0017**	2	GROMMET	
	16	1	**488-3971**	2	BOLT AS	
	17	1	**533-4159**	8	BOLT AS	
M	18	1	**344-5675**	6	NUT (M10X1.5-THD)	
Y	19	1	*519-3678*	2	MANIFOLD GP-HYDRAULIC	601
	20	1	**529-6460**	2	HOSE AS	
I	21	1	**529-6461**	2	HOSE AS	
	22	1	**532-5958**	2	BRACKET AS	
	23	1	**581-1001**	1	BRACKET AS	
	24	1	**581-1002**	1	BRACKET AS	
	25	1	**6V-7359**	2	GROMMET (25-MM ID, 37-MM OD)	

I - REFER TO HYDRAULIC INFORMATION SYSTEM
M - METRIC PART
Y - SEPARATE ILLUSTRATION

507-7426 **LINES GP-LIFT CYLINDER (**contd.**)** **i07814598**

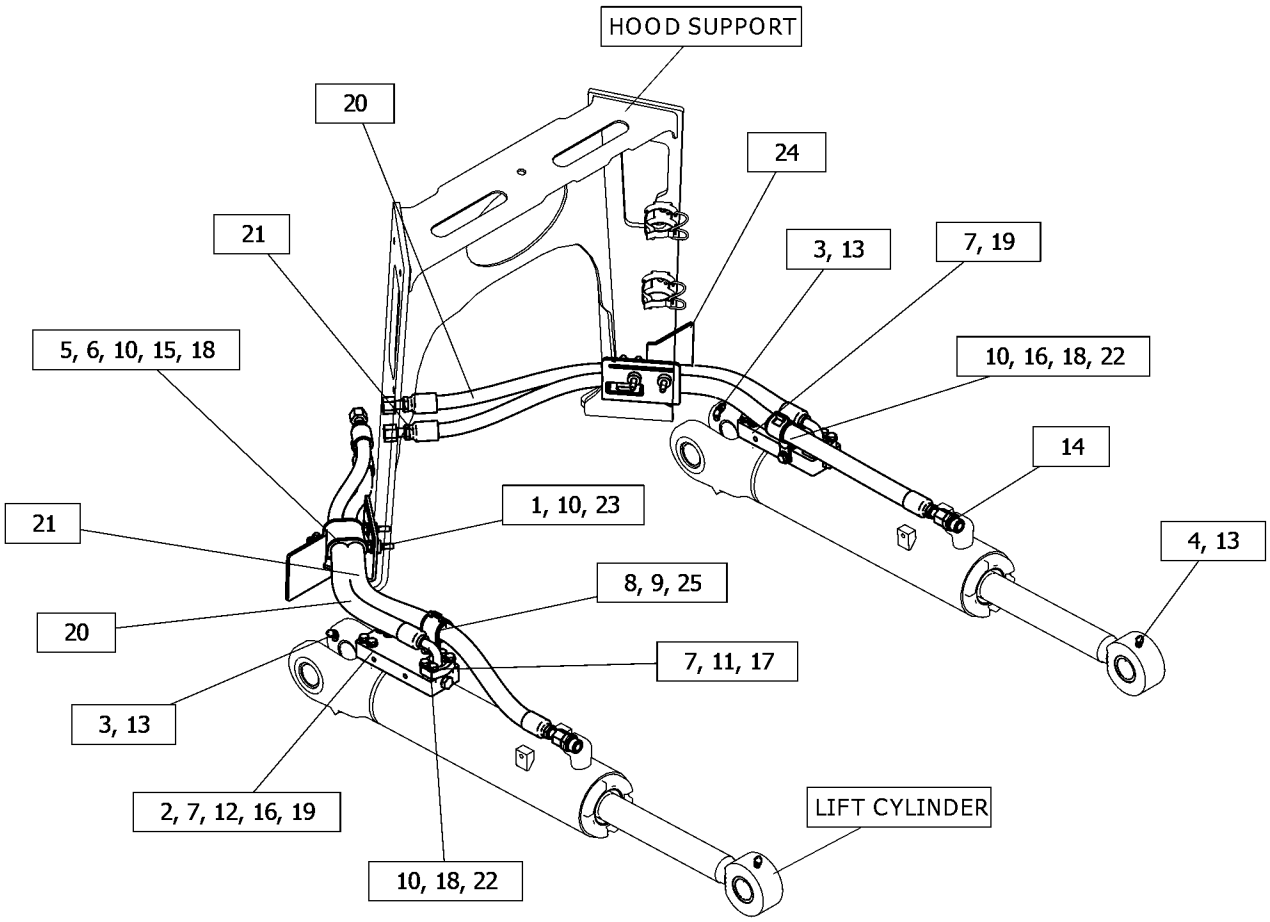

GRAPHIC #1 <END> g06444845

507-7427 LINES GP-LIFT CYLINDER

S/N: Z2K1-UP

PART OF 533-7717 INSTALLATION AR-BULLDOZER

AN ATTACHMENT

SMCS-5057, 5102 **i07790467**

NOTE	REF NO	GRAPHIC REF	PART NUMBER	QTY	PART NAME 1 2 3 4 5 6 (PRODUCT LEVEL)	SEE PAGE
M	1	1	**8T-4182**	4	BOLT (M10X1.5X45-MM)	
M	2	1	**8T-4185**	8	BOLT (M10X1.5X50-MM)	
	3	1	**3B-8486**	2	FITTING-GREASE (1/8-27 PTF)	
	4	1	**3B-8489**	2	ADAPTER	
	5	1	**3G-8054**	2	CLIP (TAB)	
	6	1	**3G-8057**	2	CLIP (SLOT)	
	7	1	**4J-5267**	4	SEAL-O-RING	
	8	1	**5P-7464**	2	CLIP (SLOT)	
	9	1	**5P-7465**	2	CLIP (TAB)	
	10	1	**7X-7729**	10	WASHER (11X25X3-MM THK)	
	11	1	**8C-3205**	4	FLANGE-HALF	
	12	1	**8T-4121**	8	WASHER-HARD (11X21X2.5-MM THK)	
	13	1	**9J-4782**	4	PROTECTOR	
	14	1	*148-8341*	2	CONNECTOR AS	
					(EACH INCLUDES)	
		1	**3D-2824**	1	SEAL-O-RING	
		1	**6V-8713**	1	CONNECTOR	
		1	**7J-9108**	1	SEAL-O-RING	
	15	1	**479-0017**	2	GROMMET	
	16	1	**488-3971**	2	BOLT AS	
	17	1	**509-1019**	2	HOSE AS	
	18	1	**533-4159**	8	BOLT AS	
M	19	1	**344-5675**	6	NUT (M10X1.5-THD)	
I	20	1	**509-1018**	2	HOSE AS	
	21	1	**6V-7359**	2	GROMMET (25-MM ID, 37-MM OD)	
Y	22	1	*519-3678*	2	MANIFOLD GP-HYDRAULIC	601
	23	1	**532-5958**	2	BRACKET AS	
					(EACH INCLUDES)	
M		1	**171-2419**	1	STUD-WELD (M10X1.5X35-MM)	
	24	1	**581-1001**	1	BRACKET AS	
	25	1	**581-1002**	1	BRACKET AS	
					(EACH BRACKET AS INCLUDES)	
M		1	**171-2419**	2	STUD-WELD (M10X1.5X35-MM)	
		1	**198-4777**	2	WASHER-HARD (11X25X10-MM THK)	

I - REFER TO HYDRAULIC INFORMATION SYSTEM
M - METRIC PART
Y - SEPARATE ILLUSTRATION

507-7427 **LINES GP-LIFT CYLINDER (**contd.**)** **i07790467**

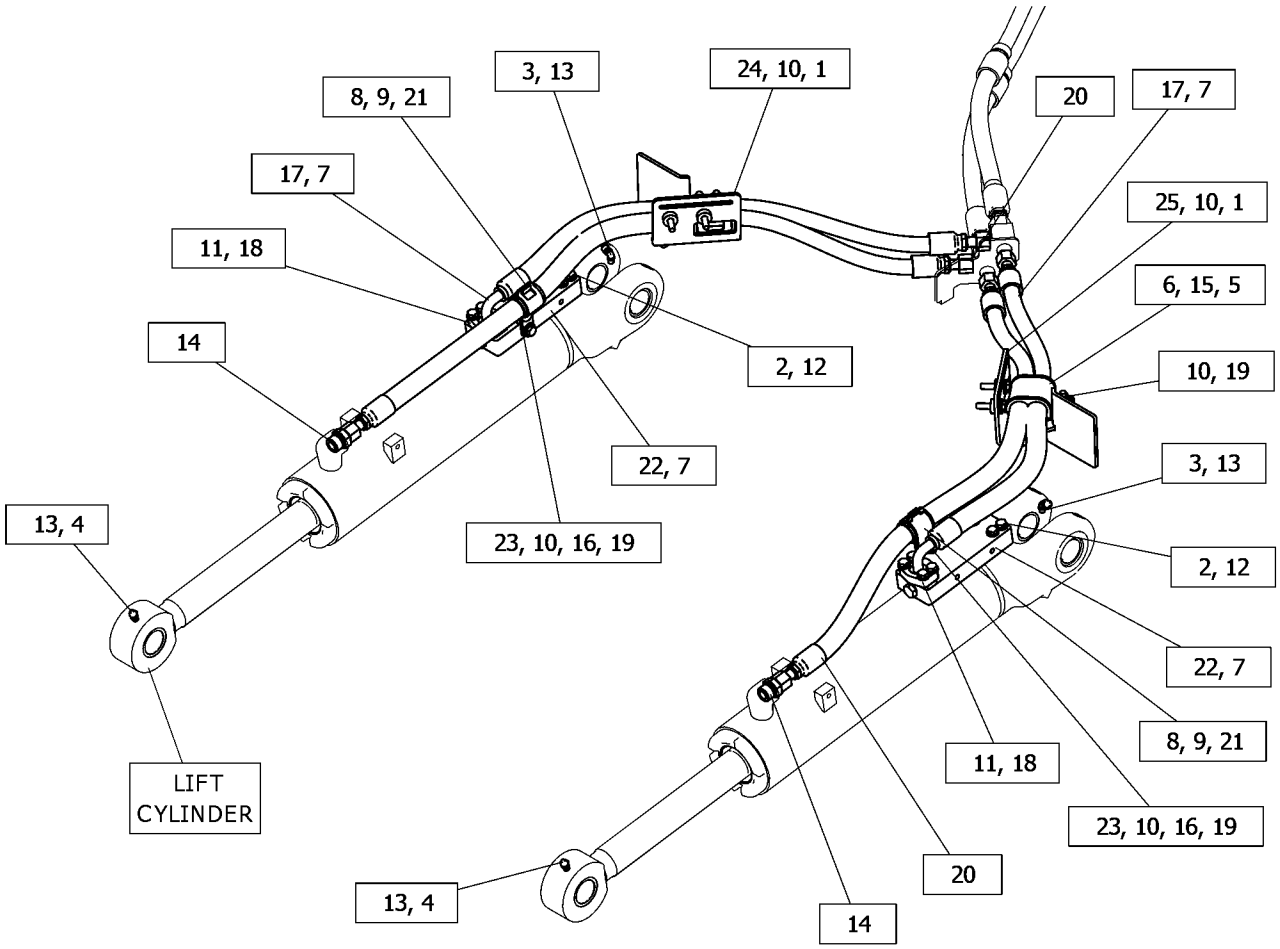

GRAPHIC #1 <END> g06449856

507-7422 LINES GP-PUMP

S/N: Z2K1-UP; Z2N1-UP
PART OF 575-9700 HYDRAULIC AR
AN ATTACHMENT

SMCS-5057 **i07825680**

NOTE	REF NO	GRAPHIC REF	PART NUMBER	QTY	PART NAME 1 2 3 4 5 6 (PRODUCT LEVEL)	SEE PAGE
	1	2	**175-7904**	1	SEAL-O-RING	
M	2	1	**8T-4185**	1	BOLT (M10X1.5X50-MM)	
	3	1	**204-2281**	2	STRAP-CABLE	
	4	1	**3K-0360**	1	SEAL-O-RING	
	5	1	**5P-4961**	2	CLAMP-HOSE	
	6	2	**5P-7466**	2	CLIP (SLOT)	
	7	2	**5P-7467**	2	CLIP (TAB)	
	8	2	**5P-7468**	2	CLIP (SLOT)	
	9	2	**5P-7469**	2	CLIP (TAB)	
	10	2	**6K-8178**	1	CLIP (LOOP)	
	11	2	**447-7206**	1	SEAL-O-RING	
	12	1	**6V-8397**	1	SEAL-O-RING	
	13	1	**6V-9168**	1	NUT (11/16-16-THD)	
	14	1	**8C-8835**	1	ADAPTER-BULKHEAD	
	15	1,2	**8T-4121**	7	WASHER-HARD (11X21X2.5-MM THK)	
M	16	2	**8T-4139**	4	BOLT (M12X1.75X30-MM)	
	17	2	**8T-4223**	4	WASHER-HARD (13.5X25.5X3-MM THK)	
	18	2	**8T-4984**	2	CLAMP-HOSE	
	19	2	**8T-7971**	4	WASHER-HARD (13.5X25.5X5-MM THK)	
	20	2	*148-8316*	1	CONNECTOR AS	
		2	**3J-7354**	1	SEAL-O-RING	
		2	**4J-5477**	1	SEAL-O-RING	
		2	**6V-8647**	1	CONNECTOR	
	21	1	*148-8335*	1	CONNECTOR AS	
		1	**5K-9090**	1	SEAL-O-RING	
		1	**6V-8635**	1	CONNECTOR	
		1	**7M-8485**	1	SEAL-O-RING	
	22	1	*148-8344*	1	CONNECTOR AS	
		1	**3D-2824**	1	SEAL-O-RING	
		1	**6V-9162**	1	CONNECTOR	
		1	**6V-9746**	1	SEAL-O-RING	
	23	1	*148-8357*	1	ELBOW AS	
		1	**5K-9090**	1	SEAL-O-RING	
		1	**6V-9008**	1	ELBOW	
		1	**7M-8485**	1	SEAL-O-RING	
	24	2	*148-8360*	1	ELBOW AS	
		2	**6V-9182**	1	ELBOW	
		2	**6V-9746**	1	SEAL-O-RING	
		2	**7M-8485**	1	SEAL-O-RING	
	25	1	*148-8378*	1	ELBOW AS	
		1	**3J-1907**	1	SEAL-O-RING	
		1	**6V-8397**	1	SEAL-O-RING	
		1	**6V-8724**	1	ELBOW	
	26	1	*150-3024*	1	ELBOW AS	
		1	**3J-1907**	1	SEAL-O-RING	
		1	**5P-4924**	1	ELBOW	

507-7422 **LINES GP-PUMP (**contd.**)** **i07825680**

NOTE	REF NO	GRAPHIC REF	PART NUMBER	QTY	PART NAME 1 2 3 4 5 6 (PRODUCT LEVEL)	SEE PAGE
	27	1	*150-3036*	1	ELBOW AS	
		1	**3J-1907**	1	SEAL-O-RING	
		1	**6V-8397**	1	SEAL-O-RING	
		1	**8T-1905**	1	ELBOW	
	28	2	*150-4043*	1	CONNECTOR AS	
		2	**3J-1907**	1	SEAL-O-RING	
		2	**6V-8398**	1	SEAL-O-RING	
		2	**6V-9873**	1	CONNECTOR	
	29	1	*153-6258*	1	CONNECTOR AS	
		1	**3J-1907**	1	SEAL-O-RING	
		1	**6V-8398**	1	SEAL-O-RING	
		1	**8T-5050**	1	CONNECTOR	
	30	1	*164-5562*	1	CONNECTOR AS	
		1	**3J-1907**	1	SEAL-O-RING	
		1	**5P-1046**	1	CONNECTOR	
	31	1	**177-2215**	2	STRAP-DUAL CLAMP	
	32	1	**200-6345**	1	SADDLE-MOUNTING (DUAL SWIVEL)	
	33	1,2	**203-3847**	2	BRACKET AS	
M	34	1	**274-9987**	2	SETSCREW-SOCKET (M10X1.5X120-MM)	
E	35	1	**456-8410**		HOSE (53-CM)	
	36	1	**524-2226**	1	CLAMP AS	
	37	1,2	**529-6539**	3	BOLT AS	
	38	2	**533-4159**	2	BOLT AS	
	39	1	**541-6633**	1	CLIP (LOOP)	
Y	40	1	*160-2669*	1	ACCUMULATOR GP-HYDRAULIC (CHARGED)	561
	41	2	**194-6478**	1	HOSE	
	42	1	**206-2423**	1	SADDLE-MOUNTING	
M	43	1,2	**264-0168**	2	STUD-TAPERLOCK (M10X1.5X50-MM)	
M	44	1,2	**344-5675**	6	NUT (M10X1.5-THD)	
M	45	1,2	**479-2171**	3	BOLT AS	
M	46	1,2	**479-2172**	2	BOLT AS	
Y	47	2	**508-6786**	1	PUMP GP-PISTON (IMPLEMENT)	605
	48	1	**517-9188**	1	TUBE AS	
	49	1	**518-0621**	1	HOSE	
	50	1	**526-7172**	1	PLATE	
I	51	1	**544-0774**	1	HOSE AS	
I	52	1	**561-0321**	1	HOSE AS	
	53	1	**561-4781**	1	BRACKET AS	
	54	2	**566-7683**	1	GASKET	
I	55	1	**571-4239**	1	HOSE AS	
I	56	1	**571-4240**	1	HOSE AS	
	57	2	**572-2292**	1	BRACKET AS	
M		2	**8T-3490**	1	NUT-WELD (M10X1.5-THD)	
	58	2	**572-2293**	1	BRACKET AS	
M		2	**8T-3490**	1	NUT-WELD (M10X1.5-THD)	
	59	2	**574-5932**	1	TUBE AS	
	60	1	**580-3589**	1	TUBE AS	
	61	2	**5P-8112**	2	GROMMET	
	62	2	**6D-3479**	1	CLIP (LOOP)	
	63	2	**6D-4244**	1	CLIP (LOOP)	
	64	1	**7D-7233**	1	CLIP (LOOP)	

507-7422 **LINES GP-PUMP (**contd.**)** **i07825680**

NOTE	REF NO	GRAPHIC REF	PART NUMBER	QTY	PART NAME 1 2 3 4 5 6 (PRODUCT LEVEL)	SEE PAGE
	65	1	**7K-1181**	2	STRAP-CABLE	
M	66	2	**8T-4183**	4	BOLT (M12X1.75X40-MM)	
	67	1	**8T-6703**	2	CLAMP-HOSE	

E - ORDER BY THE CENTIMETER
I - REFER TO HYDRAULIC INFORMATION SYSTEM
M - METRIC PART
Y - SEPARATE ILLUSTRATION

507-7422 **LINES GP-PUMP (**contd.**)** **i07825680**

REFER TO ALL ILLUSTRATIONS OF THIS GROUP FOR AUXILIARY VIEWS

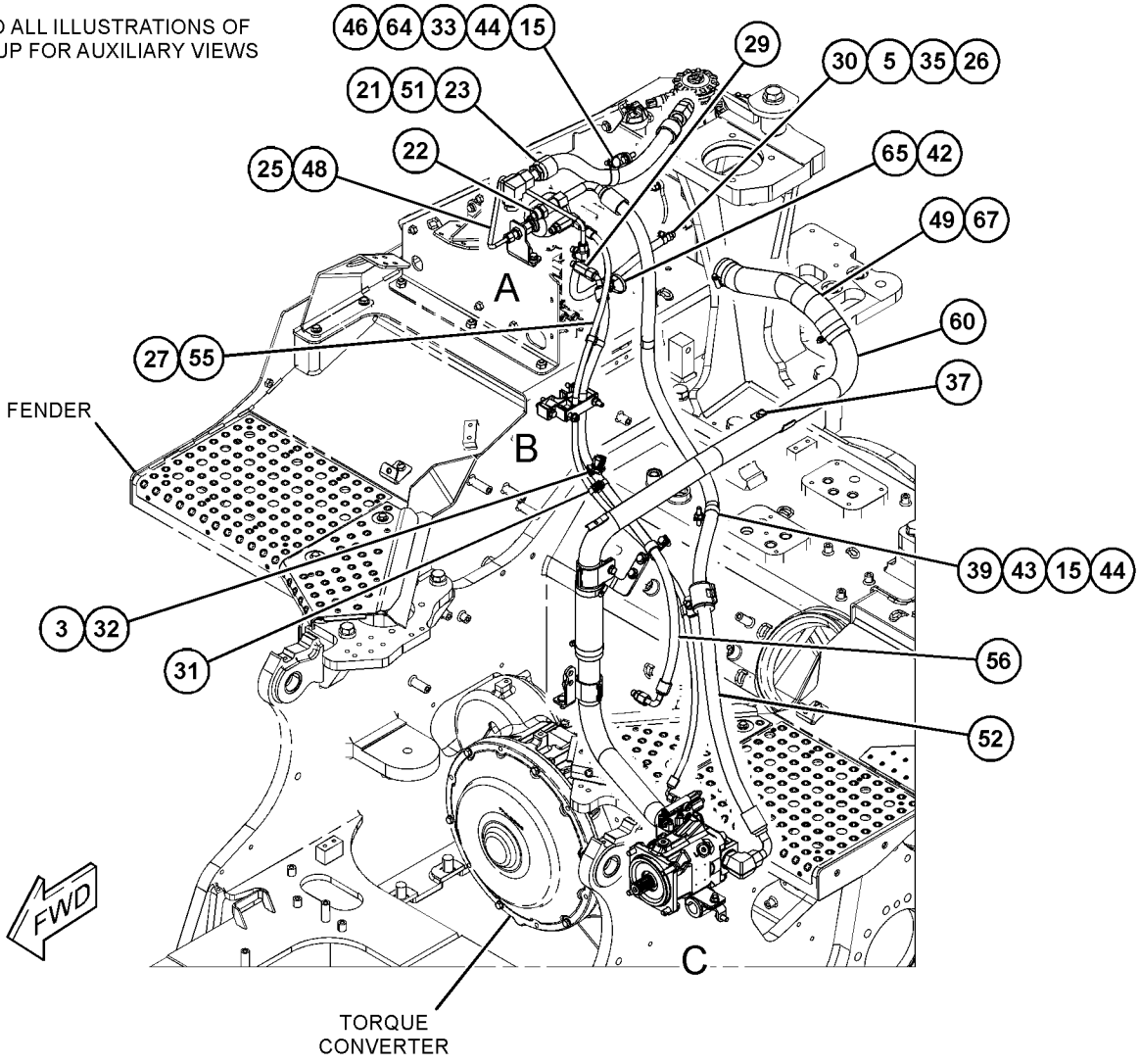

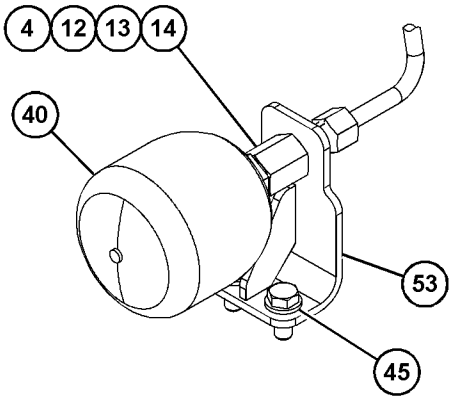

VIEW OF AREA A 180°

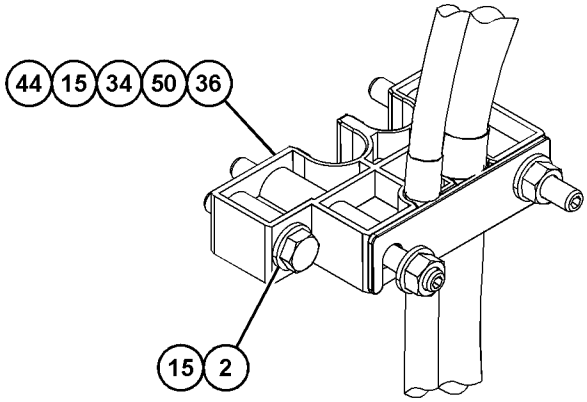

VIEW OF AREA B

GRAPHIC #1 g06453924

507-7422 **LINES GP-PUMP (**contd.**)** **i07825680**

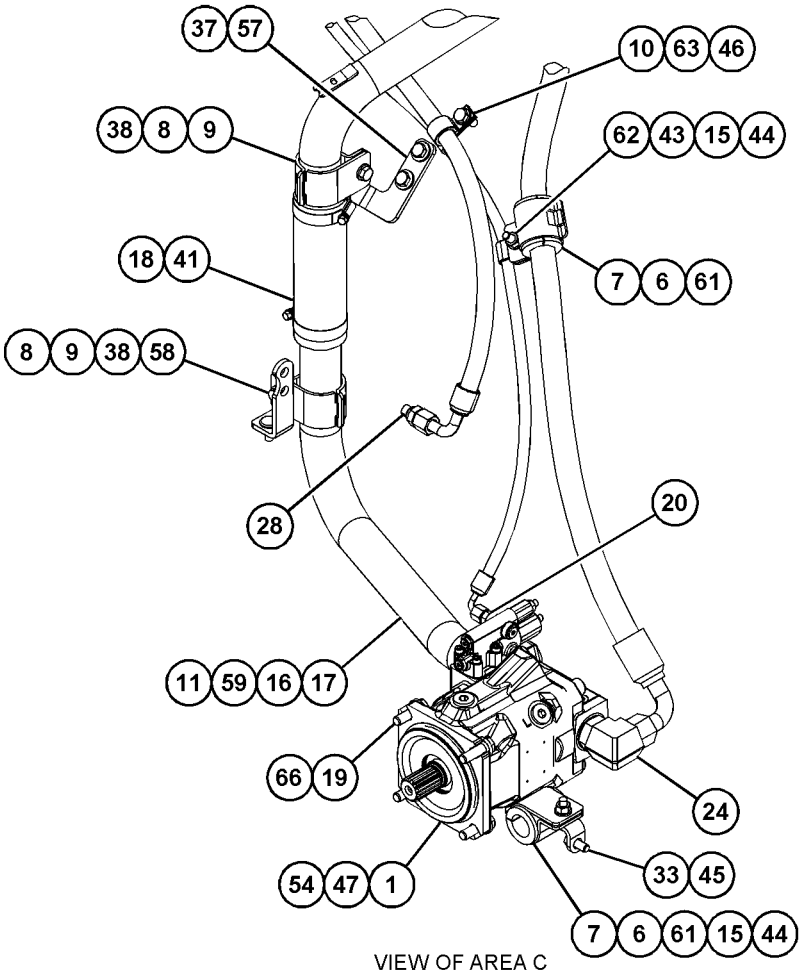

VIEW OF AREA C

GRAPHIC #2 <END> g06453925

507-7434 LINES GP-RIPPER

S/N: Z2K1-UP; Z2N1-UP

PART OF 515-7373 CONTROL AR-HYDRAULIC, 515-7372 CONTROL GP-RIPPER

AN ATTACHMENT

SMCS-5057, 5352, 5356 **i07816175**

NOTE	REF NO	GRAPHIC REF	PART NUMBER	QTY	PART NAME 1 2 3 4 5 6 (PRODUCT LEVEL)	SEE PAGE
	1	1	**310-4947**	1	CLIP (SLOT)	
M	2	1	**7X-0818**	1	BOLT (M8X1.25X45-MM)	
	3	1	**6V-9169**	2	NUT (13/16-16-THD)	
	4	1	**6V-9830**	2	CAP (ORFS)	
	5	1	**8T-4121**	1	WASHER-HARD (11X21X2.5-MM THK)	
	6	1	*148-8328*	1	CONNECTOR AS	
		1	**3D-2824**	1	SEAL-O-RING	
		1	**6V-8398**	1	SEAL-O-RING	
		1	**6V-8633**	1	CONNECTOR	
	7	1	*148-8457*	2	UNION AS (STRAIGHT)	
					(EACH INCLUDES)	
		1	**6V-8398**	2	SEAL-O-RING	
		1	**6V-8995**	1	UNION (STRAIGHT)	
	8	1	*205-2357*	1	CONNECTOR AS	
		1	**3D-2824**	1	SEAL-O-RING	
		1	**6V-8398**	1	SEAL-O-RING	
		1	**8T-7968**	1	CONNECTOR	
M	9	1	**231-0336**	1	STUD-TAPERLOCK (M10X1.5X70-MM)	
	10	1	**241-0624**	1	BODY-CLAMP	
	11	1	**310-4948**	1	CLIP (TAB)	
	12	1	**459-1938**	1	PLATE	
	13	1	**529-6539**	2	BOLT AS	
	14	1	**536-7106**	1	GROMMET	
M	15	1	**344-5675**	1	NUT (M10X1.5-THD)	
M	16	1	**479-2171**	2	BOLT AS	
	17	1	**518-5927**	1	BRACKET AS	
	18	1	**518-5928**	1	BRACKET	
I	19	1	**571-8375**	1	HOSE AS	
I	20	1	**571-8376**	1	HOSE AS	

I - REFER TO HYDRAULIC INFORMATION SYSTEM
M - METRIC PART

507-7434 **LINES GP-RIPPER (**contd.**)** **i07816175**

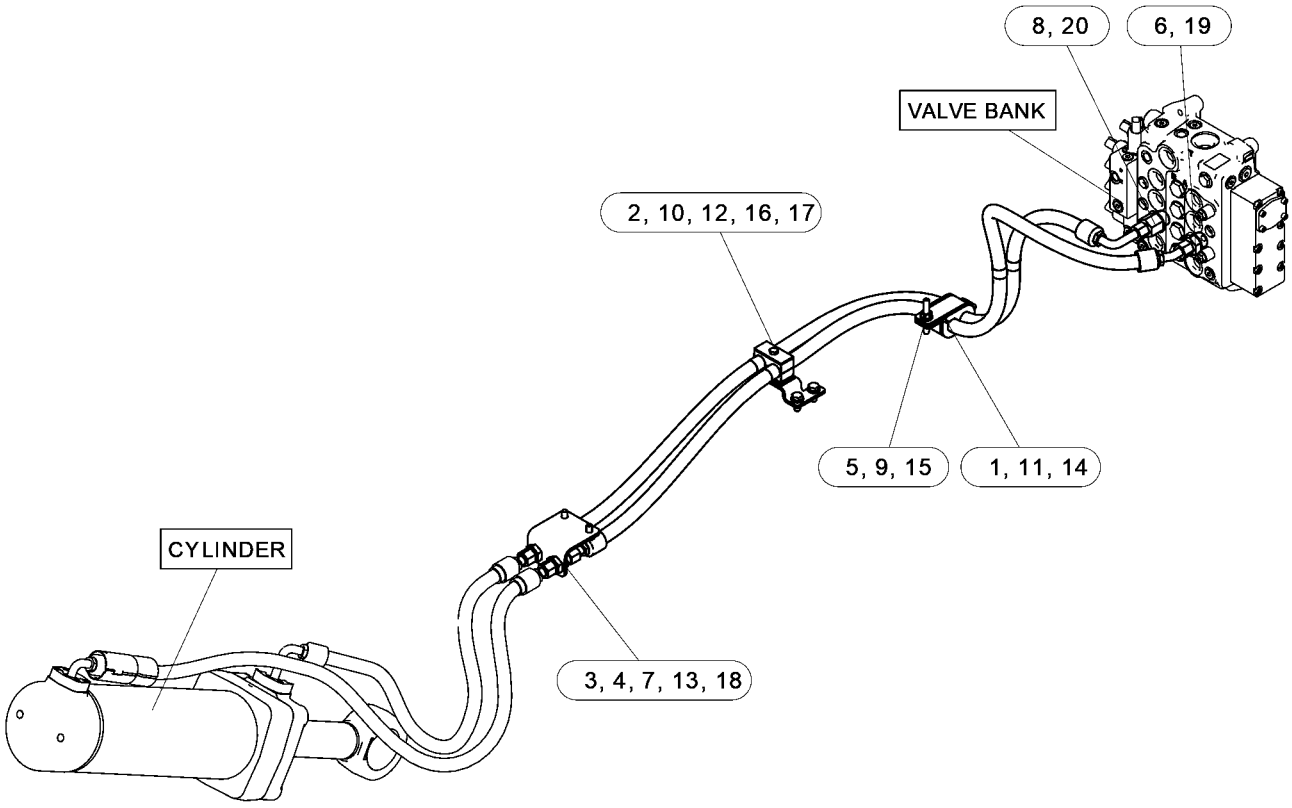

GRAPHIC #1 <END> g06444054

524-1772 LINES GP-RIPPER

S/N: Z2K1-UP; Z2N1-UP; H9Z1-UP
PART OF 533-7719 RIPPER AR
AN ATTACHMENT

SMCS-5057, 5352, 5356

i07817574

NOTE	REF NO	GRAPHIC REF	PART NUMBER	QTY	PART NAME 1 2 3 4 5 6 (PRODUCT LEVEL)	SEE PAGE
	1	1	**4J-5267**	2	SEAL-O-RING	
	2	1	**5P-7466**	1	CLIP (SLOT)	
	3	1	**5P-7467**	1	CLIP (TAB)	
	4	1	**8T-4121**	8	WASHER-HARD (11X21X2.5-MM THK)	
	5	1	**9M-2904**	4	CLAMP-HOSE	
	6	1	**130-1977**	4	SHIELD	
	7	1	**130-9192**	4	GROMMET	
	8	1	**208-6727**	2	SHIELD	
	9	1	**397-9301**	1	WASHER-HARD (11.5X20X15-MM THK)	
I	10	1	**524-2978**	1	HOSE AS	
I	11	1	**524-2979**	1	HOSE AS	
	12	1	**5P-8112**	1	GROMMET	
M	13	1	**8T-4186**	7	BOLT (M10X1.5X40-MM)	
M	14	1	**8T-6466**	1	BOLT (M10X1.5X60-MM)	

I - REFER TO HYDRAULIC INFORMATION SYSTEM
M - METRIC PART

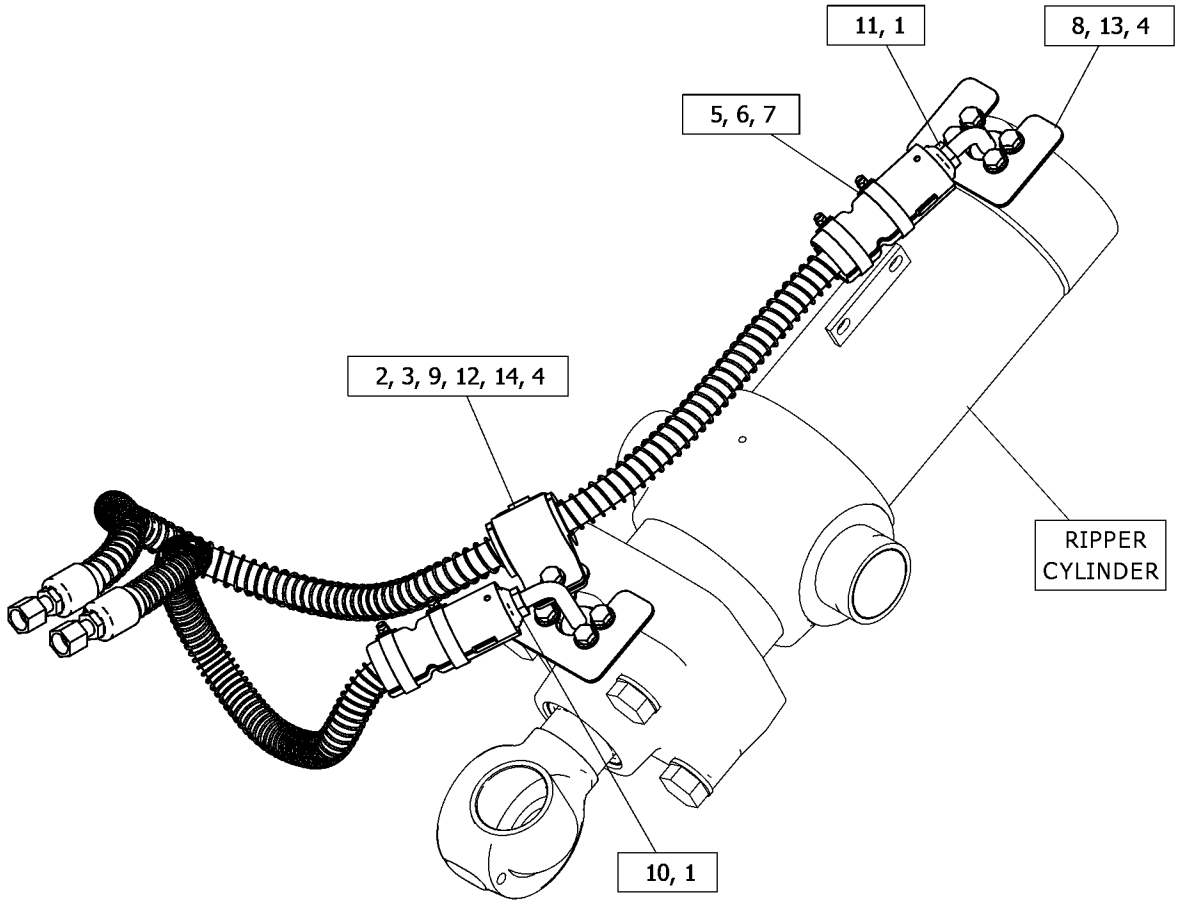

GRAPHIC #1 <END> g06445530

519-3678 MANIFOLD GP-HYDRAULIC

S/N: Z2K1-UP; Z2N1-UP
PART OF 507-7426, 507-7427 LINES GP-LIFT CYLINDER
AN ATTACHMENT

SMCS-5264 **i07815465**

NOTE	REF NO	GRAPHIC REF	PART NUMBER	QTY	PART NAME 1 2 3 4 5 6 (PRODUCT LEVEL)	SEE PAGE
	1	1	*148-8411*	1	PLUG AS	
		1	**3K-0360**	1	SEAL-O-RING	
		1	**9S-4185**	1	PLUG (3/4-16-THD)	
	2	1	**530-1111**	1	MANIFOLD	

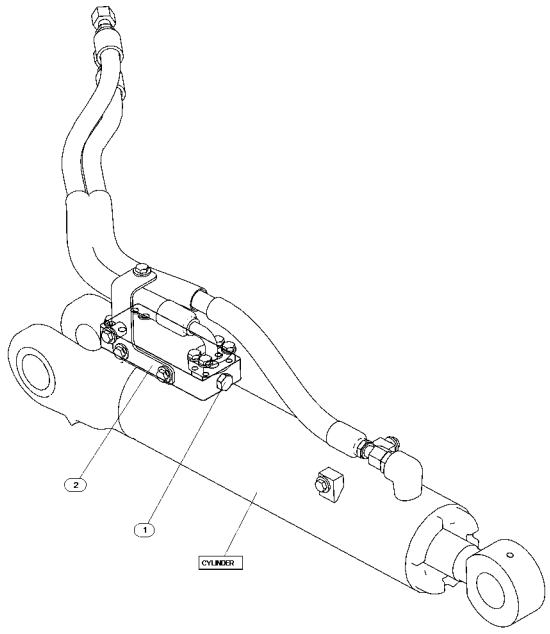

GRAPHIC #1 <END> g06444042

509-5171 MOTOR GP-GEAR

S/N: Z2K1-UP; Z2N1-UP
PART OF 527-0210 LINES GP-HYDRAULIC FAN
AN ATTACHMENT

SMCS-5061 **i07819707**

NOTE	REF NO	GRAPHIC REF	PART NUMBER	QTY	PART NAME 1 2 3 4 5 6 (PRODUCT LEVEL)	SEE PAGE
M	1	1	**095-0664**	4	BOLT-SOCKET HEAD (M10X1.5X145-MM)	
	2	1	**326-3269**	8	WASHER (10X16X2-MM THK)	
	3	1	**515-5462**	1	SENSOR AS-SPEED	
M	4	1	**8C-6364**	2	BOLT-SOCKET HEAD (M5X0.8X14-MM)	
	5	1	**180-7451**	2	WASHER-HARD (5.3X8.8X2-MM THK)	
J	6	1	**095-0919**	1	RING-RETAINING	
	7	1	**095-0936**	1	RING-RETAINING	
	8	1	**3E-4333**	1	KEY-WOODRUFF	
					PARTS SHOWN IN GRAPHIC(S) WITHOUT A REFERENCE NUMBER ARE NOT SERVICED SEPARATELY	
					AVAILABLE REPAIR KIT(S):	
			380-8573	1	KIT-SEAL (GEAR MOTOR)	
					(INCLUDES SEALS AND RING)	

J - KIT MARKED J SERVICES PART(S) MARKED J
M - METRIC PART

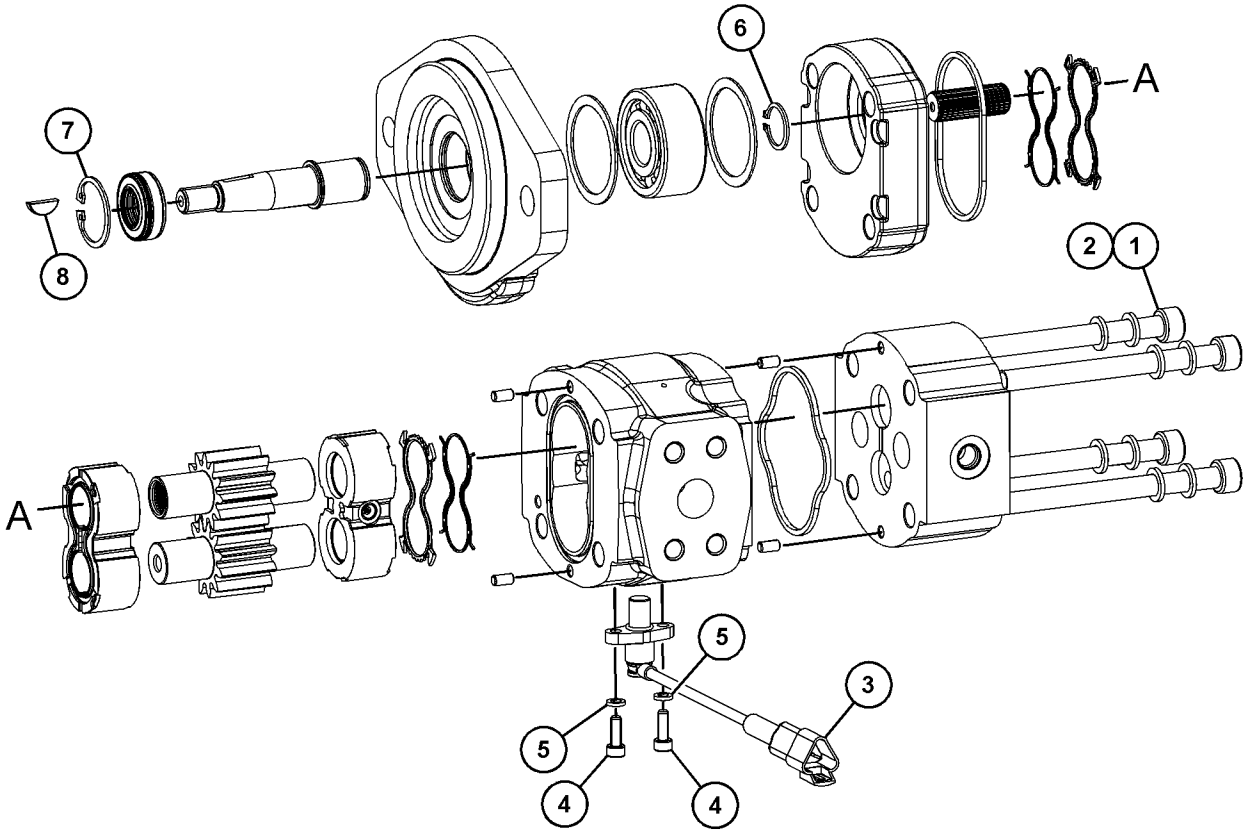

GRAPHIC #1 <END> g06451565

509-5174 MOTOR GP-GEAR

S/N: Z2K1-UP; Z2N1-UP
PART OF 507-6716 LINES GP-HYDRAULIC FAN
AN ATTACHMENT

SMCS-5061 **i07813847**

NOTE	REF NO	GRAPHIC REF	PART NUMBER	QTY	PART NAME 1 2 3 4 5 6 (PRODUCT LEVEL)	SEE PAGE
	1	1	**515-5462**	1	SENSOR AS-SPEED	
M	2	1	**8C-6364**	2	BOLT-SOCKET HEAD (M5X0.8X14-MM)	
	3	1	**180-7451**	2	WASHER-HARD (5.3X8.8X2-MM THK)	
	4	1	**095-0919**	1	RING-RETAINING	
J	5	1	**095-0936**	1	RING-RETAINING	
	6	1	**3E-4333**	1	KEY-WOODRUFF	
					PARTS SHOWN IN GRAPHIC(S) WITHOUT A REFERENCE NUMBER ARE NOT SERVICED SEPARATELY	
					AVAILABLE REPAIR KIT(S):	
J			**380-8573**	1	KIT-SEAL	

J - KIT MARKED J SERVICES PART(S) MARKED J
M - METRIC PART

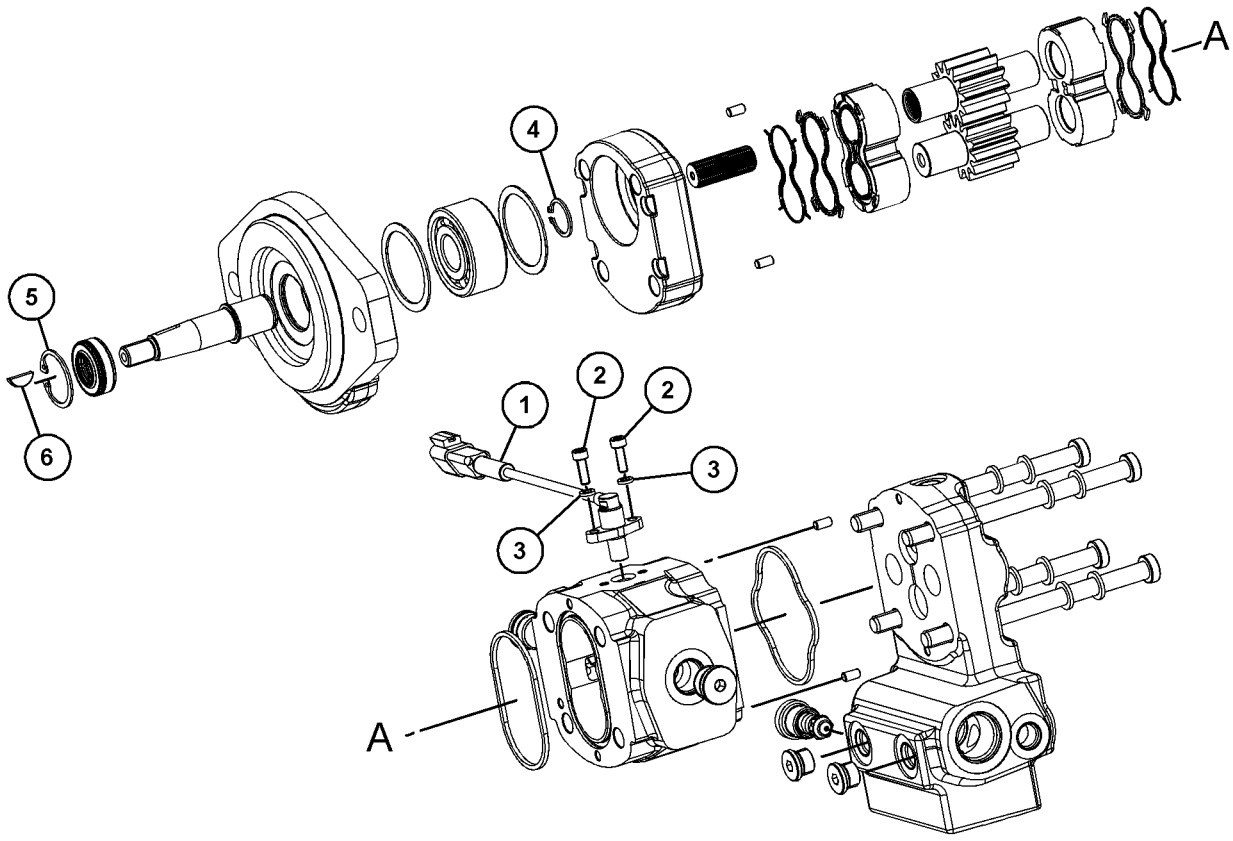

GRAPHIC #1 <END> g06446787

563-0090 PLUG GP-HYDRAULIC LINES

S/N: Z2K1-UP; Z2N1-UP
PART OF 550-5570 FILM GP
AN ATTACHMENT

SMCS-5057 **i07818675**

NOTE	PART NUMBER	QTY	PART NAME 1 2 3 4 5 6 (PRODUCT LEVEL)	SEE PAGE
M	**479-2171**	3	BOLT AS	
			(1 BOLT - ON FRONT C-FRAME TOWER,ONTO FRONT FACE TO PLUG UPPER THREADED HOLE) (1 BOLT - ON FRONT C-FRAME TOWER, ONTO FRONT FACE TO PLUG LOWER THREADED HOLE) (1 BOLT - ON FRONT C-FRAME TOWER, ONTO WELDED BOSS NEXT TO REMOVABLE BACK COVERING PLATE)	
	5H-4018	1	COVER	
			(ON FRONT C-FRAME TOWER, ONTO REMOVABLE BACK COVERING PLATE)	
	5H-4019	1	COVER	
			(ON FRONT C-FRAME TOWER, AT FRONT FACE ABOVE TRUNNION)	
	278-5921	1	PLUG	
			(ON RADIATOR GUARD, TO PLUG HOLE ON TOP RIGHT)	
	7K-1181	2	STRAP-CABLE	
			(1 STRAP - TO STRAP BRANCH OF HARNESS "MAIN CONNECTOR" ON EC520 CHASSIS SENSOR MOUNTING BRACKET) (1 STRAP - TO STRAP BRANCH OF HARNESS "ETHERNET CONNECTOR" ON EC520 CHASSIS SENSOR MOUNTING BRACKET)	
M - METRIC PART				
			<END>	

508-6786 PUMP GP-PISTON

S/N: Z2K1-UP; Z2N1-UP
IMPLEMENT
PART OF 507-7422 LINES GP-PUMP
AN ATTACHMENT

SMCS-5070 **i07825696**

NOTE	REF NO	GRAPHIC REF	PART NUMBER	QTY	PART NAME 1 2 3 4 5 6 (PRODUCT LEVEL)	SEE PAGE
Y	1	1	**285-5240**	1	VALVE GP-PUMP CONTROL (PRESSURE, FLOW COMPENSATOR)	616
	2	1	**335-8230**	2	PLUG	
Y	3	2	**471-5752**	1	ROTATING GP-PUMP	608
	4	2	**174-9994**	1	PISTON-CONTROL	
	5	2	**274-7452**	1	LINK-CONTROL	
	6	1	**468-9828**	1	HOUSING	
	7	2	**565-4166**	1	HEAD	
	8	2	**168-7317**	1	SWASHPLATE	
	9	2	**565-4167**	1	SHAFT	
	10	1	**310-7267**	1	PLUG-CONTROL	
	11	2	**168-2197**	1	SPRING	
	12	2	**565-4190**	1	COUPLING	
B	13	2	**168-2203**	1	SHIM-SHAFT (3-MM THK)	
	14	2	**3P-1210**	1	CONE-BEARING	
	15	2	**9W-2109**	1	CONE-BEARING	
	16	2	**282-0919**	1	BEARING-CRADLE	
	17	2	**282-0918**	1	BEARING-CRADLE	
	18	2	**139-2840**	1	SEAL-SHAFT	
	19	2	**475-1055**	1	SEAL-O-RING	
	20	1	**449-5139**	2	SEAL-O-RING	
	21	2	**335-8226**	1	RING-RETAINING	
M	22	1	**8T-2503**	4	BOLT-SOCKET HEAD (M14X2X35-MM)	
	23	2	**190-6507**	1	RING-STOP	
	24	2	**9X-8979**	1	DOWEL	
	25	1	**280-7870**	1	GASKET	
M	26	1	**8T-8442**	4	BOLT-SOCKET HEAD (M6X1X30-MM)	
	27	2	**9W-2110**	1	CUP-TAPERED ROLLER	
M	28	2	**6R-7943**	2	SCREW (M5X0.8X15-MM)	
	29	2	**8J-0412**	1	CUP-BEARING	

B - USE AS REQUIRED
M - METRIC PART
Y - SEPARATE ILLUSTRATION

508-6786 **PUMP GP-PISTON (**contd.**)** **i07825696**

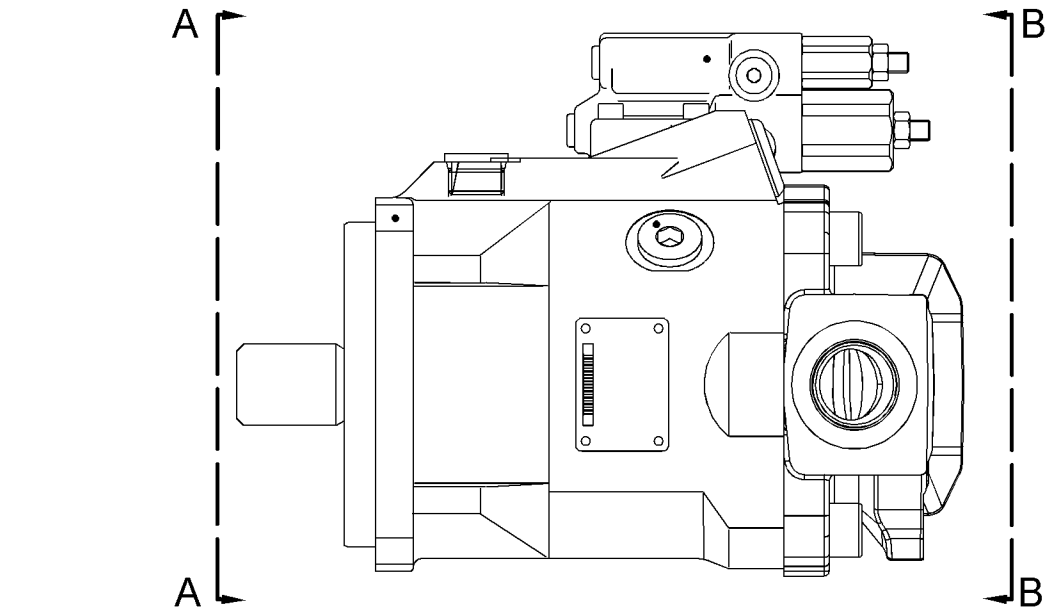

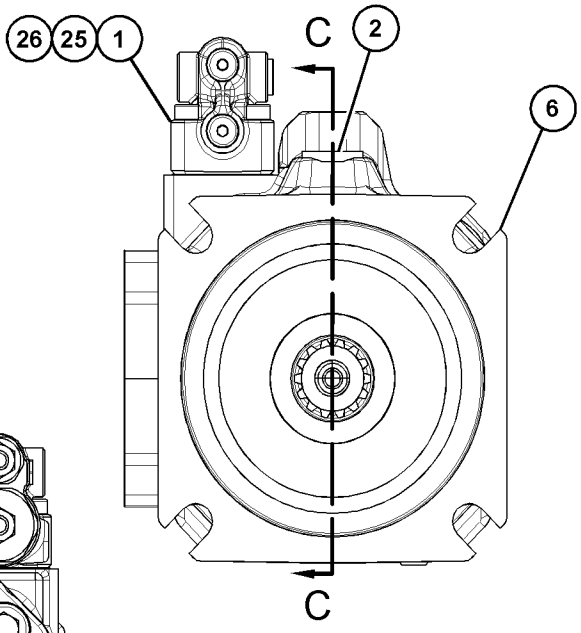

VIEW A-A

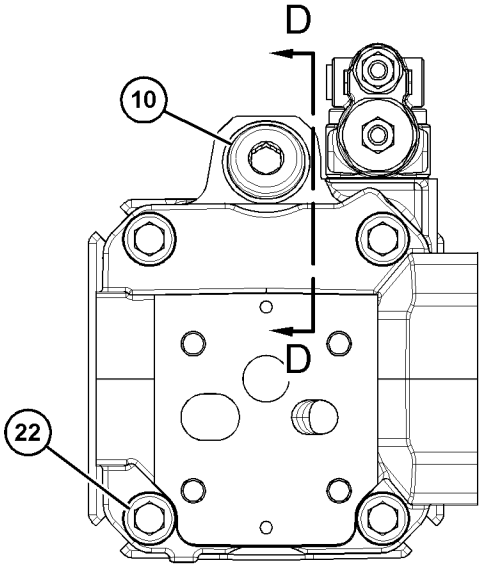

VIEW B-B

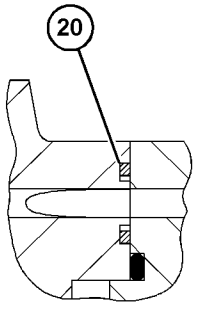

SECTION D-D

REFER TO ALL ILLUSTRATIONS OF THIS GROUP FOR AUXILIARY VIEWS

GRAPHIC #1

g06454704

508-6786 **PUMP GP-PISTON (**contd.**)** **i07825696**

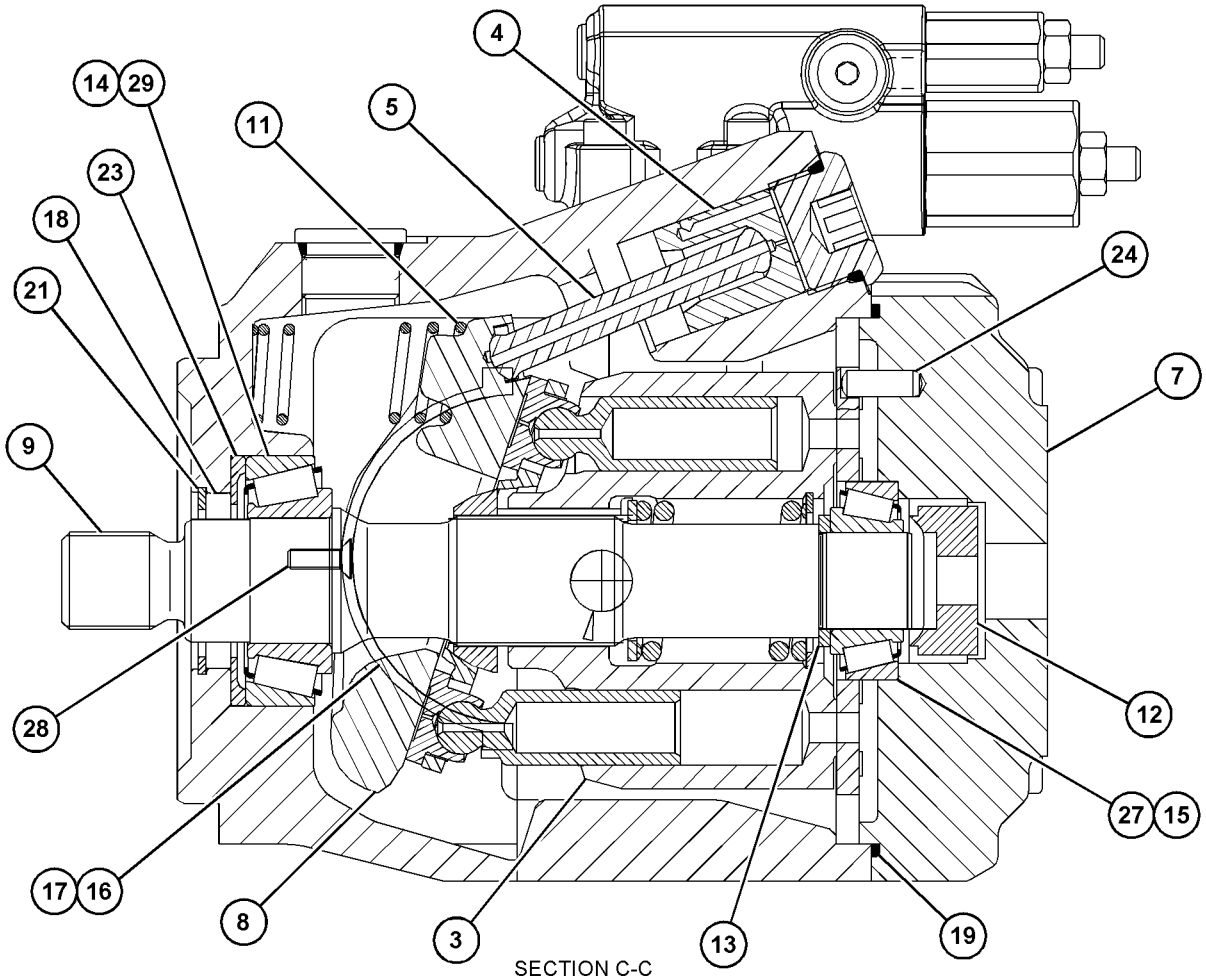

SECTION C-C

GRAPHIC #2 <END> g06454705

471-5752 ROTATING GP-PUMP

S/N: Z2K1-UP; Z2N1-UP
BASIC
PART OF 508-6786 PUMP GP-PISTON
AN ATTACHMENT

SMCS-5070 **i07825711**

NOTE	REF NO	GRAPHIC REF	PART NUMBER	QTY	PART NAME 1 2 3 4 5 6 (PRODUCT LEVEL)	SEE PAGE
	1	1	**168-3384**	9	PISTON AS-PUMP	
	2	1	**168-3380**	1	BARREL-CYLINDER	
	3	1	**376-0898**	1	PLATE-VALVE	
	4	1	**168-3385**	1	PLATE-RETRACTION	
	5	1	**168-3378**	1	BEARING-SPHERICAL	
	6	1	**168-3381**	1	SPRING	
	7	1	**168-3379**	3	PIN	
	8	1	**6V-7723**	1	RING-RETAINING	
	9	1	**168-3382**	1	WASHER (30X42X2.7-MM THK)	

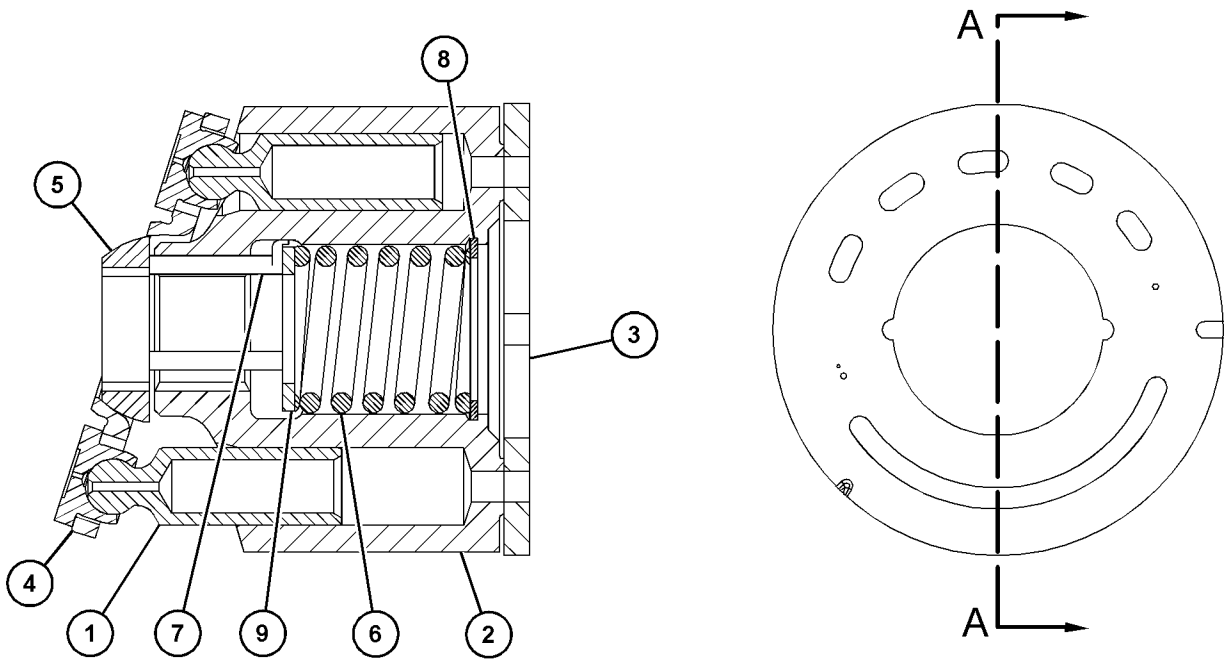

SECTION A-A

GRAPHIC #1 <END> g06095756

562-7341 SHAFT GP-HYDRAULIC MOTOR

S/N: Z2K1-UP; Z2N1-UP
PART OF 562-7338 FLANGE GP
AN ATTACHMENT

SMCS-5058 **i07836383**

NOTE	REF NO	GRAPHIC REF	PART NUMBER	QTY	PART NAME 1 2 3 4 5 6 (PRODUCT LEVEL)	SEE PAGE
	1	1	**562-7345**	1	SHAFT	
B	2	1	**234-2872**	1	SHIM (3.90-MM THK)	
B	3	1	**141-0241**	1	SHIM (2.95-MM THK)	
B		1	**141-0240**	1	SHIM (2.9-MM THK)	
B		1	**141-0239**	1	SHIM (2.85-MM THK)	
B		1	**141-0238**	1	SHIM (2.8-MM THK)	
B		1	**141-0237**	1	SHIM (2.75-MM THK)	
B		1	**141-0236**	1	SHIM (2.7-MM THK)	
B		1	**141-0235**	1	SHIM (2.65-MM THK)	
B		1	**440-3455**	1	SHIM (2.60-MM THK)	
B		1	**440-3456**	1	SHIM (2.55-MM THK)	
B		1	**440-3457**	1	SHIM (2.50-MM THK)	
B		1	**440-3473**	1	SHIM (2.45-MM THK)	
B		1	**141-0224**	1	SHIM (3-MM THK)	
	4	1	**8T-4241**	1	RING-RETAINING	
	5	1	**133-8929**	1	BEARING AS	
	6	1	**141-0244**	1	BEARING AS	

B - USE AS REQUIRED

562-7341 **SHAFT GP-HYDRAULIC MOTOR (**contd.**)** **i07836383**

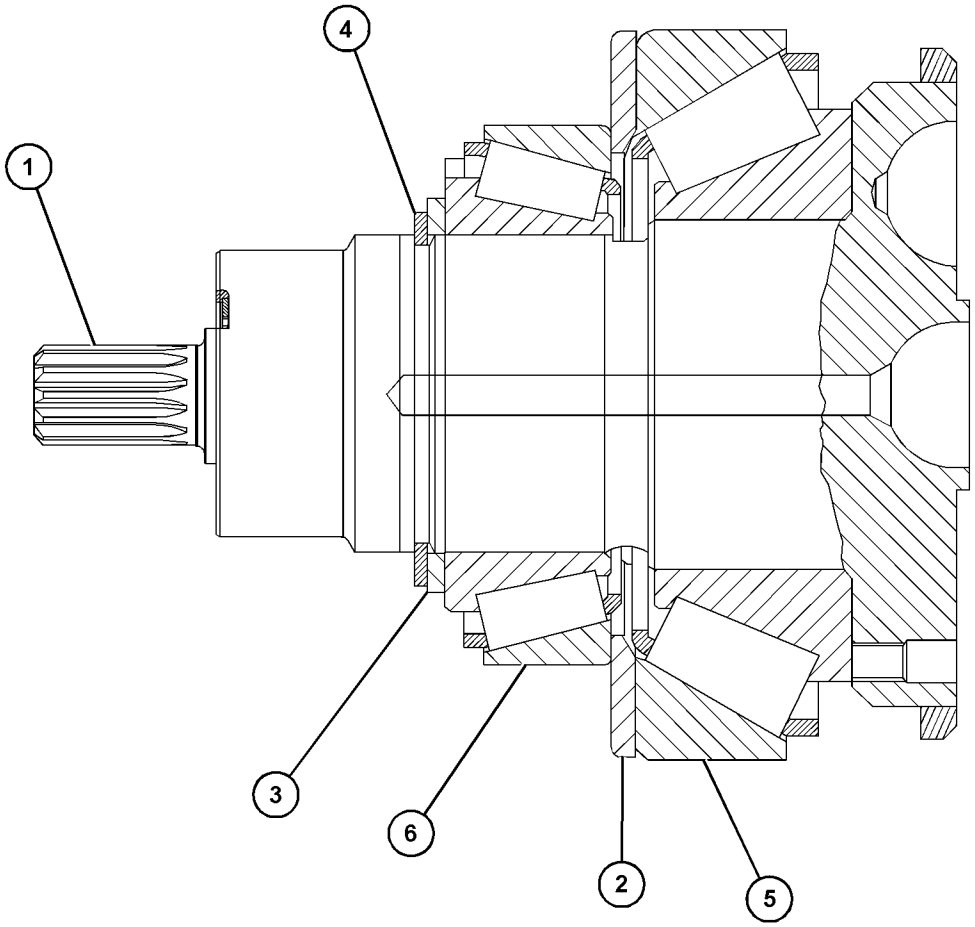

GRAPHIC #1 <END> g06459270

468-7433 TANK & FILTER GP-HYDRAULIC

S/N: Z2K1-UP; Z2N1-UP
PART OF 507-7404 TANK & MTG GP-HYDRAULIC
AN ATTACHMENT

SMCS-5056, 5068 **i07824643**

NOTE	REF NO	GRAPHIC REF	PART NUMBER	QTY	PART NAME 1 2 3 4 5 6 (PRODUCT LEVEL)	SEE PAGE
	1	1	**1U-2827**	1	GUIDE-VALVE	
	2	1	**2D-4202**	1	PLATE	
	3	1	**4F-7507**	1	SEAL-O-RING	
	4	1	**4J-8251**	1	GROMMET	
	5	1	**4J-8252**	1	GAUGE-SIGHT (HYDRAULIC OIL)	
	6	1	**5M-2057**	1	SEAL-O-RING	
	7	1	**6H-9361**	1	RING-RETAINING	
	8	1	**6V-5839**	4	WASHER (11X21X2.5-MM THK)	
	9	1	**7B-3039**	1	SPRING	
	10	1	**7H-1447**	1	CAP-FILLER (HYDRAULIC TANK)	
	11	1	**8J-6913**	1	RETAINER	
	12	1	**8J-8782**	1	BODY-DRAIN VALVE	
	13	1	**8J-8783**	1	VALVE-DRAIN	
	14	1	**8T-2275**	1	BALL	
	15	1	**8T-3298**	1	SEAL-RECTANGULAR	
	16	1	**8T-4121**	6	WASHER-HARD (11X21X2.5-MM THK)	
	17	1	**9H-6454**	1	GASKET	
	18	1	**9J-7031**	1	PLUG-DRAIN (HYDRAULIC TANK)	
	19	1	**9X-2027**	4	WASHER (11X18X2-MM THK)	
	20	1	**187-9194**	1	PLATE (SIGHT GLASS)	
	21	1	**492-6794**	1	STRAINER (PLASTIC) (HYDRAULIC TANK FILL)	
M	22	1	**344-5675**	4	NUT (M10X1.5-THD)	
	23	1	**468-7434**	1	TANK AS-HYDRAULIC	
	24	1	**507-0646**	1	BREATHER AS (HYDRAULIC OIL)	
		1	**3D-2824**	1	SEAL-O-RING	
	25	1	**517-3434**	1	COVER	
	26	1	**532-3900**	1	FILTER GP-OIL (HYDRAULIC)	
		1	**532-3904**	1	KIT-SEAL	
					(INCLUDES GASKET, SEAL & O-RING SEAL)	
		1	**530-2864**	1	SWITCH GP-PRESSURE (HYDRAULIC FILTER)	
		1	**532-3902**	1	ELEMENT (HYDRAULIC OIL)	
		1	**532-3905**	1	LID AS	
	27	1	**532-3901**	1	FILTER GP-OIL (HYDRAULIC)	
		1	**532-3904**	1	KIT-SEAL	
					(INCLUDES GASKET, SEAL & O-RING SEAL)	
		1	**530-2865**	1	SWITCH GP-PRESSURE (HYDRAULIC FILTER)	
		1	**532-3903**	1	ELEMENT (HYDRAULIC OIL)	
		1	**532-3905**	1	LID AS	
M	28	1	**6V-7744**	6	LOCKNUT (M10X1.5-THD)	
M	29	1	**8T-4195**	4	BOLT (M10X1.5X30-MM)	

M - METRIC PART

468-7433 **TANK & FILTER GP-HYDRAULIC (**contd.**)** **i07824643**

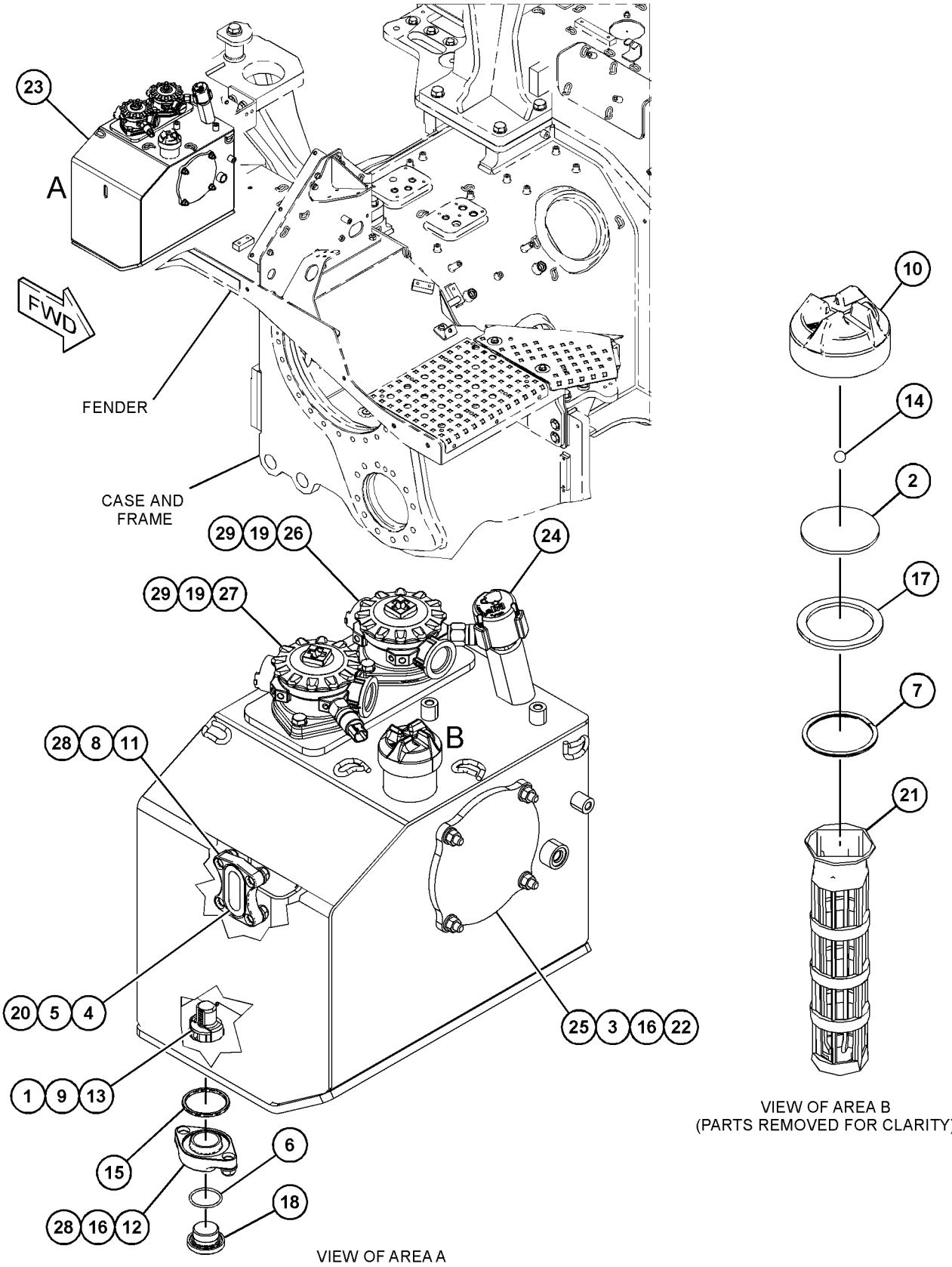

GRAPHIC #1 <END> g06453040

507-7404 TANK & MTG GP-HYDRAULIC

S/N: Z2K1-UP; Z2N1-UP
PART OF 575-9700 HYDRAULIC AR
AN ATTACHMENT

SMCS-5056 **i07824624**

NOTE	REF NO	GRAPHIC REF	PART NUMBER	QTY	PART NAME 1 2 3 4 5 6 (PRODUCT LEVEL)	SEE PAGE
M	1	1	**8T-4910**	4	BOLT (M12X1.75X60-MM)	
	2	1	**7D-1649**	4	WASHER-HARD (13.5X32X5-MM THK)	
Y	3	1	*468-7433*	1	TANK & FILTER GP-HYDRAULIC	611

M - METRIC PART
Y - SEPARATE ILLUSTRATION

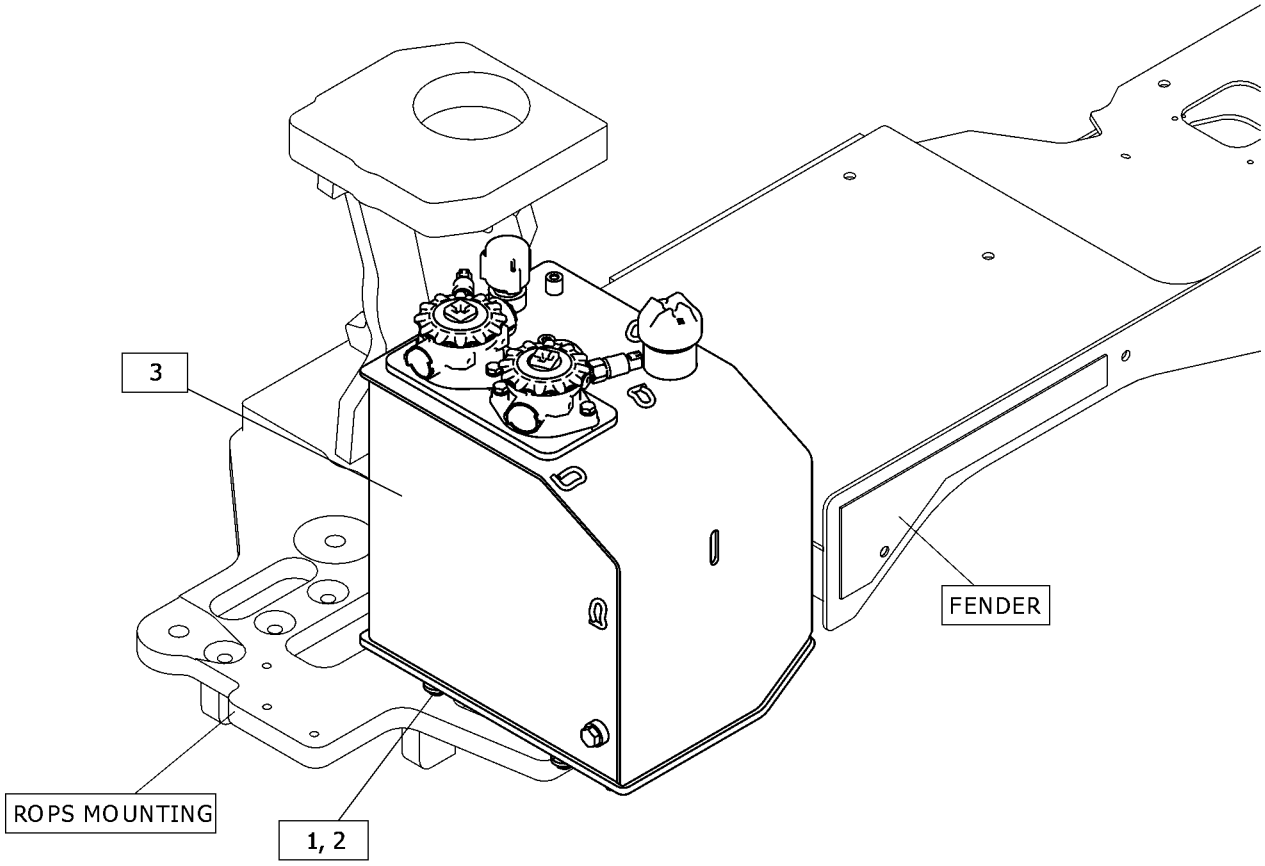

GRAPHIC #1 <END> g06452222

507-7405 VALVE & MTG GP-CONTROL

S/N: Z2K1-UP; Z2N1-UP
PART OF 575-9700 HYDRAULIC AR
AN ATTACHMENT

SMCS-5051 **i07824658**

NOTE	REF NO	GRAPHIC REF	PART NUMBER	QTY	PART NAME 1 2 3 4 5 6 (PRODUCT LEVEL)	SEE PAGE
M	1	1	**8T-5005**	3	BOLT (M10X1.5X70-MM)	
	2	1	**8T-4121**	3	WASHER-HARD (11X21X2.5-MM THK)	
Y	3	1	**507-1295**	1	VALVE GP-BANK 4 (BULLDOZER, RIPPER)	615

M - METRIC PART
Y - SEPARATE ILLUSTRATION

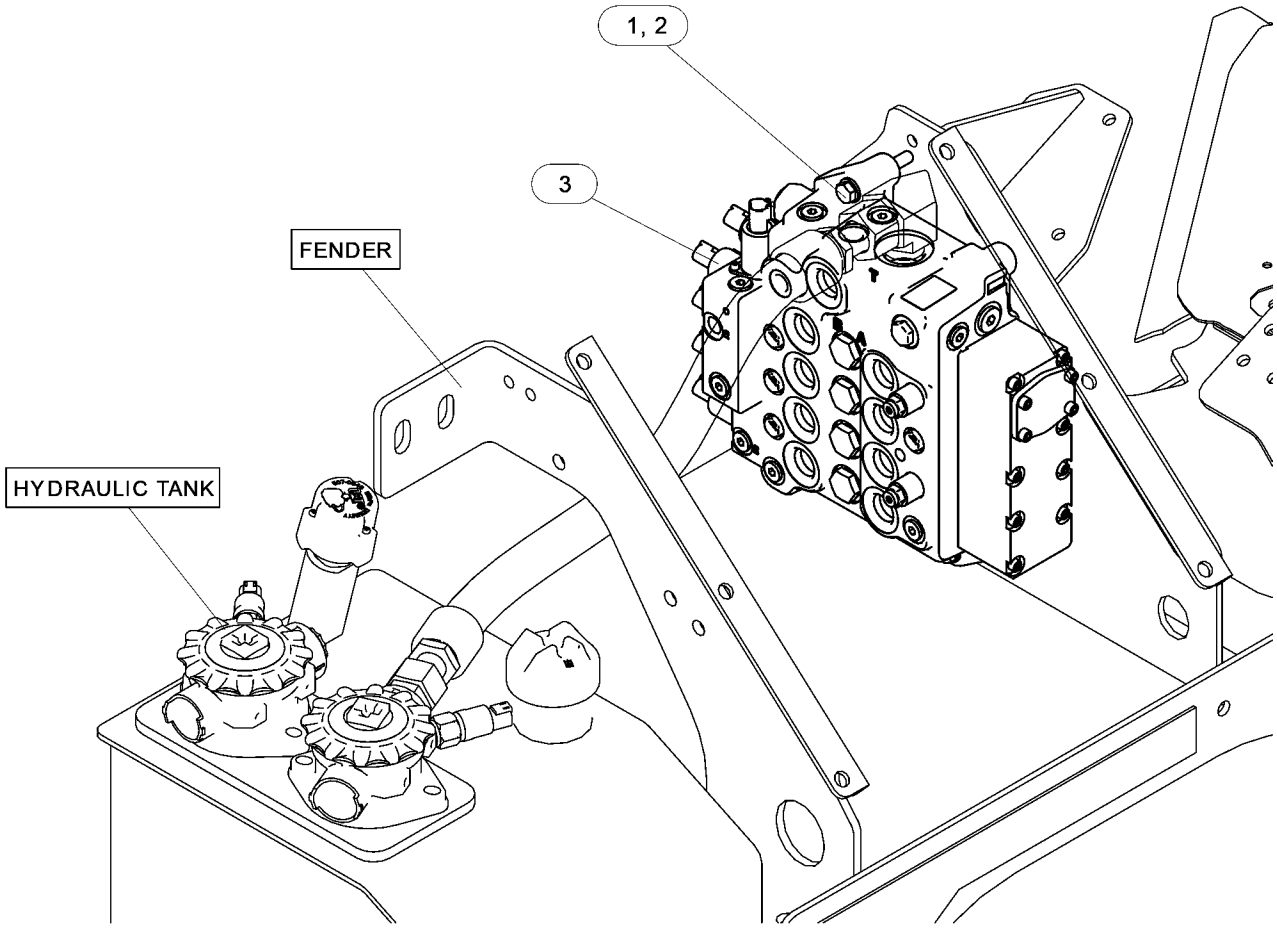

GRAPHIC #1 <END> g06451160

507-1295 VALVE GP-BANK 4

S/N: Z2K1-UP; Z2N1-UP
IMPLEMENT
PART OF 507-7405 VALVE & MTG GP-CONTROL
AN ATTACHMENT

SMCS-5051 **i07766145**

NOTE	PART NUMBER	QTY	PART NAME 1 2 3 4 5 6 (PRODUCT LEVEL)	SEE PAGE
M	**6V-8653**	4	BOLT-SOCKET HEAD (M6X1X40-MM)	
M	**105-3486**	6	BOLT-SOCKET HEAD (M6X1X50-MM)	
M	**9X-2537**	8	BOLT-SOCKET HEAD (M6X1X70-MM)	
M	**109-1393**	18	BOLT-SOCKET HEAD (M4X0.7X10-MM)	
	570-1054	1	HOUSING GP	
	570-1056	1	MANIFOLD & VALVE GP	
	9S-8005	3	PLUG (3/4-16-THD)	
	9S-8001	3	PLUG	
	9S-8004	10	PLUG (9/16-18-THD)	
	437-2831	4	VALVE AS-CHECK	
			(EACH INCLUDES)	
	2M-9780	1	SEAL-O-RING	
	570-1041	1	VALVE AS-CHECK	
	8J-2413	1	SEAL-O-RING	
	421-5456	1	VALVE GP-RELIEF	
	228-7103	1	SEAL-O-RING	
	570-1042	1	VALVE AS-RELIEF	
	228-7103	1	SEAL-O-RING	
	570-1038	4	VALVE AS-RELIEF	
			(EACH INCLUDES)	
	228-7103	1	SEAL-O-RING	
	570-1048	1	VALVE AS-RELIEF	
	238-5081	1	SEAL-O-RING	
	238-5082	1	SEAL-O-RING	
	485-9850	1	VALVE GP-SOLENOID (24-VDC)	
	346-4995	8	VALVE-SOLENOID (12-VDC)	
			AVAILABLE REPAIR KIT(S):	
	570-1055	1	KIT-SEAL	
			(INCLUDES O-RINGS)	
	570-1058	1	KIT-SEAL	
			(INCLUDES O-RINGS)	
	570-1050	1	KIT-SPRING	
			(INCLUDES NUT & SPRING)	
	570-1052	1	KIT-SPRING	
			(INCLUDES SPOOL, SPRING(S) & WASHER)	

M - METRIC PART

<END>

285-5240 VALVE GP-PUMP CONTROL–PRESSURE, FLOW COMPENSATOR

S/N: Z2K1-UP; Z2N1-UP
PART OF 508-6786 PUMP GP-PISTON
AN ATTACHMENT

SMCS-5455 **i03996598**

NOTE	REF NO	GRAPHIC REF	PART NUMBER	QTY	PART NAME 1 2 3 4 5 6 (PRODUCT LEVEL)	SEE PAGE
M	1	1	**8T-8442**	4	BOLT-SOCKET HEAD (M6X1X30-MM)	
	2	1	**280-7870**	1	GASKET	
J	3	1	**6E-6528**	2	SEAL	
	4	1	**9S-8002**	1	PLUG (7/16-20-THD)	
	5	1	**3J-7354**	1	SEAL-O-RING	
J	6	1	**033-6043**	1	SEAL-O-RING	
J	7	1	**6V-6339**	1	SEAL-O-RING	
					AVAILABLE REPAIR KIT(S):	
J			**293-8350**	1	KIT-SEAL (FLOW COMPENSATOR)	
					(INCLUDES SEAL-O-RINGS & BACK-UP RINGS)	

J - KIT MARKED J SERVICES PART(S) MARKED J
M - METRIC PART

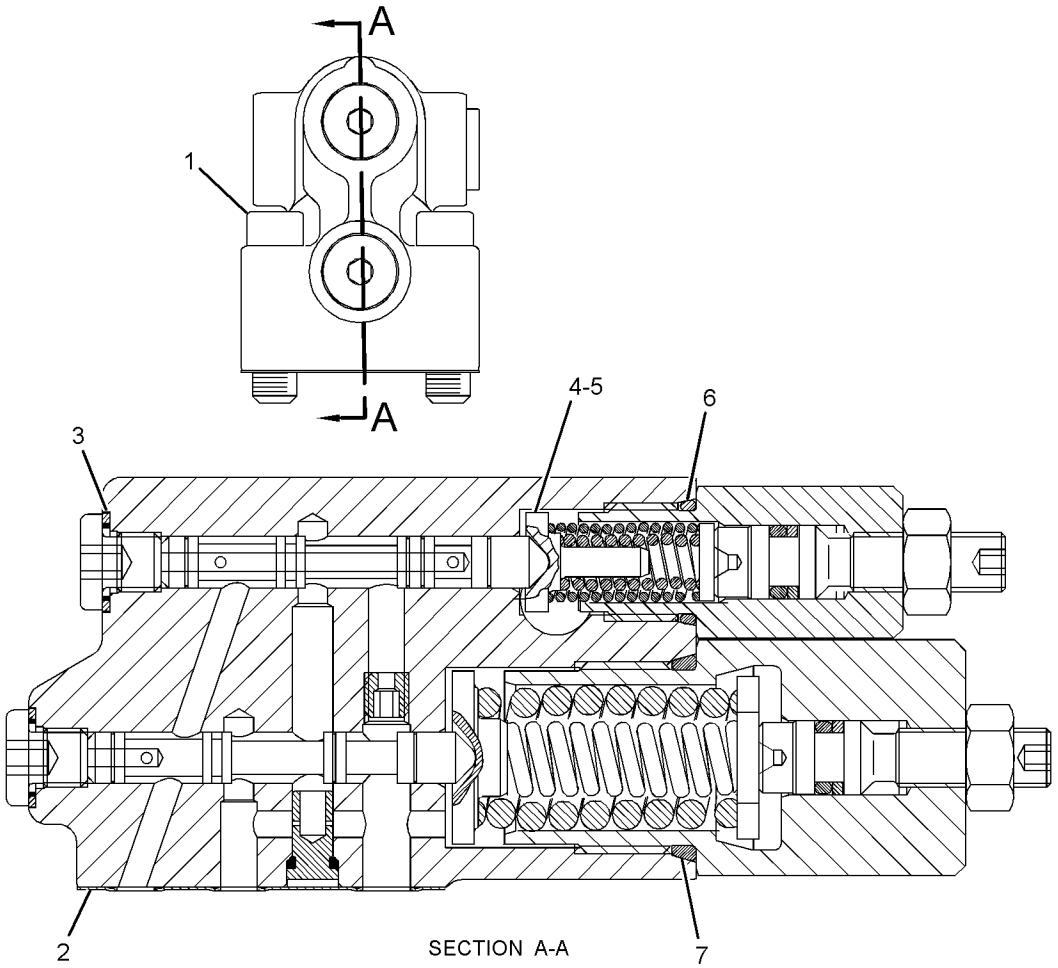

GRAPHIC #1 <END> g01297140

437-2846 VALVE GP-SOLENOID–24-VDC

S/N: Z2K1-UP; Z2N1-UP
PART OF 507-6716 LINES GP-HYDRAULIC FAN
AN ATTACHMENT

SMCS-5479 **i07828625**

NOTE	REF NO	GRAPHIC REF	PART NUMBER	QTY	PART NAME 1 2 3 4 5 6 (PRODUCT LEVEL)	SEE PAGE
	1	1	**3E-6786**	1	SEAL-O-RING	
M	2	1	**465-5626**	1	NUT-SPECIAL (M18X1.5-THD)	
	3	1	**466-2974**	1	COIL AS	
	4	1	**456-1826**	1	SEAL-O-RING	
					AVAILABLE REPAIR KIT(S):	
			499-7325	1	KIT-SEAL	
					(INCLUDES PARTS MARKED "H" IN THE GRAPHIC)	

M - METRIC PART

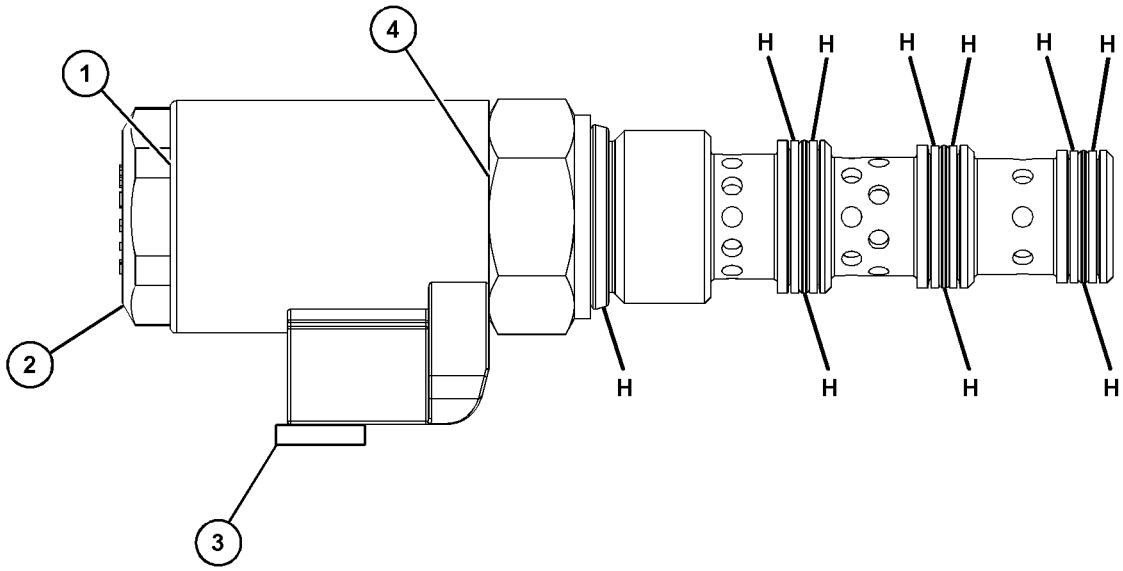

GRAPHIC #1 <END> g06391293

533-7731 C-FRAME GP-POWER ANGLING

S/N: Z2K1-UP
VPAT, XL
PART OF 533-7717 INSTALLATION AR-BULLDOZER
AN ATTACHMENT

SMCS-6063 **i07791732**

NOTE	REF NO	GRAPHIC REF	PART NUMBER	QTY	PART NAME 1 2 3 4 5 6 (PRODUCT LEVEL)	SEE PAGE
	1	1	**510-1559**	1	FRAME AS	
	1A	1	**342-8909**	1	TRUNNION	
M		1	**8Y-3795**	2	BOSS (M10X1.5X39-MM)	
		1	**224-0683**	2	STEP AS	
		1	**286-2562**	4	PLATE	
		1	*529-8472*	1	TOWER AS	
M		1	**8Y-3795**	1	BOSS (M10X1.5X39-MM)	
M		1	**9R-2672**	1	BOSS-THREADED (M10X1.5X120-MM)	
M		1	**9R-3761**	1	BOSS (M10X1.5X51-MM)	
Y	2	1	*519-7099*	1	PIN GP	627

M - METRIC PART
Y - SEPARATE ILLUSTRATION

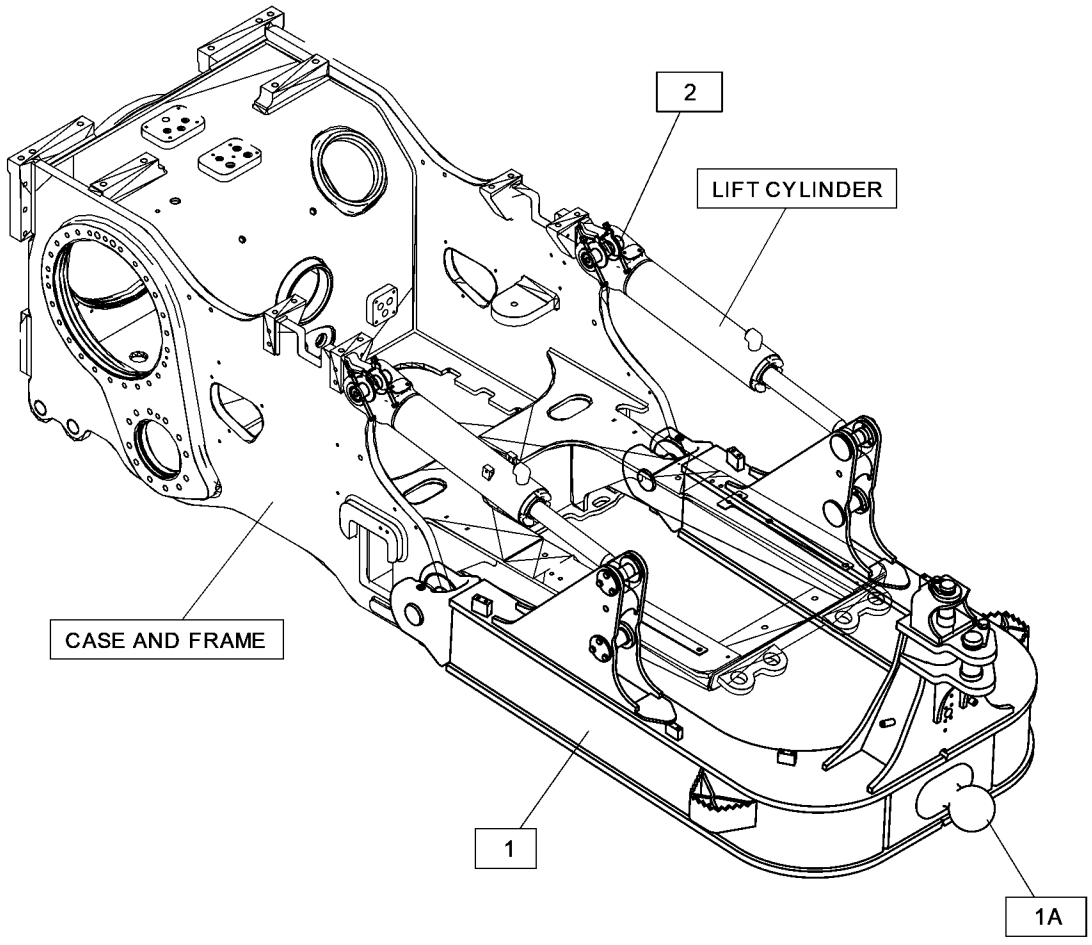

GRAPHIC #1 <END> g06448246

533-7732 C-FRAME GP-POWER ANGLING

S/N: Z2K1-UP; Z2N1-UP
PART OF 533-7718 INSTALLATION AR-BULLDOZER
AN ATTACHMENT

SMCS-6063 **i07815656**

NOTE	REF NO	GRAPHIC REF	PART NUMBER	QTY	PART NAME 1 2 3 4 5 6 (PRODUCT LEVEL)	SEE PAGE
M	1	1	**8T-4192**	2	BOLT (M12X1.75X25-MM)	
	2	1	**198-4778**	8	WASHER-HARD (13.5X30X12-MM THK)	
	3	1	**329-8607**	2	STEP AS	
	4	1	**510-1561**	1	FRAME AS	
	4A	1	**342-8909**	1	TRUNNION	
M		1	**8Y-3795**	2	BOSS (M10X1.5X39-MM)	
		1	**286-2562**	4	PLATE	
Y	5	1	*519-7099*	1	PIN GP	627
M	6	1	**362-1320**	6	BOLT (M12X1.75X35-MM)	

M - METRIC PART
Y - SEPARATE ILLUSTRATION

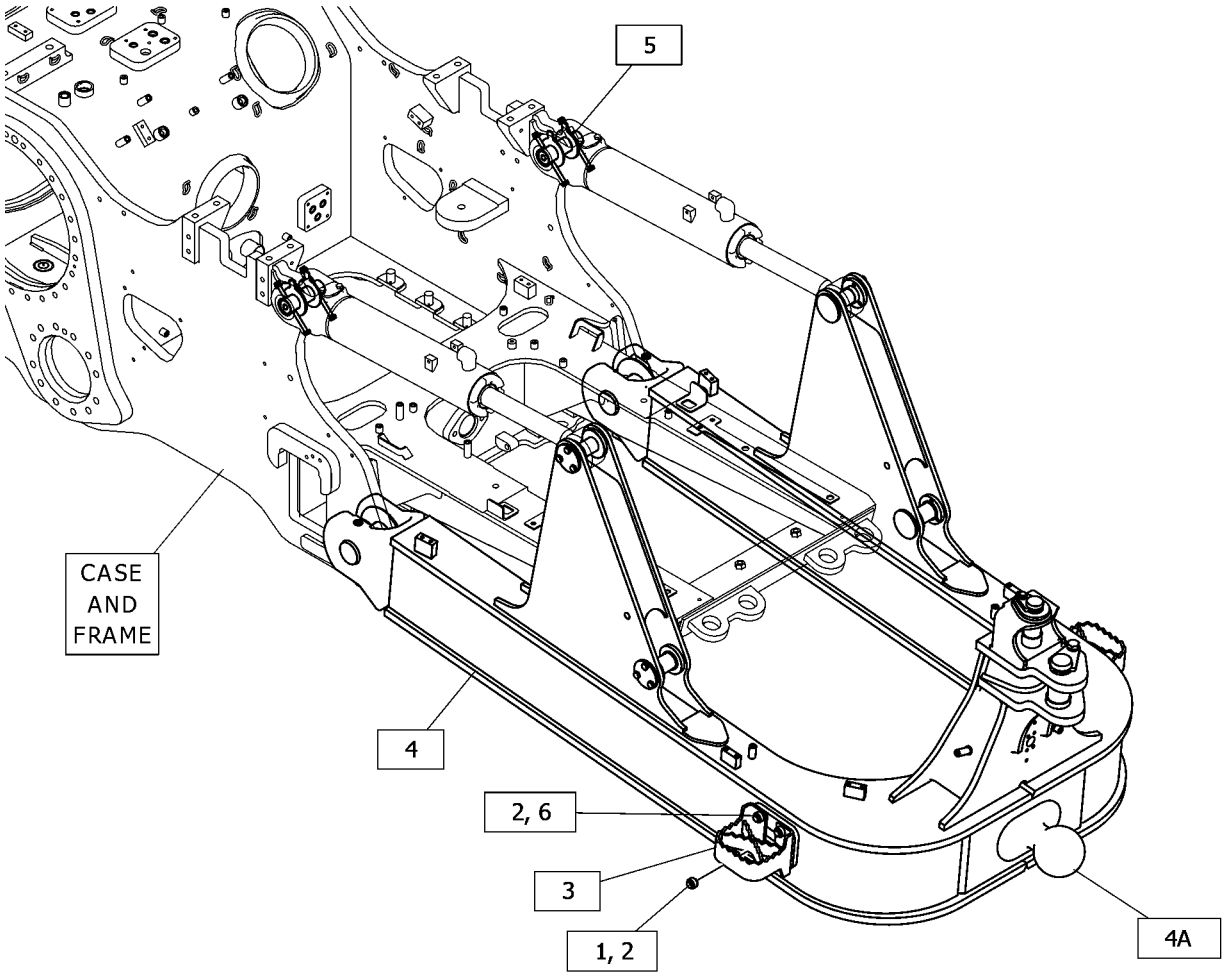

GRAPHIC #1 <END> g06445254

435-5628 COVER GP-TRUNNION

S/N: Z2K1-UP; Z2N1-UP
VPAT
PART OF 515-3737, 515-3738 INSTALLATION AR-BULLDOZER
AN ATTACHMENT

SMCS-4077, 6069 **i07790418**

NOTE	REF NO	GRAPHIC REF	PART NUMBER	QTY	PART NAME 1 2 3 4 5 6 (PRODUCT LEVEL)	SEE PAGE
	1	1	**421-4528**	2	COVER	
M	2	1	**8T-4193**	20	BOLT (M16X2X50-MM)	
	3	1	**9M-3786**	2	SEAL-O-RING	
	4	1	**9X-8257**	20	WASHER (17.5X30X3.5-MM THK)	

M - METRIC PART

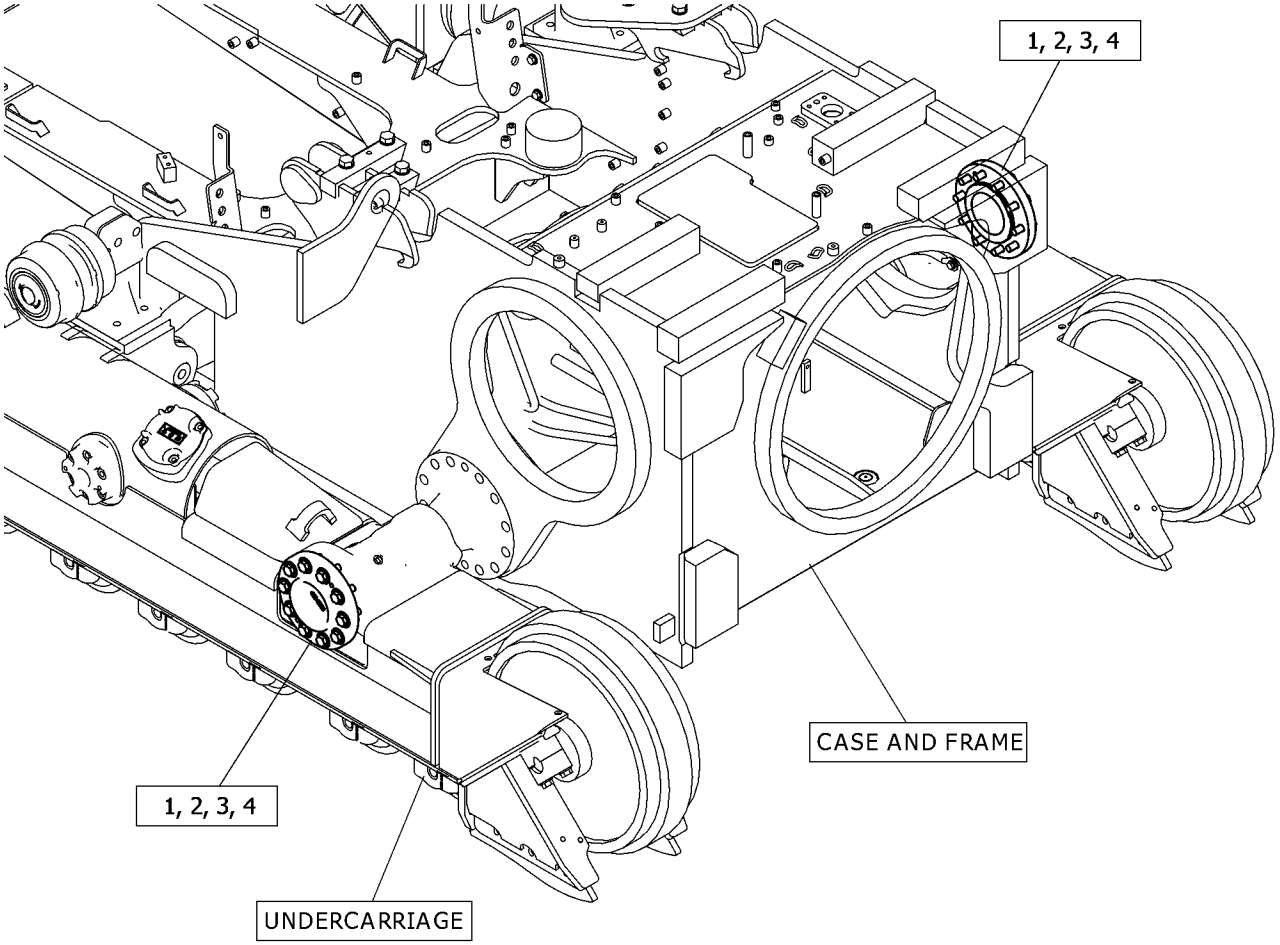

GRAPHIC #1 <END> g06441861

515-3737 INSTALLATION AR-BULLDOZER

S/N: Z2K1-UP
GRADE CONTROL, VPAT, XL
PART OF 532-9851, 532-9856 DISTRIBUTION AR
AN ATTACHMENT

SMCS-6050 **i07790322**

NOTE	PART NUMBER	QTY	PART NAME 1 2 3 4 5 6 (PRODUCT LEVEL)	SEE PAGE
Y	*435-5628*	1	COVER GP-TRUNNION	620
Y	*533-7717*	1	INSTALLATION AR-BULLDOZER	621

Y - SEPARATE ILLUSTRATION

<END>

515-3738 INSTALLATION AR-BULLDOZER

S/N: Z2K1-UP; Z2N1-UP
LGP, VPAT, GRADE CONTROL
FOR USE WITH UNDERCARRIAGE AR-FINE GRADING
AN ATTACHMENT

SMCS-6050 **i07814572**

NOTE	PART NUMBER	QTY	PART NAME 1 2 3 4 5 6 (PRODUCT LEVEL)	SEE PAGE
Y	*435-5628*	1	COVER GP-TRUNNION	620
Y	*533-7718*	1	INSTALLATION AR-BULLDOZER	622

Y - SEPARATE ILLUSTRATION

<END>

533-7717 INSTALLATION AR-BULLDOZER

S/N: Z2K1-UP
XL
PART OF 515-3737 INSTALLATION AR-BULLDOZER
AN ATTACHMENT

SMCS-6050 **i07790429**

NOTE	PART NUMBER	QTY	PART NAME 1 2 3 4 5 6 (PRODUCT LEVEL)	SEE PAGE
Y	*533-7731*	1	C-FRAME GP-POWER ANGLING	618
Y	*554-3767*	1	COVER GP-ACCESS	355
Y	**544-5051**	2	CYLINDER GP-BULLDOZER LIFT	566
Y	**379-3507**	2	CYLINDER GP-ANGLING	564
Y	**379-3506**	1	CYLINDER GP-BULLDOZER TILT	567
Y	*523-9933*	1	GUARD GP-LINES	388
Y	*507-7432*	1	LINES GP-ANGLE & TILT	577
Y	*507-7427*	1	LINES GP-LIFT CYLINDER	591
Y	*348-6250*	1	LINK GP-PITCH	626

Y - SEPARATE ILLUSTRATION

<END>

533-7718 INSTALLATION AR-BULLDOZER

S/N: Z2K1-UP; Z2N1-UP
LGP
PART OF 515-3738 INSTALLATION AR-BULLDOZER
AN ATTACHMENT

SMCS-6050 **i07814596**

NOTE	PART NUMBER	QTY	PART NAME 1 2 3 4 5 6 (PRODUCT LEVEL)	SEE PAGE
Y	*533-7732*	1	C-FRAME GP-POWER ANGLING	619
Y	*554-3767*	1	COVER GP-ACCESS	355
Y	**379-3507**	2	CYLINDER GP-ANGLING	564
Y	**379-3506**	1	CYLINDER GP-BULLDOZER TILT	567
Y	**544-5051**	2	CYLINDER GP-BULLDOZER LIFT	566
Y	*523-9933*	1	GUARD GP-LINES	388
Y	*507-7433*	1	LINES GP-ANGLE & TILT	580
Y	*507-7426*	1	LINES GP-LIFT CYLINDER	589
Y	*348-6250*	1	LINK GP-PITCH	626

Y - SEPARATE ILLUSTRATION

<END>

524-1773 LINES GP-GREASE

S/N: Z2K1-UP; Z2N1-UP
PART OF 510-9713 HYDRAULIC AR
AN ATTACHMENT

SMCS-7510 **i07819327**

NOTE	REF NO	GRAPHIC REF	PART NUMBER	QTY	PART NAME 1 2 3 4 5 6 (PRODUCT LEVEL)	SEE PAGE
	1	1	**204-2281**	4	STRAP-CABLE	
	2	1	**561-3837**	1	COVER	
M	3	1	**8T-4192**	4	BOLT (M12X1.75X25-MM)	
	4	1	**3B-6552**	1	ELBOW-PIPE	
	5	1	**4K-6177**	1	CLIP	
	6	1	**5M-6214**	3	PLUG (1/8-27 PTF)	
	7	1	**8T-4223**	4	WASHER-HARD (13.5X25.5X3-MM THK)	
	8	1	**532-6050**	1	HOSE AS	
	9	1	**532-6051**	1	HOSE AS	
	10	1	**561-3836**	1	COVER	
	11	1	**562-1927**	4	BOLT AS	
	12	1	**569-1137**	1	HOSE AS	
	13	1	**8M-2770**	4	CLIP (LOOP)	

M - METRIC PART

524-1773 **LINES GP-GREASE (**contd.**)** **i07819327**

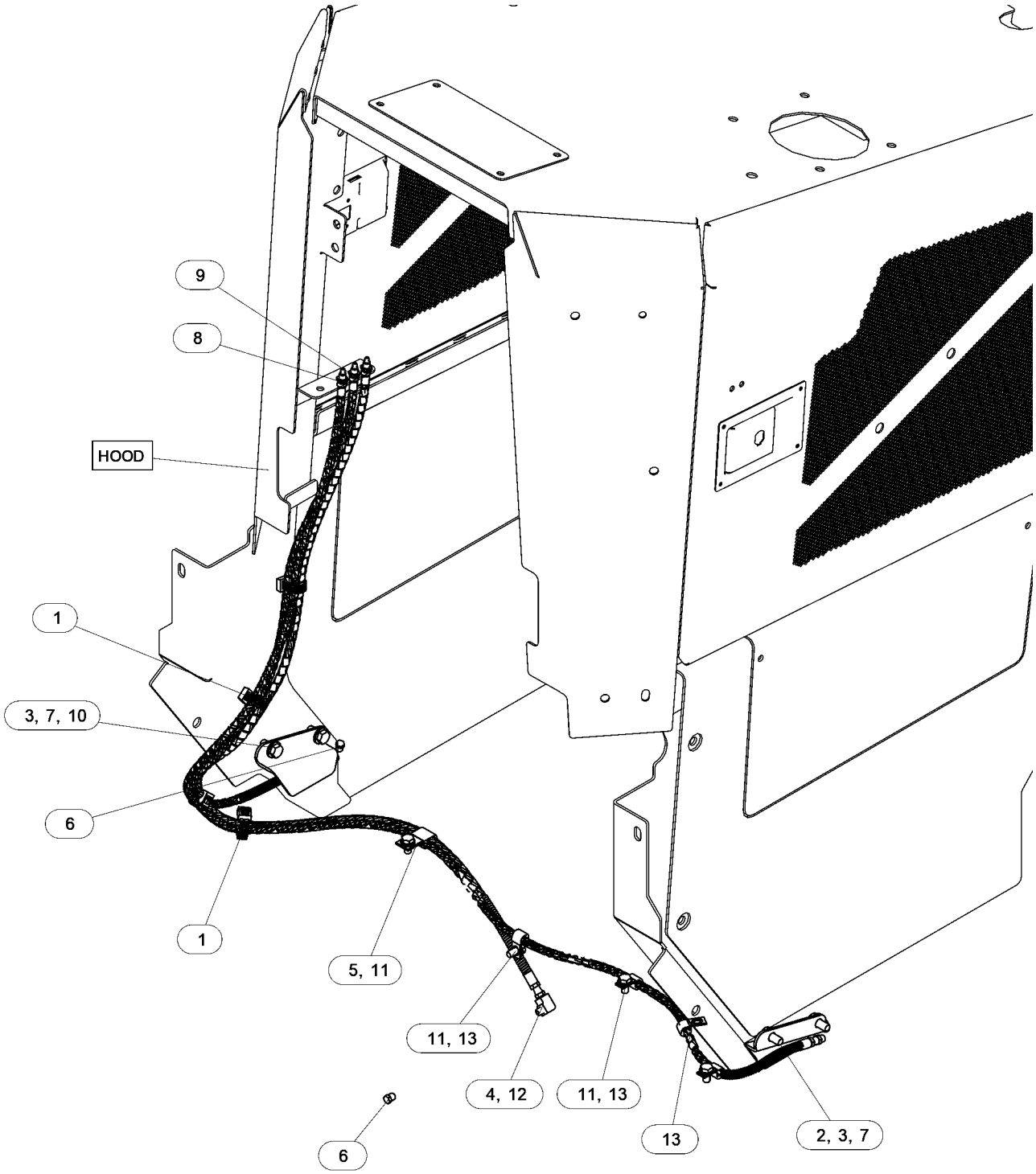

GRAPHIC #1 <END> g06446310

559-5182 LINES GP-GREASE

S/N: AA31-UP; AA91-UP; Z2K1-UP; Z2N1-UP
PART OF 515-3731, 515-3734, 559-6019, 559-6020 BLADE AR-ANGLING, 515-3730, 515-3733 BLADE AR-STRAIGHT
AN ATTACHMENT

SMCS-7510 **i07787550**

NOTE	REF NO	GRAPHIC REF	PART NUMBER	QTY	PART NAME 1 2 3 4 5 6 (PRODUCT LEVEL)	SEE PAGE
	1	1	**8T-1885**	3	CLIP (SLOT)	
	2	1	**8T-1886**	3	CLIP (TAB)	
M	3	1	**479-2171**	3	BOLT AS	
	4	1	**374-2065**	1	HOSE AS	

M - METRIC PART

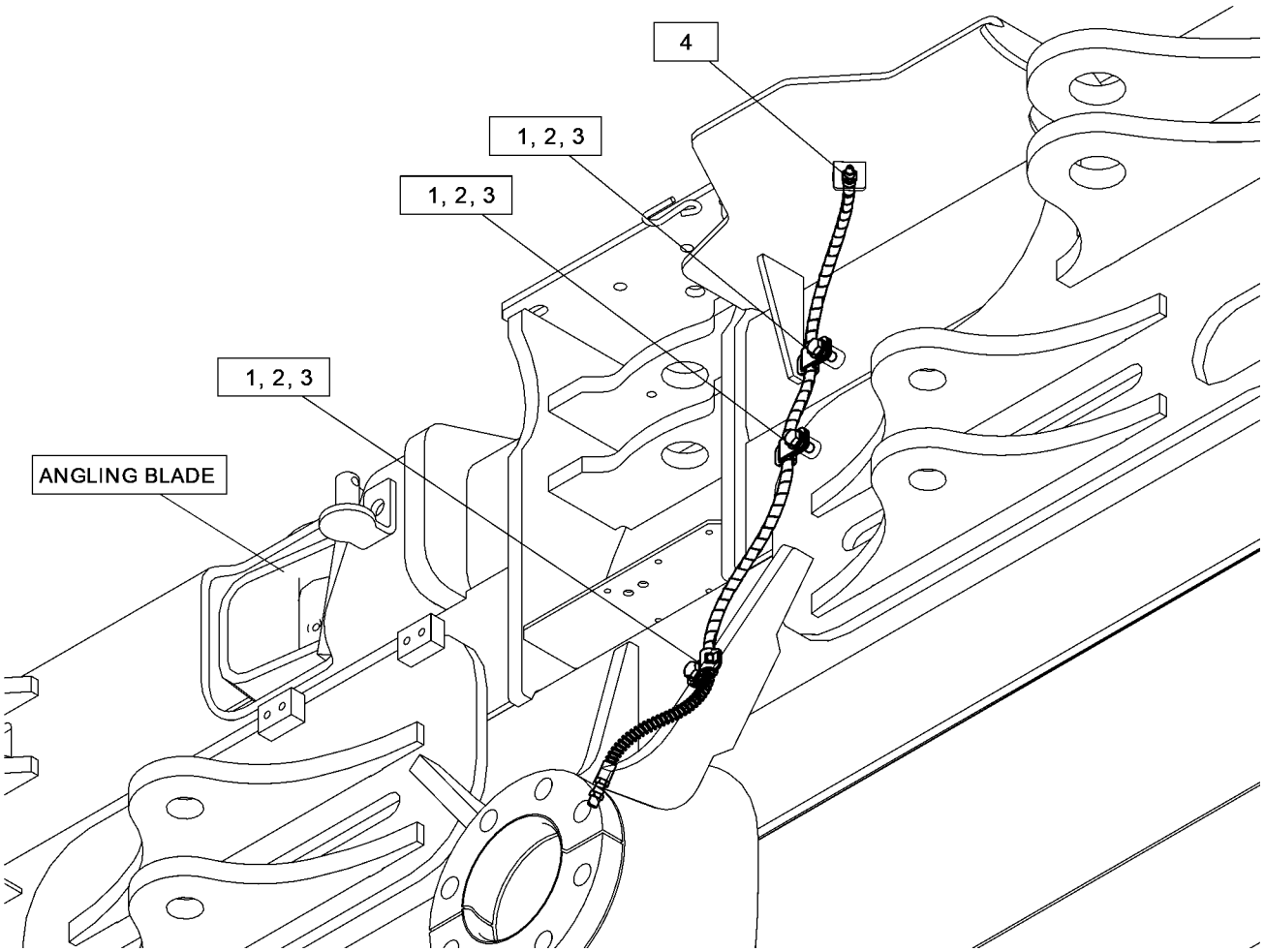

GRAPHIC #1 <END> g06439470

348-6250 LINK GP-PITCH

S/N: Z2K1-UP; Z2N1-UP

PART OF 533-7717, 533-7718 INSTALLATION AR-BULLDOZER

AN ATTACHMENT

SMCS-6079, 6081

i07107186

NOTE	REF NO	GRAPHIC REF	PART NUMBER	QTY	PART NAME 1 2 3 4 5 6 (PRODUCT LEVEL)	SEE PAGE
	1	1	**3B-8489**	4	ADAPTER	
	2	1	**9J-4782**	4	PROTECTOR	
	3	1	**444-0092**	1	ROD-EYE	
	4	1	**444-0093**	1	ROD-EYE	
	5	1	**348-6253**	1	SLEEVE	
	6	1	**3B-4617**	1	PIN-COTTER	
	7	1	**3T-7184**	1	PIN-CLEVIS	
	8	1	**5M-6214**	1	PLUG (1/8-27 PTF)	
	9	1	**8T-0333**	2	BEARING	
	10	1	**8T-9599**	2	RING-RETAINING	

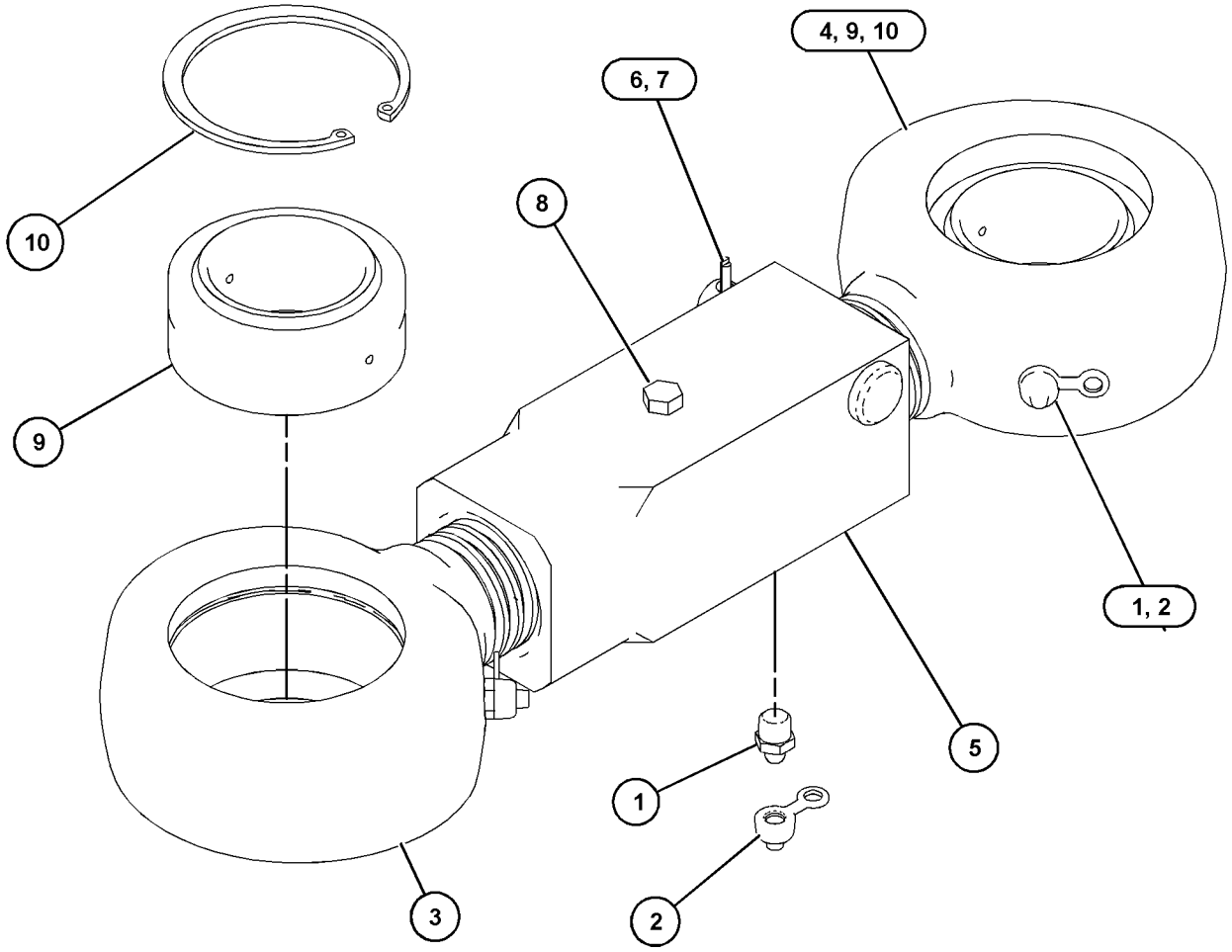

GRAPHIC #1 <END> g06239765

519-7099 PIN GP

S/N: Z2K1-UP; Z2N1-UP
XL, LOW GROUND PRESSURE, VPAT
PART OF 533-7731, 533-7732 C-FRAME GP-POWER ANGLING
AN ATTACHMENT

SMCS-6108 **i07792323**

NOTE	REF NO	GRAPHIC REF	PART NUMBER	QTY	PART NAME 1 2 3 4 5 6 (PRODUCT LEVEL)	SEE PAGE
	1	1	**109-0958**	2	PIN	
M	2	1	**7X-2562**	1	BOLT (M20X2.5X45-MM)	
	3	1	**104-4746**	2	DOWEL	
	4	1	**104-4817**	1	PIN	
	5	1	**108-5794**	4	PLUG-PIPE	
	6	1	**124-5234**	4	RETAINER	
	7	1	**124-5741**	2	PIN	
M	8	1	**149-4156**	2	SETSCREW-SOCKET (M16X2-THD)	
M	9	1	**212-2085**	4	BOLT (M10X1.5X170-MM)	
	10	1	**223-3279**	1	RETAINER	
	11	1	**226-7192**	1	SPACER (50.8X57.15X25-MM THK)	
	12	1	**229-1516**	2	SPACER (64X72X18-MM THK)	
	13	1	**473-4512**	1	PIN	
	14	1	**282-6598**	4	SPACER (50.8X57.15X4.73-MM THK)	
	15	1	**313-9790**	1	SPACER (50.8X57.15X35-MM THK)	
	16	1	**358-2191**	2	PIN	
	17	1	**4T-0231**	1	RETAINER	
	18	1	**4Y-4905**	6	WASHER (79X175X2-MM THK)	
	19	1	**529-8307**	2	PIN	
B	20	1	**564-3012**	4	SHIM (3-MM THK)	
	21	1	**8G-5747**	2	SPACER (45X50X15-MM THK)	
M	22	1	**8T-0389**	4	LOCKNUT (M10X1.5-THD)	
	23	1	**8T-4121**	8	WASHER-HARD (11X21X2.5-MM THK)	
	24	1	**8T-4123**	1	WASHER (22X35X3.5-MM THK)	
M	25	1	**8T-4139**	12	BOLT (M12X1.75X30-MM)	
	26	1	**8T-4223**	1	WASHER-HARD (13.5X25.5X3-MM THK)	
M	27	1	**8T-4956**	1	BOLT (M12X1.75X35-MM)	

B - USE AS REQUIRED
M - METRIC PART

519-7099 **PIN GP (**contd.**)** **i07792323**

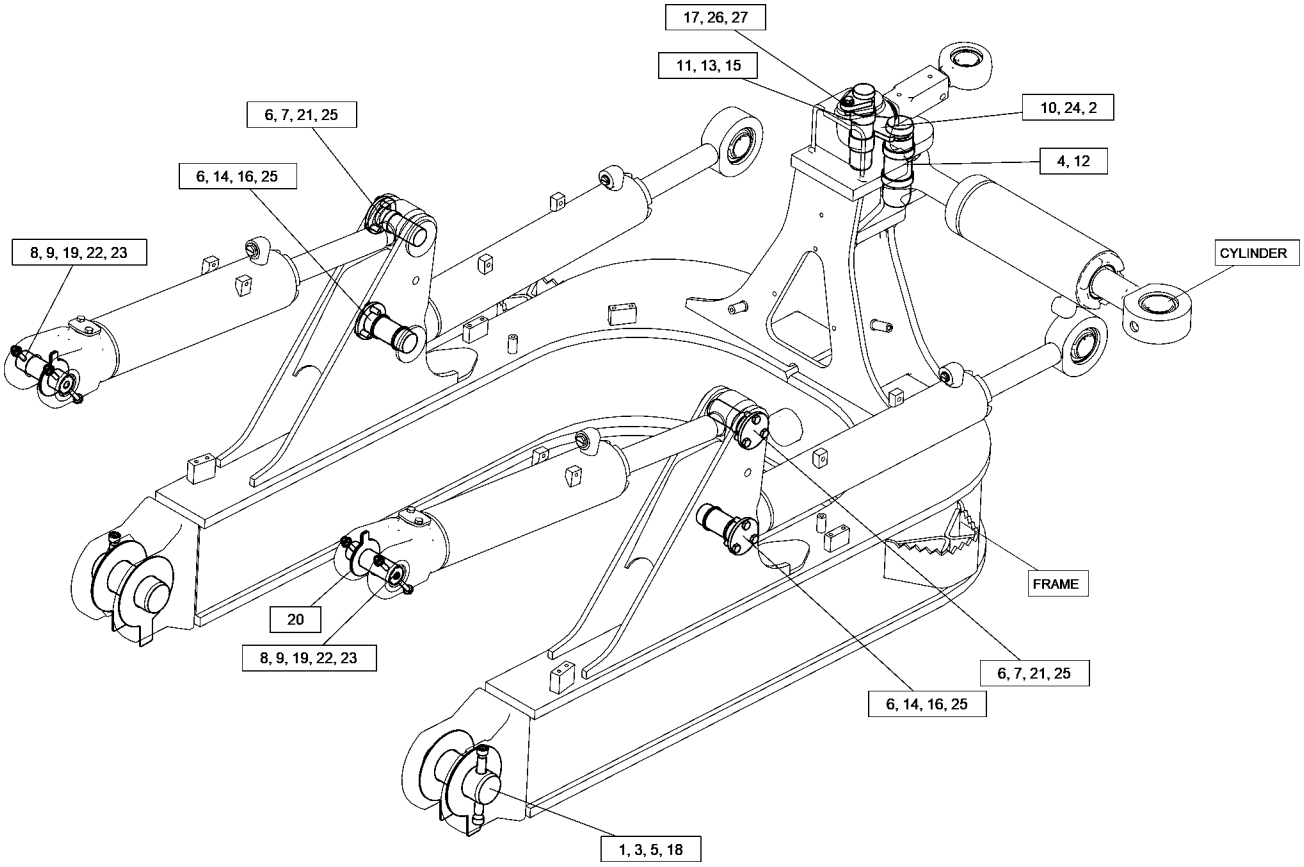

GRAPHIC #1 <END> g06442317

482-7008 ADJUSTER GP-CONTROL

S/N: Z2K1-UP; Z2N1-UP
PART OF 493-9035 MOUNTING GP-CONTROL
AN ATTACHMENT

SMCS-3033, 7312 **i07821065**

NOTE	REF NO	GRAPHIC REF	PART NUMBER	QTY	PART NAME 1 2 3 4 5 6 (PRODUCT LEVEL)	SEE PAGE
	1	1	**3S-2093**	1	STRAP-CABLE	
	2	1	**6V-9197**	1	LOCK PIN	
		1	**5D-4822**	1	RING-RETAINING	
	3	1	**164-0850**	1	LEVER	
	4	1	**266-3214**	1	PIN	
	5	1	**369-1864**	1	CLIP	
	7	1	**468-3625**	1	CABLE AS	
	8	1	*469-2653*	1	BELLCRANK AS (RH)	
	9	1	**483-6363**	1	LEVER	
	10	1	*491-8177*	1	BRACKET AS	
	14	1	*498-3748*	1	PLATE AS	
	15	1	**511-8780**	1	FILM-IDENTIFICATION (CONSOLE JOYSTICK)	
	16	1	**532-7849**	1	PIN	
	17	1	**522-4209**	1	BRACKET AS	
M	18	1	**096-4876**	1	NUT (M14X2-THD)	
M	19	1	**128-2136**	1	SCREW-TRUSS HEAD (M6X1X16-MM)	
M	20	1	**220-6381**	4	BOLT (M8X1.25X40-MM)	
M	21	1	**344-5673**	1	NUT (M6X1-THD)	
M	22	1	**344-5674**	1	NUT (M8X1.25-THD)	
M	23	1	**6V-5218**	1	BOLT (M8X1.25X35-MM)	
	24	1	**7X-0578**	1	WASHER-HARD (10.2X32X2.5-MM THK)	
M	25	1	**8T-4138**	4	BOLT (M6X1X20-MM)	
	26	1	**8T-4224**	1	WASHER-HARD (8.8X16X2-MM THK)	
M	27	1	**8T-8442**	4	BOLT-SOCKET HEAD (M6X1X30-MM)	
	28	1	**9X-2038**	2	WASHER (7X19X2-MM THK)	
M	29	1	**9X-2046**	2	SCREW-TRUSS HEAD (M6X1X35-MM)	
	30	1	**9X-8256**	3	WASHER (6.6X12X2-MM THK)	

M - METRIC PART

482-7008 **ADJUSTER GP-CONTROL (**contd.**)** **i07821065**

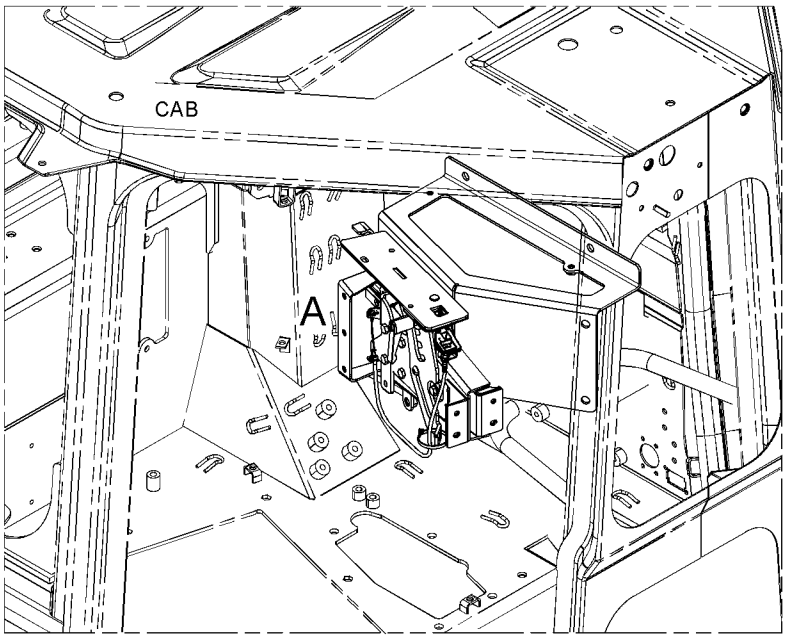

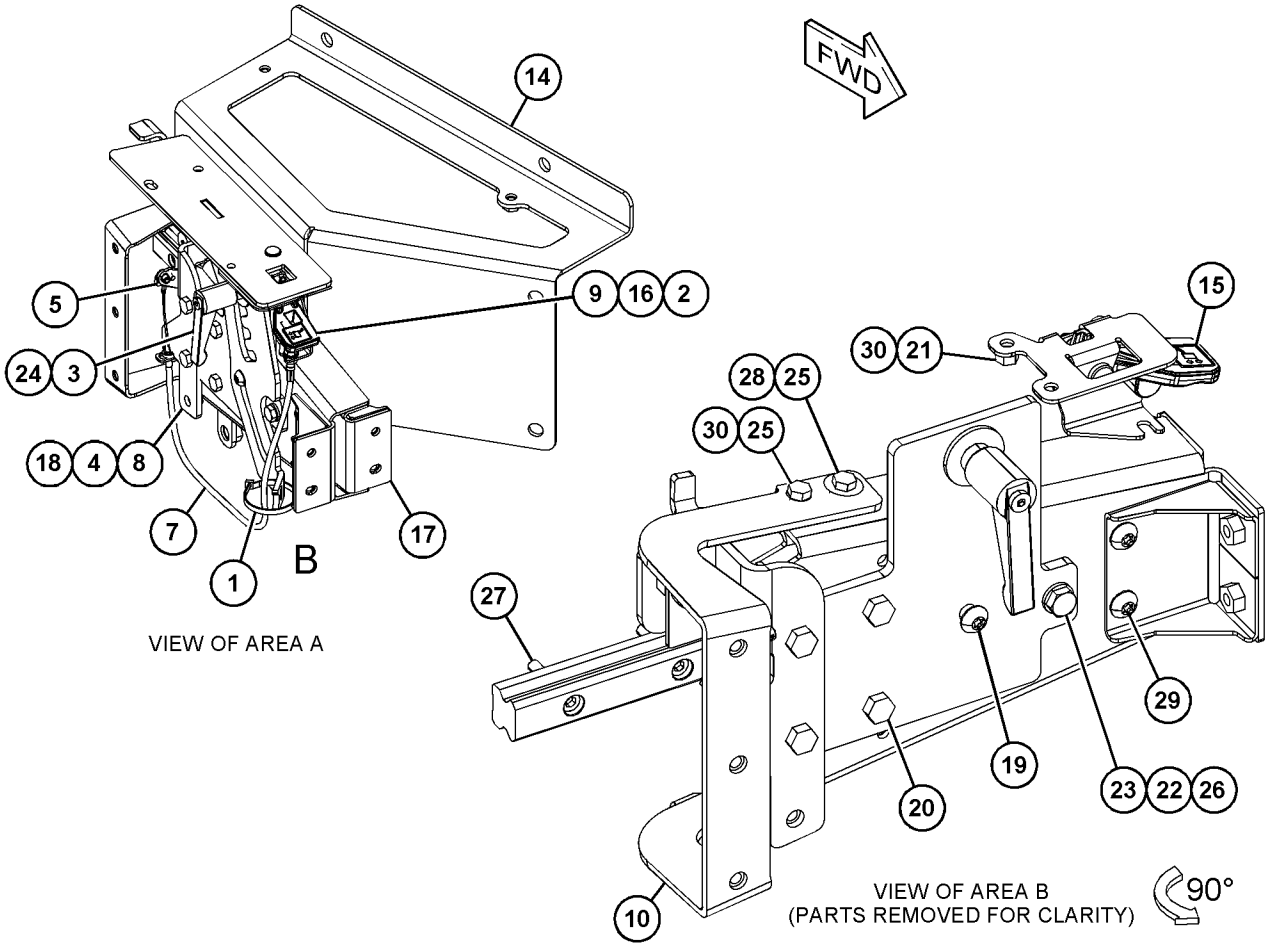

GRAPHIC #1 <END> g06355729

482-7009 ADJUSTER GP-CONTROL

S/N: Z2K1-UP; Z2N1-UP
PART OF 563-8073 MOUNTING GP-CONTROL
AN ATTACHMENT

SMCS-3033, 7312 **i07821032**

NOTE	REF NO	GRAPHIC REF	PART NUMBER	QTY	PART NAME 1 2 3 4 5 6 (PRODUCT LEVEL)	SEE PAGE
	1	1	**3S-2093**	1	STRAP-CABLE	
	2	1	**532-7849**	1	PIN	
	3	1	**6V-9197**	1	LOCK PIN	
	4	1	**164-0850**	1	LEVER	
	5	1	**266-3214**	1	PIN	
	6	1	**369-1864**	1	CLIP	
	8	1	**468-3485**	1	BELLCRANK AS (LH)	
	9	1	**468-3625**	1	CABLE AS	
	10	1	**473-4859**	1	LEVER	
	16	1	**511-8780**	1	FILM-IDENTIFICATION (CONSOLE JOYSTICK)	
	17	1	**522-4209**	1	BRACKET AS	
M		1	**6V-9632**	10	NUT-WELD (M6X1-THD)	
M	18	1	**096-4876**	1	NUT (M14X2-THD)	
M	19	1	**128-2136**	1	SCREW-TRUSS HEAD (M6X1X16-MM)	
M	20	1	**220-6381**	4	BOLT (M8X1.25X40-MM)	
M	21	1	**344-5673**	1	NUT (M6X1-THD)	
M	22	1	**344-5674**	1	NUT (M8X1.25-THD)	
M	23	1	**6V-5218**	1	BOLT (M8X1.25X35-MM)	
	24	1	**7X-0578**	1	WASHER-HARD (10.2X32X2.5-MM THK)	
M	25	1	**8T-4138**	4	BOLT (M6X1X20-MM)	
	26	1	**8T-4224**	1	WASHER-HARD (8.8X16X2-MM THK)	
M	27	1	**8T-8442**	2	BOLT-SOCKET HEAD (M6X1X30-MM)	
	28	1	**9X-2038**	2	WASHER (7X19X2-MM THK)	
M	29	1	**9X-2046**	2	SCREW-TRUSS HEAD (M6X1X35-MM)	
	30	1	**9X-8256**	3	WASHER (6.6X12X2-MM THK)	

M - METRIC PART

482-7009 **ADJUSTER GP-CONTROL** (contd.) **i07821032**

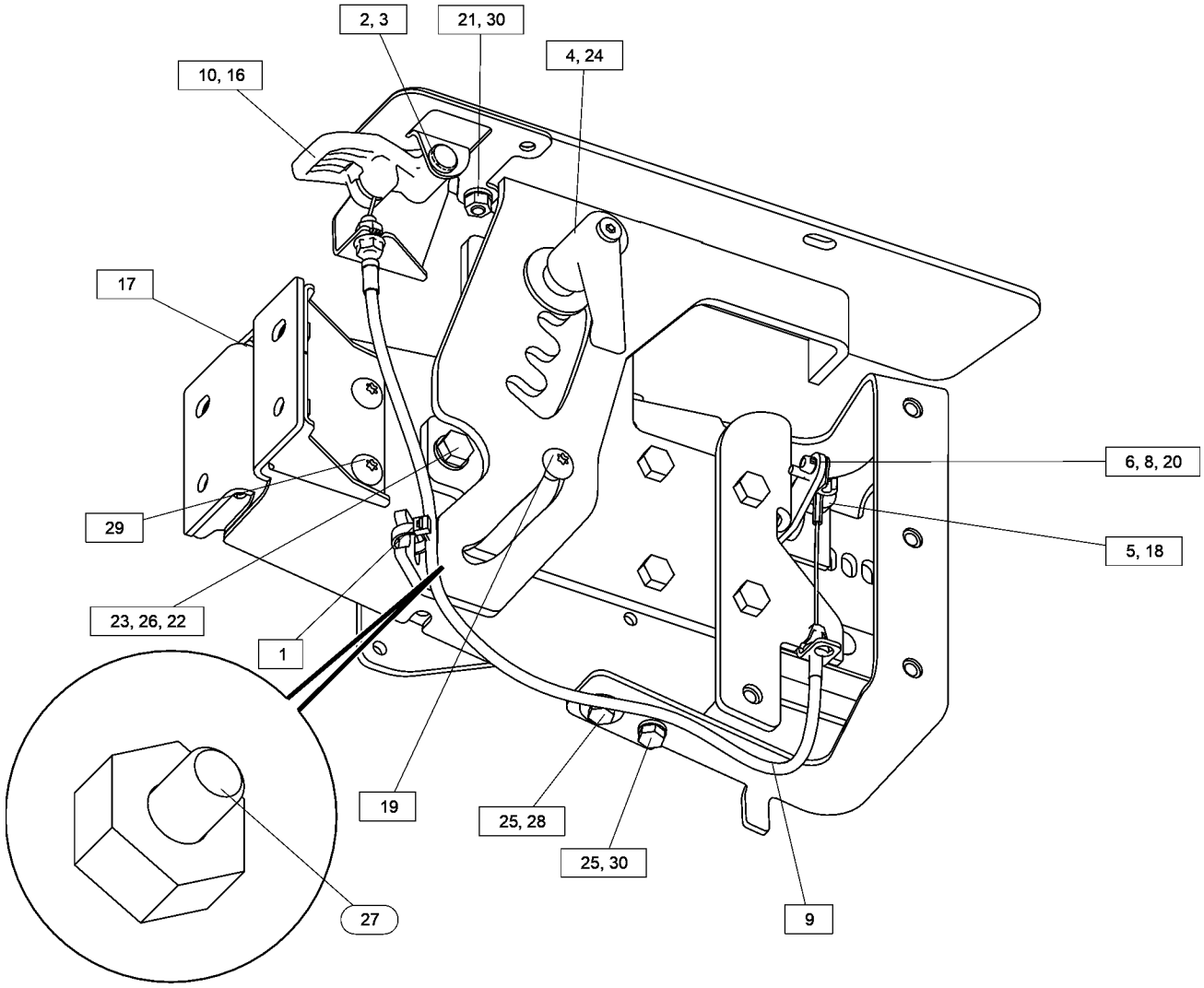

GRAPHIC #1 <END> g06355900

577-0167 AIR CONDITIONER & MOUNTING GP

S/N: Z2K1-UP; Z2N1-UP

PART OF 536-6467, 536-6468, 536-6469, 536-6470, 579-6887 CAB AR

AN ATTACHMENT

SMCS-7320 **i07814410**

NOTE	REF NO	GRAPHIC REF	PART NUMBER	QTY	PART NAME 1 2 3 4 5 6 (PRODUCT LEVEL)	SEE PAGE
Y	1	1	*577-0168*	1	AIR CONDITIONER & MOUNTING GP	634
	2	1	**7X-7729**	5	WASHER (11X25X3-MM THK)	
	3	1	**8T-4121**	2	WASHER-HARD (11X21X2.5-MM THK)	
M	4	1	**8T-4136**	5	BOLT (M10X1.5X25-MM)	
M	5	1	**8T-4182**	4	BOLT (M10X1.5X45-MM)	
	6	1	**8T-4222**	2	WASHER-PLATED (11X32X2.5-MM THK)	

M - METRIC PART
Y - SEPARATE ILLUSTRATION

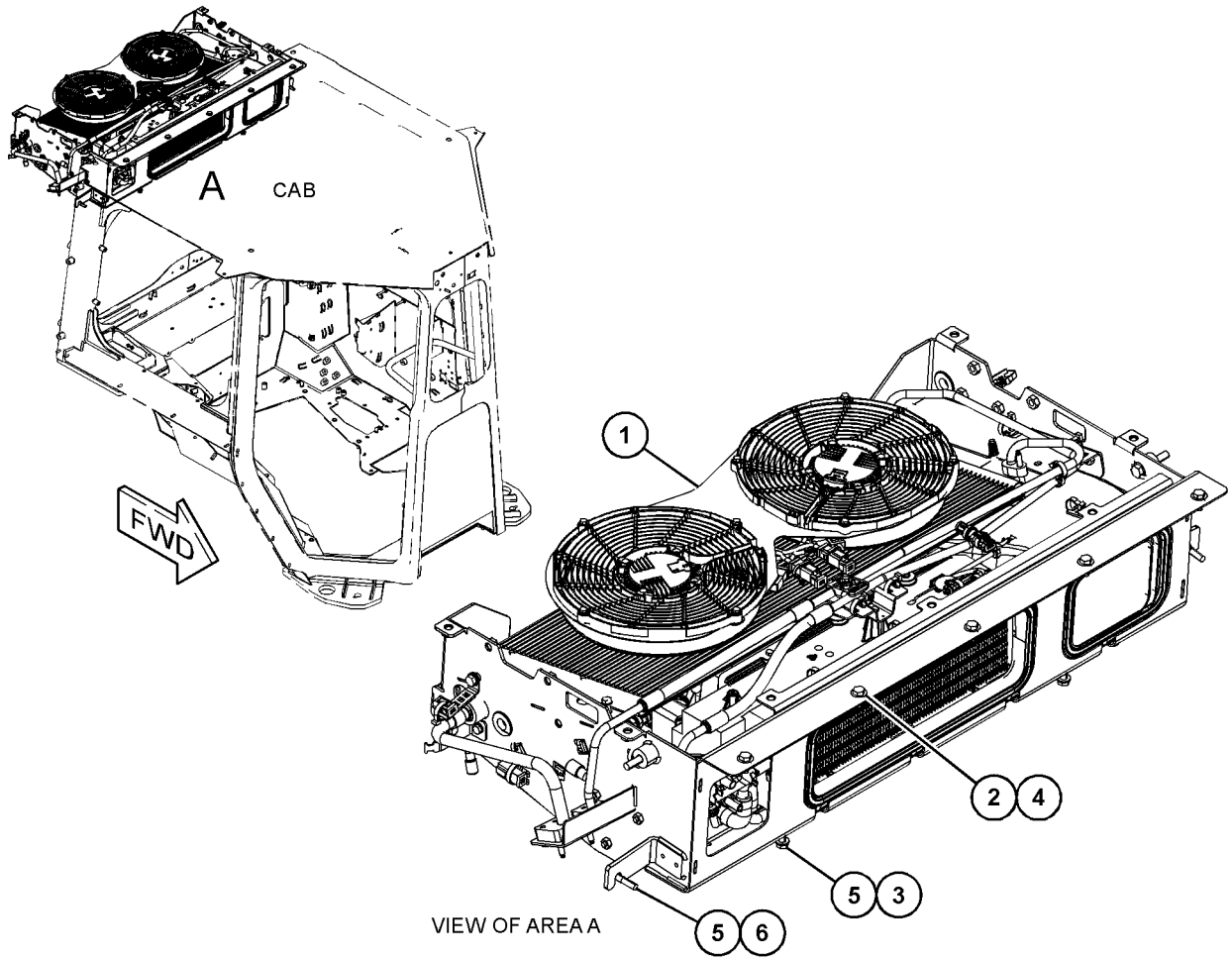

GRAPHIC #1 <END> g06451988

577-0168 AIR CONDITIONER & MOUNTING GP

S/N: Z2K1-UP; Z2N1-UP

PART OF 577-0167 AIR CONDITIONER & MOUNTING GP

AN ATTACHMENT

SMCS-7320 **i07814426**

NOTE	REF NO	GRAPHIC REF	PART NUMBER	QTY	PART NAME 1 2 3 4 5 6 (PRODUCT LEVEL)	SEE PAGE
M	1	1	**344-5674**	6	NUT (M8X1.25-THD)	
	2	1	**488-4533**	1	BRACKET AS	
M		1	**8T-3612**	5	NUT-WELD (M8X1.25-THD)	
Y	3	1	*495-4405*	1	LINES GP-AIR CONDITIONER	696
Y	4	1	**533-3131**	1	AIR CONDITIONER GP	636
Y	5	1	**533-3132**	1	CONDENSER & MTG GP-REFRIGERANT	646
	6	1	**577-0175**	1	FRAME AS (HVAC)	
Y	7	1	*577-0177*	1	WIRING GP-AIR CONDITIONER	224
M	8	1	**6V-7357**	4	BOLT (M6X1X25-MM)	
	9	1	**7X-0579**	6	WASHER-HARD (8.8X25.5X2-MM THK)	
M	10	1	**8T-4189**	3	BOLT (M8X1.25X20-MM)	
	11	1	**8T-4224**	7	WASHER-HARD (8.8X16X2-MM THK)	
M	12	1	**8T-7547**	4	BOLT (M8X1.25X30-MM)	
	13	1	**9X-8256**	4	WASHER (6.6X12X2-MM THK)	

M - METRIC PART
Y - SEPARATE ILLUSTRATION

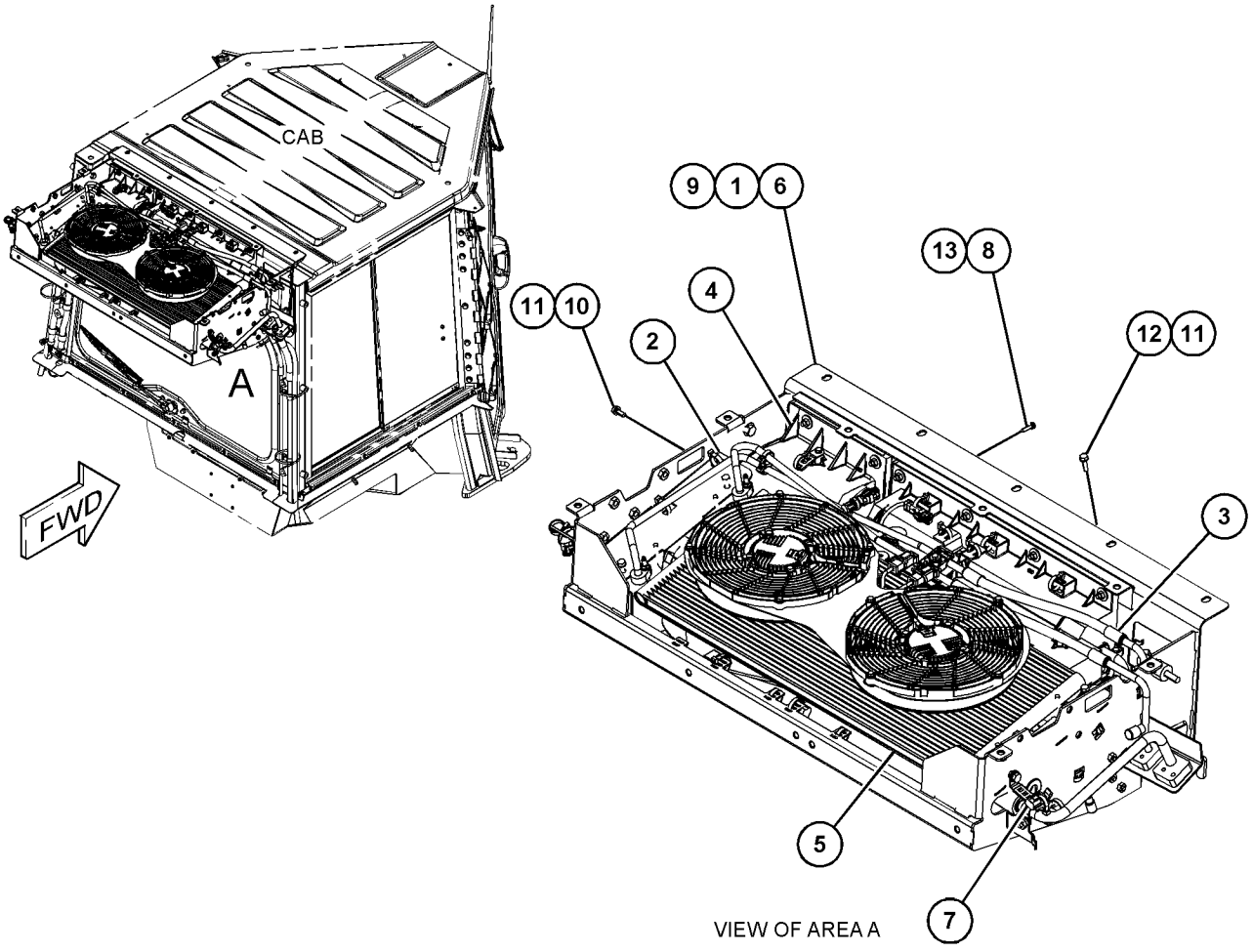

VIEW OF AREA A

GRAPHIC #1 <END> g06453559

575-9695 AIR CONDITIONER AR

S/N: Z2K1-UP; Z2N1-UP
PART OF 532-9856 DISTRIBUTION AR
AN ATTACHMENT

SMCS-7320 **i07840530**

NOTE	PART NUMBER	QTY	PART NAME 1 2 3 4 5 6 (PRODUCT LEVEL)	SEE PAGE
Y	*568-7695*	1	INSTALLATION AR-CAB	686
Y	*566-4326*	1	LINES GP-AIR CONDITIONER	699
Y	*567-1308*	1	MOUNTING GP-CAB	721
	533-3137	1	PLATE & FILM GP	
	489-5533	1	PLATE-INSTRUCTION (AIR CONDITIONER)	

Y - SEPARATE ILLUSTRATION

<END>

575-9697 AIR CONDITIONER AR

S/N: Z2K1-UP; Z2N1-UP
QUICK DISCONNECT
PART OF 532-9851 DISTRIBUTION AR
AN ATTACHMENT

SMCS-7320 **i07840013**

NOTE	PART NUMBER	QTY	PART NAME 1 2 3 4 5 6 (PRODUCT LEVEL)	SEE PAGE
Y	*568-7696*	1	INSTALLATION AR-CAB	686
Y	*509-3200*	1	LINES GP-AIR CONDITIONER	698
Y	*567-1308*	1	MOUNTING GP-CAB	721
	533-3137	1	PLATE & FILM GP	
	489-5533	1	PLATE-INSTRUCTION (AIR CONDITIONER)	

Y - SEPARATE ILLUSTRATION

<END>

533-3131 AIR CONDITIONER GP

S/N: Z2K1-UP; Z2N1-UP

PART OF 577-0168 AIR CONDITIONER & MOUNTING GP

AN ATTACHMENT

SMCS-7320 **i07819703**

NOTE	REF NO	GRAPHIC REF	PART NUMBER	QTY	PART NAME 1 2 3 4 5 6 (PRODUCT LEVEL)	SEE PAGE
	1	1	**308-2525**	1	SENSOR GP-TEMPERATURE (EVAPORATOR)	
	2	1	**327-0282**	1	SEAL-INTEGRAL (1/2-IN)	
	3	1	**327-0283**	1	SEAL-INTEGRAL (3/4-IN)	
	4	1	**552-8910**	1	VALVE-EXPANSION	
	5	1	**454-0780**	1	FAN AS	
		1	**102-8804**	1	KIT-RECEPTACLE (4-PIN)	
					(INCLUDES RECEPTACLE AS & WEDGE)	
Y	6	1	*533-3134*	1	LINES GP-HEATER	702
	7	1	**506-5854**	1	COIL AS-EVAPORATOR	
	8	1	**4I-7924**	1	WASHER (4.5X40X1.2-MM THK)	
	9	1	**540-3273**	1	CASE AS	
		1	**439-2964**	2	SPACER	
	10	1	**540-3275**	1	CASE AS	
		1	**439-2964**	4	SPACER	
	11	1	**540-3276**	1	CASE AS	
	12	1	**540-3277**	1	CASE AS	
		1	**371-1679**	7	SCREW-FORMING	
		1	**540-3272**	1	CASE AS	
	13	1	**540-3281**	1	GROMMET	
	14	1	**540-3282**	1	GROMMET	
	15	1	**540-3283**	1	GASKET	
	16	1	**540-3284**	1	GASKET	
M	17	1	**151-6282**	2	BOLT-SOCKET HEAD (M6X1X40-MM)	
	18	1	**371-1679**	9	SCREW-FORMING	
M	19	1	**6V-7357**	15	BOLT (M6X1X25-MM)	
	20	1	**9X-8256**	15	WASHER (6.6X12X2-MM THK)	
E	21	1	**126-8472**		SEAL (122.5-CM)	
E	21A	1	**126-8472**		SEAL (67.5-CM)	
	22	1	**465-7609**	1	SCREW-WASHER HEAD (8-16X2.3-IN)	
	23	1	**540-3299**	1	COIL AS-HEATER	

E - ORDER BY THE CENTIMETER
M - METRIC PART
Y - SEPARATE ILLUSTRATION

533-3131 **AIR CONDITIONER GP (**contd.**)** **i07819703**

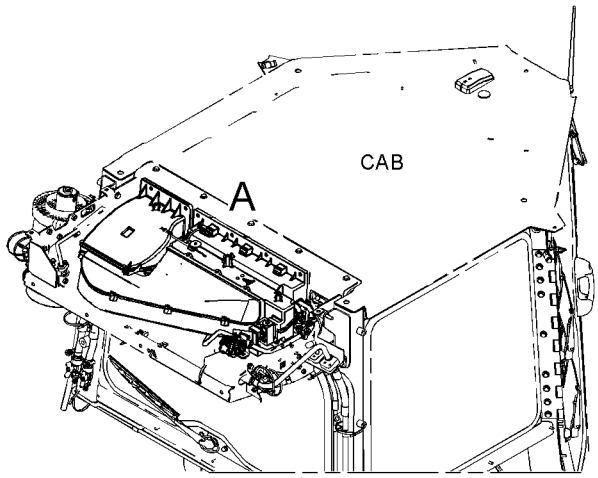

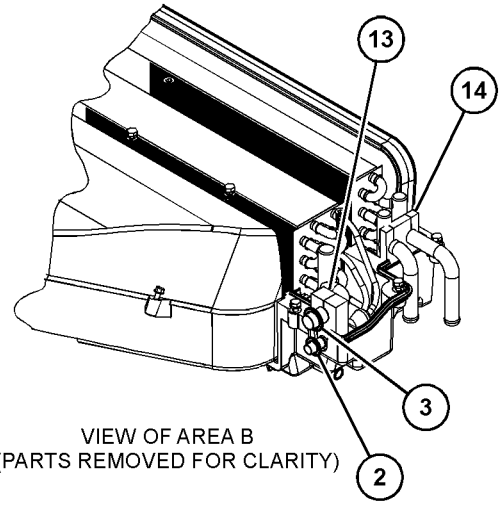

VIEW OF AREA B
(PARTS REMOVED FOR CLARITY)

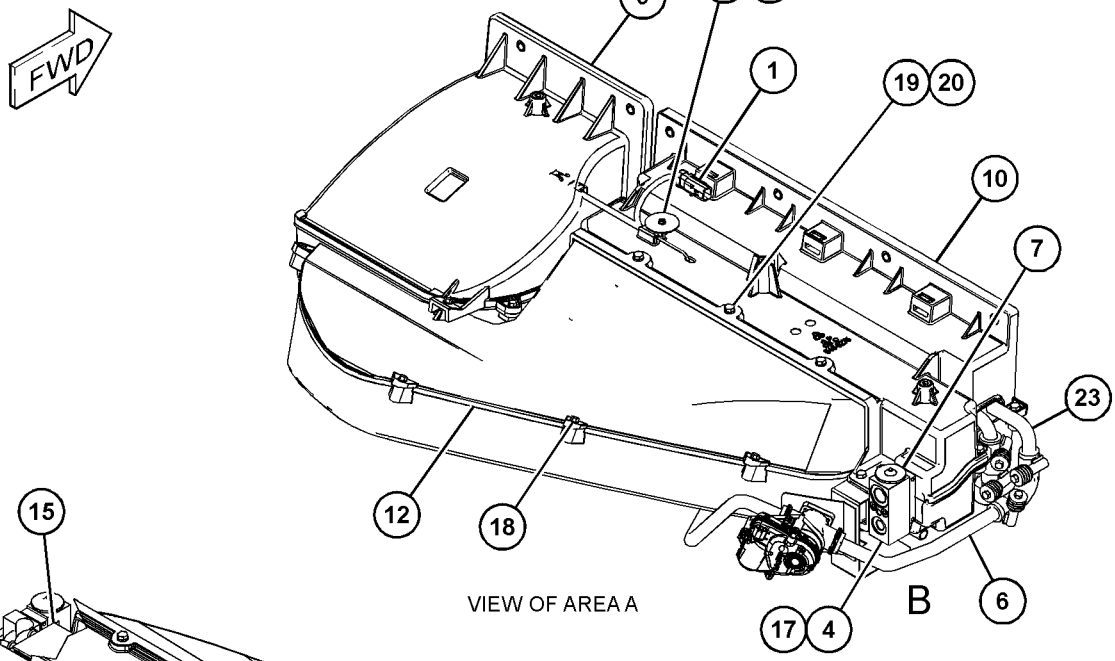

VIEW OF AREA A

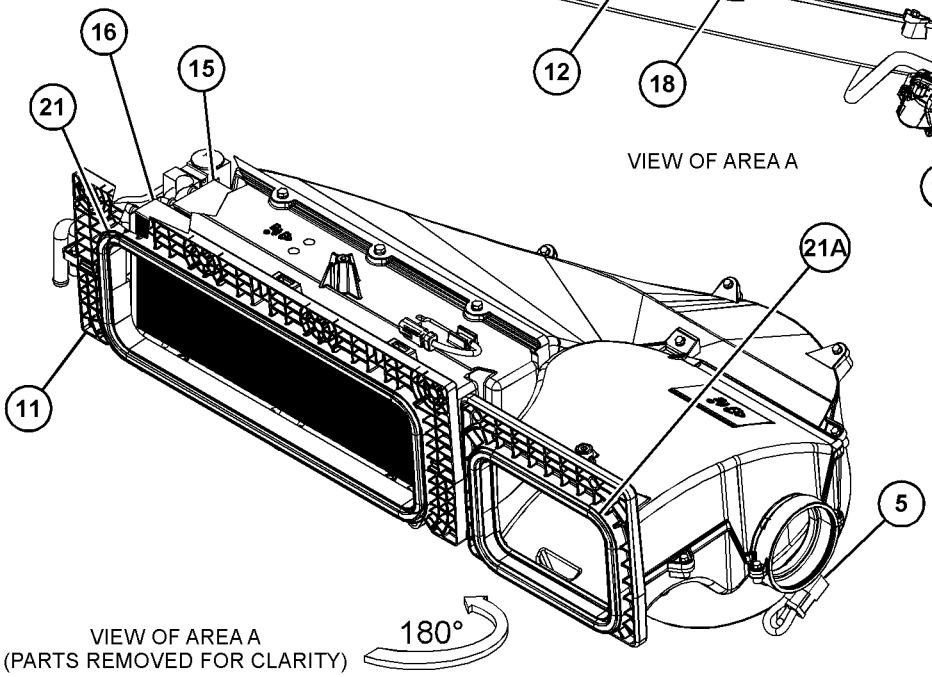

VIEW OF AREA A
(PARTS REMOVED FOR CLARITY)

GRAPHIC #1 <END> g06428245

536-6467 CAB AR

S/N: Z2K1-UP
PART OF 532-9856 DISTRIBUTION AR
AN ATTACHMENT

SMCS-7301 **i07828296**

NOTE	PART NUMBER	QTY	PART NAME 1 2 3 4 5 6 (PRODUCT LEVEL)	SEE PAGE
Y	*577-0167*	1	AIR CONDITIONER & MOUNTING GP	633
Y	*536-6476*	1	CAB GP	641
Y	*562-3973*	1	LINER GP-CAB	691
Y	*105-9659*	1	MIRROR GP-REAR VIEW (INTERIOR)	709
Y	*565-7935*	1	MOUNTING GP-CONTROL	725
Y	*565-7936*	1	MOUNTING GP-CONTROL	727
Y	*435-5734*	1	PEDAL GP-GOVERNOR & BRAKE	737
Y	*578-5040*	1	SEAL GP-CAB	754
Y	*518-1561*	1	WASHER GP-WINDOW	775
Y	*565-8666*	1	WIRING GP-CAB	233
Y	*577-0169*	1	LINES GP-HEATER & AIR COND	707

Y - SEPARATE ILLUSTRATION

<END>

536-6468 CAB AR

S/N: Z2K1-UP; Z2N1-UP
COMFORT
FOR USE WITH 575-9697—PAGE: 635
AN ATTACHMENT

SMCS-7301 **i07839910**

NOTE	PART NUMBER	QTY	PART NAME 1 2 3 4 5 6 (PRODUCT LEVEL)	SEE PAGE
Y	*577-0167*	1	AIR CONDITIONER & MOUNTING GP	633
Y	*536-6476*	1	CAB GP	641
Y	*562-3973*	1	LINER GP-CAB	691
Y	*578-9542*	1	LINES GP-HEATER	705
Y	*105-9659*	1	MIRROR GP-REAR VIEW (INTERIOR)	709
Y	*493-9035*	1	MOUNTING GP-CONTROL	723
Y	*565-7936*	1	MOUNTING GP-CONTROL	727
Y	*435-5734*	1	PEDAL GP-GOVERNOR & BRAKE	737
Y	*578-5040*	1	SEAL GP-CAB	754
Y	*518-1561*	1	WASHER GP-WINDOW	775
Y	*526-7919*	1	WIRING GP-CAB	225

Y - SEPARATE ILLUSTRATION

<END>

536-6469 CAB AR

S/N: Z2K1-UP; Z2N1-UP
PREMIUM
FOR USE WITH 575-9697—PAGE: 635
PART OF 532-9851 DISTRIBUTION AR
AN ATTACHMENT

SMCS-7301 **i07839925**

NOTE	PART NUMBER	QTY	PART NAME 1 2 3 4 5 6 (PRODUCT LEVEL)	SEE PAGE
Y	*577-0167*	1	AIR CONDITIONER & MOUNTING GP	633
Y	*536-6476*	1	CAB GP	641
Y	*562-3973*	1	LINER GP-CAB	691
Y	*578-9542*	1	LINES GP-HEATER	705
Y	*105-9659*	1	MIRROR GP-REAR VIEW (INTERIOR)	709
Y	*493-9035*	1	MOUNTING GP-CONTROL	723
Y	*563-8073*	1	MOUNTING GP-CONTROL	724
Y	*435-5734*	1	PEDAL GP-GOVERNOR & BRAKE	737
Y	*578-5040*	1	SEAL GP-CAB	754
Y	*518-1561*	1	WASHER GP-WINDOW	775
Y	*526-7919*	1	WIRING GP-CAB	225

Y - SEPARATE ILLUSTRATION

<END>

536-6470 CAB AR

S/N: Z2K1-UP; Z2N1-UP
WASTE HANDLING
FOR USE WITH 575-9697—PAGE: 635
AN ATTACHMENT

SMCS-7301 **i07839938**

NOTE	PART NUMBER	QTY	PART NAME 1 2 3 4 5 6 (PRODUCT LEVEL)	SEE PAGE
Y	*577-0167*	1	AIR CONDITIONER & MOUNTING GP	633
Y	**536-6478**	1	CAB GP	642
Y	*562-3973*	1	LINER GP-CAB	691
Y	*578-9542*	1	LINES GP-HEATER	705
Y	*105-9659*	1	MIRROR GP-REAR VIEW (INTERIOR)	709
Y	*493-9035*	1	MOUNTING GP-CONTROL	723
Y	*563-8073*	1	MOUNTING GP-CONTROL	724
Y	*435-5734*	1	PEDAL GP-GOVERNOR & BRAKE	737
Y	*578-5040*	1	SEAL GP-CAB	754
Y	*518-1561*	1	WASHER GP-WINDOW	775
Y	*526-7919*	1	WIRING GP-CAB	225

Y - SEPARATE ILLUSTRATION

<END>

579-6887 CAB AR

S/N: Z2K1-UP; Z2N1-UP

AN ATTACHMENT

SMCS-7301 **i07844075**

NOTE	PART NUMBER	QTY	PART NAME 1 2 3 4 5 6 (PRODUCT LEVEL)	SEE PAGE
Y	*577-0167*	1	AIR CONDITIONER & MOUNTING GP	633
Y	**579-6896**	1	CAB GP	643
Y	*562-3973*	1	LINER GP-CAB	691
Y	*578-9542*	1	LINES GP-HEATER	705
Y	*105-9659*	1	MIRROR GP-REAR VIEW (INTERIOR)	709
Y	*493-9035*	1	MOUNTING GP-CONTROL	723
Y	*563-8073*	1	MOUNTING GP-CONTROL	724
Y	*435-5734*	1	PEDAL GP-GOVERNOR & BRAKE	737
Y	*578-5040*	1	SEAL GP-CAB	754
Y	*518-1561*	1	WASHER GP-WINDOW	775
Y	*526-7919*	1	WIRING GP-CAB	225

Y - SEPARATE ILLUSTRATION

<END>

536-6476 CAB GP

S/N: Z2K1-UP; Z2N1-UP
SINGLE
PART OF 536-6467, 536-6468, 536-6469 CAB AR
AN ATTACHMENT

SMCS-7301 **i07793455**

NOTE	REF NO	GRAPHIC REF	PART NUMBER	QTY	PART NAME 1 2 3 4 5 6 (PRODUCT LEVEL)	SEE PAGE
Y	1	1	*435-5737*	1	WIPER GP-WINDOW	782
Y	2	1	*435-5743*	1	MOUNTING GP-CAB	715
Y	3	1	*435-5789*	1	WINDOW GP-CAB	777
Y	4	1	*475-9767*	1	DOOR GP-CAB	674
Y	5	1	*545-7815*	1	WIRING GP-CAB	232
Y	6	1	**579-5061**	1	ROPS GP-ENCLOSED	744

Y - SEPARATE ILLUSTRATION

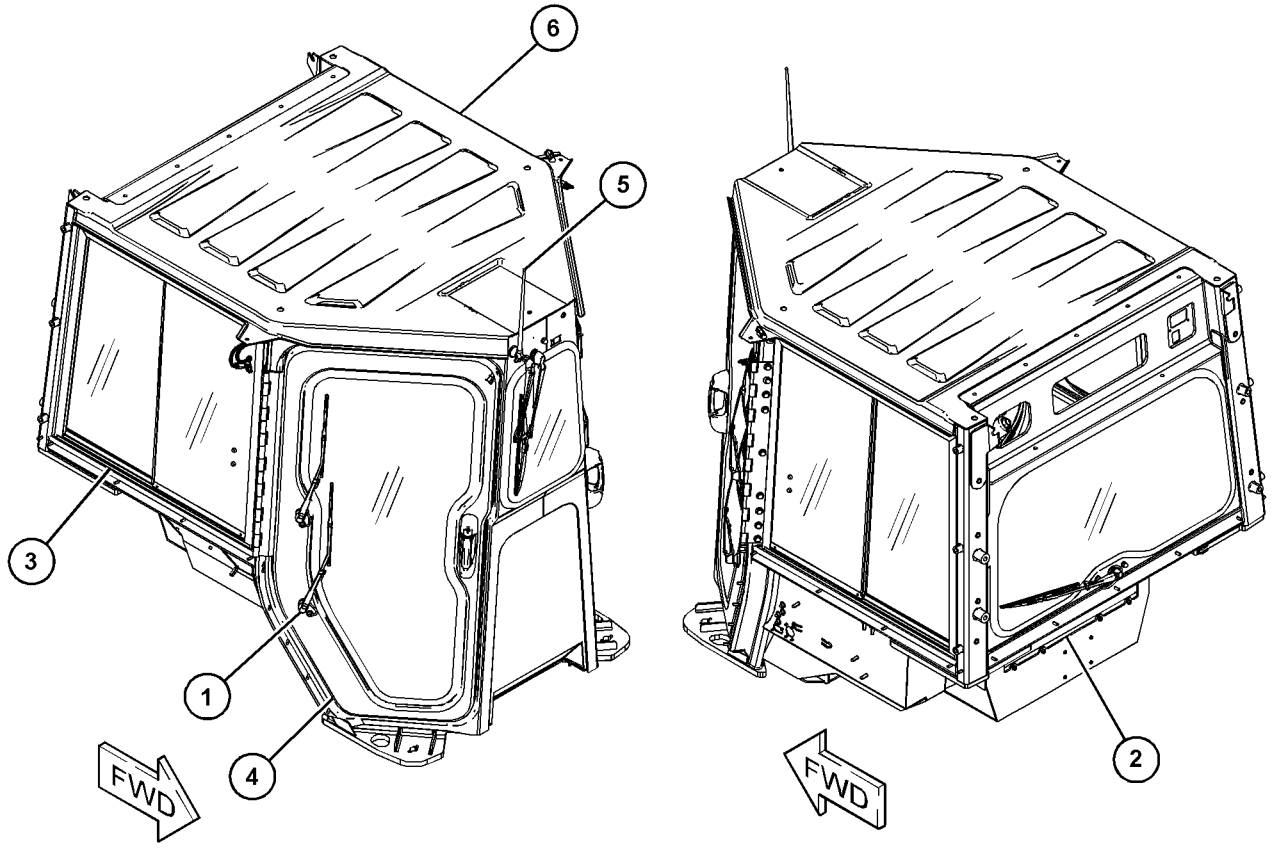

GRAPHIC #1 <END> g06452043

536-6478 CAB GP

S/N: Z2K1-UP; Z2N1-UP
WASTE HANDLING
PART OF 536-6470 CAB AR
AN ATTACHMENT

SMCS-7301 **i07839940**

NOTE	REF NO	GRAPHIC REF	PART NUMBER	QTY	PART NAME 1 2 3 4 5 6 (PRODUCT LEVEL)	SEE PAGE
Y	1	1	*435-5792*	1	WINDOW GP-CAB	779
Y	2	1	*435-5737*	1	WIPER GP-WINDOW	782
Y	3	1	*435-5743*	1	MOUNTING GP-CAB	715
Y	4	1	*475-9767*	1	DOOR GP-CAB	674
Y	5	1	*545-7815*	1	WIRING GP-CAB	232
Y	6	1	**579-5061**	1	ROPS GP-ENCLOSED	744

Y - SEPARATE ILLUSTRATION

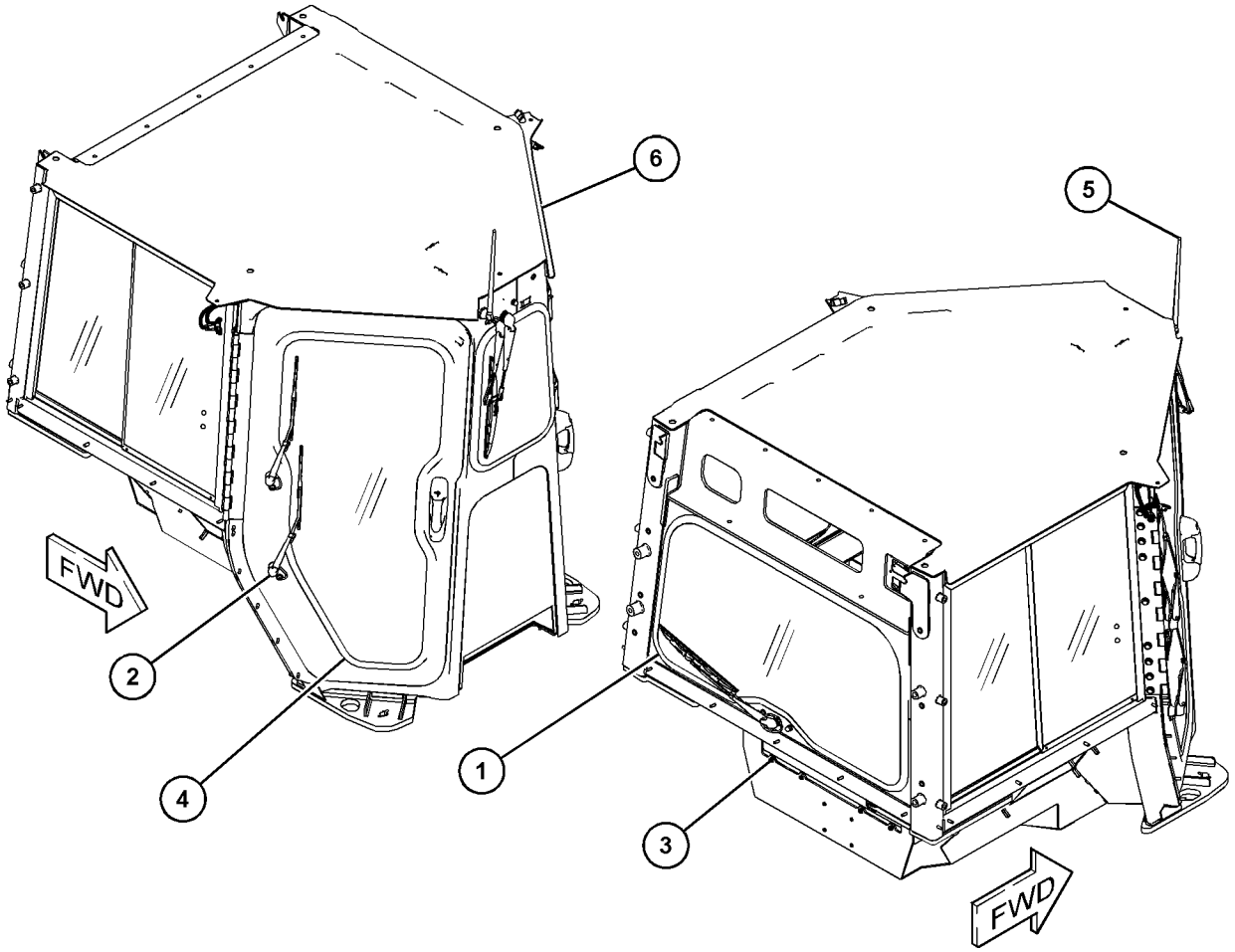

GRAPHIC #1 <END> g06452283

579-6896 CAB GP

S/N: Z2K1-UP; Z2N1-UP
FORESTRY
PART OF 579-6887 CAB AR
AN ATTACHMENT

SMCS-7301 **i07844097**

NOTE	REF NO	GRAPHIC REF	PART NUMBER	QTY	PART NAME 1 2 3 4 5 6 (PRODUCT LEVEL)	SEE PAGE
Y	1	1	*435-5737*	1	WIPER GP-WINDOW	782
Y	2	1	*435-5743*	1	MOUNTING GP-CAB	715
Y	3	1	*435-5791*	1	WINDOW GP-CAB	778
Y	4	1	*475-9767*	1	DOOR GP-CAB	674
Y	5	1	*545-7815*	1	WIRING GP-CAB	232
Y	6	1	**579-5061**	1	ROPS GP-ENCLOSED	744

Y - SEPARATE ILLUSTRATION

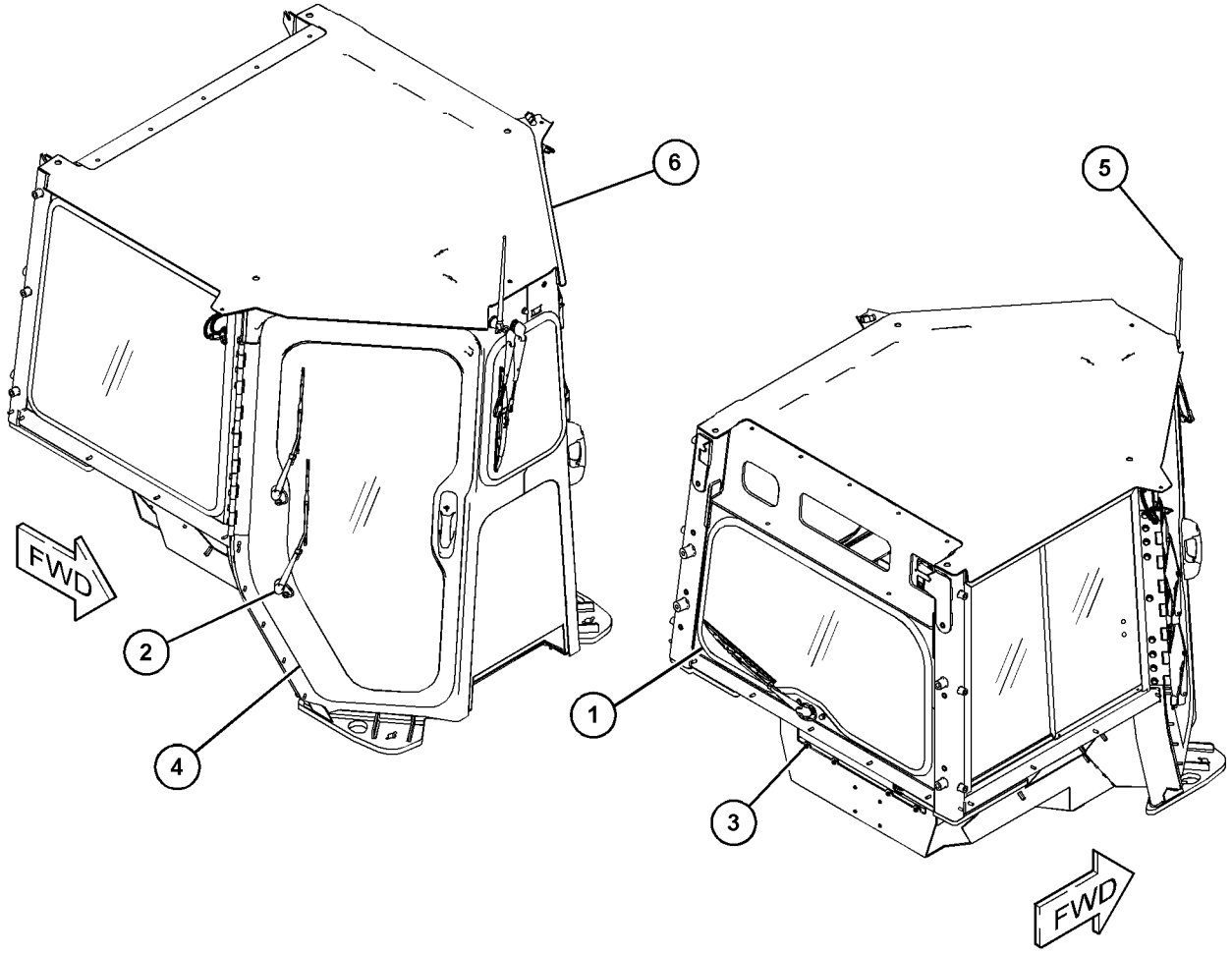

GRAPHIC #1 <END> g06452297

374-7094 COMPRESSOR & MTG GP-REFRIG

S/N: 4501-UP
PART OF 569-0811 ENGINE AR-PRIMARY
AN ATTACHMENT

SMCS-1802 **i05330642**

NOTE	REF NO	GRAPHIC REF	PART NUMBER	QTY	PART NAME 1 2 3 4 5 6 (PRODUCT LEVEL)	SEE PAGE
M	1	1	**127-3361**	2	BOLT (M8X1.25X95-MM)	
M	2	1	**101-7178**	3	BOLT (M10X1.5X55-MM)	
Y	3	1	**320-1291**	1	COMPRESSOR GP-REFRIGERANT	645
	4	1	**330-1725**	1	BRACKET AS	
		1	**161-9820**	2	PIN	
M	5	1	**346-2999**	2	BOLT (M8X1.25X16.6-MM)	

M - METRIC PART
Y - SEPARATE ILLUSTRATION

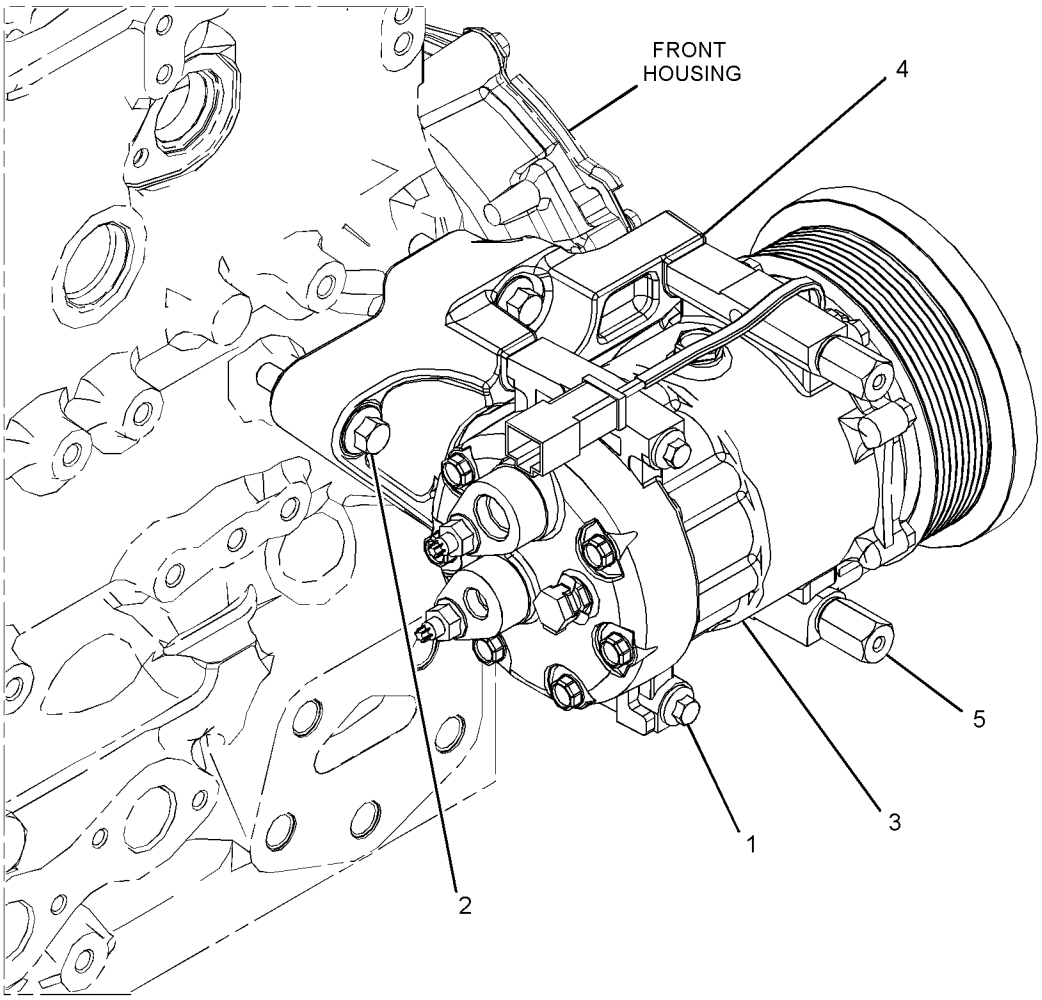

GRAPHIC #1 <END> g02510958

320-1291 COMPRESSOR GP-REFRIGERANT

S/N: 4501-UP

PART OF 374-7094 COMPRESSOR & MTG GP-REFRIG

AN ATTACHMENT

SMCS-1802 **i07285125**

NOTE	REF NO	GRAPHIC REF	PART NUMBER	QTY	PART NAME 1 2 3 4 5 6 (PRODUCT LEVEL)	SEE PAGE
	1	1	**102-8802**	1	KIT-RECEPTACLE (2-PIN)	
					(INCLUDES RECEPTACLE AS & WEDGE)	
	2	1	**314-4018**	1	VALVE AS-PRESSURE RELIEF (REFRIGERANT COMPRESSOR)	
	3	1	**126-1767**	2	PIN-CONNECTOR (14-GA TO 16-GA)	
	4	1	**7T-4532**	1	PLUG AS	

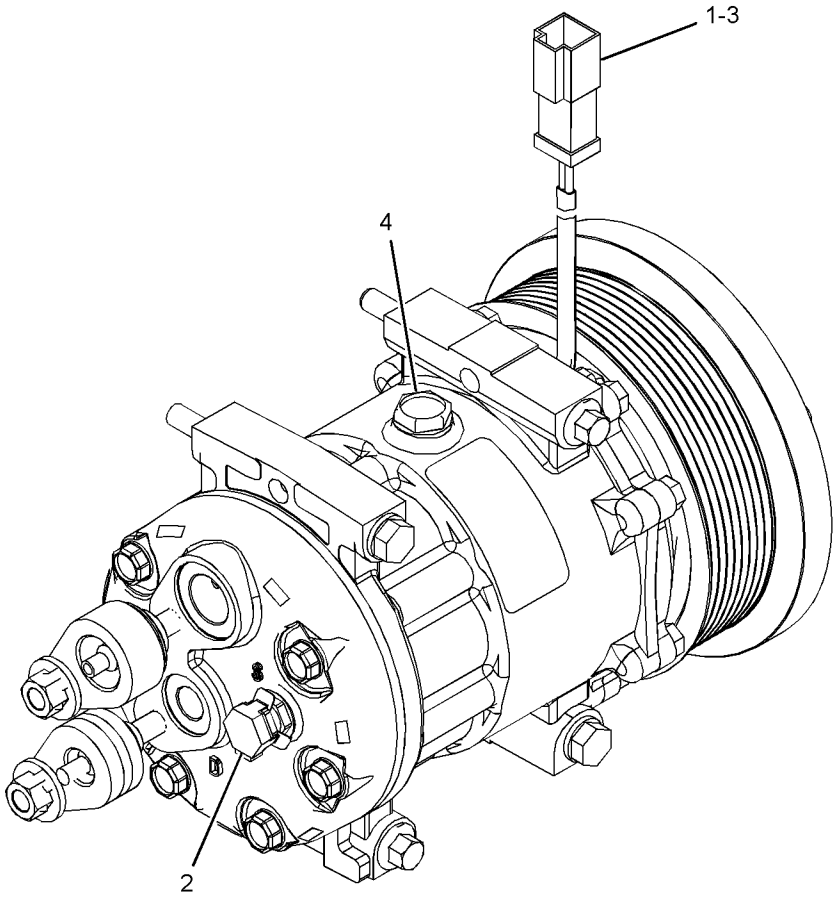

GRAPHIC #1 <END> g02214255

533-3132 CONDENSER & MTG GP-REFRIGERANT

S/N: Z2K1-UP; Z2N1-UP
PART OF 577-0168 AIR CONDITIONER & MOUNTING GP
AN ATTACHMENT

SMCS-1805 **i07814470**

NOTE	REF NO	GRAPHIC REF	PART NUMBER	QTY	PART NAME 1 2 3 4 5 6 (PRODUCT LEVEL)	SEE PAGE
	1	1	**361-5582**	2	FAN AS (5-BLADE)	
					(EACH INCLUDES)	
		1	**102-8804**	1	KIT-RECEPTACLE (4-PIN)	
					(INCLUDES RECEPTACLE AS & WEDGE)	
		1	**8T-8729**	2	PIN-CONNECTOR (16-GA TO 20-GA)	
		1	**9X-3401**	2	PIN-CONNECTOR (16-GA TO 18-GA)	
	2	1	**488-4526**	1	CORE AS-CONDENSER	
		1	**095-0878**	1	PIN-SPRING	
		1	**317-8141**	4	MOUNT	
M		1	**325-4416**	2	STUD (M8X1.25X52-MM)	
	3	1	**540-3270**	1	SHROUD AS	
	4	1	**206-1345**	3	STRAP-CABLE	
M	5	1	**6V-7357**	8	BOLT (M6X1X25-MM)	
	6	1	**7X-0579**	4	WASHER-HARD (8.8X25.5X2-MM THK)	
M	7	1	**7X-2537**	4	BOLT (M8X1.25X35-MM)	
	8	1	**9X-8256**	8	WASHER (6.6X12X2-MM THK)	

M - METRIC PART

533-3132 **CONDENSER & MTG GP-REFRIGERANT (**contd.**)** **i07814470**

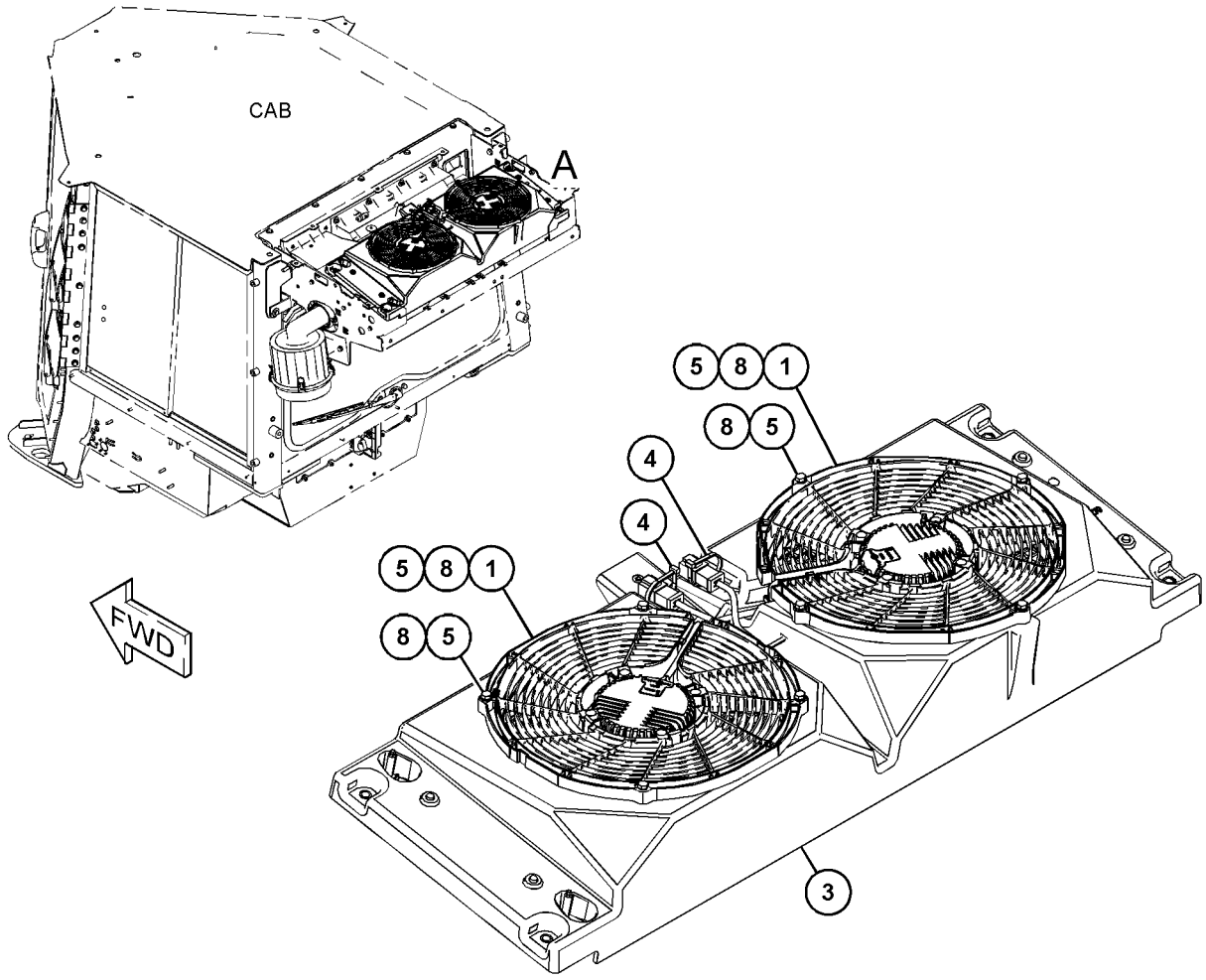

VIEW OF AREA A

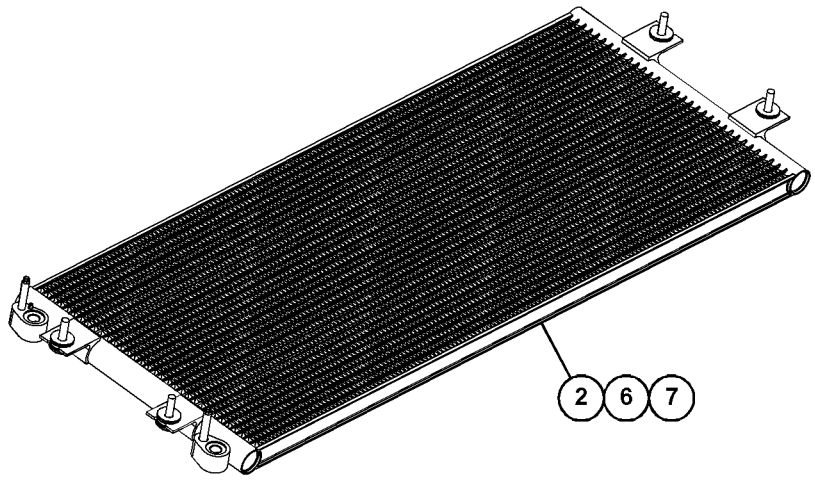

VIEW OF AREA A
(PARTS REMOVED FOR CLARITY)

GRAPHIC #1 <END> g06357557

432-0047 CONTROL GP-HANDLE

S/N: Z2K1-UP; Z2N1-UP
SINGLE AXIS LEVER
PART OF 435-5767 CONTROL GP-RIPPER
AN ATTACHMENT

SMCS-5063, 5705 **i07816166**

NOTE	REF NO	GRAPHIC REF	PART NUMBER	QTY	PART NAME 1 2 3 4 5 6 (PRODUCT LEVEL)	SEE PAGE
	1	1	**151-9274**	1	KIT-RECEPTACLE (4-PIN)	
					(INCLUDES RECEPTACLE AS & WEDGE)	
Y	2	1	*563-5532*	1	KIT-HANDLE	688

Y - SEPARATE ILLUSTRATION

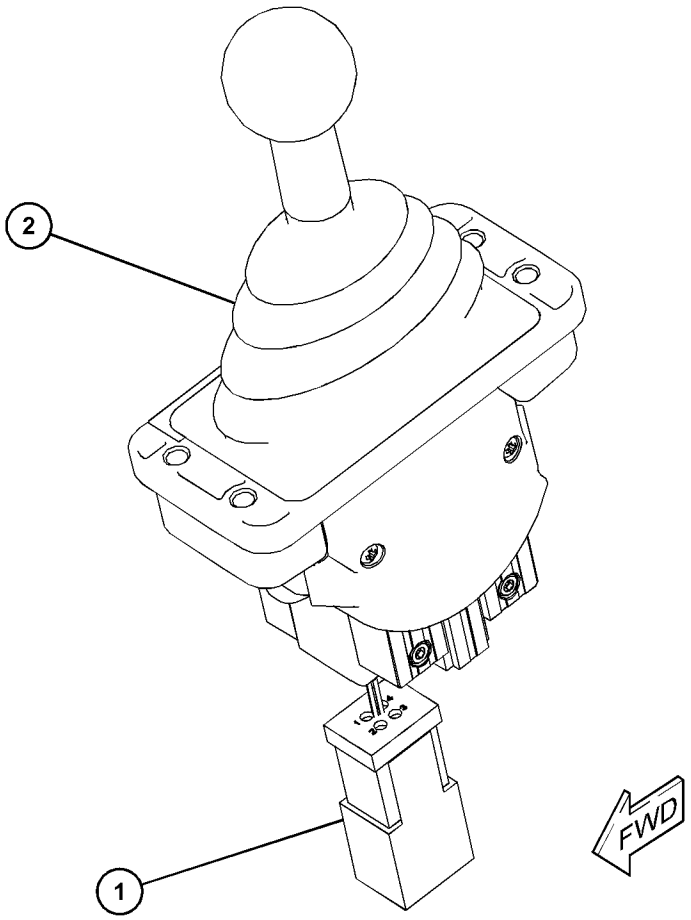

GRAPHIC #1 <END> g06339083

461-9456 CONTROL GP-HANDLE

S/N: Z2K1-UP; Z2N1-UP
PART OF 461-3381 CONTROL GP-JOYSTICK
AN ATTACHMENT

SMCS-5063, 5705 **i06799052**

NOTE	REF NO	GRAPHIC REF	PART NUMBER	QTY	PART NAME 1 2 3 4 5 6 (PRODUCT LEVEL)	SEE PAGE
	1	1	**1S-9593**	2	STRAP-CABLE	
	2	1	**162-8387**	1	LEVER	
	3	1	**162-8389**	1	PLATE (SWITCH)	
	4	1	**179-7376**	1	SWITCH AS-PUSH BUTTON (IMPLEMENT)	
		1	**162-8378**	1	SWITCH AS-PUSH BUTTON	
		1	**144-0331**	1	CAP-PUSH BUTTON (YELLOW)	
	5	1	**144-0331**	1	CAP-PUSH BUTTON (YELLOW) (MODE SELECT)	
	5A	1	**144-0331**	1	CAP-PUSH BUTTON (YELLOW) (MANUAL)	
	6	1	**8T-8729**	11	PIN-CONNECTOR (16-GA TO 20-GA)	
E	7	1	**218-7136**		SLEEVE (63-CM)	
	8	1	**434-3203**	1	HOUSING GP-LEVER (JOYSTICK)	
	9	1	**175-4165**	2	SCREW-PAN HEAD (4-20X0.5-IN)	
	10	1	**175-4170**	2	SCREW-PAN HEAD (6-19X1.625-IN)	
	11	1	**260-6728**	1	RECEPTACLE AS-CONNECTOR (12-PIN)	
	12	1	**9B-1117**	2	LOCKWASHER	
	13	1	**8T-8737**	1	PLUG-SEAL	
	14	1	**268-3696**	1	RING-ADAPTER	

E - ORDER BY THE CENTIMETER

461-9456 **CONTROL GP-HANDLE (**contd.**)** **i06799052**

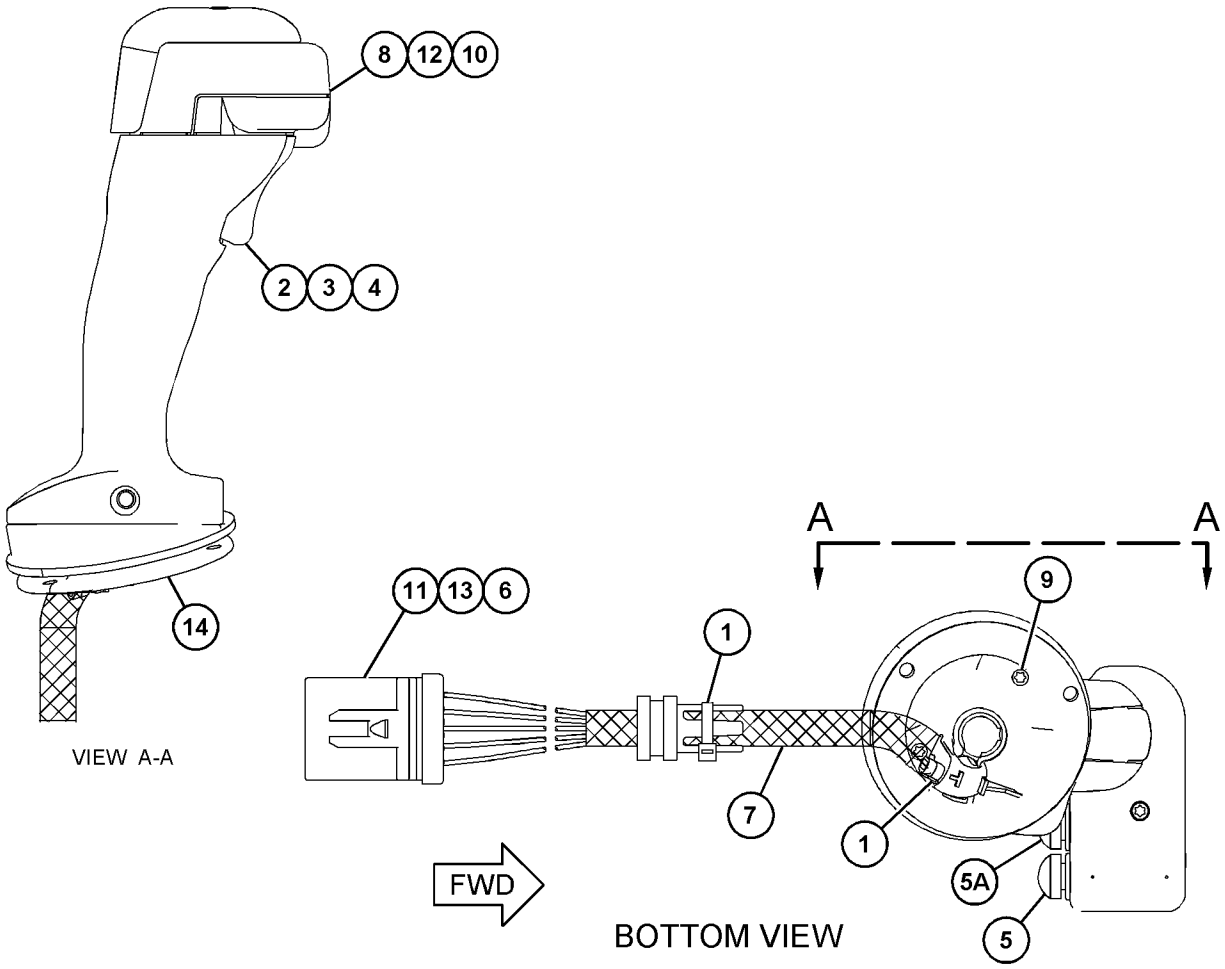

GRAPHIC #1 <END> g06143108

461-9457 CONTROL GP-HANDLE

S/N: Z2K1-UP; Z2N1-UP
PART OF 461-3380 CONTROL GP-JOYSTICK
AN ATTACHMENT

SMCS-5063, 5705 **i07839691**

NOTE	REF NO	GRAPHIC REF	PART NUMBER	QTY	PART NAME 1 2 3 4 5 6 (PRODUCT LEVEL)	SEE PAGE
E	1	1	**218-7136**		SLEEVE (63-CM)	
	2	1	**1S-9593**	2	STRAP-CABLE	
	3	1	**8T-8737**	1	PLUG-SEAL	
	4	1	**8T-8729**	11	PIN-CONNECTOR (16-GA TO 20-GA)	
	5	1	**276-4878**	1	GROMMET	
	6	1	**434-3205**	1	HOUSING GP-LEVER	
	7	1	**175-4165**	2	SCREW-PAN HEAD (4-20X0.5-IN)	
	8	1	**175-4170**	2	SCREW-PAN HEAD (6-19X1.625-IN)	
	9	1	**260-6728**	1	RECEPTACLE AS-CONNECTOR (12-PIN)	
	10	1	**9B-1117**	2	LOCKWASHER	

E - ORDER BY THE CENTIMETER

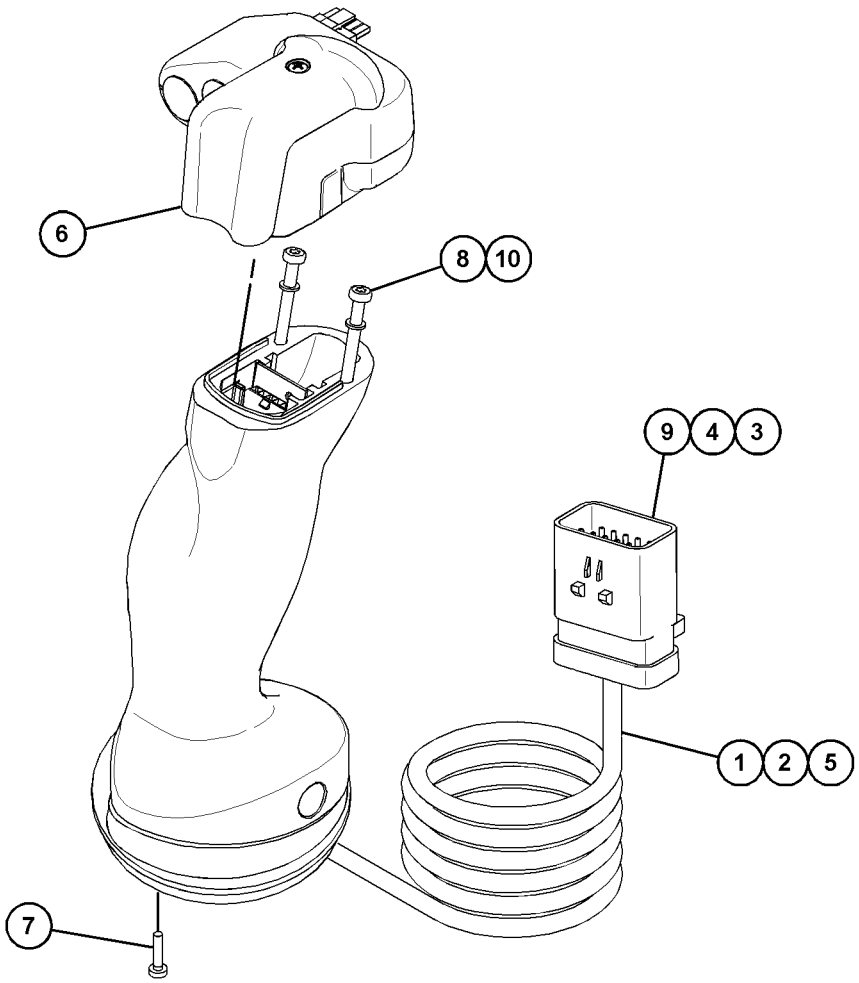

GRAPHIC #1 <END> g06132745

462-6407 CONTROL GP-HANDLE

S/N: Z2K1-UP; Z2N1-UP
PART OF 488-1756 CONTROL GP-STEERING & XMSN
AN ATTACHMENT

SMCS-5063, 5705 **i07357171**

NOTE	REF NO	GRAPHIC REF	PART NUMBER	QTY	PART NAME 1 2 3 4 5 6 (PRODUCT LEVEL)	SEE PAGE
	1	1	**292-1368**	1	HANDLE AS (LOWER)	
M		1	**8T-8442**	1	BOLT-SOCKET HEAD (M6X1X30-MM)	
	2	1	**3S-2093**	1	STRAP-CABLE	
	3	1	**131-0447**	1	NUT-SPECIAL (15/32-32-THD)	
	4	1	**292-1366**	1	HANDLE (UPPER)	
M	5	1	**174-8131**	3	SCREW-TRUSS HEAD (M4X0.7X12-MM)	
M	6	1	**184-0982**	3	SCREW-PAN HEAD (M6X1X16-MM)	
	7	1	**9X-8256**	3	WASHER (6.6X12X2-MM THK)	

M - METRIC PART

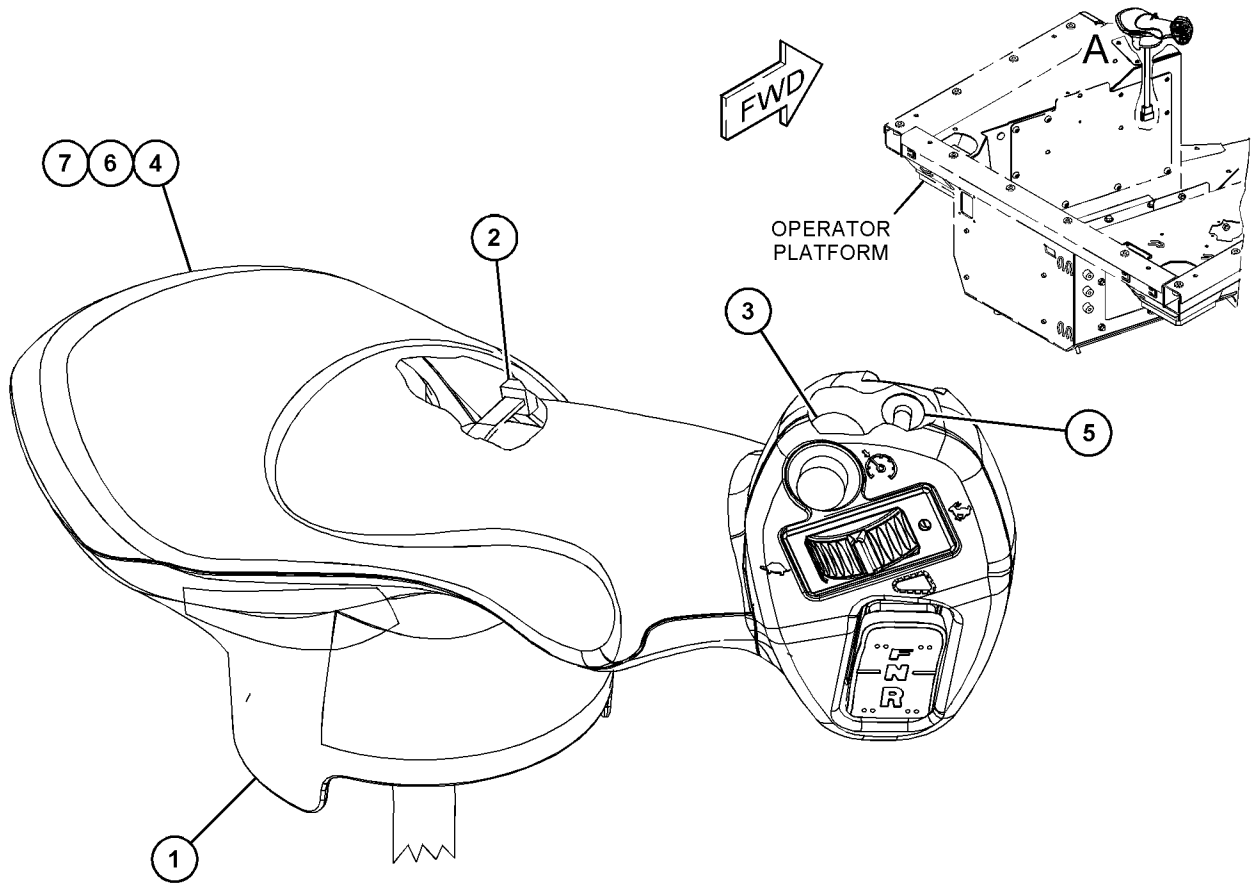

VIEW OF AREA A

GRAPHIC #1 <END> g06107665

435-5757 CONTROL GP-JOYSTICK

S/N: Z2K1-UP; Z2N1-UP
PART OF 532-9856 DISTRIBUTION AR
AN ATTACHMENT

SMCS-5705 **i07839587**

NOTE	REF NO	GRAPHIC REF	PART NUMBER	QTY	PART NAME 1 2 3 4 5 6 (PRODUCT LEVEL)	SEE PAGE
	1	1	**7K-1181**	2	STRAP-CABLE	
Y	2	1	**461-3380**	1	CONTROL GP-JOYSTICK (BULLDOZER)	656
	3	1	**495-9034**	1	PLATE	
	4	1	**498-0810**	1	COVER	
	5	1	**526-7430**	1	BRACKET	
M	6	1	**112-6646**	4	LOCKNUT (M6X1-THD)	
M	7	1	**9X-2044**	4	SCREW-TRUSS HEAD (M6X1X16-MM)	

M - METRIC PART
Y - SEPARATE ILLUSTRATION

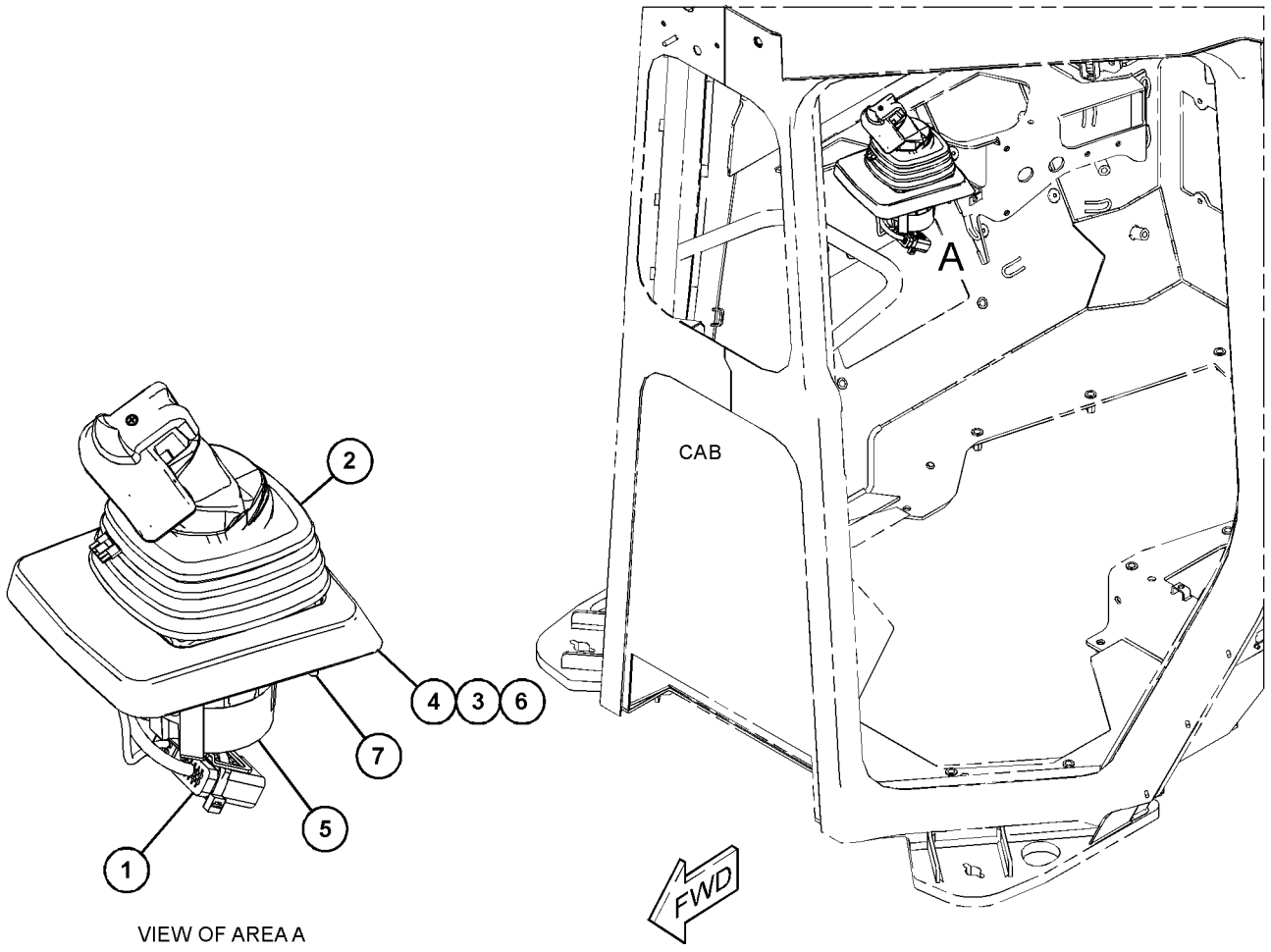

VIEW OF AREA A

GRAPHIC #1 <END> g06350048

435-5759 CONTROL GP-JOYSTICK

S/N: Z2K1-UP; Z2N1-UP
GRADE CONTROL
PART OF 532-9851 DISTRIBUTION AR
AN ATTACHMENT

SMCS-5705 **i07839986**

NOTE	REF NO	GRAPHIC REF	PART NUMBER	QTY	PART NAME 1 2 3 4 5 6 (PRODUCT LEVEL)	SEE PAGE
	1	1	**7K-1181**	2	STRAP-CABLE	
Y	2	1	**461-3381**	1	CONTROL GP-JOYSTICK (GRADE CONTROL)	657
	3	1	**495-9034**	1	PLATE	
	4	1	**498-0810**	1	COVER	
	5	1	**526-7430**	1	BRACKET	
M	6	1	**112-6646**	4	LOCKNUT (M6X1-THD)	
M	7	1	**9X-2044**	4	SCREW-TRUSS HEAD (M6X1X16-MM)	

M - METRIC PART
Y - SEPARATE ILLUSTRATION

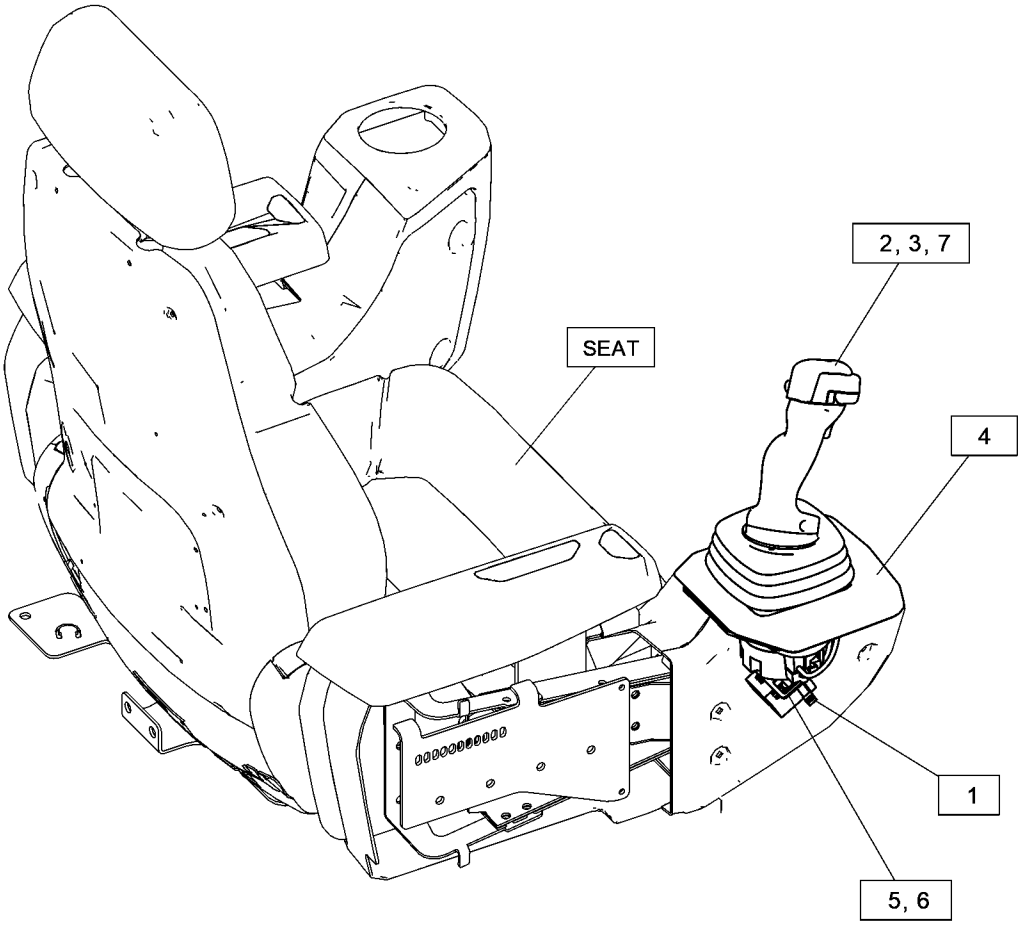

GRAPHIC #1 <END> g06410645

438-8680 CONTROL GP-JOYSTICK

S/N: Z2K1-UP; Z2N1-UP
PART OF 435-5769 CONTROL GP-WINCH
AN ATTACHMENT

SMCS-5705 **i07580660**

NOTE	REF NO	GRAPHIC REF	PART NUMBER	QTY	PART NAME 1 2 3 4 5 6 (PRODUCT LEVEL)	SEE PAGE
	1	1	**285-0150**	1	BOOT	
	2	1	**425-8520**	1	BASE AS	
	2A	1	**8T-8729**	6	PIN-CONNECTOR (16-GA TO 20-GA)	
	2B	1	**281-3136**	1	RECEPTACLE AS-CONNECTOR (6-PIN)	
	3	1	**279-2506**	1	CONTROL GP-HANDLE	
	3A	1	**8T-8737**	9	PLUG-SEAL	
	3B	1	**260-6728**	1	RECEPTACLE AS-CONNECTOR (12-PIN)	
	3C	1	**8T-8729**	3	PIN-CONNECTOR (16-GA TO 20-GA)	
M	4	1	**8T-0640**	4	BOLT (M6X1X30-MM)	
	5	1	**144-0331**	1	CAP-PUSH BUTTON (YELLOW)	
M	6	1	**213-7489**	3	SCREW (M4X0.7X25-MM)	
M	7	1	**178-9983**	3	LOCKNUT (M4X0.7-THD)	

M - METRIC PART

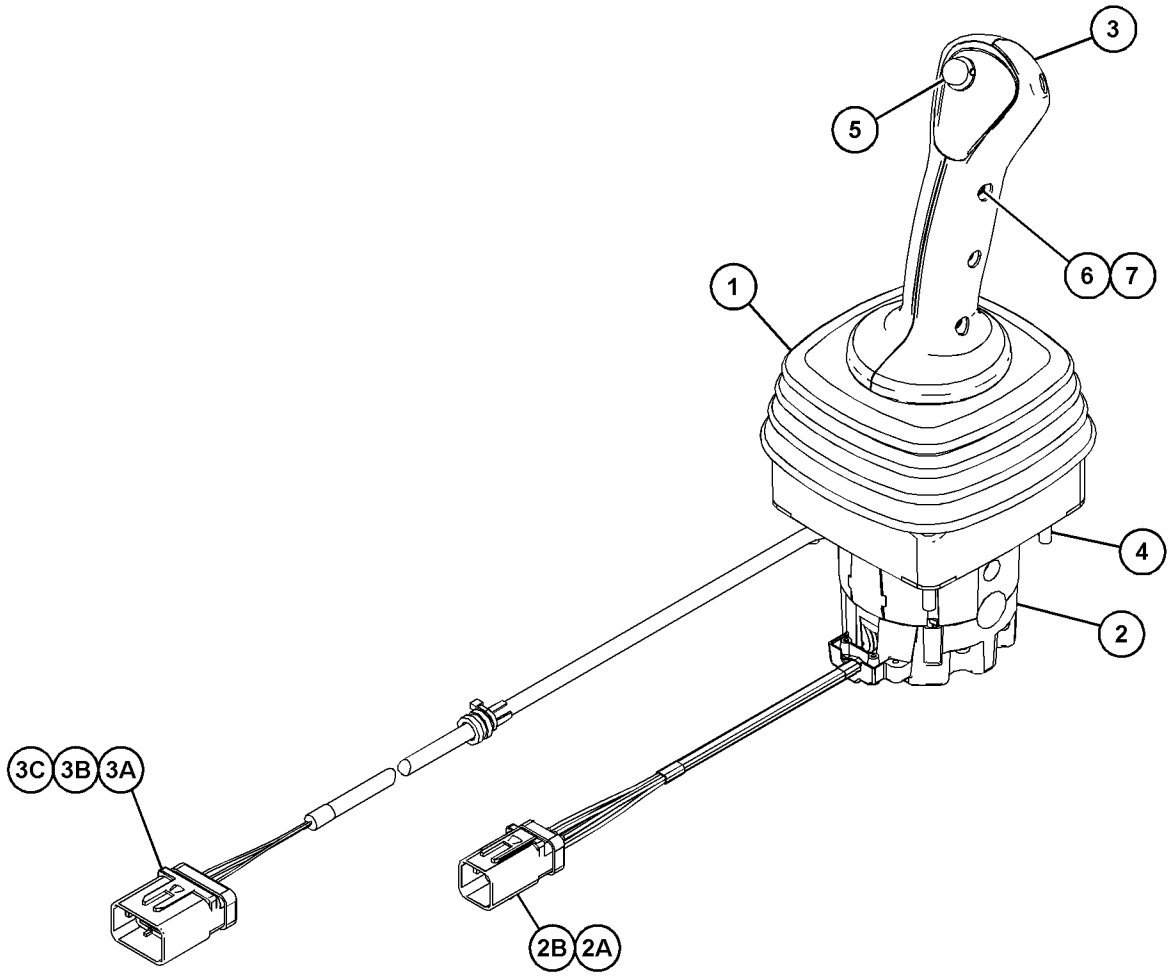

GRAPHIC #1 <END> g03817145

461-3380 CONTROL GP-JOYSTICK

S/N: Z2K1-UP; Z2N1-UP
BULLDOZER
PART OF 435-5757 CONTROL GP-JOYSTICK
AN ATTACHMENT

SMCS-5705 **i07839658**

NOTE	REF NO	GRAPHIC REF	PART NUMBER	QTY	PART NAME 1 2 3 4 5 6 (PRODUCT LEVEL)	SEE PAGE
Y	1	1	**461-9457**	1	CONTROL GP-HANDLE (BULLDOZER)	651
	2	1	**461-3376**	1	BASE AS-JOYSTICK	
	2A	1	**281-3136**	1	RECEPTACLE AS-CONNECTOR (6-PIN)	
	2B	1	**8T-8729**	6	PIN-CONNECTOR (16-GA TO 20-GA)	
M	2C	1	**280-0440**	4	STUD-MOUNTING (M6X1-THD)	
	3	1	**285-0150**	1	BOOT	
	4	1	**4B-9808**	2	SETSCREW (1/4-20X0.5-IN)	
	5	1	**260-6728**	1	RECEPTACLE AS-CONNECTOR (12-PIN)	
	6	1	**8T-8737**	1	PLUG-SEAL	
	7	1	**8T-8729**	11	PIN-CONNECTOR (16-GA TO 20-GA)	

M - METRIC PART
Y - SEPARATE ILLUSTRATION

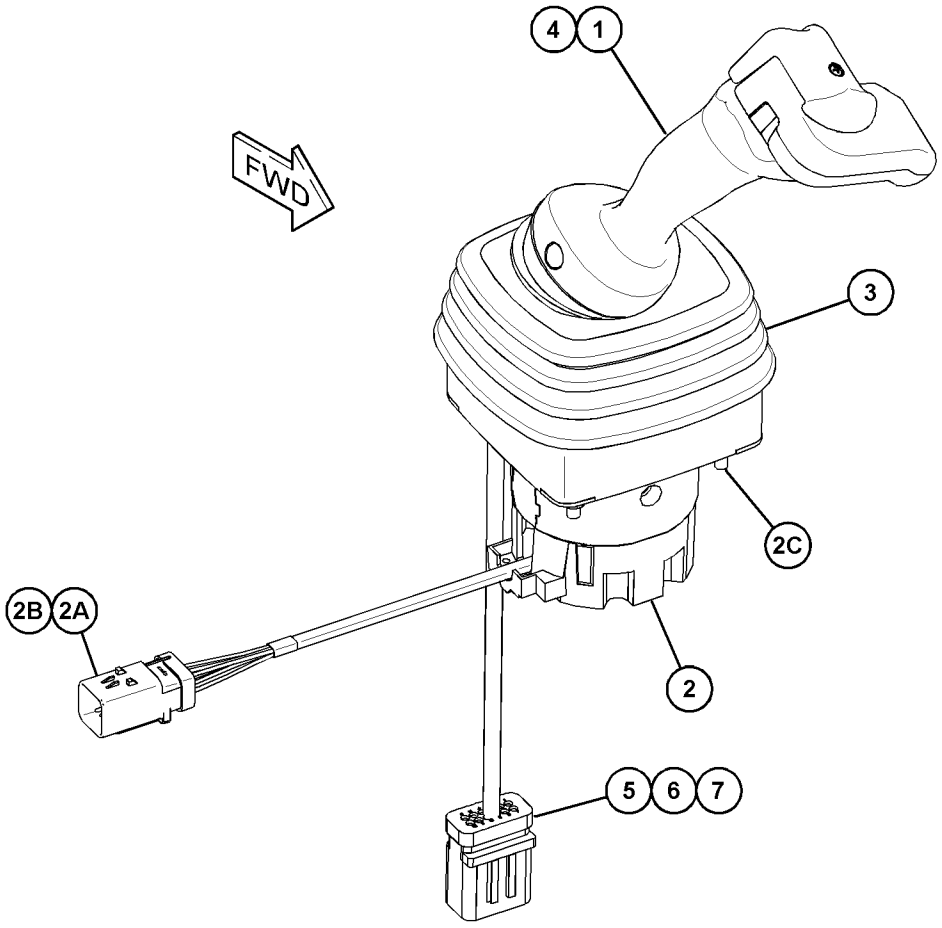

GRAPHIC #1 <END> g06133076

461-3381 CONTROL GP-JOYSTICK–RH

S/N: Z2K1-UP; Z2N1-UP
PART OF 435-5759 CONTROL GP-JOYSTICK
AN ATTACHMENT

SMCS-5705 **i06799035**

NOTE	REF NO	GRAPHIC REF	PART NUMBER	QTY	PART NAME 1 2 3 4 5 6 (PRODUCT LEVEL)	SEE PAGE
Y	1	1	**461-9456**	1	CONTROL GP-HANDLE (BULLDOZER)	649
	2	1	**461-3376**	1	BASE AS-JOYSTICK	
	2A	1	**8T-8729**	6	PIN-CONNECTOR (16-GA TO 20-GA)	
	2B	1	**281-3136**	1	RECEPTACLE AS-CONNECTOR (6-PIN)	
M		1	**280-0440**	4	STUD-MOUNTING (M6X1-THD)	
	3	1	**285-0150**	1	BOOT	
	4	1	**4B-9808**	2	SETSCREW (1/4-20X0.5-IN)	
	5	1	**260-6728**	1	RECEPTACLE AS-CONNECTOR (12-PIN)	
	6	1	**8T-8737**	1	PLUG-SEAL	
	7	1	**8T-8729**	11	PIN-CONNECTOR (16-GA TO 20-GA)	

M - METRIC PART
Y - SEPARATE ILLUSTRATION

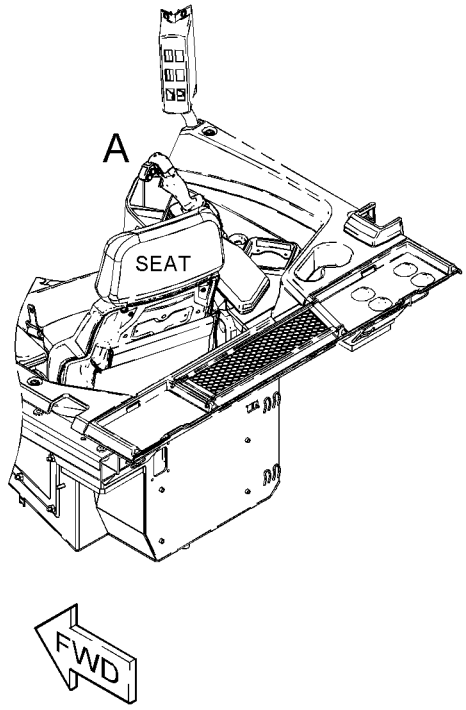

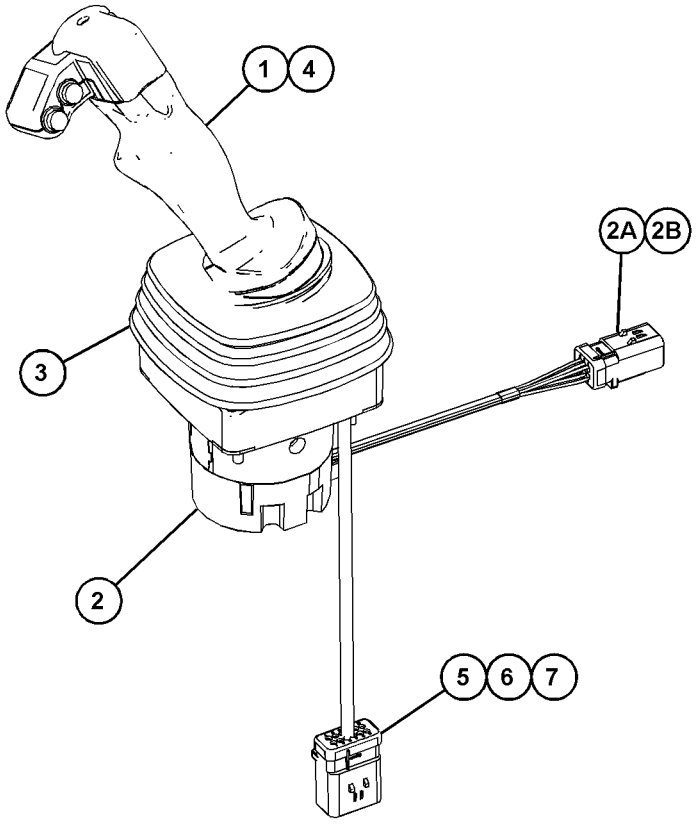

VIEW OF AREA A

GRAPHIC #1 <END> g06136281

435-5767 CONTROL GP-RIPPER

S/N: Z2K1-UP; Z2N1-UP
PART OF 515-7372 CONTROL GP-RIPPER
AN ATTACHMENT

SMCS-5357 **i07816162**

NOTE	REF NO	GRAPHIC REF	PART NUMBER	QTY	PART NAME 1 2 3 4 5 6 (PRODUCT LEVEL)	SEE PAGE
Y	1	1	**432-0047**	1	CONTROL GP-HANDLE	648
	2	1	**467-6262**	1	BEZEL AS	
M	3	1	**121-9870**	3	SCREW-MACHINE (M6X1X40-MM)	
M	4	1	**9X-2045**	4	SCREW-TRUSS HEAD (M6X1X20-MM)	

M - METRIC PART
Y - SEPARATE ILLUSTRATION

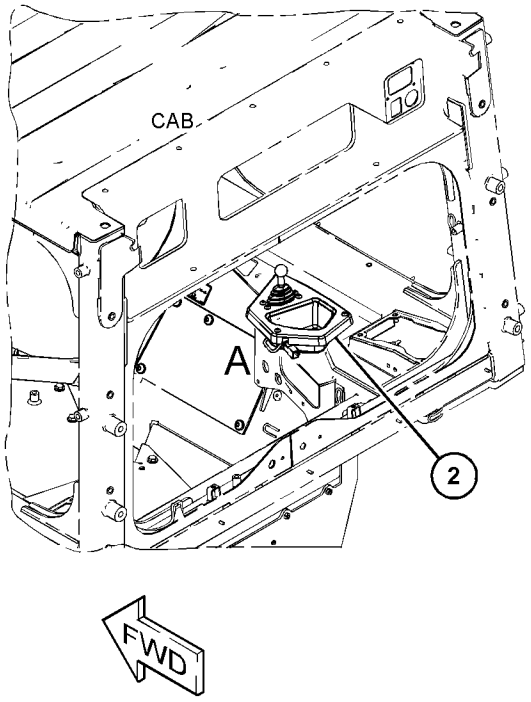

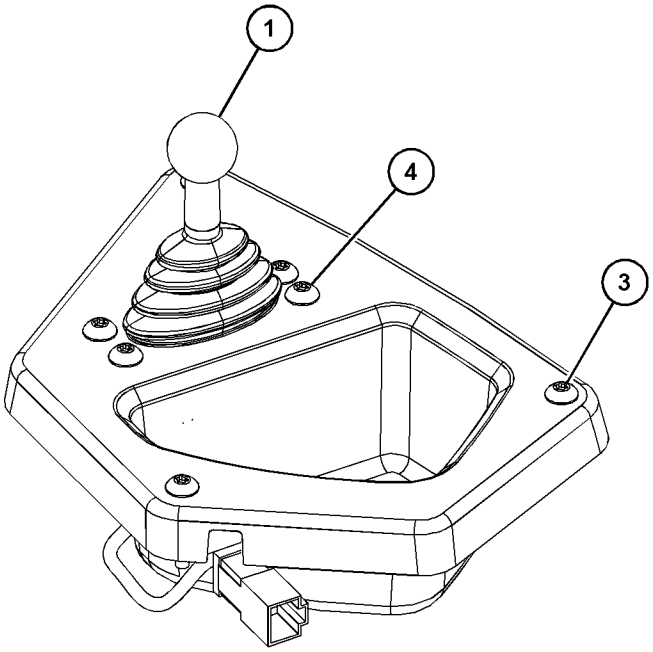

VIEW OF AREA A

GRAPHIC #1 <END> g06356279

515-7372 CONTROL GP-RIPPER

S/N: Z2K1-UP; Z2N1-UP
CANNOT BE USED WITH WINCH AR
PART OF 532-9851 DISTRIBUTION AR
AN ATTACHMENT

SMCS-5357 **i07816145**

NOTE	PART NUMBER	QTY	PART NAME 1 2 3 4 5 6 (PRODUCT LEVEL)	SEE PAGE
Y	*435-5767*	1	CONTROL GP-RIPPER	658
Y	*507-7434*	1	LINES GP-RIPPER	598
	511-8773	1	FILM-INSTRUCTION (RIPPER CONTROL)	

Y - SEPARATE ILLUSTRATION

<END>

537-3141 COVER GP-ACCESS

S/N: Z2K1-UP; Z2N1-UP
PART OF 550-5575 GRADE CONTROL AR
AN ATTACHMENT

SMCS-726A **i07852062**

NOTE	REF NO	GRAPHIC REF	PART NUMBER	QTY	PART NAME 1 2 3 4 5 6 (PRODUCT LEVEL)	SEE PAGE
	1	1	**537-3138**	2	PLATE	
M	2	1	**8T-4138**	12	BOLT (M6X1X20-MM)	
	3	1	**9X-8256**	12	WASHER (6.6X12X2-MM THK)	
	4	1	**510-8174**	1	PLATE AS	
	5	1	**510-8175**	1	PLATE AS	
M	6	1	**479-2171**	4	BOLT AS	

M - METRIC PART

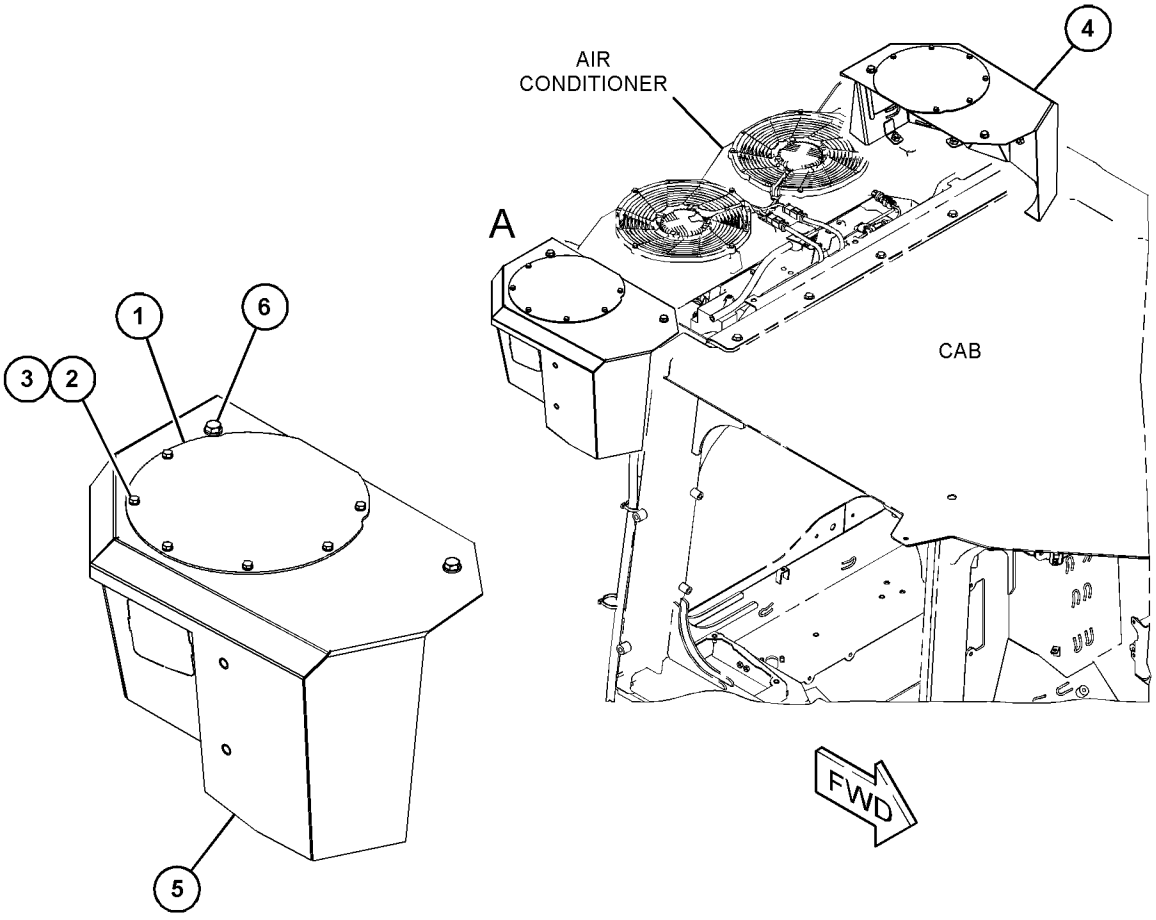

VIEW OF AREA A

GRAPHIC #1 <END> g06351119

561-6673 COVER GP-ACCESS

S/N: Z2K1-UP; Z2N1-UP
PART OF 577-1292, 577-1293 DISPLAY AR-MONITOR
AN ATTACHMENT

SMCS-726A **i07817874**

NOTE	REF NO	GRAPHIC REF	PART NUMBER	QTY	PART NAME 1 2 3 4 5 6 (PRODUCT LEVEL)	SEE PAGE
	1	1	**561-6676**	1	PLATE AS	
	2	1	**561-6677**	1	PLATE AS	
M	3	1	**479-2171**	4	BOLT AS	

M - METRIC PART

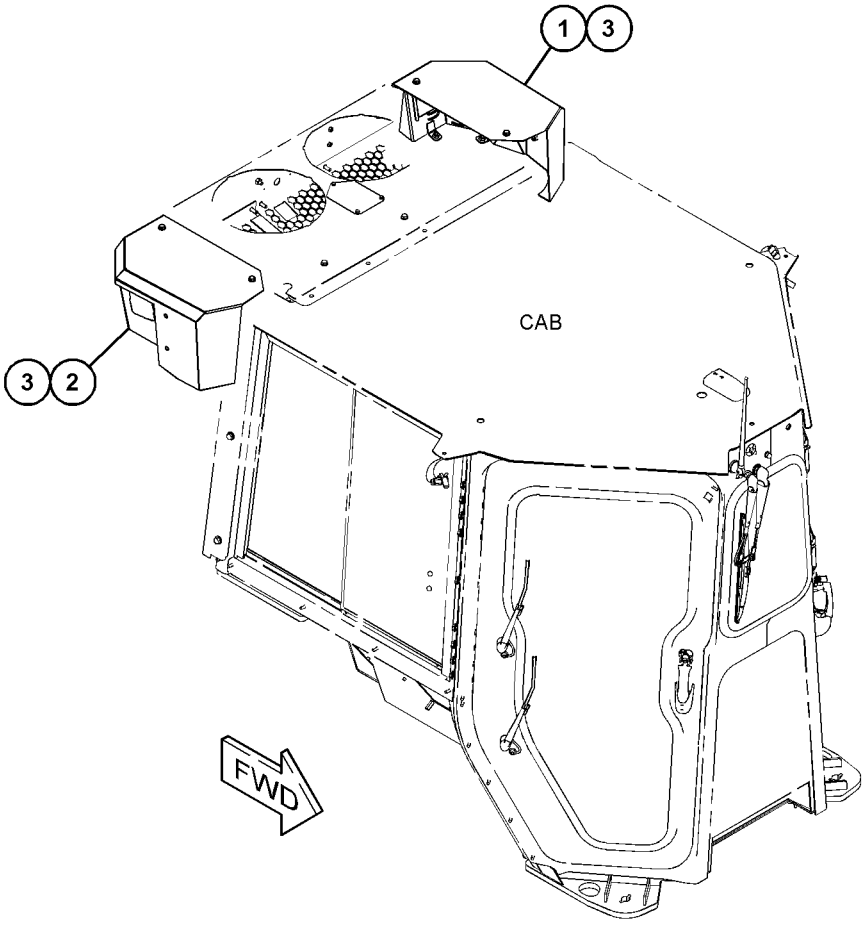

GRAPHIC #1 <END> g06334115

561-6674 COVER GP-ACCESS

S/N: Z2K1-UP; Z2N1-UP
PART OF 577-1295, 577-1296 GRADE CONTROL AR
AN ATTACHMENT

SMCS-726A **i07850056**

NOTE	REF NO	GRAPHIC REF	PART NUMBER	QTY	PART NAME 1 2 3 4 5 6 (PRODUCT LEVEL)	SEE PAGE
	1	1	**510-8174**	1	PLATE AS	
	2	1	**510-8175**	1	PLATE AS	
	3	1	**537-3135**	2	PLATE	
	4	1	**537-3136**	2	SEAL	
M	5	1	**8T-4138**	12	BOLT (M6X1X20-MM)	
	6	1	**9X-8256**	12	WASHER (6.6X12X2-MM THK)	
M	7	1	**479-2171**	4	BOLT AS	

M - METRIC PART

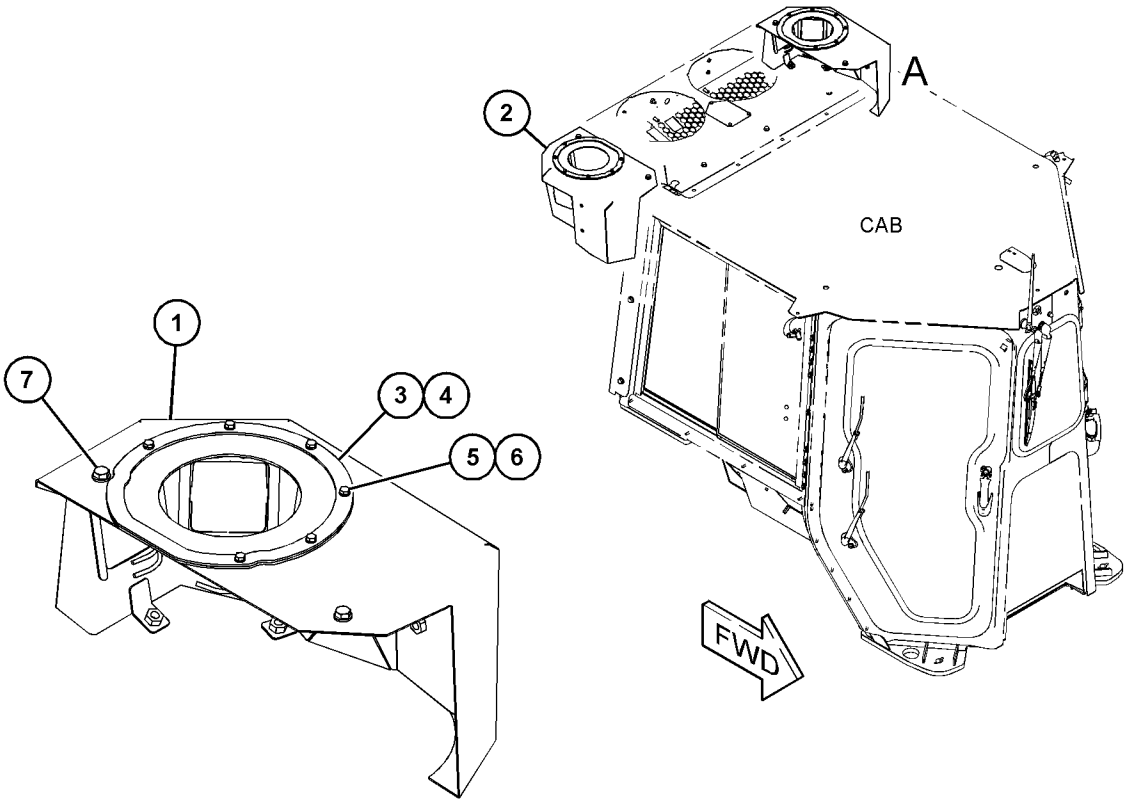

VIEW OF AREA A

GRAPHIC #1 <END> g06334681

487-5822 COVER GP-CAB

S/N: Z2K1-UP; Z2N1-UP
PART OF 579-5778 COVER GP-CAB
AN ATTACHMENT

SMCS-7301 **i06858705**

NOTE	REF NO	GRAPHIC REF	PART NUMBER	QTY	PART NAME 1 2 3 4 5 6 (PRODUCT LEVEL)	SEE PAGE
	1	1	**9U-8263**	1	COVER	
	2	1	**373-4446**	1	PLUG	

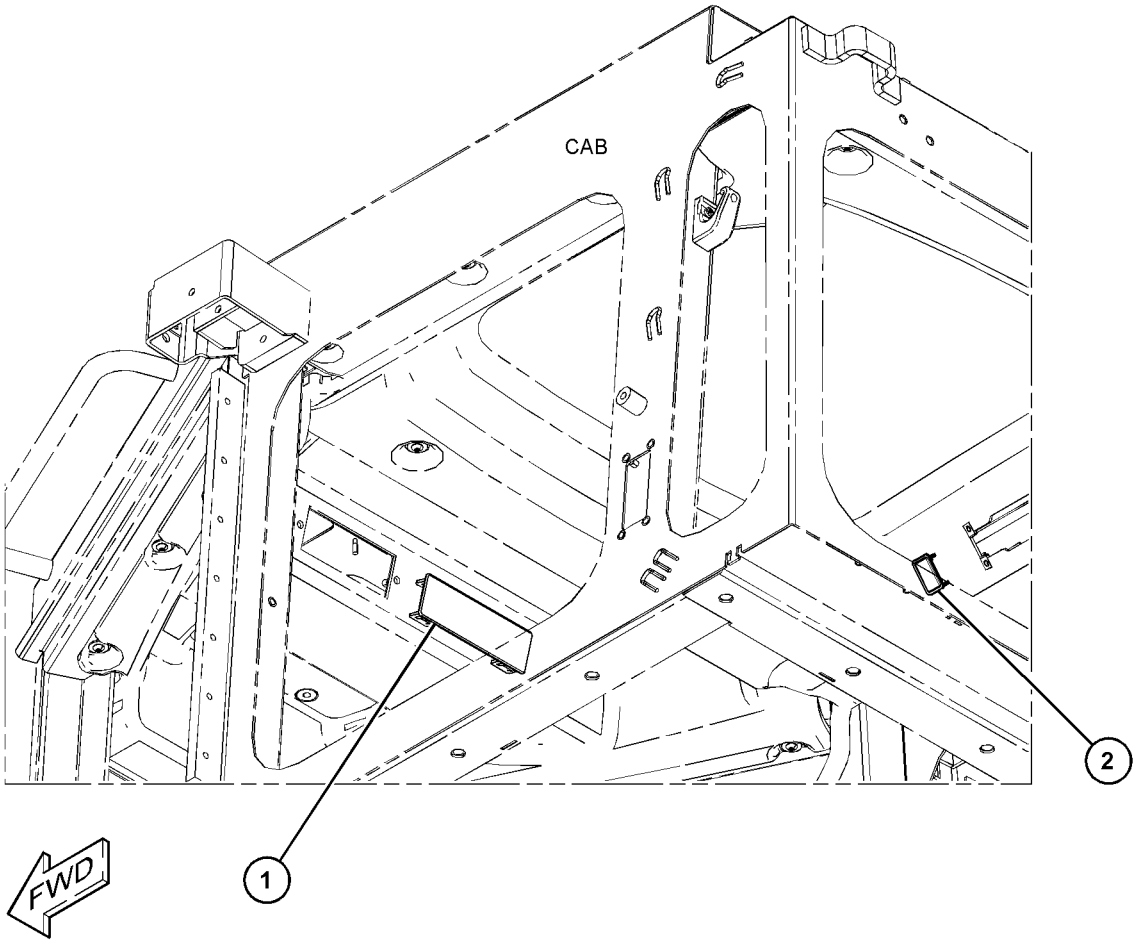

(VIEWED FROM BOTTOM)

GRAPHIC #1 <END> g06144352

539-1378 COVER GP-CAB

S/N: Z2K1-UP; Z2N1-UP
PART OF 568-7696 INSTALLATION AR-CAB
AN ATTACHMENT

SMCS-7301 **i07824619**

NOTE	REF NO	GRAPHIC REF	PART NUMBER	QTY	PART NAME 1 2 3 4 5 6 (PRODUCT LEVEL)	SEE PAGE
M	1	1	**172-8591**	5	NUT-CLIP (M6X1-THD)	
	2	1	**464-8549**	1	COVER-REAR	
	3	1	**471-2055**	1	COVER-STORAGE	
	4	1	**500-5043**	1	COVER-REAR	
	5	1	**507-3864**	1	TRAY	
	6	1	**514-5496**	1	FLOOR MAT AS	
	7	1	**527-6937**	1	BASE (CABLE MOUNTING)	
	8	1	**539-3468**	1	PLATE	
	9	1	**114-6658**	8	WASHER (6.5X17X1-MM THK)	
	10	1	**7K-1181**	1	STRAP-CABLE	
M	11	1	**9X-2045**	9	SCREW-TRUSS HEAD (M6X1X20-MM)	
	12	1	**500-5045**	1	COVER	
	13	1	**500-5046**	1	COVER	
	14	1	**514-6888**	1	TRAY	
	15	1	**355-5860**	2	RECEPTACLE (CLIP)	
	16	1	**455-6127**	2	STUD AS	
	17	1	**491-1972**	1	PLENUM AS	
	18	1	**7X-0579**	4	WASHER-HARD (8.8X25.5X2-MM THK)	
M	19	1	**9X-2046**	4	SCREW-TRUSS HEAD (M6X1X35-MM)	
	20	1	**212-6891**	2	RETAINER	

M - METRIC PART

539-1378 **COVER GP-CAB** (contd.) **i07824619**

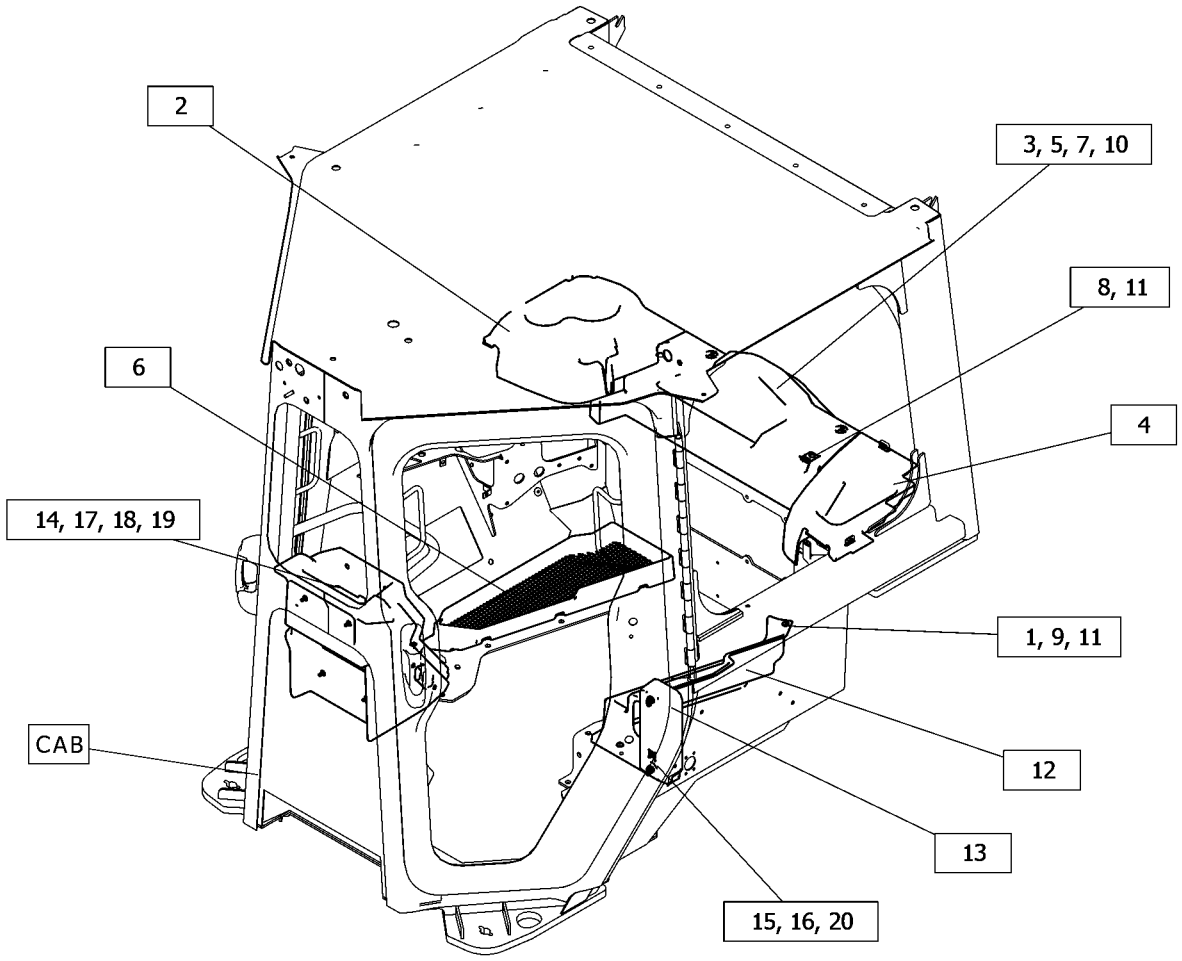

GRAPHIC #1 <END> g06377554

568-7744 COVER GP-CAB

S/N: Z2K1-UP; Z2N1-UP
PART OF 568-7695 INSTALLATION AR-CAB
AN ATTACHMENT

SMCS-7301 **i07828907**

NOTE	REF NO	GRAPHIC REF	PART NUMBER	QTY	PART NAME 1 2 3 4 5 6 (PRODUCT LEVEL)	SEE PAGE
M	1	1	**172-8591**	5	NUT-CLIP (M6X1-THD)	
	2	1	**464-8549**	1	COVER-REAR	
	3	1	**471-2055**	1	COVER-STORAGE	
	4	1	**500-5043**	1	COVER-REAR	
	5	1	**507-3864**	1	TRAY	
	6	1	**355-5860**	2	RECEPTACLE (CLIP)	
	7	1	**527-6937**	1	BASE	
	8	1	**539-3468**	1	PLATE	
	9	1	**114-6658**	8	WASHER (6.5X17X1-MM THK)	
	10	1	**7K-1181**	1	STRAP-CABLE	
M	11	1	**9X-2045**	9	SCREW-TRUSS HEAD (M6X1X20-MM)	
	12	1	**455-6127**	2	STUD AS	
	13	1	**491-1972**	1	PLENUM AS	
	14	1	**500-5045**	1	COVER	
	15	1	**500-5046**	1	COVER	
	16	1	**514-6888**	1	TRAY	
	17	1	**7X-0579**	4	WASHER-HARD (8.8X25.5X2-MM THK)	
M	18	1	**9X-2046**	4	SCREW-TRUSS HEAD (M6X1X35-MM)	

M - METRIC PART

568-7744 **COVER GP-CAB** (contd.) **i07828907**

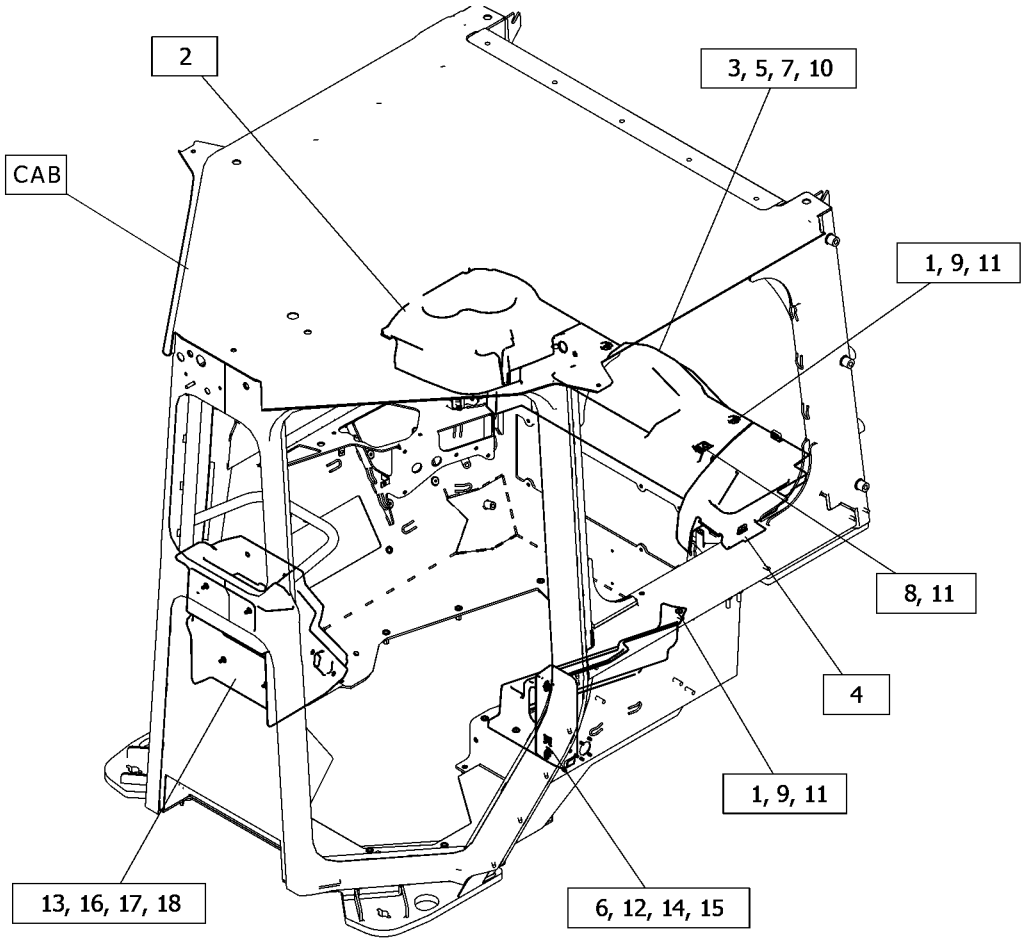

GRAPHIC #1 <END> g06452282

579-5778 COVER GP-CAB

S/N: Z2K1-UP; Z2N1-UP
NO RADIO ENTERTAINMENT
PART OF 532-9851, 532-9856 DISTRIBUTION AR
AN ATTACHMENT

SMCS-7301 **i07833457**

NOTE	PART NUMBER	QTY	PART NAME 1 2 3 4 5 6 (PRODUCT LEVEL)	SEE PAGE
Y	*487-5822*	1	COVER GP-CAB	663

Y - SEPARATE ILLUSTRATION

<END>

577-1292 DISPLAY AR-MONITOR

S/N: Z2K1-UP; Z2N1-UP
PART OF 532-9856 DISTRIBUTION AR
AN ATTACHMENT

SMCS-7490 **i07841573**

NOTE	REF NO	GRAPHIC REF	PART NUMBER	QTY	PART NAME 1 2 3 4 5 6 (PRODUCT LEVEL)	SEE PAGE
Y	1	1	*561-6673*	1	COVER GP-ACCESS	661
Y	2	1	*566-4130*	1	DISPLAY GP-MONITOR	672
Y	3	1	*569-0452*	1	NET GP-STORAGE	735
	4	1	**582-1730**	1	FILM-IDENTIFICATION (FUSE/RELAY PANEL)	
FY			*575-4738*	1	ELECTRONICS GP-MONITOR (PRIMARY DISPLAY)	147
FY			*575-8486*	1	ELECTRONICS GP-MONITOR (NETWORK MANAGER)	147

F - NOT SHOWN
Y - SEPARATE ILLUSTRATION

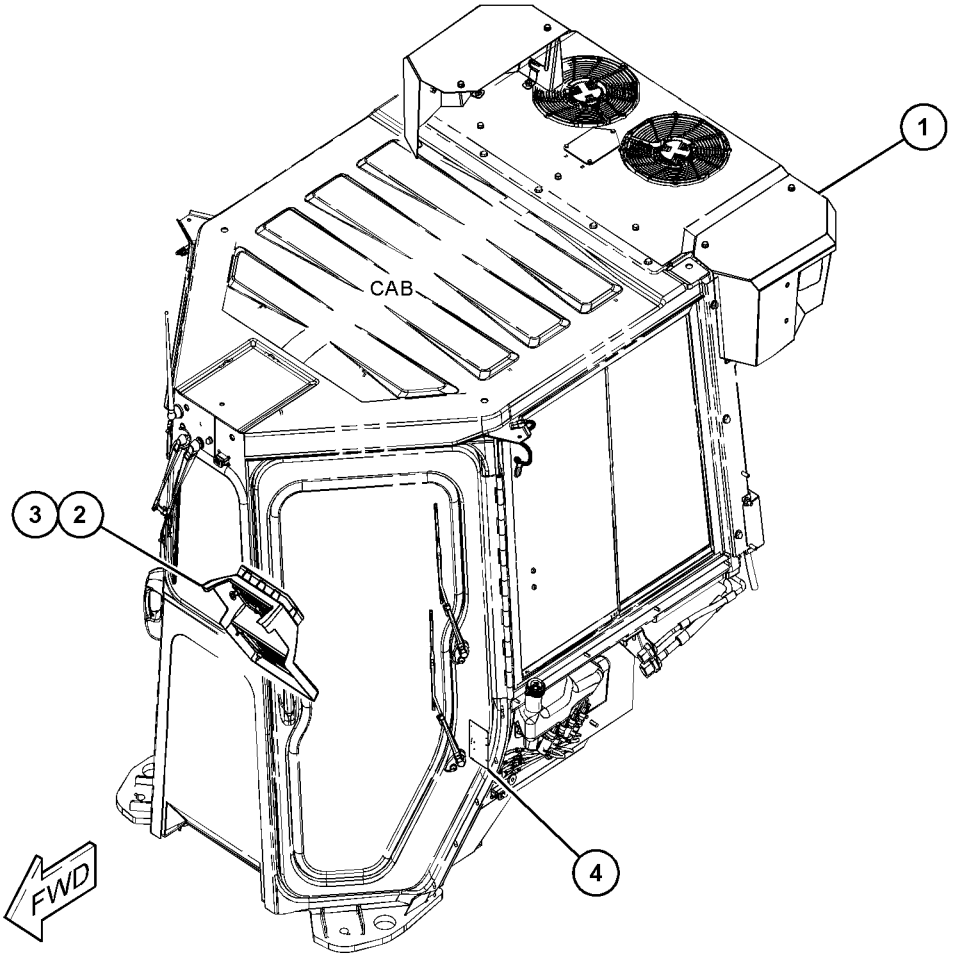

GRAPHIC #1 <END> g06459296

577-1293 DISPLAY AR-MONITOR

S/N: Z2K1-UP; Z2N1-UP

FOR USE WITH 536-6468—PAGE: 638, 536-6469—PAGE: 639, 536-6470—PAGE: 639

AN ATTACHMENT

SMCS-7490 **i07865721**

NOTE	REF NO	GRAPHIC REF	PART NUMBER	QTY	PART NAME 1 2 3 4 5 6 (PRODUCT LEVEL)	SEE PAGE
Y	1	1	*505-6759*	1	ELECTRONICS GP-MONITOR (PRIMARY)	145
Y	2	1	*511-5453*	1	DISPLAY GP-MONITOR	671
Y	3	1	*558-8922*	1	ELECTRONICS GP-MONITOR (VIMS)	146
Y	4	1	*561-6673*	1	COVER GP-ACCESS	661
Y	5	1	*574-0147*	1	DOOR GP-ACCESS	673
	6	1	**582-1729**	1	FILM-IDENTIFICATION (FUSE/RELAY PANEL)	
					(ON SIDE SURFACE OF FUSE PANEL, ON INSIDE OF CAB, ON LOWER LH SIDE)	

Y - SEPARATE ILLUSTRATION

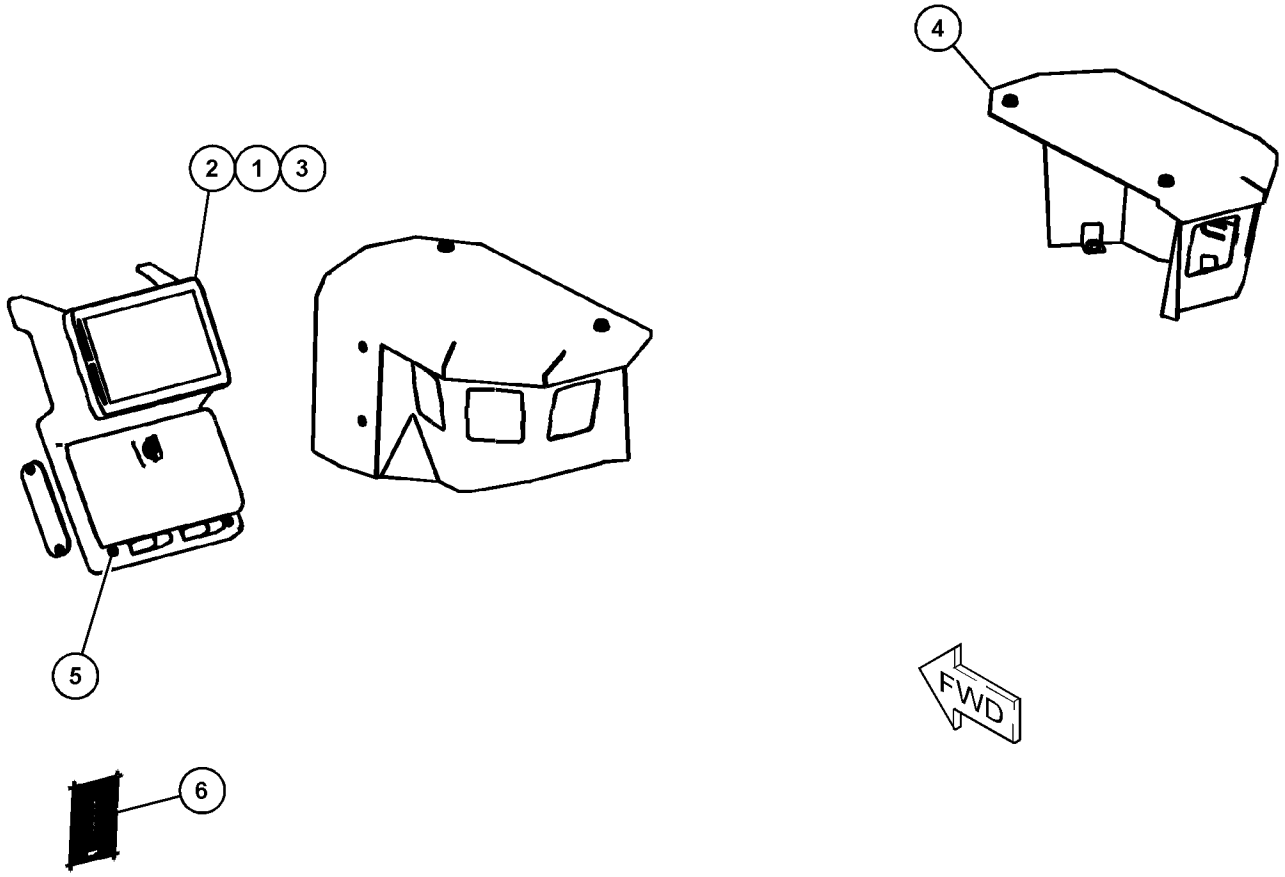

GRAPHIC #1 <END> g06463594

511-5453 DISPLAY GP-MONITOR

S/N: Z2K1-UP; Z2N1-UP

PART OF 577-1293 DISPLAY AR-MONITOR, 550-5575, 577-1295, 577-1296 GRADE CONTROL AR AN ATTACHMENT

SMCS-7490 **i07820565**

NOTE	REF NO	GRAPHIC REF	PART NUMBER	QTY	PART NAME 1 2 3 4 5 6 (PRODUCT LEVEL)	SEE PAGE
	1	1	**489-5593**	1	COVER AS	
YR	2	1	**490-5874**	1	MODULE GP-DISPLAY (10-IN TOUCH SCREEN)	710
	3	1	**6P-0205**	2	SPACER (0.269X0.405X0.656-IN THK)	
M	4	1	**6V-7357**	4	BOLT (M6X1X25-MM)	
	5	1	**7X-0579**	2	WASHER-HARD (8.8X25.5X2-MM THK)	
M	6	1	**9X-2046**	2	SCREW-TRUSS HEAD (M6X1X35-MM)	
	7	1	**9X-8256**	4	WASHER (6.6X12X2-MM THK)	

M - METRIC PART
R - REMANUFACTURED PART MAY BE AVAILABLE
Y - SEPARATE ILLUSTRATION

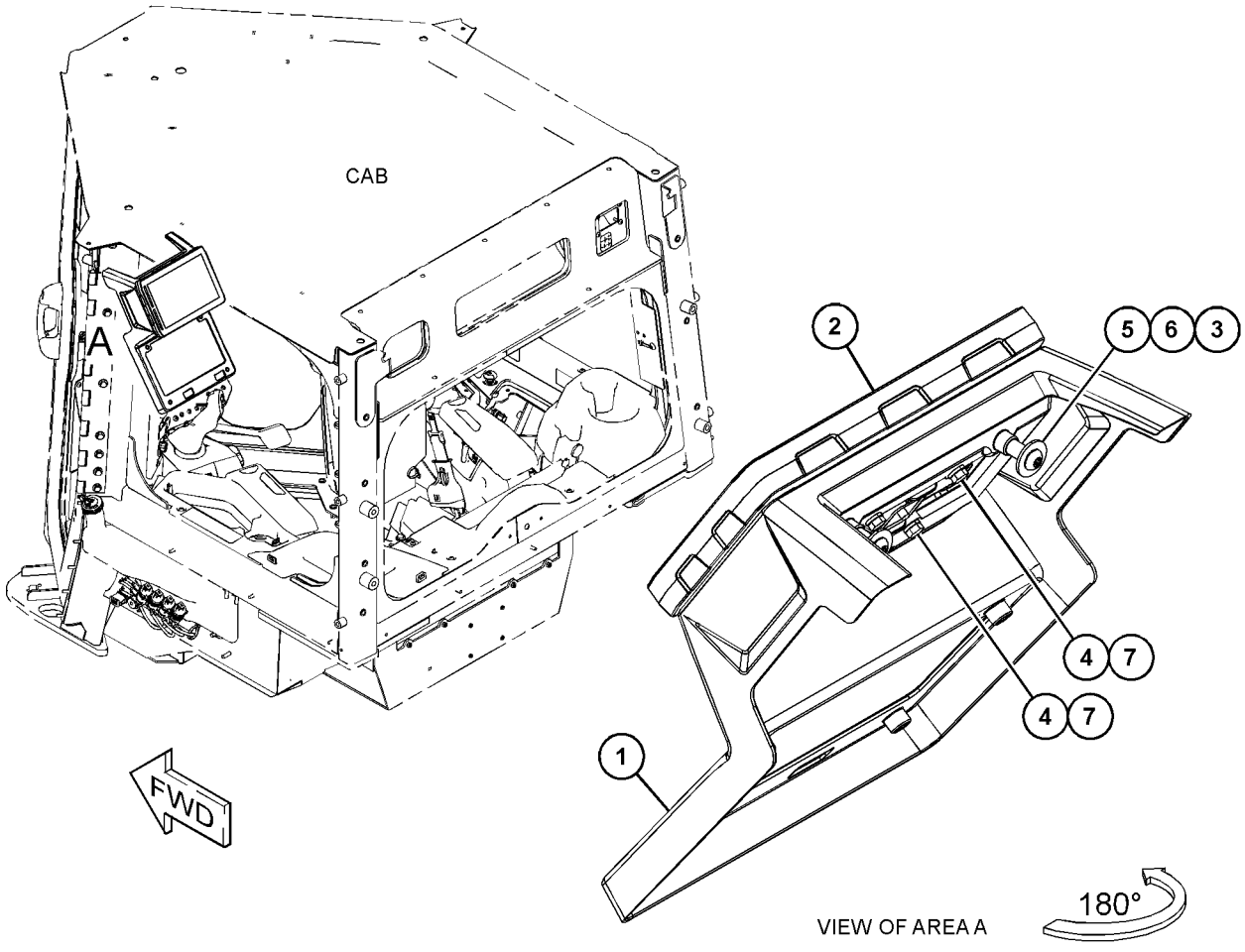

GRAPHIC #1 <END> g06334319

566-4130 DISPLAY GP-MONITOR

S/N: Z2K1-UP; Z2N1-UP
PART OF 577-1292 DISPLAY AR-MONITOR
AN ATTACHMENT

SMCS-7490 **i07842171**

NOTE	REF NO	GRAPHIC REF	PART NUMBER	QTY	PART NAME 1 2 3 4 5 6 (PRODUCT LEVEL)	SEE PAGE
	1	1	**501-1264**	1	COVER AS-SOUND SUPPRESSION	
	2	1	**567-2092**	1	MONITOR GP-OPERATOR	
	3	1	**6P-0205**	2	SPACER (0.269X0.405X0.656-IN THK)	
M	4	1	**6V-7357**	4	BOLT (M6X1X25-MM)	
	5	1	**7X-0579**	2	WASHER-HARD (8.8X25.5X2-MM THK)	
M	6	1	**9X-2046**	2	SCREW-TRUSS HEAD (M6X1X35-MM)	
	7	1	**9X-8256**	4	WASHER (6.6X12X2-MM THK)	

M - METRIC PART

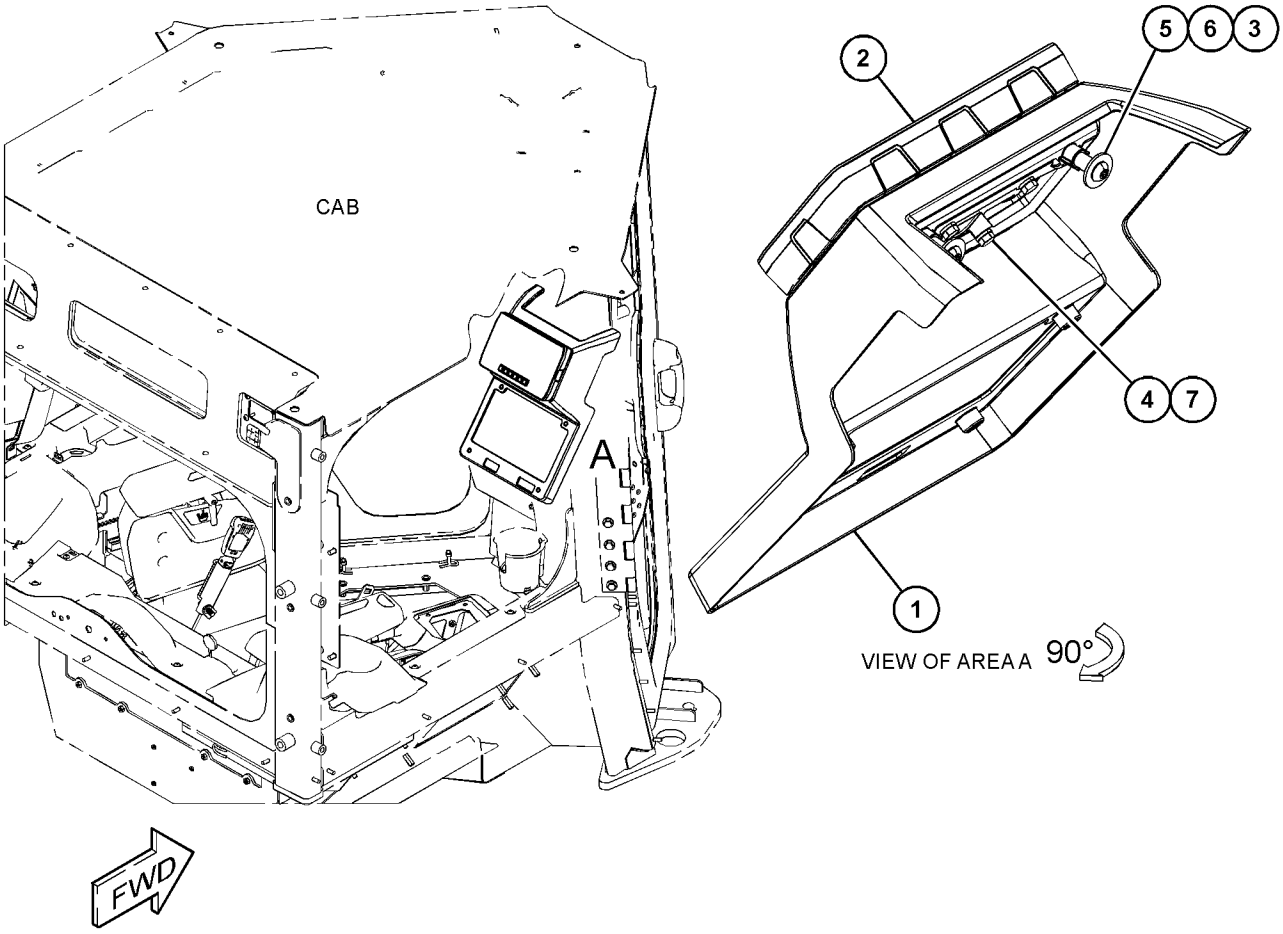

GRAPHIC #1 <END> g06456667

574-0147 DOOR GP-ACCESS

S/N: Z2K1-UP; Z2N1-UP
PART OF 577-1293 DISPLAY AR-MONITOR
AN ATTACHMENT

SMCS-7273 **i07865725**

NOTE	REF NO	GRAPHIC REF	PART NUMBER	QTY	PART NAME 1 2 3 4 5 6 (PRODUCT LEVEL)	SEE PAGE
M	1	1	**3E-8020**	4	SCREW-TRUSS HEAD (M6X1X25-MM)	
M	2	1	**7Y-7388**	12	SCREW-BUTTON HEAD (M5X0.8X12-MM)	
	3	1	**393-2286**	1	LATCH AS	
	4	1	**426-0972**	2	BUMPER	
	5	1	**427-5774**	2	HINGE AS	
	6	1	**489-5594**	1	DOOR AS-ACCESS	
	7	1	**510-7323**	1	PLATE	
	8	1	**574-0150**	1	PLATE	
	9	1	**574-0151**	1	PLATE	
M	10	1	**9X-2042**	2	SCREW-TRUSS HEAD (M6X1X12-MM)	

M - METRIC PART

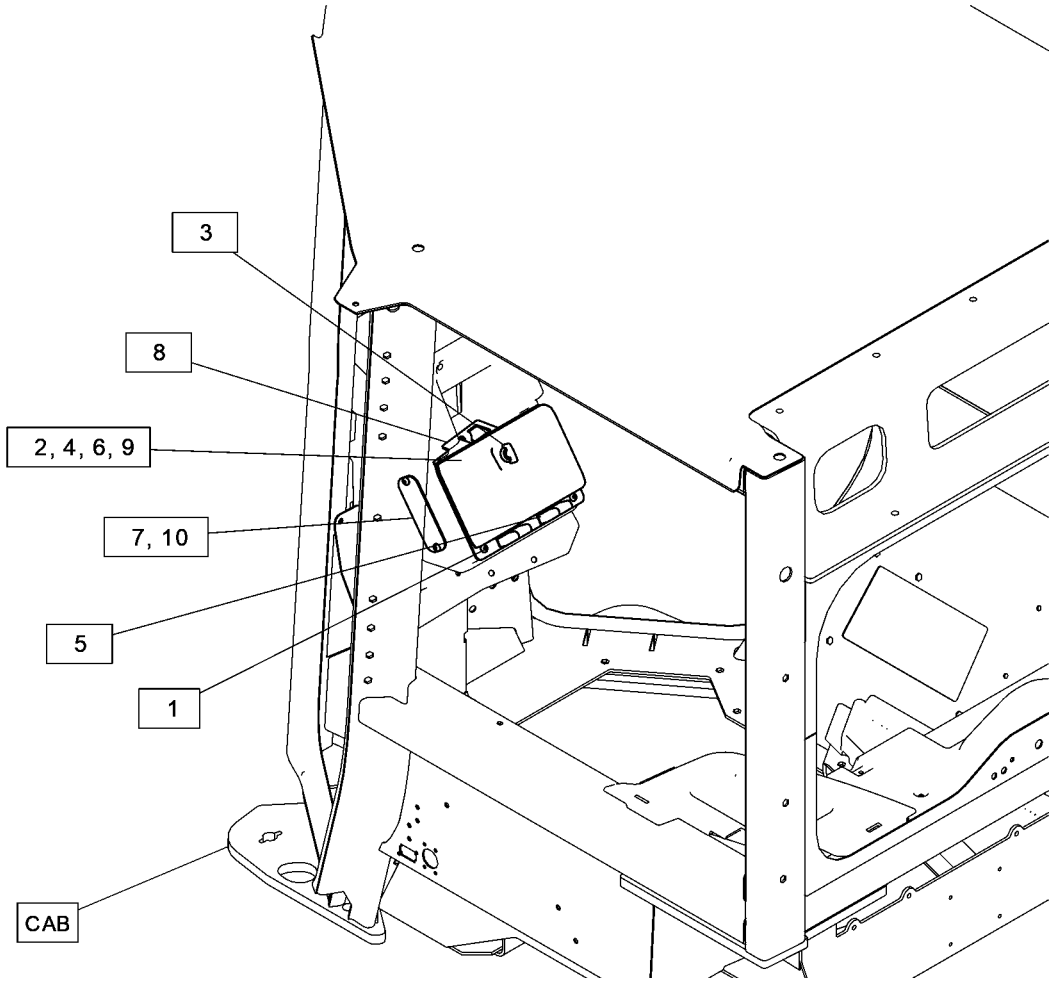

GRAPHIC #1 <END> g06411164

475-9767 DOOR GP-CAB

S/N: Z2K1-UP; Z2N1-UP
PART OF 536-6476, 536-6478, 579-6896 CAB GP
AN ATTACHMENT

SMCS-7308 **i07795384**

NOTE	REF NO	GRAPHIC REF	PART NUMBER	QTY	PART NAME 1 2 3 4 5 6 (PRODUCT LEVEL)	SEE PAGE
	1	1,2	**6V-7636**	2	PIN AS-SPRING	
	2	1,2	**218-7119**	2	GASKET	
	3	1,2	**323-3726**	4	SCREW-PAN HEAD	
J	4	1,2	**336-6672**	2	HANDLE AS (PULL)	
	5	1	**475-7420**	1	DOOR AS-CAB	
M		1	**8T-0269**	2	BOLT-SOCKET HEAD (M6X1X20-MM)	
		1	**9X-8256**	2	WASHER (6.6X12X2-MM THK)	
	6	1	**475-9773**	2	HINGE AS	
Y	7	1	*475-9779*	1	RETAINER GP-DOOR (RH)	742
	8	2	**477-0525**	1	DOOR AS-CAB	
M		2	**8T-0269**	2	BOLT-SOCKET HEAD (M6X1X20-MM)	
		2	**9X-8256**	2	WASHER (6.6X12X2-MM THK)	
Y	9	2	*477-0532*	1	RETAINER GP-DOOR (LH)	743
	10	1	**478-7574**	1	PLATE AS	
	11	2	**478-7575**	1	PLATE AS	
	12	1,2	**501-1125**	2	HANDLE AS-DOOR	
Y	13	1	*501-7810*	1	LATCH GP (RH)	689
Y	14	2	*501-7812*	1	LATCH GP (LH)	690
	15	1,2	**502-9314**	2	HANDLE AS-DOOR	
	16	1,2	**518-5888**	2	BASE	
	17	1	**525-5951**	1	LATCH AS (RH)	
	18	2	**525-5952**	1	LATCH AS (LH)	
	19	1	**525-5953**	1	BELLCRANK AS (RH)	
	20	2	**525-5954**	1	BELLCRANK AS (LH)	
	21	1,2	**525-5955**	2	ROD AS	
	22	1,2	**536-0889**	2	STRIKER AS	
M	23	1,2	**127-1960**	4	SCREW-FLAT HEAD (M6X1X16-MM)	
M	24	1	**188-9644**	18	SCREW-FLAT HEAD (M8X1.25X25-MM)	
M	25	1,2	**216-7352**	14	SCREW-TRUSS HEAD (M8X1.25X30-MM)	
M	26	1,2	**3E-8020**	12	SCREW-TRUSS HEAD (M6X1X25-MM)	
	27	1	**5P-6460**	4	GROMMET	
	28	1	**7X-7729**	18	WASHER (11X25X3-MM THK)	
M	29	1	**8T-4186**	18	BOLT (M10X1.5X40-MM)	
M	30	1,2	**9X-2043**	10	SCREW-TRUSS HEAD (M6X1X14-MM)	
E	31	1	**331-9731**		SEAL (4-CM EACH)	
E	32	1,2	**525-2188**		SEAL-BULK (398-CM EACH)	

E - ORDER BY THE CENTIMETER
J - REQUIRES CORPORATE KEY
M - METRIC PART
Y - SEPARATE ILLUSTRATION

475-9767 **DOOR GP-CAB (**contd.**)** **i07795384**

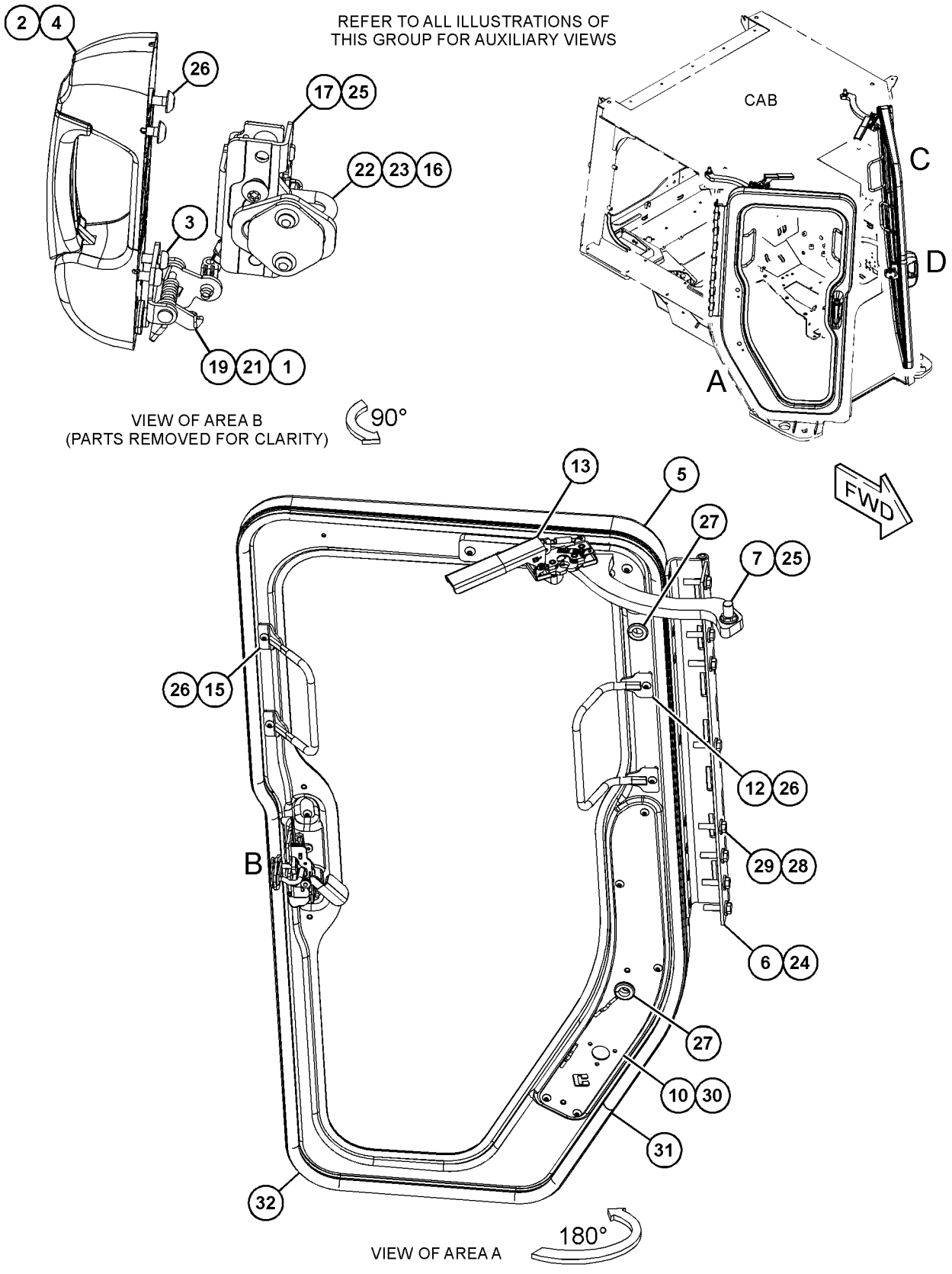

GRAPHIC #1 g06354819

475-9767 **DOOR GP-CAB** (contd.) **i07795384**

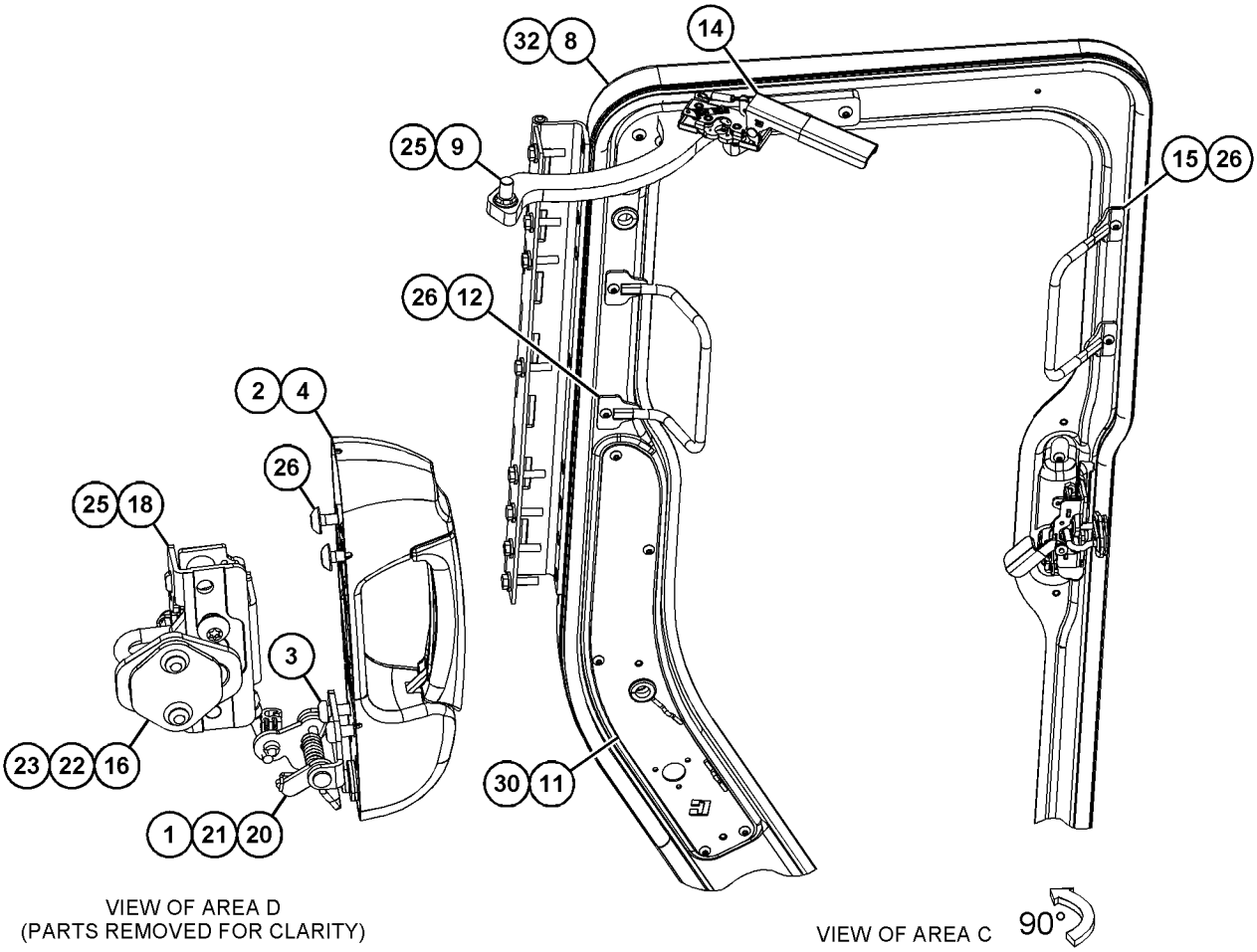

GRAPHIC #2 <END> g06357558

441-9252 FILTER GP-CAB AIR

S/N: Z2K1-UP; Z2N1-UP
PART OF 532-9851, 532-9856 DISTRIBUTION AR
AN ATTACHMENT

SMCS-7342 **i07821066**

NOTE	REF NO	GRAPHIC REF	PART NUMBER	QTY	PART NAME 1 2 3 4 5 6 (PRODUCT LEVEL)	SEE PAGE
	1	1	**193-2200**	1	SEAL-LIP TYPE	
	2	1	**545-8339**	1	FILTER-CAB AIR	
Y	3	1	*441-9261*	1	FILTER GP-CAB AIR	678
	4	1	**1T-0580**	1	RING-RETAINING	
	5	1	**8T-4121**	2	WASHER-HARD (11X21X2.5-MM THK)	
M	6	1	**8T-4196**	2	BOLT (M10X1.5X35-MM)	

M - METRIC PART
Y - SEPARATE ILLUSTRATION

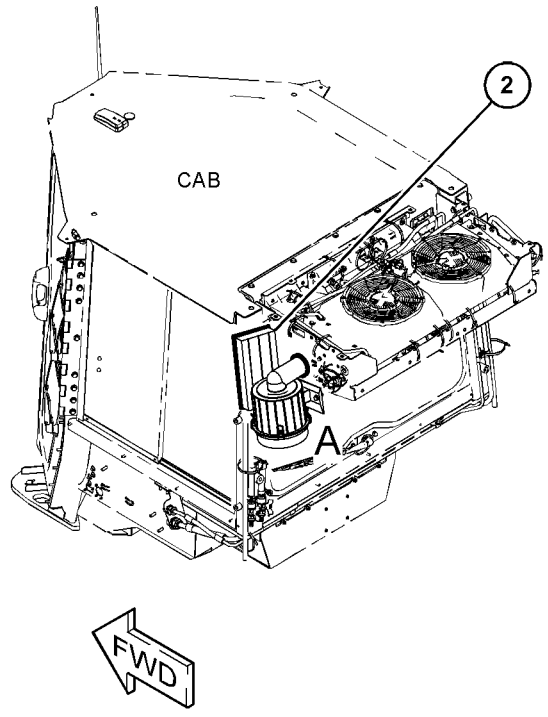

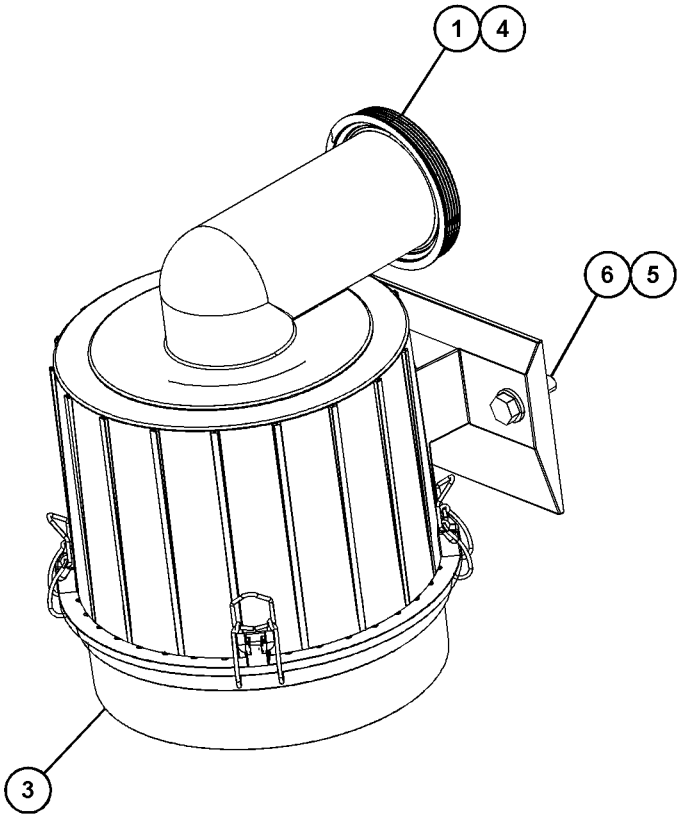

VIEW OF AREA A

GRAPHIC #1 <END> g06356835

441-9261 FILTER GP-CAB AIR

S/N: Z2K1-UP; Z2N1-UP
FIELD REPLACEMENT ORDER 573-4585—PAGE: 679
PART OF 441-9252 FILTER GP-CAB AIR
AN ATTACHMENT

SMCS-7342 **i07863365**

NOTE	REF NO	GRAPHIC REF	PART NUMBER	QTY	PART NAME 1 2 3 4 5 6 (PRODUCT LEVEL)	SEE PAGE
	1	1	**464-8460**	1	CARTRIDGE-FILTER	
	2	1	**464-8447**	4	CLIP	

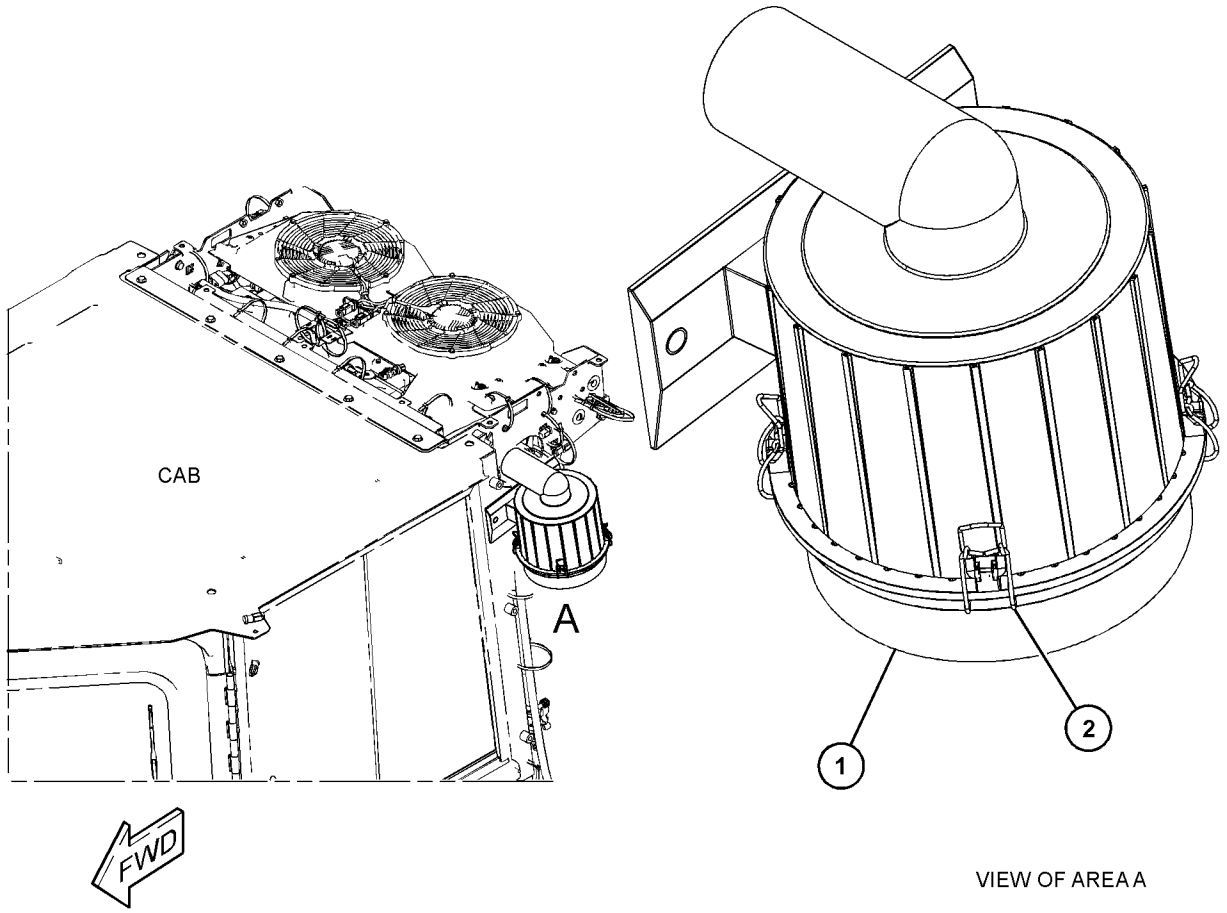

VIEW OF AREA A

GRAPHIC #1 <END> g06451559

573-4585 FILTER GP-CAB AIR

S/N: Z2K1-UP; Z2N1-UP

FIELD REPLACEMENT FOR 441-9261—PAGE: 678

SMCS-7342 **i07863382**

NOTE	REF NO	GRAPHIC REF	PART NUMBER	QTY	PART NAME 1 2 3 4 5 6 (PRODUCT LEVEL)	SEE PAGE
	1	1	**464-8460**	1	CARTRIDGE-FILTER	
	2	1	**464-8447**	4	CLIP	

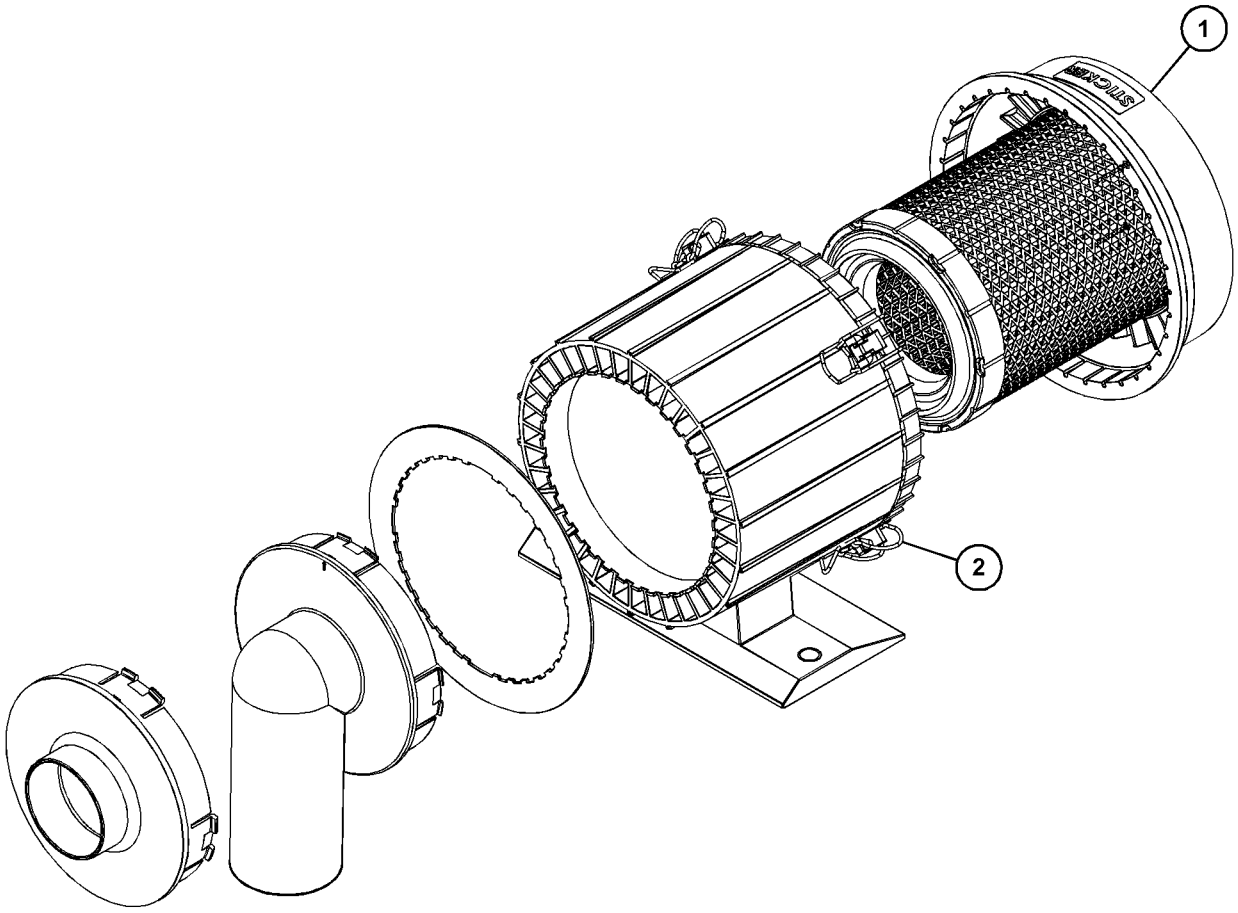

GRAPHIC #1 <END> g06453939

550-5579 HANDHOLD AR

S/N: Z2K1-UP; Z2N1-UP
CANNOT BE USED WITH 550-5580—PAGE: 748
PART OF 532-9793 ENCLOSURE AR, 532-9797 WASTE HANDLING AR
AN ATTACHMENT

SMCS-7256 **i07819918**

NOTE	PART NUMBER	QTY	PART NAME 1 2 3 4 5 6 (PRODUCT LEVEL)	SEE PAGE
Y	*576-0991*	1	HANDHOLD GP	681
Y	*435-5754*	1	MOUNTING GP-CAB	716
	515-3741	1	PLUG GP (RADIATOR GUARD)	
	125-7037	8	INSERT	

Y - SEPARATE ILLUSTRATION

<END>

576-0991 HANDHOLD GP

S/N: Z2K1-UP; Z2N1-UP
PART OF 550-5579 HANDHOLD AR
AN ATTACHMENT

SMCS-7256 **i07850293**

NOTE	REF NO	GRAPHIC REF	PART NUMBER	QTY	PART NAME 1 2 3 4 5 6 (PRODUCT LEVEL)	SEE PAGE
	1	1	**505-1206**	1	TUBE AS	
	2	1	**505-1207**	1	TUBE AS	
	3	1	**576-0992**	1	PLATE AS	
	4	1	**5P-1076**	3	WASHER-HARD (13.5X30X4-MM THK)	
M	5	1	**7X-2533**	2	BOLT (M6X1X35-MM)	
M	6	1	**8T-5460**	4	BOLT (M20X2.5X40-MM)	
	7	1	**8T-4123**	4	WASHER (22X35X3.5-MM THK)	
M	8	1	**8T-4139**	5	BOLT (M12X1.75X30-MM)	
	9	1	**8T-4223**	2	WASHER-HARD (13.5X25.5X3-MM THK)	
	10	1	**9X-8256**	2	WASHER (6.6X12X2-MM THK)	

M - METRIC PART

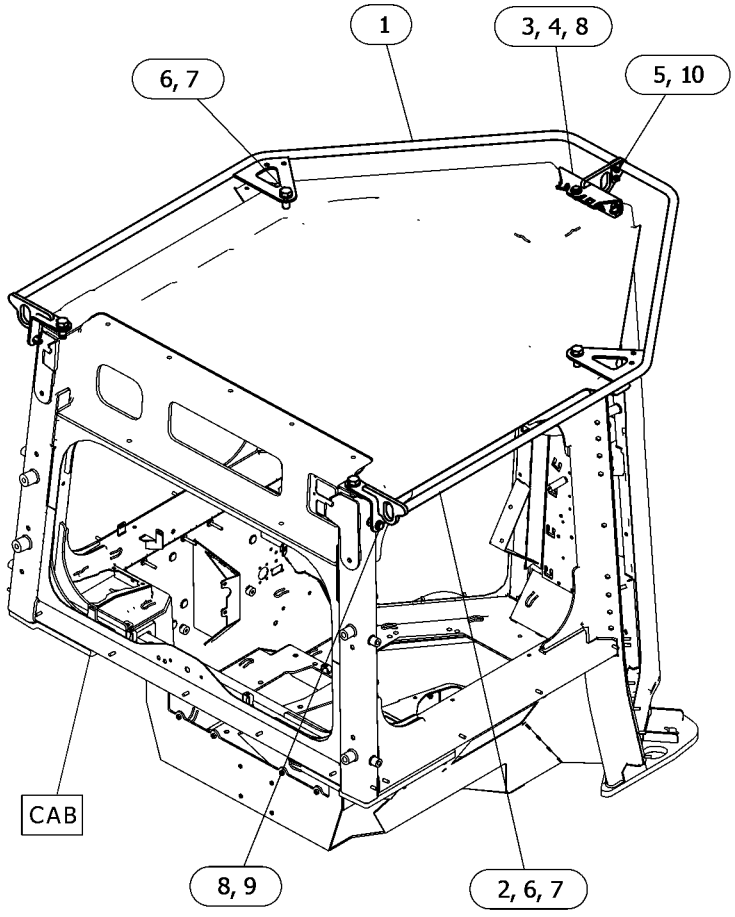

GRAPHIC #1 <END> g06457316

435-5766 HOLDER GP-CUP

S/N: Z2K1-UP; Z2N1-UP
PART OF 565-5309 LINER GP-CAB
AN ATTACHMENT

SMCS-731C **i07824640**

NOTE	REF NO	GRAPHIC REF	PART NUMBER	QTY	PART NAME 1 2 3 4 5 6 (PRODUCT LEVEL)	SEE PAGE
M	1	1	**121-9870**	3	SCREW-MACHINE (M6X1X40-MM)	
	2	1	**447-0891**	1	LINER	
	3	1	**505-7959**	1	HOLDER-CUP	

M - METRIC PART

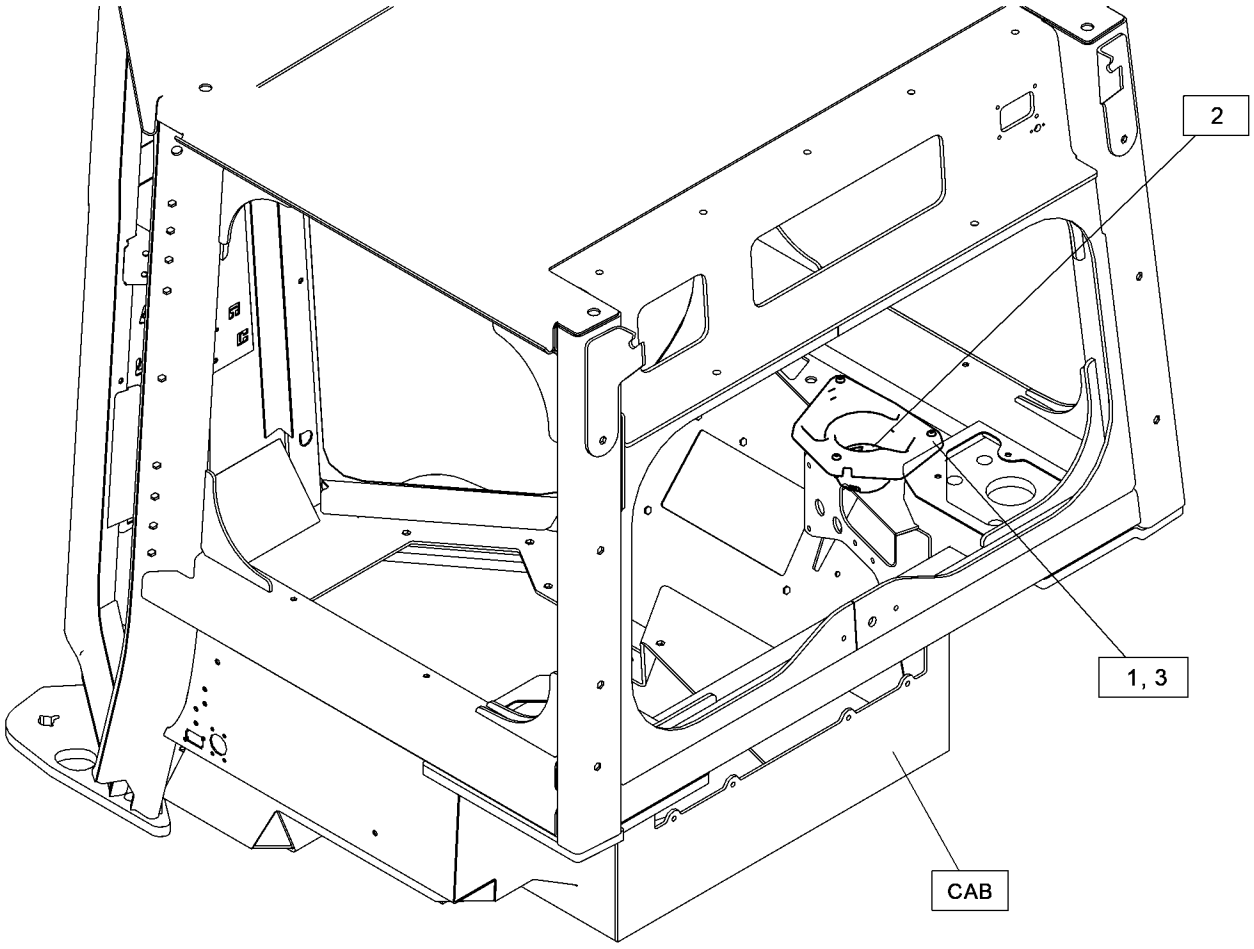

GRAPHIC #1 <END> g06450560

174-2231 HOUSING GP-SEAT SUSPENSION

S/N: Z2K1-UP

PART OF 160-7165 SUSPENSION GP-SEAT

AN ATTACHMENT

SMCS-7321 **i01883773**

NOTE	REF NO	GRAPHIC REF	PART NUMBER	QTY	PART NAME 1 2 3 4 5 6 (PRODUCT LEVEL)	SEE PAGE
	1	1	**1Y-7927**	1	PIN	
	2	1	**2D-6235**	2	LOCKNUT (1/4-20-THD)	
	3	1	**2M-7819**	4	RING-RETAINING	
	4	1	**3D-2975**	2	RING-RETAINING	
	5	1	**4B-5059**	6	WASHER (15X29.5X2.5-MM THK)	
	6	1	**4N-2927**	2	RACE-THRUST BEARING	
	7	1	**5D-4822**	2	RING-RETAINING	
	8	1	**5P-8445**	4	RING-RETAINING	
	9	1	**5V-0770**	2	BOLT-CARRIAGE (1/4-20X0.74-IN)	
	10	1	**7M-7219**	1	BEARING-THRUST	
	11	1	**7V-5191**	2	SPACER (28X10X7.1-MM THK)	
	12	1	**8L-8413**	2	STRAP-CABLE (WHITE)	
	13	1	**8S-7803**	4	RING-RETAINING	
	14	1	**8Y-6041**	1	ARM AS	
	15	1	**8Y-6045**	1	CAM	
	16	1	**8Y-6046**	1	PIN	
	17	1	**8Y-6047**	2	PIN	
	18	1	**8Y-6060**	2	ROLLER	
	19	1	**8Y-6062**	1	LINK-ACTUATOR	
	20	1	**8Y-6063**	1	LINK-ACTUATOR	
	21	1	**8Y-6064**	2	ROLLER-SLIDER	
	22	1	**8Y-6066**	1	SPRING	
	23	1	**8Y-6067**	1	SPACER (10.54-MM THK)	
	24	1	**8Y-6068**	1	NUT (3/8X16-THD)	
	25	1	**8Y-6069**	1	ADJUSTER AS	
	26	1	**9X-8918**	3	SCREW-FLAT HEAD (8-32X0.5-IN)	
	27	1	**095-0878**	1	PIN-SPRING	
	28	1	**131-4242**	1	BOLT (3/8-16X5.18-IN)	
	29	1	**131-5167**	1	KNOB AS-ADJUSTMENT (SEAT SUSPENSION)	
	30	1	**161-5967**	1	SHAFT	
	31	1	**174-2237**	1	FRAME AS-SUSPENSION	
JZ	32	1		1	KNOB-HEIGHT (SEAT SUSPENSION)	
JZ	33	1		1	KNOB-HEIGHT (SEAT SUSPENSION)	
LZ	34	1		2	SPRING	
LZ	35	1		2	BUSHING	
VZ	36	1		2	SPRING	
VZ	37	1		2	SPACER	
VZ	38	1		2	BUSHING-GUIDE	
VZ	39	1		2	ROD	
PZ	40	1		1	TAPE-INDICATOR	
PZ	41	1		1	GUIDE	
SZ	42	1		1	PIN	
SZ	43	1		1	FOLLOWER-CAM	
TZ	44	1		1	PIN	
TZ	45	1		1	FOLLOWER-CAM	
UZ	46	1		2	ROLLER AS	

174-2231 **HOUSING GP-SEAT SUSPENSION** (contd.) **i01883773**

NOTE	REF NO	GRAPHIC REF	PART NUMBER	QTY	PART NAME 1 2 3 4 5 6 (PRODUCT LEVEL)	SEE PAGE
UZ	47	1		1	ROLLER AS	
QZ	48	1		3	BUMPER	
					AVAILABLE REPAIR KIT(S):	
J			**8Y-5945**	1	KIT-SUSPENSION KNOB (HEIGHT ADJUSTMENT) (SUSPENSION SEAT)	
L			**8Y-6859**	1	KIT-SPRING (SUSPENSION SEAT)	
V			**8Y-6860**	1	KIT-SPRING (HEIGHT ADJUSTMENT) (SUSPENSION SEAT)	
P			**100-3224**	1	KIT-INDICATOR (WEIGHT ADJUSTMENT) (SUSPENSION SEAT)	
Q			**100-5179**	1	KIT-BUMPER (WEIGHT ADJUSTMENT) (SUSPENSION SEAT)	
S			**108-4086**	1	KIT-FOLLOWER (SUSPENSION SEAT)	
T			**108-4087**	1	KIT-FOLLOWER (SUSPENSION SEAT)	
U			**108-4103**	1	KIT-BEARING (SUSPENSION SEAT)	

J - KIT MARKED J INCLUDES PART(S) MARKED J
L - KIT MARKED L INCLUDES PARTS MARKED L AND RETAINING RING
P - KIT MARKED P INCLUDES PARTS MARKED P AND CABLE STRAP
Q - KIT MARKED Q INCLUDES PART(S) MARKED Q
S - KIT MARKED S INCLUDES PART(S) MARKED S
T - KIT MARKED T INCLUDES PART(S) MARKED T
U - KIT MARKED U INCLUDES PART(S) MARKED U
V - KIT MARKED V INCLUDES PART(S) MARKED V
Z - NOT SERVICED SEPARATELY

174-2231 **HOUSING GP-SEAT SUSPENSION** (contd.) **i01883773**

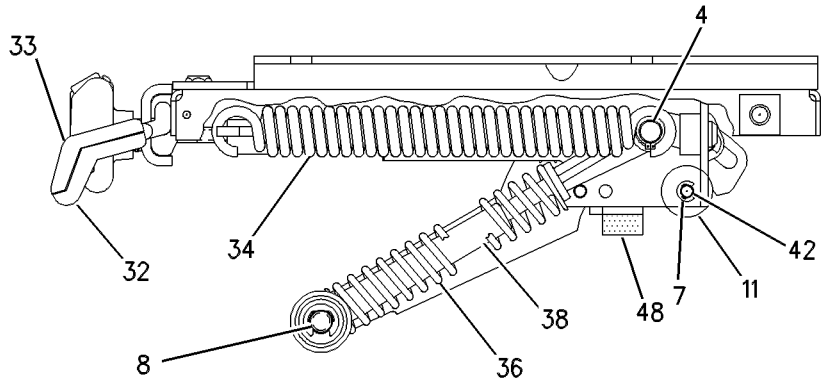

SECTION B-B

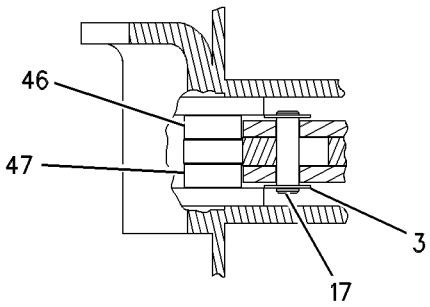

SECTION C-C

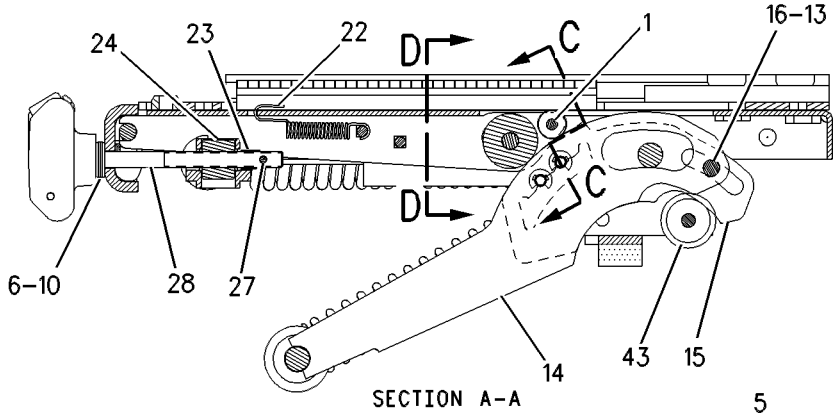

SECTION A-A

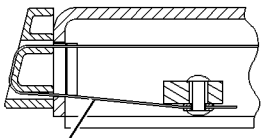

SECTION E-E

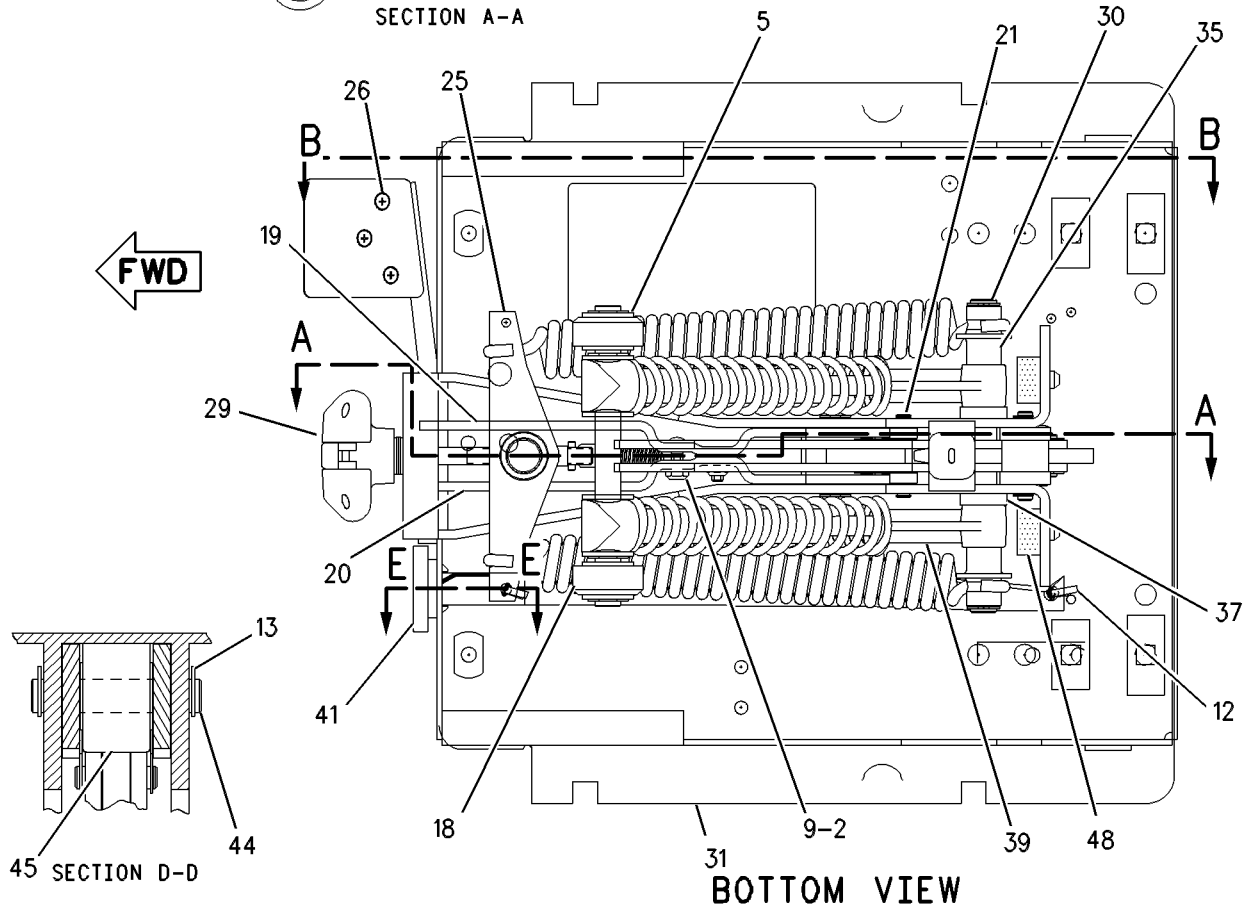

BOTTOM VIEW

SECTION D-D

GRAPHIC #1 <END> g00608620

568-7695 INSTALLATION AR-CAB

S/N: Z2K1-UP; Z2N1-UP
PART OF 575-9695 AIR CONDITIONER AR
AN ATTACHMENT

SMCS-7301 **i07828894**

NOTE	PART NUMBER	QTY	PART NAME 1 2 3 4 5 6 (PRODUCT LEVEL)	SEE PAGE
Y	*575-9962*	1	INSTALLATION GP-CAB	687
Y	**485-3445**	1	SEAT BELT GP	759
Y	*568-7744*	1	COVER GP-CAB	666
Y	*575-4388*	1	WIRING GP-SEAT	266

Y - SEPARATE ILLUSTRATION

<END>

568-7696 INSTALLATION AR-CAB

S/N: Z2K1-UP; Z2N1-UP
PART OF 575-9697 AIR CONDITIONER AR
AN ATTACHMENT

SMCS-7301 **i07840020**

NOTE	PART NUMBER	QTY	PART NAME 1 2 3 4 5 6 (PRODUCT LEVEL)	SEE PAGE
Y	*539-1378*	1	COVER GP-CAB	664
Y	*575-9962*	1	INSTALLATION GP-CAB	687
Y	**485-3445**	1	SEAT BELT GP	759
Y	*575-4388*	1	WIRING GP-SEAT	266

Y - SEPARATE ILLUSTRATION

<END>

575-9962 INSTALLATION GP-CAB

S/N: Z2K1-UP; Z2N1-UP
PART OF 568-7695, 568-7696 INSTALLATION AR-CAB
AN ATTACHMENT

SMCS-7301 **i07828922**

NOTE	REF NO	GRAPHIC REF	PART NUMBER	QTY	PART NAME 1 2 3 4 5 6 (PRODUCT LEVEL)	SEE PAGE
	1	1	**132-5789**	1	CLIP (LADDER)	
M	2	1	**479-2171**	4	BOLT AS	
	3	1	**504-5755**	1	PLATE	
	4	1	**504-5756**	1	PLATE AS	
M		1	**6V-9632**	2	NUT-WELD (M6X1-THD)	
	5	1	**504-6303**	1	PLATE AS	
M		1	**6V-9632**	4	NUT-WELD (M6X1-THD)	
	6	1	**575-6940**	1	PLATE AS	
M	7	1	**172-8591**	1	NUT-CLIP (M6X1-THD)	
	8	1	**4P-7581**	1	CLIP (LADDER)	
	9	1	**7K-1181**	2	STRAP-CABLE	
M	10	1	**9X-2041**	3	SCREW-TRUSS HEAD (M10X1.5X20-MM)	
M	11	1	**9X-2045**	10	SCREW-TRUSS HEAD (M6X1X20-MM)	

M - METRIC PART

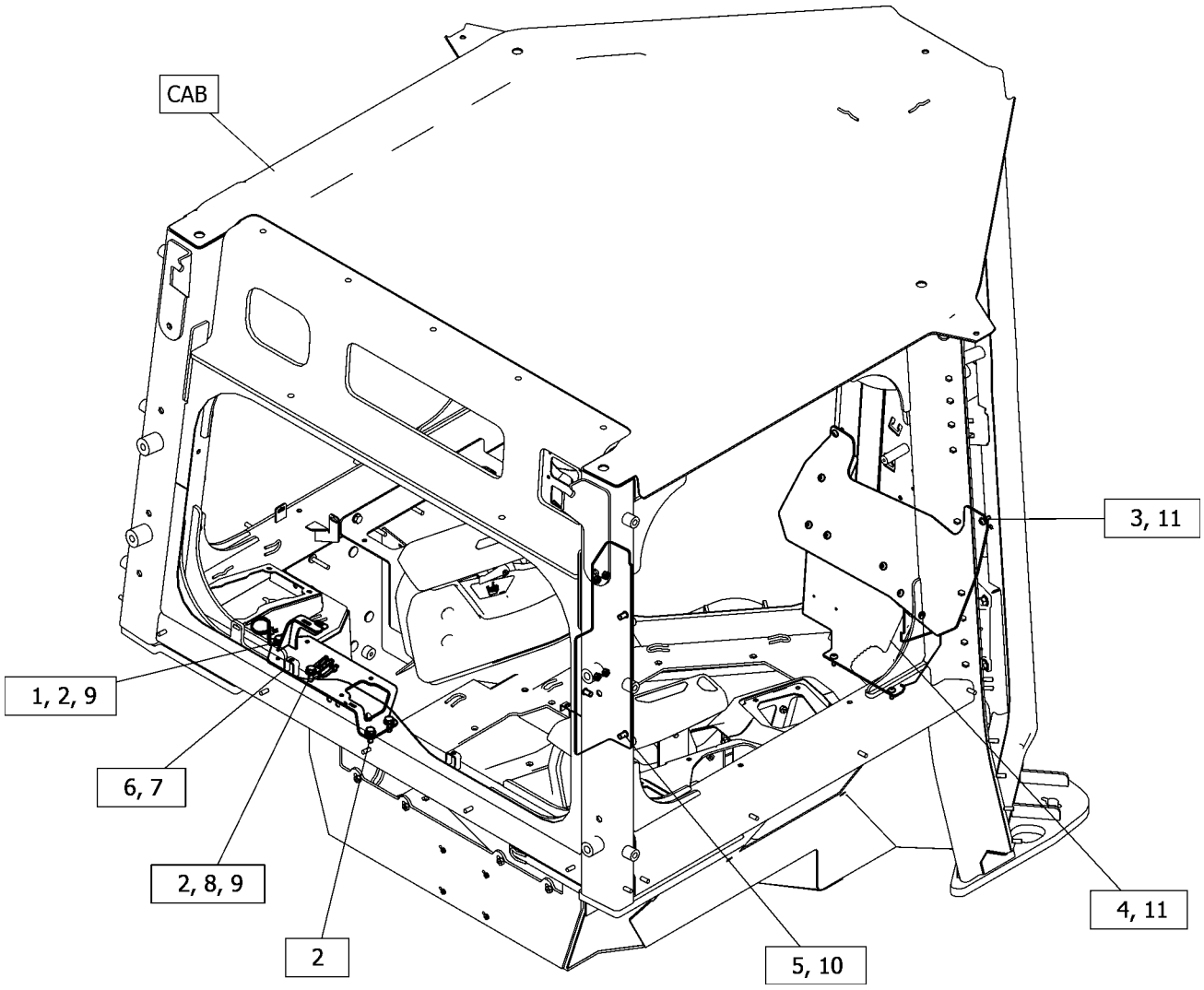

GRAPHIC #1 <END> g06451329

563-5532 KIT-HANDLE

S/N: Z2K1-UP; Z2N1-UP
PART OF 432-0047 CONTROL GP-HANDLE
AN ATTACHMENT

SMCS-7312 **i07435925**

NOTE	PART NUMBER	QTY	PART NAME 1 2 3 4 5 6 (PRODUCT LEVEL)	SEE PAGE
	566-2688	1	BOOT	
	566-2687	1	KNOB	
	566-2686	1	SLEEVE	

<END>

501-7810 LATCH GP

S/N: Z2K1-UP; Z2N1-UP
RH
PART OF 475-9767 DOOR GP-CAB
AN ATTACHMENT

SMCS-7308 **i07797687**

NOTE	REF NO	GRAPHIC REF	PART NUMBER	QTY	PART NAME 1 2 3 4 5 6 (PRODUCT LEVEL)	SEE PAGE
	1	1	**9X-2027**	1	WASHER (11X18X2-MM THK)	
M	2	1	**096-4883**	1	LOCKNUT (M10X1.5-THD)	
	3	1	**106-6553**	1	BUMPER-CONICAL	
	4	1	**547-9635**	1	LATCH AS	
M	5	1	**3E-8020**	4	SCREW-TRUSS HEAD (M6X1X25-MM)	

M - METRIC PART

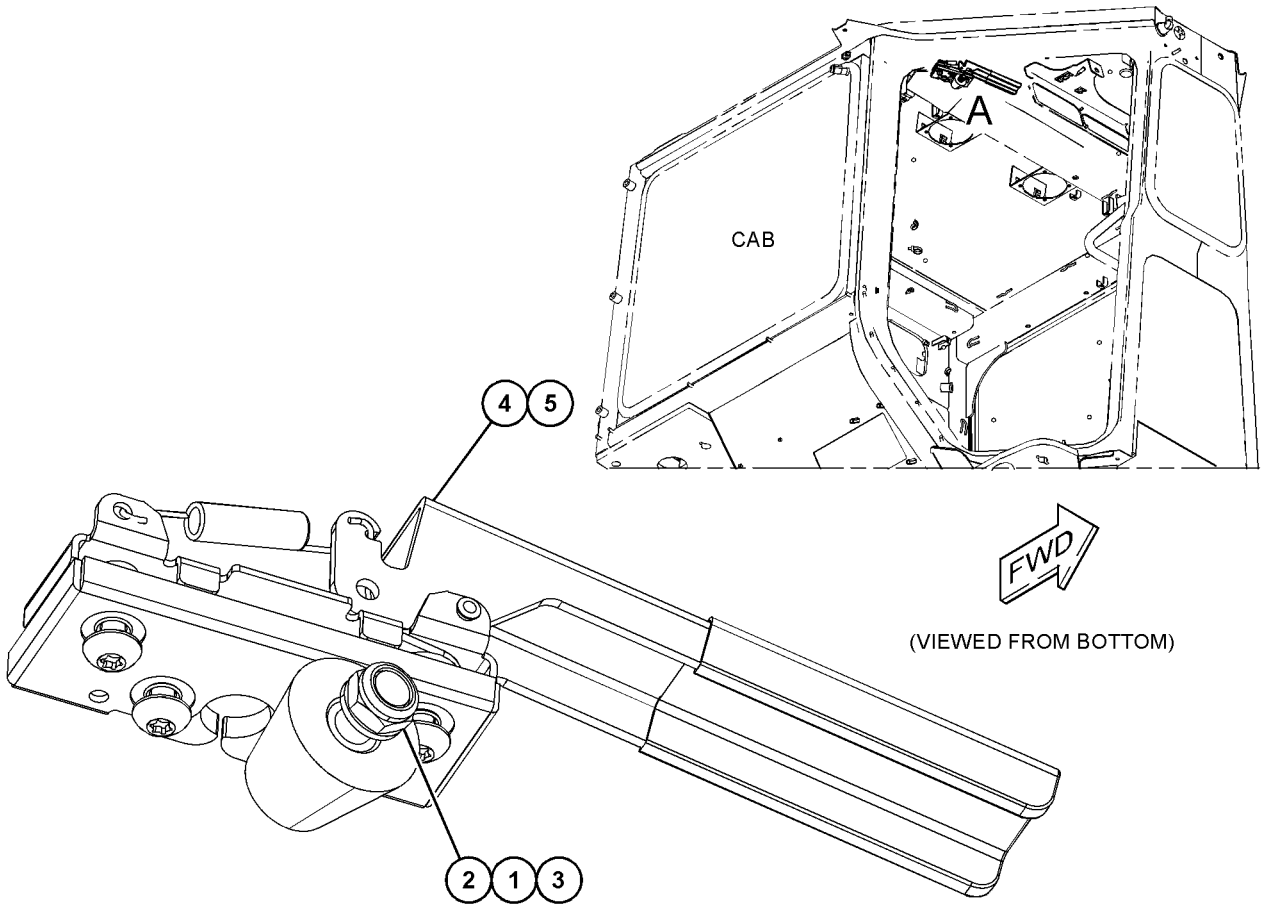

VIEW OF AREA A

GRAPHIC #1 <END> g06352400

501-7812 LATCH GP

S/N: Z2K1-UP; Z2N1-UP
LH
PART OF 475-9767 DOOR GP-CAB
AN ATTACHMENT

SMCS-7308 **i07797779**

NOTE	REF NO	GRAPHIC REF	PART NUMBER	QTY	PART NAME 1 2 3 4 5 6 (PRODUCT LEVEL)	SEE PAGE
	1	1	**9X-2027**	1	WASHER (11X18X2-MM THK)	
M	2	1	**096-4883**	1	LOCKNUT (M10X1.5-THD)	
	3	1	**106-6553**	1	BUMPER-CONICAL	
	4	1	**547-9627**	1	LATCH AS	
M	5	1	**3E-8020**	4	SCREW-TRUSS HEAD (M6X1X25-MM)	

M - METRIC PART

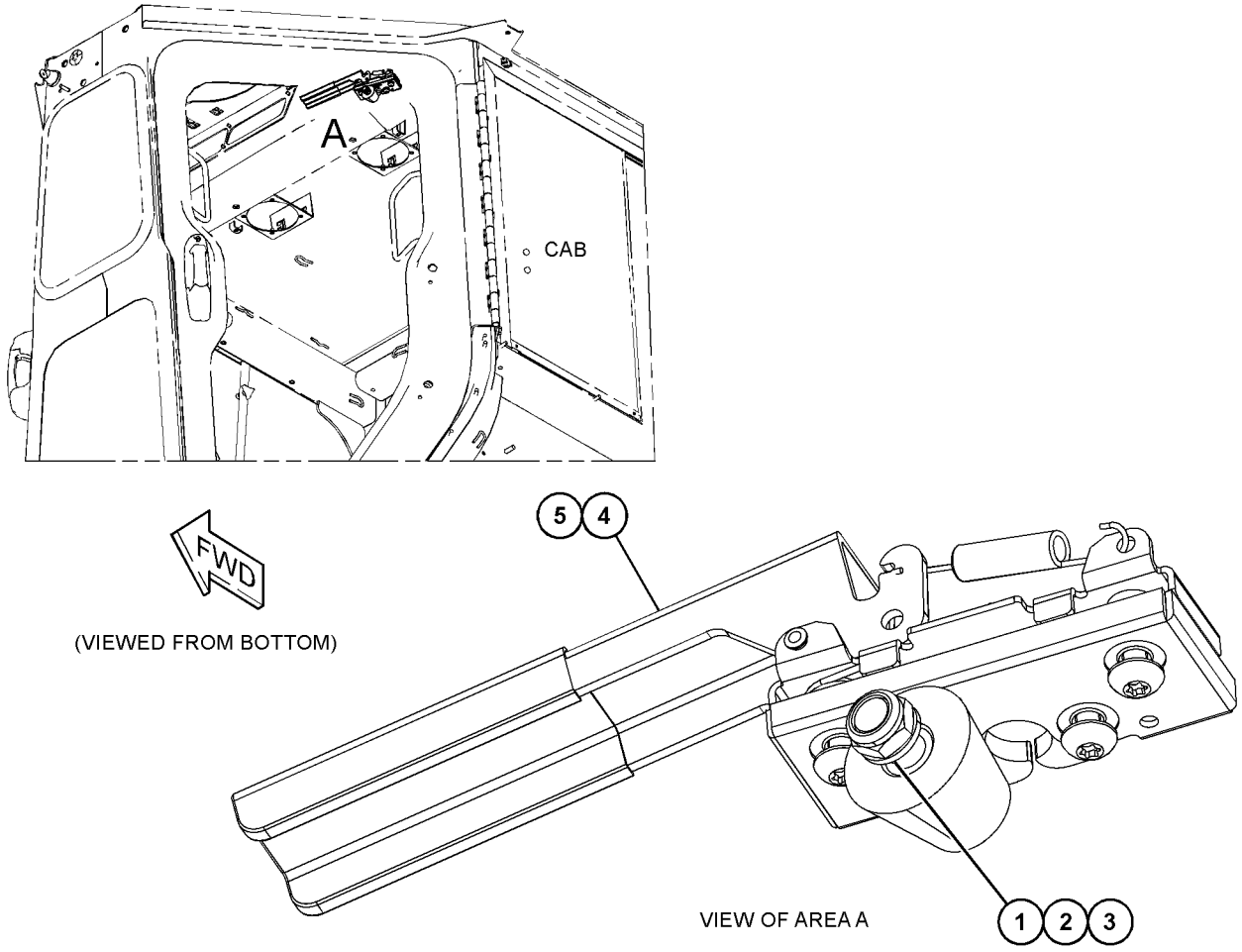

GRAPHIC #1 <END> g06352767

562-3973 LINER GP-CAB

S/N: Z2K1-UP; Z2N1-UP

PART OF 536-6467, 536-6468, 536-6469, 536-6470, 579-6887 CAB AR

AN ATTACHMENT

SMCS-7329 **i07805554**

NOTE	REF NO	GRAPHIC REF	PART NUMBER	QTY	PART NAME 1 2 3 4 5 6 (PRODUCT LEVEL)	SEE PAGE
M	1	1,2	**172-8591**	22	NUT-CLIP (M6X1-THD)	
	2	3	**5P-7957**	1	LANYARD	
	3	3	**342-9457**	3	GASKET	
	4	3	**424-6355**	1	NET AS-STORAGE	
	5	1,2	**447-0891**	2	LINER	
	6	2	**460-4735**	11	LOUVER AS	
	7	2	**460-4738**	2	LOUVER AS	
	8	1	**463-8337**	1	LINER AS-CAB	
	9	1	**463-8338**	1	HEADLINER	
	10	1	**463-8341**	1	DUCT AS	
	11	1	**463-8343**	1	DUCT AS (RH)	
	12	1	**463-8344**	1	DUCT AS (LH)	
	13	1	**464-8548**	1	COVER (RH)	
	14	1	**464-8550**	1	COVER (LH)	
	15	1	**464-8551**	1	CONSOLE (RH)	
	16	1	**562-3974**	1	PANEL-SWITCH (RH)	
	17	2	**562-3975**	1	PANEL-SWITCH (LH)	
	18	3	**467-2275**	1	STORAGE AS	
	19	1	**468-2855**	1	BEZEL AS	
	20	1	**476-6351**	1	COVER-LATCH	
	21	1	**476-6352**	1	COVER-LATCH	
	22	1	**478-8416**	1	COVER	
	23	1	**478-8417**	1	COVER	
	24	3	**524-3722**	1	PLATE	
	25	3	**117-6838**	1	STUD	
	26	2	**500-5044**	1	COVER (LH)	
	27	1	**507-3863**	1	LINER	
	28	2	**510-8110**	1	HOLDER-CUP	
M	29	3	**138-8454**	1	SCREW-TRUSS HEAD (M4X0.7X10-MM)	
	30	2	**523-9187**	1	COVER (RH)	
	31	3	**536-6517**	1	PLATE	
	32	2	**104-2091**	16	SCREW-FLAT HEAD (6-20X0.5-IN)	
M	33	1	**111-4627**	8	SCREW-MACHINE (M6X1X30-MM)	
	34	1,2	**114-6658**	26	WASHER (6.5X17X1-MM THK)	
	35	2	**118-5619**	6	SCREW-FLAT HEAD (6-20X1-IN)	
M	36	1	**3E-8020**	4	SCREW-TRUSS HEAD (M6X1X25-MM)	
	37	3	**6C-3679**	1	RIVET-POP	
	38	3	**470-9481**	1	DUCT AS	
	39	1	**7X-0579**	25	WASHER-HARD (8.8X25.5X2-MM THK)	
M	40	1	**9X-1046**	4	SCREW (M4X0.7X18-MM)	
M	41	1,2,3	**9X-2044**	10	SCREW-TRUSS HEAD (M6X1X16-MM)	
M	42	1,2,3	**9X-2045**	24	SCREW-TRUSS HEAD (M6X1X20-MM)	
M	43	1	**9X-2046**	12	SCREW-TRUSS HEAD (M6X1X35-MM)	
	44	3	**4B-4863**	4	WASHER (4.7X11X1.2-MM THK)	
	45	3	**2R-2376**	1	WASHER (7X16X0.8-MM THK)	
	46	3	**5P-0537**	1	WASHER-HARD (7.2X14.5X2-MM THK)	

562-3973 **LINER GP-CAB** (contd.) **i07805554**

NOTE	REF NO	GRAPHIC REF	PART NUMBER	QTY	PART NAME 1 2 3 4 5 6 (PRODUCT LEVEL)	SEE PAGE
	47	3	**7K-4201**	1	NUT-SPEED	
M	48	3	**174-8131**	4	SCREW-TRUSS HEAD (M4X0.7X12-MM)	
	49	3	**482-7531**	1	HOOK-COAT	
	50	3	**502-0259**	1	PLATE	
	51	3	**525-1179**	1	COVER AS-SOUND SUPPRESSION	
	52	3	**8M-7758**	2	RIVET-POP	
E	53	3	**345-3155**		SEAL (60-CM)	
E	54	3	**123-3827**		SEAL (127-CM)	
E	54A	3	**123-3827**		SEAL (71-CM EACH)	
D	55	3	**6V-5746**		TRIM (0.1-M EACH)	

D - ORDER BY THE METER
E - ORDER BY THE CENTIMETER
M - METRIC PART

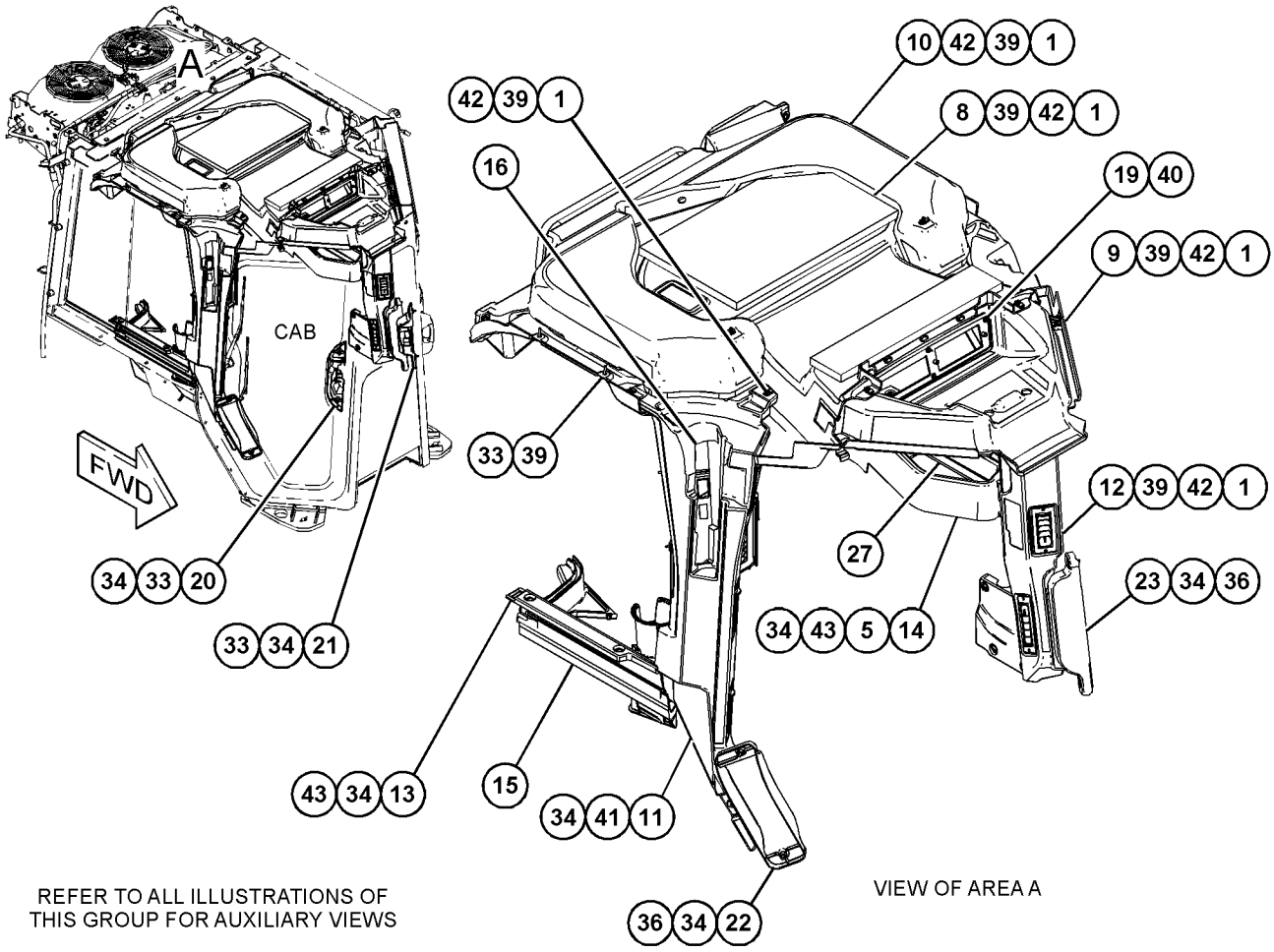

GRAPHIC #1 g06457193

562-3973 **LINER GP-CAB (**contd.**)** **i07805554**

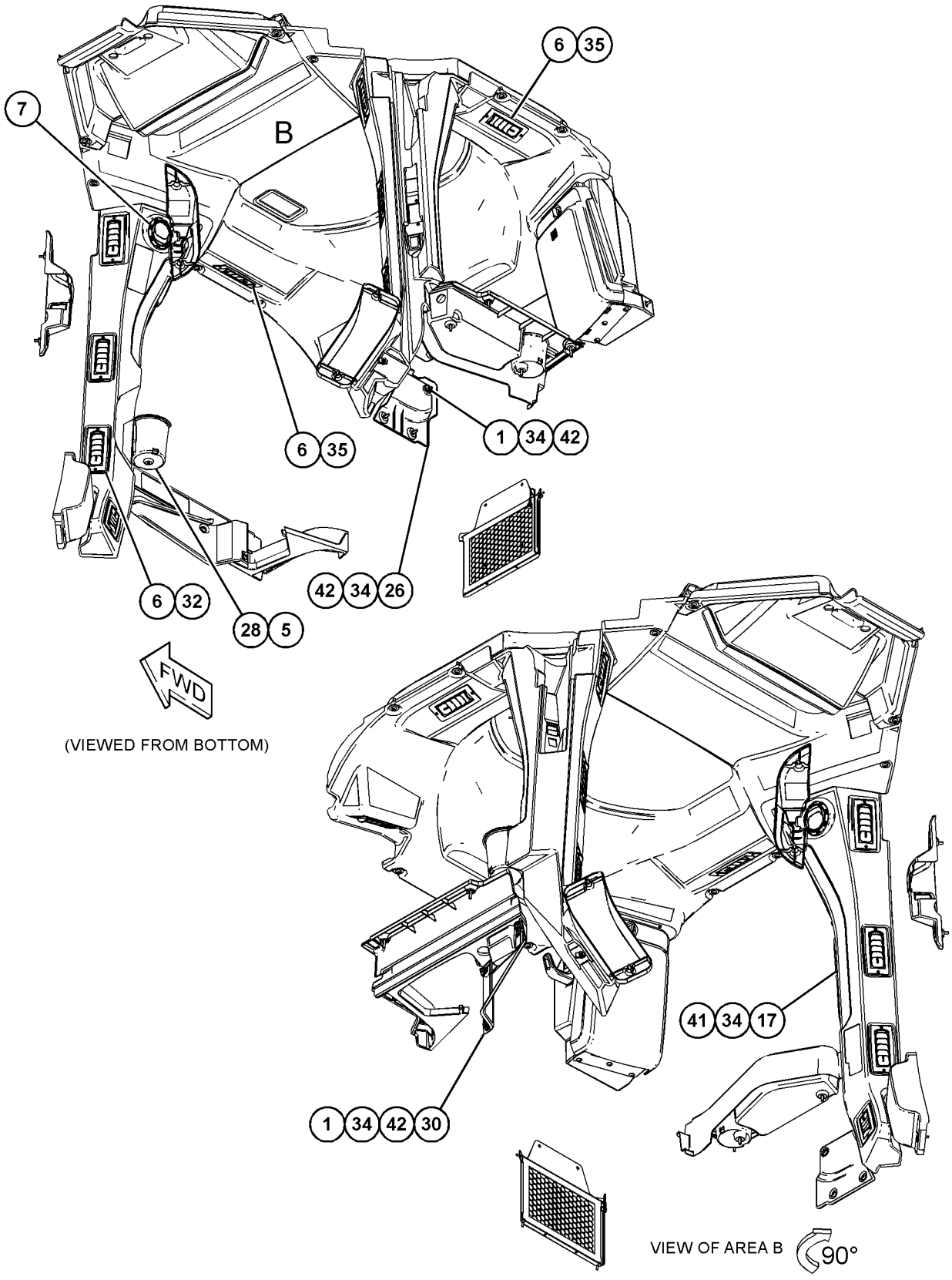

GRAPHIC #2 g06457194

562-3973 **LINER GP-CAB (**contd.**)** **i07805554**

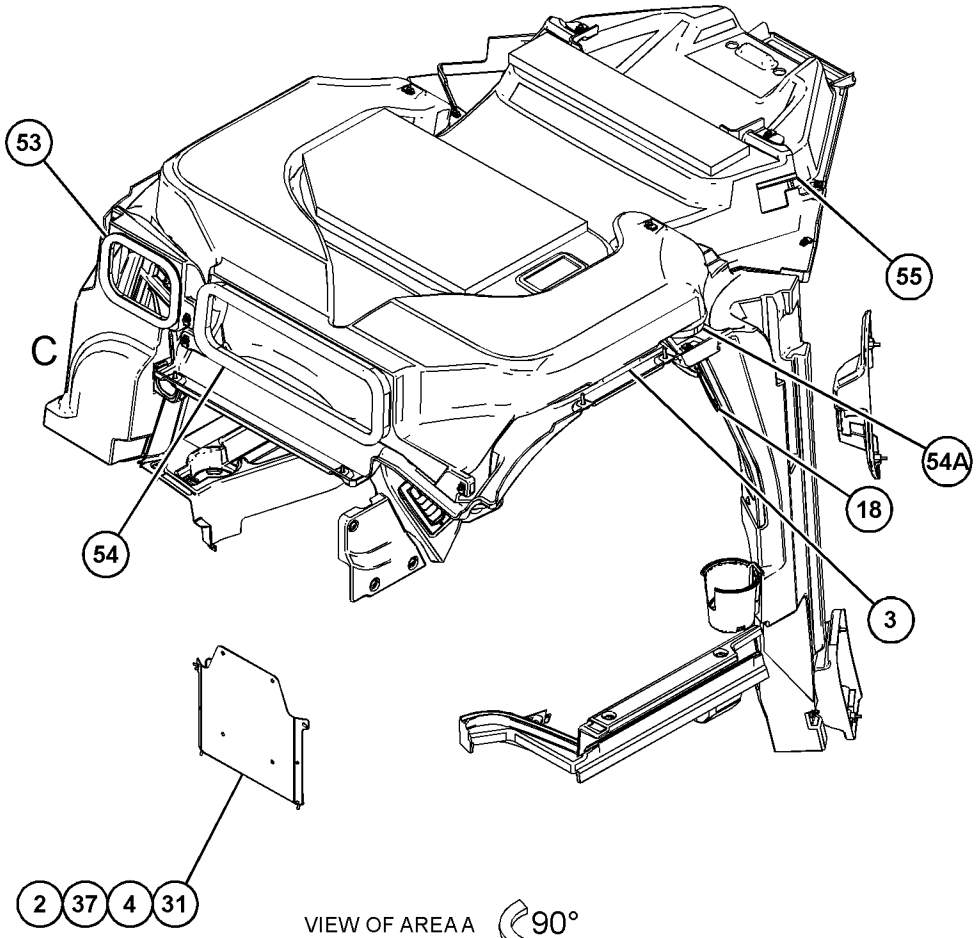

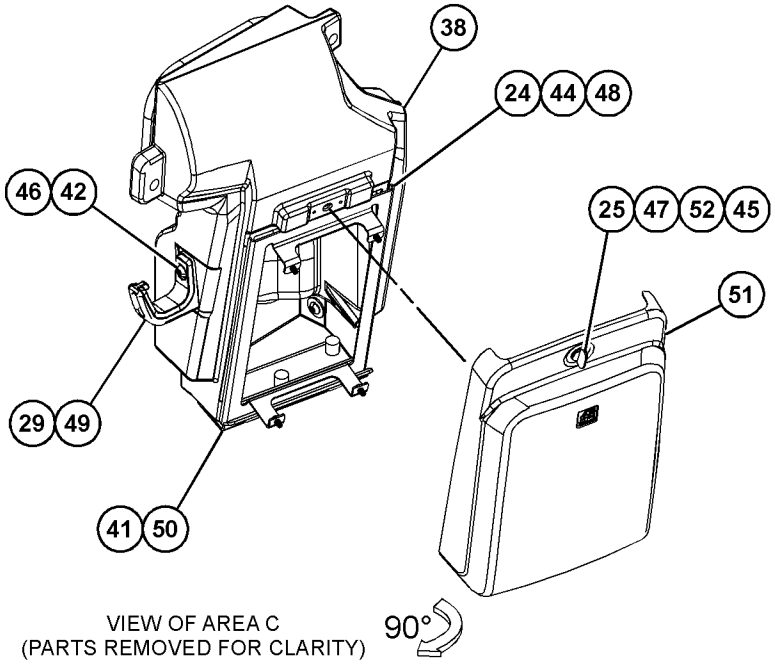

GRAPHIC #3 <END> g06457195

565-5309 LINER GP-CAB

S/N: Z2K1-UP; Z2N1-UP
NO REAR ATTACHMENT
PART OF 532-9856 DISTRIBUTION AR
AN ATTACHMENT

SMCS-7329 **i07824633**

NOTE	PART NUMBER	QTY	PART NAME 1 2 3 4 5 6 (PRODUCT LEVEL)	SEE PAGE
Y	*435-5766*	1	HOLDER GP-CUP	682
	565-4121	1	PLUG GP	
	148-8408	2	PLUG AS	
			(EACH INCLUDES)	
	3D-2824	1	SEAL-O-RING	
	9S-4183	1	PLUG (1-1/16-12-THD)	

Y - SEPARATE ILLUSTRATION

<END>

495-4405 LINES GP-AIR CONDITIONER

S/N: Z2K1-UP; Z2N1-UP

PART OF 577-0168 AIR CONDITIONER & MOUNTING GP

AN ATTACHMENT

SMCS-1808 **i07849774**

NOTE	REF NO	GRAPHIC REF	PART NUMBER	QTY	PART NAME 1 2 3 4 5 6 (PRODUCT LEVEL)	SEE PAGE
	1	1	**506-3777**	1	PLATE	
	2	1	**506-3778**	1	PLATE	
	3	1	**506-5857**	1	BRACKET	
	4	1	**327-0282**	5	SEAL-INTEGRAL (1/2-IN)	
	5	1	**327-0283**	1	SEAL-INTEGRAL (3/4-IN)	
	6	1	**355-1782**	1	BRACKET	
	7	1	**355-1793**	1	DRYER AS-REFRIGERANT	
	8	1	**367-9097**	1	SENSOR GP-PRESSURE (INLET AIR)	
	9	1	**367-9098**	1	SENSOR GP-PRESSURE (OUTLET AIR)	
	10	1	**387-5690**	1	WASHER	
	11	1	**387-5691**	1	INSULATION	
M	12	1	**178-3336**	4	NUT-HEX FLANGE (M8X1.25-THD)	
	13	1	**355-1790**	1	CLAMP	
	14	1	**506-3729**	1	TUBE AS	
	15	1	*571-2192*	1	HOSE AS	
		1	**7K-1181**	1	STRAP-CABLE	
		1	**506-3732**	1	TUBE AS	
E		1	**516-7903**		INSULATION-BULK (34-CM)	
	16	1	**506-3733**	1	TUBE AS	
M	17	1	**6I-0260**	1	BOLT (M8X1.25X25-MM)	
	18	1	**506-3734**	1	TUBE AS	
	19	1	**6D-4246**	1	CLIP (LOOP)	
M	20	1	**8C-8451**	1	BOLT (M6X1X40-MM)	
M	21	1	**8T-4189**	6	BOLT (M8X1.25X20-MM)	
	22	1	**8T-4224**	8	WASHER-HARD (8.8X16X2-MM THK)	
M	23	1	**8T-4908**	2	BOLT (M8X1.25X25-MM)	
	24	1	**9X-2038**	1	WASHER (7X19X2-MM THK)	
	25	1	**9X-7378**	2	SEAL-O-RING	
D	26	1	**5P-7070**		INSULATION-STRIP (0.3-M)	
	27	1	**206-2423**	1	SADDLE-MOUNTING	
	28	1	**7K-1181**	2	STRAP-CABLE	

D - ORDER BY THE METER
E - ORDER BY THE CENTIMETER
M - METRIC PART

495-4405 **LINES GP-AIR CONDITIONER (**contd.**)** **i07849774**

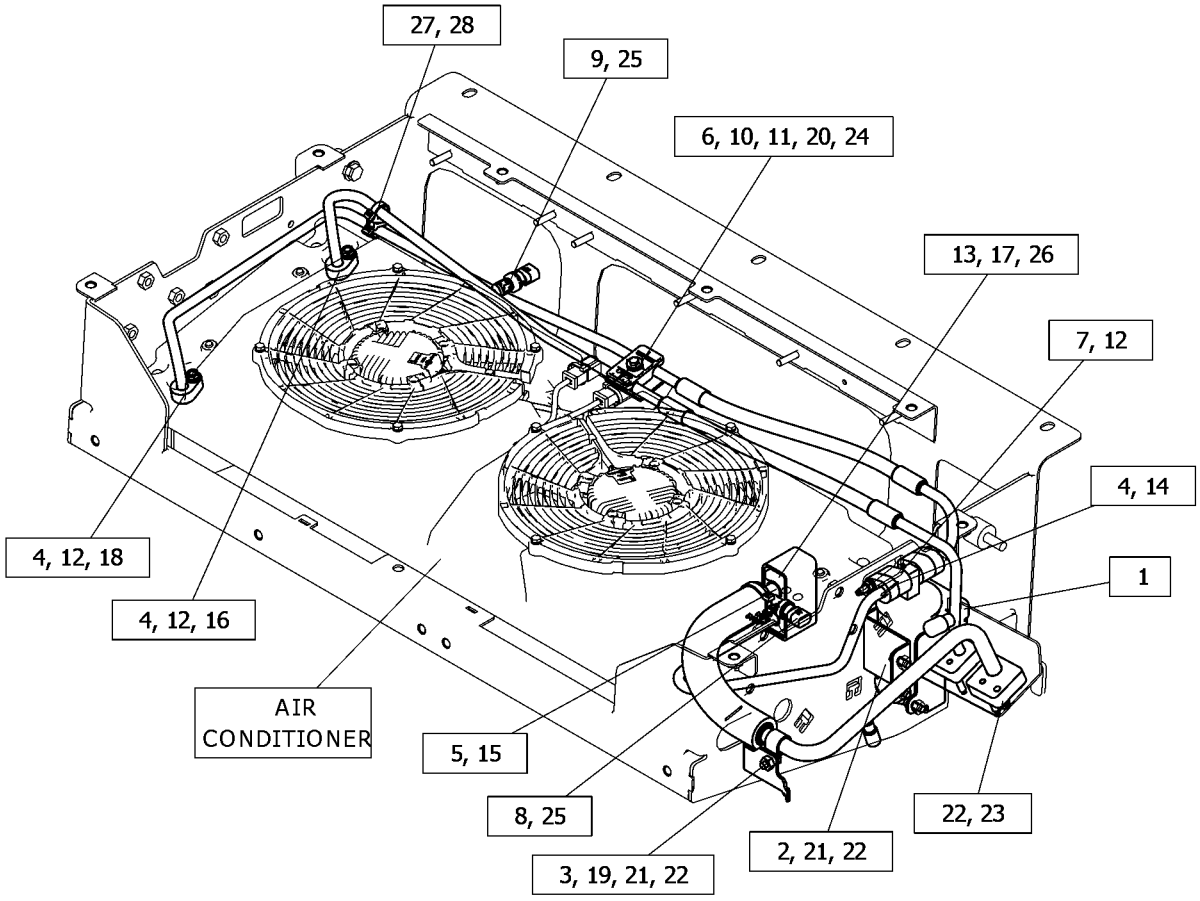

GRAPHIC #1 <END> g06396555

509-3200 LINES GP-AIR CONDITIONER

S/N: Z2K1-UP; Z2N1-UP
PART OF 575-9697 AIR CONDITIONER AR
AN ATTACHMENT

SMCS-1808 **i07824586**

NOTE	REF NO	GRAPHIC REF	PART NUMBER	QTY	PART NAME 1 2 3 4 5 6 (PRODUCT LEVEL)	SEE PAGE
	1	1	**9X-7381**	1	SEAL-O-RING	
	2	1	**9X-7383**	1	SEAL-O-RING	
	3	1	**327-0282**	1	SEAL-INTEGRAL (1/2-IN)	
	4	1	**327-0283**	1	SEAL-INTEGRAL (3/4-IN)	
	5	1	**509-3205**	1	HOSE AS	
	6	1	**509-3206**	1	HOSE AS	
Y	7	1	*567-2079*	1	LINES GP-AIR CONDITIONER	700
	8	1	**571-6908**	1	COUPLING	
	9	1	**571-6910**	1	COUPLING	

Y - SEPARATE ILLUSTRATION

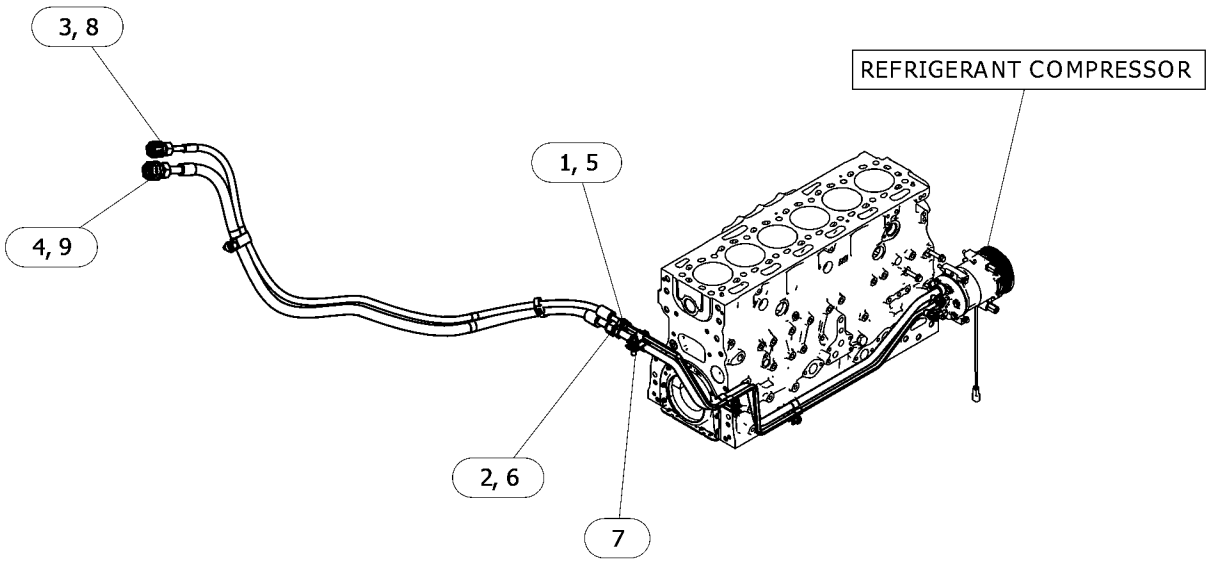

GRAPHIC #1 <END> g06456781

566-4326 LINES GP-AIR CONDITIONER

S/N: Z2K1-UP; Z2N1-UP
PART OF 575-9695 AIR CONDITIONER AR
AN ATTACHMENT

SMCS-1808 **i07828884**

NOTE	REF NO	GRAPHIC REF	PART NUMBER	QTY	PART NAME 1 2 3 4 5 6 (PRODUCT LEVEL)	SEE PAGE
	1	1	**9X-7381**	1	SEAL-O-RING	
	2	1	**9X-7383**	1	SEAL-O-RING	
	3	1	**327-0282**	1	SEAL-INTEGRAL (1/2-IN)	
	4	1	**327-0283**	1	SEAL-INTEGRAL (3/4-IN)	
Y	5	1	*567-2079*	1	LINES GP-AIR CONDITIONER	700
	6	1	**579-1512**	1	HOSE AS	
	7	1	**579-1513**	1	HOSE AS	

Y - SEPARATE ILLUSTRATION

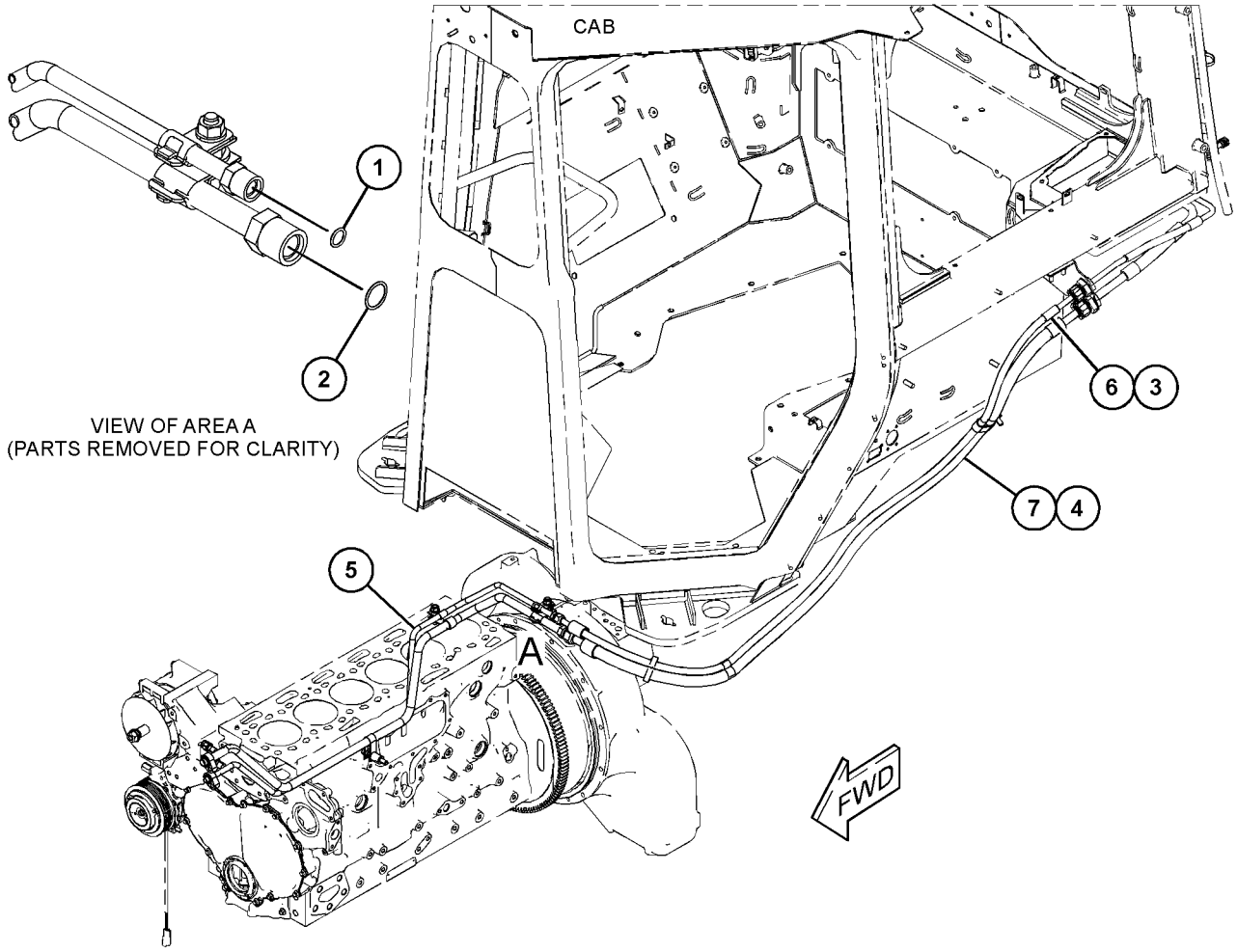

GRAPHIC #1 <END> g06455197

567-2079 LINES GP-AIR CONDITIONER

S/N: Z2K1-UP; Z2N1-UP

PART OF 509-3200, 566-4326 LINES GP-AIR CONDITIONER

AN ATTACHMENT

SMCS-1808 **i07828764**

NOTE	REF NO	GRAPHIC REF	PART NUMBER	QTY	PART NAME 1 2 3 4 5 6 (PRODUCT LEVEL)	SEE PAGE
M	1	1	**8T-4186**	1	BOLT (M10X1.5X40-MM)	
M	2	1	**101-3129**	1	STUD (M10X1.5-THD)	
	3	1	**128-8678**	1	SPACER (10.5X25X15-MM THK)	
	4	1	**133-6934**	1	SPACER (11X20X25-MM THK)	
	5	1	**177-2215**	1	STRAP-DUAL CLAMP	
M	6	1	**287-3049**	1	STUD (M10X1.5X50-MM)	
	7	1	**313-9198**	1	CLIP	
	8	1	**327-0282**	1	SEAL-INTEGRAL (1/2-IN)	
	9	1	**327-0283**	1	SEAL-INTEGRAL (3/4-IN)	
	10	1	**336-6482**	1	CLIP (LOOP)	
	11	1	**344-1950**	1	CLIP (SLOT)	
	12	1	**344-1951**	1	CLIP (TAB)	
M	13	1	**344-5675**	3	NUT (M10X1.5-THD)	
	14	1	**564-8192**	1	STUD	
	15	1	**567-2075**	1	TUBE AS	
	16	1	**567-2078**	1	TUBE AS	
	17	1	**5D-6523**	2	CLIP	
	18	1	**5R-0939**	1	CLIP (TAB)	
	19	1	**5R-0940**	1	CLIP (SLOT)	
	20	1	**6K-6355**	1	CLIP	
	21	1	**8T-4121**	8	WASHER-HARD (11X21X2.5-MM THK)	
	22	1	**8T-4223**	1	WASHER-HARD (13.5X25.5X3-MM THK)	
	23	1	**8T-7934**	1	WASHER-HARD (11X21X5-MM THK)	

M - METRIC PART

567-2079 **LINES GP-AIR CONDITIONER (**contd.**)** **i07828764**

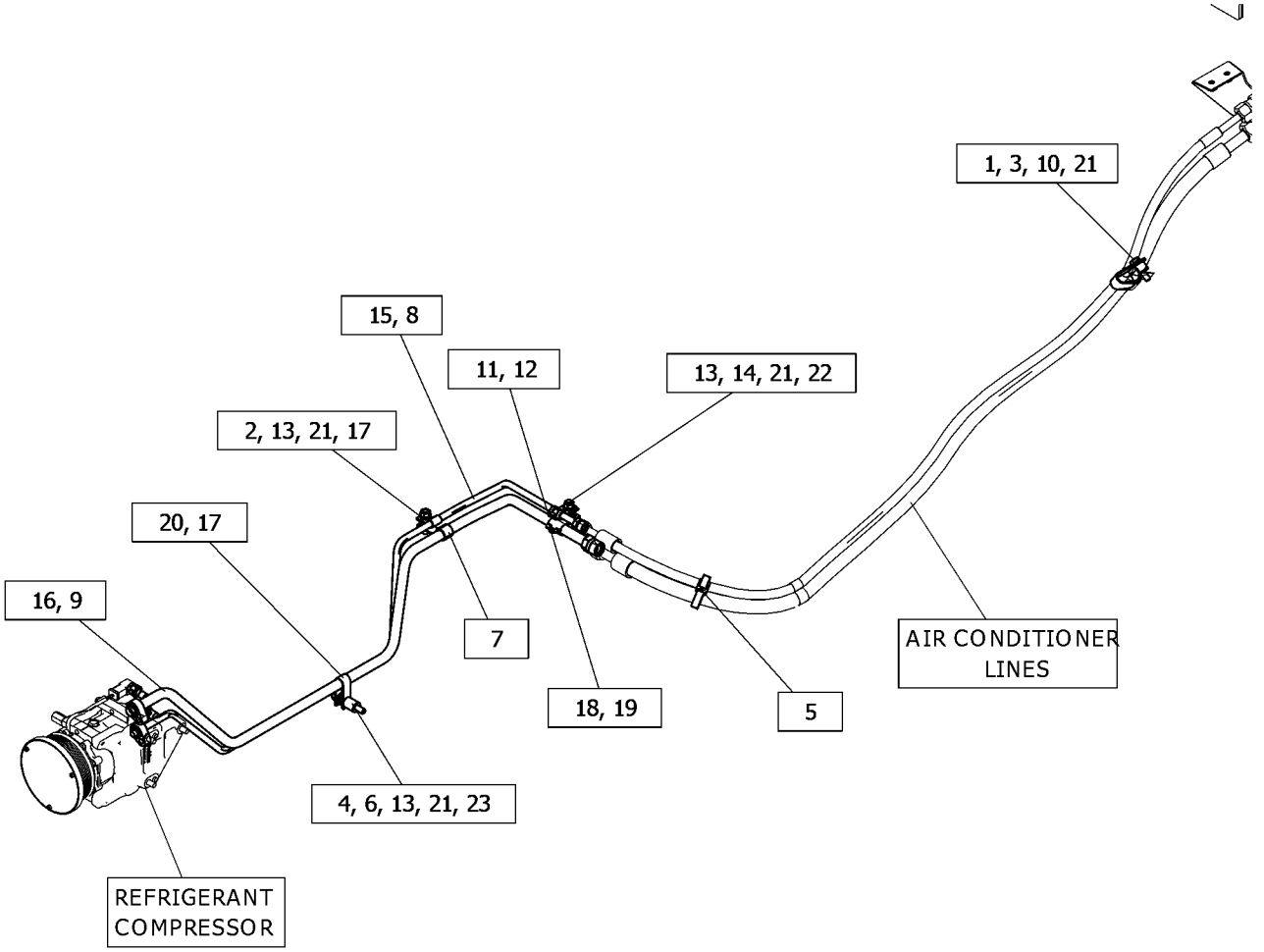

GRAPHIC #1 <END> g06452280

533-3134 LINES GP-HEATER

S/N: Z2K1-UP; Z2N1-UP
PART OF 533-3131 AIR CONDITIONER GP
AN ATTACHMENT

SMCS-1380, 1812, 7304 **i07819741**

NOTE	REF NO	GRAPHIC REF	PART NUMBER	QTY	PART NAME 1 2 3 4 5 6 (PRODUCT LEVEL)	SEE PAGE
Y	1	1	**465-7631**	1	VALVE GP-WATER (ACTUATOR)	774
	2	1	**311-3520**	4	SCREW-HEX HEAD (8-16X0.5-IN)	
M	3	1	**344-5673**	1	NUT (M6X1-THD)	
	4	1	**506-5786**	1	ELBOW	
	5	1	**511-7342**	4	BRACKET	
	6	1	**529-6841**	1	BRACKET AS	
	7	1	**533-4412**	1	TUBE	
	8	1	**533-4413**	1	TUBE	
	9	1	**533-4417**	1	TUBE	
	10	1	**540-3286**	1	BRACKET AS	
	11	1	**540-3287**	1	BRACKET	
M	12	1	**6V-7357**	10	BOLT (M6X1X25-MM)	
	13	1	**9X-2488**	4	CLAMP-HOSE	
	14	1	**9X-8256**	11	WASHER (6.6X12X2-MM THK)	
E	15	1	**136-1953**		HOSE (7-CM)	

E - ORDER BY THE CENTIMETER
M - METRIC PART
Y - SEPARATE ILLUSTRATION

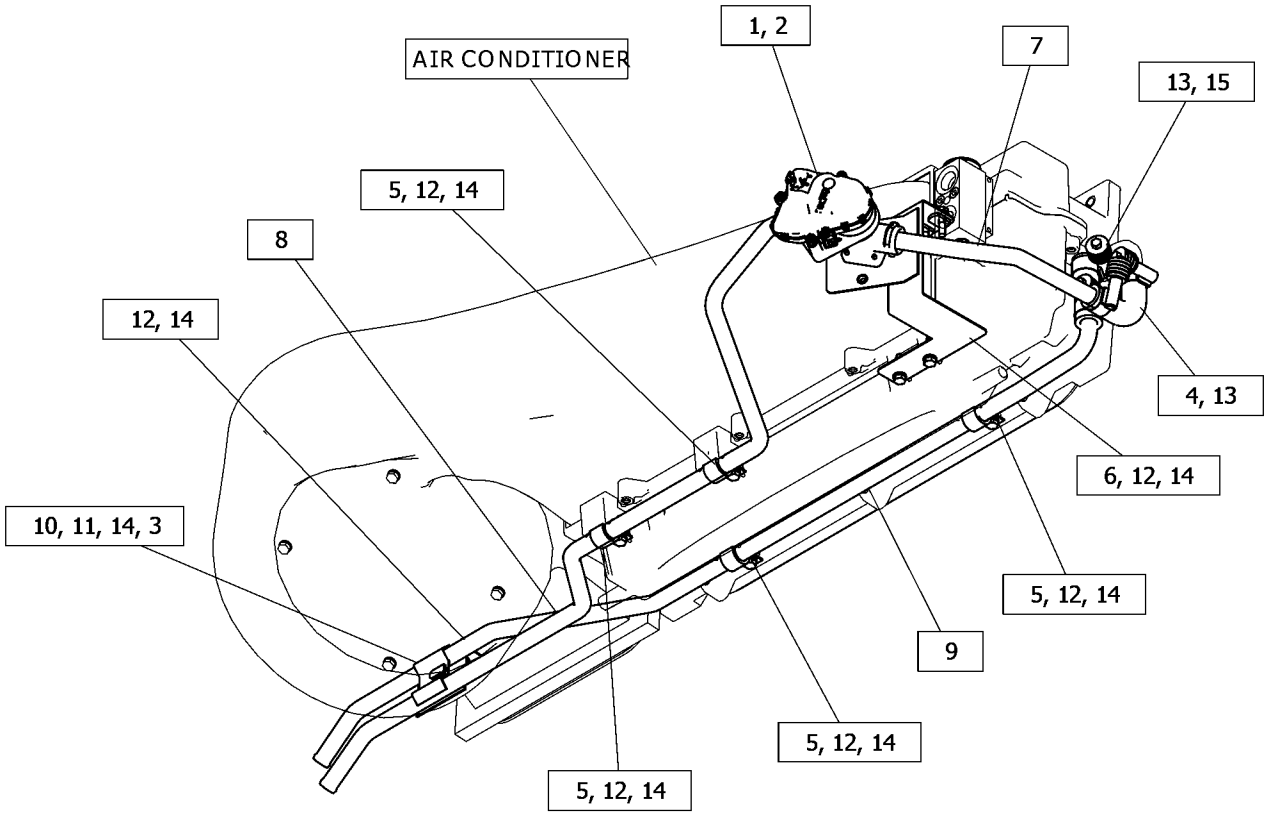

GRAPHIC #1 <END> g06426560

561-4259 LINES GP-HEATER

S/N: Z2K1-UP; Z2N1-UP
PART OF 559-5994 INSTALLATION AR-ENGINE
AN ATTACHMENT

SMCS-1380, 1812, 7304 **i07817972**

NOTE	REF NO	GRAPHIC REF	PART NUMBER	QTY	PART NAME 1 2 3 4 5 6 (PRODUCT LEVEL)	SEE PAGE
M	1	1	**8T-4172**	1	BOLT (M10X1.5X80-MM)	
	2	1	**179-0469**	1	SPACER (11X20X40-MM THK)	
	3	1	*250-1482*	1	CONNECTOR AS	
		1	**3K-0360**	1	SEAL-O-RING	
		1	**5P-9615**	1	CONNECTOR	
M	4	1	**260-6673**	1	BOLT (M10X1.5X65-MM)	
	5	1	**278-0518**	1	SPACER (10.5X20X62.3-MM THK)	
	6	1	*315-9857*	1	ELBOW AS	
		1	**8T-6850**	1	SEAL-O-RING	
		1	**315-9856**	1	ELBOW	
M	7	1	**344-5675**	6	NUT (M10X1.5-THD)	
	8	1	**379-0067**	1	STUD	
	9	1	**3E-4321**	13	CLIP (LOOP)	
M	10	1	**479-2171**	5	BOLT AS	
M	11	1	**479-2172**	5	BOLT AS	
	12	1	**533-4159**	1	BOLT AS	
	13	1	**553-9412**	1	BRACKET AS	
M		1	**8T-3490**	2	NUT-WELD (M10X1.5-THD)	
	14	1	**561-4260**	1	BRACKET AS	
M		1	**8T-3490**	1	NUT-WELD (M10X1.5-THD)	
	15	1	**561-6787**	1	BRACKET AS	
M		1	**8T-3490**	1	NUT-WELD (M10X1.5-THD)	
	16	1	**562-1927**	1	BOLT AS	
	17	1	**563-3805**	1	BRACKET AS	
M		1	**8T-3490**	1	NUT-WELD (M10X1.5-THD)	
	18	1	*565-6293*	1	TEE AS	
		1	**8T-7524**	1	SEAL-O-RING	
		1	**565-6292**	1	TEE	
	19	1	**6V-1581**	1	CLIP (SLOT)	
	20	1	**6V-1582**	1	CLIP (TAB)	
	21	1	**8T-4121**	8	WASHER-HARD (11X21X2.5-MM THK)	
	22	1	**8T-7934**	1	WASHER-HARD (11X21X5-MM THK)	
	23	1	**8V-9708**	1	SPACER (14.3X25.4X35-MM THK)	
	24	1	**9X-2488**	4	CLAMP-HOSE	
	25	1	**9X-8250**	3	CLIP (LOOP)	
E	26	1	**5P-0767**		HOSE (400-CM)	
E	26A	1	**5P-0767**		HOSE (457-CM)	

E - ORDER BY THE CENTIMETER
M - METRIC PART

561-4259 **LINES GP-HEATER** (contd.) **i07817972**

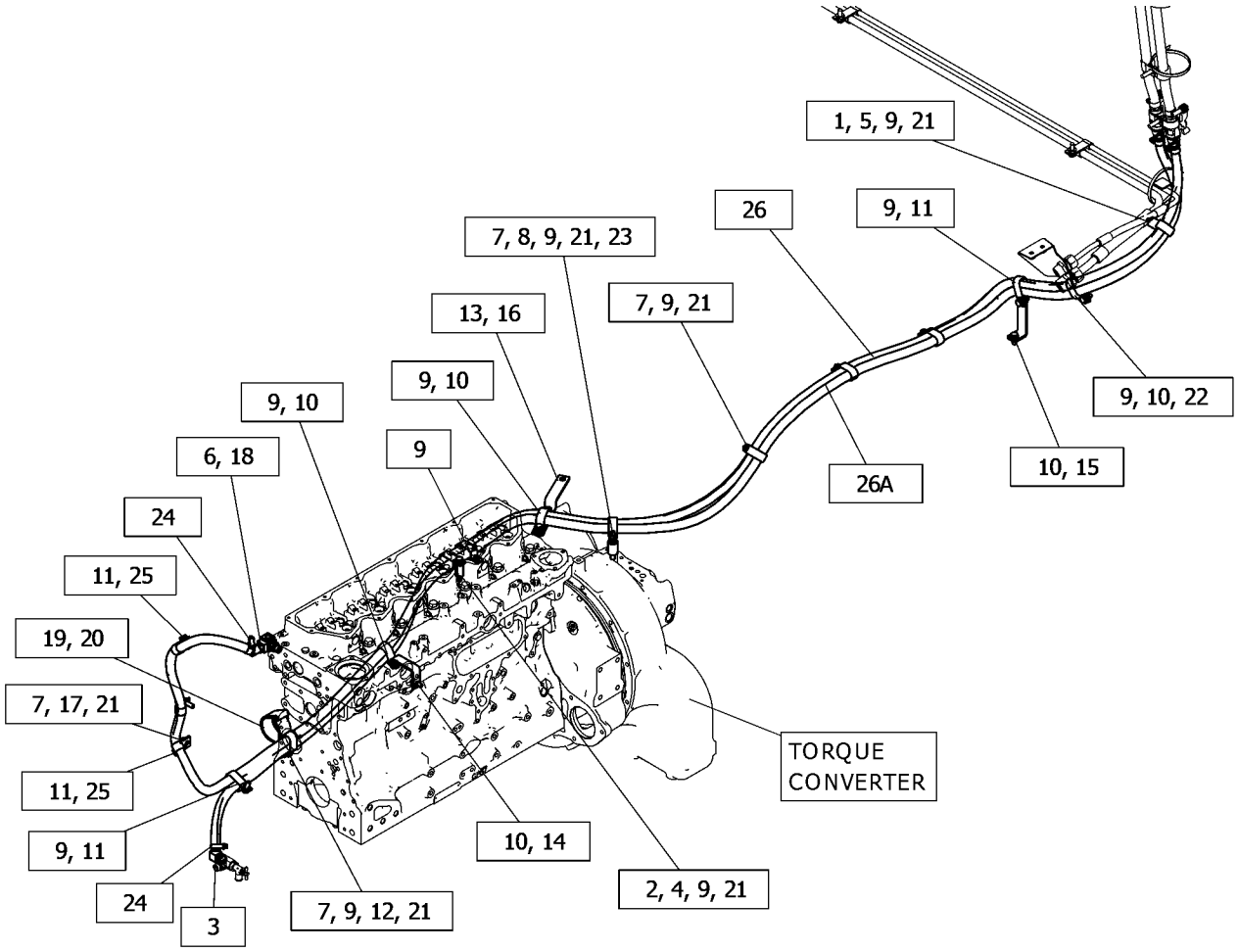

GRAPHIC #1 <END> g06453009

578-9542 LINES GP-HEATER

S/N: Z2K1-UP; Z2N1-UP
PART OF 536-6468, 536-6469, 536-6470, 579-6887 CAB AR
AN ATTACHMENT

SMCS-1380, 1812, 7304 **i07839915**

NOTE	REF NO	GRAPHIC REF	PART NUMBER	QTY	PART NAME 1 2 3 4 5 6 (PRODUCT LEVEL)	SEE PAGE
	1	1	**460-3336**	1	BRACKET	
	2	1	**6D-3534**	4	CONNECTOR-HOSE	
	3	1	**7K-1181**	7	STRAP-CABLE	
	4	1	**527-6937**	1	BASE	
	5	1	**541-6629**	4	CLIP (LOOP)	
	6	1	**327-0282**	2	SEAL-INTEGRAL (1/2-IN)	
	7	1	**327-0283**	2	SEAL-INTEGRAL (3/4-IN)	
	8	1	**571-6907**	1	COUPLING	
	9	1	**459-0643**	2	VALVE-BALL	
M	10	1	**178-3336**	2	NUT-HEX FLANGE (M8X1.25-THD)	
	11	1	**1B-3057**	2	CLIP	
	12	1	**312-0288**	2	CLAMP	
M	13	1	**344-5675**	2	NUT (M10X1.5-THD)	
	14	1	**4S-4455**	2	CLIP	
	15	1	**533-4425**	1	HOSE & TUBE AS	
	16	1	**578-9541**	1	HOSE & TUBE AS	
	17	1	**5P-4295**	4	CLIP	
	18	1	**6V-7383**	2	CLIP	
	19	1	**8T-4121**	9	WASHER-HARD (11X21X2.5-MM THK)	
M	20	1	**8T-4186**	5	BOLT (M10X1.5X40-MM)	
M	21	1	**8T-4195**	2	BOLT (M10X1.5X30-MM)	
	22	1	**8T-7934**	4	WASHER-HARD (11X21X5-MM THK)	
	23	1	**9X-2488**	4	CLAMP-HOSE	
	24	1	**571-6909**	1	COUPLING	
E	25	1	**9X-2133**		HOSE (133-CM)	
E	25A	1	**9X-2133**		HOSE (122-CM)	
E	26	1	**136-1953**		HOSE (58-CM)	
E	26A	1	**136-1953**		HOSE (63-CM)	

E - ORDER BY THE CENTIMETER
M - METRIC PART

578-9542 **LINES GP-HEATER** (contd.) **i07839915**

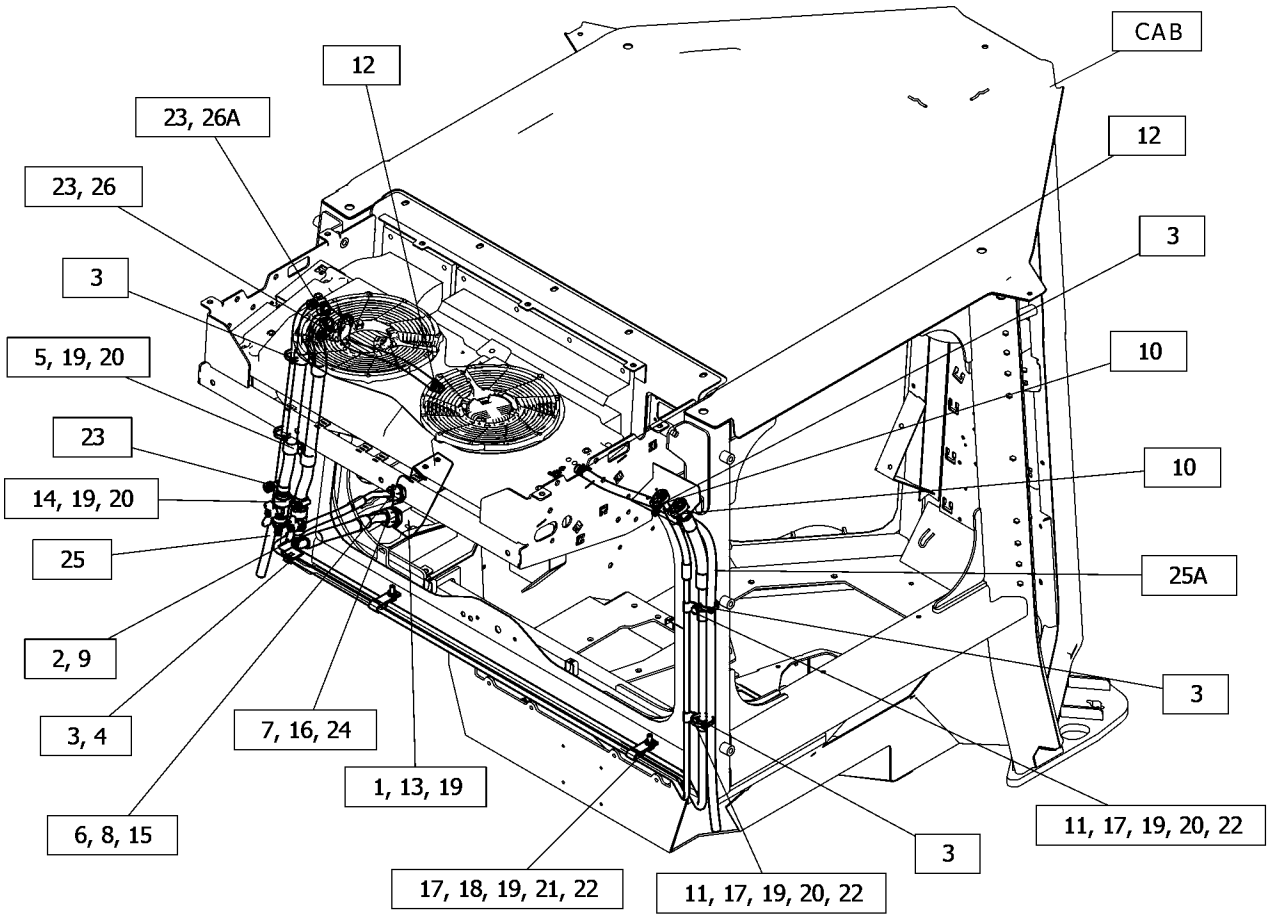

GRAPHIC #1 <END> g06450627

577-0169 LINES GP-HEATER & AIR COND

S/N: Z2K1-UP
PART OF 536-6467 CAB AR
AN ATTACHMENT

SMCS-1380, 1808, 1812, 7304 **i07820796**

NOTE	REF NO	GRAPHIC REF	PART NUMBER	QTY	PART NAME 1 2 3 4 5 6 (PRODUCT LEVEL)	SEE PAGE
	1	1	**577-0172**	1	BRACKET	
	2	1	**7K-1181**	7	STRAP-CABLE	
	3	1	**327-0282**	1	SEAL-INTEGRAL (1/2-IN)	
	4	1	**327-0283**	1	SEAL-INTEGRAL (3/4-IN)	
	5	1	**506-4783**	2	ADAPTER	
	6	1	**527-6937**	1	BASE	
	7	1	**541-6629**	6	CLIP (LOOP)	
M	8	1	**178-3336**	2	NUT-HEX FLANGE (M8X1.25-THD)	
	9	1	**1B-3057**	2	CLIP	
	10	1	**212-4174**	1	LOCKWASHER	
M	11	1	**241-8253**	1	NUT (M27X2-THD)	
	12	1	**2H-3925**	1	LOCKWASHER	
	13	1	**312-0288**	2	CLAMP	
M	14	1	**344-5675**	2	NUT (M10X1.5-THD)	
	15	1	**388-5331**	1	NUT-JAM (M33X2-MM)	
	16	1	**577-0170**	1	HOSE & TUBE AS	
	17	1	**577-0171**	1	HOSE & TUBE AS	
	18	1	**5P-4295**	4	CLIP	
	19	1	**6V-7383**	2	CLIP	
	20	1	**6V-9832**	1	CAP (ORFS)	
	21	1	**6V-9833**	1	CAP	
	22	1	**8T-4121**	9	WASHER-HARD (11X21X2.5-MM THK)	
M	23	1	**8T-4186**	5	BOLT (M10X1.5X40-MM)	
M	24	1	**8T-4195**	2	BOLT (M10X1.5X30-MM)	
	25	1	**8T-7934**	4	WASHER-HARD (11X21X5-MM THK)	
	26	1	**9X-2488**	4	CLAMP-HOSE	
E	27	1	**9X-2133**		HOSE (133-CM)	
E	27A	1	**9X-2133**		HOSE (122-CM)	
E	28	1	**136-1953**		HOSE (72-CM)	
E	28A	1	**136-1953**		HOSE (68-CM)	

E - ORDER BY THE CENTIMETER
M - METRIC PART

577-0169 **LINES GP-HEATER & AIR COND** (contd.) **i07820796**

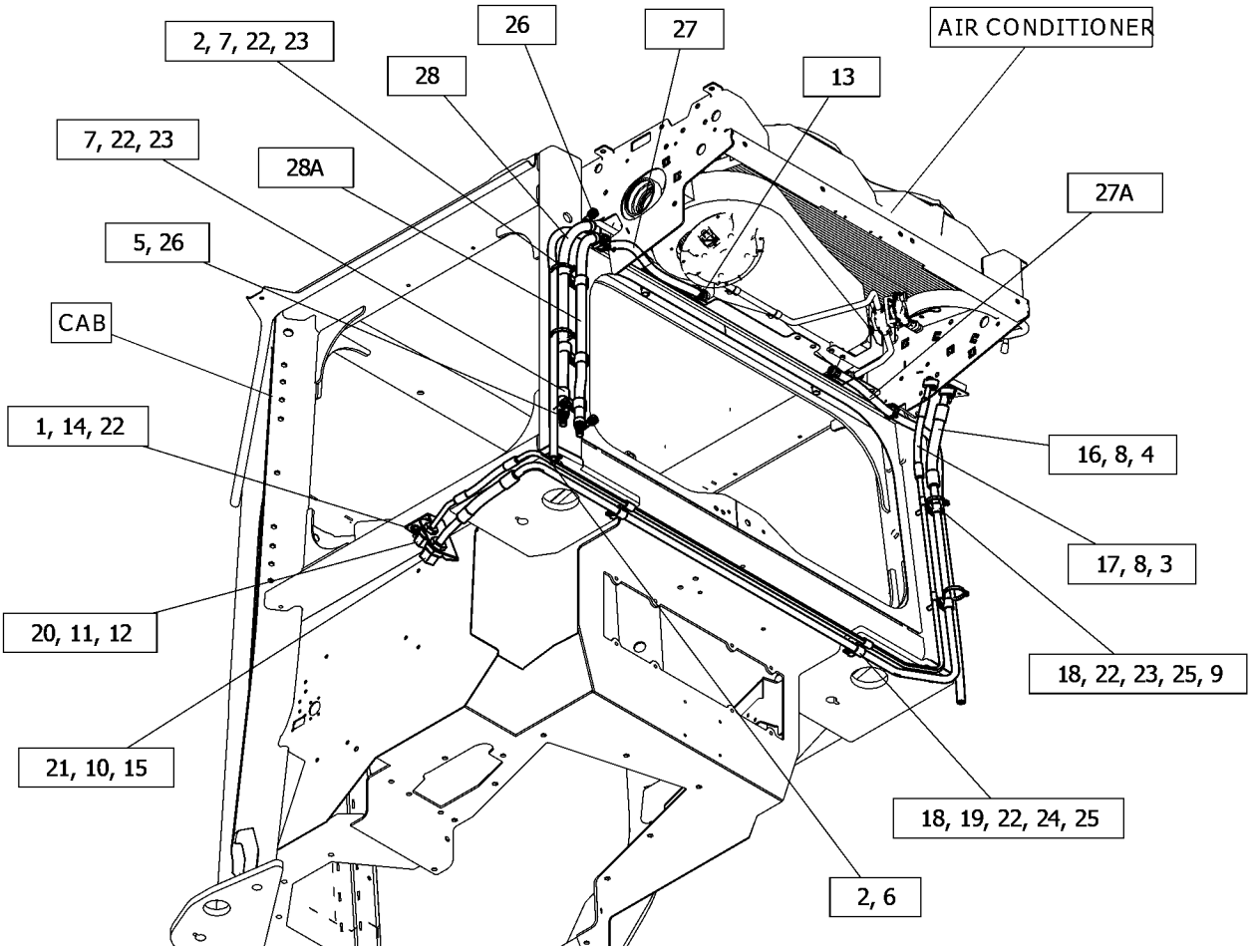

GRAPHIC #1 <END> g06449971

105-9659 MIRROR GP-REAR VIEW—INTERIOR

S/N: Z2K1-UP; Z2N1-UP

PART OF 536-6467, 536-6468, 536-6469, 536-6470, 579-6887 CAB AR

AN ATTACHMENT

SMCS-7319 **i00599732**

NOTE	REF NO	GRAPHIC REF	PART NUMBER	QTY	PART NAME 1 2 3 4 5 6 (PRODUCT LEVEL)	SEE PAGE
	1	1	**9P-9388**	1	KNOB	
	2	1	**5P-6874**	1	MIRROR	
	3	1	**5K-9179**	1	BOLT-CARRIAGE (3/8-16X11-IN)	
	4	1	**6Y-5113**	1	BRACKET	
	5	1	**8T-4121**	2	WASHER-HARD (11X21X2.5-MM THK)	
M	6	1	**8T-4195**	2	BOLT (M10X1.5X30-MM)	

M - METRIC PART

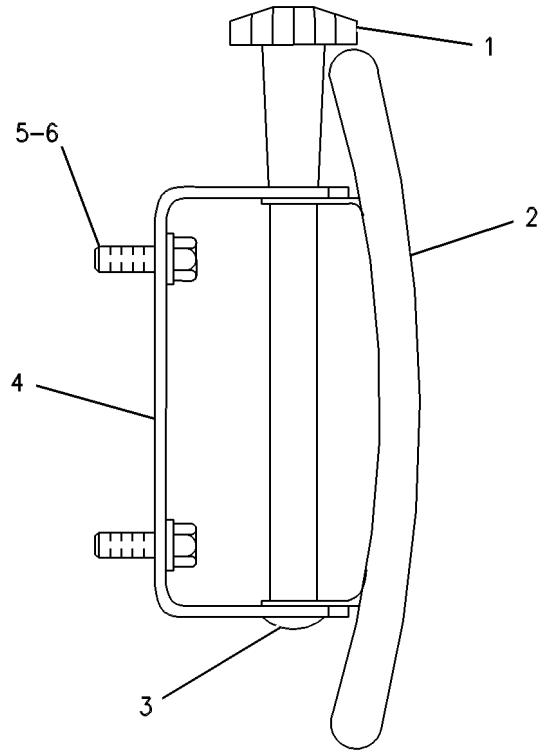

GRAPHIC #1 <END> g00254288

490-5874 MODULE GP-DISPLAY*R

S/N: Z2K1-UP; Z2N1-UP
PART OF 511-5453 DISPLAY GP-MONITOR
AN ATTACHMENT

SMCS-7347, 7490

i07692453

NOTE	REF NO	GRAPHIC REF	PART NUMBER	QTY	PART NAME 1 2 3 4 5 6 (PRODUCT LEVEL)	SEE PAGE
	1	1	**545-8567**	1	COVER (DISPLAY)	
Y	2	1	**519-6970**	1	ELECTRONICS GP-MONITOR	146

Y - SEPARATE ILLUSTRATION

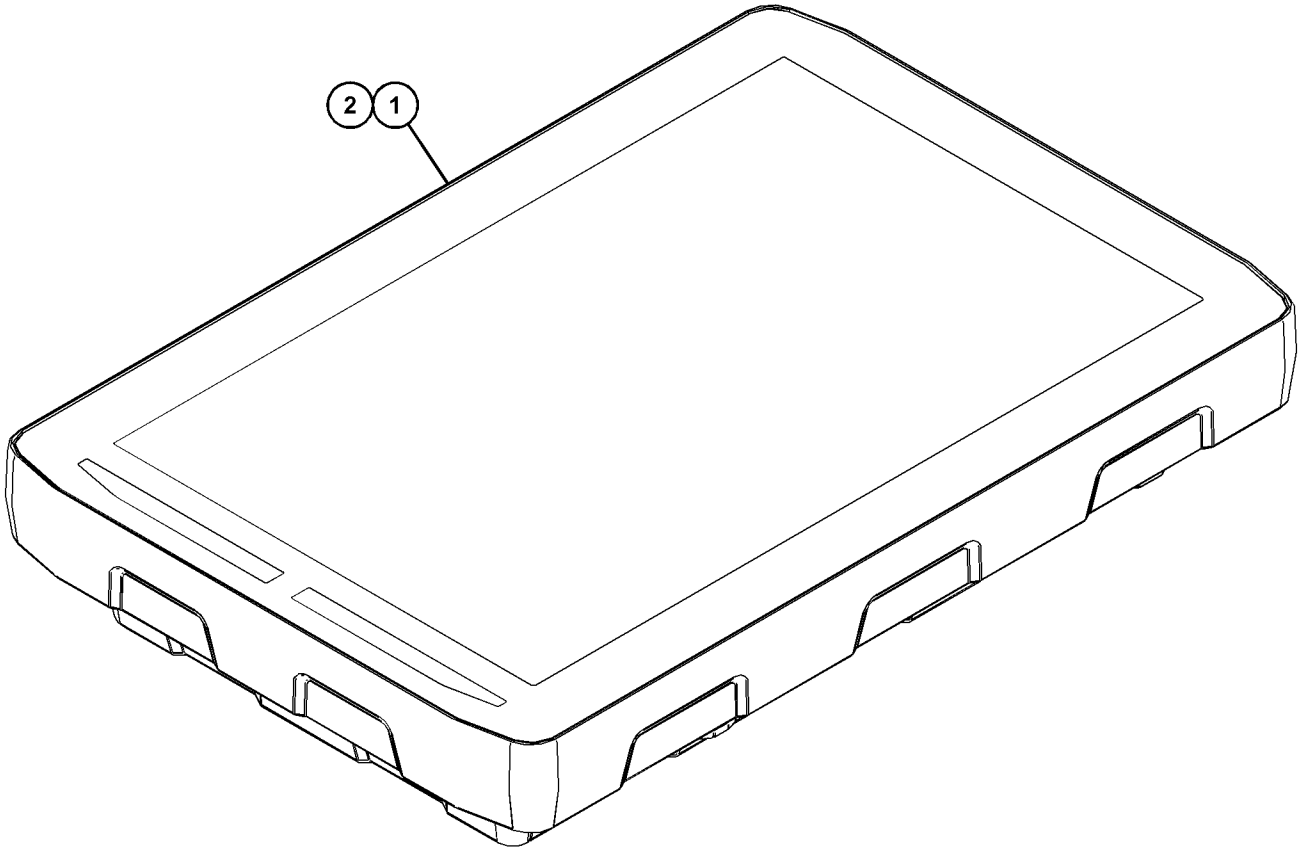

GRAPHIC #1 <END> g06387975

474-5545 MOTOR GP-WINDOW WIPER

S/N: Z2K1-UP; Z2N1-UP
24-VOLT
PART OF 435-5737 WIPER GP-WINDOW
AN ATTACHMENT

SMCS-7305 **i07793458**

NOTE	REF NO	GRAPHIC REF	PART NUMBER	QTY	PART NAME 1 2 3 4 5 6 (PRODUCT LEVEL)	SEE PAGE
	1	1	**102-8804**	1	KIT-RECEPTACLE (4-PIN)	
					(INCLUDES RECEPTACLE AS & WEDGE)	
	2	1	**525-7487**	1	HARDWARE GP-MOUNTING	
	3	1	**8T-8729**	4	PIN-CONNECTOR (16-GA TO 20-GA)	

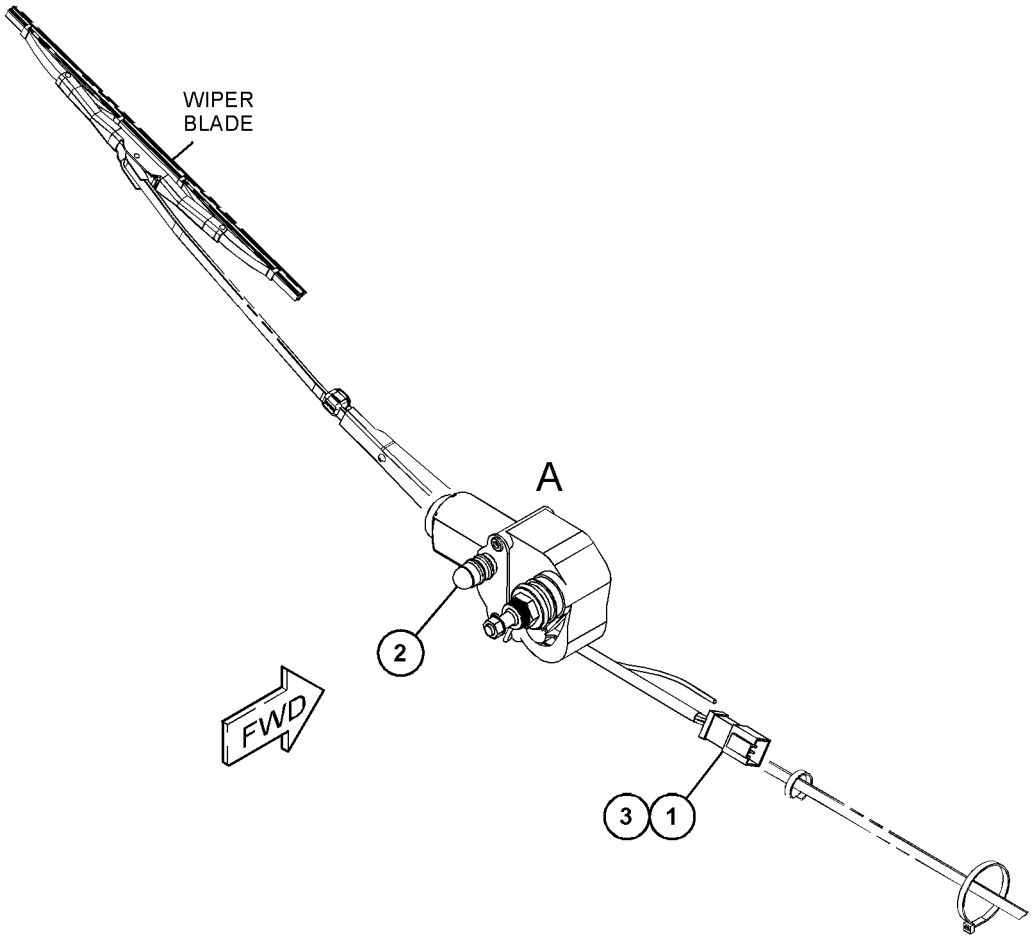

GRAPHIC #1 <END> g06354736

493-4898 MOTOR GP-WINDOW WIPER

S/N: Z2K1-UP; Z2N1-UP
24-VOLT
PART OF 435-5737 WIPER GP-WINDOW
AN ATTACHMENT

SMCS-7305 **i07793459**

NOTE	REF NO	GRAPHIC REF	PART NUMBER	QTY	PART NAME 1 2 3 4 5 6 (PRODUCT LEVEL)	SEE PAGE
	1	1	**102-8805**	1	KIT-RECEPTACLE (6-PIN)	
					(INCLUDES RECEPTACLE AS & WEDGE)	
	2	1	**525-7486**	1	HARDWARE GP-MOUNTING	
	3	1	**8T-8729**	6	PIN-CONNECTOR (16-GA TO 20-GA)	
	4	1	**8T-8737**	1	PLUG-SEAL	

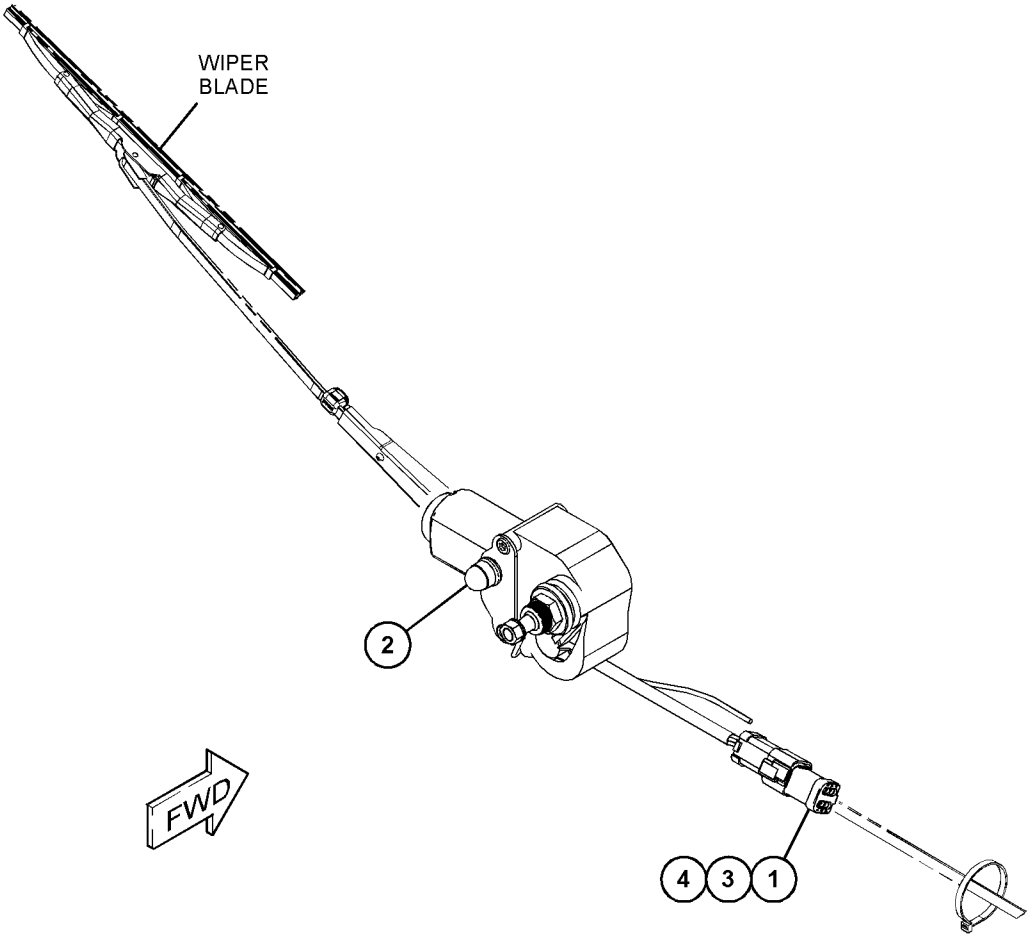

GRAPHIC #1 <END> g06349800

511-2371 MOTOR GP-WINDOW WIPER

S/N: Z2K1-UP; Z2N1-UP
24-VOLT
PART OF 435-5737 WIPER GP-WINDOW
AN ATTACHMENT

SMCS-7305 **i07793472**

NOTE	REF NO	GRAPHIC REF	PART NUMBER	QTY	PART NAME 1 2 3 4 5 6 (PRODUCT LEVEL)	SEE PAGE
	1	1	**102-8805**	1	KIT-RECEPTACLE (6-PIN)	
					(INCLUDES RECEPTACLE AS & WEDGE)	
	2	1	**8T-8737**	1	PLUG-SEAL	
	3	1	**8T-8729**	5	PIN-CONNECTOR (16-GA TO 20-GA)	

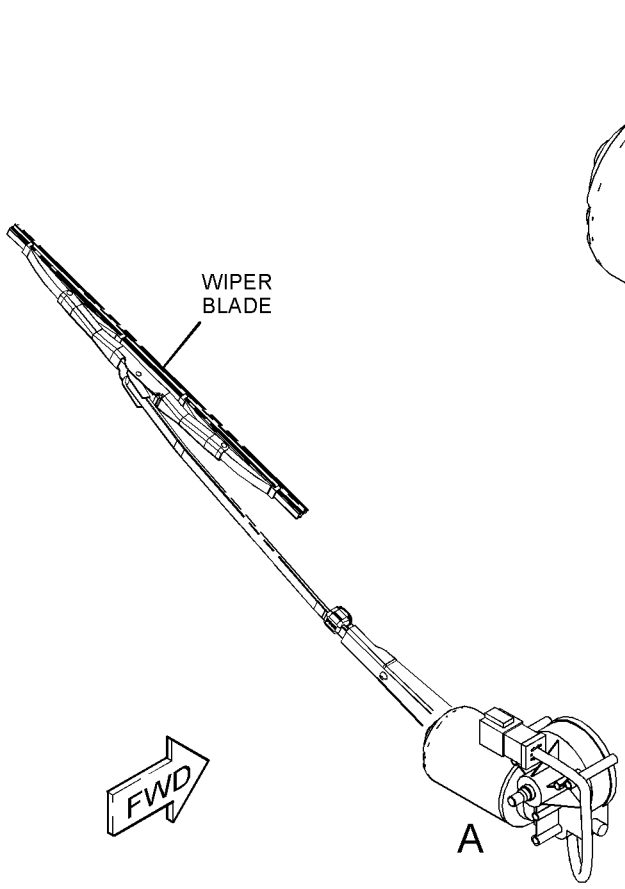

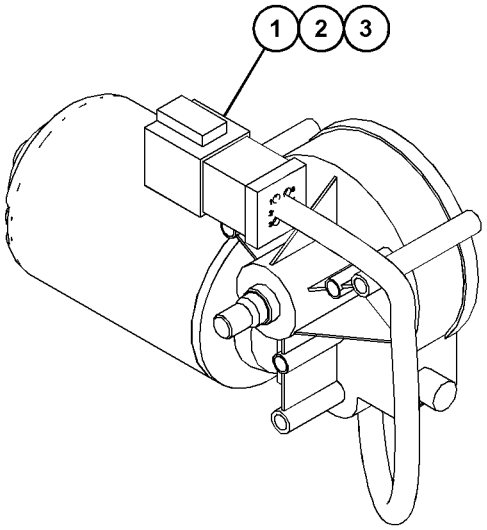

VIEW OF AREA A

GRAPHIC #1 <END> g06349820

511-2372 MOTOR GP-WINDOW WIPER

S/N: Z2K1-UP; Z2N1-UP
24-VOLT
PART OF 435-5737 WIPER GP-WINDOW
AN ATTACHMENT

SMCS-7305 **i07793698**

NOTE	REF NO	GRAPHIC REF	PART NUMBER	QTY	PART NAME 1 2 3 4 5 6 (PRODUCT LEVEL)	SEE PAGE
	1	1	**102-8805**	1	KIT-RECEPTACLE (6-PIN)	
					(INCLUDES RECEPTACLE AS & WEDGE)	
	2	1	**8T-8737**	1	PLUG-SEAL	
	3	1	**8T-8729**	5	PIN-CONNECTOR (16-GA TO 20-GA)	

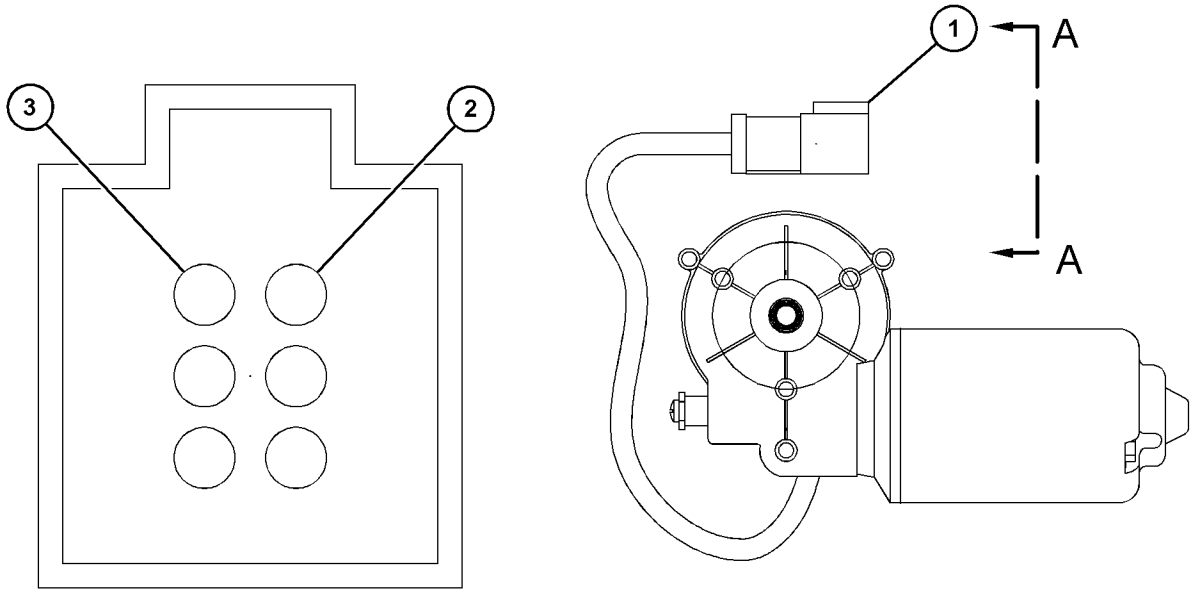

VIEW A-A

GRAPHIC #1 <END> g06353124

435-5743 MOUNTING GP-CAB

S/N: Z2K1-UP; Z2N1-UP
PART OF 536-6476, 536-6478, 579-6896 CAB GP
AN ATTACHMENT

SMCS-7266, 7301 **i07794448**

NOTE	REF NO	GRAPHIC REF	PART NUMBER	QTY	PART NAME 1 2 3 4 5 6 (PRODUCT LEVEL)	SEE PAGE
	1	1	**435-5804**	1	GASKET	
	2	1	**435-5805**	1	PLATE	
	3	1	**467-7997**	1	PLATE AS	
		1	**467-7999**	1	GASKET	
	4	1	**496-0526**	1	PLATE	
	5	1	**496-0527**	1	GASKET	
M	6	1	**3E-8020**	8	SCREW-TRUSS HEAD (M6X1X25-MM)	
	7	1	**7X-7729**	13	WASHER (11X25X3-MM THK)	
M	8	1	**8T-4182**	9	BOLT (M10X1.5X45-MM)	
	9	1	**9X-2038**	8	WASHER (7X19X2-MM THK)	
M	10	1	**9X-2039**	4	SCREW-TRUSS HEAD (M10X1.5X35-MM)	
	11	1	**541-9374**	1	PLATE	

M - METRIC PART

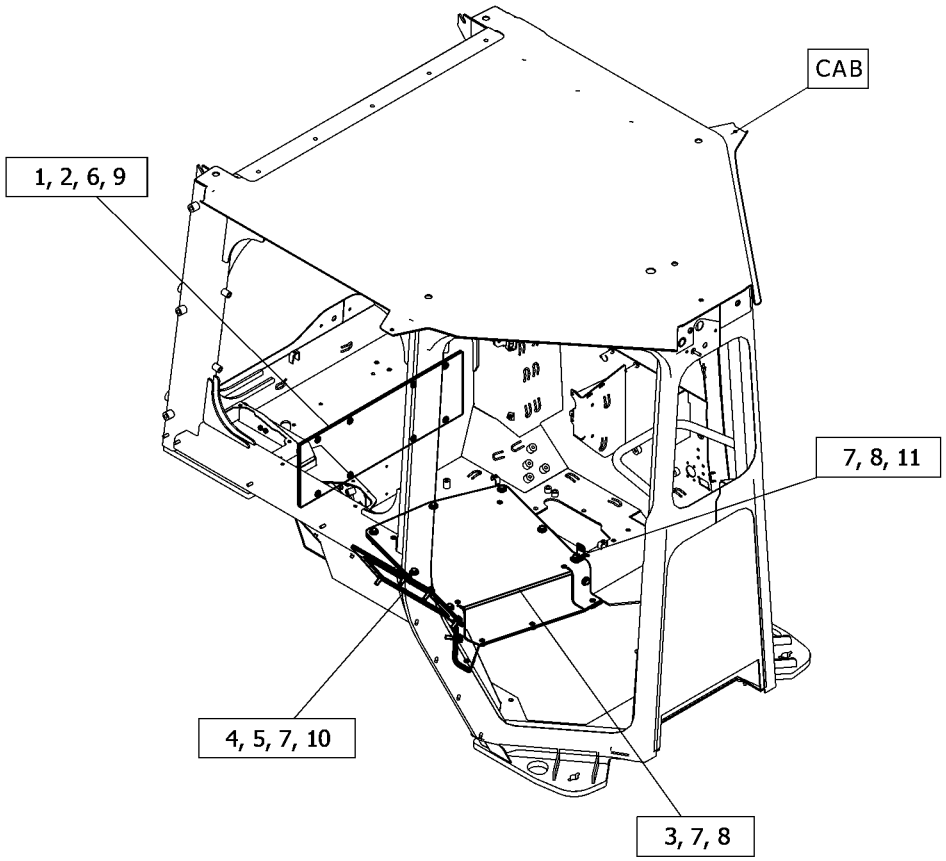

GRAPHIC #1 <END> g06337977

435-5754 MOUNTING GP-CAB

S/N: Z2K1-UP; Z2N1-UP
PART OF 550-5579 HANDHOLD AR
AN ATTACHMENT

SMCS-7266, 7301

i07819923

NOTE	REF NO	GRAPHIC REF	PART NUMBER	QTY	PART NAME 1 2 3 4 5 6 (PRODUCT LEVEL)	SEE PAGE
	1	1	**507-5615**	2	MOUNT AS	
	2	1	**507-5616**	2	MOUNT AS	
	3	1	**299-3424**	16	WASHER-HARD (17.5X30X6-MM THK)	
M	4	1	**7X-2553**	16	BOLT (M16X2X40-MM)	
M	5	1	**8T-5878**	2	BOLT (M24X3X80-MM)	
	6	1	**293-8335**	2	SPACER (26X60X23-MM THK)	
	7	1	**8T-1482**	2	WASHER-HARD (26X50X8-MM THK)	
M	8	1	**7X-2575**	2	BOLT (M24X3X60-MM)	

M - METRIC PART

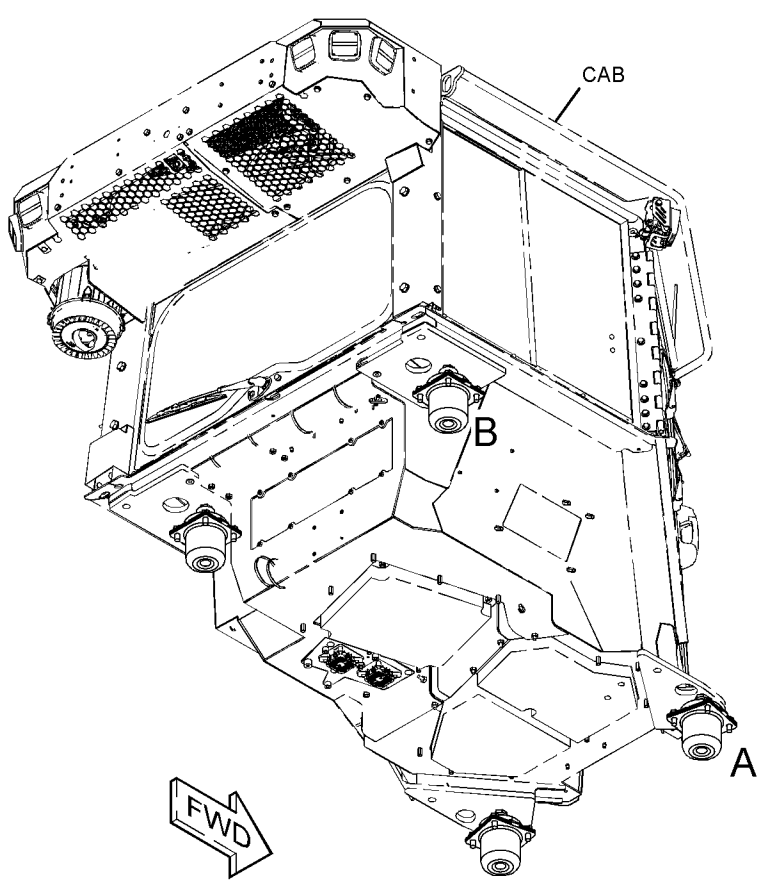

(VIEWED FROM BOTTOM)

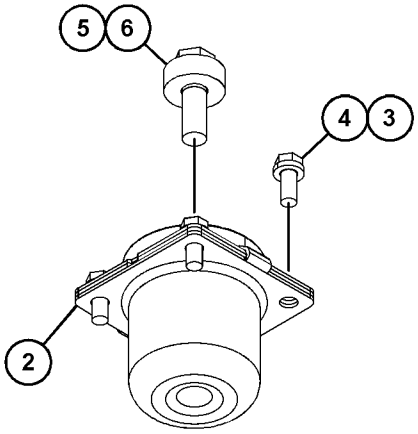

VIEW OF AREA B

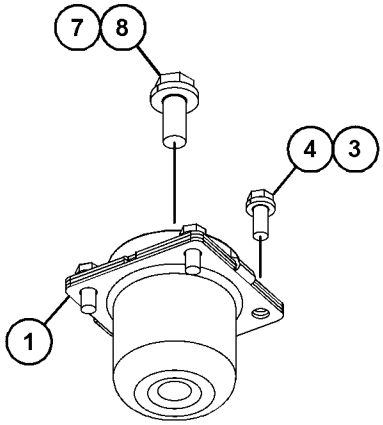

VIEW OF AREA A

GRAPHIC #1

<END>

g06333041

435-5755 MOUNTING GP-CAB

S/N: Z2K1-UP; Z2N1-UP
PART OF 550-5581, 550-5583 SWEEP GP
AN ATTACHMENT

SMCS-7266, 7301 **i07824671**

NOTE	REF NO	GRAPHIC REF	PART NUMBER	QTY	PART NAME 1 2 3 4 5 6 (PRODUCT LEVEL)	SEE PAGE
	1	1	**507-5615**	2	MOUNT AS	
	2	1	**518-3847**	2	MOUNT AS	
	3	1	**293-8335**	2	SPACER (26X60X23-MM THK)	
M	4	1	**7X-2553**	16	BOLT (M16X2X40-MM)	
M	5	1	**8T-5878**	2	BOLT (M24X3X80-MM)	
	6	1	**299-3424**	16	WASHER-HARD (17.5X30X6-MM THK)	
M	7	1	**7X-2575**	2	BOLT (M24X3X60-MM)	
	8	1	**8T-1482**	2	WASHER-HARD (26X50X8-MM THK)	

M - METRIC PART

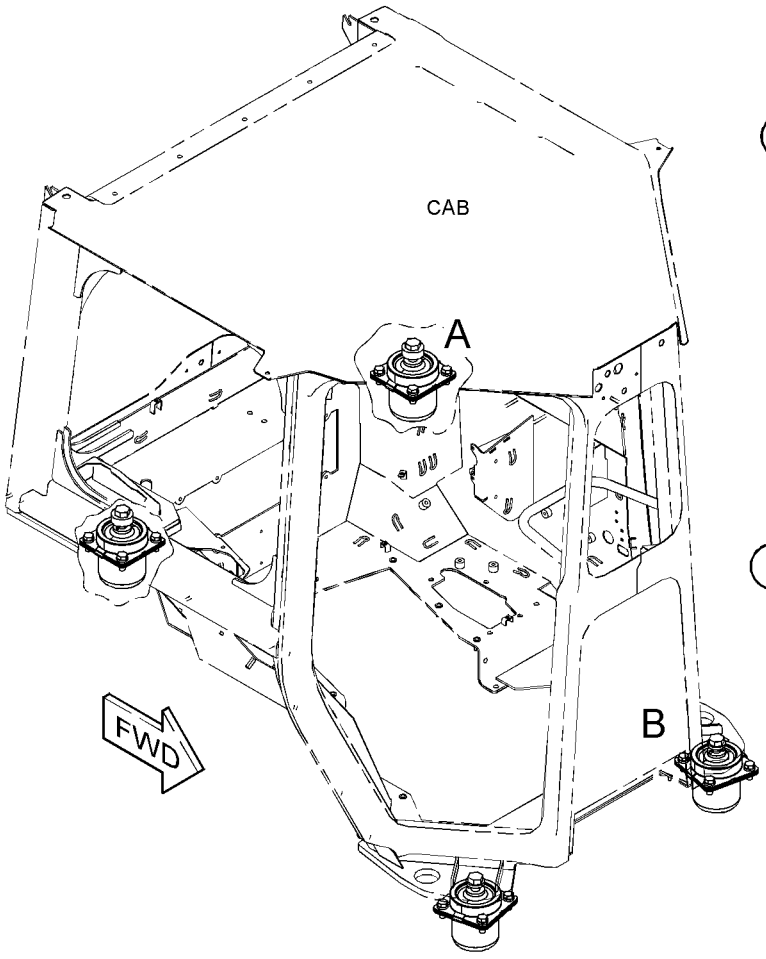

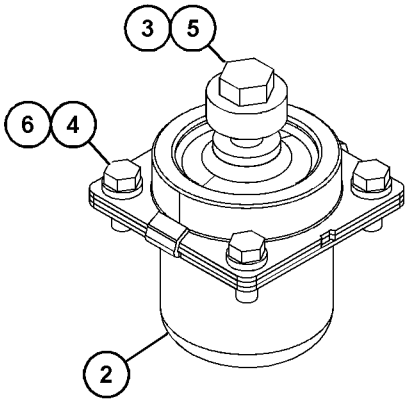

VIEW OF AREA A

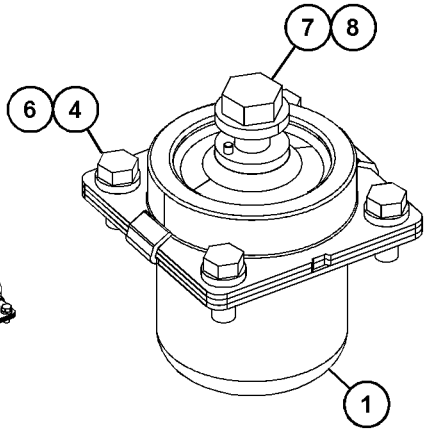

VIEW OF AREA B

GRAPHIC #1 <END> g06332122

541-1192 MOUNTING GP-CAB

S/N: Z2K1-UP; Z2N1-UP
PART OF 577-1296 GRADE CONTROL AR
AN ATTACHMENT

SMCS-7266, 7301 **i07821116**

NOTE	REF NO	GRAPHIC REF	PART NUMBER	QTY	PART NAME 1 2 3 4 5 6 (PRODUCT LEVEL)	SEE PAGE
	1	1	**537-3132**	2	BRACKET AS	
M	2	1	**8T-4189**	8	BOLT (M8X1.25X20-MM)	
	3	1	**8T-4224**	8	WASHER-HARD (8.8X16X2-MM THK)	

M - METRIC PART

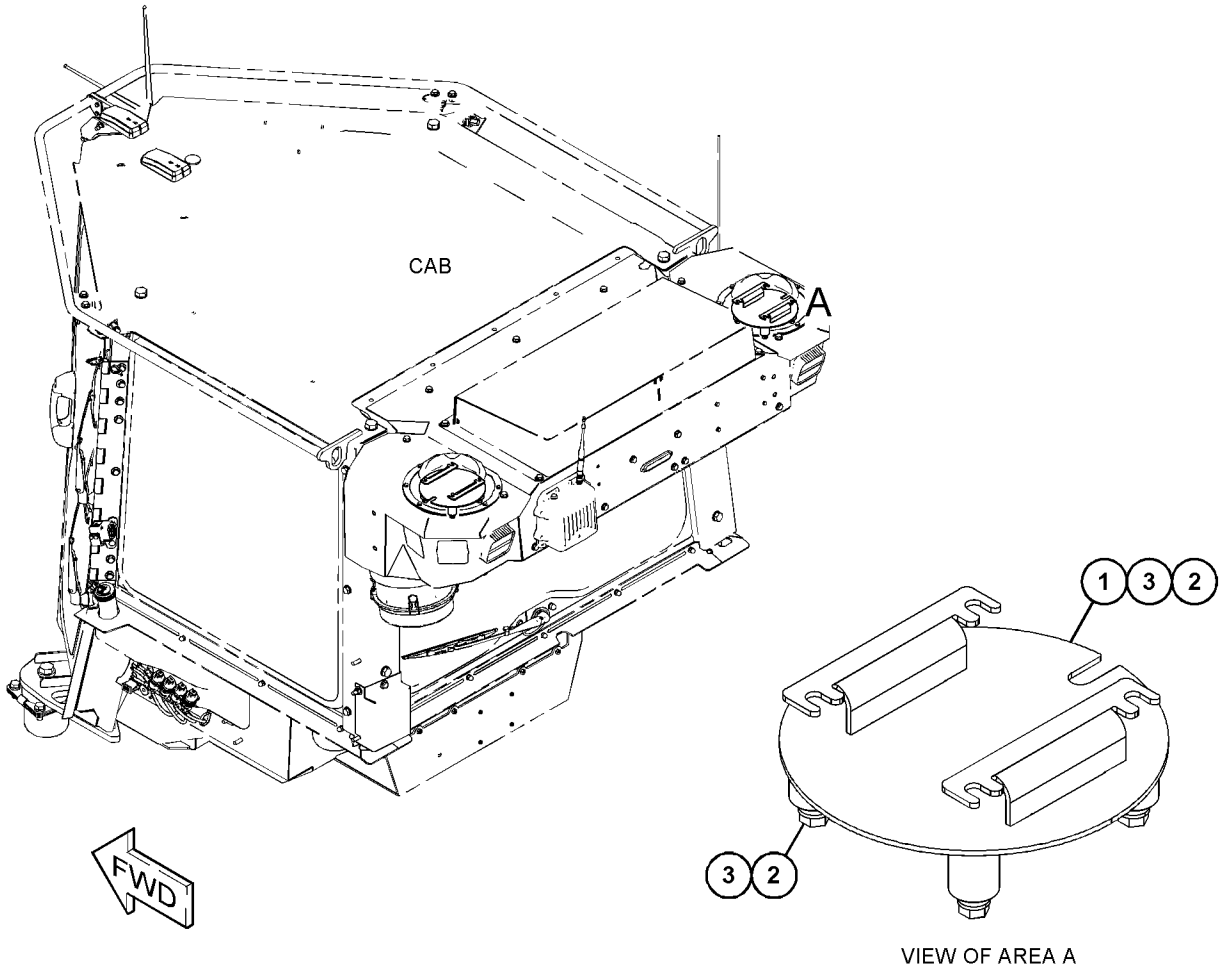

VIEW OF AREA A

GRAPHIC #1 <END> g06354818

543-1113 MOUNTING GP-CAB

S/N: Z2K1-UP; Z2N1-UP
PART OF 532-9856 DISTRIBUTION AR
AN ATTACHMENT

SMCS-7266, 7301 **i07828929**

NOTE	REF NO	GRAPHIC REF	PART NUMBER	QTY	PART NAME 1 2 3 4 5 6 (PRODUCT LEVEL)	SEE PAGE
	1	1	**339-3566**	2	SUPPORT AS	
	2	1	**513-7195**	1	FLOOR MAT AS	
	3	1	*543-1117*	1	FLOORPLATE AS	
		1	**543-1123**	1	PLATE AS	
M		1	**178-7023**	4	BOSS (M10X1.5X30-MM)	
		1	**543-1167**	1	GASKET	
	4	1	**7X-7729**	15	WASHER (11X25X3-MM THK)	
M	5	1	**8T-4136**	4	BOLT (M10X1.5X25-MM)	
M	6	1	**8T-4186**	11	BOLT (M10X1.5X40-MM)	

M - METRIC PART

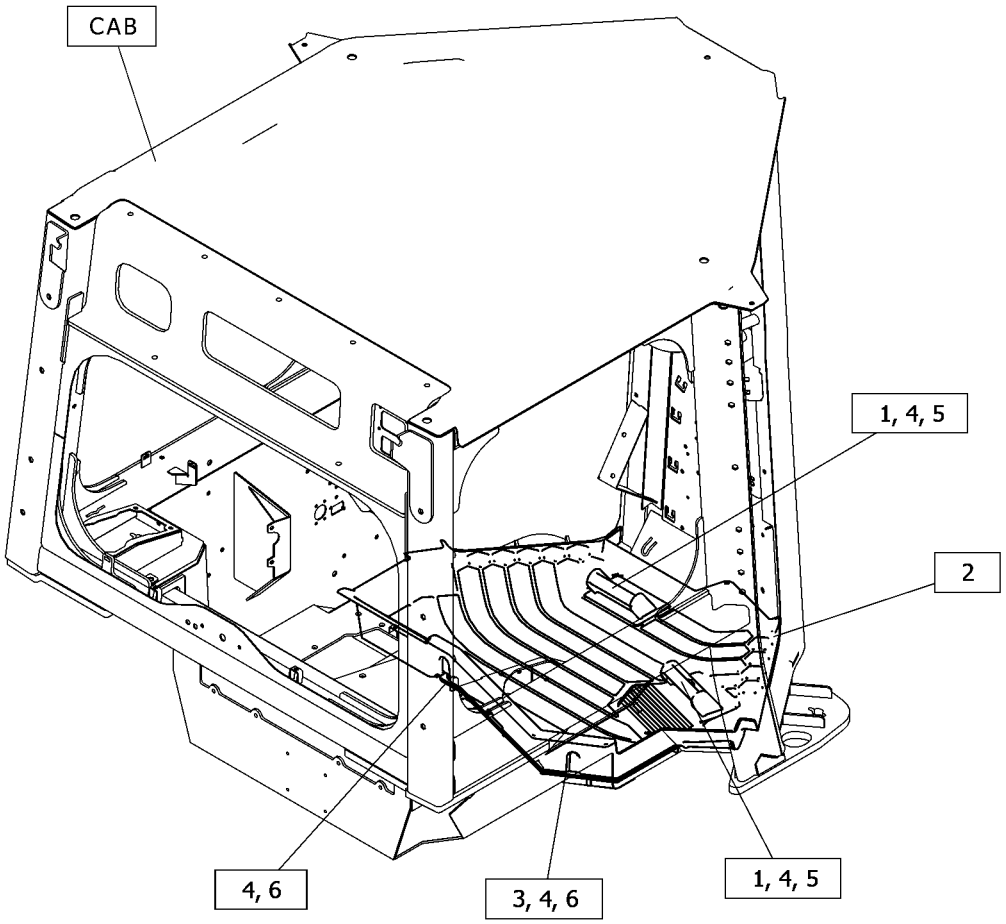

GRAPHIC #1 <END> g06450551

543-1114 MOUNTING GP-CAB

S/N: Z2K1-UP; Z2N1-UP
PART OF 532-9851 DISTRIBUTION AR
AN ATTACHMENT

SMCS-7266, 7301 **i07816755**

NOTE	REF NO	GRAPHIC REF	PART NUMBER	QTY	PART NAME 1 2 3 4 5 6 (PRODUCT LEVEL)	SEE PAGE
	1	1	**212-4023**	2	SUPPORT AS (FOOT)	
	2	1	**435-5742**	1	FLOORPLATE AS	
		1	**435-5802**	1	GASKET	
	3	1	**473-7815**	1	FLOORPLATE AS	
	4	1	**513-7195**	1	FLOOR MAT AS	
	5	1	**7X-7729**	16	WASHER (11X25X3-MM THK)	
M	6	1	**8T-4136**	4	BOLT (M10X1.5X25-MM)	
M	7	1	**8T-4182**	12	BOLT (M10X1.5X45-MM)	

M - METRIC PART

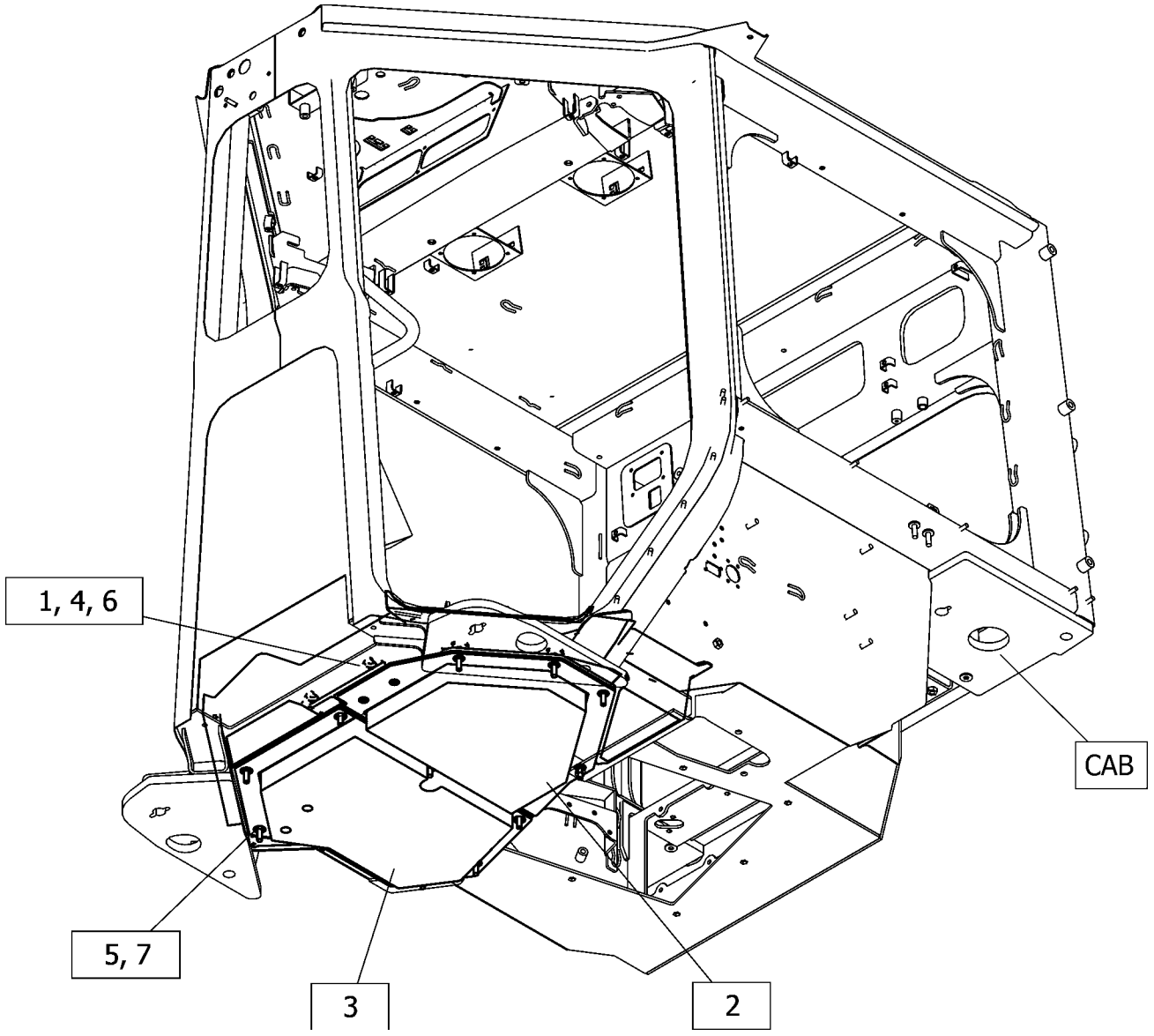

GRAPHIC #1 <END> g06350308

567-1308 MOUNTING GP-CAB

S/N: Z2K1-UP; Z2N1-UP
PART OF 575-9695, 575-9697 AIR CONDITIONER AR
AN ATTACHMENT

SMCS-7266, 7301 **i07840018**

NOTE	REF NO	GRAPHIC REF	PART NUMBER	QTY	PART NAME 1 2 3 4 5 6 (PRODUCT LEVEL)	SEE PAGE
	1	1	**473-9569**	2	GASKET	
	2	1	**504-4032**	1	PLATE	
	3	1	**537-3139**	1	PLATE	
	4	1	**560-7756**	1	PLATE	
M	5	1	**479-2172**	18	BOLT AS	
	6	1	**577-8019**	1	PLATE AS	
	7	1	**577-8017**	1	PLATE AS	
M		1	**8T-3490**	1	NUT-WELD (M10X1.5-THD)	
	8	1	**539-6408**	1	PLATE AS	
M		1	**6V-9632**	11	NUT-WELD (M6X1-THD)	
M		1	**8T-3490**	6	NUT-WELD (M10X1.5-THD)	
	9	1	**505-8924**	1	PLATE AS	
M		1	**8T-3490**	1	NUT-WELD (M10X1.5-THD)	
M	10	1	**7X-2553**	4	BOLT (M16X2X40-MM)	
M	11	1	**8T-4139**	6	BOLT (M12X1.75X30-MM)	
	12	1	**8T-4223**	6	WASHER-HARD (13.5X25.5X3-MM THK)	
M	13	1	**9X-2045**	6	SCREW-TRUSS HEAD (M6X1X20-MM)	
	14	1	**9X-8257**	4	WASHER (17.5X30X3.5-MM THK)	
	15	1	**505-8925**	1	PLATE	
	16	1	**511-0768**	1	PLATE	
M	17	1	**2Y-5829**	1	NUT (M10X1.5-THD)	
M	18	1	**479-2171**	2	BOLT AS	
M	19	1	**6V-7357**	3	BOLT (M6X1X25-MM)	
M	20	1	**8T-4137**	1	BOLT (M10X1.5X20-MM)	
M	21	1	**8T-4970**	4	BOLT (M6X1X14-MM)	
	22	1	**7X-7729**	2	WASHER (11X25X3-MM THK)	
	23	1	**9X-8256**	7	WASHER (6.6X12X2-MM THK)	

M - METRIC PART

567-1308 **MOUNTING GP-CAB** (contd.) **i07840018**

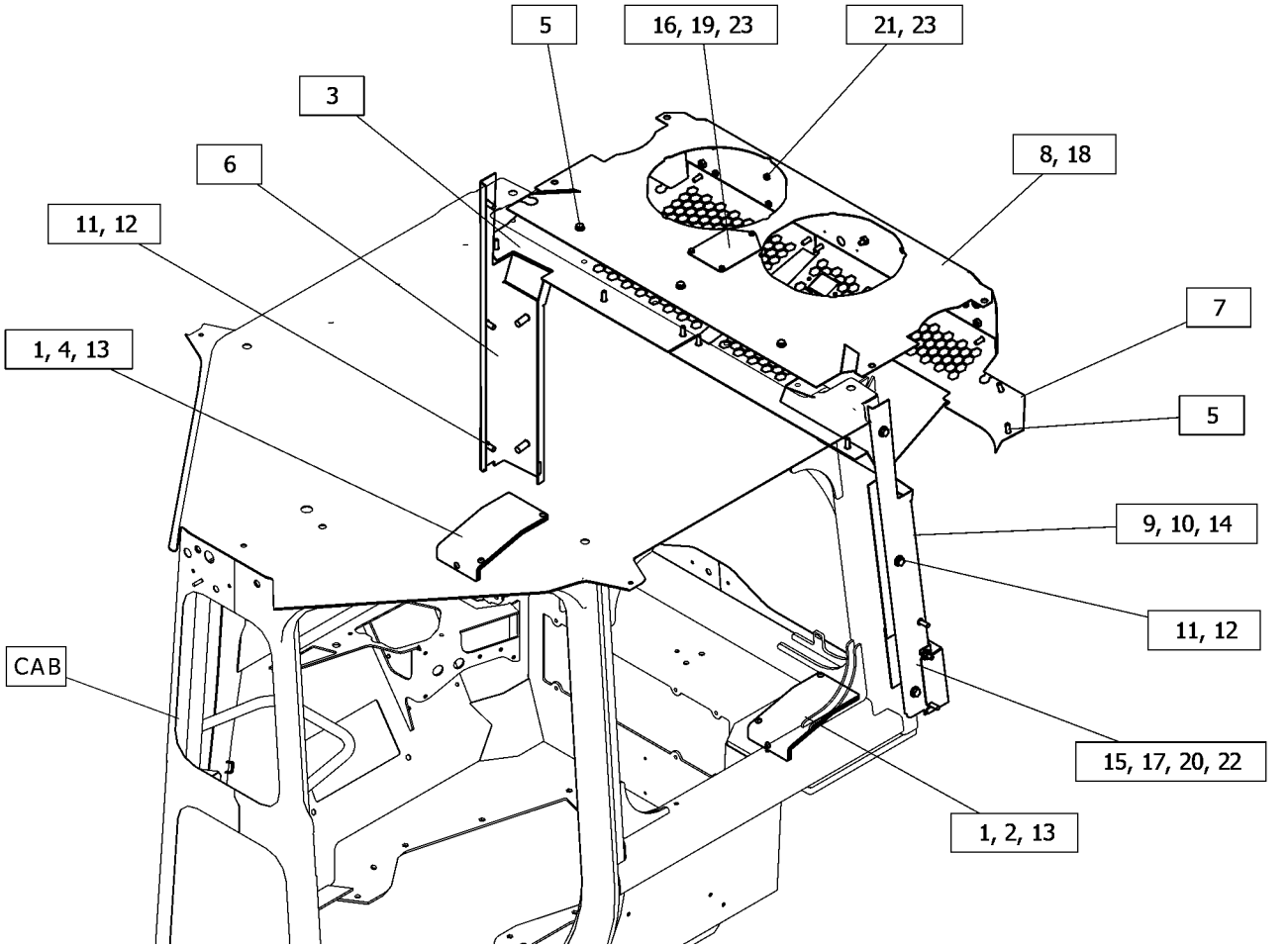

GRAPHIC #1 <END> g06451781

493-9035 MOUNTING GP-CONTROL

S/N: Z2K1-UP; Z2N1-UP
PART OF 536-6468, 536-6469, 536-6470, 579-6887 CAB AR
AN ATTACHMENT

SMCS-5063 **i07821062**

NOTE	REF NO	GRAPHIC REF	PART NUMBER	QTY	PART NAME 1 2 3 4 5 6 (PRODUCT LEVEL)	SEE PAGE
	1	1	**206-1667**	2	CLIP (TRIM)	
	2	1	**433-0934**	1	FILM-INFORMATION (READ OMM, STEERING)	
Y	3	1	*488-1756*	1	CONTROL GP-STEERING & XMSN	544
	4	1	**492-0165**	1	CUSHION AS	
	5	1	**498-0811**	1	COVER (LH)	
	6	1	**523-3660**	1	FILM-IDENTIFICATION (ARMREST ADJUSTMENT)	
Y	7	1	**482-7008**	1	ADJUSTER GP-CONTROL	629
	8	1	**492-0164**	1	CUSHION AS (LH)	
	9	1	**498-0812**	1	COVER (LH)	
	10	1	**498-0813**	1	COVER (LH)	
	11	1	**8T-4121**	4	WASHER-HARD (11X21X2.5-MM THK)	
M	12	1	**8T-4136**	4	BOLT (M10X1.5X25-MM)	
M	13	1	**9X-2044**	5	SCREW-TRUSS HEAD (M6X1X16-MM)	
M	14	1	**9X-2045**	7	SCREW-TRUSS HEAD (M6X1X20-MM)	

M - METRIC PART
Y - SEPARATE ILLUSTRATION

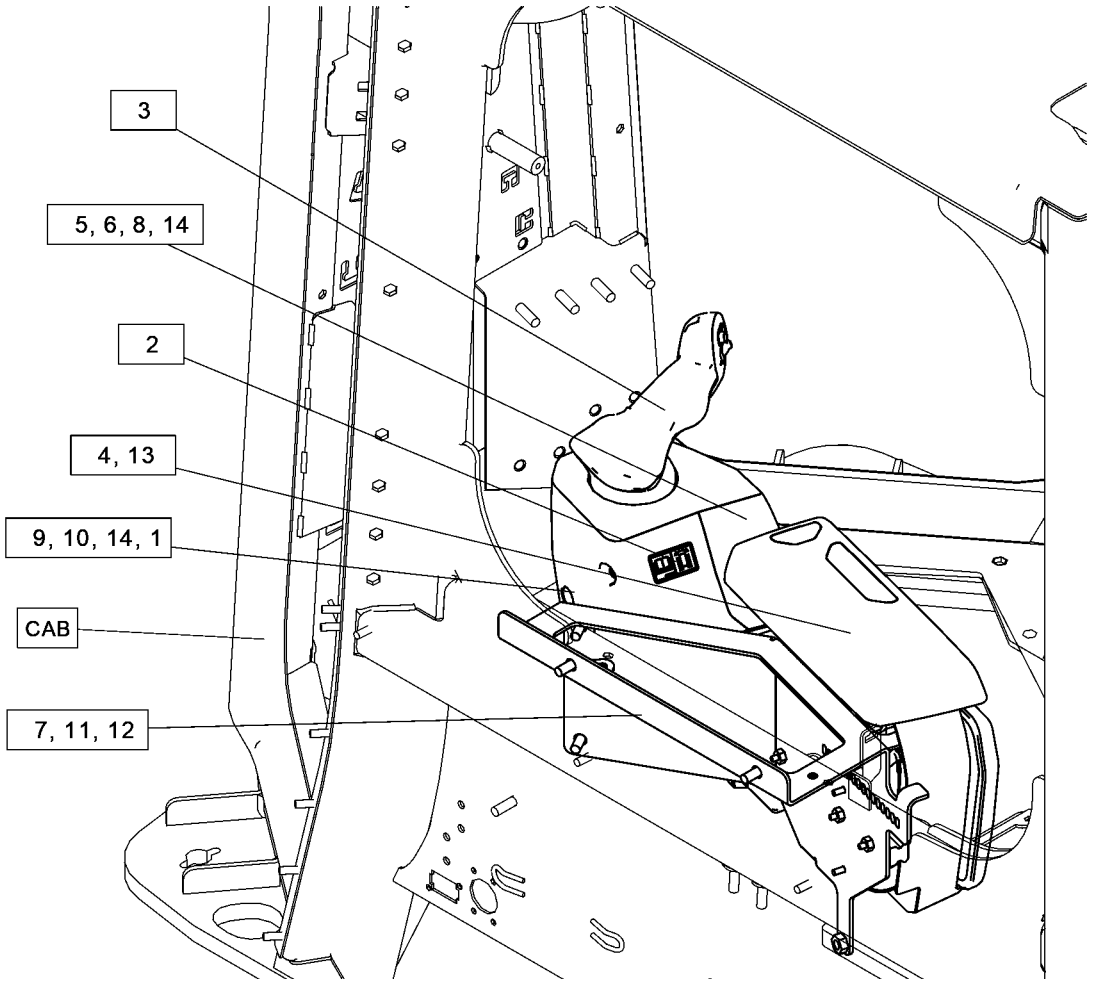

GRAPHIC #1 <END> g06348042

563-8073 MOUNTING GP-CONTROL

S/N: Z2K1-UP; Z2N1-UP
PART OF 536-6469, 536-6470, 579-6887 CAB AR
AN ATTACHMENT

SMCS-5063 **i07821028**

NOTE	REF NO	GRAPHIC REF	PART NUMBER	QTY	PART NAME 1 2 3 4 5 6 (PRODUCT LEVEL)	SEE PAGE
	1	1	**198-4775**	4	WASHER-HARD (6.6X15X6-MM THK)	
	2	1	**206-1667**	3	CLIP (TRIM)	
	3	1	**491-8178**	1	BRACKET AS (RH)	
	4	1	**491-8179**	1	CUSHION AS (RH)	
M		1	**6V-9632**	3	NUT-WELD (M6X1-THD)	
	5	1	**498-0808**	1	COVER (RH)	
	6	1	**498-0809**	1	COVER (RH)	
	7	1	**522-4867**	1	FILM-IDENTIFICATION (ARMREST ADJUSTMENT) (LH)	
Y	8	1	**482-7009**	1	ADJUSTER GP-CONTROL	631
	9	1	**491-8127**	1	CUSHION AS (RH)	
M	10	1	**6V-7357**	4	BOLT (M6X1X25-MM)	
M	11	1	**8T-8442**	2	BOLT-SOCKET HEAD (M6X1X30-MM)	
M	12	1	**9X-2044**	5	SCREW-TRUSS HEAD (M6X1X16-MM)	
M	13	1	**9X-2045**	7	SCREW-TRUSS HEAD (M6X1X20-MM)	

M - METRIC PART
Y - SEPARATE ILLUSTRATION

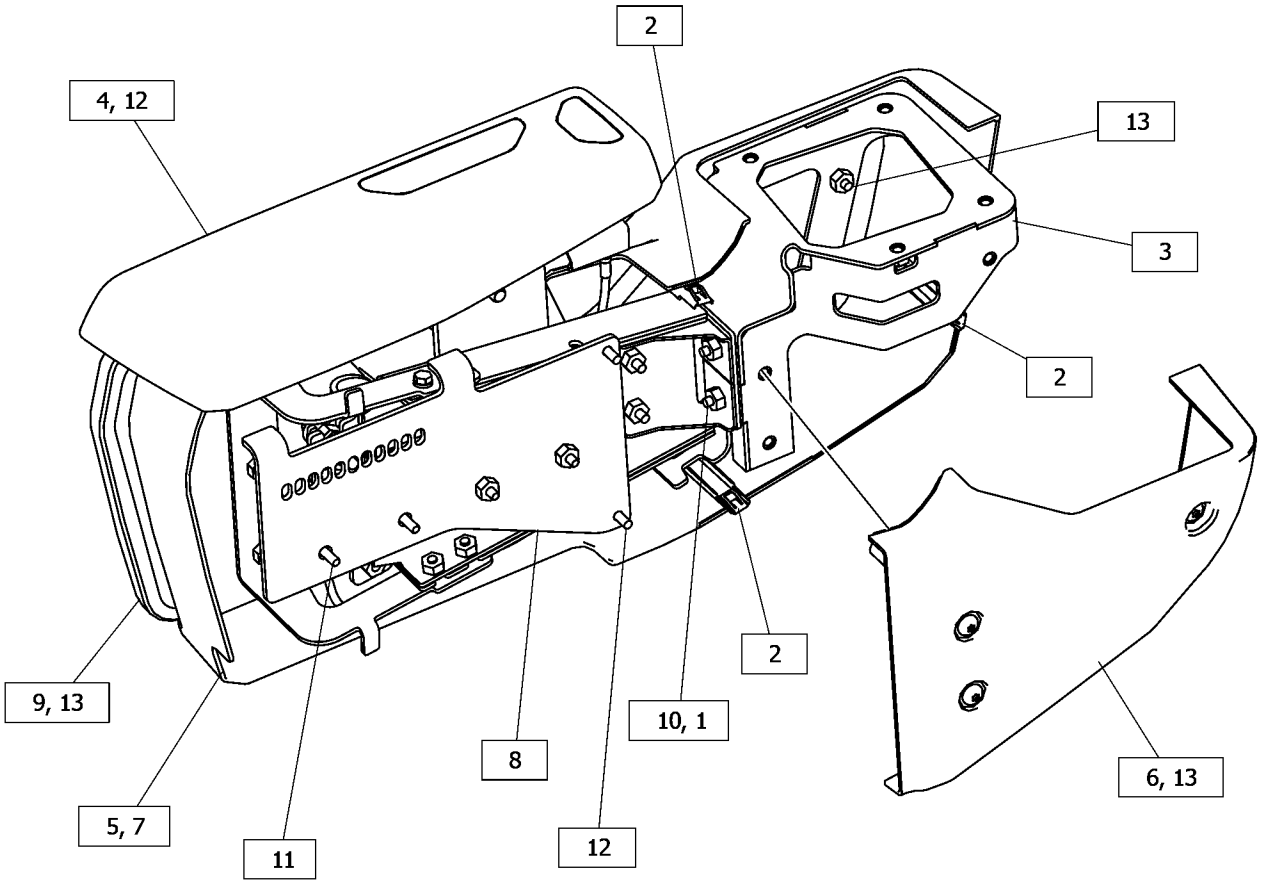

GRAPHIC #1 <END> g06343483

565-7935 MOUNTING GP-CONTROL

S/N: Z2K1-UP
LH
PART OF 536-6467 CAB AR
AN ATTACHMENT

SMCS-5063 **i07806143**

NOTE	REF NO	GRAPHIC REF	PART NUMBER	QTY	PART NAME 1 2 3 4 5 6 (PRODUCT LEVEL)	SEE PAGE
	1	1	**164-0850**	1	LEVER	
	2	1	**206-1667**	2	CLIP (TRIM)	
	3	1	**433-0934**	1	FILM-INFORMATION (READ OMM, STEERING)	
Y	4	1	*488-1756*	1	CONTROL GP-STEERING & XMSN	544
	5	1	**492-0163**	1	BRACKET AS	
		1	**474-2079**	1	STUD-WELD	
	6	1	**492-0165**	1	CUSHION AS	
M		1	**6V-9632**	3	NUT-WELD (M6X1-THD)	
	7	1	**498-0811**	1	COVER (LH)	
	8	1	**523-3660**	1	FILM-IDENTIFICATION (ARMREST ADJUSTMENT)	
M	9	1	**128-2136**	1	SCREW-TRUSS HEAD (M6X1X16-MM)	
	10	1	**492-0164**	1	CUSHION AS	
	11	1	**498-0812**	1	COVER	
	12	1	**498-0813**	1	COVER	
	13	1	**565-7937**	1	MOUNT AS	
M		1	**6V-9632**	8	NUT-WELD (M6X1-THD)	
M		1	**8T-3490**	1	NUT-WELD (M10X1.5-THD)	
	14	1	**7X-0578**	1	WASHER-HARD (10.2X32X2.5-MM THK)	
	15	1	**8T-4121**	4	WASHER-HARD (11X21X2.5-MM THK)	
M	16	1	**8T-4136**	4	BOLT (M10X1.5X25-MM)	
M	17	1	**9X-2044**	5	SCREW-TRUSS HEAD (M6X1X16-MM)	
M	18	1	**9X-2045**	7	SCREW-TRUSS HEAD (M6X1X20-MM)	

M - METRIC PART
Y - SEPARATE ILLUSTRATION

565-7935 **MOUNTING GP-CONTROL (**contd.**)** **i07806143**

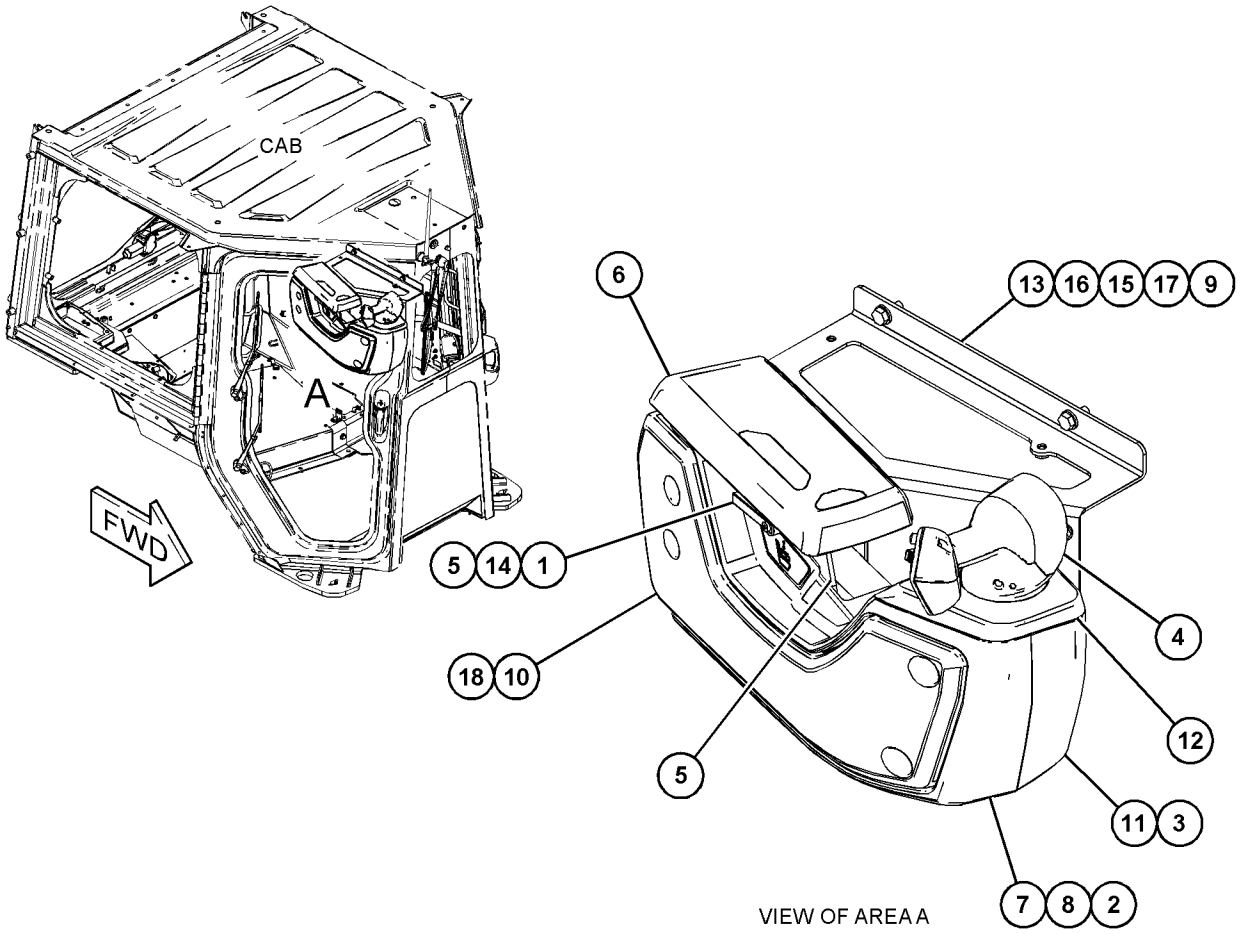

GRAPHIC #1 <END> g06453567

565-7936 MOUNTING GP-CONTROL

S/N: Z2K1-UP; Z2N1-UP
RH
PART OF 536-6467, 536-6468 CAB AR
AN ATTACHMENT

SMCS-5063 **i07806191**

NOTE	REF NO	GRAPHIC REF	PART NUMBER	QTY	PART NAME 1 2 3 4 5 6 (PRODUCT LEVEL)	SEE PAGE
	1	1	**164-0850**	1	LEVER	
	2	1	**198-4775**	4	WASHER-HARD (6.6X15X6-MM THK)	
	3	1	**206-1667**	3	CLIP (TRIM)	
	4	1	**491-8178**	1	BRACKET AS	
M		1	**6V-9632**	9	NUT-WELD (M6X1-THD)	
	5	1	**491-8179**	1	CUSHION AS	
M		1	**6V-9632**	3	NUT-WELD (M6X1-THD)	
	6	1	**491-8252**	1	BRACKET AS	
	7	1	**498-0808**	1	COVER (RH)	
	8	1	**498-0809**	1	COVER (RH)	
	9	1	**522-4867**	1	FILM-IDENTIFICATION (ARMREST ADJUSTMENT)	
M	10	1	**128-2136**	1	SCREW-TRUSS HEAD (M6X1X16-MM)	
	11	1	**491-8127**	1	CUSHION AS	
	12	1	**565-7938**	1	MOUNT AS	
M		1	**6V-9632**	6	NUT-WELD (M6X1-THD)	
M	13	1	**6V-7357**	4	BOLT (M6X1X25-MM)	
	14	1	**7X-0578**	1	WASHER-HARD (10.2X32X2.5-MM THK)	
M	15	1	**9X-2044**	6	SCREW-TRUSS HEAD (M6X1X16-MM)	
M	16	1	**9X-2045**	7	SCREW-TRUSS HEAD (M6X1X20-MM)	

M - METRIC PART

565-7936 **MOUNTING GP-CONTROL (**contd.**)** **i07806191**

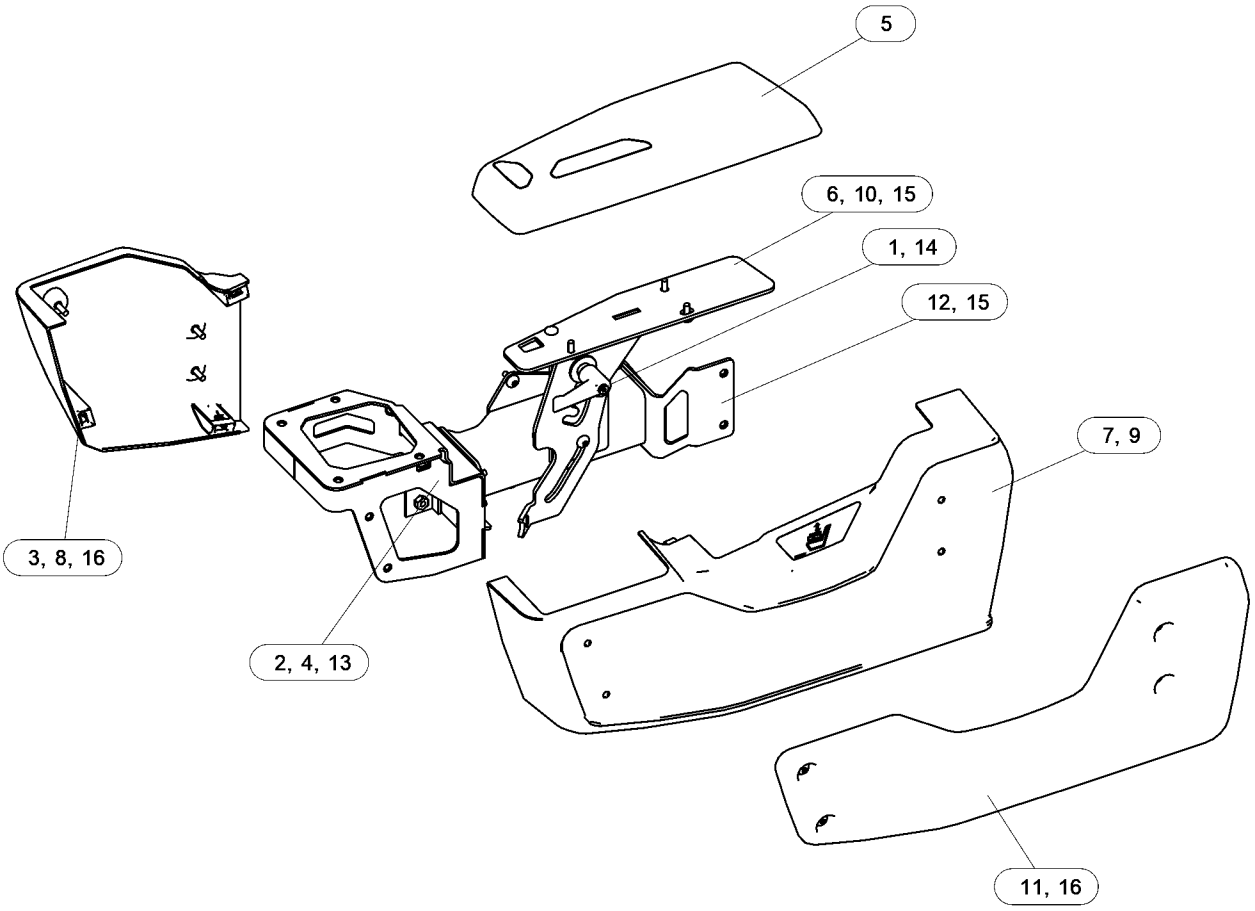

GRAPHIC #1 <END> g06446432

574-0149 MOUNTING GP-MONITOR

S/N: Z2K1-UP; Z2N1-UP
PART OF 577-1295, 577-1296 GRADE CONTROL AR
AN ATTACHMENT

SMCS-7490 **i07843962**

NOTE	REF NO	GRAPHIC REF	PART NUMBER	QTY	PART NAME 1 2 3 4 5 6 (PRODUCT LEVEL)	SEE PAGE
	1	1	**574-0150**	1	PLATE	
M	2	1	**121-9870**	2	SCREW-MACHINE (M6X1X40-MM)	
	3	1	**137-6723**	2	SCREW-FLAT HEAD (6-32X0.5-IN)	
	4	1	**367-5533**	1	LEVER AS	
M	5	1	**3E-8020**	4	SCREW-TRUSS HEAD (M6X1X25-MM)	
	6	1	**418-3925**	1	LATCH AS	
	7	1	**427-5774**	2	HINGE AS	
	8	1	**503-6466**	1	PLATE	
	9	1	**503-7483**	1	CABLE AS	
	10	1	**503-7485**	1	PLATE	
	11	1	**509-0269**	1	MODULE GP-DISPLAY	
		1	**564-9474**	1	SOFTWARE GP-MONITOR	
	12	1	**574-0151**	1	PLATE	
	13	1	**574-0152**	1	STRIKER AS	
	14	1	**574-0153**	2	SPACER (6.6X12.7X13-MM THK)	
M	15	1	**7Y-7388**	12	SCREW-BUTTON HEAD (M5X0.8X12-MM)	
M	16	1	**7Y-7389**	4	SCREW (M5X0.8X16-MM)	
M	17	1	**9X-2042**	2	SCREW-TRUSS HEAD (M6X1X12-MM)	

M - METRIC PART

574-0149 **MOUNTING GP-MONITOR (**contd.**)** **i07843962**

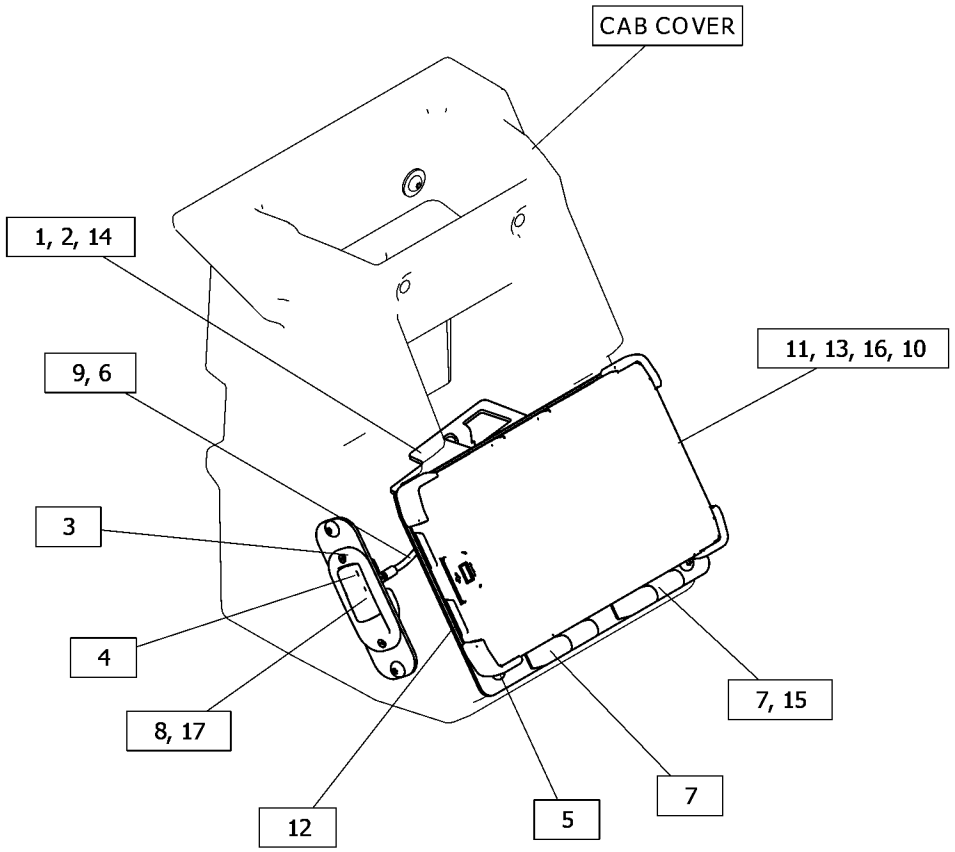

GRAPHIC #1 <END> g06410087

543-1115 MOUNTING GP-PLATFORM

S/N: Z2K1-UP; Z2N1-UP

AN ATTACHMENT

SMCS-7253 **i07839944**

NOTE	REF NO	GRAPHIC REF	PART NUMBER	QTY	PART NAME 1 2 3 4 5 6 (PRODUCT LEVEL)	SEE PAGE
	1	1	**339-3566**	2	SUPPORT AS	
M	2	1	**479-2171**	8	BOLT AS	
	3	1	**543-1167**	1	GASKET	
	4	1	**575-5582**	1	FLOOR MAT AS	
		1	**513-7195**	1	FLOOR MAT AS	
	5	1	**578-1341**	1	PLATE AS	
M		1	**6V-9632**	4	NUT-WELD (M6X1-THD)	
M		1	**8T-3490**	4	NUT-WELD (M10X1.5-THD)	
	6	1	**578-1343**	1	PLATE AS	
M		1	**6V-9632**	4	NUT-WELD (M6X1-THD)	
	7	1	**578-1344**	1	GASKET	
	8	1	**578-1345**	1	PANEL	
	9	1	**578-1346**	2	STRIKER AS	
	10	1	**578-1347**	1	TREAD	
	11	1	**578-1702**	2	HINGE AS	
	12	1	**578-4267**	1	PANEL	
	13	1	**580-2835**	1	PANEL	
M	14	1	**6V-8214**	8	BOLT (M6X1X20-MM)	
	15	1	**7X-7729**	11	WASHER (11X25X3-MM THK)	
M	16	1	**8T-4186**	11	BOLT (M10X1.5X40-MM)	
	17	1	**9X-8256**	8	WASHER (6.6X12X2-MM THK)	

M - METRIC PART

543-1115 **MOUNTING GP-PLATFORM (**contd.**)** **i07839944**

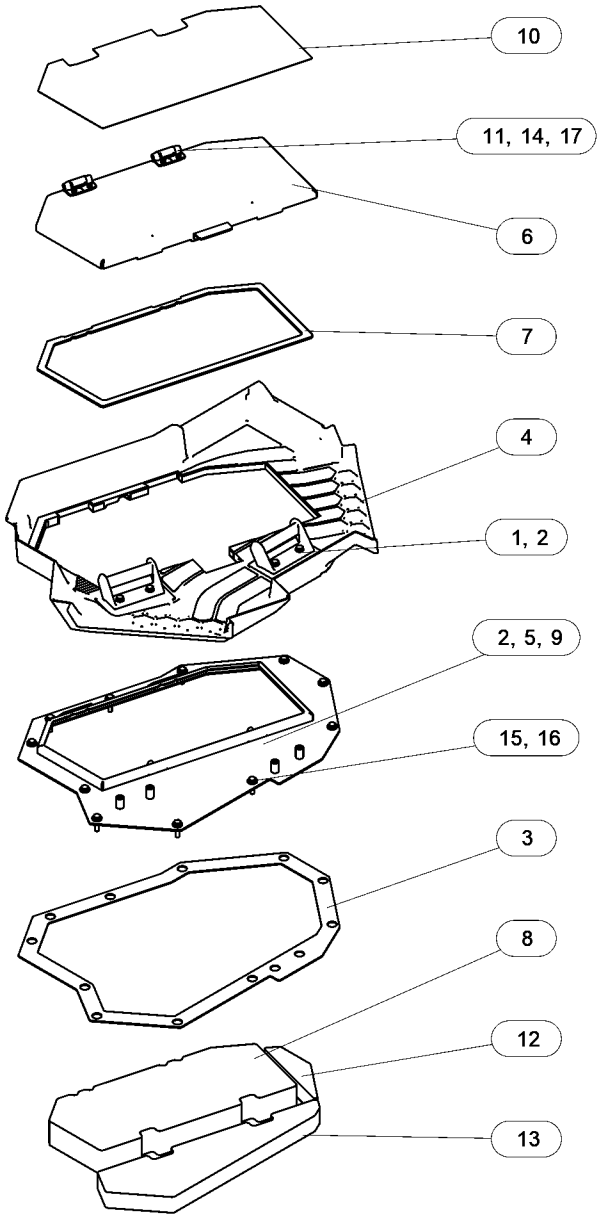

GRAPHIC #1 <END> g06451716

507-6027 MOUNTING GP-ROPS

S/N: Z2K1-UP; Z2N1-UP
PART OF 559-5990 CHASSIS AR
AN ATTACHMENT

SMCS-7266 **i07817118**

NOTE	REF NO	GRAPHIC REF	PART NUMBER	QTY	PART NAME 1 2 3 4 5 6 (PRODUCT LEVEL)	SEE PAGE
	1	1	**528-5564**	1	PLATE	
	2	1	**528-5566**	1	PLATE	
	3	1	**5H-3182**	4	PIN-SPRING	
M	4	1	**7X-2489**	10	BOLT (M24X3X100-MM)	
M	5	1	**303-9441**	6	BOLT (M16X2X80-MM)	
M	6	1	**8T-4141**	10	BOLT (M20X2.5X70-MM)	
M	7	1	**8T-4193**	6	BOLT (M16X2X50-MM)	
	8	1	**8T-1482**	2	WASHER-HARD (26X50X8-MM THK)	
	9	1	**8T-4123**	2	WASHER (22X35X3.5-MM THK)	
	10	1	**8T-4167**	10	WASHER-HARD (26X44X4-MM THK)	
	11	1	**198-4781**	8	WASHER-HARD (22X40X10-MM THK)	
	12	1	**474-6949**	2	PLATE	
	13	1	**515-1229**	1	PLATE AS	
	14	1	**515-1230**	1	PLATE AS	
	15	1	**528-8150**	2	PLATE	
	16	1	**578-9476**	2	PLATE	
	17	1	*580-8224*	1	SUPPORT GP-ROPS	
		1	**507-6028**	1	SUPPORT AS (RH)	
		1	**507-6029**	1	SUPPORT AS (LH)	
M	18	1	**114-6099**	2	BOLT (M24X3X80-MM)	
	19	1	**9X-8257**	12	WASHER (17.5X30X3.5-MM THK)	

M - METRIC PART

507-6027 **MOUNTING GP-ROPS** (contd.) **i07817118**

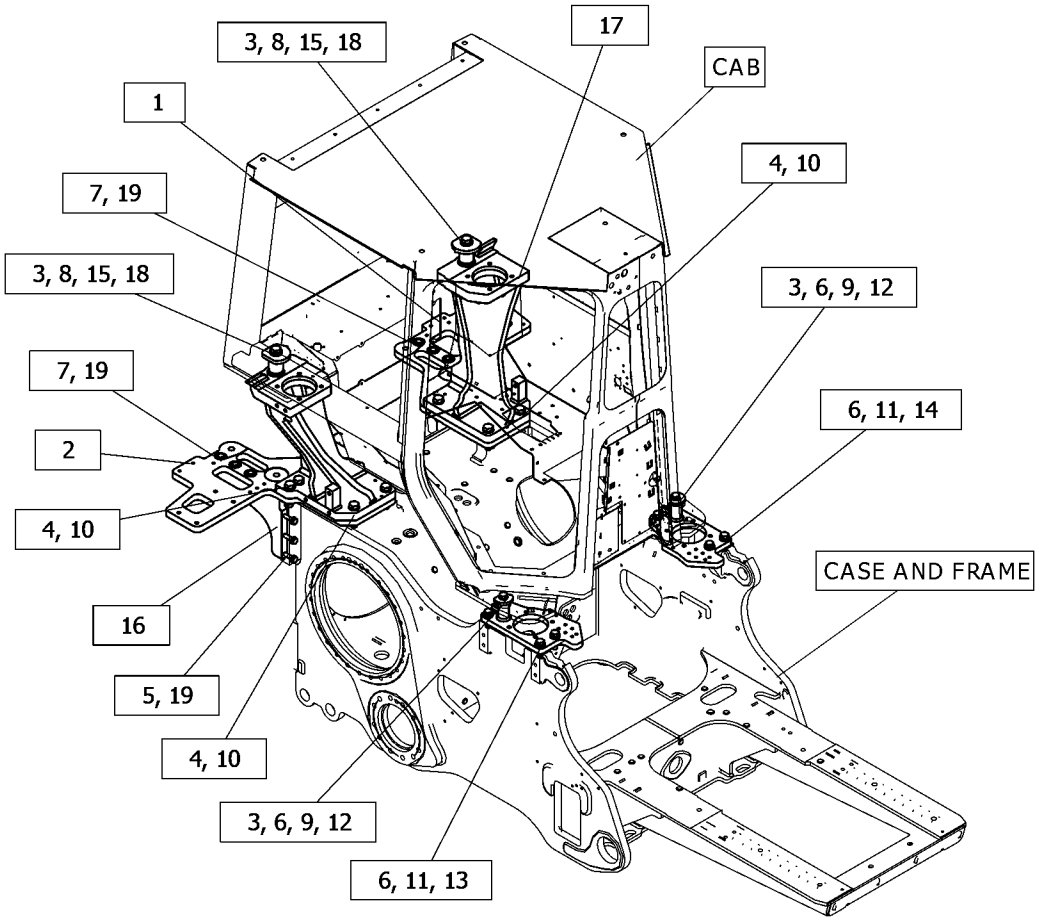

GRAPHIC #1 <END> g06454659

569-0452 NET GP-STORAGE

S/N: Z2K1-UP; Z2N1-UP
PART OF 577-1292 DISPLAY AR-MONITOR
AN ATTACHMENT

SMCS-7268 **i07834955**

NOTE	REF NO	GRAPHIC REF	PART NUMBER	QTY	PART NAME 1 2 3 4 5 6 (PRODUCT LEVEL)	SEE PAGE
M	1	1	**3E-8020**	4	SCREW-TRUSS HEAD (M6X1X25-MM)	
	2	1	**467-2285**	1	NET AS-STORAGE	
	3	1	**509-8192**	1	PLATE	

M - METRIC PART

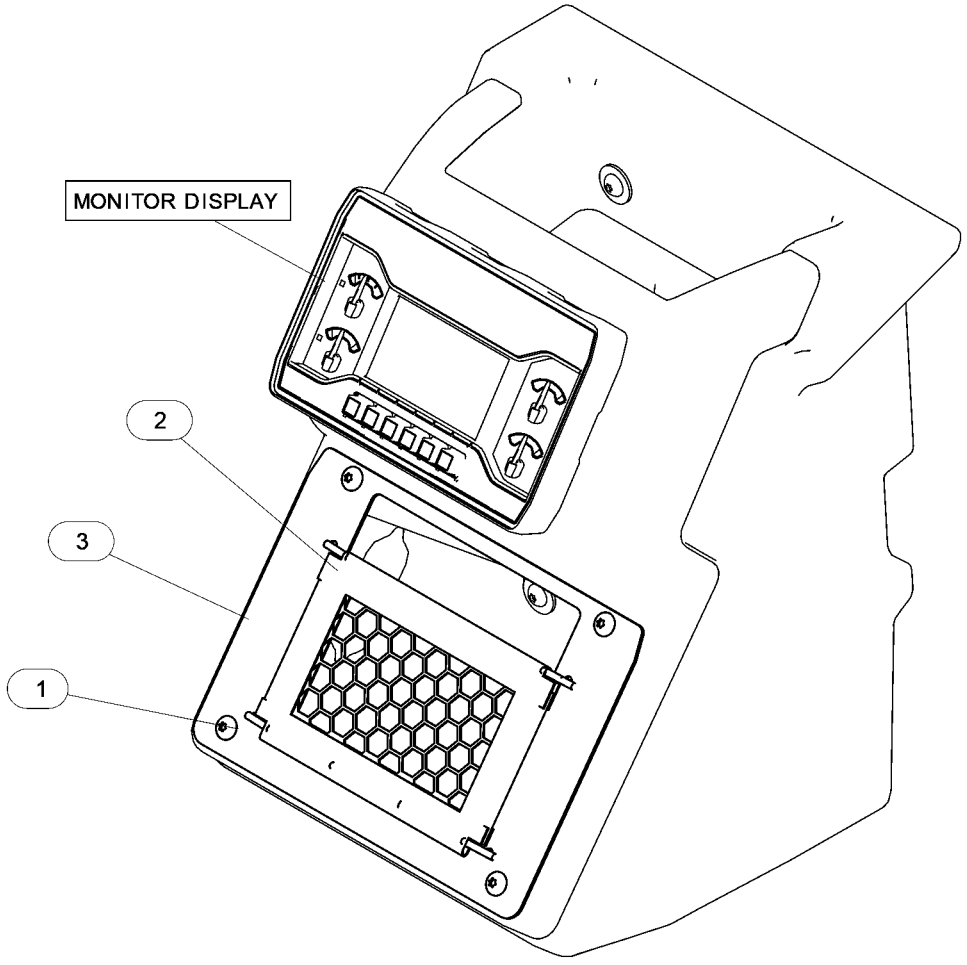

GRAPHIC #1 <END> g06452609

486-3160 PEDAL GP-BRAKE

S/N: Z2K1-UP; Z2N1-UP

PART OF 435-5734 PEDAL GP-GOVERNOR & BRAKE

AN ATTACHMENT

SMCS-4269 **i07793232**

NOTE	REF NO	GRAPHIC REF	PART NUMBER	QTY	PART NAME 1 2 3 4 5 6 (PRODUCT LEVEL)	SEE PAGE
	1	1	**132-7077**	1	SWITCH AS-LIMIT (SERVICE BRAKE PEDAL)	
		1	**6V-8376**	3	SCREW-MACHINE (8-32XO.25-IN)	
		1	**9B-7233**	3	LOCKWASHER	
Y	2	1	**266-1467**	1	SENSOR GP-POSITION (ROTARY) (DECELERATOR, SERVICE BRAKE)	200

Y - SEPARATE ILLUSTRATION

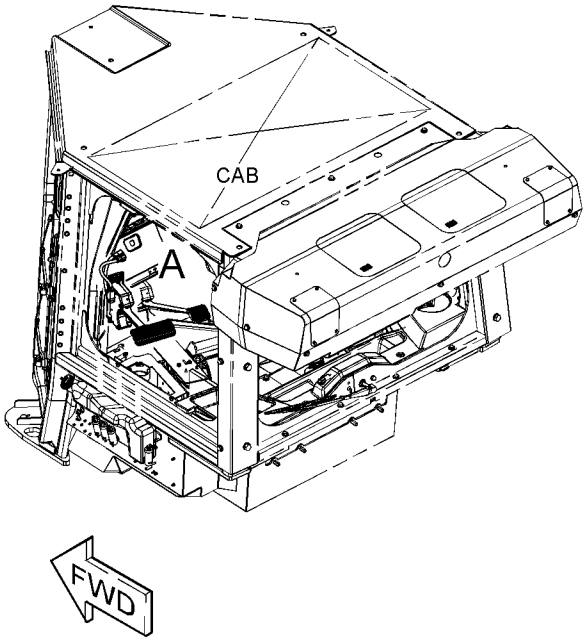

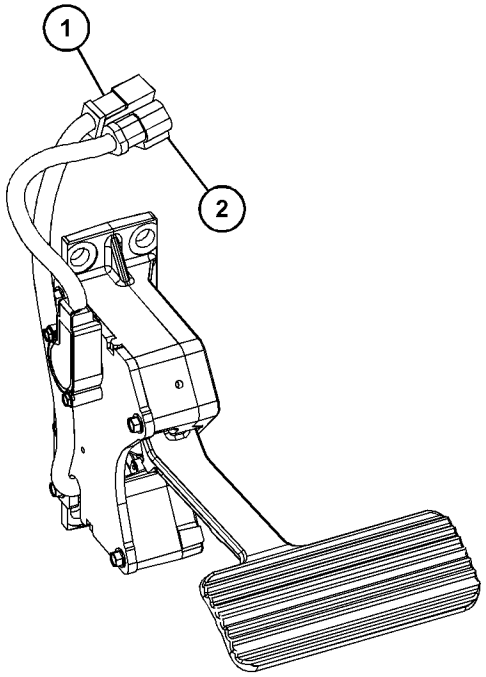

VIEW OF AREA A

GRAPHIC #1 <END> g06345136

435-5734 PEDAL GP-GOVERNOR & BRAKE

S/N: Z2K1-UP; Z2N1-UP

PART OF 536-6467, 536-6468, 536-6469, 536-6470, 579-6887 CAB AR

AN ATTACHMENT

SMCS-4122 **i07792832**

NOTE	REF NO	GRAPHIC REF	PART NUMBER	QTY	PART NAME 1 2 3 4 5 6 (PRODUCT LEVEL)	SEE PAGE
Y	1	1	*486-3160*	1	PEDAL GP-BRAKE	736
Y	2	1	*486-3161*	1	SENSOR GP-POSITION (DECELERATOR)	204
	3	1	**8T-4121**	8	WASHER-HARD (11X21X2.5-MM THK)	
M	4	1	**344-5675**	4	NUT (M10X1.5-THD)	
M	5	1	**8T-4136**	4	BOLT (M10X1.5X25-MM)	

M - METRIC PART
Y - SEPARATE ILLUSTRATION

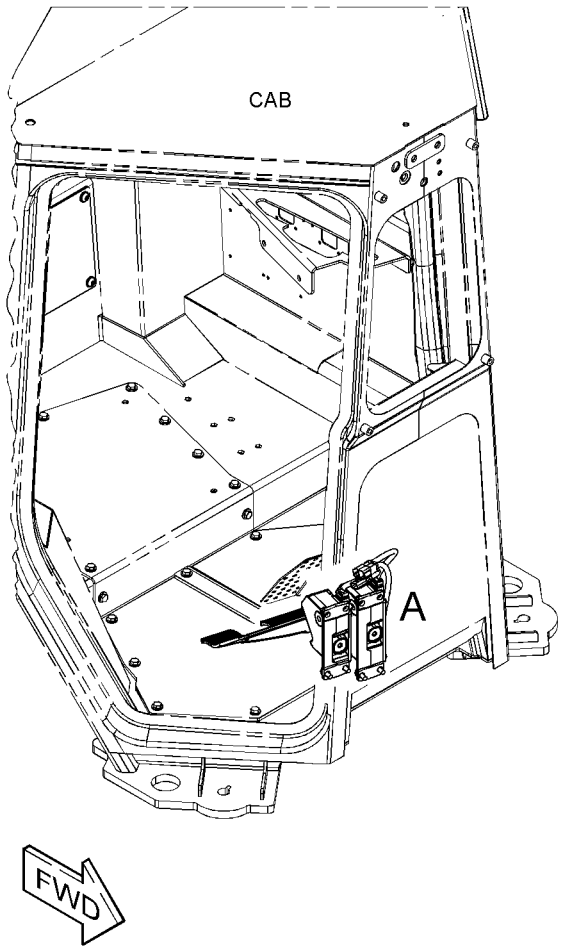

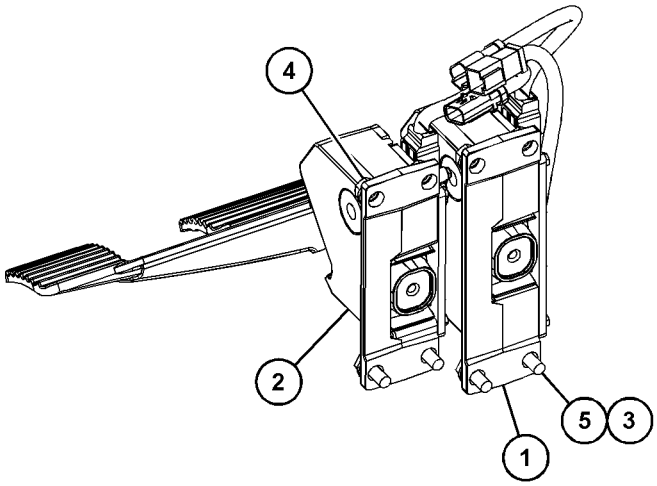

VIEW OF AREA A

GRAPHIC #1 <END> g06345134

441-9253 PRECLEANER GP-CAB AIR

S/N: Z2K1-UP; Z2N1-UP

AN ATTACHMENT

SMCS-7311, 7316, 7342 **i07821103**

NOTE	REF NO	GRAPHIC REF	PART NUMBER	QTY	PART NAME 1 2 3 4 5 6 (PRODUCT LEVEL)	SEE PAGE
	1	1	**193-2200**	1	SEAL-LIP TYPE	
	2	1	**545-8339**	1	FILTER-CAB AIR	
Y	3	1	*540-8689*	1	PRECLEANER GP-CAB AIR	739
	4	1	**1T-0580**	1	RING-RETAINING	
	5	1	**7X-7729**	4	WASHER (11X25X3-MM THK)	
M	6	1	**8T-4196**	4	BOLT (M10X1.5X35-MM)	

M - METRIC PART
Y - SEPARATE ILLUSTRATION

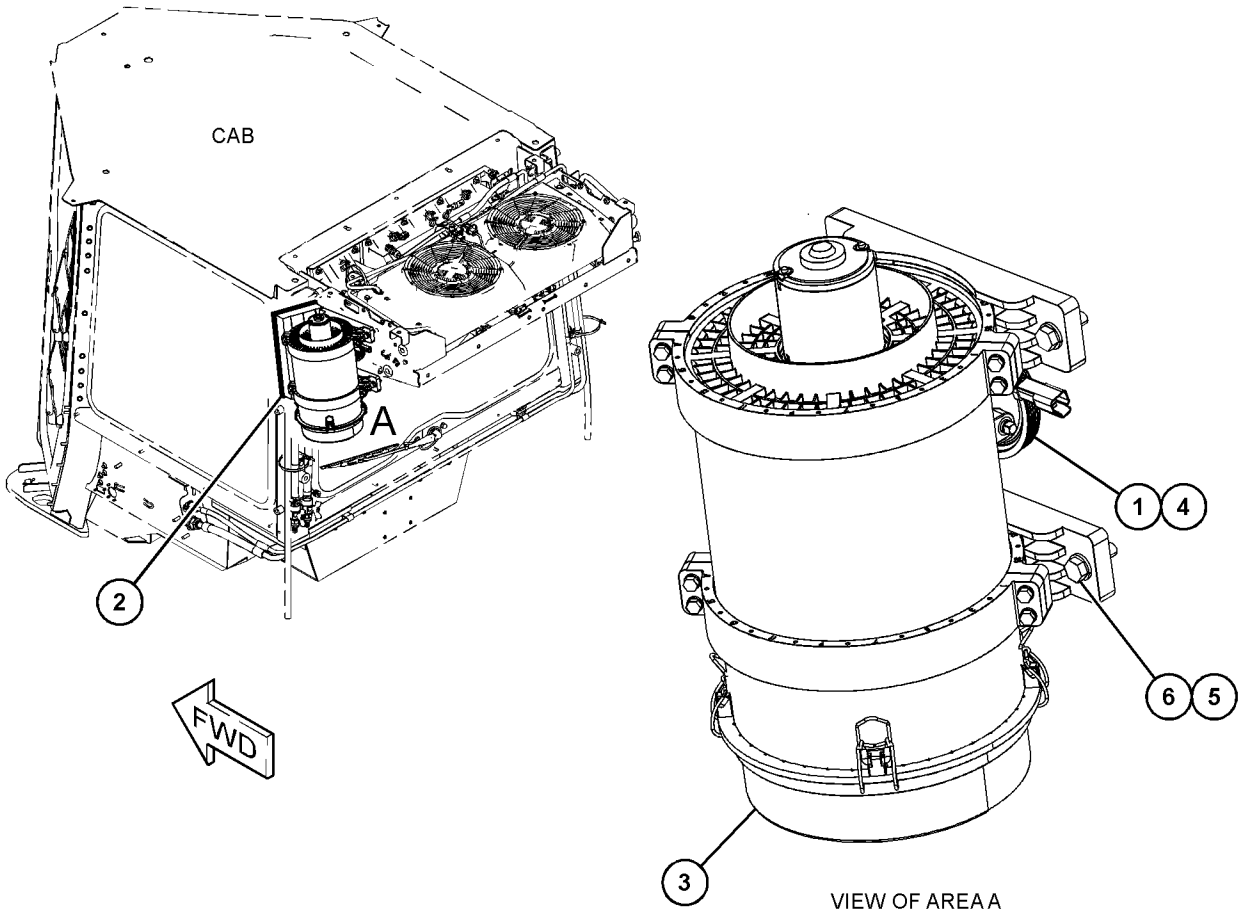

GRAPHIC #1 <END> g06356875

540-8689 PRECLEANER GP-CAB AIR

S/N: Z2K1-UP; Z2N1-UP
PART OF 441-9253 PRECLEANER GP-CAB AIR
AN ATTACHMENT

SMCS-7311, 7316, 7342 **i07722124**

NOTE	REF NO	GRAPHIC REF	PART NUMBER	QTY	PART NAME 1 2 3 4 5 6 (PRODUCT LEVEL)	SEE PAGE
	1	1	**457-2836**	1	FILTER AS-AIR	
					—OR—	
F			**457-3049**	1	FILTER AS-AIR (HIGH EFFICIENCY PARTICULATE AIR)	
					—OR—	
F			**472-7939**	1	FILTER AS-AIR (ACTIVATED CHARCOAL)	
	2	1	**464-8447**	4	CLIP	
	3	1	**9X-8256**	8	WASHER (6.6X12X2-MM THK)	
M	4	1	**8T-0639**	4	BOLT (M6X1X12-MM)	
M	5	1	**6V-7357**	8	BOLT (M6X1X25-MM)	
Y	6	1	**464-8457**	1	FAN & MOTOR GP (5-BLADE)	69

F - NOT SHOWN
M - METRIC PART
Y - SEPARATE ILLUSTRATION

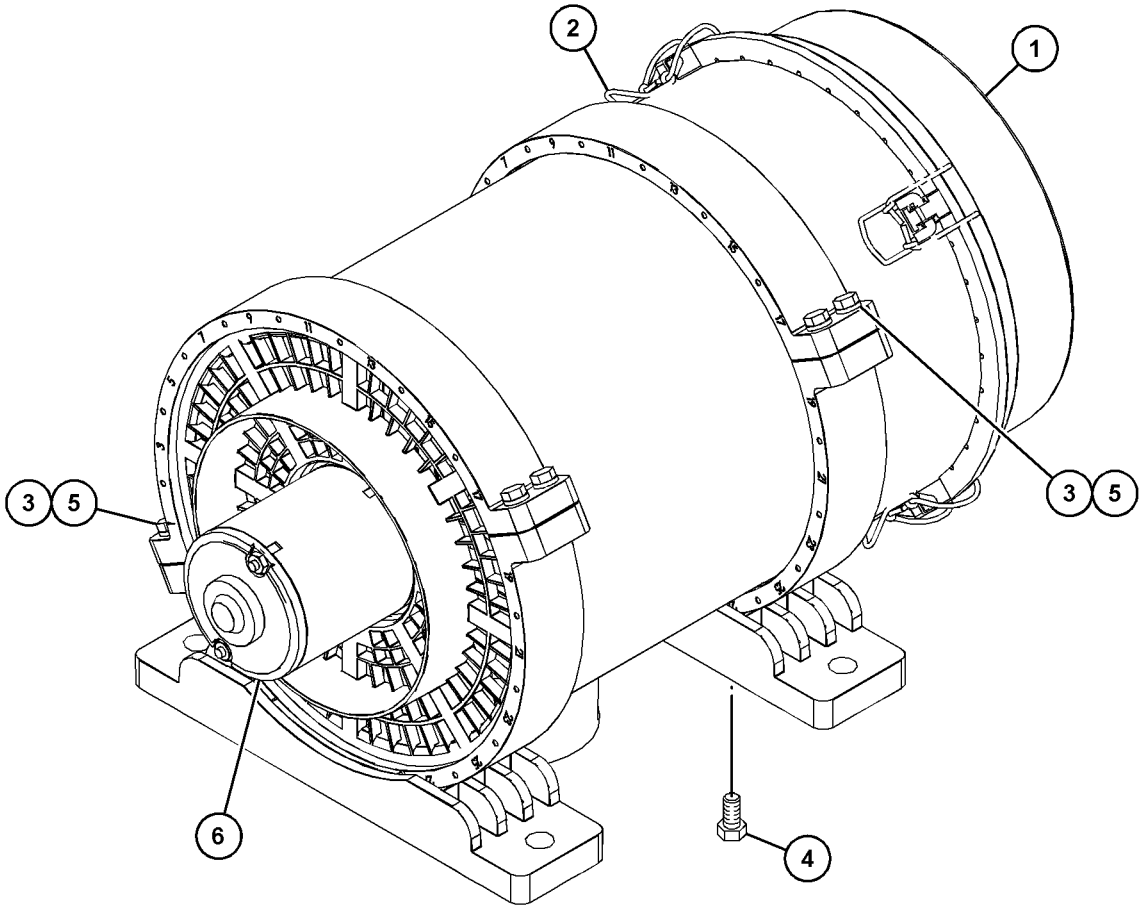

GRAPHIC #1 <END> g06360260

487-5821 RADIO GP

S/N: Z2K1-UP; Z2N1-UP
PART OF 579-5779 RADIO GP
AN ATTACHMENT

SMCS-7338 **i07021214**

NOTE	REF NO	GRAPHIC REF	PART NUMBER	QTY	PART NAME 1 2 3 4 5 6 (PRODUCT LEVEL)	SEE PAGE
	1	1	**136-5490**	1	BUSHING (RADIO MOUNT)	
Y	2	1	**200-5728**	1	HARNESS AS-RADIO (FLANGE)	171
	3	1	**462-9619**	1	RADIO GP (AM/FM/USB/BLUETOOTH)	
	4	1	**349-8642**	1	MICROPHONE	

Y - SEPARATE ILLUSTRATION

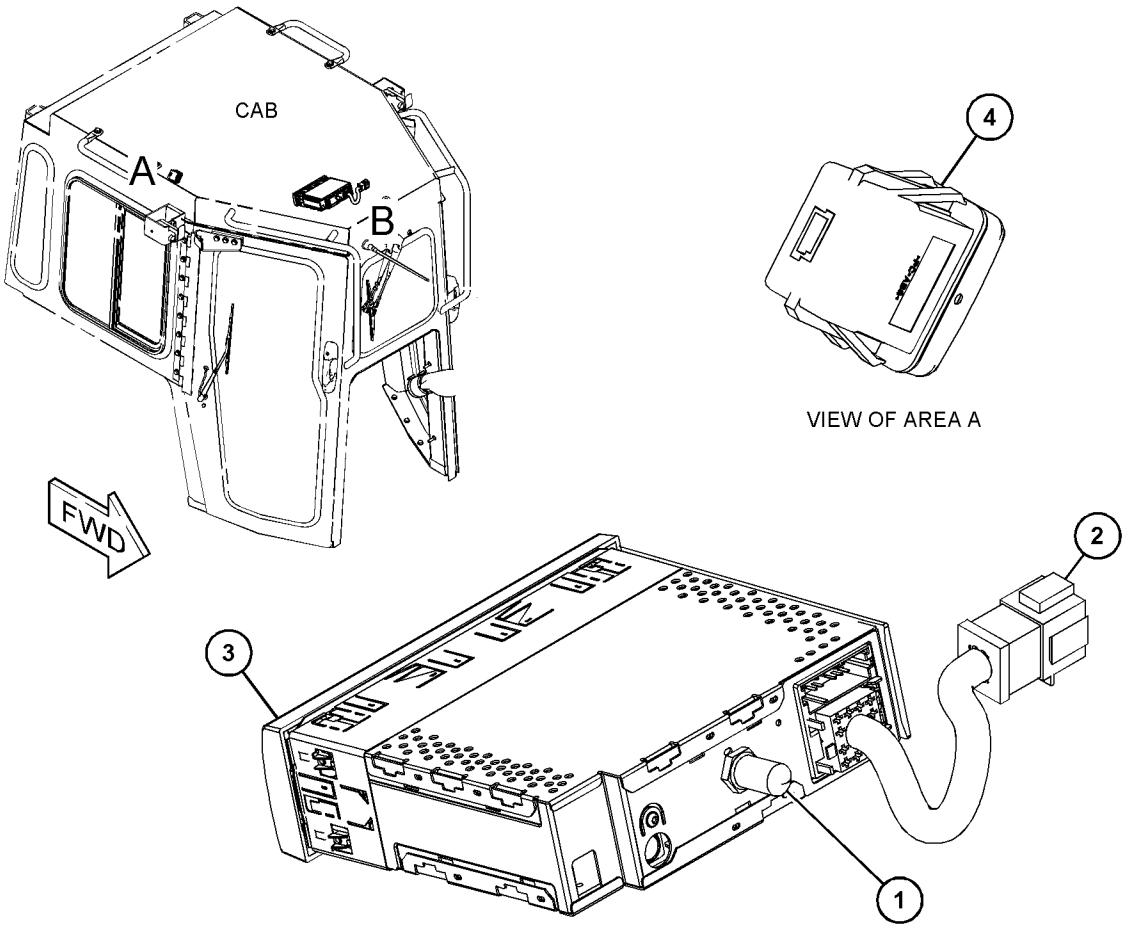

VIEW OF AREA A

VIEW OF AREA B

GRAPHIC #1 <END> g06198553

579-5779 RADIO GP

S/N: Z2K1-UP; Z2N1-UP

AN ATTACHMENT

SMCS-7338 **i07844051**

NOTE	PART NUMBER	QTY	PART NAME 1 2 3 4 5 6 (PRODUCT LEVEL)	SEE PAGE
Y	*487-5821*	1	RADIO GP (AM/FM)	740

Y - SEPARATE ILLUSTRATION

<END>

475-9779 RETAINER GP-DOOR

S/N: Z2K1-UP; Z2N1-UP
RH
PART OF 475-9767 DOOR GP-CAB
AN ATTACHMENT

SMCS-7308 **i07797647**

NOTE	REF NO	GRAPHIC REF	PART NUMBER	QTY	PART NAME 1 2 3 4 5 6 (PRODUCT LEVEL)	SEE PAGE
	1	1	**8T-4158**	1	WASHER-SPECIAL	
	2	1	**196-3773**	1	STRIKER	
	3	1	**478-6205**	1	RETAINER	
	4	1	**478-6206**	1	PLATE	
M	5	1	**8T-1159**	4	BOLT-SOCKET HEAD (M10X1.5X25-MM)	

M - METRIC PART

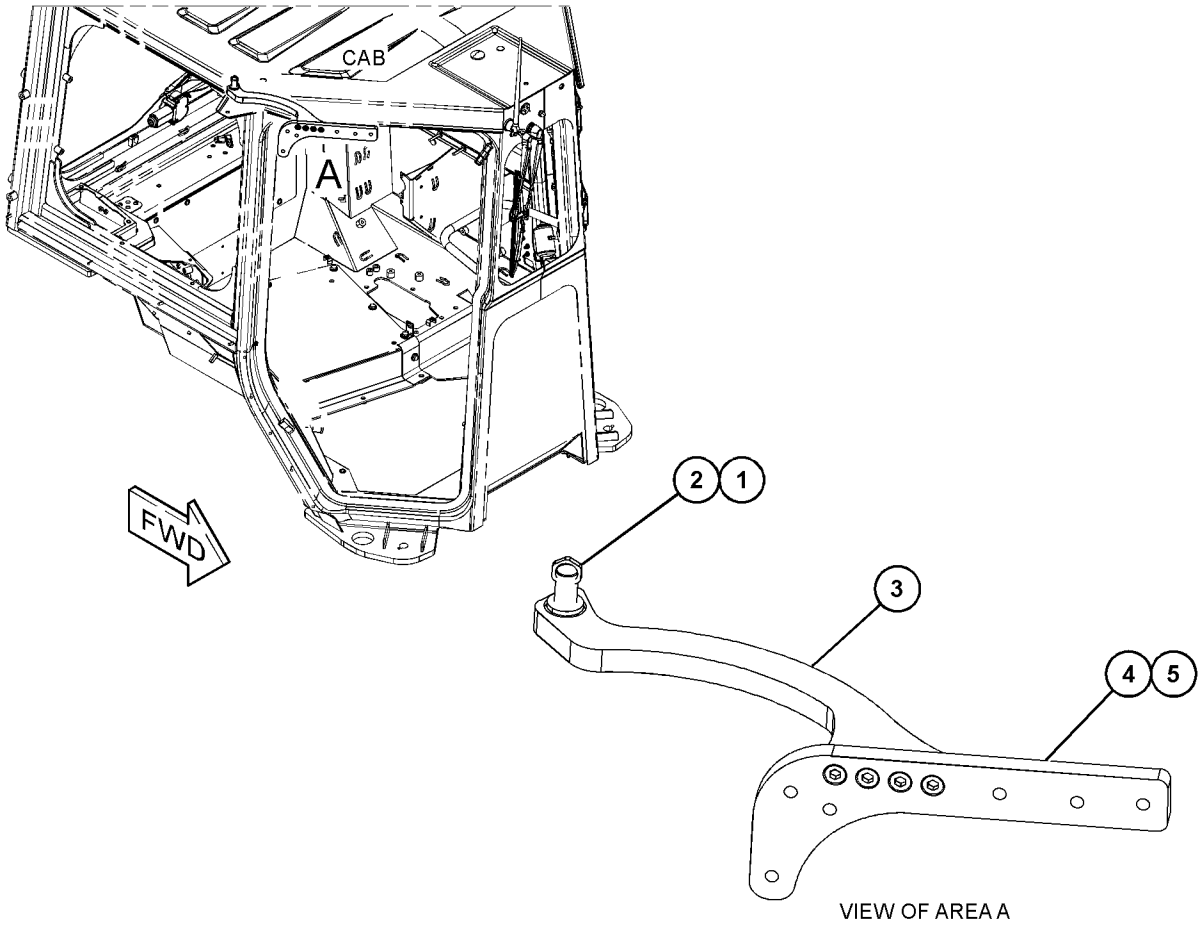

VIEW OF AREA A

GRAPHIC #1 <END> g06354899

477-0532 RETAINER GP-DOOR

S/N: Z2K1-UP; Z2N1-UP
LH
PART OF 475-9767 DOOR GP-CAB
AN ATTACHMENT

SMCS-7308 **i07797676**

NOTE	REF NO	GRAPHIC REF	PART NUMBER	QTY	PART NAME 1 2 3 4 5 6 (PRODUCT LEVEL)	SEE PAGE
	1	1	**196-3773**	1	STRIKER	
M	2	1	**8T-1159**	4	BOLT-SOCKET HEAD (M10X1.5X25-MM)	
	3	1	**478-6203**	1	PLATE	
	4	1	**539-5172**	1	RETAINER	
	5	1	**8T-4158**	1	WASHER-SPECIAL	

M - METRIC PART

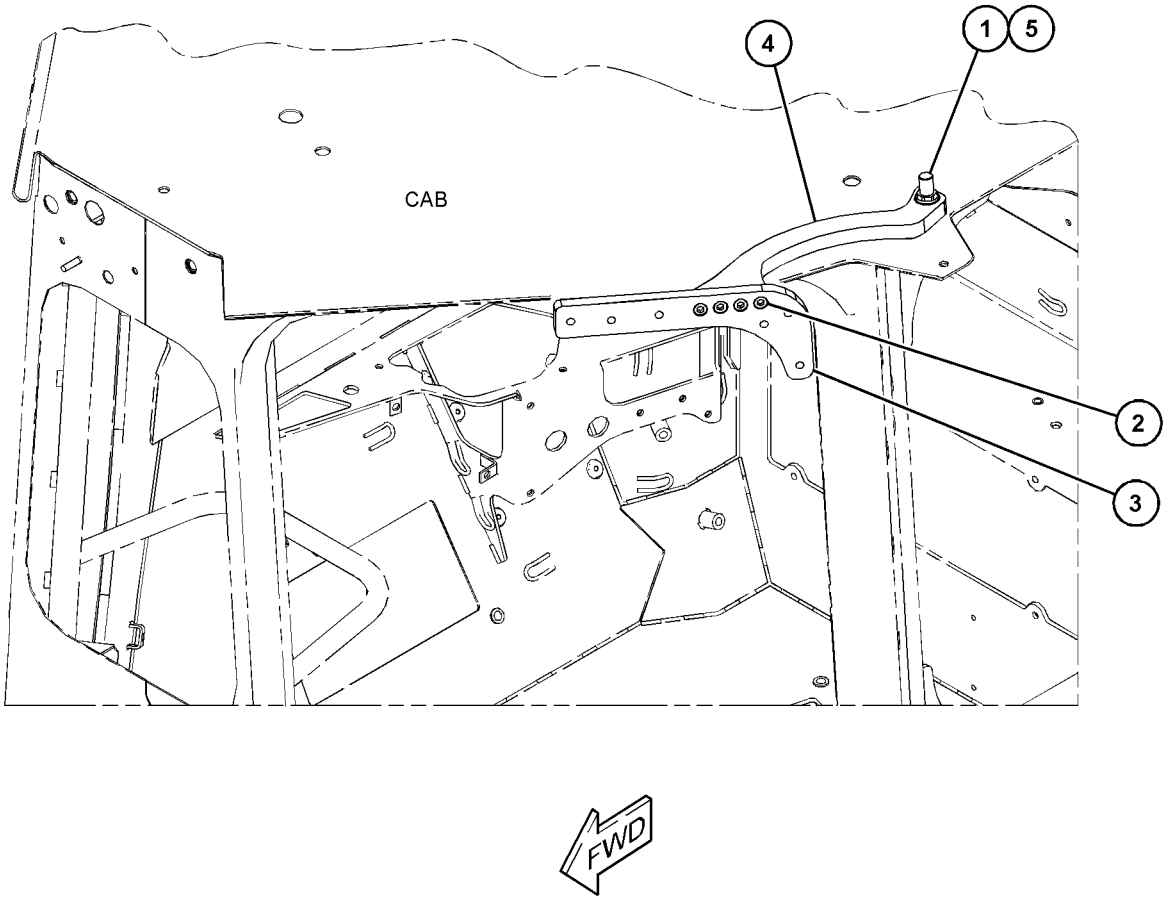

GRAPHIC #1 <END> g06340793

579-5061 ROPS GP-ENCLOSED

S/N: Z2K1-UP; Z2N1-UP
PART OF 536-6476, 536-6478, 579-6896 CAB GP
AN ATTACHMENT

SMCS-7323 **i07805246**

NOTE	REF NO	GRAPHIC REF	PART NUMBER	QTY	PART NAME 1 2 3 4 5 6 (PRODUCT LEVEL)	SEE PAGE
	1	1	**577-7257**	1	FILM-ROPS	
	2	1	**473-2320**	45	INSERT-THREADED	
M	3	1	**170-4057**	27	INSERT-THREADED (M6X1-THD)	
M	4	1	**354-0132**	18	INSERT-HEX (M4X0.7-THD)	

M - METRIC PART

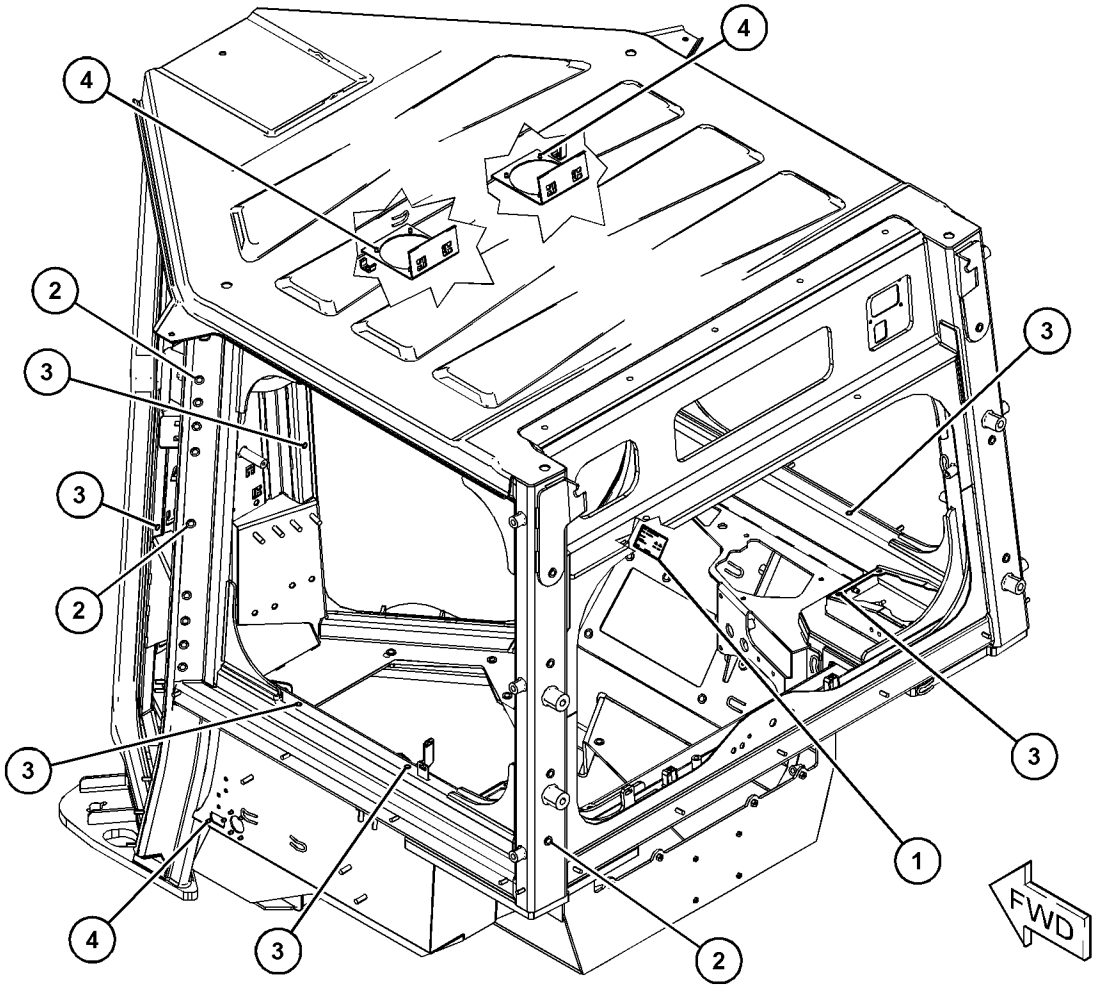

GRAPHIC #1 <END> g06453015

527-8728 SCREEN GP-PROTECTION

S/N: Z2K1-UP; Z2N1-UP
REAR
PART OF 550-5580 SCREEN GP-PROTECTION
AN ATTACHMENT

SMCS-7165 **i07821885**

NOTE	REF NO	GRAPHIC REF	PART NUMBER	QTY	PART NAME 1 2 3 4 5 6 (PRODUCT LEVEL)	SEE PAGE
	1	1	**527-8713**	1	SCREEN AS-PROTECTION (REAR)	

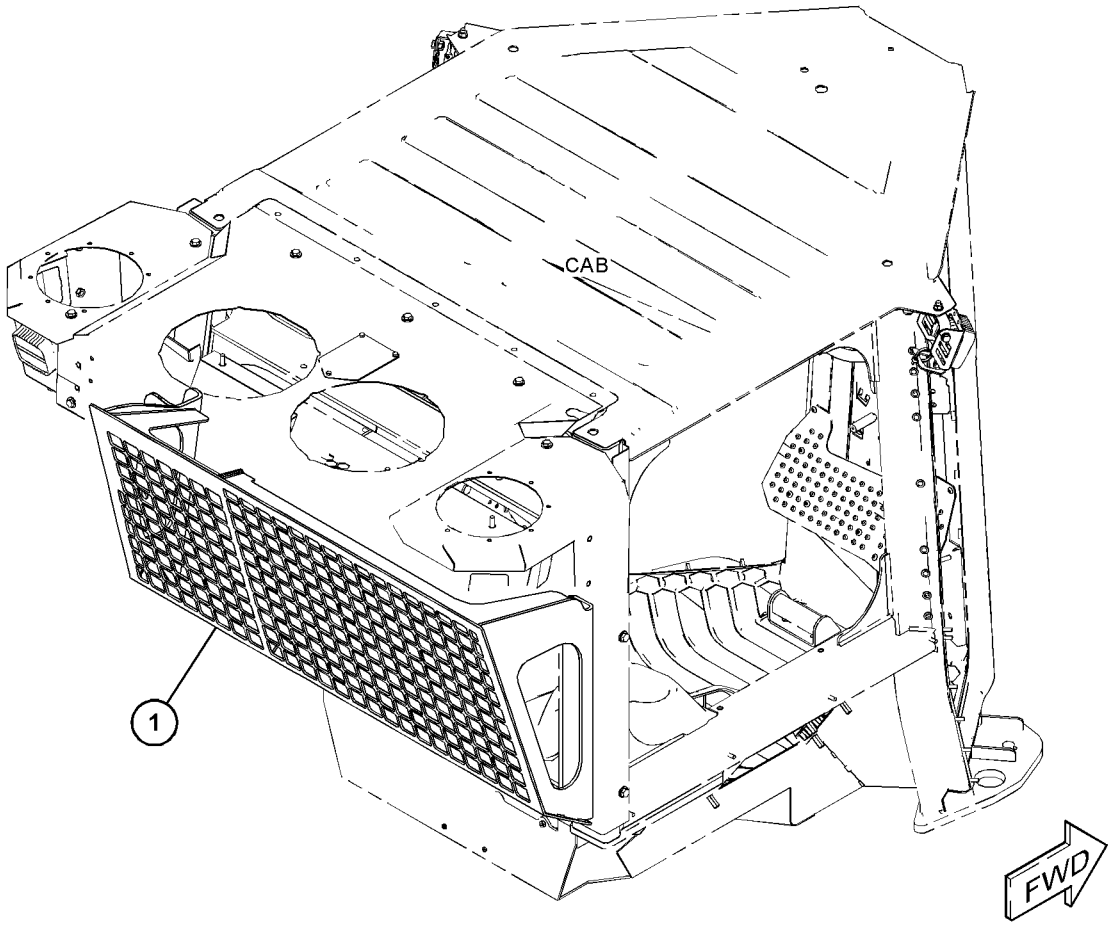

GRAPHIC #1 <END> g06350043

536-8780 SCREEN GP-PROTECTION

S/N: Z2K1-UP; Z2N1-UP
REAR
PART OF 550-5589 SCREEN GP-PROTECTION
AN ATTACHMENT

SMCS-7165 **i07820646**

NOTE	REF NO	GRAPHIC REF	PART NUMBER	QTY	PART NAME 1 2 3 4 5 6 (PRODUCT LEVEL)	SEE PAGE
	1	1	**114-9284**	2	BUMPER	
	2	1	**279-0942**	1	BOLT AS-STRIKER	
		1	**8T-4158**	1	WASHER-SPECIAL	
	3	1	**172-2385**	1	LATCH AS-ROTARY	
M	4	1	**184-0983**	1	NUT-HEX FLANGE (M12X1.75-THD)	
M	5	1	**344-5674**	2	NUT (M8X1.25-THD)	
	6	1	**581-4229**	1	PLATE AS	
	7	1	**581-4230**	1	PLATE AS	
	8	1	**581-4231**	1	SCREEN AS-PROTECTION	
	9	1	**565-3713**	1	PLATE	
	10	1	**5P-0372**	2	LOCK PIN	
	11	1	**6S-9277**	2	PIN	
	12	1	**7X-3391**	2	WASHER-HARD (13.5X32X6-MM THK)	
M	13	1	**8C-8451**	4	BOLT (M6X1X40-MM)	
	14	1	**9X-2038**	4	WASHER (7X19X2-MM THK)	
	15	1	**3B-4615**	1	PIN-COTTER	
	16	1	**4E-8957**	2	GROMMET	
	17	1	**282-3117**	1	ROD	
	18	1	**569-7576**	1	PLATE	
	19	1	**313-6347**	1	PAD	

M - METRIC PART

536-8780 **SCREEN GP-PROTECTION (**contd.**)** **i07820646**

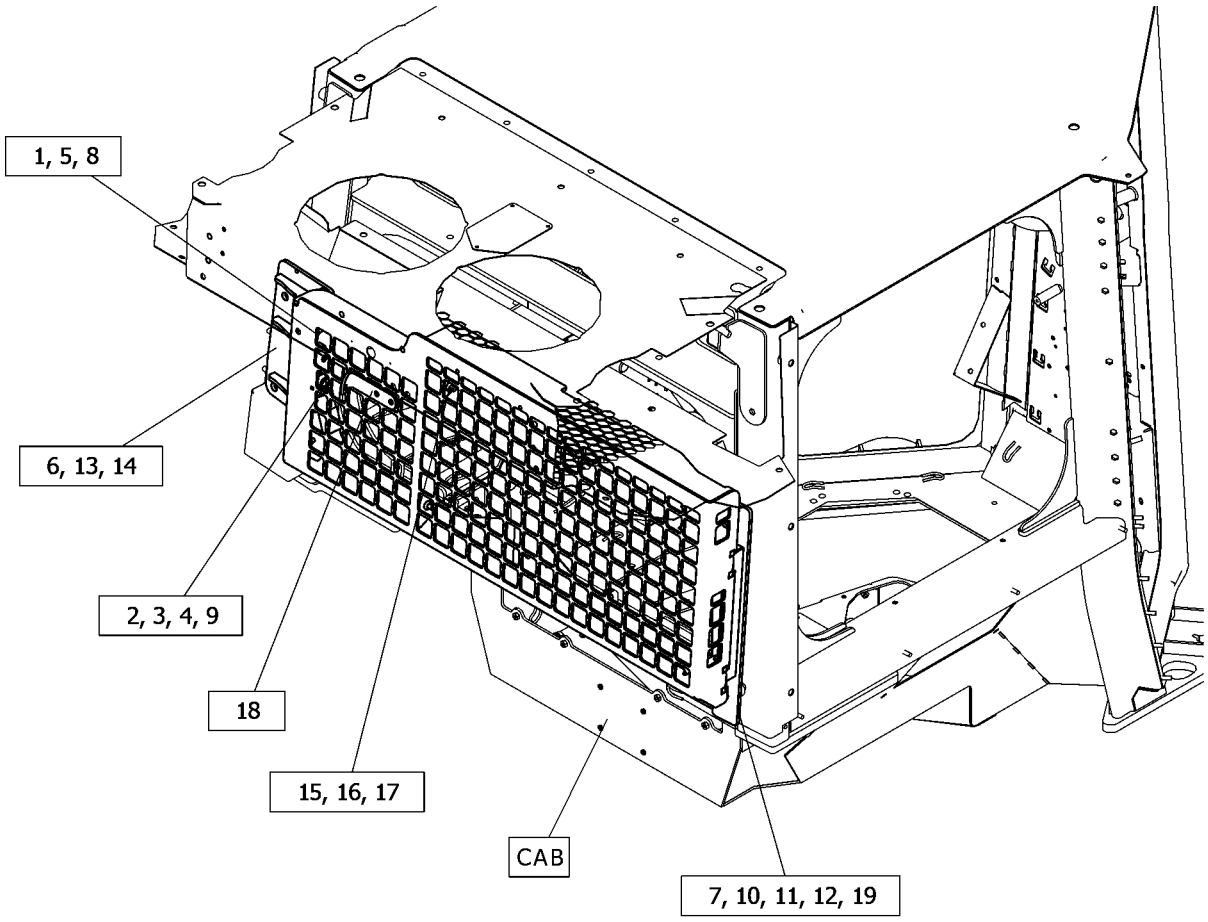

GRAPHIC #1 <END> g06448465

550-5580 SCREEN GP-PROTECTION

S/N: Z2K1-UP; Z2N1-UP

REAR

AN ATTACHMENT

SMCS-7165 **i07821587**

NOTE	PART NUMBER	QTY	PART NAME 1 2 3 4 5 6 (PRODUCT LEVEL)	SEE PAGE
Y	**527-8728**	1	SCREEN GP-PROTECTION (REAR)	745

Y - SEPARATE ILLUSTRATION

<END>

557-0528 SCREEN GP-PROTECTION

S/N: Z2K1-UP; Z2N1-UP
SIDE, RH
PART OF 560-0311 SCREEN GP-PROTECTION
AN ATTACHMENT

SMCS-7165 **i07820662**

NOTE	REF NO	GRAPHIC REF	PART NUMBER	QTY	PART NAME 1 2 3 4 5 6 (PRODUCT LEVEL)	SEE PAGE
M	1	1	**6V-7357**	4	BOLT (M6X1X25-MM)	
	2	1	**9W-2822**	1	ROD	
	3	1	**114-9284**	2	BUMPER	
M	4	1	**129-3737**	1	STRIKER BOLT-CAB (M12X1.75X17.8-MM)	
	5	1	**172-2384**	1	LATCH AS-ROTARY	
M	6	1	**344-5674**	2	NUT (M8X1.25-THD)	
M	7	1	**184-0983**	1	NUT-HEX FLANGE (M12X1.75-THD)	
	8	1	**4D-1212**	3	GROMMET	
	9	1	**557-0475**	1	PLATE AS-SIDE (RH)	
	10	1	**557-0477**	1	PLATE AS-SIDE (RH)	
	11	1	**1H-3244**	4	LOCKWASHER	
	12	1	**557-0479**	1	DOOR AS-ACCESS (RH)	
M		1	**8T-3612**	4	NUT-WELD (M8X1.25-THD)	
	13	1	**5P-0372**	3	LOCK PIN	
	14	1	**6S-9277**	2	PIN	
	15	1	**7X-3391**	2	WASHER-HARD (13.5X32X6-MM THK)	

M - METRIC PART

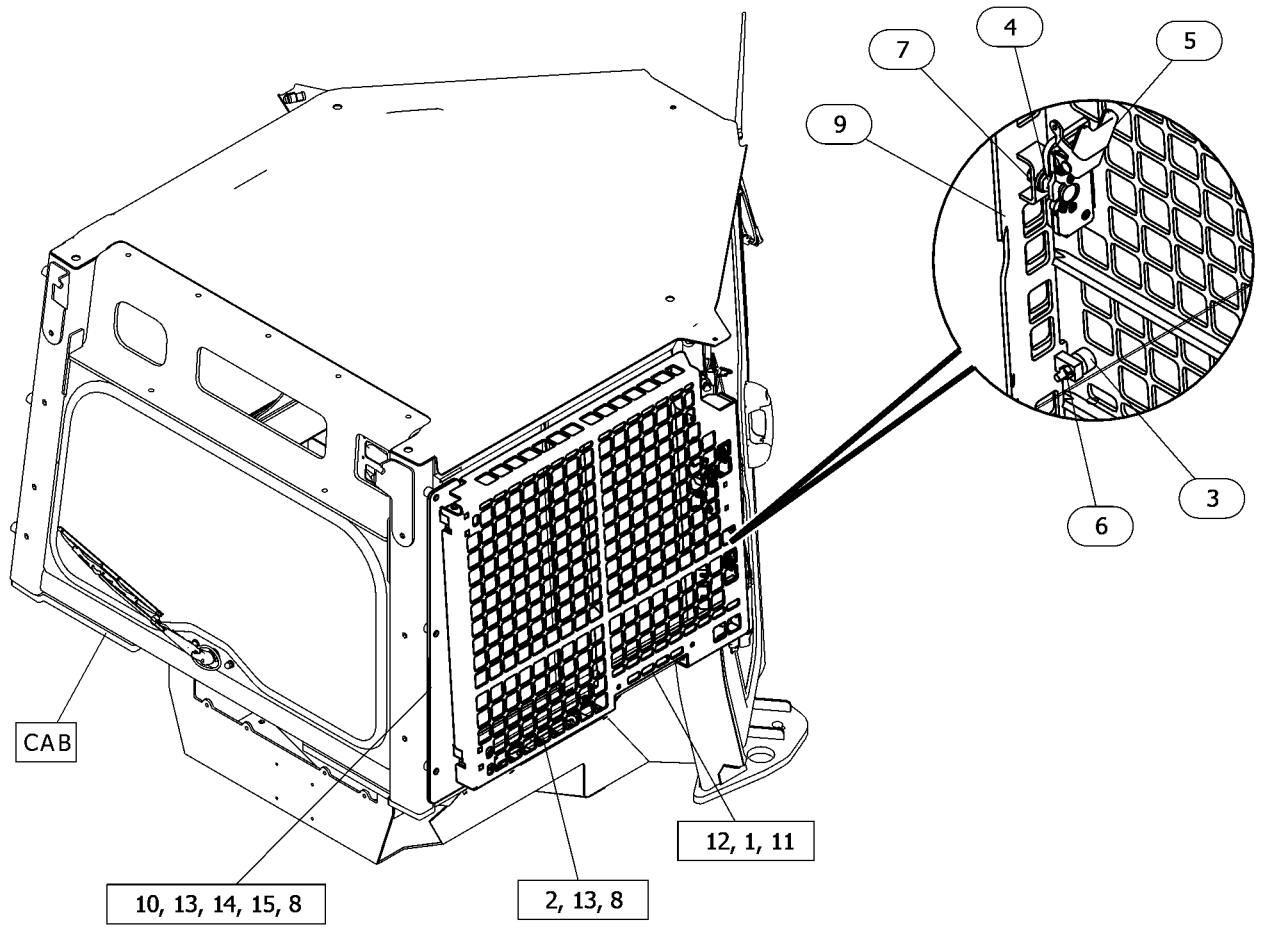

GRAPHIC #1 <END> g06451228

557-0529 SCREEN GP-PROTECTION

S/N: Z2K1-UP; Z2N1-UP
SIDE, LH
PART OF 560-0311 SCREEN GP-PROTECTION
AN ATTACHMENT

SMCS-7165 **i07820668**

NOTE	REF NO	GRAPHIC REF	PART NUMBER	QTY	PART NAME 1 2 3 4 5 6 (PRODUCT LEVEL)	SEE PAGE
M	1	1	**6V-7357**	4	BOLT (M6X1X25-MM)	
	2	1	**9W-2822**	1	ROD	
	3	1	**114-9284**	2	BUMPER	
M	4	1	**129-3737**	1	STRIKER BOLT-CAB (M12X1.75X17.8-MM)	
	5	1	**172-2384**	1	LATCH AS-ROTARY	
M	6	1	**344-5674**	2	NUT (M8X1.25-THD)	
M	7	1	**184-0983**	1	NUT-HEX FLANGE (M12X1.75-THD)	
	8	1	**4D-1212**	5	GROMMET	
	9	1	**557-0480**	1	PLATE AS-SIDE (LH)	
	10	1	**557-0481**	1	PLATE AS-SIDE (LH)	
	11	1	**1H-3244**	4	LOCKWASHER	
	12	1	**557-0482**	1	DOOR AS-ACCESS (LH)	
M		1	**8T-3612**	5	NUT-WELD (M8X1.25-THD)	
	13	1	**5P-0372**	3	LOCK PIN	
	14	1	**6S-9277**	2	PIN	
	15	1	**7X-3391**	2	WASHER-HARD (13.5X32X6-MM THK)	

M - METRIC PART

557-0529 **SCREEN GP-PROTECTION** (contd.) **i07820668**

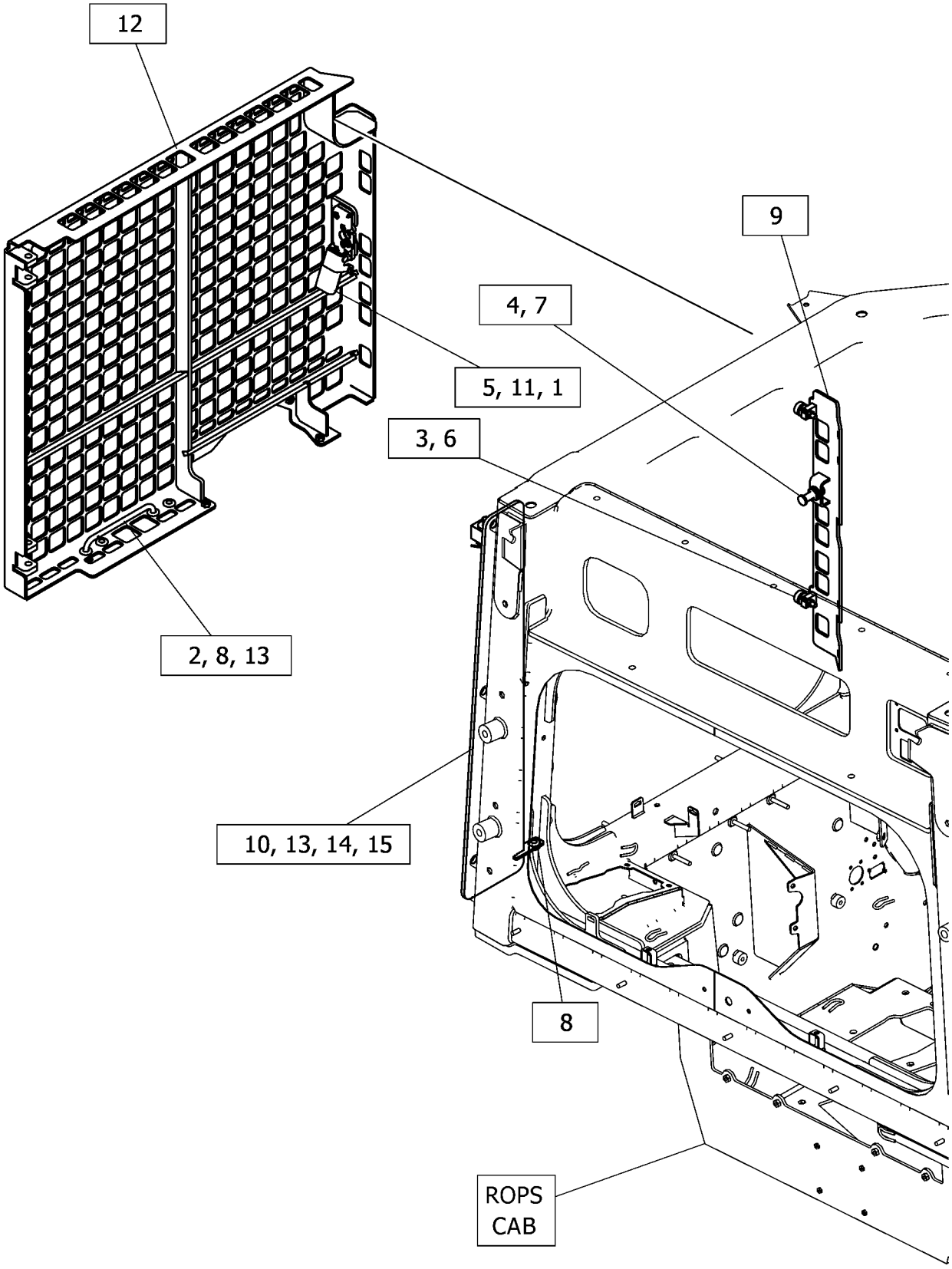

GRAPHIC #1 <END> g06450891

560-0311 SCREEN GP-PROTECTION

S/N: Z2K1-UP; Z2N1-UP
CAB, SIDE
CANNOT BE USED WITH HANDHOLD GP
PART OF 550-5589 SCREEN GP-PROTECTION
AN ATTACHMENT

SMCS-7165 **i07820647**

NOTE	REF NO	GRAPHIC REF	PART NUMBER	QTY	PART NAME 1 2 3 4 5 6 (PRODUCT LEVEL)	SEE PAGE
Y	1	1	*557-0528*	1	SCREEN GP-PROTECTION (SIDE, RH)	749
Y	2	1	*557-0529*	1	SCREEN GP-PROTECTION (SIDE, LH)	750
	3	1	**557-0535**	1	PLATE-SIDE (RH)	
	4	1	**557-0536**	1	PLATE-SIDE (LH)	
M	5	1	**8T-4908**	6	BOLT (M8X1.25X25-MM)	
	6	1	**8T-4224**	6	WASHER-HARD (8.8X16X2-MM THK)	

M - METRIC PART
Y - SEPARATE ILLUSTRATION

560-0311 **SCREEN GP-PROTECTION** (contd.) **i07820647**

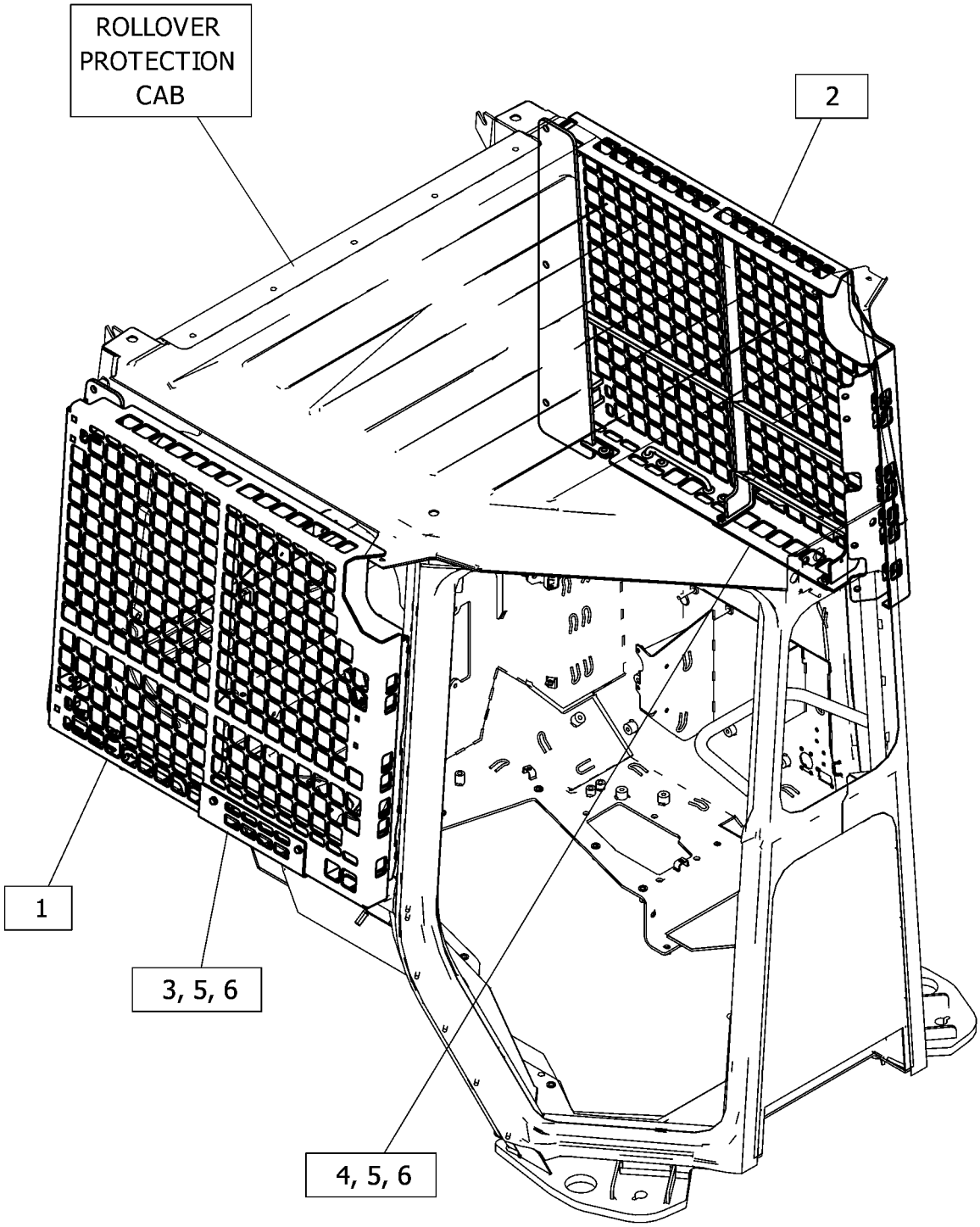

GRAPHIC #1 <END> g06448166

578-5040 SEAL GP-CAB

S/N: Z2K1-UP; Z2N1-UP

PART OF 536-6467, 536-6468, 536-6469, 536-6470, 579-6887 CAB AR

AN ATTACHMENT

SMCS-7301 **i07814519**

NOTE	REF NO	GRAPHIC REF	PART NUMBER	QTY	PART NAME 1 2 3 4 5 6 (PRODUCT LEVEL)	SEE PAGE
	1	1	**507-1669**	1	PLATE	
M	2	1	**195-3699**	27	NUT (M8X1.25-THD)	
	3	1	**507-1666**	1	SEAL	
	4	1	**507-1668**	2	PLATE	
	5	1	**577-4278**	1	PLATE	
	6	1	**507-1671**	1	PLATE	
	7	1	**540-2376**	1	SEAL	
	8	1	**540-2377**	1	SEAL	
	9	1	**540-2378**	1	SEAL	
	10	1	**540-2379**	1	SEAL	
	11	1	**8T-4224**	27	WASHER-HARD (8.8X16X2-MM THK)	

M - METRIC PART

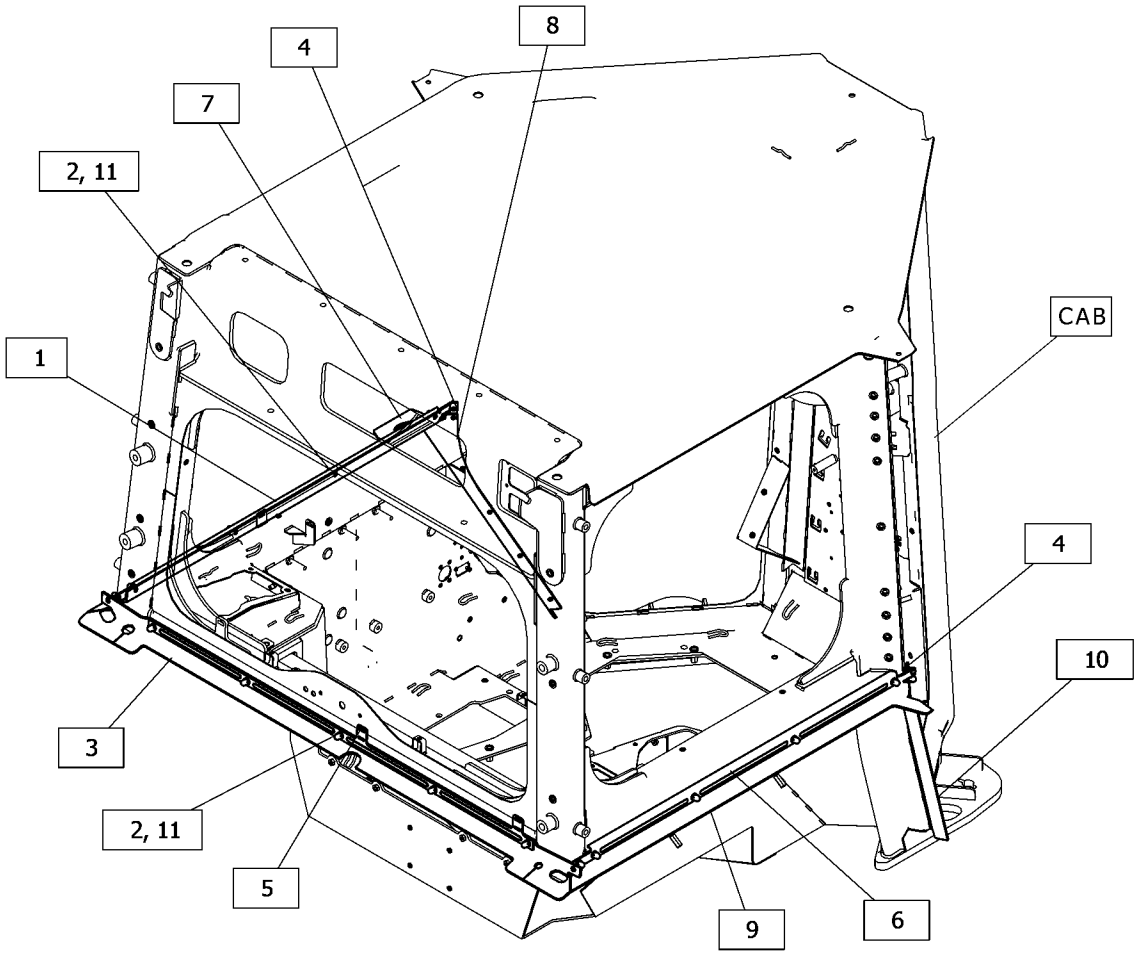

GRAPHIC #1 <END> g06445981

470-7252 SEAT & MOUNTING GP

S/N: Z2K1-UP; Z2N1-UP
PART OF 532-9851 DISTRIBUTION AR
AN ATTACHMENT

SMCS-7312 **i07805123**

NOTE	REF NO	GRAPHIC REF	PART NUMBER	QTY	PART NAME 1 2 3 4 5 6 (PRODUCT LEVEL)	SEE PAGE
Y	1	1	**468-3126**	1	SEAT GP-SUSPENSION	763
	2	1	**7X-7729**	4	WASHER (11X25X3-MM THK)	
M	3	1	**9X-2125**	4	BOLT-LOCKING (M10X1.5X25-MM)	

M - METRIC PART
Y - SEPARATE ILLUSTRATION

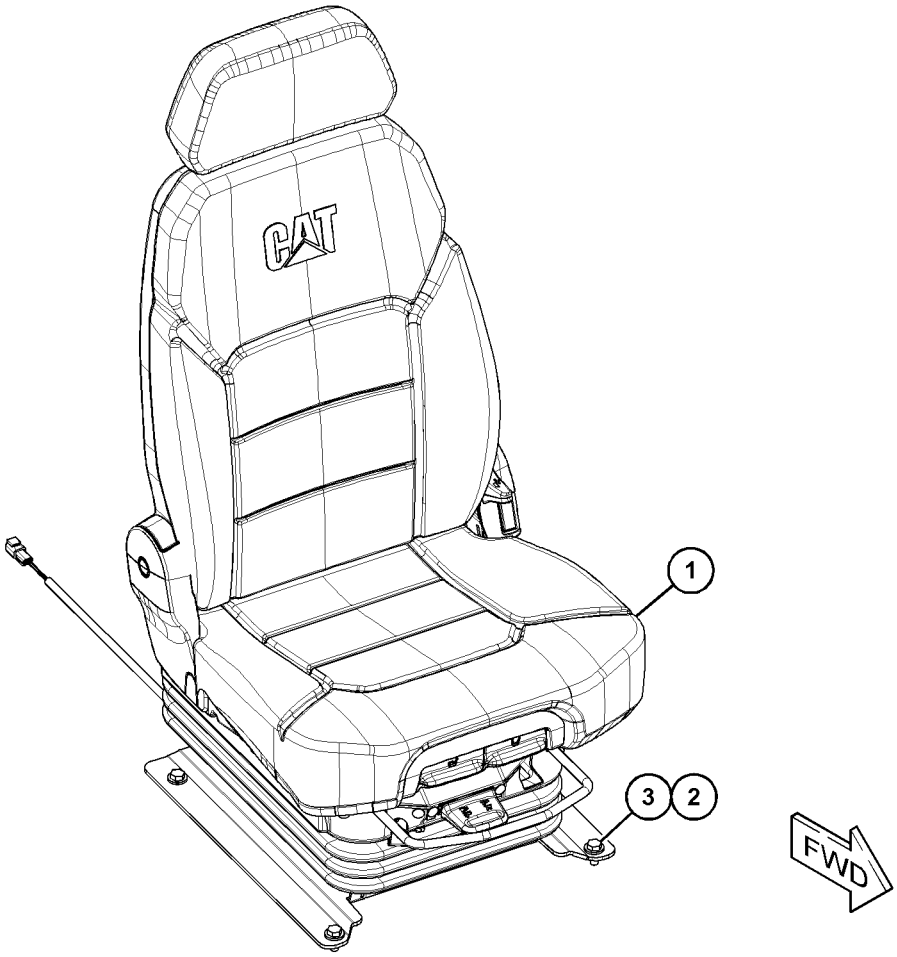

GRAPHIC #1 <END> g06346305

560-9088 SEAT & MOUNTING GP–CONVERTER

S/N: Z2K1-UP; Z2N1-UP

AN ATTACHMENT

SMCS-7312 **i07816759**

NOTE	REF NO	GRAPHIC REF	PART NUMBER	QTY	PART NAME 1 2 3 4 5 6 (PRODUCT LEVEL)	SEE PAGE
Y	1	1	*497-7986*	1	SEAT GP-SUSPENSION	767
	2	1	**348-7842**	1	CONVERTER-POWER (24-VOLT TO 12-VOLT)	

Y - SEPARATE ILLUSTRATION

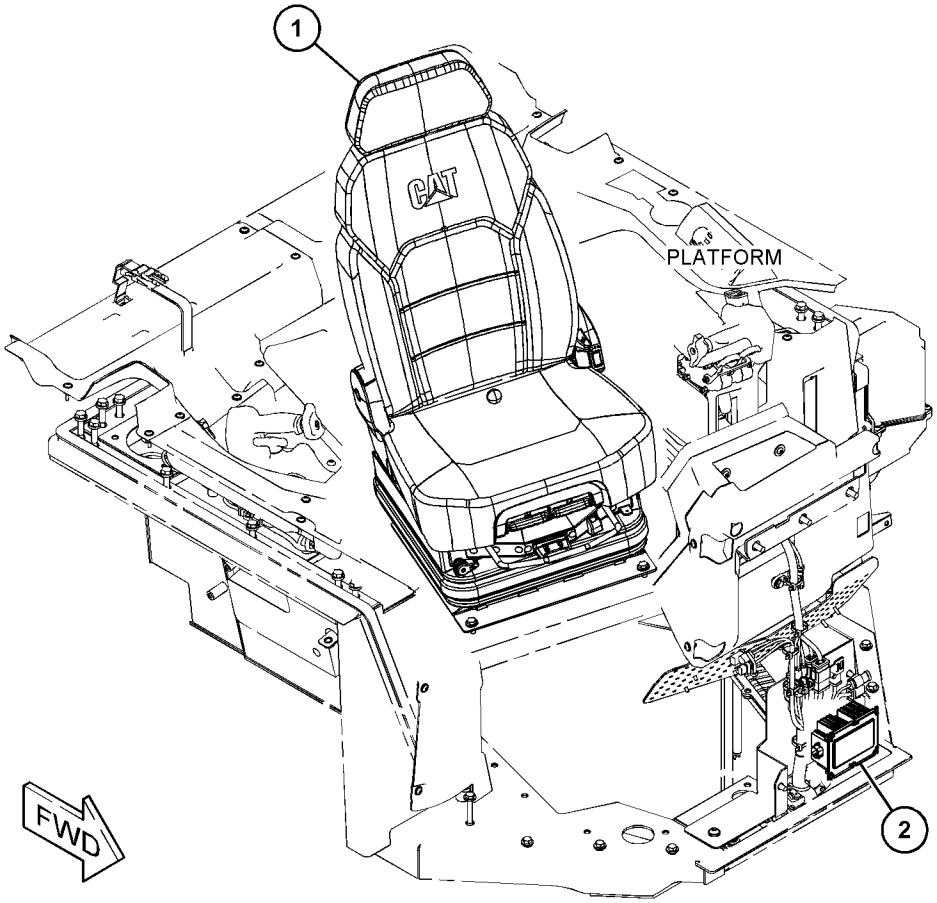

GRAPHIC #1 <END> g06340817

569-2068 SEAT & MOUNTING GP

S/N: Z2K1-UP
VINYL
PART OF 532-9856 DISTRIBUTION AR
AN ATTACHMENT

SMCS-7312 **i07840499**

NOTE	REF NO	GRAPHIC REF	PART NUMBER	QTY	PART NAME 1 2 3 4 5 6 (PRODUCT LEVEL)	SEE PAGE
Y	1	1	**443-8228**	1	SEAT GP-SUSPENSION (VINYL)	762
	2	1	**7X-7729**	4	WASHER (11X25X3-MM THK)	
M	3	1	**9X-2125**	4	BOLT-LOCKING (M10X1.5X25-MM)	

M - METRIC PART
Y - SEPARATE ILLUSTRATION

569-2068 **SEAT & MOUNTING GP (**contd.**)** **i07840499**

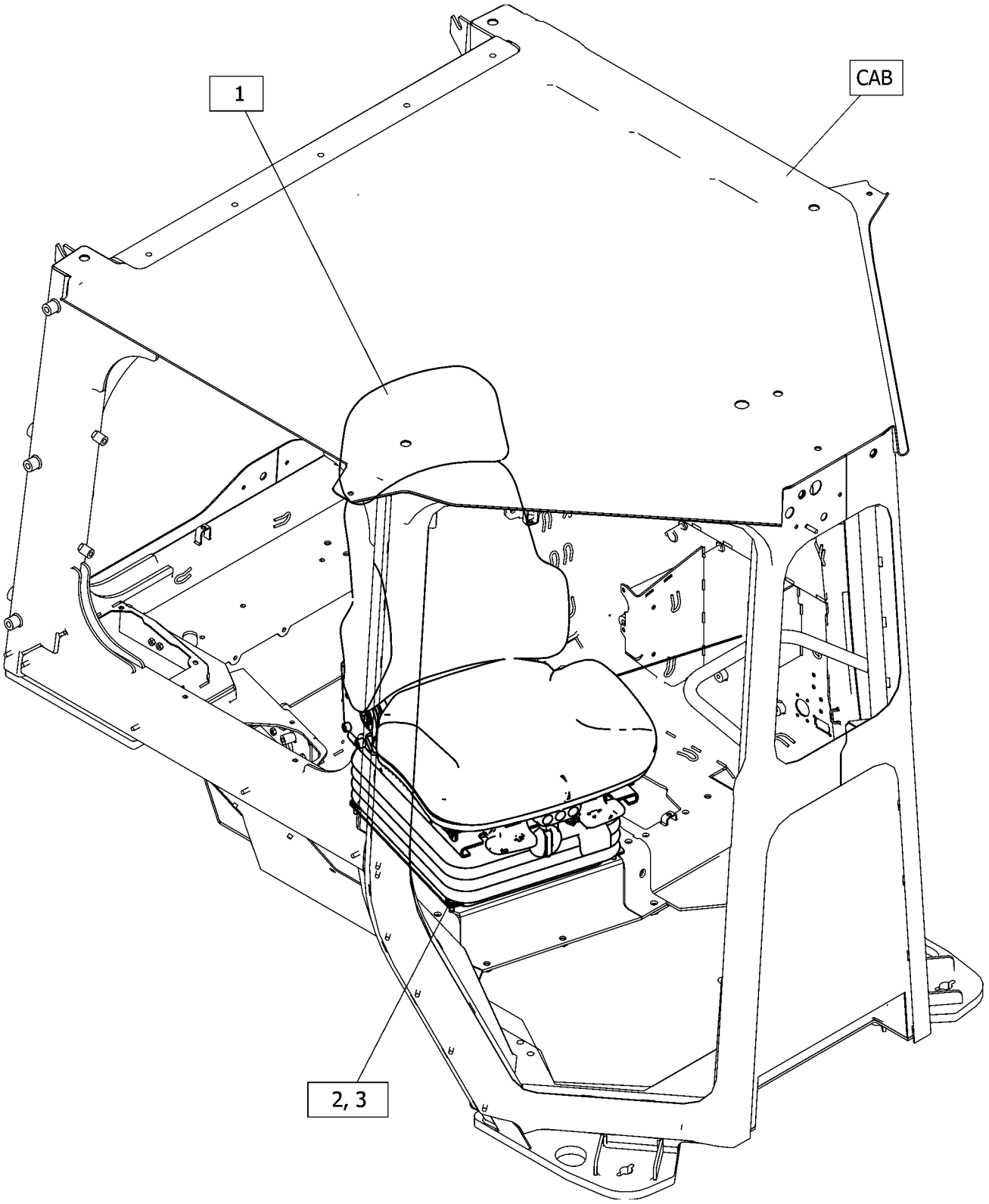

GRAPHIC #1 <END> g06378324

485-3445 SEAT BELT GP

S/N: Z2K1-UP; Z2N1-UP
PART OF 568-7695, 568-7696 INSTALLATION AR-CAB
AN ATTACHMENT

SMCS-7327 **i07686293**

NOTE	REF NO	GRAPHIC REF	PART NUMBER	QTY	PART NAME 1 2 3 4 5 6 (PRODUCT LEVEL)	SEE PAGE
					(NO SERVICED PARTS)	

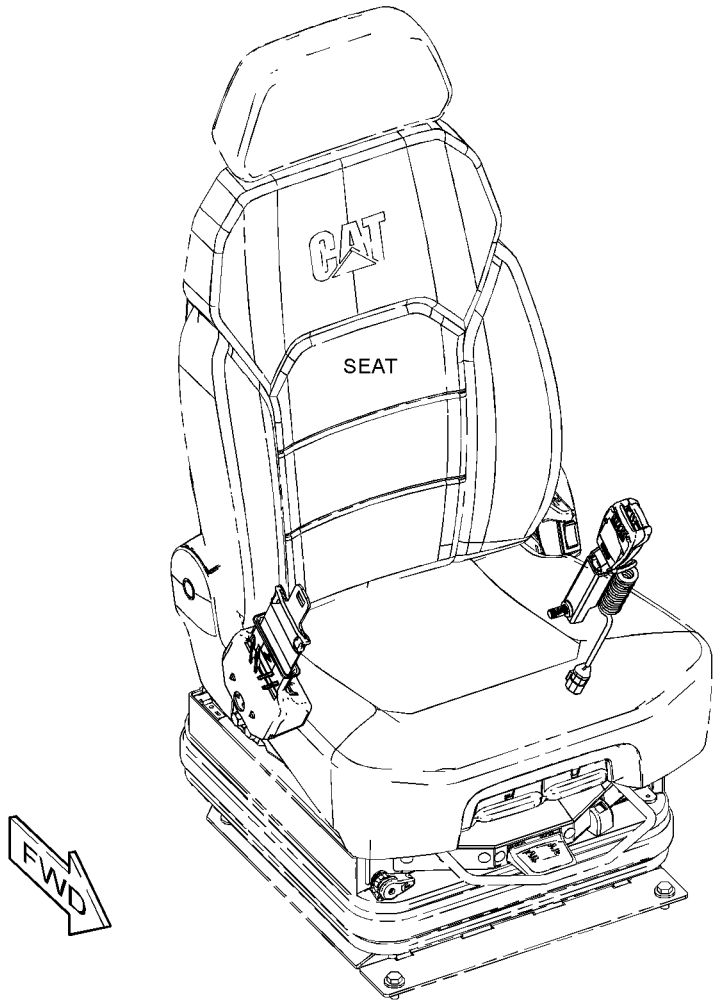

GRAPHIC #1 <END> g06191822

507-5489 SEAT GP–CLOTH, AIR

S/N: Z2K1-UP; Z2N1-UP
PART OF 468-3126 SEAT GP-SUSPENSION
AN ATTACHMENT

SMCS-7312 **i07548678**

NOTE	REF NO	GRAPHIC REF	PART NUMBER	QTY	PART NAME 1 2 3 4 5 6 (PRODUCT LEVEL)	SEE PAGE
	1	1	**513-9168**	1	KIT-CUSHION	
					(INCLUDES CUSHION ASSEMBLIES)	
	2	1	**513-9171**	1	KIT-KNOB	
					(INCLUDES COVERS & KNOB)	
	3	1	**513-9172**	1	KIT-HEADREST	
					(INCLUDES HEADREST ASSEMBLY, GUIDE ASSEMBLY & CUSHION ASSEMBLY)	
	4	1	**513-9174**	1	KIT-SEAT (LUMBAR)	

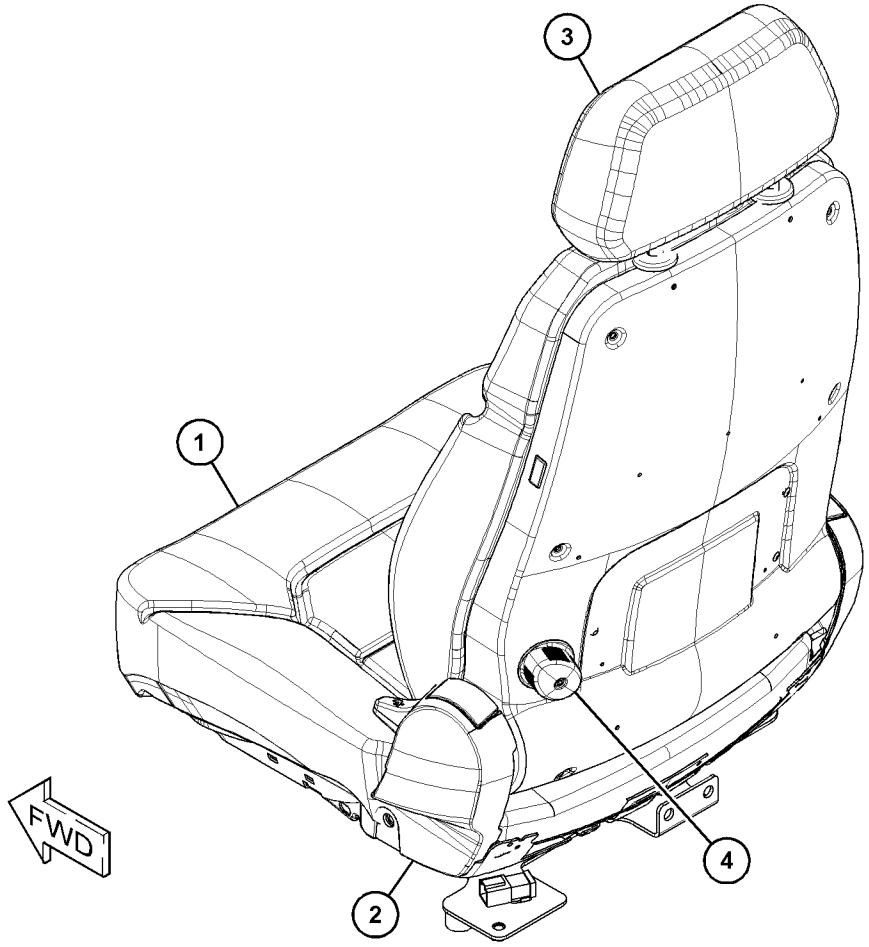

GRAPHIC #1 <END> g06343147

507-5490 SEAT GP

S/N: Z2K1-UP; Z2N1-UP
12-VOLT. CLOTH, LEATHER
PART OF 468-3128 SEAT GP-SUSPENSION
AN ATTACHMENT

SMCS-7312 **i07703874**

NOTE	REF NO	GRAPHIC REF	PART NUMBER	QTY	PART NAME 1 2 3 4 5 6 (PRODUCT LEVEL)	SEE PAGE
	1	1	**513-9171**	1	KIT-KNOB	
					(INCLUDES COVERS & KNOB)	
	2	1	**513-9173**	1	KIT-HEADREST	
					(INCLUDES HEADREST AS, GUIDE AS & CUSHION AS)	
	3	1	**513-9175**	1	KIT-SEAT (LUMBAR)	

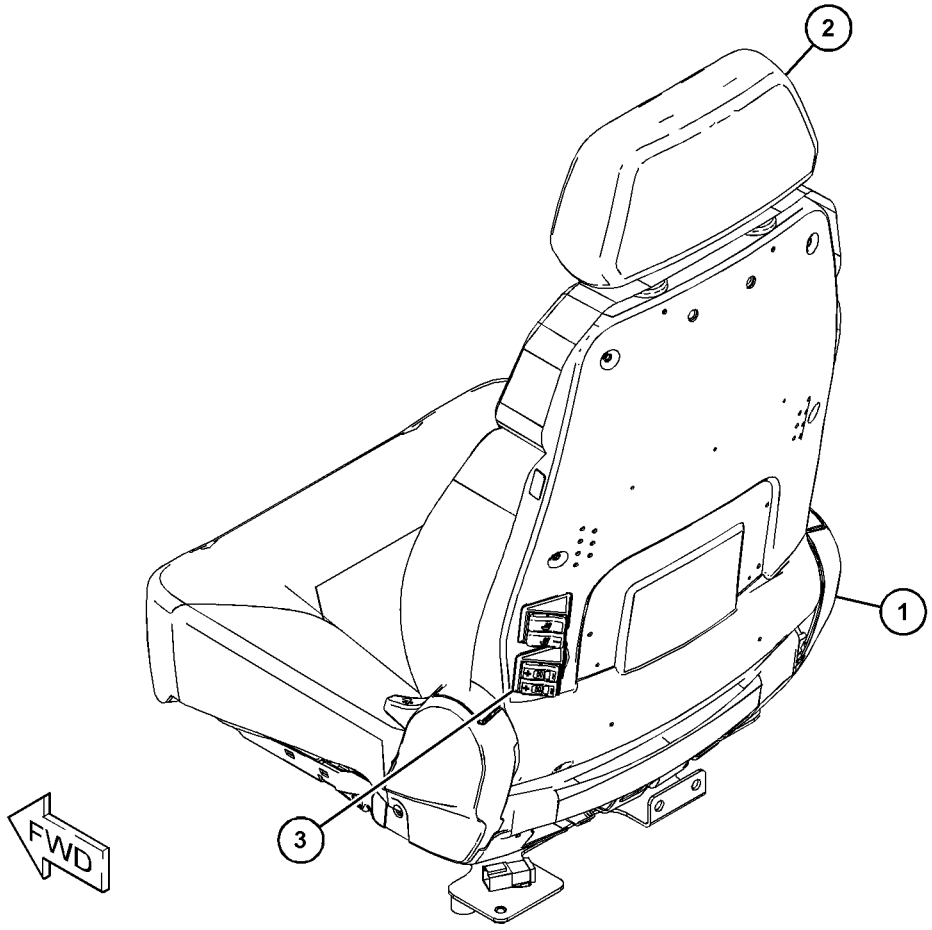

GRAPHIC #1 <END> g06348941

443-8228 SEAT GP-SUSPENSION—VINYL

S/N: Z2K1-UP
OPS, READ OMM
PART OF 569-2068 SEAT & MOUNTING GP
AN ATTACHMENT

SMCS-7321, 7324, 7336 **i07764780**

NOTE	REF NO	GRAPHIC REF	PART NUMBER	QTY	PART NAME 1 2 3 4 5 6 (PRODUCT LEVEL)	SEE PAGE
Y	1	1	**160-7165**	1	SUSPENSION GP-SEAT	768
Y	2	1	**489-6485**	1	SEAT GP-SUSPENSION	765
	3	1	**173-7035**	1	KIT-SLIDER BLOCK (SUSPENSION SEAT)	
					(INCLUDES WASHERS, BOLT, BLOCK-SLIDERS & SETSCREWS)	
	4	1	**498-4463**	1	KIT-LITERATURE HOLDER	
					(INCLUDES LANYARD, RETAINER, HOLDER & RIVET-POP)	

Y - SEPARATE ILLUSTRATION

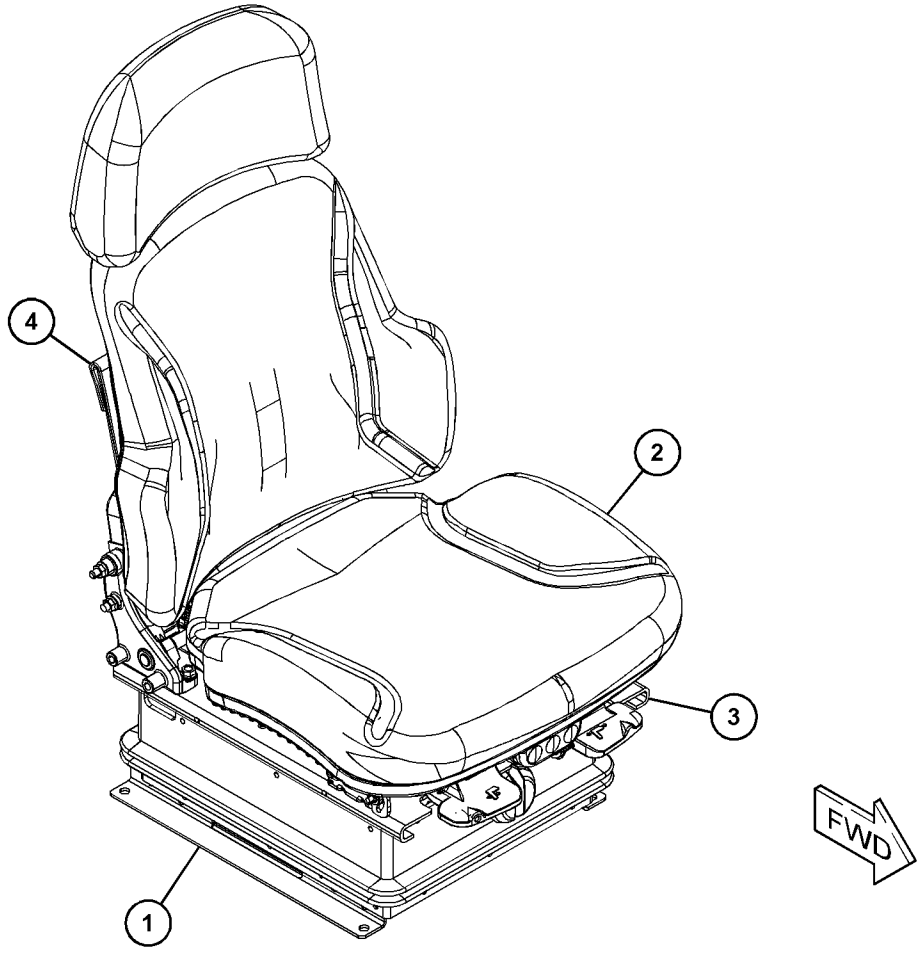

GRAPHIC #1 <END> g06162549

468-3126 SEAT GP-SUSPENSION—CLOTH, AIR

S/N: Z2K1-UP; Z2N1-UP
24-VOLT
PART OF 470-7252 SEAT & MOUNTING GP
AN ATTACHMENT

SMCS-7321, 7324, 7336 **i07805128**

NOTE	REF NO	GRAPHIC REF	PART NUMBER	QTY	PART NAME 1 2 3 4 5 6 (PRODUCT LEVEL)	SEE PAGE
Y	1	1	**501-4454**	1	SUSPENSION GP-SEAT (AIR)	770
	2	1	**513-9176**	1	KIT-SLIDE RAIL	
					(INCLUDES NUTS, SCREWS, WASHERS, HANDLE, SLIDE AS & STOPS)	
Y	3	1	**507-5489**	1	SEAT GP (CLOTH, AIR) (COMFORT)	760

Y - SEPARATE ILLUSTRATION

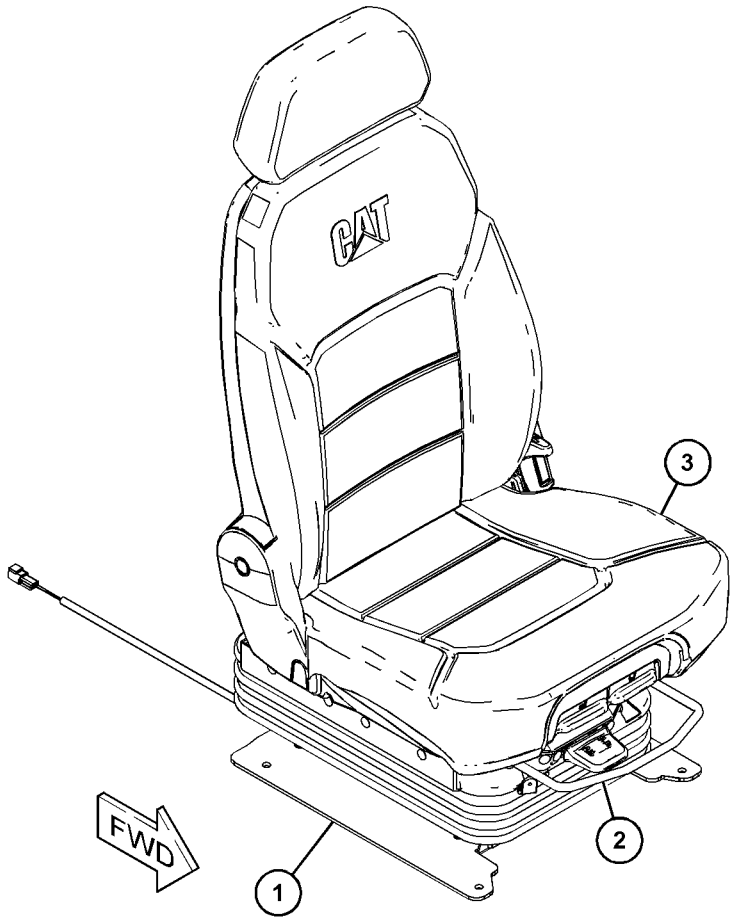

GRAPHIC #1 <END> g06343213

468-3128 SEAT GP-SUSPENSION

S/N: Z2K1-UP; Z2N1-UP
24-VOLT. CLOTH, LEATHER. HEATED, COOLED. AIR
PART OF 497-7986 SEAT GP-SUSPENSION
AN ATTACHMENT

SMCS-7321, 7324, 7336 **i07567332**

NOTE	REF NO	GRAPHIC REF	PART NUMBER	QTY	PART NAME 1 2 3 4 5 6 (PRODUCT LEVEL)	SEE PAGE
Y	1	1	**507-5490**	1	SEAT GP (CLOTH, LEATHER)	761
Y	2	1	**513-0285**	1	SUSPENSION GP-SEAT (AIR)	772
	3	1	**513-9176**	1	KIT-SLIDE RAIL (6-IN)	
					(INCLUDES HANDLE, NUTS, SCREW, SLIDE AS, SLIDE STOP & WASHERS)	

Y - SEPARATE ILLUSTRATION

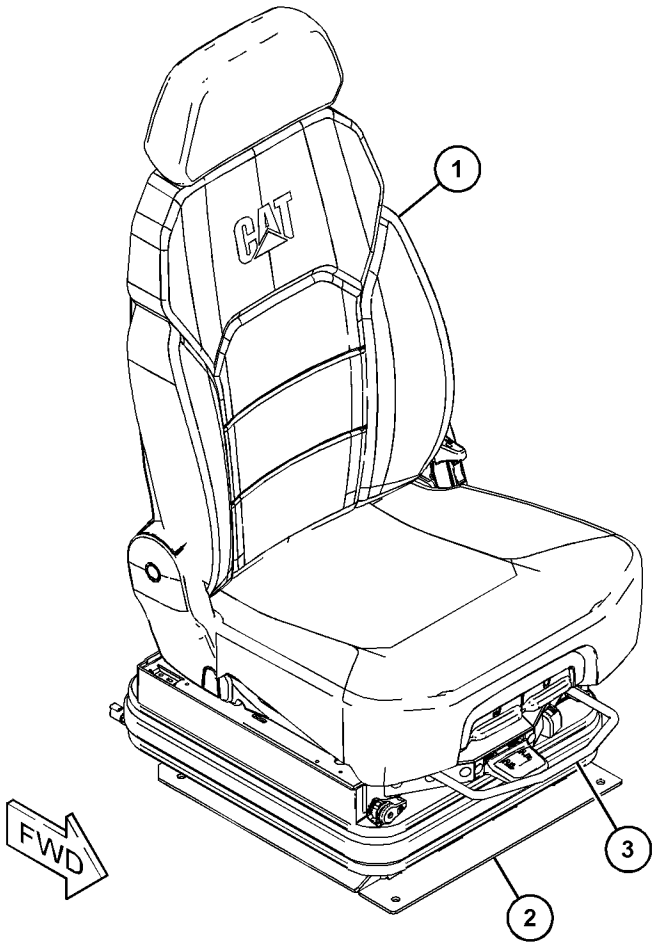

GRAPHIC #1 <END> g06340404

489-6485 SEAT GP-SUSPENSION

S/N: Z2K1-UP

FIELD REPLACEMENT FOR OT-0244 BOLT: FOR 205-6388 BOLT: FOR 222-0345 SEAT BELT GP: FOR 275-7803 SPACER

PART OF 443-8228 SEAT GP-SUSPENSION

AN ATTACHMENT

SMCS-7321, 7324, 7336

i06954737

NOTE	REF NO	GRAPHIC REF	PART NUMBER	QTY	PART NAME 1 2 3 4 5 6 (PRODUCT LEVEL)	SEE PAGE
M	1	1	**8T-4908**	4	BOLT (M8X1.25X25-MM)	
	2	1	**173-3083**	1	EXTENSION GP-BACKREST (VINYL)	
	3	1	**277-8103**	3	PLUG	
	4	1	**355-3016**	1	PLATE AS	
	5	1	**446-0637**	1	KIT-CUSHION	
					(INCLUDES CUSHION ASSEMBLIES & SCREWS)	
	6	1	**389-0879**	1	PAN-SEAT BACK	
	7	1	**488-1670**	1	PAN AS	
	8	1	**436-1687**	1	KIT-LATCH	
					(INCLUDES BOLTS, LATCHES, RODS, SPRINGS, & WASHERS)	
	9	1	**443-8573**	1	KIT-HANDLE (SEAT ADJUSTMENT)	
					(INCLUDES ROD, LEVERS, SPRINGS & WASHERS)	
	10	1	**436-1688**	1	KIT-SEAT	
					(INCLUDES RETAINERS, ROD, SPRINGS & WASHERS)	
	11	1	**488-2137**	1	KIT-SHAFT (RECLINER)	
					(INCLUDES SHAFT, CABLE AS, LEVERS, RECLINERS & BOLT)	

M - METRIC PART

489-6485 **SEAT GP-SUSPENSION (**contd.**)** **i06954737**

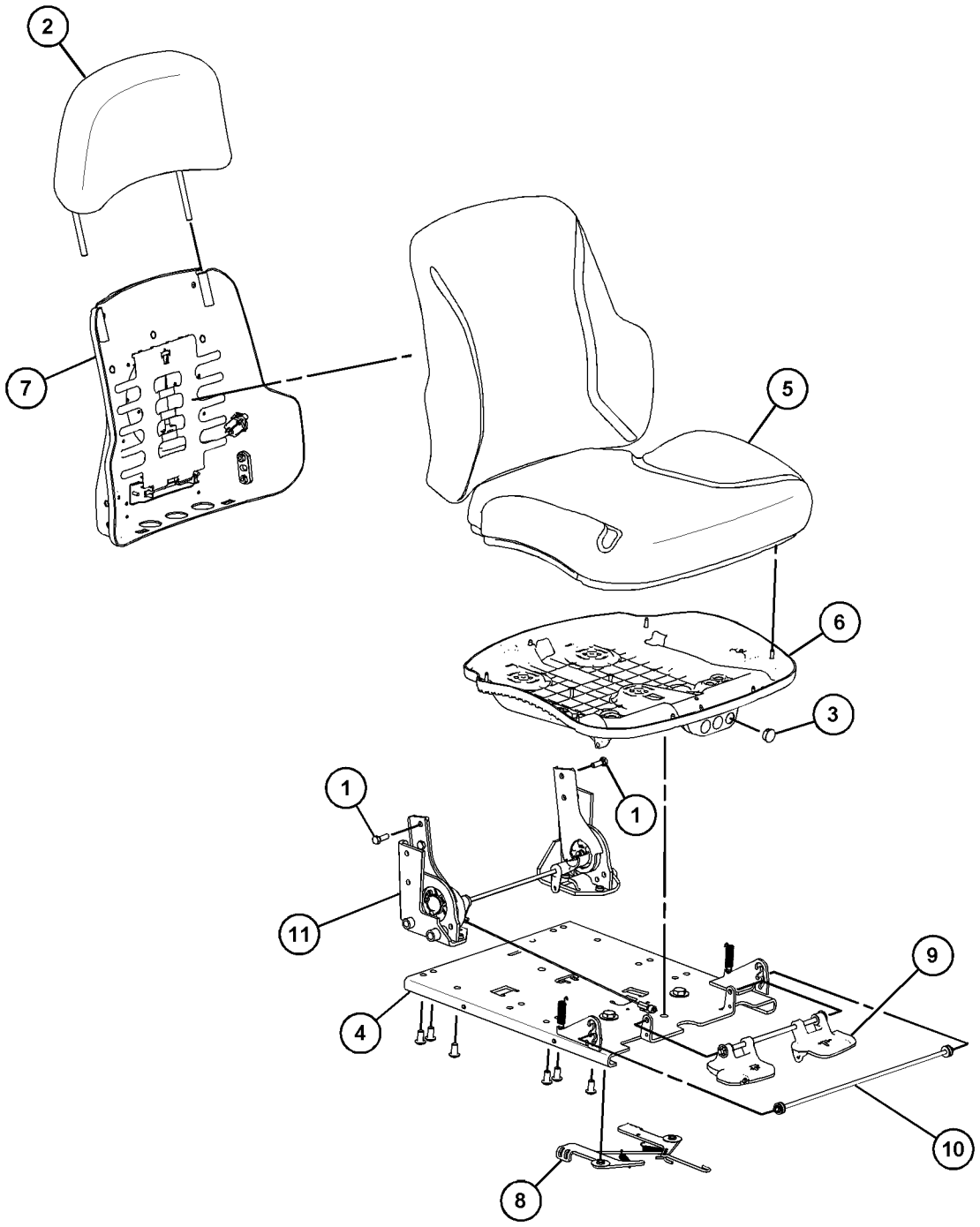

GRAPHIC #1 <END> g06113890

497-7986 SEAT GP-SUSPENSION

S/N: Z2K1-UP; Z2N1-UP
CLOTH, LEATHER
PART OF 560-9088 SEAT & MOUNTING GP
AN ATTACHMENT

SMCS-7321, 7324, 7336 **i07816761**

NOTE	REF NO	GRAPHIC REF	PART NUMBER	QTY	PART NAME 1 2 3 4 5 6 (PRODUCT LEVEL)	SEE PAGE
Y	1	1	**468-3128**	1	SEAT GP-SUSPENSION (PREMIUM)	764
	2	1	**7X-7729**	4	WASHER (11X25X3-MM THK)	
M	3	1	**9X-2125**	4	BOLT-LOCKING (M10X1.5X25-MM)	

M - METRIC PART
Y - SEPARATE ILLUSTRATION

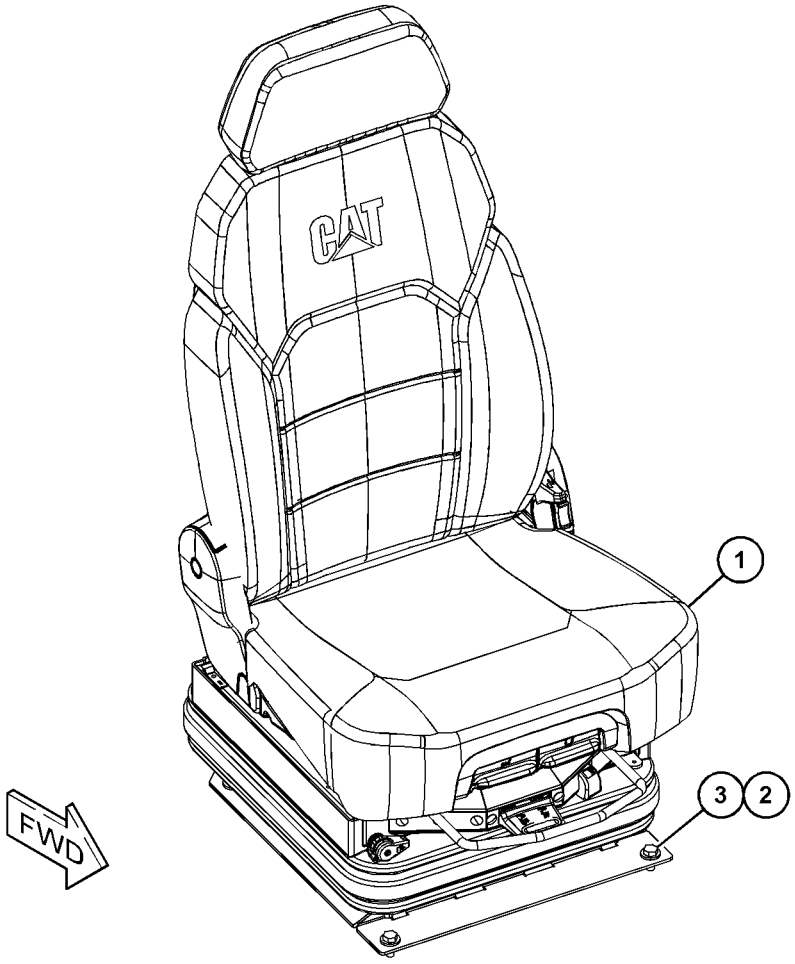

GRAPHIC #1 <END> g06341403

160-7165 SUSPENSION GP-SEAT

S/N: Z2K1-UP

PART OF 443-8228 SEAT GP-SUSPENSION

AN ATTACHMENT

SMCS-7324 **i06605552**

NOTE	REF NO	GRAPHIC REF	PART NUMBER	QTY	PART NAME 1 2 3 4 5 6 (PRODUCT LEVEL)	SEE PAGE
	1	1	**2K-4973**	2	LOCKNUT (3/8-16-THD)	
	2	1	**4V-7884**	2	BEARING	
	3	1	**4V-8577**	4	BEARING	
	4	1	**5V-1497**	1	RETAINER	
	5	1	**8Y-5965**	1	ABSORBER AS-SHOCK	
	6	1	**8Y-6012**	1	ARM AS-SUSPENSION	
	7	1	**8Y-6014**	1	HOUSING AS (LOWER)	
	8	1	**8Y-6024**	2	SHAFT AS	
J	9	1	**101-0003**	20	FASTENER	
J	10	1	**166-6781**	6	FASTENER	
J	11	1	**163-1146**	3	FASTENER	
	12	1	**145-0326**	1	FILM-INSTRUCTION (SEAT ADJUSTMENT)	
	13	1	**169-7380**	1	BOLT-SOCKET HEAD (3/8-16X0.375-IN)	
Y	14	1	**174-2231**	1	HOUSING GP-SEAT SUSPENSION	683
J	15	1	**197-7689**	3	FASTENER	
					AVAILABLE REPAIR KIT(S):	
J			**8Y-5944**	1	KIT-SUSPENSION BOOT (SEAT)	
					(INCLUDES BOOT, RETAINER & FASTENERS)	
			101-4194	1	KIT-TETHER BELT (SUSPENSION SEAT)	
					(INCLUDES BELTS)	
			101-4195	1	KIT-SUSPENSION ROLLER (SUSPENSION SEAT)	
					(INCLUDES ROLLERS)	

J - KIT MARKED J INCLUDES PART(S) MARKED J
Y - SEPARATE ILLUSTRATION

160-7165 **SUSPENSION GP-SEAT (**contd.**)** **i06605552**

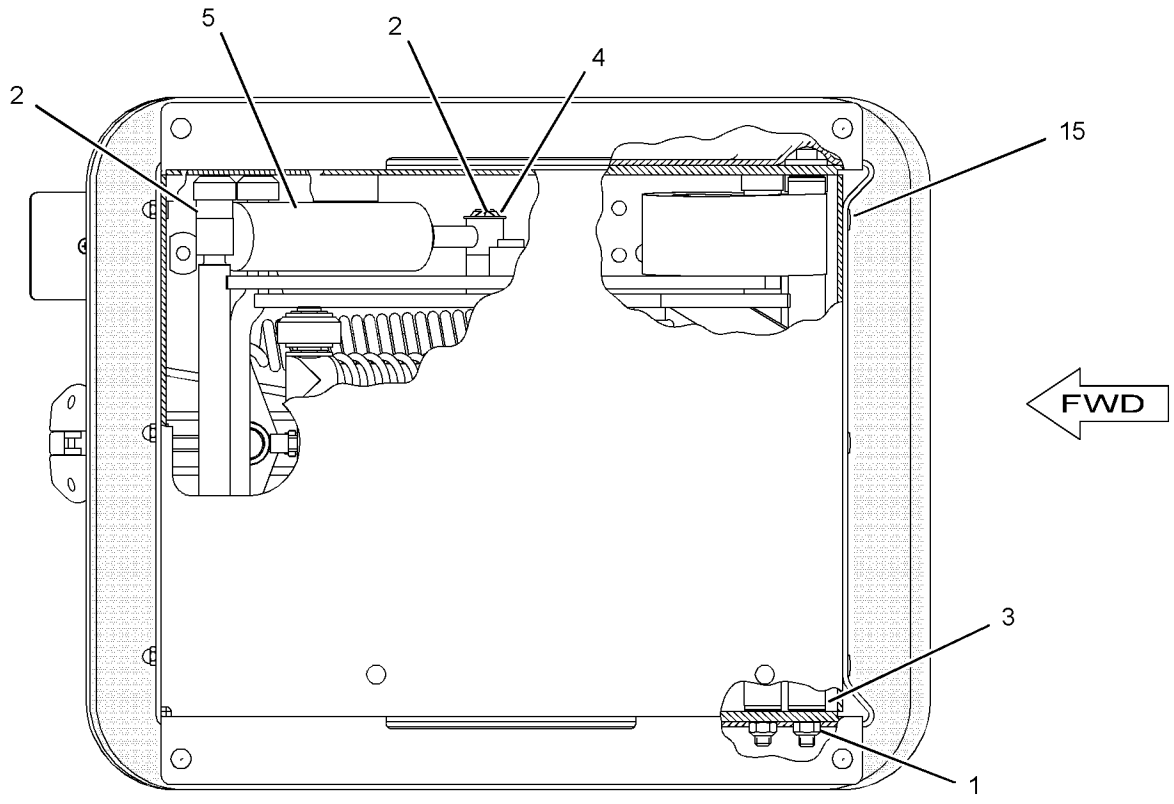

BOTTOM VIEW

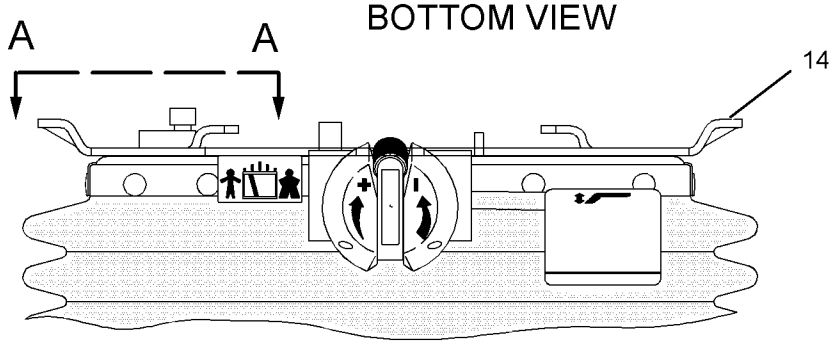

FRONT VIEW

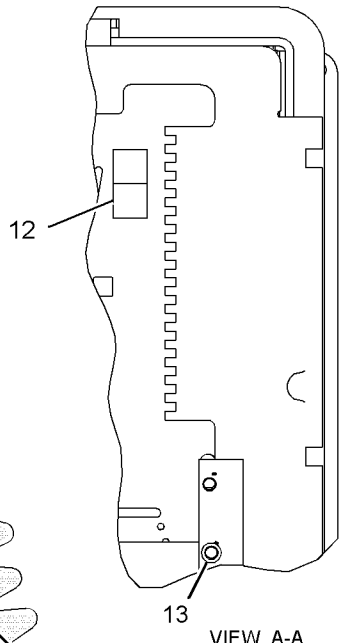

VIEW A-A

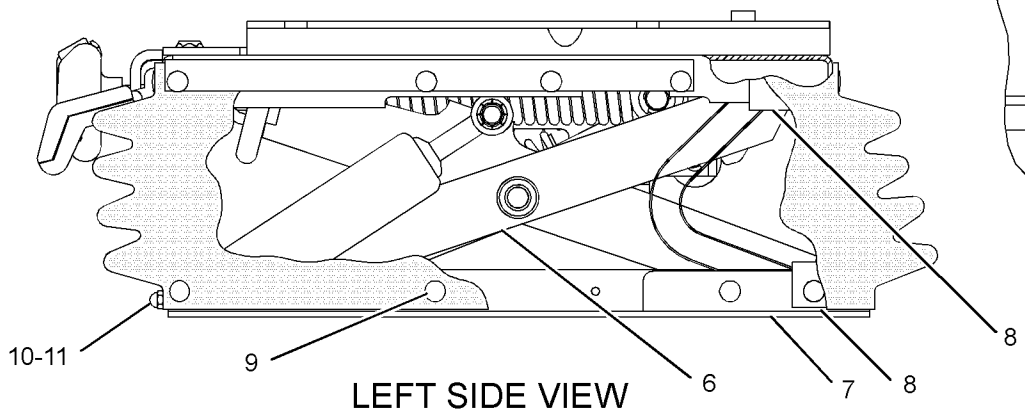

LEFT SIDE VIEW

GRAPHIC #1 <END> g01486873

501-4454 SUSPENSION GP-SEAT—AIR

S/N: Z2K1-UP; Z2N1-UP
24-VOLT
PART OF 468-3126 SEAT GP-SUSPENSION
AN ATTACHMENT

SMCS-7324 **i07805131**

NOTE	REF NO	GRAPHIC REF	PART NUMBER	QTY	PART NAME 1 2 3 4 5 6 (PRODUCT LEVEL)	SEE PAGE
	1	1	**304-5418**	1	KIT-GAS SPRING (SUSPENSION SEAT)	
					(INCLUDES SPRING , SCREW & PLUGS)	
	2	1	**304-5422**	1	KIT-SHOCK ABSORBER (SUSPENSION SEAT)	
					(INCLUDES SHOCK-ABSORBER, BOLTS, RINGS, WASHERS & PLUGS)	
	3	1	**513-9148**	1	KIT-COMPRESSOR	
					(INCLUDES CABLE TIES, CLIP, COMPRESSOR, HOSE AS & PAD)	
	4	1	**513-9150**	1	KIT-SWITCH	
					(INCLUDES BEARING, HANDLE, KNOB, MICRO-SWITCH, PIN, RIVETS, SCREWS, SPRING, VALVE)	
	5	1	**513-9156**	1	KIT-TETHER	
					(INCLUDES BOLTS, BRACKETS, CLAMPS, NUTS & STRAP)	
	6	1	**513-9159**	1	KIT-SEAT WIRING	
	7	1	**513-9160**	1	KIT-BEARING	
					(INCLUDES NUTS, BLOCKS, BOLTS, BUMPERS, BUSHINGS, ROLLERS, SCREWS, STOPPER AS & WASHERS)	
	8	1	**513-9161**	1	KIT-KNOB	
					(INCLUDES CLAMP, GUIDE-CABLE, SCREWS & KNOBS)	
	9	1	**513-9164**	1	KIT-BOOT	
					(INCLUDES BOOT & BOOT BUTTONS)	

501-4454 **SUSPENSION GP-SEAT (**contd.**)** **i07805131**

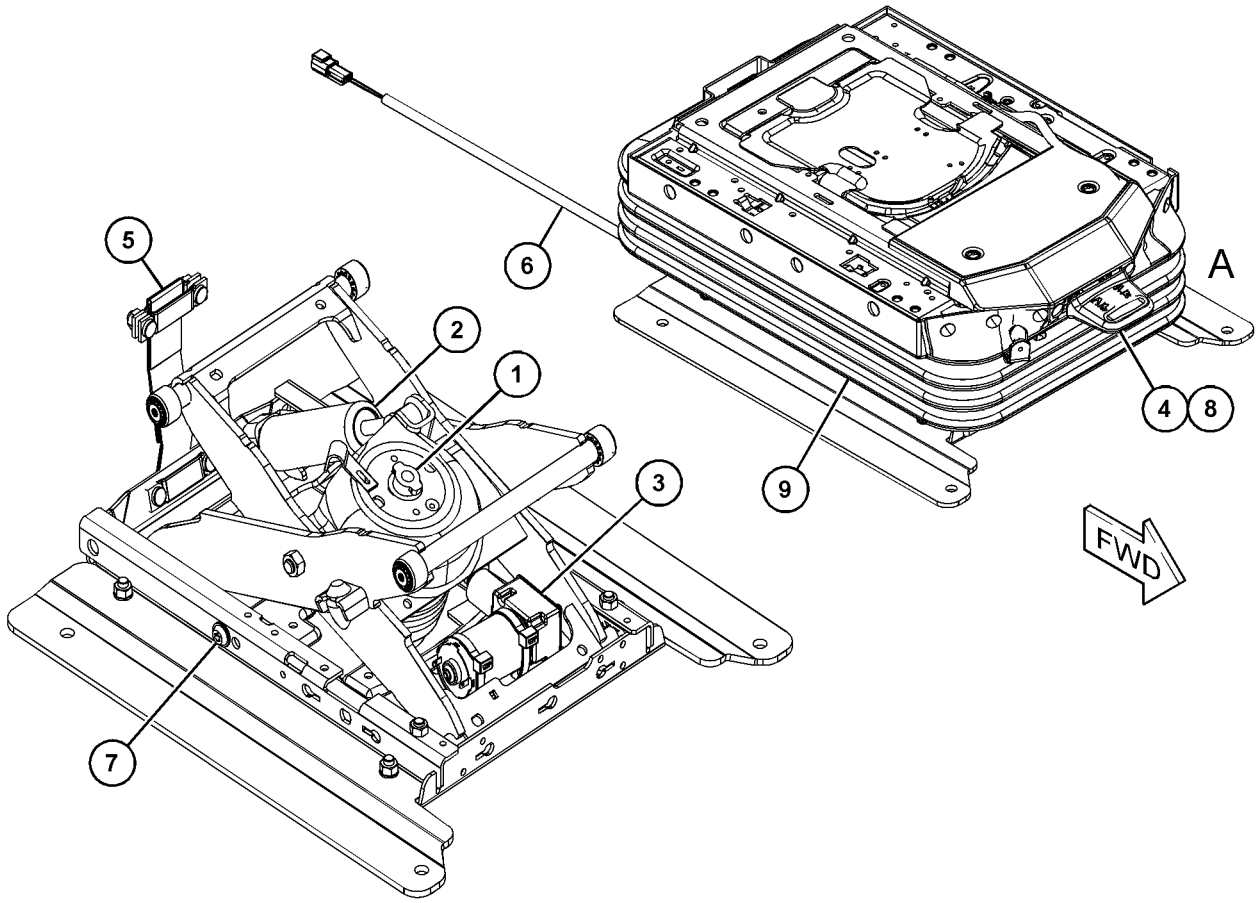

VIEW OF AREA A
(PARTS REMOVED FOR CLARITY)

GRAPHIC #1 <END> g06359545

513-0285 SUSPENSION GP-SEAT

S/N: Z2K1-UP; Z2N1-UP
24-VOLT. AIR
PART OF 468-3128 SEAT GP-SUSPENSION
AN ATTACHMENT

SMCS-7324 **i07567347**

NOTE	REF NO	GRAPHIC REF	PART NUMBER	QTY	PART NAME 1 2 3 4 5 6 (PRODUCT LEVEL)	SEE PAGE
	1	1	**304-5418**	1	KIT-GAS SPRING (SUSPENSION SEAT)	
					(INCLUDES SPRING, SCREW & PLUGS)	
	2	1	**513-9148**	1	KIT-COMPRESSOR	
					(INCLUDES STRAPS, CLIP, COMPRESSOR, HOSE AS & PAD)	
	3	1	**513-9150**	1	KIT-SWITCH	
					(INCLUDES BLOCK, HANDLE, KNOB, SWITCH, PIN, RIVETS, SCREWS, SPRING & VALVE)	
	4	1	**513-9152**	1	KIT-DAMPER	
					(INCLUDES BEARINGS, CABLE, CLAMP, CLIPS, CYLINDER, FIXING, FORK, GUIDE, INDICATOR AS, KNOB, PINS, PISTON AS, SCREWS & SPRING)	
	5	1	**513-9156**	1	KIT-TETHER	
					(INCLUDES BOLTS, BRACKETS, BRACKET AS, CLAMPS, NUTS & STRAP)	
	6	1	**513-9157**	1	KIT-HARNESS	
	7	1	**513-9160**	1	KIT-BEARING	
					(INCLUDES NUTS, BLOCKS, BOLTS, BUMPERS, BUSHINGS, ROLLERS, SCREWS, STOPPER AS & WASHERS)	
	8	1	**513-9161**	1	KIT-KNOB	
					(INCLUDES CLAMP, GUIDE, SCREWS & KNOBS)	
	9	1	**513-9162**	1	KIT-BOOT	
					(INCLUDES BOOT & BUTTONS)	

513-0285 **SUSPENSION GP-SEAT (**contd.**)** **i07567347**

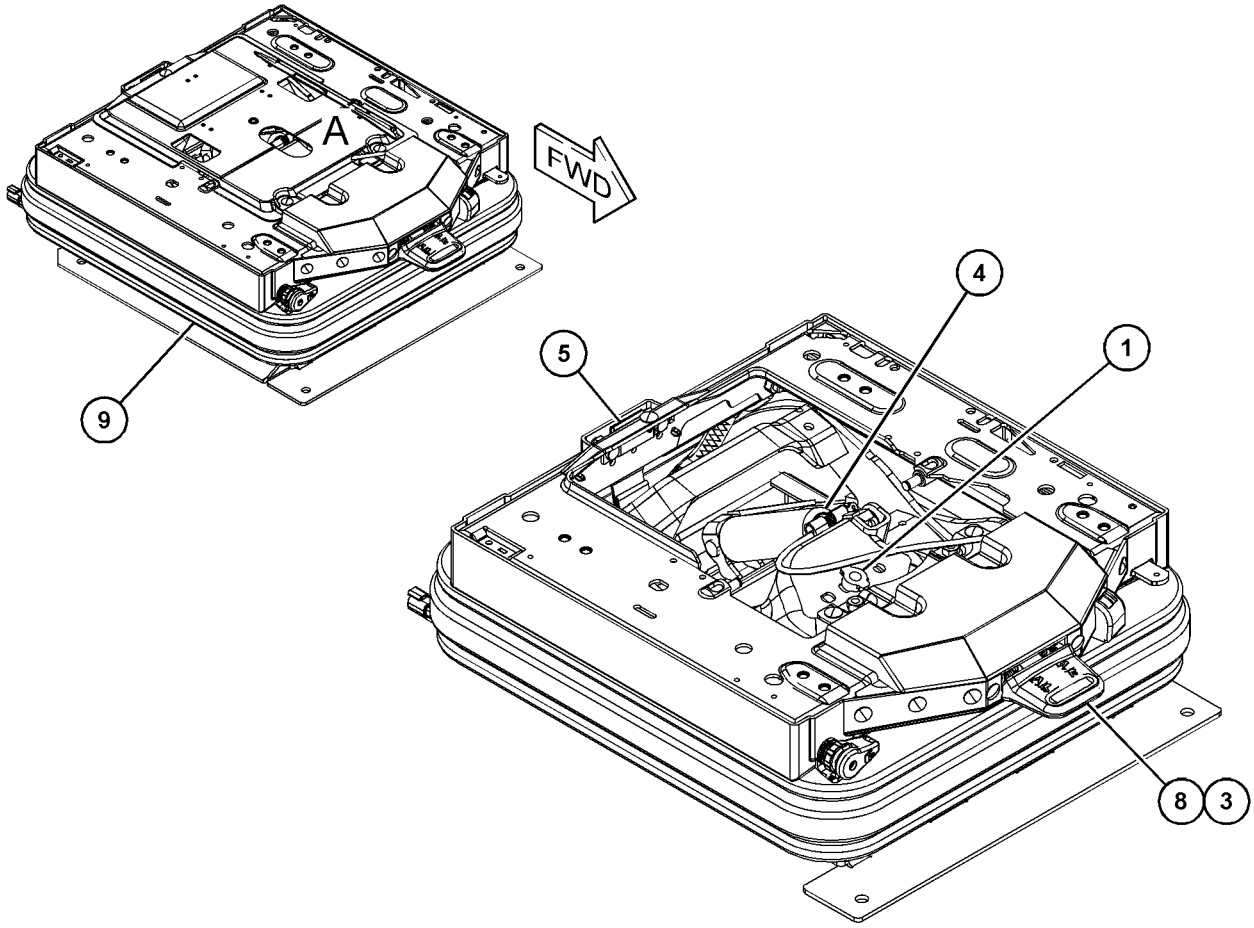

VIEW OF AREA A
(PARTS REMOVED FOR CLARITY)

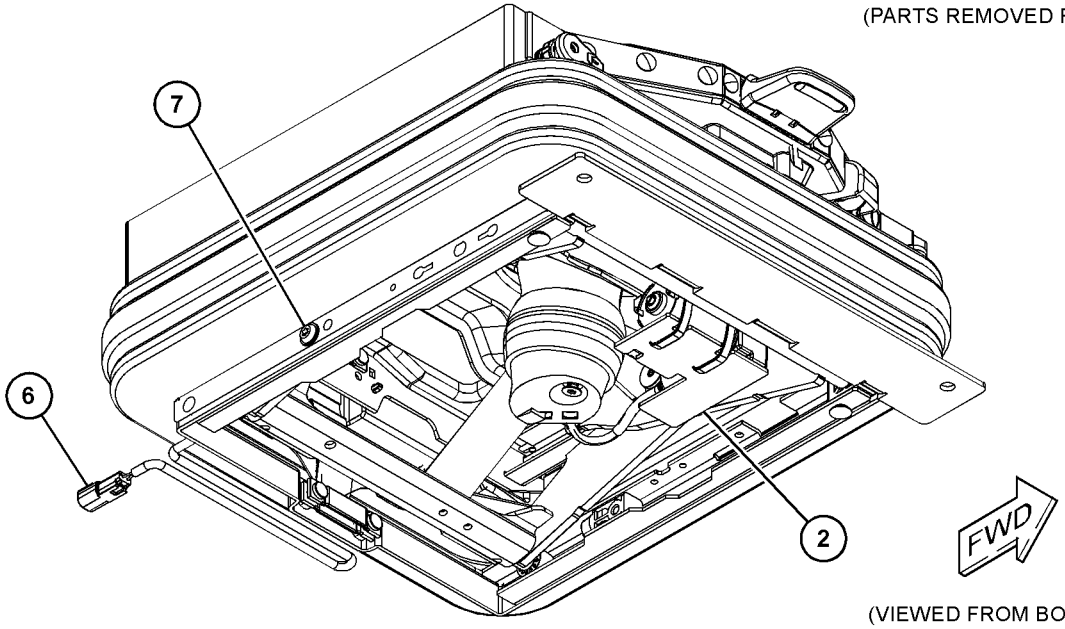

(VIEWED FROM BOTTOM)

(PARTS REMOVED FOR CLARITY)

GRAPHIC #1 <END> g06350745

465-7631 VALVE GP-WATER

S/N: Z2K1-UP; Z2N1-UP
PART OF 533-3134 LINES GP-HEATER
AN ATTACHMENT

SMCS-7304 **i06548257**

NOTE	REF NO	GRAPHIC REF	PART NUMBER	QTY	PART NAME 1 2 3 4 5 6 (PRODUCT LEVEL)	SEE PAGE
	1	1	**279-0850**	1	ACTUATOR (ELECTRONIC)	
B	2	1	**450-4968**	3	SCREW-HEX HEAD (8-16X0.5-IN)	
B	3	1	**465-7609**	3	SCREW-WASHER HEAD (8-16X2.3-IN)	
	4	1	**465-7610**	1	VALVE & MOUNTING AS-WATER	
B	5	1	**311-3520**	3	SCREW-HEX HEAD (8-16X0.5-IN)	

B - USE AS REQUIRED

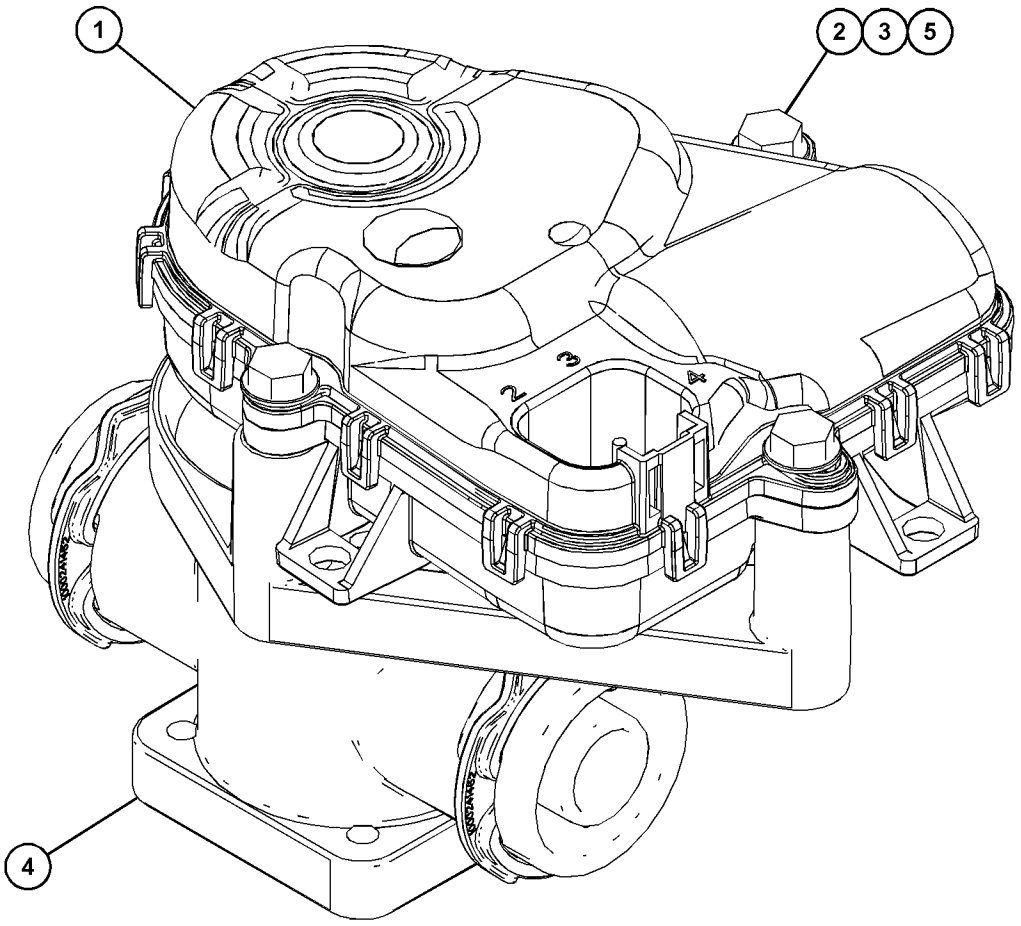

GRAPHIC #1 <END> g06069116

518-1561 WASHER GP-WINDOW

S/N: Z2K1-UP; Z2N1-UP
PART OF 536-6467, 536-6468, 536-6469, 536-6470, 579-6887 CAB AR
AN ATTACHMENT

SMCS-7306 **i07793303**

NOTE	REF NO	GRAPHIC REF	PART NUMBER	QTY	PART NAME 1 2 3 4 5 6 (PRODUCT LEVEL)	SEE PAGE
M	1	1	**2Y-5829**	3	NUT (M10X1.5-THD)	
	2	1	**7Y-3474**	2	VALVE AS-CHECK (WINDOW WASHER)	
	3	1	**497-9968**	1	TANK GP-WINDOW WASHER	
		1	**3S-2093**	4	STRAP-CABLE	
		1	**488-1568**	1	CAP AS-VENTED (WASHER TANK)	
		1	**523-9432**	4	PUMP AS-WASHER (24-VOLT)	
	4	1	**469-5745**	4	VALVE-CHECK	
	5	1	**7K-1181**	35	STRAP-CABLE	
	6	1	**8T-4121**	3	WASHER-HARD (11X21X2.5-MM THK)	
B	7	1	**7X-7930**		TAPE-IDENTIFICATION (LETTER D)	
B	8	1	**7X-7929**		TAPE-IDENTIFICATION (LETTER C)	
B	9	1	**7X-7928**		TAPE-IDENTIFICATION (LETTER B)	
B	10	1	**7X-7927**		TAPE-IDENTIFICATION (LETTER A)	
E	11	1	**144-0195**		HOSE (246-CM)	
E	11A	1	**144-0195**		HOSE (108-CM)	
E	11B	1	**144-0195**		HOSE (5-CM)	
E	11C	1	**144-0195**		HOSE (4-CM)	
E	11D	1	**144-0195**		HOSE (260-CM)	
E	11E	1	**144-0195**		HOSE (6-CM EACH)	
E	11F	1	**144-0195**		HOSE (176-CM)	
E	11G	1	**144-0195**		HOSE (28-CM)	
E	11H	1	**144-0195**		HOSE (31-CM)	
E	11J	1	**144-0195**		HOSE (33-CM)	
E	11K	1	**144-0195**		HOSE (32-CM)	

B - USE AS REQUIRED
E - ORDER BY THE CENTIMETER
M - METRIC PART

518-1561 **WASHER GP-WINDOW (**contd.**)** **i07793303**

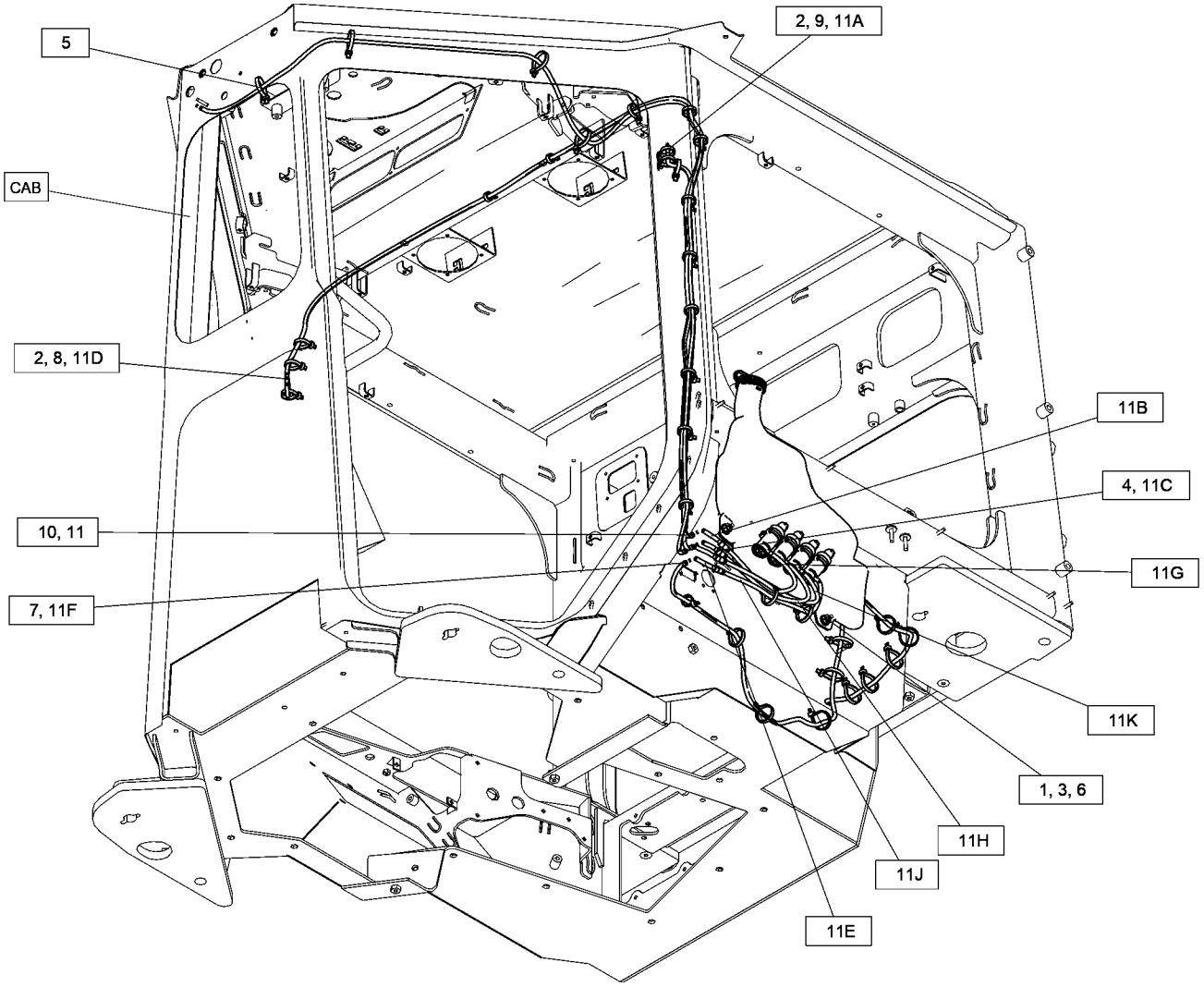

GRAPHIC #1 <END> g06339770

435-5789 WINDOW GP-CAB

S/N: Z2K1-UP; Z2N1-UP
PART OF 536-6476 CAB GP
AN ATTACHMENT

SMCS-7310 **i07794504**

NOTE	REF NO	GRAPHIC REF	PART NUMBER	QTY	PART NAME 1 2 3 4 5 6 (PRODUCT LEVEL)	SEE PAGE
	1	1	**110-7524**	8	BUTTON	
	2	1	**469-9930**	1	GLASS-FRONT	
Y	3	1	**470-0010**	1	WINDOW GP-CAB (LH)	780
Y	4	1	**470-0011**	1	WINDOW GP-CAB (RH)	781
	5	1	**532-7731**	2	GLASS-DOOR	
	6	1	**533-7758**	1	GLASS-REAR	
H	7	1	**5P-6606**		SEAL (16.7-DM)	
H	7A	1	**5P-6606**		SEAL (33.1-DM)	
H	8	1	**573-1751**		SEAL (33.8-DM EACH)	

H - ORDER BY THE DECIMETER
Y - SEPARATE ILLUSTRATION

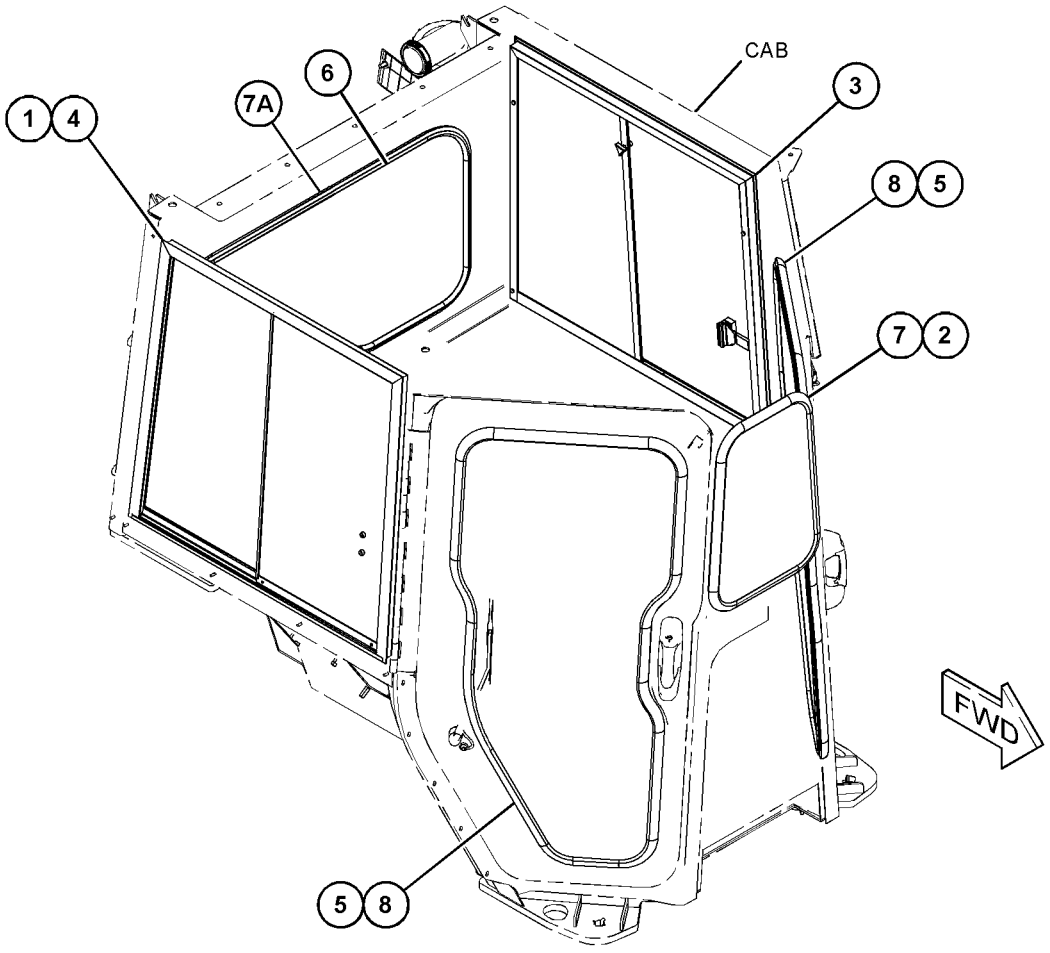

GRAPHIC #1 <END> g06344011

435-5791 WINDOW GP-CAB

S/N: Z2K1-UP; Z2N1-UP
FORESTRY
PART OF 579-6896 CAB GP
AN ATTACHMENT

SMCS-7310 **i07844114**

NOTE	REF NO	GRAPHIC REF	PART NUMBER	QTY	PART NAME 1 2 3 4 5 6 (PRODUCT LEVEL)	SEE PAGE
	1	1	**110-7524**	28	BUTTON	
	2	1	**469-9930**	1	GLASS-FRONT	
Y	3	1	**470-0010**	1	WINDOW GP-CAB (RH)	780
Y	4	1	**470-0011**	1	WINDOW GP-CAB (LH)	781
	5	1	**503-4834**	1	GLASS-DOOR (LH)	
	6	1	**505-1120**	1	GLASS-DOOR (RH)	
	7	1	**533-7758**	1	GLASS-REAR	
H	8	1	**5P-6606**		SEAL (33.1-DM)	
H	8A	1	**5P-6606**		SEAL (16.5-DM)	

H - ORDER BY THE DECIMETER
Y - SEPARATE ILLUSTRATION

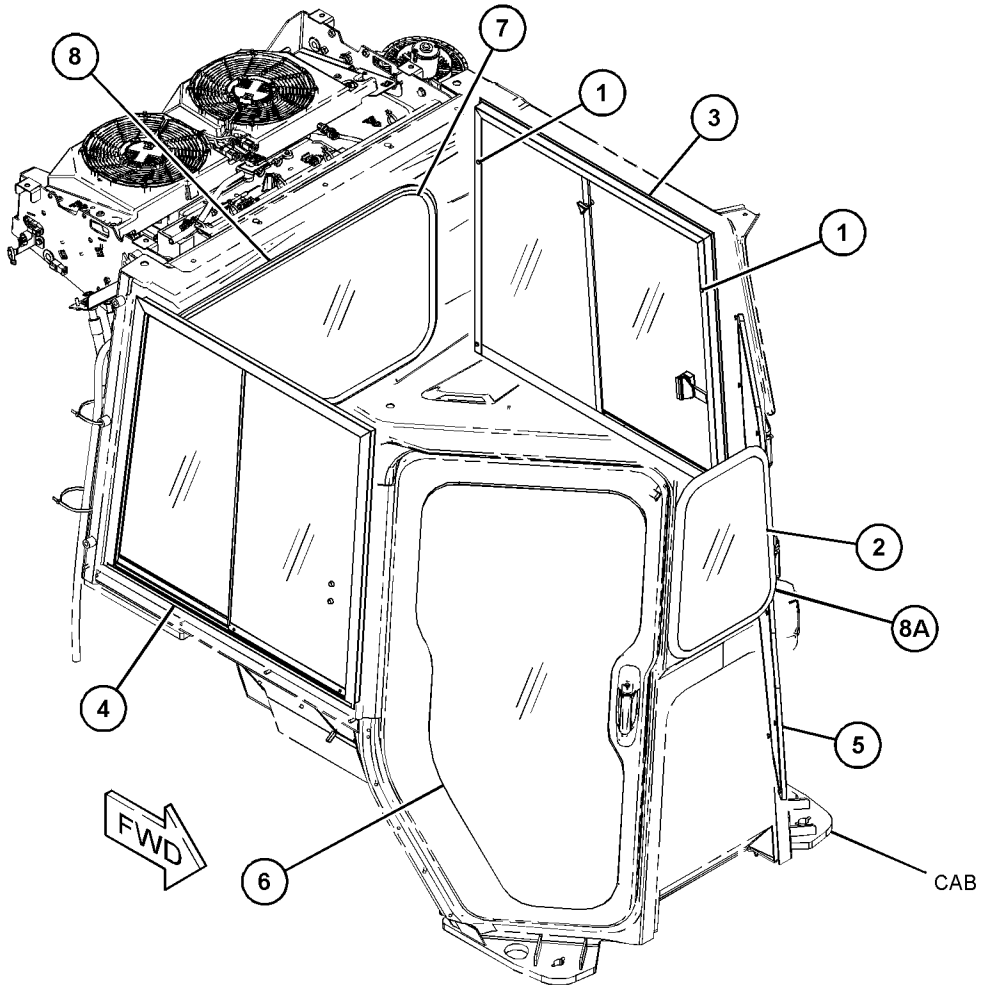

GRAPHIC #1 <END> g06354649

435-5792 WINDOW GP-CAB

S/N: Z2K1-UP; Z2N1-UP
WASTE HANDLING
PART OF 536-6478 CAB GP
AN ATTACHMENT

SMCS-7310 **i07821108**

NOTE	REF NO	GRAPHIC REF	PART NUMBER	QTY	PART NAME 1 2 3 4 5 6 (PRODUCT LEVEL)	SEE PAGE
	1	1	**470-0007**	1	FRAME	
	2	1	**110-7524**	28	BUTTON	
	3	1	**470-0001**	1	GLASS AS-FRONT	
	4	1	**470-0005**	1	GLASS AS	
	5	1	**470-0006**	1	GLASS AS	
	6	1	**470-0008**	1	FRAME	
	7	1	**503-4834**	1	GLASS-DOOR	
	8	1	**505-1120**	1	GLASS-DOOR	
	9	1	**533-7759**	1	GLASS AS-REAR	
H	10	1	**5P-6606**		SEAL (33.3-DM EACH)	
H	10A	1	**5P-6606**		SEAL (16.7-DM)	
H	10B	1	**5P-6606**		SEAL (33.1-DM)	

H - ORDER BY THE DECIMETER

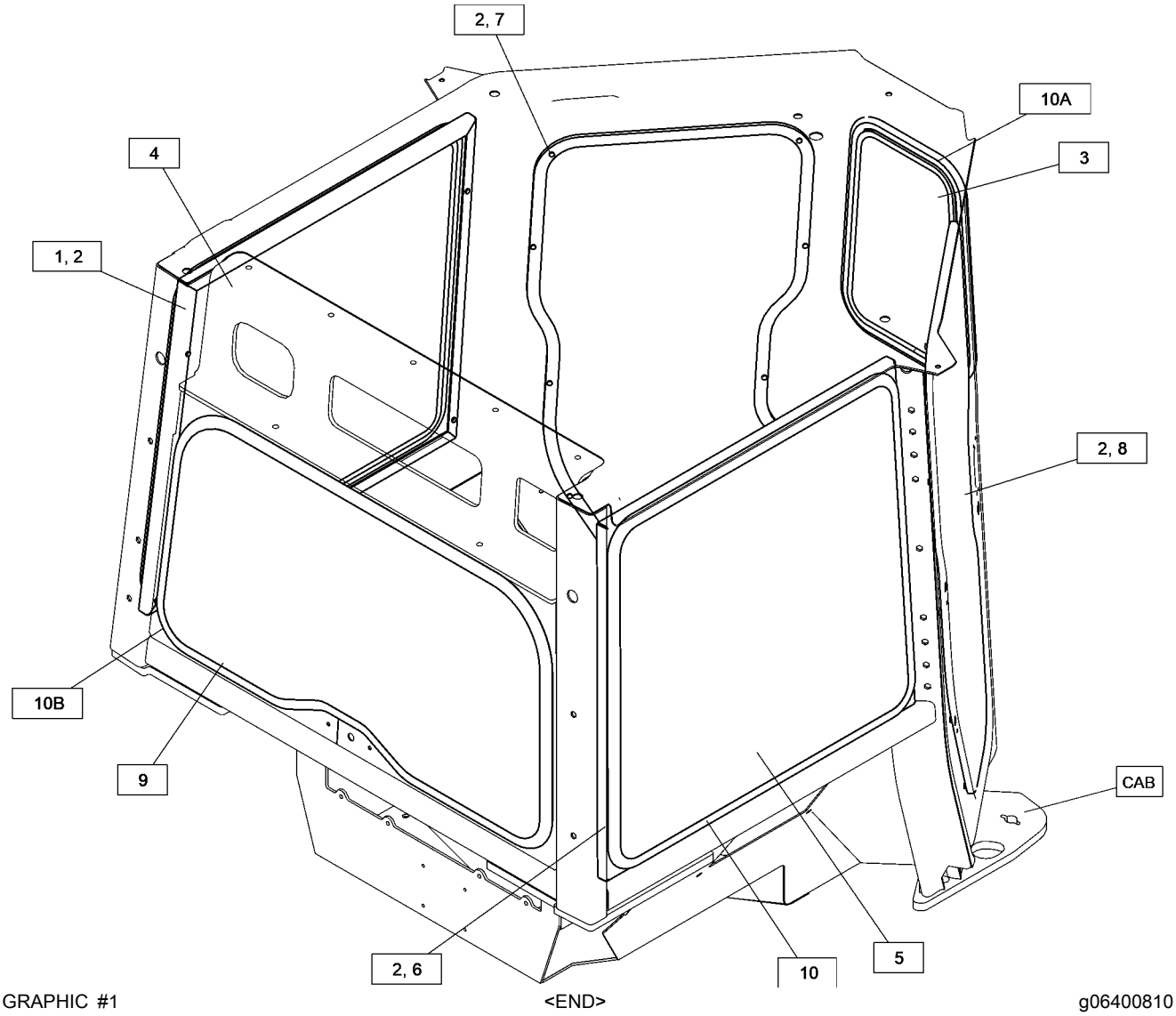

GRAPHIC #1 <END> g06400810

470-0010 WINDOW GP-CAB

S/N: Z2K1-UP; Z2N1-UP
LH
PART OF 435-5789, 435-5791 WINDOW GP-CAB
AN ATTACHMENT

SMCS-7310 **i07794692**

NOTE	REF NO	GRAPHIC REF	PART NUMBER	QTY	PART NAME 1 2 3 4 5 6 (PRODUCT LEVEL)	SEE PAGE
	1	1	**505-3627**	1	HANDLE AS	
	2	1	**523-4105**	1	GLASS AS	
	3	1	**523-4106**	1	GLASS AS-SLIDING	

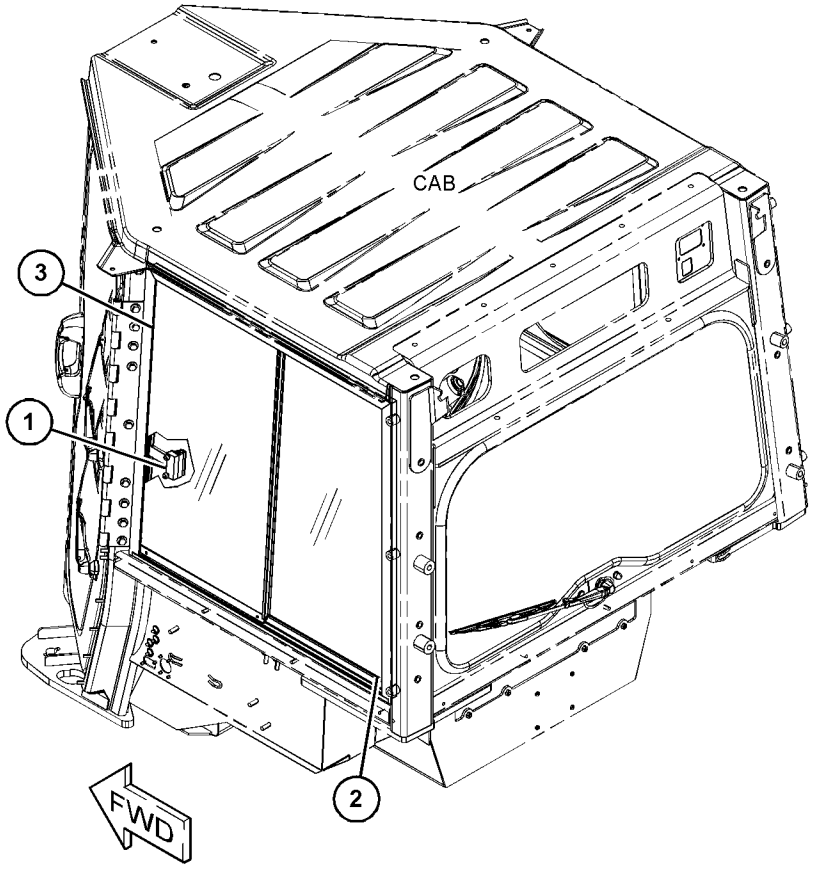

GRAPHIC #1 <END> g06354758

470-0011 WINDOW GP-CAB

S/N: Z2K1-UP; Z2N1-UP
RH
PART OF 435-5789, 435-5791 WINDOW GP-CAB
AN ATTACHMENT

SMCS-7310 **i07818531**

NOTE	REF NO	GRAPHIC REF	PART NUMBER	QTY	PART NAME 1 2 3 4 5 6 (PRODUCT LEVEL)	SEE PAGE
	1	1	**505-3627**	1	HANDLE AS	
	2	1	**526-1313**	1	GLASS AS	
	3	1	**526-1314**	1	GLASS AS-SLIDING	

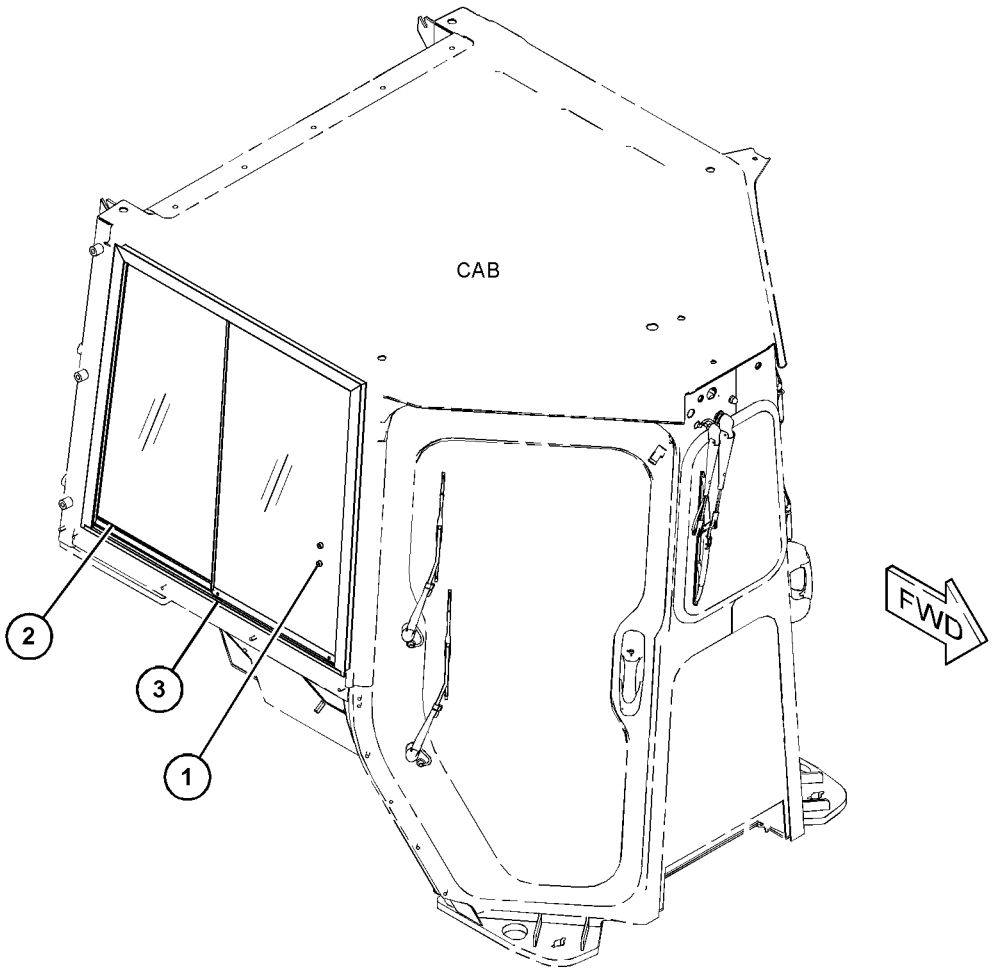

GRAPHIC #1 <END> g06344004

435-5737 WIPER GP-WINDOW

S/N: Z2K1-UP; Z2N1-UP
PART OF 536-6476, 536-6478, 579-6896 CAB GP
AN ATTACHMENT

SMCS-7305 **i07793456**

NOTE	REF NO	GRAPHIC REF	PART NUMBER	QTY	PART NAME 1 2 3 4 5 6 (PRODUCT LEVEL)	SEE PAGE
	1	1	**6V-5851**	1	BLADE AS-WIPER (400-MM) (FRONT)	
M	2	1	**8T-4970**	6	BOLT (M6X1X14-MM)	
	3	1,2	**8T-5400**	10	CONNECTOR	
	4	1,2	**128-5040**	4	BLADE AS-WIPER (330-MM)	
	5	1	**218-2656**	2	FITTING	
	6	2	**471-3357**	1	BLADE AS-WIPER	
	7	2	**474-4198**	1	ARM GP-WINDOW WIPER (LOWER LH)	
	8	2	**474-4199**	1	ARM GP-WINDOW WIPER (UPPER LH)	
					(EACH ARM GP-WINDOW WIPER INCLUDES)	
E		2	**194-5171**		HOSE (25-CM)	
		2	**501-7933**	1	NOZZLE	
	9	1	**474-4200**	1	ARM GP-WINDOW WIPER (LOWER RH)	
	10	1	**474-4201**	1	ARM GP-WINDOW WIPER (UPPER RH)	
					(EACH ARM GP-WINDOW WIPER INCLUDES)	
E		1	**194-5171**		HOSE (25-CM)	
		1	**501-7967**	1	NOZZLE	
Y	11	2	**474-5545**	1	MOTOR GP-WINDOW WIPER (REAR)	711
	12	2	**474-5562**	1	LINKAGE GP-WIPER (LH)	
	13	1	**474-5563**	1	LINKAGE GP-WIPER (RH)	
					(EACH LINKAGE GP-WIPER INCLUDES)	
		1	**524-3097**	2	HARDWARE GP-MOUNTING	
	14	1	**493-4897**	1	ARM AS-WINDOW WIPER (REAR)	
		1	**136-3191**	1	NOZZLE AS-WASHER	
E		1	**194-5171**		HOSE (38-CM)	
Y	15	1	**493-4898**	1	MOTOR GP-WINDOW WIPER (24-VOLT) (FRONT)	712
Y	16	2	**511-2371**	1	MOTOR GP-WINDOW WIPER (24-VOLT, 2-SPEED) (DOOR, LH)	713
Y	17	1	**511-2372**	1	MOTOR GP-WINDOW WIPER (24-VOLT, 2-SPEED) (DOOR, RH)	714
	18	2	**525-7489**	1	ARM AS-WINDOW WIPER (FRONT)	
E		2	**194-5171**		HOSE (40-CM)	
		2	**501-7967**	1	NOZZLE	
	19	1	**1H-3244**	6	LOCKWASHER	
	20	1	**3F-9556**	2	LOCKWASHER	
M	21	1	**5C-7261**	2	NUT (M8X1.25-THD)	
	22	1	**7K-1181**	6	STRAP-CABLE	
E	23	1	**144-0195**		HOSE (50-CM EACH)	
E	23A	1,2	**144-0195**		HOSE (13-CM EACH)	
BE	24	2	**7X-7928**		TAPE-IDENTIFICATION (LETTER B)	
BE	25	1	**7X-7929**		TAPE-IDENTIFICATION (LETTER C)	

B - USE AS REQUIRED
E - ORDER BY THE CENTIMETER
M - METRIC PART
Y - SEPARATE ILLUSTRATION

435-5737 **WIPER GP-WINDOW (**contd.**)** **i07793456**

REFER TO ALL ILLUSTRATIONS OF
THIS GROUP FOR AUXILIARY VIEWS

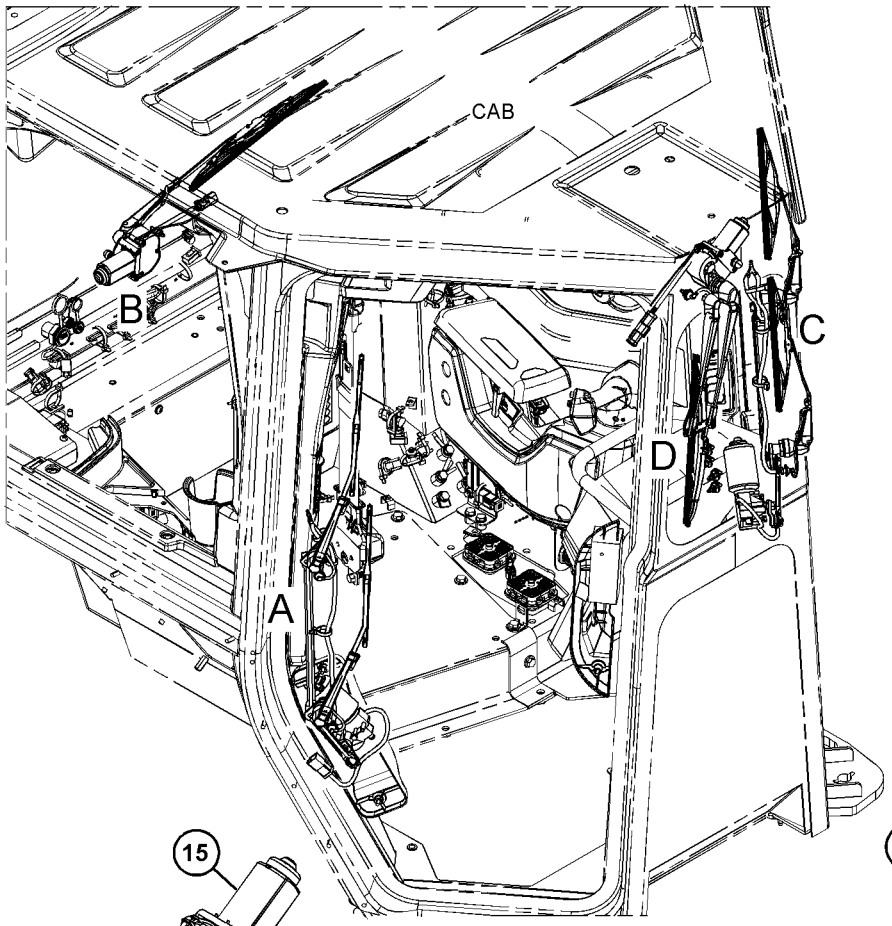

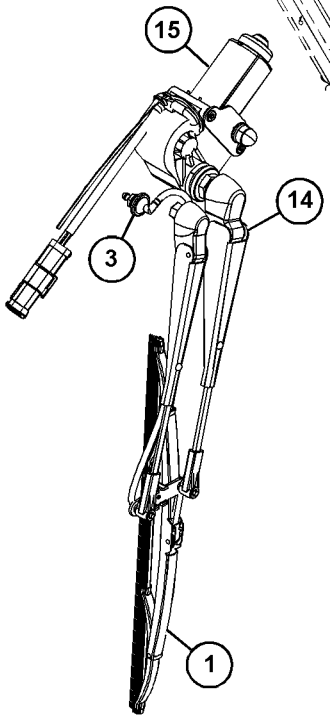

VIEW OF AREA D

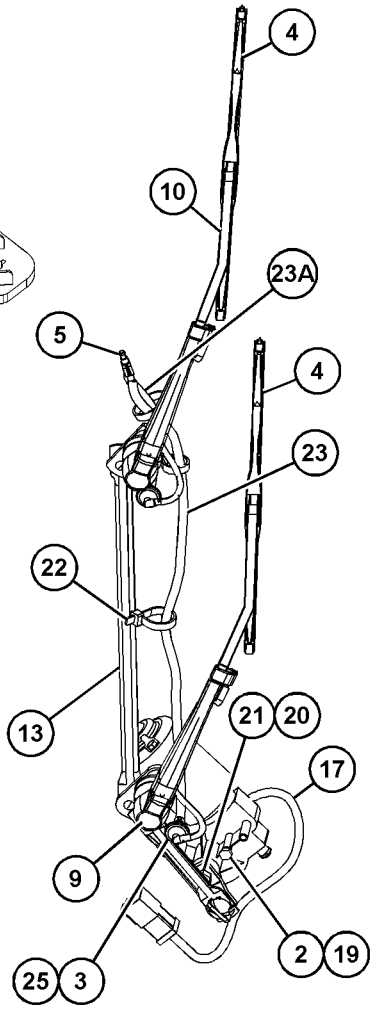

VIEW OF AREA A

GRAPHIC #1 g06355734

435-5737 **WIPER GP-WINDOW (**contd.**)** **i07793456**

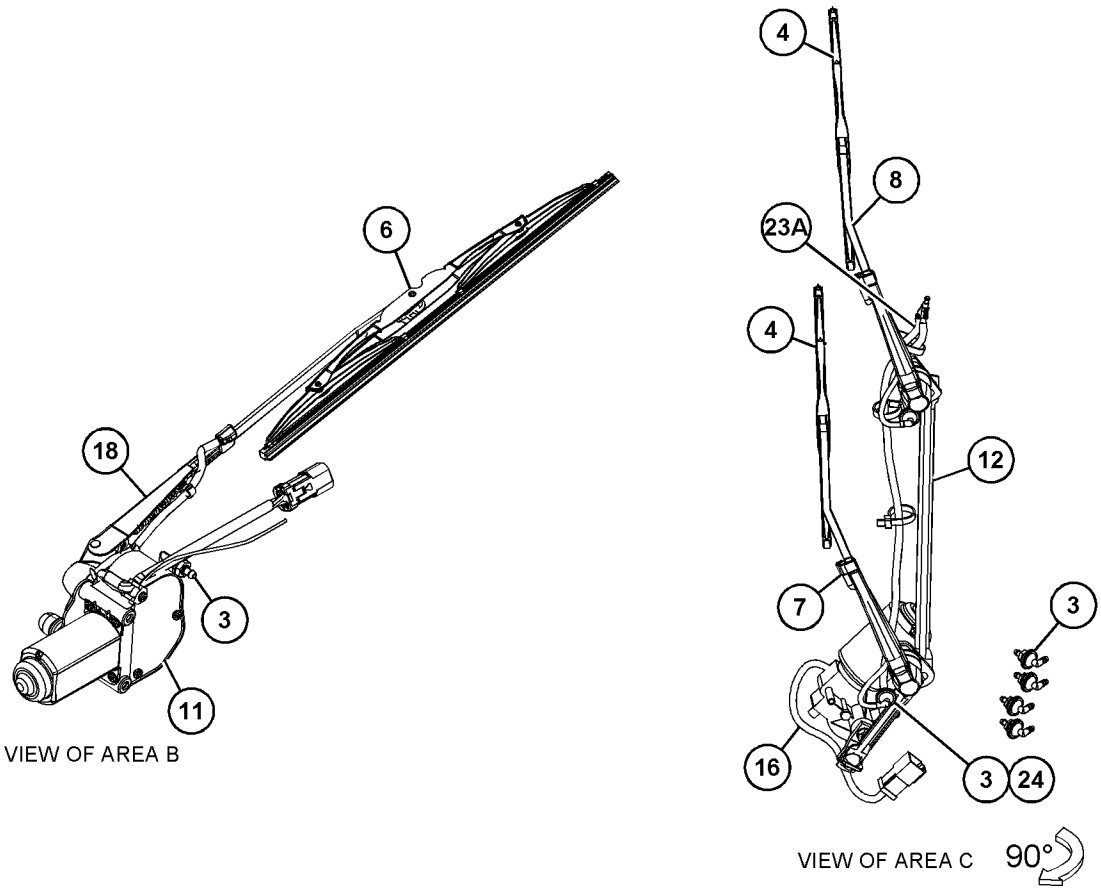

GRAPHIC #2 <END> g06355735

559-7728 BLADE & EDGE GP-ANGLING

S/N: Z2K1-UP
XL, FOLDABLE
PART OF 515-3731 BLADE AR-ANGLING
AN ATTACHMENT

SMCS-6060 **i07787608**

NOTE	REF NO	GRAPHIC REF	PART NUMBER	QTY	PART NAME 1 2 3 4 5 6 (PRODUCT LEVEL)	SEE PAGE
M	1	1	**8T-4183**	4	BOLT (M12X1.75X40-MM)	
M	2	1	**8T-4184**	2	BOLT (M12X1.75X45-MM)	
M	3	1	**259-2627**	1	BOLT (M12X1.75X40-MM)	
	4	1	**3B-8489**	2	ADAPTER	
	5	1	**3E-9411**	1	WASHER-HARD (17.5X38X6-MM THK)	
	6	1	**4T-0231**	3	RETAINER	
	7	1	**5P-1076**	4	WASHER-HARD (13.5X30X4-MM THK)	
	8	1	**7D-1649**	2	WASHER-HARD (13.5X32X5-MM THK)	
	9	1	**8T-4123**	1	WASHER (22X35X3.5-MM THK)	
	10	1	**8T-4167**	8	WASHER-HARD (26X44X4-MM THK)	
	11	1	**8T-4223**	3	WASHER-HARD (13.5X25.5X3-MM THK)	
M	12	1	**362-1320**	3	BOLT (M12X1.75X35-MM)	
M	13	1	**8T-5460**	1	BOLT (M20X2.5X40-MM)	
	14	1	**9J-4782**	2	PROTECTOR	
	15	1	**089-8249**	2	SPACER (64X72X13-MM THK)	
	16	1	**104-4817**	1	PIN	
	17	1	**144-5478**	2	BOLT (M20X2.5X130-MM)	
	18	1	**223-3279**	1	RETAINER	
	19	1	**232-4810**	3	PIN	
	20	1	*240-1467*	1	PLATE & FILM GP	
		1	**4B-4158**	2	SCREW-DRIVE (NO 4X0.25-IN)	
		1	**8T-7371**	1	PLATE-SERIAL NUMBER (BLADE)	
Y	21	1	*257-0207*	1	EDGE GP-BIT & CUTTING (ANGLING)	805
	22	1	**328-4847**	1	SPACER (28X17.5X13-MM THK)	
	23	1	**358-2227**	3	PIN	
	24	1	**358-2260**	1	ARM AS-SUPPORT	
	25	1	**466-2917**	6	SPACER (51.2X57X23-MM THK)	
	26	1	**477-0065**	1	PLATE AS	
		1	**153-7452**	1	HOOK	
	27	1	**483-9282**	1	BLADE AS (LH)	
		1	**8P-9770**	1	PLATE	
	28	1	**483-9298**	2	BOSS	
	29	1	**483-9299**	2	RETAINER	
	30	1	**484-0217**	1	PIN AS	
	31	1	**490-1616**	2	CAP-BEARING	
	32	1	**500-4763**	1	PLATE	
	33	1	**505-7069**	1	PIN	
	34	1	**505-7081**	2	PIN AS	
	35	1	*561-5082*	1	BLADE AS-ANGLING (RH)	
	35A	1	**560-0439**	1	BEARING	
M		1	**9R-2672**	3	BOSS-THREADED (M10X1.5X120-MM)	
		1	**557-7475**	1	PLATE AS	
M	36	1	**114-6099**	8	BOLT (M24X3X80-MM)	
B	37	1	**348-6260**	6	SHIM (1.5-MM THK)	
B	38	1	**483-9315**	20	SHIM (0.5-MM THK)	
B	39	1	**484-0219**	12	SHIM (0.5-MM THK)	

559-7728 **BLADE & EDGE GP-ANGLING** (contd.) **i07787608**

NOTE	REF NO	GRAPHIC REF	PART NUMBER	QTY	PART NAME 1 2 3 4 5 6 (PRODUCT LEVEL)	SEE PAGE

B - USE AS REQUIRED
M - METRIC PART
Y - SEPARATE ILLUSTRATION

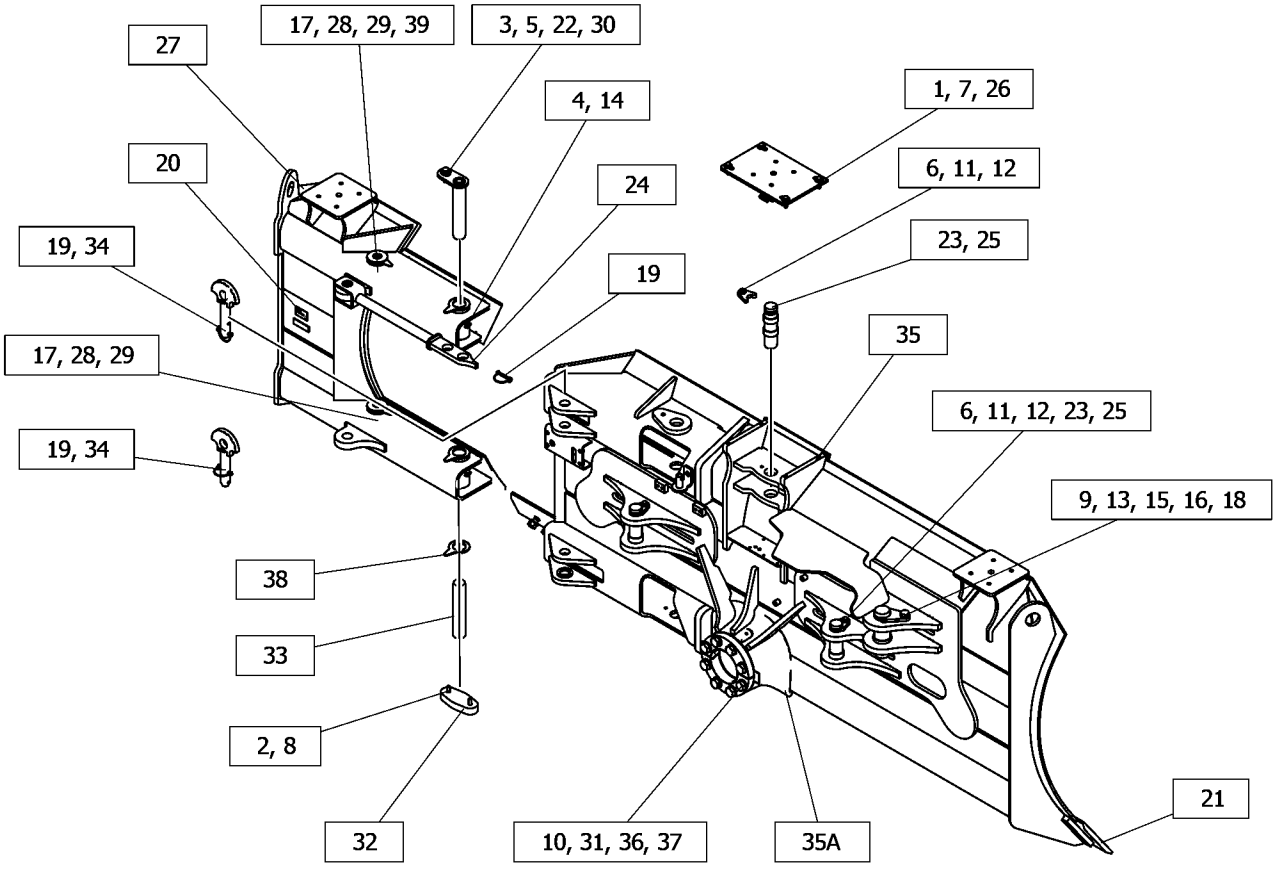

GRAPHIC #1 <END> g06444157

563-1981 BLADE & EDGE GP-ANGLING

S/N: Z2K1-UP
WASTE HANDLING, XL
PART OF 559-6019 BLADE AR-ANGLING
AN ATTACHMENT

SMCS-6060 **i07832599**

NOTE	REF NO	GRAPHIC REF	PART NUMBER	QTY	PART NAME 1 2 3 4 5 6 (PRODUCT LEVEL)	SEE PAGE
	1	1	**4T-0231**	3	RETAINER	
	2	1	**5P-1076**	4	WASHER-HARD (13.5X30X4-MM THK)	
Y	3	1	*8E-9380*	1	EDGE GP-BIT & CUTTING	808
	5	1	**8T-4123**	1	WASHER (22X35X3.5-MM THK)	
	6	1	**8T-4167**	8	WASHER-HARD (26X44X4-MM THK)	
M	7	1	**8T-4183**	4	BOLT (M12X1.75X40-MM)	
	8	1	**8T-4223**	3	WASHER-HARD (13.5X25.5X3-MM THK)	
M	9	1	**8T-4956**	3	BOLT (M12X1.75X35-MM)	
M	10	1	**8T-5460**	1	BOLT (M20X2.5X40-MM)	
	11	1	**089-8249**	2	SPACER (64X72X13-MM THK)	
	12	1	**104-4817**	1	PIN	
	13	1	**223-3279**	1	RETAINER	
	14	1	*240-1467*	1	PLATE & FILM GP	
		1	**4B-4158**	2	SCREW-DRIVE (NO 4X0.25-IN)	
		1	**8T-7371**	1	PLATE-SERIAL NUMBER (BLADE)	
	15	1	**259-2968**	6	SPACER (52.4X57X23-MM THK)	
	16	1	**358-2227**	3	PIN	
	17	1	**477-0065**	1	PLATE AS	
	18	1	**490-1616**	2	CAP-BEARING	
Y	19	1	**565-0025**	1	BLADE AS-ANGLING	798
M	20	1	**7X-2577**	8	BOLT (M24X3X90-MM)	
B	21	1	**348-6260**	6	SHIM (1.5-MM THK)	

B - USE AS REQUIRED
M - METRIC PART
Y - SEPARATE ILLUSTRATION

563-1981 **BLADE & EDGE GP-ANGLING** (contd.) **i07832599**

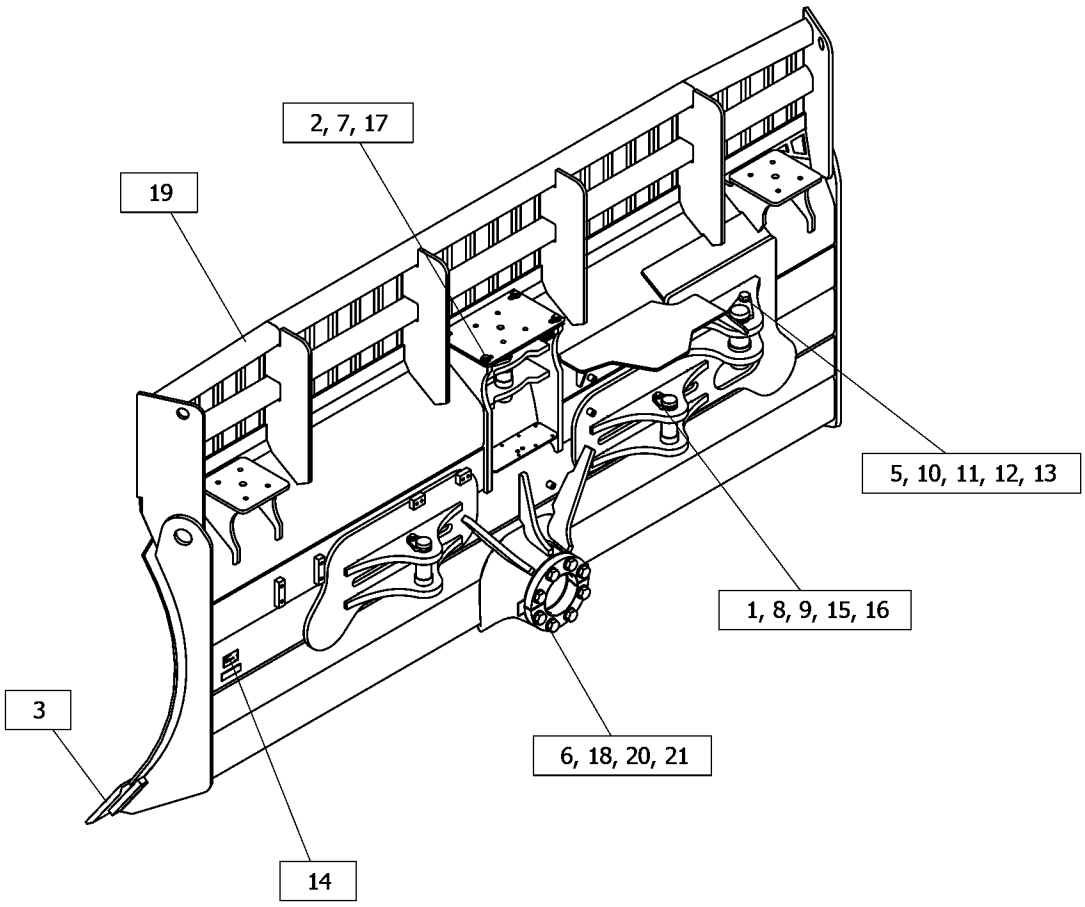

GRAPHIC #1 <END> g06453645

563-1994 BLADE & EDGE GP-ANGLING

S/N: AA31-UP
WASTE HANDLING, LGP
PART OF 559-6020 BLADE AR-ANGLING
AN ATTACHMENT

SMCS-6060 **i07827878**

NOTE	REF NO	GRAPHIC REF	PART NUMBER	QTY	PART NAME 1 2 3 4 5 6 (PRODUCT LEVEL)	SEE PAGE
	1	1	**4T-0231**	3	RETAINER	
Y	2	1	*4T-2314*	1	EDGE GP-BIT & CUTTING	807
	3	1	**5P-1076**	4	WASHER-HARD (13.5X30X4-MM THK)	
	4	1	**8T-4123**	1	WASHER (22X35X3.5-MM THK)	
	5	1	**8T-4167**	8	WASHER-HARD (26X44X4-MM THK)	
M	6	1	**8T-4183**	4	BOLT (M12X1.75X40-MM)	
	7	1	**8T-4223**	3	WASHER-HARD (13.5X25.5X3-MM THK)	
M	8	1	**8T-4956**	3	BOLT (M12X1.75X35-MM)	
M	9	1	**8T-5460**	1	BOLT (M20X2.5X40-MM)	
	10	1	**089-8249**	2	SPACER (64X72X13-MM THK)	
	11	1	**104-4817**	1	PIN	
	12	1	**223-3279**	1	RETAINER	
	13	1	*240-1467*	1	PLATE & FILM GP	
		1	**8T-7371**	1	PLATE-SERIAL NUMBER (BLADE)	
		1	**4B-4158**	2	SCREW-DRIVE (NO 4X0.25-IN)	
	14	1	**259-2968**	6	SPACER (52.4X57X23-MM THK)	
	15	1	**358-2227**	3	PIN	
	16	1	**477-0065**	1	PLATE AS	
	17	1	**490-1616**	2	CAP-BEARING	
	18	1	**565-0028**	1	BLADE AS-ANGLING	
	18A	1	**560-0439**	1	BEARING	
		1	**557-7475**	1	PLATE AS	
M	19	1	**7X-2577**	8	BOLT (M24X3X90-MM)	
B	20	1	**348-6260**	6	SHIM (1.5-MM THK)	

B - USE AS REQUIRED
M - METRIC PART
Y - SEPARATE ILLUSTRATION

563-1994 **BLADE & EDGE GP-ANGLING** (contd.) **i07827878**

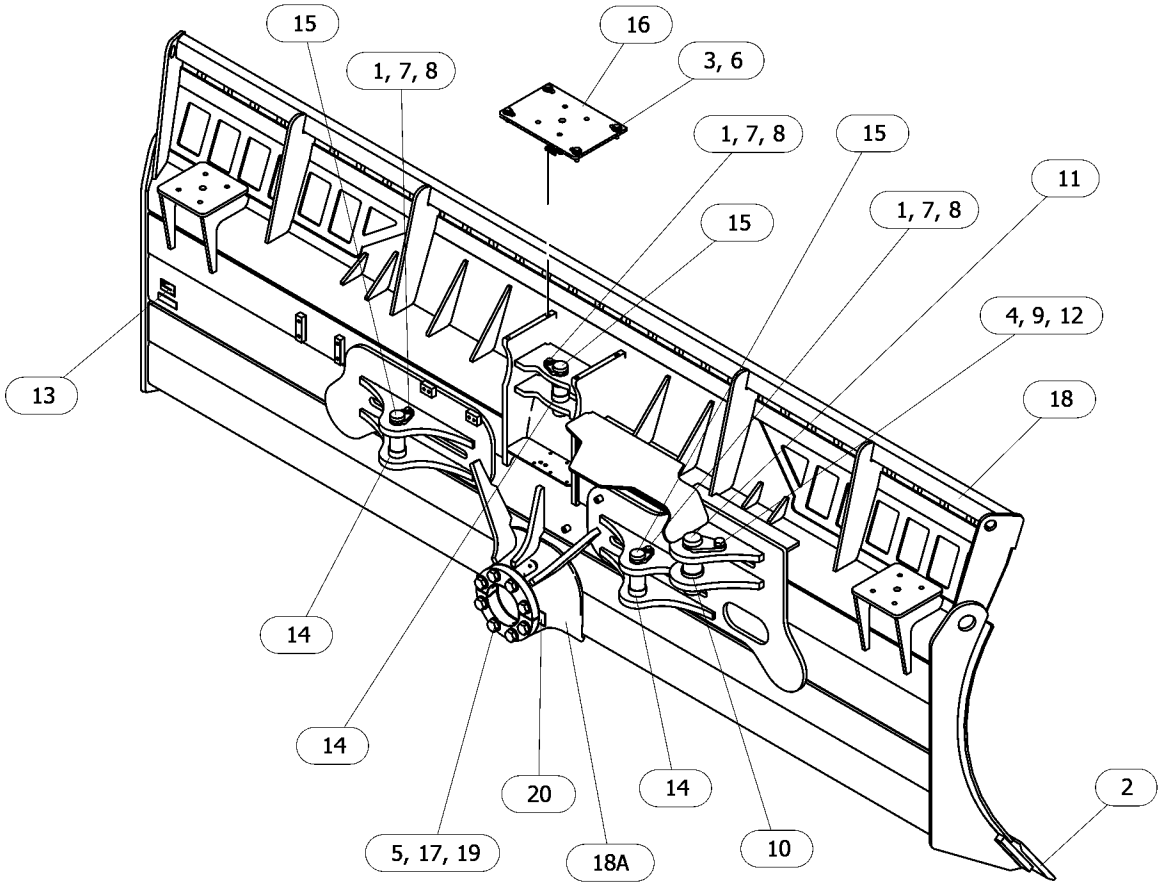

GRAPHIC #1 <END> g06452131

557-7473 BLADE & EDGE GP-STRAIGHT

S/N: AA91-UP
XL
PART OF 515-3730 BLADE AR-STRAIGHT
AN ATTACHMENT

SMCS-6051 **i07789787**

NOTE	REF NO	GRAPHIC REF	PART NUMBER	QTY	PART NAME 1 2 3 4 5 6 (PRODUCT LEVEL)	SEE PAGE
	1	1	**4T-0231**	3	RETAINER	
	2	1	**5P-1076**	4	WASHER-HARD (13.5X30X4-MM THK)	
Y	3	1	*8E-9380*	1	EDGE GP-BIT & CUTTING	808
	4	1	**8T-4123**	1	WASHER (22X35X3.5-MM THK)	
	6	1	**8T-4167**	8	WASHER-HARD (26X44X4-MM THK)	
M	7	1	**8T-4183**	4	BOLT (M12X1.75X40-MM)	
	8	1	**8T-4223**	3	WASHER-HARD (13.5X25.5X3-MM THK)	
M	9	1	**8T-4956**	3	BOLT (M12X1.75X35-MM)	
M	10	1	**8T-5460**	1	BOLT (M20X2.5X40-MM)	
	11	1	**089-8249**	2	SPACER (64X72X13-MM THK)	
	12	1	**104-4817**	1	PIN	
	13	1	**223-3279**	1	RETAINER	
	14	1	*240-1467*	1	PLATE & FILM GP	
		1	**8T-7371**	1	PLATE-SERIAL NUMBER (BLADE)	
		1	**4B-4158**	2	SCREW-DRIVE (NO 4X0.25-IN)	
	15	1	**259-2968**	6	SPACER (52.4X57X23-MM THK)	
	16	1	**358-2227**	3	PIN	
	17	1	**477-0065**	1	PLATE AS	
	18	1	**490-1616**	2	CAP-BEARING	
Y	19	1	*557-7474*	1	BLADE AS-STRAIGHT	799
M	20	1	**8T-5878**	8	BOLT (M24X3X80-MM)	
B	21	1	**348-6260**	6	SHIM (1.5-MM THK)	

B - USE AS REQUIRED
M - METRIC PART
Y - SEPARATE ILLUSTRATION

557-7473 **BLADE & EDGE GP-STRAIGHT (**contd.**)** **i07789787**

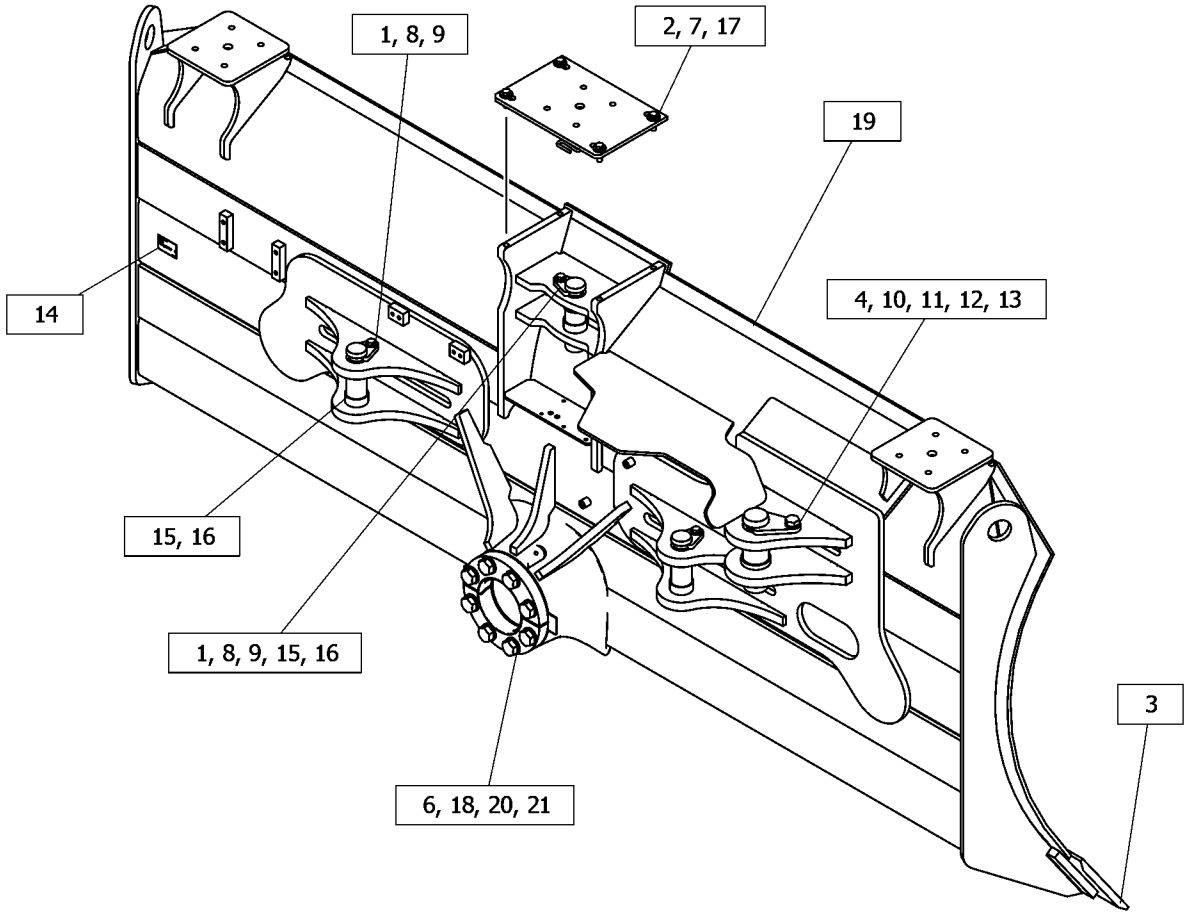

GRAPHIC #1 <END> g06440135

559-7725 BLADE & EDGE GP-STRAIGHT

S/N: Z2N1-UP
LOW GROUND PRESSURE
PART OF 515-3733 BLADE AR-STRAIGHT
AN ATTACHMENT

SMCS-6051 **i07852635**

NOTE	REF NO	GRAPHIC REF	PART NUMBER	QTY	PART NAME 1 2 3 4 5 6 (PRODUCT LEVEL)	SEE PAGE
	1	1	**5P-1076**	4	WASHER-HARD (13.5X30X4-MM THK)	
	2	1	**8T-4123**	1	WASHER (22X35X3.5-MM THK)	
	3	1	**8T-4167**	8	WASHER-HARD (26X44X4-MM THK)	
M	4	1	**8T-4183**	4	BOLT (M12X1.75X40-MM)	
	5	1	**8T-4223**	3	WASHER-HARD (13.5X25.5X3-MM THK)	
M	6	1	**8T-4956**	3	BOLT (M12X1.75X35-MM)	
M	7	1	**8T-5460**	1	BOLT (M20X2.5X40-MM)	
M	8	1	**8T-5878**	8	BOLT (M24X3X80-MM)	
	9	1	**089-8249**	2	SPACER (64X72X13-MM THK)	
	10	1	**104-4817**	1	PIN	
	11	1	**223-3279**	1	RETAINER	
	12	1	*240-1467*	1	PLATE & FILM GP	
		1	**8T-7371**	1	PLATE-SERIAL NUMBER (BLADE)	
		1	**4B-4158**	2	SCREW-DRIVE (NO 4X0.25-IN)	
	13	1	**259-2968**	6	SPACER (52.4X57X23-MM THK)	
	14	1	**358-2227**	3	PIN	
	15	1	**477-0065**	1	PLATE AS	
	16	1	**490-1616**	2	CAP-BEARING	
	17	1	**4T-0231**	3	RETAINER	
Y	18	1	*4T-2314*	1	EDGE GP-BIT & CUTTING	807
Y	19	1	*559-7727*	1	BLADE AS-STRAIGHT	800
B	20	1	**348-6260**	6	SHIM (1.5-MM THK)	

B - USE AS REQUIRED
M - METRIC PART
Y - SEPARATE ILLUSTRATION

559-7725 **BLADE & EDGE GP-STRAIGHT** (contd.) **i07852635**

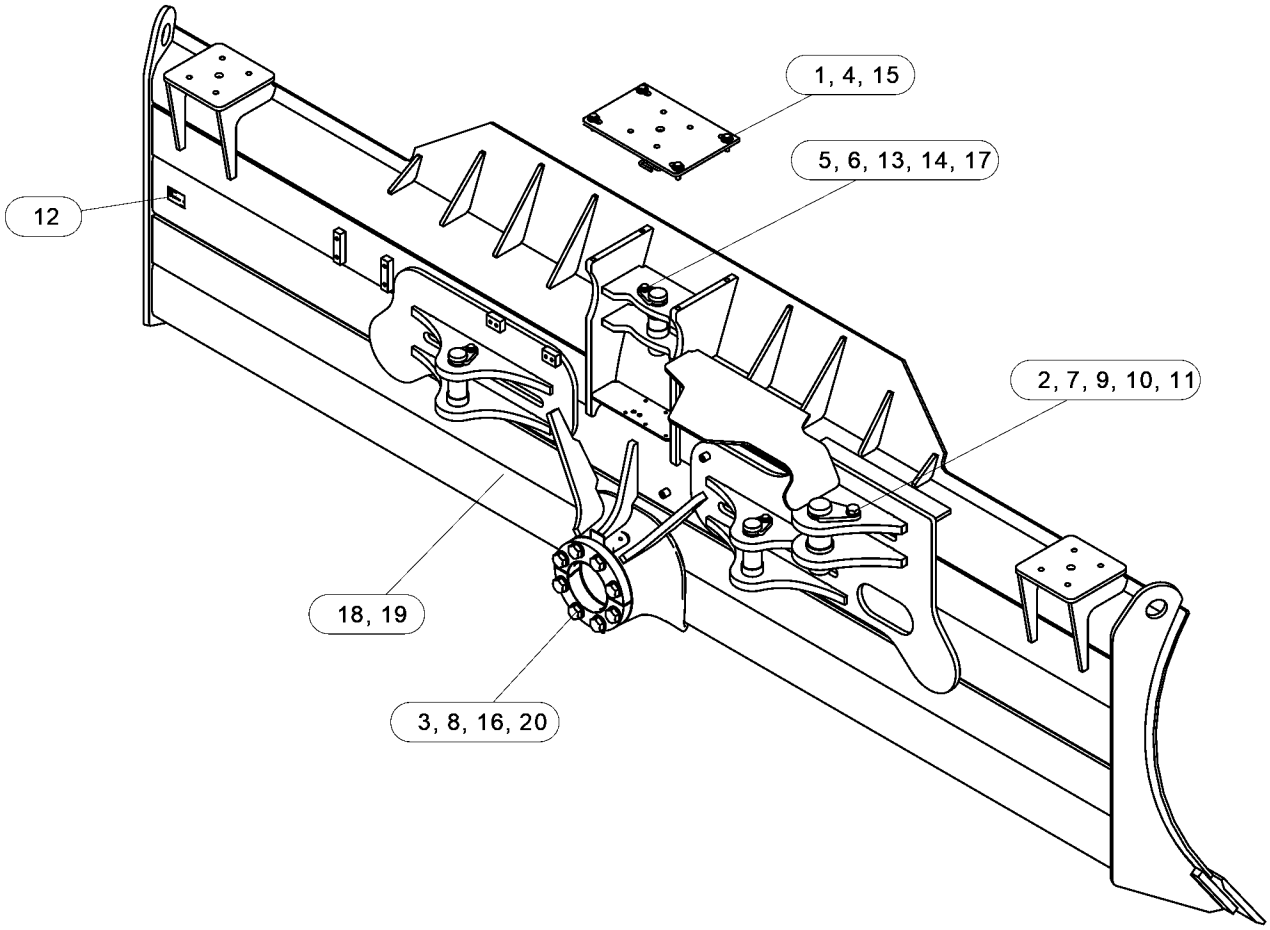

GRAPHIC #1 <END> g06458265

515-3731 BLADE AR-ANGLING

S/N: Z2K1-UP
FOLDABLE, XL, VPAT
PART OF 575-9797 BLADE AR-ANGLING
AN ATTACHMENT

SMCS-6060, 6701 **i07787527**

NOTE	PART NUMBER	QTY	PART NAME 1 2 3 4 5 6 (PRODUCT LEVEL)	SEE PAGE
Y	**559-7728**	1	BLADE & EDGE GP-ANGLING	785
Y	*559-5182*	1	LINES GP-GREASE	625

Y - SEPARATE ILLUSTRATION

<END>

515-3734 BLADE AR-ANGLING

S/N: Z2N1-UP
LOW GROUND PRESSURE, FOLDABLE, VPAT
PART OF 575-9800 BLADE AR-ANGLING
AN ATTACHMENT

SMCS-6060, 6701 **i07787680**

NOTE	PART NUMBER	QTY	PART NAME 1 2 3 4 5 6 (PRODUCT LEVEL)	SEE PAGE
Y	**559-7730**	1	BLADE GP-ANGLING	801
Y	*559-5182*	1	LINES GP-GREASE	625

Y - SEPARATE ILLUSTRATION

<END>

559-6019 BLADE AR-ANGLING

S/N: Z2K1-UP
LANDFILL
PART OF 575-9798 BLADE AR-ANGLING
AN ATTACHMENT

SMCS-6060, 6701 **i07832597**

NOTE	PART NUMBER	QTY	PART NAME 1 2 3 4 5 6 (PRODUCT LEVEL)	SEE PAGE
Y	*563-1981*	1	BLADE & EDGE GP-ANGLING	787
Y	*559-5182*	1	LINES GP-GREASE	625

Y - SEPARATE ILLUSTRATION

<END>

559-6020 BLADE AR-ANGLING

S/N: AA31-UP
WASTE HANDLING, LGP
PART OF 575-9801 BLADE AR-ANGLING
AN ATTACHMENT

SMCS-6060, 6701 **i07827877**

NOTE	PART NUMBER	QTY	PART NAME 1 2 3 4 5 6 (PRODUCT LEVEL)	SEE PAGE
Y	*563-1994*	1	BLADE & EDGE GP-ANGLING	789
Y	*559-5182*	1	LINES GP-GREASE	625

Y - SEPARATE ILLUSTRATION

<END>

575-9797 BLADE AR-ANGLING

S/N: Z2K1-UP
FOLDABLE
AN ATTACHMENT

SMCS-6060, 6701 **i07844205**

NOTE	PART NUMBER	QTY	PART NAME 1 2 3 4 5 6 (PRODUCT LEVEL)	SEE PAGE
Y	*515-3731*	1	BLADE AR-ANGLING	795

Y - SEPARATE ILLUSTRATION

<END>

575-9798 BLADE AR-ANGLING

S/N: Z2K1-UP
LANDFILL
AN ATTACHMENT

SMCS-6060, 6701 **i07832595**

NOTE	PART NUMBER	QTY	PART NAME 1 2 3 4 5 6 (PRODUCT LEVEL)	SEE PAGE
Y	*559-6019*	1	BLADE AR-ANGLING	795

Y - SEPARATE ILLUSTRATION

<END>

575-9800 BLADE AR-ANGLING

S/N: Z2N1-UP
FOLDABLE, LGP
AN ATTACHMENT

SMCS-6060, 6701 **i07848548**

NOTE	PART NUMBER	QTY	PART NAME 1 2 3 4 5 6 (PRODUCT LEVEL)	SEE PAGE
Y	*515-3734*	1	BLADE AR-ANGLING	795

Y - SEPARATE ILLUSTRATION

<END>

575-9801 BLADE AR-ANGLING

S/N: Z2N1-UP
WASTE HANDLING, LGP
AN ATTACHMENT

SMCS-6060, 6701 **i07848550**

NOTE	PART NUMBER	QTY	PART NAME 1 2 3 4 5 6 (PRODUCT LEVEL)	SEE PAGE
Y	*559-6020*	1	BLADE AR-ANGLING (WASTE HANDLING)	795

Y - SEPARATE ILLUSTRATION

<END>

515-3730 BLADE AR-STRAIGHT

S/N: AA91-UP
XL
PART OF 575-9796 BLADE AR-STRAIGHT
AN ATTACHMENT

SMCS-6051, 6060 **i07789781**

NOTE	PART NUMBER	QTY	PART NAME 1 2 3 4 5 6 (PRODUCT LEVEL)	SEE PAGE
Y	**557-7473**	1	BLADE & EDGE GP-STRAIGHT	791
Y	*559-5182*	1	LINES GP-GREASE	625

Y - SEPARATE ILLUSTRATION

<END>

515-3733 BLADE AR-STRAIGHT

S/N: Z2N1-UP
LOW GROUND PRESSURE
PART OF 575-9799 BLADE AR-STRAIGHT
AN ATTACHMENT

SMCS-6051, 6060 **i07790006**

NOTE	PART NUMBER	QTY	PART NAME 1 2 3 4 5 6 (PRODUCT LEVEL)	SEE PAGE
Y	**559-7725**	1	BLADE & EDGE GP-STRAIGHT	793
Y	*559-5182*	1	LINES GP-GREASE	625

Y - SEPARATE ILLUSTRATION

<END>

575-9796 BLADE AR-STRAIGHT

S/N: Z2K1-UP
AN ATTACHMENT

SMCS-6051, 6060 **i07844192**

NOTE	PART NUMBER	QTY	PART NAME 1 2 3 4 5 6 (PRODUCT LEVEL)	SEE PAGE
Y	*515-3730*	1	BLADE AR-STRAIGHT	797

Y - SEPARATE ILLUSTRATION

<END>

575-9799 BLADE AR-STRAIGHT

S/N: Z2N1-UP
LGP
AN ATTACHMENT

SMCS-6051, 6060 **i07848523**

NOTE	PART NUMBER	QTY	PART NAME 1 2 3 4 5 6 (PRODUCT LEVEL)	SEE PAGE
Y	*515-3733*	1	BLADE AR-STRAIGHT	797

Y - SEPARATE ILLUSTRATION

<END>

565-0025 BLADE AS-ANGLING

S/N: Z2K1-UP

PART OF 563-1981 BLADE & EDGE GP-ANGLING

AN ATTACHMENT

SMCS-6060 **i07868094**

NOTE	REF NO	GRAPHIC REF	PART NUMBER	QTY	PART NAME 1 2 3 4 5 6 (PRODUCT LEVEL)	SEE PAGE
	1	1	**8E-9502**	1	SUPPORT	
	2	1	**8P-9770**	1	PLATE	
M	3	1	**9R-2672**	3	BOSS-THREADED (M10X1.5X120-MM)	
	4	1	**557-7475**	1	PLATE AS	
	5	1	**560-0439**	1	BEARING	

M - METRIC PART

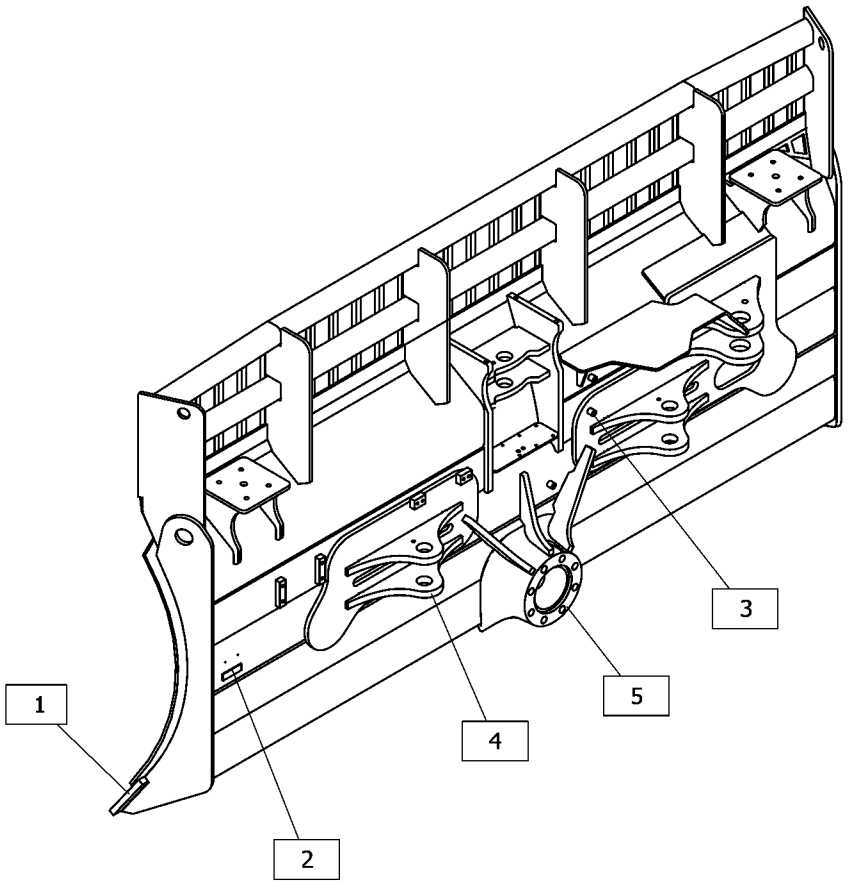

GRAPHIC #1 <END> g06453640

557-7474 BLADE AS-STRAIGHT

S/N: AA91-UP
PART OF 557-7473 BLADE & EDGE GP-STRAIGHT
AN ATTACHMENT

SMCS-6051, 6060

i07789791

NOTE	REF NO	GRAPHIC REF	PART NUMBER	QTY	PART NAME 1 2 3 4 5 6 (PRODUCT LEVEL)	SEE PAGE
	1	1	**8E-9502**	1	SUPPORT	
M	2	1	**9R-2672**	3	BOSS-THREADED (M10X1.5X120-MM)	
	3	1	**557-7475**	1	PLATE AS	
	4	1	**560-0439**	1	BEARING	

M - METRIC PART

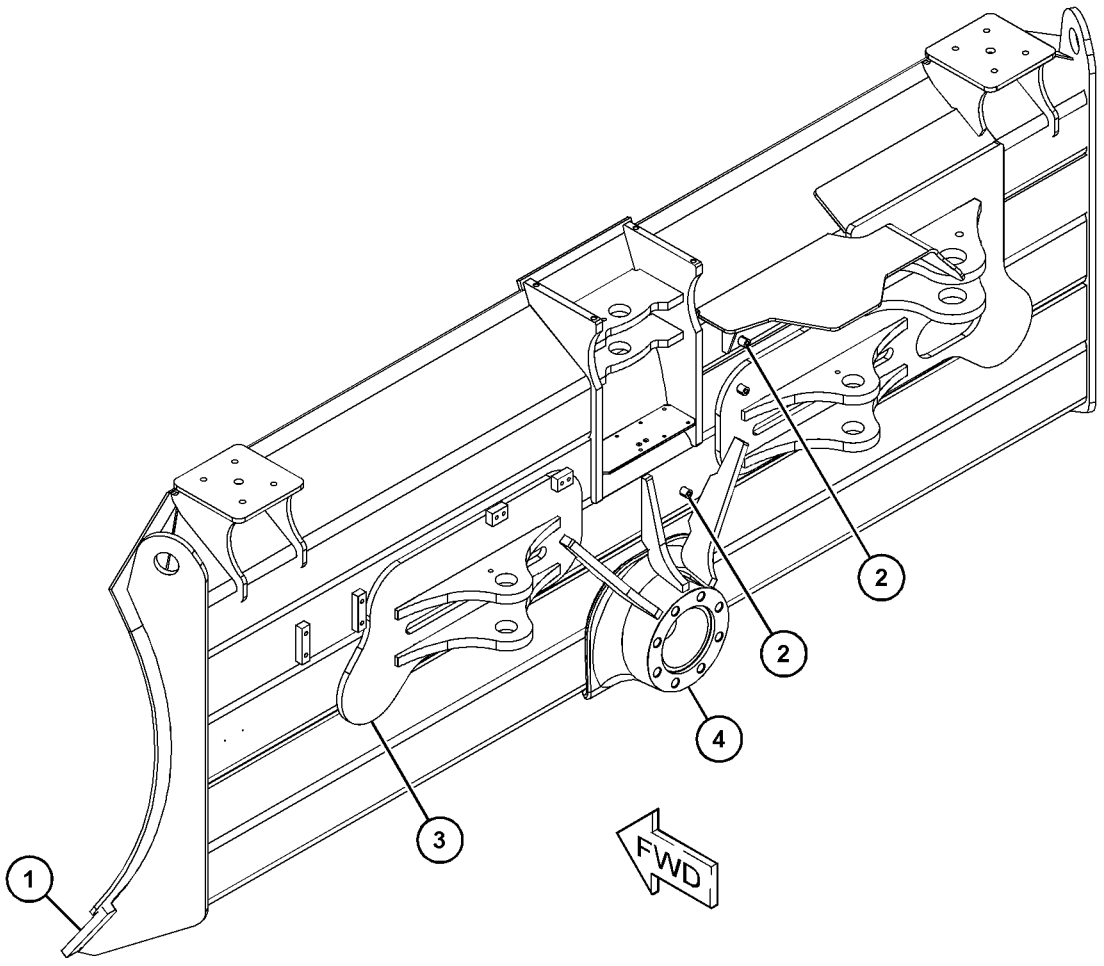

GRAPHIC #1 <END> g06446195

559-7727 BLADE AS-STRAIGHT

S/N: Z2N1-UP

PART OF 559-7725 BLADE & EDGE GP-STRAIGHT

AN ATTACHMENT

SMCS-6051, 6060

i07852640

NOTE	REF NO	GRAPHIC REF	PART NUMBER	QTY	PART NAME 1 2 3 4 5 6 (PRODUCT LEVEL)	SEE PAGE
	1	1	**557-7475**	1	PLATE AS	
M	2	1	**9R-2672**	3	BOSS-THREADED (M10X1.5X120-MM)	
	3	1	**560-0439**	1	BEARING	

M - METRIC PART

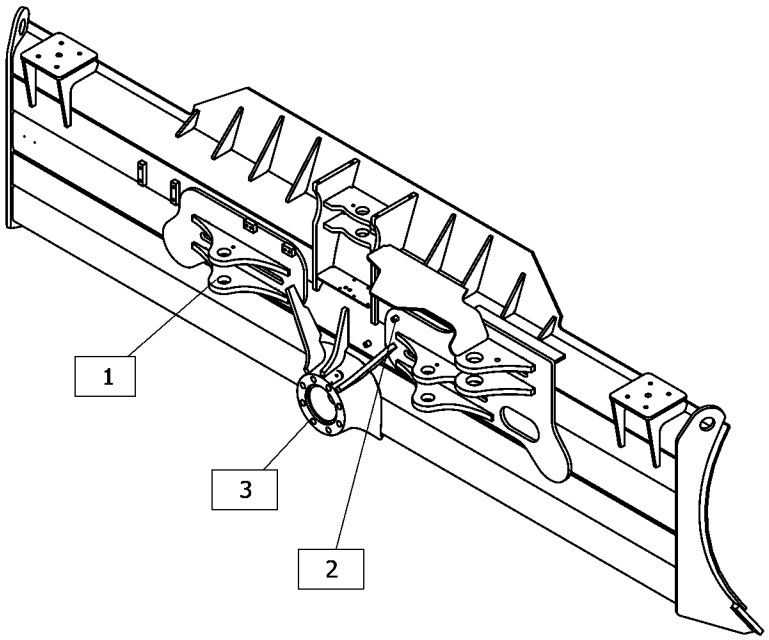

GRAPHIC #1 <END> g06452139

559-7730 BLADE GP-ANGLING

S/N: Z2N1-UP
LOW GROUND PRESSURE
PART OF 515-3734 BLADE AR-ANGLING
AN ATTACHMENT

SMCS-6052, 6060, 6701 **i07787935**

NOTE	REF NO	GRAPHIC REF	PART NUMBER	QTY	PART NAME 1 2 3 4 5 6 (PRODUCT LEVEL)	SEE PAGE
M	1	1	**259-2627**	4	BOLT (M12X1.75X40-MM)	
M	2	1	**8T-4184**	2	BOLT (M12X1.75X45-MM)	
M	3	1	**8T-4193**	1	BOLT (M16X2X50-MM)	
	4	1	**3B-8489**	2	ADAPTER	
	5	1	**3E-9411**	1	WASHER-HARD (17.5X38X6-MM THK)	
	6	1	**4T-0231**	5	RETAINER	
	7	1	**5P-1076**	4	WASHER-HARD (13.5X30X4-MM THK)	
	8	1	**7D-1649**	2	WASHER-HARD (13.5X32X5-MM THK)	
	9	1	**8T-4123**	1	WASHER (22X35X3.5-MM THK)	
	10	1	**8T-4167**	8	WASHER-HARD (26X44X4-MM THK)	
	11	1	**8T-4223**	5	WASHER-HARD (13.5X25.5X3-MM THK)	
M	12	1	**362-1320**	5	BOLT (M12X1.75X35-MM)	
M	13	1	**8T-5460**	1	BOLT (M20X2.5X40-MM)	
	14	1	**9J-4782**	2	PROTECTOR	
	15	1	**089-8249**	2	SPACER (64X72X13-MM THK)	
	16	1	**104-4817**	1	PIN	
	17	1	**144-5478**	2	BOLT (M20X2.5X130-MM)	
	18	1	**177-4548**	1	PIN	
	19	1	**223-3279**	1	RETAINER	
	20	1	**232-4810**	3	PIN	
	21	1	*240-1467*	1	PLATE & FILM GP	
		1	**4B-4158**	2	SCREW-DRIVE (NO 4X0.25-IN)	
		1	**8T-7371**	1	PLATE-SERIAL NUMBER	
Y	22	1	*257-8150*	1	EDGE GP-BIT & CUTTING	806
	23	1	**259-2968**	4	SPACER (52.4X57X23-MM THK)	
	24	1	**328-4847**	1	SPACER (28X17.5X13-MM THK)	
	25	1	**358-2227**	3	PIN	
	26	1	**358-2260**	1	ARM AS-SUPPORT	
	27	1	**370-5549**	1	PIN	
	28	1	**466-2917**	2	SPACER (51.2X57X23-MM THK)	
	29	1	**477-0065**	1	PLATE AS	
		1	**153-7452**	1	HOOK	
	30	1	**483-9160**	1	BRACKET AS	
	31	1	**483-9298**	2	BOSS	
	32	1	**483-9299**	2	RETAINER	
	33	1	**483-9332**	1	BLADE AS-ANGLING (LH)	
	34	1	**484-0217**	1	PIN AS	
	35	1	**490-1616**	2	CAP-BEARING	
	36	1	**500-4763**	1	PLATE	
	37	1	**505-7069**	1	PIN	
	38	1	**505-7081**	2	PIN AS	
	39	1	*561-5106*	1	BLADE AS-ANGLING (RH)	
	39A	1	**560-0439**	1	BEARING	
M		1	**8Y-4489**	2	BOSS (M10X1.5-THD)	
M		1	**9R-2672**	3	BOSS-THREADED (M10X1.5X120-MM)	
M	40	1	**114-6099**	8	BOLT (M24X3X80-MM)	

559-7730 **BLADE GP-ANGLING (**contd.**)** **i07787935**

NOTE	REF NO	GRAPHIC REF	PART NUMBER	QTY	PART NAME 1 2 3 4 5 6 (PRODUCT LEVEL)	SEE PAGE
B	41	1	**348-6260**	6	SHIM (1.5-MM THK)	
B	42	1	**483-9315**	20	SHIM (0.5-MM THK)	
B	43	1	**484-0219**	12	SHIM (0.5-MM THK)	

B - USE AS REQUIRED
M - METRIC PART
Y - SEPARATE ILLUSTRATION

559-7730 **BLADE GP-ANGLING (**contd.**)** **i07787935**

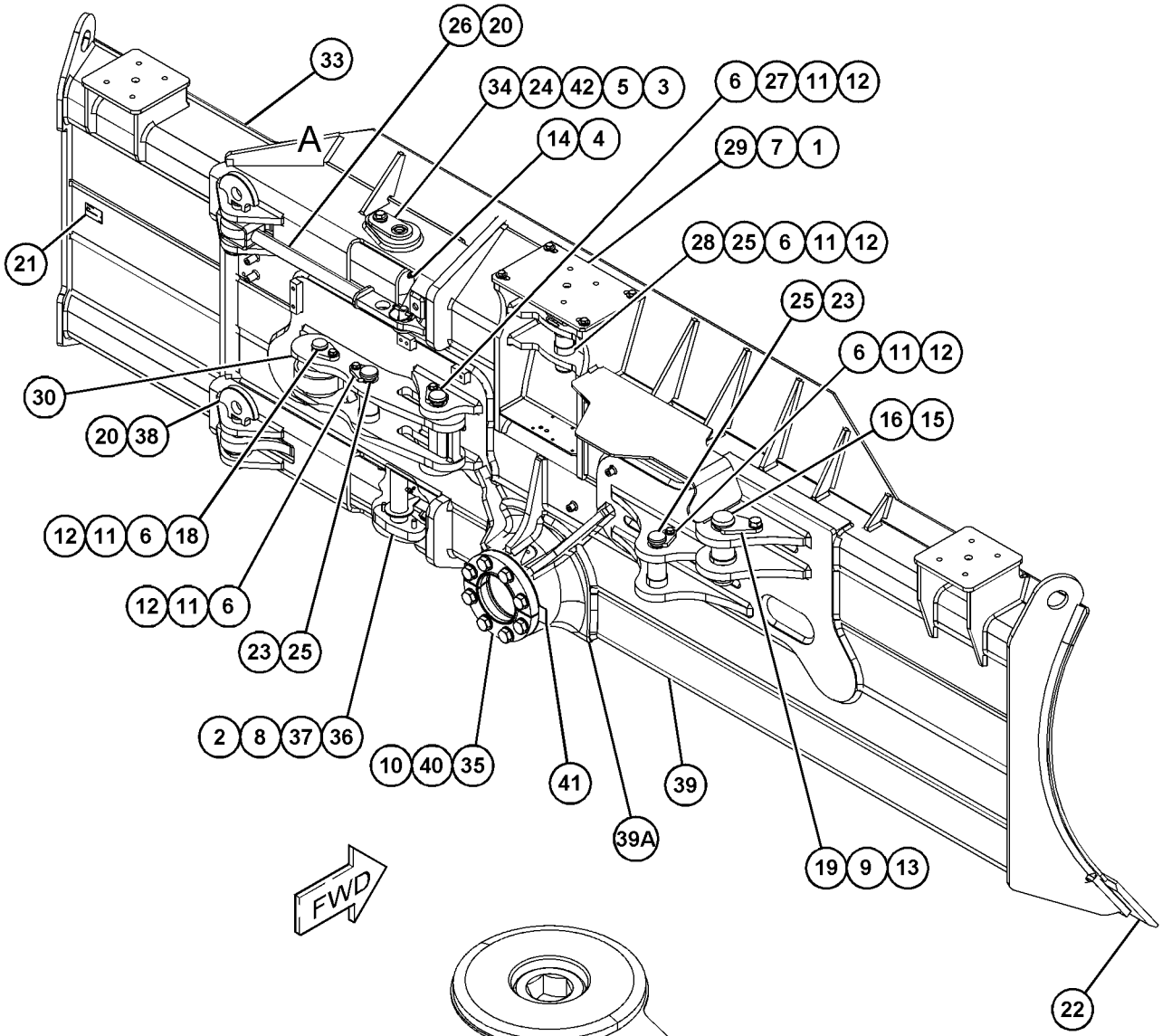

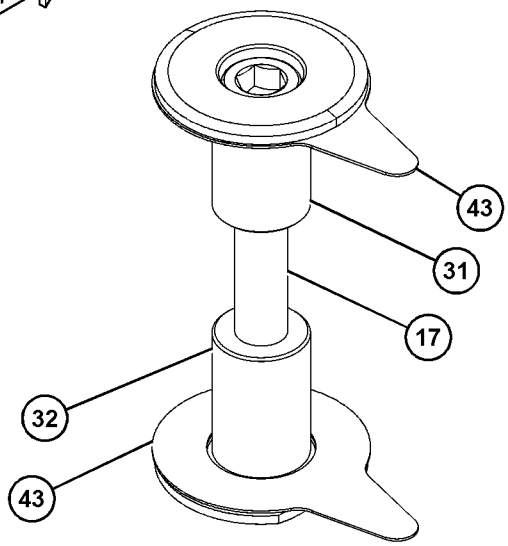

VIEW OF AREA A
(PARTS REMOVED FOR CLARITY)

GRAPHIC #1 <END> g06447580

435-5769 CONTROL GP-WINCH

S/N: Z2K1-UP; Z2N1-UP
PART OF 515-7373 CONTROL AR-HYDRAULIC
AN ATTACHMENT

SMCS-5161, 5170 **i07816178**

NOTE	REF NO	GRAPHIC REF	PART NUMBER	QTY	PART NAME 1 2 3 4 5 6 (PRODUCT LEVEL)	SEE PAGE
	1	1	**7K-1181**	4	STRAP-CABLE	
	2	1	**246-4311**	1	GUARD (SWITCH)	
Y	3	1	**438-8680**	1	CONTROL GP-JOYSTICK (IMPLEMENT)	655
	4	1	**505-7957**	1	BEZEL AS	
Y	5	1	**523-2364**	1	HARNESS AS-CONTROL (WINCH)	161
	6	1	**527-7032**	1	SWITCH AS-ROCKER (24-VOLT) (WINCH LOCKOUT)	
M	7	1	**121-9870**	3	SCREW-MACHINE (M6X1X40-MM)	
	8	1	**352-3970**	1	CLIP (LADDER)	
	9	1	**8T-4121**	1	WASHER-HARD (11X21X2.5-MM THK)	
M	10	1	**8T-4191**	1	BOLT (M10X1.5X16-MM)	
M	11	1	**112-6646**	4	LOCKNUT (M6X1-THD)	

M - METRIC PART
Y - SEPARATE ILLUSTRATION

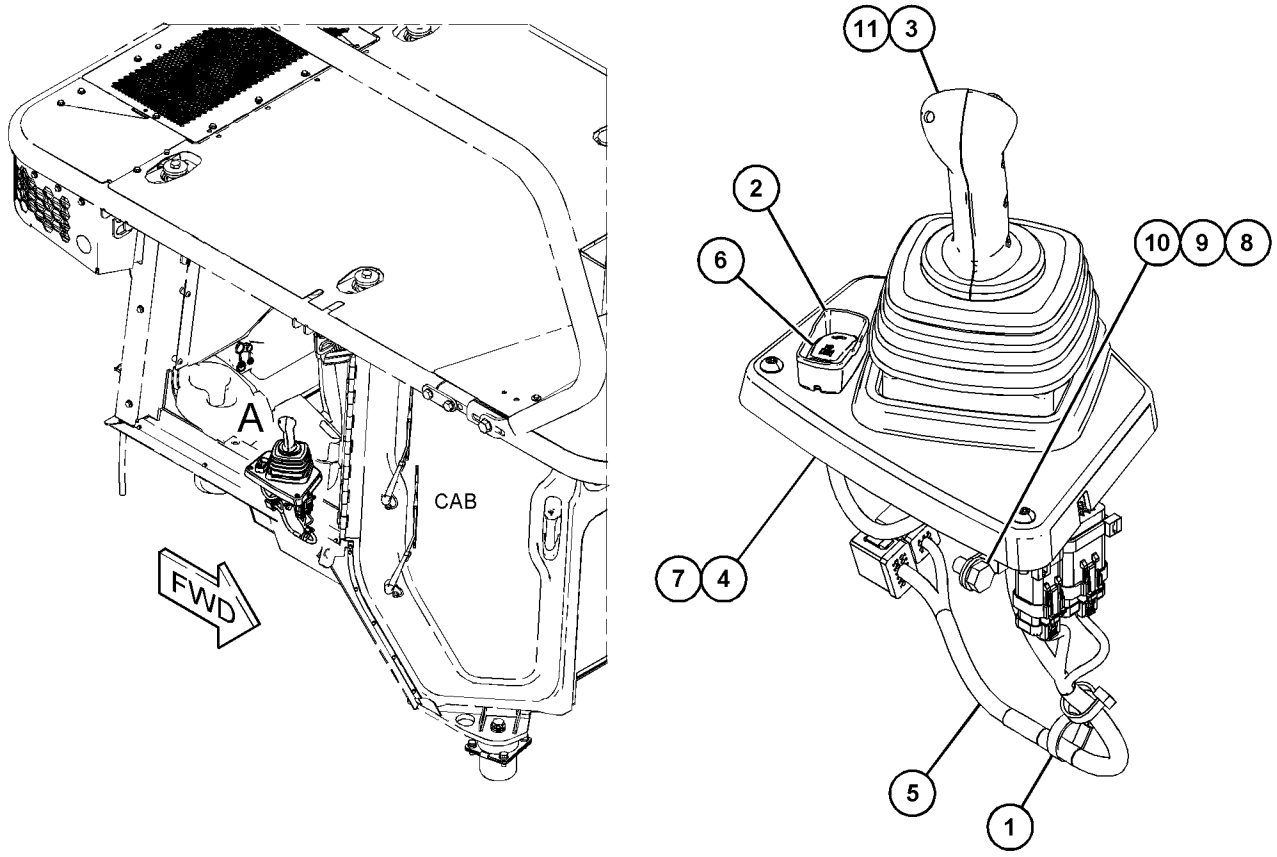

VIEW OF AREA A

GRAPHIC #1 <END> g06350358

257-0207 EDGE GP-BIT & CUTTING

S/N: Z2K1-UP
FOR USE WITH FOLDABLE BLADE
PART OF 559-7728 BLADE & EDGE GP-ANGLING
AN ATTACHMENT

SMCS-6801, 6804

i03626238

NOTE	PART NUMBER	QTY	PART NAME 1 2 3 4 5 6 (PRODUCT LEVEL)	SEE PAGE
	8E-9379	1	BIT-END (RH)	
	5J-4773	22	BOLT-PLOW (3/4-10X2.5-IN)	
	3G-4282	1	EDGE-CUTTING	
	257-0264	1	EDGE-CUTTING	
	257-0265	1	EDGE-CUTTING	
	2J-3506	22	NUT-FULL (3/4-10-THD)	
	5P-8248	22	WASHER-HARD (20X36.5X3.5-MM THK)	

<END>

257-8150 EDGE GP-BIT & CUTTING

S/N: Z2N1-UP

PART OF 559-7730 BLADE GP-ANGLING

AN ATTACHMENT

SMCS-6801, 6804

i06713288

NOTE	REF NO	GRAPHIC REF	PART NUMBER	QTY	PART NAME 1 2 3 4 5 6 (PRODUCT LEVEL)	SEE PAGE
	1	1	**8E-9378**	1	BIT-END (LH)	
	2	1	**8E-9379**	1	BIT-END (RH)	
	3	1	**278-2168**	2	EDGE-CUTTING	
	4	1	**278-2169**	1	EDGE-CUTTING	
	5	1	**278-2170**	1	EDGE-CUTTING	
	6	1	**2J-3506**	28	NUT-FULL (3/4-10-THD)	
	7	1	**5J-4773**	28	BOLT-PLOW (3/4-10X2.5-IN)	
	8	1	**5P-8248**	28	WASHER-HARD (20X36.5X3.5-MM THK)	

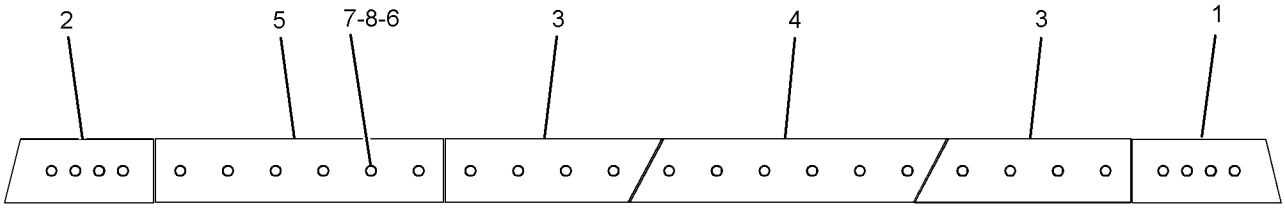

FRONT VIEW

GRAPHIC #1

<END>

g01226316

4T-2314 EDGE GP-BIT & CUTTING

S/N: AA31-UP; Z2N1-UP

PART OF 563-1994 BLADE & EDGE GP-ANGLING, 559-7725 BLADE & EDGE GP-STRAIGHT

AN ATTACHMENT

SMCS-6801, 6804

i06712777

NOTE	REF NO	GRAPHIC REF	PART NUMBER	QTY	PART NAME 1 2 3 4 5 6 (PRODUCT LEVEL)	SEE PAGE
	1	1	**8E-9378**	1	BIT-END (LH)	
		1	**8E-9379**	1	BIT-END (RH)	
	2	1	**4T-2315**	2	EDGE-CUTTING	
	3	1	**5J-4773**	28	BOLT-PLOW (3/4-10X2.5-IN)	
		1	**2J-3506**	28	NUT-FULL (3/4-10-THD)	
		1	**5P-8248**	28	WASHER-HARD (20X36.5X3.5-MM THK)	

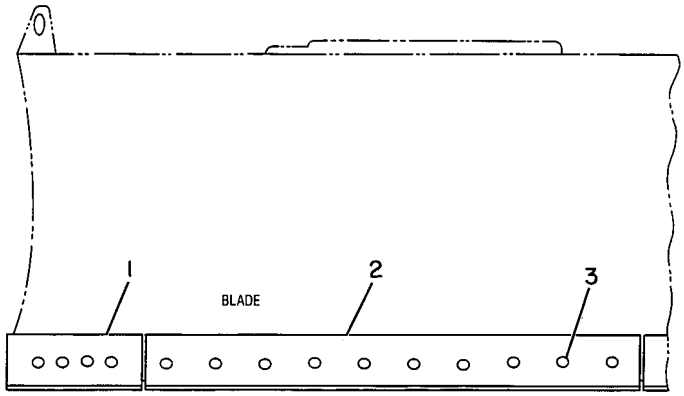

GRAPHIC #1

<END>

g00174286

8E-9380 EDGE GP-BIT & CUTTING

S/N: AA91-UP; Z2K1-UP

PART OF 563-1981 BLADE & EDGE GP-ANGLING, 557-7473 BLADE & EDGE GP-STRAIGHT

AN ATTACHMENT

SMCS-6801, 6804

i00599768

NOTE	REF NO	GRAPHIC REF	PART NUMBER	QTY	PART NAME 1 2 3 4 5 6 (PRODUCT LEVEL)	SEE PAGE
	1	1	**8E-9378**	1	BIT-END (LH)	
		1	**8E-9379**	1	BIT-END (RH)	
	2	1	**3G-4282**	2	EDGE-CUTTING	
	3	1	**5J-4773**	22	BOLT-PLOW (3/4-10X2.5-IN)	
	4	1	**5P-8248**	22	WASHER-HARD (20X36.5X3.5-MM THK)	
	5	1	**2J-3506**	22	NUT-FULL (3/4-10-THD)	

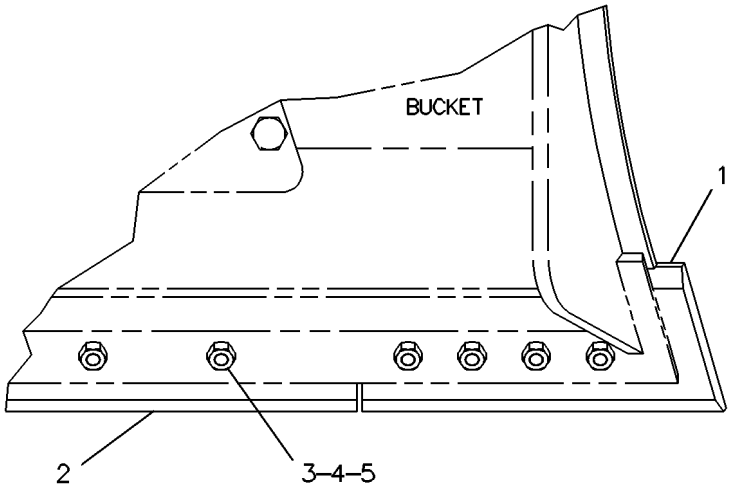

GRAPHIC #1 <END> g00223481

576-8137 GUARD GP-WINCH

S/N: Z2K1-UP; Z2N1-UP
PART OF 515-3713, 515-3714 WINCH AR-TOWING
AN ATTACHMENT

SMCS-5163 **i07844776**

NOTE	REF NO	GRAPHIC REF	PART NUMBER	QTY	PART NAME 1 2 3 4 5 6 (PRODUCT LEVEL)	SEE PAGE
M	1	1	**1W-9589**	1	NUT (M10X1.5-THD)	
	2	1	**5P-1076**	7	WASHER-HARD (13.5X30X4-MM THK)	
	3	1	**5P-2228**	5	BOLT (1/2-13X1-IN)	
	4	1	**7X-3391**	1	WASHER-HARD (13.5X32X6-MM THK)	
	5	1	**8T-8917**	2	BOLT (1/2-13X1.25-IN)	
M	6	1	**344-5675**	1	NUT (M10X1.5-THD)	
	7	1	**576-8138**	1	GUARD	
	8	1	**576-8139**	1	GUARD AS-WINCH	
	9	1	**576-8141**	1	GUARD	

M - METRIC PART

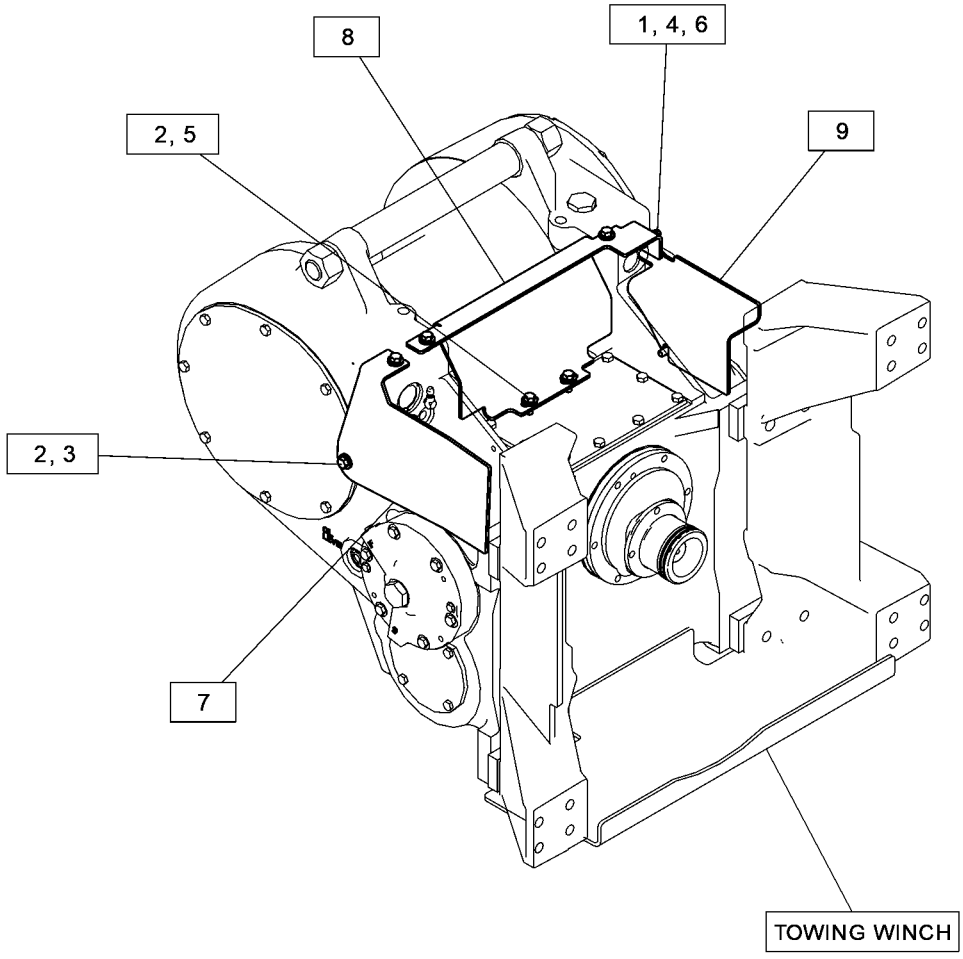

GRAPHIC #1 <END> g06453032

359-3346 MOUNTING GP-RIPPER

S/N: Z2K1-UP; Z2N1-UP; H9Z1-UP
PART OF 533-7719 RIPPER AR
AN ATTACHMENT

SMCS-6165, 6310, 6324 **i07082422**

NOTE	REF NO	GRAPHIC REF	PART NUMBER	QTY	PART NAME 1 2 3 4 5 6 (PRODUCT LEVEL)	SEE PAGE
	1	1	**1U-0063**	2	PIN	
	2	1	**3A-8613**	1	BRACKET AS (LH)	
	3	1	**3A-8614**	1	BRACKET AS (RH)	
	4	1	**9N-4450**	12	SPACER (68X120X5-MM THK)	
	5	1	**114-5671**	1	PLATE AS (RH)	
	6	1	**114-5672**	1	PLATE AS (LH)	
	7	1	**193-3074**	2	SPACER (52X120X5-MM THK)	
	8	1	**1U-0159**	2	PIN	
	9	1	**6K-8987**	2	DOWEL	
M	10	1	**6V-7687**	2	LOCKNUT (M12X1.75-THD)	
M	11	1	**6V-7744**	2	LOCKNUT (M10X1.5-THD)	
	12	1	**8T-4123**	26	WASHER (22X35X3.5-MM THK)	
M	13	1	**8T-4198**	2	BOLT (M10X1.5X100-MM)	
M	14	1	**8T-5412**	2	BOLT (M12X1.75X140-MM)	
M	15	1	**8T-6430**	26	BOLT (M20X2.5X50-MM)	

M - METRIC PART

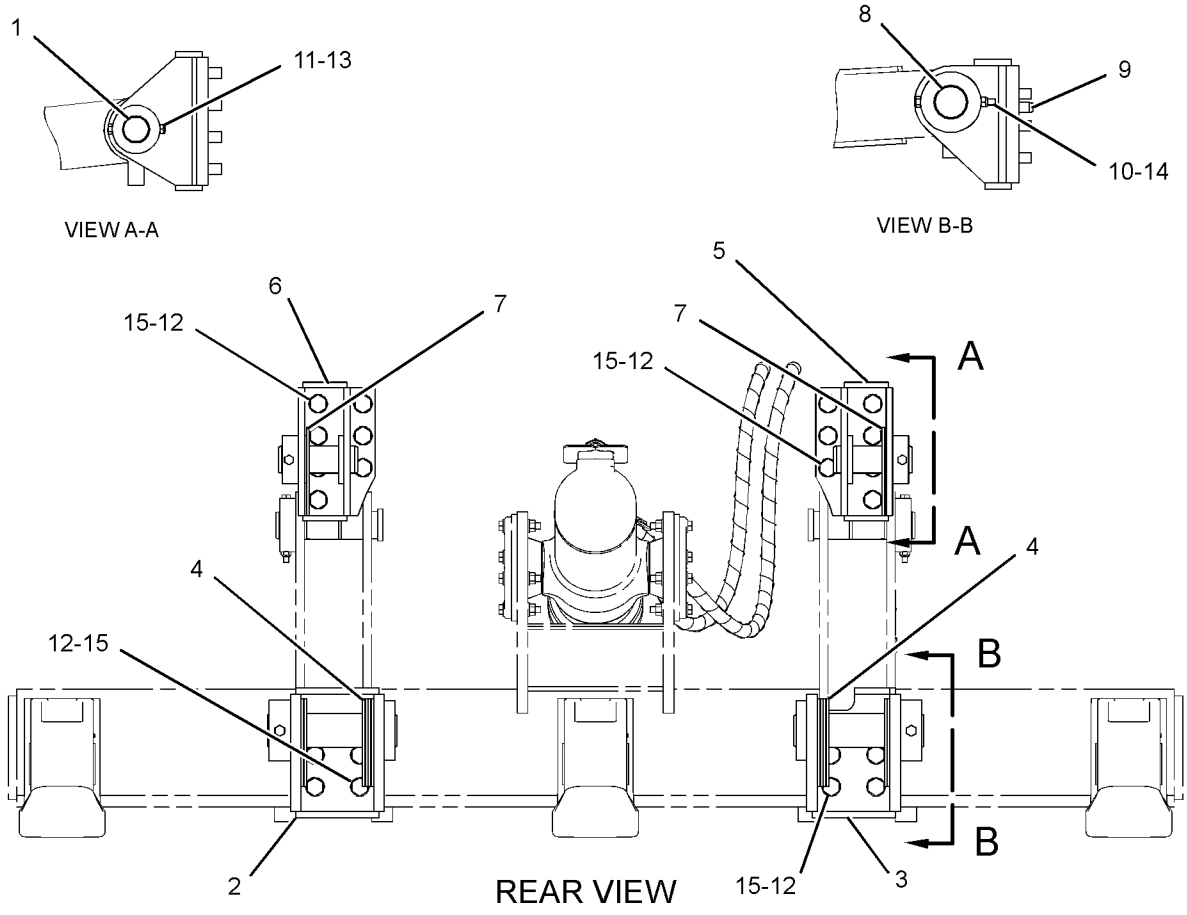

GRAPHIC #1 <END> g06219426

515-3715 RIPPER AR

S/N: Z2K1-UP; Z2N1-UP
CANNOT BE USED WITH RIPPER (CURVED), WINCH, DRAWBAR
AN ATTACHMENT

SMCS-6310 **i07839872**

NOTE	PART NUMBER	QTY	PART NAME 1 2 3 4 5 6 (PRODUCT LEVEL)	SEE PAGE
Y	*533-7719*	1	RIPPER AR	811
Y	*359-3347*	1	TOOTH GP-RIPPER	814

Y - SEPARATE ILLUSTRATION

<END>

515-3716 RIPPER AR—CURVED

S/N: H9Z1-UP
FOR USE WITH CONTROL GP-RIPPER
CANNOT BE USED WITH DRAWBAR AR, WINCH AR, BAR AR-STRIKER
AN ATTACHMENT

SMCS-6310 **i07817542**

NOTE	PART NUMBER	QTY	PART NAME 1 2 3 4 5 6 (PRODUCT LEVEL)	SEE PAGE
Y	*533-7719*	1	RIPPER AR	811
Y	*359-3348*	1	TOOTH GP-RIPPER	815

Y - SEPARATE ILLUSTRATION

<END>

533-7719 RIPPER AR

S/N: Z2K1-UP; Z2N1-UP; H9Z1-UP
PART OF 515-3715, 515-3716 RIPPER AR
AN ATTACHMENT

SMCS-6310 **i07817563**

NOTE	PART NUMBER	QTY	PART NAME 1 2 3 4 5 6 (PRODUCT LEVEL)	SEE PAGE
Y	**448-4913**	1	CYLINDER GP-RIPPER	569
Y	*524-1772*	1	LINES GP-RIPPER	600
Y	*359-3346*	1	MOUNTING GP-RIPPER	810
Y	*555-7345*	1	RIPPER GP	812
	240-1469	1	PLATE & FILM GP	
	3A-5449	1	FILM-INFORMATION (FRANCE)	
			(ON CARRIAGE ASSEMBLY ON RH SIDE OF RH TOWER ADJACENT TO SERIAL NO PLATE NOT TO BE USED ON SHIPMENTS TO DESTINATIONS WITHIN THE UNITED STATES OF AMERICA)	
	4B-4158	2	SCREW-DRIVE (NO 4X0.25-IN)	
	7X-7644	2	FILM-IDENTIFICATION (TIE-DOWN)	
			(ON REAR OF THE UNDERCARRIAGE, EACH SIDE)	
	8M-3494	1	PLATE-SERIAL NUMBER (RIPPER)	
			(ON CARRIAGE AS ON RH SIDE OF RH TOWER)	

Y - SEPARATE ILLUSTRATION

<END>

555-7345 RIPPER GP

S/N: Z2K1-UP; Z2N1-UP; H9Z1-UP
PART OF 533-7719 RIPPER AR
AN ATTACHMENT

SMCS-6310, 6325

i07817577

NOTE	REF NO	GRAPHIC REF	PART NUMBER	QTY	PART NAME 1 2 3 4 5 6 (PRODUCT LEVEL)	SEE PAGE
M	1	1	**7X-2621**	2	BOLT (M10X1.5X12-MM)	
M	2	1	**7X-2543**	2	BOLT (M10X1.5X120-MM)	
M	3	1	**8T-4648**	8	BOLT (M12X1.75X70-MM)	
M	4	1	**8T-7929**	2	BOLT (M12X1.75X180-MM)	
	5	1	**2K-0703**	1	BAR	
	6	1	**3A-8612**	2	LINK AS	
					(EACH INCLUDES)	
	6A	1	**7J-9682**	2	BUSHING	
	7	1	**3B-5325**	1	PIN-COTTER	
	8	1	**3B-8489**	11	ADAPTER	
	9	1	**3K-8510**	1	PIN	
	10	1	**4K-3004**	2	BEARING-TRUNNION SUPPLEMENTARY	
	11	1	**6H-3616**	4	PLUG-PROTECTION	
M	12	1	**6V-7687**	2	LOCKNUT (M12X1.75-THD)	
M	13	1	**8T-4139**	2	BOLT (M12X1.75X30-MM)	
	14	1	**8T-4223**	18	WASHER-HARD (13.5X25.5X3-MM THK)	
M	15	1	**8T-4244**	8	NUT (M12X1.75-THD)	
	16	1	**9J-9598**	2	PIN	
	17	1	**322-3353**	1	CARRIAGE AS	
	18	1	**1U-0159**	2	PIN	
	19	1	**556-3018**	1	LINK AS	
	19A	1	**9W-0099**	4	BUSHING	
M	20	1	**6V-7744**	2	LOCKNUT (M10X1.5-THD)	
B	21	1	**9T-5900**	6	WASHER (51.2X98X4.76-MM THK)	

B - USE AS REQUIRED
M - METRIC PART

555-7345 **RIPPER GP (**contd.**)** **i07817577**

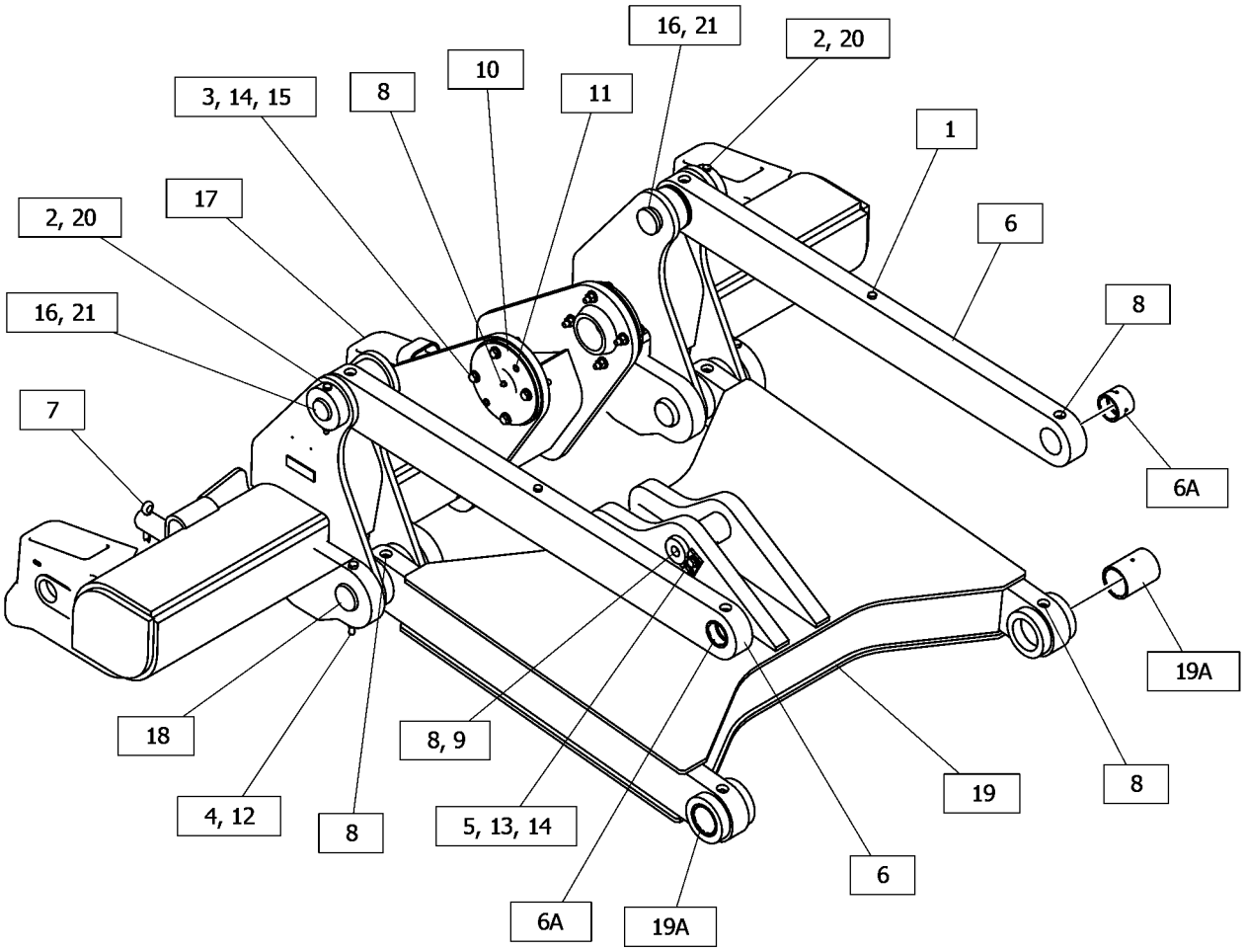

GRAPHIC #1 <END> g06451039

359-3347 TOOTH GP-RIPPER—STRAIGHT

S/N: Z2K1-UP; Z2N1-UP
PART OF 515-3715 RIPPER AR
AN ATTACHMENT

SMCS-6808, 6810

i07034406

NOTE	REF NO	GRAPHIC REF	PART NUMBER	QTY	PART NAME 1 2 3 4 5 6 (PRODUCT LEVEL)	SEE PAGE
Y	1	1	*8J-2189*	3	TOOTH GP-RIPPER	816

Y - SEPARATE ILLUSTRATION

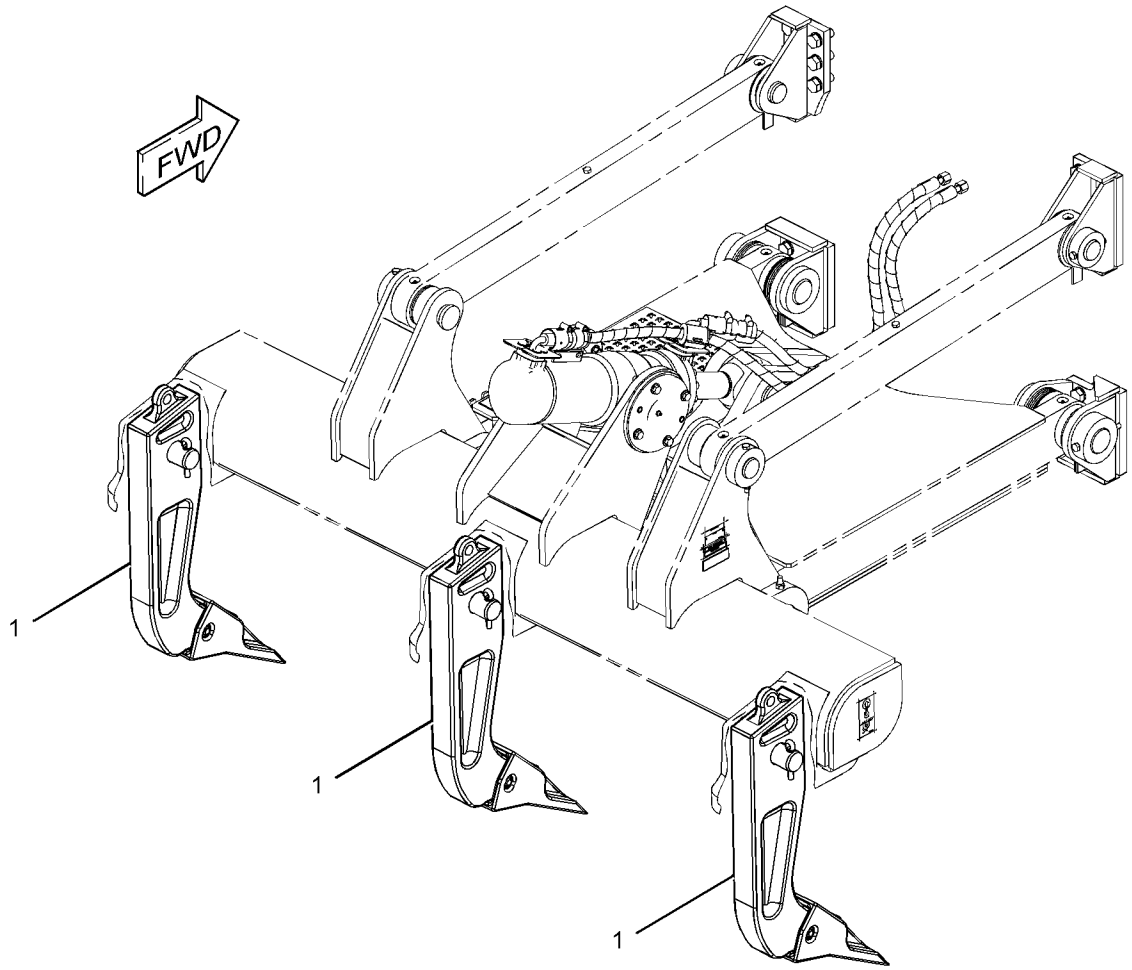

GRAPHIC #1 <END> g02797128

359-3348 TOOTH GP-RIPPER—CURVED

S/N: H9Z1-UP
PART OF 515-3716 RIPPER AR
AN ATTACHMENT

SMCS-6808, 6810

i06038524

NOTE	REF NO	GRAPHIC REF	PART NUMBER	QTY	PART NAME 1 2 3 4 5 6 (PRODUCT LEVEL)	SEE PAGE
Y	1	1	*9J-8926*	3	TOOTH GP-RIPPER	817

Y - SEPARATE ILLUSTRATION

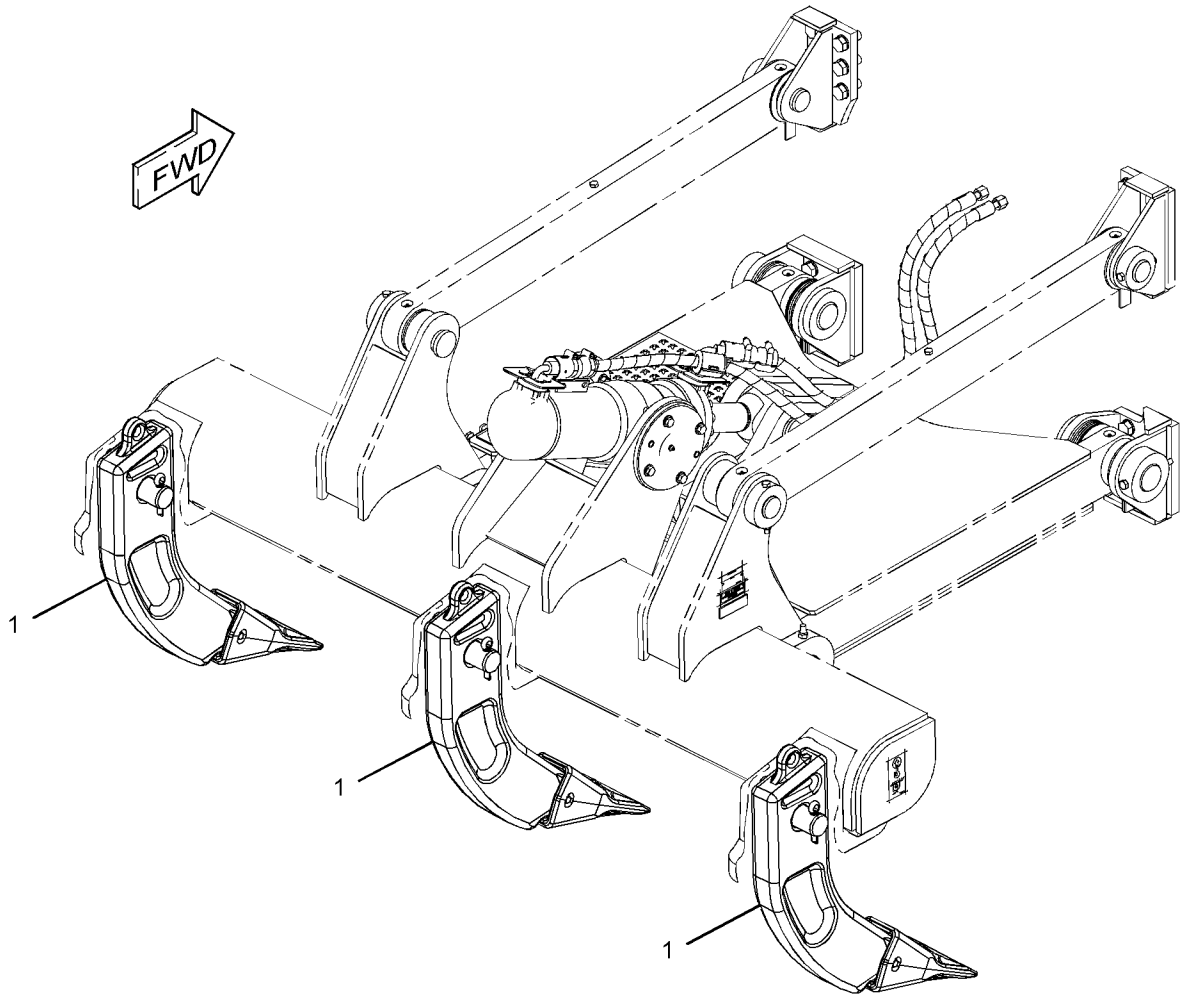

GRAPHIC #1 <END> g02797199

8J-2189 TOOTH GP-RIPPER

S/N: Z2K1-UP; Z2N1-UP
PART OF 359-3347 TOOTH GP-RIPPER
AN ATTACHMENT

SMCS-6808, 6810 **i07540558**

NOTE	REF NO	GRAPHIC REF	PART NUMBER	QTY	PART NAME 1 2 3 4 5 6 (PRODUCT LEVEL)	SEE PAGE
	1	1	**6Y-0359**	1	TIP-RIPPER	
	2	1	**484-8282**	1	SHANK AS-RIPPER	
C	3	1	**114-0358**	1	PIN	
C	4	1	**114-0359**	1	RETAINER AS	
	5	1	**3B-5325**	2	PIN-COTTER	
	6	1	**8J-2190**	1	PIN	

C - CHANGE FROM PREVIOUS TYPE

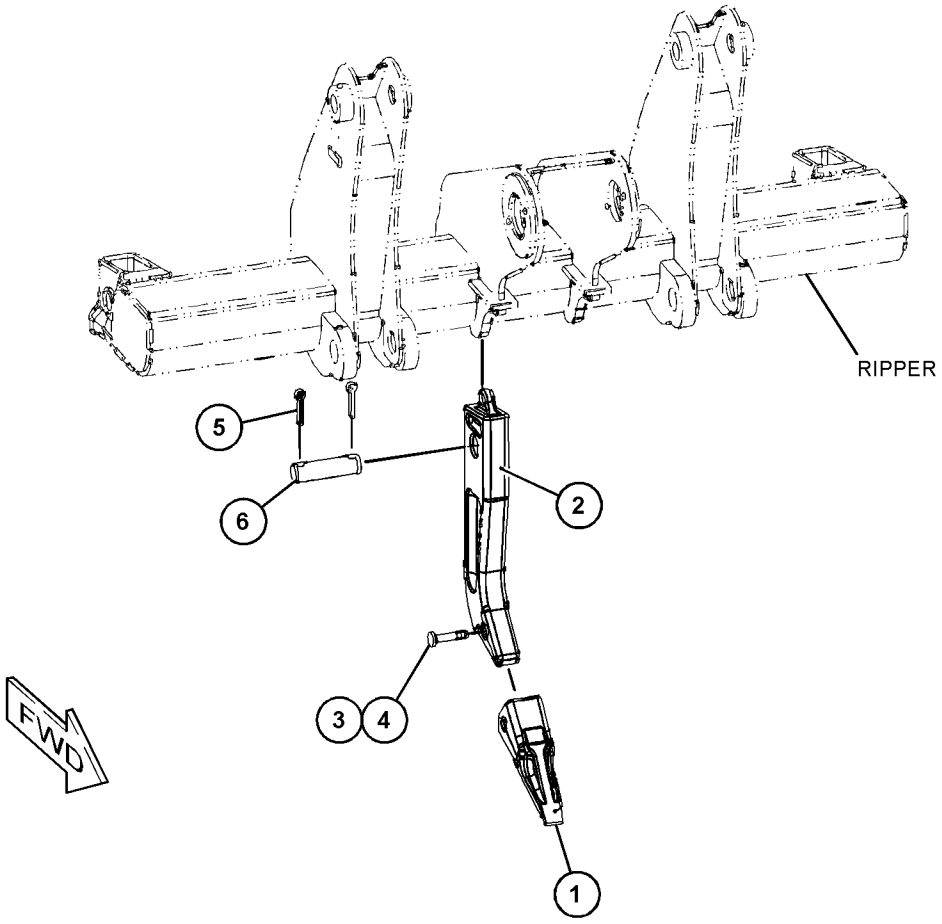

GRAPHIC #1 <END> g06159374

9J-8926 TOOTH GP-RIPPER—CURVED

S/N: H9Z1-UP

PART OF 359-3348 TOOTH GP-RIPPER

AN ATTACHMENT

SMCS-6808, 6810

i01095060

NOTE	REF NO	GRAPHIC REF	PART NUMBER	QTY	PART NAME 1 2 3 4 5 6 (PRODUCT LEVEL)	SEE PAGE
	1	1	**3B-5325**	2	PIN-COTTER	
	2	1	**8J-2190**	1	PIN	
	3	1	**9J-8923**	1	SHANK-RIPPER	
	4	1	**114-0358**	1	PIN	
	5	1	**6Y-0352**	1	TIP-RIPPER	
	6	1	**114-0359**	1	RETAINER AS	

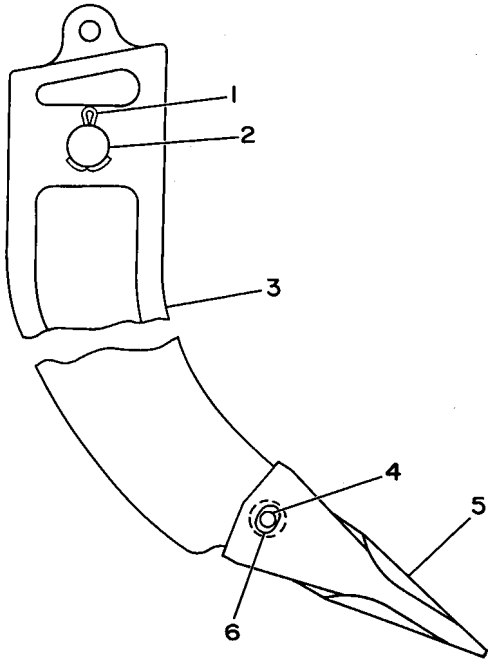

GRAPHIC #1

<END>

g00174183

515-3713 WINCH AR-TOWING

S/N: Z2K1-UP; Z2N1-UP
STANDARD SPEED
FOR USE WITH REAR SCREEN (FIXED OR HINGED VERSION)
CANNOT BE USED WITH ALL OTHER REAR WORK TOOLS
AN ATTACHMENT

SMCS-5163 **i07839791**

NOTE	PART NUMBER	QTY	PART NAME 1 2 3 4 5 6 (PRODUCT LEVEL)	SEE PAGE
Y	*576-8137*	1	GUARD GP-WINCH	809
Y	*526-4250*	1	WIRING GP-WINCH	267
	567-5729	1	PLUG GP	
	4E-9452	10	PLUG	

Y - SEPARATE ILLUSTRATION

<END>

515-3714 WINCH AR-TOWING

S/N: Z2K1-UP; Z2N1-UP
SLOW SPEED
FOR USE WITH REAR SCREEN (FIXED OR HINGED VERSION)
CANNOT BE USED WITH OTHER REAR WORK TOOLS
AN ATTACHMENT

SMCS-5163 **i07839870**

NOTE	PART NUMBER	QTY	PART NAME 1 2 3 4 5 6 (PRODUCT LEVEL)	SEE PAGE
Y	*576-8137*	1	GUARD GP-WINCH	809
Y	*526-4250*	1	WIRING GP-WINCH	267
	567-5729	1	PLUG GP	
	4E-9452	10	PLUG	

Y - SEPARATE ILLUSTRATION

<END>

520-0176 FILM GP–INTERNATIONAL

S/N: Z2K1-UP; Z2N1-UP
PART OF 550-9960, 579-5780 FILM GP
AN ATTACHMENT

SMCS-0375, 7405, 7557 **i07828278**

NOTE	REF NO	GRAPHIC REF	PART NUMBER	QTY	PART NAME 1 2 3 4 5 6 (PRODUCT LEVEL)	SEE PAGE
	1	1	**219-0305**	1	FILM-WARNING (NO WELD, NO DRILL, READ OMM)	
	2	1	**247-6876**	1	FILM-WARNING (DO NOT OPERATE, READ OMM)	
	3	1	**247-6878**	1	FILM-WARNING (SEAT BELT)	
	4	1	**307-0047**	1	FILM-INFORMATION (PRODUCT LINK, READ OMM)	
	5	1	**345-0351**	1	FILM-IDENTIFICATION (IGNITION SWITCH)	
	6	1	**437-4487**	1	FILM-WARNING (PRODUCT LINK, READ OMM)	
	7	1	**461-5738**	1	FILM-INSTRUCTION (GRADE, SLOPE)	
	8	1	**512-0201**	1	FILM-IDENTIFICATION (WINDOW WIPER CONTROLS)	

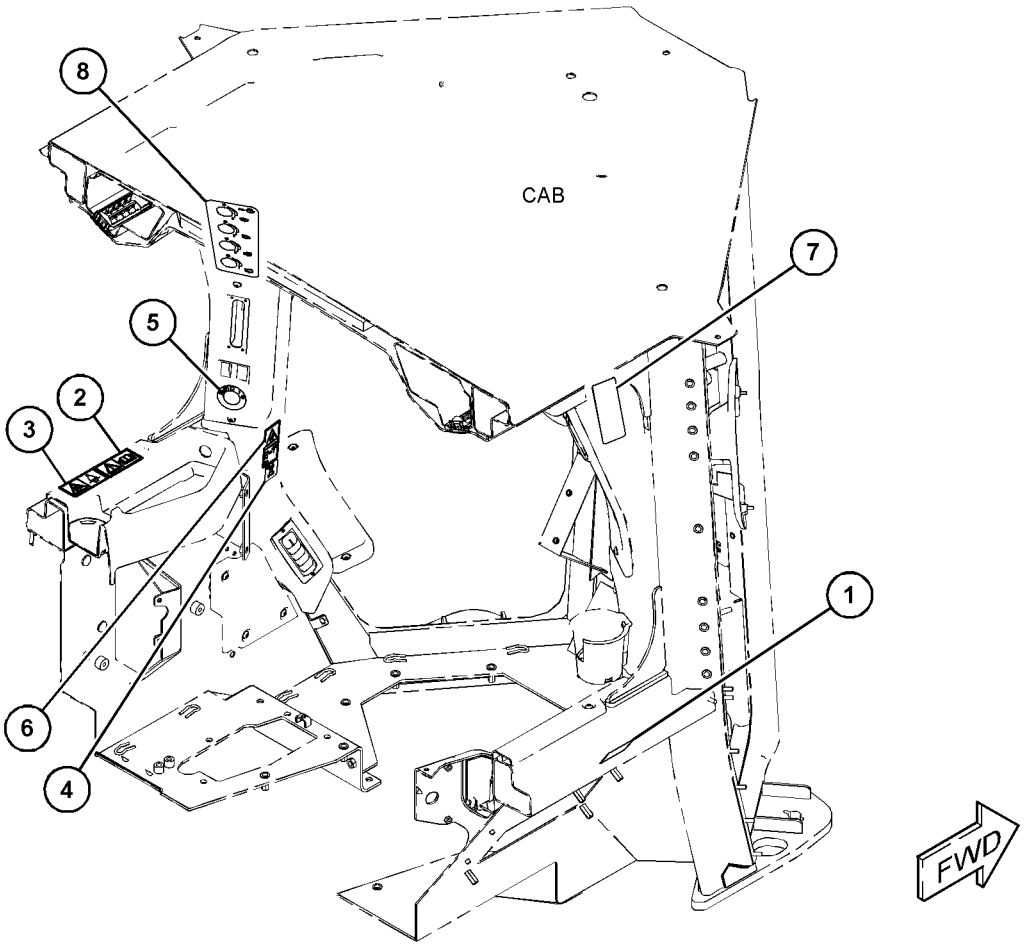

GRAPHIC #1 <END> g06343586

525-1198 FILM GP

S/N: Z2K1-UP; Z2N1-UP
BRAZIL
PART OF 532-9851, 532-9856 DISTRIBUTION AR
AN ATTACHMENT

SMCS-0375, 7405, 7557 **i07290444**

NOTE	PART NUMBER	QTY	PART NAME 1 2 3 4 5 6 (PRODUCT LEVEL)	SEE PAGE
	202-9824	1	FILM-INFORMATION (BRAZIL)	
			(ON TRACTOR NEAR PIN PLATE)	

<END>

550-5570 FILM GP

S/N: Z2K1-UP; Z2N1-UP
PART OF 532-9856 DISTRIBUTION AR
AN ATTACHMENT

SMCS-0375, 7405, 7557 **i07822025**

NOTE	PART NUMBER	QTY	PART NAME 1 2 3 4 5 6 (PRODUCT LEVEL)	SEE PAGE
Y	*563-0090*	1	PLUG GP-HYDRAULIC LINES	604
	577-2148	1	FILM GP	
	511-8778	1	FILM-INSTRUCTION (JOYSTICK)	
Y - SEPARATE ILLUSTRATION				

<END>

550-9960 FILM GP

S/N: Z2K1-UP; Z2N1-UP
INTERNATIONAL
AN ATTACHMENT

SMCS-0375, 7405, 7557 **i07828276**

NOTE	PART NUMBER	QTY	PART NAME 1 2 3 4 5 6 (PRODUCT LEVEL)	SEE PAGE
Y	*520-0176*	1	FILM GP (INTERNATIONAL)	819
Y	*550-9963*	1	FILM GP-INTERNATIONAL	828
Y - SEPARATE ILLUSTRATION				

<END>

575-0002 FILM GP

S/N: Z2K1-UP
PART OF 575-0008 FILM GP
ALSO AN ATTACHMENT

SMCS-0375, 7405, 7557

i07834648

NOTE	REF NO	GRAPHIC REF	PART NUMBER	QTY	PART NAME 1 2 3 4 5 6 (PRODUCT LEVEL)	SEE PAGE
	1	1	**575-0139**	1	FILM-IDENTIFICATION (CAT) (FRONT)	
	2	1	**575-5539**	1	FILM-IDENTIFICATION (D5) (LH)	
	2A	1	**575-5539**	1	FILM-IDENTIFICATION (D5) (RH)	
	3	1	**575-5540**	1	FILM-IDENTIFICATION (CAT) (RH)	
	4	1	**571-4652**	1	FILM-IDENTIFICATION (CAT) (LH)	
	4A	1	**571-4652**	1	FILM-IDENTIFICATION (CAT) (REAR)	

575-0002 **FILM GP (**contd.**)** **i07834648**

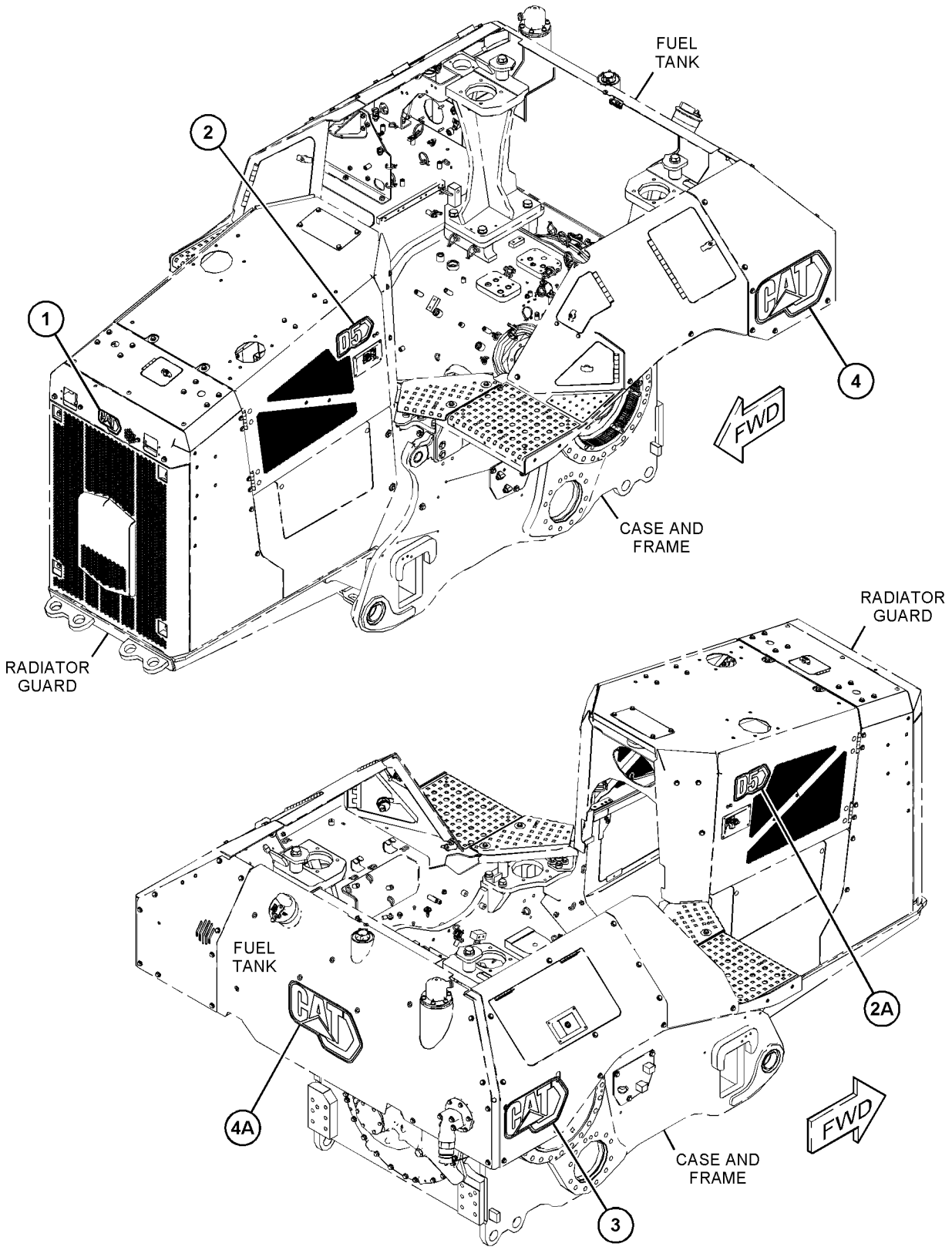

GRAPHIC #1 <END> g06443987

575-0003 FILM GP

S/N: Z2N1-UP

PART OF 575-0009 FILM GP

SMCS-0375, 7405, 7557

i07827800

NOTE	REF NO	GRAPHIC REF	PART NUMBER	QTY	PART NAME 1 2 3 4 5 6 (PRODUCT LEVEL)	SEE PAGE
	1	1	**570-2440**	2	FILM-IDENTIFICATION (LGP)	
	2	1	**575-0139**	1	FILM-IDENTIFICATION (CAT)	
	3	1	**575-5539**	2	FILM-IDENTIFICATION (D5)	
	4	1	**575-5540**	1	FILM-IDENTIFICATION (CAT)	
	5	1	**571-4652**	2	FILM-IDENTIFICATION (CAT)	

575-0003 **FILM GP (**contd.**)** **i07827800**

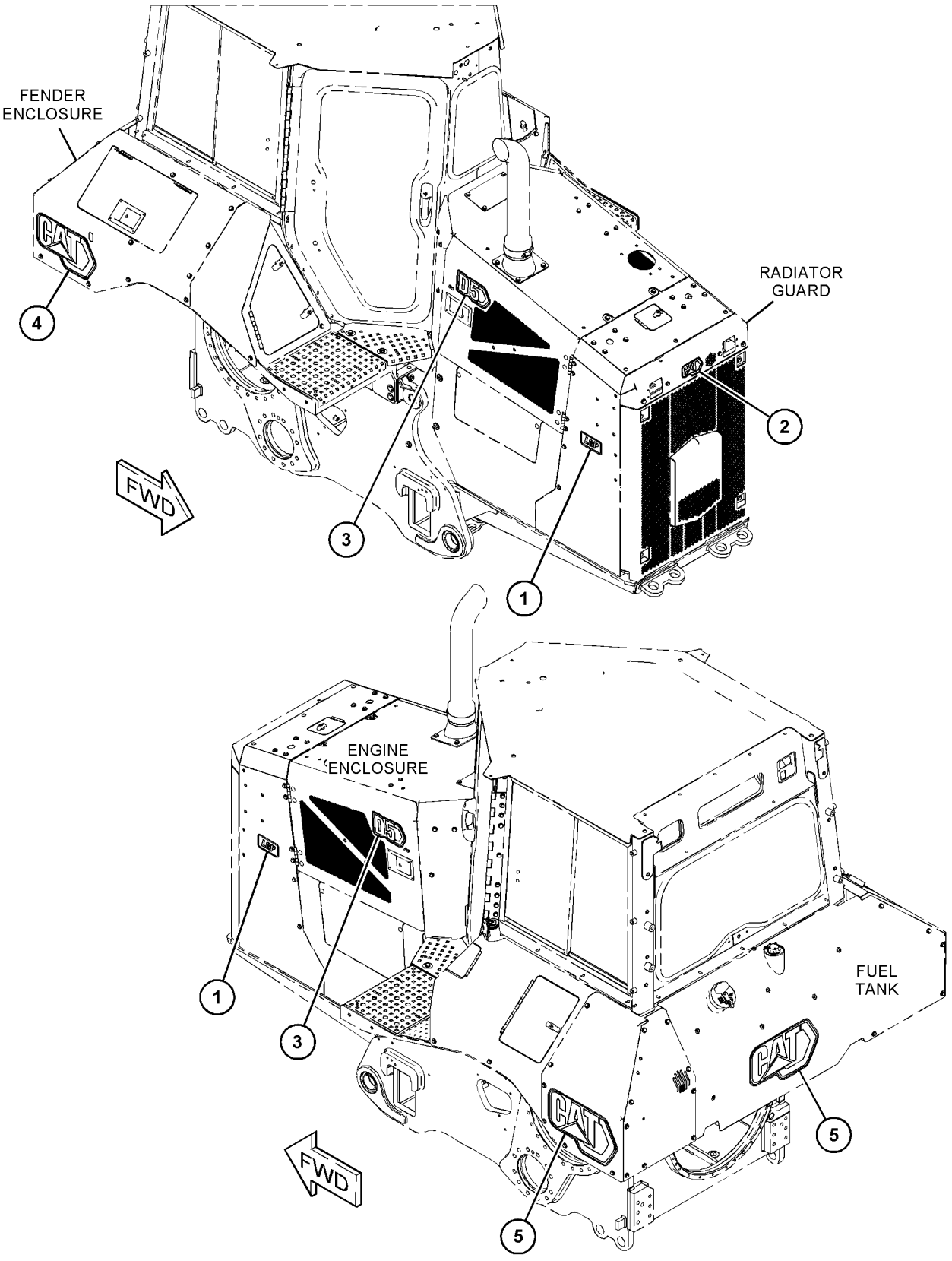

GRAPHIC #1 <END> g06451673

575-0008 FILM GP

S/N: Z2K1-UP
PART OF 505-5308 PLATE & FILM GP
ALSO AN ATTACHMENT

SMCS-0375, 7405, 7557 **i07849903**

NOTE	REF NO	GRAPHIC REF	PART NUMBER	QTY	PART NAME 1 2 3 4 5 6 (PRODUCT LEVEL)	SEE PAGE
	1	1	**568-5315**	1	FILM-IDENTIFICATION (LUBRICATION POINTS)	
	2	1	**568-5317**	1	FILM-NOTICE (SHIPPING)	
Y	3	1	*575-0002*	1	FILM GP	821

Y - SEPARATE ILLUSTRATION

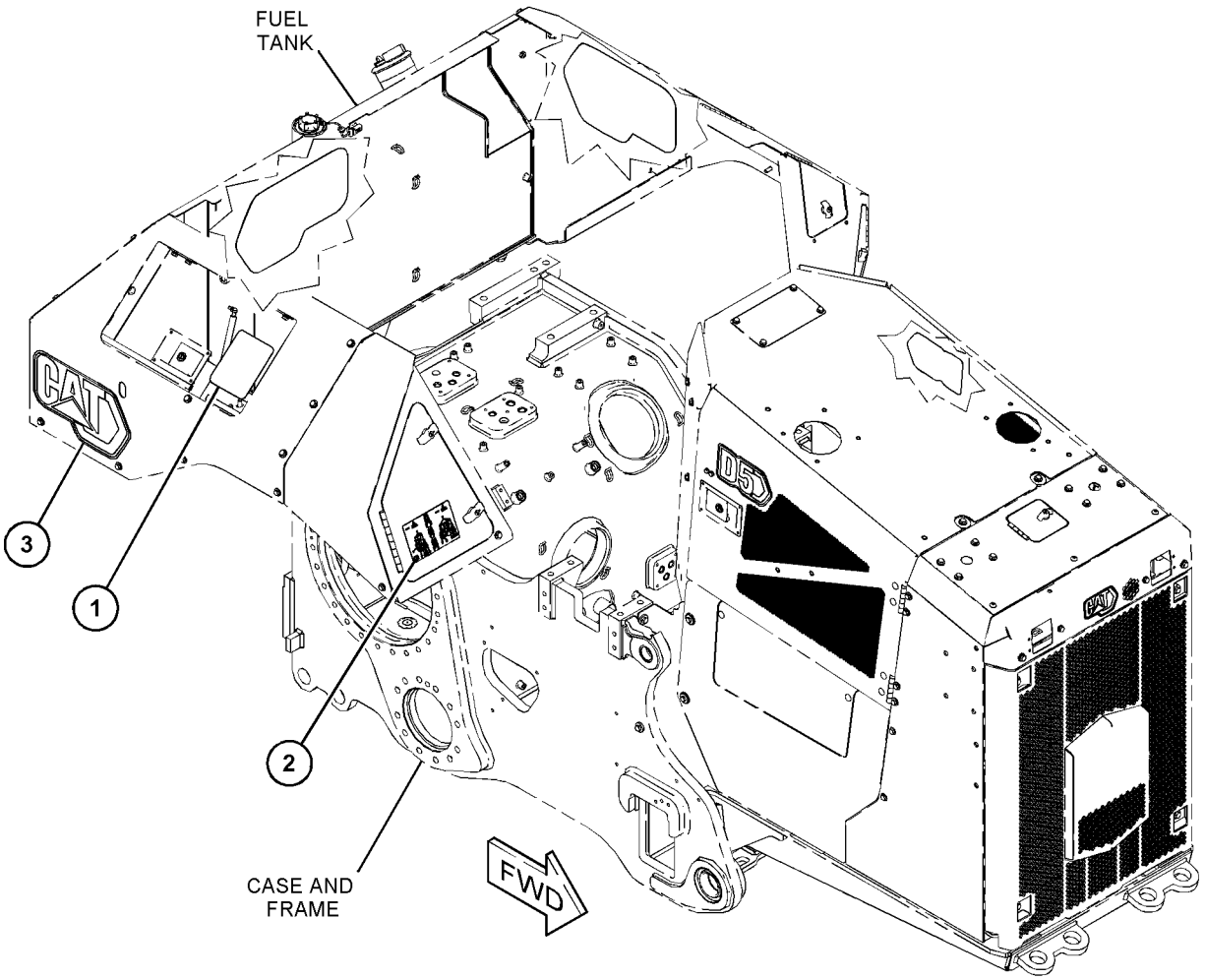

GRAPHIC #1 <END> g06457214

575-0009 FILM GP

S/N: Z2N1-UP

PART OF 505-5309 PLATE & FILM GP

SMCS-0375, 7405, 7557 **i07848829**

NOTE	REF NO	GRAPHIC REF	PART NUMBER	QTY	PART NAME 1 2 3 4 5 6 (PRODUCT LEVEL)	SEE PAGE
	1	1	**568-5315**	1	FILM-IDENTIFICATION (LUBRICATION POINTS)	
	2	1	**568-5317**	1	FILM-NOTICE (SHIPPING)	
Y	3	1	*575-0003*	1	FILM GP	823

Y - SEPARATE ILLUSTRATION

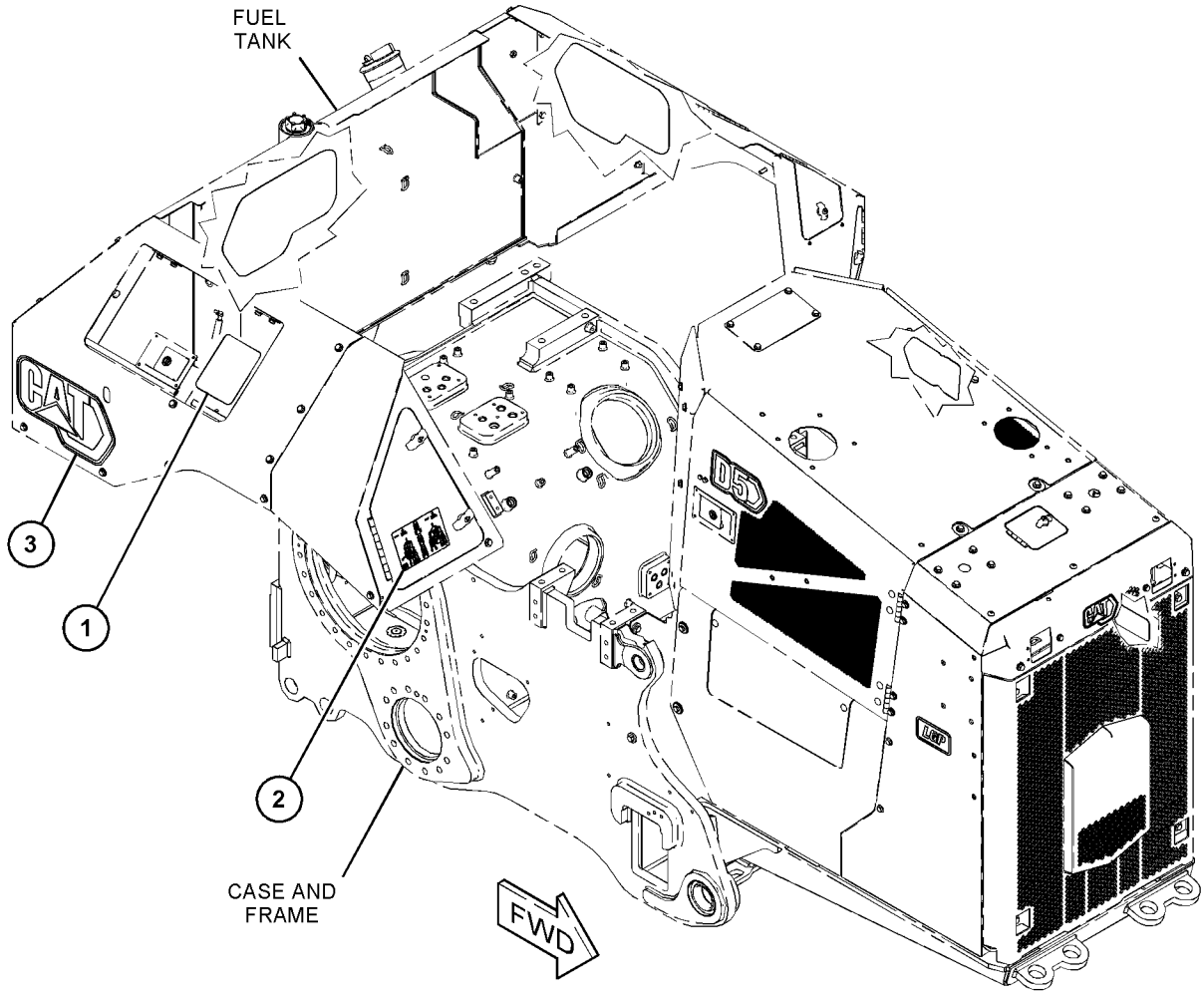

GRAPHIC #1 <END> g06457228

579-5780 FILM GP

S/N: Z2K1-UP; Z2N1-UP
INTERNATIONAL, BRAZILIAN MARKET
PART OF 532-9851, 532-9856 DISTRIBUTION AR
AN ATTACHMENT

SMCS-0375, 7405, 7557

i07840307

NOTE	PART NUMBER	QTY	PART NAME 1 2 3 4 5 6 (PRODUCT LEVEL)	SEE PAGE
Y	*520-0176*	1	FILM GP (INTERNATIONAL)	819
Y	*550-9963*	1	FILM GP-INTERNATIONAL	828

Y - SEPARATE ILLUSTRATION

<END>

550-9963 FILM GP-INTERNATIONAL

S/N: Z2K1-UP; Z2N1-UP
PART OF 550-9960, 579-5780 FILM GP
AN ATTACHMENT

SMCS-7405, 7557

i07832637

NOTE	PART NUMBER	QTY	PART NAME 1 2 3 4 5 6 (PRODUCT LEVEL)	SEE PAGE
	349-8604	1	FILM-INFORMATION (LOW SULFUR DIESEL FUEL)	
			(W/O FUEL TANK GUARD - ON FUEL TANK, ON RIGHT SIDE OF FILLER PORT, CENTERED) (W/FUEL TANK GUARD - ON FUEL TANK GUARD, ON RIGHT SIDE OF FILLER PORT, CENTERED)	
	232-3402	1	FILM-WARNING (ELECTRICAL SHOCK HAZARD)	
			(ON EXTERIOR OF FUSE PANEL COVER)	
	242-5054	5	FILM-WARNING (NO STEP)	
			(VPAT MACHINE - 1-ON EACH GUARD ABOVE LIFT CYLINDER, 1-ON EACH GUARD ABOVE ANGLE CYLINDER) (SU MACHINE - 2-ON EACH PUSH-ARM ON SLIPPERY SURFACE) (W/DRAWBAR - 1-ON TOP SURFACE OF DRAWBAR, ON LEFT AREA NEXT TO CLEVIS & PIN) (W/RIPPER - 1-ON TOP SURFACE OF RIPPER, ON LEFT AREA OF CARRIAGE)	
	276-2334	1	FILM-WARNING (HIGH PRESS CYLINDER, READ OMM)	
			(ON TRANSMISSION ACCUMULATOR, MUST BE VISIBLE FROM ENCLOSURE DOOR)	
	364-4013	1	FILM-WARNING (UNIVERSAL, READ OMM)	
			(ON ENGINE VALVE COVER, RH FRONT TOP SIDE)	
	450-7011	3	FILM-WARNING (FALL HAZARD, LANYARD, READ OMM)	
			(ON TOP OF CAB FOR REAR 2 CLIPPING POINTS & ON FRONT OF CAB BELOW FRONT POINT)	
	224-0672	1	FILM-WARNING (HIGH PRESSURE, READ OMM, INTL)	
			(ON UNDERSIDE OF RIGHT HYDRAULIC ENCLOSURE DOOR, NEXT TO LATCH)	
	224-8946	1	FILM-WARNING (NO ETHER SPRAY/AIR INTK, INTL)	
			(ON ENGINE AIR CLEANER COVER, ON BOTTOM IN DEDICATED SHALLOW RECESS)	
	225-4257	2	FILM-WARNING (HOT FLUID UNDER PRESS)	
			(1-ON INNER FACE OF TOP RADIATOR GUARD TRAP DOOR, RIGHT SIDE OF FILM-ELEC) (1-ON REMOVABLE PLATE ON FRONT BOTTOM GUARD)	
	393-1683	1	FILM-WARNING (HIGH PRESSURE FUEL LINES)	
			(ON EXISTING WARNING FILM (ANSI) STRAPPED ON HIGH PRESSURE FUEL LINE)	
	398-8246	1	FILM-WARNING (ROTATING FAN, ENTANGLEMENT)	
			(ON FRONT GRILL, AT TOP OF VERTICAL CHAMFER)	
			<END>	

550-5600 FILM-INFORMATION

S/N: Z2K1-UP; Z2N1-UP
PART OF 532-9851, 532-9856 DISTRIBUTION AR
AN ATTACHMENT

SMCS-7405, 7557

i07854229

NOTE	REF NO	GRAPHIC REF	PART NUMBER	QTY	PART NAME 1 2 3 4 5 6 (PRODUCT LEVEL)	SEE PAGE
	1	1	**334-4603**	1	FILM-INFORMATION (HYDO ADVANCED 10)	

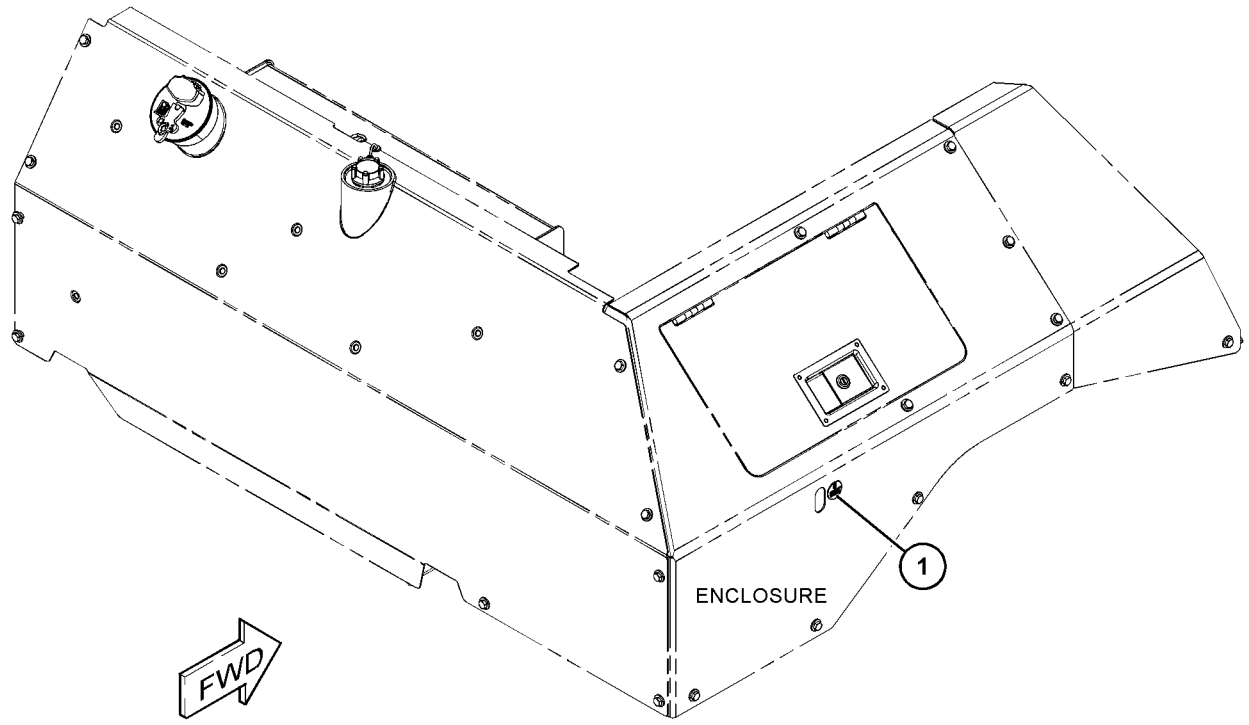

GRAPHIC #1 <END> g06447568

580-3600 KIT-SEAL—HYDRAULIC CYLINDER

S/N: Z2K1-UP

FOR USE WITH 379-3507—PAGE: 564

FIELD INSTALLATION

SMCS-1000 **i07844230**

NOTE	PART NUMBER	QTY	PART NAME 1 2 3 4 5 6 (PRODUCT LEVEL)	SEE PAGE
	2K-6830	1	RING-BACKUP	
	4T-5613	1	RING-WEAR	
	6J-2797	1	RING-WEAR	
	495-8179	1	SEAL AS	
	289-2935	1	SEAL AS-BUFFER	
	9X-4611	1	SEAL-O-RING	
	421-4023	1	SEAL-U-CUP	
	308-1845	1	SEAL-WIPER	

<END>

507-7424 LINES GP-DIAGNOSTIC

S/N: Z2K1-UP; Z2N1-UP
PART OF 575-9700 HYDRAULIC AR
AN ATTACHMENT

SMCS-7554 **i07827335**

NOTE	REF NO	GRAPHIC REF	PART NUMBER	QTY	PART NAME 1 2 3 4 5 6 (PRODUCT LEVEL)	SEE PAGE
	1	2	**204-2281**	2	STRAP-CABLE	
	2	2	**3S-2093**	2	STRAP-CABLE	
	3	1,2	**6V-0852**	8	CAP-DUST	
	4	2	**6V-8367**	3	LOCKWASHER	
	5	2	**6V-9168**	3	NUT (11/16-16-THD)	
	6	1	**8C-3447**	1	CAP-DUST	
	7	2	**8T-4121**	3	WASHER-HARD (11X21X2.5-MM THK)	
M	8	2	**101-3129**	1	STUD (M10X1.5-THD)	
	9	2	**121-0530**	3	FITTING AS-HYDRAULIC (QUICK DISCONNECT)	
					(EACH INCLUDES)	
		2	**6V-8397**	1	SEAL-O-RING	
	10	1	*148-8305*	1	ADAPTER AS	
		1	**3J-1907**	1	SEAL-O-RING	
		1	**5P-9617**	1	ADAPTER	
	11	1	*148-8325*	1	CONNECTOR AS	
		1	**3J-1907**	1	SEAL-O-RING	
		1	**4J-5477**	1	SEAL-O-RING	
		1	**6V-8641**	1	CONNECTOR	
	12	2	*148-8336*	1	CONNECTOR AS	
		2	**3J-1907**	1	SEAL-O-RING	
		2	**6V-8397**	1	SEAL-O-RING	
		2	**6V-8636**	1	CONNECTOR	
	13	2	*148-8374*	1	ELBOW AS	
		2	**3K-0360**	1	SEAL-O-RING	
		2	**6V-8397**	1	SEAL-O-RING	
		2	**6V-8723**	1	ELBOW	
	14	2	*148-8378*	1	ELBOW AS	
		2	**3J-1907**	1	SEAL-O-RING	
		2	**6V-8397**	1	SEAL-O-RING	
		2	**6V-8724**	1	ELBOW	
	15	2	*150-4046*	2	ADAPTER AS	
					(EACH INCLUDES)	
		2	**2M-9780**	1	SEAL-O-RING	
		2	**5P-1404**	1	ADAPTER	
	16	1	*162-6802*	1	ELBOW AS	
		1	**3J-7354**	1	SEAL-O-RING	
		1	**151-5145**	1	ELBOW	
	17	1,2	*164-5567*	5	COUPLER AS-QUICK DISCONNECT (MALE)	
					(EACH INCLUDES)	
		1,2	**6V-3965**	1	FITTING (QUICK DISCONNECT)	
		1,2	**214-7568**	1	SEAL-O-RING	
	18	1	*164-5590*	2	VALVE AS-FLUID SAMPLING	
					(EACH INCLUDES)	
		1	**3J-7354**	1	SEAL-O-RING	
		1	**8C-3446**	1	VALVE-SAMPLING	
	19	2	*165-4931*	1	ELBOW AS	
		2	**3J-1907**	1	SEAL-O-RING	

507-7424 **LINES GP-DIAGNOSTIC (**contd.**)** **i07827335**

NOTE	REF NO	GRAPHIC REF	PART NUMBER	QTY	PART NAME 1 2 3 4 5 6 (PRODUCT LEVEL)	SEE PAGE
		2	**6V-8077**	1	ELBOW	
	20	1	*180-9933*	1	ADAPTER AS	
		1	**3J-7354**	1	SEAL-O-RING	
		1	**135-9941**	1	ADAPTER	
	21	2	**200-6345**	1	SADDLE-MOUNTING (DUAL SWIVEL)	
	22	2	**203-3847**	1	BRACKET AS	
M		2	**171-2419**	1	STUD-WELD (M10X1.5X35-MM)	
	23	2	**204-8000**	1	MOUNTING-CABLE TIE	
	24	1	**213-3745**	1	ELBOW	
	25	2	**214-4653**	2	TAG-IDENTIFICATION (NUMBER TWO)	
	26	1,2	*241-6215*	2	ELBOW AS	
					(EACH INCLUDES)	
		1,2	**3J-1907**	1	SEAL-O-RING	
		1,2	**6V-8076**	1	ELBOW	
	27	2	**291-5280**	2	TAG-IDENTIFICATION (NUMBER ONE)	
	28	1	*357-4574*	1	ADAPTER AS	
		1	**8D-8428**	1	ADAPTER	
		1	**238-5084**	1	SEAL-O-RING	
	29	1	*451-0408*	1	ELBOW AS	
		1	**6V-6609**	1	SEAL-O-RING	
		1	**115-5411**	1	ELBOW	
	30	2	**529-6539**	2	BOLT AS	
	31	2	**206-2423**	1	SADDLE-MOUNTING	
M	32	2	**344-5675**	2	NUT (M10X1.5-THD)	
I	33	2	**449-4214**	1	HOSE AS	
	34	2	**521-8138**	1	BRACKET AS	
M		2	**171-2419**	1	STUD-WELD (M10X1.5X35-MM)	
	35	2	**528-5429**	1	HOSE AS	
	36	2	**528-5430**	1	HOSE AS	
	37	2	**553-6655**	1	FILM-IDENTIFICATION (DIAGNOSTIC)	
	38	2	**7K-1181**	3	STRAP-CABLE	
	39	1	**8C-3451**	1	CAP-DUST (HYDRAULIC OIL)	

I - REFER TO HYDRAULIC INFORMATION SYSTEM
M - METRIC PART

507-7424 **LINES GP-DIAGNOSTIC (**contd.**)** **i07827335**

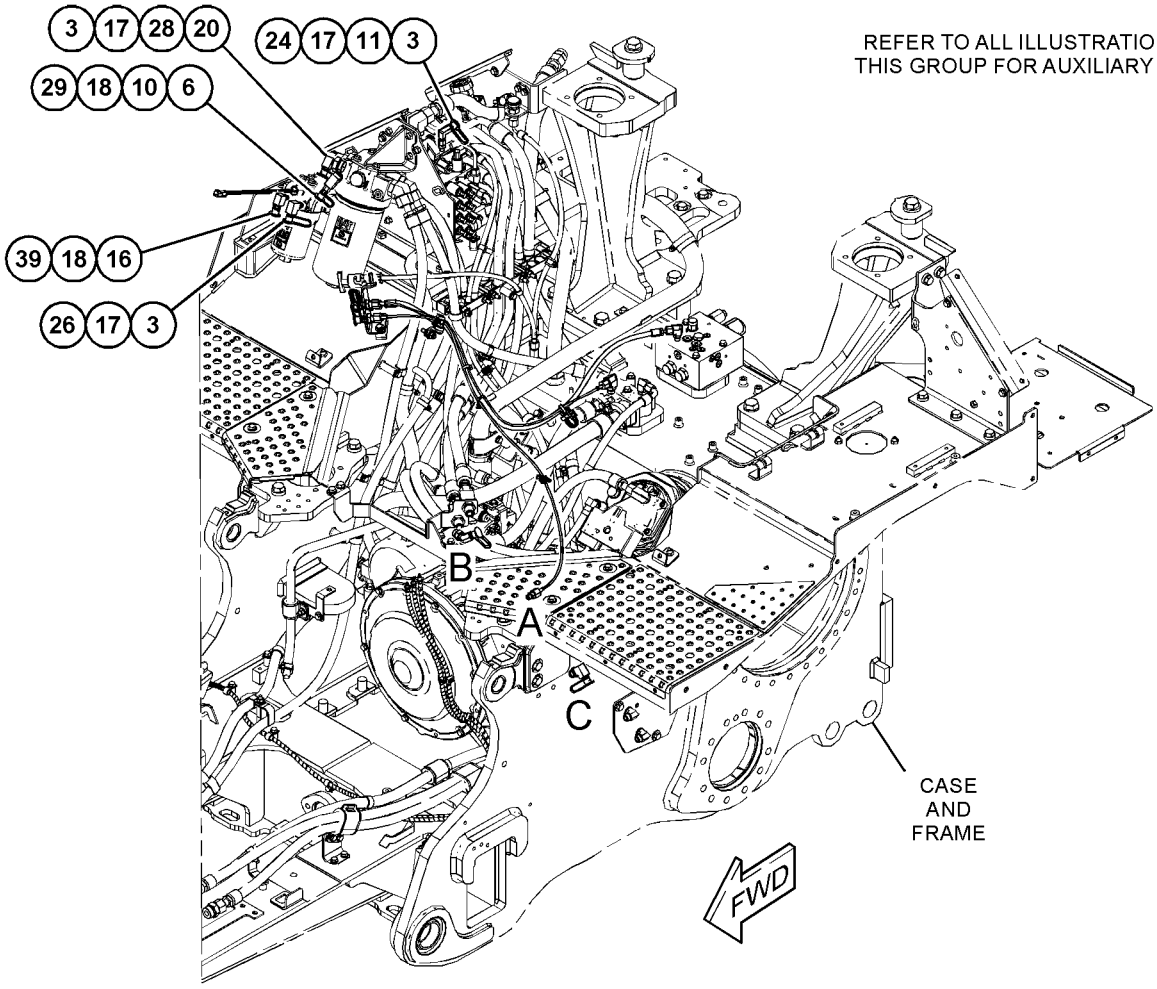

GRAPHIC #1 g06453715

507-7424 **LINES GP-DIAGNOSTIC (**contd.**)** **i07827335**

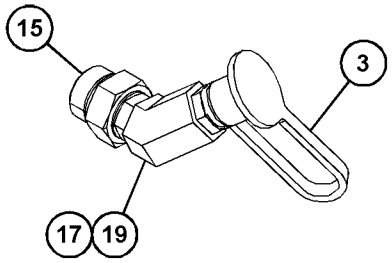

VIEW OF AREA B

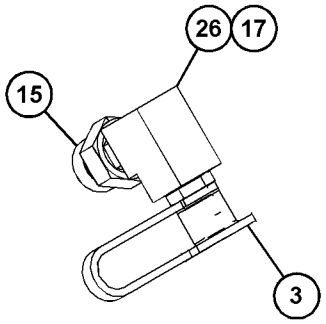

VIEW OF AREA C

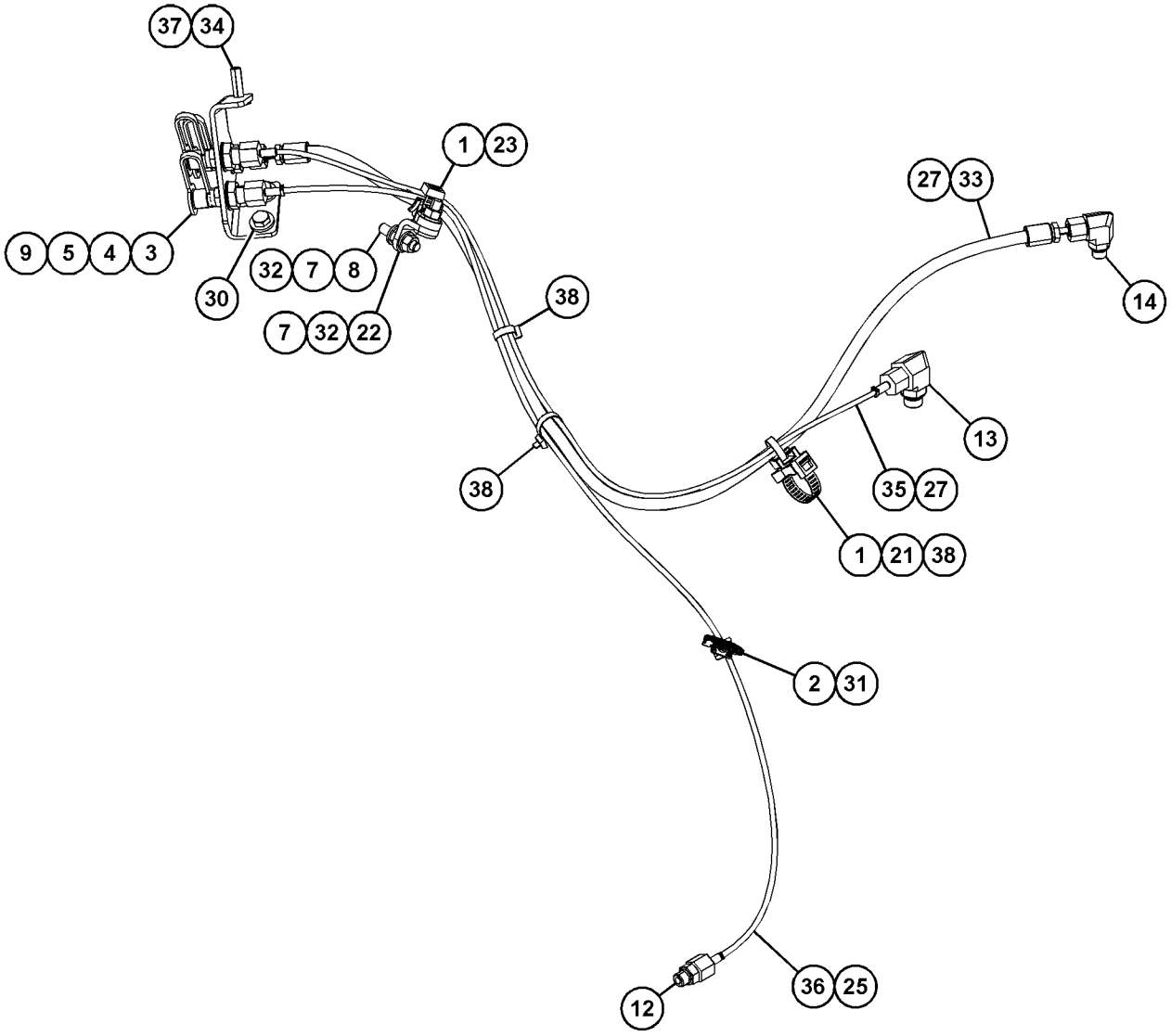

VIEW OF AREA A

GRAPHIC #2 <END> g06453718

505-5308 PLATE & FILM GP

S/N: Z2K1-UP
VPAT, XL, POWER SHIFT TRANSMISSION
PART OF 532-9851, 532-9856 DISTRIBUTION AR
ALSO AN ATTACHMENT

SMCS-7557, 7563 **i07849900**

NOTE	PART NUMBER	QTY	PART NAME 1 2 3 4 5 6 (PRODUCT LEVEL)	SEE PAGE
Y	*575-0008*	1	FILM GP	825
	575-0001	1	PLATE GP-IDENTIFICATION	
	515-7905	1	PLATE-SERIAL NUMBER (MACHINE)	
			(ON LH SIDE OF CASE AS-FRAME)	
A	**475-6787**	1	PLATE-SERIAL NUMBER (ENGINE)	
			(ON CYLINDER BLOCK)	

A - NOT PART OF THIS GROUP
Y - SEPARATE ILLUSTRATION

<END>

505-5309 PLATE & FILM GP

S/N: Z2N1-UP
VPAT, POWER SHIFT TRANSMISSION

SMCS-7557, 7563 **i07849901**

NOTE	PART NUMBER	QTY	PART NAME 1 2 3 4 5 6 (PRODUCT LEVEL)	SEE PAGE
Y	*575-0009*	1	FILM GP	826
	575-0001	1	PLATE GP-IDENTIFICATION	
	515-7905	1	PLATE-SERIAL NUMBER (MACHINE)	
			(ON LH SIDE OF CASE AS-FRAME)	
A	**475-6787**	1	PLATE-SERIAL NUMBER (ENGINE)	
			(ON CYLINDER BLOCK)	

A - NOT PART OF THIS GROUP
Y - SEPARATE ILLUSTRATION

<END>

550-9965 PLATE & FILM GP

S/N: Z2K1-UP; Z2N1-UP
PART OF 559-6006 PLATE & FILM GP
AN ATTACHMENT

SMCS-7557, 7563

i07824596

NOTE	PART NUMBER	QTY	PART NAME 1 2 3 4 5 6 (PRODUCT LEVEL)	SEE PAGE
	7X-3229	4	FILM-IDENTIFICATION (LIFT EYE, TIE-DOWN LOCATION)	
			(2-ON EACH SIDE OUTER SIDE OF TRACK ROLLER FRAMES, BETWEEN FRONT ROLLER & IDLER, & BETWEEN REAR ROLLER & IDLER)	
	7X-7644	6	FILM-IDENTIFICATION (TIE-DOWN)	
			(1-ON EACH OUTER SIDE OF LH TRACK ROLLER FRAME, CENTERED BETWEEN FRONT & REAR IDLER) (1-ON EACH OUTER SIDE OF RH TRACK ROLLER FRAME, CENTERED BETWEEN FRONT & REAR IDLER) (2-ON EACH FRONT FACE OF CASE & FRAME, NEAR WELDED PLATES INTENDED FOR TIE DOWN) (2-ON EACH REAR FACE OF CASE & FRAME, NEAR WELDED BLOCKS (RIPPER OR DRAWBAR))	
	158-7864	1	FILM-IDENTIFICATION (HYDRAULIC OIL)	
			(ON OUTBOARD OF HYDRAULIC TANK FILLER NECK)	
	190-5386	2	FILM-IDENTIFICATION (ROUND RED REFLECTIVE)	
			(W/O FUEL TANK GUARD - ON REAR LH CORNER OF ENCLOSURE (NEXT TO LADDER) & ON RH CORNER OF FUEL TANK AT BOTTOM) (W/FUEL TANK GUARD & W/O FAST FILL ADAPTER - ON REAR LH CORNER (NEXT TO LADDER) & ON RH CORNER OF FUEL TANK GUARD, AT BOTTOM) (W/FUEL TANK GUARD & W/FAST FILL ADAPTER - ON REAR LH CORNER (NEXT TO THE LADDER) & ON FAST FILL COVER, AT BOTTOM)	
	297-3141	1	FILM-IDENTIFICATION (ENGINE STOP, RUN)	
			(IN GROUND LEVEL SERVICE CENTER, ON RH SIDE OF ENGINE KILL SWITCH)	
	455-1084	1	FILM-IDENTIFICATION (CAT)	
			(ON INNER SURFACE OF GROUND LEVEL SERVICE CENTER DOOR)	
	423-4101	1	FILM-IDENTIFICATION (BATTERY DISCONNECT, READ OMM)	
			(IN GROUND LEVEL SERVICE CENTER, ON RH SIDE OF HOUR METERS DISPLAY)	
	445-2684	1	FILM-IDENTIFICATION (BATTERY DISCONNECT, READ OMM)	
			(IN GROUND LEVEL SERVICE CENTER, ATTACHED TO RING ON PADLOCK)	
	134-7258	1	FILM-INFORMATION (EXTENDED LIFE COOLANT)	
			(ON INNER FACE OF TOP RADIATOR GUARD TRAP DOOR, LH SIDE OF FILM INDICATING HOT FLUID)	
	209-5776	1	FILM-INFORMATION (ENGINE COOLANT)	
			(ON LH SIDE OF SHUNT TANK, NEXT TO SIGHT GAUGE (TOP RIGHT LOCATION))	
	279-6497	1	FILM-INSTRUCTION (GREASE, READ OMM)	
			(VPAT MACHINE - ON LH DOOR OF ENGINE ENCLOSURES, ON BOTTOM RH CORNER, PARALLEL TO LOWER DOOR EDGE) (SU MACHINE - ON RH DOOR OF ENGINE ENCLOSURES, NEXT TO TOP HINGE, PARALLEL TO TOP HOOD LINE)	
	9X-6340	1	FILM-INSTRUCTION (ENGINE OIL)	
			(ON ENGINE OIL FILLER TUBE)	
	8T-7038	2	FILM-WARNING (DO NOT LIFT)	
			(1-EACH SIDE ON TOP OF ROPS SUPPORTS, NEXT TO DUAL PATH BOSS ON ROUGH SURFACE)	
	241-0157	1	FILM-WARNING (ELECTROCUTION HAZARD, READ OMM)	

550-9965 **PLATE & FILM GP (**contd.**)** **i07824596**

NOTE	PART NUMBER	QTY	PART NAME 1 2 3 4 5 6 (PRODUCT LEVEL)	SEE PAGE
			(INSIDE DOOR OF REAR LH ENCLOSURE, CENTERED BETWEEN CAM-LATCH & BOTTOM EDGE)	
	246-2641	1	PADLOCK GP	
	5P-8500	1	KEY	
			(ON MASTER DISCONNECT SWITCH)	
	430-7600	1	PLATE-IDENTIFICATION (SERVICE INFORMATION NUMBERS)	
			(ON FRONT OF LH CONSOLE IN CAB WITH DRIVE SCREWS)	
	9F-6656	2	RING-RETAINING	
			(1-ON KEY ON IGNITION SWITCH) (1-ON PADLOCK INSIDE GROUND LEVEL SERVICE CENTER)	
	2K-3219	4	SCREW-DRIVE (NO 6X0.25-IN)	
			(USE 4 TO MOUNT PLATE TO LOWER FRONT CONSOLE IN CAB)	

<END>

559-6006 PLATE & FILM GP

S/N: Z2K1-UP; Z2N1-UP
PART OF 532-9780 COMMON AR
AN ATTACHMENT

SMCS-7557, 7563 **i07824591**

NOTE	PART NUMBER	QTY	PART NAME 1 2 3 4 5 6 (PRODUCT LEVEL)	SEE PAGE
Y	*550-9965*	1	PLATE & FILM GP	836

Y - SEPARATE ILLUSTRATION

<END>

575-9699 PLATE GP-CERTIFICATION

S/N: Z2K1-UP; Z2N1-UP
PART OF 532-9851, 532-9856 DISTRIBUTION AR
AN ATTACHMENT

SMCS-7405, 7557 **i07834673**

NOTE	PART NUMBER	QTY	PART NAME 1 2 3 4 5 6 (PRODUCT LEVEL)	SEE PAGE
	354-8706	1	PLATE-SERIAL NUMBER (YEAR OF MANUFACTURE)	

<END>

562-0250 PLUG GP

S/N: Z2K1-UP; Z2N1-UP
PART OF 550-5561, 550-5562 STARTING AR-ELECTRIC
AN ATTACHMENT

SMCS-0663 **i07828246**

NOTE	REF NO	GRAPHIC REF	PART NUMBER	QTY	PART NAME 1 2 3 4 5 6 (PRODUCT LEVEL)	SEE PAGE
	1	1	**6V-4360**	1	PLUG-BUTTON	
	2	1	**096-6166**	4	WASHER-HARD (4.5X9X1-MM THK)	
M	3	1	**170-5632**	4	BOLT (M4X0.7X16-MM)	

M - METRIC PART

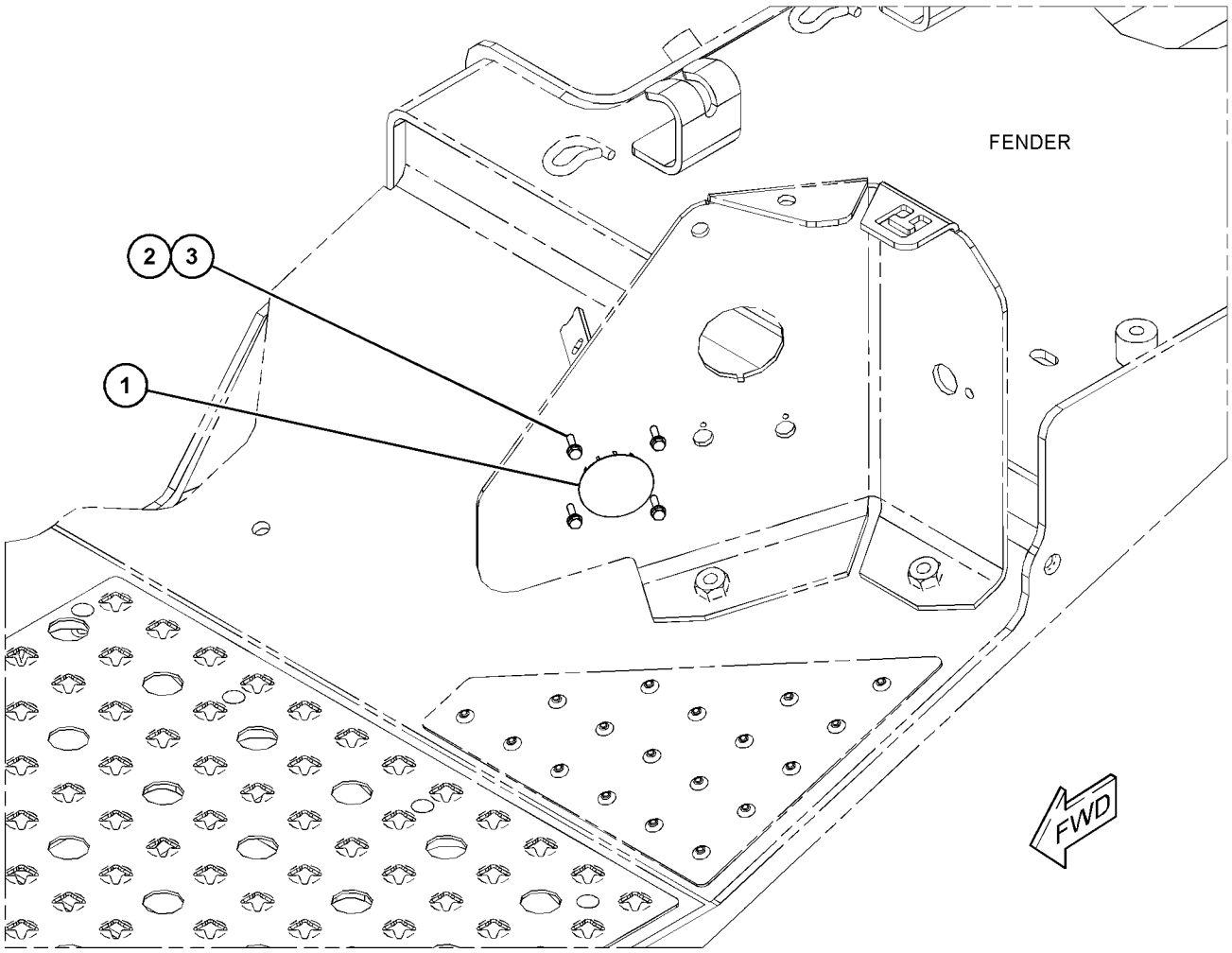

GRAPHIC #1 <END> g06448817

PART NUMBER INDEX

Part	Page
0	
0L-1143	272
0S-0509	279
	304
0S-1585	276
	278
0S-1595	304
0S-1599	304
0S-1614	272
	304
1	
1A-1460	272
	276
1A-2029	272
	276
1A-2223	272
1A-5350	304
1B-3057	705
	707
1B-3978	292
	294
	296
	298
	300
1B-3980	292
	294
	296
	298
	300
1B-5174	431
	433
	435
	437
1B-8705	327
1B-8706	202
1B-8736	327
1C-0569	276
1D-4540	279
1H-3244	125
	749
	750
	782
1H-8128	292
	294
	296
	298
	300
1H-9696	292
	294
	296
	298
	300
1J-6472	333
	422
	424
	564
1J-9671	268
	269
1K-7095	566
1L-6561	251
1L-6957	304
1M-4986	253
1M-6119	128
	130
1M-6120	128
	130
1M-8649	320
1M-9011	294
1M-9351	336
1N-7057	333
1P-0810	153
	154
	158
	176
1P-2841	343
1P-3703	546
1P-4278	71
	104
1P-4576	355
	569
1P-4578	308
1P-4582	308
1Q-4230	298
	300
1S-0994	310
1S-1860	527
	528
	529
	530
	531
	532
	533
	534
	535
	536
1S-3311	567
1S-7251	128
	130
	241
1S-9593	649
	651
1T-0034	331
1T-0043	331
	333
1T-0205	331
1T-0580	677
	738
1T-0720	304
1T-0933	331
1T-0936	333
1T-1639	331
1U-0063	810
1U-0159	810
	812
1U-2827	611
1U-4049	567
1U-8846	273
1U-9458	172
1W-6448	202
1W-6735	28
1W-9589	809
1Y-7927	683
1Z-9932	343
2	
2A-3576	278
2A-4639	272
2B-0858	281
2B-2404	304
2D-0516	320
2D-4202	611
2D-6235	683
2D-8009	304
	327
	431
	433
	435
	437
2D-9155	71
2H-3920	219
	222
	225
2H-3922	218
	251
2H-3925	707
2H-9445	202
2J-0564	569
2J-3506	805
	806
	807
	808
2J-3961	567
2J-6274	499
	501
2J-6356	202
2J-6362	304
2J-6384	564
2K-0703	812
2K-2939	546
2K-3219	837
2K-4096	569
2K-4507	569
2K-4821	125
2K-4973	768
2K-5066	292
	294
	296
	298
	300
2K-5069	273
2K-6830	564
	830
2K-8467	343
2K-9295	273
	276
2L-8050	160
	211
2L-8051	247
2L-8058	160
	211
2L-8069	154
	158
	159
	160
	165
2L-8078	160
2L-8079	154
	158
	159
	160
2M-3433	255
2M-5795	135
	137
2M-7819	683
2M-9780	55
	90
	115
	118
	120
	122
	123
	350
	546
	547
	551
	552
	583
	615
	831
2N-1287	304
2P-1293	55
	58
2P-8421	320
2R-0098	315
2R-2376	691
2S-1382	338
2S-1384	338
2S-1385	338
2S-4078	292
	294
	296
	298
	300
	309
	499
	501
2S-5658	329
2S-5835	336
2S-5926	499
	501
2S-8983	304
2T-3019	247
2V-1771	233
2V-3216	225
	233
2Y-5829	721
	775
3	
3A-5449	811
3A-8612	812
3A-8613	810
3A-8614	810
3B-1915	304
3B-4124	273
	276
3B-4501	218
3B-4607	135
	137
3B-4615	746
3B-4617	379
	380
	626
3B-5325	812
	816
	817
3B-6552	577
	580
	623
3B-7255	71
3B-8486	589
	591
3B-8489	421
	423
	488
	577
	580
	589
	591
	626
	785
	801
	812
3D-2824	55
	176
	320
	546
	574
	588
	589
	591
	593
	598
	611
	695

► PRIMARY REFERENCE

PART NUMBER INDEX

Part	Page
3D-2975	683
3D-5279	224
3D-8317	336
3D-9872	185
3E-0105	115
3E-3365	218
3E-3389	171
3E-3390	187
	251
3E-3805	138
3E-4071	167
	172
3E-4096	80
3E-4321	703
3E-4333	602
	603
3E-4354	276
3E-5000	487
3E-5169	251
3E-5226	165
3E-6703	567
3E-6773	90
	115
	350
3E-6786	617
3E-7420	583
3E-8020	225
	233
	362
	673
	674
	689
	690
	691
	715
	729
	735
3E-8082	413
3E-9375	200
3E-9411	785
	801
3F-9556	125
	226
	233
	782
3G-1753	569
3G-1757	569
3G-4282	805
	808
3G-8047	577
	580
3G-8054	308
	577
	580
	589
	591
3G-8057	308
	577
	580
	589
	591
3H-0702	202
3H-1461	308
	327
3J-1907	240
	247
	309
	310
	327
	336
	338
	556
	557
	583
	586
	593
	594
	831
	832
3J-7354	268
	269
	552
	557
	583
	586
	593
	616
	831
	832
3J-9545	567
3K-0360	24
	58
	71
	104
	115
	273
	276
	292
	294
	296
	298
	300
	309
	310
	431
	433
	435
	437
	556
	557
	577
	580
	593
	601
	703
	831
3K-1432	320
3K-3963	488
3K-4025	431
	433
	435
	437
3K-8510	812
3L-9410	304
3N-0759	547
3P-1210	605
3P-3441	320
3P-7019	319
3S-0004	327
3S-1281	333
3S-1307	474
3S-2093	104
	115
	128
	130
	154
	173
	176
	212
	226
	232
	233
	240
	247
	253
	255
	257
	259
	279
	308
	318
	544
	629
	631
	652
	775
	831
3S-2708	273
	276
3S-6049	128
	130
3S-6050	128
	130
3S-8109	319
	320
3T-0810	319
3T-0852	135
	402
	404
3T-3447	319
3T-4568	272
3T-4629	320
3T-4824	272
3T-5807	276
3T-6469	331
3T-6471	331
3T-6769	320
3T-6963	272
3T-7184	626
3T-7584	320
3T-8757	327
3T-9272	272
3T-9315	318
3T-9536	473
	474
	476
3T-9674	304
3T-9819	304
3V-4694	232
3W-2025	431
	433
	435
	437
3W-2369	499
	501
	750
4D-7735	104
4E-8957	746
4E-9452	342
	408
	418
	818
4F-2294	336
4F-7507	611
4I-7924	636
4J-0520	308
4J-0522	308
4J-0527	308
4J-3420	569
4J-3745	566
4J-5267	308
	586
	589
	591
	600
4J-5477	593
	831
4J-7533	551
4J-8251	611
4J-8252	611
4K-3004	812
4K-3128	569
4K-6177	623
4L-1250	69
4M-1751	338
4M-2381	336
4M-7470	395
4M-8239	338
4N-2927	683
4P-7428	419
4P-7481	151
4P-7581	187
	190
	205
	212
	224
	226
	234
	240
	247
	257
	259
	262
	265
	391
	419
	687
4P-8134	176
	226
	234
	240
	251
4S-1962	226
	234
4S-4455	705
4S-8537	319
4T-0231	627
	785
	787
	789
	791
	793
	801
4T-2314	789
	793
	807
4T-2315	807
4T-5613	564
	830

4

Part	Page
4B-3665	331
4B-4098	330
4B-4158	785
	787
	789
	791
	793
	801
	811
4B-4274	247
4B-4277	226
	234
4B-4863	195
	226
	234
	691
4B-5059	683
4B-7739	281
4B-9808	656
	657
4B-9880	336
4D-1212	749

PART NUMBER INDEX

Part	Page
4V-5090	232
	234
4V-7884	768
4V-8577	768
4Y-4905	627
5	
5B-0841	305
5C-2874	248
	253
5C-2890	211
5C-7261	227
	235
	343
	782
5C-9553	205
5D-1026	104
5D-4822	629
	683
5D-6523	700
5D-7523	318
5G-2247	479
	481
5G-7636	333
5H-3182	733
5H-4018	604
5H-4019	604
5H-6202	278
5I-8748	388
5J-2974	55
5J-3864	320
5J-4773	805
	806
	807
	808
5K-0216	473
	474
	476
5K-1770	308
5K-9090	309
	546
	588
	593
5K-9106	320
5K-9107	273
5K-9179	709
5K-9660	345
5L-7200	218
5M-0578	273
	276
5M-1179	202
5M-2057	611
5M-2894	273
	276
	279
	305
	473
5M-3320	327
5M-6214	623
	626
5M-6667	488
5M-7925	273
5M-9548	338
5P-0370	577
	580
5P-0372	746
	749
	750
5P-0537	305
	691
5P-0695	241
5P-0767	71
	703
5P-1046	594
5P-1076	137
	182
	265
	343
	374
	379
	380
	384
	386
	393
	394
	681
	785
	787
	789
	791
	793
	801
	809
5P-1404	831
5P-1465	71
5P-2228	809
5P-2618	90
5P-3131	320
5P-3455	248
5P-3629	333
5P-3930	320
5P-4115	212
	227
	235
5P-4116	76
	77
	104
	130
	247
	255
	395
5P-4295	583
	586
	705
	707
5P-4571	154
	158
5P-4920	305
5P-4921	305
5P-4924	593
5P-4961	104
	308
	593
5P-5630	212
5P-5637	419
5P-5649	413
5P-5677	221
5P-5689	247
5P-5846	331
5P-5991	105
5P-6264	192
5P-6460	674
5P-6606	777
	778
	779
5P-6874	709
5P-7070	696
5P-7462	257
	259
5P-7463	257
	259
5P-7464	241
	546
	574
	577
	580
	589
	591
5P-7465	241
	546
	574
	577
	580
	589
	591
5P-7466	55
	308
	593
	600
5P-7467	55
	308
	593
	600
5P-7468	593
5P-7469	593
5P-7483	357
	359
	395
5P-7530	320
5P-7701	302
	545
5P-7814	90
5P-7957	691
5P-8065	279
5P-8112	55
	260
	311
	594
	600
5P-8118	320
5P-8210	320
5P-8245	272
	273
	276
	320
5P-8247	125
	425
	426
	427
	428
	429
	430
5P-8248	805
	806
	807
	808
5P-8440	262
5P-8441	391
	419
5P-8445	683
5P-8500	1
	498
	837
5P-8874	247
5P-9186	320
5P-9615	703
5P-9617	831
5P-9806	316
	331
5Q-7578	298
	300
5R-0939	700
5R-0940	700
5S-7001	338
5S-7349	125
5T-6374	247
	546
5V-0564	318
5V-0770	683
5V-1497	768
5W-9419	70
6	
6A-3361	253
6B-6863	425
	426
	427
	428
	429
	430
6C-3679	691
6C-7875	372
6D-3033	258
6D-3479	594
6D-3534	705
6D-4244	575
	594
6D-4246	696
6D-7889	331
6E-3569	566
6E-3570	566
6E-5449	347
	566
6E-6528	616
6F-0711	347
6F-6673	315
6F-7045	251
6F-8499	343
6H-3616	812
6H-3956	406
6H-3977	308
6H-9361	611
6I-0217	12
	29
	36
	51
	61
	73
	89
	108
	113
6I-0254	73
6I-0260	36
	61
	63
	84
	108
	117
	696
6I-0289	53
6I-0292	198
6I-0293	53
	198
6I-0363	36
6I-0456	141
6I-0563	89
6I-0572	36
6I-0593	108
6I-0594	63
	113
6I-0631	110
	111
6I-0645	29
6I-0650	29
6I-0654	32
	36
	113
6I-0839	73
6I-0917	84
6I-1090	51

PART NUMBER INDEX

Part	Page
	59
6I-1418	227
	235
6I-1497	53
6I-4200	108
6I-4374	51
6I-4681	36
6I-4709	61
6I-8077	329
6I-8078	287
	288
	289
	290
	291
	329
6I-8488	319
6I-8724	272
6J-2797	564
	830
6K-3632	384
6K-6355	700
6K-8178	593
6K-8328	305
6K-8329	305
6K-8987	810
6L-5359	308
6P-0205	671
	672
6P-1735	273
6P-1736	273
6P-2233	319
6P-4977	319
6P-5317	273
	276
6P-7742	319
6P-7743	319
6P-7772	320
6P-7773	320
6P-7968	320
6P-7983	320
6P-7985	319
6P-8269	395
6R-7943	605
6S-6251	395
6S-9277	746
	749
	750
6T-0062	272
6T-0064	272
6T-0850	272
6T-1698	391
	419
6T-3631	221
	251
6T-3632	221
	251
6T-3633	221
	251
6T-5598	226
	234
	241
6T-7695	227
	235
6T-7995	304
6T-7996	304
6V-0327	300
6V-0330	292
	294
	296
	298
	300
6V-0400	546
6V-0439	292
	294
	296
	298
	300
	301
6V-0491	154
	158
6V-0744	167
	172
6V-0826	227
	235
6V-0834	320
6V-0835	320
6V-0852	316
	320
	338
	583
	586
	831
6V-0891	154
	157
6V-0894	544
6V-0937	329
6V-1195	571
6V-1249	574
	577
	580
6V-1572	308
6V-1573	308
6V-1581	80
	703
6V-1582	80
	703
6V-1586	320
6V-1649	320
6V-1720	319
6V-1792	527
	528
	529
	530
	531
	532
	533
	534
	535
	536
6V-1864	305
6V-1867	80
6V-1868	80
6V-1889	586
6V-1971	1
6V-2314	118
	120
	544
6V-2369	226
	234
6V-2404	305
6V-2686	212
6V-3940	336
6V-3965	279
	320
	331
	338
	831
6V-4292	309
6V-4360	838
6V-4365	338
6V-4589	559
6V-5048	545
6V-5063	122
	123
6V-5218	629
	631
6V-5230	333
6V-5746	692
6V-5839	611
6V-5843	330
6V-5851	782
6V-6339	616
6V-6609	832
6V-6782	85
6V-6783	85
6V-7238	24
	71
6V-7357	224
	227
	235
	260
	544
	634
	636
	646
	671
	672
	702
	721
	724
	727
	739
	749
	750
6V-7359	547
	589
	591
6V-7383	705
	707
6V-7568	320
6V-7636	674
6V-7687	810
	812
6V-7723	608
6V-7744	407
	611
	810
	812
6V-8076	832
6V-8077	832
6V-8189	125
6V-8214	731
6V-8225	182
6V-8227	227
	235
6V-8237	569
6V-8367	831
6V-8369	219
	222
	225
6V-8370	218
6V-8376	736
6V-8397	583
	586
	593
	594
	831
6V-8398	309
	310
	574
	575
	577
	580
	594
	598
6V-8625	309
6V-8626	546
6V-8629	55
6V-8633	574
	598
6V-8635	593
6V-8636	831
6V-8637	574
6V-8639	577
	580
6V-8640	583
6V-8641	831
6V-8647	593
6V-8653	615
6V-8713	589
	591
6V-8714	588
6V-8716	309
6V-8723	831
6V-8724	593
	831
6V-8782	309
6V-8981	574
6V-8990	55
6V-8995	598
6V-9005	309
6V-9008	593
6V-9027	71
6V-9162	593
6V-9168	593
	831
6V-9169	308
	574
	598
6V-9170	574
	588
6V-9182	593
6V-9197	395
	629
	631
6V-9200	583
	586
6V-9632	105
	140
	205
	226
	227
	234
	631
	687
	721
	724
	725
	727
	731
6V-9746	55
	58
	309
	546
	574
	575
	583
	588
	593
6V-9796	574
6V-9830	598
6V-9832	707
6V-9833	707
6V-9851	574
6V-9873	594
6V-9874	58
6W-1594	419
6W-6005	130
6Y-0306	321
6Y-0352	817
6Y-0359	816
6Y-0473	473
	474
	476
	479
	481
	482

► PRIMARY REFERENCE

PART NUMBER INDEX

Part	Page
	483
6Y-0846	520
	521
	522
	523
	524
	525
	526
6Y-0859	294
	296
	298
	300
6Y-0926	272
6Y-0984	272
6Y-1198	479
	481
6Y-2704	272
	276
6Y-3125	484
6Y-3164	331
6Y-3484	320
6Y-5010	327
6Y-5113	709
6Y-6277	292
6Y-8473	311
	338
6Y-8475	338

7

7B-0863	365
	498
7B-3028	331
	431
	433
	435
	437
7B-3039	611
7B-7515	320
7C-4616	29
7D-1649	613
	785
	801
7D-7233	594
7E-7606	28
7F-6935	330
7F-9543	365
	498
7G-0437	321
7G-1596	272
7G-3496	331
7G-3710	321
7G-3832	546
7G-3833	546
7G-3834	546
7G-5675	321
7G-5730	321
7G-6061	319
7G-7053	115
	232
7G-8121	319
7H-1447	611
7H-3607	329
7H-4566	273
7J-1309	567
7J-1908	546
	547
7J-9108	546
	574
	588
	589
	591
7J-9682	812
7K-1181	71
	140
	178
	179
	180
	182
	187
	190
	191
	192
	196
	212
	224
	227
	232
	235
	241
	248
	251
	253
	255
	257
	258
	259
	260
	262
	263
	265
	266
	267
	311
	419
	595
	604
	653
	654
	664
	666
	687
	696
	705
	707
	775
	782
	804
	832
7K-4201	692
7K-6058	546
7K-9205	422
	424
7M-0475	318
7M-3361	258
7M-7219	683
7M-8485	65
	67
	309
	310
	546
	552
	593
7M-8592	338
7N-5274	128
	130
7P-4190	202
7P-6596	345
	422
	424
7R-2751	154
	158
7R-3029	258
7R-5517	551
7S-3916	308
7S-3919	308
7S-4534	321
7T-1099	77
	244
	253
	372
	419
7T-1885	272
	276
7T-4532	645
7T-6799	220
7T-6994	272
	276
7T-8130	272
7T-8136	276
7T-8859	305
7T-9031	276
7T-9356	278
7T-9515	218
7T-9832	272
7T-9837	272
	276
7V-5191	683
7W-2632	141
7W-6534	273
7X-0515	340
	379
	380
7X-0550	469
	470
7X-0563	151
7X-0578	629
	631
	725
	727
7X-0579	634
	646
	664
	666
	671
	672
	691
7X-0587	421
	423
7X-0605	469
	470
7X-0607	340
7X-0613	151
	212
7X-0618	379
	380
	386
7X-0766	406
7X-0818	598
7X-1062	212
7X-2489	733
7X-2532	484
7X-2533	681
7X-2536	187
7X-2537	646
7X-2543	151
	556
	812
7X-2549	70
	308
	374
7X-2553	372
	716
	717
	721
7X-2554	340
7X-2555	390
7X-2562	627
7X-2563	292
	294
	296
	298
	300
7X-2565	365
	391
	419
7X-2567	384
7X-2575	716
	717
7X-2577	787
	789
7X-2621	812
7X-2906	550
	572
7X-3229	836
7X-3391	395
	746
	749
	750
	809
7X-3392	70
	308
7X-6315	143
	233
7X-7608	321
7X-7644	408
	811
	836
7X-7729	90
	120
	151
	244
	257
	259
	308
	350
	357
	359
	369
	395
	400
	403
	419
	577
	580
	589
	591
	633
	674
	715
	719
	720
	721
	731
	738
	755
	757
	767
7X-7816	331
7X-7927	775
7X-7928	775
	782
7X-7929	775
	782
7X-7930	775
7X-7933	547
7X-7958	71
7Y-2854	395
7Y-3474	775
7Y-3962	114
7Y-3963	114
7Y-3964	114
7Y-3965	114
7Y-7388	362

► PRIMARY REFERENCE

PART NUMBER INDEX

673
729
7Y-7389 362
729
7Y-9099 402
404

8

8C-3056 226
234
241
8C-3205 308
586
589
591
8C-3206 133
308
355
8C-3229 331
8C-3290 35
8C-3445 60
8C-3446 831
8C-3447 831
8C-3451 832
8C-3681 71
8C-5607 227
235
8C-5608 227
235
8C-5918 128
130
8C-6364 602
603
8C-6965 551
8C-8422 276
8C-8451 227
235
696
746
8C-8478 384
8C-8729 292
294
296
298
300
8C-8835 593
8C-8844 384
8C-9160 564
8D-0071 304
8D-2388 232
8D-4771 292
294
296
298
300
315
8D-5096 319
8D-8428 832
8E-1118 232
8E-1143 336
8E-1484 319
8E-1666 319
8E-3075 292
294
296
298
300
8E-4832 395
8E-6332 260
8E-6334 260
8E-8115 321
8E-8117 321
8E-8118 319
8E-8297 321
8E-8299 321
8E-8307 272
276
8E-8310 272
8E-9378 806
807
808
8E-9379 805
806
807
808
8E-9380 787
791
808
8E-9502 798
799
8F-1326 226
234
8F-7702 202
8G-3102 499
501
8G-3202 431
433
435
437
8G-4189 422
424
8G-4190 422
424
8G-4386 345
8G-4565 292
294
296
298
300
8G-4566 292
294
296
298
300
8G-4568 292
294
296
298
300
8G-4569 292
294
296
298
300
8G-4945 499
501
8G-4960 501
8G-5247 345
8G-5258 80
8G-5747 627
8G-7085 365
498
8G-8311 422
424
8G-8316 421
423
8H-0901 292
294
296
298
8H-0902 292
294
296
298
300
8H-5303 251
8H-7521 473
474
476
8H-9818 281
8H-9819 281
8J-0412 605
8J-1256 227
235
8J-2189 814
816
8J-2190 816
817
8J-2413 615
8J-6913 611
8J-8782 611
8J-8783 611
8K-0589 431
433
8L-2746 559
8L-2786 37
303
8L-6557 305
8L-8413 128
130
683
8M-2031 333
8M-2538 338
8M-2770 71
311
623
8M-3494 811
8M-4409 338
8M-4438 273
276
8M-4986 338
8M-5249 308
8M-5254 308
318
556
8M-7758 692
8M-8489 327
8N-0869 128
130
8N-1545 248
8N-1725 128
130
8N-5083 564
8P-0058 321
8P-5244 384
8P-8357 273
276
8P-8555 333
8P-8950 319
8P-9770 785
798
8R-2566 349
352
8S-0023 547
8S-0024 546
8S-0527 276
319
8S-0948 235
8S-3426 321
8S-7583 257
259
8S-7803 683
8S-9129 308
8S-9130 308
8T-0072 273
8T-0078 55
8T-0100 331
8T-0119 71
8T-0154 115
8T-0267 241
8T-0269 17
674
8T-0281 492
493
495
497
8T-0282 427
428
8T-0328 69
118
120
227
235
253
8T-0333 626
8T-0338 551
8T-0356 327
8T-0359 425
426
8T-0375 499
501
8T-0389 128
130
402
404
627
8T-0639 739
8T-0640 202
655
8T-1158 80
8T-1159 742
743
8T-1482 716
717
733
8T-1579 343
8T-1687 309
8T-1885 308
625
8T-1886 308
625
8T-1889 128
248
253
8T-1890 128
248
253
8T-1895 240
8T-1896 241
8T-1897 241
260
8T-1898 241
260
8T-1899 308
8T-1900 308
8T-1905 583
586
594
8T-2223 315
8T-2275 611
8T-2503 605
8T-2658 196
8T-2659 226
234
8T-2920 241
8T-3298 611
8T-3490 55
70
80
85
105
137
138

PART NUMBER INDEX

Part	Page
	139
	151
	196
	226
	234
	241
	244
	248
	253
	258
	260
	311
	340
	343
	349
	352
	355
	357
	359
	368
	369
	370
	372
	375
	384
	386
	388
	389
	391
	395
	407
	414
	419
	547
	575
	577
	580
	594
	703
	721
	725
	731
8T-3597	70
	343
	357
	359
	368
	370
	372
	386
	389
	395
8T-3612	105
	212
	240
	258
	343
	349
	352
	357
	359
	372
	389
	634
	749
	750
8T-3647	331
8T-3957	550
	572
8T-4121	55
	80
	90
	104
	115
	128
	133
	138
	176
	190
	192
	212
	224
	227
	235
	241
	248
	253
	257
	259
	260
	263
	265
	292
	294
	296
	298
	300
	308
	331
	340
	343
	345
	355
	377
	378
	381
	402
	404
	431
	433
	435
	437
	499
	501
	546
	556
	569
	574
	586
	589
	591
	593
	598
	600
	611
	614
	627
	633
	677
	700
	703
	705
	707
	709
	723
	725
	737
	775
	804
	831
8T-4123	35
	292
	294
	296
	298
	300
	315
	365
	384
	484
	498
	546
	627
	681
	733
	785
	787
	789
	791
	793
	801
	810
8T-4131	484
8T-4133	381
8T-4136	224
	227
	235
	263
	279
	292
	294
	296
	298
	300
	305
	308
	338
	431
	433
	435
	437
	546
	633
	719
	720
	723
	725
	737
8T-4137	227
	235
	343
	721
8T-4138	123
	212
	629
	631
	660
	662
8T-4139	308
	395
	577
	580
	593
	627
	681
	721
	812
8T-4140	365
	372
	390
	460
	461
	462
	463
	466
	467
	469
	470
	471
	472
	498
8T-4141	118
	120
	315
	733
8T-4149	309
8T-4158	742
	743
	746
8T-4167	35
	384
	733
	785
	787
	789
	791
	793
	801
8T-4172	308
	703
8T-4175	340
8T-4176	265
8T-4179	128
	130
	227
	235
	253
8T-4182	55
	80
	227
	235
	260
	330
	419
	499
	501
	589
	591
	633
	715
	720
8T-4183	182
	308
	343
	439
	440
	441
	442
	447
	448
	449
	450
	455
	456
	457
	459
	547
	595
	785
	787
	789
	791
	793
8T-4184	308
	386
	546
	577
	580
	785
	801
8T-4185	55
	90
	120
	227
	235
	350

► PRIMARY REFERENCE

PART NUMBER INDEX

Part	Page
	574
	577
	580
	589
	591
	593
8T-4186	115
	133
	308
	321
	355
	378
	546
	569
	600
	674
	700
	705
	707
	719
	731
8T-4189	76
	77
	128
	130
	176
	212
	224
	357
	359
	634
	696
	718
8T-4190	421
	423
8T-4191	240
	247
	318
	804
8T-4192	439
	440
	441
	442
	443
	445
	447
	448
	449
	450
	451
	453
	455
	456
	457
	459
	546
	619
	623
8T-4193	292
	294
	296
	298
	300
	379
	380
	620
	733
	801
8T-4194	340
	379
	380
	384
	414
	443
	445
	451
	453
	469
	470
	547
8T-4195	65
	67
	227
	235
	260
	331
	372
	381
	388
	395
	611
	705
	707
	709
8T-4196	257
	259
	308
	369
	377
	677
	738
8T-4197	227
	235
8T-4198	80
	104
	176
	810
8T-4200	263
	266
8T-4205	125
8T-4222	253
	388
	395
	633
8T-4223	70
	90
	129
	130
	227
	235
	241
	254
	292
	294
	296
	298
	300
	308
	315
	318
	343
	374
	400
	403
	431
	433
	435
	437
	439
	440
	441
	442
	443
	445
	447
	448
	449
	450
	451
	453
	455
	456
	457
	459
	546
	577
	580
	593
	623
	627
	681
	700
	721
	785
	787
	789
	791
	793
	801
	812
8T-4224	80
	125
	129
	142
	176
	187
	212
	224
	248
	254
	263
	266
	343
	357
	359
	402
	404
	629
	631
	634
	696
	718
	752
	754
8T-4226	130
8T-4231	572
8T-4240	551
8T-4241	609
8T-4244	812
8T-4648	90
	400
	403
	812
8T-4778	365
	469
	470
	471
	472
	498
8T-4896	474
8T-4908	105
	151
	248
	343
	696
	752
	765
8T-4910	318
	331
	386
	393
	394
	395
	443
	445
	451
	453
	455
	456
	457
	459
	546
	613
8T-4956	308
	431
	433
	435
	437
	627
	787
	789
	791
	793
8T-4958	566
8T-4970	721
	782
8T-4983	85
	309
	546
8T-4984	71
	593
8T-4987	80
8T-4994	202
	577
	580
8T-5005	308
	614
8T-5030	327
8T-5050	594
8T-5361	384
8T-5373	58
8T-5400	782
8T-5412	374
	810
8T-5413	253
8T-5460	681
	785
	787
	789
	791
	793
	801
8T-5668	569
8T-5878	485
	486
	487
	716
	717
	791
	793
8T-6342	174
8T-6381	35
8T-6430	498
	810
8T-6466	212
	244
	316
	395
	600
8T-6685	80
8T-6703	85
	311
	595
8T-6850	703
8T-6868	137
8T-6869	247
8T-6912	255
8T-7038	836
8T-7338	421
	423

PART NUMBER INDEX

Part Page

484
8T-7371 785
787
789
791
793
801
8T-7524 703
8T-7547 212
248
343
634
8T-7929 812
8T-7934 80
104
205
227
235
260
309
318
372
546
700
703
705
707
8T-7968 598
8T-7971 104
318
546
593
8T-8442 605
616
629
631
652
724
8T-8549 400
403
8T-8729 160
171
187
196
217
219
220
221
223
225
253
255
646
649
651
655
656
657
711
712
713
714
8T-8730 152
161
170
226
234
8T-8737 152
153
154
155
158
159
160

Part Page

161
162
163
165
166
167
168
169
170
171
172
174
179
180
219
220
222
225
649
651
655
656
657
712
713
714
8T-8827 241
8T-8917 809
8T-8919 315
8T-9383 488
8T-9402 546
8T-9496 343
8T-9530 431
433
8T-9599 626
8T-9655 227
235
8T-9756 128
130
8U-4791 80
8V-6990 235
8V-9708 703
8W-3214 58
8Y-3795 618
619
8Y-3966 406
8Y-3998 406
8Y-4489 801
8Y-5747 406
8Y-5944 768
8Y-5945 684
8Y-5965 768
8Y-6012 768
8Y-6014 768
8Y-6024 768
8Y-6041 683
8Y-6045 683
8Y-6046 683
8Y-6047 683
8Y-6060 683
8Y-6062 683
8Y-6063 683
8Y-6064 683
8Y-6066 683
8Y-6067 683
8Y-6068 683
8Y-6069 683
8Y-6400 343
406
8Y-6859 684
8Y-6860 684
8Y-8306 406

Part Page

9

9B-0576 273
9B-1117 649
651
9B-7233 736
9D-8508 118
120
9F-1399 331
9F-6656 262
837
9G-0002 128
130
9G-0005 128
130
9G-1233 321
9G-1234 319
9G-1307 253
9G-1642 482
483
9G-4876 292
294
296
298
300
9G-5127 309
9G-8615 319
9G-9435 155
158
9H-5604 321
9H-6454 611
9J-0461 331
9J-4782 577
580
589
591
626
785
801
9J-7031 611
9J-8923 817
9J-8926 815
817
9J-9598 812
9L-6770 125
9L-9132 273
9M-1503 319
9M-1974 279
331
336
9M-2904 600
9M-3786 620
9M-3835 135
137
9M-4995 105
9M-6527 65
67
9M-7959 85
9M-8406 105
9N-0869 227
235
9N-4450 810
9P-1360 473
474
476
9P-3066 395
9P-5558 319
9P-7072 305
9P-7121 122
123
9P-8899 431
433
435
437

Part Page

9P-9388 709
9R-2672 618
785
798
799
800
801
9R-3761 618
9S-4181 302
545
9S-4182 545
9S-4183 122
123
320
695
9S-4185 37
292
294
296
298
300
331
431
433
435
437
601
9S-4188 319
331
9S-4190 90
122
123
350
9S-4191 327
545
9S-5187 384
9S-8001 615
9S-8002 545
551
557
616
9S-8004 309
336
556
557
615
9S-8005 273
276
303
309
556
557
615
9S-8006 551
9S-8010 499
501
9S-9334 310
551
9T-2714 569
9T-5900 812
9T-7045 564
9U-6995 309
9U-8263 663
9U-8668 336
9U-8669 336
9W-0099 812
9W-0844 152
153
154
158
162
169
170
171

► PRIMARY REFERENCE

PART NUMBER INDEX

Part	Page
9W-0852	69
	114
	154
	157
	162
	163
	169
	171
9W-1442	160
9W-1571	272
9W-2109	605
9W-2110	605
9W-2822	749
	750
9W-2853	272
9W-3361	520
	521
	522
	523
	524
	525
	526
9W-6102	272
9W-6582	35
9W-6584	35
9W-7385	35
9W-9930	35
9W-9940	35
9X-0199	218
9X-1046	227
	235
	691
9X-1056	160
9X-1813	207
	217
	253
	255
9X-2027	315
	333
	338
	476
	611
	689
	690
9X-2032	253
9X-2038	227
	235
	629
	631
	696
	715
	746
9X-2039	402
	404
	715
9X-2040	389
9X-2041	687
9X-2042	362
	673
	729
9X-2043	241
	248
	674
9X-2044	140
	227
	235
	653
	654
	691
	723
	724
	725
	727
9X-2045	227
	235
	658
	664
	666
	687
	691
	721
	723
	724
	725
	727
9X-2046	629
	631
	664
	666
	671
	672
	691
9X-2085	310
9X-2125	320
	755
	757
	767
9X-2133	705
	707
9X-2201	80
9X-2480	151
9X-2488	702
	703
	705
	707
9X-2537	615
9X-3401	115
	118
	120
	154
	157
	161
	162
	166
	169
	170
	171
	175
	200
	201
	208
	218
	225
	233
	240
	646
9X-3402	152
	153
	154
	158
	161
	162
	163
	164
	169
	170
	171
	173
	174
	240
	260
9X-3404	130
9X-3592	567
9X-3962	546
9X-3982	104
9X-3994	391
	419
9X-4580	431
	433
	435
	437
9X-4609	309
9X-4611	564
	830
9X-6165	227
	235
9X-6340	836
9X-6562	431
	433
	435
	437
9X-7138	212
9X-7264	569
9X-7287	90
	115
	350
9X-7378	696
9X-7381	698
	699
9X-7383	698
	699
9X-7719	331
9X-8250	104
	703
9X-8256	123
	182
	202
	205
	224
	227
	235
	247
	260
	263
	544
	629
	631
	634
	636
	646
	652
	660
	662
	671
	672
	674
	681
	702
	721
	731
	739
9X-8257	292
	294
	296
	298
	300
	395
	421
	423
	469
	470
	471
	472
	484
	620
	721
	733
9X-8268	492
	493
	495
	497
	499
	501
9X-8271	476
9X-8399	566
9X-8408	309
9X-8918	683
9X-8979	605
9Y-9236	65
	67
9Z-9214	343

0

Part	Page
005-4834	272
030-2135	272
032-1267	304
032-1268	304
033-6027	557
033-6031	123
033-6033	217
	545
033-6034	246
033-6043	557
	616
034-1432	85
034-2151	309
034-3679	104
	310
035-3360	319
052-0572	304
053-2294	473
067-6043	15
067-6070	211
067-6135	10
	13
067-6179	29
067-6823	15
	45
070-0195	88
077-3241	347
077-8353	551
085-8091	309
	574
089-7365	151
089-8249	785
	787
	789
	791
	793
	801
091-9035	55
095-0664	602
095-0878	646
	683
095-0919	602
	603
095-0936	602
	603
095-1671	545
095-1678	303
096-4876	629
	631
096-4883	689
	690
096-6166	176
	838
097-7234	154
	158
099-0169	80
099-6418	117
	349
	352
	357

PART NUMBER INDEX

Part	Page
	359
1	
100-3224	684
100-3751	29
	61
100-4458	108
100-4830	89
100-4841	31
100-5179	684
101-0003	768
101-3129	105
	240
	700
	831
101-3895	12
	29
101-3917	63
101-4194	768
101-4195	768
101-4639	118
	120
101-7178	644
101-7398	333
101-7547	63
102-8801	154
	157
	159
	160
	166
	168
	173
	174
102-8802	69
	115
	154
	157
	160
	165
	166
	168
	187
	207
	208
	217
	218
	223
	244
	253
	255
	645
102-8803	152
	160
	168
	187
	196
	200
	221
102-8804	154
	157
	159
	161
	163
	165
	167
	168
	169
	172
	175
	251
	636
	646
	711
102-8805	154
	157
	160
	162
	170
	220
	225
	712
	713
	714
102-8806	171
	174
	219
	222
	225
103-5705	12
104-2091	691
104-4746	627
104-4817	627
	785
	787
	789
	791
	793
	801
104-5604	273
104-6729	279
104-6730	279
105-2740	84
	134
105-3478	333
105-3484	90
105-3486	615
105-9659	638
	639
	640
	709
106-0713	292
	294
	296
	298
	300
106-0721	331
106-1607	527
106-1613	527
106-1618	479
	481
106-1629	479
	481
106-1630	479
	481
106-1642	527
	528
	529
	530
	531
	532
	533
	534
	536
106-4175	547
106-6553	689
	690
106-8186	347
106-8187	347
107-0713	532
107-0714	532
107-0715	535
107-0716	535
107-0717	535
107-0718	535
107-0719	527
	528
	529
	530
	531
	532
	533
	534
	535
	536
107-0803	160
107-1763	292
	294
	296
	300
107-2348	82
107-8126	347
108-4086	684
108-4087	684
108-4103	684
108-5618	319
108-5620	319
108-5621	319
108-5623	319
108-5794	627
108-8250	304
108-8296	330
109-0958	627
109-0959	347
109-1393	615
109-5815	546
110-1211	331
110-3362	473
	474
	476
110-5897	574
110-6349	583
	586
110-6969	469
	470
	471
	472
110-7524	777
	778
	779
111-0859	25
	33
111-4627	263
	691
111-5009	345
112-4550	221
	225
	233
112-5056	318
112-5057	318
112-6174	▶219
	▶233
112-6646	653
	654
	804
112-7704	211
113-4630	175
113-8129	73
113-8490	154
	157
113-8491	154
	157
113-9212	319
114-0358	816
	817
114-0359	816
	817
114-0561	302
114-2772	560
114-5671	810
114-5672	810
114-6099	733
	785
	801
114-6658	664
	666
	691
114-9284	746
	749
	750
115-5411	832
115-6433	395
116-0118	240
116-3883	552
117-0615	528
	536
117-0616	528
	536
117-6512	263
117-6838	691
118-3509	232
118-5619	691
118-5803	488
118-6345	▶484
	▶537
	538
	539
	540
118-6604	488
119-2174	488
119-2211	488
119-3662	154
	159
	162
	165
	166
	167
	170
	172
	174
	226
	234
120-7536	488
120-9027	196
121-0530	831
121-9870	362
	658
	682
	729
	804
122-4376	154
	158
123-1373	128
123-2899	32
	62
123-2933	54
123-3827	692
123-7615	154
	157
124-0763	488
124-1479	257
	259
124-2100	167
	172
124-3536	38
	40
124-3815	29
	51
	89
	104
	108
	134
	199
	246

PART NUMBER INDEX

Part	Page
124-5234	627
124-5741	627
124-6657	304
124-9899	572
124-9900	572
124-9960	572
125-3518	413
125-5341	279
125-7037	376
	393
	394
	409
	680
125-7874	152
	154
	158
	159
	160
	161
	162
	163
	164
	165
	168
	169
	170
	171
	172
	173
	174
125-7875	154
	158
	163
	165
	170
	173
125-7876	114
	226
	234
	235
126-1767	166
	175
	200
	201
	208
	645
126-1768	164
	174
126-1774	154
	157
126-8472	636
126-8928	485
	486
	487
126-9093	96
	104
127-1647	574
127-1960	674
127-2170	544
127-3361	644
127-5485	248
128-2136	629
	631
	725
	727
128-5016	154
	158
128-5040	782
128-7625	546
128-8678	700
129-3737	749
	750
130-1977	600
130-5300	187
	225
	233
	240
130-9192	600
131-0167	327
131-0447	652
131-3201	248
	251
131-4242	683
131-5167	683
131-7546	255
132-1334	529
132-1336	529
132-1805	240
132-3421	135
132-5789	173
	246
	247
	251
	265
	687
132-7077	736
132-8487	258
133-1011	29
133-1222	327
133-6934	225
	233
	247
	253
	700
133-7810	240
133-8929	609
133-9469	82
134-2540	154
	158
	159
	162
	163
	165
	167
	172
134-7258	836
135-7393	564
135-8573	340
	395
	419
	577
	580
135-8574	574
135-8575	115
	139
	355
	367
	369
	372
	391
	393
	394
	400
	403
	419
135-8577	139
135-8578	309
	583
	586
135-9941	832
136-1595	272
136-1953	702
	705
	707
136-3191	782
136-5490	740
137-6723	362
	729
138-7500	240
138-8454	195
	691
139-1398	85
	310
	547
139-2840	605
140-1739	571
141-0224	609
141-0235	609
141-0236	609
141-0237	609
141-0238	609
141-0239	609
141-0240	609
141-0241	609
141-0244	609
144-0195	153
	775
	782
144-0331	649
	655
144-0761	319
144-1636	207
144-5478	785
	801
145-0326	768
145-4911	27
146-0742	567
146-2282	395
146-5132	429
	430
147-1445	154
	157
147-1446	154
	157
148-1928	309
148-8305	831
148-8307	247
148-8309	320
148-8316	593
148-8317	588
148-8322	583
148-8324	58
148-8325	831
148-8327	574
148-8328	574
	598
148-8335	593
148-8336	831
148-8339	309
148-8340	577
	580
148-8341	589
	591
148-8344	593
148-8355	309
148-8357	593
148-8360	593
148-8361	583
	586
148-8364	309
148-8370	574
148-8374	831
148-8375	574
148-8378	593
	831
148-8388	55
148-8390	546
148-8395	309
	556
148-8406	310
148-8408	695
148-8410	90
	122
	123
	350
148-8411	601
148-8428	309
148-8457	598
149-4156	627
149-5933	498
149-7738	586
150-3024	593
150-3026	309
150-3036	583
	586
	594
150-4041	583
150-4043	594
150-4046	831
150-4049	309
151-5145	831
151-6282	636
151-9274	648
151-9275	225
	233
152-8070	479
	481
153-1276	88
153-5710	128
153-6252	309
153-6258	594
153-7452	785
	801
153-8003	187
154-9024	71
155-0576	141
155-2255	152
	153
	154
	155
	157
	159
	161
	162
	163
	165
	168
	172
155-2256	163
	165
155-2257	165
155-2260	152
	153
	154
	157
	159
	160
	162
	163
	165
	166
	167
	168
	169
	172
155-2265	154
	157
	159
	169
155-2270	152
	154
	155
	157
	159
	160
	165

► PRIMARY REFERENCE

PART NUMBER INDEX

Part	Page
	166
	168
	169
	170
	174
	227
	234
155-2271	152
	153
	154
	157
	159
	160
	162
	164
	165
	167
	168
	169
	170
	171
	172
	260
155-2274	153
	154
	157
	159
	160
	161
	173
	179
	180
155-6258	574
156-2525	104
	115
156-4406	319
156-6175	247
157-0670	71
158-6632	▶218
	▶225
	▶233
158-7864	836
159-3727	118
	120
159-4700	562
159-8047	253
159-8049	128
	130
	241
159-8050	128
	130
159-9322	154
	157
	169
160-2669	▶561
	▶594
160-3518	171
160-5656	551
160-7165	762
	768
160-7689	169
160-8761	212
160-8763	212
160-9192	118
	120
160-9756	473
	476
161-5967	683
161-6879	562
161-6880	562
161-7247	476
161-7249	473
	476
161-7550	473
	476
161-9820	33
	644
162-0177	309
	336
	556
162-2165	279
	331
162-6802	831
162-8378	649
162-8387	649
162-8389	649
162-9523	309
163-1146	768
163-4300	115
164-0150	255
164-0850	629
	631
	725
	727
164-2108	559
164-3417	115
	350
164-5562	594
164-5567	279
	320
	331
	831
164-5590	831
164-5606	55
164-5608	309
164-5624	310
164-5641	546
164-7468	108
165-2273	71
165-4931	831
165-4933	55
166-0321	557
166-5229	154
	157
166-6781	768
167-2200	566
167-2204	567
167-2314	567
167-8987	171
168-2197	605
168-2203	605
168-3332	71
168-3378	608
168-3379	608
168-3380	608
168-3381	608
168-3382	608
168-3384	608
168-3385	608
168-7317	605
169-0705	159
169-1616	557
169-5414	265
	279
169-7380	768
170-4057	744
170-5632	176
	838
171-2419	55
	77
	253
	591
	832
171-5349	207
	208
171-7077	205
172-2384	749
	750
172-2385	746
172-7753	557
172-8037	171
172-8039	171
172-8591	664
	666
	687
	691
173-3083	765
173-7035	762
173-9683	566
173-9779	569
174-2231	▶683
	▶768
174-2237	683
174-4770	▶488
174-4909	557
	559
174-5414	88
174-8131	652
	692
174-9994	605
175-1367	212
175-4165	649
	651
175-4170	649
	651
175-7896	310
175-7902	566
175-7904	308
	546
	593
175-9079	247
177-2215	104
	247
	594
	700
177-4487	319
177-4548	801
177-9653	160
177-9656	165
178-1780	247
178-3336	696
	705
	707
178-3707	485
	486
	487
178-5457	372
178-6854	292
	294
	296
	298
	300
178-7023	372
	719
178-9041	327
178-9983	655
179-0469	703
179-6707	292
	294
	296
	298
	300
179-7376	649
180-7451	602
	603
180-9339	159
	160
	163
	165
	167
	168
	172
	174
180-9419	▶562
180-9933	832
183-1343	215
	216
183-4274	255
184-0982	652
184-0983	215
	216
	746
	749
	750
185-0884	15
185-1860	155
	158
	164
185-1861	155
	158
	161
185-2638	125
185-2639	125
185-2644	125
185-2647	125
185-2650	125
185-2654	125
185-2655	125
185-2658	125
186-3735	222
187-1679	115
	350
187-7331	340
187-8675	225
	233
187-9194	611
188-2128	155
188-9644	674
189-2164	474
189-2165	474
189-2170	474
189-2171	474
189-6123	35
190-1546	439
	440
	441
	442
	447
	448
	449
	450
	473
190-1547	473
	474
190-5386	836
190-6507	605
190-7614	168
190-7615	160
190-8609	499
	501
191-0938	272
191-0940	272
191-4916	270
191-4917	271
191-4923	292
	294
191-4925	296
192-3258	157
192-9207	96
193-1598	90
193-2200	677
	738
193-3074	810
193-5917	411
193-7361	▶270
	▶282

▶ PRIMARY REFERENCE

PART NUMBER INDEX

Part	Page
	▶283
	▶285
193-7362	▶271
	▶284
	▶286
193-7365	270
	271
193-7366	270
193-7367	271
193-7405	272
194-2903	71
194-5171	782
194-5226	159
	160
	163
	164
	165
	166
	167
	168
	172
	174
194-5227	159
	160
	163
	164
	165
	166
	167
	168
	172
	174
194-6478	594
195-1117	130
195-2037	104
	310
195-3699	754
195-9245	12
196-2412	154
	158
196-2413	154
	158
196-3773	742
	743
196-7074	439
	440
	441
	442
	447
	448
	449
	450
	455
	456
	457
	459
196-8548	333
197-2477	577
	580
197-3295	310
197-7481	247
197-7689	768
198-0918	485
	486
	487
198-4775	544
	724
	727
198-4776	247
	253
198-4777	80
	187
	247
	257
	259
	265
	310
	591
198-4778	65
	67
	340
	374
	384
	414
	443
	445
	451
	453
	619
198-4780	372
	390
198-4781	118
	120
	733
198-9162	304
198-9163	304
198-9706	225
199-7891	125
199-8436	125
199-9252	199
199-9267	199
199-9751	20
	23
	199

2

200-1131	225
	233
200-5728	▶171
	▶740
200-6345	71
	104
	594
	832
200-8644	304
201-1281	304
201-1282	304
201-2557	343
201-4066	253
202-0314	155
	158
202-0549	327
202-0550	327
202-0551	327
202-0552	327
202-2005	336
202-2380	319
202-4364	310
	327
202-5293	349
	352
202-5397	155
	157
	161
202-6488	327
202-9824	820
203-3847	104
	310
	594
	832
203-4600	310
203-4786	304
203-9007	225
	233
204-1297	155
	158
	161
204-2281	71
	104
	233
	240
	247
	593
	623
	831
204-5341	304
204-6365	460
	461
	462
	463
	466
	467
	469
	470
	471
	472
204-7266	455
	456
	457
	459
	474
204-7876	319
204-8000	104
	225
	233
	240
	247
	832
204-8981	304
204-9092	304
204-9096	304
205-0626	125
205-2357	598
205-5314	276
205-6127	▶460
205-6128	▶469
205-6129	▶461
205-6130	▶470
205-6131	▶462
205-6141	469
	470
	471
	472
205-6160	460
	466
205-6162	469
205-6163	469
205-6164	462
205-6165	461
205-6167	470
205-6168	470
205-7396	304
205-7397	304
205-7398	304
206-1345	164
	646
206-1667	723
	724
	725
	727
206-1826	117
206-2080	304
206-2423	212
	240
	247
	310
	594
	696
	832
206-2963	304
206-9292	302
206-9295	217
	545
208-6727	600
208-8469	211
208-9287	108
209-4573	80
209-4582	80
209-5776	836
209-7253	232
209-9219	16
210-8236	258
210-8958	167
	172
211-6807	159
	165
212-2085	627
212-4023	720
212-4174	707
212-4483	551
212-6891	664
213-3719	319
213-3745	832
213-7489	655
214-3573	272
	276
214-4208	155
	158
214-4653	832
214-7566	572
214-7568	279
	320
	331
	545
	831
215-1594	501
215-4012	80
216-0143	349
	352
	395
216-4983	80
216-7352	674
216-7431	272
216-9633	60
217-0099	141
217-2293	272
217-2730	310
217-9039	164
	211
	246
218-2373	559
218-2656	782
218-7119	674
218-7136	649
	651
219-0305	819
219-0669	265
220-0229	253
220-5946	240
220-6381	629
	631
221-3197	431
	433
	435
	437
222-1796	530
222-1797	530
222-5093	340
222-5693	572
223-3279	627
	785
	787
	789

▶ PRIMARY REFERENCE

PART NUMBER INDEX

Part	Page
	791
	793
	801
223-9110	492
	493
	495
	497
224-0672	828
224-0683	618
224-5132	268
	269
224-5152	268
	269
224-8946	828
225-0311	71
225-3281	569
225-4257	828
225-4286	331
225-6524	51
225-7738	73
225-7944	61
225-8019	73
225-8287	29
225-8524	82
225-8526	82
225-8858	15
226-1416	298
226-7192	627
226-9622	559
227-1148	567
227-2451	272
227-6715	247
228-3323	163
228-4947	199
228-6089	225
	233
228-7089	54
228-7090	310
228-7100	108
	265
228-7103	615
228-8811	300
228-9655	125
228-9656	125
228-9657	125
229-1516	627
229-5446	▶489
	▶537
	538
	539
	540
229-7367	226
230-4009	155
	157
	161
230-4011	155
	157
	159
	164
	165
	168
	169
	170
230-4012	215
	216
230-4013	155
	157
	159
	165
	169
	174
	240
230-4014	118
	120
	159
	201
	240
230-4872	569
230-5008	159
230-5010	155
	157
	161
230-7732	240
230-8094	17
	36
231-0336	598
231-1455	63
231-3538	566
232-1322	16
	20
	23
232-1693	246
232-3402	828
232-3657	29
232-3666	29
232-3751	61
232-4810	785
	801
232-7449	16
232-7596	15
232-7597	15
232-7599	15
233-0367	▶425
	▶439
	440
	441
	442
	443
	▶445
	▶447
	448
	449
	450
	451
	▶453
	▶455
	456
	457
	▶459
233-0854	▶426
	▶439
	440
	441
	442
	443
	▶445
	▶447
	448
	449
	450
	451
	▶453
	▶455
	456
	457
	▶459
233-6832	340
	413
234-2872	609
234-5013	▶210
	▶240
	▶247
	▶310
234-5925	225
	233
234-9525	105
	316
235-2501	477
	478
	482
	483
235-2504	526
235-2509	477
	482
235-2511	▶477
	▶520
	▶521
235-4123	155
	158
	161
236-4545	212
236-5511	36
237-0145	202
237-0227	165
	169
237-4860	564
238-0112	265
238-5080	104
	115
	210
	331
238-5081	104
	615
238-5082	320
	615
238-5083	319
	331
238-5084	832
238-5085	65
	67
238-8245	164
238-8247	164
238-8288	84
238-8292	83
239-1139	319
239-4989	431
	433
239-8090	427
239-8091	428
240-1467	785
	787
	789
	791
	793
	801
240-1469	811
240-9557	▶494
	▶495
241-0037	268
	269
241-0157	836
241-0624	598
241-2501	391
	419
241-3720	431
	433
	435
	437
241-6157	108
241-6215	832
241-8253	707
242-1555	155
	158
242-2542	569
242-5054	828
243-2158	87
243-2709	551
243-4398	▶268
	▶310
243-4506	114
244-2310	276
245-1042	165
245-1043	164
245-1044	164
	165
245-1045	165
245-1048	164
	165
245-7434	155
	157
	161
245-8842	105
246-2641	1
	498
	837
246-4311	804
246-4361	100
246-5747	521
246-5748	520
246-5759	511
	520
247-4928	100
	102
247-5838	498
247-6876	819
247-6878	819
247-9730	85
248-2841	155
	158
248-6862	187
	194
249-6365	316
250-0393	▶269
250-1482	703
250-3988	479
	481
251-3269	557
251-8569	▶463
	464
	465
251-8570	463
	467
251-8601	439
	440
	441
	442
	447
	448
	449
	450
	455
	456
	457
	459
251-8609	501
251-8616	▶464
251-8619	▶471
252-0080	35
252-1607	212
252-5806	90
252-6922	130
253-1346	431
	433
	435
	437
253-8110	159
	173
253-8111	159
253-8113	159
	173
254-0072	560
254-0225	520
	521
	522
	523
	524

▶ PRIMARY REFERENCE

PART NUMBER INDEX

Part	Page
	525
	526
254-3929	425
	426
254-9049	526
254-9050	521
254-9052	520
255-0045	▶427
	▶439
	440
	441
	442
	▶447
	448
	449
	450
	▶455
	456
	457
	▶459
255-0046	▶428
	▶439
	440
	441
	442
	▶447
	448
	449
	450
	▶455
	456
	457
	▶459
255-2752	▶220
	▶225
	▶233
255-9267	272
	276
256-3455	76
	88
256-4873	512
	521
256-6453	210
256-6454	199
	225
	233
257-0207	785
	805
257-0264	805
257-0265	805
257-8150	801
	806
258-4819	258
258-5652	333
259-2627	65
	67
	785
	801
259-2968	787
	789
	791
	793
	801
259-7140	253
260-0634	85
260-1556	176
260-5864	194
	221
260-6673	703
260-6728	649
	651
	655
	656
	657
260-9174	546
261-0634	176
261-2044	471
261-2046	472
261-2047	472
261-6728	583
	586
264-0168	594
264-3517	104
264-3518	104
264-3519	104
264-3520	104
264-5732	155
	158
264-7029	164
265-2109	304
265-5287	333
266-1467	▶200
	▶736
266-3214	629
	631
266-9180	316
266-9983	567
267-4211	332
267-6097	517
	522
267-6099	522
267-7207	164
	165
267-7208	164
267-8910	523
267-9572	164
	165
268-1530	115
268-1531	115
268-3696	649
268-5577	333
269-1981	▶201
	▶204
270-2679	225
	233
271-2180	221
271-5995	467
271-6164	▶465
	▶468
271-6185	499
271-7312	226
	234
271-9247	395
271-9408	233
272-0710	114
272-7239	225
	233
273-3989	443
	445
	451
	453
	495
274-1931	46
274-1935	26
274-3774	169
274-4254	333
274-4990	164
274-7452	605
274-7646	516
	523
274-9987	574
	594
274-9988	104
275-0571	348
275-2428	211
275-2431	211
275-7741	▶222
	▶225
275-9891	54
275-9897	36
276-2334	828
276-4878	651
276-5600	15
276-5602	15
276-5603	16
	199
276-7278	128
	130
276-7391	13
276-7394	13
276-7476	38
	42
276-7478	11
	40
276-8116	19
276-8117	19
276-8123	49
	50
276-8133	49
	50
276-8134	20
276-9200	47
276-9201	47
276-9206	47
276-9207	47
276-9230	47
277-0116	28
277-1873	205
	224
	225
	233
	247
	251
277-1974	51
277-1975	51
277-2500	63
277-2502	63
277-2503	63
277-2525	61
277-2526	61
277-2537	61
277-2923	73
277-2925	73
277-3012	29
277-3013	29
277-4223	44
277-4302	20
	23
277-4409	211
277-4490	34
277-4993	99
277-5065	246
277-5307	47
277-8103	765
277-8873	560
277-9463	85
277-9938	57
	101
277-9940	57
278-0017	89
278-0518	104
	703
278-2145	225
	233
278-2168	806
278-2169	806
278-2170	806
278-3242	73
278-5111	47
278-5112	47
278-5113	47
278-5125	10
278-5170	97
278-5203	141
278-5921	185
	258
	604
279-0850	774
279-0942	746
279-2506	655
279-6497	836
279-9254	27
279-9651	32
280-0440	656
	657
280-1384	36
280-1911	▶47
	▶49
280-1912	47
280-1913	47
280-1914	47
280-2709	155
	157
280-7870	605
	616
281-3136	655
	656
	657
281-3395	165
281-5969	574
281-8744	62
281-8803	168
281-8804	164
281-8811	155
	158
282-0918	605
282-0919	605
282-3117	746
282-6598	627
283-4662	28
283-5745	▶429
	▶443
	▶445
	▶451
	▶453
283-5746	429
283-5748	429
283-5749	▶430
	▶443
	▶445
	▶451
	▶453
283-5750	430
283-5752	430
283-5753	429
	430
283-6447	226
	234
283-8106	159
	173
283-8301	34
283-8302	34
284-8481	226
	234
285-0150	655
	656
	657
285-1204	225
	233
285-5240	605
	616
286-0123	113
286-0323	225
	233
286-2562	618
	619

▶ PRIMARY REFERENCE

PART NUMBER INDEX

Part	Page
286-2890	99
	101
	102
286-6498	574
286-7851	83
287-0427	71
287-3049	247
	700
287-6104	524
287-6106	515
	524
287-8597	28
288-4513	71
288-6974	28
288-6975	28
288-7146	155
	158
288-7324	155
	158
289-1502	226
	234
289-2935	564
	830
289-2937	569
289-2948	569
289-9555	142
290-5562	233
290-5792	▶207
	▶331
290-9849	272
291-5280	832
291-6819	226
	234
292-1357	202
292-1366	652
292-1368	652
292-2893	211
292-2896	164
292-3462	84
293-3081	348
	351
	356
	370
293-8335	716
	717
293-8350	616
293-9452	331
294-4813	522
294-5374	574
295-4670	101
	102
295-6661	20
	23
295-8610	61
	63
295-8613	63
295-8615	63
296-4285	233
297-3141	836
299-3424	80
	716
	717
299-5511	49
	50
299-6082	226
	234
299-6083	128
	130

3

Part	Page
301-0091	234
	235
	241
	253
301-2722	104
301-2979	251
302-3908	55
	104
302-6112	28
303-4649	176
	247
303-9441	395
	733
303-9449	240
304-2746	333
304-5062	32
304-5418	770
	772
304-5422	770
305-2418	276
305-6991	104
306-2337	51
306-5048	140
306-6687	247
306-6688	253
306-8526	128
	253
307-0047	819
307-0649	225
	233
307-2670	331
307-5172	70
308-1845	564
	830
308-2525	636
309-0572	80
309-1905	574
309-6678	49
	50
310-2187	567
310-2189	569
310-4912	▶496
	▶497
310-4915	▶490
	▶492
310-4918	▶491
	▶493
310-4947	574
	577
	580
	598
310-4948	574
	577
	580
	598
310-7267	605
311-0325	551
311-0326	551
311-3520	702
	774
311-8131	551
311-8132	551
312-0288	705
	707
312-4626	159
312-8811	159
313-4542	524
313-6347	746
313-9198	105
	700
313-9790	627
314-4018	645
315-9856	703
315-9857	703
316-5240	226
	234
316-9351	164
	263
317-1117	384
317-5482	38
	40
317-6214	42
317-8141	646
317-8261	304
318-0106	304
318-1179	▶208
	▶304
318-2375	520
	521
	522
	523
	524
	525
	526
319-2305	351
	389
319-6231	320
319-8426	10
320-0360	514
	525
320-0361	525
320-1291	644
	645
320-3060	199
320-3062	199
320-3063	265
320-6553	55
321-1291	128
321-5715	319
322-3353	812
323-2092	333
323-2093	333
323-3726	674
323-6974	476
323-9312	11
	40
324-0444	29
324-5680	159
	165
324-5681	159
	165
325-4416	646
325-9335	333
326-0319	319
	331
326-3269	602
326-7289	12
327-0282	636
	696
	698
	699
	700
	705
	707
327-0283	636
	696
	698
	699
	700
	705
	707
328-4847	785
	801
329-0418	208
329-0419	167
	172
329-3356	240
	253
	318
329-3734	152
	153
	155
	158
	159
	160
	161
	162
	165
	166
	168
	169
	170
	173
	174
329-3796	31
329-8607	619
330-1725	644
330-9723	108
330-9751	546
331-0290	▶11
	▶38
	▶40
331-2427	499
331-2430	499
331-4226	174
331-4931	155
331-6835	15
331-7132	333
331-9731	674
332-2788	391
	419
332-7865	175
332-8591	104
332-8593	104
332-8832	302
332-8833	▶302
	▶310
332-8888	393
	394
333-8538	225
	233
334-4603	829
335-2252	225
	233
335-5365	225
	233
335-8226	605
335-8230	572
	605
335-8611	82
336-6482	700
336-6672	674
337-5270	303
337-6324	127
337-7325	85
337-7619	384
339-3566	719
	731
339-8780	13
339-9637	49
	50
340-3690	128
	130
340-7503	421
	423
342-2631	80
342-2976	155
	157
342-6502	46
342-6510	46
342-8909	618
	619
342-9023	196

PART NUMBER INDEX

Part	Page
342-9290	225
342-9457	691
344-1950	700
344-1951	700
344-5360	310
344-5673	247
	263
	629
	631
	702
344-5674	225
	233
	253
	629
	631
	634
	746
	749
	750
344-5675	55
	105
	115
	128
	130
	138
	190
	192
	205
	212
	240
	247
	253
	265
	310
	316
	345
	357
	359
	400
	403
	547
	575
	586
	589
	591
	594
	598
	611
	700
	703
	705
	707
	737
	809
	832
344-7132	310
344-7391	240
345-0351	819
345-1237	65
	67
345-3155	692
345-7738	379
	380
345-8846	7
	28
345-9030	7
	27
346-0006	113
346-0007	113
346-0099	7
	61
346-0220	7
	52
346-0334	85
346-0407	29
346-0408	29
346-0663	225
	233
346-1510	7
	34
346-2900	421
	423
346-2908	7
	45
346-2999	644
346-4709	49
346-4995	615
347-0794	225
	233
347-7407	303
347-8645	102
	105
347-8646	105
347-8647	105
348-0495	101
348-4637	246
348-5034	151
348-5113	85
348-5129	214
	215
348-5409	76
348-6250	621
	622
	626
348-6253	626
348-6260	785
	787
	789
	791
	793
	802
348-7842	225
	233
	756
349-1178	247
349-6097	545
349-7059	122
	123
349-8604	828
349-8642	740
350-7735	122
	123
350-8742	127
351-0959	478
	483
351-0961	▶478
	▶522
	523
	524
	525
	526
351-1724	46
351-1904	240
351-4749	36
352-3964	173
	255
352-3967	224
352-3968	176
	240
	247
	263
	266
352-3970	176
	247
	804
353-0297	241
353-1634	225
353-2172	431
	433
353-2173	431
	433
353-2187	443
	445
	451
	453
353-4515	187
353-4688	302
	303
353-7952	240
353-7953	247
354-0132	744
354-6778	85
354-8322	28
354-8706	837
355-1651	523
355-1782	696
355-1790	696
355-1793	696
355-2290	525
355-2381	336
355-2617	320
355-2618	320
355-2924	90
355-3016	765
355-5860	664
	666
355-7217	546
356-1219	164
356-3427	533
356-3428	533
356-3429	531
356-3430	531
356-3431	534
356-3432	534
356-9301	265
357-4339	384
357-4574	832
357-6890	408
357-7450	333
357-7451	333
357-9709	333
358-0921	349
	352
	357
	359
358-2191	627
358-2227	785
	787
	789
	791
	793
	801
358-2260	785
	801
358-2399	▶209
	▶240
358-6190	544
358-6490	564
358-6494	564
358-7239	439
	440
	441
	442
	447
	448
	449
	450
	455
	456
	457
	459
	497
358-8583	439
	440
	447
	448
	455
	456
	457
	459
	492
359-3346	▶810
	▶811
359-3347	811
	814
359-3348	811
	815
359-3609	545
359-4894	333
360-1564	40
360-5120	202
360-5122	▶202
	▶544
360-6838	333
360-8958	▶93
	▶94
360-8960	93
361-5582	646
361-6052	160
361-6722	333
361-6725	333
362-1320	318
	619
	785
	801
362-5412	93
	94
362-9689	94
363-0559	13
363-4123	118
	120
363-4541	320
363-7498	105
363-7502	105
363-7544	197
363-8109	333
364-0147	544
364-4013	828
364-5145	13
365-0587	310
365-0588	310
365-5823	57
365-6798	320
365-6800	319
365-6801	320
365-6802	320
365-6803	320
365-6804	320
365-6805	319
365-6807	279
	336
366-2382	400
	403
366-6614	28
366-8298	319
366-8968	331
366-8971	333
366-9373	108
367-3340	83
367-5533	362
	729
367-7644	330
367-9097	696
367-9098	696
368-3145	211
368-6505	333

▶ PRIMARY REFERENCE

PART NUMBER INDEX

Part	Page
368-8559	▶57
	▶89
368-9752	241
369-1255	9
369-1658	84
369-1864	629
	631
369-3188	42
369-3867	51
369-4098	251
369-7304	17
	38
369-7799	97
370-1739	155
370-5513	111
370-5516	110
370-5517	110
370-5518	110
370-5520	▶110
	▶117
370-5549	801
370-6545	15
370-8376	93
370-9478	248
371-1679	636
371-2478	7
	17
	31
371-2480	7
	49
371-2483	7
	97
371-2544	7
	36
371-2554	7
	46
371-2558	7
	33
371-2684	113
371-2691	113
371-2716	7
	29
371-2720	7
	89
371-2740	7
	32
371-2745	7
	60
371-3974	97
	98
371-6432	115
371-7263	113
371-8298	25
372-2297	7
	73
372-3740	279
	331
373-3607	7
	62
373-4446	663
373-7039	546
374-2065	625
374-4419	73
374-6300	7
	13
	17
374-6716	419
374-7094	7
	644
374-7463	152
	155
	169
	170
374-7464	155
	157
	169
374-7465	169
	171
374-7466	155
	157
374-7467	155
	157
	169
374-8372	159
	173
374-9295	7
	44
375-0098	7
	26
375-0482	117
375-0483	117
375-2647	▶112
	▶113
375-2649	117
375-3937	7
	25
375-4607	513
	526
375-6988	117
375-8254	112
375-8407	▶175
	▶246
376-0898	608
376-1108	7
	9
376-4074	13
376-4078	13
376-6403	98
376-6405	98
376-6409	112
376-6410	112
376-6411	112
377-0399	19
377-0400	19
377-1293	246
377-2876	82
377-2877	▶82
	▶89
377-4687	551
377-4690	551
377-4718	36
	37
377-5988	99
377-6932	164
377-9255	25
377-9605	115
378-0625	7
	53
378-8166	7
	24
378-9463	393
	394
378-9488	357
	359
378-9500	395
379-0067	318
	703
379-3506	▶567
	▶621
	▶622
379-3507	▶564
	▶621
	▶622
379-5189	567
379-5190	567
379-5199	564
379-5200	564
379-6986	588
380-0415	▶114
	▶115
380-2065	38
	40
	42
380-4696	114
380-8401	240
380-8573	602
	603
380-9615	12
381-2621	225
	233
	247
	251
	253
382-0936	557
382-0937	557
382-0938	557
382-4473	225
383-1388	12
383-2629	240
383-3581	▶15
	▶16
384-2286	83
384-3275	441
	442
	449
	450
	493
384-3888	199
384-4858	212
384-5313	▶19
	▶20
	▶23
384-7413	3
	4
	466
384-7414	▶467
384-7415	▶472
384-7567	211
385-1398	100
385-2572	7
	20
385-3458	349
	352
	357
	359
385-5997	▶164
	▶246
385-7511	69
386-0444	225
	233
386-1864	100
386-2112	29
386-2737	102
386-2971	112
386-2976	112
386-3819	112
386-6145	340
387-2867	279
	332
387-3577	108
387-5690	696
387-5691	224
	696
387-9639	215
388-4327	90
388-4707	20
388-5331	707
388-9525	79
	87
389-0879	765
389-1076	545
389-3346	7
	12
389-3863	246
389-5775	108
389-5784	108
389-5922	546
389-7847	431
	433
	435
	437
390-0854	7
	16
	17
390-7626	84
391-1817	108
391-2898	155
	157
391-3732	40
391-3735	40
391-4811	7
	113
391-5523	7
	84
391-8044	547
392-0610	65
	67
392-2780	246
392-9262	333
393-1683	828
393-2034	117
393-2035	117
393-2286	362
	673
393-3605	567
393-4006	28
393-5467	111
393-5468	111
393-7694	7
	83
394-0525	▶111
	▶117
394-2666	▶279
	▶335
394-4451	33
394-7564	▶468
394-9639	7
	117
395-0110	7
	199
395-0112	7
	198
395-0113	7
	246
395-0114	7
	211
395-1633	110
	111
395-3268	176
395-6991	551
396-2102	102
396-2615	7
	10
396-8795	10
397-9301	104
	600
398-1743	340
398-6226	117
398-8246	828
399-2842	128
399-5260	215

▶ PRIMARY REFERENCE

PART NUMBER INDEX

Part	Page
4	
415-1604	32
416-1065	99
416-1069	▶99
	▶108
416-2583	333
416-2585	333
416-7727	83
416-8305	▶545
	▶546
416-9520	51
417-7782	62
418-0176	551
418-0199	551
418-1411	551
418-1417	551
418-1418	551
418-1428	551
418-3925	362
	729
418-5545	187
418-6597	115
418-7612	78
	87
419-0384	51
419-6603	7
	51
419-6899	▶304
	▶335
419-6901	304
419-6903	304
420-0454	59
420-2371	89
420-4129	53
	54
420-4133	54
420-4136	54
420-4143	53
421-4023	564
	830
421-4024	566
421-4525	485
	487
421-4528	620
421-4529	485
	486
	487
421-4533	431
	433
	435
	437
421-5456	615
421-6190	104
421-7677	80
422-5316	130
422-7715	82
422-7837	381
422-8724	55
423-4101	836
423-7576	25
423-9049	216
424-4322	234
424-6355	691
425-2633	104
425-7103	29
425-8520	655
426-0972	362
	673
426-4147	71
426-4167	71
427-5774	362
	673
	729
427-9771	211
428-5968	377
428-5969	378
428-7042	134
428-7687	326
	330
428-8308	128
428-8644	545
430-7600	837
432-0047	▶648
	▶658
432-6484	7
	108
432-8723	108
433-0190	100
433-0934	723
	725
433-1316	▶100
	▶108
433-5967	333
433-5968	333
433-6515	179
	180
433-6938	7
	134
433-8954	340
434-1217	372
434-3203	649
434-3205	651
434-4496	▶278
	▶304
434-4497	278
435-5614	421
	423
435-5628	▶620
	▶621
435-5629	485
	486
	487
435-5734	638
	639
	640
	737
435-5737	641
	642
	643
	782
435-5742	720
435-5743	641
	642
	643
	715
435-5754	680
	716
435-5755	418
	717
435-5757	4
	653
435-5759	3
	654
435-5766	▶682
	▶695
435-5767	▶658
	▶659
435-5769	563
	804
435-5789	641
	777
435-5791	643
	778
435-5792	642
	779
435-5802	720
435-5804	715
435-5805	715
435-9861	159
436-0521	49
	50
436-1687	765
436-1688	765
436-7781	38
	40
437-2831	615
437-2846	583
	617
437-4170	89
437-4487	819
438-8680	▶655
	▶804
439-1840	104
439-1867	588
439-2964	636
439-5037	96
439-5039	96
439-5040	96
439-5272	333
439-5274	333
439-6487	90
440-0257	▶217
	▶302
440-2104	▶144
	▶182
440-3455	609
440-3456	609
440-3457	609
440-3473	609
440-9567	272
441-3637	226
	233
441-9252	3
	4
	677
441-9253	▶738
441-9261	677
	678
442-0013	272
442-1579	104
442-5653	551
442-8465	▶101
	▶108
442-8569	108
443-6917	283
	292
443-8228	757
	762
443-8573	765
443-9475	38
	42
443-9543	40
443-9898	38
	42
443-9919	38
	42
444-0092	626
444-0093	626
444-2190	40
444-5022	▶96
	▶105
444-7604	164
445-2684	836
445-5511	96
445-6133	▶173
	▶279
445-6134	173
	174
446-0105	96
446-0637	765
446-1268	198
446-4935	276
446-8945	187
447-0748	310
447-0891	682
	691
447-5581	212
	223
447-6844	▶485
	▶537
	▶539
447-6845	▶486
	▶538
	▶540
447-6846	▶487
	▶538
447-6847	485
447-6848	486
447-6849	487
447-7206	90
	593
447-9950	483
447-9951	482
448-0181	▶421
	▶537
	▶539
448-0182	421
	422
448-0183	422
448-0185	▶423
	▶538
	▶540
448-0186	423
	424
448-0187	424
448-1167	282
	294
448-1230	284
	296
448-1354	319
448-1367	319
448-1398	574
448-2859	279
448-4217	13
448-4218	13
448-4220	13
448-4222	13
448-4227	13
448-4913	▶569
	▶811
448-6997	569
449-0302	282
	283
	284
	285
	286
	315
449-4214	832
449-5139	605
449-5872	247
449-8192	251
450-4968	774
450-6214	263
450-7011	828
451-0408	832
451-1222	▶17
	▶18
451-6724	124
451-6726	124
451-6728	124
451-8019	155
	158
451-8317	17
451-8385	6
	18

PART NUMBER INDEX

Part	Page
452-6582	6
	21
452-6584	21
	22
452-6585	22
	50
452-6586	22
	23
452-8547	▶94
	▶95
452-9704	84
453-0790	112
453-7163	7
	95
454-0780	636
454-5109	112
454-7797	402
	404
454-9560	42
454-9569	42
454-9573	42
455-0704	155
	157
	159
	164
	165
	168
	169
	170
455-0705	155
	157
	159
	164
	165
	168
	169
	174
	240
455-0706	159
455-0707	155
	158
	161
455-0709	155
	157
	161
	165
455-1084	836
455-6127	664
	666
455-9568	226
	233
456-1826	617
456-8410	594
456-8429	167
	172
456-9904	443
	445
	451
	453
	476
456-9905	476
457-2836	739
457-3049	739
458-3587	▶282
	▶287
458-3589	▶283
	▶291
458-3590	▶284
	▶288
458-3635	320
458-7918	40
458-7939	40
458-7940	40
458-8357	89
459-0643	705
459-1938	598
460-3336	705
460-4735	691
460-4738	691
460-4832	294
	296
	298
	300
460-6047	541
460-6052	572
461-3125	547
	551
461-3376	656
	657
461-3380	653
	656
461-3381	654
	657
461-5232	128
	131
461-5738	819
461-7396	226
	234
461-9456	▶649
	▶657
461-9457	▶651
	▶656
462-1171	52
462-2235	211
462-6407	544
	652
462-6685	7
	59
462-9619	740
463-8337	691
463-8338	691
463-8341	691
463-8343	691
463-8344	691
464-3454	577
	580
464-7762	572
464-8447	678
	679
	739
464-8457	▶69
	▶739
464-8460	678
	679
464-8548	691
464-8549	664
	666
464-8550	691
464-8551	691
465-5626	617
465-6593	115
	348
	351
	389
465-7609	636
	774
465-7610	774
465-7631	702
	774
466-2917	785
	801
466-2974	617
466-4849	38
	40
	42
466-6951	90
	120
	350
467-2275	691
467-2285	735
467-2859	157
	120
467-6262	658
467-7997	715
467-7999	715
468-2855	691
468-3126	755
	763
468-3128	▶764
	▶767
468-3485	631
468-3625	629
	631
468-7433	▶611
	▶613
468-7434	611
468-9828	605
469-2653	629
469-5745	775
469-9930	777
	778
470-0001	779
470-0005	779
470-0006	779
470-0007	779
470-0008	779
470-0010	777
	778
	780
470-0011	777
	778
	781
470-3528	551
470-3673	▶145
	▶197
470-4959	260
470-7252	3
	755
470-8038	38
	40
470-8101	13
470-8171	13
470-9481	691
471-2055	664
	666
471-3357	782
471-5752	605
	608
471-8197	90
472-4434	310
472-5584	▶196
472-7499	384
472-7939	739
473-1373	40
473-1457	473
	474
473-2320	744
473-4512	627
473-4859	631
473-7815	720
473-9569	721
474-2079	725
474-4198	782
474-4199	782
474-4200	782
474-4201	782
474-5545	▶711
	▶782
474-5562	782
474-5563	782
474-6949	733
474-9959	79
475-1055	605
475-6787	835
475-7048	118
	120
475-7420	674
475-9767	641
	642
	643
	674
475-9773	674
475-9779	674
	742
476-0700	574
476-2947	113
476-6351	691
476-6352	691
476-8834	65
	67
477-0065	785
	787
	789
	791
	793
	801
477-0525	674
477-0532	674
	743
478-2338	248
478-6203	743
478-6205	742
478-6206	742
478-7555	285
	298
478-7556	286
	300
478-7557	▶285
	▶289
478-7558	▶286
	▶290
478-7574	674
478-7575	674
478-8207	557
	560
478-8416	691
478-8417	691
479-0017	310
	589
	591
479-2171	55
	76
	77
	105
	115
	128
	130
	133
	176
	187
	192
	240
	247
	251
	253
	257
	258
	259
	260
	263
	310
	340
	349
	350
	352
	368
	370

PART NUMBER INDEX

Part	Page
	374
	395
	547
	575
	583
	586
	594
	598
	604
	625
	660
	661
	662
	687
	703
	721
	731
479-2172	55
	70
	85
	90
	105
	138
	240
	247
	251
	253
	257
	259
	281
	310
	340
	345
	395
	575
	577
	580
	586
	594
	703
	721
479-8987	▶74
	▶77
479-8989	74
	75
479-8991	74
	75
479-8993	74
479-8995	74
	75
480-4489	38
	40
480-4490	38
	40
480-4491	38
	40
480-6340	292
480-7724	377
480-7725	378
480-8190	▶377
	▶379
480-8191	▶378
	▶380
482-4108	71
482-7008	▶629
	▶723
482-7009	▶631
	▶724
482-7531	692
483-2517	547
	575
483-2761	155
483-2762	155
	158
483-2763	155
	158
483-2765	155
	158
483-2767	155
	158
483-2768	156
	158
483-2777	156
	157
483-6363	629
483-9160	801
483-9282	785
483-9298	785
	801
483-9299	785
	801
483-9315	785
	802
483-9332	801
484-0217	785
	801
484-0219	785
	802
484-7200	▶102
	▶108
484-8282	816
485-1325	546
485-3445	686
	759
485-4894	73
485-4895	73
485-5146	556
	557
485-9850	615
485-9971	542
485-9973	542
485-9975	551
485-9978	551
485-9979	551
485-9983	551
485-9985	551
485-9988	542
485-9989	551
485-9990	551
486-3160	▶736
	▶737
486-3161	▶204
	▶737
486-3208	7
	40
487-5821	▶740
	▶741
487-5822	▶663
	▶668
487-6212	552
487-6297	▶281
	▶316
488-1568	775
488-1670	765
488-1756	▶544
	▶723
	▶725
488-2137	765
488-3971	55
	78
	79
	138
	196
	253
	372
	383
	388
	391
	395
	419
	589
	591
488-3974	139
	240
	367
	369
	372
	383
	386
	388
	389
	390
	395
	400
	403
	409
	413
	577
	580
488-4526	646
488-4533	634
488-7916	330
488-8130	544
488-9163	140
489-3875	551
489-3877	551
489-3878	551
489-5533	635
489-5593	671
489-5594	362
	673
489-6485	762
	765
490-0571	156
	158
490-0572	140
490-0578	156
	158
490-0579	240
490-0582	140
490-0586	156
	157
490-0588	240
490-0590	247
490-1616	785
	787
	789
	791
	793
	801
490-4245	226
	234
490-5874	671
	710
490-6042	161
491-1972	664
	666
491-6843	225
	233
491-8127	724
	727
491-8177	629
491-8178	724
	727
491-8179	724
	727
491-8252	727
492-0163	725
492-0164	723
	725
492-0165	723
	725
492-6794	611
492-7319	263
493-4897	782
493-4898	▶712
	▶782
493-9035	638
	639
	640
	723
494-1760	123
494-6472	▶143
	▶225
495-1742	141
495-3105	7
	141
495-4405	634
	696
495-8179	830
495-8197	566
495-9034	653
	654
496-0526	715
496-0527	715
497-7986	756
	767
497-9968	775
498-0808	724
	727
498-0809	724
	727
498-0810	653
	654
498-0811	723
	725
498-0812	723
	725
498-0813	723
	725
498-3748	629
498-4463	762
499-7325	617
	5
500-4763	785
	801
500-5043	664
	666
500-5044	691
500-5045	664
	666
500-5046	664
	666
501-1125	674
501-1264	672
501-3885	226
501-4187	115
	124
501-4188	124
501-4454	763
	770
501-7810	674
	689
501-7812	674
	690
501-7933	782
501-7967	782
502-0259	692
502-3927	272
502-9314	674
503-0096	▶190
	▶194

PART NUMBER INDEX

Part	Page
503-0097	185
	191
503-4834	778
	779
503-6466	362
	729
503-7483	362
	729
503-7485	362
	729
504-2903	38
	42
504-4032	721
504-5755	687
504-5756	687
504-6303	687
505-1120	778
	779
505-1206	681
505-1207	681
505-3564	74
	75
505-3627	780
	781
505-5306	3
	4
	399
505-5307	▶399
505-5308	3
	4
	835
505-5309	▶835
505-5758	65
505-6759	▶145
	▶148
	149
	150
	▶670
505-6762	145
505-7069	785
	801
505-7081	785
	801
505-7957	804
505-7959	682
505-8924	721
505-8925	721
506-2390	226
	234
506-3729	696
506-3732	696
506-3733	696
506-3734	696
506-3777	696
506-3778	696
506-4783	707
506-5786	702
506-5854	636
506-5857	696
507-0646	611
507-1295	614
	615
507-1666	754
507-1668	754
507-1669	754
507-1671	754
507-2963	387
507-3673	1
	347
507-3678	▶345
	▶347
507-3679	345
507-3863	691
507-3864	664
	666
507-5489	▶760
	▶763
507-5490	▶761
	▶764
507-5615	716
	717
507-5616	716
507-6027	1
	733
507-6028	733
507-6029	733
507-6716	▶583
	▶585
507-6853	148
	257
507-7082	80
507-7083	80
507-7404	573
	613
507-7405	573
	614
507-7422	573
	593
507-7423	▶546
	▶573
507-7424	573
	831
507-7425	573
	588
507-7426	▶589
	▶622
507-7427	▶591
	▶621
507-7431	573
	574
507-7432	▶577
	▶621
507-7433	▶580
	▶622
507-7434	563
	598
	659
507-7656	431
	433
	435
	437
507-8263	8
	70
507-8557	389
507-8559	▶389
	▶390
507-8560	1
	390
507-8561	1
	374
507-8563	375
507-8880	130
507-8882	240
	247
508-1350	1
	395
508-1352	▶357
	▶361
508-1353	▶359
	▶361
508-1354	357
508-1355	359
508-1356	407
508-1357	407
508-1358	349
508-1359	367
	369
508-1360	▶361
	▶395
508-1363	407
508-1364	407
508-1365	395
508-1366	395
508-1367	349
	352
508-1606	122
508-1607	118
	122
508-1609	3
	118
508-1610	4
	120
508-1611	120
	123
508-1613	368
508-1614	368
	370
508-1620	1
	372
508-1621	366
	367
	415
508-1622	356
508-1623	348
508-1624	349
508-1626	372
508-1822	583
508-1824	583
508-1826	547
508-1827	547
508-1830	547
508-2572	8
	35
508-6279	400
	403
508-6786	594
	605
508-7772	35
509-0269	729
509-1018	591
509-1019	591
509-3200	635
	698
509-3205	698
509-3206	698
509-3795	326
	543
509-3796	326
	556
509-3797	▶316
	▶326
509-3799	▶308
	▶573
509-3805	310
509-3808	364
	408
509-3811	310
509-5165	547
	550
509-5171	586
	602
509-5174	583
	603
509-6606	375
509-8118	▶133
	▶260
509-8119	133
509-8120	133
509-8192	735
509-8959	147
	148
	258
510-1477	263
510-1478	263
510-1530	3
	4
	585
510-1532	▶585
510-1559	618
510-1561	619
510-3810	▶431
	▶439
	▶441
	▶443
	▶456
510-3811	▶433
	▶440
	▶442
	▶445
	▶455
510-3812	431
510-3813	433
510-3820	▶435
	▶447
	▶449
	▶451
	▶457
510-3821	▶437
	▶448
	▶450
	▶453
	▶459
510-3822	435
510-3823	437
510-4915	▶171
	▶262
510-6064	147
	259
510-6812	▶255
	▶342
510-7323	673
510-8110	691
510-8174	660
	662
510-8175	660
	662
510-9705	▶1
	▶2
510-9710	2
	326
510-9713	2
	573
510-9717	3
	4
	287
510-9718	▶288
510-9719	▶289
510-9720	▶290
510-9723	▶291
511-0768	721
511-2371	▶713
	▶782
511-2372	▶714
	▶782
511-5453	148
	149
	150
	670
	671
511-7342	702
511-8773	659
511-8774	563
511-8776	147
	148
511-8778	820
511-8780	629

PART NUMBER INDEX

Part	Page
	631
512-0201	819
512-6093	▶416
	▶418
512-6094	▶417
	▶418
512-6096	▶383
	▶416
512-6099	384
512-8093	310
512-8331	561
512-9202	400
	403
513-0285	764
	772
513-1126	80
513-2374	547
513-5066	▶340
	▶342
513-5079	340
513-5980	149
	150
513-7195	719
	720
	731
513-7595	583
513-7940	▶75
	▶76
513-7941	75
513-8115	384
513-9148	770
	772
513-9150	770
	772
513-9152	772
513-9156	770
	772
513-9157	772
513-9159	770
513-9160	770
	772
513-9161	770
	772
513-9162	772
513-9164	770
513-9168	760
513-9171	760
	761
513-9172	760
513-9173	761
513-9174	760
513-9175	761
513-9176	763
	764
513-9227	384
514-5496	664
514-6421	247
514-6437	226
514-6888	664
	666
514-7505	▶144
	▶178
515-1229	733
515-1230	733
515-3711	▶410
515-3712	▶364
515-3713	▶818
515-3714	▶818
515-3715	▶811
515-3716	▶811
515-3719	▶342
515-3730	▶797
515-3731	▶795
	▶796
515-3733	▶797
515-3734	▶795
	▶796
515-3737	3
	4
	621
515-3738	▶621
515-3741	680
515-3745	310
515-3746	310
515-4400	1
	128
	214
515-4415	▶130
	▶214
515-4951	71
515-5462	602
	603
515-6179	▶348
	▶368
515-6180	▶356
	▶368
515-6183	372
515-6186	372
515-6189	368
	370
515-6190	368
	370
515-6192	1
	414
515-6194	372
515-6195	372
515-6196	372
515-6198	▶349
	▶368
515-7372	3
	659
515-7373	▶563
515-7905	835
516-2856	216
516-5804	547
516-5819	547
516-6853	240
516-6869	547
516-7903	696
516-7941	310
516-7942	310
516-7944	310
516-7945	310
516-7946	55
516-7947	547
517-0033	310
517-0093	376
	379
517-0094	376
	380
517-2426	310
517-3275	379
	380
517-3434	611
517-4512	233
517-7206	333
517-8243	97
517-9188	594
518-0169	340
518-0621	594
518-1367	128
518-1561	638
	639
	640
	775
518-3847	717
518-5072	279
	331
518-5888	674
518-5927	598
518-5928	598
519-3678	589
	591
	601
519-6303	574
519-6970	▶146
	▶710
519-7099	618
	619
	627
519-9809	258
520-0176	▶819
	▶820
	▶827
520-9790	547
521-2750	345
521-2751	345
521-2752	345
521-2753	345
521-2754	345
521-2755	345
521-2756	345
521-2757	345
521-3388	▶76
521-4270	3
	4
	77
521-5446	333
521-7609	147
	148
	205
521-8138	832
521-9011	577
521-9012	577
521-9013	577
521-9014	577
522-4209	629
	631
522-4867	724
	727
522-9007	355
523-2364	▶161
	▶804
523-3660	723
	725
523-3945	399
	400
523-3946	▶135
	▶400
	▶403
523-3949	400
	402
523-3953	115
523-3954	115
523-3955	▶115
523-3956	92
	353
523-3957	357
	359
523-3958	3
	350
523-3959	▶90
523-3961	386
523-3962	367
	368
523-3964	354
523-4105	780
523-4106	780
523-7808	248
523-7899	248
523-8662	276
523-9187	691
523-9366	▶439
	▶537
523-9367	▶440
	▶537
523-9368	▶441
	▶537
523-9369	▶442
	▶537
523-9370	▶443
	▶537
523-9371	▶445
	▶537
523-9372	▶447
	▶538
	▶539
523-9373	▶448
	▶538
	▶539
523-9374	▶449
	▶538
523-9375	▶450
	▶538
523-9376	▶451
	▶538
	▶539
523-9377	▶453
	▶538
	▶539
523-9388	3
	4
	537
523-9389	▶537
523-9390	▶537
523-9391	▶538
523-9392	▶538
523-9393	▶538
523-9394	▶539
523-9395	▶539
523-9432	775
523-9933	▶388
	▶621
	▶622
524-1772	▶600
	▶811
524-1773	573
	623
524-2226	594
524-2296	310
524-2978	600
524-2979	600
524-3097	782
524-3722	691
524-5487	248
524-9008	147
	148
	260
525-1038	551
525-1179	692
525-1198	3
	4
	820
525-2188	674
525-5951	674
525-5952	674
525-5953	674
525-5954	674
525-5955	674
525-7037	248
525-7217	226
	234
525-7486	712
525-7487	711
525-7489	782
525-7915	▶172

▶ PRIMARY REFERENCE

PART NUMBER INDEX

Part	Page
	▶267
525-8332	431
	433
525-8504	192
526-0846	▶272
	▶543
526-0847	▶276
	▶543
526-0868	▶173
	▶226
	▶234
526-1313	781
526-1314	781
526-1511	226
	234
526-3291	547
526-3825	226
	234
526-3826	226
	234
526-3828	226
	234
526-4250	▶267
	▶818
526-6691	574
526-7172	575
	594
526-7430	653
	654
526-7919	▶225
	▶638
	639
	640
526-7925	226
	234
526-8407	76
526-8420	77
526-9282	473
	474
	476
527-0210	585
	586
527-0308	586
527-0309	586
527-0310	586
527-0485	333
527-0701	372
527-1637	12
527-1641	12
527-5872	248
527-6683	▶393
	▶399
527-6684	▶394
	▶399
527-6937	664
	666
	705
	707
527-7032	804
527-8713	745
527-8728	▶745
	▶748
527-9750	310
528-0213	586
528-3856	547
528-3857	547
528-4814	8
	151
528-5429	832
528-5430	832
528-5564	733
528-5566	733
528-6202	399
	403
528-6203	357
	359
528-6793	205
528-7140	340
528-7313	130
528-8150	733
528-9537	5
	369
528-9539	370
528-9540	370
528-9547	▶351
	▶370
528-9549	351
528-9550	▶352
	▶370
528-9551	352
528-9552	370
528-9635	326
	331
528-9636	331
	333
529-6131	348
	351
529-6295	311
529-6402	353
529-6460	589
529-6461	589
529-6539	55
	240
	345
	388
	395
	547
	575
	594
	598
	832
529-6841	702
529-6957	248
529-7050	311
529-7523	104
529-7524	104
529-7641	248
529-8307	627
529-8472	618
530-1111	601
530-1846	577
530-2864	611
530-2865	611
531-1124	571
531-1959	▶55
	▶573
532-3471	580
532-3472	580
532-3473	580
532-3474	580
532-3900	611
532-3901	611
532-3902	611
532-3903	611
532-3904	611
532-3905	611
532-5917	376
	386
532-5958	589
	591
532-6050	623
532-6051	623
532-6139	583
	586
532-7731	777
532-7849	629
	631
532-9780	▶2
532-9781	▶2
532-9793	3
	4
	366
532-9795	▶5
532-9797	▶5
532-9799	▶415
532-9803	▶2
	3
	4
532-9809	388
532-9810	388
532-9851	▶3
532-9856	▶4
533-0020	580
533-0021	577
	580
533-0464	258
533-3131	634
	636
533-3132	634
	646
533-3134	636
	702
533-3137	635
533-4159	55
	80
	85
	104
	240
	248
	310
	355
	586
	589
	591
	594
	703
533-4412	702
533-4413	702
533-4417	702
533-4425	705
533-5449	226
	234
533-5450	226
533-5451	226
533-5453	▶152
	▶226
	▶234
533-5458	▶152
	▶232
533-5461	▶153
	▶266
533-6465	388
533-6466	388
533-6467	▶187
	▶189
533-6468	187
533-7717	621
533-7718	621
	622
533-7719	811
533-7731	▶618
	▶621
533-7732	▶619
	▶622
533-7734	5
	78
	366
533-7758	777
	778
533-7759	779
535-5960	394
535-5961	393
536-0889	674
536-1550	435
	437
536-5248	272
536-6332	439
	440
	441
	442
	447
	448
	449
	450
	455
	456
	457
	459
536-6333	443
	445
	451
	453
536-6467	4
	638
536-6468	▶638
536-6469	3
	639
536-6470	▶639
536-6476	638
	639
	641
536-6478	639
	642
536-6517	691
536-7106	575
	577
	580
	598
536-7945	164
536-7946	164
536-8780	412
	746
536-9109	383
537-3132	718
537-3135	662
537-3136	662
537-3138	660
537-3139	721
537-3141	148
	660
537-6032	577
537-6033	577
537-6034	580
537-6035	580
538-3651	443
	445
538-3652	443
	445
538-3654	451
	453
538-3655	451
	453
538-3656	443
	445
	451
	453
538-3657	443
	445
	451
	453
538-3658	443
	445
	451
	453
538-3659	443
	445

▶ PRIMARY REFERENCE

PART NUMBER INDEX

Part	Page
	451
	453
539-1378	▶664
	▶686
539-3468	664
	666
539-5172	743
539-5524	190
	191
	195
539-6408	721
539-6535	566
540-2307	92
	354
540-2308	389
540-2311	386
540-2321	400
	403
540-2376	754
540-2377	754
540-2378	754
540-2379	754
540-2510	▶161
	▶262
540-3270	646
540-3272	636
540-3273	636
540-3275	636
540-3276	636
540-3277	636
540-3281	636
540-3282	636
540-3283	636
540-3284	636
540-3286	702
540-3287	702
540-3299	636
540-3800	176
540-8689	738
	739
540-8952	146
540-8953	146
541-1192	150
	718
541-3260	333
541-4624	479
	481
541-4625	479
	481
541-4626	479
	481
541-4627	479
	481
541-4628	479
	481
541-4629	▶479
	▶527
	528
	529
	▶532
	▶533
541-4630	▶481
	▶530
	▶531
	▶534
	535
	536
541-6629	705
	707
541-6633	55
	310
	547
	594
541-9374	715
542-3264	226
	234
542-5471	227
543-0545	348
	351
	356
	370
543-1113	4
	719
543-1114	3
	720
543-1115	▶731
543-1117	719
543-1123	719
543-1167	719
	731
543-4745	▶240
	▶244
543-5298	196
544-0428	384
544-0774	594
544-5051	▶566
	▶621
	▶622
544-5052	566
544-5054	566
545-3987	180
545-7813	▶178
545-7815	▶232
	▶641
	642
	643
545-8339	677
	738
545-8567	710
546-4993	85
547-9627	690
547-9635	689
548-1192	5
	79
	415
548-1921	193
548-3254	183
	190
548-4774	369
	370
548-4775	369
549-0463	352
549-8359	326
	335
549-8381	▶319
	▶335
550-3269	179
550-3491	311
550-4389	311
550-5561	3
	4
	214
550-5562	▶214
550-5565	▶353
550-5566	▶92
550-5567	▶354
550-5570	4
	820
550-5571	3
	147
550-5572	▶148
550-5575	3
	148
550-5579	5
	366
	680
550-5580	▶748
550-5581	415
	418
550-5583	5
	418
550-5585	3
	4
	376
550-5587	5
	376
550-5589	▶412
	▶418
550-5600	3
	4
	829
550-9960	▶820
550-9963	820
	827
	828
550-9965	▶836
	▶837
552-3288	260
552-3289	142
552-6088	147
552-6116	205
552-7547	78
	79
552-7563	547
552-8910	636
552-9082	588
552-9083	588
552-9981	55
553-3782	▶318
	▶326
553-6655	832
553-9412	703
554-3767	▶355
	▶621
	▶622
554-7029	577
	580
554-8761	265
554-8937	142
555-1263	186
	192
555-7345	811
	812
555-8382	320
555-9632	311
556-1607	364
	365
556-1691	575
556-1695	575
556-3018	812
556-3891	55
556-4537	320
556-4538	320
556-6623	575
556-6629	575
556-6631	575
556-8474	▶381
	▶382
556-8476	381
557-0475	749
557-0477	749
557-0479	749
557-0480	750
557-0481	750
557-0482	750
557-0528	▶749
	▶752
557-0529	▶750
	▶752
557-0535	752
557-0536	752
557-1860	577
	580
557-3629	146
557-5447	1
	216
557-7473	▶791
	▶797
557-7474	791
	799
557-7475	785
	789
	798
	799
	800
558-0716	365
558-1782	572
558-1783	572
558-1801	541
558-1803	541
558-6604	519
	527
558-8919	144
	145
558-8921	144
	145
558-8922	▶146
	▶148
	149
	150
	▶670
558-9212	518
	528
558-9213	503
	529
558-9216	509
	530
558-9217	507
	531
559-0352	387
559-1415	85
559-1512	1
	137
559-2193	240
559-2195	▶153
	▶232
559-2709	5
	413
559-3061	376
559-3063	376
	409
559-4300	342
	498
559-4303	343
559-4308	▶343
	▶498
559-4330	▶170
	▶240
559-5182	▶625
	▶795
	▶797
559-5990	▶1
	▶2
559-5994	2
	8
559-5996	2
	144
559-6006	2
	837
559-6007	3
	4
	64
559-6008	▶64
559-6019	▶795
	▶796
559-6020	▶795

▶ PRIMARY REFERENCE

PART NUMBER INDEX

Part	Page
	▶796
559-7725	▶793
	▶797
559-7727	793
	800
559-7728	▶785
	▶795
559-7730	795
	801
560-0311	412
	752
560-0439	785
	789
	798
	799
	800
	801
560-2035	343
560-3061	227
	234
560-5946	144
	247
560-5951	144
	251
560-7640	89
560-7756	721
560-7813	▶104
	▶107
560-9088	▶756
561-0321	594
561-2376	71
561-2380	71
561-2381	8
	71
561-2941	146
561-2947	146
561-3001	▶125
	▶127
561-3220	1
	176
561-3447	387
561-3457	125
561-3836	623
561-3837	623
561-3838	374
	375
561-4259	8
	703
561-4260	703
561-4781	594
561-4852	80
561-4973	80
561-4982	80
561-5059	80
561-5082	785
561-5106	801
561-5155	80
561-5159	8
	80
561-5392	27
561-6673	▶661
	▶669
	▶670
561-6674	149
	150
	662
561-6676	661
561-6677	661
561-6787	703
561-7171	575
561-7221	151
561-8689	212
561-8751	137
561-8783	137
562-0250	214
	838
562-1812	▶146
	▶149
	▶150
562-1817	▶146
	▶148
562-1927	71
	137
	248
	253
	255
	311
	623
	703
562-2915	64
	65
562-2916	65
562-2917	65
562-2919	65
562-2920	65
	67
562-2921	65
	67
562-3500	205
562-3973	638
	639
	640
	691
562-3974	691
562-3975	691
562-6488	240
562-6802	241
562-7044	403
	404
562-7151	413
562-7152	413
562-7337	550
	572
562-7338	550
	571
562-7339	▶541
	▶550
562-7341	571
	609
562-7342	541
562-7344	572
562-7345	609
562-7346	571
562-7347	541
562-7348	541
562-7887	▶142
	▶147
	▶148
562-9032	342
563-0090	▶604
	▶820
563-0542	416
	419
563-0545	▶391
	▶417
563-0549	137
563-1027	▶539
563-1028	▶540
563-1029	▶455
	▶539
563-1030	▶456
	▶539
563-1138	▶457
	▶540
563-1139	▶459
	▶540
563-1588	379
	380
	382
563-1981	▶787
	▶795
563-1994	▶789
	▶795
563-3805	703
563-4606	▶542
	▶551
563-4607	542
563-4608	542
563-4609	551
563-4611	551
563-5532	648
	688
563-6608	318
563-8073	639
	640
	724
563-8309	260
563-8759	391
	419
563-8760	391
	419
563-9734	340
564-0798	67
564-2666	▶183
	▶192
564-2699	190
564-2798	146
564-3012	627
564-6737	▶170
	▶191
564-8192	700
564-9474	729
565-0025	787
	798
565-0028	789
565-3057	8
	85
565-3713	746
565-3813	419
565-3814	419
565-3816	419
565-3818	419
565-3819	419
565-3820	419
565-4121	695
565-4166	605
565-4167	605
565-4173	55
565-4190	605
565-5309	4
	695
565-6292	703
565-6293	703
565-6671	1
	138
565-7287	144
	265
565-7935	638
	725
565-7936	638
	727
565-7937	725
565-7938	727
565-8666	▶233
	▶638
566-1095	85
566-1884	8
	127
566-2020	▶154
	▶227
566-2686	688
566-2687	688
566-2688	688
566-3122	6
	145
566-3123	145
566-3386	186
	193
566-4130	669
	672
566-4326	635
	699
566-7452	6
566-7683	594
566-7771	145
566-7931	12
566-8123	105
566-8924	105
567-0371	145
567-1252	85
567-1308	635
	721
567-2075	700
567-2078	700
567-2079	698
	699
	700
567-2092	672
567-2688	1
	212
567-5729	818
568-5111	144
568-5281	418
568-5294	410
	411
568-5303	2
	342
568-5315	825
	826
568-5317	825
	826
568-5979	3
	58
568-7464	58
568-7695	635
	686
568-7696	635
	686
568-7744	▶666
	▶686
569-0452	669
	735
569-0794	372
569-0796	372
569-0811	6
	7
569-1137	623
569-1973	414
569-2068	4
	757
569-7576	746
569-8077	263
570-0376	185
	186
	194
570-1038	615
570-1041	615
570-1042	615
570-1048	615
570-1050	615
570-1052	615
570-1054	615
570-1055	615
570-1056	615
570-1058	615
570-2440	823

▶ PRIMARY REFERENCE

PART NUMBER INDEX

Part	Page
570-4062	395
570-4086	64
	67
570-4087	67
570-4088	395
570-4089	395
570-4090	67
570-4091	67
570-5540	85
	139
570-6945	402
570-6946	404
570-6948	402
	404
570-7534	135
570-8524	251
	253
571-0031	575
571-0032	575
571-2065	395
571-2066	395
571-2192	696
571-3530	311
571-3546	311
571-4239	594
571-4240	594
571-4652	821
	823
571-4816	575
571-4826	575
571-4832	575
571-6188	185
	195
571-6705	425
571-6706	426
571-6709	425
	428
571-6710	426
	427
571-6907	705
571-6908	698
571-6909	705
571-6910	698
571-7344	85
571-7642	85
571-8375	598
571-8376	598
572-2292	594
572-2293	594
572-6059	145
573-0362	55
573-1751	777
573-4585	▶679
573-7310	80
574-0147	670
	673
574-0148	148
	362
574-0149	149
	150
	729
574-0150	362
	673
	729
574-0151	362
	673
	729
574-0152	362
	729
574-0153	362
	729
574-3366	577
	580
574-4833	71
574-5257	146
574-5932	594
574-8683	260
574-9280	55
575-0001	835
575-0002	▶821
	▶825
575-0003	▶823
	▶826
575-0008	▶825
	▶835
575-0009	▶826
	▶835
575-0139	821
	823
575-0404	224
575-1114	185
575-3346	▶6
575-4387	227
	234
575-4388	▶266
	▶686
575-4389	▶169
	▶224
575-4390	148
	149
	150
	262
575-4391	149
	150
	263
575-4392	▶162
	▶263
575-4393	263
575-4394	263
575-4396	263
575-4397	263
575-4738	▶147
	▶669
575-4745	147
575-5502	▶185
	▶186
575-5503	3
	189
575-5505	4
	185
575-5507	3
	185
575-5509	5
	186
575-5539	821
	823
575-5540	821
	823
575-5582	731
575-5630	5
	387
575-6940	687
575-7726	504
	532
575-7727	505
	533
575-7729	508
	534
575-7730	510
	535
575-7733	3
	4
	503
575-7734	▶504
575-7735	▶505
575-7736	▶506
575-7738	▶507
575-7739	▶508
575-7740	▶509
575-7741	▶510
575-8486	▶147
	▶669
575-9695	4
	635
575-9697	3
	635
575-9699	3
	4
	837
575-9700	2
	573
575-9703	2
	144
575-9704	▶1
575-9705	3
	4
	107
575-9708	3
	4
	6
575-9796	▶797
575-9797	▶796
575-9798	▶796
575-9799	▶797
575-9800	▶796
575-9801	▶796
575-9893	85
575-9962	686
	687
576-0011	70
576-0991	680
	681
576-0992	681
576-1010	372
576-1011	372
576-1032	255
576-1937	70
576-4212	372
576-4402	506
	536
576-5029	144
576-8137	▶809
	▶818
576-8138	809
576-8139	809
576-8141	809
576-8851	159
577-0167	▶633
	▶638
	639
	640
577-0168	633
	634
577-0169	638
	707
577-0170	707
577-0171	707
577-0172	707
577-0175	634
577-0177	▶224
	▶634
577-1292	4
	669
577-1293	▶670
577-1295	▶149
577-1296	▶150
577-2145	185
577-2146	147
	148
577-2148	820
577-2230	391
	419
577-2233	137
577-4278	754
577-7257	744
577-7697	▶179
577-7698	▶180
577-7699	▶162
	▶179
	▶180
577-7750	3
	197
577-8017	721
577-8019	721
577-8099	140
577-8623	3
	140
578-1341	731
578-1343	731
578-1344	731
578-1345	731
578-1346	731
578-1347	731
578-1702	731
578-4267	731
578-4914	370
578-4915	351
578-4916	351
578-5040	638
	639
	640
	754
578-9044	391
578-9476	733
578-9541	705
578-9542	638
	639
	640
	705
579-0072	395
	407
579-1512	699
579-1513	699
579-2103	311
579-3031	105
579-3034	105
579-3035	105
579-3036	105
579-4147	248
579-4881	115
579-5061	641
	642
	643
	744
579-5636	▶181
579-5770	▶511
579-5771	▶512
579-5773	▶513
579-5774	▶514
579-5775	▶515
579-5776	▶516
579-5777	▶517
579-5778	3
	4
	668
579-5779	▶741
579-5780	3
	4
	827
579-6887	▶640
579-6896	640
	643
580-0633	368
	370
580-0643	253
580-0725	▶166

PART NUMBER INDEX

Part	Page
	►255
580-0726	►159
	►241
580-0727	►174
	►241
580-2835	731
580-3589	594
580-3600	564
	830
580-3608	►163
	►258
580-5698	372
580-5699	372
580-7781	383
	384
	417
580-8200	431
	433
	499
580-8201	499
	501
580-8202	435
	437
	501
580-8224	733
580-8225	388
580-8226	388
580-9714	144
	244
581-1001	589
	591
581-1002	589
	591
581-1098	311
581-1621	76
	77
581-1751	55
581-3674	►167
	►259
581-3676	►172
	►257
581-3677	►165
	►248
581-3681	►160
	►251
581-3701	260
581-3702	►168
	►265
581-3703	128
581-3708	130
581-3713	241
581-3714	253
581-3755	253
581-3756	253
581-4229	746
581-4230	746
581-4231	746
581-6213	181
	182
581-6369	195
581-7275	343
581-7276	343
582-1429	499
	501
582-1585	196
582-1729	148
	149
	150
	670
582-1730	669
582-2157	253
582-2158	253
582-2159	253
582-2335	234
582-2336	234
582-2453	391
	419
582-2454	419
582-2965	70
582-4725	241
582-5249	431
	433
	435
	437
582-5252	431
	433
	435
	437
582-7310	139
582-7312	139
582-7316	139
582-9275	192
582-9860	►163
	►182
583-4667	►157
	►235
583-6928	182
584-2192	►518
584-2193	►519
584-3325	138
584-6132	248
584-7378	146
584-7747	248
585-2954	138
585-4449	244

► PRIMARY REFERENCE

MEMORANDA



©2019 Caterpillar
All Rights Reserved

CAT, CATERPILLAR, LET'S DO THE WORK, their respective logos, “Caterpillar Yellow”, the "Power Edge" and Cat "Modern Hex" trade dress as well as corporate and product identity used herein, are trademarks of Caterpillar and may not be used without permission.