TECHNICAL MANUAL

UNIT MAINTENANCE, DIRECT SUPPORT AND GENERAL SUPPORT MAINTENANCE REPAIR PARTS AND SPECIAL TOOLS LISTS

TRACTOR, FULL TRACKED, LOW SPEED DIESEL-ENGINE DRIVEN, SECTIONALIZED AND NONSECTIONALIZED W/ANGLE DOZER, WINCH AND ROPS

MODEL D5BNS
NSN 2410-01-126-7902

MODEL D5BS
NSN 2410-01-127-6512

MODEL D5BS1
NSN 2410-01-270-1192

MODEL D5BNS1
NSN 2410-01-296-8479

This manual supersedes TM 5-241 0-236-24P, 15 November 1989

Approved for Public Release; Distribution is Unlimited

HEADQUARTERS, DEPARTMENT OF THE ARMY

15 SEPTEMBER 1992

CHANGE

NO. 1

HEADQUARTERS
DEPARTMENT OF THE ARMY
Washington D.C., 22 *July 1993*

**UNIT MAINTENANCE,
DIRECT SUPPORT AND
GENERAL SUPPORT MAINTENANCE
REPAIR PARTS AND SPECIAL TOOLS LIST
FOR**

**TRACTOR, FULL TRACKED, LOW SPEED
DIESEL-ENGINE DRIVEN, SECTIONALIZED AND
NONSECTIONALIZED W/ANGLE DOZER, WINCH
AND ROPS**

MODEL D5BNS
NSN 2410-01-126-7902

MODEL D5BS
NSN 2410-01-127-6512

MODEL D5BS1
NSN 2410-01-270-1192

MODEL D5BNS1
NSN 2410-01-296-8479

Current as of 7 May 1993

TM 5-2410-236-24P, dated 15 September 1992, is changed as follows:
1. Remove old pages and insert new pages.
2. New or changed material is indicated by an asterisk or by a vertical bar in the margin of the page.

Remove Pages	**Insert Pages**
iii through viii	*iii through viii*
1-1 through Figure 6	*1-1 through Figure 6*
9-1 through Figure 11	*9-1 through Figure 11*
12-1 through Figure 16	*12-1 through Figure 16*
17-1 through 23-2	*17-1 through 23-2*
24-1 and 24-2	*24-1 and 24-2*
25-1 through Figure 27	*25-1 through Figure 27*
29-1 and Figure 30	*29-1 and Figure 30*
31-1 and 31-2	*31-1 and 31-2*
34-1 and 34-2	*34-1 and 34-2*
Figure 36 Sheet 2 of 2 through 39-2	*Figure 36 Sheet 2 of 2 through 39-2*
40-1 and 40-2 40-1 and 40-2	
41-1 through Figure 44	*41-1 through Figure 44*
Figure 47 Sheet 2 of 2 through 47-3	*Figure 47 Sheet 2 of 2 through 47-3*
49-1 and Figure 50	*49-1 and Figure 50*
51-1 through 53-2	*51-1 through 53-2*

Approved for public release: distribution is unlimited.

Remove Pages (Con't)	Insert Pages (Con't)
56-1 through 58-2	*56-1 through 58-2*
60-1 through 61-2	*60-1 through 61-2*
62-1 through 64-2	*62-1 through 64-2*
65-1 and 65-2	*65-1 and 65-2*
66-1 and Figure 67	*66-1 and Figure 67*
68-1 through Figure 70	*68-1 through Figure 70*
Figure 71 Sheet 2 of 2 through Figure 72	*Figure 71 Sheet 2 of 2 through Figure 72*
73-1 and Figure 74	*73-1 and Figure 74*
75-1 through 78-2	*75-1 through 78-2*
79-1 through 80-2	*79-1 through 80-2*
82-1 through Figure 85	*82-1 through Figure 85*
87-1 through Figure 89	*87-1 through Figure 89*
90-1 and 90-2	*90-1 and 90-2*
91-1 and Figure 92	*91-1 and Figure 92*
93-1 and 93-2	*93-1 and 93-2*
94-1 through 96-2	*94-1 through 96-2*
98-1 through 99-2	*98-1 through 99-2*
100-1 and Figure 101	*100-1and Figure 101*
102-1 through 107-2	*102-1 through 107-2*
108-1 through 114-2	*108-1 through 114-2*
115-1 through Figure 117	*115-1 through Figure 117*
119-1 and 119-2	*119-1 and 119-2*
120-1 and 120-2	*120-1 and 120-2*
121-1 and 121-2	*121-1 and 121-2*
122-1 through 123-2	*122-1 through 123-2*
124-1 and 124-2	*124-1 and 124-2*
127-1 through Figure 133 Sheet 1 of 3	*127-1 through Figure 133 Sheet 1 of 3*
134-1 through 135-2	*134-1 through 135-2*
136-1 and 136-2	*136-1 and 136-2*
137-1 through 138-2	*137-1 through 138-2*
139-1 through Figure 142	*139-1 through Figure 142*
143-1 through Figure 145 Sheet 1 of 2	*143-1 through Figure 145 Sheet 1 of 2*
145-2 and 145-3	*145-2 and 145-3*
146-1 through 148-2	*146-1 through 148-2*
151-1 through 152-2	*151-1 through 152-2*
Bulk-1 through 1-223	*Bulk-1 through I-223*

3. File this change sheet in front of the publication for reference purposes.

By Order of the Secretary of the Army:

GORDON R. SULLIVAN
General, United States Army
Chief of Staff

Official: 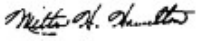

MILTON H. HAMILTON
Administrative Assistant to the
Secretary of the Army
04580

Distribution:
To be distributed in accordance with DA Form 1 2-25-E, Block 2313, requirements for TM 5-241 0-236-24P.

TECHNICAL MANUAL

*TM 5-241 0-236-24P

HEADQUARTERS
DEPARTMENT OF THE ARMY
WASHINGTON D.C., 15 September 1992

UNIT MAINTENANCE, DIRECT SUPPORT AND GENERAL SUPPORT MAINTENANCE REPAIR PARTS AND SPECIAL TOOLS LIST FOR

TRACTOR, FULL TRACKED, LOW SPEED DIESEL-ENGINE DRIVEN, SECTIONALIZED AND NONSECTIONALIZED W/ANGLE DOZER, WINCH AND ROPS

MODEL D5BNS
NSN 2410-01-126-7902

MODEL D5BS
NSN 2410-01-127-6512

MODEL D5BS1
NSN 2410-01-270-1192

MODEL D5BNS1
NSN 2410-01-296-8479

CURRENT AS OF

REPORTING OF ERRORS

You can help improve this manual. If you find any mistakes or if you know of a way to improve the procedures, please let us know. Mail your letter DA Form 2028 (Recommended Changes to Publications and Blank Forms) or DA Form 2028-2 located in the back of this manual direct to: Commander, U.S. Army Tank-Automotive Command, ATTN: AMSTA-MB, Warren, Mi 48397-5000. A reply will be furnished to you.

Approved for public release; distribution is unlimited.

TABLE OF CONTENTS

		PAGE	ILLUS FIG
SECTION I.	INTRODUCTION	1	
SECTION II.	REPAIR PARTS LIST	1-1	

***This publication supersedes TM 5-2410-236-24P, dated 15 November 1989.**

TABLE OF CONTENTS

		PAGE	ILLUS FIG
GROUP 01	ENGINE		
	0100-ENGINEASSEMBLY	1-1	
	ENGINE ASSEMBLY	1-1	1
	ENGINE LIFTING EYES AND MOUNTS	2-1	2
	0101-CRANKCASE, BLOCK, CYLINDER HEAD .	3-1	
	CYLINDER HEAD AND FASTENERS	3-1	3
	ENGINE BLOCK	4-1	4
	0102-CRANKSHAFT	5-1	
	CRANKSHAFTASSEMBLY	5-1	5
	0103-FLYWHEEL ASSEMBLY	6-1	
	FLYWHEEL AND FLYWHEEL HOUSING	6-1	6
	0104-PISTONS, CONNECTING RODS	7-1	
	PISTON AND CONNECTING RODS	7-1	7
	0105-VALVES, CAMSHAFTS, AND TIMING SYSTEM	8-1	
	CAMSHAFT ASSEMBLY	8-1	8
	VALVE COVER AND VALVE MECHANISM	9-1	9
	FRONT HOUSING, COVER AND FASTENER GROUP	10-1	10
	TIMING GEARS	11-1	11
	0106-ENGINE LUBRICATION SYSTEM	12-1	
	ENGINE OIL COOLER (D5BS1)	12-1	12
	ENGINE OIL FILTER (D5BNS AND D5BS)	13-1	13
	ENGINE OIL COOLER ASSEMBLY (D5BNS AND D5BS)	14-1	14
	ENGINE OIL LINES	15-1	15
	FUMES DISPOSAL AND BREATHER	16-1	16
	OIL FILLER AND DIPSTICK .	17-1	17
	OIL PAN ASSEMBLY	18-1	18
	OIL PUMP MOUNTING AND ASSEMBLY	19-1	19
	ENGINE OIL SAMPLING VALVE	20-1	20
	0108-MANIFOLDS	21-1	
	EXHAUSTMANIFOLD	21-1	21
GROUP 03	FUEL SYSTEM		
	0301-CARBURETOR, FUEL INJECTOR	22-1	
	FUEL INJECTION LINES	22-1	22
	0302-FUEL PUMPS	23-1	
	GOVERNOR	23-1	23
	FUEL INJECTION PUMP	24-1	24
	FUEL PRIMING PUMP AND FILTER	25-1	25
	FUEL DRAIN LINES	26-1	26
	0304-AIR CLEANER	27-1	
	AIR CLEANER	27-1	27
	0306-TANKS, LINES, FITTINGS, HEADERS	28-1	
	AIR LINES	28-1	28
	FUEL LINES	29-1	29
	FUELTANK	30-1	30

TABLE OF CONTENTS

	PAGE	ILLUS FIG
0308-ENGINE SPEED GOVERNOR AND CONTROLS	31-1	
GOVERNOR CONTROL	31-1	31
DECELERATOR CONTROL	32-1	32
0309-FUEL FILTERS	33-1	
WATER SEPARATOR	33-1	33
0311-ENGINE STARTING AIDS	34-1	
ETHER STARTING AID	34-1	34
GROUP 04 EXHAUST SYSTEM		
0401-MUFFLER AND PIPES	35-1	
MUFFLER	35-1	35
GROUP 05 COOLING SYSTEM		
0501-RADIATOR, EVAPORATIVE COOLER, OR HEAT EXCHANGER	36-1	
RADIATOR	36-1	36
0503-WATER MANIFOLD, HEADERS, THERMOSTATS AND HOUSING GASKETS	37-1	
WATER LINES (D5BNS AND D5BS)	37-1	37
THERMOSTAT HOUSING	38-1	38
0504-WATER PUMP	39-1	
WATER PUMP (D5BNS AND D5BS)	39-1	39
WATER PUMP (D5BS1 AND REPLACEMENT FOR MODELS D5BNS AND D5BS)	40-1	40
0505-FAN ASSEMBLY	41-1	
FAN AND GUARD	41-1	41
FAN DRIVE AND PULLEY	42-1	42
GROUP 06 ELECTRICAL SYSTEM		
0601-GENERATOR, ALTERNATOR	43-1	
ALTERNATOR MOUNTING	43-1	43
ALTERNATOR ASSEMBLY (D5BNS AND D5BS)	44-1	44
ALTERNATOR ASSEMBLY (D5BS1)	45-1	45
0603-STARTING MOTOR	46-1	
STARTING MOTOR AND MOUNTING	46-1	46
STARTING MOTOR ASSEMBLY (D5BNS AND D5BS)	47-1	47
STARTING MOTOR ASSEMBLY (D5BS1)	48-1	48
STARTER SOLENOID	49-1	49
STARTER SWITCH	50-1	50
0607-INSTRUMENT OR ENGINE CONTROL PANEL	51-1	
ENGINE CONTROL PANEL WIRING	51-1	51
STARTING RECEPTACLE (D5BS1 AND D5BNS1)	52-1	52
0609-LIGHTS	53-1	
LIGHTING GROUP	53-1	53
ROPS MOUNTED LIGHTS (D5BS1)	54-1	54
0611-HORN, SIREN	55-1	
ELECTRIC HORN	55-1	55

TABLE OF CONTENTS

	PAGE	ILLUS FIG
0612-BATTERIES, STORAGE .	56-1	
BATTERIES AND HOLDDOWN	56-1	56
0613-HULL OR CHASSIS WIRING HARNESS	57-1	
CHASSIS WIRING	57-1	57
WIRING HARNESSES	58-1	58
0615-RADIO INTERFERENCE SUPPRESSION .	59-1	
RADIO INTERFERENCE SUPPRESSION	59-1	59
GROUP 07 TRANSMISSION		
0704-TRANSMISSION TOP COVER ASSEMBLY	60-1	
TRANSMISSION CONTROL LINKAGE	60-1	60
0708-TORQUE CONVERTER OR FLUID COUPLING	61-1	
TORQUE CONVERTER	61-1	61
FLEXIBLE COUPLING DRIVE	62-1	62
0710-TRANSMISSIONASSEMBLY .	63-1	
TRANSMISSION ARRANGEMENT	63-1	63
TRANSMISSION AND SUPPORT	64-1	64
PLANETARY TRANSMISSION	65-1	65
0714-SERVO UNIT	66-1	
TRANSMISSION HYDRAULIC CONTROL	66-1	66
TRANSMISSION SELECTOR AND PRESSURE CONTROL VALVE	67-1	67
0719-REDUCTION OR TRANSFER GEARS, SHAFTS, AND BEARINGS	68-1	
TRANSFER GEAR	68-1	68
0721-COOLERS, PUMPS, MOTORS	69-1	
TRANSMISSION OIL SAMPLING VALVE	69-1	69
TRANSMISSION OIL FILTER	70-1	70
POWER TRAIN OIL LINES	71-1	71
BY-PASS VALVE	72-1	72
TRANSMISSION OIL COOLER (D5BNS AND D5BS)	73-1	73
TRANSMISSION OIL COOLER (D5BS1)	74-1	74
TRANSMISSION OIL PUMP	75-1	75
MAGNETIC SCREEN	76-1	76
GROUP 08 TRANSFER AND FINAL DRIVE ASSEMBLIES		
0801-POWER TRANSFER AND FINAL DRIVE ASSEMBLIES	77-1	
FINAL DRIVE - UPPER HALF	77-1	77
FINAL DRIVE - LOWER HALF	78-1	78
GROUP 12 BRAKES		
1204-HYDRAULIC BRAKE SYSTEM	79-1	
BRAKE CONTROL LINES	79-1	79
HYDRAULIC BRAKE MECHANISM	80-1	80

TABLE OF CONTENTS

		PAGE	ILLUS FIG
GROUP 13	WHEELS AND TRACKS		
	1301-SUSPENSIONASSEMBLY .	81-1	
	LIFT AND TIEDOWN EYES	81-1	81
	TRACK ROLLER FRAME (D5BNS AND D5BS)	82-1	82
	1302-TRACK SUPPORT ROLLERS AND BRACKETS	83-1	
	TRACK ROLLER FRAME (D5BS1 AND D5BNS1)	83-1	83
	TRACK CARRIER ROLLER	84-1	84
	TRACK ROLLER GROUP - SINGLE FLANGE	85-1	85
	TRACK ROLLER GROUP - DOUBLE FLANGE	86-1	86
	1303-TRACK IDLERS AND BRACKETS .	87-1	
	IDLER SPRING TENSION - FRONT	87-1	87
	IDLER WHEEL - FRONT	88-1	88
	1305-TRACK ASSEMBLY	89-1	
	TRACK	89-1	89
	1311-WHEEL ASSEMBLY	90-1	
	NOSE WHEEL (D5BS AND D5BS1) .	90-1	90
GROUP 14	STEERING		
	1403-STEERING BRAKES .	91-1	
	STEERING CLUTCH	91-1	91
	STEERING BRAKE FOOT PEDALS AND LINKAGE	92-1	92
	STEERING BRAKE BAND, LINING AND RELATED PARTS	93-1	93
	STEERING CLUTCH HAND CONTROL AND LINKAGE	94-1	94
	STEERING CLUTCH CONTROL VALVE AND PIPING	95-1	95
	1414-STEERING SYSTEM VALVES	96-1	
	STEERING CLUTCH CONTROL VALVE ASSEMBLY	96-1	96
GROUP 15	FRAME, TOWING ATTACHMENTS, AND DRAWBARS		
	1501-FRAME ASSEMBLY	97-1	
	FRAME	97-1	97
	CHASSIS AND POWER TRAIN SECTIONALIZING I GROUP (D5BS AND D5BS1)	98-1	98
	DOZER SECTIONALIZING GROUP (D5BS AND D5BS1)	99-1	99
	RECOIL MECHANISM GUARD	100-1	100
	1503-PINTLES AND TOWING ATTACHMENTS	101-1	
	FIXED DRAWBAR (D5BS AND D5BS1)	101-1	101
GROUP 16	SPRINGS AND SHOCK ABSORBERS		
	1601-SPRINGS	102-1	
	EQUALIZER SPRINGS	102-1	102
GROUP 18	BODY, CAB, HOOD AND HULL		
	1801-BODY, CAB, HOOD AND HULL ASSEMBLIES	103-1	
	RADIATOR GUARD	103-1	103
	CRANKCASE GUARD	104-1	104

TABLE OF CONTENTS

	PAGE	ILLUS FIG
PROTECTIVE SCREEN (D5BS1 AND D5BNS1)	105-1	105
CONTROL CONSOLE AND GUARDS .	106-1	106
ENGINE HOOD AND MOUNTING	107-1	107
ROLLOVER PROTECTIVE STRUCTURE	108-1	108
DECONTAMINATION TANK MOUNTING (D5BS1)	109-1	109
TRACK ROLLER DIRT GUARD (D5BNS AND D5BS)	110-1	110
TRACK AND ROLLER GUARD (D5BS1 AND D5BNS1)	111-1	111
1802-FENDERS	112-1	
FENDERS	112-1	112
1805-FLOORS	113-1	
FLOOR PLATES	113-1	113
1806-UPHOLSTERY SEATS AND CARPETS .	114-1	
SUPPORT AND SEAT	114-1	114
SEATSUPPORT	115-1	115
SEAT ASSEMBLY	116-1	116
1808-STOWAGE RACKS, BOXES, STRAPS, CARRYING CASES, CABLE REELS, HOSE REELS, ETC	117-1	
BASKET ASSEMBLY (D5BS AND D5BS1)	117-1	117
GROUP 20 HOIST, WINCH, CAPSTAN, WINDLASS, POWER CONTROL UNIT, AND POWER TAKE-OFF		
2001 -WINCH ASSEMBLY	118-1	
WINCH CASE MOUNTING	118-1	118
CABLE GUIDE AND WINCH CASE	119-1	119
WINCH CASE COVERS, BREATHER AND MAGNETIC SCREEN	120-1	120
WINCH DRUM AND DRIVING GEARS	121-1	121
WINCH DRIVING GEARS	122-1	122
WINCH DRIVING AND INPUT GEARS	123-1	123
WINCH INPUT GEARS	124-1	124
WINCH OIL FILTER	125-1	125
WINCH DRIVE SHAFT	126-1	126
WINCH HAND CONTROL	127-1	127
WINCH GEAR PUMP ASSEMBLY	128-1	128
WINCH PUMP LINES	129-1	129
WINCH CONTROL VALVE	130-1	130
WINCH SELECTOR VALVE ASSEMBLY	131-1	131
WINCH PRESSURE CONTROL VALVE ASSEMBLY	132-1	132
GROUP 22 BODY CHASSIS OR HULL, AND ACCESSORY ITEMS		
2210-DATA PLATES AND INSTRUCTION HOLDERS	133-1	
NAMEPLATES AND DECALS	133-1	133
GROUP 24 HYDRAULIC AND FLUID SYSTEMS		
2401-PUMP AND MOTOR	134-1	
HYDRAULIC OIL PUMP	134-1	134

TABLE OF CONTENTS

	PAGE	ILLUS FIG
2402-MANIFOLD AND/OR CONTROL VALVES	135-1	
HYDRAULIC TANK SUCTION LINE CONTROL VALVE (D5BNS AND D5BS)	135-1	135
HYDRAULIC TANK CONTROL VALVE (D5BS1 AND D5BNS1)	136-1	136
2403-HYDRAULIC CONTROLS AND/OR MANUAL CONTROLS	137-1	
BULLDOZER CONTROL LINKAGE (D5BNS AND D5BS)	137-1	137
BULLDOZER CONTROL LINKAGE (D5BS1 AND D5BNS1)	138-1	138
2406-STRAINERS, FILTERS, LINES AND FITTINGS, ETC	139-1	
BULLDOZER SUPPLY/RETURN LINES	139-1	139
BULLDOZER LIFT CYLINDER LINES	140-1	140
PUMP LINES	141-1	141
TILT CYLINDER LINES (D5BS1)	142-1	142
2407-HYDRAULIC CYLINDERS	143-1	
LIFT CYLINDER MOUNTING	143-1	143
LIFT CYLINDER ASSEMBLY	144-1	144
2408-LIQUID TANKS	145-1	
HYDRAULIC TANK AND VALVE (D5BNS AI-D D5BS)	145-1	145
HYDRAULIC TANK MOUNTING	146-1	146
HYDRAULIC TANK AND VALVE (D5BS1 AND D5BNS1)	147-1	147
GROUP 42 ELECTRICAL EQUIPMENT		
4209-SIGNALING DEVICES	148-1	
BACK-UP WARNING GROUP	148-1	148
GROUP 47 GAGES, WEIGHING AND MEASURING DEVICES		
4701-INSTRUMENTS (SPEED AND DISTANCE)	149-1	
TACHOMETER DRIVE (D5BS1)	149-1	149
4702-GAGES, MOUNTINGS, LINES, AND FITTINGS	150-1	
NON-ELECTRICAL GAGES	150-1	150
GAGE TUBING	151-1	151
GROUP 74 CRANES, SHOVELS, AND EARTH MOVING EQUIPMENT COMPONENTS		
7435-BLADE, FRAME AND BRACES	152-1	
BLADE, FRAME AND BRACES	152-1	152
GROUP 94 REPAIR PARTS KITS		
9401-REPAIR PARTS KITS	KIT-1	
REPAIR KITS	KIT-1	KIT
GROUP 95 GENERAL USE STANDARDIZED PARTS		
9501-BULK MATERIEL	BULK-1	
BULK	BULK-1	BULK

TABLE OF CONTENTS

		PAGE	ILLUS FIG
SECTION III.	SPECIAL TOOLS LIST		
GROUP 26	TOOLS AND TEST EQUIPMENT		
	2604-SPECIAL TOOLS	153-1	
	SPECIALTOOLS	153-1	153
SECTION IV.	CROSS-REFERENCE INDEXES	I-1	
	NATIONAL STOCK NUMBER INDEX	I-1	
	PART NUMBER INDEX	I-44	
	FIGURE AND ITEM NUMBER INDEX	I-134	

UNIT, DIRECT SUPPORT AND GENERAL SUPPORT MAINTENANCE REPAIR PARTS AND SPECIAL TOOLS LISTS

SECTION I. INTRODUCTION

1.Scope.

This RPSTL lists and authorizes spares and repair parts; special tools; special test, measurement, and diagnostic equipment (TMDE); and other special support equipment required for performance of Unit, Direct Support and General Support Maintenance of the Tractor, Full Tracked. It authorizes the requisitioning, issue, and disposition of spares, repair parts and special tools as indicated by the source, maintenance and recoverability (SMR) codes.

2.General.

In addition to Section I. Introduction, this Repair Parts and Special Tools List is divided into the following sections:

a. *Section II. Repair Parts List*. A list of spares and repair parts authorized by this RPSTL for use in the performance of maintenance. The list also includes parts which must be removed for replacement of the authorized parts. Parts lists are composed of functional groups in ascending alphanumeric sequence, with the parts in each group listed in ascending figure and item number sequence. Bulk materials are listed in item name sequence. Repair kits are listed separately in their own functional group within Section II. Repair parts for repairable special tools are also listed in the section. Items listed are shown on the associated illustration(s)/figure(s).

b. Section III. Special Tools List. A list of special tools, special TMDE, and other special support equipment authorized by this RPSTL (as indicated by Basis of Issue (BOI) information in DESCRIPTION AND USABLE ON CODE column) for the performance of maintenance.

c. Cross-reference Indexes. A list, in National Item Identification Number (NIIN) sequence, of all National stock numbered items appearing in the listing, followed by a list in alphanumeric sequence of all part numbers appearing; in the listings. National stock numbers and part numbers are cross-referenced to each illustration, figure and item number appearance. The figure and item number index lists figure and item numbers in alphanumeric sequence and cross-references NSN, CAGE and part numbers.

3.Explanation of Columns (Sections II and III).

a. ITEM NO. (Column (1)). Indicates the number used to identify items called out in the illustration.

b. SMR CODE (Column (2)). The Source, Maintenance, and Recoverability (SMR) code is a 5-position code containing supply/requisitioning information, maintenance category authorization criteria and disposition instructions, as shown in the following breakout:

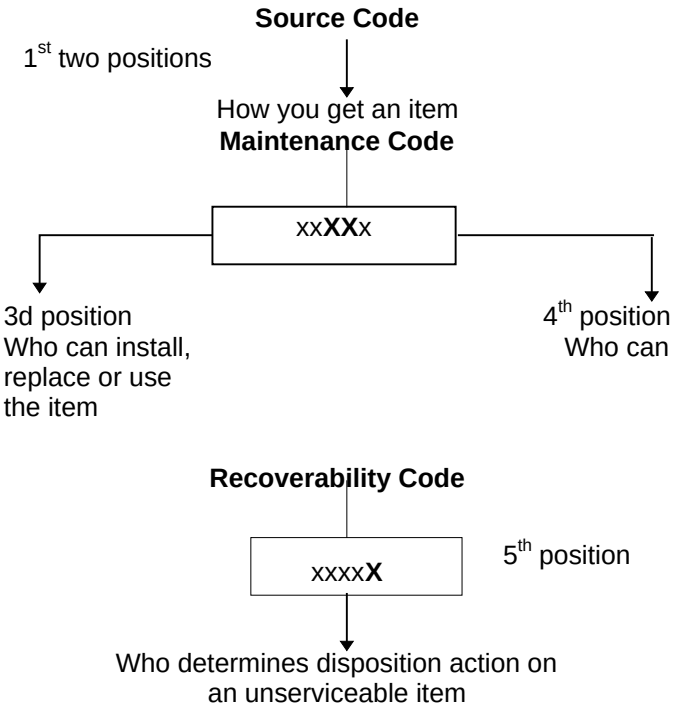

*Complete Repair. Maintenance capacity, capability, and authority to perform all corrective maintenance tasks of the "Repair" function in a use/user environment in order to restore serviceability to a failed item.

(1) Source Code. The source code tells you how to get an item needed for maintenance, repair or overhaul of an end item/equipment. Explanations of source codes follows:

Code	Application/Explanation
PA PB PC** PD PE PF PG	Stocked items; use the applicable NSN to request/requisition items with these source codes. They are authorized to the category indicated by the code entered in 3d position of the SMR code. **Items coded PC are subject to deterioration.
KD KF KB	Items with these codes are not to be requested/requisitioned individually. They are part of a kit which is authorized to the maintenance category indicated in the 3d position of the SMR code. The complete kit must be requisitioned and applied.
MO-(Made at UM A VUM Level)	Items with these codes are not to be requested/ requisitioned individually. They must be made from bulk material which is identified by the part number in the DESCRIPTION AND USABLE ON CODE (UOC) column and listed in the Bulk Material group of the repair parts list in this RPSTL. If the item is authorized to you by the 3d position code of the SMR code, but if the source code indicates it is made at a higher level, order the item from the higher level of maintenance.
MF-(Made at DS/ AVUM Level)	
ML-(Made at Specialized Repair Act (SRA))	
MD-(Made at Depot)	
AO-(Assembled by UM/AVUM Level)	Items with these codes are not to be requested/requisitioned individually The parts that make up the assembled item must be requisitioned or fabricated and assembled at the level of maintenance indicated by the source code. If the 3d position code of the SMR code by authorizes you to replace the item, but the source code indicates the item is assembled at a higher level, order the item from the higher level of maintenance.
AF-(Assembled by DS/A VIM Level)	
AH-(Assembled by GS Category)	
AL-(Assembled by SRA)	
AD-(Assembled by Depot)	
XA-	Do not requisition an "XA"-coded Item. Order its next higher assembly. (Also, refer to the NOTE below.)
XB-	If an "XB" item is not available from salvage order it using the CAGE and part number given
XC-	Installation drawing, diagram, instruction sheet, field service drawing, that is identified by the manufacturer's part number.
XD-	Item is not stocked. Order an "XD"-coded item through normal supply channels using the CAGE and part number given, if no NSN is available.

NOTE: Cannibalization or controlled exchange, when authorized, may be used as source of supply for items with the above source codes, except for those source coded "XA" or those aircraft support items restricted by requirements of AR 70042.

(2) Maintenance Code. Maintenance codes tell you the level(s) of maintenance authorized to USE and REPAIR support items. The maintenance codes are entered in the third and fourth positions of the SMR Code as follows:

(a) The maintenance code entered in the third position tells you the lowest maintenance level authorized to remove, replace and use an item. The maintenance code entered in the third position will indicate authorization to one of the following levels of maintenance:

Code	Application/Explanation
C -	Crew or operator maintenance done within unit or aviation unit maintenance.
O -	Unit maintenance or aviation unit category can remove, replace and use the item.
F -	Direct support or aviation intermediate level can remove, replace and use the item.
H -	General support level can remove, replace and use the item.
L -	Specialized repair activity can remove, replace and use the item.

D - Depot level can remove, replace and use the item.

(b) The maintenance code entered in the fourth position tells whether or not the item is to be repaired and identifies the lowest maintenance level with the capability to do complete repair (i.e., perform all authorized repair functions.) (NOTE: Some limited repair may be done on the item at a lower level of maintenance, if authorized by the Maintenance Allocation Chart (MAC) and SMR codes.) This position will contain one of the following maintenance codes:

Code	Application/Explanation
O -	Unit maintenance or Aviation unit is the lowest level that can do complete repair of the item F Direct support or aviation intermediate is the lowest level that can do complete repair of the item.
H	General support is the lowest level that can do complete repair of the item.
L	Specialized repair activity is the lowest level that can do complete repair of the item.
D	Depot is the lowest level that can do complete repair of the item.
Z -	Nonreparable. No repair is authorized.
B -	No repair is authorized. (No parts or special tools are authorized for the maintenance of a "B" coded item). However, the item may be reconditioned by adjusting, lubrication, etc, at the user level.

(3) Recoverability Code. Recoverability codes are assigned to items to indicate the disposition action on unserviceable items. The recoverability code is entered in the fifth position of the SMR Code as follows:

Code	Application/Explanation
Z -	Nonreparable item. When unserviceable, condemn and dispose of the item at the level of maintenance shown in 3d position of the SMR code.
O	Reparable item. When uneconomically reparable, condemn and dispose of the item at unit maintenance or aviation unit level.
F	Reparable item. When uneconomically reparable, condemn and dispose of the item at the direct support or aviation intermediate level.
H -	Reparable item. When uneconomically reparable, condemn and dispose of the item at the general support level D Reparable item. When beyond lower level repair capability, return to depot. Condemnation and disposal of item not authorized below depot level.
L	Reparable item. Condemnation and disposal of item not authorized below specialized repair activity (SRA).
A	Item requires special handling or condemnation procedures because of specific reasons (e.g., precious metal content, high dollar value, critical material, or hazardous material). Refer to appropriate manuals/directives for specific instructions.

c. CAGEC (Column (3)). The Commercial And Government Entity (CAGE) Code (C) is a 5-digit alphanumeric code which is used to identify the manufacturer, distributor or Government agency, etc., that supplies the item.

d. PART NUMBER (Column (4)). Indicates the primary number used by the manufacturer (individual, company, firm, corporation or Government activity), which controls the design and characteristics of the item by means of its engineering drawings, specifications standards and inspection requirements to identify an item or range of items.

NOTE: When you use a NSN to requisition an item, the item you receive may have a different part number from the part ordered.

e. DESCRIPTION AND USABLE ON CODE (UOC) (Column (5)). This column includes the following information:

(1) The Federal item name and, when required, a minimum description to identify the item.

(2)Physical security classification. Not applicable.

(3) Items that are included in kits and sets are listed below the name of the kit or set on Figure KIT.

(4) Spare/repair parts that make up and assembled item are listed immediately following the assembled item line entry.

(5) Part numbers for bulk materials are referenced in this column in the line item entry for the item to be manufactured/fabricated.

(6) When the item is not used with all serial numbers of the same model, the effective serial numbers are shown on the last line(s) of the description (before UOC). Not applicable.

(7) The usable on code, when applicable (see paragraph 5, Special information).

(8) In the Special Tools List section, the basis of issue (BOI) appears as the last line(s) in the entry for each special tool, special TMDE and other special support equipment. When density of equipments supported exceeds density spread indicated in the basis of issue, the total authorization is increased proportionately.

(9) The statement "END OF FIGURE" appears just below the last item description in Column 5 for a given figure in both Section II and Section III.

f. QTY (Column (6)). The QTY (quantity per figure column) indicates the quantity of the item used in the breakout shown on the illustration figure, which is prepared for a functional group, subfunctional group or an assembly. A "V" appearing in this column in lieu of a quantity indicates that the quantity is variable and the quantity may vary from application to application.

4. Explanation of Columns (Section IV).

a. NATIONAL STOCK NUMBER (NSN) INDEX.

(1)STOCK NUMBER column. This column lists the NSN by National item identification number (NIIN) sequence. The NIIN consists of the last nine

NSN

digits of the NSN (i.e., 530501674-1467)

NIIN

When using this column to locate an item, ignore the first 4 digits of the NSN. However, the complete NSN should be used when ordering items by stock number.

(2) FIG. column. This column lists the number of the Figure where the item is identified/located. The figures are in numerical order in Section 11 and Section Ill.

(3) ITEM column. The item number identifies the item associated with the figure listed in the adjacent FIG. column. This item is also identified by the NSN listed on the same line.

b. PART NUMBER INDEX. Part numbers in this index are listed by part number in ascending 4 alphanumeric sequence (i.e., vertical arrangement of letter and number combination which places the first letter or digit of each group in order A through Z, followed by the numbers 0 through 9 and each following letter or digit in like order.)

(1) CAGEC column. The Commercial And Government Entity (CAGE) Code (C) is a 5 digit alphanumeric code used to identify the manufacturer, distributor or Government agency, etc., that supplies the item.

(2) PART NUMBER column. Indicates the primary number used by the manufacturer (individual, firm, corporation or Government activity), which controls the design and characteristics of the item by means of its engineering drawings, specifications standards, and inspection requirements to identify an item or range of items.

(3) STOCK NUMBER column. This column lists the NSN for the associated part number and manufacturer identified in the PART NUMBER and CAGEC columns to the left.

(4) FIG. column. This column lists the number of the figure where the item is identified/located in Section 11 and 111.

(5) ITEM column. The item number is that number assigned to the item as it appears in the figure referenced in the adjacent figure number column.

c. FIGURE AND ITEM NUMBER INDEX.

(1) FIG. column. This column lists the number of the figure where the item is identified/located in Section II and Ill.

(2) ITEM column. The item number is that number assigned to the item as it appears in the figure referenced in the adjacent figure number column.

(3) STOCK NUMBER column. This column lists the NSN for the item.

(4) CAGEC column. The Commercial And Government Entity (CAGE) Code (C) is a 5 digit alphanumeric code used to identify the manufacturer, distributor or Government agency, etc., that supplies the item.

(5) PART NUMBER column. Indicates the primary number used by the manufacturer (individual, firm, corporation or Government activity), which controls the design and characteristics of the item by means of its engineering drawings, specifications standards and inspection requirements to identify an item or range of items.

5.Special Information.

Use the following subparagraphs as applicable:

a. USABLE ON CODE. The usable on code appears in the lower left corner of the Description Column heading. Usable on codes are shown as "UOC: in the Description Column Justified left) on the first line following applicable item description/nomenclature.
Uncoded items are applicable to all models.
Identification of the usable on codes used in the RPSTL are:

Code	Used On
AGS	D5BNS
AGT	D5BS
AGU	D5BS1
AGV	D5BNS1

b. FABRICATION INSTRUCTIONS. Bulk materials required to manufacture items are listed in the Bulk Material Functional Group of this RPSTL. Part numbers for bulk materials are also referenced in the description column of the line item entry for the item to be manufactured/fabricated. Detailed fabrication instructions for items source coded to be manufactured or fabricated are found in TM 5-2410-236-24.

c. ASSEMBLY INSTRUCTION. Detailed assembly instructions for items source coded to be assembled from component spare/repair parts are found in TM 5-2410-236-24. Items that make up the assembly are listed immediately following the assembly item entry or reference is made to an applicable figure.

d. KITS. Line item entries for repair parts kits appear in group 9401 in Section II.

e. INDEX NUMBERS. Items which have the word BULK in the figure column will have and index number shown in the item number column. This index number is a cross-reference between the National Stock Number/Part Number Index and the bulk material list in Section II.

f. ASSOCIATED PUBLICATIONS. The publications listed below pertain to the Tractor, Full Tracked and its components:

Publication	Short Title
TM 5-2410-236-10	Tractor, Full Tracked
TM 5-2410-236-24	Tractor, Full Tracked

6. How to Locate Repair Parts.

a. When National Stock Number or Part Number is Not Known.

(1) First. Using the table of contents, determine the assembly group or subassembly group to which the item belongs. This is necessary since figures are prepared for assembly groups and subassembly groups, and listings are divided into the some groups.

(2) Second. Find the figure covering the assembly group or subassembly group to which the item belongs.

(3) Third. Identify the item on the figure and use the Figure and Item Number Index to find the NSN.

b. When National Stock Number or Part Number is Known.

(1) First. Using the National Stock Number or the Part Number Index, find the pertinent National Stock Number or Part Number. The NSN index is in National Item Identification Number (NIIN) sequence (see 4.a(1)). The part numbers in the Part Number index are listed in ascending alphanumeric sequence (see 4.b). Both indexes cross-reference you to the illustration/figure and item number of the item you are looking for.

(2) Second. Turn to the figure and item number, verify that the item is the one you're looking for, then locate the item number in the repair parts list for the figure.

7. Abbreviations.
For standard abbreviations see MIL-STD-1 2D, Military Standard Abbreviations For Use On Drawings, Specifications, Standards And In Technical Documents.

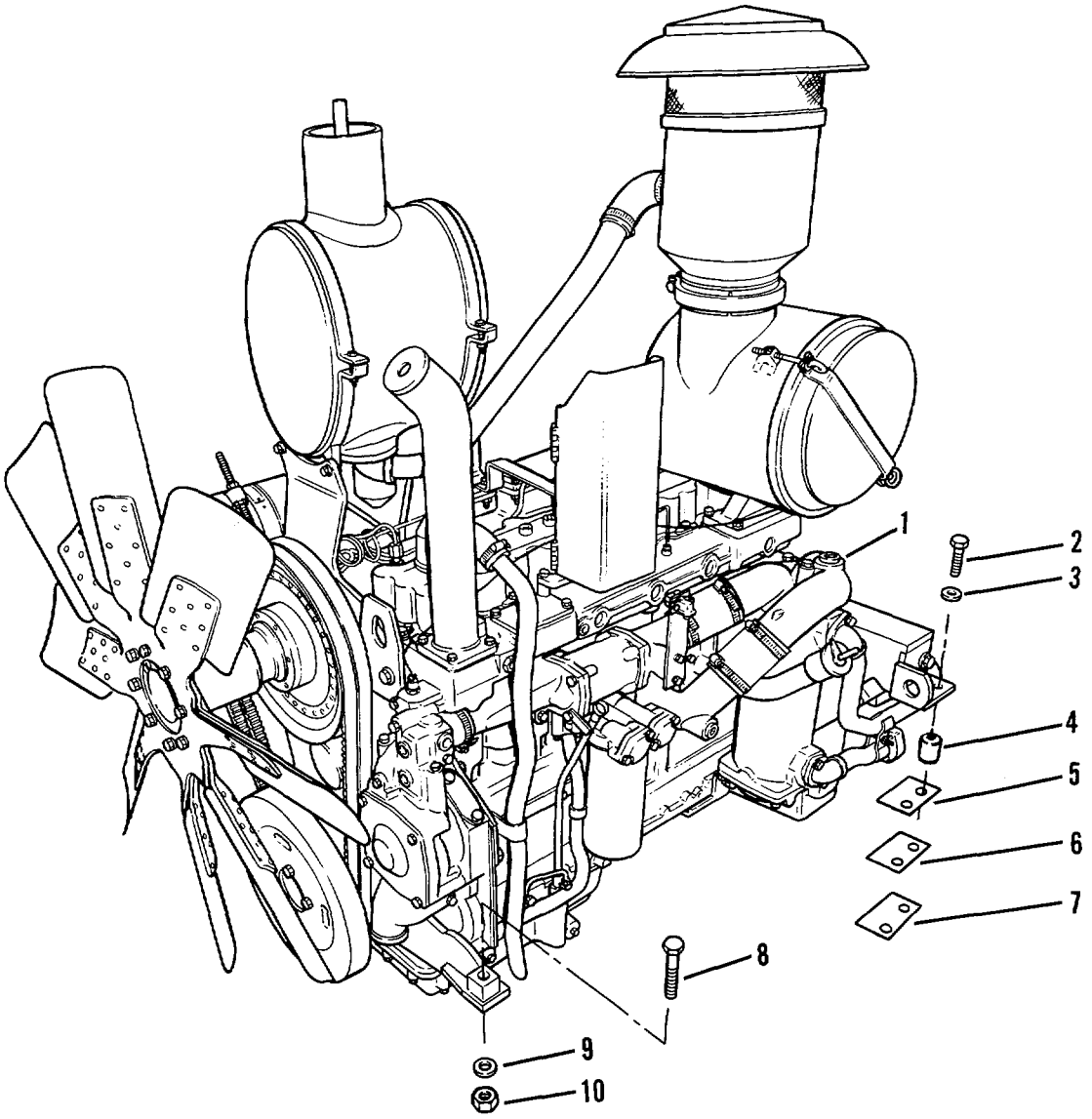

Figure 1. Engine Assembly

(1) ITEM NO	(2) SMR CODE	(3) CAGEC	(4) PART NUMBER	(5) DESCRIPTION AND USABLE ON CODES (UOC)	(6) QTY
				GROUP 01 ENGINE	
				GROUP 0100 - ENGINE ASSEMBLY	
				FIG. 1 - ENGINE ASSEMBLY	
1	PAFHD	11083	7N4980	ENGINEIDIESEL.....	1
2	PFFZZ	11083	104586	BOLT,MACHINE	4
* 3	PFFZZ	11083	4D3704	WASHER,FLAT.....	4
4	PAFZZ	11083	9M3637	SPACER ,SLEEVE.....	4
5	PAFZZ	11083	8S775	SPACERIPLATE 0.049 IN. THICK.....	2
6	PAFZZ	11083	8S0776	SPACER,PLATE 0.065 IN. THICK.....	2
7	PAFZZ	11083	850777	SPACER,PLATE 0.082 IN. THICK.....	2
8	PFFZZ	11083	3B2968	BOLT,MACHINE	2
* 9	PFFZZ	29510	39422D	WASHER,FLAT.....	2
10	PFFZZ	11083	2J3506	NUT,PLAIN,HEXAGON	2
				END OF FIGURE	

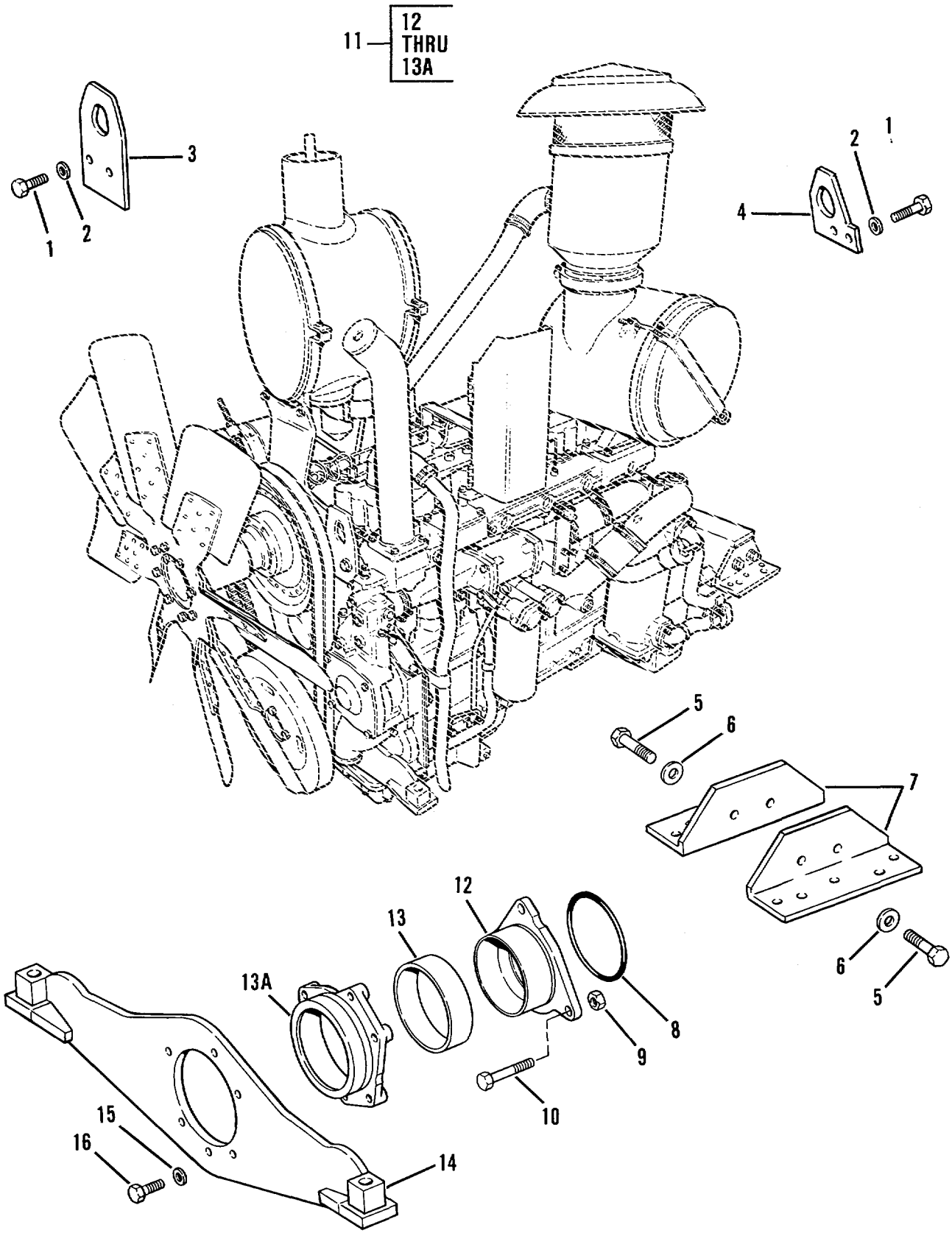

Figure 2. Engine Lifting Eyes and Mounts

(1) ITEM NO	(2) SMR CODE	(3) CAGEC	(4) PART NUMBER	(5) DESCRIPTION AND USABLE ON CODES (UOC)	(6) QTY
				GROUP 0100 - ENGINE ASSEMBLY	
				FIG. 2 - ENGINE LIFTING EYES AND MOUNTS	
1	PFFZZ	96906	MS35307-462	SCREW,CAP,HEXAGON H	4
2	PFFZZ	11083	805054	WASHER,FLAT	4
3	PFFZZ	11083	8N8721	PLATE,LIFTING EYE	1
4	PFFZZ	11083	8N8722	PLATE,LIFTING EYE	1
* 5	PFFZZ	80204	B1821BH063C175N	SCREW,CAP,HEXAGON H	4
6	PAFZZ	11083	4D3704	WASHER,FLAT	4
7	PFFZZ	11083	4N8948	BRACKET,ANGLE	2
9	PAFZZ	11083	2P1692	PACKING,PREFORMED PART OF KIT P/N 6V2912	1
9	PFFZZ	96906	MS21304-7	NUT,PLAIN,SQUARER	3
* 10	PFFZZ	11083	OL1329	BOLT,MACHINE	3
11	PFFZZ	11083	lW1219	TRUNNION ASSEMBLY	1
12	XAFZZ	11083	8N0081	TRUNNION	1
13	PAFZZ	11083	2P1487	PACKING,PREFORMED PART OF KIT P/N 6V2912	1
13A	PFFZZ	11083	1W1219	TRUNNION ASSEMBLY	1
14	PFFZZ	11083	8N5584	SUPPORT ASSY,ENGINE	1
15	PFFZZ	96906	MS27183-17	WASHER,FLAT	6
* 16	PFFZZ	11083	OS1585	BOLT,MACHINE.	6
				END OF FIGURE	

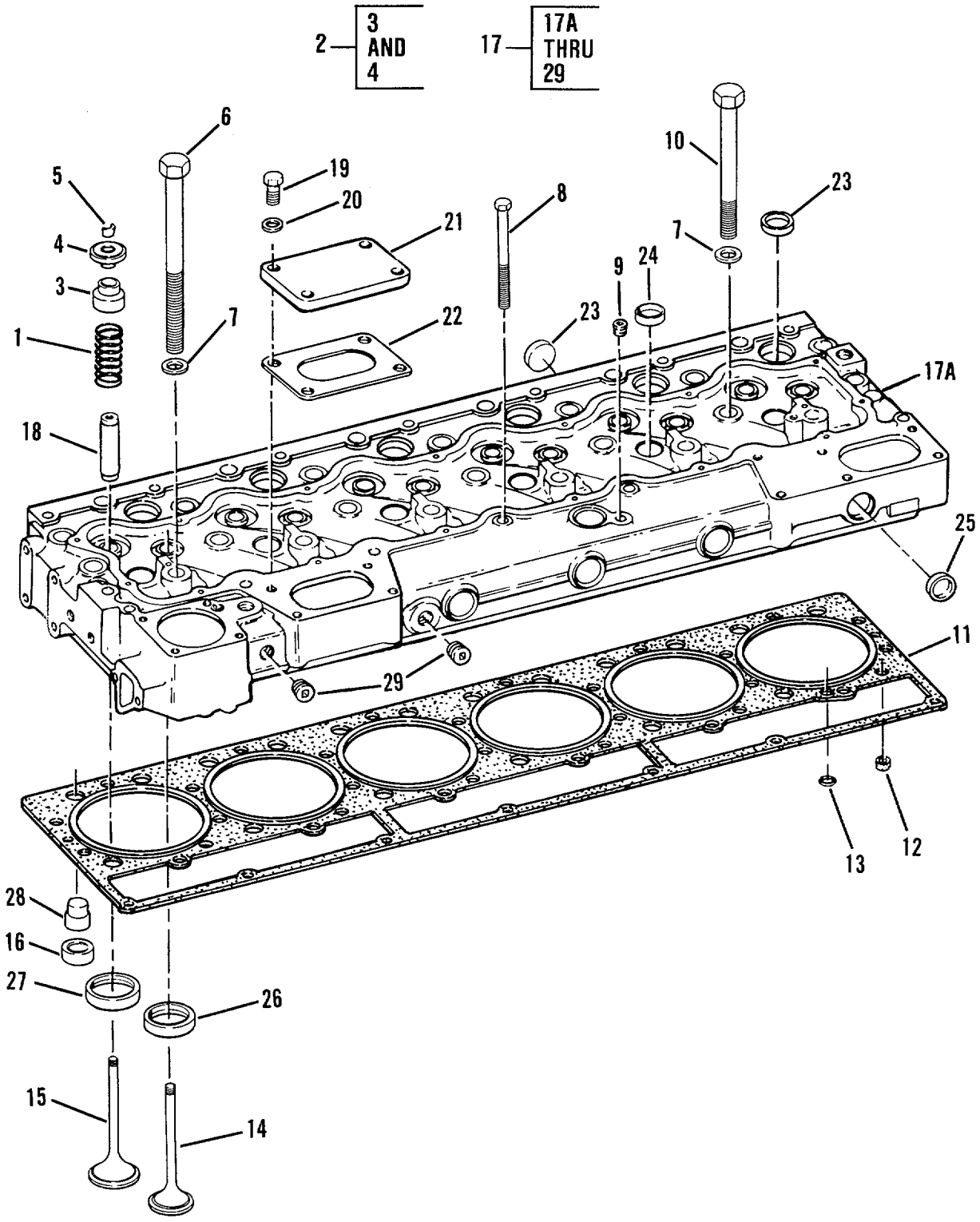

Figure 3. Cylinder Head and Fasteners

(1) ITEM NO	(2) SMR CODE	(3) CAGEC	(4) PART NUMBER	(5) DESCRIPTION AND USABLE ON CODES (UOC)	(6) QTY
				GROUP 0101 - CRANKCASE, BLOCK, CYLINDER HEAD	
				FIG. 3 - CYLINDER HEAD AND FASTENERS	
1	PAHZZ	58312	7S7144-00	SPRING,HELICAL,COMP	12
2	PFHZZ	11083	1W5300	ROTOCOIL ASSY	12
3	PFHZZ	11083	6N7174	SEAL,VALVE GUIDE	1
4	PFHZZ	11083	8N7782	ROT0R,ENGINE POPPET	1
5	PAHZZ	11083	2A4429	LOCK,VALVE SPRING R	24
6	PAFZZ	11083	1B7709	BOLT,SPECIAL	5
7	PAFZZ	11083	25736	WASHER,FLAT	25
* 8	PFFZZ	30204	81821BH038C500N	SCREW,CAP,HEXAGON H	7
9	PFHZZ	11083	5M6213	PLUG,PIPE	1
10	PAFZZ	11083	1D4595	BOLT,MACHINE	20
11	PAFZZ	11083	7N7999	GASKET	1
12	PAFZZ	11083	7N8018	SEAL,PLAIN	6
13	PFFZZ	11083	3S5496	PACKING,PREFORMED PART OF KIT P/N 6V2971	1
14	PFHZZ	11083	6N9915	VALVE,POPPET,ENGINE INTAKE	6
15	PAHZZ	11083	7N0573	VALVE,POPPET ,ENGINE EXHAUST	6
16	PAFZZ	11083	4W8087	SEAL,SPECIAL	18
17	PFFHH	11083	8N6796	HEAD GROUP CYLINDER	1
17A	XAHZZ	11083	4W7406	HEAD,CYLINDER	1
18	PAHZZ	11083	2P1262	GUIDE,VALVE STEM	12
* 19	PFFZZ	11083	S1594	BOLT,MACHINE	4
20	PFFZZ	11083	5M2894	WASHER,FLAT	4
21	PFFZZ	11083	1P6367	COVER,ACCESS	1
22	PFFZZ	58312	5S6735-00	*GASKET PART OF KIT P/N 6V2971	1
23	PFHZZ	11083	3P1896	PLUG,EXPANSION	12
24	PFHZZ	11083	380623	PLUG,EXPANSION	6
25	PFHZZ	11083	3S8313	PLUG,MACHINE THREAD	7
26	PFHZZ	11083.	7N4448	*WASHER,RECESSED INTAKE	6
27	PAHZZ	11083	2W4837	SEAT,VALVE EXHAUST	6
28	PAHZZ	11083	153062	DIRECTOR,CYLINDER H	18
29	PFHZZ	15235	PLG1	PLUG,PIPE	3
				END OF FIGURE	

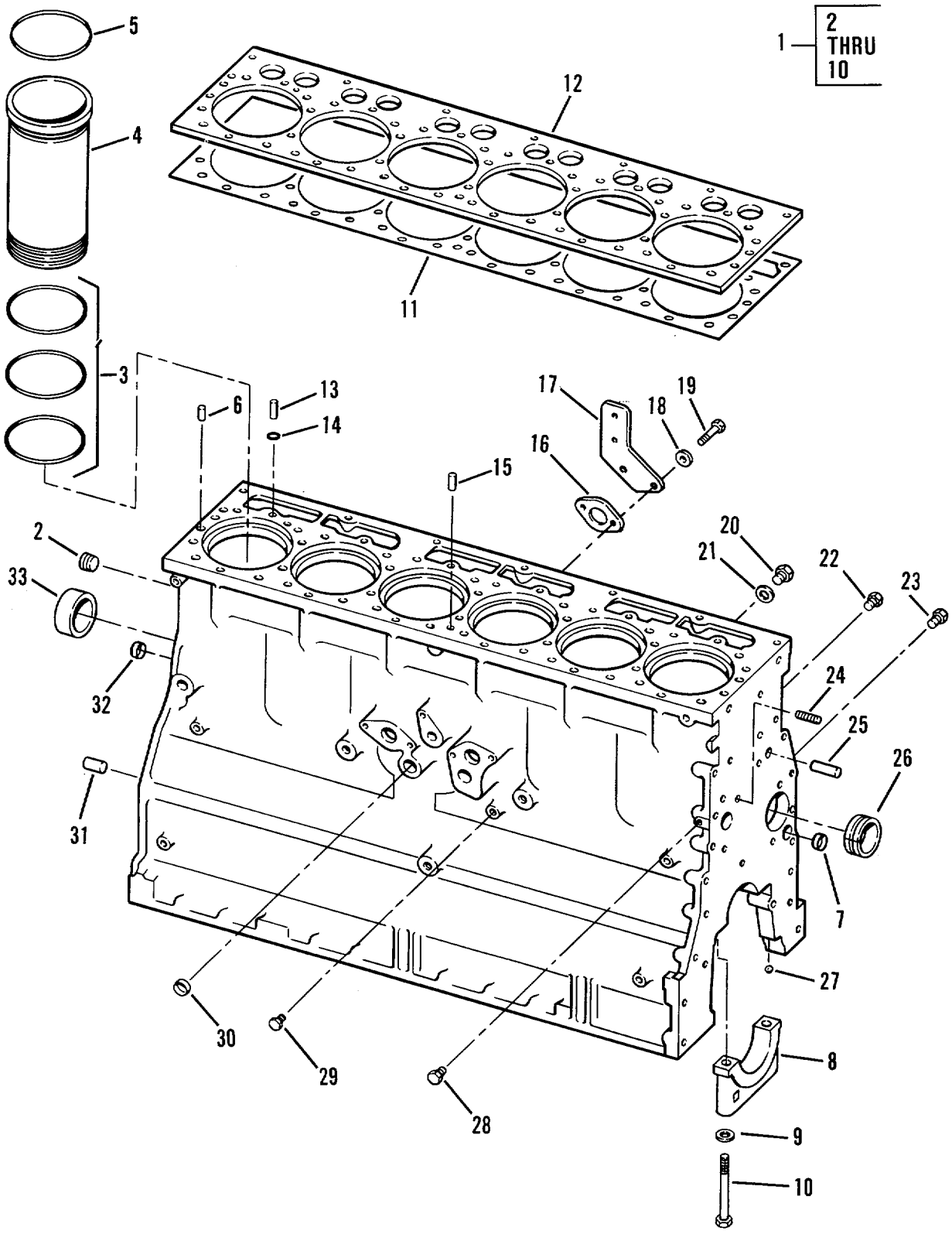

Figure 4. Engine Block

(1) ITEM NO	(2) SMR CODE	(3) CAGEC	(4) PART NUMBER	(5) DESCRIPTION AND USABLE ON CODES (UOC)	(6) QTY
				GROUP 0101 - CRANKCASE, BLOCK, CYLINDER HEAD	
				FIG. 4 - ENGINE BLOCK	
1	PFHHH	11083	1N3576	ENGINE BLOCK,DIESEL	1
2	PAHZZ	61038	7077	.PLUG,PIPE	1
3	PAHZZ	58312	5S6670-00	.PACKING,PREFORMED PART OF KIT P/N 5P8768	18
4	PAHZZ	11083	2P8889	.CYLINDER SLEEVE	6
5	PAHZZ	11083	9L5854	GASKET PART OF KIT P/N 5P8768	6
6	PFHZZ	11083	8K1207 .	PIN,STRAIGHT,HEADLE	2
7	PFHZZ	11083	483938	*PLUG,EXPANSION PART OF KIT P/N 6N7727	1
* 8	PFHZZ	11083	6N8003	CLAMP,HUB BEARING CAP	7
9	PAHZZ	11083	2S5658	WASHER,FLAT	14
10	PAHZZ	58312	7S3224-00	BOLT,MACHINE	14
11	PAFZZ	11083	7W7546	GASKET PART OF KIT P/N 6V2971	1
12	PFFZZ	11083	7N7998	CYLINDER HEAD,DIESE PLATE	1
13	PFHZZ	11083	1S9540	DOWEL	1
14	PFFZZ	11083	S5496	PACKING,PREFORMED PART OF KIT P/N 6V2971	1
15	PFHZZ	11083	587652	PIN,STRAIGHT,HEADLE	2
16	PAFZZ	11083	4M6480	GASKET PART OF KIT P/N 6V1752	1
17	PFFZZ	11083	6N7232	COVER,ACCESS	1
18	PFFZZ	11083	5M2894	WASHER,FLAT	2
* 19	PFFZZ	11083	S1594	BOLT,MACHINE	2
20	PAHZZ	11083	8M9307	PLUG,MACHINE THREAD	1
21	PFHZZ	11083	6F7062	WASHER,FLAT	1
22	PFHZZ	11083	5M6213	PLUG,PIPE	3
23	PFHZZ	61208	M2051K	PLUG,PIPE	1
24	PFHZZ	11083	T101	STUD,PLAIN.	1
25	PFHZZ	11083	8B6349	PIN,STRAIGHT,HEADLE	2
26	PAHZZ	11083	8N4110	BEARING,SLEEVE	1
27	PAHZZ	11083	489782	BALL,BEARING	1
28	PFHZZ	55883	IPD5M6214	PLUGIPIPE	1
29	PFHZZ	11083	3J5389	PLUG,PIPE	2
30	PAHZZ	11083	4B5387	PLUG,EXPANSION PART OF KIT P/N 6N7727	2
31	PFHZZ	11083	2A3798	PIN,STRAIGHT,HEADLE	2
32	PFHZZ	11083	483938	PLUG,EXPANSION	1
33	PAHZZ	11083	7M4046	BEARING,SLEEVE	4
				END OF FIGURE	

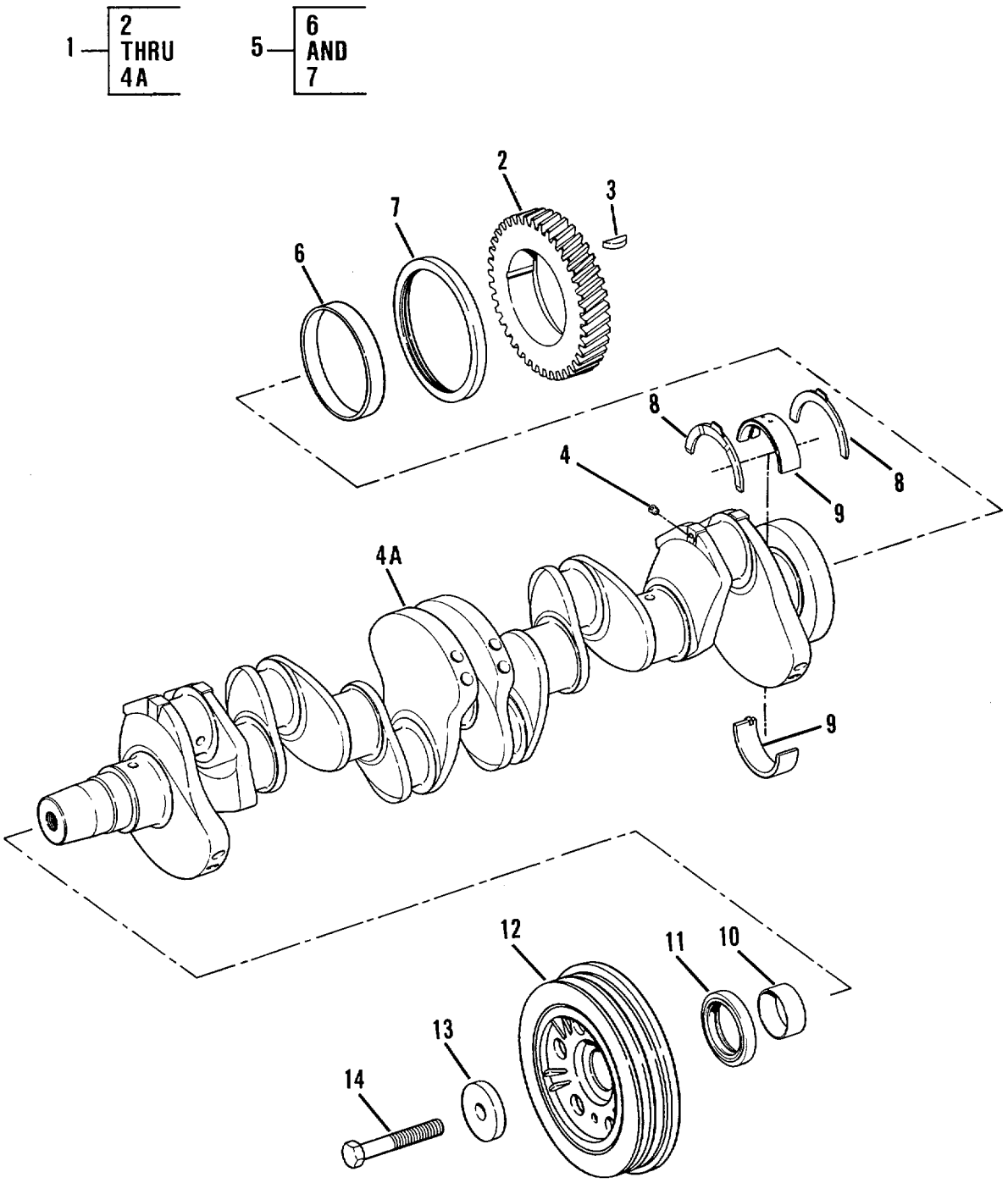

Figure 5. Crankshaft Assembly

(1) ITEM NO	(2) SMR CODE	(3) CAGEC	(4) PART NUMBER	(5) DESCRIPTION AND USABLE ON CODES (UOC)	(6) QTY
				GROUP 0102 - CRANKSHAFT	
				FIG. 5 - CRANKSHAFT ASSEMBLY	
1	PFHHH	11083	4N7693	CRANKSHAFT,ENGINE	1
2	PAHZZ	11083	7N4525	GEAR,HELICAL	1
* 3	PFHZZ	11083	1B8708	*KEY,WOODRUFF	1
4	PFHLZ	89346	50410DA	PLUG,PIPE	6
4A	XAHZZ	11083	4N7696	SHAFT	1
5	PAHZZ	11083	4W0452	SEAL ASSEMBLY PART OF KIT P/N 6V1550	1
6	PFHZZ	11083	2P3858 .	SLEEVE	1
7	PFHZZ	80201	527838	SEAL,PLAIN ENCASED	1
8	PFHZZ	11083	7N9342	PLATE,THRUST	2
9	PAHZZ	11083	4W5738	BEARING	7
9	PFH2Z	11083	8N8225	BEARING,SLEEVE 0.010 IN. UNDERSIZE	7
9	PFHZZ	11083	8N8226	BEARING,SLEEVE 0.020 IN. UNDERSIZE	7
9	PFHZZ	11083	8N8227	BEARING,SLEEVE 0.030 IN. UNDERSIZE	7
9	PFHZZ	11083	8N8229	BEARING,SLEEVE 0.010 IN. UNDERSIZE FOR REBORED BLOCK	7
9	PFHZZ	11083	8N8228	BEARING,SLEEVE 0.020 IN. OVERSIZE FOR REBORED BLOCK	7
10	PAHZZ	11083	2P3859	SLEEVE .	1
11	PAFZZ	11083	5S6296	SEAL,PLAIN ENCASED	1
12	PFFZZ	11083	8N5469	DAMPER,INERTIA	1
13	PAFZZ	58312	5S9948-00	WASHER,FLAT	1
14	PAFZZ	96906	MS90727-192	SCREW,CAP,HEXAGON H	1
				END OF FIGURE	

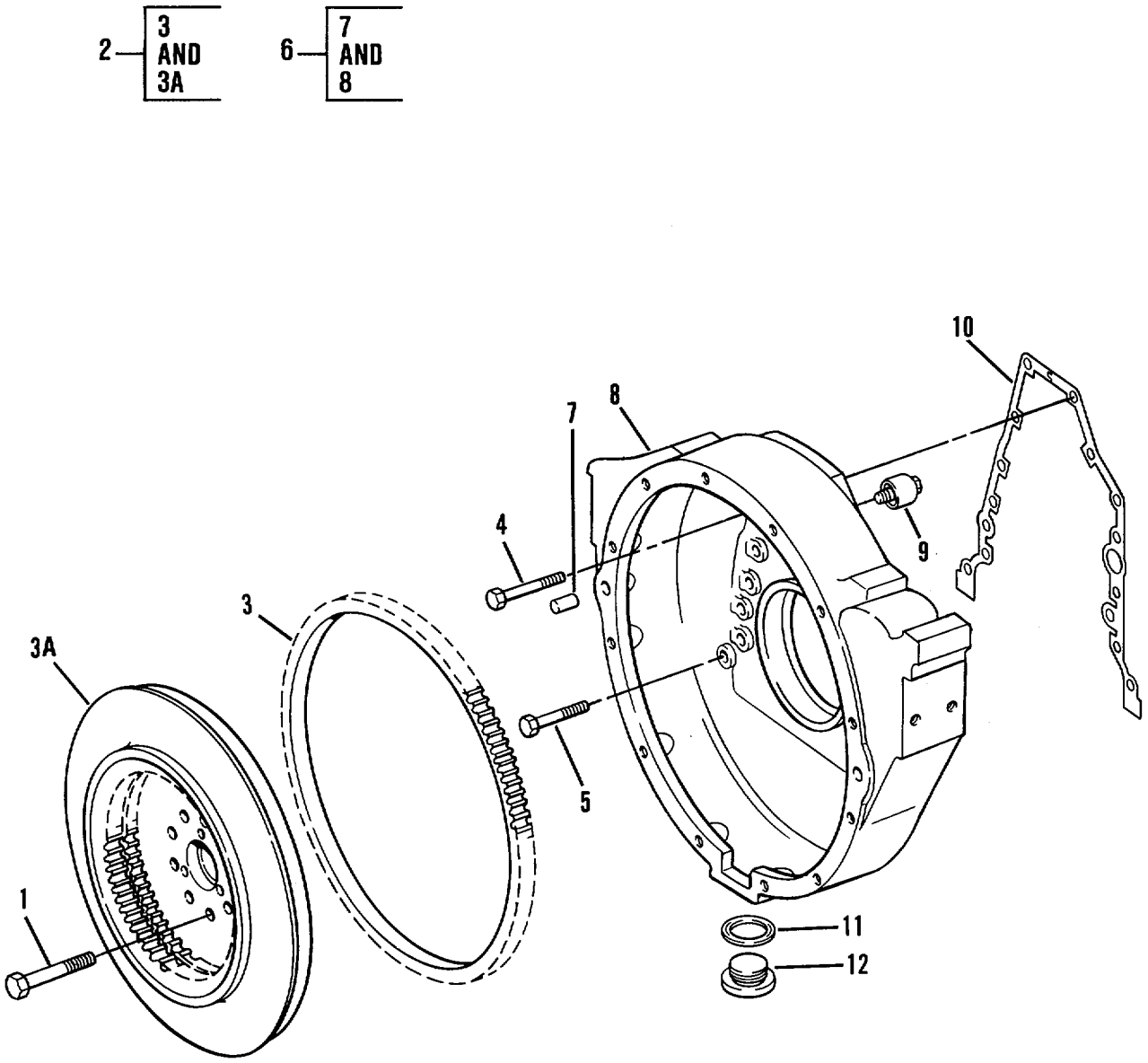

Figure 6. Flywheel and Flywheel Housing

(1) ITEM NO	(2) SMR CODE	(3) CAGEC	(4) PART NUMBER	(5) DESCRIPTION AND USABLE ON CODES (UOC)	(6) QTY
				GROUP 0103 - FLYWHEEL ASSEMELY	
				FIG. 6 - FLVWHEEL AND FLYWHEEL HOUSING	
1	PFHZZ	11083	S1565	BOLTTMACHINE	9
2	PAHFH	11083	2W7303	FLYWHEEL, ENGINE	1
3	PAHZZ	11083	7N9146	.GEAR	1
3A	XAHZZ	11083	2W1897	.FLYWHEEL	1
4	PFHZZ	96906	MS90728-116	SCREW, CAP, HEXAGON H	2
5	PFHZZ	96906	MS90728-115	SCREW, CAP, HEXAGON H	1
6	PFHZZ	11083	7S7780	HOUSING, FLYWHHEEL	1
7	PFHZZ	11083	2A3798	.PIN, STRAIGHT, HEADLE	2
8	XAHZZ	11083	5S803C	.HOUSING	1
9	PAOZZ	55355	1577AL	BREATHER	1
10	PAHZZ	11083	9H5921	GASKET PART OF KIT P/N 6V1550	1
11	PAOZZ	75165	920	GASKET PART OF KIT P/N 6V1550	1
12	PFOZZ	11083	L827	PLUG, MACHINE THREAD	1
				END OF FIGURE	

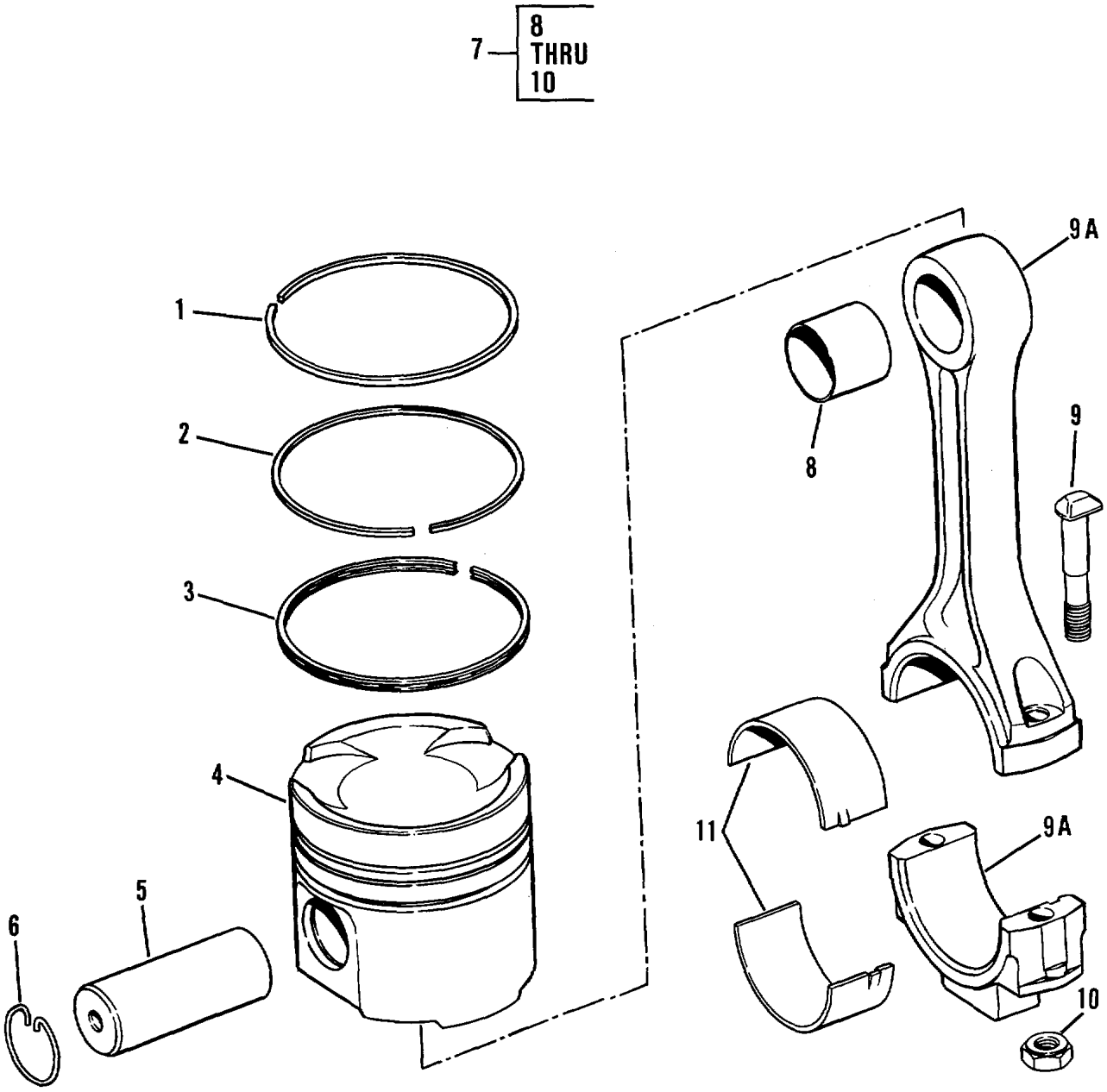

Figure 7. Piston and Connecting Rods

(1) ITEM NO	(2) SMR CODE	(3) CAGEC	(4) PART NUMBER	(5) DESCRIPTION AND USABLE ON CODES (UOC)	(6) QTY
				GROUP 0104 - PISTONS, CONNECTING RODS	
				FIG. 7 - PISTON AND CONNECTING RODS	
1	PAHZZ	11083	9S3029	RING, PISTON TOP RING PART EF KIT ..... P/N 2W609	6
2	PAHZZ	58312	5S6750-00	RING, PISTON INTERMEDIATE RING PART ..... OF KIT PIN 2W6091	6
3	PAHZZ	11083	9L6934	RING, PISTON OIL RING PART OF KIT..... P/N 2W6091	6
4	PAHZZ	11083	1W6757	PISTON, INTERNAL COM.....	6
5	PFHZZ	55883	1PD7N9805	PIN, PISTON	6
6	PFHZZ	11083	1S9543	RING, RETAINING.....	12
7	PFHZZ	11083	8N1721	CONNECTING RCC, PIST	6
8	PAHZZ	11083	8N1849	.BEARING, SLEEVE	1
9	PAHZZ	11J83	1P9956	.BOLT, SHOULDER.....	12
9A	PAHZZ	11083	8N1720	.ROD, PISTON, LINEAR A	6
13	PAHZZ	58312	5S6348-30	.NUT, PLAIN, SINGLE BA.....	12
11	PAHZZ	11383	4W5739	BEARING, SLEEVE	6
11	PFHZZ	11083	2S0502	BEARING, ROD 0101 IN UNDERSIZE.....	6
11	PFHZZ	01212	2530AP20	BEARING, SLEEVE 0.02 IN UNDERSIZE.....	6
11	PAHZZ	11083	8N8223	BEARING, SLEEVE 0.03 IN UNCERSIZE.....	6
				END OF FIGURE	

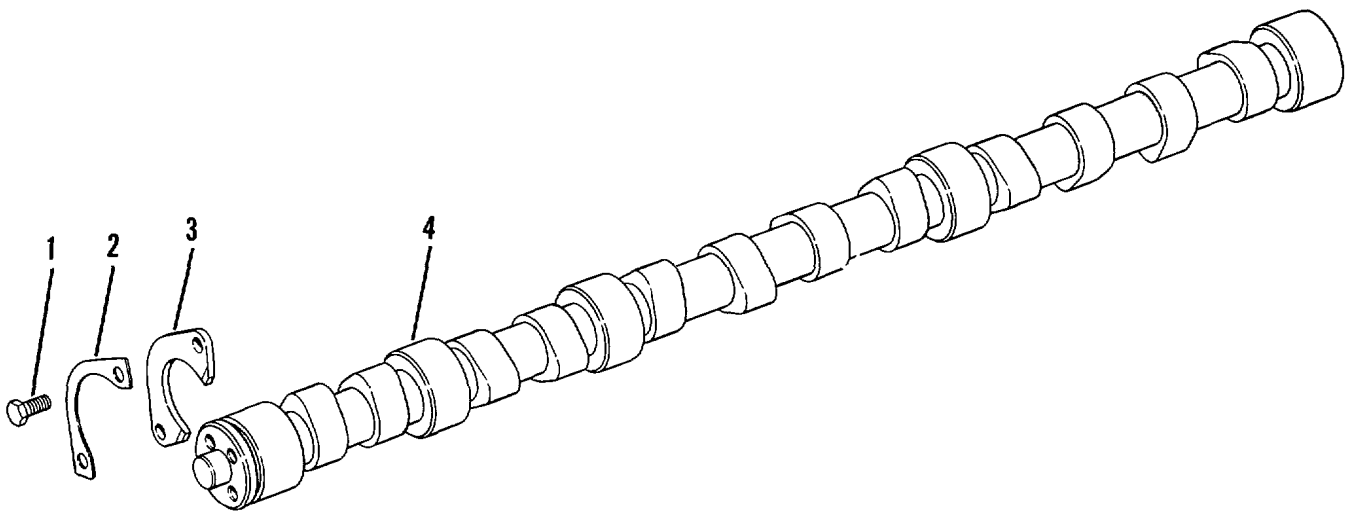

Figure 8. Camshaft Assembly

(1) ITEM NO	(2) SMR CODE	(3) CAGEC	(4) PART NUMBER	(5) DESCRIPTION AND USABLE ON CODES (UOC)	(6) QTY
				GROUP 0105 - VALVES, CAMSHAFTS, AND TIMING SYSTEM	
				FIG. 8 - CAMSHAFT ASSEMBLY	
1	PAHZZ	96906	MS18154-58	SCREW, CAP, HEXAGON H.....	2
2	PFHZZ	58312	8S1491-00	NUT, SPECIAL PART OF KIT P/N 6V2912.....	1
3	PFHZZ	58312	7S2204-00	WASHER, CAMSHAFT.....	1
4	PAHZL	11083	8N3981	CAMSHAFT, ENGINE.....	1
				END OF FIGURE	

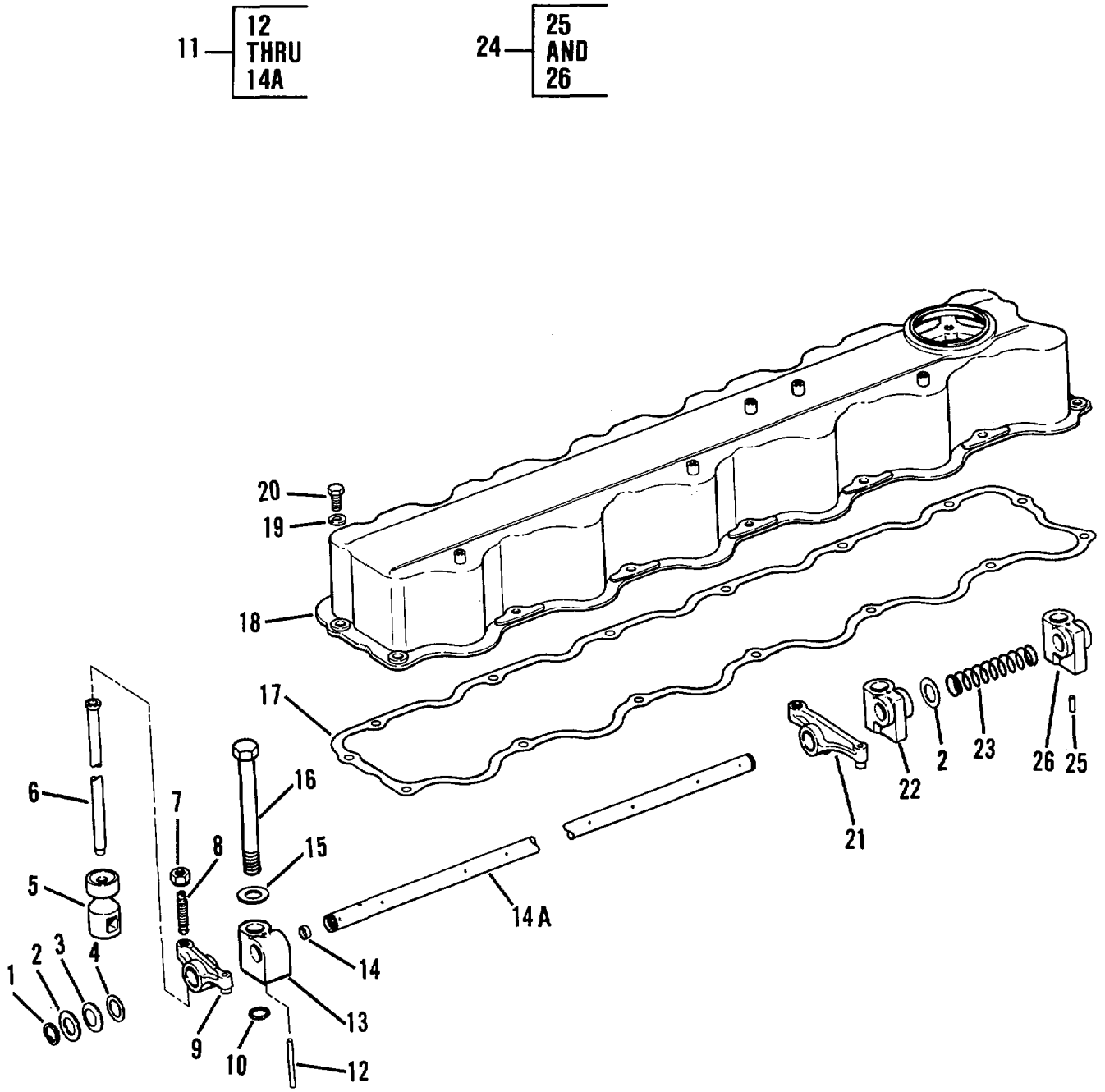

Figure 9. Valve Cover and Valve Mechanism

(1) ITEM NO	(2) SMR CODE	(3) CAGEC	(4) PART NUMBER	(5) DESCRIPTION AND USABLE ON CODES (UOC)	(6) QTY
				GROUP 0105 - VALVES, CAMSHAFTS, AND TIMING SYSTEM	
				FIG. 9 - VALVE COVER AND VALVE MECHANISM	
1	PAHZZ	80756	RST-68	RING, RETAINING	2
2	PAHZZ	11083	9H1110	WASHER, FLAT	12
3	PAHZ7	11083	9H1112	WASHER, SPRING TENSI	2
* 4	PAHZZ	19207	9093668	WASHER, FLAT	2
5	PAHZZ	11083	753161	TAPPET, ENGINE POPPE	12
6	PAHZZ	11083	5S5918	PUSH ROD, ENGINE POP	12
7	PFHZZ	96906	MS35690-624	NUT, PLAIN, HEXAGON	2
8	PAHZZ	58312	5S5917-00	SCREWIADJUSTING, VAL	2
9	PAHZZ	11083	8N3326	ROCKER ARM, ENGINE P	6
10	PAHZZ	11083	8M4448	PACKING, PREFORMED PART OF KIT P/N 6V2971	1
11	AHHHH	11083	8N3252	SHAFT, AV ROCKER	1
12	PAHZZ	11083	5M4606	.PIN, STRAIGHT, HEADLE	1
13	PAHZZ	11083	7N8015	.BRACKET, ROCKER ARM	1
14	PAHZZ	11083	L1026	.PLUG, EXPANSION	2
14A	PAHZZ	11083	SN3251	.SHAFT, STRAIGHT	1
15	PAHZZ	11083	2S736	WASHER, FLAT	1
16	PAHZZ	58312	187709-00	BOLT, SPECIAL	1
17	PAOZZ	58312	8S1605-00	GASKET	1
18	PFOZZ	11083	2W1086	COVER, ENGINE POPPET	1
19	PFOZZ	96906	M535338-45	WASHER, LOCK	15
* 20	PAOZZ	80204	81821BH031C075N	BOLT, MACHINE	15
21	PAHZZ	11083	8N3324	ROCKER ARM, ENGINE P	6
22	PAHZZ	11083	5S5879	BRACKETTANGLE	4
23	PAHZZ	11083	4B4910	SPRING, HELICAL, COMP	5
24	PFHZZ	11083	8S1499	BRACKET ASSEMBLY, RO	1
25	PAHZZ	11083	1L5072	PIN	1
26	PAHZZ	11083	8S1498	BRACKET, EYE, NONROTA	1
				END OF FIGURE	

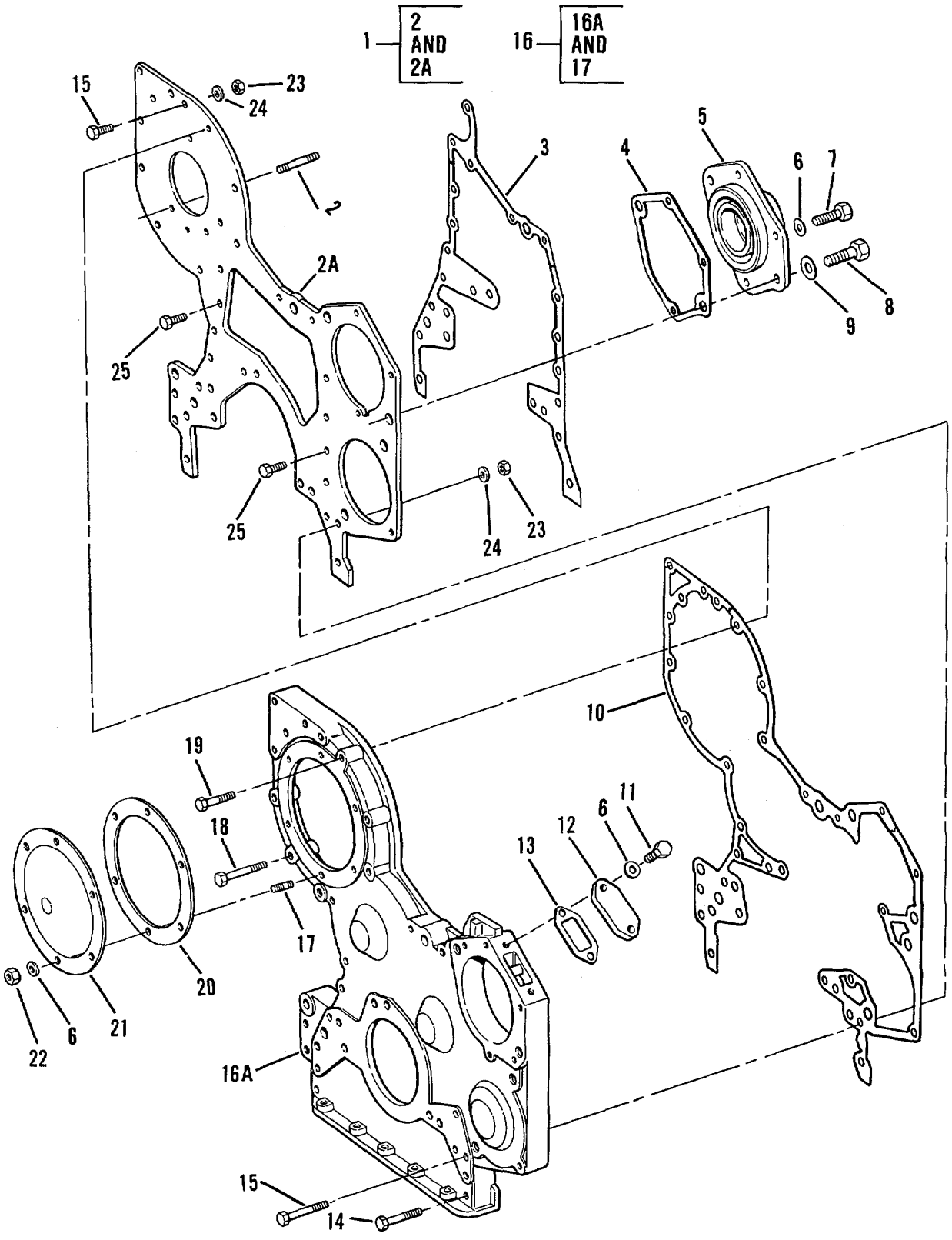

Figure 10. Front Housing, Cover and Fastener Group

(1) ITEM NO	(2) SMR CODE	(3) CAGEC	(4) PART NUMBER	(5) DESCRIPTION AND USABLE ON CODES (UOC)	(6) QTY
				GROUP 0105 - VALVES, CAMSHAFTS, AND TIMING SYSTEM	
				FIG. 10 - FRONT HOUSING, COVER AND FASTENER GROUP	
1	PFHZZ	11083	6N9060	PLATE ASSEMBLYIFRON	1
2	PAHZZ	11083	4M8743	.STUD, PLAIN	3
2A	PFHZZ	11083	1W7110	.PLATE, COVER	1
* 3	PAHZZ	11083	8N110	GASKET PART OF KIT P/N 6V2912o	1
4	PAHZZ	11083	2PO220	GASKET PART OF KIT P/N 6V29	1
5	PFHZZ	11083	1W4542	HOUSING, COOLANT PUM	1
6	PFHZZ	11083	5M2894	WASHERSFLAT	11
* 7	PFHZZ	11083	3B1915	BOLT	3
* 8	PFHZZ	11083	S1566	BOLT LMACHINE	2
9	PAHZZ	11083	5P8247	WASHER, FLAT	2
10	PAHZZ	11083	1W3900	GASKET PART OF KIT P/N 6V2912	1
11	PFHZZ	11083	L1351	BOLT, MACHINE	2
12	PFHZZ	11083	4N4526	COVER, ACCESS	1
13	PAHZZ	11083	2P2720	GASKET PART OF KIT P/N 6V2912	1
* 14	PFHZZ	11083	0L2070	BOLT, MACHINE	13
* 15	PFHZZ	11083	L1143	BOLT, MACHINE	5
16	PFHZZ	11083	8N0109	HOUSING ASSEMBLY, FRR	1
16A	XAHZZ	11083	8N0535	.HOUSING	1
17	PAHZZ	11083	2S42	.STUD	6
* 18	PFHZZ	11083	0T0573	CAPSCREW, FUEL PUMP	1
19	PAHZZ	11083	1C2251	BOLT, MACHINE	2
20	PAHZZ	11083	6N7887	GASKET PART OF KIT P/N 6VZ912912	1
21	PFHZZ	11083	9N5769	COVER, HOUSING	1
22	PFHZZ	96906	M535690-624	NUT, PLAIN, HEXAGON	6
* 23	PFHZZ	11083	1D4717	NUT, HEXAGON	7
24	PFHZZ	11083	5M2894	WASHER, FLAT	7
25	PFHZZ	03038	LH90725-59	BOLT, SELF-LOCKING	6
				END OF FIGURE	

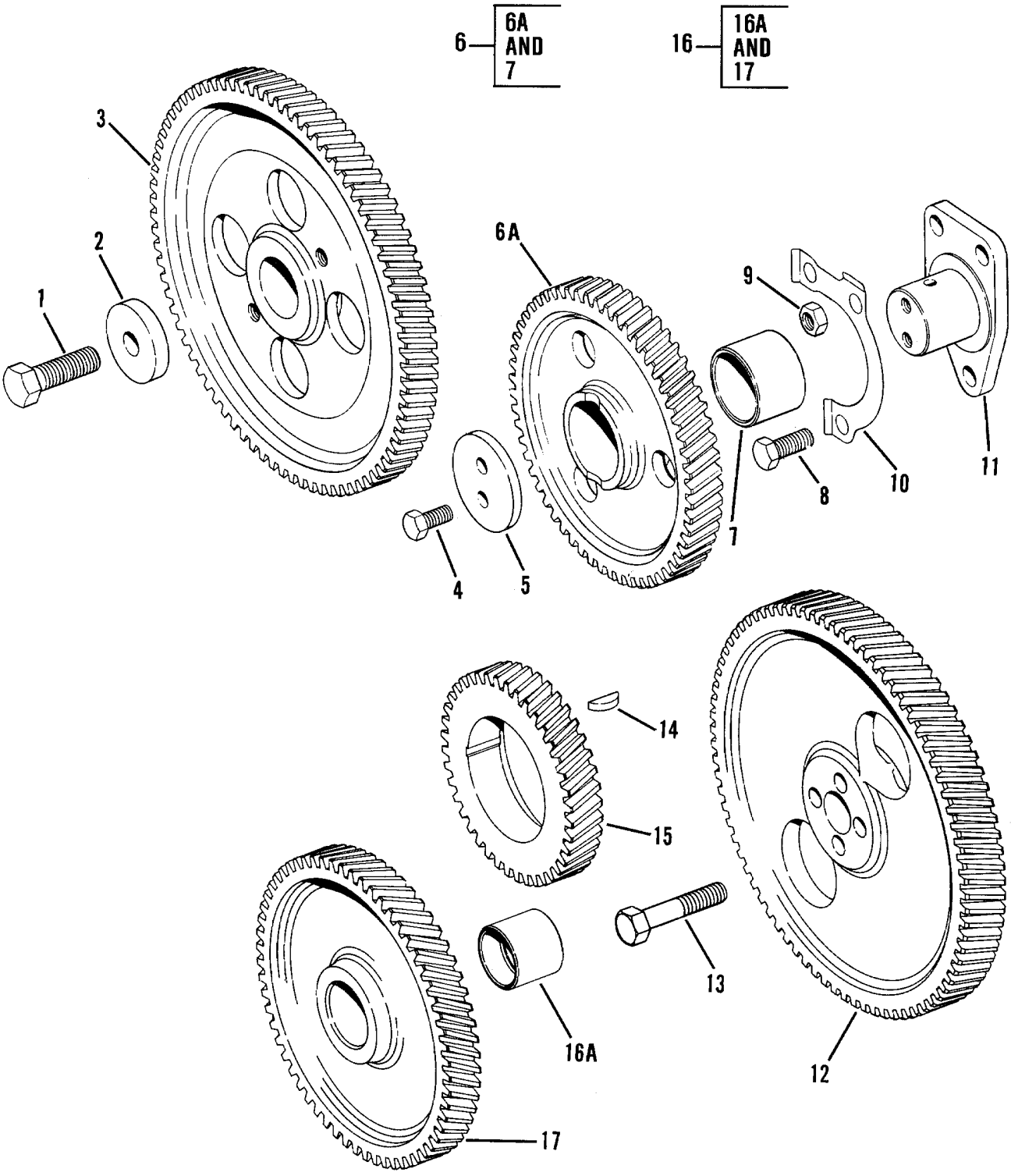

Figure 11. Timing Gears

(1) ITEM NO	(2) SMR CODE	(3) CAGEC	(4) PART NUMBER	(5) DESCRIPTION AND USABLE ON CODES (UOC)	(6) QTY
				GROUP 015 - WALVEST CAPSPAFIST AND TIMING SYSTEM	
				FIG. 11 - TIPING GEARS	
1	PF1ZZ	11083	51603	BULT, MACHINE., ...	1
2	PFHZZ	11083	4N3371	WASHER, FLAT	1
3	PAHZZ	11083	7N3536	GEARTHELICAL	1
4	PFFZZ	96906	MS90728-34	BOLT, MACHINE	2
5	PAHZZ	11083	8N4960	PLATE, THRUST	1
6	PFHZZ	11083	7N4791	GEAR, HELICAL	1
6A	XAHZZ	11083	7N3524	.GEAR	1
7	PAHZZ	11083	5S7630	.BEARING, SLEEVE	1
8	PFHZZ	11083	L1351	BOLT, MACHINE	2
9	PFHZZ	96906	MS35691-21	NUT, PLAIN, HEXAGON	1
10	PAHZZ	11083	557611	LOCKING PLATJENUT A PART UF KIT P/N 6V2912	1
11	PAHZZ	11083	8N4959	SHAFT, IDLER	1
12	PAHZZ	11083	1W4402	GEAR, HELICAL	1
13	PFHZZ	96906	MS90727-66	SCREW, CAP, HEXAGON H	1
14	PFHZZ	96906	MS35756-12	KEY, WOODRUFF	1
15	PAHZZ	11083	1W4405	GEAR, HELICAL	1
16	PFHZZ	11083	7N4722	GEAR, SPUR	1
16A	PAHZZ	11083	2P1168	.BEARING, SLEEVE	1
17	PFHZZ	11083	7N4716	.GEAR, HELICAL	1
				END OF FIGURE	

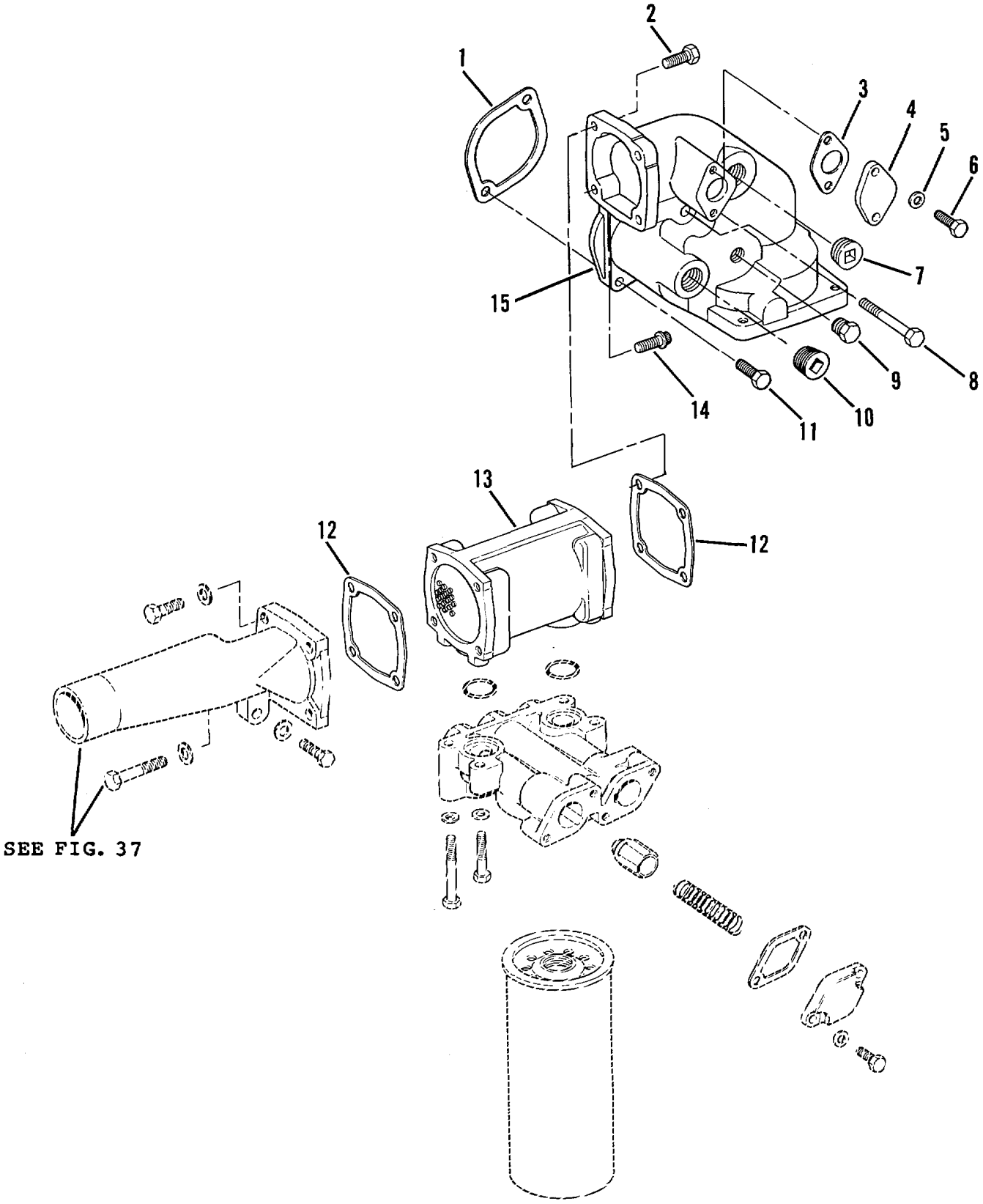

Figure 12. Engine Oil Cooler

(1) ITEM NO	(2) SMR CODE	(3) CAGEC	(4) PART NUMBER	(5) DESCRIPTION AND USABLE ON CODES (UOC)	(6) QTY
				GROUP 0106 - ENGINE LUBRICATION SYSTEM	
				FIG. 12 - ENGINE OIL COOLER	
1	PAOZZ	11083	2W4561	GASKET	1
* 2	PFOZZ	11083	1A2029	BOLT, MACHINE	3
3	PFOZZ	11083	4N3841	GASKET	1
4	PFOZZ	11083	4N3840	COVER, ACCESS	1
5	PFOZZ	96906	MS27183-12	WASHER, FLAT	2
* 6	PFOZZ	80204	B1821BH031C088N	BOLT, MACHINE	2
7	PFOZZ	11083	3B0551	PLUG, PIPE	1
* 8	PFOZZ	96906	MS35307-371	SCREW, CAP, HEXAGON H	1
9	PFOZZ	01276	2082-6B	PLUG, PIPE	1
10	PFOZZ	11083	1B5174	PLUG, PIPE	1
* 11	PFOZZ	11083	5S1591	SCREW	1
12	PFOZZ	11083	5S6051	GASKET	2
13	PFOZZ	11083	7N0165	CORE ASSEMBLY, OIL C	1
14	PFOZZ	11083	1T0765	BOLT, MACHINE	1
15	PFOZZ	11083	6N124	HOUSING, MECHANICAL	1
				END OF FIGURE	

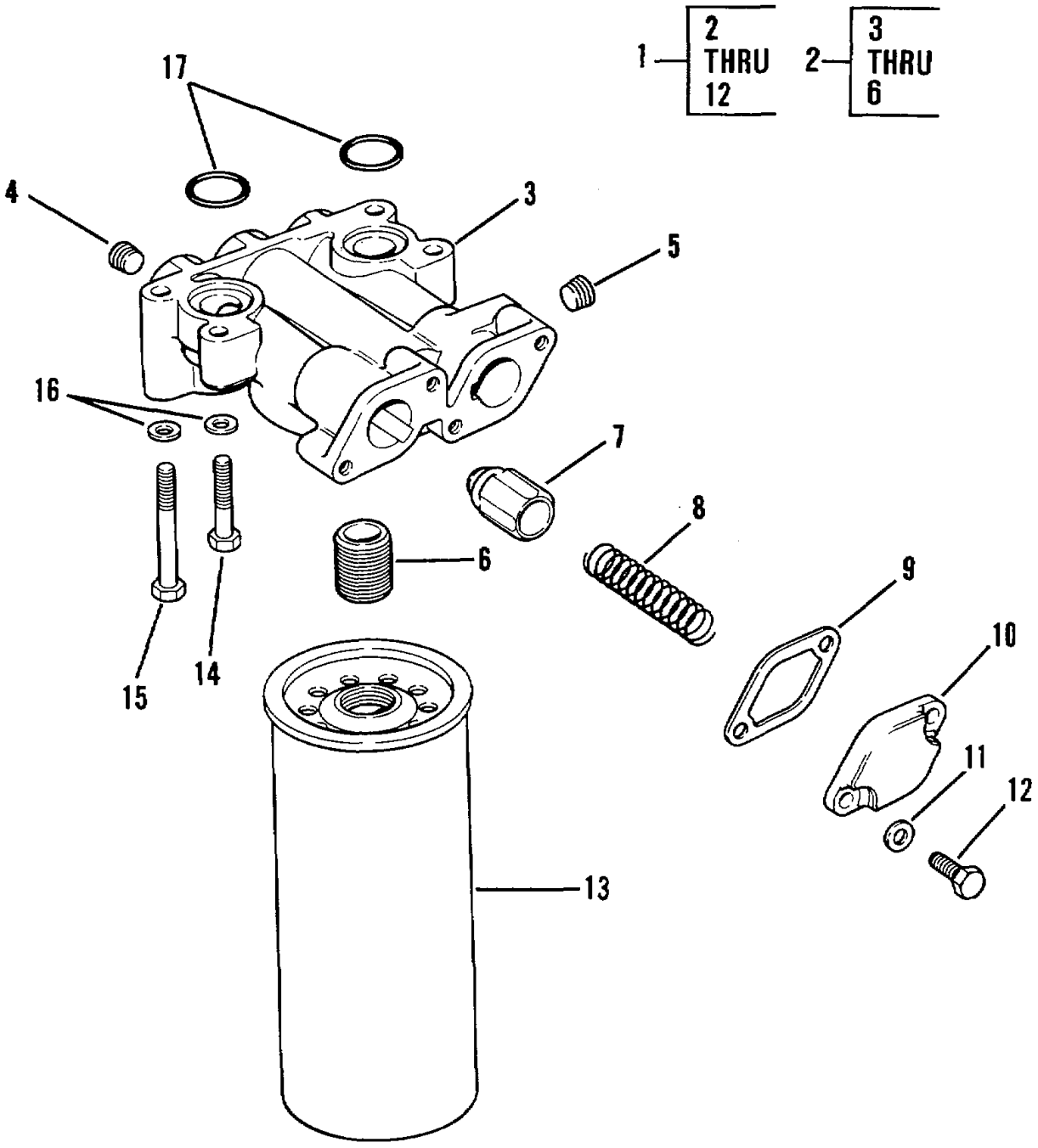

Figure 13. Engine Oil Filter

(1) ITEM NO	(2) SMR CODE	(3) CAGEC	(4) PART NUMBER	(5) DESCRIPTION AND USABLE ON CODES (UOC)	(6) QTY
				GROUP 0106 - ENGINE LUBRICATION SYSTEM	
				FIG. 13 - ENGINE OIL FILTER	
1	PFOOO	11083	8N4457	HEAD, FLUID FILTER	1
2	PAOZZ	11063	2W6681	.HEAD, FLUID FILTER	1
3	XAOZZ	19207	NPN1	..HEAD	1
4	PFOZZ	15434	S962	..PLUG, PIPE	3
5	PFOZZ	15235	PLG1	..PLUG, PIPE	3
* 6	PFOZZ	11083	2P2537	..STUD, PLAIN	1
7	PFOZZ	11083	1P1367	.PLUNGER, DETENT	2
8	PAOZZ	11083	8M3182	.SPRING, HELICAL, COMP.....	2
9	PAOZZ	11083	SN6985	.GASKET.....	2
10	PFOZZ	11083	8N6986	.COVER, RELIEF VALVE	2
11	PFOZZ	96906	MS27183-12	.WASHER, FLAT.....	4
*12	PFOZZ	11083	0S1618	.BOLT, MACHINE	4
13	PAOZZ	12658	876	FILTER ELEMENT, FLUI	1
* 14	PFOZZ	80204	B1821BH031C175N	BOLT, MACHINE	3
15	PAOZZ	96906	MS18154-41	BOLT, MACHINE	1
* 16	PFOZZ	96906	MS27183-12	WASHER, FLAT.....	4
17	PAOZZ	11083	8M4432	PACKING, PREFORMED PART OF KIT P/N..... 6V1752 PART OF KIT P/N 6V1681	2
				END OF FIGURE	

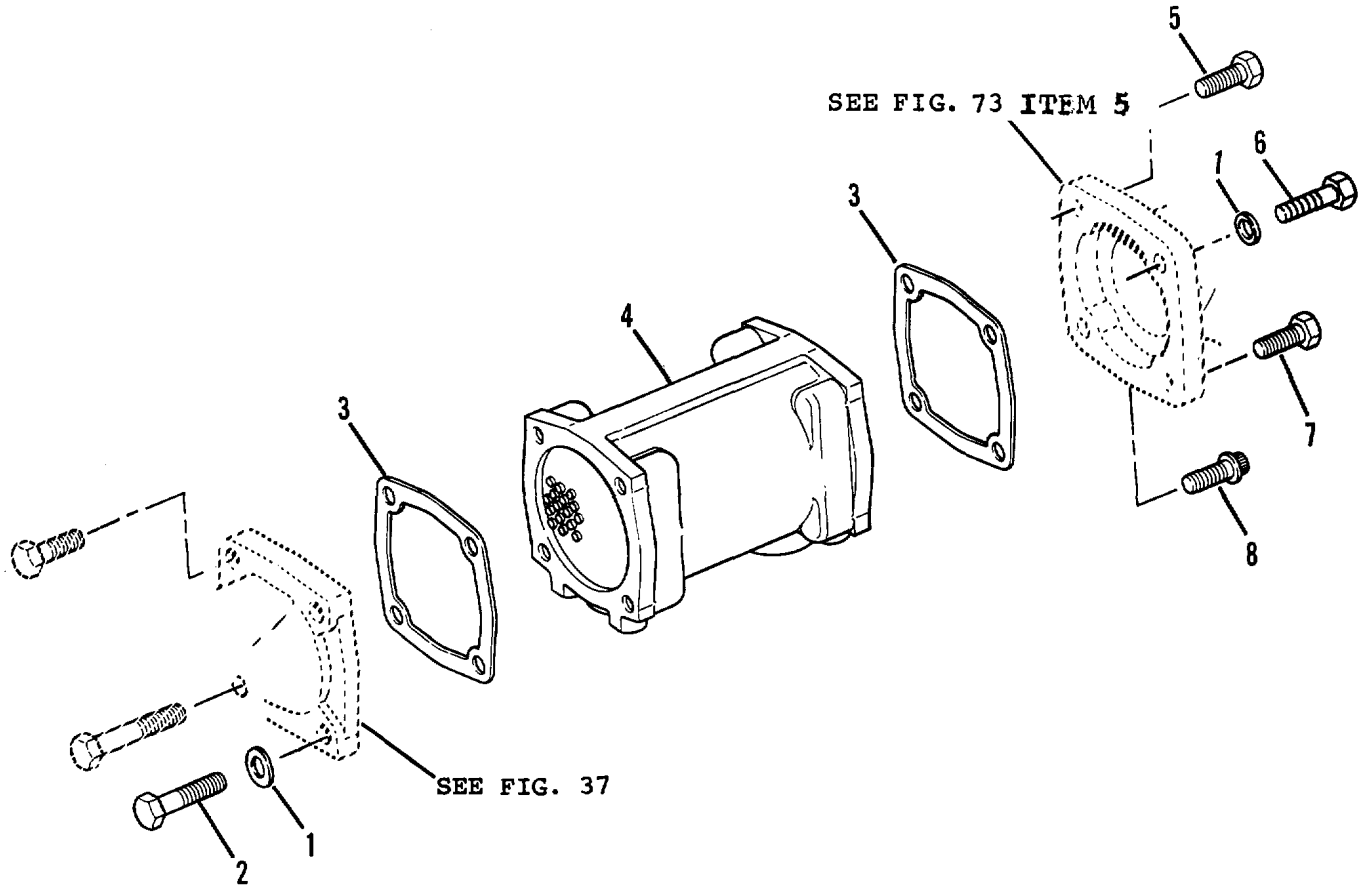

Figure 14. Engine Oil Cooler Assembly

	(1) ITEM NO	(2) SMR CODE	(3) CAGEC	(4) PART NUMBER	(5) DESCRIPTION AND USABLE ON CODES (UOC)	(6) QTY
					GROUP 0106 - ENGINE LUBRICATION SYSTEM	
					FIG. 14 - ENGINE OIL COOLER ASSEMBLY	
	1	PFOZZ	11083	5M2894	WASHER, FLAT	5
*	2	PFOZZ	11083	OS1591	SCREW	1
	3	PFOZZ	11083	5S6051	GASKET PART OF KIT P/N 6V1681	2
	4	PFOZZ	11083	7N0165	CORE ASSEMBLY, FLUID	1
*	5	PFOZZ	11083	1A2029	BOLT, MACHINE	3
*	6	PFOZZ	11083	S1619	BOLT, MACHINE	1
*	7	PAOZZ	11083	3B1915	BOLT	1
	8	PFOZZ	11083	1T0765	BOLT, MACHINE	1
					END OF FIGURE	

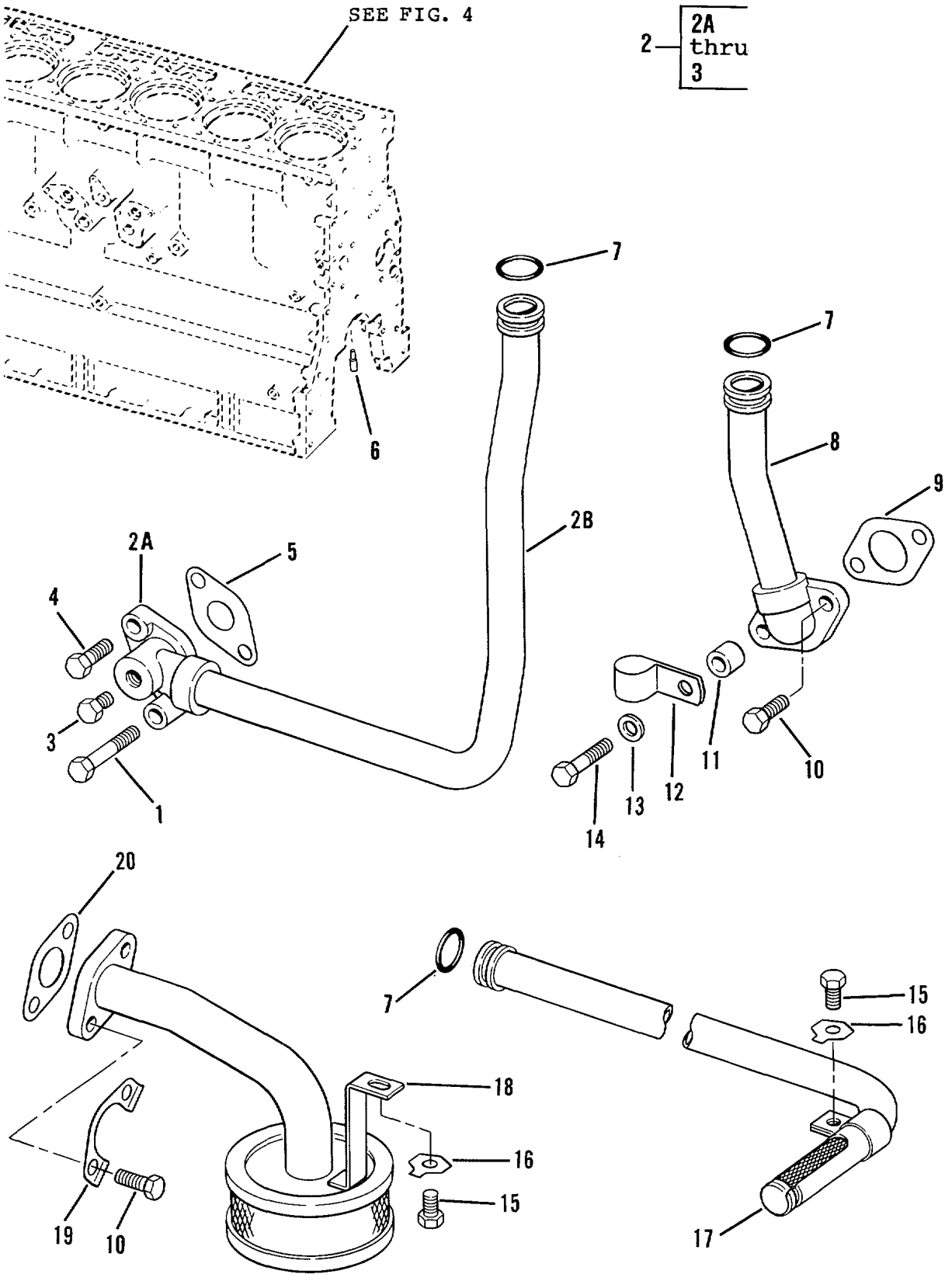

Figure 15. Engine Oil Lines

(1) ITEM NO	(2) SMR CODE	(3) CAGEC	(4) PART NUMBER	(5) DESCRIPTION AND USABLE ON CODES (UOC)	(6) QTY
				GROUP 0106 - ENGINE LUBRICATION SYSTEM	
				FIG. 15 - ENGINE OIL LINES	
* 1	PFFZZ	11083	0L2070	BOLT, MACHINE	1
2	PFFZZ	11083	8N7318	TUBE ASSEMBLY, METAL	1
2A	XAFZZ	11083	8N7316	.ELBOW	1
28	XAFZZ	11083	3N7613	.TUBE	1
3	PFFZZ	11083	5M6213	.PLUG, PIPE	1
* 4	PFFZZ	11083	1A2029	BOLT, MACHINE	1
5	PAFZZ	11083	2M5407	GASKET PART OF KIT P/N 6V1681	1
6	PAFZZ	11083	2S1541	RESTRICTOR, FLUID FL.	6
7	PAOZZ	11083	9M4849	SEAL, RING PART OF KIT P/N 6V1752 PART OF KIT P/N 6V2971 PART OF KIT P/N 6V1681	3
8	PFOZZ	11083	8N7315	TUBE ASSEMBLY, METAL	1
9	PFOZZ	11083	7F7590	GASKET PART OF KIT P/N 6V1681	1
* 10	PFOZZ	11083	S1594	BOLT, MACHINE	3
11	PAOZZ	11083	1L5081	WASHER, FLAT	1
12	PFOZZ	11083	3P2404	CLAMP, LOOP	1
13	PFOZZ	11083	5M2894	WASHER, FLAT	1
* 14	PFOZZ	11083	0S1571	SCREW, CAP, HEXAGON H	1
* 15	PFOZZ	11083	0S0509	SCREW, CAP, HEXAGON H	2
* 16	PFOZZ	11083	L364	LOCK PLATE PART OF KIT P/N 6V1752	2
17	PFOZZ	11083	2P1739	TUBE ASSEMBLY, OIL	1
18	PFOZZ	11083	2P1751	STRAINER, OIL PUMP BELL ASSY	1
19	PAOZZ	11083	8S8874	LOCKING PLATE NUT PART OF KIT PIN 6V1752	1
20	PAOZZ	11083	8M0904	GASKET PART OF KIT P/N 6Vl 752	1
				END OF FIGURE	

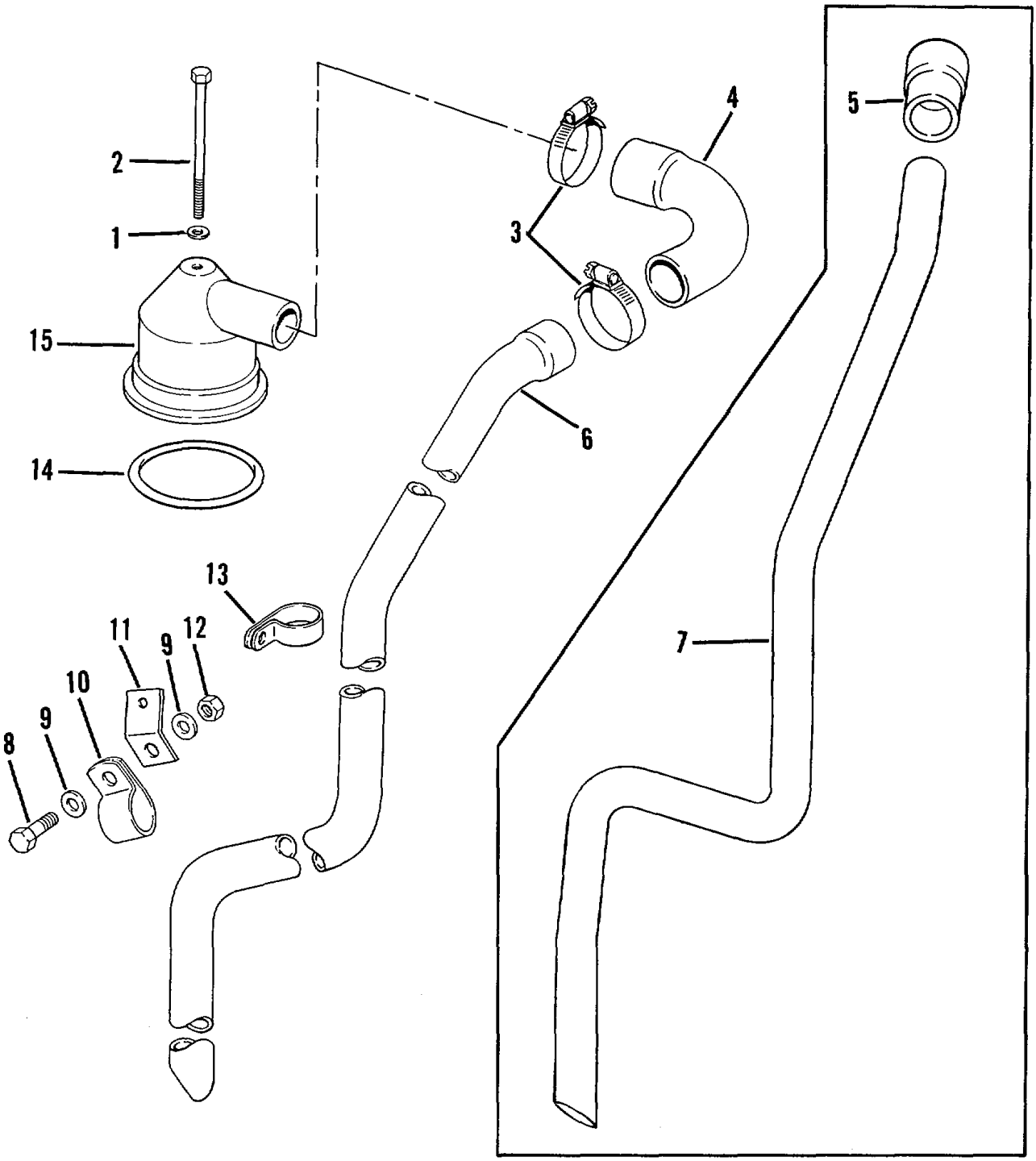

Figure 16. Fumes Disposal and Breather

(1) ITEM NO	(2) SMR CODE	(3) CAGEC	(4) PART NUMBER	(5) DESCRIPTION AND USABLE ON CODES (UOC)	(6) QTY
				GROUP 0106 - ENGINE LUBRICATICN SYSTEM	
				FIG. 16 - FUMES DISPOSAL AND BREATHER	
1	PFOZZ	96906	MS1575-512	WASHER, FLAT	1
2	PFOZZ	969J6	MS90728-51	BOLT, MACHINE	1
3	PAOZZ	96906	M535842-12	CLAMP, HOSEF	2
4	PAOZZ	11083	4N3326	HOSE, PREFORMED UOC :AGS , AGT	1
5	PAOZZ	11083	1N4102	HOSE, PREFORMED UOC :AGU, AGV	1
6	PFOZZ	11083	8N8095	TUBE, BENT, ME7ALLIC UOC :AGS , AGT	1
7	PFOZZ	11083	2W2317	TUBE, BENT, METALLIC UOC:AGU, AGV	1
8	PFOZZ	71183	L1351	BOLT.MACHINE	1
9	PFOZZ	11083	5M2894	WASHER, FLAT	2
10	PAOZZ	11083	0T0J386	CLAMP, LOOP	1
11	PAOZZ	11083	6N1369	CLIP, STRAP	1
12	PAOZZ	11083	1D4717	NUT, HEXAGON	1
13	PAOZZ	11083	8M8788	CLAMP, LOOP	1
14	PAOZZ	11083	4L9564	PACKING, PREFORMED	1
15	PAOZZ	18265	8A502-0048	BREATHER	1
				END OF FIGURE	

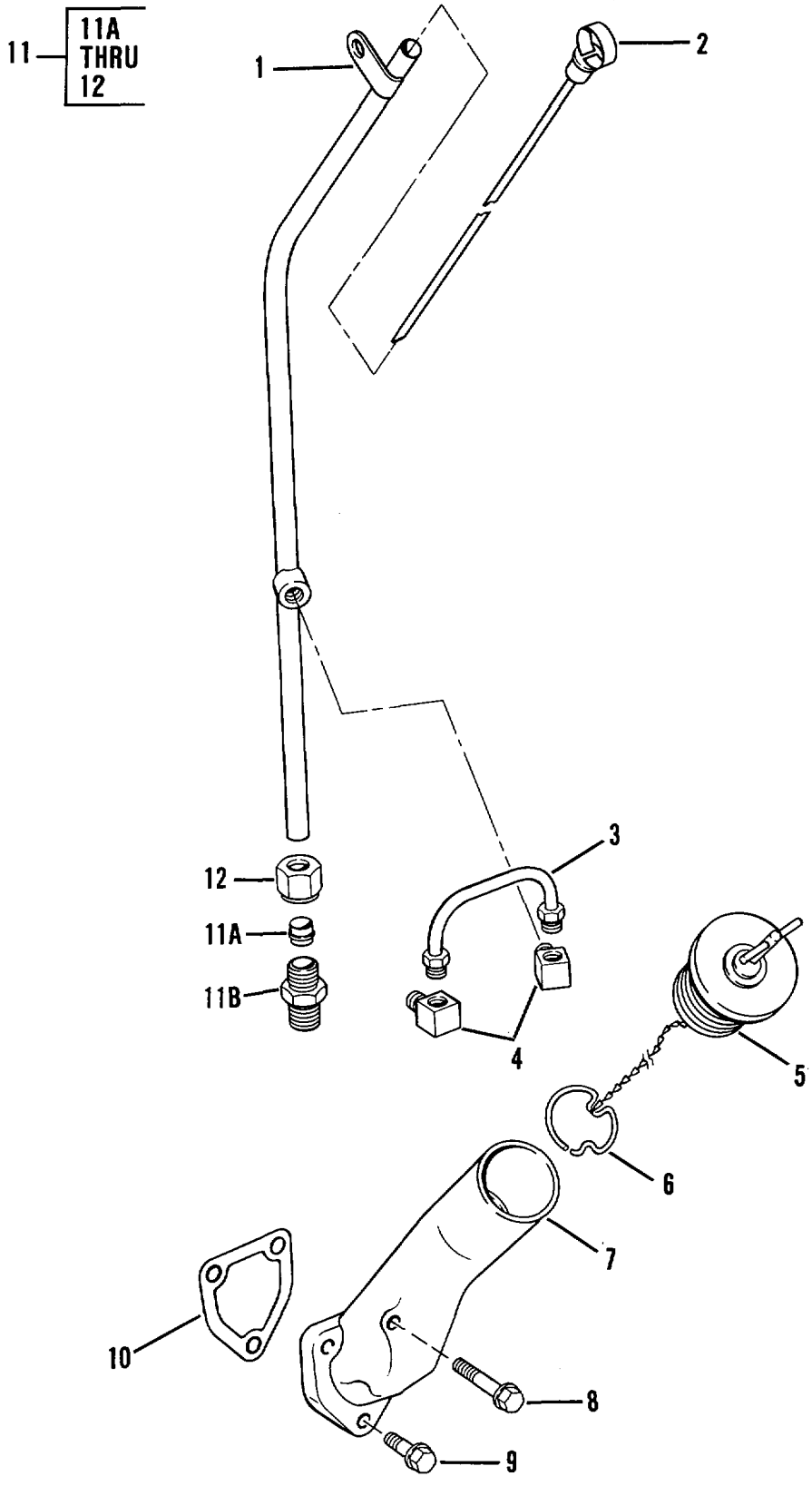

Figure 17. Oil Filler and Dipstick

(1) ITEM NO	(2) SMR CODE	(3) CAGEC	(4) PART NUMBER	(5) DESCRIPTION AND USABLE ON CODES (UOC)	(6) QTY
				GROUP 0106 - ENGINE LUBRICATION SYSTEM	
				FIG. 17 - OIL FILLER AND DIPSTICK	
1	PFOZZ	11083	2P2547	FILLER NECK	1
2	PFOZZ	11083	8S3995	GAGE ROD, LIQUID LEV	1
3	PFOZZ	11083	2P2697	TUBE A	1
4	PAOZZ	11083	5K9243	ELBOW, PIPE TO TUBE	2
5	PAOZZ	01943	4901-3	CAP, OIL FILLER TUBE	1
6	PFOZZ	11083	7S1801	ANCHOR WIRE, SAFETY	1
* 7	PFOZZ	11083	1P6784	FILLER NECK	1
* 8	PFOZZ	11083	2P3206	BOLT, MACHINE	1
* 9	PFOZZ	11083	0S0509	SCREW, CAP, HEXAGON H	2
10	PFOZZ	11083	558055	GASKET PART OF KIT P/N 6V1752	1
11	PFOZZ	11083	8S1326	ADAPTER, STRAIGHT, PI	1
11A	PAOZZ	11083	5P4443	.SLEEVE, COMPRESSION	1
11B	PAOZZ	11083	5P4908	.ADAPTER, STRAIGHT, PI	1
12	PFOZZ	30327	81LB1-2IN	.INVERTED NUT, TUBE C	1
				END OF FIGURE	

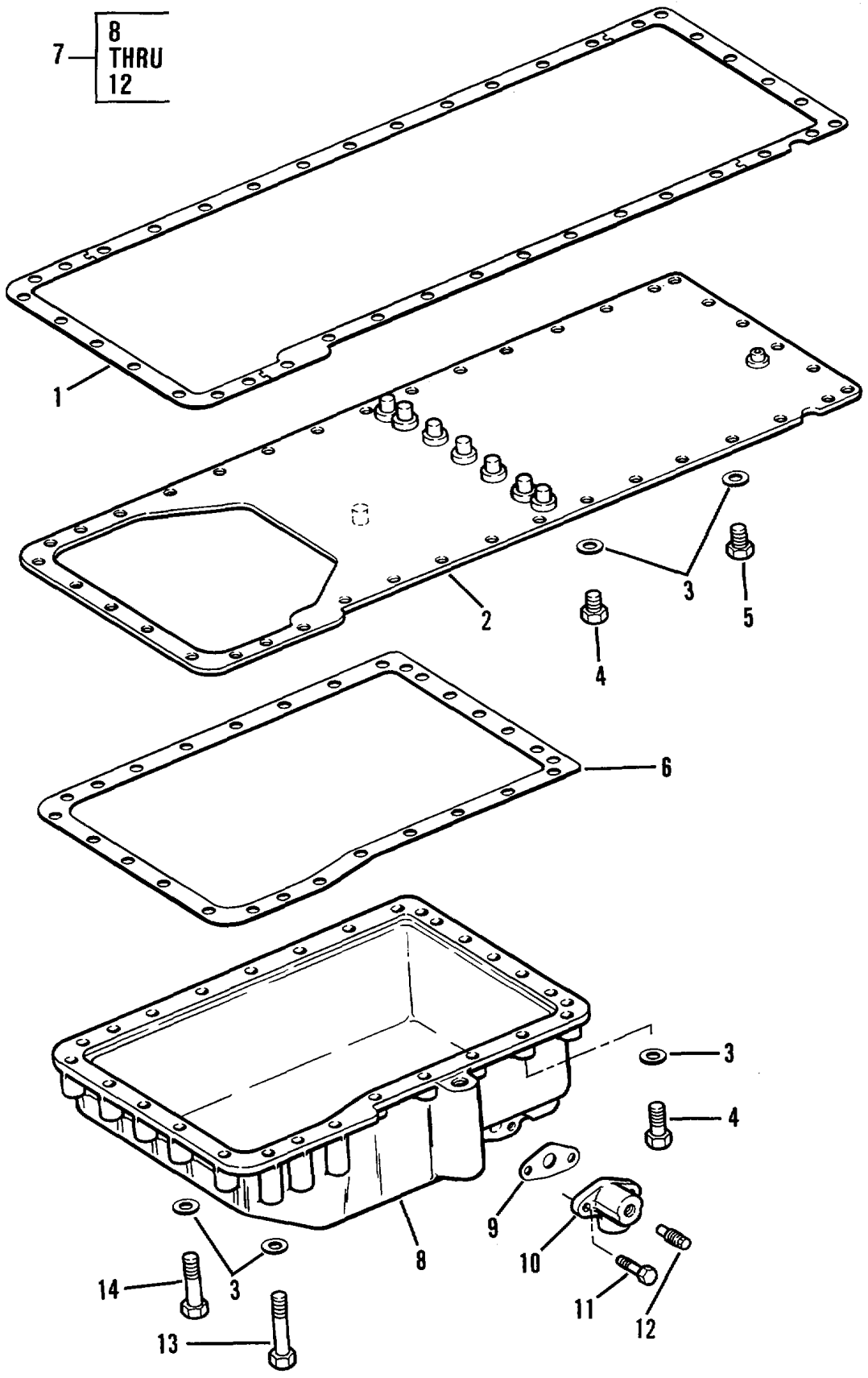

Figure 18. Oil Pan Assembly

(1) ITEM NO	(2) SMR CODE	(3) CAGEC	(4) PART NUMBER	(5) DESCRIPTION AND USABLE ON CODES (UOC)	(6) QTY
				GROUP 0106 - ENGINE LUBRICATION SYSTEM	
				FIG. 18 - OIL PAN ASSEMBLY	
1	PFFZZ	11083	4M2969	GASKET	1
2	PFFZZ	11083	2P1738	PLATE ASSY, OIL PAAN	1
3	PFFZZ	11083	5M2894	WASHER, FLAT	46
* 4	PFFZZ	11083	0S1591	SCREW	2
5	PFFZZ	11083	L1351	BOLT LMACHINE	18
6	PFFZZ	11083	8S1965	GASKET	1
7	PFFFF	11083	4N7820	.OIL PAN	1
8	PFFZZ	11083	8N6184	.OIL PAN	1
9	PAFZZ	11083	8N6854	.GASKET	1
10	PAFZZ	11083	8N6849	.ELBOW, PIPE TO T U BE	1
* 11	PAFZZ	11083	3B1915	.BOLT	2
12	PFOZZ	11083	5N8780	.PLUG, MACHINE THREAD	1
* 13	PFFZZ	96906	MS35307-371	SCREW, CAP, HEXAGON H	3
* 14	PFFZZ	11083	OT0573	CAPSCREW, FUEL PUMP	5
				END OF FIGURE	

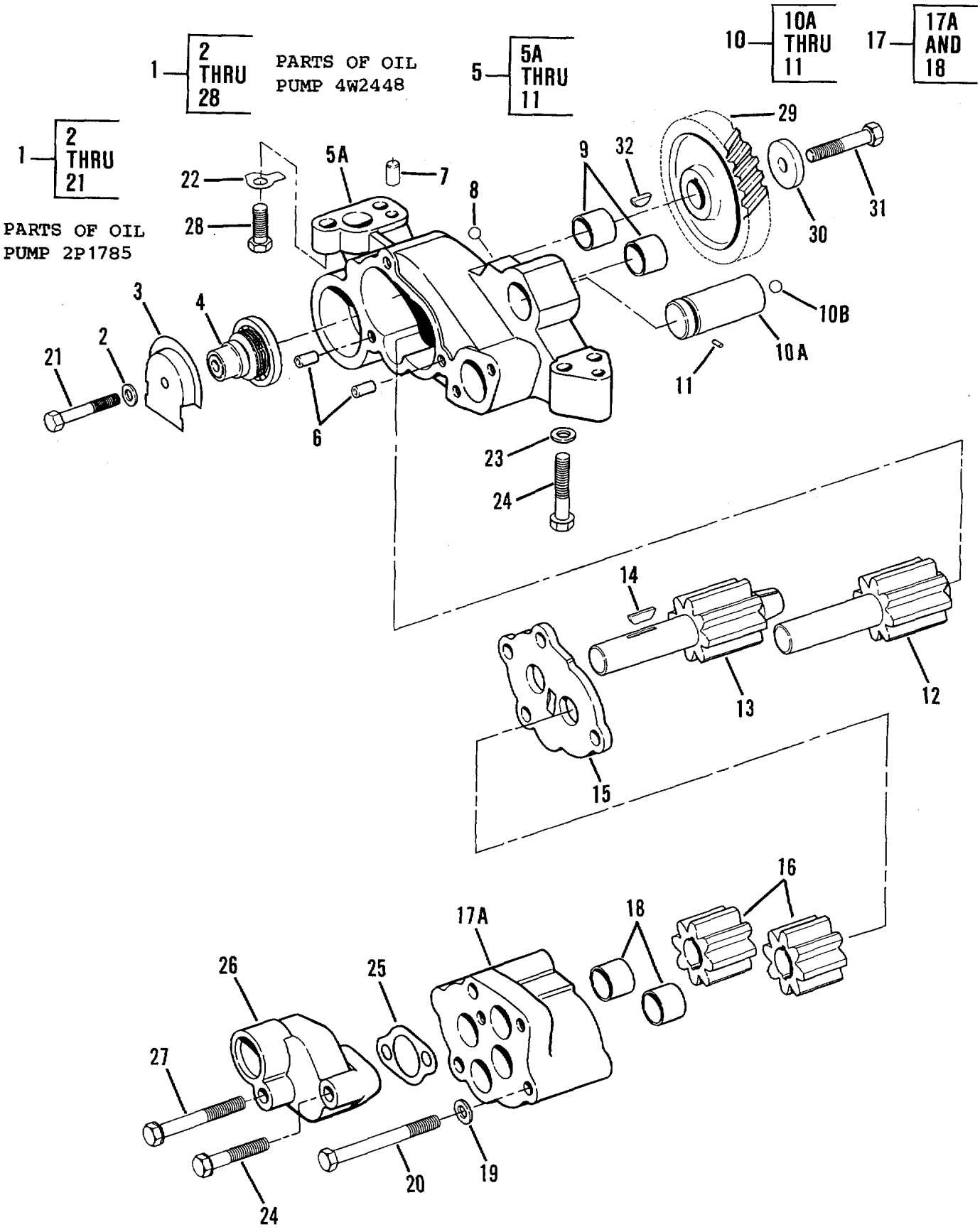

Figure 19. Oil Pump Mounting and Assembly

(1) ITEM NO	(2) SMR CODE	(3) CAGEC	(4) PART NUMBER	(5) DESCRIPTION AND USABLE ON CODES (UOC)	(6) QTY
				GROUP 0106 - ENGINE LUBRICATION SYSTEM	
				FIG. 19 - OIL PUMP MOUNTING AND ASSEMBLY	
* 1	PFHHH	11083	4P4020	OIL PUMP ASSEMBLY, E	1
2	PFHZZ	96906	MS27183-12	.WASHER, FLAT	1
3	PFHZZ	11083	4N3732	.COVER, ACCESS	1
4	PFHZZ	11083	4N8385	.VALVE, OIL PUMP	1
5	PFHHH	11083	4W2322	.HOUSING, OIL PUMP AS	1
5A	XAHZZ	11083	8N8639	..BODY	1
6	PFHZZ	11083	1M3735	..PIN, STRAIGHT, HEADLE	2
7	PFHZZ	11083	1F1006	..PIN, STRAIGHT, HEADLE	1
8	PFHZZ	11083	4B9880	..BALL, BEARING	1
9	PAHZZ	11083	8S6511	..BEARING, SLEEVE	2
10	PFHHH	11083	2P1170	..SHAFT, STRAIGHT	1
10A	XAHZZ	11083	2P1169	...SHAFT	1
10B	PFHZZ	11083	4B9782	...BALL, BEARING	1
11	PFHZZ	11083	6F7172	...PIN, STRAIGHT, HEADLE	1
12	PFHZZ	11083	8S0493	.SHAFT ASSEMBL YIOIL	1
13	PFHZZ	11083	2P6245	.SHAFT	1
14	PAHZZ	96906	MS35756-13	.KEY, WOODRUFF	1
15	PFHZZ	11083	2P1781	.SPACER	1
* 16	PFHZZ	11083	6N1036	.GEAR, SPUR	2
17	PFHHH	11083	4W2321	.HOUSING, LIQUID PUMP	1
17A	PFHZZ	11083	4N4054	..HOUSING, LIQUID PUMP	1
18	PAHZZ	11083	8S6511	..BEARING, SLEEVE	2
19	PFHZZ	11083	5M2894	.WASHER, FLAT	3
* 20	PFHZZ	11083	T65	.BOLT, MACHINE	3
* 21	PFHZZ	80204	B1821BH031C200N	.BOLT, MACHINE	1
22	PAHZZ	11083	8M7587	.LOCK PART OF KIT P/N 6V1752	2
23	PFHZZ	11083	5M2894	.WASHER, FLAT	3
* 24	PFHZZ	11083	OS1590	.BOLT, MACHINE	3
25	PFHZZ	11083	2P8746	.GASKET PART OF KIT P/N 6VI752	1
26	PFHZZ	11083	4N5353	.ELBOW, FLANGETSCAVEN	1
* 27	PFHZZ	11083	S1619	.BOLT, MACHINE	1
* 28	PAHZZ	11083	3B1915	.BOLT	2
29	PFHZZ	11083	8S0497	GEAR, HELICAL UOC:AGS, AGT	1
29	PFHZZ	11083	7WO507	GEAR, HELICAL UOC: AGU, AGV	1
30	PAHZZ	11083	1P7346	WASHER	1
* 31	PFHZZ	11083	0S1590	BOLT, MACHINE	1
32	PFHZZ	11083	8M5599	KEY, WOODRUFF	1
				END OF FIGURE	

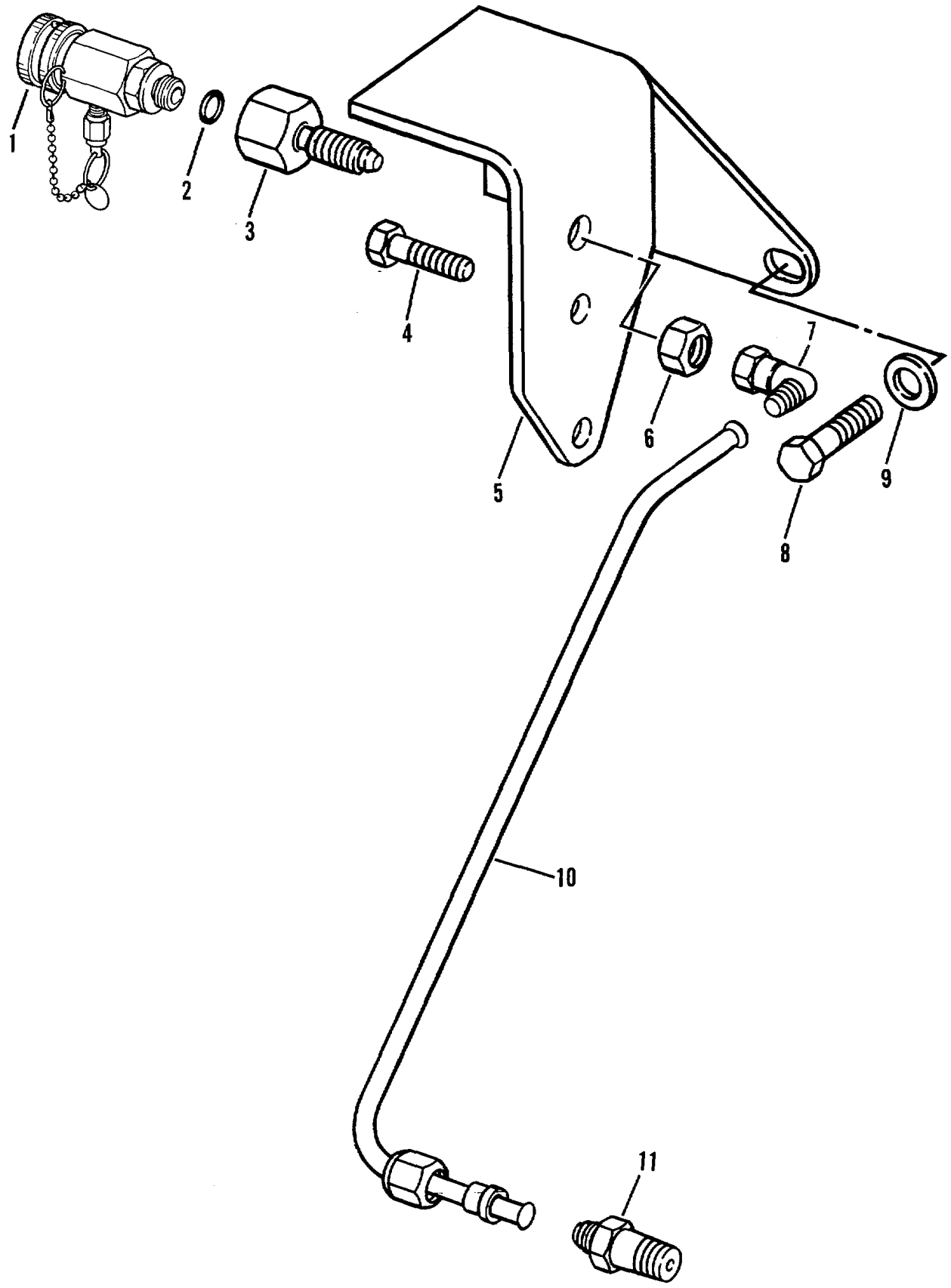

Figure 20. Engine Oil Sampling Valve

(1) ITEM NO	(2) SMR CODE	(3) CAGEC	(4) PART NUMBER	(5) DESCRIPTION AND USABLE ON CODES (UOC)	(6) QTY
				GROUP 0106 - ENGINE LUBRICATION SYSTEM	
				FIG. 20 - ENGINE OIL SAMPLING VALVE	
1	PAOZZ	91816	HV50-2-R	VALVE, OIL SAMPLING	1
2	PFOZZ	11083	3J7354	PACKING, PREFORMED	1
3	PFOZZ	11083	5R5107	ADAPTER, STRAIGHT, TU	1
* 4	PFOZZ	80204	B1821BH031C113N	BOLT, MACHINE	2
5	PFOZZ	11083	5R5104	BRACKET ANGLE	1
6	PFOZZ	11083	4D6432	NUT, SELF-LOCKING, CL	1
7	PFOZZ	11083	7K9197	ELBOW, TUBE	1
* 8	PFOZZ	11083	0S1591	SCREW	2
9	PFOZZ	11083	5M2894	WASHER, FLAT	2
10	PFOZZ	11083	5R5118	TUBE ASSEMBLY, MET	1
11	PFOZZ	11083	4S6399	ADAPTER, STRAIGHT, PI	1
				END OF FIGURE	

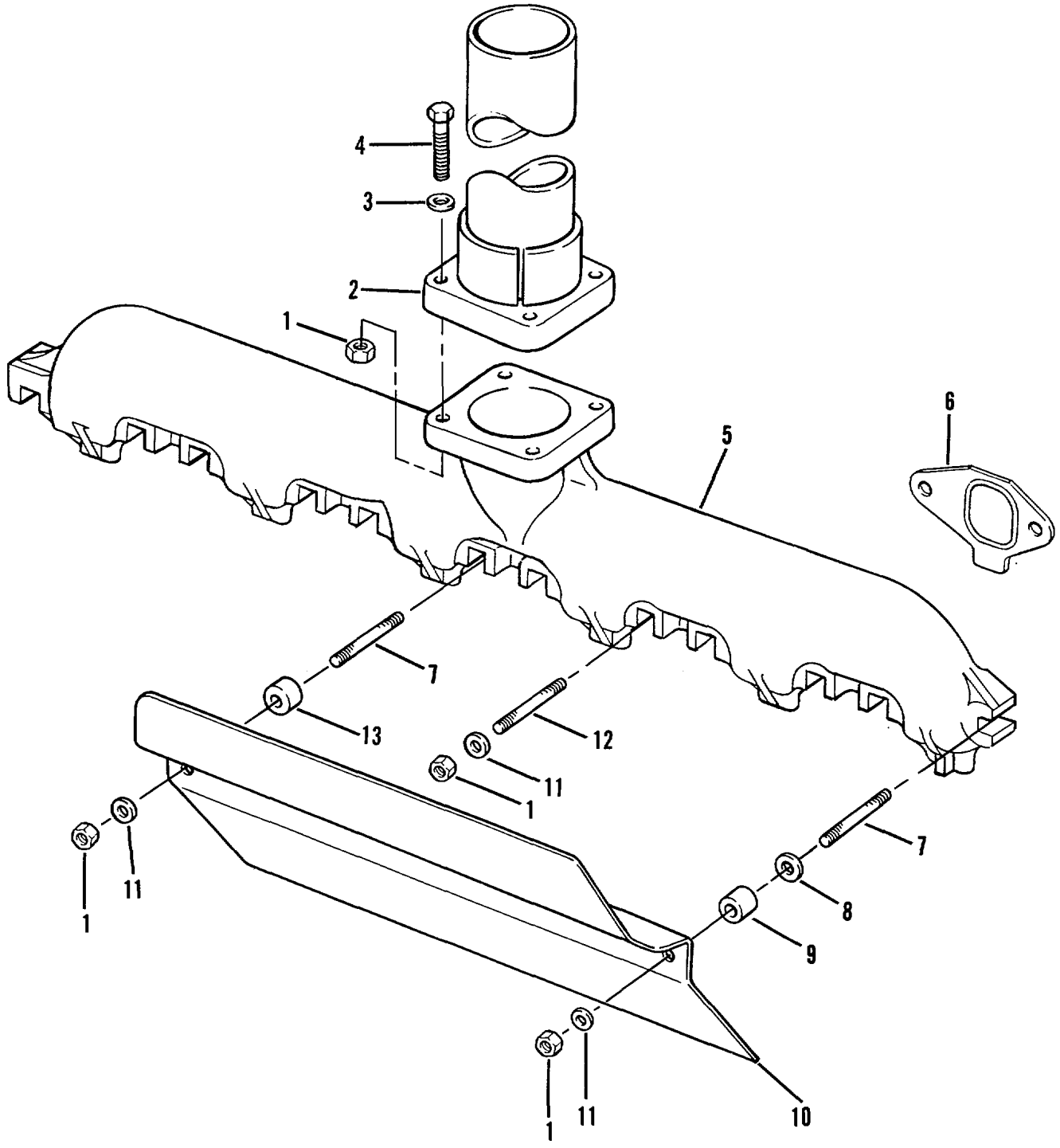

Figure 21. Exhaust Manifold

	(1) ITEM NO	(2) SMR CODE	(3) CAGEC	(4) PART NUMBER	(5) DESCRIPTION AND USABLE ON CODES (UOC)	(6) QTY
					GROUP 0108 - MANIFOLDS	
					FIG 21 - EXHAUST MANIFOLD	
	1	PFOZZ	11083	1D4717	NUT, HEXAGON	4
	2	PFOZZ	11083	6N7665	PIPE, EXHAUST	1
	3	PFOZZ	11083	5M2894	WASHER, FLAT	4
	4	PFOZZ	11083	OS1571	SCREW, CAP, HEXAGON H	4
*	5	PFFZZ	11083	9S2355	MANIFOLD, EXHAUST	1
*	6	PFFZZ	11083	9Y1979	GASKET PART OF KIT P/N 6V297971	6
	7	PFFZZ	11083	2M2488	STUD, PLAIN	2
	8	PFFZZ	11083	9M6527	WASHER, FLAT	1
	9	PFFZZ	11083	lB4971	SPACER	1
	10	PFFZZ	11083	4N9587	DEFLECTOR, HEAT SHIE	1
*	11	PFFZZ	19200	10910174-16	WASHER, FLAT	12
	12	PFFZZ	11083	7S6719	STUD	10
	13	PFFZZ	11083	1M7643	SPACER, SLEEVE	1

END OF FIGURE

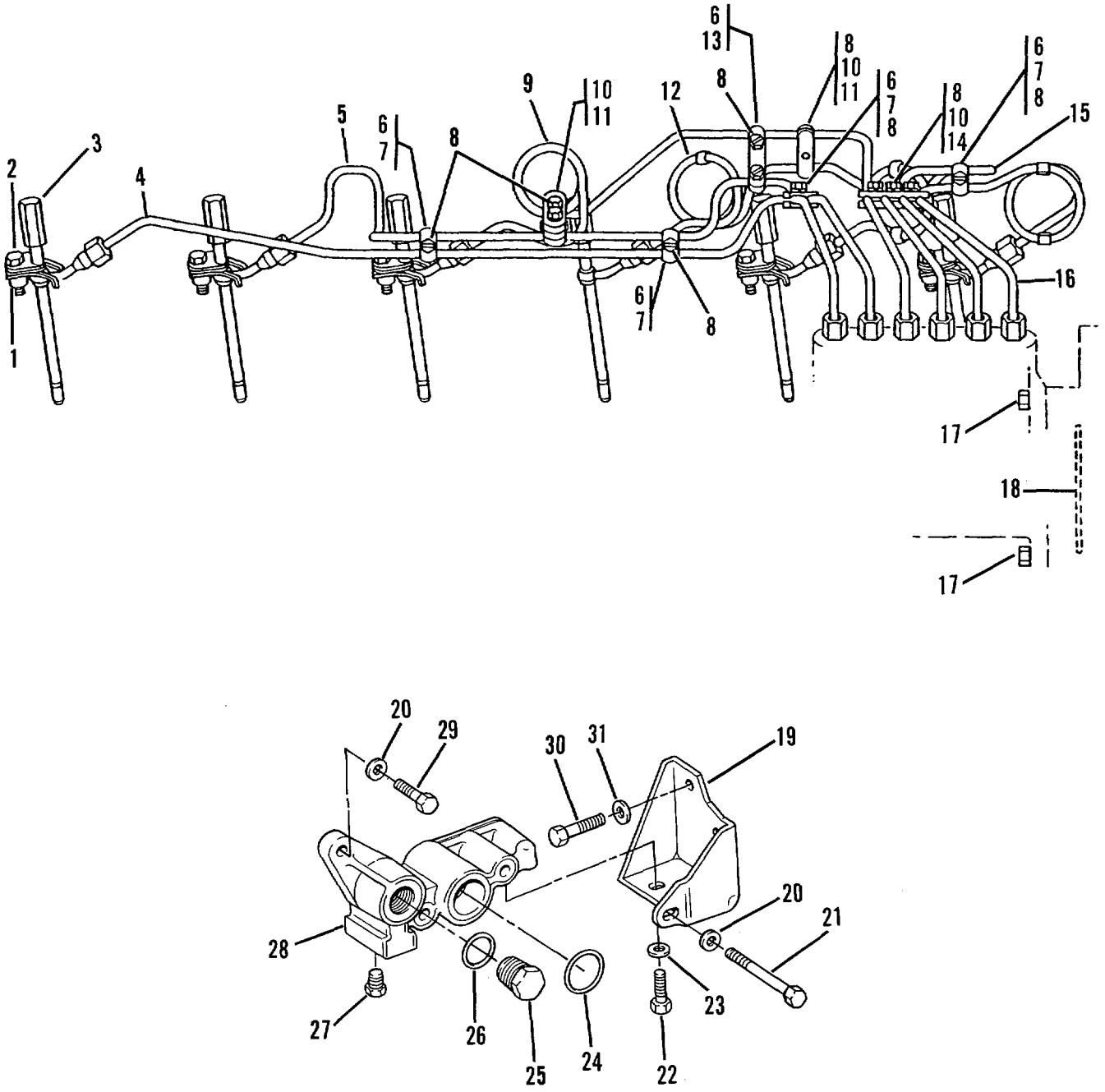

Figure 22. Fuel Injection Lines

	(1) ITEM NO	(2) SMR CODE	(3) CAGEC	(4) PART NUMBER	(5) DESCRIPTION AND USABLE ON CODES (UOC)	(6) QTY
					GROUP 03 FUEL SYSTEM	
					GROUP 0301 - CARBURETOR, FUEL INJECTOR	
					FIG. 22 - FUEL INJECTION LINES	
	1	PFFZZ	11083	9L8388	SPACER, SLEEVE	6
	2	PAFZZ	78514	22999	CLAMP ASSEMBLY	6
	3	PAFZZ	11083	7N449	NOZZLE, FUEL INJECTI	6
	4	PFFZZ	11083	8N4376	TUBE ASSEMBLY, METAL	1
	5	PFFZZ	11083	8N4375	TUBE ASSEMBLY, METAL	1
	6	PAFZZ	11083	6N6403	CLAMPBLOCK	7
	7	PAFZZ	11083	6N6404	CLAMPBLOCK	5
	8	PAFZZ	11083	6H9954	SCREW, ASSEMBLED WAS	10
	9	PFFZZ	11083	8N4374	TUBE ASSEMB LY, METAL	1
	10	PAFZZ	11083	6N5124	CLAMPBLOCK	2
*	11	PAFZZ	11083	7N4417	CLAMP, BLOCK, SECTION	1
	12	PFFZZ	11083	8N4373	TUBE ASSEMBLYIMETAL	1
	13	PAFZZ	11083	lN3139	FAIRLEAD HALFITUBUL	1
	14	PAFZZ	11083	6N5125	CLAMPBLOCKAMPBLOC.K.	1
	15	PFFZZ	11083	8N4372	TUBE ASSEMBLY, METAL.	1
	16	PFFZZ	11083	8N4371	TUBE ASSEMBLY, METAL	1
	17	PFFZZ	96906	MS35690-624	NUT, PLAIN, HEXAGON	3
*	18	PAFZZ	09990	2-241N951-75	PACKING, PREFORMED PART OF KIT P/N 6V2912 PART OF KIT P/N 6V29727.2	1
	19	PFFZZ	11083	6N4682	BRACKETAANGLELE	1
	20	PFFZZ	11083	5M2894	WASHER, FLAT	3
*	21	PFFZZ	11083	S1619	BOLT, MACHINE	2
*	22	PAFZZ	80204	81821BH031CO88N	BOLT, MACHINE	2
	23	PFFZZ	96906	MS27183-12	WASHER, FLAT	2
	24	PFFZZ	09990	2-216S1032-70	PACKING, PREFORMED PART OF KIT P/N 6V2972	1
	25	PAFZZ	89926	70920416	PLUG, PIPE	1
	26	PAFZZ	11083	8M5253	SEAL, RING PART OF KIT P/N 6V29729	1
	27	PFOZZ	55883	IPD5M6214	PLUG, PIPE	1
	28	PFFZZ	11083	4N4057	ADAPTER ASSEMBLY, FU	1
*	29	PFFZZ	11083	lA2029	BOLTVMACHINE	1
	30	PAFZZ	11083	2A5546	BOLT, MACHINE	2
	31	PFFZZ	11083	5P0537	WASHER	2

END OF FIGURE

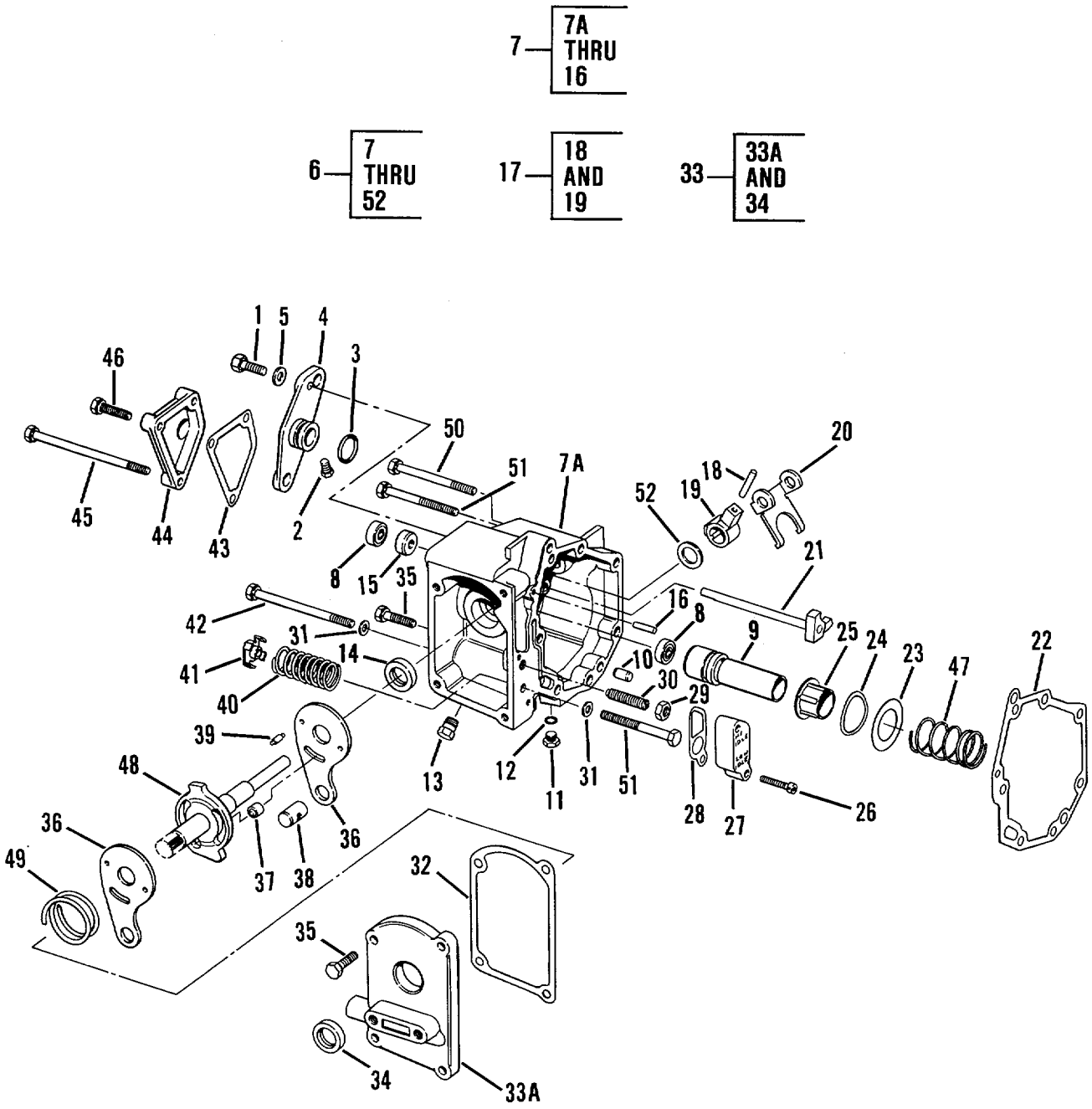

Figure 23. Governor

	(1) ITEM NO	(2) SMR CODE	(3) CAGEC	(4) PART NUMBER	(5) DESCRIPTION AND USABLE ON CODES (UOC)	(6) QTY
					GROUP 0302 - FUEL PUMPS	
					FIG 23 - GOVERNOR	
*	1	PFHZZ	11083	S1615	BOLT, MACHINE	2
	2	PAHZZ	11083	2S7905	PLUG, MACHINE THREAD	1
	3	PFHZZ	11083	4M8303	PACKING, PREFORMED PART OF KIT P/N 6V2972	1
	4	PFHZZ	11083	8N8082	COVER, ACCESS	1
	5	PFHZZ	11083	5P0537	WASHER	1
*	6	PAFZZ	11083	1N4857	PUMP, FUEL, ELECTRICA ORDER FOR REPLACEMENT	1
	7	PFHHH	11083	6N5324	.HOUSING, MECHANICAL.1	1
	7A	XAHZZ	11083	4N1082	..HOUSING	
	8	PFHZZ	11083	4N260	..SEAL, PLAIN ENCASED PART OF KIT P/N 6V2972	2
	9	PAHZZ	11083	6N5323	..SEAT, HELICAL COMPRE	1
	10	PAHZZ	11083	8S6814	..PIN, STRAIGHT, HEADLE	2
*	11	PFHZZ	11083	9S4180	..PLUG, MACHINE THREAD	1
	12	PFHZZ	59556	K-500-EN-0431	..SEAL PART OF KIT P/N 6V2972	1
	13	PFHZZ	11083	4N5050	PLUG, PIPE	1
	14	PAHZZ	80201	511642	SEAL, PLAIN ENCASED PART OF KIT P/N 6V2972	1
	15	PFHZZ	11083	6N2578	BEARING	1
	16	PFHZZ	11083	4N2333	..PIN	1
*	17	PFHZZ	11083	4N448	.LEVERIMANUAL CONTRO	1
	18	PFHZZ	60380	Q-8322	..ROLLER, BEARING DOWEL	1
	19	XAHZZ	11083	4N0447	..LEVER	1
	20	PFHZZ	11083	4N1881	.LEVER	1
	21	PFHZZ	11083	4NO927	.SHAFT	1
	22	PAHZZ	11083	4N594	.GASKET PART OF KIT P/N 6V2972	1
	23	PFHZZ	11083	6N2957	.SHIM	2
	24	PFHZZ	11083	6N2956	.WASHER, SPRING TENSI	1
	25	PFHZZ	11083	6N7451	.SEAT, HELICAL COMPRE	1
	26	PFHZZ	11083	lP2497	.SCREW	2
	27	PFHZZ	11083	4N5578	.COVER, PLATE	1
	28	PFHZZ	11083	4N49	.GASKET PART OF KIT P/N 6V29727.2	1
	29	PFHZZ	11083	5B3180	.NUT	1
	30	PFHZZ	11083	4N0054	.SCREW	1
	31	PFHZ	84479	NAS620-C416	.WASHER, FLAT	2
	32	PAHZZ	11083	4N0402	.GASKET PART OF KIT P/N 6V297272	1
	33	PFHZZ	11083	4N0687	.COVER ASSEMBL YTHRO	1
	33A	XAHZZ	11083	4N0686	..COVER.-	1
	34	PAHZZ	80201	511642	..SEAL, PLAIN ENCASED PART OF KIT P/N 6VZ972	1
*	35	PAHZZ	80204	B1821BH025C100N	.SCREW, CAP, HEXAGON H	6
	36	PFHZZ	11083	6N5482	.PLATE, PUMP	2
	37	PFHZZ	11083	4N8179	.PIN	1
	38	PFHZZ	11083	9SB601	.PIN	1
	39	PAHZZ	11083	4N0444	.SHAFTISHOULDERED	1
	40	PFHZZ	11083	9S8632	.SPRING	1
	41	PFHZZ	11083	4N0116	.GUIDE	1

	(1) ITEM NO	(2) SMR CODE	(3) CAGEC	(4) PART NUMBER	(5) DESCRIPTION AND USABLE ON CODES (UOC)	(6) QTY
*	42	PFHZZ	11083	3B8695	.BOLT, MACHINE	1
	43	PAHZZ	11083	4N159	.GASKET PART OF KIT P/N 6V2972	1
	44	PFHZZ	11083	4N0053	.COVERVACCESS	1
	45	PFHZZ	96906	MS16208-19	.BOLT, MACHINE	2
*	46	PAHZZ	80204	B1821BH025ClOON	.SCREWICAP, HEXAGON H	1
	47	PFHZZ	11083	4N4223	.SPRINGIHELICALICOMP	1
	48	PFHZZ	11083	4N4320	.SHAFT A	1
	49	PFHZZ	11083	4N4366	.SPRING	1
*	50	PFHZZ	80204	B1821BHO25C275N	.SCREW, CAP, HEXAGON H	1
	51	PFHZZ	11083	lP9925	.BOLT	2
	52	PFHZZ	96906	MS27183-19	WASHER, FLAT	1

END OF FIGURE

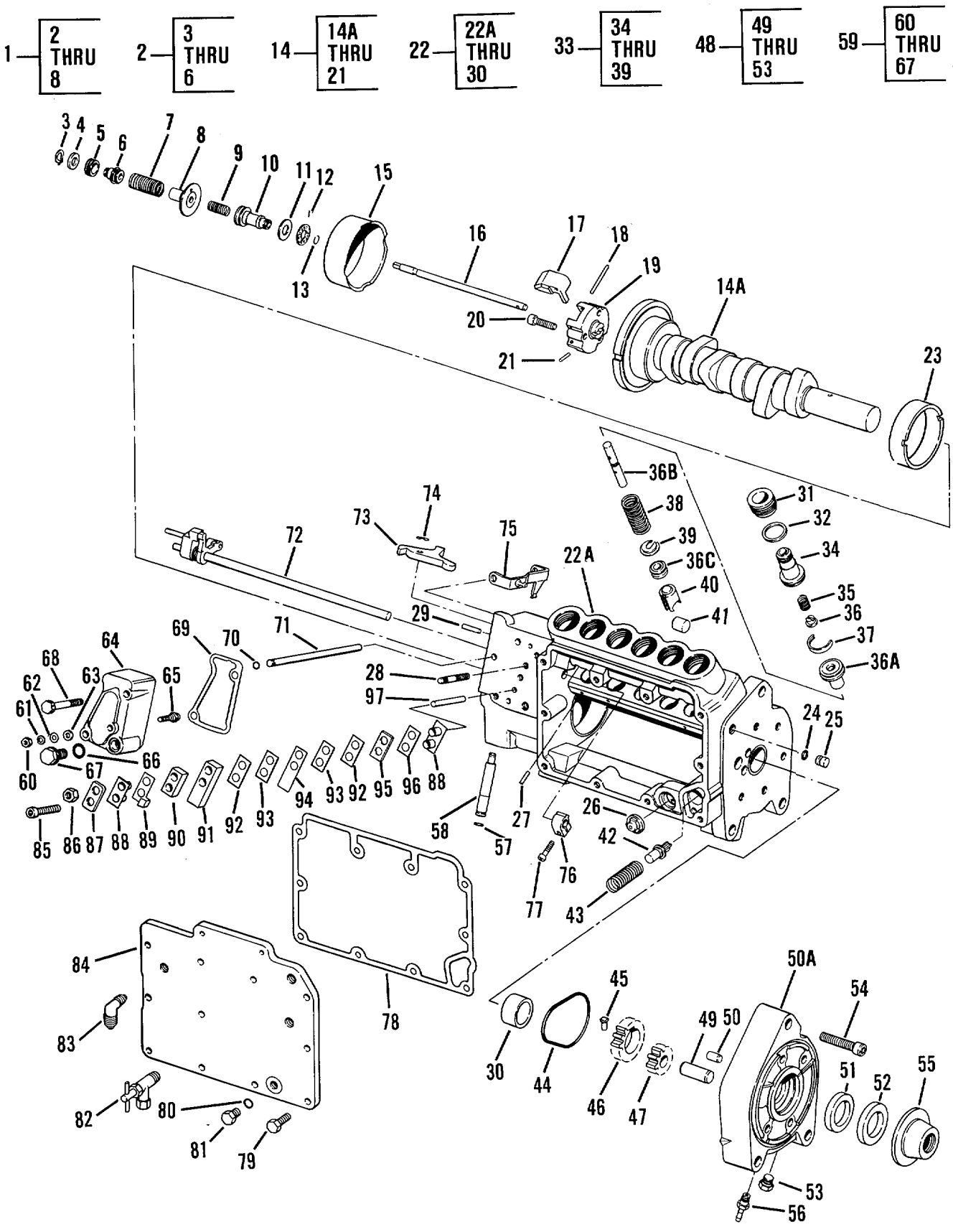

Figure 24. Fuel Injection Pump

(1) ITEM NO	(2) SMR CODE	(3) CAGEC	(4) PART NUMBER	(5) DESCRIPTION AND USABLE ON CODES (UOC)	(6) QTY
				GROUP 0302 - FUEL PUMPS	
				FIG 24 - FUEL INJECTION PUMP (SEE FIGURE 23 FOR TOP ASSEMBLY PART NUMBER 1N4857)	
1	PFDZZ	11083	6N4655	DASHPOT	1
2	PFDZZ	11083	4N6408	PISTON ASSEMBLY, DAS	1
3	PFDZZ	79136	5101-35-ZD	RING, RETAINING	1
4	PADZZ	11083	4N6406	RING.-. -	1
5	PFDZZ	59556	K-500-EN-0472	SPOOL, FUEL INJECTIO.	1
6	PFDZZ	11083	4N6403	DASHPOT9	1
7	PFDZZ	11083	4N6410	SPRING, HELICAL, COMP	1
8	XADZZ	11083	4N6401	SEAT, SPRING	1
9	PFDZZ	11083	6N6662	SPRING, HELICAL, COMP	1
10	PFDZZ	11083	4N434	RISERGOVERNOR	1
* 11	PFDZZ	21335	JD-530502	SEAT, BEARING	2
12	PFDZZ	11083	7M7219	RETAINER AND ROLLER	1
13	PFDZZ	11083	4N2953	RING, RETAINING	1
14	PFDDD	11083	7N1776	CAMSHAFTIENGINE	1
14A	PFDZZ	11083	7N1787	CAMSHAFT, FUEL PUMP	1
15	PADZZ	11083	4N1723	SHIELD	1
16	PFDZZ	11083	4N9018	SHAFT, STRAIGHT	1
17	PADZZ	11083	4N425	WEIGHT, FUEL INJECTI	3
18	PADZZ	11083	4N511	PIN, STRAIGHT, HEADLE	3
19	PADZZ	11083	8N2663	HOUSING, FUEL, INJECT CARRIER	1
20	PADZZ	80205	NA51352-4LE16	SCREW, SELF-LOCKING	3
21	PFDZZ	11083	4N9019	DOWEL	1
22	PFDDD	11083	8N1570	HOUSING, MECHANICAL	1
22A	XADZZ	11083	4N256	HOUSING	1
23	PFDZZ	11083	8N0628	BEARING, SLEEVE	1
24	PFDZZ	11083	2D6392	GASKET PART OF KIT P/N 6V2972	1
25	PFDZZ	11083	4N1826	DOWEL	1
26	PFDZZ	70040	5622759	VALVE ASSEMBLY, FUEL	1
27	PFDZZ	11083	8N0984	PIN, SPRING	6
28	PFDZZ	11083	4N5481	STUO, PLAIN	1
29	PFDZZ	11083	4N2333	PIN	1
30	PFD2Z	11083	5P4810	BEARING	1
*31	PADZZ	11083	4N218	BUSHINGIBONNET	6
32	PADZZ	11083	6F6672	PACKING, PREFORMED PART OF KIT P/N 6V2972	6
33	PFDZZ	11083	6N7527	PLUNGER AND BARREL R.L	6
34	PFDZZ	11083	8N1417	CAP, VALVE	1
35	PADZZ	11083	8N1415	SPRING, HELICAL, COMP	1
36	PFDZZ	11083	3N1414	VALVE, CHECK	1
36A	XADZZ	11083	4N2034	BARREL	1
36B	XADZZ	11083	4N1762	PLUNGER	1
36C	XADZZ	11083	4N1764	SLEEVE -	1
37	PADZZ	11083	4N224	RING, SPECIAL	1
38	PADZZ	11083	9N5862	SPRING, HELICAL, COMP	1
39	PADZZ	11083	4N2728	WASHER, FLAT .	1
40	PADZZ	11083	6N6794	LIFTERIFUEL PUMP PL	6

	(1) ITEM NO	(2) SMR CODE	(3) CAGEC	(4) PART NUMBER	(5) DESCRIPTION AND USABLE ON CODES (UOC)	(6) QTY
	41	PFDZZ	11083	4N2685	ROLLER, FUEL PUMP	6
	42	PFDZZ	11083	4N1767	VALVE, FUEL BYPASS	1
*	43	PFDZZ	11083	4N605	SPRING, HELICAL, COMP	1
	44	PFDZZ	11083	5M6509	PACKING, PREFORMEO PART OF KIT P/N 6V27Z97	1
	45	PFDZZ	11083	4N3779	KEY	1
	46	PFDZZ	11083	4N0429	GEAR	1
	47	PFDZZ	11083	4N0406	GEAR, SPUR	1
	48	PFDDD	11083	9L6863	BODY ASSEMBLY, TRANST	1
	49	PFDZZ	11083	8H9804	PIN, STRAIGHT, HEADLE	1
	50	PFDZZ	11083	8S6814	PIN, STRAIGHT, HEAOLE	1
	50A	XADZZ	11083	9L6788	BODY	1
	51	PADZZ	11083	4N0636	SEAL PART OF KIT P/N 6V2972	1
	52	PADZZ	11083	4N1584	SEAL PART OF KIT P/N 6V2972	1
	53	PFDZZ	11083	4N5050	PLUG, PIPE	1
	54	PFDZZ	11083	5J5314	SCREWICAPISOCKET HE	4
	55	PFDZZ	11083	4N2954	SLEEVE	1
	56	PFDZZ	79470	110-03428	ADAPTERTSTRAIGHT, PIPIO	1
	57	PADZZ	11083	206392	GASKET PART OF KIT P/N 6V297272	1
	58	PADZZ	11083	4N523	PIN, SHOULDER, HEADLE	1
	59	PFDDD	11083	4N1591	HOUSINGOFUELL	1
*	60	PFDZZ	18876	9024483	NUT, PLAIN, HEXAGON	1‘
	61	PFDZZ	96906	MS35338-42	WASHER, LOCK	1
	62	PADZZ	01843	WA-79849	WASHER, FLAT	1
	63	PADZZ	85480	NW8-3756	WASHER, FLAT	1
	64	PFDZZ	11083	6N0411	COVER, TORQUE SPRING6	1
*	65	PADZ	11083	6N412	SCREW, MACHINE	1
	66	PADZZ	81349	M83248/2-905	PACKING, PREFORMED PART OF KIT P/N 6V2972	1
	67	PAD7Z	11083	2P3200	BOLT.MACHINE	1
	68	PADZ	58312	2M5471-00	SCREWICAPVHEXAGON H	2
	69	PADZZ	11083	4N0508	GASKET PART OF KIT P/N 6V2972	1
	70	PADZZ	11083	3H0442	RING SEAL PART OF KIT P/N 6VZ972	1
	71	PFDZZ	11083	4N0528	SHAFTISTRAIGHT	1
	72	PFOZZ	11083	4N0572	SHAFT ASSEMBLY, SLEE	1
*	73	PFDZZ	11083	4N445	PAWL	1
	74	PADZ	96906	MS16633-1025	RINGRETAINING	1
	75	PFDZZ	11083	4N2677	LEVER ASSEM3LY, RISE	1
*	76	PFOZZ	11083	4N1763	COLLARVSHAFT	6
	77	PADZ	11083	2N2658	SCREW, CAP, SOCKET HE	6
	78	PFDZZ	11083	4N9057	GASKET PART OF KIT P/N 6V2972	1
*	79	PFDZZ	11083	S1615	BOLTMACHINE	10
	80	PFDZZ	59556	K-500-EN-0431	SEAL PART OF KIT P/N 6V2972	1
*	81	PFDZZ	11083	9S4180	PLUG, MACHINE THREAD	1
	82	PFOZZ	11083	6D238	VALVE, ANGLE	1
	83	PAOZZ	79470	131-05004	VALVE, CHECK	1
	84	PFDZZ	11083	7N2058	COVER, ACCESS	1
	85	PADZZ	11083	4L7124	SCREW, CAP, SOCKET HE	1
	86	PADZZ	11083	4L6458	NUT, PLAIN, HEXAGON	1
	87	PADZZ	11083	8M9064	SPACER, PLATE	1
	88	PFDZZ	58312	lP6452-00	INSULATOR, BUSHING	2
	89	PFDZZ	11083	4N3882	CONTACT, LOAD STOP -.-	1

(1) ITEM NO	(2) SMR CODE	(3) CAGEC	(4) PART NUMBER	(5) DESCRIPTION AND USABLE ON CODES (UOC)	(6) QTY
90	PACZZ	11083	4N9098	SPACER, PLATE	1
91	PFCZZ	11083	TN7856	SPACER , PLATE	1
92	PACZZ	11083	4N7777	SHIM	3
93	PADZZ	11083	9L9347	SHIM.2	2
94	PFDZZ	11083	6N3)4	SPRING	1
95	PADZZ	11083	L7235	SHIM	3
96	PACZZ	11083	8L8601	SH	6
97	PFDZZ	11083	4N443	PIN, STRAIGHT, HEADLE	1

ENG OF FIGURE

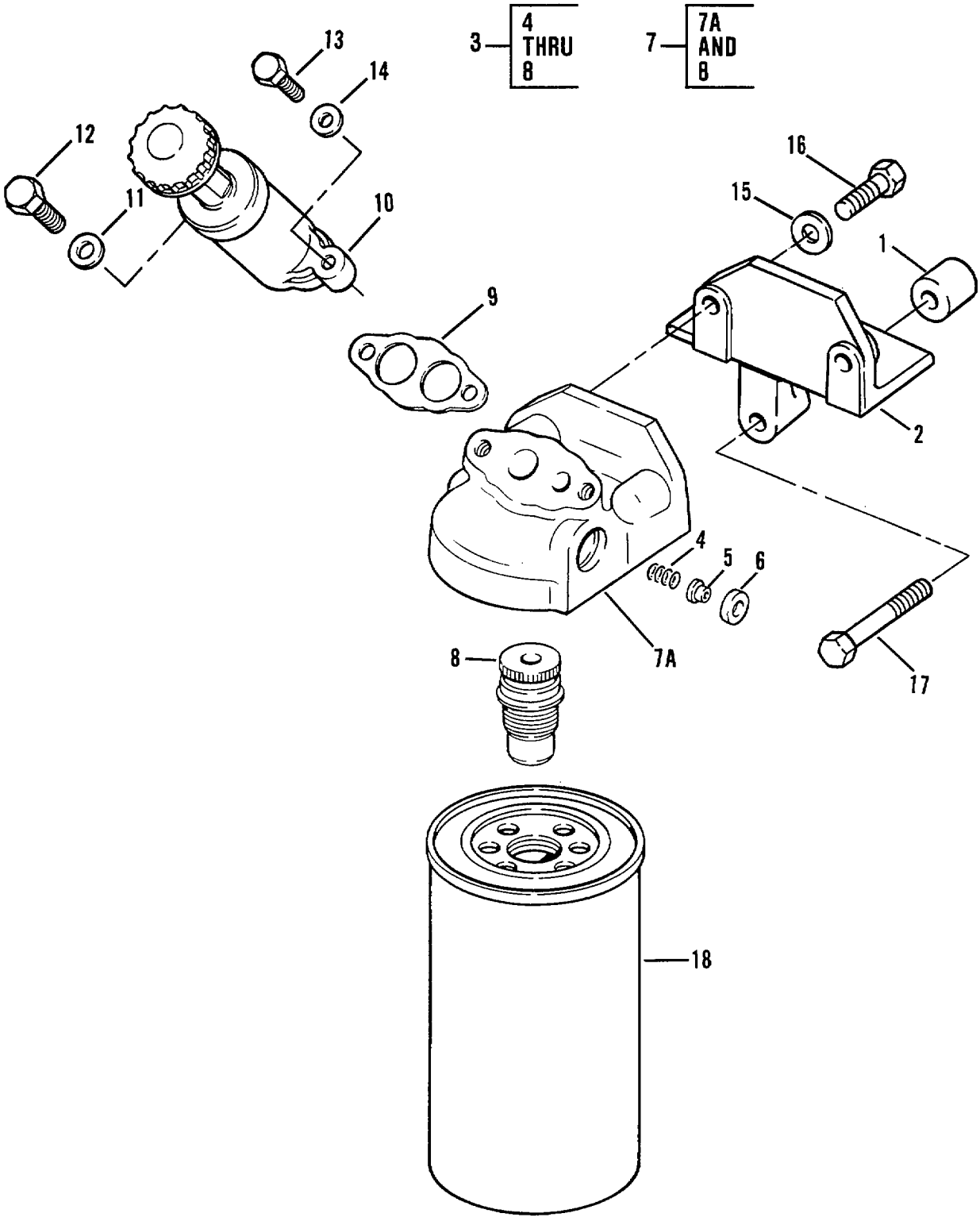

Figure 25. Fuel Pump and Filter

(1) ITEM NO	(2) SMR CODE	(3) CAGEC	(4) PART NUMBER	(5) DESCRIPTION AND USABLE ON CODES (UOC)	(6) QTY
				GROUP 0302 - FUEL PUMPS	
				FIG 25 - FUEL PRIMING PUMP AND FILTER	
1	PAOZZ	11083	6B7469	SPACER	2
2	PFOZZ	11083	1W6009	SUPPORT, FUEL FILTER	1
3	PFOZZ	110l3	4N3302	BASE ASSEMBLY, FILTE	1
4	PAOZZ	11083	4N3296	SPRINGIHELICALICOMP	1
5	PAOZZ	11083	4N3297	.DISK, VALVE	1
6	PAOZZ	11083	4N3298	.SEAT, VALVE	1
7	PFOZZ	11083	4N3295	.FILTER ASSEMBLY, FLU	1
7A	XAOZZ	19207	NPN14	..HOUSING	1
8	PFOZZ	11083	4N3294	..FILTER F-LEMENTIFLUI	1
9	PAOZZ	11083	1P436	GASKET	1
10	PAOZZ	11083	4W0788	PUMP, ENGINE PRIMING	1
11	PFOZZ	96906	MS27183-12	WASHERSFLAT	1
12	PAOLZ	11083	lB2790	BOLT LMACHINE	1
* 13	PFOZZ	11083	7B2742	BOLT LMACHINE	1
14	PFOZZ	11083	5P0537	WASHER	1
15	PFOZZ	11083	5M2894	WASHER, FLAT	2
* 16	PFOZZ	11083	lA2029	BOLTIMACHINE -	2
* 17	PFOZZ	11083	L1143	BOLT, MACHINE	1
* 18	PAOZZ	11083	1W8633	FILTER ELEMENT, FLUI	1
				END OF FIGURE	

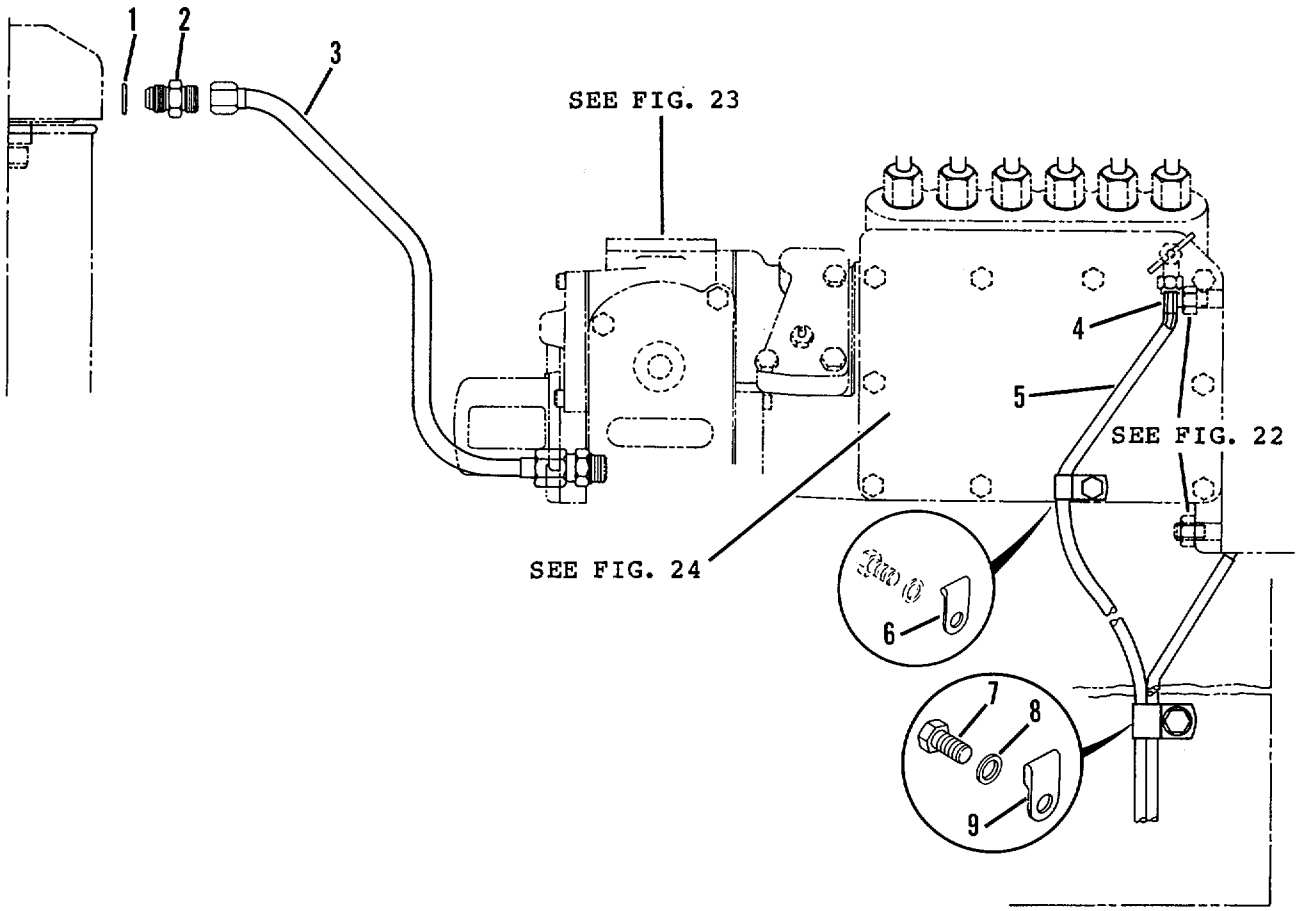

Figure 26. Fuel Drain Lines

(1) ITEM NO	(2) SMR CODE	(3) CAGEC	(4) PART NUMBER	(5) DESCRIPTION AND USABLE ON CODES (UOC)	(6) QTY
				GROUP 0302 - FUEL PUMPS FIG 26 - FUEL DRAIN LINES	
1	PAOZZ	25184	906-737-70	PACKING, PREFORMED PART OF KIT P/N 6V2972	2
2	PAOZ	96906	MS51525A6	ADAPTER, STRAIGHT, TU	2
3	PFOZZ	11083	4N3363	TUBE ASSEMBLYIMETAL	1
4	PFOZZ	11083	7K8332	INSERT, FUEL INJECTI	1
* 5	MOOZZ	11083	5P6011-23.7	TUBING, NONMETALLIC MAKE FROM TUBE P/N NN-4-035, 23.7 INCHES LONG	1
6	PFOZZ	96906	MS21333-34	CLAMP, LOOP	1
7	PAOZZ	11083	2H3755	BOLT, MACHINE	1
8	PFOZZ	96906	MS27183-12	WASHERIFLAT	1
9	PFOZZ	30966	BDT-413	CLAMP, LOOP	1
				END OF FIGURE	

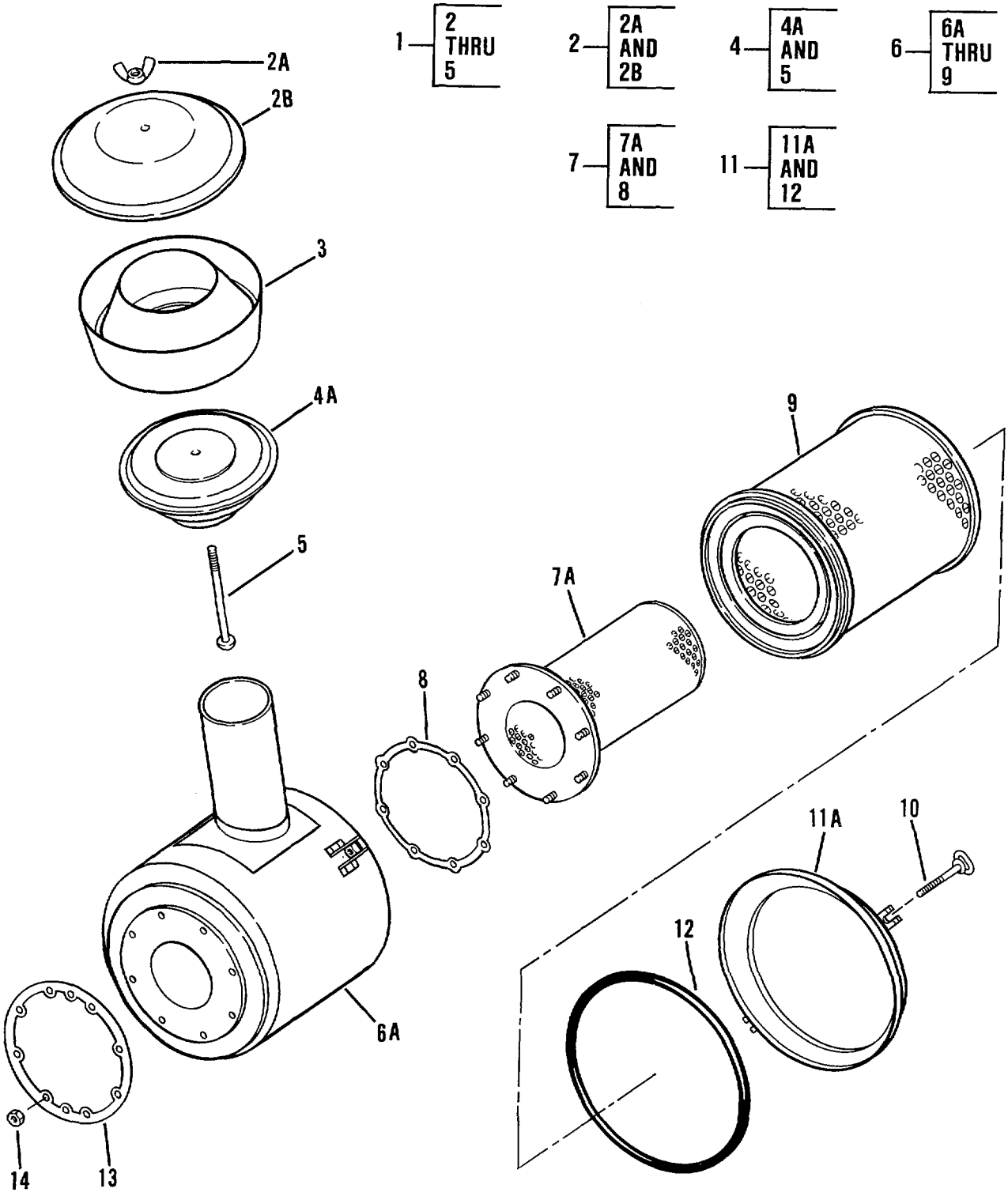

Figure 27. Air Cleaner

(1) ITEM NO	(2) SMR CODE	(3) CAGEC	(4) PART NUMBER	(5) DESCRIPTION AND USABLE ON CODES (UOC)	(6) QTY
				GROUP 0304 - AIR CLEAHEP	
				FIG. 27 - AIR CLEANER	
1	PFOOO	19207	11621206	PRECLEANER, AIR INTA	1
2	PFOZZ	18265	P10-4517	.COVER, ACCESS	1
2A	XACZZ	19207	NPN2	..WINGNU'T	1
2B	XACZZ	19207	NPN3	..COVER	1
3	PFOZZ	18265	P16330	.BODYAIR PRE-CLEANE	1
4	PFOZZ	18265	P16338	.SLEEVE ASSEMBLY	1
4A	XAOZZ	19207	NPN4	..SLEEVE	1
5	PFOZZ	18265	P-20342	..BOLT, RIBBED NECK	1
6	PFOCCO	11083	6N7847	AIR CLEANER, INTAKE	1
6A	PFOZZ	11083	4M9334	.FILTER ELEMENT, INTA	1
7	PAOZZ	12658	PA-1675	.FILTER ELEMENT, INTA	1
7A	XAOZZ	19207	NPN5	..FILTER	1
8	PFOZZ	11083	9S1274	..GASKET	1
9	PAOZZ	18265	KYXOC-5696	.FILTER ELEMENT, INTA	1
10	PFOZZ	18265	P10-2533	BOLT, EYE	2
11	PFOZZ	18265	P11-0103	AIR CLEANER, BOWL, EN	1
11A	XAOZZ	19207	NPN6	.BOWL	1
12	PFOZZ	18265	P10-2929	.GASKET	1
13	PFOZZ	I1083	9S1274	GASKET	1
14	PFOZZ	11083	14717	NUT, HEXAGCN	8

END OF FIGURE

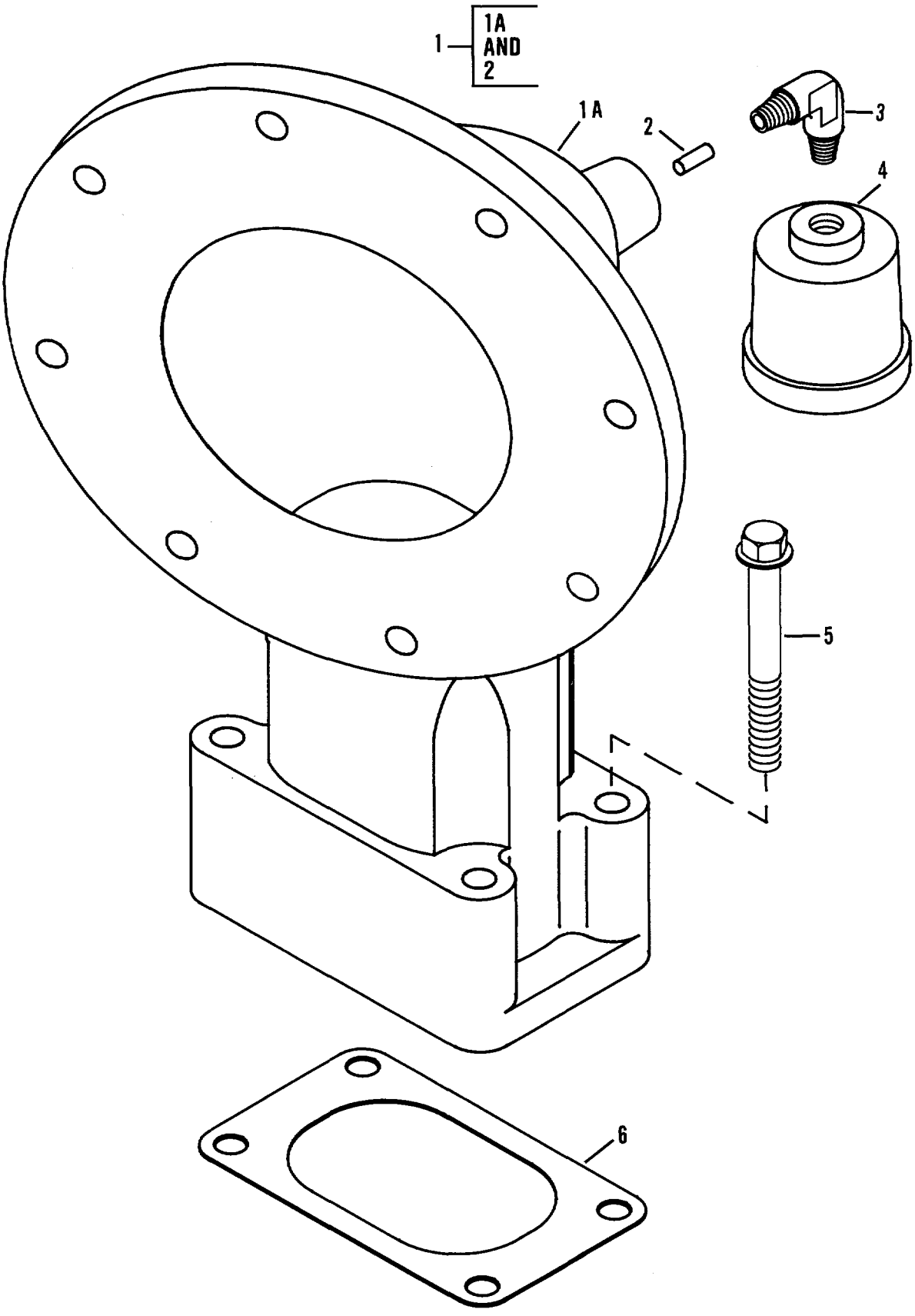

Figure 28. Air Lines

(1) ITEM NO	(2) SMR CODE	(3) CAGEC	(4) PART NUMBER	(5) DESCRIPTION AND USABLE ON CODES (UOC)	(6) QTY
				GROUP 0304 - AIR CLEANER	
				FIG 28 - AIR CLEANEF LINES	
1	PFOZZ	11083	7S5449	PIPE ASSEMBLY, INTAK	1
1A	XAOZZ	11083	7S5425	.PIPE	1
2	PFOZZ	18265	PIO-0128	.STRAINER ELEPENSE	1
3	PFOZZ	11083	6V443	ELBOW, PIPE TC TUBE	1
4	PFOZZ	59150	1875-330	INDICATOR, FILIER WA	1
5	PFOZZ	96906	MS18154-67	SCREW, CAP, EXAGON H	4
6	PFOZZ	58312	556735-00	GASKET	1
				END OF FIGURE	

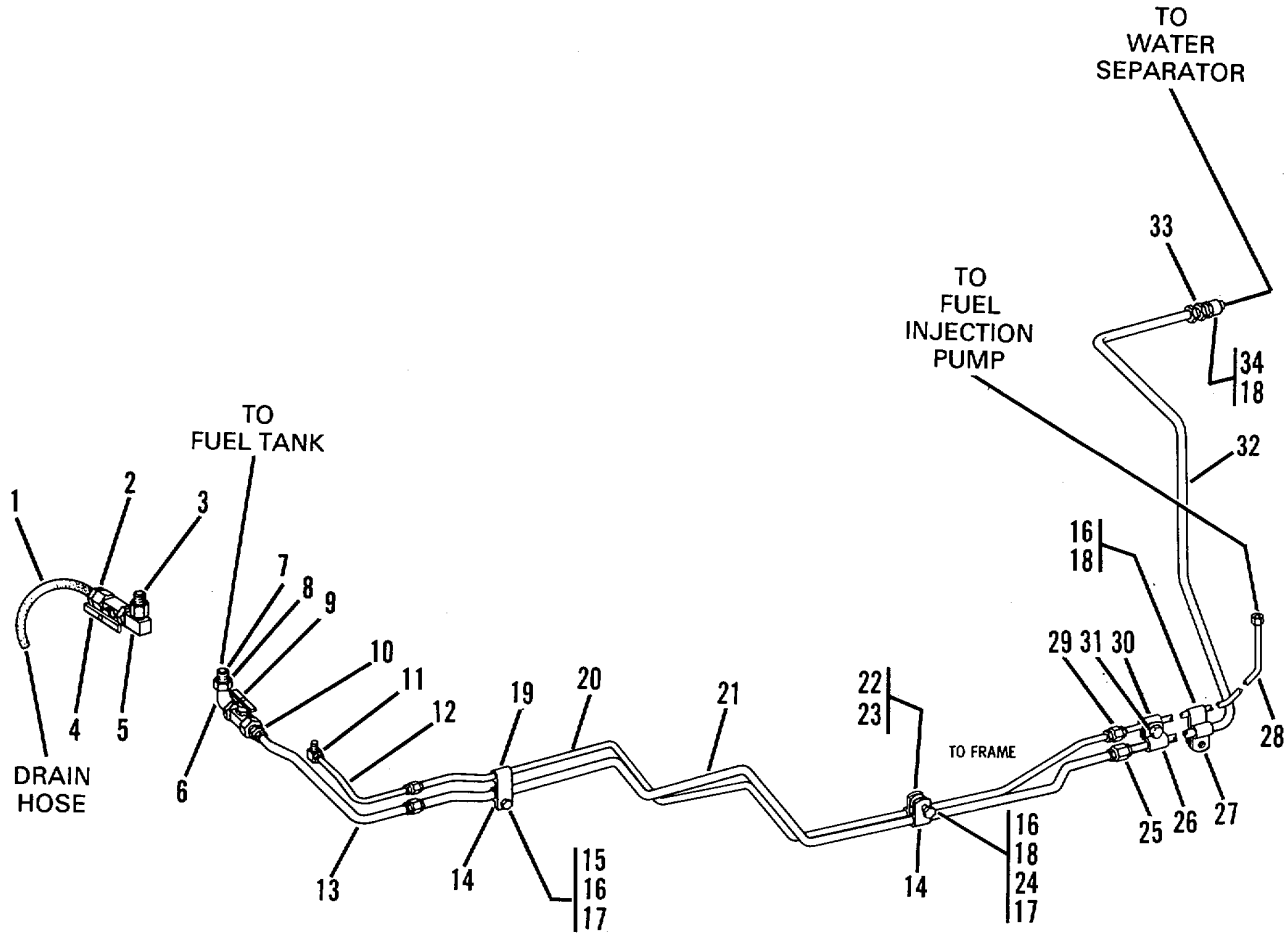

Figure 29. Fuel Lines

(1) ITEM NO	(2) SMR CODE	(3) CAGEC	(4) PART NUMBER	(5) DESCRIPTION AND USABLE ON CODES (UOC)	(6) QTY
				GROUP 0306 - TANKS, LINES, FITTINGS, HEADERS	
				FIG. 29 - FUEL LINES	
1	MOOZZ	11083	5P1442-9.8	HOSE MAKE FROM HOSE P/N 5P1442, 9.8 IN	1
2	PFOZZ	98441	322F-E	ADAPTER, STRAIGHT, PI	1
3	PAOZZ	79470	3200X6	COUPLING, PIPE	1
4	PAOZZ	96795	30014300	VALVE, BALL	1
5	PFOZZ	96906	MS51845-4	ELBOW, PIPE	1
6	PAOZZ	78640	32143	ELBOW, PIPE	1
7	PAOZZ	11083	9G8856	STRAINER ELEMENT, SE	1
8	PFOZZ	11649	SS-8-A-8RP	COUPLING, PIPE	1
9	PAOZZ	03730	40532	VALVE, BALL	1
10	PAOZZ	11083	5K9248	FITTING	1
11	PAOZZ	11083	5K9243	ELBOW, PIPE TO TUBE	1
12	PFOZZ	11083	9G0964	TUBE ASSY, METAL	1
13	PFOZZ	11083	8P2823	TUBE ASSY, METAL	1
14	PFOZZ	11083	7M3882	CLAMP, LOOP	2
15	PFOZZ	11083	1A2029	BOLT, MACHINE	2
16	PFOZZ	11083	104717	NUT THEXAGON	3
17	PFOZZ	96906	MS27183-14	WASHER, FLAT	6
18	PAOZZ	81349	M83248/2-905	PACKING, PREFORMED PART OF KIT P/N 6V2972	1
19	PAOZZ	11083	5K6437	CLAMP A LOOP	2
20	PFOZZ	11083	9GO966	TUBE ASSY, METAL	1
21	PFOZZ	11083	8P2956	TUBE ASSY, METAL	1
22	PAOZZ	11083	6H3068	CLAMP, LOOP	1
23	PAOZZ	11083	4S5719	SPACER	1
24	PAOZZ	11083	2A4639	BOLT, MACHINE	1
25	PAOZZ	11083	7K1456	COUPLING, TUBE	2
26	PAOZZ	11083	9S1350	CLAMP, LOOP	1
27	PFOZZ	96906	MS21333-57	CLAMP, LOOP	1
28	PFOZZ	11083	3T0872	TUBE ASSY, METAL UOC: AGU, AGV	1
28	PFOZZ	11083	7T0187	TUBE ASSEMBLY, METAL UOC: AGU, AGV	1
29	PAOZZ	11083	5K9242	FITTING	2
30	PAOZZ	11083	2B2404	CLIP , ELECTRICAL	1
31	PFOZZ	11083	OS0509	SCREW, CAPIHEXAGON H	1
32	PFOZZ	11083	9G8494	TUBE ASSY SMETAL	1
33	PADZZ	11083	5K9246	ADAPTERT STRAIGHT, PI	1
34	PFOZZ	30327	720F505/16	ADAPTER, STRAIGHTIPI	1

END OF FIGURE

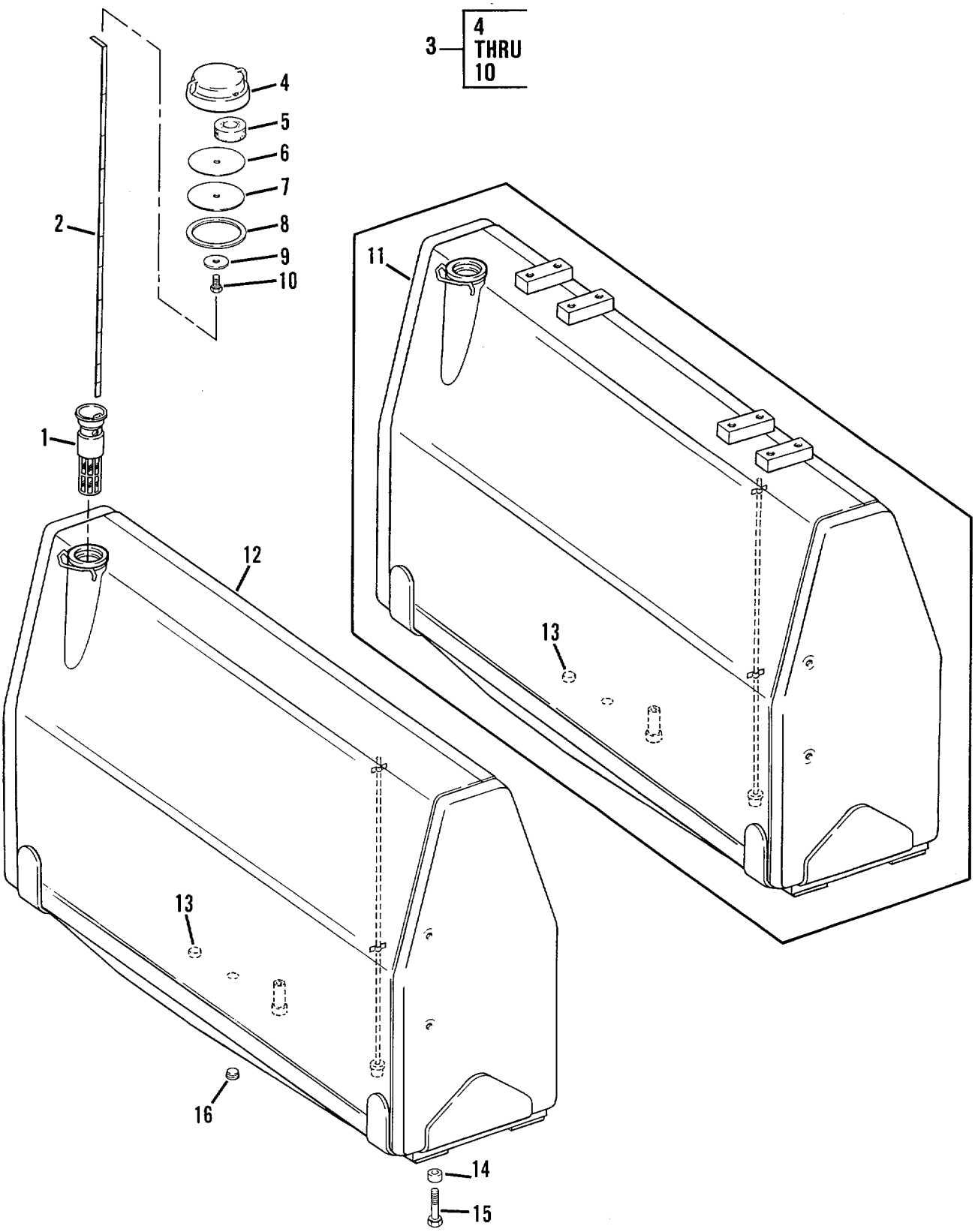

Figure 30. Fuel Tank

(1) ITEM NO	(2) SMR CODE	(3) CAGEC	(4) PART NUMBER	(5) DESCRIPTION AND USABLE ON CODES (UOC)	(6) QTY
				GROUP 0306 - TANKS, LINES FITTINGS HEADERS	
				FIG 30 - FUEL TANK	
1	PADZZ	56620	41403	STRAINER, FUELPENGIN	1
2	PFOZZ	11083	8P1224	GAGE RODLICJID LEV	1
3	PAOZZ	11083	4B5441	CAP, FILLER CPENING	1
4	PFOLZ	11l83	485389	.CAPIFILLER GPENING	1
5	PACZZ	11083	4B5949	.STRAINER, FLEL CAP .,	2
6	PAOZZ	11083	4B5423	.GASKET	1
7	PAOZZ	11083	3F4134	.BAFFLE, AIRFLOW	1
8	PAOZZ	11083	7T2037	.GASKET	1
9	PAOZZ	63532	WAS125	.WASHER1FLAT	1
10	PAOZZ	11083	3H8389	.SCREW, FUEL TANK FIL	1
11	PFCFF	11083	5R8092	TANK, FUEL, ENGINE	1
				UOC :AGU, AGV	
12	PFOFF	11083	9GO968	TANK KFUELLENGINE.O.111	1
				UOC :AGS, AGT	
13	PFOZZ	11083	7M5007	FITTING, TANK	2
14	PAOZZ	11083	6K5640	SPACER, SLEEVE	4
15	PAOZZ	11083	3B2968	BOLT, MACHINE	4
16	PFCZZ	15235	PLG1	PLUG, PIPE	1

END OF FIGURE

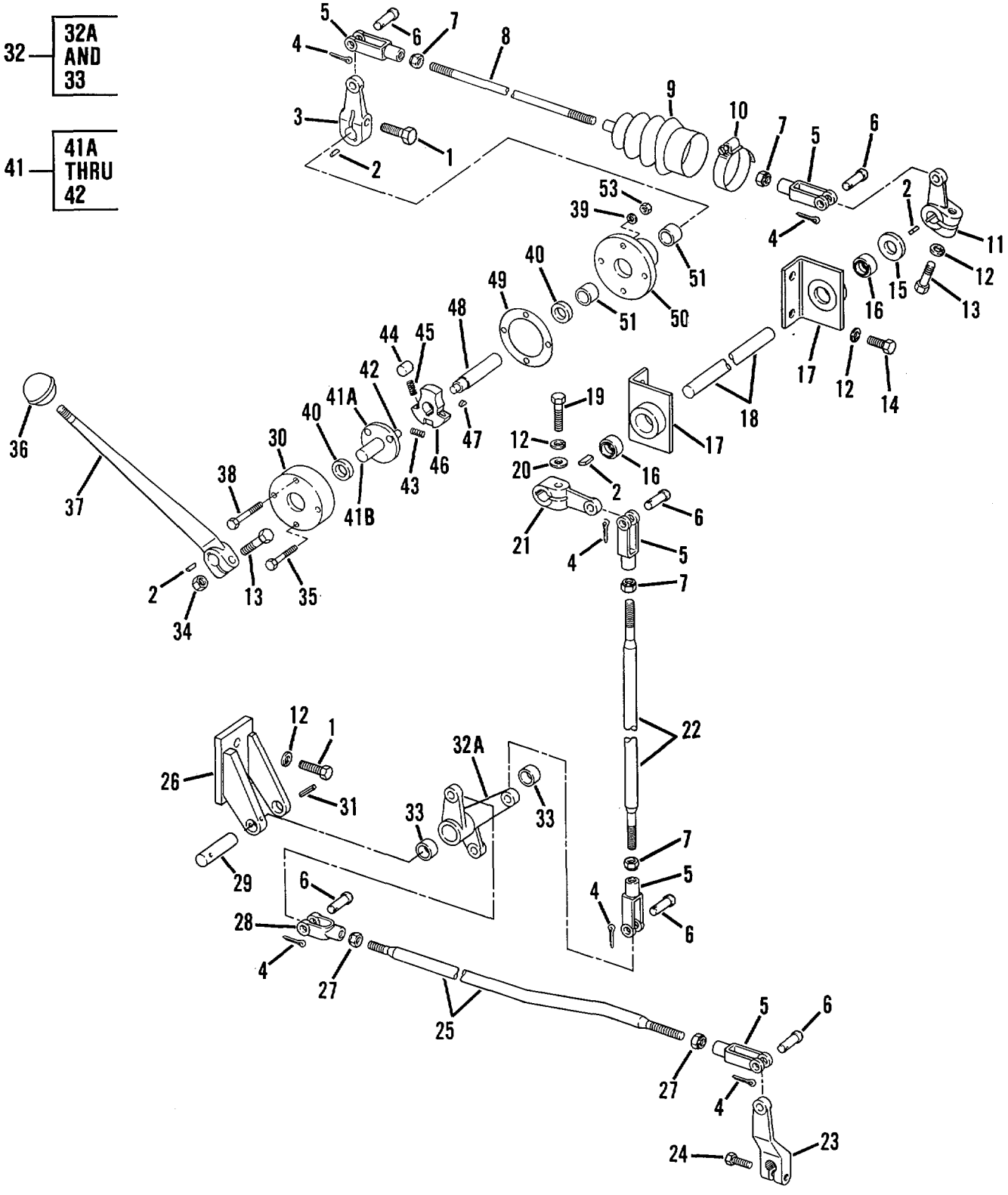

Figure 31. GOVENOR CONTROL

(1) ITEM NO	(2) SMR CODE	(3) CAGEC	(4) PART NUMBER	(5) DESCRIPTION AND USABLE ON CODES (UOC)	(6) QTY
				GROUP 0308 - ENGINE SPEED GOVERNOR AND CONTROLS	
				FIG. 31 - GOVERNOR CONTROL	
1	PFOZZ	80204	B18218H038C125N	SCREW, CAPVHEXAGON H	3
2	PFOZZ	96906	MS35756-8	KEY, WOODRUFF	4
3	XBOZZ	11083	8M6773	LEVER, REMOTE CONTROTRO	1
4	PFOZZ	96906	MS24665-351	PINI, OTTER	4
5	PFOZZ	96906	MS35812-4	CLEVIS, ROD END	4
6	PFOZZ	11083	9H6673	PIN, STRAIGHTIHEAOED	6
7	PFOZZ	96906	MS35691-21	NUT, PLAIN, HEXAGON	4
8	PFOZZ	11083	1P4573	STUDI, PLAIN	1
9	XBOZZ	11083	8P7317	BELLOWSTRUBBER	1
10	PFOZZ	96906	MS35842-13	CLAMP, HOSE	1
11	XBOZZ	11083	6D5707	LEVER, REMOTE CONTRO	1
12	PFOZZ	96906	MS35338-46	WASHER, LOCK	8
13	PAOZZ	11083	3B1915	80LT	2
14	PFOZZ	11083	L1351	BOLT, MACHINE	4
15	PFOZZ	96906	MS27183-21	WASHER, FLAT	1
16	PFOZZ	21335	EA28899	BEARING, PLAIN, SELF-	2
17	PFOZZ	11083	3T1753	BRACKET, EYE, ROTATIN	2
18	PFOZZ	11083	8P2435	SHAFT	1
19	PFOZZ	11083	0S1591	SCREW	1
20	PFOZZ	96906	MS27183-14	WASHER, FLAT	1
21	XBOZZ	11083	605707	LEVER, REMOTE CONTRO	1
22	PFOZZ	11083	8P2444	CONNECTING LINK, RIG	1
23	XBOZZ	11083	IV0026	LEVER, REMOTE CONTRO	1
24	PFOZZ	80204	B1821BHO3lC113N	BOLT, MACHINE	1
25	PFOZZ	11083	8P2445	ROD, THREADED END	1
26	PFOZZ	11083	8P2437	BRACKETANGLE	1
27	PFOZZ	96906	MS35691-21	NUTIPLAINVHEXAGON	1
28	PFOZZ	11083	lF5403	CLEVIS, ROD END	1
29	PFOZZ	11083	8P2443	SHAFT, STRAIGHT	1
30	PFOZZ	11083	7M2167	RING, GOVERNOR	1
31	PF0ZZ	11083	6H3956	PINSPRING	1
32	XBOFF	11083	8P2441	BELL CRANK	1
32A	XB8ZZ	11083	8P2442	BELL CRANK	1
33	PFOZZ	11083	3K6662	BEARING, SLEEVE	2
34	PFOZZ	11083	104717	NUT, HEXAGON	1
35	PFOZZ	11083	1B2713	BOLT, MACHINE	1
36	PFOZZ	11083	7F8092	KNOB	1
37	PFOZZ	11083	8M6770	LEVER, REMOTE CONTRO	1
38	PAOZZ	77445	466473	BOLT, MACHINE	3
39	PFOZZ	96906	M535338-44	WASHER, LOCK	4
40	PFOZZ	80201	6143	SEAL, PLAIN ENCASED	2
41	XBOZZ	11083	8P2430	SHAFT, STRAIGHT	1
41A	XAOZZ	11083	256112	PLATE	1
41B	XAOZZ	11083	lV1728	SHAFT	1
42	PFOZZ	11083	2S6091	PINISTRAIGHT, HEADLE	2
43	PAOZZ	10001	159384PC5	SPRING, HELICAL, COMP	1

(1) ITEM NO	(2) SMR CODE	(3) CAGEC	(4) PART NUMBER	(5) DESCRIPTION AND USABLE ON CODES (UOC)	(6) QTY
44	PAOZZ	11083	8H9182	ROLLERIBEARING	2
45	PFOZZ	11083	8H9186	SPRING, HELICALICOMP	2
46	PFOZZ	11083	8H7577	CAMICONTROL	1
47	PAOZZ	96906	MS35756-33	KEYIWOODRUFF	1
48	PFOZZ	11083	8P2429	SHAFTVSHOULDERED	1
49	PADZZ	58312	7M6955-00	GASKET	1
50	PFDZZ	11083	8P2427	PLATE, RETAINING, BEARING	1
51	PFOZZ	11083	9F5647	BUSHING, SLEEVE	2
52	PFOZZ	31159	JM56	NUT, PLAIN, HEXAGON	4

END OF FIGURE

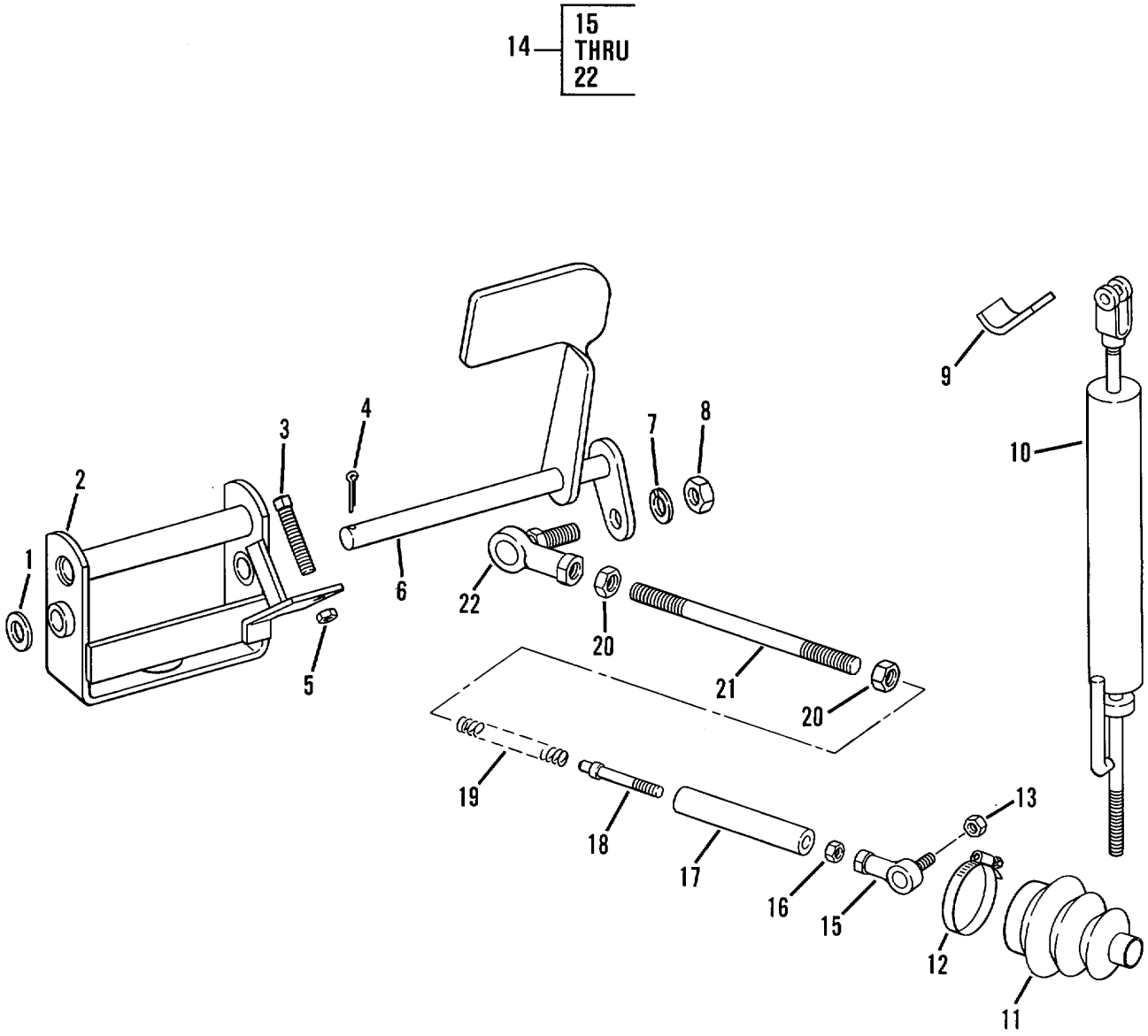

Figure 32. Decelerator Control

(1) ITEM NO	(2) SMR CODE	(3) CAGEC	(4) PART NUMBER	(5) DESCRIPTION AND USABLE ON CODES (UOC)	(6) QTY
				GROUP 0308 - ENGINE SFEED GCVERNOR AND CONTROLS	
				FIG, 32 DECELERATCR CCNTRCL	
1	PAOZZ	77260	X747	WASHER, FLAT	1
2	PFOZZ	11083	8P2460	BRACKET, ANGLE	1
3	PFOZZ	96906	MS5195542	SETSCREW	1
4	PFCZZ	96906	MS24665-353	PIN, COTTER	1
5	PFOZZ	96906	MS35691-17	NUT, PLAIN, HEXAGON	1
6	PFCZZ	11083	8P2463	PEDAL, CONTRL	1
7	PAOZZ	96906	MS.35338-4E	WASHER, LOCK	1
8	PFOZZ	96906	M551968-14	NUT, PLAIN, HEXAGON	1
9	PFOZZ	11083	9V7112	BRACKETIANGLE	1
10	PFOZZ	11083	9W1395	ROD ASSEMBLY	1
11	PAOZZ	11083	8P7792	BOOT, DLST ANO MOIST.O	1
12	PFOZZ	9b906	MS35842-13	CLAMP, HOSE	1
13	PFOZZ	96906	MS51922-13	NUT, SELF-LOCKING, HE	1
14	PFOZZ	11083	8P2454	ROL, THREADEC END	1
15	PFOZZ	11083	6VL033	BEARING, PLAI, ROD	1
16	PFOZZ	88044	AN316-5R	NUTPLAIN-EXAGON	1
17	PFOZZ	11083	8P2456	TUBE, METALLIC	1
18	PFOZZ	11083	8P2458	ROD, THREAOED E N D	1
19	PFOZZ	11083	8H9523	SPRING HELICAL COMP	1
20	PFOZZ	81352	AN316-8R	NUT,PLAIN,HEXAGON	2
21	PFOZZ	11083	8P2455	RODTHREADED EN	1
22	PFCZZ	11083	5J0557	ROD END, THREADED	1

END OF FIGURE

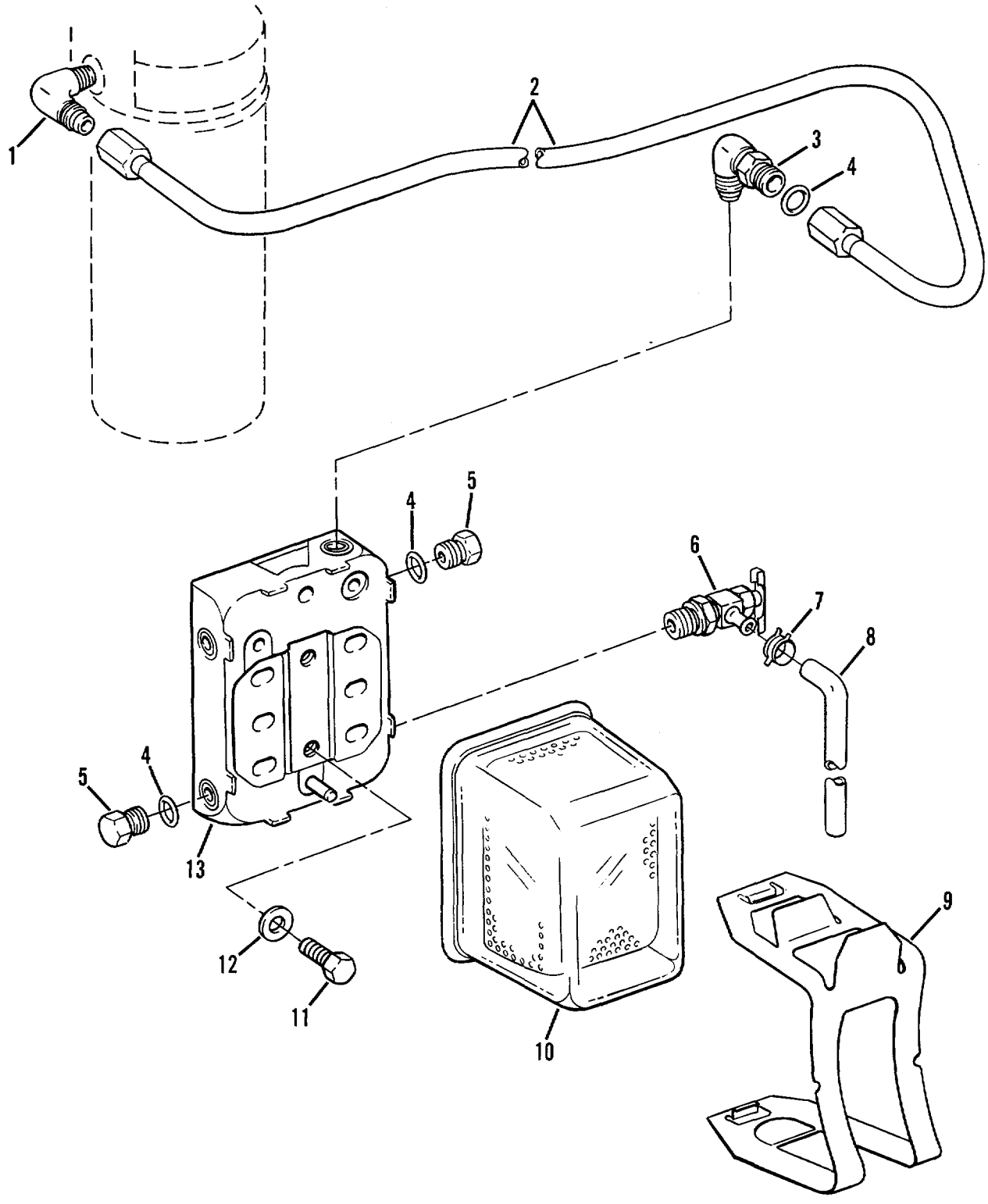

Figure 33. Water Separator

(1) ITEM NO	(2) SMR CODE	(3) CAGEC	(4) PART NUMBER	(5) DESCRIPTION AND USABLE ON CODES (UOC)	(6) QTY
				GROUP 0309 - FUEL FILTERS	
				FIG 33 WATER SEPARATOR	
1	PAOZZ	96906	MS51504-A6	ELBOW, PIPE TO TUBE	1
2	PFOZZ	11083	6N9930	TUBE ASSEMBLY, METAL	1
3	PFOZZ	11083	8K, 3968	ELBOW, TUBE TO BOSS	1
4	PAOZZ	81349	M8324E/2-905	PACKING, PREFORMED	4
5	PAOZZ	11083	3K8460	PLUG.PIPE	2
6	PAOZZ	11083	6V2611	VALVE, ANGLE	1
7	PAOZZ	80033	M30094-001	CLAMP, HOSE	1
8	MOOZZ	11083	5P5991-23.6	IN HOSE MAKE FROM HOSE P/N 5P5991 23.6 IN	1
9	PAOZZ	11083	8N9802	CLAMP	1
10	PAOZZ	11083	8N9803	SEPARATOR, WATER, LIQ	1
11	PFOZZ	96906	MS18154-5Q	SCREW, CAP, HEXAGON H	2
12	PFOZZ	11083	5M2894	WASHER, FLAT	2
13	PFOZZ	11083	8N9801	SEPARATOR, WATER LIQ	1
				END OF FIGURE	

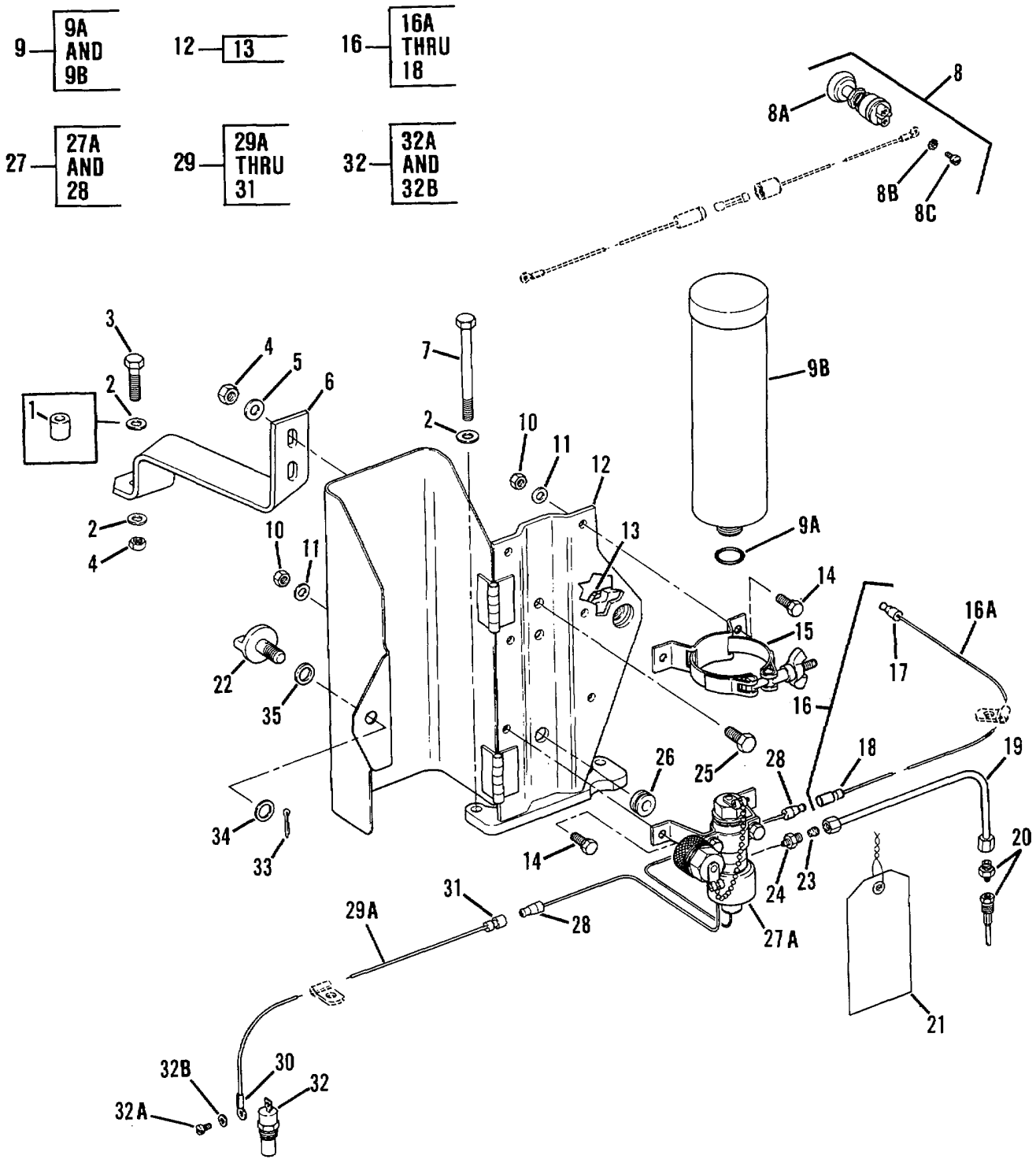

Figure 34. Ether Starting Aid

(1) ITEM NO	(2) SMR CODE	(3) CAGEC	(4) PART NUMBER	(5) DESCRIPTION AND USABLE ON CODES (UOC)	(6) QTY
				GROUP 0311 - ENGINE STARTING AIDS	
				FIG 34 - ETHER STARTING AID	
1	PFOZZ	11083	2B941	SPACER, SLEEVE..... UOC:AGU, AGV	1
2	PFOZZ	11083	5M2894	WASHER, FLAT..... UOC: AGS, AGT	3
*3	PFOZZ	11083	OL2070	BOLT, MACHINE ..... UOC:AGS, AGT	1
*3	PFOZZ	11083	51619	BOLT, MACHINE** ..... UOC:AGU, AGV	1
*4	PFOZZ	11083	lD4717	NUT, HEXAGON-.....	3
5	PAOZZ	78189	3320-14-01	WASHER, SQUARE CONE.....	2
6	PFOZZ	11083	3T1685	BRACKET.	1
7	PAOZZ	11083	5F4899	BOLT, MACHINE	2
8	PFOZZ	13445	90065-01	SWITCH, ENGINE START...	1
8A	XAOZZ	19207	NPN7	.SWITCH	1
83	XAOZZ	19207	NPN8	.WASHER	2
8C	XAOZZ	19207	NPN9	.SCREW.....	2
9	PAOZZ	78280	LP-535-1	CARTRIDGE, ENGINE ST.....	1
9A	PF02Z	11083	7N9801	.GASKET.....	1
9B	XAOZZ	19207	NPN10	.CARTRIDGE	1
* 10	PAOZZ	96906	MS51967-5	NUT, PLAIN, HEXAGON	6
11	PAOZZ	78189	WD23755	WASHER, SQUARE CONE.....	6
12	PFOZZ	11083	7G6359	BOX ASSEMBLY	1
* 13	PA0Zl	11083	1F748	.NUT, SELF-LOCKING, WE	1
* 14	PAOZZ	80204	81821BH031C075N	BOLT, MACHINE	6
15	PAOZZ	53203	300 450	CLAMP, LOOP.....	1
16	PAOZZ	11083	9G6561	LEAD ASSEMBLY, ELECT.....	6
* 16A	MOOZZ	11083	5P5624-22.04	.WIRE MAKE FROM WIRE, BLACK P/N..... M16878/18KE7, 22.04 INCHES LONG	1
17	PFOZZ	79550	300-2863	.TERMINAL, QUICK DISC	1
18	PFOZZ	11083	6N9587	.TERMINAL, QUICK DISC	1
19	PFOZZ	11083	9GO941	TUBE, BENT, METALLIC	1
* 20	PFOZZ	61112	QA5-lTC	ATOMIZER, START AID.....	1
21	PFOZZ	11083	2V1l13	TAG, INSTRUCTION	1
22	PADZZ	11083	601746	THUMBSCREW	1
23	PAOZZ	96906	MS51825-1A	SLEEVE, CLINCH, TUBE	1
24	PAOZZ	11083	5P7907	ADAPTER, STRAIGHT, PI.....	1
* 25	PFOZZ	11083	S1594	BOLT, MACHINE	2
26	PAOZZ	70485	2758	GROMMET, NONMETALLIC.....	1
27	PAOZZ	61112	QS5-2CT	VALVE, ENGINE START	1
27A	XAOZZ	19207	NPN15	.SWITCH	1
28	PAOZZ	79550	300-2863	.TERMINAL, QUICK DISC	2
29	PAOZZ	11083	9G6560	LEAD ASSEMBLY, ELECT.....	1
* 29A	MOOZZ	11083	5P5624-35.40	.WIRE MAKE FROM WIRE, BLACK P/N..... M16878/IBKE7, 35.40 INCHES LONG	1
30	PFOZZ	96906	MS25036-153	.TERMINAL, LUG.....	1
31	PFOZZ	11083	6N9587	.TERMINAL, QUICK DISC	1
32	PAOZZ	11083	6N5899	SWITCH, THERMOSTATIC	1

(1) ITEM NO	(2) SMR CODE	(3) CAGEC	(4) PART NUMBER	(5) DESCRIPTION AND USABLE ON CODES (UOC)	(6) QTY
32A	PFOZZ	11083	6V8376	.SCREW, MACHINE	1
32B	PFOZZ	96906	MS35333-38	.WASHER, LOCK.....	1
* 33	PFOZZ	00198	PK379	PIN, COTTER	1
* 34	PFOZZ	11083	OL1365	WASHER, FLAT.....	1
35	PAGZZ	11083	63801	WASHER, FLAT.....	1

END OF FIGURE

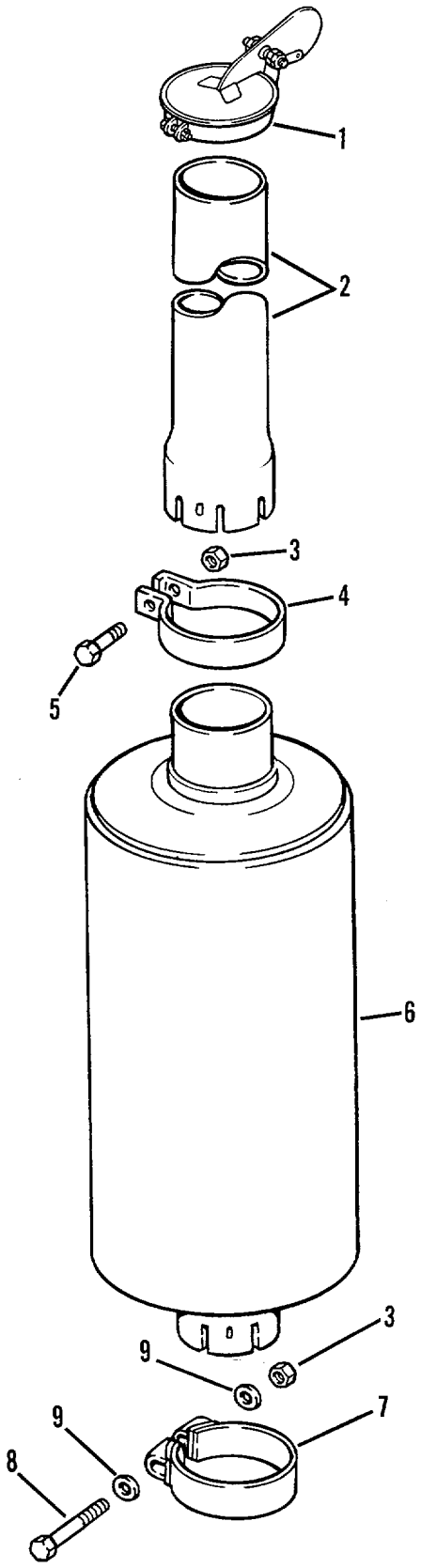

Figure 35. Muffler

(1) ITEM NO	(2) SMR CODE	(3) CAGEC	(4) PART NUMBER	(5) DESCRIPTION AND USABLE ON CODES (UOC)	(6) QTY
				GROUP 04 EXHAUST SYSTEM	
				GROUP 0401 MUFFLER ANC PIPES	
				FIG 35 MUFFLER	
1	PFOZZ	11083	8S1935	CAP ASSEMBLY, PROTEC	1
2	PAOZZ	18265	AEMOO-1306	PIPE, EXHAUST	1
3	PFOZZ	11083	1D4717	NUT, HEXAGON	2
4	PAOZZ	11083	5S580	CLAMP, LOOP	1
5	PFOZZ	96906	MS90728-64	SCREW, CAP, HEXAGON	1
6	PFOZZ	18265	MFMC8-0083	MUFFLER, EXHAUST	1
7	PAOZZ	11083	7NS08	CLAMP, LOOP	1
8	PFOZZ	11083	7F1866	BOLT, MACHINE	1
9	PFOZZ	11083	5M2894	WASHER, FLAT	2
				END OF FIGURE	

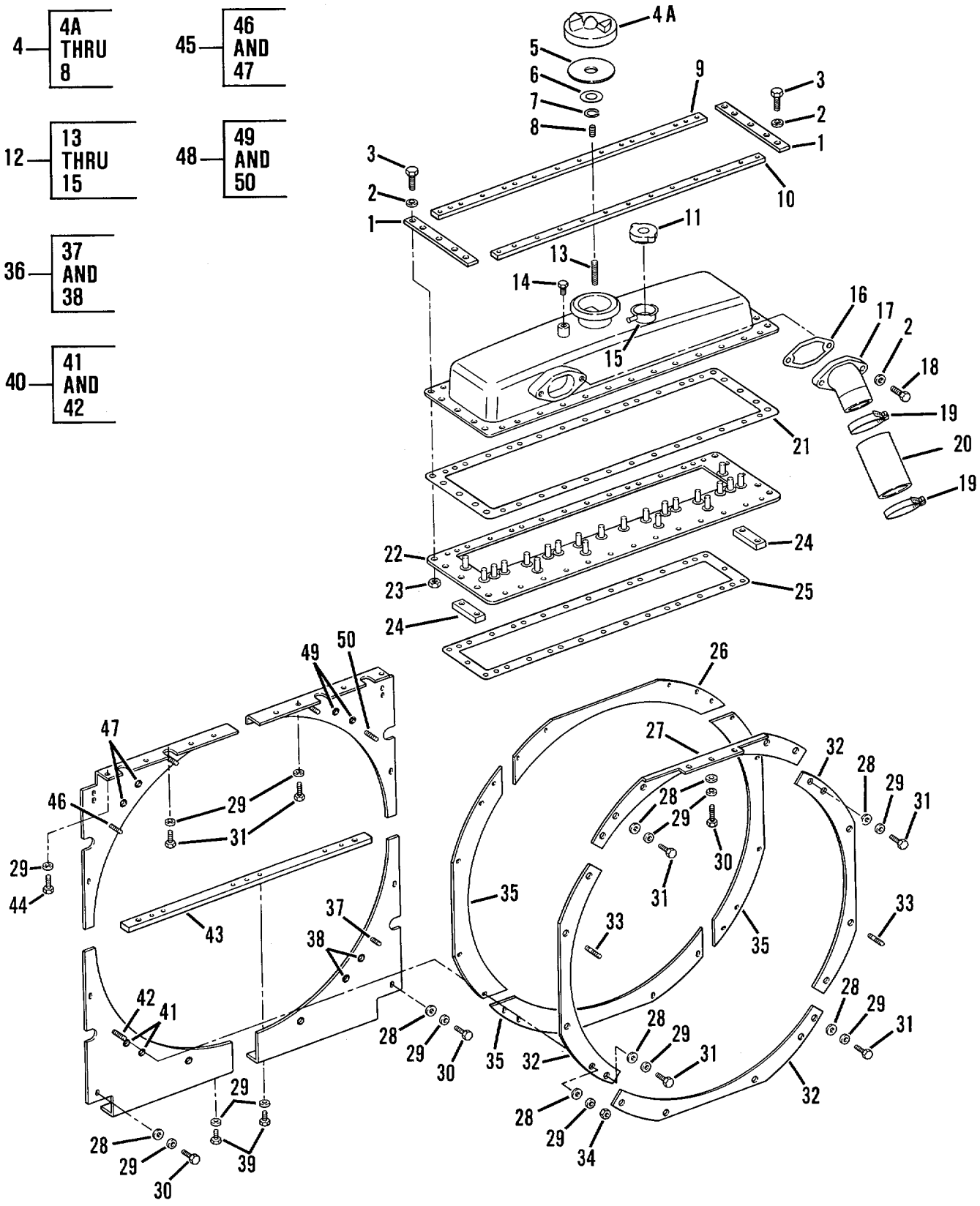

Figure 36. Radiator - Sheet 1 of 2

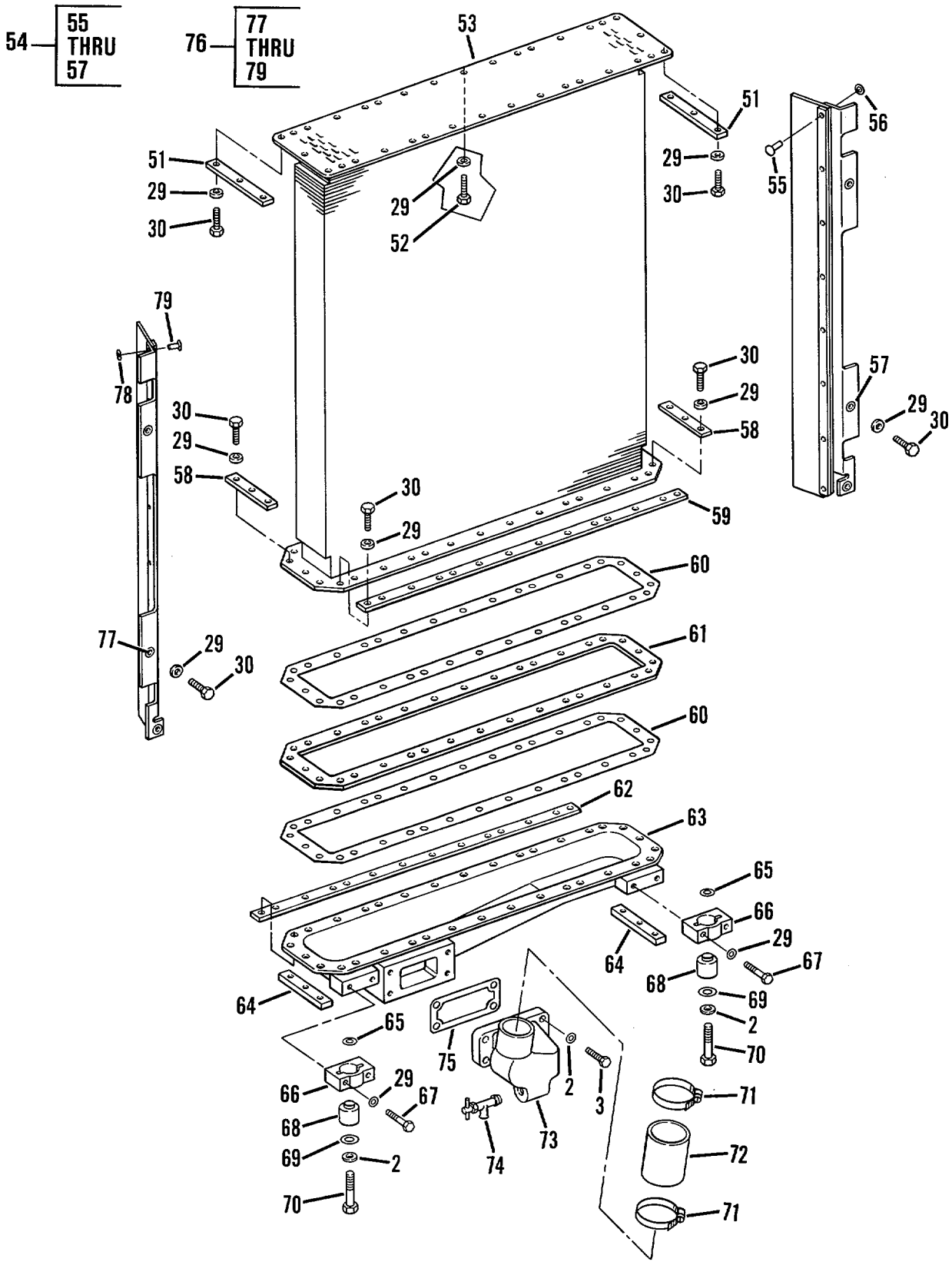

Figure 36. Radiator - Sheet 2 of 2

(1) ITEM NO	(2) SMR CODE	(3) CAGEC	(4) PART NUMBER	(5) DESCRIPTION AND USABLE ON CODES (UOC)	(6) QTY
				GROUP 05 COOLING SYSTEM	
				GROUP 0501 - RADIATOR, EVAPORATIVE COOLER, OR HEAT EXCHANGER	
				FIG. 36 - RADIATOR	
1	PFFZZ	11083	1P6403	PLATE, RETAINING	2
2	PFFZZ	96906	MS27183-18	WASHER, FLAT	12
* 3	PAFZZ	11083	OS1585	BOLT, MACHINE	10
4	PAOZZ	11083	7S7809	CAP, FILLER OPENING	1
4A	XAOZZ	11083	7s7808	.CAP	1
5	PFOZZ	11083	2P3230	.GASKET	1
6	PFOZZ	11083	2S2846	.WASHER, FLAT	1
7	PFOZZ	11083	9S9979	.RING	1
8	PFOZZ	11083	7S7807	.INSERT	1
9	PFFZZ	11083	lP7980	PLATE, RETAINING	1
10	PFFZZ	11083	lP6015	PLATE, RETAINING	1
11	PAOZZ	70040	850624	CAP, FILLER OPENING	1
12	PFFFF	11083	lP6379	TANK SECTION, FLUID	14
13	PAFZZ	11083	1S0286	.STUD, CONTINUOUS THR	1
14	PFFZZ	55883	IP05M6214	.PLUG, PIPE	1
15	PFFZZ	54492	541-11-00-129	.TANK SECTION FLUID	1
16	PAFZZ	11083	2M4810	GASKET	1
17	PFFZZ	11083	7M4741	ELBOW, INLET, RADIATO	1
* 18	PFFZZ	11083	7B3235	BOLT, MACHINE	2
* 19	PFOZZ	11083	5P0598	CLAMP A HOSE	2
20	MOOZZ	11083	5P1263-5IN	HOSE, NONMETALLIC MAKE FROM HOSE P/N 5P12631, 5 IN	1
21	PAFZZ	11083	6N4962	GASKET	1
22	PFFZZ	11083	lP6029	PLATE ASSY	1
23	PFFZZ	96906	MS51967-14	NUT, PLAIN, HEXAGON	2
24	PFFZZ	11083	lP60Z5	NUT STRIP	2
25	PAFZZ	11083	6N4960	GASKET	1
26	PFFZZ	11083	lP5957	BAFFLE ASSY, RADIATO	1
27	PFFZZ	11083	lP5955	PLATE RETAINING	1
* 28	PFFZZ	96906	M527183-14	WASHER, FLAT	16
29	PFFZZ	78189	3320-14-01	WASHER, SQUARE CONE	104
* 30	PFFZZ	11083	381915	BOLT	18
* 31	PFFZZ	11083	S1594	BOLT MACHINE.	11
32	PFFZZ	11083	lP5956	SPACER, PLATE	3
33	PFFZZ	11083	6H0406	STUD, PLAIN	4
34	PFFZZ	11083	104717	NUT, HEXAGON	1
35	PFFZZ	11083	1P5958	BAFFLE ASSEMBLY, RAD	3
36	PFFZZ	11083	lP5475	GUARD, MECHANICAL	1
37	PAFZZ	11083	7M7794	.STUD, WELDING	1
38	PFFZZ	11083	9F2978	.NUT, PLAIN, WELDING	4
* 39	PFFZZ	11083	OS0509	SCREW, CAP, HEXAGON	2
40	PFFFF	11083	4N5538	SHIELD ASSEMBLY, FAN	1
41	PFFZZ	11083	9F2978	.NUT, PLAIN, WELDING	2
42	PAFZZ	11083	5M9621	.STUD, WELDING	1

(1) ITEM NO	(2) SMR CODE	(3) CAGEC	(4) PART NUMBER	(5) DESCRIPTION AND USABLE ON CODES (UOC)	(6) QTY
43	PFFZZ	11083	lP6117	SUPPORT, SHIELD, RADI	1
44	PFFZZ	11083	8T2502	BOLT, MACHINE**	9
45	PFFFF	11083	4N5537	GUARD, MECHANICAL DR	1
46	PAFZZ	11083	5M9621	.STUD.WELDING	2
47	PFFZZ	11083	9F2978	.NUT, PLAIN, WELDING	2
48	PFFFF	11083	4N5539	COVER.ACCESS	1
49	PFFZZ	11083	9F2978	.NUT, PLAIN, WELDING	2
50	PAFZZ	11083	5M9621	.STUD WELDING	2
51	PFFZZ	11083	lP7316	PLATE, RETAINING	2
52	PFFZZ	11083	4L9337	BOLT	16
53	PAFFF	11083	8N8B42	CORE, RADIATOR	1
54	PFFZZ	11083	lP6023	BAFFLE ASSEMBLY, RAD	1
55	PFFZZ	11083	6B4594	.RIVET, TUBULAR	8
56	PFFZZ	11083	lF1605	WASHER, FLAT	1
57	PFFZZ	11083	9F2978	NUT, PLAIN, WELDING	3
58	PFFZ2	11083	lP9169	SPACER.PLATE	2
59	PFFZZ	11083	lP6026	PLATE, RETAINING	4
60	PAFZZ	11083	6N4953	GASKET	2
61	PFFZZ	11083	1P7989	SHIM	1
62	PFFZZ	11083	lP6401	NUT STRIP	2
63	PFFFF	11083	1P6377	TANK SECTION, FLUID	1
64	PFFZZ	11083	lP7315	NUT STRIP	2
65	PAFZZ	89346	52726R1	WASHER, FLAT	2
66	PFFZZ	11083	9M8867	CLAMP, HUB	2
* 67	PFFZZ	11083	0L2070	BOLT, MACHINE	4
68	PFFZZ	08129	12180	BUMPER, NONMETALLIC	2
69	PFFZ2	11083	4B4280	WASHER, FLAT	2
* 70	PFFZZ	11083	9S1366	BOLT, MACHINE	2
71	PFOZZ	08484	HTM350	CLAMP, HOSE	2
* 72	MOOZZ	11083	5P1262-41N	HOSE, LOWER MAKE FROM HOSE P/N MS521302B121R, 4 INCHES ES	1
73	PFFZZ	11083	2P6146	ELBOW, RADIATOR OUTL	1
* 74	PAOZZ	09990	V404PH-10-6	VALVE, ANGLE	1
75	PFFZZ	11083	5S1334	GASKET	1
76	PFFZZ	11083	1P6024	BAFFLE ASSEMBLY, RAD1	1
77	PFFZZ	11083	9F2978	NUT, PLAIN, WELDING	3
78	PFFZZ	11083	lFl605	WASHER, FLAT	1
79	PFFZZ	11083	6B4594	RIVET.TUBULAR	8

END OF FIGURE

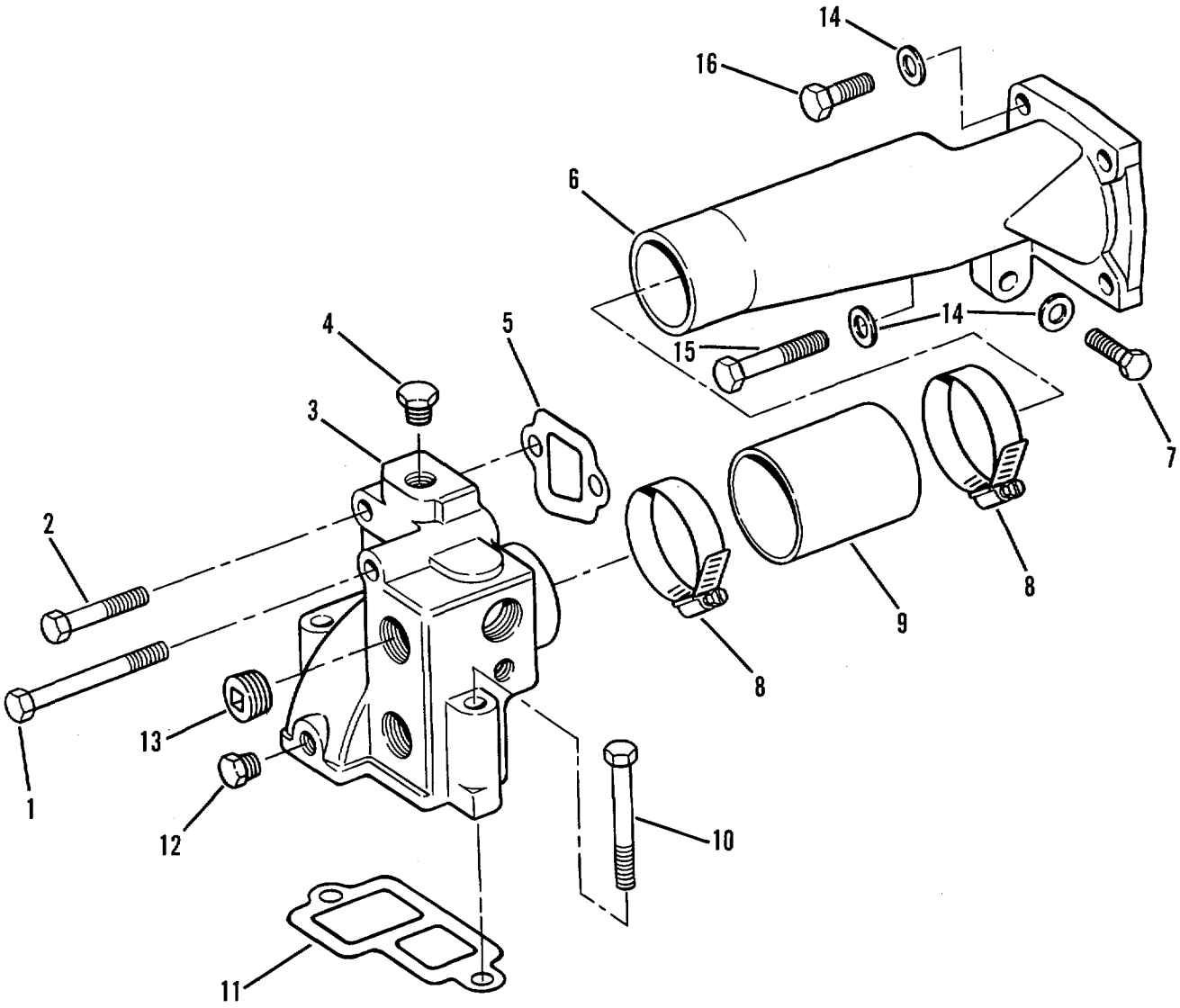

Figure 37. Water Lines

(1) ITEM NO	(2) SMR CODE	(3) CAGEC	(4) PART NUMBER	(5) DESCRIPTION AND USABLE ON CODES (UOC)	(6) QTY
				GROUP 0503 - WATER MANIFOLD, HEADERS THERMOSTATS AND HOUSING GASKET	
				FIG. 37 - WATER LINES	
* 1	PFOZZ	11083	T65	BOLT, MACHINE	1
* 2	PFOZZ	11083	OS1590	BOLT, MACHINE	1
3	PFOZZ	11083	lN3958	HOUSING, MECHANICAL*	1
4	PFOZZ	01276	2082-68	PLUG, PIPE	1
5	PFOZZ	11083	2P6132	GASKET PART OF KIT P/N 6V2971	1
* 6	XBOZZ	11083	2P2511	HOUSING, MECHANICAL UOC: AGS , AGT	1
6	PFOZZ	11083	2W5240	PIPE, METALLIC UOC:AGU, AGV	1
* 7	PFOZZ	80204	B18218H038C125N	SCREW, CAP, HEXAGON H UOC: AGS , AGT	1
* 7	PFOZZ	11083	3B1915	BOLT UOC:AGU, AGV	1
8	PFOZZ	08484	HTM350	CLAMP, HOSE	2
9	MOOZZ	11083	5Pl260-3IN	HOSE MAKE FROM HOSE P/N 5P1260 3 IN	1
* 10	PFOZZ	11083	S1619	BOLT, MACHINE	2
11	PFOZZ	11083	7N200	GASKET	1
12	PFOZZ	11083	5M6213	PLUG, PIPE	2
13	PFOZZ	96906	MS49006-10	PLUG, PIPE, MAGNETIC	1
14	PFOZZ	11083	5M2894	WASHER, FLAT UOC:AGU, AGV	5
* 15	PFOZZ	11083	OL2070	B0LT, MACHINE UOC:AGU, AGV	1
* 16	PFOZZ	80204	B1821BH038C125N	SCREW, CAP, HEXAGON H UOC:AGU, AGV	3
				END OF FIGURE	

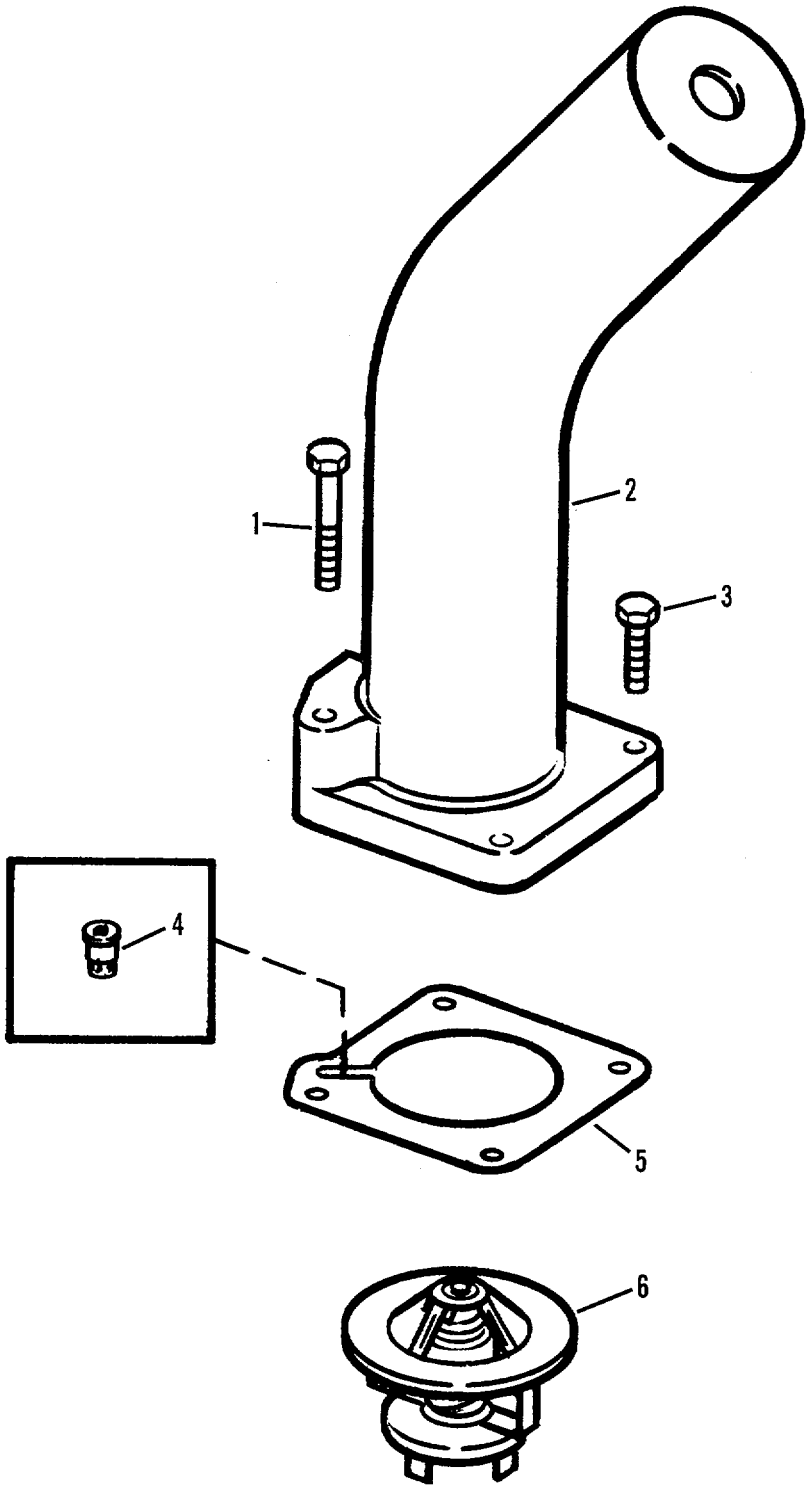

Figure 38. Thermostat Housing

(1) ITEM NO	(2) SMR CODE	(3) CAGEC	(4) PART NUMBER	(5) DESCRIPTION AND USABLE ON CODES (UOC)	(6) QTY
				GROUP 0503- WATER MANIFOLD, HEADERS THERMOSTATS AND HOUSING GASKET	
				FIG* 38- THERMOSTAT HOUSING	
* 1	PFOZZ	80204	81821BH038C125N	SCREW, CAP, HEXAGON H	3
2	PFOZZ	11083	lN3116	TUBE, ASSEMBLY METAL.	1
* 3	PFOZZ	11083	OS1590	BOLT, MACHINE.	1
4	PAOZZ	11083	8N4485	CARTRIDGE, VALVE..... UOC: AGU , AGV	1
5	PFOZZ	11083	7N0944	GASKET PART OF KIT P/N 6V2971	1
6	PAOZZ	78493	4A308-21	THERMOSTAT, FLOW CON	1
				END OF FIGURE	

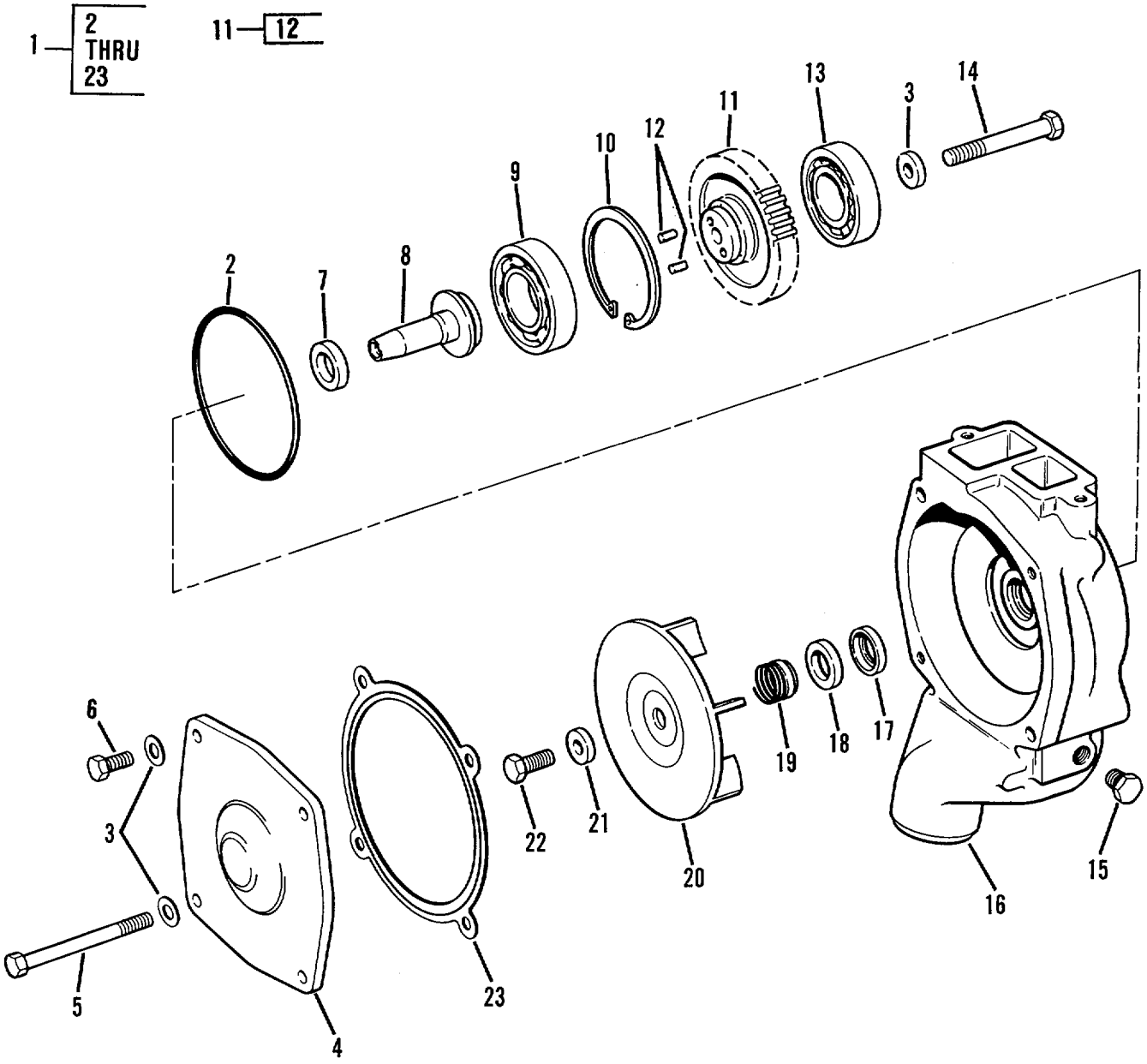

Figure 39. Water Pump (Used on Models D5BNS and D5BS)

(1) ITEM NO	(2) SMR CODE	(3) CAGEC	(4) PART NUMBER	(5) DESCRIPTION AND USABLE ON CODES (UOC)	(6) QTY
				GROUP 0504 - WATER PUMP	
				FIG* 39 - WATER PUMP USED ON MODELS D5BNS AND D5BS	
* 1	PAOFF	11083	2W8002	PUMP, COOLING SYSTEM..... UOC:AGS, AGT	1
2	PAFZZ	11083	5F3106	.PACKING, PREFORMED PART OF KIT P/N..... 5P9898..... UOC: AGS , AGT	1
3	PFFZZ	11083	5M2894	.WASHER, FLAT PART OF KIT P/N lW7053 ..... UOC:AGS, AGT	5
4	PFFZZ	11083	8N5929	.COVER, ACCESS..... UOC: AGS, AGT	1
* 5	PFFZZ	11083	OTO055	.BOLT, MACHINE ..... UOC:AGS, AGT	2
6	PFFZZ	11083	L1351	.BOLT, MACHINE ..... UOC;AGS, AGT	2
7	PFFZZ	11083	8H9520	.SEAL. ..... UOC:AGS, AGT	1
8	PFFZZ	11083	7N5899	.SHAFT, SHOULDERED PART OF KIT P/N ..... 1W7053 UOC: AGS , AGT	1
9	PFFZZ	12128	W55	.BEARING, BALL, ANNULA PART OF KIT P/N ..... 1W7053 UOC:AGS, AGT	1
10	PAFZZ	96906	MS16625-1315	.RING, RETAINING PART OF KIT P/N ..... 1W7053 UOC:AGS, AGT	1
11	PFFZZ	11083	7N5193	.GEAR, HELICALL ..... UOC:AGS, AGT	1
12	PFFZZ	11083	2L5893	.PIN, STRAIGHT, HEADLE..... UOC:AGS, AGT	2
13	PFFZZ	08162	207	.BEARING, BALL, ANNULA PART OF KIT P/N ..... 1W7053 UOC:AGS, AGT	1
* 14	PFFZZ	11083	S1619	.BOLT, MACHINE ..... UOC: AGS, AGT	1
15	PFFZZ	11083	5M6213	.PLUG, PIPE ..... UOC:AGS, AGT	1
16	PFFZZ	11083	1W4619	.HOUSING, LIQUID PUMP ..... UOC:AGS, AGT	1
17	PFFZZ	11083	8S8821	.PACKING, PREFORMED PART OF KIT P/N..... 5P9898 UOC:AGS, AGT	1
18	PFFZZ	11083	8S7762	.RING PART OF KIT P/N 5P9898..... UOC: AGS, AGT	1
* 19	PFFZZ	11083	7E6844	.PACKING, PREFORMED PART OF KIT P/N..... 5P989 UOC:AGS, AGT	1
20	PFFZZ	11083	7N5910	.IMPELLER, PUMP, CENTR.....	1

(1) ITEM NO	(2) SMR CODE	(3) CAGEC	(4) PART NUMBER	(5) DESCRIPTION AND USABLE ON CODES (UOC)	(6) QTY
				UOC: AGS, AGT	
21	PFFZZ	96906	MS27183-15	.WASHER, FLAT*	1
				UOC:AGS, AGT	
*22	PFFZZ	11083	4L6454	.BOLT, MACHINE PART OF KIT P/N lW7053.....	1
				UOC: AGS , AGT A	
23	PFFZZ	11083	8N5928	.GASKET PART OF KIT P/N 5P9898	1
				UOC: AGS, AGT	

END OF FIGURE

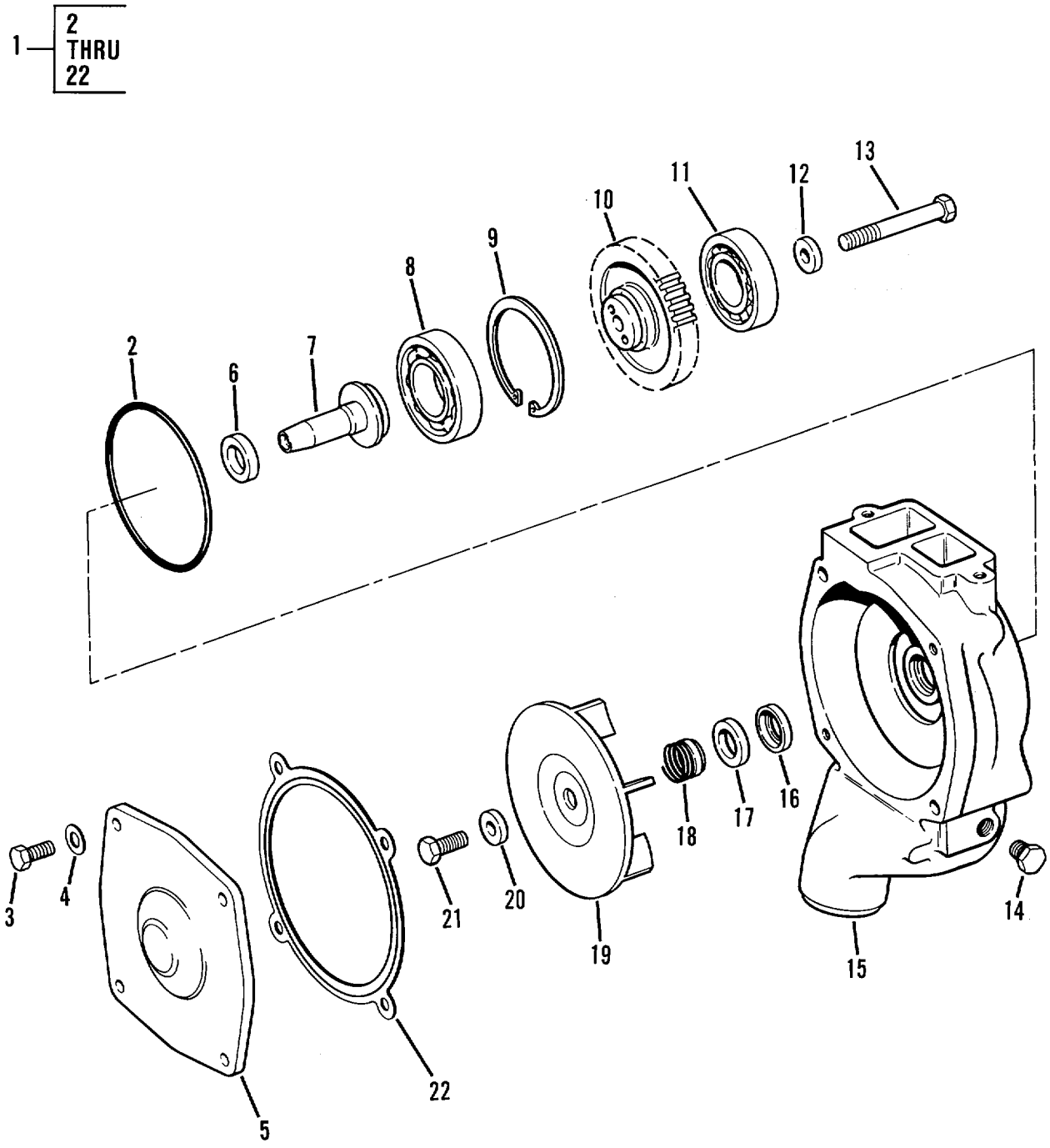

Figure 40. Water Pump (Used on Models D5BS1 and D5BNS1 and replacement for Models D5BNS and D5BS)

(1) ITEM NO	(2) SMR CODE	(3) CAGEC	(4) PART NUMBER	(5) DESCRIPTION AND USABLE ON CODES (UOC)	(6) QTY
				GROUP 0504 - WATER PUMP	
				FIG. 40 - WATER PUMP USED ON MODELS D5BS1 AND D5BNS1 AND AS REPLACEMENT ON MODELS D5BNS AND 05BS	
1	PAOFF	11083	2W8001	PUMP, COOLING SYSTEM..... UOC: AGU, AGV	1
2	PFFZZ	11083	5F3106	.PACKING, PREFORMED PART OF KIT P/N 5P9898..... UOC:AGU, AGV	1
3	PFFZZ	11083	L1351	.BOLT, MACHINE ..... UOC: AGU, AGV	4
4	PFFZZ	11083	5M2894	.WASHER, FLAT PART OF KIT P/N lW7053 ..... UOC: AGU, AGV	4
5	PFFZZ	11083	8N5929	.COVER, ACCESS..... UOC:AGU, AGV	1
6	PFFZZ	11083	8H9520	.SEAL ..... UOC: AGU, AGV	1
7	PFFZZ	11083	2W7255	.SHAFT, SHOULDERED PART OF KIT PIN 1W7053 ..... UOC:AGU, AGV	1
8	PFFZZ	12128	W55	.BEARING, BALL, ANNULA PART OF KIT P/N 1W7053 ..... UOC: AGU, AGV	1
9	PAFZZ	96906	MS16625-1315	.RING, RETAINING PART OF KIT P/N 1W7053 ..... UOC:AGU, AGV	1
10	PFFZZ	11083	7W0450	.GEAR, HELICAL ..... UOC:AGU, AGV	1
11	PFFZZ	11083	8H9789	.BEARING, BALL, ANNULA PART OF KIT P/N 1W7053 ..... UOC:AGU, AGV	1
12	PFFZZ	11083	9M6527	.WASHER, FLAT PART OF KIT P/N 1W7053..... UOC: AGU, AGV	1
13	PFFZZ	11083	3B8428	.BOLT, MACHINE*..... UOC: AGU, AGV	1
14	PFFZZ	11083	5M6213	.PLUG, PIPE ..... UOC:AGU, AGV	1
15	PFFZZ	11083	1W4619	.HOUSING, WATER PUMP ..... UOC: AGU, AGV	1
16	PFFZZ	11083	8S8821	.PACKING, PREFORMED PART OF KIT P/N 5P9898..... UOC: AGU, AGV	1
17	PFFZZ	11083	857762	.RING PART OF KIT PIN 5P9898..... UOC: AGT, AGV	1
18	PFFZZ	11083	7E6844	.PACKING, PREFORMED PART OF KIT PIN 5P9898..... UOC: AGU, AGV	1
19	PFFZZ	11083	7N5910	.IMPELLER, PUMP, CENTR..... UOC: AGU , AGV	1

(1) ITEM NO	(2) SMR CODE	(3) CAGEC	(4) PART NUMBER	(5) DESCRIPTION AND USABLE ON CODES (UOC)	(6) QTY
20	PFFZZ	61510	CKE42A	.WASHER, FLAT..... UOC:AGG, AGV	1
* 21	PFFZZ	11083	4L6454	.BOLT, MACHINE PART OF KIT PIN 1W7053 ..... UOC: AGU, AGV	1
22	PFFZZ	11083	8N5928	.GASKET PART OF KIT P/N 5P9898..... UOC: AGU, AGV	1

END OF FIGURE

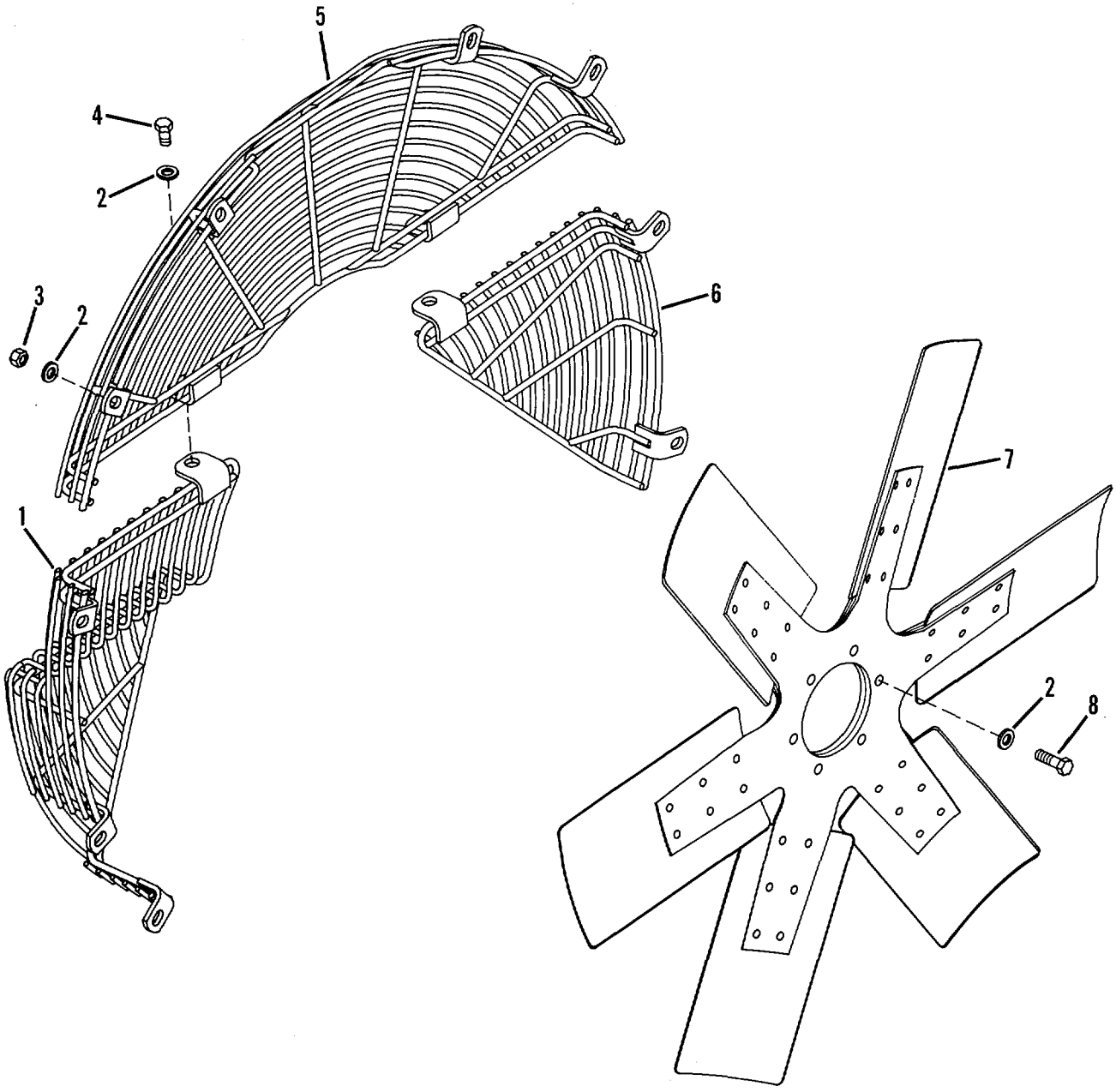

Figure 41. Fan and Guard

(1) ITEM NO	(2) SMR CODE	(3) CAGEC	(4) PART NUMBER	(5) DESCRIPTION AND USABLE ON CODES (UOC)	(6) QTY
				GROUP 0505 - FAN ASSEMBLY	
				FIG. 41 - FAN AND GUARD	
1	PFOZZ	11083	7N5227	GRILLE METAL	1
2	PFOZZ	11083	5M2894	WASHER, FLAT	17
3	PFOZZ	96906	MS51922-17	NUT, SELF-LOCKING, HE	9
* 4	PFOZZ	11083	0S0509	SCREW, CAP, HEXAGON	2
5	PFOZZ	11083	7N5226	GRILL, METAL	1
6	PFOZZ	11083	4N7941	GRILL, METAL	1
7	PFOZZ	11083	7S0543	IMPELLER, FAN, AXIAL	1
* 8	PFOZZ	80204	B1821BH038C125N	SCREW, CAP, HEXAGON H	6
				END OF FIGURE	

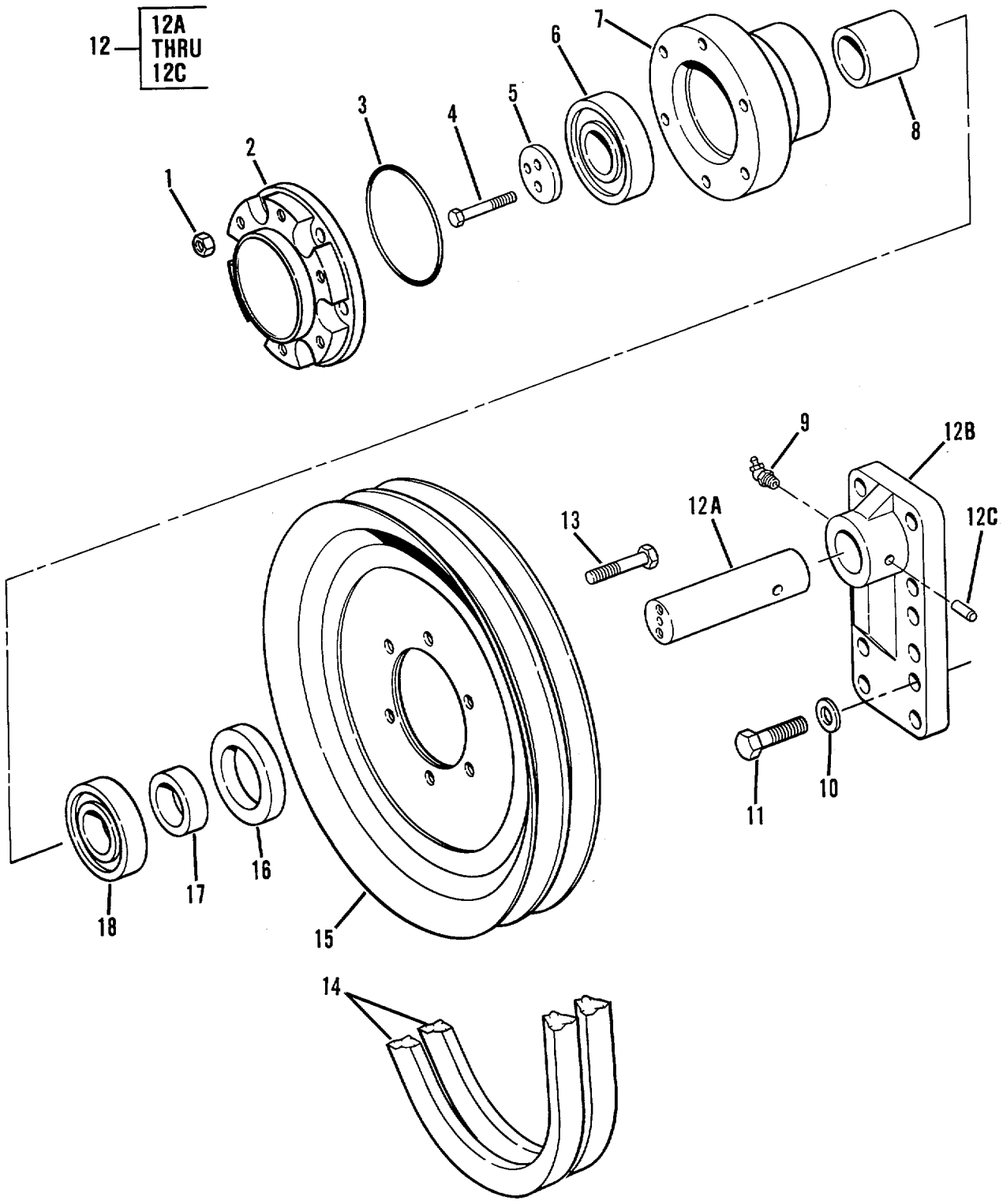

Figure 42. Fan Drive and Pulley

(1) ITEM NO	(2) SMR CODE	(3) CAGEC	(4) PART NUMBER	(5) DESCRIPTION AND USABLE ON CODES (UOC)	(6) QTY
				GROUP 0505 - FAN ASSEMBLY	
				FIG. 42 - FAN DRIVE AND PULLEY	
1	PFFZZ	11083	2P3261	NUT	
6					
* 2	PFFZZ	11083	4N3826	HUB, FAN CLUTCH	1
* 3	PAFZZ	09990	2-338N951-75	PACKING, PREFORMED PART OF KIT P/N 6V2912	1
4	PFFZZ	11083	6V4626	BOLT, SELF-LOCKING	2
5	PAFZZ	11083	5S7264	SPACER, PLATE	1
6	PAFZZ	08162	307	BEARING, BALL, ANNULA	1
7	PFFZZ	11083	2P1757	HUB, FAN	1
8	PAFZZ	11083	8N5305	SPACER, SLEEVE	1
9	PFOZZ	96906	MS15003-4	FITTING, LUBRICATION	1
10	PFFZZ	96906	MS27183-18	WASHER, FLAT	4
* 11	PFFZZ	11083	S1587	BOLT, MACHINE	4
12	PFFZZ	11083	1P9945	BRACKET ASSY, FAN	1
12A	PFFZZ	11083	1P9946	.SHAFT, STRAIGHT	1
12B	PFFZZ	11083	1P9899	.BRACKET	1
12C	PFFZZ	11083	5B5812	.PIN, STRAIGHT, HEADLE	1
13	PFFZZ	11083	2P3208	BOLT, MACHINE	6
14	PAOZZ	24161	473SET2	BELTS, V, MATCHED SET	1
15	PFFZZ	11083	4N7982	PULLEY, GROOVE	1
16	PAFZZ	11083	5S2106	SEAL, PLAIN ENCASED PART OF KIT P/N 6V2912	1
17	PAFZZ	11083	5S9062	SPACER	1
18	PFFZZ	08162	207	BEARING, BALL, ANNULA	1
				END OF FIGURE	

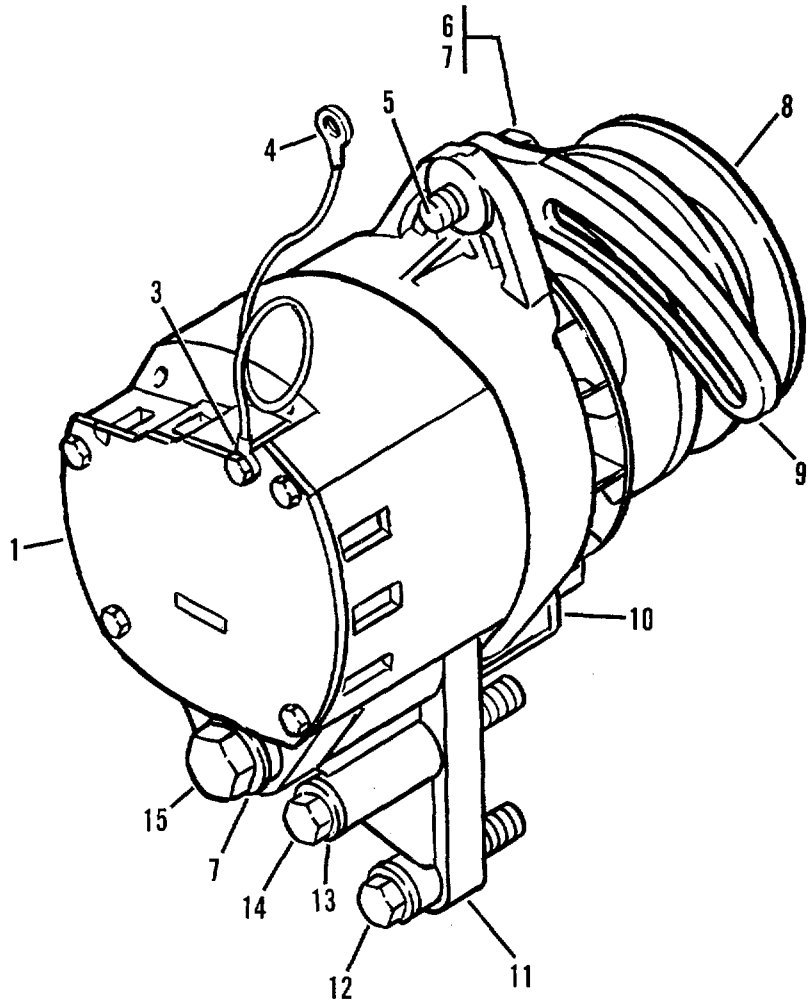

Figure 43. Alternator Mounting

(1) ITEM NO	(2) SMR CODE	(3) CAGEC	(4) PART NUMBER	(5) DESCRIPTION AND USABLE ON CODES (UOC)	(6) QTY
				GROUP 06 ELECTRICAL SYSTEMS	
				GROUP 0601 - GENERATOR, ALTERNATOR	
				FIG. 43 - ALTERNATOR MOUNTING	
1	PAOFF	16764	1117647	GENERATOR, ALTERNATI SEE FIG 44 ..... FOR BREAKDOWN UOC; AGS, AGT	1
1	PAOFF	11083	7N9720	GENERATOR, ALTERNATI SEE FIG 45 ..... FOR BREAKDOWN UOC: AGU, AGV	1
* 2	MOOZZ	11083	9S4146	CABLE, ASSY, 1OGA BLK MAKE FROM WIRE..... P/N M16878/3BMGO, 12 INCHES LONG ..... (SEE GROUP 9501)	1
3	PFOZZ	96906	MS25036-112	TERMINAL, LUG.....	1
4	PFOZZ	96906	MS25036-114	TERMINAL, LUG.....	1
* 5	PF0ZZ	11083	OS1585	BOLT, MACHINE	2
6	PFOZZ	11083	2S6735	WASHERS, FLAT	1
7	PFOZZ	11083	8M4791	WASHER, FLAT.....	3
8	PFOZZ	11083	5S7609	PULLEY, GROOVE.....	1
* 9	XBOZZ	11083	BS4183	ARM, ADJUSTING, BELT	1
10	PFOZZ	11083	9S1240	NUT, PLAIN, PLATE	1
11	PFOZZ	11083	8N4198	BRACKET ALTERNATOR	1
* 12	PFOZZ	11083	OS1571	SCREW, CAP, HEXAGON H.....	1
13	PFOZZ	11083	5M2894	WASHER, FLAT.....	1
* 14	PFOZZ	11083	S1619	BOLT, MACHINE	1
* 15	PFOZZ	80204	B1821BH050C600N	CREW, CAP, HEXAGON H	1

END OF FIGURE

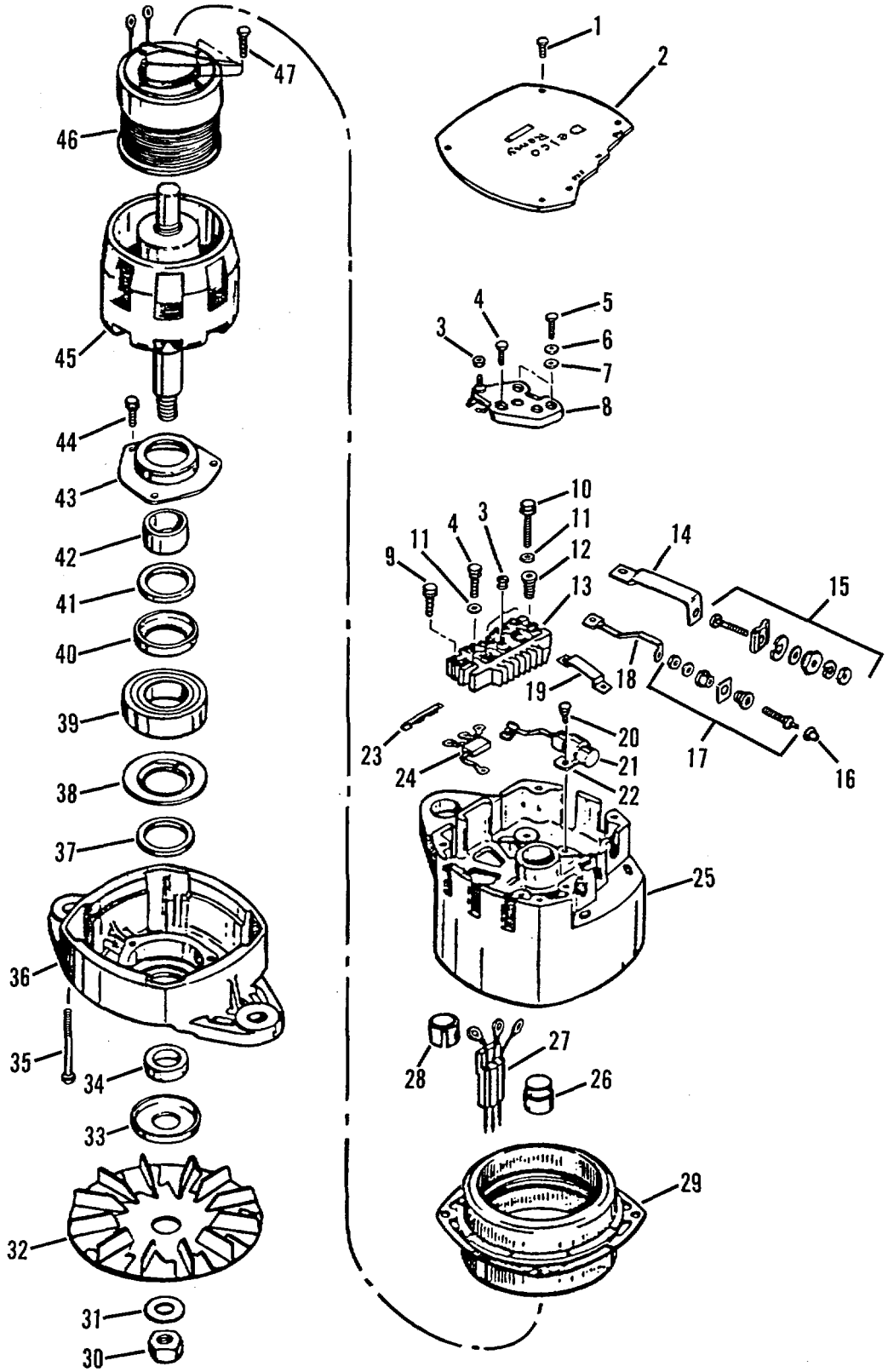

Figure 44. Alternator Assembly (Used on Models D5BNS and D5BS)

(1) ITEM NO	(2) SMR CODE	(3) PART CAGEC	(4) NUMBER	(5) DESCRIPTION AND USABLE ON CODES (UOC)	(6) QTY
				GROUP 0601 - GENERATORT ALTERNATOR	
				FIG. 44 - ALTERNATOR ASSEMBLY USED ON MODELS D58NS AND DSBS (SEE FIGURE 43 FOR TOP ASSEMBLY, PART NUMBER 111747)	
1	PFFZZ	16764	1894641	BOLT, SELF-LOCKING ..... UOC :AGS, AGT	5
2	PFFZZ	16764	1894444	PLATE, RETAINING ..... UOC:AGS, AGT	1
3	PFFZZ	16764	1851808	NUT, PLAIN, ASSEMBLED..... UOC :AGS, AGT	4
4	PFFZZ	16764	1894458	BOLT, ASSEMBLED WASH ..... UOC :AGS , AGT	2
5	PFFZZ	16764	1976061	SCREW..... UOC :AGS, AGT	2
6	PFFZZ	16764	1913846	WASHER, FLAT..... UOC:AGS, AGT	2
7	PFFZZ	58275	A063947	WASHER, FLAT..... UOC:AGS, AGT	2
8	PFFZZ	16764	1984287	REGULATOR, VOLTAGE..... UOC :AGS, AGT	1
9	PFFZZ	16764	1846955	SCREW, ASSEMBLED WASH ..... UOC:AGS, AGT	1
10	PFFZZ	16764	833338	BOLT, ASSEMBLED WASH ..... UOC:AGS, AGT	1
11	PFFZZ	16764	807295	WASHER#FLAT..... UOC:AGS, AGT	2
12	PAFZZ	16764	1894463	BUSHING#ALTERNATOR..... UOC:AGS, AGT	1
13	PFFZZ	16764	1891055	RECTIFIER, SEMICONDUCTOR ..... UOC:AGS, AGT	1
14	PFFZZ	16764	1894464	CONNECTING LINK, RIG..... UOC :AGS, AGT	1
15	PAFZZ	16764	1894626	PARTS KIT, ENG ..... UOC:AGSTAGT	1
16	PFFZZ	11862	1970227	CAP, ELECTRICAL..... UOC:AGS, AGT	1
17	PAFZZ	16764	1894627	PARTS KIT, ENG ..... UOC:AGS, AGT	1
18	PFFZZ	16764	1894473	CONNECTING LINK, RIG..... UOC :AGS, AGT	1
19	PFFZZ	16764	1894462	CONNECTINGLINK, RIG..... UOC:AGS, AGT	1
20	PFFZZ	16164	1846955	SCREW, ASSEMBLED WAS ..... UOC :AGS, AGT	3
21	PFFZZ	16764	1985445	CAPACITOR ..... UOC:AGS, AGT	1
22	PFFZZ	16764	1869573	CLAMP, LOOP..... UOC :AGS, AGT	1
23	PFFZZ	16764	1894472	INSULATOR, ANGLE BRA	2

(1) ITEM NO	(2) SMR CODE	(3) CAGEC	(4) PART NUMBER	(5) DESCRIPTION AND USABLE ON CODES (UOC)	(6) QTY
				UOC:AGS, AGT	
24	PFFZZ	16764	1985348	SEMICONDUCTCR EVIC	1
				UOC :AGS , AGT	
25	PFFZZ	16764	1894465	HOUSING, ELECTIRCAL..	1
				UOC :AGS, AGT	
26	PAFZZ	60380	CB50430	BEARING, RCLENF, NEE	1
				UOC:AGSIAGT	
27	PFFZZ	16764	1894468	GROMMET	1
				UOC :AGS, AGT	
28	PAFZZ	16764	1968990	BUSHING, SLEEVE	1
				UOC :AGS, AGT	
29	PFFZZ	16764	1894467	STATOR, ALTERNATOR	1
				UOC:AGS, AGT	
30	PFOZZ	16764	9418881	NUT, SELF-LOCKING, HE	1
				UOC :AGS, AGT	
31	PFOZZ	16764	1905406	WASHER, FLAT	2
				UOC:AGS, AGT	
32	PFFZZ	16764	1970593	IMPELLER, FAN, AXIAL	1
				UOC :AGS, AGT	
33	PFFZZ	16764	1969070	SEAL, PLAIN..	1
				UOC :AGS, AGT	
34	PAFZZ	16764	1969046	COLLAR	1
				UOC:AGS, AGT	
35	PAFZZ	16764	1894445	BOLTISHOULDER	4
				UOC:AGS, AGT	
36	PFFZZ	16T64	1894483	COVER, ACCESSS	1
				UOC:AGS, AGT	
37	PFFZZ	16764	1955660	PACKING, PREFORMED.	1
				UOC:AGS, AGT	
38	PFFZZ	16764	1955664	PLATE, RETAINER..	1
				UOC :AGS, AGT	
39	PAFZZ	11083	5P9514	BEARING, BALL, ANNULA	1
				UOC :AGS , AGT	
40	PFFZZ	16764	825196	WASHER, RECESSED	1
				UOC:AGS, AGT	
41	PFFZZ	16764	8251S7	FCLTMEACANLP	1
				UOC :AGS, AGT	
42	PAFZZ	16764	1957726	BEARING, SLEEVE	1
				UOC :AGS, AGT	
43	PFFZZ	16764	1961867	RETAINER, ...	1
				UOC:AG.5, AG T	
44	PFFZZ	16764	1846956	SCREW, MACHINE..	3
				UOC:AGS, AGT	
45	PFFZZ	16764	1894446	ROTURRGENERATO R	1
				UOC:AGS, AGT	
46	PFFZZ	16764	1894474	C ILELECTRICAL	1
				UOC:AGS, AGT	
47	PAFZZ	16764	1968945	SCREWIEXTERNALLY REE	4
				UOC :AGS TAGT	

END OF FIGURE

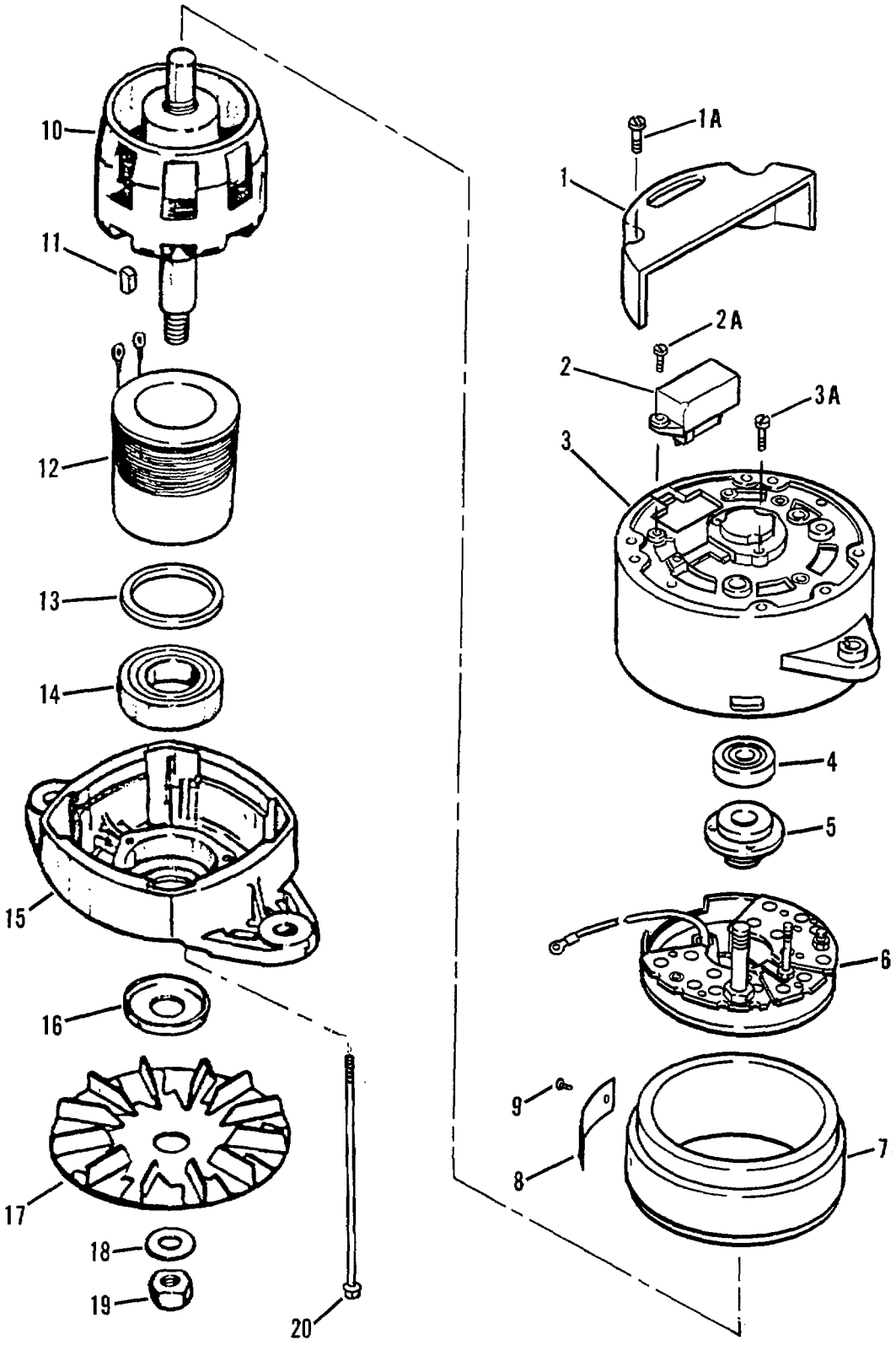

Figure 45. Alternator Assembly (Used on Models D5BS1 and D5BNS1)
See Figure 43 for Top Assembly, P/N 7N9720.

(1) ITEM NO	(2) SMR CODE	(3) CAGEC	(4) PART NUMBER	(5) DESCRIPTION AND USABLE ON CODES (UOC)	(6) QTY
				GROUP 0601 - GENERATCR, ALTERNATOR	
				FIG, 45 - ALTERNATOR ASSEMBLY	
				USED EN MODELS 05BS1 AND C5ENS1 (SEE FIGURE 43 FGR TOP ASSEMBLY, PART NUMBER 7N9720)	
1	PFFZZ	53867	1 125 500 024	COVER, ALTERNATOR ..... UOC:AGU, AGV	1
1A	XAFZZ	19207	NPN11	SCREW ..... UOC :AGU, AGV	2
2	PAFZZ	53867	1 197 001 000	REGULATOR, ENGINE GE ..... UOC:AGU, AGV	1
2A	XAFZZ	19207	NPN12	SCREW ..... UOC :AGU, AGV	2
3	PAFZZ	01843	1125885031	END BELLE ECLECTRICAL ..... UOC :AGU, AGV	1
3A	XAFZZ	19207	NPN13	SCREW ..... UOC :ACU, AGV	3
4	PAFZZ	53867	1 903 910 024	BEARING, ROLL CYLI ..... UOC:AGU, AGV	1
5	PFFZZ	01843	1 123 222 001	RETAINER, PACKING ..... UOC:AGU, AGV	1
6	PFFZZ	53867	1 127 320 503	RECTIFIER ..... UOC :AGU, AGV	1
7	PFFZZ	53867	1 125 045 115	WINDING, MOTOR FIELD ..... UOC:AGU, AGV	1
8	PFFZZ	11083	3T5962	PLATE, IDENTIFICATIO ..... UOC:AGU, AGV	1
9	PFFZZ	969J6	MS21318-13	SCREW, DRIVE ..... UOC:AGL, AGV	2
11	PFFZZ	01843	1 124 035 317	KEY, WOODRUFF ..... UOG :AGU, AGV	1
11	PFOZZ	96906	MS35756-9	KEY, WOODRIUF ..... UOC :AGU, AGV	1
12	PFFZZ	11083	9G75568	COIL LECTRICAL ..... UOC:AGU, AGV	1
13	PFFZZ	53867	1 120 200 323	SPACER, RING ..... UOC :AGU, AGV	1
14	PAFFZ	31843	1 129 900 009	BEARING.BALL, ANNULA ..... UOC :AGU, AGV	1
15	PFFZZ	53867	1 125 825 321	END BELLE-CRICAL ..... UOC :AGU, AGV	1
16	PFFZZ	53867	1 120 220 007	WASHER, SHOULDERE ..... UOC :AGUU, AGV	1
17	PFFZZ	53867	1 126 610 161	IMPELLER, FAN, CENTRI ..... UOC:AGU, AGV	1
18	PFOZZ	96936	MS35140-50	WASHER, LOCK ..... UOC :AGU , AGV	1
19	PFOZZ	96906	M551968-20	NUT, PLAIN, HEXAGON ..... UOC:AGU, AGV	1
20	PAFZZ	53867	1 123 414 004	SCREW, MACHINE	4

(1) ITEM NO	(2) SMR CODE	(3) CAGEC	(4) PART NUMBER	(5) DESCRIPTION AND USABLE ON CODES (UOC)	(6) QTY
				UOC:AGU, AGV	

END OF FIGURE

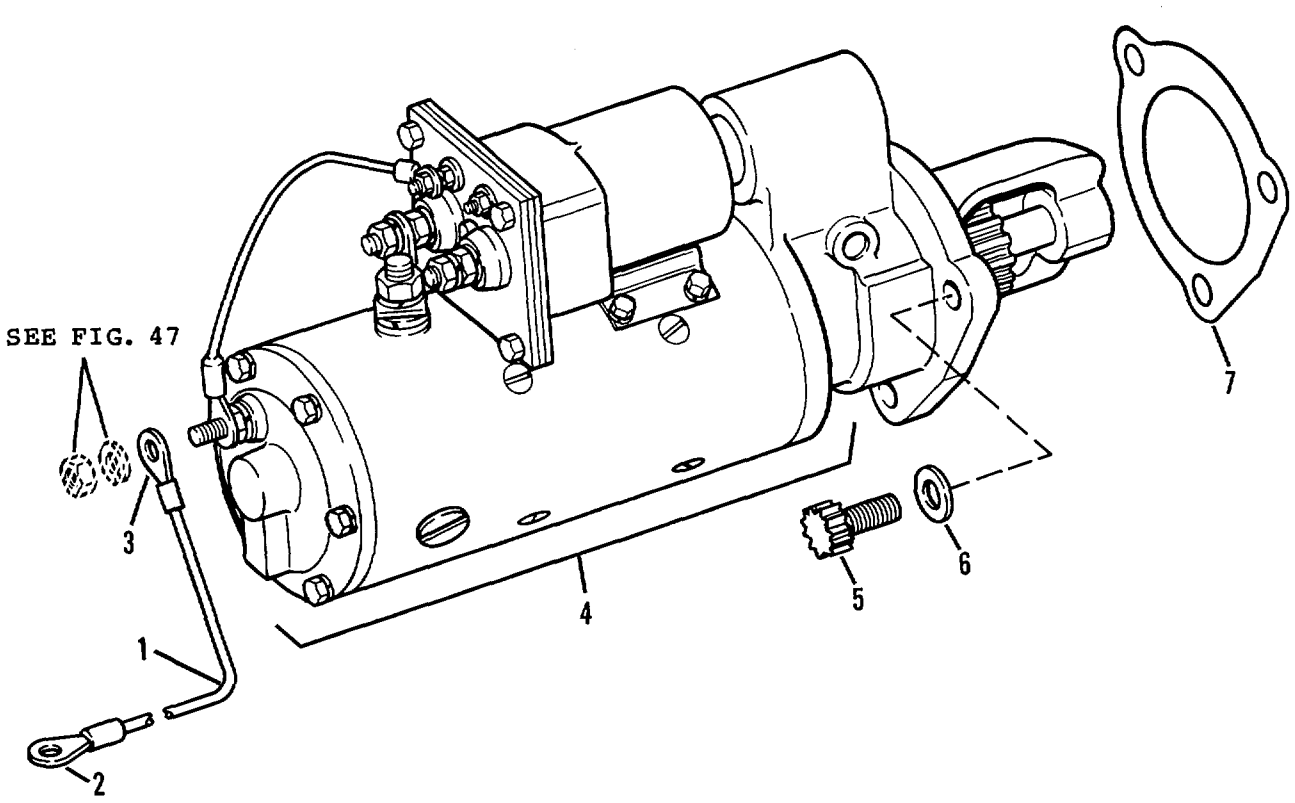

Figure 46. Starting Motor and Mounting

(1) ITEM NO	(2) SMR CODE	(3) CAGEC	(4) PART NUMBER	(5) DESCRIPTION AND USABLE ON CODES (UOC)	(6) QTY
				GROUP 0603 - STARTING MOTOR	
				FIG. 46 - STARTING MOTOR AND MOUNTING	
1	MCOZZ	11083	5P6641-12	LEAD, ELECTRICAL MAIKE FRCO CAELE PJ ..... N 5P6441, 12 IN (SEE GROUP 9501)	1
2	PFOZZ	11083	2L8052	TERMINAL, LUG, 11.....	1
3	PFOZZ	64488	4113C	TERMINAL , L6G	1
4	PACFF	16764	1993739	STARTER, ENGINE, ELEC SEE FIG. 48 ..... FUR BEEAKDOWN ..... UOC AGU , AGV	1
4	PACFF	16764	1990228	STARTER, ENCINE, ELEC SEE FIG. 47 ..... FOR BREAKDOWN ..... UOC:AGS, AGT	1
5	PFOZZ	11083	7J8902	BOLT, MACHINE	3
6	PFOZZ	11083	8D5054	WASHER, FLAT.....	3
7	PFOZZ	11083	4H7869	GASKET.....	1
				END OF FIGURE	

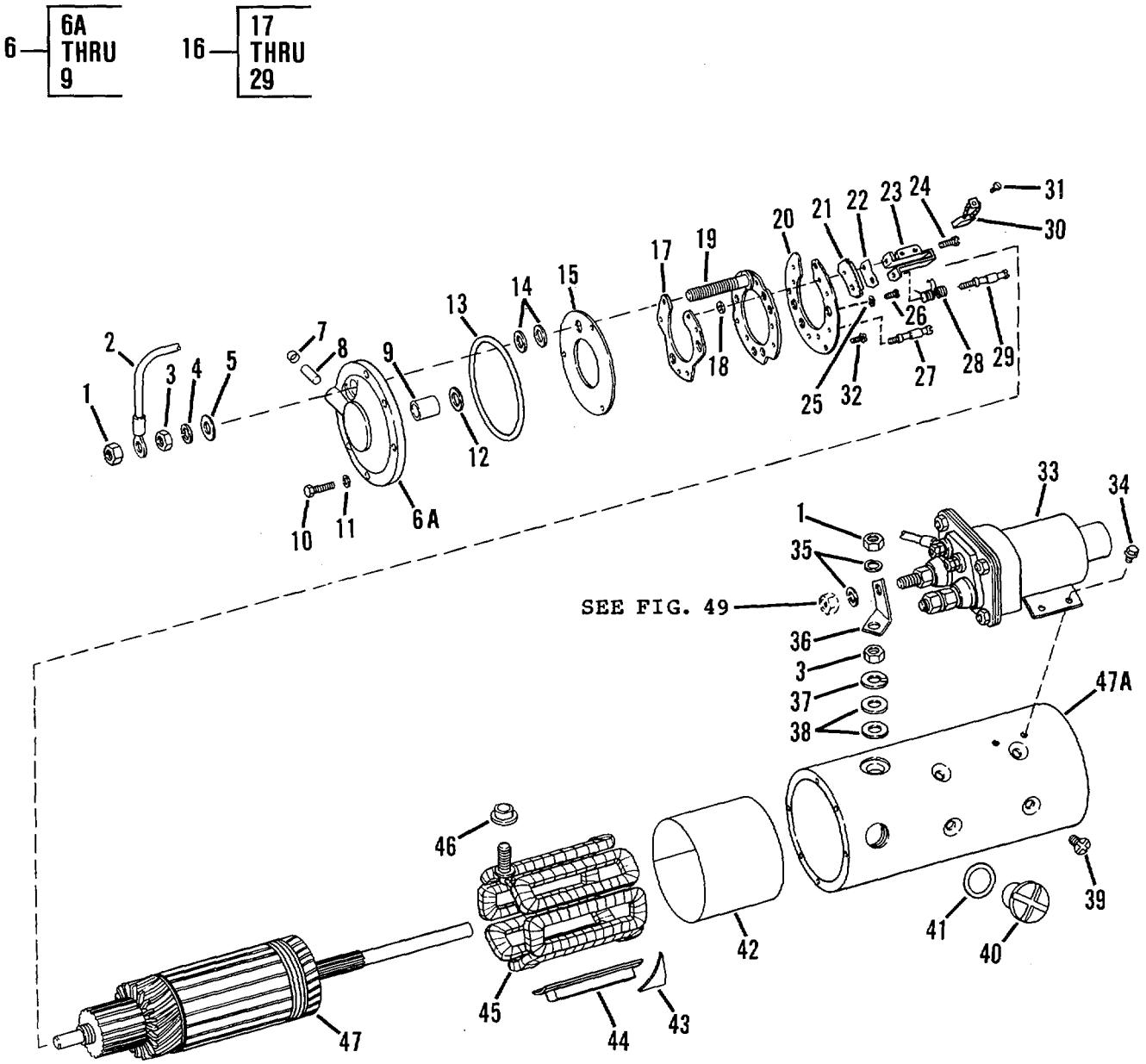

Figure 47. Starting Motor Assembly - Sheet 1 of 2 (Used on Models D5BNS and D5BS)

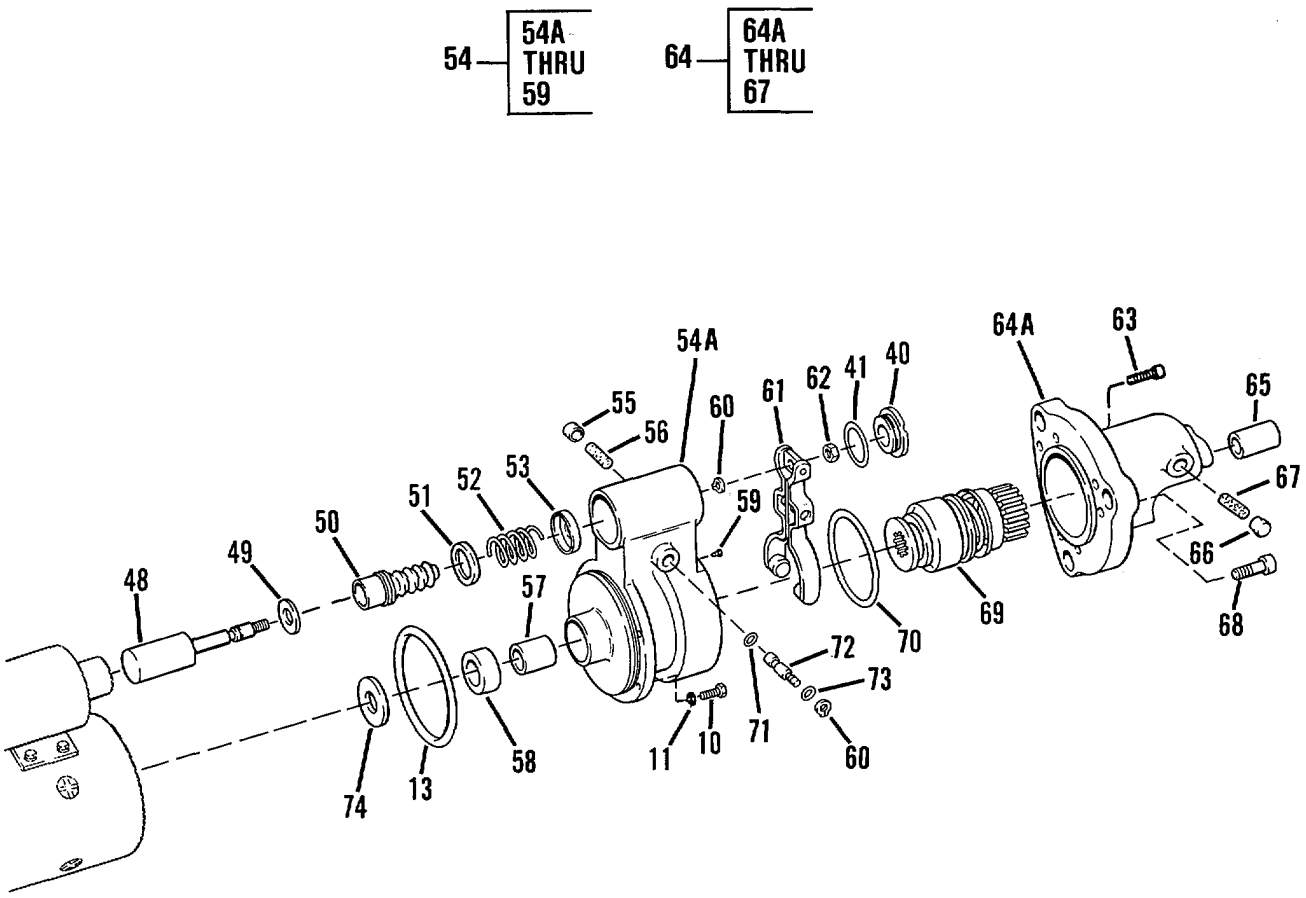

Figure 47. Starting Motor Assembly - Sheet 2 of 2 (Used on Models D5BNS and D5BS)

(1) ITEM NO	(2) SMR CODE	(3) CAGEC	(4) PART NUMBER	(5) DESCRIPTION AND USABLE ON CODES (UOC)	(6) QTY
				GROUP 0603 - STARTING MOTOR	
				FIG. 47 - STARTING MOTOR ASSEMBLY USED ON MODELS D5BNS AND D5BS (SEE FIGURE 46 FOR TOP ASSEMBLY, PART NUMBER 1990228)	
1	PFFZZ	96906	MS51967-14	NUT, PLAINIHEXAGON ..... UOC: AGS , AGT	1
2	PFFZZ	11083	3T3422	LEAD , ELECTRICAL..... UOC:AGS, AGT	1
3	PFFZZ	11083	3H3680	NUT, PLAIN, HEXAGON ..... UOC: AGS, AGT	2
4	PFFZZ	16764	11504248	WASHER, LOCK..... UOC: AGS, AGT	1
5	PFFZZ	88044	AN960-816L	WASHER, FLAT..J..... UOC:AGS, AGT	1
6	PFFFF	16764	1945848	STARTER HOUSING, ENG..... UOC:AGS, AGT	1
6A	XAFZZ	19207	NPN17	.FRAME..... UOC: AGS ?AGT	1
7	PAFZZ	16764	19756	.CAP, ROTECTIVE, DUST ..... UOC:AGS, AGT	1
8	PFFZZ	16764	1978754	.WICK..... UOC: AGS, AGT	1
9	PFFZZ	16764	1894638	.BEARING, SLEEVE..... UOC: AGS , AGT	1
10	PFFZZ	16764	1914869	BOLT, MACHINE. ..... UOC: AGS , AGT	7
* 11	PFFZZ	96906	MS35338-44	WASHER, LOCK..... UOC:AGS, AGT	7
12	PFFZZ	16764	1953237	WASHER, FLAT..... UOC:AGS, AGT	1
13	PFFZZ	62983	154101	PACKING, PREFORMED. ..... UOC:AGS, AGT	2
14	PFFZZ	16764	1913084	WASHER, FLAT..... UOC:AGST, AGT	2
15	PFFZZ	16764	1964516	INSULATOR, BRUSH PLA ..... UOC:AGS, AGT	1
* 16	PFFFF	16764	1945849	HOLDER ASSEMBLY, ELE..... UOC: AGS, AGT	1
17	PFFZZ	16764	1869760	.HOLDER, ELECTRICAL ..... UOC:AGS, AGT	1
18	PAFZZ	16764	1913080	.WASHER, FLAT..... UOC: AGS, AGT	4
19	PFFZZ	16764	1945851	.PLATE AND STUD ASSE..... UOC:AGS, AGT	1
20	PFFZZ	16764	1945850	.INSULATOR, DISK. ..... UOC: AGS, AGT	1
21	PFFZZ	16764	1965093	.INSULATOR, PLATE ..... UOC:AGS, AGT	2
22	PFFZZ	16764	1979389	.PLATE, INSULATOR HOLO.....	2

(1) ITEM NO	(2) SMR CODE	(3) CAGEC	(4) PART NUMBER	(5) DESCRIPTION AND USABLE ON CODES (UOC)	(6) QTY
				UOC: AGS, AGT	
23	PFFZZ	11083	7F3513	.HOLDER, ELECTRICAL C.	6
				UOC: AGS, AGT	
24	PFFZZ	11083	5H6467	.SCREW, MACHINE	3
				UOC;AGS, AGT	
25	PFFZZ	11083	7H2079	.WASHERVLOCK	12
				UOC: AGS, AGT	
26	PFFZZ	16764	1914580	.SETSCREW	3
				UOC:AGS, AGT	
27	, PFFZZ	16764	1928500	.SCREW, SHOULDER	3
				UOC: AGS , AGT	
28	PFFZZ	11083	7F3512	.SPRING, HELICAL, TORS	12
				UOC:AGS, AGT	
29	PFFZZ	11083	7F3522	.SCREW	3
				UOC:AGS, AGT	
30	PFFZZ	16764	1906989	BRUSH, ELECTRICAL CO	12
				UOC:AGS, AGT	
* 31	PFFZZ	96906	MS35206-244	SCREW, MACHINE	12
				UOC:AGS, AGT	
32	PFFZZ	16764	1847807	SCREW, MACHINE	3
				UOC: AGS, AGT	
* 33	PAFFF	16764	1115607	RELAY-SOLENOIDVENGI SEE FIG. 49 FOR BREAKDOWN	1
				UOC:AGS, AGT	
34	PFFZZ	16764	1930611	BOLT, MACHINE	4
				UOC: AGS, AGT	
35	PFFZZ	11083	9F4976	WASHER, LOCK	2
				UOC:AGS, AGT	
36	PFFZZ	16764	1945862	TERMINAL, LUG	1
				UOC: AGST, AGT	
37	PFFZZ	16764	811912	WASHER, LOCK	1
				UOC:AGS, AGT	
36	PFFZZ	16764	1922457	WASHER, FLAT	2
				UOC:AGS, AGT	
39	PFFLZ	11862	1968396	SCREW, MACHINE	2
				UOC:AGS, AGT	
40	PFFZZ	16764	1945356	PLUG, MACHINE THREAD	4
				UOC:AGS, AGT	
41	PFFZZ	16764	1964857	GASKET	4
				UOC: AGS, AGT	
42	PFFZZ	16764	1955989	INSULATOR, PLATE	1
				UOC:AGS, AGT	
43	PAFZZ	11083	1H2629	PLATE, INSULATION	3
				UOC:AGS, AGT	
44	PFFZZ	16764	1869747	POLE SHOE, STARTER	6
				UOC: AGS, AGT	
45	PFFZZ	16764	1945853	WINDING, MOTOR FIELD	1
				UOC: AGS, AGT	
46	PAFZZ	16764	1965472	INSULATOR, BUSHING	1
				UOC:AGS, AGT	
47	PFFZZ	16764	1945840	ARMATURE, MOTOR	1
				UOC: AGS, AGT	

(1) ITEM NO	(2) SMR CODE	(3) CAGEC	(4) PART NUMBER	(5) DESCRIPTION AND USABLE ON CODES (UOC)	(6) QTY
47A	XAFZZ	19207	NPN16	HOUSING SEE FIGURE 46 FOR TOP..... ASSEMBLY, PART NUMBER 1990228..... UOC:AGS, AGT	1
48	PFFZZ	16764	1948522	PLUNGER , SOLENIOD ..... UOC:AGS, AGT	1
49	PFFZZ	16764	1948519	WASHER, FLAT..... UDC :AGS , AGT	1
50	PFFZZ	16764	831077	BELLOWS, PROTECTION ..... UOC:AGS, AGT	1
51	PAFZZ	16764	1948520	WASHER, RECESSED..... UOC :AGS , AGT	1
52	PAFZZ	16764	1948521	SPRING, HELICAL, COMP..... UOC:AGS, AGT	1
53	PFFZZ	16764	1948526	WASHER, RECESSED..... UOC :AGS , AGT	1
54	PFFFF	16764	1979870	HOUSING, LEVERS ..... UOC :AGS, AGT	1
54A	XAFZZ	192U7	NPNl9	.HOUSING.HOUSING..... UOC :AGS , AGT	1
55	PFFZZ	16764	1978756	.CAP, PROTECTIVE, DUST ..... UOC: AGSVAGT	1
56	PFFZZ	16764	1978754	.WICK..... UOC:AGS, AGT	1
57	PFFZZ	16764	1894637	BEARING, SLEEVE ..... UOC:AGS, AGT	1
58	PAFZZ	11083	2F6678	.SEAL, STARTER ..... UOC :AGS, AGT	1
59	PAFZZ	16764	1964402	.PLUG..... UOC :AGS, AGT	1
60	PFFZZ	96906	MS16624-1337	RING, RETAINING..... UOC :AGS, AGT	2
61	PFFZZ	16764	1945484	LEVER ASSEMBLY ..... UOC:AGS, AGT	1
62	PFFZZ	96906	MS21083N5	NUT, SELF-LOCKING, HE.. ..... UOC:AGS, AGT	1
63	PAFZZ	16764	1948537	BOLT, INTERNAL WRENC ..... UOC :AGS, AGT	1
64	PFFZZ	16764	1970455	HOUSING, ENGINE..... UOC :AGS , AGT	1
64A	XAFZZ	19207	NPN18	.HOUSING..... UOC :AGS, AGT	1
65	PFFZZ	11083	9G9818	.BUSHING..... UOC:AGS, AGT	1
66	PFFZZ	16764	1978756	.CAP, PROTECTIVE, DUST ..... UOC :AGS, AGT	1
67	PFFZZ	16764	1978754	.WICK..... UOC:AGS, AGT	1
68	PAFZZ	16764	1948536	BOLT.INTERNAL WRENC ..... UOC :AGS, AGT	5
69	PFFZZ	16764	1893560	DRIVE, ENGINE, ELECTRICI..... UOC:AGS, AGT	1
70	PFFZZ	16764	1945476	PACKING, PREFORMED	1

(1) ITEM NO	(2) SMR CODE	(3) CAGEC	(4) PART NUMBER	(5) DESCRIPTION AND USABLE ON CODES (UOC)	(6) QTY
				UOC :AGSTAGT	
71	PFFZZ	11083	1H1023	PACKING, PREFORMED ..... UOC:AGS, AGT	1
72	PFFZZ	16764	1948529	SHAFT, SHOULDERED ..... UOC :AGS, AGT	1
73	PAFZZ	11083	2D6392	GASKET..... UOC :AGS, AGT	1
74	PFFZZ	16764	1936466	WASHER ..... UOC:AGS, AGT	1

END OF FIGURE

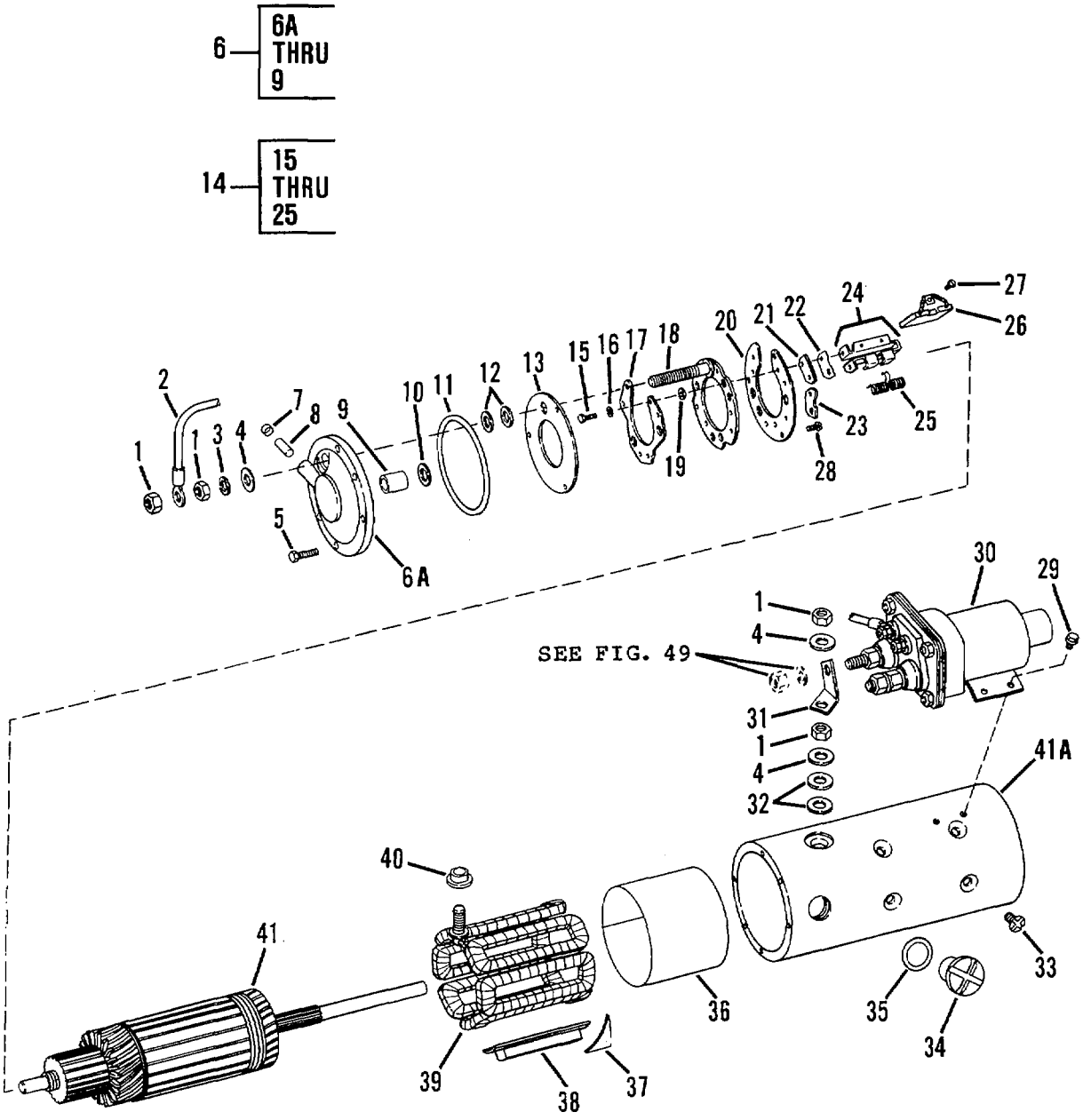

Figure 48. Starting Motor Assembly - Sheet 1 of 2 (Used on Models D5BS1 and D5BNS1). See Figure 46 for Top Assembly, P/N 1993739.

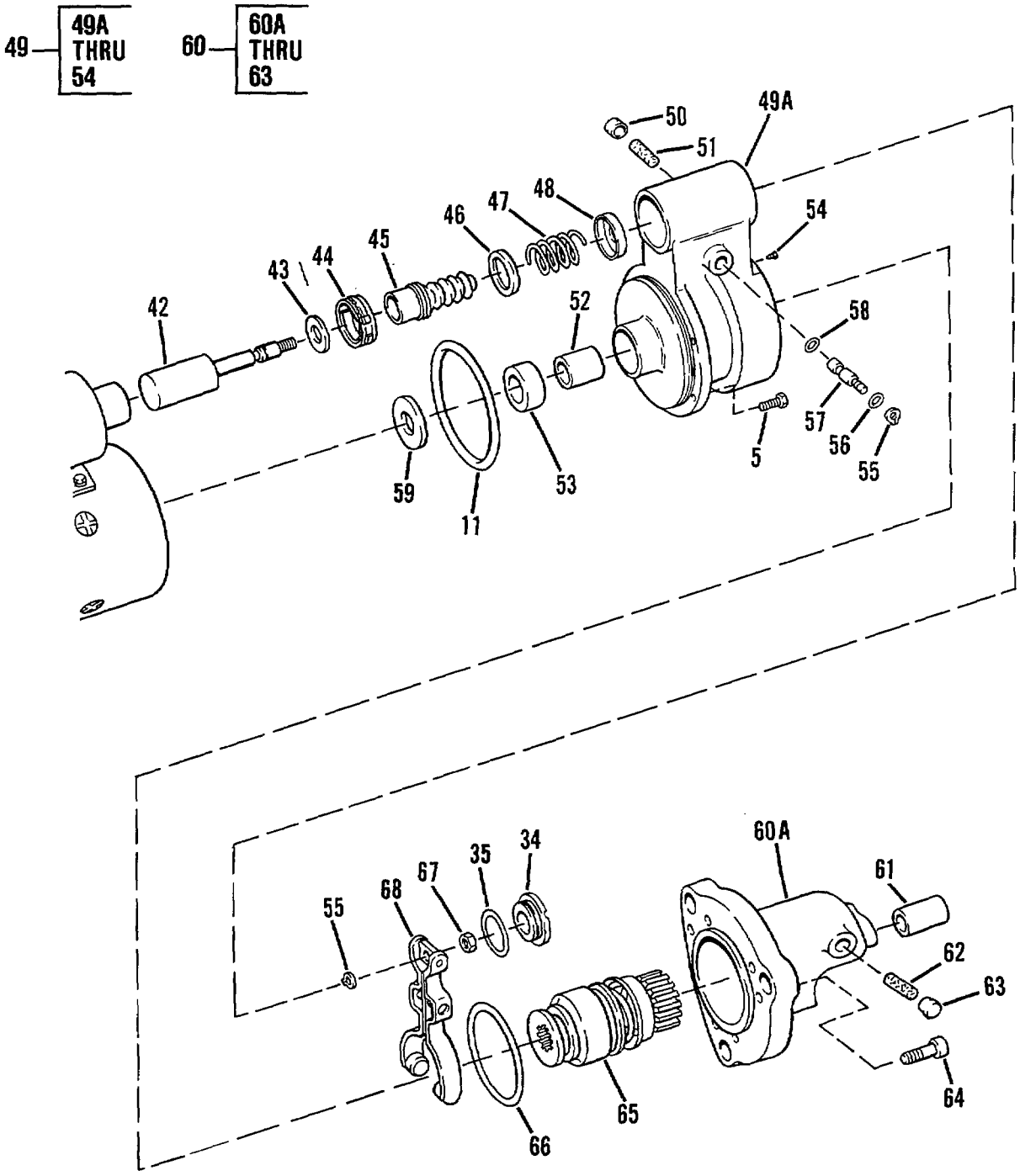

Figure 48. Starting Motor Assembly - Sheet 2 of 2 (Used on Models D5BSi and D5BNS1)

(1) ITEM NO	(2) SMR CODE	(3) CAGEC	(4) PART NUMBER	(5) DESCRIPTION AND USABLE ON CODES (UOC)	(6) QTY
				GROUP 0603 - STARTING MOTOR	
				FIG. 48 - STARTING MOTOR ASSEMBLY USED ON MODELS 05BS1 ANC 058NS1 (SEE FIGURE 46 FOR TOP ASSEMBLY, PART NUMBER 1993739)	
1	PFFZZ	16764	9439624	NUT, PLAIN, HEXAGON ..... UOC :AGU, AGV	4
2	PFFZZ	16764	1979600	LEAD ASSEMBLY, ELECT ..... UOC:AGU, AGV	1
3	PFFZZ	96906	MS35333-44	WASHER, LOCK ..... UOC :AGU, AGV	1
4	PFFZZ	96906	MS27183-17	WASHER, FLAT ..... UQOC:AGU, AGV	4
5	PFFZZ	16764	1914869	BOLT, MACHINE ..... UOGC:AGU, AGV	13
6	PFFFF	16764	1945848	STARTER HOUSING, ENG ..... UOC:AGU, AGV	1
6A	XAFZZ	19237	NPN20	.HOUSING ..... UOC:AGU, AGV	1
7	PFFZZ	16764	1978756	.CAP, PROTECIVE, DUST ..... UOC :AGU, AGV	1
8	PFFZZ	16764	1978754	.WICK ..... UOC :AGU, AGV	1
9	PAFZZ	16764	1894638	.BEARING, SLEEVE ..... UOC:AGU, AGV	1
10	PFFZZ	16764	1953237	WASHER, FLAT ..... UOC:AGU, AGV	1
11	PFFZZ	62983	154101	PACKINGI PREFCPMED ..... UOC: AGU, AGV	2
12	PFFZZ	16764	1913084	WASHER, FLAT ..... UOC :AGU, AGV	2
13	PFFZZ	16764	1964516	INSULATOR, BRUSH PLA ..... UOC :AGU, AGV	1
14	PFFZZ	16764	1984974	HOLDER ASSEMBLY, ELE ..... UOC:AGU, AGV	1
15	PFFZZ	11383	5P6298	.SCREW, CAP, HEXAGON H ..... UOC:AGU, AGV	12
16	PFFZZ	75377	56-941-45	.WASHER, LOCK ..... UOC:AGU, AGV	12
17	PFFZZ	16764	1984981	.PLATE, , STATOR, MOTOR ..... UOC :AGU, AGV	1
18	XAFZZ	16764	1984975	.PLATE ASSY ..... UOC :AGU, AGV	1
19	PFFZZ	16764	1913080	.WASHER, FLAT ..... UOC :AGU, AGV	6
20	PFFZZ	16764	1984978	.PLATE, INSULATOR, STA ..... UOC :AGU, AGV	1
21	PFFZZ	16764	1965093	.INSULATOR, PLATE ..... UOC:AGU, AGV	3
22	PFFZZ	16764	1979389	.PLATE, INSULATOR HOL	3

(1) ITEM NO	(2) SMR CODE	(3) CAGEC	(4) PART NUMBER	(5) DESCRIPTION AND USABLE ON CODES (UOC)	(6) QTY
				UOC :AGUPAGV	
23	PFFZZ	16764	1979388	CPLATEPGRCUND HOLDER	3
				UOC :AGU, AGV	
24	PFFZZ	16764	1984979	.HOLDER, ELECTRICAL	6
				UOC :AGU, AGV	
25	PFFZZ	11083	3T9494	.SPRING, BRUS.....	6
				UOC :AGU, AGV	
26	PAFZZ	16764	1852888	BRUSH, ELECTRICAL.....	6
				UOC :AGU, AGV	
27	PFFZZ	16764	1968998	SCREW TAPPING	6
				UOC:AGU, AGV	
28	PFFZZ	16764	1847807	SCREW, MACHINE	3
				UOC :AGU.AGV	
29	PFFZZ	16764	1930611	BOLT, MACHINE	4
				UOL:AGUTAGV	
30	PFFFF	16764	1115637	RELAY-SOLENOID, ENGI SEE FIG. 49.....	1
				FOR BREAK.....	
				UOC :AGU .AGV	
31	PFFZL	16764	19458(2	TERMINAL, LUG.....	1
				UOC:AGU, AGV	
32	PFFZZ	16764	1922457	WASHER, FLAT..... .	2
				UOC :AGU, AGV	
33	PFFZZ	11862	1968396	SCREW, MACHINE	12
				UWC:AGU, AGV	
34	PFFZZ	16764	1945356	PLUG, MACHINE THREACRCC..C.....	4
				JOC:AGU, AGV	
35	PFFZZ	16764	1964857	GASKET.....	4
				UOC :AC-UAGV	
36	PFFZZ	16764	1955989	INSULATOR, PLATE	1
				UOC :AGU, AGV	
31	PFFZZ	11083	1H2629	PLATE, INSULATION.	3
				UOC : AGU, AGV	
38	PFFZZ	16764	1869747	POLE SHOE, STARTER.....	6
				UOC:AGU, AGV	
39	PFFZZ	16764	1945853	WINDING, MOTOR FIELD	1
				UOC :AGU, AGV	
40	PAFZZ	16764	1965472	INSULATOR, BUSHING	1
				UOC:AGU, AGV	
41	PFFZZ	16764	1945840	ARMATURE, MOTOR.....	1
				UGC:AGU, AGV	
41A	XAFZZ	19207	NPN21	HOUSING SEE FIGURE 46 FOR TOP.....	1
				ASSEMBLY, PART NUMBER 1S93739.	
				UOC:AGU, AGV	
42	PFFZZ	16764	1948522	PLUNGER, SOLENOID	1
				UOC :AGU, AGV	
43	PFFZZ	16764	1948519	WASHER, FLAT.....	1
				UOC :AGU, AGV	
44	PFFZZ	78553	A3122-28-1	CLAMP, HOSE.....	1
				UOC :AGU, AGV	
45	PAFZZ	16764	801077	BELLOWS, PROTECTION	1
				UUC :AGU, AGV	
46	PFFZZ	16764	1948520	WASHER, RECESSED.....	1

(1) ITEM NO	(2) SMR CODE	(3) CAGEC	(4) PART NUMBER	(5) DESCRIPTION AND USABLE ON CODES (UOC)	(6) QTY
				UOC:AGU, AGV	
47	PAFZZ	16764	1948521	SPRING, HELICAL, COMP.....	1
				UOC :AGU, AGV	
48	PFFZZ	16764	1948526	WASHER, RECESSED.....	1
				UOC :AGU , AGV	
49	PFFFF	16764	1979870	HOUSING, LEVER.....	1
				UOC:AGUPAGV	
49A	XAFZZ	19207	NPN22	.HOUSING.....	1
				UOC :AGU, AGV	
53	PFFZZ	16764	1978756	.CAP, PROTECTIVE, DUST	1
				UOC:AGU, AGV	
51	PFFZZ	16764	1978754	.WICK.....	1
				UOC :AGU, AGV	
52	PFFZZ	16764	1894637	.BEARING, SLEEVE	1
				UOC:AGU, AGV	
53	PAFZZ	11083	2F6678	.SEAL, STARTER	1
				UOC:AGU, AGV	
54	PFFZZ	16764	1964402	.PLUG.....	1
				UOC:AGU, AGV	
55	PFFZZ	96906	MS16624-1037	RING, RETAINING.....	2
				UOC :AGU, AGV	
56	PFFZZ	16764	1894643	PACKING, PREFOEMED	1
				UOC:AGU, AGV	
57	PFFZZ	16764	1948529	SHAFT, SHOULDERED	1
				UOC :AGU , AGV	
58	PFFZZ	16764	1894642	PACKING, PREFORMED	1
				UOC:AGUJAGV	
59	PFFZZ	16764	1936466	WASHER.	1
				UOC :AGU, AGV	
63	PFFFF	16764	1957846	STARTER HOUSING, ENG.....	1
				UOCC:AGU, AGV	
60A	XAFZZ	19207	NPN23	.HOUSING.....	1
				UOC:AGU, AGV	
61	PFFZZ	16764	1894635	.BUSHING, SLEEVE.....	1
				UOC:AGU, AGV	
62	PFFZZ	16764	1978754	WICK.....	1
				UOC :AGU, AGV	
63	PFFZZ	16764	l178756	.CAP, PROTECTIVE, DUST	1
				UOC :AGU, AGV	
64	PFFZI	16764	1948536	BOLT*INTERNAL WRENC	5
				UOC :AGU, AGV	
65	PFFZZ	16764	1893560	DRIVE, ENGINE, ELECTR	1
				UOC:AGU, AGV	
66	PFFZZ	16764	1945476	PACKING, PREFORMED	1
				UOC :AGU , AGV	
67	PFFZZ	96936	MS21083N5	NUTISELF-LOCKING, HE	1
				UOC :A U, AGV	
68	PFFZZ	16764	1945484	LEVER ASSEMBLY	1
				UOC:AGU.AGV	
				END OF FIGURE	

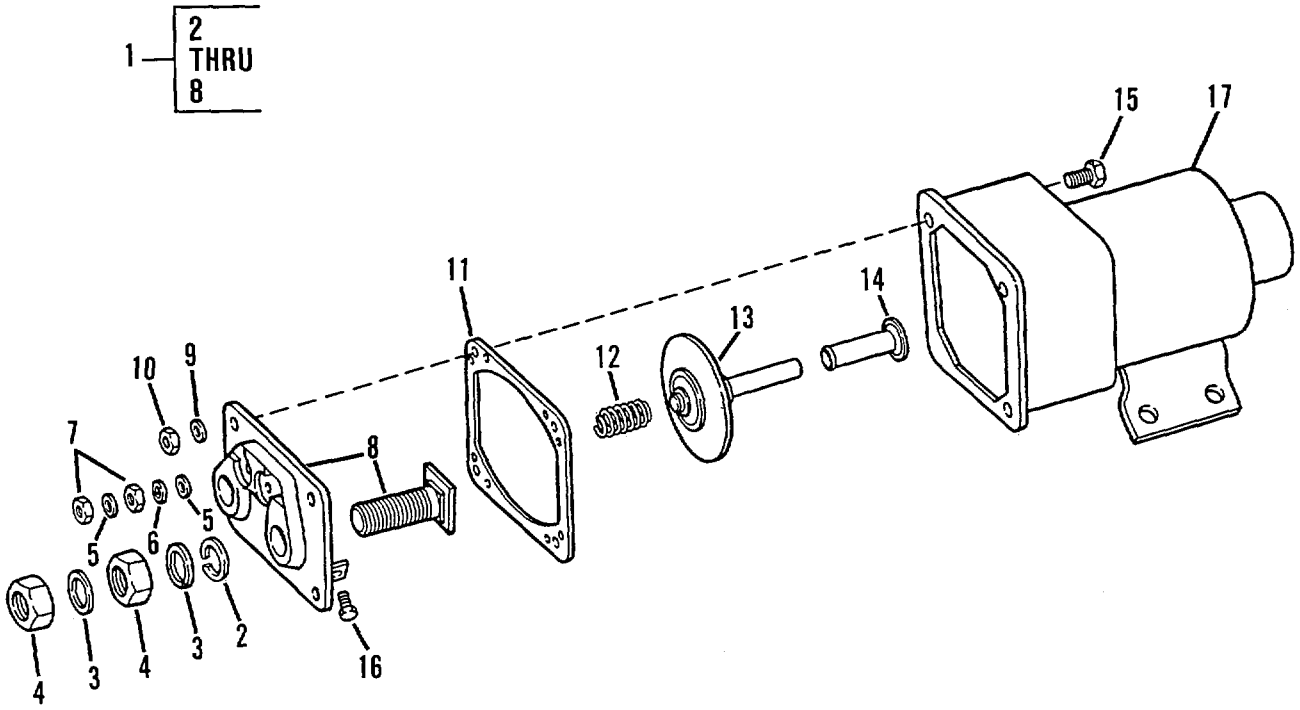

Figure 49. Starter Solenoid

(1) ITEM NO	(2) SMR CODE	(3) CAGEC	(4) PART NUMBER	(5) DESCRIPTION AND USABLE ON CODES (UOC)	(6) QTY
				GROUP 0603 - STARTING MOTOR	
				FIG. 49 - STARTER SOLENOID (SEE FIGURES 47 AND 48 FOR TOP ASSEMBLY-T PART NUMBER 1115607)	
1	PAFZZ	16764	1979498	TERMINAL, FEEDTHRU	1
2	PFFZZ	11083	9F4976	.WASHERILOCK	2
3	PFFZZ	96906	MS27183-17	.WASHER, FLAT	3
* 4	PFFZZ	11083	3H3680	..NUT, PLAIN, HEXAGON	3
* 5	PFFZZ	04998	WA1248	.WASHER, FLAT	3
6	PFFZZ	11083	384502	.WASHER, LOCK	2
7	PFFZZ	66289	PD115	.NUT, PLAIN, HEXAGON	3
8	PFFZZ	16764	1984705	.INSULATOR, STANDOFF	1
* 9	PFFZZ	04998	WA1248	WASHER, FLAT	4
10	PFFZZ	66289	P0115	NUT, PLAIN, HEXAGON..	4
11	PFFZZ	16764	10496037	GASKET	1
12	PFFZZ	16764	1945402	SPRING, HELICAL, COMP	1
13	PFFZZ	16764	1977264	CONTACT ASSEMBLY, EL	1
14	PFFZZ	16764	1972716	BEARING, SLEEVE	1
15	PFFZZ	11083	454065	SCREW, CAP, HEXAGON H	4
16	PFFZZ	24617	1840633	SCREW, MACHINE	3
17	XAFZZ	11083	4M1813	CASE	1
				END OF FIGURE	

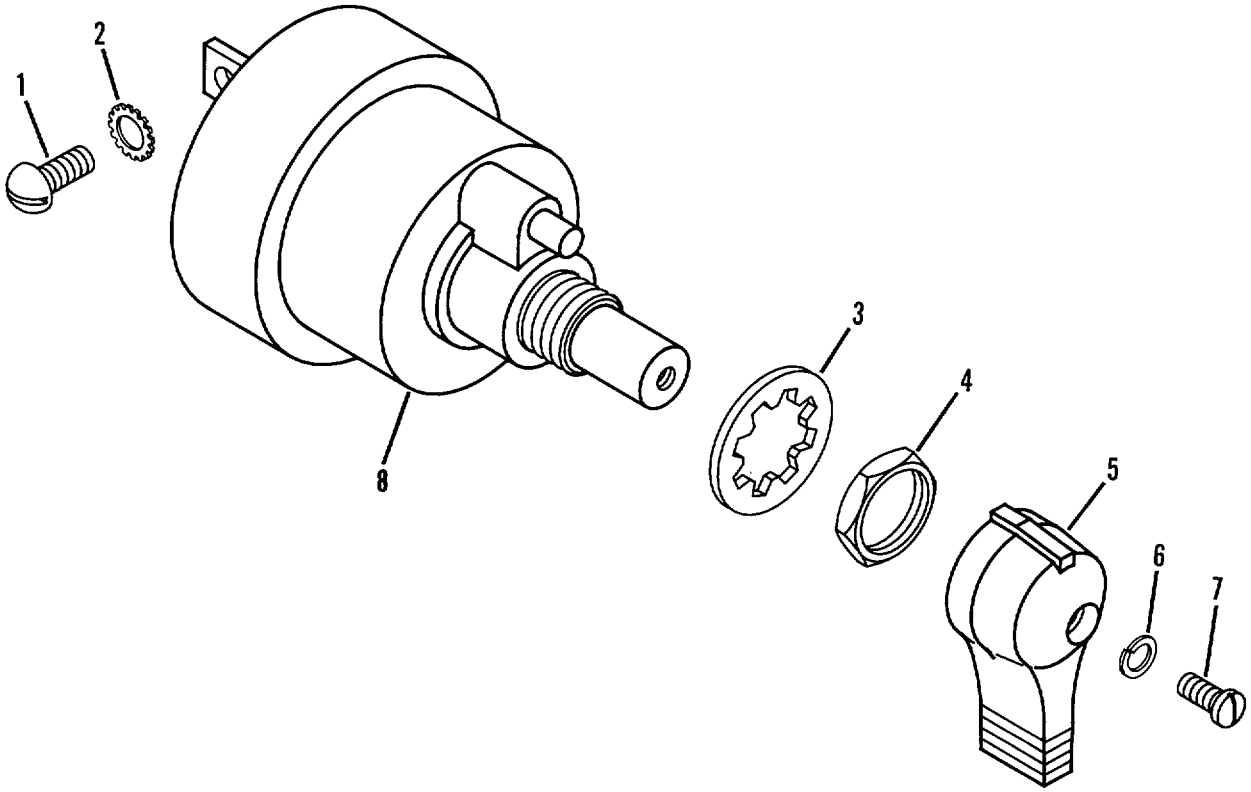

Figure 50. Starter Switch

(1) ITEM NO	(2) SMR CODE	(3) CAGEC	(4) PART NUMBER	(5) DESCRIPTION AND USABLE ON CODES (UOC)	(6) QTY
				GROUP 0603 - STARTING MOTOR	
				FIG. 50 - STARTER SWITCH (SEE FIGURE 57 FOR TOP ASSEMBLY, PART NUMBER 9WI1077)	
1	PAOZZ	11083	6V8364	SCREW, MACHINE	3
2	PFOZZ	96906	MS35333-35	WASHER, LOCK.....	3
3	PFOZZ	96906	MS35333-46	WASHER, LOCK.....	1
4	PAOZZ	16764	1914379	NUT, PLAIN, HEXAGON	1
5	PFOZZ	13445	80101	KNOB	1
6	PAOZZ	96906	MS35338-42	WASHER, LOCK.....	1
7	PAOZZ	11083	5L7200	SCREW, MACHINE	1
8	XACZZ	19207	NPN24	SWITCH	1
				END OF FIGURE	

19 — 20 THRU 23

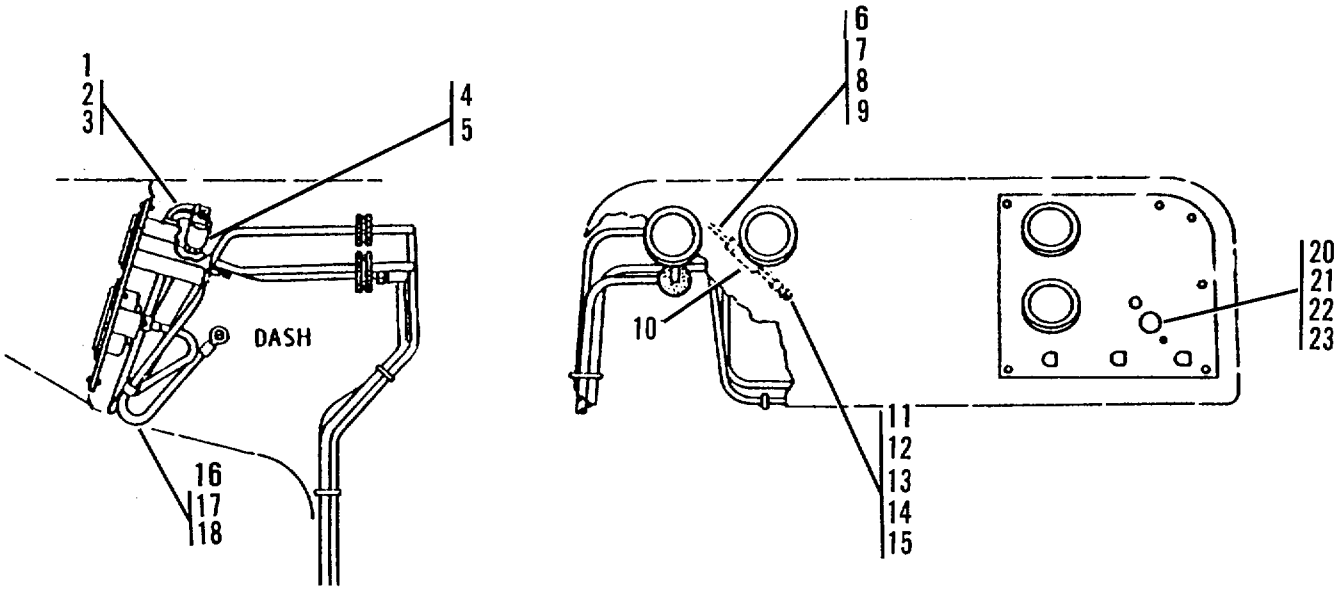

Figure 51. Engine Control Panel Wiring

(1) ITEM NO	(2) SMR CODE	(3) CAGEC	(4) PART NUMBER	(5) DESCRIPTION AND USABLE ON CODES (UOC)	(6) QTY
				GROUP 0607 - INSTRUMENT OR ENGINE CONTROL PANEL	
				FIG. 51 - ENGINE CONTROL PANEL WIRING	
* 1	MOOZZ	11083	5P2764-28IN	WIRE A MAKE FROM WIRE P/N 5700-2, 28 INCHES LONG (SEE GROUP 9501)	1
2	PAOZZ	11083	5P4571	TERMINAL, QUICK DISC	1
3	PAOZZ	96906	MS25036-108	TERMINAL, LUG	1
4	PFOZZ	11083	9G8010	SWITCHI PRESSURE	1
5	PAOZZ	11083	5P3741	TEE, PIPE TO TUBE	1
* 6	MOOZZ	11083	5P2764-8IN	WIRE A MAKE FROM WIRE P/N 5700-2, 8 INCHES LONG (SEE GROUP 9501)	1
7	PAOZ2	96906	MS25036-108	TERMINAL, LUG	1
8	PAOZZ	11083	2S5012	CAP	1
* 9	PAOZZ	79550	12871	CONTACT, ELECTRICAL	1
10	PAOZZ	81349	F02A250V5A	FUSE, CARTRIDGE	1
* 11	MOOZZ	11083	5P2764-8IN	WIRE A MAKE FROM WIRE P/N 570D-2, 8 INCHES LONG (SEE GROUP 9501)	1
12	PAOZZ	96906	MS25036-108	TERMINAL, LUG	1
13	PFOZZ	79550	12864	FUSEHOLDER SUBASSEM	1
14	PAOZ2	79550	12870	RINGIRETAINING	1
* 15	PAOZZ	79550	12871	CONTACT, ELECTRICAL	1
16	MOOZZ	11083	6A3626-8IN	WIRE AS MAKE FROM WIRE P/N 6A3626 (SEE GROUP 9501) 8-IN LONG	1
17	PAOZZ	11083	5P5694	TERMINAL	1
* 18	PFOZZ	96906	MS25036-110	TERMINALILUG	1
19	PAOZZ	11083	7S6402	SWITCH, ROTARY	1
20	PAOZZ	13445	81285	.KNOB	1
* 21	PFOZZ	16764	1914379	.NUT, PLAIN, HEXAGON	1
22	PFOZZ	96906	M535335-31	.WASHERVLOCK	3
23	PFOZZ	96906	MS35206-241	.SCREW, MACHINE	3
				END OF FIGURE	

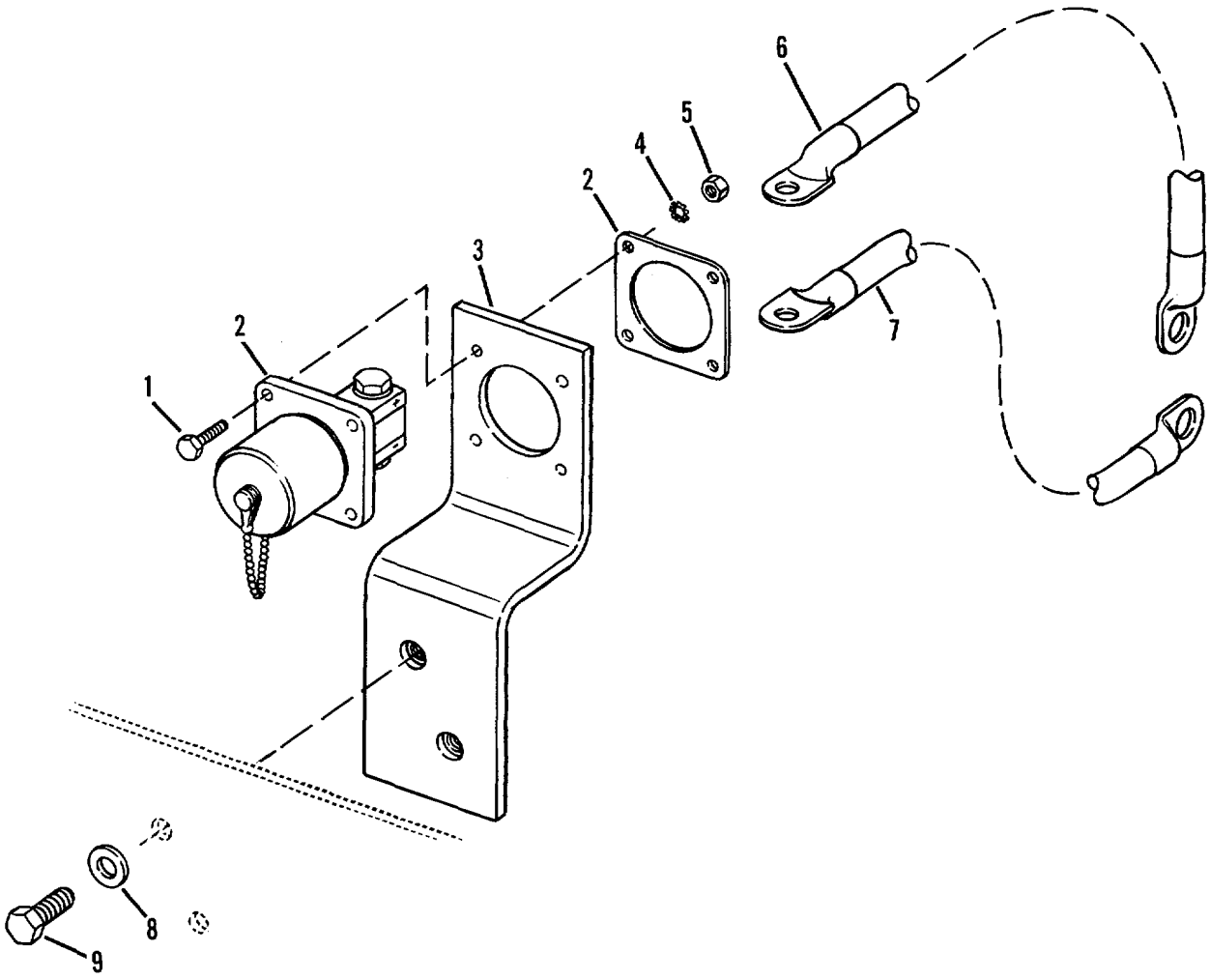

Figure 52. Starting Receptacle (Used on Models D5BS1 and D5BNS1)

	(1) ITEM NO	(2) SMR CODE	(3) CAGEC	(4) PART NUMBER	(5) DESCRIPTION AND USABLE ON CODES (UOC)	(6) QTY
					GROUP 0607 - INSTRUMENT OR ENGINE CONTROL PANEL	
					FIG. 52 - STARTING RECEPTACLE, USE ON MODELS 058S1 AND D5BNS1	
	1	PFOZZ	08179	400405	SCREW, CAP, HEXAGON H ..... UOC: AGU, AGV	4
*	2	PFOZZ	19207	11674728	CONNECTOR, RECEPTACL ..... UOC:AGU, AGV	1
	3	PFOZZ	11083	5R8086	BRACKET, MOUNTING..... UOC:AGULAGV	1
	4	PFOZZ	96906	MS35335-32	WASHER, LOCK..... UOC: AGUGAGV	4
	5	PFOZZ	96906	M551943-34	NUT, SELF-LOCKING, HE ..... UOC:AGU, AGV	4
	6	PAOZZ	11083	SD0273	LEAD, STORAGE BATTER ..... UOC:AGU, AGV	1
	7	PAOZZ	11083	2V7396	LEAD, STORAGE BATTER ..... UOC: AGU, AGV	1
	8	PFOZZ	11083	5M2894	WASHER, FLAT..... UOC: AGU, AGV	2
*	9	PFOZZ	11083	S1594	BOLT, MACHINE ..... UOC: AGU, AGV	2
					END OF FIGURE	

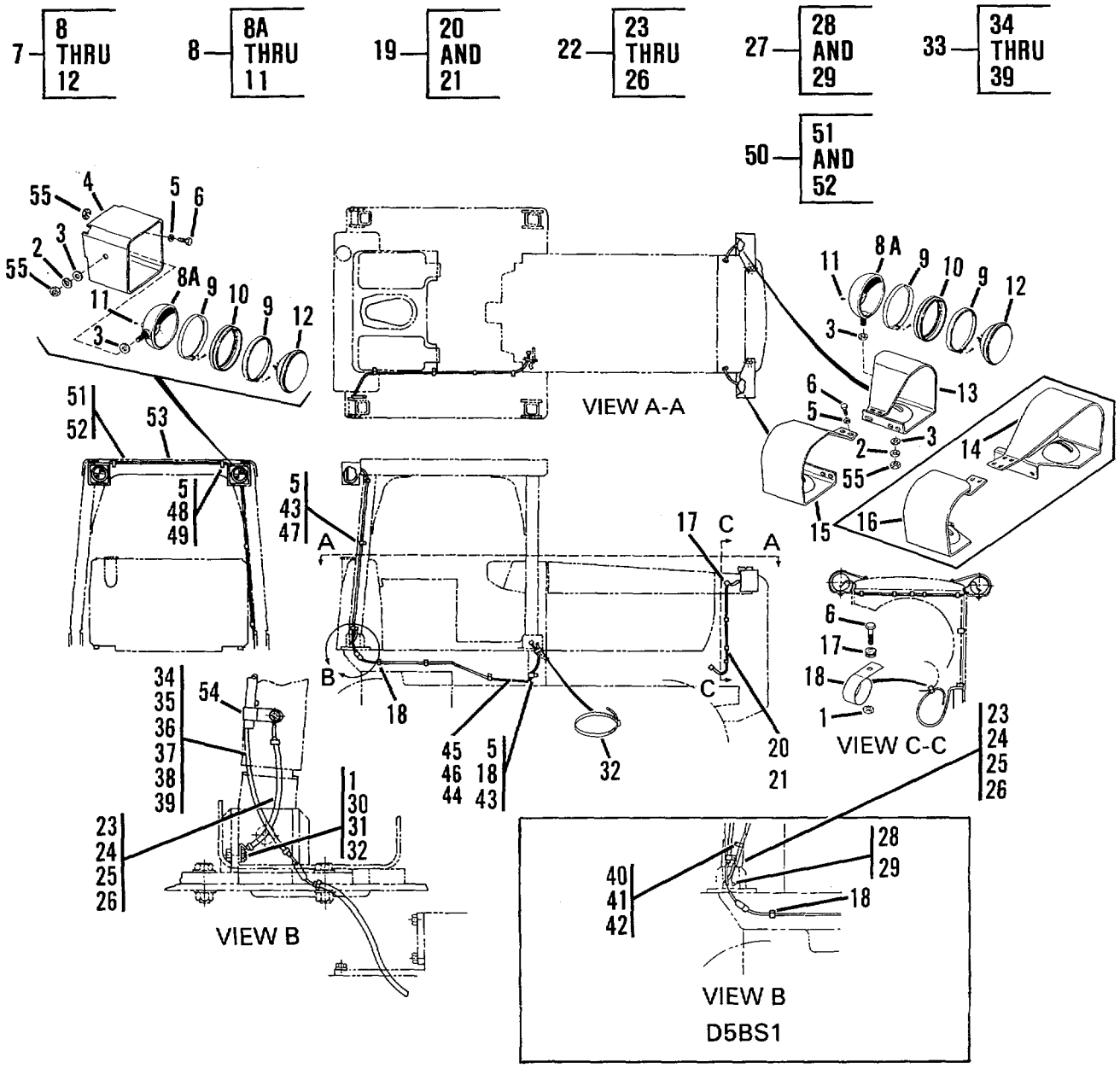

Figure 53. Lighting Group

(1) ITEM NO	(2) SMR CODE	(3) CAGEC	(4) PART NUMBER	(5) DESCRIPTION AND USABLE ON CODES (UOC)	(6) QTY
				GROUP 0609 - LIGHTS	
				FIG 53 - LIGHTING GROUP	
1	PFOZZ	96906	MS51967-14	NUT,PLAIN,HEXAGON	6
2	PFOZZ	96906	M535340-50	WASHER,LOCK.	4
3	PFOZZ	11083	2B8352	WASHER,SPRING TENSI..	4
4	PAOZZ	11083	8P8306	BRACKET ASSEMBLY . .	2
5	PAOZZ	78189	3320-14-01	WASHER,SQUARE CONE	8
6	PFOZZ	11083	S1594	BOLT,MACHINE	22
7	PAOZZ	73331	910824	FLOODLIGHT,ELECTRIC	2
8	PFOZZ	11083	2P2541	.HOUSING,LIGHT	1
8A	XAOZZ	19207	NPN25	..HOUSING	1
9	PAOZZ	73331	921472	..RETAINER,LENS	2
10	PAOZZ	16764	5949719	..RETAINERILENS	1
11	PAOZZ	11083	5M6668	..SCREW,MACHINE	2
12	PAOZZ	96906	M517165-4578	..LAMPIINCANDESCENT . .	1
13	PFOZZ	11083	9P0739	GUARD,LAMP LEFT.HAND UOC: AGS, AGT	1
14	PFOZZ	11083	5A4550	GUARD,LAMP RIGHT HAND. UOC:AGU,AGV	1
15	PFOZZ	11083	9P0736	GUARD,LAMP RIGHT HAND UOC:AGSIAGT	1
16	PFOZZ	11083	5A4549	GUARD,LAMP LEFT HAND UOC: AGU,AGV	1
17	PAOZZ	70485	2758	GROMMET ,NONMETALLIC	2
18	PFOZZ	11083	H5166	RETAINER,WIRING HAR	12
19	PAOZZ	11083	8P6362	WIRE HARNESS,BRAN	1
20	PFOZZ	96906	M525036-153	.TERMINAL,LUG	2
21	PFOZZ	79550	300-2863	.TERMINAL,QUICK DISC	1
22	PAOZZ	11083	9P2696	LEAD AND CONDUIT AS.	1
23	MOOZZ	11083	5P5628-8	TUBE,METALLIC MAKE FROM TUBE P/N 5P5628-8 INCHES LONG N G	6
24	PFOZZ	11083	S9593	.STRAP,LINE SUPPORTI	2
25	PFOZZ	96906	MS25036-154	.TERMINAL,LUG	1
26	PFOZZ	96906	MS25036-110	.TERMINAL,LUG .	1
27	PFOZZ	11083	5R8091	LEAD ASSEMBLY,ELECT UOC:AGU,AGV	1
28	PFOZZ	96906	MS25036-153	.TERMINAL,LUG UOC: AGU ,AGV	1
29	PAOZZ	11083	6K1827	CONNECTOR,PLUG,ELEC UOC:AGU,AGV	1
30	PFOZZ	11083	S1595	BOLT,MACHINE	1
31	PFOZZ	11083	4B4280	WASHER,FLAT	1
32	PAOZZ	11083	3S2093	STRAP.	1
33	PAOOO	11083	8P6433	WIRING HARNESSIBRAN	1
34	MOOZZ	11083	5P5628-30 5P5628	TUBE,METALLIC MAKE FROM TUBE P/N 30 INCHES LONG	6
35	PFOZZ	64488	1300C	CONNECTOR BODYIPLUG	1
36	PFOZZ	11083	1S9593	STRAP,LINE SUPPORTI	4
37	PFOZZ	11083	6K1827	CONNECTORPLUGELEC.	1
38	PFOZZ	96906	MS25036-153	TERMINAL,LUG	1

(1) ITEM NO	(2) SMR CODE	(3) CAGEC	(4) PART NUMBER	(5) DESCRIPTION AND USABLE ON CODES (UOC)	(6) QTY
39	PFOZZ	11083	6K1828	CONNECTOR,PLUG,ELEC	1
40	PFOZZ	11083	2B3243	CLAMP,LOOP UOC:AGU,AGV	1
41	PFOZZ	80204	B1821BH050C075N	SCREW,CAP,HEXAGON H UOC:AGU,AGV	1
42	PFOZZ	96906	MS27183-17	WASHERIFLAT UOC:AGU,AGV	1
43	PFOZZ	11083	0S0509	SCREW,CAPIHEXAGON H	3
44	MOOZZ	11083	5P5624-104IN	CABLE ASSY MAKE FROM WIRE P/N M16878/1BKE7, 104 INCHES LONG (SEE GROUP 9501)	1
45	PFOZZ	11083	6K1827	CONNECTOR,PLUG,ELEC11	1
46	PFOZZ	11083	6K1828	CONNECTOR,PLUG ,ELECC	1
47	PFOZZ	11083	4S5718	CLAMP ,LOOP	2
48	PFOZZ	11083	1S2487	CLAMP,LOOP	3
49	PFOZZ	11083	OS0509	SCREW,CAP,HEXAGON H	3
50	PAOZZ	11083	8P6432	LEAD ASSEMBLY,ELECT	1
51	PFOZZ	79550	300-2863	TERMINAL,QUICK DISC.O	1
52	PFOZZ	96906	MS25036-153	TERMINAL,LUG	1
53	PFOZZ	11083	9P4730	TUBE,METALLIC	1
54	PAOZZ	11083	9P3351	TUBE,METALLIC	1
55	PFOZZ	96906	MS51968-20	NUT,PLAIN,HEXAGON	6

END OF FIGURE

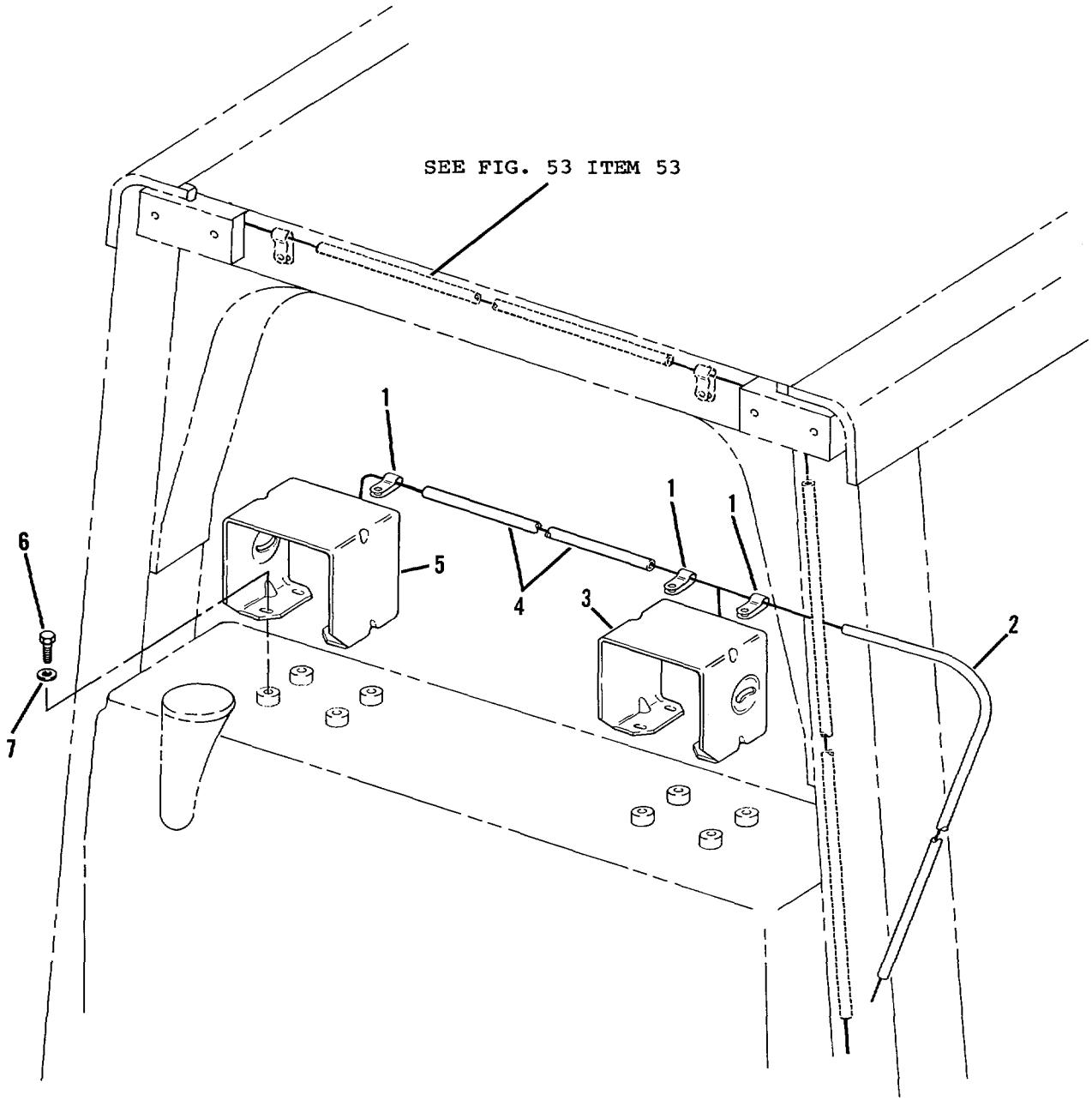

Figure 54. ROPS Mounted Lights (Used on Models D5BS1 and D5BNS1)

(1) ITEM NO	(2) SMR CODE	(3) CAGEC	(4) PART NUMBER	(5) DESCRIPTION AND USABLE ON CODES (UOC)	(6) QTY
				GROUP 0609 - L IGHTS	
				FIG. 54 - RCPS MOUNTED LIGHIS# USED ON MODELS 05851 AND C58bS	
1 -	PFOZZ	11083	8F8513	CLAMP,LOOP.. UOC :AGU,AGV	3
2	MOOZZ	11083	5P5628-133	TUBEBENT,METALLIC PAKE FRCP TUBE P/N 5P5628 103 INCHES TCNG UUC :AGU ,AGV	1
3	PFCZZ	11083	3T5286	GUARD,LAMP UOC:AGU,AGV	1
4	MCOZZ	11083	5P5628-39	TUBE,METALLIC MAKE FROM TUBE P/N 5P5628 39 INCHES LONG. UOC :AGU ,AGV	1
5	PFOZZ	11083	3T5287	GUARD,LAMP UC :AGU,AGV	1
6	PFCZZ	96906	MS90728-8	SCREWCAPHEXAGON UOC :AGU,AGV	8
7	PFOZZ	78189	3320-14-01	WASHER,SQUARE CONE ONE UOC :AGU1AGV	8

END OF FIGURE

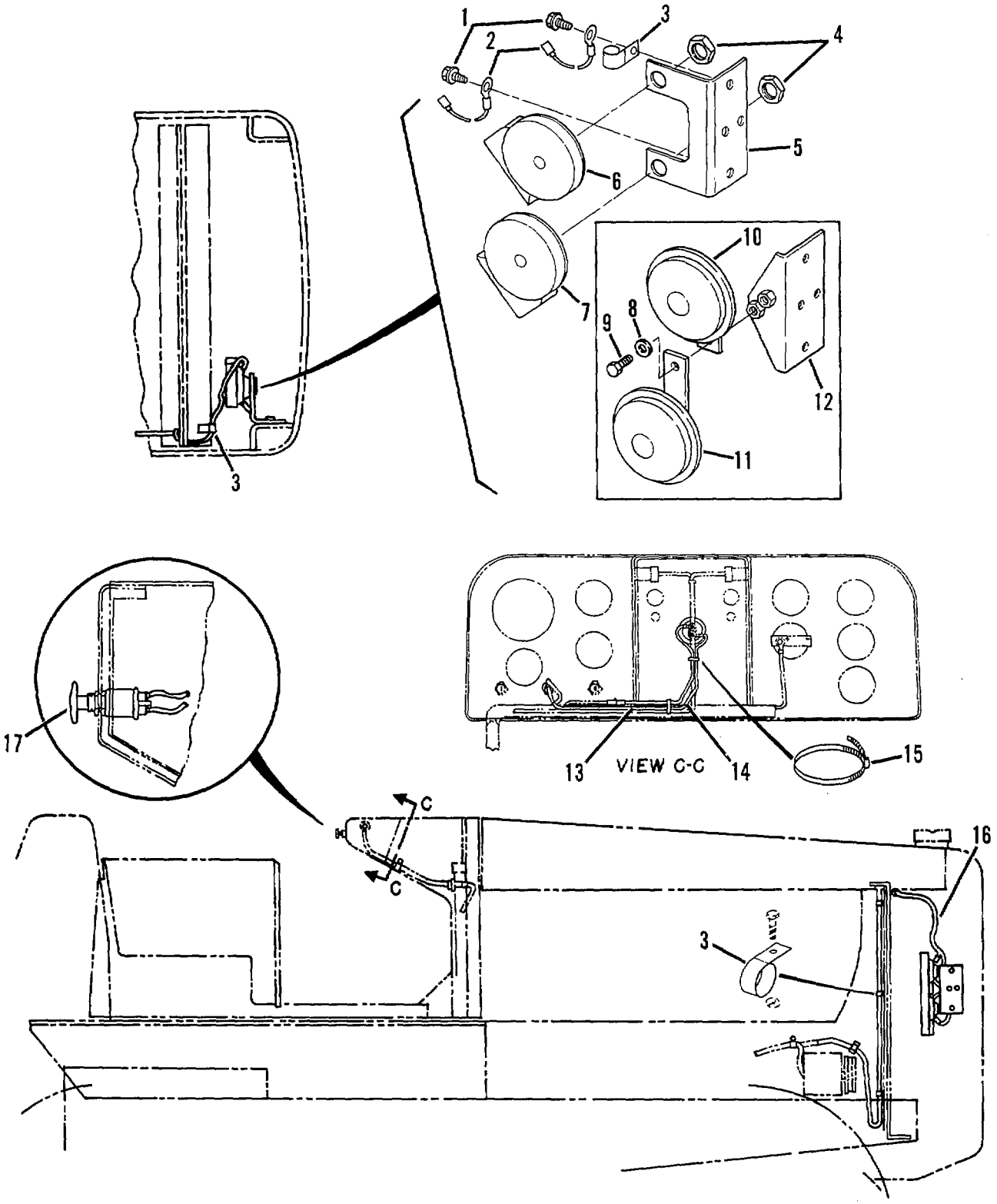

Figure 55. Electric Horn.

(1) ITEM NO	(2) SMR CODE	(3) CAGEC	(4) PART NUMBER	(5) DESCRIPTION AND USABLE ON CODES (UOC)	(6) QTY
				GROUP 0611 - HORN, SIPEF	
				FIG. 55 - ELECTRIC ICPN	
1	PAOZZ	11083	319831	SCREWPMACHINE	2
2	PAOZZ	11083	8P1342	CABLE ASSEMBLYISPEC	2
3	PAOZZ	11083	H5166	RETAINER,WIRING H C	8
4	PAOZZ	11083	3S4701	NUT,PLAIN, HEXAGON UOC :AGS,AGT	2
5	PFOZZ	11083	9G9300	BRACKETVANGLE UOC:AGS,AGT	1
6	PFOZZ	16764	1892242	HORN,FLUID CPERATED UOC :AGS,AGT	1
7	PFOZZ	16764	1892243	HORN,ELECTRICAL UOC:AGS,AGT	1
8	PFOZZ	78189	3320-14-31	WASHER,SQUARE CONE UOC:AGU,AGV	2
9	PFOZZ	96906	MS9U728-8	SCREW,CAP,HEXAGON H UOC :AGU,AGV	2
13	PAOZZ	F0777	77970	HORN,ELECTRICAL UOC:AGU,AGV	1
11	PAOZZ	64189	40602	HORN,ELECTRICAL UOC:AGU,AGV	1
12	PAOZZ	11083	7T7116	BRACKETIANGLE UOC:AGUGAGV	2
13	PAOZZ	11083	8P7277	LEAD,ELECTRICAL	1
14	PAOZZ	’1083	8P7278	LEAD,ELECTRICAL	1
15	PAOZZ	11083	1S9593	STRAP,RETAINING,	2
16	PAOZZ	11083	BP7281	WIRING HARNESS,BRAN UOC:AGS,AGT	1
16	PAOZZ	11083	7T6986	WIRING HARNESS,BRAN UOC :AGU,AGV	1
17	PFOZZ	13445	90065SWITCHIPUSH	1	

END OF FIGURE

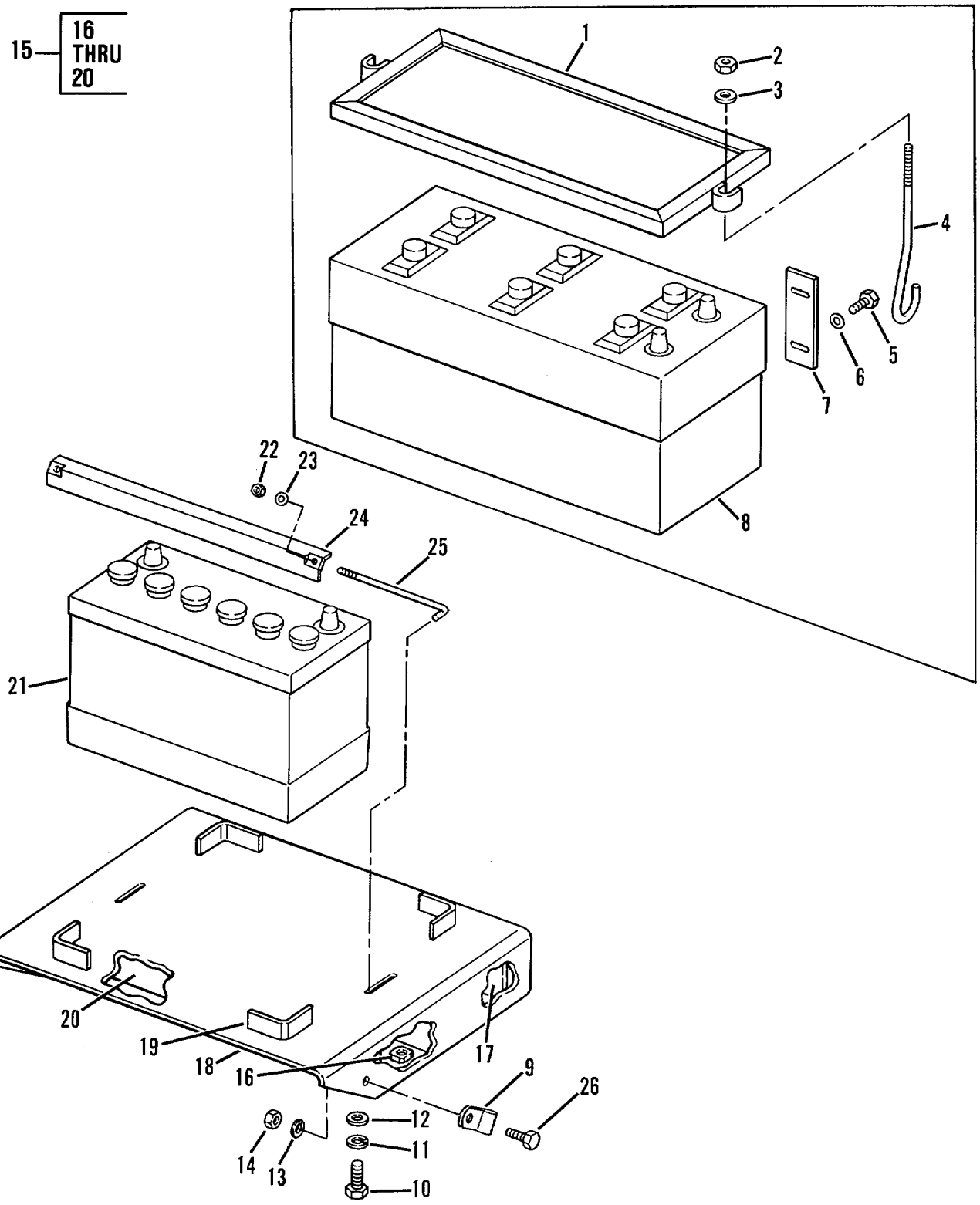

Figure 56. Batteries and Holddown

(1) ITEM NO	(2) SMR CODE	(3) CAGEC	(4) PART NUMBER	(5) DESCRIPTION AND USABLE ON CODES (UOC)	(6) QTY
				GROUP 0612 - BATTERIES, STORAGE (WET OR DRY)	
				FIG. 56 - BATTERIES AND HOLDDOWN	
1	PFOZZ	11083	8P1222	HOLD DOWN UOC: AGU,AGV	2
*2	PAOZZ	11083	4J8265	NUT,SPECIAL UOC:AGU,AGY	4
*3	PFOZZ	11083	3K925	WASHER,FLAT UOC: AGU ,AGV	4
4	PFOZZ	11083	BP9728	BOLT UOC: AGU,AGV	4
*5	PFOZZ	11083	S1594	BOLT,MACHINE UOC: AGU,AGV	2
6	PFOZZ	11083	5M2894	WASHER,FLAT-C UOC: AGU,AGV	2
7	PFOZZ	11083	9P0126	PLAT,IMENDING UOC:AGU,AGV	1
8	PAOFA	11083	9G4247	8ATTERY UOC:AGU,AGV	2
9	PFOZZ	11083	5K3294	CLAMP,LOOP UOC:AGS,AGT	1
10	PFOZZ	11083	783235	BOLT,MACHINE	4
11	PFOZZ	96906	MS35338-48	WASHER,LOCK	4
12	PAOZZ	11083	2M849	WASHER,FLATLAT.	4
13	PFOZZ	96906	MS35338-46	WASHER,LOCK. UOC:AGS,AGT	1
14	PFOZZ	11083	104717	NUT ,HEXAGON H. UOC: AGS,AGT	1
15	PFOZZ	11083	3T5803	BRACKET ASSEMBL BA	1
16	PAOZZ	11083	1F748	.NUT,PLAIN,WELDING	4
17	PFOZZ	11083	8P1219	.BRACKET,DOUBLE ANGL	1
18	PFOZZ	11083	8P1221	.PLATE,MOUNTING,FLAT	1
19	PFOZZ	11083	3T3002	.BRACKET,ANGLE	4
20	PFOZZ	11083	8P1220	.SPACER,PLATE	4
21	PAOFA	81348	W-B-131	BATTERY,STORAGE UOC: AGS ,AGT	2
22	PAOZZ	11083	2D6235	NUT,SELF LOCKING,HE UOC: AGS,AGT	4
23	PFOZZ	96906	MSZ7183-12	WASHERIFLAT UOC: AGS,AGT	4
24	PFOZZ	11083	7P7608	BRACKETIANGLE.... UOC: AGS,AGT	2
25	PFOZZ	11083	7P7612	BOLT,HOOK UOC:AGS,AGT	4
26	PFOZZ	11083	S1594	BOLT,MACHINE UOC:AGS,AGT	1

END OF FIGURE

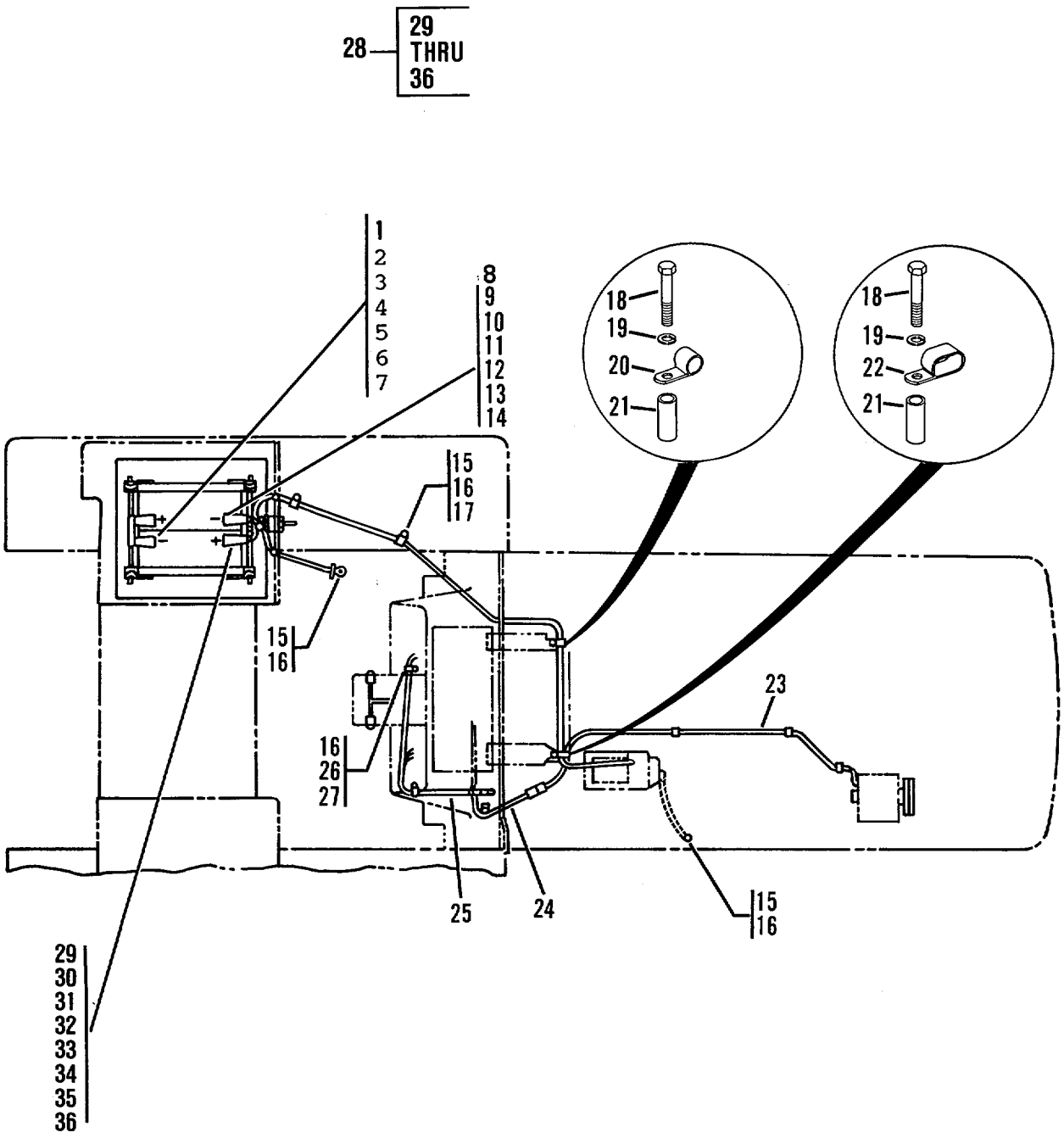

Figure 57. Chassis Wiring -Sheet 1 of 2.

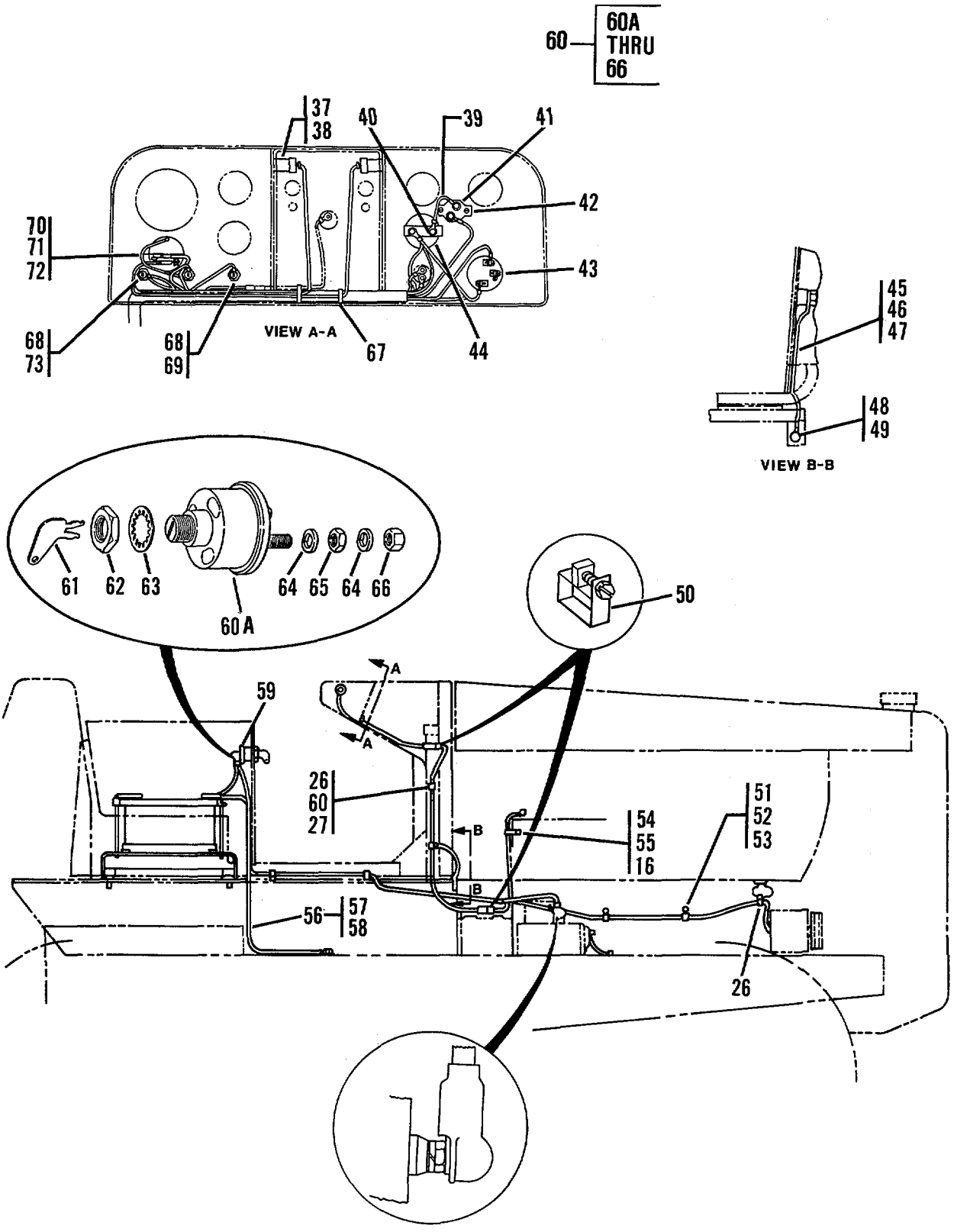

Figure 57. Chassis Wiring - Sheet 2 of 2

(1) ITEM NO	(2) SMR CODE	(3) CAGEC	(4) PART NUMBER	(5) DESCRIPTION AND USABLE ON CODES (UOC)	(6) QTY
				GROUP 0613-HULL OR CHASSIS WIRING HARNESS	
				FIG 57 - CHASSIS WIRING	
1	MOOZZ	11083	5P0747-6	LEAD,STORAGE BATTER MAKE FROM WIRE..... PIN 5P 747 6 INCHES LONG	1
2	PAOZZ	11083	M6120	NUT,SLEEVE.....	2
3	PFOZZ	11083	M6119	B0LT,MACHINE	2
4	PFOZZ	11083	8T9757	TERMINAL ASSY	1
5	PFOZZ	96906	MS75004-1	TERMINAL,LUG..... .	1
6	PFOZZ	79550	40196	INSULATION SLEEVING-.-	1
7	PFOZZ	79550	58904-01-6	COVER,ELECTRICAL CO-.....	1
8	MOOZZ	11083	5P0747-12	LEAD,STORAGE BATTER MAKE FROM WIRE..... P/N 5P 747 12 INCHES LONG	1
9	PFOZZ	77060	2966377	SHELL,ELECTRICAL.....	1
10	PFOZZ	11083	1S7252	TERMINAL	1
11	PFOZZ	04618	29711	TERMINAL,LUG.....	1
12	PFOZZ	11083	M6119	BOLT,MACHINE	1
13	PAOZZ	11083	M6120	NUT,SLEEVE.....	1
14	PFOZZ	60237	4301	COVERY ELECTRICAL.....	1
15	PFOZZ	11083	OS0509	SCREW,CAP,HEXAGON H.....	3
16	PFOZZ	96906	M535338-46	WASHER,LOCK.....	3
17	PFOZZ	11083	S994	CLAMP,LQOP	2
18	PFOZZ	11083	OL1329	BOLT,MACHINE	2
19	PFOZZ	96906	M535338-48	WASHER,LOCK.....	2
20	PFOZ	11083	S1015	CLAMP,LOOP	1
21	PAOZZ	11083	3S3158	SPACER SLEEVE .CC.	2
22	PAOZZ	11083	751912	CLIP1	1
23	PFOZZ	11083	9G6120	WIRING HARNESS,BRAN SEE FIG 58 ..... FOR BREAKDOWNEAKDOWN	1
24	PFOZZ	11083	9G6119	WIRING HARNESS,BRAN SEE FIG 58 ..... FOR BREAKDOWN-.	1
25	PFOZZ	11083	9P3118	WIRING HARNESS,BRAN SEE FIG 58 ..... FOR BREAKDOWN	1
26	PAOZZ	11083	H5166	RETAINER,WIRING HAR	5
27 2	PFOZ	11083	OS0509	SCREW,CAP,HEXAGON H.....	
28	PFOZZ	10988	S239743	LEAD,STORAGE BATTERC	1
29	MOOZZ	11083	5P0747-15	LEAD,ELECTRICAL MAKE FROM WIRE P/N ..... 5P 747, 15 IN LONGONG.....	1
30	PFOZZ	98410	CBT-2/OP	.TERMINAL,LUG.....	1
31	PFOZZ	11083	S4915	.LINER.....	2
32	PFOZZ	11083	352093	.STRAP	2
33	PFOZZ	64488	4543A	.TERMINAL,LUGC	2
34	PFOZZ	60237	D7-614-R	.COVER,BATTERY CABLE	1
35	XBOZZ	60237	D-614-R	COVER,BATTERY CABLE	1
36	PFOZZ	11083	1S2244	BOOT	2
37	PAOZZ	96906	MS15570-623	LAMP,INCANDESCENT	1
38	PFOZZ	11083	6N8742	BODY ASSEMBLY,LAMP.....	1
39	MOOZZ	11083	5P5632-4	CABLE ASSEMBLY,LIGHT MAKE FROM WIRE ..... P/N 5P5632 4 INCHES LONGN.G.....	1
40	PFOZZ	96906	MS25036-112	TERMINALRLUG	2

(1) ITEM NO	(2) SMR CODE	(3) CAGEC	(4) PART NUMBER	(5) DESCRIPTION AND USABLE ON CODES (UOC)	(6) QTY
41	PAOZZ	14859	7851-13-60I	CIRCUIT BREAKER	1
42	PAOZZ	11083	481223	SCREW,MACHINE	2
43	PAOZZ	11083	9W1077	SWITCH,ROTARY SEE FIG 50 FOR BREAKDOWN	1
44	PAOZZ	11083	8M7892	AMMETER	1
45	MOOZZ	11083	5P5675-11.8	LEAD,ELECTRICAL MAKE FROM WIRE P/N 8106S, 11.8 INCHES LONG	1
46	PFOZZ	96906	MS25036-122	TERMINAL,LUG...-	1
47	PFOZZ	96906	MS25036-120	TERMINAL,LUG	1
48	PFOZZ	11083	S1615	BOLT,MACHINE	1
49	PADZZ	11083	5P537	WASHER	1
50	PAOZZ	11083	3T3393	CLAMP,HOSEH.	2
51	PAOZZ	11083	2M287	CLIP,SPRING TENSION	2
52	PAOZZ	11083	S1624	BOLT,MACHINE	2
53	PFOZZ	96906	MS35340-50	WASHER,LOCK	2
54	PAOZZ	11083	4D7794	CLAMP A LOOP	1
55	PFOZZ	11083	050509	SCREW,CAP,HEXAGON H	5
56	MOOZZ	11083	5P0747-42.5	LEAD,STORAGE BATTER MAKE FROM WIRE PIN 5P 747 42.52 INCHES LONG	1
57	PFOZZ	77060	2966377	SHELL,ELECTRICAL CO i	1
58	PFOZZ	11083	1S7252	TERMINAL-	2
59	PFOZZ	11083	8H8648	PLATE	1
60	PFOZZ	13445	75900-09	SWITCH,LOCK,IGNITIO	1
60A	XAOZZ	19207	NPN26	.SWITCH	1
61	PAOZZ	13445	8398	.KEY,SWITCH	1
62	PAOZZ	13445	2484-26	.NUT,PLAINIHEXAGON	1
63	PAOZZ	78189	1232-00	.WASHER,LOCK	1
64	PACZZ	11083	7F7259	.WASHER,LOCK	4
65	PAOZZ	11083	6L1962	.NUT	2
66	PAOZZ	11083	6F7045	.NUT,PLAIN,HEXAGONC	2
67	PAOZZ	11083	S9593	STRAP,RETAINING	2
68	PFOZZ	71400	HKP-LW-HH	FUSEHOLDERTEXTRACTO-	3
69	PAOZZ	81349	F02A32V15A	FUSE,CARTRIDGE	2
70	MOOZZ	11083	5P5624-6	LEAD,ELECTRICAL.....MAKE FROM WIRE P/N M16878/BKE7, 6.1 INCHES LONG	1
71	PFOZZ	11083	4L3916	TERMINAL,QUICK DISC.C	1
72	PFOZZ	96906	MS25036-153	TERMINALILUG	1
73	PAOZZ	81349	F02A250V5A	FUSE,CARTRIDGE	6

END OF FIGURE

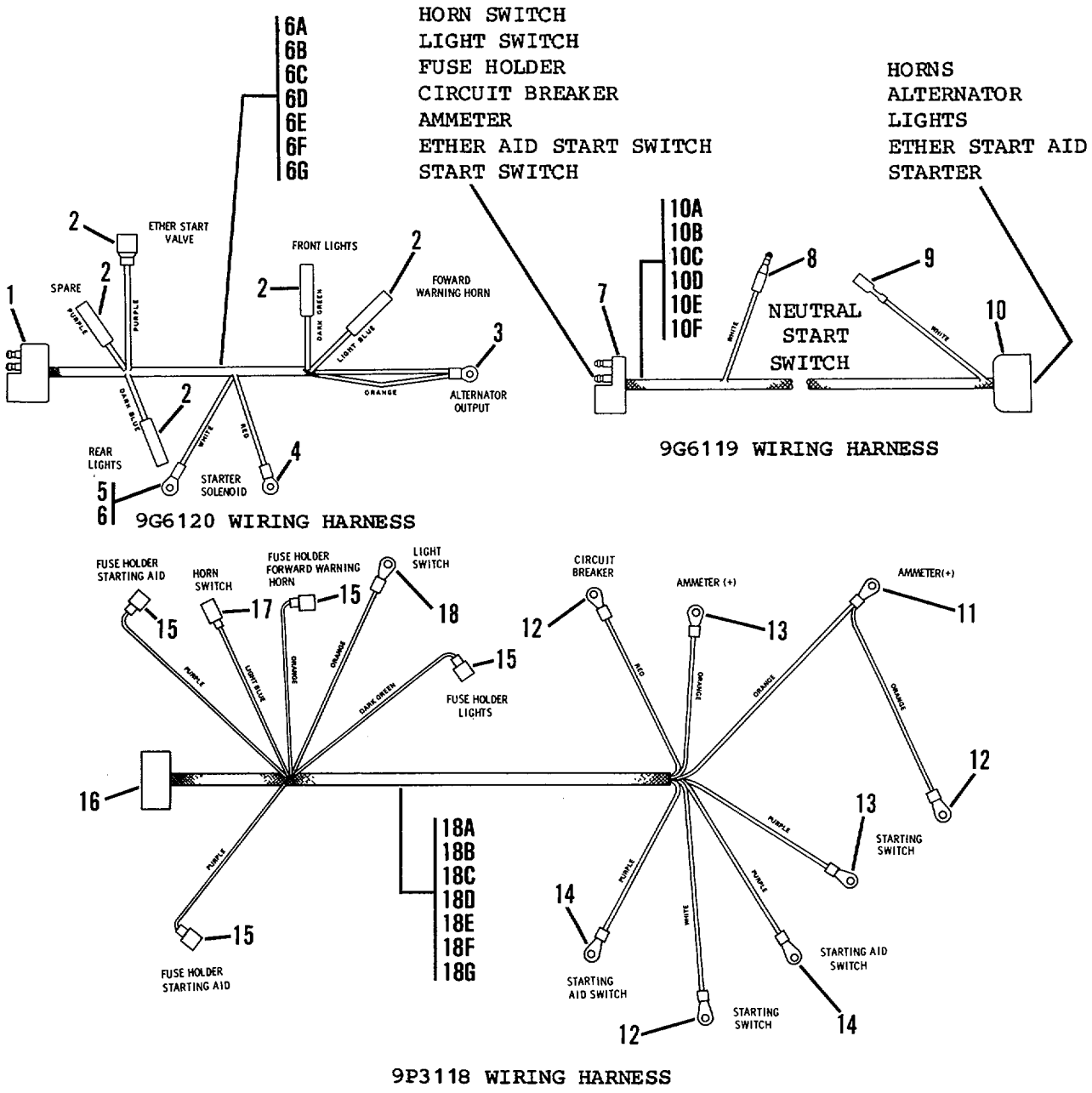

Figure 58. Wiring Harness

(1) ITEM NO	(2) SMR CODE	(3) CAGEC	(4) PART NUMBER	(5) DESCRIPTION AND USABLE ON CODES (UOC)	(6) QTY
				GROUP 0613 - HULL OR CHASSIS WIRING HARNESS	
				FIG 58 - WIRING HARNESSES (PART NUMBERS 9G6120, 9G61191 9P3118)	
1	PFOZZ	79550	19189C	CONNECTURTPLUGIELEC	1
2	PFOZZ	11083	6K1828	CONNECTOR,PLUG,ELEC	5
3	PFOZZ	64488	4113C	TERMINAL,LUG	1
4	PFOZ	64488	1903C	TERMINAL,LUG	
5	PFOZZ	96906	MS25036-112	TERMINAL,LUG	1
6	PFOZZ	77060	2984033	INSULATOR,BOOT	1
6A	MOOZZ	11083	5P4703-43C3	LEAD ELECTRICAL MAKE FROM WIRE P/N M16878/BKE7, 43.3 INCHES LONG (PURPLE)U R PL).C	1
68	MOOZZ	11083	6A3369-27.6	LEAD,ELECTRICAL MAKE FROM WIRE P/N M16878/3BMGO, 27.6 INCHES LONG (WHITE)	1
6C	MOOZZ	11083	5P2762-27.6	LEAD,ELECTRICAL MAKE FROM WIRE P/N M16878/3BMGO, 27.6 INCHES LONG (RED)	1
6D	MOOZZ	11083	5P4510-59	LEAD,ELECTRICAL MAKE FROM WIRE P/N M16878/18KE7, 59 INCHES LONG (DK GREEN)	1
6E	MOOZZ	11083	5P5018-59	LEAD,ELECTRICAL MAKE FROM WIRE P/N M16878/18KE7, 59 INCHES LONG (LT BLUE)	1
6F	MOOZZ	11083	5P3385-126	LEAD,ELECTRICAL MAKE FROM WIRE P/N 16878/3BMGO, 126 INCHES LONG (ORANGE)	1
6G	MOOZZ	11083	5P4511-4	LEAD,ELECTRICAL.....MAKE FROM WIRE P/N M16878/BKE7, 4 INCHE LONG (DK BLUE)	1
7	PFOZZ	79550	19189C	CONNECTOR,PLUG,ELEC	1
8	PFOZZ	11083	7K9689	TERMINAL,QUICK DISC	
9	PFOZZ	11083	6K1828	CONNECTOR,PLUG,ELEC	1
10	PFOZZ	11083	5P3161	CONNECTOR,PLUG,ELEC	1
10A	MOOZZ	11083	6A3369-39.4	LEAD,ELECTRICAL MAKE FROM WIRE P/N M16878/3BMGO, 39.4 INCHES LONG (.HIT.)	1
10B	MOOZZ	11083	5P4703-74.8	LEAD,ELECTRICAL MAKE FROM WIRE P/N M16878JBKE7, 74.8 INCHES LONG (PURPLE)	1
10C	MOOZZ	11083	5P5018-39.4	LEAD,ELECTRICAL MAKE FROM WIRE P/N M16878/IBKE7, 39.4 INCHES LONG (LT BLUE)	1
10D	MOOZZ	11083	5P3385-74.8	LEAD,ELECTRICAL MAKE FROM WIRE P/N M16878/3BMGO 74.8 INCHES LONG (ORANGE)	1
10E	MOOZZ	11083	5P4510-394	LEAD,ELECTRICAL MAKE FROM WIRE P/N M16878/BKE7, 39.4 INCHES LONG (DK GREEN)	1
10F	MOOZZ	11083	5P2762-39.4	LEAD,ELECTRICAL MAKE FROM WIRE P/N	1

(1) ITEM NO	(2) SMR CODE	(3) CAGEC	(4) PART NUMBER	(5) DESCRIPTION AND USABLE ON CODES (UOC)	(6) QTY
				M16878/3BMGO, 39.4 INCHES LONG (RED) CCC.00	
1	PAOZZ	96906	MS25036-119	TERMINALILUG.....	1
12	PFOZZ	96906	MS25036-112	TERMINALILUG.....	3
13	PFOZZ	96906	MS25036-108	TERMINALILUG.....	2
14	PAOZZ	96906	M525036-153	TERMINAL,LUG.....	1
15	PAOZZ	79550	412026	TERMINAL,QUICK DISC	4
16	PFOZZ	11083	6S7115	CONNECTOR,RECEPTACL	1
17	PFOZZ	16428	724105	TERMINAL,QUICK DISC	1
18	PFOZ	96906	MS25036-156	TERMINAL,LUG.....	1
18A	MOOZZ	11083	5P5018-15.7	LEAD?ELECTRICAL MAKE FROM WIRE PIN ..... M16878/1BKE7, 15.7 INCHES LONG (LT BLUE)	1
18B	MOOZZ	11083	6A3355-23.6	LEAD,ELECTRICAL MAKE FROM WIRE PIN ..... M16878/1BKE7, 23.6 INCHES LONG (ORANGE)	1
18C	MOOZZ	11083	5P3385-59	LEAD,ELECTRICAL MAKE FROM WIRE P/N ..... M16878/39MGO, 59 INCHES LONG (ORANGE)R A NG.....	1
18D	MOOZZ	11083	5P4510-15.7	LEAD,ELECTRICAL MAKE FROM WIRE PIN ..... M16878/1BKE7, 15.7 INCHES LONG (DK GREEN)	1
18E	MOOZZ	11083	5P2762-31.5	LEAD,ELECTRICAL MAKE FROM WIRE P/N ..... M16878/3BMGO, 31.5 INCHES LONG (RED)	1
18F	MOOZ	11083	6A3369-31.5	LEAD,ELECTRICAL MAKE FROM WIRE P/N ..... M16878/3BMGO, 31.5 INCHES LONG (WHITE)	1
18G	MOOZZ	11083	5P4703-82.7	LEAD,ELECTRICAL MAKE FROM WIRE P/N ..... M16878/1BKE7, 82.7 INCHES LONG (PURPLE).....	1

END OF FIGURE

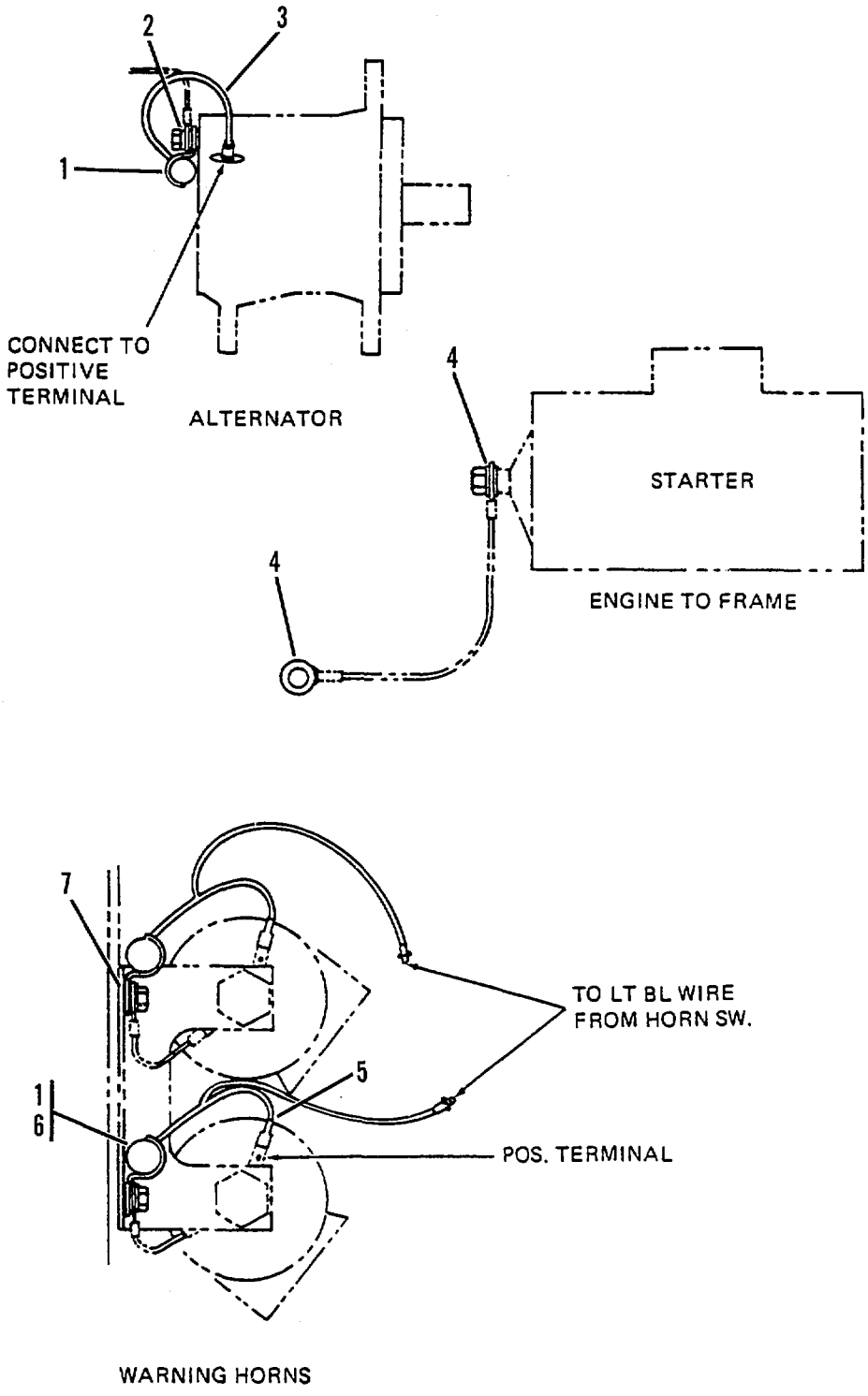

Figure 59. Radio Inform Suppressing.

(1) ITEM NO	(2) SMR CODE	(3) CAGEC	(4) PART NUMBER	(5) DESCRIPTION AND USABLE ON CODES (UOC)	(6) QTY
				GROUP 0615 - RADIO INTERFERENCE SUPPRESSION	
				FIG. 59 - R'ADIO INTERFERENCE SUPPRESSION	
1	PFOZZ	26901	535950	CAPACITOR	3
2	PFGZZ	96906	MS35335-32	WASHER,LOCKC	3
3	PAOZZ	11083	5R4686	LEAD,ELECTRICAL	1
4	PFOZZ	96906	MS35335-37	WASHER,LOCK	4
5	PFOZZ	11083	8DO324	WIRE ASSEMBLY	2
6	PFOZZ	14726	H118	TERMINAL,QUICK DISC	2
7	PFOZZ	96906	MS35335-35	WASHER,LUCK	6

END OF FIGURE

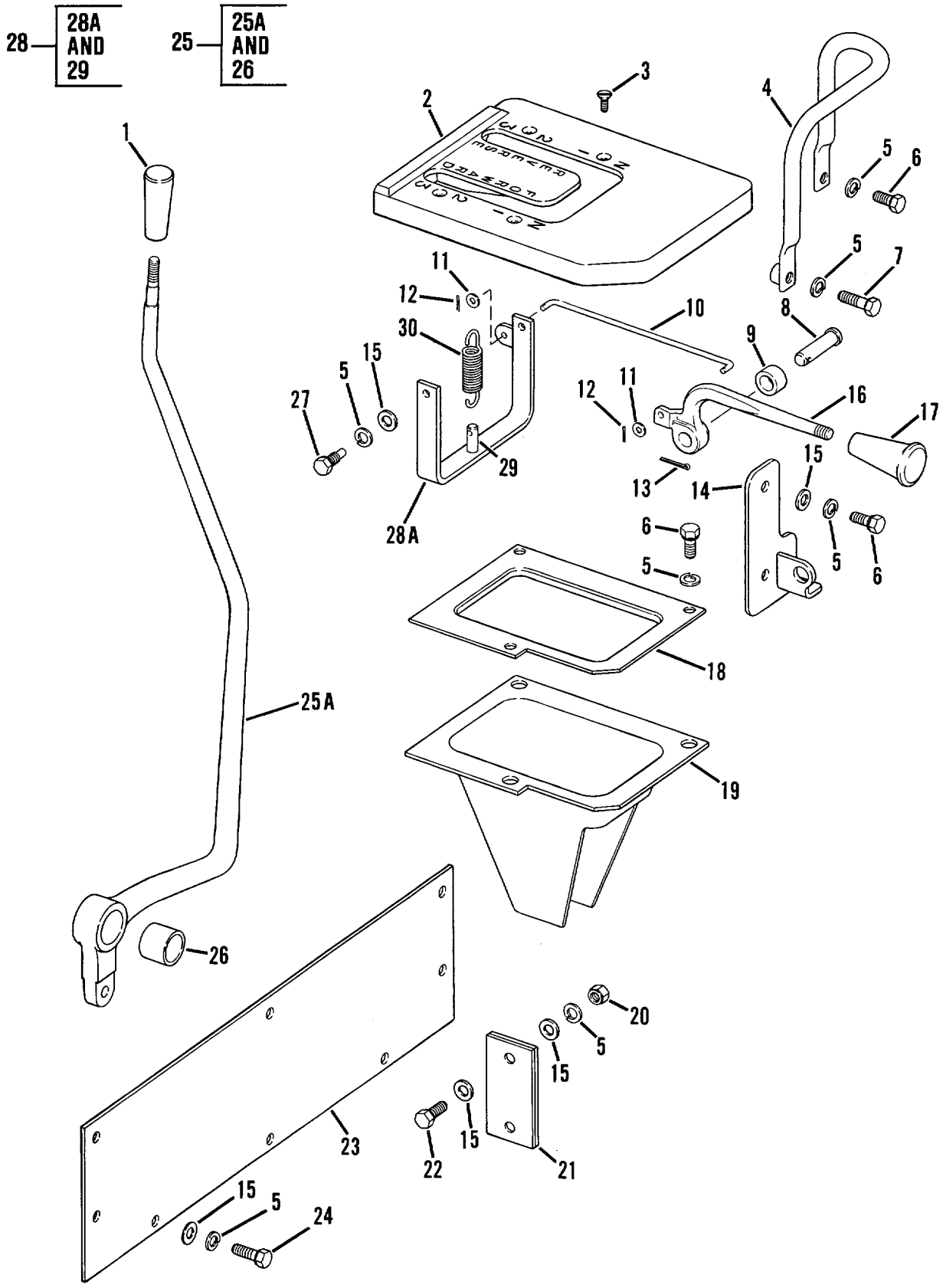

Figure 60. Transmission Control Linking - Sheet 1 of 2

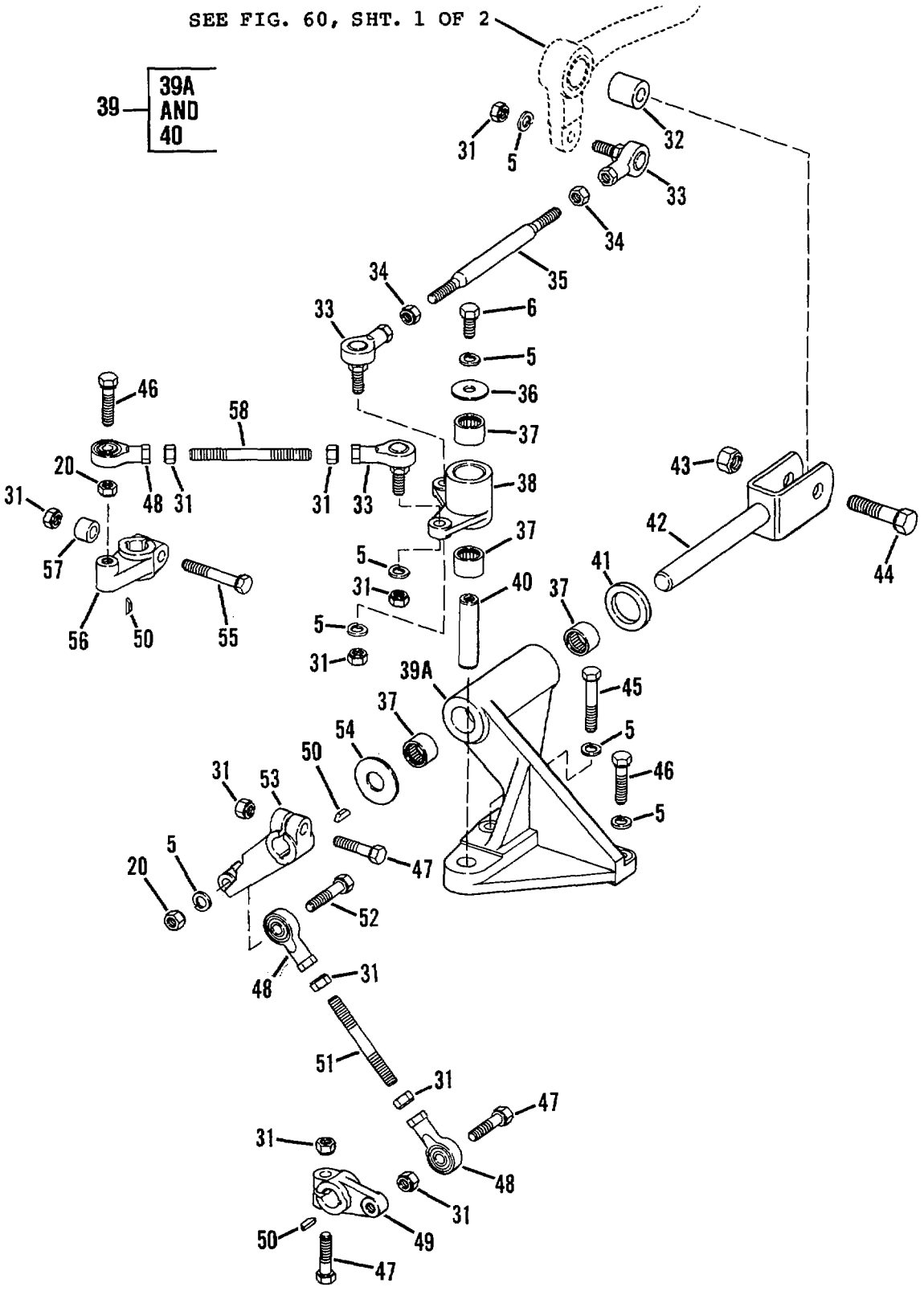

Figure 60. Transmission Control Linking - Sheet 2 of 2

(1) ITEM NO	(2) SMR CODE	(3) CAGEC	(4) PART NUMBER	(5) DESCRIPTION AND USABLE ON CODES (UOC)	(6) QTY
				GROUP 07 - TRANSMISSION	
				GROUP 0704 - TRANSMISSION TOP COVER ASSEMBLY	
				FIG. 60 - TRANSMISSION CONTROL LINKAGE	
1	PFOZZ	11083	7M706	KNOB	1
2	PFOZZ	11083	8P2424	GUARD,MECHANICAL DR	1
3	PAOZZ	11083	4B1282	SCREW.	4
4	PFOZZ	11083	9G6760	GUARD ASSEMBLY.	1
5	PFOZZ	96906	MS35338-46	WASHER,LOCK	27
6	PFOZZ	11083	OS0509	SCREWICAP,HEXAGON H	7
7	PFOZZ	11083	A2029	BOLT,MACHINE	1
8	PAOZZ	11083	J1971	PIN	1
9	PAOZZ	11083	6L1698	SPACER,SLEEVE	1
10	XBOZZ	11083	8P2271	CONNECTING LINK,RIG	1
11	PAOZZ	11083	2A3211	WASHERIFLAT	2
12	PFOZZ	96906	MS24665-134	PINICOTTER	2
13	PFOZZ	96906	MS24665-353	PIN,COTTER	1
14	PFOZZ	11083	9G6544	COVER,ACCESS	1
15	PFOZZ	96906	MS27183-14	WASHER,FLAT	8
16	PFOZZ	11083	P929	LEVER,MANUAL CONTRO	1
17	PFOZZ	11083	2M8908	KNOB	1
18	PAOZZ	11083	8P7625	GUARD,MECHANICAL DR	1
19	PFOZZ	11083	9P9488	BOOT,DUST AND MOIST	1
20	PFOZZ	11083	D4717	NUT,HEXAGON	7
21	PFOZZ	11083	8P3990	PLATE, MOUNTING	2
22	PFOZZ	11083	L1351	BOLT,MACHINE	4
23	PFOZZ	11083	8P3548	COVER,ACCESS	1
24	PFOZZ	11083	51594	BOLT,MACHINE	8
25	PFOZZ	11083	8P2262	LEVER,MANUAL CONTRO	1
25A	XAOZZ	19207	NPN27	LEVER	1
26	PAOZZ	11083	5H3895	BUSHING,SLEEVE	1
27	PAOLZ	11083	4D9483	SETSCREW	2
28	XBOZZ	11083	8P2272	LEVER,MANUAL CONTRO	1
28A	XAOZZ	19207	NPN28	BRACKET	1
29	PAOZZ	11083	3R4762	PIN,STRAIGHT,HEADLE	1
30	PAOZZ	11083	5M9813	SPRING,HELICAL,EXTE	1
31	PFOZZ	96906	MS35690-624	NUT,PLAINHEXAGON	10
32	PAOZZ	11083	2M7167	SPACERISLEEVE	1
33	PFOZZ	11083	5J5315	BALL ROD END	3
34	PFOZZ	96906	MS35691-21	NUT,PLAIN,HEXAGON	2
35	PFOZZ	11083	802586	STUD,SHOULDERED -	1
36	PAOZZ	11083	OL1319	WASHER,FLAT	1
37	PFOZZ	11083	7P4190	BEARING.	4
38	XBOZZ	11083	7G3910	BELL CRANK	1
39	PFOZZ	11083	7G3908	BRACKET ASSEMBLY.	1
39A	XAOZZ	19207	NPN29	BRACKET	1
40	PAOZZ	11083	7G3909	POST,ELECTRICAL-MEC	1
41	PAOZZ	11083	9S1385	SPACER,SLEEVE	1
42	PFOZZ	11083	8P1876	CLEVIS,ROD END	1
43	PAOZZ	19207	443339	NUTISELF-LOCKINGIHE	1

(1) ITEM NO	(2) SMR CODE	(3) CAGEC	(4) PART NUMBER	(5) DESCRIPTION AND USABLE ON CODES (UOC)	(6) QTY
44	PFOZZ	11083	A1460	BOLT,MACHINE	1
45	PAOZZ	11083	OS1590	BOLT,MACHIINE	1
46	PFOZZ	11083	0S1591	SCREW	3
47	PAOZZ	11083	T924	BOLT,MACHINE	3
48	PFOZZ	11083	4D4064	ROD END	3
49	PFOZZ	11083	3S6593	LEVER,REMOTE CONTRO	1
50	PFOZZ	64294	29620-3	KEY WOODRUFF	3
51	PFOZZ	11083	4M4030	ST UD,PLAIN	1
52	PAOZZ	11083	4M496	BOLTGMACHINE	1
53	PFOZZ	11083	8P2Z61	LEVER,REMOTE CONTRO	1
54	PAOZZ	11083	8B4037	WASHER,FLAT	1
55	PFOZZ	11083	L639	SCREW,CAP,HEXAGON H	1
56	PFOZZ	11083	8P8039	LEVER,REMOTE CONTRO	1
57	PAOZZ	11083	9M4136	SPACER SLEEVE	1
58	PFOZZ	11083	4L7551	STUD,PLAIN	1

END OF FIGURE

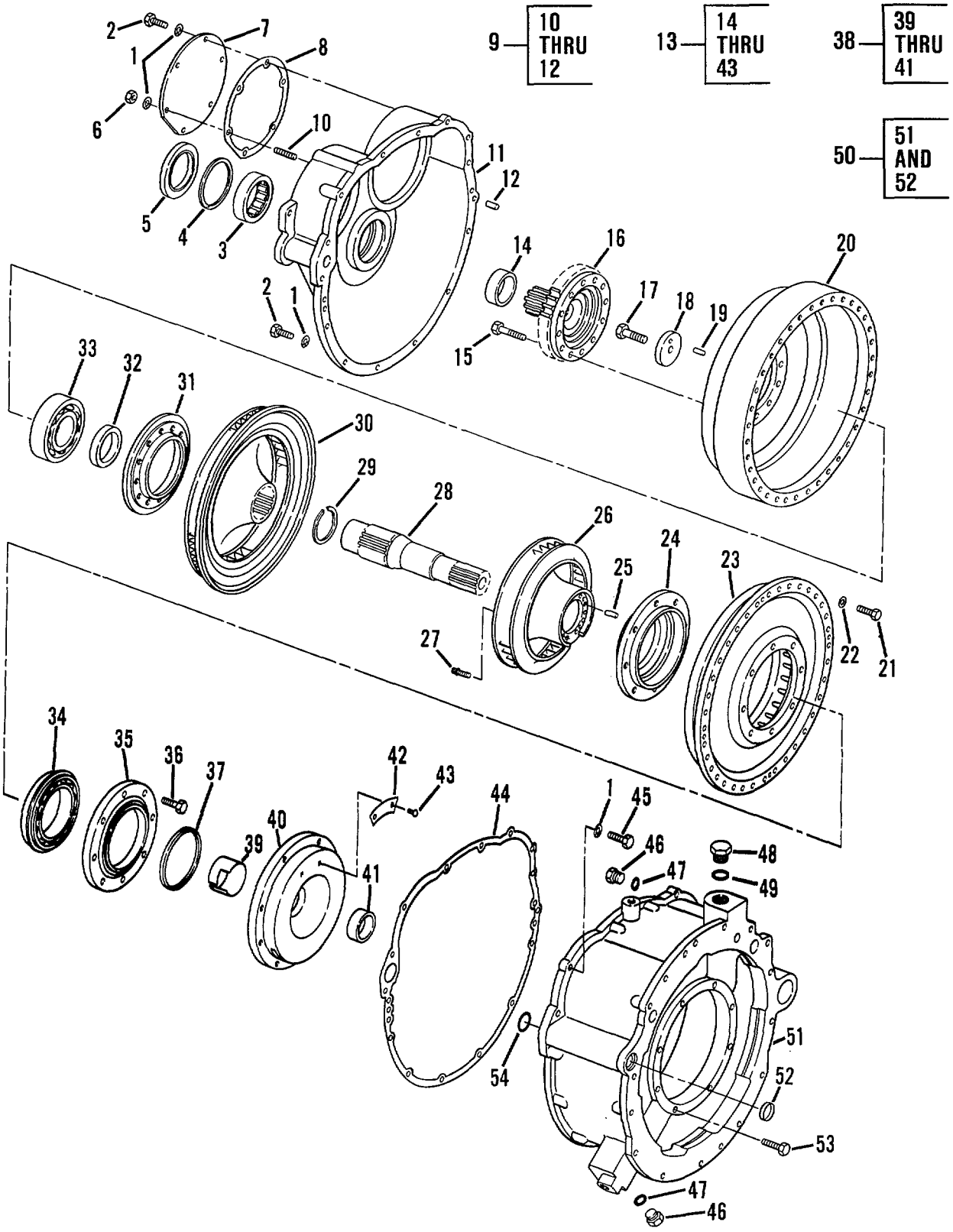

Figure 61. Torque Converter.

(1) ITEM NO	(2) SMR CODE	(3) CAGEC	(4) PART NUMBER	(5) DESCRIPTION AND USABLE ON CODES (UOC)	(6) QTY
				GROUP 0708-TORQUE CONVERTER OR FLUID COUPLING	
				FIG - 61 TORQUE CONVERTER (SEE FIGURE 63 FOR TOP ASSEMBLY)	
1	PFHZ	96906	MS35338-46	WASHER,LOCK	20
2	PFHZZ	11083	A2029	BOLT,MACHINE	14
3	PFHZZ	08162	M1210EL	BERNIOLRC-s	1
4	PAHZZ	80756	RR-354	RNGVRETANING	1
5	PFHZL	11083	5S4408	SEALLPLAIN ENCASED PART OF KIT P/N 5P9140	1
6	PFHZZ	11083	D4717	NUT,HEXAGON	2
7	PFFZZ	11083	7S6865	COVERIACCESS	1
8	PAHZZ	11083	3P1605	GASKET PART OF KIT P/N SP914O	1
9	PFHZZ	11083	7S6870	COVER ASEB-TR-	1
10	PFHZZ	19207	539023	.STUD,CONTINUOUS THR	4
11	XAHZZ	11083	7S6869	.COVER	1
12	PFHZ	11083	1F1006	PIN,STRAIGHT,HEADLE	2
13	PFHHH	11083	T350	.CONVERTER ASSEMBLY	1
14	PFHZZ	11083	885964	.RING,BEARING,INNER	1
15	PFHZZ	96906	MS90727-66	.SCREW,CAP,HEXAGON H	1
16	PAFZZ	11083	1T1349	.GERHFPR	1
17	PFHZZ	14544	3B4419	.BOTMCIE	1
18	PAHZZ	11083	1T531	.P L T ,E-NN,H	1
19	PAHZZ	11083	7M5130	.PINISPRING	1
20	PFHZZ	11083	T749	.HUIGMCAIA--	1
21	PFHZZ	80204	B1821BH031C113N	.BL,A-N-,-	36
22	PFHZZ	81205	BACW1OP140S	.WASHERIFLAT	36
23	PFHZZ	11083	1T0387	.HOUSING, MECHANICAL	1
24	PFHZZ	11083	T64	.PLATE,RETAINING	1
25	PAHZZ	10001	1592919	.PIN, STRAIGHT,HEADLE	6
26	PFHZZ	11083	1T535	.WHEEL ASEBLY,TORQ	1
27	PAHZZ	11083	1T414	.BOLT,MACHINE	8
28	XBHZZ	61208	215569-A	.SHAFT,SHOULDER	1
29	PAHZZ	61208	A-2622-C	.RING,RETAINING	1
30	PFHZZ	11083	1T52	.VANE,CONVERTER,TRAN	1
31	PFHZZ	11083	T945	.PLATE,RETAINING,BEA	1
32	PAHZZ	11083	IT744	.WASHER,FLAT	1
33	PAHZZ	43334	ND3311	.BEARING,BALL,ANNULA	1
34	PAHZZ	11083	1T425	.BEARING,BALL,ANNULA	1
35	PAHZZ	11083	T521	.PLATE,RETAINING,BEA	1
36	PAHZZ	11083	A2209	.BOLT,MACHINE	8
37	PAHZZ	61208	M1904-CN	.RING,PISTON	1
38	PFHZZ	11083	T747	.HUB,BODY	2
39	PFHZZ	11083	T445	.BUSHING,SLEEVE	4
40	XAHZL	11083	T746	...CARRIER	1
41	PAHZZ	11083	3H6849	...BEARING,SLEEVE	4
42	XBHZZ	11083	T94	.PLATE, IDENTIFICATION	1
43	PFHZZ	96906	MS21318-21	.SCEW,DRIVE	2
44	PAHZZ	11083	8P7685	GASKET PART OF KIT P/N 5P9140-	1
45	PFHZZ	80204	B1821BH038C25N	SCREW,CAPGHEXAGON H	4

(1) ITEM NO	(2) SMR CODE	(3) CAGEC	(4) PART NUMBER	(5) DESCRIPTION AND USABLE ON CODES (UOC)	(6) QTY
46	PAFZZ	11083	9S4191	PLUG,MACHINE THREAD	2
47	PFFZZ	25184	906-737-70	PACKING,PREFORMED PART OF KIT P/N 5P91400	2
48	PAFZZ	11083	9S4183	PLUG, ASSEMBLY.	1
49	PFFZZ	11083	3D2824	PACKING,PREFORMED PART OF KIT P/N 5P9140	1
50	XBHZZ	11083	8P2836	HOUSINGI MECHANICAL	1
51	XAHZZ	11083	8P2835	HOUSING	1
52	PFHZZ	11083	3S8313	PLUG,MACHINE THREAD.READ	1
53	PAHZZ	11083	OS1571	SCREW,CAPGHEXAGON H	8
54	PFHZZ	09990	2-216S1032-70	PACKING,PREFORMED PART OF KIT P/N 5P9140	1

.....END OF FIGURE

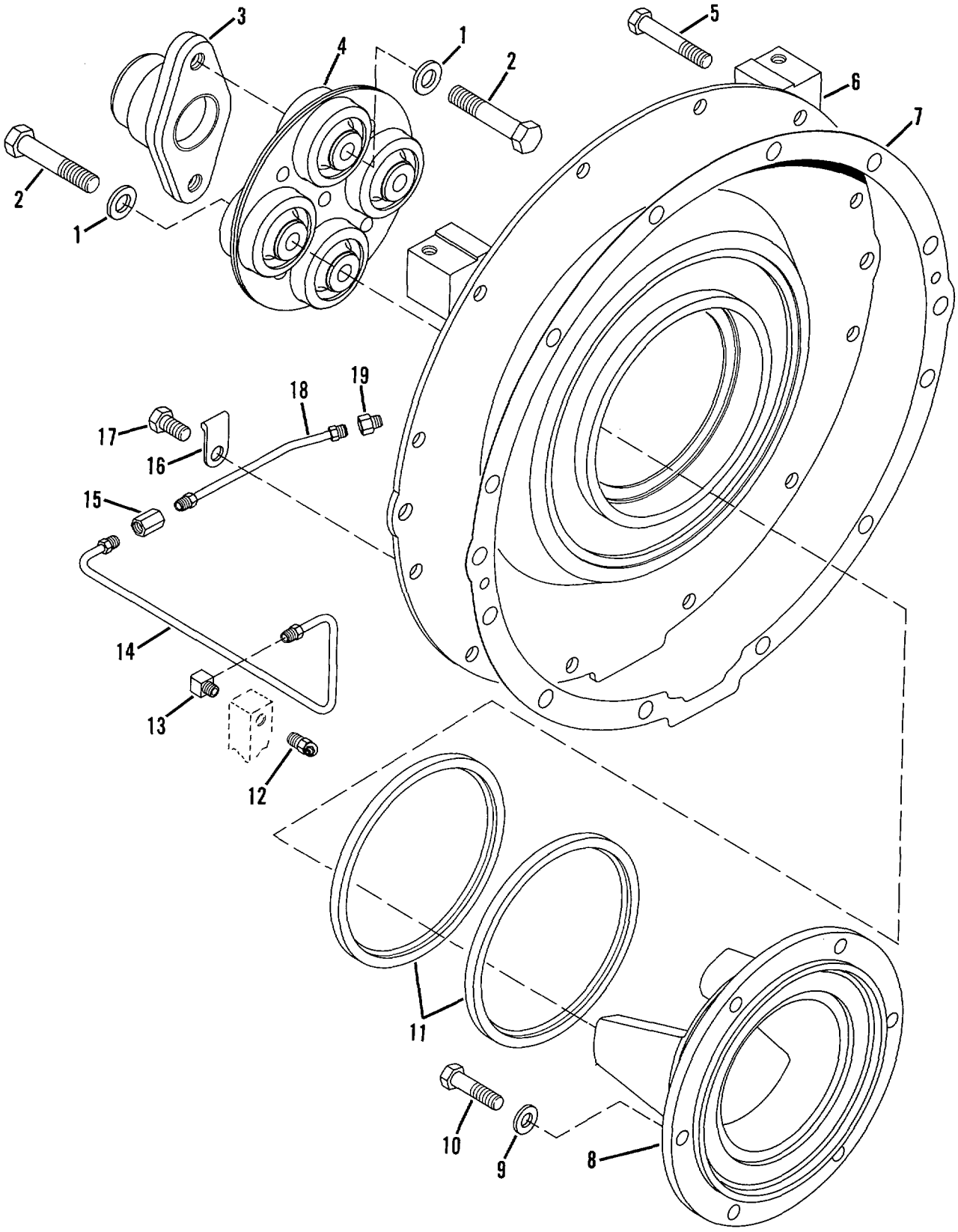

Figure 62. Flexible Coupling Drive

(1) ITEM NO	(2) SMR CODE	(3) CAGEC	(4) PART NUMBER	(5) DESCRIPTION AND USABLE ON CODES (UOC)	(6) QTY
				GROUP 0708-TORQUE CONVERTER OR FLUID COUPLING	
				FIG 62 - FLEXIBLE COUPLING DRIVE	
1	PAHZZ	11083	5P8247	WASHER,FLAT	4
2	PAHZZ	80204	B1821BH063C325N	SCREW,CAPVHEXAGON H	4
3	PFHZZ	11083	7G6688	FLANGE ASSEMBLYOUT.	1
4	PFHZZ	11083	7G6689	JOINT ASSEMBLYIAUTO..	1
5	PFHZZ	11083	OL1329	BOLT,MACHINE	2
6	PFHZZ	11083	6P3955	COVER,ACCESS	1
7	PAHZZ	11083	8S1495	GASKET.	1
8	PFHZZ	11083	7G6690	FLANGE,COUPLING INP	1
9	PFHZZ	96906	MS27183-17	WASHER,FLAT	6
10	PFHZZ	11083	1A1460	BOLT,MACHINE	6
11	PFHZZ	11083	5P32T5	SEAL,PLAIN	2
12	PAHZZ	11083	3J7283	FITTING,LUBRICATION	1
13	PFHZZ	11083	5K9243	ELBOW,PIPE TO TUBE	1
14	PFHZZ	11083	6P4420	TUBE ASSEMB.Y.METAL	1
15	PFHZZ	11083	5K9242	FITTING	1
16	PAHZZ	11083	7M873	CLIP	1
17	PAHZZ	11083	S1621	BOLT,MACHINE	10
18	PFHZZ	11083	6P4421	TUBE ASSEMBLY,METAL	1
19	PAHZZ	11083	6L3616	FITTING	1

END OF FIGURE

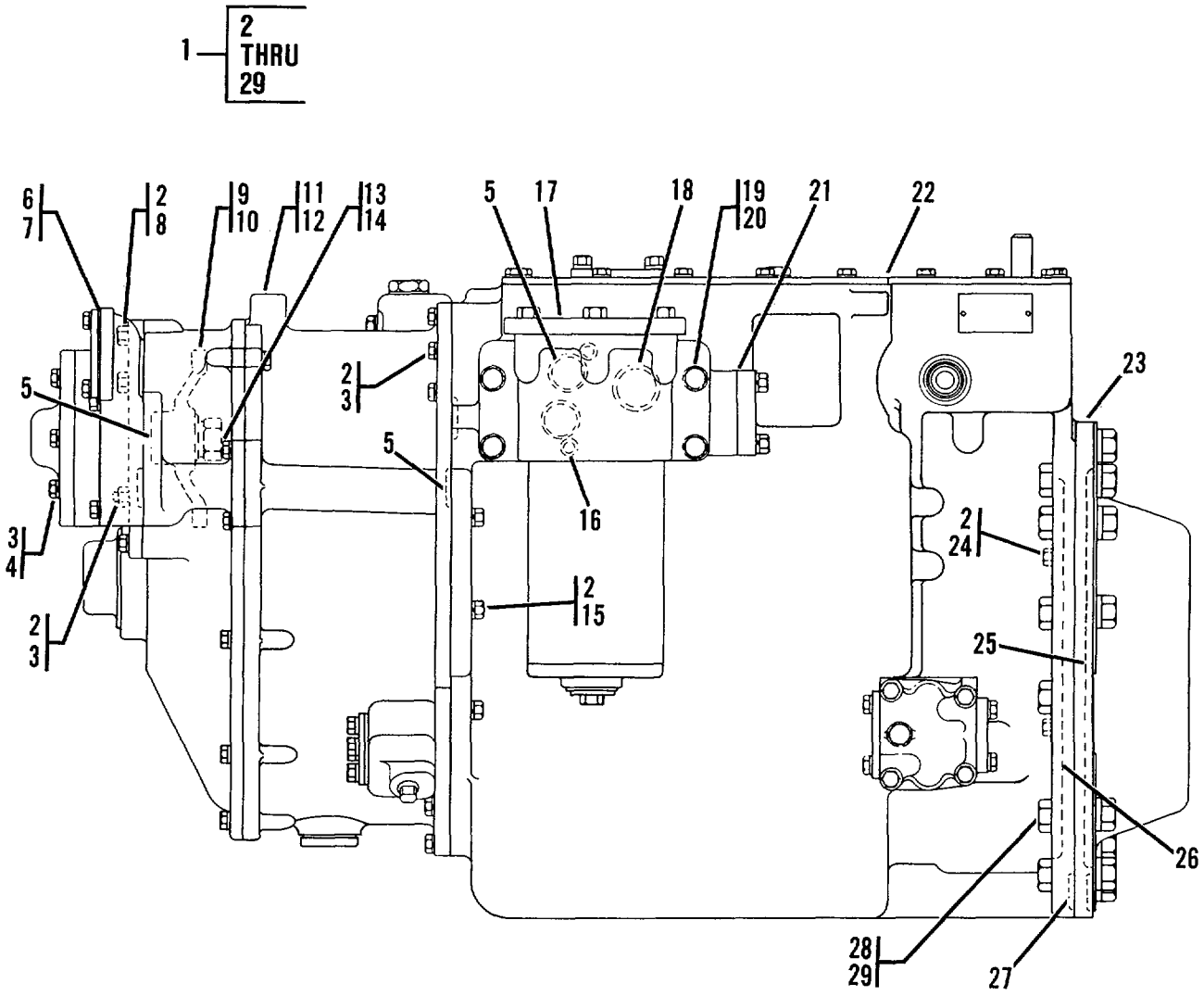

Figure 63. Transmission Arrangement

(1) ITEM NO	(2) SMR CODE	(3) CAGEC	(4) PART NUMBER	(5) DESCRIPTION AND USABLE ON CODES (UOC)	(6) QTY
				GROUP 0710 - TRANSMISSION ASSEMBLY	
				FIG 63 - TRANSMISSION ARRANGEMENT	
1	PAFHD	11083	3T3394	TRANSMISSIONIHYDRAU	1
2	PFHZZ	96906	MS35338-46	WASHER,LOCK	5
3	PFHZZ	11083	ID4717	NUT,HEXAGON	12
* 4	PFHZZ	11083	OL2070	BOLT,MACHINE	2
5	PAHZZ	09990	2-216S1032-70	PACKING,PREFORMED PART OF KIT P/N 5P9137	5
6	PFHHH	11083	7S8660	PUMP,ROTARY SEE FIG 75 FOR BREAKDOWN	1
7	PAHZZ	11083	7S8622	GASKET PART OF KIT P/N 5P9137	1
* 8	PFHZZ	11083	1A2029	BOLT,MACHINE	3
9	PFHZZ	11083	7S8621	GEAR,SPUR	1
10	PFHZZ	11083	IB8714	KEY,WOODRUFF	1
11	PAHHH	11083	2P1064	TORQUE CONVERTER SEE FIG 61 FOR BREAKDOWN	1
12	PAHZZ	11083	356886	GASKET PART OF KIT P/N 5P9137	1
13	PFHZZ	11083	3F7673	NUTISELF-LOCKING,HE	1
14	PFHZZ	11083	7F548	WASHER,FLAT	1
* 15	PFHZZ	11083	OS1591	SCREW	5
16	PAHZZ	11083	6J3134	SEAL	2
17	PFHZZ	11083	356830	FILTER,FLUID SEE FIG 70 FOR BREAKDOWN	1
18	PFHZZ	11083	8M5249	PACKING,PREFORMED PART OF KIT P/N 5P9137	2
* 19	PFHZZ	11083	OV0375	SCREW,CAPIHEXAGON H	4
20	PFHZZ	96906	MS35338-48	WASHER,LOCK	4
21	PFFZZ	11083	3T3399	VALVE,REGULATING,FL SEE FIG 72 FOR BREAKDOWN	1
* 22	XBHHH	11083	9P4905	TRANSMISSION,HYDRAU SEE FIG 64 FOR BREAKDOWN	1
23	PFHHH	11083	5S916	GEAR ASSEMBLY,TRANS SEE FIG 68 FOR BREAKDOWN	1
* 24	PFHZZ	11083	3B1915	BOLT	2
25	PFHZZ	11083	2M3818	PACKING,PREFORMED PART OF KIT P/N 5P9137	1
26	PAHZZ	11083	5H4082	PACKING,PREFORMED PART OF KIT P/N 5P9137.	1
27	PAHZZ	96906	MS9068-214	PACKING,PREFORMED PART OF KIT PJN 5P9137	2
28	PFHZZ	96906	MS51967-20	NUT,PLAIN, HEXAGON	12
29	PFHZZ	96906	MS35340-50	WASHER,LOCK	12
				END OF FIGURE	

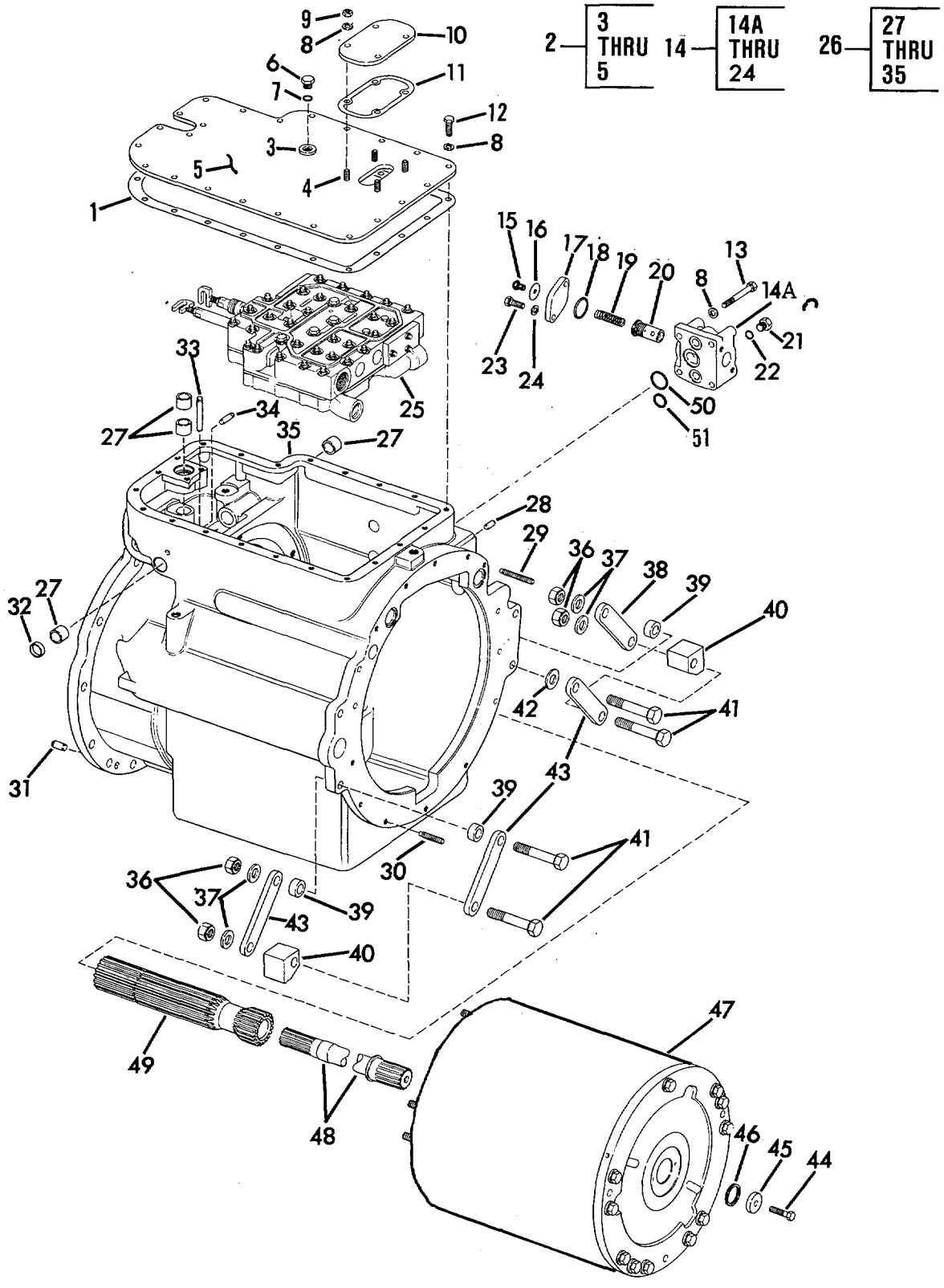

Figure 64. Transmission and Support

(1) ITEM NO	(2) SMR CODE	(3) CAGEC	(4) PART NUMBER	(5) DESCRIPTION AND USABLE ON CODES (UOC)	(6) QTY
				GROUP 0710 - TRANSMISSION ASSEMBLY	
				FIG 64 - TRANSMISSION AND SUPPORT (SEE FIGURE 63 FOR TOP ASSEMBLY, PART NUMBER 9P4905)	
1	PAHZZ	11083	5S1058	GASKET PART OF KIT P/N 5P9137 PART OF KIT P/N 5P9139139	1
2	PFHZZ	11083	5S1053	COVER,ACCESS	1
3	PAHZZ	11083	5S1057	FLANGE,PIPE	1
4	PAHZZ	11083	7M7794	STUD,WELDING	4
5	XAHZZ	11083	5S1056	COVER	1
6	PFHZZ	11083	9S4191	PLUG,MACHINE THREAD	1
* 7	PAHZZ	25184	906-737-70	PACKING,PREFORMED	1
8	PFHZZ	96906	MS35338-46	WASHER,LOCK	31
* 9	PFHZZ	11083	104717	NUT,HEXAGON	4
10	PFHZZ	11083	9M2133	COVER,ACCESS	1
11	PAHZZ	11083	9M2132	GASKET PART OF KIT P/N 5P91337	1
* 12	PFHZZ	11083	S1594	BOLT,MACHINE,	23
* 13	PFHZZ	11083	S1619	BOLT,MACHINE	4
14	PFHHH	11083	356860	VALVE-GVRELIF	4
14A	XAHZZ	11083	3S4411		
15	PFHZZ	11083	7B3028	SCREW,DRIVE	1
16	PFHZZ	11083	9G7399	PLATE,IDENTIFICATIO	1
17	PFHZZ	11083	4M8815	COVER,ACCESS	1
* 18	PAHZZ	58312	8M5254-00	PACKING,PREFORMED	1
19	PFHZZ	11083	8M8597	SPRING	1
* 20	XBHZZ	11083	8M8598	SPOOL	1
21	PFHZZ	11083	9S4191	*PLUG,MACHINE THREAD	1
* 22	PAHZZ	25184	906-737-70	PACKING,PREFORMED PART OF KIT P/N 5P9137	1
* 23	PFHZZ	11083	S1594	BOLT,MACHINE	2
24	PFHZZ	96906	MS35338-46	WASHER,LOCK	2
25	PFHHH	11083	9P5365	BODY,VALVE SEE FIG 66 FOR BREAKDOWN	1
26	PFHZZ	11083	9P2680	CASE ASSEMBLYETRANS	1
27	PAHZZ	11083	8HS175	BEARING	4
28	PAHZZ	11083	L2061	PIN,STRAIGHTI HEADLE	2
29	PAHZZ	11083	2M1755	STUD,PLAIN	9
30	PAHZZ	11083	2M4779	STUD,PLAIN	1
31	PAHZZ	11083	9M4007	PIN,STRAIGHT,HEADLE	1
32	PAHZZ	11083	4K8603	PLUG	1
33	PAHZZ	11083	9M2069	PIN,STRAIGHT,HEADLE	1
34	PAHZZ	58312	1M3833-00	PIN,GROOVED,HEADLES	1
35	XAHZZ	11083	9P2679	CASE	1
36	PFFZZ	96906	MS51967-20	NUT,PLAIN,HEXAGON	4
37	PFFZZ	96906	MS27183-21	WASHER,FLAT	4
38	PFFZZ	11083	5R5114	CONNECTING LINK,RIG UOC:AGS,AGT	1
38	PFFZZ	11083	5R8096	CONNECTING LINK,RIG UOC:AGU,AGV	1
39	PFFZZ	11083	8S1069	WASHERIFLAT	3

(1) ITEM NO	(2) SMR CODE	(3) CAGEC	(4) PART NUMBER	(5) DESCRIPTION AND USABLE ON CODES (UOC)	(6) QTY
40	PFFZZ	11083	5R5116	SPACER,SPECIAL SHAP.....	2
41	PFFZZ	11083	5R5115	SCREW,CAP,HEXAGON H.....	4
42	PFFZZ	92967	10273-00	WASHER,FLAT.....	1
43	PFFZZ	11083	5R5114	CONNECTING LINK,RIG.....	3
* 44	PFHZZ	11083	OS1591	SCREW	1
45	PAHZZ	11083	5S6981	RETAINER	1
46	PAHZZ	80756	RRT-143	RING,RETAINING.....	1
47	PFFHD	11083	4S6000	TRANSMISSIONIHYDRAU SEE FIGURE 65..... FOR PARTS BREAKDOWN	1
48	PFHZZ	11083	5S7015	SHAFT,SHOULDERED	1
49	PFHZZ	11083	7S4660	SHAFT, SHOULDERED	1
50	PAHZZ	11083	8M8514	PACKING,PREFORMED PART OF KIT P/N..... 5P9137P.....	1
51	PAHZZ	11083	8M4389	PACKING,PREFORMED PART OF KIT P/N..... 5P9137 PART OF KIT P/N 5P9139	2

END OF FIGURE

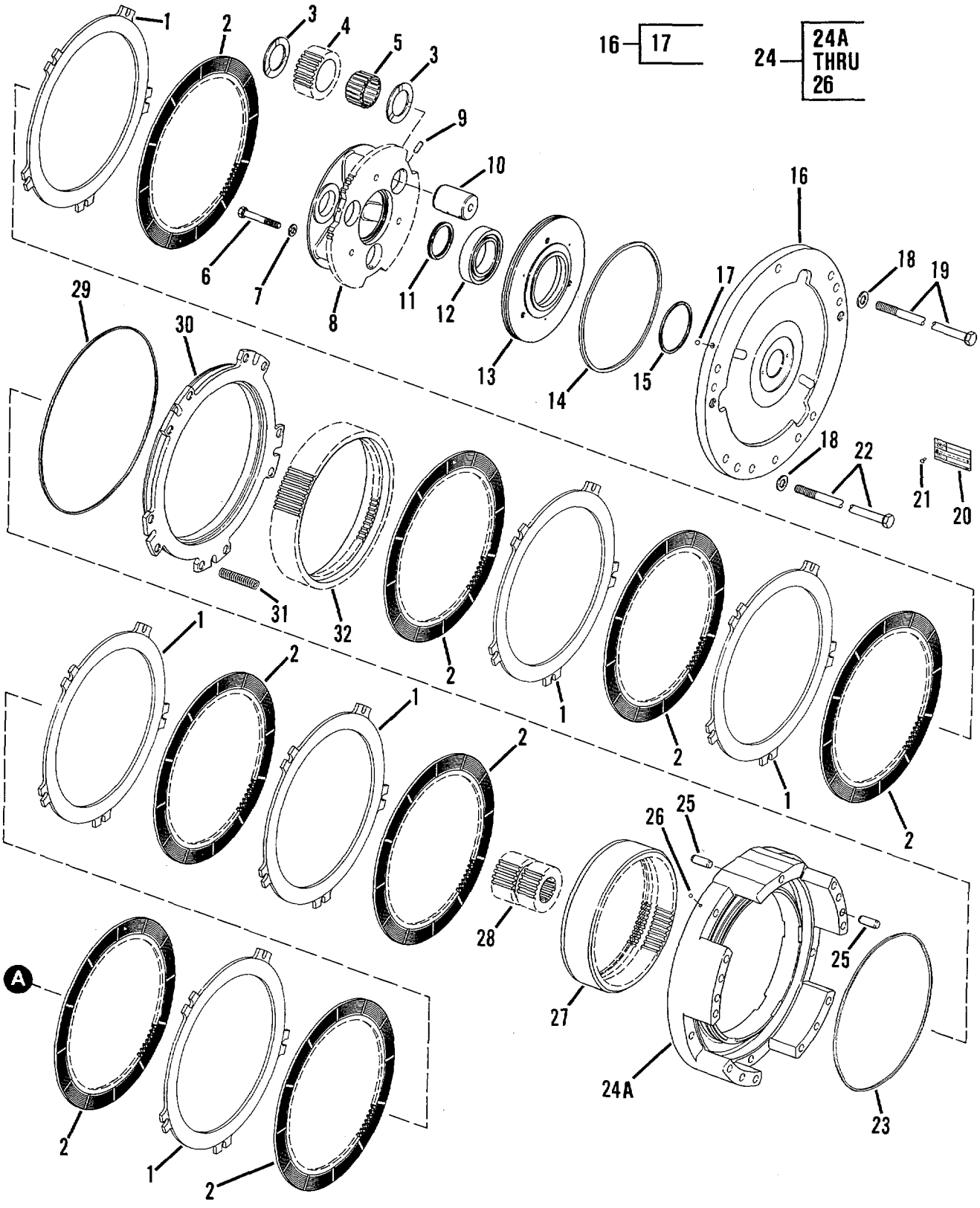

Figure 65. Planetary Transmission - Sheet 1 of 3

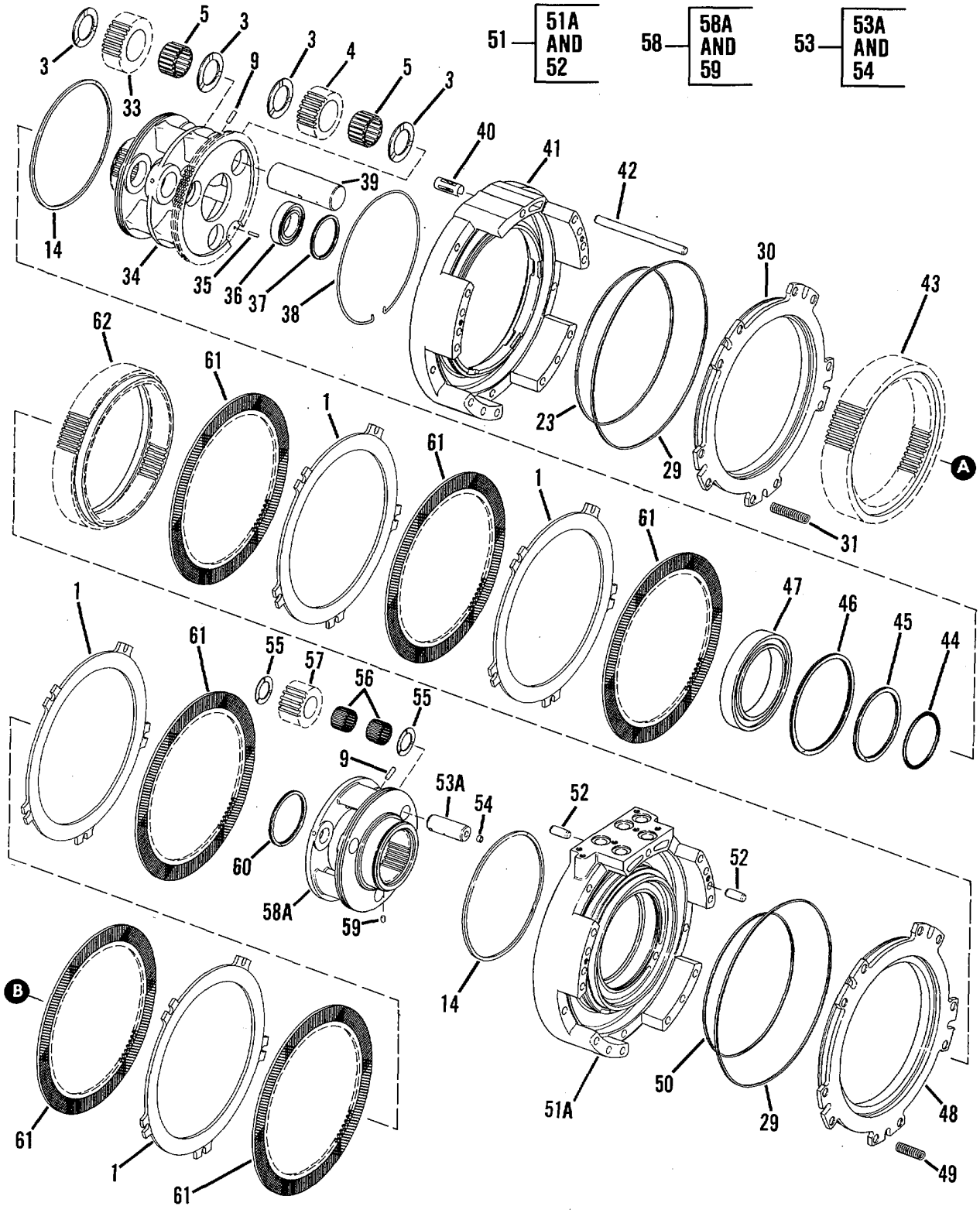

Figure 65. Planetary Transmission - Sheet 2 of 3

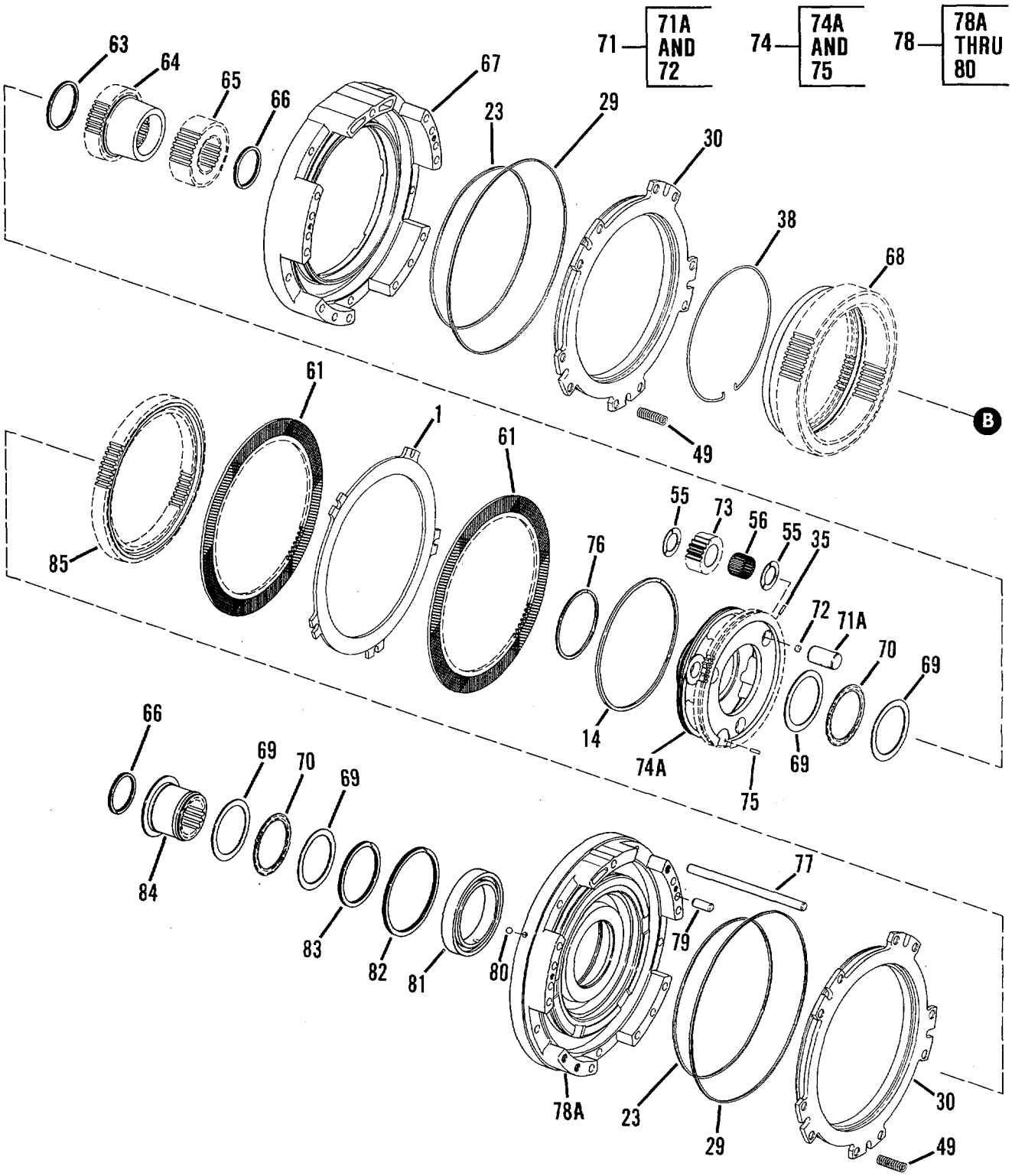

Figure 65. Planetary Transmission - Sheet 3 of 3

(1) ITEM NO	(2) SMR CODE	(3) CAGEC	(4) PART NUMBER	(5) DESCRIPTION AND USABLE ON CODES (UOC)	(6) QTY
				GROUP 0710 - TRANSMISSION ASSEMBLY	
				FIG 65 - PLANETARY TRANSMISSION (SEE FIGURE 64 FOR TOP ASSEMBLY, PART NUMBER 456000)	
1	PFHZZ	11083	8S3522	DISK,CLUTCH	11
2	PFHZZ	11083	3P5955	DISC ASSEMBLY,PLANE	8
3	PFHZZ	11083	7T3143	BEARING,WASHER,THRU	18
4	PFHZZ	11083	7G2487	GEAR,SPUR	6
5	PFHZZ	11083	5M2051	BEARING,ROLLER,JOUR	9
* 6	PFHZZ	11083	L1143	BOLT, MACHINE	3
7	PFHZZ	11083	5M2894	WASHER,FLAT	3
8	PFHZZ	11083	5S4493	CARRIER	1
9	PAHZZ	11083	3S2708	PIN	9
10	PFHZZ	11083	5S7010	SHAFT	3
11	PFHZZ	11083	5H6199	RING,RETAINING	1
12	PFHZZ	11083	7F2742	BEARINGGBALLAU	1
13	PFHZZ	11083	5S4491	CAGE	1
14	PAHZZ	11083	351259	SEALIOIL	4
15	PAHZZ	11083	1M3937	SEAL RINGIMETAL	1
16	PFHZZ	11083	5S7009	END PLATE ASSEMBLY	1
17	PFHZZ	11083	439880	BALL,BEARING	1
18	PFHZZ	11083	2M849	WASHER,FLAT	11
* 19	XBHZZ	11083	9H6530	BOLT	8
20	PFHZZ	11083	6V1720	PLATEGIDENTIFICATIO	1
21	PFHZZ	11083	7B3028	SCREWTDRIVE	2
22	PFHZZ	11083	4M4924	SCREW,CAP,HEXAGON H	3
23	PFHZZ	11083	8S3371	WASHER PART OF KIT P/N 5P9138	4
24	PFHZZ	11083	4S5974	BODY ASSEMBLY,CLUTC	1
24A	XAHZZ	11083	4S5942	BODY	1
25	PAHZZ	11083	5M7937	PIN	4
26	PAHZZ	96906	MS19059-2412	BALL,BEARING	2
27	PFHZZ	11083	5S7013	GEAR	1
28	PFHZZ	11083	5S6972	GEAR	1
29	PAHZZ	11083	8S3372	SEAL PART OF KIT P/N 5P9138	5
30	PFHZZ	11083	4S5943	PISTON	4
31	PAHZZ	11083	9H5537	SPRING,HELICAL,COMP	20
32	PFHZZ	11083	5S6973	GEAR,SPUR	1
33	PFHZZ	11083	7G2473	GEAR,SPUR	3
34	PFHZZ	11083	5S7023	CARRIER,PLANET,VEHI	1
35	PFHZZ	11083	2K5986	PIN	7
36	PFHZZ	11083	4L9825	BEARING	1
37	PFHZZ	80756	RR-267	RING,RETAINING	1
38	PFHZZ	11083	5M7878	RING,RETAINING	2
39	PAHZZ	11083	5S6978	SHAFT	3
40	PFHZZ	11083	9M4355	DAMPER,BOLT,TRANSMI	11
41	PFHZZ	11083	4S5932	HOUSING,MECHANICAL	1
42	PFHZZ	11083	9H5546	PIN	5
43	PFHZZ	11083	7SB572	GEAR,INTERNAL	1
44	PAHZZ	11083	4L9564	PACKING,PREFORMED PART OF KIT P/N 5P9138	1

(1) ITEM NO	(2) SMR CODE	(3) CAGEC	(4) PART NUMBER	(5) DESCRIPTION AND USABLE ON CODES (UOC)	(6) QTY
45	PFHZZ	80756	RST-450	RING,RETAINING	1
46	PFHZZ	80756	RR-625	RING,RETAINING	1
47	PAHZZ	11083	6Y3484	BEARING,BALL	1
48	PFHZZ	11083	3S988	PRESSURE PLATE ASSE	1
49	PFHZZ	11083	4M9592	SPRING,HELICAL,COMP	30
50	PFHZZ	11083	8S3373	SEAL PART OF KIT P/N 5P9138	1
51	PFHZZ	11083	4S5972	HOUSING,MECHANICAL	1
51A	PFHZZ	11083	4S5933	HOUSING,FRICTION CL	1
52	PAHZZ	11083	5M7937	PIN	4
53	PFHZZ	11083	458534	SHAFT	3
53A	XAHZZ	11083	455989	SHAFT	1
54	PFHZZ	11083	3S36	WASHER,RECESSED	3
55	PAHZZ	11083	7T3137	BEARING,WASHER,	12
56	PAHZZ	11083	2S669	BEARING,ROLLER,JOUR	9
57	PFHZZ	11083	7G2520	GEARISPUR	3
58	PFHZZ	11083	4S5940	CARRIER	1
58A	XAHZZ	11083	455941	CARRIER	1
59	PAHZZ	11083	4S8537	*DOWEL	1
60	PFHZZ	80756	RR337	RING,RETAINING	1
61	PFHZZ	11083	8P8680	DISICLUTCH	8
62	PFHZZ	11083	455948	GEAR	1
63	PFHZZ	80756	RST-287	RING,RETAINING	1
64	PFHZZ	11083	4S5944	GEAR	1
65	PFHZZ	11083	4S5945	GEAR	1
66	PFHZZ	80756	RST231	RING,RETAINING	2
67	PFHZZ	11083	4S5937	HOUSIN,MECHANICAL	1
68	PFHZZ	11083	4S5981	GEAR	1
69	PFHZZ	11083	358021	BEARING,WASHER,THRU	4
70	PAHZZ	11083	3S8022	RETAINER AND ROLR	2
71	PFHZZ	11083	4S8531	SHAFT	3
71A	XAHZZ	11083	4S8530	SHAFT	1
72	PAHZZ	11083	3S36	WASHER,RECESSED	3
73	PFHZZ	11083	7G2477	GEAR,SPUR	3
74	PAHZZ	11063	455979	CARRIER,ASSEMBLYIPL	1
74A	PFHZZ	11083	4S5980	CARRIER,CLUTCH RELE	1
75	PFHZZ	11083	4S8537	DOWEL	1
76	PFHZZ	11083	6F155	RING,RETAINING	1
* 77	PFHZZ	19207	11634187	PIN,STRAIGHT,HEADLE	5
78	PAHZZ	11083	4S5973	HOUSING,MECHANICAL	1
*78A	PFHZZ	11083	4S5935	HOUSING,FRICTION CL	1
79	PAHZZ	11083	5M7937	PIN	2
80	PAHZZ	11083	4B9782	BALL,BEARING	2
81	PAHZZ	11083	4S8538	BEARING,BALL,ANNULA	1
82	PAHZZ	80756	RRT-525	RING,RETAINING	1
83	PFHZZ	80756	RST-375	RING,RETAINING	1
84	PAHZZ	11083	4S5998	SPACER,SLEEVE	1
85	PFHZZ	11083	4S5947	GEAR	1

END OF FIGURE

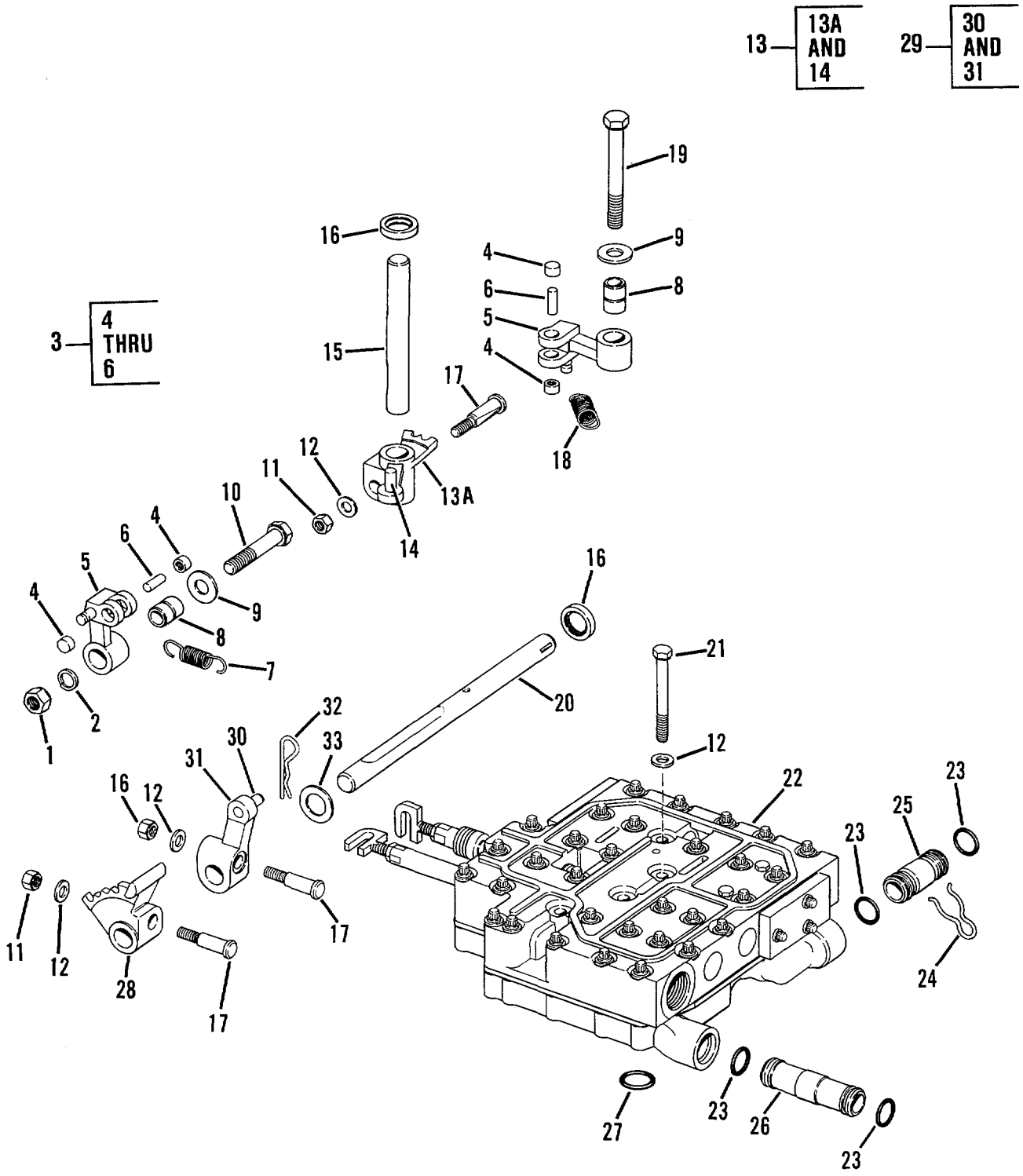

Figure 66. Transmission Hydraulic Control

(1) ITEM NO	(2) SMR CODE	(3) CAGEC	(4) PART NUMBER	(5) DESCRIPTION AND USABLE ON CODES (UOC)	(6) QTY
				GROUP 0714 - SERVO UNIT	
				FIG 66 - TRANSMISSION HYDRAULIC CONTROL (SEE FIGURE 64 FOR TOP ASSEMBLY, PART NUMBER 9P5365)	
1	PFHZZ	96906	MS51967-14	NUT,PLAIN,HEXAGON.	1
2	PFHZZ	96906	MS35338-48	WASHER,LOCK.....	1
3	PFHZZ	11083	5S899	PAWL	2
4	PFHZZ	11083	lS3206	BEARING,ROLLER,NEED.....	2
5	PAHZZ	11083	7G4663	DETENT PLATE	1
6	PFHZZ	60380	Q-12378	ROLLRER,BEARING	1
7	PAHZZ	11083	2P3682	SPRING.....	1
8	PAHZZ	11083	9S5222	SPACER.....	2
9	PFHZZ	11083	V531	WASHER,FLAT.....	2
10	PFHZZ	11083	lA5822	BOLT,MACHINE	1
11	PFHZZ	96906	MS35690-624	NUT,PL AIN,HEXAGON	3
12	PFHZZ	11083	5M2894	WASHER,FLAT.....	4
13	PAHZZ	11083	5S897	CAM,CDNTROL.....	1
13A	XAHZZ	19207	NPN30	CAM	1
14	PAHZZ	11083	9M2089	PIN,STRAIGHT,HEADLE.....	1
15	PAHZZ	11083	5S902	PIN,GROOVED,HEADLES	1
16	PAHZZ	11083	9H223	SEAL,PLAIN ENCASED PART OF KIT P/N 5P9139	2
17	PAHZZ	11083	7M5915	PINISPECIAL	3
18	PAHZZ	11083	7M1224	SPRING,HELICAL,EXTE	1
19	PFHZZ	11083	S1573	BOLT,MACHINE	2
* 20	XBHZZ	11083	5S0903	SHAFT,STRAIGHT	1
* 21	PFHZZ	96906	MS35307-371	BOLTMH	4
22	PFHHH	11083	9P3049	VALVE BODY SEE FIG 67 FOR..... BREAKDOWN.....	1
23	PFHZZ	11083	8M4389	PACKING,PREFORMED PART OF KIT P/N..... 5P9139	4 .
24	PFHZZ	11083	7B2500	CLIPRETAINING.....	4
25	PFHZZ	11083	3S2582	SPACERISLFEEE.....	1
26	PFHZZ	11083	7S8624	COUPLIG,TUBE	1
27	PFHZZ	11083	8M4446	PACKINGTPREFORMED PART OF KIT P/N..... 5P9139	1
28	PFHZ2	11083	5S901	CAM,CONTROL.	1
29	PAHZZ	11083	5S0904	LEVER,REMOTE CONTRO	1
30	PAHZZ	11083	9M2089	PIN,STRAIGHT,HEADLE.....	1
31	PAHZZ	11083	550905	LEVER,REMOTE CONTRO	1
32	PFHZZ	11083	8S6377	PIN	1
33	PAHZZ	11083	4H1394	WASHER,CROSS SHAFT.....	5
				END OF FIGURE	

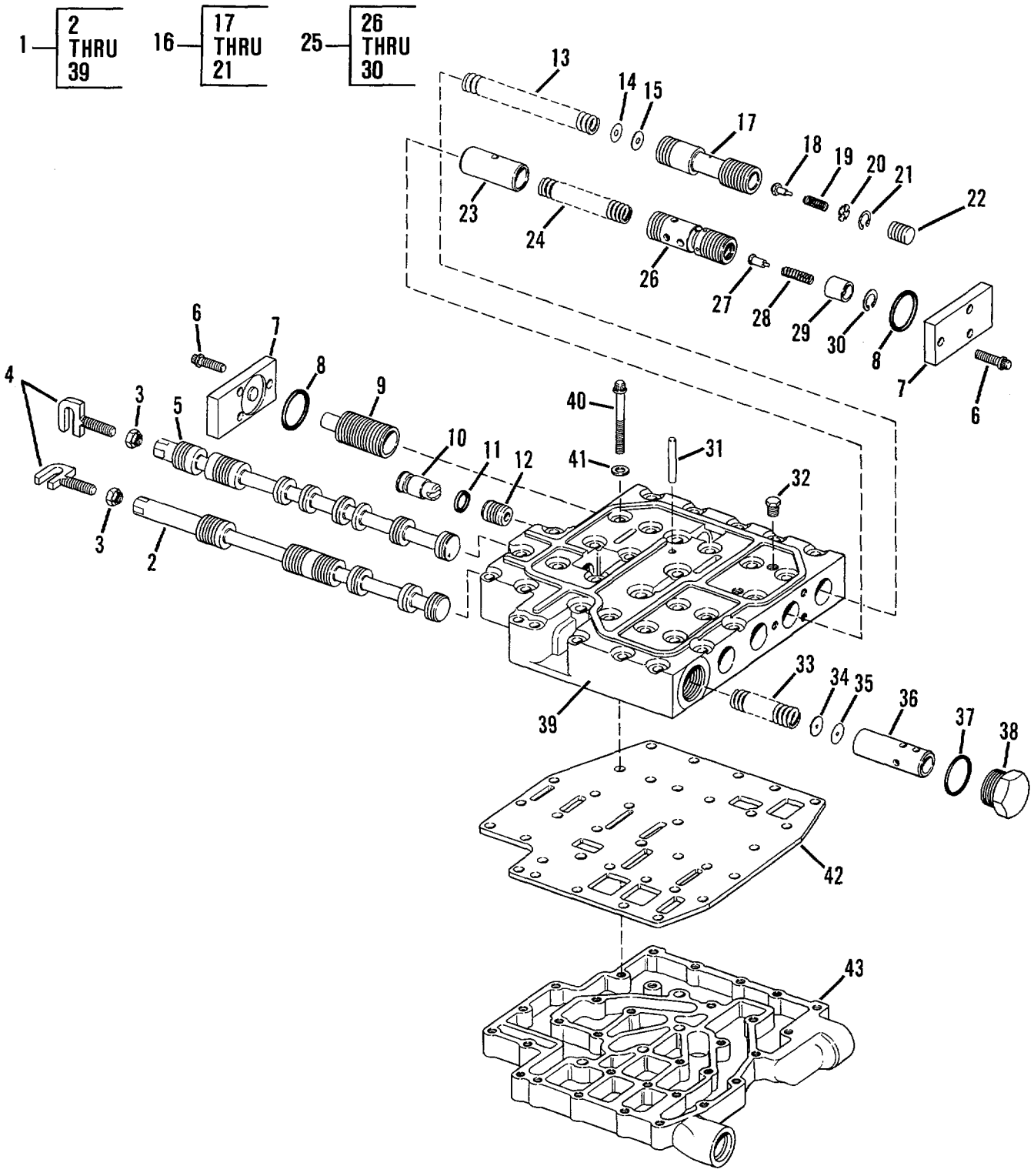

Figure 67. Transmission Selector and Pressure Control Valve

(1) ITEM NO	(2) SMR CODE	(3) CAGEC	(4) PART NUMBER	(5) DESCRIPTION AND USABLE ON CODES (UOC)	(6) QTY
				GROUP 0714 - SERVO LNIT	
				FIG 67 - TRAISMISSICH SELECTCR AND PRESSURE CONTROL VALVE TSEE FIGURE 66 FCR TOP ASSEMBLY, FART NUMBER 9P30491	
1	PAHHH	11083	9P3050	VALVE,ASSEMBLY,CONT	1
2	PFHZZ	11083	3S2585	SPOOL,LINEAR DIRECT	1
3	PFHZZ	11083	2S5717	NUT PLAIN,CASTLLAT	2
4	PFHZZ	11083	5S909	CONNECTOR,ROD END	2
5	PFHZZ	11083	6P8939	SPOOL,DIRECTIONAL	1
6	PFKZZ	11083	1T414	BOLT,MACHINE	2
7	PFHZZ	11083	6P8937	COVER,ACCESS	1
8	PAHZZ	11083	8M4433	PACKING,PREFORMED	6
9	PFHZZ	11183	8S9194	SLIDE,DIRECTIONAL C	2
10	PFHZZ	11083	3P209	VALVE,PLUG	1
11	PAHZZ	11083	5M1868	PACKING,PREFORMED PART OF KIT P/N	1
12	PAHZZ	11083	1S6529	DISK,VALVE	1
13	PFHZZ	11083	3S259	SPRING,HELICAL,COMP	1
14	PFHZZ	19207	11634204-2	SHIM	2
15	PFHZZ	11083	5M7915	WASHER,FLAT	3
16	PFHZZ	11083	3P2755	SLIDE,DIRECTIONAL	1
17	PFHZZ	11083	3P27C8	SPOOL,LINEAR DIRECT	1
18	PFYZZ	11083	1S2121	PLUNGER,RETARDER	1
19	PFHZZ	11083	4M2381	SPRING,SPECIAL	1
20	PFKZZ	11083	8M1013	RETAINER	1
21	PFHZZ	96906	MS16625-1062	RING,RETAINING	1
22	PAHZZ	11083	2M7041	SLUG	1
23	PFHZZ	11083	6PB938	RETAINER,HELICAL	1
24	PFHZZ	11083	8M8132	SPRING HELICAL,COMP	1
25	PFHZZ	11083	6P4711	SLIDE,DIRECTIONAL	1
26	PFHZZ	11083	EP8848	PLUNGER	1
27	PFHZZ	11083	6P9295	SPOOL,DIRECTIONAL	1
28	PFHZZ	11383	9H2367	SPRING,HELICAL,,CLIP	1
29	PFHZZ	11083	6P4717	SLEEVE,DIRECTIONAL	1
30	PFFZZ	11083	2M8191	RING	1
31	PFHZZ	11083	2S696	DOWEL.	1
32	PFHZZ	55883	IPD5M6214	PLUG,PIPE	1
33	PFHZZ	11083	8M8627	SPRING,HELICACOMP	1
34	PFHZZ	73734	S7410	WASHER,FLAT	1
35	PFHZZ	11083	5M3492	SPACER	5
36	PFHZZ	11083	5M9656	SLEEVE,DIRECTIONAL	1
37	PFHZZ	11083	7M8485	SEAL,ADAPTER,MOTOR PART OF KIT P/N 5P9139	1
38	PFHZZ	11083	9S4181	PLUG.MACHINE THREAD	1
39	PFHZZ	11083	9P3051	VALVE,ASSEMBLY	1
40	PFHZZ	11083	3S4346	BOLT.MACHINE	31
41	PFHZZ	96906	MS27183-12	WASHER,FLAT	31
42	PFHZZ	11083	6P8940	SPACER.PLATE	1
43	PFHZZ	11083	3S25S6	BODY,VALVE	1
				END OF FIGURE	

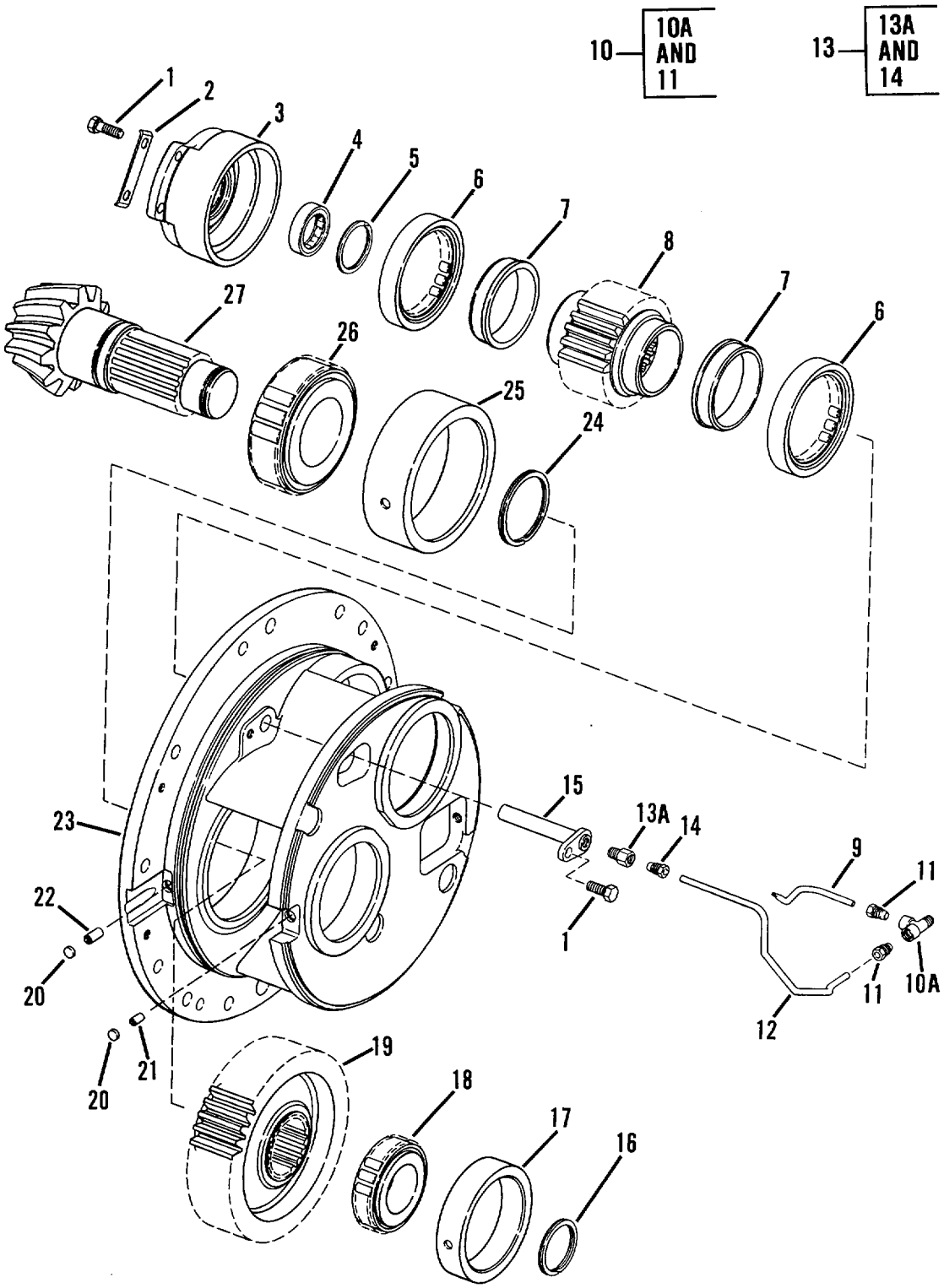

Figure 68. Transfer Gear

(1) ITEM NO	(2) SMR CODE	(3) CAGEC	(4) PART NUMBER	(5) DESCRIPTION AND USABLE ON CODES (UOC)	(6) QTY
				GROUP 0719 - REDUCTION OR TRANSFER GEARS, SHAFTS, AND BEARINGS	
				FIG 68 - TRANSFER GEAR (SEE FIGURE 63 FOR TOP ASSEMBLY,PART NUMBER 5S916)	
* 1	PFHZZ	11083	S1594	BOLT,MACHINE	5
2	PAHZZ	11083	6H4208	LOCKPLATE.	2
* 3	XBHZZ	11083	4S8723	HOUSING,MECHANICAL	1
4	PFHZZ	11083	8B2321	BEARING,ROLLER,CYLI	1
5	PFHZZ	80756	RR204S	RING,RETAINING	1
6	PFHZZ	11083	3S1404	RACE	2
7	PFHZZ	11083	2S9507	RING,BEARING,INNER	2
8	PFHZZ	11083	3S2712	GEARSPUR	1
9	PFHZZ	11083	5S0911	TUBE	1
10	PAHZZ	30327	91L1-4X1-8	TEE,PIPE TO TUBE.	1
10A	XAHZZ	19207	NPN31	TEE	1
11	PAHZZ	11083	1F1344	INVERTED NUTITUBE	2
12	PFHZZ	11083	5S3591	TUBE,BENT,METALLIC	1
* 13	PFHZZ	30327	9975928	ADAPTER,STRAIGHT,PI	1
13A	XAHZZ	19207	NPN32	ADAPTER	1
14	PAHZZ	11083	1F1344	INVERTED NUT,TUBE C	1
15	PFHZZ	11083	5S3626	TUBE ASSEMBLY,GEAR	1
16	PFHZZ	80756	RST-196	RING,RETAINING	1
17	PFHZZ	11083	4S8722	RING,BEARING,OUTER	1
* 18	XBHZZ	08162	MU1310L	BEARING,ROLLER,CYLI	1
19	PFHZZ	11083	4S8716	GEAR,SPUR	1
20	PAHZZ	11083	3S2173	CAP,PROTECTIVE,DUST	2
21	PAHZZ	11083	407651	PIN,STRAIGHT,HEADLE	1
22	PFHZZ	11083	1H525	POST,ELECTRICAL-MEC	1
*23	XBHZZ	11083	5S0915	HOUSING,MECHANICAL	1
24	PFHZZ	80756	RST-275	RING,RETAINING	1
25	PFHZZ	11083	5P9885	RING BEARING,OUTER	1
26	PFHZZ	11083	5P3753	BEARING,ROLLERVCYLI	1
* 27	XBHZZ	11083	6TO443	GEARSHAFT,BEVEL	1
				END OF FIGURE	

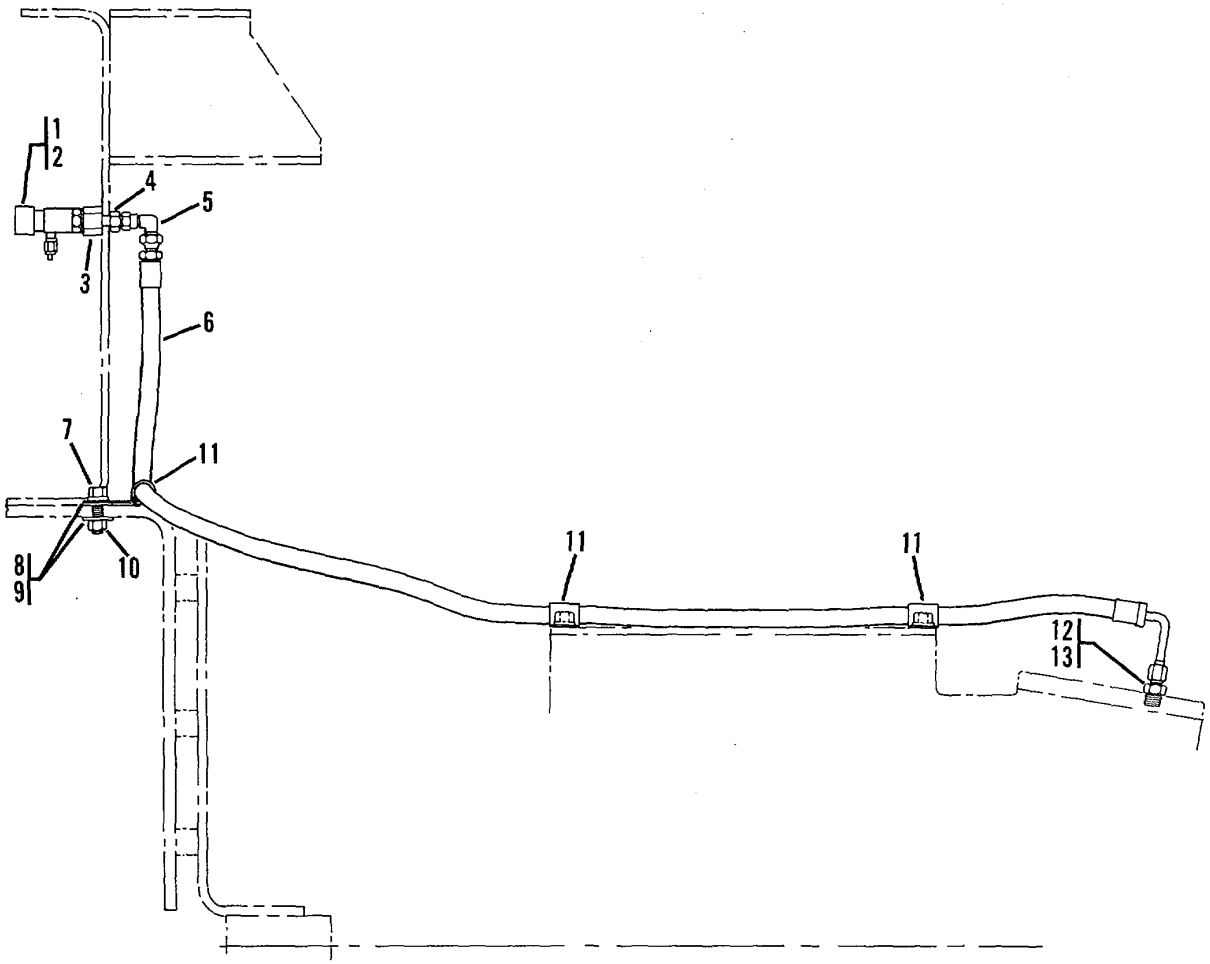

Figure 69. Transmission Oil Sampling Valve

(1) ITEM NO	(2) SMR CODE	(3) CAGEC	(4) PART NUMBER	(5) DESCRIPTION AND USABLE ON CODES (UOC)	(6) QTY
				GROUP 0721 - COOLERS, PUMPST MOTORS	
				FIG 69 - TRANSMISSION OIL SAMPLING VALVE	
1	PFOZZ	91816	HV50-2-Y	VALVEIVENT	1
2	PAOZZ	11083	3J7354	PACKING,PREFORMED	1
3	PFOZZ	11083	5R5107	ADAPTER,STRAIGHT,TU	1
4	PAOZZ	11083	4D6432	NUT,SELF-LOCKINGICL	1
5	PFOZZ	11083	7K9197	ELBOW,TUBE	1
6	PFOZZ	11083	7D5961	HOSE ASSEMBLYE, NONME	1
* 7	PFOZZ	80204	B1821BH038C125N	SCREW,CAP,HEXAGON H	1
8	PAOZZ	11083	5M2894	WASHER,FLAT	3
9	PAOZZ	11083	9L9132	WASHER	2
* 10	PFOZZ	11083	lD4717	NUT,HEXAGON	1
11	PFOZZ	11083	4S1936	CLAMP,LOOP	3
12	PFOZZ	96906	MS51525B4-6	ADAPTER,STRAIGHT,TU	1
13	PAOZZ	25184	906-737-70	PACKING,PREFORMED	1
				END OF FIGURE	

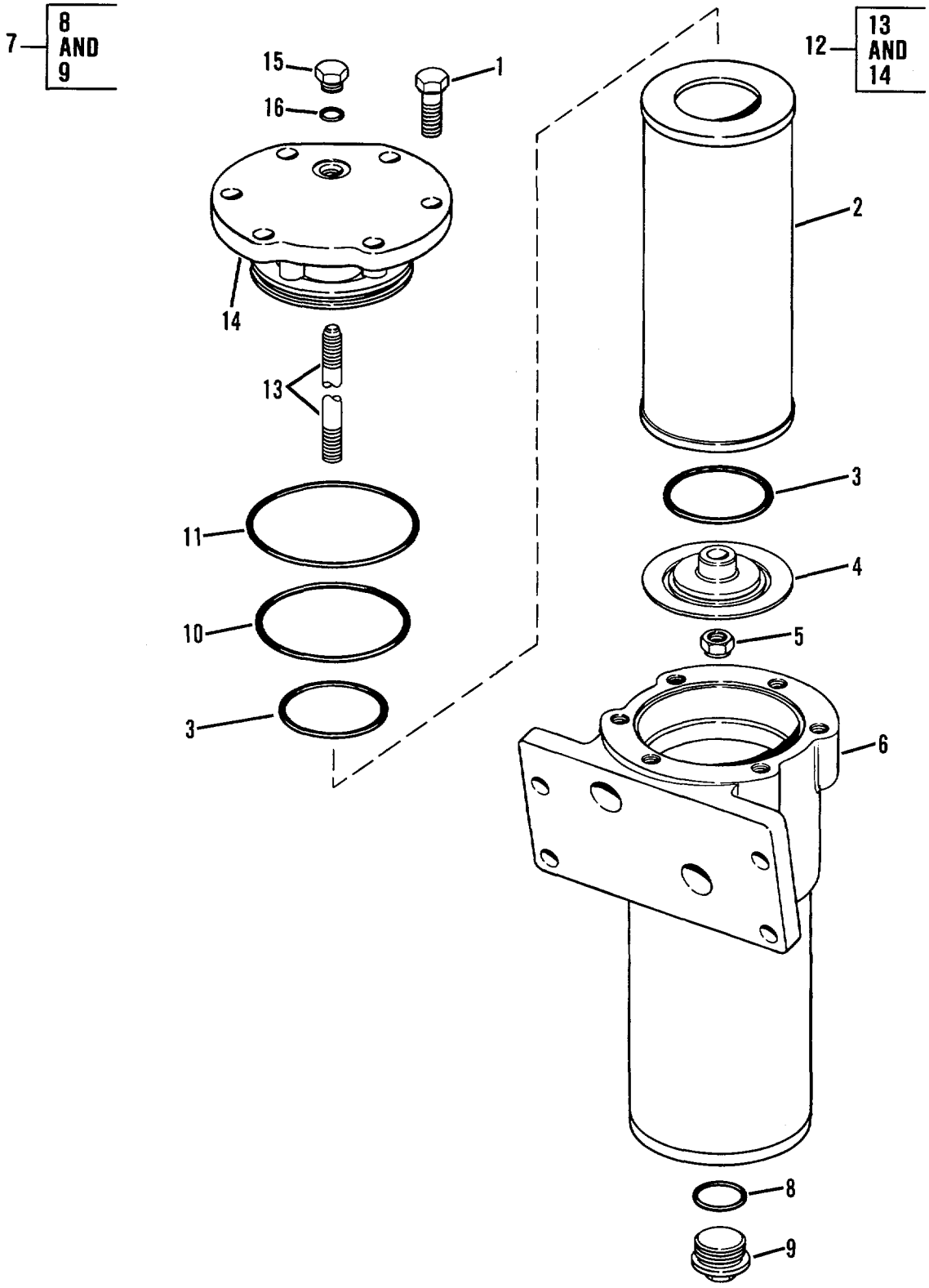

Figure 70. Transmission Oil Filter

(1) ITEM NO	(2) SMR CODE	(3) CAGEC	(4) PART NUMBER	(5) DESCRIPTION AND USABLE ON CODES (UOC)	(6) QTY
				GROUP 0721 - COOLERS, PLMPS, MOTURS	
				FIG 70 - TRANSMISSICN CIL FILTER (SEE FIGURE 63 FOR TOP ASSEMLY, PART NUMBER 3S6830)	
1	PFOZZ	96906	MS90728-112	SCREW,CAP,HEXAGON H	6
2	PAOZZ	11083	9M974C	FILTER ELEMEN-FLUI	1
3	PFOZZ	62983	154J85	PACKING,PART OF KIT P/N 5P9141	2
4	PFOZZ	11383	256462	RETAINER	1
5	PFOZZ	11083	2H3788	NUT	1
6	PFOZZ	11083	3S14C1	FILTER BODY,FLUID.	1
7	PFOZZ	11083	4S5858	PLUG,MACHINE THREAD	1
8	PFOZZ	11083	7M8485	SEAL,ADAPTER,MOTOR PART OF KIT P/N 5P9141	1
9	PFOZZ	11083	9S4205	PLUG,MACHINE THREAD	1
10	PAOZZ	11083	5KI77C	PACKING,PREFORMED PART OF KIT P/N 55P14	1
11	PAOZZ	32697	2-244C873-73	PACKING,PREFORMED PART OF KIT P/N 5P9141	1
12	PFOZZ	11083	7S87CC	COVER ASSEMBLY.	1
13	PFOZZ	11083	354398	STUD	1
14	PFOZZ	11083	7S8699	COVER,FLUID FILTER	1
15	PFOZZ	11083	9S4191	PLUGIMACHINE THREAD	1
16	PAOZZ	25184	906-737-70	PACKING,PREFORMED PART OF KIT PIN 5P9141	1
				END OF FIGURE	

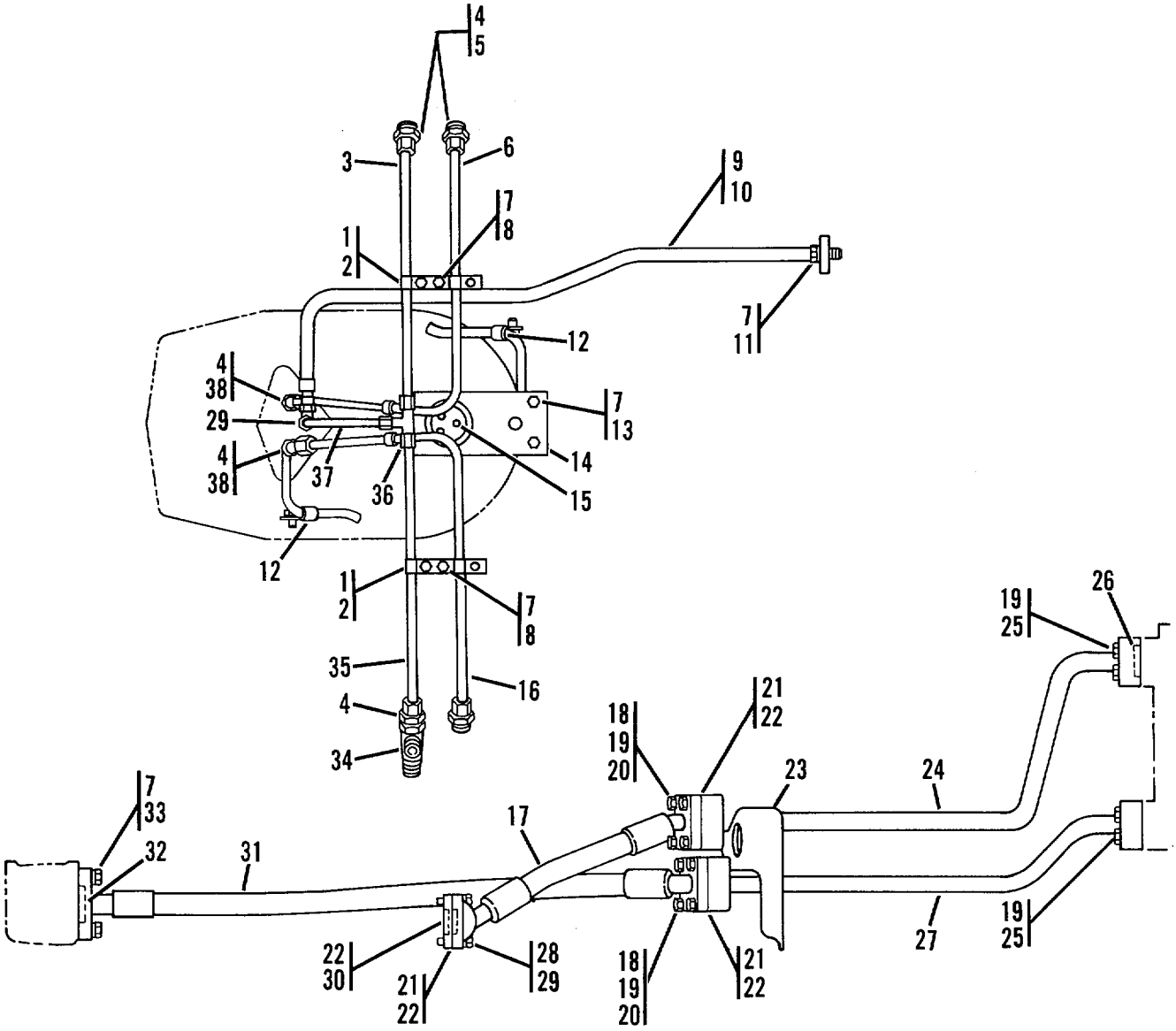

Figure 71. Power Train Oil Lines - Sheet 1 of 2

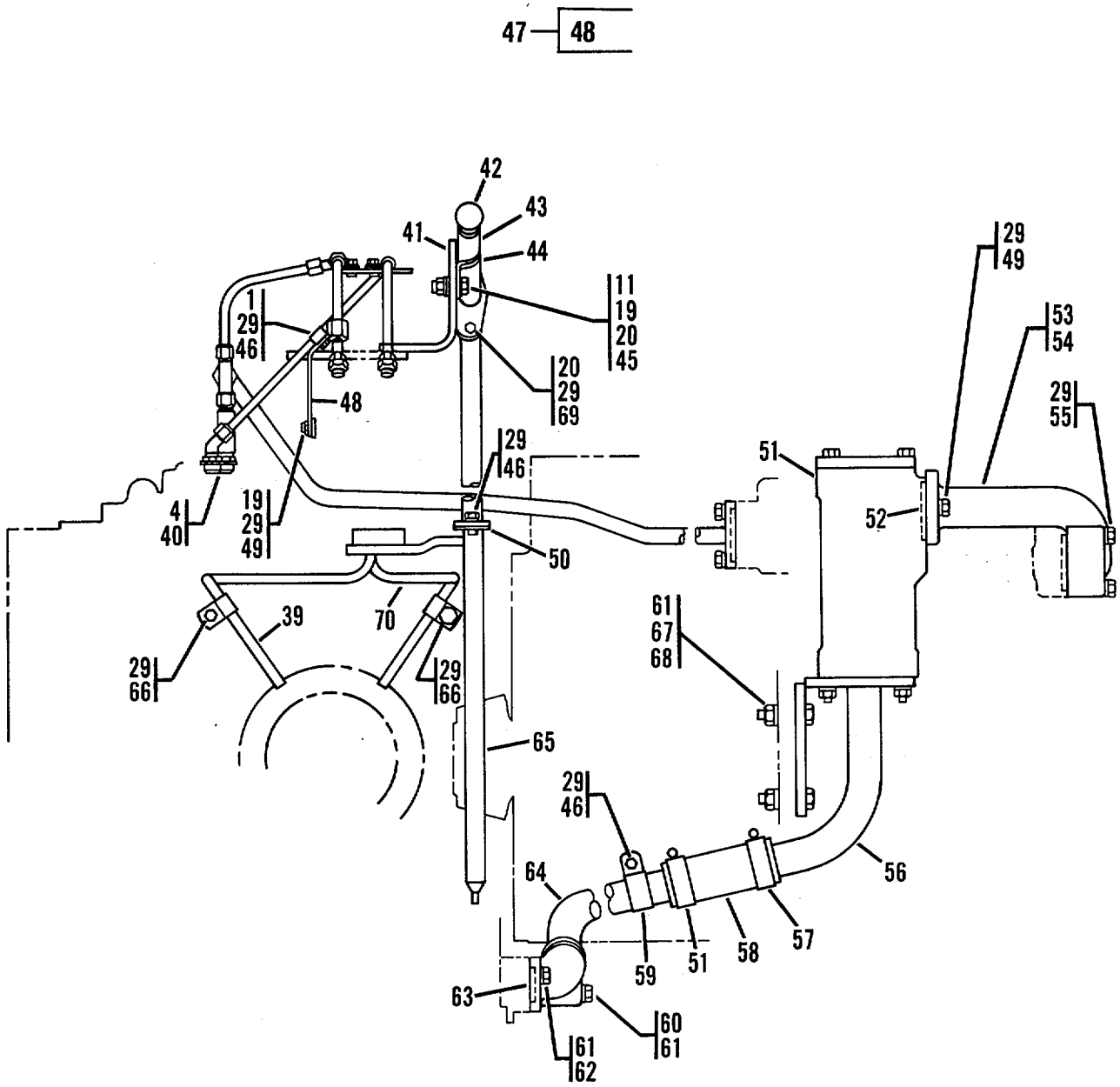

Figure 71. Power Train Oil Lines - Sheet 2 of 2

(1) ITEM NO	(2) SMR CODE	(3) CAGEC	(4) PART NUMBER	(5) DESCRIPTION AND USABLE ON CODES (UOC)	(6) QTY
				GROUP 0721 - COOLERS, PUMPS, MOTORS	
				FIG 71 - POWER TRAIN OIL LINES	
1	PFOZZ	11083	4D7794	CLAMP,LOOP	4
2	PFOZZ	11083	9G817	SPACER,PLATE	2
3	PAOZZ	11083	7G6193	TUBE ASSEMBLY,METAL	1
4	PAOZZ	25184	906-737-70	PACKING,PREFORMED PART OF KIT P/N 59138	6
5	PFOZZ	96906	MS51525A6	ADAPTER,STRAIGHT,TU	3
6	PFOZZ	11083	7G6195	TUBE ASSEMBLYIMETAL	1
7	PFOZZ	96906	MS35338-46	WASHER,LOCK	14
8	PFOZZ	11083	4F4879	BOLT,MACHINE	4
9	PAOZZ	09990	2-216S1032-70	PACKING,PREFORMED PART OF KIT P/N 5P9139	1
10	PAOZZ	11083	7G6205	TUBE ASSEMBLYIMETAL..:	1
* 11	PFOZZ	11083	IA2029	BOLT,MACHINE	1
12	PFOZZ	96906	MS21333-57	CLAMP,LOOP	2
13	PFOZZ	11083	L1351	BOLT,MACHINE	2
14	PFOZZ	11083	8P1738	BRACKET ASSY	1
15	PAOZZ	11083	2L3650	PIN,STRAIGHT,HEADLE	1
16	PFOZZ	11083	7G6194	TUBE ASSEMBLY,METAL	1
17	PAOZZ	11083	3S6544	HOSE ASSEMBLY,NONME	18
19	PFOZZ	11083	5M2894	WASHER,FLAT	14
20	PFOZZ	11083	lD4717	NUT,HEXAGON	11
21	PFOZZ	11083	1P4576	FLANGE,PIPE	6
22	PAOZZ	96906	MS9068-214	PACKING,PREFORMED PART OF KIT P/N 5P9142	4
23	PFOZZ	11083	7S2050	BRACKET	1
24	PAOZZ	11083	9P8631	TUBE ASSEMBLY,METAL	1
25	PFOZZ	11083	2A4639	BOLT,MACHINE	8
26	PAOZZ	11083	lP3703	PACKING,PREFORMED	2
27	PFOZZ	11083	9P8630	TUBE ASSEMBLY,METAL	1
* 28	PFOZZ	11083	0S1591	SCREW	4
29	PFOZZ	96906	MS51523A6	TEE,TUBE	1
30	PFOZZ	11083	9K6426	RESTRICTOR,FLUID FL	1
31	PAOZZ	11083	9G7601	HOSE ASSEMBLY,NONME	1
32	PAOZZ	09990	2-219S1032-70	PACKING,PREFORMED PART OF KIT P/N 5P9142	1
* 33	PFOZZ	11083	lA2029	BOLT,MACHINE	2
34	PFOZZ	11083	6M6853	TEE,TUBE TO BOSS	1
35	PAOZZ	11083	9G0807	TUBE ASSEMBLY1METAL	1
36	PFOZZ	11083	4S3652	TEE,TUBE	1
37	PFOZZ	11083	7G6192	TUBE ASSEMBLY,METAL	1
38	PFOZZ	78640	307942	ELBOW,TUBE TO BOSS	2
39	PFOZZ	11083	8P1641	TUBE,BENT,METALLIC	1
40	PFOZZ	11083	307937	ADAPTER,STRAIGHT,TU	1
41	PFOZZ	11083	7G360	BRACKET,ANGLE	1
* 42	XBOZZ	11083	8P4147	GAGE ROD-CAP,LIQUID	1
43	PFOZZ	11083	8P3998	TUBE ASSEMBLY,METAL	1

(1) ITEM NO	(2) SMR CODE	(3) CAGEC	(4) PART NUMBER	(5) DESCRIPTION AND USABLE ON CODES (UOC)	(6) QTY
44	PFOZZ	11083	151409	CLAMP,LOOP	1
45	PFOZZ	78189	3320-14-01	WASHER,SQUARE CONE	1
* 46	PFOZZ	11083	OS0509	SCREW,CAP,HEXAGON H	4
47	PAOZZ	11083	7G9684	BRACKET,ANGLE	1
48	PFOZZ	11083	9F2978	NUT,PLAIN WELDING	1
* 49	PFOZZ	11083	3B1915	BOLT	3
50	PAOZZ	11083	7B6473	GASKET PART OF KIT P/N 5P9	2
51	PFOZZ	11083	9M8669	FILTER,FLUID SEE FIG 76 FOR BREAKDOWN	1
52	PAOZZ	11083	8M4436	PACKING PART OF KIT P/N 5P9142c4Z	1
53	PFOZZ	11083	8P2283	ELBOW,FLANGE	1
54	PAOLZ	11083	8M4986	PACKING,PREFORMED PART OF KIT PIN 5P9142	1 .
* 55	PFOZZ	11083	OL2070	BOLT,MACHINE	2
56	PFOZZ	11083	5R5126	TUBE ASSEMBLY,METAL	1
57	PFOZZ	55883	IPD5P597	CLAMPIHOSE	2
58	MOOZZ	11083	5P1291-6 IN	HOSE,NONMETALLIC MAKE FROM HOSE P/N 5P1291, 6 INCHES	1
59	PFOZZ	11083	2L2685	CLAMP,LOOP	1
* 60	PFOZZ	11083	OL1329	BOLT,MACHINE	1
61	PFOZZ	96906	MS35338-48	WASHER,LOCK	4
62	PFOZZ	11083	6H1717	BOLT,MACHINE	1
63	PAOZZ	11083	1H9696	PACKING,PREFORMED PART OF KIT P/N 5P9142	1
64	PFOZZ	11083	5R5108	TUBE ASSEMBLY,METAL	1
65	PFOZZ	11083	8P4145	TUBE ASSEMBLY,METAL	1
* 66	PFOZZ	11083	OS0509	SCREW,CAP,HEXAGON H	2
* 67	PFDZZ	11083	1A1460	BOLT,MACHINE	2
68	PFOZZ	96906	MS51967-14	NUT,PLAIN,HEXAGON	2
* 69	PFOZZ	11083	S1594	BOLT,MACHINE	2
70	PFOZZ	11083	8P1640	TUBE,BENT,METALLIC	1

END OF FIGURE

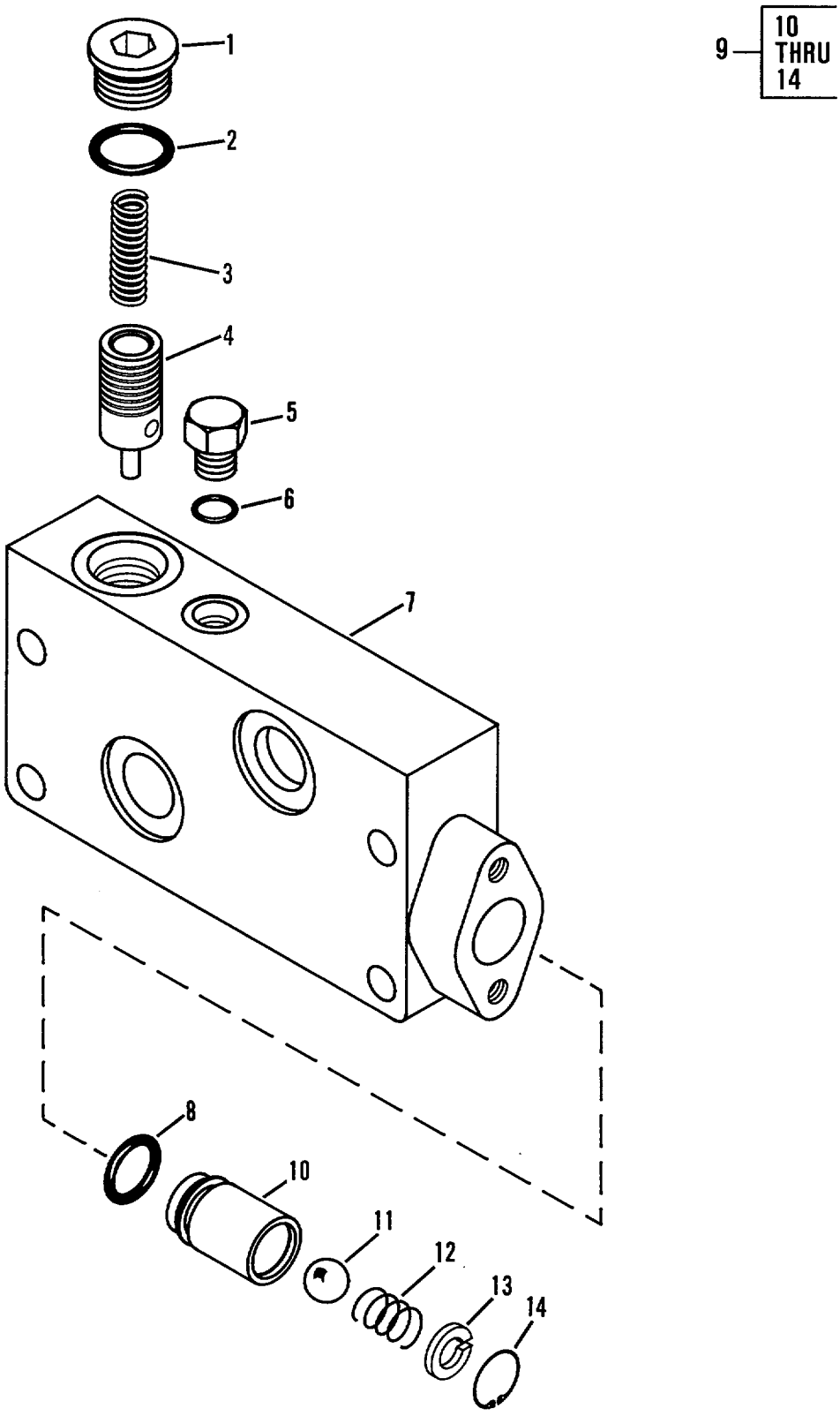

Figure 72. By-Pass Valve

(1) ITEM NO	(2) SMR CODE	(3) CAGEC	(4) PART NUMBER	(5) DESCRIPTION AND USABLE ON CODES (UOC)	(6) QTY
				GROUP 0721 - COOLERS,PUMPS,MOTORS	
				FIG.72 VALVE (SEE FIGURE 63 FOR TOP ASSEMBLY,PART NUMBER 3T3399)	
1	PFFZZ	79470	7238X12	PLUG,TUBE FITTING	1
2	PFFZZ	11083	302824	PACKING,PREFORMED PART OF KIT P/N 5P9139	1
3	PFFZZ	11083	9M1986	SPRING,HELICAL,COMP	1
4	PFFZZ	11083	3T688	SPOOL,VALVE	1
5	PFFZZ	11083	9S4191	PLUG,MACHINE THREAD	1
6	PFFZZ	25184	906-737-70	PACKING,PREFORMED PART OF KIT P/N	1
7	PFFZZ	11083	3T3398	VALVE,REGULATING	1
8	PAFZZ	1183	1H8171	SEAL,COVER ASSEMLY	1
9	PFFFF	11083	3S9901	VALVE,CHECK	1
13	PFFZZ	11083	3S9891	HOUSING,VALVE	1
11	PFFZZ	11083	4B9786	BALL, BEARING	1
12	PFFZZ	11083	1W9509	SPRING,HELICAL	1
13	PFFZZ	11083	7S8511	WASHER,SPLIT	1
14	PFFZZ	96906	MS16625-1081	RING,RETAINING	1
				END OF FIGURE	

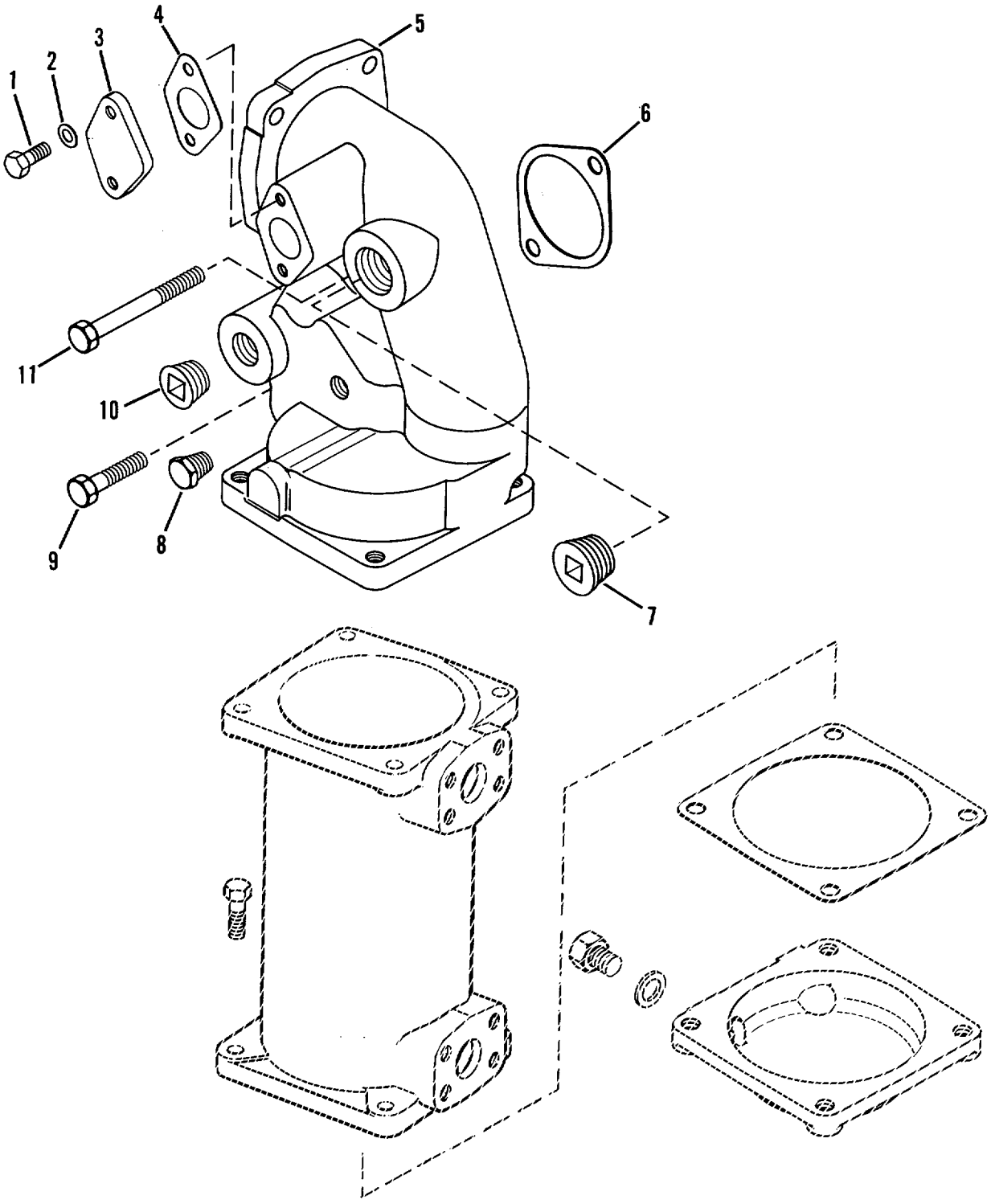

Figure 73. Transmission Oil Cooler

(1) ITEM NO	(2) SMR CODE	(3) CAGEC	(4) PART NUMBER	(5) DESCRIPTION AND USABLE ON CODES (UOC)	(6) QTY
				GROUP 0721 - COOLERS, PUMPS, MOTORS	
				FIG 73 - TRANSMISSION OIL COOLER	
*1	PFOZZ	80204	B1821BH031C075N	BOLT,MACHINE	2
2	PFOZZ	96906	MS27183-12	WASHER,FLAT	2
3	PFOZZ	11083	4N3840	COVERGACCESS	1
4	PFOZZ	11083	4N3841	GASKET	1
5	PFOZZ	11083	6N124	HOUSING,MECHANICAL	1
6	PFOZZ	11083	2W4561	GASKET	1
7	PFOZZ	11083	330551	PLUG,PIPE	1
8	PFOZZ	01276	2082-6B	PLUG,PIPE	2
*9	PFOZZ	11083	OS1591	SCREW	1
10	PFOZZ	96906	MS49006-10	PLUG,PIPE,MAGNETIC	1
* 11	PFOZZ	96906	MS35307-371	SCREW,CAP,HEXAGON H	1
				END OF FIGURE	

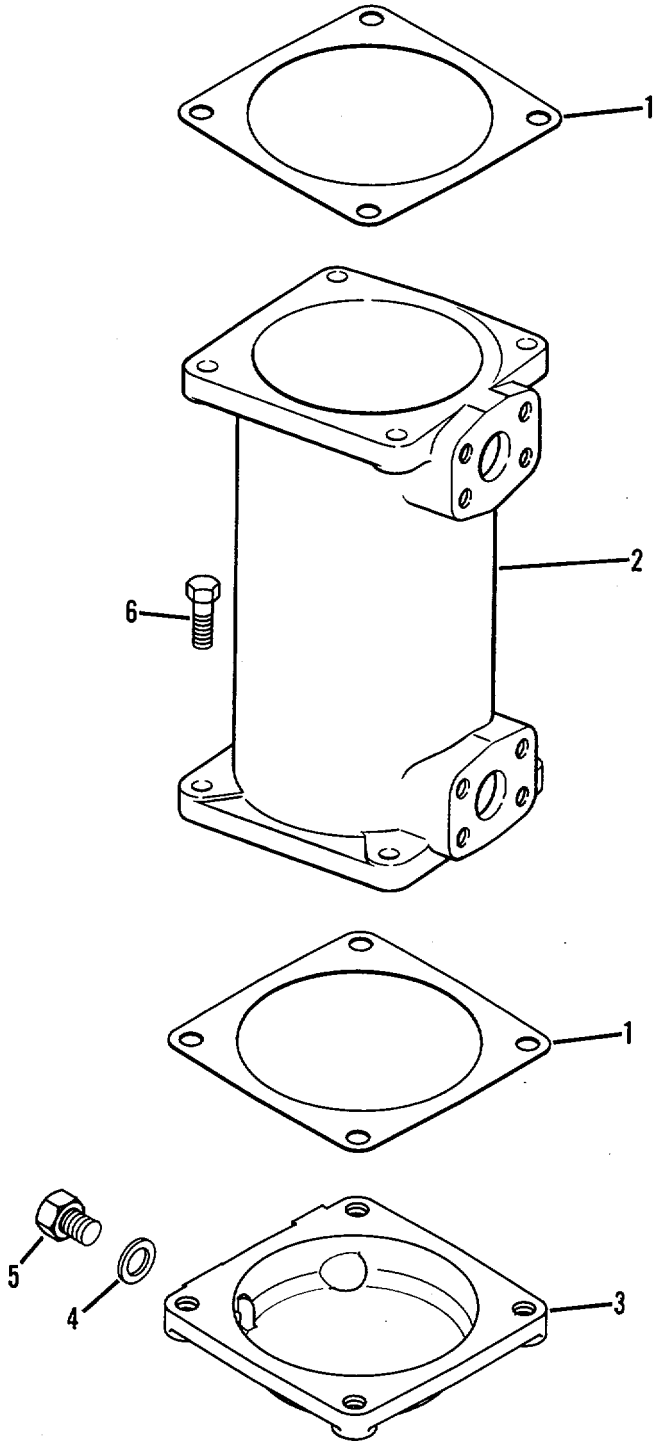

Figure 74. Transmission Oil Cooler Bonnet.

(1) ITEM NO	(2) SMR CODE	(3) CAGEC	(4) PART NUMBER	(5) DESCRIPTION AND USABLE ON CODES (UOC)	(6) QTY
				GROUP 0721 - COOLERST PLMPS, MOTORS	
				FIG. 74 - TRANSMISSION OIL COOLER BONNET	
1	PFOZZ	11083	5M4741	GASKET	2
2	PFOZZ	11083	6N9851	CORE ASSEMBLY	1
3	PFDZZ	11083	5S7163	BONNET, OIL COOLER	1
4	PFCZZ	11083	6F7062	WASHER, FLAT	1
5	PFCZZ	11083	8M93C7	PLUG, MACHINE	1
6	PFOZZ	96906	MS90728-62	SCREW, CAP, HEXAGON H	8

END OF FIGURE

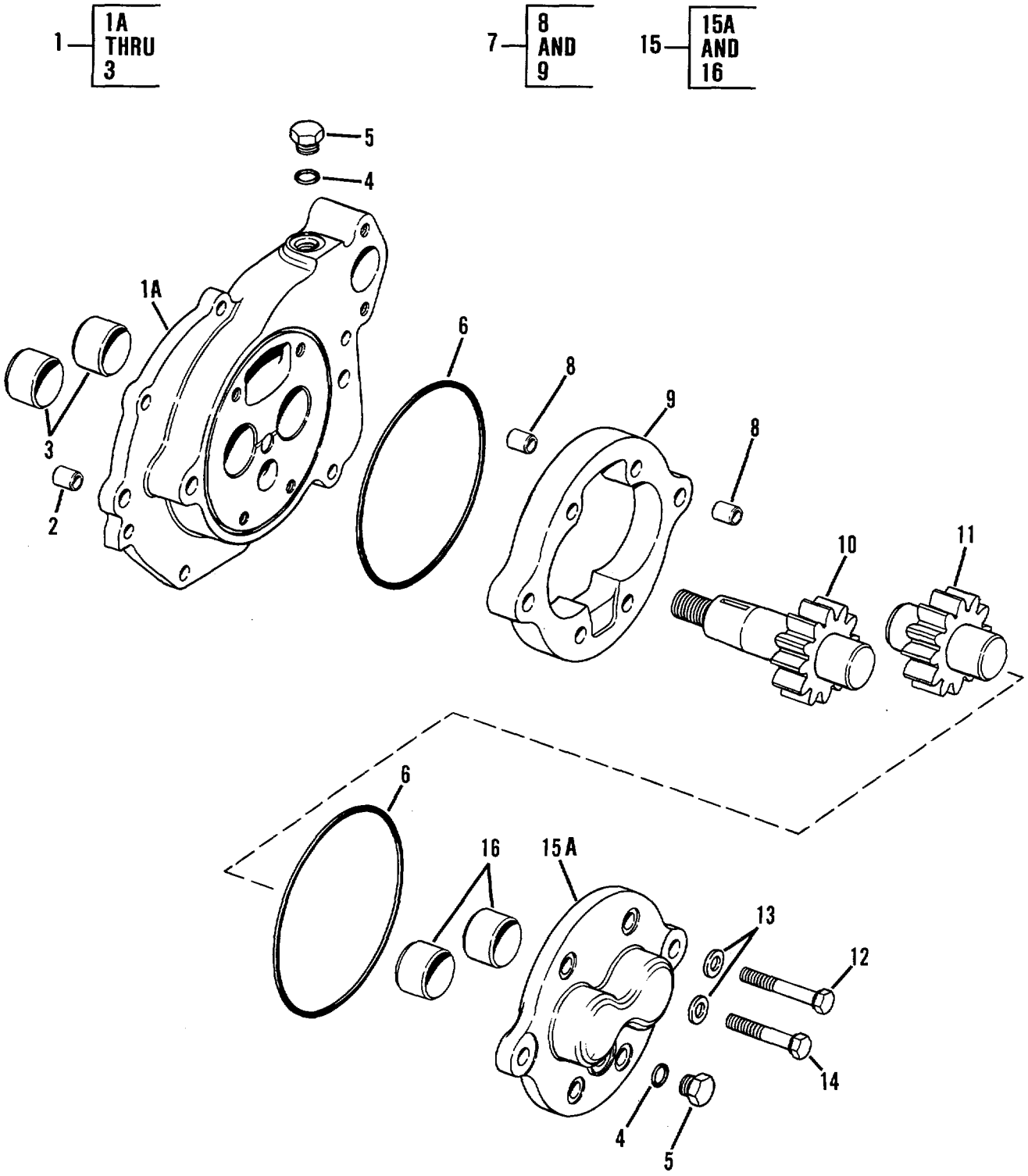

Figure 75. Transmission Oil Pump

(1) ITEM NO	(2) SMR CODE	(3) CAGEC	(4) PART NUMBER	(5) DESCRIPTION AND USABLE ON CODES (UOC)	(6) QTY
				GROUP 0721 - COOLERS, PUMPS, MOTORS	
				FIG. 75 - TRANSMISSION OIL PUMP (SEE FIGURE 63 FOR TOP ASSEMBLY, PART NUMBER, 7S8660)	
1	PFFZZ	11083	7S8659	BODY, TRANSMISSION, P	1
1A	XAFZZ	11083	7S8658	BODY	1
2	PFFZZ	11083	8M8489	PIN, HOLLOW.....	2
3	PFFZZ	11083	1M3780	BEARING, SLEEVE	2
4	PAFZZ	25184	906-737-70	PACKING, PREFORMED PART OF KIT P/N 5P9140.....	2
5	PFFZZ	11083	954191	PLUG, MACHINE THREAD	2
6	PAFZZ	11083	8M5007	PACKING, PREFORMED PART OF KIT P/N 5P9140.....	2
7	PFFZZ	11083	9M2210	HOUSING, LIQUID PUMP	1
8	PFFZZ	11083	8M8489	PIN, HOLLOW.....	4
*9	PFFZZ	11083	9M2209	HOUSING, MECHANICAL.....	1
10	PFFZZ	11083	7S8657	GEARSHAFT, SPUR	1
11	PFFZZ	11083	9M8281	GEAR, SPUR	1
12	PFFZZ	14351	13XX3958	BOLT, MACHINE	2
13	PFFZZ	11083	3S4	WASHER, FLAT.....	6
* 14	PFFZZ	11083	0S1590	BOLT, MACHINE	4
15	PFFZZ	11083	2S1454	COVER ASSYSS	1
15A	XAFZZ	11083	2S1453	COVER.....	1
16	PFFZZ	11083	1M3780	BEARING, SLEEVE	2

END OF FIGURE

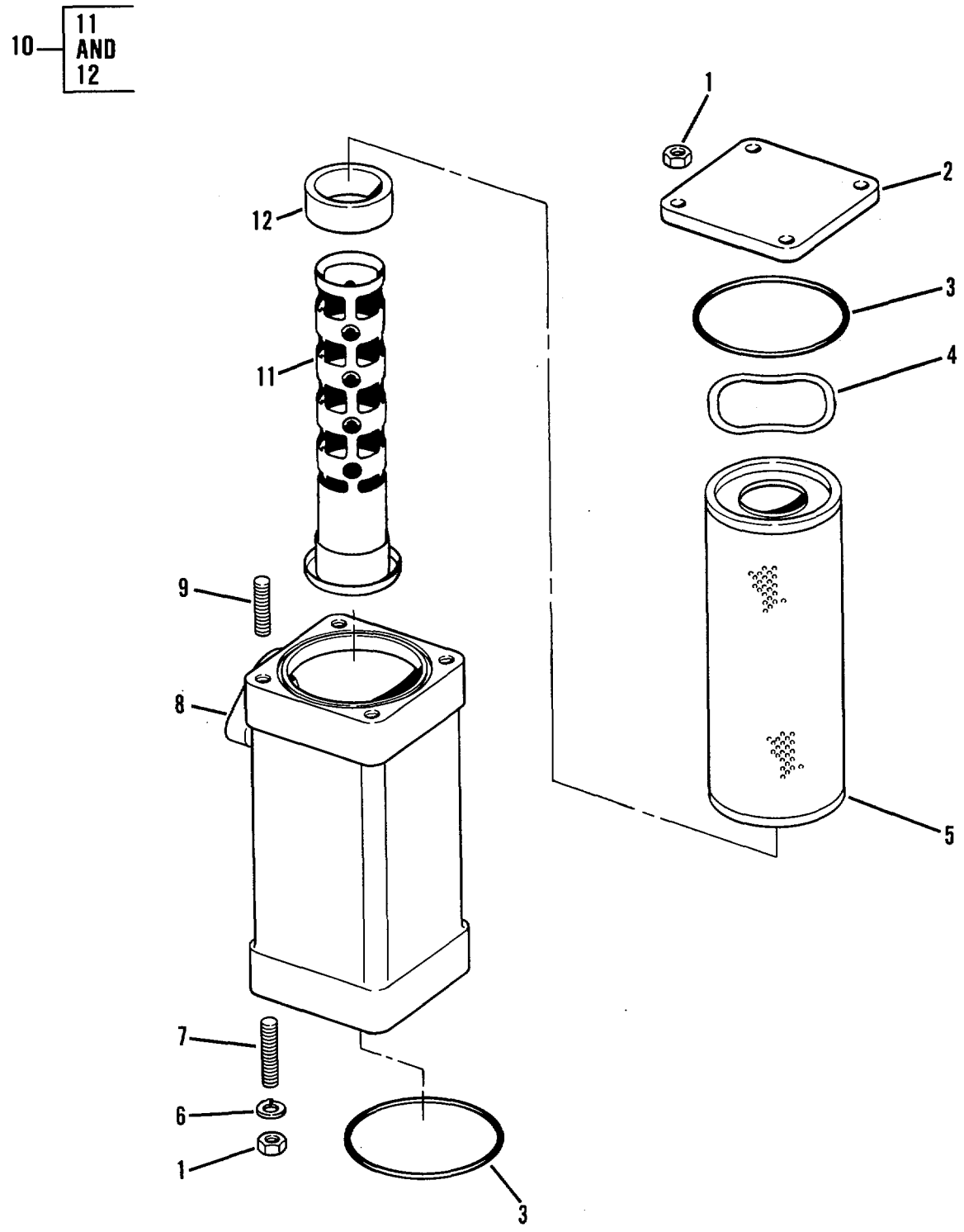

Figure 76. Magnetic Screen

(1) ITEM NO	(2) SMR CODE	(3) CAGEC	(4) PART NUMBER	(5) DESCRIPTION AND USABLE ON CODES (UOC)	(6) QTY
				GROUP 0721 - COOLERS, PUMPS, MOTORS	
				FIG. 76 - MAGNETIC SCREEN (SEE FIGURE 71 FOR TOP ASSEMBLY, PART NUMBER 9M8669)	
* 1	PFOZZ	11083	lD4717	NUT, HEXAGON	8
2	PFOZZ	11083	3S3439	COVER	1
3	PAOZZ	11083	5F149	PACKING, PREFORMED	2
4	PAOZZ	11083	3S3440	WASHER, SPRING TENSI	1
5	PAOZZ	11083	3S3875	FILTER ELEMENT, FLUI	1
6	PFOZZ	96906	MS35338-46	WASHER, LOCK	4
* 7	PAOZZ	11083	2M4779	STUD, PLAIN	4
8	PFOZZ	11083	8M7166	HOUSING, STRAINER	1
9	PAOZZ	11083	302871	STUD	4
10	PFOZZ	11083	2S1641	TUBE ASSEMBLY.*	1
11	PFOZZ	11083	9MZ877	TUBE ASSEMBLY	1
12	PAOZZ	11083	8M7160	MAGNET	4

END OF FIGURE

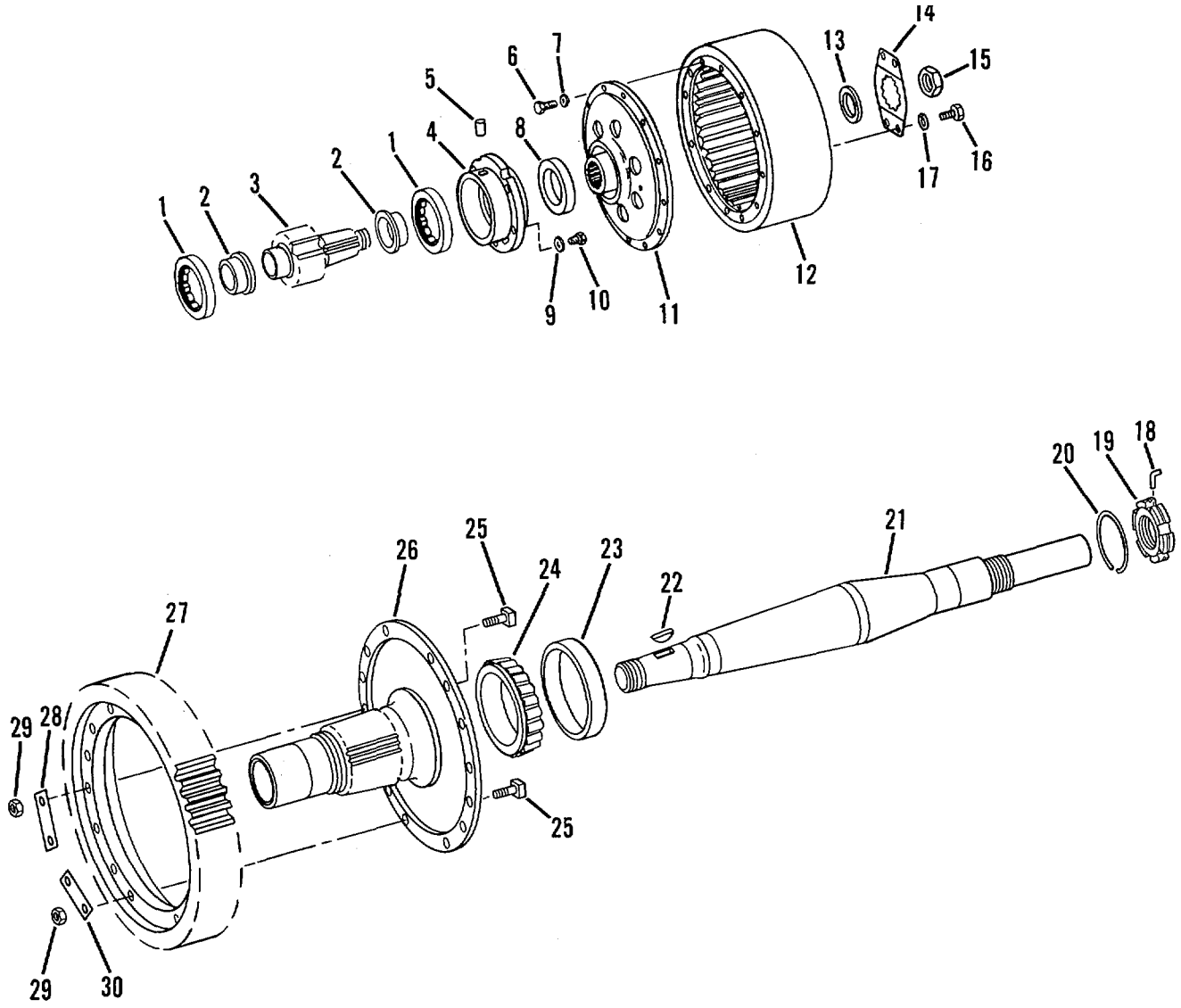

Figure 77. Final Drive - Upper Half

(1) ITEM NO	(2) SMR CODE	(3) CAGEC	(4) PART NUMBER	(5) DESCRIPTION AND USABLE ON CODES (UOC)	(6) QTY
				GROUP 08 TRANSFER AND FINAL DRIVE ASSEMBLIES	
				GROUP 0801 - POWER TRANSFER AND FINAL DRIVE ASSEMBLIES	
				FIG. 77 - FINAL DRIVE - UPPER HALF	
* 1	XBHZZ	11083	2D6421	BEARING, ROLLER, CYLI	2
2	PFHZZ	11083	1M1604	RING, BEARING, INNER	2
3	PFHZZ	11083	8P1774	GEARSHAFT, SPUR	1
* 4	XBHZZ	11083	2P9672	HOUSING, MECHANICAL	1
5	PAHZZ	11083	6H879	PIN, STRAIGHT, HEADLE	1
6	PFHZZ	11083	4B4043	BOLT, MACHINE	12
7	PFHZZ	96906	MS35340-50	WASHER, LOCK	12
8	PAHZZ	11083	5P4251	SEAL, PLAIN	1
9	PFHZZ	19207	6299613	WASHER, FLAT	5
10	PFHZZ	11083	S1595	BOLT, MACHINE	5
11	PFHZZ	11083	8P1328	FLANGE, COMPANION, UN	1
12	PFHZZ	11083	8P0203	BRAKE DRUM	1
13	PAHZZ	11083	6P8359	GASKET	1
14	PFHZZ	11083	6P6698	RETAINER, NUT AND BO	1
15	PFHZZ	11083	2J5815	NUT, HEXAGON	1
* 16	PFHZZ	11083	OS0509	SCREW, CAP, HEXAGON H	2
17	PFHZZ	96906	MS35338-46	WASHER, LOCK	2
18	PAHZZ	11083	2B8093	PIN, LOCKING, BEARING	1
* 19	XBHZZ	11083	8H3326	NUT, SPECIAL	1
* 20	XBHZZ	11083	288092	RING, RETAINING	1
21	PFHZZ	11083	2F7576	SHAFT DRIVE SPROCKE	1
22	PFHZZ	11083	1B8742	KEY	1
23	PFHZZ	08162	67322	CUP, TAPERED ROLLER	1
24	PFHZZ	08162	67388	CONE AND ROLLERS, TA	1
25	PFHZZ	11083	6B4598	BOLT, MACHINE	14
26	PFHZZ	11083	7G8459	GEARSHAFT, SPUR	1
27	PFHZZ	11083	2P9660	GEAR, SPUR	1
28	PFHZZ	11083	3P5446	LOCKING PLATE, NUT A	3
29	PFHZZ	96906	MS51968-23	NUT, HEXAGON	14
30	PFHZZ	11083	3P5447	LOCKING PLATE, NUT A	4

END OF FIGURE

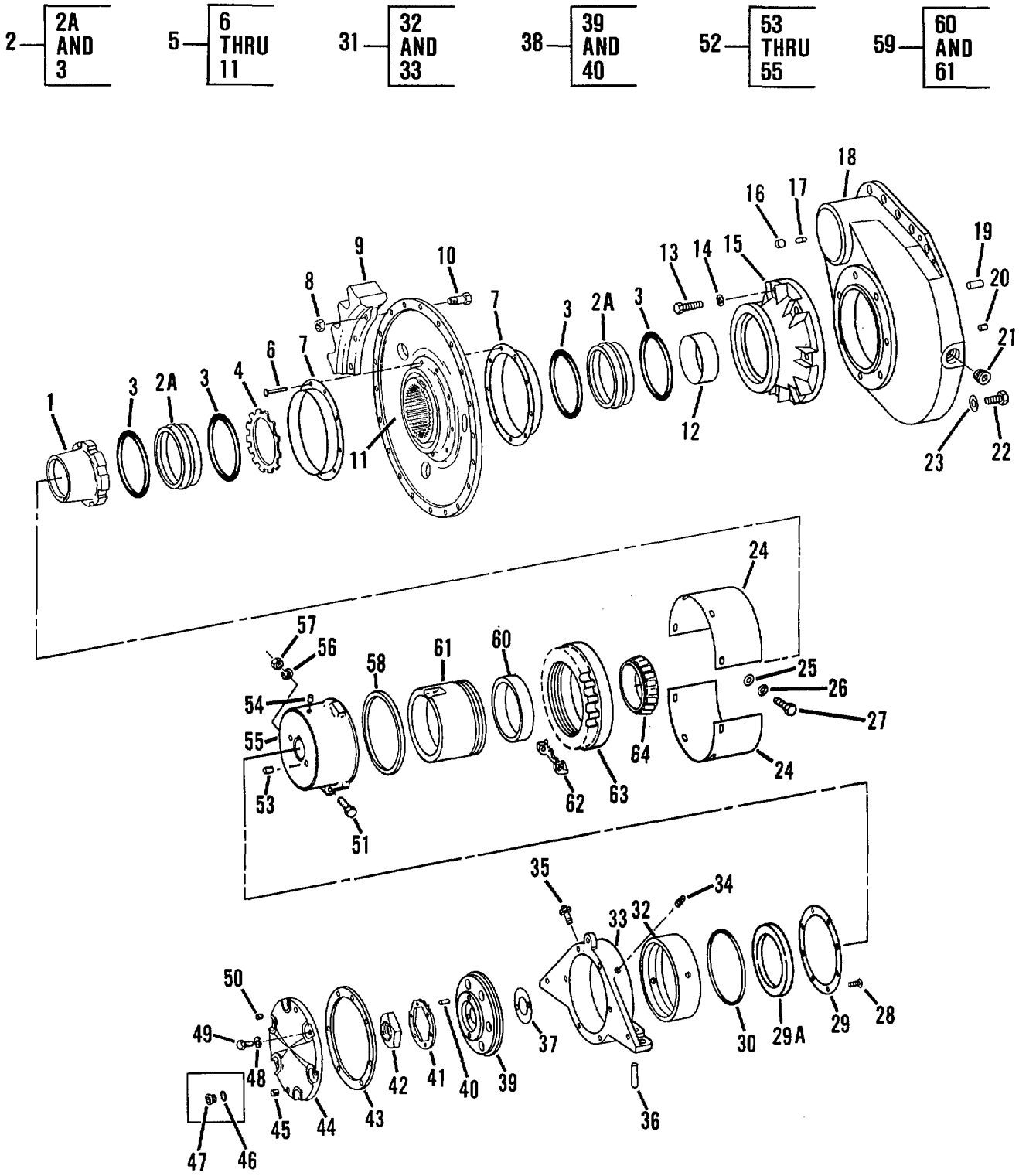

Figure 78. Final Drive - Lower Half

(1) ITEM NO	(2) SMR CODE	(3) CAGEC	(4) PART NUMBER	(5) DESCRIPTION AND USABLE ON CODES (UOC)	(6) QTY
				GROUP 0801 - POWER TRANSFER AND FINAL DRIVE ASSEMBLIES	
				FIG. 78 - FINAL DRIVE - LOWER HALF	
* 1	XBHZZ	11083	4H9040	NUT	1
* 2	PFHZ	11083	9W7332	SEAL ASSEMBLY	2
2A	XAHZZ	11083	9G5340	.SPACER	2
3	PFHZZ	11083	7M475	PACKINGIPREFORMED	4
4	PAHZZ	11083	3F1960	LOCK	2
5	PFHHH	11083	8P1855	HUB ASSEMBLY, TRAK	1
6	PFHZZ	11083	4B4340	.RIVET, SOLID	9
7	PFHZZ	11083	4F6070	.GUARD	2
8	PFOZZ	11083	7H3607	.NUT, PLAIN, HEXAGON	27
9	PAOZZ	11083	9P984	.SPROCKET WHEEL SEGM	18
10	PAOZZ	11083	3S8182	.BOLT, SPROCKET	27
11	PFHZZ	11083	8P1856	.HUB, BODY	1
12	PFHZZ	11083	2P1553	CUP, TAPERED ROLLER	1
13	PFHZZ	11083	5M6671	SCREW, CAP, HEXAGON H	7
14	PFHZZ	11083	403704	WASHER, FLAT	7
15	PFHZZ	11083	7G8458	EXTENSION, FINAL DRI	1
16	PFHZZ	11083	L1026	PLUG, EXPANSION	1
17	PAHZZ	11083	3F1953	DOWEL	1
18	PFHZZ	11083	2P9951	HOUSING, MECHANICAL	1
19	PAHZZ	11083	2B8162	PIN, STRAIGHT, HEADLE	2
* 20	PFHZZ	81348	LLLS731	STOPPER, BOTTLE	1
21	PAOZZ	02951	1000-20	PLUG, PIPE, MAGNETIC	2
* 22	PFHZZ	11083	OS1585	BOLT, MACHINE	20
23	PFHZZ	11083	2M849	WASHER, FLAT	20
24	PFHZZ	11083	3Fl958	GUARD	2
* 25	PFHZZ	96906	MS27183-14	WASHER, FLAT	8
26	PFHZZ	96906	MS35338-46	WASHER, LOCK	8
* 27	PFHZZ	11083	0S0509	SCREW, CAP, HEXAGON H	8
28	PFHZZ	96906	MS35190-288	SCREW, MACHINE	8
29	PAHZZ	11083	3F1954	GASKET UOC:AGS, AGT	2
29	PFHZZ	11083	7T0200	RETAINER, OIL SEAL UOC:AGU, AGV	2
29A	PAHZZ	11083	8T0102	SEAL, NONMETALLIC SP	2
30	PAHZZ	11083	9M5894	PACKING, PREFORMED UOC:AGS, AGT	1
31	PFHZZ	11083	7S7625	SUPPORT ASSEMBLY UOC:AGS, AGV	1
31	PFHZZ	11083	7T0358	BEARING UNIT, PLAIN UOC:AGT, AGU	2
32	PAHZZ	11083	3F1965	.BEARING UNIT, PLAIN UOC:AGS, AGV	1
32	PAHZZ	11083	7T0201	.BEARING, SLEEVE UOC:AGT, AGU	1
33	XAHZZ	11083	7S7569	.SUPPORT UOC:AGS, AGV	1

(1) ITEM NO	(2) SMR CODE	(3) CAGEC	(4) PART NUMBER	(5) DESCRIPTION AND USABLE ON CODES (UOC)	(6) QTY
33	XAHZZ	11083	7T0357	.SUPPORT UOC:AGTGAGU	1
34	PFHZZ	81348	WW-P-471AASBCA	PLUG, PIPE	2
35	PFOZZ	95879	1684B	FITTING, LUBRICATION	2
36	PAHZZ	11083	2M122	PIN, SHOULDER, HEADLE UOC:AGS, AGV	4
* 36	PFHZZ	11083	5R5197	CONNECTOR, ROD END UOC:AGT, AGU	4
37	PFHZZ	11083	2S4366	SHIM	4
38	PFHZZ	11083	3F1972	RETAINER, FINAL DRIV	1
39	XAHZZ	11083	3F1971	.RETAINER	1
40	PAHZZ	21450	544009	PIN, STRAIGHT, HEADLE	2
* 41	XBHZZ	11083	2F2815	LOCK	1
42	PFHZZ	11083	1A3585	NUT, PLAIN, HEXAGON	1
43	PAHZZ	11083	3F1955	GASKET	1
44	PFHZZ	11083	3F1956	CAP UOC:AGS, AGT	1
44	PAHZZ	11083	7T0481	COVER, ACCESS UOC:AGU, AGV	1
* 45	PFHZZ	89346	50410DA	PLUG, PIPE UOC:AGS, AGT	1
46	PAHZZ	11083	3K360	PACKING, PREFORMED UOC:AGU, AGV	1
* 47	PFHZZ	30780	8HP5N-S	PLUG, MACHINE THREAD UOC:AGU, AGV	1
48	PFHZZ	96906	MS35338-48	WASHER, LOCK	6
* 49	PFHZZ	11083	S1587	BOLT, MACHINE	6
50	PFHZZ	11083	2B7557	CORK	1
51	PFHZZ	11083	6F7024	BOLT, MACHINE	1
52	PFHZZ	11083	251477	HOLDER ASSEMBLY, CAG	1
53	PAHZZ	11083	8B1312	PIN, STRAIGHT, HEADLE	2
54	PFHZZ	11083	8M6521	DOWEL	1
55	XAHZZ	11083	7M3085	HOLDER	1
56	PAHZZ	96906	MS35340-50	WASHER, LOCK UOC:AGS, AGV	2
56	PFHZZ	11083	2S7593	WASHER, FLAT UOC:AGT, AGU	4
57	PFHZZ	96906	MS51968-20	NUT, PLAIN, HEXAGON	1
58	PAHZZ	11083	8P4237	GASKET	1
59	PFHZZ	11083	7G6044	HOUSING, BEARING UNI	1
60	PFHZZ	08162	56650	CUP, TAPERED ROLLER	1
61	XAHZZ	11083	7G6043	CAGE	1
62	PFHZZ	11083	3P3623	LOCK	1
63	PAHZZ	11083	8P1853	NUT, ADJUSTING, DIFFE	1
64	PFHZZ	08162	56425	CONE AND ROLLERS, TA	1

END OF FIGURE

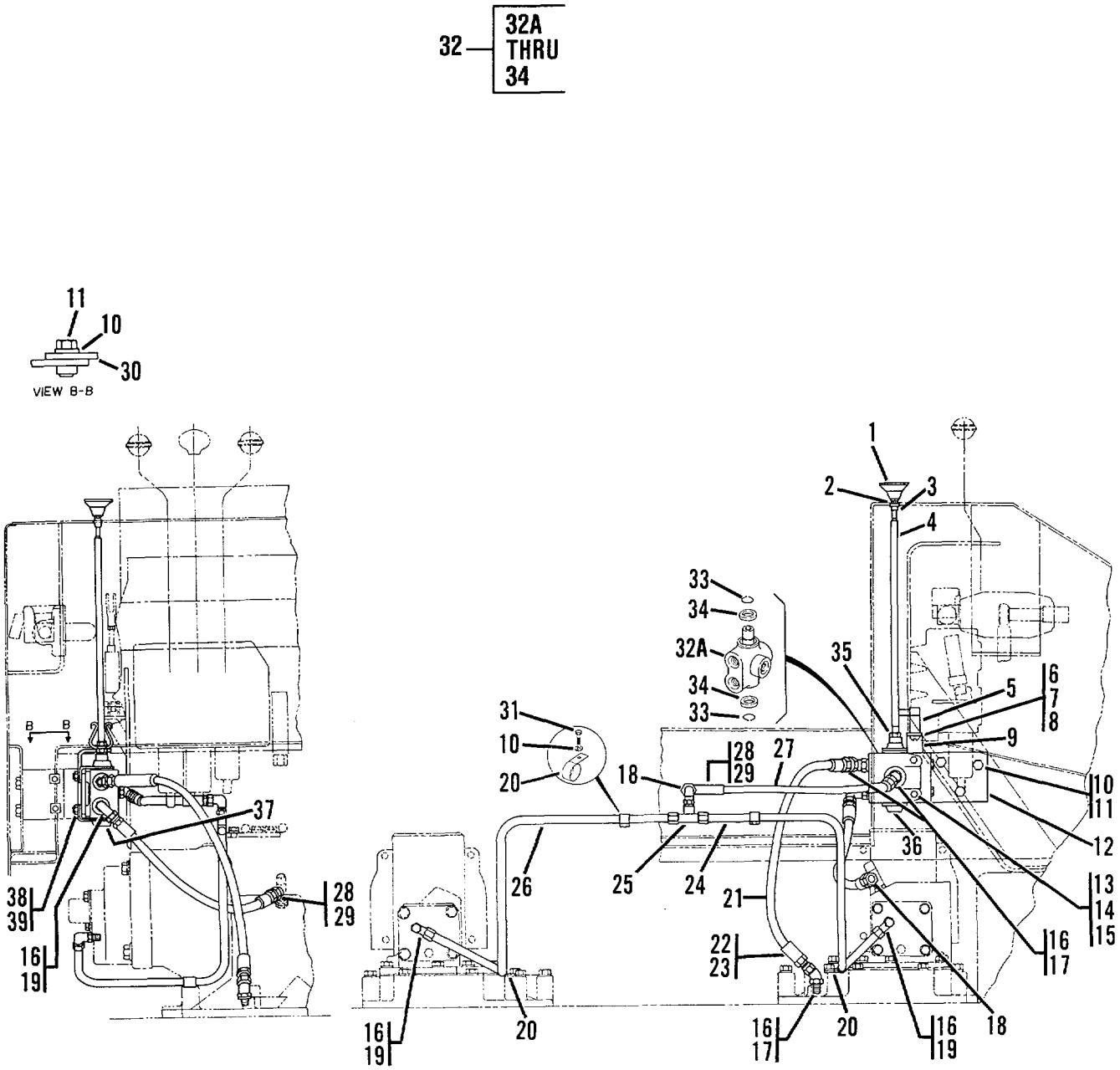

Figure 79. Brake Control Lines

(1) ITEM NO	(2) SMR CODE	(3) CAGEC	(4) PART NUMBER	(5) DESCRIPTION AND USABLE ON CODES (UOC)	(6) QTY
				GROUP 12 BRAKES	
				GROUP 1204 - HYDRAULIC BRAKE SYSTEM	
				FIG. 79 - BRAKE CONTROL LINES	
1	PFOZZ	80813	250-702	KNOB	1
2	PFOZZ	11083	9M1311	NUT, PLAIN, HEXAGON	1
3	PAOZZ	11083	347897	BEARING, SLEEVE	1
4	PFOZZ	11083	3T2368	STUD, SHOULDERED AND	1
5	PAOZZ	11083	3P5938	CLIP, SPRING TENSION	1
6	PFOZZ	31159	JM56	NUT, PLAIN, HEXAGON	1
7	PAOZZ	11083	5P537	WASHER	1
8	PFOZZ	11083	4B1254	SCREW, MACHINE	1
9	PFOZZ	11083	3T2367	BRACKET, ANGLE	1
10	PFOZZ	11083	5M2894	WASHER, FLAT	2
11	PFOZZ	11083	L1351	BOLT, MACHINE	2
12	PFOZZ	11083	3T9257	BRACKET, ANGLE	1
* 13	PFOZZ	96906	MS51967-5	NUT, PLAIN, HEXAGON	2
14	PFOZZ	96906	MS27183-12	WASHER, FLAT	4
* 15	PFOZZ	80204	B1821BHO31C200N	BOLT, MACHINE	2
16	PAOZZ	25184	906-737-70	PACKING, PREFORMED	6
17	PFOZZ	78640	307942	ELBOW, TUBE TO BOSS	3
18	PFOZZ	11083	6K9194	ELBOW, TUBE	1
19	PFOZZ	96906	MS51527A6	ELBOW, TUBE TO BOSS	3
20	PFOZZ	11083	4D7794	CLAMP, LOOP	4
21	MOOZZ	11083	-16.5	HOSE ASSY MAKE FROM HOSE P/N 2P5943, 16.5 IN, SEE GROUP 9501	2
22	PFOZZ	11083	4S5414	SLEEVE, HOSE	2
23	PFOZZ	11083	8S6417	ADAPTER, STRAIGHT, TU	2
24	PFOZZ	11083	9G0808	TUBE ASSEMBLY, METAL	1
25	PFOZZ	11083	4S3652	TEE, TUBE	1
26	PFOZZ	11083	9G0806	TUBE ASSEMBLY, METAL	1
27	MOOZZ	11083	2P5943-10.63	HOSE ASSEMBLY, NONME MAKE FROM HOSE P/N 2P5943, 10.63 INCHES, SEE GROUP 9501	1
28	PFOZZ	11083	8S6417	ADAPTER, STRAIGHT, TU	2
29	PFOZZ	11083	4S5414	SLEEVEHOSE	2
30	PFOZZ	11083	3T9256	BRACKET, ANGLE	1
31	PFOZZ	11083	4F4879	BOLT, MACHINE	2
32	PFOFF	11341	128018	VALVE, LINEAR, DIRECT	1
32A	XAFZZ	19207	NPN33	VALVE	1
* 33	PFFZZ	96906	MS16632-4075	RING, RETAINING	2
34	PAFZZ	11341	1A9033	SEAL	2
35	PFOZZ	96906	MS35691-17	NUT, PLAIN, HEXAGON	1
36	PFOZZ	11083	3T9254	CAP-PLUG, PROTECTIVE	2
37	PFOZZ	11083	3T9255	BRACKET, ANGLE	2
* 38	PFOZZ	80204	B1821BH025C050N	SCREW, CAP, HEXAGON H	4
39	PAOZZ	T8189	WD23875	WASHER, SPRING TENSI	4

END OF FIGURE

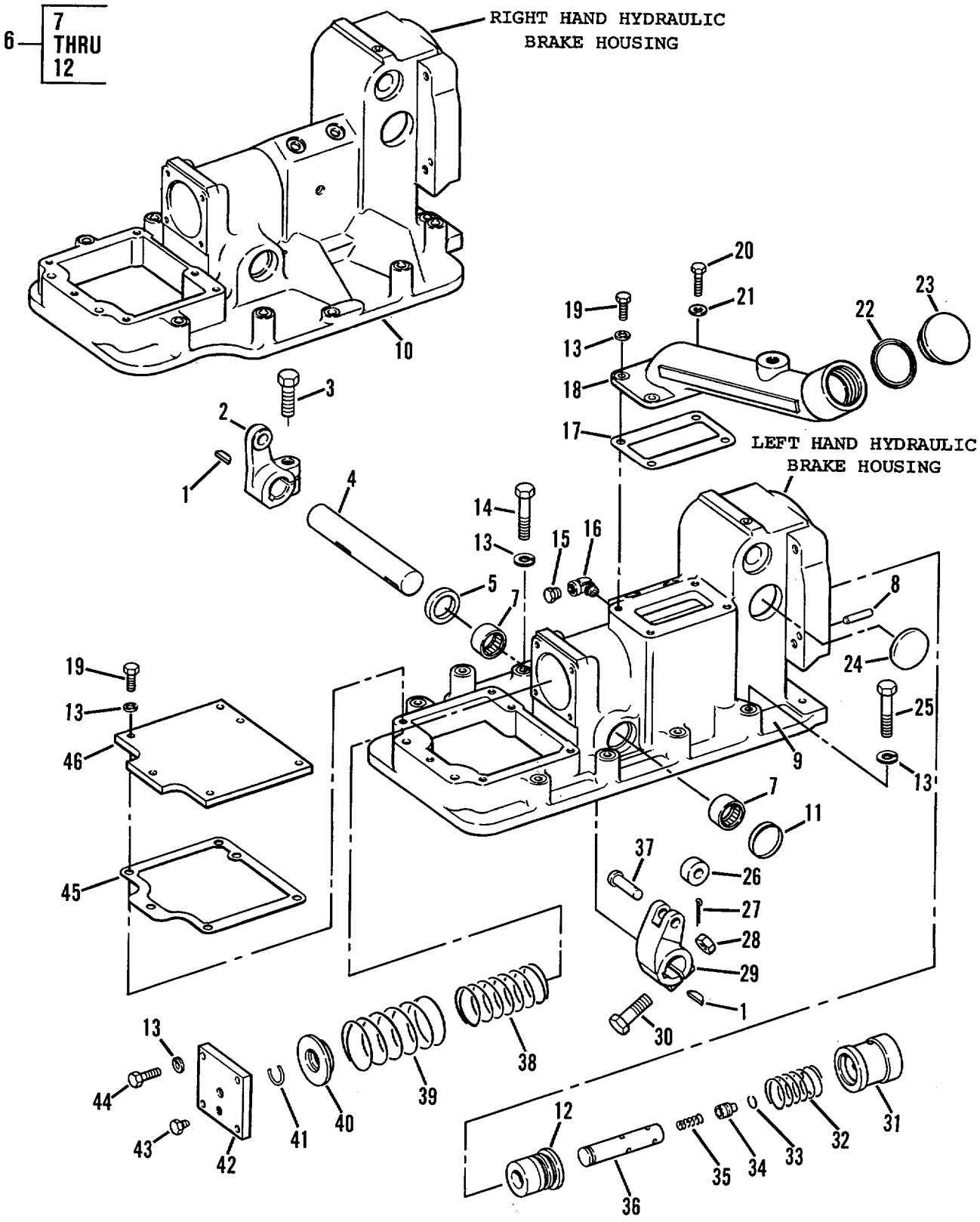

Figure 80. Hydraulic Brake Mechanism

(1) ITEM NO	(2) SMR CODE	(3) CAGEC	(4) PART NUMBER	(5) DESCRIPTION AND USABLE ON CODES (UOC)	(6) QTY
				GROUP 1204 - HYDRAULIC BRAKE SYSTEM	
				FIG. 80 - HYDRAULIC BRAKE MECHANISM	
1	PFFZZ	96906	MS35756-22	KEY, WOODRUFF	3
2	PFFZZ	11083	8P3204	LEVER, REMOTE CONTROL.H	1
2	PFFZZ	11083	8P3203	LEVER, MANUAL CONTROL.H	1
* 3	PFFZZ	80204	B1821BH063C175N	SCREW, CAP, HEXAGON H	1
4	PFFZZ	11083	8P0802	SHAFT, STRAIGHT	2
5	PFFZZ	11083	2P6286	SEAL ASSEMBLY 2	
6	PFFFF	11083	9G0818	HOUSING, MECHANICAL R.H BRAKE	1
6	PFFFF	11083	9G805	HOUSING, MECHANICAL L.H BRAKE	1
7	PAFZZ	21335	B2012-OH	BEARING, ROLLER, NEED	2
8	PAFZZ	11083	6B7651	PIN, STRAIGHT, HEADLE	2
9	XAFZZ	11083	9G1444	HOUSING L.H	1
10	XAFZZ	11083	9G1443	HOUSING R.H	1
11	PFFZZ	11083	L1021	PLUG, EXPANSION PLX	2
12	PFFZZ	11083	2S8359	BUSHING, SLEEVE	1
13	PFFZZ	96906	MS35338-46	WASHER, LOCK	29
* 14	PFFZZ	11083	OS1591	SCREW	3
15	PFFZZ	55883	IPD5M6214	PLUG, PIPE	1
16	PFFZZ	11083	386552	ELBOW, PIPE	1
17	PAFZZ	11083	8P3394	GASKET	1
* 18	PFFZZ	11083	8P3197	FILLER NECK	1
* 19	PFFZZ	11083	S1594	BOLT, MACHINE	6
* 20	PFFZZ	11083	3B1915	BOLT	2
21	PFFZZ	78189	3320-14-01	WASHER, SQUARE CONE	2
22	PAQZZ	75165	920	GASKET	1
23	PFOZZ	11083	L827	PLUG, MACHINE THREAD	1
24	PAFZZ	11083	3Ff022	PLUG, CORE	1
* 25	PFFZZ	11083	OT0573	CAPSCREWIFUEL PUMPU M	10
26	PFFZZ	11083	6B7687	ROLLERLINEAR-ROTAR*	2
27	PFFZZ	96906	MS24665-353	PIN, COTTER	2
28	PFFZZ	96906	MS51967-20	NUT, PLAIN, HEXAGON	2
* 29	XBFZZ	11083	9H7657	LEVER	2
30	PFFZZ	11083	8S9092	BOLT, MACHINE	2
31	PFFZZ	11083	9G9465	PISTON, LINEAR ACTUA	2
32	PFFZZ	11083	3J3370	SPRING, HELICAL, COMP	2
33	PAFZZ	78553	NAN50	RING, RETAINING	2
34	PAFZZ	11083	2S8571	SLIDE, DIRECTIONAL C	2
35	PFFZZ	11083	5M3389	SPRING, HELICAL, COMP	2
36	PFFZZ	11083	5S6880	PLUNGER	2
37	PAFZZ	11083	3H1977	PINTRACT	2
38	PFFZZ	11083	9H7553	SPRING, HELICAL, COMP*	2
39	PAFZZ	11083	9H7534	SPRING	2
40	PFFZZ	11083	2S8416	RETAINER, HELICAL CO	2
41	PFFZZ	11083	4H8158	RING, RETAINING	2
42	PFFZZ	11083	8P8255	COVER ASSEMBLY	2
43	PFFZZ	11083	5M6213	PLUG, PIPE	2
* 44	PFFZZ	11083	1A2029	BOLT MACHINE	8
45	PFFZZ	11083	8P805	GASKET	1

(1) ITEM NO	(2) SMR CODE	(3) CAGEC	(4) PART NUMBER	(5) DESCRIPTION AND USABLE ON CODES (UOC)	(6) QTY
46	PFFZZ	11083	8P804	COVER, ACCESS.....	1

END OF FIGURE

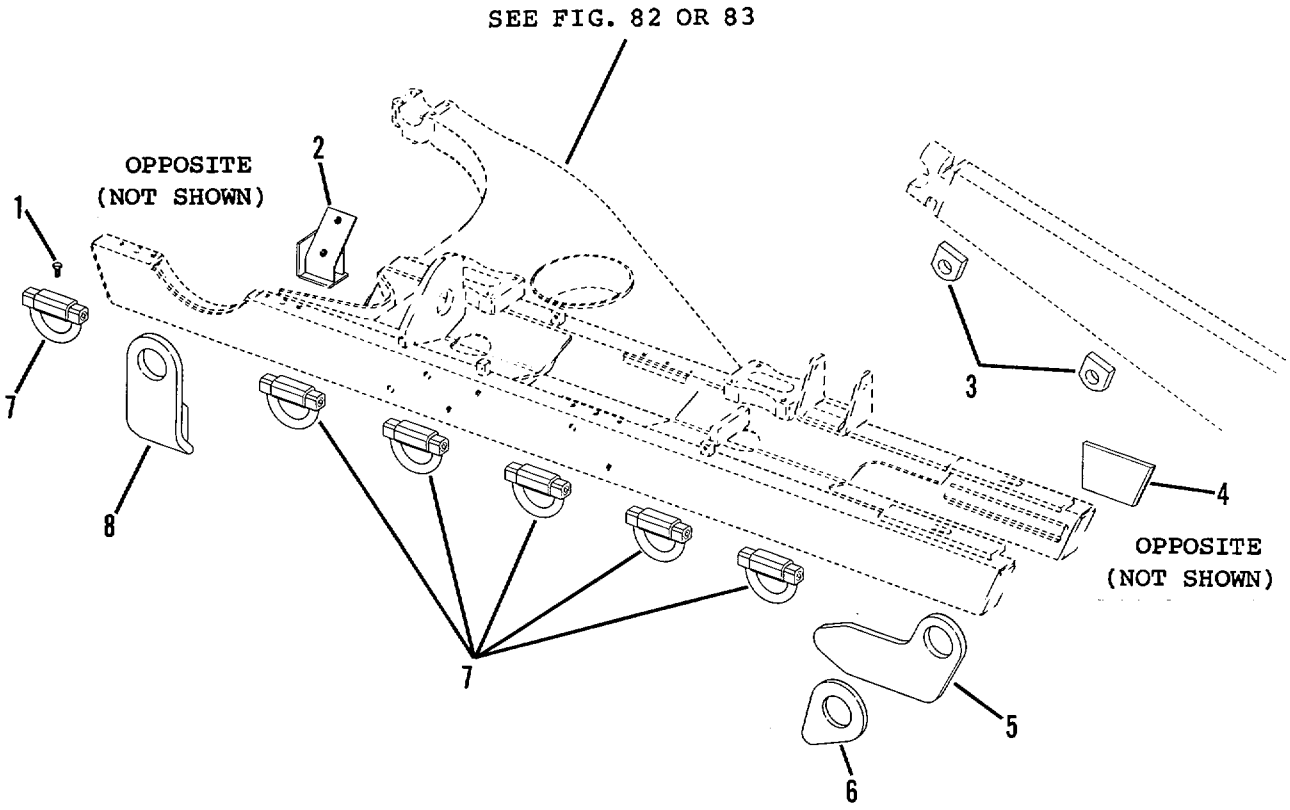

Figure 81. Lift and Tiedown Eyes

(1) ITEM NO	(2) SMR CODE	(3) CAGEC	(4) PART NUMBER	(5) DESCRIPTION AND USABLE ON CODES (UOC)	(6) QTY
				GROUP 13 WHEELS AND TRACKS	
				GROUP 1301 - SUSPENSICN ASSEPELY	
				FIG. 81 - LIFT AND TIEDOWN EYES	
1	PFOZZ	11083	2P4337	SCREW, TAPPING	16
2	PFOZZ	11083	5R5138	BRACKET, MOUNTING..... UOC :AGT, AGU	1
2	PFOZZ	11083	5R5137	BRACKET, MOLNTING ..... UOC:AGT, AGU	1
3	PFOZZ	11083	5R5164	PLATE, TIEDOWN..... UOC:AGT, AGU	4
4	PFOZZ	11083	5R5184	BRACKET, ANGLE ..... UOC:AGT, AGU	1
4	PFOZZ	11083	5R5185	BRACKET, ANGLE ..... UOC :AGT, AGU	1
5	PFOZZ	11383	3R3595	PAD EYE.....	2
6	PFOZZ	11083	3R4240	PLATE, MOUNTING, FLAT	2
7	PFOZZ	11083	5R66C2	HOOK, SUPPORT	16
8	PFOZZ	11083	5R5131	COUPLER, DRAWBAR, RIN	2

END OF FIGURE

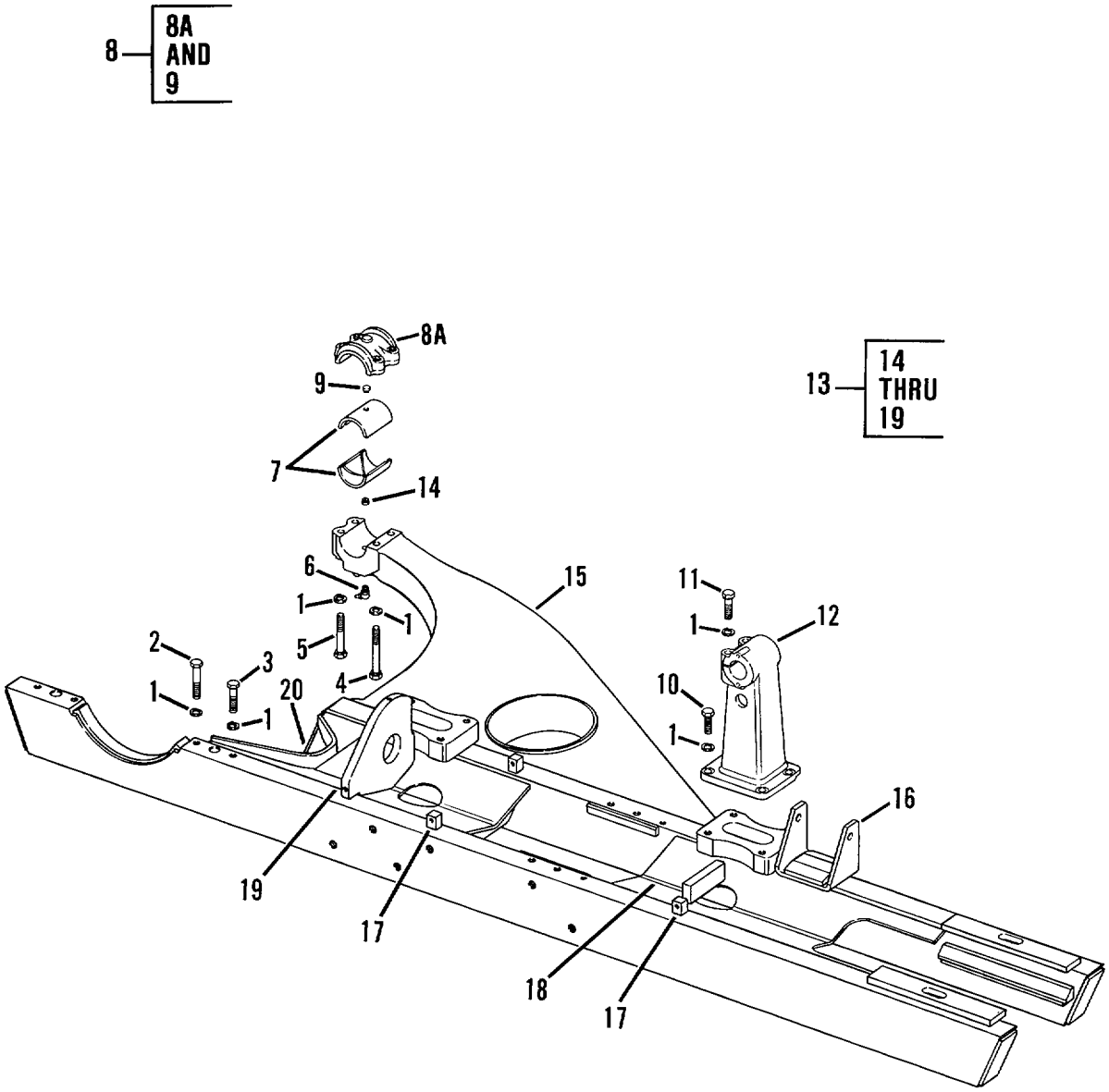

Figure 82. Track Roller Frame (Used on Models D5BNS and D5BS)

(1) ITEM NO	(2) SMR CODE	(3) CAGEC	(4) PART NUMBER	(5) DESCRIPTION AND USABLE ON CODES (UOC)	(6) QTY
				GROUP 1301 - SUSPENSION ASSEMBLY	
				FIG. 82 - TRACK ROLLER FRAME USED ON MODELS D5BNS AND D5BS	
1	PFHZZ	96906	MS35340-50	WASHER, LOCK..... UOC:AGS, AGT	40
* 2	PFHZZ	80204	B1821BH063C325N	SCREW, CAP, HEXAGON H..... UOC:AGS, AGT	4
3	PFHZZ	11083	S1625	SCREW, CAP, HEXAGON H..... UOC:AGS, AGT	4
4	PFHZZ	11083	1A8651	BOLT, MACHINE ..... UOC:AGS, AGT	4
5	PFHZZ	11083	L1169	BOLT, MACHINE ..... UOC:AGS, AGT	4
6	PFOZZ	95879	1629 B	FITTING, LUBRICATION ..... UOC:AGSIAGT	2
7	PFHZZ	11083	7B5979	SHELL, TRACK BEARING..... UOC:AGS, AGT	4
8	PFHZZ	11083	lS5315	CAP ASSEMBLY, ROLLER ..... UOC:AGS, AGT	2
8A	XAHZZ	11083	lS5314	CUP..... UOC:AGSIAGT	1
9	PFHZZ	11083	9P7752	*PIN, STRAIGHT, HEADED..... UOC:AGS, AGT	1
*10	PFHZ	80204	81821BH063C175N	SCREW, CAP, HEXAGON H4..... UOC:AGS, AGT	16
* 11	PFHZZ	80204	B1821BH063C325N	SCREW, CAP, HEXAGON H..... UOC:AGS, AGT	8
12	PFHZZ	11083	2M7207	BRACKET ..... UOC:AGS, AGT	4
13	PFHHH	11083	8P3774	FRAME ASSEMBLY, TRAC..... UOC:AGS, AGT	1
13	PFHHH	11083	8P3773	FRAME ASSEMBLY, TRAC..... UOC:AGS, AGT	1
14	PFHZZ	11083	3B1464AND9P7751	*CAP ASSEMBLY, DIAGON..... UOC:AGS, AGT	1
15	PFHZZ	11083	lS5321	*FRAME SECTION, STRUC..... UOC:AGS, AGT	1
15	PFHZZ	11083	lS5322	BRACE ASSEMBLY..... UOC:AGS, AGT	1
16	PFHZZ	11083	8M6243	*BRACKET, DOUBLE ANGL ..... UOC:AGS, AGT	1
17	PFHZZ	11083	8K8428	BLOCK ..... UOC:AGS, AGT	3
18	PFHZZ	11083	7K1293	WEAR STRIP..... UOC:AGS, AGT	1
19	PFHZZ	11083	2KZ879	FRAME SECTION, STRUC ..... UOC:AGSTAGT	2
20	PFHZZ	11083	4K4780	WEAR STRIP..... UOC:AGS, AGT	2

END OF FIGURE

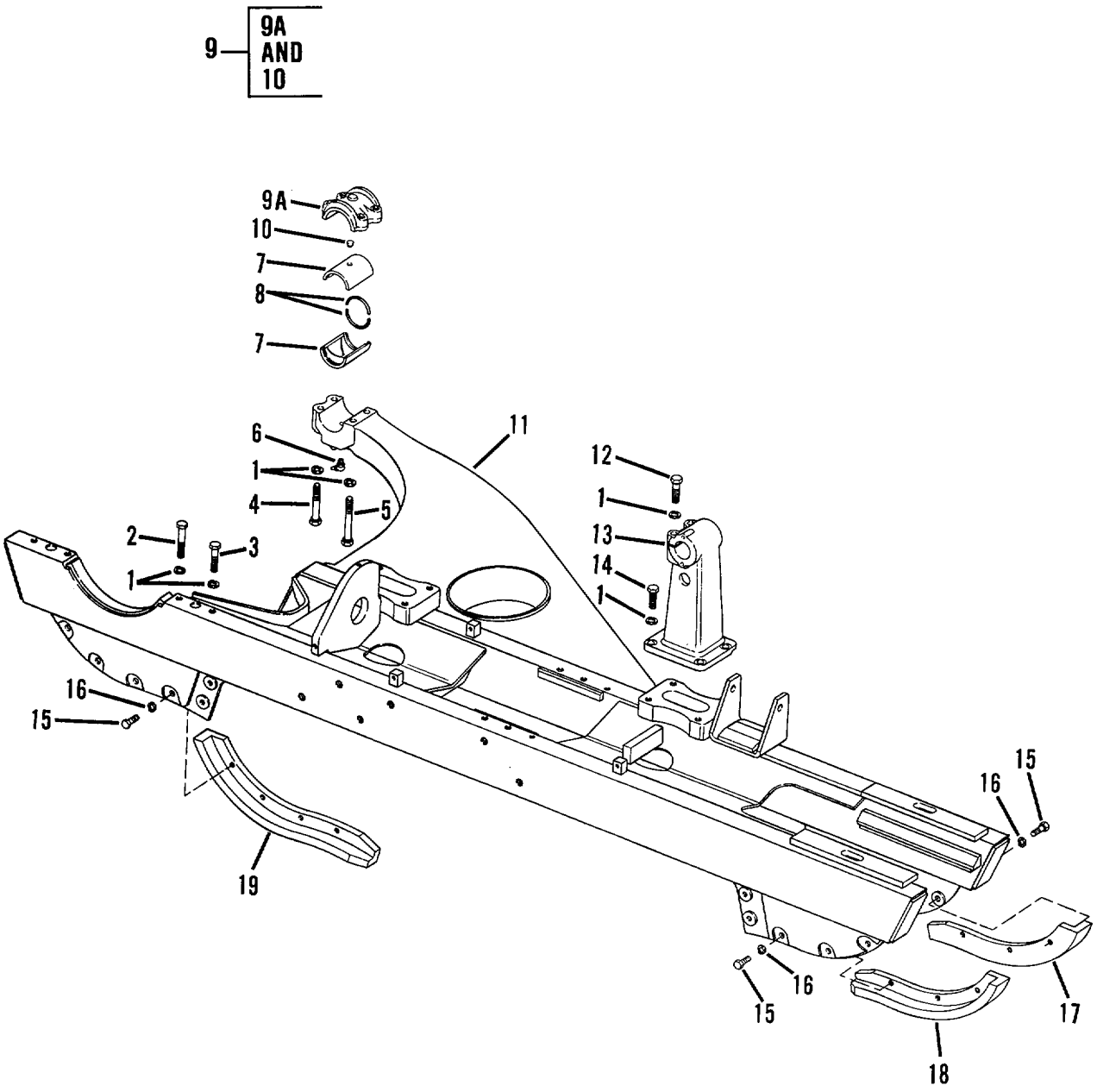

Figure 83. Track Roller Frame (Used on Models D5BS1 and D5BNS1

	(1) ITEM NO	(2) SMR CODE	(3) CAGEC	(4) PART NUMBER	(5) DESCRIPTION AND USABLE ON CODES (UOC)	(6) QTY
					GROUP 1302 - TRACK SUPPORT ROLLERS AND BRACKETS	
					FIG. 83 - TRACK ROLLER FRAME USED ON MODELS D5BS1 AND D5BNS1	
	1	PFHZZ	96906	MS35340-50	WASHER, LOCK UOC:AGU, AGV	40
	*2	PFHZZ	80204	B1821BH063C325N	SCREW, CAP, HEXAGON H UOC:AGU, AGV	4
	3	PFHZZ	11083	S1625	SCREW, CAP, HEXAGON H UOC:AGU, AGV	4
*	4	PFHZZ	11083	L1169	BOLT, MACHINE UOC:AGU, AGV	4
*	5	PFHZZ	11083	1A8651	BOLT, MACHINE UOC:AGU, AGV	4
	6	PAOZZ	95879	1629 B	FITTING, LUBRICATION UOC:AGU, AGV	2
	7	PFH2Z	11083	7T0206	BEARING HALF, SLEEVE UOC:AGU, AGV	4
	8	PFHZZ	11083	6V8543	SEAL, PLAIN UOC: AGU, AGV	8
	9	PFHZZ	11083	lS5315	CAP ASSEMBLY, ROLLER UOC:AGU, AGV	2
*	9A	XAHZZ	11083	IS5314	CAP UOC:AGU, AGV	1
	10	PFHZZ	11083	9P7752	PINSTRAIGHTHEAEDE UOC:AGU, AGV	1
	11	PFHZZ	11083	8P3770	ARM ASSEMBLY, PIVOT R.H UOC:AGU, AGV	1
	11	PFHZZ	11083	8P3769	ARM ASSEMBLY, PIVOT LH UOC:AGU, AGV	1
*	12	PFHZZ	11083	8S9092	BOLT, MACHINE UOC:AGU, AGV	8
	13	PFHZZ	11083	2M7207	BRACKETC UOC:AGU, AGV	4
*	14	PFHZZ	80204	B1821BH063C175N	SCREW, CAP, HEXAGON H UOC:AGU, AGV	16
*	15	PFOZZ	11083	7B3235	BOLT, MACHINE UOC:AGU, AGV	20
	16	PFOZZ	96906	MS35338-48	WASHER.LOCK UOC:AGU, AGV	20
	17	PFOZZ	11083	9S8354	GUARD, MECHANICAL DR UOC:AGU, AGV	2
	18	PFOZZ	11083	9S8353	GUARD, MECHANICAL DR UOC:AGU, AGV	2
	19	PFOZZ	11083	9S8246	GUARD, MECHANICAL DR L.H UOC:AGU, AGV	1
	19	PFOZZ	11083	9S8245	GUARD, MECHANICAL DR R.H UOC:AGU, AGV	1

END OF FIGURE

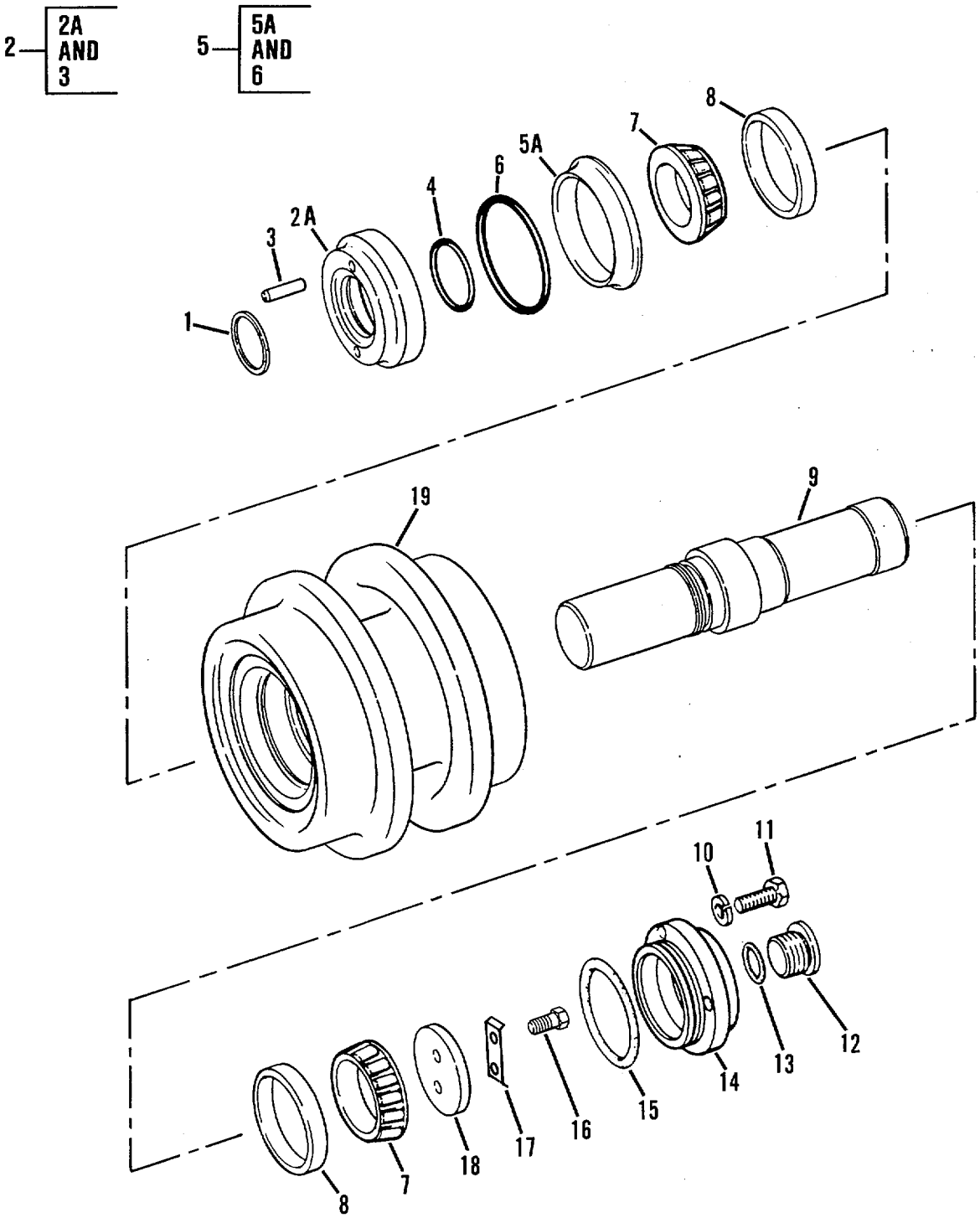

Figure 84. Track Carrier Roller

(1) ITEM NO	(2) SMR CODE	(3) CAGEC	(4) PART NUMBER	(5) DESCRIPTION AND USABLE ON CODES (UOC)	(6) QTY
				GROUP 1302 - TRACK SUPPORT ROLLERS AND BRACKETS	
				FIG. 84 - TRACK CARRIER ROLLER	
1	PAFZZ	80756	RS200	RING, RETAINING	1
2	PFFZZ	11083	9S3567	COLLAR ASSEMBLY	1
* 2A	XBFZZ	11083	9S3566	COLLAR, SHAFT	1
3	PFFZZ	11083	lM4291	PIN, STRAIGHT, HEADLE	2
4	PFFZZ	11083	1H9696	PACKING, PREFORMED	1
5	PAFZZ	11083	9W6647	PACKING WITH RETAIN	1
5A	XAFZZ	11083	8H2229	RETAINER	2
6	PFFZZ	11083	8H2262	PACKING, PREFORMED	2
7	PFFZZ	08162	JLM104948	CONE AND ROLLERSTA	2
8	PFFZZ	08162	JLM104910	CUP, TAPERED ROLLER	2
* 9	XBFZZ	11083	3T3207	SHAFT, SHOULDERED	1
10	PFFZZ	96906	MS35338-46	WASHER, LOCK	3
* 11	PFFZZ	11083	S1594	BOLT, MACHINE	3
12	PFFZZ	11083	2P347	PLUG, MACHINE THREAD	1
13	PAFZZ	11083	lS8947	PACKING, PREFORMED	1
14	PFFZZ	11083	5M2043	COVER, ACCESS	1
15	PFFZZ	11083	2H6338	PACKING, PREFORMED	1
16	PFFZZ	11083	5K9107	BOLT, SELF-LOCKING-	2
17	PFFZZ	11083	OT0329	LOCKING PLATE, NUT A	1
18	PFFZZ	11083	BP6188	PLATE, RETAINING, BEA	1
19	PFFZZ	11083	953569	ROLLER	1

END OF FIGURE

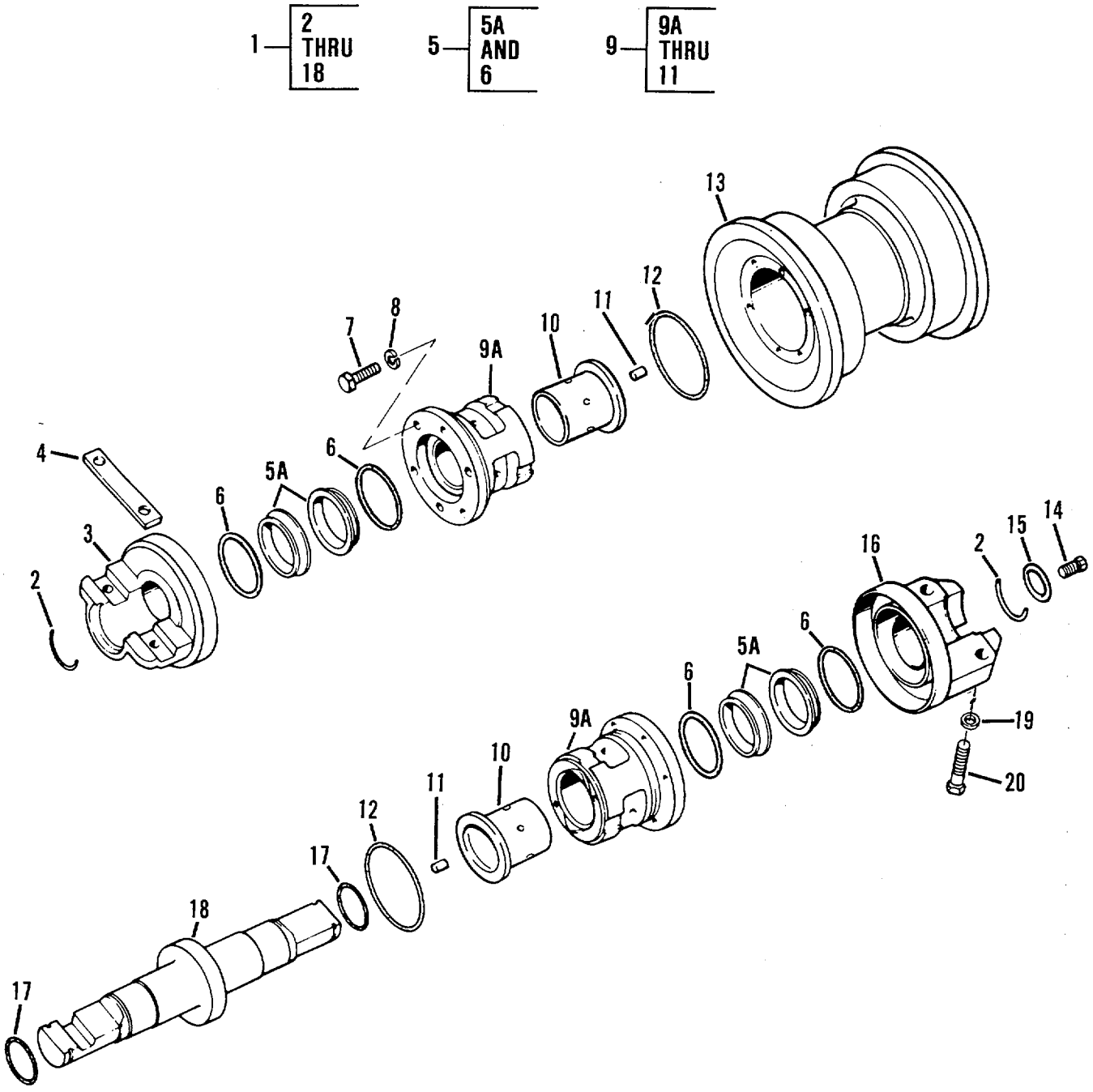

Figure 85. Track Roller - Single Flange

(1) ITEM NO	(2) SMR CODE	(3) CAGEC	(4) PART NUMBER	(5) DESCRIPTION AND USABLE ON CODES (UOC)	(6) QTY
				GROUP 1302 - TRACK SUPPORT RELLERS AND) BRACKETS	
				FIG. 85 - TRACK ROLLER - SINGLE FLANGE	
1	PFFFF	11083	7K8572	ROLLER ASSEMBLY, SIN.....	6
2	PFFZZ	11083	617382	.RING	2
3	PFFZZ	11083	IM3812	.COLLAR	1
4	P4FZZ	11083	4FO324	.LOCK PLATE, ROLLER F	1
5	PAFZZ	11083	2M2858	.PARTS KIT, SEAL REPL	2
5A	XAFZZ	11083	IM3098	..RING	2
6	PFFZZ	11083	1M3097	..PACKING, PREFORMED	2
7	PFFZZ	96936	MS90728-62	.SCREW, CAP, HEXAGON H.....	12
8	PFFZZ	11l83	5M2894	.WASHER, FLAT.....	12
9	PFFZZ	11083	2P8045	.BUSHING ASSEMBLY, TR.....	2
9A	XAFZZ	11083	8S5805	..BUSHING	1
10	PFFZZ	11U83	8P6652	..BEARING, SLEEVE	1
11	PAFZZ	11083	982269	..PIN, STRAIGHT, HEADLE.....	2
12	PAFZZ	88044	AN123902	.PACKING, PREFORMED	2
13	PFFZZ	11083	9S9535	.WHEEL, SOLID RUBBER.....	1
14	PFFZZ	11083	2P347	.PLUG, MACHINE THREAD	1
15	PFFZZ	11083	1S8947	.PACKING, PREFORMED	1
16	PFFZZ	11083	5M06217	.COLLAR	1
17	PFFZZ	96906	MS9021-225	.PACKING, PREFORMED	2
18	PFFZZ	11083	5M1915	.SHAFT, SHOULDERED	1
19	PFFZZ	96906	MS35340-50	WASHER, ...	4
20	PFFZZ	11083	S1601	SCREW, CAP, HEXAGON	4

END OF FIGURE

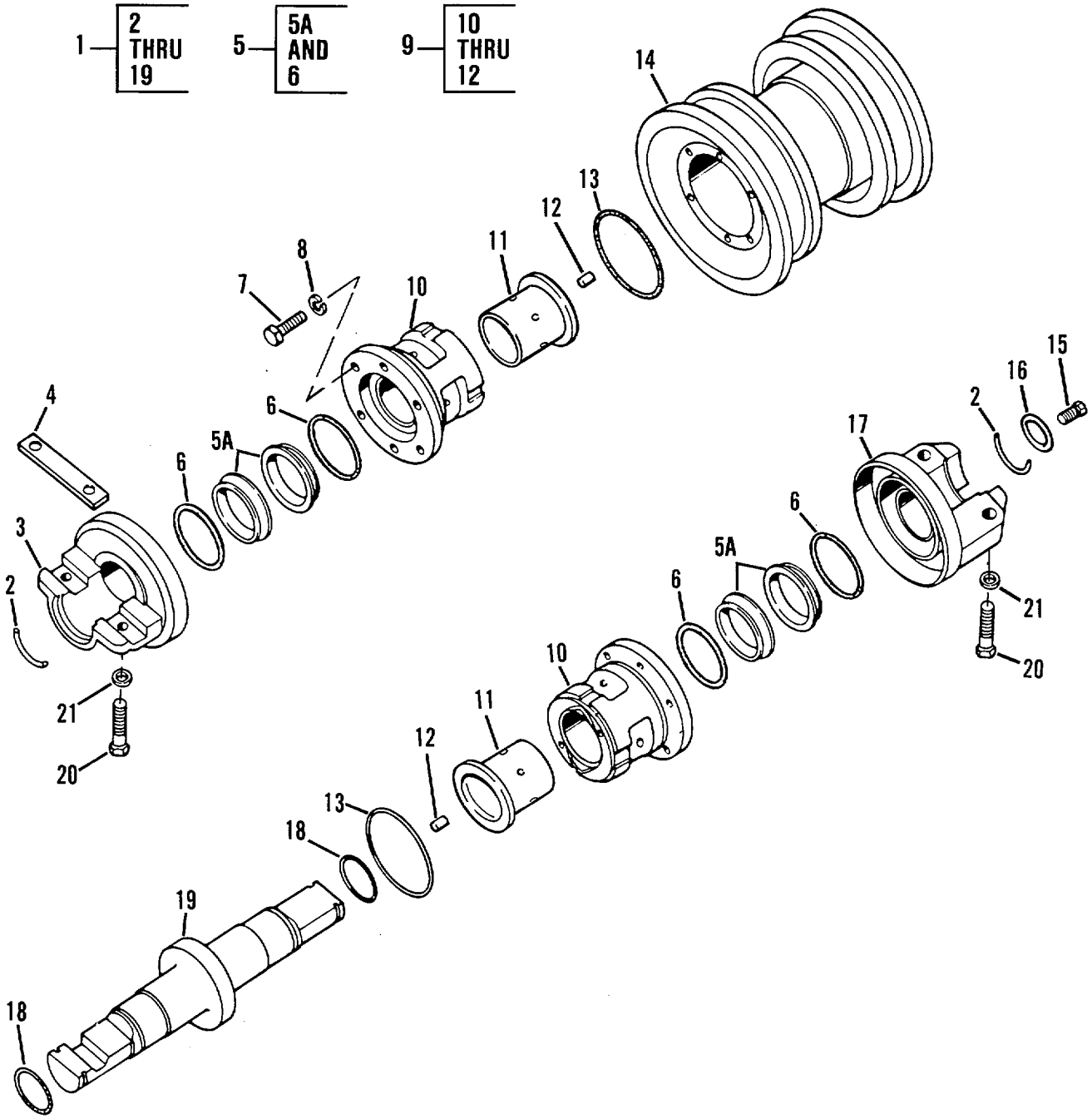

Figure 86. Track Roller - Double Flange

(1) ITEM NO	(2) SMR CODE	(3) CAGEC	(4) PART NUMBER	(5) DESCRIPTION AND USABLE ON CODES (UOC)	(6) QTY
				GROUP 1302 - TRACK SUPPORT ROLLERS AND BRACKETS	
				FIG. 86 - TRACK RCLLER - DOUBLE FLANGE	
1	PFFFF	11083	7K8571	ROLLER ASSEMBLY, TRA	6
2	PFFZZ	11083	6H7382	.RING	2
3	PFFZZ	11083	lM3812	.COLLAR	1
4	PAFZZ	11083	4FO324	.LOCK PLATET, ROLLER F	1
5	PFFZZ	11083	2M2858	.PARTS KIT, SEAL REPL.	2
5A	XAFZZ	11083	1M3098	..RING	4
6	PFFZZ	11083	1M3097	.PACKING, PREFORMED	4
7	PFFZZ	96936	MS90728-62	.SCREW, CAP, HEXAGON	12
8	PFFZZ	96906	MS35338-46	.WASHER, LOCK.....	10
9	PFFZZ	11383	2P8045	.BUSHING ASSEMBLY, TR.....	2
10	XAFZZ	11083	8S5805	..BUSHING	1
11	PFFZZ	11083	8S5796	..BEARING, SLEEVE, ...	1
12	PAFZZ	11083	9B2289	..PIN, STRAIGHT, HEADLE.....	2
13	PFFZZ	88U44	AN123902	.PACKING, PREFORMED	2
14	PFFZZ	11083	9S9534	.RIM ASSEMBLYTRACK	1
15	PFFZZ	11083	2P347	.PLUG, MACHINE THREAD	1
16	PFFZZ	11083	1S8947	.PACKING, PREFORMED	1
17	PFFZZ	11083	5MU627	.COLLAR	1
18	PFFZZ	96906	MS9021-225	.PACKING, PREFORMED	2
19	PFFZZ	11083	5M1915	.SHAFT, SHOULDERED	1
20	PFFZZ	11083	S1601	SCREW, CAP, HEXAGON	4
21	PFFZZ	96906	MS35340-50	WASHER, LOCK.....	4

END OF FIGURE

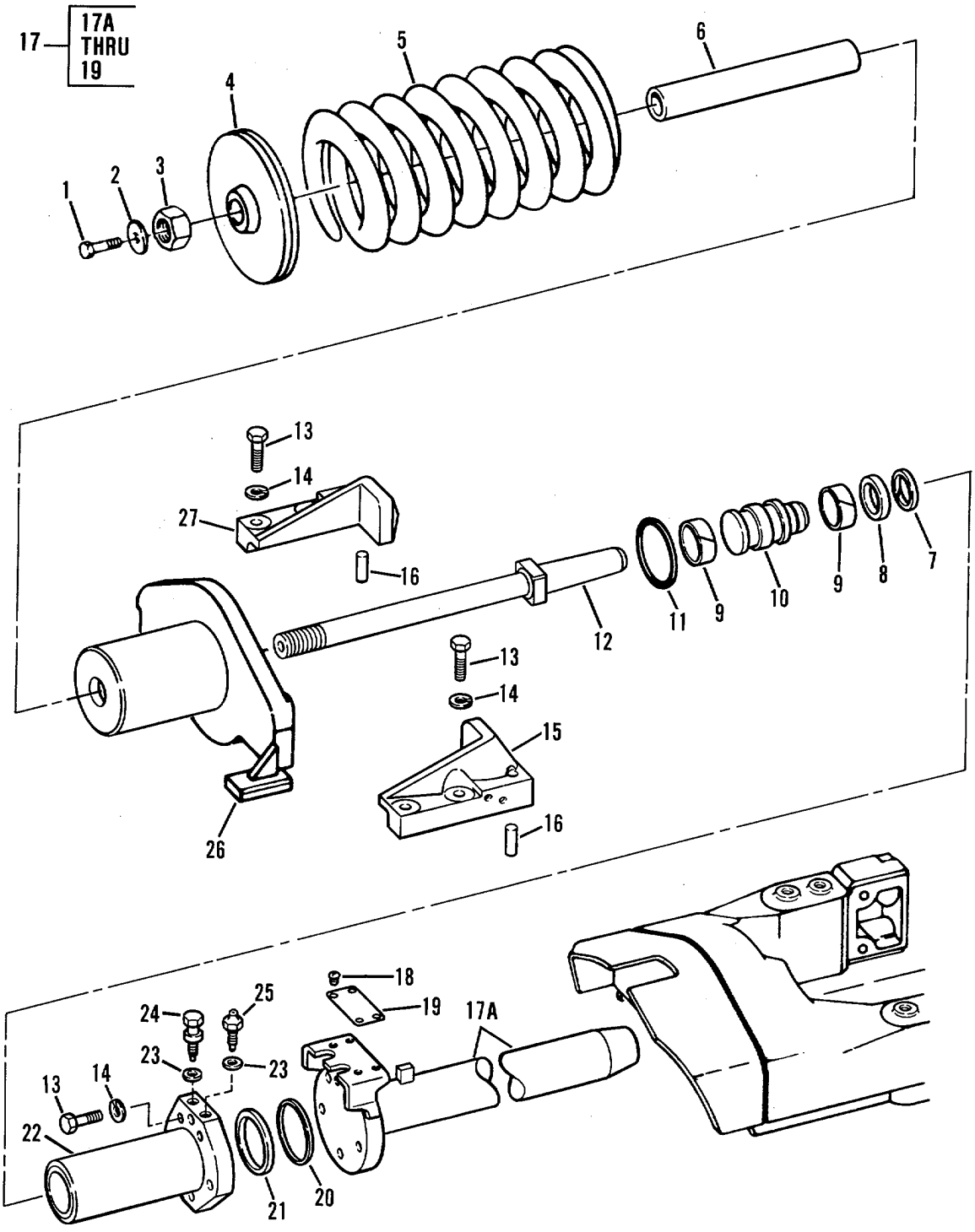

Figure 87. Idler Spring Tension - Front

(1) ITEM NO	(2) SMR CODE	(3) CAGEC	(4) PART NUMBER	(5) DESCRIPTION AND USABLE ON CODES (UOC)	(6) QTY
				GROUP 1303 - TRACK IDLERS AND BRACKETS	
				FIG. 87 - IDLER SPRING TENSION - FRONT	
1	PFFZZ	11083	S1620	BOLT, MACHINE	2
2	PFFZZ	11083	2S1654	WASHER, FLAT	2
3	PFFZZ	96906	MS51967-35	NUT, PLAIN, HEXAGON	2
* 4	XBFZZ	11083	9H4104	PILOT	2
5	PFFZZ	11083	7H2445	SPRING, SPECIAL	2
6	PFFZZ	11083	7H2424	SPACER, SLEEVE	2
7	PFFZZ	80756	RS-150	RING, RETAINING	2
8	PFFZZ	11083	ZS5867	PACKING, PREFORMED	2
9	PFFZZ	11083	7H2423	RING	4
10	PFFZZ	11083	9H7670	PISTON, TRACK ROLLER	2
11	PFFZZ	11083	7H2444	PACKING, PREFORMED	2
12	PFFZZ	11083	2P7622	BOLT, INTERNALLY REL	2
* 13	PFFZZ	80204	B1821SH063C200N	SCREW, CAP, HEXAGON H	20
14	PFFZZ	96906	MS35340-50	WASHER, LOCK	28
15	PFFZZ	11083	2V7524	STOP, RECOIL SPRING	2
16	PFFZZ	11083	7M1201	PIN, STRAIGHT, HEADLE	4
17	PFFZZ	11083	9G8246	ROD ASSEMBLY, IDLER	2
17A	XAFZZ	11083	7G7530	.ROD	1
18	PFFZZ	11083	7B3028	.SCREW, DRIVE	4
19	PFFZZ	11083	2S5927	.PLATE, IDENTIFICATIO	1
20	PFFZZ	11083	4M7022	RING	2
21	PAFZZ	11083	4M7021	SEAL	2
22	PFFZZ	11083	8M6676	CYLINDER	2
23	PFFZZ	11083	5M6708	WASHERISHOULDERED	4
24	PAFZZ	57733	330671	STEM, FLUID VALVE	1
25	PFOZZ	11083	2S5925	VALVE HYDRAULIC	2
26	PFFZZ	11083	156422	PILOT ASSEMBLY	2
27	PFFZZ	11083	2V7525	STOP, FRONT IDLER SP	2

END OF FIGURE

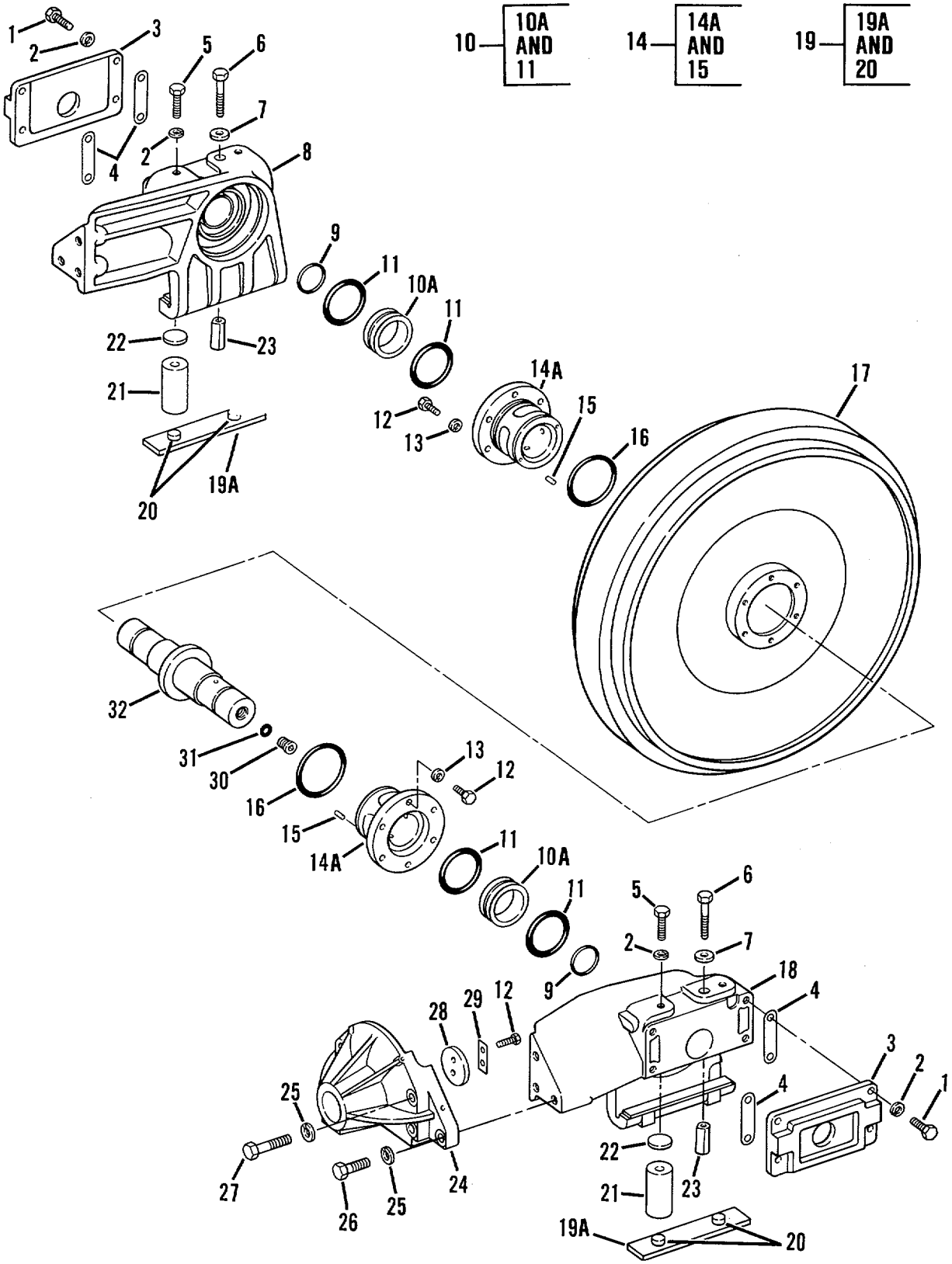

Figure 88. Idler Wheel - Front

(1) ITEM NO	(2) SMR CODE	(3) CAGEC	(4) PART NUMBER	(5) DESCRIPTION AND USABLE ON CODES (UOC)	(6) QTY
				GROUP 1303 - TRACK IDLERS AND BRACKETS FIG. 88 - IDLER WHEEL - FRONT	
* 1	PFFZZ	11083	S1587	BOLTIMACHINE	16
2	PFFZZ	96906	MS35338-48	WASHER, LOCK	24
* 3	XBFZZ	11083	7M9398	PLATE GUIDE	4
4	PFFZZ	11083	4K7384	SPACER, PLATE	24
* 5	PFFZZ	11083	051585	BOLT, MACHINE	8
6	PFFZZ	11083	3B8428	BOLT, MACHINE	4
7	PFFZZ	11083	4K9943	WASHER, FLAT	4
8	PFFZZ	11083	9G8300	BEARING, IDLER	1
9	PFFZZ	96906	MS9021-225	PACKING, PREFORMED	4
10	PFFZZ	11083	2M2858	PARTS KIT, SEAL REPL	4
10A	XAFZZ	11083	1M3098	.RETAINER	2
11	PFFZZ	11083	1M3097	.PACKING, PREFORMED	2
* 12	PFFZZ	11083	1A2029	BOLT, MACHINE	24
13	PFFZZ	96906	MS35338-46	WASHER, LOCK	24
14	PFFZZ	11083	3P8272	BUSHING	4
14A	XAFZZ	11083	8S5803	BUSHING	1
15	PFFZZ	11083	9B2289	PIN, STRAIGHT, HEADLE	2
16	PFFZZ	88044	AN123902	PACKINGIPREFORMED	4
17	PFFZZ	11083	8S2560	IDLER, TRACK, FRONT	2
18	PFFZZ	11083	9G8301	HOUSING, BEARING UNINI	1
19	PFFZZ	11083	1F8875	PLATE, SHAFT END	4
19A	XAFZZ	11083	1F8876	.PLATE	1
20	PFFZZ	11083	6B6022	.PIN, END PLATE, IDLER	2
21	PFFZZ	11083	4F5004	SPRING, HELICAL, COMP	8
22	PFFZZ	11083	481382	DISK, SOLID, PLAIN	8
23	PAFZZ	11083	5M5000	LOCK PIN, IDLER	4
24	PFFZZ	11083	4M1186	HOUSING, BEARING UNI	2
25	PFFZZ	96906	MS35340-50	WASHER, LOCK	8
* 26	PFFZZ	80204	B1821BH063C200N	SCREW, CAP, HEXAGON H	8
27	PFFZZ	11083	1B4367	BOLT, MACHINE	8
28	PAFZZ	11083	7M2461	SPACER, PLATE	2
29	PFFZZ	11083	0T0329	LOCKING PLATE, NUT A	2
30	PFFZZ	11083	2P347	PLUG, MACHINE THREAD	2
31	PFFZZ	11083	1S8947	PACKING, PREFORMED	2
* 32	XBFZZ	11083	5K305	SHAFT, SHOULDERED	2

END OF FIGURE

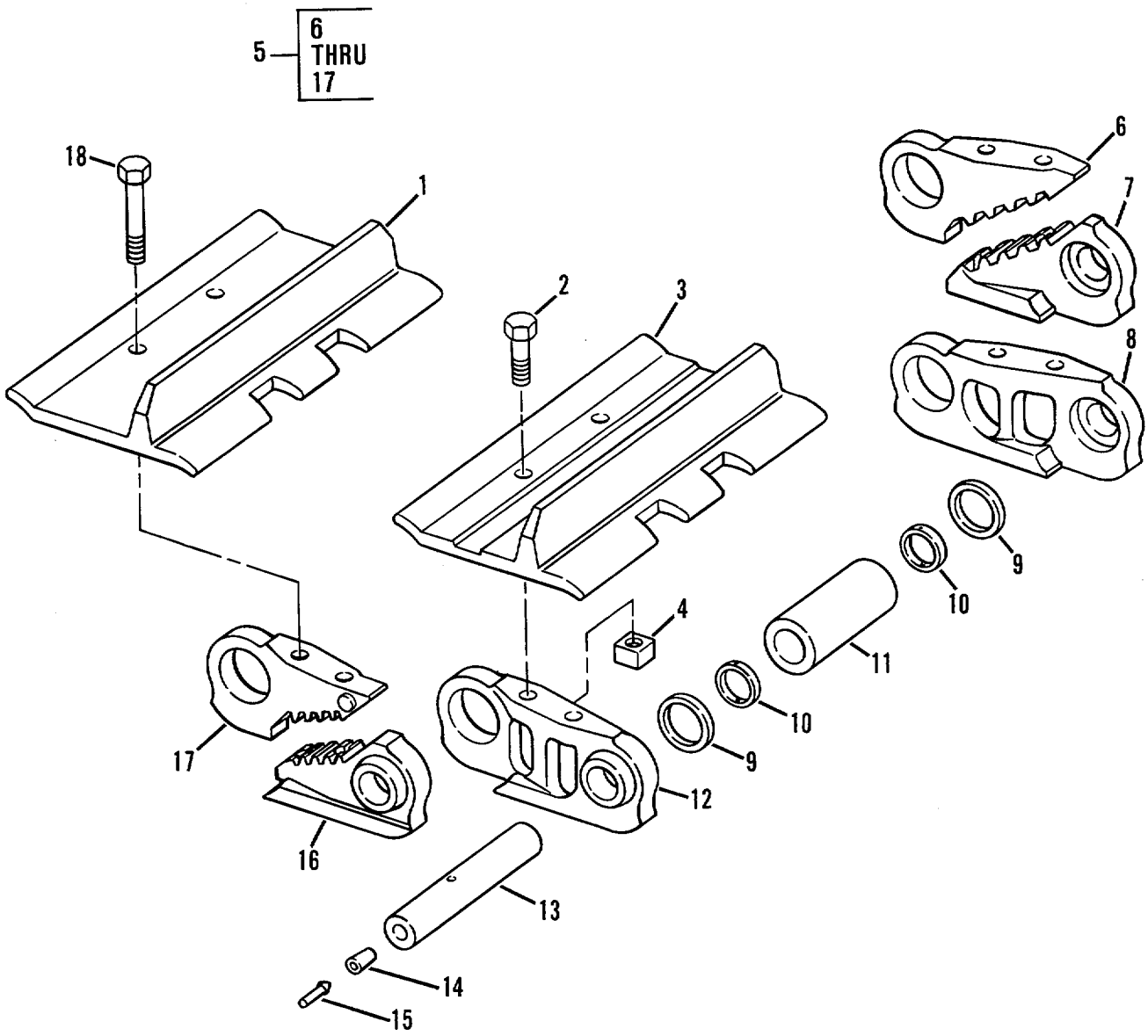

Figure 89. Track

(1) ITEM NO	(2) SMR CODE	(3) CAGEC	(4) PART NUMBER	(5) DESCRIPTION AND USABLE ON CODES (UOC)	(6) QTY
				GROUP 1305 - TRACK ASSEMBLY	
				FIG. 89 - TRACK	
1	PFOZZ	11083	3P3888	TRACK SHOE, VEHICULA,	1
2	PFOZZ	11083	7H3597	BOLT, MACHINE	152
3	PFOZZ	11083	5S0820	TRACK SHOE, VEHICULA	38
4	PAOZZ	11083	1M1408	NUT, PLAIN, SQUARE	152
5	PFFZZ	11083	3P3885	LINK, TRACK SHOE,	1
6	PFFZZ	11083	3P304t	.LINK, TRACK SHOE, CON L.H.-BUSHING END	1
7	PFFZZ	11083	3P3044	LINK, TRACK MASTER L.H.-PIN ENDC	1
8	PFFZZ	11083	3P7154	.LINK, TRACK SHOE, CON L.H	36
9	PFFZZ	11083	3P3883	.RETAINER, PACKING	78
13	PFFZZ	11083	3P3878	.SPACER, RING	78
11	PFFZZ	11383	3P387S	.BUSHING, SLEEVE	39
12	PFFZZ	11J83	3P7153	.LINK, TRACK SHOE, CON R.H	38
13	PFFZZ	11083	3P3880	.PIN, STRAIGHT, HEADLE	39
14	PAFZZ	11083	9G1642	.BUSHINGINCNPETALLIC	39
15	PFFZZ	11083	6YU473	.PLUG, PROTECTIVE, DUS	39
16	PFFZZ	11083	3P3043	.LINK, TRACK SHOE, CON R.H.-PIN END	1
17	PFFZZ	11083	2P3045	.LINK, TRACK SHOE, CON R.H.-BUSHING END	1
18	PAFZZ	11083	3P2274	BOLT, MACHINE	8

END OF FIGURE

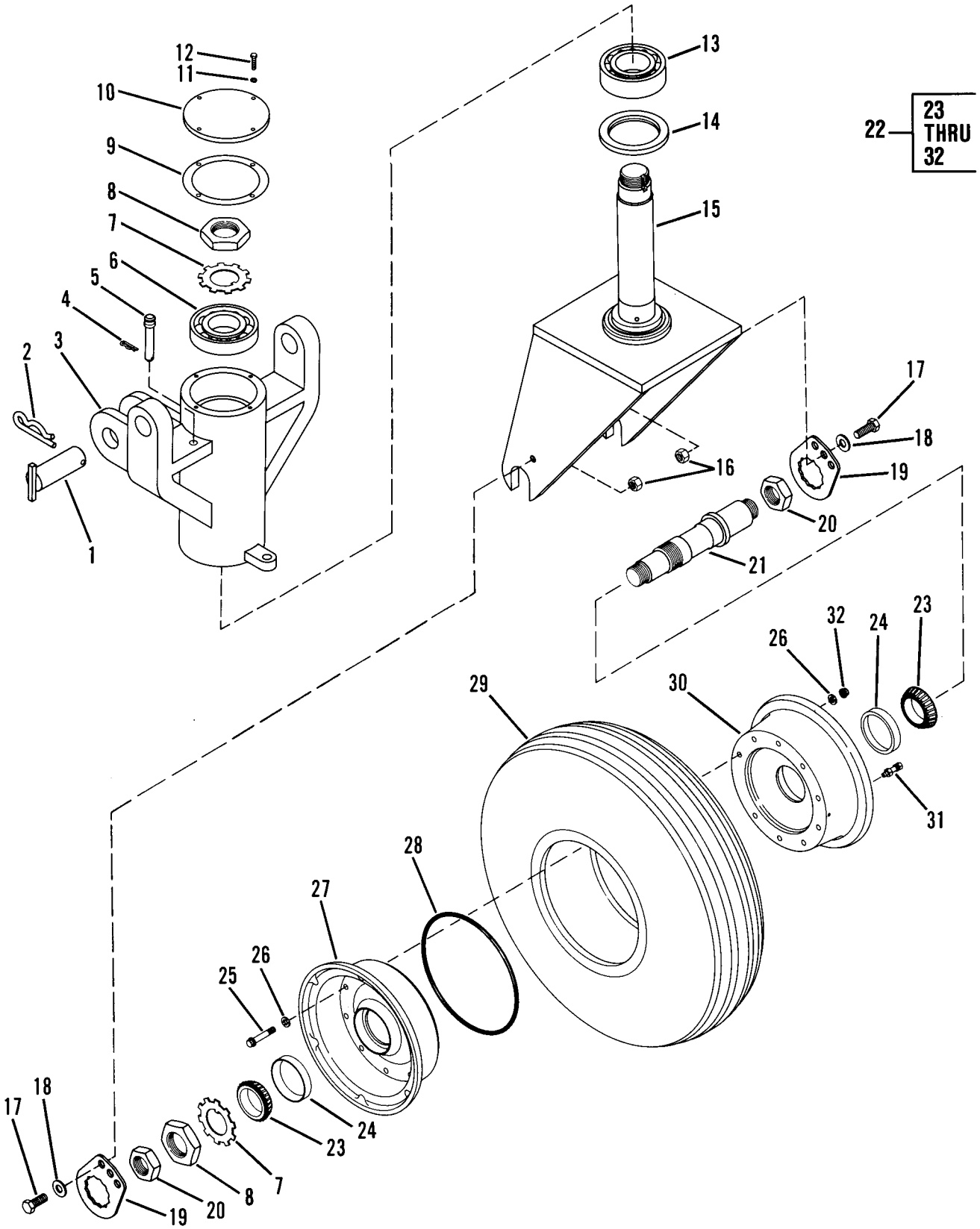

Figure 90. Nose Wheel (Used on Models D5BS and D5BS1)

(1) ITEM NO	(2) SMR CODE	(3) CAGEC	(4) PART NUMBER	(5) DESCRIPTION AND USABLE ON CODES (UOC)	(6) QTY
				GROUP 1311 - WHEEL ASSEMBLY	
				FIG. 90 - NOSE WHEEL USED ON MODELS D5BS AND D5BS1	
1	PAOZZ	11083	3R8509	PIN, STRAIGHT, HEADED ..... UOC:AGT, AGU	3
2	PFDZZ	11083	5P8837	PIN, LOCK..... UOC:AGT, AGU	3
3	PFOZZ	11083	3R8464	YOKE ASSEMBLY ..... UOC:AGT, AGU	1
4	PFOZZ	11083	3J1770	PIN, LOCK..... UOC:AGTIAGU	1
5	PAOZZ	11083	3R8534	PIN, SHOULDER, HEADLE..... UOC:AGT, AGU	1
6	PAOZZ	43334	30311	BEARING, BALL, ANNULA..... UOC:AGT, AGU	1
7	PFOZZ	11083	2B3455	WASHER, KEY ..... UOC:AGT, AGU	2
* 8	XBOZZ	11083	2B3457	NUT, PLAIN, ROUND ..... UOC:AGT, AGU	2
9	PAOZZ	11083	3R8502	GASKET..... UOC:AGT, AGU	1
10	PFOZZ	11083	3R8504	COVER, ACCESS..... UOC:AGT, AGU	1
11	PAOZZ	11083	5P537	WASHER ..... UOC:AGT, AGU	4
* 12	PFOZZ	80204	B1821BH025C088N	SCREW, CAP, HEXAGON H..... UOC:AGT, AGU	4
13	PAOZZ	43334	5213	BEARING, BALL, ANNULA..... UOC:AGT, AGU	1
14	PFOZZ	11083	300085	SEAL, PLAIN ENCASED ..... UOC:AGT, AGU	1
* 15	XBOZZ	11083	3R8492	SHAFT ASSEMBLY, SPIN..... UOC:AGT, AGU	1
16	PFOZZ	19207	443339	NUT, SELF-LOCKING, HE ..... UOC:AGT, AGU	2
17	PFOZZ	11083	8F9372	SCREW, CAP, HEXAGON H..... UOC:AGT, AGU	2
18	PFOZZ	11083	5P1076	WASHER, SHOULDERED A ..... UOC: AGT, AGU	4
19	PAOLZ	11083	5R5103	BRACKET, SHAFT RETAI..... UOC:AGT, AGU	2
20	PFOZZ	11083	1A3585	NUT, PLAIN, HEXAGON ..... UOC:AGT, AGU	2
* 21	XBOZ	11083	5R5100	SHAFT, SHOULDERED ..... UOC:AGT, AGU	1
22	PFOOO	83187	3-1379	WHEEL, PNEUMATIC TIR ..... UOC:AGT, AGU	1
23	PAOZZ	11083	6M1882	CONE AND ROLLERS, TA..... UOC:AGT, AGU	1

(1) ITEM NO	(2) SMR CODE	(3) CAGEC	(4) PART NUMBER	(5) DESCRIPTION AND USABLE ON CODES (UOC)	(6) QTY
24	PAOZZ	11083	6MI881	.CUP, TAPERED ROLLER ..... UOC:AGT, AGU	1
25	PFOZZ	97153	43-786	.BOLT, MACHINE ..... UOC :AGT, AGU	10
26	PFOZZ	96936	MS20032C6	.WASHER, RECESSED..... UOC:AGT, AGU	1
27	PFOZZ	97153	30U-519	.WHEEL SEGMENT, PNEUM..... UOC:AGT, AGU	1
28	PAOZZ	97153	68-216	.PACKING, PREFORMED ..... UOC:AGT, AGU	1
29	PAOZZ	97153	418-58	.TIRE, PNEUMATIC..... UOC :AGT, AGU	1
30	PFOZZ	97153	300-520	.WHEEL SEGMENT, PNEUM..... UOC:AGT, AGU	1
31	PAOZZ	97153	211-47	.VALVE ASSEMBLY..... UOC:AGT, AGU	1
32	PAOZZ	97153	42FLW624	.NUT, SELF-LOCKINGE, EX ..... UOC:AGT, AGU	10

END OF FIGURE

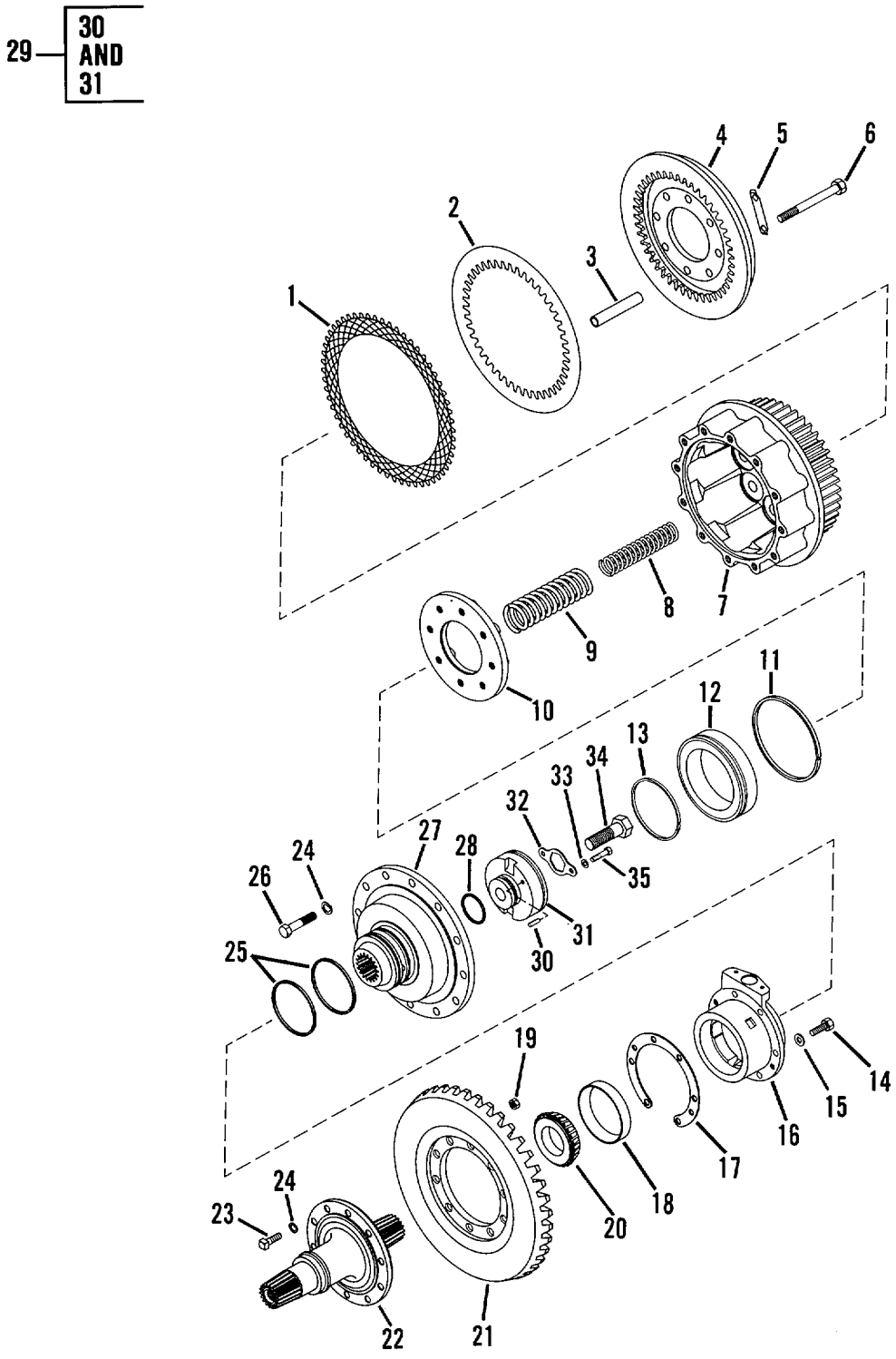

Figure 91. Steering Clutch

	(1) ITEM NO	(2) SMR CODE	(3) CAGEC	(4) PART NUMBER	(5) DESCRIPTION AND USABLE ON CODES (UOC)	(6) QTY
					GROUP 14 STEERING	
					GROUP 1403 - STEERING BRAKES	
					FIG. 91 - STEERING CLUTCH	
	1	PAHZZ	11083	9P9382	CLUTCH ASSEMBLY, FRI	18
*	2	PAHZZ	79370	PP2	DISK, CLUTCH	16
	3	PFHZZ	11083	6P6696	BUSHING, SLEEVE	16
	4	PFHZZ	11083	8P8240	PRESSURE PLATE ASSE	2
	5	PAHZZ	11083	9M6775	LOCK PLATE	8
	6	PFHZZ	11083	5D9514	BOLT, MACHINE	16
	7	PAHZZ	11083	3T1900	DRUM, CLUTCH	2
	8	PFHZZ	11083	6P6630	SPRING, HELICAL, COMP	16
	9	PFHZZ	11083	6P6586	SPRING, HELICAL, COMP	16
	10	PFHZZ	11083	1M9444	RETAINER	2
	11	PFHZZ	11083	8M7438	PACKING, PREFORMED	2
	12	PFHZZ	11083	8P1353	PISTON-STEERING CLU	2
	13	PFHZZ	11083	9M1393	RETAINER, PACKING	2
*	14	PFHZZ	11083	0S1585	BOLT, MACHINE	12
	15	PFHZZ	96906	MS27183-17	WASHER, FLAT	12
	16	PFHZZ	11083	8P1324	HOUSING, MECHANICAL UOC:AGS, AGT	2
	16	PFHZZ	11083	8P1323	BEARING UNIT, PLAIN UOC:AGUIAGV	1
	17	PFHZZ	11083	7G4141	SHIM	2
	18	PFHZZ	08162	HM212010	CUP, TAPERED ROLLER UOC:AGS AGT	2
*	1B	PFHZZ	60038	H414210	CUP, TAPERED ROLLER UOC:AGU, AGV	1
	19	PFHZZ	16764	9418881	NUT , SELF-LOCKING, HE	10
	20	PFHZZ	08162	HM212047	CONE AND ROLLER, TA UOC:AGS, AGT	2
*	20	XDHZZ	8G357	H414236	CONE UOC:AGU, AGV	1
	21	PFHZZ	11083	8P1183	GEAR, BEVEL	1
	22	PFHZZ	11083	8P1182	SHAFT, SHOULDERED	1
	23	PFHZZ	11083	3B4990	BOLT	10
	24	PFHZZ	11083	5P8247	WASHER, FLAT	24
	25	PFHZZ	11083	7P1697	RING, PISTON	4
	26	PFHZZ	11083	1B4367	BOLTIMACHINE	24
	27	PFHZZ	11083	8P1325	HUB, STEERING CLUTCH	2
	28	PFHZZ	11083	6L1650	PACKING, PREFORMED	2
	29	PFHZZ	11083	8P8570	PILOT ASSEMBLY	2
	30	PAHZZ	11083	IT550	.PIN, SPRING	1
	31	XAHZZ	11083	8P1326	.PILOT	1
	32	PFHZZ	11083	6P6700	LOCKING PLATE, NUT A	2
	33	PFHZZ	11083	5M2894	WASHER, FLAT	4
	34	PFHZZ	11083	6F7037	SCREW, CAP, HEXAGON H	2
*	35	PFHZZ	11083	0S0509	SCREW, CAP, HEXAGON H	4

END OF FIGURE

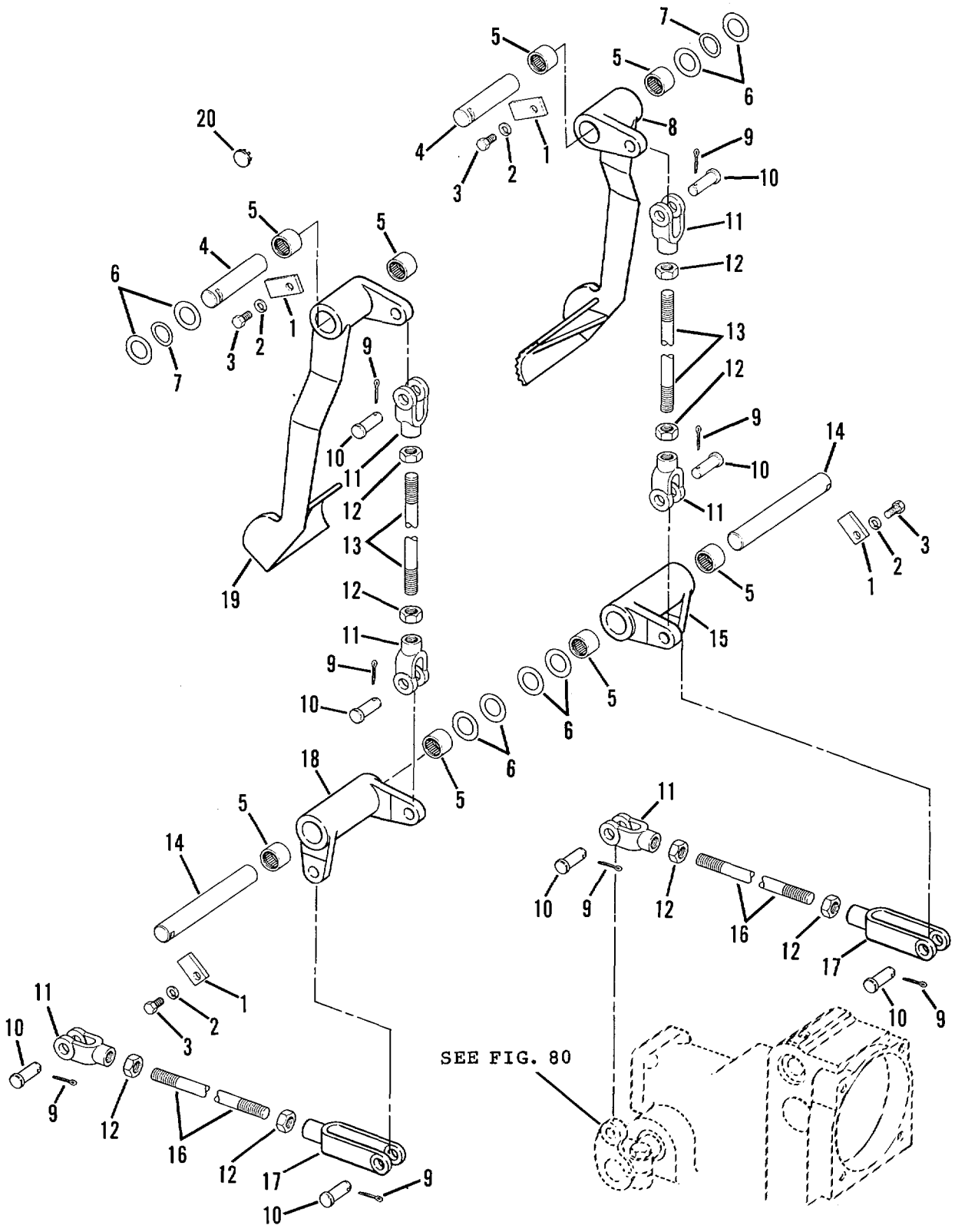

Figure 92. Steering Brake Foot Pedals and Linkage

(1) ITEM NO	(2) SMR CODE	(3) CAGEC	(4) PART NUMBER	(5) DESCRIPTION AND USABLE ON CODES (UOC)	(6) QTY
				GROUP 1403 - STEERING BRAKES	
				FIG. 92 - STEERING BRAKE FOOT PEDALS AND LINKAGE	
1	PAFZZ	11083	7G6773	SPACER, PLATEC	4
2	PFFZZ	96906	MS35338-46	WASHER, LOCK	4
3	PFFZZ	96906	MS90727-158	SCREW, CAP, HEXAGON	4
4	PFFZZ	11083	8P3475	SHAFT, STRAIGHT	2
5	P4FZZ	11083	6K8088	BEARING	8
6	PFFZZ	11083	9S1328	WASHER, FLAT	8
7	PFFZZ	11083	8P9821	WASHER, SPRING	2
8	PFFZZ	11083	8P1870	PEDAL, CONTRCL	1
9	PFOZZ	96906	M524665-353	PIN, COTTER.	8
10	PFOZZ	11083	95S1315	PIN, STRAIGHT-EAD EDCC	8
11	PFOZZ	11083	4M7930	CLEVIS, ROD END	6
12	PFOZZ	24617	145036	NUT, SELF-LOCKING, HE	8
13	PFOZZ	11083	8P2502	ROD, THREADED END	2
14	PFFZZ	11083	8P25C7	SHAFT, STRAIGHT	2
15	PFFZZ	11383	8P25C4	BELL CRANK	1
16	PFOZZ	11083	8P2511	ROD, THREADED	2
17	PFOZZ	11383	9S1314	ROD	2
18	PFFZZ	11083	8P25C3	BELL CRANK	1
19	PFFZZ	11083	EP1871	PEDAL, BRAKE	1
20	PFFZZ	61864	SS51142	BUTTON, PLUG	1

END OF FIGURE

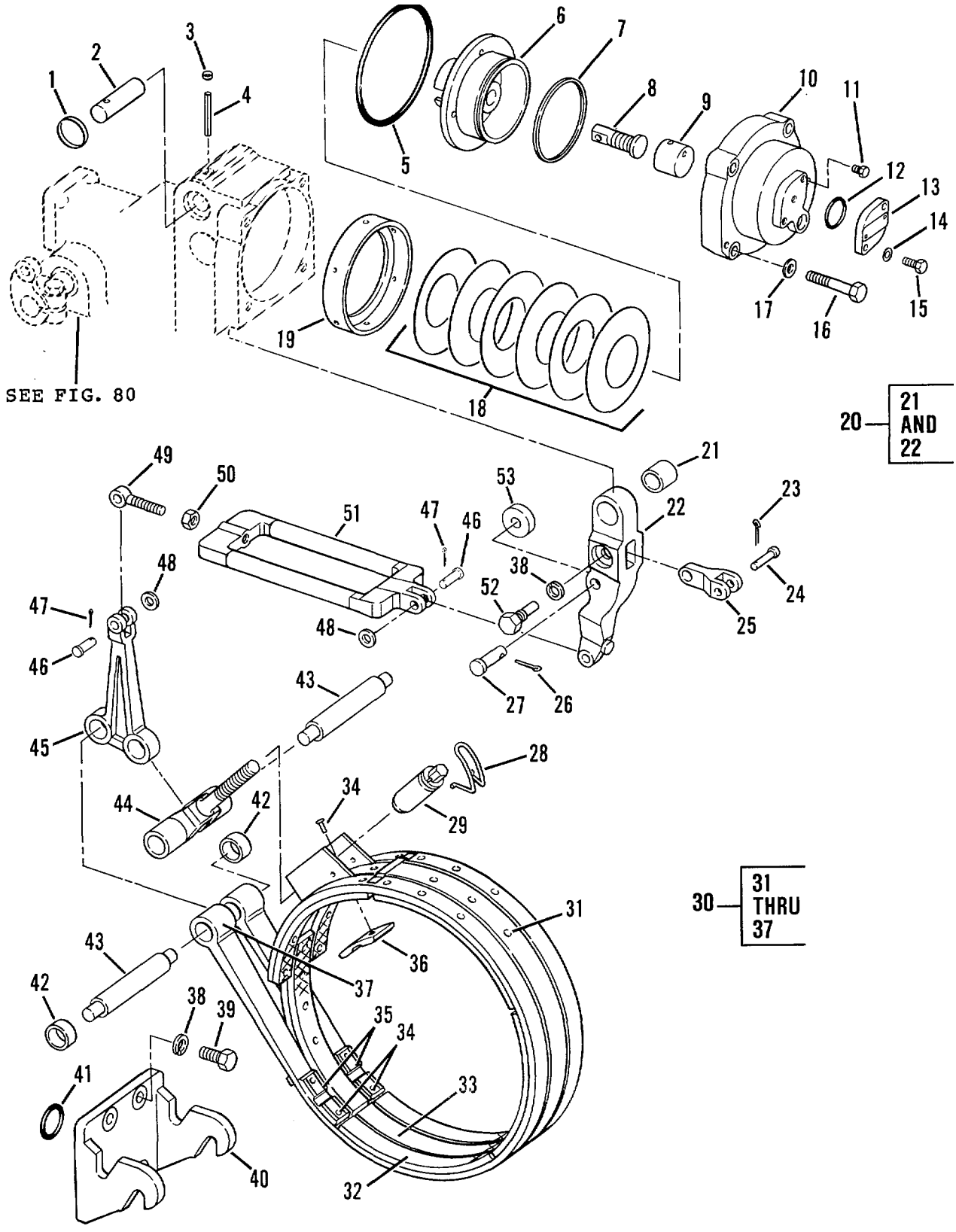

Figure 93. Steering Brake Band, Lining and Related Parts

(1) ITEM NO	(2) SMR CODE	(3) CAGEC	(4) PART NUMBER	(5) DESCRIPTION AND USABLE ON CODES (UOC)	(6) QTY
				GROUP 1403 - STEERING BRAKES	
				FIG. 93 - STEERING BRAKE BAND, LINING AND RELATED PARTS	
1	PFFZZ	11083	L1021	PLUG, EXPANSION	2
2	PFFZZ	11083	8P569	SHAFT, STRAIGHT	2
3	PFFZZ	11083	L1026	PLUG, EXPANSION	2
4	PFFZZ	11083	1J5353	PIN, SPRING	2
5	PFFZZ	96906	MS29513-166	PACKING, PREFORMED	2
6	PFFZZ	11083	7G5078	PISTON, LINEAR ACTUA	2
7	PFFZZ	11083	2P1068	PACKING, PREFORMED	2
8	PFFZZ	11083	9G780	SLIDE, DIRECTIONAL C	2
9	PFFZZ	11083	9G787	CAP, LINEAR ACTUATIN	2
10	PFFZZ	11083	7G5081	CYLINDER, ACTUATING,	2
11	PFFZZ	55883	IPD5M6214	PLUG, PIPE	1
12	PFFZZ	11083	3H1461	PACKING, PREFORMED	2
13	PFFZZ	11083	3T1264	COVER, ACCESS	2
14	PFFZZ	11083	5M2894	WASHER, FLAT	2
* 15	PFFZZ	80204	B1821BHC38C150N	SCREW, CAP, HEXAGON H	2
16	PFHZZ	11083	S1623	BOLT, MACHINE	8
17	PFFZZ	96906	MS27183-17	WASHER, FLAT.	8
18	PFFZZ	11083	9G809	WASHER, SPRING TENSI	2.
19	PFFZZ	11083	9G1706	RETAINER	2
20	PFFZZ	11083	9G7804P	LEVER, REMOTE CONTRO	2
21	PAFZZ	11083	752670	.BEARING, SLEEVE	1
22	PFFZZ	11083	9G788	.LEVER, REMOTE CONTRO	1
23	PFFZZ	96906	MS24665-351	PIN, COTTER	2
24	PFFZZ	11083	1A8827	PIN, STRAIGHT, HEADED	2
25	PFFZZ	11083	9G779	CLEVIS, ROD END	2
26	PFFZZ	96906	MS24665-355	PIN, COTTER	2
* 27	XBFZZ	11083	6B7988	PIN, STRAIGHT, HEADED	
28	PFFZZ	11083	9P1154	CLIP, RETAINING	2
29	PFFZZ	11083	8P5647	ASSEMBLY, NUT	2
* 30	XBFFF	11083	9P740	BRAKE BAND AND LINI	2
31	PAFZZ	11083	7B5068	.RIVET, TUBULAR	64
32	PAFZZ	11083	9P0678	.LINING, FRICTION	8
33	PAFZZ	11083	9P0946	.LINING, FRICTION	4
* 34	PAFZZ	11083	7B5060	.RIVET, LINING	6
35	PAFZZ	11083	9P0695	.LINING, FRICTION	2
* 36	PFFZ7	11083	9P0696	.LINING, FRICTION	1
37	PFFZZ	11083	9P0741	.BRAKE BAND AND LINI	1
38	PFFZZ	96906	MS35340-50	WASHER, LOCK	10
39	PFFZZ	90940	0035392-0	BOLT, MACHINE	8
40	PFFZZ	11083	8P3001	ANCHOR, BRAKE	2
41	PAFZZ	11083	9M7002	PACKING, PREFORMED	2
42	PFFZZ	11083	7M2853	SPACER, SLEEVE	4
43	PFFZZ	11083	8P3002	PIN, SHOULDER, HEADLE	4
44	PFFZZ	11083	6P9420	CLEVIS, ROD END	2
45	PFFZZ	11083	8P4545	LEVER, REMOTE CONTRO	2
46	PFFZZ	11083	881419	PIN, STRAIGHT, HEADED	4

(1) ITEM NO	(2) SMR CODE	(3) CAGEC	(4) PART NUMBER	(5) DESCRIPTION AND USABLE ON CODES (UOC)	(6) QTY
47	PFFZZ	96906	MS24665-3!3	PIN, COTTER	4
48	PFFZZ	52788	265079	WASHER, FLAT.....	4
49	PFFZZ	11083	8P4546	CONNECTOR, ROD END.	2
50	PFFZZ	81352	AN316-8R	NUT, PLAIN, HEXAGON	2
51	PFFZZ	11083	8P4714	CONNECTING LINK, RIG.....	2
52	PFFZZ	11083	2K2188	SETSCREW.....	2
53	PFFZZ	11083	1P1650	ROLLER, LINEAR-ROTAR	2

END OF FIGURE

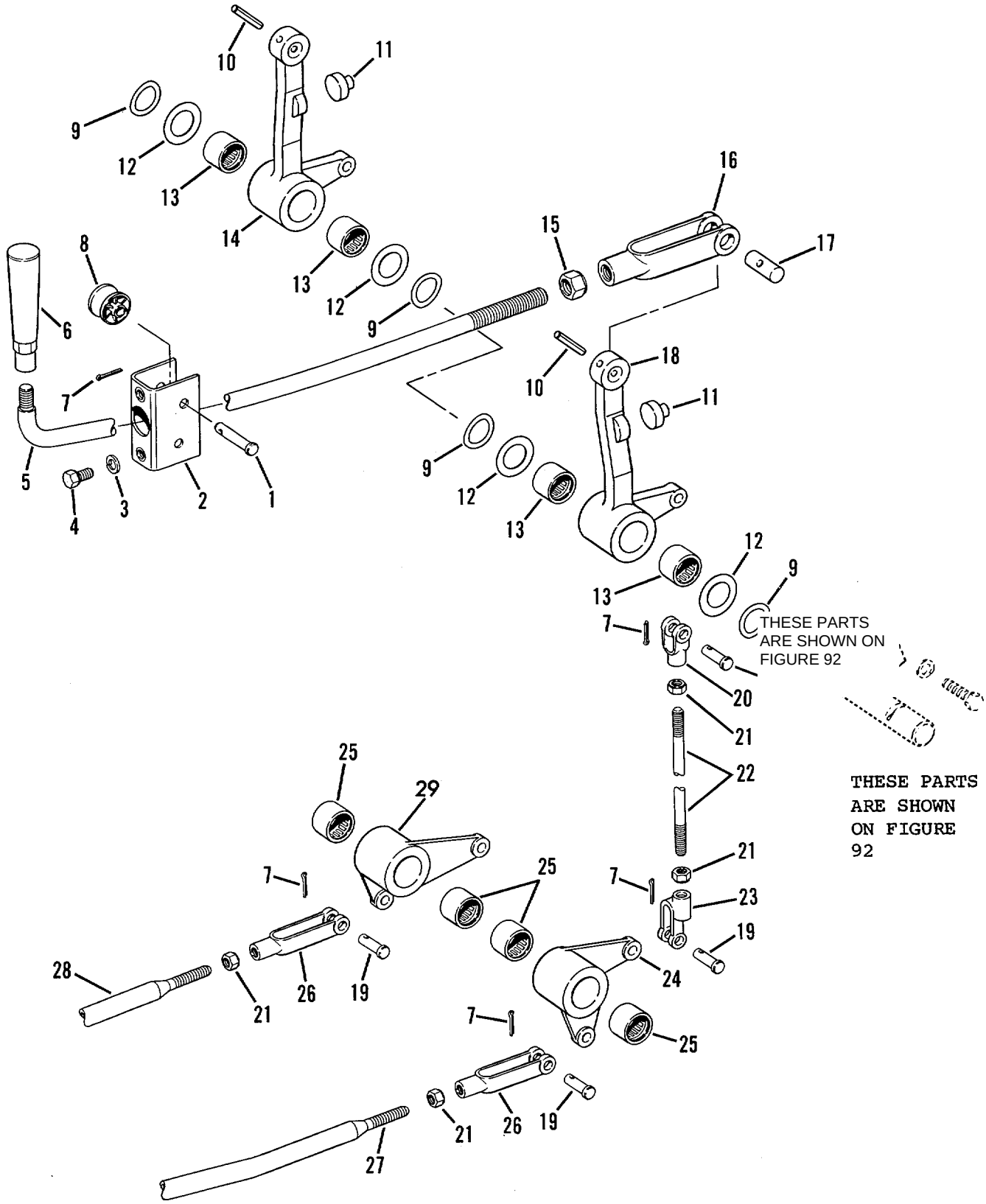

Figure 94. Steering Clutch Hand Control and Linkage

(1) ITEM NO	(2) SMR CODE	(3) CAGEC	(4) PART NUMBER	(5) DESCRIPTION AND USABLE ON CODES (UOC)	(6) QTY
				GROUP 1403 - STEERING BRAKES	
				FIG. 94 STEERING CLUTCH HAND CONTROL AND LINKAGE	
1	PFFZZ	11083	1A8827	PIN, STRAIGHT, HEADED	4
2	PFFZZ	11083	8P3409	BRACKET, ANGLE	2
3	PFFZZ	96906	MS35338-46	WASHER, LOCK	4
* 4	PFFZZ	11083	0S0509	SCREW, CAP, HEXAGON H	4
5	PFFZZ	11083	8P3410	LEVER, MANUAL CONTRO	2
6	PFFZZ	11083	0L0829	HANDLE, CLUTCH LEVER	2
7	PFFZZ	96906	MS24665-351	PIN, COTTER	12
8	PFFZZ	11083	1P2878	ROLLER	4
9	PFFZZ	11083	8P9821	WASHER, SPRING TENSI	4
10	PFFZZ	11083	1H1200	PIN, SPRING	2
11	PFFZZ	11083	9M5884	BUMPER, NONMETALLIC	2
12	PFFZZ	11083	9Sl328	WASHER, FLAT	4
13	PFFZZ	11083	6K8088	BEARING	4
14	PFFZZ	11083	8P3261	LEVER, REMOTE CONTRO	1
15	PFFZZ	24617	145036	NUT, SELF-LOCKING, HE	2
16	PFFZZ	11083	4K5563	CLEVIS, ROD END	2
17	PFFZZ	11083	7H9397	PIN, STRAIGHT, HEADLE	2
* 18	XBFZZ	11083	8P3262	LEVER, REMOTE CONTRO	1
19	PFFZZ	11083	1B676	PIN, STRAIGHT, HEADED	8
20	PFFZZ	11083	lM1341	CLEVIS, ROD END	2
21	PFFZZ	96906	MS35691-21	NUT, PLAIN, HEXAGON	8
22	PFFZZ	11083	8P2971	ROD, THREADED END	2
23	PFFZZ	11083	2K400	CLEVIS, ROD END	2
* 24	XBFZZ	11083	8P2505	BELL CRANK	1
25	PFFZZ	11083	6K8088	BEARING	4
26	PFFZZ	96906	MS35812-4	CLEVIS, ROD END	2
27	PFFZZ	11083	8P3987	ROD, THREADED END	1
28	PFFZZ	11083	3T7540	ROD, THREADED END	1
29	PFFZZ	11083	8P2506	BELL CRANK	1

END OF FIGURE

THESE PARTS ARE SHOWN
ON FIGURE 94.

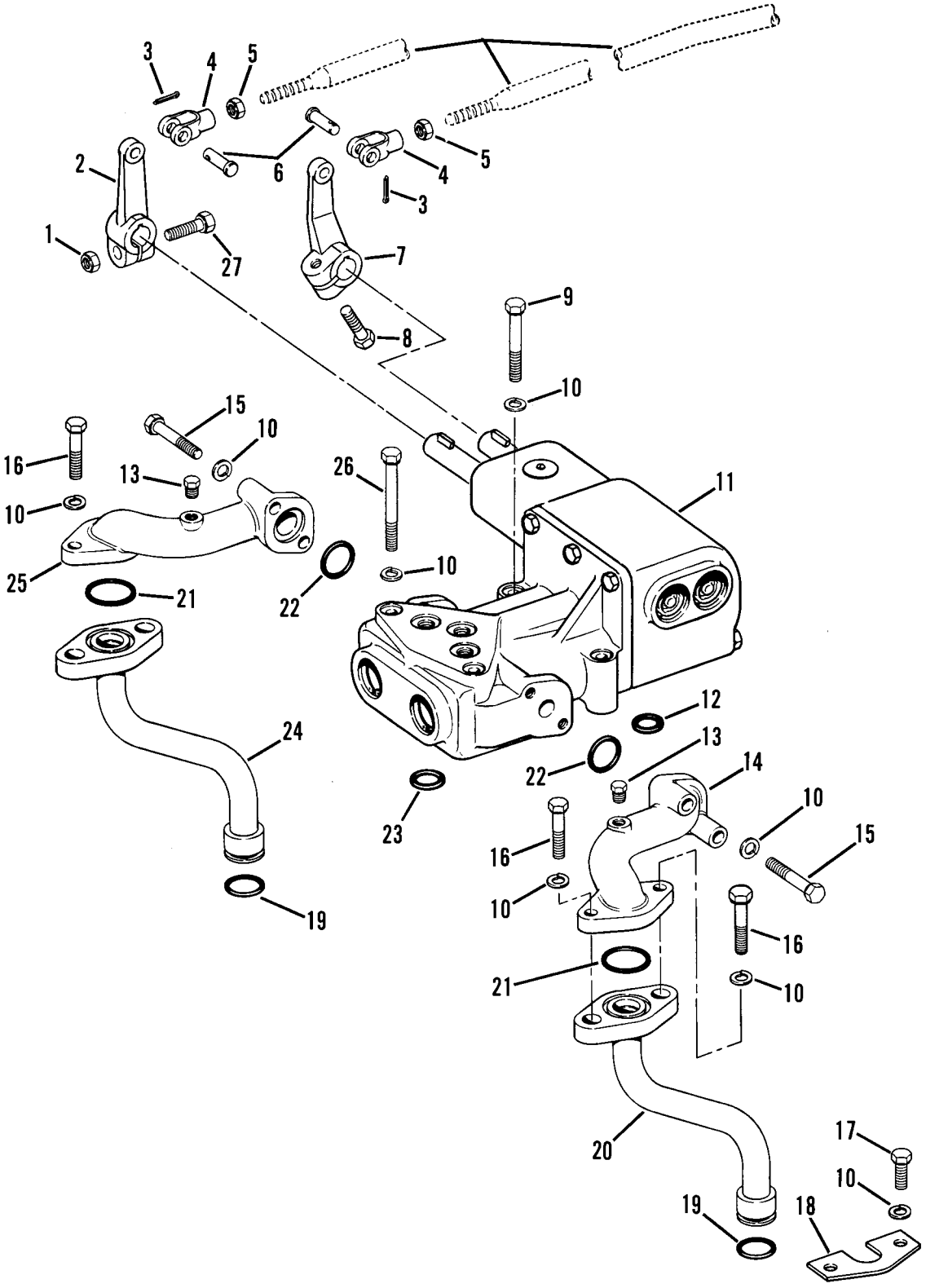

Figure 95. Steering Clutch Control Valve and Piping

	(1) ITEM NO	(2) SMR CODE	(3) CAGEC	(4) PART NUMBER	(5) DESCRIPTION AND USABLE ON CODES (UOC)	(6) QTY
					GROUP 1403 - STEERING BRAKES FIG. 95 STEERING CLUTCH CONTROL VALVE AND PIPING	
	1	PFFZZ	11083	1D4717	NUT, HEXAGON	1
*	2	XBFZZ	11083	5H6799	LEVER, REMOTE CONTRO	1
	3	PFFZZ	96906	MS24665-351	PIN, COTTER	2
	4	PFFZZ	11083	1M1341	CLEVIS, ROD END	2
	5	PFFZZ	96906	MS35691-21	NUT, PLAIN, HEXAGON	2
	6	PFFZZ	11083	18676	PIN, STRAIGHT, HEADED	2
*	7	XBFZZ	11083	7G9990	LEVER, REMOTE CONTRO	1
*	8	PFFZZ	80204	B1821BH038C125N	SCREW, CAP, HEXAGON H	1
*	9	PFFZZ	11083	L1143	BOLT, MACHINE	2
	10	PFFZZ	96906	MS35338-46	WASHER, LOCK	16
	11	PFFFF	11083	3T9365	VALVE, LINEAR, DIRECT, SEE FIG 96 FOR BREAKDOWN	1
*	12	PFFZZ	09990	2-31ZS1032-70	PACKING, PREFORMED	1
	13	PFFZZ	55883	IP05M6214	PLUG, PIPE	1
	14	PFFZZ	11083	3S2471	ELBOW, STEERING	1
*	15	PFFZZ	11083	OL2070	BOLT, MACHINE	4
*	16	PFFZZ	11083	OS1571	SCREW, CAP, HEXAGON H	4
*	17	PFFZZ	11083	S1594	BOLT, MACHINE.	4
	18	PFFZZ	11083	9P1383	COVER, ACCESS	2
	19	PFFZZ	11083	8M4446	PACKING, PREFORMED	2
	20	PFFZZ	11083	8P1728	TUBE ASSEMBLY, METAL	1
	21	PFFZZ	09990	2-219S1032-70	PACKING, PREFORMED	2
*	22	PAFZZ	96906	MS9068-214	PACKING, PREFORMED	2
	23	PAFZZ	11083	1S4	PACKING, PREFORMED	2
	24	PFFZZ	11083	8P1729	TUBE ASSEMBLY, METAL	1
	25	PFFZZ	11083	3S2472	ELBOW, FLANGE	1
*	26	PFFZZ	96906	MS35307-371	BOLT, MACHINE	2
*	27	PFFZZ	11083	OS1591	SCREW	1

END OF FIGURE

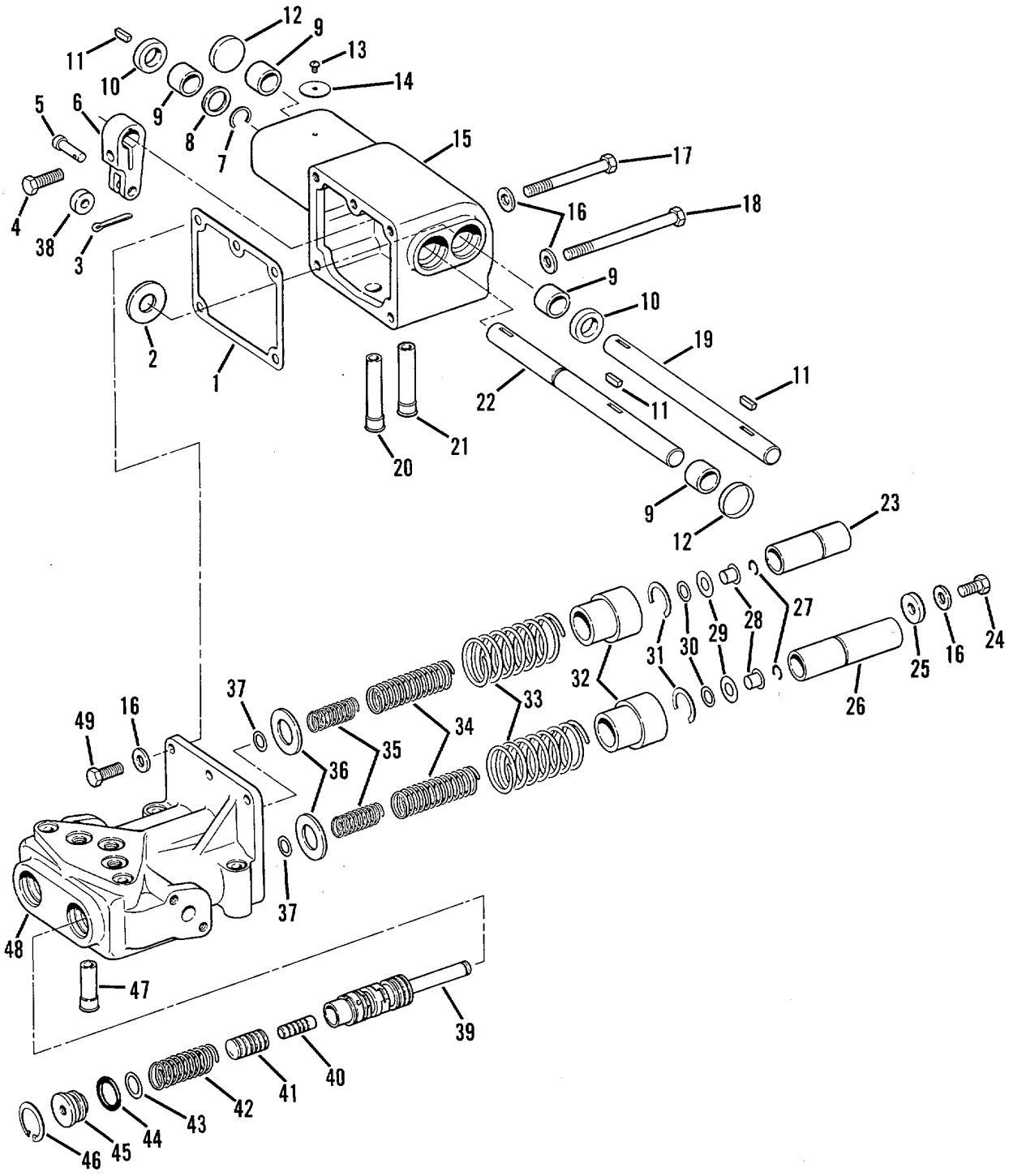

Figure 96. Steering Clutch Control Valve Assembly

(1) ITEM NO	(2) SMR CODE	(3) CAGEC	(4) PART NUMBER	(5) DESCRIPTION AND USABLE ON CODES (UOC)	(6) QTY
				GROUP 1414 - STEERING SYSTEM VALVES	
				FIG. 96 - STEERING CLUTCH CONTROL VALVE ASSEMBLY (SEE FIGURE 95 FOR TOP ASSEMBLY, PART NUMBER 3T9365)	
1	PAFZZ	11083	2S8414	GASKET	1
2	PAFZZ	11083	4B4283	WASHER	1
3	PFFZZ	96906	MS24665-351	PIN, COTTER	2
* 4	PFFZZ	80204	81821BH038C125N	SCREW, CAP, HEXAGON H	2
5	PAFZZ	11083	18676	PIN, STRAIGHT, HEADED	2
* 6	XBFZZ	11083	2S8396	LEVER, REMOTE CONTRO	2
7	PFFZZ	72800	421	RING	1
8	PFFZZ	19207	8392184	WASHER, FLAT	1
9	PAFZZ	11083	8H8175	BEARING..	4
10	PAFZZ	11083	9H223	SEAL, PLAIN ENCASED	2
11	PFFZZ	64294	29620-3	KEY, WOODRUFF	4
12	PFFZZ	11083	3S8313	PLUG, MACHINE THREAD	2
13	PFFZZ	11083	7B3028	SCREW, DRIVE	1
14	PFFZZ	11083	3T9368	PLATE, IDENTIFICATIO	1
15	PFFZZ	11083	8P8043	HOUSING, MECHANICAL	1
16	PFFZZ	11083	5M2894	WASHER, FLAT	6
* 17	PFFZZ	11083	T65	BOLT, MACHINE	2
18	PFFZZ	11083	1A5183	BOLT, MACHINE	1
19	PFFZZ	11083	8P2520	SHAFT, STRAIGHT.	1
20	PFFZZ	11083	8S5716	TUBE METALLIC, PRECU	1
21	PFFZZ	11083	2S8413	TUBE, METALLIC	1
* 22	XBFZZ	11083	8P3301	SHAFT, STRAIGHT	1
* 23	XBFZZ	11083	9P8186	SLIDE, DIRECTIONAL C	1
* 24	PFFZZ	11083	0S0509	SCREW, CAP, HEXAGON H	1
25	PAFZZ	11083	3K925	WASHER, FLAT	1
26	PFFZZ	11083	9P8185	SLIDE, DIRECTIONAL	1
27	PFFZZ	96906	MS16632-1037	RING, RETAINING	4
28	PFFZZ	11083	3T1100	BUSHING, SLEEVE.	2
29	PFFZZ	11083	9P8218	WASHER, FLAT	2
30	PFFZZ	11083	9P8217	WASHER, FLAT	2
31	PFFZZ	11083	1H4148	RING, RETAINING	2
32	PFFZZ	11083	9P7913	BUSHING, SEEVE	2
33	PFFZZ	11083	8S5753	SPRING	2
34	PFFZZ	11083	3T9366	SPRING, HELICAL, COMP	2
35	PFFZZ	11083	3T9367	SPRING, HELICAL, COMP	2
36	PFFZZ	11083	3T9981	WASHER, FLAT	2
37	PAFZZ	11083	7G6005	SHIM	V
38	PFFZZ	11083	2S8411	ROLLER, LINEAR-ROTAR	2
39	PFFZZ	11083	9P8197	SLIDE, DIRECTIONAL C	2
40	PFFZZ	11083	3P3716	SLIDE, DIRECTIONAL C	2
41	PFFZZ	11083	9P8196	SLIDE, DIRECTIONAL C	2
42	PFFZZ	11083	9P8308	SPRING, HELICAL, COMP	2
43	PAFZZ	11083	7G4271	SHIM	12
44	PFFZZ	11083	8M4445	PACKING, PREFORMED	2
45	PFFZZ	11083	2S8399	PLUG, MACHINE THREAD	2
46	PFFZZ	96906	M516625-1165	RING, RETAINING	2

(1) ITEM NO	(2) SMR CODE	(3) CAGEC	(4) PART NUMBER	(5) DESCRIPTION AND USABLE ON CODES (UOC)	(6) QTY
47	PFFZZ	11083	2S8412	TUBE, METALLIC	1
48	PFFZZ	11083	9P8001	HOUSING, MECHANIC AL	1
* 49	PFFZZ	11083	S1594	BOLT, MACHINE	3

END OF FIGURE

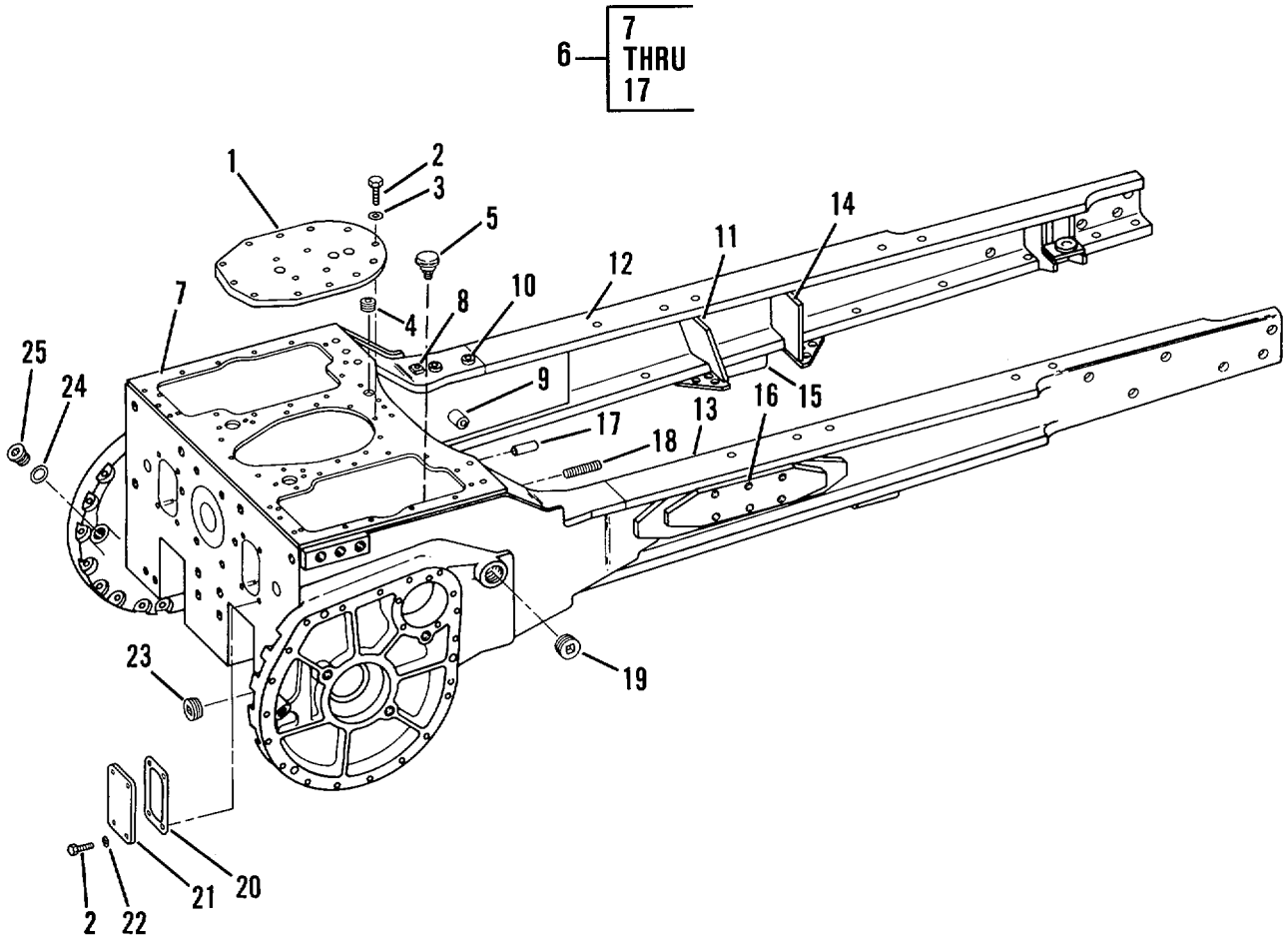

Figure 97. Frame

(1) ITEM NO	(2) SMR CODE	(3) CAGEC	(4) PART NUMBER	(5) DESCRIPTION AND USABLE ON CODES (UOC)	(6) QTY
				GROUP 15 FRAME, TOWING ATTACHMENTS DRAWBARS AND ARTICULATION SYSTEM	
				GROUP 1501 - FRAME ASSEMBLY	
				FIG. 97 - FRAME	
1	PFFZZ	11083	8P1211	COVER, ACCESS	1
2	PFFZZ	96906	MS90728-60	SCREW, CAP, HEXAGON H	20
3	PFFZZ	11083	5M2894	WASHER, FLAT	12
4	PFFZZ	11083	4B4845	PLUG, MACHINE THREAD.	1
5	PAOZZ	11083	gG5127	BREATHER	1
6	PFHZZ	11083	8P1053	FRAME ASSEMBLY, REAR	1
7	XAHZZ	11083	8P1050	.CASE	1
8	PF4ZZ	11083	8S5783	.WASHER, FLAT	2
9	PFHZZ	11083	5D2643	.NUT, PLAIN, ROUND	1
10	PFHZZ	11083	1H4262	.DISK, SOLID, PLAIN	2
11	XAHZZ	11083	rH7952	.REINFORCEMENT	1
12	PFHZZ	11083	5S3250	.FRAME ASSEMBLY, LEFT L.H	1
13	PFHZZ	11083	5S3245	.FRAME ASSEIBLY, MAIN R.H	1
14	XAFZZ	11083	5H7951	.REINFORCEMENT	1
15	PFHZZ	11083	1P9497	.STOP, BRACKET FRAME	2
16	PFHZZ	11083	2P3127	.PLATE ASSEMBLY	1
16	PFHZZ	11083	2P3126	.PLATE ASSEMBLY	1
17	PAHZZ	11083	2B8162	.PIN, STRAIGHT, HEADLE	1
18	PAFZZ	11083	3J8154	STUD, CONTINUOS THR	12
19	PFFZZ	11083	7B9665	PLUG, PIPE	2
20	PAFZZ	11083	9P2074	GASKET	2
21	PFFZZ	11083	9P4064	COVER, ACCESS.	2
22	PFFZZ	96906	MS35338-46	WASHER, LOCK	8
23	PAFZZ	11083	5S4017	PLUG	3
24	PAFZZ	11083	6F4868	GASKET	2
25	PFFZZ	11083	4B2363	PLUG, MACHINE THREAD	2

END OF FIGURE

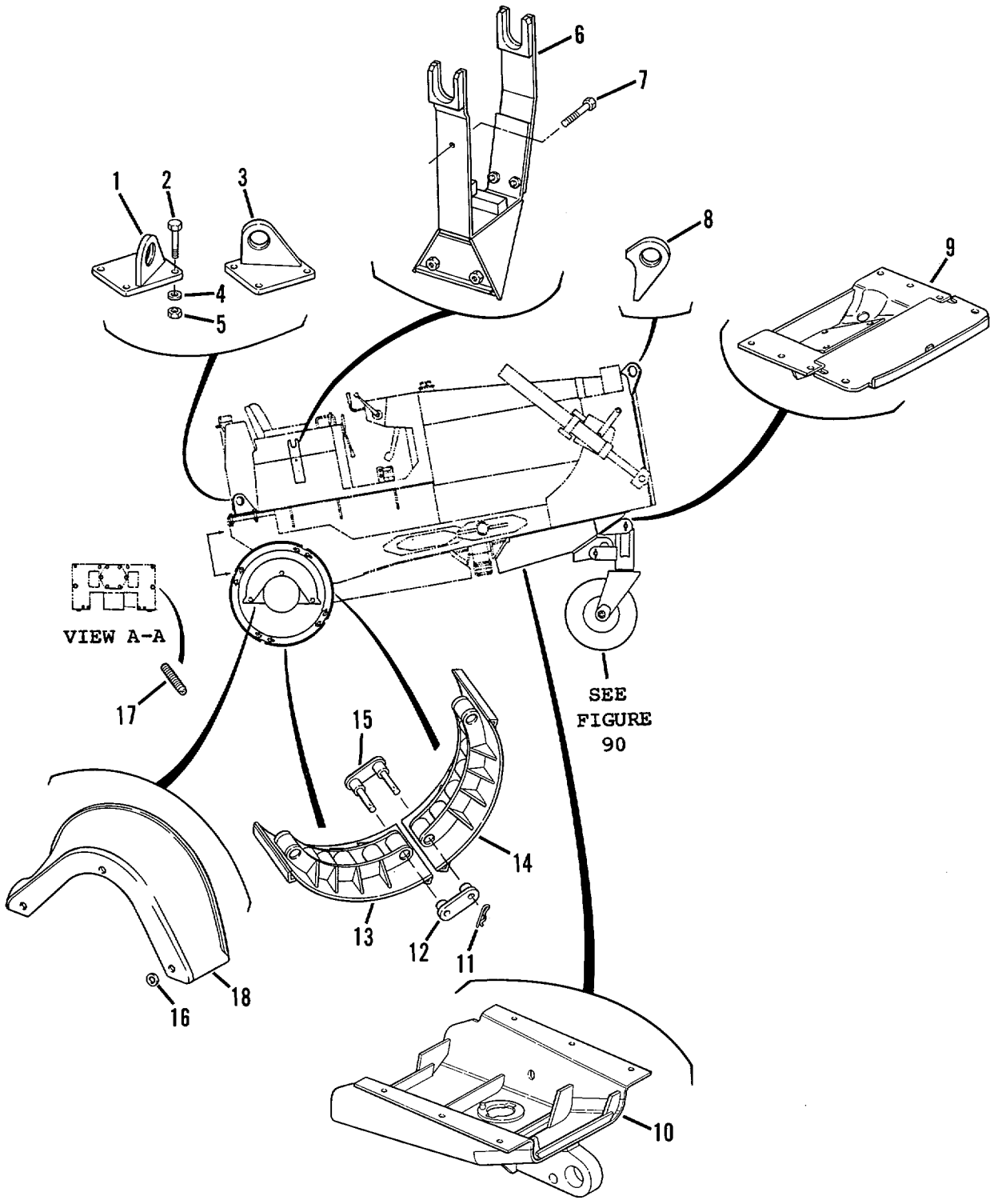

Figure 98. Chassis and Powertrain Sectionalizing Group
(Used on Models D5BS and D5BS1)

(1) ITEM NO	(2) SMR CODE	(3) CAGEC	(4) PART NUMBER	(5) DESCRIPTION AND USABLE ON CODES (UOC)	(6) QTY
				GROUP 1501 - FRAME ASSEMBLY	
				FIG. 98 - CHASSIS AND POWER TRAIN SECTIONALIZING GROUP USED ON MODELS D5BS AND D5BS1	
1	PFOZZ	11083	5R5160	PAD EYE. UOC:AGT, AGU	1
2	PFOZZ	11083	3B2968	BOLT, MACHINE UOC:AGT, AGU	8
3	PFOZZ	11083	5R5161	EYE ASSEMBLY, LEFT UOC:AGT, AGU	1
4	PFOZZ	11083	5P3248	WASHE, FLAT UOC:AGT, AGU	8
5	PFOZZ	11083	2J3506	NUT, PLAIN, HEXAGON UOC:AGT, AGU	8
6	PFOZZ	11083	5R5175	SUPPORT ASSEMBLY, SE UOC:AGT, AGU	1
* 7	PFOZZ	11083	S1594	BOLT, MACHINE UOC:AGT, AGU	1
8	PFOZZ	11083	5R6600	BRACKET, LIFTING EYE UOC:AGT, AGU	2
9	PFOZZ	11083	5R5117	GUARD ASSEMBLY, RADI UOC:AGT, AGU	1
* 10	XBOZZ	11083	5R5121	GUARD, MECHANICAL DR UOC:AGT, AGU	1
11	PFOZZ	11083	3J1770	PIN, LOCK UOC:AGT, AGU	16
* 12	XBOZZ	11083	3R8533	CONNECTING LINK, RIG UOC:AGT, AGU	8
13	PFOZZ	11083	3R8475	TRACK SHOE ASSEMBLY UOC:AGT, AGU	2
14	PFOZZ	11083	3R8512	SHOE ASSEMBLY, UNDER UOC:AGT, AGU	6
15	PFOZ2	11083	3R8527	LINK, TRACK SHOE, CON UOC:AGT, AGU	8
16	PFOZZ	11083	2S7593	WASHER, FLAT UOC.:AGT, AGU	4
17	PFOZZ	11083	503118	STUD, CONTINUOUS THR UOC:AGT, AGU	2
18	PFOZZ	11083	3R8634	GUARD, MECHANICAL DR L.H UOC:AGT, AGU	1
18	PFOZZ	11083	3R8633	GUARD, MECHANICAL DR R.H UOC:AGT, AGU	1

END OF FIGURE

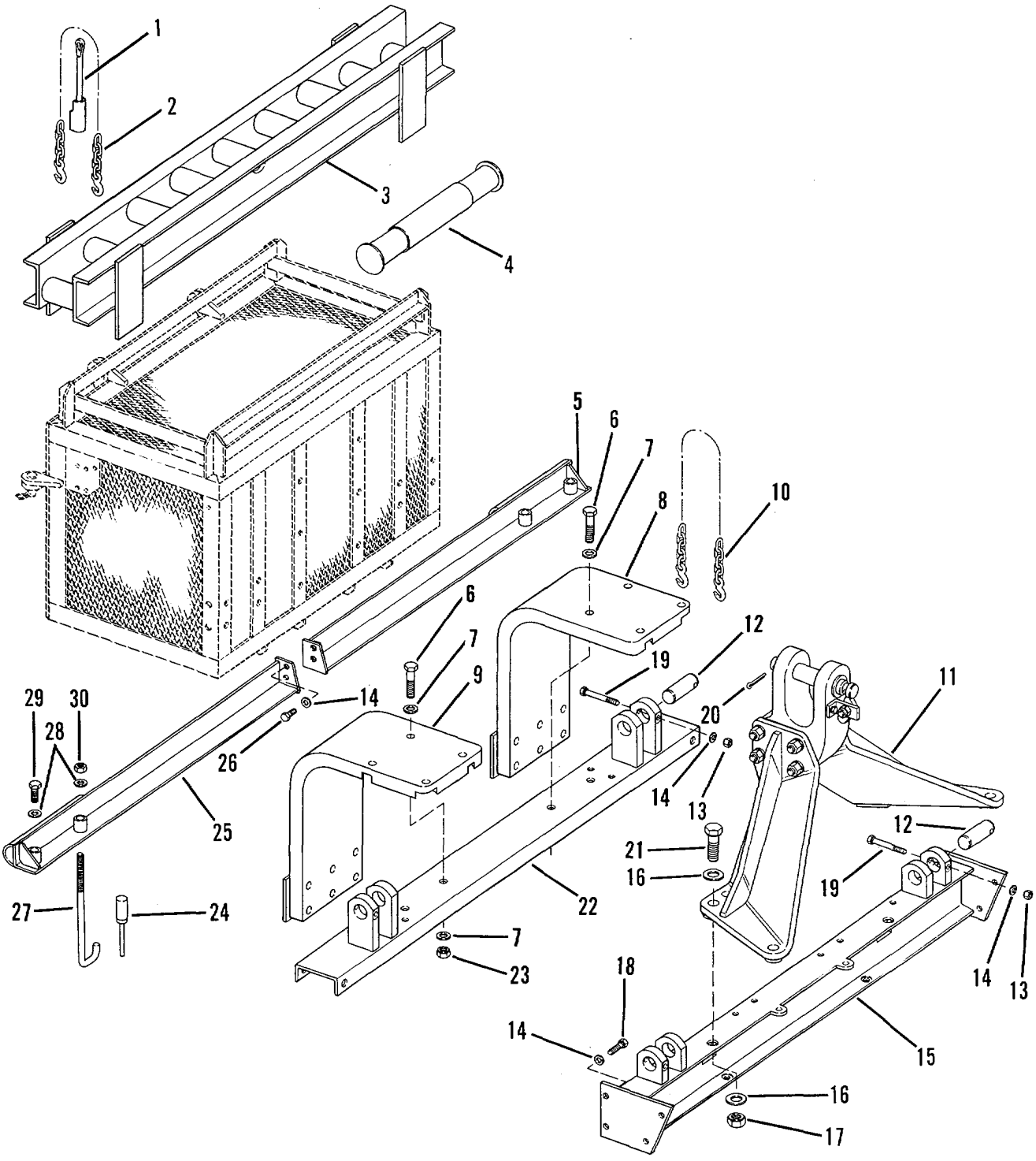

Figure 99. Dozer Sectionalizing Group (Used on Models D5BS and D5BS1)

(1) ITEM NO	(2) SMR CODE	(3) CAGEC	(4) PART NUMBER	(5) DESCRIPTION AND USABLE ON CODES (UOC)	(6) QTY
				GROUP 1501 --- FRAME ASSEMBLY	
				FIG. 99 - DOZER SECTIONALIZING GROUP USED ON MODELS 05BS AND D5BS1	
1	PFOZZ	11083	3R8507	BINDER,LOAD UO:AGT,AGU	6
2	PAOZZ	11083	5R5132	CHAIN ASSEMBLY,SING UO:AGT,AGU	2
3	PFOZZ	11083	3R8442	RAIL ASSEMBLY UO:AGT,AGU	2
4	PFOZZ	11083	3R8549	BAR ASSEMBLY UO:AGT,AGU	1
*5	XBHZZ	11083	5R5153	BRACE ASSEMBLY, FRAM. UO:AGT,AGU	1
6	PFHZZ	11083	1D4609	BOLT,MACHINE UO:AGT,AGU	4
7	PFHZZ	11083	5P8248	WASHER,FLAT UO:AGT,AGU	8
8	PFHZZ	11083	8P3901	BRAKET,ANGLE UO:AGT,AGU	1
9	PFHZZ	11083	8P3904	BRAKET,ANGLE UO:AGT,AGU	1
10	PFHZZ	11083	3R8506	CHAIN ASSEMBLY,SING UO:AGT,AGU	4
11	PFHZZ	11083	39179	DRAWBAR UO:AGT,AGU	1
* 12	PAHZZ	11083	2J5997	PIN,STRAIGHT,HEADLE UO:AGT,AGU	4
13	PFHZZ	11083	1F7958	NUT,PLAIN,HEXAGON UO:AGT,AGU	4
14	PFHZZ	96906	M27183-17	WASHER,FLAT UO:AGT,AGU	4
15	PFHZZ	11083	5R5148	FRAME,ASSEMBLY,BOOY UO:AGT,AGU	4
16	PFHZZ	11083	5P8250	WASHER,FLAT UO:AGT,AGU	4
17	PFH2Z	11083	2J3507	NUT,PLAIN,HEXAGON UO:AGT,AGU	2
* 18	PFHZZ	11083	1587	BOLT,MACHINE UO:AGT,AGU	8
19	PFHZZ	11083	1B2886	BOLT,MACHINE UO:AGT,AGU	4
20	PFHZZ	96906	M24665-750	PIN,COTTER UO:AGT,AGU	1
21	PFHZZ	11083	1l4709	BOLT,MACHINE UO:AGT,AGU	2
22	PFHZZ	11083	5R5150	CHANNEL,LIFT,VEHICL UO:AGT,AGU	1
23	PFHZZ	11083	2J3506	NUT,PLAIN,HEXAGON UO:AGT,AGU	4
24	PFHZZ	11083	5R5197	CONNETOR,ROD END	4

(1) ITEM NO	(2) SMR CODE	(3) CAGEC	(4) PART NUMBER	(5) DESCRIPTION AND USABLE ON CODES (UOC)	(6) QTY
				UOC:AGT,AGU	
25	PFHZZ	11083	5R5154	BRACE ASSEMBLY,BODY..... UOC:AGT,AGU	1
26	PFHZZ	11083	S1595	BOLT,MACHINE. ..... UOC:AGT,AGU	2
27	PAHZZ	11083	3R8593	BOLT,HOOK ..... UOC:AGT,AGU	2
28	PFHZZ	11083	5P8247	WASHER, FLAT..... UOC:AGT,AGU	4
* 29	PFHZZ	11083	S1566	BOLT, MACHINE ..... UOC: AGT,AGU	2
30	PFHZZ	96906	MS51967-20	NUT,PLAIN,HEXAGON ..... UOC:AGT,AGU	2

END OF FIGURE

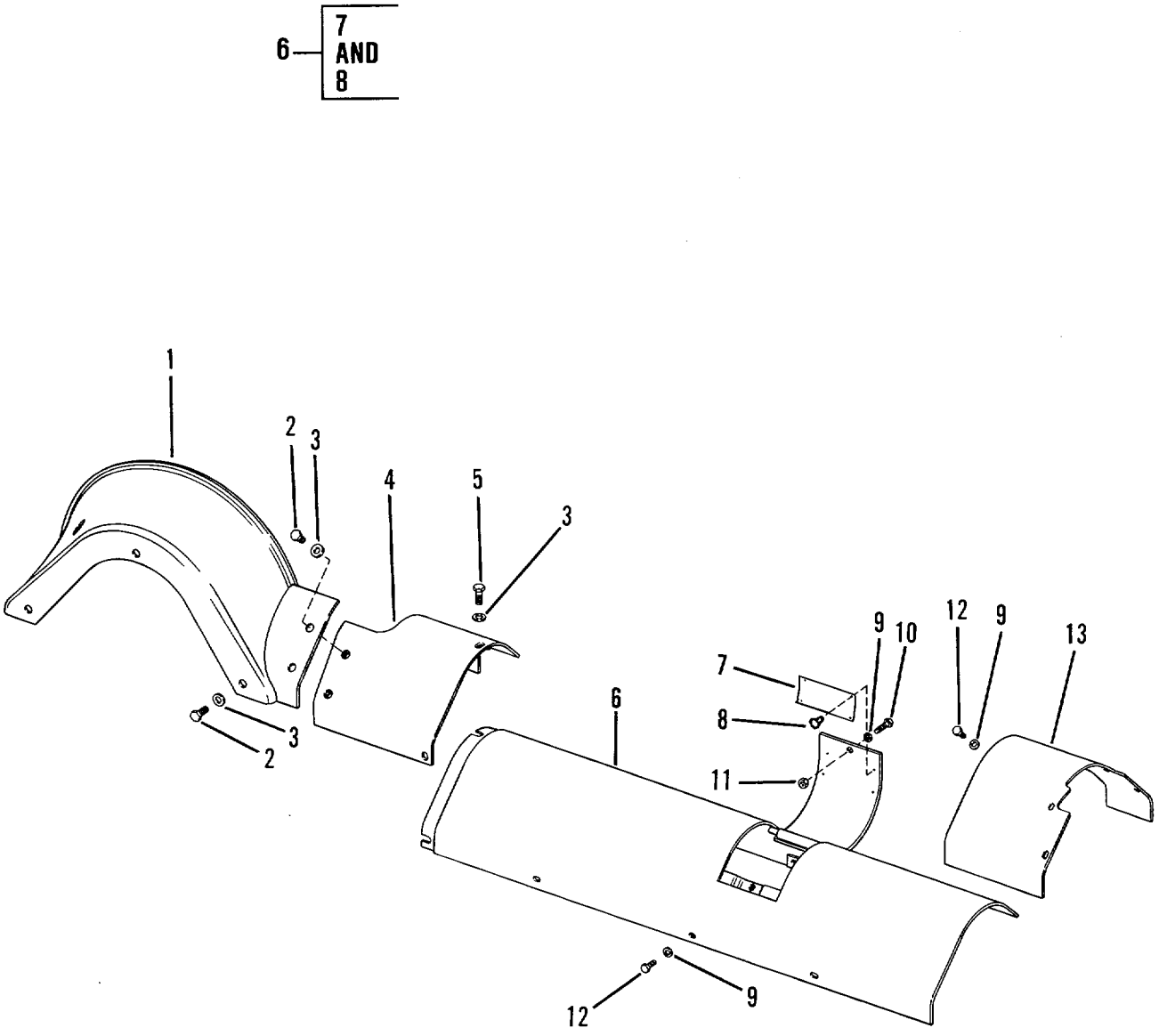

Figure 100. Recoil Mechanism Guard

(1) ITEM NO	(2) SMR CODE	(3) CAGEC	(4) PART NUMBER	(5) DESCRIPTION AND USABLE ON CODES (UOC)	(6) QTY
				GROUP 1501 - FRAM ASSMBLY	
				FIG. 100 - RIL MHANISM GUARD	
1	PAZZ	11083	81831	GUARD,MECHANICAL DR RH ..... UOAG AGV	1
1	PAZZ	11083	81832	GUARD MECHANICAL DR LH. ..... UOAG ,AGV	1
1	PFZZ	11083	3R8633	GUARD MECHANICAL DR RH ..... UOAGT,AGU	1
1	PFZZ	11083	3R8634	GUARD MECHANICAL DR L.H ..... UOAGT,AGU	1
2	PAZZ	11083	1621	BOLT,MACHINE	10
3	PFZZ	96906	M 27183-17	WASHER,FLAT	14
4	PFZZ	11083	8P4111	GUARD MECHANICAL R RH.... ..... UOAG ,AGV	1
4	PAZZ	11083	8P4112	GUARD MECHANICAL R L.H..* ..... UOAG ,AGV	1
4	PFZZ	11083	5R5136	GUARD MECHANICAL DR RIGHT HAND* ..... UOAGT,AGU	1
4	PFZZ	11083	5R5135	GUARD,MECHANICAL DR LFT HAND ..... UOAGT,AGU	1
5	PAZZ	11083	51595	BOLT,MACHINE	4
* 6	XBZZ	11083	5R5133	GUARD,MECHANICAL DR RH*.*..... UOAGT,AGU	1
* 6	XBZZ	11083	5R5134	GUARD,MECHANICAL DR L.H.H ..... UOAGT,AGU	1
* 6	XBZZ	11083	3A3275	GUARD,MECHANICAL DR R.H ..... UOAG ,AGV	1
* 6	XBZZ	11083	3A3276	GUARD,MECHANICAL DR L.H.H ..... UOAG ,AGV	1
7	PFZZ	11083	15242-4	.PLATE, INSTRUCTION	2
8	PAZZ	11083	7B3028	..SCREW,DRIVE	4
9	PFZZ	11083	5M2894	WASHER,FLAT	20
* 10	PAZZ	11083	3B1915	BOLT	2
* 11	PFZZ	11083	lD4717	NUT,HEXAGON .... UOAG ,AGV	2
11	PAZZ	11083	9F2978	NUT,PLAIN,WELDING ..... UOAGT,AGU	2
* 12	PFZZ	11083	1594	BOLT, MACHINE.....	18
13	PAZZ	11083	5A6897	GUARD MECHANICAL DR R.H..... ..... UOAG ,AGV	1
13	PAZZ	11083	5A6898	GUARD,MECHANICAL DR L.H ..... UOAG ,AGV	1
13	PFZZ	11083	5R5140	GUARD,MECHANICAL DR RIGHT HAND ..... UOAGTTAGU	1
13	PFZZ	11083	5R5139	GUARD,MECHANICAL DR LFT HAND ..... UOAGT,AGU	1

END OF FIGURE

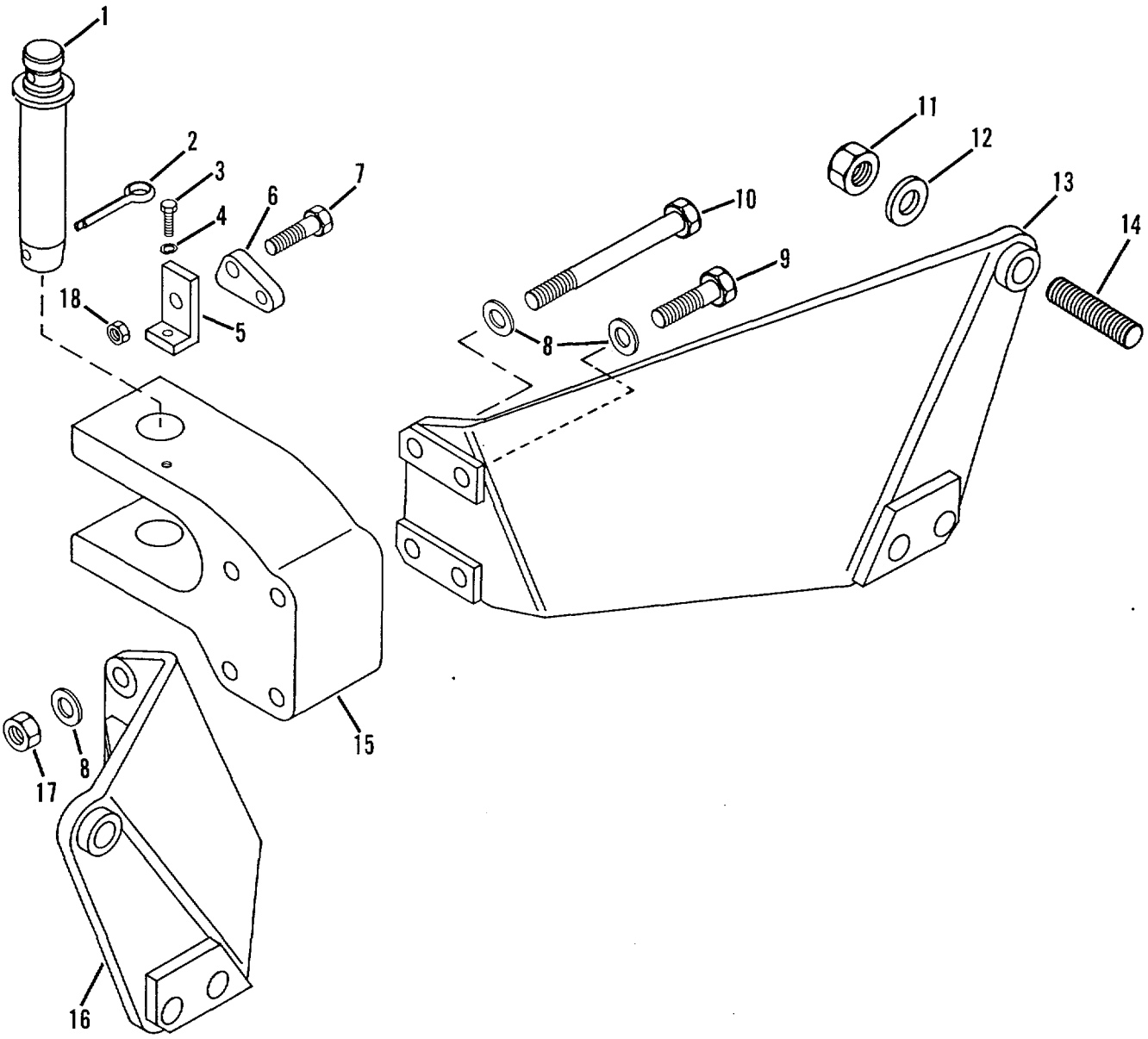

Figure 101. Fixed Drawbar (Used on Models D5BS and D5BS1)

(1) ITEM NO	(2) SMR CODE	(3) CAGEC	(4) PART NUMBER	(5) DESCRIPTION AND USABLE ON CODES (UOC)	(6) QTY
				GROUP 1503 - PINTLES ANU TO%ING ATTACHMENTS	
				FIG. 101 - FIXED DRAWEAR USED ON MODELS D58S AND D5BS1	
1	PAOZZ	11383	7F9547	PIN,SHOULDER,HEADLE..... UOC:AGT,AGU	1
2	PFOZZ	11083	3B5318	PIN,COTTER ..... UOC:AGTRAGU	1
3	PFOZZ	96906	MS90728-60	SCREW,CAP,HEXAGON H..... UOC :AGT, AGU	2
4	PFOZZ	96906	MS35338-46	WASHER,LOCK..... UOC :AGTIAGU	1
5	PFOZZ	11083	4M4649	PLATE,LOCK,DRAWBAR..... UOC:AGT,AGU	1
6	PFCZZ	11083	7B8863	LATCH..... UOC :AGT ,AGU	1
7	PFOZZ	11083	S1577	BOLT,MACHINE ..... UOC :AGT.AGL	1
8	PFOZZ	11083	5P8248	WASHER,FLAT..... UOC :AGT ,AGU	8
9	PFOZZ	11083	lD4709	BOLT,MACHINE ..... UOC :AGT,AGU	2
1	PFOZZ	11083	2H3750	SCREW,CAP,HEXAGCN H ..... UOC :AGT,AGU	2
11	PFOZZ	11J83	2J3537	NUT,PLAIN, HEXAGON ..... UOC:AGT,AGU	2
12	PFOZZ	11083	5P8250	WASHER,FLAT..... UOCC:AGT,AGU	4
13	PAOZZ	11083	3S9222	BRACKET ASSEMBLY, DR..... UOC:AGT,AGU	1
14	PAOZZ	11083	503118	STUD,CONTINUOUS THR..... UOC:AGT,AGU	2
15	PFOZZ	11083	2M5164	COUPLER,DRAWBAR, ... UOC:AGT,AGU	1
16	PFOZZ	11083	3S9221	BRACKET ASSEMBLY, DR..... UOC:AGT,AGU	1
17	PFOZZ	96906	MS51968-23	NUT,PLAIN,HEXAGON ..... UOC:AGT,AGU	4
18	PFOZZ	16764	p418881	NUT,SELF-LOCKING,HE ..... UOC:AGT,AGU	1

END OF FIGURE

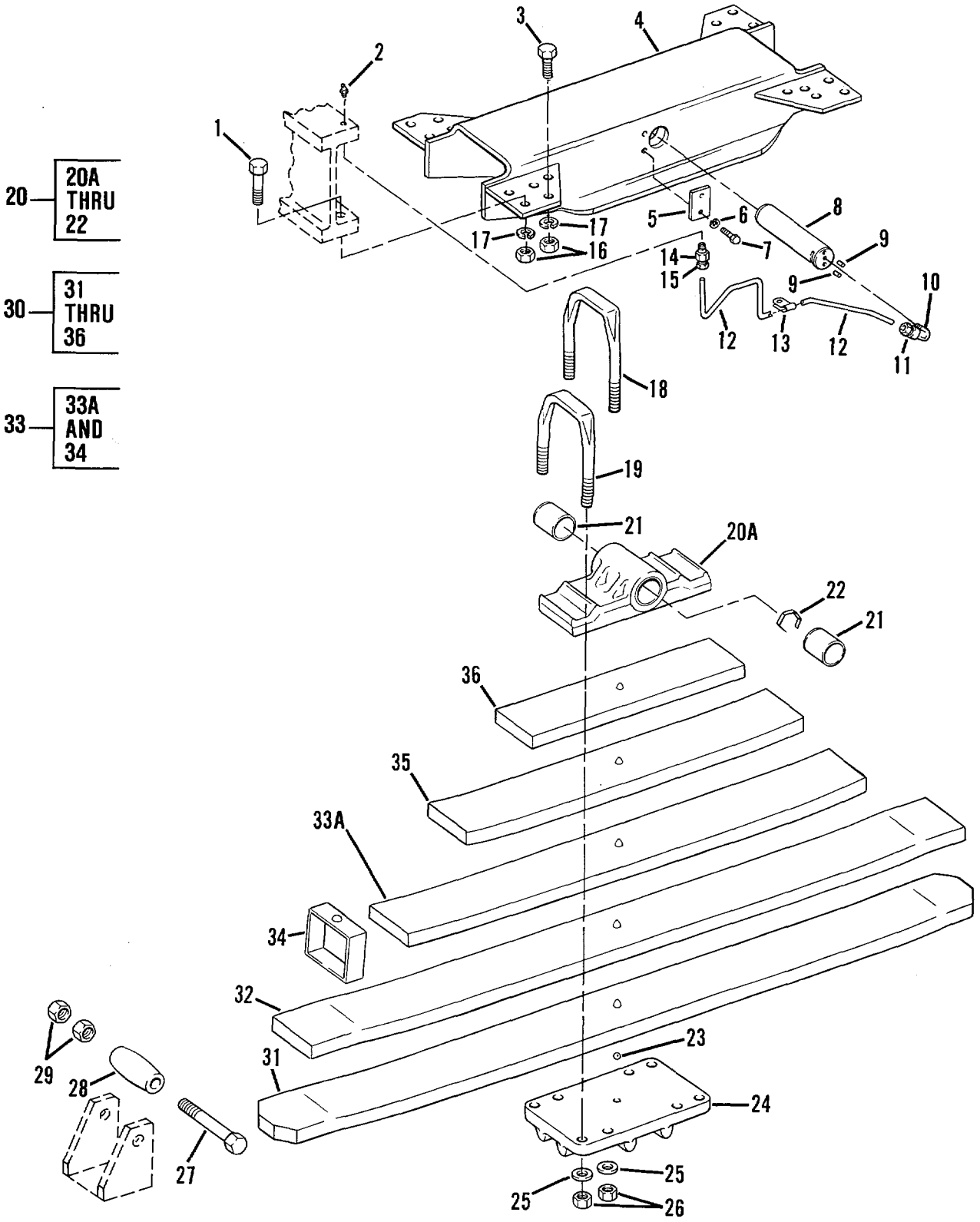

Figure 102. Equalizer Springs

(1) ITEM NO	(2) SMR CODE	(3) CAGEC	(4) PART NUMBER	(5) DESCRIPTION AND USABLE ON CODES (UOC)	(6) QTY
				GROUP 16 SPRINGS AND SHOCK ABSORBERS	
				GROUP 1601 - SPRINGS	
				FIG. 102 - EQUALIZER SPRINGS	
1	PFHZZ	11083	S1601	SCREW,CAP,HEXAGON H	8
2	PFOZZ	04043	A5100	FITTING,LUBRICATION	1
3	PFHZZ	11083	5B841	BOLT,MACHINE	12
4	PFHZZ	11083	8M2059	BRACKET ASSEMBLY,EQ	1
5	PAHZZ	11083	2K703	LOCK PLATE,LINK PIN	1
6	PFHZZ	96906	MS35338-48	WASHER,LOCK	2
7	PFHZZ	11083	S1595	BOLT,MACHINE	2
8	PAHZZ	11083	8M1467	PIN	1
*9	XBHZZ	11083	9F2746	CORK	2
*10	PFOZZ	58312	3B8998-00	ELBOW,PIPE TO TUBE	1
11	PAOZZ	11083	1F1344	INVERTEO NUT,TUBE C	1
12	PFOZZ	11083	4S8385	TUBE,METALLIC	2
13	PAOZZ	11083	L2072	CLAMP,LOOP	11
*14	PFOZZ	30327	9975928	ADAPTER,STRAIGHT,PI	1
15	PFOZZ	11083	lF1344	INVERTED NUT,TUBE C	1
16	PFHZZ	96906	MS51968-20	NUT,PLAIN,HEXAGON	20
17	PFHZZ	96906	MS35340-50	WASHER,LOCK	20
18	PAHZZ	11083	7H4717	BOLT,U	2
19	PAHZZ	11083	4M4142	BOLT,U	2
20	PFHZZ	11083	7S7363	PLATE,ASSY,SPRING	1
20A	XAHZZ	11083	7S7359	PLATE	1
21	PFHZZ	11083	7H4710	BUSHING	2
22	PAHZZ	11083	8M6888	SPACER,PLATE	1
23	PAHZZ	11083	4B9784	BALL,BEARING	1
24	PFHZZ	11083	4M3065	PATE,SUPPORT,EQUAL	1
25	PAHZZ	11083	5B639	WASHER,FLAT	8
26	PFHZZ	96906	MS51968-23	NUT,PLAIN,HEXAGON	8
27	PFHZZ	11083	lD4620	BOLT,MACHINE	2
28	PAHZZ	11083	7H4860	SPACER,SLEEVE	2
29	PFHZZ	80064	K-6643118 6	PIECE NUT,PLAIN,HEXAGON	4
30	PFHZZ	11083	8M6240	SPRING ASSEMBLYILEA	1
31	PFHZZ	11083	8M6617	SPRING,LEAF	1
32	PFHZZ	11083	8M6618	SPRINGLEAF	1
33	PFHZZ	11083	4M3020	SPRING,LEAF	1
33A	XAHZZ	19207	NPN34	SPRINGVLEAF	1
34	PAHZZ	11083	4M3017	ALIGNMENT CLIP,LEAF	2
35	PFHZZ	11083	4M3021	SPRING,LEAF	1
36	PFHZZ	11083	4M3022	SPRING,LEAF	1

END OF FIGURE

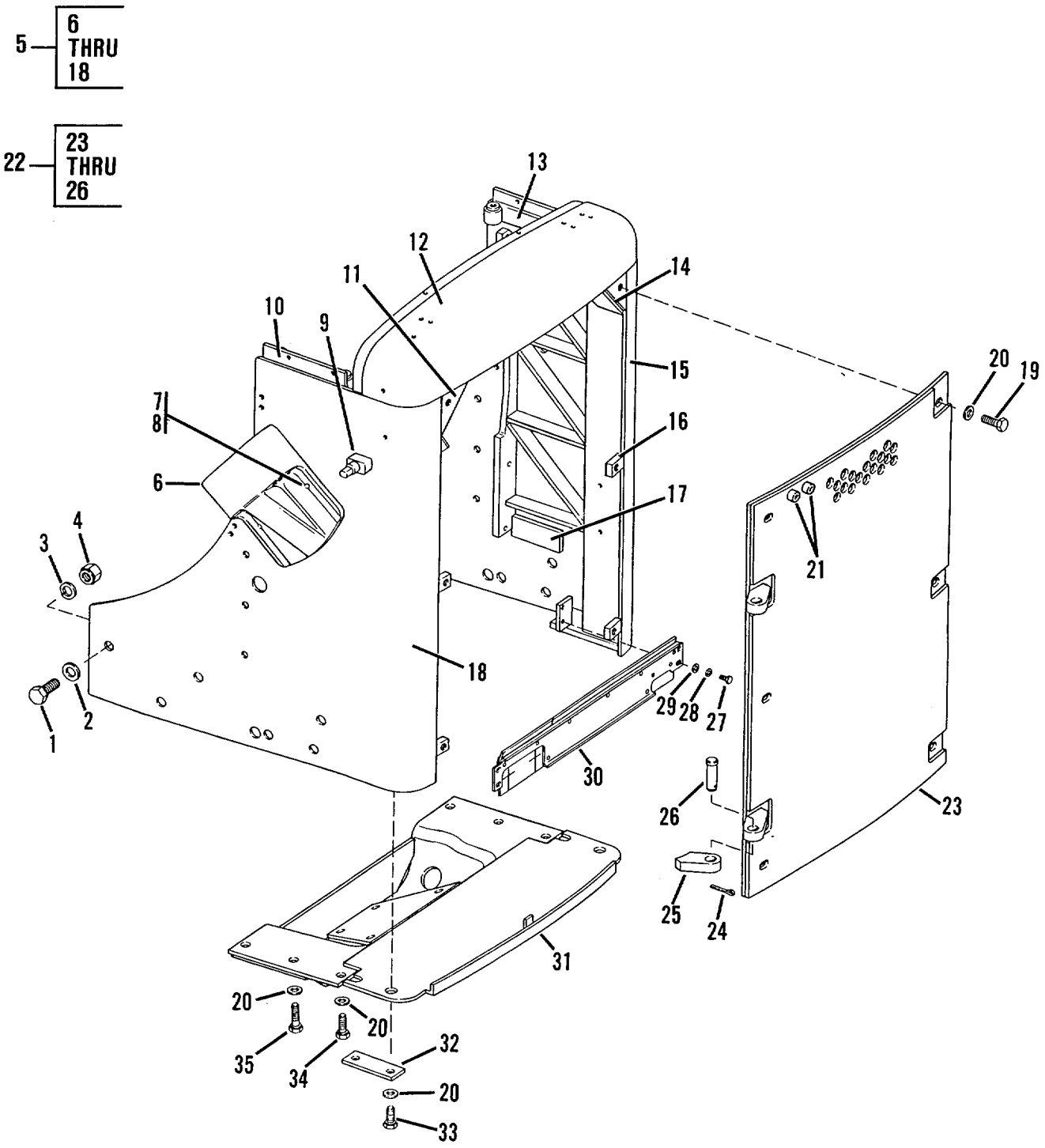

Figure 103. Radiator Guard

(1) ITEM NO	(2) SMR CODE	(3) CAGEC	(4) PART NUMBER	(5) DESCRIPTION AND USABLE ON CODES (UOC)	(6) QTY
				GROUP 18 BODYT CAB, HOOD AND HULL	
				GROUP 1801 - BODYT CAB, HOOD, AND HULL ASSEMBLIES	
				FIG. 103 - RADIATOR GUARD	
1	PFOZZ	11083	S1973	BOLT,MACHINE	12
2	PFOZZ	11083	5P8249	WASHERIFLAT	12
3	PFOZZ	23382	4317	WASHERLOCK	12
4	PFOZZ	11083	2J3505	NUTTPLAINIHEXAGON	12
5	PFOZZ	11083	8J2896	GUARD ASSEMBLYIRAI	1
6	PFOZZ	11083	5J5975	.BRACKETSUPPORT	2
*7	PFOZZ	11083	0S1571	SCREWICAPHEXAGON H	4
8	PFOZZ	11083	1D4717	.NUT,HEXAGON	4
9	PFOZZ	11083	2J3207	.PIN,STRAIGH HEADED	2
10	XAFZZ	11083	3T7555	.PLATE ASSY	1
11	PFFZZ	11083	3T7781	.BRACE CORNER	2
12	XAFZZ	11083	2P764	.GUARD ASSY	1
13	XAFZZ	11083	3T7556	.PLATE ASSY	1
14	XAFZZ	11083	7F1611	.REINFORCEMENT	2
15	XAFZZ	11083	2P766	.PLATE ASSYTSID	1
16	PFFZZ	11083	3T7782	.NUT,PLAIN,RECTANGUL	4
17	PFFZZ	11083	5M8669	.BLOCKMOUNTINGIGENE	2
18	XAFZZ	11083	2P765	.PLATE ASSY,SIDE	1
* 19	PFOZZ	80204	B1821BH0630175N	.SCREW,CAP,HEXAGON H	6
20	PFOZZ	11083	5P8247	.WASHERFLAT	16
21	PFOZZ	11083	5R7037	.SPACER,SLEEVE	2
22	PFOZZ	11083	2P2094	.SHROUD,FAN,RADIATOR	1
23	PFOZZ	11083	8P8033	.DOOR, ACCESS	1
24	PFOZZ	11083	384629	.PIN,COTTER	2
25	PFOZZ	11083	3P9119	CLAMP,RIM CLENCHING	2
26	PFOZZ	11083	4H4311	PIN,STRAIGHT,HEADED	2
* 27	PFOZZ	11083	OS0509	SCREW,CAP,HEXAGON H	4
28	PFOZZ	96906	MS35338-46	WASHER,LOCK	4
* 29	PFOZZ	96906	MS27183-14	WASHER,FLAT	4
30	PFOZZ	11083	2P770	PLATE ASSEMBLY,BAFF	1
31	PFOZZ	11083	7G4897	GUARD ASSEMBLY,RADI UOC:AGS,AGV	1
31	PFOZZ	11083	5R5117	GUARD ASSEMBLY,RADI UOC:AGT,AGU	1
32	PFOZZ	11083	9G5088	CONNECTING LINKIRIG	2
33	PFOZZ	11083	4B4043	BOLT,MACHINE	4
* 34	PFOZZ	11083	S1566	BOLT,MACHINE	2
* 35	PFOZZ	80204	B18218H063C200N	SCREW,CAP,HEXAGON H	4

END OF FIGURE

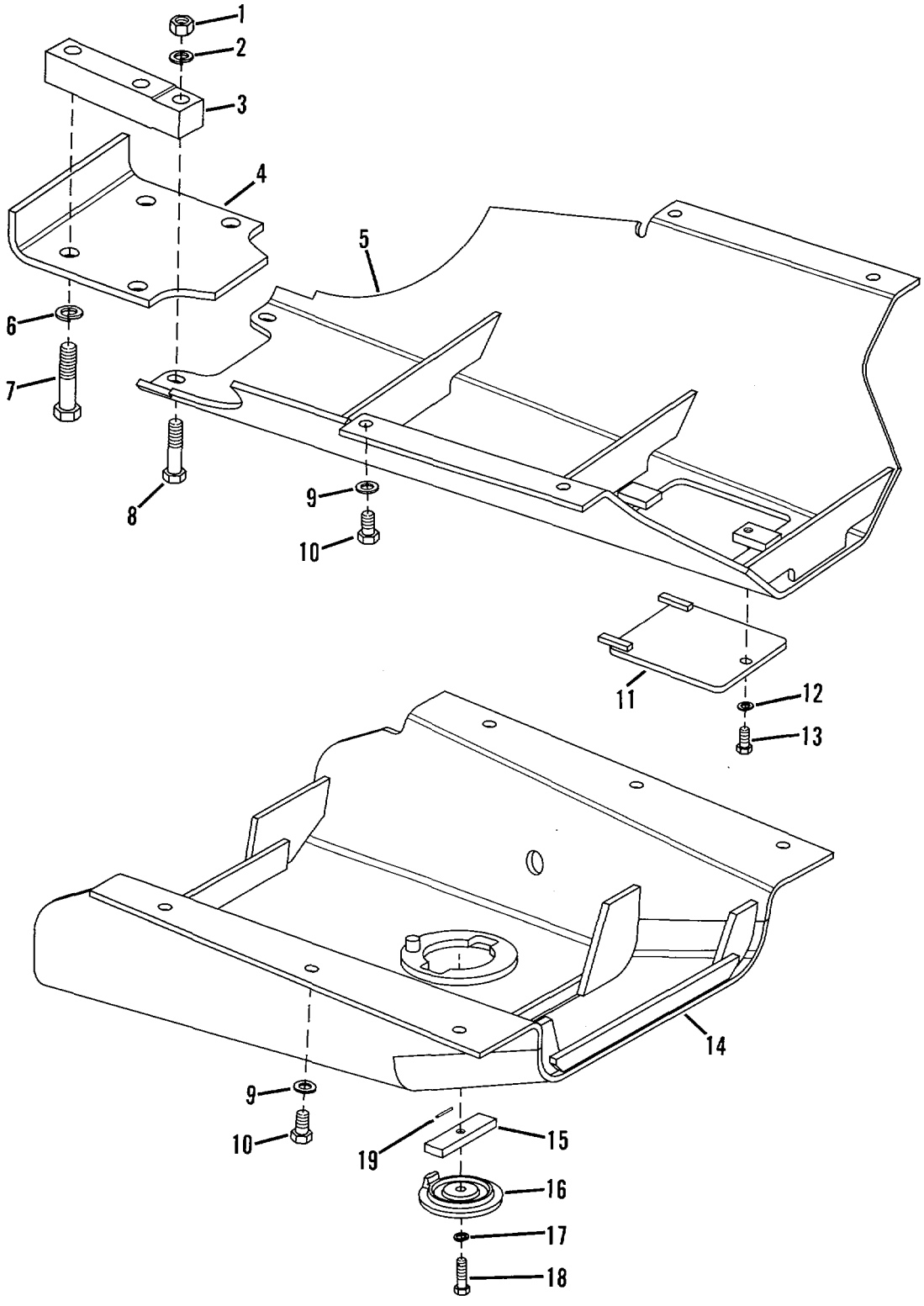

Figure 104. Crankcase Guard

(1) ITEM NO	(2) SMR CODE	(3) CAGEC	(4) PART NUMBER	(5) DESCRIPTION AND USABLE ON CODES (UOC)	(6) QTY
				GROUP 1801 - BODY, CAB, HOODO ANO HULL ASSEMBLIES	
				FIG. 104 - CRANKCASE GUARD	
1	PFOZZ	96906	MS51967-23	NUT,PLAIN,HEXAGON	2
2	PFOZZ	96906	MS35338-51	WASHER,LOCK	2
3	PFOZZ	11083	IP7037	SPACER,PLATE	2
4	PFOZZ	11083	6P5723	BRACKET,ANGLE	1
5	PFOZZ	11083	3S5949	OIL PAN PLATE ASSYS	1
6	PFOZZ	23382	4317	WASHERLDOCK	4
7	PFOZZ	11083	104630	BOLT,MACHINE	4
8	PFOZZ	11083	1D4610	BOLT,MACHINE	2
9	PFOZZ	11083	5P8247	WASHER,FLAT	10
10	PFOZZ	11083	S1566	BOLT,MACHINE	10
11	PFOZZ	11083	3S5954	COVER ASSEMBLY,CRAN	1
12	PFOZZ	96906	MS35338-48	WASHER,LOCK	1
13	PFOZZ	11083	6H1717	BOLT,MACHINE	1
14	PFOZZ	11083	9S2721	GUARD ASSEMBLY,CRAN UOC:AGS,AGV	1
14	XBOZZ	11083	5R5121	GUARD,MECHANICAL DR UOC:AGT,AGU	1
15	PFOZZ	11083	2S9434	NUT,PLAIN,RECTANGUL	1
16	PFOZZ	11083	8S8673	COVE,ACCESS	1
17	PFOZZ	96906	MS35340-50	WASHER,LOCK	1
18	PFOZZ	11083	2S9732	SCREW,CAP,HEXAGON H	1
19	PFOZZ	11083	4H5128	PIN,STRAIGHT,HEADLE	1

END OF FIGURE

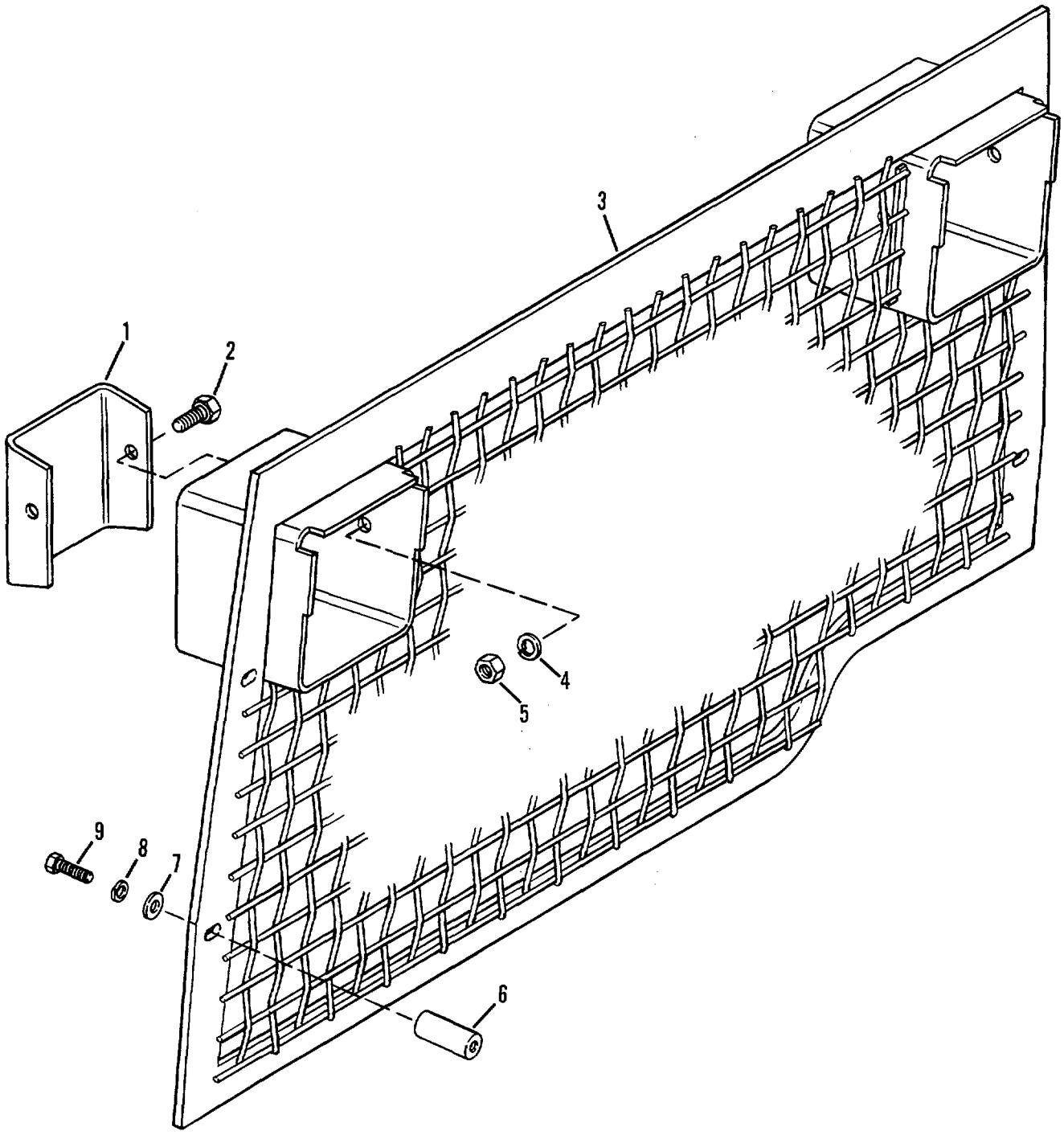

Figure 105. Protective Screen (Used on Models D5BS1 and D5BNS1)

(1) ITEM NO	(2) SMR CODE	(3) CAGEC	(4) PART NUMBER	(5) DESCRIPTION AND USABLE ON CODES (UOC)	(6) QTY
				GROUP 1801 - BODY, CAB, HOOD, AND HULL ASSEMBLIES	
				FIG. 105 - PROTECTIVE SCREEN USED ON MODELS 05BS1 AND D5BNS1	
1	PFOZZ	11083	8P8305	COVER,ACCESS..... UOC:AGU,AGV	2
* 2	PFOZZ	90940	0035392-0	BOLTIMACHINE ..... UOC:AGU,AGV	4
3	PFOZZ	11083	SP6032	GRILLE PANEL..... UOC:AGU,AGV	1
4	PFOZZ	96906	MS35340-50	WASHER,LOCK..... UOC:AGU,AGV	4
5	PFOZZ	96906	MS5196T-20	NUT,PLAIN,HEXAGON ..... UOC:AGU,AGV	4
6	PFOZZ	11083	9P7849	SPACERISLEEVE..... UOC:AGU,AGV	4
7	PFOZZ	96906	MS27183-17	WASHER, LOCK..... UOC:AGU,AGV	4
8	PFOZZ	96906	MS35338-48	WASHER,LOCK..... UOC:AGU,AGV	4
* 9	PFOZZ	11083	0S1585	BOLT,MACHINE ..... UOC:AGUVAGV	4

END OF FIGURE

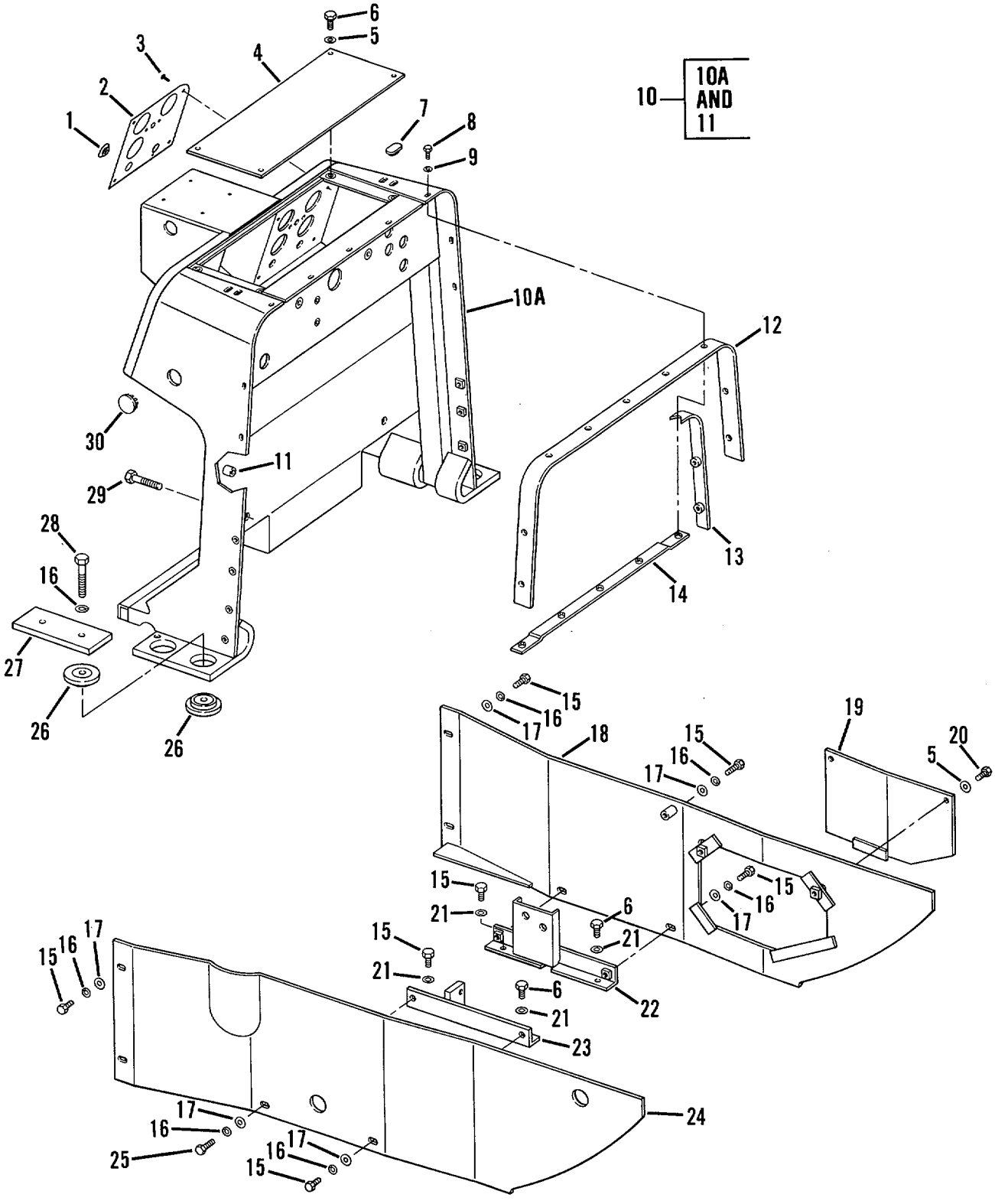

Figure 106. Control Console and Guards

(1) ITEM	(2) SMR	(3)	(4) PART	(5)	(6)
				GROUP 1801 - BODY, CAB, HOOD AND HULL ASSEMBLIES	
				FIG. 106 - CONTROL CONSOLE AND GUARDS	
1	PFOZZ	11083	3T7856	CAP-PLUG,PROTECTIVE	1
2	PFOZZ	11083	7V1566	PANEL,INLAY UOC:AGS,AGT	1
2	PFOZZ	11083	6T5810	PANEL,BLANK UOC:AGU,AGV	1
3	PFOZZ	11083	7B3028	SCREW,DRIVE	4
4	PAOZZ	11083	8P3295	COVER,ACCESS	1
5	PFOZZ	78189	3320-14-01	WASHER,SQUARE CONE	2
6	PFOZZ	11083	L1351	BOLT,MACHINE	7
7	PFOZZ	11083	8P4757	PLUG,PROTECTIVE,DUS	4
8	PFOZZ	78640	310216	BOLT,SELF-LOCKING	9
9	PAOZZ	78189	WD23875	WASHER,SPRING TENSI	9
10	PFOZZ	11083	7G9737	DASH ASSEMBLY,VEHIC	1
10A	XAOZZ	19207	NPN35	DASH	1
11	PFOZZ	11083	4D9376	BOSS	4
12	PFOZZ	11083	8P8222	SEAL,NONMETALLIC ST	1
13	PFOZZ	11083	9P160	BRACKET,ANGLE	2
14	PFOZZ	11083	9P174	NUT STRIP	1
* 15	PFOZZ	11083	51594	BOLT	7
16	PFOZZ	96906	MS35338-46	WASHER,LOCK	19
17	PFOZZ	11083	5M2894	WASHER,FLAT	13
18	PFOZZ	11083	3T7142	GUARD ASSEMBLY,ENGI	1
19	PFOZZ	11083	3T7144	DOOR,ACCESS	1
*20	PFOZZ	11083	0S0509	SCREW,CAP,HEXAGON H	7
21	PFOZZ	11083	5M2894	WASHER,FLAT	11
22	PFOZZ	11083	2P6644	BRACKET	1
23	PFOZZ	11083	6P4028	BRACKET	1
24	PFOZZ	11083	5S3295	GUARD ASSEMBL Y,HOOD	1
*25	PFOZZ	11083	0S1591	SCREW	1
26	PAOZZ	11083	8P3595	MOUNT,RESILIENT	8
27	PFOZZ	11083	8P3185	SPACER,PLATE	2
*28	PFOZZ	11083	0L1329	BOLT,MACHINE	4
29	PFOZZ	88807	362PS182	SCREW,CAP,HEXAGON H	2
30	PFOZZ	55644	SS-48132-K2915	BUTTON,PLUG-	2

END OF FIGURE

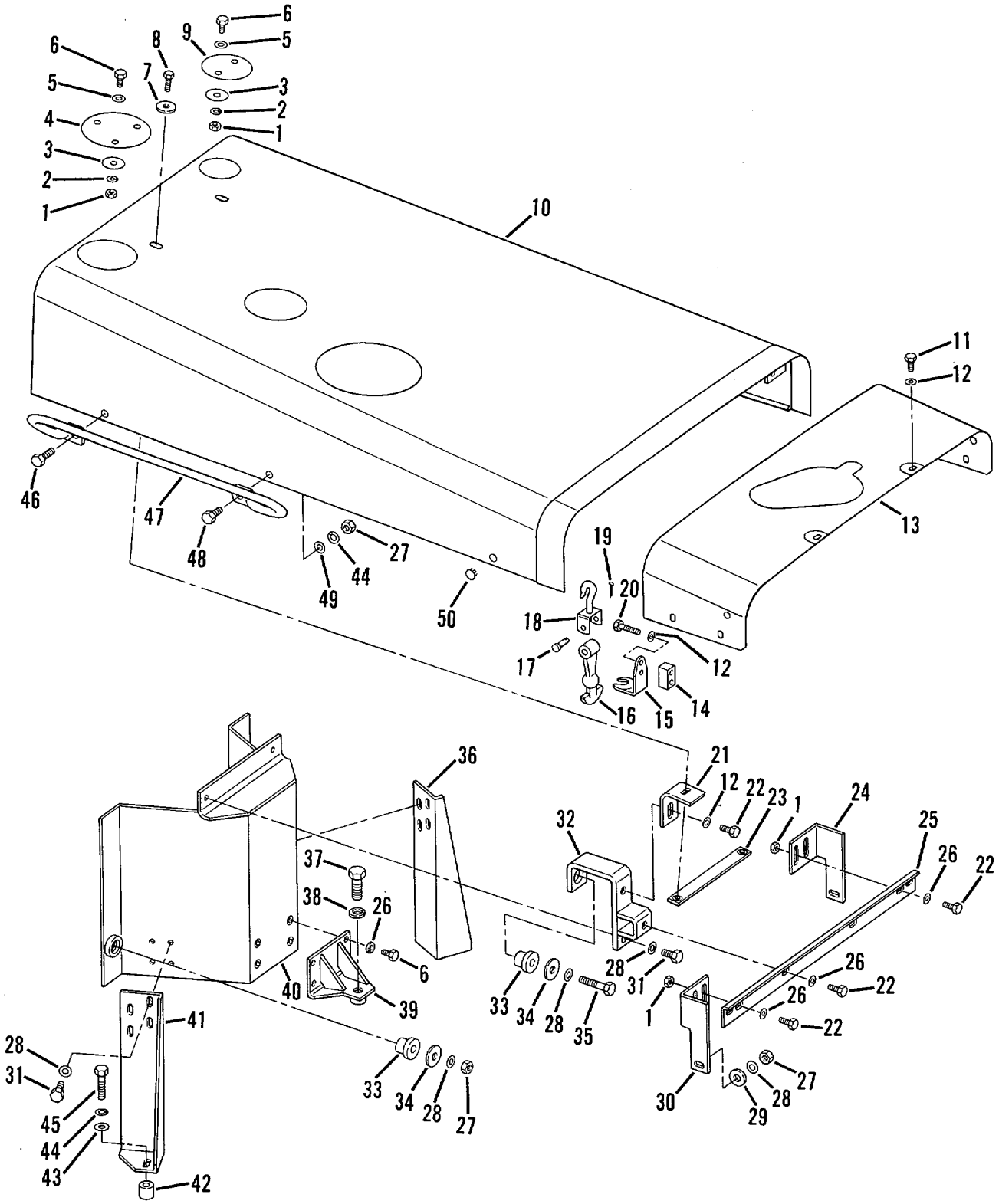

Figure 107. Engine Hood and Mounting

(1) ITEM NO	(2) SMR CODE	(3) CAGEC	(4) PART NUMBER	(5) DESCRIPTION AND USABLE ON CODES (UOC)	(6) QTY
				GROUP 1801 - BODY, CAB, HOOD, AND HULL ASSEMBLIES	
				FIG. 107 - ENGINE HOOD AND MOUNTING	
1	PFOZZ	11083	1D4717	NUTIHEXAGON	5
2	PFOZZ	96906	MS35338-46	WASHER,LOCK	8
* 3	XBOZZ	11083	7K3222	WASH,FLAT	5
4	PFOZZ	11083	2P9674	COVER,ACCESS	1
*5	PFOZZ	96906	MS27183-14	WASHER,FLAT	5
*6	PFOZZ	11083	0S0509	SCREW,AP,HEXAGON H UOC:AGSIAGT	11
*6	PFOZZ	11083	0S0509	SCREW,CAP,HEXAGON H UOC:AGU,AGV	10
7	PFOZZ	11083	8M4069	WASHER,FLAT	2
*8	PFOZZ	11083	1A2029	BOLT,MACHINE	2
9	PFOZZ	11083	2P9673	COVER,ACCESS	1
10	PFOZZ	11083	8P3972	HOOD,ENGINE COMPART	1
11	PFOZZ	11083	L1351	BOLT,MACHINE	13
12	PFOZZ	78189	3320-14-01	WASHER,SQUARE CONE	4
13	PFOZZ	11083	8P3978	COVER ASSEMBLY	1
14	PFOZZ	11083	3R6757	SPACER,PLATE.*	2
15	PFOZZ	11083	2S2109	BRACKET,ANGLE	2
16	PFOZZ	11083	9M3835	LATCH,HOOD	2
17	PFOZZ	19204	7161056	PIN,STRAIGHT,HEADED	2
18	PFOZZ	11083	3S7881	HOOK A	2
19	PFOZZ	96906	MS24665-281	PINGCOTTER	2
* 20	PFOZZ	11083	051571	SCREW,CAP,HEXAGON H	4
21	PFOZZ	11083	9G4059	BRACKET,ANGLE	16
* 22	PFOZZ	11083	S1594	BULT,MACHINE	1
23	PFOZZ	11083	9G1237	NUT SPACER,PLATE	1
24	PFOZZ	11083	8P6692	BRACKET,ANGLE	1
25	PFOZZ	11083	8P6690	BRACKET,ANGLE	1
26	PFOZZ	11083	5M2894	WASHER,FLAT	26
27	PFOZZ	96906	MS51967-14	NUT,PLAIN,HEXAGON	2
28	PFOZZ	96906	MS27183-17	WASHERFLAT	4
29	PFOZZ	11083	485273	WASHER,FLAT UOC:AGSGAGT	2
29	PFOZZ	11083	5P1076	WASHER,SHOULDERED A UOC:AGU,AGV	8
30	PFOZZ	11083	8P6691	BRACKET,ANGLE	1
31	PFOZZ	11083	S1621	BOLT,MACHINE	4
32	PFOZZ	11083	8P5495	BRACKETMOUNTING	2
33	PADZZ	76005	CB-1121-4	MOUNT,RESILRENT	4
34	PFOZZ	11083	1A2519	WASHER,FLAT	6
35	PFOZZ	88807	362PS182	SCREW,CAP,HEXAGON H	2
36	PFOZZ	11083	8P8443	BRACKET,ANGLE	1
37	PFOZZ	11083	L1178	BOLT,MACHINE	1
38	PFOZZ	11083	5P8248	WASHER,FLAT	1
39	PFOZZ	11083	8P4898	BRACKET,ANGLE	1
40	PFOZZ	11083	8P2944	BRACKET ASSY	1

(1) ITEM NO	(2) SMR CODE	(3) CAGEC	(4) PART NUMBER	(5) DESCRIPTION AND USABLE ON CODES (UOC)	(6) QTY
41	PFOZZ	11083	8P8444	PLATE	1
42	PFOZZ	11083	1F9341	SPACE,SLEEVE	2
43	PFOZZ	11083	4B4280	WASHER,FLAT	2
44	PFOZZ	96906	MS35338-48	WASHERTLOCK	8
45	PFOZZ	11083	2B947	BOLT,MACHINE	2
*46	PFOZZ	11083	783235	BOLT,MACHINE	2
47	PFOZZ	11083	7G2819	HANDLE,BOW	2
48	PFOZZ	11083	S1595	BOLT,MACHINE	2
49	PFOZZ	11083	4J4144	WASHER,FLAT	2
50	PFOZZ	61864	SS-51156	BUTTON,PLUG	2

END OF FIGURE

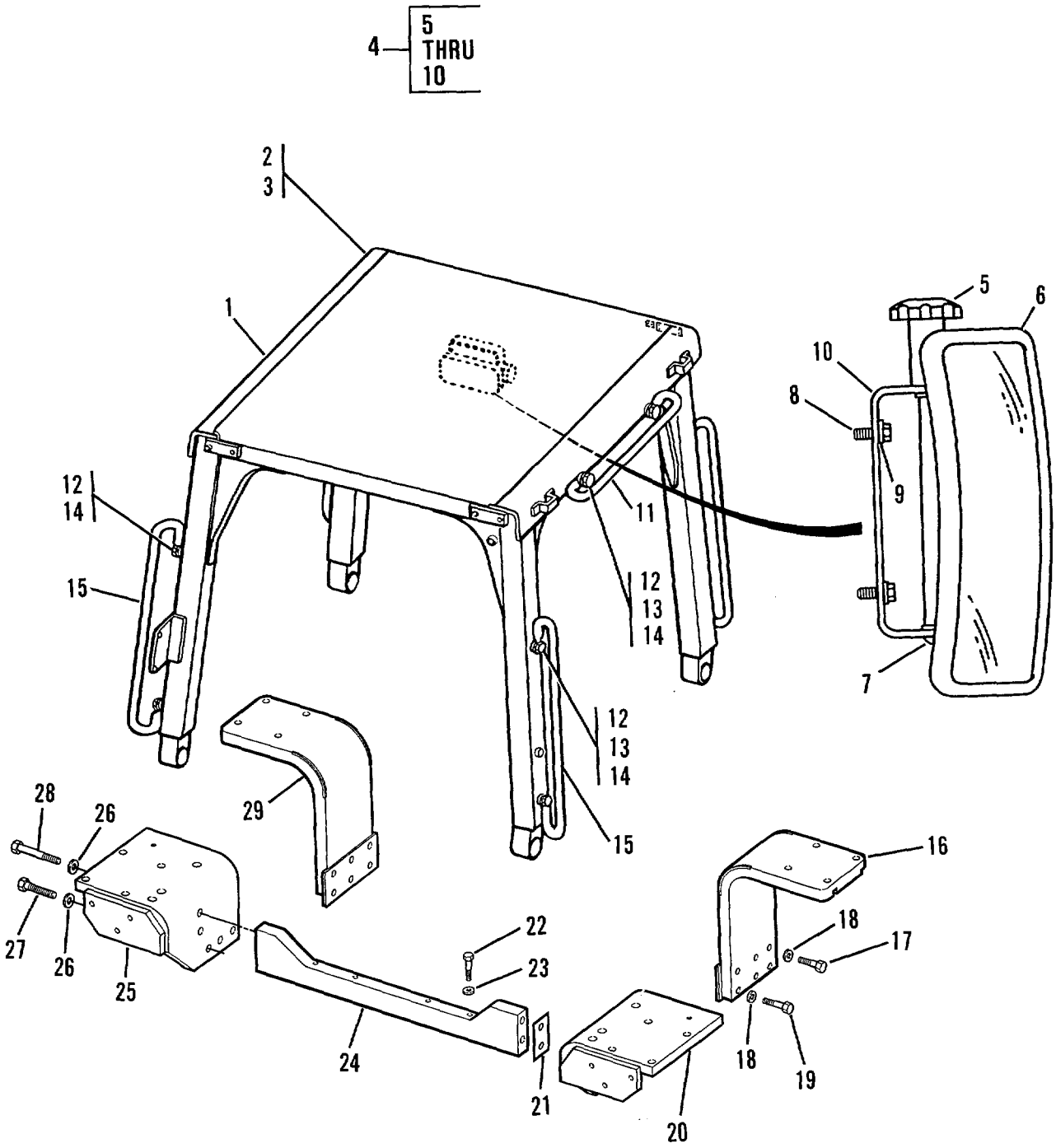

Figure 108. Roll Over Protective Structure

(1) ITEM NO	(2) SMR CODE	(3) CAGEC	(4) PART NUMBER	(5) DESCRIPTION AND USABLE ON CODES (UOC)	(6) QTY
				GROUP 1801 - BODY CAB, HOOD, AND HULL ASSEMBLIES	
				FIG. 108 - ROLL OVER PROTECTIVE STRUCTURE	
1	PFOZZ	11083	9G6868	ROLLOVER ASSEMBLY,P	1
2	PADZZ	11083	5P7132	PLATE, INSTRUCTION	1
3	PFOZZ	11083	6V3254	PLATE,IDENTIFICATIO	1
4	PAOZZ	11083	9P9392	MIRROR ASSEMBLY,REA	1
5	PADZZ	11083	9P9388	.KNOB	1
6	PAOZZ	11083	5P6874	MIRROR HEAD,VEHICUL	1
7	PAOZZ	11083	5K9179	BOLT,SQUARE NECK	1
8	PFOZZ	11083	L1351	BOLTMACHINE	2
9	PFOZZ	78189	3320-14-01	WASHER,SQUARE CONE	2
10	PAOZZ	11083	9P9390	*STRAP,RETAINING	1
11	PAOZZ	11083	SP8299	HANDLE,BOW	2
12	PFOZZ	11083	S1621	BOLT,MACHINE	12
13	PFOZZ	96906	MS35338-48	WASHER,LOCK	12
14	PFOZZ	11083	4B4280	WASHE,FLAT	12
15	PAOZZ	11083	9P7853	HANDLE,BOW	4
16	PFOZZ	11083	8P3901	BRACKETANGLE	1
17	PFOZZ	11083	104609	BOLT,MACHINE	12
18	PFOZZ	11083	2S0115	WASHE,FLAT	12
19	PFOZZ	11083	1D4610	BOLT, MACHINE	12
20	PFOZZ	11083	8P3911	SUPPORT ASSEMBLY	1
21	PFOZZ	11083	7G8366	SHIM	4
* 22	PFOZZ	80204	B1821BH0630325N	SCREW,CAP,HEXAGON H	4
23	PFOZZ	11083	4D3704	WASHER,FLAT	4
24	PFOZZ	11083	7G8368	BRACE SPECIAL	1
25	PFOZZ	11083	8P3908	SUPPORT ASSEMBLY	1
* 26	PFOZZ	78500	1229T1554	WASHER,FLAT	10
27	PFOZZ	11083	9F9522	SCREW,CAP,HEXAGON H	6
28	PAOZZ	11083	9S1322	BOLT,MACHINE	4
29	PFOZZ	11083	8P3904	BRACKET,ANGLE	1

END OF FIGURE

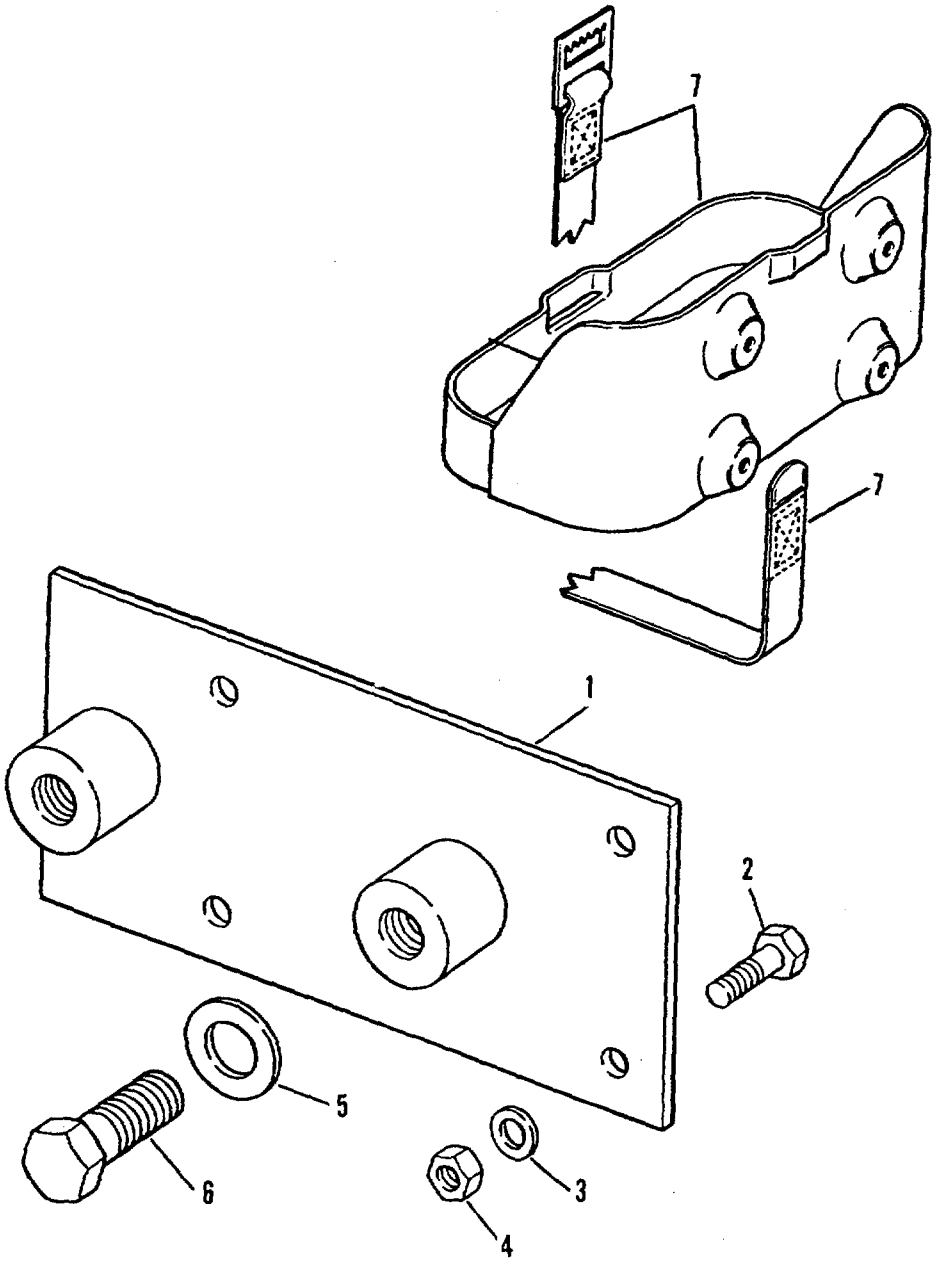

Figure 109. Decontamination Tank Mounting

(1) ITEM NO	(2) SMR CODE	(3) CAGEC	(4) PART NUMBER	(5) DESCRIPTION AND USABLE ON CODES (UOC)	(6) QTY
				GROUP 1801 - BODY, CAB, HOOD, AND HULL ASSEMBLIES	
				FIG. 109 - DECONTAMINATION TANK MOUNTING	
1	PFOZZ	11083	5R8089	BRACKET MOUNTING	1
*2	PFOZZ	80204	81821BH0380125N	SCREW,CAP,HEXAGON H	4
3	PFOZZ	11083	5M2894	WASHER,FLAT	4
4	PFOZZ	11083	1D4717	NUT,HEXAGON.....	4
* 5	PFOZZ	29510	39422D	WASHER,FLAT	2
* 6	PFOZZ	11083	L1178	BOLT,MACHINE	2
7	PFOZZ	11083	5R6242	BRACKET,MOUNTING	1

END OF FIGURE

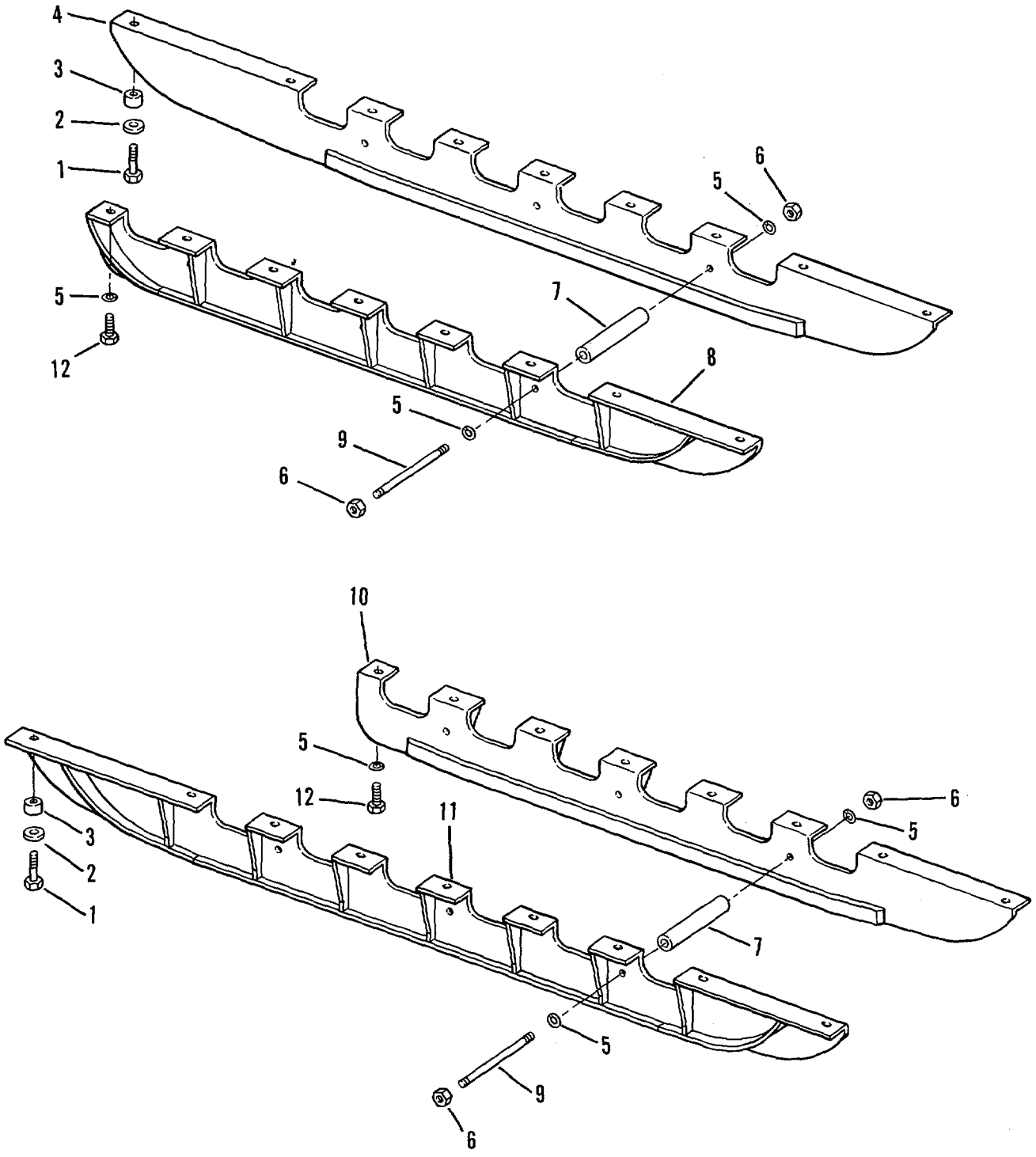

Figure 110. Track. Roller Dirt Guard (Used on Models D5BNS and D5BS)

(1) ITEM NO	(2) SMR CODE	(3) CAGEC	(4) PART NUMBER	(5) DESCRIPTION AND USABLE ON CODES (UOC)	(6) QTY
				GROUP 1801 - BODY, CAB, HOOD, AND HULL ASSEMBLIES	
				FIG, 110 - TRACK ROLLER DIRT GUARD USED ON MODELS 05BNS AND D5BS	
1	PFOZZ	11083	184367	BOLT,MACHINE ..... UOC:AGSIAGT	32
2	PFOZZ	11083	403704	WASHER,FLAT..... UOC:AGS,AGT	32
3	PAOZZ	11083	3P4134	SPACER..... UOC:AGS,AGT	32
4	PFOZZ	11083	5M0635	GUARD RH OUTER ..... UOC:AGSIAGT	1
5	PFOZZ	96906	MS35340-50	WASHER,LOCK..... UOC:AGS,AGT	12
6	PFOZZ	96906	MS51968-20	NUT,PLAIN,HEXAGON ..... UOC:AGS,AGT	6
7	PFOZZ	11083	2F23	SPACER,SLEEVE..... UOC:AGS ,AGT	6
8	PFOZZ	11083	5M0633	GUARD ASSEMBLY RH INNER..... UOC:AGSIAGT	1
9	PFOZZ	11083	8H1381	TIE ROD,STEERING ROD, THREADED ..... UOC:AGS?AGT	6
10	PFOZZ	11083	5M634	GUARD ASSEMBLY,DIRT L.H INNER..... UOC:AGS,AGT	1
11	PFOZZ	11083	5M0636	GUARD LH OUTER ..... UOC:AGSVAGT	1
12	PFOZZ	80204	B1821BH063C200N	SCREW,CAP,HEXAGON H..... UOC:AGSTAGT	2

END OF FIGURE

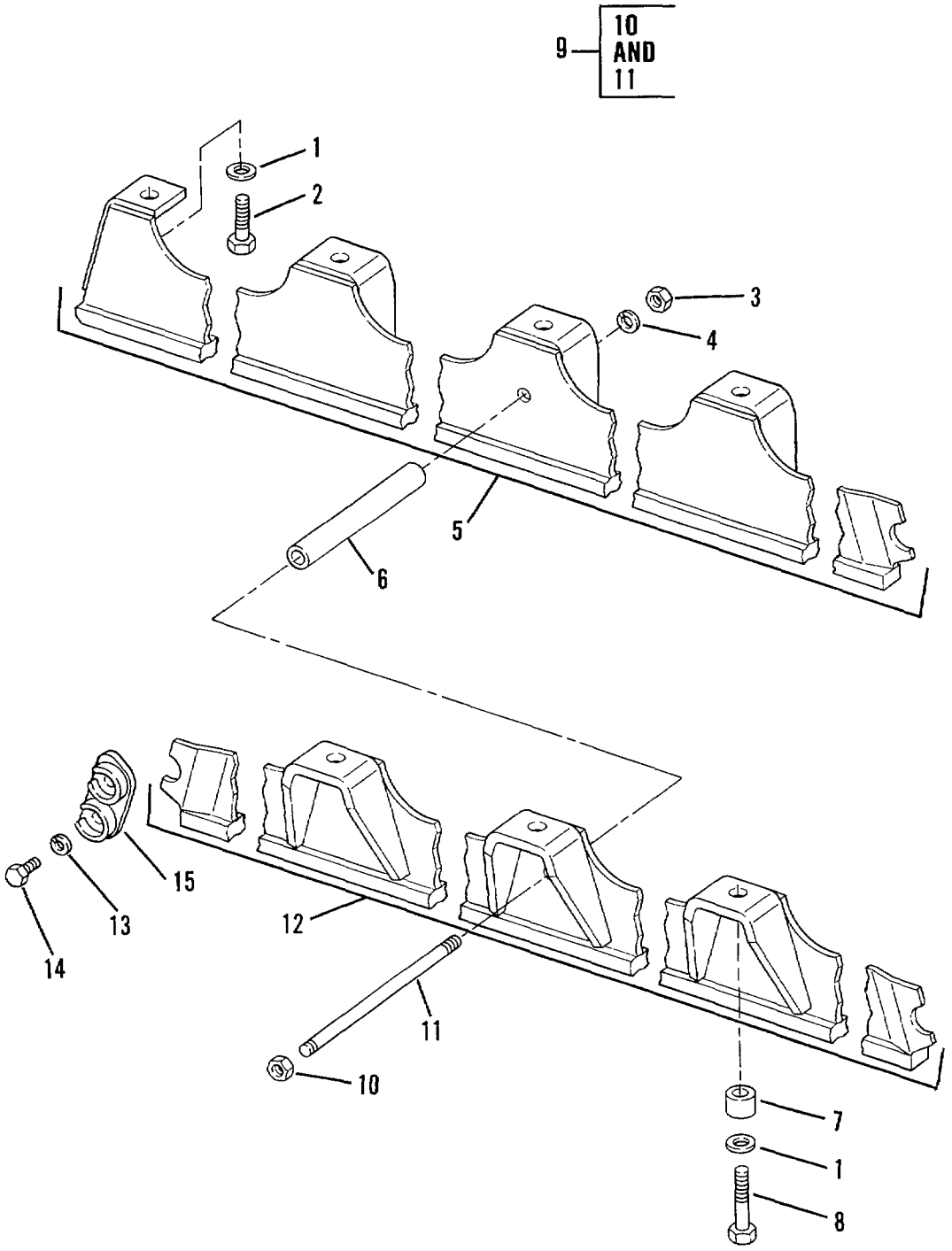

Figure 111. Track and Roller Guard (Used on Models D5BS1 and D5BNSI)

(1) ITEM NO	(2) SMR CODE	(3) CAGEC	(4) PART NUMBER	(5) DESCRIPTION AND USABLE ON CODES (UOC)	(6) QTY
				GROUP 1801 - BODY, CAB, HOOD, AND HULL ASSEMBLIES	
				FIG. 111 - TRACK AND ROLLER GUARD USED ON MODEL D5BSI AND D53NSI	
*1	PFOZZ	11083	4D3704	WASHER,FLAT ..... UOC:AGUIAGV	22
*2	PFOZZ	11083	8S9092	BOLT,MACHINE ..... UOC:AGU,AGV	2
3	PFZZ	96906	MS51968-20	NUT,PLAIN,HEXAGON ..... UOC:AGU,AGV	6
4	PFOZZ	96906	MS35340-50	WASHER,LOCK - ..... UOC:AGU,AGV	12
5	PFOZZ	11083	9S8347	GUARD,MECHANICAL DR R.H INNER ..... UOC: AGU,AGV	1
5	PFOZZ	11083	9S8348	GUARD,MECHANICAL DR L.HC INNER .11 ..... UOC:AGU,AGV	1
6	PFOZZ	11083	4S6559	TUBE,METALLIC ..... UOC:AGU,AGV	6
7	PFOZZ	11083	3P4134	SPACER..... UOC:AGU,AGV	20
8	PFOZZ	80204	B18218H0630325N	SCREW,CAP,HEXAGON H ..... UOC:AGU,AGV	20
9	PFOZZ	11083	8H1382	ROD ..... UOC:AGU,AGV	6
10	PFOZZ	96906	MS51968-20	.NUT,PLAIN,HEXAGON ..... UOC:AGU,AGV	1
11	PFOZZ	11083	8H1381	TIE ROD,STEERING ROD, THREADED ..... UOC:AGUGAGV	1
12	PFOZZ	11083	9S8351	GUARD,MECHANICAL DR OUTER11E R111..... UOC:AGU,AGV	2
13	PFOZZ	96906	MS35338-48	WASHER,LOCK..... UOC:AGU,AGV	12
14	PFOZZ	11083	0S1585	BOLT,MACHINE ..... UOC:AGU,AGV	12
15	PFOZZ	11083	2M4668	RETAINER,GUARDITRAC ..... UOC:AGU,AGV	6

END OF FIGURE

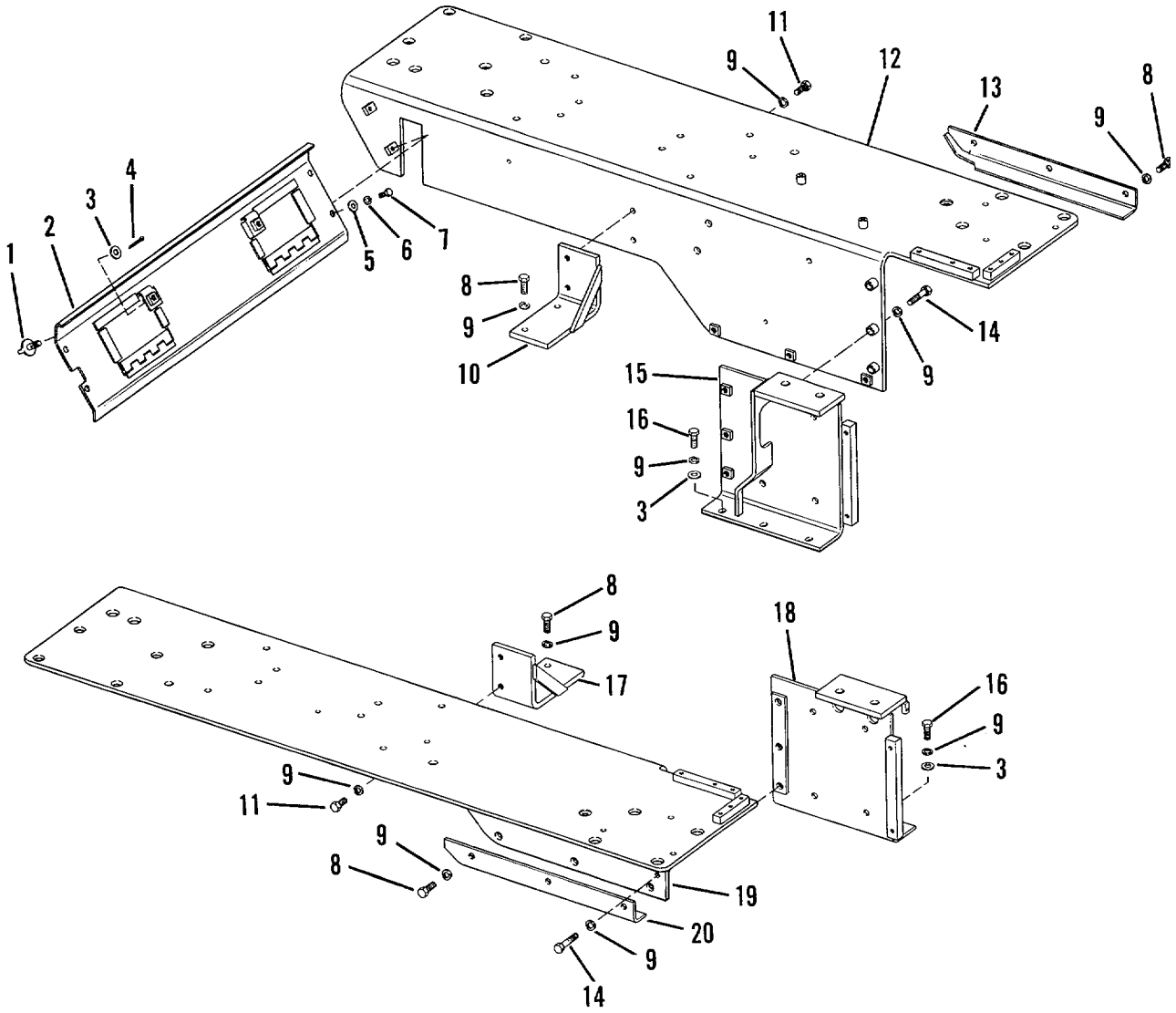

Figure 112. Fenders

(1) ITEM NO	(2) SMR CODE	(3) CAGEC	(4) PART NUMBER	(5) DESCRIPTION AND USABLE ON CODES (UOC)	(6) QTY
				GROUP 1802 - FENDERS	
				FIG. 112 - FENDERS	
1	PFOZZ	11083	6D1746	THUMBSCREW	2
2	PFOZZ	11083	8P9995	PLATE ASSEMBLY,FEND	1
3	PFOZZ	11083	4B4280	WASHERTFLAT	8
4	PFOZZ	00198	PK379	PIN,COTTER	2
5	PFOZZ	96906	MS27183-15	WASHERTFLAT	4
6	PFOZZ	96906	MS35338-46	WASHER,LOCK.	4
7	PFOZZ	11083	0S0509	SCREW,CAP,HEXAGON H	4
8	PFOZZ	11083	S1595	BOLT,MACHINE	10
9	PFOZZ	96906	MS35338-48	WASHER,LOCK	26
10	XAOZZ	11083	3T1017	BRACKET ASSY	1
11	PFOZZ	11083	6H1717	BOLT,MACHINE..	4
12	PFOZZ	11083	7G8608	FENDER,VEHICULAR	1
13	PFOZZ	11083	3P6033	GUARDIMECHANICAL DR	1
14	PFOZZ	11083	2B0947	BOLTMACHINE	6
15	PFOZZ	11083	8P3439	SUPPORT ASSEMBLY,FE	1
16	PFOZZ	11083	OS1585	BOLT,MACHINE	6
17	XAOZZ	11083	3T1019	BRACKET ASSYSSY	1
18	PFOZZ	11083	8P3440	SUPPORT ASSEMBLYIFE	1
19	PFOZZ	11083	7G8607	FENDERIVEICULAR	1
20	PFOZZ	11083	3P6032	GUARD,MECHANICAL ORR	1

END OF FIGURE

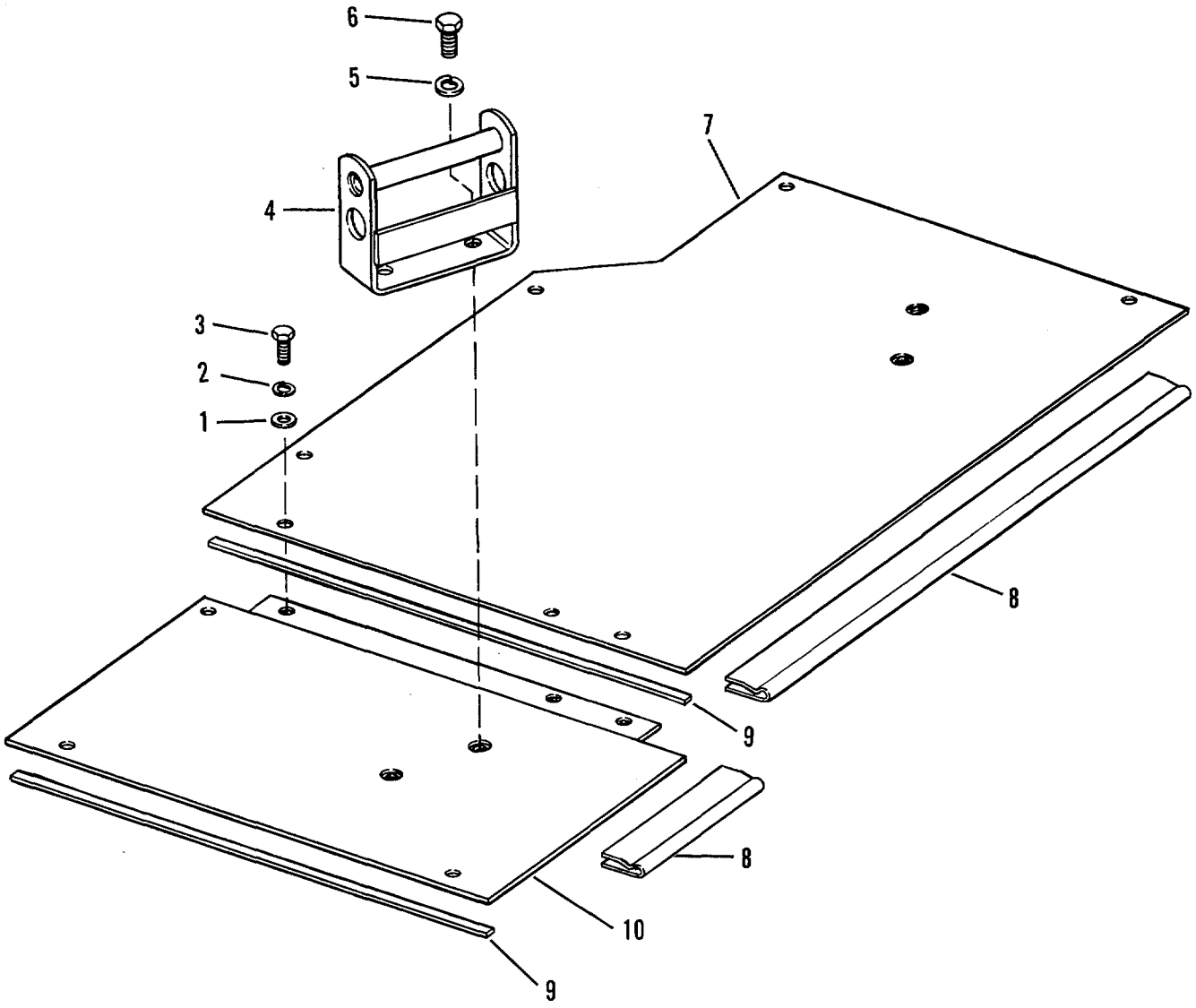

Figure 113. Floor Plates

(1) ITEM NO	(2) SMR CODE	(3) CAGEC	(4) PART NUMBER	(5) DESCRIPTION AND USABLE ON CODES (UOC)	(6) QTY
				GROUP 1805- FLOORS	
				FIG. 113 - FLOOR PLATES	
1	PFOZZ	96906	MS27183-14	WASHERIFLAT.....	10
2	PFOZZ	96906	MS35338-46	WASHERILOCK.....	4
3	PFOZZ	11083	S1594	BOLTMACHINE	10
4	PFOZZ	11083	5H156	SUPPORT	2
5	PFOZZ	96906	MS35338-48	WASHER,LOCK.....	4
6	PFOZZ	11083	S1621	BOLTTMAC.....	4
7	PFOZZ	11083	7G1770	FLOORPLATE ASSEMBLY	1
8	MOOZZ	11083	5P7245-323IN	SEAL,NONMETALLIC SP MAKE FROM SEAL..... P/N 5P72451 32.3 IN	1
9	MOOZZ	11083	5P7246-138907	IN RUBBER STRIP MAKE FROM RUBBER ..... STRIP P/N 5P7246 (SEE GROUP 9501) 13807 INCH LONGC	1
10	PFOZ	11083	7G1771	PLATE ASSEMBLYIFLOO.....	1
				END OF FIGURE	

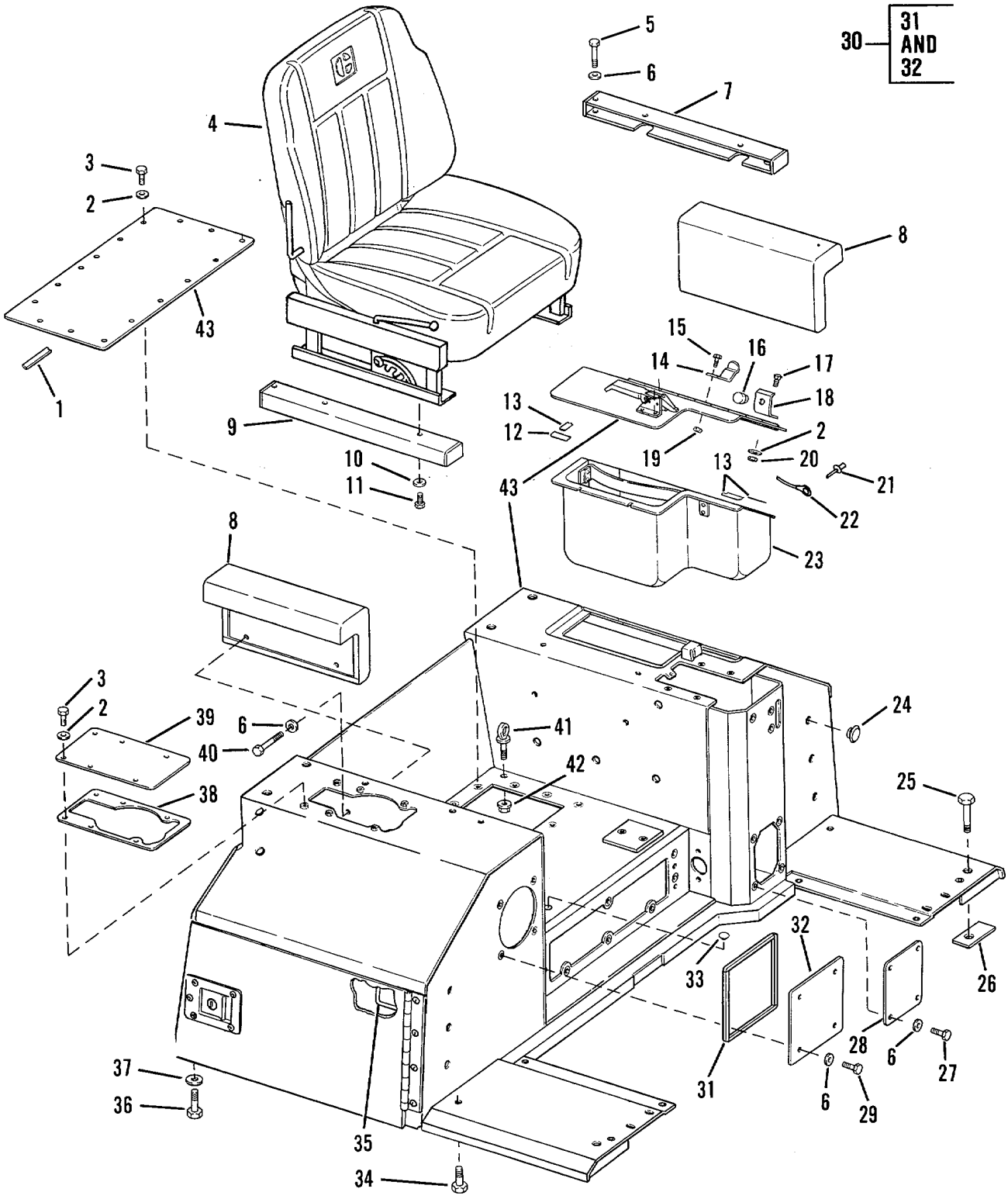

Figure 114. Support and Seat

(1) ITEM NO	(2) SMR CODE	(3) CAGEC	(4) PART NUMBER	(5) DESCRIPTION AND USABLE ON CODES (UOC)	(6) QTY
				GROUP 1806- UPHOLSTERY SEATS AND CARPETS	
				FIG 114- SUPPORT AND SEAT	
1	PAOZZ	11083	9G5953	GASKET..	1
2	PFOZZ	11083	5M2894	WASHERVFLAT	22
3	PFOZZ	11083	S1594	BOLTIMACHINE	18
4	PFOOO	91024	1155701	SEAT,VEHICULAR SEE FIG 116 FOR BREAKDOWN	1
5	PFOZZ	11083	OS1590	BOLT,MACHINE	2
6	PFOZZ	11083	5M2894	WASHER,FLAT..	14
7	PFOZZ	11083	9G6180	CHANNE,SEAT..	1
8	PFOZZ	11083	9C3754	CUSHION ASSEMBLYISI	2
9	PFOZZ	11083	9G6177	CHANNEL ASSEMBLY	1
10	PFOZZ	19200	10910174-16	WASHER,FLAT	4
11	PFOZZ	11083	S1594	BOLT,MACHINE	24
12	PFOZZ	11083	3T8852	SEAL.	1
13	PAOZZ	11083	5P5637	SEAL,RUBBER STRIP	2
14	PFOZZ	11083	3T8823	CLIPISPRING TENSION	1
15	PFOZZ	80204	81821BHO25CO50N	SCREW,CAP,HEXAGON H	2
16	PFOZZ	11083	9M5884	BUMPER,NONMETALLIC	2
17	PFOZZ	11083	104676	BOLT,SQUARE NECK	
18	PFOZZ	11083	3T8824	BRACKET,DOUBLE ANGL	2
19	PFOZZ	31159	JM56	NU,IPLAIN,HEXAGON	2
20	PFOZZ	11083	D4717	NUT,HEXAGON	2
21	PFOZZ	07707	SD64BS	RIVETVBLINDO	1
22	PFOZZ	11083	5P7957	WIRE ROPE ASSEMBLY	1
23	PFOZZ	11083	9G5974	TRAY ASSEMBLY,STORA	1
24	PFOZZ	11083	3T7857	CAP-PLUG,PROTECTIVE	14
25	PFOZ	11083	OV0375	SCREWVCAP,HEXAGON H	2
26	PFOZZ	11083	9G7190	SPACERIPLATE	6
27	PFOZZ	11083	OS0509	SCREW,CAP,HEXAGON H.	4
28	PFOZZ	11083	9G6543	COVERVACCESS	1
29	PFOZZ	11083	L1351	BOLT,MACHINE .	4
30	PFOZZ	11083	8P4877	COVER,ACCESS	1
31	MOOZZ	11083	5P7246-26.78IN	.RUBBER STRIP MAKE FROM RUBBER STRIP P/N 5P7246 (SEE GROUP 9501) 26.78 INCH LONG	1
32	XAOZZ	11083	8P4878	.COVER,ACCESS .	1
33	PFOZZ	99017	B-641	PLUG,PROTECTIVE,DUS	1
34	PFOZZ	11083	7B3235	BOLTMACHINEE	2
35	MOOZZ	11083	5P8310-23.42IN	SEALINONMETALLIC SP MAKE FROM SEAL P/N RS-104 (SEE GROUP 9501) 23.42 INCH LONG	1
36	PFOZZ	11083	1A5822	BOLT,MACHINE	2
37	PFOZZ	96906	MS27183-17	WASHER,FLAT	6
38	PAOZZ	11083	8P4825	SEAL	1
39	PFOZZ	11083	8P4824	COVER,ACCESS	1
40	PFOZZ	96906	MS90727-59	SCREW,CAP,HEXAGON H	8
41	PFOZZ	11083	BS933	BOLT,EYE	2

(1) ITEM NO	(2) SMR CODE	(3) CAGEC	(4) PART NUMBER	(5) DESCRIPTION AND USABLE ON CODES (UOC)	(6) QTY
42	PFOZZ	11083	8S934	NUTSELF-LOCKING,EX.....	2
43	PFOOO	11083	9G9302	SUPPORT ASSEPBLY,SEE FIG 115..... FOR BREAKDOWN	1

END OF FIGURE

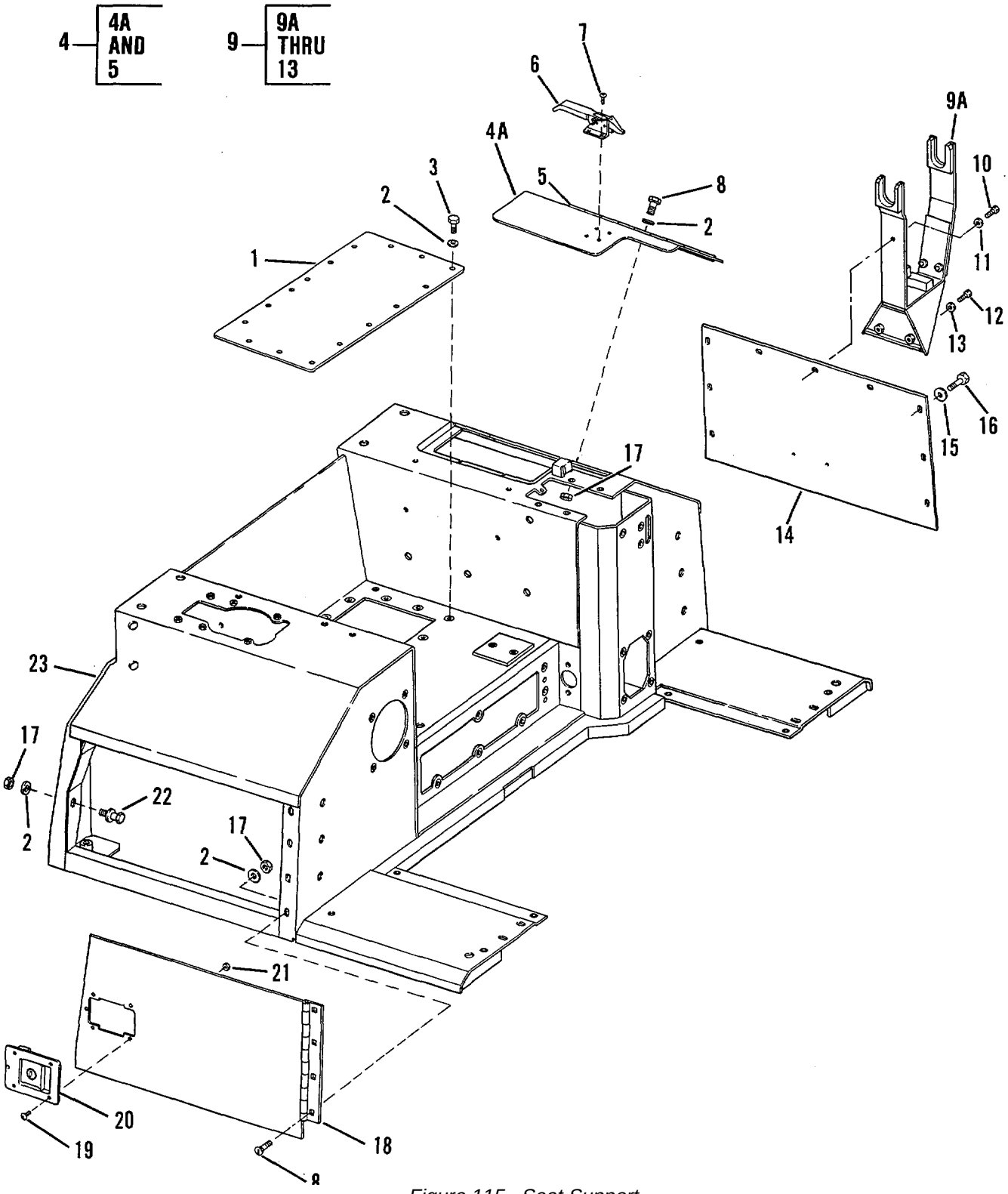

Figure 115. Seat Support

(1) ITEM NO	(2) SMR CODE	(3) CAGEC	(4) PART NUMBER	(5) DESCRIPTION AND USABLE ON CODES (UOC)	(6) QTY
				GROUP 1806- UPHOLSTERY SEATS AND CARPETS	
				FIG 115 - SEAT SUPPORT (SEE FIGURE 114 FOR TOP ASSEMBLY, PART NUMBER 9G9302)	
1	PFOZZ	11083	9G5954	COVER,ACCESS	1
2	PFOZZ	11083	5M2894	WASHER,FLAT	10
3	PFOZZ	11083	S1594	BOLT,MACHINE	2
4	PFOZZ	11083	9G5951	DOOR,ACCESS	1
4A	XAOZZ	19207	NPN36	.DOOR	1
5	XAOZZ	11083	9G5964	.HINGE.	1
6	PFOZZ	94222	A2-99-112-11	CATCH,CLAMPING	1
7	PFOZZ	53551	RV6676-8-6	RIVET,BLINDO	4
8	PFOZZ	11083	104676	BOLT,SQUARE NECK	7
9	PFOZ	11083	5R5175	SUPPORT ASSEMBLY,SE	1
9A	XAOZZ	11083	5R5176	.BRACKET	1
10	PFOZZ	11083	L1351	.BOLT,MACHINE	3
11	PFOZZ	78189	3320-14-01	.WASHER,SQUARE CONE.	3
12	PFOZZ	11083	S1621	BOLT,MACHINE	2
13	PFOZZ	11083	5P1076	WASHER,SHOULDERED A	2
14	PFOZZ	11083	3T408	COVE ,ACCESS	1
15	PFOZ2	78189	3320-14-01	WASHER,SQUAR CONE	9
16	PAOZZ	11083	OS0509	SCREW,CAP,HEXAGON H.	9
17	PFOZZ	11083	D4717	NUT ,HEXAGON	8
18	PFOZZ	11083	9G5957	DOOR,ACCESS	1
19	PFOZZ	11083	8D7712	SCREW,CAP,SOCKET H	4
20	PFOZZ	11083	6V6957	CATCH,FLUSH.	1
21	PFOZZ	82458	CLMT1032S	NUT,SELF-LOCKING,HE	74
22	PFOZZ	11083	5V8309	STUD,FRICTION CATCH	1
23	PFOZZ	11083	9G5900	SUPPORT ASSEMBLY,SE	1
				END OF FIGURE	

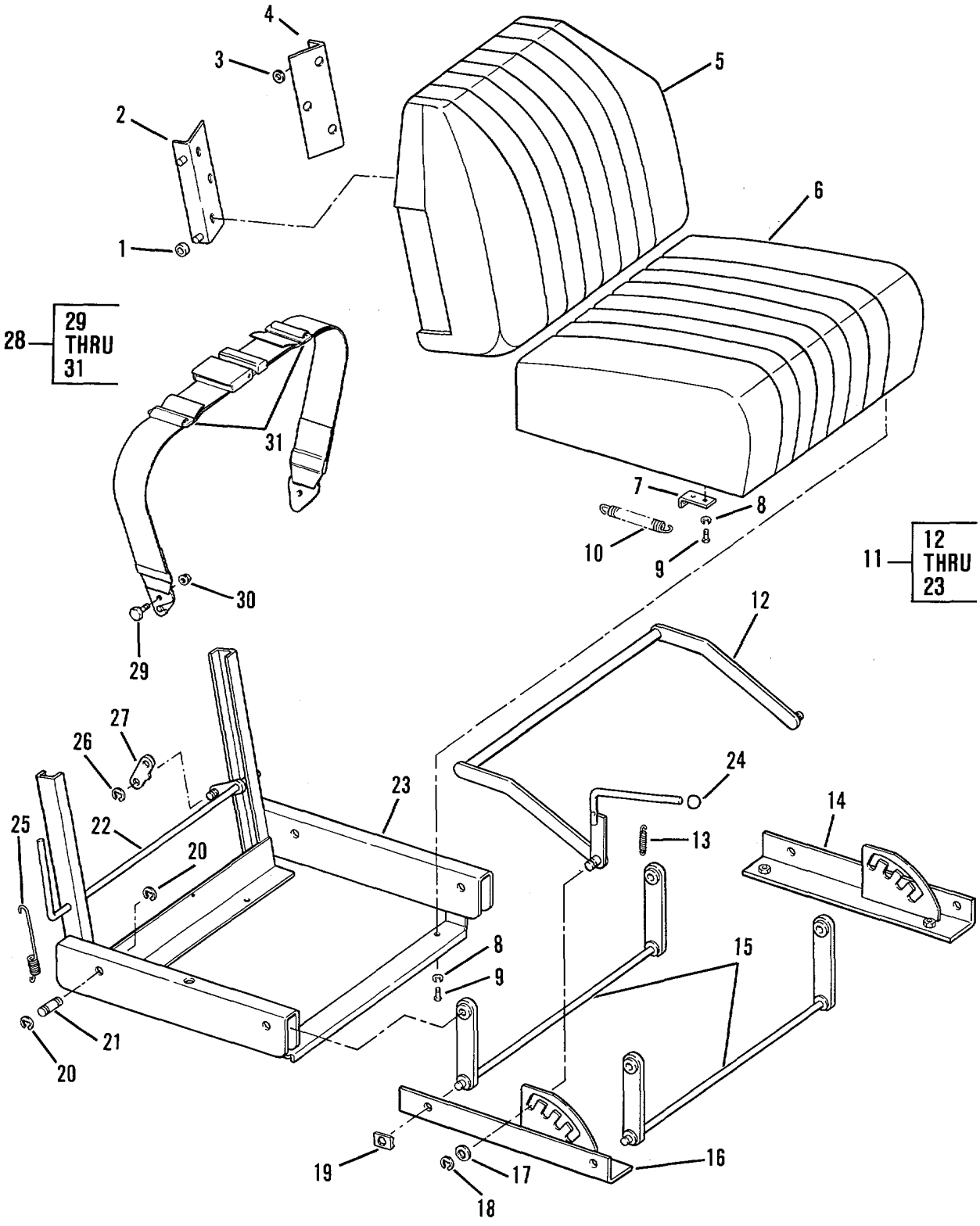

Figure 116. Seat Assembly

(1) ITEM NO	(2) SMR CODE	(3) CAGEC	(4) PART NUMBER	(5) DESCRIPTION AND USABLE ON CODES (UOC)	(6) QTY
				GROUP 1806 - UPHOLSTERY SEATS AND CARPETS	
				FIG 116 - SEAT ASSEMBLY(SEE FIGURE 114 FOR TOP ASSEMBLY, PART NUMBER 1155701)	
1	PAOZZ	91024	1267300	ROLLER,LINEAR-ROTAR	4
2	PFOZ	91024	1267001	BRACKET,SEAT,SUPPOR	1
3	PFOZZ	88044	AN960-816L	WASHER,FLAT	2
4	PFOZZ	91024	1267002	BRACKET,ANGLE	1
5	PFOZZ	91024	1266800	CUSHION,SEAT BACK,Y	1
6	PFOZZ	91024	1267803	SEAT CUSHION ASSEMS.	1
7	PADZ	91024	1267600	BRACKET ,ANGLE	1
8	PFOZZ	96906	MS35338-45	WASHER,LOCK	12
9	PFOZZ	96906	MS35206-298	SCREW,MACHINE	12
10	PFOZZ	91024	1267700	SPRING,HELICAL,EXTE.	1
11	PFOOO	11083	755391	FRAME ASSEMBLYIVEHI	1
12	PFOZZ	91024	1265000	.LEVER,MANUAL CONTRO	1
13	PAOZZ	91024	1265500	.SPRINGIHELICALEXTE	1
14	PFOZZ	91024	1265802	.ANGLE,SUPPORT	1
15	PFOZ	91024	1264700	.LEVER ASSEMBLY	2
16	PFOZZ	91024	1265801	.ANGLESUPPORT	1
17	PAOZZ	91024	1944400	.WASHER,SPRING TENSI	2
18	PFOZZ	79136	5133-50-MD	.RINGIRETAINING	2
19	PFOZZ	91024	1266100	.PUSH ON NUT..	4
20	PFOZZ	96906	MS16633-1062	.RING,RETAINING	8
21	PFOZZ	91024	1265600	.PINGROOVED,HEADLES	4
22	PFOZZ	91024	1266200	.LINK ASSEMBLYIBACK	1
23	PFOZZ	91024	1264100	.FRAME ASSEMBLYVSEAT	1
24	PFOZZ	11083	7S5380	KNOB	1
25	PAOZZ	11083	7S5383	SPRING	2
26	PFOZZ	79136	5133-50-MD	RING,RETAINING	4
27	PFOZZ	91024	1267400	CONNECTING LINK,RIG	2
28	PFOZZ	11083	7V9507	BELT,VEHICULAR SAFE	1
29	PADZZ	11083	5M6755	.SCREW,CAP,HEXAGON H	2
30	PAOZZ	11083	310249	.NUTSELF-LOCKINGIHE	2
31	PFOZZ	29944	10884	.BUCKLE,SEAT BELT,SA	2

END OF FIGURE

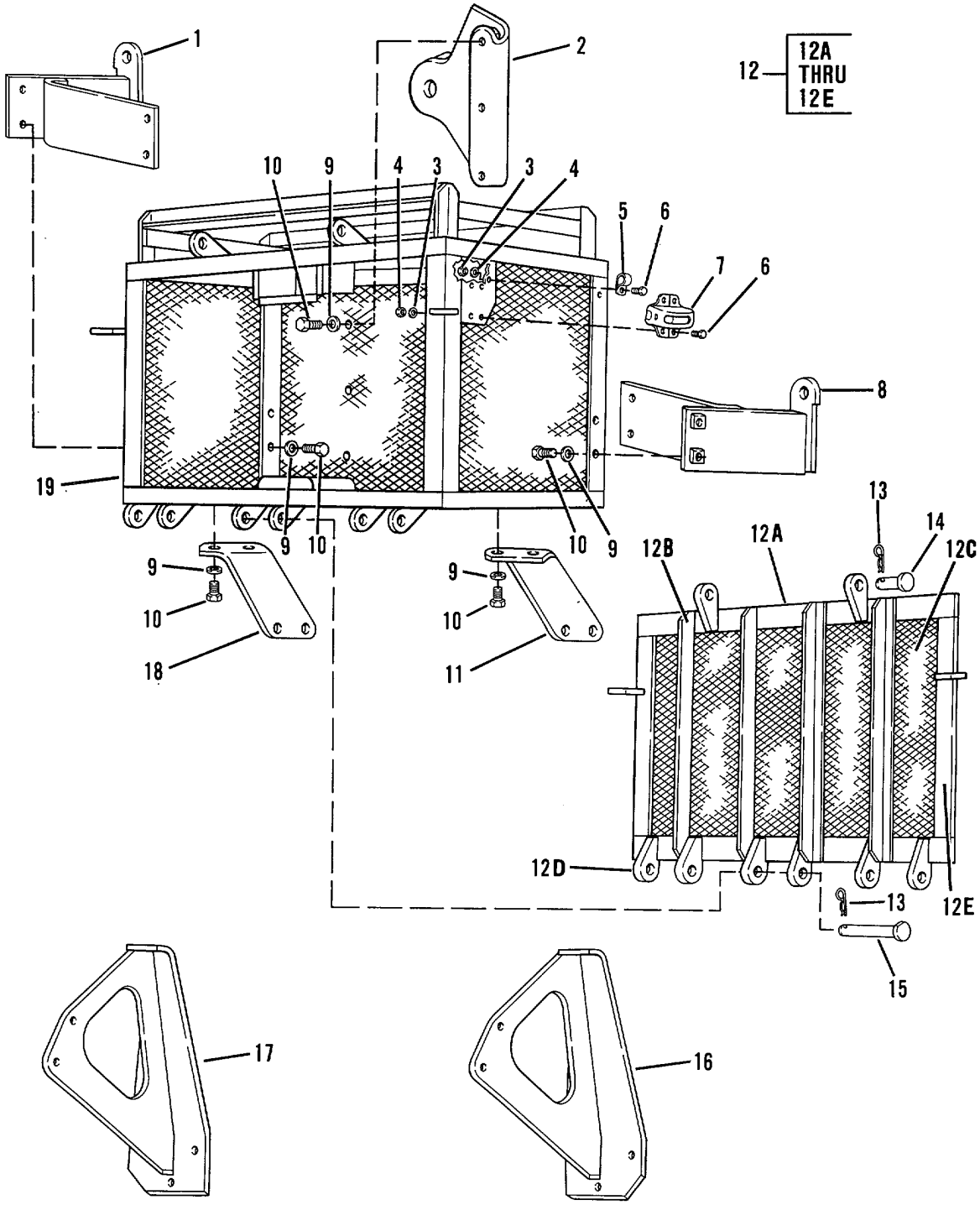

Figure 117. Basket Assembly (Used on Models D5BS and D5BS1)

(1) ITEM NO	(2) SMR CODE	(3) CAGEC	(4) PART NUMBER	(5) DESCRIPTION AND USABLE ON CODES (UOC)	(6) QTY
				GROUP 1808 - STOWAGE RACKST CXES. ETC.	
				FIG 117 - EASKET ASSEPELY USED CN MODELS D5BS AND D5SIS	
1	PFOZZ	11083	5R5146	BRACKET,MOUNTING..... UOC :4GT,AGU	1
2	PFOZZ	11083	5R5183	BRACKET,MOUNTING RH ..... UOC :AGT.AGU	2
3	PFOZZ	11083	9S8752	NUT,PLAIN,HEXAGON ..... UOC:AGTPAGU	12
4	PFOZZ	78189	3320-14-01	WASHER,SQUARE CONE..... UOC :AGT ,AGU	12
5	PFOZZ	11083	7D1728	CLIP,RETAINING..... UOC:AGT,AGU	4
6	PFOZZ	96936	MS90728-8	SCREW,CAP,HEXAGON H..... UOC :AGT ,AGU	12
7	PFOZZ	11083	IS1888	BRACKET,LAMP..... UOC :AGT,AGU	2
8	PFGZZ	11083	5R5147	BRACKET,MOUNTING..... UOC:AGT,AGU	1
9	PFOZZ	11083	5P1076	WASHER,SHOULDERED A ..... UOC:AGT,AGU	18
10	PFOZZ	11083	S1621	BOLT, MACHINE ..... UOC:AGT,AGU	18
11	PFOZZ	11033	3R8545	BRACKETANGLE ..... UOC :AGT,AGU	1
12	PACZZ	11083	3R8638	DOOR ASSEMBLY,CAB..... UOC:AGT,AGU	1
12A	XPOZZ	11083	3R8636	CHANNEL ..... UOC:AGT,AGU	2
12B	XAOZZ	11083	3R8607	ANGLE. ..... UOC:AGT,AGU	4
12C	XAOZZ	11083	3R8637	SCREEN ..... UOC:AGT,AGU	1
12D	XAOZZ	11083	3R855	BRACKET ..... UOC:AGT,AGU	10
12E	XAOZZ	11083	3R8635	CHANNEL SIDE..... UOC:AGT,AGU	2
13	PFOZZ	11083	3J1770	PINLOCKC ..... UOC:AGT,AGU	5
14	PAOZZ	11083	7H395	PIN,STRAIGHT,HEADED ..... UOC:AGT,AGU	2
15	PFOZZ	d83	787387	PIN,STRAIGHT,HEALDED ..... UOC:ACT,AGU	3
16	PFOZZ	11083	5R5191	SUPPORT ASSEBLY,BO ..... UOC:AGT,AGU	1
17	PFOZZ	11083	5R5188	SUPPORT ASSEMBLY..... UOC:AGT,AGU	1
18	PFOZZ	11083	3R8546	BRACKETANGLE	1

(1) ITEM NO	(2) SMR CODE	(3) CAGEC	(4) PART NUMBER	(5) DESCRIPTION AND USABLE ON CODES (UOC)	(6) QTY
19	PAOZZ	11083	3R8673	UOC:AGT,AGU BASKET ASSEMBLY..... UOC:AGT,AGU	1

END OF FIGURE

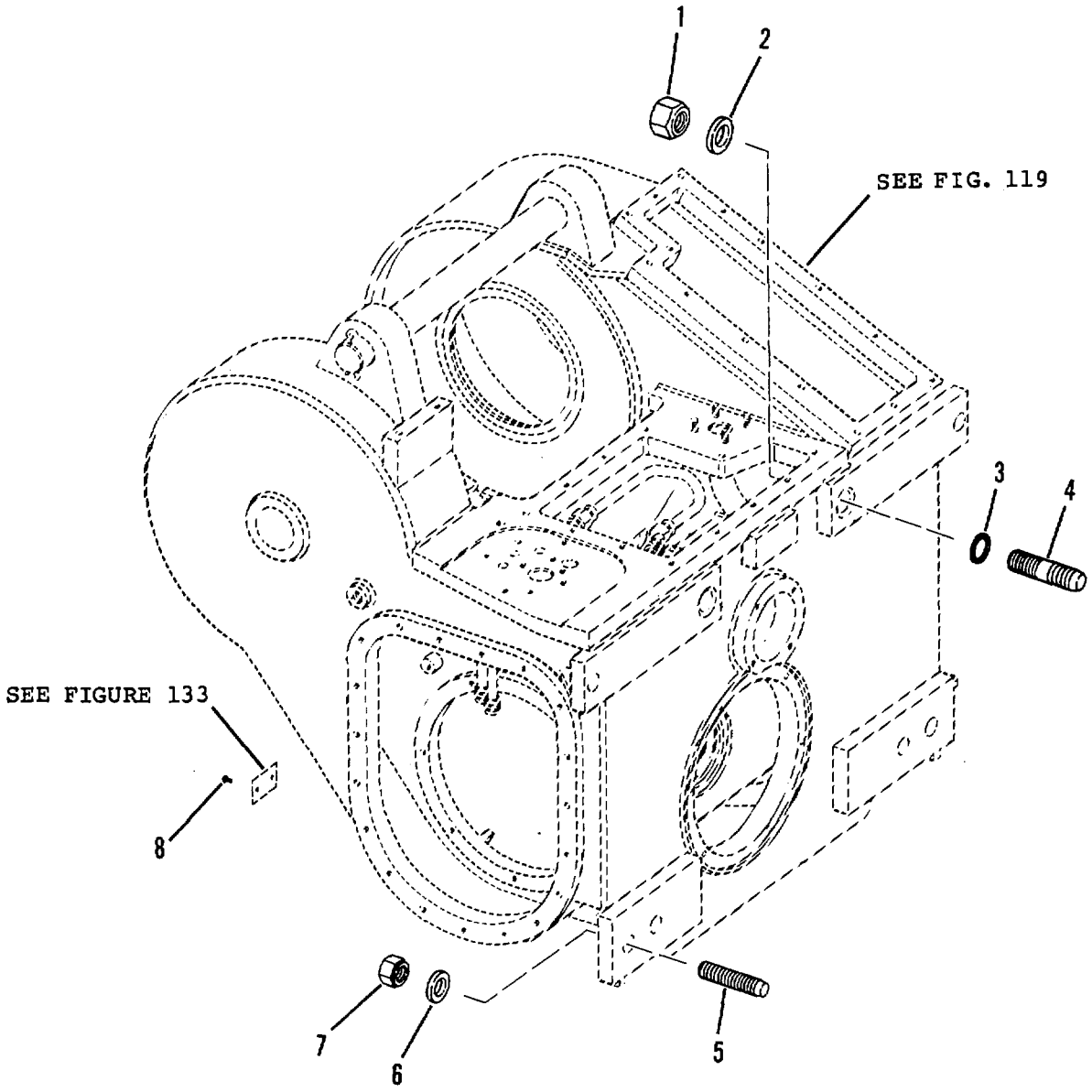

Figure 118. Winch Case Mounting

(1) ITEM NO	(2) SMR CODE	(3) CAGEC	(4) PART NUMBER	(5) DESCRIPTION AND USABLE ON CODES (UOC)	(6) QTY
				GROUP 20 - HOIST WINCH, CAPSTAN, WIND-LASS, FCWER CCNTFCL UNIT, AND POWER TAKE-CFF	
				GROUP 2001 - UINCH ASSEPBLY	
				FIG 118 - WINCH CASE MCUNT1G	
1	PFFZZ	11083	2K7468	NUT,SELF-LOCKING,HE	2
2	PFFZZ	11083	4K684	WASHER,FLAT.....	2
3	PFFZZ	11083	5M7423	PACKING,PREFORMED..	2
4	PFFZZ	11083	2S2113	STUD,PLAIN	2
5	PFFZZ	11083	9M5854	STUD,CONTINUOLS THR	6
6	PFFZZ	11083	3K5234	WASHER,FLAT.....	6
7	PFFZZ	11083	2J3507	NUT,PLAIN,HEXAGON.O.....	6
8	PFFZZ	96906	MS21318-21	SCREW,DRIVE.....	2

END OF FIGURE

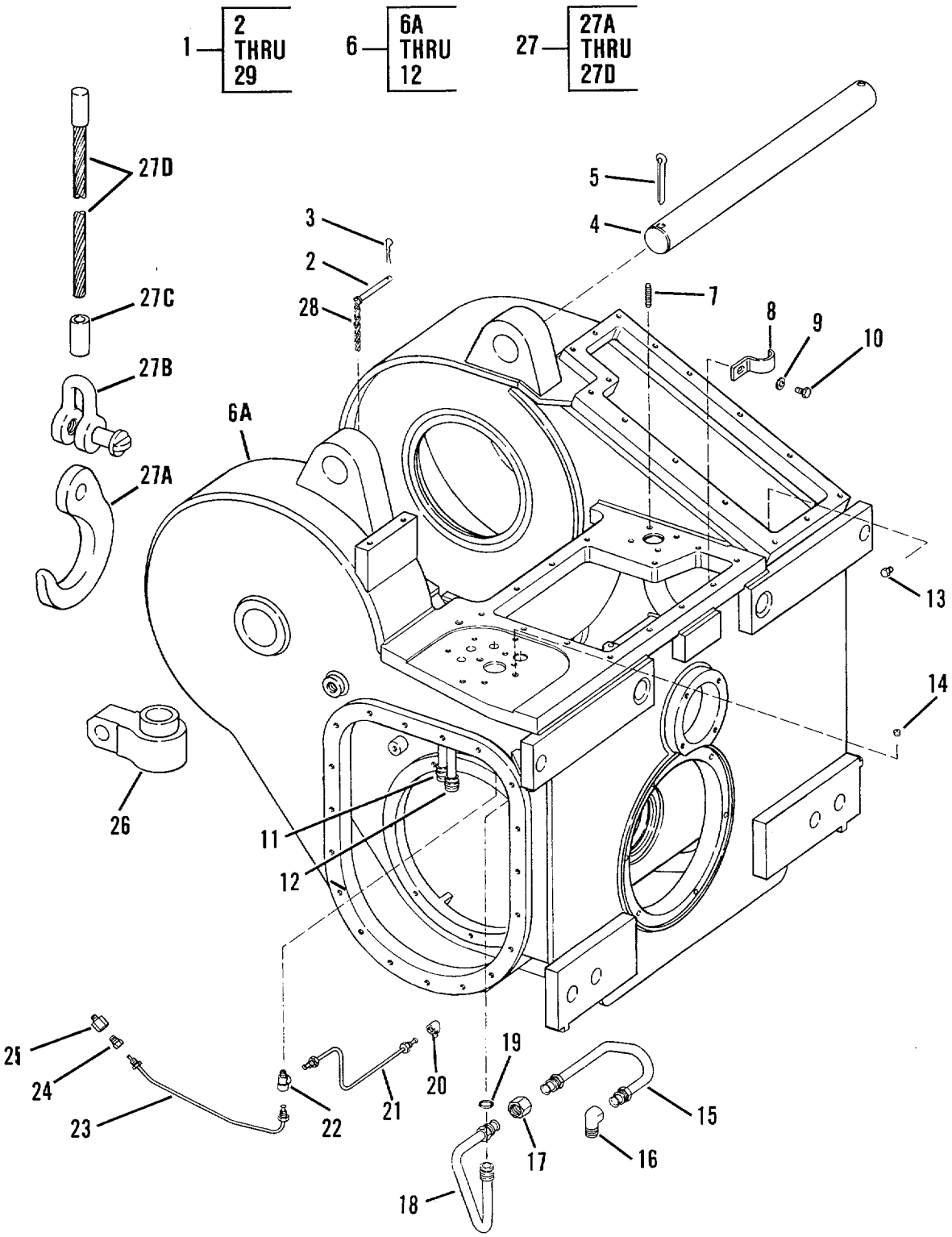

Figure 119. Cable Guide and Winch Case

(1) ITEM NO	(2) SMR CODE	(3) CAGEC	(4) PART NUMBER	(5) DESCRIPTION AND USABLE ON CODES (UOC)	(6) QTY
				GROUP 2001-WINCH ASSEMBLY	
				FIG. 119 - CABLE GUIDE AND WINCH CASE	
1	PAFHH	11083	5R7491	WINCH,DRUM,POWER OP	1
2	PAOZZ	11083	9P1976	PIN,STRAIGHT,HEADED	1
3	PAOZZ	11083	5P372	PINILOCK-	1
4	PFOZZ	11083	1P9265	SHAFT,STRAIGHT	1
5	PFOZZ	11083	3B5325	PIN,COTTER	2
6	XBHZZ	11083	8P1504	HOUSING,MECHANICALG,MECHANIC.A.	1
6A	XAHZZ	11083	8P1502	CASE ASSY,WINCH	1
7	PFHZZ	11083	2M1538	STUD,CONTINUOUS THR.	4
8	PFHZZ	11083	2P3572	STRAP,RETAINING	1
9	PFHZZ	96906	MS27183-14	WASHER,FLAT	1
10	PFHZZ	80204	B1821BH038C063N	SCREW,CAP,HEXAGON H	1
11	XAHZZ	11083	P9290	TUBE A	1
12	XAHZZ	11083	1P9292	TUBE b	1
13	PFHZZ	55883	IPD5M6124	PLUG,PIPE	1
14	PFHZZ	89346	50410DA	PLUG,PIPE	1
15	PFHZZ	11083	8P7623	TUBE ASSEMBLYIMETAL	1
16	PAHZZ	11083	5K9240	ELBOW,PIPE TO TUBE	1
17	PFHZZ	11083	5K9249	COUPLINGTUBE-.	1
18	PFHZZ	11083	8P7622	TUBE ASSEMBLY,METAL	1
19	PFHZZ	11083	7F8607	PACKING,PREFORMED.	1
20	PAHZZ	11083	5K9243	ELBOW,PIPE TO TUBE UOC:AGS,AGT	1
20	PAHZZ	11083	5K9235	ELBOW,PIPE TO TUBE UOC:AGU,AGV	1
21	PFHZZ	11083	6P7820	TUBE ASSEMBLY,METAL UOC:AGS,AGT	1
21	PAHZZ	11083	6T1145	TUBE ASSEMBLY,METAL UOC:AGU,AGV	1
22	PAHZZ	11083	9L9045	TEE,PIPE TO TUBE. UOC:AGS,AGT	1
22	PAHZZ	11083	6K8498	.TEE UOC:AGU,AGV	1
23	PFHZZ	11083	P9279	TUBE ASSEMBLY,METAL UOC:AGS,AGT	1
23	PAHZZ	11083	6T1146	TUBE ASSEMBLY,METAL UOC:AGU,AGV	1
24	PAHZ	11083	5K9239	ADAPTER,STRAIGHT,PI UOC:AGS,AGT	1
24	PAHZZ	11083	5K9246	ADAPTERISTRAIGHT,PI UOC:AGU,AGV	1
25	PAH7Z	11083	2P4439	REDUCER,PIPE	1
26	PFHZZ	11083	5R5128	LEVER,REMOTE CONTRO.	1
27	PAOOO	11083	3R8990	WIRE ROPE ASSEMBLY	1
27A	XAOZZ	3P954	S3200	HOOK 5TON	1
27B	XAOZZ	3P954	602A	SHACKLE 6-1/2TON	1
27C	XAOZZ	19207	NPN39	THIMBLE EYE	1
27D	XAOZZ	3P954	L-6	CABLE	1

(1) ITEM NO	(2) SMR CODE	(3) CAGEC	(4) PART NUMBER	(5) DESCRIPTION AND USABLE ON CODES (UOC)	(6) QTY
28	PFOZZ	39428	361OT13	CAIN,WELDLES	1

END OF FIGURE

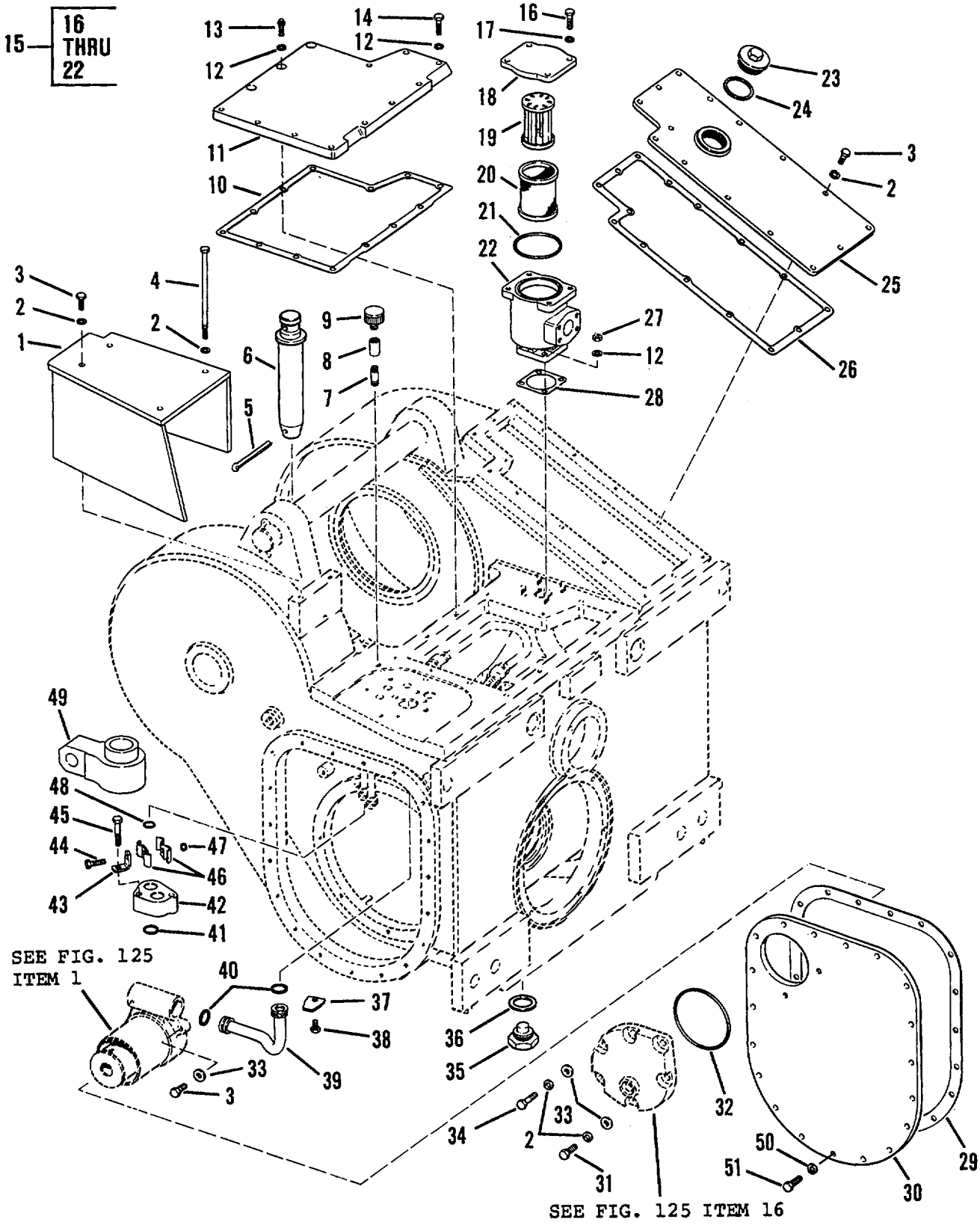

Figure 120. Winch Case Covers, Breather and Magnetic Screen

(1) ITEM NO	(2) SMR CODE	(3) CAGEC	(4) PART NUMBER	(5) DESCRIPTION AND USABLE ON CODES (UOC)	(6) QTY
				GROUP 2001 - WINCH ASSEMBLY	
				FIG 120 - WINCH CASE COVERS, BREATHER AND MAGNETIC SCREEN	
1	PFOZZ	11083	8P54	.COVER ASSEMBLY	1
2	PFOZZ	96906	MS35338-46	.WASHER,LOCK	47
3	PFOZZ	11083	S1594	.BOLT,MACHINE	36
4	PADZZ	11083	6L3670	.BOLT,SPECIALA	2
5	PFOZZ	11083	3B5319	.PINICOTTER	1
6	PFOZZ	11083	7F9541	.PIN, DRAWBAR	1
7	PFOZZ	11083	3B7262	.NIPPLE,PIPE	1
8	PFOZZ	29510	105409	.COUPLING,PIPE	1
9	PFOZZ	11083	9G5127	.BREATHER EA T HER	1
10	PAFZZ	11083	6P7825	.GASKET	1
11	PFFZZ	11083	6P7930	.COVER,ACCESS	1
12	PFFZZ	11083	5M2894	.WASHER,FLAT	21
13	PFFZZ	11083	1T0765	.BOLTIMACHINE	3
14	PFFZZ	11083	3BI915	.BOLT	10
15	PFOZZ	11083	2P7020	.STRAINER BODY,SEDIM	1
16	PFOZZ	11083	A2029	.BOLT,MACHINE	4
17	PFOZZ	96906	MS35338-46	.WASHER,LOCK	4
18	PAOZZ	11083	1P3262	.COVER,ACCESS	1
19	PAOZZ	11083	8S9129	.FILTER-	1
20	PAOZZ	11083	8S9130	.STRAINER ELEMENT	1
21	PFOZZ	11083	2H6338	.PACKING,PREFORMED	1
22	PAOZZ	11083	2P7016	.HOUSING,MECHANICAL	1
23	PFOZZ	11083	5H7110	.PLUGPIPE	1
24	PAOZZ	75165	920	.GASKET.. .	1
25	PFOZZ	11083	3P4603	.COVER.	1
26	PAOZZ	11083	3P4602	.GASKET	1
27	PFOZZ	11083	D4717	.NUT,HEXAGON	4
28	PFOZZ	11083	2P6896	.GASKET	1
29	PAHZZ	11083	2P3637	.GASKET.	1
30	PFHZZ	11083	2P5738	.COVERACCESS	1
31	PFOZZ	80204	B1821BH038C125N	.SCREW,CAP,HEXAGON H	2
32	PFOZZ	96906	MS28775-249	.PACKINGIPREFORME	1
33	PFOZZ	96906	MS27183-14	.WASHER,FLAT	8
34	PFOZZ	11083	2A4639	.BOLT,MACHINE	4
35	PFO0Z	11083	2D8390	.PLUG .	1
36	PAOZZ	11083	6F4868	.GASKET	1
37	PAHZZ	11083	6P8678	.SPACER,PLATE	1
38	PFHZZ	11083	OS0509	.SCREW,CAP,HEXAGON H	1
39	PFHZZ	11083	2P5853	.TUBE ASSE MBL ,METAL	1
40	PFHZZ	99193	S9413-215	.PACK ING ,PREFORMED..	2
41	PFHZZ	11083	5H2767	.PACKING,PREFORMED	2
42	PAHZZ	11083	2P1053	.FLANGE,COMPANIN,UN	1
43	PAHZZ	11083	2P4438	.BRACKET,ANGLE	1
44	PFHZZ	11083	A2209	.BOLT,MACHINE	1
45	PFHZZ	11083	OS1590	.BOLT,MACHINE	2
46	PAHZZ	11083	2P4437	.STRAP,RETAINING	2

(1) ITEM NO	(2) SMR CODE	(3) CAGEC	(4) PART NUMBER	(5) DESCRIPTION AND USABLE ON CODES (UOC)	(6) QTY
47	PFHZZ	11083	2L6267	NUTISELF-LOCKINGIHE	1
48	PAHZZ	11083	4J5351	PACKING,PREFORMEO.....	2
49	PFHZZ	11083	5R5128	LEVER,REMOTE CONTRO	1
50	PFHZZ	96906	MS35338-46	WASHER LOCK	15
51	PFHZZ	80204	B1821BH038C125N	SCREW,CAP,HEXAGON H	15

END OF FIGURE

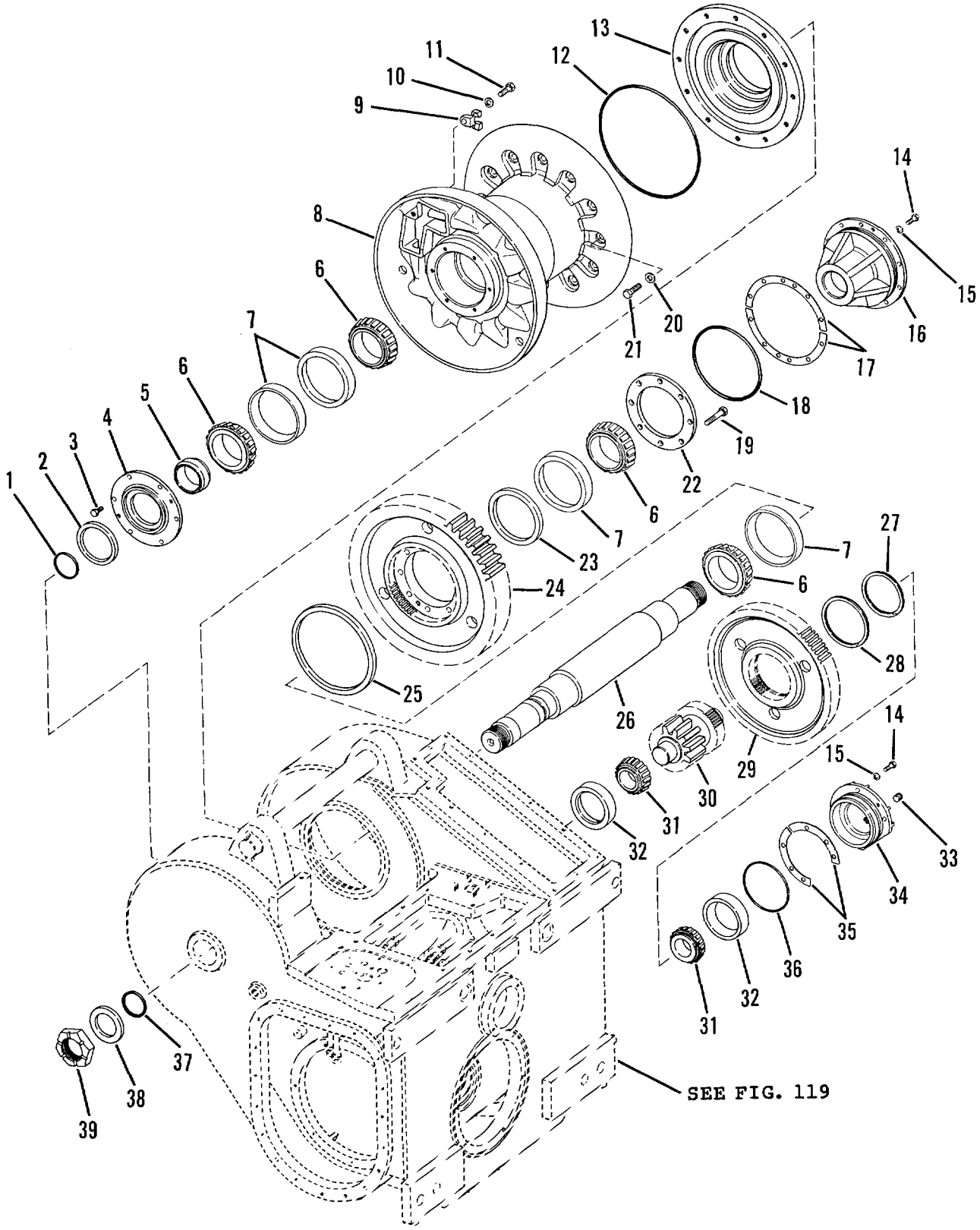

Figure 121. Winch Drum and Driving Gears

(1) ITEM NO	(2) SMR CODE	(3) CAGEC	(4) PART NUMBER	(5) DESCRIPTION AND USABLE ON CODES (UOC)	(6) QTY
				GROUP 2001 - WINCH ASSEMBLY	
				FIG. 121 - WINCH DRUM AND DRIVING GEARS	
1	PFHZZ	11083	1H5728	.PACKING,PREFORMED	1
2	PAHZZ	11083	8S5767	.SEAL,PLAIN ENCASED	1
3	PFHZZ	11083	L1351	.BOLT,MACHINE	12
4	PAHZZ	11083	P8209	.RETAINER,PACKING.	1
5	PAHZZ	11083	3P2846	.SPACER,SLEEVE	1
6	PAHZZ	60038	JM718149	.CONE AND ROLLERSITA	4
7	PFHZZ	11083	1P3934	.RINGVBEARINGIOUTER	4
8	PFHZZ	11083	P8204	.DRUM ASSEMBLY	1
				UOC:AGS,AGT	
8	PFHZZ	11083	6TO199	.REEL,CABLE	1
				UOC:AGU,AGV	
9	PAOZZ	11083	1P8952	.CLAMP	1
				UOC:AGS,AGT	
9	PFOZZ	11083	6G0773	.SPACER,PLATE	1
				UOC:AGU,AGV	
10	PFOZZ	96906	MS35338-48	.WASHER,LOCK	1
11	PFOZZ	11083	7B3235	.B OLT,MACHINE	1
				UOC:AGS,AGT	
11	PFOZZ	11083	S1621	.BOLT,MACHINE	1
				UOC:AGU,AGV	
12	PFHZZ	11083	8F2857	.PACKING,PREFORMED	1
13	PFHZZ	11083	P9214	.GEAR,SPUR	1
14	PFHZ	11083	A2029	.BOLT ,MACHINE	14
15	PFHZZ	96906	MS35338-46	.WASHER,LOCK	14
16	PAHZZ	11083	P8917	.FLANGE,WINCH	1
17	PFHZZ	11083	1P9243	.SHIM	2
18	PAHZZ	11083	4H6520	.PACKING,PREFORMED	1
19	PFHZZ	11083	9S1366	.BOLT,MACHINE	8
20	PFHZZ	11083	2M849	.WASHER,FLAT	12
21	PFHZZ	11083	S1587	.BOLTMACHINE	12
22	PAHZZ	11083	1P9245	.SPACER,PLATE	1
23	PFHZZ	11083	1P9244	.SPACER,RING	1
24	PAHZZ	11083	1P8642	.GEAR,SPUR	1
25	PFHZZ	11083	5P7456	.SEAL,PLAIN	1
26	PAHZZ	11083	P9241	.SHAFT,SHOULDERED	1
27	PFHZZ	80756	RST-450	.RING,RETAINING	1
28	PFHZZ	80756	RR-500	.RING,RETAINING	1
29	PAHZZ	11083	1P8640	.GEAR,SPUR	1
30	PFHZZ	11083	P8641	.GEARSHAFTISPUR	1
31	PFHZZ	60038	JHM807045	.CONE AND ROLLERS,TA	2
32	PAHZZ	60038	JHM807012	.CUP,TAPERED ROLLER	2
33	PFHZZ	11083	484845	.PLUG,MACHINE THREAD	1
34	PFHZZ	11083	1P9232	.HOUSING,BEARING UNI	1
35	PAHZZ	11083	1P9246	.SHIM	2
36	PFHZZ	96906	MS28775-249	.PACKING,PREFORMED	2
37	PFHZZ	11083	6F8146	.PACKING,PREFORMED	2

(1) ITEM NO	(2) SMR CODE	(3) CAGEC	(4) PART NUMBER	(5) DESCRIPTION AND USABLE ON CODES (UOC)	(6) QTY
38	PFHZZ	11083	6B1776	.COLLAR,SHAFT	2
39	PFFZZ	11083	5F3353	.NUT,PLAIN,SLOTTED,H	2

END OF FIGURE

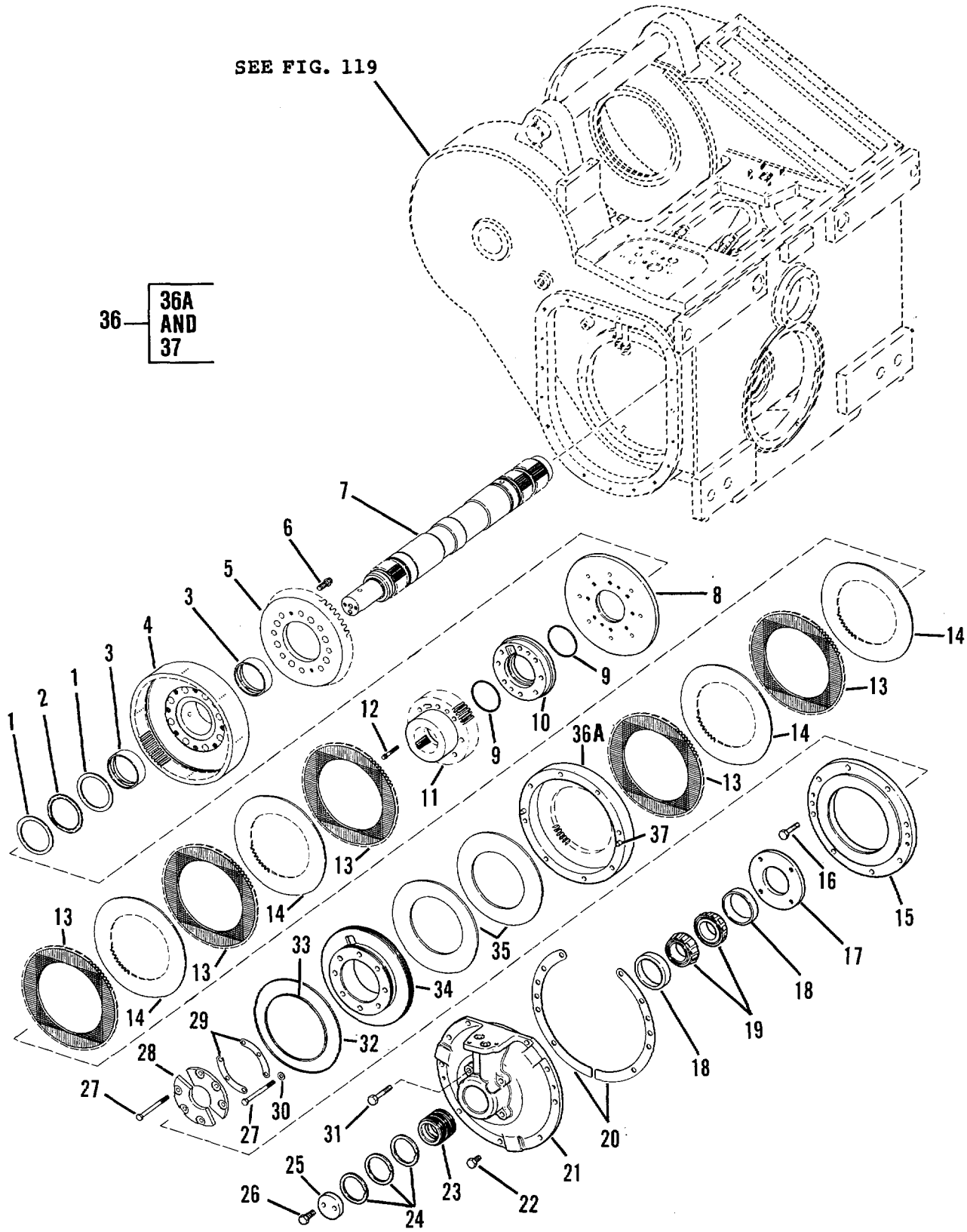

Figure 122. Winch Driving Gears

(1) ITEM NO	(2) SMR CODE	(3) CAGEC	(4) PART NUMBER	(5) DESCRIPTION AND USABLE ON CODES (UOC)	(6) QTY
				GROUP 2001 WINCH ASSEMBLY	
				FIG 122 - WINCH DRIVING GEARS	
1	PAHZZ	11083	1P6071	.BEARING,WASHERITHRU	6
2	PAHZZ	60380	NTA-5266	.RETAINER AND ROLLER	3
3	PAHZZ	11083	2P10O5	.BEARING,SLEEVE	6
4	PFHZZ	11083	8P8904	.HOUSINGIMECHANICAL	1
5	PFHZ2	11083	8P1075	.GEAR,BEVEL	2
6	PFHZZ	11083	8M2530	.BOLT,MACHINE	16
* 7	XBHZZ	11083	1P9248	.SHAFT ,SHOULDERED	1
8	PAHZZ	11083	1P6167	.DISK,CLUTCH	2
9	PFHZZ	11083	6H3977	.PACKINGI PREFORMED	4
10	PFHZZ	11083	1P6701	.COLLARSHAFT	2
11	PAHZZ	11083	1P8651	.HUB, BOD Y	2
12	PAHZZ	11083	5P6446	.BOLT,MACHINE	4
13	PFHZZ	11083	6T4944	.DISK,CLUTCH	10
14	PAHZZ	11083	2P4370	.DISK,CLUTCH	8
15	PAHZZ	11083	1P6153	.PLATE,RETAINING,SHA	2
*16	PFHZZ	11083	OS1590	.BOLT,MACHINE	18
17	PFHZZ	11083	1P4232	.SPACER,PLATE	1
18	PFHZZ	08162	JLM10491O	.CUP,TAPERED ROLLER	2
19	PFHZZ	08162	JLM104948	.CONE AND ROLLERS,TA	2
20	PFHZZ	11083	1P6178	.SHIM SET	2
* 21	XBHZZ	11083	1P5290	.HUB,BODY	1
* 22	PFHZZ	11083	S1594	.BOLTIMACHINE	9
23	PFHZZ	11083	1P6172	.RING,SPECIAL	1
24	PFHZZ	11083	9F7378	.RING,SEAL	3
25	PAHZZ	11083	1P6180	.PLATE,RETAINING,BEA	1
* 26	PAHZZ	80204	B1821BH038C125N	.SCREW,CAP,HEXAGON	23
27	PFHZZ	58312	1A5964-00	.SCREW,CAP,HEXAGON H	16
28	PFHZZ	11083	1P6176	.PLATE,RETAINING,BEA	4
29	PAHZZ	11083	1P6177	.SHIM	2
30	PAHZZ	11083	5M2894	.WASHERVFLAT	4
* 31	PFHZZ	11083	L1143	.BOLT,MACHINE	4
32	PFHZZ	11083	8S3371	.WASHER	2
33	PFHZZ	11083	1S9497	.RETAINER,PACKING	2
34	PAHZZ	11083	1P6158	.COLLAR,SHAFT	2
35	PFHZZ	11083	6P3767	.WASHER,SPRING TENSI	4
36	PFHZZ	11083	P6179	.HUB,BODY	2
36A	PFHZZ	11083	1P5293	..HUB,RANGE CLUTCH	1
37	PAHZZ	11083	8B1312	..PIN,STRAIGHT,HEADLE.	2
				END OF FIGURE	

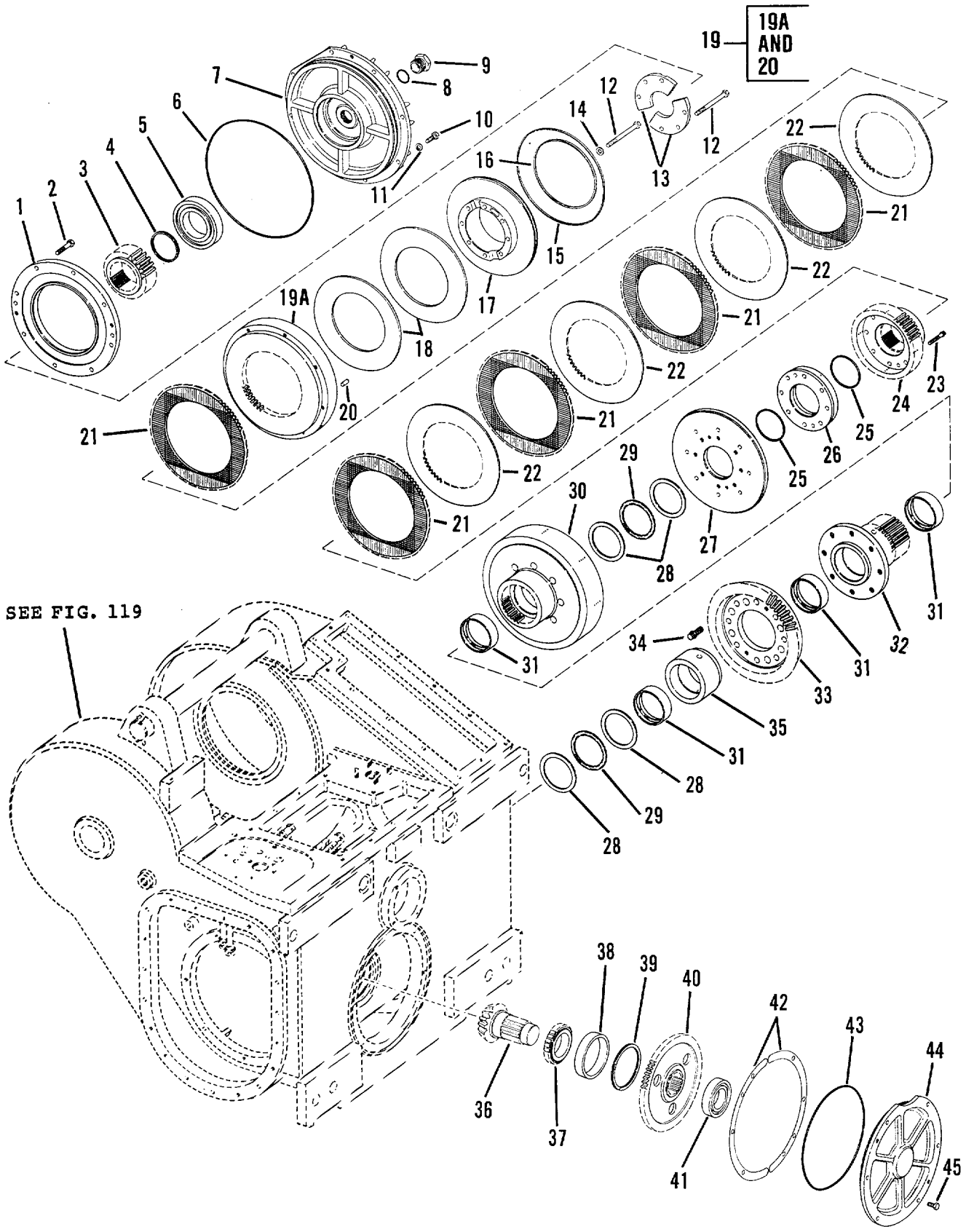

Figure 123. Winch Driving and Input Gears

(1) ITEM NO	(2) SMR CODE	(3) CAGEC	(4) PART NUMBER	(5) DESCRIPTION AND USABLE ON CODES (UOC)	(6) QTY
				GROUP 2001 - WINCH ASSEMBLY FIG 123 - WINCH DRIVING AND INPUT GEARS	
1	PFHZZ	11083	1P6153	.PLATE,RETAINING,SHA	1
* 2	PFHZZ	11083	OS1590	.BOLT,MACHINE	8
3	PFHZZ	11083	1P8639	.GEAR,SPUR	1
* 4	PFHZZ	80756	RST293	.RING,RETAINING	1
5	PAHZZ	23040	B8QH4470A	.BEARING,BALL,ANNULA	1
* 6	PFHZZ	11083	8F2857	.PACKING,PREFORMED	1
7	PFHZZ	11083	1P9247	.PLATERETAININGIBEA	1
8	PAHZZ	11083	7M8485	.SEAL ADAPTER,MOTOR	
9	PAHZZ	11083	4J4742	.INDICATOR,SIGHT UOC:AGS,AGT	1
* 9	PAHZZ	24346	CS-2008-156-750	.INDICATOR,SIGHT,LIQ UOC:AGU,AGV	1
* 10	PFHZZ	11083	1A2029	.BOLT,MACHINE	8
11	PFHZZ	96906	MS35338-46	.WASHER,LOCK	8
* 12	PFHZZ	58312	1A5964-00	.SCREW,CAP,HEXAGON H	8
13	PAHZZ	11083	1P6176	.PLATE,RETAINING,BEA	2
14	PFHZZ	11083	5M2894	.WASHER,FLAT	2
15	PAHZZ	11083	8S3371	.WASHER	1
16	PAHZZ	11083	1S9497	.RETAINER,PACKING	1
17	PFHZZ	11083	1P6158	.COLLAR,SHAFT	1
18	PFHZZ	11083	6P3767	.WASHER,SPRING TENSI	2
19	PFHZZ	11083	1P6179	.HUB,BOOY	1
19A	XAHZZ	11083	1P5293	.HUB	1
20	PAHZZ	11083	8B1312	.PIN,STRAIGHT,HEADLE	1
21	PFHZZ	11083	2P4371	.DISK,CLUTCH UOC:AGS,AGT	5
21	PFHZZ	11083	6T4944	.DISK,CLUTCH UOC:AGU,AGV	5
22	PAHZZ	11083	2P4370	.DISK,CLUTCH	4
23	PAHZZ	11083	5P6446	.BOLTMACHINE	2
24	PAHZZ	11083	1P8651	.HUB,BODY	1
25	PFHZZ	11083	6H3977	.PACKING,PREFQRME D	2
26	PFHZZ	11083	1P6701	.COLLAR,SHAFT	1
27	PAHZZ	11083	1P6167	.DISKCLUTCH	1
28	PAHZZ	11083	1P6071	.BEARING,WASHE,THRU	4
29	PAHZZ	60380	NTA-5266	.RETAINER AND ROLLER	2
30	PFHZZ	11083	1P8662	.HOUSINGIMECHANICAL	1
31	PAHLZ	11083	2P1005	.BEARINGISLEEVE.	4
32	PFHZZ	11083	8P8905	.COUPLING,SHAFT,RIGI	1
33	PFHZZ	11083	8P1075	.GEAR,BEVEL	1
34	PFHZZ	11083	8M2530	.BOLT,MACHINE	8
35	PAHZZ	11083	8P8906	.SPACER,STEPPED	1
36	PFHZZ	11083	1P9251	.GEARSHAFT,BEVEL	1
37	PFHZZ	11083	2K1738	.BEARINGIROLLER,CYLI	1
38	PAHZZ	11083	5P9066	.RING,BEARING,OUTER	1
39	PFHZZ	80756	RRT-433	.RING,RETAINING	1

(1) ITEM NO	(2) SMR CODE	(3) CAGEC	(4) PART NUMBER	(5) DESCRIPTION AND USABLE ON CODES (UOC)	(6) QTY
40	PFHZZ	11083	1P8636	.GEAR,SPUR	1
41	PAHZZ	11083	1T43	.BEARING,BALL,ANNULA.....	1
42	PAHZZ	11083	1P6175	.SHIM	4
43	PAHZZ	11083	5H4909	.SEAL,TORQUE CONVERT	1
44	PAHZZ	11083	1P6174	.HOUSING,BEARING UNI	1
45	PFFZZ	11083	L1351	.BOLT,MACHINE	6

END OF FIGURE

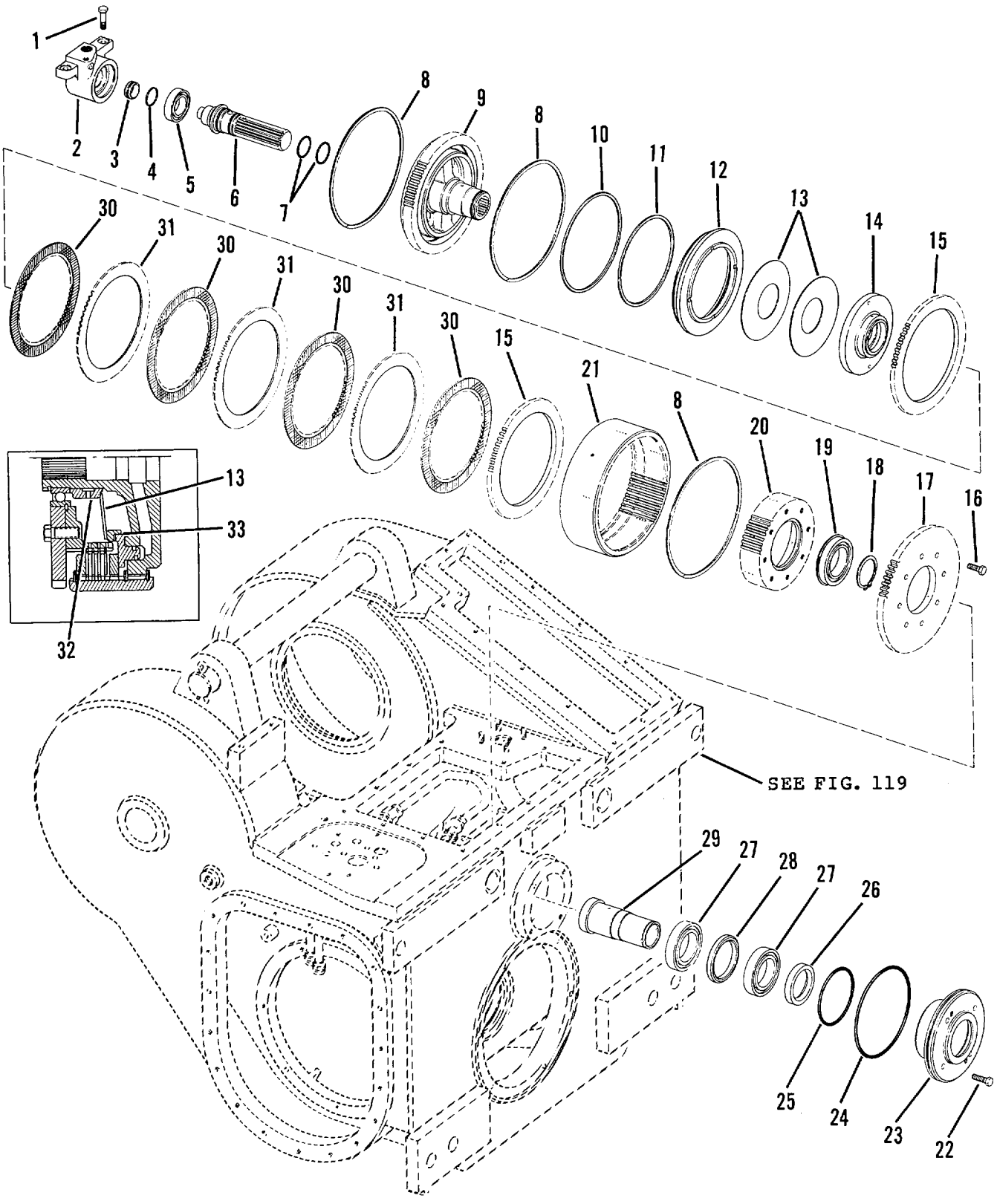

Figure 124. Winch Input Gears

(1) ITEM NO	(2) SMR CODE	(3) CAGEC	(4) PART NUMBER	(5) DESCRIPTION AND USABLE ON CODES (UOC)	(6) QTY
				GROUP 2001 - WINCH ASSEMBLY FIG 124 - WINCH INPUT GEARS	
1	PFHZZ	11083	4F9351	.BOLT,MACHINE UOC:AGS,AGT	2
1	PFHZZ	11083	5K4781	.BOLT,SHOULDER UOC :AGU,AGV	2
2	PFHZZ	11083	6P7826	.HOUSING,BEARING UNI UOC:AGS,AGT	1
2	PFHZZ	11083	6T1411	.HOUSING,BEARING UNI UOC:AGUGAGV	1
3	PAHZZ	11083	2P3672	.RETAINER,PACKING	1
4	PAHZZ	11083	1P9252	.SEAL, RING	1
5	PAHZZ	11083	253029	.BEARING,BALL,ANNULA UOC:AGS,AGT	1
5	PAHZZ	52676	6007Z	.BEARING,BALL,ANNULA UOC:AGU,AGV	1
6	PFHZZ	11083	6P7827	.SHAFT,SHOULDERED UOC:AGSIAGT	1
6	PFHZZ	11083	6T1412	.SHAFT,SHOULDERED UOC:AGU,AGV	1
7	PFHZZ	11083	6J2419	PACKING,PREFORMED	2
8	PFHZZ	80756	RR-875	.RING,RETAINING	3
9	PFHZZ	11083	6P7828	.HOUSING,MECHANICAL	1
10	PAHZZ	11083	1P9260	.RING,WIPER	1
11	PAHZZ	11083	1P9261	.RING	1
12	PFHZZ	11083	1P7542	.CLUTCH,POSITIVE	1
13	PAHZZ	11083	1P9258	.WASHER,SPRING TENSI	2
14	PFHZZ	11083	1P7543	.HOUSING,MECHANICAL	1
15	PAHZZ	11083	1P7544	.DISK,CLUTCH	2
* 16	PFHZZ	11083	S1594	.BOLT,MACHINE	2
17	PFHZZ	11083	1P8635	.GEAR,SPUR	1
18	PFHZZ	96906	MS16624-1215	.RING,RETAINING	1
19	PAHZZ	11083	3K526	.BEARING,BALL,ANNULA UOC:AGS,AGT	1
19	PAHZZ	11083	6V6686	.BEARING,BALL,ANNULA UOC:AGU,AGV	1
20	PFHZZ	11083	1P8661	.HUB,BODY	1
21	PFHZZ	11083	8P2670	.GEAR,INTERNAL	1
* 22	PFHZZ	80204	B1821BH038C125N	.SCREW,CAP,HEXAGON H	4
23	PFHZZ	11083	1P8644	.HOUSING,BEARING UNI	1
24	PFHZZ	96906	MS28775-260	.PACKING,PREFORMED	1
25	PFHZZ	88044	AN123902	.PACKINGVPREFORMED	1
26	PAHZZ	11083	7H7107	.SEAL,PLAIN ENCASED	1
27	PAHZZ	11083	9M1997	.BEARING,BALL,ANNULA	2
28	PAHZZ	11083	1P9257	.SPACER,RING	1
29	PFHZZ	11083	1P8663	.COUPLING,SHAFT,RIGI	1
* 30	XBHZZ	11083	2P3719	.DISC	4
31	PAHZZ	11083	P9256	.DISK,CLUTCH	3
32	PFHZZ	11083	6TI409	.SPACERSLEEVE	1

(1) ITEM NO	(2) SMR CODE	(3) CAGEC	(4) PART NUMBER	(5) DESCRIPTION AND USABLE ON CODES (UOC)	(6) QTY
33	PFHZZ	11083	6T1410	UDC:AGU,AGV .WASHER,SHOULDERED ..... UOC:AGU,AGV	1

END OF FIGURE

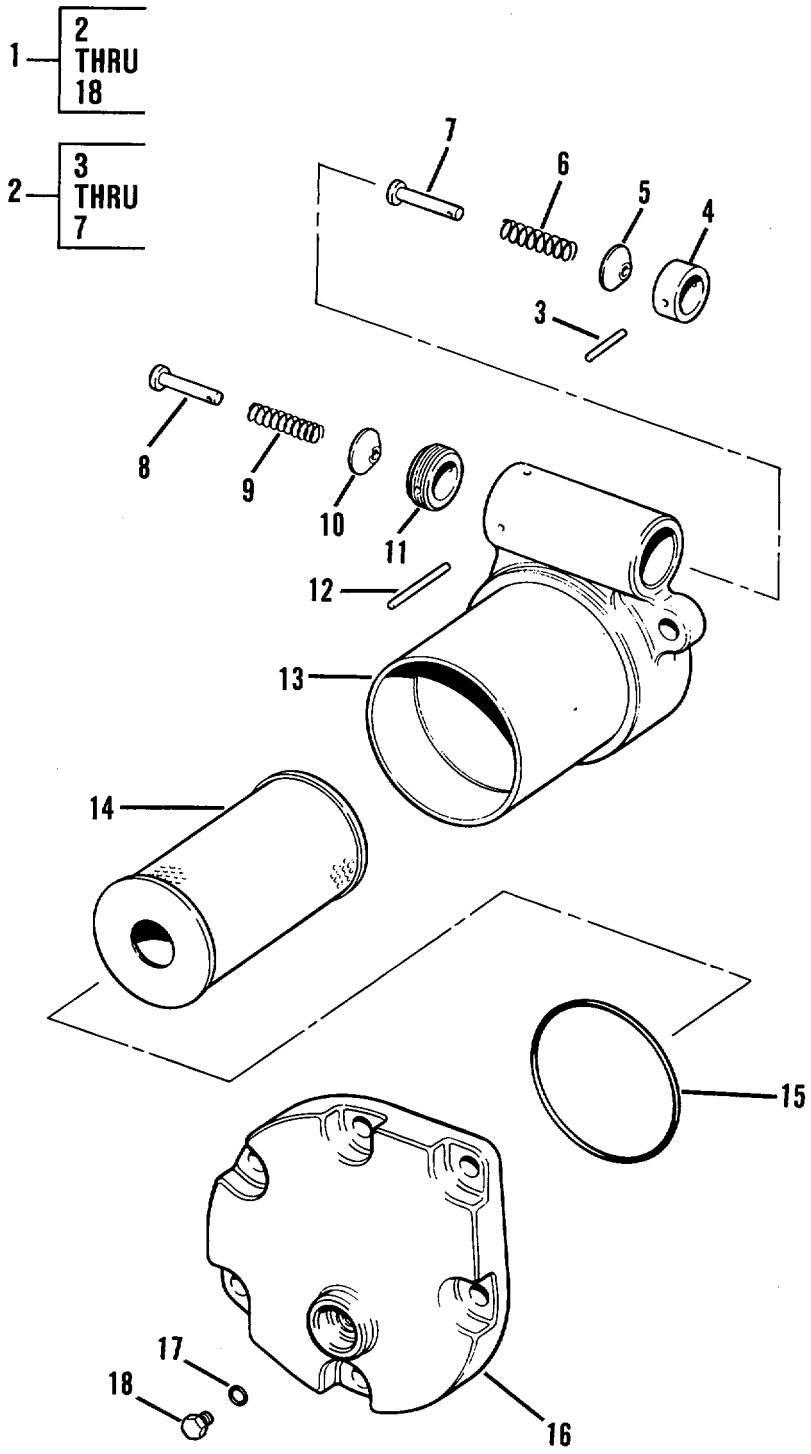

Figure 125. Winch Oil Filter

(1) ITEM NO	(2) SMR CODE	(3) CAGEC	(4) PART NUMBER	(5) DESCRIPTION AND USABLE ON CODES (UOC)	(6) QTY
				GROUP 2001 - CINCH ASSEMBLY	
				FIGURE 125 - WINCH OIL FILTER	
1	PFFFF	11083	2P5830	.FILTER,FLUID	1
2	PFFFF	11083	1P21S5	..VALVE,BY PASS	1
3	PFFZZ	11083	3H3433	...PIN,OIL PUIYP DRIVE,,	1
4	XAFZZ	11083	9L674	...COLLAR	1
5	PFFZZ	11083	9L672	...DISK,VALVE	1
6	PFFZZ	11083	1K7041	...SPRING,HELICAL, COMP	I
7	PFFZZ	11083	1P5274	...PIN,STRAIGHT,HEACE	1
8	PFFZZ	11083	1P5274	..PIN.STRAIGHT.HEADE	1
9	PAFZZ	11083	8F2621	..SPRING,HELICAL	1
10	PFFZZ	11083	9L672	..DISK,VALVE	1
11	PFFZZ	11383	6L4470	..SEAT.VALVE	1
12	PAFZZ	96906	MS171542	..PIN,SPRING	1
13	PFFZZ	11083	2P5832	..HEAD,FLUID FILTER	1
14	PAOZZ	64829	63560-2	..FILTER ELEMENT FLUI	1
15	PAOZZ	11083	2H4145	..RETAINER,PACKING	1
16	PFOZZ	11083	2P5818	..HEAD,FLUID FILTER	1
17	PFOZZ	59556	K-500-EN-0431	..SEAL	1
18	PFOZZ	11083	9S4180	..PLUG	1
				END OF FIGURE	

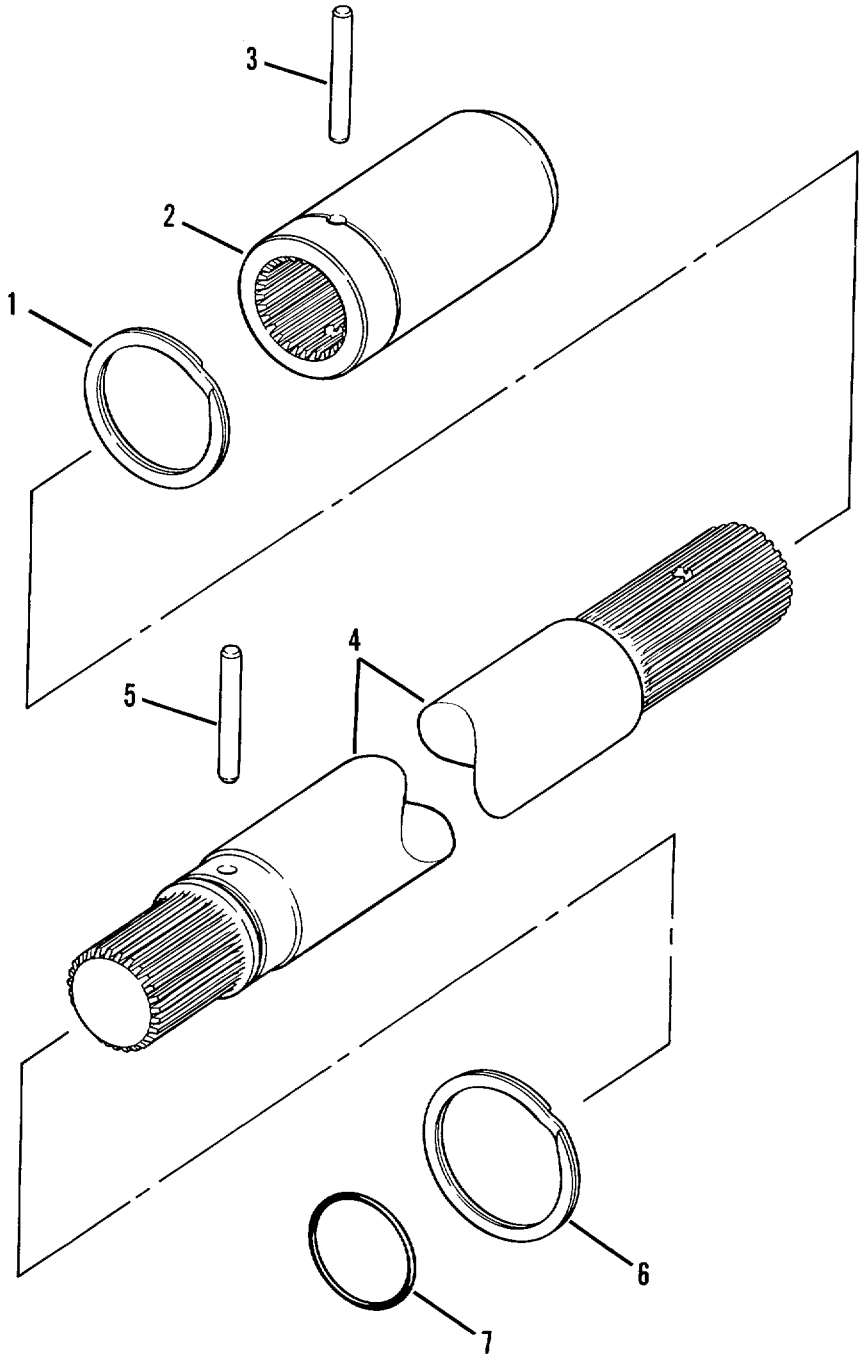

Figure 126. Winch Drive Shaft

(1) ITEM NO	(2) SMR CODE	(3) CAGEC	(4) PART NUMBER	(5) DESCRIPTION AND USABLE ON CODES (UOC)	(6) QTY
				GROUP 2001 - INCH ASSEMBLY	
				FIG 126 - WINCH DRIVE SHAFT	
1	PFFZZ	80756	RS-175	RING,RETAINING.....	1
2	PAFZZ	11083	2P2917	COUPLING, SHAFT, RIGl	1
3	PAFZZ	11083	3H2023	PIN,STRAIGHT,HEADLE.....	1
4	PFFZZ	11083	2P2911	SHAFT,SHOULDERED	1
5	PAFZZ	21450	505559	PIN,STRAIGHT,HEADLE	1
6	PAFZZ	80756	RS200	RING,RETAINING.....	1
7	PFFZZ	11083	1J2419	PACKING,PREFORMED	1
				END OF FIGURE	

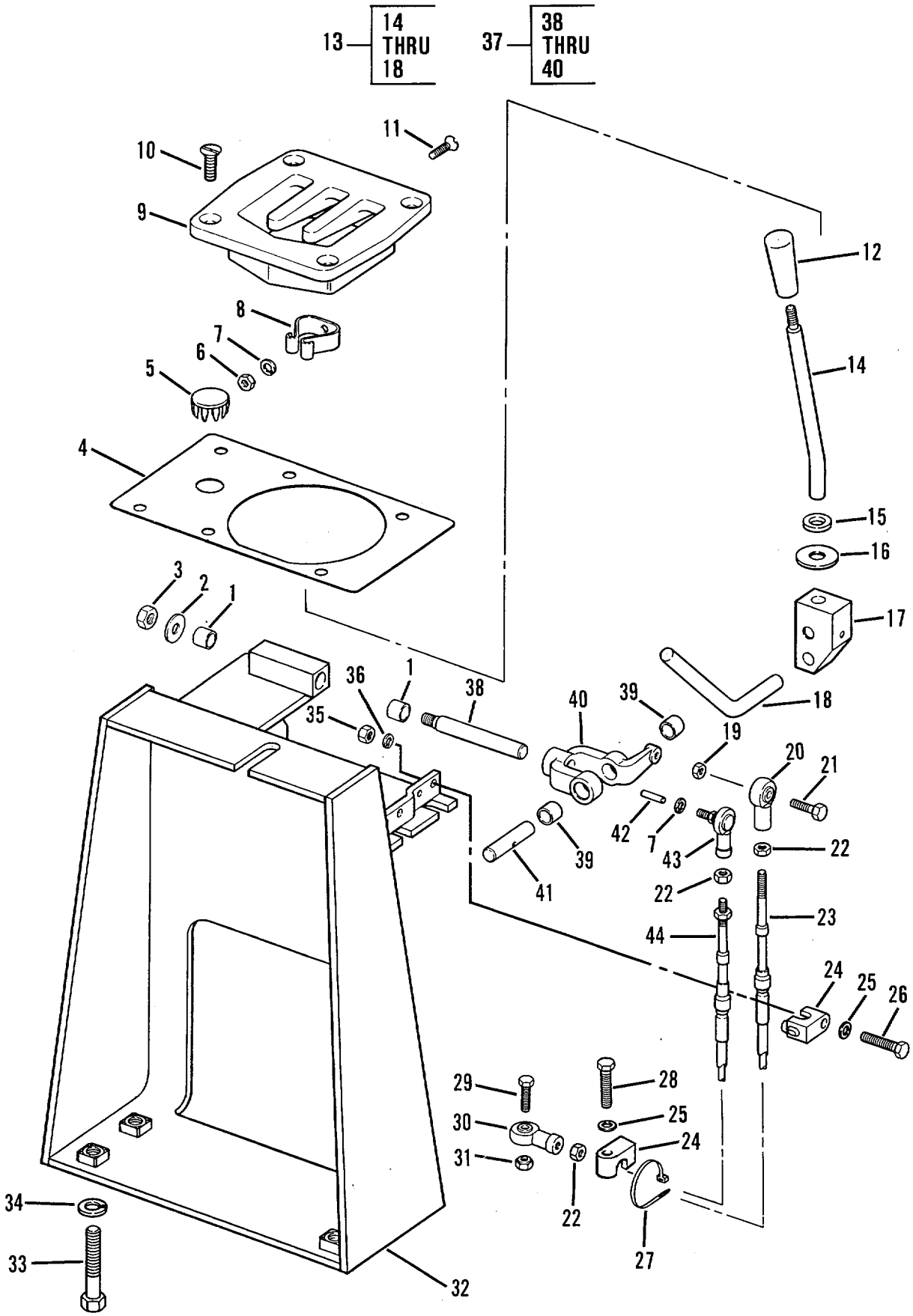

Figure 127. Winch Hand Control

(1) ITEM NO	(2) SMR CODE	(3) CAGEC	(4) PART NUMBER	(5) DESCRIPTION AND USABLE ON CODES (UOC)	(6) QTY
				GROUP 2001 - WINCH ASSEMBLY FIG 127 - WINCH HAND CONTROL	
1	PAFZZ	11083	9H2400	BUSHING,SLEEVE	2
2	PFFZZ	11083	3L9689	WASHER,FLAT	1
3	PFFZZ	11083	2K4973	LOCKNUT	1
4	PAFZZ	11083	8P4866	COVER ACCESS	1
5	PAFZZ	83058	HS51328	BUTTON PLUG	1
6	PFFZZ	31159	JM56	NUT,PLAIN,HEAXAGON	1
* 7	PFFZZ	96906	MS35338-44	WASHER,LOCK	2
8	PAFZZ	11083	3P5938	CLIP,SPRING TENSION	1
9	PAFZZ	11083	6P5661	GUARD,MECHANICAL	1
10	PFFZZ	96906	MS35190-320	SCREW,MACHINE	4
11	PFFZZ	96906	MS35190-291	SCEWE	1
12	PFOZZ	11083	7M706	KNOB	1
13	PAFZZ	11083	8P4872	LEVER,MANUAL CONTRO	1
14	XAFZZ	11083	6P6034	LEVER	1
15	PAFLZ	89346	52726R1	WASHER,FLAT	1
16	PAFZZ	11083	9H4257	WASHER,FLAT	1
17	XAFZZ	11083	8P4873	BLOCK,LEVER	1
18	XAFZZ	11083	8P5006	ROD	1
19	PFFZZ	96906	MS21083N4	NUT,SELF-LOCKING,HE	1
20	PFFZZ	11083	6L7751	ROD,END	1
21	PFFZZ	11083	S1597	SCREW,CAP,HEXAGON H	1
22	PFFZZ	72915	120613	NUT,PLAIN,HEXAGON	1
23	PAFZZ	11083	3PZ300	CONTROL ASSEMBLY,PU	1
24	PFFZZ	11083	9G9979	CLAMP	1
25	PFFZZ	96906	MS27183-12	WASHER,FLAT	1
26	PFFZZ	11083	1A9579	BOLT,MACHINE	1
27	PFFZZ	96906	MS3367-5-0	STRAP,TIEDOWN,ELECT	2
* 28	PFFZZ	80204	81821BH031C125N	BOLT,MACHINE	1
* 29	PFFZZ	80204	B1821BHO25C100N	SCREW,CAP,HEXAGON H	1
30	PFFZZ	11083	6L7751	ROD,	2
* 31	PFFZZ	94135	12Z2007-260	NUT,SLEF-LOCKING	1
32	PAFZZ	11083	8P5007	GUARD,MECHANICAL D	1
* 33	PFFZZ	11083	7B3235	BOLT,MACHINE	4
34	PFFZZ	96906	MS35338-48	WASHER,LOCK	4
* 35	PFFZZ	96906	MS51967-5	NUT,PLAIN,HEXAGON	1
36	PFFZZ	96906	MS35338-45	WASHER,LOCK	2
37	PFFZZ	11083	2P6001	BELL CRANK ASSEMBLY	1
38	PAFZZ	11083	2P6009	SHAFT	1
39	PAFZZ	11083	9H2400	BUSHING,SLEEVE	2
40	XAFZZ	11083	2P6000	.BELLCRANK	1
41	PAFZZ	11083	2P6008	.SHAFT,STRAIGHT	1
42	PAFZZ	96906	MS16562-49	.PIN,SPRING	1
43	PFFZZ	11083	8S7048	BEARING,PLAIN,ROD E	1
44	PFFZZ	11083	3P2299	CONTROL ASSEMBLY,PU	1
				END OF FIGURE	

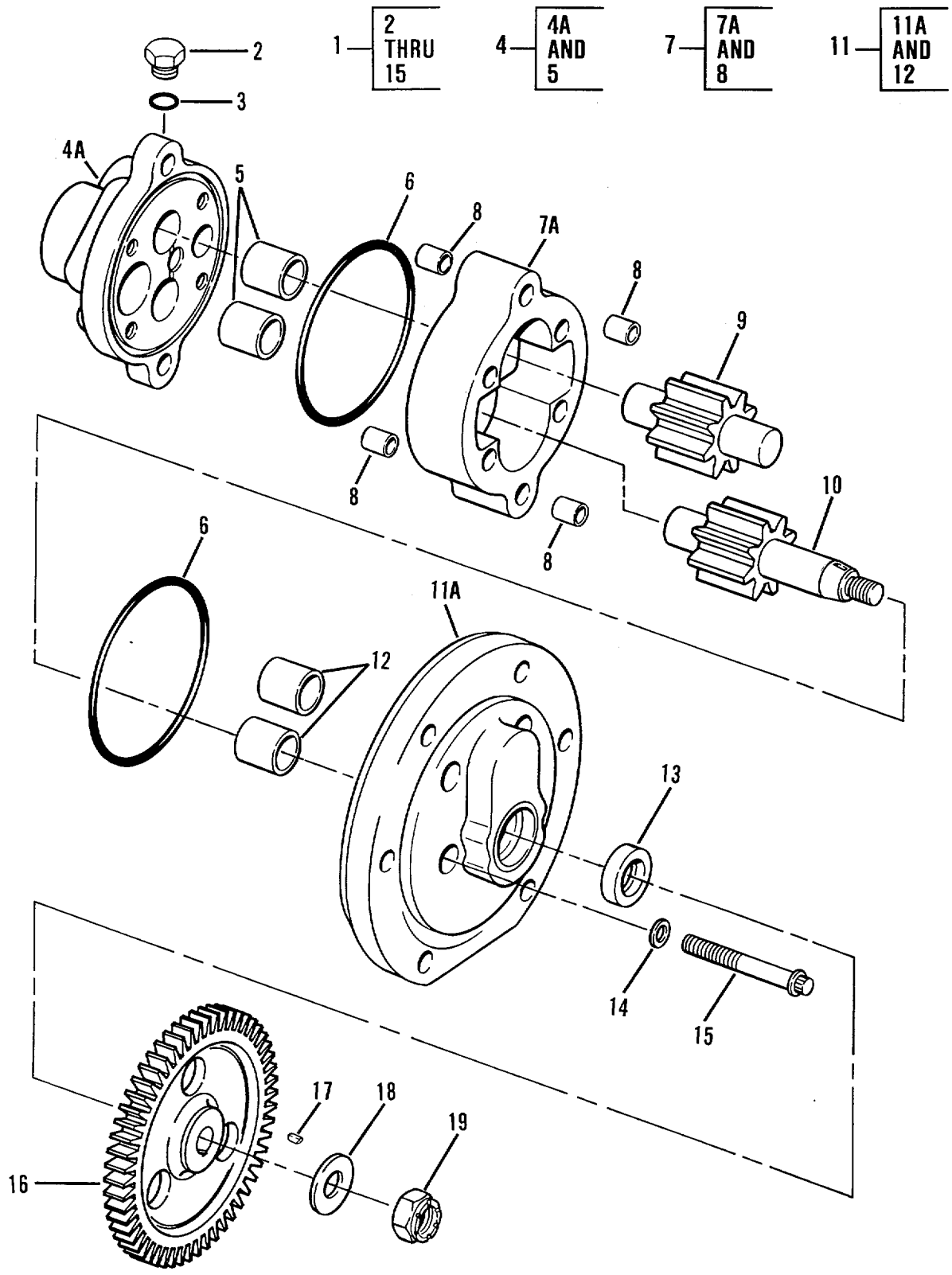

Figure 128. Winch Gear Pump Assembly

(1) ITEM NO	(2) SMR CODE	(3) CAGEC	(4) PART NUMBER	(5) DESCRIPTION AND USABLE ON CODES (UOC)	(6) QTY
				GROUP 2001 - WINCH ASSEMBLY	
				FIG 128 - WINCH GEAR PUMP ASSEMBLY	
1	PFOFF	11083	3P5926	PUMP,ROTARY	1
2	PFOZZ	11083	9S4191	.PLUG,MACHINE THREAD	1
* 3	PAOZZ	25184	906-737-70	.PACKING,PREFORMED	1
* 4	XBFZZ	11083	lP2167	.HOUSINGIMECHANICAL	1
4A	XAFZZ	11083	1P2166	..MANIFOLD	1
5	PAFZZ	11083	2S7931	..BEARING,SLEEVE	2
6	PFFZZ	11083	4M189	.PACKNG,PREFORMED	2
* 7	XBFZZ	11083	1P2165	.HOUSING,MECHANICAL	1
7A	XAFZZ	11083	1P2164	..BODY	1
8	PFFZZ	11083	8M8489	..PIN,HOLLOW	4
9	PFFZZ	11083	1P2186	.GEAR,SPUR	1
* 10	XBFZZ	11083	1P8184	.GEAR,SHAFT,SPUR	1
11	PFFZZ	11083	3P5925	.HOUSING,MECHANICAL	1
11A	XAFZZ	11083	3P5924	..MANIFOLD	1
12	PAFZZ	11083	257931	..BEARING,SLEEVE	2
13	PAFZZ	11083	7S3029	.SEALPLAIN	1
14	PFFZZ	11083	3S4	.WASHER,FLAT	4
*15	PFFZZ	11083	OL2070	.BOLT,MACHINE	4
16	PFFZZ	11083	8S6980	GEAR,SPUR	1
17	PFFZZ	96906	MS35756-6	KEY,WOODRUFF	1
18	PFFZZ	15434	S658	WASHE,FLAT	1
* 19	PFFZZ	11083	4K8977	NUT	1
				END OF FIGURE	

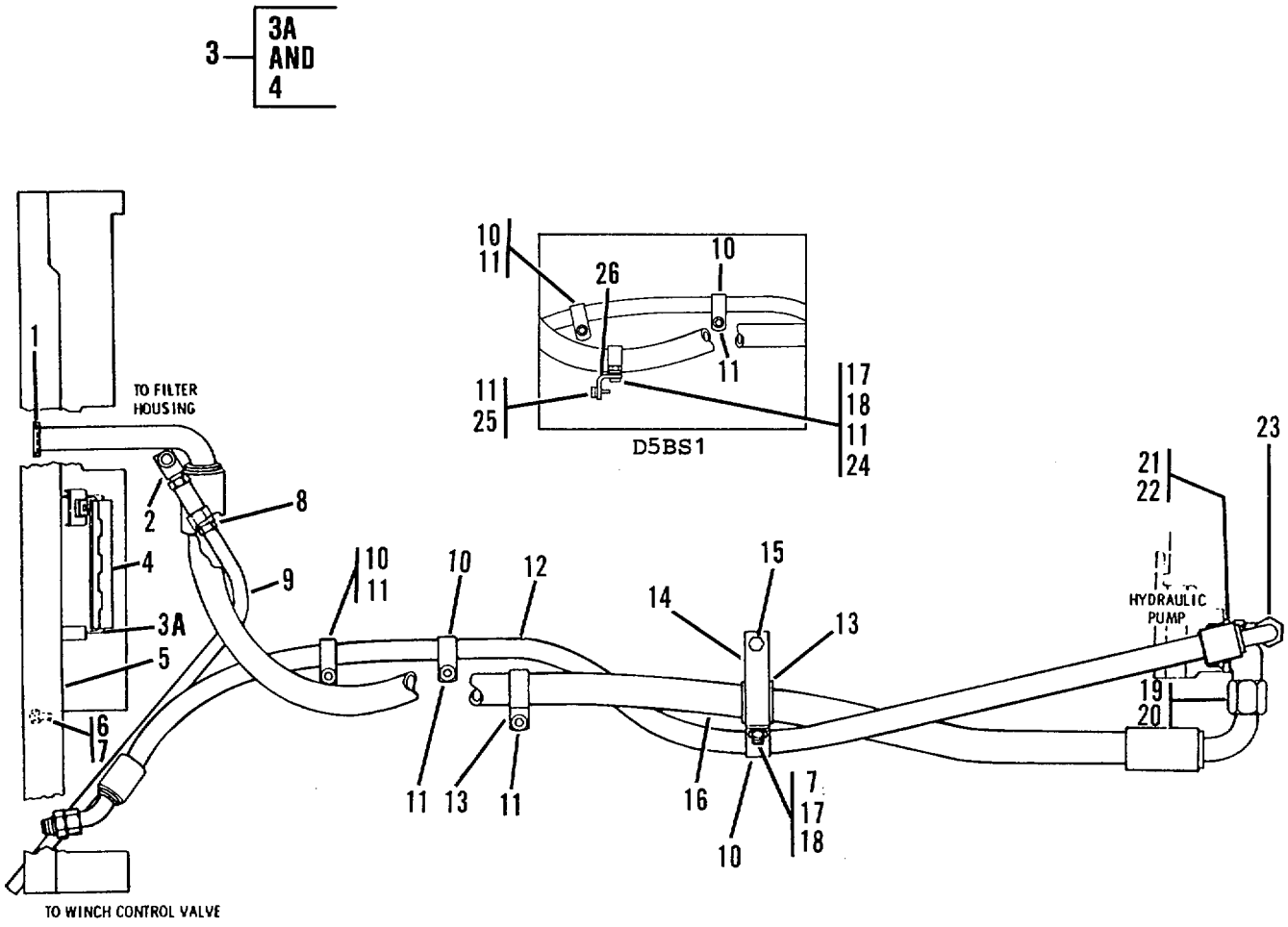

Figure 129. Winch Pump Lines

(1) ITEM NO	(2) SMR CODE	(3) CAGEC	(4) PART NUMBER	(5) DESCRIPTION AND USABLE ON CODES (UOC)	(6) QTY
				GROUP 2001 - WINCH ASSEMBLY	
				FIG 129 - WINCH PUMP LINES	
1	PFOZZ	11083	4J522	PACKING,PREFORMED	1
2	PFOZZ	79470	8137731	ELBOW,PIPE	1
3	PFOZZ	11083	9P2125	PLATE ASSEMBLY	1
3A	XAOZZ	19207	NPN41	.PLATE	1
4	MOOZZ	96906	MS35829-16C-7IN	.HINGE,BUTT MAKE FROM HINGE P/N MS35829-16C, 7 IN	1
5	PAOZZ	11083	9P2123	BRACKE,ANGLE	1
6	PFOZZ	78189	3320-14-01	WASHER,SQUARE CONE	2
* 7	PFOZZ	11083	S1594	BOLT,MACHINE	3
8	PFOZZ	98441	322F-E	ADAPTER,STRAIGHT,PI	1
9	MOOZZ	11083	5P1442-27.6	HOSE,NONMETALLIC MAKE FROM HOSE P/N 5P14421 27.6 IN	1
10	PFOZZ	75272	COV-2113	CLAMP,LOOP	3
11	PFOZZ	11083	5M2894	WASHER,FLAT	6
12	PAOZZ	11083	9P3408	HOSE ASSEMEBLY	1
13	PFOZZ	11083	701553	CLAMP L	2
14	PFOZZ	11083	2P8977	BRACKET,ANGLE	1
* 15	PFOZZ	11083	1A2029	BOLTMACHINE	1
16	PFOZZ	11083	9P3407	HOSE ASSEMBLYINONME	1
17	PFOZZ	96906	MS35338-46	WASHER,LOCK UOC:AGS,AGT	1
17	PFOZZ	96906	MS35338-46	WASHER, LOCK UOC:AGU,AGV	2
18	PFOZZ	11083	lD4717	NUT,HEXAGON UOC:AGS,AGT	1
18	PFOZZ	11083	1D4717	NUT UOC:AGU,AGV	2
19	PAOZZ	11083	2S4078	PACKINGPREFORMED	1
20	PAOZZ	11083	6M5652	ELBOW,TUBE TO BOSS	1
21	PFOZZ	11083	3D2824	PACKING PREFORMED	2
22	PAOZZ	96906	MS51525A12	ADAPTER STRAIGHT,TU	2
23	PAOZZ	96906	MS51521A12	ELBOW,TUSE.	1
24	PFOZZ	11083	L1351	BOLT,MACHINE UOC:AGU,AGV	1
25	PFOZZ	11083	0S1591	SCREW UOC:AGUVAGV	1
26	PFOZZ	11083	5S8995	BRACKET,ANGLE UOC:AGU,AGV	1
				END OF FIGURE	

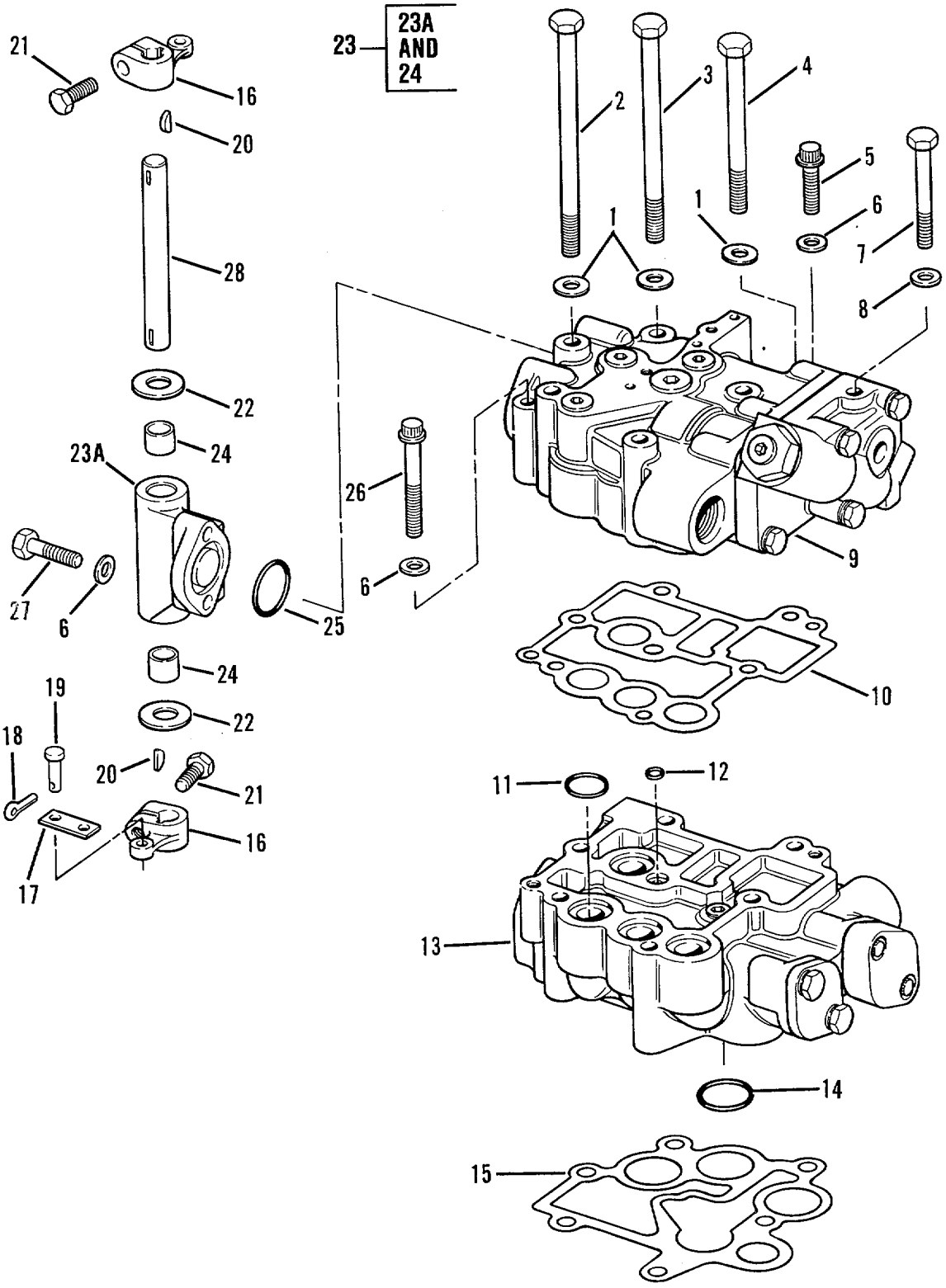

Figure 130. Winch Control Valve

(1) ITEM NO	(2) SMR CODE	(3) CAGEC	(4) PART NUMBER	(5) DESCRIPTION AND USABLE ON CODES (UOC)	(6) QTY
				GROUP 2001 - WINCH ASSEMBLY	
				FIG 130 - WINCH CONTROL VALVE	
1	PFHZZ	11083	5M2894	WASHER,FLAT	6
2	PFHZZ	11083	7F3425	SCREW,CAP,HEXAGON H	4
3	PAHZZ	11083	5B2638	SCREW,CAP,HEXAGON H	1
4	PFHZZ	11083	8S9191	BOLT,MACHINE	1
5	PAHZZ	11083	6L4783	BOLT,MACHINE	1
6	PFHZZ	96906	MS27183-12	WASHER,FLAT	4
*7	PFHZZ	80204	B1821BH031C250N	BOLT,MACHINE	1
8	PFHZZ	96906	MS27183-12	WASHER,FLAT	1
9	PFHHH	11083	3T8649	VALVE,LINEAR,DIRECT SEE FIG 132 FOR BREAKDOWN	1
10	PAHZZ	11083	2P3650	GASKET	1
11	PFHZZ	11083	5F7054	PACKING,PREFORMED	4
12	PFHZZ	11083	2H5001	PACKING,PREFORMED	1
13	PFHHH	11083	3P4121	VALVE,LINEAR,DIRECT SEE FIG 131 FOR BREAKDOWN	1
14	PFHZZ	11083	8B4967	PACKING,PREFORMED	3
15	PAHZZ	11083	8P16	GASKET	1
16	PAHZZ	11083	6P9367	LEVER,REMOTE CONTRO	2
*17	XBHZZ	11083	IP5130	CONNECTING LINK,RIG	2
18	PFHZZ	96906	MS24665-281	PIN,COTTER	2
19	PAHZZ	11083	9S1303	PIN,STRAIGHT,HEADED	2
20	PFHZZ	96906	MS35756-6	KEY,WOODRUFF	2
* 21	PFHZZ	80204	B1821BH031C088N	BOLT,MACHINE	2
22	PFHZZ	11083	4B4280	WASHER,FLAT	2
23	PFHZZ	11083	2P6971	RETAINER,BEARING	1
23A	XAHZZ	11083	2P6970	.RETAINER	1
24	PAHZZ	11083	9H2400	.BUSHING,SLEEVE	2
25	PFHZZ	11083	3D2992	PACKING,PREFORME	1
26	PFHZZ	11083	3S4346	BOLT,MACHINE	1
* 27	PFHZZ	80204	B1821BH031C125N	BOLT,MACHINE	2
28	PFHZZ	11083	2P6969	SHAFT,STRAIGHT	1
				END OF FIGURE	

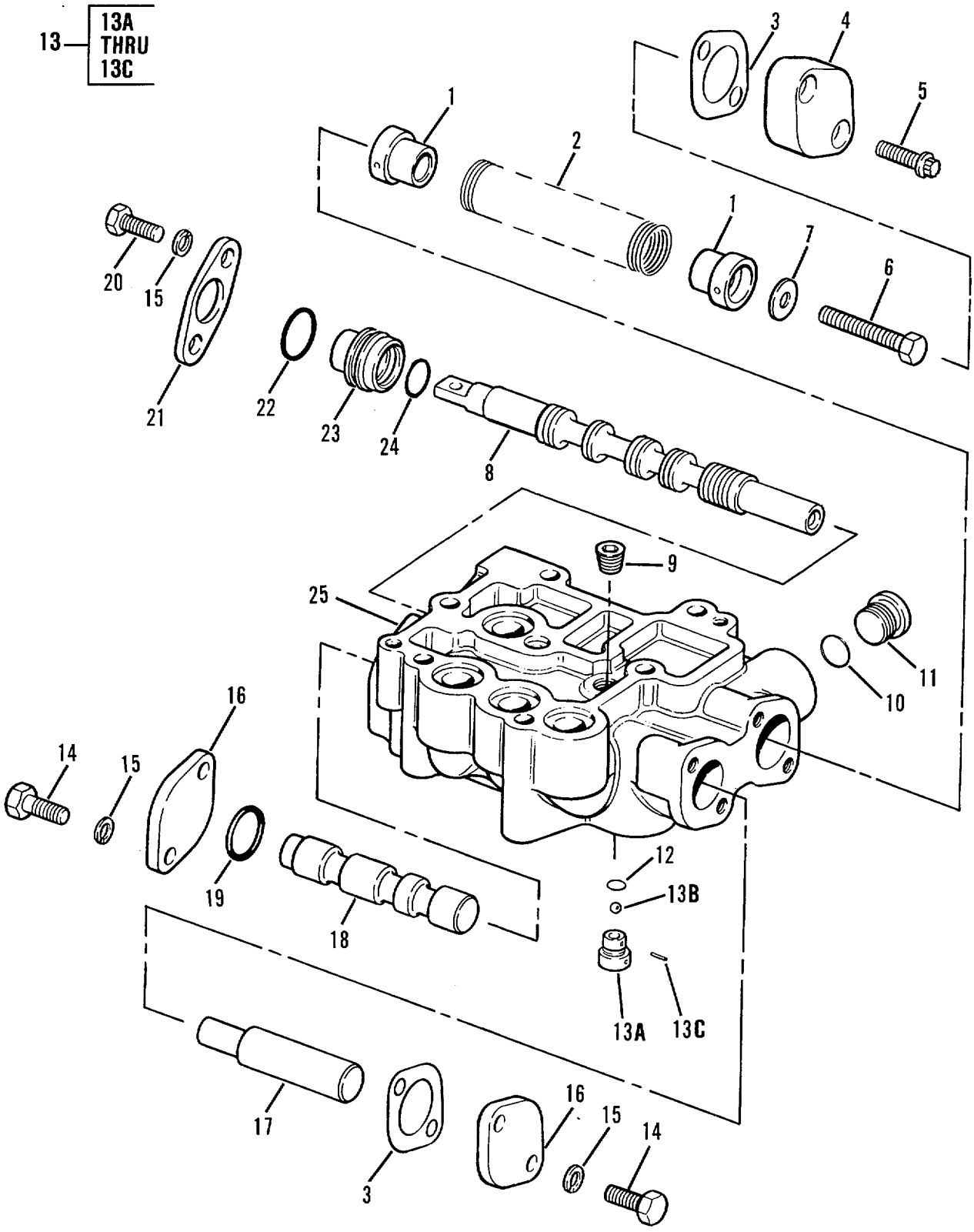

Figure 131. Winch Selector Valve Assembly

(1) ITEM NO	(2) SMR CODE	(3) CAGEC	(4) PART NUMBER	(5) DESCRIPTION AND USABLE ON CODES (UOC)	(6) QTY
				GROUP 2001 - WINCH ASSEMBLY	
				FIG 131 - WINCH SELECTOR VALVE ASSEMBLY (SEE FIGURE 130 FOR TOP ASSEMBLY, PART NUMBER 3P4121)	
1	PAHZZ	11083	3P220	.RETAINER,HELICAL CO	2
2	PFHZZ	11083	3P3202	.SPRING,HELICAL,COMP	1
3	PAHZZ	11083	3P218	.GASKET	2
4	PFHZZ	11083	8P4299	.COVER,ACCESS	1
5	PFHZZ	11083	1T414	.BOLT,MACHINE	2
*6	PFHZZ	11083	OS1618	.BOLT,MACHINE	1
7	PFHZZ	81205	BACW10P140S	.WASHER,FLAT	1
8	PFHZZ	11083	2P3617	.SLIDE,DIRECTIONAL C	1
9	PFHZZ	24491	10015	.PLUG,PIPE	1
10	PFHZZ	11083	3K360	.PACKING,PREFORMED	1
* 11	PFHZZ	30780	8HP5N-S	.PLUG,MACHINE THREAD	1
12	PFHZZ	11083	5F9144	.PACKING,PREFORMED	1
13	PFHZZ	11083	3P4117	.VALVE,CHECK	1
13A	XAHZZ	11083	3P4116	..BODY,VALVE	1
13B	PFHZZ	19200	B271406C	..BALL,BEARING	1
13C	PFHZZ	11083	1L5316	..PIN	1
*14	PFHZZ	80204	B1821BH031C088N	.BOLT,MACHINE	4
15	PFHZZ	96906	MS35338-45	.WASHER,LOCK	6
16	PFHZZ	11083	6B830	.COVER,ACCESS	2
17	PFHZZ	11083	2P3683	.PIN,SHOULDER,HEALE	2
18	PFHZZ	11083	2P3639	.SLIDE,DIRECTIONAL	1
19	PFHZZ	11083	3H107	.PACKING PREFORMED	1
* 20	PFHZZ	80204	B1821BH031C075N	.BOLT,MACHINE	2
21	PFHZZ	11083	1P6217	.FLANGE,PIPE	1
22	PAHZZ	58312	4D9986-00	.SEAL	1
23	PAHZZ	11083	3S2682	.BUSHING,SLEEVE	1
24	PFHZZ	11083	8M5260	.PACKING,PREFORMED	1
25	PFHZZ	11083	3P4120	.BODY,VALVE	1
				END OF FIGURE	

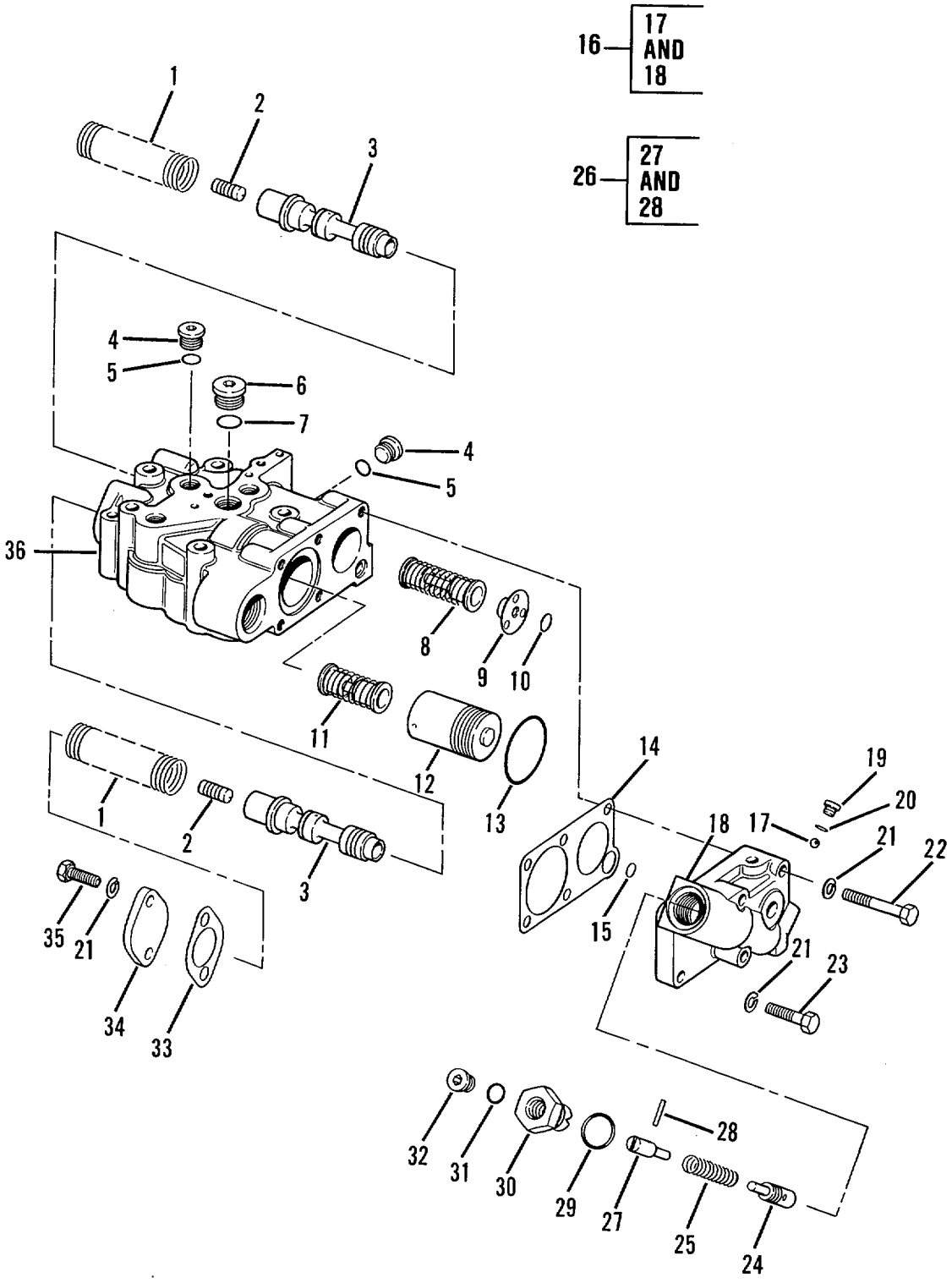

Figure 132. Winch Pressure Control Valve Assembly

(1) ITEM NO	(2) SMR CODE	(3) CAGEC	(4) PART NUMBER	(5) DESCRIPTION AND USABLE ON CODES (UOC)	(6) QTY
				GROUP 2001 - WINCH ASSEMBLY	
				FIG 132 - WINCH PRESSURE CONTROL VALVE ASSEMBLY (SEE FIGURE 130 FOR TOP ASSEMBLY, PART NUMBER 3T8649)	
1	PFHZZ	11083	1P3216	SPRING,HELICAL,COMP	2
2	PAHZZ	11083	2Mll68	SLUG	2
3	PFHZZ	11083	3P2767	SLIDE,DIRECTIONAL	2
* 4	PFHZZ	30780	6HP5N-SS	PLUG,MACHINE THREAD	4
* 5	PAHZZ	25184	906-737-70	PACKING,PREFORMED	4
* 6	PFHZZ	30780	8HP5N-S	PLUG,MACHINE THREAD	1
7	PFHZZ	11083	3K360	PACKING,PREFORMED	1
8	PFHZZ	11083	3P5169	RETAINER	1
9	PFHZZ	11083	3P2847	RETAINER,HELICAL	1
10	PAHZZ	11083	4K2039	PACKING,PREFORMED	1
11	PFHZZ	11083	3P5168	RETAINER	1
* 12	XBHZZ	11083	2P3646	PISTON,LINEAR ACTUA	1
13	PFHZZ	11083	1H9696	PACKING,PREFORM	1
14	PAHZZ	11083	2P3644	GASKET	1
15	PFHZZ	11083	6F5559	PACKING,PREFORMED	1
16	PAHZZ	11083	8P345	BODY,VALVE ASSY	1
17	PFHZZ	11083	489880	.BALL,BEARING	1
18	XAHZZ	11083	8P327	.BODY	1
* 19	PFHZZ	30780	2HP5N-S	PLUG,MACHINE THREAD	1
20	PFHZZ	59556	K-500-EN-0431	SEAL	1
21	PFHZZ	96906	MS35338-45	WASHER,LOCK	8
* 22	PFHZZ	80204	B1821BH031C200N	BOLTIMACHINE	3
* 23	PFHZZ	80204	B1821BH031C125N	BOLT,MACHINE	1
24	PFHZZ	11083	3P4660	VALVE,LINEAR,DIRECT	1
25	PFHZZ	11083	8P346	SPRING,HELICAL,COMP	1
26	PFHZZ	11083	8P325	STOP ASSEMBLYT TRACT	1
27	XAHZZ	11083	8P326	.STOP	1
28	PAHZZ	11083	5H9809	.PIN,STRAIGHT,HEADLE	1
29	PFHZZ	81349	M83248/2-910	PACKING,PREFORMED	1
30	PAHZZ	11083	6P9959	PLUG,ADJUSTINGBALL	1
31	PFHZZ	81349	M83248/2-905	PACKINGIPREFORMED	1
32	PFHZZ	11083	4R2579	PLUGTMACHINE THREAD	1
33	PAHZZ	11083	3P218	GASKET	2
34	PFHZZ	11083	68830	COVE,ACCESS	2
* 35	PFHZZ	80204	B18218HO31C088N	BOLTMACHINE	4
36	XAHZZ	11083	8PI5	BODY	1
				END OF FIGURE	

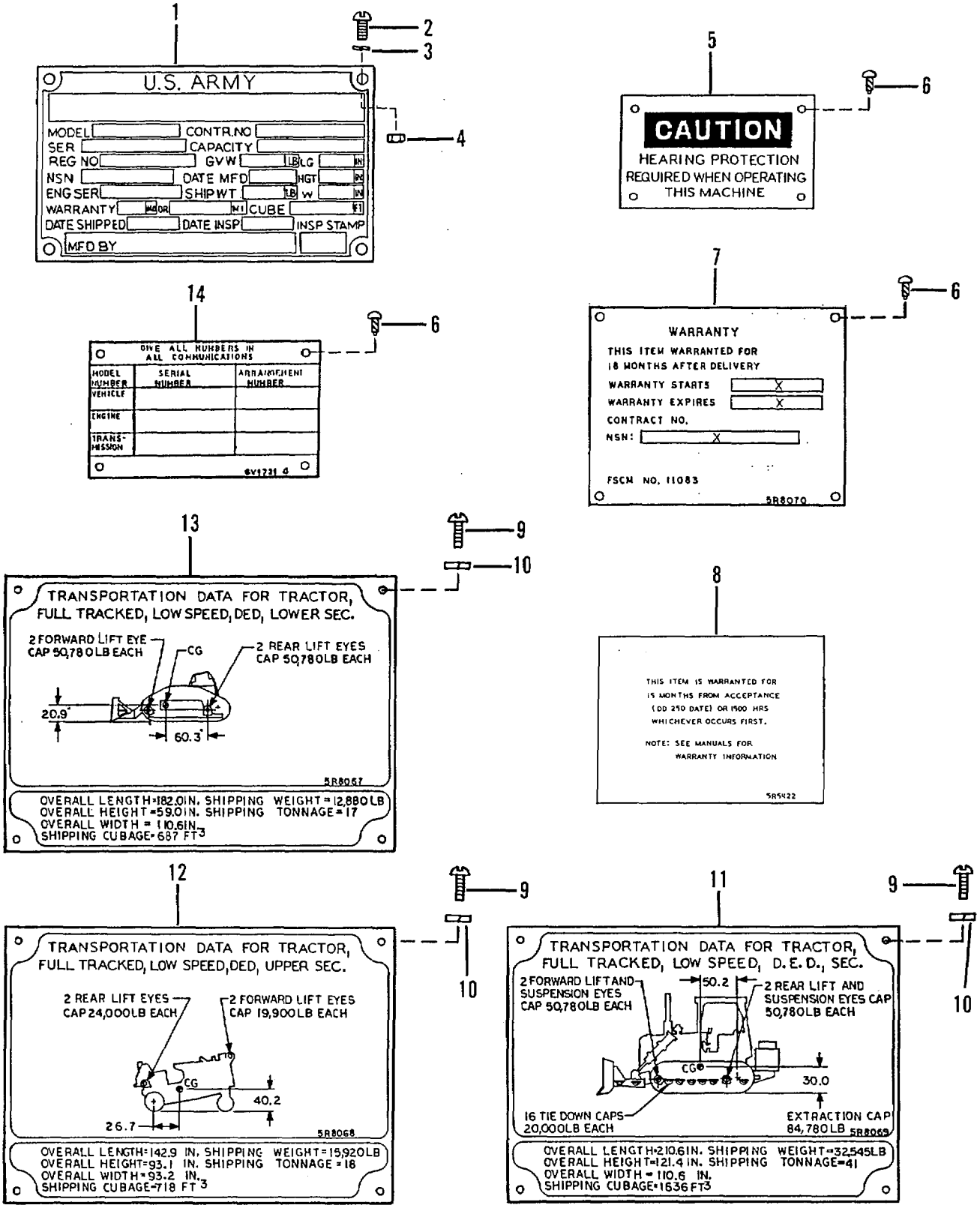

Figure 133. Nameplates and Decals - Sheet 1 of 3

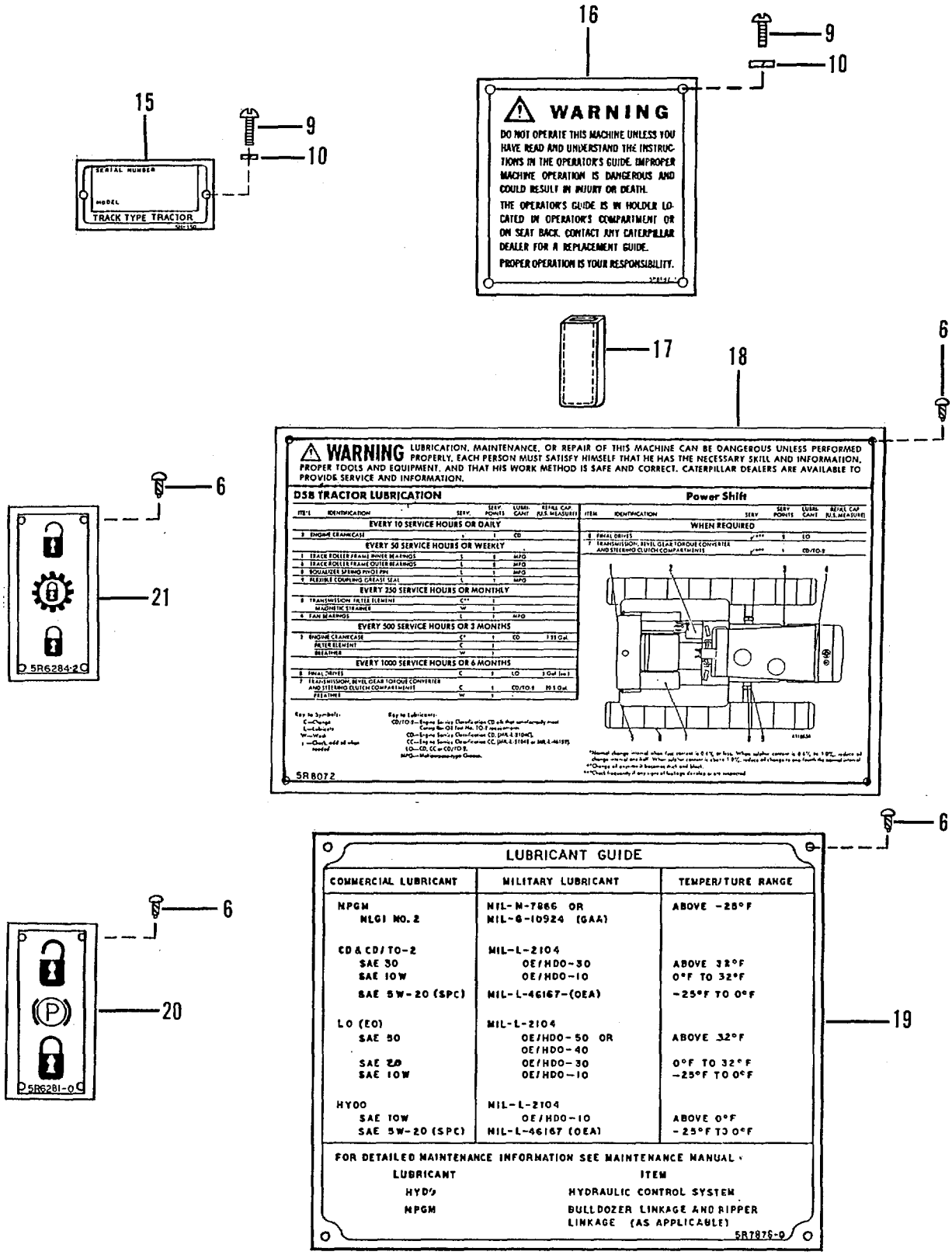

Figure 133. Nameplates and Decals - Sheet 2 of 3

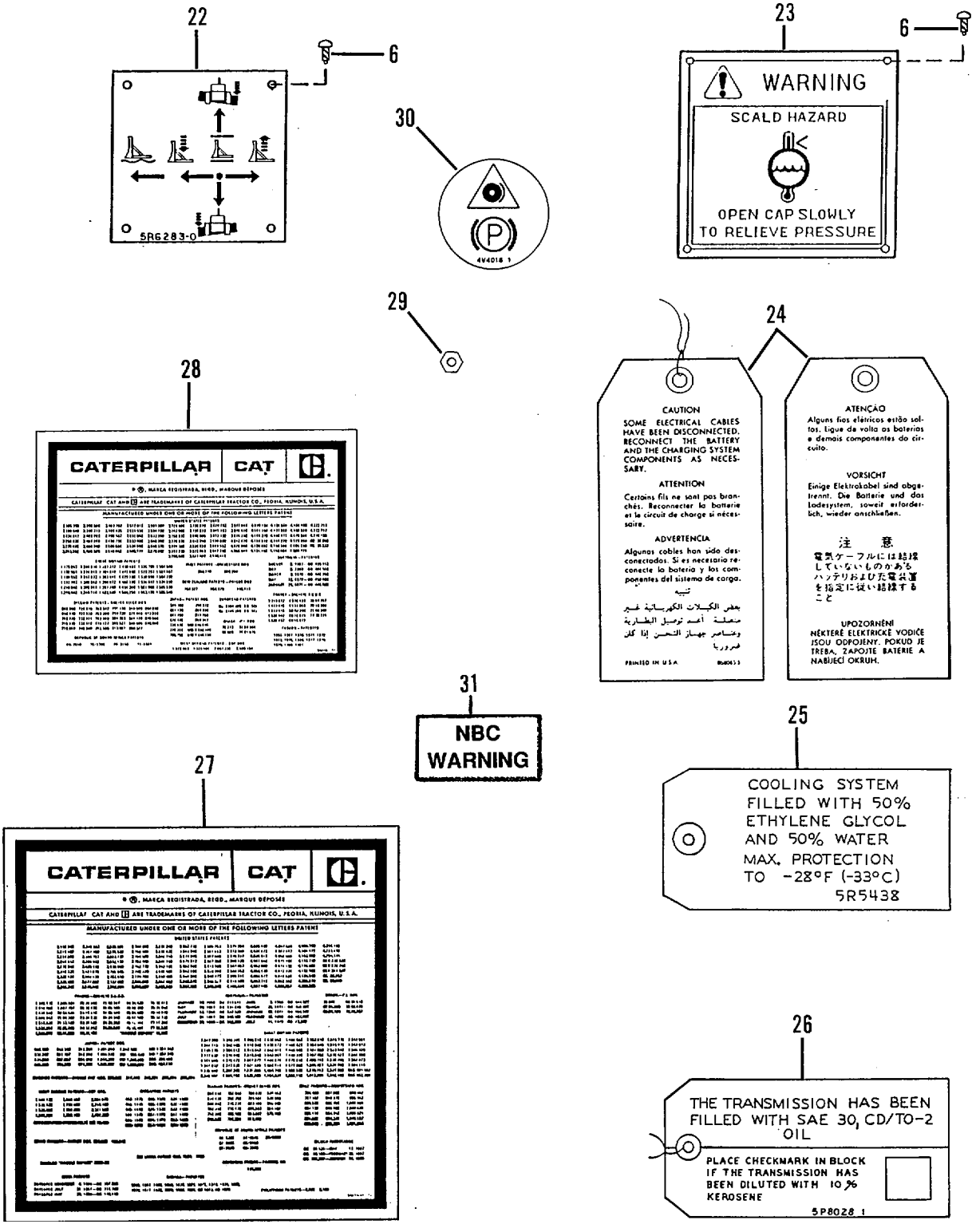

Figure 133. Nameplates and Decals - Sheet 3 of 3

(1) ITEM NO	(2) SMR CODE	(3) CAGEC	(4) PART NUMBER	(5) DESCRIPTION AND USABLE ON CODES (UOC)	(6) QTY
				GROUP 22 BODY9 CHASSIS, AND PULL ACCESSORY ITEMS	
				GROUP 2210 - DATA PLATES ANE INSTRUCTION HCLDERS	
				FIG 133 - NAMEPLATES AND DECALS	
1	PFOZZ	11083	5R54017	PLATE,IDENTIFICATIO END ITEM..... UOC :AGS ,AGT	1
1	PFOZZ	11083	5R3413	PLATEVIDENTIFICATIO END ITE ..... UOC :AGU,AGV	1
2	PAOZZ	11083	4B1221	SCREW,MACHINEC.....	4
3	PACZZ	96936	MS35338-42	WASHER,LOCK.....	4
4	PACZZ	68505	X141	NUT,PLAIN,HEX	4
5	PAOZZ	11083	5R5421	PLATE,INSTRUCTION BEARING ..... PROTECTION.....	1
6	PFOZZ	96906	MS21318-21	SCREW,DRIVEC	36
7	PFOZZ	11083	5R80170	PLATE,INSTRLCTION WARRANTY ..... INFORMATION ..... UOC:AGU,AGV	1
8	PFOZZ	11083	5R5422	LABEL WARRANTY INFORMATION ..... UOC :AGU ,AGV	2
9	PFCZZ	96906	MS35206-217	SCREW,MACHINE	8
10	PFOZZ	11083	6B4542	WASHER LOCK.....	8
11	XDOZZ	11083	5R5409	PLATE,IDENTIFICATIO TRANSPORTATION ..... DATA..... UOC:AGS,AGT	1
11	PFCZZ	11083	5R806S	PLATE,IDENTIFICATIO TRANSPORTATION ..... AT CDATA ..... UOC :AGU,AGV	1
11	PFOZZ	11083	5R5410	PLATE,IDENTIFICATIO TRANSPORTATION ..... DATA ..... UOC:AGT.AGU	1
12	PFOZZ	11083	5R8068	PLATE ,INSTRUCTION TRANSPORTATION..... DATAT UPPER ..... UOC :ACU,AGV	1
12	PFCZZ	11083	5R5411	PLATE,IDENTIFICATION TRANSPORTATION..... DATA, UPPER ..... UOC:AGT,AGU	1 1
13	XBOZZ	11383	5R8067	PLATE,INSTRUCTION TRANSPORTATION..... DATA ,LOWER C..... UOC:AGU.AGV	1
13	PFOZZ	11383	5R5412	PLATE.IDENTIFICATIO TRANSPORTATION ..... DATA, LOWER C UOC:AGT,AGU	1
14	PAOZZ	11083	6V1721	PLATE,IDENTIFICATIO SERIAL NUMBER	1
15	PAOZZ	11083	5H8450	PLATE,IDENTIFICATION TRACTOF NUMBER	1
16	PAOZZ	11083	5P8197	PLATE,INSTRUCTILN UNIVERSAL..... OPERATING WARNING	1
17	PAOZZ	11083	5P9398	GRIP,HANDLE.....	2

(1) ITEM NO	(2) SMR CODE	(3) CAGEC	(4) PART NUMBER	(5) DESCRIPTION AND USABLE ON CODES (UOC)	(6) QTY
18	PAOZZ	11083	5P6792	MARKER,IDENTIFICATI LUBRICATION ..... INSTRUCTION..... UOC:AGS,AGT	1
18	PFCZZ	11083	5R8072	PLATE, INSTRUCTION LUBRICATION ..... INSTRUCTION..... UOC:AGU,AGV.....	1
19	PFCZZ	11383	5R7878	MARKER,IDENTIFICATI LUBRICATION ..... INSTRUCTION..... UOC:AGU.AGV.....	1
20	PFCZZ	11083	5R6281	PLATE,IDENTIFICATIO PARKING BRAKE ..... UOC:AGU,AGY	1
21	PFOZZ	11083	5P94C9	MARKER,IDENTIFICATI TRANSMISSION ..... UOC:AGS,AGT	1
21	PFCZZ	11383	5R6284	PLATE, IDENTIFICATIO TRANSMISSION..... UOC:AGU,AGV	1
22	PFCZZ	11083	5R6283	PLATE,INSTRUCTION DOZING ..... INSTRUCTICNS ..... UOC:AGU,AGV	1
23	PFOZZ	11083	5R8071	PLATE, INSTRUCTION SCALE HAZAPRD ..... UOC:AGU,AGV	1
24	PFOZZ	11083	9S8063	TAG, INSTRUCTION BAIIER ..... UOC:AGU,AGV	1
25	PFOZZ	11083	5R5438	TAG,INSTRUCTION RACIAL ..... INFORMATION ..... UOC:AGU,AGV	1
26	XDOZZ	11083	5P8028	TAG, INSTRUCTION TRANSMISSION OIL ..... UOC:AGU,AGV	1
27	XCOZZ	11J83	5M7400	MARKER,IDENTIFICATI PATENT ..... UOC.,AGU,AGV	1
28	PFCZZ	11083	9M0016	MARKER,IDENTIFICATI ENGINE PATENT..... UOC:AGU,AGV	1
29	PFOZL	11083	6B4540	NUT,PLAIN,HEXAGONC.....	12
30	PAOZZ	11083		MARKER, INDENTIFICATION PARKING RELEASE..	
31	PACZZ	19207	12296626	DECAL NBC WARNING -AIR FILTER	1

END OF FIGURE

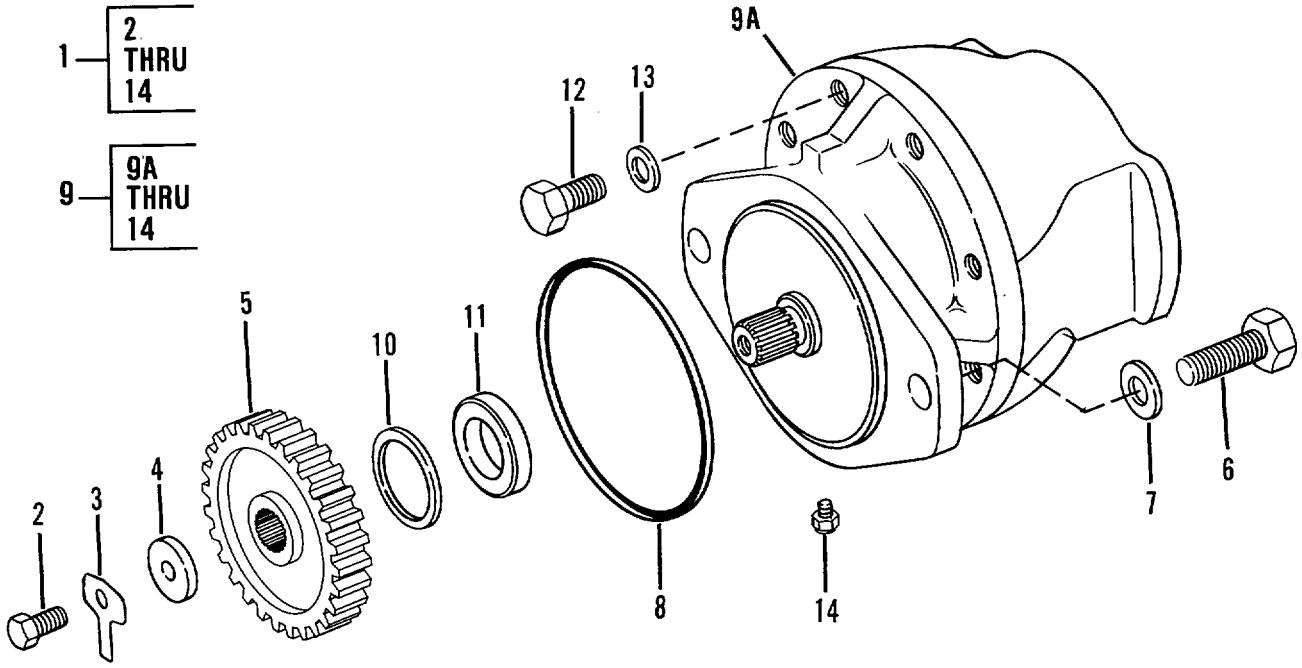

Figure 134. Hydraulic Oil Pump

(1) ITEM NO	(2) SMR CODE	(3) CAGEC	(4) PART NUMBER	(5) DESCRIPTION AND USABLE ON CODES (UOC)	(6) QTY
				GROUP 24 HYDRAULIC AND FLUID SYSTEMS	
				GROUP 2401 - PUMP AND MOTOR FIG. 134 - HYDRAULIC OIL PUMP	
* 1	PFFFF	11083	8J6330	PUMP,ROTARY	1
* 2	PFFZZ	11083	OS0509	.SCREW,CAP,HEXAGON H	1
* 3	XBFZZ	11083	9L4685	.PLATE,LOCK	1
4	PFFZZ	78286	S14-35-5017	.WASHER,FLAT	1
* 5	XBFZZ	11083	7N6611	.GEAR,HELICAL	1
* 6	PAFZZ	80204	B1821BH063C175N	.SCREW,CAP,HEXAGON H	2
7	PAFZZ	11083	4D3704	.WASHER,FLAT	2
8	PFFZZ	11083	5F3106	.PACKING,PREFORMED PART OF KIT P/N 13061	1
9	PAFFF	11671	20300C-DKP	.PUMP,HYDRAULIC RAM	1
9A	XAFZZ	19207	NPN42	..PUMP	1
10	PFFZZ	11083	3G1280	..SPACER	1
11	PAFZZ	80201	542255	..SEAL,PLAIN PART OF KIT P/N 13061	2
12	PFFZZ	11083	S1595	..BOLT,MACHINE	8
13	PFFZZ	11671	11146	..WASHER,FLAT	8
* 14	PFFZZ	62983	431832	..VALVE,SAFETY RELIEF	1
				END OF FIGURE	

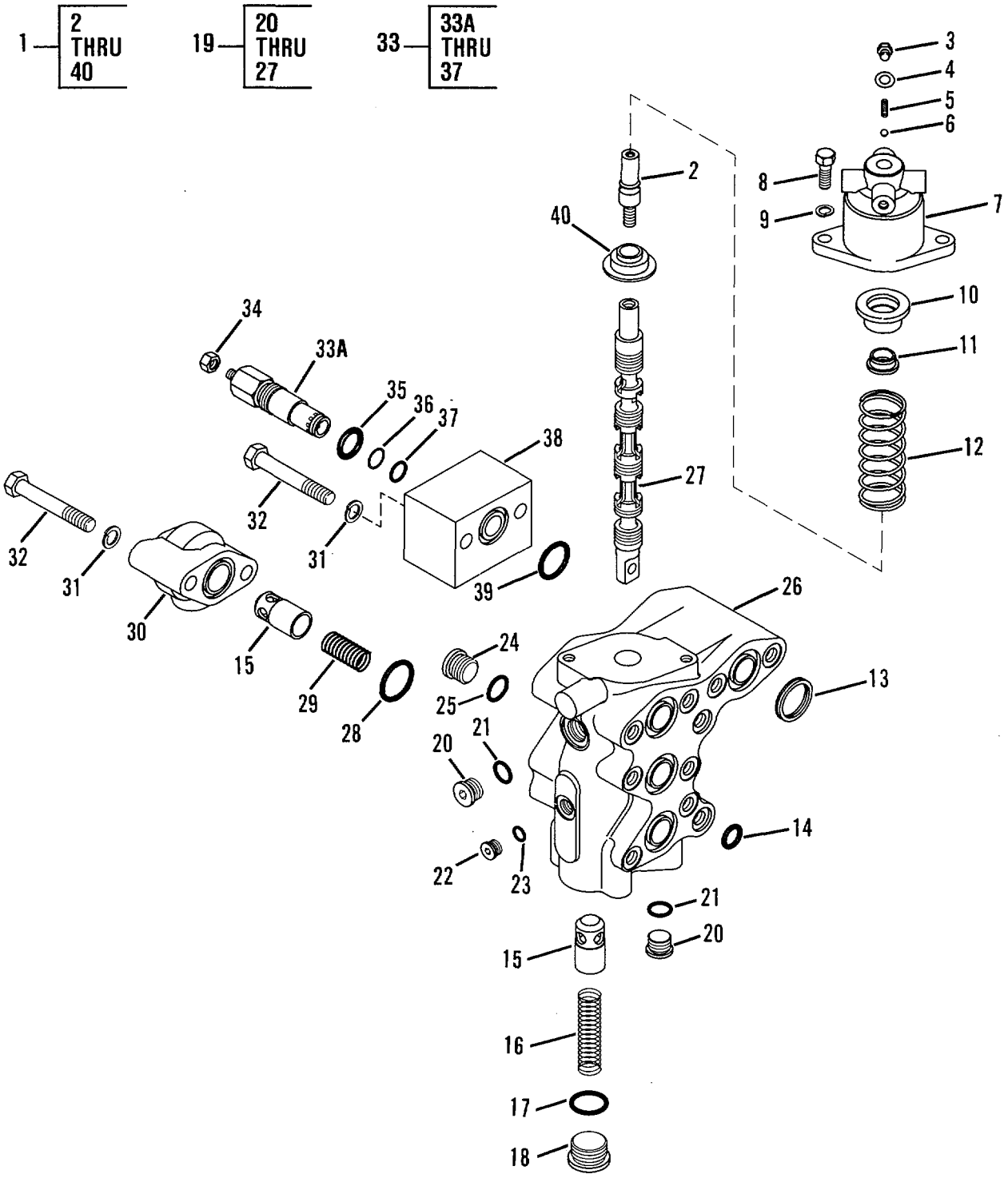

Figure 135. Hydraulic Tank Suction Line Control Valve
(Used on Models D5BNS and D5BS)

(1) ITEM NO	(2) SMR CODE	(3) CAGEC	(4) PART NUMBER	(5) DESCRIPTION AND USABLE ON CODES (UOC)	(6) QTY
				GROUP 2402- MANIFOLD AND/OR CONTROL VALVES	
				FIG. 135 - HYDRAULIC TANK SUCTION LINE CONTROL VALVE USED ON MODELS D5BNS AND D58S	
1	PFFFF	11083	9T0174	VALVE,LINEAR,DIRECT UOC:AGS,AGT	1
2	PAFZZ	11083	8J3556	.SLIDE,DIRECTIONAL C UOC:AGS,AGT	1
3	PAFLZ	11083	7J1767	.BUSHING,MACHINE THR UOC:AGS,AGT	4
4	PAFZZ	11083	6J6516	.SHIM UOC:AGS,AGT	8
5	PAFZZ	11083	6J9996	.SPRING,HELICAL,COMP UOC:AGS,AGT	4
6	PAFZZ	95879	A122	.BALL,BEARING UOC:AGS,AGT	4
7	PFFZZ	11083	6J9992	.HEAD,VALVE UOC:AGS,AGT	1
8	PFFZZ	11083	1A2029	.BOLT,MACHINE UOC:AGS,AGT	1
9	PFFZZ	96906	MS35338-46	.WASHER,LOCK UOC:AGS,AGT	2
10	PAFZZ	11083	5J9092	.SPACER,STEPPED UOC:AGS,AGT	1
11	PAFZZ	11083	5J9091	.SPACER,SLEEVE UOC:AGS,AGT	1
12	PAFZZ	11083	4J5105	.SPRING,HELICAL,COMP UOC:AGS,AGT	1
13	PAFZZ	11083	lP3703	.PACKING,PREFORMED UOC:AGS,AGT	1
14	PAFZZ	11083	2J157	.PACKING,PREFORMED UOC:AGS,AGT	10
15	PFFZZ	11083	5J9078	.DISK,VALVE UOC:AGS,AGT	2
16	PAFZZ	11083	2A5885	.SPRING,HELICAL,COMP UOC:AGS,AGT	1
17	PAFZZ	81349	M83248/2-914	.PACKING,PREFORMED UOC:AGS,AGT	1
18	PAFZZ	11083	9S8009	.PLUG,MACHINE THREAD UOC:AGS,AGT	1
19	PFFFF	11083	1U4662	.VALVE,REGULATING,TE UOC:AGS,AGT	1
20	PFFZZ	30780	8HP5N-S	.PLUG,MACHINE THREAD UOC:AGS,AGT	2
21	PAFZZ	11083	3K360	.PACKING,PREFORMED UOC:AGS,AGT	2
22	PFFZZ	19207	11621436-1	.PLUG,MACHINE THREAD UOC:AGS,AGT	1

(1) ITEM NO	(2) SMR CODE	(3) CAGEC	(4) PART NUMBER	(5) DESCRIPTION AND USABLE ON CODES (UOC)	(6) QTY
23	PAFZZ	81349	M83248/2-905	PACKING,PREFORMED UOC:AGS,AGT	1
* 24	PAFZ2	19207	12267772	PLUG,MACHINE,THREA UOC:AGS,AGT	1
25	PAFZZ	81349	M83248/2-910	PACKING,PREFORMED UOC:AGS,AGT	1
26	XAFZZ	11083	7J9973	BODY UOC:AGS,AGT	1
27	XAFZZ	11083	9S7192	SPOOL,VALVE UOC:AGS,AGT	1
28	PAFZZ	11083	4J519	PACKING,PREFORMED UOC:AGS,AGT	1
29	PAFZZ	11083	5J9098	SPRING,HELICAL,COMP UOC:AGS,AGT	1
30	PFFZZ	11083	8J3554	HOUSING,MECHANICAL UOC:AGS,AGT	1
31	PFFZZ	96906	MS35338-48	WASHER,LOCK UOC:AGS,AGT	4
* 32	PFFZZ	11083	OV0375	SCREW,CAP,HEXAGON H UOC:AGS,AGT	4
33	PFFZZ	11083	3G8078	VALVE,SAFETY RELIEF UDC:AGS,AGT	1
33A	XAFZZ	19207	NPN	CARTRIDGE UOC:AGS,AGT	1
34	PAFZZ	11083	3G3726	NUT,PLAIN,HEXAGON UOC:AGS,AGT	1
35	PAFZZ	11083	617539	PACKING,PREFORMED UOC:AGS,AGT	1
36	PFFZZ	11083	9J6367	RING UOC:AGS,AGT	1
37	PFFZZ	11083	8L2746	PACKING,PRFORMED UOC:AGS,AGT	1
38	PFFZZ	11083	8J5449	BODY,VALVE UOC:AGS,AGT	1
* 39	PFFZZ	11083	4J8997	PACKING,PREFORMED UOC:AGS,AGT	5
40	PAFZZ	11083	8J3557	SPACER,STEPPED UOC:AGS,AGT	1

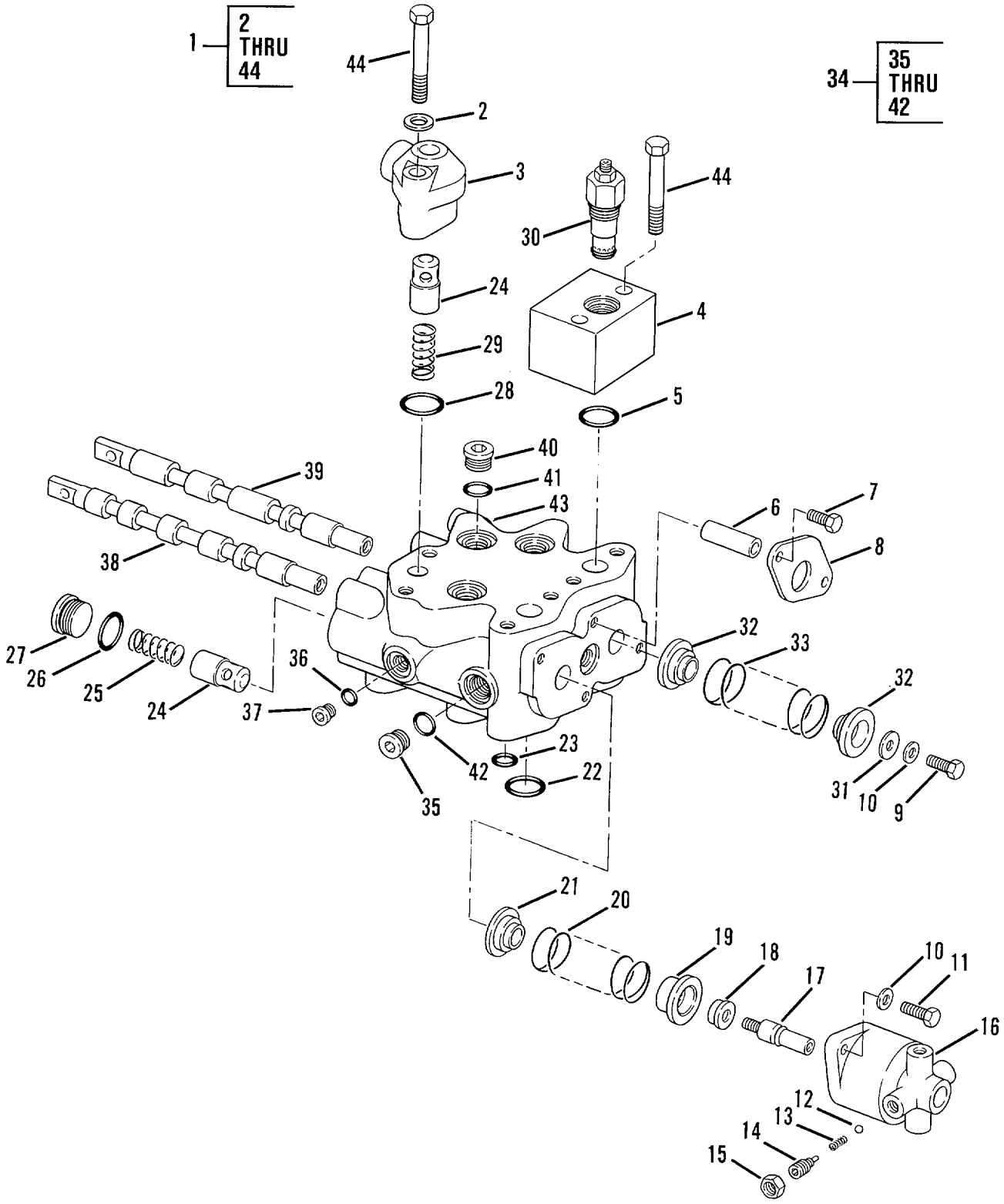

Figure 136. Hydraulic Tank Control Valve (Used on Model D5BS1)

(1) ITEM NO	(2) SMR CODE	(3) CAGEC	(4) PART NUMBER	(5) DESCRIPTION AND USABLE ON CODES (UOC)	(6) QTY
				GROUP 2402 - MANIFOLD AND/OR CONTROL VALVES	
				FIG. 136 - HYDRAULIC TANK CONTROL VALVE USED ON MODELS 05BS1 ANC 058KS1	
1	PFFFF	11083	9T0176	VALVE,LINEAR,DIRECT UOC :AGU,AGV	1
2	PFFZZ	11083	5P7213	WASHER,FLAT UOC:AGU,AGY	2
3	PFFZZ	11083	8J3554	HOUSING,MECHANICAL UOC :AGU,AGV	1
4	PFFZZ	11083	8J5449	BODY,VALVE UOC:AGU,AGV	1
5	PFFZZ	02697	2-216N674-70	*PACKING*PREFCRMEO.*CC.CC .....UOC:AGU,AGV	1
6	PFFZZ	11t83	8J3639	CSPACER,SLEEE .....UOC: AGU, AGV	2
7	PFFZZ	11083	6VO717	BOLT,SELF-LOCKING UOC:AGU,AGV	2
8	PFFZZ	11083	8J3640	PLATE,REED VALVE UOC :AGU,AGV	1
9	PFFZZ	11083	L1351	BOLT,MACHINE UOC :AGU ,AGV	1
10	PFFZZ	11383	5M2894	WASHER,FLAT UOC:AGU,AGV	3
11	PFFZZ	11083	3435517	BOLT,SELF-LOCKING UOC :AGU ,AGV	2
12	PFFZZ	95879	A122	BALL,BEARING UOC :AGU, AGV	4
13	PFFZZ	11083	6J9996	SPRING,HELICAL,COMP UOC :AGU,AGV	4
14	PFFZZ	11083	4B1771	SET,SCREW UOC:AGU,AGV	4
15	PFFZZ	13335	235C7	NUT,PLAIN,HEXAGON UOC :AGU,AGV	4
16	PFFZZ	11-83	3G9806	RETAINER VALVE UOC:AGU,AGV	1
17	PFFZZ	11083	8J3556	SLIDE,DIRECTIONAL UOC:AGU,AGV	1
18	PFFZZ	11083	5J9091	SPACER,SLEEVE UOC:AGU,AGV	
19	PFFZZ	11083	5J9092	SPACER,STEPPED UOC:AGU,AGV	1
23	PFFZZ	11083	4J5105	SPRING,HELICAL,COMP UOC:AGU,AGV	1
21	PFFZZ	11083	8J3557	SPACER,STEPPED UOC:AGU,AGV	1
22	PFFZZ	11083	1P3703	PACKING,PREFORMED UOC:AGU,AGV	1
23	PFFZZ	02697	2-2U8N674-73	PACKING.PREFORMED	14

(1) ITEM NO	(2) SMR CODE	(3) CAGEC	(4) PART NUMBER	(5) DESCRIPTION AND USABLE ON CODES (UOC)	(6) QTY
				UOC:AGU,AGV	
24	PFFZZ	11083	5J9078	DISK,VALVE 1	
				UDC:AGU,AGV	
25	PFFZZ	11083	2A5885	SPRING,HELICAL,COMP 2	
				UOC:AGU,AGV	
26	PFFZZ	11083	4K1388	SEAL,CONNECTOR TUBE 2	
				UOC:AGU,AGV	
27	PFFZZ	11083	9S8009	PLUG,MACHINE THREAD 2	
				UOC:AGU,AGV	
28	PFFZZ	34995	30123D	PACKING REFORMED 1	
				UOC:AGU,AGV	
29	PFFZZ	11083	5J9098	SPRING,HELICAL,COMP 1	
				UOC:AGU,AGV	
30	PFFLZ	11083	3G8078	VALVE,SAFETY RELIEF 1	
				UOC:AGU,AGV	
31	PFFZZ	11083	6B7949	WASHER 1	
				UOC:AGU,AGV	
32	PFFZZ	11083	5J9088	SPACER STEPPED 2	
				UOC:AGU,AGV	
33	XBFZZ	11083	3J4121	SPRING,HELICAL,COMP 1	
				UOC:AGU,AGV	
34 1	PFFZZ	11083	9T0175	VALVE,LINEAR,DIRECT ..... o	o
				UOC:AGU,AGV	
35	PFFZZ	30780	8HP5N-S	PLUG,MACHINE THREAD 3	
				UOC:AGU,AGV	
36	PFFZZ	11083	lJ9671	PACKING,PREFORMED 2	
				UOC:AGU,AGV	
37	PFFZZ	19207	11621436-1	PLUG,MACHINE THREAD 2	
				UOC:AGU,AGV	
38	XAFZZ	11083	9T0172	STEM 1	
				UOC:AGU,AGV	
39	XAFZZ	11083	3G5656	STEM 1	
				UOC:AGU,AGV	
40	PFFZZ	30780	10 HP5N-S	PLUG,MACHINE THREAD 3	
				UOC:AGU,AGV	
41	PFFZZ	81349	M83248/2-910	PACKING,PREFORMED 3	
				UOC:AGU,AGV	
42	PFFZZ	11083	3K360	PACKING,PREFORMED 3	
				UOC:AGU,AGV	
43	XAFZZ	11083	8J1839	BODY 1	
				UOC:AGU,AGV	
44	PFFZZ	11083	5P8091	BOLT,SELF-LOCKING 4	
				UOC:AGU,AGV	

END OF FIGURE

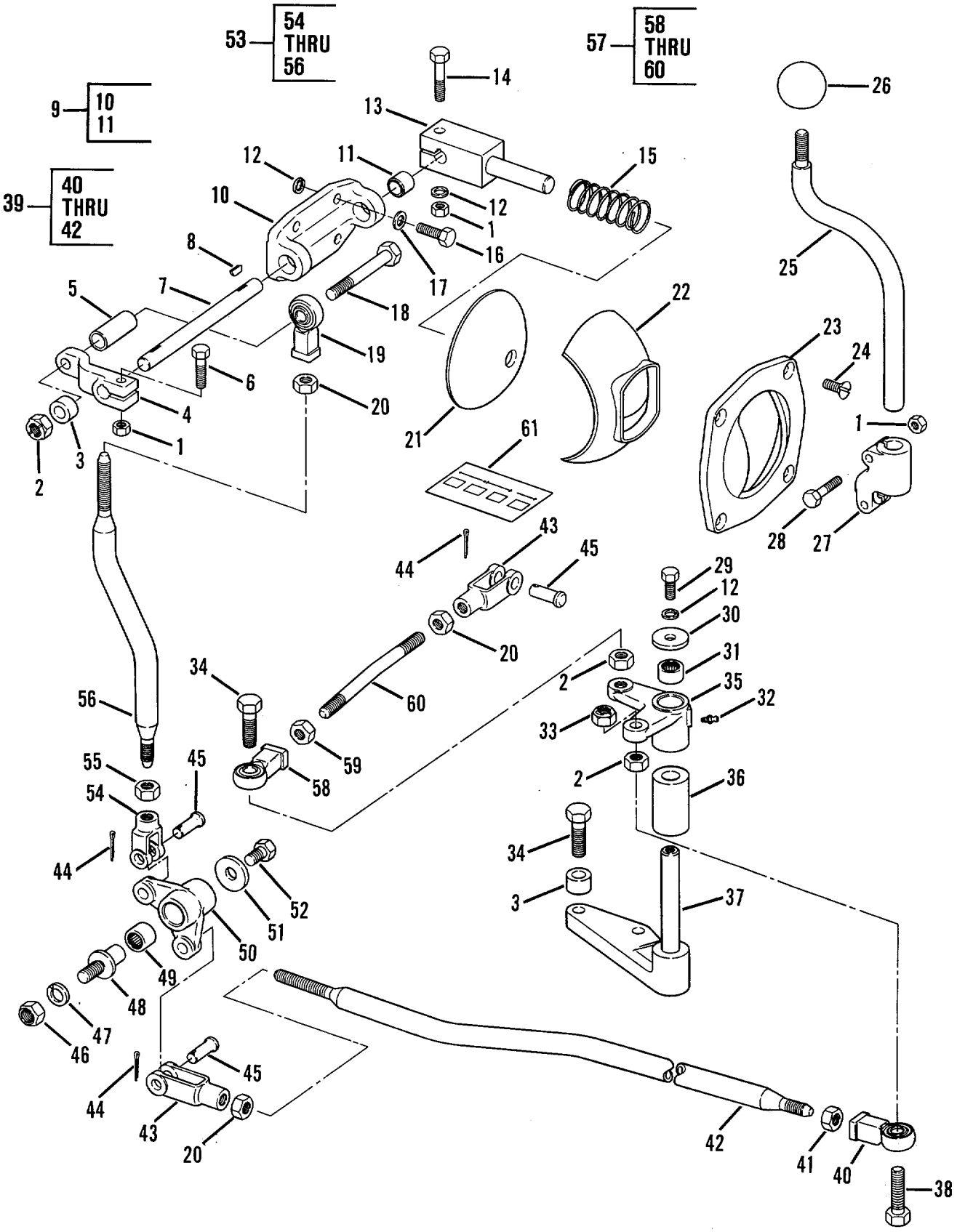

Figure 137. Bulldozer Control Linkage (Used on Models D5BNS and D5BS)

(1) ITEM NO	(2) SMR CODE	(3) CAGEC	(4) PART NUMBER	(5) DESCRIPTION AND USABLE ON CODES (UOC)	(6) QTY
				GROUP 2403 - HYDRAULIC CONTROLS AND/OR MANUAL CONTROLS	
				FIG. 137 - BULLDOZER CONTROL LINKAGE USED ON MODELS D5BNS AND D5BS	
1	PFFZZ	11083	104717	NUT,HEXAGON	4
				UOC:AGS,AGT	
2	PFFZZ	96906	MS51967-14	NUT,PLAIN,HEXAGON	3
				UOC:AGS,AGT	
3	PFFZZ	11083	lS4305	SPACER,SLEEVE	4
				UOC;AGS,AGT	
4	PFFZZ	11083	8P2483	LEVER,REMOTE CONTRO	1
				UOC:AGS,AGT	
5	PFFZZ	11083	3S3158	SPACER,SLEEVE	1
				UOC:AGS,AGT	
6	PFFZZ	11083	OS1591	SCREW	1
				UOC:AGS,AGT	
7	PFFZZ	11083	3P3942	SHAFT,STRAIGHT	1
				UOC:AGS,AGT	
8	PFFZZ	96906	MS35756-8	KEY WOODRUFF	2
				UOC:AGS,AGT	
9	AFFZZ	11083	6P5205	BRACKET ASSY Y	1
				UOC:AGSGAGT	
10	PFFZZ	11083	6P5206	BRACKET,DOUBLE ANGL	1
				UOC:AGS,AGT	
11	PFFZZ	11083	9F5647	BUSHING,SLEEVE	2
				UOC:AGS,AGT	
12	PFFZZ	11083	8M9124	SPACER,SLEEVE	1
				UOC:AGS,AGT	
13	PFFZZ	11083	8P5048	LEVER,MANUAL CONTRO.	1
				UOC:AGS,AGT	
14	PFFZZ	11083	051590	BOLT,MACHINE	1
				UOC:AGS,AGT	
15	PAFZZ	11083	2J7295	SPRING,HELICAL,COMP	1
				UOC:AGS,AGT	
16	PFFZZ	80204	B1821BHO38C125N	SCREW,CAP,HEXAGON H	4
				UOC:AGS,AGT	
17	PFFZZ	11083	5M2894	WASHER,FLAT	5
				UOC:AGS,AGT	
18	PFFZZ	11083	S1573	BOLT,MACHINE_	1
				UOC:AGS,AGT	
19	PFFZZ	11083	4D4065	BEARING,PLAIN,ROD	1
				UOC:AGS,AGT	
20	PFFZZ	96906	MS51968-14	NUT,PLAIN,HEXAGON	3
				UOC:AGS,AGT	
21	PAFZZ	11083	BP7352	BOOT3DUST AND MOIST	1
				UOC:AGS,AGT	
22	PAFZZ	11083	6P5208	GUIDE,LEVER	1
				UOC:AGS,AGT	
23	PAFZZ	11083	6P5209	COVER,ACCESS.	1

(1) ITEM NO	(2) SMR CODE	(3) CAGEC	(4) PART NUMBER	(5) DESCRIPTION AND USABLE ON CODES (UOC)	(6) QTY
				UOC:AGS,AGT	
24	PFFZZ	96906	MS35190-319	SCREW,MACHINE 4	
				UOC:AGS,AGT	
25	PFFZZ	11083	8P2480	LEVER,MANUAL CONTRO.-..... 1	
				UOC:AGS,AGT	
26	PFOZZ	11083	2A1736	KNOB 1	
				UOC: AGS ,AGT	
27	PAFZZ	11083	9P0468	CLAMP,H 1	
				UOC;AGS,AGT	
28	PFFZZ	11083	01571	SCREW,CAP,HEXAGON H. 2	
				UOC:AGS,AGT	
29	PFFZZ	11083	S1594	BOLT,MACHINE 1	
				UOC:AGS,AGT	
30	PFFZZ	11083	8M4069	WASHER,FLAT..... 1	
				UOC:AGS,AGT	
31	PAFZZ	60380	JTT1211	BEARING,ROLLER,NEED..... 2	
				UOC:AGS,AGT	
32	PAFZZ	96906	MS15003-1	FITTING,LUBRICATION 1	
				UOC:AGS,AGT	
33	PFFZZ	19207	443339	NUT1SELF-LOCKING HE 1	
				UOC:AGS,AGT	
34	PFFZZ	11083	S1587	BOLT,MACHINE 1	
				UOC:AGS,AGT	
35	PFFZZ	11083	9G8854	BELL CRANK 1	
				UOC:AGS,AGT	
36	PAFZZ	11083	8P5324	SPACER,SLEEVE..... 1	
				UOC:AGS,AGT	
37	PFFZZ	11083	8P5333	BRACKET ASSEMBLY 1	
				UOC:AGS,AGT	
38	PFFZZ	11083	lA1460	BOLT,MACHINE 1	
				UOC:AGS,AGT	
39	PFFZZ	11083	8P5327	LEVER,MANUAL CONTRO-..... 1	
				UOC: AGS,AGT	
40	PFFZZ	11083	404065	1BEARINGVPLAIN,ROD E 1	
				UOC: AGS AGT	
41	PFFZZ	96906	MS51968-14	NUT,PLAIN,HEXAGON 1	
				UOC: AGS AGT	
42	XAFZZ	11083	8P5328	ROD. 1	
				UOC: AGS,AGT	
43	PFFZZ	11083	6F7010	CLEVIS,ROD END 2	
				UOC:AGS,AGT	
44	PFFZZ	96906	MS24665-353	PIN,COTTER 3	
				UOC:AGS,AGT	
45	PAFZZ	11083	S175	PIN,STRAIGHT,HEADED 3	
				UOC:AGS,AGT	
46	PFFZZ	11083	3K2889	NUT.,.. 1	
				UOC:AGS,AGT	
47	PFFZZ	96906	MS27183-21	WASHER,FLAT..... 1	
				UOC:AGS,AGT	
48	PFFZZ	11083	5S9704	SHAFT,SHOULDERED 1	
				UOC:AGS,AGT	
49	PFFZZ	60380	JTT1212	BEARING,ROLLER,NEED..... 2	

(1) ITEM NO	(2) SMR CODE	(3) CAGEC	(4) PART NUMBER	(5) DESCRIPTION AND USABLE ON CODES (UOC)	(6) QTY
				UOC:AGS,AGT 1	
*50	XBFZZ	11083	8P2496	BELL CRANK 1	
				UOC:AGS,AGT	
51	PFFZZ	11083	1J8965	WASHER,FLAT 1	
				UOC:AGS,AGT	
*52	PFFZZ	11083	OS1585	BOLT,MACHINE 1	
				UOC:AGS,AGT	
53	PFFZZ	11083	8P3391	LEVER,MANUAL CONTRO 1	
				UOC:AGS,AGT	
54	PFFZZ	11083	2M8340	CLEVIS,ROD END 1	
				UOC: AGS,AGT	
55	PFFZZ	96906	MS51968-14	NUTPLAINtHEXAGON 1	
				UOC:AGS,AGT	
56	XAFZZ	11083	8P2478	ROD 1	
				UOC:AGS,AGT	
57	PFFZZ	11083	8P5325	ROD END,THREADED. 1	
				UOC:AGS,AGT	
58	PFFZZ	11083	4D4065	BEARING,PLAIN,ROD E 1	
				UOC:AGS,AGT	
59	PFFZZ	11083	lB4205	NU-TPLAIN,HEXAGON 1	
				UOC:AGS,AGT	
*60	XBFZZ	11083	8P5326	STUD,PLAIN. 1	
				UOC:AGS,AGT	
61	PFFZZ	11083	5P8166	MARKER,IDENTIFICATI. 1	
				UOC:AGS,AGT	

END OF FIGURE

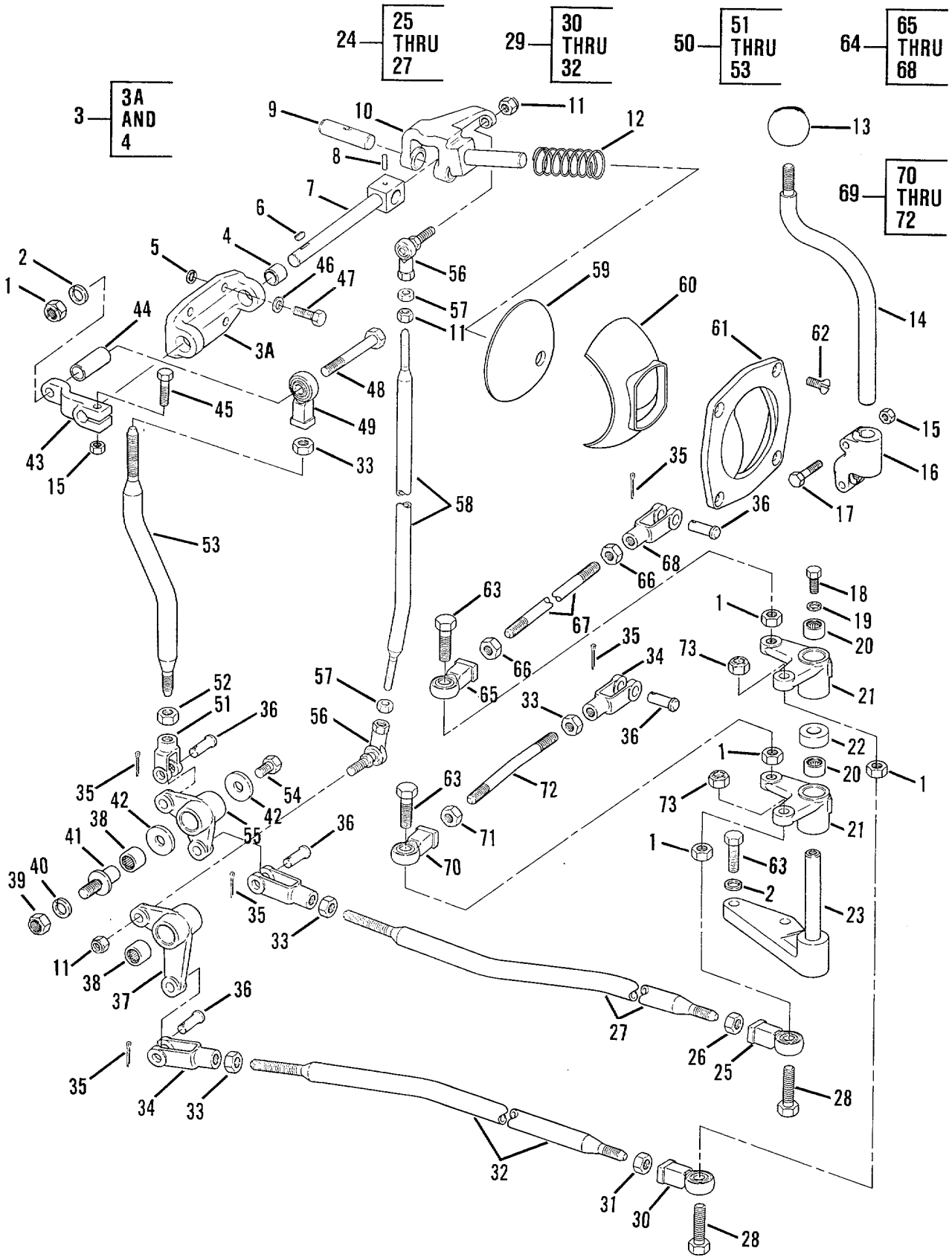

Figure 138. Bulldozer Control Linkage (Used on Model D5BS1)

(1) ITEM NO	(2) SMR CODE	(3) CAGEC	(4) PART NUMBER	(5) DESCRIPTION AND USABLE ON CODES (UOC)	(6) QTY
				GROUP 2403 - HYDRAULIC CONTROLS AND/OR MANUAL CONTROLS	
				FIG. 138 - BULLDOZER CONTROL LINKAGE USED ON MODEL D5BS1 AND D5BNS1	
1	PFFZZ	96906	MS51967-14	NUT,PLAIN,HEXAGON UOC:AGU,AGV	5
2	PFFZZ	96906	MS35338-48	WASHER,LOCK UOC:AGU,AGV	5
*3	AFFZZ	11083	6P5205	BRACKET UOC:AGU,AGV	1
3A	PFFZZ	11083	6P5206	BRACKET,DOUBLE ANGL. UOC:AGU,AGV	1
4	PFFZZ	11083	9F5647	BUSHING,SLEEVE.. UOC:AGU,AGV	2
5	PFFZZ	96906	MS35338-46	WASHER,LOCK UOC:AGU,AGV	5
6	PFFZZ	96906	MS35756-8	KEY,WOODRUFF UOC:AGU,AGV	1
7	PFFZZ	11083	3P3935	PIN;STRAIGHT,HEADED. UOC:AGU,AGV	1
8	PFFZZ	11083	7L0811	PIN,STRAIGHT,HEADLE UOC:AGU,AGV	1
9	PFFZZ	11083	3P3937	SHAFTS,RIGHT UOC:AGU,AGV	1
10	PFFZZ	11083	8P2481	LEVER,REMOTE CONTRO UOC:AGU,AGV	1
11	PFFZZ	96906	MS51922-21	NUTSELF-LOCKING HE UOC:AGU,AGV	2
12	PAFZZ	11083	2J7295	SPRING,HELICAL,COMP UOC:AGU,AGV	1
13	PFOZZ	11083	2A1736	KNOB UOC:AGU,AGV	1
14	PFFZZ	11083	8P2480	LEVER,MANUAL CONTRO UOC:AGU,AGV	1
15	PFFZZ	11083	104717	NUT,HEXAGON UOC:AGU,AGV	3
16	PAFZZ	11083	9P0468	CLAMP,HUB UOC:AGU,AGV	1
*17	PFFZZ	11083	OS1571	SCREW,CAP,HEXAGON H UOC:AGU,AGV	2
18	PFFZZ	11083	L1351	BOLT,MACHINE UOC:AGU,AGV	1
19	PFFZZ	11083	8M4069	WASHER,FLAT UOC:AGU,AGV	1
20	PAFZZ	60380	JTT1211	BEARING, ROLLER,NEED UOC:AGU,AGV	4
21	PFFZZ	11083	2P8145	BELL CRANK.- UOC:AGU,AGV	2
22	PFFZZ	11083	5J5326	SPACER,SLEEVE UOC:AGU,AGV	1

(1) ITEM NO	(2) SMR CODE	(3) CAGEC	(4) PART NUMBER	(5) DESCRIPTION AND USABLE ON CODES (UOC)	(6) QTY
23	PFFZZ	11083	8P5333	BRACKET ASSEMBLY. 1 UOC:AGU,AGV	
24	PFFZZ	11083	8P5327	LEVER,MANUAL,CONTRO 1 UOC:AGU,AGV	
25	PFFZZ	11083	4D4065	BEARING,PLAIN,ROD E 1 UOC:AGU,AGV	
26	PFFZZ	11083	184205	NUT,PLAIN,HEXAGON 1 UOC:AGU,AGV	
27	XAFZZ	11083	8P5328	R0D UOC:AGU,AGV	1
*28	PFFZZ	11083	1A1460	BOLT,MACHINE 2 UGC:AGU,AGV	
29	PFFZZ	11083	8P5329	CONNECTING LINK,RIG 1 UOC:AGU,AGV	
30	PFFZZ	11083	4D4065	BEARING,PLAIN,ROD E 1 UOC:AGU,AGV	
31	PFFZZ	11083	184205	NUT,PLAIN,HEXAGON 1 UOC:AGU,AGV	
32	XAFZZ	11083	8P5330	ROD. 1 UOC:AGU,AGV	
33	PFFZZ	11083	lB4205	NUT,PLAIN,HEXAGON 4 UOC:AGU,AGV	
34	PFFZZ	11083	6F7010	CLEVIS,ROD END 3 UOC:AGU,AGV	
35	PFFZZ	96906	MS24665-353	PIN,COTTER 5 UOC: AGU,AGV	
*36	XBFZZ	11083	OS0175	PIN UOC:AGU,AGV	5
37	PFFZZ	11083	8P2495	BELL CRANK. 1 UOC:AGU,AGV	
38	PFFZZ	11083	6D3787	BEARING,ROLLER 8 UOC:AGU,AGV	
39	PFFZZ	96906	MS51967-20	NUT,PLAIN,HEXAGON 2 UOC:AGU,AGV	
40	PFFZZ	96906	MS35340-50	WASHER,LOCK 2 UOC:AGU,AGV	
41	PFFZZ	11083	5S9704	SHAFT,SHOULDERED 2 UOC:AGU,AGV	
42	PFFZZ	11083	lJ8965	WASHER,FLAT 2 UOC:AGU,AGV	
43	PFFZZ	11083	8P2483	LEVER,REMOTE CONTRO 1 UOC:AGU,AGV	
44	PFFZZ	11083	3S3158	SPACER,SLEEVE 1 UOC:AGU,AGV	
*45	PFFZZ	11083	OS1591	SCREW. 1 UOC:AGU,AGV	
*46	PFFZZ	96906	MS27183-14	WASHER,FLAT 4 UOC:AGU,AGV	
*47	PFFZZ	11083	lA2029	BOLT,MACHINE 4 UOC:AGU,AGV	
48	PFFZZ	11083	S1573	BOLT,MACHINE 1 UOC:AGU,AGV	

(1) ITEM NO	(2) SMR CODE	(3) CAGEC	(4) PART NUMBER	(5) DESCRIPTION AND USABLE ON CODES (UOC)	(6) QTY
49	PFFZZ	11083	4D4065	BEARING,PLAIN,ROD UOC :AGU,AGV	1
50	PFFZZ	1108	3 8P3391	LEVER.MANUAL CONTROL UOC :AGU,AGV	1
51	PFFZZ	11083	2M8340	CLEVIS.ROD E C UOC:AGU,AGV	1
52	PFFZZ	11083	1B4205	NUT,PLAIN,HEXAGON UOC:AGU,AGV	1
53	XAFZZ	11083	8P2478	ROD UOC :AGU,AGV	1
54	PFFZZ	11083	2H3855	BOLT,MACHINE UOC:AGU,AGV	2
55	PFFZZ	11083	8P2496	BELL CRANK UOC:AGU,AGV	1
56	PFFZZ	11083	5J5315	BALL ROD E UOC :AGU,AGV	2
57	PFFZZ	969J6	MS35691-21	NUT#PLAIN,HEXAGON UOC:AGU,AGV	1
58	PFFZZ	11083	8P2479	ROD,THREADED E N D UOC:AGU,AGV	1
59	PAFZZ	11083	8P7352	BOOT,DUST AND M T UOC:AGU,AGV	1
60	PAFZZ	11083	6P5208	GUIDE LEVER UOC :AGU,AGV	1
61	PAFZZ	11083	6P5209	COVER UOC:AGU,AGV	1
62	PFFZZ	96906	MS35190-319	SCREW,MACHINE UOC:AGU,AGV	4
63	PFFZZ	96906	MS90728-114	SCREW,CAP,HEXAGON HC. UOC:AGU,AGV	4
64	PFFZZ	11083	89P5331	CONNECTING LINK RIG UOC :AGU,AGV	1
65	PFFZZ	11083	4D4065	BEARING,PLAIN,ROD E UOC:AGU,AGV	1
66	PFFZZ	11083	1B4205	NUTPLAIN,HEXAGON UOC:AGU,AGV	2
67	PFFZZ	11083	8P5332	LEVER,MANUAL CONTROL UOC:AGU.AGV	1
68	PFFZZ	11083	2M8340	CLEVIS.ROD END UOC:AGU,AGV	1
69	PFFZZ	1L183	8P5325	ROD END,THREADED UOC:AGU,AGV	1
70	PFFZZ	11083	4D4065	BEARING,PLAIN,ROD E UOC:AGU,AGV	1
71	PFFZZ	11083	lB42C5	NUT,PLAIN,HEXAGON UOC:AGU,AGV	1
72	PFFZZ	11083	8P5332	ROD UOC:AGU,AGV	1
73	PFFZZ	96906	MS51922-33	NUT,SELF-LOCKING,HE UOC:AGU,AGV	2

END OF FIGURE

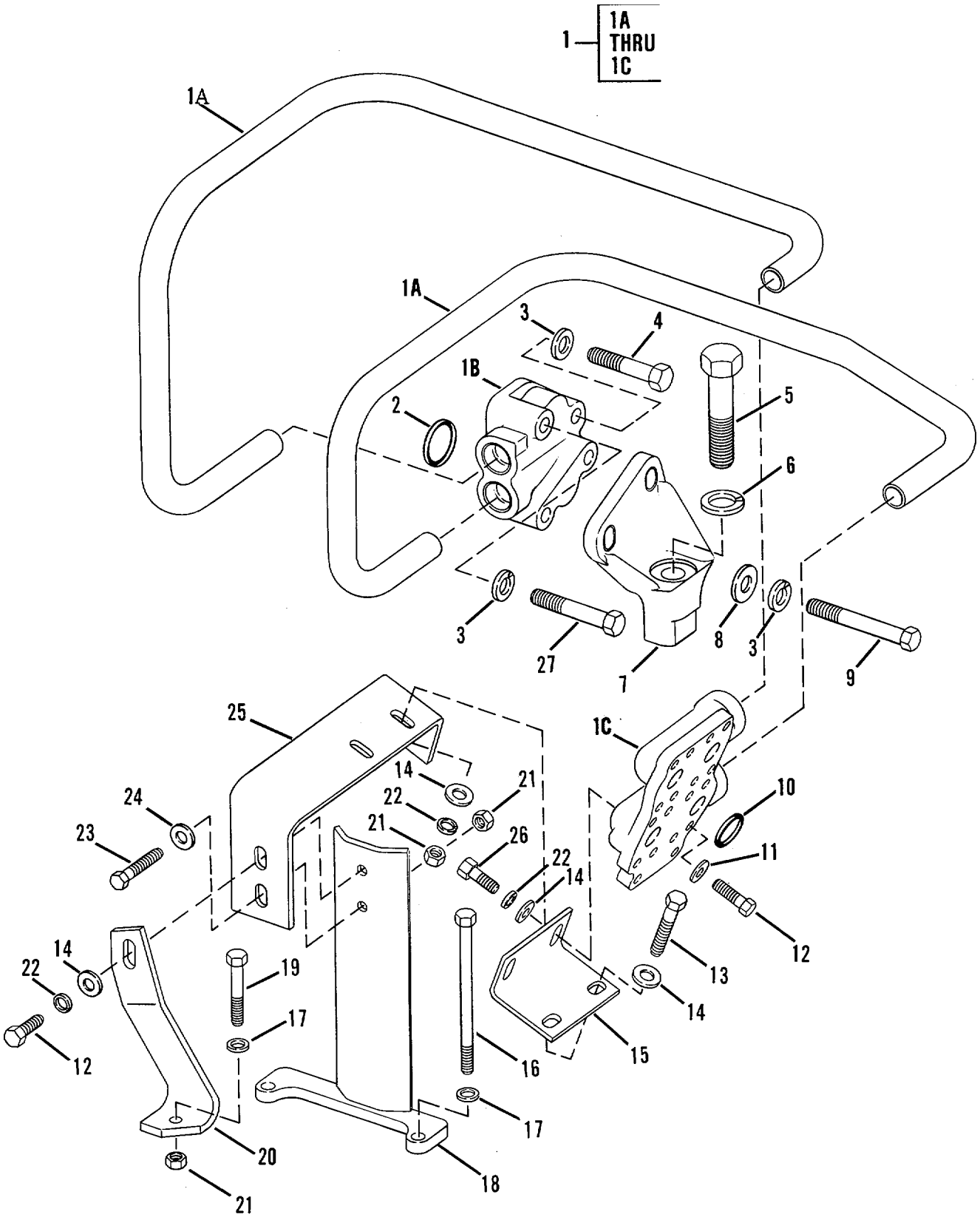

Figure 139. Bulldozer Supply/Return Lines

(1) ITEM NO	(2) SMR CODE	(3) CAGEC	(4) PART NUMBER	(5) DESCRIPTION AND USABLE ON CODES (UOC)	(6) QTY
				GROUP 2406 - STRAINERS, FILTERS, LINES AND FITTINGS, ETC.	
				FIG. 139 - BULLDOZER SUPPLY/RETURN LINES	
1	PFOZZ	11083	7G6543	TUBE ASSEMBLY,METAL	1
1A	XAOZZ	19207	NPN43	TUBE	2
1B	XAOZZ	19207	NPN44	ELBOW	1
1C	XAOZZ	19207	NPN45	EL1OW	1
2	PAOZZ	11083	4J519	PACKING,PREFORMED	2
3	PFOZZ	96906	MS35338-48	WASHER,LOCK	4
*4	PFOZZ	11083	951366	BOLT,MACHINE	1
5	PFOZZ	11083	3B2968	BOLT,MACHINE	1
6	PFOZZ	96906	MS35338-51	WASHER,LOCK	1
7	PAOZZ	11083	8P1189	BRACKET	1
8	PFOZZ	19207	5284124	WASHER,FLAT	2
9	PFOZZ	11083	1B2886	BOLT,MACHINE	2
10	PAOZZ	81349	M83248/2-214	PACKING,PREFORMED	4
*11	PFOZZ	96906	MS27183-14	WASHER,FLAT.	16
*12	PFOZZ	80204	81821BH038C125N	SCREW,CAP,HEXAGON H	19
*13	PFOZZ	11083	381915	BOLT	2
14	PFOZZ	15434	108330	WASHER,FLAT	7
15	PFOZZ	11083	3P4979	BRACKET,ANGLE.. .	1
16	PFOZZ	11083	5F4899	BOLT,MACHINE	2
17	PFOZZ	11083	5M2894	WASHER,FLAT	3
18	PFOZZ	11083	3P4983	BRACKET	1
*19	PFOZZ	11083	0L2070	BOLT,MACHINE	1
20	PFOZZ	11083	3P4981	BRACKET,ANGLE	1
21	PFOZZ	11083	104717	NUT,HEXAGON	5
22	PFOZZ	96906	MS35338-46	WASHER,LOCK	5
*23	PFOZZ	11083	S1594	BOLT,MACHINE	2
24	PFOZZ	78189	3320-14-01	WASHER,SQUARE CONE	2
25	PFFZZ	11083	3P4984	BRACKET	1
*26	PFOZZ	11083	lA2029	BOLT,MACHINE	2
*27	PFOZZ	11083	OL1329	BOLT,MACHINE	1
				END OF FIGURE	

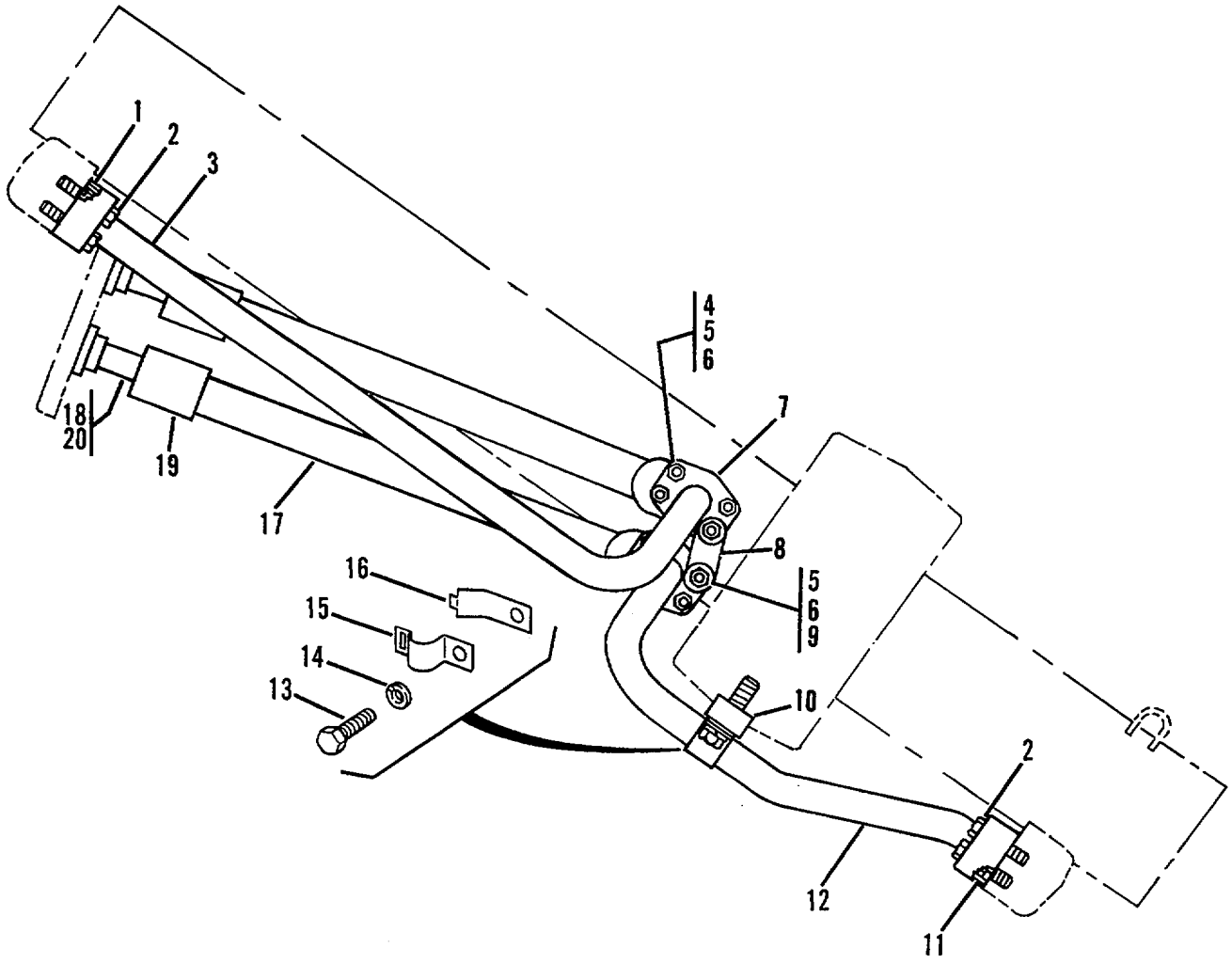

Figure 140. Bulldozer Lift Cylinder Lines

(1) ITEM NO	(2) SMR CODE	(3) CAGEC	(4) PART NUMBER	(5) DESCRIPTION AND USABLE ON CODES (UOC)	(6) QTY
				GROUP 2406 - STRAINERS, FILTERS, LINES AND FITTINGS, ETC.	
				FIG. 140 - BULLDOZER LIFT CYLINDER LINES	
1	PAOZZ	81349	M83248/2-214	PACKING,PREFORMED 4	
*2	PAOZZ	11083	QS1571	SCREW,CAP,HEXAGON H 16	
3	PAOZZ	11083	6P8155	TUBE ASSEMBLY,METAL R.H. 1	
3	PFOZZ	11083	6P8157	TUBE ASSEMBLY,METAL L.H. 1	
*4	PFOZZ	11083	L1143	BOLT,MACHINE 12	
*5	PFOZZ	96906	MS27183-14	WASHER,FLAT 20	
6	PAOZZ	11083	4J8265	NUT,SPECIAL 16	
7	PAOZZ	11083	1P4576	FLANGE,PIPE 8	
8	PAOZZ	11083	2P7092	CONNECTING LINK.RIG 2	
*9	PFOZZ	11083	OT0573	CAPSCREW,FUEL PUMP 4	
10	PAOZZ	11083	8B2133	SPACER,SLEEVE 2	
11	PAOZZ	11083	4J519	PACKING,PREFORMED 4	
12	PFOZZ	11083	6P8158	TUBE ASSEMBLY,METAL R.H 1	
12	PFOZZ	11083	6P8156	TUBE ASSEMBLY,METAL L.H. 1	
*13	PFOZZ	11083	lA1460	BOLT,MACHINE 2	
14	PFOZZ	96906	MS35338-48	WASHER,LOCK 2	
15	PFOZZ	11083	7S3919	CLIP	2
16	PFOZZ	11083	7S3916	CLIP	2
17	PAOZZ	11083	9S5682	HOSE A 4	
18	PAOZZ	11083	6V4651	ADAPTER,STRAIGHTIFL 1	
19	PAOZZ	11083	3S7166	PLUNGER,DETENT 2	
20	PAOZZ	11083	6V4658	ELBOW,FLANGE TO HOS 1	
				END OF FIGURE	

29 — 30 THRU 32

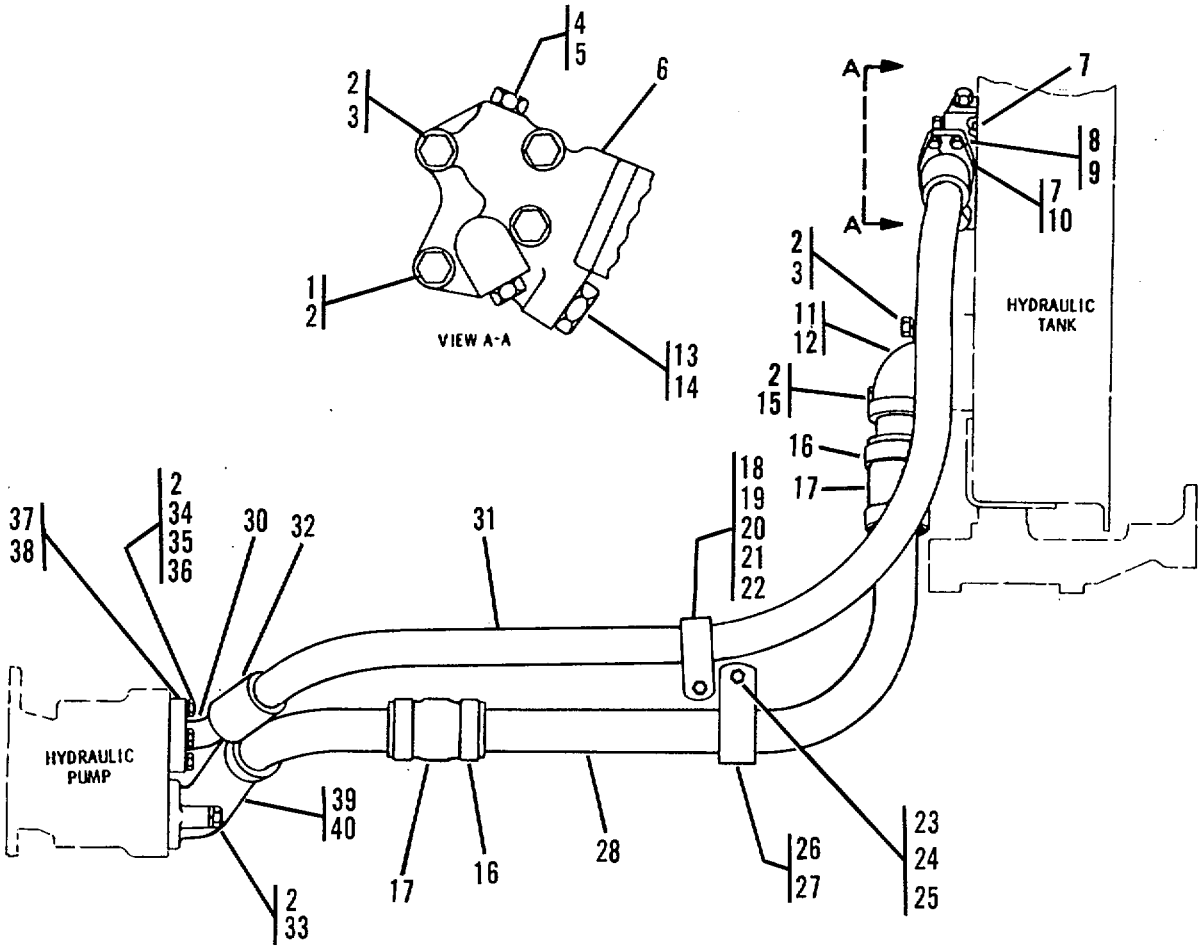

Figure 141. Pump Lines

(1) ITEM NO	(2) SMR CODE	(3) CAGEC	(4) PART NUMBER	(5) DESCRIPTION AND USABLE ON CODES (UOC)	(6) QTY
				GROUP 2406 - STRAINERS, FILTERS, LINES AND FITTINGS, ETC.	
				FIG. 141 - PUMP LINES	
*1	PFOZZ	11083	S1587	BOLTTMACHINE	- 1
2	PFOZZ	96906	MS27183-17	WASHERtFLAT	8
*3	PFOZZ	11083	2B0947	BOLT, MACHINE	4
4	PAOZZ	25184	906-737-70	PACKINGtPREFORMED	2
5	PAOZZ	11083	9S4191	PLUG,MACHINE THREAD	2
6	PFOZZ	11083	3P1288	ELBOW SPECIAL	1
7	PAOZZ	11083	4J520	PACKING,PREFORMED	3
8	PFOZZ	11083	5M2894	WASHER,FLAT	4
*9	PFOZZ	80204	B1821BH038C125N	SCREW,CAP,HEXAGON H	4
10	PAOZZ	11083	1P4577	FLANGE,PIPE	2
11	PFOZZ	11083	2P6650	ELBOW7FLANGE TO HOS	1
12	PAOZZ	81349	M83248/2-227	PACKING,PREFORMED	1
13	PAOZZ	11083	302824	PACKING,PREFORMED	1
14	PAOZZ	11083	9S4183	PLUG,ASSEMBLY	1
15	PAOZZ	11083	182886	BOLT,MACHINE	1
16	PFOZZ	96906	MS35842-13	CLAMP,HOSE	4
17	MOOZZ	11083	5P1292-4.5	HOSE MAKE FROM HOSE P/N 5P1292, 4.5 IN	1
18	PAOZZ	11083	5P7468	CLIP,SPRING TENSION	1
19	PAOZZ	11083	5P8444	GROMMET,NONMETALLIC	1
20	PAOZZ	11083	5P7469	CLIP,SPRING TENSION-	1
21	PAOZZ	11083	4S8875	SPACER,SLEEVE	1
*22	PFOZZ	11083	1A1460	BOLT MACHINE	1
23	PFOZZ	96906	MS51967-14	NUT,PLAIN,HEXAGON	1
24	PAOZZ	11083	5P7213	WASHER,FLAT	1
25	PAOZZ	11083	S1621	BOLT, MACHINE	2
26	PFOZZ	11083	6K6167	CLIP,SPRING TENSION ON	1
27	PFOZZ	11083	6K6164	CLIP,SPRING TENSION	1
28	PFOZZ	11083	2P9848	TUBE BENT	1
29	MOOZZ	11083	8S9355-56.3	HOSE ASSY MAKE FROM HOSE P/N. 8S9355 (SEE GROUP 9501) 56.29 IN	1
30	PFOZZ	11083	7S575	STEM ASSEMBLY	1
31	PFOZZ	11083	3S8496	ADAPTER,STRAIGHT,FL	1
32	PFOZZ	11083	3S7252	SLEEVE	2
*33	PFOZZ	11083	9S1366	BOLT, MACHINE	2
34	PAOZZ	11083	5P8244	WASHER,FLAT	4
35	PAOZZ	63005	427564	BOLT,MACHINE	4
36	PAOZZ	11083	S1595	BOLT, MACHINE	1
37	PAOZZ	11083	4J522	PACKING,PREFORMED	1
38	PAOZZ	11083	lP4578	FLANGE,PIPE	2
39	PFOZZ	11083	2P9849	TUBE ASSEMBLY, METAL	1
40	PAOZZ	11083	4J524	PACKING, PREFORMED	1
				END OF FIGURE	

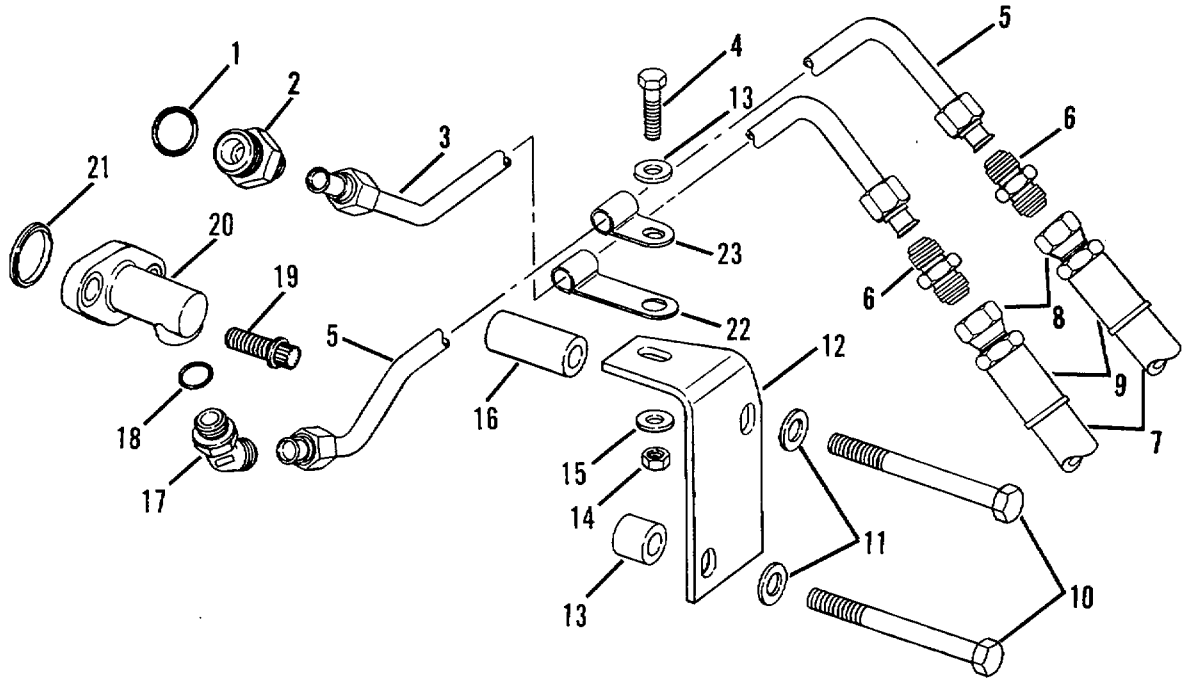

Figure 142. Tilt Cylinder Lines (Used on Model D5BS1)

(1) ITEM NO	(2) SMR CODE	(3) CAGEC	(4) PART NUMBER	(5) DESCRIPTION AND USABLE ON CODES (UOC)	(6) QTY
				GROUP 2406 - STRAINER5, FILTERS, LINES AND FIT7INGS9 ETC.	
				FIG. 142 - TILT CYLINDER LINES USED ON MODELS 058S1 AND C58NS1	
1	PAOZZ	11083	3D2824	PACKING,PREFORMED UOC:AGU,AGV	1
2	PFOZZ	11083	308189	CONNECTOR UOC :AGU,AGV	1
3	PFOZZ	11083	6T3662	TUBE ASSEMBLY,METAL UOC :AGU.AGV	1
4	PFCZZ	96906	MS90728-63	SCREW,CAP,HEXAGON H UOC:AGU,AGV	1
5	PFCZZ	11083	6T3663	TUBE ASSEMBLY,METAL UOC:AGU,AGV	1
6	PFOZZ	11083	3R27C4	NIPPLE,TUBE UOCC:AGU,AGV	2
7	MCOZZ	11083	2P5943-25	HOSE ASSY MAKE FROM HOSE P/N 2P5943, 25 UOC:AGU,AGV	2
8	PAOZZ	11083	8S6417	ADAPTER,STRAIGHT,TU UOC:AGU,AGV	2
9	PACZZ	11083	4S5414	SLEEVE,HOSE UOC:ACU,AGV	2
10	PFOZZ	11083	282006	BOLT,MACHINE UOC:AGU,AGV	2
11	PFOZZ	96906	MS27183-17	WASHER,FLAT UOC:AGU,AGV	2
12	PFOZZ	11083	6T1799	BRACKET,ANGLE UOC:AGU,AGV	1
13	PFCZZ	11083	7V0762	SPACER,SLEEVE UOC:AGU,AGV	1
14	PFOZZ	11083	104717	NUT,HEXAGON UOC :AGU,AGV	1
15	PFOZZ	78189	3320-14-01	WASHER,SQUARE CONE UOC:AGU,AGV	2
16	PFOZZ	11083	2G6236	SPACER,SLEEVE UOC :AGU,AGV	1
17	PFOZZ	11083	307943	ELBOW,TUBE TO UOC:AGU,AGV	1
18	PAOZZ	11083	3K360	PACKING,PREFORMED UOC:AGU,AGV	1
19	PFOZZ	11083	8M2530	BOLT, MACHINE UOC:ACU,AGV	2
23	PFOZZ	11083	7T8753	ELBOW UOC :AGU,AGV	1
21	PAOZZ	11383	8T7211	PACKING, PREFORMED UOC :AGU,AGV	1
22	PFOZZ	11383	6V7383	CLAMP,LOOP UOC:AGU,AGV	1
23	PFOZZ	11083	5P9298	CLAMP,LOOP	1

(1) ITEM NO	(2) SMR CODE	(3) CAGEC	(4) PART NUMBER	(5) DESCRIPTION AND USABLE ON CODES (UOC)	(6) QTY
				UOC:AGU,AGV	

END OF FIGURE

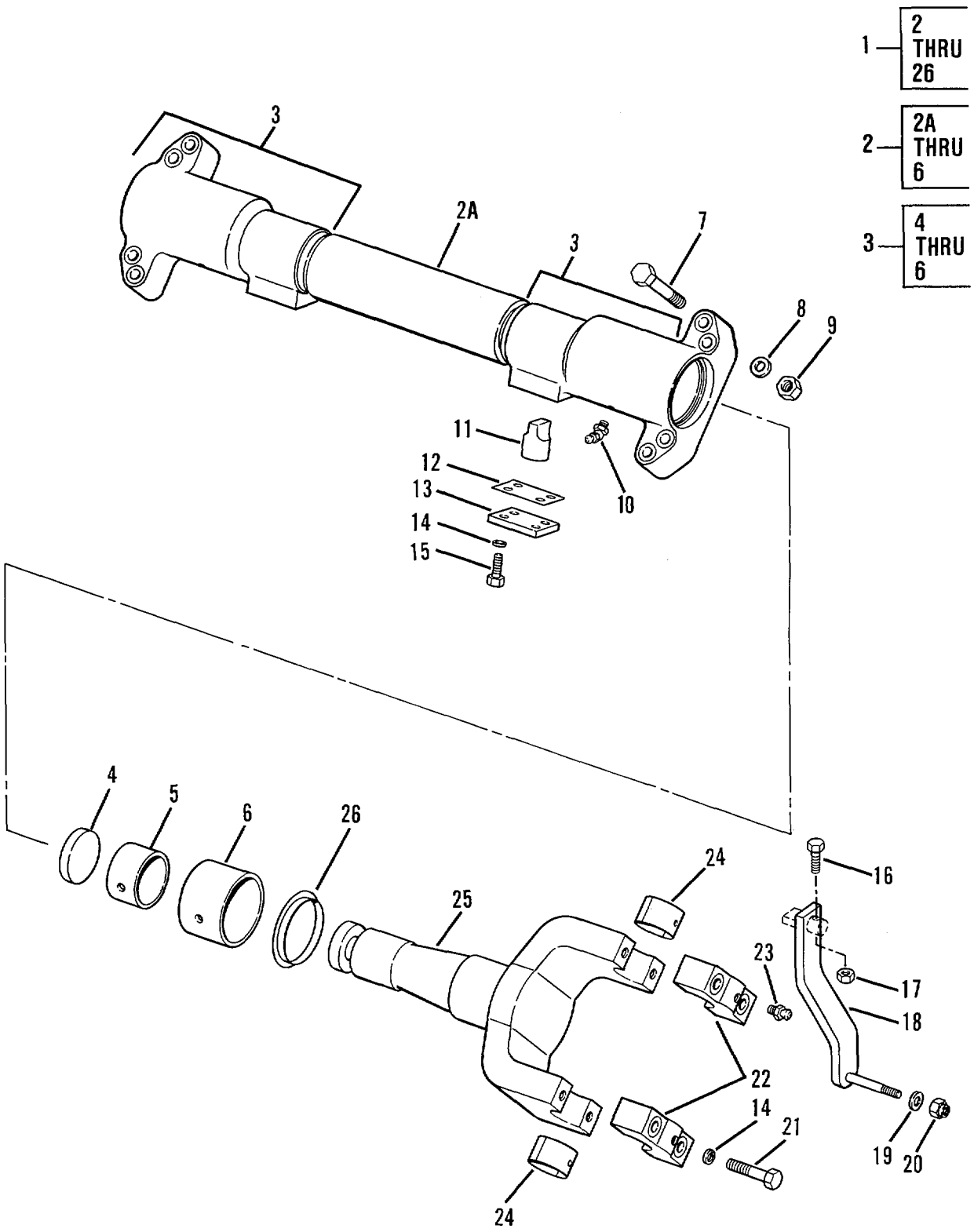

Figure 143. Lift Cylinder Mounting

(1) ITEM NO	(2) SMR CODE	(3) CAGEC	(4) PART NUMBER	(5) DESCRIPTION AND USABLE ON CODES (UOC)	(6) QTY
				GROUP 2407 - HYDRAULIC CYLINDERS	
				FIG 143 - LIFT CYLINDER MOUNTING	
1	PFFFF	11083	8J2895	CYLINDER ASSEMBLY,A.....	1
2	PFFZZ	11083	6J8499	.TUBE,MOUNTING GEAR.....	1
2A	XAFZZ	11083	5J6679	..TUBE.....	1
3	PFFZ	11083	5J6159	..HOUSING,BEARING UNI RIGHT HAND.....	1
3	PFFZ	11083	5J6160	..BEARING UNIT,PLAIN,LEFT HAND	1
* 4	PFFZZ	11083	0T0199	...PLUG.....	1
5	PAFZZ	11083	2J6306	...BEARING.*.....	1
* 6	XBFZZ	11083	2J6316	.BEARING	1
7	PAFZZ	11083	104600	.BOLT	8
8	PAFZZ	11083	2S5658	.WASHER,FLAT.....	8
* 9	PFFZZ	96906	MS51967-20	.NUT,PLAIN,HEXAGON	8
10	PFOZ	96906	MS15003-4	.FITTING,LUBRICATION	2
11	PAFZZ	11083	5J6161	.POST,ELECTRICAL-MEC	2
12	PAFZZ	11083	8J7067	.GASKET.....	2
13	PAFZZ	11083	5J6162	.COVER,ACCESS.....	2
14	PFFZZ	96906	MS35338-48	.WASHER,LOCK.....	16
15	PAFZZ	11083	S1595	.BOLT,MACHINE	8
* 16	PFFZZ	80204	B1821BH044C150N	.SCREW,CAP,HEXAGON H.....	2
17	PAFZZ	11083	104718	.NUT.....	2
* 18	XBFZZ	11083	9J1903	.CONNECTING LINK,RIG.....	2
19	PFFZZ	11083	4B4280	.WASHER,FLAT.....	2
20	PAFZZ	72962	21-NE-083	.NUT,SELF-LOCKING,HE.	2
* 21	PFFZ	11083	2B0947	.BOLT,MACHINE	8
* 22	XBFZZ	11083	4J6327	.CAP,YOKE,CYLINDER.....	4
23	PFOZZ	96906	MS15003-1	.FITTING,LUBRICATION	4
24	PFFZZ	11083	4J6326	.BEARING HALF,SLEEVE.....	4
25	PAFZZ	11083	5J6156	.YOKE,HYDRAULIC CYLI.....	2
26	PAFZZ	11083	2J6305	.SEAL	2
				END OF FIGURE	

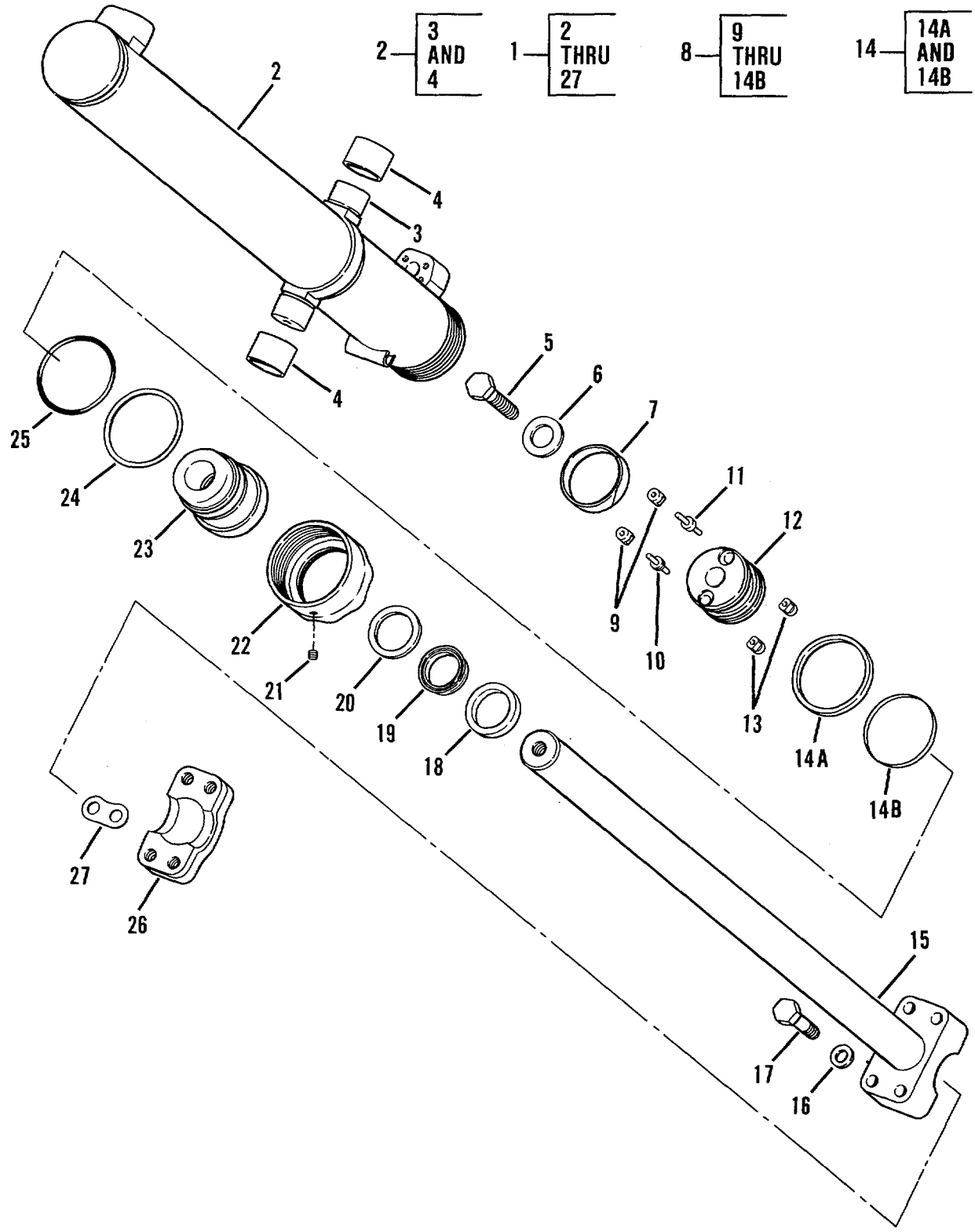

Figure 144. Lift Cylinder Assembly

(1) ITEM NO	(2) SMR CODE	(3) CAGEC	(4) PART NUMBER	(5) DESCRIPTION AND USABLE ON CODES (UOC)	(6) QTY
				GROUP 2407 - HYDRAULIC CYLINDERS	
				FIG* 144 - LIFT CYLINDER ASSEMBLY	
1	PFFFF	11083	7J8299	CYLINDER,HYDRAULIC	1
2	PFFFF	11083	7J8298	.CYLINDER,ACTUATING,	1
3	XAFZZ	11083	7J8292	..TRUNNION	1
* 4	XBFZZ	11083	4J6374	..BEARING,SLEEVE - ,,	2
5	PFFZZ	11083	5P1839	.BOLT SELF-LOCKING	1
6	PAFZZ	11083	8J4359	.WASHER, FLAT	1
7	PAFZZ	11083	lM1571	.RING,CYLINDER*	1
8	PFFZZ	11083	9J2007	.PISTON,LINEAR ACTUA	1
9	PFFZZ	11083	9J2010	..INSERT,HYDRAULIC	2
10	PAFZZ	11083	9J2009	..ROD,PISTON,LINEAR AI	1
* 11	XBFZZ	11083	9J2008	..ROD,PISTON,LINEAR A	1
12	PFFZZ	11083	9J2011	..PISTON,LINCAR ACTUA	1
13	PFFZZ	11083	8J9282	...SPACER,SLEEVEF	2
14	PFFZZ	11083	5J5402	..SEAL ASSEMBLY,STEER	1
*14A	PFFZZ	11083	5J5401	...SPACER,RING	1
*14B	PFFZZ	11083	5J5401	...SPACER,RING	1
* 15	XBFZZ	11083	7J8294	.PROPELLER SHAFT	1
16	PAFZZ	11083	5P8248	.WASHER,FLAT	4
17	PAFZZ	11083	3B2968	.BOLT,MACHINE	4
18	PAFZZ	11083	8C3840	.SEAL,PLAIN ENCASED	1
19	PAFZZ	73680	17159-1110	.PACKING,PREFORMED	1
* 20	PAFZZ	11083	8C3839	.GASKET	1
21	PFFZZ	11083	8J5912	.SCREW	1
22	PAFZZ	11083	7J6461	.CROWN	1
23	PFFZZ	11083	7J8295	.HEAD,LINEAR ACTUATI	1
24	PAFZZ	11083	2K6830	.RINGSEAL	1
25	PAFZZ	11083	lH8128	.PACKING,PREFORMED	1
26	PFFZZ	11083	3J6559	.CAP,PILLOW BLOCK	1
27	PAFZZ	11083	3J6572	.SPACER,PLATE	12

END OF FIGURE

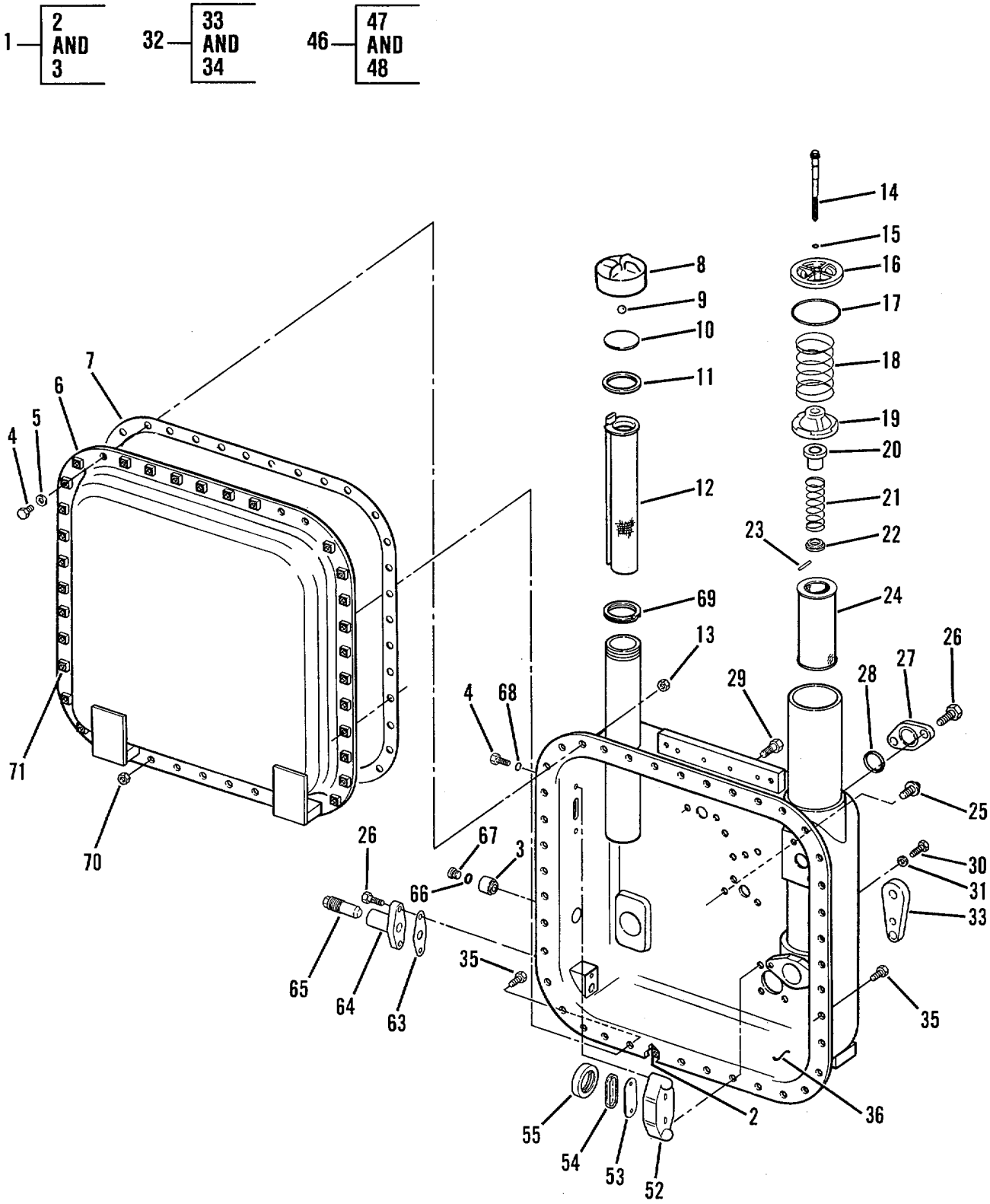

Figure 145. Hydraulic Tank and Valve - Sheet 1 of 2 (Used on Models D5BNS and D5BS)

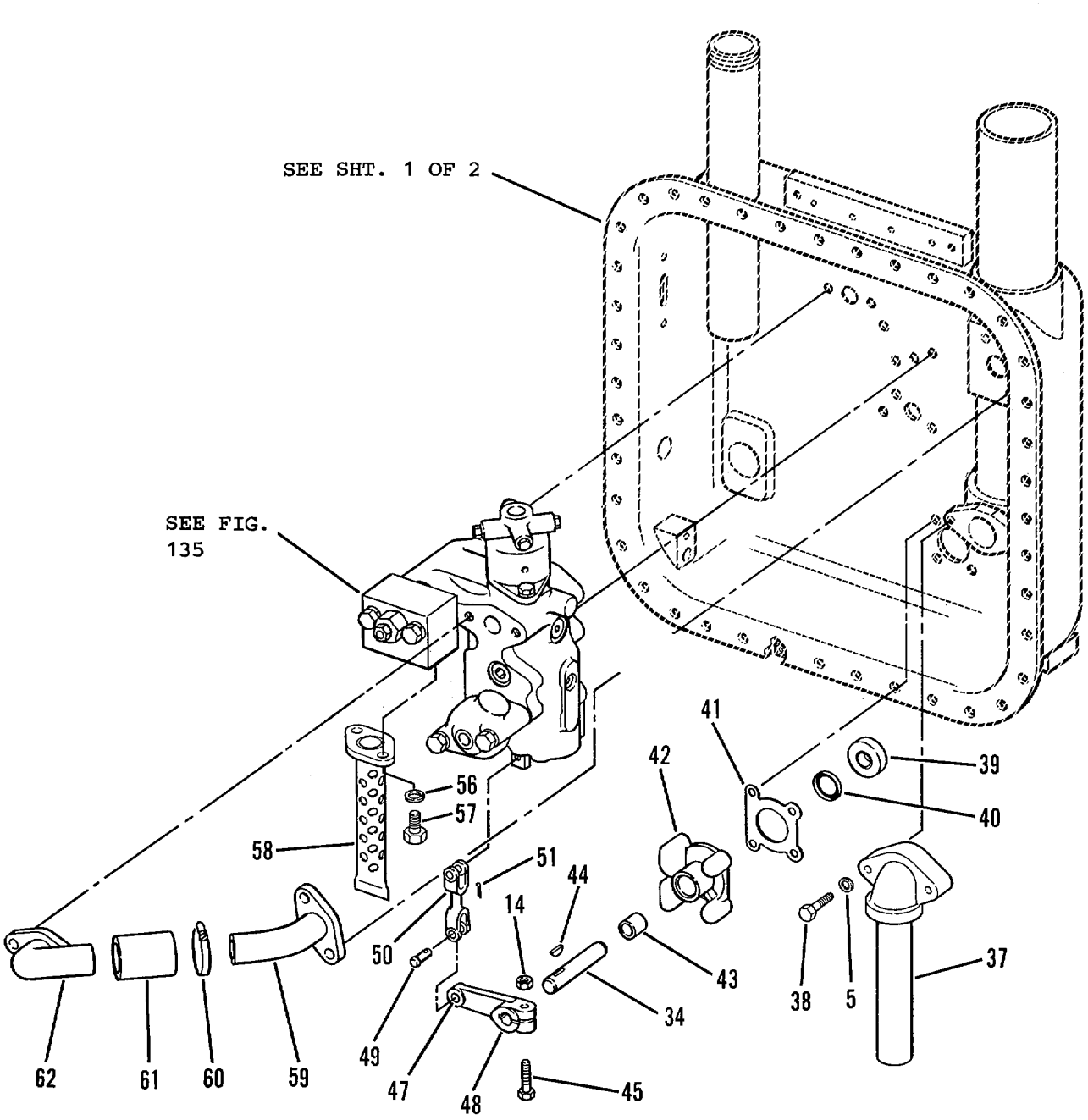

Figure 145. Hydraulic Tank and Valve - Sheet 2 of 2 (Used on Models D5BNS and D5BS)

(1) ITEM NO	(2) SMR CODE	(3) CAGEC	(4) PART NUMBER	(5) DESCRIPTION AND USABLE ON CODES (UOC)	(6) QTY
				GROUP 2408 - LIQUID TANKS	
				FIG. 145 - HYERAULIC TASK AND VALVE USED CN MODELS 05BNS AND C5BS	
1	PFFZZ	11083	3G2712	TANK,OIL,HYDRAULIC ..... UCC:AGSAGT	1
2	PFFZZ	11083	9F2978	NUT,PLAI,WELDING ..... UOC:AGS,AGT	4
3	PAFZZ	11083	5J3306	INSERT TUBE FITTING ..... UCC:AGS,AGT	1
4	PFFZZ	11083	50353	BOLT,SELF-LCCKING..... UOC :AGS5AGT	3
5	PFFZZ	11383	5M2894	WASHER,FLAT* ..... UOC :AGS,AGT	2
6	PFFZZ	11083	3G7229	COVER ASSY..... UCC:AGS,AGT	1
7	PAFZZ	11083	3H9523	GASKET..... UOC:AGS,AGT	1
8	PAOZZ	11033	7Hl447	CAP,FILLER OPENING ..... UOC:AGSPAGT	1
9	PACZZ	11083	7B6368	BALL,BEARING ..... UOC :AGS ,AGT	1
10	PAOZZ	11083	6H5139	PLATE,PRESSLRE..... UOC:AGS,AGT	1
11	PAOZZ	11J83	9H6454	GASKET..... UOC :AGS,AGT	1
12	PAOZZ	11J83	9J3047	STRAINER ELEMENTS..... UOC:AGS,AGT	1
13	PAFZZ	11383	1D4717	NUT,HEXAGON..... UOC:AGS,AGT	1
14	PAOZZ	11083	7J5590	BOLTGFILTER..... UOC:AGS,,AGT	1
15	PAOZZ	11083	8F92G	PACKING,PREFORMED ..... UOC :AGS,AGT	1
16	PFOZZ	11J83	4J596	COVER,FLUID FILTER..... UOC:AGS,AGT	1
17	PAOZZ	11383	3J1991	GASKETC ..... UOC:AGS,AGT	1
18	PAOZZ	11083	9J8775	SPRING,HELICAL,COMP..... UOC:AGS,AGT	1
19	PFOZZ	11083	5J1015	SEAT,VALVE ..... UOC:AGS,AGT	1
20	PFOZZ	11083	5J1096	SEAT,VALVE ..... UOC:AGS,AGT	1
21	PAOZZ	11083	7F9802	SPRING,HELICAL,COMP..... UOC :AGS,AGT	1
22	PAOZZ	11083	3J1997	WASHER,SHOULDERED ..... UOC :AGS.AGT	1
23	PAOZZ	11083	2M8729	PIN,SPRING..... UOC :AGS,AGT	1

(1) ITEM NO	(2) SMR CODE	(3) CAGEC	(4) PART NUMBER	(5) DESCRIPTION AND USABLE ON CODES (UOC)	(6) QTY
24	PAOZZ	12658	PT-93	FILTER ELEMENT,FLUI ..... - UOC:AGS,AGT	1
25	PAFZZ	11083	9M6590	SCREW,CAP,HEXAGON ..... UOC:AGS,AGT	2
* 26	PFFZZ	11083	0S1585	BOLTIMACHINE ..... UOC:AGS,AGT	4
27	PFFZZ	11083	2J6195	COVERVACCESS ..... UOC:AGS,AGT	2
28	PFFZZ	11083	4J519	PACKING,PREFORMEDO ..... UOC:AGS,AGT	2
29	PFFZZ	11083	S1595	BOLTIMACHINE ..... UOC:AGS,AGT	2
* 30	PFFZZ	11083	1A2029	BOLT,MACHINE ..... UOC:AGS,AGT	6
31	PFFZZ	96906	MS35338-46	WASHER,LOCK..... UOC:AGS,AGT	14
* 32	XBFZZ	11083	8J2654	LEVER AND SHAFT ASS..... UOC:AGS,AGT	1
33	PFFZZ	11083	2J1345	LEVER,MANUAL CONTRO..... UOC:AGS,AGT	1
34	PFFZZ	11083	8J2652	SHAFT,STRAIGHT ..... UOC:AGS,AGT	1
35	PAFZZ	11083	5K9107	BOLT,SELF-LOCKING ..... UOC:AGS,AGT	37
36	PAFZ	11083	3G2692	COVER,ACCESS..... UOC:AGS,AGT	1
37	PFFZZ	11083	3G4074	SUCTION TUBE ASSEM..... UOC:AGS,AGT	1
38	PAFZZ	11083	343557	BOLT,SELF-OCKING ..... UOC:AGS,AGT	7
39	PAFZZ	11083	2H5746	WASHER,RECESSED..... UOC:AGSIAGT	1
40	PAFZZ	73680	23548-4754	SEAL,PLAIN ENCASED ..... UOC:AGSIAGT	1
41	PFFZZ	11083	4J8425	GASKET..... UOC:AGS,AGT	1
* 42	XBFZZ	11083	8J1841	HOUSING,MECHANICAL..... UOC:AGS,AGT	1
43	PAFZZ	96906	MS17131-23	BEARING,ROLLER,NEED..... UOC:AGS,AGT	2
* 44	PFF7Z	64294	29620-3	KEY,WOODRUFF..... UOC:AGS,AGT	1
* 45	PFFZZ	11083	0S1591	SCREW..... UOC:AGS,AGT	1
* 46	XBFZZ	11083	2J6074OUM*OIDAG	LEVER,REMOTE CONTRO ..... UOC:AGS,AGT	1
47	PFFZZ	11083	7H3912	BEARING,SLEEVE ..... UOC:AGS,AGT	1
48	XAFZZ	11083	2J6073	LEVER..... UOC:AGS,AGT	1
49	PAFZZ	11083	1J4384	PIN,STRAIGHT,HEADED ..... UOC:AGS,AGT	2

(1) ITEM NO	(2) SMR CODE	(3) CAGEC	(4) PART NUMBER	(5) DESCRIPTION AND USABLE ON CODES (UOC)	(6) QTY
50	PFFZZ	11083	7H3932	CLEVIS,ROD END UOC:AGS,AGT	1
51	PFFZZ	96906	MS24665-351	PINCOTER UOC:AGS,AGT	2
52	PFFZZ	11083	8J6913	RETAINER UOC:AGS,AGT	1
53	PFFZZ	11083	3G5980	PLATE9,DENTIFICATIO** UOC:AGS,AGT	1
54	PAFZZ	11083	4J8252	GLASS,LIQUID SIGHT UOC:AGS,AGT	1
55	PAFZZ	11083	4J8251	GROMMET,NONMETALLIC UOC:AGS,AGT	1
56	PFFZZ	96906	MS3533B-48	WASHER,LOCK UOC:AGS,AGT	6
57	PFFZZ	11083	S1621	BOLT,MACHINE UOC:AGS,AGT	6
58	PFFZZ	11083	8J2509	SUCTION TUBE ASSEMB UOC:AGS,AGT	1
59	PFFZZ	11083	8J1803	ELBOW,FLANGE TO TUB UOC:AGS,AGT	1
60	PFFZZ	11083	1J9778	CLAMP,HOSE UOC:AGS,AGT	2
61	PAFZZ	11083	8J2660	HOSE,NONMETALLIC UOC:AGS,AGT	1
62	PFFZZ	11083	8J3539	ELBOW,FLANGE TO TUB UOC:AGS,AGT	1
63	PAFZZ	11083	8H9818	GASKET UOC:AGS,AGT	1
64	PFFZZ	11083	8H9819	ADAPTER,DRAIN PLUG UOC:AGS,AGT	1
65	PAFZZ	11083	487739	PLUG,MACHINE THREAD UOC:AGS,AGT	1
66	PAFZZ	25184	906-737-70	PACKING,PREFORMED UOC:AGS,AGT	1
* 67	PAFZZ	30780	6HP5N-SS	PLUG,MACHINE THREAD UOC:AGS,AGT	1
68	PAFZZ	11083	5H6005	PACKING,PREFORMED UOC:AGS,AGT	2
69	PAFZZ	11083	3G361	GASKET UOC:AGS,AGT	1
70	PFFZZ	96906	MS35691-17	NUT,PLAIN,HEXAGON UOC:AGS,AGT	4
71	PFFZZ	11083	9F2978	NUT,PLAIN,WELDING UOC:AGS,AGT	29

END OF FIGURE

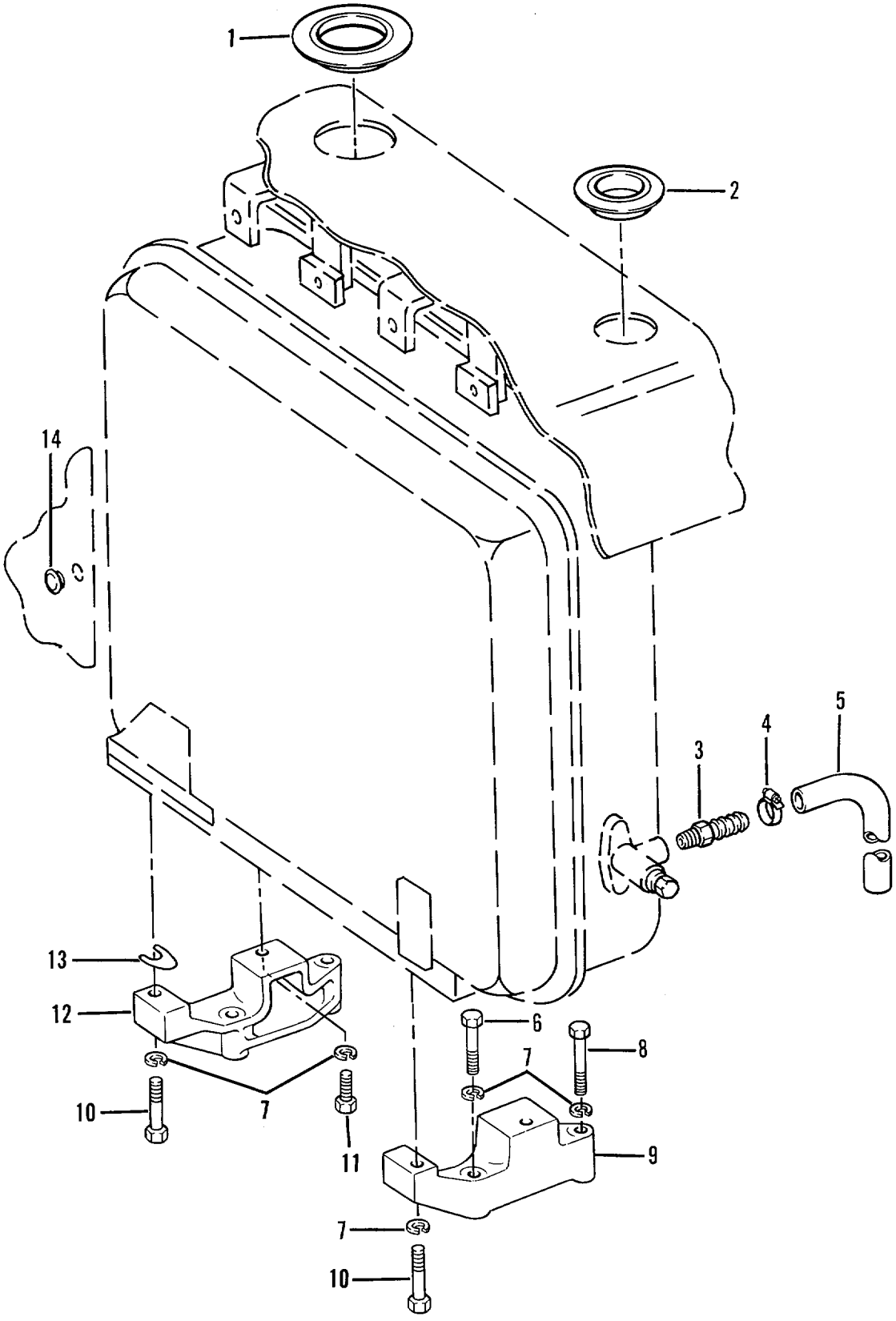

Figure 146. Hydraulic Tank Mounting

(1) ITEM NO	(2) SMR CODE	(3) CAGEC	(4) PART NUMBER	(5) DESCRIPTION AND USABLE ON CODES (UOC)	(6) QTY
				GROUP 2408 - LIQUID TANKS	
				FIG 146 - HYDRAULIC TANK MOUNTING	
1	PAOZZ	11083	7G5266	PACKING,PREFORMED	1
2	PFOZZ	11083	3J4586	GROMMETNONMETALLIC	1
3	PAOZZ	78640	308491	CONNECTOR	1
4	PAOZZ	81646	6710	CLAMP,HOSE	9
1					
5	MOOZZ	11083	5P1694-15-3	HOSE,NONMETALLIC MAKE FROM HOSE P/N 5P1694, 15.3 IN	1
* 6	PFFZZ	11083	9S1366	BOLT,MACHINET	2
7	PFFZZ	96906	MS35338-48	WASHER,LOCK	8
* 8	PFFZZ	11083	0V0375	SCREW,CAP,HEXAGON H	2
* 9	PFFZZ	11083	8P1188	BRACKET,MOUNTING	1
* 10	PFFZZ	11083	0L1329	BOLT,MACHINE	2
* 11	PFFZZ	11083	7B3235	BOLT,MACHINE	2
12	PFFZZ	11083	8P1187	BRACKET,MOUNTING	1
13	PAFZZ	11083	3J3372	SPACER,PLATE	8
14	PFFZZ	11083	6V1178	CAR-PLUG,PROTECTIVE	2

END OF FIGURE

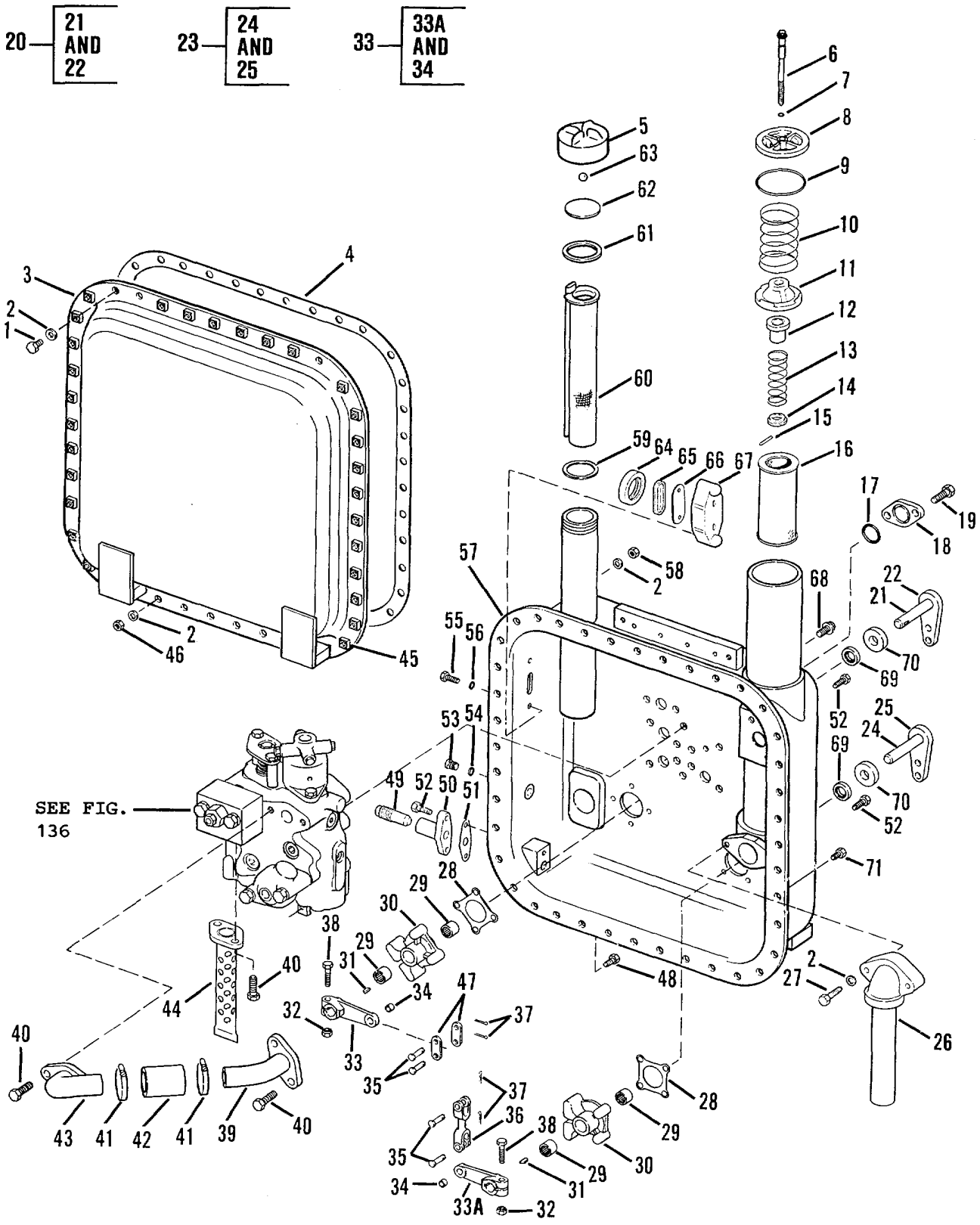

Figure 147. Hydraulic Tank and Valve (Used on Models D5BS1 and D5BNS1)

(1) ITEM NO	(2) SMR CODE	(3) CAGEC	(4) PART NUMBER	(5) DESCRIPTION AND USABLE ON CODES (UOC)	(6) QTY
				GROUP 2408 - LIQUID TANKS	
				FIGURE 147 - HYDRAULIC TANK AND VALVE USED ON MODELS D5BS1 AND D5BNS1	
1	PAFZZ	11083	343557	BOLT,SELF-LOCKING ..... UOC:AGU,AGV	3
2	PFFZZ	11083	5M2894	WASHER,FLAT..... UOC:AGU,AGV	16
3	PAFZZ	11083	3G7229	COVER ASSY..... UOC:AGU,AGV	1
4	PAFZZ	11083	3H9523	GASKET..... UOC:AGU,AGV	1
5	PAOZZ	11083	7H1447	CAP,FILLER OPENING ..... UOC:AGU,AGV	1
6	PAOZZ	11083	7J5590	BOLT,FILTER ..... UOC:AGU,AGV	1
7	PAOZZ	11083	8F9206	PACKING,PREFORMED ..... UOC:AGU,AGV	1
8	PFOZZ	11083	4J0596	COVER,FLUID FILTER.* ..... UOC:AGU,AGV	1
9	PAOZZ	11083	3J1991	GASKETT ..... UOC:AGU,AGV	1
10	PAOZZ	11083	9J8775	SPRING,HELICAL,COMP..... UOC:AGU,AGV	1
11	PFOZZ	11083	5J1095	SEAT,VALVE ..... UOC:AGULAGV	1
12	PFOZZ	11083	5J1096	SEAT,VALVE ..... UOC:AGU,AGV	1
13	PAOZZ	11083	7F9802	SPRING,HELICAL,COMP..... UOC:AGU,AGV	1
14	PAOZZ	11083	3J1997	WASHER,SHOULDERED ..... UOC:AGU,AGV	1
15	PAOZZ	11083	2M8729	PIN,SPRING..... UOC:AGU,AGV	1
16	PAOZZ	11083	4J0816	FILTER ELEMENT,FLUI ..... UOC:AGUYAGV	1
17	PFFZZ	11083	8T7266	PACKING,PREFORME..... UOC:AGU,AGV	1
18	PFFZZ	11083	2J6195	COVER,ACCESS..... UOC:AGU,AGV	1
* 19	PFFZZ	11083	0S1585	BOLT,MACHINE ..... UOC:AGU,AGV	2
20	PFFZZ	11083	8J2653	HANDLE,MANUAL CONTR N T ..... UOC:AGU,AGV	1
21	PFFZZ	11083	8J2652	SHAFT,STRAIGHT ..... UOC:AGU,AGV	1
22	PFFZZ	11083	2J1345	LEVER,MANUAL CONTRDO ..... UOC: AGU,AGV	1
* 23	XBFZZ	11083	8J2654	LEVER AND SHAFT ASS..... UOC:AGU,AGV	1
24	PFFZZ	11083	8J2652	SHAFT,STRAIGHT	1

(1) ITEM NO	(2) SMR CODE	(3) CAGEC	(4) PART NUMBER	(5) DESCRIPTION AND USABLE ON CODES (UOC)	(6) QTY
				UOC:AGU,AGV	
25	PFFZZ	11083	2J1345	LEVER,MANUAL CONTRO	1
				UOC:AGU,AGV	
26	PFFZZ	11083	3G4074	SUCTION TUBE ASSEMB	1
				UOC:AGU,AGV	
27	PAFZZ	11083	310219	BOLTISELF-LOCKING	2
				UOC:AGU,AGV	
28	PAFZZ	11063	1U4599	GASKET	2
				UOC:AGU,AGV	
29	PAFZZ	96906	MS17131-23	BEARING,ROLLER,NEED	4
				UOC: AGUIAGV	
* 30	XBFZZ	11083	8J1841	HOVSING,MECHANICAL	2
				UOC:AGU,AGV	
31	PFFZZ	64294	29620-3	KEY,WOODRUFF	2
				UOC:AGU,AGV	
32	PFFZZ	11083	1D4717	NUT,HEXAGON	2
				UOC:AGU,AGV	
* 33	XBFZZ	11083	2J60740UM.OIDAG	LEVER,REMOTE CONTRO	2
				UOC:AGU,AGV	
33A	XAFZZ	11083	2J6073	LEVER	1
				UOC:AGU,AGV	
34	PAFZZ	11083	7H3912	BEARING,SLEEVE	1
				UOC:AGU,AGV	
35	PAFZZ	11083	1J4384	PIN,STRAIGHT,HEADED	4
				UOC:AGU,AGV	
36	PFFZZ	11083	7H3932	CLEVIST,ROD END	1
				UOC:AGU,AGV	
37	PFFZZ	96906	MS24665-351	PIN,COTTER	4
				UOC:AGU,AGV	
* 38	PFFZZ	11083	0S1591	SCREW	2
				UOC:AGU,AGV	
39	PFFZZ	11083	8J1803	ELBOWGFLANGE TO TUB	1
				UOC:AGU,AGV	
40	PAFZZ	11083	6K5718	BOLT,SELF-LOCKING	6
				UOC:AGU,AGV	
41	PAFZZ	11083	1J9778	CLAMP,HOSE	2
				UOC:AGU,AGV	
42	PAFZZ	11083	8J2660	HOSE,NONMETALLIC	1
				UOC:AGU,AGV	
43	PFFZZ	11083	8J3539	ELBOW,FLANGE TO TUB	1
				UOC:AGU,AGV	
44	PFFZZ	11083	8J2509	SUCTION TUBE ASSEMB	1
				UOC:AGU,AGV	
45	PAFZZ	11083	1F750	NUT,PLAIN,WELDING	29
				UOC:AGU,AGV	
46	PFFZZ	96906	MS35649-2382	NUT,PLAIN,HEXAGON*	4
				UOC:AGU,AGV	
47	PFFZZ	11083	5H2207	CONNECTING,LINK,RIG	2
				UOC:AGU,AGV	
48	PFFZZ	11083	L1351	BOLT,MACHINE	4
				UOC:AGU,AGV	
49	PAFZZ	11083	487739	PLUG,MACHINE THREAD	1

(1) ITEM NO	(2) SMR CODE	(3) CAGEC	(4) PART NUMBER	(5) DESCRIPTION AND USABLE ON CODES (UOC)	(6) QTY
				UOC:AGU,AGV	
50	PFFZZ	11083	8H9819	ADAPTER,DRAIN PLUG ..... UOC:AGU,AGV	1
51	PAFZZ	11083	8H9818	GASKET..... UOC:AGU,AGV	1
* 52	PFFZZ	11083	1A2029	BOLT,MACHINE . ..... UOC:AGU,AGV	8
53	PFFZZ	11083	958004	PLUG,MACHINE THREAD ..... UOC:AGU,AGV	1
* 54	PAFZZ	25184	906-737-70	PACKING,PREFORMED ..... UOC:AGU,AGV	1
* 55	PFFZZ	11083	S1594	BOLT,MACHINE ..... UOC:AGU,AGV	2
56	PAFZZ	11083	8F6952	PACKING,PREFORMED ..... UOC:AGU,AGV	2
* 57	PFFZZ	11083	3G2708	TANK,OIL,HYDRAULIC ..... UDC:AGU,AGV	1
* 58	PFFZZ	11083	1D4717	NUTIHEXAGON..... UOC:AGU,AGV	3
59	PAOZZ	11083	3G361	GASKET..... UOC:AGU,AGV	1
60	PAOZZ	11083	9J3047	STRAINER ELEMENT,SE ..... UOC:AGU,AGV	1
61	PAOZZ	11083	9H6454	GASKET* ..... UOC:AGU,AGV	1
62	PAOZZ	11083	6H5139	PLATE,PRESSURE ..... UOC: AGU,AGV	1
63	PAOZZ	11083	4B9782	BALL,BEARING*..... UOC:AGU,AGV	1
64	PAFZZ	11083	4J8251	GROMMET,NONMETALLIC..... UOC:AGU,AGV	1
65	PAFZZ	08805	940	WINDOW,OBSERVATION ..... UOC:AGU,AGV	1
66	PFFZZ	11083	3G5980	PLATE,IDENTIFICATIO..... UOC:AGU,AGV	1
67	PFFZZ	11083	3G2692	COVER,ACCESS..... UOC:AGU,AGV	1
68	PFFZZ	11083	9M6590	SCREW,CAPGHEXAGON H ..... UOC:AGU,AGV	2
69	PAFZZ	11083	6V7371	SEAL,PLAZN..... UOC:AGU,AGV	2
70	PFFZZ	11083	2H5746	WASHER,RECESSED..... UOC:AGU,AGV	2
71	PFFZZ	11083	5K9107	BOLTISELF-LOCKING ..... UOC:AGU,AGV	33

END OF FIGURE

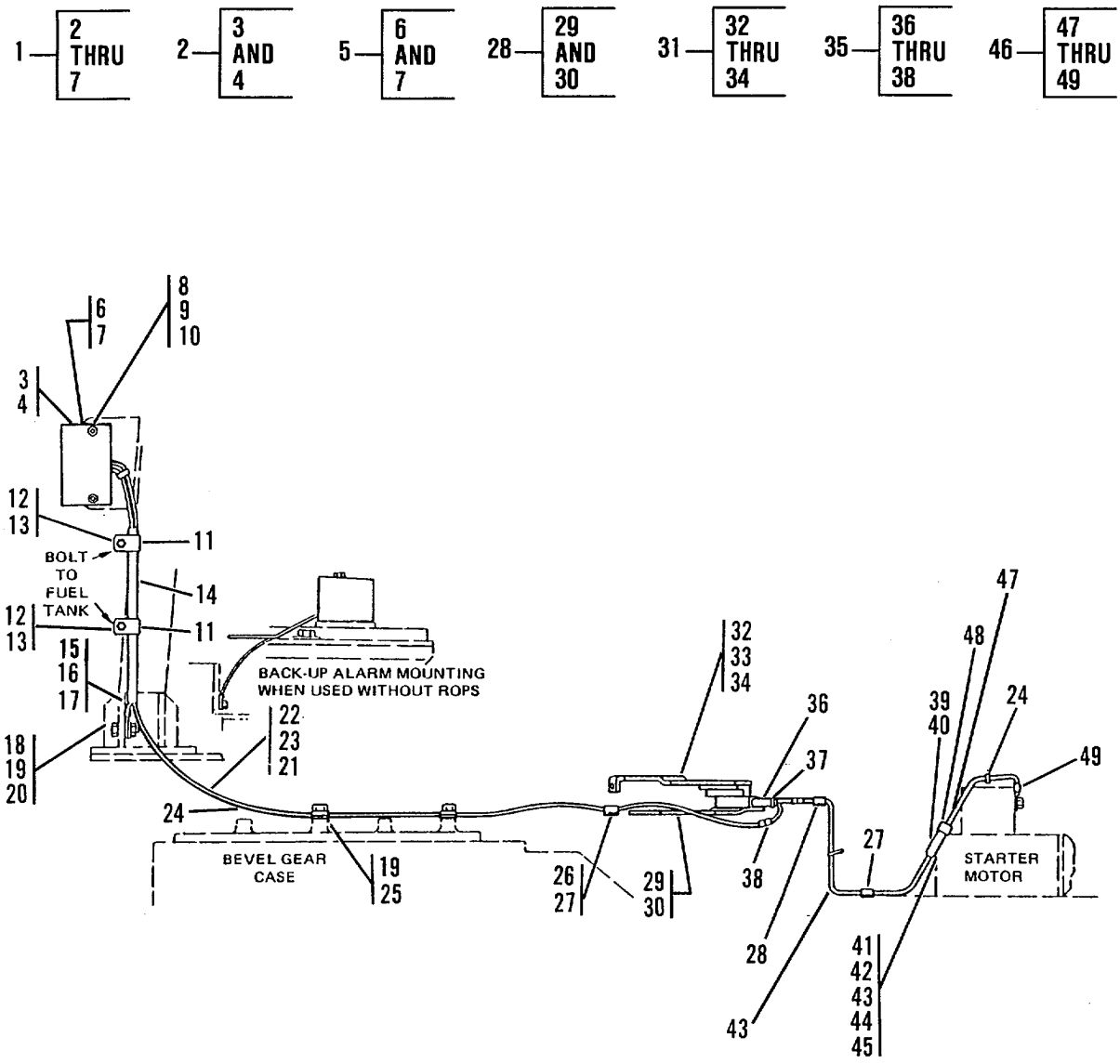

Figure 148. Back-Up Warning Group

(1) ITEM NO	(2) SMR CODE	(3) CAGEC	(4) PART NUMBER	(5) DESCRIPTION AND USABLE ON CODES (UOC)	(6) QTY
				GROUP 42 - ELECTRICAL EQUIPMENT	
				GROUP 4209 - SIGNALING DEVICES	
				FIG. 148 - BACK-UP WARNING GROUP	
1	PFOZZ	11083	8P8845	HORN,ELECTRICAL	1
2	PFOZZ	11083	9G9019	LEAD,ELECTRICAL	2
3	PAOZZ	79550	117Z2	CONNECTORTPLUG,ELEC	1
4	PAOZZ	96906	MS25036-153	TERMINAL,LUG	1
* 5	PFOZZ	62539	EXLB-1	ALARM,BACK-UP,VEHIC	1
6	PAOZZ	68505	X141	NUT,PLAIN,HEXAGON	4
7	PAOZZ	78189	1108	WASHER,LOCK	2
8	PFOZZ	11083	5M2894	WASHER,FLAT	4
9	PAOZZ	11083	8S9191	BOLT,MACHINE	2
10	PAOZZ	11083	4J8265	NUT,SPECIAL	2
11	PFOZZ	11083	1S9886	CLAMP,LOOP	2
* 12	PFOZZ	80204	B18218H050C075N	SCREW,CAP,HEXAGON H	2
13	PFOZZ	96906	MS27183-17	WASHER,FLAT	2
14	PFOZZ	11083	9P3354	TUBE,METALLIC	1
* 15	MOOZZ	11083	5P5624-30	WIRE A MAKE FROM WIRE P/N M16878/ 1BKE7, 30INCHES LONG, (SEE GROUP 9501)	1 *
16	PAOZZ	96906	MS25036-154	TERMINAL,LUG	1
17	PAOZZ	11083	6K18Z8	CONNECTOR,PLUG,ELEC	2
18	PFOLZ	96906	MS51967-14	NUT,PLAIN,HEXAGON	1
19	PAOZZ	11083	484280	WASHER,FLAT	3
20	PAOZZ	11083	S1595	BOLT,MACHINE	1
* 21	MOOZZ	11083	5P5624-9491	WIRE A MAKE FROM WIRE PIN M16878/ 1BKE7, 94.1 INCHES, AND SLEEVING P/N TEMFLEX 105C 2 AWG BLACK (SEE GROUP 9501)	1
22	PAOZZ	11083	1S9593	STRAP,RETAINING	2
23	PAOZZ	11083	6K1828	CONNECTOR,PLUG,ELEC	2
24	PAOZZ	11083	6K0806	TIE	4
25	PFOZZ	11083	1H5165	PLATE,MENDING	3
26	PAOZZ	11083	1H5166	RETAINER,WIRING HAR	2
* 27	PFOZZ	96906	MS27183-14	WASHER,FLAT	2
28	AOOZZ	11083	9P8121	BRACKET	1
29	PFQZZ	81349	M24243/1-A404	RIVET,BLIND	2
30	PFOZZ	11083	9P8122	BRACKET,DOUBLE ANGL	1
31	PFOZZ	11083	9P8637	BRACKET,MOUNTING	1
32	PFOZZ	11083	9P8636	BRACKET	1
33	PFOZZ	11083	9P4609	*BRACKET,ANGLE	1
34	PFOZZ	11083	9M5731	RIVET,BLIND	2
35	PFOZZ	11083	9P4608	SWITCHIPUSH	1
36	MOOZZ	11083	5P5628-72	TUBE,METALLIC MAKE FROM TUBE P/N 5P5628 72 INCHES LONG	1
37	PFOZZ	96906	MS3367-1-9	STRAP,TIEDOWN,ELECT	2
* 38	XB0ZZ	11083	5P6725	LEAD ASSEMBLY,ELECT	2
39	PAOZZ	11083	8P5912	LEAD ASSEMBLY,ELECT	1
40	PFOZZ	11083	6K1828	CONNECTOR,PLUG,ELEC	1
41	PFOZZ	11083	1S9593	STRAP,LINE SUPPORTI	2

(1) ITEM NO	(2) SMR CODE	(3) CAGEC	(4) PART NUMBER	(5) DESCRIPTION AND USABLE ON CODES (UOC)	(6) QTY
42	PFOZZ	79550	12864	FUSEHOLDER SUBASSEM.....	1
* 43	PFOZZ	79550	12871	CONTACTIELECTRICAL.....	2
44	PFOZZ	11083	2S5013	SPRING.....	1
45	PAOZZ	11083	3P8989	FUSE.....	1
46	PAOZZ	11083	8P6314	LEAD ASSEMBLY,ELECT.....	1
47	PFOZZ	11083	2S5012	CAP.....	1
* 48	PFOZZ	79550	12871	CONTACT,ELECTRICAL.....	1
49	PFOZZ	96906	MS25036-154	TERMINAL,LUG.....	1

END OF FIGURE

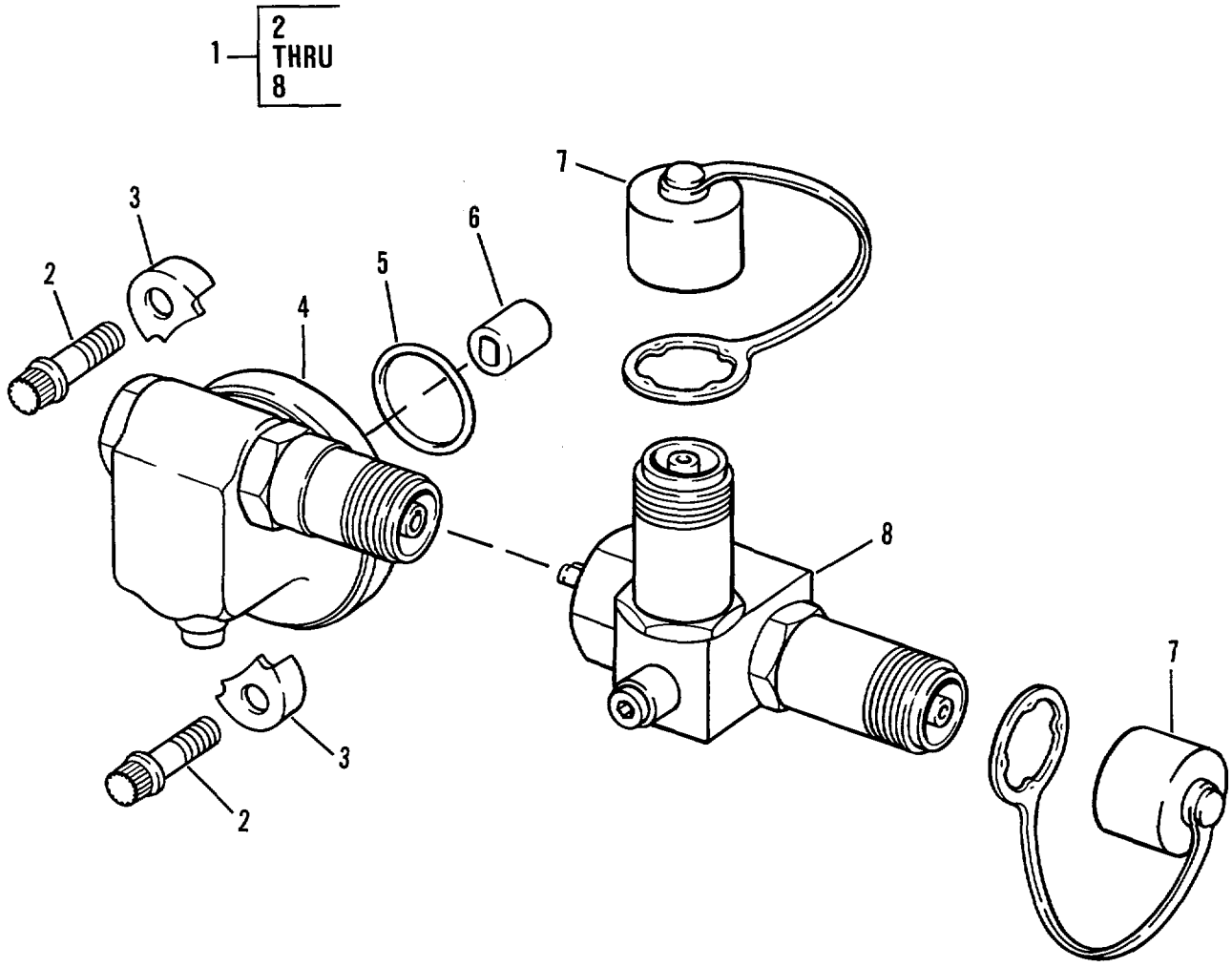

Figure 149. Tachometer Drive (Used on Models D5BS1 and D5BNS1)

(1) ITEM NO	(2) SMR CODE	(3) CAGEC	(4) PART NUMBER	(5) DESCRIPTION AND USABLE ON CODES (UOC)	(6) QTY
				GROUP 47 GAGES (NCN ELECTRICAL)	
				GROUP 4701 - INSTRUMENTS (SPEED AND DISTANCE)	
				FIG. 149 - TACHCMETER CF1VE USED ON MODELS D5BS1 AND D5NS1	
1	ACCOO	11083	5R8094	TACHOMETER DRIVE ..... UOC:AGU,AGV	1
2	PFCZZ	11083	9S5033	BOLT,MACHINE ..... UOC:AGU,AGV	2
3	PFOZZ	11083	9S0211	CLAMP.RIM CLENCHING ..... UOC:AGU,AGV	2
4	PFOZZ	11083	6N1345	ADAPTER,SPEED,METER..... UOC:AGU,AGV	1
5	PAOZZ	11083	4M8303	PACKING PREFORMED ..... UOC:AGU,AGV	1
6	PFOZZ	11083	4N0538	BUSHING,SLEEVE..... UOC :AGU,AGV	1
7	PFCZZ	11083	4W5235	CAP PROTECIVE,DUST ..... UOC :AGU,AGV	2
8	PFOZZ	33203	A02H23MA16	,ADAPTERSPEECOMETE ..... UOC:AGU,AGV	1

END OF FIGURE

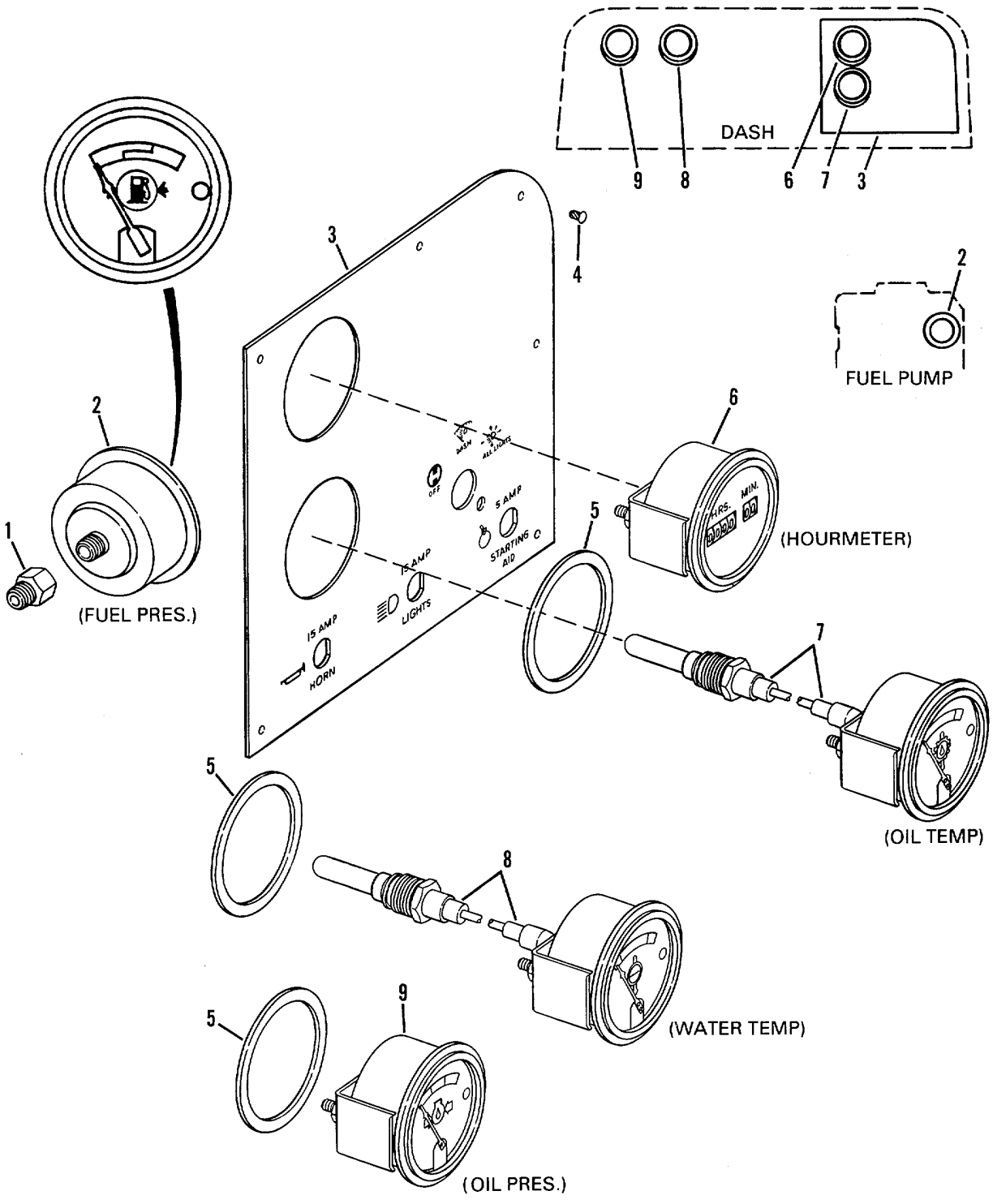

Figure 150. Non-Electrical Gages

(1) ITEM NO	(2) SMR CODE	(3) CAGEC	(4) PART NUMBER	(5) DESCRIPTION AND USABLE ON CODES (UOC)	(6) QTY
				GROUP 4702 - GAGES# MCL^TINGS, LINES AND FITTINGS	
				FIG. 150 - NCT-ELECTRICAL GAGES	
1	PFOZZ	11083	8F390	COUPLING,PIPE	2
2	PAOZZ	03479	05-35-756	GAGE,PRESSURE,DIAL	1
3	PFOZZ	11083	9G655	PANEL,INSTRUMENT	1
4	PAOZZ	11083	783028	SCREW,DRIVER	6
5	PAOZZ	11083	6V3507	PACKING,PREFORMED	3
6	PFOZZ	74400	15002-3	METER,TIME TOTALIZI HOURMETER	1
7	PAOZZ	03479	20BTG-250-AGFX4	INDICATOR,TEPPERATU OIL TEMPERATURE.....	1
8	PAOZZ	03479	10-35-87C	INDICATOR, TEMPERATU WATER ..... TEMPERATURE	1
9	PAOZZ	11083	1W0705	GAGE,PRESSURE,DIAL OIL PRESSURE.....	1

END OF FIGURE

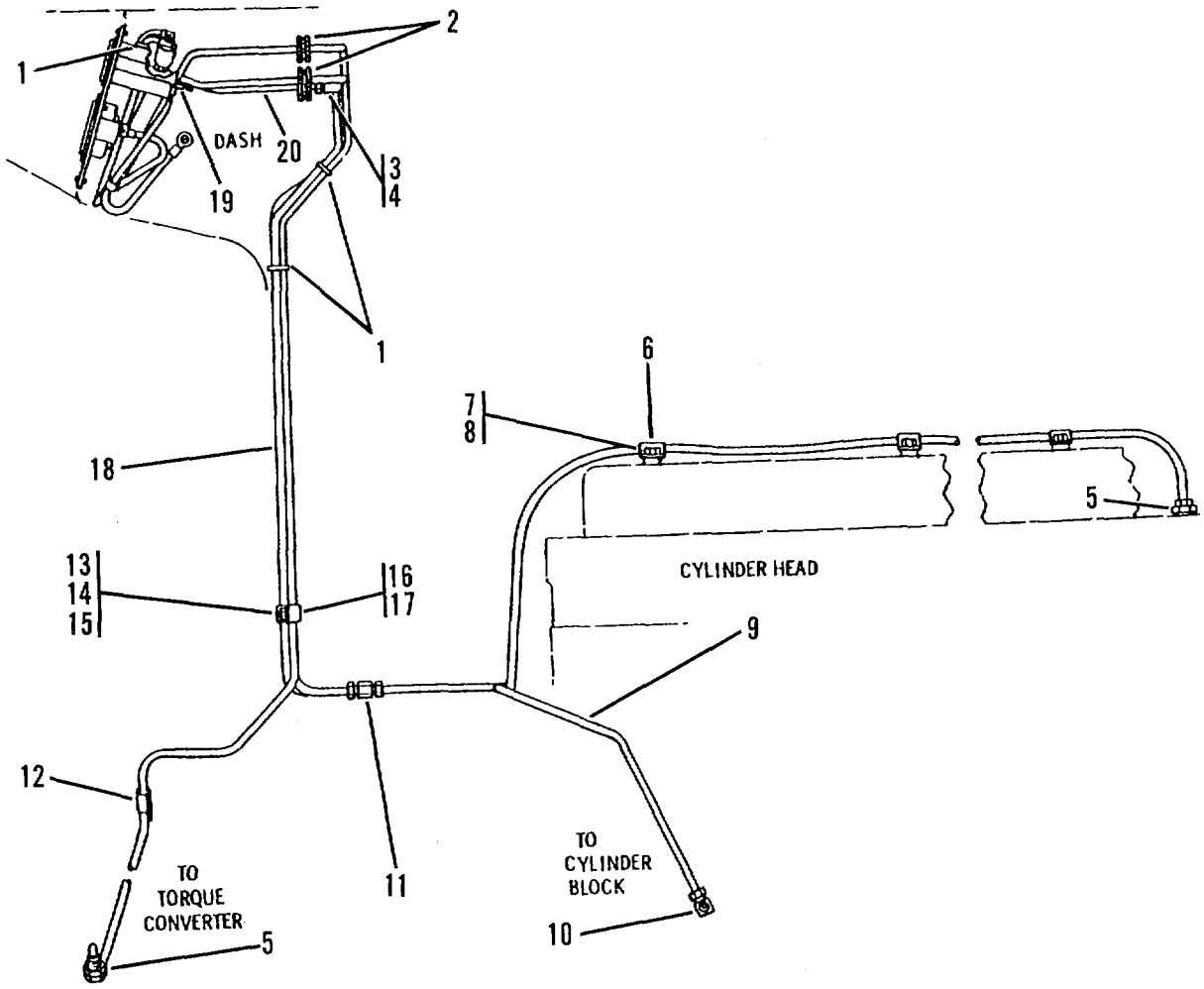

Figure 151. Gage Tubing

(1) ITEM NO	(2) SMR CODE	(3) CAGEC	(4) PART NUMBER	(5) DESCRIPTION AND USABLE ON CODES (UOC)	(6) QTY
				GROUP 4702 - GAGES, MOUNTINGS, LINES AND FITTINGS	
				FIG. 151 - GAGE TUBING	
1	PAOZZ	11083	6K0806	TIE	5
2	PAOZZ	11083	2D2751	GROMMET,METALLIC	3
3	PFOZZ	11083	9S7703	ELBOW,TUBE TO BOSS	1
4	PAOZZ	11083	4B8756	INVERTED NUT,TUBE C	6
5	PFOZZ	11083	6H6699	ADAPTER,STRAIGHT,PI	2
6	PAOZZ	11083	1H5166	RETAINER,WIRING HAR	3
* 7	PAOZZ	80204	B1821BH031C056N	BOLT,MACHINE	3
8	PFOZZ	96906	MS27183-12	WASHER,FLAT	3
9	PFOZZ	11083	9G6473	TUBE ASSEMBLY,METAL	1
10	PFOZZ	11083	5K9241	FITTING	1
11	PADZZ	11083	5K9242	FITTING	1
12	PAOZZ	11083	L2072	-CLAMPLOOP	1
* 13	PFOZZ	11083	S1615	BOLT,MACHINE	1
* 14	PFOZZ	96906	MS35338-44	WASHER,LOCK	1
15	PFOZZ	31159	JM56	NUT,PLAIN,HEXAGON	1
16	PAOZZ	11083	8M2771	CLAMP	1
17	PAOZZ	11083	lV3113	CLAMP,LOOP	2
18	PFOZZ	11083	9G7514	TUBE ASSEMBLY,METAL	1
19	PAOZZ	11083	6L3616	FITTING	1
* 20	MOOZZ	11083	5PO089-7.81N	TUBE,BULK,STEEL MAKE FROM TUBE P/N MIL-T-8504, 7.8 IN UOC:AGU,AGV	1

END OF FIGURE

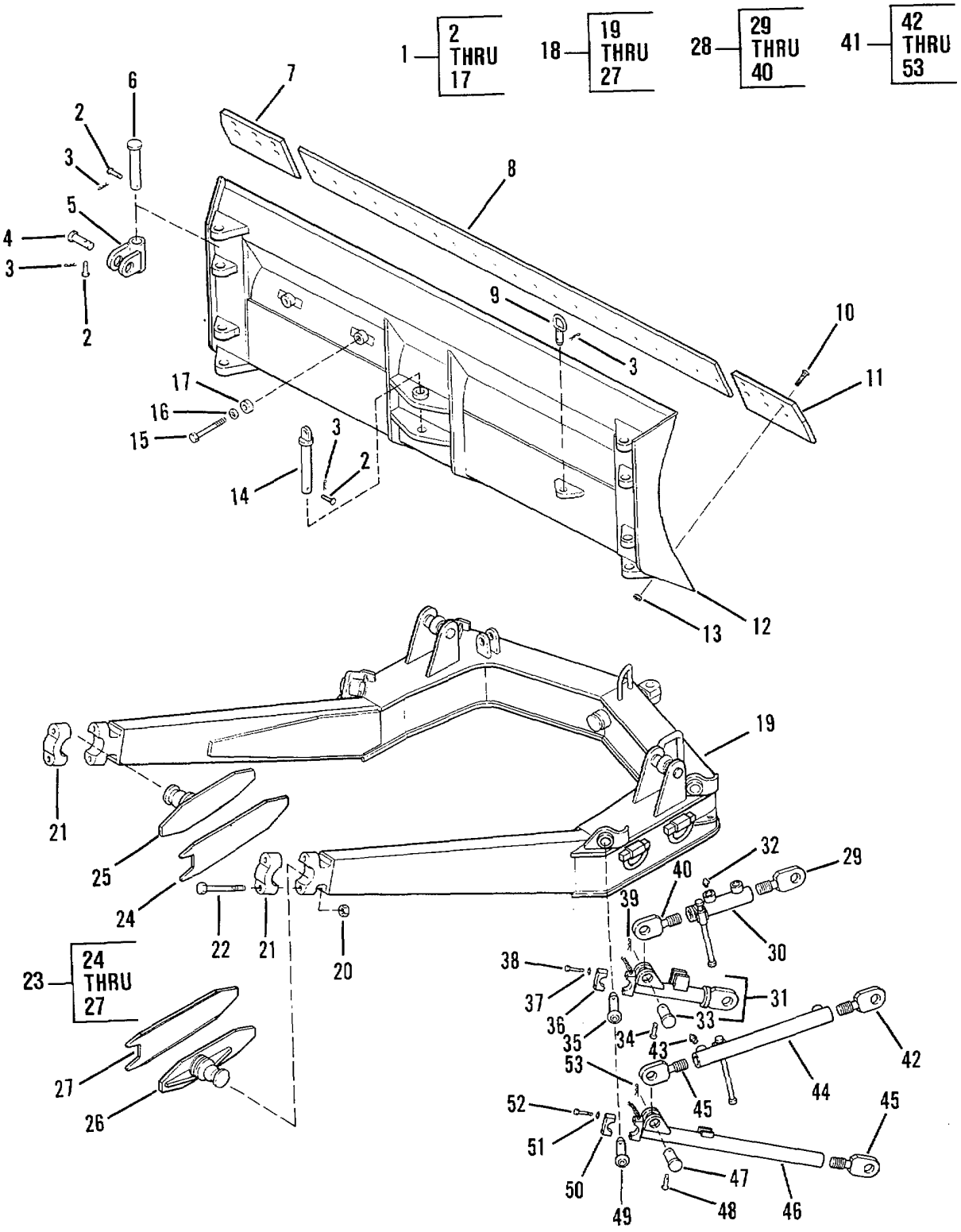

Figure 152. Blade, Frame and Braces

(1) ITEM NO	(2) SMR CODE	(3) CAGEC	(4) PART NUMBER	(5) DESCRIPTION AND USABLE ON CODES (UOC)	(6) QTY
				GROUP 74 CRANES? SHOVELS, AND EARTH MOVING COMPONENTS	
				GROUP 7435 - BLADE, FRAME AND BRACES	
				FIG. 152 - BLADE, FRAME AND BRACES	
	PFOFF	89917	50097	MOLDBOARD ASSEMBLY	1
2	PFOZZ	89917	31488	PIN,STRAIGHT,HEADED	9
3	PFOZZ	89917	25172	PIN,STRAIGHT,HEADED	9
4	PFOZZ	11083	3F4971	PIN,STRAIGHT,HEADED	4
5	PFOZZ	89917	50038	CLEVIS,ROD END	4
6	PFOZZ	11083	5J442	PIN,STRAIGHT,HEADED	4
7	PAOZZ	11083	4T3052	END BIT,MOLDBOARD	1
8	PAOZZ	11083	5R8053	CUTTING EDGE,MOLDB	1
9	PFOZZ	89917	50047	PIN,STRAIGHT,HEADED	1
* 10	PAOZZ	11083	3F5108	*BOLT,SQUARE NECK	33
11	PAOZZ	11083	4T3051	END BIT,MOLDBOARD*	1
12	PFOZZ	89917	49889	MOLDBOARD ASSEMBLY	1
13	PFOZZ	96906	MS51967-20	NUT,PLAIN,HEXAGON	33
14	PFOZZ	89917	20183	PIN,STRAIGHT,HEADED	1
15	PFOZZ	89917	31488	PIN,STRAIGHT,HEADED	2
16	PFOZZ	96906	MS27183-17	WASHER,FLAT	2
17	PAOZZ	89917	51102	WASHER,SHOULDERED	2
18	PFFFF	89917	50100	FRAME ASSEMBLY .-	1
19	PFFZZ	89917	50071	C-FRAME ASSEMBLY	1
20	PFFZZ	11083	4F2710	NUT,PLAIN,SQUARE	4
21	PFFZZ	11083	6F3183	CAP,PILLOW BLOCK	2
* 22	PFFZZ	11083	386753	BOLT,MACHINE	4
23	PFFZZ	89917	49840	TRUNNION PLATE ASSE	1
24	PFFZZ	89917	49832	SPACER,PLATE	1
25	PFFZZ	89917	49830	TRUNNION PLATE ASSE*	1
26	PFFZZ	89917	49829	*.TRUNNION PLATE ASSE	1
27	PFFZZ	89917	49831	SPACER,PLATE	1
28	PFFFF	89917	88581	BRACE AND ARM ASSEMS	1
29	PFFZZ	89917	50045	*CONNECTOR,ROD ENDND	1
30	PFFZZ	89917	88159	CONNECTING LINKRIG	1
31	PFFZZ	89917	50096	*BRACKET,EYE,NONROTA	1
* 32	PFOZZ	89917	3B8489	FITTING,LUBRICATION	2
33	PFFZZ	11083	3F4971	PIN,STRAIGHT,HEADED	1
34	PFFZZ	89917	31488	PIN,STRAIGHT,HEADED	1
35	PAFZZ	11083	2JB85	PIN,STRAIGHT,HEADED	4
36	PFFZZ	11083	2J851	CAP,PILLOW BLOCK	2
* 37	PFFZZ	96906	MS3533B-48	WASHER,LOCK	4
38	PFFZZ	89917	23697	SCREW,CAP,HEXAGON H	4
39	PFFZZ	89917	25172	PIN,STRAIGHT,HEADED	1
40	PFFZZ	89917	50044	CONNECTOR,ROD END	1
41	PFFFF	89917	88582	FRAME SECTION,STRUC	2
42	PAFZZ	89917	50045	CONNECTOR,ROD E N D	1
* 43	PFOZZ	89917	3B8489	FITTING,LUBRICATION	2
44	PFFZZ	89917	49918	BRACE ASSEMBLY,BLAD	1
45	PAF7Z	89917	50044	CONNECTOR,ROD END	2

(1) ITEM NO	(2) SMR CODE	(3) CAGEC	(4) PART NUMBER	(5) DESCRIPTION AND USABLE ON CODES (UOC)	(6) QTY
46	PFFZZ	89917	49915	ARMSTEERING GEAR	1
47	PFFZZ	11083	3F4971	PIN,STRAIGHT,HEADED	1
48	PFFZZ	89917	31488	PIN,STRAIGHT,HEADED	1
49	PFFZZ	89917	25172	PIN,STRAIGHT,HEADED	1
50	PFFZZ	11083	2J851	CAP,PILLOW BLOCK	1
* 51	PFFZZ	96906	MS35338-48	WASHER,LOCK	4
52	PFFZZ	89917	23697	SCREW,CAP,HEXAGON H	4
53	PFFZZ	89917	25172	PIN,STRAIGHT,HEADED	1

END OF FIGURE

(1) ITEM NO	(2) SMR CODE	(3) CAGEC	(4) PART NUMBER	(5) DESCRIPTION AND USABLE ON CODES (UOC)		(6) QTY
				GROUP 94 - REPAIR KITS		
				GROUP 9401 - REPAIR KITS		
				FIG KITS		
		11083	1W7053	PARTS KITHYDRAULIC	.....	1
				UOC:AGU,AGV		
				BEARING,BALL,ANNULA(1)	40-11	
				BEARING,BAL,ANNULAI	(1).....40-8	
				BEARING,BALL,ANNULA(	(1.....39-13	
				BARING,BALL,ANNULA(	(1)..... 39-S	
				RING,RETAINING	(1)..... 40-S	
				RING,RETAIING	(1).....39-10	
				SCREW,CAP,HEXAGON	(1).....40-21	
				SCREW,CAP,HEXAGON H(	(1).....39-22	
				SHAFT,SHOULDERED	(1).....40-7	
				SHAFT,SHOULCERED	(1).....39-8	
				WASHERIFLAT	(1).....40-12	
				WASHER,FLAT	(4).....40-4	
				WASHER,FLAT	(5).....39-3	
	PAOZZ	11671	13061	PARTS KIT,ROTARY PU	.....	1
				PACKING,PREFORMED	(1).....134-8	
				SEAL,PLAIN	(2).....134-11	
	PAHZZ	11083	2W6051	RING SET,PISTON	(1)	
				RING,PISTON	(6).....7-3	
				RING,PISTON	(6).....7-2	
				RING,PISTCH	(6).....7-1	
	PFHZZ	11083	5P8768	GASKET SET	.....	6
				GASKET	(6).....4-5	
				PACKING,PREFORMED	(18).....4-3	
	PAHZZ	11083	5P9137	PARTS KIT,VEHICULAR	.....	1
				GASKET	(1).....63-12	
				GASKET	(1).....63-7	
				GASKET	(1).....64-11	
				GASKET	(1).....64-1	
				PACKING,PREFORMED	(1).....63-26	
				PACKING,PREFORMED	(1).....63-25	
				PACKING,PPEFCRMED	(2).....63-27	
				PACKING,PPEFORMED	(5).....63-5	
				PACKING,PREFORMED	(2).....63-18	
				PACKING,PREFORMED	(2).....64-51	
				PACKING,PREFORMED	(1).....64-50	
				PACKING,PREFORMEC	(1).....44-22	
	PAOZZ	11083	5P9138	GASKET KIT	.....	1
				PACKING,PREFORMED	(1).....65-44	
				PACKING,PREFORMED	(6).....71-4	
				SEAL	(1).....65-50	
				SEAL	(5).....65-29	
				WASHER	(4).....65-23	
	PAOZZ	11083	5P9139	GASKET AND SEAL SET	.....	1
				GASKET	(1).....64-1	

(1) ITEM NO	(2) SMR CODE	(3) CAGEC	(4) PART NUMBER	(5) DESCRIPTION AND USABLE ON CODES (UOC)		(6) QTY
				PACKING,PREFORMED	(1).....67-11	
				PACKING,PREFORMED	(4).....46-23	
				PACKING,PREFCRMED	(1).....66-27	
				PACKING,PREFORMED	(2).....64-51	
				PACKING,PREFCRMED	(1).....71-9	
				PACKING,PREFORMED	(1).....72-2	
				SEAL,ADAPTER,MOTOR	(1).....71-37	
				SEAL,PLAIN ENCASED	(2).....66-16	
	PAOZZ	11083	5P9140	GASKET AND SEAL SET	(1)	
				GASKET	(1).....61-8	
				GASKET	(1).....61-44	
				PACKING,PREFORMED	(2).....61-47	
				PACKING,PPEFORMED	(1).....61-49	
				PACKING,PREFORMED	(1).....61-54	
				PACKING,PREFORMED	(2).....75-4	
				PACKINGTPREFCRMED	(2).....75-6	
				PACKING,PPEFORMED	(1).....12-6	
				SEAL,PLAIN ENCASED	(1).....1-5	
	PAOZZ	11083	5P9141	SEAL KIT	.....	1
				PACKING,PREFORMED	(1).....70-11	
				PACKING,PREFORMED	(1).....70-16	
				PACKING,PREFCRMED	(1).....741-10	
				PACKINGTPREFORMED	(2).....70-3	
				SEAL,ADAPTER,MOTOR	(1).....70-8	
	PAOZZ	11083	5P9142	GASKET AND SEAL SET	.....	1
				GASKET	(2).....71-50	
				PACKING	(1).....71-52	
				PACKING,PREFORMED	(1).....71-32	
				PACKING,PREFORMED	(1).....11-22	
				PACKING,PREFORMED	(1).....711-54	
				PACKING,PREFORMED	(1).....71-63	
	PAFZZ	11083	5P9898	GASKET SET	(1).....	1
				UOC:AGU,AGV		
				GASKET	(1).....40-22	
				GASKET	(1)..... 3S;-23	
				PACKING,PREFORMED	(1).....41-18	
				PACKING,PREFORMED	(1).....40-16	
				PACKING,PREFORMED	(1)..... 4C-2	
				PACKING,PREFORMED	(1).....39-19	
				PACKING,PREFORMED	(1).....39-2	
				PACKING,PREFORMED	(1).....39-17	
				PING	(1).....40-17	
				RING	(1).....39-18	
	PAFZZ	11083	6N7727	PARTS KIT,DIESEL ENC1		
				PLUG,EXPANS1CN	(2).....4-30	
				PLUG,EXPANSICN	(1).....4-7	
	PAHZZ	11083	6Vl550	PARTS KIT, VEHICULAR	.....	1
				GASKET	(1).....6-10	
				GASKET	(1).....6-11	
				SEAL ASSEMBLY	(1).....5-5	
	PAFZZ	11083	6V1681	GASKET AND SEAL SETECT	.....	1
				GASKET	(1).....15-9	

(1) ITEM NO	(2) SMR CODE	(3) CAGEC	(4) PART NUMBER	(5) DESCRIPTION AND USABLE ON CODES (UOC)	(6) QTY
				GASKET (1) 15-5	
				GASKET (2) 14-5	
				PACKINGTPREFCRMEO (2) 13-17	
				SEAL,RING (3) 15-7	
	PAHZZ	11083	6V1752	GASKET AND SEAL SET	1
				GASKET (1) 4-16	
				GASKET (1) 17-10	
				GASKET (1) 15-25	
				GASKET (1) 15-20	
				LOCK,SPECIAL (2) 15-16	
				LOCKING PLATE NUT (1) 15-19	
				LOCK (2) 19-22	
				PACKINGIPREFCRMED (2) 13-1l	
				SEAL#RING (3) 15-7	
	PAHZZ	11083	6V2912	GASKET AND SEAL SET	1
				GASKET (1) 10-3	
				GASKET (1) 10-11)	
				GASKET (1) 10-13	
				GASKET (1) 10-4	
				GASKET (1) 10-20	
				LOCKING PLATE,NUT t(1) 11-it	
				NUTTSPECIAL (1) 8-2	
				PACKINGTPREFCRMED (1) 2-8	
				PACKINGTPREFCRMED (1) 2-13	
				PACKINGTPREFCRMED (1) 22-18	
				PACKING,PPEFGRMED (1) 42-3	
				SEAL,PLAIN ENCASEC (1) 42-16	
	PAHZZ	11383	6V2971	GASKET AND SEAL SET	1
				GASKET (1) 4-l	
				GASKET (1) 3-22	
				GASKET (6) 21-6	
				GASKET (1) 37-5	
				GASKET (1) 36-5	
				PACKING,PREFCRMED (1) 4-14	
				PACKING,PREFCRMED (1) 3-13	
				PACKING,PREFCRMED (1) 9-10	
				SEAL,RING (3) 15-7	
	PAFZZ	11083	6V2972	GASKET AND SEAL SET	1
				GASKET (1) 24-24	
				GASKET (1) 23-28	
				GASKET (1) 23-22	
				GASKET (1) 24-69	
				GASKET (1) 24-57	
				GASKET (1) 23-32	
				GASKET (1) 24-78	
				GASKET (1) 23-43	
				PACKINGIPREFORMED (1) 22-18	
				PACKINGTPREFCRMED (1) 22-24	
				PACKING,PREFCRMED (11 24-44	
				PACKINGTPREFCRMED (6) 24-32	
				PACKINGIPPEFCRMED (1) 24-66	
				PACKINGTPREFORMED (1) 29-18	

(1) ITEM NO	(2) SMR CODE	(3) CAGEC	(4) PART NUMBER	(5) DESCRIPTION AND USABLE ON CODES (UOC)	(6) QTY
				PACKING,PREFCRMED (2) 26-1	
				PACKING,PREFORMED (1) 23-3	
				RING SEAL (1) 24-70	
				SEAL (1) 23-12	
				SEAL (1) 24-51	
				SEAL (1) 24-52	
				SEAL (1) 24-8)	
				SEAL,PLAIN ENCASED (2) 23-8	
				SEALTPLAIN ENCASED (1) 23-14	
				SEAL,PLAIN ENCASED (1) 23-34	
				SEAL,TRING (1) 22-26	

END OF FIGURE

(1) ITEM NO	(2) SMR CODE	(3) CAGEC	(4) PART NUMBER	(5) DESCRIPTION AND USABLE ON CODES (UOC)	(6) QTY
				GROUP 95 - GENERAL USE STANDARDIZED PARTS	
				GROUP 9501 - BULK MATERIEL	
				FIG - BULK	
*1	PAOZZ	11083	5P 747	CABLE	1
2	PFFZZ	96906	MS35829-16C	HINGE,BUTT	V
3	PAOZZ	11083	5P1292	HOSES	90
* 4	PAOZZ	11083	5P1442	HOSE,NONMETALLIC	500
* 5	PAOZZ	11083	5P5991	HOSE,NONMETALLIC	15
* 6	PAOZZ	11083	5P1263	HOSE,NONMETALLIC	90
* 7	PFOZZ	11083	5P1260	HOSE,NONMETALLIC.	90
* 8	PAOZZ	11083	5P1291	HOSE,NONMETALLIC	90
* 9	PAOZZ	11083	2P5943	HOSE,NONMETALLIC	15
* 10	PAOZZ	11083	5P1694	HOSE,NONMETALLIC	500
* 11	PAOZZ	96906	MS5213028121R	HOSE,NONMETALLIC	1
* 12	PAOZZ	11083	8S9355	HOSE,SPECIAL	600
* 13	PAOZZ	20999	TEMFIEX 105C I/2 IN BLACK	INSULATION SLEEVINGELECTRICAL	V
* 14	PAOZZ	11083	5P7246	RUBBER STRIP	3
* 15	PADZZ	11083	5P7245	SEAL,NONMETALLIC SP	3
* 16	PAOZZ	82654	RS-104	SEAL,NONMETALLIC SP	7
* 17	PAOZZ	81349	MIL-T-8504	TUBE,METALLIC	15
* 18	PFOZZ	11083	5P5628	TUBE,METALLIC	1
* 19	PAOZZ	61424	NN-4-035	TUBING,NONMETALLIC	1
* 20	PFOZZ	64488	8106S	WIRE,ELECTRICAL	1
* 21	PAOZZ	79550	570D-2	WIRE,ELECTRICAL	1
* 22	PAOZZ	81349	M16878/3BMGO	WIRE,ELECTRICAL	1
* 23	PAOZZ	81349	M16878/1BKE7	WIRE,ELECTRICAL	1
* 24	PAOZZ	11083	5P6641	WIRE,ELECTRICAL	1
* 25	PAOZZ	11083	5P5632	WIRE,ELECTRICAL	1
* 26	PAOZZ	11083	6A3626	WIRE,ELECTRICAL	1
				END OF FIGURE	

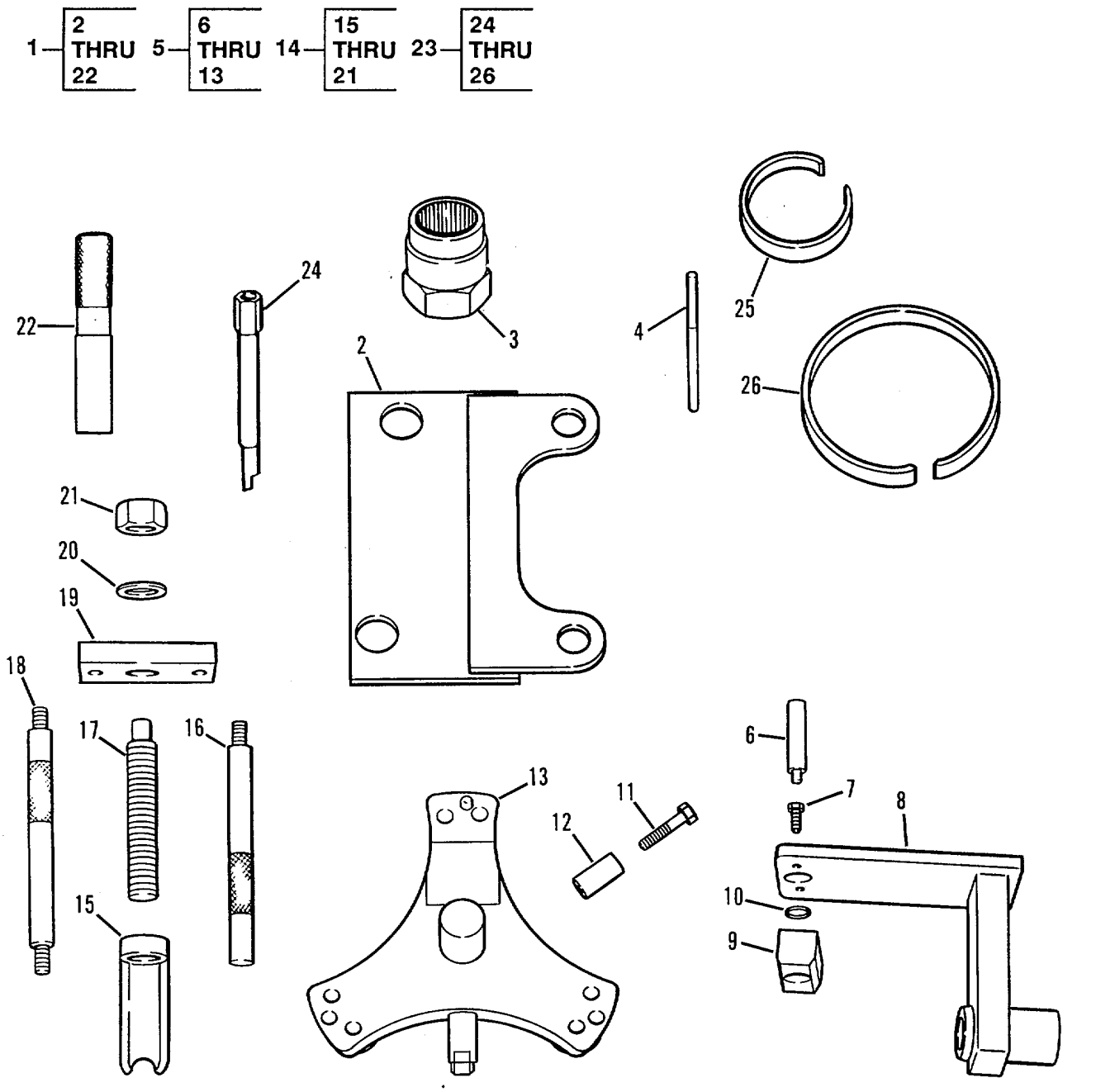

TA706925

Figure 153. Special Tools

(1) ITEM NO	(2) SMR CODE	(3) CAGEC	(4) PART NUMBER	(5) DESCRIPTION AND USABLE ON CODES (UOC)	(6) QTY
				GROUP 26 TOOLS AND TEST EQUIPMENT	
				GROUP 2604 - SPECIAL TOOLS	
				FIG. 153 - SPECIAL TOOLS	
* 1	ADFFF	19207	5705778	TOOL KIT,GENERAL ME ..... BOI:2 AUTH BY BN AND BDE TYPE HQ (EXCEPT WHEN BN OR BDE HAS SVC CO)	
* 2	PEFZ	11083	5P1762	.BRACKETIDOUBLE ANGL..... BOI:2 AUTH BY BN AND BDE TYPE HQ (EXCEPT WHEN BN OR BDE HAS SVC CO)	
* 3	PEFZZ	11083	8S2243	.WRENCH,FUEL INJECTJEC. ..... BOI:2 AUTH BY BN AND BDE TYPE HQ (EXCEPT WHEN 8N OR BDE HAS SVC CO)	
* 4	PEFZZ	11083	6V4186	.PIN,TIMING..... BOI:2 AUTH BY BN AND BDE TYPE HQ (EXCEPT WHEN BN OR BDE HAS SVC CO)	
* 5	PEFZZ	11083	6V0082	.ADJUSTING TOO BEAR ..... BOI:2 AUTH BY BN AND BDE TYPE HQ (EXCEPT WHEN BN OR BDE HAS SVC CO)	
* 6	PEFZZ	11083	5P8635	.PIN,SHOULDER,HEADLE..... BOI:2 AUTH BY BN AND BDE TYPE HQ (EXCEPT WHEN BN OR BDE HAS SVC CO)	
* 7	PEFZZ	11083	051585	.BOLT,MACHINE ..... BOI:2 AUTH BY BN AND BDE TYPE HQ (EXCEPT WHEN BN OR BDE HAS SVC CO)	
* 8	XBFZZ	11083	5P8631	.DRIVER..... BOI:2 AUTH BY BN AND BDE TYPE HQ (EXCEPT WHEN BN OR BDE HAS SVC CO)	
* 9	PEFZZ	11083	5P8630	.HEAD,DRIVER ASSEMBL..... BOI:2 AUTH BY BN AND BDE TYPE HQ (EXCEPT WHEN BN OR BOE HAS SVC CO)	
*10	PEFZZ	09990	2-320N951-75	.PACKING,PREFORMED.-..... BOI:2 AUTH BY BN AND BOE TVPE HQ (EXCEPT WHEN BN OR BDE HAS SVC CO)	
*11	PEFZZ	11083	2BO947	..BOLT,MACHINE BOI:2 AUTH BY BN AND BDE TYPE HQ (EXCEPT WHEN BN OR BODE HAS SVC CO)	
*12	PEFZZ	11083	5P8634	..SPACER,SLEEVE.....	

(1) ITEM NO	(2) SMR CODE	(3) CAGEC	(4) PART NUMBER	(5) DESCRIPTION AND USABLE ON CODES (UOC)	(6) QTY
				BOI:2 AUTH BY BN AND BDE TYPE HQ (EXCEPT WHEN BN OR 3DE HAS SVC CO)	
* 13	XBFZZ	11083	5P8632	..TRUNNION ..... B0I:2 AUTH BY BN AND BDE TYPE HQ (EXCEPT WHEN BN OR BDE HAS SVC CO)	
* 14	PEFZZ	11083	6V4061	.PULLER,MECHANICAL..... B0I:2 AUTH BY BN AND BOE TYPE HQ (EXCEPT WHEN BN OR BOE HAS SVC CO)	
* 15	PEFZZ	11083	6V4149	..JAW,MECHANICAL PULL BOI:2 AUTH BY BN AND BDE TYPE HQ (EXCEPT WHEN 8N OR BDE HAS SVC CO)	
* 16	PEFZZ	11083	6V4150	..LEG,MECHANICAL PULL BOI:2 AUTH BY BN AND BDE TYPE HQ (EXCEPT WHEN BN OR BDE HAS SVC CO)	
* 17	PEFZZ	11083	6V4192	..SHAFT ASSEMBLYIFLEX .... BOI:2 AUTH BY BN AND BOE TYPE HQ (EXCEPT WHEN BN OR BDE HAS SVC CO)	
* 18	PEFZZ	11083	6V4151	..LEG,MECHANICAL PULL BOI:2 AUTH BY BN AND BDE TYPE HQ (EXCEPT WHEN BN OR BDE HAS SVC CO)	
* 19	PEFZZ	11083	6V4153	..PLATE,MECHANICAL PU. BOI:2 AUTH BY BN AND BDE TYPE HQ (EXCEPT WHEN BN OR BDE HAS SVC CO)	
* 20	PEFZZ	11083	2S5658	..WASHERFLAT BOI:2 AUTH BY BN AND BDE TYPE HQ (EXCEPT WHEN BN OR BDE HAS SVC CO)	
* 21	PEFZZ	96906	MS51968-20	..NUT,PLAINHEXAGON ..... BOI:2 AUTH BY BN AND BDE TYPE HQ (EXCEPT WHEN ON OR BDE HAS SVC CO)	
* 22	PEFZZ	11083	8S2244	.EXTRACTOR,FUEL INJE ..... BOI:2 AUTH BY BN AND BDE TYPE HQ (EXCEPT WHEN BN OR BDE HAS SVC CO)	
* 23	ADHHH	19207	5705779	TOOL KIT,GENERAL ME ..... BOI:1 AUTH BY BN AND BDE TYPE HQ (EXCEPT WHEN BN OR BDE HAS SVC CO)	
* 24	PEHZZ	11083	5P7312	.TOOL,DISTORTER..... BOI:1 AUTH BY BN AND BOE TYPE HQ (EXCEPT WHEN BN OR BDE HAS SVC C)	
* 25	PEHZZ	11083	5P7315	.DISTORTER, SLEEVE	

(1) ITEM NO	(2) SMR CODE	(3) CAGEC	(4) PART NUMBER	(5) DESCRIPTION AND USABLE ON CODES (UOC)	(6) QTY
* 26	PEHZZ	11083	5P7313	DISTORTER,SLEEVE ..... BOI:1 AUTH BY BN AND BDE TYPE HQ (EXCEPT WHEN BN OR BDE HAS SVC CO) END OF FIGURE	

CROSS- REFERENCE-INDEXES
NATIONAL STOCK NUMBER INDEX

STOCK NUMBER	FIG.	ITEM	STOCK NUMBER	FIG.	ITEM
5306-00-003-0681	108	28	5365-00-032-4357	84	12
5307-00-004-1605	36	42		85	14
	36	46		86	15
	36	50		88	30
5305-00-004-7245	24	68	2910-00-033-2200	24	26
5310-00-005-0779	24	86	3040-00-034-4216	47	72
5310-00-005-0781	36	38		48	57
	36	41	5330-00-036-6824	128	13
	36	47	5330-00-036-6825	5	11
	36	49	5310-00-042-6376	31	52
	36	57		79	6
	36	77		114	19
	71	48		127	6
	100	11		151	15
	145	2	4730-00-042-8988	131	9
	145	71	6145-00-043-1257	BULK	23
5310-00-005-0895	57	62	2540-00-044-0644	114	8
5305-00-005-0896	53	11	5310-00-044-3339	60	43
5310-00-006-0673	67	15		90	16
5365-00-006-0678	67	14		137	33
5315-00-007-6034	66	17	4730-00-044-4688	5	4
5355-00-007-9980	51	20		78	45
5925-00-008-0548	57	41		119	14
5310-00-010-3092	133	4	4730-00-044-4715	13	4
	148	6	5310-00-045-1079	92	12
4730-00-010-9365	62	12		94	15
5310-00-011-9711	136	31	5310-00-045-3299	24	61
3110-00-011-9931	102	23		50	6
3110-00-011-9935	4	27		133	3
	19	108	5310-00-045-5001	45	18
	65	80		53	2
	147	63		57	53
5315-00-012-0123	93	26		63	29
5920-00-012-0151	57	69		77	7
5315-00-012-4553	63	10		78	56
4730-00-013-7397	151	4		82	1
5315-00-017-1893	93	46		83	1
5340-00-018-7588	137	43		85	19
	138	34		86	21
5315-00-018-9396	119	5		87	14
5315-00-018-9576	31	47		88	25
6240-00-019-3093	57	37		93	38
5310-00-020-0358	143	20		102	17
2920-00-021-2273	47	19		104	17
2815-00-024-4596	4	4		105	4
2940-00-029-0388	13	13		110	5
5330-00-031-2558	84	13		111	4
	85	15		138	40
	86	16	4730-00-050-4208	137	32
	88	31		143	23

CROSS- REFERENCE-INDEXES
NATIONAL STOCK NUMBER INDEX

STOCK NUMBER	FIG.	ITEM	STOCK NUMBER	FIG.	ITEM
5315-00-050-5559	126	5	5330-00-074-3770	67	11
5307-00-053-9023	61	10	5305-00-076-3714	52	1
5315-00-054-4009	78	40	5310-00-080-6004	29	17
5305-00-054-9276	32	3		31	20
5310-00-056-3395	147	46		36	28
5306-00-060-5945	35	8		60	15
5310-00-062-2051	47	49		78	25
	48	43		103	29
5306-00-063-5001	61	36		107	5
	120	44		113	1
3120-00-064-1275	31	51		119	9
	137	11		120	33
	138	4		139	11
5315-00-064-1450	103	26		140	5
5310-00-066-2486	89	4		148	27
5305-00-068-0510	101	3	5310-00-080-9422	30	9
5305-00-068-0511	31	1	5310-00-081-4219	12	5
	37	7		13	11
	37	16		13	16
	38	1		19	2
	41	8		22	23
	61	45		25	11
	69	7		26	8
	74	6		56	23
	85	7		67	41
	86	7		73	2
	95	8		79	14
	96	4		127	25
	109	2		130	6
	120	31		130	8
	120	51		151	8
	122	26	5305-00-082-6977	5	14
	124	22	4730-00-084-7543	28	2
	137	16	5310-00-087-4652	41	3
	138	47	4730-00-089-2515	3	9
	139	12		4	22
	141	9		15	3
5305-00-071-2055	143	16		37	12
5305-00-071-2068	70	1		39	15
5305-00-071-2071	6	5		40	14
	138	28		80	43
5305-00-071-2072	6	4	5961-00-099-9791	44	24
5305-00-071-2505	90	12	3110-00-100-0534	90	24
5305-00-071-2506	79	38	3110-00-100-0602	78	60
	114	15	3110-00-100-0611	77	23
5305-00-071-2514	23	50	3110-00-100-3529	90	23
5975-00-074-2072	148	37	3110-00-100-3632	78	64
5330-00-074-3600	6	10	3110-00-100-3649	77	24
5330-00-074-3603	18	1	3110-00-100-6149	65	26
5330-00-074-3764	87	11		131	13B

CROSS- REFERENCE-INDEXES
NATIONAL STOCK NUMBER INDEX

STOCK NUMBER	FIG.	ITEM
3110-00-100-6150	135	6
	136	12
3110-00-100-6160	72	11
4330-00-103-5502	71	51
5340-00-103-8902	27	2
5330-00-104-4371	3	13
	4	14
5330-00-105-0368	93	41
5305-00-105-1207	47	26
5310-00-109-7638	128	18
5310-00-111-3609	65	54
	65	72
6625-00-113-3279	57	44
2520-00-113-5509	6	9
5940-00-113-8190	46	2
	57	46
5940-00-113-9826	43	4
5940-00-114-1310	58	11
5305-00-115-9526	8	1
	33	11
5365-00-116-0408	24	87
3040-00-116-9845	61	23
3110-00-117-0661	61	14
3110-00-117-0696	61	3
5310-00-117-4788	3	20
	4	18
	10	6
	10	24
	14	1
	15	13
	16	9
	18	3
	19	19
	19	23
	20	9
	21	3
	22	20
	25	15
	33	12
	34	2
	35	9
	37	14
	39	3
	40	4
	41	2
	43	13
	52	8
	56	6
	65	7
	66	12
5310-00-117-4788	69	8
	71	19
	79	10
	85	8
	91	33
	93	14
	96	16
	97	3
	100	9
	106	17
	106	21
	107	26
	109	3
	114	2
	114	6
	115	2
	120	12
	122	30
	123	14
	129	11
	130	1
	136	10
	137	17
	139	17
	141	8
	145	5
	147	2
	148	8
5306-00-118-3055	120	4
5365-00-118-3056	7	6
5330-00-118-5526	145	17
	147	9
4330-00-118-5528	145	24
	147	16
5920-00-118-8195	57	68
5940-00-118-8836	46	3
	58	3
4730-00-122-3969	12	10
2520-00-122-9919	65	1
2590-00-126-3730	55	7
5365-00-131-4761	122	24
4730-00-133-3196	129	23
5975-00-133-8687	127	27
5307-00-135-3077	119	7
5365-00-136-2006	60	32
5360-00-137-3464	80	38
5330-00-138-0365	64	50
6680-00-138-4143	145	54
5306-00-138-4466	138	54
5310-00-139-7030	1	3

CROSS- REFERENCE-INDEXES
NATIONAL STOCK NUMBER INDEX

STOCK NUMBER	FIG.	ITEM	STOCK NUMBER	FIG.	ITEM
5310-00-139-7030	2	6	3110-00-156-7942	90	13
	78	14	3110-00-156-8137	90	6
	108	23	2910-00-157-0650	25	18
	110	2	5365-00-161-0747	144	14A
	111	1		144	14B
	134	7	4710-00-163-8924	102	12
5305-00-139-7071	63	19	5320-00-164-0917	93	34
	114	25	5330-00-165-1980	24	66
	135	32		29	18
	146	8		33	4
5306-00-140-2032	60	52		132	31
5330-00-141-2476	6	11		135	23
	80	22	5310-00-167-0839	47	5
	120	24		116	3
5365-00-143-0033	68	16	5310-00-167-1304	32	20
4730-00-143-3941	79	19		93	50
5940-00-143-4774	34	30	5330-00-167-5174	132	29
	53	20		135	25
	53	28		136	41
	53	38	5315-00-169-8105	130	19
	53	52	4730-00-172-0025	102	2
	57	72	4730-00-172-0028	42	9
	58	14		143	10
	148	4	5305-00-172-6356	145	4
5940-00-143-4775	58	18	5365-00-175-5049	22	1
5940-00-143-4780	51	3	3120-00-176-5546	80	26
	51	7	2510-00-176-5600	101	6
	51	12	5310-00-178-0741	47	35
	58	13		49	2
5940-00-143-4793	51	18	5120-00-178-1267	153	22
	53	26	5310-00-178-7700	47	3
5940-00-143-4794	43	3		49	4
	57	40	5306-00-130-5319	91	6
	58	5	3110-00-183-6730	145	43
	58	12		147	29
5310-00-143-5722	49	5	5310-00-188-0473	48	16
	49	9	4730-00-138-1854	120	7
5330-00-143-7173	144	20	3110-00-191-3923	84	8
5330-00-143-8713	30	6		122	18
5305-00-145-0809	24	20	2815-00-192-8768	16	15
2520-00-147-8491	91	2	5315-00-193-0919	64	31
2815-00-148-6705	5	1	5315-00-193-0923	31	6
2530-00-149-7388	82	14	5315-00-193-0924	84	3
2530-00-149-8065	88	19	5310-00-193-1076	87	2
5360-00-149-8898	88	21	5310-00-194-1483	48	3
5306-00-149-9066	77	25	5330-00-194-3681	61	5
5310-00-149-9146	90	26	5340-00-195-8288	104	16
5340-00-150-0873	56	9	3110-00-198-1783	91	18
3110-00-155-6207	124	5	3110-00-198-1796	124	19
4330-00-155-8240	125	14	3110-00-198-2292	123	41

CROSS- REFERENCE-INDEXES
NATIONAL STOCK NUMBER INDEX

STOCK NUMBER	FIG.	ITEM	STOCK NUMBER	FIG.	ITEM
5940-00-201-8938	57	11	5306-00-226-4835	130	7
3110-00-202-1879	61	34	3110-00-227-4431	80	7
5365-00-205-3664	24	96	5306-00-228-6835	39	22
5310-00-205-9982	16	1		40	21
5310-00-209-5116	59	4	5340-00-229-9287	9	14
5310-00-209-6512	96	8		78	16
5360-00-209-8467	145	21		93	3
	147	13	5340-00-229-9294	3	24
2815-00-211-4462	9	24	5940-00-230-0515	53	25
5970-00-213-7747	24	88		148	16
5305-00-218-6387	47	32		148	49
	48	28	4730-00-231-5605	80	16
5310-00-220-6552	92	6	4720-00-235-4138	BULK	11
	94	12	3120-00-236-1319	141	32
5310-00-221-3150	34	34	5360-00-237-2158	31	43
2920-00-221-8856	44	38	2520-00-237-4603	67	is
6640-00-222-3103	78	20	4730-00-239-2503	34	23
4730-00-223-6410	82	6	5340-00-239-8226	9	22
	83	6	5310-00-241-6658	52	5
5310-00-224-0529	104	15	2530-00-243-9486	76	8
5340-00-224-1522	35	4	2530-00-243-9530	88	23
3130-00-224-8095	144	26	4710-00-243-9576	76	11
5305-00-225-3843	23	35	4730-00-244-0606	119	20
	23	46	4730-00-244-6517	78	35
	54	6	5330-00-245-6767	120	40
	55	9	5310-00-245-9841	43	7
	117	6	5315-00-245-9995	78	53
	127	29		122	37
5310-00-225-6993	138	73		123	20
5306-00-226-4823	151	7	5315-00-246-8066	71	15
5306-00-226-4825	9	20	5330-00-247-5972	130	14
	34	14	5330-00-248-2168	71	50
	73	1	3110-00-248-5973	65	47
	131	20	5330-00-248-6691	65	14
5306-00-226-4826	12	6	5360-00-249-3504	9	23
	22	22	4730-00-249-3885	29	5
	130	21	3110-00-249-5244	65	5
	131	14	3110-00-249-5245	65	81
	132	35	5977-00-249-5758	47	23
5306-00-226-4827	11	4	5325-00-249-6345	34	26
5306-00-226-4828	20	4		53	17
	31	24	5315-00-252-2959	4	31
	61	21		6	7
5306-00-226-4829	127	28	5365-00-252-4753	96	46
	130	27	5305-00-252-8919	15	15
	132	23		17	9
5306-00-226-4832	13	14		29	31
5306-00-226-4833	19	21		36	39
	79	15		41	4
	132	22		53	43

CROSS- REFERENCE-INDEXES
NATIONAL STOCK NUMBER INDEX

STOCK NUMBER	FIG.	ITEM
5305-00-252-8919	53	49
	57	15
	57	27
	57	55
	60	6
	71	46
	71	66
	77	16
	78	27
	91	35
	94	4
	96	24
	103	27
	106	20
	107	6
	107	6
	112	7
	114	27
	115	16
	120	38
	134	2
5306-00-253-3376	22	30
5305-00-253-5609	45	9
5305-00-253-5615	61	43
	118	8
	133	6
5305-00-253-7629	104	18
5306-00-253-7864	122	6
	123	34
	142	19
5340-00-253-7912	57	51
5310-00-253-7918	43	10
4730-00-258-1864	69	12
5320-00-260-4020	36	55
	36	79
5306-00-260-4502	101	7
5306-00-260-4508	3	19
	4	19
	15	10
	34	25
	36	31
	52	9
	53	6
	56	5
	56	26
	60	24
	64	12
	64	23
	68	1
	71	69
5306-00-260-4508	80	19
	84	11
	95	17
	96	49
	97	2
	98	7
	100	12
	106	15
	107	22
	113	3
	114	3
	114	11
	115	3
	120	3
	122	22
	124	16
	129	7
	137	29
	139	23
	147	55
5305-00-260-4511	85	20
	86	20
	102	1
5330-00-261-0990	144	18
5306-00-261-1153	23	1
	24	79
	57	48
	151	13
5310-00-262-4715	44	31
5310-00-262-4789	1	9
109	5	
4730-00-263-3122	12	7
	73	7
5306-00-263-3533	152	10
5306-00-263-4038	29	24
	71	25
	120	34
5306-00-263-7301	10	11
	11	8
	16	8
	11	5
	31	14
	39	6
	40	3
	60	22
	71	13
	79	11
	106	6
	107	11
	108	8

CROSS- REFERENCE-INDEXES
NATIONAL STOCK NUMBER INDEX

STOCK NUMBER	FIG.	ITEM
5306-00-263-7301	114	29
	115	10
	121	3
	123	45
	129	24
	136	9
	138	18
	147	48
5306-00-263-7302	57	52
5306-00-263-7303	11	1
5306-00-263-7305	60	47
5306-00-263-8950	40	13
	88	6
5306-00-263-8978	42	11
	78	49
	88	1
	99	18
	121	21
	137	34
	141	1
5306-00-263-8979	61	17
5306-00-263-8982	78	51
4730-00-266-2637	68	10
5315-00-266-5276	78	19
	97	17
5315-00-267-2268	85	11
	86	12
	88	15
5306-00-268-2449	67	40
	130	26
5306-00-268-5798	2	10
	57	18
	62	5
	71	60
	106	28
	139	27
	146	10
5306-00-268-6005	102	3
5340-00-269-0841	71	59
5305-00-269-3235	114	40
5305-00-269-3242	11	13
	61	15
5310-00-270-2105	102	25
5310-00-271-4656	78	8
5306-00-272-1804	25	12
5306-00-272-4246	1	2
5310-00-272-5692	2	9
5315-00-272-6760	94	19
	95	6
	96	5
5306-00-273-6357	60	44
	62	10
	71	67
	137	38
	140	13
	141	22
5306-00-275-5012	10	8
	99	29
	103	34
	104	10
5310-00-275-8639	36	65
	127	15
5310-00-275-9191	44	40
5310-00-275-9421	32	1
5310-00-276-2822	60	54
5340-00-276-5832	4	7
	4	32
4730-00-277-6320	48	44
4730-00-277-9141	29	6
4730-00-278-3383	3	29
	13	5
	30	16
4730-00-278-4339	34	24
4730-00-278-8368	68	11
	68	14
	102	11
	102	15
3110-00-280-3216	137	49
5310-00-281-5021	44	7
5365-00-282-1831	124	18
5365-00-282-5047	96	31
5340-00-282-7505	29	27
	71	12
5340-00-282-7519	26	6
5920-00-284-6787	51	10
	57	73
5306-00-285-1368	10	15
	25	17
	65	6
	95	9
	122	31
	140	4
5365-00-285-7939	61	4
5310-00-285-8867	134	4
2805-00-288-3650	3	5
4730-00-288-8055	78	34
4730-00-289-1242	68	13
	102	14
4730-00-289-2357	129	2
4730-00-289-4736	29	3

CROSS- REFERENCE-INDEXES
NATIONAL STOCK NUMBER INDEX

STOCK NUMBER	FIG.	ITEM	STOCK NUMBER	FIG.	ITEM
5360-00-290-0851	125	6	5315-00-352-7512	78	36
5365-00-290-3745	84	1	5330-00-352-7517	78	29
	126	6	2520-00-352-7520	78	38
5330-00-290-9386	85	12	5315-00-352-7540	152	4
	86	13		152	33
	88	16		152	47
	124	25	2530-00-352-7722	85	4
5940-00-291-0085	34	17		86	4
	34	28	3130-00-352-8136	152	21
	53	21	2530-00-352-8468	110	8
	53	51	4820-00-353-3223	24	82
	58	17	2910-00-356-1863	30	3
5340-00-291-0372	92	20	5305-00-362-7336	130	3
5310-00-291-4498	47	18	5315-00-362-7367	42	12C
	48	19	2520-00-362-7883	94	6
5330-00-291-7192	22	18	5310-00-362-7988	4	21
3110-00-293-8566	91	20		74	4
5330-00-297-6548	97	24	5977-00-363-3568	47	17
	120	36	5999-00-363-6240	29	30
5330-00-297-7228	15	9	5315-00-363-8794	19	7
5310-00-297-8836	127	22		61	12
4730-00-307-6426	51	5	5315-00-363-9727	80	8
5310-00-308-2227	107	29	5365-00-363-9900	145	65
5365-00-309-7459	65	76		147	49
2910-00-309-9473	10	18	2930-00-365-2152	15	16
	18	14	2910-00-367-5238	30	5
	80	25	2540-00-368-8227	116	6
	140	9	5355-00-371-3370	137	26
6145-00-310-2590	BULK	21		138	13
5330-00-310-6575	24	32	5340-00-371-3422	88	22
5306-00-325-0158	124	1	5305-00-371-5138	47	27
5330-00-325-6310	84	15	5310-00-374-1365	152	20
	120	21	5310-00-375-0518	40	20
5310-00-332-5036	134	13	5330-00-393-4054	130	25
5330-00-333-4384	121	1	3120-00-394-4276	5	10
3040-00-333-4393	93	36	3120-00-397-4451	5	6
5330-00-339-6224	130	11	5306-00-400-3518	141	35
5340-00-346-2596	102	13	5325-00-400-8682	151	2
	151	12	4730-00-401-0306	95	14
5310-00-347-4123	137	59	5305-00-401-5261	3	6
	138	26		9	16
	138	31	3120-00-401-6060	61	39
	138	33	4730-00-401-8098	17	11
	138	52	4730-00-403-4338	29	25
	138	66	5310-00-404-2422	93	48
	138	71	5340-00-404-4100	129	10
4730-00-349-8975	95	25	5330-00-404-4964	27	8
5310-00-350-3587	44	11		27	13
5340-00-351-6992	54	1	3110-00-404-5484	61	24
5365-00-352-7400	110	7	4820-00-404-7133	145	20

CROSS- REFERENCE-INDEXES
NATIONAL STOCK NUMBER INDEX

STOCK NUMBER	FIG.	ITEM	STOCK NUMBER	FIG.	ITEM
4820-00-404-7133	147	12	2530-00-422-9813	82	8
4710-00-405-7326	96	47		83	9
4710-00-405-7327	96	21	5305-00-423-4909	49	16
5315-00-406-7278	23	10	5306-00-423-8069	107	37
	24	50		109	6
2815-00-407-4730	104	5	5315-00-423-8085	64	28
5365-00-407-6204	121	28	5365-00-423-8098	6	12
2815-00-407-6451	104	11		80	23
4820-00-407-8330	97	23	5306-00-423-8114	6	1
5340-00-407-8369	3	21	5306-00-423-8116	93	39
5310-00-407-9566	9	19		105	2
	116	8	5306-00-423-8117	53	30
	127	36		77	10
	131	15		99	26
	132	21		100	5
5315-00-409-3703	64	34		102	7
5340-00-410-1903	107	16		107	48
5365-00-410-3076	1	6		112	8
5365-00-410-3077	1	5		134	12
5365-00-410-3078	1	7		141	36
2990-00-410-6812	35	6		143	15
2815-00-411-3925	3	28		145	29
5340-00-411-3926	31	28		148	20
5310-00-411-4399	102	29	5315-00-423-8126	137	45
5307-00-411-4501	76	9	5340-00-423-8146	84	17
5365-00-411-4584	61	46		88	29
	64	6	5306-00-423-8194	12	2
	64	21		14	5
	70	15		15	4
	72	5		22	29
	75	5		25	16
	128	2		29	15
	141	5		60	7
5310-00-413-4983	36	6		61	2
5310-00-413-5060	56	3		63	8
	96	25		71	11
5310-00-413-5083	63	14		71	33
5310-00-413-5144	75	13		80	44
	128	14		88	12
5310-00-413-6522	78	56		107	8
	98	16		120	16
5340-00-417-2920	4	30		121	14
5310-00-419-1363	108	18		123	10
5365-00-419-3212	65	38		129	15
5365-00-419-3254	23	2		135	8
5307-00-419-4067	4	24		139	26
4730-00-419-8863	29	34		145	30
2930-00-419-9036	36	43		147	52
2530-00-420-6514	84	19	5310-00-423-8219	78	42
4720-00-421-3854	BULK	6		90	20

CROSS- REFERENCE-INDEXES
NATIONAL STOCK NUMBER INDEX

STOCK NUMBER	FIG.	ITEM
5306-00-423-8292	82	4
	83	5
5306-00-423-8313	31	35
5306-00-423-8316	99	19
	139	9
	141	15
5306-00-423-8393	10	19
5306-00-423-8409	102	27
5306-00-423-8784	25	13
5306-00-423-9054	91	23
5365-00-423-9251	97	25
5306-00-423-9325	77	6
	103	33
5340-00-423-9937	131	16
	132	34
5306-00-424-0086	36	18
	56	10
	83	15
	107	46
	114	34
	121	11
	127	33
	146	11
5355-00-425-4840	31	36
2920-00-425-5932	46	4-
5340-00-426-2852	80	11
	93	1
5306-00-426-2922	66	19
	137	18
	138	48
5306-00-426-2932	14	6
	19	27
	22	21
	34	3
	37	10
	39	14
	43	14
	64	13
5306-00-426-2933	87	1
5306-00-426-2934	62	17
	100	2
	107	31
	108	12
	113	6
	115	12
	117	10
	121	11
	141	25
	145	57
5305-00-426-2936	82	3
5305-00-426-2936	83	3
5306-00-426-2945	103	1
5306-00-426-2974	19	20
	37	1
	96	17
5306-00-426-3080	66	10
	114	36
5305-00-426-3085	122	27
	123	12
5306-00-426-3209	88	27
	91	26
	110	1
5306-00-426-3403	99	6
	108	17
5306-00-426-3404	104	8
	108	19
5306-00-426-3409	104	7
5306-00-426-4171	1	8
	30	15
	98	2
	139	5
	144	17
5315-00-426-4566	78	17
5330-00-426-4567	78	43
2530-00-426-4568	78	44
2530-00-426-4569	78	24
2530-00-426-4571	78	4
3130-00-426-4575	78	32
5365-03-426-4576	78	37
5340-00-426-4656	57	54
	71	1
	79	20
5340-00-426-4794	29	26
5340-00-426-4819	57	20
5306-00-426-5062	71	8
	79	31
5315-00-426-5074	120	6
5315-00-426-6042	101	1
2530-00-426-6110	110	4
2530-00-426-6111	110	11
4730-00-427-5121	12	9
	37	4
	73	8
5330-00-429-3542	129	19
5970-00-431-3667	47	42
	48	36
3020-00-431-6447	43	8
5330-00-431-7121	78	30
5330-00-431-7137	39	17
	40	16

CROSS- REFERENCE-INDEXES
NATIONAL STOCK NUMBER INDEX

STOCK NUMBER	FIG.	ITEM	STOCK NUMBER	FIG.	ITEM
5330-00-431-7140	131	24	5310-00-451-3384	122	32
5310-00-431-7237	143	17		123	15
5310-00-431-7239	56	12	2930-00-451-6070	41	7
	65	18	5365-00-452-0344	135	18
	78	23		136	27
	121	20	5340-00-455-0326	67	4
5310-00-431-7244	4	9	5306-00-455-0459	36	70
	143	8		121	19
	153	20		139	4
2520-00-432-1730	74	2		141	33
5310-00-432-4324	3	7		146	6
	9	15	5306-00-455-0460	80	30
3120-00-432-8120	44	28		83	12
5365-00-432-8183	39	18		111	2
	40	17	5306-00-455-0462	36	52
5305-00-432-8422	48	27	5306-00-455-0467	61	27
5310-00-434-1347	133	10		67	6
5930-00-434-9121	51	19		131	5
5365-00-435-5279	124	8	5365-00-455-2753	1	4
5306-00-436-9896	152	22	5330-00-455-7065	144	19
4730-00-437-0131	78	21	3120-00-455-7085	143	24
5306-00-438-8600	57	3	5330-00-455-7096	121	2
	57	12	5360-00-455-7142	67	28
5310-00-438-8604	57	2	5360-00-455-7145	80	32
	57	13	2530-00-455-9268	88	17
3120-00-439-4878	11	7	4730-00-456-1469	36	17
3120-00-440-8463	19	9	2990-00-456-1474	31	30
	19	18	5330-00-456-2587	36	75
5365-00-441-8849	65	63	2815-00-457-1615	9	8
5365-00-442-5845	116	18	2930-00-457-1616	12	13
	116	26		14	4
5310-00-445-4632	34	13	5315-00-457-6895	31	42
	56	16	5315-00-457-6897	4	25
5310-00-445-4633	79	2	5330-00-458-1909	63	25
3110-00-446-9696	124	27	3120-00-458-1921	31	33
3120-00-446-9863	31	16	5365-00-458-2276	70	7
5365-00-449-2597	3	25	5307-00-458-2364	36	13
	61	52	3020-00-460-6696	19	16
	96	12	4730-00-460-6725	4	29
5340-00-449-2612	11	10		22	25
2540-00-449-7378	116	5	2530-00-464-4334	89	3
5310-00-450-0414	24	62	5307-00-465-6789	64	30
5305-00-450-0421	44	47		76	7
5306-00-450-4026	4	10	5340-00-465-6799	57	22
5305-00-450-5937	47	39	6680-00-466-0299	17	2
	48	33	5306-00-470-5543	130	4
2815-00-450-9341	9	5		148	9
2815-00-450-9344	8	4	2815-00-470-6352	19	12
5340-00-451-0632	53	47	5310-00-470-9833	118	6
5310-00-451-3384	65	23	5315-00-472-5242	65	77

CROSS- REFERENCE-INDEXES
NATIONAL STOCK NUMBER INDEX

STOCK NUMBER	FIG.	ITEM	STOCK NUMBER	FIG.	ITEM
5306-00-472-5282	16	2	3110-00-516-5490	42	18
5305-00-475-4440	30	10	2815-00-518-3561	7	2
5365-00-478-2920	61	48	5360-00-519-6605	3	1
	141	14	5330-00-520-1552	9	17
5330-00-478-2938	93	5	3120-00-523-4278	61	41
5315-00-479-2833	131	130	5330-00-527-7939	85	17
5310-00-480-6100	66	9		86	18
5310-00-436-2505	139	14		88	9
2815-00-487-2840	7	7	5310-00-528-4124	139	8
2815-00-487-3123	9	6	2815-00-529-5441	3	18
4720-00-489-5891	BULK	3	5315-00-532-4359	125	3
5365-00-490-4623	70	9	5315-00-532-5746	9	25
2590-00-490-5442	17	5	5315-00-533-9530	39	12
5310-00-490-9859	99	17	5310-00-543-4385	50	3
	101	11	5306-00-543-5567	23	45
	118	7	2530-00-545-0322	82	7
5340-00-490-9869	107	15	5340-00-547-9875	148	25
3040-00-491-3215	36	66	5940-00-549-6581	57	5
4730-00-491-9576	26	2	5330-00-549-7691	4	5
	71	5	5306-00-550-3023	47	34
2815-00-493-2110	28	1		48	29
5340-00-493-3997	94	11	5310-00-550-3714	57	63
	114	16	5306-00-550-9129	47	10
2815-00-493-7022	21	5		48	5
5310-00-494-1962	20	6	3110-00-554-3245	123	5
	69	4	3110-00-554-3272	65	12
5340-00-494-1996	15	19	3110-00-554-5302	39	9
5330-00-494-2763	124	7		40	8
	126	7	3110-00-554-5304	124	5
5330-00-494-2764	4	3	3110-00-554-5653	61	33
2815-00-494-9420	80	24	3110-00-554-9004	91	18
5306-00-497-0342	7	9	5330-00-555-3810	144	25
5307-00-498-0804	21	12	3120-00-555-4525	145	47
5360-00-498-2883	65	49		147	34
5330-00-498-2905	42	16	3110-00-555-5207	42	6
5330-00-498-2906	131	22	5940-00-557-4344	57	47
5330-00-498-2913	23	14	5330-00-557-8489	15	20
	23	34	5330-00-557-8494	12	12
5365-00-498-2920	42	17		14	3
5365-00-498-2962	42	5	5970-00-557-8747	47	15
5310-00-498-2967	8	3		48	13
5330-00-498-4556	120	48	5310-00-557-9389	7	10
5340-00-499-9648	13	7	5310-00-557-9391	8	2
4730-00-499-9837	4	2	5310-00-557-9414	56	2
5970-00-503-0852	47	20		140	6
5310-00-507-5727	53	3		148	10
5365-00-514-1706	61	29	5310-00-559-0070	34	32B
5315-00-514-3189	19	11	5315-00-565-0437	77	18
3110-00-516-5490	39	13	5306-00-566-7243	89	2
	40	11	5315-00-575-0640	77	5

CROSS- REFERENCE-INDEXES
NATIONAL STOCK NUMBER INDEX

STOCK NUMBER	FIG.	ITEM	STOCK NUMBER	FIG.	ITEM
5305-00-576-1429	106	29	5330-00-590-1064	153	10
	107	35	5330-00-591-3112	131	12
5310-00-576-5752	50	2	5330-00-591-7543	119	19
5330-00-580-1215	132	15	5330-00-593-1192	131	19
5330-00-580-1226	71	63	5330-00-593-1193	93	12
	84	4	5330-00-593-1197	145	7
	132	13		147	4
5330-00-580-1227	145	68	5330-00-593-1282	70	3
	147	56	5310-00-596-7691	52	4
5315-00-582-2466	24	27		59	2
5310-00-582-5965	31	39	5310-00-596-7693	51	22
	47	11		148	7
	127	7	5310-00-596-8422	32	16
	151	14	5360-00-597-3278	47	28
5330-00-584-1310	46	7	5365-00-598-6232	39	10
5310-00-584-5272	32	7		40	9
	56	11	5365-00-598-6265	68	5
	57	19	5330-00-599-2190	121	37
	63	20	5330-00-599-2268	121	12
	66	2		123	6
	71	61	5330-00-599-2938	145	15
	78	48		147	7
	83	16	6645-00-602-5968	150	6
	88	2	5315-00-604-3345	88	20
	102	6	4720-00-604-6497	BULK	19
	104	12	5330-00-605-1009	145	40
	105	8	5330-00-613-6500	136	36
	107	44	5330-00-613-6522	23	3
	108	13		149	5
	111	13	5330-00-613-7263	17	10
	112	9	5330-00-613-7468	18	6
	113	5	5365-00-616-4946	65	37
	121	10	5315-00-616-5499	80	1
	127	34	5315-00-616-5514	128	17
	135	31		130	20
	138	2	5315-00-616-5521	19	14
	139	3	5315-00-616-5522	5	3
	140	14		11	14
	143	14	5315-00-616-5524	60	50
	145	56		96	11
	146	7		145	44
	152	37		147	31
	152	51	5315-00-616-5525	45	11
5365-00-584-6620	96	27	5315-00-616-5526	31	2
5310-00-584-7888	104	2		137	8
	139	6		138	6
5365-00-584-9755	65	66	4730-00-618-5381	71	29
5315-00-584-9792	61	25	5315-00-619-2962	145	49
5330-00-585-3204	90	28		147	35
5315-00-586-5103	31	31	3805-00-620-7109	102	5

CROSS- REFERENCE-INDEXES
NATIONAL STOCK NUMBER INDEX

STOCK NUMBER	FIG.	ITEM	STOCK NUMBER	FIG.	ITEM
5365-00-621-3192	87	7	4730-00-639-9167	120	8
5310-00-627-6128	59	7	6240-00-643-0687	53	12
3110-00-629-4111	24	12	2910-00-646-9727	34	9
5310-00-629-9613	77	9	5365-00-650-7092	34	1
5330-00-632-6417	78	58	5305-00-651-2686	127	21
5330-00-632-7222	74	1	5310-00-655-7646	103	3
5340-00-633-8043	94	23		104	6
5340-00-635-8296	145	8	5970-00-657-8133	47	46
	147	5		48	40
5310-00-637-1058	49	7	5310-00-660-3381	47	62
	49	10		48	67
5306-00-637-4927	96	18	5330-00-663-5709	39	2
5310-00-637-9541	31	12		40	2
	56	13		134	8
	57	16	5315-00-664-0384	99	20
	60	5		101	2
	61	1	4730-00-677-3738	17	12
	63	2	5310-00-678-2152	9	4
	64	8	5330-00-678-3369	125	15
	64	24	5365-00-679-9841	123	39
	71	7	5310-00-682-4425	24	63
	76	6	5306-00-685-2384	75	12
	77	17	5310-00-685-2973	127	31
	78	26	5365-00-687-3379	67	21
	80	13	5305-00-688-2111	142	4
	84	10	5306-00-690-6976	10	25
	86	8	2930-00-695-7197	36	11
	88	13	5306-00-698-2150	10	14
	92	2		15	1
	94	3		34	3
	95	10		36	67
	97	22		37	15
	101	4		63	4
	103	28		71	18
	106	16		71	55
	107	2		95	15
	112	6		128	15
	113	2		139	19
	120	2	5310-00-698-4460	60	36
	120	17	5330-00-699-9033	44	41
	120	50	5305-00-708-3823	64	15
	121	15		65	21
	123	11		87	18
	129	17		96	13
	129	17		100	8
	135	9		106	3
	138	5		150	4
	139	22	5315-00-710-2087	94	10
	145	31	4730-00-710-5571	129	22
5310-00-638-0201	90	7	5365-00-715-1152	47	60

CROSS- REFERENCE-INDEXES
NATIONAL STOCK NUMBER INDEX

STOCK NUMBER	FIG.	ITEM	STOCK NUMBER	FIG.	ITEM
5365-00-715-1152	48	55	5330-00-738-8622	123	43
5930-00-715-1939	57	61	5330-00-738-8639	84	5
5315-00-716-1056	107	17	5310-00-739-9977	87	23
5310-00-719-5470	47	38	2910-00-740-3593	70	2
	48	32	3110-00-740-6782	77	2
5305-00-721-5322	2	1	5330-00-741-2096	122	9
5305-00-721-5492	119	10		123	25
5365-00-721-7680	24	74	5365-00-753-3646	65	46
5305-00-724-7221	2	5	5365-00-753-9528	47	40
	80	3		48	34
	82	10	5310-00-754-3384	24	60
	83	14	2940-00-756-8519	27	9
	103	19	6220-00-756-8787	53	10
	134	6	5310-00-757-6377	50	4
5305-00-724-7222	87	13		51	21
	88	26	5310-00-757-6531	5	13
	103	35	6110-00-757-7187	47	61
	110	12		48	68
5305-00-724-7236	62	2	5330-00-760-7367	3	22
	82	2		28	6
	82	11	5315-00-760-7417	19	6
	83	2	5315-00-760-7421	9	12
	108	22	5315-00-760-7425	75	2
	111	8		75	8
5310-00-725-1984	61	22		128	8
	131	7	5310-00-762-6241	87	3
5305-00-725-2317	35	5	5365-00-763-5016	65	82
	93	15	5310-00-763-8901	77	29
	138	45		101	17
5310-00-725-7382	9	7		102	26
	10	22	5310-00-763-8905	45	19
	22	17		53	55
	60	31		78	57
	66	11		102	16
5305-00-726-2525	92	3		110	6
6145-00-726-7275	BULK	22		111	3
5355-00-730-8027	60	17		111	10
3110-00-731-1593	145	9		153	21
5305-00-732-0512	53	41	5310-00-763-8920	63	28
	148	12		64	36
5310-00-732-0560	32	8		80	28
	137	20		99	30
	137	41		105	5
	137	55		138	39
5365-00-734-2114	97	4		143	9
	121	33		152	13
5310-00-734-8959	47	14	5310-00-763-8921	104	1
	48	12	5365-00-763-9328	68	24
2920-00-737-3225	47	43	5305-00-765-2121	116	29
	48	37	5310-00-765-3237	67	34

CROSS- REFERENCE-INDEXES
NATIONAL STOCK NUMBER INDEX

STOCK NUMBER	FIG.	ITEM
5306-00-766-2182	142	10
5310-00-768-0318	36	23
	47	1
	53	1
	66	1
	71	68
	107	27
	136	15
	137	2
	138	1
	141	23
	148	18
5330-00-774-6894	136	5
2920-00-775-7691	57	60
6220-00-778-7213	53	18
	55	3
	57	26
	148	26
	151	6
3110-00-781-4334	7	11
5306-00-783-5183	47	68
	48	64
5306-00-783-5188	47	63
5330-00-801-3354	26	1
	61	47
	64	7
	64	22
	69	13
	70	16
	71	4
	72	6
	75	4
	79	16
	128	3
	132	5
	141	4
	145	66
	147	54
5365-00-804-9740	72	14
5977-00-809-2517	47	30
5310-00-809-3079	23	52
5310-00-809-4061	39	21
	112	5
5310-00-809-5997	2	15
	48	4
	49	3
	53	42
	62	9
	91	15
	93	17
5310-00-809-5997	99	14
	100	3
	105	7
	107	28
	114	37
	141	2
	142	11
	148	13
	152	16
5310-00-809-5998	36	2
	42	10
5306-00-809-7134	107	45
	112	14
	141	3
	143	21
	153	11
5310-00-811-2861	47	25
5360-00-812-0196	47	52
	48	47
4730-00-812-7999	33	1
5310-00-813-3653	90	32
5306-00-814-6559	3	10
5306-00-814-8967	26	7
5315-00-816-1794	34	33
	112	4
5305-00-821-3869	138	17
5310-00-822-2236	47	51
	48	46
5310-00-822-2241	47	53
	48	48
2920-00-822-2287	47	48
	48	42
5310-00-823-8803	31	15
	64	37
	137	47
5315-00-825-4591	125	12
5310-00-827-2821	47	12
	48	10
3120-00-828-6852	48	61
5365-00-828-7572	126	1
5940-00-828-8510	47	36
	48	31
5330-00-828-8639	16	14
	65	44
5977-00-828-9053	47	16
3110-00-830-8802	65	70
6220-00-832-8774	53	9
5310-00-833-9298	57	66
5330-00-835-3007	136	28
	147	17

CROSS- REFERENCE-INDEXES
NATIONAL STOCK NUMBER INDEX

STOCK NUMBER	FIG.	ITEM	STOCK NUMBER	FIG.	ITEM
5340-00-835-6504	107	50	5330-00-858-8186	86	6
2920-00-838-9344	47	47		88	11
	48	41	4320-00-858-8192	85	5
9390-00-839-1864	47	50		86	5
	48	45		88	10
5315-00-839-2326	107	19	5330-00-858-8223	130	12
	130	18	5330-00-858-8224	135	14
5315-00-839-5820	60	12	5330-00-862-6861	42	3
5315-00-839-5821	31	4	3110-00-862-7671	65	56
	93	23	5306-00-862-8901	82	5
	94	7		83	4
	95	3	5305-00-863-1627	133	2
	96	3	5330-00-863-5549	76	3
	145	51	2530-00-865-2215	144	14
	147	37	5330-00-869-6563	70	10
5315-00-839-5822	32	4	5330-00-869-6574	91	28
	60	13	5330-00-871-5332	121	18
	80	27	5306-00-874-4001	71	62
	92	9		104	13
	93	47		112	11
	137	44	2940-00-876-2181	27	3
	138	35	4730-00-877-6298	146	4
5365-00-842-2613	116	20	5305-00-879-8351	12	8
5330-00-843-7194	24	24		18	13
	24	57		66	21
	47	73		73	11
5330-00-844-1442	78	3		95	26
5315-00-844-3966	127	42	5310-00-880-7744	34	10
5340-00-844-7921	44	22		79	13
5365-00-845-1529	65	45		127	35
	121	27	5310-00-880-8203	115	21
5330-00-847-4351	15	7	4730-00-882-8621	102	10
2540-00-848-2531	78	7	5305-00-889-2999	133	9
5330-00-848-6108	84	6	2530-00-890-2229	144	24
5365-00-848-7439	80	41	2530-00-890-2233	144	7
5330-00-848-9950	145	11	5330-00-890-2235	22	26
	147	61	5365-00-891-0387	102	21
5320-00-850-3233	114	21	5315-00-891-0815	80	37
4730-00-850-3812	15	6	2920-00-891-0928	47	44
5330-00-850-7586	120	41		48	38
5310-00-851-2682	32	5	5355-00-891-4401	60	1
	79	35		127	12
	145	70	5310-00-891-4411	66	33
5330-00-851-7742	44	43	5330-00-893-5250	4	16
2930-00-852-1174	36	4	5330-00-893-7274	145	63
5310-00-852-8266	49	6		147	51
5306-00-857-5672	31	38	3120-00-893-8317	4	33
5360-00-858-6197	60	30	5360-00-894-7275	65	31
3120-00-858-6240	60	26	5330-00-895-7034	124	26
5330-00-858-8186	85	6	5305-00-897-2405	108	27

CROSS- REFERENCE-INDEXES
NATIONAL STOCK NUMBER INDEX

STOCK NUMBER	FIG.	ITEM	STOCK NUMBER	FIG.	ITEM
5306-00-897-9295	34	7	3805-00-920-7472	147	50
	139	16	5330-00-920-8186	31	49
1630-00-898-2157	90	31	2940-00-920-8228	27	4
3120-00-898-4700	75	3	5365-00-921-3208	9	1
	75	16	5330-00-921-6911	87	8
5360-00-898-6730	31	45	5330-00-921-6914	87	21
5307-00-900-5570	64	29	3120-00-921-7248	143	5
5365-00-903-7544	65	60	5340-00-922-2596	29	22
4730-00-903-7652	142	6	5310-00-922-8691	19	22
5310-00-903-8282	127	19	4730-00-923-2126	151	5
5330-00-904-0335	128	6	2590-00-923-2418	87	22
4730-00-908-3193	16	3	5330-00-923-6952	143	26
4730-00-909-8627	31	10	5330-00-923-6958	9	10
	32	12	5330-00-923-6988	36	16
	141	16	3040-00-923-7063	85	3
2940-00-910-3065	27	6A		86	3
2940-00-910-3066	27	7	2520-00-923-7084	87	26
4820-00-911-9224	87	24	3120-00-923-7103	88	14
4730-00-911-9226	87	25	3110-00-924-1971	31	44
5330-00-912-1586	96	1	5315-00-924-5894	104	19
5330-00-913-6143	135	28	2530-00-924-7864	87	10
	139	2	4730-00-924-7886	4	28
	140	11		22	27
	145	28		36	14
5330-00-913-6144	141	7		67	32
5330-00-913-8119	135	39		80	15
5330-00-913-8120	64	18		93	11
5330-00-913-8872	22	24		95	13
	61	54		119	13
	63	5	4730-00-924-7974	120	35
	71	9	3040-00-924-9564	85	16
5330-00-913-8878	13	17		86	17
3120-00-914-0691	128	5	5315-00-925-0012	102	8
	128	12	5315-00-925-0204	77	22
5330-00-914-0703	47	41	5330-00-925-4778	71	32
	48	35		95	21
5330-00-914-3320	95	12	5340-00-925-7019	16	13
5330-00-914-5310	75	6	5365-00-928-9630	123	4
5330-00-914-5821	96	44	5330-00-928-9798	44	37
5330-00-914-5846	141	40	5330-00-929-0699	64	11
5970-00-918-5568	47	21	5330-00-930-4064	64	51
	48	21		66	23
2520-00-918-9977	77	21	5306-00-930-5643	127	26
5310-00-919-2242	103	4	5330-00-930-5736	71	54
5330-00-919-2245	145	41	3110-00-930-6289	137	31
5330-00-919-2249	66	16		138	20
	96	10	5310-00-930-7013	36	69
5330-00-920-6922	15	5		53	31
5330-00-920-6924	47	71		107	43
3805-00-920-7472	145	64		108	14

CROSS- REFERENCE-INDEXES
NATIONAL STOCK NUMBER INDEX

STOCK NUMBER	FIG.	ITEM
5310-00-930-7013	112	3
	130	22
	143	19
	148	19
5330-00-930-9407	67	37
	70	8
	123	8
2530-00-930-9778	72	8
3110-00-931-7854	66	4
5315-00-931-8963	90	4
	98	11
	117	13
5330-00-933-3305	136	26
3020-00-936-3972	19	29
2990-00-936-7105	35	1
3110-00-938-5084	84	7
	122	19
5365-00-938-5568	4	20
	74	5
5330-00-941-3599	70	11
5310-00-944-5896	44	30
	91	19
	101	18
5315-00-944-7035	19	32
5330-00-944-8281	61	49
	72	2
	129	21
	141	13
	142	1
5330-00-945-0494	24	44
5340-00-945-2401	87	9
5330-00-945-4395	95	23
5340-00-945-5659	87	20
5340-00-945-5871	85	2
	86	2
5360-00-946-2127	87	5
5365-00-948-1600	67	35
5330-00-948-4063	129	1
	141	37
3110-00-948-5793	64	27
	96	9
5330-00-948-6062	63	18
3120-00-948-6453	96	38
5340-00-948-6464	68	2
5330-00-948-6482	78	46
	131	10
	132	7
	135	21
	136	42
	142	18
5330-00-948-6632	65	15
2530-00-948-9748	91	5
5330-00-948-9768	71	52
5330-00-948-9776	91	11
2530-00-949-0666	76	12
2530-00-949-0817	91	10
4330-00-949-0868	76	5
4710-00-949-0874	76	10
3110-00-949-1438	19	8
	65	17
	132	17
2530-00-949-4505	96	7
5310-00-949-9296	108	26
5360-00-950-2471	67	33
5310-00-950-2660	67	3
5310-00-950-6944	145	39
	147	70
5310-00-950-6980	76	4
5360-00-950-8041	67	19
5330-00-950-8217	47	13
	48	11
5360-00-950-8251	13	8
5330-00-952-8008	20	2
	69	2
4730-00-954-1281	4	23
5305-00-958-5245	78	28
5305-00-958-5247	12T	11
5310-00-959-1488	138	11
5305-00-959-2723	137	24
	138	62
5305-00-959-2724	127	10
5305-00-964-0503	3	8
4730-00-968-6129	37	13
	73	10
5340-00-971-4820	36	68
5310-00-972-0479	99	13
5330-00-972-7644	47	58
	48	53
5310-00-975-2075	11	9
	31	7
	31	27
	60	34
	94	21
	95	5
	138	57
5330-00-976-4695	47	70
	48	66
5310-00-978-5406	1	10
	98	5
	99	23

CROSS- REFERENCE-INDEXES
NATIONAL STOCK NUMBER INDEX

STOCK NUMBER	FIG.	ITEM	STOCK NUMBER	FIG.	ITEM
4720-00-981-8519	BULK	12	2520-01-021-9923	65	2
5365-00-983-2395	65	11	3120-01-022-3955	24	31
5310-00-984-3807	32	13	5320-01-023-2529	148	29
5305-00-984-5678	116	9	3040-01-023-7833	24	73
5305-00-984-6189	51	23	4730-01-023-8633	24	56
5305-00-984-6192	47	31	5360-01-023-9435	24	43
5340-00-985-0823	31	5	5310-01-023-9757	11	2
	94	26	2910-01-024-0938	24	75
5360-00-985-2253	49	12	2910-01-024-0939	24	33
5310-00-987-1294	21	11	2990-01-024-1509	24	2
	114	10	2910-01-024-1510	24	10
2920-00-993-4233	47	45	2910-01-024-1512	24	42
	48	39	2910-01-024-2868	24	41
5330-00-997-7230	63	27	2910-01-024-2869	24	89
	71	22	5330-01-024-3368	24	69
	95	22	5365-01-024-3727	24	13
5310-00-999-2527	47	74	5305-01-024-4773	24	85
	48	59	5305-01-024-4774	24	77
5330-00-999-5504	66	27	5330-01-024-4862	25	9
	95	19	5365-01-024-5118	24	37
5310-00-999-8286	9	2	5306-01-024-7524	24	67
5310-00-999-8287	9	3	3110-01-024-9817	122	2
5310-00-999-8288	21	8		123	29
	40	12	5365-01-024-9868	132	4
5315-00-999-8416	24	49		145	67
6620-01-008-1893	38	6	5306-01-025-3843	90	25
5330-01-013-3723	136	23	5305-01-025-4359	24	65
5305-01-015-6841	12	11	5305-01-026-9518	15	14
	14	2		21	4
	18	4		43	12
	20	8		61	53
	31	19		95	16
	60	46		103	7
	63	15		107	20
	64	44		137	28
	71	28		140	2
	73	9	5365-01-026-9555	67	38
	80	14	2520-01-028-8096	145	10
	5	27		147	62
	106	25	5365-01-031-8183	78	47
	129	25		131	11
	137	6		132	6
	145	45		135	20
	147	38		136	35
2940-01-016-4654	27	1	3040-01-032-2286	66	3
5330-01-017-6535	139	10	5305-01-032-2312	43	15
	140	1	5365-01-032-7272	65	40
5330-01-019-2448	120	32	5330-01-032-7315	5	7
	121	36	5365-01-035-4899	132	32
2910-01-021-1845	25	10		135	22

CROSS- REFERENCE-INDEXES
NATIONAL STOCK NUMBER INDEX

STOCK NUMBER	FIG.	ITEM	STOCK NUMBER	FIG.	ITEM
5365-01-035-4899	136	37	5305-01-053-7366	24	54
4730-01-035-6669	33	7	2815-01-053-7470	64	14
5365-01-036-0010	147	53	2520-01-053-7539	74	3
6220-01-037-5622	53	8	3110-01-053-7564	121	7
3110-01-037-7207	121	6	5306-01-054-5310	17	8
5330-01-038-7345	23	22	5310-01-058-8071	127	3
5365-01-040-1344	136	40	2910-01-058-8075	60	48
5330-01-043-5565	71	26	5940-01-058-9090	57	33
	135	13	2920-01-058-9099	53	32
	136	22		57	32
5310-31-047-6064	44	3	5940-01-058-9112	51	2
5961-01-047-6729	44	13		57	71
5330-01-048-6001	80	5	5305-01-058-9146	50	7
2590-01-049-5318	17	7	5330-01-058-9176	36	5
2815-01-049-8552	17	6	5940-01-059-0873	58	4
5330-01-050-5024	124	24	5920-01-059-0881	51	13
5365-01-050-8008	21	9		148	42
2930-01-050-8012	42	7	5920-01-059-0882	51	8
5310-01-050-8016	42	1		148	47
5310-01-051-2300	19	30	5360-01-059-0883	148	44
5305-01-051-2302	101	10	5999-01-059-0884	51	9
4730-01-051-2312	71	38		51	15
	79	17		148	43
5310-01-051-2360	22	31		143	48
	23	5	5920-01-059-0894	148	45
	25	14	5310-01-059-0992	57	64
	57	49	3110-01-059-2029	121	32
	79	7	4730-01-059-5352	36	19
	90	11	5310-01-059-7159	70	5
4730-01-051-3134	71	21	2520-01-059-7175	70	4
	140	7	5315-01-059-7198	65	9
4730-01-051-5256	141	10	5307-01-059-9293	70	13
4730-01-051-5257	141	38	2940-01-059-9296	70	12
5340-01-051-6767	140	19	4730-01-059-9344	29	33
2520-01-051-6769	141	30		119	24
4730-01-051-7600	141	31	2520-01-059-9381	132	2
4730-01-051-8745	79	18	2520-01-059-9414	67	31
5315-01-052-3942	103	24	4730-01-059-9435	17	4
5330-01-053-2907	48	56		29	11
5306-01-053-3837	99	21		62	13
	101	9		119	20
5340-01-053-3843	94	20	2520-01-059-9520	75	15
	95	4	5306-01-059-9566	130	5
4820-01-053-4586	24	83	5340-01-061-4018	15	12
5365-01-053-4681	29	23	5310-01-061-8633	69	9
4730-01-053-4687	71	57	5330-D1-061-9380	24	52
5305-01-053-4707	47	29	5330-01-061-9382	24	51
5305-01-053-4850	47	24	5310-01-062-0380	24	39
5330-01-053-7021	48	58	3110-01-062-0950	24	30
5306-01-053-7322	42	13	2910-01-062-1354	26	4

CROSS- REFERENCE-INDEXES
NATIONAL STOCK NUMBER INDEX

STOCK NUMBER	FIG.	ITEM	STOCK NUMBER	FIG.	ITEM
5330-01-062-2852	24	70	2520-01-066-9192	143	4
4710-01-062-3719	BULK	17	5315-01-067-1727	65	42
5340-01-062-5196	137	54	3110-01-067-1732	65	36
	138	51	3020-01-067-2172	65	64
	138	68	3020-01-067-2173	65	65
2420-01-062-5208	106	11	3020-01-067-2174	65	85
5315-01-062-5209	65	25	3020-01-067-2175	65	62
	65	52	3020-01-067-2176	65	68
	65	79	5365-01-067-2179	23	11
5340-01-062-5938	129	13		24	81
9340-01-062-6129	147	65		125	18
4730-01-063-0685	142	2	4720-01-067-2180	140	17
5365-01-063-0778	25	1	3020-01-067-4689	65	28
4730-01-063-0817	20	7	5360-01-067-5538	64	19
	69	5	5360-01-067-5545	66	7
5305-01-063-1423	60	3	2530-01-067-5556	65	39
4730-01-063-3007	119	22	2530-01-067-5557	65	10
5330-01-063-9839	12	3	3020-01-067-5558	65	27
	73	4	2520-31-067-5621	124	11
5315-01-064-1015	64	33	3040-01-067-5649	19	10
5310-01-064-1494	23	31	5330-01-067-5652	39	7
5340-01-064-2275	64	10		40	6
5330-01-064-3774	65	29	2530-01-067-5667	23	48
5330-01-064-3775	65	50	5360-01-067-5668	23	49
5315-01-064-3778	66	32	2530-01-067-5675	19	13
5365-01-064-3788	66	8	5330-01-067-5727	10	13
2920-01-064-3809	57	59	5330-01-067-5728	37	5
5306-01-064-3842	114	41	5330-01-067-5729	19	25
5355-01-064-3851	50	5	2530-01-067-8011	23	21
2590-01-064-7493	36	7	5315-01-067-8066	24	21
5330-01-064-8247	63	16	2815-01-068-1729	19	4
5310-01-065-9110	57	65	4710-01-068-3420	15	17
2520-01-066-0504	144	22	5330-01-068-6073	132	10
2520-01-066-0510	127	20	4730-01-068-6077	148	24
	127	30		151	1
5340-01-066-0526	36	8	4730-01-068-6081	62	19
2920-01-066-0593	57	10		151	19
	57	58	5330-01-068-6104	2	8
3120-01-066-2505	11	16A	5365-01-068-6114	65	83
4720-01-066-4587	BULK	9	2520-01-068-6120	65	30
2520-01-066-4723	78	54	3110-01-068-6123	65	13
5315-01-066-5213	65	35	5365-01-068-6124	51	14
5310-01-066-5275	137	46		64	46
4330-01-066-7713	120	19	5325-01-068-6227	145	55
2530-01-066-8462	67	26		147	64
5315-01-066-8470	92	10	5310-01-068-7065	23	29
5310-01-066-9171	128	19	4730-01-068-7106	67	22
3110-01-066-9172	92	5	4730-01-068-7122	24	15
	94	13	3040-01-068-7123	23	20
	94	25	4730-01-068-7124	24	55

CROSS- REFERENCE-INDEXES
NATIONAL STOCK NUMBER INDEX

STOCK NUMBER	FIG.	ITEM
2930-01-068-7125	42	2
2540-01-068-7149	57	31
3110-01-068-7155	68	6
2895-01-068-7158	65	58
5340-01-068-7167	64	45
5340-01-068-7178	92	17
5360-01-068-7181	23	40
2815-01-068-8565	15	18
5305-01-068-9704	23	30
3020-01-068-9705	24	47
3020-01-068-9706	24	46
3040-01-068-9709	24	71
5315-01-068-9711	23	16
	24	29
3110-01-068-9716	23	15
5305-01-068-9719	23	26
4710-01-068-9728	17	3
2530-01-068-9744	65	71
2530-01-068-9745	65	53
5315-01-068-9758	23	38
4310-01-068-9775	23	41
3040-01-068-9779	24	76
5315-01-068-9780	24	45
5330-01-068-9824	23	32
4730-01-069-0768	151	10
4730-01-069-0769	29	29
	62	15
	151	11
5340-01-069-0788	67	20
4720-01-069-0789	16	4
2530-01-069-0791	94	8
2530-01-069-0802	57	36
2510-01-069-0804	107	18
2520-01-069-0806	65	59
	65	75
5360-01-069-0308	116	10
5360-01-069-0812	96	33
4730-01-069-0859	29	10
5306-01-069-0877	23	51
5365-01-069-0882	19	15
2520-01-069-0891	76	2
2840-01-069-0899	65	8
5340-01-069-0904	140	16
5340-01-069-0905	140	15
5360-01-069-1390	80	39
5315-01-069-1410	24	25
5315-01-069-1414	23	37
5307-01-069-1419	13	6
5365-01-069-1426	110	3
	111	7
5360-01-069-1437	116	25
5330-01-069-1478	10	4
5307-01-070-2014	10	17
5365-01-079-1624	135	24
4730-01-079-4374	120	23
3110-01-079-7024	44	26
5315-01-080-3033	119	3
5340-01-088-2385	34	15
5330-01-088-6106	135	17
2530-01-090-6880	82	12
	83	13
4720-01-093-7331	BULK	4
5340-01-093-7394	24	1
5330-01-093-7888	10	20
5330-01-093-8484	118	3
5330-01-093-8485	93	7
5340-01-094-0721	23	25
5365-01-094-3237	23	23
4730-01-094-7469	79	23
	79	28
	142	8
5330-01-094-8058	38	5
5310-01-094-8702	23	24
5310-01-094-8810	34	5
	36	29
	53	5
	54	7
	55	8
	71	45
	80	21
	106	5
	107	12
	108	9
	115	11
	115	15
	117	4
	129	6
	139	24
	142	15
5306-01-094-9106	19	24
	19	31
	37	2
	38	3
	60	45
	75	14
	114	5
	120	45
	122	16
	123	2
	137	14

CROSS- REFERENCE-INDEXES
NATIONAL STOCK NUMBER INDEX

STOCK NUMBER	FIG.	ITEM	STOCK NUMBER	FIG.	ITEM
4730-01-095-0075	79	22	5315-01-098-3928	93	4
	79	29	5310-31-098-7244	64	42
	142	9	2920-01-099-3085	44	34
5306-01-095-1238	106	8	5340-01-099-8154	106	30
5310-01-095-1246	120	47	5330-01-100-9046	124	4
5306-01-095-1486	46	5	3120-01-101-5088	47	9
5360-01-095-1834	72	3		48	9
5305-01-095-3292	130	2	3120-01-101-5089	47	57
5305-01-095-3961	79	8		48	52
5310-01-095-4631	10	9	5930-01-101-7845	34	32
	62	1	5340-01-102-1789	117	5
	91	24	5310-31-102-2477	98	4
	99	28		99	7
	103	20		101	8
	104	9		107	38
5340-01-095-5004	114	33		144	16
3120-01-095-5803	65	55	5310-01-102-9866	136	2
5310-01-095-5910	34	11		141	24
5930-01-095-6194	51	4	5340-01-103-3617	62	16
5310-01-096-6984	107	34	2990-01-103-3619	30	13
5940-01-097-3578	34	18	2990-01-103-3652	60	33
	34	31		138	56
6220-01-097-4320	53	7	5365-01-103-3673	67	30
5310-01-097-6720	90	18	5307-01-103-3673	24	28
	107	29	5360-01-103-3676	24	94
	115	13	2990-01-103-3684	23	36
	117	9	2990-01-103-3696	BULK	1
5935-01-097-7239	53	39	4720-01-103-3697	BULK	7
	53	46	4730-01-103-3727	33	5
	58	2	5315-01-103-3917	61	19
	58	9	5306-01-103-6598	143	7
	148	17	2990-01-103-6635	57	38
	148	23	5940-01-103-6808	51	17
	148	40	2990-01-103-6817	4	13
5935-01-097-7240	53	29	6145-01-103-7036	BULK	25
	53	37	5365-01-103-7156	24	95
	53	45	5365-01-103-7157	24	93
	148	3	3110-01-103-9158	60	37
5935-01-097-7247	58	16	5999-01-104-0445	44	16
5306-01-097-7874	12	14	4820-01-104-4091	38	4
	14	8	4820-01-104-5111	25	6
	120	13	2910-01-104-9318	24	64
5330-01-097-8142	39	19	5306-01-105-1790	136	11
	40	18		145	38
5355-01-097-8255	79	1		147	1
5310-01-097-8955	141	34	4820-01-105-2265	25	5
5340-01-097-9213	26	9	2910-01-105-3610	24	40
5935-01-097-9974	52	2	5310-01-105-9384	116	30
5310-01-098-0634	79	39	5360-01-105-9599	24	38
	106	9	5315-01-106-0333	24	18

CROSS- REFERENCE-INDEXES
NATIONAL STOCK NUMBER INDEX

STOCK NUMBER	FIG.	ITEM	STOCK NUMBER	FIG.	ITEM
5330-01-106-0940	141	12	5340-01-115-3548	48	7
4730-01-106-4024	23	13		48	50
	24	53		48	63
5360-01-106-4246	125	9	5340-01-116-1312	22	6
4730-01-106-7246	36	71	5340-01-116-3799	22	7
	37	8	2815-01-116-5920	7	5
5330-01-106-8540	23	43	5306-01-116-9622	13	12
5310-01-107-3590	2	2		131	6
	46	6	5935-01-118-8884	58	1
5330-01-107-3603	23	28		58	7
5307-01-107-3674	21	7	3110-01-119-1128	23	18
5315-01-107-3758	24	58	5310-01-119-1442	114	42
5360-01-107-3891	25	4	5310-01-119-1730	96	2
5340-01-107-4111	149	3	2540-01-119-1743	108	6
5340-01-107-4130	12	4	5120-01-119-1748	153	24
	73	3	5120-01-119-1749	153	26
5330-01-107-4168	23	8	5120-01-119-1750	153	25
5307-01-107-4197	10	2	2815-01-119-2241	5	8
5315-01-107-4226	4	15	5120-01-123-5884	153	3
5330-01-107-5182	67	8	3020-01-123-5929	6	3
5360-01-107-5441	23	47	5330-01-123-6209	145	69
3040-01-107-8262	23	17		147	59
2520-01-107-9188	12	15	5365-01-124-2945	132	19
	73	5	2815-01-125-1675	3	4
5315-01-108-1232	24	97	2910-01-125-4534	24	72
5310-01-108-7538	137	51	2815-01-125-4580	9	9
	138	42	2815-01-125-5535	11	5
5310-01-108-8405	147	45	3040-01-125-5536	11	11
5306-01-110-1130	84	16	2815-01-125-5544	10	1
	145	35	2815-01-125-5947	9	21
	147	71	4730-01-125-9752	119	22
5330-01-110-1866	KIT		2815-01-125-9819	10	16
2920-01-112-0988	47	64	3020-01-126-0375	11	17
2920-01-112-2687	47	69	4730-01-126-4892	19	26
	48	65	2930-01-126-4959	39	20
9390-01-112-3500	47	8		40	19
	47	56	3020-01-126-8956	11	3
	47	67	3020-01-126-9232	5	2
	48	8	2815-01-127-2912	4	12
	48	51	3020-01-127-3363	39	11
	48	62	3020-01-127-5195	11	6
3110-01-113-0637	121	31	4730-01-127-5373	20	11
5315-01-113-2356	66	14	3040-01-127-6149	39	8
	66	30	5330-01-127-8566	4	11
7690-01-114-3702	133	31	5330-01-127-8567	24	78
5340-01-114-9149	22	10	5330-01-127-8574	37	11
5340-01-114-9150	22	14	5306-01-127-9361	2	16
5340-01-115-3548	47	7		36	3
	47	55		43	5
	47	66		78	22

CROSS- REFERENCE-INDEXES
NATIONAL STOCK NUMBER INDEX

STOCK NUMBER	FIG.	ITEM	STOCK NUMBER	FIG.	ITEM
5306-01-127-9361	88	5	2910-01-142-2643	25	7
	91	14	2910-01-142-3204	30	12
	105	9	5340-01-142-3207	36	48
	111	14	3020-01-142-3213	36	36
	112	16	3020-01-142-3214	36	45
	137	52	5430-01-142-3215	36	63
	145	26	5430-01-142-3216	36	12
	147	19	6680-01-142-6218	30	2
	153	7	3020-01-143-1520	42	15
3120-01-128-1114	4	26	4710-31-143-1528	22	9
5330-01-128-4130	3	12	4730-01-143-4326	119	16
5330-01-128-4137	10	3	2815-01-143-4335	3	14
4710-01-128-4741	15	8	2910-01-143-4403	22	3
5330-01-128-5196	3	11	5330-01-143-5059	135	37
5330-01-128-6854	5	5	2540-01-143-8037	41	6
4710-01-129-5674	15	2	3040-01-143-8049	31	46
2990-01-129-5893	78	62	4710-01-143-9128	26	3
5340-01-129-5917	9	13	4710-01-144-0294	22	4
3110-01-129-6756	44	39	5306-01-144-0396	32	14
5310-01-129-7508	47	4	5330-01-144-0406	KIT	
5310-01-130-0611	3	26	4320-01-144-0413	63	6
5365-01-130-4159	60	41	2910-01-144-1532	23	6
6140-01-130-6646	57	28	2530-01-144-2146	144	1
3120-01-130-9116	7	8	4730-01-144-2386	20	3
5305-01-131-5030	22	8		69	3
4720-01-132-0980	BULK	8	4710-01-144-2667	22	5
5315-01-132-1188	4	6	4710-01-144-2668	22	12
5330-01-132-2201	39	23	4710-01-144-2669	22	15
	40	22	2930-01-144-3418	39	16
5340-01-132-4704	47	59		40	15
	48	54	2510-01-144-3568	41	1
3040-01-132-4761	9	14A	4710-01-144-3606	20	10
5970-01-137-3420	47	22	4710-01-144-3607	22	16
	48	22	4730-01-144-3766	38	2
5977-01-137-3421	48	23	5360-01-144-4403	24	9
5970-01-138-7044	48	20	2930-01-144-5767	36	59
2920-01-138-7045	48	60	3040-01-144-7812	31	37
2920-01-138-7046	47	6	2510-01-144-8615	41	5
	48	6	2920-01-144-8796	43	1
2920-01-140-0116	49	13	3040-01-145-1891	31	48
4320-01-140-4299	134	9	2520-01-145-4314	63	23
4920-01-140-7569	34	20	2520-01-145-4315	67	1
2910-01-140-8212	24	59		67	39
5995-01-140-9058	48	2	2520-01-145-4328	63	1
2815-01-141-1322	1	1	4320-01-145-6113	KIT	
2815-01-142-1295	24	14	5340-01-145-8462	31	26
2930-01-142-1296	36	40	5310-01-146-1218	15	11
3040-01-142-2287	31	29	2910-01-146-4165	22	28
6110-01-142-2424	44	8	2815-01-146-4526	3	2
2940-01-142-2642	25	3	5306-01-146-5675	78	10

CROSS- REFERENCE-INDEXES
NATIONAL STOCK NUMBER INDEX

STOCK NUMBER	FIG.	ITEM	STOCK NUMBER	FIG.	ITEM
4710-01-146-5853	34	19	3040-01-148-2816	24	19
4730-01-146-5883	33	3	3020-01-148-3798	11	15
2815-01-146-5926	18	2	5330-01-148-5891	23	12
4820-01-146-5933	24	34		24	80
4710-01-146-5963	29	13		125	17
4710-01-146-5964	29	20		132	20
4710-01-146-5965	29	21	5340-01-148-7396	19	3
4710-01-146-5966	29	32	4820-01-148-8161	72	4
4710-01-146-5967	33	2	5995-01-148-8196	57	25
2520-01-146-7213	63	11	5995-01-148-8197	57	23
2815-01-146-8869	2	14	3040-01-148-8880	24	22
2940-01-146-8870	27	11	4710-01-148-9496	32	17
4330-01-146-8899	25	8	2520-01-148-9519	62	8
5365-01-147-0083	42	8	2520-01-148-9520	62	3
4820-01-147-1309	24	36	2590-01-148-9536	17	1
3040-01-147-1360	24	16	5340-01-148-9802	42	12
2910-01-147-1376	23	33	5340-01-148-9803	42	128
5365-01-147-1448	36	61	5365-01-148-9811	36	58
5365-01-147-1450	24	90	5365-01-149-0888	36	32
2930-01-147-2241	10	5	2910-01-149-0937	24	17
2510-01-147-2252	2	11	3040-01-149-1235	75	9
	2	13A	5310-01-149-1946	36	62
2540-01-147-2256	32	6	6220-01-149-2803	53	13
5340-01-147-2808	22	19	3020-01-149-3164	11	12
2910-01-147-3000	24	48	2540-01-149-3344	150	3
2910-01-147-3001	23	27	4820-01-149-3722	63	21
2990-01-147-3003	21	10	2930-01-149-3801	36	54
5340-01-147-4097	2	7	2520-01-149-3802	62	4
5306-01-147-4110	31	25	4820-01-149-3833	67	9
5365-01-147-4323	24	91	5340-01-149-4421	23	44
5975-01-147-4455	34	12	4730-01-149-4969	28	3
3040-01-147-5481	23	39	4730-01-149-4970	151	3
2930-01-147-5534	36	9	2910-01-149-5000	36	22
4730-01-147-5535	36	73	2990-01-149-5010	24	5
2930-01-147-5536	36	51	3040-01-149-5043	4	8
2590-01-147-5578	36	15	4710-01-149-5080	151	18
4710-01-147-6388	16	6	4730-01-149-5082	33	10
5340-01-147-6397	13	10	5340-01-149-5256	60	21
3040-01-147-6412	42	12A	5340-01-149-5988	33	9
4710-01-147-6490	29	12	2930-01-149-6719	37	3
4710-01-147-6491	29	28	2590-01-149-6777	55	6
5340-01-147-7948	10	21	5310-01-149-7188	24	4
5340-01-147-8215	20	5	2910-01-149-7860	34	27
2930-01-147-9326	36	10	4720-01-150-0882	BULK	5
2930-01-147-9327	36	1	4820-01-150-0911	67	17
5365-01-147-9591	24	3	4820-01-150-0912	67	27
5360-01-148-0305	24	35	4820-01-150-0913	67	2
4730-01-148-0865	64	32	4820-01-150-0965	125	5
6220-01-148-1686	53	15		125	10
2815-01-148-2595	7	1	5940-01-150-1426	59	6

CROSS- REFERENCE-INDEXES
NATIONAL STOCK NUMBER INDEX

STOCK NUMBER	FIG.	ITEM	STOCK NUMBER	FIG.	ITEM
5970-01-150-1446	49	8	5330-01-152-0601	150	5
4820-01-150-1736	67	5	5340-01-152-2540	64	2
2520-01-150-1737	60	4	5340-01-152-4538	66	24
3040-01-150-1749	60	25	5340-01-152-4541	3	23
3020-01-150-1751	60	2	9905-01-152-5326	34	21
5340-01-150-2240	62	6	3020-01-152-5585	65	57
3040-01-150-2274	66	28	3020-01-152-5586	65	33
5975-01-150-3454	57	9	2520-01-152-7749	61	26
	57	57	2520-01-152-7750	65	16
3040-01-150-3669	64	48	3040-01-152-7823	61	20
2930-01-150-3672	36	27	2520-01-152-7824	65	67
4820-01-150-3859	67	36	3040-01-152-7825	65	51
4820-01-150-3860	67	16	2520-01-152-7826	65	41
3040-01-150-3937	61	38	3020-01-152-7851	65	73
4710-01-150-3951	62	14	5977-01-153-0247	48	26
4710-01-150-3952	62	18	5977-01-153-0322	48	24
2930-01-150-4922	36	76	5307-01-153-0874	60	51
2520-01-150-5419	67	43	5306-01-153-1362	27	10
3040-01-150-5425	60	16	5307-01-153-1409	32	21
3010-01-150-5434	65	61	2815-01-153-1615	7	4
5340-01-150-6251	55	5	2815-01-154-1242	7	3
5360-01-150-6272	67	13	5340-01-154-4059	148	32
5340-01-150-7766	60	14	5340-01-154-5252	4	17
5340-01-150-9810	10	12	5340-01-154-6546	67	23
5340-01-151-2810	24	84	3120-01-154-7173	32	22
2530-01-151-3633	60	19	3020-01-154-7961	63	9
4820-01-151-3650	67	29	2920-01-154-8021	44	17
4820-01-151-3651	67	25	2920-01-154-8144	34	8
5340-01-151-5227	34	6	5340-01-154-8437	22	2
3040-01-151-5694	60	56	4T30-01-155-0222	71	53
3040-01-151-5695	60	49	4820-01-155-0235	72	7
3040-01-151-5696	60	53	3020-01-155-0355	65	32
4710-01-151-5709	151	9	3020-01-155-0356	65	4
5340-01-151-6146	60	42	3110-01-155-1756	24	11
5365-01-151-6167	67	42	5330-01-155-2584	2	13
5995-01-151-6312	148	2	5340-01-155-2595	32	9
5995-01-151-6364	57	24	5315-01-155-2618	125	7
5340-01-151-7395	39	4		125	8
	40	5	5330-01-155-4283	10	10
9905-01-151-7584	65	20	5340-01-155-4485	67	7
4720-01-151-8127	16	5	4820-01-155-5024	72	9
5310-01-151-8350	60	11	4730-01-155-5055	71	36
3120-01-151-8371	5	9		79	25
5365-01-151-8595	56	20	4730-01-155-5059	71	34
5330-01-151-9294	18	9	2930-01-155-5095	36	26
5330-01-151-9295	13	9	2520-01-155-5096	65	34
5340-01-151-9297	56	19	2520-01-155-5097	64	26
3120-01-151-9299	5	9	2520-01-155-5098	75	1
5307-01-151-9304	60	58	3020-01-155-5156	75	11
5340-01-151-9308	57	17	4710-01-155-5191	71	43

CROSS- REFERENCE-INDEXES
NATIONAL STOCK NUMBER INDEX

STOCK NUMBER	FIG.	ITEM	STOCK NUMBER	FIG.	ITEM
4710-01-155-5192	71	65	3040-01-158-8691	77	3
4820-01-155-5809	72	10	3040-01-158-8692	120	22
3040-01-155-5859	75	10	2510-01-158-8797	102	34
6350-01-155-5993	148	5	3040-01-158-9329	127	41
3110-01-155-6124	66	6	3040-01-158-9330	130	28
5340-01-155-6148	32	2	3040-01-158-9331	64	49
5307-01-155-6687	60	35	4320-01-158-9333	KIT	
2910-01-155-7936	25	2	2510-01-158-9351	106	10
2520-01-155-7937	61	30	2510-01-158-9354	82	15
2520-01-155-7963	65	48	3020-01-158-9401	68	8
5340-01-155-8733	60	23	3020-01-158-9402	68	19
5970-01-156-0688	58	6	3040-01-159-0162	85	18
3110-01-156-5289	61	31		86	19
5306-01-156-5437	147	27	4820-01-159-0852	125	11
3020-01-156-5940	65	43	3040-01-159-0862	92	14
5315-01-156-6567	32	18	3040-01-159-0909	77	26
2940-01-156-7277	70	14	3040-01-159-0931	61	16
5340-01-156-8752	148	30	2520-01-159-0995	66	5
3120-01-156-9486	5	9	4820-01-159-1012	67	12
3120-01-156-9487	5	9	5306-01-159-1513	39	5
6685-01-156-9713	150	7	5305-01-159-1552	60	55
5340-01-156-9918	23	4	5365-01-159-1561	87	6
3120-01-157-0913	5	9	5365-01-159-1562	21	13
5365-01-157-0917	66	25	5310-01-159-1871	93	18
5340-01-157-0972	71	23	2520-01-159-2719	78	31
5360-01-157-0998	67	24	3040-01-159-2731	121	26
5340-01-157-2056	71	44	2510-01-159-2742	102	32
5310-01-157-3385	55	4	2510-01-159-2743	102	33
5310-01-157-3394	99	16	2510-01-159-2744	102	35
	101	12	4710-01-159-2788	68	9
5365-01-157-5068	2	3	4710-01-159-2789	68	12
6685-01-157-5477	150	8	3040-01-159-2881	92	4
5365-01-157-6106	71	2	3040-01-159-2882	93	2
5935-01-158-0035	57	7	2930-01-159-2910	103	31
5935-01-158-0364	58	10	4710-01-159-2927	68	15
5306-01-158-1154	13	15	3040-01-159-2950	96	48
5340-01-158-1165	71	41	3040-01-159-2963	93	10
5310-01-158-2006	36	64	3040-01-159-2978	80	2
5310-01-158-2007	36	24	4820-01-159-3012	135	19
6620-01-158-2909	150	9	3040-01-159-3017	66	29
6620-01-158-2910	150	2	3020-01-159-3036	91	21
3010-01-158-4092	126	2	3040-01-159-3040	66	31
3040-01-158-6202	91	22	3040-01-159-3041	130	16
3120-01-158-6680	88	8	3040-01-159-3352	124	6
5340-01-158-6754	93	13	2530-01-159-3446	82	13
5340-01-158-6755	114	30	3040-01-159-3487	124	9
2520-01-158-6838	65	74	3040-01-159-348S	135	30
4820-01-158-6839	125	2		136	3
4820-01-158-6861	134	14	3040-01-159-3510	80	2
3040-01-158-8578	61	9	3040-01-159-3588	77	12

CROSS- REFERENCE-INDEXES
NATIONAL STOCK NUMBER INDEX

STOCK NUMBER	FIG.	ITEM
3010-01-159-3591	77	11
5310-01-159-4501	36	56
	36	78
2530-01-159-5833	93	37
2930-01-159-5861	103	30
3040-01-159-5863	103	32
2520-01-159-5869	78	15
2530-01-159-5870	80	42
2910-01-159-5883	30	7
2520-01-159-5884	91	7
2590-01-159-5901	80	18
3040-01-159-5903	122	4
3040-01-159-5904	124	14
2530-01-159-5907	80	31
4820-01-159-5909	80	34
3040-01-159-5944	92	15
3020-01-159-5945	124	20
3040-01-159-5946	93	45
3040-01-159-5947	93	51
3040-01-159-5948	93	22
4710-01-159-5982	79	26
4710-01-159-5983	79	24
5365-01-159-6679	18	12
4730-01-159-7677	119	24
2815-01-159-7706	3	27
3040-01-159-7774	121	16
2530-01-159-7776	91	27
3040-01-159-7827	80	6
3040-01-159-7828	80	6
2530-01-159-7830	91	16
4820-01-159-7837	96	41
4730-01-159-7840	120	20
3040-01-159-7951	61	18
2530-01-159-8680	89	1
2530-01-159-8742	87	27
2530-01-159-8743	89	5
2530-01-159-8744	89	8
2530-01-159-8745	89	17
2530-01-159-8746	89	7
2530-01-159-8747	89	16
2530-01-159-8748	89	6
2540-01-159-8749	92	19
2510-01-159-8750	97	6
2530-01-159-8751	97	12
2530-01-159-8752	97	15
2510-01-159-8753	97	13
2510-01-159-8754	102	24
2930-01-159-8755	110	10
2510-01-159-8756	112	15
2510-01-159-8797	112	12
3040-01-159-8804	94	5
3040-01-159-8805	93	9
3040-01-159-8807	93	6
4820-01-159-8809	93	8
2510-01-159-8867	102	31
2510-01-159-8868	102	36
2540-01-159-8879	92	8
5306-01-159-9328	111	9
5315-01-159-9438	94	17
5360-01-159-9495	96	42
5365-01-159-9499	89	10
4720-01-159-9737	71	17
3030-01-159-9742	42	14
2510-01-159-9781	112	18
3830-01-159-9782	112	2
2510-01-159-9783	113	7
2510-01-159-9784	113	10
2510-01-159-9792	112	19
2510-01-159-9793	112	13
2510-01-159-9794	112	20
3020-01-159-9797	121	24
3020-01-159-9798	121	29
2520-01-159-9803	78	11
2540-01-159-9805	116	28
3110-01-160-0455	78	52
5365-01-160-0596	114	26
5310-01-160-0787	96	36
3110-01-160-0800	68	26
5340-01-160-0837	82	17
2530-01-160-0845	91	12
2510-01-160-0846	102	4
4820-01-160-0852	96	40
3040-01-160-1057	127	38
2530-01-160-1596	87	15
2510-01-160-1608	KIT	
2990-01-160-1659	21	2
5310-01-160-2034	56	22
5330-01-160-2124	91	13
5340-01-160-2302	16	10
5315-01-160-2315	87	16
5340-01-160-2351	97	16
5340-01-160-2354	22	13
5340-01-160-2374	94	16
5340-01-160-2431	93	28
5340-01-160-2444	97	10
5340-01-160-2464	53	24
	53	36
	55	15
	57	67
	148	22

CROSS- REFERENCE-INDEXES
NATIONAL STOCK NUMBER INDEX

STOCK NUMBER	FIG.	ITEM	STOCK NUMBER	FIG.	ITEM
5340-01-160-2464	148	41	5340-01-160-4676	93	25
5340-01-160-2491	103	25	5340-01-160-4698	106	1
5995-01-160-3599	59	3	3110-01-160-4713	61	35
4730-01-160-3603	129	20	3110-01-160-4714	84	18
2530-01-160-3621	82	13	5365-01-160-4721	24	92
3020-01-160-3640	127	9	5365-01-160-4727	104	3
4710-01-160-3657	71	10	5365-01-160-4733	106	27
4710-01-160-3658	71	16	5365-01-160-4738	121	22
4710-01-160-3659	71	37	7690-01-160-5205	137	61
4710-01-160-3660	71	56	7690-01-160-5206	133	18
4710-01-160-3661	71	64	7690-01-160-5207	133	30
4710-01-160-3662	119	21	6680-01-160-5291	123	9
5340-01-160-3902	113	4	3040-01-160-5875	66	13
5330-01-160-3926	89	9	5340-01-160-6800	116	4
5305-01-160-3946	55	1	5360-01-160-6911	80	35
5306-01-160-3949	87	12	5340-01-160-6915	114	24
5310-01-160-3967	97	9	5340-01-160-7320	120	25
5310-01-160-3978	97	8	5340-01-160-7614	79	37
5330-01-160-3988	61	8	5360-01-160-7762	91	9
5330-01-160-3989	12	1	5340-01-160-7776	114	14
	73	6	3020-01-160-9355	77	27
5330-01-160-3992	63	12	5310-01-161-0004	107	23
5340-01-160-4008	104	4	4730-01-161-0160	119	25
3110-01-160-4016	68	25	3040-01-161-0179	80	4
5340-01-160-4030	80	46	2530-01-161-0185	89	12
5340-01-160-4031	97	1	3010-01-161-0220	124	12
5340-01-160-4032	114	28	5365-01-161-0257	96	43
5340-01-160-4074	97	16	5365-01-161-0259	107	14
5340-01-160-4081	93	49	4710-01-161-0262	71	3
5340-01-160-4083	93	44	4710-01-161-0263	71	6
5340-01-160-4084	92	11	4710-01-161-0265	120	39
5340-01-160-4097	68	22	5315-01-161-0405	126	3
3120-01-160-4111	93	53	5330-01-161-0895	130	10
5306-01-160-4495	102	19	5999-01-161-0974	5	12
5306-01-160-4498	42	4	5340-01-161-0977	107	47
5305-01-160-4505	60	27	3020-01-161-0978	122	5
5305-01-160-4527	65	22		123	33
5310-01-160-4532	77	15	3020-01-161-0980	124	17
5310-01-160-4533	121	39	3040-01-161-0993	92	18
5310-01-160-4538	63	13	5340-01-161-2249	93	19
5310-01-160-4539	118	1	5330-01-161-2429	131	3
5310-01-160-4549	88	7		132	33
5330-01-160-4569	63	26	5340-01-161-2533	71	47
5330-01-160-4575	120	28	5330-01-161-2610	36	60
5340-01-160-4588	103	11	5330-01-161-2611	64	1
3120-01-160-4604	80	12	5330-01-161-2612	77	13
5365-01-160-4615	107	42	5330-01-161-2613	120	10
5315-01-160-4640	91	30	5365-01-161-2642	60	9
5315-01-160-4647	60	29	5365-01-161-2643	102	28
5315-01-160-4654	93	43	5365-01-161-2644	93	42

CROSS- REFERENCE-INDEXES
NATIONAL STOCK NUMBER INDEX

STOCK NUMBER	FIG.	ITEM	STOCK NUMBER	FIG.	ITEM
5365-01-161-2648	30	14	5340-01-161-9146	120	30
5307-01-161-2653	36	33	5340-01-161-9147	115	4
3020-01-161-2763	124	21	5315-01-161-9153	66	15
3010-01-161-2770	124	29	5330-01-161-9158	KIT	
5365-01-161-2794	92	1	5330-01-161-9159	KIT	
5365-01-161-2795	88	4	5340-01-161-9160	107	40
5340-01-161-4024	79	9	5365-01-161-9161	122	23
4710-01-161-5083	71	70	5340-01-161-9162	137	10
3040-01-161-5121	137	7		138	3A
3040-01-161-5123	137	48	5360-31-161-9170	96	35
	138	41	5340-01-161-9175	132	9
3040-01-161-5157	137	37	5365-01-161-9190	96	37
	138	23	5995-01-161-9595	34	29
5340-01-161-5470	106	22	4730-01-161-9596	119	17
5305-01-161-5498	93	52	2590-01-161-9630	152	44
5340-01-161-5526	114	18	2590-01-161-9632	145	37
3110-01-161-5527	68	7		147	26
3110-01-161-5528	68	17	2815-01-161-9635	18	8
5340-01-161-5942	107	41	2520-01-161-9637	60	18
5310-01-161-6144	106	14	2590-01-161-9656	148	1
5340-01-161-6147	94	2	2520-01-161-9658	122	14
5306-01-161-6220	92	16		123	22
5340-01-161-6223	120	18	5340-01-161-9923	130	23
5330-01-161-6240	KIT		5340-01-162-0078	61	7
2520-01-161-6374	60	39	5995-01-162-0091	34	16
5940-01-161-6503	57	14	5995-01-162-0092	148	46
4810-01-161-6542	135	33	5995-01-162-0093	148	39
	136	30	4730-01-162-0112	18	10
3830-01-161-6593	152	19	2590-01-162-0179	145	58
3830-01-161-6594	152	1		147	44
3040-01-161-6655	93	20	3020-01-162-0180	78	9
3040-01-161-6657	44	14	3040-01-162-0199	127	13
3040-01-161-6658	44	18	4730-01-162-0206	29	7
3040-01-161-6659	44	19	3040-01-162-0257	140	8
4710-01-161-6675	119	18	4710-01-162-0275	140	3
5307-01-161-7354	79	4	4710-01-162-0276	140	3
5307-01-161-7356	31	8	5310-01-162-0412	127	2
5340-01-161-7400	151	17	5305-01-162-2354	57	42
4710-01-161-7773	53	53	5310-01-162-2524	61	32
4720-01-161-7783	145	61	5330-01-162-2549	121	4
	147	42	3120-01-162-2573	96	28
3040-01-161-7794	123	30	5365-01-162-2576	65	84
2520-01-161-7796	122	8	5365-01-162-2577	121	5
	123	27	5340-01-162-2634	29	19
4710-01-161-7803	71	24	5360-01-162-2845	96	34
4710-01-161-7804	71	27	5360-01-162-2847	132	1
5930-01-161-8150	57	43	5360-01-162-2848	132	25
5340-01-161-9132	16	11	5340-01-162-2864	80	40
5306-01-161-9138	92	13	2520-01-162-3746	64	47
5307-01-161-9140	118	4	5330-01-162-4005	120	26

CROSS- REFERENCE-INDEXES
NATIONAL STOCK NUMBER INDEX

STOCK NUMBER	FIG.	ITEM	STOCK NUMBER	FIG.	ITEM
5340-01-162-4077	84	14	2530-01-162-6584	127	32
2540-01-162-4161	116	31	4820-01-162-6586	79	32
2530-01-162-4236	100	1	4710-01-162-6731	140	12
2530-01-162-4237	100	4	4710-01-162-6732	139	1
2530-01-162-4238	100	4	4710-01-162-7147	140	12
2940-01-162-4246	125	1	3040-01-162-7187	137	13
3040-01-162-4303	122	15	5930-01-162-7312	55	17
	123	1	5930-01-162-7313	148	35
2520-01-162-4337	66	22	3040-01-162-7355	96	19
4730-01-162-4358	140	20	2510-01-162-7369	103	5
4720-01-162-4359	129	16	3040-01-162-7541	137	25
4720-01-162-4360	129	12		138	14
2590-01-162-4365	124	10	2590-01-162-7550	144	8
2530-01-162-4394	152	46	3020-01-162-7565	128	9
3040-01-162-4396	152	31	3040-01-162-7639	137	35
4730-01-162-4406	141	6	3040-01-162-7641	116	27
2520-01-162-4413	91	4	4710-01-162-7671	95	24
2930-01-162-4423	36	53	5340-01-162-7686	139	25
2520-01-162-4424	124	31	5340-01-162-7687	145	6
3010-01-162-4426	123	32		147	3
4820-01-162-4435	135	15	5340-01-162-7951	114	39
	136	24	5910-01-162-8299	44	21
5330-01-162-4762	63	7	5306-01-162-8500	93	16
5330-01-162-4763	8o	45	5310-01-162-8563	103	16
5340-01-162-4819	107	32	5330-01-162-8587	132	14
5360-01-162-4838	91	8	5320-01-162-8609	78	6
5310-01-162-5733	103	2	5320-01-162-8615	93	31
5330-01-162-5742	121	25	5340-01-162-8639	107	25
5340-01-162-5790	107	9	5340-01-162-8642	79	30
5330-01-162-5843	KIT		5340-01-162-8647	107	24
5306-01-162-5998	114	17	5306-01-162-8667	94	28
	115	8	3130-01-162-8695	124	23
5310-01-162-6012	118	2	5340-01-162-8758	71	14
5330-01-162-6024	36	21	5340-01-162-8766	107	39
3120-01-162-6037	79	3	5340-01-162-8767	132	11
3120-01-162-6039	91	3	5340-01-162-8768	132	8
5340-01-162-6047	97	21	5340-01-162-8857	119	8
5315-01-162-6052	103	9	5340-01-162-8859	115	20
5315-01-162-6056	89	13	5365-01-162-8875	2	4
5365-01-162-6080	121	17	4820-01-162-8950	130	9
5365-01-162-6082	121	23	4820-01-162-8951	130	13
4730-01-162-6355	145	62	2530-01-162-8966	91	25
	147	43	4140-01-162-8967	44	32
4730-01-162-6356	145	59	2540-01-162-8988	114	23
	147	39	2540-01-162-8995	116	12
2920-01-162-6410	44	25	4820-01-162-8996	131	18
5310-01-162-6413	78	63	4820-01-162-8997	132	3
3040-01-162-6414	137	27	2590-01-162-8998	143	1
	138	16	2920-01-162-8999	44	29
3040-01-162-6563	123	36	2920-01-162-9006	44	36

CROSS- REFERENCE-INDEXES
NATIONAL STOCK NUMBER INDEX

STOCK NUMBER	FIG.	ITEM	STOCK NUMBER	FIG.	ITEM
5340-01-162-9565	53	4	5365-01-163-2017	137	3
5306-01-162-9690	102	18	5340-OI-163-2034	146	12
5305-01-162-9717	91	34	4710-01-163-2441	71	39
5330-01-162-9751	77	8	5330-01-163-2497	36	25
5340-01-162-9819	107	4	4730-01-163-2608	150	1
5330-01-162-9842	KIT		2410-01-163-2680	152	18
9905-01-163-0019	133	14	3040-01-163-2722	121	30
9905-01-163-0020	108	3	3040-01-163-2778	137	4
9905-01-163-0023	133	1		138	43
9905-01-163-0024	133	15	5340-01-163-2785	91	32
9905-01-163-0029	133	16	5340-01-163-2786	77	30
4710-01-163-0318	119	23	4710-01-163-2796	119	15
5310-01-163-0513	92	7	2940-01-163-2809	145	16
	94	9		147	8
4710-01-163-0593	141	28	3040-01-163-3240	122	34
5340-01-163-0631	129	14		123	17
5995-01-163-0665	53	22	4730-01-163-3243	131	21
4730-01-163-06T4	66	26	9905-01-163-3475	133	25
3040-01-163-0714	121	38	5995-01-163-3526	55	14
3830-01-163-0757	152	26	5995-01-163-3527	55	13
2920-01-163-0758	44	46	4710-01-163-3556	143	2
2520-01-163-0816	91	1	5995-01-163-3577	53	19
5995-01-163-0820	53	33	5995-01-163-3578	55	16
3040-01-163-0825	144	10	4710-01-163-4303	53	54
2530-01-163-0826	100	13	2530-01-163-4312	32	11
4820-01-163-0828	131	8	4720-01-163-4347	71	31
5340-01-163-0904	77	28	5305-01-163-5667	44	44
5340-01-163-0918	79	5	5310-01-163-5805	133	29
	127	8	5340-01-163-5906	107	21
4710-01-163-0932	95	20	5340-01-163-5907	107	30
4820-01-163-1045	95	11	3110-01-163-5917	68	4
3040-01-163-1108	119	4	5365-01-163-5954	135	11
3040-01-163-1109	126	4		136	18
3040-01-163-1150	137	53	3120-01-163-5957	137	19
	138	50		137	40
3040-01-163-1151	13T	39		137	58
	138	24		138	25
2540-01-163-1155	114	43		138	30
2540-01-163-1156	115	23		138	49
2590-01-163-1193	100	13		138	65
4820-01-163-1195	96	26		138	70
4820-01-163-1196	96	39	5340-01-163-5980	115	14
3020-01-163-1206	123	3	5340-01-163-5981	137	23
2520-01-163-1220	123	21		138	61
4710-01-163-1258	141	39	5340-01-163-6173	141	26
5940-01-163-1435	49	1	5340-01-163-6174	141	27
5340-01-163-1911	106	23	5340-01-163-6175	141	20
5340-01-163-1972	107	36	5365-01-163-6185	121	35
5365-01-163-2015	60	57	5365-01-163-6186	91	17
5365-01-163-2016	137	36	3120-01-163-6536	89	11

CROSS- REFERENCE-INDEXES
NATIONAL STOCK NUMBER INDEX

STOCK NUMBER	FIG.	ITEM	STOCK NUMBER	FIG.	ITEM
5340-01-163-6563	115	1	3040-01-164-0352	123	26
5340-01-163-6564	120	11	5305-01-164-1125	115	19
2520-01-163-6933	124	15	5330-01-164-1151	146	1
4710-01-163-6995	71	35	3110-01-164-1162	123	38
4820-01-163-7157	29	4	5340-01-164-1271	146	14
2920-01-163-7209	44	15	9905-01-164-1458	133	24
3830-01-163-7219	152	23	5310-01-164-1650	44	33
2540-01-163-7235	116	11	5315-01-164-1780	152	14
2540-01-163-7236	116	23	5315-01-164-1781	152	9
2540-01-163-7237	116	16	2530-01-164-1785	93	33
2530-01-163-7238	121	8	5340-01-164-1912	152	5
3040-01-163-7309	96	15	5365-01-164-1989	152	24
3040-01-163-7311	128	11	5305-01-164-2328	78	13
3020-01-163-7319	100	1	5340-01-164-2400	143	11
3020-01-163-7329	121	13	5340-01-164-4510	139	15
3040-01-163-7345	94	29	5340-01-164-4596	131	1
3040-01-163-7349	94	14	4730-01-164-4738	141	11
3120-01-163-7472	32	15	2520-01-164-6115	61	37
5306-01-163-7474	94	22	5306-01-164-6317	122	12
5340-01-163-7476	95	18		123	23
5330-01-163-7488	KIT		5310-01-164-6356	135	34
2530-01-163-7861	93	32	5310-01-164-6362	96	29
3020-01-163-7964	128	16	5310-01-164-6372	145	22
4330-01-163-8040	13	1		147	14
5330-01-163-8130	79	34	5307-01-164-6429	118	5
3130-01-163-8225	88	18	5340-01-164-6469	142	23
5305-01-163-8242	34	22	5365-01-164-6599	122	29
	112	1	5365-01-164-6623	122	17
5330-01-163-8378	KIT		4820-01-164-7015	29	9
5340-01-163-8509	77	14	2590-01-164-7253	145	1
5340-01-163-8510	23	9	5306-01-164-7446	56	25
2530-01-163-8594	144	9	5306-01-164-7449	144	5
2530-01-163-8629	144	23	5310-01-164-7495	144	6
3040-01-163-8631	144	2	5310-01-164-7502	124	13
9905-01-163-9191	87	19	5330-01-164-7507	62	7
3120-01-163-9375	122	1	5330-01-164-7508	61	44
	123	28	5340-01-164-7528	99	8
5306-01-163-9381	94	27		108	16
5340-01-163-9390		115	5340-01-164-7529	99	9
3130-01-163-9419	143	3		108	29
5340-01-163-9440	60	40	5340-01-164-7530	139	20
5340-01-163-9459	141	18	5340-01-164-7531	56	24
4320-01-164-0005	128	1	5340-01-164-7532	106	13
2540-01-164-0033	116	14	5340-01-164-7533	129	5
2520-01-164-0077	97	5	3110-01-164-7536	123	37
	120	9	5365-01-164-7546	140	10
9905-01-164-0167	145	53	5365-01-164-7547	141	21
	147	66	5325-01-164-7552	146	2
9905-01-164-0168	133	5	5325-01-164-7555	141	19
3040-01-164-0352	122	10	5340-01-164-7556	131	4

CROSS- REFERENCE-INDEXES
NATIONAL STOCK NUMBER INDEX

STOCK NUMBER	FIG.	ITEM	STOCK NUMBER	FIG.	ITEM
5340-01-164-7558	127	4	3120-01-164-8629	127	39
5340-01-164-7559	106	19		130	24
5315-01-164-7582	120	5	5340-01-164-8663	106	4
5315-01-164-7583	93	24	5315-01-164-8693	152	6
	94	1	5365-01-164-8702	122	20
5315-01-164-7586	145	23	5340-01-164-8705	107	13
	147	15	5330-01-164-8707	78	2
5315-01-164-7589	132	28	5340-01-164-8709	127	24
5340-01-164-7600	120	1	5340-01-164-8714	108	24
5340-01-164-7606	139	7	5360-01-164-8752	145	18
5340-01-164-7608	108	11		147	10
5340-01-164-7609	108	15	5340-01-164-8760	120	46
5340-01-164-7611	145	50	3110-01-164-8765	122	25
	147	36	5365-01-164-8774	123	35
5360-01-164-7619	135	5	5365-01-164-8781	146	13
	136	13	5365-01-164-8782	144	27
5360-01-164-7620	135	12	5330-01-164-9754	114	1
	136	20	5315-01-164-9838	131	17
5360-01-164-7621	135	16	5340-01-164-9882	22	11
	136	25	5340-01-164-9895	137	57
5360-01-164-7622	135	29		138	69
	136	29	5340-01-164-9957	106	7
5360-01-164-7624	66	18	5340-01-164-9958	108	10
5365-01-164-7631	89	14	5365-01-164-9962	123	42
5365-01-164-7640	135	4	5365-01-164-9968	88	28
5365-01-164-7642	124	28	3020-01-165-0300	123	40
2530-01-164-7812	93	35	2590-01-165-0354	120	42
3805-01-164-7838	152	12	4730-01-165-0851	145	12
2540-01-164-7840	116	15		147	60
3040-01-164-7841	127	37	6150-01-165-1191	47	2
2910-01-164-7906	30	1	5340-01-165-1217	82	16
4330-01-164-7973	125	13	5306-01-165-1266	44	1
5340-01-164-8142	139	18	5330-01-165-1334	134	11
5310-01-164-8539	44	6	5340-01-165-1564	68	20
5310-01-164-8541	34	35	5995-01-165-1343	55	2
5330-01-164-8558	135	35	5306-01-165-2448	108	7
5330-01-164-8563	130	15	5340-01-165-2560	53	48
5330-01-164-8564	120	29	5365-01-165-2606	80	33
5330-01-164-8565	147	28	5365-01-165-2637	120	37
5330-01-164-8570	97	20	5310-01-165-3342	116	19
5330-01-164-8571	143	12	5330-01-165-3400	BULK	16
5330-01-164-8575	124	3	5360-01-165-3674	131	2
5330-01-164-8576	122	33	5360-01-165-3682	116	13
	123	16	3110-01-165-3725	122	28
5330-01-164-8578	BULK	15		123	13
5330-01-164-8580	106	12	5310-01-165-4308	107	7
5340-01-164-8621	120	43		137	30
3120-01-164-8623	122	3		138	19
	123	31	5310-01-165-4315	72	13
3120-01-164-8629	127	1	5330-01-165-4331	80	17

CROSS- REFERENCE-INDEXES
NATIONAL STOCK NUMBER INDEX

STOCK NUMBER	FIG.	ITEM	STOCK NUMBER	FIG.	ITEM
3120-01-165-4357	7	11	4820-01-167-1563	147	11
3120-01-165-4358	24	23	3120-01-167-3402	131	23
5340-01-165-4466	BULK	2	5315-01-167-3452	116	21
5365-01-165-4512	108	21	5365-01-167-3498	135	40
5365-01-165-4517	102	22		136	21
2540-01-165-4934	116	22	5365-01-167-3499	135	10
6145-01-165-5631	BULK	24		136	19
3120-01-165-5662	116	1	9390-01-167-3646	78	50
2815-01-165-5713	3	17	5365-01-167-4225	152	27
2590-01-165-5746	145	52	3040-01-167-4493	122	11
3805-01-165-5750	135	36		123	24
5307-01-165-5751	36	37	4820-01-167-5453	33	6
	64	4	5340-01-167-6300	152	29
4730-01-165-6616	29	2		152	42
	129	8	5307-01-167-6375	97	18
5365-01-165-7678	137	12	2520-01-167-7696	31	18
5306-01-165-8107	145	14	3130-01-167-8185	124	2
	147	6	5340-01-167-8357	116	7
4820-01-165-8251	132	24	3130-01-167-9124	78	59
5365-01-165-8752	144	13	5340-01-167-9936	152	40
3130-01-165-8813	88	24		152	45
2815-01-165-9635	9	26	9905-01-168-0972	100	7
5340-01-166-0801	143	13	2530-01-168-1038	80	36
3130-01-166-0809	121	34	3110-01-168-1053	138	38
3130-01-166-0810	123	44	3120-01-168-1850	7	11
2510-01-166-1256	107	10	5305-01-168-5422	44	5
5355-01-166-1721	108	5	5305-01-168-8928	44	35
4730-01-166-2297	120	15	5940-01-169-3889	57	30
5310-01-166-2618	116	17	2530-01-169-4620	137	21
5330-01-166-3661	62	11		138	59
3120-01-166-3685	127	43	4730-01-169-5830	142	17
9905-01-166-5122	96	14	3120-01-169-7172	65	69
3120-01-166-6163	96	32	4720-01-169-7527	BULK	10
3120-01-166-6915	93	21	5340-01-169-7528	146	3
5340-01-166-6926	151	16	5340-01-169-7536	56	1
5340-01-166-6931	146	9	5306-01-169-7537	56	4
5360-01-166-6940	137	15	6140-01-169-7538	56	8
	138	12	5330-01-169-7541	114	12
5306-01-166-7926	44	10	2815-01-169-8915	3	15
5320-01-166-7973	115	7	6140-01-170-1451	57	34
5340-01-166-8112	107	33	5330-01-170-1459	114	38
3120-01-166-8144	49	14	4010-01-170-1460	114	22
5340-01-166-8693	29	14	5315-01-170-2228	60	8
5360-01-166-8899	32	19	5365-01-170-2231	134	10
5365-01-166-8934	135	3	5970-01-170-4693	44	23
5340-01-166-8936	106	26	5340-01-170-6336	148	33
5340-01-167-0261	79	12	4710-01-170-9234	96	20
5306-01-167-1084	44	4	2815-01-170-9235	104	14
5330-01-167-1118	BULK	14	4820-01-170-9766	131	13
4820-01-167-1563	145	19	2930-01-170-9820	39	1

CROSS- REFERENCE-INDEXES
NATIONAL STOCK NUMBER INDEX

STOCK NUMBER	FIG.	ITEM	STOCK NUMBER	FIG.	ITEM
4730-01-170-9822	93	29	5910-01-176-8877	59	1
9905-01-171-0245	108	2	5340-01-177-1055	115	6
5365-01-171-1560	44	12	3110-01-177-4667	45	14
4730-01-171-1981	97	19	2815-01-177-4792	10	2A
3040-01-171-3357	137	22	4330-01-177-5446	33	13
	138	60	2920-01-177-8505	45	2
2930-01-171-3358	36	35	2920-01-177-8565	45	15
3040-01-171-3370	78	18	2920-01-178-0499	45	10
2940-01-171-3389	125	16	3040-01-178-0698	40	7
3110-01-171-4038	123	7	4730-01-178-0773	17	11A
2520-01-171-4806	65	24	5330-01-178-3728	45	5
2940-01-171-4855	70	6	2920-01-178-6536	45	1
3130-01-171-8186	152	36	2920-01-178-6574	45	3
	152	50	2990-01-179-2586	35	2
2520-01-172-0694	78	5	2520-01-179-4097	61	13
2590-01-172-0861	127	44	3040-01-179-4393	23	7
5365-01-172-1614	102	20	6680-01-179-4546	149	8
2520-01-172-3041	65	78	3110-01-179-5935	45	4
5365-01-172-5614	57	21	2510-01-179-6353	114	7
	137	5	5340-01-180-2615	133	17
	138	44	9905-01-180-3839	45	8
2510-01-172-6796	129	3	2940-01-182-2317	27	6
5340-01-173-1016	145	36	4730-01-182-6781	29	8
	147	67	2910-01-182-6793	30	4
2940-01-173-4272	28	4	5310-01-183-1237	117	3
2510-01-173-4658	108	25	3120-01-183-1341	44	42
2520-01-173-6418	91	29	2815-01-183-4649	3	3
5340-01-173-6886	103	23	5330-01-133-8680	27	12
5995-01-173-6906	53	50	2590-01-184-0473	143	25
2530-01-173-6943	93	40	3040-01-184-4026	122	36
2510-01-173-6944	108	20		123	19
4730-01-173-7628	71	30	5305-01-184-5919	34	32A
2530-01-173-8618	84	2	5340-01-184-7635	127	5
2510-01-173-8619	114	9	4730-01-185-0026	140	18
2920-01-174-1278	44	45	5330-01-185-0502	KIT	
4730-01-174-6160	71	40	5330-01-185-7446	KIT	
2510-01-174-6183	106	18	5306-01-186-5378	27	5
2510-01-174-6184	103	6	5340-01-186-7625	79	36
2540-01-174-6185	106	2	5340-01-186-9430	69	11
5961-01-174-8652	45	6	2530-01-186-9472	98	13
5365-01-174-8876	45	13	2540-01-186-9473	101	16
5310-01-175-0630	45	16	5305-01-187-0533	49	15
5315-01-175-1147	82	9	2590-01-187-1231	99	3
	83	10	2530-01-187-1232	98	14
4820-01-175-3050	135	7	2540-01-187-2544	101	15
5305-01-175-7537	45	20	5340-01-187-3506	90	10
4140-01-176-2818	45	17	5315-01-187-3541	90	2
2540-01-176-2910	116	2	5310-01-187-6114	152	17
2590-01-176-2972	127	23	2510-01-187-7023	56	15
2540-01-176-2987	114	4	2930-01-187-7024	98	9

CROSS- REFERENCE-INDEXES
NATIONAL STOCK NUMBER INDEX

STOCK NUMBER	FIG.	ITEM	STOCK NUMBER	FIG.	ITEM
2930-01-187-7024	103	31	5310-01-194-5398	71	20
2590-01-187-7025	101	5		76	1
2530-01-187-7159	98	15		95	1
2930-01-187-7160	103	22		100	11
3020-01-187-7176	98	18		103	8
	100	1		107	1
3020-01-187-7177	98	18		109	4
	100	1		114	20
5340-01-187-8834	115	22		115	17
2510-01-188-3690	106	24		120	27
5305-01-188-4766	145	25		129	18
	147	68		129	18
3120-01-188-5540	47	65		137	1
9905-01-188-6517	133	11		138	15
9905-01-188-6518	133	12		139	21
9905-01-188-6519	133	13		142	14
5340-01-188-9576	35	7		145	13
5330-01-188-9608	KIT			147	32
2590-01-189-8840	144	12		147	58
2510-01-191-6514	117	17	2920-01-195-2876	47	33
2510-01-191-8449	98	6		48	30
	115	9	5306-01-195-4681	10	7
2510-01-191-8450	98	8		14	7
2510-01-191-9387	99	25		18	11
2510-01-192-3579	117	16		19	28
2530-01-192-4705	90	22		31	13
2590-01-192-5925	108	1		36	30
3020-01-192-6042	100	13		37	7
3020-01-192-6043	100	4		63	24
2510-01-192-8221	99	15		71	49
3020-01-192-8365	100	13		80	20
3020-01-192-8366	100	4		100	10
4820-01-192-8370	135	2		120	14
	136	17		139	13
4010-01-194-4792	99	10	2815-01-195-7346	KIT	
5310-01-194-5398	10	23	2510-01-196-1284	117	7
	16	12	4030-01-196-2310	121	9
	21	1	3950-01-196-4838	119	1
	27	14	5330-01-196-5624	KIT	
	29	16	4010-01-197-1499	119	28
	31	34	2520-01-197-7936	90	3
	34	4	2510-01-198-0856	117	19
	35	3	5340-01-198-0864	90	19
	36	34	3830-01-198-0866	152	25
	56	14	2510-01-198-1152	117	12
	60	20	2590-01-198-1153	101	13
	61	6	5306-01-198-2332	89	18
	63	3	2530-01-198-4326	132	30
	64	9	5310-01-198-8570	122	35
	69	10		123	18

CROSS- REFERENCE-INDEXES
NATIONAL STOCK NUMBER INDEX

STOCK NUMBER	FIG.	ITEM	STOCK NUMBER	FIG.	ITEM
4730-01-199-6453	145	3	2510-01-215-3290	103	17
4730-01-199-6588	64	3	2510-01-215-4219	102	30
5330-01-199-9472	90	14	2815-01-215-4322	KIT	
5330-01-199-9463	90	9	2590-01-215-4369	119	26
5315-01-200-4094	90	1		120	49
5315-01-200-7984	90	5	4710-01-216-1006	148	14
5306-01-201-0288	99	27	5340-01-216-1487	148	11
5315-01-201-4588	68	21	4710-01-216-2151	BULK	18
5315-01-201-4768	99	12	5305-01-216-3986	81	1
4320-01-202-3552	134	1	2530-01-216-4212	110	9
4820-01-202-3575	132	26		111	11
3120-01-202-5894	5	9	5310-01-216-5696	43	6
5307-01-202-9002	98	17	5310-01-216-7387	107	49
	101	14	3120-01-216-9086	86	11
4820-01-202-9608	20	1	5320-01-217-0799	148	34
6140-01-203-4912	56	21	3120-01-217-0829	85	10
5315-01-203-6492	117	14	5330-01-217-2008	147	69
5305-01-203-9343	90	17	4820-01-217-2702	135	38
2530-01-204-5618	85	9		136	4
	86	9	5340-01-217-3041	43	11
4320-01-204-8062	19	17A	5330-01-217-3936	114	13
5310-01-205-9054	96	30	2815-01-217-5755	19	1
4730-01-206-1428	152	32	5340-01-218-1340	81	7
	152	43	2510-01-218-7470	98	3
5940-01-206-4291	58	8	5970-01-219-4329	57	6
2920-01-207-9671	47	54	2540-01-219-6728	99	22
	48	49	4820-01-219-9334	132	16
5305-01-208-6720	152	38	5340-01-222-5376	145	27
	152	52		147	18
5315-01-209-0872	152	3	2540-01-222-7734	81	8
	152	39	5340-01-222-8963	78	36
	152	49		99	24
	152	53	5325-01-223-4251	44	27
5306-01-209-7895	136	44	6145-01-229-2077	BULK	26
5330-01-209-8731	30	8	6145-01-229-3623	BULK	20
3120-01-210-0859	7	11	3990-01-230-5679	99	1
5330-01-211-0809	3	16	5315-01-235-6827	152	2
5935-01-211-4990	53	35		152	15
5330-01-212-4617	31	40		152	34
4820-01-213-8015	69	1		152	48
5340-01-215-0411	147	20	2590-01-236-2281	111	15
2530-01-215-1605	86	14	5305-01-238-3071	44	9
3040-01-215-2217	145	34		44	20
	147	21	5310-01-243-6178	47	37
	147	24	2815-01-246-6227	4	1
2510-01-215-2231	81	3	2815-01-248-5807	18	7
2590-01-215-2313	145	33	5306-01-250-0897	23	42
	147	22	6680-01-253-1033	123	9
	147	25	4820-01-253-2787	36	74
2530-01-215-3287	87	17	2815-01-253-3454	19	5

CROSS- REFERENCE-INDEXES
NATIONAL STOCK NUMBER INDEX

STOCK NUMBER	FIG.	ITEM	STOCK NUMBER	FIG.	ITEM
2815-01-253-3458	9	18	2530-01-279-3087	85	1
2815-01-253-3471	7	9A	2530-01-279-3088	86	1
5977-01-253-5207	48	14	6220-01-280-0531	54	3
2940-01-253-5590	13	2	6140-01-280-3380	52	6
4320-01-253-6286	19	17	6220-01-280-3549	53	16
3040-01-253-7350	138	9	6220-01-280-3550	53	14
4730-01-253-7361	57	50	6150-01-280-4059	53	27
4730-01-253-8588	17	118	6140-01-280-4060	52	7
3020-01-253-9282	19	29	6150-01-280-4289	55	16
3020-01-254-1227	11	16	3830-01-280-4395	152	11
5365-01-254-2381	96	45	2510-01-280-4868	105	3
6105-01-254-2722	48	17	2530-01-280-4978	83	19
2540-01-254-5036	108	4	2530-01-280-4979	83	19
4810-01-254-5581	131	25	2530-01-280-4980	111	5
2930-01-255-2943	40	1	2530-01-280-4981	}11	5
5340-01-255-3577	53	40	2530-01-280-4982	111	12
3120-01-257-3300	149	6	5306-31-280-6692	124	1
5330-01-257-3807	49	11	5340-01-280-6870	55	12
3120-01-257-4402	65	3	5340-01-280-6952	105	1
5315-01-257-7800	138	8	5340-01-280-7104	109	1
5340-01-258-0153	129	26	4710-01-280-8242	37	6
5305-01-260-5875	48	15	4710-01-280-8279	16	7
3110-01-266-2376	78	12	4730-01-280-8352	142	20
5310-01-266-2481	138	46	3040-01-280-8451	138	37
5365-01-266-2562	121	9	3040-01-280-8452	138	21
5315-01-266-9238	138	7	6220-01-280-8458	54	5
3020-01-267-4337	40	10	3040-01-280-8978	124	6
7690-01-267-5491	133	28	3040-01-280-9034	138	10
7690-01-267-5497	133	19	3040-01-280-9037	138	29
5315-01-268-2194	153	4	5340-01-280-9422	56	7
9905-01-268-7580	133	1	5360-01-280-9482	72	12
5340-01-269-9343	149	7	4010-01-281-0601	99	2
5340-01-270-1290	153	2	2910-01-281-0843	30	11
5315-01-270-1888	153	6	5330-01-281-0908	142	21
5365-01-270-2772	153	12	5365-01-281-0941	124	32
5120-01-272-0763	153	9	5365-01-281-0942	138	22
5120-01-272-4055	153	5	5340-01-281-1003	142	22
4320-01-275-1691	75	7	2530-01-281-1085	83	18
5340-01-277-4531	24	6	3830-01-281-1107	121	8
2530-01-278-0248	147	47	4710-01-281-1150	119	21
5365-01-278-0250	136	32	4710-01-281-1151	142	3
5365-01-278-0313	136	6	4710-01-281-1152	142	5
2805-01-278-0472	136	8	4710-01-281-1158	29	28
4730-01-278-1859	145	60	4710-01-281-1538	111	6
	147	41	5310-01-281-1831	124	33
3830-01-279-0296	152	7	3040-01-281-2485	138	64
3830-01-279-0297	152	8	5340-01-281-3888	78	44
6115-01-279-2610	43	1	5340-01-281-3921	105	6
6105-01-279-2683	45	7	2530-01-281-5233	83	11
5950-01-279-2818	45	12	4820-01-281-5980	136	1

CROSS- REFERENCE-INDEXES
NATIONAL STOCK NUMBER INDEX

STOCK NUMBER	FIG.	ITEM	STOCK NUMBER	FIG.	ITEM
4820-01-281-5981	136	34	5120-01-295-1199	153	16
5306-01-281-7146	149	2	5120-01-295-1200	153	15
5340-01-281-7206	52	3	9905-01-295-1907	133	21
3120-01-281-7217	83	7	5120-01-296-3865	153	18
5306-01-281-7805	136	7	9905-01-297-1695	133	20
5365-01-281-7846	142	13	5315-01-298-9712	117	15
3130-01-281-7891	78	31	6680-01-299-5060	153	17
4820-01-281-7920	136	16	2530-01-300-0231	64	25
3020-01-281-7979	83	17	5330-01-302-9890	34	9A
5340-01-281-9218	142	12	2815-01-305-2251	6	6
2920-01-281-9385	46	4	2530-01-307-3486	85	13
2530-01-281-9386	83	11	3130-01-308-6011	143	3
3010-01-281-9394	149	4	5340-01-308-6246	89	15
5315-01-282-0458	152	35	5340-01-308-9145	117	2
5305-01-282-1523	136	14	5340-01-308-9178	117	1
5365-01-282-1584	142	16	2510-01-309-1002	82	19
2590-01-282-1781	55	11	5305-01-309-3743	64	41
3130-01-282-2712	124	2	5340-01-309-3766	64	17
5975-01-282-2779	106	2	5340-01-309-4357	117	18
5306-01-282-3377	147	40	5365-01-309-4813	81	6
2590-01-282-4318	55	10	5340-01-309-4971	117	8
9905-01-282-7263	133	22	5365-01-309-7146	64	39
3120-01-282-7553	78	32	5340-01-309-7217	148	31
5330-01-283-0524	78	29	5340-01-309-7218	81	2
5305-01-283-5592	144	21	5340-01-309-7258	98	1
5306-01-283-9260	138	58	5340-01-309-7780	81	4
4710-01-283-9783	119	23	5340-01-310-1111	81	4
4720-01-284-2236	69	6	2540-01-310-1245	99	11
3040-01-284-4551	152	30	5340-01-310-1659	81	2
5120-01-284-4968	153	14	5340-01-310-4006	56	17
4820-01-284-5440	67	10	5340-01-310-5274	117	11
4010-01-284-5806	119	27	2530-01-310-6432	99	4
2590-01-284-6164	152	28	2530-01-310-6438	82	20
2510-01-285-2927	152	41	2530-01-310-6439	82	18
2520-01-285-5094	122	13	5365-01-311-0014	56	18
	123	21	9905-01-311-4033	133	11
5940-01-285-5146	58	15	9905-01-311-4034	133	12
5306-01-285-8875	36	44	9905-01-311-4035	133	18
4730-01-286-4632	72	1	9905-01-311-5230	64	16
5310-01-286-5447	103	21	2610-01-311-6854	90	29
5330-01-287-0377	78	29A	2590-01-312-2888	81	5
5315-01-287-1633	119	2	2530-01-314-4415	90	27
3110-01-287-2313	124	19	2530-01-314-4416	90	30
5360-01-287-2422	24	7	3040-01-314-4457	31	17
5330-01-288-5038	83	8	3040-01-314-4461	31	22
5310-01-289-2547	127	16	2940-01-314-8880	63	17
9905-01-289-3373	133	23	5355-01-321-5693	116	24
9905-01-289-3374	133	7	5330-01-332-4089	21	6
5120-01-294-0320	153	19	3040-01-342-0691	122	36A
5360-01-294-0436	48	25	3040-01-342-0693	64	38

CROSS- REFERENCE-INDEXES
NATIONAL STOCK NUMBER INDEX

STOCK NUMBER	FIG.	ITEM	STOCK NUMBER	FIG.	ITEM
3040-01-342-0693	64	43			
5340-01-342-2648	109	7			
7690-01-343-1442	133	8			
3040-01-344-1851	138	67			
	138	72			
2805-01-347-7439	65	51A			
2520-01-347-7443	65	74A			
2815-01-347-8593	6	2			
4820-01-347-8627	135	1			
2910-01-348-1577	24	14A			
2510-01-348-2171	82	15			
5365-01-348-3376	64	40			
3110-01-348-3791	31	50			
3040-01-348-3945	64	38			
2520-01-349-7391	65	78A			

NATIONAL STOCK NUMBER AND PART NUMBER INDEX
PART NUMBER INDEX

CAGEC	PART NUMBER	STOCK NUMBER	FIG.	ITEM
61208	A-2622-C	5365-00-514-1706	61	29
33203	AD2H23MA16	6680-01-179-4546	149	8
18265	AEM00-1306	2990-01-179-2586	35	2
88044	AN123902	5330-00-290-9386	85	12
			86	13
			88	16
			124	25
88044	AN316-5R	5310-00-596-8422	32	16
81352	AN316-8R	5310-00-167-1304	32	20
			93	50
88044	AN960-816L	5310-00-167-0839	47	5
			116	3
58275	A063947	5310-00-281-5021	44	7
95879	A122	3110-00-100-6150	135	6
			136	12
94222	A2-99-112-11	5340-01-177-1055	115	6
78553	A3122-28-1	4730-00-277-6320	48	44
04043	A5100	4730-00-172-0025	102	2
99017	B-641	5340-01-095-5004	114	33
81205	BACW10P140S	5310-00-725-1984	61	22
			131	7
18265	BAS02-0048	2815-00-192-8768	16	15
30966	BDT-413	5340-01-097-9213	26	9
80204	81821BH025C050N	5305-00-071-2506	79	38
			114	15
80204	B1821BH025C088N	5305-00-071-2505	90	12
80204	B1821BH025C100N	5305-00-225-3843	23	35
			23	46
			127	29
80204	B1821BH025C275N	5305-00-071-2514	23	50
80204	B1821BH031C056N	5306-00-226-4823	151	7
80204	81821BH031C075N	5306-00-226-4825	9	20
			34	14
			73	1
			131	20
80204	B1821BH031C088N	5306-00-226-4826	12	6
			22	22
			130	21
			131	14
			132	35
80204	B1821BH031C113N	5306-00-226-4828	20	4
			31	24
			61	21
80204	B1821BH031Cl25N	5306-00-226-4829	127	28
			130	27
			132	23
80204	B1821BH031C175N	5306-00-226-4832	13	14
80204	B1821BH031C200N	5306-00-226-4833	19	21
			79	15
			132	22
80204	B1821BH031C250N	5306-00-226-4835	130	7

NATIONAL STOCK NUMBER AND PART NUMBER INDEX
PART NUMBER INDEX

CAGEC	PART NUMBER	STOCK NUMBER	FIG.	ITEM
80204	B1821BH038C063N	5305-00-721-5492	119	10
80204	B1821SH038C125N	5305-00-068-0511	31	1
			37	7
			37	16
			38	1
			41	8
			61	45
			69	7
			95	8
			96	4
			109	2
			120	31
			120	51
			122	26
			124	22
			137	16
			139	12
			141	9
80204	B1821BH038C150N	5305-00-725-2317	93	15
80204	B1821BH03SC500N	5305-00-964-0503	3	8
80204	B1821BH044C150N	5305-00-071-2055	143	16
80204	B1821BH050C075N	5305-00-732-0512	53	41
			148	12
80204	B1821BH050C600N	5305-01-032-2312	43	15
80204	B1821BH063C175N	5305-00-724-7221	2	5
			80	3
			82	10
			83	14
			103	19
			134	6
80204	B1821SH063C200N	5305-00-724-7222	87	13
			88	26
			103	35
			110	12
80204	B1821BH063C325N	5305-00-724-7236	62	2
			82	2
			82	11
			83	2
			108	22
			111	8
21335	B2012-0H	3110-00-227-4431	80	7
19200	B271406C	3110-00-100-6149	131	13B
12658	B76	2940-00-029-0388	13	13
23040	B8QH4470A	3110-00-554-3245	123	5
76005	CB-1121-4	5340-01-166-8112	107	33
98410	CBT-2/0P	5940-01-169-3889	57	30
61510	CKE42A	5310-00-375-0518	40	20
82458	CLMT1032S	5310-00-880-8203	115	21
75272	COV-2113	5340-00-404-4100	129	10
24346	CS-2008-156-750	6680-01-253-1033	123	9
60237	614-R		57	35

NATIONAL STOCK NUMBER AND PART NUMBER INDEX
PART NUMBER INDEX

CAGEC	PART NUMBER	STOCK NUMBER	FIG.	ITEM
60380	0850430	3110-01-079-7024	44	26
60237	D7-614-R	6140-01-170-1451	57	34
21335	EA28899	3120-00-446-9863	31	16
62539	EXLB-1	6350-01-155-5993	148	5
81349	F02A250V5A	5920-00-284-6787	51	10
			57	73
81349	F02A32V15A	5920-00-012-0151	57	69
71400	HKP-LW-HH	5920-00-118-8195	57	68
08162	HM212010	3110-00-554-9004	91	18
08162	HM212047	3110-00-293-8566	91	20
83058	HS51328	5340-01-184-7635	127	5
08484	HTM350	4730-01-106-7246	36	71
			37	8
91816	HV50-2-R	4820-01-202-9608	20	1
91816	HV50-2-Y	4820-01-213-8015	69	1
14726	H118	5940-01-150-1426	59	6
60038	H414210	3110-00-198-1783	91	18
8G357	H414236		91	20
55883	IP05M6124	4730-00-924-7886	119	13
55883	IPD5M6214	4730-00-924-7886	4	28
			22	27
			36	14
			67	32
			80	15
			93	11
			95	13
55883	IP05P597	4730-01-053-4687	71	57
55883	IPD7N9805	2815-01-116-5920	7	5
21335	JD-530502	3110-01-155-1756	24	11
60038	JHM807012	3110-01-059-2029	121	32
60038	JHM807045	3110-01-113-0637	121	31
08162	JLM104910	3110-00-191-3923	84	8
			122	18
08162	JLM104948	3110-00-938-5084	84	7
			122	19
31159	JM56	5310-00-042-6376	31	52
			79	6
			114	19
			127	6
			151	15
60038	JM718149	3110-01-037-7207	121	6
60380	JTT1211	3110-00-930-6289	137	31
			138	20
60380	JTT1212	3110-00-280-3216	137	49
59556	K-500-EN-0431	5330-01-148-5891	23	12
			24	80
			125	17
			132	20
59556	K-500-EN-0472	2990-01-149-5010	24	5
80064	K-6643118 PIECE 6	5310-00-411-4399	102	29

NATIONAL STOCK NUMBER AND PART NUMBER INDEX
PART NUMBER INDEX

CAGEC	PART NUMBER	STOCK NUMBER	FIG.	ITEM
18265	KYX00-5696	2940-00-756-8519	27	9
3P954	L-6		119	270
03038	LH90725-59	5306-00-690-6976	10	25
81348	LLLS731	6640-00-222-3103	78	20
78280	LP-535-1	2910-00-646-9727	34	9
11083	L1021I	5340-00-426-2852	80	11
			93	1
11083	L1026	5340-00-229-9287	9	14
			78	16
			3	3
11083	L1143	5306-00-285-1368	10	15
			25	17
			65	6
			95	9
			122	31
			140	4
11083	L1169	5306-00-862-8901	82	5
			83	4
11083	L1178	5306-00-423-8069	107	37
			109	6
11083	L1351	5306-00-263-7301	10	11
			11	8
			16	8
			18	5
			31	14
			39	6
			40	3
			60	22
			71	13
			79	11
			106	6
			107	11
			108	8
			114	29
			115	10
			121	3
			123	45
			129	24
			136	9
			138	18
			147	48
11083	L2061	5315-00-423-8085	64	28
11083	L2072	5340-00-346-2596	102	13
			151	12
11083	L364	2930-00-365-2152	15	16
11083	L639	5305-01-159-1552	60	55
11083	L827	5365-00-423-8098	6	12
			80	23
18265	MFM08-0083	2990-00-410-6812	35	6
81349	MIL-T-8504	4710-01-062-3719	BULK	17
96906	MS15003-1	4730-00-050-4208	137	32

NATIONAL STOCK NUMBER AND PART NUMBER INDEX
PART NUMBER INDEX

CAGEC	PART NUMBER	STOCK NUMBER	FIG.	ITEM
96906	MS15003-1	4730-00-050-4208	143	23
96906	M515003-4	4730-00-172-0028	42	9
			143	10
96906	MS15570-623	6240-00-019-3093	57	37
96906	MS15795-512	5310-00-205-9982	16	1
96906	MS16208-19	5306-00-543-5567	23	45
96906	MS16562-49	5315-00-844-3966	127	42
96906	MS16624-1037	5365-00-715-1152	47	60
			48	55
96906	MS16624-1215	5365-00-282-1831	124	18
96906	MS166Z5-1062	5365-00-687-3379	67	21
96906	MS16625-1081	5365-00-804-9740	72	14
96906	MS16625-1165	5365-00-252-4753	96	46
96906	MS16625-1315	5365-00-598-6232	39	10
			40	9
96906	MS16632-1037	5365-00-584-6620	96	27
96906	MS16632-4075		79	33
96906	MS16633-1025	5365-00-721-7680	24	74
96906	MS16633-1062	5365-00-842-2613	116	20
96906	MS17131-23	3110-00-133-6730	145	43
			147	29
96906	MS171542	5315-00-825-4591	125	12
96906	MS17165-4578	6240-00-643-0687	53	12
96906	M513154-41	5306-01-158-1154	13	15
96906	MS18154-58	5305-00-115-9526	8	1
			33	11
96906	MS18154-67		28	5
96906	MS19059-2412	3110-00-100-6149	65	26
96906	MS20002C6	5310-00-149-9146	90	26
96906	MS21083N4	5310-00-903-8282	127	19
96906	MS21083N5	5310-00-660-3381	47	62
			48	67
96906	MS21304-7	5310-00-272-5692	2	9
96906	MS21318-13	5305-00-253-5609	45	9
96906	MS21318-21	5305-00-253-5615	61	43
			118	8
			133	6
96906	MS21333-34	5340-00-282-7519	26	6
96906	MS21333-57	5340-00-282-7505	29	27
			71	12
96906	MS24665-134	5315-00-839-5820	60	12
96906	MS24665-281	5315-00-839-2326	107	19
			130	18
96906	MS24665-351	5315-00-839-5821	31	4
			93	23
			94	7
			95	3
			96	3
			145	51
			147	37
96906	MS24665-353	5315-00-839-5822	32	4

NATIONAL STOCK NUMBER AND PART NUMBER INDEX
PART NUMBER INDEX

CAGEC	PART NUMBER	STOCK NUMBER	FIG.	ITEM
96906	MS24665-353	5315-00-839-5822	60	13
			80	27
			92	9
			93	47
			137	44
			138	35
96906	MS24665-355	5315-00-012-0123	93	26
96906	MS24665-750	5315-00-664-0384	99	20
96906	MS25036-108	5940-00-143-4780	51	3
			51	7
			51	12
			58	13
96906	MS25036-110	5940-00-143-4793	51	18
			53	26
96906	MS25036-112	5940-00-143-4794	43	3
			57	40
			53	5
			58	12
96906	MS25036-114	5940-00-113-9826 4	3	4
96906	MS25036-119	5940-00-114-1310	58	11
96906	MS25036-120	5940-00-557-4344	57	47
96906	MS25036-122	5940-00-113-8190	57	46
96906	MS25036-153	5940-00-143-4774	34	30
			53	20
			53	28
			53	38
			53	52
			57	72
			58	14
			148	4
96906	MS25036-154	5940-00-230-0515	53	25
			148	16
			148	49
96906	MS25036-156	5940-00-143-4775	58	18
96906	MS27183-12	5310-00-081-4219	12	5
			13	11
			13	16
			19	2
			22	23
			25	11
			26	8
			56	23
			67	41
			73	2
			79	14
			127	25
			130	6
			130	8
			151	8
96906	MS27183-14	5310-00-080-6004	29	17
			31	20

NATIONAL STOCK NUMBER AND PART NUMBER INDEX
PART NUMBER INDEX

CAGEC	PART NUMBER	STOCK NUMBER	FIG.	ITEM
96906	MS27183-14	5310-00-080-6004	36	28
			60	15
			78	25
			103	29
			107	5
			113	1
			119	9
			120	33
			139	11
			140	5
			148	27
96906	MS27183-15	5310-00-809-4061	39	21
			112	5
96906	MS27183-17	5310-00-809-5997	2	15
			48	4
			49	3
			53	42
			62	9
			91	15
			93	17
			99	14
			100	3
			105	7
			107	28
			114	37
			141	2
			142	11
			148	13
			152	16
96906	MS27183-18	5310-00-809-5998	36	2
			42	10
96906	MS27183-19	5310-00-809-3079	23	52
96906	MS27183-21	5310-00-823-8803	31	15
			64	37
			131	47
96906	MS28775-249	5330-01-019-2448	120	32
			121	36
96906	MS28775-260	5330-01-050-5024	124	24
96906	MS29513-166	5330-00-478-2938	93	5
96906	M53367-1-9	5975-00-074-2072	148	37
96906	MS3367-5-0	5975-00-133-8687	127	27
96906	MS35190-288	5305-00-958-5245	78	28
96906	MS35190-291	5305-00-958-5247	127	11
96906	M535190-319	5305-00-959-2723	137	24
			138	62
96906	MS35190-320	5305-00-959-2724	127	10
96906	M535206-217	5305-00-889-2999	133	9
96906	MS35206-241	5305-00-984-6189	51	23
96906	MS35206-244	5305-00-984-6192	47	31
96906	MS35206-298	5305-00-934-5678	116	9
96906	MS35307-371	5305-00-879-8351	12	8

NATIONAL STOCK NUMBER AND PART NUMBER INDEX
PART NUMBER INDEX

CAGEC	PART NUMBER	STOCK NUMBER	FIG.	ITEM
96906	MS35307-371	5305-00-879-8351	18	13
			66	21
			73	11
			95	26
96906	MS35307-462	5305-00-721-5322	2	1
96906	MS35333-38	5310-00-559-0070	34 3	2B
96906	MS35333-39	5310-00-576-5752	50	2
96906	MS35333-44	5310-00-194-1483	48	3
96906	MS35333-46	5310-00-543-4385	50	3
96906	MS35335-31	5310-00-596-7693	51	22
96906	MS35335-32	5310-00-596-7691	52	4
			59	2
96906	MS35335-35	5310-00-627-6128	59	7
96906	MS35335-37	5310-00-239-5116	59	4
96906	MS35338-42	5310-00-045-3299	24	61
			50	6
			133	3
96906	MS35338-44	5310-00-582-5965	31	39
			47	11
			127	7
			151	14
96906	MS35338-45	5310-00-407-9566	9	19
			116	8
			127	36
			131	15
			132	21
96906	MS35338-46	5310-00-637-9541	31	12
			56	13
			57	16
			60	5
			61	1
			63	2
			64	8
			64	24
			71	7
			76	6
			77	17
			78	26
			80	13
			84	10
			86	8
			88	13
			92	2
			94	3
			95	10
			97	22
			101	4
			103	28
			106	16
			107	2
			112	6

NATIONAL STOCK NUMBER AND PART NUMBER INDEX
PART NUMBER INDEX

CAGEC	PART NUMBER	STOCK NUMBER	FIG.	ITEM
96906	MS35338-46	5310-00-637-9541	113	2
			120	2
			120	17
			120	50
			121	15
			123	11
			129	17
			129	17
			135	9
			138	5
			139	22
			145	31
96906	MS35338-48	5310-00-584-5272	32	7
			56	11
			57	19
			63	20
			66	2
			71	61
			78	48
			83	16
			88	2
			102	6
			104	12
			105	8
			107	44
			108	13
			111	13
			112	9
			113	5
			121	10
			127	34
			135	31
			138	2
			139	3
			140	14
			143	14
			145	56
			146	7
			152	37
			152	51
96906	MS35338-51	5310-00-584-7888	104	2
			139	6
96906	MS35340-50	5310-00-045-5001	45	18
			53	2
			57	53
			63	29
			77	7
			78	56
			82	1
			83	1
			85	19

CROSS-REFERENCE INDEXES
PART NUMBER INDEX

CAGEC	PART NUMBER	STOCK NUMBER	FIG.	ITEM
96906	MS35340-50	5310-00-045-5001	86	21
			87	14
			88	25
			93	38
			102	17
			104	17
			105	4
			110	5
			111	4
			138	40
96906	MS35649-2382	5310-00-056-3395	147	46
96906	MS35690-624	5310-00-725-7382	9	7
			10	22
			22	17
			60	31
			66	11
96906	MS35691-17	5310-00-851-2682	32	5
			79	35
			145	70
96906	MS35691-21	5310-00-975-2075	11	9
			31	7
			31	27
			60	34
			94	21
			95	5
			138	57
96906	MS35756-12	5315-00-616-5522	11	14
96906	MS35756-13	5315-00-616-5521	19	14
96906	MS35756-22	5315-00-616-5499	80	1
96906	MS35756-33	5315-00-018-9576	31	47
96906	MS35756-6	5315-00-616-5514	128	17
			130	20
96906	MS35756-8	5315-00-616-5526	31	2
			137	8
			138	6
96906	MS35756-9	5315-00-616-5525	45	11
96906	MS35812-4	5340-00-985-0823	31	5
			94	26
96906	MS35629-16C	5340-01-165-4466	BULK	2
96906	MS35829-16C-71N		129	4
96906	MS35842-12	4730-00-908-3193	16	3
96906	MS35842-13	4730-00-909-8627	31	10
			32	12
			141	16
96906	MS49006-10	4730-00-968-6129	37	13
			73	10
96906	MS51504-A6	4730-00-812-7999	33	1
96906	MS51521A12	4730-00-133-3196	129	23
96906	MS51523A6	4730-00-618-5381	71	29
96906	M551525A12	4730-00-710-5571	129	22
96906	MS51525A6	4730-00-491-9576	26	2

CROSS-REFERENCE INDEXES
PART NUMBER INDEX

CAGEC	PART NUMBER	STOCK NUMBER	FIG.	ITEM
96906	MS51525A6	4730-00-491-9576	71	5
96906	MS51525B4-6	4730-00-258-1864	69	12
96906	MS51527A6	4730-00-143-3941	79	19
96906	MS51825-1A	4730-00-239-2503	34	23
96906	MS51845-4	4730-00-249-3885	29	5
96906	MS51922-13	5310-00-984-3807	32	13
96906	MS51922-17	5310-00-087-4652	41	3
96906	MS51922-21	5310-00-959-1488	138	11
96906	MS51922-33	5310-00-225-6993	138	73
96906	MS51943-34	5310-00-241-6658	52	5
96906	MS51955-42	5305-00-054-9276	32	3
96906	MS51967-14	5310-00-768-0318	36	23
			47	1
			53	1
			66	1
			71	68
			107	27
			137	2
			138	1
			141	23
			148	18
96906	MS51967-20	5310-00-763-8920	63	28
			64	36
			80	28
			99	30
			105	5
			138	39
			143	9
			152	13
96906	MS51967-23	5310-00-763-8921	104	1
96906	MS51967-35	5310-00-762-6241	87	3
96906	MS51967-5	5310-00-880-7744	34	10
			79	13
			127	35
96906	MS51968-14	5310-00-732-0560	32	8
			137	20
			137	41
			137	55
96906	MS51968-20	5310-00-763-8905	45	19
			53	55
			78	57
			102	16
			110	6
			111	3
			111	10
			153	21
96906	MS51968-23	5310-00-763-8901	77	29
			101	17
			102	26
96906	MS521302B121R	4720-00-235-4138	BULK	11
96906	MS75004-1	5940-00-549-6581	57	5

CROSS-REFERENCE INDEXES
PART NUMBER INDEX

CAGEC	PART NUMBER	STOCK NUMBER	FIG.	ITEM
96906	MS9021-225	5330-00-527-7939	85	17
			86	18
			88	9
96906	MS9068-214	5330-00-997-7230	63	27
			71	22
			95	22
96906	MS90727-158	5305-00-726-2525	92	3
96906	MS90727-192	5305-00-082-6977	5	14
96906	MS90727-59	5305-00-269-3235	114	40
96906	MS90727-66	5305-00-269-3242	11	13
			61	15
96906	MS90728-112	5305-00-071-2068	70	1
96906	MS90728-114		138	63
96906	MS90728-115	5305-00-071-2071	6	5
			138	28
96906	MS90728-116	5305-00-071-2072	6	4
96906	MS90728-34	5306-00-226-4827	11	4
96906	MS90728-60	5305-00-068-0510	101	3
96906	MS90728-62	5305-00-068-0511	74	6
			85	7
			86	7
			138	47
96906	MS90728-63	5305-00-688-2111	142	4
96906	MS90728-64	5305-00-725-2317	35	5
			138	45
96906	MS90728-65	5305-00-821-3869	138	17
96906	MS90728-8	5305-00-225-3843	54	6
			55	9
			117	6
08162	MU1310L		68	18
08162	M1210EL	3110-00-117-0696	61	3
81349	M16378/1BKE7	6145-00-043-1257	BULK	23
81349	M16878/3BMG0	6145-00-726-7275	BULK	22
61208	M1904-CN	2520-01-164-6115	61	37
61208	M2051K	4T30-00-954-1281	4	23
81349	M24243/1-A404	5320-01-023-2529	148	29
80033	M30094-007	4730-01-035-6669	33	7
81349	M83248/2-214	5330-01-017-6535	139	10
			140	1
81349	M83248/2-227	5330-01-106-0940	141	12
81349	M83248/2-905	5330-00-165-1980	24	66
			29	18
			33	4
			132	31
			135	23
81349	M83248/2-910	5330-00-167-5174	132	29
			135	25
			136	41
81349	M83248/2-914	5330-01-088-6106	135	17
78553	NAN50	5365-01-165-2606	80	33
80205	NAS1352-4LE16	5305-00-145-0809	24	20

CROSS-REFERENCE INDEXES
PART NUMBER INDEX

CAGEC	PART NUMBER	STOCK NUMBER	FIG.	ITEM
84479	NAS620-C416	5310-01-064-1494	23	31
43334	N03311	3110-00-554-5653	61	33
61424	NN-4-035	4720-00-604-6497	BULK	19
19207	NPN		135	33A
19207	NPN1		13	3
19207	NPN10		34	9B
19207	NPN11		45	1A
19207	NPN12		45	2A
19207	NPN13		45	3A
19207	NPN14		25	7A
19207	NPN15		34	27A
19207	NPN16		47	47A
19207	NPN17		47	6A
19207	NPN18		47	64A
19207	NPN19		47	54A
19207	NPN2		27	2A
19207	NPN20		48	6A
19207	NPN21		48	41A
19207	NPN22		48	49A
19207	NPN23		48	60A
19207	NPN24		50	8
19207	NPN25		53	8A
19207	NPN26		57	60A
19207	NPN27		60	25A
19207	NPN28		60	28A
19207	NPN29		60	39A
19207	NPN3		27	2B
19207	NPN30		66	13A
19207	NPN31		68	10A
19207	NPN32		68	13A
19207	NPN33		79	32A
19207	NPN34		102	33A
19207	NPN35		106	10A
19207	NPN36		115	4A
19207	NPN39		119	27C
19207	NPN4		27	4A
19207	NPN41		129	3A
19207	NPN42		134	9A
19207	NPN43		139	1A
19207	NPN44		139	1B
19207	NPN45		139	1C
19207	NPN5		27	7A
19207	NPN6		27	11A
19207	NPN7		34	8A
19207	NPN8		34	88
19207	NPN9		34	8C
60380	NTA-5266	3110-01-024-9817	122	2
			123	29
85480	NW8-3756	5310-00-682-4425	24	63
11083	0T0329	5340-00-423-8146	84	17
			88	29

CROSS-REFERENCE INDEXES
PART NUMBER INDEX

CAGEC	PART NUMBER	STOCK NUMBER	FIG.	ITEM
18265	P-20342	5306-01-186-5378	27	5
12658	PA-1675	2940-00-910-3066	27	7
66289	PD115	5310-00-637-1058	49	7
			49	10
00198	PK379	5315-00-816-1794	34	33
			112	4
15235	PLG1	4730-00-278-3383	3	29
			13	5
			30	16
79370	PP2	2520-00-147-8491	91	2
12658	PT-93	4330-00-118-5528	145	24
18265	P10-0128	4730-00-084-7543	28	2
18265	P10-2533	5306-01-153-1362	27	10
18265	P10-2929	5330-01-183-8680	27	12
18265	P10-4517	5340-00-103-8902	27	2
18265	P11-0103	2940-01-146-8870	27	11
18265	P16330	2940-00-876-2181	27	3
18265	P16338	2940-00-920-8228	27	4
60380	Q-12378	3110-01-155-6124	66	6
60380	Q-8322	3110-01-119-1128	23	18
61112	QA5-1TC	4920-01-140-7569	34	20
61112	QS5-2CT	2910-01-149-7860	34	27
80756	RR-267	5365-00-616-4946	65	37
80756	RR-354	5365-00-285-7939	61	4
80756	RR-500	5365-00-407-6204	121	28
80756	RR-625	5365-00-753-3646	65	46
80756	RR-875	5365-00-435-5279	124	8
80756	RRT-143	5365-01-068-6124	64	46
80756	RRT-433	5365-00-679-9841	123	39
80756	RRT-525	5365-00-763-5016	65	82
80756	RR2045	5365-00-598-6265	68	5
80756	RR337	5365-00-903-7544	65	60
82654	RS-104	5330-01-165-3400	BULK	16
80756	RS-150	5365-00-621-3192	87	7
80756	RS-175	5365-00-828-7572	126	1
80756	RST-196	5365-00-143-0033	68	16
80756	RST-275	5365-00-763-9328	68	24
80756	RST-287	5365-00-441-8849	65	63
80756	RST-375	5365-01-068-6114	65	83
80756	RST-450	5365-00-845-1529	65	45
			121	27
80756	RST-68	5365-00-921-3208	9	1
80756	RST231	5365-00-584-9755	65	66
80756	RST293	5365-00-928-9630	123	4
80756	RS200	5365-00-290-3745	84	1
			126	6
53551	RV6676-8-6	5320-01-166-7973	115	7
07707	SD64BS	5320-00-850-3233	114	21
55644	SS-48132-K2915	5340-01-099-8154	106	30
61864	SS-51156	5340-00-835-6504	107	50
11649	SS-8-A-8RP	4730-01-182-6781	29	8

CROSS-REFERENCE INDEXES
PART NUMBER INDEX

CAGEC	PART NUMBER	STOCK NUMBER	FIG.	ITEM
61864	SS51142	5340-00-291-0372	92	20
78286	S14-35-5017	5310-00-285-8867	134	4
11083	S1565	5306-00-423-8114	6	1
11083	S1566	5306-00-275-5012	10	8
			99	29
			103	34
			104	10
11083	S1573	5306-00-426-2922	66	19
			137	18
			138	48
11083	S1577	5306-00-260-4502	101	7
11083	S1587	5306-00-263-8978	42	11
			78	49
			88	1
			99	18
			121	21
			137	34
			141	1
11083	S1594	5306-00-260-4508	3	19
			4	19
			15	10
			34	25
			36	31
			52	9
			53	6
			56	5
			56	26
			60	24
			64	12
			64	23
			68	1
			71	69
			80	19
			84	11
			95	17
			96	49
			97	2
			98	7
			100	12
			106	15
			107	22
			113	3
			114	3
			114	11
			115	3
			120	3
			122	22
			124	16
			129	7
			137	29
			139	23

CROSS-REFERENCE INDEXES
PART NUMBER INDEX

CAGEC	PART NUMBER	STOCK NUMBER	FIG.	ITEM
11083	S1594	5306-00-260-4508	147	55
11083	S1595	5306-00-423-8117	53	30
			77	10
			99	26
			100	5
			102	7
			107	48
			112	8
			134	12
			141	36
			143	15
			145	29
			148	20
11083	S1597	5305-00-651-2686	127	21
11083	S1601	5305-00-260-4511	85	20
			86	20
			102	1
11083	S1603	5306-00-263-7303	11	1
11083	S1615	5306-00-261-1153	23	1
			24	79
			57	48
			151	13
11083	S1619	5306-00-426-2932	14	6
			19	27
			22	21
			34	3
			37	10
			39	14
			43	14
			64	13
11083	S1620	5306-00-426-2933	87	1
11083	S1621	5306-00-426-2934	62	17
			100	2
			107	31
			108	12
			113	6
			115	12
			117	10
			121	11
			141	25
			145	57
11083	S1623	5306-01-162-8500	93	16
11083	S1624	5306-00-263-7302	57	52
11083	S1625	5305-00-426-2936	82	3
			83	3
11083	5175	5315-00-423-8126	137	45
11083	S1973	5306-00-426-2945	103	1
10988	S239743	6140-01-130-6646	57	28
3P954	S3200		119	27A
15434	S658	5310-00-109-7638	128	18
99193	S9413-215	5330-00-245-6767	120	40

CROSS-REFERENCE INDEXES
PART NUMBER INDEX

CAGEC	PART NUMBER	STOCK NUMBER	FIG.	ITEM
15434	S962	4730-00-044-4715	13	4
20999	TEMFLEX 105C 1/2 IN BLACK		BULK	13
11083	T101	5307-00-419-4067	4	24
11083	T65	5306-00-426-2974	19	20
			37	1
			96	17
11083	T924	5306-00-263-7305	60	47
09990	V404PH-10-6	4820-01-253-2787	36	74
11083	V531	5310-00-480-6100	66	9
81348	W-B-131	6140-01-203-4912	56	21
01843	WA-79849	5310-00-450-0414	24	62
60532	WAS125	5310-00-080-9422	30	9
04998	WA1248	5310-00-143-5722	49	5
			49	9
78189	WD23755	5310-01-095-5913	34	11
78189	WD23875	5310-01-098-0634	79	39
			106	9
81348	WW-P-471AASBCA	4730-00-288-8055	78	34
12128	W55	3110-00-554-5302	39	9
			40	8
68505	X141	5310-00-010-3092	133	4
			148	6
77260	X747	5310-00-275-9421	32	1
11083	0L0829	2520-00-362-7883	94	6
11083	0L1319	5310-00-698-4460	60	36
11083	0L1329	5306-00-268-5798	2	10
			57	18
			62	5
			71	60
			106	28
			139	27
			146	10
11083	0L1365	5310-00-221-3150	34	34
11083	0L2070	5306-00-698-2150	10	14
			15	1
			34	3
			36	67
			37	15
			63	4
			71	18
			71	55
			95	15
			128	15
			139	19
11083	0S0175		138	36
11083	0S0509	5305-00-252-8919	15	15
			17	9
			29	31
			36	39
			41	4

CROSS-REFERENCE INDEXES
PART NUMBER INDEX

CAGEC	PART NUMBER	STOCK NUMBER	FIG.	ITEM
11083	0S0509	5305-00-252-8919	53	43
			53	49
			57	15
			57	27
			57	55
			60	6
			71	46
			71	66
			77	16
			78	27
			91	35
			94	4
			96	24
			103	27
			106	20
			107	6
			107	6
			112	7
			114	27
			115	16
			120	38
			134	2
11083	0S1571	5305-01-026-9518	15	14
			21	4
			43	12
			61	53
			95	16
			103	7
			107	20
			137	28
			140	2
11083	0S1585	5306-01-127-9361	2	16
			36	3
			43	5
			78	22
			88	5
			91	14
			105	9
			111	14
			112	16
			137	52
			145	26
			147	19
			153	7
11083	0S1590	5306-01-094-9106	19	24
			19	31
			37	2
			38	3
			60	45
			75	14
			114	5

CROSS-REFERENCE INDEXES
PART NUMBER INDEX

CAGEC	PART NUMBER	STOCK NUMBER	FIG.	ITEM
11083	0S1590	5306-01-094-9106	120	45
			122	16
			123	2
			137	14
11083	0S1591	5305-01-015-6841	12	11
			14	2
			18	4
			20	8
			31	19
			60	46
			63	15
			64	44
			71	28
			73	9
			80	14
			95	27
			106	25
			129	25
			137	6
			145	45
			147	38
11083	0S1618	5306-01-116-9622	13	12
			131	6
11083	0T0055	5306-01-159-1513	39	5
11083	0T0199	2520-01-066-9192	143	4
11083	0T0386	5340-01-160-2302	16	10
11083	0T0573	2910-00-309-9473	10	18
			18	14
			80	25
			140	9
11083	0V0375	5305-00-139-7071	63	19
			114	25
			135	32
			146	8
90940	0035392-0	5306-00-423-8116	93	39
			105	2
03479	05-35-756	6620-01-158-2910	150	2
53867	1 120 200 023	5365-01-174-8876	45	13
53867	1 120 220 007	5310-01-175-0630	45	16
01843	1 120 222 001	5330-01-178-3728	45	5
53867	1 123 414 004	5305-01-175-7537	45	20
01843	1 124 035 017	2920-01-178-0499	45	10
53867	1 125 045 115	6105-01-279-2683	45	7
53867	1 125 500 024	2920-01-178-6536	45	1
53867	1 125 825 021	2920-01-177-8565	45	15
53867	1 126 610 061	4140-01-176-2818	45	17
53867	1 127 320 503	5961-01-174-8652	45	6
53867	1 197 011 000	2920-01-177-8505	45	2
53867	1 900 910 024	3110-01-179-5935	45	4
11083	1A1460	5306-00-273-6357	60	44
			62	10

CROSS-REFERENCE INDEXES
PART NUMBER INDEX

CAGEC	PART NUMBER	STOCK NUMBER	FIG.	ITEM
11083	1A1460	5306-00-273-6357	71	67
			137	38
			140	13
			141	22
11083	1A2029	5306-00-423-8194	12	2
			14	5
			15	4
			22	29
			25	16
			29	15
			60	7
			61	2
			63	8
			71	11
			71	33
			80	44
			88	12
			107	8
			120	16
			121	14
			123	10
			129	15
			135	8
			139	26
			145	30
			147	52
11083	1A2209	5306-00-063-5001	61	36
			120	44
11083	1A2519	5310-01-096-6984	107	34
11083	1A3585	5310-00-423-8219	78	42
			90	20
11083	1A5183	5306-00-637-4927	96	18
11083	1A5822	5306-00-426-3080	66	10
			114	36
58312	1A5964-00	5305-00-426-3085	122	27
			123	12
11083	1A8651	5306-00-423-8292	82	4
			83	5
11083	1A8827	5315-01-164-7583	93	24
			94	1
11341	1A9033	5330-01-163-8130	79	34
11083	1A9579	5306-00-930-5643	127	26
11083	1B2713	5306-00-423-8313	31	35
11083	1B2790	5306-00-272-1804	25	12
11083	1B2886	5306-00-423-8316	99	19
			139	9
			141	15
11083	1B4205	5310-00-347-4123	137	59
			138	26
			138	31
			138	33

CROSS-REFERENCE INDEXES
PART NUMBER INDEX

CAGEC	PART NUMBER	STOCK NUMBER	FIG.	ITEM
11083	1B4205	5310-00-347-4123	138	52
			138	66
			138	71
11083	1B4367	5306-00-426-3209	88	27
			91	26
			110	1
11083	1B4971	5365-01-050-8008	21	9
11083	1B5174	4730-00-122-3969	12	10
11083	18676	5315-00-272-6760	94	19
			95	6
			96	5
11083	1B7709	5305-00-401-5261	3	6
58312	1B7709-00	5305-00-401-5261	9	16
11083	1B8708	5315-00-616-5522	5	3
11083	1B8714	5315-00-012-4553	63	10
11083	1B8742	5315-00-925-0204	77	22
11083	1C2251	5306-00-423-8393	10	19
11083	1D4586	5306-00-272-4246	1	2
11083	1D4595	5306-00-814-6559	3	10
11083	1D4600	5306-01-103-6598	143	7
11083	104609	5306-00-426-3403	99	6
			108	17
11083	1D4610	5306-00-426-3404	104	8
			108	19
11083	1D4620	5306-00-423-8409	102	27
11083	1D4630	5306-00-426-3409	104	7
11083	1D4676	5306-01-162-5998	114	17
			115	8
11083	1D4709	5306-01-053-3837	99	21
			101	9
11083	1D4717	5310-01-194-5398	10	23
			16	12
			21	1
			27	14
			29	16
			31	34
			34	4
			35	3
			36	34
			56	14
			60	20
			61	6
			63	3
			64	9
			69	10
			71	20
			76	1
			95	1
			100	11
			103	8
			107	1

CROSS-REFERENCE INDEXES
PART NUMBER INDEX

CAGEC	PART NUMBER	STOCK NUMBER	FIG.	ITEM
11083	1D4717	5310-01-194-5398	109	4
			114	20
			115	17
			120	27
			129	18
			129	18
			137	1
			138	15
			139	21
			142	14
			145	13
			147	32
			147	58
11083	1D4718	5310-00-431-7237	143	17
11083	1F1006	5315-00-363-8794	19	7
			61	12
11083	1F1344	4730-00-278-8368	68	11
			68	14
			102	11
			102	15
11083	1F1605	5310-01-159-4501	36	56
			36	78
11083	1F5403	5340-00-411-3926	31	28
11083	1F748	5310-00-445-4632	34	13
			56	16
11083	1F750	5310-01-108-8405	147	45
11083	1F7958	5310-00-972-0479	99	13
11083	1F8875	2530-00-149-8065	88	19
11083	1F8876		88	19A
11083	1F9341	5365-01-160-4615	107	42
11083	1H1023	5330-00-920-6924	47	71
11083	1H1200	5315-00-710-2087	94	10
11083	1H2629	2920-00-737-3225	47	43
			48	37
11083	1H4148	5365-00-282-5047	96	31
11083	1H4262	5340-01-160-2444	97	10
11083	1H5165	5340-00-547-9875	148	25
11083	1H5166	6220-00-778-7213	53	18
			55	3
			57	26
			148	26
			151	6
11083	1H525	5340-01-160-4097	68	22
11083	1H5728	5330-00-333-4384	121	1
11083	1H8128	5330-00-555-3810	144	25
11083	1H8171	2530-00-930-9778	72	8
11083	1H9696	5330-00-580-1226	71	63
			84	4
			132	13
11083	1J1971	5315-01-170-2228	60	8
11083	1J4384	5315-00-619-2962	145	49

CROSS-REFERENCE INDEXES
PART NUMBER INDEX

CAGEC	PART NUMBER	STOCK NUMBER	FIG.	ITEM
11083	1J4384	5315-00-619-2962	147	35
11083	1J5353	5315-01-098-3928	93	4
11083	1J8965	5310-01-108-7538	137	51
			138	42
11083	1J9671	5330-00-613-6500	136	36
11083	1J9778	4730-01-278-1859	145	60
			147	41
11083	1K7041	5360-00-290-0851	125	6
11083	1L5072	5315-00-532-5746	9	25
11083	1L5081	5310-01-146-1218	15	11
11083	1L5316	5315-00-479-2833	131	13C
11083	1M1341	5340-01-053-3843	94	20
			95	4
11083	1M1408	5310-00-066-2486	89	4
11083	1M1571	2530-00-890-2233	144	7
11083	1M1604	3110-00-740-6782	77	2
11083	1M3097	5330-00-858-8186	85	6
			86	6
			88	11
11083	1M3098		85	5A
			86	5A
			88	10A
11083	1M3735	5315-00-760-7417	19	6
11083	1M3780	3120-00-898-4700	75	3
			75	16
11083	1M3812	3040-00-923-7063	85	3
			86	3
58312	1M3833-00	5315-00-409-3703	64	34
11083	1M3937	5330-00-948-6632	65	15
11083	1M4291	5315-00-193-0924	84	3
11083	1M6119	5306-00-438-8600	57	3
			57	12
11083	1M6120	5310-00-438-8604	57	2
			57	13
11083	1M7643	5365-01-159-1562	21	13
11083	1M9444	2530-00-949-0817	91	10
11083	1N3116	4730-01-144-3766	38	2
11083	1N3139	5340-01-160-2354	22	13
11083	1N3576	2815-01-246-6227	4	1
11083	1N3958	2930-01-149-6719	37	3
11083	1N4102	4720-01-151-8127	16	5
11083	1N4857	2910-01-144-1532	23	6
11083	1P1367	5340-00-499-9648	13	7
11083	1P1650	3120-01-160-4111	93	53
11083	1P2164		128	7A
11083	1P2165		128	7
11083	1P2166		128	4A
11083	1P2167		128	4
11083	1P2186	3020-01-162-7565	128	9
11083	1P2195	4820-01-158-6839	125	2
11083	1P2497	5305-01-068-9719	23	26

CROSS-REFERENCE INDEXES
PART NUMBER INDEX

CAGEC	PART NUMBER	STOCK NUMBER	FIG.	ITEM
11083	12878	2530-01-069-0791	94	8
11083	1P3216	5360-01-162-2847	132	1
11083	1P3262	5340-01-161-6223	120	18
11083	1P3703	5330-01-043-5565	71	26
			135	13
			136	22
11083	1P3934	3110-01-053-7564	121	7
11083	1P4232	5365-01-164-6623	122	17
11083	1P436	5330-01-024-4862	25	9
11083	1P4573	5307-01-161-7356	31	8
11083	1P4576	4730-01-051-3134	71	21
			140	7
11083	1P4577	4730-01-051-5256	141	10
11083	1P4578	4730-01-051-5257	141	38
11083	1P5130		130	17
11083	1P5274	5315-01-155-2618	125	7
			125	8
11083	1P5290		122	21
11083	1P5293	3040-01-342-0691	122	36A
			123	19A
11083	1P5475	3020-01-142-3213	36	36
11083	1P5955	2930-01-150-3672	36	27
11083	1P5956	5365-01-149-0888	36	32
11083	1P5957	2930-01-155-5095	36	26
11083	1P5958	2930-01-171-3358	36	35
11033	1P6015	2930-01-147-9326	36	10
11083	1P6023	2930-01-149-3801	36	54
11083	1P6024	2930-01-150-4922	36	76
11083	1P6025	5310-01-158-2007	36	24
11083	1P6026	2930-01-144-5767	36	59
11083	1P6029	2910-01-149-5000	36	22
11083	1P6071	3120-01-163-9375	122	1
			123	28
11083	1P6117	2930-00-419-9036	36	43
11083	1P6153	3040-01-162-4303	122	15
			123	1
11083	1P6158	3040-01-163-3240	122	34
			123	17
11083	1P6167	2520-01-161-7796	122	8
			123	27
11083	1P6172	5365-01-161-9161	122	23
11083	1P6174	3130-01-166-0810	123	44
11083	1P6175	5365-01-164-9962	123	42
11083	1P6176	3110-01-165-3725	122	28
			123	13
11083	1P6177	5365-01-164-6599	122	29
11083	1P6178	5365-01-164-8702	122	20
11083	1P6179	3040-01-184-4026	122	36
			123	19
11083	1P6180	3110-01-164-8765	122	25
11083	1P6217	4730-01-163-3243	131	21

CROSS-REFERENCE INDEXES
PART NUMBER INDEX

CAGEC	PART NUMBER	STOCK NUMBER	FIG.	ITEM
11083	1P6367	5340-00-407-8369	3	21
11083	1P6377	5430-01-142-3215	36	63
11083	1P6379	5430-01-142-3216	36	12
11083	1P6401	5310-01-149-1946	36	62
11083	1P6403	2930-01-147-9327	36	1
58312	1P6452-00	5970-00-213-7747	24	88
11083	1P6701	3040-01-164-0352	122	10
			123	26
11083	1P6784	2590-01-049-5318	17	7
11083	1P7037	5365-01-160-4727	104	3
11083	1P7315	5310-01-158-2006	36	64
11083	1P7316	2930-01-147-5536	36	51
11083	1P7346	5310-01-051-2300	19	30
11083	1P7542	3010-01-161-0220	124	12
11083	1P7543	3040-01-159-5904	124	14
11083	1P7544	2520-01-163-6933	124	15
11083	1P7980	2930-01-147-5534	36	9
11083	1P7989	5365-01-147-1448	36	61
11083	1P8184		128	10
11083	1P8204	2530-01-163-7238	121	8
11083	1P8209	5330-01-162-2549	121	4
11083	1P8635	3020-01-161-0980	124	17
11083	1P8636	3020-01-165-0300	123	40
11083	1P8639	3020-01-163-1206	123	3
11083	1P8640	3020-01-159-9798	121	29
11083	1P8641	3040-01-163-2722	121	30
11083	1P8642	3020-01-159-9797	121	24
11083	1P8644	3130-01-162-8695	124	23
11083	1P8651	3040-01-167-4493	122	11
			123	24
11083	1P8661	3020-01-159-5945	124	20
11083	1P8662	3040-01-161-7794	123	30
11083	1P8663	3010-01-161-2770	124	29
11083	1P8917	3040-01-159-7774	121	16
11083	1P8952	4030-01-196-2310	121	9
11083	1P9169	5365-01-148-9811	36	58
11083	1P9214	3020-01-163-7329	121	13
11083	1P9232	3130-01-166-0809	121	34
11083	1P9241	3040-01-159-2731	121	26
11083	1P9243	5365-01-162-6080	121	17
11083	1P9244	5365-01-162-6082	121	23
11083	1P9245	5365-01-160-4738	121	22
11083	1P9246	5365-01-163-6185	121	35
11083	1P9247	3110-01-171-4038	123	7
11083	1P9248		122	7
11083	1P9251	3040-01-162-6563	123	36
11083	1P9252	5330-01-100-9046	124	4
11083	1P9256	2520-01-162-4424	124	31
11083	1P9257	5365-01-164-7642	124	28
11083	1P9258	5310-01-164-7502	124	13
11083	1P9260	2590-01-162-4365	124	10

CROSS-REFERENCE INDEXES
PART NUMBER INDEX

CAGEC	PART NUMBER	STOCK NUMBER	FIG.	ITEM
11083	1P9261	2520-01-067-5621	124	11
11083	1P9265	3040-01-163-1108	119	4
11083	1P9279	4710-01-163-0318	119	23
11083	1P929	3040-01-150-5425	60	16
11083	1P9290		119	11
11083	1P9292		119	12
11083	1P9497	2530-01-159-8752	97	15
11083	1P9899	5340-01-148-9803	42	128
11083	1P9925	5306-01-069-0877	23	51
11083	1P9945	5340-01-148-9802	42	12
11083	1P9946	3040-01-147-6412	42	12A
11083	1P9956	5306-00-497-0342	7	9
11083	1S0286	5307-00-458-2364	36	13
11083	1S1015	5340-00-426-4819	57	20
11083	1S1409	5340-01-157-2056	71	44
11083	1S1888	2510-01-196-1284	117	7
11083	1S2121	2520-00-237-4603	67	18
11083	1S2244	2530-01-069-0802	57	36
11083	1S2487	5340-01-165-2560	53	48
11083	153062	2815-00-411-3925	3	28
11083	1S3206	3110-00-931-7854	66	4
11083	1S4	5330-00-945-4395	95	23
11083	1S4305	5365-01-163-2017	137	3
11083	1S4915	2540-01-068-7149	57	31
11083	1S5242-4	9905-01-168-0972	100	7
11083	1S5314		82	8A
			83	9A
11083	1S5315	2530-00-422-9313	82	8
			83	9
11083	1S5321	2510-01-348-2171	82	15
11083	1S5322	2510-01-158-9354	82	15
11083	1S6422	2520-00-923-7084	87	26
11083	1S6529	4820-01-159-1012	67	12
11l83	1S7252	2920-01-066-0593	57	10
			57	58
11083	1S8947	5330-00-031-2558	84	13
			85	15
			86	16
			88	31
11083	1S9497	5330-01-164-8576	122	33
			123	16
11083	1S9540	2990-01-103-6817	4	13
11083	1S9543	5365-00-118-3056	7	6
11083	1S9593	5340-01-160-2464	53	24
			53	36
			55	15
			57	67
			148	22
			148	41
11083	1S9886	5340-01-216-1487	148	11
11083	1S994	5340-01-151-9308	57	17

CROSS-REFERENCE INDEXES
PART NUMBER INDEX

CAGEC	PART NUMBER	STOCK NUMBER	FIG.	ITEM
11083	1T3387	3040-00-116-9845	61	23
11083	1T0765	5306-01-097-7874	12	14
			14	8
			120	13
11083	111349	3040-01-159-0931	61	16
11083	1T1350	2520-01-179-4097	61	13
11083	1T414	5306-00-455-0467	61	27
			67	6
			131	5
11083	1T425	3110-00-202-1879	61	34
11083	1T43	3110-00-198-2292	123	41
11083	1T445	3120-00-401-6060	61	39
11083	1T52	2520-01-155-7937	61	30
11083	1T521	3110-01-160-4713	61	35
11083	1T531	3040-01-159-7951	61	18
11083	1T535	2520-01-152-7749	61	26
11083	1T550	5315-01-160-4640	91	30
11083	1T64	3110-00-404-5484	61	24
11083	1T744	5310-01-162-2524	61	32
11083	1T746		61	40
11083	1T747	3040-01-150-3937	61	38
11083	1J749	3040-01-152-7823	61	20
11083	1T94		61	42
11083	1T945	3110-01-156-5289	61	31
11083	1U4599	5330-01-164-8565	147	28
11083	1U4662	4820-01-159-3012	135	19
11083	1V0026		31	23
11083	11V728		31	41B
11083	1V3113	5340-01-161-7400	151	17
11083	1W0705	6620-01-158-2909	150	9
11083	1W1219	2510-01-147-2252	2	11
			2	13A
11083	1W3900	5330-01-155-4283	10	10
11083	1W4402	3020-01-149-3164	11	12
11083	1W4405	3020-01-148-3798	11	15
11083	1W4542	2930-01-147-2241	10	5
11083	1W4619	2930-01-144-3418	39	16
			40	15
11083	1W5300	2815-01-146-4526	3	2
11083	1W6009	2910-01-155-7936	25	2
11083	1W6757	2815-01-153-1615	7	4
11083	1W7053	4320-01-158-9333	KIT	
11083	1W7110	2815-01-177-4792	10	ZA
11083	1W8633	2910-00-157-0650	25	18
11083	1W9509	5360-01-280-9482	72	12
30780	10 HP5N-S	5365-01-040-1344	136	40
03479	10-35-870	6685-01-157-5477	150	8
02951	1000-20	4730-00-437-0131	78	21
24491	10015	4730-00-042-8988	131	9
92967	10273-00	5310-01-098-7244	64	42
16764	10496037	5330-01-257-3807	49	11

CROSS-REFERENCE INDEXES
PART NUMBER INDEX

CAGEC	PART NUMBER	STOCK NUMBER	FIG.	ITEM
29510	105409	4730-00-639-9167	120	8
15434	108330	5310-00-486-2505	139	14
29944	10884	2540-01-162-4161	116	31
19200	10910174-16	5310-00-987-1294	21	11
			114	10
79470	110-03428	4730-01-023-8633	24	56
78189	110	5310-00-596-7693	148	7
11671	11146	5310-00-332-5036	134	13
16764	1115607	2920-01-195-2876	47	33
			48	30
16764	1117647	2920-01-144-8796	43	1
01843	1125885031	2920-01-178-6574	45	3
01843	1129900009	3110-01-177-4667	45	14
16764	11504248	5310-01-129-7508	47	4
91024	1155701	2540-01-176-2987	114	4
19207	11621206	2940-01-016-4654	27	1
19207	11621436-1	5365-01-035-4899	135	22
			136	37
19207	11634187	5315-00-472-5242	65	77
19207	11634204-2	5365-00-006-0678	67	14
19207	11674728	5935-01-097-9974	52	2
79550	11722	5935-01-097-7240	148	3
94135	12Z2007-260	5310-00-685-2973	127	31
72915	120613	5310-00-297-8836	127	22
08129	12180	5340-00-971-4820	36	68
19207	12267772	5365-01-079-1624	135	24
78500	1229T1554	5310-00-949-9296	108	26
19207	12296626	7690-01-114-3702	133	31
78189	1232-00	5310-00-550-3714	57	63
91024	1264100	2540-01-163-7236	116	23
91024	1264700	2540-01-164-7840	116	15
91024	1265000	2540-01-162-8995	116	12
91024	1265500	5360-01-165-3682	116	13
91024	1265600	5315-01-167-3452	116	21
91024	1265801	2540-01-163-7237	116	16
91024	1265802	2540-01-164-0033	116	14
91024	1266100	5310-01-165-3342	116	19
91024	1266200	2540-01-165-4934	116	22
91024	1266800	2540-00-449-7378	116	5
91024	1267001	2540-01-176-2910	116	2
91024	1267002	5340-01-160-6800	116	4
91024	1267300	3120-01-165-5662	116	1
91024	1267400	3040-01-162-7641	116	27
91024	1267600	5340-01-167-8357	116	7
91024	1267700	5360-01-069-0808	116	10
91024	1267803	2540-00-368-8227	116	6
11341	128018	4820-01-162-6586	79	32
79550	12864	5920-01-059-0881	51	13
			148	42
79550	12870	5365-01-068-6124	51	14
79550	12871	5999-01-059-0884	51	9

CROSS-REFERENCE INDEXES
PART NUMBER INDEX

CAGEC	PART NUMBER	STOCK NUMBER	FIG.	ITEM
79550	12871	5999-01-059-0884	51	15
			148	43
			148	48
14351	13XX3958	5306-00-685-2384	75	12
64488	1300C	5935-01-211-4990	53	35
11671	13061	4320-01-145-6113	KIT	
79470	131-05004	4820-01-053-4586	24	83
24617	145036	5310-00-045-1079	92	12
			94	15
74400	15002-3	6645-00-602-5968	150	6
62983	154085	5330-00-593-1282	70	3
62983	154101	5330-00-950-8217	47	13
			48	11
55355	1577AL	2520-00-113-5509	6	9
10001	1592919	5315-00-584-9792	61	25
10001	159384PC5	5360-00-237-2158	31	43
95879	1629 B	4730-00-223-6410	82	6
			83	6
95879	1684 B	4730-00-244-6517	78	35
73680	17159-1110	5330-00-455-7065	144	19
24617	1840633	5305-00-423-4909	49	16
16764	1846955	5305-01-238-3071	44	9
			44	20
16764	1846956	5305-01-163-5667	44	44
16764	1847807	5305-00-218-6387	47	32
			48	28
16764	1851808	5310-01-047-6064	44	3
16764	1852888	5977-01-153-0247	48	26
16764	1869573	5340-00-844-7921	44	22
16764	1869747	2920-00-891-0928	47	44
			48	38
16764	1369760	5977-00-363-3568	47	17
59150	1875-330	2940-01-173-4272	28	4
16764	1891055	5961-01-047-6729	44	13
16764	1892242	2590-01-149-6777	55	6
16764	1892243	2590-00-126-3730	55	7
16764	1893560	2920-01-112-2687	47	69
			48	65
16764	1894444		44	2
16764	1894445	5305-01-168-8928	44	35
16764	1894446	2920-01-174-1278	44	45
16764	1894458	5306-01-167-1084	44	4
16764	1894462	3040-01-161-6659	44	19
16764	1894463	5365-01-171-1560	44	12
16764	1894464	3040-01-161-6657	44	14
16764	1894465	2920-01-162-6410	44	25
16764	1894467	2920-01-162-8999	44	29
16764	1894468	5325-01-223-4251	44	27
16764	1894472	5970-01-170-4693	44	23
16764	1894473	3040-01-161-6658	44	18
16764	1894474	2920-01-163-0758	44	46

CROSS-REFERENCE INDEXES
PART NUMBER INDEX

CAGEC	PART NUMBER	STOCK NUMBER	FIG.	ITEM
16764	1894483	2920-01-162-9006	44	36
16764	1894626	2920-01-163-7209	44	15
16764	1894627	2920-01-154-8021	44	17
16764	1894635	3120-00-828-6852	48	61
16764	1894637	3120-01-101-5089	47	57
			48	52
16764	1894638	3120-01-131-5088	47	9
			48	9
16764	1894641	5306-01-165-1266	44	1
16764	1894642	5330-01-053-7021	48	58
16764	1894643	5330-01-053-2907	48	56
64488	1903C	5940-01-059-0873	58	4
16764	1905406	5310-00-262-4715	44	31
16764	1906989	5977-00-809-2517	47	30
16764	1913080	5310-00-291-4498	47	18
			48	19
16764	1913084	5310-00-734-8959	47	14
			48	12
16764	1913846	5310-01-164-8539	44	6
16764	1914379	5310-00-757-6377	50	4
			51	21
16764	1914580	5305-00-105-1207	47	26
16764	1914869	5306-00-550-9129	47	10
			48	5
79550	19189C	5935-01-118-8884	58	1
			58	7
16764	1922457	5310-00-719-5470	47	38
			48	32
16764	1928500	5305-00-371-5138	47	27
16764	1930611	5306-00-550-3023	47	34
			48	29
16764	1936466	5310-00-999-2527	47	74
			48	59
91024	1944400	5310-01-166-2618	116	17
16764	1945356	5365-00-753-9528	47	40
			48	34
16764	1945402	5360-00-985-2253	49	12
16764	1945476	5330-00-976-4695	47	70
			48	66
16764	1945484	6110-00-757-7187	47	61
			48	68
16764	1945840	2920-00-838-9344	47	47
			48	41
16764	1945848	2920-01-138-7046	47	6
			48	6
16764	1945849	5977-00-828-9053	47	16
16764	1945850	5970-00-503-0852	47	20
16764	1945851	2920-00-021-2273	47	19
16764	1945853	2920-00-993-4233	47	45
			48	39
16764	1945862	5940-00-828-8510	47	36

CROSS-REFERENCE INDEXES
PART NUMBER INDEX

CAGEC	PART NUMBER	STOCK NUMBER	FIG.	ITEM
16764	1945862	5940-00-828-8510	48	31
16764	1948519	5310-00-062-2051	47	49
			48	43
16764	1948520	5310-00-822-2236	47	51
			48	46
16764	1948521	5360-00-812-0196	47	52
			48	47
16764	1948522	2920-00-822-2287	47	48
			48	42
16764	1948526	5310-00-822-2241	47	53
			48	48
16764	1948529	3040-00-034-4216	47	72
			48	57
16764	1948536	5306-00-783-5183	47	68
			48	64
16764	1948537	5306-00-783-5188	47	63
16764	1953237	5310-00-827-2821	47	12
			48	10
16764	1955660	5330-00-928-9798	44	37
16764	1955664	2920-00-221-8856	44	38
16764	1955989	5970-00-431-3667	47	42
			48	36
16764	1957726	3120-01-133-1341	44	42
16764	1957846	2920-01-138-7045	48	60
16764	1961867	5330-00-851-7742	44	43
16764	1964402	5340-01-132-4704	47	59
			48	54
16764	1964516	5970-00-557-8747	47	15
			48	13
16764	1964857	5330-00-914-0703	47	41
			48	35
16764	1965093	5970-00-918-5568	47	21
			48	21
16764	1965472	5970-00-657-8133	47	46
			48	40
11862	1968396	5305-00-450-5937	47	39
			48	33
16764	1968945	5305-00-450-0421	44	47
16764	1968990	3120-00-432-8120	44	28
16764	1968998	5305-00-432-8422	48	27
16764	1969046	2920-01-099-3085	44	34
16764	1969070	5310-01-164-1650	44	33
11862	1970227	5999-01-104-0445	44	16
16764	1970455	2920-01-112-0988	47	64
16764	1970593	4140-01-162-8967	44	32
16764	1972716	3120-01-166-8144	49	14
16764	1976061	5305-01-168-5422	44	5
16764	1977264	2920-01-140-0116	49	13
16764	1978754	9390-01-112-3500	47	8
			47	56
			47	67

CROSS-REFERENCE INDEXES
PART NUMBER INDEX

CAGEC	PART NUMBER	STOCK NUMBER	FIG.	ITEM
16764	1978754	9390-01-112-3500	48	8
			48	51
			48	62
16764	1978756	5340-01-115-3548	47	7
			47	55
			47	66
			48	7
			48	50
			48	63
16764	1979388	5977-01-137-3421	48	23
16764	1979389	5970-01-137-3420	47	22
			48	22
16764	1979498	5940-01-163-1435	49	1
16764	1979600	5995-01-140-9058	48	2
16764	1979870	2920-01-207-9671	47	54
			48	49
16764	1984287	6110-01-142-2424	44	8
16764	1984705	5970-01-150-1446	49	8
16764	1984974	5977-01-253-5207	48	14
16764	1984975		48	18
16764	1984978	5970-01-138-7044	48	20
16764	1984979	5977-01-153-0322	48	24
16764	1984981	6105-01-254-2722	48	17
16764	1985348	5961-00-099-9791	44	24
16764	1985445	5910-01-162-8299	44	21
16764	1990228	2920-00-425-5932	46	4
16764	1993739	2920-01-281-9385	46	4
02697	2-208N674-70	5330-01-013-3723	136	23
02697	2-216N674-70	5330-00-774-6894	136	5
09990	2-216S1032-70	5330-00-913-8872	22	24
			61	54
			63	5
			71	9
09990	2-219S1032-70	5330-00-925-4778	71	32
			95	21
09990	2-241N951-75	5330-00-291-7192	22	18
02697	2-244C873-70	5330-00-941-3599	70	11
09990	2-312S1032-70	5330-00-914-3320	95	12
09990	2-320N951-75	5330-00-590-1064	153	10
09990	2-338N951-75	5330-00-862-6861	42	3
11083	2A1736	5355-00-371-3370	137	26
			138	13
11083	2A3211	5310-01-151-8350	60	11
11083	2A3798	5315-00-252-2959	4	31
			6	7
11083	2A4429	2805-00-288-3650	3	5
11083	2A4639	5306-00-263-4038	29	24
			71	25
			120	34
11083	2A5546	5306-00-253-3376	22	30
11083	2A5885	5360-01-164-7621	135	16

CROSS-REFERENCE INDEXES
PART NUMBER INDEX

CAGEC	PART NUMBER	STOCK NUMBER	FIG.	ITEM
11083	2A5885	5360-01-164-7621	136	25
11083	2B0947	5306-00-809-7134	112	14
			141	3
			143	21
			153	11
11083	2B2006	5306-00-766-2182	142	10
11083	232404	5999-00-363-6240	29	30
11083	233243	5340-01-255-3577	53	40
11083	233455	5310-00-638-0201	90	7
11083	283457		90	8
11083	237557	9390-01-167-3646	78	50
11083	2B8092		77	20
11083	288093	5315-00-565-0437	77	18
11083	2B8162	5315-00-266-5276	78	19
			97	17
11083	208352	5310-00-507-5727	53	3
11083	2B941	5365-00-650-7092	34	1
11083	28947	5306-00-809-7134	107	45
11083	2D2751	5325-00-400-8682	151	2
11083	206235	5310-01-160-2034	56	22
11083	206392	5330-00-843-7194	24	24
			24	57
			47	73
11083	2D6421		77	1
11083	2D8390	4730-00-924-7974	120	35
11083	2F23	5365-00-352-7400	110	7
11083	2F2815		78	41
11083	2F6678	5330-00-972-7644	47	58
			48	53
11083	2F7576	2520-00-918-9977	77	21
11083	2G6236	5365-01-282-1584	142	16
30780	2HP5N-S	5365-01-124-2945	132	19
11083	2H3750	5305-01-051-2302	101	10
11083	2H3755	5306-00-814-8967	26	7
11083	2H3788	5310-01-059-7159	70	5
11083	2H3855	5306-00-138-4466	138	54
11083	2H4145	5330-00-678-3369	125	15
11083	2H5001	5330-00-858-8223	130	12
11083	2H5746	5310-00-950-6944	145	39
			147	70
11083	2H6338	5330-00-325-6310	84	15
			120	21
11083	2J1345	2590-01-215-2313	145	33
			147	22
			147	25
11083	2J157	5330-00-858-8224	135	14
11083	2J3207	5315-01-162-6052	103	9
11083	2J3505	5310-00-919-2242	103	4
11083	2J3506	5310-00-978-5406	1	10
			98	5
			99	23

CROSS-REFERENCE INDEXES
PART NUMBER INDEX

CAGEC	PART NUMBER	STOCK NUMBER	FIG.	ITEM
11083	2J3507	5310-00-490-9859	99	17
			101	11
			118	7
11083	2J5815	5310-01-160-4532	77	15
11083	2J5997	5315-01-201-4768	99	12
11083	2J6073		145	48
			147	33A
11083	2J60740UM.OIDAG		145	46
			147	33
11083	2J6195	5340-01-222-5376	145	27
			147	18
11083	2J6305	5330-00-923-6952	143	26
11083	2J6306	3120-00-921-7248	143	5
11083	2J6316		143	6
11083	2J7295	5360-01-166-6940	137	15
			138	12
11083	2J851	3130-01-171-8186	152	36
			152	50
11083	2J885	5315-01-282-0458	152	35
11083	2K1738	3110-01-164-7536	123	37
11083	2K2188	5305-01-161-5498	93	52
11083	2K2879	2510-01-309-1002	82	19
11083	2K400	5340-00-633-8043	94	23
11083	2K4973	5310-01-058-8071	127	3
11083	2K5986	5315-01-066-5213	65	35
11083	2K6830	2530-00-890-2229	144	24
11083	2K703	3805-00-620-7109	102	5
11083	2K7468	5310-01-160-4539	118	1
11083	2L2685	5340-00-269-0841	71	59
11083	2L3650	5315-00-246-8066	71	15
11083	2L5893	5315-00-533-9530	39	12
11083	2L6267	5310-01-095-1246	120	47
11083	2L8052	5940-00-113-8190	46	2
1103	2M1168	2520-01-059-9381	132	2
11083	2M122	5315-00-352-7512	78	36
11083	2M1538	5307-00-135-3077	119	7
11083	2M1755	5307-00-900-5570	64	29
11083	2M2488	5307-01-107-3674	21	7
11083	2M2858	4320-00-858-8192	85	5
			86	5
			88	10
11083	2M287	5340-00-253-7912	57	51
11083	2M3818	5330-00-458-1909	63	25
11083	2M4668	2590-01-236-2281	111	15
11083	2M4779	5307-00-465-6789	64	30
			76	7
11083	2M4810	5330-00-923-6988	36	16
11083	2M5164	2540-01-187-2544	101	15
11083	2M5407	5330-00-920-6922	15	5
58312	2M5471-00	5305-00-004-7245	24	68
11083	2M7041	4730-01-068-7106	67	22

CROSS-REFERENCE INDEXES
PART NUMBER INDEX

CAGEC	PART NUMBER	STOCK NUMBER	FIG.	ITEM
11083	2M7167	5365-00-136-2006	60	32
11083	2M7207	2530-01-090-6880	82	12
			83	13
11083	2M8191	5365-01-103-3670	67	30
11083	2M8340	5340-01-062-5196	137	54
			138	51
			138	68
11083	2M849	5310-00-431-7239	56	12
			65	18
			78	23
			121	20
11083	2M8729	5315-01-164-7586	145	23
			147	15
11083	2M8908	5355-00-730-8027	60	17
11083	2N2658	5305-01-024-4774	24	77
11083	2P0220	5330-01-069-1478	10	4
11083	2P1005	3120-01-164-8623	122	3
			123	31
11083	2P1053	2590-01-165-0354	120	42
11083	2P1064	2520-01-146-7213	63	11
11083	2P1068	5330-01-093-8485	93	7
11083	2P1168	3120-01-066-2505	11	16A
11083	2P1169		19	10A
11083	2P1170	3040-01-067-5649	19	10
11083	2P1262	2815-00-529-5441	3	18
11083	2P1487	5330-01-155-2584	2	13
11083	2P1553	3110-01-266-2376	78	12
11083	2P1692	5330-01-068-6104	2	8
11083	2P1738	2815-01-146-5926	18	2
11083	2P1739	4710-01-068-3420	15	17
11083	2P1751	2815-01-068-8565	15	18
11083	2P1757	2930-01-050-8012	42	7
11083	2P1781	5365-01-069-0882	19	15
11083	2P2094	2930-01-187-7160	103	22
11083	2P2511		37	6
11083	2P2537	5307-01-069-1419	13	6
11083	2P2541	6220-01-037-5622	53	8
11083	2P2547	2590-01-148-9536	17	1
11083	2P2697	4710-01-068-9728	17	3
11083	2P2720	5330-01-067-5727	10	13
11083	2P2911	3040-01-163-1109	126	4
11083	2P2917	3010-01-158-4092	126	2
11083	2P3126	5340-01-160-4074	97	16
11083	2P3127	5340-01-160-2351	97	16
11083	2P3200	5306-01-024-7524	24	67
11083	2P3206	5306-01-054-5310	17	8
11083	2P3208	5306-01-053-7322	42	13
11083	2P3230	5330-01-058-9176	36	5
11083	2P3261	5310-01-050-8016	42	1
11083	2P347	5365-00-032-4357	84	12
			85	14

CROSS-REFERENCE INDEXES
PART NUMBER INDEX

CAGEC	PART NUMBER	STOCK NUMBER	FIG.	ITEM
11083	2P347	5365-00-032-4357	86	15
			88	30
11083	2P3572	5340-01-162-8857	119	8
11083	2P3617	4820-01-163-0828	131	8
11083	2P3637	5330-01-164-8564	120	29
11083	2P3639	4820-01-162-8996	131	18
11083	2P3644	5330-01-162-8587	132	14
11083	2P3646		132	12
11083	2P3650	5330-01-161-0895	130	10
11083	2P3672	5330-01-164-8575	124	3
11083	2P3682	5360-01-067-5545	66	7
11083	2P3683	5315-01-164-9838	131	17
11083	2P3719		124	30
11083	2P3858	3120-00-397-4451	5	6
11083	2P3859	3120-00-394-4276	5	10
11083	2P4337	5305-01-216-3986	81	1
11083	2P4370	2520-01-161-9658	122	14
			123	22
11083	2P4371	2520-01-163-1220	123	21
11083	2P4437	5340-01-164-8760	120	46
11083	2P4438	5340-01-164-8621	120	43
11083	2P4439	4730-01-161-0160	119	25
11083	2P5738	5340-01-161-9146	120	30
11083	2P5818	2940-01-171-3389	125	16
11083	2P5830	2940-01-162-4246	125	1
11083	2P5832	4330-01-164-7973	125	13
11083	2P5853	4710-01-161-0265	120	39
11083	2P5943	4720-01-066-4587	BULK	9
11083	2P5943-10.63		79	27
11083	2P5943-16*5		79	21
11083	2P5943-25		142	7
11083	2P6000		127	40
11083	2P6001	3040-01-164-7841	127	37
11083	2P6008	3040-01-158-9329	127	41
11083	2P6009	3040-01-160-1057	127	38
11083	2P6132	5330-01-067-5728	37	5
11083	2P6146	4730-01-147-5535	36	73
11083	2P6245	2530-01-067-5675	19	13
11083	2P6286	5330-01-048-6001	80	5
11083	2P6644	5340-01-161-5470	106	22
11083	2P6650	4730-01-164-4738	141	11
11083	2P6896	5330-01-160-4575	120	28
11083	2P6969	3040-01-158-9330	130	28
11083	2P6970		130	23A
11083	2P6971	5340-01-161-9923	130	23
11083	2P7016	3040-01-158-8692	120	22
11083	2P7020	4730-01-166-2297	120	15
11083	2P7092	3040-01-162-0257	140	8
11083	2P7622	5306-01-160-3949	87	12
11083	2P764		103	12
11083	2P765		103	18

CROSS-REFERENCE INDEXES
PART NUMBER INDEX

CAGEC	PART NUMBER	STOCK NUMBER	FIG.	ITEM
11083	2P766		103	15
11083	2P770	2930-01-159-5861	103	30
11083	2P8045	2530-01-204-5613	85	9
			86	9
11083	2P8145	3040-01-280-3452	138	21
11083	2P8746	5330-01-067-5729	19	25
11083	2P8889	2815-00-024-4596	4	4
11083	2P8977	5340-01-163-0631	129	14
11083	2P9660	3020-01-160-9355	77	27
11083	2P9672		77	4
11083	2P9673	5340-01-162-5790	107	9
11083	2P9674	5340-01-162-9819	107	4
11083	2P9848	4710-01-163-0593	141	28
11083	2P9849	4710-01-163-1258	141	39
11083	2P9951	3040-01-171-3370	78	18
11083	2S0115	5310-00-419-1363	108	18
11083	2S0502	3110-00-781-4334	7	11
11083	2S1453		75	15A
11083	2S1454	2520-01-059-9520	75	15
11083	251477	3110-01-160-0455	78	52
11083	2S1541	4730-00-850-3812	15	6
11083	2S1641	4710-00-949-0874	76	10
11083	2S1654	5310-00-193-1076	87	2
11083	2S2109	5340-00-490-9869	107	15
11083	2S2846	5310-00-413-4983	36	6
11083	2S3029	3110-00-554-5304	124	5
11083	2S4078	5330-00-429-3542	129	19
11083	2S42	5307-01-070-2014	10	17
11083	254366	5365-00-426-4576	78	37
11083	2S5012	5920-01-059-0882	51	8
			148	47
11083	2S5013	5360-01-059-0883	148	44
11083	2S5658	5310-00-431-7244	4	9
			143	8
			153	20
11083	2S5717	5310-00-950-2660	67	3
11083	2S5867	5330-00-921-6911	87	8
11083	2S5925	4730-00-911-9226	87	25
11083	2S5927	9905-01-163-9191	87	19
11083	2S6091	5315-00-457-6895	31	42
11083	2S6112		31	41A
11083	2S6462	2520-01-059-7175	70	4
11083	2S669	3110-00-862-7671	65	56
11083	2S6735	5310-01-216-5696	43	6
11083	25696	2520-01-059-9414	67	31
11083	2S736	5310-00-432-4324	3	7
			9	15
11083	2S7593	5310-00-413-6522	78	56
			98	16
11083	2S7905	5365-00-419-3254	23	2
11083	2S7931	3120-00-914-0691	128	5

CROSS-REFERENCE INDEXES
PART NUMBER INDEX

CAGEC	PART NUMBER	STOCK NUMBER	FIG.	ITEM
11083	257931	3120-00-914-0691	128	12
11083	2S8359	3120-01-160-4604	80	12
11083	2S8396		96	6
11083	2S8399	5365-01-254-2381	96	45
11083	2S8411	3120-00-948-6453	96	38
11083	2S8412	4710-00-405-7326	96	47
11083	2S8413	4710-00-405-7327	96	21
11083	2S8414	5330-00-912-1586	96	1
11083	2S8416	5340-01-162-2864	so	40
11083	2S8571	4820-01-159-5909	80	34
11083	2S9434	5310-00-224-0529	104	15
11083	2S9507	3110-01-161-5527	68	7
11083	2S9732	5305-00-253-7629	104	18
11083	2V1713	9905-01-152-5326	34	21
11083	2V7396	6140-01-280-4060	52	7
11083	2V7524	2530-01-160-1596	87	15
11083	2V7525	2530-01-159-8742	87	27
11083	2W1086	2815-01-253-3458	9	18
11083	2W1397		6	3A
11083	2W2317	4710-01-280-8279	16	7
11083	2W4561	5330-01-160-3989	12	1
			73	6
11083	2W4837	2815-01-159-7706	3	27
11083	2W5240	4710-01-280-8242	37	6
11083	2W6091	2815-01-195-7346	KIT	
11083	2W6681	2940-01-253-5590	13	2
11083	2W7255	3040-01-178-0698	40	7
11083	2W7303	2815-01-347-8593	6	2
11083	2W8001	2930-01-255-2943	40	1
11083	2W8002	2930-01-170-9820	39	1
03479	20BTG-250-AGFX4	6685-01-156-9713	150	7
89917	20183	5315-01-164-1780	152	14
11671	20300C-DKP	4320-01-140-4299	134	9
08162	207	3110-00-516-5490	39	13
			42	18
01276	2082-6B	4730-00-427-5121	12	9
			37	4
			73	8
72962	21-NE-083	5310-00-020-0358	143	20
97153	211-47	1630-00-898-2157	90	31
61208	215569-A		61	28
78514	22999	5340-01-154-8437	22	2
13305	235C7	5310-00-768-0318	136	15
73680	23548-4754	5330-30-605-1009	145	40
89917	23697	5305-01-208-6720	152	38
			152	52
13445	2484-26	5310-00-005-0895	57	62
80813	250-702	5355-01-097-8255	79	1
89917	25172	5315-01-209-0872	152	3
			152	39
			152	49

CROSS-REFERENCE INDEXES
PART NUMBER INDEX

CAGEC	PART NUMBER	STOCK NUMBER	FIG.	ITEM
89917	25172	5315-01-209-0872	152	53
01212	2530AP20	3120-01-165-4357	7	11
52788	265079	5310-00-404-2422	93	48
70485	2758	5325-00-249-6345	34	26
			53	17
64294	29620-3	5315-00-616-5524	60	50
			96	11
			145	44
			147	31
77060	2966377	5975-01-150-3454	57	9
			57	57
04618	29711	5940-00-201-8938	57	11
77060	2984033	5970-01-156-0688	58	6
83187	3-1379	2530-01-192-4705	90	22
11083	3A3275		100	6
11083	3A3276		100	6
11083	380551	4730-00-263-3122	12	7
			73	7
11083	3B0623	5340-00-229-9294	3	24
11083	3B1464AND9P7751	2530-00-149-7388	82	14
11083	3B1915	5306-01-195-4681	10	7
			14	7
			18	11
			19	28
			31	13
			36	30
			37	7
			63	24
			71	49
			80	20
			100	10
			120	14
			139	13
11083	332968	5306-00-426-4171	1	8
			30	15
			98	2
			139	5
			144	17
14544	384419	5306-00-263-8979	61	17
11083	384502	5310-00-852-8266	49	6
11083	3B4629	5315-01-052-3942	103	24
11083	384990	5306-00-423-9054	91	23
11083	385318	5315-00-664-0384	101	2
11083	3B5319	5315-01-164-7582	120	5
11083	385325	5315-00-018-9396	119	5
11083	3B6552	4730-00-231-5605	80	16
11083	3B6753	5306-00-436-9896	152	22
11083	3B7262	4730-00-188-1854	120	7
11083	3B8428	5306-00-263-8950	40	13
			88	6
89917	3B8489	4730-01-206-1428	152	32

CROSS-REFERENCE INDEXES
PART NUMBER INDEX

CAGEC	PART NUMBER	STOCK NUMBER	FIG.	ITEM
89917	388489	4730-01-206-1428	152	43
11083	388695	5306-01-250-0897	23	42
58312	388998-00	4730-00-882-8621	102	10
11083	3D2824	5330-00-944-8281	61	49
			72	2
			129	21
			141	13
			142	1
11083	302871	5307-00-411-4501	76	9
11083	302992	5330-00-393-4054	130	25
11083	3F1953	5315-00-426-4566	78	17
11083	3F1954	5330-00-352-7517	78	29
11083	3FI955	5330-00-426-4567	78	43
11083	3F1956	2530-00-426-4568	78	44
11083	3F1958	2530-00-426-4569	78	24
11083	3F1960	2530-00-426-4571	78	4
11083	3FI965	3130-00-426-4575	78	32
11083	3F1971		78	39
11083	3FI972	2520-00-352-7520	78	38
11083	3F4134	2910-01-159-5883	30	7
11083	3F4971	5315-00-352-7540	152	4
			152	33
			152	47
11083	3F5022	2815-00-494-9420	80	24
11083	3F5108	5306-00-263-3533	152	10
11083	3F7673	5310-01-160-4538	63	13
11083	3G1280	5365-01-170-2231	134	10
11083	3G2692	5340-01-173-1016	145	36
			147	67
11083	3G2708		147	57
11083	3G2712	2590-01-164-7253	145	1
11083	3G361	5330-01-123-6209	145	69
			147	59
11083	3G3726	5310-01-164-6356	135	34
11083	3G4074	2590-01-161-9632	145	37
			147	26
11083	3G5656		136	39
11083	3G5980	9905-01-164-0167	145	53
			147	66
11083	3G7229	5340-01-162-7687	145	6
			147	3
11083	3G8078	4810-01-161-6542	135	33
			136	30
11083	3G9806	4820-01-281-7920	136	16
11083	3H0442	5330-01-062-2852	24	70
11083	3H107	5330-00-593-1192	131	19
11083	3H1461	5330-00-593-1193	93	12
11083	3H1977	5315-00-891-0815	80	37
11083	3H2023	5315-01-161-0405	126	3
11083	3H3243	5306-00-472-5282	16	2
11083	3H3433	5315-00-532-4359	125	3

CROSS-REFERENCE INDEXES
PART NUMBER INDEX

CAGEC	PART NUMBER	STOCK NUMBER	FIG.	ITEM
11083	3H3680	5310-00-178-7700	47	3
			49	4
11083	3H6849	3120-00-523-4278	61	41
11083	3H8389	5305-00-475-4440	30	10
11083	3H9523	5330-00-593-1197	145	7
			147	4
11083	3J1770	5315-00-931-8963	90	4
			98	11
			117	13
11083	3JI991	5330-00-118-5526	145	17
			147	9
11083	3J1997	5310-01-164-6372	145	22
			147	14
11083	3J3370	5360-00-455-7145	80	32
11083	3J3372	5365-01-164-8781	146	13
11083	3J4121		136	33
11083	3J4586	5325-01-164-7552	146	2
11083	3J5389	4730-00-460-6725	4	29
11083	3J6559	3130-00-224-8095	144	26
11083	3J6572	5365-01-164-8782	144	27
11083	3J7283	4730-00-010-9365	62	12
11083	3J7354	5330-00-952-8008	20	2
			69	2
11083	3J8154	5307-01-167-6375	97	18
11083	3K2889	5310-01-066-5275	137	46
11083	3K360	5330-00-948-6482	78	46
			131	10
			132	7
			135	21
			136	42
			142	18
11083	3K5234	5310-00-470-9833	118	6
11083	3K526	3110-00-198-1796	124	19
11083	3K6662	3120-00-458-1921	31	33
11083	3K8460	4730-01-103-3727	33	5
11083	3K925	5310-00-413-5060	56	3
			96	25
11083	3L9689	5310-01-162-0412	127	2
11083	3N7613		15	2B
11083	3P1288	4730-01-162-4406	141	6
11083	3P1605	5330-01-160-3988	61	8
11083	3P1896	5340-01-152-4541	3	23
11083	3P209	4820-01-284-5440	67	10
11083	3P218	5330-01-161-2429	131	3
			132	33
11083	3P220	5340-01-164-4596	131	1
11083	3P2274	5306-01-198-2332	89	18
11083	3P2299	2590-01-172-0861	127	44
11083	3P2300	2590-01-176-2972	127	23
11083	3P2404	5340-01-061-4018	15	12
11083	3P2708	4820-01-150-0911	67	17

CROSS-REFERENCE INDEXES
PART NUMBER INDEX

CAGEC	PART NUMBER	STOCK NUMBER	FIG.	ITEM
11083	3P2755	4820-01-150-3860	67	16
11083	3P2767	4820-01-162-8997	132	3
11083	3P2846	5365-01-162-2577	121	5
11083	3P2847	5340-01-161-9175	132	9
11083	3P3043	2530-01-159-3747	89	16
11083	3P3044	2530-01-159-6746	89	7
11083	3P3045	2530-01-159-8745	89	17
11083	3P3046	2530-01-159-8748	89	6
11083	3P3202	5360-01-165-3674	131	2
11083	3P3623	2990-01-129-5893	73	62
11083	3P3716	4820-01-160-0952	96	40
11083	3P3378	5365-01-159-9499	89	10
11033	3P3879	3120-01-163-6536	89	11
11033	3P3880	5315-01-162-6056	89	13
11083	3P3883	5330-01-160-3926	89	9
11083	3P3385	2530-01-159-8743	89	5
11033	3P3888	2530-01-159-3680	89	1
110 3	3P3935	5315-01-266-9238	138	7
11083	3P3937	3040-01-253-7350	138	9
11083	3P3942	3040-01-161-5121	137	7
11083	3P4116		131	13A
11083	3P4117	4820-01-170-9766	131	13
11083	3P4120	4810-01-254-5581	131	25
11083	3P4121	4820-01-162-8951	130	13
11083	3P4134	5365-01-069-1426	110	3
			111	7
11083	3P4602	5330-01-162-4005	120	26
11093	3P4603	5340-01-160-7320	120	25
11033	3P4660	4820-01-165-8251	132	24
11083	3P4979	5340-01-164-4510	139	15
11083	3P4981	5340-01-164-7530	139	20
11083	3P4983	5340-01-164-8142	139	18
11083	3P4984	5340-01-162-7686	139	25
11083	3P5168	5340-01-162-8767	132	11
11083	3P5169	5340-01-162-8768	132	8
11083	3P5446	5340-01-163-0904	77	28
11083	3P5447	5340-01-163-2786	77	30
11083	3P5924		128	11A
11083	3P5925	3040-01-163-7311	128	11
11083	3P5926	4320-01-164-0005	128	1
11083	3P5938	5340-01-163-0918	79	5
			127	8
11083	3P5955	2520-01-021-9923	65	2
11083	3P6032	2510-01-159-9794	112	20
11083	3P6033	2510-01-159-9793	112	13
11083	3P7153	2530-01-161-0185	89	12
11083	3P7154	2530-01-159-8744	89	8
11083	3P8272	3120-00-923-7103	88	14
11083	3P8989	5920-01-059-0894	148	45
11083	3P9119	534C-01-160-2491	103	25
11083	3R2704	4730-00-903-7652	142	6

CROSS-REFERENCE INDEXES
PART NUMBER INDEX

CAGEC	PART NUMBER	STOCK NUMBER	FIG.	ITEM
11083	3R3595	2590-01-312-2888	81	5
11083	3R4240	5365-01-309-4813	81	6
11083	3R4762	5315-01-160-4647	60	29
11083	3R6757	5365-01-161-0259	107	14
11083	3R8442	2590-01-187-1231	99	3
11083	3R8464	2520-01-197-7936	90	3
11083	3R8475	2530-01-186-9472	98	13
11083	3R8492		90	15
11083	3R8502	5330-01-199-9483	90	9
11083	3R8504	5340-01-187-3506	90	10
11083	3R8506	4010-01-194-4792	99	10
11083	3R8507	3990-01-230-5679	99	1
11083	3R8509	5315-01-200-4094	90	1
11083	3R8512	2530-01-187-1232	98	14
11083	3R8527	2530-01-187-7159	98	15
11083	3R8533		98	12
11083	3R8534	5315-01-200-79B4	90	5
11083	3R8545	5340-01-310-5274	117	11
11083	3R8546	5340-01-309-4357	117	18
11083	3R8549	2530-01-310-6432	99	4
11083	3R8585		117	12D
11083	3R8593	5306-01-201-0288	99	27
11083	3R8607		117	128
11083	3R8633	3020-01-187-7176	98	18
			100	1
11083	3R8634	3020-01-187-7177	98	18
			100	1
11083	3R8635		117	12E
11083	3R8636		117	12A
11083	3R8637		117	12C
11083	3R8638	2510-01-198-1152	117	12
11083	3R8673	2510-01-198-0856	117	19
11083	3R8990	4010-01-284-5806	119	27
11083	3S1259	5330-00-248-6691	65	14
11083	3S1401	2940-01-171-4855	70	6
11083	3S1404	3110-01-068-7155	68	6
11083	3S2093	2920-01-058-9099	53	32
			57	32
11083	3S2113	5307-01-161-9140	118	4
11083	3S2173	5340-01-165-1584	68	20
11083	352471	4730-00-401-0306	95	14
11083	3S2472	4730-00-349-8975	95	25
11083	3S2582	5365-01-157-0917	66	25
11083	3S2585	4820-01-150-0913	67	2
11083	3S2593	5360-01-150-6272	67	13
11083	3S2596	2520-01-150-5419	67	43
11083	3S2682	3120-01-167-3402	131	23
11083	3S2708	5315-01-059-7198	65	9
11083	3S2712	3020-01-158-9401	68	8
11083	3S3158	5365-01-172-5614	57	21
			137	5

CROSS-REFERENCE INDEXES
PART NUMBER INDEX

CAGEC	PART NUMBER	STOCK NUMBER	FIG.	ITEM
11083	3S3158	5365-01-172-5614	138	44
11083	3S3439	2520-01-069-0891	76	2
11083	3S3440	5310-00-950-6980	76	4
11083	3S36	5310-00-111-3609	65	54
			65	72
11083	3S3875	4330-00-949-0868	76	5
11083	3S4	5310-00-413-5144	75	13
			128	14
11083	3S4346	5306-00-268-2449	67	40
			130	26
11083	3S4398	5307-01-059-9293	70	13
11083	3S4411	64	14A	
11083	3S4701	5310-01-157-3385	55	4
11083	3S5496	5330-00-104-4371	3	13
			4	14
11083	3S5949	2815-00-407-4730	104	5
11083	3S5954	2815-00-407-6451	104	11
11083	3S6544	4720-01-159-9737	71	17
11083	3S6593	3040-01-151-5695	60	49
11083	3S6830	2940-01-314-8880	63	17
11083	3S6860	2815-01-053-7470	64	14
11083	3S6886	5330-01-160-3992	63	12
11083	3S7166	5340-01-051-6767	140	19
11083	3S7252	3120-00-236-1319	141	32
11083	3S7881	2510-01-069-0804	107	18
11083	3S8021	3120-01-169-7172	65	69
11083	3S8022	3110-00-830-8802	65	70
11083	3S8182	5306-01-146-5675	78	10
11083	3S8313	5365-00-449-2597	3	25
			61	52
			96	12
11083	3S8496	4730-01-051-7600	141	31
11083	3S9179	2540-01-310-1245	99	11
11083	3S9221	2540-01-186-9473	101	16
11083	3S9222	2590-01-198-1153	101	13
11083	3S988	252O-01-155-7963	65	48
11083	3S9899	4820-01-155-5809	72	10
11083	3S9901	4820-01-155-5024	72	9
11083	3TO872	4710-01-147-6491	29	28
11083	3T1017		112	10
11083	3T1019		112	17
11083	3T1100	3120-01-162-2573	96	28
11083	3T1264	5340-01-158-6754	93	13
11083	3T1685	5340-01-151-5227	34	6
11083	3T1753	3040-01-314-4457	31	17
11083	3T1900	2520-01-159-5884	91	7
11083	3T2367	5340-01-161-4024	79	9
11083	3T2368	5307-01-161-7354	79	4
11083	3T3002	5340-01-151-9297	56	19
11083	3T3207		84	9
11083	3T3393	4730-01-253-7361	57	50

CROSS-REFERENCE INDEXES
PART NUMBER INDEX

CAGEC	PART NUMBER	STOCK NUMBER	FIG.	ITEM
11083	3T3394	2520-01-145-4328	63	1
11083	3T3398	4820-01-155-0235	72	7
11083	3T3399	4820-01-149-3T22	63	21
11083	3T3422	6150-01-165-1191	47	2
11083	3T408	5340-01-163-5980	115	14
11083	3T5286	6220-01-280-0531	54	3
11083	3T5287	6220-01-280-8458	54	5
11083	3T5803	2510-01-187-7023	56	15
11083	3T5962	9905-01-180-3839	45	8
11083	3T688	4820-01-148-8161	72	4
11083	3T7142	2510-01-174-6183	106	18
11083	3T7144	5340-01-164-7559	106	19
11083	3T7540	5306-01-162-8667	94	28
11083	3T7555		103	10
11083	3T7556		103	13
11083	3T7781	5340-01-160-4588	103	11
11083	3T7782	5310-01-162-8563	103	16
11083	3T7856	5340-01-160-4698	106	1
11083	3T7857	5340-01-160-6915	114	24
11083	3T8649	4820-01-162-8950	130	9
11083	3T8823	5340-01-160-7776	114	14
11083	3T8824	5340-01-161-5526	114	18
11083	3T8852	5330-01-169-7541	114	12
11083	3T9254	5340-01-186-7625	79	36
11083	3T9255	5340-01-160-7614	79	37
11083	3T9256	5340-01-162-8642	79	30
11083	3T9257	5340-01-167-0261	79	12
11083	3T9365	4820-01-163-1045	95	11
11083	3T9366	5360-01-162-2845	96	34
11083	3T9367	5360-01-161-9170	96	35
11083	3T9368	9905-01-166-5122	96	14
11083	3T9494	5360-01-294-0436	48	25
11083	3T9981	5310-01-160-0787	96	36
53203	300 450	5340-01-088-2385	34	15
79550	300-2863	5940-00-291-0085	34	17
			34	28
			53	21
			53	51
97153	300-519	2530-01-314-4415	90	27
97153	300-520	2530-01-314-4416	90	30
11033	300085	5330-01-199-9472	90	14
96795	30014300	4820-01-163-7157	29	4
34995	301230	5330-00-835-3007	136	28
43334	30311	3110-00-156-8137	90	6
08162	307	3110-00-555-5207	42	6
11083	307937	4730-01-174-6160	71	40
78640	307942	4730-01-051-2312	71	38
			79	17
11083	307943	4730-01-169-5830	142	17
11083	308189	4730-01-063-0685	142	2
78640	308491	5340-01-169-7528	146	3

CROSS-REFERENCE INDEXES
PART NUMBER INDEX

CAGEC	PART NUMBER	STOCK NUMBER	FIG.	ITEM
78640	310216	5306-01-095-1238	106	8
11083	310219	5306-01-156-5437	147	27
11083	310249	5310-01-105-9384	116	30
89917	31488	5315-01-235-6827	152	2
			152	15
			152	34
			152	48
11083	319831	5305-01-160-3946	55	1
79470	3200X6	4730-00-289-4736	29	3
78640	32143	4730-C0-277-9141	29	6
98441	322F-E	4730-01-165-6616	29	2
			129	8
57733	330671	4820-00-911-9224	87	24
78189	3320-14-01	5310-01-094-8810	34	5
			36	29
			53	5
			54	7
			55	8
			71	45
			80	21
			106	5
			107	12
			108	9
			115	11
			115	15
			117	4
			129	6
			139	24
			142	15
11083	343557	5306-01-105-1790	136	11
			145	38
			147	1
11083	347897	3120-01-162-6037	79	3
39428	3610T13	4010-01-197-1499	119	28
88807	362PS182	5305-00-576-1429	106	29
			107	35
29510	39422D	5310-00-262-4789	1	9
			109	5
78493	4A308-21	6620-01-008-1893	38	6
11083	481221	5305-00-863-1627	133	2
11083	4B1223	5305-01-162-2354	57	42
11083	481254	5305-C1-C95-3961	79	8
11083	4B1282	5305-01-063-1423	60	3
11083	4B1382	5340-00-371-3422	88	22
11083	481771	5305-01-282-1523	136	14
11083	482363	5365-00-423-9251	97	25
11083	4B3938	5340-00-276-5832	4	7
			4	32
11083	484043	5306-00-423-9325	77	6
			103	33
11083	484278	5310-01-266-2481	138	46

CROSS-REFERENCE INDEXES
PART NUMBER INDEX

CAGEC	PART NUMBER	STOCK NUMBER	FIG.	ITEM
11083	4B4280	5310-00-930-7013	36	69
			53	31
			107	43
			108	14
			112	3
			130	22
			143	19
			148	19
11083	4B4283	5310-01-119-1730	96	2
11083	4B4340	5320-01-162-8609	78	6
11083	4B4845	5365-00-734-2114	97	4
			121	33
11083	4B4910	5360-00-249-3504	9	23
11083	4B5273	5310-00-308-2227	107	29
11083	485387	5340-00-417-2920	4	30
11083	435389	2910-01-182-6793	30	4
11083	485423	5330-00-143-8713	30	6
11083	485441	2910-00-356-1863	30	3
11083	485949	2910-00-367-5238	30	5
11083	4B7739	5365-00-363-9900	145	65
			147	49
11083	488756	4730-00-013-7397	151	4
11083	439782	3110-00-011-9935	4	27
			19	103
			65	80
			147	63
11083	489784	3110-00-011-9931	102	23
11083	4B9786	3110-00-100-6160	72	11
11083	409880	3110-00-949-1438	19	8
			65	17
			132	17
11083	403704	5310-00-139-7030	1	3
			2	6
			78	14
			108	23
			110	2
			111	1
			134	7
11083	404064	2910-01-058-8075	60	48
11083	404065	3120-01-163-5957	137	19
			137	40
			137	58
			138	25
			138	30
			138	49
			138	65
			138	70
11083	406432	5310-00-494-1962	20	6
			69	4
11083	4D7651	5315-01-201-4588	68	21
11083	4D7794	5340-00-426-4656	57	54

CROSS-REFERENCE INDEXES
PART NUMBER INDEX

CAGEC	PART NUMBER	STOCK NUMBER	FIG.	ITEM
11083	407794	5340-00-426-4656	71	1
			79	20
11083	409376	2420-01-062-5208	106	11
11083	4D9483	5305-01-160-4505	60	27
58312	409986-00	5330-00-498-2906	131	22
11083	4F0324	2530-00-352-7722	85	4
			86	4
11083	4F2710	5310-00-374-1365	152	20
11083	4F4879	5306-00-426-5062	71	8
			79	31
11083	4F5004	5360-00-149-8898	88	21
11083	4F6070	2540-00-848-2531	78	7
11083	4F9351	5306-00-325-0158	124	1
11083	4H1394	5310-00-891-4411	66	33
11083	4H4311	5315-00-064-1450	103	26
11083	4H5128	5315-00-924-5894	104	19
11083	4H6520	5330-00-871-5332	121	18
11083	4H7869	5330-00-584-1310	46	7
11083	4H8158	5365-00-848-7439	80	41
11083	4H9040		78	1
11083	4J0596	2940-01-163-2809	147	8
11083	4J0816	4330-00-118-5528	147	16
11083	4J4144	5310-01-216-7387	107	49
11083	4J4742	6680-01-160-5291	123	9
11083	4J5105	5360-01-164-7620	135	12
			136	20
11083	4J519	5330-00-913-6143	135	28
			139	2
			140	11
			145	28
11083	4J520	5330-00-913-6144	141	7
11083	4J522	5330-00-948-4063	129	1
			141	37
11083	4J524	5330-00-914-5846	141	40
11083	4J5351	5330-00-498-4556	120	48
11083	4J596	2940-01-163-2809	145	16
11083	4J6326	3120-00-455-7085	143	24
11083	4J6327		143	22
11083	4J6374		144	4
11083	4J8251	5325-01-068-6227	145	55
			147	64
11083	4J8252	6680-00-138-4143	145	54
11083	4J8265	5310-00-557-9414	56	2
			140	6
			148	10
11083	4J8425	5330-00-919-2245	145	41
11083	4J8997	5330-00-913-8119	135	39
11083	4K1388	5330-00-933-3305	136	26
11083	4K2039	5330-01-068-6073	132	10
11083	4K4780	2530-01-310-6438	82	20
11083	4KS563	5340-01-160-2374	94	16

CROSS-REFERENCE INDEXES
PART NUMBER INDEX

CAGEC	PART NUMBER	STOCK NUMBER	FIG.	ITEM
11083	4K684	5310-01-162-6012	118	2
11083	4K7384	5365-01-161-2795	88	4
11083	4K8603	4730-01-148-0865	64	32
11083	4K8977	5310-01-066-9171	128	19
11083	4K9943	5310-01-160-4549	88	7
11083	4L3916	5940-01-058-9112	57	71
11083	4L6454	5306-00-228-6835	39	22
			40	21
11083	4L6458	5310-00-005-0779	24	86
11083	4L7124	5305-01-024-4773	24	85
11083	4L7551	5307-01-151-9304	60	58
11083	4L9337	5306-00-455-0462	36	52
11083	4L9564	5330-00-828-8639	16	14
			65	44
11083	4L9825	3110-01-067-1732	65	36
11083	4M1186	3130-01-165-8813	88	24
11083	4M1813		49	17
11083	4M189	5330-00-904-0335	128	6
11083	4M2381	5360-00-950-8041	67	19
11083	4M2969	5330-00-074-3603	18	1
11083	4M3017	2510-01-158-8797	102	34
11083	4M3020	2510-01-159-2743	102	33
11083	4M3021	2510-01-159-2744	102	35
11083	4M3022	2510-01-159-8868	102	36
11083	4M3065	2510-01-159-8754	102	24
11083	4M4030	5307-01-153-0874	60	51
11083	4M4142	5306-01-160-4495	102	19
11083	4M4649	2590-01-187-7025	101	5
11083	4M4924	5305-01-160-4527	65	22
11083	4M496	5306-00-140-2032	60	52
11083	4M6480	5330-00-893-5250	4	16
11083	4M7021	5330-00-921-6914	87	21
11083	4M7022	5340-00-945-5659	87	20
11083	4M7930	5340-01-160-4084	92	11
11083	4M8303	5330-00-613-6522	23	3
			149	5
11083	4M8743	5307-01-107-4197	10	2
11083	4M8815	5340-01-309-3766	64	17
11083	4M9334	2940-00-910-3065	27	6A
11083	4M9592	5360-00-498-2883	65	49
11083	4N0053	5340-01-149-4421	23	44
11083	4N0054	5305-01-068-9704	23	30
11083	4N0116	4310-01-068-9775	23	41
11083	4N0402	5330-01-068-9824	23	32
11083	4N0406	3020-01-068-9705	24	47
11083	4N0429	3020-01-068-9706	24	46
11083	4N0444	3040-01-147-5481	23	39
11083	4N0447		23	19
11083	4N0508	5330-01-024-3368	24	69
11083	4N0528	3040-01-068-9709	24	71
11083	4N0538	3120-01-257-3300	149	6

CROSS-REFERENCE INDEXES
PART NUMBER INDEX

CAGEC	PART NUMBER	STOCK NUMBER	FIG.	ITEM
11083	4NO572	2910-01-125-4534	24	72
11083	4N0636	5330-01-061-9382	24	51
11083	4N0686		23	33A
11083	4N0687	2910-01-147-1376	23	33
11083	4NO927	2530-01-067-8011	23	21
11083	4N1082		23	7A
11083	4N1584	5330-01-061-9380	24	52
11083	4N159	5330-01-106-8540	23	43
11083	4N1591	2910-01-140-8212	24	59
11083	4N1723	4730-01-068-7122	24	15
11083	4N1762		24	36B
11083	4N1763	3040-01-068-9779	24	76
11083	4N1764		24	36C
11083	4N1767	2910-01-024-1512	24	42
11083	4N1826	5315-01-069-1410	24	25
11083	4N1881	3040-01-068-7123	23	20
11083	4N2034		24	36A
11083	4N218	3120-01-022-3955	24	31
11083	4N224	5365-01-024-5118	24	37
11083	4N2333	5315-01-068-9711	23	16
			24	29
11083	4N256		24	22A
11083	4N260	5330-01-107-4168	23	8
11083	4N2677	2910-01-024-0938	24	75
11083	4N2685	2910-01-024-2868	24	41
11083	4N2728	5310-01-062-0380	24	39
11083	4N2953	5365-01-024-3727	24	13
11083	4N2954	4730-01-068-7124	24	55
11083	4N3294	4330-01-146-8899	25	8
11083	4N3295	2910-01-142-2643	25	7
11083	4N3296	5360-01-107-3891	25	4
11083	4N3297	4820-01-105-2265	25	5
11083	4N3298	4820-01-104-5111	25	6
11083	4N3302	2940-01-142-2642	25	3
11083	4N3326	4720-01-069-0789	16	4
11083	4N3363	4710-01-143-9128	26	3
11083	4N3371	5310-01-023-9757	11	2
11083	4N3732	5340-01-148-7396	19	3
11083	4N3779	5315-01-068-9780	24	45
11083	4N3826	2930-01-068-7125	42	2
11083	4N3840	5340-01-107-4130	12	4
			73	3
11083	4N3841	5330-01-063-9839	12	3
			73	4
11083	4N3882	2910-01-024-2869	24	89
11083	4N4054	4320-01-204-8062	19	17A
11083	4N4057	2910-01-146-4165	22	28
11083	4N4223	5360-01-107-5441	23	47
11083	4N425	2910-01-149-0937	24	17
11083	4N4320	2530-01-067-5667	23	48
11083	4N434	2910-01-024-1510	24	10

CROSS-REFERENCE INDEXES
PART NUMBER INDEX

CAGEC	PART NUMBER	STOCK NUMBER	FIG.	ITEM
11083	4N4366	5360-01-067-5668	23	49
11083	4N443	5315-01-108-1232	24	97
11083	4N445	3040-01-023-7833	24	73
11083	4N448	3040-01-107-8262	23	17
11083	4N4526	5340-01-150-9810	10	12
11083	4N49	5330-01-107-3603	23	28
11083	4N5050	4730-01-106-4024	23	13
			24	53
11083	4N511	5315-01-106-0333	24	18
11083	4N523	5315-01-107-3758	24	58
11083	4N5353	4730-01-126-4892	19	26
11083	4N5481	5307-01-103-3673	24	28
11083	4N5537	3020-01-142-3214	36	45
11083	4N5538	2930-01-142-1296	36	40
11083	4N5539	5340-01-142-3207	36	48
11083	4N5578	2910-01-147-3001	23	27
11083	4N594	5330-01-038-7345	23	22
11083	4N605	5360-01-023-9435	24	43
11083	4N6401		24	8
11083	4N6403	5340-01-277-4531	24	6
11083	4N6406	5310-01-149-7188	24	4
11083	4N6408	2990-01-024-1509	24	2
11083	4N6410	5360-01-287-2422	24	7
11083	4N7693	2815-00-148-6705	5	1
11083	4N7696		5	4A
11083	4N7777	5365-01-160-4721	24	92
11083	4N7820	2815-01-248-5807	18	7
11083	4N7941	2540-01-143-8037	41	6
11083	4N7982	3020-01-143-1520	42	15
11083	4N8179	5315-01-069-1414	23	37
11083	4N8385	2815-01-068-1729	19	4
11083	4N8948	5340-01-147-4097	2	7
11083	4N9018	3040-01-147-1360	24	16
11083	4N9019	5315-01-067-8066	24	21
11083	4N9057	5330-01-127-8567	24	78
11083	4N9098	5365-01-147-1450	24	90
11083	4N9587	2990-01-147-3003	21	10
11083	4P4020	2815-01-217-5755	19	1
11083	4R2579	5365-01-035-4899	132	32
11083	4S1936	5340-01-186-9430	69	11
11033	4S3652	4730-01-155-5055	71	36
			79	25
11083	4S5414	4730-01-095-0075	79	22
			79	29
			142	9
11083	4S5718	5340-00-451-0632	53	47
11083	4S5719	5365-01-053-4681	29	23
11083	4S5858	5365-00-458-2276	70	7
11083	4S5932	2520-01-152-7826	65	41
11083	4S5933	2805-01-347-7439	65	51A
11083	4S5935	2520-01-349-7391	65	78A

CROSS-REFERENCE INDEXES
PART NUMBER INDEX

CAGEC	PART NUMBER	STOCK NUMBER	FIG.	ITEM
11083	455937	2520-01-152-7824	65	67
11083	4S5940	2895-01-068-7158	65	58
11083	455941		65	58A
11083	4S5942		65	24A
11083	4S5943	2520-01-068-6120	65	30
11083	4S5944	3020-01-067-2172	65	64
11083	4S5945	3020-01-067-2173	65	65
11083	4S5947	3020-01-067-2174	65	85
11083	4SS948	3020-01-067-2175	65	62
11083	4S5972	3040-01-152-7825	65	51
11083	4S5973	2520-01-172-3041	65	78
11083	4S5974	2520-01-171-4806	65	24
11083	455979	2520-01-158-6838	65	74
11083	4S5980	2520-01-347-7443	65	74A
11083	4S5981	3020-01-067-2176	65	68
11083	4S5989		65	53A
11083	4S5998	5365-01-162-2576	65	84
11083	4S6000	2520-01-162-3746	64	47
11083	4S6399	4730-01-127-5373	20	11
11083	4S6559	4710-01-281-1538	111	6
11083	4S8385	4710-00-163-8924	102	12
11083	4SB530		65	71A
11083	4S8531	2530-01-068-9744	65	71
11083	4S8534	2530-01-068-9745	65	53
11083	458537	2520-01-069-0806	65	59
			65	75
11083	458538	3110-00-249-5245	65	81
11083	4S8716	3020-01-158-9402	68	19
11083	4S8722	3110-01-161-5528	68	17
11083	4S8723		68	3
11083	4S8875	5365-01-164-7547	141	21
11083	4T3051	3830-01-280-4395	152	11
11083	4T3052	3830-01-279-0296	152	7
11083	4V4018	7690-01-160-5207	133	30
11083	4WO452	5330-01-128-6854	5	5
11083	4W0788	2910-01-021-1845	25	10
11083	4W2321	4320-01-253-6286	19	17
11083	4W2322	2815-01-253-3454	19	5
11083	4W5235	5340-01-269-9343	149	7
11083	4W5738	3120-01-202-5894	5	9
11083	4W5739	3120-01-210-0859	7	11
11083	4W7406		3	17A
11083	4W8087	5330-01-211-0809	3	16
08179	400405	5305-00-076-3714	52	1
79550	40196	5970-01-219-4329	57	6
03730	40532	4820-01-164-7015	29	9
64189	40602	2590-01-282-1781	55	11
64488	4113C	5940-00-118-8336	46	3
			58	3
79550	412026	5940-01-285-5146	58	15
56620	41400	2910-01-164-7906	30	1

CROSS-REFERENCE INDEXES
PART NUMBER INDEX

CAGEC	PART NUMBER	STOCK NUMBER	FIG.	ITEM
97153	418-58	2610-01-311-6854	90	29
97153	42FLW624	5310-00-813-3653	90	32
72800	421	2530-00-949-4505	96	7
63005	427564	5306-00-400-3518	141	35
97153	43-786	5306-01-025-3843	90	25
60237	4301	5940-01-161-6503	57	14
23382	4317	5310-00-655-7646	103	3
			104	6
62983	431832	4820-01-158-6861	134	14
19207	443339	5310-00-044-3339	60	43
			90	16
			137	33
11083	454065	5305-01-187-0533	49	15
64488	4543A	5940-01-056-9090	57	33
77445	466473	5306-00-857-5672	31	38
24161	473SET2	3030-01-159-9742	42	14
01943	4901-3	2590-00-490-5442	17	5
89917	49829	3830-01-163-0757	152	26
89917	49830	3830-01-198-0866	152	25
89917	49831	5365-01-167-4225	152	27
89917	49832	5365-01-164-1989	152	24
89917	49840	3830-01-163-7219	152	23
89917	49889	3805-01-164-7838	152	12
89917	49915	2530-01-162-4394	152	46
89917	49918	2590-01-161-9630	152	44
11083	5A4549	6220-01-280-3549	53	16
11083	5A4550	6220-01-280-3550	53	14
11083	5A6897	2530-01-163-0826	100	13
11083	5A6898	2590-01-163-1193	100	13
11083	582638	5305-00-362-7336	130	3
11083	583180	5310-01-068-7065	23	29
11083	585812	5315-00-362-7367	42	12C
11083	5B639	5310-00-270-2105	102	25
11083	587652	5315-01-107-4226	4	15
11083	58841	5306-OC-266-6005	102	3
11083	5D2643	5310-01-160-3967	97	9
11083	503118	5307-01-202-9002	98	17
			101	14
11083	5D353	5305-00-172-6356	145	4
11083	5D9514	5306-00-180-5319	91	6
11083	SF149	5330-00-863-5549	76	3
11083	5F3106	5330-00-663-5709	39	2
			40	2
			134	8
11033	5F3353	5310-01-160-4533	121	39
11083	5F4899	5306-00-897-9295	34	7
			139	16
11083	5F7054	5330-00-339-6224	130	11
11083	5F9144	5330-00-591-3112	131	12
11083	5H156	5340-01-160-3902	113	4
11083	5H2207	2530-01-278-0248	147	47

CROSS-REFERENCE INDEXES
PART NUMBER INDEX

CAGEC	PART NUMBER	STOCK NUMBER	FIG.	ITEM
11083	5H2767	5330-00-850-7586	120	41
11083	5H3895	3120-00-858-6240	60	26
11083	5H4082	5330-01-160-4569	63	26
11083	5H4909	5330-00-738-8622	123	43
11083	5H6005	5330-00-580-1227	145	68
11083	5H6199	5365-00-983-2395	65	11
11083	5H6467	5305-01-053-4850	47	24
11083	5H6799		95	2
11083	5H7110	4730-01-079-4374	120	23
11083	5H7951		97	14
11083	5H7952		97	11
11083	5H8450	9905-01-163-0024	133	15
11083	5H9809	5315-01-164-7589	132	28
11083	5J0557	3120-01-154-7173	32	22
11083	5JlO95	4820-01-167-1563	145	19
			147	11
11083	5J1096	4820-00-404-7133	145	20
			147	12
11083	5J3306	4730-01-199-6453	145	3
11083	5J442	5315-01-164-8693	152	6
11083	5J5314	5305-01-053-7366	24	54
11083	5J5315	2990-01-103-3652	60	33
			138	56
11083	5J5326	5365-01-281-0942	138	22
11083	5J5401	5365-00-161-0747	144	14A
			144	14B
11083	5J5402	2530-00-865-2215	144	14
11083	5J5975	2510-01-174-6184	103	6
11083	5J6156	2590-01-184-0473	143	25
11083	5J6159	3130-01-308-6011	143	3
11083	5J6160	3130-01-163-9419	143	3
11083	5J6161	5340-01-164-2400	143	11
11083	5J6162	5340-01-166-0801	143	13
11083	5J6679		143	2A
11083	5J9078	4820-01-162-4435	135	15
			136	24
11083	5J9088	5365-01-278-0250	136	32
11083	5J9091	5365-01-163-5954	135	11
			136	18
11083	5J9092	5365-01-167-3499	135	10
			136	19
11083	5J9098	5360-01-164-7622	135	29
			136	29
11083	5K1770	5330-00-869-6563	70	10
11083	5K305		88	32
11083	5K3294	5340-00-150-0873	56	9
11083	5K4781	5306-01-280-6692	124	1
11083	5K6437	5340-01-162-2634	29	19
11083	5K9107	5306-01-110-1130	84	16
			145	35
			147	71

CROSS-REFERENCE INDEXES
PART NUMBER INDEX

CAGEC	PART NUMBER	STOCK NUMBER	FIG.	ITEM
11083	5K9179	5306-01-165-2448	108	7
11083	5K9235	4730-00-244-0606	119	20
11083	5K9239	4730-01-159-7677	119	24
11083	5K9Z40	4730-01-143-4326	119	16
11083	5K9241	4730-01-069-0768	151	10
11083	5K9242	4730-01-069-0769	29	29
			62	15
			151	11
11083	5K9243	4730-01-059-9435	17	4
			29	11
			62	13
			119	20
11083	5K9246	4730-01-059-9344	29	33
			119	24
11083	5K9248	4730-01-069-0859	29	10
11083	5K9249	4730-01-161-9596	119	17
11083	5L7200	5305-01-058-9146	50	7
11083	5M0627	3040-00-924-9564	85	16
			86	17
11083	5M0633	2530-00-352-8468	110	8
11083	5M0635	2530-00-426-6110	110	4
11083	5M0636	2530-00-426-6111	110	11
11083	5M1868	5330-00-074-3770	67	11
11083	5M1915	3040-01-159-0162	85	18
			86	19
11083	5M2043	5340-01-162-4077	84	14
11083	5M2051	3110-00-249-5244	65	5
11083	5M2894	5310-00-117-4788	3	20
			4	18
			10	6
			10	24
			14	1
			15	13
			16	9
			18	3
			19	19
			19	23
			20	9
			21	3
			22	20
			25	15
			33	12
			34	2
			35	9
			37	14
			39	3
			40	4
			41	2
			43	13
			52	8
			56	6

CROSS-REFERENCE INDEXES
PART NUMBER INDEX

CAGEC	PART NUMBER	STOCK NUMBER	FIG.	ITEM
11083	5M2894	5310-00-117-4788	65	7
			66	12
			69	8
			71	19
			79	10
			85	8
			91	33
			93	14
			96	16
			97	3
			100	9
			106	17
			106	21
			107	26
			109	3
			114	2
			114	6
			115	2
			120	12
			122	30
			123	14
			129	11
			130	1
			136	10
			137	17
			139	17
			141	8
			145	5
			147	2
			148	8
11083	5M3389	5360-01-160-6911	80	35
11083	5M3492	5365-00-948-1600	67	35
11083	5M4606	5315-00-760-7421	9	12
11083	5M4741	5330-00-632-7222	74	1
11083	5M5000	2530-00-243-9530	88	23
11083	5M6213	4730-00-089-2515	3	9
			4	22
			15	3
			37	12
			39	15
			40	14
			80	43
11083	5M634	2930-01-159-8755	110	10
11083	5M6509	5330-00-945-0494	24	44
11083	5M6668	5305-00-005-0896	53	11
11083	5M6671	5305-01-164-2328	78	13
11083	5M6708	5310-00-739-9977	87	23
11083	5M6755	5305-00-765-2121	116	29
11083	5M7400		133	27
11083	5M7423	5330-01-093-8484	118	3
11083	5M7878	5365-00-419-3212	65	38

CROSS-REFERENCE INDEXES
PART NUMBER INDEX

CAGEC	PART NUMBER	STOCK NUMBER	FIG.	ITEM
11083	5M7915	5310-00-036-0673	67	15
11083	5M7937	5315-01-062-5209	65	25
			65	52
			65	79
11083	5M8669	2510-01-215-3290	103	17
11083	5M9621	5307-00-004-1605	36	42
			36	46
			36	50
11083	5M9656	4820-01-150-3859	67	36
11083	5M9813	5360-00-858-6197	60	30
11083	5N8780	5365-01-159-6679	18	12
11083	5P 747	2990-01-103-3696	BULK	1
11083	5P0189-7.8IN		151	20
11083	5P0537	5310-01-051-2360	22	31
			23	5
			25	14
11083	5P0598	4730-01-059-5352	36	19
11083	5P0747-12		57	8
11083	5P0747-15		57	29
11083	5P0747-42.5		57	56
11083	5P0747-6		57	1
11083	5P1076	5310-01-097-6720	90	18
			107	29
			115	13
			117	9
11083	5P1260	4720-01-103-3697	BULK	7
11083	5P1260-3IN		37	9
11083	5P1262-41N		36	72
11083	5P1263	4720-00-421-3854	BULK	6
11083	5P1263-5IN		36	20
11083	5Pl291	4720-01-132-0980	BULK	8
11083	5P1291-6 IN		71	58
11083	5P1292	4720-00-489-5891	BULK	3
11083	5P1Z92-4.5		141	17
11083	5P1442	4720-01-093-7331	BULK	4
11083	5Pl442-27o6		129	9
11083	5P1442-9.8		29	1
11083	5P1694	4720-01-169-7527	BULK	10
11083	5P1694-1593		146	5
11083	5P1762	5340-01-270-1290	153	2
11083	5Pl839	5306-01-164-7449	144	5
11083	5P2762-27e6		58	60
11083	5P2762-31.5		58	18E
11083	5P2762-39.4		58	10F
11083	5P2764-28IN		51	1
11083	5P2764-BIN		51	6
			51	11
11083	5P3161	5935-01-158-0364	58	10
11083	5P3275	5330-01-166-3661	62	11
11083	5P3385-1Z6		58	6F
11083	5P3385-59		58	18C

CROSS-REFERENCE INDEXES
PART NUMBER INDEX

CAGEC	PART NUMBER	STOCK NUMBER	FIG.	ITEM
11083	5P3385-74.8		58	100
11083	5P372	5315-01-080-3033	119	3
11083	5P3741	4730-00-307-6426	51	5
11083	5P3753	3110-01-160-0800	68	26
11083	5P4251	5330-01-162-9751	77	8
11083	5P4443	4730-01-178-0773	17	11A
11083	5P4510-15.7		58	18D
11083	5P4510-39.4		58	10E
11083	5P4510-59		58	60
11083	5P4511-4		58	6G
11083	5P4571	5940-01-058-9112	51	2
11083	5P4703-43*3		58	6A
11083	5P4703-74.8		58	10B
11083	5P4703-82e7		58	18G
11083	5P4810	3110-01-062-0950	24	30
11083	5P4908	4730-01-253-8588	17	118
11083	5P5018-15*7		58	18A
11083	5P5018-39C4		58	15C
11083	5P5018-59		58	6E
11083	5P537	5310-01-051-2360	57	49
			79	7
			90	11
11083	5P5624-104IN		53	44
11083	5P5624-22.04		34	16A
11083	5P5624-30		148	15
11083	5P5624-35.40		34	29A
11083	5P5624-6		57	70
11083	5P5624-94.1		148	21
11083	5P5628	4710-01-216-2151	BULK	18
11083	5P5628-103		54	2
11083	5P5628-30		53	34
11083	5P5628-39		54	4
11083	5P5628-72		148	36
11083	5P5628-8		53	23
11083	5P5632	6145-01-103-7036	BULK	25
11083	5P5632-4		57	39
11083	5P5637	5330-01-217-3936	114	13
11083	5P5675-11.8		57	45
11083	5P5694	5940-01-103-6808	51	17
11083	5P5991	4720-01-150-0882	BULK	5
11083	5P5991-23.6 IN		33	8
11083	5P6011-23*7		26	5
11083	5P6298	5305-01-260-5875	48	15
11083	5P6446	5306-01-164-6317	122	12
			123	23
11083	5P6641	6145-01-165-5631	BULK	24
11083	5P6641-12		46	1
11083	5P6725		148	38
11083	5P6792	7690-01-160-5206	133	18
11083	5P6874	2540-01-119-1743	108	6
11083	5P7132	9905-01-171-0245	108	2

CROSS-REFERENCE INDEXES
PART NUMBER INDEX

CAGEC	PART NUMBER	STOCK NUMBER	FIG.	ITEM
11083	5P7213	5310-01-102-9866	136	2
			141	24
11083	5P7245	5330-01-164-8578	BULK	15
11083	5P7245-32.3 IN		113	8
11083	5P7246	5330-01-167-1118	BULK	14
11083	5P7246-138.07 IN		113	9
11083	5P7246-26.78IN		114	31
11083	5P7312	5120-01-119-1748	153	24
11083	5P7313	5120-01-119-1749	153	26
11083	5P7315	5120-01-119-1750	153	25
11083	5P7456	5330-01-162-5742	121	25
11083	5P7468	5340-01-163-9459	141	18
11083	5P7469	5340-01-163-6175	141	20
11083	5P7907	4730-00-278-4339	34	24
11083	5P7957	4010-01-170-1460	114	22
11083	5P8028		133	26
11083	5P8091	5306-01-209-7895	136	44
11083	5P8166	7690-01-160-5205	137	61
11083	5P8197	9905-01-163-0029	133	16
11083	5P8244	5310-01-097-8955	141	34
11083	5P8247	5310-01-095-4631	10	9
			62	1
			91	24
			99	28
			103	20
			104	9
11083	5P8248	5310-01-102-2477	98	4
			99	7
			101	8
			107	38
			144	16
11083	5P8249	5310-01-162-5733	103	2
11083	5P8250	5310-01-157-3394	99	16
			101	12
11083	5P8310-23C42IN		114	35
11083	5P8444	5325-01-164-7555	141	19
11083	5P8630	5120-01-272-0763	153	9
11083	5P8631		153	8
11083	5P8632		153	13
11083	5P8634	5365-01-270-2772	153	12
11083	5P8635	5315-01-270-1888	153	6
11083	5P8768	5330-01-144-0406	KIT	
11083	5P8837	5315-01-187-3541	90	2
11083	5P9066	3110-01-164-1162	123	38
11083	5P9137	2510-01-160-1608	KIT	
11083	5P9138	5330-01-161-9158	KIT	
11083	5P9139	5330-01-163-8378	KIT	
11083	5P9140	5330-01-163-7488	KIT	
11083	5P9141	5330-01-161-9159	KIT	
11083	5P9142	5330-01-162-9842	KIT	
11083	5P9298	5340-01-164-6469	142	23

CROSS-REFERENCE INDEXES
PART NUMBER INDEX

CAGEC	PART NUMBER	STOCK NUMBER	FIG.	ITEM
11083	5P9398	5340-01-180-2615	133	17
11083	5P9409		133	21
11083	5P9514	3110-01-129-6756	44	39
11083	5P9885	3110-01-160-4016	68	25
11083	5P9898	5330-01-110-1866	KIT	
11083	5R3413	9905-01-268-7580	133	1
11083	5R4686	5995-01-160-3599	59	3
11083	5R5100		90	21
11083	5R5103	5340-01-198-0864	90	19
11083	5R5104	5340-01-147-8215	20	5
11083	5R5107	4730-01-144-2386	20	3
			69	3
11083	5R5108	4710-01-160-3661	71	64
11083	5R5114	3040-01-342-0693	64	38
			64	43
11083	SR5115	5305-01-309-3743	64	41
11083	5R5116	5365-01-348-3376	64	40
11083	5R5117	2930-01-187-7024	98	9
			103	31
11083	5R5118	4710-01-144-3606	20	10
11083	5R5121		98	10
			104	14
11083	5R5126	4710-01-160-3660	71	56
11083	5R5128	2590-01-215-4369	119	26
			120	49
11083	5R5131	2540-01-222-7734	81	8
11083	5R5132	4010-01-281-0601	99	2
11083	5R5133		100	6
11083	5R5134		100	6
11083	5R5135	3020-01-192-8366	100	4
11083	5R5136	3020-01-192-6043	100	4
11083	5R5137	5340-01-309-7218	81	2
11083	5R5138	5340-01-310-1659	81	2
11083	5R5139	3020-01-192-8365	100	13
11083	5R5140	3020-01-192-6042	100	13
11083	5R5146	5340-01-308-9178	117	1
11083	5R5147	5340-01-309-4971	117	8
11083	5R5148	2510-01-192-8221	99	15
11083	5R5150	2540-01-219-6728	99	22
11083	5R5153		99	5
11083	5R5154	2510-01-191-9387	99	25
11083	5R5160	5340-01-309-7258	98	1
11083	5R5161	2510-01-218-7470	98	3
11083	5R5164	2510-01-215-2231	81	3
11083	5R5175	2510-01-191-8449	98	6
			115	9
11083	5R5176		115	9A
11083	5R5183	5340-01-308-9145	117	2
11083	5R5184	5340-01-309-7780	81	4
11083	5R5185	5340-01-310-1111	81	4
11083	5R5188	2510-01-191-6514	117	17

CROSS-REFERENCE INDEXES
PART NUMBER INDEX

CAGEC	PART NUMBER	STOCK NUMBER	FIG.	ITEM
11083	5R5191	2510-01-192-3579	117	16
11083	5R5197	5340-01-222-8963	78	36
			99	24
11083	5R5407	9905-01-163-0023	133	1
11083	5R5409		133	11
11083	5R5410	9905-01-188-6517	133	11
11083	5R5411	9905-01-188-6518	133	12
11083	5R5412	9905-01-188-6519	133	13
11083	5R5421	9905-01-164-0168	133	5
11083	5R5422	7690-01-343-1442	133	8
11083	5R5438	9905-01-163-3475	133	25
11083	5R6242	5340-01-342-2648	109	7
11083	5R6281	9905-01-297-1695	133	20
11083	5R6283	9905-01-282-7263	133	22
11083	5R6284	9905-01-295-1907	133	21
11083	5R6600	2510-01-191-8450	98	8
11083	5R6602	5340-01-218-1340	81	7
11083	5R7037	5310-01-286-5447	103	21
11083	5R7491	3950-01-196-4838	119	1
11083	5R7878	7690-01-267-5497	133	19
11083	5R8053	3830-01-279-0297	152	8
11083	5R8067		133	13
11083	5R8068	9905-01-311-4034	133	12
11083	5R8069	9905-01-311-4033	133	11
11083	5R8070	9905-01-289-3374	133	7
11083	5R8071	9905-01-289-3373	133	23
11083	5R8072	9905-01-311-4035	133	18
11083	5R8086	5340-01-281-7206	52	3
11083	5R8089	5340-01-280-7104	109	1
11083	5R8091	6150-01-280-4059	53	27
11083	5R8092	2910-01-281-0843	30	11
11083	5RS094		149	1
11083	5R8096	3040-01-348-3945	64	38
11083	5S0823	2530-00-464-4334	89	3
11083	5S0903		66	20
11083	5S0904	3040-01-159-3017	66	29
11083	5S0905	3040-01-159-3040	66	31
11083	5S0911	4710-01-159-2788	68	9
11083	5S0915		68	23
11083	5S1053	5340-01-152-2540	64	2
11083	5Sl056		64	5
11083	5S1057	4730-01-199-6588	64	3
11083	5S1058	5330-01-161-2611	64	1
11083	5S1334	5330-00-456-2587	36	75
11083	552106	5330-00-498-2905	42	16
11083	5S3249	2510-01-159-8753	97	13
11083	5S3250	2530-01-159-8751	97	12
11083	5S3295	2510-01-188-3690	106	24
11083	5S3591	4710-01-159-2789	68	12
11083	5S3626	4710-01-159-2927	68	15
11083	5S4017	4820-00-407-8330	97	23

CROSS-REFERENCE INDEXES
PART NUMBER INDEX

CAGEC	PART NUMBER	STOCK NUMBER	FIG.	ITEM
11083	5S4408	5330-00-194-3681	61	5
11083	5S4491	3111-01-068-6123	65	13
11083	5S4493	2840-01-069-0899	65	8
11083	5S580	5340-00-224-1522	35	4
11083	5S5879	5340-00-239-8226	9	22
58312	5S5917-00	2815-00-457-1615	9	8
11083	5S5918	2815-00-487-3123	9	6
11083	5S6051	5330-00-557-8494	12	12
			14	3
11083	5S6296	5330-00-036-6825	5	11
58312	5S6348-00	5310-00-557-9389	7	10
58312	5S6670-00	5330-00-494-2764	4	3
58312	5S6735-00	5330-00-760-7367	3	22
			28	6
58312	5S6750-00	2815-00-518-3561	7	2
11083	5S6880	2530-01-168-1038	80	36
11083	5S6972	3020-01-067-4689	65	28
11083	556973	3020-01-155-0355	65	32
11083	5S6978	2530-01-067-5556	65	39
11083	5S6981	5340-01-068-7167	64	45
11083	5S7009	2520-01-152-7750	65	16
11083	5S7010	2530-01-067-5557	65	10
11083	5S7013	3020-01-067-5558	65	27
11083	5S7015	3040-01-150-3669	64	48
11083	5S7023	2520-01-155-5096	65	34
11083	5S7163	2520-01-053-7539	74	3
11083	5S7264	5365-00-498-2962	42	5
11083	5S7609	3020-00-431-6447	43	8
11083	5S7611	5340-00-449-2612	11	10
11083	5S7630	3120-00-439-4878	11	7
11083	5SB30		6	8
11083	5S8055	5330-00-613-7263	17	10
11083	5S897	3040-01-160-5875	66	13
11083	5S899	3040-01-032-2286	66	3
11083	5S8995	5340-01-258-0153	129	26
11083	55901	3040-01-150-2274	66	28
11083	5S902	5315-01-161-9153	66	15
11083	5S9062	5365-00-498-2920	42	17
11083	5s909	5340-00-455-0326	67	4
11083	5S916	2520-01-145-4314	63	23
11083	5S9704	3040-01-161-5123	137	48
			138	41
58312	5S9948-00	5310-00-757-6531	5	13
11083	5V8309	5340-01-187-8834	115	22
89917	50038	5340-01-164-1912	152	5
89917	50044	5340-01-167-9936	152	40
			152	45
89917	50045	5340-01-167-6300	152	29
			152	42
89917	50047	5315-01-164-1781	152	9
89917	50071	3830-01-161-6593	152	19

CROSS-REFERENCE INDEXES
PART NUMBER INDEX

CAGEC	PART NUMBER	STOCK NUMBER	FIG.	ITEM
89917	50096	3040-01-162-4396	152	31
89917	50097	3830-01-161-6594	152	1
89917	50100	2410-01-163-2680	152	18
89346	50410DA	4730-00-044-4688	5	4
			78	45
			119	14
21450	505559	5315-00-050-5559	126	5
79136	5101-35-ZD	5365-01-147-9591	24	3
89917	51102	5310-01-187-6114	152	17
80201	511642	5330-0O-498-2913	23	14
			23	34
79136	5133-50-MO	5365-00-442-5845	116	18
			116	26
43334	5213	3110-00-156-7942	90	13
89346	52726R1	5310-00-275-8639	36	65
			127	15
80201	527838	5330-01-032-7315	5	7
19207	5284124	5310-00-528-4124	139	8
26901	535950	5910-01-176-8877	59	1
19207	539023	5307-00-053-9023	61	10
54492	541-11-00-129	2590-01-147-5578	36	15
80201	542255	5330-01-165-1334	134	11
21450	544009	5315-00-054-4009	78	40
75377	56-941-45	5310-00-188-0473	48	16
70040	5622759	2910-00-033-2200	24	26
08162	56425	3110-00-100-3632	78	64
08162	56650	3110-00-100-060Z	78	60
79550	5T0D-2	6145-00-310-2590	BULK	21
19207	5705778		153	1
19207	5705779		153	23
79550	58904-01-6	5935-01-158-0035	57	7
16764	5949719	6220-00-756-8787	53	10
11083	6A3355-23.6		58	18B
11083	6A3369-27.6		58	6B
11083	6A3369-31.5		58	18F
11083	6A3369-39.4		58	1OA
11083	6A3626	6145-01-229-2077	BULK	26
11083	6A3626-8IN		51	16
11083	6B1776	3040-01-163-0714	121	38
11083	6B4540	5310-01-163-5805	133	29
11083	6B4542	5310-00-434-1347	133	10
11083	6B4594	5320-00-260-4020	36	55
			36	79
11083	684598	5306-00-149-9066	77	25
11083	6B6022	5315-00-604-3345	88	20
11083	6B7469	5365-01-063-0778	25	1
11083	6B7651	5315-00-363-9727	80	8
11083	6B7687	3120-00-176-5546	80	26
11083	687949	5310-00-011-9711	136	31
11083	6B7988		93	27
11083	68830	5340-00-423-9937	131	16

CROSS-REFERENCE INDEXES
PART NUMBER INDEX

CAGEC	PART NUMBER	STOCK NUMBER	FIG.	ITEM
11083	6B830	5340-00-423-9937	132	34
11083	6D1746	5305-01-163-8242	34	22
			112	1
11083	6D238	4820-00-353-3223	24	82
11083	603787	3110-01-168-1053	138	38
11083	6D5707		31	11
			31	21
11083	6F155	5365-00-309-7459	65	76
11083	6F3183	3130-00-352-8136	152	21
11083	6F4868	5330-00-297-6548	97	24
			120	36
11083	6F5559	5330-00-580-1215	132	15
11083	6F6672	5330-00-310-6575	24	32
11083	6F7010	5340-00-018-7588	137	43
			138	34
11083	6F7024	5306-00-263-8982	78	51
11083	6F7037	5305-01-162-9717	91	34
11083	6F7045	5310-00-833-9298	57	66
11083	6F7062	5310-00-362-7988	4	21
			74	4
11083	6F7172	5315-00-514-3189	19	11
11083	6F8146	5330-00-599-2190	121	37
11083	6G0773	5365-01-266-2562	121	9
30780	6HP5N-SS	5365-01-024-9868	132	4
			145	67
11083	6H0406	5307-01-161-2653	36	33
11083	6H1717	5306-00-874-4001	71	62
			104	13
			112	11
11083	6H3068	5340-00-922-2596	29	22
11083	6H3956	5315-00-586-5103	31	31
11083	6H3977	5330-00-741-2096	122	9
			123	25
11083	6H4208	5340-00-948-6464	68	2
11083	6H5139	2520-01-028-8096	145	10
			147	62
11083	6H6699	4730-03-923-2126	151	5
11083	6H7382	5340-00-945-5871	85	2
			86	2
11083	6HS79	5315-00-575-0640	77	5
11083	6H9954	5305-01-131-5030	22	8
11083	6J2419	5330-00-494-2763	124	7
			126	7
11083	6J3134	5330-01-064-8247	63	16
11083	6J6516	5365-01-164-7640	135	4
11083	6J8499	4711-01-163-3556	143	2
11083	6J9992	4820-Q1-175-3050	135	7
11083	6J9996	5360-01-164-7619	135	5
			136	13
11083	6K0806	4730-01-068-6077	148	24
151	1			

CROSS-REFERENCE INDEXES
PART NUMBER INDEX

CAGEC	PART NUMBER	STOCK NUMBER	FIG.	ITEM
11083	6K1827	5935-01-097-7240	53	29
			53	37
			53	45
11083	6K1828	5935-01-097-7239	53	39
			53	46
			58	2
			58	9
			148	17
			148	23
			148	40
11083	6K5640	5365-01-161-2648	30	14
11083	6K5718	5306-01-282-3377	147	40
11083	6K6164	5340-01-163-6174	141	27
11083	6K6167	5340-01-163-6173	141	26
11083	6K8088	3110-01-066-9172	92	5
			94	13
			94	25
11083	6K8498	4730-01-063-3007	119	22
11083	6K9194	4730-01-051-8745	79	18
11083	6L1650	5330-00-869-6574	91	28
11083	6L1698	5365-01-161-2642	6U	9
11083	6L1962	5310-01-065-9110	57	65
11083	6L3616	4730-01-068-6081	62	19
			151	19
11083	6L3670	5306-00-118-3055	120	4
11083	6L4470	4820-01-159-0852	125	11
11083	6L4783	5306-01-059-9566	130	5
11083	6L7751	2520-01-066-0510	127	20
			127	30
11083	6M1882	3110-00-100-3529	90	23
11083	6M1883	3110-00-100-0534	90	24
11083	6M5652	4730-01-160-3603	129	20
11083	6M6853	4730-01-155-5059	71	34
11083	6N0411	2910-01-104-9318	24	64
11083	6N1036	3020-00-460-6696	19	16
11083	6N124	2520-01-107-9188	12	15
			73	5
11083	6N1345	3010-01-281-9394	149	4
11083	6N1369	5340-01-161-9132	16	11
11083	6N2578	3110-01-068-9716	23	15
11083	6N2956	5310-01-094-8702	23	24
11083	6N2957	5365-01-094-3237	23	23
11083	6N3034	5360-01-103-3676	24	94
11083	6N412	5305-01-025-4359	24	65
11083	6N4655	5340-01-093-7394	24	1
11083	6N4682	5340-01-147-2808	22	19
11083	6N4953	5330-01-161-2610	36	60
11083	6N4960	5330-01-163-2497	36	25
11083	6N4962	5330-01-162-6024	36	21
11083	6N5124	5340-01-114-9149	22	10
11083	6N5125	5340-01-114-9150	22	14

CROSS-REFERENCE INDEXES
PART NUMBER INDEX

CAGEC	PART NUMBER	STOCK NUMBER	FIG.	ITEM
11083	6N5323	5340-01-163-8510	23	9
11083	6N5324	3040-01-179-4393	23	7
11083	6N5482	2990-01-103-3684	23	36
11083	6N5899	5930-01-101-7845	34	32
11083	6N6403	5340-01-116-1312	22	6
11083	6N6404	5340-01-116-3799	22	7
11083	6N6662	5360-01-144-4403	24	9
11083	6N6794	2910-01-105-3610	24	40
11083	6N7174	2815-01-183-4649	3	3
11083	6N7232	5340-01-154-5252	4	17
11083	6N7451	5340-01-094-O021	23	25
11083	6N7527	2910-01-024-0939	24	33
11083	6N7665	2990-01-160-1659	21	2
11083	6N7727	2815-01-215-4322	KIT	
11083	6N7847	2940-01-182-2317	27	6
11083	6N7887	5330-01-093-7888	10	20
11083	6N8003	3040-01-149-5043	4	8
11083	6N8742	2990-01-103-6635	57	38
11083	6N9060	2815-01-125-5544	10	1
11083	6N9587	5940-01-097-3578	34	18
			34	31
11083	6N9851	2520-00-432-1730	74	2
11083	6N9915	2815-01-143-4335	3	14
11083	6N9930	4710-01-146-5967	33	2
11083	6P3767	5310-01-198-8570	122	35
			123	18
11083	6P3955	5340-01-150-2240	62	6
11083	6P4028	5340-01-163-1911	106	23
11083	6P4420	4710-01-150-3951	62	14
11083	6P4421	4710-01-150-3952	62	18
11083	6P4711	4820-01-151-3651	67	25
11083	6P4717	4820-01-151-3650	67	29
11083	6P5205		137	9
			138	3
11083	6P5206	5340-01-161-9162	137	10
			138	3A
11083	6P5208	3040-01-171-3357	137	22
			138	60
11083	6P5209	5340-01-163-5981	137	23
			138	61
11083	6P5661	3020-01-160-3640	127	9
11083	6P5723	5340-01-160-4008	104	4
11083	6P6034		127	14
11083	6P6586	5360-01-160-7762	91	9
11083	6P6630	5360-01-162-4838	91	8
11083	6P6696	3120-01-162-6039	91	3
11083	6P6698	5340-01-163-8509	77	14
11083	6P6700	5340-01-163-2785	91	32
11083	6P7820	4710-01-160-3662	119	21
11083	6P7825	5330-01-161-2613	120	10
11083	6P7826	3130-01-167-8185	124	2

CROSS-REFERENCE INDEXES
PART NUMBER INDEX

CAGEC	PART NUMBER	STOCK NUMBER	FIG.	ITEM
11083	6P7827	3040-01-159-3352	124	6
11083	6P7828	3040-01-159-3487	124	9
11083	6P7930	5340-01-163-6564	120	11
11083	6P8155	4710-01-162-0275	140	3
11083	6P8156	4710-01-162-6731	140	12
11083	6P8157	4710-01-162-0276	140	3
11083	6P8158	4710-01-162-7147	140	12
11083	6P8359	5330-01-161-2612	77	13
11083	6P8678	5365-01-165-2637	120	37
11083	6P8848	2530-01-066-8462	67	26
11083	6P8937	5340-01-155-4485	67	7
11083	6P8938	5340-01-154-6546	67	23
11083	6P8939	4820-01-150-1736	67	5
11083	6P8940	5365-01-151-6167	67	42
11083	6P9295	4820-01-150-0912	67	27
11083	6P9367	3040-01-159-3041	130	16
11083	6P9420	5340-01-160-4083	93	44
11083	6P9959	2530-01-198-4326	132	30
11083	6S7115	5935-01-097-7247	58	16
11083	6T0199	3830-01-281-1107	121	8
11083	6T0443		68	27
11083	6T1145	4710-01-281-1150	119	21
11083	6T1146	4710-01-283-9783	119	23
11083	6T1409	5365-01-281-0941	124	32
11083	6Tl410	5310-01-281-1831	124	33
11083	6Tl411	3130-01-282-2712	124	2
11083	6T1412	3040-01-280-8978	124	6
11083	6T1799	5340-01-281-9218	142	12
11083	6T3662	4710-01-281-1151	142	3
11083	6T3663	4710-01-281-1152	142	5
11083	6T4944	2520-01-285-5094	122	13
			123	21
11083	6T5810	5975-01-282-2779	106	2
11083	6V0082	5120-01-272-4055	153	5
11083	6V0717	5306-01-281-7805	136	7
11083	6V1033	3120-01-163-7472	32	15
11083	6V1178	5340-01-164-1271	146	14
11083	6V1550	5330-01-161-6240	KIT	
11083	6V1681	5330-01-188-9608	KIT	
11083	6V1720	9905-01-151-7584	65	20
11083	6V1721	9905-01-163-0019	133	14
11083	6V1752	5330-01-185-7446	KIT	
11083	6V2611	4820-01-167-5453	33	6
11083	6V2912	5330-01-185-0502	KIT	
11083	6V2971	5330-01-196-5624	KIT	
11083	6V2972	5330-01-162-5843	KIT	
11083	6V3254	9905-01-163-0020	108	3
11083	6V3507	5330-01-152-0601	150	5
11083	6V4061	5120-01-284-4968	153	14
11083	6V4149	5120-01-295-1200	153	15
11083	6V4150	5120-01-295-1199	153	16

CROSS-REFERENCE INDEXES
PART NUMBER INDEX

CAGEC	PART NUMBER	STOCK NUMBER	FIG.	ITEM
11083	6V4151	5120-01-296-3865	153	18
11083	6V4153	5120-01-294-0320	153	19
11083	6V4186	5315-01-268-2194	153	4
11083	6V4192	6680-01-299-5060	153	17
11083	6V443	4730-01-149-4969	28	3
11083	6V4626	5306-01-160-4498	42	4
11083	6V4651	4730-01-185-0026	140	18
11083	6V4658	4730-01-162-4358	140	20
11083	6V6686	3110-01-287-2313	124	19
11083	6V695T	5340-01-162-8859	115	20
11083	6V7371	5330-01-217-2008	147	69
11083	6V7383	5340-01-281-1003	142	22
11083	6V8364		50	1
11083	6V8376	5305-01-184-5919	34	32A
11083	6V8543	5330-01-288-5038	83	8
11083	6Y0473	5340-01-308-6246	89	15
11083	6Y3484	3110-00-248-5973	65	47
52676	6007Z	3110-00-155-6207	124	5
3P954	602A		119	27B
d0201	6143	5330-01-212-4617	31	40
11083	617539	5330-01-164-8558	135	35
19207	6299613	5310-00-629-9613	77	9
64829	63560-2	4330-00-155-8240	125	14
11083	63801	5310-01-164-8541	34	35
81646	6710	4730-00-877-6298	146	4
08162	67322	3110-00-100-0611	77	23
08162	67388	3110-00-100-3649	77	24
97153	68-216	5330-00-585-3204	90	28
11083	7B0863	2510-00-176-5600	101	6
11083	782500	5340-01-152-4538	66	24
11083	7B2742	5306-00-423-8784	25	13
11083	7B3028	5305-00-708-3823	64	15
			65	21
			87	18
			96	13
			100	8
			106	3
			150	4
11083	783235	5306-00-424-0086	36	18
			56	10
			83	15
			107	46
			114	34
			121	11
			127	33
			146	11
11083	785060	5320-00-164-0917	93	34
11083	7B5068	5320-01-162-8615	93	31
11083	7B5979	2530-00-545-0322	82	7
11083	786368	3110-00-731-1593	145	9
11083	7B6473	5330-00-248-2168	71	50

CROSS-REFERENCE INDEXES
PART NUMBER INDEX

CAGEC	PART NUMBER	STOCK NUMBER	FIG.	ITEM
11083	7B7387	5315-01-298-9712	117	15
11083	7B9665	4730-01-171-1981	97	19
11083	7D1553	5340-01-062-5938	129	13
11083	701728	5340-01-102-1789	117	5
11083	7D5961	4720-01-284-2236	69	6
11083	7E6844	5330-01-097-8142	39	19
			40	18
11083	7F1611		103	14
11083	7F1866	5306-00-060-5945	35	8
11083	7F2742	3110-00-554-3272	65	12
11083	7F3425	5305-01-095-3292	130	2
11083	7F3512	5360-00-597-3278	47	28
11083	7F3513	5977-00-249-5758	47	23
11083	7F352Z	5305-01-053-4707	47	29
11083	7F548	5310-00-413-5083	63	14
11083	7F7259	5310-01-059-0992	57	64
11083	7F7590	5330-00-297-7228	15	9
11083	7F8092	5355-00-425-4340	31	36
11083	7F8607	5330-00-591-7543	119	19
11083	7F9541	5315-00-426-5074	120	6
11083	7F9547	5315-00-426-6042	101	1
11083	7F9802	5360-00-209-8467	145	21
			147	13
11083	7GI770	2510-01-159-9783	113	7
11083	7GI7I	2510-01-159-9784	113	10
11083	7G2473	3020-01-152-5586	65	33
11083	7G2477	3020-01-152-7851	65	73
11083	7G2487	3020-01-155-0356	65	4
11083	7G2520	3020-01-152-5585	65	57
11083	7G2819	5343-01-161-0977	107	47
11083	7G360	5340-01-158-1165	71	41
11083	7G3903	2520-01-161-6374	60	39
11083	7G3909	5340-01-163-9440	6D	40
11083	7S3910		60	38
11083	7G4141	5365-01-163-6186	91	17
11083	7G4271	5365-01-161-0257	96	43
11083	7G4663	2520-01-159-0995	66	5
11083	7G4897	2930-01-159-2910	103	31
11083	7G5078	3040-01-159-8307	93	6
11083	7G5081	3040-01-159-2963	93	10
11083	7G5266	5330-01-164-1151	146	1
11083	7G6005	5365-01-161-9190	96	37
11083	7G6043		78	61
11083	7G6044	3130-01-167-9124	78	59
11083	7G6192	4710-01-160-3659	71	37
11083	7G6193	4710-01-161-0262	71	3
11083	7G6194	4710-01-160-3658	71	16
11083	7G6195	4710-01-161-0263	71	6
11083	7G6205	4710-01-160-365T	71	10
11083	7G6359	5975-01-147-4455	34	12
11083	7G6543	4710-01-162-6732	139	1

NATIONAL STOCK NUMBER AND PART NUMBER INDEX
PART NUMBER INDEX

CAGEC	PART NUMBER	STOCK NUMBER	FIG.	ITEM
11083	7G6688	2520-01-148-9520	62	3
11083	7G6689	2520-01-149-3802	62	4
11083	7G6690	2520-01-148-9519	62	8
11083	7G6773	5365-01-161-2794	92	1
11083	7G7530		87	17A
11083	7G8366	5365-01-165-4512	108	21
11083	7G8368	5340-01-164-8714	108	24
11083	7G8458	2520-01-159-5869	78	15
11083	7GB459	3040-01-159-0909	77	26
11083	7G8607	2510-01-159-9792	112	19
11083	7G8608	2510-01-159-8797	112	12
11083	7G9684	5340-01-161-2533	71	47
11083	7G9737	2510-01-158-9351	106	10
11083	7G9990		95	7
11083	7H1447	5340-00-635-8296	145	8
			147	5
11083	7H2079	5310-00-811-2861	47	25
11083	7H2423	5340-00-945-2401	87	9
11083	7H2424	5365-01-159-1561	87	6
11083	7H2444	5330-00-074-3764	87	11
11083	7H2445	5360-00-946-2127	87	5
11083	7H3597	5306-00-566-7243	89	2
11083	7H3607	5310-00-271-4656	78	8
11083	7H3912	3120-00-555-4525	145	47
			147	34
11083	7H3932	5340-01-164-7611	145	50
			147	36
11083	7H395	5315-01-203-6492	117	14
11083	7H4710	5365-00-891-0387	102	21
11083	7H4717	5306-01-162-9690	102	1B
11083	7H4860	5365-01-161-2643	102	28
11083	7H7107	5330-00-895-7034	124	26
11083	7H9397	5315-01-159-9438	94	17
11083	7J1767	5365-01-166-8934	135	3
11083	7J5590	5306-01-165-8107	145	14
			147	6
11083	7J6461	2520-01-066-0504	144	22
11083	7J8292		144	3
11083	7J8294		144	15
11083	7J8295	2530-01-163-8629	144	23
11083	7J8298	3040-01-163-8631	144	2
11083	7J8299	2530-01-144-2146	144	1
11083	7JS902	5306-01-095-1486	46	5
11083	7J9973		135	26
11083	7K1293	2530-01-310-6439	82	18
11083	7K1456	4730-00-403-4338	29	25
11083	7K3222		107	3
11083	7K8332	2910-01-062-1354	26	4
11083	7K8571	2530-01-279-3088	86	1
11083	7K8572	2530-01-279-3087	85	1
11083	7K9197	4730-01-063-0817	20	7

NATIONAL STOCK NUMBER AND PART NUMBER INDEX
PART NUMBER INDEX

CAGEC	PART NUMBER	STOCK NUMBER	FIG.	ITEM
11083	7K9197	4730-01-063-0817	69	5
11083	7K9689	5940-01-206-4291	58	8
11083	7L0811	5315-01-257-7800	138	8
11083	7MI201	5315-01-160-2315	87	16
11083	7M1224	5360-01-164-7624	66	18
11083	7M2167	2990-00-456-1474	31	30
11083	7M2461	5365-01-164-9968	88	28
11083	7M2853	5365-01-161-2644	93	42
11083	7M3085		78	55
11083	7M3882	5340-01-166-8693	29	14
11083	7M4046	3120-00-893-8317	4	33
11083	7M4741	4730-00-456-1469	36	17
11083	7M475	5330-00-844-1442	78	3
11083	7M5007	2990-01-103-3619	30	13
11083	7M5130	5315-01-103-3917	61	19
11083	7M5915	5315-00-007-6034	66	17
58312	7M6955-00	5330-00-920-8186	31	49
11083	7M706	5355-00-891-4401	60	1
			127	12
11083	7M7219	3110-00-629-4111	24	12
11083	7M7794	5307-01-165-5751	36	37
			64	4
11083	7M8485	5330-00-930-9407	67	37
			70	8
			123	8
11083	7M873	5340-01-103-3617	62	16
11083	7M9398		88	3
11083	7N0165	2930-00-457-1616	12	13
			14	4
11083	7NQ573	2815-01-169-8915	3	15
11083	7N0944	5330-01-094-8058	38	5
11083	7N1776	2815-01-142-1295	24	14
11083	7N1787	2910-01-348-1577	24	14A
11083	7N200	5330-01-127-8574	37	11
11083	7N2058	5340-01-151-2810	24	84
11083	7N3524		11	6A
11083	7N3536	3020-01-126-8956	11	3
11083	7N4417	5340-01-164-9882	22	11
11083	7N4448	5310-01-130-0611	3	26
11083	7N449	2910-01-143-4403	22	3
11083	7N4525	3020-01-126-9232	5	2
11083	7N4716	3020-01-126-0375	11	17
11083	7N4722	3020-01-254-1227	11	16
11083	7N4791	3020-01-127-5195	11	6
11083	7N4980	2815-01-141-1322	1	1
11083	7N5193	3020-01-127-3363	39	11
11083	7N5226	2510-01-144-8615	41	5
11083	7N5227	2510-01-144-3568	41	1
11083	7N5899	3040-01-127-6149	39	8
11083	7N5910	2930-01-126-4959	39	20
			40	19

NATIONAL STOCK NUMBER AND PART NUMBER INDEX
PART NUMBER INDEX

CAGEC	PART NUMBER	STOCK NUMBER	FIG.	ITEM
11083	7N6611		134	5
11083	7N7856	5365-01-147-4323	24	91
11083	7N7998	2815-01-127-2912	4	12
11083	7N7999	5330-01-128-5196	3	11
11083	7N8015	5340-01-129-5917	9	13
11083	7N8018	5330-01-128-4130	3	12
11083	7NB08	5340-01-188-9576	35	7
11083	7N9146	3020-01-123-5929	6	3
11083	7N9342	2815-01-119-2241	5	8
11083	7N9720	6115-01-279-2610	43	1
11083	7N9801	5330-01-302-9890	34	9A
11083	7P1697	2530-01-162-8966	91	25
11083	7P4190	3110-01-103-9158	60	37
11083	7P7608	5340-01-164-7531	56	24
11083	7P7612	5306-01-164-7446	56	25
11083	7S0543	2930-00-451-6070	41	7
11083	7S1801	2815-01-049-8552	17	6
11083	7S1912	5340-00-465-6799	57	22
11083	7S2050	5340-01-157-0972	71	23
58312	752204-00	5310-00-498-2967	8	3
11083	7S2670	3120-01-166-6915	93	21
11083	7S3029	5330-00-036-6824	128	13
11083	7S3161	2815-00-450-9341	9	5
58312	7S3224-00	5306-00-450-4026	4	10
11083	7S3916	5340-01-069-0904	140	16
11083	7S3919	5340-01-069-0905	140	15
11083	7S4660	3040-01-158-9331	64	49
11083	7S5380	5355-01-321-5693	116	24
11083	755383	5360-01-069-1437	116	25
11083	7S5391	2540-01-163-7235	116	11
11083	7S5425		28	1A
11083	7S5449	2815-00-493-2110	28	1
11083	7S575	2520-01-051-6769	141	30
11083	7S6402	5930-00-434-9121	51	19
11083	7S6719	5307-00-498-0804	21	12
11083	7S6865	5340-01-162-0078	61	7
11083	7S6869		61	11
11083	7S6870	3040-01-158-B578	61	9
58312	7S7144-00	5360-00-519-6605	3	1
11083	7S7359		102	20A
11083	7S7363	5365-01-172-1614	102	20
11083	7S7569		78	33
11083	7S7625	2520-01-159-2719	78	31
11083	7S7780	2815-01-305-2251	6	6
11083	7S7807	5340-01-066-0526	36	8
11083	7S7808		36	4A
11083	7S7809	2930-00-852-1174	36	4
11083	7S8511	5310-01-165-4315	72	13
11083	7S8572	3020-01-156-5940	65	43
11083	7S8621	3020-01-154-7961	63	9
11083	7SB622	5330-01-162-4762	63	7

NATIONAL STOCK NUMBER AND PART NUMBER INDEX
PART NUMBER INDEX

CAGEC	PART NUMBER	STOCK NUMBER	FIG.	ITEM
11083	7S8624	4730-01-163-0674	66	26
11083	7S8657	3040-01-155-5859	75	10
11083	7S8658		75	1A
11083	7S8659	2520-01-155-5098	75	1
11083	7S8660	4320-01-144-0413	63	6
11083	7S8699	2940-01-156-7277	70	14
11083	7S8700	2940-01-059-9296	70	12
11083	7T0187	4710-01-281-1158	29	28
11083	7T0200	5330-01-283-0524	78	29
11083	7TO201	3120-01-282-7553	78	32
11083	7T0206	3120-01-281-7217	83	7
11083	7T0357		78	33
11083	7T0358	3130-01-281-7891	78	31
11083	7T0481	5340-01-281-3888	78	44
11083	7T2037	5330-01-209-8731	30	8
11083	7T3137	3120-01-095-5803	65	55
11083	7T3143	3120-01-257-4402	65	3
11083	7T6986	6150-01-280-4289	55	16
11083	7T7116	5340-01-280-6870	55	12
11083	7T8753	4730-01-280-8352	142	20
11083	7V0762	5365-01-281-7846	142	13
11083	7V1566	2540-01-174-6185	106	2
11083	7V9507	2540-01-159-9805	116	28
11083	7W0450	3020-01-267-4337	40	10
11083	7W0507	3020-01-253-9282	19	29
11083	7W7546	5330-01-127-8566	4	11
61038	7077	4730-00-499-9837	4	2
89926	70920416	4730-00-460-6725	22	25
19204	7161056	5315-00-716-1056	107	17
30327	720FS05/16	4730-00-419-8863	29	34
79470	7238X12	4730-01-286-4632	72	1
16428	724105	5940-00-291-0085	58	17
13445	75900-09	2920-00-775-7691	57	60
F0777	77970	2590-01-282-4318	55	10
14859	7851-13-60I	5925-00-008-0548	57	41
11083	881312	5315-00-245-9995	78	53
			122	37
			123	20
11083	881419	5315-00-017-1893	93	46
11083	832133	5365-01-164-7546	140	10
11083	852321	3110-01-163-5917	68	4
11083	884037	5310-00-276-2822	60	54
11083	8B4967	5330-00-247-5972	130	14
11083	885964	3110-00-117-0661	61	14
11083	8B6349	5315-00-457-6897	4	25
11083	8C3839	5330-00-143-7173	144	20
11083	8C3840	5330-00-261-0990	144	18
11083	8D0273	6140-01-280-3380	52	6
11083	8D0324		59	5
11083	8D2586	5307-01-155-6687	60	35
11083	8D5054	5310-01-107-3590	2	2

NATIONAL STOCK NUMBER AND PART NUMBER INDEX
PART NUMBER INDEX

CAGEC	PART NUMBER	STOCK NUMBER	FIG.	ITEM
11083	8D5054	5310-01-107-3590	46	6
11083	8D7712	5305-01-164-1125	115	19
11083	8F2621	5360-01-106-4246	125	9
11083	8F2857	5330-00-599-2268	121	12
			123	6
11083	8F390	4730-01-163-2608	150	1
11083	8F6952	5330-00-580-1227	147	56
11083	8F8513	5340-00-351-6992	54	1
11083	8F9206	5330-00-599-2938	145	15
			147	7
11083	8F9372	5305-01-203-9343	90	17
30780	8HP5N-S	5365-01-031-8183	78	47
			131	11
			132	6
			135	20
			136	35
11083	SH1381	2530-01-216-4212	110	9
			111	11
11083	8H1382	5306-01-159-9328	111	9
11083	8H2229		84	5A
11083	8H2262	5330-00-848-6108	84	6
11083	BH3326		77	19
11083	8H7577	3040-01-143-8049	31	46
11083	8H8175	3110-00-948-5793	64	27
			96	9
11083	8H8648	2920-01-064-3809	57	59
11083	8H9182	3110-00-924-1971	31	44
11083	6H9186	5360-00-898-6730	31	45
11083	8H9520	5330-01-067-5652	39	7
			40	6
11083	8H9523	5360-01-166-8899	32	19
11083	8H9789	3110-00-516-5490	40	11
11083	8H9804	5315-00-999-8416	24	49
11083	8H9818	5330-00-893-7274	145	63
			147	51
11093	8H9819	3805-00-920-7472	145	64
			147	50
11083	8J1803	4730-01-162-6356	145	59
			147	39
11083	8J1839		136	43
11083	8J1841		145	42
			147	30
11083	8J2509	2590-01-162-0179	145	58
			147	44
11083	BJ2652	3040-01-215-2217	145	34
			147	21
			147	24
11083	8J2653	5340-01-215-0411	147	20
11083	8J2654		145	32
			147	23
11083	8J2660	4720-01-161-7783	145	61

NATIONAL STOCK NUMBER AND PART NUMBER INDEX
PART NUMBER INDEX

CAGEC	PART NUMBER	STOCK NUMBER	FIG.	ITEM
11083	8J2660	4720-01-161-7783	147	42
11083	8J2895	2590-01-162-8998	143	1
11083	8J2896	2510-01-162-7369	103	5
11083	8J3539	4730-01-162-6355	145	62
			147	43
11083	8J3554	3040-01-159-3488	135	30
			136	3
11083	8J3556	4820-01-192-8370	135	2
			136	17
11083	8J3557	5365-01-167-3498	135	40
			136	21
11083	8J3639	5365-01-278-0313	136	6
11083	8J3640	2805-01-278-0472	136	8
11083	8J4359	5310-01-164-7495	144	6
11083	8J5449	4820-01-217-2702	135	38
			136	4
11083	8J5912	5305-01-283-5592	144	21
11083	8J6330	4320-01-202-3552	134	1
11083	8J6913	2590-01-165-5746	145	52
11083	8J7067	5330-01-164-8571	143	12
11083	8J9282	5365-01-165-8752	144	13
11083	8K0968	4730-01-146-5883	33	3
11083	8KI207	5315-01-132-1188	4	6
11083	8K8428	5340-01-160-0837	82	17
11083	8L2746	5330-01-143-5059	135	37
11083	8L8601	5365-00-205-3664	24	96
11083	8M0904	5330-00-557-8489	15	20
11083	8M1013	5340-01-069-0788	67	20
11083	8MI467	5315-00-925-0012	102	8
11083	8M2059	2510-01-160-0846	102	4
11083	8M2530	5306-00-253-7864	122	6
			123	34
			142	19
11083	8M2771	5340-01-166-6926	151	16
11083	8M3182	5360-00-950-8251	13	8
11083	8M4069	5310-01-165-4308	107	7
			137	30
			138	19
11083	8M4389	5330-00-930-4064	64	51
			66	23
11083	8M4432	5330-00-913-8878	13	17
11083	8M4433	5330-01-107-5182	67	8
11083	8M4436	5330-00-948-9768	71	52
11083	8M4445	5330-00-914-5821	96	44
11083	8M4446	5330-00-999-5504	66	27
			95	19
11083	8M4448	5330-00-923-6958	9	10
11083	8M4791	5310-00-245-9841	43	7
11083	8M4986	5330-00-930-5736	71	54
11083	8M5007	5330-00-914-5310	75	6
11083	8M5249	5330-00-948-6062	63	18

NATIONAL STOCK NUMBER AND PART NUMBER INDEX
PART NUMBER INDEX

CAGEC	PART NUMBER	STOCK NUMBER	FIG.	ITEM
11083	8M5253	5330-00-890-2235	22	26
58312	8M5254-00	5330-00-913-8120	64	18
11083	8M5260	5330-00-431-7140	131	24
11083	8M5599	5315-00-944-7035	19	32
11083	8M6240	2510-01-215-4219	102	30
11083	8M6243	5340-01-165-1217	82	16
11083	8M6521	2520-01-066-4723	78	54
11083	8M6617	2510-01-159-8867	102	31
11083	8M6618	2510-01-159-2742	102	32
11083	8M6676	2590-00-923-2418	87	22
11083	8M6770	3040-01-144-7812	31	37
11083	8M6773		31	3
11083	8M6888	5365-01-165-4517	102	22
11083	8M7160	2530-00-949-0666	76	12
11083	8M7166	2530-00-243-9486	76	8
11083	8M7438	5330-00-948-9776	91	11
11083	8M7587	5310-00-922-8691	19	22
11083	8M7892	6625-00-113-3279	57	44
11083	8M8132	5360-01-157-0998	67	24
11083	8M8489	5315-00-760-7425	75	2
			75	8
			128	8
11083	8M8514	5330-00-138-0365	64	50
11083	8M8597	5360-01-067-5538	64	19
11083	8M8598		64	20
11083	8M8627	5360-00-950-2471	67	33
11083	8M8788	5340-00-925-7019	16	13
11083	8M9064	5365-00-116-0408	24	87
11083	8M9124	5365-01-165-7678	137	12
11083	8M9307	5365-00-938-5568	4	20
			74	5
11083	8N0081		2	12
11083	8N0109	2815-01-125-9819	10	16
11083	8N0535		10	16A
11083	8N0628	3120-01-165-4358	24	23
11083	8N0984	5315-00-582-2466	24	27
11083	8N110	5330-01-128-4137	10	3
11083	8N1414	4820-01-147-1309	24	36
11083	8N1415	5360-01-148-0305	24	35
11083	8N1417	4820-01-146-5933	24	34
11083	8N1570	3040-01-148-8880	24	22
11083	8N1720	2815-01-253-3471	7	9A
11083	8N1721	2815-00-487-2840	7	7
11083	8N1849	3120-01-130-9116	7	8
11083	8N2663	3040-01-148-2816	24	19
11083	SN3251	3040-01-132-4761	9	14A
11083	8N3252		9	11
11083	8N3324	2815-01-125-5947	9	21
11083	8N3326	2815-01-125-4580	9	9
11083	8N3981	2815-00-450-9344	8	4
11083	8N4110	3120-01-128-1114	4	26

NATIONAL STOCK NUMBER AND PART NUMBER INDEX
PART NUMBER INDEX

CAGEC	PART NUMBER	STOCK NUMBER	FIG.	ITEM
11083	8N4198	5340-01-217-3041	43	11
11083	8N4371	4710-01-144-3607	22	16
11083	8N4372	4710-01-144-2669	22	15
11083	8N4373	4710-01-144-Z668	22	12
11083	8N4374	4710-01-143-1528	22	9
11083	8N4375	4710-01-144-2667	22	5
11083	8N4376	4710-01-144-0294	22	4
11083	8N4457	4330-01-163-8040	13	1
11083	8N4485	4820-01-104-4091	38	4
11083	8N4959	3040-01-125-5536	11	11
11083	8N4960	2815-01-125-5535	11	5
11083	8N5305	5365-01-147-0083	42	8
11083	8N5469	5999-01-161-0974	5	12
11083	8N5584	2815-01-146-8869	2	14
11083	8N5928	5330-01-132-2201	39	23
			40	22
11083	8N5929	5340-01-151-7395	39	4
			40	5
11083	8N6184	2815-01-161-9635	18	8
11083	8N6796	2815-01-165-5713	3	17
11083	8N6849	4730-01-162-0112	18	10
11083	8N6854	5330-01-151-9294	18	9
11083	8N6985	5330-01-151-9295	13	9
11083	8N6986	5340-01-147-6397	13	10
11083	8N7315	4710-01-128-4741	15	8
11083	8N7316		15	2A
11083	8N7318	4710-01-129-5674	15	2
11083	8N7782	2815-01-125-1675	3	4
11083	8N8082	5340-01-156-9918	23	4
11083	8N8095	4710-01-147-6388	16	6
11083	8N8223	3120-01-168-1850	7	11
11083	8N8225	3120-01-151-8371	5	9
11083	8N8226	3120-01-156-9486	5	9
11083	8N8227	3120-01-156-9487	5	9
11033	8N8228	3120-01-151-9299	5	9
11083	8N8229	3120-01-157-0913	5	9
11083	8N8639		19	5A
11083	8N8721	5365-01-157-5068	2	3
11083	8NB722	5365-01-162-8875	2	4
11083	8N8842	2930-01-162-4423	36	53
11083	8N9801	4330-01-177-5446	33	13
11083	8N9802	5340-01-149-5988	33	9
11083	8N9803	4730-01-149-5082	33	10
11083	8P0203	3040-01-159-3588	77	12
11083	8P0802	3040-01-161-0179	80	4
11083	8P1050		97	7
11083	8P1053	2510-01-159-8750	97	6
11083	8P1075	3020-01-161-0978	122	5
			123	33
11083	8Pll82	3040-01-158-6202	91	22
11083	8P1183	3020-01-159-3036	91	21

NATIONAL STOCK NUMBER AND PART NUMBER INDEX
PART NUMBER INDEX

CAGEC	PART NUMBER	STOCK NUMBER	FIG.	ITEM
11083	8P1187	5340-01-163-2034	146	12
11083	8P1188	5340-01-166-6931	146	9
11083	8S1189	5340-01-164-7606	139	7
11083	8P1211	5340-01-160-4031	97	1
11083	8P1219	5340-01-310-4006	56	17
11083	8P1220	5365-01-151-8595	56	20
11083	8P1221	5365-01-311-0014	56	18
11083	8P1222	5340-01-169-7536	56	1
11083	8P1224	6680-01-142-6218	30	2
11083	8P1323		91	16
11083	8P1324	2530-01-159-7830	91	16
11083	8P1325	2530-01-159-7776	91	27
11083	8Pl326		91	31
11083	8P1328	3010-01-159-3591	77	11
11083	8P1342	5995-01-165-1343	55	2
11083	8P1353	2530-01-160-0845	91	12
11083	8P15		132	36
11083	8P1502		119	6A
11083	8P1504		119	6
11083	8P16	5330-01-164-8563	130	15
11083	8P1640	4710-01-161-5083	71	70
11083	8P1641	4710-01-163-2441	71	39
11083	8P1728	4710-01-163-0932	95	20
11083	8P1729	4710-01-162-7671	95	24
11083	8P1738	5340-01-162-8758	71	14
11083	8P1774	3040-01-158-8691	77	3
11083	8P1B53	5310-01-162-6413	78	63
11083	8P1855	2520-01-172-0694	78	5
11083	8P1856	2520-01-159-9803	78	11
11083	8P1870	2540-01-159-8879	92	8
11083	SP1871	2540-01-159-8749	92	19
11083	8P1876	5340-01-151-6146	60	42
11083	8P2261	3040-01-151-5696	60	53
11083	8P2262	3040-01-150-1749	60	25
11083	8P2271		60	10
11083	8P2272		60	28
11083	8P2283	4730-01-155-0222	71	53
11083	8P2424	3020-01-150-1751	60	2
11083	8P2427	3110-01-348-3791	31	50
11083	8P2429	3040-01-145-1891	31	48
11083	8P2430		31	41
11083	SP2435	2520-01-167-7696	31	18
11083	8P2437	5340-01-145-8462	31	26
11083	8P2441		31	32
11083	8P2442		31	32A
11083	8P2443	3040-01-142-2287	31	29
11083	8P2444	3040-01-314-4461	31	22
11083	8P2445	5306-01-147-4110	31	25
11083	8P2454	5306-01-144-0396	32	14
11083	8P2455	5307-01-153-1409	32	21
11083	8P2456	4710-01-148-9496	32	17

NATIONAL STOCK NUMBER AND PART NUMBER INDEX
PART NUMBER INDEX

CAGEC	PART NUMBER	STOCK NUMBER	FIG.	ITEM
11083	8P2458	5315-01-156-6567	32	18
11083	8P2460	5340-01-155-6148	32	2
11083	8P2463	2540-01-147-2256	32	6
11083	8P2478		137	56
			138	53
11083	8P2479	5306-01-283-9260	138	58
11083	8P2480	3040-01-162-7541	137	25
			138	14
11083	8P2481	3040-01-280-9034	138	10
11083	8P2483	3040-01-163-2778	137	4
			138	43
11083	8P2495	3040-01-280-8451	138	37
11033	8P2496		137	50
			138	55
11083	8P2502	5306-01-161-9138	92	13
11083	8P2503	3040-01-161-0993	92	18
11083	SP2504	3040-01-159-5944	92	15
11083	8P2505		94	24
11083	8P2506	3040-01-163-7345	94	29
11083	BP2507	3040-01-159-0862	92	14
11083	8P2511	5306-01-161-6220	92	16
11083	8P2520	3040-01-162-7355	96	19
11083	8P2670	3020-01-161-2763	124	21
11083	8P2823	4710-01-146-5963	29	13
11083	8P2835		61	51
11083	8P2836		61	50
11083	8P2944	5340-01-161-9160	107	40
11083	8P2956	4710-01-146-5965	29	21
11083	8P2971	5306-01-163-7474	94	22
11083	8P3001	2530-01-173-6943	93	40
11083	8P3002	5315-01-160-4654	93	43
11083	8P3185	5365-01-160-4733	106	27
11083	8P3197	2590-01-159-5901	80	18
11083	8P3203	3040-01-159-3510	80	2
11093	8P3204	3040-01-159-2978	80	2
11083	8P325	4820-01-202-3575	132	26
11083	3P326		132	27
11083	8P3261	3040-01-163-7349	94	14
11083	8P3262		94	18
11083	8P327		132	18
11083	8P3295	5340-01-164-8663	106	4
11083	8P3301		96	22
11083	8P3391	3040-01-163-1150	137	53
			138	50
11083	8P3394	5330-01-165-4331	80	17
11083	8P3409	5340-01-161-6147	94	2
11083	8P3410	3040-01-159-8804	94	5
11083	8P3439	2510-31-159-8756	112	15
11083	8P3440	2510-01-159-9781	112	18
11083	8P345	4820-01-219-9334	132	16
11083	8P346	5360-01-162-2848	132	25

NATIONAL STOCK NUMBER AND PART NUMBER INDEX
PART NUMBER INDEX

CAGEC	PART NUMBER	STOCK NUMBER	FIG.	ITEM
11083	8P3475	3040-01-159-2881	92	4
11083	8P3548	5340-01-155-8733	60	23
11083	8P3595	5340-01-166-8936	106	26
11083	8P3769	2530-01-281-5233	83	11
11083	8P3770	2530-01-281-9386	83	11
11083	8P3773	2530-01-159-3446	82	13
11083	8P3774	2530-01-160-3621	82	13
11083	8P3901	5340-01-164-7528	99	8
			108	16
11083	8P3904	5340-01-164-7529	99	9
			108	29
11083	8P3908	2510-01-173-4658	108	25
11083	8P3911	2510-01-173-6944	108	20
11083	8P3972	2510-01-166-1256	107	10
11083	8P3978	5340-01-164-8705	107	13
11083	8P3987	5306-01-163-9381	94	27
11083	8P3990	5340-01-149-5256	60	21
11083	8P3998	4710-01-155-5191	71	43
11083	8P4111	2530-01-162-4237	100	4
11083	8P4112	2530-01-162-4238	100	4
11083	8P4145	4710-01-155-5192	71	65
11083	8P4147		71	42
11083	8P4237	5330-00-632-6417	78	58
11083	8P4299	5340-01-164-7556	131	4
11083	8P4545	3040-01-159-5946	93	45
11083	8P4546	5340-01-160-4081	93	49
11083	8P4714	3040-01-159-5947	93	51
11083	8P4757	5340-01-164-9957	106	7
11083	8P4824	5340-01-162-7951	114	39
11083	8P4825	5330-01-170-1459	114	38
11083	8P4866	5340-01-164-7558	127	4
11083	8P4872	3040-01-162-0199	127	13
11083	8P4873		127	17
11083	8P4877	5340-01-158-6755	114	30
11083	8P4878		114	32
11083	SP4898	5340-01-162-8766	107	39
11083	8P5006		127	18
11083	8P5007	2530-01-162-6584	127	32
11083	8P5048	3040-01-162-7187	137	13
11083	6P5324	5365-01-163-2016	137	36
11083	8P5325	5340-01-164-9895	137	57
			138	69
11083	8P5326		137	60
11083	8P5327	3040-01-163-1151	137	39
			138	24
11083	8P5328		137	42
			138	27
11083	8P5329	3040-01-280-9337	138	29
11083	8P5330		138	32
11083	8P5331	3040-01-281-2485	138	64
11083	8P5332	3040-01-344-1851	138	67

NATIONAL STOCK NUMBER AND PART NUMBER INDEX
PART NUMBER INDEX

CAGEC	PART NUMBER	STOCK NUMBER	FIG.	ITEM
11083	8P5332	3040-01-344-1851	138	72
11083	8P5333	3040-01-161-5157	137	37
			138	23
11083	8P54	5340-01-164-7600	120	1
11083	8P5495	5340-01-162-4819	107	32
11083	8P5647	4730-01-170-9822	93	29
11083	8P569	3040-01-159-2882	93	2
11083	8P5912	5995-01-162-0093	148	39
11083	8P6032	2510-01-280-4868	105	3
11083	8P6188	3110-01-160-4714	84	18
11083	8P6314	5995-01-162-0092	148	46
11083	8P6362	5995-01-163-3577	53	19
11083	8P6432	5995-01-173-6906	53	50
11083	8P6433	5995-01-163-0820	53	33
11083	8P6652	3120-01-217-0829	85	10
11083	8P6690	5340-01-162-8639	107	25
11083	8P6691	5340-01-163-5907	107	30
11083	8P6692	5340-31-162-8647	107	24
11083	8P7277	5995-01-163-3527	55	13
11083	8P7278	5995-01-163-3526	55	14
11083	8P7281	5995-01-163-3578	55	16
11033	8P7317		31	9
11083	CP7352	2530-01-169-4620	137	21
			138	59
11083	8P7622	4710-01-161-6675	119	18
11083	8P7623	4710-01-163-2796	119	15
11083	8P7625	2520-01-161-9637	60	18
11083	8P7685	5330-01-164-7508	61	44
11083	8P7792	2530-01-163-4312	32	11
11083	8P8033	5340-01-173-6886	103	23
11083	8P8039	3040-01-151-5694	60	56
11083	BP804	5340-01-160-4030	80	46
11083	8P8043	3040-01-163-7309	96	15
11083	8P805	5330-01-162-4763	80	45
11083	8P8222	5330-01-164-8580	106	12
11083	8P8240	2520-01-162-4413	91	4
11083	SP8255	2530-01-159-5870	80	42
11083	8P8299	5340-01-164-7608	108	11
11083	8P8305	5340-01-280-6952	105	1
11083	8P8306	5340-01-162-9565	53	4
11083	8P8443	5340-01-163-1972	107	36
11083	8P8444	5340-01-161-5942	107	41
11083	8P8570	2520-01-173-6418	91	29
11083	8PS680	3010-01-150-5434	65	61
11083	8P8845	2590-01-161-9656	148	1
11083	8P8904	3040-01-159-5903	122	4
11083	8P8905	3010-01-162-4426	123	32
11083	8P8906	5365-01-164-8774	123	35
11083	8P9728	5306-01-169-7537	56	4
11083	8P9821	5310-01-163-0513	92	7
			94	9

NATIONAL STOCK NUMBER AND PART NUMBER INDEX
PART NUMBER INDEX

CAGEC	PART NUMBER	STOCK NUMBER	FIG.	ITEM
11083	8P9995	3830-01-159-9782	112	2
11083	850493	2815-00-470-6352	19	12
11083	8S0497	3020-00-936-3972	19	29
11083	8S0776	5365-00-410-3076	1	6
11083	SS0777	5365-00-410-3078	1	7
11083	8S1069	5365-01-309-7146	64	39
11083	8S1326	4730-00-401-8098	17	11
58312	8S1491-00	5310-00-557-9391	3	2
11083	8S1495	5330-01-164-7507	62	7
11083	8S1498	2815-01-165-9635	9	26
11083	8S1499	2815-00-211-4462	9	24
58312	8S1605-00	5330-00-520-1552	9	17
11083	8S1783	5310-01-160-3978	97	8
11083	8S1831	3020-01-163-7319	100	1
11083	8S1832	2530-01-162-4236	100	1
11083	8S1935	2990-00-936-7105	35	1
11083	8S1965	5330-00-613-7468	18	6
11083	8S2243	5120-01-123-5884	153	3
11083	8S2244	5120-00-178-1267	153	22
11083	8S2560	2530-00-455-9268	88	17
11083	8S3371	5310-00-451-3384	65	23
			122	32
			123	15
11083	8S3372	5330-01-064-3774	65	29
11083	853373	5330-01-064-3775	65	50
11083	8S3522	2520-00-122-9919	65	1
11033	8S3995	6680-00-466-0299	17	2
11083	8S4183		43	9
11083	8S5716	4710-01-170-9234	96	20
11083	8S5753	5360-01-069-0812	96	33
11083	8S5767	5330-00-455-7096	121	2
11083	855796	3120-01-216-9086	86	11
11083	8S5803		88	14A
11083	8S5805		85	9A
			86	10
11083	8S6377	5315-01-064-3778	66	32
11083	8S6417	4730-01-094-7469	79	23
			79	28
			142	8
11083	8S6511	3120-00-440-8463	19	9
			19	18
11083	8S6814	5315-00-406-7278	23	10
			24	50
11083	8S6980	3020-01-163-7964	128	16
11083	8S7048	3120-01-166-3685	127	43
11083	8S775	5365-00-410-3077	1	5
11083	8S7762	5365-00-432-8183	39	18
			40	17
11083	8S8673	5340-00-195-8288	104	16
11083	8S8821	5330-00-431-7137	39	17
			40	16

NATIONAL STOCK NUMBER AND PART NUMBER INDEX
PART NUMBER INDEX

CAGEC	PART NUMBER	STOCK NUMBER	FIG.	ITEM
11083	8S8874	5340-00-494-1996	15	19
11083	8s9092	5306-00-455-0460	80	30
			83	12
			111	2
11083	8S9129	4330-01-066-7713	120	19
11083	8S9130	4730-01-159-7840	120	20
11083	8s9191	5306-00-470-5543	130	4
			148	9
11083	8S9194	4820-01-149-3833	67	9
11083	8S933	5306-01-064-3842	114	41
11083	8S934	5310-01-119-1442	114	42
11083	8S9355	4720-00-981-8519	BULK	12
11083	8S9355-56.3		141	29
11083	8T0102	5330-01-287-0377	78	29A
11083	8T2502	5306-01-285-8875	36	44
11083	8T7211	5330-01-281-0908	142	21
11083	8T7266	5330-00-835-3007	147	17
11083	8T9757		57	4
13445	80101	5355-01-064-3851	50	5
16764	801077	9390-00-839-1864	47	50
			48	45
16764	807295	5310-00-350-3587	44	11
30327	81LB1-21N	4730-00-677-3738	17	12
64488	8106S	6145-31-229-3623	BULK	20
16764	811912	5310-01-243-6178	47	37
13445	81285	5355-00-007-9980	51	20
79470	8137731	4730-00-289-2357	129	2
16764	825196	5310-00-275-9191	44	40
16764	825197	5330-00-699-9033	44	41
16764	830338	5306-01-166-7926	44	10
19207	8392184	5310-00-209-6512	96	8
13445	8398	5930-00-715-1939	57	61
70040	850624	2930-00-695-7197	36	11
89917	88159	3040-01-284-4551	152	30
89917	88581	2590-01-284-6164	152	28
89917	88582	2510-01-285-2927	152	41
11083	992289	5315-00-267-2268	85	11
			86	12
			88	15
11083	9C3754	2540-00-044-0644	114	8
11083	9F2746		102	9
11083	9F2978	5310-00-005-0781	36	38
			36	41
			36	47
			36	49
			36	57
			36	77
			71	48
			100	11
			145	2
			145	71

NATIONAL STOCK NUMBER AND PART NUMBER INDEX
PART NUMBER INDEX

CAGEC	PART NUMBER	STOCK NUMBER	FIG.	ITEM
11083	9F4976	5310-00-178-0741	47	35
			49	2
11083	9F5647	3120-00-064-1275	31	51
			137	11
			138	4
11083	9F7378	5365-00-131-4761	122	24
11083	9F9522	5305-00-897-2405	108	27
11083	9GO806	4710-01-159-5982	79	26
11083	9G0807	4710-01-163-6995	71	35
11083	9G0808	4710-01-159-5983	79	24
11083	9G0818	3040-01-159-7827	80	6
11083	9GO941	4710-01-146-5853	34	19
11083	9G0964	4710-01-147-6490	29	12
11083	9G0966	4710-01-146-5964	29	20
11083	9G0968	2910-01-142-3204	30	12
11083	9G1237	5310-01-161-0004	107	23
11083	9G1443		80	10
11083	9G1444		80	9
11083	9G1642	5365-01-164-7631	89	14
11083	9G1706	5340-01-161-2249	93	19
11083	9G4059	5340-01-163-5906	107	21
11083	9G4247	6140-01-169-7538	56	8
11083	9G5088	3040-01-159-5863	103	32
11083	9G5127	2520-01-164-0077	97	5
			120	9
11083	9G5340		78	2A
11083	9G5900	2540-01-163-1156	115	23
11083	9G5951	5340-01-161-9147	115	4
11083	9G5953	5330-01-164-9754	114	1
11083	9G5954	5340-01-163-6563	115	1
11083	9G5957	5340-01-163-9390	115	18
11083	9G5964		115	5
11083	9G5974	2540-01-162-8988	114	23
11083	9G6119	5995-01-151-6364	57	24
11083	9G6120	5995-01-148-8197	57	23
11083	9G6177	2510-01-173-8619	114	9
11083	9G6180	2510-01-179-6353	114	7
11083	9G6473	4710-01-151-5709	151	9
11083	9G6543	5340-01-160-4032	114	28
11083	9G6544	5340-01-150-7766	60	14
11083	9G655	2540-01-149-3344	150	3
11083	9G6560	5995-01-161-9595	34	29
11083	9G6561	5995-01-162-0091	34	16
11083	9G6760	2520-01-150-1737	60	4
11083	9G6868	2590-01-192-5925	108	1
11083	9G7190	5365-01-160-0596	114	26
11083	9G7399	9905-01-311-5230	64	16
11083	9G7514	4710-01-149-5080	151	18
11083	9G7558	5950-01-279-2818	45	12
11083	9G7601	4720-01-163-4347	71	31
11083	9G779	5340-01-160-4676	93	25

NATIONAL STOCK NUMBER AND PART NUMBER INDEX
PART NUMBER INDEX

CAGEC	PART NUMBER	STOCK NUMBER	FIG.	ITEM
11083	9G780	4820-01-159-8809	93	8
11083	9G7804P	3040-01-161-6655	93	20
11083	9G787	3040-01-159-8805	93	9
11083	9G788	3040-01-159-5943	93	22
11083	9G8010	5930-01-095-6194	51	4
11083	9G805	3040-01-159-7823	80	6
11083	9G809	5310-01-159-1871	93	18
11083	9G817	5365-01-157-6106	71	2
11083	9G8246	2530-01-215-3287	87	17
11083	9G8300	3120-01-153-6680	88	8
11083	9G8301	3130-01-163-8225	88	18
11083	9G8494	4710-01-146-5966	29	32
11083	9G3854	3040-01-162-7639	137	35
11083	9G8856	4730-01-162-0206	29	7
11083	9G9019	5995-01-151-6312	148	2
11083	9G9300	5340-01-150-6251	55	5
11083	9G9302	2540-01-163-1155	114	43
11083	9G9465	2530-01-159-5907	80	31
11083	9G9818	3120-01-188-5540	47	65
11083	9G9979	5340-01-164-8709	127	24
11083	9H1110	5310-00-999-8286	9	2
11083	9H1112	5310-00-999-8287	9	3
11083	9H223	5330-00-919-2249	66	16
			96	10
11083	9H2367	5360-00-455-7142	67	28
11083	9H2400	3120-01-164-8629	127	1
			127	39
			130	24
11083	9H4104		87	4
11083	9H4257	5310-01-289-2547	127	16
11083	9H5537	5360-00-894-7275	65	31
11083	9H5546	5315-01-067-1727	65	42
11083	9H5921	5330-00-074-3600	6	10
11083	9H6454	5330-00-848-9950	145	11
			147	61
11083	9H6530		65	19
11083	9H6673	5315-00-193-0923	31	6
11083	9H7534	5360-01-069-1390	80	39
11083	9H7553	5360-00-137-3464	80	38
11083	9H7657		80	29
11083	9H7670	2530-00-924-7864	87	10
11083	9J1903		143	18
11083	9J2007	2590-01-162-7550	144	8
11083	9J2GOS		144	11
11083	9J2009	3040-01-163-0825	144	10
11083	9J2010	2530-01-163-8594	144	9
11083	9J2011	2590-01-189-8840	144	12
11083	9J3047	4730-01-165-0851	145	12
			147	60
11083	9J6367	3805-01-165-5750	135	36
11083	9J8775	5360-01-164-8752	145	18

NATIONAL STOCK NUMBER AND PART NUMBER INDEX
PART NUMBER INDEX

CAGEC	PART NUMBER	STOCK NUMBER	FIG.	ITEM
11083	9J8775	5360-01-164-8752	147	10
11083	9K6426	4730-01-173-7628	71	30
11083	9L4685		134	3
11083	9L5854	5330-00-549-7691	4	5
11083	9L672	4820-01-150-0965	125	5
			125	10
11083	9L674		125	4
11083	9L6788		24	50A
11083	9L6863	2910-01-147-3000	24	48
11083	9L6934	2815-01-154-1242	7	3
11083	9L7235	5365-01-103-7156	24	95
11083	9L8388	5365-00-175-5049	22	1
11083	9L9045	4730-01-125-9752	119	22
11083	9L9132	5310-01-061-8633	69	9
11083	9L9347	5365-01-103-7157	24	93
11083	9M0016	7690-01-267-5491	133	28
11083	9M1311	5310-00-445-4633	79	2
11083	9M1393	5330-01-160-2124	91	13
11083	9M1986	5360-01-095-1834	72	3
11083	9M1997	3110-00-446-9696	124	27
11083	9M2069	5315-01-064-1015	64	33
11083	9M2089	5315-01-113-2356	66	14
			66	30
11083	9M2132	5330-00-929-0699	64	11
11083	9M2133	5340-01-064-2275	64	10
11083	9M2209	3040-01-149-1235	75	9
11083	9M2210	4320-01-275-1691	75	7
11083	9M2877	4710-00-243-9576	76	11
11083	9M3637	5365-0&-455-2753	1	4
11083	9M3835	5340-00-410-1903	107	16
11083	9M4007	5315-00-193-0919	64	31
11083	9M4136	5365-01-163-2015	60	57
11083	9M4355	5365-01-032-7272	65	40
11083	9M4849	5330-00-847-4351	15	7
11083	9M5731	5320-01-217-0799	148	34
11083	9M5854	5307-01-164-6429	118	5
11083	9M5884	5340-00-493-3997	94	11
			114	16
11083	9M5894	5330-00-431-7121	78	30
11083	9M6527	5310-00-999-8288	21	8
			40	12
11083	9M6590	5305-01-188-4766	145	25
			147	68
11083	9M6775	2530-00-948-9748	91	5
11083	9M7002	5330-00-105-0368	93	41
11083	9M8281	3020-01-155-5156	75	11
11083	9M8669	4330-00-103-5502	71	51
11083	9M8867	3040-00-491-3215	36	66
11083	9M9740	2910-00-740-3593	70	2
11083	9N5769	5340-01-147-7948	10	21
11083	9N5862	5360-01-105-9599	24	38

NATIONAL STOCK NUMBER AND PART NUMBER INDEX
PART NUMBER INDEX

CAGEC	PART NUMBER	STOCK NUMBER	FIG.	ITEM
11083	9P0126	5340-01-230-9422	56	7
11083	9P0468	3040-01-162-6414	137	27
			138	16
11083	9P0678	2530-01-163-7861	93	32
11083	9P0695	2530-01-164-7812	93	35
11083	9P0696	3040-00-333-4393	93	36
11083	9P0736	6220-01-148-1686	53	15
11083	9P0739	6220-01-149-2803	53	13
11083	9P0741	2530-01-159-5833	93	37
11083	9PC946	2530-01-164-1785	93	33
11083	9P1154	5340-01-160-2431	93	28
11083	9P1383	5340-01-163-7476	95	18
11083	9P160	5340-01-164-7532	106	13
11083	9P174	5310-01-161-6144	106	14
11083	9P1976	5315-01-287-1633	119	2
11083	9P2074	5330-01-164-8570	97	20
11083	9P2123	5340-01-164-7533	129	5
11083	9P2125	2510-01-172-6796	129	3
11083	9P2679		64	35
11083	9P2680	2520-01-155-5097	64	26
11083	9P2696	5995-01-163-0665	53	22
11083	9P3049	2520-01-162-4337	66	22
11083	9P3050	2520-01-145-4315	67	1
11083	9P3051	2520-01-145-4315	67	39
11083	9P3118	5995-01-148-8196	57	25
11083	9P3351	4710-01-163-4303	53	54
11083	9P3354	4710-01-216-1006	148	14
11083	9P340T	4720-01-162-4359	129	16
11083	9P3408	4720-01-162-4360	129	12
11083	9P4064	5340-01-162-6047	97	21
11083	9P4608	5930-01-162-7313	148	35
11083	9P4609	5340-01-170-6336	148	33
11083	9P4730	4710-01-161-7773	53	53
11083	9P4905		63	22
11083	9P5365	2530-01-300-0231	64	25
11083	9P740		93	30
11083	9P7752	5315-01-175-1147	82	9
			83	10
11083	9P7849	5340-01-281-3921	105	6
11083	9P7853	5340-01-164-7609	108	15
11083	9P7913	3120-01-166-6163	96	32
11083	9P8001	3040-01-159-2950	96	48
11083	9P8121		148	28
11083	9P8122	5340-01-156-8752	148	30
11083	9P8185	4820-01-163-1195	96	26
11083	9P8186		96	23
11083	9P8196	4820-01-159-7837	96	41
11083	9P8197	4820-01-163-1196	96	39
11083	9P8217	5310-01-205-9054	96	30
11083	9P8218	5310-01-164-6362	96	29
11083	9P8308	5360-01-159-9495	96	42

NATIONAL STOCK NUMBER AND PART NUMBER INDEX
PART NUMBER INDEX

CAGEC	PART NUMBER	STOCK NUMBER	FIG.	ITEM
11083	9P8630	4710-01-161-7804	71	27
11083	9P8631	4710-01-161-7803	71	24
11083	9P8636	5340-01-154-4059	148	32
11083	9P8637	5340-01-309-7211	148	31
11083	9P9382	2520-01-163-0816	91	1
11083	9P9388	5355-01-166-1721	108	5
11083	9P9390	5340-01-164-9958	108	10
11083	9P9392	2540-01-254-5036	108	4
11083	9P9488	2530-01-151-3633	60	19
11083	9P984	3020-01-162-0180	78	9
11083	9S0211	5340-01-107-4111	149	3
11083	9S1240	5310-00-253-7918	43	10
11083	9S1274	5330-00-404-4964	27	8
			27	13
11083	951303	5315-00-169-8105	130	19
11083	9S1314	5340-01-068-7178	92	17
11083	9S1315	5315-01-066-8470	92	10
11083	9S1322	5306-00-003-0681	108	28
11083	9S1328	5310-00-220-6552	92	6
			94	12
11083	9S1350	5340-00-426-4794	29	26
11083	9S1366	5306-00-455-0459	36	70
			121	19
			139	4
			141	33
			146	6
11083	9S1385	5365-01-130-4159	60	41
11083	952355	2815-00-493-7022	21	5
11083	9S2721	2815-01-170-9235	104	14
11083	9S3029	2815-01-148-2595	7	1
11083	953566		84	2A
11083	9S3567	2530-01-173-8618	84	2
11083	953569	2530-30-420-6514	84	19
11083	9S4146		43	2
11083	9S4180	5365-01-067-2179	23	11
			24	81
			125	18
11083	9S4181	5365-01-026-9555	67	38
11083	9S4183	5365-00-478-2920	61	48
			141	14
11083	9S4191	5365-00-411-4584	61	46
			64	6
			64	21
			70	15
			72	5
			75	5
			128	2
			141	5
11083	9S4205	5365-00-490-4623	70	9
11083	9S5033	5306-01-281-7146	149	2
11083	9S5222	5365-01-064-3788	66	8

NATIONAL STOCK NUMBER AND PART NUMBER INDEX
PART NUMBER INDEX

CAGEC	PART NUMBER	STOCK NUMBER	FIG.	ITEM
11083	9S5682	4720-01-067-2180	140	17
11083	9S7192		135	27
11083	9S7703	4730-01-149-4970	151	3
11083	9S8004	5365-01-036-0010	147	53
11083	9S8009	5365-00-452-0344	135	18
			136	27
11083	9S8063	9905-01-164-1458	133	24
11083	9S8245	2530-01-280-4979	83	19
11083	9S8246	2530-01-280-4978	83	19
11083	9S8347	2530-01-280-4980	111	5
11083	9S8348	2530-01-230-4981	111	5
11083	9S8351	2530-01-280-4982	111	12
11083	9S8353	2530-01-281-1085	83	18
11083	9S8354	3020-01-281-7979	83	17
11083	9S8601	5315-01-068-9758	23	38
11083	9S8632	5360-01-068-7181	23	40
11083	9S8752	5310-01-183-1237	117	3
11083	9S9534	2530-01-215-1605	86	14
11083	9S9535	2530-01-307-3486	85	13
11083	9S9979	2590-01-064-7493	36	7
11083	9T0172		136	38
11083	9T0174	4820-01-347-8627	135	1
11083	9T0175	4820-01-281-5981	136	34
11083	9TO176	4820-01-281-5980	136	1
11083	9V7112	5340-01-155-2595	32	9
11083	9W1077	5930-01-161-8150	57	43
11083	9W1395		32	10
11083	9W6647	5330-00-738-8639	84	5
11083	9W7332	5330-01-164-8707	78	2
11083	9Y1979	5330-01-332-4089	21	6
13445	90065	5930-01-162-7312	55	17
13445	90065-01	2920-01-154-8144	34	8
18876	9024483	5313-00-754-3384	24	60
25184	906-737-70	5330-00-801-3354	26	1
			61	47
			64	7
			64	22
			69	13
			70	16
			71	4
			72	6
			75	4
			79	16
			128	3
			132	5
			141	4
			145	66
			147	54
19207	9093668	5310-00-678-2152	9	4
30327	91L1-4X1-8	4730-00-266-2637	68	10
73331	910824	6220-01-097-4320	53	7

NATIONAL STOCK NUMBER AND PART NUMBER INDEX
PART NUMBER INDEX

CAGEC	PART NUMBER	STOCK NUMBER	FIG.	ITEM
75165	920	5330-00-141-2476	6	11
			80	22
			120	24
73331	921472	6220-00-832-8774	53	9
08805	940	9340-01-062-6129	147	65
16764	9418881	5310-00-944-5896	44	30
			91	19
			101	18
16764	9439624		48	1
73734	97410	5310-00-765-3237	67	34
30327	9975928	4730-00-289-1242	68	13
			102	14

CROSS REFERENCE INDEXES

FIGURE AND ITEM NUMBER INDEX

FIG.	ITEM	STOCK NUMBER	CAGEC	PART NUMBER
BULK	1	2990-01-103-3696	11083	5P 747
BULK	2	5340-01-165-4466	96906	MS35829-16C
BULK	3	4720-00-489-5891	11083	5P1292
BULK	4	4720-01-093-7331	11083	5P1442
BULK	5	4720-01-150-0882	11083	5P5991
BULK	6	4720-00-421-3854	11083	5P1263
BULK	7	4720-01-103-3697	11083	5P1260
BULK	8	4720-01-132-0980	11083	5P1291
BULK	9	4720-01-066-4587	11083	2P5943
BULK	10	4720-01-169-7527	11083	5P1694
BULK	11	4720-00-235-4138	96906	MS5213028121R
BULK	12	4720-00-981-8519	11083	8S9355
BULK	13	20999		TEMFLEX 105C I/2 IN BLACK
BULK	14	5330-01-167-1118	11083	5P7246
BULK	15	5330-01-164-8578	11083	5P7245
BULK	16	5330-01-165-3400	82654	RS-104
BULK	17	4710-01-062-3719	81349	MIL-T-8504
BULK	18	4710-01-216-2151	11083	5P5628
BULK	19	4720-00-604-6497	61424	NN-4-035
BULK	20	6145-01-229-3623	64488	8106S
BULK	21	6145-00-310-2590	79550	570D-2
BULK	22	6145-00-726-7275	81349	M16878/3BMGO
BULK	23	6145-00-043-1257	81349	M16878/18KE7
BULK	24	6145-01-165-5631	11083	5P6641
BULK	25	6145-01-103-7036	11083	5P5632
BULK	26	6145-01-229-2077	11083	6A3626
KIT		2510-01-160-1608	11083	5P9137
KIT		2815-01-195-7346	11083	2W6091
KIT		2815-01-215-4322	11083	6N7727
KIT		4320-01-145-6113	11671	13061
KIT		4320-01-158-9333	11083	lW7053
KIT		5330-01-110-1866	11033	5P9898
KIT		5330-01-144-0406	11083	5P8768
KIT		5330-01-161-6240	11083	6VI550
KIT		5330-01-161-9158	11083	5P9138
KIT		5330-01-161-9159	11033	5P9141
KIT		5330-01-162-5843	11083	6V2972
KIT		5330-01-162-9842	11083	5P9142
KIT		5330-01-163-7488	11083	5P9140
KIT		5330-01-163-8378	11083	5P9139
KIT		5330-01-185-0502	11083	6V2912
KIT		5330-01-185-7446	11083	6V1752
KIT		5330-01-188-9608	11083	6V1681
KIT		5330-01-196-5624	11083	6V2971
1	1	2815-01-141-1322	11083	7N4980
1	2	5306-00-272-4246	11083	1D4586
1	3	5310-00-139-7030	11083	403704
1	4	5365-00-455-2753	11083	9M3637
1	5	5365-00-410-3077	11083	8S775
1	6	5365-00-410-3076	11083	8SO776

CROSS REFERENCE INDEXES

FIGURE AND ITEM NUMBER INDEX

FIG.	ITEM	STOCK NUMBER	CAGEC	PART NUMBER
1	7	5365-00-410-3078	11083	8S0777
1	8	5306-00-426-4171	11083	382968
1	9	5310-00-262-4789	29510	394220
1	10	5310-00-978-5406	11083	2J3506
2	1	5305-00-721-5322	96906	MS35307-462
2	2	5310-01-107-3590	11083	8D5054
2	3	5365-01-157-5068	11083	8N8721
2	4	5365-01-162-8875	11083	8N8722
2	5	5305-00-724-7221	80204	B1821SH063Cl75N
2	6	5310-00-139-7030	11083	403704
2	7	5340-01-147-4097	11083	4NS948
2	8	5330-01-068-6104	11083	2P1692
2	9	5310-00-272-5692	96906	MS21304-7
2	10	5306-00-268-5798	11083	OL1329
2	11	2510-01-147-2252	11083	1W1219
2	12		11083	8N0081
2	13	5330-01-155-2584	11083	2P1487
2	13A	2510-01-147-2252	11083	lW1219
2	14	2815-01-146-8869	11083	8N5584
2	15	5310-00-809-5997	96906	MS27183-17
2	16	5306-01-127-9361	11083	OS1585
3	1	5360-00-519-6605	58312	7S7144-00
3	2	2815-01-146-4526	11083	lW5300
3	3	2815-01-183-4649	11083	6N7174
3	4	2815-01-125-1675	11083	8N7782
3	5	2805-00-288-3650	11083	2A4429
3	6	5305-00-401-5261	11083	lB7709
3	7	5310-00-432-4324	11083	2S736
3	8	5305-00-964-0503	80204	81821BH038C50ON
3	9	4730-00-089-2515	11083	5M6213
3	10	5306-00-814-6559	11083	1D4595
3	11	5330-01-128-5196	11083	7N7999
3	12	5330-01-128-4130	11083	7N8018
3	13	5330-00-104-4371	11033	355496
3	14	2815-01-143-4335	11083	6N9915
3	15	2815-01-169-8915	11083	7N0573
3	16	5330-01-211-0809	11083	4W8087
3	17	2815-01-165-5713	11083	8N6796
3	17A		11083	4W7406
3	18	2815-00-529-5441	11083	2P1262
3	19	5306-00-260-4508	11083	S1594
3	20	5310-00-117-4788	11083	5M2894
3	21	5340-00-407-8369	11083	1P6367
3	22	5330-00-760-7367	53312	556735-00
3	23	5340-01-152-4541	11083	3P1896
3	24	5340-00-229-9294	11083	3B0623
3	25	5365-00-449-2597	11083	3S8313
3	26	5310-01-130-0611	11083	7N4448
3	27	2815-01-159-7706	11083	2W4837
3	28	2815-00-411-3925	11083	1S3062
3	29	4730-00-278-3383	15235	PLG1

CROSS REFERENCE INDEXES

FIGURE AND ITEM NUMBER INDEX

FIG.	ITEM	STOCK NUMBER	CAGEC	PART NUMBER
4	1	2815-01-246-6227	11083	1N3576
4	2	4730-00-499-9837	61038	7077
4	3	5330-00-494-2764	58312	5S6670-00
4	4	2815-00-024-4596	11083	2P8889
4	5	5330-00-549-7691	11083	9L5854
4	6	5315-01-132-1188	11083	8K1207
4	7	5340-00-276-5832	11083	4B3938
4	8	3040-01-149-5043	11083	6N8003
4	9	5310-00-431-7244	11083	2S5658
4	10	5306-00-450-4026	58312	TS3224-00
4	11	5330-01-127-8566	11083	7W7546
4	12	2815-01-127-2912	11083	7N7998
4	13	2990-01-103-6817	11083	1S9540
4	14	5330-00-104-4371	11083	3S5496
4	15	5315-01-107-4226	11083	5B7652
4	16	5330-00-893-5250	11083	4M6480
4	17	5340-01-154-5252	11083	6N7232
4	18	5310-00-117-4788	11083	5M2894
4	19	5306-00-260-4508	11083	S1594
4	20	5365-00-938-5568	11083	dM9307
4	21	5310-00-362-7988	11083	6F7062
4	22	4730-00-089-2515	11083	5M6213
4	23	4730-00-954-1281	61208	M2051K
4	24	5307-00-419-4067	11083	T101
4	25	5315-00-457-6897	11083	886349
4	26	3120-01-128-1114	11083	8N4110
4	27	3110-00-011-9935	11083	4B9782
4	28	4730-00-924-7886	55883	IPD5M6214
4	29	4730-00-460-6725	11083	3J5389
4	30	5340-00-417-2920	11083	485387
4	31	5315-00-252-2959	11083	2A3798
4	32	5340-00-276-5832	11083	483938
4	33	3120-00-893-8317	11083	7M4046
5	1	2815-00-148-6705	11083	4N7693
5	2	3020-01-126-9232	11083	7N4525
5	3	5315-00-616-5522	11083	lB8708
5	4	4730-00-044-4688	89346	504100A
5	4A		11083	4N7696
5	5	5330-01-128-6854	11083	4W0452
5	6	3120-00-397-4451	11083	2P3858
5	7	5330-01-032-7315	80201	527838
5	8	2815-01-119-2241	11083	7N9342
5	9	3120-01-151-8371	11083	8N8225
5	9	3120-01-151-9299	11083	8N8228
5	9	3120-01-156-9486	11083	8N8226
5	9	3120-01-156-9487	11083	8N8227
5	9	3120-01-157-0913	11083	8N8229
5	9	3120-01-202-5894	11083	4W5738
5	10	3120-00-394-4276	11083	2P3859
5	11	5330-00-036-6825	11083	5S6296
5	12	5999-01-161-0974	11083	8N5469

CROSS REFERENCE INDEXES

FIGURE AND ITEM NUMBER INDEX

FIG.	ITEM	STOCK NUMBER	CAGEC	PART NUMBER
5	13	5310-00-757-6531	58312	559948-00
5	14	5305-00-082-6977	96906	MS90727-192
6	1	5306-00-423-8114	11083	S1565
6	2	2815-01-347-8593	11083	2W7303
6	3	3020-01-123-5929	11083	7N9146
6	3A		11083	2W1897
6	4	5305-00-071-2072	96906	MS90728-116
6	5	5305-00-071-2071	96906	MS90728-115
6	6	2815-01-305-2251	11083	7S7780
6	7	5315-00-252-2959	11083	2A3798
6	8		11083	558030
6	9	2520-00-113-5509	55355	1577AL
6	10	5330-00-074-3600	11083	9H5921
6	11	5330-00-141-2476	75165	920
6	12	5365-00-423-8098	11083	L827
7	1	2815-01-148-2595	11083	9S3029
7	2	2815-00-518-3561	58312	5S6750-00
7	3	2815-01-154-1242	11083	9L6934
7	4	2815-01-153-1615	11083	1W6757
7	5	2815-01-116-5920	55883	IPD7N9805
7	6	5365-00-118-3056	11083	lS9543
7	7	2815-00-487-2840	11083	8N1721
7	8	3120-01-130-9116	11083	8N1849
7	9	5306-00-497-0342	11083	1P9956
7	9A	2815-01-253-3471	11083	8N1720
7	10	5310-00-557-9389	58312	5S6348-00
7	11	3110-00-781-4334	11083	2S0502
7	11	3120-01-165-4357	01212	2530AP20
7	11	3120-01-168-1850	11083	8N8223
7	11	3120-01-210-0859	11083	4W5739
8	1	5305-00-115-9526	96906	MS18154-58
8		5310-00-557-9391	58312	8S1491-00
8		5310-00-498-2967	58312	7S2204-00
8	4	2815-00-450-9344	11083	8N3981
9	1	5365-00-921-3208	80756	RST-68
9	2	5310-00-999-8286	11083	9H1110
9	3	5310-00-999-8287	11083	9H1112
9	4	5310-00-678-2152	19207	9093668
9	5	2815-00-450-9341	11083	7S3161
9	6	2815-00-487-3123	11083	5S5918
9	7	5310-00-725-7382	96906	MS35690-624
9	8	2815-00-457-1615	58312	5S5917-00
9	9	2815-01-125-4580	11083	8N3326
9	10	5330-00-923-6958	11083	8M4448
9	11		11083	8N3252
9	12	5315-00-760-7421	11083	5M4606
9	13	5340-01-129-5917	11083	7N8015
9	14	5340-00-229-9287	11083	L1026
9	14A	3040-01-132-4761	11083	8N3251
9	15	5310-00-432-4324	11083	2S736
9	16	5305-00-401-5261	58312	1B7709-00

CROSS REFERENCE INDEXES

FIGURE AND ITEM NUMBER INDEX

FIG.	ITEM	STOCK NUMBER	CAGEC	PART NUMBER
9	17	5330-00-520-1552	58312	8S1605-00
9	18	2815-01-253-3458	11083	2W1086
9	19	5310-00-407-9566	96906	MS35338-45
9	20	5306-00-226-4825	80204	B1821BH031C075N
9	21	2815-01-125-5947	11083	8N3324
9	22	5340-00-239-8226	11083	5S5879
9	23	5360-00-249-3504	11083	4B4910
9	24	2815-00-211-4462	11083	8S1499
9	25	5315-00-532-5746	11083	1L5072
9	26	2815-01-165-9635	11083	8S1498
10	1	2815-01-125-5544	11083	6N9060
10	2	5307-01-107-4197	11083	4M8743
10	2A	2815-01-177-4792	11083	1WT110
10	3	5330-01-128-4137	11083	8N110
10	4	5330-01-069-1478	11083	2PO220
10	5	2930-01-147-2241	11083	1W4542
10	6	5310-00-117-4788	11083	5M2894
10	7	5306-01-195-4681	11083	381915
10	8	5306-00-275-5012	11083	S1566
10	9	5310-01-095-4631	11083	5P8247
10	10	5330-01-155-4283	11083	1W3900
10	11	5306-00-263-7301	11083	L1351
10	12	5340-01-150-9810	11083	4N4526
10	13	5330-01-067-5727	11083	2P2720
10	14	5306-00-698-2150	11083	OL2070
10	15	5306-00-285-1368	11083	L1143
10	16	2815-01-125-9819	11083	8N0109
10	16A		11083	8N0535
10	17	5307-01-070-2014	11083	2S42
10	18	2910-00-309-9473	11083	OT0573
10	19	5306-00-423-8393	11083	1C2251
10	20	5330-01-093-7888	11083	6N7887
10	21	5340-01-147-7948	11083	9N5769
10	22	5310-00-725-7382	96906	MS35690-624
10	23	5310-01-194-5398	11083	104717
10	24	5310-00-117-4788	11083	5M2894
10	25	5306-00-690-6976	03038	LH90725-59
11	1	5306-00-263-7303	11083	S1603
11	2	5310-01-023-9757	11083	4N3371
11	3	3020-01-126-8956	11083	7N3536
11	4	5306-00-226-4827	96906	MS90728-34
11	5	2815-01-125-5535	11083	8N4960
11	6	3020-01-127-5195	11083	7N4791
11	6A		11083	7N3524
11	7	3120-00-439-4878	11083	5S7630
11	8	5306-00-263-7301	11083	L1351
11	9	5310-00-975-2075	96906	MS35691-21
11	10	5340-00-449-2612	11083	5S7611
11	11	3040-01-125-5536	11083	8N4959
11	12	3020-01-149-3164	11083	1W4402
11	13	5305-00-269-3242	96906	MS90727-66

CROSS REFERENCE INDEXES

FIGURE AND ITEM NUMBER INDEX

FIG.	ITEM	STOCK NUMBER	CAGEC	PART NUMBER
11	14	5315-00-616-5522	96906	MS35756-12
11	15	3020-01-148-3798	11083	lW4405
11	16	3020-01-254-1227	11083	7N4722
11	16A	3120-01-066-2505	11083	2P1168
11	17	3020-01-126-0375	11083	7N4716
12	1	5330-01-160-3989	11083	2W4561
12	2	5306-00-423-81.94	11083	lA2029
12	3	5330-01-063-9839	11083	4N3841
12	4	5340-01-107-4130	11083	4N3840
12	5	5310-00-081-4219	96906	MS27133-12
12	6	5306-00-226-4826	80204	B1821BH031CO88N
12	7	4730-00-263-3122	11083	3BO551
12	8	5305-00-879-8351	96906	MS35307-371
12	9	4730-00-427-5121	01276	2082-68
12	10	4730-00-122-3969	11083	1B5174
12	11	5305-01-015-6841	11083	OS1591
12	12	5330-00-557-8494	11083	5S6051
12	13	2930-00-457-1616	11083	7N0165
12	14	5306-01-097-7874	11083	1T0765
12	15	2520-01-107-9188	11083	6N124
13	1	4330-01-163-8040	11083	8N4457
13	2	2940-01-253-5590	11083	2W6681
13	3		19207	NPN1
13	4	4730-00-044-4715	15434	S962
13	5	4730-00-278-3383	15235	PLG1
13	6	5307-01-069-1419	11083	2P2537
13	7	5340-00-499-9648	11083	1P1367
13	8	5360-00-950-8251	11083	8M3182
13	9	5330-01-151-9295	11083	8N6985
13	10	5340-01-147-6397	11083	8N6986
13	11	5310-00-081-4219	96906	MS27183-12
13	12	5306-01-116-9622	11083	0S1618
13	13	2940-00-029-0388	12658	B76
13	14	5306-00-226-4832	80204	B1821BH031C175N
13	15	5306-01-158-1154	96906	MS18154-41
13	16	5310-00-081-4219	96906	MS27183-12
13	17	5330-00-913-8878	11083	8M4432
14	1	5310-00-117-4788	11083	5M2894
14	2	5305-01-015-6841	11083	OS1591
14	3	5330-00-557-8494	11083	5S6051
14	4	2930-00-457-1616	11083	7N0165
14	5	5306-00-423-8194	11083	lA2029
14	6	5306-00-426-2932	11083	S1619
14	7	5306-01-195-4681	11083	3B1915
14	8	5306-01-097-7874	11083	1T0765
15	1	5306-00-698-2150	11083	OL2070
15	2	4710-01-129-5674	11083	8N7318
15	2A		1103	8N7316
15	2B		11083	3N7613
15	3	4730-00-089-2515	11083	5M6213
15	4	5306-00-423-8194	11083	1A2029

CROSS REFERENCE INDEXES

FIGURE AND ITEM NUMBER INDEX

FIG.	ITEM	STOCK NUMBER	CAGEC	PART NUMBER
15	5	5330-00-920-6922	11083	2M5407
15	6	4730-00-850-3812	11083	2S1541
15	7	5330-00-847-4351	11083	9M4849
15	8	4710-01-128-4741	11083	8N7315
15	9	5330-00-297-7228	11083	7F7590
15	10	5306-00-260-4508	11083	S1594
15	11	5310-01-146-1218	11083	lL5081
15	12	5340-01-061-4018	11083	3P2404
15	13	5310-00-117-4788	11083	5M2894
15	14	5305-01-026-9518	11083	OS1571
15	15	5305-00-252-8919	11083	OS0509
15	16	2930-00-365-2152	11083	L364
15	17	4710-01-068-3420	11083	2P1739
15	18	2815-01-068-8565	11083	2P1751
15	19	5340-00-494-1996	11083	8S8874
15	20	5330-00-557-8489	11083	8M0904
16	1	5310-00-205-9982	96906	MS15795-512
16	2	5306-00-472-5282	11083	3H3243
16	3	4730-00-908-3193	96906	MS35842-12
16	4	4720-01-069-0789	11083	4N3326
16	5	4720-01-151-8127	11083	lN4102
16	6	4710-01-147-6388	11083	8N8095
16	7	4710-01-280-8279	11083	2W2317
16	8	5306-00-263-7301	11083	L1351
16	9	5310-00-117-4788	11083	5M2894
16	10	5340-01-160-2302	11083	OT0386
16	11	5340-01-161-9132	11083	6N1369
16	12	5310-01-194-5398	11083	lD4717
16	13	5340-00-925-7019	11083	8M8788
16	14	5330-00-828-8639	11083	4L9564
16	15	2815-00-192-8768	18265	BAS02-0048
17	1	2590-01-148-9536	11083	2P2547
17	2	6680-00-466-0299	11083	8S3995
17	3	4710-01-068-9728	11083	2P2697
17	4	4730-01-059-9435	11033	5K9243
17	5	2590-00-490-5442	01943	4901-3
17	6	2815-01-049-8552	11083	751801
17	7	2590-01-049-5318	11083	1P6784
17	8	5306-01-054-5310	11083	2P3206
17	9	5305-00-252-8919	11083	O0509
17	10	5330-00-613-7263	11083	5S8055
17	11	4730-00-401-8093	11083	8S1326
17	11A	4730-01-178-0773	11083	5P4443
17	11	4730-01-253-8588	11083	5P4908
17	12	4730-00-677-3738	30327	81LBI-2IN
18	1	5330-00-074-3603	11083	4M2969
18	2	2815-01-146-5926	11083	2P1738
18	3	5310-00-117-4788	11083	5M2894
18	4	5305-01-015-6841	11083	OS1591
18	5	5306-00-263-7301	11083	L1351
18	6	5330-00-613-7468	11083	851965

CROSS REFERENCE INDEXES

FIGURE AND ITEM NUMBER INDEX

FIG.	ITEM	STOCK NUMBER	CAGEC	PART NUMBER
18	7	2815-01-248-5807	11083	4N7820
18	8	2815-01-161-9635	11083	8N6184
18	9	5330-01-151-9294	11083	8N6854
18	10	4730-01-162-0112	11083	8N6849
18	11	5306-01-195-4681	11083	3B1915
18	12	5365-01-159-6679	11083	5N8780
18	13	5305-00-879-8351	96906	MS35307-371
18	14	2910-00-309-9473	11083	OT0573
19	1	2815-01-217-5755	11083	4P4020
19	2	5310-00-081-4219	96906	MS27183-12
19	3	5340-01-148-7396	11083	4N3732
19	4	2815-01-068-1729	11083	4N8385
19	5	2815-01-253-3454	11083	4W2322
19	5A		11083	8N8639
19	6	5315-00-760-7417	11083	1M3735
19	7	5315-00-363-8794	11083	1F1006
19	8	3110-00-949-1438	11083	4B9880
19	9	3120-00-440-8463	11083	8S6511
19	10	3040-01-067-5649	11083	2P1170
19	10A		11083	2P1169
19	108	3110-00-011-9935	11083	4B9782
19	11	5315-00-514-3189	11083	6F7172
19	12	2815-00-470-6352	11083	8S0493
19	13	2530-01-067-5675	11083	2P6245
19	14	5315-00-616-5521	96906	MS35756-13
19	15	5365-01-069-0882	11083	2P1781
19	16	3020-00-460-6696	11083	6N1036
19	17	4320-01-253-6286	11083	4W2321
19	17A	4320-01-204-8062	11083	4N4054
19	18	3120-00-440-8463	11083	856511
19	19	5310-00-117-4788	11083	5M2894
19	20	5306-00-426-2974	11083	T65
19	21	5306-00-226-4833	80204	81821BH031C200N
19	22	5310-00-922-8691	11083	8M7587
19	23	5310-00-117-4788	11083	5M2894
19	24	5306-01-094-9106	11083	OS1590
19	25	5330-01-067-5729	11083	2P8746
19	26	4730-01-126-4892	11083	4N5353
19	27	5306-00-426-2932	11083	S1619
19	28	5306-01-195-4681	11083	381915
19	29	3020-00-936-3972	11083	8S0497
19	29	3020-01-253-9282	11083	7WO507
19	30	5310-01-051-2300	11083	1P7346
19	31	5306-01-094-9106	11083	OS1590
19	32	5315-00-944-7035	11083	8M5599
20	1	4820-01-202-9608	91816	HV50-2-R
20	2	5330-00-952-8008	11083	3J7354
20	3	4730-01-144-2386	11083	5R5107
20	4	5306-00-226-4828	80204	B1821BHO31C113N
20	5	5340-01-147-8215	11083	5R5104
20	6	5310-00-494-1962	11083	4D6432

CROSS REFERENCE INDEXES

FIGURE AND ITEM NUMBER INDEX

FIG.	ITEM	STOCK NUMBER	CAGEC	PART NUMBER
20	7	4730-01-063-0817	11083	7K9197
20	a	5305-01-015-6841	11083	OS1591
20	9	5310-00-117-4788	11083	5M2894
20	10	4710-01-144-3606	11083	5R5118
20	11	4730-01-127-5373	11083	4S6399
21	1	5310-01-194-5398	11083	104717
21	2	2990-01-160-1659	11083	6N7665
21	3	5310-00-117-4788	11083	5M2894
21	4	5305-01-026-9518	11083	QS1571
21	5	2815-00-493-7022	11083	9S2355
21	6	5330-01-332-4089	11083	9Y1979
21	7	5307-01-107-3674	11083	2M2488
21	8	5310-00-999-8288	11083	9M6527
21	9	5365-01-050-8008	11083	1B4971
21	10	2990-01-147-3003	11083	4N9587
21	11	5310-00-987-1294	19200	10910174-16
21	12	5307-00-498-0804	11083	7S6719
21	13	5365-01-159-1562	11083	1M7643
22	1	5365-00-175-5049	11083	9L8388
22	2	5340-01-154-8437	78514	22999
22	3	2910-01-143-4403	11083	7N449
22	4	4710-01-144-0294	11083	8N4376
22	5	4710-01-144-2667	11083	8N4375
22	6	5340-01-116-1312	11083	6N6403
22	7	5340-01-116-3799	11083	6N6404
22	8	5305-01-131-5030	11083	6H9954
22	9	4710-01-143-1528	11083	8N4374
22	10	5340-01-114-9149	11083	6N5124
22	11	5340-01-164-9882	11083	7N4417
22	12	4710-01-144-2668	11083	8N4373
22	13	5340-01-160-2354	11083	lN3139
22	14	5340-01-114-9150	11083	6N5125
22	15	4710-01-144-2669	11083	8N4372
22	16	4710-01-144-3607	11083	8N4371
22	17	5310-00-725-7382	96906	MS35690-624
22	18	5330-00-291-7192	09990	2-241N951-75
22	19	5340-01-147-2808	11083	6N4682
22	20	5310-00-117-4788	11083	5M2894
22	21	5306-00-426-2932	11083	S1619
22	22	5306-00-226-4826	80204	B1821BH031C088N
22	23	5310-00-081-4219	96906	MS27183-12
22	24	5330-00-913-8872	09990	2-216S1032-70
22	25	4730-00-460-6725	89926	70920416
22	26	5330-00-890-2235	11083	8M5253
22	27	4730-00-924-7886	55883	IPD5M6214
22	28	2910-01-146-4165	11083	4N4057
22	29	5306-00-423-8194	11083	1A2029
22	30	5306-00-253-3376	11083	2A5546
22	31	5310-01-051-2360	11083	5PO537
23	1	5306-00-261-1153	11083	51615
23	2	5365-00-419-3254	11083	2S7905

CROSS REFERENCE INDEXES

FIGURE AND ITEM NUMBER INDEX

FIG.	ITEM	STOCK NUMBER	CAGEC	PART NUMBER
23	3	5330-00-613-6522	11083	4M8303
23	4	5340-01-156-9918	11083	8N8082
23	5	5310-01-051-2360	11083	5P0537
23	6	2910-01-144-1532	11083	1N4857
23	7	3040-01-179-4393	11083	6N5324
23	7A		11083	4N1082
23	8	5330-01-107-4168	11083	4N260
23	9	5340-01-163-8510	11083	6N5323
23	10	5315-00-406-7278	11083	8S6814
23	11	5365-01-067-2179	11083	9S4180
23	12	5330-01-148-5891	59556	K-500-EN-0431
23	13	4730-01-106-4024	11083	4N5050
23	14	5330-00-498-2913	80201	511642
23	15	3110-01-068-9716	11083	6N2578
23	16	5315-01-068-9711	11083	4N2333
23	17	3040-01-107-8262	11083	4N448
23	18	3110-01-119-1128	60380	Q-8322
23	19		11083	4N0447
23	20	3040-01-068-7123	11083	4N1881
23	21	2530-01-067-8011	11083	4N0927
23	22	5330-01-038-7345	11083	4N594
23	23	5365-01-094-3237	11083	6N2957
23	24	5310-01-094-8702	11083	6N2956
23	25	5340-01-094-0721	11083	6N7451
23	26	5305-01-068-9719	11083	lP2497
23	27	2910-01-147-3001	11083	4N5578
23	28	5330-01-107-3603	11083	4N49
23	29	5310-01-068-7065	11083	5B3180
23	30	5305-01-068-9704	11083	4N0054
23	31	5310-01-064-1494	84479	NAS620-0416
23	32	5330-01-068-9824	11083	4N0402
23	33	2910-01-147-1376	11083	4N0687
23	33A		11083	4N0686
23	34	5330-00-498-2913	80201	511642
23	35	5305-00-225-3843	80204	B1821BH0250100N
23	36	2990-01-103-3684	11083	6N5482
23	37	5315-01-069-1414	11083	4N8179
23	38	5315-01-068-9758	11083	9S8601
23	39	3040-01-147-5481	11083	4N0444
23	40	5360-01-068-7181	11083	9S8632
23	41	4310-01-068-9775	11083	4N0116
23	42	5306-01-250-0897	11083	3B8695
23	43	5330-01-106-8540	11083	4N159
23	44	5340-01-149-4421	11083	4N0053
23	45	5306-00-543-5567	96906	MS16208-19
23	46	5305-00-225-3843	80204	B1821BH0250100N
23	47	5360-01-107-5441	11083	4N4223
23	48	2530-01-067-5667	11083	4N4320
23	49	5360-01-067-5668	11083	4N4366
23	50	5305-00-071-2514	80204	B1821BH0250275N
23	51	5306-01-069-0877	11083	1P9925

CROSS REFERENCE INDEXES

FIGURE AND ITEM NUMBER INDEX

FIG.	ITEM	STOCK NUMBER	CAGEC	PART NUMBER
23	52	5310-00-809-3079	96906	MS27183-19
24	1	5340-01-093-7394	11033	6N4655
24	2	2990-01-024-1509	11083	4N6408
24	3	5365-01-147-9591	79136	5101-35-ZD
24	4	5310-01-149-7188	11083	4N6406
24	5	2990-01-149-5010	59556	K-500-EN-0472
24	6	5340-01-277-4531	11083	4N6403
24	7	5360-01-287-2422	11083	4N6410
24	8		11083	4N6401
24	9	5360-01-144-4403	11083	6N6662
24	10	2910-01-024-1510	11083	4N434
24	11	3110-01-155-1756	21335	JD-530502
24	12	3110-00-629-4111	11083	7M7219
24	13	5365-01-024-3727	11083	4N2953
24	14	2815-01-142-1295	11083	7N1776
24	14A	2910-01-348-1577	11083	7N1787
24	15	4730-01-068-7122	11083	4N1723
24	16	3040-01-147-1360	11083	4N9018
24	17	2910-01-149-0937	11083	4N425
24	18	5315-01-106-0333	11083	4N511
24	19	3040-01-148-2816	11083	8N2663
24	20	5305-00-145-0809	80205	NAS1352-4LE16
24	21	5315-01-067-8066	11083	4N9019
24	22	3040-01-148-8880	11083	8N1570
24	22A		11083	4N256
24	23	3120-01-165-4358	11083	8N0628
24	24	5330-00-843-7194	11083	206392
24	25	5315-01-069-1410	11083	4Nl826
24	26	2910-00-033-2200	70040	5622759
24	27	5315-00-582-2466	11083	8N0984
24	28	5307-01-103-3673	11083	4N5481
24	29	5315-01-068-9711	11083	4N2333
24	30	3110-01-062-0950	11083	5P4810
24	31	3120-01-022-3955	11083	4N218
24	32	5330-00-310-6575	11083	6F6672
24	33	2910-01-024-0939	11083	6N7527
24	34	4820-01-146-5933	11083	8N1417
24	35	5360-01-148-0305	11083	8N1415
24	36	4820-01-147-1309	11083	8N1414
24	36A		11083	4N2034
24	368		11083	4N1762
24	36C		11083	4N1764
24	37	5365-01-024-5118	11083	4N224
24	38	5360-01-105-9599	11083	9N5862
24	39	5310-01-062-0380	11083	4N2728
24	40	2910-01-105-3610	11083	6N6794
24	41	2910-01-024-2868	11083	4N2685
24	42	2910-01-024-1512	11083	4N1767
24	43	5360-01-023-9435	11083	4N605
24	44	5330-00-945-0494	11083	5M6509
24	45	5315-01-068-9780	11083	4N3779

CROSS REFERENCE INDEXES

FIGURE AND ITEM NUMBER INDEX

FIG.	ITEM	STOCK NUMBER	CAGEC	PART NUMBER
24	46	3020-01-068-9706	11083	4N0429
24	47	3020-01-068-9705	11083	4N0406
24	48	2910-01-147-3000	11083	9L6863
24	49	5315-00-999-8416	11083	8H9804
24	50	5315-00-406-7278	11083	8S6814
24	50A		11083	9L6788
24	51	5330-01-061-9382	11083	4N0636
24	52	5330-01-061-9380	11083	4N1584
24	53	4730-01-106-4024	11083	4N5050
24	54	5305-01-053-7366	11083	5J5314
24	55	4730-01-068-7124	11083	4N2954
24	56	4730-01-023-8633	79470	110-03428
24	57	5330-00-843-7194	11083	2D6392
24	58	5315-01-107-3758	11083	4N523
24	59	2910-01-140-8212	11083	4N1591
24	60	5310-00-754-3384	18876	9024483
24	61	5310-00-045-3299	96906	MS35338-42
24	62	5310-00-450-0414	01843	WA-79849
24	63	5310-00-682-4425	85480	NW8-3756
24	64	2910-01-104-9318	11083	6N0411
24	65	5305-01-025-4359	11083	6N412
24	66	5330-00-165-1980	81349	M83248/2-905
24	67	5306-01-024-7524	11083	2P3200
24	68	5305-00-004-7245	58312	2M5471-00
24	69	5330-01-024-3368	11083	4N0508
24	70	5330-01-062-2852	11083	3H0442
24	71	3040-01-068-9709	11083	4N0528
24	72	2910-01-125-4534	11083	4N0572
24	73	3040-01-023-7833	11083	4N445
24	74	5365-00-721-76&0	96906	MS16633-1025
24	75	2910-01-024-0938	11083	4N26?7
24	76	3040-01-068-9779	11083	4N1763
24	77	5305-01-024-4774	11083	2N2658
24	78	5330-01-127-8567	11083	4N9057
24	79	5306-00-261-1153	11083	S1615
24	80	5330-01-148-5891	59556	K-500-EN-0431
24	81	5365-01-067-2179	11083	9S4180
24	82	4820-00-353-3223	1103	6D238
24	83	4820-01-053-4586	79470	131-05004
24	84	5340-01-151-2810	11083	7N2058
24	85	5305-01-024-4773	11083	4L7124
24	86	5310-00-005-0779	11083	4L6458
24	87	5365-00-116-0408	11083	8M9064
24	88	5970-00-213-7747	58312	1P6452-00
24	89	2910-01-024-2869	11083	4N3882
24	90	5365-01-147-1450	11083	4N9098
24	91	5365-01-147-4323	11083	7N7856
24	92	5365-01-160-4721	11083	4N7777
24	93	5365-01-103-7157	11083	9L9347
24	94	5360-01-103-3676	11083	6N3034
24	95	5365-01-103-7156	11083	9L7235

CROSS REFERENCE INDEXES

FIGURE AND ITEM NUMBER INDEX

FIG.	ITEM	STOCK NUMBER	CAGEC	PART NUMBER
24	96	5365-00-205-3664	11033	8LS601
24	97	5315-01-108-1232	11083	4N443
25	1	5365-01-063-0778	11083	6B7469
25	2	2910-01-155-7936	11083	IW6009
25	3	2940-01-142-2642	11083	4N3302
25	4	5360-01-107-3891	11083	4N3296
25	5	4820-01-105-2265	11083	4N3297
25	6	4820-01-104-5111	11083	4N3298
25	7	2910-01-142-2643	11083	4N3295
25	7A		19207	NPN14
25	8	4330-01-146-8899	11083	4N3294
25	9	5330-01-024-4862	11083	1P436
25	10	2910-01-021-1845	11083	4W0788
25	11	5310-00-081-4219	96906	MS27183-12
25	12	5306-00-272-1804	11083	1B2790
25	13	5306-00-423-8784	11083	7B2742
25	14	5310-01-051-2360	11083	5P0537
25	15	5310-00-117-4788	11083	5M2894
25	16	5306-00-423-8194	11083	1A2029
25	17	5306-00-285-1363	11083	L1143
25	18	2910-00-157-0650	11083	IW8633
26	1	5330-00-801-3354	25184	906-737-70
26	2	4730-00-491-9576	96906	MS51525A6
26	3	4710-01-143-9128	11083	4N3363
26	4	2910-01-062-1354	11083	7K8332
26	5		11083	5P6011-23.7
26	6	5340-00-282-7519	96906	MS21333-34
26	7	5306-00-814-8967	11083	2H3755
26	8	5310-00-081-4219	96906	MS27183-12
26	9	5340-01-097-9213	30966	BDT-413
27	1	2940-01-016-4654	19207	11621206
27	2	5340-00-103-8902	18265	P10-4517
27	2A		19207	NPN2
27	2B		19207	NPN3
27	3	2940-00-876-2181	18265	P16330
27	4	2940-00-920-8228	18265	P16338
27	4A		19207	NPN4
27	5	5306-01-186-5378	18265	P-20342
27	6	2940-01-182-2317	11083	6N7847
27	6A	2940-00-910-3065	11083	4M9334
27	7	2940-00-910-3066	12658	PA-1675
27	7A		19207	NPN5
27	8	5330-00-404-4964	11083	9S1274
27	9	2940-00-756-8519	18265	KYX00-5696
27	10	5306-01-153-1362	18265	P10-2533
27	11	2940-01-146-8870	18265	P11-0103
27	11A		19207	NPN6
27	12	5330-01-183-8680	18265	P10-2929
27	13	5330-00-404-4964	11083	951274
27	14	5310-01-194-5398	11083	104717
28	1	2815-00-493-2110	11083	7S5449

CROSS REFERENCE INDEXES

FIGURE AND ITEM NUMBER INDEX

FIG.	ITEM	STOCK NUMBER	CAGEC	PART NUMBER
28	1A		11083	7S5425
28	2	4730-00-084-7543	18265	P10-0128
28	3	4730-01-149-4969	11083	6V443
28	4	2940-01-173-4272	59150	1875-330
28	5		96906	MS18154-67
28	6	5330-00-760-7367	58312	5S6735-00
29	1		11083	5P1442-9.8
29	2	4730-01-165-6616	98441	322F-E
29	3	4730-00-289-4736	79470	3200X6
29	4	4820-01-163-7157	96795	30014300
29	5	4730-00-249-3885	96906	MS51845-4
29	6	4730-00-277-9141	78640	32143
29	7	4730-01-162-0206	11083	9G8856
29	8	4730-01-182-6781	11649	SS-8-A-8RP
29	9	4820-01-164-7015	03730	40532
29	10	4730-01-069-0859	11083	5K9248
29	11	4730-01-059-9435	11083	5K9243
29	12	4710-01-147-6490	11083	9G0964
29	13	4710-01-146-5963	11033	8P2823
29	14	5340-01-166-8693	11083	7M3882
29	15	5306-00-423-8194	11083	1A2029
29	16	5310-01-194-5398	11083	104717
29	17	5310-00-080-6004	96906	MS27183-14
29	18	5330-00-165-1980	81349	M83248/2-905
29	19	5340-01-162-2634	11083	5K6437
29	20	4710-01-146-5964	11083	9G0966
29	21	4710-01-146-5965	11083	8P2956
29	22	5340-00-922-2596	11083	6H3068
29	23	5365-01-053-4681	11083	4S5719
29	24	5306-00-263-4038	11083	2A4639
29	25	4730-00-403-4338	11083	7K1456
29	26	5340-00-426-4794	11083	951350
29	27	5340-00-282-7505	96906	MS21333-57
29	28	4710-01-147-6491	11083	3T0872
29	28	4710-01-281-1158	11083	7T0187
29	29	4730-01-069-0769	11083	5K9242
29	30	5999-00-363-6240	11083	282404
29	31	5305-00-252-8919	11083	0S0509
29	32	4710-01-146-5966	11083	9G8494
29	33	4730-01-059-9344	11083	5K9246
29	34	4730-00-419-8863	30327	720FS05/16
30	1	2910-01-164-7906	56620	41400
30	2	6680-01-142-6218	11083	8P1224
30	3	2910-00-356-1863	11083	4B5441
30	4	2910-01-182-6793	11083	4B5389
30	5	2910-00-367-5238	11083	4B5949
30	6	5330-00-143-8713	11083	485423
30	7	2910-01-159-5883	11083	3F4134
30	8	5330-01-209-8731	11083	7T2037
30	9	5310-00-080-9422	60532	WAS125
30	10	5305-00-475-4440	11083	3H8389

CROSS REFERENCE INDEXES

FIGURE AND ITEM NUMBER INDEX

FIG.	ITEM	STOCK NUMBER	CAGEC	PART NUMBER
30	11	2910-01-281-0843	11083	5R8092
30	12	2910-01-142-3204	11083	9GO968
30	13	2990-01-103-3619	11083	7M5007
30	14	5365-01-161-2648	11083	6K5640
30	15	5306-00-426-4171	11083	3B2968
30	16	4730-00-278-3383	15235	PLG1
31	1	5305-00-068-0511	80204	B1821BH0380125N
31	2	5315-00-616-5526	96906	MS35756-8
31	3		11083	8M6773
31	4	5315-00-839-5821	96906	MS24665-351
31	5	5340-00-985-0823	96906	MS35812-4
31	6	5315-00-193-0923	11083	9H6673
31	7	5310-00-975-2075	96906	MS35691-21
31	8	5307-01-161-7356	11083	1P4573
31	9		11083	BP7317
31	10	4730-00-909-8627	96906	MS35842-13
31	11		11083	605707
31	12	5310-00-637-9541	96906	MS35338-46
31	13	5306-01-195-4681	11083	3B1915
31	14	5306-00-263-7301	11083	L1351
31	15	5310-00-823-8803	96906	MS27183-21
31	16	3120-00-446-9863	21335	EA28899
31	17	3040-01-314-4457	11083	3T1753
31	18	2520-01-167-7696	11083	SP2435
31	19	5305-01-015-6841	11083	OS1591
31	20	5310-00-080-6004	96906	MS27183-14
31	21		11083	605707
31	22	3040-01-314-4461	11083	8P2444
31	23		11083	1V0026
31	24	5306-00-226-4828	80204	B1821BH031C113N
31	25	5306-01-147-4110	11083	8P2445
31	26	5340-01-145-8462	11083	8P2437
31	27	5310-00-975-2075	96906	MS35691-21
31	28	5340-00-411-3926	11083	1F5403
31	29	3040-01-142-2287	11083	8P2443
31	30	2990-00-456-1474	11083	7M2167
31	31	5315-00-586-5103	11083	6H3956
31	32		11083	8P2441
31	32A		11083	8P2442
31	33	3120-00-458-1921	11083	3K6662
31	34	5310-01-194-5398	11083	1D4717
31	35	5306-00-423-8313	11083	1B2713
31	36	5355-00-425-4840	11083	7F8092
31	37	3040-01-144-7812	11083	8M677C
31	38	5306-00-857-5672	77445	466473
31	39	5310-00-582-5965	96906	MS35338-44
31	40	5330-01-212-4617	80201	6143
31	41		11083	8P2430
31	41A		11083	2S6112
31	41B		11083	1V1728
31	42	5315-00-457-6895	11083	2S6091

CROSS REFERENCE INDEXES

FIGURE AND ITEM NUMBER INDEX

FIG.	ITEM	STOCK NUMBER	CAGEC	PART NUMBER
31	43	5360-00-237-2158	10001	159384P05
31	44	3110-00-924-1971	11083	8H9182
31	45	5360-00-898-6730	11083	8H9186
31	46	3040-01-143-8049	11083	8H7577
31	47	5315-00-018-9576	96906	MS35756-33
31	48	3040-01-145-1891	11083	8P2429
31	49	5330-00-920-8186	58312	7M6955-00
31	50	3110-01-348-3791	11083	8P2427
31	51	3120-00-064-1275	11083	9F5647
31	52	5310-00-042-6376	31159	JM56
32	1	5310-00-275-9421	77260	X747
32	2	5340-01-155-6148	11083	8P2460
32	3	5305-00-054-9276	96906	MS51955-42
32	4	5315-00-839-5822	96906	MS24665-353
32	5	5310-00-851-2682	96906	MS35691-17
32	6	2540-01-147-2256	11083	8P2463
32	7	5310-00-584-5272	96906	MS35338-48
32	8	5310-00-732-0560	96906	MS51968-14
32	9	5340-01-155-2595	11083	9V7112
32	10		11083	9W1395
32	11	2530-01-163-4312	11083	8P7792
32	12	4730-00-909-8627	96906	MS35842-13
32	13	5310-00-984-3807	96906	MS51922-13
32	14	5306-01-144-0396	11083	8P2454
32	15	3120-01-163-7472	11083	6V1033
32	16	5310-00-596-8422	83044	AN316-5R
32	17	4710-01-148-9496	11083	8P2456
32	18	5315-01-156-6567	11083	8P2458
32	19	5360-01-166-8399	11083	8H9523
32	20	5310-00-167-1304	81352	AN316-8R
32	21	5307-01-153-1409	11083	8P2455
32	22	3120-01-154-7173	11083	5JO557
33	1	4730-00-812-7999	96906	MS51504-A6
33	2	4710-01-146-5967	1103	6N9930
33	3	4730-01-146-5883	11083	8K0968
33	4	5330-00-165-1980	81349	M83248/2-905
33	5	4730-01-103-3727	11083	3K8460
33	6	4820-01-167-5453	11083	6V2611
33	7	4730-01-035-6669	80033	M30094-007
33	8		11083	5P5991-2396 IN
33	9	5340-01-149-5988	11033	8N9802
33	10	4730-01-149-5082	11083	8N9803
33	11	5305-00-115-9526	96906	MS18154-58
33	12	5310-00-117-4788	11083	5M2894
33	13	4330-01-177-5446	11083	BN9801
34	1	5365-00-650-7092	11083	2B941
34	2	5310-00-117-4788	11083	5M2894
34	3	5306-00-426-2932	11083	51619
34	3	5306-00-698-2150	11083	0L2070
34	4	5310-01-194-5398	11083	1D4717
34	5	5310-01-094-8810	73189	3320-14-01

CROSS REFERENCE INDEXES

FIGURE AND ITEM NUMBER INDEX

FIG.	ITEM	STOCK NUMBER	CAGEC	PART NUMBER
34	6	5340-01-151-5227	11083	3TI685
34	7	5306-00-897-9295	11083	5F4899
34	8	2920-01-154-8144	13445	90065-01
34	8A		9207	NPN7
34	8B		19207	NPN8
34	8C		19207	NPN9
34	9	2910-00-646-9727	78280	LP-535-1
34	9A	5330-01-302-9890	11083	7N9801
34	9B		19207	NPN10
34	10	5310-00-880-7744	96906	MS51967-5
34	11	5310-01-095-5910	78189	WD23755
34	12	5975-01-147-4455	11083	7G6359
34	13	5310-00-445-4632	11083	1F748
34	14	5306-00-226-4825	80204	B1821BH031C075N
34	15	5340-01-088-2385	53203	300 450
34	16	5995-01-162-0091	11083	9G6561
34	16A		11083	5P5624-22.04
34	17	5940-00-291-0085	79550	300-2863
34	18	5940-01-097-3578	11083	6N9587
34	19	4710-01-146-5853	11083	9G0941
34	20	4920-01-140-7569	61112	QA5-1T0
34	21	9905-01-152-5326	11083	2V1713
34	22	5305-01-163-8242	11083	6D1746
34	23	4730-00-239-2503	96906	MS51825-1A
34	24	4730-00-278-4339	11083	5P7907
34	25	5306-00-260-4508	11083	S1594
34	26	5325-00-249-6345	70485	2758
34	27	2910-01-149-7860	61112	QS5-20T
34	274		19207	NPN15
34	28	5940-00-291-0085	79550	300-2863
34	29	5995-01-161-9595	11083	9G6560
34	29A		11083	5P5624-35.40
34	30	5940-00-143-4774	96906	MS25036-153
34	31	5940-01-097-3578	11083	6N9587
34	32	5930-01-101-7845	11083	6N5899
34	32A	5305-01-184-5919	11083	6V8376
34	323	5310-00-559-0070	96906	MS35333-38
34	33	5315-00-816-1794	00198	PK379
34	34	5310-00-221-3150	11083	0L1365
34	35	5310-01-164-8541	11083	63801
35	1	2990-00-936-7105	11083	851935
35	2	2990-01-179-2586	18265	AEM00-1306
35	3	5310-01-194-5398	11083	1D4717
35	4	5340-00-224-1522	11083	55580
35	5	5305-00-725-2317	96906	MS90728-64
35	6	2990-00-410-6812	18265	MFM08-0083
35	7	5340-01-188-9576	11083	7N808
35	8	5306-00-060-5945	11083	7F1866
35	9	5310-00-117-4788	11083	5M2894
36	1	2930-01-147-9327	11083	lP6403
36	2	5310-00-809-5998	96906	MS27183-18

CROSS REFERENCE INDEXES

FIGURE AND ITEM NUMBER INDEX

FIG.	ITEM	STOCK NUMBER	CAGEC	PART NUMBER
36	3	5306-01-127-9361	11083	0S1585
36	4	2930-00-852-1174	11083	7S7809
36	4A		11083	757808
36	5	5330-01-058-9176	11083	ZP3230
36	6	5310-00-413-4983	11083	2S2846
36	7	2590-01-064-7493	11083	9S9979
36	8	5340-01-066-0526	11083	7S7807
36	9	2930-01-147-5534	11083	1P7980
36	10	2930-01-147-9326	11083	l1P6015
36	11	2930-00-695-7197	70040	850624
36	12	5430-01-142-3216	11083	1P6379
36	13	5307-00-458-2364	11083	150286
36	14	4730-00-924-7886	55883	IPD5M6214
36	15	2590-01-147-5578	54492	541-11-00-129
36	16	5330-00-923-6988	11083	2M4810
36	17	4730-00-456-1469	11083	7M4741
36	18	5306-00-424-0086	11083	7B3235
36	19	4730-01-059-5352	11083	5PO598
36	20		11083	5P1263-5IN
36	21	5330-01-162-6024	11083	6N4962
36	22	2910-01-149-5000	11083	1P6029
36	23	5310-00-768-0318	96906	MS51967-14
36	24	5310-01-158-2007	11083	1P6025
36	25	5330-01-163-2497	11083	6N4960
36	26	2930-01-155-5095	11083	1P5957
36	27	2930-01-150-3672	11083	1P5955
36	28	5310-00-080-6004	96906	MS27183-14
36	29	5310-01-094-8810	78189	3320-14-01
36	30	5306-01-195-4681	11033	381915
36	31	5306-00-260-450a	11083	S1594
36	32	5365-01-149-0888	11083	1P5956
36	33	5307-01-161-2653	11083	6H0406
36	34	5310-01-194-5398	11083	104717
36	35	2930-01-171-3358	11033	1P5958
36	36	3020-01-142-3213	11083	1P5475
36	37	5307-01-165-5751	11083	7M7794
36	38	5310-00-005-0781	11083	9F2978
36	39	5305-00-252-8919	11083	0S0509
36	40	2930-01-142-1296	11083	4N5538
36	41	5310-00-005-0781	11083	9F2978
36	42	5307-00-004-1605	11083	5M9621
36	43	2930-00-419-9036	11083	1P6117
36	44	5306-01-285-8875	11083	8T2502
36	45	3020-01-142-3214	11083	4N5537
36	46	5307-00-004-1605	11083	5M9621
36	47	5310-00-005-0781	11083	9F2978
36	48	5340-01-142-3207	11083	4N5539
36	49	5310-00-005-0781	11083	9F2978
36	50	5307-00-004-1605	11083	5M9621
36	51	2930-01-147-5536	11083	lP7316
36	52	5306-00-455-0462	11083	4L9337

CROSS REFERENCE INDEXES

FIGURE AND ITEM NUMBER INDEX

FIG.	ITEM	STOCK NUMBER	CAGEC	PART NUMBER
36	53	2930-01-162-4423	11083	8N8842
36	54	2930-01-149-3801	11083	1P6023
36	55	5320-00-260-4020	11083	634594
36	56	5310-01-159-4501	11083	1F1605
36	57	5310-00-005-0781	11083	9F2978
36	53	5365-01-148-9811	11083	1P9169
36	59	2930-01-144-5767	11083	1P6026
36	60	5330-01-161-2610	11083	6N4953
36	61	5365-01-147-1448	11083	1P7989
36	62	5310-01-149-1946	11083	1P6401
36	63	5430-01-142-3215	11083	1P6377
36	64	5310-01-158-2006	11083	1P7315
36	65	5310-00-275-8639	89346	52726R1
36	66	3040-00-491-3215	11083	9M8867
36	67	5306-00-698-2150	11083	0L2070
36	68	5340-00-971-4820	08129	12180
36	69	5310-00-930-7013	11083	4B4280
36	70	5306-00-455-0459	11083	9S1366
36	71	4730-01-106-7246	08484	HTM350
36	72		11083	5P1262-4IN
36	73	4730-01-147-5535	11083	2P6146
36	74	4820-01-253-2787	09990	V404PH-10-6
36	75	5330-00-456-2587	11083	5S1334
36	76	2930-01-150-4922	11083	1P6024
36	77	5310-00-005-0781	11083	9F2978
36	78	5310-01-159-4501	11083	1F1605
36	79	5320-00-260-4020	11083	6B4594
37	1	5306-00-426-2974	11083	T65
37	2	5306-01-094-9106	11083	QS1590
37	3	2930-01-149-6719	11083	1N3958
37	4	4730-00-427-5121	01276	2082-63
37	5	5330-01-067-5728	11083	2P6132
37	6		11083	2P2511
37	6	4710-01-280-8242	11083	2W5240
37	7	5305-00-068-0511	80204	B1821BH038C125N
37	7	5306-01-195-4681	11083	381915
37	8	4730-01-106-7246	08484	HTM350
37	9		11083	5P1260-3IN
37	10	5306-00-426-2932	11083	S1619
37	11	5330-01-127-8574	11083	7N200
37	12	4730-00-089-2515	11083	5M6213
37	13	4730-00-968-6129	96906	MS49006-10
37	14	5310-00-117-4788	11083	5M2894
37	15	5306-00-698-2150	11083	0L2070
37	16	5305-00-068-0511	80204	B18218H038C125N
38	1	5305-00-068-0511	83204	81821BH038C125N
38	2	4730-01-144-3766	11083	lN3116
38	3	5306-01-094-9106	11083	0S1590
38	4	4820-01-104-4091	11083	8N4485
38	5	5330-01-094-8058	11083	7N0944
38	6	6620-01-008-1893	78493	4A308-21

CROSS REFERENCE INDEXES

FIGURE AND ITEM NUMBER INDEX

FIG.	ITEM	STOCK NUMBER	CAGEC	PART NUMBER
39	1	2930-01-170-9820	11083	2W8002
39	2	5330-00-663-5709	11083	5F3106
39	3	5310-00-117-4788	11083	5M2894
39	4	5340-01-151-7395	11083	8N5929
39	5	5306-01-159-1513	11083	0T0055
39	6	5306-00-263-7301	11083	L1351
39	7	5330-01-067-5652	11083	8H9520
39	8	3040-01-127-6149	11083	7N5899
39	9	3110-00-554-5302	12128	W55
39	10	5365-00-598-6232	96906	MS16625-1315
39	11	3020-01-127-3363	11083	7N5193
39	12	5315-00-533-9530	11083	2L5893
39	13	3110-00-516-5490	08162	207
39	14	5306-00-426-2932	11083	S1619
39	15	4730-00-089-2515	11083	5M6213
39	16	2930-01-144-3418	11083	lW4619
39	17	5330-00-431-7137	11083	8S8821
39	18	5365-00-432-8183	11083	BS7762
39	19	5330-01-097-8142	11083	7E6844
39	20	2930-01-126-4959	11083	7N5910
39	21	5310-00-809-4061	96906	MS27183-15
39	22	5306-00-228-6835	11083	4L6454
39	23	5330-01-132-2201	11083	SN5928
40	1	2930-01-255-2943	11083	2W8001
40	2	5330-00-663-5709	11083	5F3106
40	3	5306-00-263-7301	11083	L1351
40	4	5310-00-117-4788	11083	5M2894
40	5	5340-01-151-7395	11083	8N5929
40	6	5330-01-067-5652	11083	8H9520
40	7	3040-01-178-0698	11083	2W7255
40	8	3110-00-554-5302	12128	W55
40	9	5365-00-598-6232	96906	MS16625-1315
40	10	3020-01-267-4337	11083	7W0450
40	11	3110-00-516-5490	11083	8H9789
40	12	5310-00-999-8283	11083	9M6527
40	13	5306-00-263-8950	11083	388428
40	14	4730-00-089-2515	11083	5M6213
40	15	2930-01-144-3418	11083	IW4619
40	16	5330-00-431-7137	11083	8S8821
40	17	5365-00-432-8183	11083	8S7762
40	18	5330-01-097-8142	11083	7E6844
40	19	2930-01-126-4959	11083	7N5910
40	20	5310-00-375-0518	61510	CKE42A
40	21	5306-00-228-6835	11083	4L6454
40	22	5330-01-132-2201	11083	8N5928
41	1	2510-01-144-3568	11083	7N5227
41	2	5310-00-117-4788	11083	5M2894
41	3	5310-00-087-4652	96906	MS51922-17
41	4	5305-00-252-8919	11083	0S0509
41	5	2510-01-144-8615	11083	7N5226
41	6	2540-01-143-803T	11083	4N7941

CROSS REFERENCE INDEXES

FIGURE AND ITEM NUMBER INDEX

FIG.	ITEM	STOCK NUMBER	CAGEC	PART NUMBER
41	7	2930-00-451-6070	11083	7S0543
41	8	5305-00-068-0511	80204	B18218H038C125N
42	1	5310-01-050-8016	11083	2P3261
42	2	2930-01-068-7125	11083	4N3826
42	3	5330-00-862-6861	09990	2-338N951-75
42	4	5306-01-160-4498	11083	6V4626
42	5	5365-00-498-2962	11083	5S7264
42	6	3110-00-555-5207	08162	307
42	7	2930-01-050-8012	11083	2P1757
42	8	5365-01-147-0083	11083	8N5305
42	9	4730-00-172-0028	96906	MS15003-4
42	10	5310-00-809-5998	96906	MS27183-18
42	11	5306-00-263-8978	11083	S1587
42	12	5340-01-148-9802	11083	1P9945
42	12A	3040-01-147-6412	11083	1P9946
42	12B	5340-01-148-9803	11083	1P9899
42	12C	5315-00-362-7367	11083	585812
42	13	5306-01-053-7322	11083	2P3208
42	14	3030-01-159-9742	24161	473SET2
42	15	3020-01-143-1520	11083	4N7982
42	16	5330-00-498-2905	11083	5S2106
42	17	5365-00-498-2920	11083	5S9062
42	18	3110-00-516-5490	08162	207
43	1	2920-01-144-8796	16764	1117647
43	1	6115-01-279-2610	11083	7N9720
43	2		11083	9S4146
43	3	5940-00-143-4794	96906	MS25036-112
43	4	5940-00-113-9826	96906	MS25036-114
43	5	5306-01-127-9361	11083	OS1585
43	6	5310-01-216-5696	11083	2S6735
43	7	5310-00-245-9841	11083	8M4791
43	8	3020-00-431-6447	11083	5S7609
43	9		11083	8S4183
43	10	5310-00-253-7918	11083	9S1240
43	11	5340-01-217-3041	11083	8N4198
43	12	5305-01-026-9518	11083	0S1571
43	13	5310-00-117-4788	11083	5M2894
43	14	5306-00-426-2932	11083	S1619
43	15	5305-01-032-2312	80204	81821BH050C600N
44	1	5306-01-165-1266	16764	1894641
44	2		16764	1894444
44	3	5310-01-047-6064	16764	1851808
44	4	5306-01-167-1084	16764	1894458
44	5	5305-01-168-5422	16764	1976061
44	6	5310-01-164-8539	16764	1913846
44	7	5310-00-281-5021	58275	A063947
44	8	6110-01-142-2424	16764	1984287
44	9	5305-01-238-3071	16764	1846955
44	10	5306-01-166-7926	16764	830338
44	11	5310-00-350-3587	16764	807295
44	12	5365-01-171-1560	16764	1894463

CROSS REFERENCE INDEXES

FIGURE AND ITEM NUMBER INDEX

FIG.	ITEM	STOCK NUMBER	CAGEC	PART NUMBER
44	13	5961-01-047-6729	16764	1891055
44	14	3040-01-161-6657	16764	1894464
44	15	2920-01-163-7209	16764	1894626
44	16	5999-01-104-0445	11862	1970227
44	17	2920-01-154-8021	16764	1894627
44	18	3040-01-161-6658	16764	1894473
44	19	3040-01-161-6659	16764	1894462
44	20	5305-01-238-3071	16764	1846955
44	21	5910-01-162-8299	16764	1985445
44	22	5340-00-844-7921	16764	1869573
44	23	5970-01-170-4693	16764	1894472
44	24	5961-00-099-9791	16764	1985348
44	25	2920-01-162-6410	16764	1894465
44	26	3110-01-079-7024	60330	DB50430
44	27	5325-01-223-4251	16764	1894468
44	28	3120-00-432-8120	16764	1968990
44	29	2920-01-162-8999	16764	1894467
44	30	5310-00-944-5896	16764	9418881
44	31	5310-00-262-4715	16764	1905406
44	32	4140-01-162-8967	16764	1970593
44	33	5310-01-164-1650	16764	1969070
44	34	2920-01-099-3085	16764	1969046
44	35	5305-01-168-8928	16764	1894445
44	36	2920-01-162-9006	16764	1894483
44	37	5330-00-928-9798	16764	1955660
44	38	2920-00-221-8856	16764	1955664
44	39	3110-01-129-6756	11083	5P9514
44	40	5310-00-275-9191	16764	825196
44	41	5330-00-699-9033	16764	825197
44	42	3120-01-183-1341	16764	1957726
44	43	5330-00-851-7742	16764	1961867
44	44	5305-01-163-5667	16764	1846956
44	45	2920-01-174-1278	16764	1894446
44	46	2920-01-163-0758	16764	1894474
44	47	5305-00-450-0421	16764	1968945
45	1	2920-01-178-6536	53867	1 125 500 024
45	1A		19207	NPN11
45	2	2920-01-177-8505	53867	1 197 011 000
45	2A		19207	NPN12
45	3	2920-01-178-6574	01843	1125885031
45	3A		19207	NPN13
45	4	3110-01-179-5935	53867	1 900 910 024
45	5	5330-01-178-3728	01843	1 120 222 001
45	6	5961-01-174-8652	53867	1 127 320 503
45	7	6105-01-279-2683	53867	1 125 045 115
45	8	9905-01-180-3839	11083	3T5962
45	9	5305-00-253-5609	96906	MS21318-13
45	10	2920-01-178-0499	01843	1 124 035 017
45	11	5315-00-616-5525	96906	MS35756-9
45	12	5950-01-279-2818	11083	9G7558
45	13	5365-01-174-8876	53867	1 120 200 023

CROSS REFERENCE INDEXES

FIGURE AND ITEM NUMBER INDEX

FIG.	ITEM	STOCK NUMBER	CAGEC	PART NUMBER
45	14	3110-01-177-4667	01843	1129900009
45	15	2920-01-177-8565	53867	1 125 825 021
45	16	5310-01-175-0630	53867	1 120 220 007
45	17	4140-01-176-2818	53867	1 126 610 061
45	18	5310-00-045-5001	96906	MS35340-50
45	19	5310-00-763-8905	96906	MS51968-20
45	20	5305-01-175-7537	53867	1 123 414 004
46	1		11083	5P6641-12
46	2	5940-00-113-8190	11083	2L8052
46	3	5940-00-118-8836	64438	41130
46	4	2920-00-425-5932	16764	1990228
46	4	2920-01-281-9385	16764	1993739
46	5	5306-01-095-1486	11083	7J8902
46	6	5310-01-107-3590	11083	8B5054
46	7	5330-00-584-1310	11083	4H7869
47	1	5310-00-768-0318	96906	MS51967-14
47	2	6150-01-165-1191	11083	3T3422
47	3	5310-00-178-7700	11083	3H3680
47	4	5310-01-129-7508	16764	11504248
47	5	5310-00-167-0839	88044	AN960-816L
47	6	2920-01-138-7046	16764	1945848
47	6A		19207	NPN17
47	7	5340-01-115-3548	16764	1978756
47	8	9390-01-112-3500	16764	1978754
47	9	3120-01-101-5088	16764	1894638
47	10	5306-00-550-9129	16764	1914869
47	11	5310-00-582-5965	96906	MS35338-44
47	12	5310-00-827-2821	16764	1953237
47	13	5330-00-950-8217	62983	154101
47	14	5310-00-734-8959	16764	1913084
47	15	5970-00-557-8747	16764	1964516
47	16	5977-00-828-9053	16764	1945849
47	17	5977-00-363-3568	16764	1869760
47	18	5310-00-291-4498	16764	1913080
47	19	2920-00-021-2273	16764	1945851
47	20	5970-00-503-0852	16764	1945850
47	21	5970-00-918-5568	16764	1965093
47	22	5970-01-137-3420	16764	1979389
47	23	5977-00-249-5758	11083	7F3513
47	24	5305-01-053-4850	11083	5H6467
47	25	5310-00-811-2861	11083	7H2079
47	26	5305-00-105-1207	16764	1914580
47	27	5305-00-371-5138	16764	1928500
47	28	5360-00-597-3278	11083	7F3512
47	29	5305-01-053-4707	11083	7F3522
47	30	5977-00-809-2517	16764	1906989
47	31	5305-00-984-6192	96906	MS35206-244
47	32	5305-00-218-6387	16764	1847807
47	33	2920-01-195-2876	16764	1115607
47	34	5306-00-550-3023	16764	1930611
47	35	5310-00-178-0741	11083	9F4976

CROSS REFERENCE INDEXES

FIGURE AND ITEM NUMBER INDEX

FIG.	ITEM	STOCK NUMBER	CAGEC	PART NUMBER
47	36	5940-00-828-8510	16764	1945862
47	37	5310-01-243-6178	16764	811912
47	33	5310-00-719-5470	16764	1922457
47	39	5305-00-450-5937	11862	1968396
47	40	5365-00-753-9528	16764	1945356
47	41	5330-00-914-0703	16764	196485T
47	42	5970-00-431-3667	16764	1955989
47	43	2920-00-737-3225	11083	1H2629
47	44	2920-00-891-0928	16764	1869747
47	45	2920-00-993-4233	16764	1945853
47	46	5970-00-657-8133	16764	1965472
47	47	2920-00-838-9344	16764	1945840
47	47A		19207	NPN16
47	48	2920-00-822-2287	16764	1948522
47	49	5310-00-062-2051	16764	1948519
47	50	9390-00-839-1864	16764	801077
47	51	5310-00-822-2236	16764	1948520
47	52	5360-00-812-0196	16764	1948521
47	53	5310-00-822-2241	16764	1948526
47	54	2920-01-207-9671	16764	1979870
47	54A		19207	NPN19
47	55	5340-01-115-3548	16764	1978756
47	56	9390-01-112-3500	16764	1978754
47	57	3120-01-101-5089	16764	1894637
47	58	5330-00-972-7644	11083	2F6678
47	59	5340-01-132-4704	1b764	1964402
47	60	5365-00-715-1152	96906	MS16624-1037
47	61	6110-00-757-7187	16764	1945484
47	62	5310-00-660-3381	96906	MS21083N5
47	63	5306-00-783-5188	16764	1948537
47	64	2920-01-112-0988	16764	1970455
47	64A		19207	NPN18
47	65	3120-01-188-5540	11083	9G9818
47	66	5340-01-115-3548	16764	1978756
47	67	9390-01-112-3500	16764	1978754
47	68	5306-00-783-5183	16764	1948536
47	69	2920-01-112-2687	16764	1893560
47	70	5330-00-976-4695	16764	1945476
47	71	5330-00-920-6924	11083	1H1023
47	72	3040-00-034-4216	16764	1948529
47	73	5330-00-843-7194	11083	2D6392
47	74	5310-00-999-2527	16764	1936466
48	1		16764	9439624
48	2	5995-01-140-9058	16764	1979600
48	3	5310-00-194-1483	96906	MS35333-44
48	4	5310-00-809-5997	96906	MS27183-17
48	5	5306-00-550-9129	16764	1914869
48	6	2920-01-138-7046	16764	1945848
48	6A		19207	NPN20
48	7	5340-01-115-3548	16764	1978756
48	8	9390-01-112-3500	16764	1978754

CROSS REFERENCE INDEXES

FIGURE AND ITEM NUMBER INDEX

FIG.	ITEM	STOCK NUMBER	CAGEC	PART NUMBER
48	9	3120-01-101-5088	16764	1894638
48	10	5310-00-827-2821	16764	1953237
48	11	5330-00-950-8217	62933	154101
48	12	5310-00-734-8959	16764	1913084
48	13	5970-00-557-8747	16764	1964516
48	14	5977-01-253-5207	16764	1984974
48	15	5305-01-260-5375	11083	5P6298
48	16	5310-00-188-0473	75377	56-941-45
48	17	6105-01-254-2722	16764	1984981
48	18		16764	1984975
48	19	5310-00-291-4498	16764	1913080
48	20	5970-01-138-7044	16764	1984978
48	21	5970-00-918-5568	16764	1965093
48	22	5970-01-137-3420	16764	1979389
48	23	5977-01-137-3421	16764	1979388
48	24	5977-01-153-0322	16764	1984979
48	25	5360-01-294-0436	11083	3T9494
48	26	5977-01-153-0247	16764	1852888
48	27	5305-00-432-8422	16764	1968998
48	28	5305-00-218-6387	16764	1847807
48	29	5306-00-550-3023	16764	1930611
48	30	2920-01-195-2876	16764	1115607
48	31	5940-00-828-8510	16764	1945862
48	32	5310-00-719-5470	16764	1922457
48	33	5305-00-450-5937	11862	1968396
48	34	5365-00-753-9528	16764	1945356
48	35	5330-00-914-0703	16764	1964857
48	36	5970-00-431-3667	16764	1955989
48	37	2920-00-737-3225	11083	1H2629
48	38	2920-00-891-0928	16764	1869747
48	39	2920-00-993-4233	16764	1945853
48	40	5970-00-657-8133	16764	1965472
48	41	2920-00-838-9344	16764	1945840
48	41A		19207	NPN21
48	42	2920-00-822-2287	16764	1948522
48	43	5310-00-062-2051	16764	1948519
48	44	4730-00-277-6320	78553	A3122-28-1
48	45	9390-00-839-1864	16764	801077
48	46	5310-00-822-2236	16764	1948520
48	47	5360-00-812-0196	16764	1948521
48	48	5310-00-822-2241	16764	1948526
48	49	2920-01-207-9671	16764	1979870
48	49A		19207	NPN22
48	50	5340-01-115-3548	16764	1978756
48	51	9390-01-11Z-3500	16764	1978754
48	52	3120-01-101-5089	16764	1894637
48	53	5330-00-972-7644	11083	2F6678
48	54	5340-01-132-4704	16764	1964402
48	55	5365-00-715-1152	96906	MS16624-1037
48	56	5330-01-053-2907	16764	1894643
48	57	3040-00-034-4216	16764	1948529

CROSS REFERENCE INDEXES

FIGURE AND ITEM NUMBER INDEX

FIG.	ITEM	STOCK NUMBER	CAGEC	PART NUMBER
48	58	5330-01-053-7021	16764	1894642
48	59	5310-00-999-2527	16764	1936466
48	60	2920-01-138-7045	16764	1957846
48	60A		19207	NPN23
48	61	3120-00-828-6852	16764	1894635
48	62	9390-01-112-3500	16764	1978754
48	63	5340-01-115-3548	16764	1978756
48	64	5306-00-783-5183	16764	1948536
48	65	2920-01-112-2687	16764	1893560
48	66	5330-00-976-4695	16764	1945476
48	67	5310-00-660-3381	96906	MS21083N5
48	68	6110-00-757-7187	16764	1945484
49	1	5940-01-163-1435	16764	1979498
49	2	5310-00-178-0741	11083	9F4976
49	3	5310-00-809-5997	96906	MS27183-17
49	4	5310-00-178-7700	11033	3H3680
49	5	5310-00-143-5722	04998	WA1248
49	6	5310-00-852-8266	11083	3B4502
49	7	5310-00-637-1058	66289	PD115
49	8	5970-01-150-1446	16764	1984705
49	9	5310-00-143-5722	04998	WA1248
49	10	5310-00-637-1058	66289	PD115
49	11	5330-01-257-3807	16764	10496037
49	12	5360-00-985-2253	16764	1945402
49	13	2920-01-140-0116	16764	1977264
49	14	3120-01-166-8144	16764	1972716
49	15	5305-01-187-0533	11083	454065
49	16	5305-00-423-4909	24617	1840633
49	17		11083	4M1813
50	1		11083	6V8364
50	2	5310-00-576-5752	96906	MS35333-39
50	3	5310-00-543-4385	96906	MS35333-46
50	4	5310-00-757-6377	16764	1914379
50	5	5355-01-064-3851	13445	80101
50	6	5310-00-045-3299	96906	MS35338-42
50	7	5305-01-058-9146	11083	5L7200
50	8		19207	NPN24
51	1		11083	5P2764-28IN
51	2	5940-01-058-9112	11083	5P4571
51	3	5940-00-143-4780	96906	MS25036-108
51	4	5930-01-095-6194	11083	9G8010
51	5	4730-00-307-6426	11083	5P3741
51	6		11083	5P2764-8IN
51	7	5940-00-143-4780	96906	MS25036-108
51	8	5920-01-059-0882	11083	2S5012
51	9	5999-01-059-0884	79550	12871
51	10	5920-00-284-6787	81349	F02A250V5A
51	11		11083	5P2764-81N
51	12	5940-00-143-4780	96906	MS25036-108
51	13	5920-01-059-0881	79550	12864
51	14	5365-01-068-6124	79550	12870

CROSS REFERENCE INDEXES

FIGURE AND ITEM NUMBER INDEX

FIG.	ITEM	STOCK NUMBER	CAGEC	PART NUMBER
51	15	5999-01-059-0884	79550	12871
51	16		11083	6A3626-8IN
51	17	5940-01-103-6808	11083	5P5694
51	18	5940-00-143-4793	96906	MS25036-110
51	19	5930-00-434-9121	11083	7S6402
51	20	5355-00-007-9980	13445	81285
51	21	5310-00-757-6377	16764	1914379
51	22	5310-00-596-7693	96906	MS35335-31
51	23	5305-00-984-6189	96906	MS35206-241
52	1	5305-00-076-3714	08179	400405
52	2	5935-01-097-9974	19207	11674728
52	3	5340-01-281-7206	11083	5R8086
52	4	5310-00-596-7691	96906	MS35335-32
52	5	5310-00-241-6658	96906	MS51943-34
52	6	6140-01-280-3380	11083	8D0273
52	7	6140-01-280-4060	11083	2V7396
52	8	5310-00-117-4783	11083	5M2894
52	9	5306-00-260-4508	11083	S1594
53	1	5310-00-768-0313	96906	M551967-14
53	2	5310-00-045-5001	96906	M 535340-50
53	3	5310-00-507-5727	11033	288352
53	4	5340-01-162-9565	11083	8P8306
53	5	5310-01-094-8810	78189	3320-14-01
53	6	5306-00-260-4508	11033	S1594
53	7	6220-01-097-4320	73331	910824
53	8	6220-01-037-5622	11083	2P2541
53	8A		19207	NPN25
53	9	6220-00-832-8774	73331	921472
53	10	6220-00-756-8787	16764	5949719
53	11	5305-00-005-0896	11083	5M6668
53	12	6240-00-643-0687	96906	MS17165-4578
53	13	6220-01-149-2803	11033	9P0739
53	14	6220-01-280-3550	11083	5A4550
53	15	6220-01-148-1686	11083	9P0736
53	16	6220-01-280-3549	11083	5A4549
53	17	5325-00-249-6345	70485	2758
53	18	6220-00-778-7213	11083	1H5166
53	19	5995-01-163-3577	11083	8P6362
53	20	5940-00-143-4774	96906	MS25036-153
53	21	5940-00-291-0085	79550	300-2863
53	22	5995-01-163-0665	11083	9P2696
53	23		11083	5P5628-8
53	24	5340-01-160-2464	11093	159593
53	25	5940-00-230-0515	96906	MS25036-154
53	26	5940-00-143-4793	96906	MS25036-110
53	27	6150-01-280-4059	11083	5R8091
53	28	5940-00-143-4774	96906	MS25036-153
53	29	5935-01-097-7240	11083	6K1827
53	30	5306-00-423-8117	11083	S1595
53	31	5310-00-930-7013	11083	484280
53	32	2920-01-058-9099	11083	3S2093

CROSS REFERENCE INDEXES

FIGURE AND ITEM NUMBER INDEX

FIG.	ITEM	STOCK NUMBER	CAGEC	PART NUMBER
53	33	5995-01-163-0820	11083	8P6433
53	34		11083	5P5628-30
53	35	5935-01-211-4990	64488	1300C
53	36	5340-01-160-2464	11083	1S9593
53	37	5935-01-097-7240	11083	6K1827
53	38	5940-00-143-4774	96906	MS25036-153
53	39	5935-01-097-7239	11083	6K1828
53	40	5340-01-255-3577	11083	283243
53	41	5305-00-732-0512	80204	B1821BH050C075N
53	42	5310-00-809-5997	96906	MS27183-17
53	43	5305-00-252-8919	11083	0S0509
53	44		11083	5P5624-1041N
53	45	5935-01-097-7240	11383	6K1827
53	46	5935-01-097-7239	11083	6K1828
53	47	5340-00-451-0632	11033	4S5718
53	48	5340-01-165-2560	11083	1S2487
53	49	5305-00-252-8919	11083	0S0509
53	50	5995-01-173-6906	11083	8P6432
53	51	5940-00-291-0085	79550	300-2863
53	52	5940-00-143-4774	96906	MS25036-153
53	53	4710-01-161-7773	11083	9P4730
53	54	4710-01-163-4303	11083	9P3351
53	55	5310-00-763-8905	96906	MS51968-20
54	1	5340-00-351-6992	11083	8F8513
54	2		11083	5P5628-103
54	3	6220-01-280-0531	11083	3T5286
54	4		11083	5P5628-39
54	5	6220-01-280-8458	11083	3T5287
54	6	5305-00-225-3843	96906	MS90728-8
54	7	5310-01-094-8810	78189	3320-14-01
55	1	5305-01-160-3946	11083	319831
55	2	5995-01-165-1843	11083	8P1342
55	3	6220-00-778-7213	11083	1H5166
55	4	5310-01-157-3385	11083	3S4701
55	5	5340-01-150-6251	11083	9G9300
55	6	2590-01-149-6777	16764	1892242
55	7	2590-00-126-3730	16764	1892243
55	8	5310-01-094-8810	78189	3320-14-01
55	9	5305-00-225-3843	96906	MS90728-8
55	10	2590-01-282-4318	F0777	77970
55	11	2590-01-282-1781	64189	40602
55	12	5340-01-280-6870	11083	7T7116
55	13	5995-01-163-3527	11083	8P7277
55	14	5995-01-163-3526	11083	8P7278
55	15	5340-01-160-2464	11083	lS9593
55	16	5995-01-163-3578	11083	8P7281
55	16	6150-01-280-4289	11083	7T6986
55	17	5930-01-162-7312	13445	90065
56	1	5340-01-169-7536	11083	8P1222
56	2	5310-00-557-9414	11083	4J8265
56	3	5310-00-413-5060	11083	3K925

CROSS REFERENCE INDEXES

FIGURE AND ITEM NUMBER INDEX

FIG.	ITEM	STOCK NUMBER	CAGEC	PART NUMBER
56	4	5306-01-169-7537	11083	8P9728
56	5	5306-00-260-4508	11083	S1594
56	6	5310-00-117-4788	11083	5M2894
56	7	5340-01-280-9422	11083	9P0126
56	8	6140-01-169-7538	11083	9G4247
56	9	5340-00-150-0873	11083	5K3294
56	10	5306-00-424-0086	11083	7B3235
56	11	5310-00-584-5272	96906	MS35338-48
56	12	5310-00-431-7239	11083	2M849
56	13	5310-00-637-9541	96906	MS35338-46
56	14	5310-01-194-5398	11083	1D4717
56	15	2510-01-187-7023	11083	3T5803
56	16	5310-00-445-4632	11083	1F748
56	17	5340-01-310-4006	11083	8P1219
56	18	5365-01-311-0014	11083	8P1221
56	19	5340-01-151-9297	11083	3T3002
56	20	5365-01-151-8595	11083	8P1220
56	21	6140-01-203-4912	81348	W-8-131
56	22	5310-01-160-2034	11083	2D6235
56	23	5310-00-081-4219	96906	MS27183-12
56	24	5340-01-164-7531	11083	7P7608
56	25	5306-01-164-7446	11083	7P7612
56	26	5306-00-260-4503	11083	S1594
57	1		11083	5P0747-6
57	2	5310-00-438-8604	11083	1 M6120
57	3	5306-00-438-8600	11083	1M6119
57	4		11083	8T9757
57	5	5940-00-549-6581	96906	MS75004-1
57	6	5970-01-219-4329	79550	40196
57	7	5935-01-158-0035	79550	58904-01-6
57	8		11083	5P0747-12
57	9	5975-01-150-3454	77060	2966377
57	10	2920-01-066-0593	11083	1S7252
57	11	5940-00-201-8938	04618	29711
57	12	5306-00-438-8600	11083	lM6119
57	13	5310-00-438-8604	11083	lM6120
57	14	5940-01-161-6503	60237	4301
57	15	5305-00-252-8919	11083	0S0509
57	16	5310-00-637-9541	96906	MS35338-46
57	17	5340-01-151-9308	11083	15994
57	18	5306-00-268-5798	11083	0L1329
57	19	5310-00-584-5272	96906	MS35338-48
57	20	5340-00-426-4819	11083	S11015
57	21	5365-01-172-5614	11083	3S3158
57	22	5340-00-465-6799	11083	7S1912
57	23	5995-01-148-8197	11083	9G6120
57	24	5995-01-151-6364	11083	9G6119
57	25	5995-01-148-8196	11083	9P3118
57	26	6220-00-778-7213	11083	1H5166
57	27	5305-00-252-8919	11083	0S0509
57	28	6140-01-130-6646	10988	S239743

CROSS REFERENCE INDEXES

FIGURE AND ITEM NUMBER INDEX

FIG.	ITEM	STOCK NUMBER	CAGEC	PART NUMBER
57	29		11083	5P0747-15
57	30	5940-01-169-3889	98410	CBT-2/0P
57	31	2540-01-068-7149	11083	1S4915
57	32	2920-01-058-9099	11083	3S2093
57	33	5940-01-058-9090	64488	4543A
57	34	6140-01-170-1451	60237	D7-614-R
57	35		60237	0-614-R
57	36	2530-01-069-0802	11083	1S2244
57	37	6240-00-019-3093	96906	MS15570-623
57	38	2990-01-103-6635	11083	6N8742
57	39		11083	5P5632-4
57	40	5940-00-143-4794	96906	MS25036-112
57	41	5925-00-008-0548	14859	7851-13-601
57	42	5305-01-162-2354	11083	4B1223
57	43	5930-01-161-8150	11083	9W1077
57	44	6625-00-113-3279	11083	8M7892
57	45		11083	5P5675-118
57	46	5940-00-113-8190	96906	MS25036-122
57	47	5940-00-557-4344	96906	MS25036-120
57	48	5306-00-261-1153	11083	S1615
57	49	5310-01-051-2360	11083	5P537
57	50	4730-01-253-7361	11083	3T3393
57	51	5340-00-253-7912	11083	2M287
57	52	5306-00-263-7302	11083	S1624
57	53	5310-00-045-5001	96906	MS35340-50
57	54	5340-00-426-4656	11083	4D7794
57	55	5305-00-252-8919	11083	0S0509
57	56		11083	5P0747-4295
57	57	5975-01-150-3454	77060	2966377
57	58	2920-01-066-0593	11083	1S7252
57	59	2920-01-064-3809	11083	8H8648
57	60	Z920-00-775-7691	13445	75900-09
57	60A		19207	NPN26
57	61	5930-00-715-1939	13445	8398
57	62	5310-00-005-0895	13445	2484-26
57	63	5310-00-550-3714	78189	1232-00
57	64	5310-01-059-0992	11083	7F7259
57	65	5310-01-065-9110	11083	6L1962
57	66	5310-00-833-9298	11083	6F7045
57	67	5340-01-160-2464	11083	1S9593
57	68	5920-00-118-8195	71400	HKP-LW-HH
57	69	5920-00-012-0151	81349	F02A32V15A
57	70		11083	5P5624-6
57	71	5940-01-058-9112	11083	4L3916
57	72	5940-00-143-4774	96906	MS25036-153
57	73	5920-00-284-6787	81349	F02A250V5A
58	1	5935-01-118-8884	79550	191890
58	2	5935-01-097-7239	11083	6K1828
58	3	5940-00-118-8836	64488	41130
58	4	5940-01-059-0873	64488	19030
58	5	5940-00-143-4794	96906	MS25036-112

CROSS REFERENCE INDEXES

FIGURE AND ITEM NUMBER INDEX

FIG.	ITEM	STOCK NUMBER	CAGEC	PART NUMBER
58	6	5970-01-156-0688	77060	2984033
58	6A		11083	5P4703-43.3
58	6B		11083	6A3369-27o6
58	6C		11083	5P2762-27.6
58	60		11083	5P4510-59
53	6E		11083	5P5018-59
58	6F		11083	5P3385-126
58	6G		11083	5P4511-4
58	7	5935-01-118-8884	79550	191890
58	8	5940-01-206-4291	11083	7K9689
58	9	5935-01-097-7239	11083	6Kl828
58	10	5935-01-158-0364	11083	5P3161
58	10A		11083	6A3369-39.4
58	103		11083	5P4703-74,8
58	10C		11083	5P5018-39.4
58	100		11083	5P3385-7408
58	10E		11033	5P4510-39.4
58	10F		11083	5P2762-39.4
58	11	5940-00-114-1310	96906	MS25036-119
58	12	5940-00-143-4794	96906	MS25036-112
58	13	5940-00-143-4780	96906	MS25036-108
58	14	5940-00-143-4774	96906	MS25036-153
58	15	5940-01-285-5146	79550	412026
58	16	5935-01-097-7247	11083	6S7115
58	17	5940-00-291-0085	16428	724105
58	18	5940-00-143-4775	96906	MS25036-156
58	18A		11033	5P5018-15.7
58	18B		11033	6A3355-23.6
58	18C		11033	5P3385-59
58	180		11083	5P4510-1507
58	13E		11083	5P2762-3115
58	18F		11083	6A3369-31.5
58	18G		11083	5P4703-82.7
59	1	5910-01-176-8877	26901	535950
59	2	5310-00-596-7691	96906	MS35335-32
59	3	5995-01-160-3599	11083	5R4686
59	4	5310-00-209-5116	96906	MS35335-37
59	5		11083	800324
59	6	5940-01-150-1426	14726	H118
59	7	5310-00-627-6128	96906	MS35335-35
60	1	5355-00-891-4401	11033	7M706
60	2	3020-01-150-1751	11083	8P2424
60	3	5305-01-063-1423	11083	4B1282
60	4	2520-01-150-1737	11083	9G6760
60	5	5310-00-637-9541	96906	MS35338-46
60	6	5305-00-252-8919	11083	0S0509
60	7	5306-00-423-8194	11083	1A2029
60	8	5315-01-170-2228	11083	1J1971
60	9	5365-01-161-2642	11083	6L1698
60	10		11083	8P2271
60	11	5310-01-151-8350	11083	2A3211

CROSS REFERENCE INDEXES

FIGURE AND ITEM NUMBER INDEX

FIG.	ITEM	STOCK NUMBER	CAGEC	PART NUMBER
60	12	5315-00-839-5820	96906	MS24665-134
60	13	5315-00-839-5822	96906	MS24665-353
60	14	5340-01-150-7766	11083	9G6544
60	15	5310-00-080-6004	96906	MS27183-14
60	16	3040-01-150-5425	11083	1P929
63	17	5355-00-730-8027	11083	2M8908
60	18	2520-01-161-9637	11083	SP7625
60	19	2530-01-151-3633	11083	9P9488
60	20	5310-01-194-5398	11083	1D4717
60	21	5340-01-149-5256	11083	8P3990
60	22	5306-00-263-7301	11083	L1351
60	23	5340-01-155-8733	11083	8P3548
60	24	5306-00-260-4508	11083	S1594
60	25	3040-01-150-1749	11083	8P2262
60	25A		19207	NPN27
60	26	3120-00-858-6240	11083	5H3895
60	27	5305-01-160-4505	11083	409483
60	28		11083	SP2272
60	28A		19207	NPN28
60	29	5315-01-160-4647	11083	3R4762
60	30	5360-00-858-6197	11083	5M9813
60	31	5310-00-725-7382	96906	MS35690-624
60	32	5365-00-136-2006	11033	2M7167
60	33	2990-01-103-3652	11083	5J5315
60	34	5310-00-975-2075	96906	MS35691-21
60	35	5307-01-155-6687	11083	802586
60	36	5310-00-698-4460	11083	0L1319
60	37	3110-01-103-9158	11083	7P4190
60	38		11033	7G3910
60	39	2520-01-161-6374	11083	7G3908
60	39A		19207	NPN29
60	40	5340-01-163-9440	11083	7G3909
60	41	5365-01-130-4159	11083	9S1385
60	42	5340-01-151-6146	11083	8P1876
60	43	5310-00-044-3339	19207	443339
60	44	5306-00-273-6357	11083	1A1460
60	45	5306-01-094-9106	11083	0S1590
60	46	5305-01-015-6841	11083	0S1591
60	47	5306-00-263-7305	11083	T924
60	48	2910-01-058-8075	11083	4D4064
60	49	3040-01-151-5695	11033	3S6593
60	50	5315-00-616-5524	64294	29620-3
60	51	5307-01-153-0874	11083	4M4030
60	52	5306-00-140-2032	11083	4M496
60	53	3040-01-151-5696	11083	8P2261
60	54	5310-00-276-2822	11083	8B4037
60	55	5305-01-159-1552	11033	L639
60	56	3040-01-151-5694	11083	BP8039
60	57	5365-01-163-2015	11083	9M4136
60	58	5307-01-151-9304	11083	4L7551
61	1	5310-00-637-9541	96906	MS35338-46

CROSS REFERENCE INDEXES

FIGURE AND ITEM NUMBER INDEX

FIG.	ITEM	STOCK NUMBER	CAGEC	PART NUMBER
61	2	5306-00-423-8194	11083	1A2029
61	3	3110-00-117-0696	08162	M1210EL
61	4	5365-00-285-7939	80756	RR-354
61	5	5330-00-194-3681	11083	5S4408
61	6	5310-01-194-5398	11083	104717
61	7	5340-01-162-0078	11083	7S6865
61	8	5330-01-160-3988	11083	3P1605
61	9	3040-01-158-8578	11083	7S6870
61	13	5307-00-053-9023	19207	539023
61	11		11083	7S6869
61	12	5315-00-363-8794	11083	1F1006
61	13	2520-01-179-4097	11083	1T1350
61	14	3110-00-117-0661	11083	8B5964
61	15	5305-00-269-3242	96906	MS90727-66
61	16	3040-01-159-0931	11083	lT1349
61	17	5306-00-263-8979	14544	3B4419
61	18	3040-01-159-7951	11083	1T531
61	19	5315-01-103-3917	11083	7M5130
61	20	3040-01-152-7823	11083	1T749
61	21	5306-00-226-4828	80204	B1821BH0310113N
61	22	5310-00-725-1984	81205	BA0W10P140S
61	23	3040-00-116-9845	11083	1T0387
61	24	3110-00-404-5484	11083	1T64
61	25	5315-00-584-9792	10001	1592919
61	26	2520-01-152-7749	11083	1T535
61	27	5306-00-455-0467	11083	1T414
61	28		61208	215569-A
61	29	5365-00-514-1706	61208	A-2622-0
61	30	2520-01-155-7937	11083	1T52
61	31	3110-01-156-5289	11083	1T945
61	32	5310-01-162-2524	11083	1T744
61	33	3110-00-554-5653	43334	N03311
61	34	3110-00-202-1879	11083	1T425
61	35	3110-01-160-4713	11033	1T521
61	36	5306-00-063-5001	11033	1A2209
61	37	2520-01-164-6115	61208	M1904-0N
61	38	3040-01-150-3937	11083	1T747
61	39	3120-00-401-6060	11083	1T445
61	40		11033	1T746
61	41	3120-00-523-4278	11033	3H6849
61	42		11033	1T94
61	43	5305-00-253-5615	96906	MS21318-21
61	44	5330-01-164-7503	11083	8P7685
61	45	5305-00-068-0511	80204	818218H0380125N
61	46	5365-00-411-4584	11033	9S4191
61	47	5330-00-801-3354	25184	906-737-70
61	48	5365-00-478-2920	11083	9S4183
61	49	5330-00-944-8281	11083	302824
61	50		11083	8P2836
61	51		11083	8P2835
61	52	5365-00-449-2597	11083	3S8313

CROSS REFERENCE INDEXES

FIGURE AND ITEM NUMBER INDEX

FIG.	ITEM	STOCK NUMBER	CAGEC	PART NUMBER
61	53	5305-01-026-9518	11083	0S1571
61	54	5330-00-913-8872	09990	2-216S1032-70
62	1	5310-01-095-4631	11083	5P8247
62	2	5305-00-724-7236	80204	B1821BH063C325N
62	3	2520-01-148-9520	11083	7G6688
62	4	2520-01-149-3802	11033	7G6689
62	5	5306-00-268-5798	11083	0L1329
62	6	5340-01-150-2240	11083	6P3955
62	7	5330-01-164-7507	11083	8S1495
62	8	2520-01-148-9519	11083	7G6690
62	9	5310-00-809-5997	96906	MS27183-17
62	10	5306-00-273-6357	11083	lA1460
62	11	5330-01-166-3661	11083	5P3275
62	12	4730-00-010-9365	11083	3J7283
62	13	4730-01-059-9435	11083	5K9243
62	14	4710-01-150-3951	11083	6P4420
62	15	4730-01-069-0769	11083	5K9242
62	16	5340-01-103-3617	11083	7M873
b2	17	5306-00-426-2934	11083	S1621
62	18	4710-01-150-395Z	11083	6P4421
62	19	4730-01-068-6081	11083	6L3616
63	1	2520-01-145-4328	11083	3T3394
63	2	5310-00-637-9541	96906	MS35338-46
63	3	5310-01-194-5398	11083	104717
63	4	5306-00-698-2150	11083	0L2070
63	5	5330-00-913-8872	09990	2-216S1032-70
63	6	4320-01-144-0413	11083	7S8660
63	7	5330-01-162-4762	11083	7S8622
63	8	5306-00-423-8194	11083	lA2029
63	9	3020-01-154-7961	11083	7S8621
63	10	5315-00-012-4553	11083	1B8714
63	11	2520-01-146-7213	11083	2P1064
63	12	5330-01-160-3992	11083	3S6886
63	13	5310-01-160-4538	11083	3F7673
63	14	5310-00-413-5083	11083	7F548
63	15	5305-01-015-6841	11083	0S1591
63	16	5330-01-064-8247	11083	6J3134
63	17	2940-01-314-8880	11083	3S6830
63	18	5330-00-948-6062	11083	8M5249
63	19	5305-00-139-7071	11083	0V0375
63	20	5310-00-584-5272	96906	MS35338-48
63	21	4820-01-149-3722	11083	3T3399
63	22		11083	9P4905
63	23	2520-01-145-4314	11083	5S916
63	24	5306-01-195-4681	11083	381915
63	25	5330-00-458-1909	11083	2M3818
63	26	5330-01-160-4569	11083	5H4082
63	27	5330-00-997-7230	96906	MS9068-214
63	28	5310-00-763-8920	96906	MS51967-20
63	29	5310-00-045-5001	96906	MS35340-50
64	1	5330-01-161-2611	11043	5S1058

CROSS REFERENCE INDEXES

FIGURE AND ITEM NUMBER INDEX

FIG.	ITEM	STOCK NUMBER	CAGEC	PART NUMBER
64	2	5340-01-152-2540	11083	511053
64	3	4730-01-199-6588	11083	5S1057
64	4	5307-01-165-5751	11083	7M7794
64	5		11083	551056
64	6	5365-00-411-4584	11033	9S4191
64	7	5330-00-801-3354	25184	906-737-70
64	8	5310-00-637-9541	96906	MS35338-46
64	9	5310-01-194-5398	11083	104717
64	10	5340-01-064-2275	11083	9M2133
64	11	5330-00-929-0699	11083	9M2132
64	12	5306-00-260-4508	11083	S1594
64	13	5306-00-426-2932	11083	S1619
64	14	2815-01-053-7470	11083	3S6860
64	14A		11083	3S4411
64	15	5305-00-708-3823	11083	783028
64	16	9905-01-311-5230	11083	9G7399
64	17	5340-01-309-3766	11083	4M8815
64	18	5330-00-913-8120	58312	8M5254-00
64	19	5360-01-067-5538	11083	8M8597
64	20		11083	8M8598
64	21	5365-00-411-4584	11083	9S4191
64	22	5330-00-801-3354	25184	906-737-70
64	23	5306-00-260-4508	11083	S1594
64	24	5310-00-637-9541	96906	MS35338-46
64	25	2530-01-300-0231	11083	9P5365
64	26	2520-01-155-5097	11083	9P2680
64	27	3110-00-948-5793	11083	8H8175
64	28	5315-00-423-8085	11083	L2061
64	29	5307-00-900-5570	11083	2M1755
64	30	5307-00-465-6789	11083	2M4779
64	31	5315-00-193-0919	11083	9M4007
64	32	4730-01-148-0865	11083	4K8603
64	33	5315-01-064-1015	11083	9M2069
64	34	5315-00-409-3703	58312	IM3833-00
64	35		11083	9PZ679
64	36	5310-00-763-8920	96906	MS51967-20
64	37	5310-00-823-8803	96906	MS27183-21
64	38	3040-01-342-0693	11083	5R5114
64	38	3040-01-348-3945	11083	5R8096
64	39	5365-01-309-7146	11083	851069
64	40	5365-01-348-3376	11083	5R5116
64	41	5305-01-309-3743	11083	5R5115
64	42	5310-01-098-7244	92967	10273-00
64	43	3040-01-342-0693	11083	5R5114
64	44	5305-01-015-6841	11083	051591
64	45	5340-01-068-7167	11083	5S6981
64	46	5365-01-068-6124	80756	RRT-143
64	47	2520-01-162-3746	11083	4S6000
64	48	3040-01-150-3669	11083	5S7015
64	49	3040-01-158-9331	11083	7S4660
64	50	5330-00-138-0365	11083	8M8514

CROSS REFERENCE INDEXES

FIGURE AND ITEM NUMBER INDEX

FIG.	ITEM	STOCK NUMBER	CAGEC	PART NUMBER
64	51	5330-00-930-4064	11083	8M4389
65	1	2520-00-122-9919	11083	853522
65	2	2520-01-021-9923	11083	3P5955
65	3	3120-01-257-4402	11083	7T3143
65	4	3020-01-155-0356	11083	7G2487
65	5	3110-00-249-5244	11083	5M2051
65	6	5306-00-285-1368	11083	L1143
65	7	5310-00-117-4788	11083	5M2894
65	8	2840-01-069-0899	11083	5S4493
65	9	5315-01-059-7198	11083	3S2708
65	10	2530-01-067-5557	11083	5S7010
65	11	5365-00-983-2395	11083	5H6199
65	12	3110-00-554-3272	11083	7FZ742
65	13	3110-01-068-6123	11083	554491
65	14	5330-00-248-6691	11083	351259
65	15	5330-00-948-6632	11083	1M3937
65	16	25Z0-01-152-7750	11083	5S7309
65	17	3110-00-949-1438	11083	489880
65	18	5310-00-431-7239	11083	2M849
65	19		11083	9H6530
65	20	9905-01-151-7584	11083	6V1720
65	21	5305-00-708-3823	11083	783028
65	22	5305-01-160-4527	11083	4M4924
65	23	5310-00-451-3384	11083	8S3371
65	24	2520-01-171-4806	11083	4S5974
65	24A		11083	4S5942
65	25	5315-01-062-5209	11083	5M7937
65	26	3110-00-100-6149	96906	MS19059-2412
65	27	3020-01-067-5558	11083	5S7013
65	28	3020-01-067-4689	11083	5S6972
65	29	5330-01-064-3774	11083	8S3372
65	30	2520-01-068-6120	11083	4S5943
65	31	5360-00-894-7275	11083	9H5537
65	32	3020-01-155-0355	11083	5S6973
65	33	3020-01-152-5586	11083	7G2473
65	34	2520-01-155-5096	11083	5S7023
65	35	5315-01-066-5213	11083	2K5986
65	36	3110-01-067-1732	11083	4L9825
65	37	5365-00-616-4946	80756	RR-267
65	38	5365-00-419-3212	11083	5M7878
65	39	2530-01-067-5556	11083	5S6978
65	40	5365-01-032-7272	11083	9M4355
65	41	2520-01-152-7826	11083	4S5932
65	42	5315-01-067-1727	11083	9H5546
65	43	3020-01-156-5940	11083	7SB572
65	44	5330-00-828-8639	11083	4L9564
65	45	5365-00-845-1529	80756	RST-450
65	46	5365-00-753-3646	80756	RR-625
65	47	3110-00-248-5973	11083	6Y3484
65	48	2520-01-155-7963	11083	3S988
65	49	5360-00-498-2883	11083	4M9592

CROSS REFERENCE INDEXES

FIGURE AND ITEM NUMBER INDEX

FIG.	ITEM	STOCK NUMBER	CAGEC	PART NUMBER
65	50	5330-01-064-3775	11083	853373
65	51	3040-01-152-7825	11083	4S5972
65	51A	2805-01-347-7439	11083	455933
65	52	5315-01-062-5209	11083	5M7937
65	53	2530-01-068-9745	11083	458534
65	53A		11083	4S5989
65	54	5310-00-111-3609	11083	3S36
65	55	3120-01-095-5803	11083	7T3137
65	56	3110-00-862-7671	11083	25669
65	57	3020-01-152-5585	11083	7G2520
65	58	2895-01-068-7158	11083	455940
65	58A		11083	4S5941
65	59	2520-01-069-0806	11083	4S8537
65	60	5365-00-903-7544	80756	RR337
65	61	3010-01-150-5434	11083	8P8680
65	62	3020-01-067-2175	11033	455948
65	63	5365-00-441-8849	80756	RST-287
65	64	3020-01-067-2172	11083	455944
65	65	3020-01-067-2173	11083	455945
65	66	5365-00-584-9755	80756	RST231
65	67	2520-01-152-7824	11083	455937
65	63	3020-01-067-2176	11083	4S5981
65	69	3120-01-169-7172	11083	3S8021
65	70	3110-00-830-8802	11083	3sa022
65	71	2530-01-068-9744	11083	458531
65	71A		11083	458530
65	72	5310-00-111-3609	11083	3536
65	73	3020-01-152-7851	11083	7G2477
65	74	2520-01-158-6838	11083	4S5979
65	74A	2520-01-347-7443	11083	455980
65	75	2520-01-069-0806	11083	4S8537
65	76	5365-00-309-7459	11083	6F155
65	77	5315-00-472-5242	19207	11634187
65	78	2520-01-172-3041	110C3	455973
65	78A	2520-01-349-7391	11083	455935
65	79	5315-01-062-5209	11083	5M7937
65	80	3110-00-011-9935	11083	4B9782
65	81	3110-00-249-5245	11083	4S8538
65	82	5365-00-763-5016	80756	RRT-525
65	83	5365-01-068-6114	80756	RST-375
65	84	5365-01-162-2576	11083	4S5998
65	85	3020-01-067-2174	11083	455947
66	1	5310-00-768-0318	96906	MS51967-14
66	2	5310-00-584-5272	96906	MS35338-48
66	3	3040-01-032-2286	11083	5S899
66	4	3110-00-931-7854	11083	1S3206
66	5	2520-01-159-0995	11083	7G4663
66	6	3110-01-155-6124	60380	Q-12378
66	7	5360-01-067-5545	11083	2P3682
66	8	5365-01-064-3788	11083	9S5222
66	9	5310-00-480-6100	11083	V531

CROSS REFERENCE INDEXES

FIGURE AND ITEM NUMBER INDEX

FIG.	ITEM	STOCK NUMBER	CAGEC	PART NUMBER
66	10	5306-00-426-3080	11083	lA5822
66	11	5310-00-725-7382	96906	MS35690-624
66	12	5310-00-117-4788	11083	5M2894
66	13	3040-01-160-5875	11083	SS897
66	13A		19207	NPN30
66	14	5315-01-113-2356	11083	9M2089
66	15	5315-01-161-9153	11083	5S902
66	16	5330-00-919-2249	11083	9H223
66	17	5315-00-007-6034	11083	7M5915
66	18	5360-01-164-7624	11083	7M1224
66	19	5306-00-426-2922	11083	S1573
66	20		11083	5S0903
66	21	5305-00-879-8351	96906	MS35307-371
66	22	2520-01-162-4337	11083	9P3049
66	23	5330-00-930-4064	11083	8M4389
66	24	5340-01-152-4538	11033	7B2500
66	25	5365-01-157-0917	11083	352582
66	26	4730-01-163-0674	11083	7S8624
66	27	5330-00-999-5504	11083	8M4446
66	28	3040-01-150-2274	11083	5S901
66	29	3040-01-159-3017	11083	5S0904
66	30	5315-01-113-2356	11083	9M2089
66	31	3040-01-159-3040	11033	5S0905
66	32	5315-01-064-3778	11083	8S6377
66	33	5310-00-891-4411	11083	4H1394
67	1	2520-01-145-4315	11083	9P3050
67	2	4820-01-150-0913	11083	3S2585
67	3	5310-00-950-2660	11083	2S5717
67	4	5340-00-455-0326	11083	5S909
67	5	4820-01-150-1736	11083	6P8939
67	6	5306-00-455-0467	11083	lT414
67	7	5340-01-155-4485	11083	6P8937
67	8	5330-01-107-5182	11083	8M4433
67	9	4820-01-149-3833	11083	8S9194
67	10	4820-01-284-5440	11083	3P209
67	11	5330-00-074-3770	11083	5M1868
67	12	4320-01-159-1012	110383	1S6529
67	13	5360-01-150-6272	11083	3S2593
67	14	5365-00-006-0678	19207	11634204-2
67	15	5310-00-006-0673	11083	5M7915
67	16	4820-01-150-3860	11033	3P2755
67	17	4820-01-150-0911	11083	3PZ708
67	18	2520-00-237-4603	11083	1S2121
67	19	5360-00-950-8041	11083	4M2381
67	20	5340-01-069-0788	11083	8M1013
67	21	5365-00-687-3379	96906	MS16625-1062
67	22	4730-01-068-7106	11083	2M7041
67	23	5340-01-154-6546	11083	6P8938
67	24	5360-01-157-0998	11083	8M8132
67	25	4820-01-151-3651	11083	6P4711
67	26	2530-01-066-8462	11083	6P8B48

CROSS REFERENCE INDEXES

FIGURE AND ITEM NUMBER INDEX

FIG.	ITEM	STOCK NUMBER	CAGEC	PART NUMBER
67	27	4820-01-150-0912	11083	6P9295
67	28	5360-00-455-7142	11083	9H2367
67	29	4820-01-151-3650	11083	6P4717
67	30	5365-01-103-3670	11033	2M8191
67	31	2520-01-059-9414	11083	2S696
67	32	4730-00-924-7886	55883	IPD5M6214
67	33	5360-00-950-2471	11083	8M8627
67	34	5310-00-765-3237	73734	97410
67	35	5365-00-948-1600	11083	5M3492
67	36	4820-01-150-3859	11083	5M9656
67	37	5330-00-930-9407	11083	7M8485
67	38	5365-01-026-9555	11083	9S4181
67	39	2520-01-145-4315	11083	9P3051
67	40	5306-00-268-2449	11083	3S4346
67	41	5310-00-081-4219	96906	MS27183-12
67	42	5365-01-151-6167	11083	6P8940
67	43	2520-01-150-5419	11083	352596
68	1	5306-00-260-4508	11033	S1594
68	2	5340-00-948-6464	11083	6H4208
68	3		11083	4S8723
68	4	3110-01-163-5917	11083	8B2321
68	5	5365-00-598-6265	80756	RR204S
68	6	3110-01-068-7155	11033	351404
68	7	3110-01-161-5527	11083	2S9507
68	a	3020-01-158-9401	11083	352712
68	9	4710-01-159-2788	11083	550911
68	10	4730-00-266-2637	30327	91LI-4XI-8
63	10A		19207	NPN31
68	11	4730-00-278-8368	11083	lFl344
68	12	4710-01-159-2789	11083	5S3591
68	13	4730-00-289-1242	30327	9975928
63	13A		19207	NPN32
68	14	4730-00-278-8368	11083	lF1344
68	15	4710-01-159-2927	11083	553626
68	16	5365-00-143-0033	80756	RST-196
68	17	3110-01-161-5528	11083	458722
68	1i		08162	MU1310L
68	19	3020-01-158-9402	11033	4S8716
68	2C	5340-01-165-1584	11083	3S2173
68	21	5315-01-201-4588	11083	4D7651
68	22	5340-01-160-4097	11083	1H525
68	23		11083	5S0915
68	24	5365-00-763-9328	80756	RST-275
68	25	3110-01-160-4016	11083	5P9885
68	26	3110-01-160-0800	11083	5P3753
68	27		11083	6T0443
69	1	4820-01-213-8015	91816	HV50-2-Y
69	2	5330-00-952-8008	11033	3J7354
69	3	4730-01-144-2386	11083	5R5107
69	4	5310-00-494-1962	11083	406432
69	5	4730-01-063-0817	11083	7K9197

CROSS REFERENCE INDEXES

FIGURE AND ITEM NUMBER INDEX

FIG.	ITEM	STOCK NUMBER	CAGEC	PART NUMBER
69	6	4720-01-284-2236	11083	705961
69	7	5305-00-068-0511	80204	B1821BH038C125N
69	8	5310-00-117-4788	11083	5M2894
69	9	5310-01-061-8633	11083	9L9132
69	10	5310-01-194-5398	11083	1D4717
69	11	5340-01-186-9430	11083	4S1936
69	12	4730-00-258-1864	96906	MS51525B4-6
69	13	5330-00-801-3354	25184	906-737-70
70	1	5305-00-071-2068	96906	MS90728-112
70	2	2910-00-740-3593	11083	9M9740
70	3	5330-00-593-1282	62983	154085
70	4	2520-01-059-7175	11083	2S6462
70	5	5310-01-059-7159	11083	2H3788
70	6	2940-01-171-4855	11083	351401
70	7	5365-00-458-2276	11083	4S5858
70	8	5330-00-930-9407	11083	7M8485
70	9	5365-00-490-4623	11083	9S4205
70	10	5330-00-869-6563	11083	5K1770
70	11	5330-00-941-3599	02697	2-244C873-70
70	12	2940-01-059-9296	11083	7S8700
70	13	5307-01-059-9293	11083	3S4398
70	14	2940-01-156-7277	11083	758699
70	15	5365-00-411-4584	11083	9S4191
70	16	5330-00-801-3354	25184	906-737-70
71	1	5340-00-426-4656	11083	4D7794
71	2	5365-01-157-6106	11033	9G817
71	3	4710-01-161-0262	11083	7G6193
71	4	5330-00-801-3354	25184	906-737-70
71	5	4730-00-491-9576	96906	MS51525A6
71	6	4710-01-161-0263	11083	7G6195
71	7	5310-00-637-9541	96906	MS35338-46
71	8	5306-00-426-5062	11083	4F4879
71	9	5330-00-913-8872	09990	2-216S1032-70
71	10	4710-01-160-3657	11083	7G6205
71	11	5306-00-423-8194	11083	1A2029
71	12	5340-00-282-7505	96906	MS21333-57
71	13	5306-00-263-7301	11083	L1351
71	14	5340-01-162-8758	11083	8P1738
71	15	5315-00-246-8066	11083	2L3650
71	16	4710-01-160-3658	11083	7G6194
71	17	4720-01-159-9737	11083	3S6544
71	18	5306-00-698-2150	11083	0L2070
71	19	5310-00-117-4788	11083	5M2894
71	20	5310-01-194-5398	11083	114717
71	21	4730-01-051-3134	11083	1P4576
71	22	5330-00-997-7230	96906	MS9068-214
71	23	5340-01-157-0972	11083	752050
71	24	4710-01-161-7803	11083	9P8631
71	25	5306-00-263-4038	11083	2A4639
71	26	5330-01-043-5565	11083	1P3703
71	27	4710-01-161-7804	11083	9P8630

CROSS REFERENCE INDEXES

FIGURE AND ITEM NUMBER INDEX

FIG.	ITEM	STOCK NUMBER	CAGEC	PART NUMBER
71	28	5305-01-015-6841	11083	0S1591
71	29	4730-00-618-5381	96906	MS51523A6
71	30	4730-01-173-7628	11083	9K6426
71	31	4720-01-163-4347	11083	9G7601
71	32	5330-00-925-4778	09990	2-219S1032-70
71	33	5306-00-423-8194	11083	1A2029
71	34	4730-01-155-5059	11083	6M6853
71	35	4710-01-163-6995	11083	9G0807
71	36	4730-01-155-5055	11083	4S3652
71	37	4710-01-160-3659	11083	7G6192
71	33	4730-01-051-2312	78640	307942
71	39	4710-01-163-2441	11083	8P1641
71	40	4730-01-174-6160	11083	307937
71	41	5340-01-158-1165	11083	7G360
71	42		11083	8P4147
71	43	4710-01-155-5191	11083	8P3998
71	44	5340-01-157-2056	11083	1S1409
71	45	5310-01-094-8810	78189	3320-14-01
71	46	5305-00-252-8919	11033	0S0509
71	47	5340-01-161-2533	11083	7G9684
71	49	5310-00-005-0781	11083	9F2978
71	49	5306-01-195-4681	11083	3B1915
71	50	5330-00-248-2168	11083	7B6473
71	51	4330-00-103-5502	11083	9M8669
71	52	5330-00-948-9768	11083	8M4436
71	53	4730-01-155-0222	11083	8P2283
71	54	5330-00-930-5736	11083	8M4986
71	55	5306-00-698-2150	11083	0L2070
71	56	4710-01-160-3660	11083	5R5126
71	57	4730-01-053-4687	55883	1P05P597
71	58		11083	5P1291-6 1N
71	59	5340-00-269-0841	11083	2L2685
71	60	5306-00-268-5798	11083	0L1329
71	61	5310-00-584-5272	96906	MS35338-48
71	62	5306-00-874-4001	11083	6H1717
71	63	5330-00-580-1226	11083	1H9696
71	64	4710-01-160-3661	11083	5R5108
71	65	4710-01-155-5192	11083	SP4145
71	66	5305-00-252-8919	11083	0S0509
71	67	5306-00-273-6357	11083	1A1460
71	68	5310-00-768-0318	96906	MS51967-14
71	69	5306-00-260-4508	11083	S1594
71	70	4710-01-161-5083	11083	8P1640
72	1	4730-01-286-4632	79470	7238X12
72	2	5330-00-944-8281	11083	302824
72	3	5360-01-095-1834	11083	9M1986
72	4	4820-01-148-8161	11083	3T688
72	5	5365-00-411-4584	11033	9S4191
72	6	5330-00-801-3354	25184	906-737-70
72	7	4820-01-155-0235	11033	3T3398
72	8	2530-00-930-9778	11083	1H8171

CROSS REFERENCE INDEXES

FIGURE AND ITEM NUMBER INDEX

FIG.	ITEM	STOCK NUMBER	CAGEC	PART NUMBER
72	9	4820-01-155-5024	11083	3S9901
72	10	4820-01-155-5809	11083	359899
72	11	3110-00-100-6160	1103	4B9786
72	12	5360-01-280-9482	11083	1W9509
72	13	5310-01-165-4315	11083	7S8511
72	14	5365-00-804-9740	96906	MS16625-1081
73	1	5306-00-226-4825	80204	B1821BH031C075N
73	2	5310-00-081-4219	96906	MS27183-12
73	3	5340-01-107-4130	11083	4N3840
73	4	5330-01-063-9839	11083	4N3841
73	5	2520-01-107-9188	11033	6N124
73	6	5330-01-160-3989	11083	2W4561
73	7	4730-00-263-3122	11033	3B0551
73	8	4730-00-427-5121	01276	2082-6B
73	9	5305-01-015-6841	11033	0S1591
73	10	4730-00-968-6129	96906	MS49006-10
73	11	5305-00-879-8351	96906	MS35307-371
74	1	5330-00-632-7222	11083	5M4741
74	2	2520-00-432-1730	11083	6N9851
74	3	2520-01-053-7539	11083	5S7163
74	4	5310-00-362-7988	11083	6F7062
74	5	5365-00-938-5568	11083	8M9307
74	6	5305-00-068-0511	96906	MS90728-62
75	1	2520-01-155-5098	11083	7S8659
75	1A		11083	7S8658
75	2	5315-00-760-7425	11083	8M8489
75	3	3120-00-898-4700	11083	1 M3780
75	4	5330-00-801-3354	25134	906-737-70
75	5	5365-00-411-4584	11083	9S4191
75	6	5330-00-914-5310	11033	8M5007
75	7	4320-01-275-1691	11083	9M2210
75	8	5315-00-760-7425	11083	8M8489
75	9	3040-01-149-1235	11083	9M2209
75	10	3040-01-155-5859	11083	7S8657
75	11	3020-01-155-5156	11083	9M8281
75	12	5306-00-685-2384	14351	13XX3958
75	13	5310-00-413-5144	11083	3S4
75	14	5306-01-094-9106	11083	0S1590
75	15	2520-01-059-9520	11083	2S1454
75	15A		11083	2S1453
75	16	3120-00-898-4700	11083	1M3780
76	1	5310-01-194-5398	11083	104717
76	2	2520-01-069-0891	11083	3S3439
76	3	5330-00-863-5549	11083	5F149
76	4	5310-00-950-6980	11083	3S3440
76	5	4330-00-949-0868	11083	3S3875
76	6	5310-00-637-9541	96906	MS35338-46
76	7	5307-00-465-6789	11083	2M4779
76	8	2530-00-243-9486	11083	8M7166
76	9	5307-00-411-4501	11083	302871
76	10	4710-00-949-0874	11083	2S1641

CROSS REFERENCE INDEXES

FIGURE AND ITEM NUMBER INDEX

FIG.	ITEM	STOCK NUMBER	CAGEC	PART NUMBER
76	11	4710-00-243-9576	11083	9M2877
76	12	2530-00-949-0666	11083	8M7160
77	1		11083	206421
77	2	3110-00-740-6782	11083	1M1604
77	3	3040-01-158-8691	11083	8P1774
77	4		11083	2P9672
77	5	5315-00-575-0640	11083	6H879
77	6	5306-00-423-9325	11083	4B4043
77	7	5310-00-045-5001	96906	MS35340-50
77	8	5330-01-162-9751	11083	5P4251
77	9	5310-00-629-9613	19207	6299613
77	10	5306-00-423-8117	11083	S1595
77	11	3010-01-159-3591	11033	8P1328
77	12	3040-01-159-3588	11083	8P0203
77	13	5330-01-161-2612	11083	6PB359
77	14	5340-01-163-8509	11033	6P6698
77	15	5310-01-160-4532	11083	2J5815
77	16	5305-00-252-8919	11083	050509
77	17	5310-00-637-9541	96906	MS35338-46
77	18	5315-00-565-0437	11083	28093
77	19		11083	8H3326
77	20		11033	2B8092
77	21	2520-00-918-9977	11083	ZF7576
77	22	5315-00-925-0204	11083	188742
77	23	3110-00-100-0611	08162	67322
77	24	3110-00-100-3649	08162	67388
77	25	5306-00-149-9066	11033	684598
77	26	3040-01-159-0909	11083	7G8459
77	27	3020-01-160-9355	11083	2P9660
77	28	5340-01-163-0904	11083	3P5446
77	29	5310-00-763-8901	96906	MS51968-23
77	30	5340-01-163-2786	11083	3P5447
78	1		11083	4H9040
78	2	5330-01-164-8707	11083	9W7332
78	2A		11083	9G5340
78	3	5330-00-844-1442	11083	7M475
78	4	2530-00-426-4571	11083	3F1960
78	5	2520-01-172-0694	11083	8P1855
78	6	5320-01-162-8609	11083	434340
78	7	2540-00-848-2531	11083	4F6070
78	8	5310-00-271-4656	11083	7H3607
78	9	3020-01-162-0180	11083	9P984
78	10	5306-01-146-5675	11083	3S8182
78	11	2520-01-159-9803	11083	SP1856
78	12	3110-01-266-2376	11083	2P1553
78	13	5305-01-164-232B	11083	5M6671
78	14	5310-00-139-7030	11083	4D3704
78	15	2520-01-159-5869	11083	7G8458
78	16	5340-00-229-9287	11083	L1026
78	17	5315-00-426-4566	11083	3F1953
78	18	3040-01-171-3370	11083	2P9951

CROSS REFERENCE INDEXES

FIGURE AND ITEM NUMBER INDEX

FIG.	ITEM	STOCK NUMBER	CAGEC	PART NUMBER
78	19	5315-00-266-5276	11083	268162
78	20	6640-00-222-3103	81348	LLLS731
78	21	4730-00-437-0131	02951	1000-20
78	22	5306-01-127-9361	11083	0S1585
78	23	5310-00-431-7239	11083	2M849
78	24	2530-00-426-4569	11083	3F1958
78	25	5310-00-080-6004	96906	MS27183-14
78	26	5310-00-637-9541	96906	MS35338-46
78	27	5305-00-252-8919	11083	0S0509
78	28	5305-00-958-5245	96906	MS35190-288
78	29	5330-00-352-7517	11083	3F1954
78	29	5330-01-283-0524	11083	7T0200
78	29A	5330-01-287-0377	11083	8T0102
78	30	5330-00-431-7121	11083	9M5894
78	31	2520-01-159-2719	11083	7S7625
78	31	3130-01-281-7891	11083	7T0358
78	32	3120-01-282-7553	11083	7T0201
78	32	3130-00-426-4575	11083	3F1965
73	33		11033	7S7569
78	33		11083	7T0357
78	34	4730-00-288-8055	81348	WW-P-471AASBCA
78	35	4730-00-244-6517	95879	1684 B
78	36	5315-00-352-7512	11083	2M122
78	36	5340-01-222-8963	11083	5R5197
78	37	5365-00-426-4576	11083	2S4366
78	38	2520-00-352-7520	11083	3F1972
78	39		11083	3F1971
78	40	5315-00-054-4009	21450	544009
78	41		11083	2F2815
78	42	5310-00-423-8219	11083	1A3585
78	43	5330-00-426-4567	11083	3F1955
78	44	2530-00-426-4568	11083	3F1956
78	44	5340-01-281-3888	11083	7T0481
78	45	4730-00-044-4688	89346	50410DA
78	46	5330-00-948-6482	11083	3K360
78	47	5365-01-031-8183	30780	8HP5N-S
78	48	5310-00-584-5272	96906	MS35338-48
78	49	5306-00-263-8978	11083	S1587
78	50	9390-01-167-3646	11083	287557
78	51	5306-00-263-8982	1103	6F7024
78	52	3110-01-160-0455	11083	2S1477
78	53	5315-00-245-9995	11083	8B1312
78	54	2520-01-066-4723	11083	8M6521
78	55		11083	7M3085
78	56	5310-00-045-5001	96906	MS35340-50
78	56	5310-00-413-6522	11083	2S7593
78	57	5310-00-763-8905	96906	MS51968-20
78	58	5330-00-632-6417	11083	8P4237
78	59	3130-01-167-9124	11083	7G6044
78	60	3110-00-100-0602	08162	56650
78	61		11083	7G6043

CROSS REFERENCE INDEXES

FIGURE AND ITEM NUMBER INDEX

FIG.	ITEM	STOCK NUMBER	CAGEC	PART NUMBER
78	62	2990-01-129-5893	11083	3P3623
78	63	5310-01-162-6413	11083	8P1853
78	64	3110-00-100-3632	08162	56425
79	1	5355-01-097-8255	80813	250-702
79	2	5310-00-445-4633	11083	9M1311
79	3	3120-01-162-6037	11083	347897
79	4	5307-01-161-7354	11083	3T2368
79	5	5340-01-163-0918	11383	3P5938
79	6	5310-00-042-6376	31159	JM56
79	7	5310-01-051-2360	11033	5P537
79	8	5305-01-095-3961	11033	481254
79	9	5340-01-161-4024	11083	3T2367
79	10	5310-00-117-4788	11083	5M2894
79	11	5306-00-263-7301	11083	L1351
79	12	5340-01-167-0261	11083	3T9257
79	13	5310-00-880-7744	96906	MS51967-5
79	14	5310-00-081-4219	96906	MS27183-12
79	15	5306-00-226-4833	80204	81821BH031C200N
79	16	5330-00-801-3354	25184	?06-737-70
79	17	4730-01-051-2312	78640	307942
79	18	4730-01-051-8745	11083	6K9194
79	19	4730-00-143-3941	96906	MS51527A6
79	20	5340-00-426-4656	11083	4D7794
79	21		11083	2P5943-16o5
79	22	4730-01-095-0075	11083	455414
79	23	4730-01-094-7469	11083	8S6417
79	24	4710-01-159-5983	11083	9G0808
79	25	4730-01-155-5055	11093	4S3652
79	26	4710-01-159-5982	11083	9G0806
79	27		11083	2P5943-10.63
79	28	4730-01-094-7469	11083	8S6417
79	29	4730-01-095-0075	11083	4S5414
79	33	5340-01-162-8642	11083	3T9256
79	31	5306-00-426-5062	11083	4F4879
79	32	4820-01-162-6586	11341	128018
79	32A		19207	NPN33
79	33		96906	MS16632-4075
79	34	5330-01-163-8130	11341	1A9033
79	35	5310-00-851-2682	96906	M535691-17
79	36	5340-01-186-7625	11083	3T9254
79	37	5340-01-160-7614	11083	3T9255
79	38	5305-00-071-2506	80204	31821BH025C050N
79	39	5310-01-098-0634	78189	WD23875
80	1	5315-00-616-5499	96906	MS35756-22
so	2	3040-01-159-2978	11083	8P3204
80	2	3040-01-159-3510	11083	8P3203
80	3	5305-00-724-7221	80204	B1821BH063C175N
80	4	3040-01-161-0179	11083	8P0802
80	5	5330-01-048-6001	11083	2P6286
80	6	3040-01-159-7827	11083	9G0818
80	6	3040-01-159-7828	11053	9G805

CROSS REFERENCE INDEXES

FIGURE AND ITEM NUMBER INDEX

FIG.	ITEM	STOCK NUMBER	CAGEC	PART NUMBER
80	7	3110-00-227-4431	21335	82012-0H
80	8	5315-00-363-9727	11083	6B7651
80	9		11083	9G1444
80	10		11083	9G1443
80	11	5340-00-426-2852	11083	L1021
80	12	3120-01-160-4604	11083	2S8359
80	13	5310-00-637-9541	96906	MS35338-46
80	14	5305-01-015-6841	11083	0S1591
80	15	4730-00-924-7886	55883	1PD5M6214
80	16	4730-00-231-5605	11083	386552
80	17	5330-01-165-4331	11083	8P3394
80	18	2590-01-159-5901	11083	8P3197
80	19	5306-00-260-4508	11083	S1594
80	20	5306-01-195-4681	11083	381915
80	21	5310-01-094-8810	78189	3320-14-01
80	22	5330-00-141-2476	75165	920
80	23	5365-00-423-8098	11083	L827
80	24	2815-00-494-9420	11083	3F5022
80	25	2910-00-309-9473	11083	0T0573
80	26	3120-00-176-5546	11083	687687
80	27	5315-00-839-5822	96906	MS24665-353
80	28	5310-00-763-8920	96906	MS51967-20
80	29		11083	9H7657
80	30	5306-00-455-0460	11083	8S9092
80	31	2530-01-159-5907	11083	9G9465
80	32	5360-00-455-7145	11083	3J3370
80	33	5365-01-165-2606	78553	NAN50
80	34	4820-01-159-5909	11083	2S8571
80	35	5360-01-160-6911	1183	5M3389
80	36	2530-01-168-1038	11083	5S6880
80	37	5315-00-891-0815	11083	3H1977
80	38	5360-00-137-3464	11083	9H7553
80	39	5360-01-069-1390	11083	9H7534
80	40	5340-01-162-2864	11083	2S8416
80	41	5365-00-848-7439	11083	4H8158
80	42	2530-01-159-5870	11083	8P8255
80	43	4730-00-089-2515	11083	5M6213
80	44	5306-00-423-8194	11083	1A2029
80	45	5330-01-162-4763	11083	8P805
80	46	5340-01-160-4030	11083	8P804
81	1	5305-01-216-3986	11083	2P4337
81	2	5340-01-309-7218	11083	5R5137
81	2	5340-01-310-1659	11083	5R5138
81	3	2510-01-215-2231	11083	5R5164
81	4	5340-01-309-7780	11083	5R5184
81	4	5340-01-310-1111	11083	5R5185
81	5	2590-01-312-2888	11083	3R3595
81	6	5365-01-309-4813	11093	3R4240
81	7	5340-01-218-1340	11083	5R6602
81	8	2540-01-222-7734	11083	5R5131
82	1	5310-00-045-5001	96906	MS35340-50

CROSS REFERENCE INDEXES

FIGURE AND ITEM NUMBER INDEX

FIG.	ITEM	STOCK NUMBER	CAGEC	PART NUMBER
82	2	5305-00-724-7236	80204	B1821BH063C325N
82	3	5305-00-426-2936	11083	S1625
82	4	5306-00-423-8292	11083	1A8651
82	5	5306-00-862-8901	11083	L1169
82	6	4730-00-223-6410	95879	1629 8
82	7	2530-00-545-0322	11083	7B5979
82	8	2530-00-422-9813	11083	1S5315
82	8A		11083	1S5314
82	9	5315-01-175-1147	11083	9P7752
82	10	5305-00-724-7221	80204	B1821BH063C175N
82	11	5305-00-724-7236	80204	B1821BH063C325N
82	12	2530-01-090-6880	11083	2M7207
82	13	2530-01-159-3446	11083	8P3773
82	13	2530-01-160-3621	11083	8P3774
82	14	2530-00-149-7388	11083	3B1464AND9P7751
82	15	2510-01-158-9354	11083	1S5322
82	15	2510-01-348-2171	11083	1S5321
82	16	5340-01-165-1217	11083	8M6243
82	17	5340-01-160-0837	110B3	8K8428
82	18	2530-01-310-6439	11083	7K1293
82	19	2510-01-309-1002	11083	2K2879
82	20	2530-01-310-6438	11083	4K4780
83	1	5310-00-045-5001	96906	MS35340-50
83	2	5305-00-724-7236	80204	B1821BHG63C325N
83	3	5305-00-426-2936	11083	S1625
83	4	5306-00-862-8901	11083	L1169
83	5	5306-00-423-8292	11083	1A8651
83	6	4730-00-223-6410	95879	1629 B
83	7	3120-01-281-7217	11083	7T0206
83	8	5330-01-288-5038	11083	6V8543
83	9	2530-00-422-9813	11083	155315
83	9A		11083	1S5314
83	10	5315-01-175-1147	11083	9P7752
83	11	2530-01-281-5233	11083	8P3769
83	11	2530-01-281-9386	11033	8P3770
83	12	5306-00-455-0460	11083	8s9092
83	13	2530-01-090-6880	11083	2M7207
83	14	5305-00-724-7221	80204	B1821BH063C175N
83	15	5306-00-424-0086	11083	783235
83	16	5310-00-584-5272	96906	MS35338-48
83	17	3020-01-281-7979	11083	9S8354
83	18	2530-01-281-1085	11083	9S8353
83	19	2530-01-280-4978	11083	958246
83	19	2530-01-280-4979	11083	9S8245
84	1	5365-00-290-3745	80756	RS200
84	2	2530-01-173-8618	11083	9S3567
84	2A		11083	953566
84	3	5315-00-193-0924	11083	1M4291
84	4	5330-00-580-1226	11083	1H9696
84	5	5330-00-738-8639	11083	9W6647
84	5A		11083	8H2229

CROSS REFERENCE INDEXES

FIGURE AND ITEM NUMBER INDEX

FIG.	ITEM	STOCK NUMBER	CAGEC	PART NUMBER
84	6	5330-00-848-6108	11083	8H2262
84	7	3110-00-938-5084	08162	JLM104948
84	8	3110-00-191-3923	08162	JLM104910
84	9		11083	3T3207
84	10	5310-00-637-9541	96906	MS35338-46
84	11	5306-00-260-4508	11083	S1594
84	12	5365-00-032-4357	11083	ZP347
84	13	5330-00-031-2558	11083	1S8947
84	14	5340-01-162-4077	11083	5M2043
84	15	5330-00-325-6310	11083	2H6338
84	16	5306-01-110-1130	11033	5K9107
84	17	5340-00-423-8146	11083	0T0329
84	18	3110-01-160-4714	11083	8P6188
84	19	2530-00-420-6514	11083	9S3569
85	1	2530-01-279-3087	11083	7K8572
85	2	5340-00-945-5871	11083	6H7382
85	3	3040-00-923-7063	11083	1M3812
85	4	2530-00-352-7722	11083	4F0324
85	5	4320-00-858-8192	11083	2M2858
85	5A		11083	1M3098
85	6	5330-00-858-8186	11043	1M3097
85	7	5305-00-068-0511	96906	MS90728-62
85	8	5310-00-117-4788	11083	5M2894
85	9	2530-01-204-5613	11083	2P8045
85	9A		11083	8S5805
85	10	3120-01-217-0829	11083	8P6652
85	11	5315-00-267-2268	11083	932289
85	12	5330-00-290-9386	68044	AN123902
85	13	2530-01-307-3486	11083	959535
85	14	5365-00-032-4357	11083	2P347
85	15	5330-00-031-2558	11083	158947
85	16	3040-00-924-9564	11083	5M3627
85	17	5330-00-527-7939	96906	MS9021-225
85	19	3040-01-159-0162	11033	5M1915
85	19	5310-00-045-5001	96906	MS35340-50
85	20	5305-00-260-4511	11083	S1601
66	1	2530-01-279-3088	11083	7K8571
86	2	5340-00-945-5871	11083	6H7382
86	3	3040-00-923-7063	11033	1M3812
86	4	2530-00-352-7722	11033	4F0324
86	5	4320-00-858-8192	11083	2M2858
86	5A		11033	1M3098
86	6	5330-00-858-8186	11033	1M3097
86	7	5305-00-068-0511	96906	MS90728-62
86	8	5310-00-637-9541	96906	MS35338-46
86	9	2530-01-204-5618	11083	2P8045
86	10		11033	8S5305
86	11	3120-01-216-9086	11083	8S5796
86	12	5315-00-267-2268	11083	9B2289
86	13	5330-00-290-9386	88044	AN123902
86	14	2530-01-215-1605	11083	9S9534

CROSS REFERENCE INDEXES

FIGURE AND ITEM NUMBER INDEX

FIG.	ITEM	STOCK NUMBER	CAGEC	PART NUMBER
86	15	5365-00-032-4357	11083	2P347
86	16	5330-00-031-2558	11083	1S8947
86	17	3040-00-924-9564	11083	5M0627
86	18	5330-00-527-7939	96906	MS9021-225
86	19	3040-01-159-0162	11083	5M1915
86	20	5305-00-260-4511	11083	S1601
86	21	5310-00-045-5001	96906	MS35340-50
87	1	5306-00-426-2933	11083	S1620
87	2	5310-00-193-1076	11083	ZS1654
87	3	5310-00-762-6241	96906	MS51967-35
87	4		11083	9H4104
87	5	5360-00-946-2127	11083	7H2445
87	6	5365-01-159-1561	11083	7H2424
87	7	5365-00-621-3192	80756	RS-150
87	8	5330-00-921-6911	11083	255867
87	9	5340-00-945-2401	11083	7H2423
87	10	2530-00-924-7864	11083	9HT670
87	11	5330-00-074-3764	11083	7H2444
87	12	5306-01-160-3949	11083	2P7622
87	13	5305-00-724-7222	80204	818218H063C200N
87	14	5310-00-045-5001	96906	MS35340-50
87	15	2530-01-160-1596	11083	2V7524
87	16	5315-01-160-2315	11083	7M1201
87	17	2530-01-215-3287	11083	9G8246
87	17A		11083	7G7530
87	18	5305-00-708-3823	11083	7B3028
87	19	9905-01-163-9191	11083	2S5927
87	20	5340-00-945-5659	11083	4M7022
87	21	5330-00-921-6914	1103	4M7021
87	22	2590-00-923-2418	11083	8M6676
87	23	5310-00-739-9977	11083	5M6708
87	24	4820-00-911-9224	57733	330671
87	25	4730-00-911-9226	11083	2S5925
87	26	2520-00-923-7084	11083	156422
87	27	2530-01-159-8742	11083	2V7525
88	1	5306-00-263-8978	11083	S1587
88	2	5310-00-584-5272	96906	MS35338-48
88	3		11083	7M9398
88	4	5365-01-161-2795	11083	4K7384
88	5	5306-01-127-9361	11083	0S1585
88	6	5306-00-263-8950	11083	3BB428
88	7	5310-01-160-4549	11033	4K9943
88	a	3120-01-158-6680	11083	9G8300
88	9	5330-00-527-7939	96906	MS9021-225
88	10	4320-00-858-8192	11083	ZM2858
88	10A		11083	1M3098
88	11	5330-00-858-8186	11083	1M3097
88	12	5306-00-423-8194	11083	1A2029
88	13	5310-00-637-9541	96906	MS35338-46
88	14	3120-00-923-7103	11083	3P8272
88	14A		11083	8S5803

CROSS REFERENCE INDEXES

FIGURE AND ITEM NUMBER INDEX

FIG.	ITEM	STOCK NUMBER	CAGEC	PART NUMBER
88	15	5315-00-267-2268	11083	9B2289
88	16	5330-00-290-9386	88044	AN123902
88	17	2530-00-455-9268	11083	SS2560
88	18	3130-01-163-8225	11083	9G8301
88	19	2530-00-149-8065	11083	1F8875
88	19A		11083	1F8876
88	20	5315-00-604-3345	11083	686022
88	21	5360-00-149-8898	11083	4F5004
88	22	5340-00-371-3422	11083	4B1382
88	23	2530-00-243-9530	11083	5M5000
88	24	3130-01-165-8813	11083	4M1186
88	25	5310-00-045-5001	96906	MS35340-50
88	26	5305-00-724-7222	80204	B1821BH063C200N
88	27	5306-00-426-3209	11083	1B4367
88	28	5365-01-164-9968	11083	7M2461
88	29	5340-00-423-8146	11083	0T0329
88	30	5365-00-032-4357	11083	2P347
88	31	5330-00-031-2558	11083	1S8947
88	32		11083	5K305
89	1	2530-01-159-8680	11083	3P388B
89	2	5306-00-566-7243	11083	7H3597
89	3	2530-00-464-4334	11083	5S0820
89	4	5310-00-066-2486	11083	1M140B
89	5	2530-01-159-8743	11083	3P3885
89	6	2530-01-159-8748	11083	3P3046
89	7	2530-01-159-8746	11033	3P3044
89	8	2530-01-159-8744	11083	3P7154
89	9	5330-01-160-3926	11083	3P3883
89	10	5365-01-159-9499	11083	3P3878
89	11	3120-01-163-6536	11083	3P3879
89	12	2530-01-161-0185	11083	3P7153
89	13	5315-01-162-6056	11083	3P3880
89	14	5365-01-164-7631	11083	9G1642
89	15	5340-01-308-6246	11083	6Y0473
89	16	2530-01-159-8747	11083	3P3043
89	17	2530-01-159-8745	11083	3P3045
89	18	5306-01-198-2332	11083	3P2274
90	1	5315-01-200-4094	11083	3R8509
90	2	5315-01-187-3541	110 3	5P8837
90	3	2520-01-197-7936	11033	3R8464
90	4	5315-00-931-8963	11083	3J1770
90	5	5315-01-200-7984	11083	3R8534
90	6	3110-00-156-8137	43334	30311
90	7	5310-00-638-0201	11083	2B3455
90	8		11083	233457
90	9	5330-01-199-9483	11083	3R8502
90	10	5340-01-187-3506	11083	3R8504
90	11	5310-01-051-2360	11033	5P537
90	12	5305-00-071-2505	30204	B1821BH025C088N
90	13	3110-00-156-7942	43334	5213
90	14	5330-01-199-9472	11083	300085

CROSS REFERENCE INDEXES

FIGURE AND ITEM NUMBER INDEX

FIG.	ITEM	STOCK NUMBER	CAGEC	PART NUMBER
90	15		11083	3R8492
90	16	5310-00-044-3339	19207	443339
90	17	5305-01-Z03-9343	11083	8F9372
90	18	5310-01-097-6720	11083	5P1076
90	19	5340-01-198-0864	11083	5R5103
90	20	5310-00-423-8219	11083	1A3585
90	21		11033	5R5100
90	22	2530-01-192-4705	83187	3-1379
90	23	3110-00-100-3529	11083	6M1882
90	24	3110-00-100-0534	11083	6M1883
90	25	5306-01-025-3843	97153	43-786
90	26	5310-00-149-9146	96906	MS20002C6
90	27	2530-01-314-4415	97153	300-519
90	28	5330-00-585-3204	97153	68-216
90	29	2610-01-311-6854	97153	418-58
90	30	2530-01-314-4416	97153	300-520
90	31	1630-00-898-2157	97153	211-47
90	32	5310-00-813-3653	97153	42FLW624
91	1	2520-01-163-0816	11083	9P9382
91	2	2520-00-147-8491	79370	PP2
91	3	3120-01-162-6039	11083	6P6696
91	4	2520-01-162-4413	11083	8P8240
91	5	2530-00-948-9748	11083	9M6775
91	6	5306-00-180-5319	11083	5D9514
91	7	2520-01-159-5884	11083	3T1900
91	8	5360-01-162-4838	11083	6P6630
91	9	5360-01-160-7762	11083	6P6586
91	10	2530-00-949-0817	11083	1M9444
91	11	5330-00-948-9776	11083	8M7438
91	12	2530-01-160-0845	11083	8P1353
91	13	5330-01-160-2124	11083	9M1393
91	14	5306-01-127-9361	11083	0S1585
91	15	5310-00-809-5997	96936	MS27183-17
91	16		11083	8P1323
91	16	2530-01-159-7830	11083	8P1324
91	17	5365-01-163-6186	11083	7G4141
91	18	3110-00-198-1783	60038	H414210
91	18	3110-00-554-9004	08162	HM212010
91	19	5310-00-944-5896	16764	9418881
91	20		8G357	H414236
91	20	3110-00-293-8566	08162	HM212047
91	21	3020-01-159-3036	11093	SP1183
91	22	3040-01-158-6202	11083	8P1182
91	23	5306-00-423-9054	11083	384990
91	24	5310-01-095-4631	11083	5P8247
91	25	2530-01-162-8966	11083	7P1697
91	26	5306-00-426-3209	11083	1B4367
91	27	2530-01-159-7776	11083	8P1325
91	28	5330-00-869-6574	11083	6L1650
91	29	2520-01-173-6418	11083	8P8570
91	30	5315-01-160-4640	11083	1T550

CROSS REFERENCE INDEXES

FIGURE AND ITEM NUMBER INDEX

FIG.	ITEM	STOCK NUMBER	CAGEC	PART NUMBER
91	31		11083	8P1326
91	32	5340-01-163-2785	11083	6P6700
91	33	5310-00-117-4788	11083	5M2894
91	34	5305-01-162-9717	11083	6F7037
91	35	5305-00-252-8919	11083	0S0509
92	1	5365-01-161-2794	11083	7G6773
92	2	5310-00-637-9541	96906	MS35338-46
92	3	5305-00-726-2525	96906	MS90727-158
92	4	3040-01-159-2881	11083	8P3475
92	5	3110-01-066-9172	11083	6K8088
92	6	5310-00-220-6552	11083	9S1328
92	7	5310-01-163-0513	11083	8P9821
92	8	2540-01-159-8879	11083	8P1870
92	9	5315-00-839-5822	96906	MS24665-353
92	10	5315-01-066-8470	11083	9S1315
92	11	5340-01-160-4084	11083	4M7930
92	12	5310-00-045-1079	24617	145036
92	13	5306-01-161-9138	11083	8P2502
92	14	3040-01-159-0862	11083	8P2507
92	15	3040-01-159-5944	11083	8P2504
92	16	5306-01-161-6220	11083	8P2511
92	17	5340-01-068-7173	11083	9S1314
92	18	3040-01-161-0993	11083	SP2503
92	19	2540-01-159-8749	11083	8P1871
92	20	5340-00-291-0372	61864	SS51142
93	1	5340-00-426-2852	11083	L1021
93	2	3040-01-159-2882	11083	8P569
93	3	5340-00-229-9287	11083	L1026
93	4	5315-01-098-3928	11083	1J5353
93	5	5330-00-478-2938	96906	MS29513-166
93	6	3040-01-159-8807	11083	7G5078
93	7	5330-01-093-8485	11083	2P1068
93	8	4820-01-159-8809	11083	9G780
93	9	3040-01-159-8805	11083	9G787
93	10	3040-01-159-2963	11083	7G5081
93	11	4730-00-924-7886	55883	1PD5M6214
93	12	5330-00-593-1193	11083	3H1461
93	13	5340-01-158-6754	11083	3T1264
93	14	5310-00-117-4788	11083	5M2894
93	15	5305-00-725-2317	80204	818218H038C150N
93	16	5306-01-162-8500	11083	S1623
93	17	5310-00-809-5997	96906	MS27183-17
93	18	5310-01-159-1871	11083	9G809
93	19	5340-01-161-2249	11083	9G1706
93	20	3040-01-161-6655	11083	9G7804P
93	21	3120-01-166-6915	11083	752670
93	22	3040-01-159-5948	11083	9G788
93	23	5315-00-839-5821	96906	MS24665-351
93	24	5315-01-164-7583	11083	1A8827
93	25	5340-01-160-4676	11083	9G7T9
93	26	5315-00-012-0123	96906	MS24665-355

CROSS REFERENCE INDEXES

FIGURE AND ITEM NUMBER INDEX

FIG.	ITEM	STOCK NUMBER	CAGEC	PART NUMBER
93	27		11083	6B7988
93	28	5340-01-160-2431	11083	9P1154
93	29	4730-01-170-9822	11083	8P5647
93	30		11083	9P740
93	31	5320-01-162-8615	11083	7B5068
93	32	2530-01-163-7861	11083	9P0678
93	33	2530-01-164-1785	11083	9P0946
93	34	5320-00-164-0917	11083	785060
93	35	2530-01-164-7812	11083	9P0695
93	36	3040-00-333-4393	11083	9P0696
93	37	2530-01-159-5833	11083	9P0741
93	38	5310-00-045-5001	96906	MS35340-50
93	39	5306-00-423-8116	90940	0035392-0
93	40	2530-01-173-6943	11083	8P3001
93	41	5330-00-105-0368	11083	9M7002
93	42	5365-01-161-2644	11083	7M2853
93	43	5315-01-160-4654	11083	8P3002
93	44	5340-01-160-4083	11083	6P9420
93	45	3040-01-159-5946	11083	8P4545
93	46	5315-00-017-1893	11083	881419
93	47	5315-00-839-5822	96906	MS24665-353
93	48	5310-00-404-2422	52788	265079
93	49	5340-01-160-4081	11083	8P4546
93	50	5310-00-167-1304	81352	AN316-8R
93	51	3040-01-159-5947	11083	BP4714
93	52	5305-01-161-5498	11083	2K2188
93	53	3120-01-160-4111	11083	1P1650
94	1	5315-01-164-7583	11033	1A8827
94	2	5340-01-161-6147	11033	8P3409
94	3	5310-00-637-9541	96906	MS35338-46
94	4	5305-00-252-8919	11083	050509
94	5	3040-01-159-8804	11083	8P3410
94	6	2520-00-362-7883	11083	0L0829
94	7	5315-00-839-5821	96906	MS24665-351
94	8	2530-01-069-0791	11083	1P2878
94	9	5310-01-163-0513	11083	SP9821
94	10	5315-00-710-2087	11083	1H1200
94	11	5340-00-493-3997	11083	9M5884
94	12	5310-00-220-6552	11083	9S1328
94	13	3110-01-066-9172	11083	6K8088
94	14	3040-01-163-7349	11083	8P3261
94	15	5310-00-045-1079	24617	145036
94	16	5340-01-160-2374	11083	4K5563
94	17	5315-01-159-9438	11083	7H9397
94	18		11083	8P3262
94	19	5315-00-272-6760	11083	18676
94	20	5340-01-053-3843	11083	1M1341
94	21	5310-00-975-2075	96906	MS35691-21
94	22	5306-01-163-7474	11083	8P2971
94	23	5340-00-633-8043	11083	2K400
94	24		11083	8P2505

CROSS REFERENCE INDEXES

FIGURE AND ITEM NUMBER INDEX

FIG.	ITEM	STOCK NUMBER	CAGEC	PART NUMBER
94	25	3110-01-066-9172	11083	6K8088
94	26	5340-00-985-0823	96906	MS35812-4
94	27	5306-01-163-9381	11083	8P3987
94	28	5306-01-162-8667	11083	3T7540
94	29	3040-01-163-7345	11083	8P2506
95	1	5310-01-194-5398	11083	1D4717
95	2		11083	5H6799
95	3	5315-00-839-5821	96906	MS24665-351
95	4	5340-01-053-3843	11083	1M1341
95	5	5310-00-975-2075	96906	MS35691-21
95	6	5315-00-272-6760	11383	13676
95	7		11083	7G9990
95	8	5305-00-068-0511	80204	3 1821BH038C125N
95	9	5306-00-285-1368	11083	L1143
95	10	5310-00-637-9541	96906	MS35338-46
95	11	4820-01-163-1045	11083	3T9365
95	12	5330-00-914-3320	09990	2-312S1032-70
95	13	4730-00-924-7886	55883	1P05M6214
95	14	4T30-00-401-0306	11033	3S2471
95	15	5306-00-698-2150	11083	0L2070
95	16	5305-01-026-9518	11083	0S1571
95	17	5306-00-260-4508	11083	S1594
95	18	5340-01-163-7476	11083	9P1383
95	19	5330-00-999-5504	11083	8M4446
95	20	4710-01-163-0932	11083	SP1728
95	21	5330-00-925-4778	09990	2-219S1032-70
95	22	5330-00-997-7230	96906	MS9068-214
95	23	5330-00-945-4395	11083	154
95	24	4710-01-162-7671	11083	8P1729
95	25	4730-00-349-8975	11083	3S2472
95	26	5305-00-879-8351	96906	MS35307-371
95	27	5305-01-015-6841	11083	0S1591
96	1	5330-00-912-1586	11083	2S8414
96	2	5310-01-119-1730	11083	4B4283
96	3	5315-00-839-5821	96906	MS24665-351
96	4	5305-00-068-0511	80204	81821BH038C125N
96	5	5315-00-272-6760	11083	1B676
96	6		11083	2S8396
96	7	2530-00-949-4505	72800	421
96	8	5310-00-209-6512	19237	8392184
96	9	3110-00-948-5793	11083	8H8175
96	10	5330-00-919-2249	11083	9H223
96	11	5315-00-616-5524	64294	29620-3
96	12	5365-00-449-2597	11083	3S8313
96	13	5305-00-708-3823	11083	783028
96	14	9905-01-166-5122	11083	3T9368
96	15	3040-01-163-7309	11083	8PB043
96	16	5310-00-117-4788	11083	5M2894
96	17	5306-00-426-2974	11083	T65
96	18	5306-00-637-4927	11083	1A5183
96	19	3040-01-162-7355	11083	8P2520

CROSS REFERENCE INDEXES

FIGURE AND ITEM NUMBER INDEX

FIG.	ITEM	STOCK NUMBER	CAGEC	PART NUMBER
96	20	4710-01-170-9234	11083	8S5716
96	21	4710-00-405-7327	11083	2S8413
96	22		11083	8P3301
96	23		11083	9P8186
96	24	5305-00-252-8919	11083	0S0509
96	25	5310-00-413-5060	11083	3K925
96	26	4820-01-163-1195	11083	9P8185
96	27	5365-00-584-6620	96906	MS16632-1037
96	28	3120-01-162-2573	11083	3T1100
96	29	5310-01-164-6362	11083	9P8218
96	30	5310-01-205-9054	11083	9P8217
96	31	5365-00-282-5047	11083	1H4148
96	32	3120-01-166-6163	11083	9P7913
96	33	5360-01-069-0812	11083	8S5753
96	34	5360-01-162-2845	11083	3T9366
96	35	5360-01-161-9170	11083	3T9367
96	36	5310-01-160-0787	11083	3T9981
96	37	5365-01-161-9190	11083	7G6005
96	38	3120-00-948-6453	11083	2S8411
96	39	4820-01-163-1196	11083	9P8197
96	40	4820-01-160-0852	11083	3P3716
96	41	4820-01-159-7837	11083	9P8196
96	42	5360-01-159-9495	11083	9P8308
96	43	5365-01-161-0257	11083	7G4271
96	44	5330-00-914-5821	11083	8M4445
96	45	5365-01-254-2381	11083	2SS399
96	46	5365-00-252-4753	96906	MS16625-1165
96	47	4710-00-405-7326	11083	2S8412
96	48	3040-01-159-2950	11083	9P8001
96	49	5306-00-260-4508	11083	S1594
97	1	5340-01-160-4031	11083	8P1211
97	2	5306-00-260-4508	11083	S1594
97	3	5310-00-117-4788	11083	5M2894
97	4	5365-00-734-2114	11083	4B4845
97	5	2520-01-164-0077	11083	9G5127
97	6	2510-01-159-8750	11083	8P1053
97	7		11083	8P1050
97	8	5310-01-160-3978	11083	8S1783
97	9	5310-01-160-3967	11083	5D2643
97	10	5340-01-160-2444	11083	1H4262
97	11		11083	5H7952
97	12	2530-01-159-8751	11083	5S3250
97	13	2510-01-159-8753	11083	5S3249
97	14		11083	5H7951
97	15	2530-01-159-8752	11083	1P9497
97	16	5340-01-160-2351	11033	2P3127
97	16	5340-01-160-4074	11083	2P3126
97	17	5315-00-266-5276	11083	288162
97	18	5307-01-167-6375	11083	3J8154
97	19	4730-01-171-1981	11033	7B9665
97	20	5330-01-164-8570	11083	9P2074

CROSS REFERENCE INDEXES

FIGURE AND ITEM NUMBER INDEX

FIG.	ITEM	STOCK NUMBER	CAGEC	PART NUMBER
97	21	5340-01-162-6047	11083	9P4064
97	22	5310-00-637-9541	96906	MS35338-46
97	23	4820-00-407-8330	11083	5S4017
97	24	5330-00-297-6548	11083	6F4868
97	25	5365-00-423-9251	11083	4B2363
98	1	5340-01-309-7258	11083	5R5160
98	2	5306-00-426-4171	11083	3B2968
98	3	2510-01-218-7470	11083	5R5161
98	4	5310-01-102-2477	11083	5P8248
98	5	5310-00-978-5406	11083	2J3506
98	6	2510-01-191-8449	11083	5R5175
98	7	5306-00-260-4508	11083	S1594
98	8	2510-01-191-8450	11033	5R6600
98	9	2930-01-187-7024	11083	5R5117
98	10		11083	5R5121
98	11	5315-00-931-8963	11033	3J1770
93	12		11083	3R8533
98	13	2530-01-186-9472	11083	3R8475
98	14	2530-01-187-1232	11083	3R8512
98	15	2530-01-187-7159	11083	3R8527
98	16	5310-00-413-6522	11083	257593
98	17	5307-01-202-9002	11083	503118
98	18	3020-01-187-7176	11083	3R8633
98	18	3020-01-187-7177	11083	3R8634
99	1	3990-01-Z30-5679	11083	3R85C7
99	2	4010-01-281-0601	11083	5R5132
99	3	2590-01-187-1231	11083	3R8442
99	4	2530-01-310-6432	11083	3R8549
99	5		11083	5R5153
99	6	5306-00-426-3403	11033	1D4609
99	7	5310-01-102-2477	11033	5P8248
99	8	5340-01-164-7528	11083	8P3901
99	9	5340-01-164-7529	11083	BP3904
99	10	4010-01-194-4792	11083	3R8506
99	11	2540-01-310-1245	11083	359179
99	12	5315-01-201-4768	11083	2J5997
99	13	5310-00-972-0479	11083	1F7958
99	14	5310-00-809-5997	96906	MS27183-17
99	15	2510-01-192-8221	11083	5R5148
99	16	5310-01-157-3394	11083	5PB250
99	17	5310-00-490-9859	11083	2J3507
99	18	5306-00-263-8978	11083	S1587
99	19	5306-00-423-8316	11083	1B2886
99	20	5315-00-664-0384	96906	MS24665-750
99	21	5306-01-053-3837	11083	104709
99	22	2540-01-219-6728	11083	5R5150
99	23	5310-00-978-5406	11083	2J3506
99	24	5340-01-222-3963	11083	5R5197
99	25	2510-01-191-9387	11083	5R5154
99	26	5306-00-423-8117	11083	S1595
99	27	5306-01-201-0288	11083	3R8593

CROSS REFERENCE INDEXES

FIGURE AND ITEM NUMBER INDEX

FIG.	ITEM	STOCK NUMBER	CAGEC	PART NUMBER
99	28	5310-01-095-4631	11083	5P8247
99	29	5306-00-275-5012	11083	S1566
99	30	5310-00-763-8920	96906	MS51967-20
100	1	2530-01-162-4236	11083	8S1832
100	1	3020-01-163-7319	11083	8S1831
100	1	3020-01-187-7176	11083	3R8633
100	1	3020-01-187-7177	11083	3R8634
100	2	5306-00-426-2934	11083	S1621
100	3	5310-00-809-5997	96906	MS27183-17
100	4	2530-01-162-4237	11083	8P4111
100	4	2530-01-162-4238	11083	8P4112
100	4	3020-01-192-6043	11083	5R5136
100	4	3020-01-192-8366	11083	5R5135
100	5	5306-00-423-8117	11083	S1595
100	6		11083	3A3275
100	6		11083	3A3276
100	6		11083	5R5133
100	6		11083	5R5134
100	7	9905-01-168-0972	11083	1S5242-4
100	8	5305-00-708-3823	11083	783028
100	9	5310-00-117-4788	11083	5M2894
100	10	5306-01-195-4681	11083	381915
100	11	5310-00-005-0761	11083	9F2978
100	11	5310-01-194-5398	11083	1D4717
100	12	5306-00-260-4508	11083	S1594
100	13	2530-01-163-0826	11083	5A6897
100	13	2590-01-163-1193	11083	5A6898
100	13	3020-01-192-6042	11083	5R5140
100	13	3020-01-192-8365	11083	5R5139
101	1	5315-00-426-6042	11083	7F9547
101	2	5315-00-664-0384	11083	385318
101	3	5305-00-068-0510	96906	MS90728-60
101	4	5310-00-637-9541	96906	MS35338-46
101	5	2590-01-187-7025	11083	4M4649
101	6	2510-00-176-5600	11083	7B0863
101	7	5306-00-260-4502	11083	51577
101	8	5310-01-102-247?7	11083	5P8248
101	9	5306-01-053-3837	11083	104709
101	10	5305-01-051-2302	11083	2H3750
101	11	5310-00-490-9859	11083	2J3507
101	12	5310-01-157-3394	11083	5P8250
101	13	2590-01-198-1153	11083	3S9222
101	14	5307-01-202-9002	11083	503118
101	15	2540-01-187-2544	11083	2M5164
101	16	2540-01-186-9473	11083	3S9221
101	17	5310-00-763-8901	96906	MS51968-23
101	18	5310-00-944-5896	16764	9418881
102	1	5305-00-260-4511	11083	S1601
102	2	4730-00-172-0025	04043	A5103
102	3	5306-00-268-6005	11083	5B841
102	4	2510-01-160-0846	11083	8M2059

CROSS REFERENCE INDEXES

FIGURE AND ITEM NUMBER INDEX

FIG.	ITEM	STOCK NUMBER	CAGEC	PART NUMBER
102	5	3805-00-620-7109	11083	2K703
102	6	5310-00-584-5272	96906	MS35338-48
102	7	5306-00-423-8117	11033	S1595
102	8	5315-00-925-0012	11083	SM1467
102	9		11083	9F2746
102	10	4730-00-882-8621	58312	3B8998-00
102	11	4730-00-278-8368	11083	1F1344
102	12	4710-00-163-8924	11083	4S8385
102	13	5340-00-346-2596	1103	L2072
102	14	4730-00-Z89-1242	30327	9975928
102	15	4730-00-278-8368	11083	1F1344
102	16	5310-00-763-8905	96906	MS51968-20
102	17	5310-00-045-5001	96906	MS35340-50
102	18	5306-01-162-9690	11083	7H4717
102	19	5306-01-160-4495	11083	4M4142
102	20	5365-01-172-1614	11083	7S7363
102	20A		11083	7S7359
102	21	5365-00-891-0387	11083	7H4710
102	22	5365-01-165-4517	11083	8M6888
102	23	3110-00-011-9931	11083	489784
102	24	2510-01-159-8754	11083	4M3065
102	25	5310-00-270-2105	11083	5B639
102	26	5310-00-763-8901	96906	MS51968-23
102	27	5306-00-423-8409	11083	104620
102	28	5365-01-161-2643	11083	7H4860
102	29	5310-00-411-4399	80064	K-6643118 PIECE 6
102	30	2510-01-215-4219	11083	8M6240
102	31	2510-01-159-8867	11083	8M6617
102	32	2510-01-159-2742	11083	8M6618
102	33	2510-01-159-2743	11083	4M3020
102	33A		19207	NPN34
102	34	2510-01-158-8797	11083	4M3017
102	35	2510-01-159-2744	11083	4M3021
102	36	2510-01-159-8868	11083	4M3022
103	1	5306-00-426-2945	11083	S1973
103	2	5310-01-162-5733	11083	5P8249
103	3	5310-00-655-7646	23382	4317
103	4	5310-00-919-2242	11083	2J3505
103	5	2510-01-162-7369	11083	8J2896
103	6	2510-01-174-6184	11083	5J5975
103	7	5305-01-026-9518	11083	0S1571
103	8	5310-01-194-5398	11083	104717
103	9	5315-01-162-6052	11083	2J3207
103	10		11083	3T7555
103	11	5340-01-160-4588	11083	3T7781
103	12		11083	2P764
103	13		11083	3T7556
103	14		11083	7F1611
103	15		11083	2P766
103	16	5310-01-162-8563	11083	3T7782

CROSS REFERENCE INDEXES

FIGURE AND ITEM NUMBER INDEX

FIG.	ITEM	STOCK NUMBER	CAGEC	PART NUMBER
10317	2510-01-215-3290	11083	5M8669	
103	18		11083	2P765
103	19	5305-00-724-7221	80204	B1821BH063C175N
103	20	5310-01-095-4631	11083	5P8247
103	21	5310-01-286-5447	11083	5R7037
103	22	2930-01-187-7160	11083	2P2094
103	23	5340-01-173-6886	11083	8PS033
103	24	5315-01-052-3942	11083	3B4629
103	25	5340-01-160-2491	11083	3P9119
103	26	5315-00-064-1450	11083	4H4311
103	27	5305-00-252-6919	11033	0S0509
103	28	5310-00-637-9541	96906	MS35338-46
103	29	5310-00-080-6004	96906	MS27183-14
103	30	2930-01-159-5861	11083	2P770
103	31	2930-01-159-2910	11083	7G4897
103	31	2930-01-187-7024	11083	5R5117
103	32	3040-01-159-5863	11083	9G5088
103	33	5306-00-423-9325	11083	484043
103	34	5306-00-275-5012	11083	S1566
103	35	5305-00-724-7222	80204	31821BH063C200N
104	1	5310-00-763-8921	96906	MS51967-23
104	2	5310-00-584-7888	96906	MS35338-51
104	3	5365-01-160-4727	11083	1P7037
104	4	5340-01-160-4008	11083	6P5723
104	5	2815-00-407-4730	11083	3S5949
104	6	5310-00-655-7646	23382	4317
104	7	5306-00-426-3409	11053	104630
104	8	5306-00-426-3404	11033	1D4610
104	9	5310-01-095-4631	11083	5P8247
104	10	5306-00-275-5012	11083	S1566
104	11	2815-00-407-6451	11033	3S5954
104	12	5310-00-584-5272	96906	MS35338-48
104	13	5306-00-874-4001	11083	6H1717
104	14		11083	5R5121
104	14	2815-01-170-9235	11083	952721
104	15	5310-00-224-0529	11083	2S9434
104	16	5340-00-195-8288	11083	8S8673
104	17	5310-00-045-5001	96906	MS35340-50
104	18	5305-00-253-7629	11083	2S9732
104	19	5315-00-924-5894	11083	4H5128
105	1	5340-01-280-6952	11083	8P8305
105	2	5306-00-423-8116	90940	0035392-0
105	3	2510-01-280-4868	11083	8P6032
105	4	5310-00-045-5001	96906	MS35340-50
105	5	5310-00-763-8920	96906	MS51967-20
105	6	5340-01-281-3921	11083	9P7849
105	7	5310-00-809-5997	96906	MS27183-17
105	8	5310-00-584-5272	96906	MS35338-48
105	9	5306-01-127-9361	11083	0S1585
106	1	5340-01-160-4698	11083	3T7856
106	2	2540-01-174-6185	11083	7V1566

CROSS REFERENCE INDEXES

FIGURE AND ITEM NUMBER INDEX

FIG.	ITEM	STOCK NUMBER	CAGEC	PART NUMBER
106	2	5975-01-282-2779	11083	6T5810
106	3	5305-00-708-3823	11083	7B3028
106	4	5340-01-164-8663	11083	8P3295
106	5	5310-01-094-8810	78189	3320-14-01
106	6	5306-00-263-7301	11083	L1351
106	7	5340-01-164-9957	11083	8P4757
106	8	5306-01-095-1238	78640	310216
106	9	5310-01-098-0634	78189	WD23875
106	10	2510-01-158-9351	11083	7G9737
106	10A		19207	NPN35
106	11	2420-01-062-5208	11083	4D9376
106	12	5330-01-164-8580	11083	8P8222
106	13	5340-01-164-7532	11083	9P160
106	14	5310-01-161-6144	11083	9P174
106	15	5306-00-260-4508	11083	S1594
106	16	5310-00-637-9541	96906	MS35338-46
106	17	5310-00-117-4788	11083	5M2894
106	18	2510-01-174-6183	11083	3T7142
106	19	5340-01-164-7559	11083	3T7144
106	20	5305-00-252-8919	11083	0S0509
106	21	5310-00-117-4788	11083	5M2894
106	22	5340-01-161-5470	11083	2P6644
106	23	5340-01-163-1911	11083	6P4028
106	24	2510-01-188-3690	11083	5S3295
106	25	5305-01-015-6841	11083	0S1591
106	26	5340-01-166-8936	11083	8P3595
106	27	5365-01-160-4733	11083	8P3185
106	23	5306-00-268-5798	11083	0L1329
106	29	5305-00-576-1429	88807	362PS182
106	30	5340-01-099-8154	55644	SS-48132-K2915
107	1	5310-01-194-5398	11083	104717
107	2	5310-00-637-9541	96906	MS35338-46
107	3		11083	7K3222
107	4	5340-01-162-9819	11083	2P9674
107	5	5310-00-080-6004	96906	MS27183-14
107	6	5305-00-252-8919	11083	0S0509
107	6	5305-00-252-8919	11083	00509
107	7	5310-01-165-4308	11083	8M4069
107	8	5306-00-423-8194	11083	1A2029
107	9	5340-01-162-5790	11083	2P9673
107	10	2510-01-166-1256	11083	8P3972
107	11	5306-00-263-7301	11083	L1351
107	12	5310-01-094-8810	78189	3320-14-01
107	13	5340-01-164-8705	11083	8P3978
107	14	5365-01-161-0259	11083	3R6757
107	15	5340-00-490-9869	11083	2S2109
107	16	5340-00-410-1903	11033	9M3835
107	17	5315-00-716-1056	19204	7161056
107	18	Z510-01-069-0804	11083	3S7881
107	19	5315-00-839-2326	96906	MS24665-281
107	20	5305-01-026-9518	11083	0S1571

CROSS REFERENCE INDEXES

FIGURE AND ITEM NUMBER INDEX

FIG.	ITEM	STOCK NUMBER	CAGEC	PART NUMBER
107	21	5340-01-163-5906	11083	9G4059
107	22	5306-00-260-4508	11083	S1594
107	23	5310-01-161-0004	11083	9G1237
107	24	5340-01-162-8647	11083	8P6692
107	25	5340-01-162-8639	11083	8P6690
107	26	5310-00-117-4788	11083	5M2894
107	27	5310-00-768-0318	96906	MS51967-14
107	28	5310-00-809-5997	96906	MS27183-17
107	29	5310-00-308-2227	11083	4B5273
107	29	5310-01-097-6720	11083	5P1076
107	30	5340-01-163-5907	11083	8P6691
107	31	5306-00-426-2934	11083	S1621
107	32	5340-01-162-4819	11083	8P5495
107	33	5340-01-166-8112	76005	CB-1121-4
107	34	5310-01-096-6984	11083	1A2519
107	35	5305-00-576-1429	88807	362PS182
107	36	5340-01-163-1972	11083	8P8443
107	37	5306-00-423-8069	11083	L1178
107	38	5310-01-102-2477	11083	5P8248
107	39	5340-01-162-8766	11083	8P4898
107	40	5340-01-161-9160	11083	8P2944
107	41	5340-01-161-5942	11083	8P8444
107	42	5365-01-160-4615	11083	1F9341
107	43	5310-00-930-7013	11083	484280
107	44	5310-00-584-5272	96906	MS35338-48
107	45	5306-00-809-7134	11083	28947
107	46	5306-00-424-0086	11083	7B3235
107	47	5340-01-161-0977	11083	7G2819
107	48	5306-00-423-8117	11083	S1595
107	49	5310-01-216-7387	11083	4J4144
107	50	5340-00-835-6504	61864	SS-51156
108	1	2590-01-192-5925	11033	9G6868
108	2	9905-01-171-0245	11083	5P7132
108	3	9905-01-163-0020	11083	6V3254
108	4	2540-01-254-5036	11083	9P9392
108	5	5355-01-166-1721	11083	9P9388
108	6	2540-01-119-1743	11083	5P6874
108	7	5306-01-165-2448	11083	5K9179
108	8	5306-00-263-7301	11083	L1351
108	9	5310-01-094-8810	78189	3320-14-01
108	10	5340-01-164-9958	11083	9P9390
108	11	5340-01-164-7608	11083	3P8299
108	12	5306-00-426-2934	11083	S1621
108	13	5310-00-584-5272	96906	MS35338-48
108	14	5310-00-930-7013	11083	484280
108	15	5340-01-164-7609	11083	9P7853
108	16	5340-01-164-7528	11083	8P3901
108	17	5306-00-426-3403	11083	104609
108	18	5310-00-419-1363	11083	2S0115
108	19	5306-00-426-3404	11083	1D4610
108	20	2510-01-173-6944	11083	8P3911

CROSS REFERENCE INDEXES

FIGURE AND ITEM NUMBER INDEX

FIG.	ITEM	STOCK NUMBER	CAGEC	PART NUMBER
108	21	5365-01-165-4512	11083	7G8366
108	22	5305-00-724-7236	80204	31821BH063C325N
108	23	5310-00-139-7030	11083	403704
108	24	5340-01-164-8714	11083	7G8368
108	25	2510-01-173-4658	11083	8P3908
108	26	5310-00-949-9296	78500	1229T1554
108	27	5305-00-897-2405	11083	9F9522
108	28	5306-00-003-0681	11083	9S1322
108	29	5340-01-164-7529	11083	8P3904
109	1	5340-01-280-7104	11083	5R8089
109	2	5305-00-068-0511	80204	B18213H038C125N
109	3	5310-00-117-4788	11083	5M2894
109	4	5310-01-194-5398	11083	1D4717
109	5	5310-00-262-4789	29510	39422D
109	6	5306-00-423-8069	11083	L1178
109	7	5340-01-342-2648	11083	5R6242
110	1	5306-00-426-3209	11083	184367
110	2	5310-00-139-7030	11083	4D3704
110	3	5365-01-069-1426	11083	3P4134
110	4	2530-00-426-6110	11083	5M0635
110	5	5310-00-045-5001	96906	MS35340-50
110	6	5310-00-763-8905	96906	MS51968-20
110	7	5365-00-352-7400	11033	2F23
110	8	2530-00-352-8468	11033	5M0633
110	9	2530-01-216-4212	11083	8H1381
110	10	2930-01-159-8755	11033	5M634
110	11	2530-00-426-6111	11083	5M0636
110	12	5305-00-724-7222	80204	318213H063C200N
111	1	5310-00-139-T030	11083	4D3704
111	2	5306-00-455-0460	11083	8s9092
111	3	5310-00-763-8905	96906	MS51968-20
111	4	5310-00-045-5001	96906	MS35340-50
111	5	2530-01-280-4980	11083	9S8347
111	5	2530-01-280-4981	11083	9S8348
111	6	4710-01-281-1538	11083	4S6559
111	7	5365-01-069-1426	11083	3P4134
111	8	5305-00-724-7236	80204	31821BH063C325N
111	9	5306-01-159-9328	11083	8H1382
111	10	5310-00-763-8905	96906	MS51968-20
111	11	2530-01-216-4212	11083	8H1381
111	12	2530-01-280-4982	11083	9S8351
111	13	5310-00-584-5272	96906	MS35338-48
111	14	5306-01-127-9361	113.83	0S1585
111	15	2590-01-236-2281	11033	2M4668
112	1	5305-01-163-8242	11083	6D1746
112	2	3830-01-159-9782	11083	8P9995
112	3	5310-00-930-7013	11033	4B4280
112	4	5315-00-816-1794	00198	PK379
112	5	5310-00-809-4061	96906	MS27183-15
112	6	5310-00-637-9541	96906	MS35338-46
112	7	5305-00-252-8919	11083	0S0509

CROSS REFERENCE INDEXES

FIGURE AND ITEM NUMBER INDEX

FIG.	ITEM	STOCK NUMBER	CAGEC	PART NUMBER
112	8	5306-00-423-8117	11083	S1595
112	9	5310-00-584-5272	96906	MS35338-48
112	10		11083	3T1017
112	11	5306-00-874-4001	11083	6H1717
112	12	2510-01-159-8797	11083	7G8608
112	13	2510-01-159-9793	11083	3P6033
112	14	5306-00-809-7134	11083	2B0947
112	15	2510-01-159-8756	11083	8P3439
112	16	5306-01-127-9361	11033	051585
112	17		11083	3T1019
112	18	2510-01-159-9781	11083	8P3440
112	19	2510-01-159-9792	11083	7G8607
112	20	2510-01-159-9794	11083	3P6032
113	1	5310-00-080-6004	96906	MS27183-14
113	2	5310-00-637-9541	96906	MS35338-46
113	3	5306-00-260-4508	11083	S1594
113	4	5340-01-160-3902	11033	5H156
113	5	5310-00-584-5272	96906	MS35338-48
113	6	5306-00-426-2934	11083	51621
113	7	2510-01-159-9783	11083	7G1770
113	8		11083	5P7245-32.3 IN
113	9		11083	5P7246-138.07 IN
113	10	2510-01-159-9784	11083	7G1771
114	1	5330-01-164-9754	11083	9G5953
114	2	5310-00-117-4788	11083	5M2894
114	3	5306-00-260-4508	11083	S1594
114	4	2540-01-176-2987	91024	1155701
114	5	5306-01-094-9106	11083	0S1590
114	6	5310-00-117-4788	11083	5M2894
114	7	2510-01-179-6353	11083	9G6180
114	8	2540-00-044-0644	11083	9C3754
114	9	2510-01-173-8619	11083	9G6177
114	10	5310-00-987-1294	19200	10910174-16
114	11	5306-00-260-4508	11083	51594
114	12	5330-01-169-7541	11083	3T8852
114	13	5330-01-217-3936	11083	5P5637
114	14	5340-01-160-7776	11083	3T8823
114	15	5305-00-071-2506	80204	31821BH025C050N
114	16	5340-00-493-3997	11083	9M5884
114	17	5306-01-162-5998	11083	1D4676
114	18	5340-01-161-5526	11083	3T8824
114	19	5310-00-042-6376	31159	JM56
114	20	5310-01-194-5398	11083	134717
114	21	5320-00-850-3233	07707	SD643S
114	22	4010-01-170-1460	11083	5P7957
114	23	2540-01-162-8988	11083	9G5974
114	24	5340-01-160-6915	11083	3T7857
114	25	5305-00-139-7071	11083	0V0375
114	26	5365-01-160-0596	11083	9G7190
114	27	5305-00-252-8919	11083	3S0509
114	28	5340-01-160-4032	11083	9G6543

CROSS REFERENCE INDEXES

FIGURE AND ITEM NUMBER INDEX

FIG.	ITEM	STOCK NUMBER	CAGEC	PART NUMBER
114	29	5306-00-263-7301	11083	L1351
114	30	5340-01-158-6755	11083	8P4877
114	31		11083	5P7246-26.78 IN
114	32		11083	8P4878
114	33	5340-01-095-5004	99017	B-641
114	34	5306-00-424-0086	11083	783235
114	35		11083	5P8310-23*42 IN
114	36	5306-00-426-3080	11083	1A5822
114	37	5310-00-809-5997	96906	MS27183-17
114	38	5330-01-170-1459	11083	8P4825
114	39	5340-01-162-7951	11083	8P4824
114	40	5305-00-269-3235	96906	MS90727-59
114	41	5306-01-064-3842	11083	8S933
114	42	5310-01-119-1442	11083	3S934
114	43	2540-01-163-1155	11083	9G9302
115	1	5340-01-163-6563	11083	9G5954
115	2	5310-00-117-4788	11083	5M2894
115	3	5306-00-260-4508	11083	51594
115	4	5340-01-161-9147	11083	9G5951
115	4A		19207	NPN36
115	5		11083	9G5964
115	6	5340-01-177-1055	94222	A2-99-112-11
115	7	5320-01-166-7973	53551	RV66T6-8-6
115	8	5306-01-162-5998	11083	1D4676
115	9	2510-01-191-8449	11083	5R5175
115	9A		11083	5R5176
115	10	5306-00-263-7301	11083	L1351
115	11	5310-01-094-8810	78189	3320-14-01
115	12	5306-00-426-2934	11083	S1621
115	13	5310-01-097-6720	11083	5P1076
115	14	5340-01-163-5980	11083	3T408
115	15	5310-01-094-8810	73189	3320-14-01
115	16	5305-00-252-8919	11083	0S0509
115	17	5310-01-194-5398	11083	1D4717
115	13	5340-01-163-9390	11083	9G5957
115	19	5305-01-164-1125	11083	8D7712
115	20	5340-01-162-8859	11083	6V6957
115	21	5310-00-880-8203	82458	CLMT1032S
115	22	5340-01-187-8834	11083	5V8309
115	23	2540-01-163-1156	11083	9G5900
116	1	3120-01-165-5662	91024	1267300
116	2	2540-01-176-2910	91024	1267001
116	3	5310-00-167-0839	88044	AN960-816L
116	4	5340-01-160-6800	91024	1267002
116	5	2540-00-449-7378	91024	1266800
116	6	2540-00-368-8227	91024	1267803
116	7	5340-01-167-8357	91024	1267600
116	8	5310-00-407-9566	96906	MS35338-45
116	9	5305-00-984-5678	96906	MS35206-298
116	10	5360-01-069-0808	91024	1267700
116	11	2540-01-163-7235	11083	7S5391

CROSS REFERENCE INDEXES

FIGURE AND ITEM NUMBER INDEX

FIG.	ITEM	STOCK NUMBER	CAGEC	PART NUMBER
116	12	2540-01-162-8995	91024	1265003
116	13	5360-01-165-3682	91024	1265500
116	14	2540-01-164-0033	91024	1265802
116	15	2540-01-164-7840	91024	1264700
116	16	2540-01-163-7237	91024	1265801
116	17	5310-01-166-2618	91024	1944400
116	18	5365-00-442-5845	79136	5133-50-MD
116	19	5310-01-165-3342	91024	1266100
116	20	5365-00-842-2613	96906	MS16633-1062
116	21	5315-01-167-3452	91024	1265600
116	22	2540-01-165-4934	91024	1266200
116	23	2540-01-163-7236	91024	1264100
116	24	5355-01-321-5693	11083	7S5380
116	25	5360-01-069-1437	11083	7S5383
116	26	5365-00-442-5845	79136	5133-50-MD
116	27	3040-01-162-7641	91024	1267400
116	28	2540-01-159-9805	11083	TV9507
116	29	5305-00-765-2121	11083	5M6755
116	30	5310-01-105-9384	11083	310249
116	31	2540-01-162-4161	Z9944	10884
117	1	5340-01-308-9178	11083	5R5146
117	2	5340-01-308-9145	11083	5R5183
117	3	5310-01-183-1237	11083	9S8752
117	4	5310-01-094-8810	78189	3320-14-01
117	5	5340-01-102-1789	11083	701728
117	6	5305-00-225-3843	96906	MS90728-8
117	7	2510-01-196-1284	11083	1S1888
117	8	5340-01-309-4971	11083	5R5147
117	9	5310-01-097-6720	11083	5P1076
117	10	5306-00-426-2934	11083	S1621
117	11	5340-01-310-5274	11033	3R8545
117	12	2510-01-198-1152	11033	3R8638
117	12A		11083	3R8636
117	12B		11083	3R8607
117	12C		11083	3R8637
117	12D		11083	3R8585
117	12E		11083	3R8635
117	13	5315-00-931-8963	11083	3J1770
117	14	5315-01-203-6492	11083	7H395
117	15	5315-01-298-9712	11083	787387
117	16	2510-01-192-3579	11083	5R5191
117	17	2510-01-191-6514	11083	5R5188
117	18	5340-01-309-4357	11083	3R8546
117	19	2510-01-198-0856	11083	3R8673
118	1	5310-01-160-4539	11083	2K7468
118	2	5310-01-162-6012	11083	4K684
118	3	5330-01-093-8484	11033	5M7423
118	4	5307-01-161-9140	11033	352113
118	5	5307-01-164-6429	11083	9M5854
118	6	5310-00-470-9833	11083	3K5234
118	7	5310-00-490-9859	11083	2J3507

CROSS REFERENCE INDEXES

FIGURE AND ITEM NUMBER INDEX

FIG.	ITEM	STOCK NUMBER	CAGEC	PART NUMBER
118	8	5305-00-253-5615	96906	MS21318-21
119	1	3950-01-196-4838	11083	5R7491
119	2	5315-01-287-1633	11083	9P1976
119	3	5315-01-080-3033	11033	5P372
119	4	3040-01-163-1108	11083	1P9265
119	5	5315-00-018-9396	11083	3B5325
119	6		11083	8P1504
119	6A		11083	8P1502
119	7	5307-00-135-3077	11083	2M1538
119	8	5340-01-162-8857	11083	2P3572
119	9	5310-00-080-6004	96906	MS27183-14
119	10	5305-00-721-5492	80204	818218H038C063N
119	11		11083	1P9290
119	12		11083	1P9292
119	13	4730-00-924-7886	55883	1P05M6124
119	14	4730-00-044-4688	89346	50410DA
119	15	4710-01-163-2796	11083	8P7623
119	16	4730-01-143-4326	11083	5K9240
119	17	4730-01-161-9596	11083	5K9249
119	18	4710-01-161-6675	11083	8P7622
119	19	5330-00-591-7543	11083	7F8607
119	20	4730-00-244-0606	11083	5K9235
119	20	4730-01-059-9435	11083	5K9243
119	21	4710-01-160-3662	11083	6P7820
119	21	4710-01-281-1150	11083	6T1145
119	22	4730-01-063-3007	11083	6K8496
119	22	4730-01-125-9752	11083	9L9045
119	23	4710-01-163-0318	11083	1P9279
119	23	4710-01-283-9783	11083	6T1146
119	24	4730-01-059-9344	11083	5K9246
119	24	4730-01-159-7677	11083	5K9239
119	25	4730-01-161-0160	11083	2P4439
119	26	2590-01-215-4369	11083	5R5128
119	27	4010-01-284-5806	11083	3R8990
119	27A		3P954	S3200
119	273		3P954	602A
119	27C		19207	NPN39
119	27D		3P954	L-6
119	28	4010-01-197-1499	39428	3610T13
120	1	5340-01-164-7600	11083	SP54
120	2	5310-00-637-9541	96906	MS35338-46
120	3	5306-00-260-4508	11083	S1594
120	4	5306-00-118-3055	11083	6L3670
120	5	5315-01-164-7582	11083	3B5319
120	6	5315-00-426-5074	11083	7F9541
120	7	4730-00-188-1854	11083	387262
120	3	4730-00-639-9167	29510	105409
120	9	2520-01-164-0077	11083	9G5127
120	10	5330-01-161-2613	11083	6P7825
120	11	5340-01-163-6564	11083	6P7930
120	12	5310-00-117-4788	11083	5M2894

CROSS REFERENCE INDEXES

FIGURE AND ITEM NUMBER INDEX

FIG.	ITEM	STOCK NUMBER	CAGEC	PART NUMBER
120	13	5306-01-097-7874	11083	1T0765
120	14	5306-01-195-4681	11033	3B1915
120	15	4730-01-166-2297	11083	2P7020
120	16	5306-00-423-8194	11033	1A2029
120	17	5310-00-637-9541	96906	MS35338-46
120	18	5340-01-161-6223	11083	1P3262
120	19	4330-01-066-7713	11083	8S9129
120	20	4730-01-159-7840	11083	8S9130
120	21	5330-00-325-6310	11083	2H6338
120	22	3040-01-158-8692	11083	2P7016
120	23	4730-01-079-4374	11083	5H7110
120	24	5330-00-141-2476	75165	920
120	25	5340-01-160-7320	1103 3	3P4603
120	26	5330-01-162-4005	11083	3P4602
120	27	5310-01-194-5398	11083	104717
120	28	5330-01-160-4575	11083	2P6896
120	29	5330-01-164-8564	11083	2P3637
120	30	5340-01-161-9146	11083	2P5738
120	31	5305-00-068-0511	80204	81821BH038C125N
120	32	5330-01-019-2448	96906	MS28775-249
120	33	5310-00-080-6004	96906	MS27183-14
120	34	5306-00-263-4038	11083	2A4639
120	35	4730-00-924-7974	11083	2D8390
120	36	5330-00-297-6548	11083	6F4868
120	37	5365-01-165-2637	11083	6P8678
120	38	5305-00-252-8919	11083	3S0509
120	39	4710-01-161-0265	11083	2P5853
120	40	5330-00-245-6767	99193	S9413-215
120	41	5330-00-850-7586	11083	5H2767
120	42	2590-01-165-0354	11083	2P1053
120	43	5340-01-164-8621	11083	2P4438
120	44	5306-00-063-5001	11083	1A2209
120	45	5306-01-094-9106	11083	0S1590
120	46	5340-01-164-8760	11083	?P4437
120	47	5310-01-095-1246	11083	2L6267
120	48	5330-00-498-4556	11083	4J5351
120	49	2590-01-215-4369	11083	5R5128
120	50	5310-00-637-9541	96906	MS35338-46
120	51	5305-00-068-0511	80204	B1821BH038C125N
121	1	5330-00-333-4384	11083	1H5728
121	2	5330-00-455-7096	11083	8S5767
121	3	5306-00-263-7301	11083	L1351
121	4	5330-01-162-2549	11083	1P8209
121	5	5365-01-162-2577	11083	3P2846
121	6	3110-01-037-7207	60038	JM718149
121	7	3110-01-053-7564	11083	1P3934
121	8	2530-01-163-7238	11083	1P8204
121	8	3830-01-281-1107	11083	6T0199
121	9	4030-01-196-2310	11083	1P8952
121	9	5365-01-266-2562	11083	6G0773
121	10	5310-00-584-5272	96906	MS35338-48

CROSS REFERENCE INDEXES

FIGURE AND ITEM NUMBER INDEX

FIG.	ITEM	STOCK NUMBER	CAGEC	PART NUMBER
121	11	5306-00-424-0086	11083	783235
121	11	5306-00-426-2934	11083	S1621
121	12	5330-00-599-2268	11083	8F2857
121	13	3020-01-163-7329	11033	1P9214
121	14	5306-00-423-8194	11083	1A2029
121	15	5310-00-637-9541	96906	MS35333-46
121	16	3040-01-159-7774	11083	1P8917
121	17	5365-01-162-6080	11083	1P9243
121	18	5330-00-871-5332	11083	4H6520
121	19	5306-00-455-0459	11083	9S1366
121	20	5310-00-431-7239	11083	2M849
121	21	5306-00-263-8978	11083	S1587
121	22	5365-01-160-4738	11083	1P9245
121	23	5365-01-162-6082	11083	1P9244
121	24	3020-01-159-9797	11083	1P8642
121	25	5330-01-162-5742	11083	5P7456
121	26	3040-01-159-2731	11083	1P9241
121	27	5365-00-845-1529	80756	RST-450
121	28	5365-00-407-6204	80756	RR-500
121	29	3020-01-159-9798	11033	1PB640
121	30	3040-01-163-2722	11083	1P8641
121	31	3110-01-113-0637	60038	JHM807045
121	32	3110-01-059-2029	60038	JHM807012
121	33	5365-00-734-2114	11083	4B4845
121	34	3130-01-166-0809	11083	1P9232
121	35	5365-01-163-6185	11083	1P9246
121	36	5330-01-019-2448	96906	M528775-249
121	37	5330-00-599-2190	11083	6F8146
121	38	3040-01-163-0714	11083	681776
121	39	5310-01-160-4533	11083	5F3353
122	1	3120-01-163-9375	11083	1P6071
122	2	3110-01-024-9817	60380	NTA-5266
122	3	3120-01-164-8623	11083	2P1005
122	4	3040-01-159-5903	11083	8P8904
122	5	3020-01-161-0978	11083	8P1075
122	6	5306-00-253-7864	11033	8M2530
122	7		11083	1P9248
122	8	2520-01-161-7796	11083	1P6167
122	9	5330-00-741-2096	11083	6H3977
122	10	3040-01-164-0352	11083	1P6701
122	11	3040-01-167-4493	11033	1P8651
122	12	5306-01-164-6317	11033	5P6446
122	13	2520-01-285-5094	11083	6T4944
122	14	2520-01-161-9658	11083	2P4370
122	15	3040-01-162-4303	11083	1P6153
122	16	5306-01-094-9106	11083	0S1590
122	17	5365-01-164-6623	11083	1P4232
122	18	3110-00-191-3923	08162	JLM104910
122	19	3110-00-938-5084	08162	JLM104948
122	20	5365-01-164-8702	11083	1P6178
122	21		11083	1P5290

CROSS REFERENCE INDEXES

FIGURE AND ITEM NUMBER INDEX

FIG.	ITEM	STOCK NUMBER	CAGEC	PART NUMBER
122	22	5306-00-260-4508	11083	S1594
122	23	5365-01-161-9161	11083	1P6172
122	24	5365-00-131-4761	11083	9F7378
122	25	3110-01-164-8765	11083	1P6180
122	26	5305-00-068-0511	80204	B18218H038C125N
122	27	5305-00-426-3085	58312	1A5964-00
122	28	3110-01-165-3725	11083	1P6176
122	29	5365-01-164-6599	11083	1P6177
122	30	5310-00-117-4788	11083	5M2894
122	31	5306-00-285-1368	11083	L1143
122	32	5310-00-451-3384	11083	8S3371
122	33	5330-01-164-8576	11033	1S9497
122	34	3040-01-163-3240	11033	1P6158
122	35	5310-01-198-8570	11083	6P3767
122	36	3040-01-184-4026	11083	1P6179
122	36A	3040-01-342-0691	11083	1P5293
122	37	5315-00-245-9995	11083	8B1312
123	1	3040-01-162-4303	11083	1P6153
123	2	5306-01-094-9106	11083	0S1590
123	3	3020-01-163-1206	11083	1P8639
123	4	5365-00-928-9630	80756	RST293
123	5	3110-00-554-3245	23040	38QH4470A
123	6	5330-00-599-2268	11033	8F2857
123	7	3110-01-171-4038	11083	1P9247
123	8	5330-00-930-9407	11083	7M0485
123	9	6680-01-160-5291	11083	4J4742
123	9	6680-01-253-1033	24346	CS-2008-156-750
123	10	5306-00-423-8194	11083	1 A2029
123	11	5310-00-637-9541	96906	M535338-46
123	12	5305-00-426-3085	58312	1A5964-00
123	13	3110-01-165-3725	11083	1P6176
123	14	5310-00-117-4788	11083	5M2894
123	15	5310-00-451-3384	11083	8S3371
123	16	5330-01-164-8576	11083	1S9497
123	17	3040-01-163-3240	11083	1P6158
123	18	5310-01-198-8570	11083	6P3767
123	19	3040-01-184-4026	11083	1P6179
123	19A		11083	1P5293
123	20	5315-00-245-9995	11083	BB1312
123	21	2520-01-163-1220	11083	2P4371
123	21	2520-01-285-5094	11083	6T4944
123	22	2520-01-161-9658	11083	2P4370
123	23	5306-01-164-6317	11083	5P6446
123	24	3040-01-167-4493	11083	1P8651
123	25	5330-00-741-2096	11083	6H3977
123	26	3040-01-164-0352	11083	1P6701
123	27	2520-01-161-7796	11083	1P6167
123	28	3120-01-163-9375	11083	1P6071
123	29	3110-01-024-9817	60380	NTA-5266
123	30	3040-01-161-7794	11083	1P8662
123	31	3120-01-164-8623	11083	2P1005

CROSS REFERENCE INDEXES
FIGURE AND ITEM NUMBER INDEX

FIG.	ITEM	STOCK NUMBER	CAGEC	PART NUMBER
123	32	3010-01-162-4426	11083	8P8905
123	33	3020-01-161-0978	11083	8P1075
123	34	5306-00-253-7864	11083	8M2530
123	35	5365-01-164-8774	11083	8P8906
123	36	3040-01-162-6563	11083	lP9251
123	37	3110-01-164-7536	11083	2K1738
123	38	3110-01-164-1162	11083	5P9066
123	39	5365-00-679-9841	80756	RRT-433
123	40	3020-01-165-0300	11083	1P8636
123	41	3110-00-198-2292	11083	1T43
123	42	5365-01-164-9962	11083	lP6175
123	43	5330-00-738-8622	11083	5H4909
123	44	3130-01-166-0810	11083	lP6174
123	45	5306-00-263-7301	11083	L1351
124	1	5306-00-325-0158	11083	4F9351
124	1	5306-01-280-6692	11083	5K4781
124	2	3130-01-167-8185	11083	6P7826
124	2	3130-01-282-2712	11083	6T1411
124	3	5330-01-164-8575	11083	2P3672
124	4	5330-01-100-9046	11033	lP9252
124	5	3110-00-155-6207	52676	6007Z
124	5	3110-00-554-5304	11083	2S3029
124	6	3040-01-159-3352	11083	6P7827
124	6	3040-01-280-8978	11083	6T1412
124	7	5330-00-494-2763	11083	6J2419
124	8	5365-00-435-5279	80756	RR-875
124	9	3040-01-159-3487	11083	6P7828
124	10	2590-01-162-4365	11083	lP9260
124	11	2520-01-067-5621	11083	lP9261
124	12	3010-01-161-0220	11083	1P7542
124	13	5310-01-164-7502	11083	1P9258
124	14	3040-01-159-5904	11083	1P7543
124	15	2520-01-163-6933	11083	1P7544
124	16	5306-00-260-4508	11083	S1594
124	17	3020-01-161-0980	11083	lP8635
124	18	5365-00-282-1831	96906	MS16624-1215
124	19	3110-00-198-1796	11083	3K526
124	19	3110-01-287-2313	11083	6V6686
124	20	3020-01-159-5945	11083	1P8661
124	21	3020-01-161-2763	11083	8P2670
124	22	5305-00-068-0511	80204	81821BH038C125N
124	23	3130-01-162-8695	11083	1P8644
124	24	5330-01-050-5024	96906	MS28775-260
124	25	5330-00-290-9386	88044	AN123902
124	26	5330-00-895-7034	11083	7H7107
124	27	3110-00-446-9696	11083	9M1997
124	28	5365-01-164-7642	11083	P9257
124	29	3010-01-161-2770	11083	1P8663
124	30		11083	2P3719
124	31	2520-01-162-4424	11083	1P9256
124	32	5365-01-281-0941	11083	6T1409

CROSS REFERENCE INDEXES
FIGURE AND ITEM NUMBER INDEX

FIG.	ITEM	STOCK NUMBER	CAGEC	PART NUMBER
124	33	5310-01-281-1831	11083	6T1410
125	1	2940-01-162-4246	11083	2P5830
125	2	4820-01-158-6839	11083	lP2195
125	3	5315-00-532-4359	11083	3H3433
125	4		11083	9L674
125	5	4820-01-150-0965	11083	9L672
125	6	5360-00-290-0851	11083	lK7041
125	7	5315-01-155-2618	11083	1P5274
125	8	5315-01-155-2618	11083	1P5274
125	9	5360-01-106-4246	11083	8F2621
125	10	4820-01-150-0965	11083	9L672
125	11	4820-01-159-0852	11083	6L4470
125	12	5315-00-825-4591	96906	MS171542
125	13	4330-01-164-7973	11083	2P5832
125	14	4330-00-155-8240	64829	63560-2
125	15	5330-00-678-3369	11083	2H4145
125	16	2940-01-171-3389	11083	2P5818
125	17	5330-01-148-5891	59556	K-500-EN-0431
125	18	5365-01-067-2179	11083	9S4180
126	1	5365-00-828-7572	80756	RS-175
126	2	3010-01-158-4092	11083	2P2917
126	3	5315-01-161-0405	11083	3H2023
126	4	3040-01-163-1109	11083	2P2911
126	5	5315-00-050-5559	21450	505559
126	6	5365-00-290-3745	80756	RS200
126	7	5330-00-494-2763	11083	6J2419
127	1	3120-01-164-8629	11083	9H2400
127	2	5310-01-162-0412	11083	3L9689
127	3	5310-01-058-8071	11083	2K4973
127	4	5340-01-164-7558	11083	8P4B66
127	5	5340-01-184-7635	83058	HS51328
127	6	5310-00-042-6376	31159	JM56
127	7	5310-00-582-5965	96906	MS35338-44
127	8	5340-01-163-0918	11083	3P5938
127	9	3020-01-160-3640	11083	6P5661
127	10	5305-00-959-2724	96906	MS35190-320
127	11	5305-00-958-5247	96906	MS35190-291
127	12	5355-00-891-4401	11083	7M706
127	13	3040-01-162-0199	11083	8P4872
127	14		11083	6P6034
127	15	5310-00-275-8639	89346	52726R1
127	16	5310-01-289-2547	11083	9H4257
127	17		11083	8P4873
127	18		11083	8P5006
127	19	5310-00-903-8282	96906	MS21083N4
127	20	2520-01-066-0510	11083	6L7751
127	21	5305-00-651-2686	11083	S1597
127	22	5310-00-297-8836	72915	120613
127	23	2590-01-176-2972	11083	3P2300
127	24	5340-01-164-8709	11083	9G9979
127	25	5310-00-081-4219	96906	MS27183-12

CROSS REFERENCE INDEXES
FIGURE AND ITEM NUMBER INDEX

FIG.	ITEM	STOCK NUMBER	CAGEC	PART NUMBER
127	26	5306-00-930-5643	11083	lA9579
127	27	5975-00-133-8687	96906	MS3367-5-0
127	28	5306-00-226-4829	80204	B1821BH031C125N
127	29	5305-00-225-3843	80204	B1821BHO25ClOON
127	30	2520-01-066-0510	11083	6L7751
127	31	5310-00-685-2973	94135	12Z2007-260
127	32	2530-01-162-6584	11083	8P5007
127	33	5306-00-424-0086	11083	783235
127	34	5310-00-584-5272	96906	MS35338-48
127	35	5310-00-880-7744	96906	MS51967-5
127	36	5310-00-407-9566	96906	MS35338-45
127	37	3040-01-164-7841	11083	2P6001
127	38	3040-01-160-1057	11083	2P6009
127	39	3120-01-164-8629	11083	9H2400
127	40		11083	2P6000
127	41	3040-01-158-9329	11083	2P6008
127	42	5315-00-844-3966	96906	MS16562-49
127	43	3120-01-166-3685	11083	8S7048
127	44	2590-01-172-0861	11083	3P2299
128	1	4320-01-164-0005	11083	3P5926
128	2	5365-00-411-4584	11083	9S4191
128	3	5330-00-801-3354	25184	906-737-70
128	4		11083	lP2167
128	4A		11083	lP2166
128	5	3120-00-914-0691	11083	2S7931
128	6	5330-00-904-0335	11083	4M189
128	7		11083	lP2165
128	7A		11083	lP2164
128	8	5315-00-760-7425	11083	8M8489
128	9	3020-01-162-7565	11083	lP2186
128	10		11083	lP8184
128	11	3040-01-163-7311	11083	3P5925
128	11A		11083	3P5924
128	12	3120-00-914-0691	11083	2S7931
128	13	5330-00-036-6824	11083	7S3029
128	14	5310-00-413-5144	11083	3S4
128	15	5306-00-698-2150	11083	OL2070
128	16	3020-01-163-7964	11083	8S6980
128	17	5315-00-616-5514	96906	MS35756-6
128	18	5310-00-109-7638	15434	S658
128	19	5310-01-066-9171	11083	4K8977
129	1	5330-00-948-4063	11083	4J522
129	2	4730-00-289-2357	79470	8137731
129	3	2510-01-172-6796	11083	9P2125
129	3A		19207	NPN41
129	4		96906	MS35829-16C-71N
129	5	5340-01-164-7533	11083	9P2123
129	6	5310-01-094-8810	78189	3320-14-01
129	7	5306-00-260-4508	11083	S1594
129	8	4730-01-165-6616	98441	322F-E
129	9		11083	5P1442-27*6

CROSS REFERENCE INDEXES
FIGURE AND ITEM NUMBER INDEX

FIG.	ITEM	STOCK NUMBER	CAGEC	PART NUMBER
129	10	5340-00-404-4100	75272	COV-2113
129	11	5310-00-117-4788	11083	5M2894
129	12	4720-01-162-4360	11083	9P3408
129	13	5340-01-062-5938	11083	701553
129	14	5340-01-163-0631	11083	2P8977
129	15	5306-00-423-8194	11083	lA2029
129	16	4720-01-162-4359	11083	9P3407
129	17	5310-00-637-9541	96906	MS35338-46
129	17	5310-00-637-9541	96906	MS35338-46
129	18	5310-01-194-5398	11033	1l4717
129	18	5310-01-194-5398	11083	104717
129	19	5330-00-429-3542	11083	2S4078
129	20	4730-01-160-3603	11083	6M5652
129	21	5330-00-944-8281	11083	302824
129	22	4730-00-710-5571	96906	MS51525A12
129	23	4730-00-133-3196	96906	MS51521A12
129	24	5306-00-263-7301	11033	L1351
129	25	5305-01-015-6841	11033	OS1591
129	26	5340-01-258-0153	11083	558995
130	1	5310-00-117-4788	11083	5M2894
130	2	5305-01-095-3292	11083	7F3425
130	3	5305-00-362-7336	11083	5B2638
130	4	5306-00-470-5543	11083	SS9191
130	5	5306-01-059-9566	11083	6L4783
130	6	5310-00-081-4219	96906	MS27183-12
130	7	5306-00-226-4835	80204	81821BH031C250N
130	8	5310-00-081-4219	96906	MS27183-12
130	9	4820-01-162-8950	11083	3T8649
130	10	5330-01-161-0895	11083	2P3650
130	11	5330-00-339-6224	11083	5F7054
130	12	5330-00-858-8223	11083	2H5001
130	13	4820-01-162-8951	11083	3P4121
130	14	5330-00-247-5972	11083	8B4967
130	15	5330-01-164-8563	11083	8P16
130	16	3040-01-159-3041	11083	6P9367
130	17		11083	lP5130
130	18	5315-00-839-2326	96906	MS24665-281
130	19	5315-00-169-8105	11083	9S1303
130	20	5315-00-616-5514	96906	MS35756-6
130	21	5306-00-226-4826	80204	81821BH031C088N
130	22	5310-00-930-7013	11033	484280
130	23	5340-01-161-9923	11083	2P6971
130	23A		11083	2P6970
130	24	3120-01-164-8629	11083	9H2400
130	25	5330-00-393-4054	11083	3D2992
130	26	5306-00-268-2449	11083	3S4346
130	27	5306-00-226-4829	80204	81821lH031C125N
130	28	3040-01-158-9330	11083	2P6969
131	1	5340-01-164-4596	11083	3P220
131	2	5360-01-165-3674	11083	3P3202
131	3	5330-01-161-2429	11083	3P218

CROSS REFERENCE INDEXES
FIGURE AND ITEM NUMBER INDEX

FIG.	ITEM	STOCK NUMBER	CAGEC	PART NUMBER
131	4	5340-01-164-7556	11083	8P4299
131	5	5306-00-455-0467	11083	lT414
131	6	5306-01-116-9622	11083	OS1618
131	7	5310-00-725-1984	81205	BACWlOP140S
131	8	4820-01-163-0828	11083	2P3617
131	9	4730-00-042-8988	24491	10015
131	10	5330-00-948-6482	11083	3K360
131	11	5365-01-031-8183	30780	8HP5N-S
131	12	5330-00-591-3112	11083	SF9144
131	13	4820-01-170-9766	11083	3P4117
131	13A		11083	3P4116
131	13B	3110-00-100-6149	19200	8 271406C
131	13C	5315-00-479-2833	11083	lL5316
131	14	5306-00-226-4826	80204	B1821BHO31C088N
131	15	5310-00-407-9566	96906	MS35338-45
131	16	5340-00-423-9937	11083	68S30
131	17	5315-01-164-9838	11083	2P3683
131	18	4820-01-162-8996	11083	2P3639
131	19	5330-00-593-1192	11083	3H107
131	20	5306-00-226-4825	80204	B1821BH031C075N
131	21	4730-01-163-3243	11083	IP6217
131	22	5330-00-498-2906	59312	409986-00
131	23	3120-01-167-3402	11083	3S2682
131	24	5330-00-431-7140	11083	8M5260
131	25	4810-01-254-5581	11083	3P4120
132	1	5360-01-162-2847	11083	lP3216
132	2	2520-01-059-9381	11083	2M1168
132	3	4820-01-162-8997	11083	3P2767
132	4	5365-01-024-9868	30780	6HP5N-SS
132	5	5330-00-801-3354	25184	906-737-70
132	6	5365-01-031-8183	30780	8HP5N-S
132	7	5330-00-948-6482	11083	3K360
132	8	5340-01-162-8768	11083	3P5169
132	9	5340-01-161-9175	11083	3P2847
132	10	5330-01-068-6073	11083	4K2039
132	11	5340-01-162-8767	11083	3P5168
132	12		11083	2P3646
132	13	5330-00-580-1226	11083	1H9696
132	14	5330-01-162-8587	11083	2P3644
132	15	5330-00-580-1215	11083	6F5559
132	16	4820-01-219-9334	11083	8P345
132	17	3110-00-949-1438	11083	489880
132	18		11083	BP327
132	19	5365-01-124-2945	30780	2HP5N-S
132	20	5330-01-148-5891	59556	K-500-EN-0431
132	21	5310-00-407-9566	96906	MS35338-45
132	22	5306-00-226-4833	80204	B1821BH03IC20ON
132	23	5306-00-226-4829	80204	B1821lHO31C125N
132	24	4820-01-165-8251	11083	3P4660
132	25	5360-01-162-2848	11083	8P346
132	26	4820-01-202-3575	11083	BP325

CROSS REFERENCE INDEXES
FIGURE AND ITEM NUMBER INDEX

FIG.	ITEM	STOCK NUMBER	CAGEC	PART NUMBER
132	27		11083	SP326
132	28	5315-01-164-7589	11083	5H9809
132	29	5330-00-167-5174	81349	M63248/2-910
132	30	2530-01-198-4326	11083	6P9959
132	31	5330-00-165-1980	81349	M83248/2-905
132	32	5365-01-035-4899	11083	4R2579
132	33	5330-01-161-2429	11083	3P218
132	34	5340-00-423-9937	11083	6B830
132	35	5306-00-226-4826	30204	B1321BH031C088N
132	36		11033	8P15
133	1	9905-01-163-0023	11083	5R5407
133	1	9905-01-268-7580	11083	5R3413
133	2	5305-00-863-1627	11083	431221
133	3	5310-00-045-3299	96906	MS35338-42
133	4	5310-00-010-3092	68505	X141
133	5	9905-01-164-0168	11083	5R5421
133	6	5305-00-253-5615	96906	MS21313-21
133	7	9905-01-289-3374	11083	5R8070
133	8	7690-01-343-1442	11083	5R5422
133	9	5305-00-889-2999	96906	MS35206-217
133	10	5310-00-434-1347	11083	6B4542
133	11		11033	5R5409
133	11	9905-01-188-6517	11083	5R5410
133	11	9905-01-311-4033	11033	5R8069
133	12	9905-01-188-6518	11083	5R5411
133	12	9905-01-311-4034	11083	5R8068
133	13		11083	5R8067
133	13	9905-01-188-6519	11083	5R5412
133	14	9905-01-163-0019	11083	6V1721
133	15	9905-01-163-0024	11083	5H8450
133	16	9905-01-163-0029	11083	5P8197
133	17	5340-01-180-2615	11083	5P9398
133	18	7690-01-160-5206	11083	5P6792
133	18	9905-01-311-4035	11083	5R8072
133	19	7690-01-267-5497	11083	5R7878
133	20	9905-01-297-1695	11083	5R6281
133	21		11083	5P9409
133	21	9905-01-295-1907	11083	5R6284
133	22	9905-01-282-7263	11083	5R6283
133	23	9905-01-289-3373	11083	5R8071
133	24	9905-01-164-1458	11083	9S8063
133	25	9905-01-163-3475	11083	5R5438
133	26		11033	5P8028
133	27		11083	5M7400
133	28	7690-01-267-5491	11083	9MO016
133	29	5310-01-163-5805	11083	6B4540
133	30	7690-01-160-5207	11083	4V4016
133	31	7690-01-114-3702	19207	12296626
134	1	4320-01-202-3552	11083	8J6330
134	2	5305-00-252-8919	11083	OS0509
134	3		11083	9L4685

CROSS REFERENCE INDEXES
FIGURE AND ITEM NUMBER INDEX

FIG.	ITEM	STOCK NUMBER	CAGEC	PART NUMBER
134	4	5310-00-285-8867	78286	S14-35-5017
134	5		11083	7N6611
134	6	5305-00-724-7221	80204	818213H063C175N
134	7	5310-00-139-7030	11083	4D3704
134	8	5330-00-663-5709	11033	5F3106
134	9	4320-01-140-4299	11671	20300C-DKP
134	9A		19207	NPN42
134	10	5365-01-170-2231	11083	3G1280
134	11	5330-01-165-1334	80201	542255
134	12	5306-00-423-8117	11083	S1595
134	13	5310-00-332-5036	11671	11146
134	14	4820-01-158-6861	62983	431832
135	1	4820-01-347-8627	11083	9TO174
135	2	4820-01-192-8370	11083	8J3556
135	3	5365-01-166-8934	11083	7J1767
135	4	5365-01-164-7640	11083	6J6516
135	5	5360-01-164-7619	11083	6J9996
135	6	3110-00-100-6150	95879	A122
135	7	4820-01-175-3050	11083	6J9992
135	8	5306-00-423-8194	11083	lA2029
135	9	5310-00-637-9541	96906	MS35338-46
135	10	5365-01-167-3499	11083	5J9092
135	11	5365-01-163-5954	11083	5J9091
135	12	5360-01-164-7620	11033	4J5105
135	13	5330-01-043-5565	11083	lP3703
135	14	5330-00-858-8224	11083	2J157
135	15	4820-01-162-4435	11083	5J9078
135	16	5360-01-164-7621	11083	2A5885
135	17	5330-01-088-6106	81349	M83248/2-914
135	18	5365-00-452-0344	11083	9S8o09
135	19	4820-01-159-3012	11083	1U4662
135	20	5365-01-031-8183	30780	8HP5N-S
135	21	5330-00-948-6482	11083	3K360
135	22	5365-01-035-4899	19207	11621436-1
135	23	5330-00-165-1980	81349	M83248/2-905
135	24	5365-01-079-1624	19207	12267772
135	25	5330-00-167-5174	81349	M83248/2-910
135	26		11083	7J9973
135	27		11083	9S7192
135	28	5330-00-913-6143	11083	4J519
135	29	5360-01-164-7622	11083	5J9098
135	30	3040-01-159-3488	11083	8J3554
135	31	5310-00-584-5272	96906	MS35338-48
135	32	5305-00-139-7071	11083	OV0375
135	33	4810-01-161-6542	11033	3G8078
135	33A		19207	NPN
135	34	5310-01-164-6356	11083	3G3726
135	35	5330-01-164-8558	11083	617539
135	36	3805-01-165-5750	11083	9J6367
135	37	5330-01-143-5059	11083	8L2746
135	38	4820-01-217-2702	11083	8J5449

CROSS REFERENCE INDEXES
FIGURE AND ITEM NUMBER INDEX

FIG.	ITEM	STOCK NUMBER	CAGEC	PART NUMBER
135	39	5330-00-913-8119	11033	4J3997
135	40	5365-01-167-3498	11083	8J3557
136	1	4820-01-281-5980	11033	9T0176
136	2	5310-01-102-9866	11083	5P7213
136	3	3040-01-159-3488	11083	3J3554
136	4	4820-01-217-2702	110?3	8J5449
136	5	5330-00-774-6894	02697	2-216N674-70
136	6	5365-01-278-0313	11083	8J3639
136	7	5306-01-281-7805	11033	6V0717
136	8	2805-01-278-0472	11083	8J3640
136	9	5306-00-263-7301	11083	L1351
136	10	5310-00-117-4788	11083	5M2894
136	11	5306-01-105-1790	11083	343557
136	12	3110-00-100-6150	95879	A122
136	13	5360-01-164-7619	11083	6J9996
136	14	5305-01-282-1523	11083	4B1771
136	15	5310-00-768-0318	13305	235C7
136	16	4820-01-281-7920	11083	3G9806
136	17	4820-01-192-8370	11083	8J3556
136	13	5365-01-163-5954	11083	5J9091
136	19	5365-01-167-3499	11083	5J9092
136	20	5360-01-164-7620	11083	4J5105
136	21	5365-01-167-3498	11083	8J3557
136	22	5330-01-043-5565	11083	lP3703
136	23	5330-01-013-3723	02697	2-208N674-70
136	24	4820-01-162-4435	11083	5J9078
136	25	5360-01-164-7621	11083	2A5885
136	26	5330-00-933-3305	11083	4K1388
136	27	5365-00-452-0344	110383	9S8009
136	28	5330-00-835-3007	34995	30123D
136	29	5360-01-164-7622	11083	5J9098
136	30	4310-01-161-6542	11083	3G8078
136	31	5310-00-011-9711	11083	6B7949
136	32	5365-01-278-0250	11083	5J9088
136	33		11083	3J4121
136	34	4820-01-281-5981	11083	9T0175
136	35	5365-01-031-8183	30780	8HP5N-S
136	36	5330-00-613-6500	11083	IJ9671
136	37	5365-01-035-4899	192)7	11621436-1
136	38		11083	9T0172
136	39		11083	3G5656
136	40	5365-01-040-1344	30780	10 HP5N-S
136	41	5330-00-167-5174	81349	M83248/2-910
136	42	5330-00-948-6482	11083	3K360
136	43		11083	8J1839
136	44	5306-01-209-7895	11083	5P8091
137	1	5310-01-194-5398	11083	104717
137	2	5310-00-768-0318	96906	MS51967-14
137	3	5365-01-163-2017	11033	lS4305
137	4	3040-01-163-2778	11083	8P2483
137	5	5365-01-172-5614	11083	3S3158

CROSS REFERENCE INDEXES
FIGURE AND ITEM NUMBER INDEX

FIG.	ITEM	STOCK NUMBER	CAGEC	PART NUMBER
137	6	5305-01-015-6841	11083	051591
137	7	3040-01-161-5121	11083	3P3942
137	8	5315-00-616-5526	96906	MS35756-8
137	9		11083	6P5205
137	10	5340-01-161-9162	11083	6P5206
137	11	3120-00-064-1275	11083	9F5647
137	12	5365-01-165-7678	11083	8M9124
137	13	3040-01-162-7187	11083	8P5048
137	14	5306-01-094-9106	11083	051590
137	15	5360-01-166-6940	11083	2J7295
137	16	5305-00-068-0511	80204	B1821BH038C125N
137	17	5310-00-117-4788	11083	5M2894
137	18	5306-00-426-2922	11083	S1573
137	19	3120-01-163-5957	11083	404065
137	20	5310-00-732-0560	96906	MS51968-14
137	21	2530-01-169-4620	11083	8P7352
137	22	3040-01-171-3357	11083	6P5208
137	23	5340-01-163-5981	11083	6P5209
137	24	5305-00-959-2723	96906	MS35190-319
137	25	3040-01-162-7541	11083	BP2480
137	26	5355-00-371-3370	11083	2A1736
137	27	3040-01-162-6414	11083	9P0468
137	28	5305-01-026-9518	11083	OS1571
137	29	5306-00-260-4508	11083	S1594
137	30	5310-01-165-4308	11083	8M4069
137	31	3110-00-930-6289	60380	JTT1211
137	32	4730-00-050-4208	96906	MS15003-1
137	33	5310-00-044-3339	19207	443339
137	34	5306-00-263-8978	11083	S1587
137	35	3040-01-162-7639	11083	9G8854
137	36	5365-01-163-2016	11083	8P5324
137	37	3040-01-161-5157	11083	8P5333
137	38	5306-00-273-6357	11083	1A1460
137	39	3040-01-163-1151	11083	SP5327
137	40	3120-01-163-5957	11083	404065
137	41	5310-00-732-0560	96906	MS51968-14
137	42		11083	8P5328
137	43	5340-00-018-7588	11083	6F7010
137	44	5315-00-839-5822	96906	MS24665-353
137	45	5315-00-423-8126	11083	S175
137	46	5310-01-066-5275	11083	3K2889
137	47	5310-00-823-8803	96906	MS27183-21
137	48	3040-01-161-5123	11083	5S9704
137	49	3110-00-280-3216	60380	JTT1212
137	50		11083	8P2496
137	51	5310-01-108-7538	11083	1J8965
137	52	5306-01-127-9361	11083	0S1585
137	53	3040-01-163-1150	11083	8P3391
137	54	5340-01-062-5196	11083	2M8340
137	55	5310-00-732-0560	96906	MS51968-14
137	56		11083	8P2478

CROSS REFERENCE INDEXES
FIGURE AND ITEM NUMBER INDEX

FIG.	ITEM	STOCK NUMBER	CAGEC	PART NUMBER
137	57	5340-01-164-9895	11083	BP5325
137	58	3120-01-163-5957	11083	404065
137	59	5310-00-347-4123	11083	184205
137	60		11083	8P5326
137	61	7690-01-160-5205	11083	5P8166
138	1	5310-00-768-0318	96906	MS51967-14
138	2	5310-00-584-5272	96906	MS35338-48
138	3		11083	6P5205
138	3A	5340-01-161-9162	11083	6P5206
138	4	3120-00-064-1275	11083	9F5647
138	5	5310-00-637-9541	96906	MS35338-46
138	6	5315-00-616-5526	96906	MS35756-8
138	7	5315-01-266-9238	11083	3P3935
138	8	5315-01-257-7800	11083	7L0811
138	9	3040-01-253-7350	11083	3P3937
138	10	3040-01-280-9034	11083	8P2481
138	11	5310-00-959-1488	96906	MS51922-21
138	12	5360-01-166-6940	11083	2J7295
138	13	5355-00-371-3370	11083	2A1736
138	14	3040-01-162-7541	11083	8P2480
138	15	5310-01-194-5398	11083	ID4717
138	16	3040-01-162-6414	11033	9P0468
138	17	5305-00-821-3869	96906	MS90728-65
138	18	5306-00-263-7301	11083	L1351
138	19	5310-01-165-4308	11083	8M4069
138	20	3110-00-930-6289	60380	JTT1211
138	21	3040-01-280-8452	11083	2P8145
138	22	53b5-01-281-0942	11083	5J5326
138	23	3040-01-161-5157	11083	8P5333
138	24	3040-01-163-1151	11083	8P5327
138	25	3120-01-163-5957	11083	4D4065
138	26	5310-00-347-4123	11083	184205
138	27		11083	8P5328
138	23	5305-00-071-2071	96906	MS90728-115
138	29	3040-01-280-9037	11083	8P5329
138	30	3120-01-163-5957	11083	404065
138	31	5310-00-347-4123	11083	lB4205
138	32		11083	8P5330
138	33	5310-00-347-4123	11083	lB4205
138	34	5340-00-018-7588	11083	6F7010
138	35	5315-00-839-5822	96906	MS24665-353
138	36		11083	OSOIT5
138	37	3040-01-280-8451	11083	8P2495
138	38	3110-01-168-1053	11083	603787
138	39	5310-00-763-8920	96906	MS51967-20
138	40	5310-00-045-5001	96906	MS35340-50
138	41	3040-01-161-5123	11083	5S9704
138	42	5310-01-108-7538	11083	1J8965
138	43	3040-01-163-2778	11083	8P2483
138	44	5365-01-172-5614	11083	353158
138	45	5305-00-725-2317	96906	MS90728-64

CROSS REFERENCE INDEXES
FIGURE AND ITEM NUMBER INDEX

FIG.	ITEM	STOCK NUMBER	CAGEC	PART NUMBER
138	46	5310-01-266-2481	11083	4B4278
138	47	5305-00-068-0511	96906	MS90728-62
138	48	5306-00-426-2922	11083	S1573
138	49	3120-01-163-5957	11083	4D4065
138	50	3040-01-163-1150	11083	8P3391
138	51	5340-01-062-5196	11083	2M8340
138	52	5310-00-347-4123	11083	184205
138	53		11083	BP2478
138	54	5306-00-138-4466	11083	2H3855
138	55		11083	8P2496
138	56	2990-01-103-3652	11083	5J5315
138	57	5310-00-975-2075	96906	MS35691-Z1
138	58	5306-01-283-9260	11083	8P2479
138	59	2530-01-169-4620	11083	8P7352
138	60	3040-01-171-3357	11083	6P5208
138	61	5340-01-163-5981	11083	6P5209
138	62	5305-00-959-2723	96906	MS35190-319
138	63		96906	MS90728-114
138	64	3040-01-281-2485	11083	8P5331
138	65	3120-01-163-5957	11083	4D4065
138	66	5310-00-347-4123	11083	IB4205
138	67	3040-01-344-1851	11083	8P5332
138	68	5340-01-062-5196	11083	2M8340
138	69	5340-01-164-9895	11083	8P5325
138	70	3120-01-163-5957	11083	404065
138	71	5310-0O-347-4123	11083	134205
138	72	3040-01-344-1851	11083	8P5332
138	73	5310-00-225-6993	96906	MS51922-33
139	1	4710-01-162-6732	11083	7G6543
139	1A		19207	NPN43
139	1B		19207	NPN44
139	IC		19207	NPN45
139	2	5330-00-913-6143	11083	4J519
139	3	5310-00-584-5272	96906	MS35338-48
139	4	5306-00-455-0459	11083	9S1366
139	5	5306-00-426-4171	11083	3B2968
139	6	5310-00-584-7888	96906	MS35338-51
139	7	5340-01-164-7606	11083	8P1189
139	8	5310-00-528-4124	19207	5284124
139	9	5306-00-423-8316	11083	1B2886
139	10	5330-01-017-6535	81349	M83248/2-214
139	11	5310-00-080-6004	96906	MS27183-14
139	12	5305-00-068-0511	80204	B1821BH038C125N
139	13	5306-01-195-4681	11083	351915
139	14	5310-00-486-2505	15434	108330
139	15	5340-01-164-4510	11083	3P4979
139	16	5306-00-897-9295	11083	5F4899
139	17	5310-00-117-4788	11083	5M2894
139	18	5340-01-164-8142	11083	3P4983
139	19	5306-00-698-2150	11083	OL2070
139	20	5340-01-164-7530	11083	3P4981

CROSS REFERENCE INDEXES
FIGURE AND ITEM NUMBER INDEX

FIG.	ITEM	STOCK NUMBER	CAGEC	PART NUMBER
139	21	5310-01-194-5398	11083	lD4717
139	22	5310-00-637-9541	96906	MS35338-46
139	23	5306-00-260-4508	11083	S1594
139	24	5310-01-094-8810	78189	3320-14-01
139	25	5340-01-162-7686	11083	3P4984
139	26	5306-00-423-8194	11083	lA2029
139	27	5306-00-268-5798	11083	OL1329
140	1	5330-01-017-6535	81349	M83248/2-214
140	2	5305-01-026-9518	11083	OS1571
140	3	4710-01-162-0275	11083	6P8155
140	3	4710-01-162-0276	11083	6PB157
140	4	5306-00-285-1368	11083	L1143
140	5	5310-00-080-6004	96906	MS27183-14
140	6	5310-00-557-9414	11083	4J8265
140	7	4730-01-051-3134	11083	1P4576
140	8	3040-01-162-0257	11083	2P7092
140	9	2910-00-309-9473	11083	OT0573
140	10	5365-01-164-7546	11083	832133
140	11	5330-00-913-6143	11083	4J519
140	12	4710-01-162-6731	11083	6P8156
140	12	4710-01-162-7147	11083	6P8158
140	13	5306-00-273-6357	11083	lA1460
140	14	5310-00-584-5272	96906	MS35338-48
140	15	5340-01-069-0905	11083	7S3919
140	16	5340-01-069-0904	11083	7S3916
140	17	4720-01-067-2180	11083	9S5682
140	18	4730-01-185-0026	11083	6V4651
140	19	5340-01-051-6767	11083	3S7166
140	20	4730-01-162-4358	11033	6V4658
141	1	5306-00-263-8978	11083	S1587
141	2	5310-00-809-5997	96906	MS27183-17
141	3	5306-00-809-7134	11083	2B0947
141	4	5330-00-801-3354	25184	906-737-70
141	5	5365-00-411-4584	11083	9S4191
141	6	4730-01-162-4406	11083	3P1288
141	7	5330-00-913-6144	11083	4J520
141	8	5310-00-117-4788	11083	5M2894
141	9	5305-00-068-0511	80204	B1821BHO38Cl25N
141	10	4730-01-051-5256	11083	1P4577
141	11	4730-01-164-4738	11083	2P6650
141	12	5330-01-106-0940	81349	M83248/2-227
141	13	5330-00-944-8281	11083	302824
141	14	5365-00-478-2920	11083	9S4183
141	15	5306-00-423-8316	11083	182886
141	16	4730-00-909-8627	96906	MS35842-13
141	17		11083	5P1292-4C5
141	18	5340-01-163-9459	11083	5P7468
141	19	5325-01-164-7555	11083	5P8444
141	20	5340-01-163-6175	11083	5P7469
141	21	5365-01-164-7547	11083	4S8B75
141	22	5306-00-273-6357	11083	lA1460

CROSS REFERENCE INDEXES
FIGURE AND ITEM NUMBER INDEX

FIG.	ITEM	STOCK NUMBER	CAGEC	PART NUMBER
141	23	5310-00-768-0318	96906	MS51967-14
141	24	5310-01-102-9866	11083	5P7213
141	25	5306-00-426-2934	11083	S1621
141	26	5340-01-163-6173	11083	6K6167
141	27	5340-01-163-6174	11083	6K6164
141	28	4710-01-163-0593	11083	2P9848
141	29		11083	8S9355-56*3
141	30	2520-01-051-6769	11083	7S575
141	31	4730-01-051-7600	11083	3S8496
141	32	3120-00-236-1319	11083	3S7252
141	33	5306-00-455-0459	11083	9S1366
141	34	5310-01-097-8955	11083	5P8244
141	35	5306-00-400-3518	63005	427564
141	36	5306-00-423-8117	11083	S1595
141	37	5330-00-948-4063	11083	4J522
141	38	4730-01-051-5257	11083	1P4578
141	39	4710-01-163-1258	11083	2P9849
141	40	5330-00-914-5846	11083	4J524
142	1	5330-00-944-8281	11083	3D2824
142	2	4730-01-063-0685	11083	308189
142	3	4710-01-281-1151	11083	6T3662
142	4	5305-00-688-2111	96906	MS90728-63
142	5	4710-01-281-1152	11083	6T3663
142	6	4730-00-903-7652	11083	3R2704
142	7		11083	2P5943-25
142	8	4730-01-094-7469	11033	8S6417
142	9	4730-01-095-0075	11083	4S5414
142	10	5306-00-766-2182	11083	2B2006
142	11	5310-00-809-5997	96906	MS27183-17
142	12	5340-01-281-9218	11083	6T1799
142	13	5365-01-281-7846	11083	7VO762
142	14	5310-01-194-5398	11083	lD4717
142	15	5310-01-094-8810	78189	3320-14-01
142	16	5365-01-282-1584	11083	2G6236
142	17	4730-01-169-5830	11083	307943
142	18	5330-00-948-6482	11083	3K360
142	19	5306-00-253-7864	11083	8M2530
142	20	4730-01-280-8352	11083	7TB753
142	21	5330-01-281-0908	11083	8T7211
142	22	5340-01-281-1003	11083	6V7383
142	23	5340-01-164-6469	11083	5P9298
143	1	2590-01-162-8993	11083	aJ2895
143	2	4710-01-163-3556	11083	6J8499
143	2A		11083	5J6679
143	3	3130-01-163-9419	11083	5J6160
143	3	3130-01-308-6011	11083	5J6159
143	4	2520-01-066-9192	11083	OT0199
143	5	3120-00-921-7248	11083	2J6306
143	6		11083	2J6316
143	7	5306-01-103-6598	11083	104600
143	8	5310-00-431-7244	11083	25S658

CROSS REFERENCE INDEXES
FIGURE AND ITEM NUMBER INDEX

FIG.	ITEM	STOCK NUMBER	CAGEC	PART NUMBER
143	9	5310-00-763-8920	96906	MS51967-20
143	10	4730-00-172-0028	96906	MS15003-4
143	11	5340-01-164-2400	11083	5J6161
143	12	5330-01-164-8571	11083	8J7067
143	13	5340-01-166-0801	11083	5J6162
143	14	5310-00-584-5272	96906	MS35338-48
143	15	5306-00-423-8117	11083	S1595
143	16	5305-00-071-2055	83204	81821BH044CI5ON
143	17	5310-00-431-7237	11083	104718
143	18		11083	9JI903
143	19	5310-00-930-7013	11083	484280
143	20	5310-00-020-0358	72962	21-NE-083
143	21	5306-00-809-7134	11083	280947
143	22		11083	4J6327
143	23	4730-00-050-4208	96906	MS15003-1
143	24	3120-00-455-7085	11083	4J6326
143	25	2590-01-184-0473	11083	5J6156
143	26	5330-00-923-6952	11083	2J6305
144	1	2530-01-144-2146	11083	7J8299
144	2	3040-01-163-8631	11083	7J8298
144	3		11083	7J8292
144	4		11083	4J6374
144	5	5306-01-164-7449	11083	5P1839
144	6	5310-01-164-7495	11083	8J4359
144	7	2530-00-890-2233	11083	IM1571
144	8	2590-01-162-7550	11083	9J2007
144	9	2530-01-163-8594	11083	9J2010
144	10	3040-01-163-0825	11083	9J2009
144	11		11083	9J2008
144	12	2590-01-189-8340	11083	9J2011
144	13	5365-01-165-8752	11083	8J9282
144	14	2530-00-865-2215	11083	5J5402
144	14A	5365-00-161-0747	11083	5J5401
144	14B	5365-00-161-0747	11083	5J5401
144	15		11083	7J8294
144	16	5310-01-102-2477	11083	5PB248
144	17	5306-00-426-4171	11083	3B2968
144	18	5330-00-261-0990	11083	8C3840
144	19	5330-00-455-7065	73680	17159-1110
144	20	5330-00-143-7173	11083	8C3839
144	21	5305-01-283-5592	11083	8J5912
144	22	2520-01-066-0504	11083	7J6461
144	23	2530-01-163-8629	11083	7J8295
144	24	2530-00-890-2229	11083	2K6830
144	25	5330-00-555-3810	11083	IH8128
144	26	3130-00-224-8095	11083	3J6559
144	27	5365-01-164-8782	11083	3J6572
145	1	2590-01-164-7253	11083	3G2712
145	2	5310-00-005-0781	11083	9F2978
145	3	4730-01-199-6453	11083	5J3306
145	4	5305-00-172-6356	11083	50353

CROSS REFERENCE INDEXES
FIGURE AND ITEM NUMBER INDEX

FIG.	ITEM	STOCK NUMBER	CAGEC	PART NUMBER
145	5	5310-00-117-4788	11083	5M2894
145	6	5340-01-162-7687	11083	3G7229
145	7	5330-00-593-1197	11083	3H9523
145	8	5340-00-635-8296	110-3	7H1447
145	9	3110-00-731-1593	11083	7B6368
145	10	2520-01-028-8096	11083	6H5139
145	11	5330-00-848-9950	11083	9H6454
145	12	4730-01-165-0851	11083	9J3047
145	13	5310-01-194-5398	11083	1D4717
145	14	5306-01-165-8107	11083	7J5590
145	15	5330-00-599-2938	11083	8F9206
145	16	2940-01-163-2809	11083	4J596
145	17	5330-00-118-5526	11083	3J1991
145	5	5360-01-164-8752	11083	9J8775
145	19	4820-01-167-1563	11083	5J1095
145	20	4820-00-404-7133	11083	5J1096
145	21	5360-00-209-8467	11083	7F9802
145	22	5310-01-164-6372	11083	3J1997
145	23	5315-01-164-7586	11083	2M8729
145	24	4330-00-118-5528	12658	PT-93
145	25	5305-01-188-4766	11083	9M6590
145	26	5306-01-127-9361	11083	OS1585
145	27	5340-01-222-5376	11083	2J6195
145	28	5330-00-913-6143	11083	4J519
145	29	5306-00-423-8117	11083	S1595
145	30	5306-00-423-8194	11083	IA2029
145	31	5310-00-637-9541	96906	MS35338-46
145	32		11083	8J2654
145	33	2590-01-215-2313	11083	2J1345
145	34	3040-01-215-2217	11083	8J2652
145	35	5306-01-110-1130	11083	5K9107
145	36	5340-01-173-1016	11083	3G2692
145	37	2590-01-161-9632	11083	3G4074
145	38	5306-01-105-1790	11083	343557
145	39	5310-00-950-6944	11083	2H5746
145	40	5330-00-605-1009	73680	23548-4754
145	41	5330-00-919-2245	11083	4J8425
145	42		11083	8J1841
145	43	3110-00-183-6730	96906	MS17131-23
145	44	5315-00-616-5524	64294	29620-3
145	45	5305-01-015-6841	11C83	OS1591
145	46		11083	2J60740UM*OIDAG
145	47	3120-00-555-4525	11083	7H3912
145	48		11083	2J6073
145	49	5315-00-619-2962	11083	I J4384
145	50	5340-01-164-7611	11083	7H3932
145	51	5315-00-839-5821	96906	MS24665-351
145	52	2590-01-165-5746	11083	8J6913
145	53	9905-01-164-0167	11083	3G5980
145	54	6680-00-138-4143	11083	4J8252
145	55	5325-01-068-6227	11083	4J8251

CROSS REFERENCE INDEXES
FIGURE AND ITEM NUMBER INDEX

FIG.	ITEM	STOCK NUMBER	CAGEC	PART NUMBER
145	56	5310-00-584-5272	96906	MS35338-48
145	57	5306-00-426-2934	11083	S1621
145	58	2590-01-162-0179	11083	8J2509
145	59	4730-01-162-6356	11083	8J1803
145	60	4730-01-278-1859	11083	1J9778
145	61	4720-01-161-7783	11083	8J2660
145	62	4730-01-162-6355	11083	SJ3539
145	63	5330-00-893-7274	11083	8H9818
145	64	3805-00-920-7472	11083	8H9819
145	65	5365-00-363-9900	11083	4B7739
145	66	5330-00-801-3354	25184	906-737-70
145	67	5365-01-024-9868	30780	6HP5N-SS
145	68	5330-00-580-1227	11083	5H6005
145	69	5330-01-123-6209	11083	3G361
145	70	5310-00-851-2682	96906	MS35691-17
145	71	5310-00-005-0781	11083	9F2978
146	1	5330-01-164-1151	11083	7G5266
146	2	5325-01-164-7552	11083	3J4586
146	3	5340-01-169-7528	78640	308491
146	4	4730-00-877-6298	81646	6710
146	5		11083	5P1694-15C3
146	6	5306-00-455-0459	11083	9S1366
146	7	5310-00-584-5272	96906	MS35338-48
146	8	5305-00-139-7071	11083	OV0375
146	9	5340-01-166-6931	11083	8Pll88
146	10	5306-00-268-5798	11083	OL1329
146	11	5306-00-424-0086	11083	7B3235
146	12	5340-01-163-2034	11083	8P1187
146	13	5365-01-164-8781	11083	3J3372
146	14	5340-01-164-1271	11083	6V1178
147	1	5306-01-105-1790	11083	343557
147	2	5310-00-117-4788	11083	5M2894
147	3	5340-01-162-7687	11083	3G7229
147	4	5330-00-593-1197	11083	3H9523
147	5	5340-00-635-8296	11083	7H1447
147	6	5306-01-165-8107	11083	7J5590
147	7	5330-00-599-2938	11083	8F9206
147	8	2940-01-163-2809	11083	4JO596
147	9	5330-00-118-5526	11083	3J1991
147	10	5360-01-164-8752	11083	9J8775
147	11	4820-01-167-1563	11083	5J1095
147	12	4820-00-404-7133	11083	5J1096
147	13	5360-00-209-8467	11083	7F9802
147	14	5310-01-164-6372	11083	3J1997
147	15	5315-01-164-7586	11083	2M8729
147	16	4333-00-118-5528	11083	4JO816
147	17	5330-00-835-3007	11083	8T7266
147	18	5340-01-222-5376	11083	2J6195
147	19	5306-01-127-9361	11083	OS1585
147	20	5340-01-215-0411	11083	SJ2653
147	21	3040-01-215-2217	11083	SJ2652

CROSS REFERENCE INDEXES
FIGURE AND ITEM NUMBER INDEX

FIG.	ITEM	STOCK NUMBER	CAGEC	PART NUMBER
147	22	2590-01-215-2313	11083	2J1345
147	23		11083	SJ2654
147	24	3040-01-215-2217	llr03	8JZ652
147	25	2590-01-215-2313	11083	2JI345
147	26	2590-01-161-9632	11083	3G4074
147	27	5306-01-156-5437	11083	310219
147	28	5330-01-164-8565	11083	lU4599
147	29	3110-00-183-6730	96906	MS17131-23
147	30		11083	8J1841
147	31	5315-00-616-5524	64294	29620-3
147	32	5310-01-194-5398	11083	1D4717
147	33		11083	2J60740UM*OIDAG
147	33A		11083	2J6073
147	34	3120-00-555-4525	11083	7H3912
147	35	5315-00-619-2962	11083	1J4384
147	36	5340-01-164-7611	11083	7H3932
147	37	5315-00-839-5821	96906	MS24665-351
147	38	5305-01-015-6841	11083	OS1591
147	39	4730-01-162-6356	11083	8J1803
147	40	5306-01-282-3377	11083	6K5718
147	41	4730-01-278-1859	11083	1J9778
147	42	4720-01-161-7783	11033	8J2660
147	43	4730-01-162-6355	11083	8J3539
147	44	2590-01-162-0179	11083	8J2509
147	45	5310-01-108-8405	11083	lF750
147	46	5310-00-056-3395	96906	MS35649-2382
147	47	2530-01-278-0248	11083	5H2207
147	48	5306-00-263-7301	11083	L1351
147	49	5365-00-363-9900	11083	487739
147	50	3805-00-920-7472	11083	8H9819
147	51	5330-00-893-7274	11083	8H9818
147	52	5306-00-423-8194	11083	IA2029
147	53	5365-01-036-0010	11033	9S8004
147	54	5330-00-801-3354	25184	906-737-70
147	55	5306-00-260-4508	11083	S1594
147	56	5330-00-580-1227	11083	8F6952
147	57		11083	3G2708
147	58	5310-01-194-5398	11083	lD4717
147	59	5330-01-123-6209	11083	3G361
147	60	4730-01-165-0851	11083	9J3047
147	61	5330-00-848-9950	11083	9H6454
147	62	2520-01-028-8096	11083	6H5139
147	63	3110-00-011-9935	11083	489782
147	64	5325-01-068-6227	11083	4J8251
147	65	9340-01-062-6129	08805	940
147	66	9905-01-164-0167	11083	3G5980
147	67	5340-01-173-1016	11083	3G2692
147	68	5305-01-188-4766	11083	9M6590
147	69	5330-01-217-2008	11083	6V7371
147	70	5310-00-950-6944	11083	2H5746
147	71	5306-01-110-1130	11083	5K9107

CROSS REFERENCE INDEXES
FIGURE AND ITEM NUMBER INDEX

FIG.	ITEM	STOCK NUMBER	CAGEC	PART NUMBER
148	1	2590-01-161-9656	11083	8P8845
148	2	5995-01-151-6312	11083	9G9019
148	3	5935-01-097-7240	79550	11722
148	4	5940-00-143-4774	96906	MS25036-153
148	5	6350-01-155-5993	62539	EXLB-1
148	6	5310-00-010-3092	68505	X141
148	7	5310-00-596-7693	78189	1108
148	8	5310-00-117-4788	11083	5M2894
148	9	5306-00-470-5543	11083	8S9191
148	10	5310-00-557-9414	11083	4J8265
148	11	5340-01-216-1487	11083	1S9886
148	12	5305-00-732-0512	80204	B1821BH050C075N
148	13	5310-00-809-5997	96906	MS27183-17
148	14	4710-01-216-1006	11083	9P3354
148	15		11083	5P5624-30
148	16	5940-00-230-0515	96906	MS25036-154
148	17	5935-01-097-7239	11083	6K1828
148	18	5310-00-768-0318	96906	MS51967-14
148	19	5310-00-930-7013	11083	484280
148	20	5306-00-423-8117	11083	S1595
148	21		11083	5P5624-94*1
148	22	5340-01-160-2464	11083	1S9593
148	23	5935-01-097-7239	11083	6K1828
148	24	4730-01-068-6077	11083	6KG806
148	25	5340-00-547-9875	11083	lH5165
148	26	6220-00-778-7213	11083	lH5166
148	27	5310-00-080-6004	96906	MS27183-14
148	28		11083	9P8121
148	29	5320-01-023-2529	81349	M24243/1-A404
148	30	5340-01-156-8752	11033	9P8122
148	31	5340-01-309-7217	11083	9P8637
148	32	5340-01-154-4059	11083	9P8636
148	33	5340-01-170-6336	11083	9P4609
148	34	5320-01-217-0799	11083	9M5731
148	35	5930-01-162-7313	11083	9P4608
148	36		11083	5P5628-72
148	37	5975-00-074-2072	96906	MS3367-1-9
148	38		11083	5P6725
148	39	5995-01-162-0093	11083	8P5912
148	40	5935-01-097-7239	11083	6K1828
148	41	5340-01-160-2464	11083	1S9593
148	42	5920-01-059-0881	79550	12864
148	43	5999-01-059-0884	79550	12871
148	44	5360-01-059-0883	11083	2S5013
148	45	5920-01-059-0894	11083	3PS989
148	46	5995-01-162-0092	11083	8P6314
148	47	5920-01-059-0882	11083	2S5012
148	48	5999-01-059-0884	79550	12871
148	49	5940-00-230-0515	96906	MS25036-154
149	1		11083	5R8094
149	2	5306-01-281-7146	11083	9S5033

CROSS REFERENCE INDEXES
FIGURE AND ITEM NUMBER INDEX

FIG.	ITEM	STOCK NUMBER	CAGEC	PART NUMBER
149	3	5340-01-107-4111	11083	9S0211
149	4	3010-01-281-9394	11083	6N1345
149	5	5330-00-613-6522	11083	4M8303
149	6	3120-01-257-3300	11083	4N0538
149	7	5340-01-269-9343	11083	4W5235
149	8	6680-01-179-4546	33203	AD2H23MA16
150	1	4730-01-163-2608	11083	8F390
150	2	6620-01-158-2910	03479	05-35-756
150	3	2540-01-149-3344	11063	9G655
150	4	5305-00-708-3823	11083	7B3028
150	5	5330-01-152-0601	11033	6V3507
150	6	6645-00-602-5968	74400	15002-3
150	7	6685-01-156-9713	03479	20STG-250-AGFX4
150	8	6685-01-157-5477	03479	10-35-870
150	9	6620-01-158-2909	11083	1WO705
151	1	4730-01-068-6077	11083	6K0806
151	2	5325-00-400-8682	11083	2D2751
151	3	4730-01-149-4970	11083	9S7703
151	4	4730-00-013-7397	11083	488756
151	5	4730-00-923-2126	11083	6H6699
151	6	6220-00-778-7213	11083	1H5166
151	7	5306-00-226-4823	80204	B1821BHO31C056N
151	a	5310-00-081-4219	96906	MS27183-12
151	9	4710-01-151-5709	11083	9G6473
151	10	4730-01-069-0768	11083	5K9241
151	11	4730-01-069-0769	11083	5K9242
151	12	5340-00-346-2596	11083	L2072
151	13	5306-00-261-1153	11083	S1615
151	14	5310-00-582-5965	96906	MS35333-44
151	15	5310-00-042-6376	31159	JM56
151	16	5340-01-166-6926	11083	BM2771
151	17	5340-01-161-7400	11083	1V3113
151	13	4710-01-149-5080	11083	9G7514
151	19	4730-01-068-6081	11083	6L3616
151	20		11083	5P0189-7C8IN
152	1	3830-01-161-6594	89917	50097
152	2	5315-01-235-6827	89917	31488
152	3	5315-01-209-0872	89917	25172
152	4	5315-00-352-7540	11083	3F4971
152	5	5340-01-164-1912	89917	50038
152	6	5315-01-164-8693	11083	5J442
152	7	3830-01-279-0296	11083	4T3052
152	3	3830-01-279-0297	11083	5R8053
152	9	5315-01-164-1781	89917	50047
152	10	5306-00-263-3533	11083	3F5108
152	11	3830-01-280-4395	11083	4T3051
152	12	3805-01-164-7838	89917	49889
152	13	5310-00-763-8920	96906	MS51967-20
152	14	5315-01-164-1780	89917	20183
152	15	5315-01-235-6827	89917	31488
152	16	5310-00-809-5997	96906	MS27183-17

CROSS REFERENCE INDEXES
FIGURE AND ITEM NUMBER INDEX

FIG.	ITEM	STOCK NUMBER	CAGEC	PART NUMBER
152	17	5310-01-187-6114	89917	51102
152	18	2410-01-163-2680	89917	50100
152	19	3830-01-161-6593	89917	50071
152	20	5310-00-374-1365	11083	4F2710
152	21	3130-00-352-8136	11083	6F3183
152	22	5306-00-436-9896	11083	3B6753
152	23	3830-01-163-7219	89917	49840
152	24	5365-01-164-1989	89917	49832
152	25	3830-01-198-0866	89917	49830
152	26	3830-01-163-0757	89917	49829
152	27	5365-01-167-4225	89917	49831
152	28	2590-01-284-6164	89917	88581
152	29	5340-01-167-6300	89917	50045
152	30	3040-01-284-4551	39917	88159
152	31	3040-01-162-4396	89917	50096
152	32	4730-01-206-1428	89917	388489
152	33	5315-00-352-7540	11083	3F4971
152	34	5315-01-235-6827	89917	31488
152	35	5315-01-282-0458	11083	2J885
152	36	3130-01-171-8186	11083	2J851
152	37	5310-00-584-5272	96906	MS35338-48
152	33	5305-01-208-6720	89917	23697
152	39	5315-01-209-0872	89917	25172
152	40	5340-01-167-9936	89917	50044
152	41	2510-01-285-2927	89917	88582
152	42	5340-01-167-6300	89917	50045
152	43	4730-01-206-1428	89917	388489
152	44	2590-01-161-9630	89917	49918
152	45	5340-01-167-9936	39917	50044
152	46	2530-01-162-4394	89917	49915
152	47	5315-00-352-7540	11083	3F4971
152	48	5315-01-235-6827	89917	31488
152	49	5315-01-209-0872	89917	25172
152	50	3130-01-171-8186	11083	2J851
152	51	5310-00-584-5272	96906	MS35338-48
152	52	5305-01-208-6720	89917	23697
152	53	5315-01-209-0872	89917	25172
153	1		19207	5705778
153	2	5340-01-270-1290	11083	5P1762
153	3	5120-01-123-5884	11083	8S2243
153	4	5315-01-268-2194	11083	6V4186
153	5	5120-01-272-4055	11083	6VO082
153	6	5315-01-270-1888	11083	5P8635
153	7	5306-01-127-9361	11083	OS1585
153	8		11083	5P8631
153	9	5120-01-272-0763	11093	5P8630
153	10	5330-00-590-1064	09990	2-320N951-75
153	11	5306-00-809-7134	11083	280947
153	12	5365-01-270-2772	11083	5P8634
153	13		11083	5P8632
153	14	5120-01-284-4968	11083	6V4061

CROSS REFERENCE INDEXES
FIGURE AND ITEM NUMBER INDEX

FIG.	ITEM	STOCK NUMBER	CAGEC	PART NUMBER
153	15	5120-01-295-1200	11083	6V4149
153	16	5120-01-295-1199	11083	6V4150
153	17	6680-01-299-5060	11083	6V4192
153	18	5120-01-296-3865	11083	6V4151
153	19	5120-01-294-0320	11083	6V4153
153	20	5310-00-431-7244	11083	2S5658
153	21	5310-00-763-8905	96906	MS51968-20
153	22	5120-00-178-1267	11083	8S2244
153	23		19237	5705779
153	24	5120-01-119-1748	11083	5P7312
153	25	5120-01-119-1750	11033	5P7315
153	26	5120-01-119-1749	11083	5P7313

US GOVERNMENT PRINTING OFFICE 1993- 746017 /80230

By Order of the Secretary of the Army:

GORDON R. SULLIVAN
General, United States Army
Chief of Staff

Official:

MILTON H. HAMILTON
Administrative Assistant to the
Secretary of the Army
02587

Distribution:
To be distributed in accordance with DA Form 12-25- (Block 2313) requirements for TM5-2410-23624P.

*US GOVERNMENT PRIINTINGOFF1CE-1993.746-017180032

This page only for NON-SOFTWARE-related TM errors/improvements.

RECOMMENDED CHANGES TO EQUIPMENT TECHNICAL PUBLICATIONS



THEN...JOT DOWN THE DOPE ABOUT IT ON THIS FORM. CAREFULLY TEAR IT OUT. FOLD IT AND DROP IT IN THE MAIL.

SOMETHING WRONG WITH THIS PUBLICATION?

FROM: (PRINT YOUR UNIT'S COMPLETE ADDRESS

DATE SENT

PUBLICATION NUMBER	PUBLICATION DATE	PUBLICATION TITLE

BE EXACT PIN-POINT WHERE IT IS

PAGE NO.	PARA-GRAPH	FIGURE NO.	TABLE NO.

IN THIS SPACE TELL WHAT IS WRONG AND WHAT SHOULD BE DONE ABOUT IT:

PRINTED NAME GRADE OR TITLE AND TELEPHONE NUMBER

SIGN HERE

DA FORM 1 JUL 79 2028-2

PREVIOUS EDITIONS ARE OBSOLETE

P.S.—IF YOUR OUTFIT WANTS TO KNOW ABOUT YOUR RECOMMENDATION MAKE A CARBON COPY OF THIS AND GIVE IT TO YOUR HEADQUARTERS

TEAR ALONG PERFORATED LINE

THE METRIC SYSTEM AND EQUIVALENTS

NEAR MEASURE

. Centimeter = 10 Millimeters = 0.01 Meters = 0.3937 Inches
1 Meter = 100 Centimeters = 1000 Millimeters = 39.37 Inches
1 Kilometer = 1000 Meters = 0.621 Miles

WEIGHTS

Gram = 0.001 Kilograms = 1000 Milligrams = 0.035 Ounces
1 Kilogram = 1000 Grams = 2.2 lb.
1 Metric Ton = 1000 Kilograms = 1 Megagram = 1.1 Short Tons

LIQUID MEASURE

1 Milliliter = 0.001 Liters = 0.0338 Fluid Ounces
1 Liter = 1000 Milliliters = 33.82 Fluid Ounces

SQUARE MEASURE

1 Sq. Centimeter = 100 Sq. Millimeters = 0.155 Sq. Inches
1 Sq. Meter = 10,000 Sq. Centimeters = 10.76 Sq. Feet
1 Sq. Kilometer = 1,000,000 Sq. Meters = 0.386 Sq. Miles

CUBIC MEASURE

1 Cu. Centimeter = 1000 Cu. Millimeters = 0.06 Cu. Inches
1 Cu. Meter = 1,000,000 Cu. Centimeters = 35.31 Cu. Feet

TEMPERATURE

5/9(°F - 32) = °C
212° Fahrenheit is evuivalent to 100° Celsius
90° Fahrenheit is equivalent to 32.2° Celsius
32° Fahrenheit is equivalent to 0° Celsius
9/5C° + 32 =°F

APPROXIMATE CONVERSION FACTORS

TO CHANGE	TO	MULTIPLY BY
Inches	Centimeters	2.540
Feet	Meters	0.305
Yards	Meters	0.914
Miles	Kilometers	1.609
Square Inches	Square Centimeters	6.451
Square Feet	Square Meters	0.093
Square Yards	Square Meters	0.836
Square Miles	Square Kilometers	2.590
Acres	Square Hectometers	0.405
Cubic Feet	Cubic Meters	0.028
Cubic Yards	Cubic Meters	0.765
Fluid Ounces	Milliliters	29.573
ıts	Liters	0.473
arts	Liters	0.946
allons	Liters	3.785
Ounces	Grams	28.349
Pounds	Kilograms	0.454
Short Tons	Metric Tons	0.907
Pound-Feet	Newton-Meters	1.356
Pounds per Square Inch	Kilopascals	6.895
Miles per Gallon	Kilometers per Liter	0.425
Miles per Hour	Kilometers per Hour	1.609

TO CHANGE	TO	MULTIPLY BY
Centimeters	Inches	0.394
Meters	Feet	3.280
Meters	Yards	1.094
Kilometers	Miles	0.621
Square Centimeters	Square Inches	0.155
Square Meters	Square Feet	10.764
Square Meters	Square Yards	1.196
Square Kilometers	Square Miles	0.386
Square Hectometers	Acres	2.471
Cubic Meters	Cubic Feet	35.315
Cubic Meters	Cubic Yards	1.308
Milliliters	Fluid Ounces	0.034
Liters	Pints	2.113
Liters	Quarts	1.057
ers	Gallons	0.264
ms	Ounces	0.035
ograms	Pounds	2.205
Metric Tons	Short Tons	1.102
Newton-Meters	Pounds-Feet	0.738
Kilopascals	Pounds per Square Inch	0.145
lometers per Liter	Miles per Gallon	2.354
meters per Hour	Miles per Hour	0.621

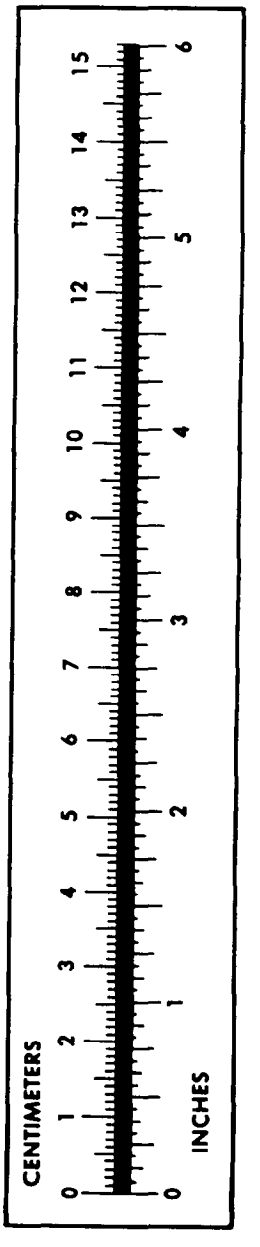

PIN: 061862-001

This fine document...

Was brought to you by me:



Liberated Manuals -- free army and government manuals

Why do I do it? I am tired of sleazy CD-ROM sellers, who take publicly available information, slap “watermarks” and other junk on it, and sell it. Those masters of search engine manipulation make sure that their sites that sell free information, come up first in search engines. They did not create it... They did not even scan it... Why should they get your money? Why are not letting you give those free manuals to your friends?

I am setting this document FREE. This document was made by the US Government and is NOT protected by Copyright. Feel free to share, republish, sell and so on.

I am not asking you for donations, fees or handouts. If you can, please provide a link to liberatedmanuals.com, so that free manuals come up first in search engines:

<A HREF=http://www.liberatedmanuals.com/>Free Military and Government Manuals</A>

- Sincerely
  Igor Chudov
  http://igor.chudov.com/
- Chicago Machinery Movers