KEPB023313

PARTS BOOK

D51EX/PX-22
Serial No. B10001 and up

SAA6D107E-1
Serial No. 30910419 and up

D51EX D51EPX-22

RUTHZIL TRATOR COMERCIAL DE PEÇAS LTDA 11 97083-6812 ROLANDO CITRANGULO

INTRODUCTION

INTRODUCTION

GENERAL

This parts book lists engine and chassis service parts for the machine shown on the title page.

We reserve the right to make changes or add improvements at any time without incurring any obligation to install such changes on products previously sold.

ILLUSTRATIONS

Illustrated items are given item numbers which correspond to the same number in the parts list. Item numbers may point to more than one identical item. The quantity of items shipped will depend on the quantity ordered. Illustrations are of typical parts only.

METHOD OF LISTING

The parts list and its associated illustration is the essential content of the Parts Book. Each parts list is arranged in numeric sequence by page number.

The parts list form is divided into five columns for easy use:

1. ***ITEM Column*** - This column contains keys to the illustration so the part can be located on the associated illustration. If there is no key number for the part, the part is non-illustrated and is not on the associated illustration.

2. ***PART NUMBER Column*** - This column contains the part number of each serviceable part. The part number, in conjunction with the description of the part, is the key to locating needed service parts. Part numbers in *ITALIC* are non-service parts listed for reference only.

3. ***DESCRIPTION Column*** - This column contains the description of each part. It can be used to find needed parts when the part number is not known. Indentation of an item indicates that it is a component part (or subassembly) of the item under which it is indented.

4. ***QTY Column*** - This column contains the quantity of each part number listed as needed for the product it is a part of.

5. ***REF Column*** - This column is reserved for notation by footnote designators. Footnotes will be found at the end of the listing.

6. ***SERIAL NO. Column*** - This column contains the serial number range of each part number listed.

PRODUCT GRAPHICS

The owner and/or operator must replace any and all safety and warning product graphics if they are defaced or removed from the machine.

ABBREVIATIONS

The following abbreviations will be used in the parts listing:

AR - As Required	NSS - Not Serviced Separately
F1,F2, etc. - Footnote	L.H. - Left Hand
N/I - Not Illustrated	R.H. - Right Hand
NS - Not Serviced	S/N - Sequence Number

NOTE: Left and right sides of the machine are determined by sitting in the operator's seat and facing forward.

COMMON HARDWARE

Mounting hardware, including bolts, nuts, cotter pins and so forth, are illustrated in most cases.

ORDERING PARTS

When ordering parts, always give the following information:

1. The complete part number, including prefix or suffix letters, the name of the part and the quantity required.
2. The complete model number, machine serial number and engine serial number of the machine. See PRODUCT IDENTIFCATION NUMBERS, which follows.
3. When ordering parts for items which have their own serial numbers (such as transmissions, torque converters or axles) also include the serial numbers of the transmission, torque converter and/or axle. We recommend that you write the model and machine serial numbers of your machine and all major components in the spaces provided below.

Date Received _____

Machine Model _____ Serial No. _____

Engine Model _____ Serial No. _____

Hydraulic Pump Model _____ Serial No. _____

Final Drive Model _____ Serial No. _____

_____ _____

_____ _____

_____ _____

_____ _____

PRODUCT IDENTIFICATION NUMBERS

Machine Model	*Engine Model*	*Chassis Serial Number*
D51EX-22	SAA6D107E-1	B10001 AND UP
D51PX-22	SAA6D107E-1	B10001 AND UP

FOREWORD

When ordering a spare part, specify the part number, part name, and quantity required, and also specify your machine model code, machine serial number, engine serial number and the service meter reading.

This Parts Book describes not only standard items but also optional equipment and attachments. To order a part, please contact your nearest Komatsu distributor.

This Parts Book contains the information and special symbols as follows:

Figure and list

When you open this Parts Book, you will find an illustration on the left page (even-numbered page) for the spare parts group. Each individual part in the group is given an index number.
On the right page, the component parts of the group are listed in the order of the index numbers shown on the illustration page. The part number, part name, and applicable machine serial number are given for each part.

FIG. No.

The FIG. No. is the number of the illustration shown on the page. It is not the spare part number. The numbers are not always continuous.

INDEX

This is the same as the index number in the illustration. The parts are listed in index number order.

PART No.

The number given in the PART No. column is the part number for the part shown. It is the code used when ordering that part. It is important that there be no mistake in this code number when ordering.

DESCRIPTION

This gives the name of part that has the part number listed. The mark "." is put in front of the part name of an assembly part and the item is entered following the assembly. If a part marked with "." is a sub assembly, its components are marked with "..".

Example:
```
ELEMENT ASSEMBLY, AIR CLEANER
.ELEMENT ASSEMBLY, OUTER
..ELEMENT, OUTER
..NUT, WING
..WASHER
```

Q'TY (Quantity)

This specifies the number of pieces used for one machine. However, if a part is included in the assembly and/or component, the quantity per such assembly and/or component is specified.

SERIAL No.

Applicable engine serial number is indicated for the engine volume. In the chassis volume, this indicates the machine serial number in which the part is used.

Symbols and codes

Symbols and codes are used in the PART No. and DESCRIPTION columns, and represent the following:

□	The part specified in the line above can be used instead of this part.

Symbols and codes (Cont'd)

⊡	This part can be used instead of the part specified in the line immediately above.
◆	This part and the part specified in the line immediately above are interchangeable.
■	The part specified in the DESCRIPTION column can be used instead of this part if it is used as a set.
☒	This shows discontinued part. The part specified in the above line is supplied instead.
▼	This shows a discontinued part. The part specified in the DESCRIPTION column is supplied instead as a set.
☆	This part cannot be supplied as an individual part. It is supplied as an assembly.
★	This part cannot be supplied as an individual part. It is supplied as an assembly. However, it is supplied as an individual part by authorized distributors only.
⊙	This indicates a part group. The part marked with this symbol is not considered a supply part.
====	The parts surrounded by this line are components of the part group specified in the above line.
G-1,G-2	These indicate categories of part groups.
KIT	This indicates kit parts. For kit parts, refer to the service kit tables provided in this Parts Book.
△	This indicates a part supplied as semi-finished. It requires additional work before installation.
PAINT(1)	This indicates parts shipped painted with undercoat.
PAINT(2)	This indicates parts supplied with different colors from the original color of your machine.
(A)	This code indicates special parts for cold weather "A" specification (-30ºC) machines.
(B)	This indicates special parts for cold weather "B" specification (-50ºC) machines.

AVANT-PROPOS

Lorsque vous passez une commande d'une ou plusieurs pièces détachées, vous êtes prié de spécifier, outre le ou les numéro(s), désignation(s) et quantité(s) des pièces commandée(s), le numéro de carrosserie, le numéro de série du moteur et la lecture du compteur de service du véhicule.

Sur le présent catalogue des pièces figurent non seulement les équipements standard, mais également les équipements et accessoires en option. Si vous désirez un équipement ou une pièce quelconque, vous êtes prié de prendre contact avec le concessionnaire Komatsu le plus proche.

Ce catalogue des pièces se présente de la manière suivante:

Figures et listes	Lorsque vous ouvrez le présent catalogue, vous trouvez: sur la page de gauche (numéro de page pair), les illustrations de toutes les pièces composant l'équipement en question avec les numéros de référence pour chacune des pièces, sur la page de droite (numéro de page impair), la liste des pièces dans l'ordre des numéro de référence des pièces avec indication du numéro des pièces, de la désignation des pièces, de la quantité utilisée et des numéros de série.
FIG. No. (Figure et liste)	Le numéro de figure (FIG. XX) correspond au numéro de la figure représentée sur cette page, mais ne correspond pas au numéro de la pièce détachée. Veuillez noter que les numéros de figure ne se suivent pas systématiquement.
INDEX (Numéros de référence)	Les numéros de référence correspondent aux numéros de référence notés sur la figure et sont énumérés dans l'ordre des numéros de référence.
PART No. (Numéros de pièce)	Les numéros indiqués dans cette colonne correspondent aux numéros des pièces représentées et constituent les codes à spécifier pour toute commande de pièce. Il est important de ne pas faire d'erreur avec ce code au moment de la commande.
DESCRIP-TION (Descript-ion)	Dans cette colonne est indiquée la désignation des différentes pièces. Dans le cas d'un ensemble constitué de pièces, la désignation de chacune de ces pièces est précédée d'un point "." et dans le cas d'un ensemble constitué de sous-ensembles eux-mêmes constitués de pièces, la désignation de chacune de ces pièces est précédée de deux points "..". Exemple: ELEMENT ASSEMBLY, AIR CLEANER .ELEMENT ASSEMBLY, OUTER ..ELEMENT, OUTER ..NUT, WING ..WASHER
Q'TY (Quantité)	Dans cette colonne est indiqué le nombre de pièces nécessaires pour l'équipement en question. S'il s'agit de pièces comprises dans un ensemble et/ou composant, et la quantité indiquée est le nombre de pièces nécessaires pour l'ensemble et/ou le composant en question.
SERIAL No. (Numéros de série)	S'il s'agit d'un élément du moteur, ces numéros sont les numéros de série des moteurs sur lesquels cette pièce est utilisée. S'il s'agit d'un élément de la carrosserie, ces numéros sont les numéros des carrosseries sur lesquelles la pièce en question est utilisée.

Codification

Les codes indiqués dans les colonnes "N° de pièce" et "Description" ont les significations suivantes:

□	Au lieu de la pièce affectée de ce code, il est possible d'utiliser la pièce qui figure juste au-dessus.
⊡	La pièce affectée de ce code peut être utilisée à la place de la pièce figurant juste au-dessus.
◆	La pièce affectée de ce code et la pièce figurant dans la ligne justeau-dessus sont interchangeables
☒	Au lieu de la pièce affectée de ce code, il est possible d'utiliser la combinaison des pièces indiquées dans la colonne "Description".
■	Les pièces affectées de ce code ne sont plus fournies. Au lieu de cette pièce, c'est la pièce figurant dans la ligne justeau-dessus qui sera fournie.
▼	Les pièces affectées de ce code ne sont plus fournies. Au lieu de cette pièce, c'est la combinaison de pièces figurant dans la colonne "Description" qui sera fournie.
☆	Les pièces affectées de ce code ne seront pas fournies à l'unité mais par jeu de pièces.
★	Les pièces affectées de ce code ne seront pas fournies à l'unité mais par jeu de pièces, sauf dans le cas de certains concessionnaires Komatsu.
⊙	Ce code indique qu'il s'agit d'un groupe de pièces. Les pièces affectées de ce code ne sont pas fournies en tant que pièces détachées.
= = = =	Les pièces ainsi encadrées sont les pièces composantes du groupe de pièces indiqué dans la ligne d'au-dessus.
G-1, G-2	Indique le numéro du groupe de pièces
KIT	Indique qu'il s'agit d'un kit de pièces. Pour les pièces composantes des kits, veuillez vous reporter à la liste des kits de service.
△	Indique qu'il s'agit de pièces fournies à l'état semi-fini. Ces pièces devront être usinées avant l'installation.
PAINT(1)	Indique que sur les pièces fournies est appliquée uniquement une couche primaire.
PAINT(2)	Indique que la couleur de la peinture est différente de celle d'origine.
(A)	Indique qu'il s'agit de pièces pour spécifications artiques A (−30°C)
(B)	Indique qu'il s'agit de pièces pour spécifications artiques B (−50°C)

VORWORT

Bei der Bestellung von Teilen bitte die Teilenummer, die Teilebezeichnung und die Menge des jeweiligen Teils sowie die Modellnummer, die Seriennummer der Maschine, die Seriennummer des Motors und den Stand des Betriebsstundenzählers angeben.

In dieser Ersatzteilliste ist nicht nur das Standardzubehör aufgeführt, sondern auch als Sonderausstattung erhältliche Teile und Einrichtungen.

Bestellungen nimmt Ihr zuständiger Komatsu-Händler entgegen.

Die folgenden Angaben sind in der Ersatzteilliste aufgeführt.

Bild und Liste	Beim Aufschlagen des Ersatzteilkatalogs ist auf der linken Seite (d.h. der Seite mit der geraden Zahl) eine Darstellung der Bauteile der betreffenden Baugruppe zu finden. Jedes Einzelteil der Baugruppe ist mit einer Kennzahl versehen. Auf der rechten Seite (d.h. der Seite mit der ungeraden Zahl) sind die Bauteile der Baugruppe, geordnet nach den auf der linken Seite angegebenen Kennzahlen, aufgeführt. Jedes Einzelteil wird mit Teilenummer, Teilebezeichnung und entsprechender Seriennummer angegeben.
FIG. No. (Bildnummer)	Die Bildnummer entspricht der Nummer des auf der betreffenden Seite stehenden Bilds. Es handelt sich dabei nicht um die Nummer des Lieferteils. Es sei ferner erwähnt, daß die Bilder nicht fortlaufend numeriert sind.
INDEX (Kennzahl)	Dabei handelt es sich um die gleiche Zahl wie die Kennzahl im Bild. Die Teile sind geordnet nach der Kennzahl aufgeführt.
PART No. (Teilenummer)	Die in der Spalte "Teilenummer" aufgeführte Nummer entspricht der Teilenummer für das betreffende Teil. Diese Nummer dient zur Bestellung des Teils. Deshalb bei der Bestellung stets auf die genaue Angabe der Teilenummer achten.
DESCRIPTION (Beschreibung)	Hierunter wird die Bezeichnung des Teils mit der aufgeführten Teilenummer angegeben. Jedes Baugruppen-Bauteil ist mit dem vorangestellten Symbol "." gekennzeichnet und wird hinter der entsprechenden Baugruppe aufgeführt. Handelt es sich bei dem mit "." gekennzeichneten Bauteil um eine Baugruppe, sind die Bauteile dieser Baugruppe mit ".." gekennzeichnet. Beispiel: Element assembly, air cleaner . Element assembly, outer .. Element, outer .. Nut, wing .. Washer
QTY (Menge)	Hierunter wird die Anzahl der Bauteile für eine Maschine angegeben. Im Falle einer Baugruppe oder eines Aggregats wird allerdings die Anzahl der Teile pro Baugruppe angegeben.
SERIAL No. (Seriennummer)	Im Ersatzteilkatalog für den Motor versteht man hierunter die Seriennummer des Motors, in den das betreffende Teil eingebaut ist. Im Ersatzteilkatalog für die Maschine versteht man hierunter die Seriennummer der Maschine, in die das entsprechende Teil eingebaut ist.
Kodes	Die in den Spalten "Teile-Nr." und "Beschreibung" verwendeten Kodes haben folgende Bedeutung: □ Anstelle dieses Teils kann das in der vorangegangenen Zeile aufgeführte Teil verwendet werden.

⊡	Dieses Teil kann anstelle des in der vorangegangenen Zeile aufgeführten Teils verwendet werden.
◆	Dieses Teil ist mit dem in der vorangegangenen Zeile aufgeführten Teil austauschbar.
■	Anstelle dieses Teils kann das in der Spalte "Beschreibung" aufgeführte Teil verwendet werden, wenn das Teil zusammen mit anderen Teilen als ein Bauteilsatz verwendet wird.
☒	Dieses Teil kann nicht mehr geliefert werden. Statt dessen wird das in der vorangegangenen Zeile aufgeführte Teil geliefert.
▼	Dieses Teil kann nicht mehr geliefert werden. Statt dessen wird das in der Spalte "Beschreibung" aufgeführte Teil als ein Bauteilsatz geliefert.
☆	Dieses Teil kann nicht als Einzelteil, sondern nur als Baugruppe geliefert werden.
★	Dieses Teil kann nicht als Einzelteil, sondern nur als Baugruppe geliefert werden. Nur bei bestimmten Händlern kann es als Einzelteil bezogen werden.
⊙	Hierdurch wird ein Aggregat gekennzeichnet. Es wird nicht zu den Lieferteilen gerechnet.
= = = =	Die Teile innerhalb dieser Markierung gehören zu dem oben aufgeführten Aggregat.
G-1, G-2	Hiermit wird die Kategorie eines Aggregats angegeben.
KIT	Hiermit werden Teile gekennzeichnet, die nur als Satz erhältlich sind. Siehe dazu die Tabelle der als Satz gelieferten Ersatzteile.
△	Hiermit werden Teile gekennzeichnet, die in vorbearbeitetem Zustand geliefert werden und für den Einbau nachbearbeitet werden müssen.
PAINT(1)	Hiermit werden Teile gekennzeichnet, die mit Grundierung geliefert werden.
PAINT(2)	Hiermit werden Teile gekennzeichnet, die in unterschiedlichen Farben geliefert werden.
(A)	Hiermit werden Teile gekennzeichnet, die speziell für kalte Witterung (A) (-30°C) ausgelegt sind.
(B)	Hiermit werden Teile gekennzeichnet, die speziell für kalte Witterung (B) (-50°C) ausgelegt sind.

PROLOGO

Cuando tenga que efectuar un pedido de repuestos, se ruega especificar el número, el nombre y la cantidad de piezas requeridas, indicando asimismo el número de modelo, el número de serie del motor y la lectura del contador de servicio.

Esta lista de piezas especifica no solamente accesorios estándar sino también piezas y accesorios opcionales. Para realizar un pedido, sírvase ponerse en contacto con su distribuidor Komatsu más cercano.

La lista de repuestos se compone de los elementos siguientes.

Figura y lista	Al abrir esta lista de repuestos, encontrará en la página izquierda (página de número impar) una ilustración de los componentes del conjunto. La figura de cada componente individual va provista de un número de índice. En la página derecha (página de número par), los componentes del conjunto están listados siguiendo el orden de los números de índice de la página izquierda.
FIG. NO. (Número de figura)	El número de figura es el número indicado en cada una de las respectivas figuras, y no es el número de la pieza. Los números de figura no son siempre continuos.
INDEX (Número de índice)	Coincide con el número de índice de cada figura, y aparecen en la lista en orden numérico.
PART NO. (Número de pieza)	El número indicado en la columna de "Número de piezas" es el número de pieza que aparece en la figura. Es sumamente importante debido a que se utiliza como código al efectuar el pedido de piezas.
DESCRIP-TION (Nombre de las piezas)	Indica la descripción correspondiente a cada número de pieza. Los componentes de un conjunto llevan la marca "." antes del nombre. Por otra parte, cuando se tratan de piezas armadas, llevan la marca ".." antes del nombre Ejemplo: ELEMENT ASSEMBLY, AIR CLEANER .ELEMENT ASSEMBLY, OUTER ..ELEMENT, OUTER ..NUT, WING ..WASHER
Q'ty (Cantidad)	Especifica el número de piezas utilizadas en cada máquina. Sin embargo, para un conjunto o componentes de un grupo de piezas, se especifica el número de piezas por conjunto.
SERIAL NO. (Número de serie)	En el manual de piezas del motor, indica el número de serie del motor en que se utiliza la pieza. En el manual de piezas de la máquina, indica el número de serie del vehículo en que se utiliza esa pieza.

Códigos	Los códigos y números de piezas especificados en las columnas "N°. de pieza" y "Nombre de la pieza" representan lo siguiente:
□	En lugar de esta pieza es posible utilizar la pieza indicada en el renglón de arriba.
⊡	Es posible utilizar esta pieza en lugar de la indicada en el renglón inmediatamente anterior.
◆	Esta pieza y la indicada en el renglón inmediatamente anterior son intercambiables.
■	Es posible utilizar la pieza especificada en la columna "Nombre de las piezas" si se utiliza como un conjunto.
☒	Esta pieza se ha dejado de suministrar. En su lugar, se suministra la pieza indicada en el renglón anterior.
▼	Esta pieza se ha dejado de suministrar. En su lugar, se suministra la pieza especificada en la columna "Nombre de las piezas" como un conjunto.
☆	Esta pieza no se suministra como pieza individual. Se suministra como un conjunto.
★	Esta pieza no se suministra como pieza individual. Se suministra como un conjunto. Sin embargo, es suministrada como pieza individual por ciertos distribuidores.
⊙	Indica grupo de piezas. Las piezas que llevan este código no son suministrables.
====	Las piezas rodeadas por esta línea son componentes del grupo de piezas especificado arriba.
G-1, G-2	Indica la clasificación del grupo de piezas.
KIT	Indica componentes de un juego. Para los componentes de un juego, refiérase a la tabla de los juegos de servicio.
Δ	Indica pieza suministrada como semiterminada. Debe ser reelaborada antes del uso.
PAINT(1)	Indica piezas despachadas con una primera mano de pintura.
PAINT(2)	Indica piezas despachadas con colores diferentes.
(A)	Indica piezas especiales (A) especificadas para climas fríos (-30°C).
(B)	Indica piezas especiales (B) especificadas para climas fríos (-50°C)

INTRODUÇÃO

Ao solicitar uma peça, informe o número, nome e quantidade da peça necessária, bem como o número da carroçaria, número do motor, e leitura do medidor de serviço.

Esta lista de peças não somente especifica os acessórios padrões mas também as peças opcionais e aditamentos. Para pedir uma peça, entre em contato com o revendedor Komatsu mais próximo.

Este livro de peças consiste nos seguintes itens.

Figura e lista

Ao abrir este livro de peças, você encontrará na página esquerda (a página com número par), uma ilustração das peças componentes do conjunto. Cada peça individual no conjunto tem um número de índice.
Na página direita (a página com número ímpar), as peças componentes do conjunto são relacionadas na ordem dos números de índice mostrados na página esquerda. Cada peça é designada com um número, nome, e número de série aplicável.

FIG. NO. (Número da figura)

O número da figura é o número da figura mostrada em tal página. Ele não é um número para fornecimento da peça. Do mesmo modo, os números das figuras nem sempre são contínuos.

INDEX (Número de índice)

Este número é igual ao número de índice na figura. As peças são relacionadas na ordem dos números de índice.

PART NO. (Número de peça)

O número designado na coluna "Número da peça" é o número para a peça mostrada. Ele é o código usado para o pedido da peça. É importante que não haja equívoco com respeito a este número ao pedir uma peça.

DESCRIPTION (Descrição)

Este item descreve o nome da peça que tem o número de peça relacionado. É colocado um "." na frente do nome de um componente de conjunto e o item é introduzido após o conjunto. Se uma peça marcada com "." é um conjunto, seus componentes são marcados com "..".

Exemplo:
ELEMENT ASSEMBLY, AIR CLEANER
.ELEMENT ASSEMBLY, OUTER
..ELEMENT, OUTER
..NUT, WING
..WASHER

Q'ty (Quantidade)

Este item especifica o número de peças usadas para 1 máquina. No entanto, para o conjunto ou componentes de um grupo de peças, o número de peças por conjunto é especificado.

SERIAL NO. (Número de série)

No livro de peças do motor, esse número indica o número de série do motor no qual a peça é usada. No livro de peças da máquina, esse número indica o número de série da máquina na qual a peça é usada.

Códigos

Os códigos e número de peça especificados nas colunas "N.º de peça" e "Descrição" representam o seguinte:

□	A peça especificada na linha acima pode ser usada no lugar desta peça.
⊡	Esta peça pode ser usada no lugar da peça especificada na linha imediatamente acima.
◆	Esta peça e a peça especificada na linha imediatamente acima são intercambiáveis.
■	A peça especificada na coluna "Descrição" pode ser usada no lugar desta peça se ela for usada como um jogo.
☒	Esta peça não é mais fornecida. A peça especificada na linha acima é fornecida em seu lugar.
▼	Esta peça não é mais fornecida. A peça especificada na coluna "Descrição" é fornecida em seu lugar como um jogo.
☆	Esta peça não pode ser fornecida como uma peça individual. Ela é fornecida como um conjunto.
★	Esta peça não pode ser fornecida como uma peça individual. Ela é fornecida como um conjunto. No entanto, ela é fornecida como uma peça individual somente por revendedores específicos.
⊙	Isso indica um grupo de peças. Esta peça não é considerada uma peça de fornecimento.
====	As peças envolvidas por esta linha são componentes do grupo de peças especificado acima.
G-1, G-2	Isso indica a categoria do grupo de peças.
KIT	Isso indica componentes de um kit. Para os componentes de um kit, refira-se à tabela de kits de serviço.
Δ	Isso indica uma peça fornecida como produto semi-acabado. Ela deve ser reformada antes do uso.
PAINT(1)	Isso indica peças embarcadas pintadas com uma primeira mão de fundo.
PAINT(2)	Isso indica peças embarcadas com cores diferentes.
(A)	Isso indica peças especiais para especificação (A) de tempo frio (-30°C).
(B)	Isso indica peças especiais para especificação (B) de tempo frio (-50°C).

مقدمة

عند طلب القطع، يرجى تحديد رقم القطعة واسم القطعة والكمية المطلوبة من القطعة، مع تحديد رقم الموديل والرقم التسلسلي للمحرك وقراءة عداد الخدمة.

قائمة القطع هذه لا تقتصر على الكماليات القياسية فقط بل تشمل ايضاً القطع والملحقات الاختيارية. لطلب القطع، يرجى الاتصال بأقرب موزع لمنتجات كوماتسو.

قائمة القطع تتضمن البنود التالية.

الشكل والقائمة
عندما تفتح كتاب القطع، ستجد على الصفحة اليسرى (الصفحة ذات الرقم الزوجي) شكلاً توضيحياً للقطع المكونة للمجموعة. كل قطعة في مجموعة المكونات لها رقم فهرس.
على الصفحة اليمنى (الصفحة ذات الرقم الفردي) تم إدراج قائمة بالقطع التي تتكون منها المجموعة مرتبة حسب ارقام الفهرس المبيّنة في الصفحة اليسرى. وقد اعطيت كل قطعة من القطع رقم قطعة واسم قطعة ورقم تسلسلي ينطبق عليها.

FIG. No. (رقم الشكل)
رقم الشكل هو الرقم الخاص بالشكل التوضيحي الذي يظهر في تلك الصفحة. وهو ليس رقم القطعة التي يتم توريدها. كما ان ارقام الاشكال ليست دائماً متتابعة.

INDEX (رقم الفهرس)
هذا الرقم هو نفس رقم الفهرس الوارد في الشكل التوضيحي. تدرج القطع في القائمة مرتبة تبعاً لارقام الفهرس.

PART No. (رقم القطعة)
الرقم الوارد في عمود « رقم القطعة » هو رقم القطعة الخاص بالقطعة المبيّنة. وهو الرمز المستخدم لطلب تلك القطعة. ومن الضروري عدم ارتكاب اي خطأ في تحديد هذا الرقم عند طلب القطع.

DESCRIPTION (الوصف)
يعطي اسم القطعة المدرج رقمها في القائمة.
توضع العلامة " . " امام اسماء القطع المكونة للمجموعة ويدرج البند بعد المجموعة. اذا كانت القطعة المشار اليها بالعلامة " . " هي نفسها عبارة عن مجموعة مكونات فان كلاً من مكوناتها يشار اليها بالعلامة " .. ".
مثال :
ELEMENT ASSEMBLY, AIR CLEANER
.ELEMENT ASSEMBLY, OUTER
.. ELEMENT, OUTER
..NUT, WING
..WASHER

Q'ty (الكمية)
هذا هو عدد القطع المستخدمة لآلية واحدة. أما بالنسبة لمجموعات المكونات ومجموعات القطع فانه يتم تحديد عدد القطع لكل مجموعة.

SERIAL No. (الرقم التسلسلي)
في كتاب قطع المحرك، يشير هذا الرقم الى الرقم التسلسلي للمحرك الذي تستخدم فيه القطعة. في كتاب قطع الآلية، يشير هذا الرقم الى الرقم التسلسلي للآلية التي تستخدم فيها القطعة.

الرموز
الرموز وارقام القطع المذكورة في عمود « رقم القطعة » وعمود « الوصف » تمثل كما يلى:

□ القطعة المذكورة في السطر السابق يمكن استعمالها بدلاً من هذه القطعة.

⊡ هذه القطعة يمكن استعمالها بدلاً من القطعة المذكورة في السطر السابق مباشرة.

◆ هذه القطعة والقطعة المذكورة في السطر السابق مباشرة يمكن لكل منهما ان تحل محل الاخرى.

■ القطعة المذكورة في عمود « الوصف » يمكن استعمالها بدلاً من هذه القطعة اذا استخدمت كطقم.

⊠ هذه القطعة توقف توريدها. يتم توريد القطعة المذكورة في السطر السابق بدلاً منها.

▼ هذه القطعة توقف توريدها. يتم توريد القطعة المذكورة في عمود « الوصف » بدلاً منها كطقم.

☆ هذه القطعة لا يمكن توريدها كقطعة منفردة. يتم توريدها كمجموعة.

★ هذه القطعة لا يمكن توريدها كقطعة منفردة. يتم توريدها كمجموعة. على انه يتم توريدها كقطعة منفردة من قبل موزعين معيّنين فقط.

⊙ هذا يشير الى مجموعة قطع.
هذه القطعة لا تعتبر قطعة للتوريد.

==== القطع المحاطة بهذا الخط هي مكونات لمجموعة القطع المذكورة اعلاه.

G-1,G-2 هذا يشير الى فئة مجموعة القطع.
KIT هذا يشير الى مكونات الاطقم التركيبية. بخصوص الاطقم التركيبية، يرجى مراجعة جدول الاطقم التركيبية للخدمة.

△ هذا يشير الى قطعة مورّدة شبه مكتملة التصنيع. تتطلب استكمال تصنيعها قبل الاستعمال.

PAINT(1) هذا يشير الى القطع المشحونة بعد طلائها بطبقة سفلية.
PAINT(2) هذا يشير الى القطع المشحونة بألوان مختلفة.

(A) هذا يشير الى قطع خاصة بمواصفات الطقس البارد من الفئة (A) (-٣٠°م).
(B) هذا يشير الى قطع خاصة بمواصفات الطقس البارد من الفئة (B) (-٥٠°م).

ПРЕДИСЛОВИЕ

При формировании заказа на детали, узлы и агрегаты, кроме их номера детали, наименования и количества, завод-изготовитель просит заказчиков информировать о серийном номере машины и двигателя, для которых делается заказ, а также показании счетчика мото-часов.

В Каталоге приведены не только стандартные агрегаты, но и дополнительные устройства и принадлежности, поставляемые по специальному заказу.
При необходимости приобретении их обратиться к местному дилеру фирмы "Комацу".

Каталог деталей составлен, как ниже изложено:

Рисунки и таблицы деталей

При открытии Каталога на левой странице (чётной) приведен рисунок деталей устройства или агрегата. Каждая деталь обозначена номером позиции.
На правой странице (нечётной) приведена таблица деталей, нарисованных на левой странице, с соответствующим номером детали, наименованием, количеством и серийными номерами машины, для которых предназначена данная деталь, в порядке возрастания номеров позиции.

FIG No. (№ рисунка)

Номер рисунка (фиг.) является собственным для данного рисунка и не является номером показанной детали. Номера рисунков (фиг.) могут быть непорядковыми.

INDEX (Указатель)

В указателе приведены номера позиции деталей на рисунке в порядке возрастания цифр.

PART No. (Номер детали)

При заказе на деталь, установленную на рисунке, следует указать номер, приведенный в данной колонне. Именно этот номер определяет каждую деталь.

DESCRIPTION (Наименование детали)

Приведено наименование детали, соответствующей выбранному номеру детали. Точка "." поставлена перед наименованием каждой составной части устройства. Если составная часть состоит из множества деталей, то эти детали обозначаются двумя точками "..".

Например:
ELEMENT ASSEMBLY, AIR CLEANER
. ELEMENT ASSEMBLY, OUTER
.. ELEMENT, OUTER
.. NUT, WING
.. WASHER

Q'TY (Количество)

Указано количество деталей, необходимое на единицу данного устройства. Для деталей составной части устройства, а также для группы деталей указано их количество на единицу составной части или на группу.

SERIAL No. (Серийные номера)

В части двигателя приведены серийные номера двигателей, а в части шасси — серийные номера машин, в которых применена данная деталь.

Условные обозначения

Условные обозначения, применяемые в колоннах "Номер детали" и "Наименование детали", характеризуют следующее:

- □ Вышеприведенная деталь может заменить настоящую деталь.

Условные обозначения (Продолжение)

- ◉ Настоящая деталь может заменить деталь, приведенную на одну строчку выше.
- ◆ Настоящая деталь и деталь, приведенную на одну строчку выше, имеют взаимозаменяемость.
- ■ Взамен настоящей детали возможно использовать детали, приведенные в колонне "Наименование детали", в комплекте.
- □ Поставка этой детали прекращена. Взамен этой детали поставляется деталь, приведенная на одну строчку выше.
- ▼ Поставка этой детали прекращена. Взамен этой детали поставляются детали, приведенные в колонне "Наименование детали", в комплекте.
- ☆ Настоящая деталь поставляется только в комплекте, а не в отдельности.
- ★ Настоящая деталь поставляется, как правило, только в комплекте, а не в отдельности. Ее можно достать только у отдельных дилеров фирмы "Комацу".
- ◉ Группа деталей.
  Детали не подлежат дополнительной поставке.
- ------ Детали, ограниченные этой линией, составляют вышеприведенную группу деталей.
- G-1, G-2 Обозначения, характеризующие отдельные группы деталей.
- KIT Составляющая комплекта.
  См. таблицы ремонтных комплектов.
- △ Деталь, поставляемая в неготовом виде.
  Перед употреблением необходимо дополнительно обработать.
- PAINT(1) Детали, отгружаемые в загрунтованном виде.
- PAINT(2) Детали, отгружаемые в окрашенном в другой цвет виде.
- (A) Детали, рассчитанные на холодные районы (-30° C)
- (B) Детали, рассчитанные на особо холодные районы (-50° C)

前　言

订购零件时，请注明需要零件的货号、品名、数量以及使用机器的车辆编号、发动机型号和系列号、工作时数。

此零件明细表上不仅记载有标准装备零件，还记载有选购零件、附件零件。如果您需要订货，请与最近的小松代理店联系。

为了清楚明了，零件手册中有如下规定:

图　表

打开此零件清单后，
在左侧的页上（偶数页）用图示表示按安装的装置上的零件。在图示上标有各种零件的索引号码。
在右侧的页上（奇数页）按照左侧图示上表示的零件索引号码以表格的形式
表示货号、品名、数量、适用机型。

FIG. No.

图号（FIG.）表示该页图的号码，它不时补充零件用的货号。同时，此号码不一定是连续号码。

INDEX

与图的索引号码一致，按索引号码顺序编制为表格形式。

PART No.

此栏所示的货号是图示零件的货号，它是在订货时需要的标明的特定代号，是非常重要的。

DESCRIP-TION

它表示相当于货号的零件名称。
构成组装品的零件，在品名的前面有标记，记载在组装品之后。

另外，如果标记的零件是组装品，在该构成零件的品名前标有 .. 标记。

例如: ELEMENT ASSEMBLY, AIR CLEANER
.ELEMENT ASSEMBLY, OUTER
..ELEMENT, OUTER
..NUT, WING
..WASHER

Q'TY

表示 1 台机器中需要使用的该零件数量。
但是，如果是组装零件和零件组的构成零件时，表示其组装件的件数。

SERIAL No.

发动机篇中表示该使用零件的发动机型号，在机体篇中表示该使用零件的车辆号码。

代　号

货号栏和零件品名栏里的代号如下所示:

□　上一行的零件可取代此行零件来使用。

代　号（续）

⊡　此行零件可代替紧接着的上一行零件使用。

◆　此行零件可与紧挨着的上一行零件互换使用。

■　如果将此行零件说明栏内的零件配套后，可取代此零件来使用。

⊠　该行零件已停止供应，用上一行的零件代替使用。

▼　此行零件已停止供应，将此行零件说明栏内的零件配套后代替此零件供应。

☆　此行零件拟成套供应，不以单一零件供应。

★　此行零件拟成套供应，不以单一零件供应，但特定代理除外。

⊙　成组零件，一般不考虑成组供应。

====　用这种符号包括的零件是符号上一行指明成组件的零部件。

G-1,G-2　成组零件编号。

KIT　修理包，关于修理包构件详情，请参考技术服务修理包资料。

△　此行零件以半成品的形式供应，使用前必须再加工。

PAINT(1)只涂底漆装船。
PAINT(2)和本体不同颜色装船。

(A)　适用寒冷地区。（－30℃）
(B)　适用极寒冷地区。（－50℃）

CONTENTS

CONTENTS

	FIG. NO	PAGE
ENGINE		
CYLINDER HEAD	A1103-A2A6	A-001
ROCKER LEVER	A1109-A2A1	A-003
CRANKCASE BREATHER	A1115-A2B3	A-005
VALVE COVER	A1112-A2A5	A-007
EXHAUST MANIFOLD	A1118-A2A6	A-009
TURBOCHARGER OIL PIPING	A1120-A2C7	A-011
TURBOCHARGER KIT AND MOUNTING	A1120-A2C8	A-013
TURBOCHARGER	A1203-A2B4	A-015
AIR INTAKE CONNECTION	A1204-A2A6	A-017
AIR INTAKE CONNECTION MOUNTING	A1204-A2A7	A-019
AIR TRANSFER CONNECTION	A1205-A2A4	A-021
AIR INTAKE MANIFOLD	A1206-A2A5	A-023
EXHAUST CONNECTION	A1209-A2B1	A-027
COOLANT RADIATOR CONNECTION	A1999-A2A1	A-029
CYLINDER BLOCK TORQUE CONVERTER OIL COOLER PLUG	A2102-A2A5	A-031
CYLINDER BLOCK HEATER PORT PLUGS	A2102-A2A4	A-033
CYLINDER BLOCK CABIN HEATER PORT PLUG	A2102-A2A6	A-035
CYLINDER BLOCK	A2103-A2A9	A-037
GEAR COVER	A2109-A2A7	A-039
REAR GEAR HOUSING	A2109-A2A9	A-041
REAR GEAR TRAIN ACCESSORY DRIVE MOUNTING	A2109-A2B0	A-043
FLYWHEEL AND MOUNTING	A2118-A2A2	A-045
OIL PAN	A2115-A2A4	A-047
VIBRATION DAMPER	A2123-A2A3	A-049
CRANKSHAFT (#30910419-36012296)	A2120-A2A4	A-051
CRANKSHAFT (#36012297-)	A2120-A2A5	A-051A
A2126-A2A8 CONNECTING ROD AND PISTON	A2126-A2A8	A-055
VALVE TAPPET	A2206-A2A1	A-057
CAMSHAFT	A2203-A2A3	A-059
ENGINE OIL FILLER AND OIL LEVEL GAUGE BRACKET	A2212-A2A1	A-060
OIL LEVEL GAUGE	A2215-A2A6	A-061
LUBRICATING OIL PUMP	A3103-A2A3	A-063
LUBRICATING OIL COOLER	A3112-A2A6	A-065
LUBRICATING OIL FILTER	A3109-A2A5	A-067
FUEL INJECTOR CONNECTOR COVERS	A4103-A2B1	A-069
FUEL INJECTION PIPING	A4103-A2B2	A-071
FUEL INJECTOR	A4112-A2A8	A-073
FUEL PIPING	A4103-A2B3	A-075
FUEL FILTER PIPING	A4106-A2B3	A-077
FUEL FILTER	A4109-A2A7	A-079
FUEL PUMP AND MOUNTING	A4115-A2B2	A-081
WATER PUMP	A5103-A2A1	A-083
COOLANT INLET CONNECTION	A5106-A2A2	A-085
THERMOSTAT AND COOLANT CONNECTION	A5109-A2A4	A-087
FAN DRIVE MOUNTING	A5112-A2A8	A-089
FAN DRIVE	A5112-A2B3	A-091
BELT TENSIONER	A6102-A2A9	A-093
STARTING MOTOR MOUNTING	A6106-A2A8	A-095
STARTING MOTOR 5.5 KW	A6112-A2A9	A-099
ENGINE CONTROL MODULE	A6203-A2A2	A-103
WIRING HARNESS	A6203-A2A3	A-103A
FLYWHEEL HOUSING	A8106-A2A9	A-107
ENGINE LIFTING BRACKET	A8109-A2A4	A-109
ENGINE ASSEMBLY	A9101-A2C0	A-111
ENGINE RELATED PARTS		
ENGINE ACCESSORIES (1/3)	B0100-01A0	B-001
ENGINE ACCESSORIES (2/3)	B0100-01A1	B-003
ENGINE ACCESSORIES (3/3)	B0100-01A2	B-005
AIR CLEANER UNIT	B0300-01A0	B-007
AIR CLEANER GROUP	B0300-01A1	B-009
AIR CLEANER HOSE GROUP	B0300-01A2	B-011
AIR CLEANER BAND GROUP	B0300-01A3	B-013

	FIG. NO	PAGE
PRE-CLEANER ASSEMBLY(EJECTOR TYPE)	B0310-01A0	B-015
PRE-CLEANER ASSEMBLY (BOWL TYPE)	B0310-01A1	B-017
RAIN CAP ASSEMBLY	B0320-01A0	B-019
EXHAUST AND MUFFLER GROUP	B0400-01A0	B-021
EXHAUST AND MUFFLER GROUP (EUROPEAN SPECIFICATIONS)	B0400-01A1	B-023
MUFFLER GROUP (#B10001-B13839)	B0410-01A0	B-025
MUFFLER GROUP (#B13840-)	B0410-01A1	B-026
EXHAUST STACK	B0420-01A0	B-027
EXHAUST STACK (EUROPEAN SPECIFICATIONS)	B0420-01A1	B-029
EXHAUST COVER	B0430-01A0	B-031
MUFFLER DRAIN	B0440-01A0	B-033
ENGINE OIL PAN DRAIN LINE	B0500-01A0	B-035
ENGINE MOUNTING BRACKETS AND CRANKCASE BREATHER MOUNT GROUP	B0600-01A0	B-037
CRANKCASE BREATHER LINE	B0600-01A1	B-039
ENGINE MOUNTING BRACKETS	B0600-01A2	B-041
ENGINE CUSHION MOUNTS	B0600-01A3	B-043
FUEL FILTER BRACKET	B0700-01A0	B-045
BELT GUARDS	B0720-01A0	B-049
HEAT SHIELD	B0720-01A1	B-051
ALTERNATOR GROUP (60A)	B0800-01A0	B-053
DAMPER ASSEMBLY MAIN PUMP	B0900-01A0	B-055
ALTERNATOR (60A) (INNER PARTS) (#B10001-B13413)	B0000-51A0	B-057
ALTERNATOR (60A) (INNER PARTS) (#B13414-)	B0000-51A1	B-057A
3D NAVIGATOR 1/3 (#B10001-B11676)	B0000-52A0	B-059
3D NAVIGATOR 2/3 (#B10001-B11676)	B0000-53A0	B-061
3D NAVIGATOR 3/3 (#B10001-B11676)	B0000-54A0	B-063
3D NAVIGATOR 1/3 (#B11677-B13008)	B0000-55A0	B-065
3D NAVIGATOR 2/3 (#B11677-B13008)	B0000-56A0	B-066
3D NAVIGATOR 3/3 (#B11677-B13008)	B0000-57A0	B-067
3D NAVIGATOR 1/3 (#B13009-B13936)	B0000-58A0	B-068
3D NAVIGATOR 1/3 (#B13937-)	B0000-58A1	B-068A
3D NAVIGATOR 2/3 (#B13009-)	B0000-59A0	B-069
3D NAVIGATOR 3/3 (#B13009-)	B0000-60A0	B-070

	FIG. NO	PAGE
COOLING SYSTEM		
COOLING SYSTEM	C0100-01A0	C-001
HEAT EXCHANGER	C0110-01A0	C-003
HEAT EXCHANGER SEALS	C0120-01A0	C-005
HEAT EXCHANGER MOUNTING BRACKETS	C0140-01A0	C-009
COOLANT RECOVERY TANK	C0150-01A0	C-011
FAN GROUP AND FAN SPEED SENSOR	C0160-01A0	C-013
FAN GUARDS	C0170-01A0	C-015
RADIATOR SHROUD	C0180-01A0	C-017
COOLING SYSTEM PIPING AIR CHARGER COOLING LINES	C0200-01A0	C-019
COOLING SYSTEM PIPING ENGINE COOLANT LINES (1/3)	C0210-01A0	C-023
COOLING SYSTEM PIPING ENGINE COOLANT LINES (2/3)	C0210-01A1	C-025
COOLING SYSTEM PIPING ENGINE COOLANT LINES (3/3)	C0210-01A2	C-027
COOLING SYSTEM PIPING FAN SUPPLY LINE	C0300-01A0	C-029
COOLING SYSTEM PIPING FAN RETURN LINE	C0300-01A1	C-031
FUEL TANK AND RELATED PARTS		
FUEL TANK (#B10001-B12351)	D0100-01A0	D-001
FUEL TANK (#B12352-)	D0100-01A0A	D-001A
FUEL TANK COVER	D0110-01A0	D-003
FUEL LEVEL SENSOR	D0120-01A0	D-005
FUEL TANK MOUNTING	D0130-01A0	D-007
FUEL LINE PIPING	D0200-01A0	D-009
FUEL LINES	D0210-01A0	D-011
FUEL PRE-FILTER	D0220-01A0	D-013
FUEL LINES AND FILTER (WITH WATER SEPARATOR)	D0220-02A0	D-015
ELECTRICAL SYSTEM		
BATTERIES	E0100-01A0	E-001
ELECTRICAL WIRING BATTERY CABLES (#B1000-)	E0120-01A0	E-005
ELECTRICAL WIRING BATTERY CABLES (WITH BATTERY DISCONNECT SWITCH) (#B11325-)	E0120-01B0	E-006
ELECTRICAL WIRING ENGINE WIRING HARNESS (#B10001-B14635)	E0200-01A0	E-007
ELECTRICAL WIRING ENGINE WIRING HARNESS (#B14636-)	E0200-01A1	E-007A

	FIG. NO	PAGE
ELECTRICAL WIRING CHASSIS WIRING HARNESS (#B10001-B14635)	E0210-01A0	E-011
ELECTRICAL WIRING CHASSIS WIRING HARNESS (1/2) (#B14636-)	E0210-01A1	E-011A
ELECTRICAL WIRING CHASSIS WIRING HARNESS (2/2) (#B14636)	E0210-01A2	E-011B
ELECTRICAL WIRING NOSE GUARD WIRING HARNESS	E0220-01A0	E-013
BACK-UP ALARM	E0300-01A0	E-015
POWER TRAIN AND FINAL DRIVE		
FINAL DRIVE HUB AND PLANETARY GEAR (LH)	F2380-01A0	F-001
FINAL DRIVE CARRIER ASSEMBLY (LH)	F2380-02A0	F-003
FINAL DRIVE TRAVEL MOTOR AND TEETH (LH)	F2380-03A0	F-005
FINAL DRIVE HUB AND PLANETARY GEAR (RH)	F2380-04A0	F-007
FINAL DRIVE CARRIER ASSEMBLY (RH)	F2380-05A0	F-009
FINAL DRIVE TRAVEL MOTOR AND TEETH (RH)	F2380-06A0	F-011
FINAL DRIVE (MOUNT)	F2380-20A0	F-013
HYDRAULIC SYSTEM		
HYDRAULIC OIL TANK COMPLETE ASSEMBLY	H0100-01A0	H-001
HYDRAULIC OIL TANK ASSEMBLY (#B10001-B11379)	H0100-01A1	H-003
HYDRAULIC OIL TANK ASSEMBLY (#B11380-B11782)	H0100-01B1	H-004
HYDRAULIC OIL TANK ASSEMBLY (#B11783-B12391)	H0100-01B2	H-004A
HYDRAULIC OIL TANK ASSEMBLY (#B12392-)	H0100-01B3	H-004B
HYDRAULIC OIL TANK ACCESS COVERS	H0100-01A2	H-005
HYDRAULIC OIL TANK MOUNTING HARDWARE	H0100-01A3	H-007
HYDRAULIC CONTROL VALVE COMPLETE ASSEMBLY	H0200-01A0	H-009
HYDRAULIC CONTROL VALVE ELBOWS AND CONNECTORS (4 SPOOL)	H0200-01A3	H-011
HYDRAULIC CONTROL VALVE ELBOWS AND CONNECTORS (5 SPOOL)	H0200-01A4	H-015
HYDRAULIC CONTROL VALVE MOUNTING ASSEMBLY (4 AND 5 SPOOL VALVE)	H0200-01A5	H-019
HYDRAULIC PUMP COMPLETE ASSEMBLY	H0300-01A0	H-021
HYDRAULIC PUMP HST PUMP ASSEMBLY (1/11)	H0310-01A0	H-023
HYDRAULIC PUMP HST PUMP ASSEMBLY (2/11)	H0310-02A0	H-025
HYDRAULIC PUMP HST PUMP ASSEMBLY (3/11)	H0310-03A0	H-027
HYDRAULIC PUMP HST PUMP ASSEMBLY (4/11)	H0310-04A0	H-029
HYDRAULIC PUMP HST PUMP ASSEMBLY (5/11)	H0310-05A0	H-031
HYDRAULIC PUMP HST PUMP ASSEMBLY (6/11)	H0310-06A0	H-033
HYDRAULIC PUMP HST PUMP ASSEMBLY (7/11)	H0310-07A0	H-035
HYDRAULIC PUMP HST PUMP ASSEMBLY (8/11)	H0310-08A0	H-037
HYDRAULIC PUMP HST PUMP ASSEMBLY (9/11)	H0310-09A0	H-039
HYDRAULIC PUMP HST PUMP ASSEMBLY (10/11)	H0310-10A0	H-041
HYDRAULIC PUMP HST PUMP ASSEMBLY (11/11)	H0310-11A0	H-043
HYDRAULIC PUMP FAN PUMP (1/4) (#B10001-B13142)	H0310-21A0	H-045
HYDRAULIC PUMP FAN PUMP (1/4) (#B13143-)	H0310-21A1	H-045A
HYDRAULIC PUMP FAN PUMP (2/4) (#B10001-B13142)	H0310-22A0	H-047
HYDRAULIC PUMP FAN PUMP (2/4) (#B13143-)	H0310-22A1	H-047A
HYDRAULIC PUMP FAN PUMP (3/4) (#B10001-B13142)	H0310-23A0	H-049
HYDRAULIC PUMP FAN PUMP (3/4) (#B13143-)	H0310-23A1	H-049A
HYDRAULIC PUMP FAN PUMP (4/4) (#B10001-B13142)	H0310-24A0	H-051
HYDRAULIC PUMP FAN PUMP (4/4) (#B13143-)	H0310-24A1	H-051A
HYDRAULIC PUMP JOINT GROUP	H0320-01A0	H-053
HYDRAULIC PUMP CHARGE PUMP MOUNTING	H0330-01A0	H-057
HYDRAULIC PUMP CHARGE PUMP ASSEMBLY	H0330-02A0	H-059
HYDRAULIC PUMP MOUNTING HARDWARE (PUMPS TO ENGINE)	H0340-01A0	H-061
HST MOTOR LEFT HAND (1/2)	H0350-01A0	H-063
HST MOTOR LEFT HAND (2/2)	H0350-02A0	H-067
HST MOTOR RIGHT HAND (1/2)	H0350-03A0	H-071
HST MOTOR RIGHT HAND (2/2)	H0350-04A0	H-075
FAN MOTOR (1/3)	H0360-01A0	H-079
FAN MOTOR (2/3)	H0360-02A0	H-081
FAN MOTOR (3/3)	H0360-03A0	H-083
CONTROL VALVE 4-SPOOL (1/5)	H0370-01A0	H-085
CONTROL VALVE 4-SPOOL (2/5)	H0370-02A0	H-087
CONTROL VALVE 4-SPOOL (3/5)	H0370-03A0	H-091
CONTROL VALVE 4-SPOOL (4/5)	H0370-04A0	H-093
CONTROL VALVE 4-SPOOL (5/5)	H0370-05A0	H-095
CONTROL VALVE 5-SPOOL (1/6)	H0380-01A0	H-097
CONTROL VALVE 5-SPOOL (2/6)	H0380-02A0	H-099
CONTROL VALVE 5-SPOOL (3/6)	H0380-03A0	H-103
CONTROL VALVE 5-SPOOL (4/6)	H0380-04A0	H-105
CONTROL VALVE 5-SPOOL (5/6)	H0380-05A0	H-107

	FIG. NO	PAGE
CONTROL VALVE 5-SPOOL (6/6)	H0380-06A0	H-109
QUICK DROP VALVE	H0390-01A0	H-111
PPC VALVE	H0390-10A0	H-113
PPC VALVE INNER PARTS (1/2)	H0390-10A1	H-113A
PPC VALVE INNER PARTS (2/2)	H0390-10A2	H-113B
RELIEF VALVE	H0390-11A0	H-115
ELECTRIC LEVER ASSEMBLY	H0390-12A0	H-117
ELECTRIC LEVER ASSEMBLY (#B10316-)	H0390-12A0A	H-118
HYDRAULIC PIPING HYDRAULIC PUMP LINES	H0400-01A0	H-119
HYDRAULIC PIPING PUMP CHARGE LINE	H0400-01A1	H-121
HYDRAULIC PIPING PUMP SUCTION LINE	H0400-01A2	H-123
HYDRAULIC PIPING PUMP WORK EQUIPMENT LINE	H0400-01A3	H-125
HYDRAULIC PIPING DRAIN LINE (1/3)	H0410-01A0	H-127
HYDRAULIC PIPING DRAIN LINE (2/3)	H0410-01A1	H-129
HYDRAULIC PIPING DRAIN LINE (3/3)	H0410-01A2	H-131
HYDRAULIC PIPING HST TRAVEL LINE	H0420-01A0	H-133
HYDRAULIC PIPING PPC LINES	H0430-01A0	H-135
HYDRAULIC PIPING CHARGE FILTER (#B10001-B14636)	H0430-01A1	H-137
HYDRAULIC PIPING CHARGE FILTER (#B14637-)	H0430-01A1A	H-138
HYDRAULIC PIPING MOTOR CONTROL HOSES	H0430-01A2	H-139
HYDRAULIC PIPING MOTOR ELBOW GROUP	H0430-01A3	H-141
HYDRAULIC PIPING SOLENOID VALVE AND ACCUMLATOR	H0430-01A4	H-143
HYDRAULIC PIPING OIL COOLER BY-PASS VALVE CONNECTIONS	H0430-01A5	H-145
HYDRAULIC PIPING OIL COOLER BY-PASS VALVE ASSEMBLY	H0430-01A6	H-147
SOLENOID VALVE BLOCK (1/2)	H0440-01A0	H-149
SOLENOID VALVE BLOCK (2/2)	H0440-02A0	H-151
HYDRAULIC PIPING DOZER LINES	H0490-01A0	H-153
HYDRAULIC PIPING LIFT CYLINDER LINES	H0500-01A0	H-155
HYDRAULIC PIPING ANGLE CYLINDER LINE (1/2)	H0510-01A0	H-159
HYDRAULIC PIPING ANGLE CYLINDER LINE (2/2)	H0510-01A1	H-161
HYDRAULIC PIPING TILT CYLINDER LINE (1/2)	H0520-01A0	H-163
HYDRAULIC PIPING TILT CYLINDER LINE (2/2)	H0520-01A1	H-165
HYDRAULIC PIPING RIPPER LINES	H0550-01A0	H-167
HYDRAULIC PIPING RIPPER CYLINDER AND HOSES	H0550-01A1	H-169
HYDRAULIC CYLINDER LIFT	H0700-01A0	H-171
HYDRAULIC CYLINDER ANGLE (#B10001-B13057)	H0700-01A1	H-173
HYDRAULIC CYLINDER ANGLE (#B13058-)	H0700-01A1A	H-173A
HYDRAULIC CYLINDER TILT	H0700-01A2	H-175
HYDRAULIC CYLINDER RIPPER	H0700-01A3	H-177
REAR HYDRAULIC LINES (RESCUE WINCH) (1/2)	H2250-01A0	H-179
REAR HYDRAULIC LINE (RESCUE WINCH) (2/2)	H2250-01A1	H-181
MAIN/REVOLVING FRAME AND RELATED PARTS		
MAIN FRAME	J2100-01A0	J-001
MAIN FRAME (EU NOISE REDUATION)	J2100-01A1	J-003
MAIN FRAME MOUNTING	J2110-01A0	J-005
EQUALIZER BAR	J2700-01A0	J-007
PIVOT SHAFT	J2710-01A0	J-009
SUSPENSION LUBRICATION AND PINS	J2750-01A0	J-011
OPERATOR'S COMPARTMENT AND CONTROL SYSTEM	K-000	K-000
OPERATOR SEAT RECLINING TYPE - FABRIC SEAT (HI-BACK)	K0110-01A0	K-001
OPERATOR SEAT RECLINING TYPE - LEATHER SEAT (HI-BACK)	K0110-01A1	K-003
OPERATOR SEAT RECLINING TYPE - LEATHER SEAT	K0110-01A2	K-005
OPERATOR SEAT RECLINING TYPE - FABRIC SEAT	K0110-01A3	K-007
OPERATOR SEAT AIR SUSPENSION TYPE - FABRIC SEAT (HI-BACK)	K0110-01A4	K-009
SEAT (AIR SUSPENSION) INNER PARTS 1/2	K0110-01A5	K-011
SEAT (AIR SUSPENSION) INNER PARTS 2/2	K0110-01A6	K-013
SEAT BELT FOR SUSPENSION SEAT - FOR RETRACTION	K0160-01A0	K-015
SEAT BELT FOR AIR SUSPENSION SEAT - FOR RETRACTION	K0160-01A1	K-017
CAB COMPLETE ASSEMBLY (BODY)	K0210-01A0	K-019
CAB DOOR AND LATCH (L.H.)	K0210-02A0	K-021
CAB DOOR BUMPER AND WINDOW	K0210-03A0	K-023
CAB DOOR AND LATCH (R.H.)	K0210-04A0	K-025
CAB DOOR BUMPER AND WINDOW	K0210-05A0	K-027
CAB DOOR OPEN LOCK BRACKET	K0210-06A0	K-029
CAB DOOR OPEN LOCK LATCH (R.H.)	K0210-07A0	K-031
CAB DOOR OPEN LOCK LATCH (L.H.)	K0210-08A0	K-033

	FIG. NO	PAGE
CAB FRONT AND REAR WINDOW GLASS AND SEALS	K0210-09A0	K-035
CAB WINDOW GLASS AND SASH (LH)	K0210-10A0	K-037
CAB WINDOW GLASS AND SASH (RH)	K0210-11A0	K-039
CAB ROOF MOUNTED AIR CONDITIONER UNIT	K0210-12A0	K-041
AIR CONDITIONER UNIT ASSEMBLY (#B10001-B11915)	K0210-13A0	K-043
AIR CONDITIONER UNIT ASSEMBLY (#B11916-)	K0210-13A0A	K-043A
CAB AIR CONDITIONER - HEATER PIPING	K0210-14A0	K-045
CONDENSER ASSEMBLY (#B10001-B11915)	K0210-15A0	K-047
CONDENSER ASSEMBLY (#B11916-)	K0210-15A0A	K-047A
CAB AIR CONDITIONER - MOUNTING BRACKETS	K0210-16A0	K-049
CAB AIR CONDITIONER WIRING HARNESS	K0210-17A0	K-051
CAB UNDER SEAT HEATER PARTS AND SUB HEATER	K0210-18A0	K-053
CAB DOOR WIPER (L.H.)	K0210-19A0	K-055
CAB DOOR WIPER (R.H.)	K0210-20A0	K-057
CAB DOOR MOUNTING HARDWARE	K0210-21A0	K-059
CAB ELECTRICAL (SWITCHES, ROOM LAMP, WIRING HARNESS)	K0210-22A0	K-061
CAB ELECTRICAL (FRONT AND REAR WIPERS)	K0210-23A0	K-063
CAB WINDOW WASHER HOSES	K0210-24A0	K-065
CAB RADIO ADD-ON	K0210-25A0	K-067
CAB CASSETTE (FOR JAPAN)	K0210-26A0	K-069
CAB CASSETTE (FOR NORTH AMERICA)	K0210-27A0	K-071
CAB INSIDE COVER	K0210-28A0	K-073
CAB REAR VIEW MIRROR	K0210-29A0	K-075
CAB PLUGS AND OUTSIDE SEALS	K0210-30A0	K-077
CAB ROOF MOUNTED AIR CONDITIONER DUCT	K0210-31A0	K-079
CAB AIR CONDITIONER COVER	K0210-32A0	K-080
CAB FUEL CONTROL	K0210-33A0	K-081
CAB TRAVEL CONTROL	K0210-34A0	K-083
TRAVEL LOCK LEVER	K0210-35A0	K-085
CAB BLADE CONTROL	K0210-36A0	K-087
CAB BLADE LOCK LEVER	K0210-37A0	K-089
CAB REAR ATTACHMENT COVER	K0210-38A0	K-091
CAB CONSOLE	K0210-39A0	K-093
CAB BRAKE PEDAL	K0210-40A0	K-095
CAB DECELERATOR PEDAL	K0210-41A0	K-097
CAB CONTROLLER	K0210-42A0	K-099
CAB WIRING HARNESS - CONTROLS	K0210-43A0	K-101
CAB BATTERY RELAY AND RELAY BOX	K0210-44A0	K-103
CAB DASHBOARD, DASH PANEL, AND SWITCHES	K0210-45A0	K-105
CAB DASHBOARD WIRING	K0210-46A0	K-107
CAB DASHBOARD, PANEL MOUNT, AND COVER	K0210-47A0	K-109
CAB DASHBOARD, LESS VANDALISM PROTECTION	K0210-48A0	K-111
CAB FLOOR COVER, FRAME SIDE COVER	K0210-49A0	K-113
CAB FLOOR COVER (#B10001-B10551)	K0210-50A0	K-115
CAB FLOOR COVER (#B10552-)	K0210-51A0	K-115A
CAB FLOOR COVER , CAB ADD ON PART (#B10001-B10551)	K0210-52A0	K-117
CAB FLOOR COVER , CAB ADD ON PART (#B10552-)	K0210-53A0	K-117A
CAB ARM REST	K0210-54A0	K-119
CAB KOMTRAX	K0210-55A0	K-121
CAB KOMTRAX (FOR JAPAN)	K0210-56A0	K-123
CAB WORK LAMPS	K0210-57A0	K-125
FLOOR MAT	K0310-01A0	K-127
ROPS COMPLETE ASSEMBLY	K0410-01A0	K-129
ROPS INSIDE COVER	K0410-02A0	K-131
ROPS MIRROR	K0410-03A0	K-133
ROPS PLUG, OUTSIDE SEAL, PLATE	K0410-04A0	K-135
ROPS REAR COVER	K0410-05A0	K-137
ROPS LESS AIR CONDITIONER	K0410-06A0	K-139
ROPS WITH SUB HEATER	K0410-06A1	K-141
ROPS WITH SUB HEATER FOR OPEN ROPS	K0410-07A1	K-143
ROPS FUEL CONTROL	K0410-08A0	K-145
ROPS TRAVEL CONTROL	K0410-09A0	K-147
ROPS TRAVEL LOCK LEVER	K0410-10A0	K-149
ROPS BLADE CONTROL	K0410-11A0	K-151
ROPS BLADE LOCK LEVER	K0410-12A0	K-153
ROPS REAR ATTACHMENT COVER	K0410-13A0	K-155
ROPS CONSOLE	K0410-14A0	K-157
ROPS BRAKE PEDAL	K0410-15A0	K-159

	FIG. NO	PAGE
ROPS DECELERATOR PEDAL	K0410-16A0	K-161
ROPS CONTROLLER	K0410-17A0	K-163
ROPS WIRING HARNESS - CONTROLS	K0410-18A0	K-165
ROPS BATTERY RELAY AND RELAY BOX	K0410-19A0	K-167
ROPS DASHBOARD, PANEL AND SWITCHES	K0410-20A0	K-169
ROPS DASHBOARD WIRING	K0410-21A0	K-171
ROPS DASHBOARD, PANEL MOUNT, AND COVER	K0410-22A0	K-173
ROPS DASHBOARD, LESS VANDALISM	K0410-23A0	K-175
ROPS FLOOR COVER, FRAME SIDE COVER	K0410-24A0	K-177
ROPS FLOOR COVER (#B10001-B10551)	K0410-25A0	K-179
ROPS FLOOR COVER (#B10552-)	K0410-25A0A	K-179A
ROPS FLOOR COVER, CAB ADD ON PART (#B10001-B10551)	K0410-26A0	K-181
ROPS FLOOR COVER, CAB ADD ON PART (#B10552-)	K0410-26A0A	K-181A
ROPS ARM REST	K0410-27A0	K-183
ROPS KOMTRAX	K0410-28A2	K-185
ROPS WORK LAMPS	K0410-29A0	K-187
VANDALISM PROTECTION INSTRUMENT PANEL	K0500-01A0	K-189
CONDITIONER LINES (#B10001-B11592)	K0700-01A0	K-191
AIR CONDITIONER LINE (#B11593-)	K0700-01A0A	K-191A
DRIVE BELT AND MOUNTING (#B10001-B11592)	K0700-01A1	K-193
DRIVE BELT AND MOUNTING (#B11593-)	K0700-01A1A	K-193A
HEATER JOINT GROUP	K0700-01A2	K-195
HEATER HOSE PIPING	K0700-01A3	K-197
DRIVE BELT AND MOUNTING WITH CANOPY	K0710-01A0	K-199
HEATER JOINT GROUP WITH CANOPY	K0710-01A1	K-201
HEATER HOSE PIPING WITH CANOPY	K0720-01A0	K-203
EXTINGUISHER	K0830-01A0	K-205
BLAND PPC PIPING GROUP	K2110-01A0	K-207
FLOOR MOUNT SUSPENSION	K2120-01A0	K-209
RIPPER CONTROL UNIT	K2520-01A0	K-211
RIPPER CONTROL GROUP	K2520-01A1	K-213
RIPPER PPC PIPING GROUP	K2520-01A2	K-215
WINCH CONTROL (FOR RESCUE) (1/2)	K2520-02A0	K-216
WINCH CONTROL (FOR RESCUE) (2/2)	K2520-02A1	K-216A
HANDRAIL GROUP	K2800-01A0	K-217
WINDOW WASHER HOSE GROUP (#B10001-B12391)	K2900-01A0	K-219
WINDOW WASHER TANK MOUNTING (#B10001-B12391)	K2900-01A2	K-221
WINDOW WASHER WIRING (#B10001-B12391)	K2900-01A3	K-223
WINDOW WASHER TANK (#B10001-B12391)	K2900-01A4	K-225
WINDOW WASHER TANK AND RELATED PARTS (#B12392-)	K2900-01A4A	K-225A
GUARD		
RADIATOR GUARD AND GRILLE	M2110-01A0	M-001
RADIATOR GUARD GAS SPRING	M2120-01A0	M-003
ENGINE HOOD	M2140-01A0	M-005
FRONT ENGINE HOOD DOOR	M2140-01A1	M-007
L.H. SIDE ENGINE HOOD DOOR	M2140-01A2	M-009
ENGINE HOOD MOUNTING	M2140-01A3	M-011
ENGINE HOOD W/NOISE PANELS	M2140-02A0	M-013
L.H. SIDE ENGINE HOOD DOOR W/NOISE PANEL	M2140-02A2	M-015
REAR COVER	M2200-01A0	M-017
UNDER CARRIAGE		
IDLER ASSEMBLY	R0110-01A0	R-001
IDLER CUSHION	R0120-01A0	R-003
TRACK ROLLER, (SINGLE)	R0200-01A0	R-005
TRACK ROLLER, (SINGLE) (PLUS TYPE)	R0200-01A1	R-005A
TRACK ROLLER, (DOUBLE)	R0200-02A0	R-007
TRACK ROLLER, (DOUBLE) (PLUS TYPE)	R0200-02A1	R-007A
TRACK ROLLER PLATE	R0200-03A0	R-009
CARRIER ROLLER	R0300-01A0	R-011
CARRIER ROLLER (PLUS TYPE)	R0300-01A1	R-011A
TRACK LINK ASSEMBLY SINGLE GROUSER, LUBRICATE TYPE	R0322-01A0	R-013
TRACK LINK ASSEMBLY SINGLE GROUSER, LUBRICATE TYPE, ABRASION RESISTANT	R0322-01A1	R-015
TRACK LINK ASSEMBLY SINGLE GROUSER, LUBRICATE TYPE (PLUS TYPE)	R0322-01A3	R-015A
TRACK LINK ASSEMBLY D51PX - LUBRICATE TYPE, SWAMP TYPE	R0322-01A5	R-015B
TRACK SHOE - D51EX LUBRICATE TYPE, SINGLE GROUSER, 510 MM WIDE	R0500-01A0	R-017

	FIG. NO	PAGE
TRACK SHOE - D51EX LUBRICATE TYPE, SINGLE GROUSER, 560 MM WIDE	R0500-01A1	R-019
TRACK SHOE - D51EX LUBRICATE TYPE, SINGLE GROUSER WITH HOLE, 510 MM WIDE	R0500-01A2	R-021
TRACK SHOE - D51EX LUBRICATE TYPE, SINGLE GROUSER WITH HOLE, 560 MM WIDE	R0500-01A3	R-023
TRACK SHOE - D51EX LUBRICATE TYPE, SINGLE GROUSER, 510 MM WIDE, ABRASION RESISTANT	R0500-01A4	R-025
TRACK SHOE - D51EX LUBRICATE TYPE, SINGLE GROUSER, 560 MM WIDE, ABRASION RESISTANT	R0500-01A5	R-027
TRACK SHOE (LUBRICATE TYPE) (SINGLE GROUSER) (510MM WIDE) (PLUS TYPE)	R0500-01A6	R-027A
TRACK SHOE (LUBRICATE TYPE) (SINGLE GROUSER) (WITH HOLE) (510MM WIDE) (PLUS TYPE)	R0500-01A7	R-027B
TRACK SHOE (LUBRICATE TYPE) (SINGLE GROUSER) (560MM WIDE) (PLUS TYPE)	R0500-01A8	R-027C
TRACK SHOE (LUBRICATE TYPE) (SINGLE GROUSER) (WITH HOLE) (560MM WIDE) (PLUS TYPE)	R0500-01A9	R-027D
TRACK SHOE (LUBRICATE TYPE) (SINGLE GROUSER) (710MM WIDE) (PLUS TYPE)	R0500-01B0	R-027E
TRACK SHOE (LUBRICATE TYPE) (SINGLE GROUSER) (WITH HOLE) (710MM WIDE) (PLUS TYPE)	R0500-01B1	R-027F
TRACK SHOE - D51PX LUBRICATE TYPE, SINGLE GROUSER, 710 MM WIDE	R0510-01A0	R-029
TRACK SHOE - D51PX LUBRICATE TYPE, SWAMP TYPE, 720 MM WIDE	R0510-01A1	R-031
TRACK SHOE - D51PX LUBRICATE TYPE, SINGLE GROUSER WITH HOLE, 710 MM WIDE	R0510-01A2	R-033
TRACK SHOE - D51PX LUBRICATE TYPE, SINGLE GROUSER, 710 MM WIDE, ABRASION RESISTANT	R0510-01A3	R-035
TRACK SHOE - D51PX LUBRICATE TYPE, SINGLE GROUSER, 710 MM WIDE WITH HOLE , ABRASION RESISTANT	R0510-01A4	R-035A
TRACK FRAME	R2100-01A0	R-037
TRACK FRAME COVER EX MODEL	R2140-01A0	R-039
TRACK FRAME COVER PX MODEL	R2140-02A0	R-041
TRACK FRAME ROLLER GUARDS	R2200-01A0	R-043
TRACK FRAME ROLLER GUARDS (PLUS)	R2200-01A1	R-043A
TRACK FRAME FULL ROLLER GUARD MODEL	R2210-01A0	R-045
TRACK FRAME FULL ROLLER GUARD (PLUS)	R2210-01A1	R-045A
SHOE BOLT AND NUT SERVICE KIT	R2300-01A0	R-047

WORK EQUIPMENT

	FIG. NO	PAGE
DOZER FRAME	T0100-01A0	T-001
BLADE LINK GROUP	T0200-01A0	T-003
CENTER BALL	T0200-01A1	T-005
CYLINDER PINS 1/2	T0200-01A2	T-007
CYLINDER PINS 2/2	T0200-01A3	T-007A
PITCH ROD, FIXED	T0300-01A0	T-009
PITCH ROD, FIXED	T0300-01A0A	T-009A
PITCH ROD, FIXED (LONG)	T0300-01A0B	T-009B
ADJUSTABLE PITCH ROD	T0300-01B0	T-010
BLADE UNIT, WIDE	T0400-01A0	T-011
BLADE GROUP WIDE	T0400-01A1	T-013
CUTTING EDGE GROUP, WIDE	T0400-01A2	T-015
BLADE UNIT, NARROW	T0450-01A0	T-017
BLADE GROUP, NARROW	T0450-01A1	T-019
CUTTING EDGE GROUP, NARROW	T0450-01A2	T-021
BLADE (POWER ANGLE POWER TILT DOZER)	T0450-01B0	T-021A
BLADE (POWER ANGLE POWER TILT DOZER) (PIN AND LOCK GROUP)	T0450-01B1	T-021B
LUBRICATION GROUP	T0630-01A0	T-023
DOZER LINE GUARDS	T0640-01A0	T-025
RIPPER GROUP	T0700-01A0	T-027
LONG DRAWBAR GROUP	T0800-01A0	T-029
HITCH	T2810-01A0	T-031

MARKS AND PLATES

	FIG. NO	PAGE
MARKS AND PLATES 1 OF 5	U0100-01A1	U-001
MARKS AND PLATES 1 OF 5 (JAPANESE)	U0100-01A2	U-003
MARKS AND PLATES 1 OF 5 (PORTUGUESE)	U0100-01A3	U-005
MARKS AND PLATES 1 OF 5 (SPANISH)	U0100-01A4	U-006
MARKS AND PLATES 2 OF 5	U0100-02A1	U-007
MARKS AND PLATES 2 OF 5 (JAPANESE)	U0100-02A2	U-009
MARKS AND PLATES 2 OF 5 (PORTUGUESE)	U0100-02A3	U-011
MARKS AND PLATES 2 OF 5 (SPANISH)	U0100-02A4	U-012

	FIG. NO	PAGE
MARKS AND PLATES 3 OF 5 (ENGLISH)	U0100-03A1	U-013
MARKS AND PLATES 3 OF 5 (JAPANESE)	U0100-03A2	U-015
MARKS AND PLATES 3 OF 5 (PORTUGUESE)	U0100-03A3	U-017
MARKS AND PLATES 3 OF 5 (SPANISH)	U0100-03A4	U-018
MARKS AND PLATES 4 OF 5	U0100-04A1	U-019
MARKS AND PLATES 4 OF 5 (JAPANESE)	U0100-04A2	U-021
MARKS AND PLATES 4 OF 5 (PORTUGUESE)	U0100-04A3	U-023
MARKS AND PLATES 4 OF 5 (SPANISH)	U0100-04A4	U-024
MARKS AND PLATES 5 OF 5	U0100-05A1	U-025
MARKS AND PLATES 5 OF 5 (JAPANESE)	U0100-05A2	U-027
MARKS AND PLATES 5 OF 5 (PORTUGUESE)	U0100-05A3	U-029
MARKS AND PLATES 5 OF 5 (SPANISH)	U0100-05A4	U-030
ROPS PLATE GERMANY	U0520-01A0	U-031
ROPS PLATE SPAIN	U0520-01A1	U-033

ACCESSORY

TOOL BOX	V0300-01A0	V-001

ENGINE

VEPB1130

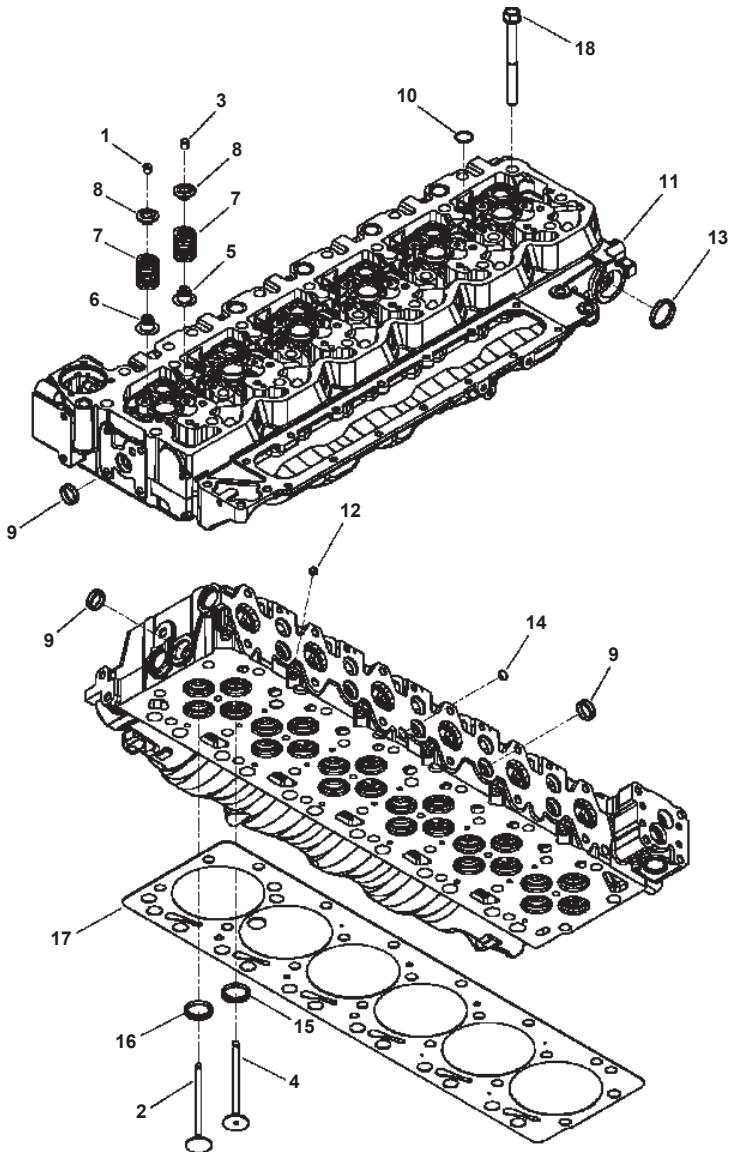

D51EX/PX-22 S/N B10001-UP

A1103-A2A6 CYLINDER HEAD

Item	Part No.	Description	Qty	Options
	6754-11-1011	HEAD, CYLINDER	1	SN:30910419--
	6754-41-4200	· KIT, EXHAUST VALVE	12	SN:30910419--
1	6744-11-1020	· · COLLET, VALVE	2	SN:30910419--
2	(NSS)	· · VALVE, EXHAUST	1	SN:30910419--
	6754-41-4100	· KIT, INTAKE VALVE	12	SN:30910419--
3	6744-11-1020	· · COLLET, VALVE	2	SN:30910419--
4	(NSS)	· · VALVE, INTAKE	1	SN:30910419--
5	6754-41-4540	· · SEAL, VALVE STEM	1	SN:30910419--
6	6754-41-4540	· SEAL, VALVE STEM	12	SN:30910419--
7	6754-41-4430	· SPRING, VALVE	24	SN:30910419--
8	6754-41-4510	· RETAINER, VALVE SPRING	24	SN:30910419--
	6754-11-1101	· HEAD, CYLINDER	1	SN:30910419--
9	6736-21-1820	· · PLUG, EXPANSION	13	SN:30910419--
10	6735-21-5530	· · PLUG, EXPANSION	11	SN:30910419--
11	(NSS)	· · HEAD, CYLINDER	1	SN:30910419--
12	1239 144 H1	· · PLUG, EXPANSION	7	SN:30910419--
13	6744-11-1070	· · PLUG, EXPANSION	2	SN:30910419--
14	6754-11-1160	· · PLUG, EXPANSION	2	SN:30910419--
15	6754-11-1170	· · INSERT, VALVE	12	SN:30910419--
16	6754-11-1180	· · INSERT, VALVE	12	SN:30910419--
17	6754-11-1811	GASKET, CYLINDER HEAD	1	SN:30910419--
18	6754-11-1610	BOLT	26	SN:30910419--

Ref. A1103-A2A6 Page A-001

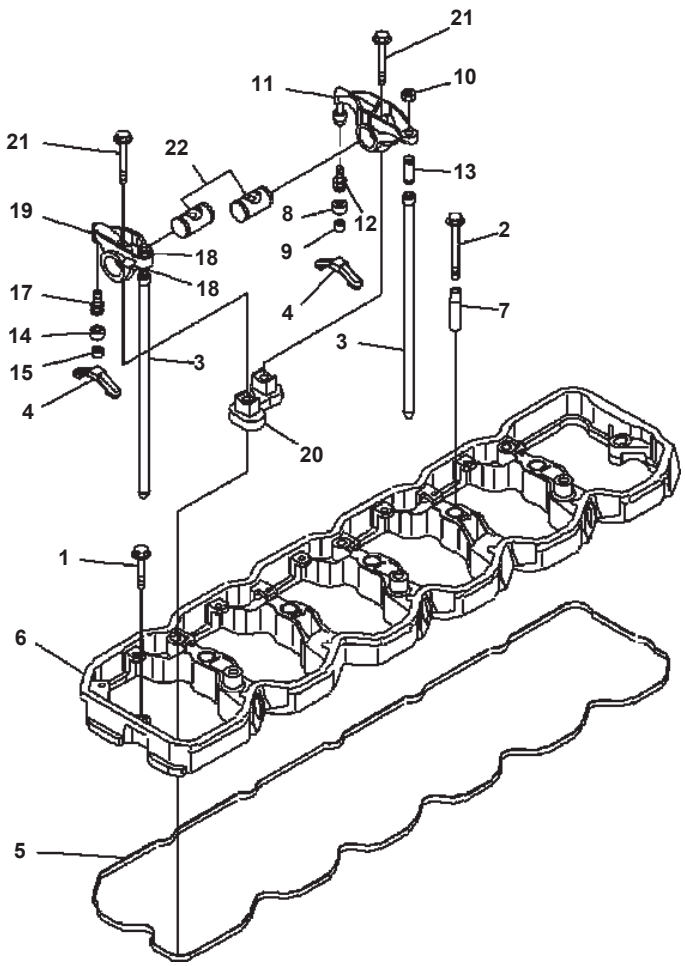

A1109-A2A1 ROCKER LEVER

Item	Part No.	Description	Qty	Options
1	6736-21-3210	BOLT	2	SN:30910419--
2	6732-61-6150	BOLT	5	SN:30910419--
3	6754-41-3110	ROD	12	SN:30910419--
4	6754-41-5310	CROSSHEAD	12	SN:30910419--
5	6754-11-7120	GASKET	1	SN:30910419--
	6754-11-7110	HOUSING ASS'Y	1	SN:30910419--
6	(NSS)	· HOUSING	1	SN:30910419--
7	(NSS)	· SLEEVE	5	SN:30910419--
	6754-41-5100	ARM ASS'Y	6	SN:30910419--
	6754-41-5110	· ARM ASS'Y, EXHAUST	1	SN:30910419--
8	6754-41-5170	· · COLLET	1	SN:30910419--
9	6754-41-5160	· · SLEEVE	1	SN:30910419--
	(NSS)	· · LEVER ASS'Y	1	SN:30910419--
10	6735-41-5550	· · · NUT	1	SN:30910419--
11	6754-41-5150	· · · LEVER	1	SN:30910419--
12	6754-41-5130	· · · BALL	1	SN:30910419--
13	6754-41-5140	· · · SCREW	1	SN:30910419--
	6754-41-5210	· ARM ASS'Y, INTAKE	1	SN:30910419--
14	6754-41-5170	· · COLLET	1	SN:30910419--
15	6754-41-5160	· · SLEEVE	1	SN:30910419--
	(NSS)	· · LEVER ASS'Y	1	SN:30910419--
16	6735-41-5550	· · · NUT	1	SN:30910419--
17	6754-41-5130	· · · BALL	1	SN:30910419--
18	6754-41-5140	· · · SCREW	1	SN:30910419--
19	6754-41-5250	· · · LEVER	1	SN:30910419--
20	6754-41-5260	· SUPPORT	1	SN:30910419--
21	6754-41-5180	· BOLT	2	SN:30910419--
22	6754-41-5190	· SHAFT	2	SN:30910419--

VEPB1115

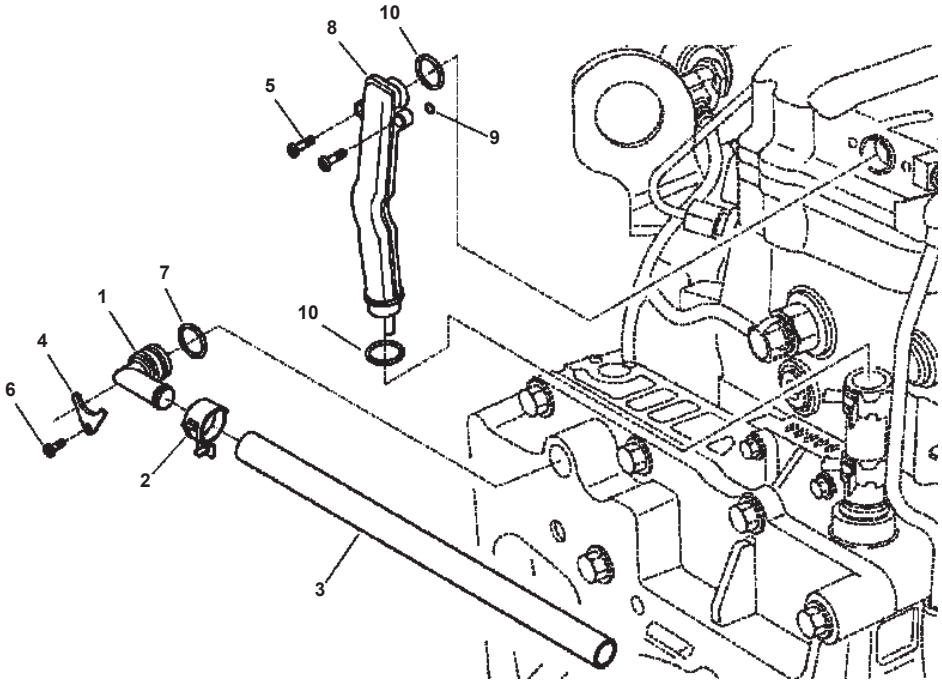

D51EX/PX-22 S/N B10001-UP

A1115-A2B3 CRANKCASE BREATHER

Item	Part No.	Description	Qty	Options
1	6754-21-6140	BREATHER, CRANKCASE	1	SN:30910419--
2	6754-21-6180	CLAMP, HOSE	1	SN:30910419--
3	6732-21-7520	HOSE, PLAIN	1	SN:30910419--
4	6754-21-6150	PLATE, CLAMPING	1	SN:30910419--
5	6754-21-6280	BOLT	2	SN:30910419--
6	6754-21-6190	BOLT	1	SN:30910419--
7	1241 155 H1	SEAL, O-RING	1	SN:30910419--
	6754-21-6100	TUBE, BREATHER	1	SN:30910419--
8	(NSS)	· TUBE, BREATHER	1	SN:30910419--
9	6754-21-6250	· SEAL, O-RING	1	SN:30910419--
10	6754-21-6240	· SEAL, O-RING	2	SN:30910419--

Ref. A1115-A2B3 Page A-005

VEPB1140

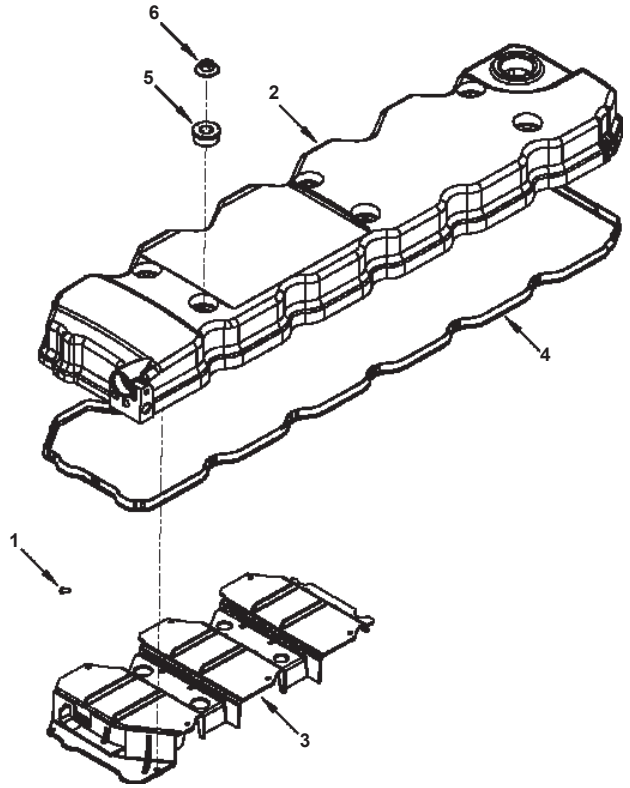

D51EX/PX-22 S/N B10001-UP

A1112-A2A5 VALVE COVER

Item	Part No.	Description	Qty	Options
	6754-22-6220	COVER, VALVE	1	SN:30910419--
1	6754-11-8150	· BOLT, SELF-TAPPING	8	SN:30910419--
2	(NSS)	· COVER, VALVE	1	SN:30910419--
3	(NSS)	· BAFFLE, BREATHER	1	SN:30910419--
4	6754-11-8180	GASKET, VALVE COVER	1	SN:30910419--
5	6754-11-8210	ISOLATOR, NOISE	6	SN:30910419--
6	6754-11-8160	NUT	6	SN:30910419--

Ref. A1112-A2A5 Page A-007

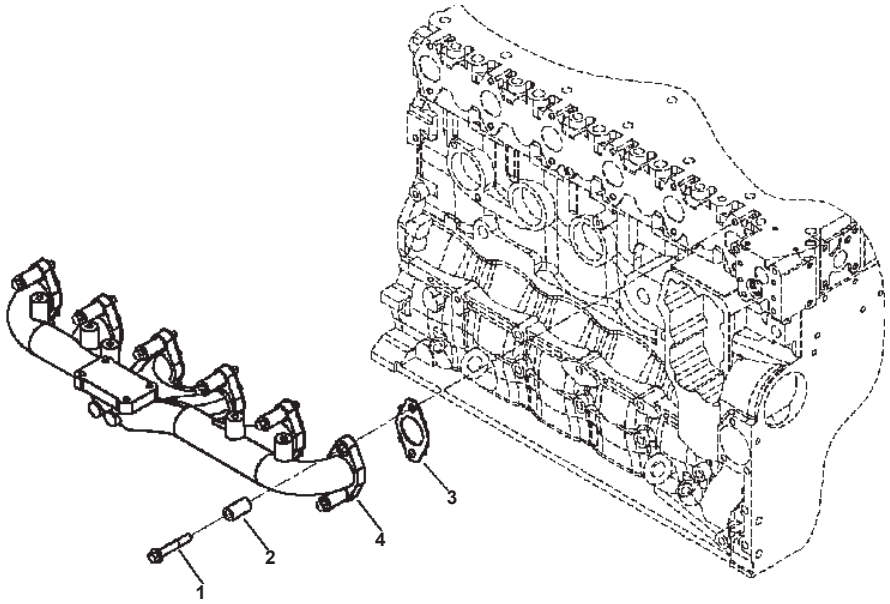

A1118-A2A6 EXHAUST MANIFOLD

Item	Part No.	Description	Qty	Options
1	6732-11-5860	BOLT (M10-1.50x65)	12	SN:30910419--
2	6754-11-5150	SPACER, MOUNTING	12	SN:30910419--
3	6754-11-5140	GASKET, EXHAUST MANIFOLD	6	SN:30910419--
4	6754-11-5110	MANIFOLD, EXHAUST	1	SN:30910419--

VEPB1110

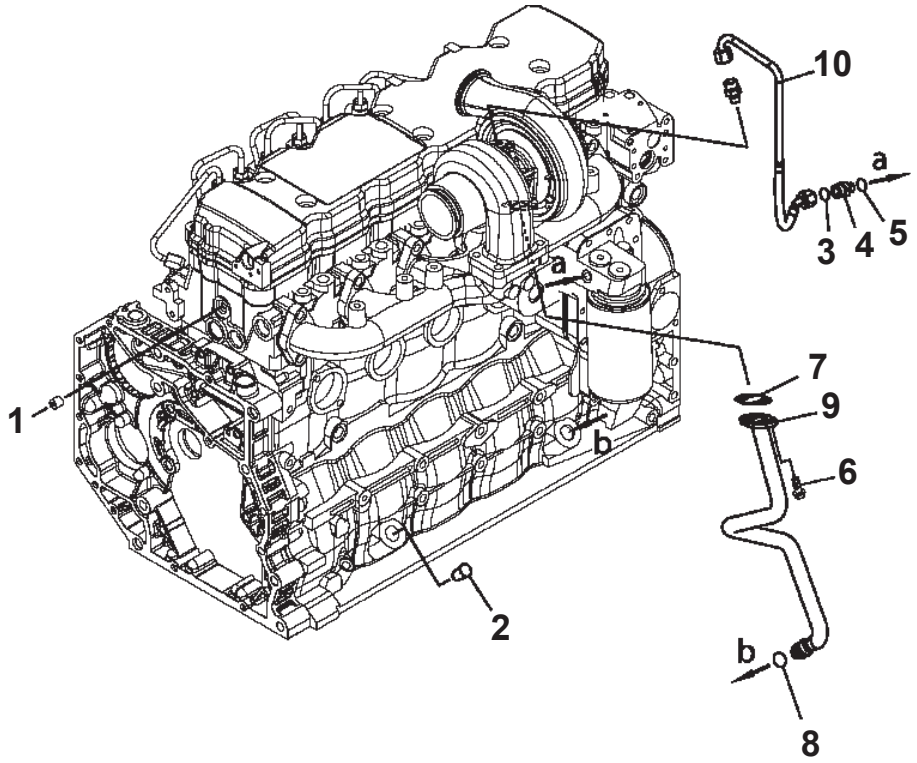

D51EX/PX-22 S/N B10001-UP

A1120-A2C7 TURBOCHARGER OIL PIPING

Item	Part No.	Description	Qty	Options
1	6732-11-1920	PLUG, PIPE	1	SN:30910419--
2	6735-21-5530	PLUG, EXPANSION	1	SN:30910419--
	6745-61-8160	CONNECTOR, MALE	2	SN:30910419--
3	6737-51-8770	· SEAL, O-RING	1	SN:30910419--
4	(NSS)	· CONNECTOR, MALE	1	SN:30910419--
5	6732-81-8860	· SEAL, O-RING	1	SN:30910419--
6	6731-61-1370	BOLT	2	SN:30910419--
7	6754-51-8121	GASKET, OIL DRAIN	1	SN:30910419--
	6754-51-8100	CONNECTION, TURBOCHARGER OIL DRAIN	1	SN:30910419--
8	6732-51-8330	· SEAL, O-RING	2	SN:30910419--
9	(NSS)	· CONNECTION, TURBOCHARGER OIL DRAIN	1	SN:30910419--
10	6754-51-8220	HOSE, FLEXIBLE	1	SN:30910419--

Ref. A1120-A2C7 Page A-011

VEPB1131

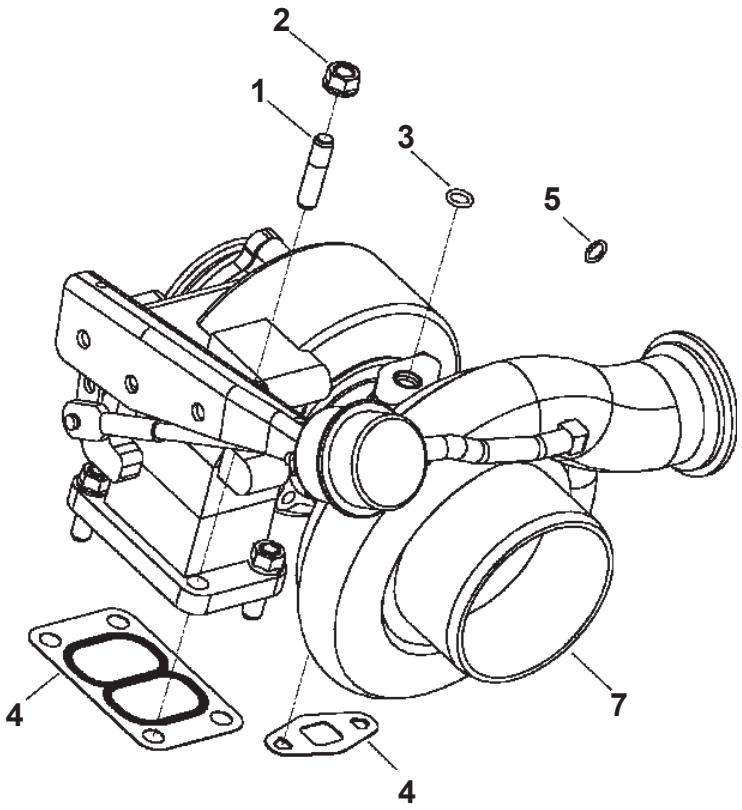

D51EX/PX-22 S/N B10001-UP

A1120-A2C8 TURBOCHARGER KIT AND MOUNTING

Item	Part No.	Description	Qty	Options
1	6732-81-8810	STUD	4	SN:30910419--
2	6732-81-8820	NUT	4	SN:30910419--
	6754-82-8010	KIT, TURBOCHARGER	1	SN:30910419--
3	6737-51-8770	· SEAL, O-RING	1	SN:30910419--
4	6754-81-8710	· GASKET, TURBOCHARGER	1	SN:30910419--
5	6732-81-8860	· SEAL, O-RING	1	SN:30910419--
6	6754-51-8121	· GASKET, OIL DRAIN	1	SN:30910419--
7	(NSS)	· TURBOCHARGER	1	SN:30910419--

Ref. A1120-A2C8 Page A-013

VEPB1132

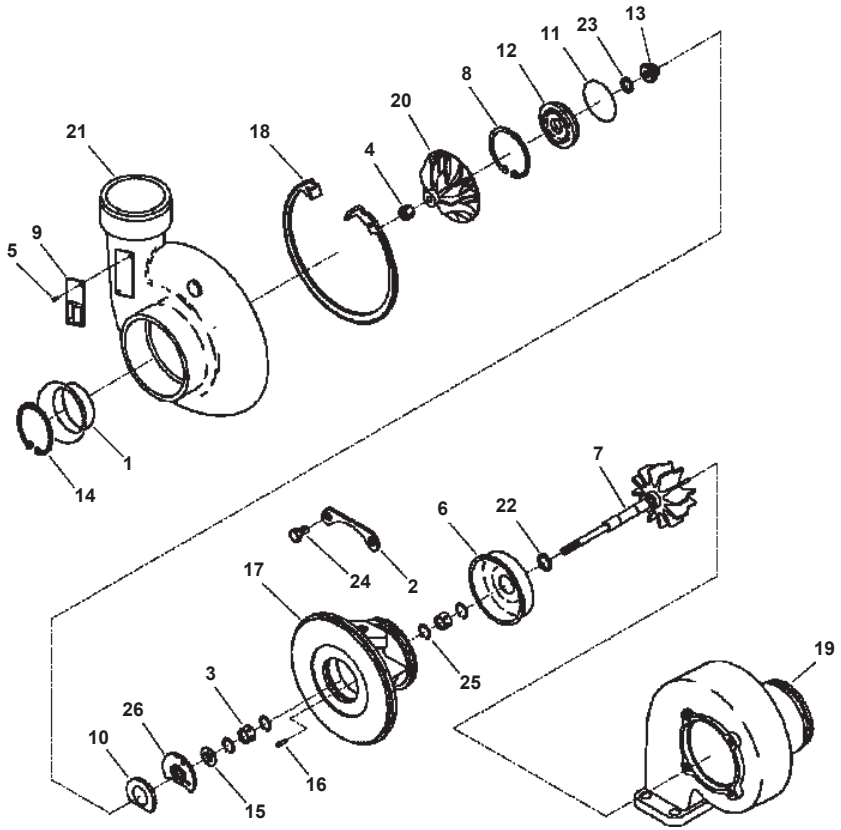

D51EX/PX-22 S/N B10001-UP

A1203-A2B4 TURBOCHARGER

Item	Part No.	Description	Qty	Options
		TURBOCHARGER (SEE FIG. A1120-A2C8)		SN:30910419--
	(NSS)	TURBOCHARGER	1	SN:30910419--
1	(NSS)	· BAFFLE, TURBOCHARGER NOISE	1	SN:30910419--
2	1304 920 H1	· PLATE, CLAMPING	2	SN:30910419--
3	6736-81-8370	· BEARING, TURBOCHARGER	2	SN:30910419--
4	6731-82-8210	· NUT, LOCK	1	SN:30910419--
5	6736-81-8480	· SCREW, DRIVE	2	SN:30910419--
6	6736-81-8430	· SHIELD, TURBOCHARGER HEAT	1	SN:30910419--
7	6736-81-8280	· SHAFT & WHEEL	1	SN:30910419--
8	6733-81-8360	· RING, RETAINING	1	SN:30910419--
9	(NSS)	· DATAPLATE	1	SN:30910419--
10	6733-81-8330	· BAFFLE, OIL	1	SN:30910419--
11	6733-81-8460	· SEAL, O-RING	1	SN:30910419--
12	6733-81-8270	· PLATE, OIL SEAL	1	SN:30910419--
13	6733-81-8260	· SLINGER, OIL	1	SN:30910419--
14	6743-82-8140	· RING, RETAINING	1	SN:30910419--
15	6735-81-8620	· COLLAR, THRUST	1	SN:30910419--
16	6733-81-8480	· PIN, ROLL	1	SN:30910419--
17	(NSS)	· HOUSING, TUR BEARING	1	SN:30910419--
18	6735-81-8310	· RING, RETAINING	1	SN:30910419--
19	(NSS)	· HOUSING TURBINE	1	SN:30910419--
20	(NSS)	· IMPELLER, TUR COMPRESSOR	1	SN:30910419--
21	(NSS)	· HOUSING, COMPRESSOR	1	SN:30910419--
22	6736-81-8440	· SEAL, SPLIT RING	1	SN:30910419--
23	6736-81-8320	· SEAL, SPLIT RING	1	SN:30910419--
24	6736-81-8380	· BOLT (M8-1.25x12)	4	SN:30910419--
25	6736-81-8360	· RING, RETAINING	4	SN:30910419--
26	6735-82-8220	· BEARING, TUR THRUST	1	SN:30910419--

Ref. A1203-A2B4 Page A-015

VEPB1121

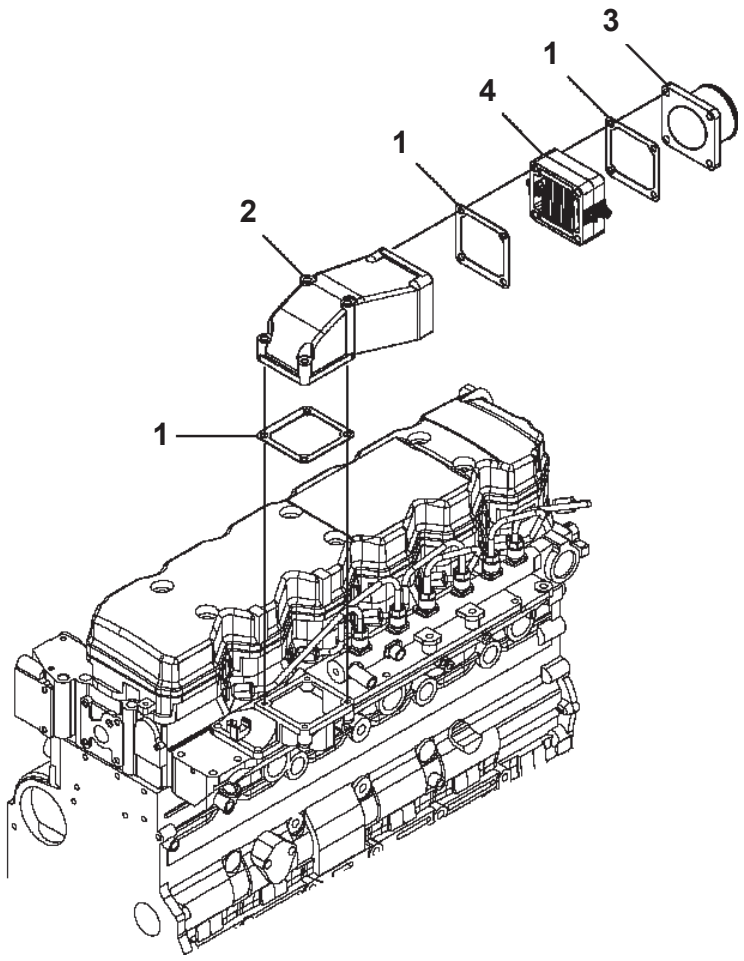

D51EX/PX-22 S/N B10001-UP

A1204-A2A6 AIR INTAKE CONNECTION

Item	Part No.	Description	Qty	Options
1	6754-11-4120	GASKET, CONNECTION	3	SN:30910419--
2	6754-12-4110	CONNECTION, AIR INTAKE	1	SN:30910419--
3	6754-12-4120	CONNECTION, AIR INTAKE	1	SN:30910419--
4	6754-81-5110	HEATER, AIR INTAKE	1	SN:30910419--

Ref. A1204-A2A6 Page A-017

VEPB1122

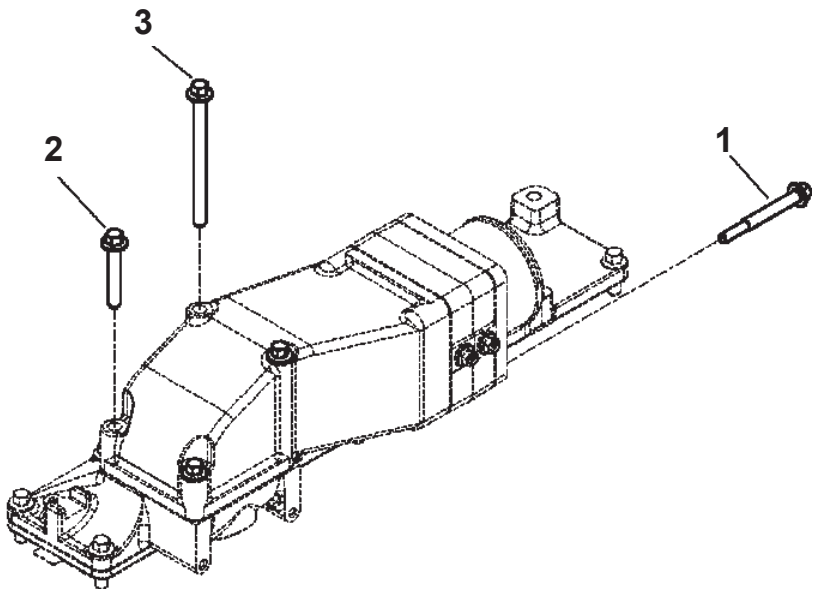

D51EX/PX-22 S/N B10001-UP

A1204-A2A7 AIR INTAKE CONNECTION MOUNTING

Item	Part No.	Description	Qty	Options
1	6732-61-6150	BOLT (M8-1.25x70)	4	SN:30910419--
2	6733-11-4150	BOLT (M8-1.25x50)	2	SN:30910419--
3	6754-12-4130	BOLT	2	SN:30910419--

Ref. A1204-A2A7 Page A-019

VEPB1124

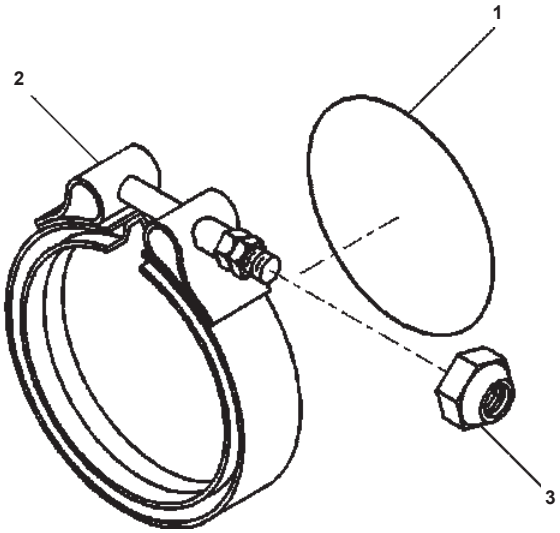

D51EX/PX-22 S/N B10001-UP

A1205-A2A4 AIR TRANSFER CONNECTION

Item	Part No.	Description	Qty	Options
1	6738-11-4370	SEAL, O-RING	1	SN:30910419--
2	6738-12-4310	CLAMP, V-BAND	1	SN:30910419--
3	☆	NUT, LOCK	1	SN:30910419--

Ref. A1205-A2A4 Page A-021

VEPB1123

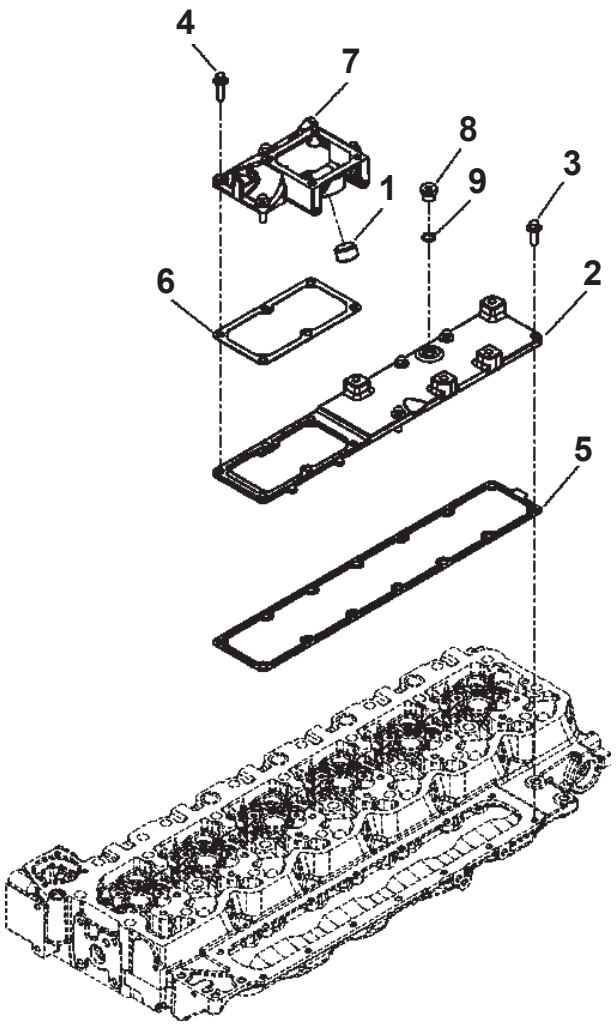

D51EX/PX-22 S/N B10001-UP

A1206-A2A5 AIR INTAKE MANIFOLD

Item	Part No.	Description	Qty	Options
1	6732-11-1920	PLUG, PIPE	1	SN:30910419--
2	6754-11-4210	COVER, INTAKE MANIFOLD	1	SN:30910419--
3	6732-11-4160	BOLT (M8-1.25x25)	4	SN:30910419--
4	6743-12-4110	BOLT (M8-1.25x30)	6	SN:30910419--
5	6754-11-4280	GASKET, INTAKE MANIFOLD COVER	1	SN:30910419--
6	6754-11-4290	GASKET, CONNECTION	1	SN:30910419--
7	6754-11-4221	CONNECTION, ADAPTER	1	SN:30910419--
	6735-21-1910	PLUG, THREADED	1	SN:30910419--
8	(NSS)	· PLUG, THREADED	1	SN:30910419--
9	6735-21-1930	· SEAL, O-RING	1	SN:30910419--

Ref. A1206-A2A5 Page A-023

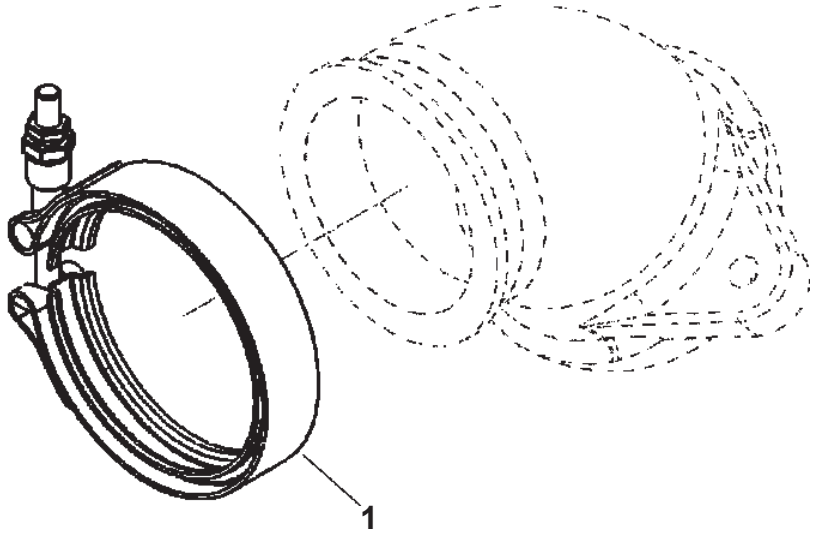

A1209-A2B1 EXHAUST CONNECTION

Item	Part No.	Description	Qty	Options
1	6732-81-8220	CLAMP, V-BAND	1	SN:30910419--

VEPB1133

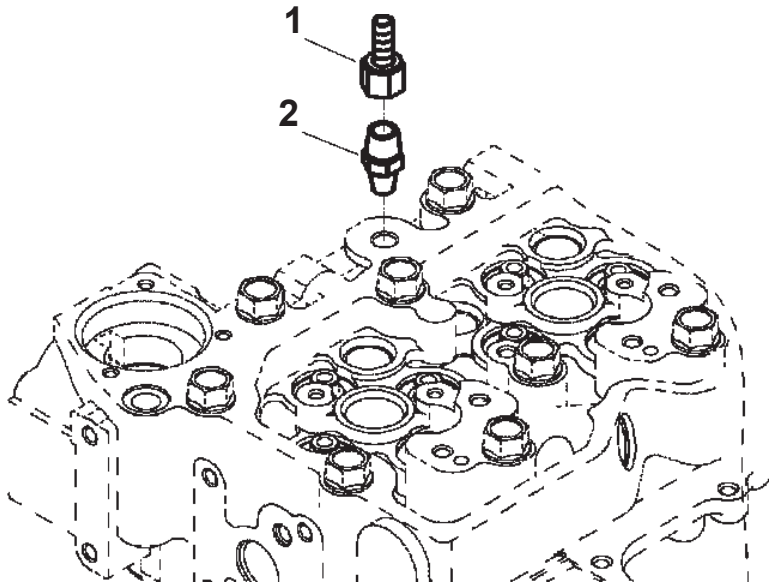

D51EX/PX-22 S/N B10001-UP

A1999-A2A1 COOLANT RADIATOR CONNECTION

Item	Part No.	Description	Qty	Options
1	6735-61-5110	COUPLING, PLAIN HOSE	1	SN:30910419--
2	6735-61-5120	VALVE, CHECK	1	SN:30910419--

Ref. A1999-A2A1 Page A-029

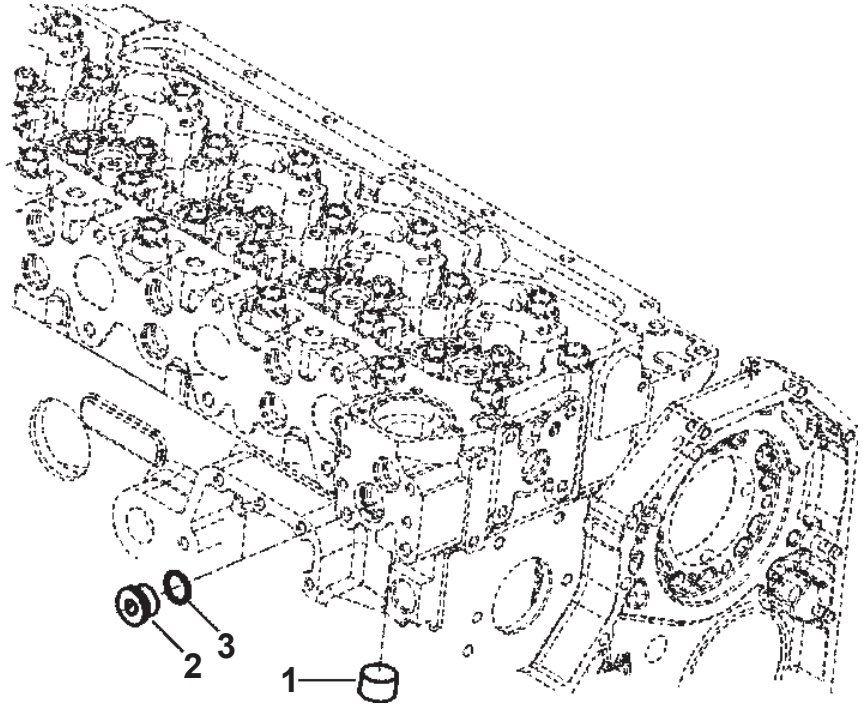

A2102-A2A5 CYLINDER BLOCK TORQUE CONVERTER OIL COOLER PLUG

Item	Part No.	Description	Qty	Options
1	6732-11-1920	PLUG, PIPE	1	SN:30910419--
	6216-14-6820	PLUG, THREADED	1	SN:30910419--
2	(NSS)	· PLUG, THREADED	1	SN:30910419--
3	6216-14-6860	· SEAL, O-RING	1	SN:30910419--

VEPB0965

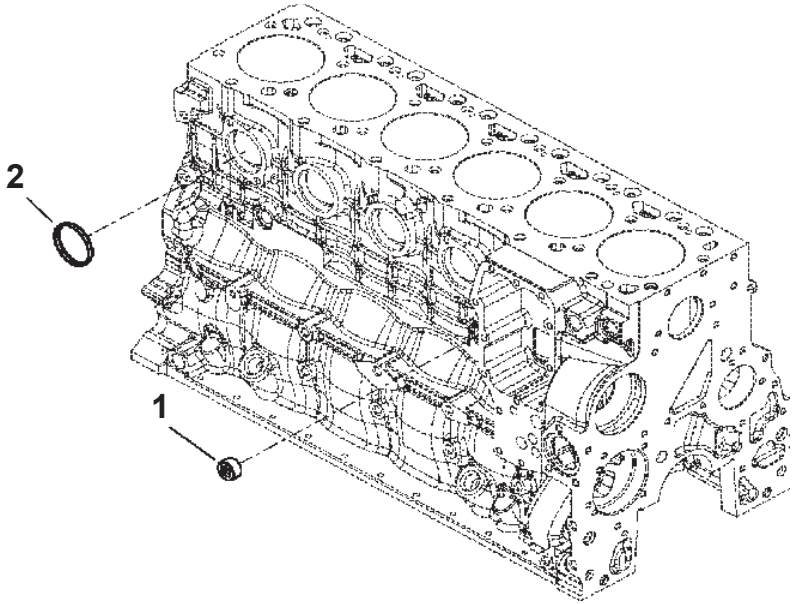

D51EX/PX-22 S/N B10001-UP

A2102-A2A4 CYLINDER BLOCK HEATER PORT PLUGS

Item	Part No.	Description	Qty	Options
1	6732-11-1920	PLUG, PIPE	1	SN:30910419--
2	6731-22-7140	PLUG, PIPE	4	SN:30910419--

Ref. A2102-A2A4 Page A-033

VEPB1108

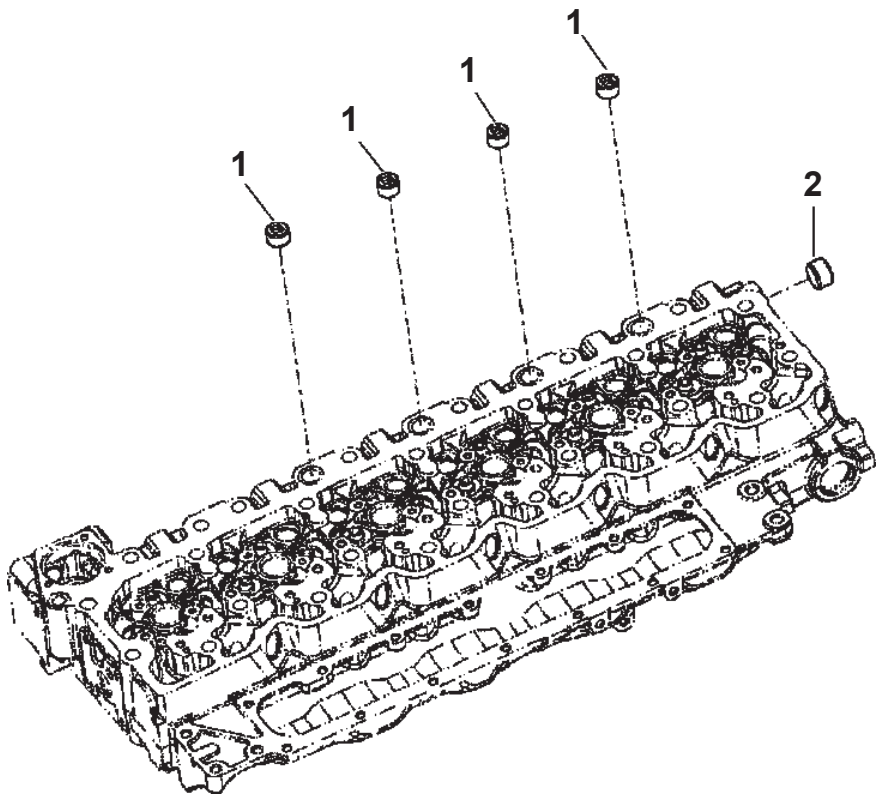

D51EX/PX-22 S/N B10001-UP

A2102-A2A6 CYLINDER BLOCK CABIN HEATER PORT PLUG

Item	Part No.	Description	Qty	Options
1	6732-11-1910	PLUG, PIPE	4	SN:30910419--
2	6732-61-2240	PLUG, PIPE	1	SN:30910419--

Ref. A2102-A2A6 Page A-035

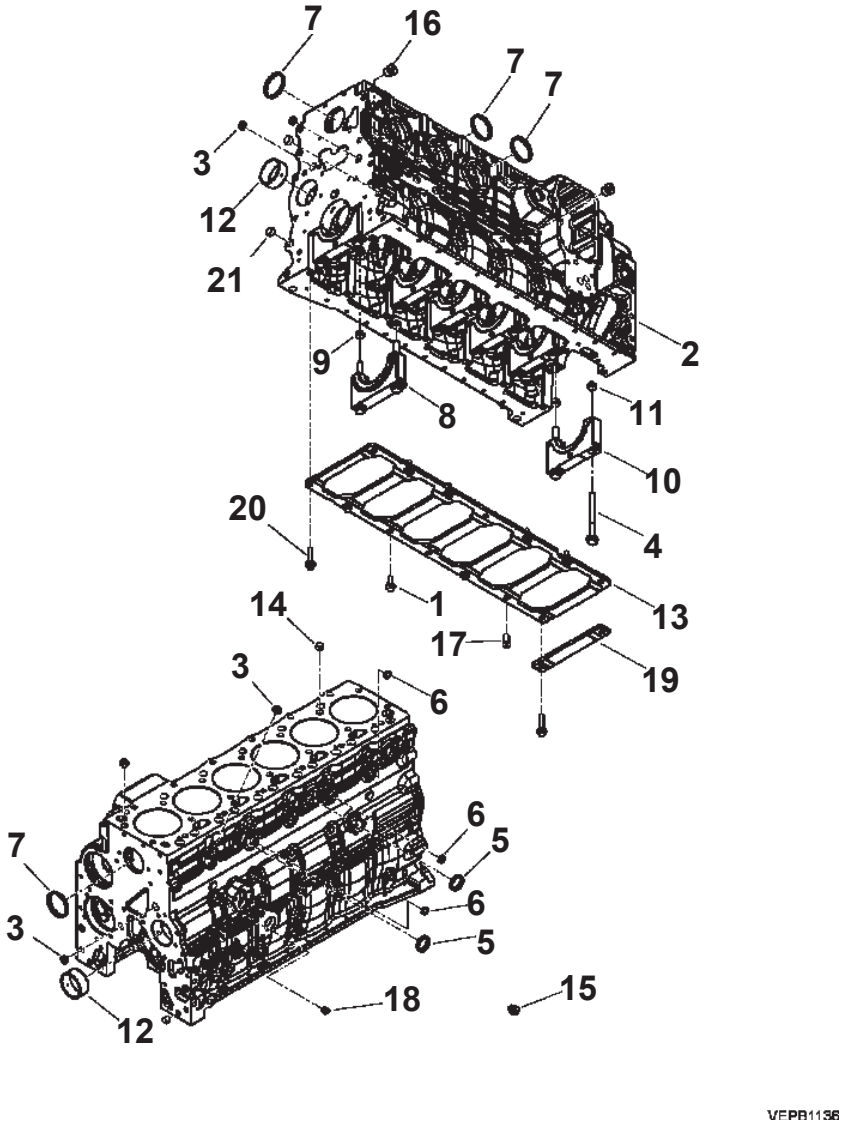

A2103-A2A9 CYLINDER BLOCK

Item	Part No.	Description	Qty	Options
1	6735-71-3220	BOLT (M10-01.50x25)	7	SN:30910419--
	6754-21-1011	BLOCK, CYLINDER	1	SN:30910419--
2	(NSS)	· BLOCK, CYLINDER	1	SN:30910419--
3	6732-21-1810	· PLUG, EXPANSION	1	SN:30910419--
4	6732-21-1611	· BOLT	14	SN:30910419--
5	6742-01-1420	· PLUG, EXPANSION	2	SN:30910419--
6	6736-21-1820	· PLUG, EXPANSION	3	SN:30910419--
7	6731-22-1610	· PLUG, EXPANSION	4	SN:30910419--
	6754-21-1240	· CAP, MAIN BEARING	1	SN:30910419--
8	(NSS)	· · CAP, MAIN BEARING	1	SN:30910419--
9	6732-21-1910	· · DOWEL, RING	2	SN:30910419--
	6754-21-1220	· CAP, MAIN BEARING	6	SN:30910419--
10	(NSS)	· · CAP, MAIN BEARING	1	SN:30910419--
11	6732-21-1910	· · DOWEL, RING	2	SN:30910419--
12	6732-21-1411	· · BUSHING	2	SN:30910419--
13	6754-21-5150	· PLATE, CYLINDER BLOCK STIFFENER	1	SN:30910419--
14	6732-21-6140	· DOWEL, RING	2	SN:30910419--
15	6754-22-6310	· PLUG, THREADED	1	SN:30910419--
16	6754-22-6330	· PLUG, THREADED	2	SN:30910419--
17	6754-21-1920	· BOLT	1	SN:30910419--
18	6745-71-5820	· PLUG, THREADED	1	SN:30910419--
19	6754-21-5170	· PLATE, CYLINDER BLOCK STIFFENER	3	SN:30910419--
20	6742-01-5504	· BOLT (M10-1.50x40)	6	SN:30910419--
21	6732-21-1910	· DOWEL, RING	2	SN:30910419--

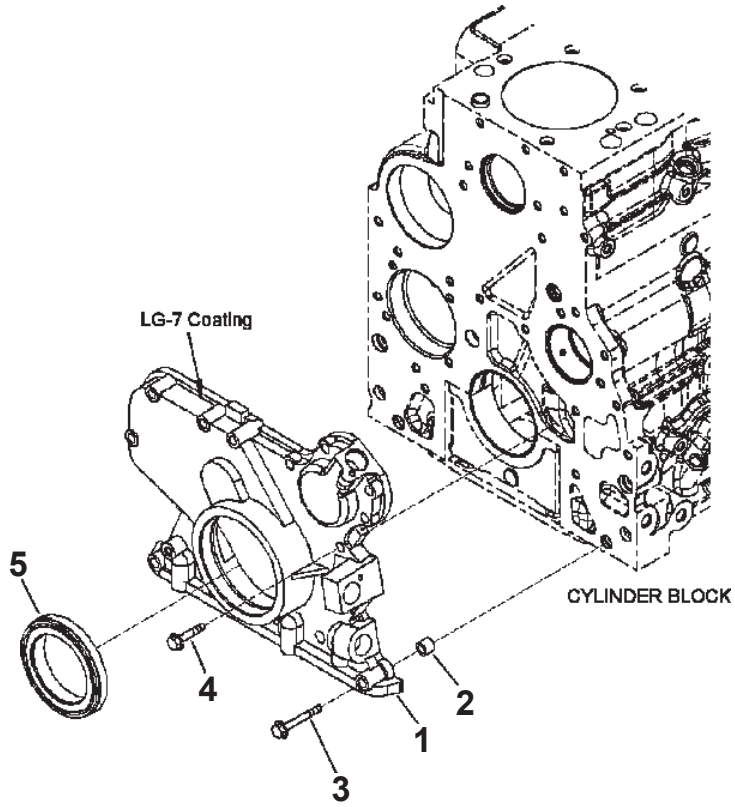

A2109-A2A7 GEAR COVER

Item	Part No.	Description	Qty	Options
1	6754-21-6211	COVER	1	SN:30910419--
2	6754-21-6220	PIN	2	SN:30910419--
3	6735-61-2120	BOLT (M8-1.25x45)	6	SN:30910419--
4	6732-21-6630	BOLT (M8-1.25x30)	7	SN:30910419--
5	6754-21-6230	SEAL, OIL	1	SN:30910419--

VEPB0896

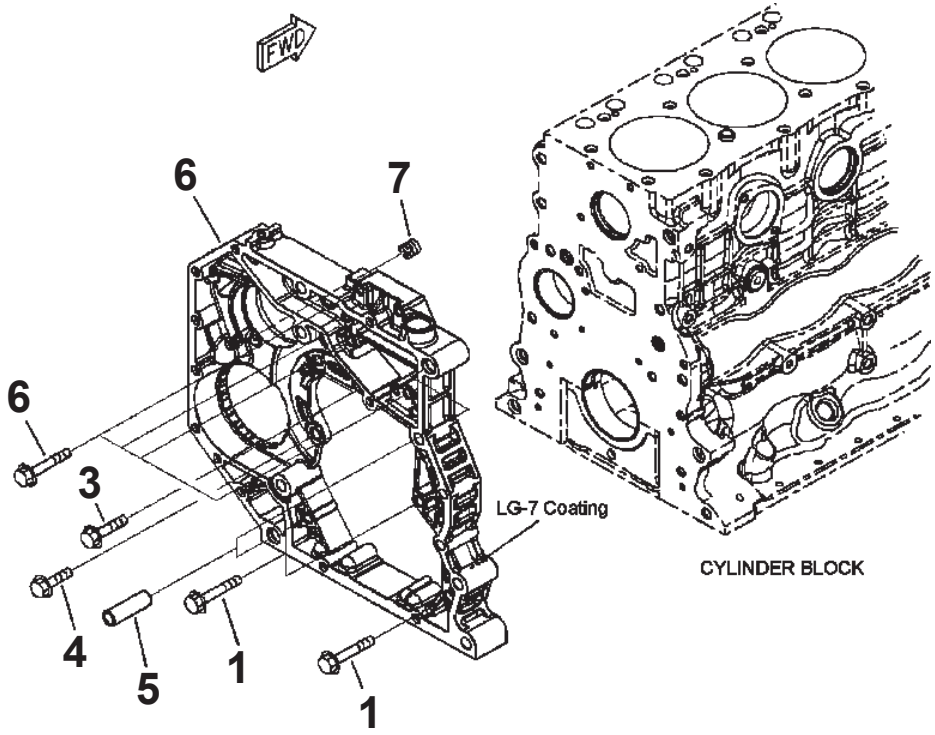

D51EX/PX-22 S/N B10001-UP

A2109-A2A9 REAR GEAR HOUSING

Item	Part No.	Description	Qty	Options
1	6754-21-3140	BOLT (M8-1.25x40)	3	SN:30910419--
2	6735-61-2120	BOLT (M8-1.25x45)	4	SN:30910419--
3	6735-61-3810	BOLT (M10-1.50x30)	2	SN:30910419--
4	6732-11-1720	BOLT (M12-1.75x30)	1	SN:30910419--
	6754-22-3120	HOUSING, REAR GEAR	1	SN:30910419--
5	6754-21-3120	· PIN	2	SN:30910419--
6	(NSS)	· HOUSING, GEAR	1	SN:30910419--
7	6754-21-3150	· INSERT, THREADED	2	SN:30910419--

Ref. A2109-A2A9 Page A-041

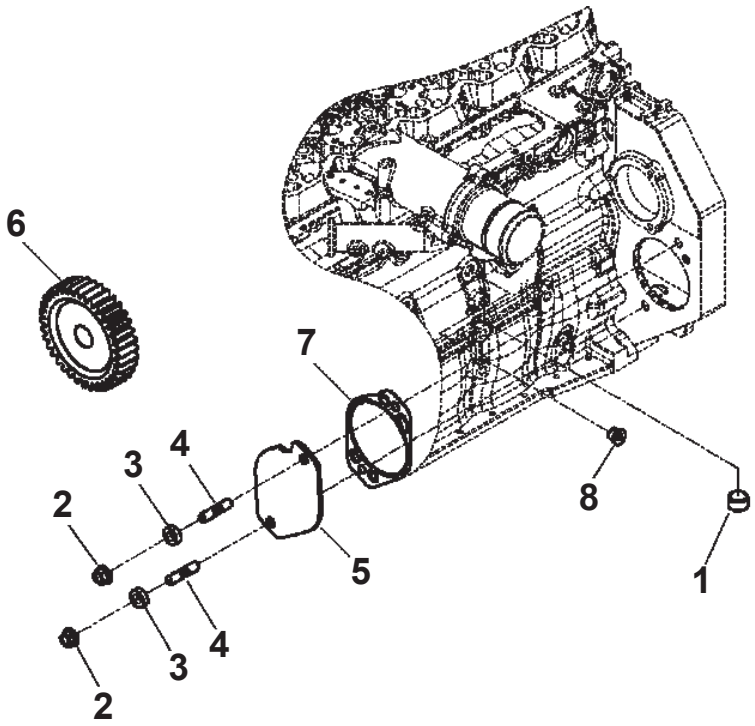

D51EX/PX-22 S/N B10001-UP

A2109-A2B0 REAR GEAR TRAIN ACCESSORY DRIVE MOUNTING

Item	Part No.	Description	Qty	Options
1	6732-11-1920	PLUG, PIPE	1	SN:30910419--
2	6735-81-6140	NUT	2	SN:30910419--
3	6754-22-3130	SPACER, MOUNTING	2	SN:30910419--
4	6741-82-3810	STUD	2	SN:30910419--
5	6754-22-3140	PLATE, COVER	1	SN:30910419--
6	6754-22-3110	GEAR, ACCESSORY DRIVE	1	SN:30910419--
7	6754-21-9120	GASKET, ACCESSORY DRIVE COVER	1	SN:30910419--
8	6754-22-6320	PLUG, THREADED	1	SN:30910419--

Ref. A2109-A2B0 Page A-043

VEPB1120

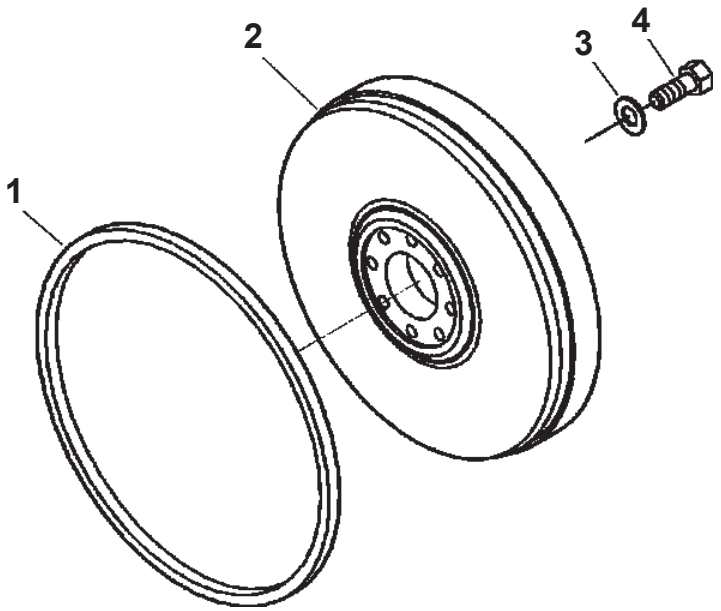

D51EX/PX-22 S/N B10001-UP

A2118-A2A2 FLYWHEEL AND MOUNTING

Item	Part No.	Description	Qty	Options
	6737-31-4100	FLYWHEEL ASSEMBLY	1	SN:30910419--
1	6732-31-4180	· GEAR, RING	1	SN:30910419--
2	(NSS)	· FLYWHEEL	1	SN:30910419--
3	6732-31-4120	WASHER	8	SN:30910419--
4	6732-31-4130	BOLT (M12-1.25x32)	8	SN:30910419--

Ref. A2118-A2A2 Page A-045

VEPB1139

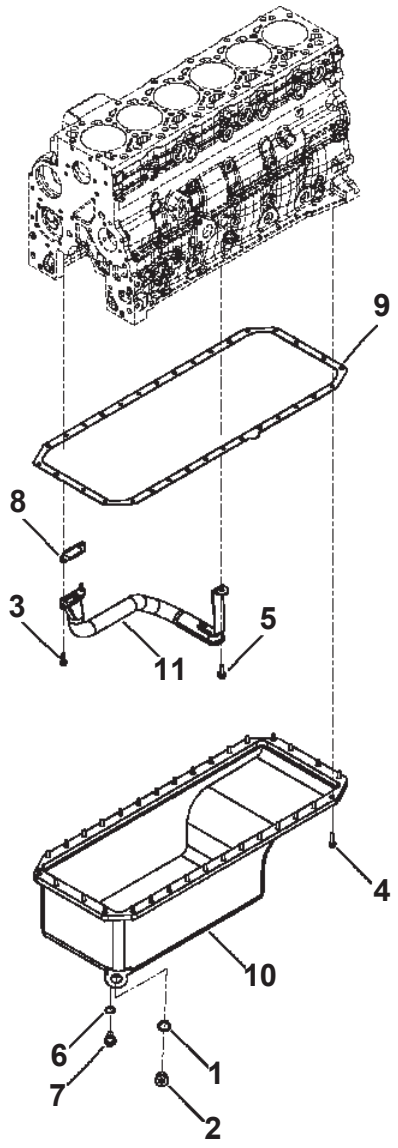

D51EX/PX-22 S/N B10001-UP

A2115-A2A4 OIL PAN

Item	Part No.	Description	Qty	Options
1	6735-21-5680	SEAL, O-RING	1	SN:30910419--
2	6735-21-5670	PLUG, THREADED	1	SN:30910419--
3	6732-21-5160	BOLT	2	SN:30910419--
4	6732-21-6630	BOLT	32	SN:30910419--
5	6735-71-3220	BOLT	1	SN:30910419--
6	6732-21-5190	WASHER, SEALING	1	SN:30910419--
7	6732-21-5210	PLUG, THEADED	1	SN:30910419--
8	6754-21-5530	GASKET, FLANGE	1	SN:30910419--
9	6754-22-5510	GASKET, OIL PAN	1	SN:30910419--
10	6754-22-5120	PAN, OIL	1	SN:30910419--
11	6754-52-5510	CONNECTION, OIL SUCTION	1	SN:30910419--

Ref. A2115-A2A4 Page A-047

VEPB1116

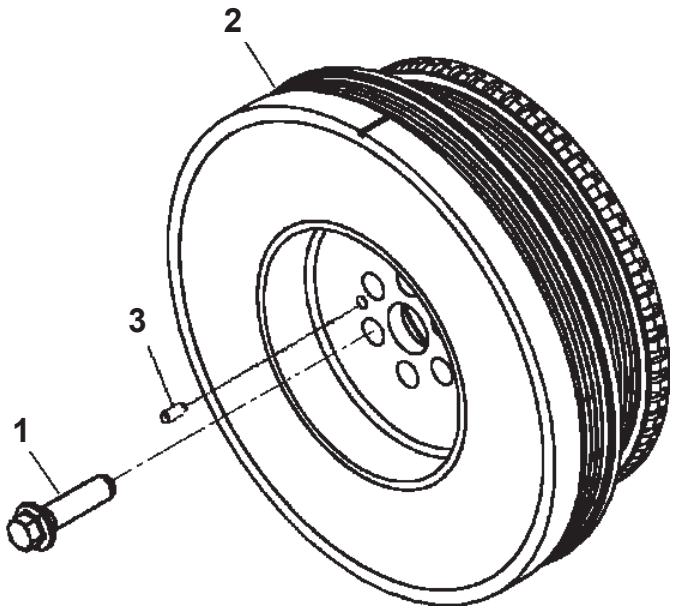

D51EX/PX-22 S/N B10001-UP

A2123-A2A3 VIBRATION DAMPER

Item	Part No.	Description	Qty	Options
1	6754-31-8120	BOLT	6	SN:30910419--
2	6754-31-8110	DAMPER, VIBRATION	1	SN:30910419--
3	6754-31-8130	PIN	1	SN:30910419--

Ref. A2123-A2A3 Page A-049

VEPB1135

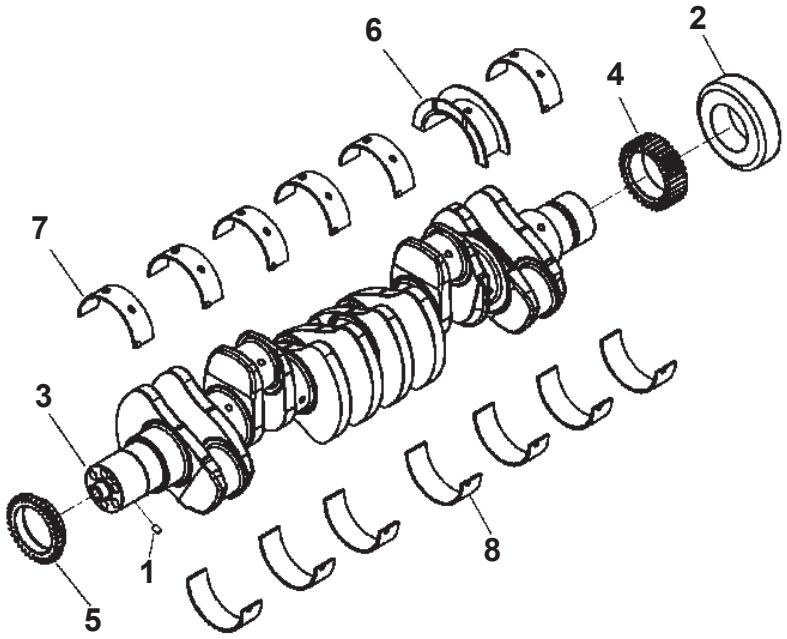

VEPB1135

D51EX/PX-22 S/N B10001-UP

A2120-A2A4 CRANKSHAFT (#30910419-36012296)

Item	Part No.	Description	Qty	Options
	6732-21-6150	CRANKSHAFT ASSEMBLY	1	SN:30910419--36012296
1	(NSS)	· CRANKSHAFT	1	SN:30910419--36012296
2	(NSS)	· COLLAR	1	SN:30910419--36012296
3	6754-31-1110	· GEAR, CRANKSHAFT	1	SN:30910419--36012296
4	6754-31-1340	· GEAR, CRANKSHAFT	1	SN:30910419--36012296
5	6754-31-1330	DOWEL, PIN	1	SN:30910419--36012296
	6754-22-8200	PDC KIT	1	SN:30910419--36012296
6	6732-21-8180	· BEARING, CRANKSHAFT THRUST	1	SN:30910419--36012296
7	6735-21-8110	· BEARING, MAIN	6	SN:30910419--36012296
8	6735-21-8210	· BEARING, MAIN	7	SN:30910419--36012296
	6732-29-8100	SET, MAIN BEARING	AR	SN:30910419--36012296
6	(NSS)	· BEARING, CRANKSHAFT THRUST	1	SN:30910419--36012296
7	(NSS)	· BEARING, MAIN	6	SN:30910419--36012296
8	6735-29-8210	· BEARING, MAIN	7	SN:30910419--36012296
	6736-28-8100	SET, MAIN BEARING - 0.50MM OVER	AR	SN:30910419--36012296
6	(NSS)	· BEARING, CRANKSHAFT THRUST	1	SN:30910419--36012296
7	(NSS)	· BEARING, MAIN	6	SN:30910419--36012296
8	6735-28-8210	· BEARING, MAIN	7	SN:30910419--36012296
	6736-27-8100	SET, MAIN BEARING - 0.75MM OVER	AR	SN:30910419--36012296
6	(NSS)	· BEARING, CRANKSHAFT THRUST	1	SN:30910419--36012296
7	(NSS)	· BEARING, MAIN	6	SN:30910419--36012296
8	6735-27-8210	· BEARING, MAIN	7	SN:30910419--36012296
	6736-26-8100	SET, MAIN BEARING - 1.00MM OVER	1	SN:30910419--36012296
6	(NSS)	· BEARING, CRANKSHAFT THRUST	1	SN:30910419--36012296
7	(NSS)	· BEARING, MAIN	6	SN:30910419--36012296
8	6735-26-8210	· BEARING, MAIN	7	SN:30910419--36012296

Ref. A2120-A2A4 Page A-051

VEPB1135A

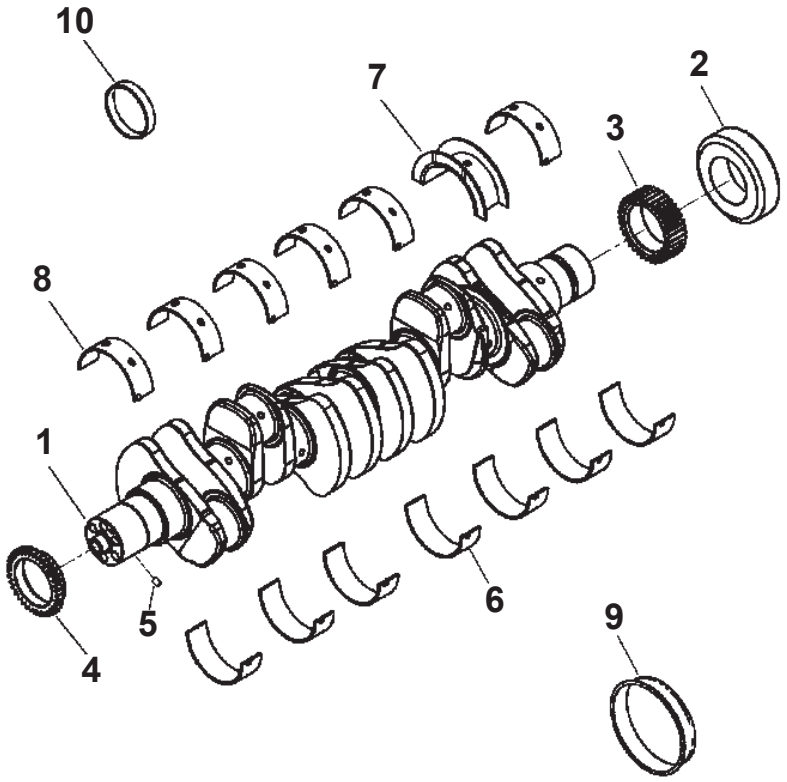

D51EX/PX-22 S/N B10001-UP

CRANKSHAFT (#36012297-)

Item	Part No.	Description	Qty	Options
	6754-32-1340	CRANKSHAFT ASSEMBLY	1	SN:36012297--
1	(NSS)	· CRANKSHAFT	1	SN:36012297--
2	(NSS)	· COLLAR	1	SN:36012297--
3	6754-31-1210	· GEAR, CRANKSHAFT	1	SN:36012297--
4	6754-31-1220	· GEAR, CRANKSHAFT	1	SN:36012297--
5	6754-31-8130	DOWEL, PIN	1	SN:36012297--
	6754-22-8200	SET, MAIN BEARING	1	SN:36012297--
6	6754-22-8130	BEARING, MAIN	7	SN:36012297--
7	6754-32-1910			SN:36012297--
8	6754-22-8120	BEARING, MAIN	6	SN:36012297--
	6754-29-8100	SET, MAIN BEARING - 0.25MM OVER	AR	SN:36012297--
6	(NSS)	· BEARING, MAIN	7	SN:36012297--
7	(NSS)	· BEARING, CRANKSHAFT THRUST	1	SN:36012297--
8	6754-29-8120	· BEARING, MAIN	6	SN:36012297--
	6754-28-8100	SET, MAIN BEARING - 0.50MM OVER	AR	SN:36012297--
6	(NSS)	· BEARING, MAIN	7	SN:36012297--
7	(NSS)	· BEARING, CRANKSHAFT THRUST	1	SN:36012297--
8	6754-28-8120	· BEARING, MAIN	6	SN:36012297--
	6754-27-8100	SET, MAIN BEARING - 0.75MM OVER	AR	SN:36012297--
6	(NSS)	· BEARING, MAIN	7	SN:36012297--
7	(NSS)	· BEARING, CRANKSHAFT THRUST	1	SN:36012297--
8	6754-27-8110	· BEARING, MAIN	6	SN:36012297--
	6754-26-8100	SET, MAIN BEARING - 1.00MM OVER	1	SN:36012297--
6	(NSS)	· BEARING, MAIN	7	SN:36012297--
7	(NSS)	· BEARING, CRANKSHAFT THRUST	1	SN:36012297--
8	6754-26-8120	· BEARING, MAIN	6	SN:36012297--
	6754-38-1710	BEARING, CRANKSHAFT THRUST - 0.50MM OS	AR	SN:36012297--
	6754-36-1710	BEARING, CRANKSHAFT THRUST - 1.00MM OVER	AR	SN:36012297--
9	6736-39-1221	WEARSLEEVE KIT, FRONT SEAL	AR	SN:36012297--
	(NSS)	· SEAL, OIL	1	SN:36012297--
	(NSS)	· SLEEVE, WEAR	1	SN:36012297--
	(NSS)	· TOOL, SEAL INSTALLATION	1	SN:36012297--
10	6736-39-1140	SEAL KIT, REAR	1	SN:36012297--
	(NSS)	· SEAL, OIL	1	SN:36012297--
	(NSS)	· SLEEVE, WEAR	1	SN:36012297--

Ref. A2120-A2A5 Page A-051A

VEPB1127

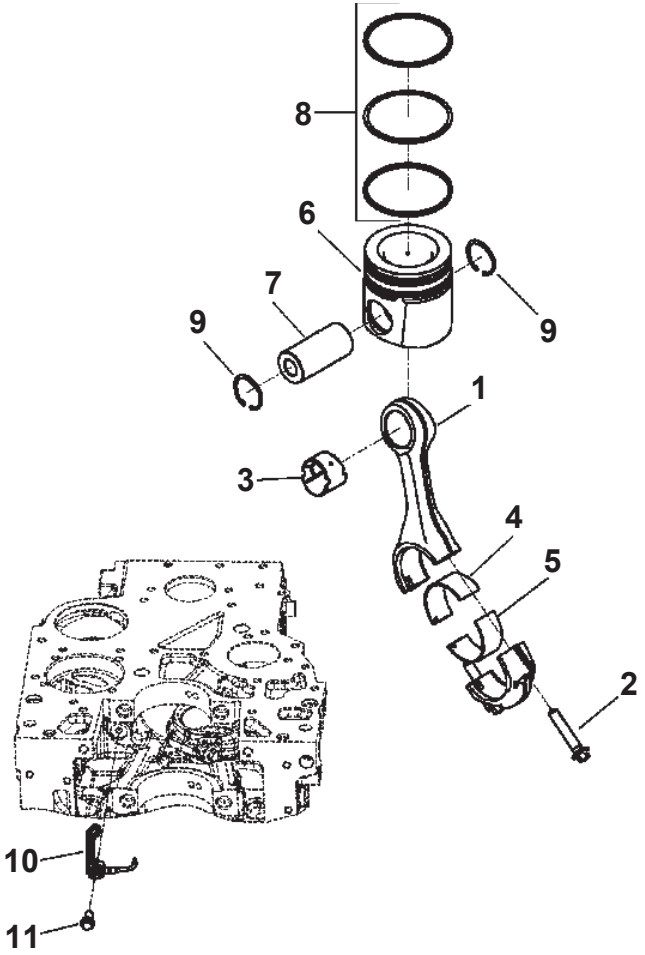

D51EX/PX-22 S/N B10001-UP

A2126-A2A8 CONNECTING ROD AND PISTON

Item	Part No.	Description	Qty	Options
	6737-32-3120	ROD, ENGINE CONNECTING	6	SN:30910419--
1	(NSS)	· ROD, ENGINE CONNECTING	1	SN:30910419--
2	6732-31-3320	· BOLT, CONNECTING ROD CAP	2	SN:30910419--
3	6732-31-3132	· BUSHING	1	SN:30910419--
4	6754-32-3410	BEARING, CONNECTING (UPPER)	6	SN:30910419--
5	6732-31-3420	BEARING, CONNECTING (LOWER)	6	SN:30910419--
	6754-32-2110	KIT, ENGINE PISTON	6	SN:30910419--
6	(NSS)	· PISTON	1	SN:30910419--
7	6754-31-2410	· PIN, PISTON	1	SN:30910419--
8	6754-31-2010	· SET, PISTON RING	1	SN:30910419--
	(NSS)	· · RING, COMPRESSION PISTON (TOP)	1	SN:30910419--
	(NSS)	· · RING, COMPRESSION PISTON (2ND)	1	SN:30910419--
	6754-31-2231	· · RING, OIL PISTON	1	SN:30910419--
9	6732-31-2420	RING, RETAINING	12	SN:30910419--
10	6754-21-1190	NOZZLE, PISTON COOLING	6	SN:30910419--
11	6754-21-1180	BOLT	6	SN:30910419--
		SERVICE PARTS		
4	6754-32-3420	BEARING, CONNECTING ROD (0.25MM OS)	AR	SN:30910419--
	6754-32-3430	BEARING, CONNECTING ROD (0.50MM OS)	AR	SN:30910419--
	6754-32-3440	BEARING, CONNECTING ROD (0.75MM OS)	AR	SN:30910419--
	6754-32-3450	BEARING, CONNECTING ROD (1.00MM OS)	AR	SN:30910419--
5	6738-39-3400	BEARING, CONNECTING ROD (0.25MM OS)	AR	SN:30910419--
	6738-38-3400	BEARING, CONNECTING ROD (0.50MM OS)	AR	SN:30910419--
	6738-37-3400	BEARING, CONNECTING ROD (0.75MM OS)	AR	SN:30910419--
	6738-36-3400	BEARING, CONNECTING ROD (1.00MM OS)	AR	SN:30910419--

Ref. A2126-A2A8 Page A-055

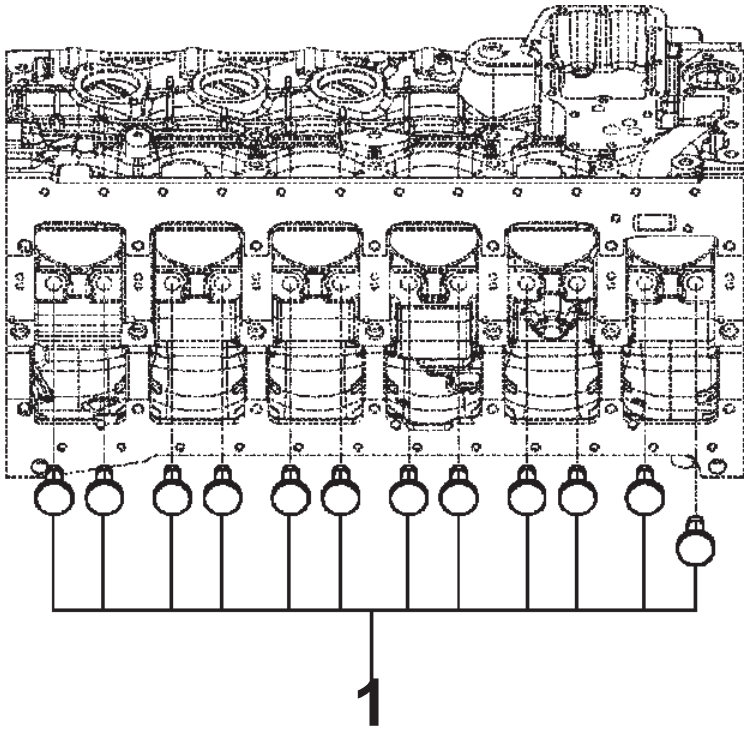

A2206-A2A1 VALVE TAPPET

Item	Part No.	Description	Qty	Options
1	6754-41-2110	TAPPET, VALVE	12	SN:30910419--

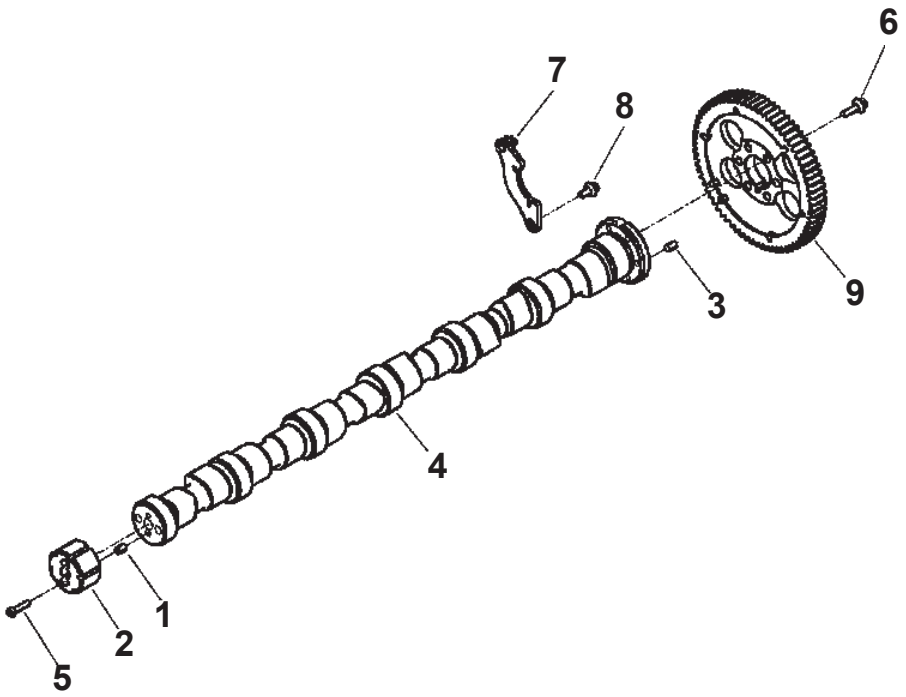

Item	Part No.	Description	Qty	Options
1	6754-41-1120	DOWEL, RING	1	SN:30910419--
2	6754-41-1140	RING, SPEED INDICATOR	1	SN:30910419--
	6754-41-1170	CAMSHAFT	1	SN:30910419--
3	6732-21-6150	· DOWEL, PIN	1	SN:30910419--
4	6754-41-1110	· CAMSHAFT	1	SN:30910419--
5	6754-41-1130	BOLT	2	SN:30910419--
6	01435-00825	BOLT	6	SN:30910419--
7	6754-41-1160	SUPPORT, CAMSHAFT THRUST	1	SN:30910419--
8	6736-21-5310	BOLT (M8-1.25x16)	2	SN:30910419--
9	6754-41-1150	GEAR, CAMSHAFT	1	SN:30910419--
NI	6732-21-6150	DOWEL, PIN	1	SN:30910419--

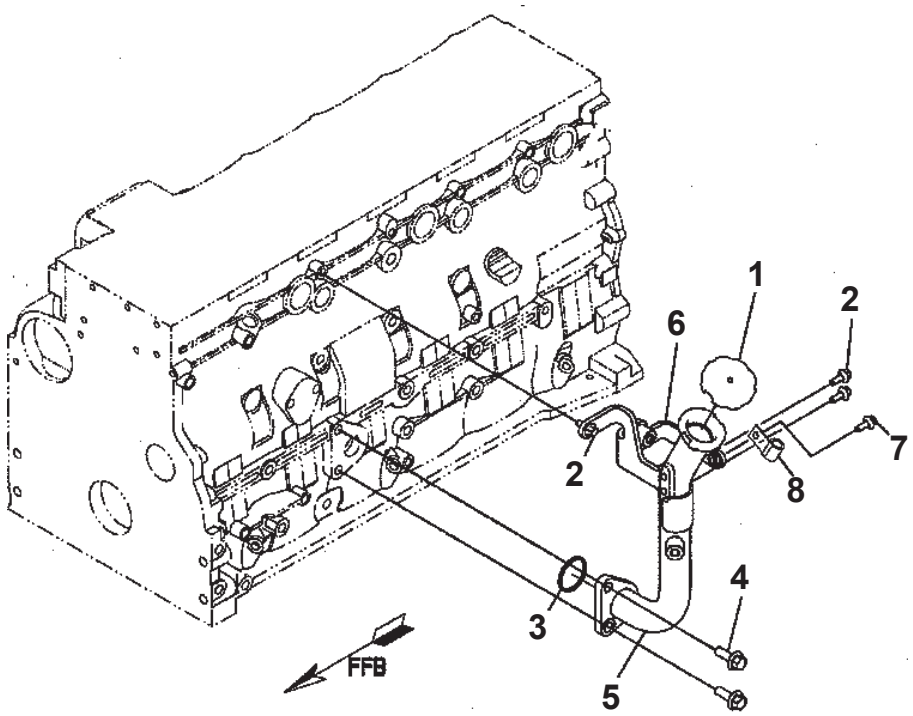

A2212-A2A1 ENGINE OIL FILLER AND OIL LEVEL GAUGE BRACKET

Item	Part No.	Description	Qty	Options
1	6136-21-7120	CAP, FILLER	1	SN:30910419--
2	6732-71-3220	SCREW	3	SN:30910419--
3	6736-21-3360	SEAL	1	SN:30910419--
4	6732-11-1720	SCREW	2	SN:30910419--
5	6754-52-8130	TUBE, OIL FILLER	1	SN:30910419--
6	6754-52-8140	BRACKET, OIL FILLER TUBE	1	SN:30910419--
7	6732-21-3120	BOLT	1	SN:30910419--
8	04434-51208	CLIP	1	SN:30910419--

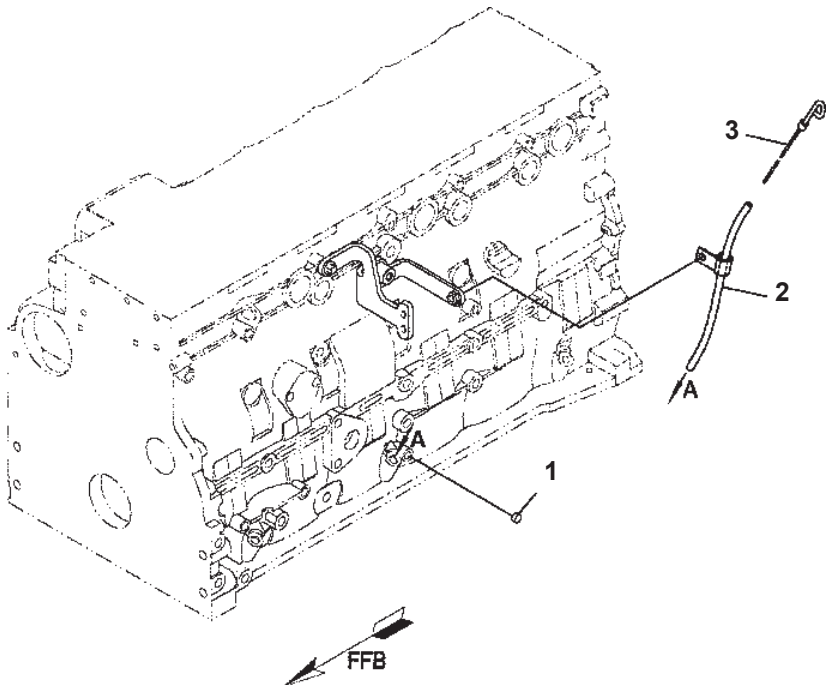

A2215-A2A6 OIL LEVEL GAUGE

Item	Part No.	Description	Qty	Options
1	6732-21-5530	PLUG, EXPANSION	4	SN:30910419--
2	6754-22-5470	TUBE, OIL GAUGE	1	SN:30910419--
3	6754-22-5480	DIPSTICK	1	SN:30910419--

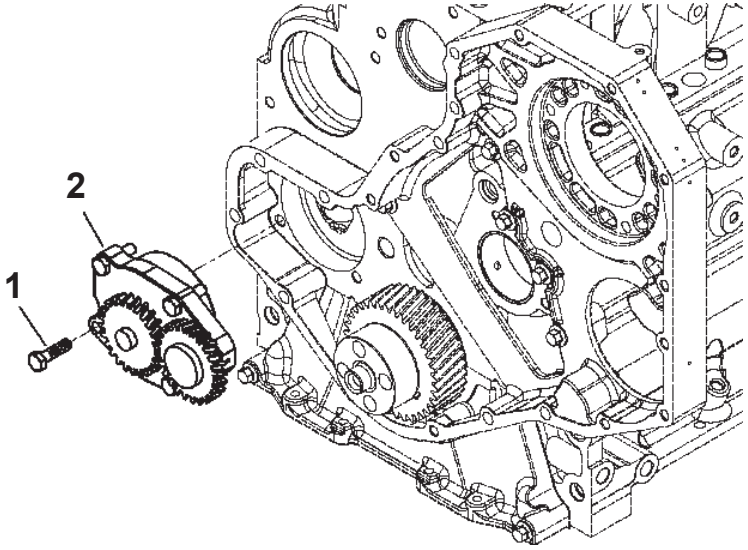

A3103-A2A3 LUBRICATING OIL PUMP

Item	Part No.	Description	Qty	Options
1	6735-51-1120	BOLT (M8-1.25x30)	4	SN:30910419--
2	6754-51-1100	PUMP, LUBRICATING OIL	1	SN:30910419--

VEPB1125

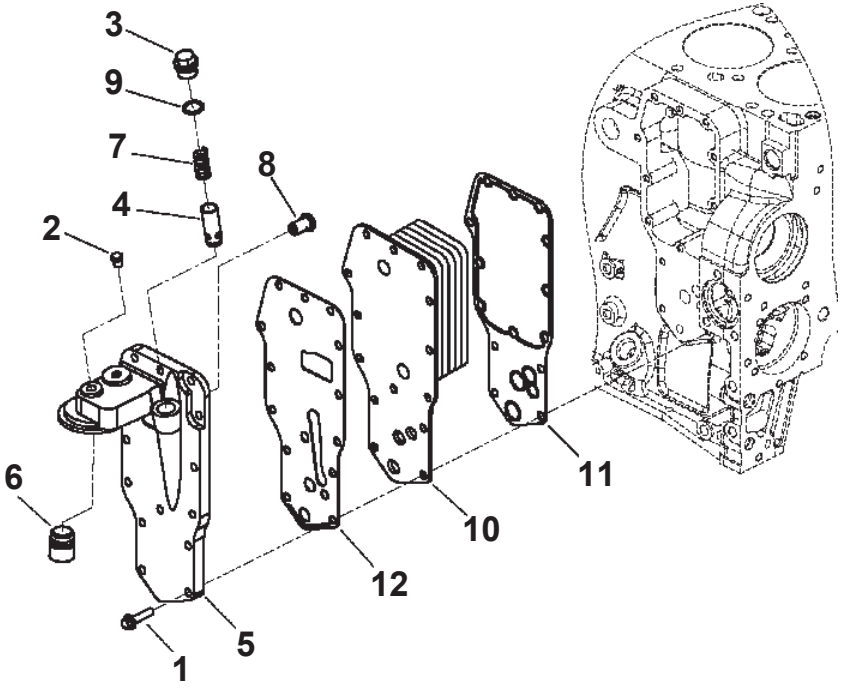

D51EX/PX-22 S/N B10001-UP

A3112-A2A6 LUBRICATING OIL COOLER

Item	Part No.	Description	Qty	Options
1	6735-61-2120	BOLT (M8-1.25x45)	15	SN:30910419--
2	6732-11-1930	PLUG, PIPE	2	SN:30910419--
3	6754-61-2260	PLUG, THREADED	1	SN:30910419--
4	6754-61-2250	PLUNGER, PRESSURE REGULATOR	1	SN:30910419--
	6754-61-2230	HEAD, LUBRICATING OIL FILTER	1	SN:30910419--
5	(NSS)	· HEAD, LUBRICATING OIL FILTER	1	SN:30910419--
6	6736-61-5180	· ADAPTER, FILTER HEAD	1	SN:30910419--
7	6735-61-2190	SPRING, COMPRESSION	1	SN:30910419--
8	6731-61-2151	VALVE, PRESSURE RELIEF	1	SN:30910419--
9	6732-51-4420	SEAL, O-RING	1	SN:30910419--
10	6754-61-2110	CORE, COOLER	1	SN:30910419--
	6754-62-2310	SET, OIL COOLER GASKET	1	SN:30910419--
11	(NSS)	· GASKET, OIL COOLER CORE	1	SN:30910419--
12	(NSS)	· GASKET, FILTER HEAD	1	SN:30910419--

Ref. A3112-A2A6 Page A-065

VEPB1137

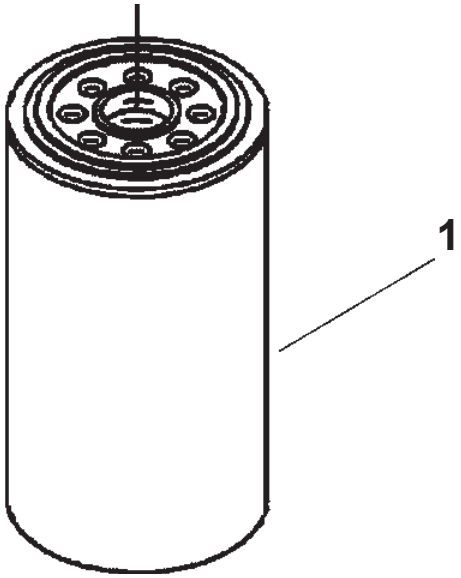

D51EX/PX-22 S/N B10001-UP

A3109-A2A5 LUBRICATING OIL FILTER

Item	Part No.	Description	Qty	Options
1	6736-51-5142	HEAD, LUBRICATING OIL FILTER	1	SN:30910419--

Ref. A3109-A2A5 Page A-067

VEPB0973

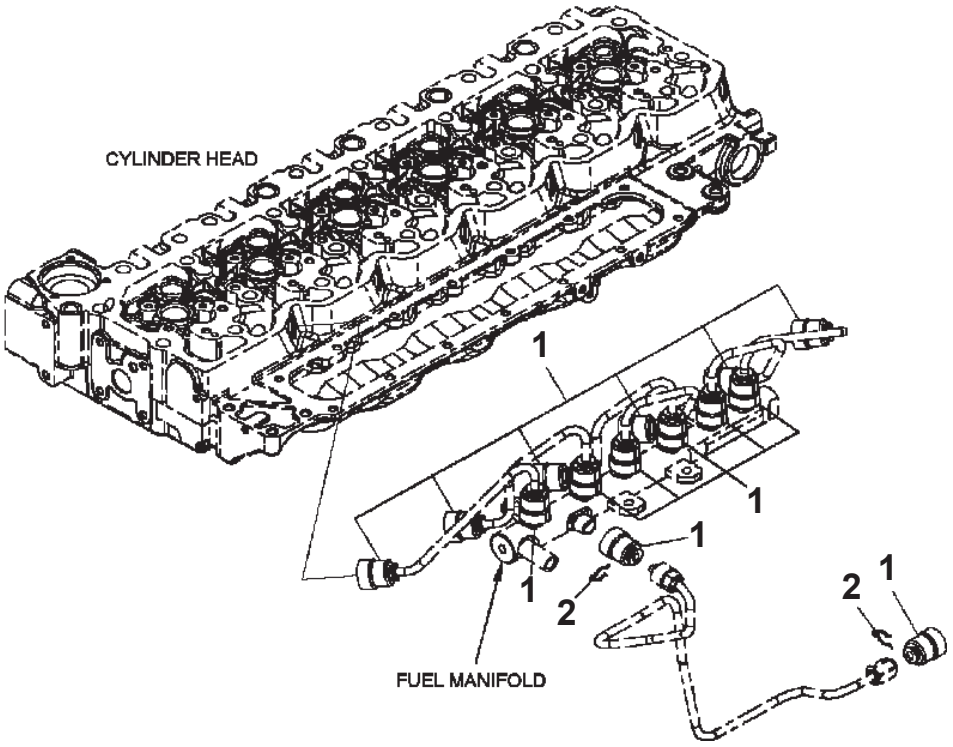

D51EX/PX-22 S/N B10001-UP

A4103-A2B1 FUEL INJECTOR CONNECTOR COVERS

Item	Part No.	Description	Qty	Options
1	6754-71-9710	COVER	14	SN:30910419--
2	6217-71-5770	CLAMP	14	SN:30910419--

Ref. A4103-A2B1 Page A-069

VEPB1129

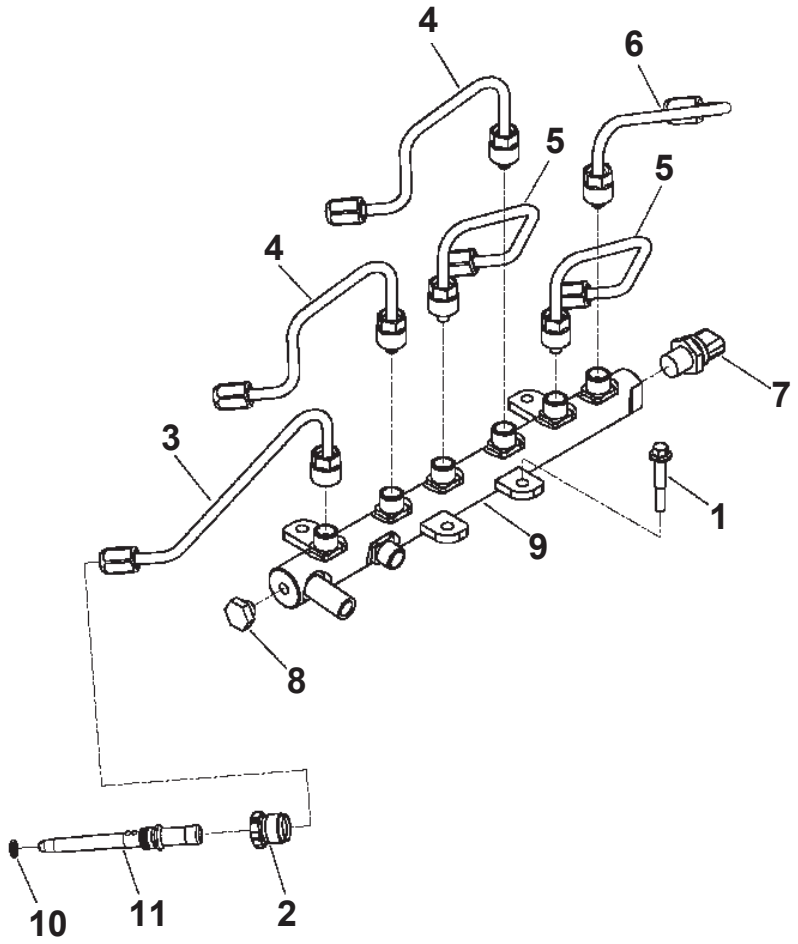

D51EX/PX-22 S/N B10001-UP

A4103-A2B2 FUEL INJECTION PIPING

Item	Part No.	Description	Qty	Options
1	6733-11-4150	BOLT	4	SN:30910419--
2	6754-71-5540	RETAINER	6	SN:30910419--
3	6754-71-5210	TUBE, INJ FUEL SUPPLY (NO. 1 CYL.)	1	SN:30910419--
4	6754-71-5220	TUBE, INJ FUEL SUPPLY (NO. 2 & 4 CYL.)	2	SN:30910419--
5	6754-71-5230	TUBE, INJ FUEL SUPPLY (NO. 3 & 5 CYL.)	2	SN:30910419--
6	6754-71-5240	TUBE, INJ FUEL SUPPLY (NO. 6 CYL.)	1	SN:30910419--
	6754-71-1210	MANIFOLD, FUEL	1	SN:30910419--
7	6754-72-1210	· SENSOR, PRESSURE	1	SN:30910419--
8	6754-72-1220	· VALVE, PRESSURE RELIEF	1	SN:30910419--
9	(NSS)	· MANIFOLD, FUEL	1	SN:30910419--
	6754-71-5510	CONNECTOR, INJECTION FUEL SUPPLY	6	SN:30910419--
10	6745-71-5550	· SEAL, O-RING	1	SN:30910419--
11	(NSS)	· CONNECTOR, INJECTION FUEL SUPPLY	1	SN:30910419--

Ref. A4103-A2B2 Page A-071

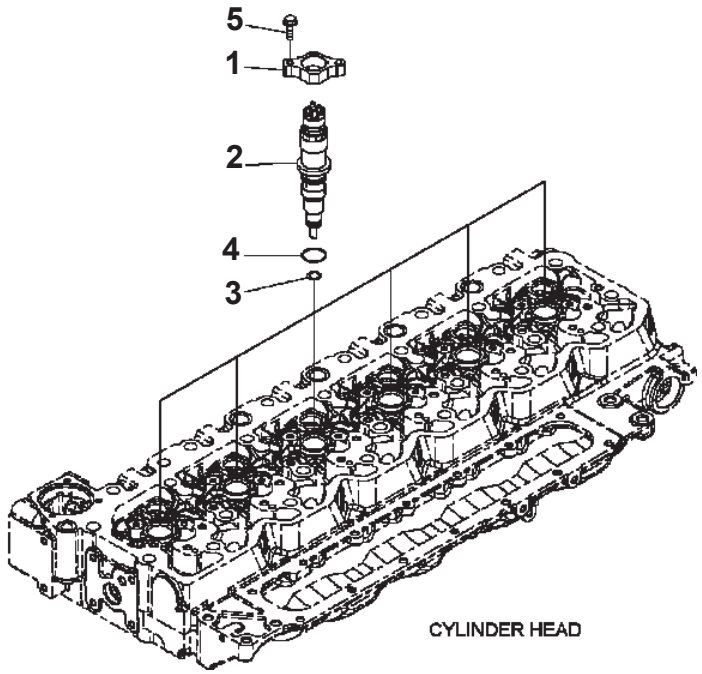

A4112-A2A8 FUEL INJECTOR

Item	Part No.	Description	Qty	Options
	6754-11-3010	INJECTOR ASSEMBLY	6	SN:30910419--
1	6754-11-3110	· CLAMP, INJECTOR	1	SN:30910419--
2	6754-11-3101	· INJECTOR	1	SN:36028522--
	6754-11-3100	· INJECTOR	1	SN:30910419--36028521
3	6754-11-3130	· · SEAL, INJECTOR	1	SN:30910419--
4	6754-11-3140	· · SEAL, O-RING	1	SN:30910419--
5	6742-01-2630	BOLT (M6-1.00x30)	12	SN:30910419--

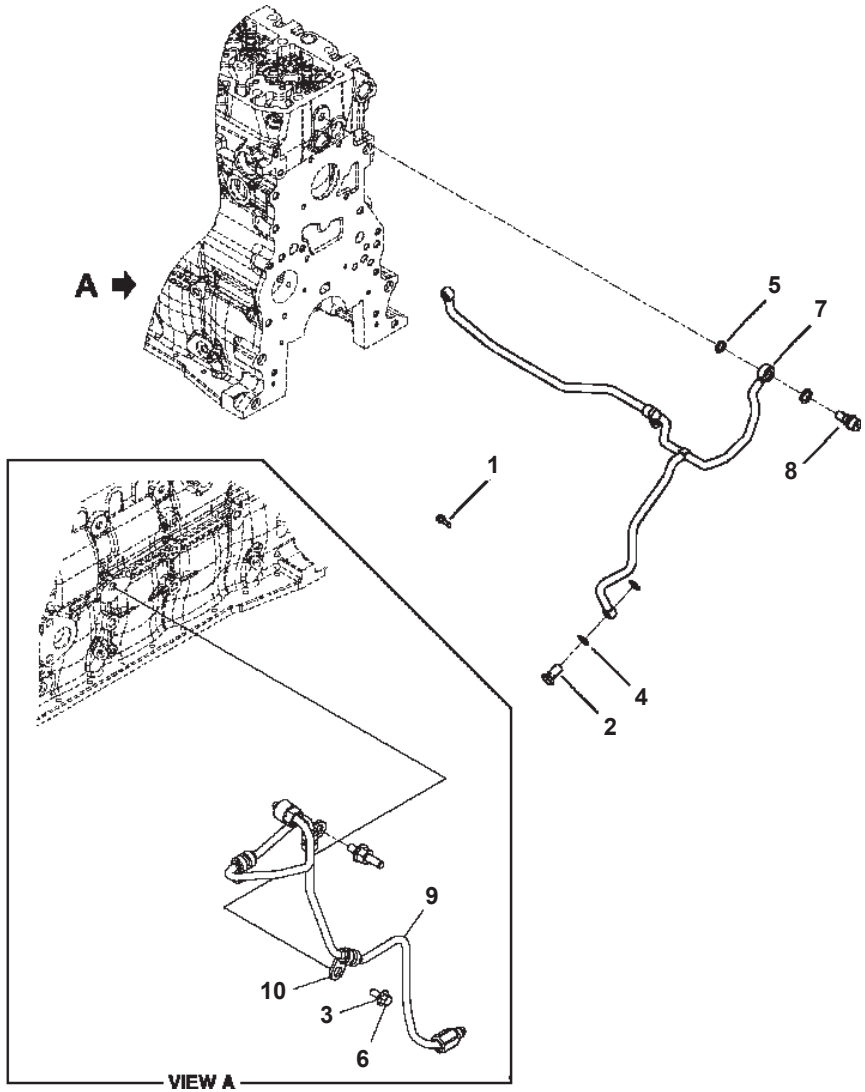

D51EX/PX-22 S/N B10001-UP

A4103-A2B3 FUEL PIPING

Item	Part No.	Description	Qty	Options
1	6732-21-3120	BOLT	2	SN:30910419--
2	6732-71-6510	JOINT, BOLT	2	SN:30910419--
3	6754-81-9330	SPACER	2	SN:30910419--
4	6731-74-5910	WASHER, SEALING	1	SN:30910419--
5	6754-71-1130	WASHER, SEALING	5	SN:30910419--
6	01435-01220	SCREW	2	SN:30910419--
7	6754-72-5330	FUEL, DRAIN	1	SN:30910419--
8	6754-72-5410	VALVE, CHECK	1	SN:30910419--
9	6754-72-5350	TUBE, FUEL SUPPLY	1	SN:30910419--
10	04434-51212	CLIP	2	SN:30910419--

Ref. A4103-A2B3 Page A-075

VEPB1142

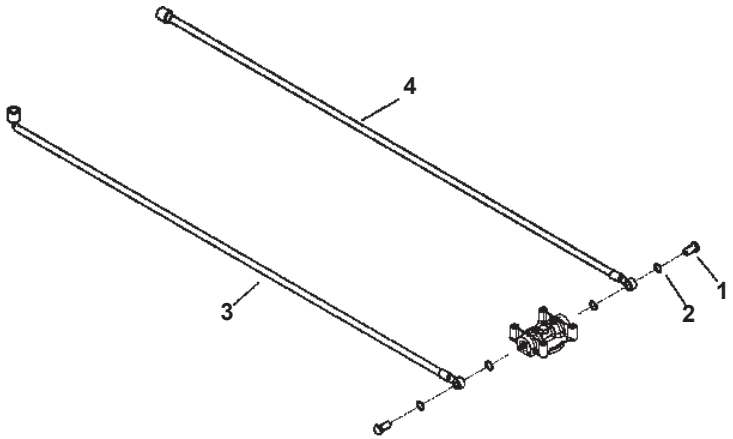

D51EX/PX-22 S/N B10001-UP

A4106-A2B3 FUEL FILTER PIPING

Item	Part No.	Description	Qty	Options
1	6732-71-6510	BOLT, BANJO CONNECTOR	2	SN:30910419--
2	6745-71-1130	WASHER, SEALING	4	SN:30910419--
3	6754-72-9930	HOSE, FLEXIBLE	1	SN:30910419--
4	6754-72-9940	HOSE, FLEXIBLE	1	SN:30910419--

Ref. A4106-A2B3 Page A-077

VEPB1141

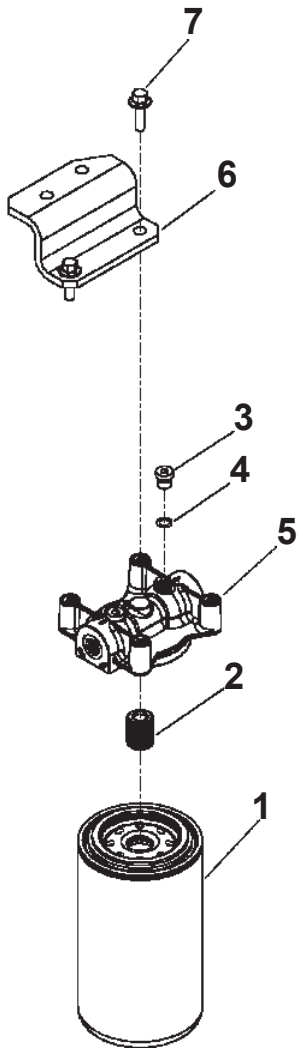

D51EX/PX-22 S/N B10001-UP

A4109-A2A7 FUEL FILTER

Item	Part No.	Description	Qty	Options
	6754-72-6330	FILTER ASSEMBLY	1	SN:30910419--
1	6754-71-6130	· CARTRIDGE	1	SN:30910419--
2	6754-71-6330	· ADAPTER	1	SN:30910419--
	6732-21-1960	· PLUG ASSEMBLY	2	SN:30910419--
3	(NSS)	· · PLUG	1	SN:30910419--
4	6215-81-9710	· · O-RING	1	SN:30910419--
5	6754-72-6110	· HEAD	1	SN:30910419--
6	6754-71-9930	BRACKET	1	SN:30910419--
7	6732-21-5160	BOLT	4	SN:30910419--

Ref. A4109-A2A7 Page A-079

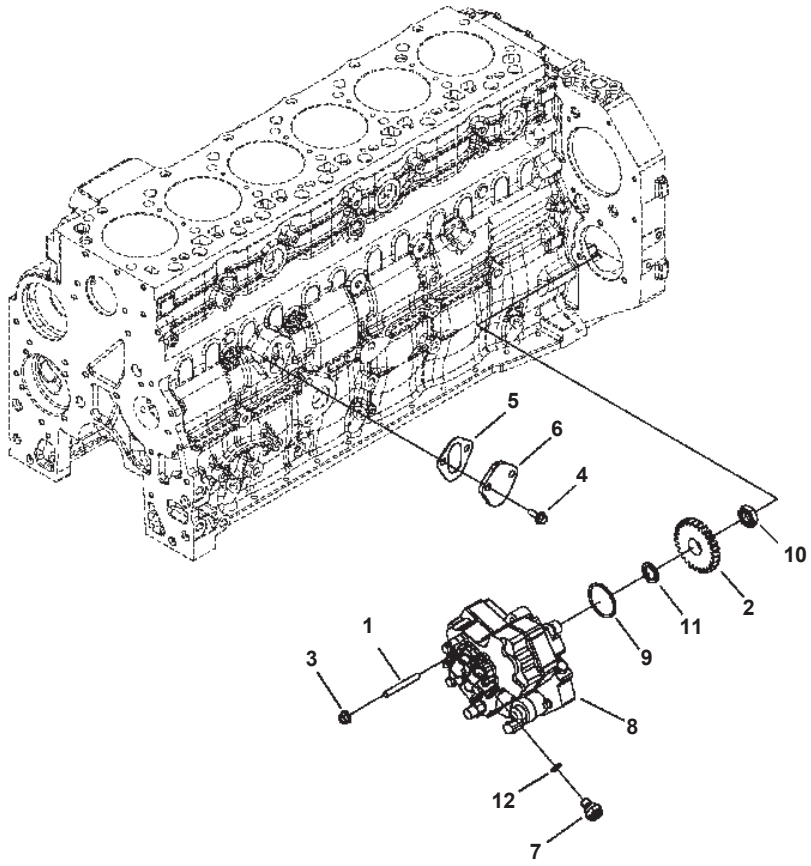

D51EX/PX-22 S/N B10001-UP

A4115-A2B2 FUEL PUMP AND MOUNTING

Item	Part No.	Description	Qty	Options
1	6754-71-3130	STUD	3	SN:30910419--
2	6754-71-3110	GEAR, FUEL PUMP	1	SN:30910419--
3	6732-71-3210	NUT	3	SN:30910419--
4	6732-71-3220	BOLT (M8-1.25x20)	2	SN:30910419--
5	6735-71-6610	GASKET, COVER PLATE	1	SN:30910419--
6	6736-71-5830	PLATE, COVER	1	SN:30910419--
	6754-71-1110	PUMP ASSEMBLY, FUEL INJECTION	1	SN:30910419--
7	6754-71-1330	· CONNECTOR, QUICK DISCONNECT	1	SN:30910419--
8	(NSS)	· PUMP, FUEL INJECTION	1	SN:30910419--
9	6754-71-1320	· SEAL, O-RING	1	SN:30910419--
10	6754-71-1340	· NUT	1	SN:30910419--
11	6754-71-1350	· WASHER, SPRING	1	SN:30910419--
12	6754-71-5350	· WASHER, SEALING	1	SN:30910419--

Ref. A4115-A2B2 Page A-081

VEPB0911

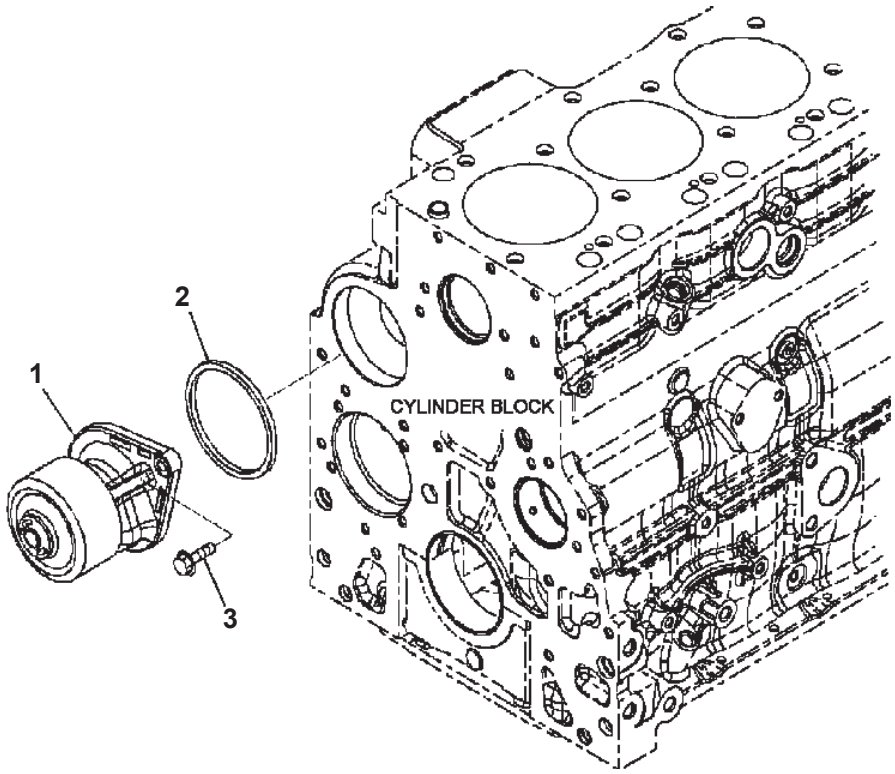

D51EX/PX-22 S/N B10001-UP

A5103-A2A1 WATER PUMP

Item	Part No.	Description	Qty	Options
	6754-61-1010	KIT, WATER PUMP	1	SN:30910419--
1	(NSS)	· PUMP, WATER	1	SN:30910419--
2	6736-61-1520	· O-RING	1	SN:30910419--
3	01435-00825	BOLT	2	SN:30910419--

Ref. A5103-A2A1 Page A-083

VEPB0979

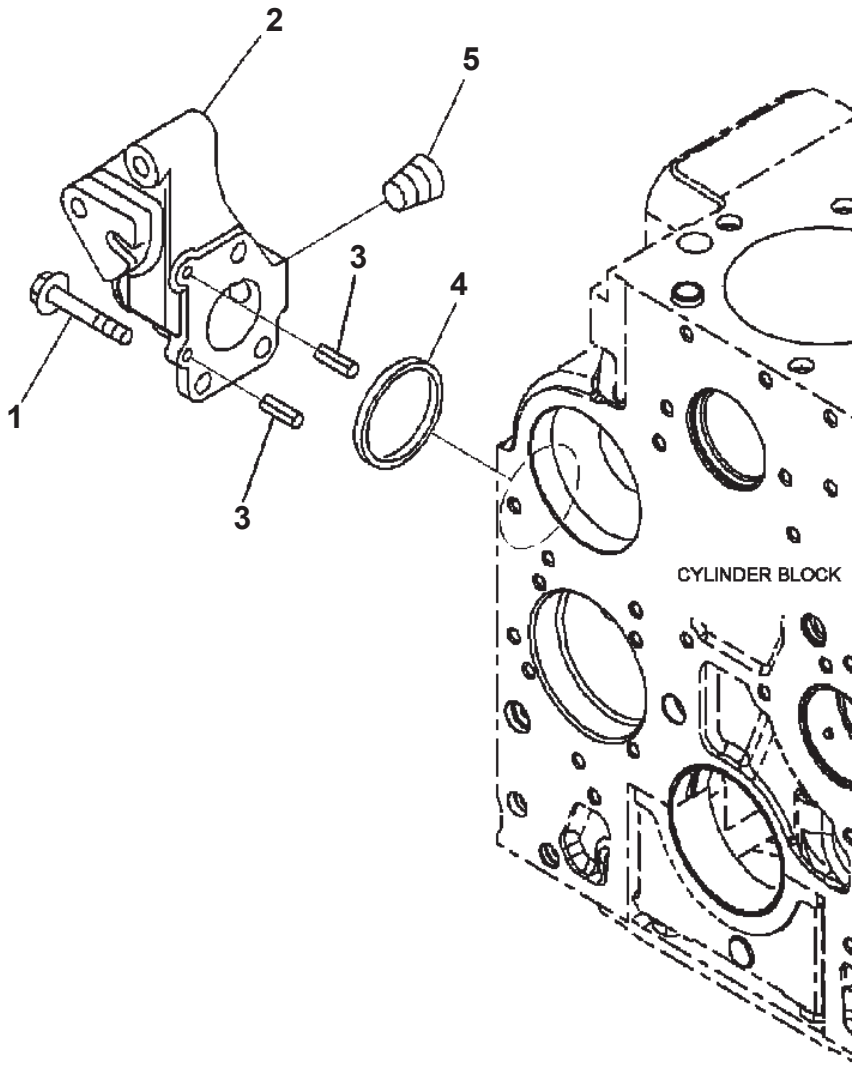

D51EX/PX-22 S/N B10001-UP

A5106-A2A2 COOLANT INLET CONNECTION

Item	Part No.	Description	Qty	Options
1	6735-71-3220	BOLT (M10-1.50x25)	3	SN:30910419--
	6737-62-6210	CONNECTION, WATER INLET	1	SN:30910419--
2	(NSS)	· CONNECTION	1	SN:30910419--
3	6737-32-2110	· PIN, ROLL	2	SN:30910419--
4	6732-61-6130	SEAL, RING	1	SN:30910419--
5	6732-11-1910	PLUG, PIPE	1	SN:30910419--

Ref. A5106-A2A2 Page A-085

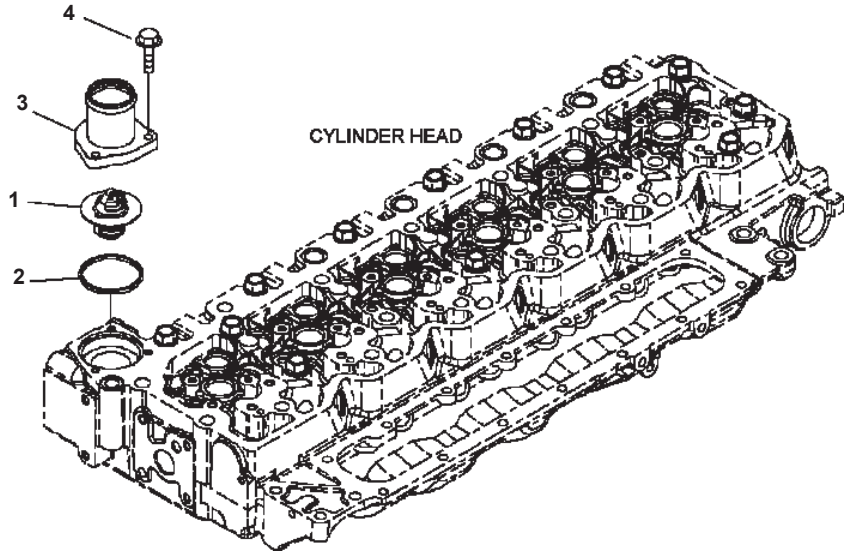

A5109-A2A4 THERMOSTAT AND COOLANT CONNECTION

Item	Part No.	Description	Qty	Options
	6754-61-6211	THERMOSTAT	1	SN:30910419--
1	(NSS)	· THERMOSTAT	1	SN:30910419--
2	6754-61-6230	· SEAL, THERMOSTAT	1	SN:30910419--
3	6754-61-6320	CONNECTOR, OUTLET	1	SN:30910419--
4	6735-71-5190	BOLT	3	SN:30910419--

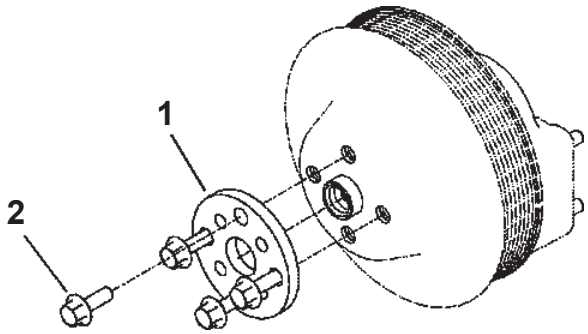

A5112-A2A8 FAN DRIVE MOUNTING

Item	Part No.	Description	Qty	Options
1	6732-61-3160	PLATE, CLAMPING	1	SN:30910419--
2	6735-71-3220	BOLT (M10-1.50x25)	4	SN:30910419--

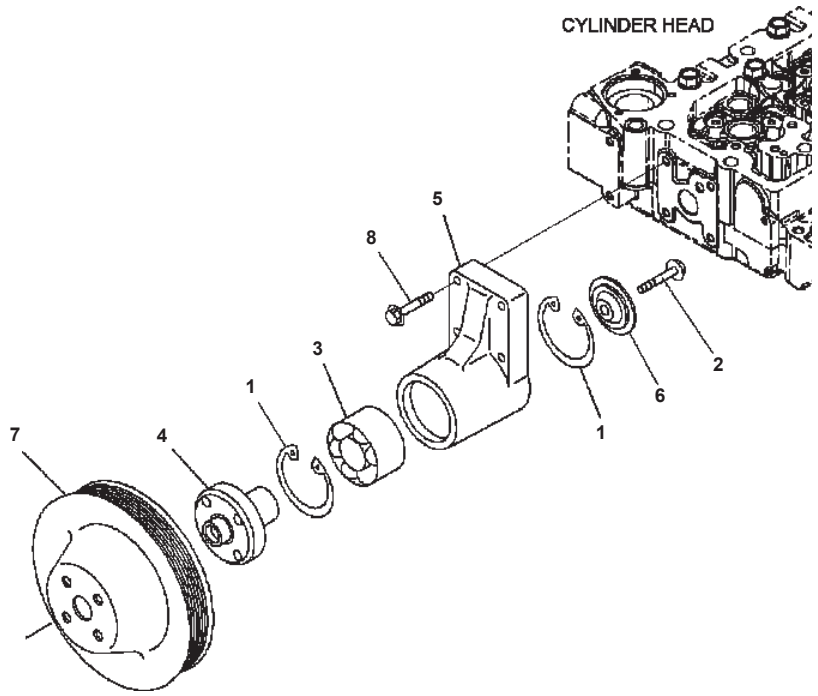

D51EX/PX-22 S/N B10001-UP

A5112-A2B3 FAN DRIVE

Item	Part No.	Description	Qty	Options
	6732-61-3120	SUPPORT ASSEMBLY	1	SN:30910419--
1	6732-61-3450	· RING	2	SN:30910419--
2	6732-61-3440	· BOLT (M10-1.75x70)	1	SN:30910419--
3	6732-61-3420	· BEARING	1	SN:30910419--
4	6732-61-3410	· HUB	1	SN:30910419--
5	(NSS)	· SUPPORT	1	SN:30910419--
6	6732-61-3430	· RETAINER	1	SN:30910419--
7	6732-61-3750	PULLEY	1	SN:30910419--
8	6732-61-3170	BOLT	4	SN:30910419--

Ref. A5112-A2B3 Page A-091

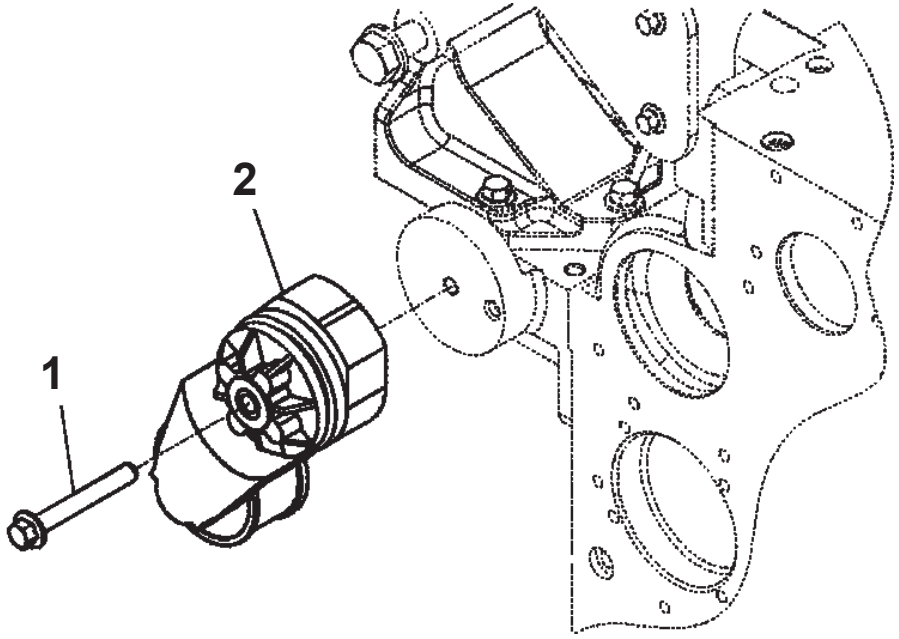

A6102-A2A9 BELT TENSIONER

Item	Part No.	Description	Qty	Options
1	6731-21-6220	BOLT (M10-1.50x80)	1	SN:30910419--
2	6754-61-4110	TENSIONER, BELT	1	SN:30910419--

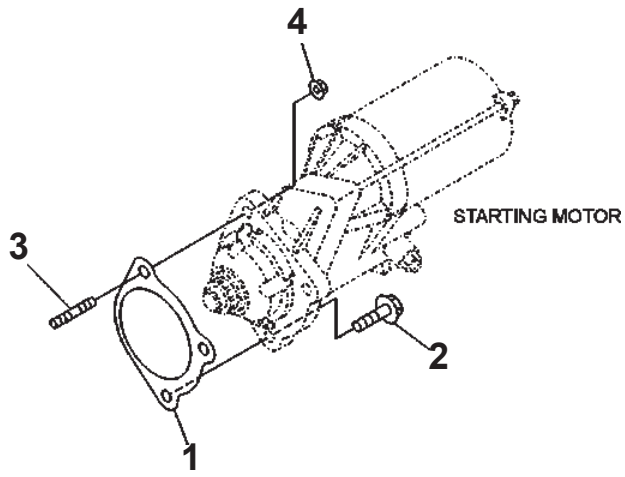

D51EX/PX-22 S/N B10001-UP

A6106-A2A8 STARTING MOTOR MOUNTING

Item	Part No.	Description	Qty	Options
1	6754-81-6810	GASKET, STARTING MOTOR	1	SN:30910419--
2	6731-82-6810	BOLT	2	SN:30910419--
3	6735-81-6170	STUD	1	SN:30910419--
4	6736-81-6170	NUT (M10-1.50)	1	SN:30910419--

Ref. A6106-A2A8 Page A-095

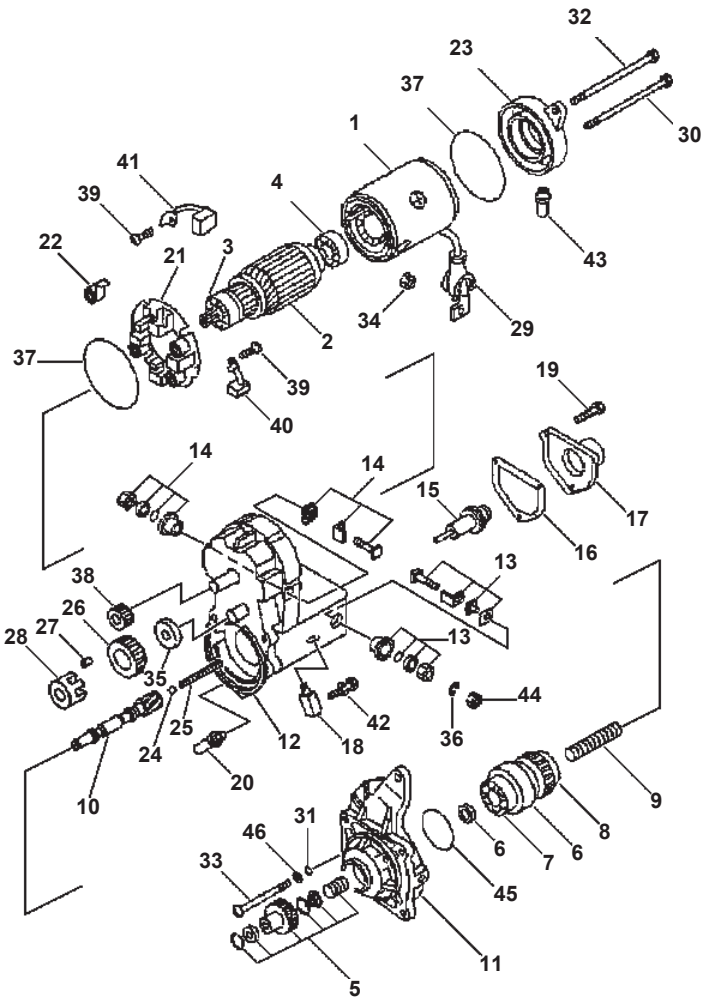

A6112-A2A9 STARTING MOTOR 5.5 KW

Item	Part No.	Description	Qty	Options
	600-863-5111	STARTING MOTOR	1	SN:30910419--
1	ND028100-5410	· YOKE ASSEMBLY	1	SN:30910419--
2	ND028200-5250	· ARMATURE ASSEMBLY	1	SN:30910419--
3	ND949100-3161	· · BEARING, BALL	1	SN:30910419--
	ND989100-5290	· · BEARING, BALL	1	SN:30910419--
4	ND949100-3540	· · BEARING, BALL	1	SN:30910419--
	ND028300-6551	· CLUTCH ASSEMBLY	1	SN:30910419--
5	ND028099-3270	· · STARTER KIT	1	SN:30910419--
6	ND028300-6751	· · CLUTCH ASSEMBLY	1	SN:30910419--
7	ND949100-4501	· · · BEARING, FRONT BALL	1	SN:30910419--
8	ND949100-1920	· · · BEARING, REAR BALL	1	SN:30910419--
9	ND949170-4040	· · SPRING	1	SN:30910419--
10	ND028381-0071	· · SHAFT	1	SN:30910419--
11	ND128401-5621	· HOUSING ASSEMBLY	1	SN:30910419--
12	ND153400-6740	· SWITCH ASSEMBLY, MAGNETIC	1	SN:30910419--
13	ND128099-5770	· · STARTER KIT	1	SN:30910419--
14	ND028099-5100	· · STARTER KIT	1	SN:30910419--
15	ND053660-0443	· · PLUNGER	1	SN:30910419--
16	ND053404-0240	· · GASKET, SOLENOID COVER	1	SN:30910419--
17	ND053505-0290	· · COVER, SOLENOID	1	SN:30910419--
18	ND053480-7560	· · BOLT ASSEMBLY, TERMINAL	1	SN:30910419--
19	ND949047-4440	· · BOLT, SOLENOID COVER	3	SN:30910419--
20	ND028065-0250	· · BUSHING	1	SN:30910419--
21	ND028510-0880	· BRUSH HOLDER ASSEMBLY	1	SN:30910419--
22	ND028520-0011	· · SPRING, BRUSH	4	SN:30910419--
23	ND028501-7711	· CAP, END	1	SN:30910419--
24	ND128961-0010	· BALL, STEEL	1	SN:30910419--
25	ND949170-4070	· SPRING	1	SN:30910419--
26	ND028371-3210	· GEAR, STARTER	1	SN:30910419--
27	ND028306-0070	· ROLLER, CLUTCH	5	SN:30910419--
28	ND028063-0030	· RETAINER	1	SN:30910419--
29	ND028062-0130	· BOOT	1	SN:30910419--
30	ND949042-3680	· BOLT, END CAP	1	SN:30910419--
31	ND90801-10050	· O-RING	3	SN:30910419--
32	ND949042-3690	· BOLT, END CAP	1	SN:30910419--
33	ND949006-4720	· SCREW	3	SN:30910419--
34	ND949056-4480	· NUT	1	SN:30910419--
35	ND028327-0171	· RETAINER, SNAP	1	SN:30910419--
36	ND90258-10001	· WASHER, SPRING	1	SN:30910419--
37	ND028901-0361	· SEAL	2	SN:30910419--
38	ND028371-3200	· GEAR, PINION	1	SN:30910419--

D51EX/PX-22 S/N B10001-UP

A6112-A2A9 STARTING MOTOR 5.5 KW

Item	Part No.	Description	Qty	Options
39	ND949007-6530	· SCREW	4	SN:30910419--
40	ND028530-1090	· BRUSH ASSEMBLY	2	SN:30910419--
41	ND028530-1100	· BRUSH ASSEMBLY	2	SN:30910419--
42	ND949007-6850	· SCREW	1	SN:30910419--
43	ND028062-5790	· COVER	1	SN:30910419--
44	ND90170-10061	· NUT	1	SN:30910419--
45	ND028901-5190	· SEAL	1	SN:30910419--
46	ND90200-06241	· WASHER	3	SN:30910419--

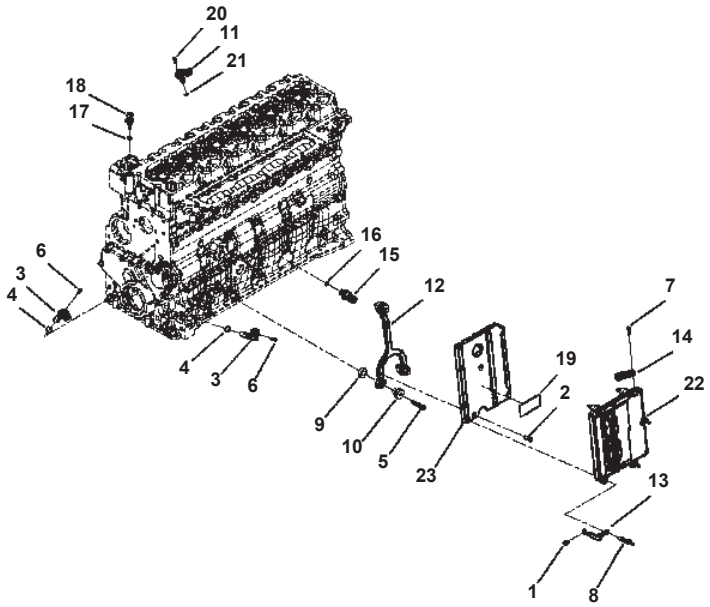

A6203-A2A2 ENGINE CONTROL MODULE

Item	Part No.	Description	Qty	Options
1	6216-74-6180	BOLT (M8-1.25x12)	1	SN:30910419--
2	6754-81-9150	BOLT	3	SN:30910419--
	6754-81-9200	SENSOR, POSITION	2	SN:30910419--
3	(NSS)	· SENSOR, POSITION	1	SN:30910419--
4	6261-81-2920	· SEAL, O-RING	1	SN:30910419--
5	6735-61-2120	BOLT (M8-1.25x45)	3	SN:30910419--
6	6216-84-9220	BOLT (M6-1.00x16)	2	SN:30910419--
7	6734-71-5520	BOLT (M5-0.80x20)	1	SN:30910419--
8	6754-81-9160	BOLT	5	SN:30910419--
9	6754-81-9110	ISOLATOR, VIBRATION	3	SN:30910419--
10	6754-81-9130	ISOLATOR, VIBRATION	3	SN:30910419--
11	6754-81-9180	BOLT	1	SN:30910419--
12	6754-81-9120	BRACKET, ETR CNT MODULE	1	SN:30910419--
13	6754-81-9170	WIRE, GROUND	1	SN:30910419--
14	6261-81-1900	SENSOR, PRESSURE	1	SN:30910419--
	6744-81-4010	SWITCH, PRESSURE	1	SN:30910419--
15	6744-81-4020	· SWITCH, PRESSURE	1	SN:30910419--
16	6216-84-9740	· SEAL, O-RING	1	SN:30910419--
	6261-81-6901	SENSOR, TEMPERATURE	1	SN:36019515--
	6261-81-6900	SENSOR, TEMPERATURE	1	SN:30910419--36019514
17	6216-84-9740	· SEAL, O-RING	1	SN:30910419--
18	6261-81-6910	· SENSOR, TEMPERATURE	1	SN:30910419--36019514
19	6754-82-2110	DATAPLATE	1	SN:30910419--
	6754-81-2701	SENSOR, PRESSURE TEMPERATURE	1	SN:30910419--
20	(NSS)	· SENSOR, PRESSURE TEMPERATURE	1	SN:30910419--
21	6754-81-2710	· SEAL, O-RING	1	SN:30910419--
22	12Y-01-12641	MODULE, ELECTRONIC CONTROL	1	SN:36161345--
	☒12Y-01-12640	MODULE, ELECTRONIC CONTROL	1	SN:30910419--36161344
23	6754-81-9140	SUPPORT, ETR CONTROL MODULE	1	SN:30910419--

WAR957GA

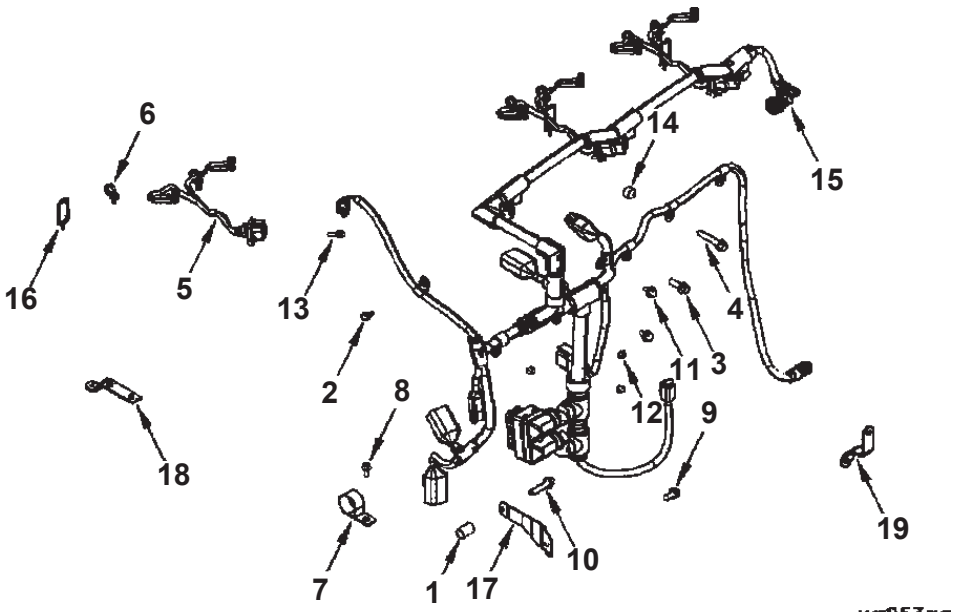

D51EX/PX-22 S/N B10001-UP

A6203-A2A3 WIRING HARNESS

Item	Part No.	Description	Qty	Options
1	6745-81-9660	SPACER, MOUNTING	1	SN:30910419--
2	6731-61-1370	SCREW	1	SN:30910419--
3	6754-81-9390	SCREW	1	SN:30910419--
4	6216-74-6180	SCREW	2	SN:30910419--
5	6754-81-9210	WIRING HARNESS	3	SN:30910419--
6	6754-81-9230	CLIP	6	SN:30910419--
7	6754-82-9410	CLIP	1	SN:30910419--
8	6733-71-5680	SCREW	1	SN:30910419--
9	6736-81-5110	SCREW	2	SN:30910419--
10	6732-21-3120	SCREW	2	SN:30910419--
11	6732-61-6140	SCREW	1	SN:30910419--
12	01584-00605	NUT	3	SN:30910419--
13	6732-21-4180	SCREW	3	SN:30910419--
14	6754-81-9330	SPACER	1	SN:30910419--
15	6754-81-9310	WIRING HARNESS, MODULE	1	SN:30910419--
16	6754-81-9220	CLIP	3	SN:30910419--
17	6754-81-9340	BRACER	2	SN:30910419--
18	6754-81-9280	BRACER	1	SN:30910419--
19	6754-81-9270	BRACER	1	SN:30910419--

Ref. A6203-A2A3 Page A-103A

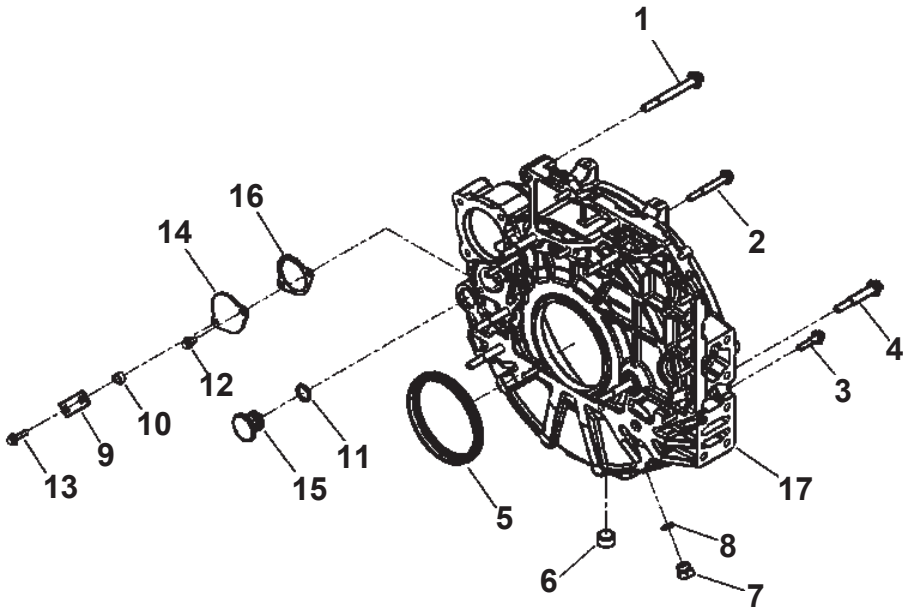

A8106-A2A9 FLYWHEEL HOUSING

Item	Part No.	Description	Qty	Options
1	6754-21-4210	BOLT	2	SN:30910419--
2	6731-21-6220	BOLT (M10-1.50x80)	2	SN:30910419--
3	6742-01-5504	BOLT (M10-1.50x40)	10	SN:30910419--
4	6736-21-5350	BOLT (M12-1.75x80)	6	SN:30910419--
5	6731-22-1310	SEAL, OIL	1	SN:30910419--
	6754-22-4110	HOUSING, FLYWHEEL	1	SN:30910419--
6	6732-11-1920	· PLUG, PIPE	1	SN:30910419--
	6735-21-4150	· PLUG, THREADED	1	SN:30910419--
7	(NSS)	· · PLUG, THREADED	1	SN:30910419--
8	6735-21-4160	· · SEAL, O-RING	1	SN:30910419--
9	6738-22-5110	· BRACE, TUBE	1	SN:30910419--
10	6754-22-5610	· SPACER, MOUNTING	1	SN:30910419--
11	6732-21-4161	· SEAL, O-RING	1	SN:30910419--
12	6732-21-3120	· BOLT (M8-1.25x16)	1	SN:30910419--
13	6732-21-6630	· BOLT (M8-1.25x30)	1	SN:30910419--
14	6732-21-4130	· PLATE, COVER	1	SN:30910419--
15	6732-21-4150	· PLUG, O-RING	1	SN:30910419--
16	6742-01-5158	· GASKET, COVER PLATE	1	SN:30910419--
17	6754-21-4120	· HOUSING, FLYWHEEL	1	SN:30910419--
		SERVICE PARTS		
	6735-K2-3010	KIT, CRANKSHAFT SEAL	1	SN:30910419--
	(NSS)	· TOOL, SEAL INSTALLATION	1	SN:30910419--
5	6731-22-1310	· SEAL, OIL	1	SN:30910419--
	(NSS)	· TOOL, SEAL INSTALLATION	1	SN:30910419--
	(NSS)	· TOOL, SEAL INSTALLATION	1	SN:30910419--

VEPB1106

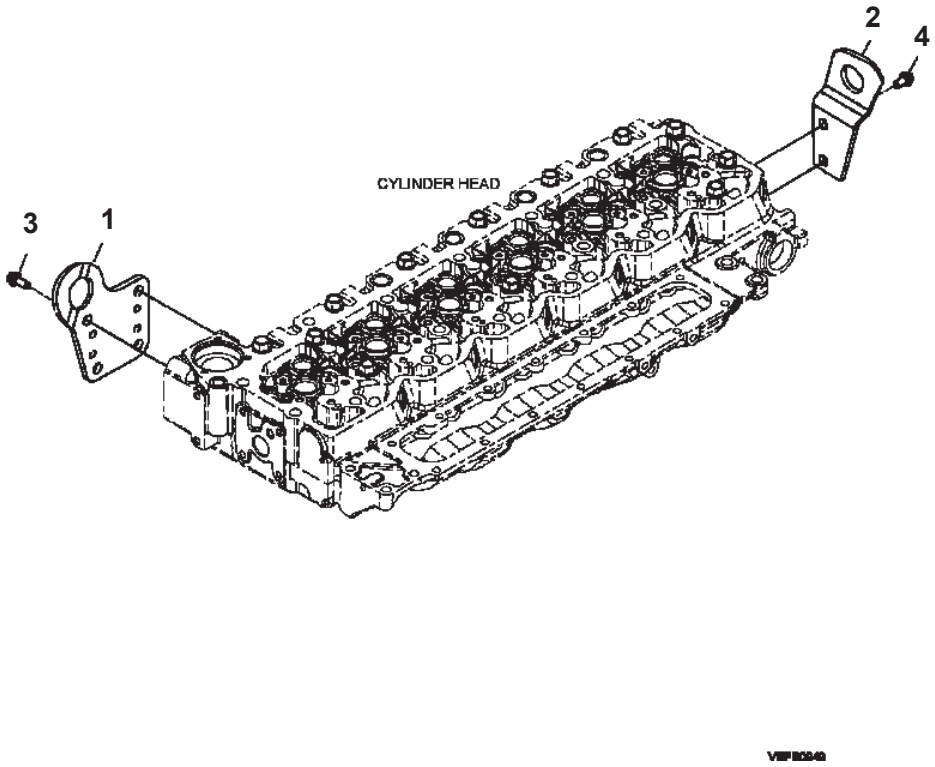

D51EX/PX-22 S/N B10001-UP

A8109-A2A4 ENGINE LIFTING BRACKET

Item	Part No.	Description	Qty	Options
1	6754-11-1710	BRACKET, FRONT	1	SN:30910419--
2	6754-11-1940	BRACKET, REAR	1	SN:30910419--
3	6735-71-3220	BOLT (M10-1.50x25)	4	SN:30910419--
4	6732-61-3140	BOLT (M10-1.50x20)	2	SN:30910419--

Ref. A8109-A2A4 Page A-109

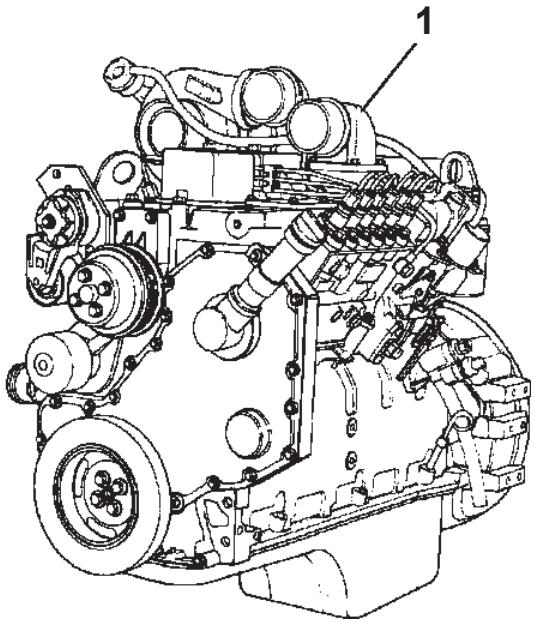

A9101-A2C0 ENGINE ASSEMBLY

Item	Part No.	Description	Qty	Wt.
1	12Y-01-11202	ENGINE, SERVICE F1 - WHEN ORDERING AN ENGINE, GIVE COMPLETE SERIAL NUMBER (INCLUDING LETTERS AND NUMERALS) SHOWN ON THE ENGINE TO BE REPLACED. F2 - THE SERVICE ENGINE IS LESS: EXHAUST CON NECTION, COOLANT TEMPERATURE SENSOR, OIL LEVEL SENSOR, OIL PRESSURE SWITCH, ALTER NATOR, ALTERNATOR MOUNTING (INCLUDING: BRACE, PULLEY, SUPPORT, PULLEY RETAINER & MOUNTING SPACER) AND STARTER.	1	F1, F2

ENGINE RELATED PARTS

CVPB00025

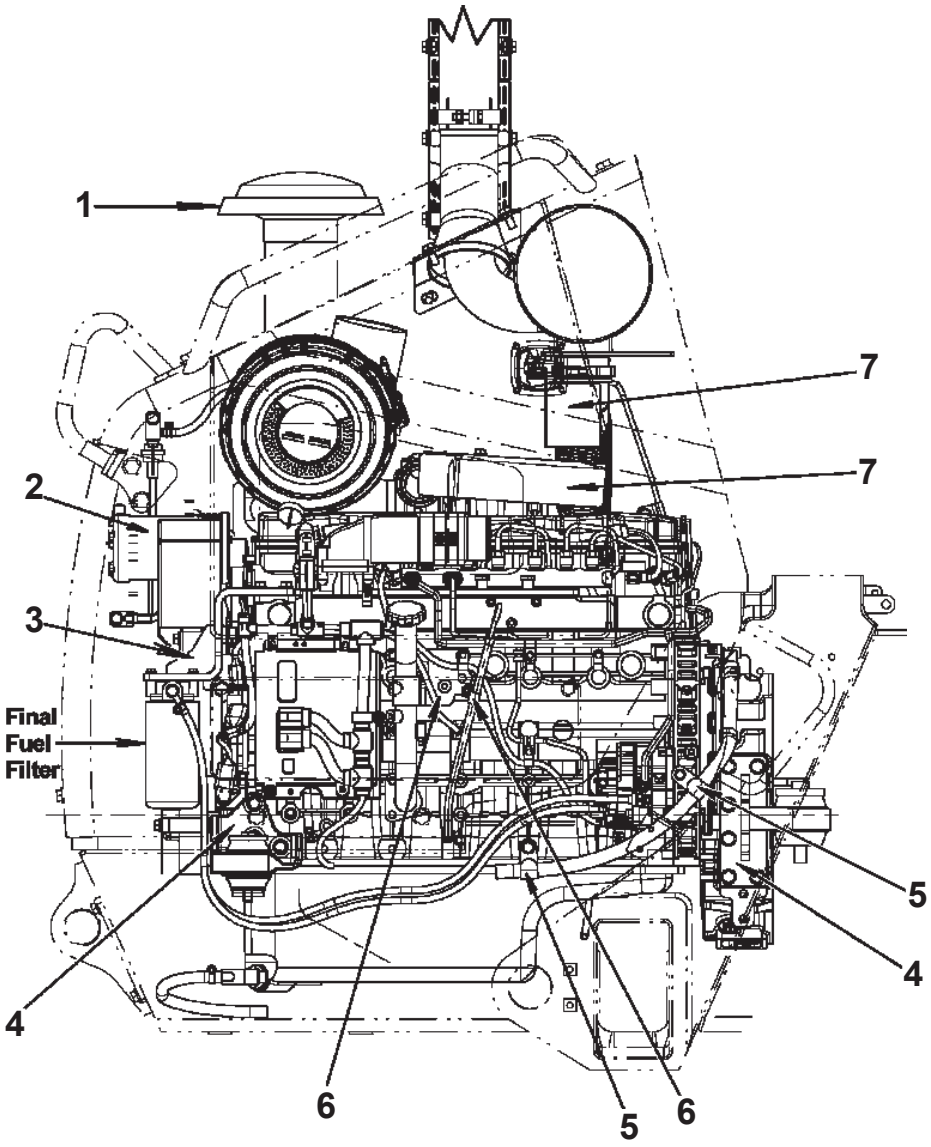

D51EX/PX-22 S/N B10001-UP

B0100-01A0 ENGINE ACCESSORIES (1/3)

Item	Description	Options
1	RAIN CAP (SEE FIG. B0320-01A0)	SN:B10001--
	OR	
1	PRE-CLEANER (SEE FIG. B0310-01A0)	SN:B10001--
	OR	
1	PRE-CLEANER (SEE FIG. B0310-01A1)	SN:B10001--
2	COMPRESSOR, A/C (SEE FIG. K0700-01A1)	SN:B10001--
3	FUEL FILTER MOUNT (SEE FIG. B0700-01A0)	SN:B10001--
4	ENGINE MOUNTS (SEE FIG. B0600-01A0)	SN:B10001--
5	CRANKCASE BREATHER (SEE FIG. B0600-01A0)	SN:B10001--
6	OIL FILLER BRACKET (SEE FIG. B0710-01A0)	SN:B10001--
7	HEAT SHIELDS (SEE FIG. B0720-01A0)	SN:B10001--

Ref. B0100-01A0 Page B-001

CVPB00026

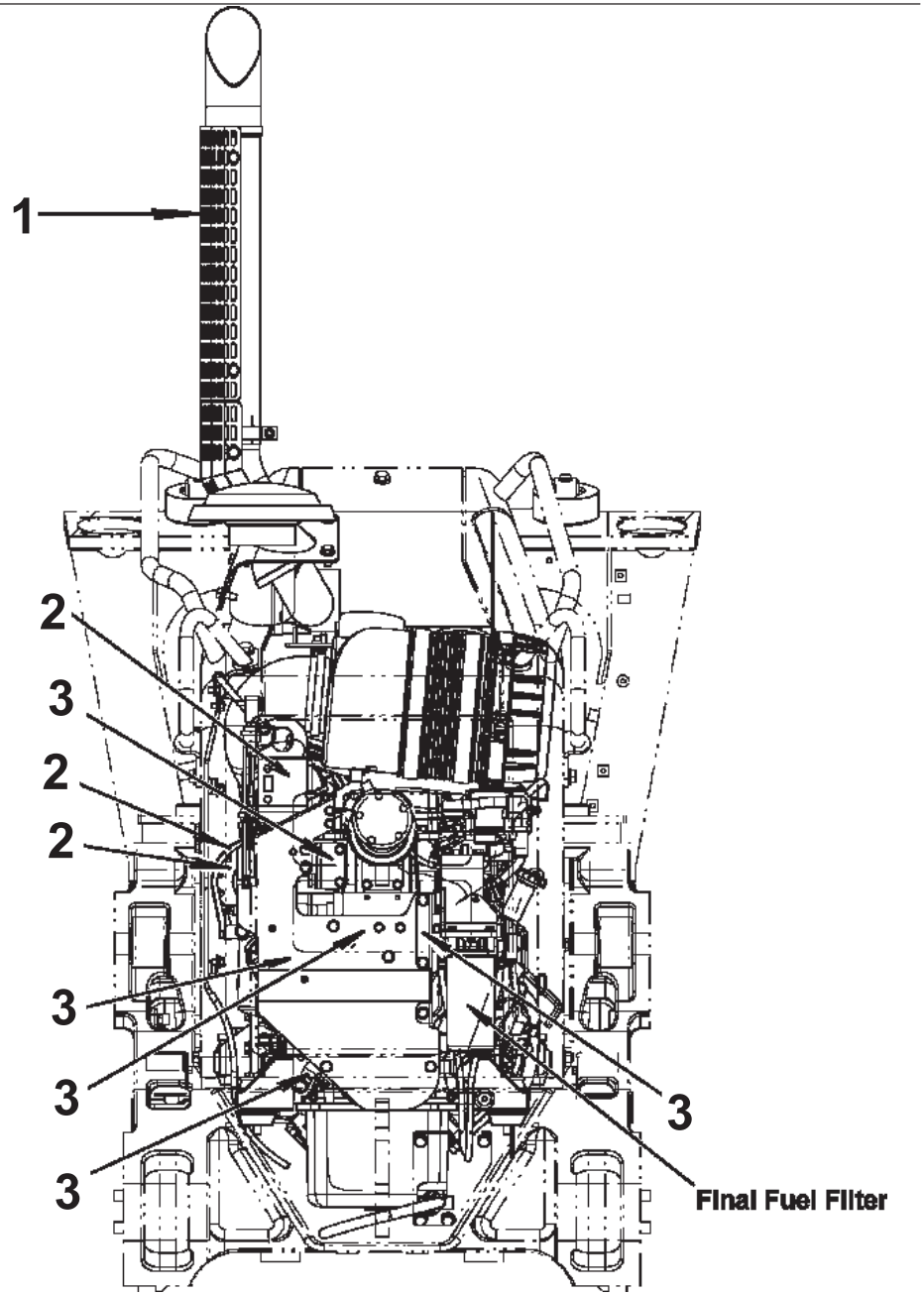

D51EX/PX-22 S/N B10001-UP

B0100-01A1 ENGINE ACCESSORIES (2/3)

Item	Description	Options
1	EXHAUST STACK (SEE FIG. B0420-01A0)	SN:B10001--
	OR	
1	EXHAUST STACK (SEE FIG. B0420-01A1)	SN:B10001--
2	ALTERNATOR GROUP (SEE FIG. B0800-01A0)	SN:B10001--
3	BELT GUARD GROUP (SEE FIG. B0720-01A0)	SN:B10001--

Ref. B0100-01A1 Page B-003

CVPB00027

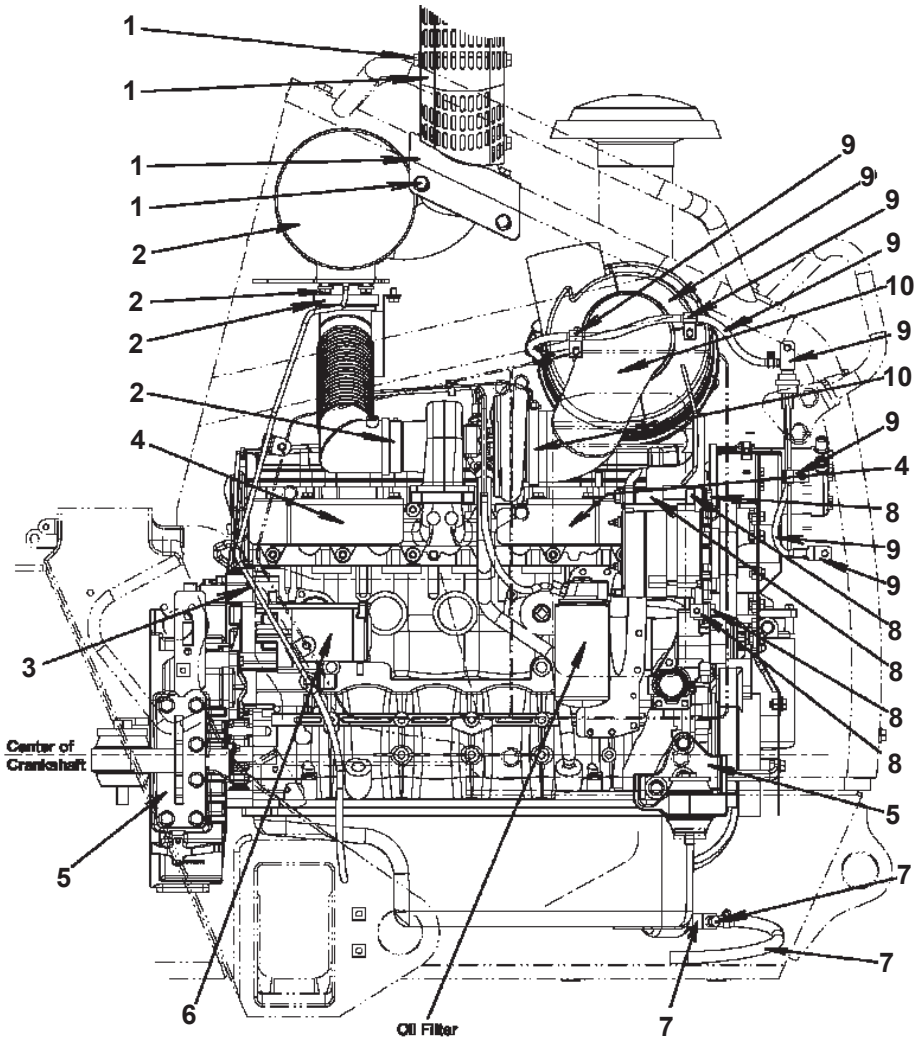

D51EX/PX-22 S/N B10001-UP

B0100-01A2 ENGINE ACCESSORIES (3/3)

Item	Description	Options
1	EXHAUST COVER (SEE FIG. B0430-01A0)	SN:B10001--
2	MUFFLER (SEE FIG. B0410-01A0)	SN:B10001--
3	MUFFLER DRAIN (SEE FIG. B0440-01A0)	SN:B10001--
4	HEAT SHIELDS (SEE FIG. B0720-01A1)	SN:B10001--
5	ENGINE MOUNTS (SEE FIG. B0600-01A2)	SN:B10001--
6	STARTER MOTOR (SEE FIG. A6112-A2A9)	SN:B10001--
7	OIL PAN DRAIN (SEE FIG. B0500-01A0)	SN:B10001--
8	ALTERNATOR GROUP (SEE FIG. B0800-01A0)	SN:B10001--
9	AIR CLEANER (SEE FIG. B0300-01A1)	SN:B10001--
10	AIR CLEANER HOSE (SEE FIG. B0300-01A2)	SN:B10001--

Ref. B0100-01A2 Page B-005

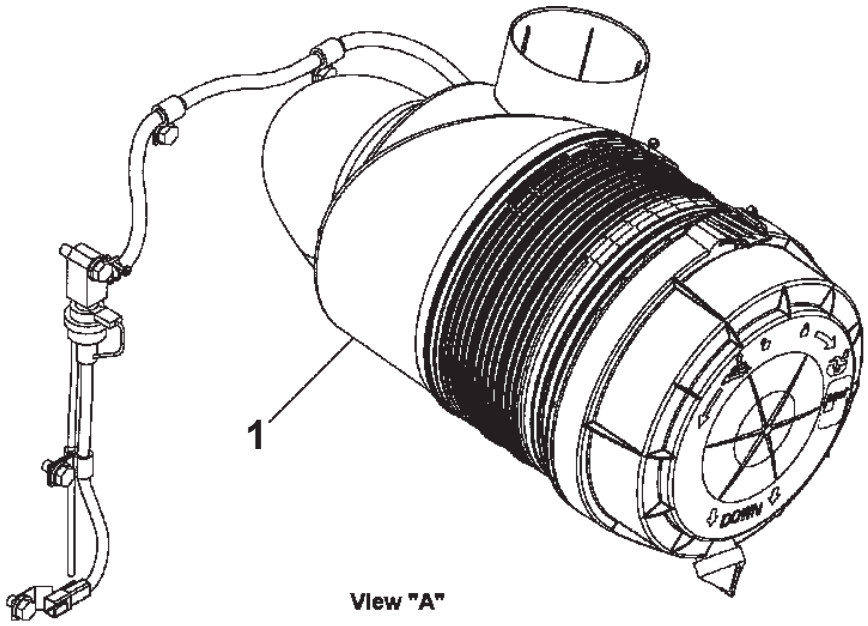

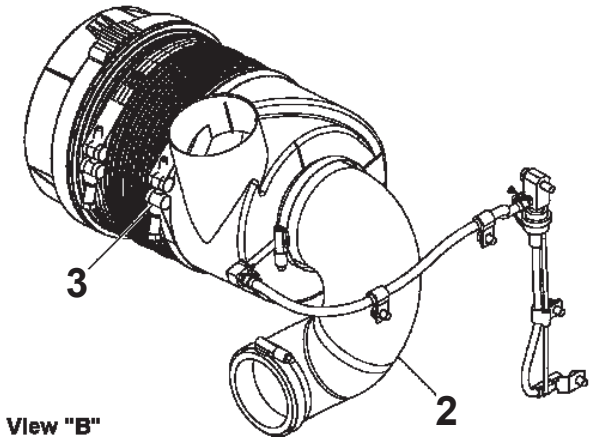

B0300-01A0 AIR CLEANER UNIT

Item	Description	Options
1	AIR CLEANER (SEE FIG. B0300-01A1)	SN:B10001--
2	HOSE GROUP (SEE FIG. B0300-01A2)	SN:B10001--
3	BAND GROUP (SEE FIG. B0300-01A3)	SN:B10001--

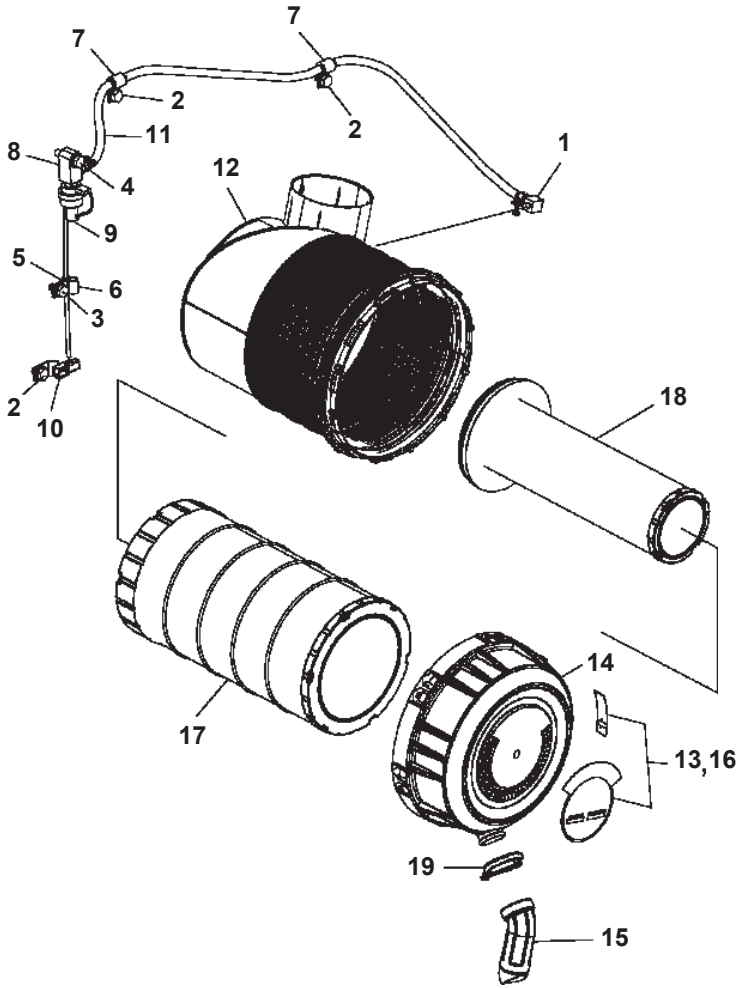

B0300-01A1 AIR CLEANER GROUP

Item	Part No.	Description	Qty	Options
1	124-01-61130	ELBOW	1	SN:B10001--
2	01010-81016	BOLT	3	SN:B10001--
	01643-31032	WASHER	3	SN:B10001--
3	01010-81020	BOLT	1	SN:B10001--
	01643-31032	WASHER	1	SN:B10001--
4	01010-81045	BOLT	1	SN:B10001--
	01643-31032	WASHER	1	SN:B10001--
5	04434-50610	CLIP	1	SN:B10001--
6	04434-51010	CLIP	1	SN:B10001--
7	04434-51410	CLIP	2	SN:B10001--
8	6217-11-4590	BLOCK	1	SN:B10001--
9	7861-93-1422	SENSOR, SWITCH (AIR CLEANER)	1	SN:B12893--
	□7861-93-1421	SENSOR, SWITCH (AIR CLEANER)	1	SN:B11779--B12892
	□7861-93-1420	SENSOR, SWITCH (AIR CLEANER)	1	SN:B10001--B11778
10	08193-20010	CLIP	1	SN:B10001--
11	08671-80080	HOSE	1	SN:B10001--
	12Y-02-11174	AIR CLEANER ASSEMBLY	1	SN:B12102--
	□12Y-02-11173	AIR CLEANER ASSEMBLY	1	SN:B10001--B12101
12	12Y-02-11321	· BODY ASSEMBLY KIT	1	SN:B12102--
	□12Y-02-11320	· BODY ASSEMBLY KIT	1	SN:B10001--B12101
13	12Y-02-11351	· · PLATE	1	SN:B11666--
	□12Y-02-11350	· · PLATE	1	SN:B10001--B11665
	12Y-02-11331	· COVER ASSEMBLY KIT	1	SN:B12102--
	□12Y-02-11330	· COVER ASSEMBLY KIT	1	SN:B10001--B12101
14	☆	· · COVER	1	SN:B10001--
15	12Y-02-11341	· · VALVE, DUST EJECTION	1	SN:B10001--
16	12Y-02-11351	· · PLATE	1	SN:B11666--
	□12Y-02-11350	· · PLATE	1	SN:B10001--B11665
	12Y-02-11360	· ELEMENT ASSEMBLY KIT	1	SN:B10001--
17	12Y-02-11180	· · ELEMENT, PRIMARY	1	SN:B10001--
18	12Y-02-11190	· · ELEMENT, SAFETY	1	SN:B10001--
19	07281-00489	CLIP	1	SN:B11541--

CVPB00003

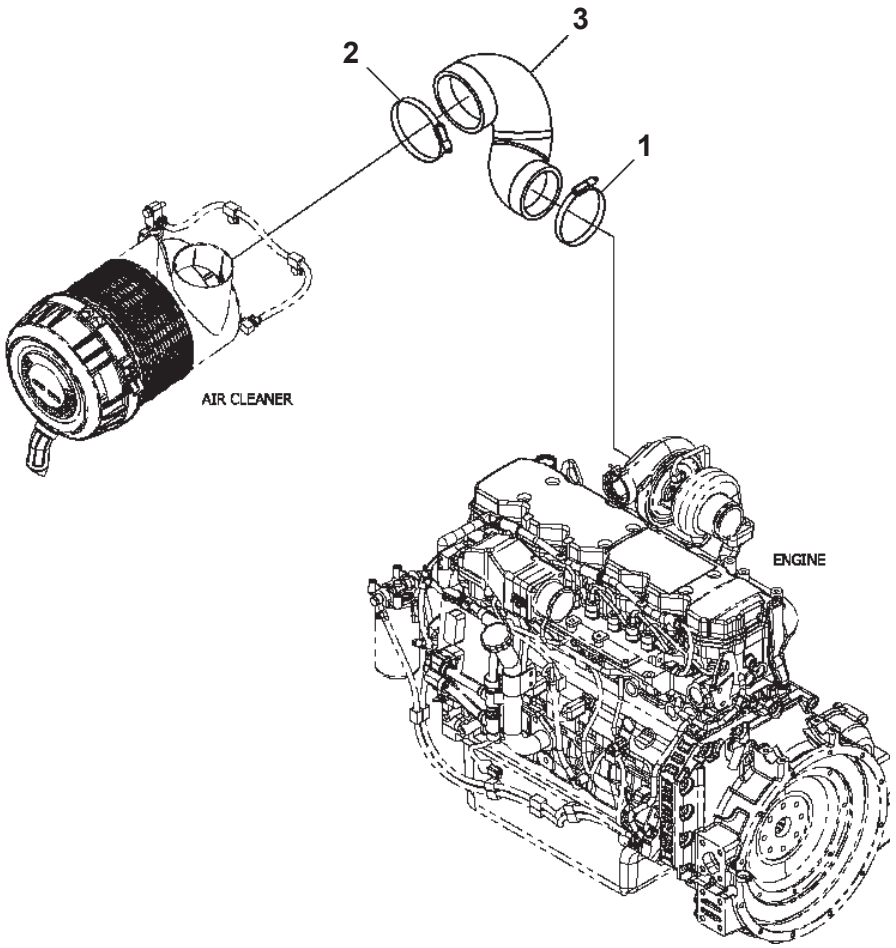

D51EX/PX-22 S/N B10001-UP

B0300-01A2 AIR CLEANER HOSE GROUP

Item	Part No.	Description	Qty	Options
1	07299-00120	CLAMP	1	SN:B10001--
2	07299-00145	CLAMP	1	SN:B10001--
3	12Y-02-11131	HOSE, AIR CLEANER	1	SN:B10001--

Ref. B0300-01A2 Page B-011

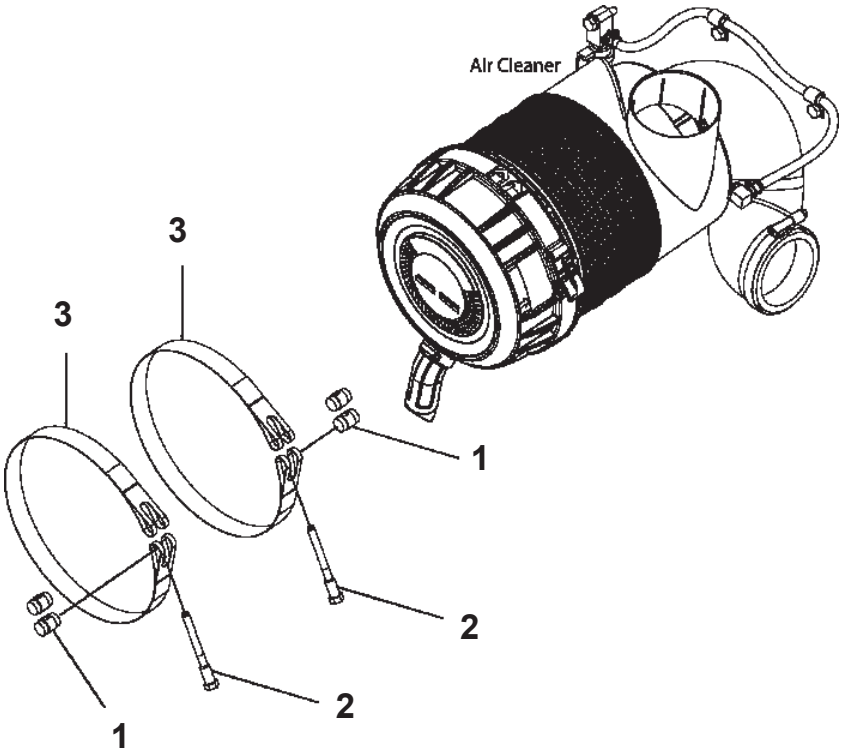

D51EX/PX-22 S/N B10001-UP

B0300-01A3 AIR CLEANER BAND GROUP

Item	Part No.	Description	Qty	Options
1	6643-11-4620	PIN	2	SN:B10001--B10477
2	6643-11-4641	BOLT	2	SN:B10001--
3	12Y-02-11311	BAND, AIR CLEANER	2	SN:B10478--
	□12Y-02-11310	BAND, AIR CLEANER	2	SN:B10001--B10477

Ref. B0300-01A3 Page B-013

CVPB00005

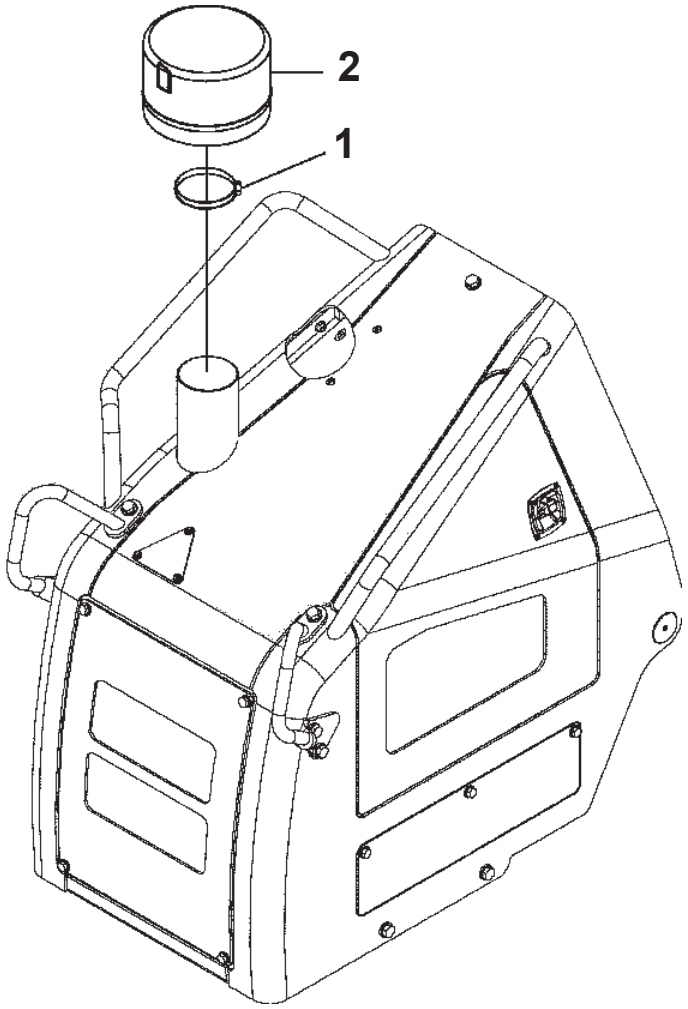

D51EX/PX-22 S/N B10001-UP

B0310-01A0 PRE-CLEANER ASSEMBLY(EJECTOR TYPE)

Item	Part No.	Description	Qty	Options
1	07289-00130	CLAMP	1	SN:B10001--B10090
2	12Y-02-11293	PRE-CLEANER ASSEMBLY	1	SN:B10366--
	□12Y-02-11292	PRE-CLEANER ASSEMBLY	1	SN:B10091--B10365
	□12Y-02-11291	PRE-CLEANER ASSEMBLY	1	SN:B10001--B10090
	12Y-02-11370	・ CLAMP	1	SN:B10366--

Ref. B0310-01A0 Page B-015

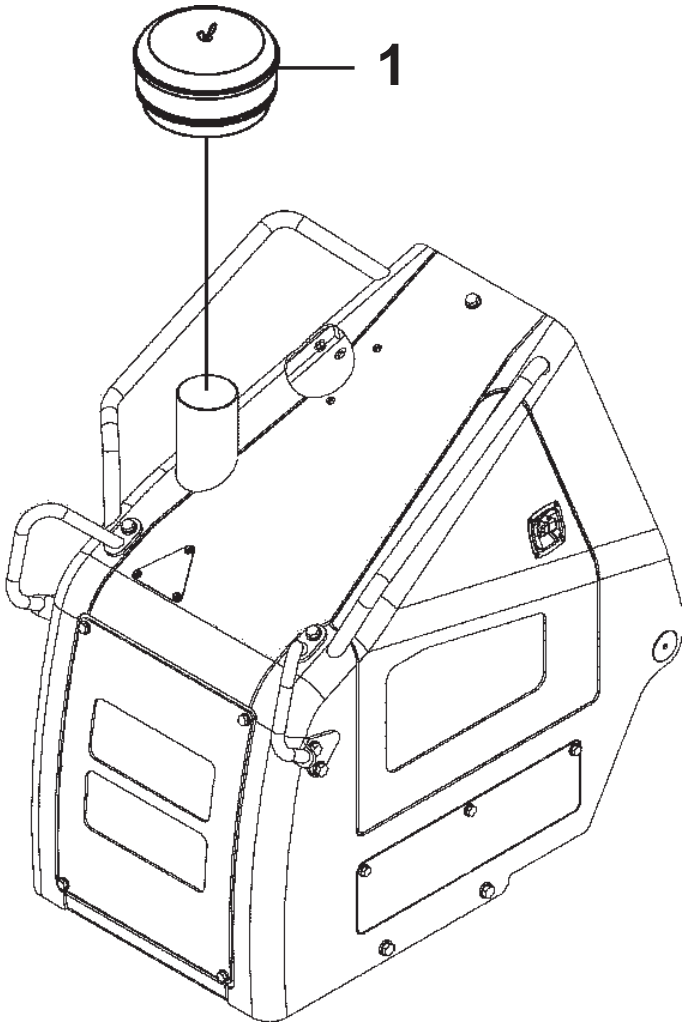

B0310-01A1 PRE-CLEANER ASSEMBLY (BOWL TYPE)

Item	Part No.	Description	Qty	Options
1	6685-81-7503	PRE-CLEANER ASSEMBLY	1	SN:B10001--

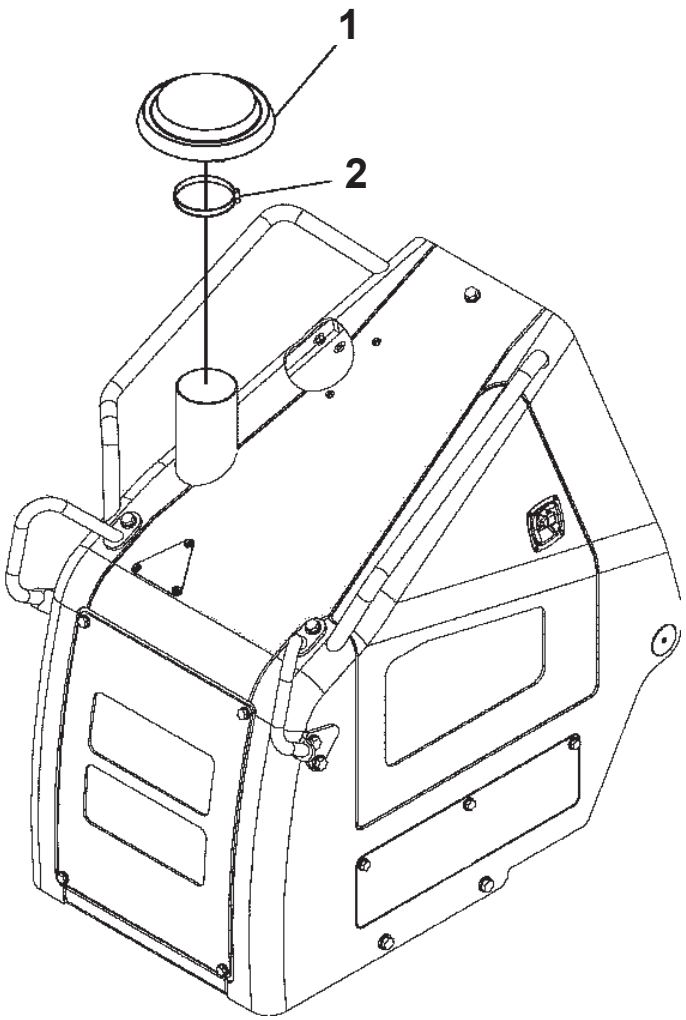

B0320-01A0 RAIN CAP ASSEMBLY

Item	Part No.	Description	Qty	Options
1	600-181-3860	CAP ASSEMBLY, RAIN	1	SN:B10001--
2	(NSS)	CLAMP	1	SN:B10001--

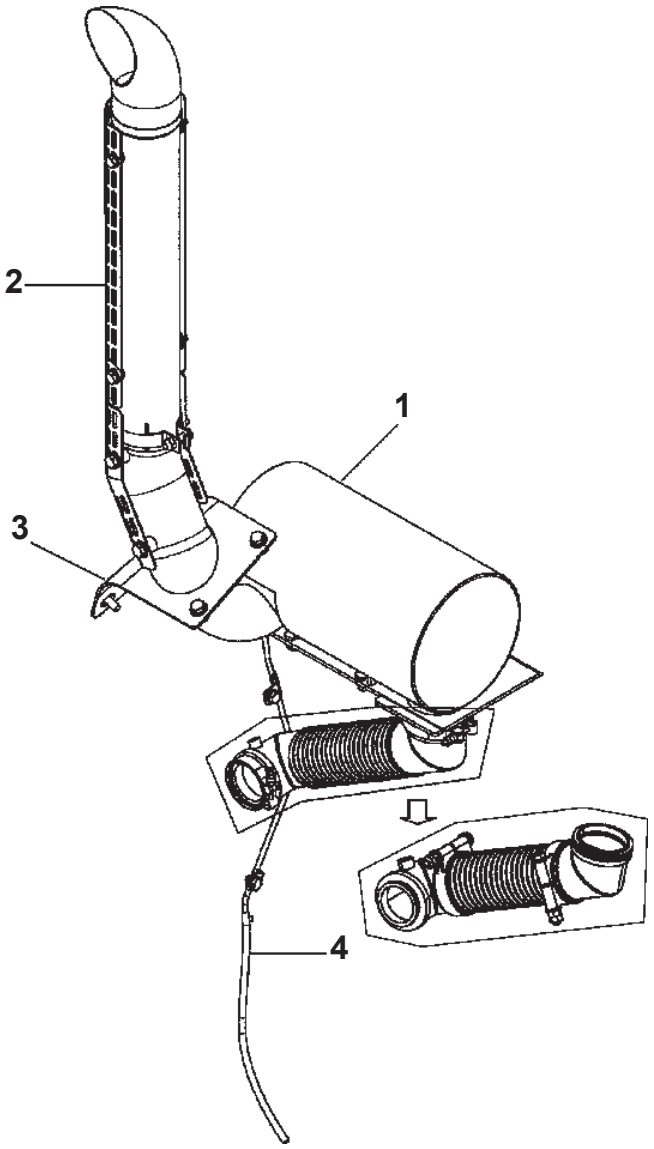

B0400-01A0 EXHAUST AND MUFFLER GROUP

Item	Description	Options
1	MUFFLER GROUP (SEE FIG. B0410-01A0)	SN:B10001--
2	EXHAUST GROUP (SEE FIG. B0420-01A0)	SN:B10001--
3	EXHAUST COVER (SEE FIG. B0430-01A0)	SN:B10001--
4	MUFFLER DRAIN (SEE FIG. B0440-01A0)	SN:B10001--

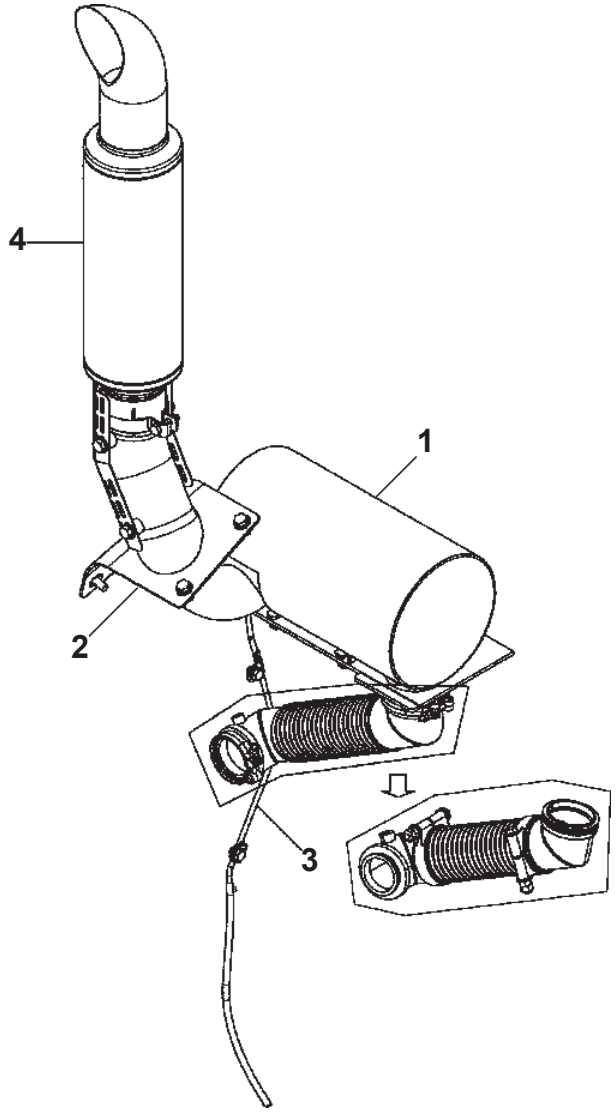

B0400-01A1 EXHAUST AND MUFFLER GROUP (EUROPEAN SPECIFICATIONS)

Item	Description	Options
1	MUFFLER GROUP (SEE FIG. B0410-01A0)	SN:B10001--
2	EXHAUST COVER (SEE FIG. B0430-01A0)	SN:B10001--
3	MUFFLER DRAIN (SEE FIG. B0440-01A0)	SN:B10001--
4	EXHAUST GROUP (SEE FIG. B0420-01A1)	SN:B10001--

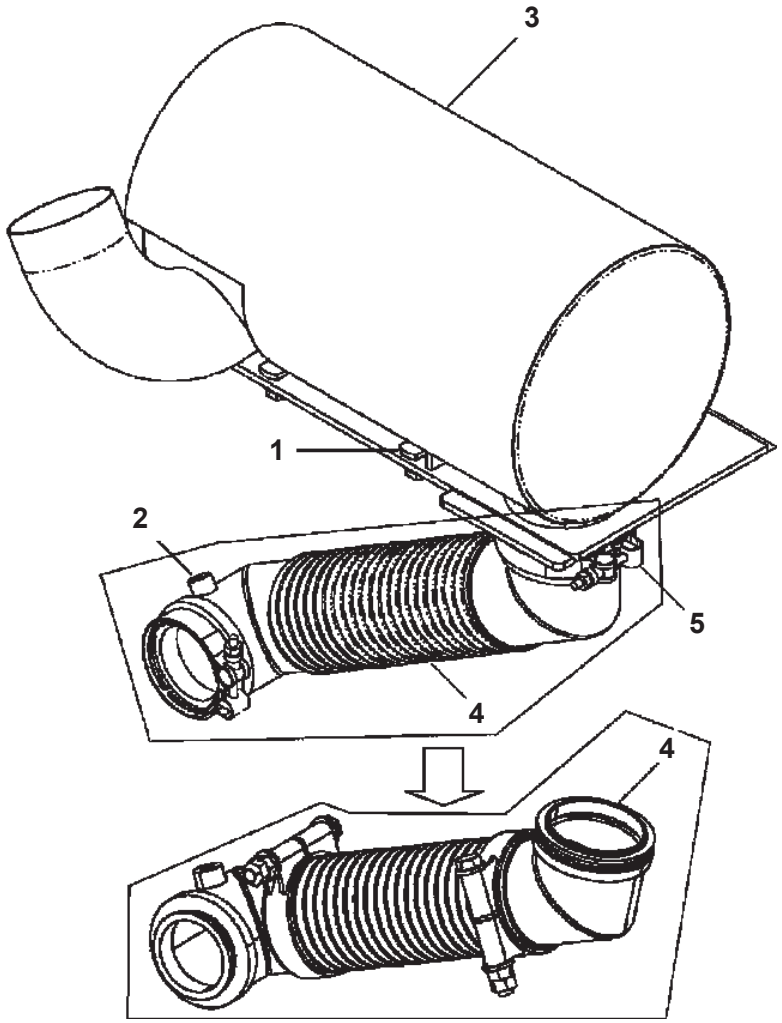

B0410-01A0 MUFFLER GROUP (#B10001-B13839)

Item	Part No.	Description	Qty	Options
1	01010-81230	BOLT	4	SN:B10001--@
2	124-54-26540	WASHER	4	SN:B10006--@
	□01643-31232	WASHER	4	SN:B10001--B10005
3	12Y-02-11143	MUFFLER	1	SN:B11894--@
	□12Y-02-11142	MUFFLER	1	SN:B11552--B11893
	□12Y-02-11141	MUFFLER	1	SN:B10001--B11551
4	12Y-02-11401	PIPE, EXHAUST	1	SN:B11565--B13839
	□12Y-02-11231	PIPE, EXHAUST	1	SN:B10001--B11564
5	6742-01-3620	CLAMP, EXHAUST PIPE	1	SN:B10001--@

CVPB0000B

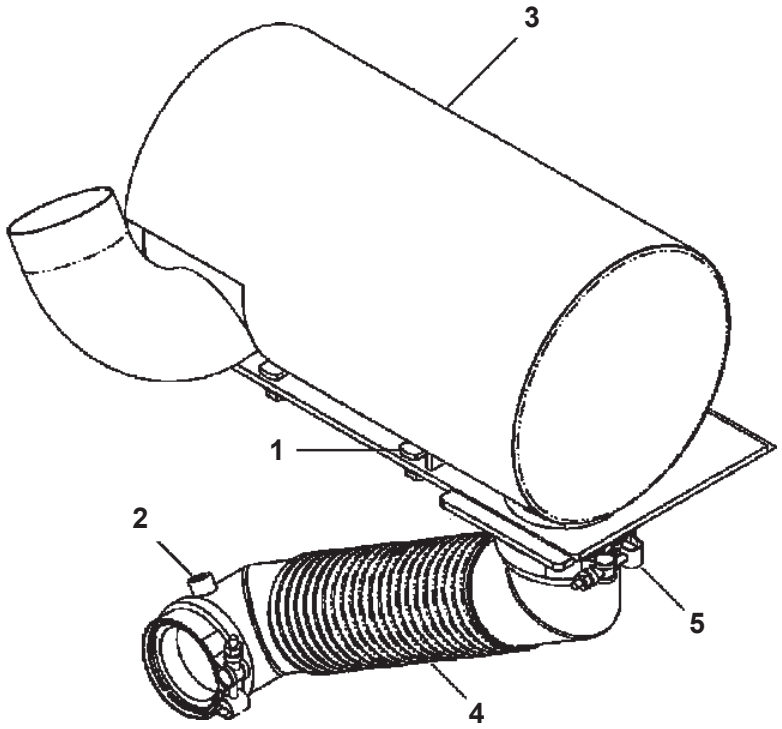

D51EX/PX-22 S/N B10001-UP

B0410-01A1 MUFFLER GROUP (#B13840-)

Item	Part No.	Description	Qty	Options
1	01010-81230	BOLT	4	SN:B10001--
2	124-54-26540	WASHER	4	SN:B10006--
3	12Y-02-11143	MUFFLER	1	SN:B11894--
4	12Y-02-11232	PIPE, EXHAUST	1	SN:B13840--
5	6742-01-3620	CLAMP, EXHAUST PIPE	1	SN:B10001--

Ref. B0410-01A1 Page B-026

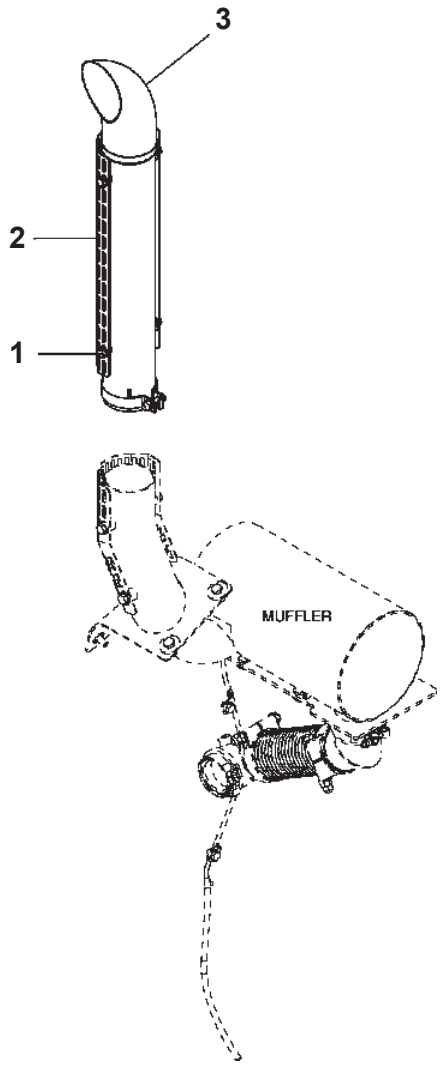

B0420-01A0 EXHAUST STACK

Item	Part No.	Description	Qty	Options
1	01010-D1020	BOLT	4	SN:B10001--
	01643-71032	WASHER	4	SN:B10001--
2	12Y-01-11790	GUARD, EXHAUST STACK	1	SN:B10001--
3	12Y-01-12370	PIPE, EXHAUST STACK	1	SN:B10001--

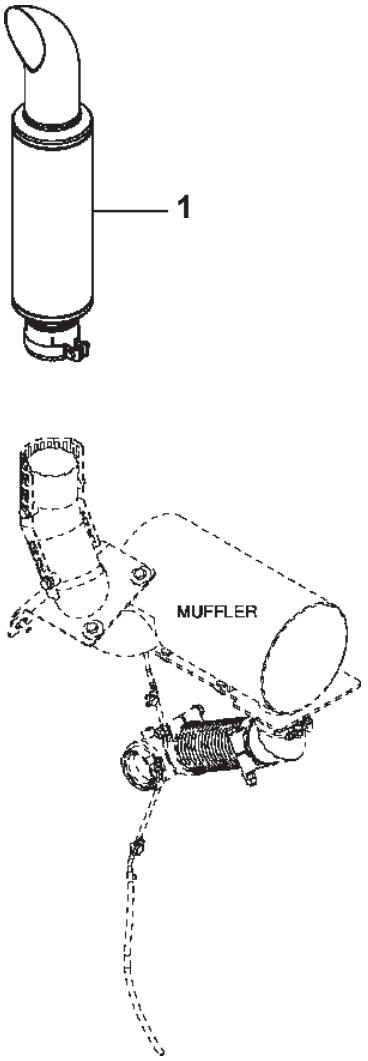

B0420-01A1 EXHAUST STACK (EUROPEAN SPECIFICATIONS)

Item	Part No.	Description	Qty	Options
1	12Y-01-11760	PIPE, EXHAUST STACK	1	SN:B10001--

CVPB00011

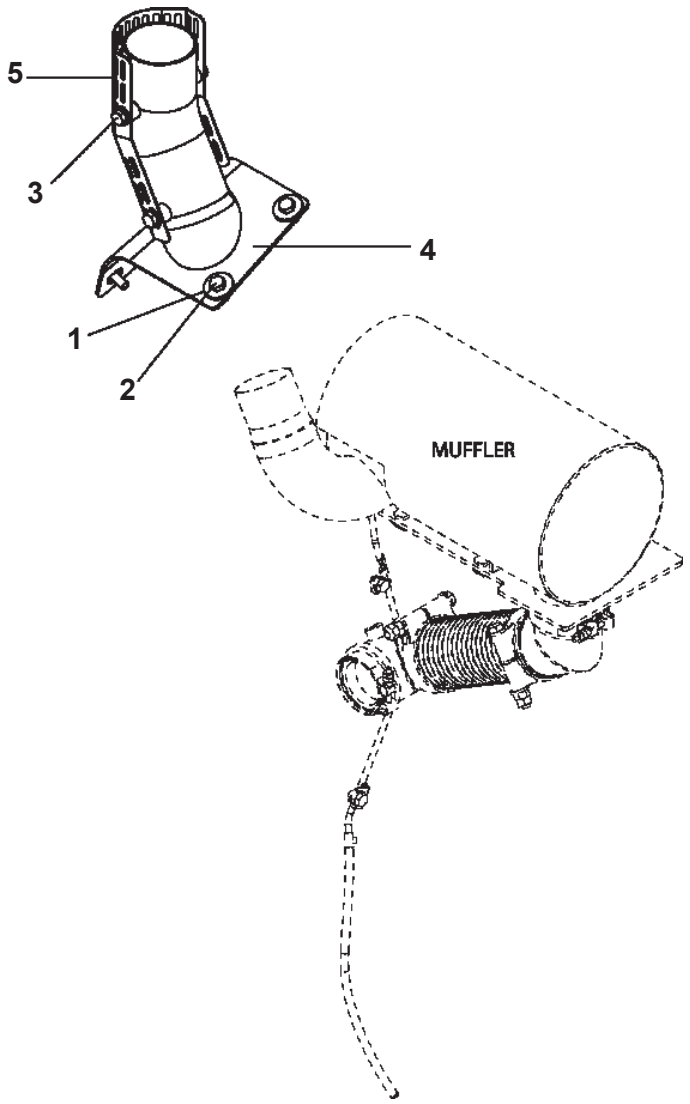

D51EX/PX-22 S/N B10001-UP

B0430-01A0 EXHAUST COVER

Item	Part No.	Description	Qty	Options
1	124-54-52480	WASHER	4	SN:B10001--
2	01010-81230	BOLT	4	SN:B13481--
	□01010-D1230	BOLT	4	SN:B10001--B13480
	01643-71232	WASHER	4	SN:B10001--
3	01010-D1220	BOLT	3	SN:B10001--
	01643-71232	WASHER	3	SN:B10001--
4	12Y-01-11771	PIPE, EXHAUST	1	SN:B10001--
5	12Y-01-11780	COVER, EXHAUST PIPE	1	SN:B10001--

Ref. B0430-01A0 Page B-031

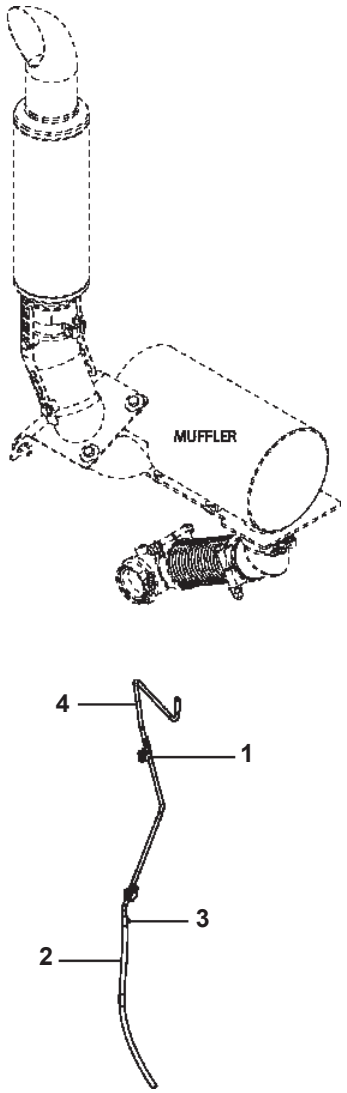

D51EX/PX-22 S/N B10001-UP

B0440-01A0 MUFFLER DRAIN

Item	Part No.	Description	Qty	Options
1	01010-81016	BOLT	2	SN:B10001--
	01643-31032	WASHER	2	SN:B10001--
2	07270-00840	TUBE, MUFFLER DRAIN	1	SN:B10001--
3	07285-00095	CLIP	1	SN:B10001--
4	12Y-01-11410	TUBE, MUFFLER DRAIN	1	SN:B10001--

Ref. B0440-01A0 Page B-033

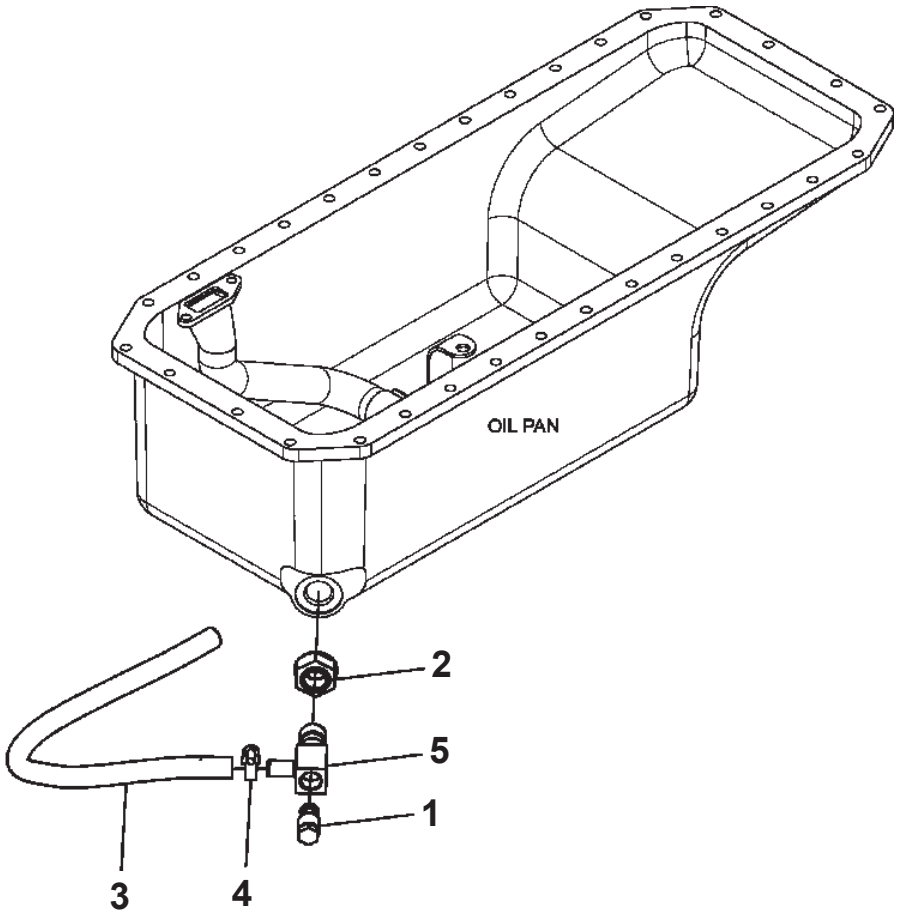

D51EX/PX-22 S/N B10001-UP

B0500-01A0 ENGINE OIL PAN DRAIN LINE

Item	Part No.	Description	Qty	Options
1	134-01-61840	PLUG	1	SN:B10001--
2	07002-22434	O-RING	1	SN:B10001--
3	07270-21550	TUBE, ENGINE OIL DRAIN	1	SN:B10001--
4	07281-00197	CLAMP, HOSE	1	SN:B10001--
5	12Y-01-12481	TEE, ENGINE OIL PAN DRAIN	1	SN:B10001--

Ref. B0500-01A0 Page B-035

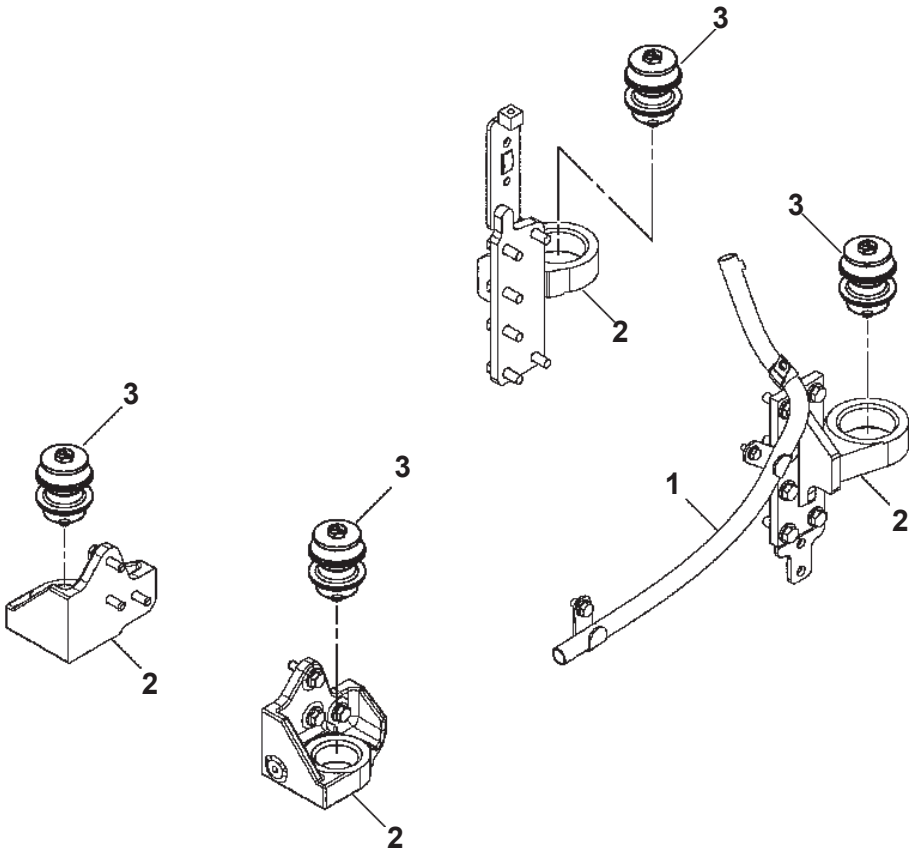

D51EX/PX-22 S/N B10001-UP

B0600-01A0 ENGINE MOUNTING BRACKETS AND CRANKCASE BREATHER MOUNT GROUP

Item	Description	Options
1	BREATHER (SEE FIG. B0600-01A1)	SN:B10001--
2	MOUNTING (SEE FIG. B0600-01A2)	SN:B10001--
3	MOUNTS (SEE FIG. B0600-01A3)	SN:B10001--

Ref. B0600-01A0 Page B-037

CVPB00017

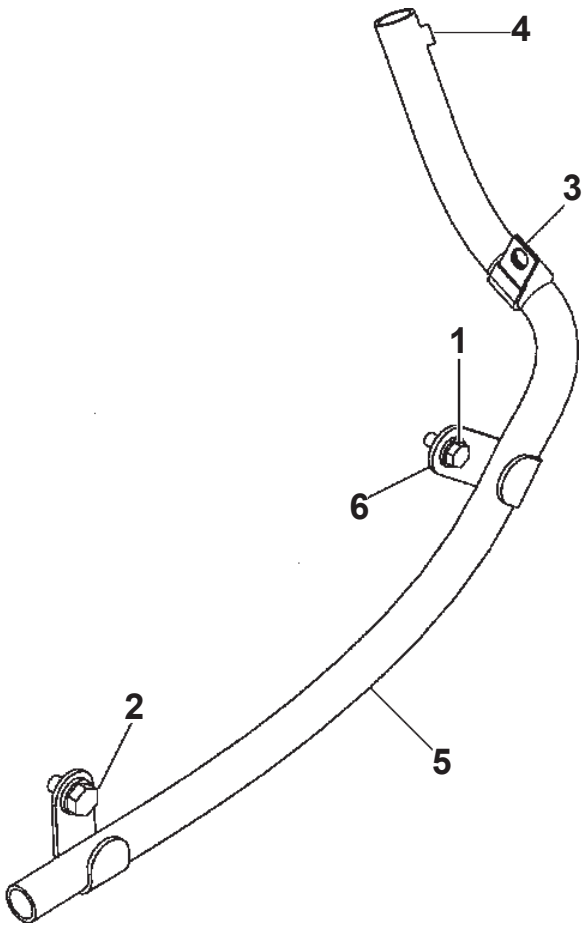

D51EX/PX-22 S/N B10001-UP

B0600-01A1 CRANKCASE BREATHER LINE

Item	Part No.	Description	Qty	Options
1	01010-80820	BOLT	1	SN:B10001--
	01643-30823	WASHER	1	SN:B10001--
2	01010-81020	BOLT	1	SN:B10001--
	01643-31032	WASHER	1	SN:B10001--
3	04434-52310	CLAMP, HOSE	1	SN:B10001--
4	07285-00220	CLIP	1	SN:B10001--
5	12Y-01-12630	HOSE, CRANKCASE BREATHER	1	SN:B10001--
6	12Y-01-12530	CLAMP, HOSE	2	SN:B10001--

Ref. B0600-01A1 Page B-039

CVPB00018

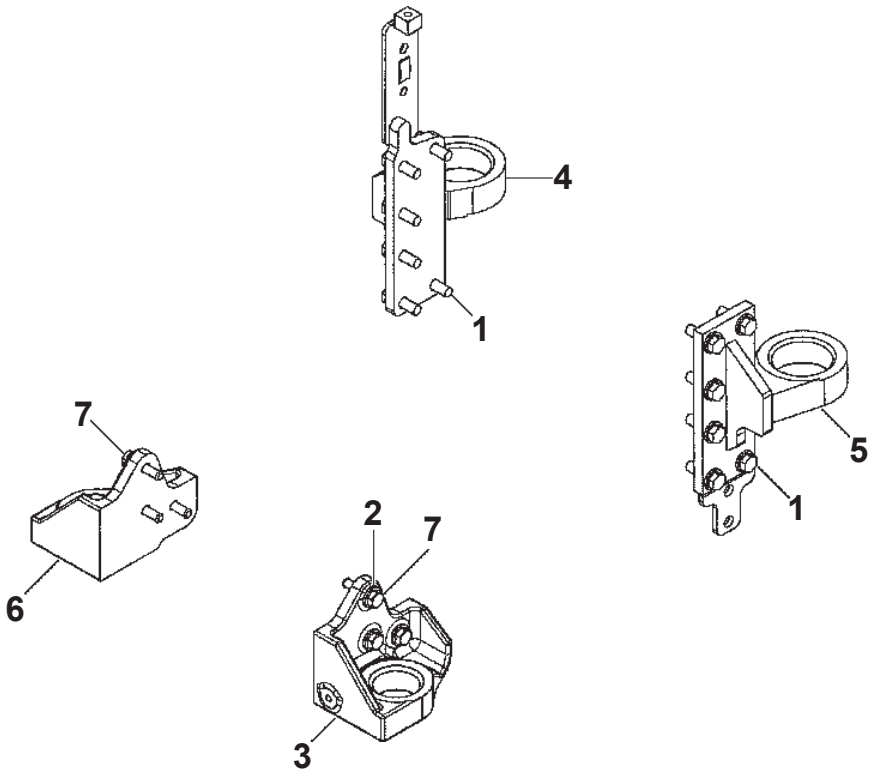

D51EX/PX-22 S/N B10001-UP

B0600-01A2 ENGINE MOUNTING BRACKETS

Item	Part No.	Description	Qty	Options
1	01010-81240	BOLT	12	SN:B10001--
	01643-30823	WASHER	12	SN:B10001--
2	01643-31232	WASHER	6	SN:B10001--
3	12Y-01-11122	BRACKET, LH FRONT	1	SN:B10001--
4	12Y-01-11581	BRACKET, RH REAR	1	SN:B10001--
5	12Y-01-11591	BRACKET, LH REAR	1	SN:B10001--
6	12Y-01-11672	BRACKET, RH FRONT	1	SN:B10001--
7	12Y-01-12430	BOLT	6	SN:B10001--

Ref. B0600-01A2 Page B-041

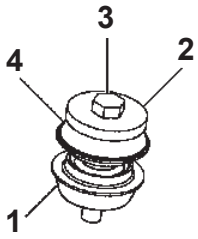

R.H. REAR

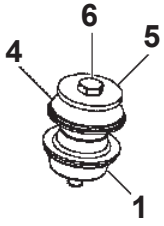

R.H. FRONT

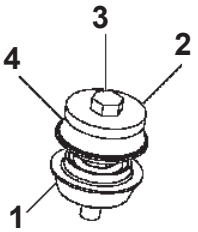

L.H. REAR

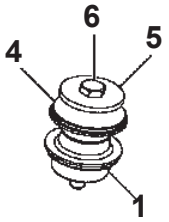

L.H. FRONT

B0600-01A3 ENGINE CUSHION MOUNTS

Item	Part No.	Description	Qty	Options
1	124-01-51450	CUSHION, BOTTOM	4	SN:B10001--
2	134-01-61461	WASHER, REAR MOUNTS	2	SN:B10001--
3	01011-82030	BOLT, REAR MOUNTS	2	SN:B10001--
4	12Y-01-11660	CUSHION, TOP	4	SN:B10001--
5	12Y-01-11950	WASHER, FRONT MOUNTS	2	SN:B10001--
6	12Y-01-12470	BOLT, FRONT MOUNTS	2	SN:B10001--

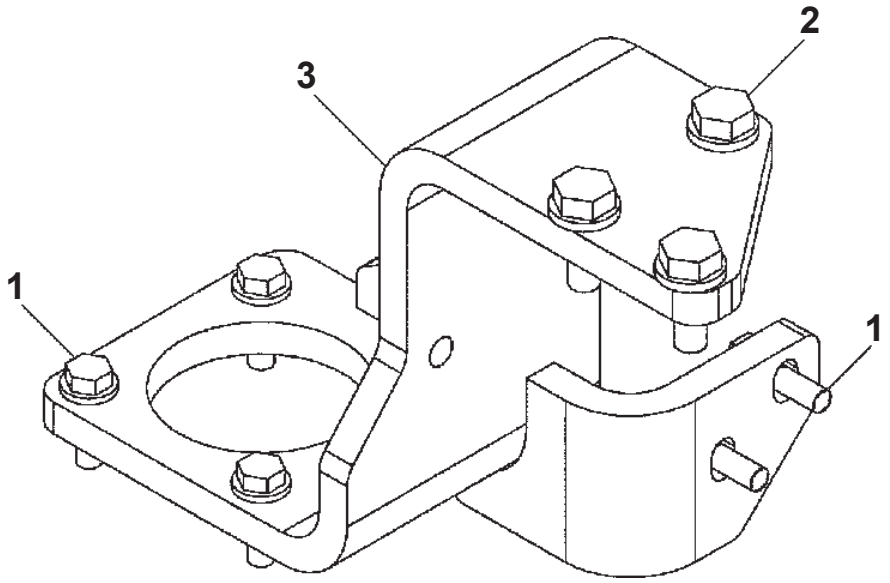

B0700-01A0 FUEL FILTER BRACKET

Item	Part No.	Description	Qty	Options
1	01010-80830	BOLT	6	SN:B10001--
	01643-30823	WASHER	6	SN:B10001--
2	01010-81030	BOLT	3	SN:B10001--
	01643-31032	WASHER	3	SN:B10001--
3	12Y-01-11723	BRACKET, FUEL FILTER	1	SN:B10001--

CVPB00021

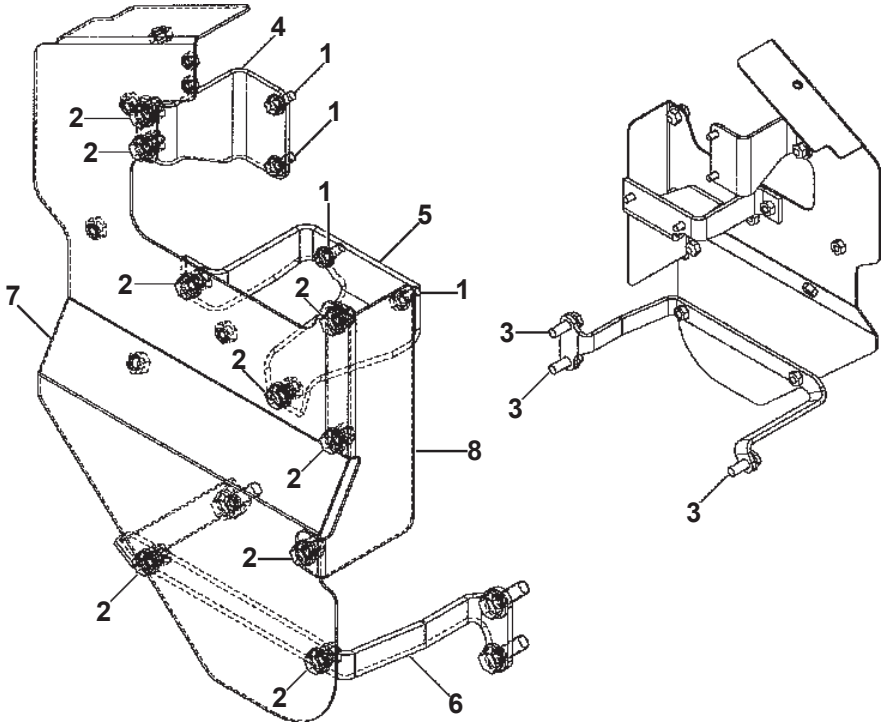

D51EX/PX-22 S/N B10001-UP

B0720-01A0 BELT GUARDS

Item	Part No.	Description	Qty	Options
1	01010-80820	BOLT	4	SN:B10001--
	01643-30823	WASHER	4	SN:B10001--
2	01010-81020	BOLT	8	SN:B10001--
	01643-31032	WASHER	8	SN:B10001--
3	01010-81235	BOLT	3	SN:B10001--
	01643-31232	WASHER	3	SN:B10001--
4	11Y-01-32260	BRACKET	1	SN:B10001--
5	11Y-01-32380	BRACKET	1	SN:B10001--
6	12Y-01-11971	BRACKET	1	SN:B10001--
7	12Y-01-12273	BRACKET	1	SN:B10001--
	12Y-01-12B22	· PLATE	1	SN:B10001--
	01580-10806	· NUT	4	SN:B10001--
8	12Y-01-12280	PLATE	1	SN:B10001--

Ref. B0720-01A0 Page B-049

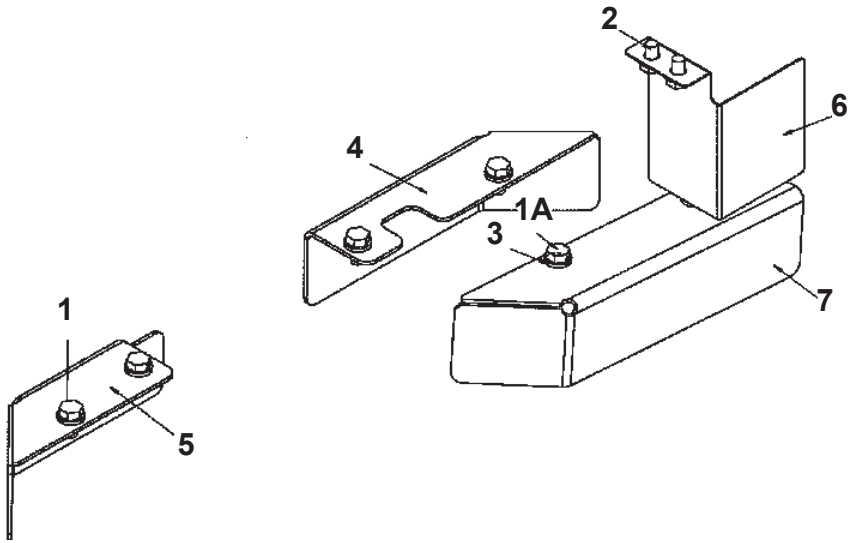

D51EX/PX-22 S/N B10001-UP

B0720-01A1 HEAT SHIELD

Item	Part No.	Description	Qty	Options
1	01010-E1020	BOLT	4	SN:B10210--
	☐01010-E1020	BOLT	6	SN:B10001--B10209
1A	01010-81020	BOLT	1	SN:B10210--
2	01010-81016	BOLT	2	SN:B10001--
	01643-31032	WASHER	2	SN:B10001--
3	01643-31032	WASHER	6	SN:B10001--
4	12Y-01-11921	COVER	1	SN:B10001--
5	12Y-01-12324	COVER	1	SN:B10476--
	☐12Y-01-12323	COVER	1	SN:B10001--B10475
6	12Y-01-12411	COVER	1	SN:B10001--
7	12Y-01-12391	COVER	1	SN:B10001--

Ref. B0720-01A1 Page B-051

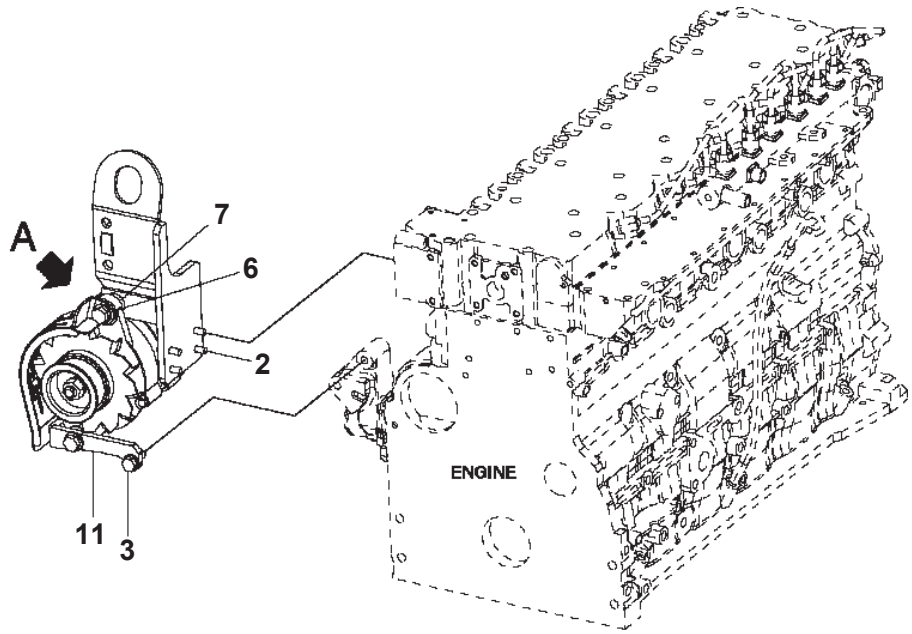

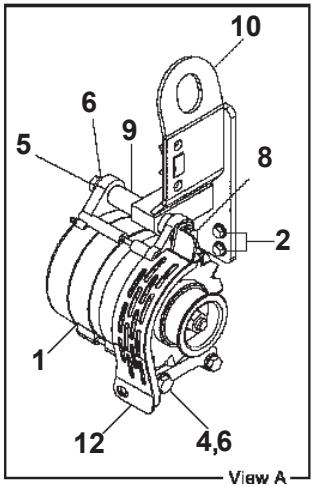

B0800-01A0 ALTERNATOR GROUP (60A)

Item	Part No.	Description	Qty	Options
1		ALTERNATOR (SEE FIG. B0000-51A0)	1	SN:B10001--
2	01010-80825	BOLT	4	SN:B10001--
	01643-30823	WASHER	4	SN:B10001--
3	01010-80830	BOLT	1	SN:B10001--
	01643-30823	WASHER	1	SN:B10001--
4	01050-81230	BOLT	1	SN:B10001--
5	01580-11210	NUT	1	SN:B10001--
6	01643-31232	WASHER	3	SN:B10001--
7	12Y-01-11980	SPACER	1	SN:B10729--
	□6206-81-6840	SPACER	1	SN:B10001--B10728
8	6207-81-6980	BOLT, ALTERNATOR	1	SN:B10001--
9	12Y-01-11990	SPACER	1	SN:B10729--
	□6735-81-6460	SPACER	1	SN:B10001--B10728
10	12Y-01-11631	BRACKET	1	SN:B10001--
11	12Y-01-11641	BRACKET	1	SN:B10001--
12	12Y-01-12492	BRACKET	1	SN:B10001--

CVPB00032

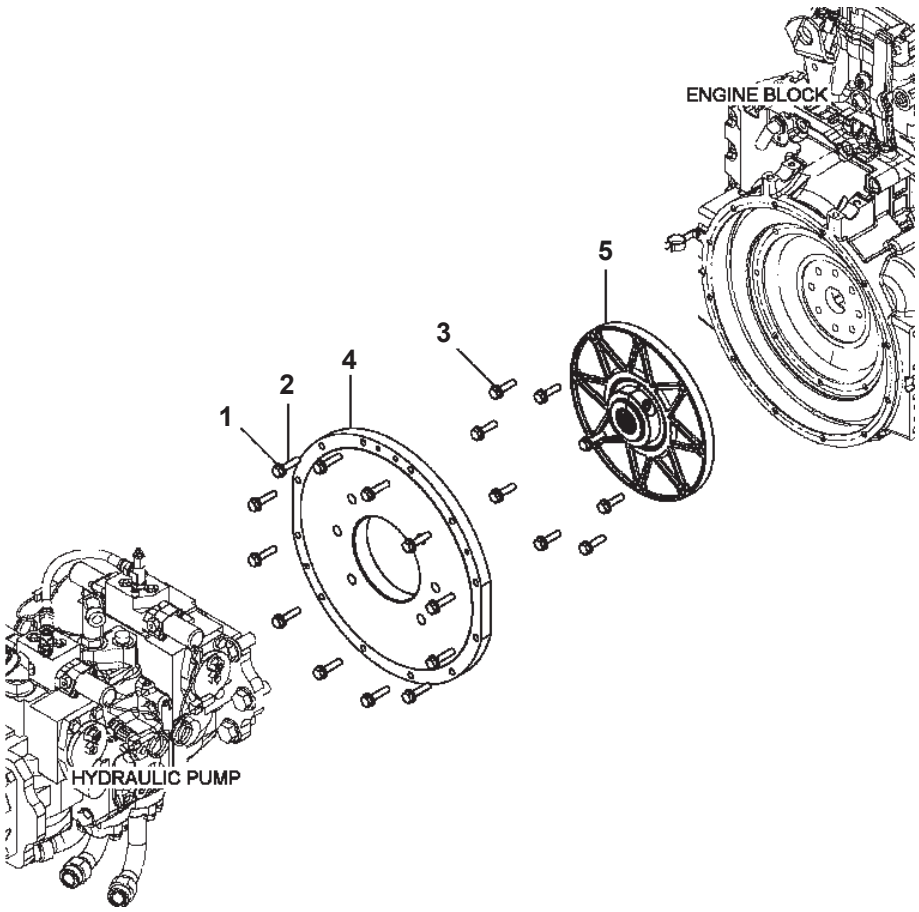

D51EX/PX-22 S/N B10001-UP

B0900-01A0 DAMPER ASSEMBLY MAIN PUMP

Item	Part No.	Description	Qty	Options
1	01010-81045	BOLT	12	SN:B10001--
2	01643-31032	WASHER	12	SN:B10001--
3	11Y-12-11130	BOLT	8	SN:B10001--
4	12Y-12-11111	COVER	1	SN:B10001--
5	12Y-12-11130	COUPLING	1	SN:B10001--

Ref. B0900-01A0 Page B-055

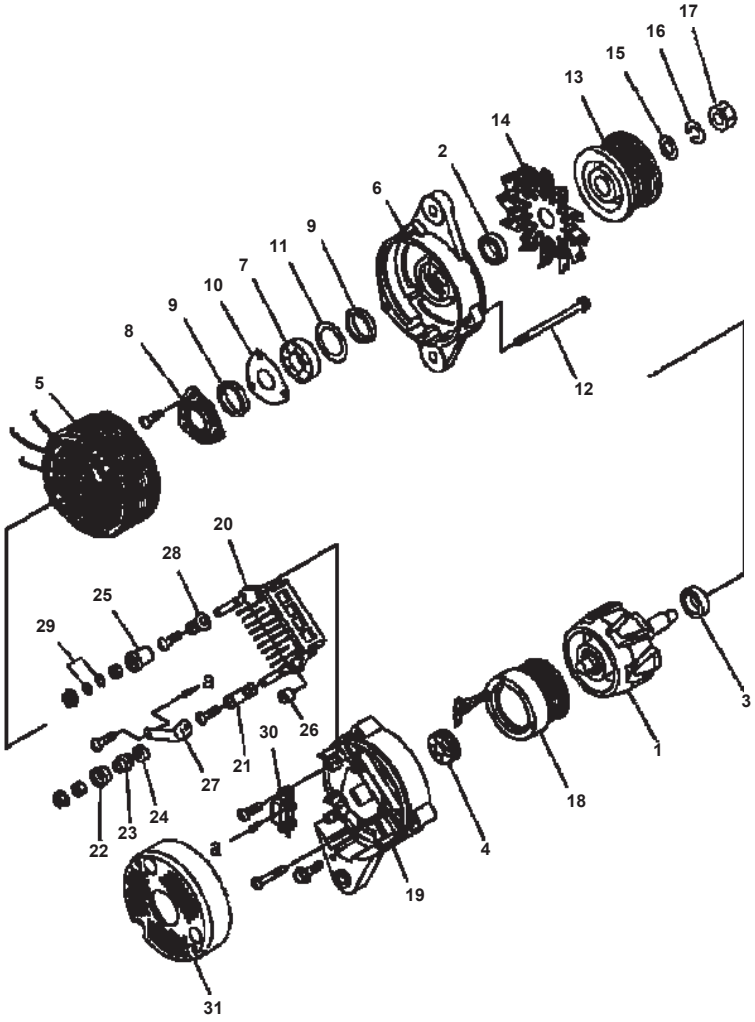

D51EX/PX-22 S/N B10001-UP

B0000-51A0 ALTERNATOR (60A) (INNER PARTS) (#B10001-B13413)

Item	Part No.	Description	Qty	Options
	600-861-6110	ALTERNATOR A. (60A) THE NIKKO DENKI PART NUMBER IS THAT KD IS REMOVED FROM KOMATSU PART NUMBER LISTED BELOW.	1	SN:B10001--B13413
1	KD0-35100-0300	· ROTOR ASSEMBLY	1	SN:B10001--B13413
2	KD1-33923-0790	· COLLAR	1	SN:B10001--B13413
3	KD1-35923-0160	· COLLAR	1	SN:B10001--B13413
4	KD0-09201-0980	· BEARING, BALL	1	SN:B10001--B13413
5	KD0-35200-0460	· STATOR ASSEMBLY	1	SN:B10001--B13413
6	KD0-35300-0350	· FRONT BRACKET ASSEMBLY	1	SN:B10001--B13413
7	KD0-09201-1140	· · BEARING, BALL	1	SN:B10001--B13413
8	KD0-35926-0070	· · RETAINER	1	SN:B10001--B13413
9	KD0-35951-0060	· · PACKING	2	SN:B10001--B13413
10	KD0-35926-0090	· · RETAINER	1	SN:B10001--B13413
11	KD1-33926-0730	· · RETAINER	1	SN:B10001--B13413
12	KD0-0275-06802	· BOLT	3	SN:B10001--B13413
13	KD0-35411-0640	· PULLEY	1	SN:B10001--B13413
14	KD0-35421-0240	· FAN	1	SN:B10001--B13413
15	KD1-0330-16012	· WASHER, PLAIN	1	SN:B10001--B13413
16	KD1-0335-16002	· WASHER, SPRING	1	SN:B10001--B13413
17	KD0-0280-16022	· NUT	1	SN:B10001--B13413
18	KD0-35120-0290	· FIELD COIL	1	SN:B10001--B13413
	KD0-35700-0950	· REAR BRACKET ASSEMBLY	1	SN:B10001--B13413
19	KD0-35710-1150	· · BRACKET, REAR	1	SN:B10001--B13413
20	KD0-35730-0700	· · RECTIFIER ASSEMBLY	1	SN:B10001--B13413
21	KD0-09170-2501	· · CONDENSER	1	SN:B10001--B13413
22	KD0-35943-0150	· · BUSH, INSULATE	1	SN:B10001--B13413
23	KD0-35923-0130	· · COLLAR	1	SN:B10001--B13413
24	KD0-35943-0160	· · BUSH, INSULATE	1	SN:B10001--B13413
25	KD0-35943-0140	· · BUSH, INSULATE	1	SN:B10001--B13413
26	KD0-35943-0170	· · BUSH, INSULATE	2	SN:B10001--B13413
27	KD0-35784-0210	· · BAR, CONNECT	1	SN:B10001--B13413
28	KD0-35784-0290	· · TERMINAL, PLATE	1	SN:B10001--B13413
29	KD0-09057-0220	· · WASHER	2	SN:B10001--B13413
30	KD0-35719-0210	· · REGULATOR ASSEMBLY	1	SN:B10001--B13413
31	KD0-35761-0250	· COVER	1	SN:B10001--B13413

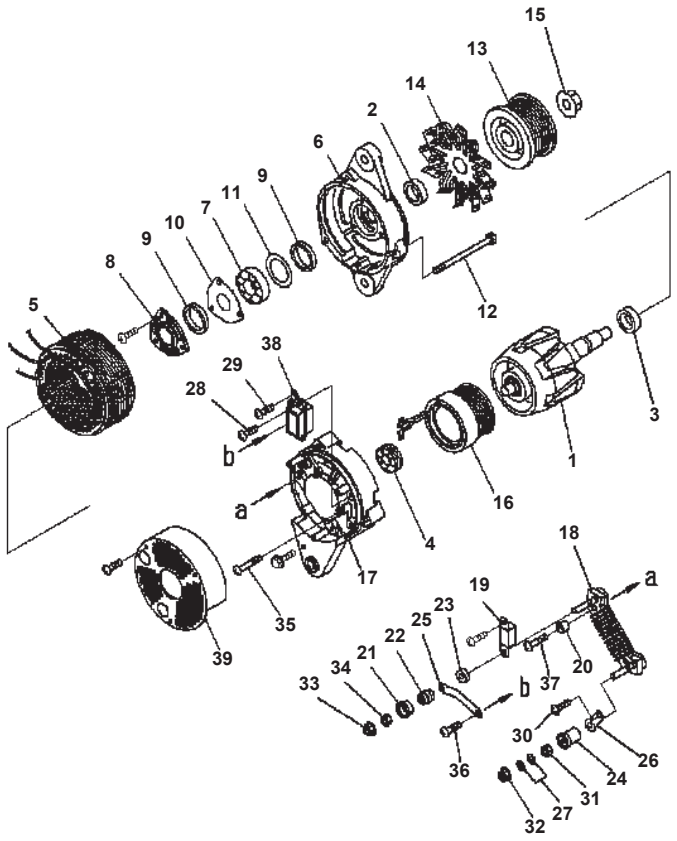

B0000-51A0 ALTERNATOR (60A) (INNER PARTS) (#B13414-)

Item	Part No.	Description	Qty	Options
	600-861-6111	ALTERNATOR A. (60A)	1	SN:B13414--
1	KD0-35100-0418	ROTOR ASSEMBLY	1	SN:B13414--
2	KD0-35943-0240	COLLAR	1	SN:B13414--
3	KD0-35923-0160	COLLAR	1	SN:B13414--
4	KD0-09201-0980	BEARING, BALL	1	SN:B13414--
5	KD0-35200-0528	STATOR ASSEMBLY	1	SN:B13414--
6	KD0-35300-0450	FRONT BRACKET ASSEMBLY	1	SN:B13414--
7	KD0-09201-1450	· BEARING, BALL	1	SN:B13414--
8	KD0-35926-0070	· RETAINER	1	SN:B13414--
9	KD0-35951-0060	· PACKING	2	SN:B13414--
10	KD0-35926-0090	· RETAINER	1	SN:B13414--
11	KD1-33926-0730	· RETAINER	1	SN:B13414--
12	KD0-0275-06802	BOLT	3	SN:B13414--
13	KD0-35411-0648	PULLEY	1	SN:B13414--
14	KD0-35421-0240	FAN	1	SN:B13414--
15	KD0-09006-0730	NUT	1	SN:B13414--
16	KD0-35120-0528	FIELD COIL	1	SN:B13414--
	KD0-35700-1140	REAR BRACKET ASSEMBLY	1	SN:B13414--
17	KD0-35710-1330	· BRACKET	1	SN:B13414--
18	KD0-35730-0700	· RECTIFIER ASSEMBLY	1	SN:B13414--
19	KD0-09170-2501	· CONDENSER	1	SN:B13414--
20	KD0-35943-0170	· BUSHING	1	SN:B13414--
21	KD0-35943-0154	· BUSHING	1	SN:B13414--
22	KD0-35923-0134	COLLAR	1	SN:B13414--
23	KD0-35943-0160	· BUSHING	1	SN:B13414--
24	KD0-35943-0140	· BUSHING	1	SN:B13414--
25	KD0-35784-0210	· BAR, CONNECT	1	SN:B13414--
26	KD0-35784-0290	· TERMINAL, PLATE	1	SN:B13414--
27	KD0-09057-0220	· WASHER	2	SN:B13414--
28	KD0-0055-05202	SCREW	2	SN:B13414--
29	KD0-0055-05122	SCREW	2	SN:B13414--
30	KD0-09011-3540	SCREW	1	SN:B13414--
31	KD0-35902-0010	NUT	1	SN:B13414--
32	KD0-09006-0370	NUT	1	SN:B13414--
33	KD0-33902-0080	NUT	1	SN:B13414--
34	KD0-33902-0090	NUT	1	SN:B13414--
35	KD0-0056-05302	SCREW	3	SN:B13414--
36	KD0-09011-3540	SCREW	2	SN:B13414--
37	KD0-0056-05302	SCREW	2	SN:B13414--
38	KD0-35719-0201	· REGULATOR ASSEMBLY	1	SN:B13414--

D51EX/PX-22 S/N B10001-UP

B0000-51A0 ALTERNATOR (60A) (INNER PARTS) (#B13414-)

Item	Part No.	Description	Qty	Options
39	KD0-35761-0308	COVER	1	SN:B13414--

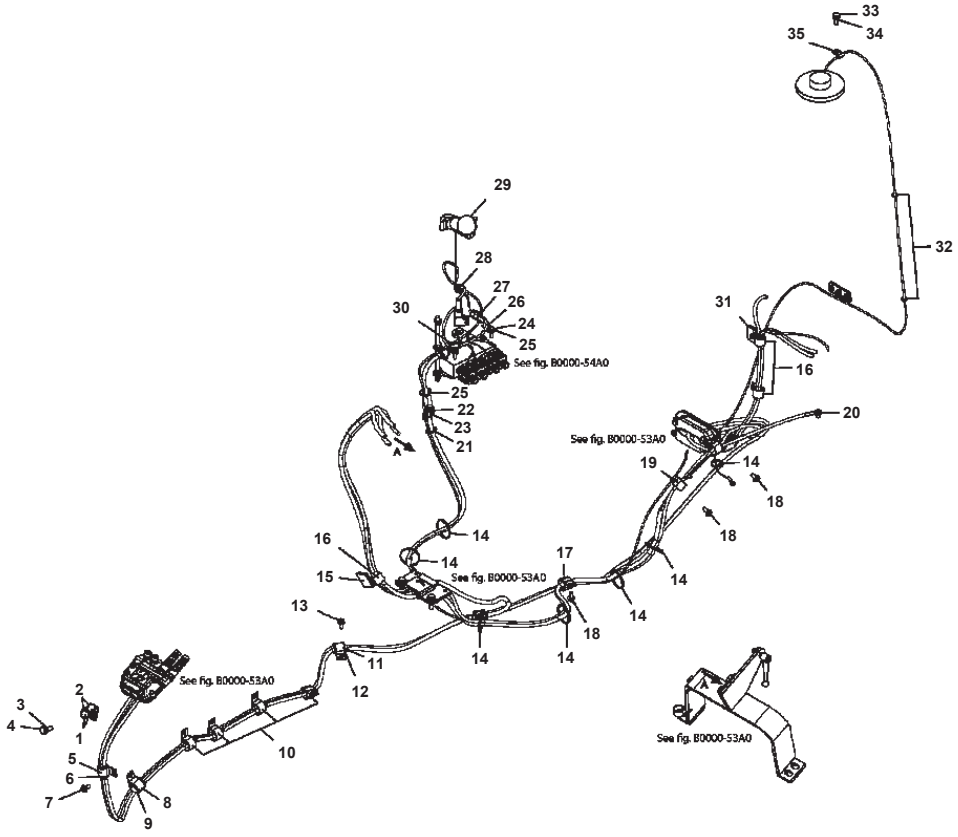

B0000-52A0 3D NAVIGATOR 1/3 (#B10001-B11676)

Item	Part No.	Description	Qty	Options
1	04434-51712	CLAMP	2	SN:B10001--B11676
2	07095-20211	CUSHION	1	SN:B10001--B11676
3	01010-81235	BOLT	1	SN:B10001--B11676
4	01643-31232	WASHER	1	SN:B10001--B11676
5	04434-52511	CLAMP	1	SN:B10001--B11676
6	07095-20318	CUSHION	1	SN:B10001--B11676
7	01435-01020	BOLT	1	SN:B10001--B11676
8	04434-53411	CLAMP	1	SN:B10001--B11676
9	07095-20627	CUSHION	1	SN:B10001--B11676
10	04434-53211	CLAMP	4	SN:B10001--B11676
11	04434-52511	CLAMP	1	SN:B10001--B11676
12	07095-20318	CUSHION	1	SN:B10001--B11676
13	01435-01020	BOLT	1	SN:B10001--B11676
14	08034-20536	BAND	7	SN:B10001--B11676
15	12Y-06-13670	BRACKET	1	SN:B10001--B11676
16	04434-52511	CLAMP	3	SN:B10001--B11676
17	04434-53211	CLAMP	1	SN:B10001--B11676
18	01435-01020	BOLT	1	SN:B10001--B11676
19	04434-52711	CLAMP	1	SN:B10001--B11676
20	01435-01016	BOLT	1	SN:B10001--B11676
21	08034-20519	BAND	2	SN:B10001--B11676
22	04434-51710	CLAMP	1	SN:B10001--B11676
23	07095-20211	CUSHION	1	SN:B10001--B11676
24	01010-80830	BOLT	1	SN:B10001--B11676
25	01643-30823	WASHER	1	SN:B10001--B11676
26	08193-20010	TERMINAL	2	SN:B10001--B11676
27	08192-23100	CONNECTOR	1	SN:B10001--B11676
28	195-06-73270	TERMINAL	1	SN:B10001--B11676
29	195-43-64321	KNOB ASS'Y	1	SN:B10001--B11676
30	04434-50808	CLAMP	1	SN:B10001--B11676
31	12Y-06-13670	BRACKET	1	SN:B10001--B11676
32	08034-20310	BAND	5	SN:B10001--B11676
33	01010-D1030	BOLT	1	SN:B10001--B11676
34	01643-71032	WASHER	1	SN:B10001--B11676
35	04434-50510	CLAMP	1	SN:B10001--B11676

TOPCON2

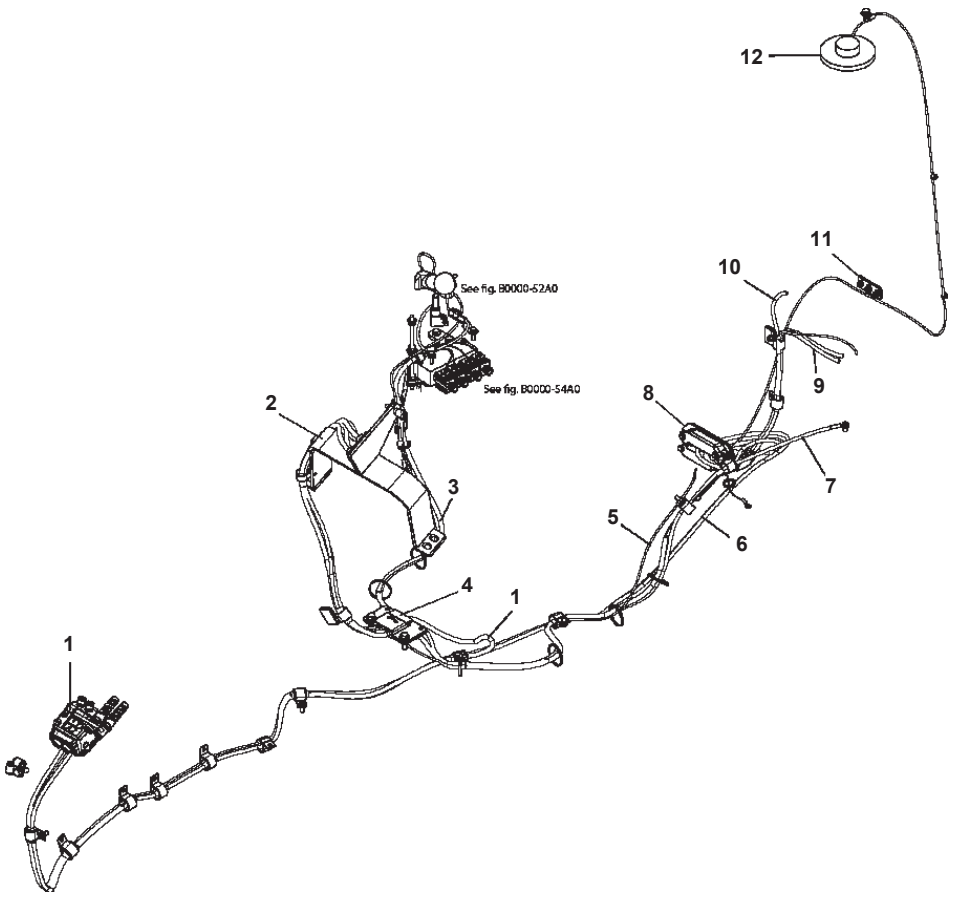

D51EX/PX-22 S/N B10001-UP

B0000-53A0 3D NAVIGATOR 2/3 (#B10001-B11676)

Item	Part No.	Description	Qty	Options
1	12Y-06-12910	CONTROL SYSTEM BOX	1	SN:B10001--B11676
2	12Y-06-12680	TOPCON SYSTEM BRACKET	1	SN:B10001--B11676
3	12Y-06-13750	WIRING HARNESS	1	SN:B10001--B11676
4	12Y-06-12570	SYSTEM FLOOR SEALING ASS'Y	1	SN:B10001--B11676
5	12Y-06-13720	WIRING HARNESS	1	SN:B10001--B11676
6	12Y-06-13710	WIRING HARNESS	1	SN:B10001--B11676
7	12Y-06-13760	WIRING HARNESS	1	SN:B10001--B11676
8	12Y-06-13680	SYSTEM FLOOR SEALING ASS'Y	1	SN:B10001--B11676
9	12Y-06-13710	WIRING HARNESS	1	SN:B10001--B11676
10	12Y-06-13730	WIRING HARNESS	1	SN:B10001--B11676
11	12Y-06-13570	SYSTEM FLOOR SEALING ASS'Y	1	SN:B10001--B11676
12	12Y-06-13770	WIRING HARNESS	1	SN:B10001--B11676

Ref. B0000-53A0 Page B-061

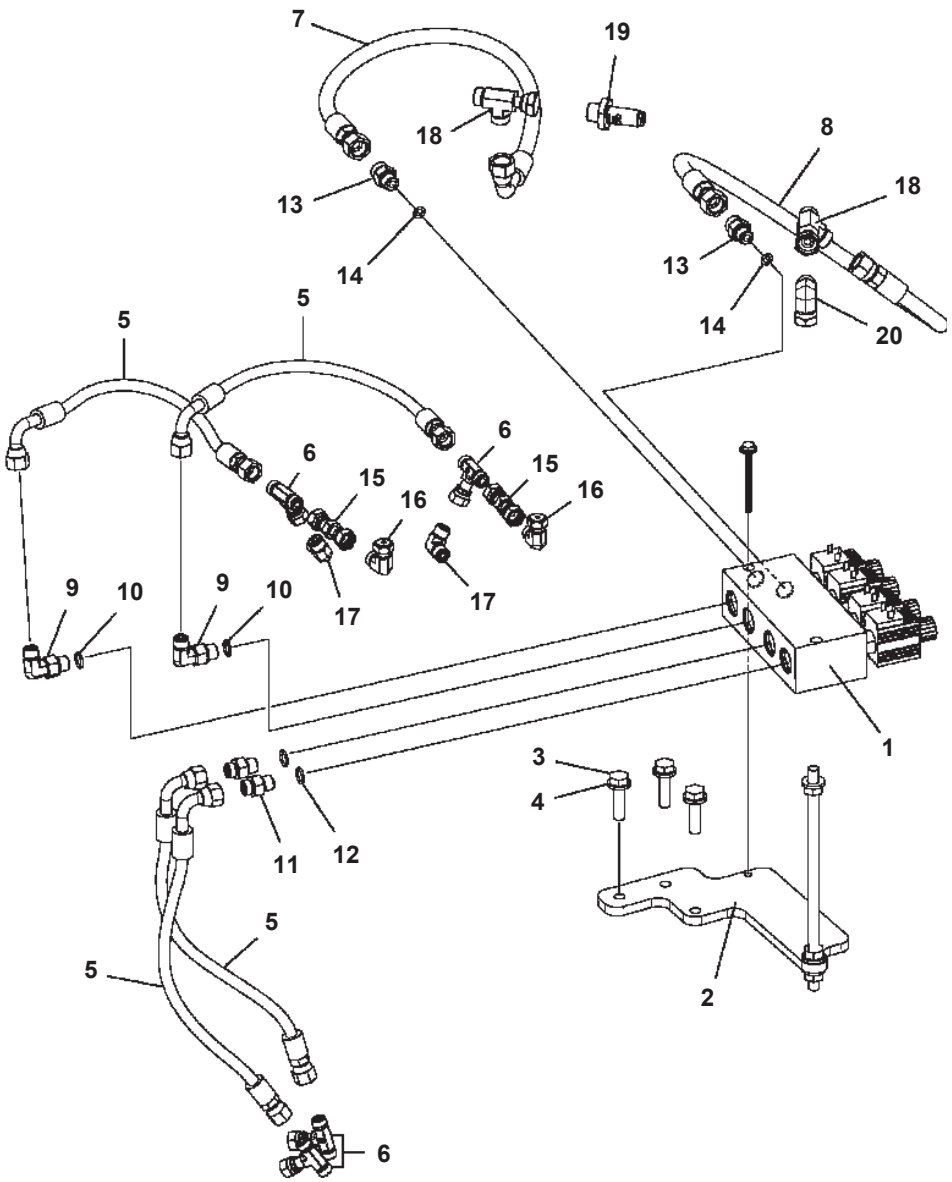

B0000-54A0 3D NAVIGATOR 3/3 (#B10001-B11676)

Item	Part No.	Description	Qty	Options
1	12Y-06-13650	VALVE ASS'Y	1	SN:B10001--B11676
2	12Y-06-13660	BRACKET	1	SN:B10001--B11676
3	01010-81040	BOLT	3	SN:B10001--B11676
4	01643-31032	WASHER	3	SN:B10001--B11676
5	12Y-62-13520	HOSE	2	SN:B10001--B11676
6	12Y-62-12190	TEE	4	SN:B10001--B11676
7	12Y-62-13490	HOSE	1	SN:B10001--B11676
8	12Y-62-13510	HOSE	1	SN:B10001--B11676
9	12Y-62-13550	ELBOW	2	SN:B10001--B11676
10	12Y-62-14970	O-RING	2	SN:B10001--B11676
11	12Y-62-13560	JOINT	2	SN:B10001--B11676
12	12Y-62-14970	O-RING	2	SN:B10001--B11676
13	12Y-62-13540	JOINT	2	SN:B10001--B11676
14	12Y-62-14970	O-RING	2	SN:B10001--B11676
15	12Y-62-13590	JOINT	2	SN:B10001--B11676
16	12Y-62-13580	ELBOW	2	SN:B10001--B11676
17	12Y-62-14350	ELBOW	2	SN:B10001--B11676
18	12Y-62-11661	TEE	2	SN:B10001--B11676
19	12Y-62-13340	PLUG	1	SN:B10001--B11676
20	12Y-62-14360	ELBOW	1	SN:B10001--B11676

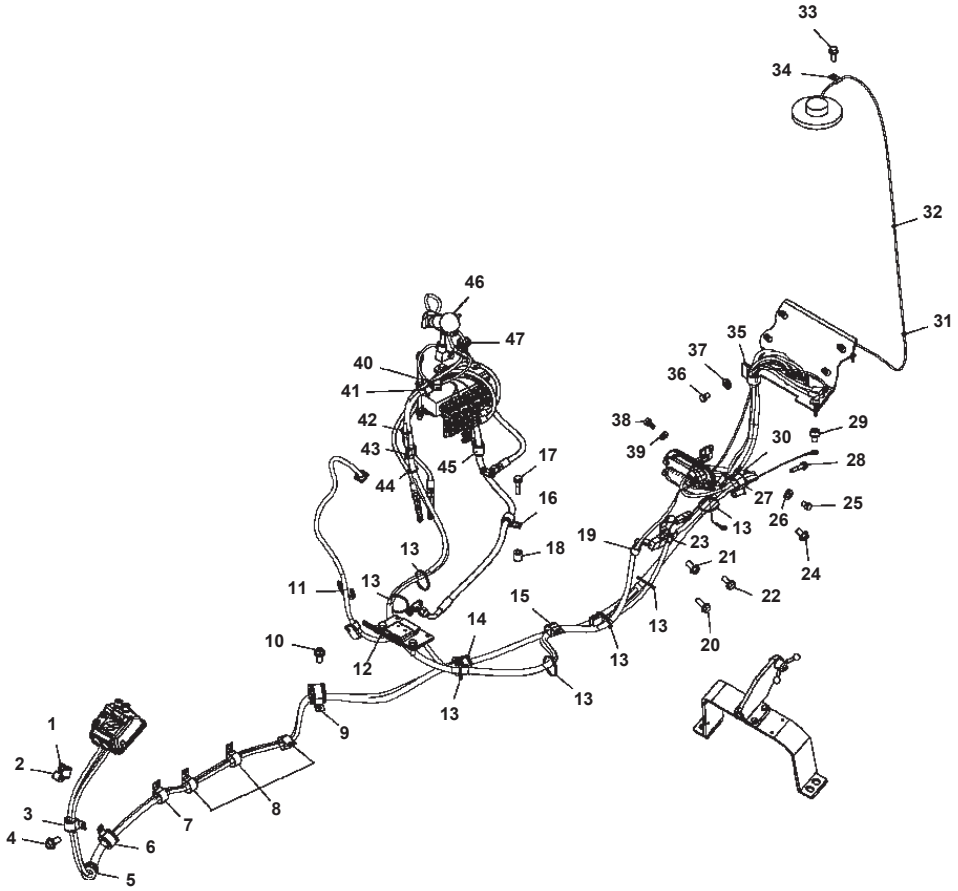

B0000-55A0 3D NAVIGATOR 1/3 (#B11677-B13008)

Item	Part No.	Description	Qty	Options
1	04434-51712	CLAMP	2	SN:B11677--B13008
2	07095-20211	CUSHION	2	SN:B11677--B13008
3	04434-53211	CLAMP	1	SN:B11677--B13008
4	01435-01020	BOLT	1	SN:B11677--B13008
5	07095-00423	BAND	2	SN:B11677--B13008
	08034-20519	CLAMP	1	SN:B11677--B13008
6	566-03-12620	CLAMP	1	SN:B11677--B13008
	566-61-49810	CUSHION	1	SN:B11677--B13008
7	04434-53211	CLAMP	1	SN:B11677--B13008
8	281-01-13180	CLAMP	3	SN:B11677--B13008
9	196-916-1590	CLAMP	1	SN:B11677--B13008
	198-04-41210	CUSHION	1	SN:B11677--B13008
10	01435-01020	BOLT	1	SN:B11677--B13008
11	12Y-54-11181	SEAL	1	SN:B11677--B13008
12	12Y-03-13660	SEAL	1	SN:B11677--B13008
13	08034-20536	BAND	7	SN:B11677--B13008
14	196-916-1590	CLAMP	1	SN:B11677--B13008
	198-04-41210	CUSHION	1	SN:B11677--B13008
15	04434-53211	CLAMP	1	SN:B11677--B13008
16	04434-52512	CLAMP	1	SN:B11677--B13008
17	01010-81250	BOLT	1	SN:B11677--B13008
	01643-31232	WASHER	1	SN:B11677--B13008
18	195-33-11220	STUD	2	SN:B11677--B13008
19	04434-51910	CLAMP	1	SN:B11677--B13008
20	01010-81030	BOLT	1	SN:B11677--B13008
	01643-30823	WASHER	1	SN:B11677--B13008
21	01435-01020	BOLT	1	SN:B11677--B13008
22	01643-81025	BOLT	1	SN:B11677--B13008
	01643-30823	WASHER	1	SN:B11677--B13008
23	04434-51910	CLAMP	1	SN:B11677--B13008
24	01435-01016	BOLT	1	SN:B11677--B13008
25	02010-80613	BOLT	1	SN:B11677--B13008
26	01643-31032	WASHER	1	SN:B11677--B13008
27	04434-53411	CLAMP	1	SN:B11677--B13008
28	01010-81055	BOLT	1	SN:B11677--B13008
	01643-31232	WASHER	1	SN:B11677--B13008
29	01252-61016	BOLT	1	SN:B11677--B13008
30	04434-53211	CLAMP	1	SN:B11677--B13008
	113-03-21170	SPACER	1	SN:B11677--B13008
31	08034-20310	BAND	1	SN:B11677--B13008
32	08034-20310	BAND	1	SN:B11677--B13008

B0000-55A0 3D NAVIGATOR 1/3 (#B11677-B13008)

Item	Part No.	Description	Qty	Options
33	01010-81030	BOLT	1	SN:B11677--B13008
	01643-30823	WASHER	1	SN:B11677--B13008
34	04434-50510	CLAMP	1	SN:B11677--B13008
35	04434-53211	CLAMP	1	SN:B11677--B13008
36	02010-80613	BOLT	1	SN:B11677--B13008
37	01643-31032	WASHER	1	SN:B11677--B13008
38	02010-80613	BOLT	1	SN:B11677--B13008
39	01643-31032	WASHER	1	SN:B11677--B13008
40	04434-50808	CLAMP	1	SN:B11677--B13008
41	04434-51710	CLAMP	1	SN:B11677--B13008
	07095-20511	CUSHION	1	SN:B11677--B13008
42	08034-20519	BAND	1	SN:B11677--B13008
43	04434-51710	CLAMP	1	SN:B11677--B13008
	07095-20211	CUSHION	1	SN:B11677--B13008
44	08034-20519	BAND	5	SN:B11677--B13008
45	04434-52512	CLAMP	1	SN:B11677--B13008
	07095-20318	CUSHION	1	SN:B11677--B13008
46	195-43-64321	KNOB ASS'Y	1	SN:B11677--B13008
47	08037-11425	GROMMET	1	SN:B11677--B13008

TOPCON2

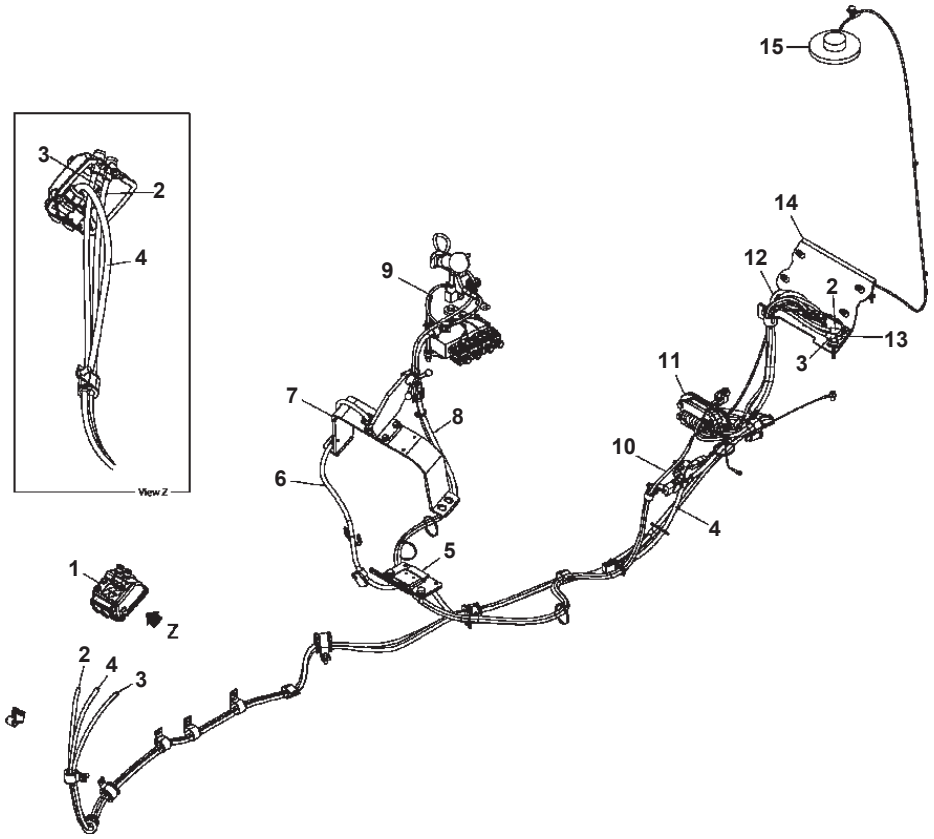

D51EX/PX-22 S/N B10001-UP

B0000-56A0 3D NAVIGATOR 2/3 (#B11677-B13008)

Item	Part No.	Description	Qty	Options
1	12Y-06-12912	CONTROL SYSTEM BOX	1	SN:B11677--B13008
2	12Y-06-13740	WIRING HARNESS	1	SN:B11677--B13008
3	12Y-06-13711	WIRING HARNESS	1	SN:B11677--B13008
4	12Y-06-13871	WIRING HARNESS	1	SN:B11677--B13008
5	12Y-06-12570	SYSTEM FLOOR SEALING ASS'Y	1	SN:B11677--B13008
6	12Y-06-13861	WIRING HARNESS	1	SN:B11677--B13008
7	12Y-06-12681	TOPCON SYSTEM BRACKET	1	SN:B11677--B13008
8	12Y-06-13751	SYSTEM FLOOR SEALING ASS'Y	1	SN:B11677--B13008
9	195-06-73270	WIRING HARNESS	1	SN:B11677--B13008
10	12Y-06-13721	WIRING HARNESS	1	SN:B11677--B13008
11	12Y-06-13570	SYSTEM FLOOR SEALING ASS'Y	1	SN:B11677--B13008
12	12Y-06-13851	WIRING HARNESS	1	SN:B11677--B13008
13	12Y-06-13570	PLUG	1	SN:B11677--B13008
14	12Y-06-13970	BRACKET	1	SN:B11677--B13008
15	12Y-06-13770	WIRING HARNESS	1	SN:B11677--B13008

Ref. B0000-56A0 Page B-066

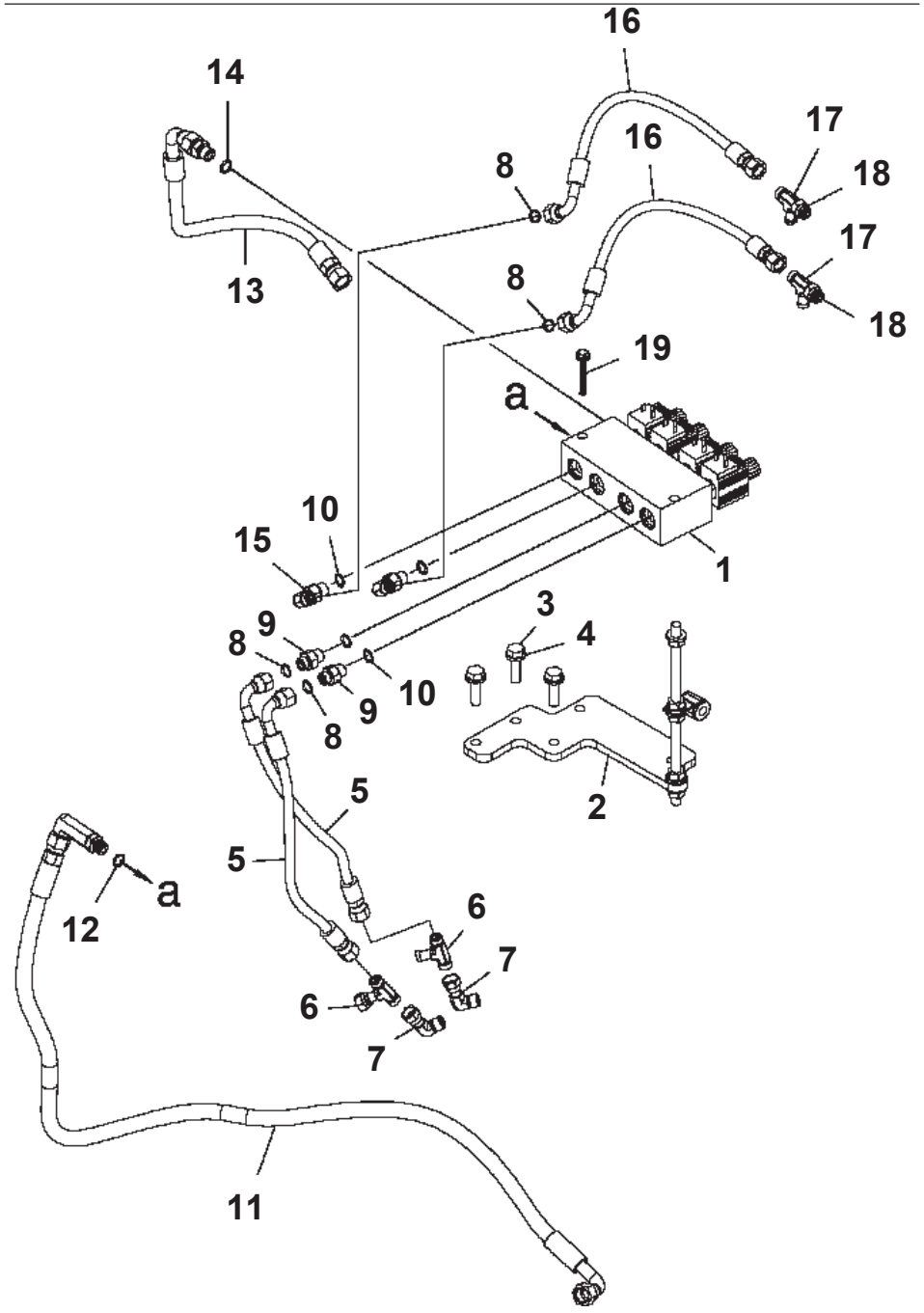

B0000-57A0 3D NAVIGATOR 3/3 (#B11677-B13008)

Item	Part No.	Description	Qty	Options
1	12Y-06-13650	VALVE ASS'Y	1	SN:B11677--B13008
2	12Y-06-13660	BRACKET	1	SN:B11677--B13008
3	01010-81040	BOLT	3	SN:B11677--B13008
4	01643-31032	WASHER	3	SN:B11677--B13008
5	12Y-62-13520	HOSE	2	SN:B11677--B13008
6	12Y-62-14940	TEE	2	SN:B11677--B13008
7	12Y-62-15230	ELBOW	2	SN:B11677--B13008
8	02896-11008	O-RING	4	SN:B11677--B13008
9	12Y-62-13561	CONNECTION	2	SN:B11677--B13008
10	12Y-62-14970	O-RING	4	SN:B11677--B13008
11	12Y-62-13491	HOSE	1	SN:B11677--B13008
12	12Y-62-14970	O-RING	2	SN:B11677--B13008
13	02761-00304	HOSE	2	SN:B11677--B13008
14	12Y-62-14970	O-RING	2	SN:B11677--B13008
15	12Y-62-13550	ELBOW	2	SN:B11677--B13008
16	12Y-62-13520	JOINT	2	SN:B11677--B13008
17	12Y-62-14940	ELBOW	2	SN:B11677--B13008
18	12Y-62-13590	ELBOW	2	SN:B11677--B13008
19	12Y-06-13660	BOLT, BRACKET FIXING	2	SN:B11677--B13008

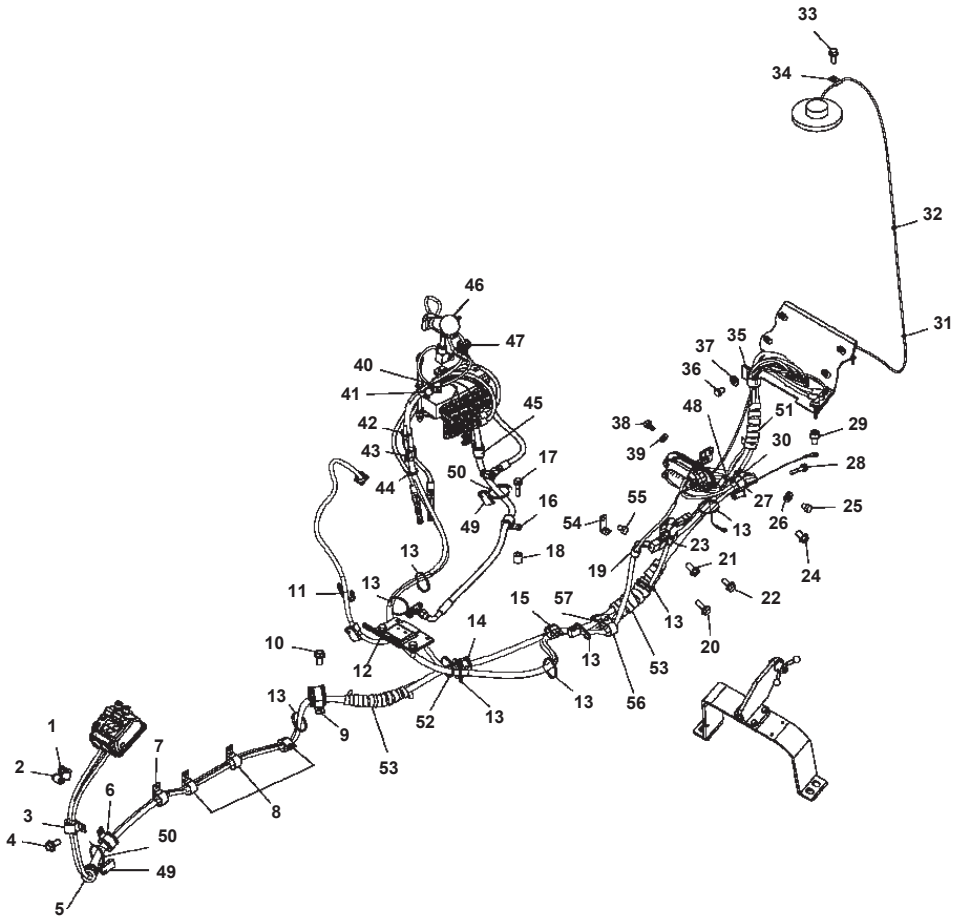

B0000-58A0 3D NAVIGATOR 1/3 (#B13009-B13936)

Item	Part No.	Description	Qty	Options
1	04434-51712	CLAMP	2	SN:B13009--B13936
2	07095-20211	CUSHION	2	SN:B13009--B13936
3	04434-53211	CLAMP	1	SN:B13009--B13936
4	01435-01020	BOLT	1	SN:B13009--B13936
5	07095-00423	BAND	2	SN:B13009--B13936
	08034-20519	CLAMP	1	SN:B13009--B13936
6	566-03-12620	CLAMP	1	SN:B13009--B13936
	566-61-49810	CUSHION	1	SN:B13009--B13936
7	04434-53211	CLAMP	1	SN:B13009--B13936
8	281-01-13180	CLAMP	3	SN:B13009--B13936
9	196-916-1590	CLAMP	1	SN:B13009--B13936
	198-04-41210	CUSHION	1	SN:B13009--B13936
10	01435-01020	BOLT	1	SN:B13009--B13936
11	12Y-54-11181	SEAL	1	SN:B13009--B13936
12	12Y-03-13660	SEAL	1	SN:B13009--B13936
13	08034-20536	BAND	8	SN:B13009--B13936
14	196-916-1590	CLAMP	1	SN:B13009--B13936
	198-04-41210	CUSHION	1	SN:B13009--B13936
15	04434-53211	CLAMP	1	SN:B13009--B13936
16	04434-52512	CLAMP	1	SN:B13009--B13936
17	01010-81250	BOLT	1	SN:B13009--B13936
	01643-31232	WASHER	1	SN:B13009--B13936
18	195-33-11220	STUD	2	SN:B13009--B13936
19	04434-51910	CLAMP	1	SN:B13009--B13936
20	01010-81030	BOLT	1	SN:B13009--B13936
	01643-30823	WASHER	1	SN:B13009--B13936
21	01435-01020	BOLT	1	SN:B13009--B13936
22	01010-81025	BOLT	1	SN:B13009--B13936
	01643-30823	WASHER	1	SN:B13009--B13936
23	04434-51910	CLAMP	1	SN:B13009--B13936
24	01435-01016	BOLT	1	SN:B13009--B13936
25	02010-80613	BOLT	1	SN:B13009--B13936
26	01643-31032	WASHER	1	SN:B13009--B13936
27	04434-53411	CLAMP	1	SN:B13009--B13936
28	01010-81050	BOLT	1	SN:B13009--B13936
	□01010-81055	BOLT	1	SN:B13186--B13936
	01643-31232	WASHER	1	SN:B13009--B13185
29	01252-61016	BOLT	1	SN:B13009--B13936
30	04434-53411	CLAMP	1	SN:B13186--B13936
	□04434-53211	CLAMP	1	SN:B13009--B13185
	418-62-23790	SPACER	1	SN:B13186--B13936

B0000-58A0 3D NAVIGATOR 1/3 (#B13009-B13936)

Item	Part No.	Description	Qty	Options
	□113-03-21170	SPACER	1	SN:B13009--B13185
31	08034-20310	BAND	1	SN:B13009--B13936
32	08034-20310	BAND	1	SN:B13009--B13936
33	01010-81030	BOLT	1	SN:B13009--B13936
	01643-30823	WASHER	1	SN:B13009--B13936
34	04434-50510	CLAMP	1	SN:B13009--B13936
35	04434-53411	CLAMP	1	SN:B13186--B13936
	□04434-53211	CLAMP	1	SN:B13009--B13185
36	02010-80613	BOLT	1	SN:B13009--B13936
37	01643-31032	WASHER	1	SN:B13009--B13936
38	02010-80613	BOLT	1	SN:B13009--B13936
39	01643-31032	WASHER	1	SN:B13009--B13936
40	04434-50808	CLAMP	1	SN:B13009--B13936
41	04434-51710	CLAMP	1	SN:B13009--B13936
	07095-20511	CUSHION	1	SN:B13009--B13936
42	08034-20519	BAND	1	SN:B13009--B13936
43	04434-51710	CLAMP	1	SN:B13009--B13936
	07095-20211	CUSHION	1	SN:B13009--B13936
44	08034-20519	BAND	5	SN:B13009--B13936
45	04434-52512	CLAMP	1	SN:B13009--B13936
	07095-20318	CUSHION	1	SN:B13009--B13936
46	195-43-64321	KNOB ASS'Y	1	SN:B13009--B13936
47	08037-11425	GROMMET	1	SN:B13009--B13936
48	04434-53411	CLAMP	1	SN:B13126--B13936
	6131-12-4570	SPACER	1	SN:B13126--B13936
	01435-01030	BOLT	1	SN:B13126--B13936
49	20U-54-46520	STICKER	2	SN:B13126--B13936
50	08034-20519	BAND	2	SN:B13126--B13936
51	415-62-13710	PROTECTOR	2	SN:B13126--B13936
52	08034-20536	BAND	1	SN:B13126--B13936
53	08210-02904	SPIRAL TUBE	2	SN:B13186--B13936
54	12Y-60-11550	BRACKET	1	SN:B13186--B13936
55	01435-01016	BOLT	1	SN:B13186--B13936
56	04434-53211	CLAMP	1	SN:B13186--B13936
57	6131-12-4570	SPACER	1	SN:B13186--B13936

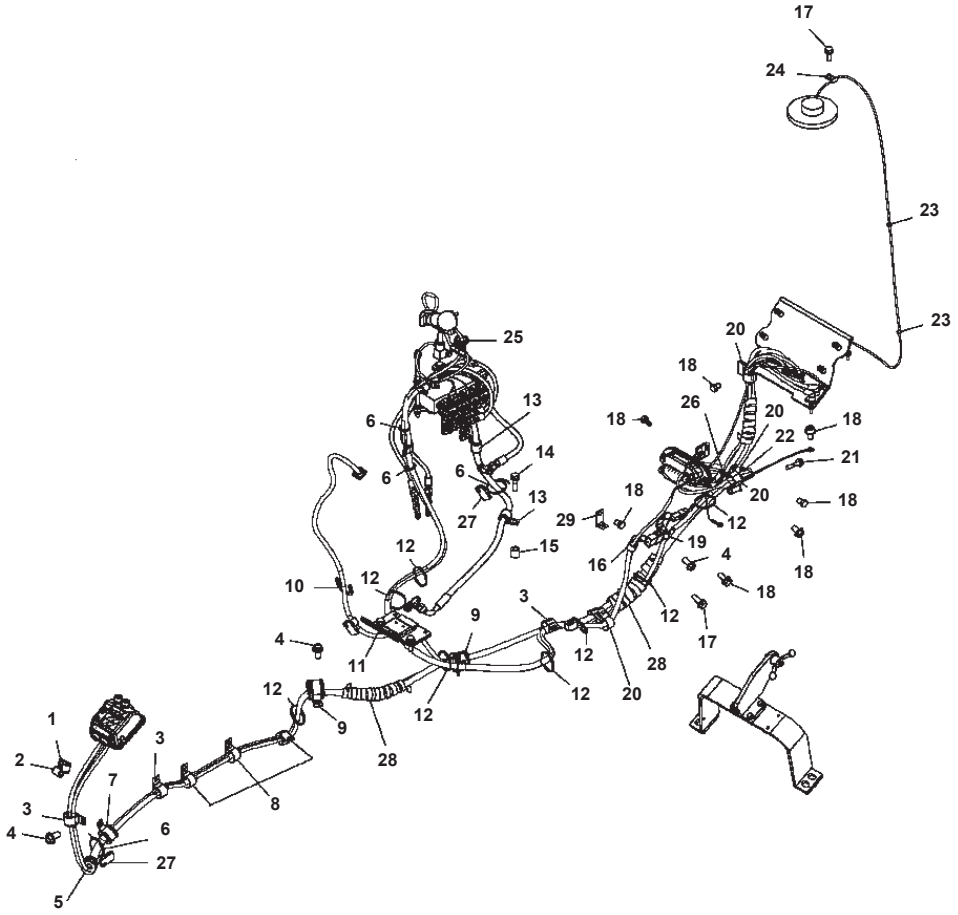

B0000-58A1 3D NAVIGATOR 1/3 (#B13937-)

Item	Part No.	Description	Qty	Options
1	04434-51712	CLAMP	2	SN:B13937--
2	07095-20211	CUSHION	2	SN:B13937--
3	04434-53211	CLAMP	3	SN:B13937--
4	01435-01020	BOLT	4	SN:B13937--
5	07095-00423	BAND	1	SN:B13937--
6	08034-20519	CLAMP	7	SN:B13937--
7	566-03-12620	CLAMP	1	SN:B13937--
	566-61-49810	CUSHION	1	SN:B13937--
8	281-01-13180	CLAMP	3	SN:B13937--
9	196-916-1590	CLAMP	2	SN:B13937--
	198-04-41210	CUSHION	2	SN:B13937--
10	12Y-54-11181	SEAL	1	SN:B13937--
11	12Y-03-13660	SEAL	1	SN:B13937--
12	08034-20536	BAND	8	SN:B13937--
13	04434-52512	CLAMP	2	SN:B13937--
14	01010-81250	BOLT	1	SN:B13937--
	01643-31232	WASHER	1	SN:B13937--
15	195-33-11220	STUD	1	SN:B13937--
16	04434-51910	CLAMP	1	SN:B13937--
17	01010-81030	BOLT	2	SN:B13937--
	01643-30823	WASHER	2	SN:B13937--
18	01435-01016	BOLT	7	SN:B13937--
19	04434-51910	CLAMP	1	SN:B13937--
20	04434-53411	CLAMP	4	SN:B13937--
21	01010-81050	BOLT	1	SN:B13937--
	01643-31232	WASHER	1	SN:B13937--
22	418-62-23790	SPACER	1	SN:B13937--
23	08034-20310	BAND	2	SN:B13937--
24	04434-50510	CLAMP	1	SN:B13937--
25	08037-11425	GROMMET	1	SN:B13937--
26	04434-53411	CLAMP	1	SN:B13937--
	6131-12-4570	SPACER	1	SN:B13937--
	01435-01030	BOLT	1	SN:B13937--
27	20U-54-46520	STICKER	2	SN:B13937--
28	08210-02904	SPIRAL TUBE	2	SN:B13937--
29	12Y-60-11550	BRACKET	1	SN:B13937--

TOPCON2

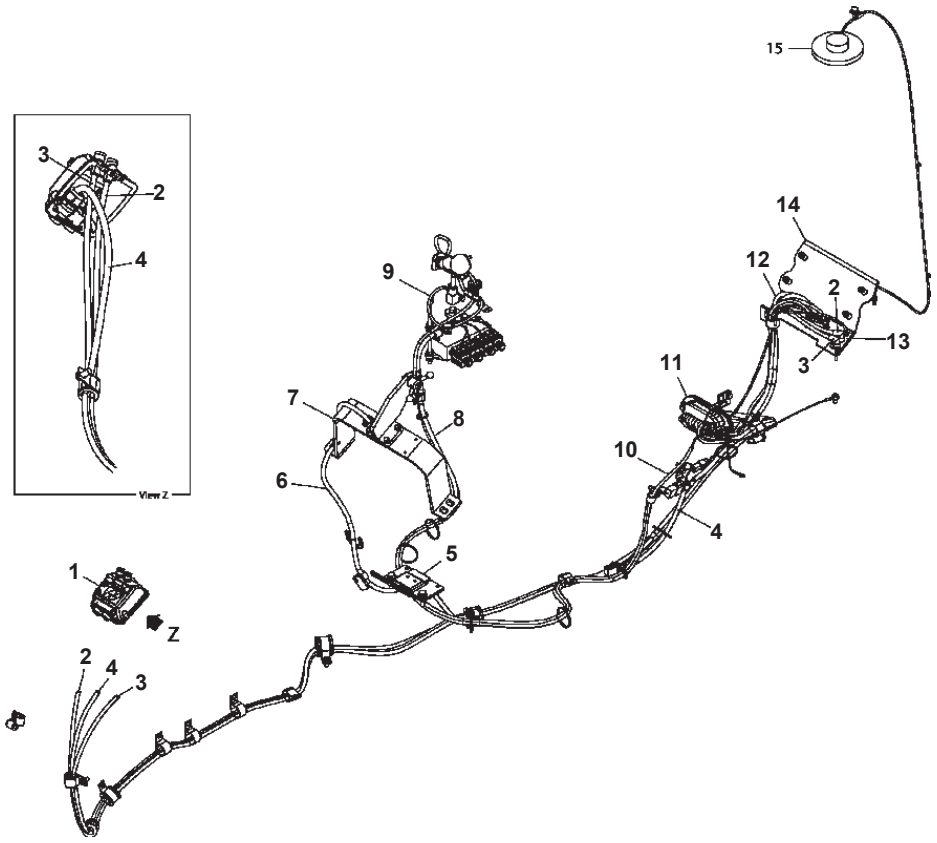

D51EX/PX-22 S/N B10001-UP

B0000-59A0 3D NAVIGATOR 2/3 (#B13009-)

Item	Part No.	Description	Qty	Options
1	12Y-06-14290	CONTROL SYSTEM BOX	1	SN:B13009--
2	12Y-06-13740	WIRING HARNESS	1	SN:B13009--
3	12Y-06-13711	WIRING HARNESS	1	SN:B13009--
4	12Y-06-14280	WIRING HARNESS	1	SN:B13009--
5	12Y-06-12571	SYSTEM FLOOR SEALING ASS'Y	1	SN:B13414--
	□12Y-06-12570	SYSTEM FLOOR SEALING ASS'Y	1	SN:B13009--B13413
6	12Y-06-13862	WIRING HARNESS	1	SN:B13009--
7	12Y-06-12682	TOPCON SYSTEM BRACKET	1	SN:B13009--
8	12Y-06-13751	SYSTEM FLOOR SEALING ASS'Y	1	SN:B13009--
9	195-06-73270	WIRING HARNESS	1	SN:B13009--
10	12Y-06-13721	WIRING HARNESS	1	SN:B13009--
11	12Y-06-13570	SYSTEM FLOOR SEALING ASS'Y	1	SN:B13009--
12	12Y-06-13851	WIRING HARNESS	1	SN:B13009--
13	12Y-06-13570	PLUG	1	SN:B13009--
14	12Y-06-13970	BRACKET	1	SN:B13009--
15	12Y-06-13770	WIRING HARNESS	1	SN:B13009--

Ref. B0000-59A0 Page B-069

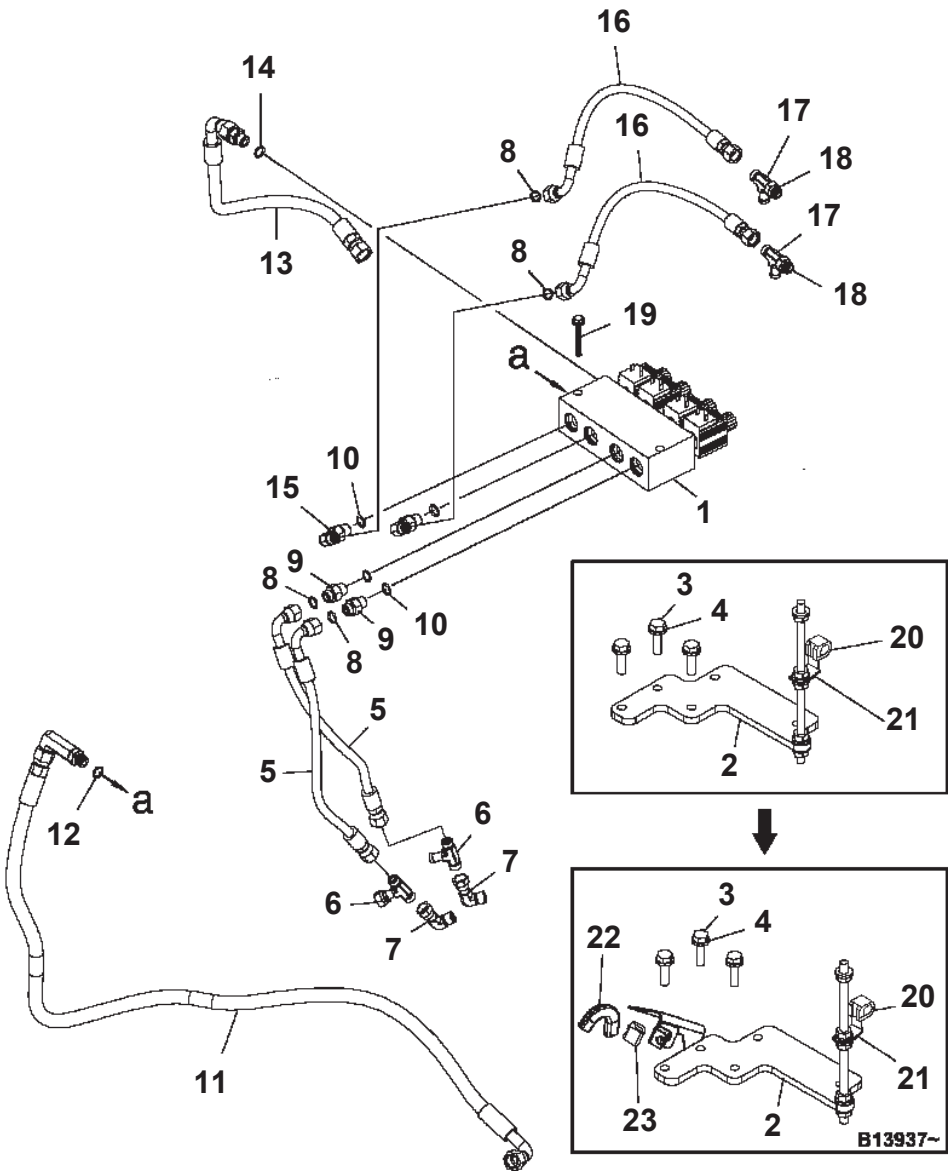

D51EX/PX-22 S/N B10001-UP

B0000-70A0 3D NAVIGATOR 3/3 (#B13009-)

Item	Part No.	Description	Qty	Options
1	12Y-06-13650	VALVE ASS'Y	1	SN:B13009--
2	12Y-06-13661	BRACKET	1	SN:B13937--
	□12Y-06-13660	BRACKET	1	SN:B13009--B13936
3	01010-81040	BOLT	3	SN:B13009--
4	01643-31032	WASHER	3	SN:B13009--
5	12Y-62-13520	HOSE	2	SN:B13009--
6	12Y-62-14940	TEE	2	SN:B13009--
7	12Y-62-15230	ELBOW	2	SN:B13009--
8	02896-11008	O-RING	4	SN:B13009--
9	12Y-62-13561	CONNECTION	2	SN:B13009--
10	12Y-62-14970	O-RING	4	SN:B13009--
11	12Y-62-13491	HOSE	1	SN:B13009--
12	12Y-62-14970	O-RING	2	SN:B13009--
13	02761-00304	HOSE	2	SN:B13009--
14	12Y-62-14970	O-RING	2	SN:B13009--
15	12Y-62-13550	ELBOW	2	SN:B13009--
16	12Y-62-13520	JOINT	2	SN:B13009--
17	12Y-62-14940	ELBOW	2	SN:B13009--
18	12Y-62-13590	ELBOW	2	SN:B13009--
19	12Y-06-13660	BOLT, BRACKET FIXING	2	SN:B13009--
20	08211-01520	CLIP, RISIN	1	SN:B13126--
21	08057-12070	CLIP	1	SN:B13126--
22	12Y-06-18370	SEAL	1	SN:B13126--
23	08211-00720	CLIP	1	SN:B14076--

Ref. B0000-60A0 Page B-070

COOLING SYSTEM

CVPB00041

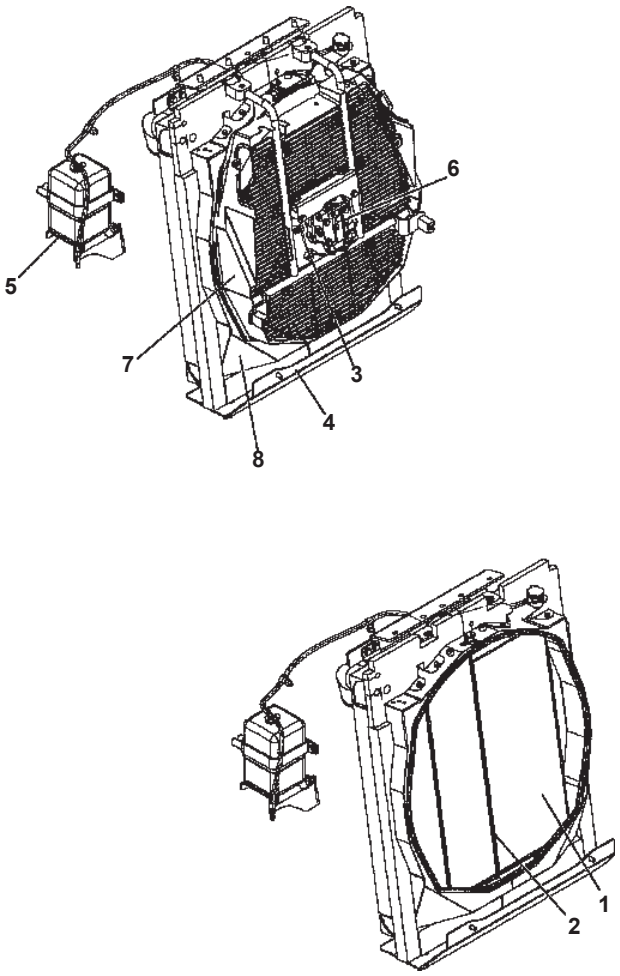

D51EX/PX-22 S/N B10001-UP

C0100-01A0 COOLING SYSTEM

Item	Description	Options
1	HEAT EXCHANGE (SEE FIG. C0110-01A0)	SN:B10001--
2	SEAL GROUP (SEE FIG. C0120-01A0)	SN:B10001--
3	FAN SPEED SENSOR (SEE FIG. C0130-01A0)	SN:B10001--
4	MOUNT GROUP (SEE FIG. C0140-01A0)	SN:B10001--
5	RECOVERY TANK (SEE FIG. C0150-01A0)	SN:B10001--
6	FAN GROUP (SEE FIG. C0160-01A0)	SN:B10001--
7	FAN GUARDS (SEE FIG. C0170-01A0)	SN:B10001--
8	SHROUD (SEE FIG. C0180-01A0)	SN:B10001--

Ref. C0100-01A0 Page C-001

CVPB00042

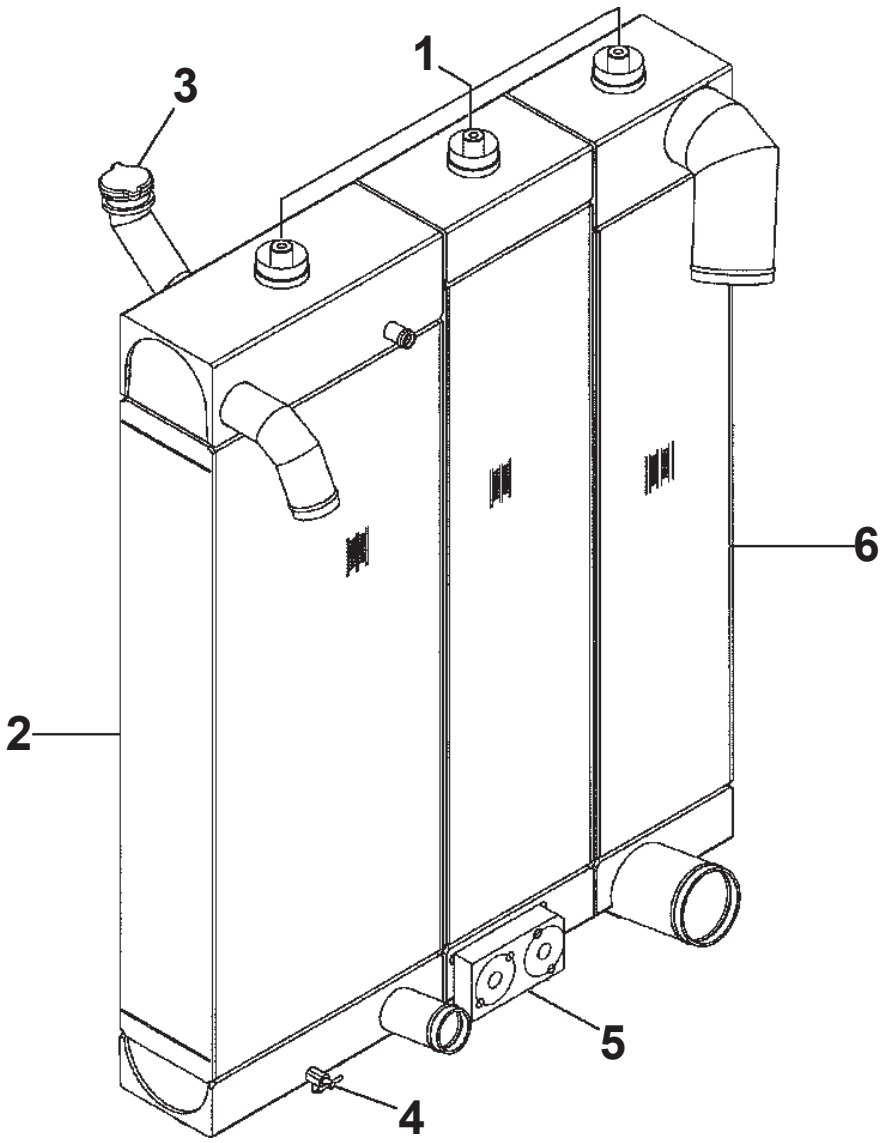

D51EX/PX-22 S/N B10001-UP

C0110-01A0 HEAT EXCHANGER

Item	Part No.	Description	Qty	Options
1	418-03-11390	CUSHION, MOUNT	9	SN:B10001--
2	12Y-03-12670	RADIATOR ASSEMBLY	1	SN:B10001--
3	12Y-03-13880	· CAP	1	SN:B10001--
4	12Y-03-13890	· VALVE, DRAIN	1	SN:B10001--
5	12Y-03-12680	COOLER ASSEMBLY, OIL	1	SN:B10001--
6	12Y-03-12691	COOLER ASSEMBLY, CHARGE AIR	1	SN:B11940--
	□12Y-03-12690	COOLER ASSEMBLY, CHARGE AIR	1	SN:B10001--B11939

Ref. C0110-01A0 Page C-003

CVPB00043

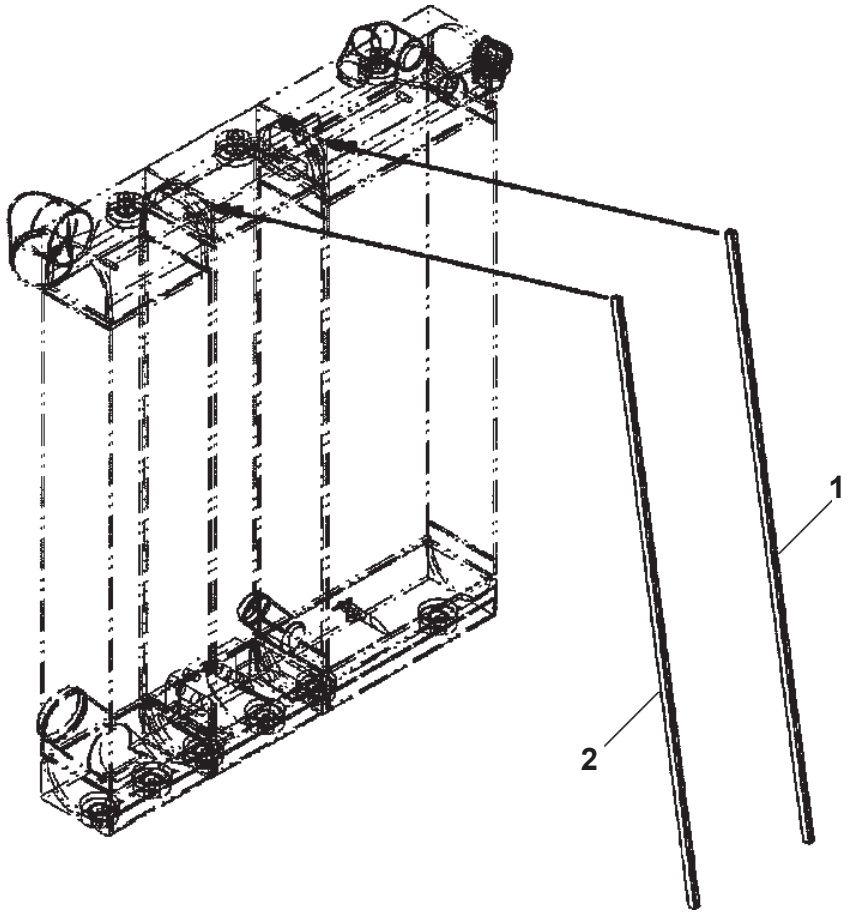

D51EX/PX-22 S/N B10001-UP

C0120-01A0 HEAT EXCHANGER SEALS

Item	Part No.	Description	Qty	Wt.	Options
1	12Y-03-11840	SEAL, RADIATOR AND OIL COOLER	AR	F1	SN:B10001--
2	12Y-03-12340	SEAL, AIR COOLER AND OIL COOLER F1: GAP IS 2 - 4MM (0.079 - 0.157 IN.) USE 1 SEAL IF GAP IS 4 - 8MM (0.157 - 0.315 IN.) USE 2 SEALS	AR	F1	SN:B10001--

Ref. C0120-01A0 Page C-005

CVPB00231

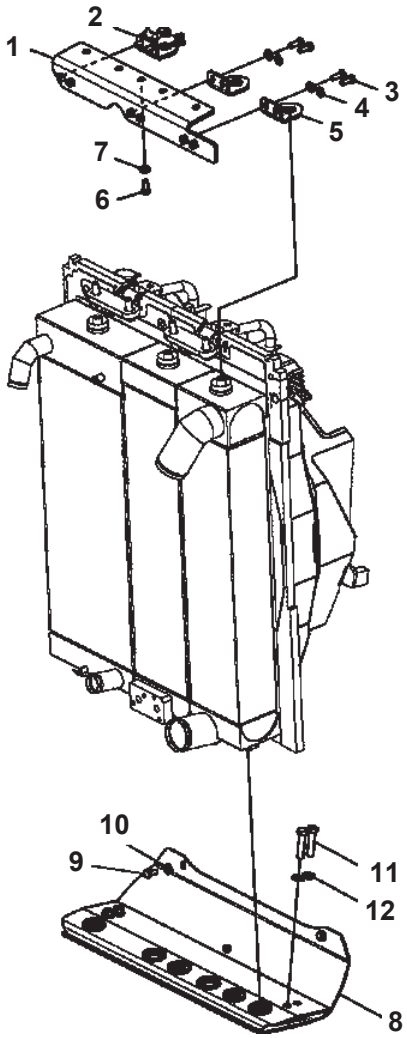

D51EX/PX-22 S/N B10001-UP

C0140-01A0 HEAT EXCHANGER MOUNTING BRACKETS

Item	Part No.	Description	Qty	Options
1	12Y-03-12751	BRACKET	1	SN:B10001--
2	12Y-03-13514	BRACKET	1	SN:B10001--
3	01010-81230	BOLT	6	SN:B10001--
4	01643-31232	WASHER	6	SN:B10001--
5	12Y-03-12731	BRACKET	1	SN:B10001--
6	01435-01025	BOLT	1	SN:B10001--
7	01643-31232	WASHER	2	SN:B10001--
8	12Y-03-12742	BRACKET	1	SN:B10443--
	□12Y-03-12741	BRACKET	1	SN:B10001--B10442
9	01010-81225	BOLT	2	SN:B10001--
10	01643-31232	WASHER	2	SN:B10001--
11	01010-81670	BOLT	4	SN:B10001--
12	01643-31645	WASHER	4	SN:B10001--

Ref. C0140-01A0 Page C-009

CVPB00046

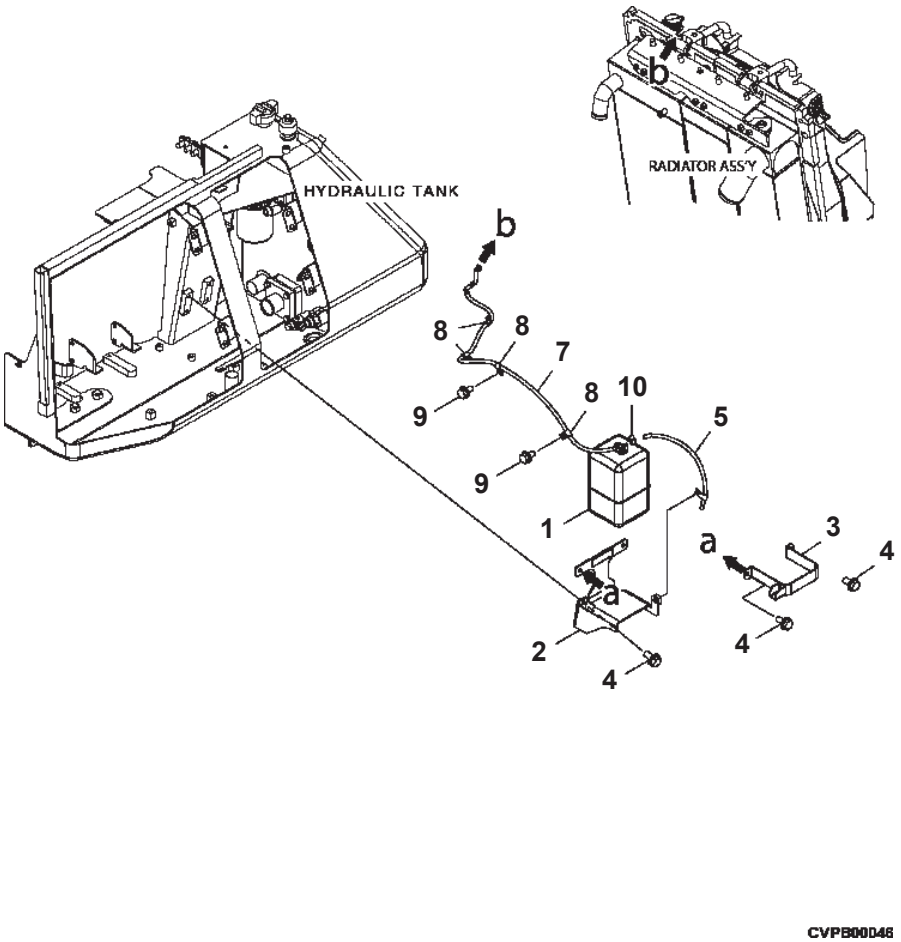

D51EX/PX-22 S/N B10001-UP

C0150-01A0 COOLANT RECOVERY TANK

Item	Part No.	Description	Qty	Options
1	17A-03-14111	TANK, COOLANT RECOVERY	1	SN:B10001--
2	12Y-03-13161	BRACKET, MOUNT TANK	1	SN:B10001--
3	12Y-03-13830	BAND, MOUNT TANK	1	SN:B10001--
4	01010-81225	BOLT	6	SN:B10001--
	01643-31232	WASHER	6	SN:B10001--
5	206-03-43330	HOSE, OVERFLOW	1	SN:B10001--
6	04434-51212	CLAMP, HOSE	1	SN:B10001--
7	12Y-03-14120	HOSE, RADIATOR TO TANK	1	SN:B10001--
8	04434-51210	CLAMP, HOSE	4	SN:B10001--
9	01010-81020	BOLT	2	SN:B10001--
	01643-31032	WASHER	2	SN:B10001--
10	07285-00110	CLIP, HOSE	3	SN:B10001--

Ref. C0150-01A0 Page C-011

CVPB00047

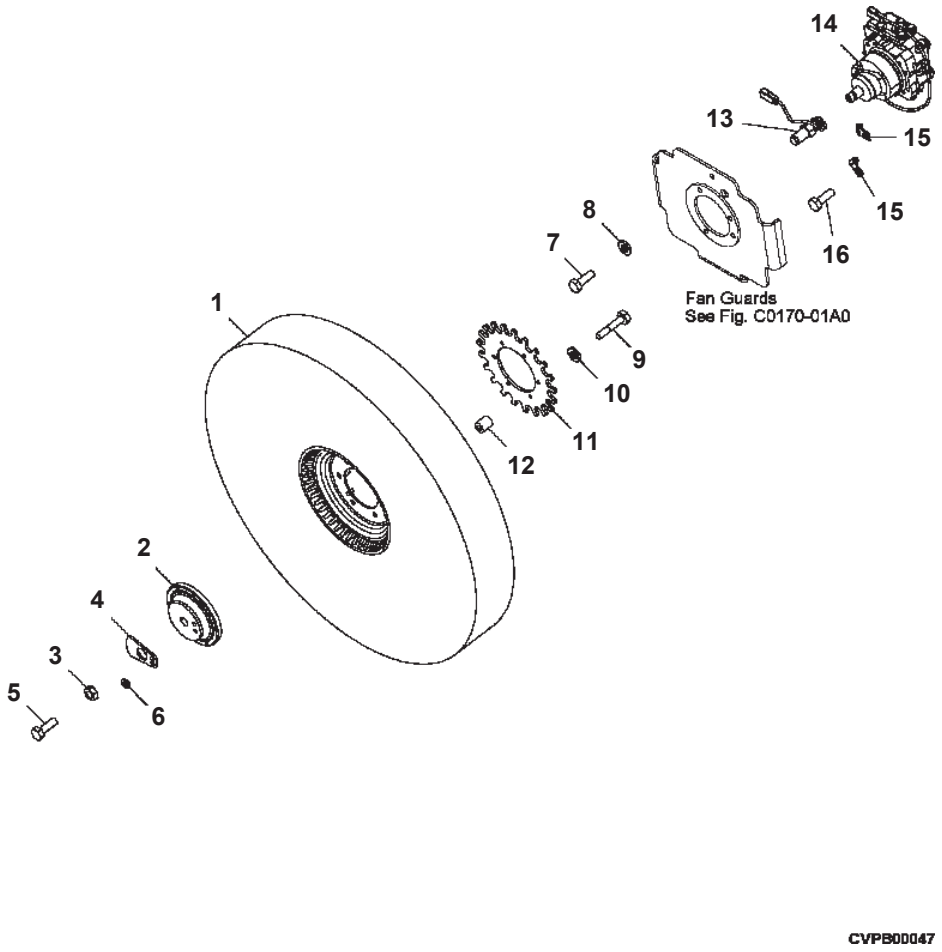

D51EX/PX-22 S/N B10001-UP

C0160-01A0 FAN GROUP AND FAN SPEED SENSOR

Item	Part No.	Description	Qty	Options
1	12Y-03-11310	FAN, COOLING	1	SN:B10001--
2	11Y-03-32211	HUB	1	SN:B10001--
3	01583-11811	NUT	1	SN:B10001--
4	124-03-63250	LOCK	1	SN:B10001--
5	01010-81020	BOLT	1	SN:B10001--
6	01643-31032	WASHER	1	SN:B10001--
7	01010-81030	BOLT, MOUNT MOTOR	4	SN:B10001--
8	01643-31032	WASHER	4	SN:B10001--
9	01010-80845	BOLT	6	SN:B10001--
10	01643-30823	WASHER	6	SN:B10001--
11	12Y-03-11510	PLATE	1	SN:B10001--
12	12Y-03-11520	COLLAR	6	SN:B10001--
13	7861-93-2330	SENSOR, FAN SPEED	1	SN:B10001--
14	708-7R-00690	MOTOR ASSEMBLY, COOLING FAN	1	SN:B10001--
15	04434-50610	CLAMP	2	SN:B10001--
16	01435-01016	BOLT	2	SN:B10001--

Ref. C0160-01A0 Page C-013

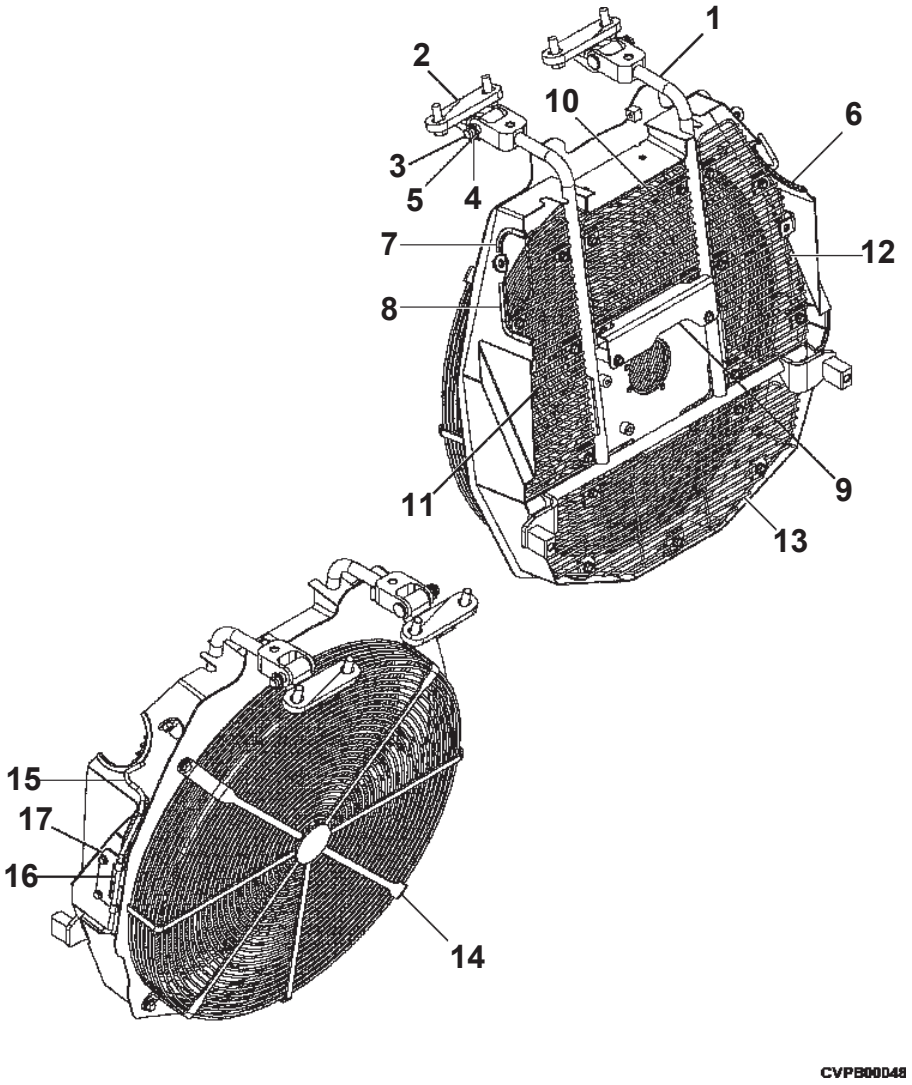

C0170-01A0 FAN GUARDS

Item	Part No.	Description	Qty	Options
1	12Y-03-12862	GUARD, FAN	1	SN:B10001--
	01010-81650	BOLT, MOUNT FAN GUARD	4	SN:B10001--
	01643-31645	WASHER	4	SN:B10001--
2	12Y-03-14111	BRACKET, GUARD HINGE	2	SN:B10001--
	12Y-03-14A10	· BLOCK	1	SN:B10001--
	12Y-03-14A20	· PLATE	1	SN:B10001--
3	12Y-03-12110	PIN, GUARD HINGE	2	SN:B10001--
4	21W-914-3390	WASHER	2	SN:B10001--
5	04050-14030	PIN, COTTER	2	SN:B10001--
6	12Y-03-13640	SEAL, RH	1	SN:B10001--
7	12Y-03-13650	SEAL, LH - UPPER	1	SN:B10001--
8	12Y-03-13660	SEAL, LH - LOWER	1	SN:B10001--
9	12Y-03-11532	COVER, FAN SENSOR	1	SN:B10001--
	01435-01020	BOLT, MOUNT COVER	2	SN:B10001--
10	12Y-03-12971	GUARD, FINGER - UPPER CENTER	1	SN:B10001--
	01435-01020	BOLT, MOUNT FINGER GUARD	4	SN:B10001--
11	12Y-03-13112	GUARD, FINGER - UPPER LH	1	SN:B10599--
	□12Y-03-13111	GUARD, FINGER - UPPER LH	1	SN:B10001--B10598
	01435-01020	BOLT, MOUNT FINGER GUARD	5	SN:B10001--
12	12Y-03-12982	GUARD, FINGER - UPPER RH	1	SN:B10599--
	□12Y-03-12981	GUARD, FINGER - UPPER RH	1	SN:B10001--B10598
	01435-01020	BOLT, MOUNT FINGER GUARD	5	SN:B10001--
13	12Y-03-12992	GUARD, FINGER - LOWER	1	SN:B10001--
	01435-01020	BOLT, MOUNT FINGER GUARD	5	SN:B10001--
14	12Y-03-11972	GUARD, FINGER	1	SN:B10001--
	01010-81020	BOLT	4	SN:B10001--
	01643-31032	WASHER	4	SN:B10001--
15	12Y-03-13341	BAR	1	SN:B10001--
16	12Y-03-13361	PLATE	1	SN:B10001--
17	12Y-03-13351	COVER	1	SN:B10001--
	01010-80816	BOLT, MOUNT COVER	2	SN:B10001--
	01643-30823	WASHER	2	SN:B10001--

CVPB00229

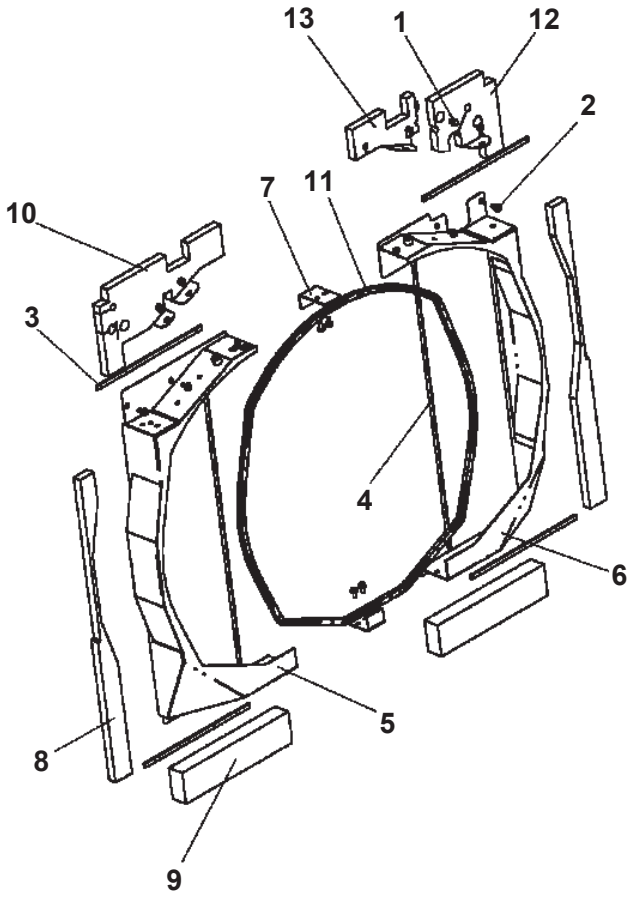

D51EX/PX-22 S/N B10001-UP

C0180-01A0 RADIATOR SHROUD

Item	Part No.	Description	Qty	Options
1	01010-80816	BOLT	1	SN:B10001--
	01643-30823	WASHER	1	SN:B10001--
2	01010-80820	BOLT	12	SN:B10001--
	01643-30823	WASHER	12	SN:B10001--
3	12Y-03-12360	SHEET	4	SN:B10001--
4	12Y-03-12373	SHEET	2	SN:B10001--
5	12Y-03-13242	SHROUD	1	SN:B10001--
6	12Y-03-13252	SHROUD	1	SN:B10001--
7	12Y-03-13260	PLATE	2	SN:B10001--
8	12Y-03-13762	SEAL, FOAM	2	SN:B10001--
9	12Y-03-13811	SEAL	2	SN:B10001--
10	12Y-03-13860	SEAL	1	SN:B10001--
11	12Y-03-13920	SEAL	1	SN:B10001--
12	12Y-03-14130	SEAL	1	SN:B10001--
13	12Y-03-14140	SEAL	1	SN:B10001--

Ref. C0180-01A0 Page C-017

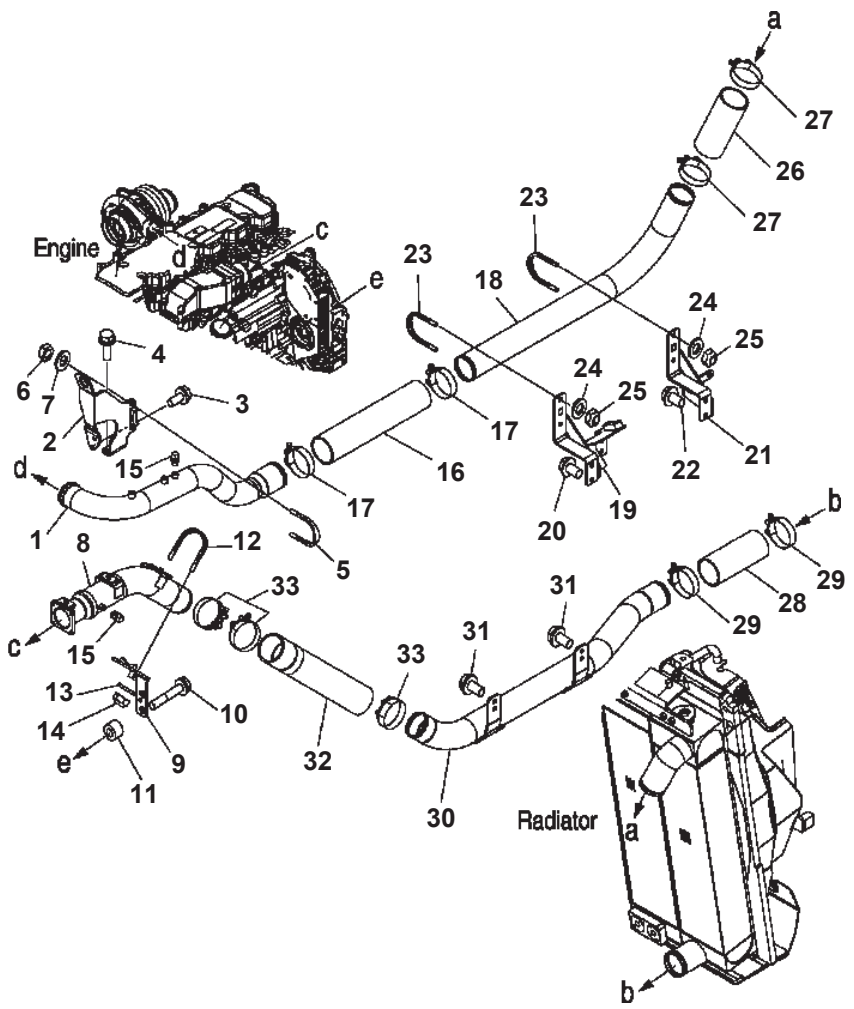

C0200-01A0 COOLING SYSTEM PIPING AIR CHARGER COOLING LINES

Item	Part No.	Description	Qty	Options
1	12Y-03-11211	PIPE, INLET LINE AT TURBOCHARGER	1	SN:B10001--
2	12Y-03-12543	BRACKET	1	SN:B10001--
3	01010-81025	BOLT, MOUNT BRACKET	2	SN:B10001--
	01643-31032	WASHER	2	SN:B10001--
4	01010-81030	BOLT, MOUNT BRACKET	2	SN:B10001--
	01643-31032	WASHER	2	SN:B10001--
5	07283-38378	U-BOLT	1	SN:B10001--
6	01643-31232	WASHER	2	SN:B10001--
7	01597-01211	NUT	2	SN:B10001--
8	12Y-03-12564	PIPE, RETURN LINE AT MANIFOLD	1	SN:B10001--
9	12Y-03-12554	BRACKET	1	SN:B10001--
10	01010-81060	BOLT, MOUNT BRACKET	2	SN:B10001--
	01643-31032	WASHER	2	SN:B10001--
11	6215-71-4480	SPACER, MOUNT BRACKET	2	SN:B10001--
12	07283-38981	U-BOLT	1	SN:B10001--
13	01643-31232	WASHER	2	SN:B10001--
14	01597-01211	NUT	2	SN:B10001--
15	07042-70108	PLUG	2	SN:B10001--
16	12Y-03-12521	HOSE, INLET LINE	1	SN:B10001--
17	175-803-3250	CLAMP, HOSE	2	SN:B10001--
18	12Y-03-11551	TUBE, INLET LINE	1	SN:B10001--
19	12Y-03-12772	BRACKET	1	SN:B10001--
20	01010-81225	BOLT, MOUNT BRACKET	2	SN:B10001--
	01643-31232	WASHER	2	SN:B10001--
21	12Y-03-12781	BRACKET	1	SN:B10001--
22	01010-81225	BOLT, MOUNT BRACKET	2	SN:B10001--
	01643-31232	WASHER	2	SN:B10001--
23	07283-38981	U-BOLT	2	SN:B10001--
24	01643-31232	WASHER	4	SN:B10001--
25	01597-01211	NUT	4	SN:B10001--
26	12Y-03-12921	HOSE, INLET LINE AT AIR COOLER	1	SN:B10001--
27	175-803-3250	CLAMP, HOSE	2	SN:B10001--
28	12Y-03-11591	HOSE, RETURN LINE AT AIR COOLER	1	SN:B10001--
29	175-803-3250	CLAMP, HOSE	2	SN:B10001--
30	12Y-03-11571	TUBE, RETURN LINE	1	SN:B10001--
31	01435-01220	BOLT, MOUNT TUBE	4	SN:B10001--
32	12Y-03-12531	HOSE, RETURN LINE	1	SN:B10001--
33	175-803-3250	CLAMP, HOSE	3	SN:B10001--

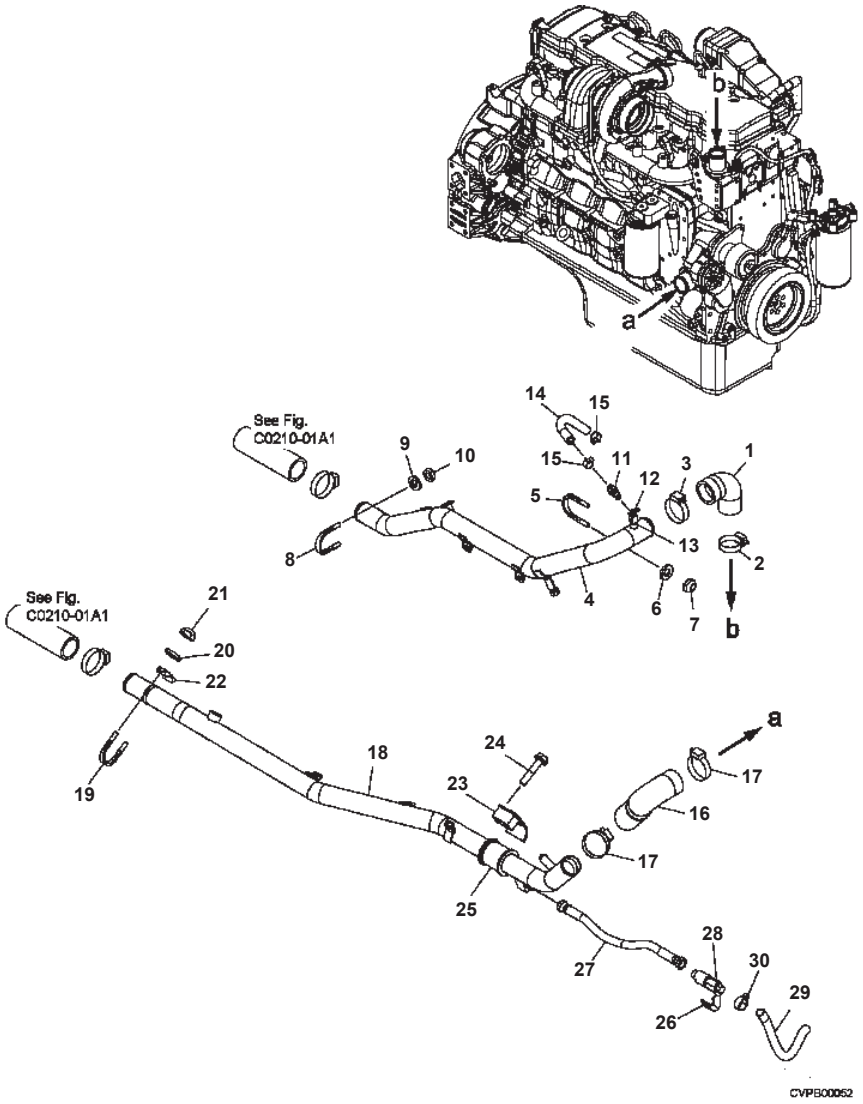

C0210-01A0 COOLING SYSTEM PIPING ENGINE COOLANT LINES (1/3)

Item	Part No.	Description	Qty	Page	Item	Options
1	12Y-03-11241	PIPE, INLET LINE AT ENGINE	1			SN:B10001--
2	07289-00055	CLAMP, HOSE	1			SN:B10001--
3	07289-00070	CLAMP, HOSE	1			SN:B10001--
4	12Y-03-12641	PIPE, INLET LINE	1			SN:B10001--
5	07283-35158	U-BOLT	1			SN:B10001--
6	01643-31032	WASHER	2			SN:B10001--
7	01597-01009	NUT	2			SN:B10001--
8	07283-35150	U-BOLT	1			SN:B10001--
9	01643-31032	WASHER	2			SN:B10001--
10	01597-01009	NUT	2			SN:B10001--
11	12Y-03-13911	FITTING	1			SN:B10274--
	□12Y-03-13910	FITTING	1			SN:B10001--B10273
12	07062-00000	VALVE, PET COCK	1			SN:B10001--
13	12Y-03-13930	FITTING	1			SN:B10001--
14	07287-01024	HOSE	1			SN:B10001--
15	07285-00150	CLIP, HOSE	2			SN:B10001--
16	12Y-03-12650	HOSE, RETURN LINE AT ENGINE	1			SN:B10001--
17	07289-00070	CLAMP, HOSE	2			SN:B10001--
18	12Y-03-12721	TUBE, RETURN LINE	1			SN:B10001--
19	07283-35150	U-BOLT	1			SN:B10001--
20	01643-31032	WASHER	2			SN:B10001--
21	01597-01009	NUT	2			SN:B10001--
22	07283-55161	SEAT, U-BOLT	1			SN:B10001--
23	07094-11432	CLAMP, TUBE	1			SN:B10001--
24	01010-81260	BOLT, MOUNT CLAMP	2			SN:B10001--
	01643-31232	WASHER	2			SN:B10001--
25	07095-01449	CUSHION	1			SN:B10001--
26	12Y-03-13551	BRACKET	1			SN:B10001--
27	12Y-03-13570	HOSE	1			SN:B10001--
28	07730-50004	VALVE, DRAIN	1			SN:B10001--
29	07260-01428	HOSE, DRAIN	1			SN:B10001--
30	07281-00259	CLAMP, HOSE	1			SN:B13279--
31	(12Y-03-11711)	HOSE, INLET LINE (SEE FIG. C0210-01A1)		C-025	2	
32	(07289-00070)	CLAMP HOSE (SEE FIG. C0210-01A1)		C-025	3	

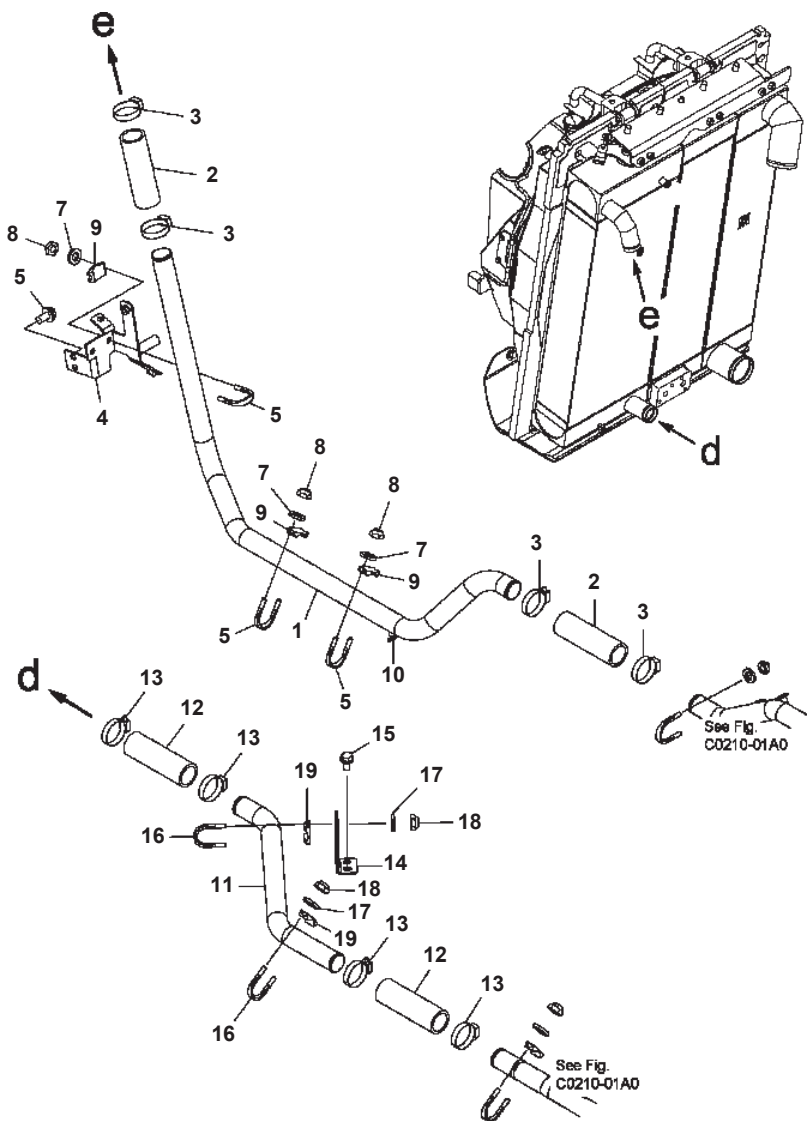

C0210-01A1 COOLING SYSTEM PIPING ENGINE COOLANT LINES (2/3)

Item	Part No.	Description	Qty	Options
1	12Y-03-11641	PIPE, INLET LINE	1	SN:B10001--
2	12Y-03-11711	HOSE, INLET LINE	2	SN:B10001--
3	07289-00070	CLAMP, HOSE	4	SN:B10001--
4	12Y-03-12482	BRACKET	1	SN:B10001--
5	01010-81225	BOLT, MOUNT BRACKET	2	SN:B10001--
	01643-31232	WASHER	2	SN:B10001--
6	07283-35150	U-BOLT	3	SN:B10001--
7	01643-31032	WASHER	6	SN:B10001--
8	01597-01009	NUT	6	SN:B10001--
9	07283-55161	SEAT	3	SN:B10001--
10	07062-00000	PET COCK	1	SN:B10001--
11	12Y-03-12711	PIPE, RETURN LINE	1	SN:B10001--
12	12Y-03-11711	HOSE, RETURN LINE	2	SN:B10001--
13	07289-00070	CLAMP, HOSE	4	SN:B10001--
14	12Y-03-12490	BRACKET	1	SN:B10001--
15	01010-81225	BOLT, MOUNT BRACKET	2	SN:B10001--
	01643-31232	WASHER	2	SN:B10001--
16	07283-35150	U-BOLT	2	SN:B10001--
17	01643-31032	WASHER	4	SN:B10001--
18	01597-01009	NUT	4	SN:B10001--
19	07283-55161	SEAT	2	SN:B10001--

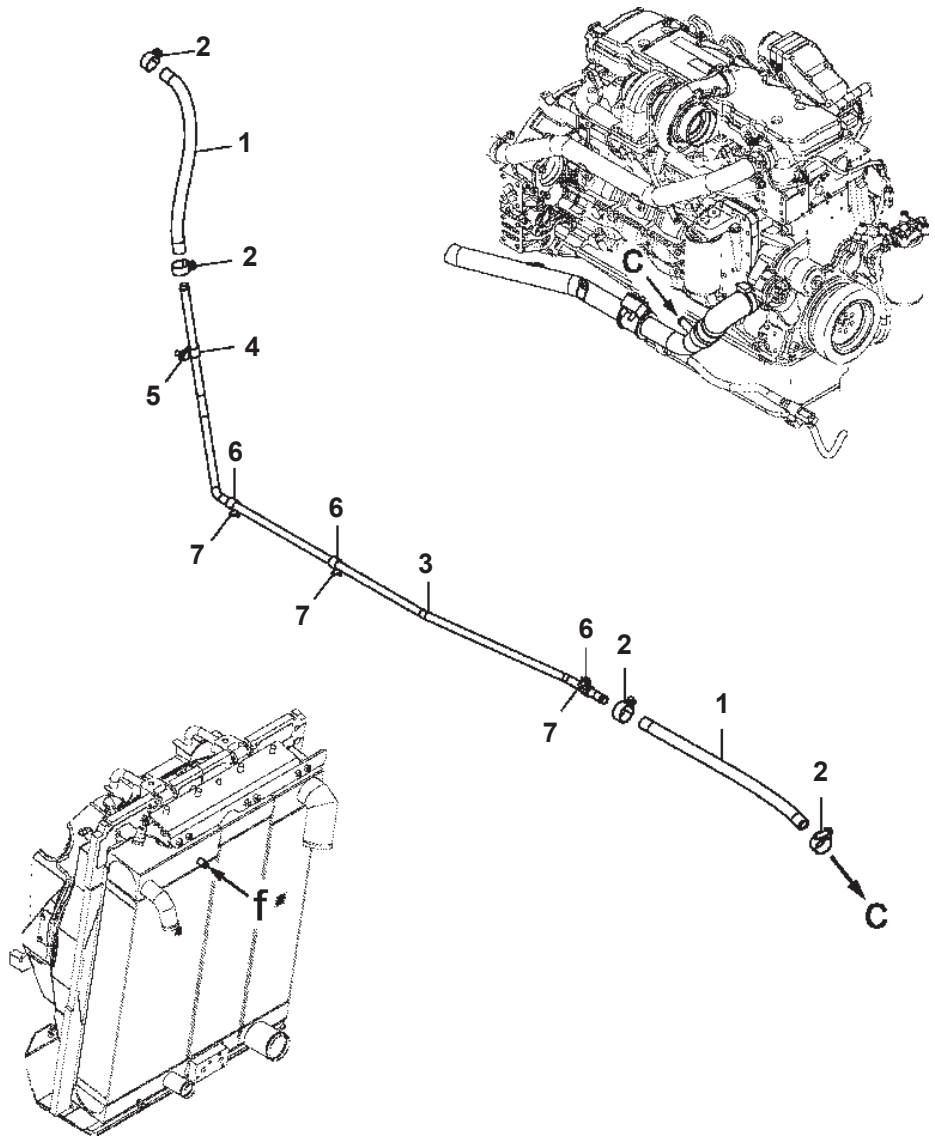

C0210-01A2 COOLING SYSTEM PIPING ENGINE COOLANT LINES (3/3)

Item	Part No.	Description	Qty	Options
1	12Y-03-13681	HOSE, FILL LINE	2	SN:B10001--
2	07281-10289	CLAMP, HOSE	4	SN:B11495--
	07281-00259	□CLAMP, HOSE	4	SN:B10001--B11494
3	12Y-03-13672	TUBE, FILL LINE	1	SN:B10001--
4	04434-51912	CLAMP	1	SN:B10001--
5	01010-81225	BOLT, MOUNT CLAMP	1	SN:B10001--
	01643-31232	WASHER	1	SN:B10001--
6	04434-51910	CLAMP	3	SN:B10001--
7	01010-81020	BOLT, MOUNT CLAMP	3	SN:B10001--
	01643-31032	WASHER	3	SN:B10001--

CVPB00055

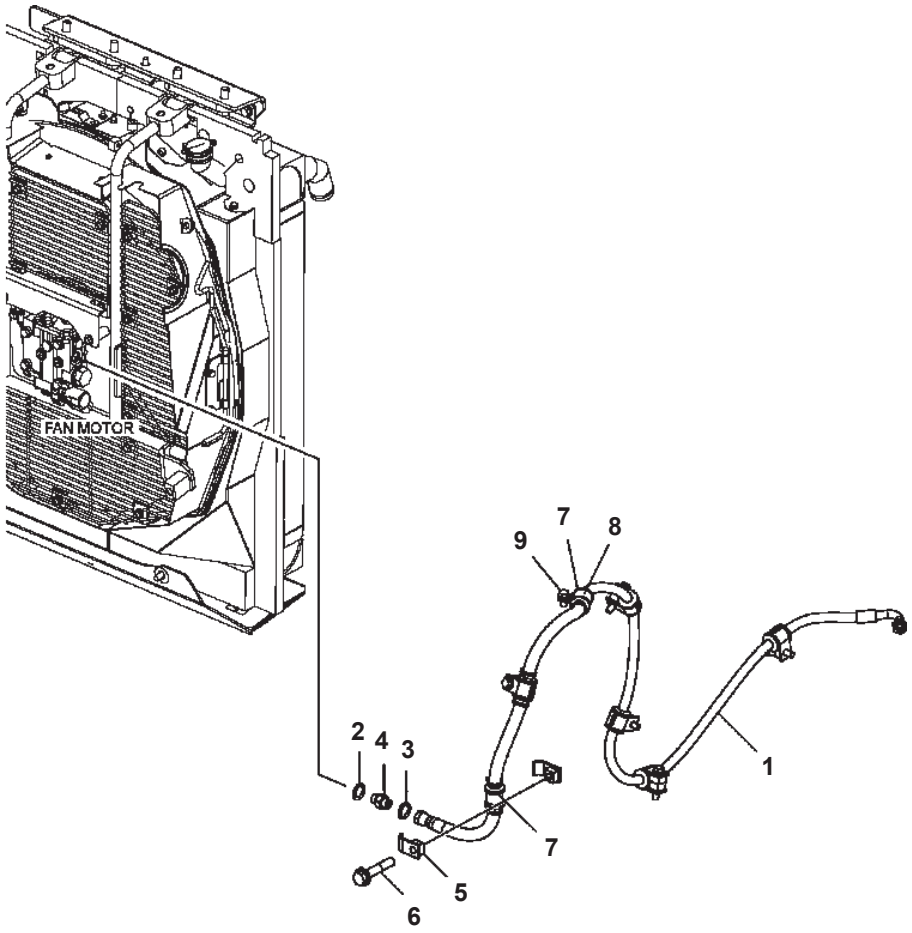

D51EX/PX-22 S/N B10001-UP

C0300-01A0 COOLING SYSTEM PIPING FAN SUPPLY LINE

Item	Part No.	Description	Qty	Options
1	12Y-03-13463	HOSE, FAN SUPPLY	1	SN:B10001--
2	07002-12034	O-RING	1	SN:B10001--
3	02781-00422	UNION	1	SN:B10001--
4	02896-11012	O-RING	1	SN:B10001--
5	07094-10417	CLAMP, HOSE	12	SN:B10001--
6	01010-81265	BOLT, MOUNT CLAMP	6	SN:B10001--
	01643-31232	WASHER	6	SN:B10001--
7	07095-00419	CUSHION	7	SN:B10001--
8	12Y-03-13541	CLAMP, HOSE	1	SN:B10001--
9	01010-81225	BOLT, MOUNT CLAMP	1	SN:B10001--
	01643-31232	WASHER	1	SN:B10001--

Ref. C0300-01A0 Page C-029

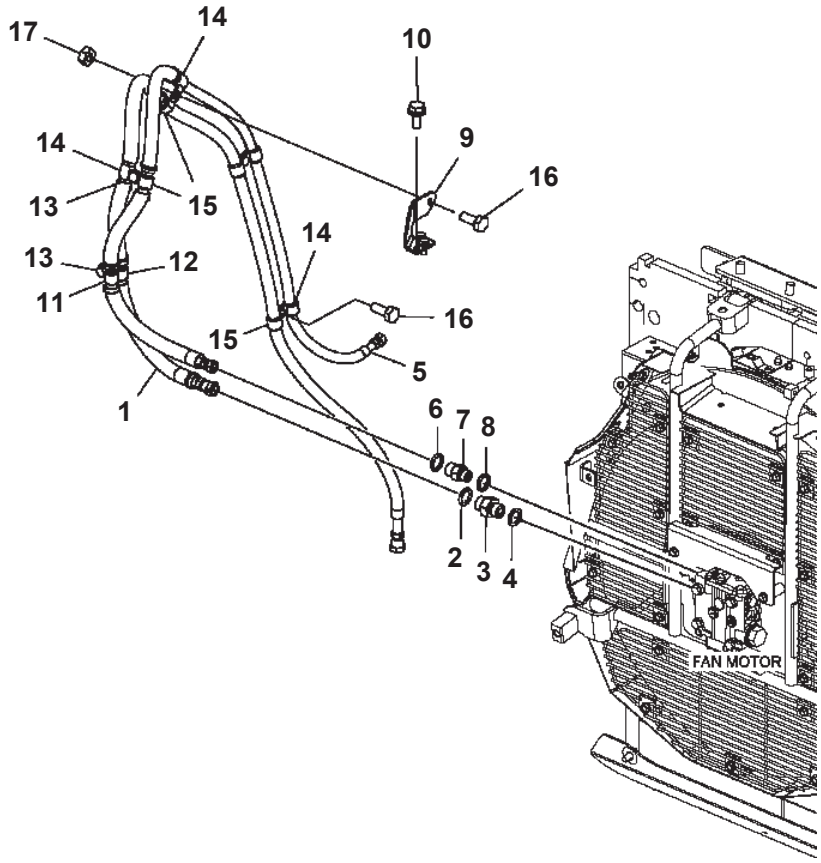

C0300-01A1 COOLING SYSTEM PIPING FAN RETURN LINE

Item	Part No.	Description	Qty	Options
1	12Y-03-13471	HOSE, FAN RETURN	1	SN:B10001--
2	02896-11012	O-RING	1	SN:B10001--
3	02781-00422	UNION	1	SN:B10001--
4	07002-12034	O-RING	1	SN:B10001--
5	12Y-03-13482	HOSE, FAN RETURN	1	SN:B10207--
	□12Y-03-13481	HOSE, FAN RETURN	1	SN:B10001--B10206
6	02896-11009	O-RING	1	SN:B10001--
7	02781-00311	UNION	1	SN:B10001--
8	07002-11423	O-RING	1	SN:B10001--
9	12Y-03-13820	BRACKET	1	SN:B10001--
10	01010-81025	BOLT, MOUNT BRACKET	3	SN:B10001--
	01643-31032	WASHER	3	SN:B10001--
11	04434-52112	CLAMP, HOSE	2	SN:B10001--
12	04434-52312	CLAMP, HOSE	2	SN:B10001--
13	01010-81225	BOLT, MOUNT CLAMP	2	SN:B10001--
	01643-31232	WASHER	2	SN:B10001--
14	04434-52110	CLAMP, HOSE	3	SN:B10001--
15	04434-52310	CLAMP, HOSE	3	SN:B10001--
16	01010-81025	BOLT, MOUNT CLAMP	2	SN:B10001--
	01643-31032	WASHER	2	SN:B10001--
17	01580-11008	NUT, MOUNT CLAMP	1	SN:B10001--

FUEL TANK AND RELATED PARTS

CVPB00203

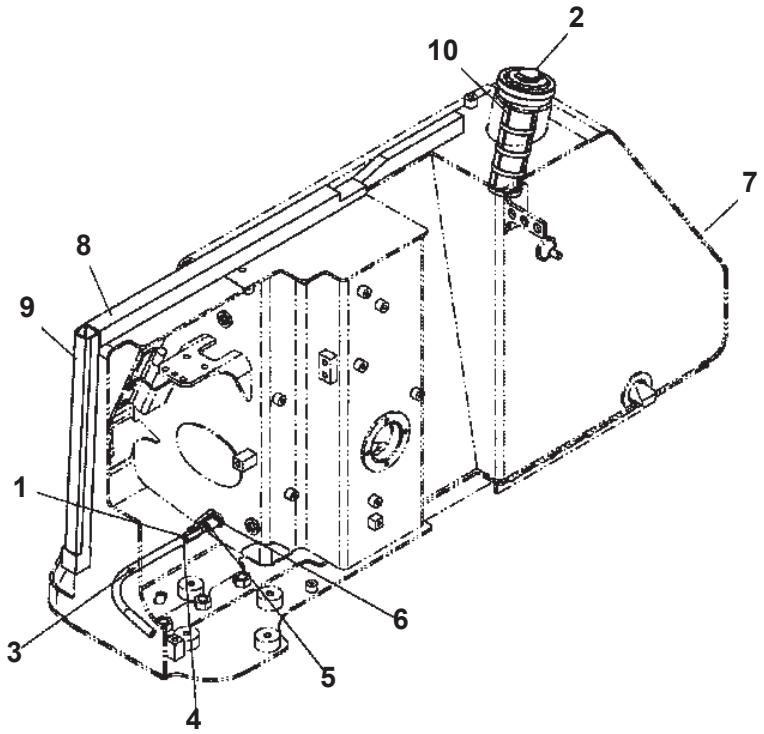

D51EX/PX-22 S/N B10001-UP

D0100-01A0 FUEL TANK (#B10001-B12351)

Item	Part No.	Description	Qty	Options
1	120-04-41130	NIPPLE	1	SN:B10001--B12351
2	134-04-71180	CAP	1	SN:B10372--B12351
	134-04-61180	CAP	1	SN:B10001--B10371
3	07270-01035	HOSE, FUEL	1	SN:B10001--B12351
4	07285-00115	CLIP	1	SN:B10001--B12351
5	07325-10200	FITTING	1	SN:B10001--B12351
6	07700-40240	VALVE, DRAIN	1	SN:B10001--B12351
7	12Y-04-11116	TANK, FUEL	1	SN:B10848--B12351
	□12Y-04-11115	TANK, FUEL	1	SN:B10698--B10847
	□12Y-04-11114	TANK, FUEL	1	SN:B10069--B10697
	□12Y-04-11113	TANK, FUEL	1	SN:B10001--B10068
8	12Y-54-11870	SEAL, R.H.	1	SN:B10001--B12351
9	12Y-54-11951	SEAL	1	SN:B10001--B12351
10	22U-04-21231	STRAINER	1	SN:B10001--B12351

Ref. D0100-01A0 Page D-001

CVPB00203A

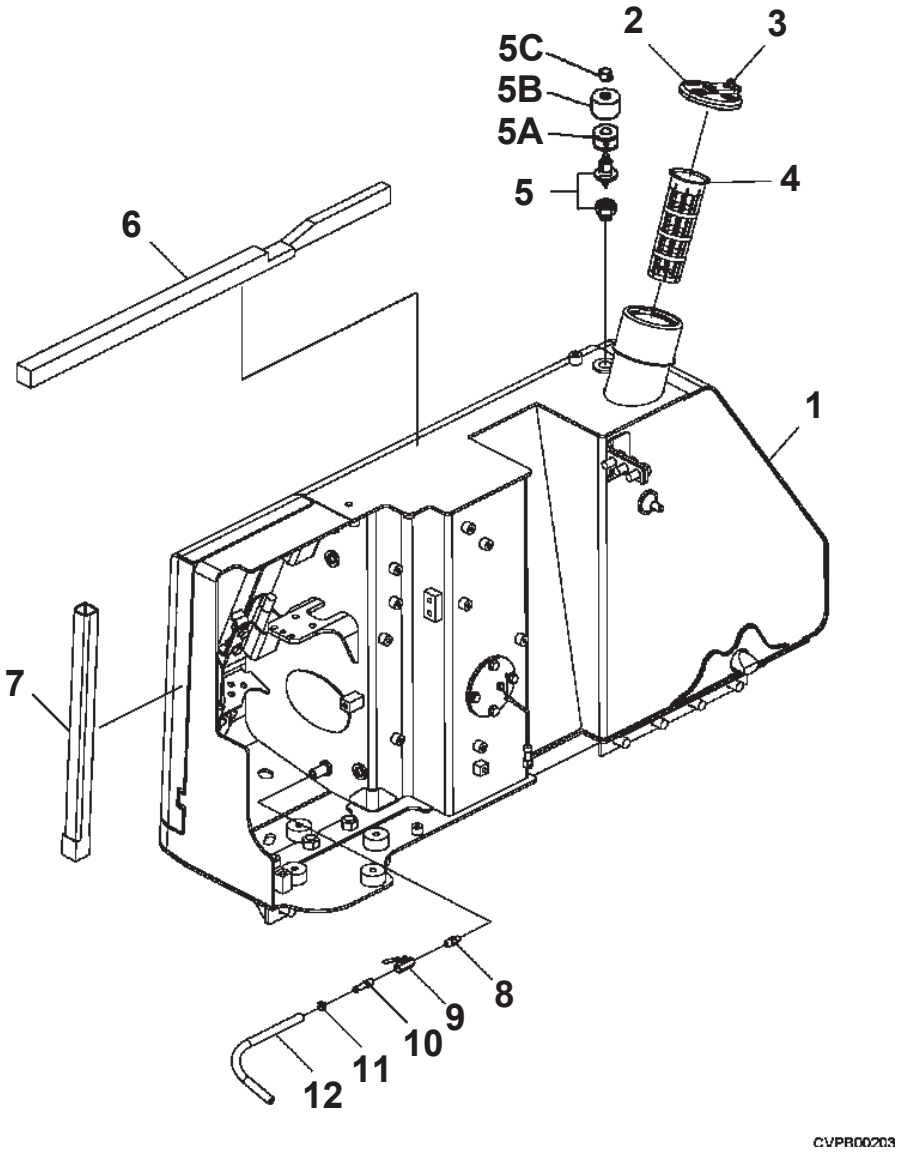

D51EX/PX-22 S/N B10001-UP

D0100-01A0A FUEL TANK (#B12352-)

Item	Part No.	Description	Qty	Options
1	12Y-04-11117	TANK, FUEL	1	SN:B12352--
2	17A-04-41411	CAP	1	SN:B12352--
3	17A-04-41440	LOCK	1	SN:B12352--
4	07056-18422	STRAINER	1	SN:B12352--
5	22U-60-21520	BREATHER	1	SN:B12352--
5A	421-60-35170	· ELEMENT	1	SN:B12352--
5B	421-60-35180	· COVER	1	SN:B12352--
5C	421-60-35190	· NUT	1	SN:B12352--
6	12Y-54-11870	SEAL	1	SN:B12352--
7	12Y-54-11951	SEAL	1	SN:B12352--
8	07325-10200	FITTING	1	SN:B12352--
9	07700-40240	VALVE, DRAIN	1	SN:B12352--
10	120-04-41130	NIPPLE	1	SN:B12352--
11	07285-00115	CLIP	1	SN:B12352--
12	07270-01035	HOSE, FUEL	1	SN:B12352--

Ref. D0100-01A0A Page D-001A

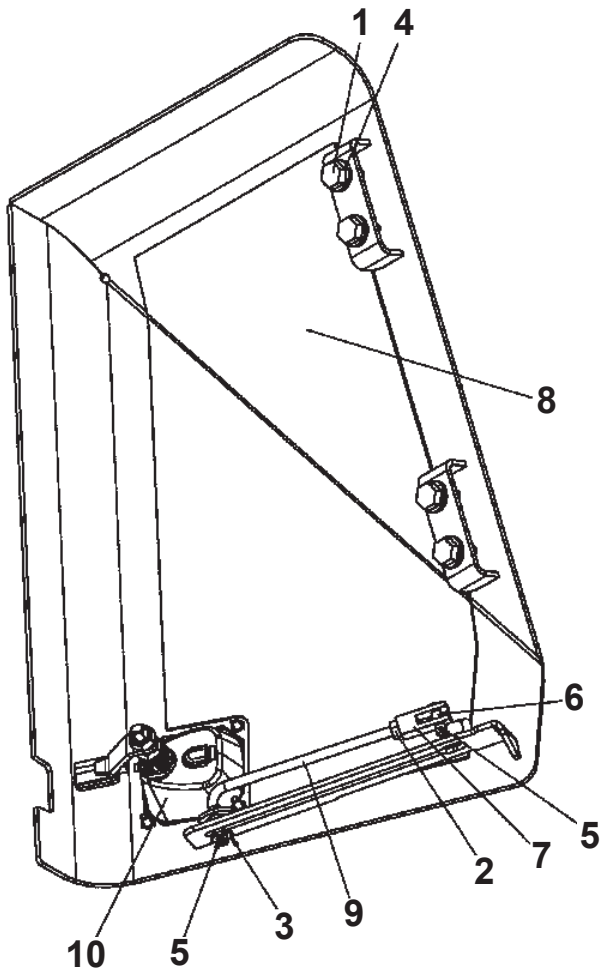

D51EX/PX-22 S/N B10001-UP

D0110-01A0 FUEL TANK COVER

Item	Part No.	Description	Qty	Options
1	01010-81225	BOLT	4	SN:B10001--
2	01580-10806	NUT	1	SN:B10001--
3	207-57-11260	WASHER	1	SN:B10001--
4	01643-31232	WASHER	4	SN:B10001--
5	04050-12015	PIN, COTTER	2	SN:B10001--
6	04205-10825	PIN	1	SN:B10001--
7	04210-20832	YOKE	1	SN:B10001--
8	12Y-04-11123	COVER, FUEL TANK	1	SN:B11431--
	□12Y-04-11122	COVER, FUEL TANK	1	SN:B10001--B11430
9	12Y-04-11542	BAR	1	SN:B10013--
	□12Y-04-11541	BAR	1	SN:B10001--B10012
10	11Y-54-31961	LEVER	1	SN:B11630--
	□11Y-54-31960	LEVER	1	SN:B11140--B11629
	□17A-54-45181	LEVER	1	SN:B10013--B11139
	□17A-54-45180	LEVER	1	SN:B10001--B10012

Ref. D0110-01A0 Page D-003

CVPB00205

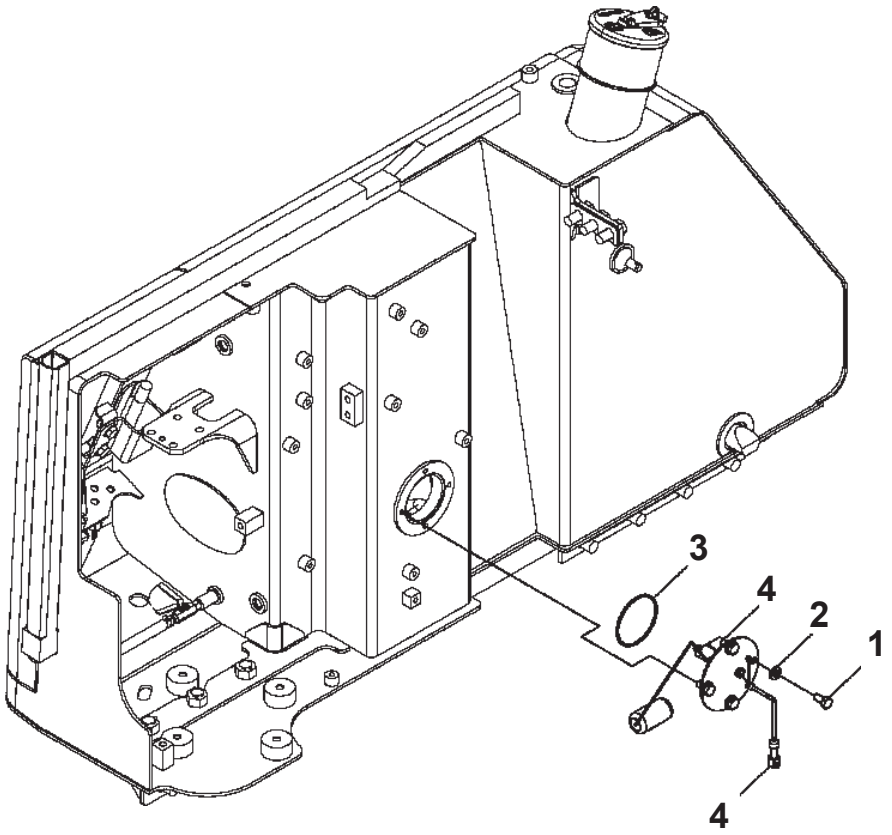

D51EX/PX-22 S/N B10001-UP

D0120-01A0 FUEL LEVEL SENSOR

Item	Part No.	Description	Qty	Options
1	01010-81020	BOLT	4	SN:B10001--
2	01643-31032	WASHER	4	SN:B10001--
3	07000-12085	O-RING	1	SN:B10001--
4	7861-93-4940	SENSOR, FUEL LEVEL	1	SN:B10001--

Ref. D0120-01A0 Page D-005

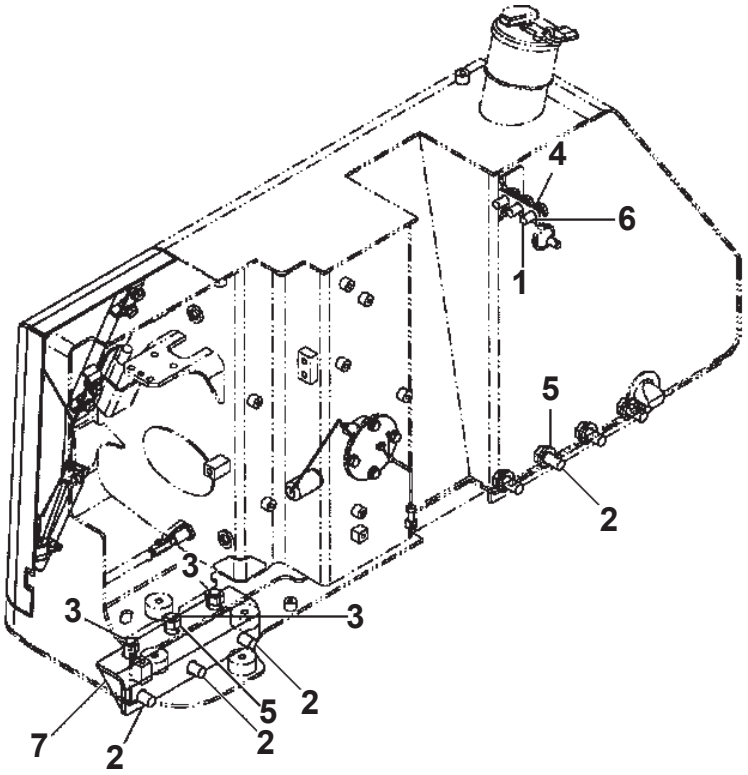

CVPB00206

D0130-01A0 FUEL TANK MOUNTING

Item	Part No.	Description	Qty	Options
1	205-27-71670	BOLT	3	SN:B10001--
2	01010-82040	BOLT	7	SN:B10001--
3	01010-82045	BOLT	3	SN:B10001--
4	01643-31645	WASHER	3	SN:B10001--
5	01643-32060	WASHER	10	SN:B10001--
6	12Y-04-11521	PLATE (SHIM)	1	SN:B10001--
7	12Y-04-11630	BRACKET	1	SN:B10001--

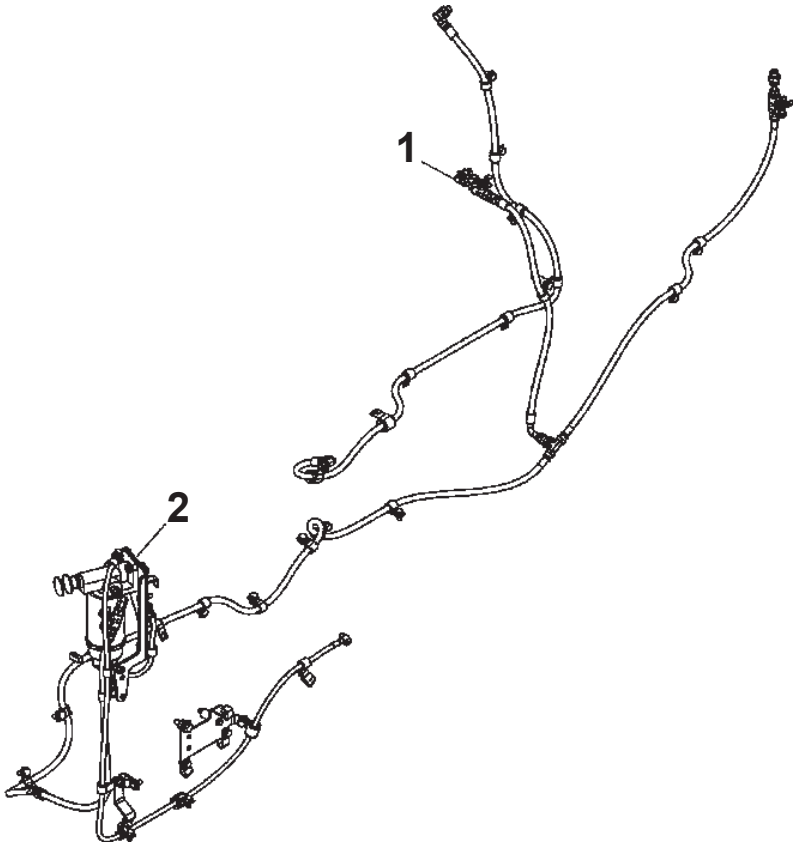

D0200-01A0 FUEL LINE PIPING

Item	Description	Options
1	PIPING, FUEL (SEE FIG. D0210-01A0)	SN:B10001--
2	PRE-FILTER, FUEL (SEE FIG. D0220-01A0)	SN:B10001--

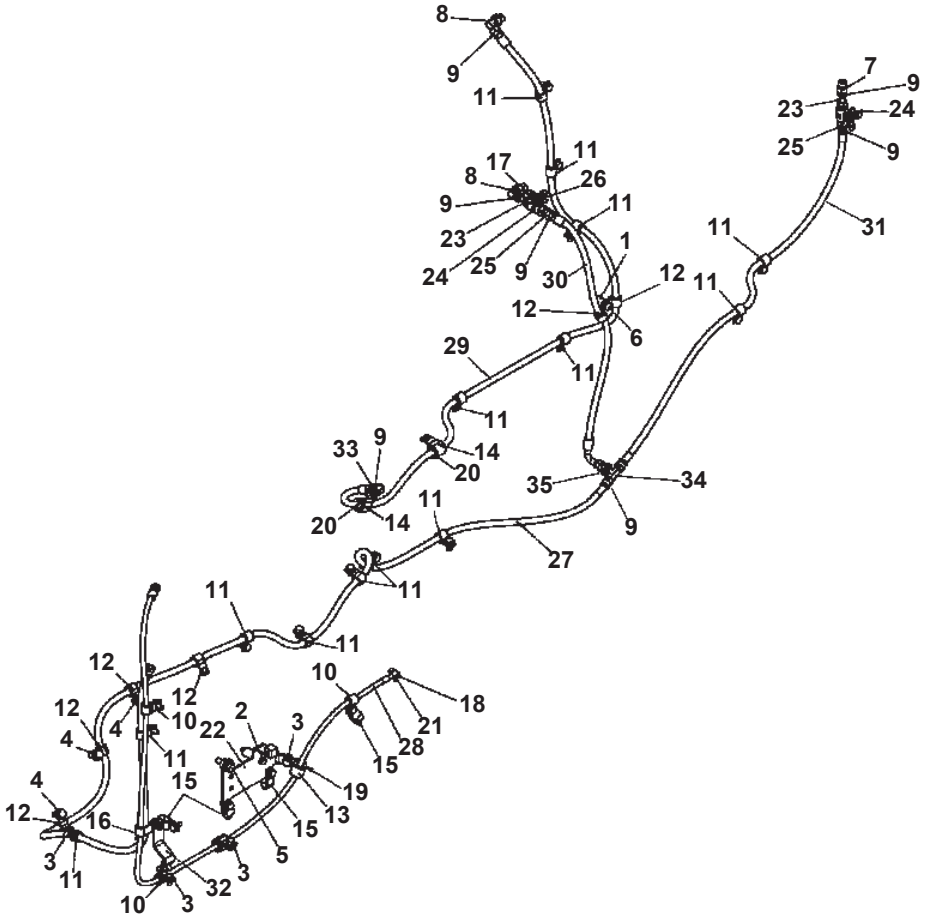

D0210-01A0 FUEL LINES

Item	Part No.	Description	Qty	Options
1	427-54-21740	SPACER	1	SN:B10001--
2	01010-80870	BOLT	1	SN:B10001--
	01643-30823	WASHER	1	SN:B10001--
3	01010-81020	BOLT	24	SN:B10001--
	01643-31032	WASHER	24	SN:B10001--
4	01010-81225	BOLT	3	SN:B10001--
	01643-31232	WASHER	3	SN:B10001--
5	01010-81240	BOLT	1	SN:B10001--
	01643-31232	WASHER	1	SN:B10001--
6	01010-81250	BOLT	1	SN:B10001--
	01643-31232	WASHER	1	SN:B10001--
7	02781-00313	UNION	1	SN:B10001--
8	02782-10313	ELBOW	2	SN:B10001--
9	02896-11009	O-RING	9	SN:B10001--
10	04434-51710	CLIP	3	SN:B10001--
11	04434-51910	CLIP	14	SN:B10001--
12	04434-51912	CLIP	6	SN:B10001--
13	04434-52511	CLIP	2	SN:B10001--
14	04434-52711	CLIP	2	SN:B10001--
15	04435-51510	CLIP	4	SN:B10001--
16	04435-51910	CLIP	1	SN:B10001--
17	07002-11823	O-RING	3	SN:B10001--
18	07005-01212	SEAL, WASHER	2	SN:B10001--
19	07095-20318	CUSHION	2	SN:B10001--
20	07095-20418	CUSHION	2	SN:B11429--
	□07095-20419	CUSHION	2	SN:B10001--B11428
21	07206-30812	JOINT	1	SN:B10001--
22	12Y-01-11893	BRACKET	1	SN:B10001--
23	12Y-04-11411	UNION	2	SN:B10001--
24	12Y-04-11420	VALVE	2	SN:B10001--
25	12Y-04-11430	UNION	2	SN:B10001--
26	12Y-04-11461	O-RING	4	SN:B10001--
27	12Y-04-11553	HOSE ASSEMBLY	1	SN:B10001--
28	12Y-04-11584	HOSE ASSEMBLY	1	SN:B10001--
29	12Y-04-11593	HOSE ASSEMBLY W/CONDUIT	1	SN:B10001--
30	12Y-04-11612	HOSE ASSEMBLY W/CONDUIT	1	SN:B10001--
31	12Y-04-11622	HOSE ASSEMBLY	1	SN:B10001--
32	12Y-04-11790	BRACKET	1	SN:B10001--
33	12Y-62-11721	ELBOW	1	SN:B10001--
34	12Y-62-12490	FITTING	1	SN:B10001--
35	12Y-62-12510	NUT	1	SN:B10001--

CVPB00202A

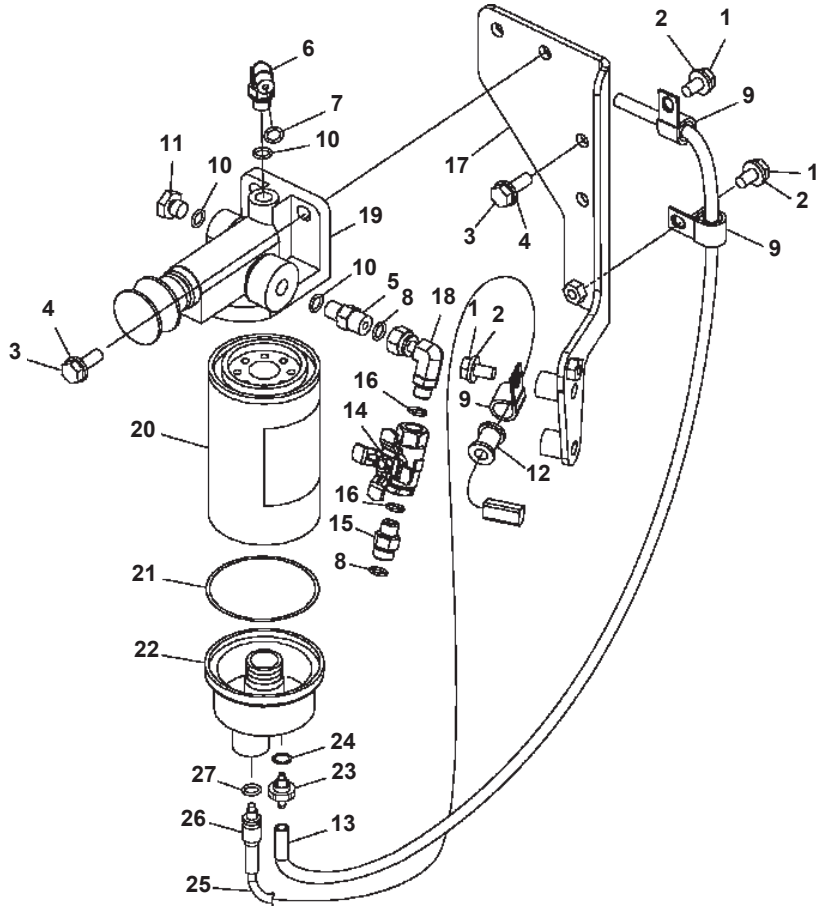

D51EX/PX-22 S/N B10001-UP

D0220-01A0 FUEL PRE-FILTER

Item	Part No.	Description	Qty	Options
1	01010-81020	BOLT	3	SN:B10001--
2	01643-31032	WASHER	3	SN:B10001--
3	01010-81030	BOLT	4	SN:B10001--
4	01643-31032	WASHER	4	SN:B10001--
5	02781-0031D	UNION	1	SN:B10001--
6	02782-10210	ELBOW	1	SN:B10001--
7	02896-11008	O-RING	1	SN:B10001--
8	02896-11009	O-RING	2	SN:B10001--
9	04434-51710	CLIP	3	SN:B10001--
10	07002-11423	O-RING	3	SN:B10001--
11	07040-11409	PLUG	1	SN:B10001--
12	07095-20211	CUSHION	1	SN:B10001--
13	07270-20855	HOSE, DRAIN	1	SN:B11666--
	□07270-00855	HOSE, DRAIN	1	SN:B10001--B11665
14	12Y-04-11420	VALVE	1	SN:B10001--
15	12Y-04-11430	UNION	1	SN:B10001--
16	12Y-04-11461	O-RING	2	SN:B10001--
17	12Y-04-11783	BRACKET	1	SN:B11593--
	□12Y-04-11782	BRACKET	1	SN:B10001--B11592
18	12Y-04-11811	ELBOW	1	SN:B10001--
	6754-71-7402	FILTER ASSEMBLY	1	SN:B11176--
	□6754-71-7401	FILTER ASSEMBLY	1	SN:B10001--B11175
19	6754-71-7200	· HEAD	1	SN:B10001--
	600-311-3602	· FILTER ASSEMBLY	1	SN:B11176--
	□600-311-3601	· FILTER ASSEMBLY	1	SN:B10001--B11175
	600-311-3610	· · CARTRIDGE ASSEMBLY	1	SN:B10001--
20	(NSS)	· · · CARTRIDGE	1	SN:B10001--
21	600-311-3630	· · · SEAL	1	SN:B10001--
22	600-311-3640	· · BOWL	1	SN:B10001--
	600-311-3660	· · VALVE ASSEMBLY	1	SN:B10001--
23	600-311-3710	· · · VALVE	1	SN:B10001--
24	600-311-3670	· · · SEAL	1	SN:B10001--
	600-311-3722	· · SENSOR	1	SN:B11176--
	□600-311-3721	· · SENSOR	1	SN:B10001--B11175
25	(NSS)	· · · TUBE	1	SN:B10001--
26	(NSS)	· · · SENSOR	1	SN:B10001--
27	600-311-3690	· · · O-RING	1	SN:B10001--

Ref. D0220-01A0 Page D-013

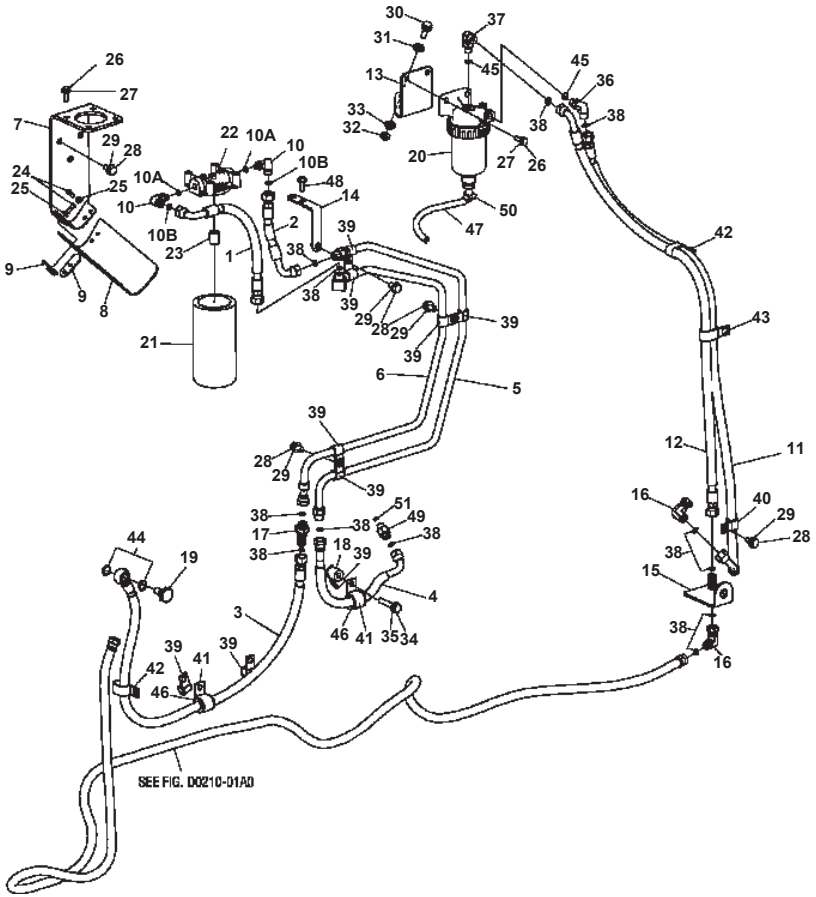

D51EX/PX-22 S/N B10001-UP

D0220-02A0 FUEL LINES AND FILTER (WITH WATER SEPARATOR)

Item	Part No.	Description	Qty	Options
1	12Y-04-11840	HOSE	1	SN:B10868--
2	12Y-04-11850	HOSE	1	SN:B10868--
3	12Y-04-11863	HOSE	1	SN:B11462--
	□12Y-04-11862	HOSE	1	SN:B10868--B11461
4	12Y-04-11871	HOSE	1	SN:B10868--
5	12Y-04-11880	TUBE	1	SN:B10868--
6	12Y-04-11891	TUBE	1	SN:B10868--
7	12Y-04-11910	BRACKET	1	SN:B10868--
8	12Y-04-11920	PLATE, RUBBER	1	SN:B10868--
9	12Y-04-11930	BRACKET	2	SN:B10868--
10	12Y-04-11940	ELBOW	2	SN:B10868--
10A	07002-11223	· O-RING	1	SN:B10868--
10B	02896-11009	· O-RING	1	SN:B10868--
11	12Y-04-11950	HOSE	1	SN:B10868--
12	12Y-04-11961	HOSE	1	SN:B10868--
13	12Y-04-11971	BRACKET	1	SN:B10868--
14	12Y-04-11981	BRACKET	1	SN:B10868--
15	12Y-04-11990	BRACKET	1	SN:B10868--
16	12Y-62-11721	ELBOW	2	SN:B10868--
17	12Y-62-13291	UNION	1	SN:B10868--
18	195-33-1120	SPACER	1	SN:B10868--
19	12Y-04-11940	EYE-BOLT	1	SN:B11462--
	□203-62-57730	EYE-BOLT	1	SN:B10868--B11461
20	600-311-7611	WATER ASSEMBLY	1	SN:B13519--
	□600-311-7610	WATER ASSEMBLY	1	SN:B10001--B13518
21	6754-79-6140	CARTRIDGE	1	SN:B10868--
22	6754-72-6110	HEAD FILTER	1	SN:B11509--
	□6754-71-6320	HEAD FILTER	1	SN:B10868--B11508
23	6754-71-6330	ADAPTER	1	SN:B10868--
24	01245-00620	BOLT	4	SN:B10868--
25	01643-70623	WASHER	4	SN:B10868--
26	01010-80825	BOLT	6	SN:B10868--
27	01643-30823	WASHER	6	SN:B10868--
28	01010-81020	BOLT	6	SN:B10868--
29	01643-31032	WASHER	6	SN:B10868--
30	01010-81030	BOLT	4	SN:B10868--
31	01643-31032	WASHER	4	SN:B10868--
32	01596-01009	NUT	3	SN:B10868--
33	01643-31032	WASHER	3	SN:B10868--
34	01010-81055	BOLT	1	SN:B10868--

Ref. D0220-02A0 Page D-015

D0220-02A0 FUEL LINES AND FILTER (WITH WATER SEPARATOR)

Item	Part No.	Description	Qty	Options
35	01643-31032	WASHER	1	SN:B10868--
36	02782-10313	ELBOW	1	SN:B10868--
37	02782-1031B	ELBOW	1	SN:B10868--
38	02896-11009	O-RING	12	SN:B10868--
39	04434-51510	CLIP	9	SN:B10868--
40	04434-51910	CLIP	1	SN:B10868--
41	04434-52711	CLIP	2	SN:B10868--
42	04435-51910	CLAMP	2	SN:B10868--
43	04435-51912	CLAMP	1	SN:B10868--
44	07000-12018	O-RING	2	SN:B10868--B11461
45	07002-11823	O-RING	2	SN:B10868--
46	07095-20418	CUSHION	2	SN:B10868--
47	07270-20805	HOSE	1	SN:B10868--
48	01435-01020	BOLT	2	SN:B10868--
49	12Y-62-14610	UNION	1	SN:B10868--
50	07285-00115	CLIP	1	SN:B10868--
51	07000-12012	O-RING	1	SN:B10868--

ELECTRICAL SYSTEM

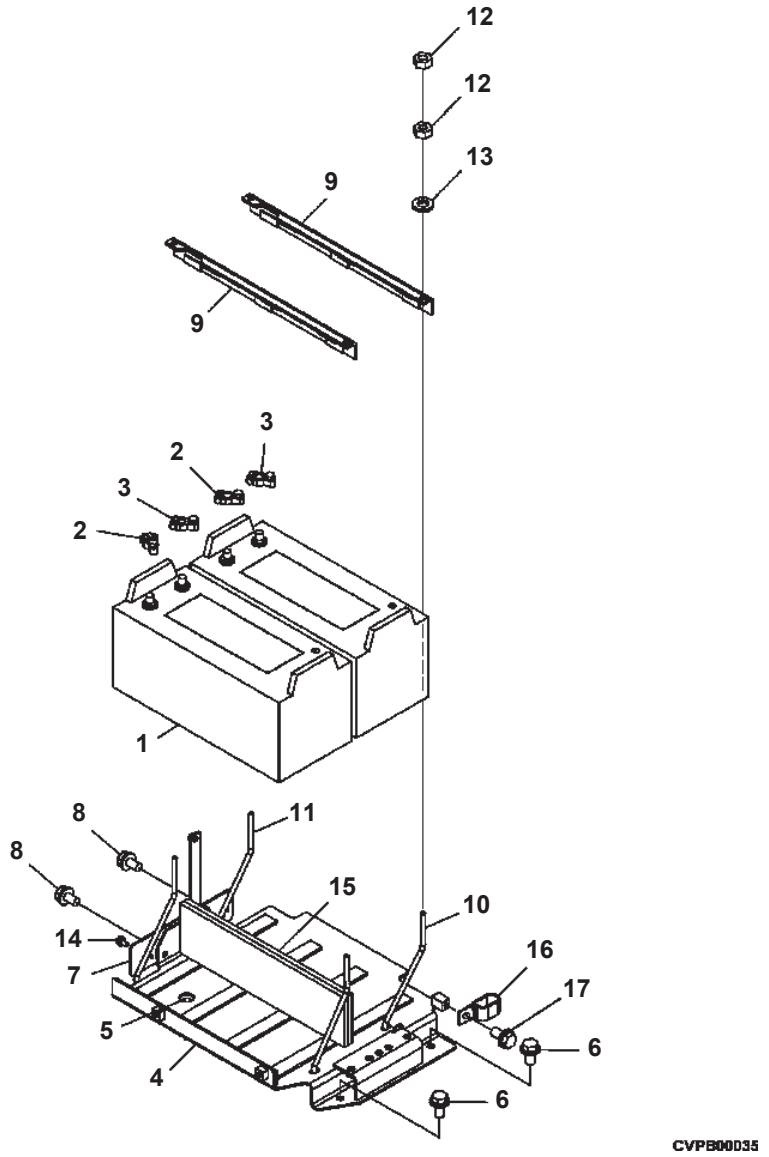

E0100-01A0 BATTERIES

Item	Part No.	Description	Qty	Wt.	Options
1	134-06-61540	BATTERY	2		SN:B10001--
2	08000-00000	TERMINAL, POSITIVE (+)	2		SN:B10001--
3	08000-00001	TERMINAL, NEGATIVE (-)	2		SN:B10001--
		OR			
1	12Y-06-14330	BATTERY	2	F2	SN:B13096--
2	08000-00020	TERMINAL, POSITIVE (+)	2	F2	SN:B13096--
3	08000-00021	TERMINAL, NEGATIVE (-)	2	F2	SN:B13096--
4	12Y-06-11594	TRAY, BATTERY	1		SN:B14636--
	□12Y-06-11593	TRAY, BATTERY	1		SN:B10001--B14635
5	01010-81290	BOLT, MOUNT TRAY	2		SN:B10001--
	01643-31232	WASHER	2		SN:B10001--
6	01010-81225	BOLT, MOUNT TRAY	2		SN:B10001--
	01643-32232	WASHER	2		SN:B10001--
7	12Y-06-12811	PLATE	1		SN:B14636--
	□12Y-06-12810	PLATE	1		SN:B10001--B14635
8	01010-81020	BOLT, MOUNT PLATE	2		SN:B10001--
	01643-31032	WASHER	2		SN:B10001--
9	12Y-06-11990	HOLDER	2		SN:B10001--
10	124-06-54340	BOLT, BATTERY HOLD-DOWN, RH	2		SN:B10001--
11	12Y-06-12530	BOLT, BATTERY HOLD-DOWN, LH	2		SN:B10001--
12	01580-11008	NUT, BATTERY HOLD-DOWN	8		SN:B10001--
13	01643-31032	WASHER, BATTERY HOLD-DOWN	4		SN:B10001--
14	01010-80620	BOLT, STOPPER	2		SN:B10001--
	01643-30623	WASHER	2		SN:B10001--
15	12Y-06-11920	CUSHION	2		SN:B10001--
16	04435-51710	CLIP	2		SN:B13106--
17	01010-81020	BOLT	1		SN:B13106--
	01643-31032	WASHER	1		SN:B13106--
		F2 - REFERENCE AND/OR PART FOR EUROPEAN MODEL.			

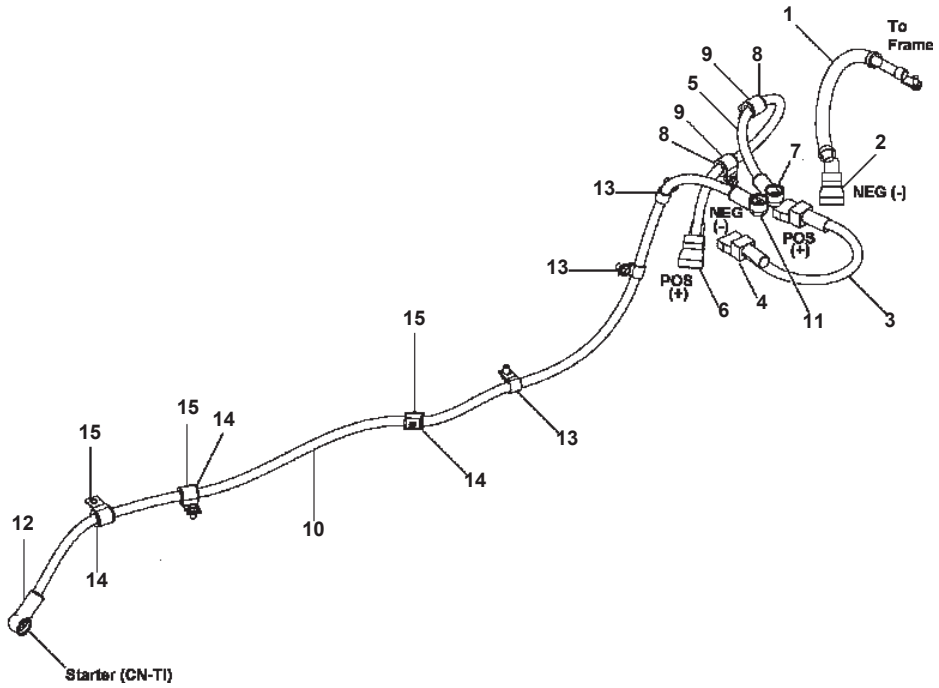

E0120-01A0 ELECTRICAL WIRING BATTERY CABLES (#B1000-)

Item	Part No.	Description	Qty	Options
1	08028-ED045	CABLE, BATTERY (-) TO FRAME	1	SN:B14636--
	□08028-ED055	CABLE, BATTERY (-) TO FRAME	1	SN:B10001--B14635
2	08038-22511	CAP, NEGATIVE TERMINAL	1	SN:B10001--
3	08028-GD055	CABLE, BATTERY TO BATTERY	1	SN:B10001--
4	08038-42511	CAP, BATTERY TERMINALS	2	SN:B10001--
5	12Y-06-13181	CABLE, BATTERY (+) TO RELAY	1	SN:B10001--
6	08038-42511	CAP, POSITIVE TERMINAL	1	SN:B10001--
7	08038-00035	CAP, RELAY (B) TERMINAL	1	SN:B10001--
8	07095-20523	CUSHION	2	SN:B10001--
9	04434-53211	CLAMP. CABLE	2	SN:B10001--
	01435-01016	BOLT, CLAMP MOUNT	2	SN:B10001--
10	12Y-06-11454	CABLE, RELAY TO STARTER MOTOR	1	SN:B14636--
	□12Y-06-11453	CABLE, RELAY TO STARTER MOTOR	1	SN:B10001--B14635
11	08038-00035	CAP, RELAY (M) TERMINAL	1	SN:B10001--
12	08038-00035	CAP, STARTER (B) TERMINAL	1	SN:B10001--
13	04434-52310	CLAMP, CABLE	3	SN:B10001--
	01435-01016	BOLT, CLAMP MOUNT	3	SN:B10001--
14	07095-20523	CUSHION	3	SN:B10001--
15	04434-53211	CLAMP, CABLE	3	SN:B10001--
	01435-01016	BOLT, CLAMP MOUNT	2	SN:B10001--

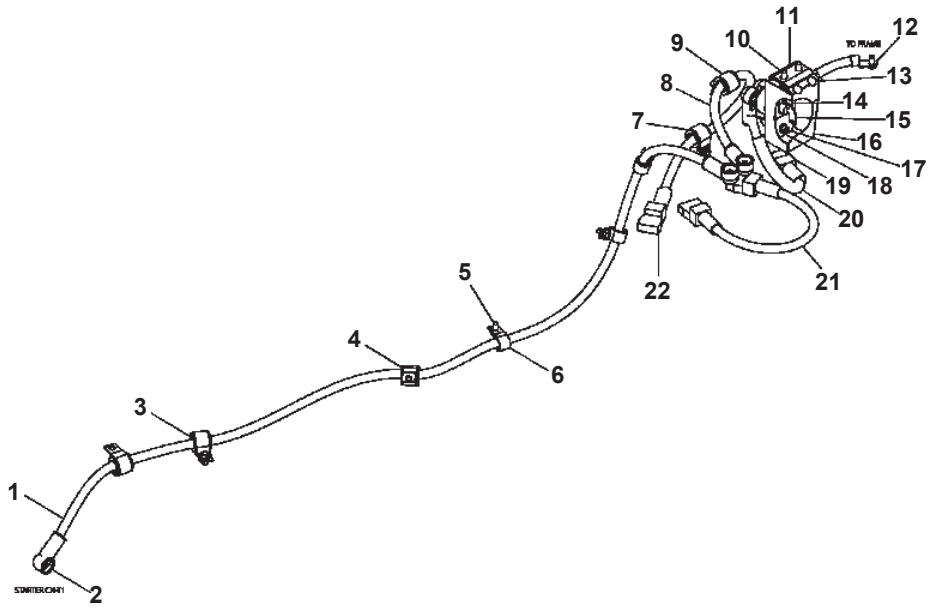

D51EX/PX-22 S/N B10001-UP

E0120-01B0 ELECTRICAL WIRING BATTERY CABLES (WITH BATTERY DISCONNECT SWITCH) (#B11325-)

Item	Part No.	Description	Qty	Options
1	12Y-06-11454	CABLE	1	SN:B14636--
	□12Y-06-11453	CABLE	1	SN:B11325--B14635
2	08038-00035	CAP	2	SN:B11325--
3	07095-20523	CUSHION	1	SN:B11325--
4	04434-53211	CLIP	5	SN:B11325--
5	01435-01016	BOLT	7	SN:B11325--
6	04434-52310	CLIP	5	SN:B11325--
7	07095-20523	CUSHION	2	SN:B11325--
8	12Y-06-13181	CABLE	1	SN:B11325--
9	07095-20523	CUSHION	2	SN:B11325--
10	01010-81020	BOLT	2	SN:B11325--
	01643-31032	WASHER	2	SN:B11325--
11	154-06-74480	BRACKET	1	SN:B11325--
12	08028-ED040	CABLE	1	SN:B11325--
13	20T-54-74510	CAP	2	SN:B11325--
14	09697-00001	PLATE	1	SN:B11325--
15	08068-00001	SWITCH	1	SN:B11325--
16	154-06-74490	COVER	1	SN:B11325--
17	01252-70825	BOLT	2	SN:B11325--
18	01643-30823	WASHER	2	SN:B11325--
19	08038-22511	CAP	1	SN:B11325--
20	08028-ED040	CABLE	1	SN:B11325--
21	08028-GD055	CABLE	1	SN:B11325--
22	08038-42511	CAP	3	SN:B11325--

Ref. E0120-01B0 Page E-006

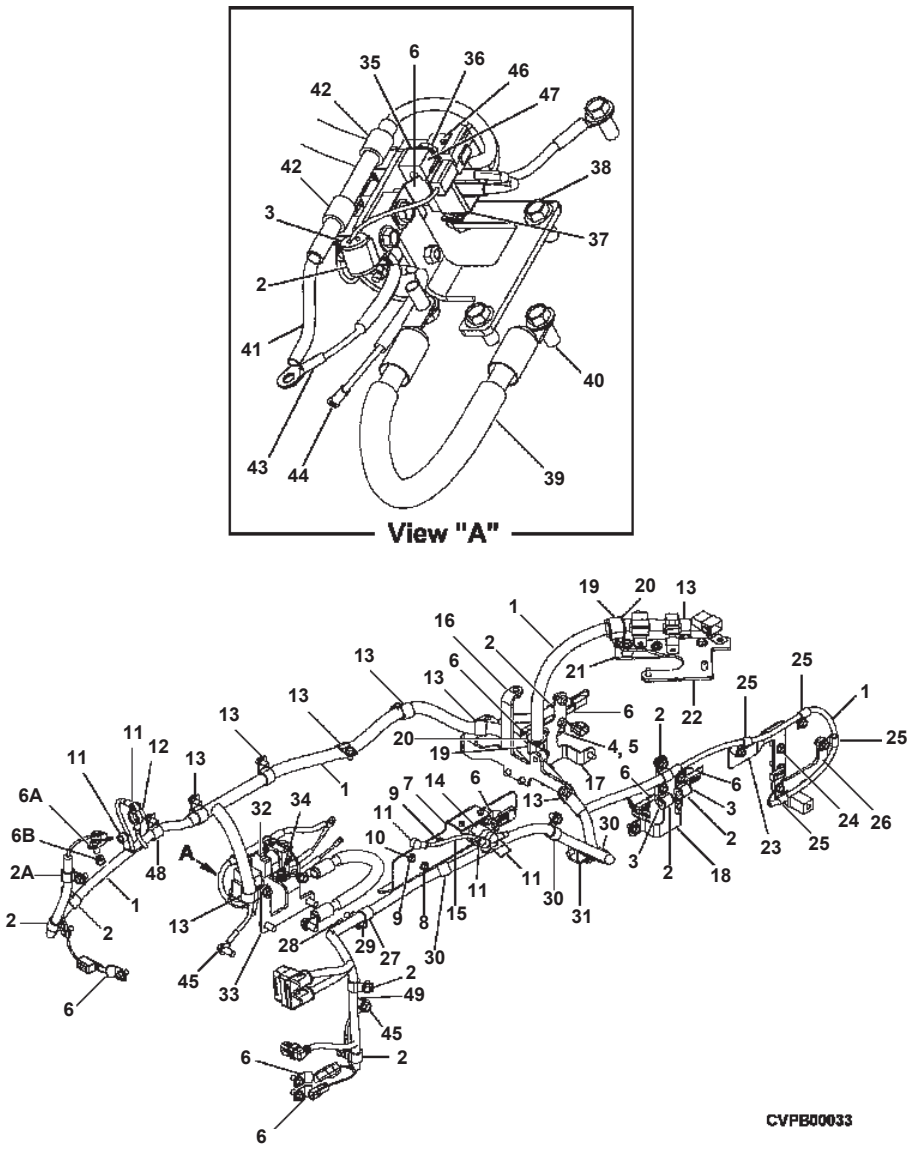

E0200-01A0 ELECTRICAL WIRING ENGINE WIRING HARNESS (#B10001-B14635)

Item	Part No.	Description	Qty	Options
1	12Y-06-11857	HARNESS, ENGINE	1	SN:B13525--B14635
	□12Y-06-11856	HARNESS, ENGINE	1	SN:B11652--B13524
	□12Y-06-11855	HARNESS, ENGINE	1	SN:B11331--B11651
	□12Y-06-1185D	HARNESS, ENGINE	1	SN:B10888--B11330
	□12Y-06-11853	HARNESS, ENGINE	1	SN:B10860--B10887
	□12Y-06-11852	HARNESS, ENGINE	1	SN:B10001--B10859
2	04434-51710	CLAMP	10	SN:B12946--B14635
	04434-51710	CLAMP	11	SN:B10001--B12945
2A	01435-01020	BOLT	1	SN:B11593--B14635
	01435-01016	BOLT, CLAMP MOUNT	10	SN:B11593--B14635
	□01435-01016	BOLT, CLAMP MOUNT	11	SN:B10001--B11592
3	07095-20211	CUSHION	3	SN:B10001--B14635
4	04434-51710	CLAMP	2	SN:B10001--B14635
	01435-01016	BOLT, CLAMP MOUNT	2	SN:B10001--B14635
5	07095-20211	CUSHION	2	SN:B10001--B14635
6	08193-20010	CLIP	10	SN:B10001--B14635
6A	01435-00820	BOLT	1	SN:B10001--B14635
6B	103-21-21260	BOSS	1	SN:B11593--B14635
	01435-01016	BOLT, CLAMP MOUNT	9	SN:B11593--B14635
	□01435-01016	BOLT, CLAMP MOUNT	10	SN:B10001--B11592
7	12Y-06-11911	BRACKET, RELAY MOUNT	1	SN:B10001--B14635
8	01435-00840	BOLT, MOUNT BRACKET	1	SN:B10001--B14635
9	01435-00816	BOLT, MOUNT BRACKET	2	SN:B10001--B14635
10	195-33-11220	SPACER, MOUNT BRACKET	1	SN:B10001--B14635
11	08038-00519	CAP	6	SN:B10001--B14635
12	08038-00525	CAP	1	SN:B10001--B14635
13	04434-52310	CLAMP	8	SN:B10001--B14635
	01435-01016	BOLT, CLAMP MOUNT	7	SN:B10001--B14635
	01435-01020	BOLT, CLAMP MOUNT	1	SN:B10001--B14635
14	600-815-2170	RELAY	1	SN:B10001--B14635
	01435-01020	BOLT, RELAY MOUNT	2	SN:B10001--B14635
15	12Y-06-12250	CABLE, RELAY TO INTAKE HEATER	1	SN:B10001--B14635
16	12Y-06-12362	BRACKET	1	SN:B10001--B14635
	01435-01016	BOLT, MOUNT BRACKET	2	SN:B10001--B14635
17	12Y-06-12390	BRACKET	1	SN:B10001--B14635
	01435-01016	BOLT, MOUNT BRACKET	1	SN:B10001--B14635
18	12Y-06-12380	BRACKET	1	SN:B10001--B14635
	01435-01016	BOLT, MOUNT BRACKET	2	SN:B10001--B14635
19	04434-53211	CLAMP	2	SN:B10001--B14635

E0200-01A0 ELECTRICAL WIRING ENGINE WIRING HARNESS (#B10001-B14635)

Item	Part No.	Description	Qty	Options
	01435-01016	BOLT, CLAMP MOUNT	2	SN:B10001--B14635
20	07095-20523	CUSHION	2	SN:B10001--B14635
21	12Y-06-13320	BRACKET	1	SN:B10001--B14635
22	12Y-06-13443	BRACKET	1	SN:B10546--B14635
	□12Y-06-13442	BRACKET	1	SN:B10001--B10545
	01435-01016	BOLT, MOUNT BRACKET	3	SN:B10001--B14635
	01435-01020	BOLT, MOUNT BRACKET	2	SN:B10001--B14635
23	12Y-06-13331	BRACKET	1	SN:B10001--B14635
24	01435-01025	BOLT, BRACKET MOUNT	2	SN:B10001--B14635
25	04434-51010	CLAMP	4	SN:B10001--B14635
	01435-01016	BOLT, CLAMP MOUNT	4	SN:B10001--B14635
26	12Y-06-13341	BRACKET	1	SN:B10001--B14635
27	04434-51910	CLAMP	1	SN:B10001--B14635
28	04434-51010	CLAMP	1	SN:B10001--B14635
29	01435-01045	BOLT, CLAMP MOUNT	1	SN:B10001--B14635
30	04434-51910	CLAMP	3	SN:B10001--B14635
	01435-01016	BOLT, CLAMP MOUNT	3	SN:B10001--B14635
31	12Y-06-12370	BRACKET	1	SN:B10001--B14635
	01435-01016	BOLT, BRACKET MOUNT	1	SN:B10001--B14635
32	124-06-64321	RELAY, STARTER	1	SN:B10001--B14635
33	12Y-01-11853	BRACKET, STARTER RELAY	1	SN:B10001--B14635
34	01435-00816	BOLT, BRACKET MOUNT	2	SN:B10001--B14635
35	421-06-22910	BRACKET	1	SN:B10001--B14635
36	01435-01016	BOLT, BRACKET MOUNT	1	SN:B10001--B14635
37	421-06-22920	BRACKET	1	SN:B10001--B14635
38	01010-81225	BOLT	2	SN:B10148--B14635
	01643-31232	WASHER	2	SN:B10148--B14635
	□01435-01225	BOLT, BRACKET MOUNT	2	SN:B10001--B10147
39	12Y-06-12410	CABLE, GROUND	1	SN:B10001--B14635
40	01010-81225	BOLT	2	SN:B10148--B14635
	01643-31232	WASHER	2	SN:B10148--B14635

D51EX/PX-22 S/N B10001-UP

E0200-01A0 ELECTRICAL WIRING ENGINE WIRING HARNESS (#B10001-B14635)

Item	Part No.	Description	Qty	Options
	□01435-01225	BOLT, GROUND CABLE MOUNT	2	SN:B10001--B10147
41	12Y-06-11981	CABLE, STARTER RELAY	1	SN:B10001--B14635
42	04434-51410	CLAMP, STARTER RELAY CABLE	2	SN:B10001--B14635
	01435-01016	BOLT, CLAMP MOUNT	2	SN:B10001--B14635
43	12Y-06-11861	CABLE, STARTER RELAY "B"	1	SN:B10001--B14635
44	12Y-06-11961	CABLE, STARTER RELAY "C"	1	SN:B10001--B14635
45	01010-80820	BOLT	1	SN:B11653--B14635
	01643-30823	WASHER	1	SN:B11653--B14635
	□01010-81025	BOLT	2	SN:B10148--B11652
	□01643-31232	WASHER	2	SN:B10148--B11652
	□01435-01225	BOLT	2	SN:B10001--B10147
46	421-06-22880	HOLDER, FUSE	1	SN:B10001--B14635
47	421-06-22830	FUSE	2	SN:B10001--B14635
48	04434-52110	CLAMP	1	SN:B12946--B14635
49	04434-51412	CLIP	1	SN:B13525--B14635

Ref. E0200-01A0 Page E-007

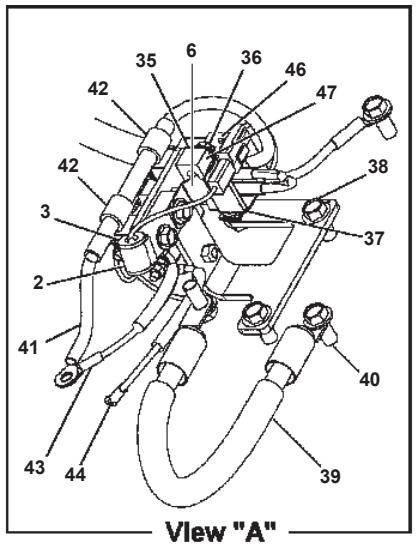

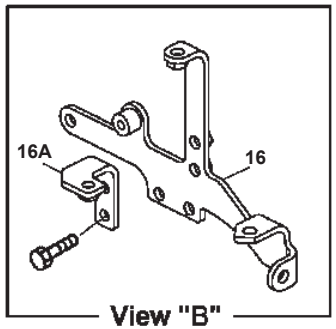

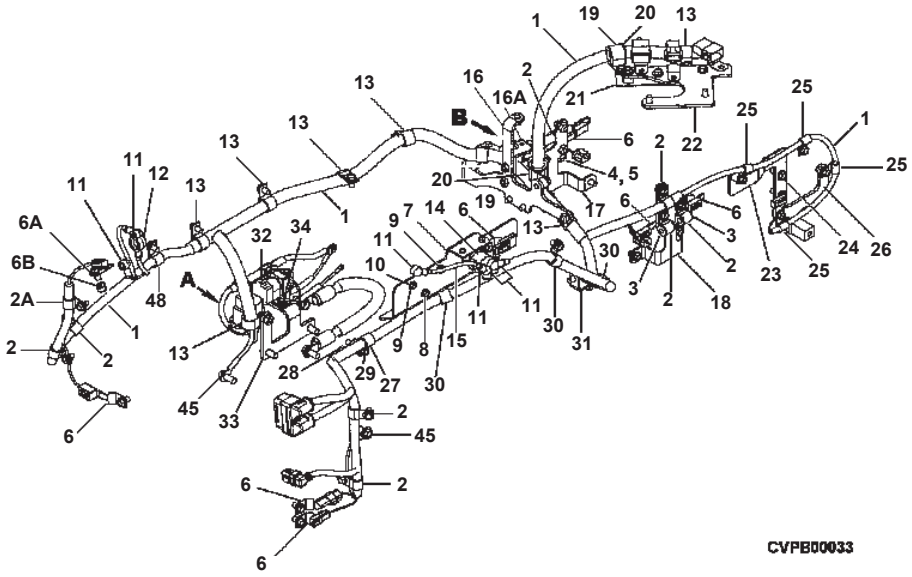

ELECTRICAL WIRING ENGINE WIRING HARNESS (#B14636-)

Item	Part No.	Description	Qty	Options
1	12Y-06-11858	HARNESS, ENGINE	1	SN:B14636--
2	04434-51710	CLAMP	10	SN:B14636--
2A	01435-01020	BOLT	3	SN:B14636--
	01435-01016	BOLT, CLAMP MOUNT	10	SN:B14636--
3	07095-20211	CUSHION	3	SN:B14636--
4	04434-51710	CLAMP	2	SN:B14636--
	01435-01016	BOLT, CLAMP MOUNT	2	SN:B14636--
5	07095-20211	CUSHION	2	SN:B14636--
6	08193-20010	CLIP	11	SN:B14636--
6A	01435-00820	BOLT	1	SN:B14636--
6B	103-21-21260	BOSS	1	SN:B14636--
	01435-01016	BOLT, CLAMP MOUNT	9	SN:B14636--
7	12Y-06-11911	BRACKET, RELAY MOUNT	1	SN:B14636--
8	01435-00840	BOLT, MOUNT BRACKET	1	SN:B14636--
9	01435-00816	BOLT, MOUNT BRACKET	2	SN:B14636--
10	195-33-11220	SPACER, MOUNT BRACKET	1	SN:B14636--
11	08038-00519	CAP	6	SN:B14636--
12	08038-00525	CAP	1	SN:B14636--
13	04434-52310	CLAMP	8	SN:B14636--
	01435-01016	BOLT, CLAMP MOUNT	7	SN:B14636--
	01435-01020	BOLT, CLAMP MOUNT	1	SN:B14636--
14	600-815-2170	RELAY	1	SN:B14636--
	01435-01020	BOLT, RELAY MOUNT	2	SN:B14636--
15	12Y-06-12250	CABLE, RELAY TO INTAKE HEATER	1	SN:B14636--
16	12Y-06-12363	BRACKET	1	SN:B14636--
16A	12Y-06-14350	BRACKET	1	SN:B14636--
	01435-01016	BOLT, MOUNT BRACKET	2	SN:B14636--
17	12Y-06-12390	BRACKET	1	SN:B14636--
	01435-01016	BOLT, MOUNT BRACKET	1	SN:B14636--
18	12Y-06-12380	BRACKET	1	SN:B14636--
	01435-01016	BOLT, MOUNT BRACKET	2	SN:B14636--
19	04434-53211	CLAMP	2	SN:B14636--
	01435-01016	BOLT, CLAMP MOUNT	2	SN:B14636--
20	07095-20523	CUSHION	2	SN:B14636--
21	12Y-06-13320	BRACKET	1	SN:B14636--
22	12Y-06-13443	BRACKET	1	SN:B14636--
	01435-01016	BOLT, MOUNT BRACKET	3	SN:B14636--
	01435-01020	BOLT, MOUNT BRACKET	2	SN:B14636--
23	12Y-06-13331	BRACKET	1	SN:B14636--
24	01435-01025	BOLT, BRACKET MOUNT	2	SN:B14636--

D51EX/PX-22 S/N B10001-UP

ELECTRICAL WIRING ENGINE WIRING HARNESS (#B14636-)

Item	Part No.	Description	Qty	Options
25	04434-51010	CLAMP	4	SN:B14636--
	01435-01016	BOLT, CLAMP MOUNT	4	SN:B14636--
26	12Y-06-13341	BRACKET	1	SN:B14636--
27	04434-51910	CLAMP	1	SN:B14636--
28	04434-51010	CLAMP	1	SN:B14636--
29	01435-01045	BOLT, CLAMP MOUNT	1	SN:B14636--
30	04434-51910	CLAMP	3	SN:B14636--
	01435-01016	BOLT, CLAMP MOUNT	3	SN:B14636--
31	12Y-06-12370	BRACKET	1	SN:B14636--
	01435-01016	BOLT, BRACKET MOUNT	1	SN:B14636--
32	124-06-64321	RELAY, STARTER	1	SN:B14636--
33	12Y-01-11853	BRACKET, STARTER RELAY	1	SN:B14636--
34	01435-00816	BOLT, BRACKET MOUNT	2	SN:B14636--
35	421-06-22910	BRACKET	1	SN:B14636--
36	01435-01016	BOLT, BRACKET MOUNT	1	SN:B14636--
37	421-06-22920	BRACKET	1	SN:B14636--
38	01010-81225	BOLT	2	SN:B14636--
	01643-31232	WASHER	2	SN:B14636--
39	12Y-06-12410	CABLE, GROUND	1	SN:B14636--
40	01010-81225	BOLT	2	SN:B14636--
	01643-31232	WASHER	2	SN:B14636--
41	12Y-06-11981	CABLE, STARTER RELAY	1	SN:B14636--
42	04434-51410	CLAMP, STARTER RELAY CABLE	2	SN:B14636--
	01435-01016	BOLT, CLAMP MOUNT	2	SN:B14636--
43	12Y-06-11861	CABLE, STARTER RELAY "B"	1	SN:B14636--
44	12Y-06-11961	CABLE, STARTER RELAY "C"	1	SN:B14636--
45	01010-80820	BOLT	1	SN:B14636--
	01643-30823	WASHER	1	SN:B14636--
46	421-06-22880	HOLDER, FUSE	1	SN:B14636--
47	421-06-22830	FUSE	2	SN:B14636--
48	04434-52110	CLAMP	1	SN:B14636--

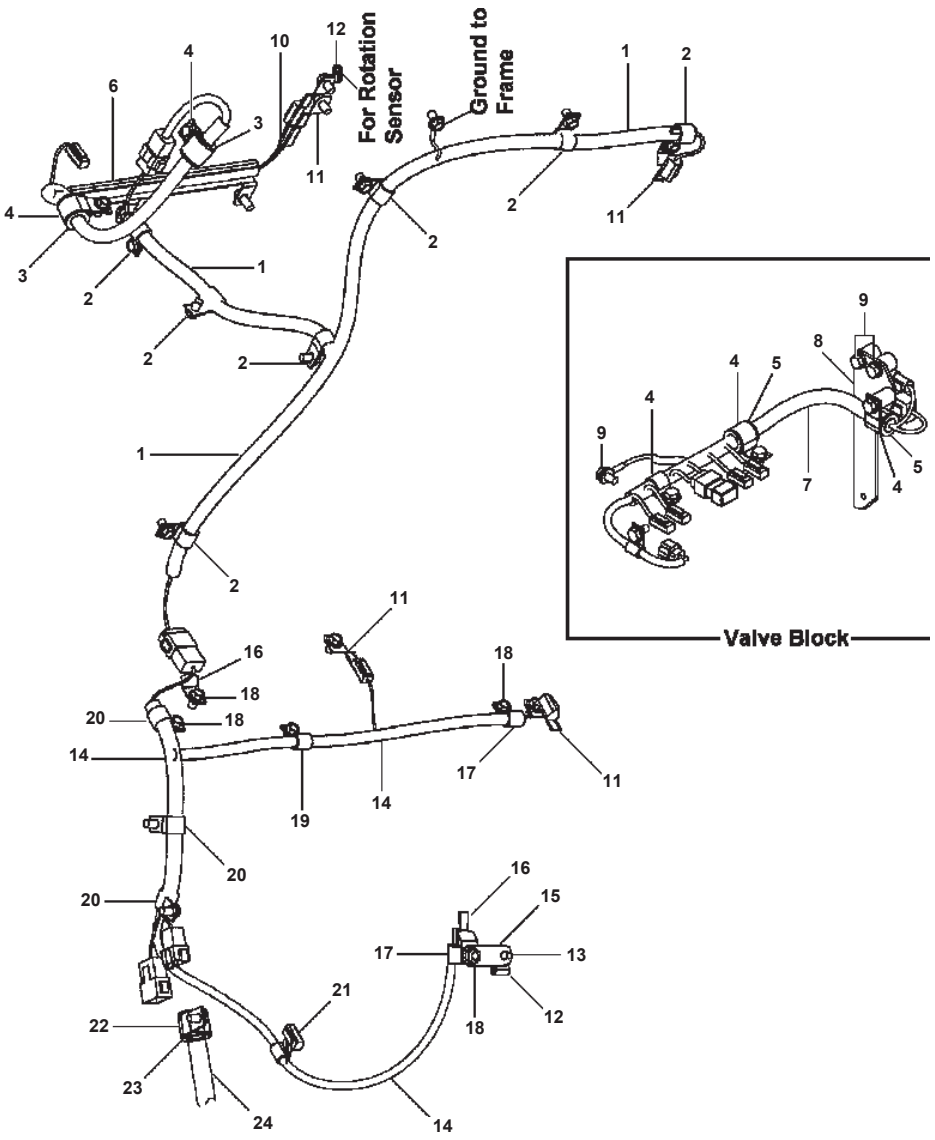

E0210-01A0 ELECTRICAL WIRING CHASSIS WIRING HARNESS (#B10001-B14635)

Item	Part No.	Description	Qty	Options
1	12Y-06-11832	HARNESS, CHASSIS	1	SN:B10874--B14635
	□12Y-06-11831	HARNESS, CHASSIS	1	SN:B10001--B10873
2	04434-51710	CLAMP	7	SN:B10001--B14635
	01435-01016	BOLT, CLAMP MOUNT	7	SN:B10001--B14635
3	07095-20418	CUSHION	2	SN:B10001--B14635
4	04434-52711	CLAMP	4	SN:B10001--B14635
	01010-81020	BOLT, CLAMP MOUNT	4	SN:B10001--B14635
	01643-31032	WASHER	4	SN:B10001--B14635
5	07095-20418	CUSHION	2	SN:B11429--B14635
	□07095-20419	CUSHION	2	SN:B10001--B11428
6	12Y-06-11890	BRACKET	1	SN:B10001--B14635
	01435-01020	BOLT, BRACKET MOUNT	2	SN:B10001--B14635
7	12Y-06-11931	HARNESS, VALVE BLOCK	1	SN:B10001--B14635
8	12Y-06-11943	BRACKET	1	SN:B13104--B14635
	□12Y-06-11942	BRACKET	1	SN:B10001--B13103
9	01010-81025	BOLT	3	SN:B10001--B14635
	01643-31032	WASHER	3	SN:B10001--B14635
10	12Y-06-11821	HARNESS, COOLING	1	SN:B10001--B14635
11	08193-20010	CLIP	5	SN:B10001--B14635
	01435-01016	BOLT, MOUNT CLIP	5	SN:B10001--B14635
12	04434-50510	CLIP	2	SN:B10001--B14635
13	01435-00816	BOLT	1	SN:B10001--B14635
14	12Y-06-11813	HARNESS, FUEL TANK	1	SN:B11301--B14635
	12Y-06-11812	HARNESS, FUEL TANK	1	SN:B10874--B11300
	□12Y-06-11811	HARNESS, FUEL TANK	1	SN:B10001--B10873
15	12Y-60-11550	BRACKET	1	SN:B10001--B14635
16	08193-20010	CLIP	2	SN:B10001--B14635
17	04434-51010	CLAMP	1	SN:B10001--B14635
18	01435-01016	BOLT	3	SN:B10001--B14635
19	04434-51310	CLAMP	2	SN:B10001--B14635
	01435-01016	BOLT, MOUNT CLAMP	2	SN:B10001--B14635
20	04434-51910	CLAMP	4	SN:B10001--B14635
	01435-01016	BOLT, MOUNT CLAMP	4	SN:B10001--B14635
21	04434-51010	CLAMP	2	SN:B10001--B14635
22	04434-53211	CLAMP	1	SN:B10001--B14635
	01435-01016	BOLT, MOUNT CLAMP	1	SN:B10001--B14635
23	07095-20523	CUSHION	1	SN:B10001--B14635
24		HARNESS, CAB (SEE FIG. K0210-12A0)	1	SN:B10001--B14635

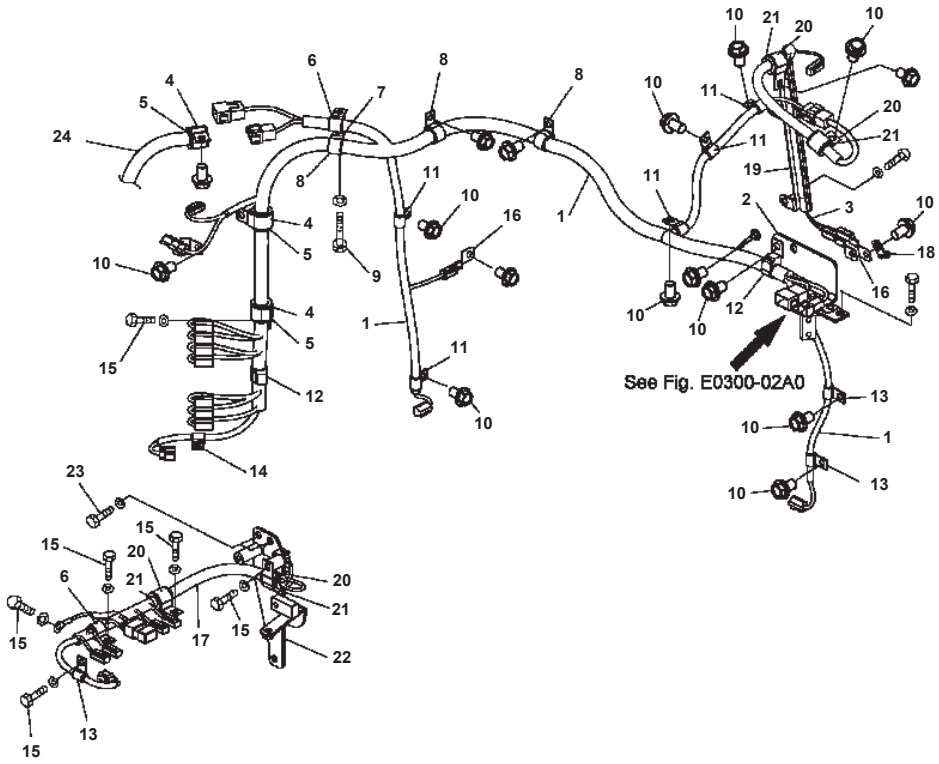

ELECTRICAL WIRING CHASSIS WIRING HARNESS (1/2) (#B14636-)

Item	Part No.	Description	Qty	Options
1	12Y-06-18111	WIRING HARNESS	1	SN:B14636--
2	12Y-06-18130	BRACKET	1	SN:B14636--
3	12Y-06-11821	HARNESS, COOLING	1	SN:B14636--
4	04434-52211	CLIP	3	SN:B14636--
5	07095-20523	CUSHION	3	SN:B14636--
6	04434-51910	CLIP	2	SN:B14636--
7	56D-61-13460	SPACER	1	SN:B14636--
8	04434-52310	CLIP	3	SN:B14636--
9	01435-01055	BOLT	1	SN:B14636--
10	01435-01016	BOLT	21	SN:B14636--
11	04434-51410	CLIP	5	SN:B14636--
12	08211-01920	CLIP	2	SN:B14636--
13	04434-51010	CLIP	3	SN:B14636--
14	08211-00720	CLIP	1	SN:B14636--
15	01010-81020	BOLT, SEMS	6	SN:B14636--
	01643-31032	WASHER	6	SN:B14636--
16	08193-20010	CLIP	4	SN:B14636--
17	12Y-06-11931	WIRING HARNESS	1	SN:B14636--
18	04434-50510	CLIP	1	SN:B14636--
19	12Y-06-11890	PLATE	1	SN:B14636--
20	04434-52711	CLIP	4	SN:B14636--
21	07095-20418	CUSHION	4	SN:B14636--
22	12Y-06-11945	BRACKET	1	SN:B14636--
23	01010-81025	BOLT	1	SN:B14636--
	01643-31032	WASHER	1	SN:B14636--
24		HARNESS, CAB (SEE FIG. K0210-12A0)	1	SN:B14636--

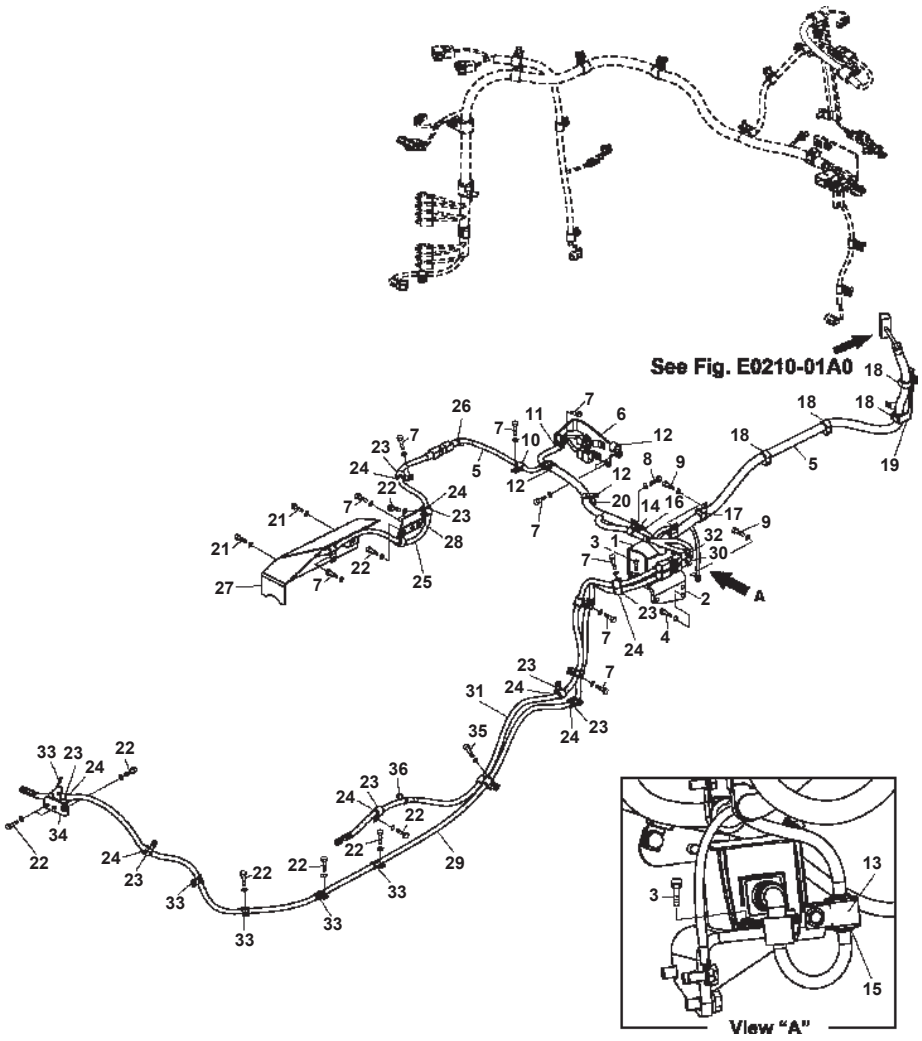

ELECTRICAL WIRING CHASSIS WIRING HARNESS (2/2) (#B14636)

Item	Part No.	Description	Qty	Options
1	7835-70-3110	SENSOR	1	SN:B14636--
2	12Y-06-18282	BRACKET	1	SN:B14636--
3	01252-A0620	BOLT	3	SN:B14636--
	01643-30623	WASHER	3	SN:B14636--
4	01010-81230	BOLT	1	SN:B14636--
	01643-31232	WASHER	1	SN:B14636--
5	12Y-06-18122	WIRING HARNESS	1	SN:B14636--
6	12Y-06-18271	BRACKET	1	SN:B14636--
7	01010-81025	BOLT	14	SN:B14636--
	01643-31032	WASHER	14	SN:B14636--
8	01435-00816	BOLT	1	SN:B14636--
9	01435-01020	BOLT	6	SN:B14636--
10	04434-51410	CLIP	1	SN:B14636--
11	04434-51710	CLIP	2	SN:B14636--
12	04434-52310	CLIP	3	SN:B14636--
13	04434-53211	CLIP	1	SN:B14636--
14	04434-53411	CLIP	2	SN:B14636--
15	07095-20523	CUSHION	1	SN:B14636--
16	07095-20625	CUSHION	2	SN:B14636--
17	08057-12010	CLIP	1	SN:B14636--
18	08211-02220	CLIP	5	SN:B14636--
19	12Y-06-18360	BRACKET	1	SN:B14636--
20	423-06-42430	FINISHER	1	SN:B14636--
21	01016-51035	BOLT	2	SN:B14636--
22	01010-81020	BOLT	12	SN:B14636--
	01643-31032	WASHER	12	SN:B14636--
23	04434-52110	CLIP	14	SN:B14636--
24	07095-20314	CUSHION	4	SN:B14636--
25	12Y-06-18151	WIRING HARNESS	1	SN:B14636--
26	21U-62-34750	BAND (BLUE)	1	SN:B14636--
27	12Y-06-18210	COVER	1	SN:B14636--
28	12Y-06-18221	BRACKET	1	SN:B14636--
29	12Y-06-18172	WIRING HARNESS	1	SN:B14636--
30	21U-62-34730	BAND (GREEN)	1	SN:B14636--
31	12Y-06-18161	WIRING HARNESS	1	SN:B14636--
32	21U-62-34780	BAND (BROWN)	1	SN:B14636--
33	04434-51510	CLIP	5	SN:B14636--
34	12Y-62-18280	BRACKET	1	SN:B14636--
35	01010-81016	BOLT	1	SN:B14636--
	01643-31032	WASHER	1	SN:B14636--

ELECTRICAL WIRING CHASSIS WIRING HARNESS (2/2) (#B14636)

Item	Part No.	Description	Qty	Options
36	08034-40521	BAND	1	SN:B14636--

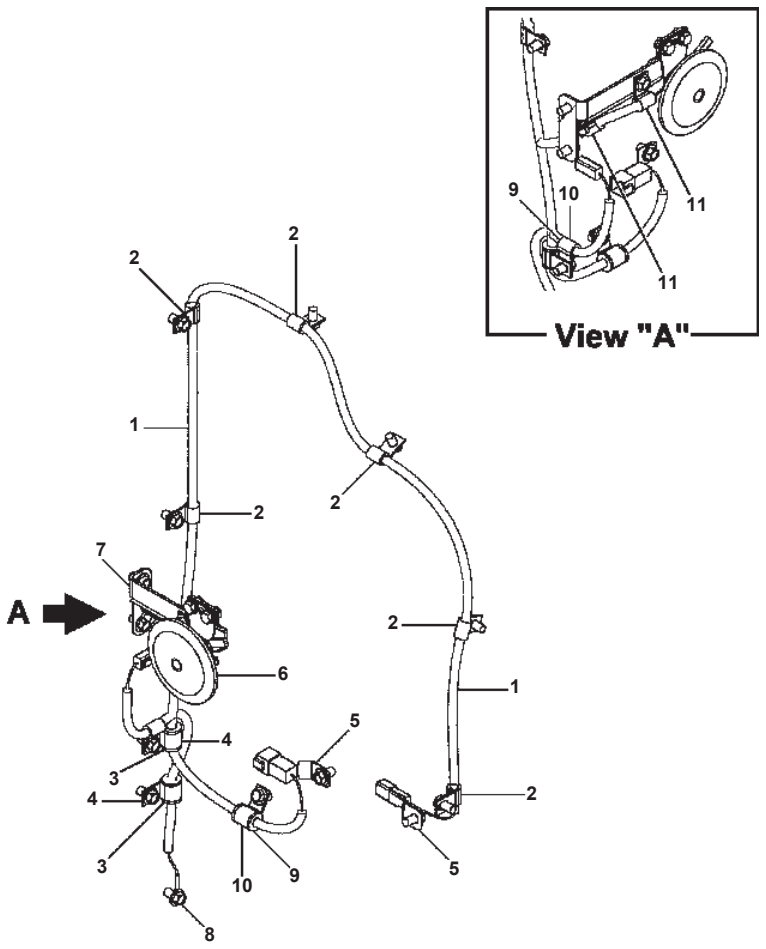

E0220-01A0 ELECTRICAL WIRING NOSE GUARD WIRING HARNESS

Item	Part No.	Description	Qty	Options
1	12Y-06-11872	HARNESS, NOSE GUARD	1	SN:B10001--
2	04434-51410	CLAMP	6	SN:B10001--
	01435-01016	BOLT, MOUNT CLAMP	6	SN:B10001--
3	07095-20211	CUSHION	2	SN:B10001--
4	04434-51610	CLAMP	2	SN:B10001--
	01435-01016	BOLT, MOUNT CLAMP	2	SN:B10001--
5	08193-20010	CLIP	2	SN:B10001--
	01435-01016	BOLT, MOUNT CLIP	2	SN:B10001--
6	12Y-06-18420	HORN	1	SN:B13706--
	□175-06-41110	HORN	1	SN:B10001--B13705
	01010-80816	BOLT, MOUNT HORN	2	SN:B10001--
	01643-30823	WASHER	2	SN:B10001--
7	12Y-06-13361	BRACKET	1	SN:B10001--
	01435-01016	BOLT, MOUNT HORN BRACKET	2	SN:B10001--
8	01435-01016	BOLT	1	SN:B10001--
9	07095-20314	CUSHION	2	SN:B10001--
10	04434-52110	CLAMP	2	SN:B10001--
	01435-01016	BOLT, MOUNT CLAMP	2	SN:B10001--
11	04434-51010	CLAMP	2	SN:B10001--
	01435-01016	BOLT, MOUNT CLAMP	2	SN:B10001--

CVPB00040

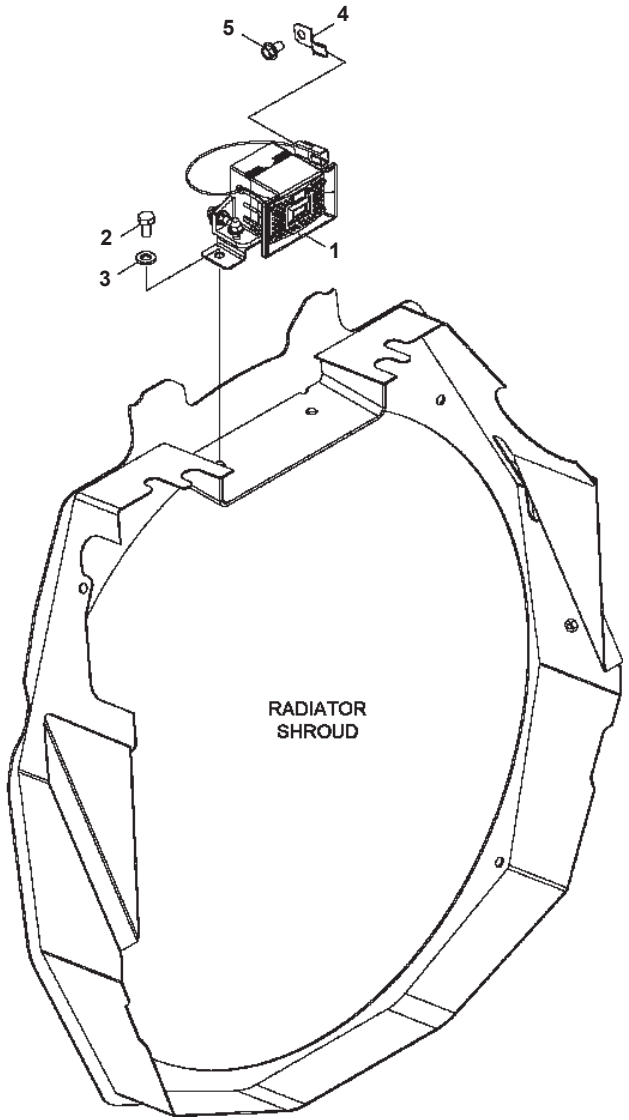

D51EX/PX-22 S/N B10001-UP

E0300-01A0 BACK-UP ALARM

Item	Part No.	Description	Qty	Options
1	20Y-06-41812	ALARM, BACK-UP	1	SN:B10001--
2	01010-81020	BOLT, MOUNT ALARM	2	SN:B10001--
3	01643-31032	WASHER	2	SN:B10001--
4	08193-20010	CLIP	1	SN:B10001--
5	01435-01016	BOLT, CLIP MOUNT	1	SN:B10001--

Ref. E0300-01A0 Page E-015

POWER TRAIN AND FINAL DRIVE

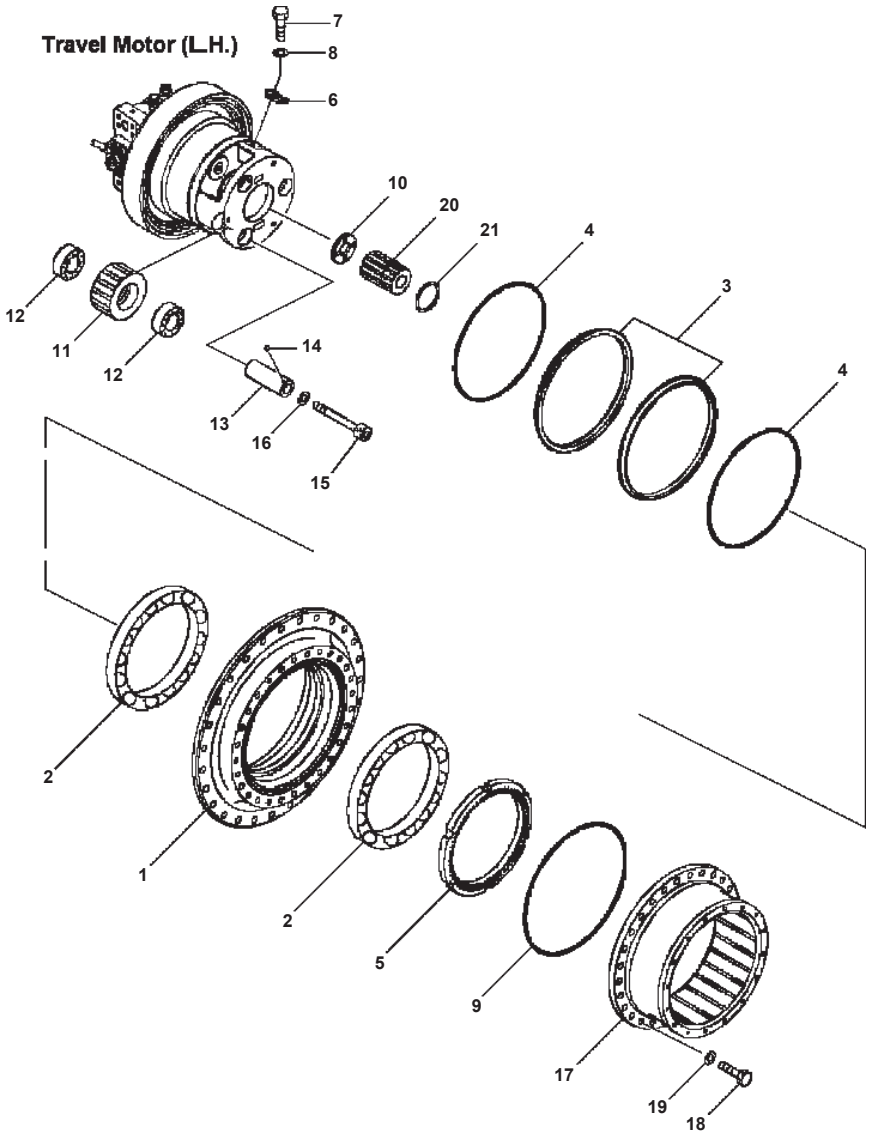

F2380-01A0 FINAL DRIVE HUB AND PLANETARY GEAR (LH)

Item	Part No.	Description	Qty	Options
	12Y-27-10101	FINAL DRIVE ASSEMBLY	1	SN:B12500--
	□12Y-27-10100	FINAL DRIVE ASSEMBLY	1	SN:B10001--B12499
	12Y-27-10301	FINAL DRIVE ASSEMBLY (CUT SPROCKET)	1	SN:B12500--
	□12Y-27-10300	FINAL DRIVE ASSEMBLY (CUT SPROCKET)	1	SN:B10001--B12499
	12Y-27-11300	· HUB ASSEMBLY	1	SN:B10001--
1	12Y-27-11410	· · HUB	1	SN:B10001--
2	12Y-27-11310	· · BEARING	2	SN:B10001--
	12Y-27-11600	· · RING ASSEMBLY, SEAL	1	SN:B10001--
3	(NSS)	· · · SEAL	2	SN:B10001--
4	(NSS)	· · · O-RING	2	SN:B10001--
5	12Y-27-11430	· · NUT	1	SN:B10001--
6	11Y-27-11440	· · LOCK	1	SN:B10001--
7	01010-81025	· · BOLT	2	SN:B10001--
8	01643-31032	· · WASHER	2	SN:B10001--
9	07000-75390	· · O-RING	1	SN:B10001--
10	12Y-27-11230	· WASHER	1	SN:B10001--
	12Y-27-11400	· PLANETARY ASSEMBLY	1	SN:B10001--
11	12Y-27-11150	· · GEAR	3	SN:B10001--
12	12Y-27-11320	· · BEARING	6	SN:B10001--
13	12Y-27-11220	· · SHAFT	3	SN:B10001--
14	04260-00635	· · BALL	3	SN:B10001--
15	01253-61645	· · BOLT	3	SN:B10001--
16	01643-51645	· · WASHER	3	SN:B10001--
17	12Y-27-11160	· GEAR, RING	1	SN:B10001--
18	01010-61650	· BOLT	28	SN:B10001--
19	01643-31645	· WASHER	28	SN:B10001--
20	12Y-27-11140	· GEAR	1	SN:B10001--
21	12Y-27-11240	· WASHER	1	SN:B10001--

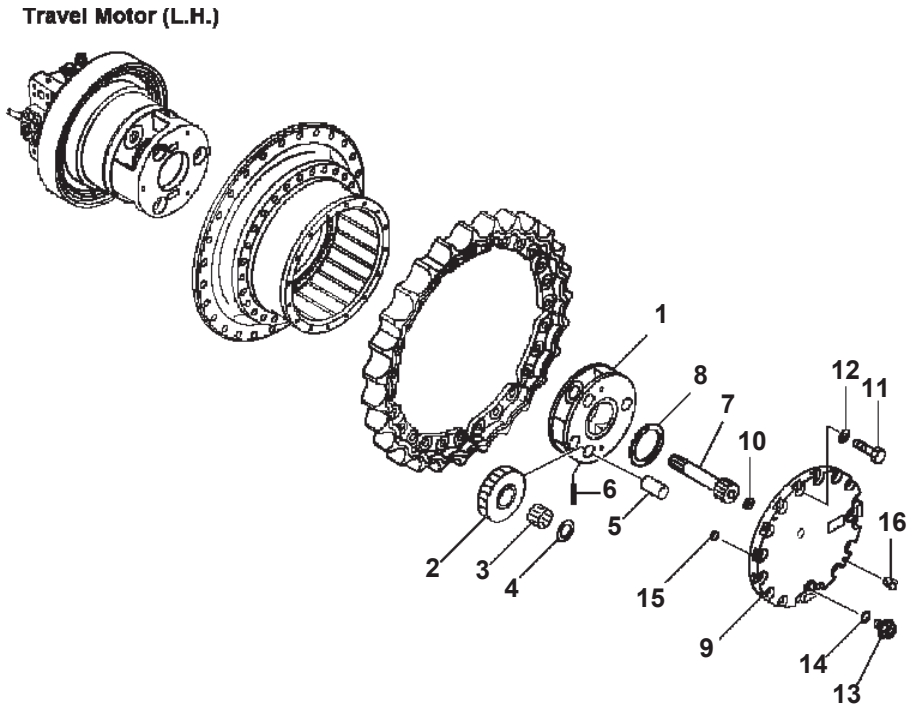

F2380-02A0 FINAL DRIVE CARRIER ASSEMBLY (LH)

Item	Part No.	Description	Qty	Options
	12Y-27-10101	FINAL DRIVE ASSEMBLY	1	SN:B12500--
	☐12Y-27-10100	FINAL DRIVE ASSEMBLY	1	SN:B10001--B12499
	12Y-27-10301	FINAL DRIVE ASSEMBLY (CUT SPROCKET)	1	SN:B12500--
	☐12Y-27-10300	FINAL DRIVE ASSEMBLY (CUT SPROCKET)	1	SN:B10001--B12499
	12Y-27-11500	· CARRIER ASSEMBLY	1	SN:B10001--
1	12Y-27-11210	· · CARRIER	1	SN:B10001--
2	12Y-27-11130	· · GEAR	3	SN:B10001--
3	41E-15-19410	· · BEARING	3	SN:B10001--
4	12Y-27-11260	· · WASHER	6	SN:B10001--
5	12Y-27-11250	· · PIN	3	SN:B10001--
6	20Y-27-21280	· · PIN	3	SN:B10001--
7	12Y-27-11120	· SHAFT	1	SN:B10001--
8	20Y-27-21310	· WASHER	1	SN:B10001--
9	12Y-27-11420	· COVER, CARRIER	1	SN:B10001--
10	20Y-27-22250	· BUTTON	1	SN:B10001--
11	01010-81235	· BOLT	16	SN:B10001--
12	01643-31232	· WASHER	16	SN:B10001--
13	07044-12412	· PLUG	2	SN:B10001--
14	07002-12434	· O-RING	2	SN:B10001--
15	11Y-27-11450	· MAGNET	2	SN:B10001--
16	07049-01215	· PLUG	1	SN:B13430--
	07049-01215	· PLUG	2	SN:B10001--B13429

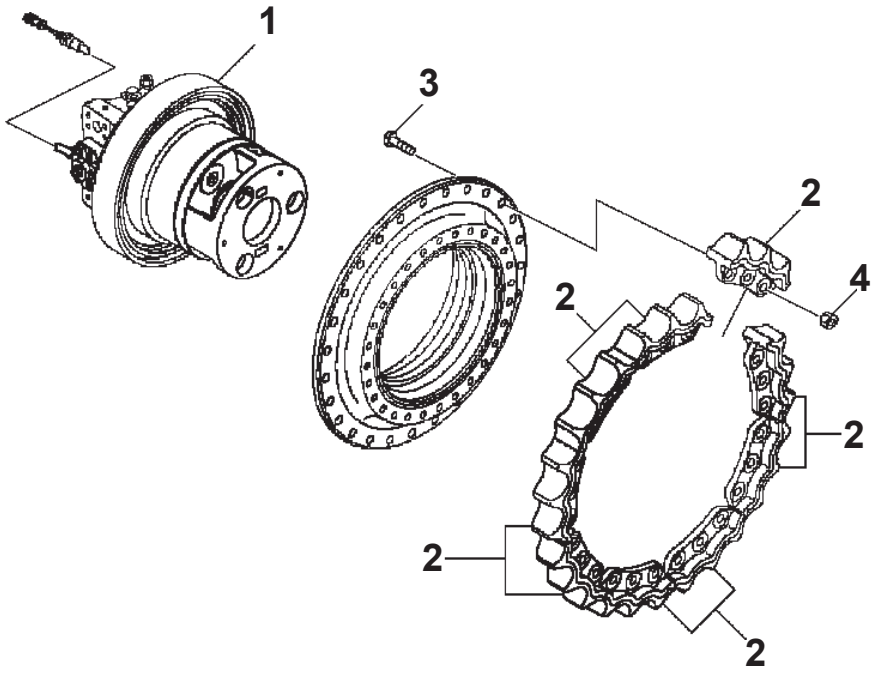

F2380-03A0 FINAL DRIVE TRAVEL MOTOR AND TEETH (LH)

Item	Part No.	Description	Qty	Options
	12Y-27-10101	FINAL DRIVE ASSEMBLY	1	SN:B12500--
	□12Y-27-10100	FINAL DRIVE ASSEMBLY	1	SN:B10001--B12499
	12Y-27-10301	FINAL DRIVE ASSEMBLY (CUT SPROCKET)	1	SN:B12500--
	□12Y-27-10300	FINAL DRIVE ASSEMBLY (CUT SPROCKET)	1	SN:B10001--B12499
1	706-8H-01111	· MOTOR, HST (SEE FIG. H0350-01A0)	1	SN:B12500--
	□706-8H-01110	· MOTOR, HST (SEE FIG. H0350-01A0)	1	SN:B10001--B12499
2	12Y-27-11510	· TEETH	9	SN:B10001--
	12Y-27-15210	· TEETH (CUT SPROCKET)	9	SN:B10001--
3	09203-21860	· BOLT	27	SN:B10001--
4	01803-01824	· NUT	27	SN:B10001--

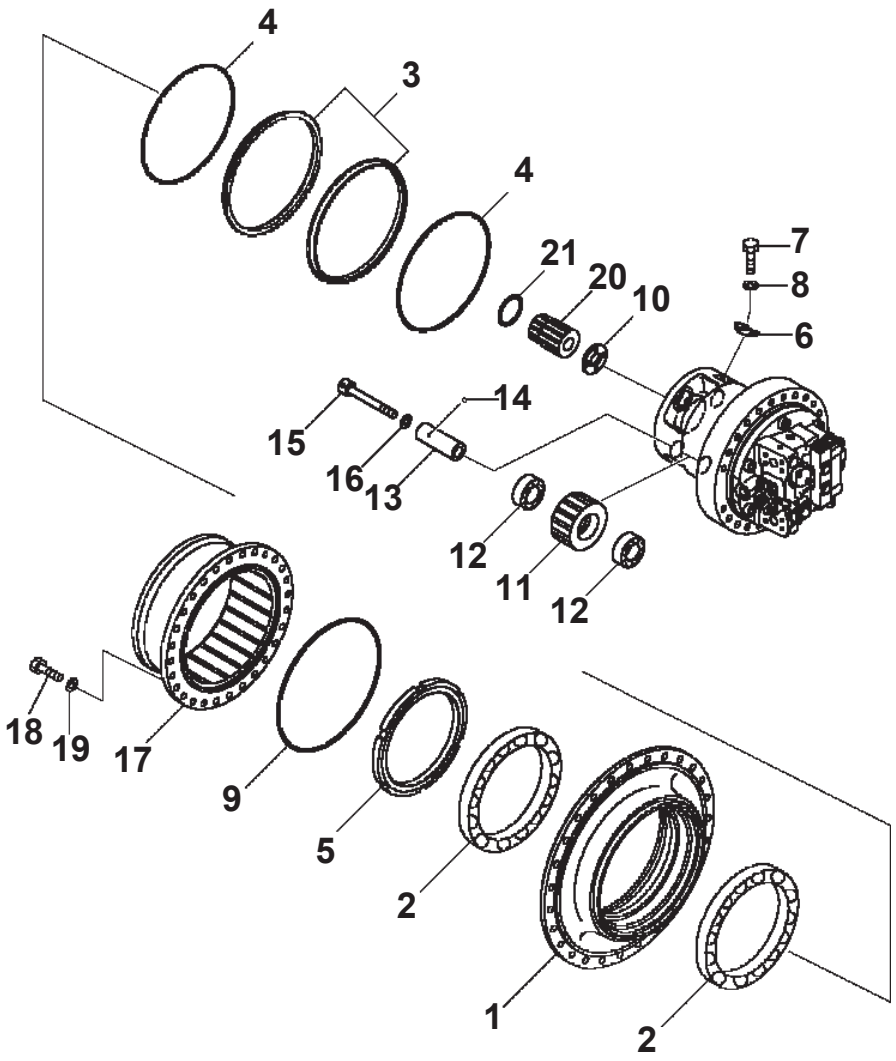

F2380-04A0 FINAL DRIVE HUB AND PLANETARY GEAR (RH)

Item	Part No.	Description	Qty	Options
	12Y-27-10201	FINAL DRIVE ASSEMBLY	1	SN:B12500--
	□12Y-27-10200	FINAL DRIVE ASSEMBLY	1	SN:B10001--B12499
	12Y-27-10401	FINAL DRIVE ASSEMBLY (CUT SPROCKET)	1	SN:B12500--
	□12Y-27-10400	FINAL DRIVE ASSEMBLY (CUT SPROCKET)	1	SN:B10001--B12499
	12Y-27-11300	· HUB ASSEMBLY	1	SN:B10001--
1	12Y-27-11410	· · HUB	1	SN:B10001--
2	12Y-27-11310	· · BEARING	2	SN:B10001--
	12Y-27-11600	· · RING ASSEMBLY, SEAL	1	SN:B10001--
3	(NSS)	· · · SEAL	2	SN:B10001--
4	(NSS)	· · · O-RING	2	SN:B10001--
5	12Y-27-11430	· · NUT	1	SN:B10001--
6	11Y-27-11440	· · LOCK	1	SN:B10001--
7	01010-81025	· · BOLT	2	SN:B10001--
8	01643-31032	· · WASHER	2	SN:B10001--
9	07000-75390	· · O-RING	1	SN:B10001--
10	12Y-27-11230	· WASHER	1	SN:B10001--
	12Y-27-11400	· PLANETARY ASSEMBLY	1	SN:B10001--
11	12Y-27-11150	· · GEAR	3	SN:B10001--
12	12Y-27-11320	· · BEARING	6	SN:B10001--
13	12Y-27-11220	· · SHAFT	3	SN:B10001--
14	04260-00635	· · BALL	3	SN:B10001--
15	01253-61645	· · BOLT	3	SN:B10001--
16	01643-51645	· · WASHER	3	SN:B10001--
17	12Y-27-11160	· GEAR, RING	1	SN:B10001--
18	01010-61650	· BOLT	28	SN:B10001--
19	01643-31645	· WASHER	28	SN:B10001--
20	12Y-27-11140	· GEAR	1	SN:B10001--
21	12Y-27-11240	· WASHER	1	SN:B10001--

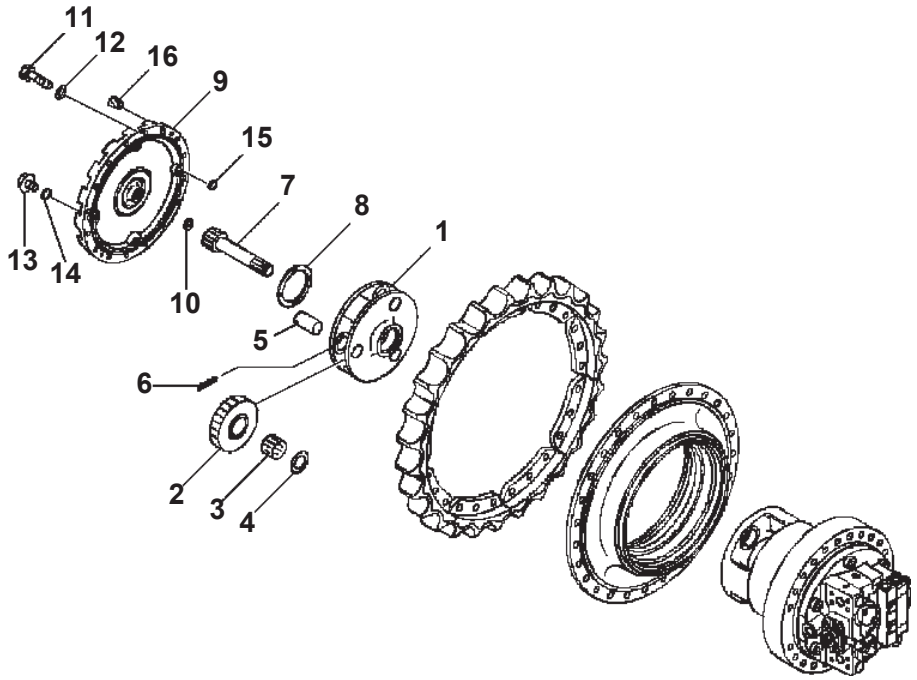

F2380-05A0 FINAL DRIVE CARRIER ASSEMBLY (RH)

Item	Part No.	Description	Qty	Options
	12Y-27-10201	FINAL DRIVE ASSEMBLY	1	SN:B12500--
	☐12Y-27-10200	FINAL DRIVE ASSEMBLY	1	SN:B10001--B12499
	12Y-27-10401	FINAL DRIVE ASSEMBLY (CUT ASSEMBLY)	1	SN:B12500--
	☐12Y-27-10400	・FINAL DRIVE ASSEMBLY (CUT ASSEMBLY)	1	SN:B10001--B12499
	12Y-27-11500	・CARRIER ASSEMBLY	1	SN:B10001--
1	12Y-27-11210	・・CARRIER	1	SN:B10001--
2	12Y-27-11130	・・GEAR	3	SN:B10001--
3	41E-15-19410	・・BEARING	3	SN:B10001--
4	12Y-27-11260	・・WASHER	6	SN:B10001--
5	12Y-27-11250	・・PIN	3	SN:B10001--
6	20Y-27-21280	・・PIN	3	SN:B10001--
7	12Y-27-11120	・SHAFT	1	SN:B10001--
8	20Y-27-21310	・WASHER	1	SN:B10001--
9	12Y-27-11420	・COVER, CARRIER	1	SN:B10001--
10	20Y-27-22250	・BUTTON	1	SN:B10001--
11	01010-81235	・BOLT	16	SN:B10001--
12	01643-31232	・WASHER	16	SN:B10001--
13	07044-12412	・PLUG	2	SN:B10001--
14	07002-12434	・O-RING	2	SN:B10001--
15	11Y-27-11450	・MAGNET	2	SN:B10001--
16	07049-01215	・PLUG	1	SN:B13430--
	07049-01215	・PLUG	2	SN:B10001--B13429

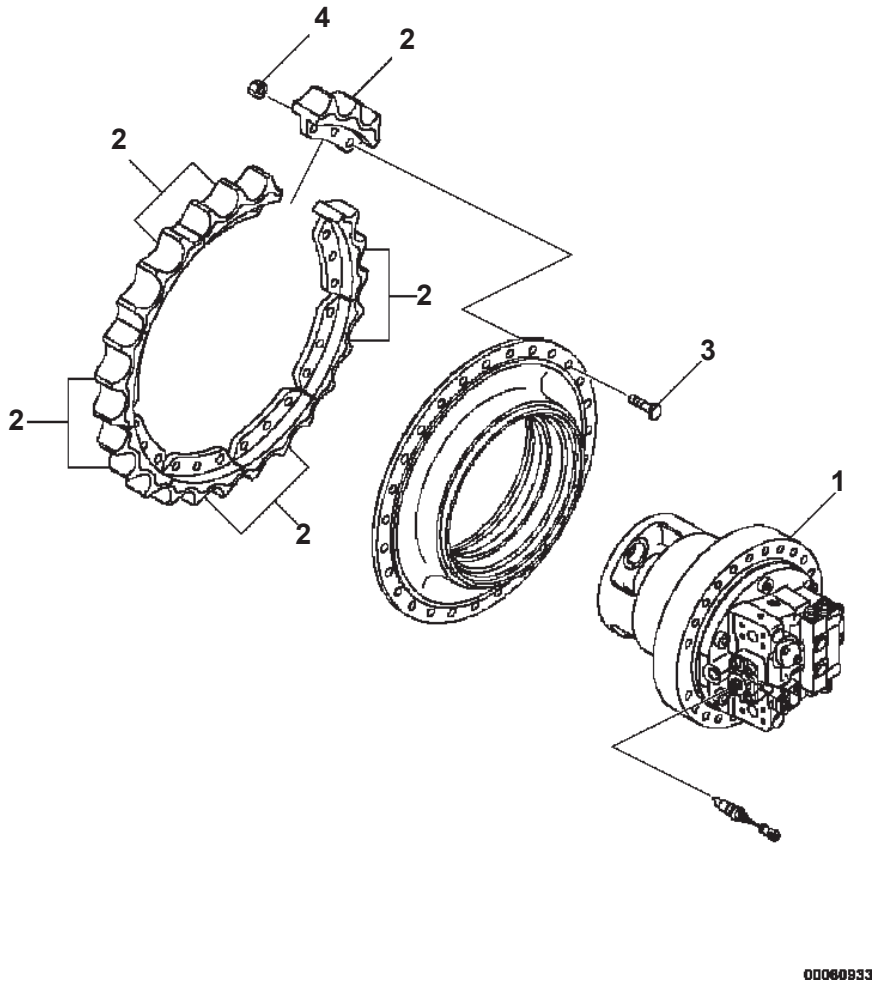

F2380-06A0 FINAL DRIVE TRAVEL MOTOR AND TEETH (RH)

Item	Part No.	Description	Qty	Options
	12Y-27-10201	FINAL DRIVE ASSEMBLY	1	SN:B12500--
	□12Y-27-10200	FINAL DRIVE ASSEMBLY	1	SN:B10001--B12499
	12Y-27-10401	FINAL DRIVE ASSEMBLY (CUT SPROCKET)	1	SN:B12500--
	□12Y-27-10400	FINAL DRIVE ASSEMBLY (CUT SPROCKET)	1	SN:B10001--B12499
1	706-8H-01121	· MOTOR, HST (SEE FIG. H0350-03A0)	1	SN:B12500--
	□706-8H-01120	· MOTOR, HST (SEE FIG. H0350-03A0)	1	SN:B10001--B12499
2	12Y-27-11510	· TEETH	9	SN:B10001--
	12Y-27-15210	· TEETH (CUT SPROCKET)	9	SN:B10001--
3	09203-21860	· BOLT	27	SN:B10001--
4	01803-01824	· NUT	27	SN:B10001--

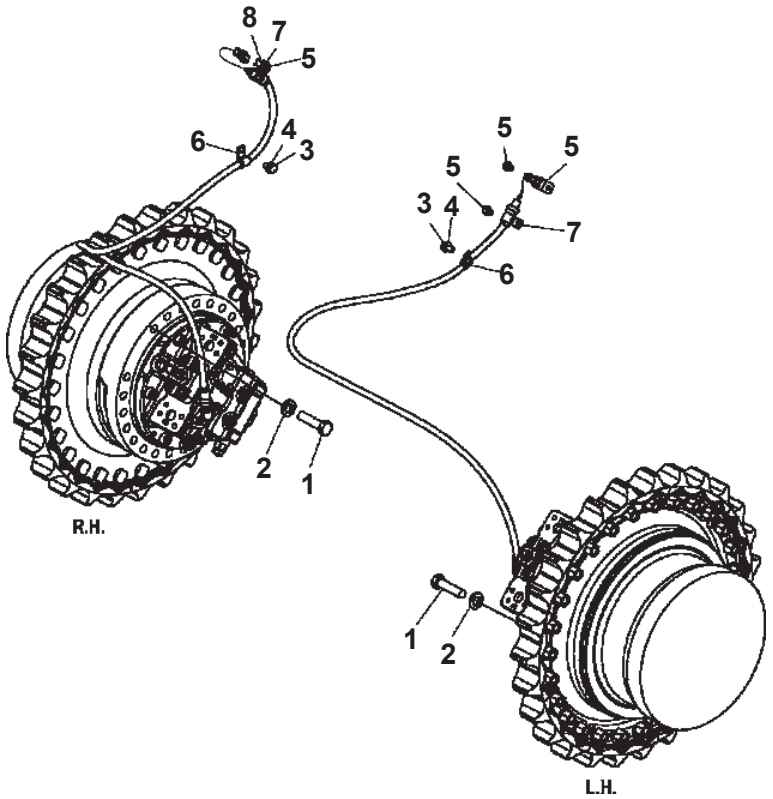

D51EX/PX-22 S/N B10001-UP

F2380-20A0 FINAL DRIVE (MOUNT)

Item	Part No.	Description	Qty	Options
1	01010-82080	BOLT	44	SN:B10001--
2	01643-32060	WASHER	44	SN:B10001--
3	01010-81220	BOLT	2	SN:B10001--
4	01643-31232	WASHER	2	SN:B10001--
5	01435-01016	BOLT	3	SN:B10001--
6	04434-51512	CLAMP	2	SN:B10001--
7	04434-51710	CLAMP	2	SN:B10001--
8	08193-20010	CLIP	2	SN:B10001--

Ref. F2380-20A0 Page F-013

HYDRAULIC SYSTEM

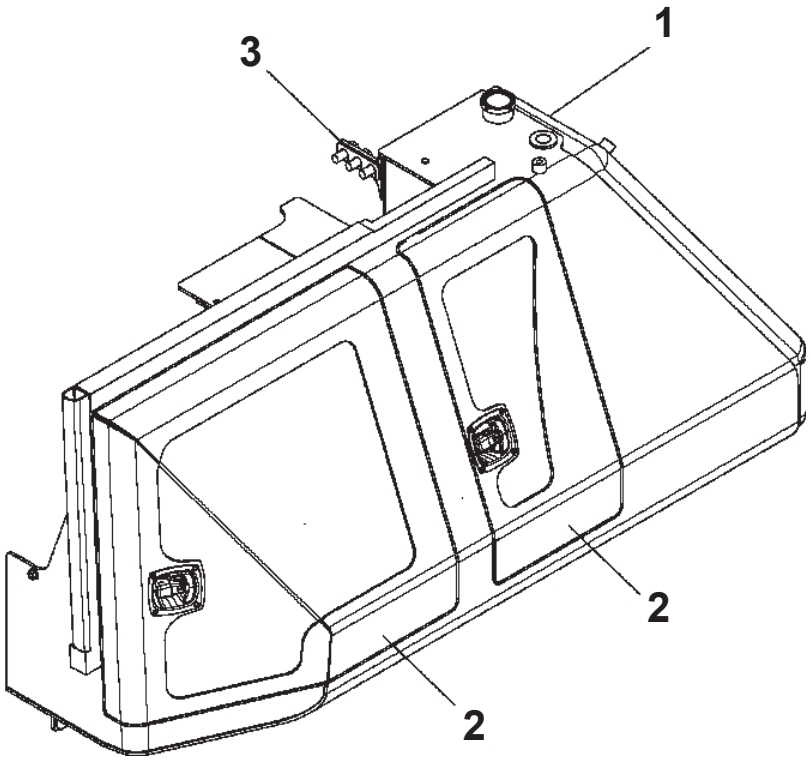

H0100-01A0 HYDRAULIC OIL TANK COMPLETE ASSEMBLY

Item	Description	Options
1	OIL TANK (SEE FIG. H0100-01A1)	SN:B10001--
2	ACCESS DOORS (SEE FIG. H0100-01A2)	SN:B10001--
3	MOUNTING HARDWARE (SEE FIG. H0100-01A3)	SN:B10001--

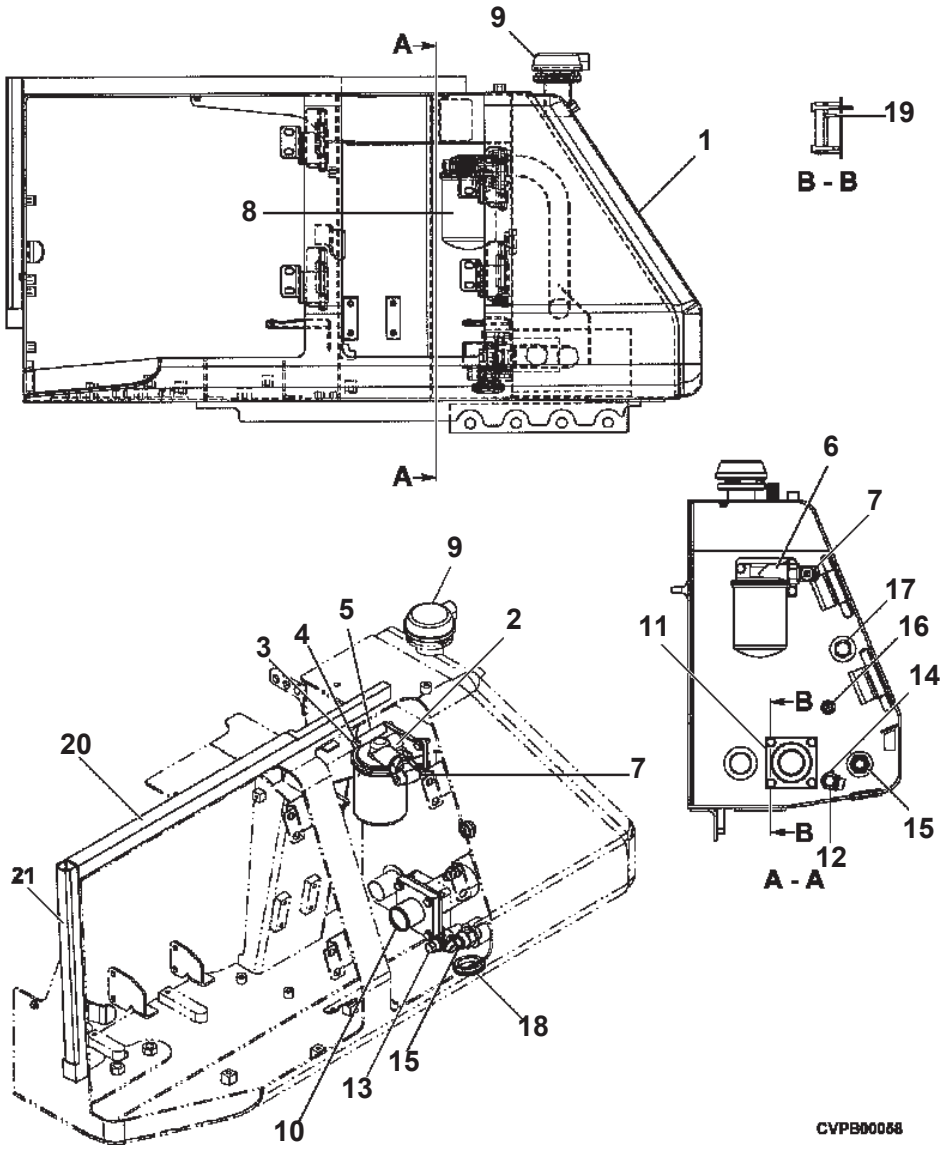

H0100-01A1 HYDRAULIC OIL TANK ASSEMBLY (#B10001-B11379)

Item	Part No.	Description	Qty	Options
1	12Y-60-11820	TANK, HYDRAULIC OIL	1	SN:B11325--@
	□12Y-60-11117	TANK, HYDRAULIC OIL	1	SN:B10474--B11324
	□12Y-60-11116	TANK, HYDRAULIC OIL	1	SN:B10069--B10473
	□12Y-60-11115	TANK, HYDRAULIC OIL	1	SN:B10001--B10068
2	113-60-43310	BASE, OIL FILTER	1	SN:B10001--@
	01010-81030	BOLT, MOUNT FILTER BASE	2	SN:B10001--@
	01643-31032	WASHER	2	SN:B10001--@
3	01011-81015	BOLT, MOUNT FILTER BASE	1	SN:B10001--@
4	01643-31032	WASHER, MOUNT FILTER BASE	1	SN:B10001--@
5	12Y-62-11790	SPACER, MOUNT FILTER BASE	1	SN:B10001--@
6	113-60-43330	VALVE, BY-PASS	1	SN:B10001--@
	07000-13031	O-RING	1	SN:B10001--@
7	11Y-62-12340	ELBOW	1	SN:B10001--@
	07002-13334	O-RING, FEMALE END	1	SN:B10001--@
	02896-11018	O-RING, MALE END	1	SN:B10001--@
8	113-60-43321	CARTRIDGE, OIL FILTER	1	SN:B10001--@
9	208-60-51700	BREATHER ASSEMBLY	1	SN:B10001--@
10	14X-60-11120	STRAINER	1	SN:B10001--@
	07000-12090	O-RING, STRAINER	1	SN:B10001--@
11	12Y-62-11480	TUBE, STRAINER	1	SN:B10001--@
	01010-81045	BOLT, MOUNT STRAINER TUBE	4	SN:B10001--@
	01643-31032	WASHER	4	SN:B10001--@
	07000-12090	O-RING, STRAINER TUBE	1	SN:B10001--@
12	(NSS)	TEE, OIL DRAIN	1	SN:B10001--@
13	419-60-35220	PLUG, OIL DRAIN	1	SN:B10412--@
	□124-60-51150	PLUG, OIL DRAIN	1	SN:B10001--B10411
14	01252-40410	BOLT, TOP OF DRAIN TEE	1	SN:B10001--@
	01640-20408	WASHER, TOP OF DRAIN TEE	3	SN:B10001--@
15	207-62-72110	UNION	2	SN:B10001--@
	07002-13334	O-RING, FEMALE END	1	SN:B10001--@
	207-62-64740	O-RING, MALE END	1	SN:B10001--@
16	02781-00313	UNION	1	SN:B10001--@
	07002-11823	O-RING	1	SN:B10001--@
	02896-11009	O-RING	1	SN:B10001--@
17	20N-60-11143	GAUGE, SIGHT	1	SN:B10001--@
18	09415-05016	CAP	1	SN:B10001--@
19	01224-40616	SCREW	2	SN:B10001--@
20	12Y-54-11941	SEAL, TOP WEATHERSTRIP	1	SN:B10001--@
21	12Y-54-11951	SEAL, SIDE WEATHERSTRIP	1	SN:B10001--@

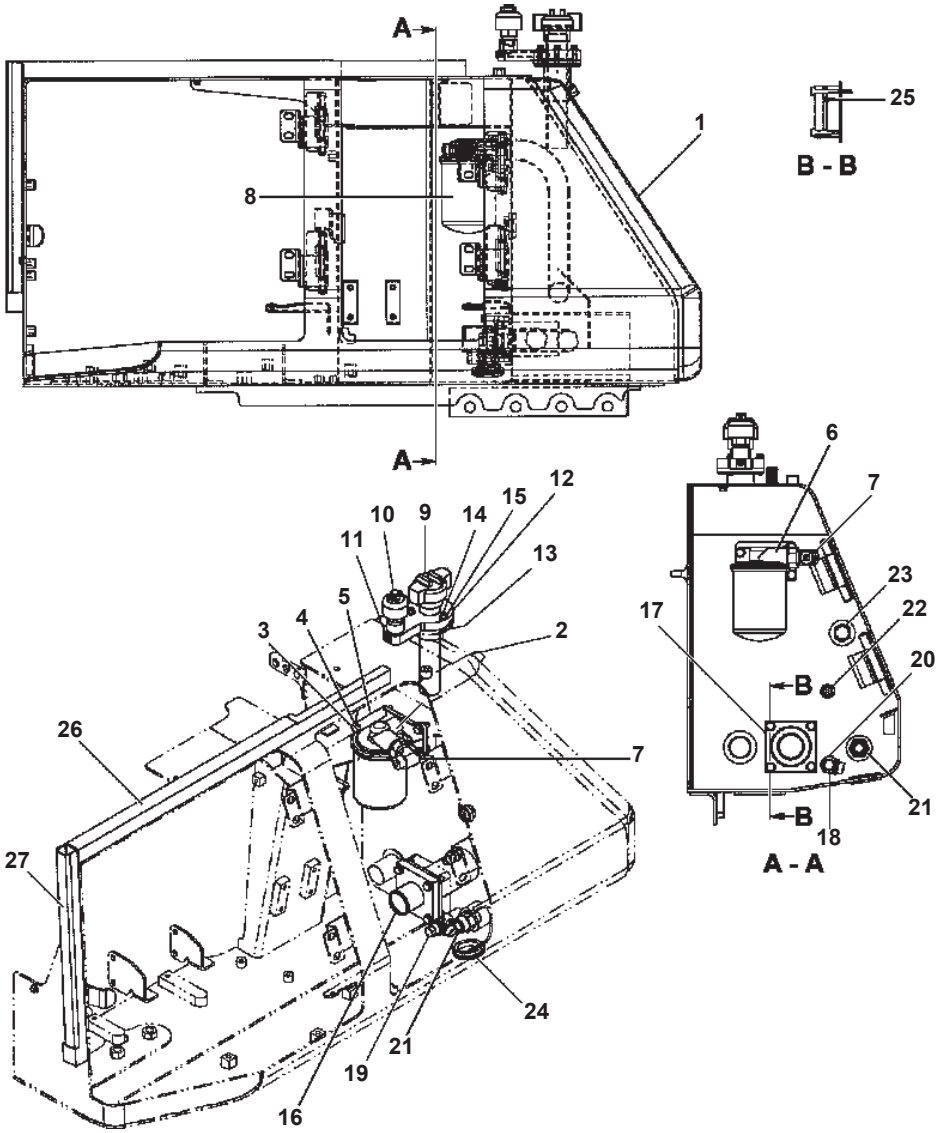

D51EX/PX-22 S/N B10001-UP

H0100-01B1 HYDRAULIC OIL TANK ASSEMBLY (#B11380-B11782)

Item	Part No.	Description	Qty	Options
1	12Y-60-11820	TANK, HYDRAULIC OIL	1	SN:B11325--B11782
2	113-60-43310	BASE, OIL FILTER	1	SN:B10001--@
	01010-81030	BOLT, MOUNT FILTER BASE	2	SN:B10001--@
	01643-31032	WASHER	2	SN:B10001--@
3	01011-81015	BOLT, MOUNT FILTER BASE	1	SN:B10001--@
4	01643-31032	WASHER, MOUNT FILTER BASE	1	SN:B10001--@
5	12Y-62-11790	SPACER, MOUNT FILTER BASE	1	SN:B10001--@
6	113-60-43330	VALVE, BY-PASS	1	SN:B10001--@
	07000-13031	O-RING	1	SN:B10001--@
7	11Y-62-12340	ELBOW	1	SN:B10001--@
	07002-13334	O-RING, FEMALE END	1	SN:B10001--@
	02896-11018	O-RING, MALE END	1	SN:B10001--@
8	113-60-43321	CARTRIDGE, OIL FILTER	1	SN:B10001--@
9	07092-01000	TANK, CAP	1	SN:B10001--@
10	22U-60-21520	BREATHER	1	SN:B11380--@
	421-60-35170	· ELEMENT	1	SN:B11380--@
	421-60-35180	· COVER	1	SN:B11380--@
	421-60-35190	· NUT	1	SN:B11380--@
11	02720-20406	PLUG	1	SN:B11380--B11782
12	12Y-62-14371	INSERT	1	SN:B11380--B11782
13	07000-12070	O-RING	1	SN:B11380--B11782
14	01252-70840	BOLT	3	SN:B11380--B11782
15	01643-70823	WASHER	3	SN:B11380--B11782
16	14X-60-11120	STRAINER	1	SN:B10001--@
	07000-12090	O-RING, STRAINER	1	SN:B10001--@
17	12Y-62-11480	TUBE, STRAINER	1	SN:B10001--@
	01010-81045	BOLT, MOUNT STRAINER TUBE	4	SN:B10001--@
	01643-31032	WASHER	4	SN:B10001--@
	07000-12090	O-RING, STRAINER TUBE	1	SN:B10001--@
18	(NSS)	TEE, OIL DRAIN	1	SN:B10001--@
19	419-60-35220	PLUG, OIL DRAIN	1	SN:B10412--@
20	01252-40410	BOLT, TOP OF DRAIN TEE	1	SN:B10001--@
	01640-20408	WASHER, TOP OF DRAIN TEE	3	SN:B10001--@
21	207-62-72110	UNION	2	SN:B10001--@
	07002-13334	O-RING, FEMALE END	1	SN:B10001--@
	207-62-64740	O-RING, MALE END	1	SN:B10001--@
22	02781-00313	UNION	1	SN:B10001--@
	07002-11823	O-RING	1	SN:B10001--@
	02896-11009	O-RING	1	SN:B10001--@
23	20N-60-11143	GAUGE, SIGHT	1	SN:B10001--@

Ref. H0100-01B1 Page H-004

H0100-01B1 HYDRAULIC OIL TANK ASSEMBLY (#B11380-B11782)

Item	Part No.	Description	Qty	Options
24	09415-05016	CAP	1	SN:B10001--@
25	01224-40616	SCREW	2	SN:B10001--@
26	12Y-54-11941	SEAL, TOP WEATHERSTRIP	1	SN:B10001--@
27	12Y-54-11951	SEAL, SIDE WEATHERSTRIP	1	SN:B10001--@

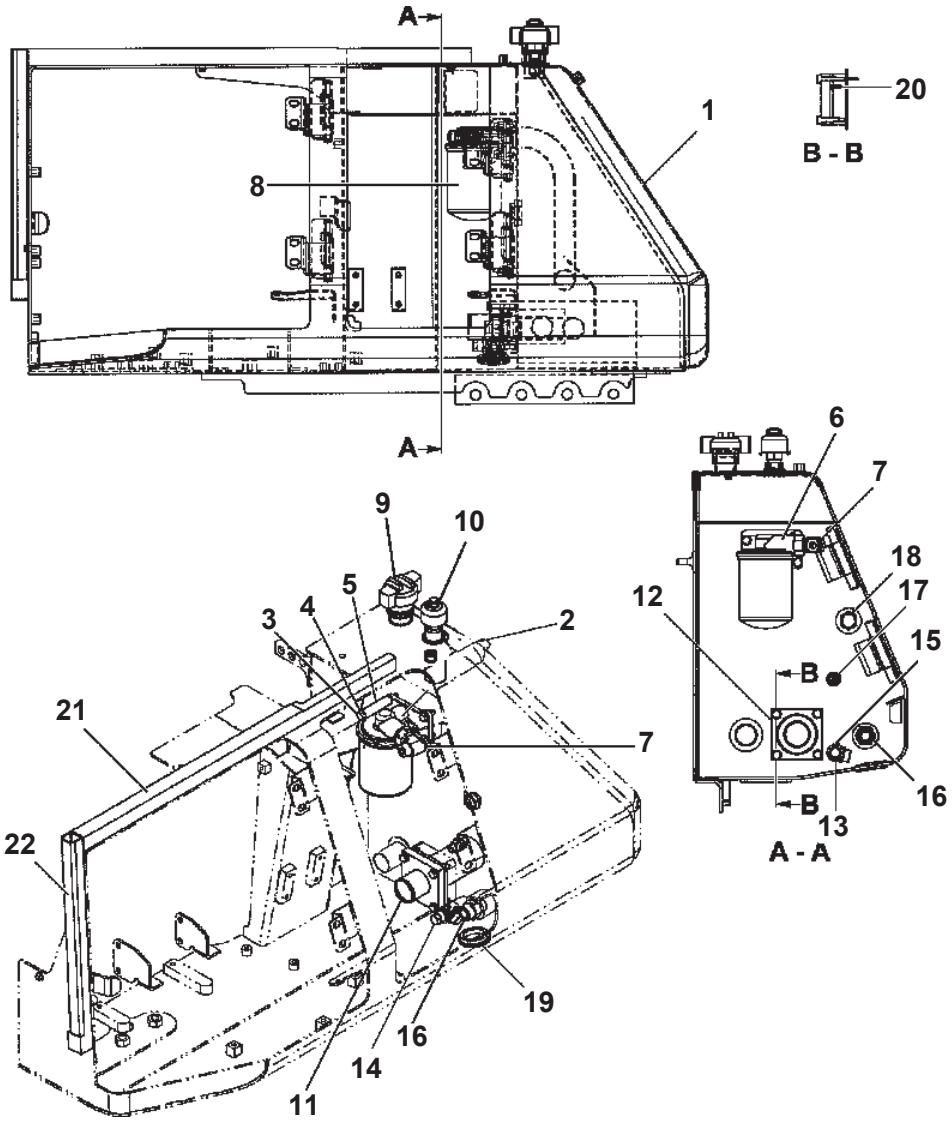

D51EX/PX-22 S/N B10001-UP

H0100-01B2 HYDRAULIC OIL TANK ASSEMBLY (#B11783-B12391)

Item	Part No.	Description	Qty	Options
1	12Y-60-11823	TANK, HYDRAULIC OIL	1	SN:B11783--B12391
2	113-60-43310	BASE, OIL FILTER	1	SN:B10001--B12391
	01010-81030	BOLT, MOUNT FILTER BASE	2	SN:B10001--B12391
	01643-31032	WASHER	2	SN:B10001--B12391
3	01011-81015	BOLT, MOUNT FILTER BASE	1	SN:B10001--B12391
4	01643-31032	WASHER, MOUNT FILTER BASE	1	SN:B10001--B12391
5	12Y-62-11790	SPACER, MOUNT FILTER BASE	1	SN:B10001--B12391
6	113-60-43330	VALVE, BY-PASS	1	SN:B10001--B12391
	07000-13031	O-RING	1	SN:B10001--B12391
7	11Y-62-12340	ELBOW	1	SN:B10001--B12391
	07002-13334	O-RING, FEMALE END	1	SN:B10001--B12391
	02896-11018	O-RING, MALE END	1	SN:B10001--B12391
8	113-60-43321	CARTRIDGE, OIL FILTER	1	SN:B10001--B12391
9	07092-01000	TANK, CAP	1	SN:B10001--B12391
10	22U-60-21520	BREATHER	1	SN:B11380--B12391
	421-60-35170	· ELEMENT	1	SN:B11380--B12391
	421-60-35180	· COVER	1	SN:B11380--B12391
	421-60-35190	· NUT	1	SN:B11380--B12391
11	14X-60-11120	STRAINER	1	SN:B10001--B12391
	07000-12090	O-RING, STRAINER	1	SN:B10001--B12391
12	12Y-62-11480	TUBE, STRAINER	1	SN:B10001--B12391
	01010-81045	BOLT, MOUNT STRAINER TUBE	4	SN:B10001--B12391
	01643-31032	WASHER	4	SN:B10001--B12391
	07000-12090	O-RING, STRAINER TUBE	1	SN:B10001--B12391
13	(NSS)	TEE, OIL DRAIN	1	SN:B10001--B12391
14	419-60-35220	PLUG, OIL DRAIN	1	SN:B10412--B12391
15	01252-40410	BOLT, TOP OF DRAIN TEE	1	SN:B10001--B12391
	01640-20408	WASHER, TOP OF DRAIN TEE	3	SN:B10001--B12391
16	207-62-72110	UNION	2	SN:B10001--B12391
	07002-13334	O-RING, FEMALE END	1	SN:B10001--B12391
	207-62-64740	O-RING, MALE END	1	SN:B10001--B12391
17	02781-00313	UNION	1	SN:B10001--B12391
	07002-11823	O-RING	1	SN:B10001--B12391
	02896-11009	O-RING	1	SN:B10001--B12391
18	20N-60-11143	GAUGE, SIGHT	1	SN:B10001--B12391
19	09415-05016	CAP	1	SN:B10001--B12391
20	01224-40616	SCREW	2	SN:B10001--B12391
21	12Y-54-11941	SEAL, TOP WEATHERSTRIP	1	SN:B10001--B12391
22	12Y-54-11951	SEAL, SIDE WEATHERSTRIP	1	SN:B10001--B12391

Ref. H0100-01B2 Page H-004A

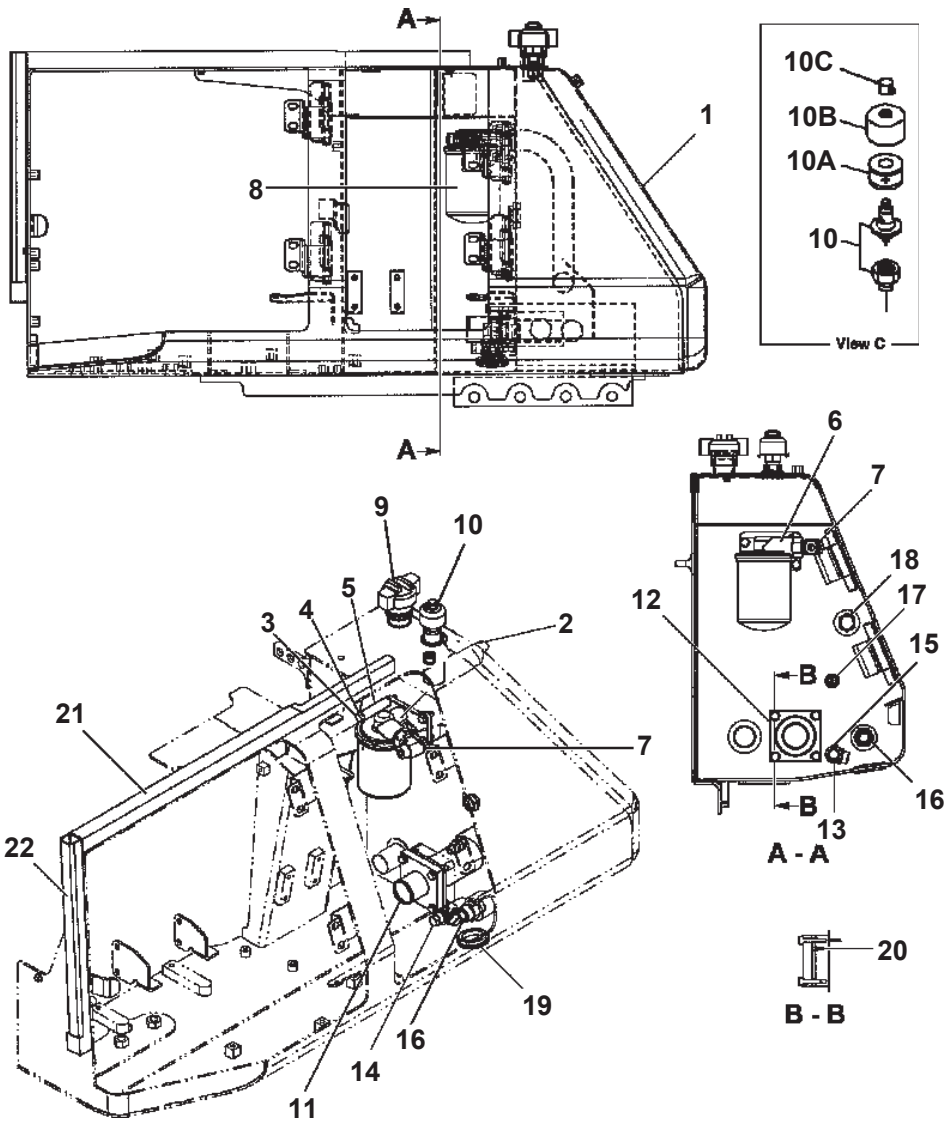

D51EX/PX-22 S/N B10001-UP

H0100-01B3 HYDRAULIC OIL TANK ASSEMBLY (#B12392-)

Item	Part No.	Description	Qty	Options
1	12Y-60-11824	TANK, HYDRAULIC OIL	1	SN:B12392--
2	113-60-43310	BASE, OIL FILTER	1	SN:B12392--
	01010-81030	BOLT, MOUNT FILTER BASE	2	SN:B12392--
	01643-31032	WASHER	2	SN:B12392--
3	01011-81015	BOLT, MOUNT FILTER BASE	1	SN:B12392--
4	01643-31032	WASHER, MOUNT FILTER BASE	1	SN:B12392--
5	12Y-62-11790	SPACER, MOUNT FILTER BASE	1	SN:B12392--
6	113-60-43330	VALVE, BY-PASS	1	SN:B12392--
	07000-13031	O-RING	1	SN:B12392--
7	11Y-62-12340	ELBOW	1	SN:B12392--
	07002-13334	O-RING, FEMALE END	1	SN:B12392--
	02896-11018	O-RING, MALE END	1	SN:B12392--
8	113-60-43321	CARTRIDGE, OIL FILTER	1	SN:B12392--
9	07092-01000	TANK, CAP	1	SN:B12392--
10	22U-60-21520	BREATHER	1	SN:B12392--
10A	421-60-35170	· ELEMENT	1	SN:B12392--
10B	421-60-35180	· COVER	1	SN:B12392--
10C	421-60-35190	· NUT	1	SN:B12392--
11	14X-60-11120	STRAINER	1	SN:B12392--
	07000-12090	O-RING, STRAINER	1	SN:B12392--
12	12Y-62-11480	TUBE, STRAINER	1	SN:B12392--
	01010-81045	BOLT, MOUNT STRAINER TUBE	4	SN:B12392--
	01643-31032	WASHER	4	SN:B12392--
	07000-12090	O-RING, STRAINER TUBE	1	SN:B12392--
13	(NSS)	TEE, OIL DRAIN	1	SN:B12392--
14	419-60-35220	PLUG, OIL DRAIN	1	SN:B12392--
15	01252-40410	BOLT, TOP OF DRAIN TEE	1	SN:B12392--
	01640-20408	WASHER, TOP OF DRAIN TEE	3	SN:B12392--
16	207-62-72110	UNION	2	SN:B12392--
	07002-13334	O-RING, FEMALE END	1	SN:B12392--
	207-62-64740	O-RING, MALE END	1	SN:B12392--
17	02781-00313	UNION	1	SN:B12392--
	07002-11823	O-RING	1	SN:B12392--
	02896-11009	O-RING	1	SN:B12392--
18	20N-60-11143	GAUGE, SIGHT	1	SN:B12392--
19	09415-05016	CAP	1	SN:B12392--
20	01224-40616	SCREW	2	SN:B12392--
21	12Y-54-11941	SEAL, TOP WEATHERSTRIP	1	SN:B12392--
22	12Y-54-11951	SEAL, SIDE WEATHERSTRIP	1	SN:B12392--

Ref. H0100-01B3 Page H-004B

CVPB00059

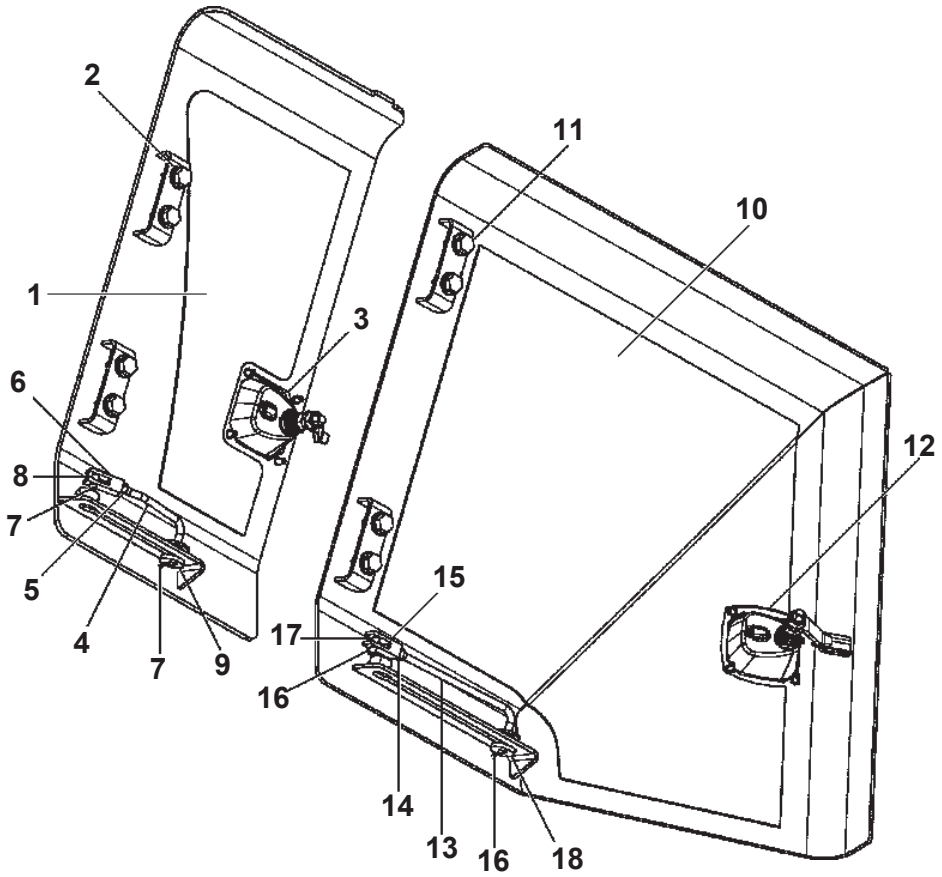

D51EX/PX-22 S/N B10001-UP

H0100-01A2 HYDRAULIC OIL TANK ACCESS COVERS

Item	Part No.	Description	Qty	Options
1	12Y-60-11133	COVER, OIL FILTER ACCESS	1	SN:B10001--
2	01010-81225	BOLT, MOUNT ACCESS COVER	4	SN:B10001--
	01643-31232	WASHER	4	SN:B10001--
3	11Y-54-31961	LATCH ASSEMBLY, DOOR	1	SN:B11630--
	11Y-54-31960	LATCH ASSEMBLY, DOOR	1	SN:B11140--B11629
	☐17A-54-45181	LATCH ASSEMBLY, DOOR	1	SN:B10013--B11139
	☐17A-54-45180	LATCH ASSEMBLY, DOOR	1	SN:B10001--B10012
4	12Y-60-11292	ROD	1	SN:B10012--
	☐12Y-60-11291	ROD	1	SN:B10001--B10011
5	01580-10806	NUT	1	SN:B10001--
6	04210-20832	YOKE	1	SN:B10001--
7	04050-12015	PIN, COTTER	2	SN:B10001--
8	04205-10825	PIN	1	SN:B10001--
9	207-57-11260	SPACER	1	SN:B10001--
10	12Y-60-11125	COVER, BATTERY ACCESS	1	SN:B12392--
	☐12Y-60-11124	COVER, BATTERY ACCESS	1	SN:B11431--B12391
	12Y-60-11123	COVER, BATTERY ACCESS	1	SN:B10001--B11430
11	01010-81225	BOLT, MOUNT ACCESS COVER	4	SN:B10001--
	01643-31232	WASHER	4	SN:B10001--
12	11Y-54-31961	LATCH ASSEMBLY, DOOR	1	SN:B11630--
	☐11Y-54-31960	LATCH ASSEMBLY, DOOR	1	SN:B11140--B11629
	☐17A-54-45181	LATCH ASSEMBLY, DOOR	1	SN:B10013--B11139
	☐17A-54-45180	LATCH ASSEMBLY, DOOR	1	SN:B10001--B10012
13	12Y-60-11282	ROD	1	SN:B10012--
	☐12Y-60-11281	ROD	1	SN:B10001--B10011
14	01580-10806	NUT	1	SN:B10001--
15	04210-20832	YOKE	1	SN:B10001--
16	04050-12015	PIN, COTTER	2	SN:B10001--
17	04205-10825	PIN	1	SN:B10001--
18	207-57-11260	SPACER	1	SN:B10001--

Ref. H0100-01A2 Page H-005

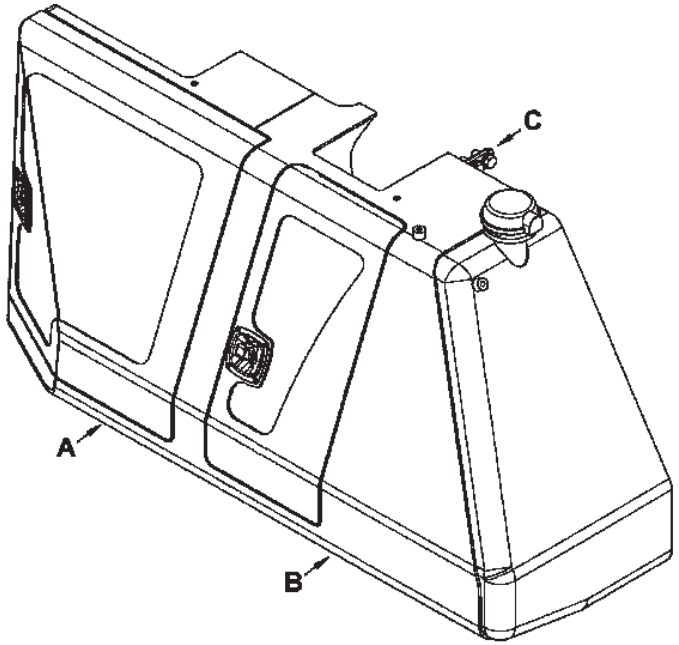

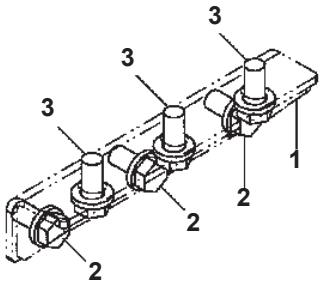

View "A"

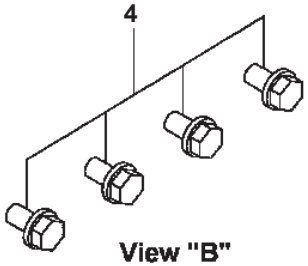

View "B"

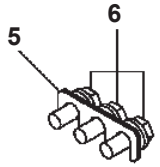

View "C"

H0100-01A3 HYDRAULIC OIL TANK MOUNTING HARDWARE

Item	Part No.	Description	Qty	Options
1	12Y-04-11630	BRACKET, MOUNTING	1	SN:B10001--
2	01010-82040	BOLT	3	SN:B10001--
	01643-32060	WASHER	3	SN:B10001--
3	01010-82045	BOLT	3	SN:B10001--
	01643-32060	WASHER	3	SN:B10001--
4	01010-82040	BOLT	4	SN:B10001--
	01643-32060	WASHER	4	SN:B10001--
5	12Y-04-11521	PLATE, SHIM	1	SN:B10001--
6	205-27-71670	BOLT	3	SN:B10001--
	01643-31645	WASHER	3	SN:B10001--

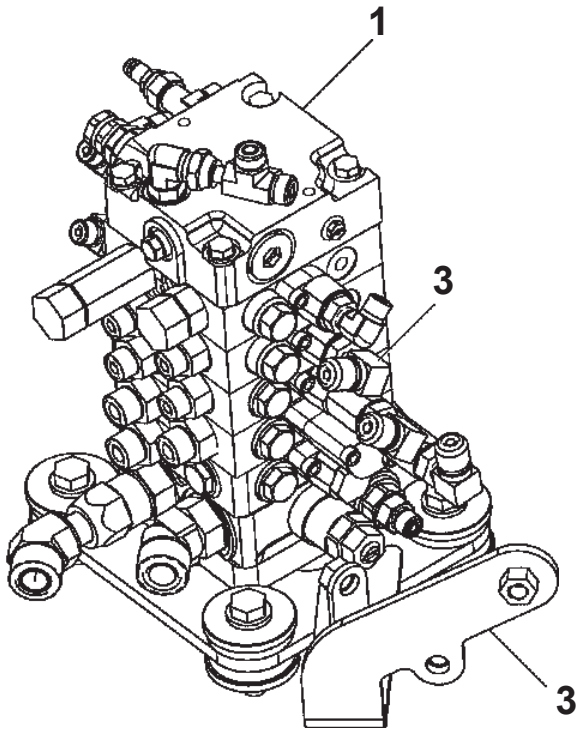

H0200-01A0 HYDRAULIC CONTROL VALVE COMPLETE ASSEMBLY

Item	Description	Qty	Options
1	VALVE, 4-SPOOL (SEE FIG. H0370-01A0)	1	SN:B10001--
	VALVE, 5-SPOOL (SEE FIG. H0380-01A0)	1	SN:B10001--
2	ELBOWS, 4-SPOOL (SEE FIG. H0200-01A3)	1	SN:B10001--
	ELBOWS, 5-SPOOL (SEE FIG. H0200-01A4)	1	SN:B10001--
3	MOUNTING BRACKET (SEE FIG. H0200-01A5)	1	SN:B10001--

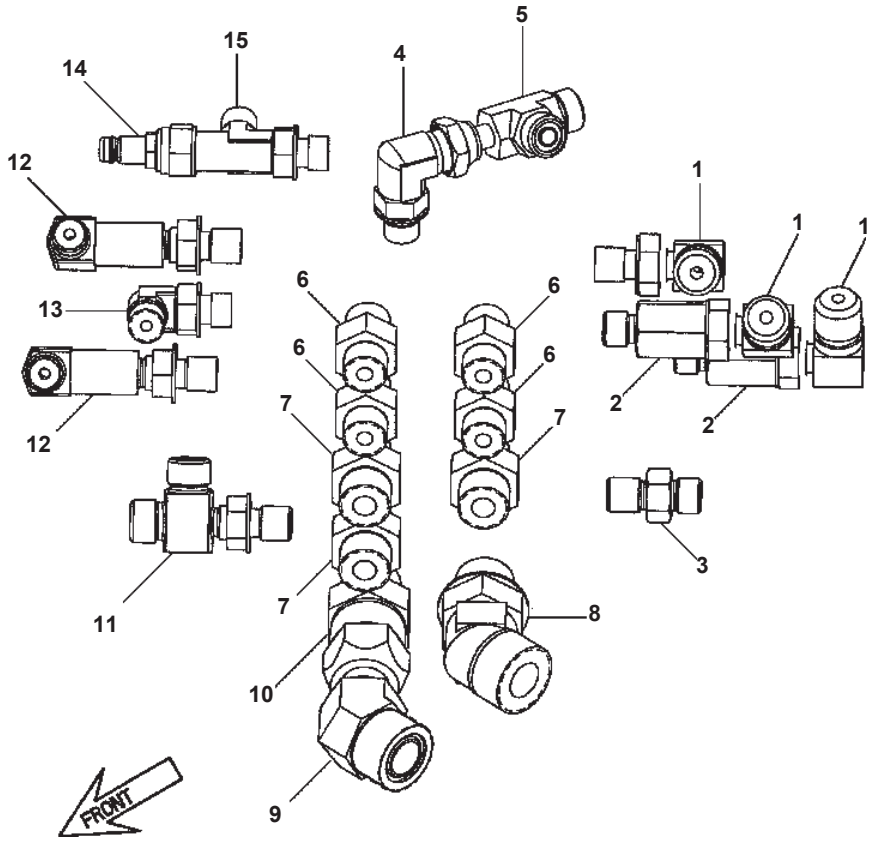

H0200-01A3 HYDRAULIC CONTROL VALVE ELBOWS AND CONNECTORS (4 SPOOL)

Item	Part No.	Description	Qty	Options
1	201-62-75420	ELBOW	3	SN:B10001--
	07002-11423	O-RING	3	SN:B10001--
2	203-62-58880	ADAPTER	2	SN:B10001--
	07002-11423	O-RING	2	SN:B10001--
3	20Y-62-41970	UNION	1	SN:B10546--
	□02781-0021D	UNION	1	SN:B10001--B10545
	07002-11423	O-RING	1	SN:B10001--
	02896-11008	O-RING	1	SN:B10001--
4	02782-10311	ELBOW	1	SN:B10001--
	07002-11423	O-RING	1	SN:B10001--
5	12Y-62-11661	TEE	1	SN:B10001--
	02896-11009	O-RING	3	SN:B10001--
6	02781-00313	UNION	4	SN:B10001--
	02896-11009	O-RING	4	SN:B10001--
	07002-11823	O-RING	4	SN:B10001--
7	02781-00420	UNION	3	SN:B10001--
	02896-11012	O-RING	3	SN:B10001--
	07002-11823	O-RING	3	SN:B10001--
8	11Y-62-36180	UNION	1	SN:B10171--
	□02783-10628	ELBOW	1	SN:B10001--B10170
	02896-11018	O-RING	1	SN:B10001--
	07002-12434	O-RING	1	SN:B10001--
9	12Y-62-12850	ELBOW	1	SN:B10001--
	02896-11018	O-RING	2	SN:B10001--
10	02781-00628	UNION	1	SN:B10001--
	07002-12434	O-RING	1	SN:B10001--
11	21N-64-36680	TEE	1	SN:B10001--
	07002-11423	O-RING	1	SN:B10001--
	02896-11009	O-RING	2	SN:B10001--
12	11Y-62-12370	ELBOW	2	SN:B10001--
	02896-11008	O-RING	2	SN:B10001--
	07002-11423	O-RING	2	SN:B10001--
13	02782-10210	ELBOW	1	SN:B10001--
	02896-11008	O-RING	1	SN:B10001--
	07002-11423	O-RING	1	SN:B10001--
14	799-101-5220	NIPPLE	1	SN:B10001--
	07002-11023	O-RING	1	SN:B10001--
15	02782-50210	ELBOW	1	SN:B10001--
	02896-11008	O-RING	1	SN:B10001--
	07002-11423	O-RING	1	SN:B10001--

H0200-01A3 HYDRAULIC CONTROL VALVE
ELBOWS AND CONNECTORS (4 SPOOL)

Item	Part No.	Description	Qty	Options
NI	20Y-62-22790	BAND, RED	2	SN:B10001--
	20Y-62-22810	BAND, YELLOW	2	SN:B10001--
	20Y-62-22820	BAND, BLUE	2	SN:B10001--
	20Y-62-22830	BAND, WHITE	2	SN:B10001--
	20Y-62-22850	BAND, GREEN	2	SN:B10001--
	20Y-62-22860	BAND, BROWN	2	SN:B10001--

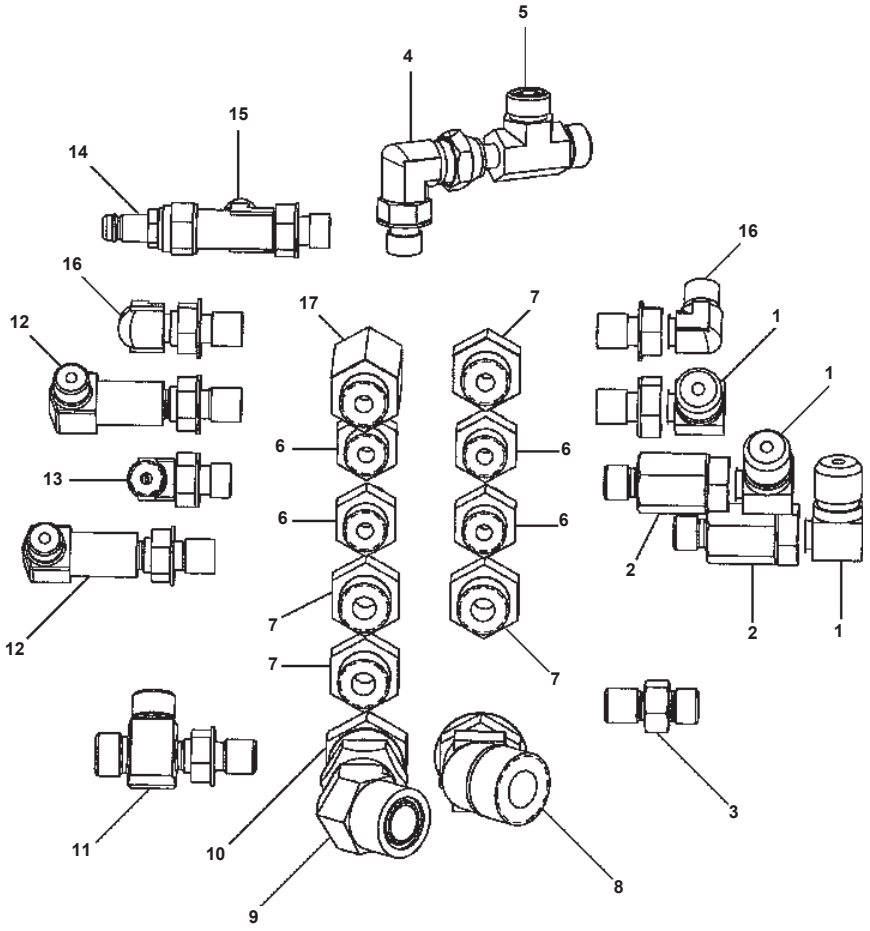

H0200-01A4 HYDRAULIC CONTROL VALVE ELBOWS AND CONNECTORS (5 SPOOL)

Item	Part No.	Description	Qty	Options
1	201-62-75420	ELBOW	3	SN:B10001--
	07002-11423	O-RING	3	SN:B10001--
2	203-62-58880	ADAPTER	2	SN:B10001--
	07002-11423	O-RING	2	SN:B10001--
3	20Y-62-41970	UNION	1	SN:B10546--
	□02781-0021D	UNION	1	SN:B10001--B10545
	07002-11423	O-RING	1	SN:B10001--
	02896-11008	O-RING	1	SN:B10001--
4	02782-10311	ELBOW	1	SN:B10001--
	07002-11423	O-RING	1	SN:B10001--
5	12Y-62-11661	TEE	1	SN:B10001--
	02896-11009	O-RING	3	SN:B10001--
6	02781-00313	UNION	4	SN:B10001--
	02896-11009	O-RING	4	SN:B10001--
	07002-11823	O-RING	4	SN:B10001--
7	02781-00420	UNION	4	SN:B10001--
	02896-11012	O-RING	4	SN:B10001--
	07002-11823	O-RING	4	SN:B10001--
8	11Y-62-36180	ELBOW	1	SN:B10001--
	02783-10628	· UNION	1	SN:B10001--
	02896-11018	O-RING	1	SN:B10001--
	07002-12434	O-RING	1	SN:B10001--
9	12Y-62-12850	ELBOW	1	SN:B10001--
	02896-11018	O-RING	2	SN:B10001--
10	02781-00628	UNION	1	SN:B10001--
	07002-12434	O-RING	1	SN:B10001--
11	21N-64-36680	TEE	1	SN:B10001--
	07002-11423	O-RING	1	SN:B10001--
	02896-11009	O-RING	2	SN:B10001--
12	11Y-62-12370	ELBOW	2	SN:B10001--
	02896-11008	O-RING	2	SN:B10001--
	07002-11423	O-RING	2	SN:B10001--
13	02782-10210	ELBOW	1	SN:B10001--
	02896-11008	O-RING	1	SN:B10001--
	07002-11423	O-RING	1	SN:B10001--
14	799-101-5220	NIPPLE	1	SN:B10001--
	07002-11023	O-RING	1	SN:B10001--
15	02782-50210	ELBOW	1	SN:B10001--
	02896-11008	O-RING	1	SN:B10001--
	07002-11423	O-RING	1	SN:B10001--

H0200-01A4 HYDRAULIC CONTROL VALVE
ELBOWS AND CONNECTORS (5 SPOOL)

Item	Part No.	Description	Qty	Options
16	11Y-62-12160	ELBOW	2	SN:B10001--
	02896-11008	O-RING	2	SN:B10001--
	07002-11423	O-RING	2	SN:B10001--
17	12Y-62-14150	FITTING, UNION	1	SN:B10001--
	02896-11012	O-RING	1	SN:B10001--
	07002-11823	O-RING	1	SN:B10001--
NI	20Y-62-22790	BAND, RED	2	SN:B10001--
	20Y-62-22810	BAND, YELLOW	2	SN:B10001--
	20Y-62-22820	BAND, BLUE	2	SN:B10001--
	20Y-62-22830	BAND, WHITE	2	SN:B10001--
	20Y-62-22850	BAND, GREEN	1	SN:B10001--
	20Y-62-22860	BAND, BROWN	2	SN:B10001--

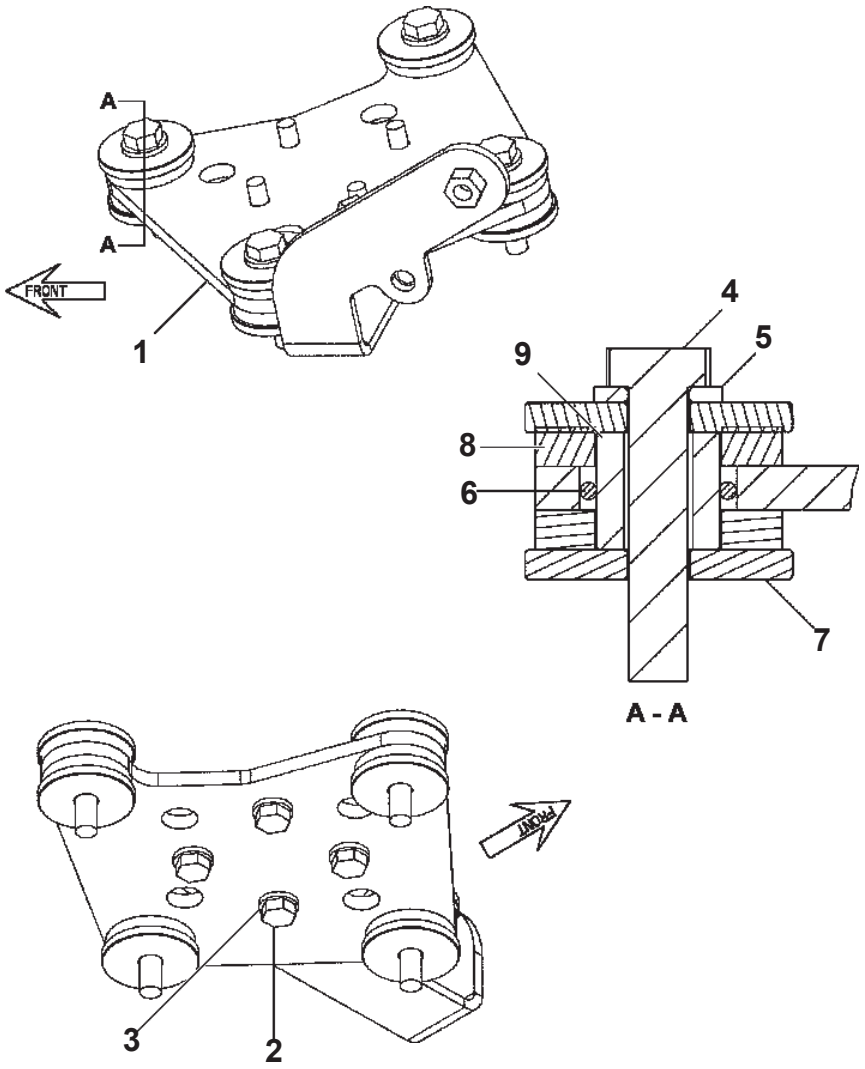

H0200-01A5 HYDRAULIC CONTROL VALVE MOUNTING ASSEMBLY (4 AND 5 SPOOL VALVE)

Item	Part No.	Description	Qty	Options
1	12Y-62-11152	BRACKET, MOUNT VALVE	1	SN:B10905--
	□12Y-62-11151	BRACKET, MOUNT VALVE	1	SN:B10001--B10904
2	01010-81025	BOLT, MOUNT VALVE	4	SN:B10001--
3	01643-31032	WASHER	4	SN:B10001--
4	01010-81060	BOLT, MOUNT BRACKET TO FUEL TANK	4	SN:B10001--
5	01643-31232	WASHER	4	SN:B10001--
6	07000-13025	O-RING	4	SN:B10001--
7	283-62-18110	WASHER	8	SN:B10001--
8	14X-60-12120	CUSHION	8	SN:B10001--
9	20X-62-21550	SPACER	4	SN:B10001--

CVPB00067

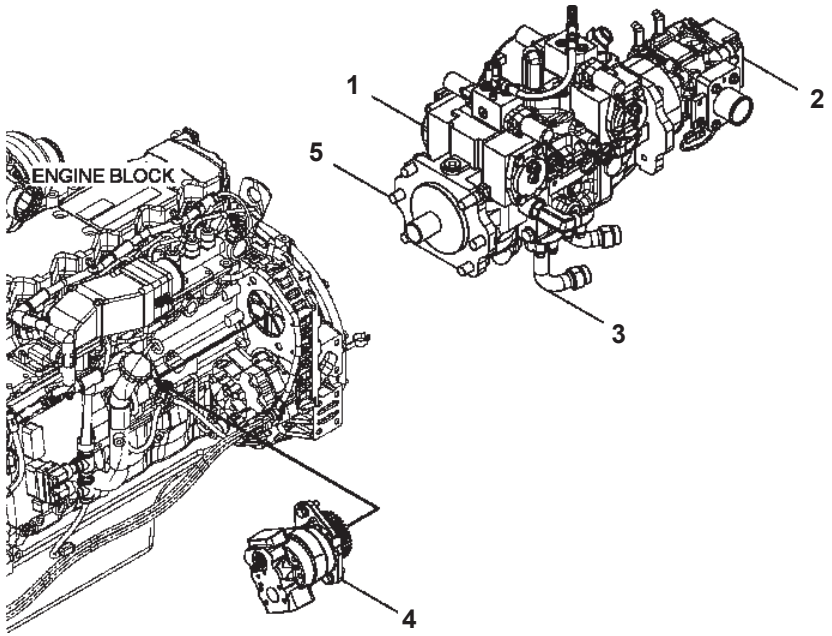

D51EX/PX-22 S/N B10001-UP

H0300-01A0 HYDRAULIC PUMP COMPLETE ASSEMBLY

Item	Description	Qty	Options
1	HST PUMP (SEE FIG. H0310-01A0)	1	SN:B10001--
2	HYDRAULIC PUMP (SEE FIG. H0310-21A0)	1	SN:B10001--
3	JOINT GROUP (SEE FIG. H0320-01A0)	1	SN:B10001--
4	CHARGE PUMP (SEE FIG. H0330-01A0)	1	SN:B10001--
5	PUMP MOUNTING (SEE FIG. H0340-01A0)	1	SN:B10001--

Ref. H0300-01A0 Page H-021

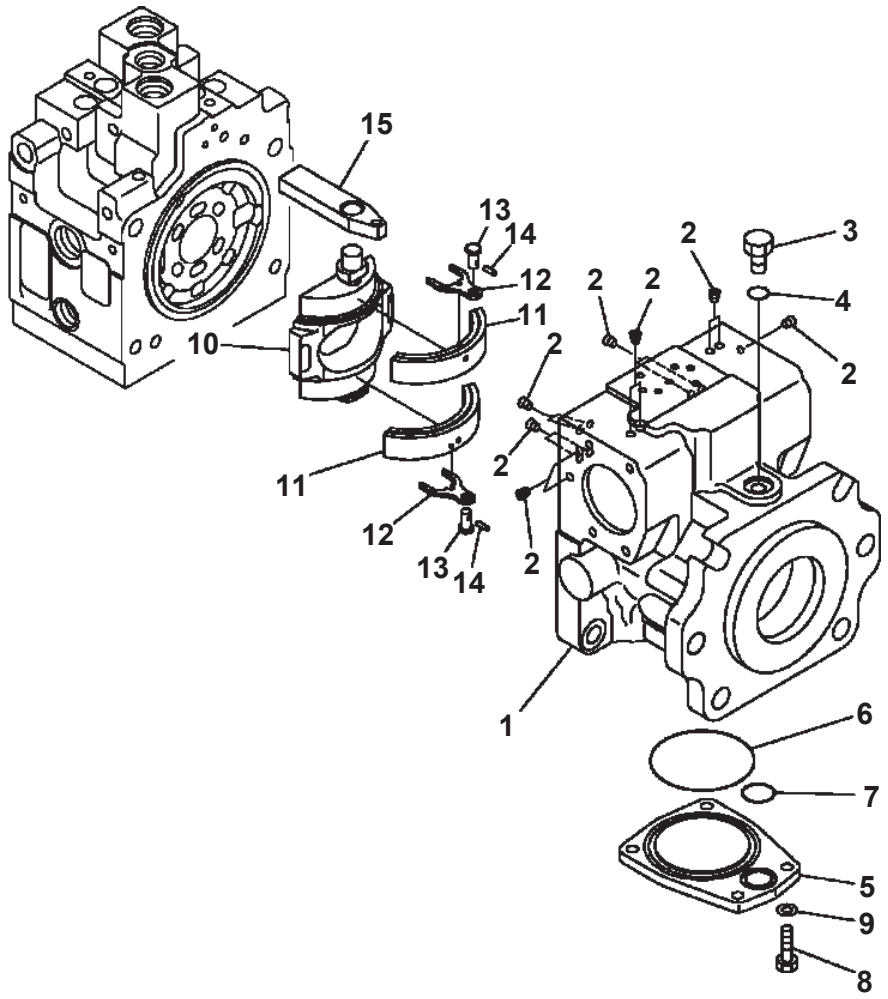

H0310-01A0 HYDRAULIC PUMP HST PUMP ASSEMBLY (1/11)

Item	Part No.	Description	Qty	Wt.	Options
	720-2L-00020	PUMP ASSEMBLY, HST	1		SN:B10001--
	720-2L-01020	PUMP SUB ASSEMBLY	1		SN:B10001--
	720-2L-04140	· CASE ASSEMBLY, FRONT	1	F1	SN:B10001--
1	(NSS)	· · CASE, FRONT	1		SN:B10001--
2	(NSS)	· · PLUG	13		SN:B10001--
3	07040-12414	· PLUG	1		SN:B10001--
4	07002-62434	· O-RING	1		SN:B10001--
5	720-1L-11131	· PLATE	1		SN:B10001--
6	07000-A2105	· O-RING	1		SN:B10001--
7	07000-B3028	· O-RING	1		SN:B10001--
8	01010-81025	· BOLT	4		SN:B10001--
9	01643-31032	· WASHER	4		SN:B10001--
10	720-1L-13420	· CAM, ROCKER	1	F1	SN:B10001--
11	720-2L-13530	· BEARING	2	F1	SN:B10001--
12	720-1L-13631	· PLATE	2	F1	SN:B10001--
13	720-2M-13630	· PIN	2	F1	SN:B10001--
14	720-2M-13640	· PIN	2	F1	SN:B10001--
15	720-1L-14180	· SLIDER	1	F1	SN:B10001--
		F1 - ONLY SUPPLIED TO AUTHORIZED DISTRIBUTORS.			

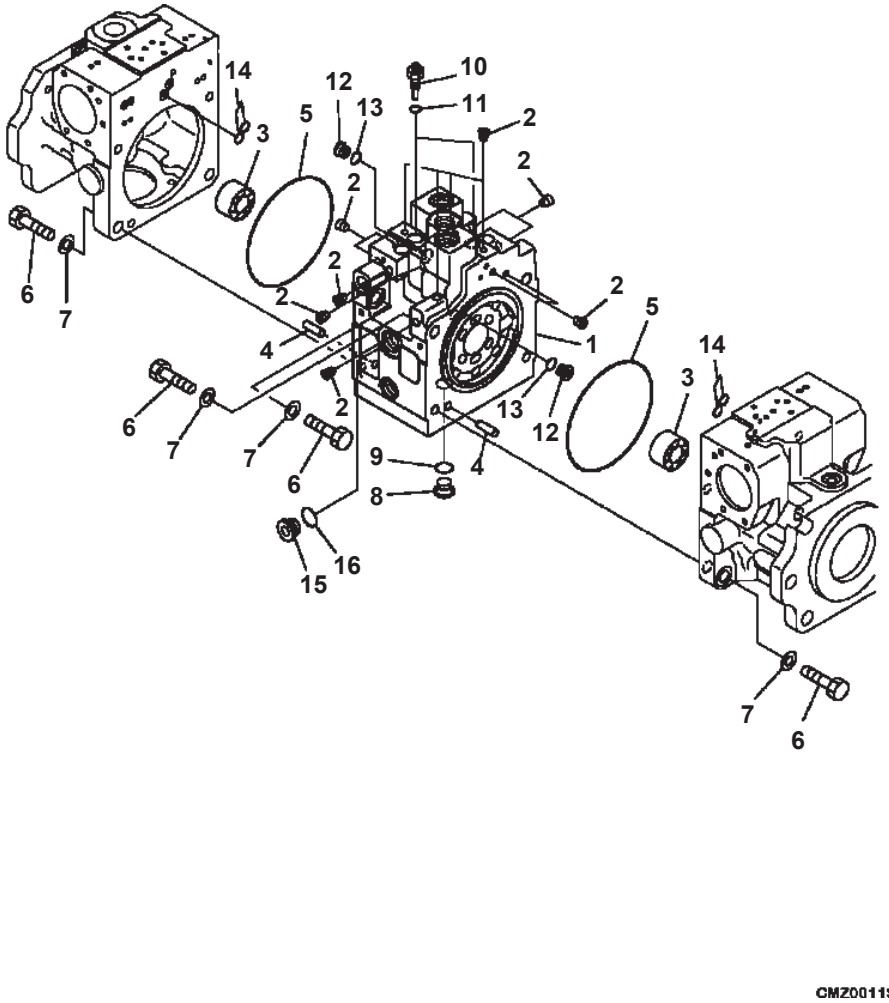

H0310-02A0 HYDRAULIC PUMP HST PUMP ASSEMBLY (2/11)

Item	Part No.	Description	Qty	Wt.	Options
		PUMP ASSEMBLY (SEE FIG. H0310-01A0)			SN:B10001--
		· PUMP SUB ASSEMBLY (SEE FIG. H0310-01A0)			SN:B10001--
	720-2L-04160	· · CAP ASSEMBLY, END	1	F1	SN:B10001--
1	(NSS)	· · · CAP, END	1		SN:B10001--
2	(NSS)	· · · PLUG	13		SN:B10001--
3	720-2L-13510	· · BEARING	2	F1	SN:B10001--
4	04020-01228	· · PIN, DOWEL	2	F1	SN:B10001--
5	07000-A5170	· · O-RING	2	F1	SN:B10001--
6	01010-81660	· · BOLT	8	F1	SN:B10001--
7	01643-51645	· · WASHER	8	F1	SN:B10001--
8	720-2M-11550	· · PLUG	1		SN:B10001--
9	07002-62034	· · O-RING	1		SN:B10001--
10	720-2M-11531	· · PLUG	2		SN:B10001--
11	07002-61223	· · O-RING	2		SN:B10001--
12	723-56-31630	· · PLUG	2		SN:B10001--
13	07002-61623	· · O-RING	2		SN:B10001--
14	07000-B2012	· · O-RING	4		SN:B10001--
15	720-2M-15270	· · PLUG	1		SN:B10001--
16	07002-62434	· · O-RING	1		SN:B10001--
		F1 - ONLY SUPPLIED TO AUTHORIZED DISTRIBUTORS.			

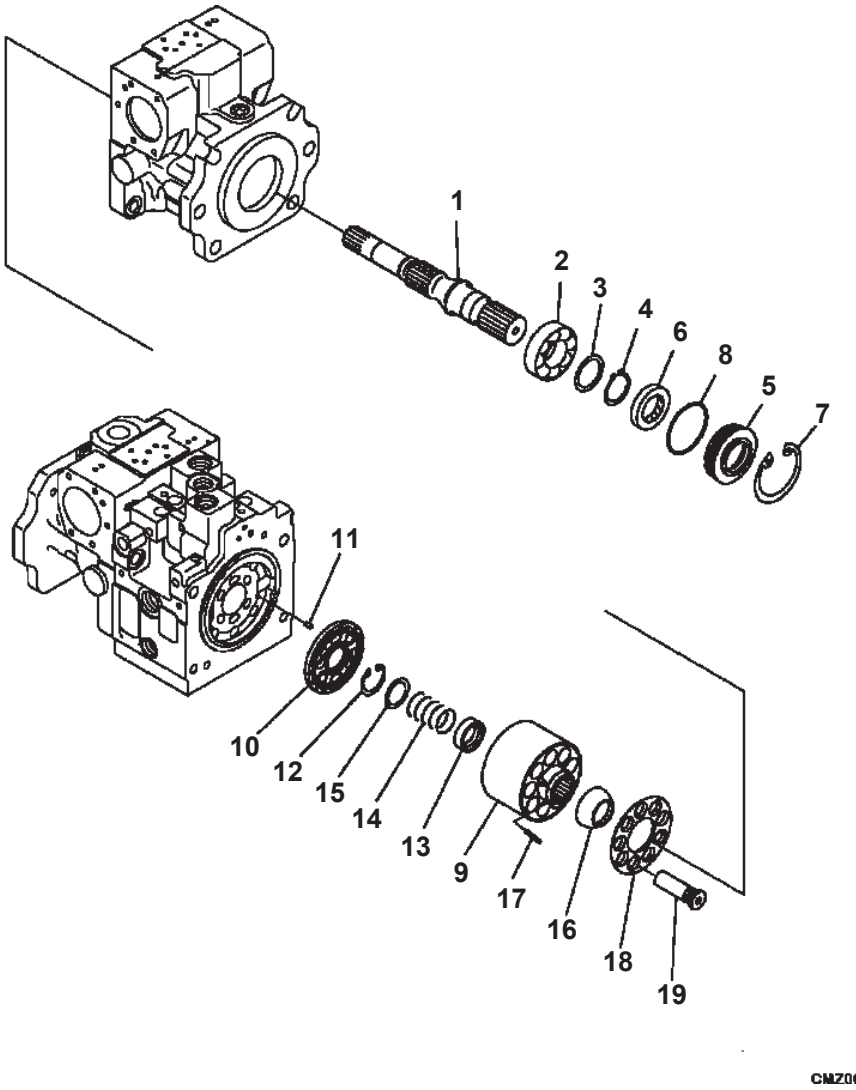

H0310-03A0 HYDRAULIC PUMP HST PUMP ASSEMBLY (3/11)

Item	Part No.	Description	Qty	Wt.	Options
		PUMP ASSEMBLY (SEE FIG. H0310-01A0)			SN:B10001--
		· PUMP SUB ASSEMBLY (SEE FIG. H0310-01A0)			SN:B10001--
1	720-2L-12140	· · SHAFT, FRONT	1	F1	SN:B10001--
2	708-2L-32150	· · BEARING	1	F1	SN:B10001--
3	708-2E-05040	· · WASHER KIT	1	F1	SN:B10001--
4	708-25-12790	· · RING, SNAP	1	F1	SN:B10001--
5	720-1L-12220	· · COVER	1		SN:B10001--
6	708-25-52861	· · SEAL, OIL	1		SN:B10001--
7	04065-09030	· · RING, SNAP	1		SN:B10001--
8	07000-A2080	· · O-RING	1		SN:B10001--
	720-2L-04330	· · CYLINDER BLOCK ASSEMBLY	1	F1	SN:B10001--
9	708-2L-33190	· · · BLOCK, CYLINDER	1	F1	SN:B10001--
10	720-2L-13230	· · · PLATE	1	F1	SN:B10001--
11	720-68-19610	· · PIN	1	F1	SN:B10001--
12	04065-04818	· · RING, SNAP	1	F1	SN:B10001--
13	708-2L-23131	· · SEAT	1	F1	SN:B10001--
14	708-2L-33160	· · SPRING	1	F1	SN:B10001--
15	708-7L-13140	· · SEAT	1	F1	SN:B10001--
16	708-2L-23351	· · GUIDE	1	F1	SN:B10001--
17	708-2L-23360	· · PIN	3	F1	SN:B10001--
18	708-2L-33350	· · RETAINER	1	F1	SN:B10001--
19	720-1L-13310	· · PISTON SUB ASSEMBLY	9	F1	SN:B10001--
		F1 - ONLY SUPPLIED TO AUTHORIZED DISTRIBUTORS.			

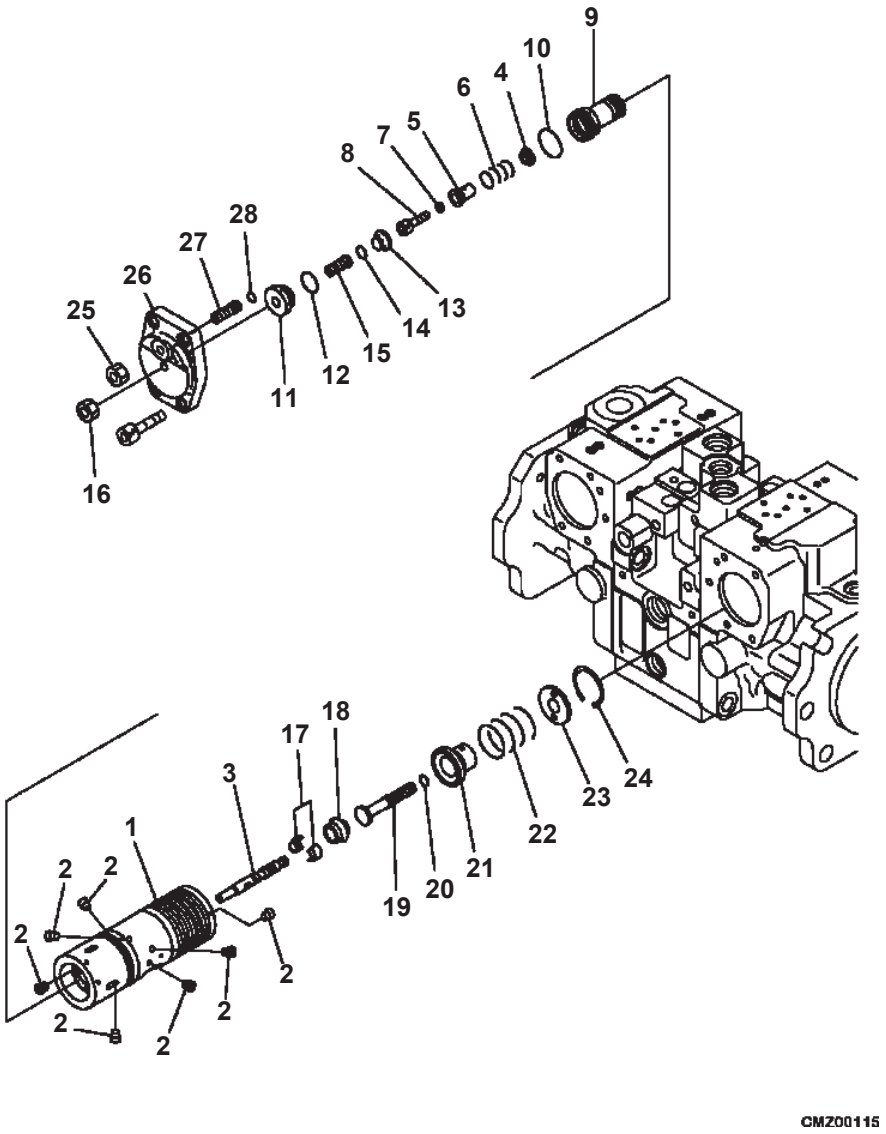

H0310-04A0 HYDRAULIC PUMP HST PUMP ASSEMBLY (4/11)

Item	Part No.	Description	Qty	Wt.	Options
		PUMP ASSEMBLY (SEE FIG. H0310-01A0)			SN:B10001--
		· PUMP SUB ASSEMBLY (SEE FIG. H0310-01A0)			SN:B10001--
	720-2L-03110	· · VALVE ASSEMBLY	1	F1	SN:B10001--
	720-2L-03130	· · · PISTON ASSEMBLY	1	F1	SN:B10001--
1	720-2L-14110	· · · · PISTON, SERVO	1	F1	SN:B10001--
2	702-16-54490	· · · · SCREW	10	F1	SN:B10001--
3	720-2L-14120	· · · SPOOL	1	F1	SN:B10001--
4	720-2M-14550	· · · RETAINER	1	F1	SN:B10001--
5	720-2M-14560	· · · RETAINER	1	F1	SN:B10001--
6	720-2L-14180	· · · SPRING	1	F1	SN:B10001--
7	723-11-17150	· · · WASHER	1	F1	SN:B10001--
8	01252-60612	· · · BOLT	1	F1	SN:B10001--
9	720-2M-14581	· · · SLEEVE	1	F1	SN:B10001--
10	07000-B3032	· · · O-RING	1	F1	SN:B10001--
11	720-2M-14590	· · · PLUG	1	F1	SN:B10001--
12	07000-B3024	· · · O-RING	1	F1	SN:B10001--
13	720-2M-14610	· · · PLUG	1	F1	SN:B10001--
14	07000-B2012	· · · O-RING	1	F1	SN:B10001--
15	720-2M-14620	· · · SCREW	1	F1	SN:B10001--
16	01582-11210	· · · NUT	1	F1	SN:B10001--
17	720-2M-14630	· · · RETAINER	2	F1	SN:B10001--
18	720-2M-14640	· · · PLUG	1	F1	SN:B10001--
19	720-2L-14150	· · · ROD	1	F1	SN:B10001--
20	07000-B2010	· · · O-RING	1	F1	SN:B10001--
21	720-2L-14130	· · · RETAINER	1	F1	SN:B10001--
22	720-2L-14170	· · · SPRING	1	F1	SN:B10001--
23	720-2L-14140	· · · RETAINER	1	F1	SN:B10001--
24	720-2L-14160	· · · RING, SNAP	1	F1	SN:B10001--
25	01582-11210	· · · NUT	1	F1	SN:B10001--
26	720-2L-14210	· · · COVER	1	F1	SN:B10001--
27	720-2M-14170	· · · SCREW	1	F1	SN:B10001--
28	07000-B1010	· · · O-RING	1	F1	SN:B10001--
		F1 - ONLY SUPPLIED TO AUTHORIZED DISTRIBUTORS.			

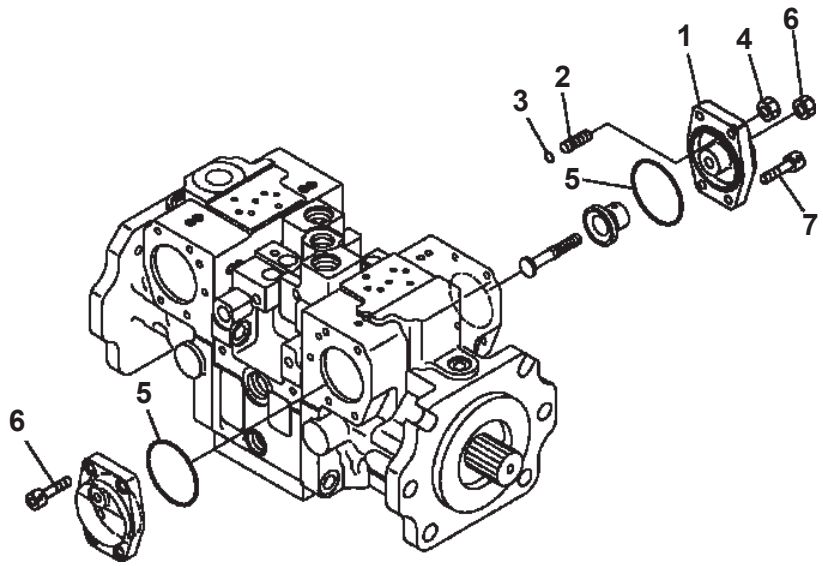

H0310-05A0 HYDRAULIC PUMP HST PUMP ASSEMBLY (5/11)

Item	Part No.	Description	Qty	Wt.	Options
		PUMP ASSEMBLY (SEE FIG. H0310-01A0)			SN:B10001--
		・ PUMP SUB ASSEMBLY (SEE FIG. H0310-01A0)			SN:B10001--
	720-2L-03120	・・ COVER ASSEMBLY	1	F1	SN:B10001--
1	720-2L-14220	・・・ COVER	1	F1	SN:B10001--
2	720-2M-14170	・・・ SCREW	1	F1	SN:B10001--
3	07000-B1010	・・・ O-RING	1	F1	SN:B10001--
4	01582-11210	・・・ NUT	1	F1	SN:B10001--
5	07000-B2080	・・ O-RING	2	F1	SN:B10001--
6	01582-11210	・・ NUT	1	F1	SN:B10001--
7	01252-61030	・・ BOLT	8		SN:B10001--
		F1 - ONLY SUPPLIED TO AUTHORIZED DISTRIBUTORS.			

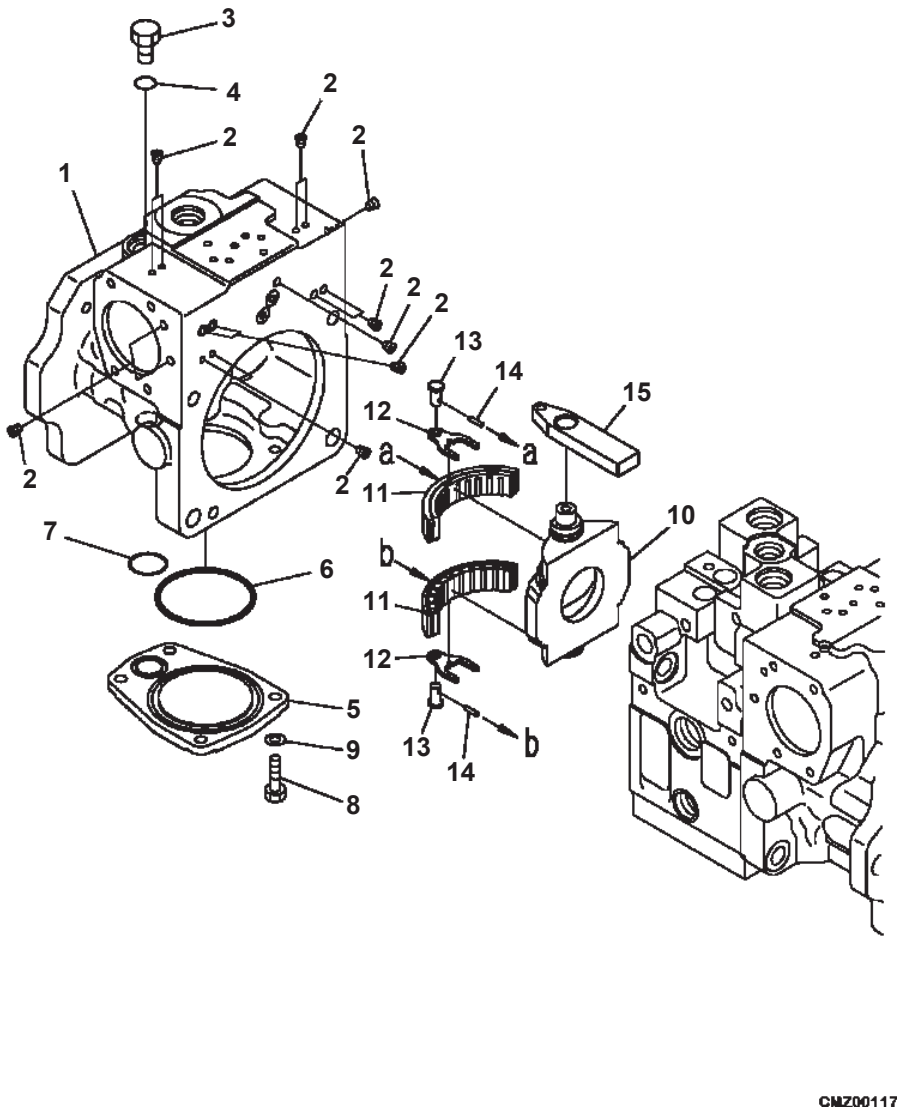

H0310-06A0 HYDRAULIC PUMP HST PUMP ASSEMBLY (6/11)

Item	Part No.	Description	Qty	Wt.	Options
		PUMP ASSEMBLY (SEE FIG. H0310-01A0)			SN:B10001--
		· PUMP SUB ASSY (SEE FIG. H0310-01A0)			SN:B10001--
	720-2L-04150	· · CASE ASSEMBLY, REAR	1	F1	SN:B10001--
1	(NSS)	· · · CASE, REAR	1		SN:B10001--
2	(NSS)	· · · PLUG	14		SN:B10001--
3	07040-12414	· · PLUG	1		SN:B10001--
4	07002-62434	· · O-RING	1		SN:B10001--
5	720-1L-11131	· · PLATE	1		SN:B10001--
6	07000-A2105	· · O-RING	1		SN:B10001--
7	07000-B3028	· · O-RING	1		SN:B10001--
8	01010-81025	· · BOLT	4		SN:B10001--
9	01643-31032	· · WASHER	4		SN:B10001--
10	720-1L-13420	· · CAM, ROCKER	1	F1	SN:B10001--
11	720-2L-13530	· · BEARING	2	F1	SN:B10001--
12	720-1L-13631	· · PLATE	2	F1	SN:B10001--
13	720-2M-13630	· · PIN	2	F1	SN:B10001--
14	720-2M-13640	· · PIN	2	F1	SN:B10001--
15	720-1L-14180	· · SLIDER	1	F1	SN:B10001--
		F1 - ONLY SUPPLIED TO AUTHORIZED DISTRIBUTORS.			

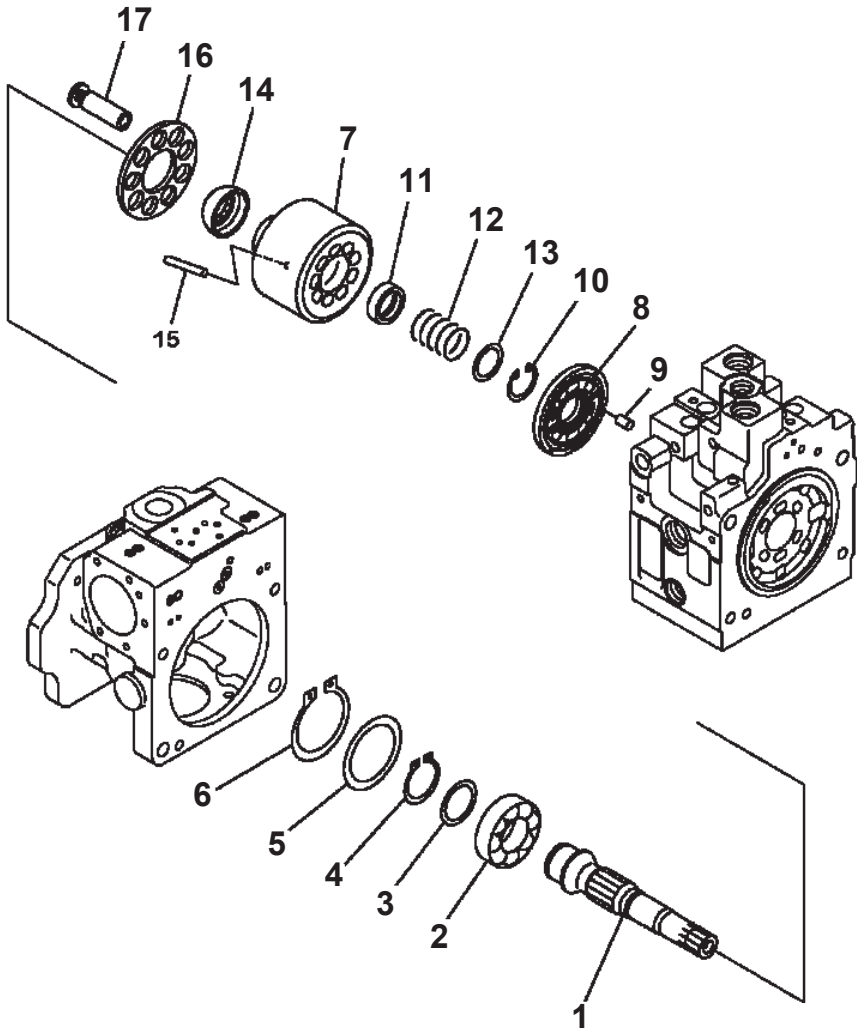

H0310-07A0 HYDRAULIC PUMP HST PUMP ASSEMBLY (7/11)

Item	Part No.	Description	Qty	Wt.	Options
		PUMP ASSEMBLY (SEE FIG. H0310-01A0)			SN:B10001--
		・ PUMP SUB ASSY (SEE FIG. H0310-01A0)			SN:B10001--
1	720-2L-12150	・・ SHAFT, REAR	1	F1	SN:B10001--
2	708-2L-32150	・・ BEARING	1	F1	SN:B10001--
3	708-2E-05040	・・ WASHER KIT	1	F1	SN:B10001--
4	708-25-12790	・・ RING, SNAP	1	F1	SN:B10001--
5	720-2L-14230	・・ WASHER	1	F1	SN:B10001--
6	04065-09030	・・ RING, SNAP	1	F1	SN:B10001--
	720-2L-04340	・・ BLOCK ASSEMBLY, CYLINDER	1	F1	SN:B10001--
7	708-2L-33190	・・・ BLOCK, CYLINDER	1	F1	SN:B10001--
8	720-2L-13240	・・・ PLATE	1	F1	SN:B10001--
9	720-68-19610	・・ PIN	1	F1	SN:B10001--
10	04065-04818	・・ RING, SNAP	1	F1	SN:B10001--
11	708-2L-23131	・・ SEAT	1	F1	SN:B10001--
12	708-2L-33160	・・ SPRING	1	F1	SN:B10001--
13	708-7L-13140	・・ SEAT	1	F1	SN:B10001--
14	708-2L-23351	・・ GUIDE	1	F1	SN:B10001--
15	708-2L-23360	・・ PIN	3	F1	SN:B10001--
16	708-2L-33350	・・ RETAINER, SHOE	1	F1	SN:B10001--
17	720-1L-13310	・・ PISTON SUB ASSEMBLY	9	F1	SN:B10001--
		F1 - ONLY SUPPLIED TO AUTHORIZED DISTRIBUTORS.			

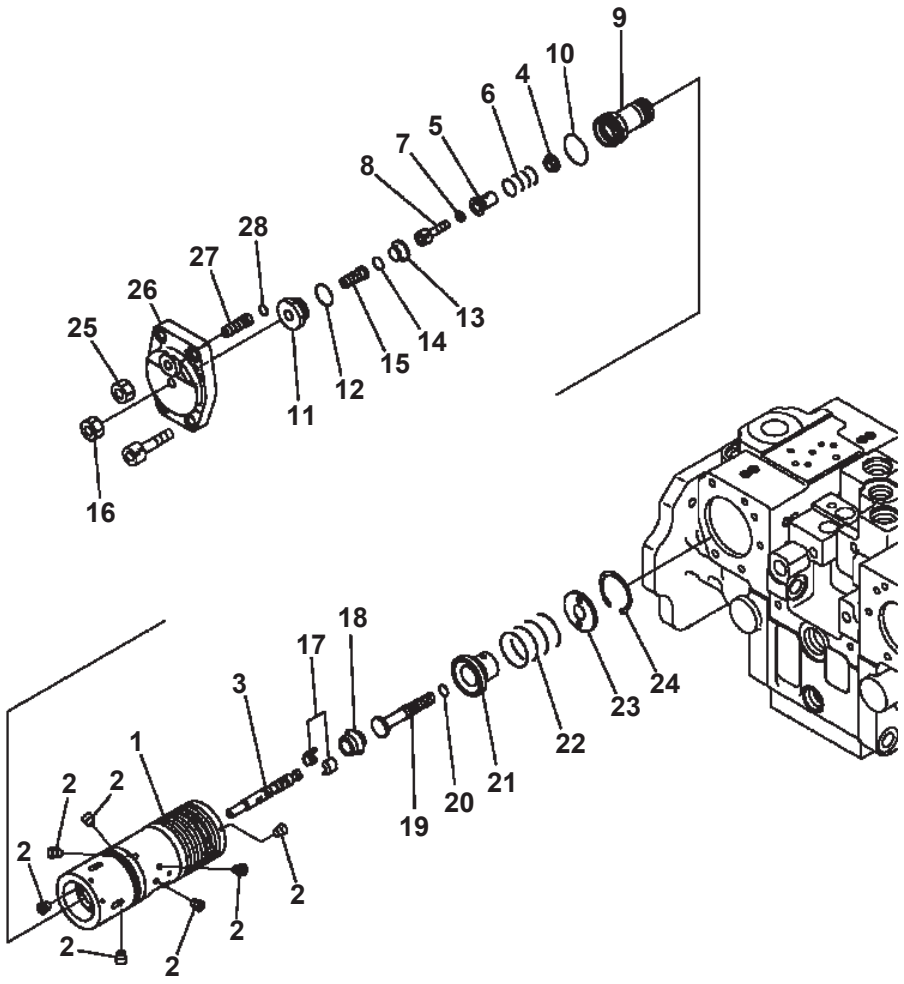

H0310-08A0 HYDRAULIC PUMP HST PUMP ASSEMBLY (8/11)

Item	Part No.	Description	Qty	Wt.	Options
		PUMP ASSEMBLY (SEE FIG. H0310-01A0)			SN:B10001--
		· PUMP SUB ASSEMBLY (SEE FIG. H0310-01A0)			SN:B10001--
		· · VALVE ASSEMBLY (SEE FIG. H0310-04A0)		F1	SN:B10001--
		· · · PISTON, SERVO (SEE FIG. H0310-04A0)		F1	SN:B10001--
1		PISTON, SERVO (SEE FIG. H0310-04A0)		F1	SN:B10001--
2	702-16-54490	SCREW	10	F1	SN:B10001--
3	720-2L-14120	· SPOOL	1	F1	SN:B10001--
4	720-2M-14550	· RETAINER	1	F1	SN:B10001--
5	720-2M-14560	· RETAINER	1	F1	SN:B10001--
6	720-2L-14180	· SPRING	1	F1	SN:B10001--
7	723-11-17150	· WASHER	1	F1	SN:B10001--
8	01252-60612	· BOLT	1	F1	SN:B10001--
9	720-2M-14581	· SLEEVE	1	F1	SN:B10001--
10	07000-B3032	· O-RING	1	F1	SN:B10001--
11	720-2M-14590	· PLUG	1	F1	SN:B10001--
12	07000-B3024	· O-RING	1	F1	SN:B10001--
13	720-2M-14610	· PLUG	1	F1	SN:B10001--
14	07000-B2012	· O-RING	1		SN:B10001--
15	720-2M-14620	· SCREW	1	F1	SN:B10001--
16	01582-11210	· NUT	1	F1	SN:B10001--
17	720-2M-14630	· RETAINER	2	F1	SN:B10001--
18	720-2M-14640	· PLUG	1	F1	SN:B10001--
19	720-2L-14150	· ROD	1	F1	SN:B10001--
20	07000-B2010	· O-RING	1	F1	SN:B10001--
21	720-2L-14130	· RETAINER	1	F1	SN:B10001--
22	720-2L-14170	· SPRING	1	F1	SN:B10001--
23	720-2L-14140	· RETAINER	1	F1	SN:B10001--
24	720-2L-14160	· RING	1	F1	SN:B10001--
25	01582-11210	· NUT	1	F1	SN:B10001--
26	720-2L-14210	· COVER	1	F1	SN:B10001--
27	720-2M-14170	· SCREW	1	F1	SN:B10001--
28	07000-B1010	· O-RING	1	F1	SN:B10001--
		F1 - ONLY SUPPLIED TO AUTHORIZED DISTRIBUTORS.			

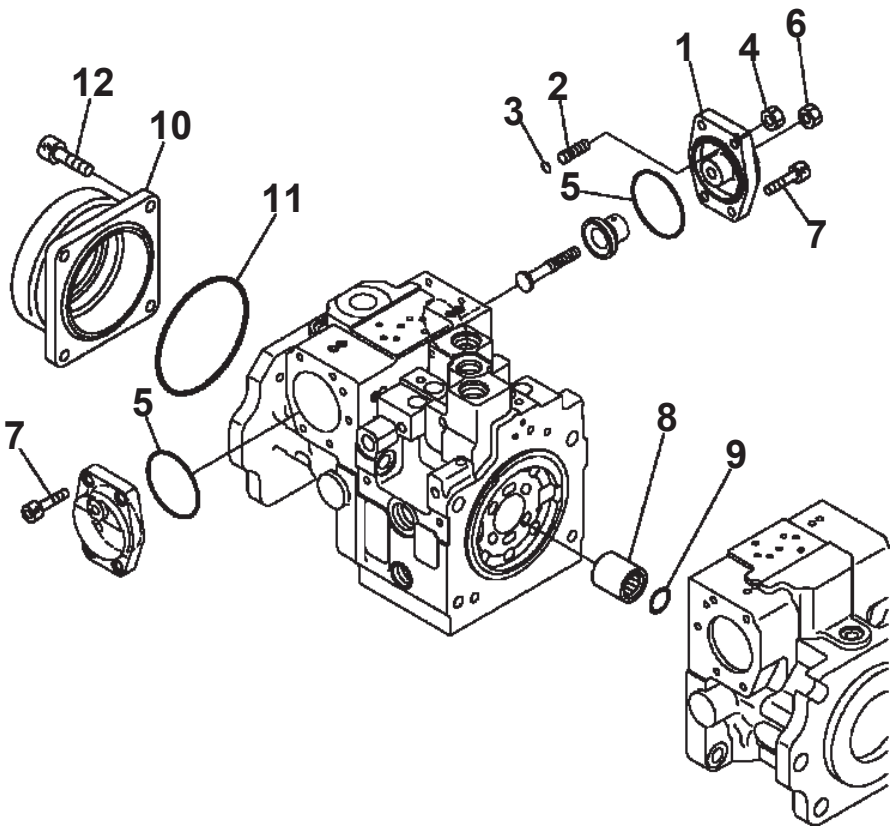

H0310-09A0 HYDRAULIC PUMP HST PUMP ASSEMBLY (9/11)

Item	Part No.	Description	Qty	Wt.	Options
		PUMP ASSY (SEE FIG. H0310-01A0)			SN:B10001--
		· PUMP SUB ASSY (SEE FIG. H0310-01A0)			SN:B10001--
		· · COVER ASSY (SEE FIG. H0310-05A0)		F1	SN:B10001--
1	720-2L-14220	· · · COVER	1	F1	SN:B10001--
2	720-2M-14170	· · · SCREW	1	F1	SN:B10001--
3	07000-B1010	· · · O-RING	1	F1	SN:B10001--
4	01582-11210	· · · NUT	1	F1	SN:B10001--
5	07000-B2080	· · O-RING	2	F1	SN:B10001--
6	01582-11210	· · NUT	1	F1	SN:B10001--
7	01252-61030	· · BOLT	8		SN:B10001--
8	720-2L-14240	· · COUPLING	1	F1	SN:B10001--
9	708-2F-12420	· · RING	1	F1	SN:B10001--
10	720-2L-11610	· HOUSING	1		SN:B10001--
11	07000-A2145	· O-RING	1		SN:B10001--
12	01252-61235	· BOLT	4		SN:B10001--
		F1 - ONLY SUPPLIED TO AUTHORIZED DISTRIBUTORS.			

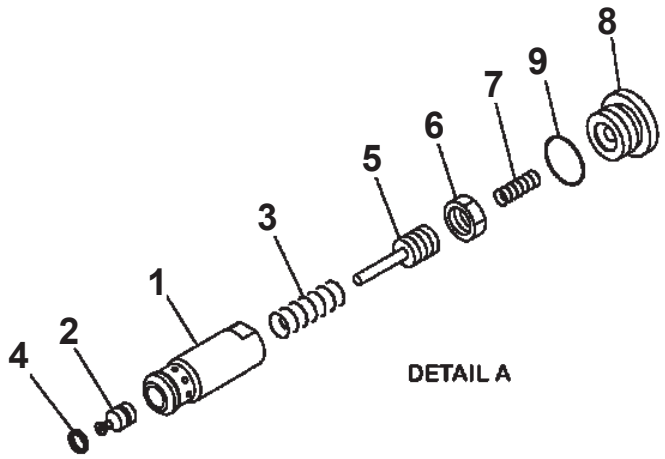

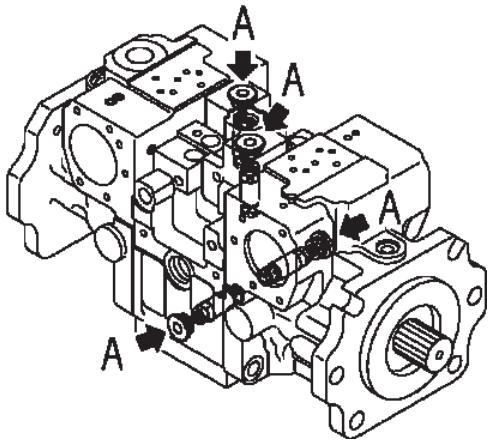

H0310-10A0 HYDRAULIC PUMP HST PUMP ASSEMBLY (10/11)

Item	Part No.	Description	Qty	Wt.	Options
		PUMP ASSEMBLY (SEE FIG. H0310-01A0)			SN:B10001--
	720-2M-03591	· VALVE ASSEMBLY	4		SN:B10001--
1	720-2M-15211	· · SLEEVE	1	F1	SN:B10001--
2	720-2M-15220	· · VALVE	1	F1	SN:B10001--
3	720-2M-15230	· · SPRING	1	F1	SN:B10001--
4	723-46-48910	· · SEAL	1	F1	SN:B10001--
5	720-2M-15240	· · SCREW	1	F1	SN:B10001--
6	702-72-11170	· · NUT	1	F1	SN:B10001--
7	720-2M-15250	· SPRING	4		SN:B10001--
8	720-2M-15270	· PLUG	4		SN:B10001--
9	07002-62434	· O-RING	4		SN:B10001--
		F1 - ONLY SUPPLIED TO AUTHORIZED DISTRIBUTORS.			

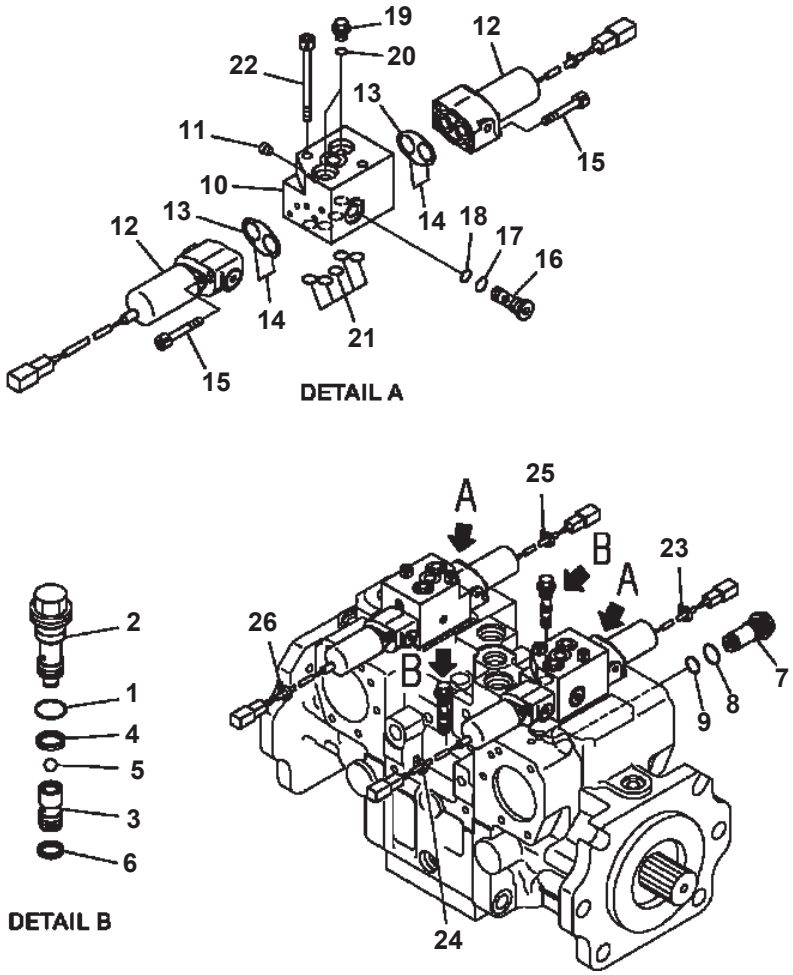

H0310-11A0 HYDRAULIC PUMP HST PUMP ASSEMBLY (11/11)

Item	Part No.	Description	Qty	Wt.	Options
		PUMP ASSEMBLY (SEE FIG. H0310-01A0)			SN:B10001--
	720-2M-03551	· VALVE ASSEMBLY, SHUTTLE	2		SN:B10001--
1	07002-61423	· · O-RING	1		SN:B10001--
2	720-2M-15412	· · SLEEVE	1	F1	SN:B10001--
3	720-2M-15421	· · HOLDER	1	F1	SN:B10001--
4	720-2M-15430	· · SEAL	1		SN:B10001--
5	700-84-11730	· · BALL	1	F1	SN:B10001--
6	720-2M-15440	· · SEAL	1		SN:B10001--
7	720-2L-14190	· PLUG	1		SN:B10001--
8	07002-62434	· O-RING	1		SN:B10001--
9	706-86-53530	· O-RING	1		SN:B10001--
	720-2M-03752	· VALVE ASSEMBLY	2		SN:B10001--
	720-2M-03761	· · BLOCK ASSEMBLY	1	F1	SN:B10001--
10	(NSS)	· · · BLOCK	1		SN:B10001--
11	(NSS)	· · · PLUG	2		SN:B10001--
12	702-21-07620	· · SOLENOID VALVE	2		SN:B10001--
13	702-21-39450	· · O-RING	1		SN:B10001--
14	700-22-11410	· · O-RING	2		SN:B10001--
15	203-60-62220	· · BOLT	4		SN:B10001--
16	708-1W-48110	· · FILTER	1		SN:B14636--
	□708-7R-18230	· · FILTER	1		SN:B10001--B14635
17	07002-61423	· · O-RING	1		SN:B10001--
18	07000-11009	· · O-RING	1		SN:B10001--
19	708-8E-16150	· · PLUG	2		SN:B10001--
20	07002-61023	· · O-RING	2		SN:B10001--
21	07000-B1010	· · O-RING	5		SN:B10001--
22	01252-60875	· BOLT	4		SN:B10001--
23	20Y-62-22790	· BAND, RED	1		SN:B10001--
24	20Y-62-22810	· BAND, YELLOW	1		SN:B10001--
25	20Y-62-22820	· BAND, BLUE	1		SN:B10001--
26	20Y-62-22850	· BAND, GREEN	1		SN:B10001--
		F1 - ONLY SUPPLIED TO AUTHORIZED DISTRIBUTORS.			

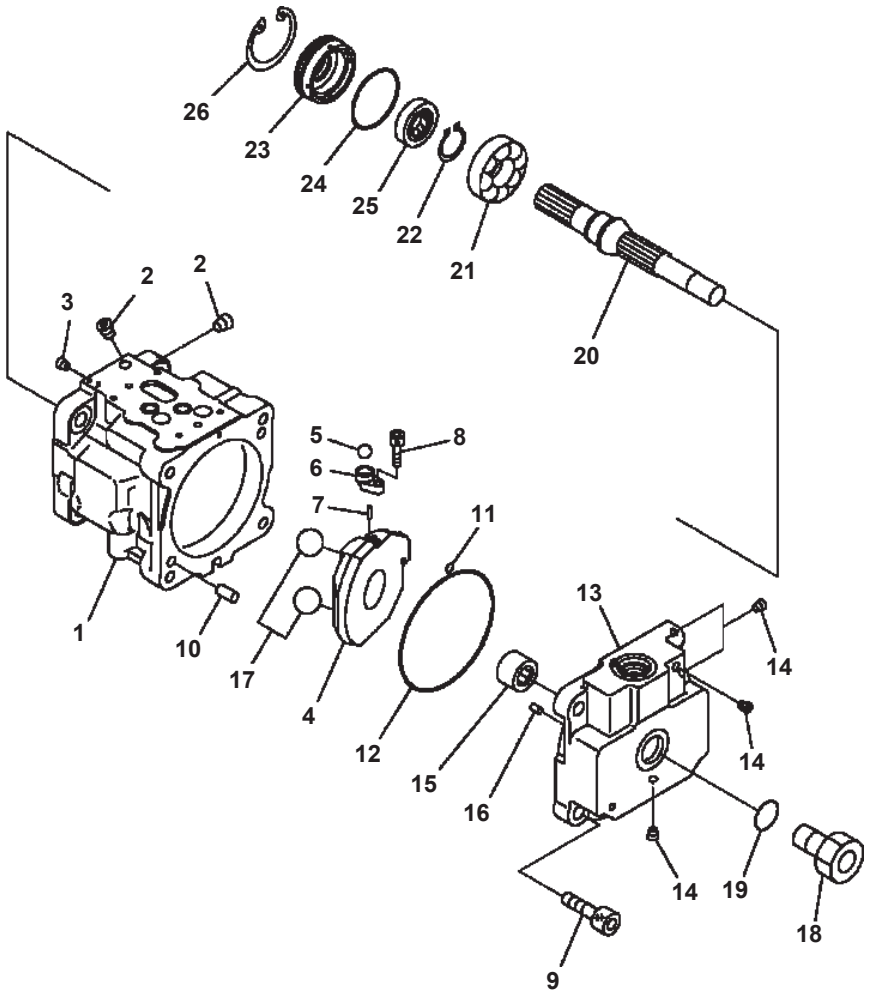

H0310-21A0 HYDRAULIC PUMP FAN PUMP (1/4) (#B10001-B13142)

Item	Part No.	Description	Qty	Wt.	Options
	708-1T-00540	PUMP ASSEMBLY	1		SN:B10001--B13142
	708-1T-01540	PUMP SUB ASSEMBLY	1		SN:B10001--B13142
	708-1T-04150	· CASE SUB ASSEMBLY	1	F1	SN:B10001--B13142
1	(NSS)	· · CASE	1		SN:B10001--@
2	(NSS)	· · PLUG	2		SN:B10001--@
3	(NSS)	· · PLUG	1		SN:B10001--@
4	708-1S-13411	· CAM, ROCKER	1	F1	SN:B10001--B13142
5	04260-01270	· BALL	1	F1	SN:B10001--@
6	708-3S-14140	· SPACER	1	F1	SN:B10001--@
7	708-1S-13420	· PIN	2	F1	SN:B10001--@
8	01252-60616	· BOLT	1	F1	SN:B10001--@
9	01252-61235	· BOLT	4	F1	SN:B10001--@
10	04020-01024	· PIN	2	F1	SN:B10001--@
11	07000-11006	· O-RING	1	F1	SN:B10001--@
12	07000-12125	· O-RING	1	F1	SN:B10001--B13142
	708-1T-04550	· CAP SUB ASSEMBLY	1	F1	SN:B10001--@
13	(NSS)	· · CAP, END	1		SN:B10001--@
14	(NSS)	· · PLUG	4		SN:B10001--@
15	708-21-12760	· BEARING	1	F1	SN:B10001--@
16	720-68-19610	· PIN	1	F1	SN:B10001--@
17	708-1S-13430	· BALL	2	F1	SN:B10001--B13142
18	07040-12412	· PLUG	1	F1	SN:B10001--@
19	07002-12434	· O-RING	1	F1	SN:B10001--B13142
20	708-1T-12160	· SHAFT	1	F1	SN:B10001--B13142
21	708-3S-12210	· BEARING	1	F1	SN:B10001--@
22	708-21-12840	· RING, SNAP	1	F1	SN:B10001--@
23	708-3S-12140	· HOLDER	1	F1	SN:B10001--@
24	207-09-11140	· O-RING	1	F1	SN:B10001--B13142
25	708-3S-12150	· SEAL, OIL	1	F1	SN:B10001--B13142
26	04065-06220	· RING, SNAP	1	F1	SN:B10001--@
		F1 - ONLY SUPPLIED TO AUTHORIZED DISTRIBUTORS.			

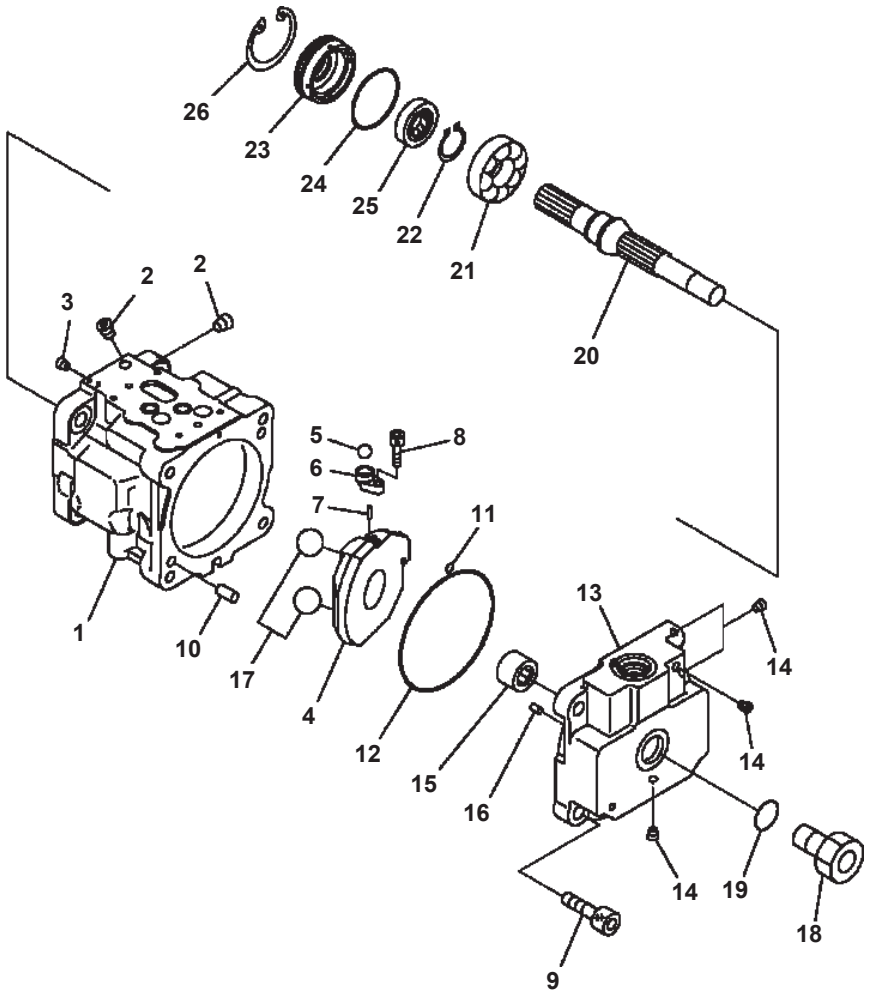

H0310-21A1 HYDRAULIC PUMP FAN PUMP (1/4) (#B13143-)

Item	Part No.	Description	Qty	Wt.	Options
	708-1T-00541	PUMP ASSEMBLY	1		SN:B13143--
	708-1T-01542	· PUMP SUB ASSEMBLY	1		SN:B13143--
	708-1T-04151	· · CASE SUB ASSEMBLY	1	F1	SN:B13143--
1	(NSS)	· · · CASE	1		SN:B10001--
2	(NSS)	· · · PLUG	2		SN:B10001--
3	(NSS)	· · · PLUG	1		SN:B10001--
4	708-3S-13480	· · CAM, ROCKER	1	F1	SN:B13143--
5	04260-01270	· · BALL	1	F1	SN:B10001--
6	708-3S-14141	· · SPACER	1	F1	SN:B13143--
7	708-1S-13420	· · PIN	2	F1	SN:B10001--
8	01252-60616	· · BOLT	1	F1	SN:B10001--
9	01252-61235	· · BOLT	4	F1	SN:B10001--
10	04020-01024	· · PIN	2	F1	SN:B10001--
11	07000-11006	· · O-RING	1	F1	SN:B10001--
12	07000-12130	· · O-RING	1	F1	SN:B13143--
	708-1T-04551	· · CAP SUB ASSEMBLY	1	F1	SN:B13143--
13	(NSS)	· · · CAP, END	1		SN:B10001--
14	(NSS)	· · · PLUG	4		SN:B10001--
15	708-21-12760	· · BEARING	1	F1	SN:B10001--
16	720-68-19610	· · PIN	1	F1	SN:B10001--
17	708-1T-33470	· · BALL	2	F1	SN:B13143--
18	07040-12412	· · PLUG	1	F1	SN:B10001--
19	07002-62434	· · O-RING	1	F1	SN:B13143--
20	708-1T-12460	· · SHAFT	1	F1	SN:B10001--
21	708-3S-12210	· · BEARING	1	F1	SN:B10001--
22	708-21-12840	· · RING, SNAP	1	F1	SN:B10001--
23	708-3S-12140	· · HOLDER	1	F1	SN:B10001--
24	708-1S-12350	· · O-RING	1	F1	SN:B13143--
25	708-7T-12330	· · SEAL, OIL	1	F1	SN:B13143--
26	04065-06220	· · RING, SNAP	1	F1	SN:B10001--
		F1 - ONLY SUPPLIED TO AUTHORIZED DISTRIBUTORS.			

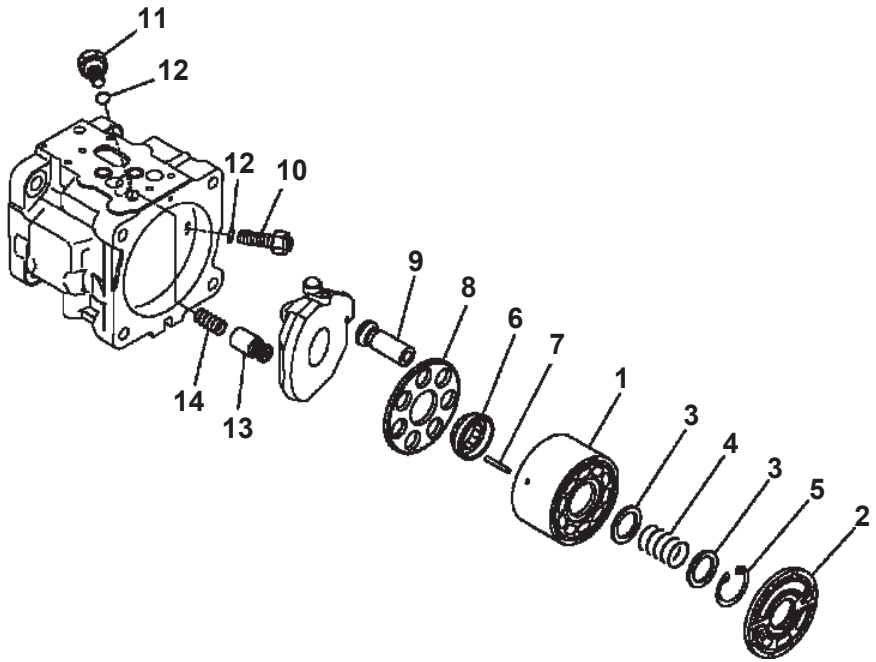

H0310-22A0 HYDRAULIC PUMP FAN PUMP (2/4) (#B10001-B13142)

Item	Part No.	Description	Qty	Options
		PUMP ASSEMBLY (SEE FIG. H0310-21A0)		SN:B10001--B13142
		・ PUMP SUB ASSEMBLY (SEE FIG. H0310-21A0)		SN:B10001--B13142
1	708-1T-13610	・・ BLOCK, CYLINDER	1	SN:B10001--B13142
2	708-1T-13620	・・ PLATE, VALVE	1	SN:B10001--B13142
3	708-3S-13160	・・ WASHER	2	SN:B10001--B13142
4	708-3S-13430	・・ SPRING	1	SN:B10001--@
5	04065-03515	・・ RING, SNAP	1	SN:B10001--@
6	708-3S-13370	・・ GUIDE, RETAINER	1	SN:B10001--B13142
7	708-1S-13380	・・ PIN	3	SN:B10001--@
8	708-3S-13410	・・ RETAINER, SHOE	1	SN:B10001--B13142
9	708-1S-13520	・・ PISTON SUB ASSEMBLY	10	SN:B10001--@
10	708-3S-14240	・・ PLUG	1	SN:B10001--@
11	708-3S-14261	・・ PLUG	1	SN:B10001--@
12	07002-11223	・・ O-RING	2	SN:B10001--@
13	708-3S-14250	・・ PISTON SUB ASSEMBLY	1	SN:B10001--@
14	708-1S-14241	・・ SPRING	1	SN:B10001--@

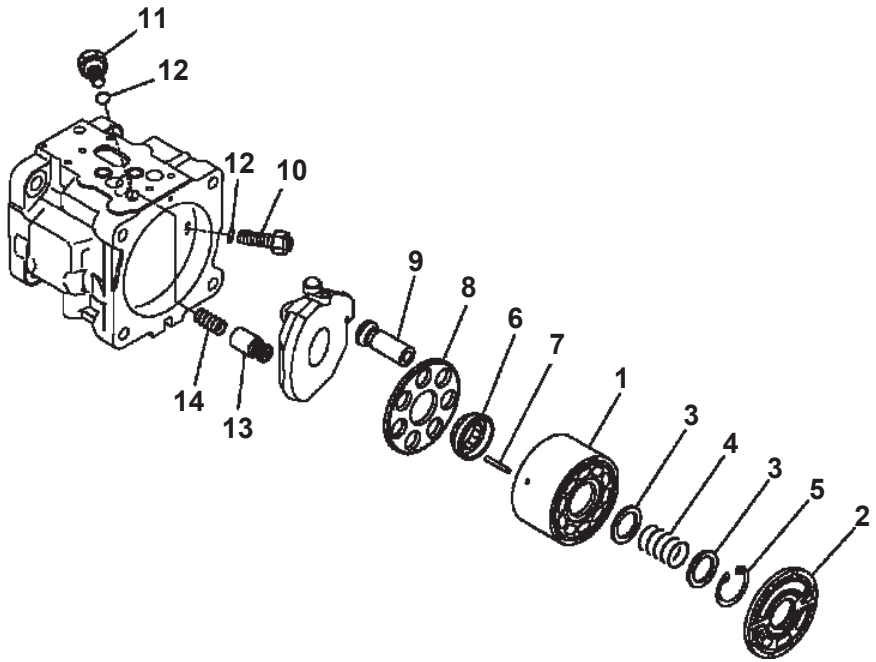

H0310-22A1 HYDRAULIC PUMP FAN PUMP (2/4) (#B13143-)

Item	Part No.	Description	Qty	Options
		PUMP ASSEMBLY (SEE FIG. H0310-21A1)		SN:B13143--
		・ PUMP SUB ASSEMBLY (SEE FIG. H0310-21A1)		SN:B13143--
1	708-1T-13440	・・ BLOCK, CYLINDER	1	SN:B13143--
2	708-1T-13450	・・ PLATE, VALVE	1	SN:B13143--
3	708-1T-13710	・・ WASHER	2	SN:B13143--
4	708-3S-13430	・・ SPRING	1	SN:B10001--
5	04065-03515	・・ RING, SNAP	1	SN:B10001--
6	708-1S-13370	・・ GUIDE, RETAINER	1	SN:B13143--
7	708-1S-13380	・・ PIN	3	SN:B10001--
8	708-1T-13670	・・ RETAINER, SHOE	1	SN:B13143--
9	708-1S-13520	・・ PISTON SUB ASSEMBLY	10	SN:B10001--
10	708-3S-14240	・・ PLUG	1	SN:B10001--
11	708-3S-14261	・・ PLUG	1	SN:B10001--
12	07002-11223	・・ O-RING	2	SN:B10001--
13	708-3S-14290	・・ PISTON SUB ASSEMBLY	1	SN:B10001--
14	708-1S-14241	・・ SPRING	1	SN:B10001--

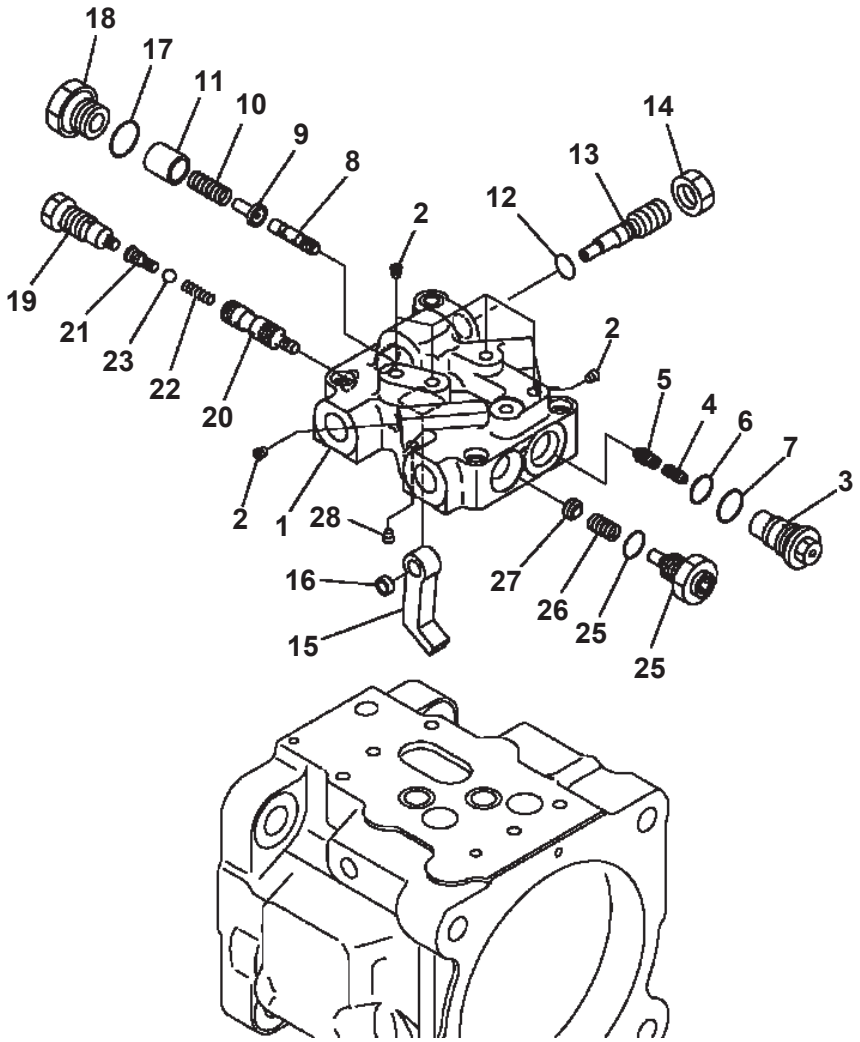

H310-23A0 HYDRAULIC PUMP FAN PUMP (3/4) (#B10001-B13142)

Item	Part No.	Description	Qty	Wt.	Options
		PUMP ASSEMBLY (SEE FIG. H0310-21A0)			SN:B10001--B13142
	708-1T-03770	· VALVE ASSEMBLY	1	F1	SN:B10001--@
	708-1U-03530	· · BODY ASSEMBLY	1	F1	SN:B10001--@
1	(NSS)	· · · BODY	1		SN:B10001--@
2	(NSS)	· · · PLUG	11		SN:B10001--@
	708-1U-04320	· · SLEEVE SUB ASSEMBLY	1	F1	SN:B10001--@
3	(NSS)	· · · SLEEVE	1		SN:B10001--@
4	(NSS)	· · · PISTON	1		SN:B10001--@
5	(NSS)	· · · PISTON	1		SN:B10001--@
6	(NSS)	· · · SEAL	1		SN:B10001--@
7	(NSS)	· · · O-RING	1		SN:B10001--@
8	708-1S-15470	· · SPOOL	1	F1	SN:B10001--@
9	708-1W-45391	· · SEAT	1	F1	SN:B10001--@
10	708-1T-15670	· · SPRING	1	F1	SN:B10001--@
11	708-1S-15480	· · RETAINER	1	F1	SN:B10001--@
12	07000-11006	· · O-RING	1	F1	SN:B10001--@
13	708-1S-15490	· · PLUG	1	F1	SN:B10001--@
14	01582-11210	· · NUT	1	F1	SN:B10001--@
15	708-1S-15270	· · LEVER	1	F1	SN:B10001--@
16	708-1S-15280	· · SPACER	1	F1	SN:B10001--@
17	07002-11623	· · O-RING	1	F1	SN:B10001--@
18	723-56-31630	· · PLUG	1	F1	SN:B10001--@
19	708-3S-15860	· · PLUG	1	F1	SN:B10001--@
	708-1W-03510	· · SPOOL SUB ASSEMBLY	1	F1	SN:B10001--B13142
20	708-1W-45610	· · · SPOOL	1	F1	SN:B10001--@
21	708-1T-15560	· · · PLUG	1	F1	SN:B10001--B13142
22	708-1T-15570	· · · SPRING	1	F1	SN:B10001--@
23	708-1T-15580	· · · BALL	1	F1	SN:B10001--@
24	708-1U-15640	· · PLUG	1	F1	SN:B10001--@
25	07002-11223	· · O-RING	2	F1	SN:B10001--@
26	708-1S-15340	· · SPRING	1	F1	SN:B10001--@
27	708-1U-15630	· · SEAT	1	F1	SN:B10001--@
28	708-1S-15930	· · ORIFICE	1	F1	SN:B10001--@
		F1 - ONLY SUPPLIED TO AUTHORIZED DISTRIBUTORS.			

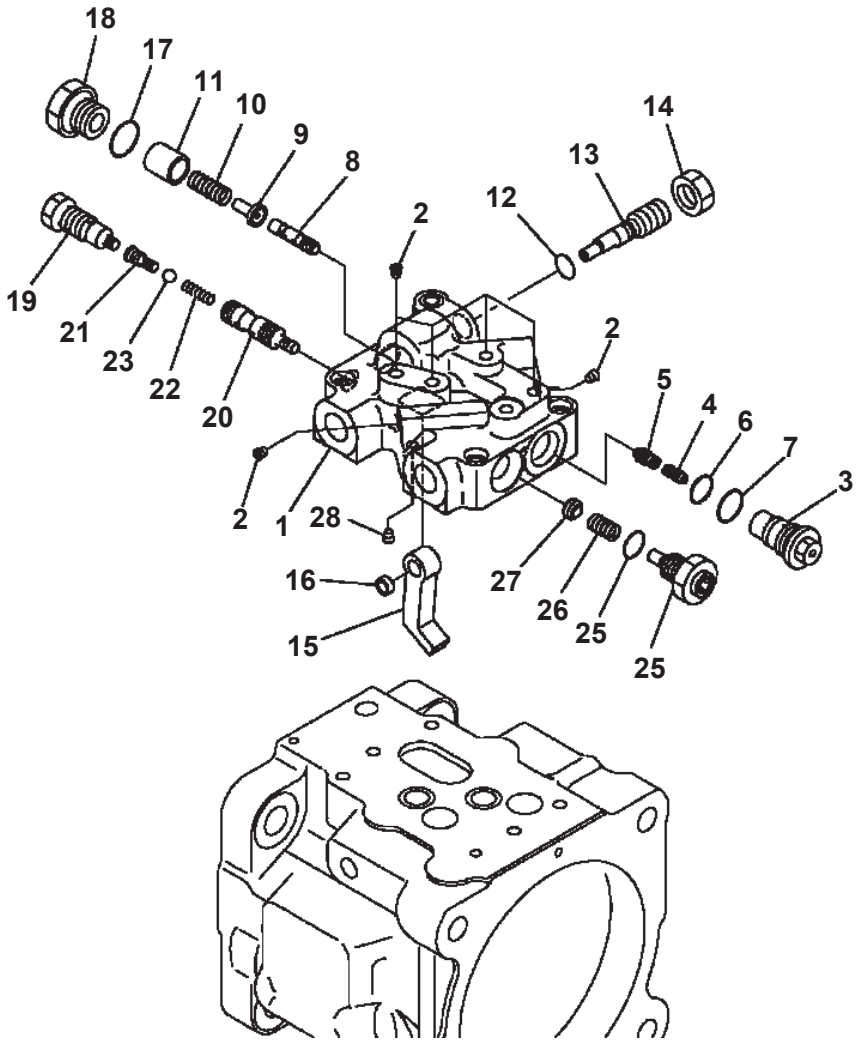

H310-23A1 HYDRAULIC PUMP FAN PUMP (3/4) (#B13143-)

Item	Part No.	Description	Qty	Wt.	Options
		PUMP ASSEMBLY (SEE FIG. H0310-21A1)			SN:B13143--
	708-1T-03770	· VALVE ASSEMBLY	1	F1	SN:B10001--
	708-1U-03530	· · BODY ASSEMBLY	1	F1	SN:B10001--
1	(NSS)	· · · BODY	1		SN:B10001--
2	(NSS)	· · · PLUG	11		SN:B10001--
	708-1U-04320	· · SLEEVE SUB ASSEMBLY	1	F1	SN:B10001--
3	(NSS)	· · · SLEEVE	1		SN:B10001--
4	(NSS)	· · · PISTON	1		SN:B10001--
5	(NSS)	· · · PISTON	1		SN:B10001--
6	(NSS)	· · · SEAL	1		SN:B10001--
7	(NSS)	· · · O-RING	1		SN:B10001--
8	708-1S-15470	· · SPOOL	1	F1	SN:B10001--
9	708-1W-45391	· · SEAT	1	F1	SN:B10001--
10	708-1T-15670	· · SPRING	1	F1	SN:B10001--
11	708-1S-15480	· · RETAINER	1	F1	SN:B10001--
12	07000-11006	· · O-RING	1	F1	SN:B10001--
13	708-1S-15490	· · PLUG	1	F1	SN:B10001--
14	01582-11210	· · NUT	1	F1	SN:B10001--
15	708-1S-15270	· · LEVER	1	F1	SN:B10001--
16	708-1S-15280	· · SPACER	1	F1	SN:B10001--
17	07002-11623	· · O-RING	1	F1	SN:B10001--
18	723-56-31630	· · PLUG	1	F1	SN:B10001--
19	708-3S-15860	· · PLUG	1	F1	SN:B10001--
	708-1W-03511	· · SPOOL SUB ASSEMBLY	1	F1	SN:B13143--
20	708-1W-45610	· · · SPOOL	1	F1	SN:B10001--
21	708-1T-15561	· · · PLUG	1	F1	SN:B13143--
22	708-1T-15570	· · · SPRING	1	F1	SN:B10001--
23	708-1T-15580	· · · BALL	1	F1	SN:B10001--
24	708-1U-15640	· · PLUG	1	F1	SN:B10001--
25	07002-11223	· · O-RING	2	F1	SN:B10001--
26	708-1S-15340	· · SPRING	1	F1	SN:B10001--
27	708-1U-15630	· · SEAT	1	F1	SN:B10001--
28	708-1S-15930	· · ORIFICE	1	F1	SN:B10001--
		F1 - ONLY SUPPLIED TO AUTHORIZED DISTRIBUTORS.			

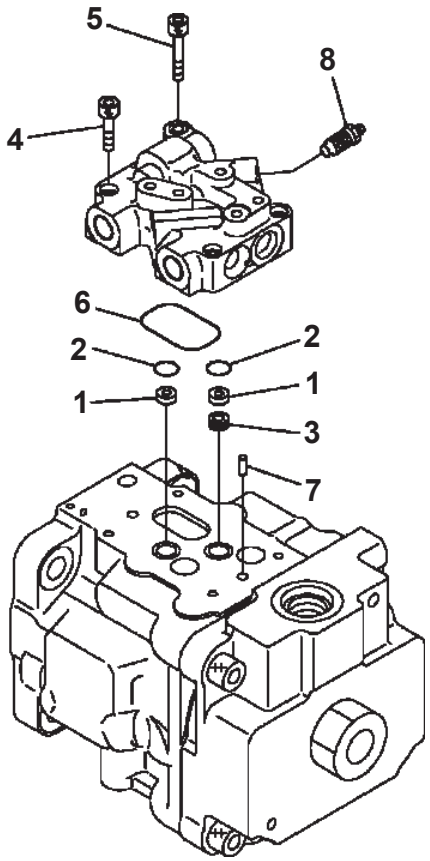

D51EX/PX-22 S/N B10001-UP

H0310-24A0 HYDRAULIC PUMP FAN PUMP (4/4) (#B10001-B13142)

Item	Part No.	Description	Qty	Options
		PUMP ASSEMBLY (SEE FIG. H0310-21A0)	1	SN:B10001--B13142
1	708-2L-25480	· FILTER	2	SN:B10001--@
2	708-2L-25490	· O-RING	4	SN:B10001--@
3	708-1S-19710	· ORIFICE	1	SN:B10001--@
4	01252-60630	· BOLT	3	SN:B10001--@
5	01252-60645	· BOLT	1	SN:B10001--@
6	07000-13040	· O-RING	1	SN:B10001--B13142
7	04020-00616	· PIN, DOWEL	2	SN:B10001--@
8	20B-27-11210	· BLEEDER	1	SN:B10001--@

Ref. H0310-24A0 Page H-051

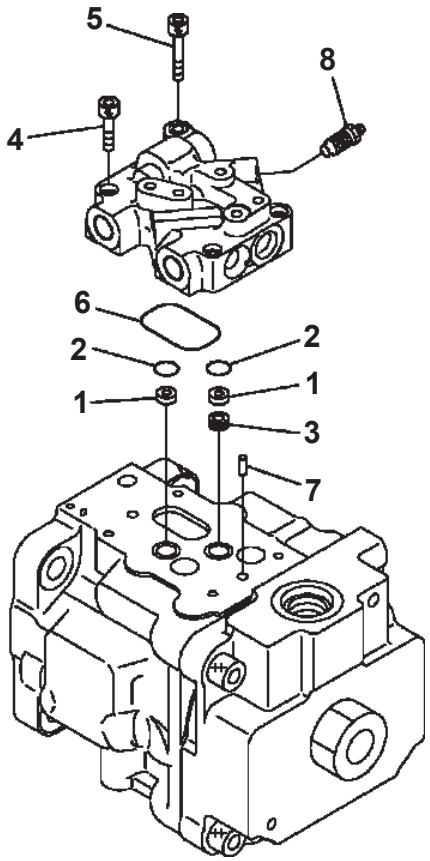

H0310-24A1 HYDRAULIC PUMP FAN PUMP (4/4) (#B13143-)

Item	Part No.	Description	Qty	Options
		PUMP ASSEMBLY (SEE FIG. H0310-21A1)	1	SN:B13143--
1	708-2L-25480	· FILTER	2	SN:B10001--
2	708-2L-25490	· O-RING	4	SN:B10001--
3	708-1S-19710	· ORIFICE	1	SN:B10001--
4	01252-60630	· BOLT	3	SN:B10001--
5	01252-60645	· BOLT	1	SN:B10001--
6	07000-B3040	· O-RING	1	SN:B13143--
7	04020-00616	· PIN, DOWEL	2	SN:B10001--
8	20B-27-11210	· BLEEDER	1	SN:B10001--

CVPB00070

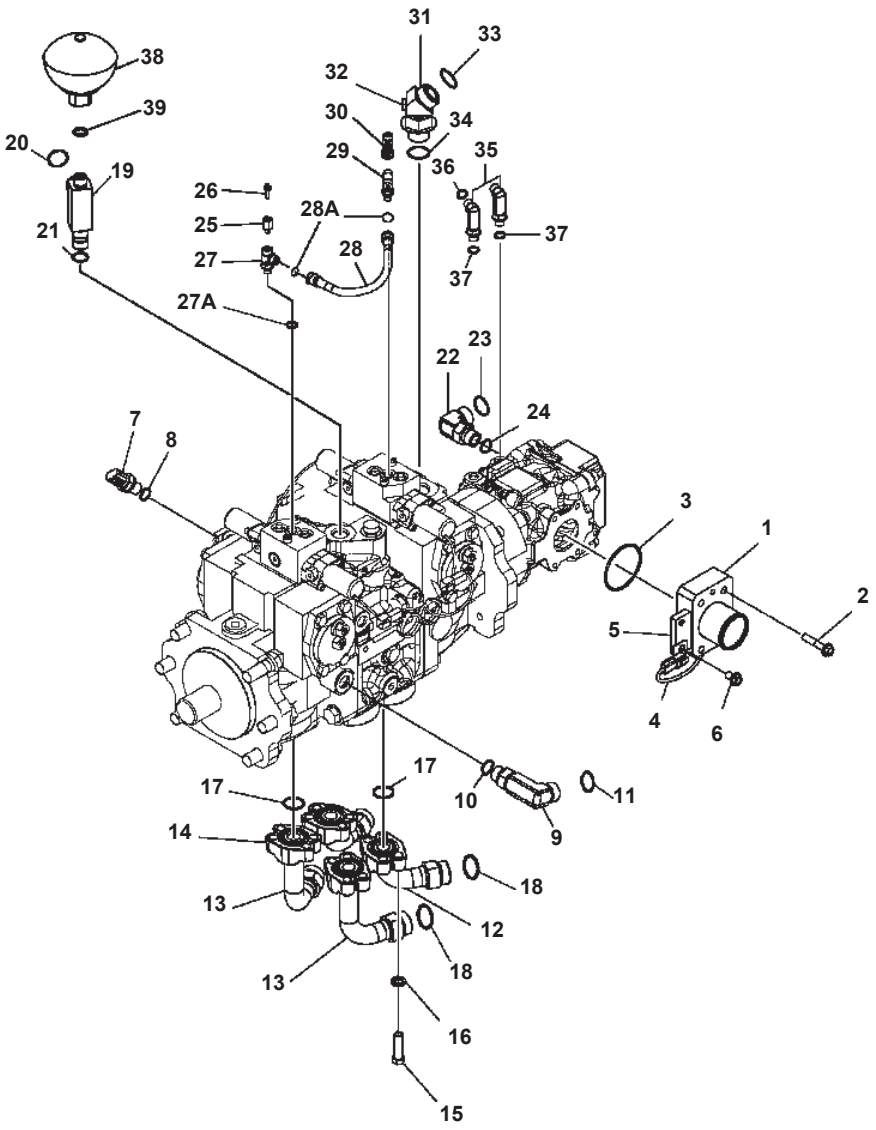

D51EX/PX-22 S/N B10001-UP

H0320-01A0 HYDRAULIC PUMP JOINT GROUP

Item	Part No.	Description	Qty	Options
1	11Y-62-31331	TUBE	1	SN:B10001--
2	01435-01050	BOLT, MOUNT TUBE	4	SN:B10001--
3	07000-12075	O-RING	1	SN:B10001--
4	7861-93-3320	SENSOR	1	SN:B10001--
5	08193-20010	CLIP	1	SN:B10001--
6	01435-01016	BOLT	1	SN:B10001--
7	7861-93-1812	SENSOR	2	SN:B11916--
	□7861-93-1811	SENSOR	2	SN:B10001--B11915
8	07002-11823	O-RING	2	SN:B10001--
9	02782-10630	ELBOW	1	SN:B10001--
10	07002-12434	O-RING	1	SN:B10001--
11	02896-11018	O-RING	1	SN:B10001--
12	12Y-49-11461	TUBE	2	SN:B10001--
13	12Y-49-11471	TUBE	2	SN:B10001--
14	12Y-49-11480	FLANGE	8	SN:B10001--
15	07372-21245	BOLT	16	SN:B10001--
16	01643-51232	WASHER	16	SN:B10001--
17	12Y-62-13870	O-RING	4	SN:B10001--
18	207-62-64740	O-RING	4	SN:B10001--
19	02782-10630	ELBOW	1	SN:B10001--
20	02896-11018	O-RING	1	SN:B10001--
21	07002-12434	O-RING	1	SN:B10001--
22	02782-10628	ELBOW	1	SN:B10001--
23	02896-11018	O-RING	1	SN:B10001--
24	07002-12434	O-RING	1	SN:B10001--
25	12Y-62-13990	ADAPTER	1	SN:B10001--
	07002-11023	O-RING	1	SN:B10001--
26	20B-27-11210	VALVE, BLEEDER	1	SN:B10001--
27	124-62-61980	TEE	1	SN:B10001--
27A	07002-11423	O-RING	1	SN:B10001--
28	02760-00303	HOSE ASSEMBLY	1	SN:B10001--
28A	02896-11009	O-RING	2	SN:B10001--
29	207-62-72160	TEE	1	SN:B10001--
	02896-11009	O-RING	1	SN:B10001--
	07002-11423	O-RING	1	SN:B10001--
30	12Y-62-11661	TEE	1	SN:B10001--
	02896-11009	O-RING	2	SN:B10001--
31	124-62-61110	ELBOW	1	SN:B10001--
32	07040-11007	PLUG	1	SN:B10001--
33	207-62-64740	O-RING	1	SN:B10001--
34	708-1W-28930	O-RING	1	SN:B10001--

Ref. H0320-01A0 Page H-053

H0320-01A0 HYDRAULIC PUMP JOINT GROUP

Item	Part No.	Description	Qty	Options
35	02782-1021A	ELBOW	2	SN:B10001--
36	02896-11008	O-RING	2	SN:B10001--
37	07002-11423	O-RING	2	SN:B10001--
38	416-62-34471	ACCUMULATOR	1	SN:B14636--
39	07002-12034	O-RING	1	SN:B14636--

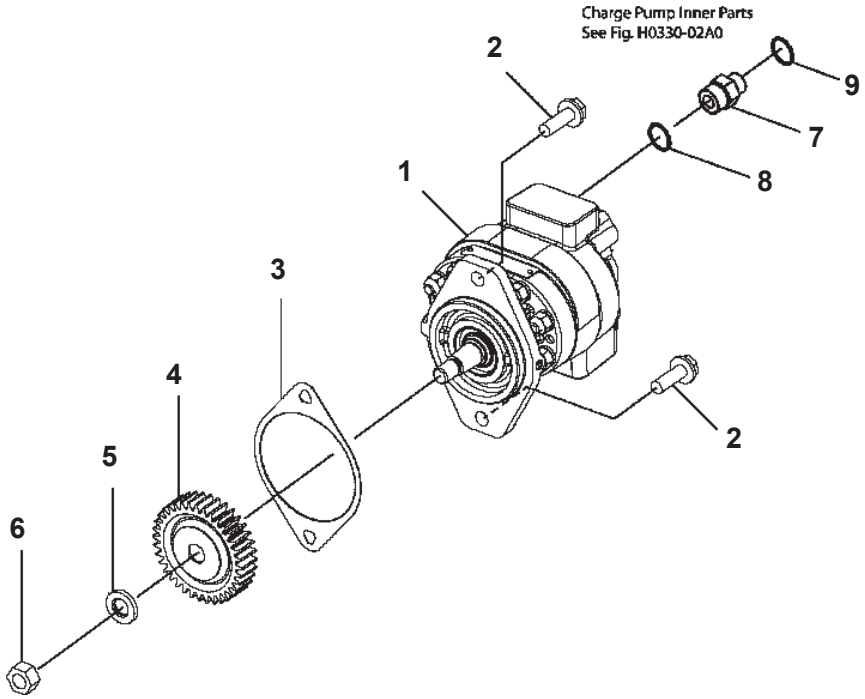

H0330-01A0 HYDRAULIC PUMP CHARGE PUMP MOUNTING

Item	Part No.	Description	Qty	Options
1	12Y-60-11171	PUMP, CHARGE (SEE FIG. H0330-02A0)	1	SN:B10001--
2	01010-81240	BOLT, MOUNT PUMP	2	SN:B10001--
	01643-31232	WASHER	2	SN:B10001--
3	6742-01-5558	GASKET	1	SN:B10001--
4	6754-22-3110	GEAR	1	SN:B10001--
5	01643-31645	WASHER, MOUNT GEAR	1	SN:B10001--
6	01582-11613	NUT, MOUNT GEAR	1	SN:B10001--
7	02781-00628	UNION	1	SN:B10001--
8	07002-12434	O-RING	1	SN:B10001--
9	02896-11018	O-RING	1	SN:B10001--

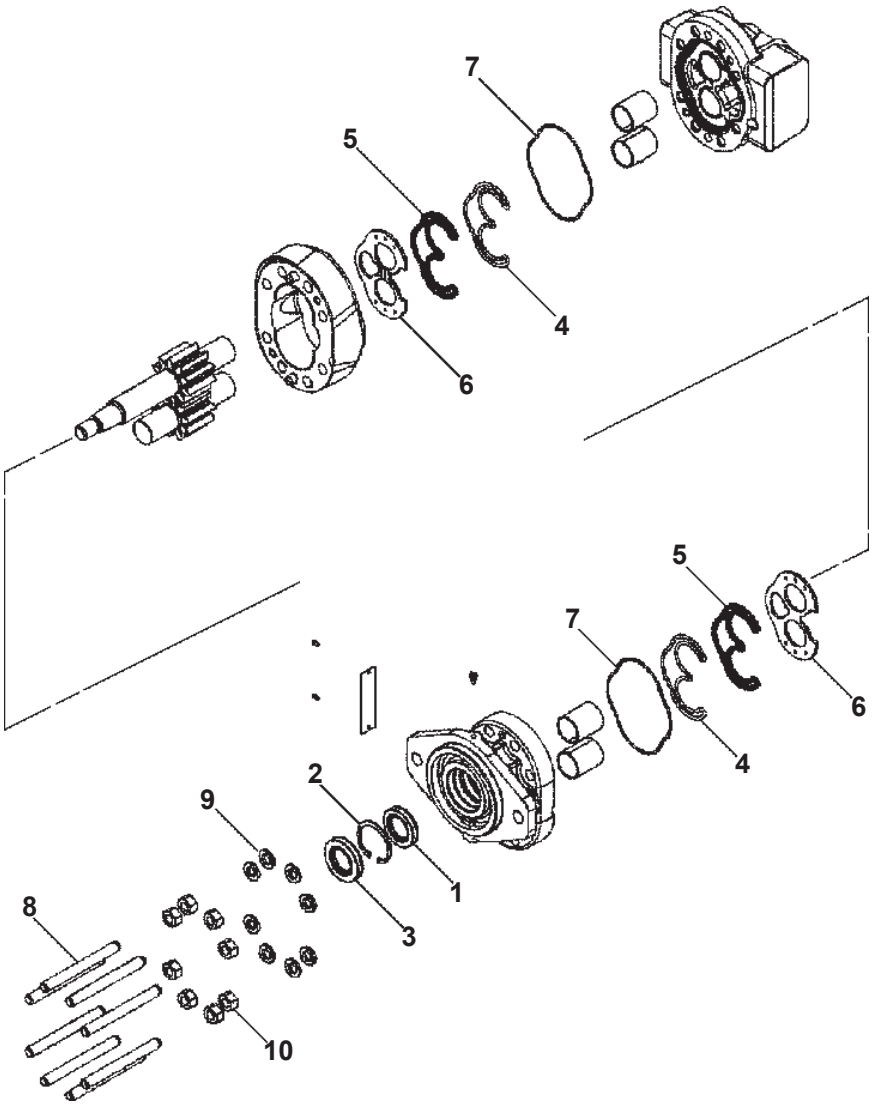

H0330-02A0 HYDRAULIC PUMP CHARGE PUMP ASSEMBLY

Item	Part No.	Description	Qty	Wt.	Options
	12Y-60-11171	PUMP ASSEMBLY, CHARGE	1		SN:B10001--
1	(NSS)	· SEAL	1	F1	SN:B10001--
2	(NSS)	· RING, SNAP	1	F1	SN:B10001--
3	(NSS)	· SEAL	1	F1	SN:B10001--
4	(NSS)	· SEAL	2	F1	SN:B10001--
5	(NSS)	· SEAL	2	F1	SN:B10001--
6	(NSS)	· PLATE, WEAR	2	F2	SN:B10001--
7	(NSS)	· SEAL	2	F1	SN:B10001--
8	12Y-60-11770	· STUD, TAPER LOCK	8		SN:B10001--
9	12Y-60-11780	· WASHER, LOCK	8		SN:B10001--
10	12Y-60-11790	· NUT	8		SN:B10001--
	12Y-60-11720	KIT, SEAL	1		SN:B10001--
	12Y-60-11740	KIT, WEAR PLATE	1		SN:B10001--
		F2 - ORDER WEAR PLATE KIT 12Y-60-11740.			

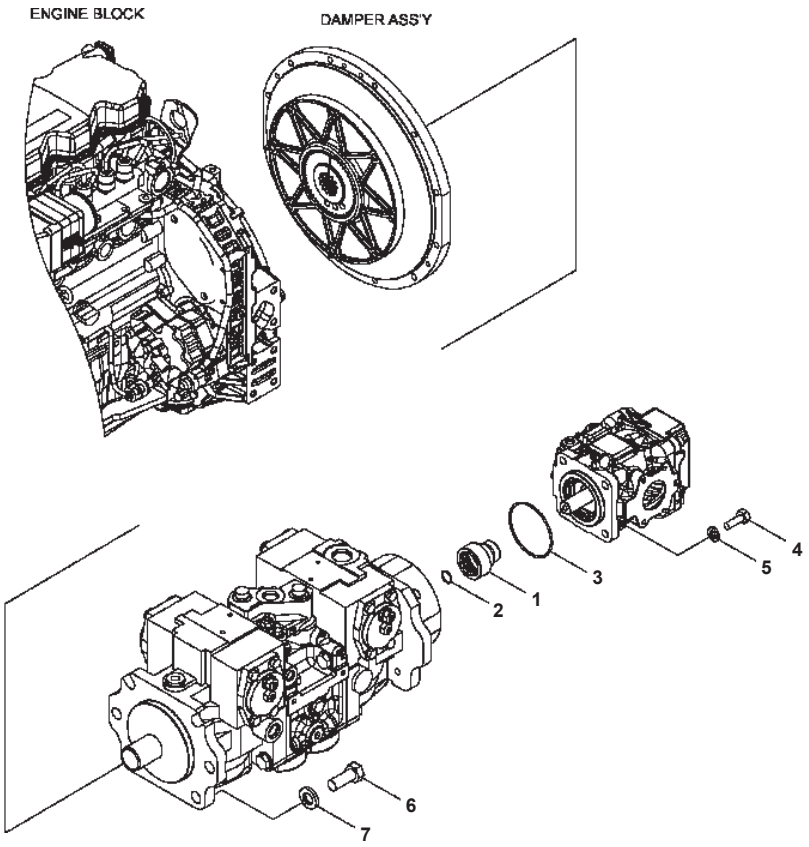

H0340-01A0 HYDRAULIC PUMP MOUNTING HARDWARE (PUMPS TO ENGINE)

Item	Part No.	Description	Qty	Options
1	720-2L-12530	COUPLING	1	SN:B10001--
2	708-23-12740	RING	1	SN:B10001--
3	07000-A2100	O-RING	1	SN:B10001--
4	01010-81240	BOLT	4	SN:B10001--
5	01643-31232	WASHER	4	SN:B10001--
6	01010-82050	BOLT	6	SN:B10001--
7	01643-32060	WASHER	6	SN:B10001--

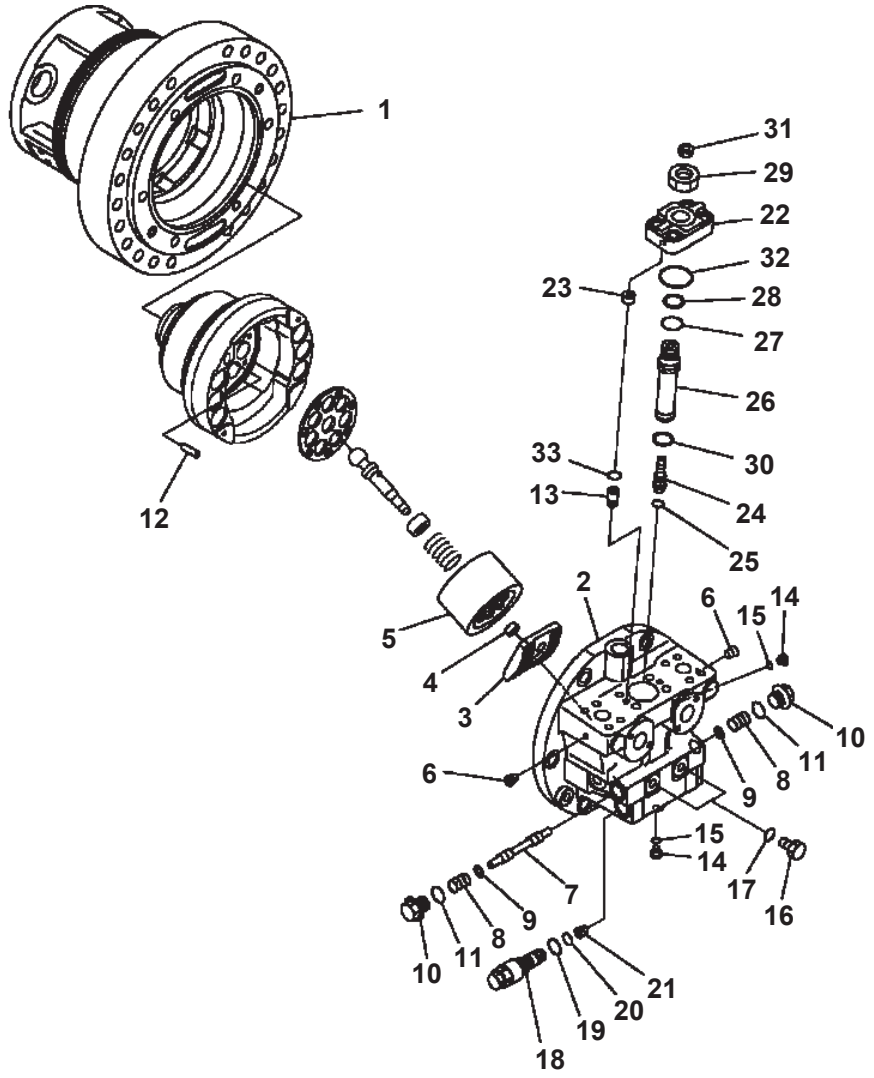

H0350-01A0 HST MOTOR LEFT HAND (1/2)

Item	Part No.	Description	Qty	Wt.	Options
	706-8H-01111	MOTOR ASSEMBLY	1		SN:B12500--
	□706-8H-01110	MOTOR ASSEMBLY	1		SN:B10001--B12499
1	706-8H-41311	· CASE	1	F1	SN:B12500--
	□706-8H-41310	· CASE	1	F1	SN:B10001--B12499
	706-8H-04141	· END COVER SUB ASSEMBLY	1	F1	SN:B10001--
2	(NSS)	· · COVER, END	1		SN:B10001--
	(NSS)	· · PLATE ASSEMBLY	1		SN:B10001--
3	(NSS)	· · · PLATE, VALVE	1		SN:B10001--
4	(NSS)	· · · BUSHING	1		SN:B10001--
5	(NSS)	· · BLOCK, CYLINDER	1		SN:B10001--
6	(NSS)	· · PLUG	2		SN:B10001--
7	(NSS)	· SPOOL	1		SN:B10001--
8	706-8H-53120	· SPRING	2		SN:B10001--
9	706-8H-53130	· SEAT	2		SN:B10001--
10	706-77-72170	· PLUG	2		SN:B10001--
11	07002-62434	· O-RING	2		SN:B10001--
12	706-86-71310	· PIN, DOWEL	1	F1	SN:B10001--
13	708-3D-15110	· VALVE	2		SN:B10001--
14	708-8E-16160	· PLUG	2		SN:B10001--
15	07002-61023	· O-RING	2		SN:B10001--
16	708-8H-11530	· PLUG	2		SN:B10001--
17	07002-61423	· O-RING	2		SN:B10001--
18	702-77-03500	· VALVE, RELIEF	1	F1	SN:B10001--
19	07002-62434	· · O-RING	1		SN:B10001--
20	706-86-53530	· · O-RING	1		SN:B10001--
21	706-8H-53230	· ORIFICE	1		SN:B10001--
	706-8H-04110	· COVER SUB ASSEMBLY	1		SN:B10001--
22	706-8H-51130	· · COVER	1		SN:B10001--
23	706-8H-51150	· · RING	2		SN:B10001--
24	706-8H-51120	· · SCREW	1		SN:B10001--
25	07000-B2014	· · O-RING	1		SN:B10001--
26	706-8H-51140	· · SLEEVE	1		SN:B10001--
27	07000-B2030	· · O-RING	1		SN:B10001--
28	07001-02030	· · RING	1		SN:B10001--
29	01583-12716	· · NUT	1		SN:B10001--
30	706-86-53230	· · SEAL	1		SN:B10001--
31	01582-11210	· · NUT	1		SN:B10001--
32	07000-B2055	· O-RING	1		SN:B10001--
33	07000-B2012	· O-RING	2	F1	SN:B10001--

H0350-01A0 HST MOTOR LEFT HAND (1/2)

Item	Part No.	Description	Qty	Wt.	Options
		F1 - ONLY SUPPLIED TO AUTHORIZED DISTRIBUTORS.			

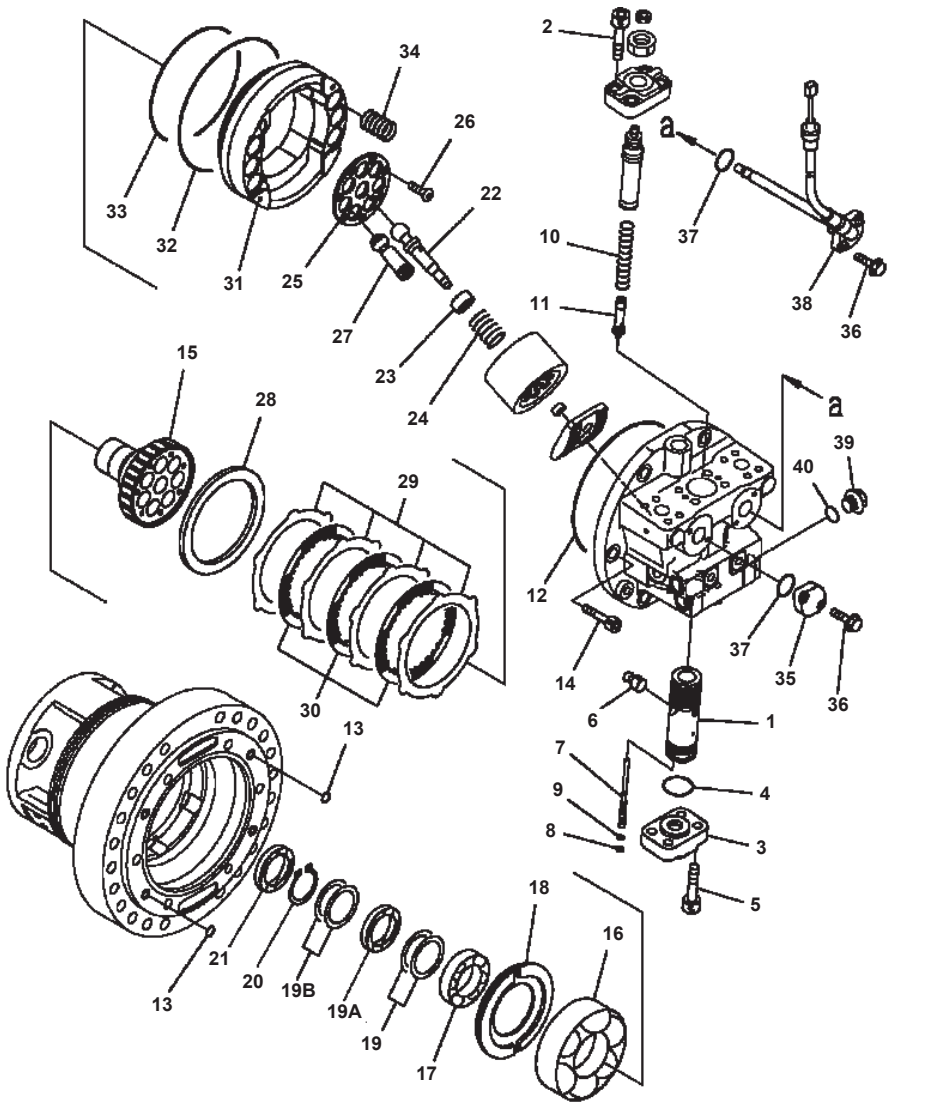

H0350-02A0 HST MOTOR LEFT HAND (2/2)

Item	Part No.	Description	Qty	Wt.	Options
		MOTOR ASSEMBLY (SEE FIG. H0350-01A0)	1		SN:B10001--
1	706-8H-04131	· PISTON SUB ASSEMBLY	1	F1	SN:B10001--
2	01252-61445	· BOLT	4	F1	SN:B10001--
3	706-8H-51110	· COVER	1	F1	SN:B10001--
4	07000-B2055	· O-RING	1	F1	SN:B10001--
5	01252-61445	· BOLT	4	F1	SN:B10001--
6	706-8H-53170	· PIN	1	F1	SN:B10001--
7	706-8H-53180	· SCREW	1	F1	SN:B10001--
8	07000-B1004	· O-RING	1	F1	SN:B10001--
9	07001-01004	· RING	1	F1	SN:B10001--
10	706-8H-53190	· SPRING	1	F1	SN:B10001--
11	706-8H-53210	· SEAT	1	F1	SN:B10001--
12	07000-A5260	· O-RING	1	F1	SN:B10001--
13	07000-B2014	· O-RING	4	F1	SN:B10001--
14	01252-61850	· BOLT	6	F1	SN:B10001--
15	706-8H-41340	· SHAFT, DRIVE	1	F1	SN:B10001--
16	706-8H-41350	· BEARING	1	F1	SN:B10001--
17	706-7H-41120	· BEARING	1	F1	SN:B10001--
18	706-8H-41371	· PLATE	1	F1	SN:B12500--
	□706-8H-41370	· PLATE	1	F1	SN:B10001--B12499
19	706-7H-05911	· SPACER KIT (17)	1	F1	SN:B12500--
	□706-7H-05910	· SPACER KIT (5)	1	F1	SN:B10001--B12499
19A	706-8H-41870	· RETAINER	1	F1	SN:B12500--
19B	706-8H-41810	· SEAL	1	F1	SN:B12500--
20	04064-06020	· RING	1	F1	SN:B10001--
21	706-8H-41880	· SEAL, OIL	1	F1	SN:B12500--
	□708-27-22811	· SEAL, OIL	1	F1	SN:B10001--B12499
22	706-8H-41120	· SHAFT, CENTER	1	F1	SN:B10001--
23	706-8H-41380	· RING,CENTER	1	F1	SN:B10001--
24	706-7H-41740	· SPRING	1	F1	SN:B10001--
25	706-8H-41260	· RETAINER	1	F1	SN:B10001--
26	708-23-12350	· SCREW	7	F1	SN:B10001--
27	706-8H-41160	· PISTON SUB ASSEMBLY	7	F1	SN:B10001--
28	706-8H-91130	· PLATE	1	F1	SN:B10001--
29	706-7K-91340	· PLATE	4	F1	SN:B10001--
30	706-8H-91120	· DISC	3	F1	SN:B10001--
31	706-8H-91110	· PISTON, BRAKE	1	F1	SN:B10001--
32	07000-B5240	· O-RING	1	F1	SN:B10001--
33	706-86-90290	· O-RING	1	F1	SN:B10001--
34	706-8H-91140	· SPRING	6	F1	SN:B10001--

H0350-02A0 HST MOTOR LEFT HAND (2/2)

Item	Part No.	Description	Qty	Wt.	Options
35	706-8H-53220	· PLATE	1		SN:B10001--
36	01435-00825	· BOLT	2		SN:B10001--
37	07000-B2040	· O-RING	4		SN:B10001--
38	729-11-21000	· SENSOR, SPEED	1	F1	SN:B10001--
39	706-77-72170	· PLUG	1		SN:B10001--
40	07002-62434	· O-RING	1		SN:B10001--
		F1 - ONLY SUPPLIED TO AUTHORIZED DISTRIBUTORS.			

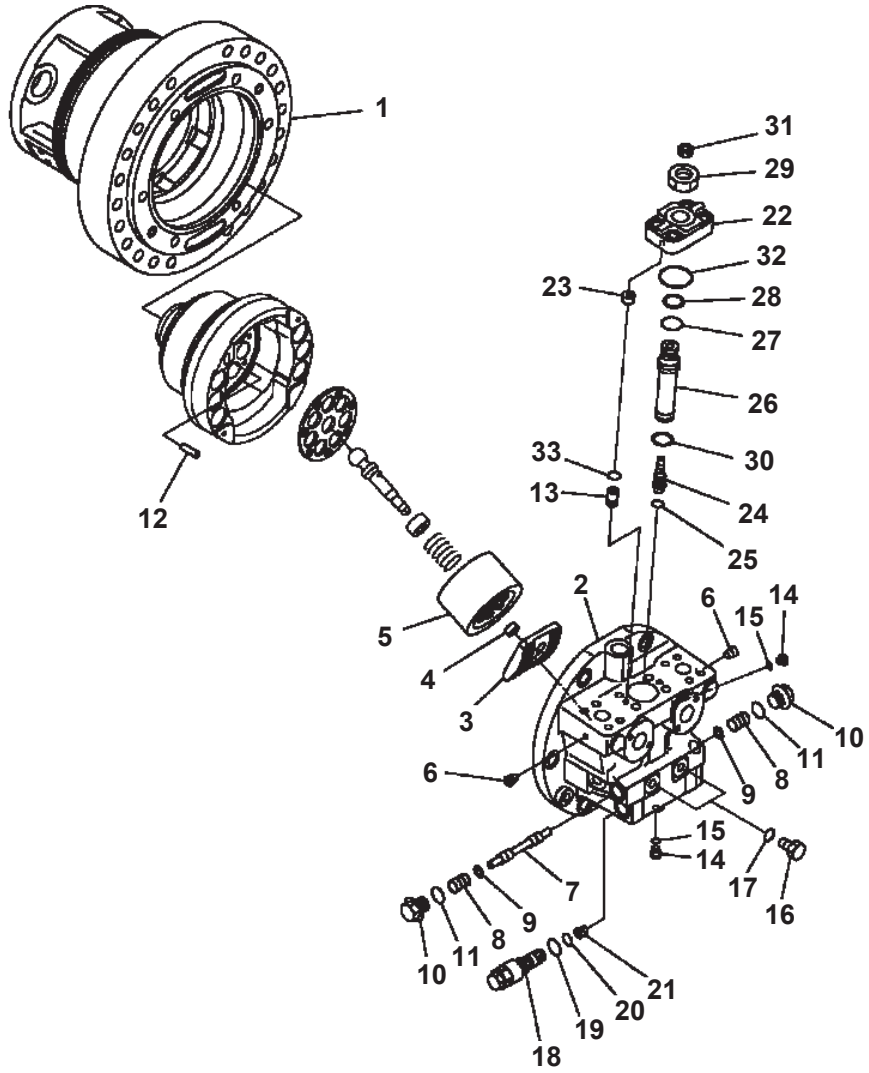

H0350-03A0 HST MOTOR RIGHT HAND (1/2)

Item	Part No.	Description	Qty	Wt.	Options
	706-8H-01121	MOTOR ASSEMBLY	1		SN:B12500--
	706-8H-01120	MOTOR ASSEMBLY	1		SN:B10001--B12499
1	706-8H-41311	· CASE	1	F1	SN:B12500--
	706-8H-41310	· CASE	1	F1	SN:B10001--B12499
	706-8H-04141	· END COVER SUB ASSEMBLY	1	F1	SN:B10001--
2	(NSS)	· · COVER, END	1		SN:B10001--
	(NSS)	· · PLATE ASSEMBLY	1		SN:B10001--
3	(NSS)	· · · PLATE, VALVE	1		SN:B10001--
4	(NSS)	· · · BUSHING	1		SN:B10001--
5	(NSS)	· · BLOCK, CYLINDER	1		SN:B10001--
6	(NSS)	· · PLUG	2		SN:B10001--
7	(NSS)	· SPOOL	1		SN:B10001--
8	706-8H-53120	· SPRING	2		SN:B10001--
9	706-8H-53130	· SEAT	2		SN:B10001--
10	706-77-72170	· PLUG	2		SN:B10001--
11	07002-62434	· O-RING	2		SN:B10001--
12	706-86-71310	· PIN, DOWEL	1	F1	SN:B10001--
13	708-3D-15110	· VALVE	2		SN:B10001--
14	708-8E-16160	· PLUG	2		SN:B10001--
15	07002-61023	· O-RING	2		SN:B10001--
16	708-8H-11530	· PLUG	2		SN:B10001--
17	07002-61423	· O-RING	2		SN:B10001--
18	702-77-03500	· VALVE, RELIEF	1	F1	SN:B10001--
19	07002-62434	· · O-RING	1		SN:B10001--
20	706-86-53530	· · O-RING	1		SN:B10001--
21	706-8H-53230	· ORIFICE	1		SN:B10001--
	706-8H-04110	· COVER SUB ASSEMBLY	1	F1	SN:B10001--
22	706-8H-51130	· · COVER	1	F1	SN:B10001--
23	706-8H-51150	· · RING	2	F1	SN:B10001--
24	706-8H-51120	· · SCREW	1	F1	SN:B10001--
25	07000-B2014	· · O-RING	1	F1	SN:B10001--
26	706-8H-51140	· · SLEEVE	1	F1	SN:B10001--
27	07000-B2030	· · O-RING	1	F1	SN:B10001--
28	07001-02030	· · RING	1	F1	SN:B10001--
29	01583-12716	· · NUT	1	F1	SN:B10001--
30	706-86-53230	· · SEAL	1	F1	SN:B10001--
31	01582-11210	· · NUT	1	F1	SN:B10001--
32	07000-B2055	· O-RING	1	F1	SN:B10001--
33	07000-B2012	· O-RING	2	F1	SN:B10001--
		F1 - ONLY SUPPLIED TO AUTHORIZED DISTRIBUTORS.			

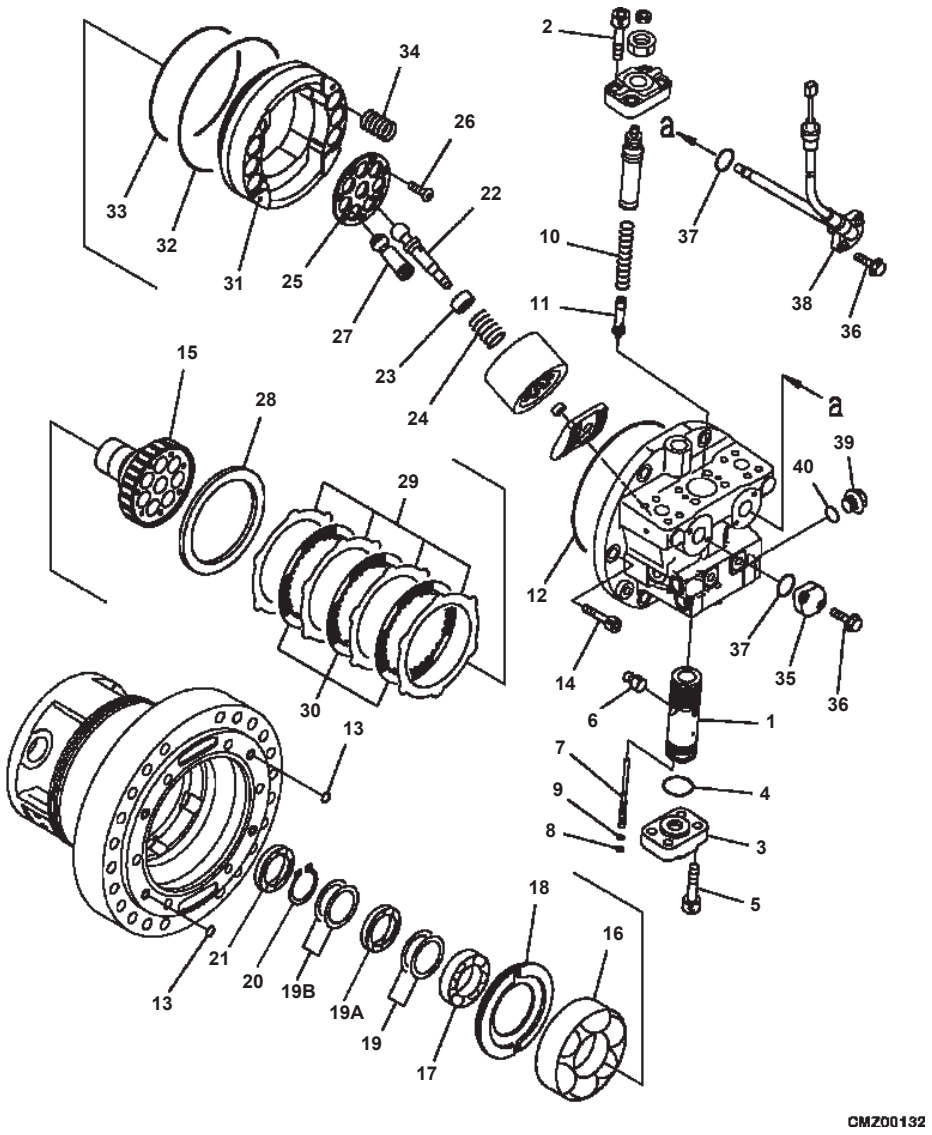

H0350-04A0 HST MOTOR RIGHT HAND (2/2)

Item	Part No.	Description	Qty	Wt.	Options
		MOTOR ASSEMBLY (SEE FIG. H0350-03A0)	1		SN:B10001--
1	706-8H-04131	· PISTON SUB ASSEMBLY	1	F1	SN:B10001--
2	01252-61445	· BOLT	4	F1	SN:B10001--
3	706-8H-51110	· COVER	1	F1	SN:B10001--
4	07000-B2055	· O-RING	1	F1	SN:B10001--
5	01252-61445	· BOLT	4	F1	SN:B10001--
6	706-8H-53170	· PIN	1	F1	SN:B10001--
7	706-8H-53180	· SCREW	1	F1	SN:B10001--
8	07000-B1004	· O-RING	1	F1	SN:B10001--
9	07001-01004	· RING	1	F1	SN:B10001--
10	706-8H-53190	· SPRING	1	F1	SN:B10001--
11	706-8H-53210	· SEAT	1	F1	SN:B10001--
12	07000-A5260	· O-RING	1	F1	SN:B10001--
13	07000-B2014	· O-RING	4	F1	SN:B10001--
14	01252-61850	· BOLT	6	F1	SN:B10001--
15	706-8H-41340	· SHAFT, DRIVE	1	F1	SN:B10001--
16	706-8H-41350	· BEARING	1	F1	SN:B10001--
17	706-7H-41120	· BEARING	1	F1	SN:B10001--
18	706-8H-41371	· PLATE	1	F1	SN:B12500--
	□706-8H-41370	· PLATE	1	F1	SN:B10001--B12499
19	706-7H-05911	· SPACER KIT (17)	1	F1	SN:B12500--
	□706-7H-05910	· SPACER KIT (5)	1	F1	SN:B10001--B12499
19A	706-8H-41870	· RETAINER	1	F1	SN:B12500--
19B	706-8H-41810	· SEAL	1	F1	SN:B12500--
20	04064-06020	· RING	1	F1	SN:B10001--
21	706-8H-41880	· SEAL, OIL	1	F1	SN:B12500--
	□708-27-22811	· SEAL, OIL	1	F1	SN:B10001--B12499
22	706-8H-41120	· SHAFT, CENTER	1	F1	SN:B10001--
23	706-8H-41380	· RING,CENTER	1	F1	SN:B10001--
24	706-7H-41740	· SPRING	1	F1	SN:B10001--
25	706-8H-41260	· RETAINER	1	F1	SN:B10001--
26	708-23-12350	· SCREW	7	F1	SN:B10001--
27	706-8H-41160	· PISTON SUB ASSEMBLY	7	F1	SN:B10001--
28	706-8H-91130	· PLATE	1	F1	SN:B10001--
29	706-7K-91340	· PLATE	4	F1	SN:B10001--
30	706-8H-91120	· DISC	3	F1	SN:B10001--
31	706-8H-91110	· PISTON, BRAKE	1	F1	SN:B10001--
32	07000-B5240	· O-RING	1	F1	SN:B10001--
33	706-86-90290	· O-RING	1	F1	SN:B10001--
34	706-8H-91140	· SPRING	6	F1	SN:B10001--

H0350-04A0 HST MOTOR RIGHT HAND (2/2)

Item	Part No.	Description	Qty	Wt.	Options
35	706-8H-53220	· PLATE	1		SN:B10001--
36	01435-00825	· BOLT	2		SN:B10001--
37	07000-B2040	· O-RING	4		SN:B10001--
38	729-11-21000	· SENSOR, SPEED	1	F1	SN:B10001--
39	706-77-72170	· PLUG	1		SN:B10001--
40	07002-62434	· O-RING	1		SN:B10001--
		F1 - ONLY SUPPLIED TO AUTHORIZED DISTRIBUTORS.			

CMZ00133

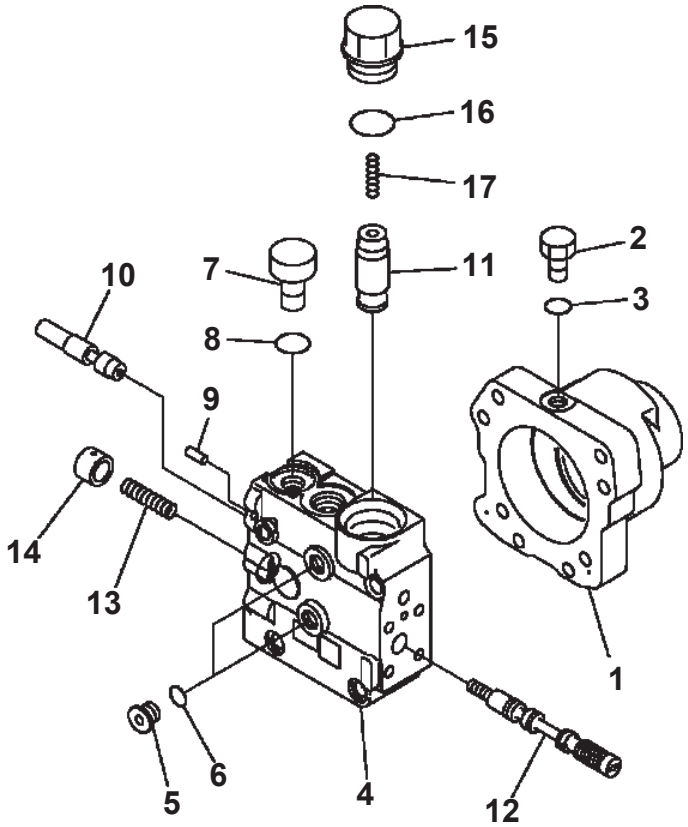

D51EX/PX-22 S/N B10001-UP

H0360-01A0 FAN MOTOR (1/3)

Item	Part No.	Description	Qty	Wt.	Options
	708-7R-00690	MOTOR ASSEMBLY, FAN	1		SN:B10001--
1	708-7R-11960	· CASE	1	F1	SN:B10001--
2	07040-11007	· PLUG	1		SN:B10001--
3	07002-11023	· O-RING	1		SN:B10001--
	708-7R-01670	· COVER SUB ASSEMBLY	1	F1	SN:B10001--
4	(NSS)	· · COVER, END	1		SN:B10001--
5	708-7R-11220	· · PLUG	2		SN:B10001--
6	07002-11223	· · O-RING	2		SN:B10001--
7	07040-11409	· · PLUG	1		SN:B10001--
8	07002-11423	· · O-RING	1		SN:B10001--
9	720-68-19610	· · PIN	2		SN:B10001--
10	(NSS)	· · SPOOL	1		SN:B10001--
11	708-7R-03130	· · SLEEVE	1	F1	SN:B10001--
12	(NSS)	· · SPOOL	1		SN:B10001--
13	708-7S-18120	· · SPRING	1	F1	SN:B10001--
14	708-7S-18130	· · SPACER	1	F1	SN:B10001--
15	708-7R-21110	· · PLUG	1		SN:B10001--
16	07002-13334	· · O-RING	1		SN:B10001--
17	708-7R-21120	· · SPRING	1		SN:B10001--
		F1 - ONLY SUPPLIED TO AUTHORIZED DISTRIBUTORS.			

Ref. H0360-01A0 Page H-079

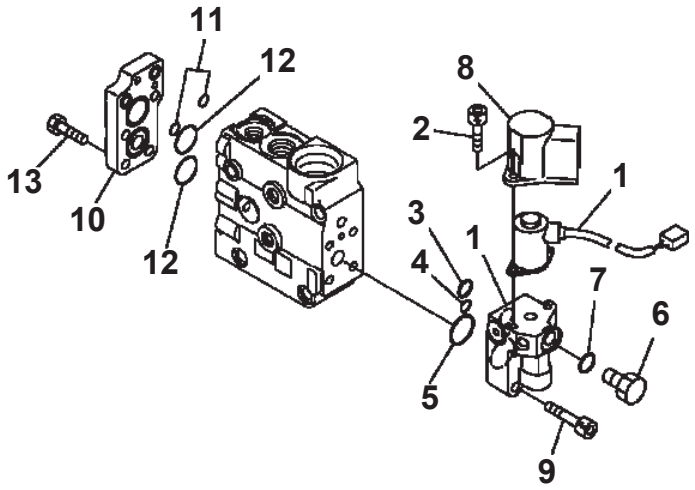

H0360-02A0 FAN MOTOR (2/3)

Item	Part No.	Description	Qty	Wt.	Options
		MOTOR, FAN (SEE FIG. H0360-01A0)	1		SN:B10001--
	708-7R-01670	· COVER SUB ASSEMBLY	1		SN:B10001--
1	708-7R-01631	· · PILOT VALVE ASSEMBLY	1		SN:B10001--
2	01252-60616	· · · BOLT	2		SN:B10001--
3	708-2L-25490	· · · O-RING	1		SN:B10001--
4	07000-11008	· · · O-RING	1	F1	SN:B10001--
5	723-11-18430	· · · O-RING	1	F1	SN:B10001--
6	07040-11007	· · · PLUG	1	F1	SN:B10001--
7	07002-11023	· · · O-RING	1	F1	SN:B10001--
8	708-1S-18180	· · · COVER	1		SN:B10001--
9	01252-60835	· · BOLT	4		SN:B10001--
10	708-7R-18430	· · COVER	1		SN:B10001--
11	07000-11010	· · O-RING	2		SN:B10001--
12	702-21-55440	· · O-RING	2		SN:B10001--
13	01010-80825	· · BOLT	4		SN:B10001--
		F1 - ONLY SUPPLIED TO AUTHORIZED DISTRIBUTORS.			

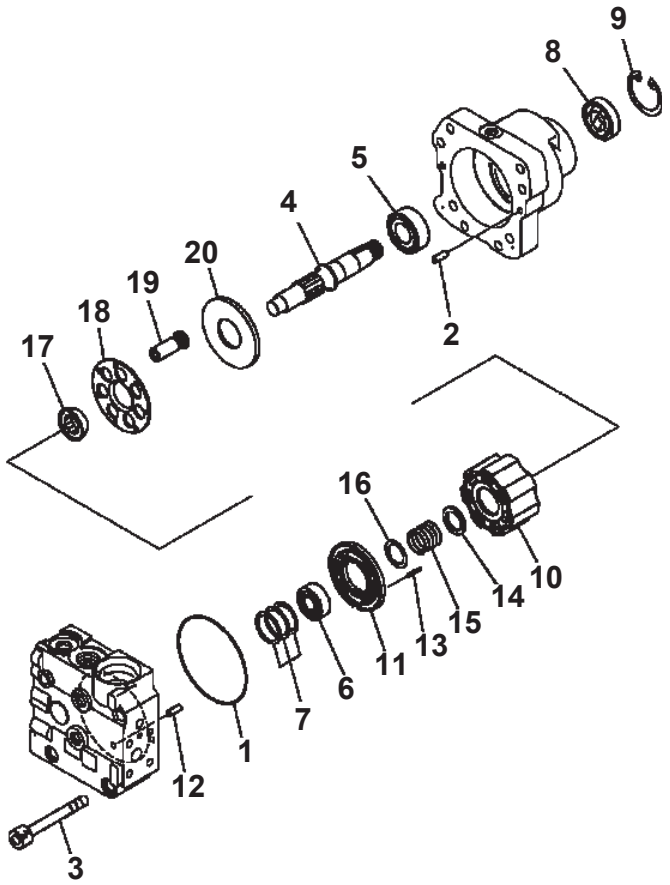

H0360-03A0 FAN MOTOR (3/3)

Item	Part No.	Description	Qty	Wt.	Options
		MOTOR, FAN (SEE FIG. H0360-01A0)	1		SN:B10001--
1	07000-12095	· O-RING	1	F1	SN:B10001--
2	720-68-19610	· PIN	2	F1	SN:B10001--
3	01010-81070	· BOLT	4	F1	SN:B10001--
4	708-7R-12210	· SHAFT	1	F1	SN:B10001--
5	708-7R-12220	· BEARING	1	F1	SN:B10001--
6	708-7S-12220	· BEARING	1	F1	SN:B10001--
7	708-7S-05110	· SHIM KIT	1	F1	SN:B10001--
8	708-7R-12240	· SEAL,OIL	1	F1	SN:B10001--
9	04065-04218	· RING	1	F1	SN:B10001--
10	708-7R-13130	· BLOCK, CYLINDER	1	F1	SN:B10001--
11	708-7R-13610	· PLATE, ALVE	1	F1	SN:B10001--
12	720-68-19610	· PIN	1	F1	SN:B10001--
13	708-7R-13540	· PIN	3	F1	SN:B10001--
14	708-7R-13530	· WASHER	2	F1	SN:B10001--
15	708-7R-13560	· SPRING	1	F1	SN:B10001--
16	04065-03012	· RING	1		SN:B10001--
17	708-7R-13590	· GUIDE, RETAINER	1		SN:B10001--
18	708-7R-13370	· RETAINER, SHOE	1		SN:B10001--
19	708-7R-13320	· PISTON SUB ASSEMBLY	7		SN:B10001--
20	708-7R-13620	· PLATE	1		SN:B10001--
		F1 - ONLY SUPPLIED TO AUTHORIZED DISTRIBUTORS.			

CMZ00136

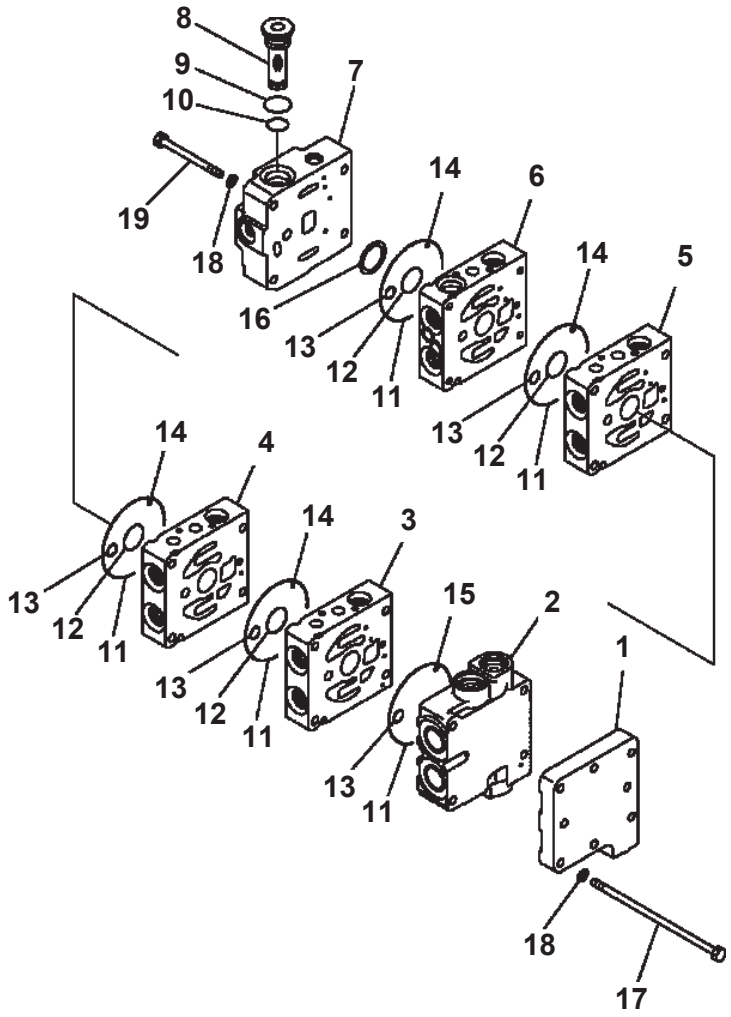

D51EX/PX-22 S/N B10001-UP

H0370-01A0 CONTROL VALVE 4-SPOOL (1/5)

Item	Part No.	Description	Qty	Options
	723-14-13201	VALVE ASSEMBLY, 4-SPOOL	1	SN:B11024--
	□723-14-13200	VALVE ASSEMBLY, 4-SPOOL	1	SN:B10001--B11023
1	(NSS)	· PLATE	1	SN:B10001--
2	(NSS)	· BODY, VALVE	1	SN:B10001--
3	(NSS)	· BLOCK, VALVE	1	SN:B10001--
4	(NSS)	· BLOCK, VALVE	1	SN:B10001--
5	(NSS)	· BLOCK, VALVE	1	SN:B10001--
6	(NSS)	· BLOCK, VALVE	1	SN:B10001--
7	723-11-21820	· COVER, VALVE	1	SN:B10001--
8	723-11-14390	· FILTER	1	SN:B10001--
9	(NSS)	· O-RING	1	SN:B10001--
10	723-11-19130	· O-RING	1	SN:B10001--
11	07000-12100	· O-RING	5	SN:B10001--
12	723-11-19110	· O-RING	4	SN:B10001--
13	723-11-19130	· O-RING	5	SN:B10001--
14	07000-11007	· O-RING	4	SN:B10001--
15	07000-11008	· O-RING	1	SN:B10001--
16	723-11-19150	· RING	1	SN:B10001--
17	6934-11-4190	· BOLT	4	SN:B10001--
18	01643-50823	· WASHER	8	SN:B10001--
19	01010-80845	· BOLT	4	SN:B10001--

Ref. H0370-01A0 Page H-085

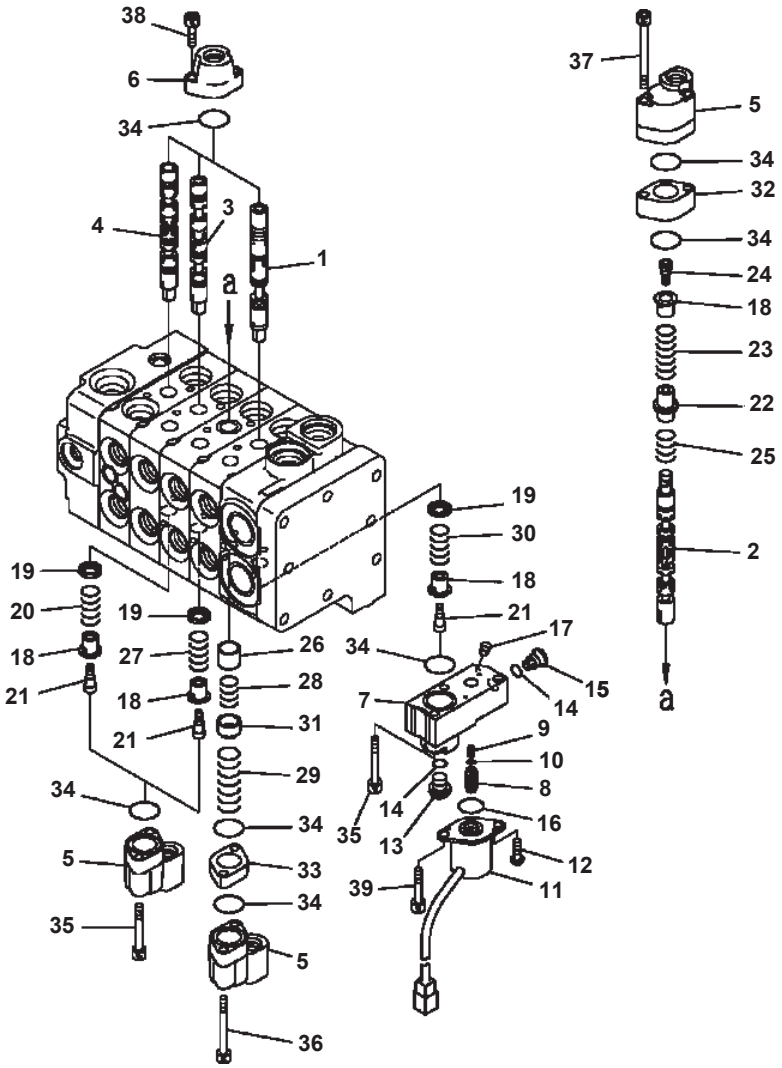

H0370-02A0 CONTROL VALVE 4-SPOOL (2/5)

Item	Part No.	Description	Qty	Options
		VALVE, 4-SPOOL (SEE FIG. H0370-01A0)	1	SN:B10001--
1	(NSS)	· SPOOL	1	SN:B10001--
2	(NSS)	· SPOOL	1	SN:B11024--
	(NSS)	· SPOOL	1	SN:B10001--B11023
3	(NSS)	· SPOOL	1	SN:B10001--
4	(NSS)	· SPOOL	1	SN:B10001--
5	723-11-17370	· CASE	4	SN:B10001--
6	723-11-17410	· CASE	3	SN:B10001--
	702-21-60800	· CASE SUB ASSEMBLY	1	SN:B11024--
	□702-21-58700	· CASE SUB ASSEMBLY	1	SN:B10001--B11023
7	(NSS)	· · CASE	1	SN:B10001--
8	(NSS)	· · SPOOL	1	SN:B10001--
9	(NSS)	· · SPRING	1	SN:B10001--
10	(NSS)	· · SHIM, 1.0 MM	1	SN:B10001--
	(NSS)	· · SHIM, 1.2 MM	1	SN:B10001--
	(NSS)	· · SHIM, 1.4 MM	1	SN:B10001--
	(NSS)	· · SHIM, 0.8 MM	1	SN:B10001--
	(NSS)	· · SHIM, 0.6 MM	1	SN:B10001--
11	702-21-58140	· · SOLENOID	1	SN:B11024--
	□702-21-57410	· · SOLENOID	1	SN:B10001--B11023
12	(NSS)	· · SCREW	2	SN:B10001--
13	708-8E-16160	· · PLUG	1	SN:B10001--
14	07002-11023	· · O-RING	2	SN:B10001--
15	702-21-54190	· · FILTER	1	SN:B10001--
16	700-80-61260	· · O-RING	1	SN:B10001--
17	(NSS)	· · SCREW	1	SN:B10001--
18	723-11-17353	· RETAINER	4	SN:B10001--
19	723-11-17330	· RETAINER	4	SN:B10001--
20	723-11-37590	· SPRING	1	SN:B10001--
21	723-11-17361	· BOLT	3	SN:B10001--
22	723-11-27380	· RETAINER	1	SN:B10001--
23	723-11-28361	· SPRING	1	SN:B10001--
24	723-11-27551	· BOLT	1	SN:B10001--
25	723-11-28750	· SPRING	1	SN:B10001--
26	723-11-27370	· RETAINER	1	SN:B10001--
27	723-11-28730	· SPRING	1	SN:B10001--
28	723-11-37580	· SPRING	1	SN:B10001--
29	723-11-37820	· SPRING	1	SN:B11024--
	□723-11-37570	· SPRING	1	SN:B10001--B11023
30	(NSS)	· SPRING	1	SN:B10001--

H0370-02A0 CONTROL VALVE 4-SPOOL (2/5)

Item	Part No.	Description	Qty	Options
31	723-11-27390	· RETAINER	1	SN:B10001--
32	723-11-27510	· PLATE	1	SN:B10001--
33	723-11-27520	· PLATE	1	SN:B10001--
34	722-12-19120	· O-RING	10	SN:B10001--
35	01252-60640	· BOLT	5	SN:B10001--
36	01252-60650	· BOLT	2	SN:B10001--
37	700-22-11910	· BOLT	2	SN:B10001--
38	01252-60620	· BOLT	6	SN:B10001--
39	01252-60630	· BOLT	2	SN:B10001--

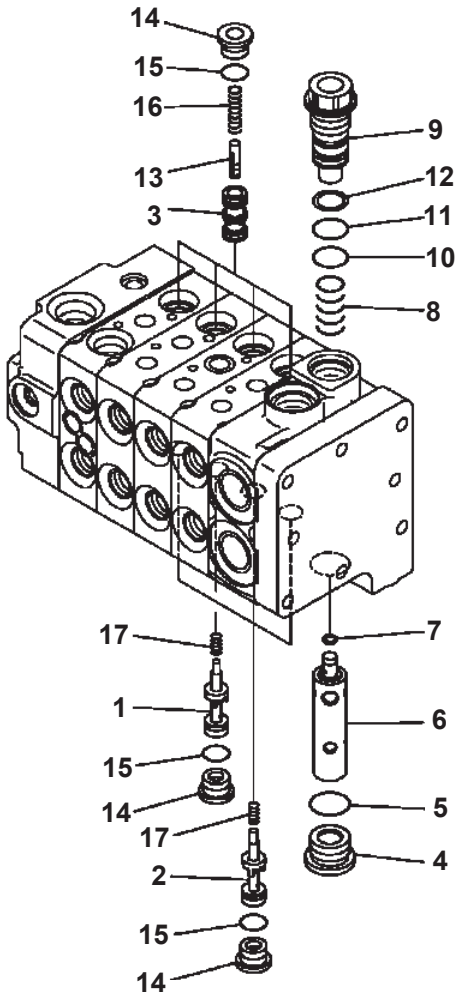

H0370-03A0 CONTROL VALVE 4-SPOOL (3/5)

Item	Part No.	Description	Qty	Options
		VALVE, 4-SPOOL (SEE FIG. H0370-01A0)	1	SN:B10001--
1	(NSS)	· VALVE	1	SN:B10001--
2	(NSS)	· VALVE	3	SN:B10001--
3	(NSS)	· VALVE	4	SN:B10001--
4	(NSS)	· PLUG	1	SN:B10001--
5	(NSS)	· O-RING	1	SN:B10001--
6	(NSS)	· SPOOL	1	SN:B11024--
	(NSS)	· SPOOL	1	SN:B10001--B11023
7	(NSS)	· SEAL	1	SN:B10001--
8	723-11-37610	· SPRING	1	SN:B10001--
9	723-11-25380	· SLEEVE	1	SN:B10001--
10	720-68-19760	· O-RING	1	SN:B10001--
11	723-11-18150	· O-RING	1	SN:B10001--
12	723-11-18160	· RING	1	SN:B10001--
13	(NSS)	· PISTON	4	SN:B10001--
14	723-11-15110	· PLUG	8	SN:B10001--
15	07002-11623	· O-RING	8	SN:B10001--
16	723-11-16130	· SPRING	4	SN:B10001--
17	723-11-15130	· SPRING	4	SN:B10001--

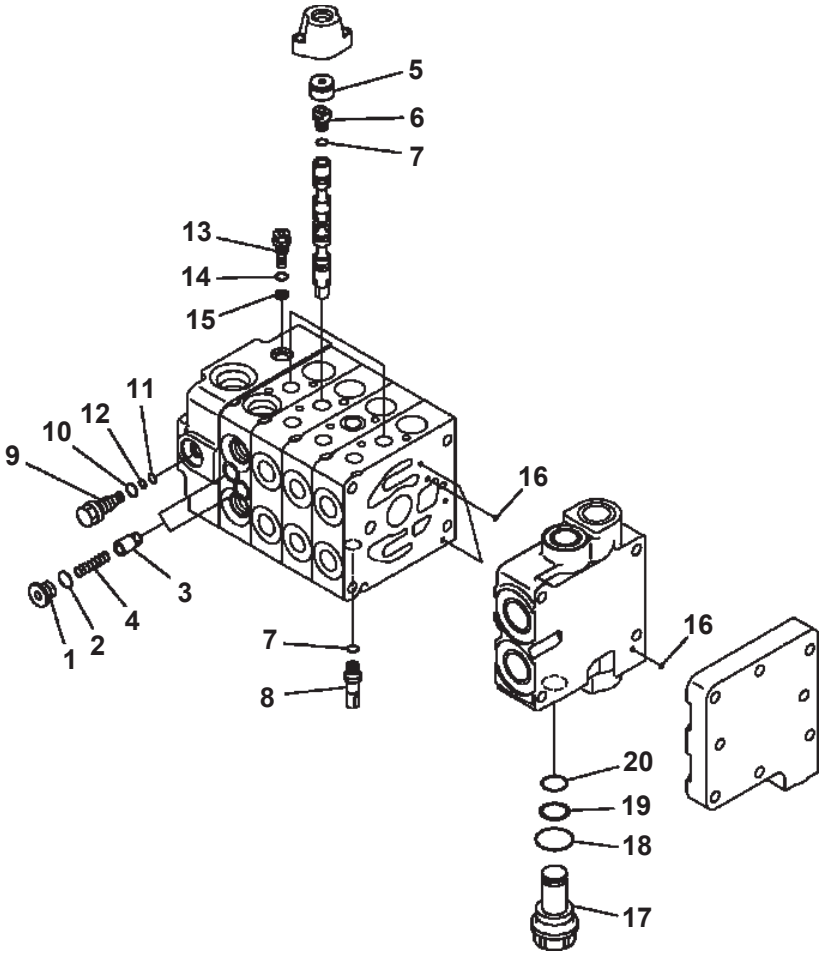

H0370-04A0 CONTROL VALVE 4-SPOOL (4/5)

Item	Part No.	Description	Qty	Options
		VALVE, 4-SPOOL (SEE FIG. H0370-01A0)	1	SN:B10001--
1	723-11-18190	· PLUG	2	SN:B10001--
2	07002-11023	· O-RING	2	SN:B10001--
3	723-11-18170	· VALVE	2	SN:B10001--
4	723-11-18180	· SPRING	2	SN:B10001--
5	723-11-17431	· RETAINER	3	SN:B10001--
6	723-11-17450	· PLUG	3	SN:B10001--
7	07002-10823	· O-RING	4	SN:B10001--
8	723-11-27540	· PLUG	1	SN:B10001--
9	723-11-18850	· PLUG	1	SN:B10001--
10	07002-11023	· O-RING	1	SN:B10001--
11	07000-11004	· O-RING	1	SN:B10001--
12	07001-01004	· RING	1	SN:B10001--
13	(NSS)	· ORIFICE	1	SN:B10001--
14	07002-10823	· O-RING	1	SN:B10001--
15	(NSS)	· RING	1	SN:B10001--
16	702-21-54260	· O-RING	4	SN:B10001--
17	723-11-29361	· PLUG	1	SN:B10001--
18	07000-13024	· O-RING	1	SN:B10001--
19	700-80-64220	· RING	1	SN:B10001--
20	700-22-11410	· O-RING	1	SN:B10001--

CMZ00140

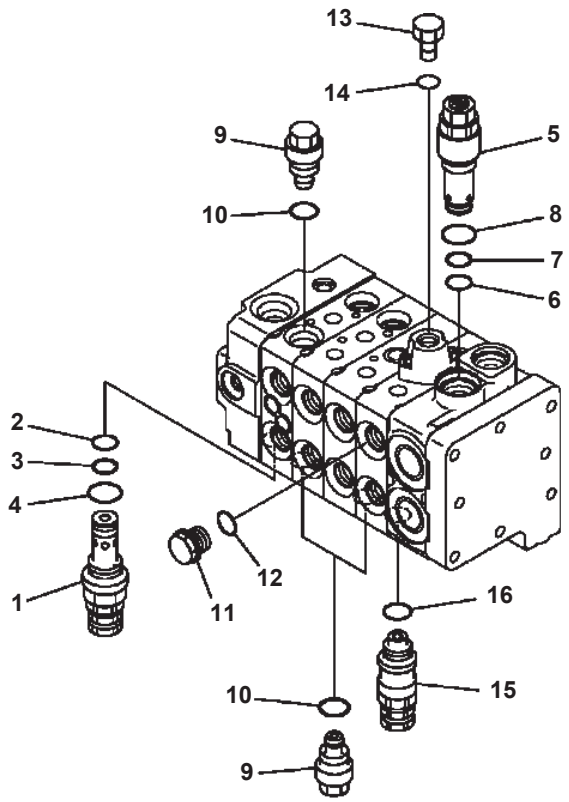

D51EX/PX-22 S/N B10001-UP

H0370-05A0 CONTROL VALVE 4-SPOOL (5/5)

Item	Part No.	Description	Qty	Options
		VALVE, 4-SPOOL (SEE FIG. H0370-01A0)	1	SN:B10001--
1	723-10-51100	· VALVE ASSEMBLY, RELIEF	1	SN:B10001--
2	700-22-11410	· · O-RING	1	SN:B10001--
3	700-80-64220	· · RING	1	SN:B10001--
4	07000-13024	· · O-RING	1	SN:B10001--
5	723-10-41100	· VALVE ASSEMBLY, RELIEF	1	SN:B10001--
6	700-22-11410	· · O-RING	1	SN:B10001--
7	700-80-64220	· · RING	1	SN:B10001--
8	07002-12434	· · O-RING	1	SN:B10001--
9	723-10-80200	· VALVE ASSEMBLY, SUCTION	3	SN:B10001--
10	07002-12034	· · O-RING	1	SN:B10001--
11	709-32-11930	· PLUG	1	SN:B10001--
12	07002-11823	· O-RING	1	SN:B10001--
13	07040-11409	· PLUG	1	SN:B10001--
14	07002-11423	· O-RING	1	SN:B10001--
15	723-10-21100	· VALVE ASSEMBLY, SUCTION	1	SN:B10001--
16	07002-12034	· · O-RING	1	SN:B10001--

Ref. H0370-05A0 Page H-095

CMZ00141

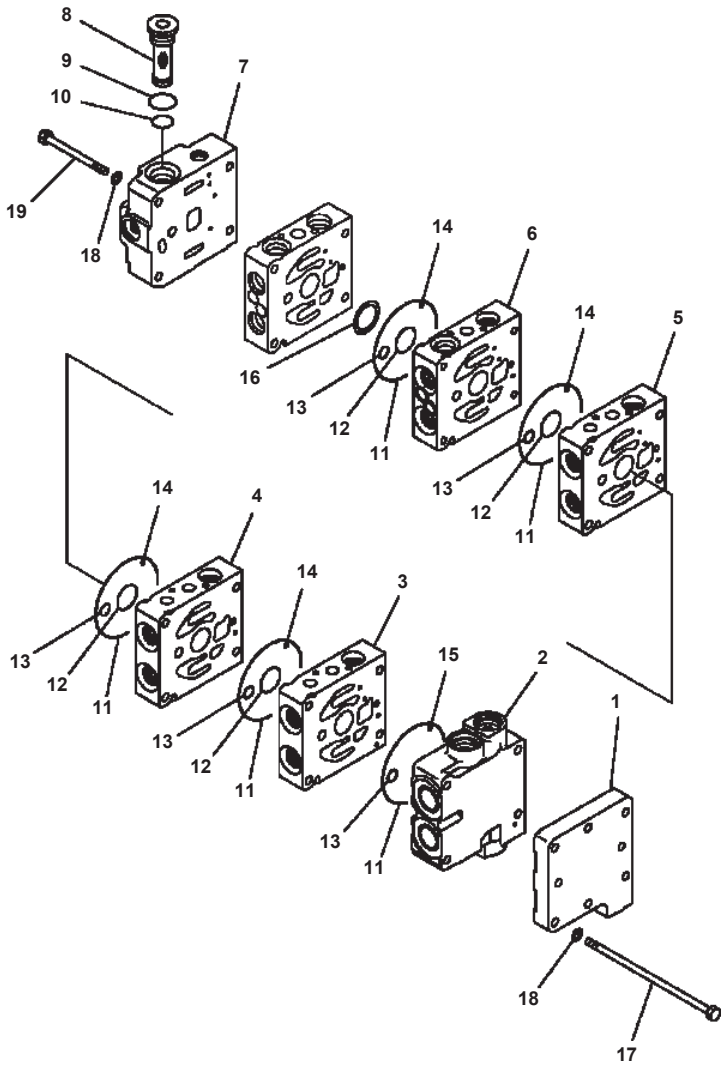

D51EX/PX-22 S/N B10001-UP

H0380-01A0 CONTROL VALVE 5-SPOOL (1/6)

Item	Part No.	Description	Qty	Options
	723-15-13101	VALVE ASSEMBLY, 5-SPOOL	1	SN:B10999--
	□723-15-13100	VALVE ASSEMBLY, 5-SPOOL	1	SN:B10001--B10998
1	(NSS)	· PLATE	1	SN:B10001--
2	(NSS)	· BODY,VALVE	1	SN:B10001--
3	(NSS)	· BLOCK,VALVE	1	SN:B10001--
4	(NSS)	· BLOCK,VALVE	1	SN:B10001--
5	(NSS)	· BLOCK,VALVE	1	SN:B10001--
6	(NSS)	· BLOCK,VALVE	1	SN:B10001--
7	723-11-21820	· COVER,VALVE	1	SN:B10001--
8	723-11-14390	· FILTER	1	SN:B10001--
9	(NSS)	· O-RING	1	SN:B10001--
10	723-11-19130	· O-RING	1	SN:B10001--
11	07000-12100	· O-RING	5	SN:B10001--
12	723-11-19110	· O-RING	4	SN:B10001--
13	723-11-19130	· O-RING	5	SN:B10001--
14	07000-11007	· O-RING	4	SN:B10001--
15	07000-11008	· O-RING	1	SN:B10001--
16	723-11-19150	· RING	1	SN:B10001--
17	6934-11-4190	· BOLT	4	SN:B10001--
18	01643-50823	· WASHER	8	SN:B10001--
19	01010-80880	· BOLT	4	SN:B10001--

Ref. H0380-01A0 Page H-097

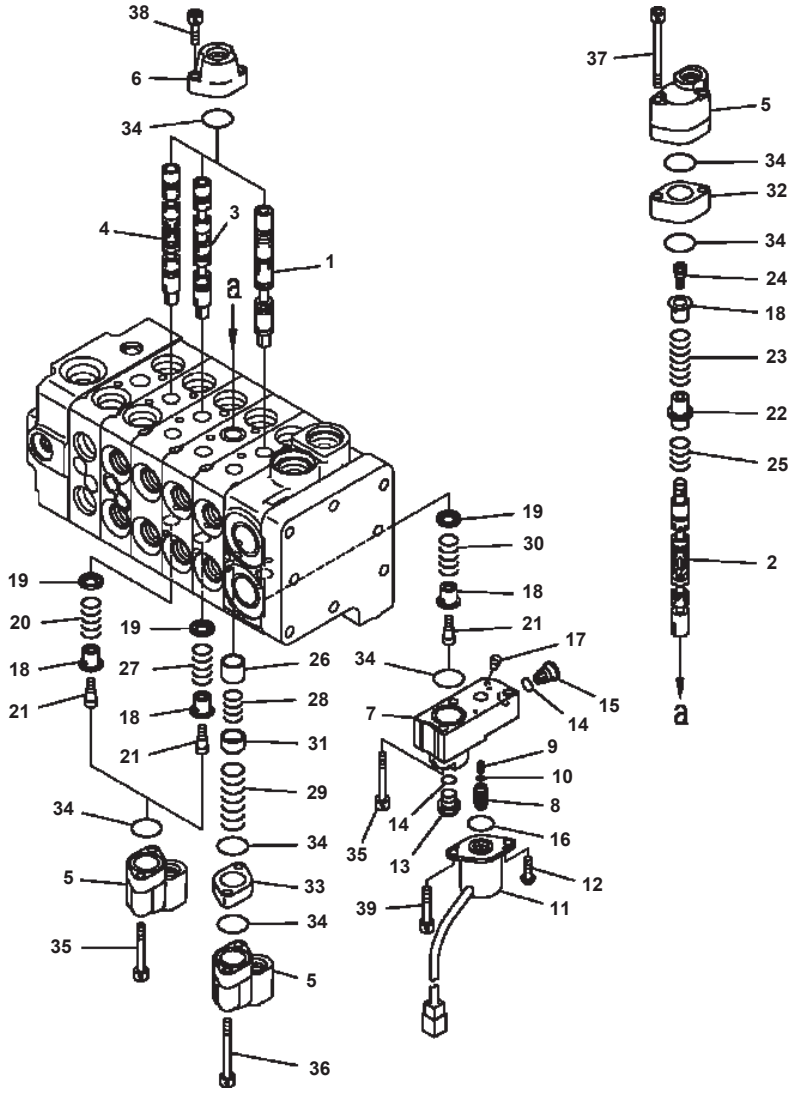

H0380-02A0 CONTROL VALVE 5-SPOOL (2/6)

Item	Part No.	Description	Qty	Options
		VALVE, 5-SPOOL (SEE FIG. H0380-01A0)	1	SN:B10001--
1	(NSS)	· SPOOL	1	SN:B10001--
2	(NSS)	· SPOOL	1	SN:B10999--
	(NSS)	· SPOOL	1	SN:B10001--B10998
3	(NSS)	· SPOOL	1	SN:B10001--
4	(NSS)	· SPOOL	1	SN:B10001--
5	723-11-17370	· CASE	4	SN:B10001--
6	723-11-17410	· CASE	3	SN:B10001--
	702-21-60800	· CASE SUB ASSEMBLY	1	SN:B10999--
	□702-21-58700	· CASE SUB ASSEMBLY	1	SN:B10001--B10998
7	(NSS)	· · CASE	1	SN:B10001--
8	(NSS)	· · SPOOL	1	SN:B10001--
9	(NSS)	· · SPRING	1	SN:B10001--
10	(NSS)	· · SHIM, 1.0 MM	1	SN:B10001--
	(NSS)	· · SHIM, 1.2 MM	1	SN:B10001--
	(NSS)	· · SHIM, 1.4 MM	1	SN:B10001--
	(NSS)	· · SHIM, 0.8 MM	1	SN:B10001--
	(NSS)	· · SHIM, 0.6 MM	1	SN:B10001--
11	702-21-58140	· · SOLENOID	1	SN:B10999--
	□702-21-57410	· · SOLENOID	1	SN:B10001--B10998
12	(NSS)	· · SCREW	2	SN:B10001--
13	708-8E-16160	· · PLUG	1	SN:B10001--
14	07002-11023	· · O-RING	2	SN:B10001--
15	702-21-54190	· · FILTER	1	SN:B10001--
16	700-80-61260	· · O-RING	1	SN:B10001--
17	(NSS)	· · SCREW	1	SN:B10001--
18	723-11-17353	· RETAINER	4	SN:B10001--
19	723-11-17330	· RETAINER	4	SN:B10001--
20	723-11-37590	· SPRING	1	SN:B10001--
21	723-11-17361	· BOLT	3	SN:B10001--
22	723-11-27380	· RETAINER	1	SN:B10001--
23	723-11-28361	· SPRING	1	SN:B10001--
24	723-11-27551	· BOLT	1	SN:B10001--
25	723-11-28750	· SPRING	1	SN:B10001--
26	723-11-27370	· RETAINER	1	SN:B10001--
27	723-11-28730	· SPRING	1	SN:B10001--
28	723-11-37580	· SPRING	1	SN:B10001--
29	723-11-37820	· SPRING	1	SN:B10999--
	□723-11-37570	· SPRING	1	SN:B10001--B10998
30	(NSS)	· SPRING	1	SN:B10001--

H0380-02A0 CONTROL VALVE 5-SPOOL (2/6)

Item	Part No.	Description	Qty	Options
31	723-11-27390	· RETAINER	1	SN:B10001--
32	723-11-27510	· PLATE	1	SN:B10001--
33	723-11-27520	· PLATE	1	SN:B10001--
34	722-12-19120	· O-RING	10	SN:B10001--
35	01252-60640	· BOLT	5	SN:B10001--
36	01252-60650	· BOLT	2	SN:B10001--
37	700-22-11910	· BOLT	2	SN:B10001--
38	01252-60620	· BOLT	6	SN:B10001--
39	01252-60630	· BOLT	2	SN:B10001--

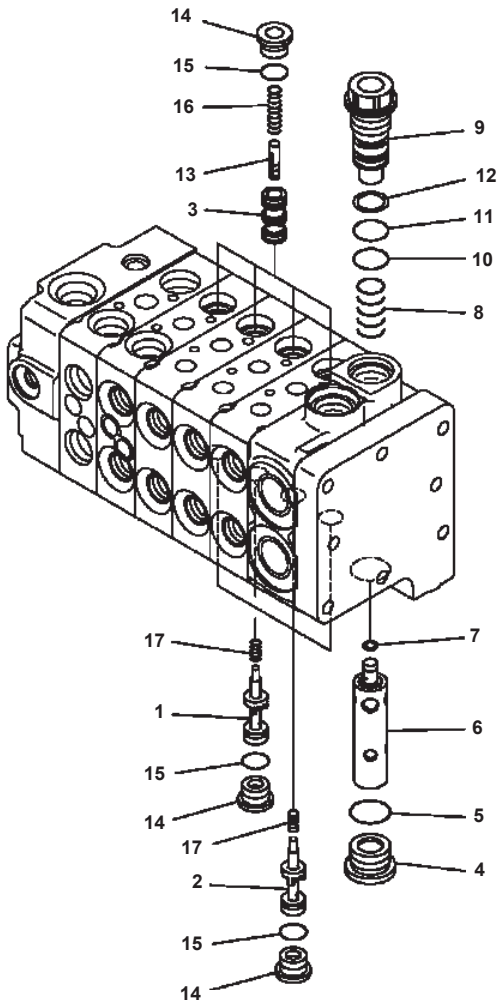

H0380-03A0 CONTROL VALVE 5-SPOOL (3/6)

Item	Part No.	Description	Qty	Options
		VALVE, 5-SPOOL (SEE FIG. H0380-01A0)	1	SN:B10001--
1	(NSS)	· VALVE	1	SN:B10001--
2	(NSS)	· VALVE	3	SN:B10001--
3	(NSS)	· VALVE	4	SN:B10001--
4	(NSS)	· PLUG	1	SN:B10001--
5	(NSS)	· O-RING	1	SN:B10001--
6	(NSS)	· SPOOL	1	SN:B10999--
	(NSS)	· SPOOL	1	SN:B10001--B10998
7	(NSS)	· SEAL	1	SN:B10001--
8	723-11-37610	· SPRING	1	SN:B10001--
9	723-11-25380	· SLEEVE	1	SN:B10001--
10	720-68-19760	· O-RING	1	SN:B10001--
11	723-11-18150	· O-RING	1	SN:B10001--
12	723-11-18160	· RING	1	SN:B10001--
13	(NSS)	· PISTON	4	SN:B10001--
14	723-11-15110	· PLUG	8	SN:B10001--
15	07002-11623	· O-RING	8	SN:B10001--
16	723-11-16130	· SPRING	4	SN:B10001--
17	723-11-15130	· SPRING	4	SN:B10001--

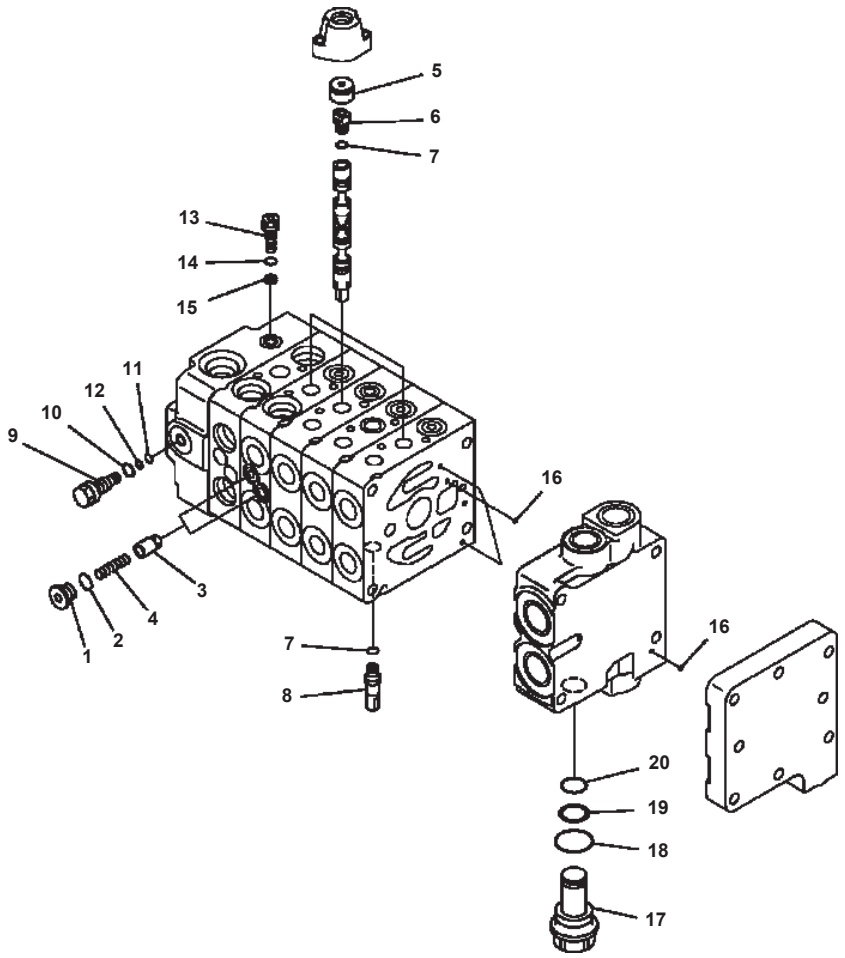

H0380-04A0 CONTROL VALVE 5-SPOOL (4/6)

Item	Part No.	Description	Qty	Options
		VALVE, 5-SPOOL (SEE FIG. H0380-01A0)	1	SN:B10001--
1	723-11-18190	· PLUG	2	SN:B10001--
2	07002-11023	· O-RING	2	SN:B10001--
3	723-11-18170	· VALVE	2	SN:B10001--
4	723-11-18180	· SPRING	2	SN:B10001--
5	723-11-17431	· RETAINER	3	SN:B10001--
6	723-11-17450	· PLUG	3	SN:B10001--
7	07002-10823	· O-RING	4	SN:B10001--
8	723-11-27540	· PLUG	1	SN:B10001--
9	723-11-18850	· PLUG	1	SN:B10001--
10	07002-11023	· O-RING	1	SN:B10001--
11	07000-11004	· O-RING	1	SN:B10001--
12	07001-01004	· RING	1	SN:B10001--
13	(NSS)	· ORIFICE	1	SN:B10001--
14	07002-10823	· O-RING	1	SN:B10001--
15	(NSS)	· RING	1	SN:B10001--
16	702-21-54260	· O-RING	4	SN:B10001--
17	723-11-29361	· PLUG	1	SN:B10001--
18	07000-13024	· O-RING	1	SN:B10001--
19	700-80-64220	· RING	1	SN:B10001--
20	700-22-11410	· O-RING	1	SN:B10001--

CMZ00145

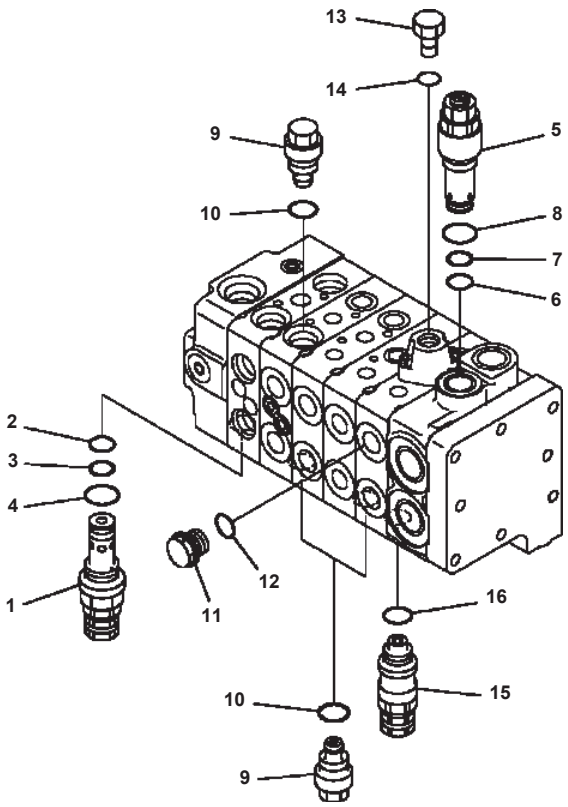

D51EX/PX-22 S/N B10001-UP

H0380-05A0 CONTROL VALVE 5-SPOOL (5/6)

Item	Part No.	Description	Qty	Options
		VALVE, 5-SPOOL (SEE FIG. H0380-01A0)	1	SN:B10001--
1	723-10-51100	· VALVE ASSEMBLY, RELIEF	1	SN:B10001--
2	700-22-11410	· · O-RING	1	SN:B10001--
3	700-80-64220	· · RING	1	SN:B10001--
4	07000-13024	· · O-RING	1	SN:B10001--
5	723-10-41100	· VALVE ASSEMBLY, RELIEF	1	SN:B10001--
6	700-22-11410	· · O-RING	1	SN:B10001--
7	700-80-64220	· · RING	1	SN:B10001--
8	07002-12434	· · O-RING	1	SN:B10001--
9	723-10-80200	· VALVE ASSEMBLY, SUCTION	3	SN:B10001--
10	07002-12034	· · O-RING	1	SN:B10001--
11	709-32-11930	· PLUG	1	SN:B10001--
12	07002-11823	· O-RING	1	SN:B10001--
13	07040-11409	· PLUG	1	SN:B10001--
14	07002-11423	· O-RING	1	SN:B10001--
15	723-10-21100	· VALVE ASSEMBLY, SUCTION	1	SN:B10001--
16	07002-12034	· · O-RING	1	SN:B10001--

Ref. H0380-05A0 Page H-107

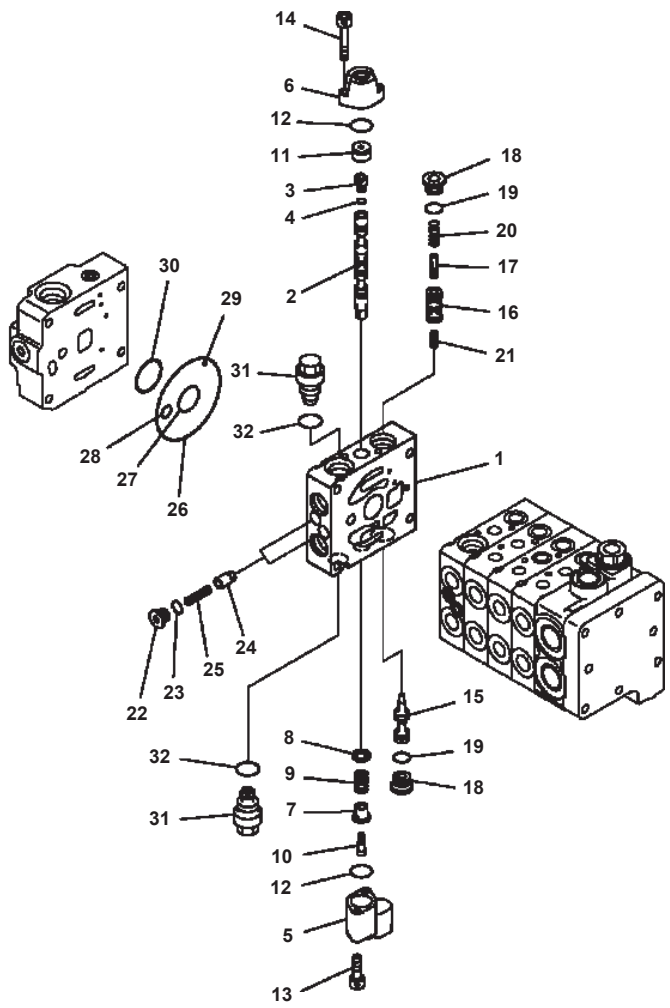

H0380-06A0 CONTROL VALVE 5-SPOOL (6/6)

Item	Part No.	Description	Qty	Options
		VALVE, 5-SPOOL (SEE FIG. H0380-01A0)	1	SN:B10001--
	723-11-01890	· VALVE SUB ASSEMBLY	1	SN:B10001--
1	(NSS)	· · BLOCK, VALVE	1	SN:B10001--
2	(NSS)	· · SPOOL	1	SN:B10001--
3	723-11-17450	· · PLUG	1	SN:B10001--
4	07002-10823	· · O-RING	1	SN:B10001--
5	723-11-17370	· · CASE	1	SN:B10001--
6	723-11-17410	· · CASE	1	SN:B10001--
7	723-11-17353	· · RETAINER	1	SN:B10001--
8	723-11-17330	· · RETAINER	1	SN:B10001--
9	723-11-28740	· · SPRING	1	SN:B10001--
10	723-11-17361	· · BOLT	1	SN:B10001--
11	723-11-17431	· · RETAINER	1	SN:B10001--
12	722-12-19120	· · O-RING	2	SN:B10001--
13	01252-60640	· · BOLT	2	SN:B10001--
14	01252-60620	· · BOLT	2	SN:B10001--
15	(NSS)	· · VALVE	1	SN:B10001--
16	(NSS)	· · VALVE	1	SN:B10001--
17	(NSS)	· · PISTON	1	SN:B10001--
18	723-11-15110	· · PLUG	2	SN:B10001--
19	07002-11623	· · O-RING	2	SN:B10001--
20	723-11-16130	· · SPRING	1	SN:B10001--
21	723-11-15130	· · SPRING	1	SN:B10001--
22	723-11-18190	· · PLUG	2	SN:B10001--
23	07002-11023	· · O-RING	2	SN:B10001--
24	723-11-18170	· · VALVE	2	SN:B10001--
25	723-11-18180	· · SPRING	2	SN:B10001--
26	07000-12100	· · O-RING	1	SN:B10001--
27	723-11-19110	· · O-RING	1	SN:B10001--
28	723-11-19130	· · O-RING	1	SN:B10001--
29	07000-11007	· · O-RING	1	SN:B10001--
30	723-11-19150	· · RING	1	SN:B10001--
31	723-20-80100	· · VALVE, SUCTION	2	SN:B10001--
32	07002-12034	· · · O-RING	1	SN:B10001--

CMZ00147

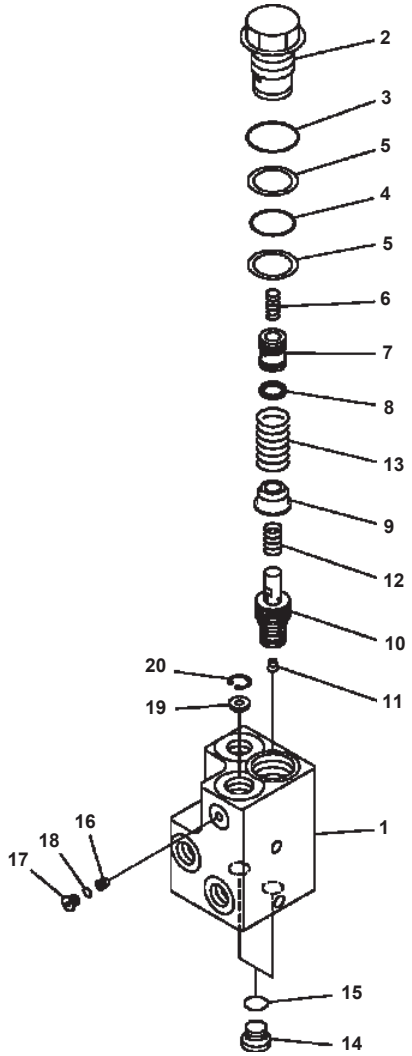

D51EX/PX-22 S/N B10001-UP

H0390-01A0 QUICK DROP VALVE

Item	Part No.	Description	Qty	Options
	702-21-11900	VALVE ASSEMBLY, QUICK DROP	1	SN:B10001--
1	(NSS)	· BODY	1	SN:B10001--
2	702-21-81540	· PLUG	1	SN:B10001--
3	07002-14234	· O-RING	1	SN:B10001--
4	07000-13032	· O-RING	1	SN:B10001--
5	702-21-81610	· RING	2	SN:B10001--
6	723-36-41930	· SPRING	1	SN:B10001--
7	(NSS)	· PISTON	1	SN:B10001--
8	702-21-35130	· SEAL	1	SN:B10001--
9	702-21-81560	· RETAINER	1	SN:B10001--
10	(NSS)	· VALVE	1	SN:B10001--
11	02720-10104	· PLUG	1	SN:B10001--
12	702-21-81570	· SPRING	1	SN:B10001--
13	702-21-81580	· SPRING	1	SN:B10001--
14	720-2M-11550	· PLUG	2	SN:B10001--
15	07002-12034	· O-RING	2	SN:B10001--
16	(NSS)	· ORIFICE	1	SN:B10001--
17	723-11-18190	· PLUG	1	SN:B10001--
18	07002-11023	· O-RING	1	SN:B10001--
19	702-21-81590	· ORIFICE	1	SN:B10001--
20	04065-02012	· RING	1	SN:B10001--

Ref. H0390-01A0 Page H-111

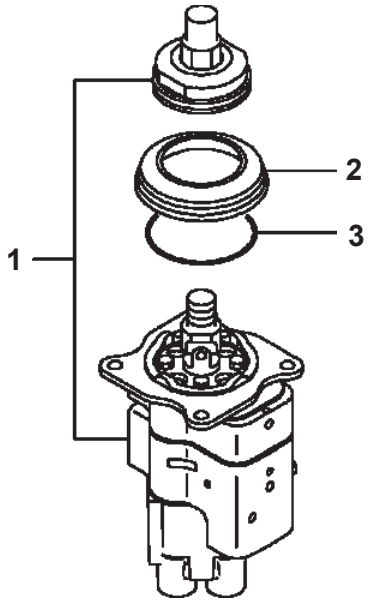

H0390-10A0 PPC VALVE

Item	Part No.	Description	Qty	Options
1	702-16-01992	VALVE ASSEMBLY, PILOT	1	SN:B10001--
2	702-16-58820	· BOOT	1	SN:B10001--
3	07000-12070	· O-RING	1	SN:B10001--

JY008977

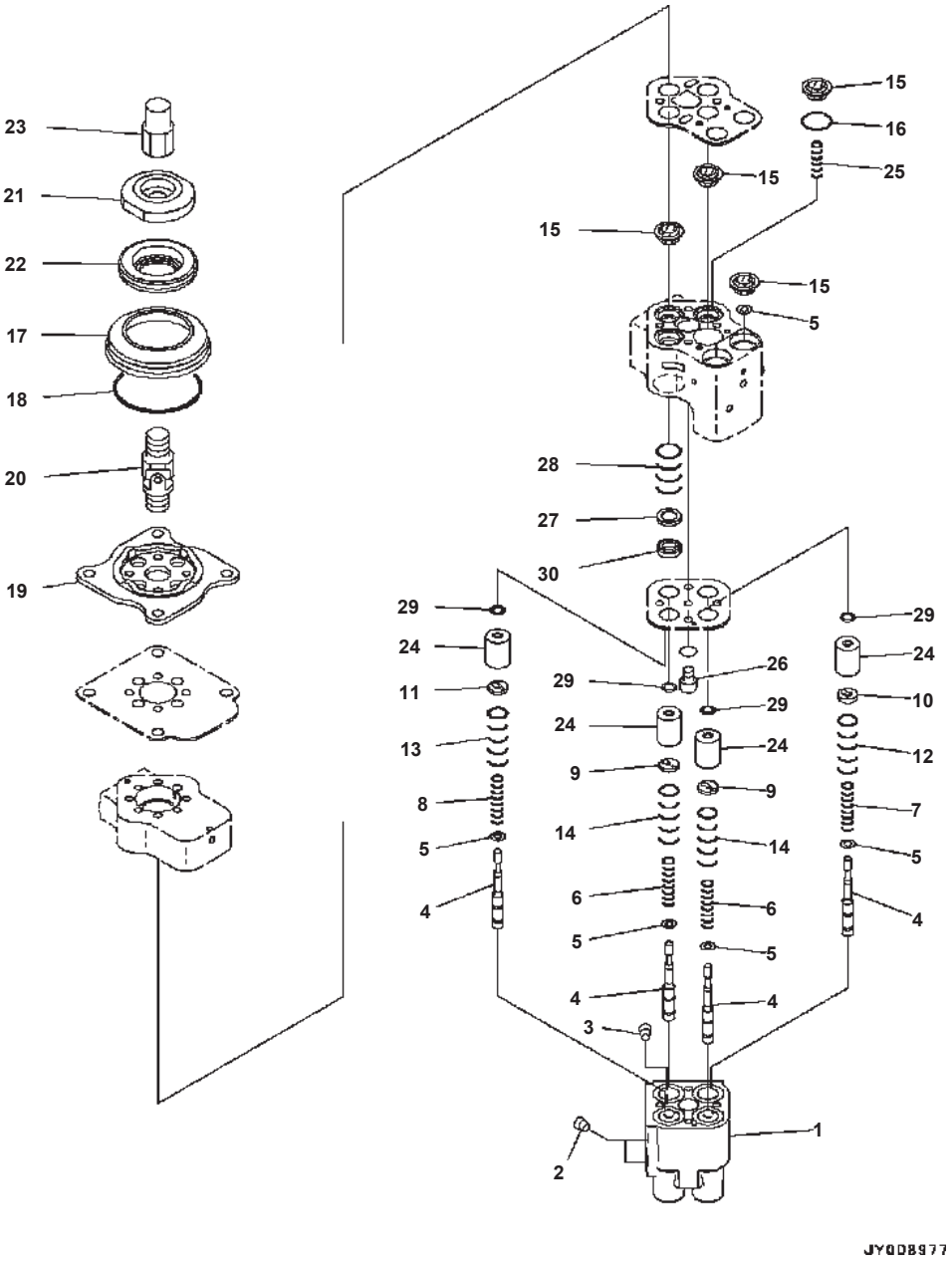

D51EX/PX-22 S/N B10001-UP

H0390-10A1 PPC VALVE INNER PARTS (1/2)

Item	Part No.	Description	Qty	Options
	702-16-01992	VALVE ASSEMBLY, PPC	1	SN:B10001--
1	☆	· VALVE BODY	1	SN:B10001--
2	708-18-12570	· PLUG	2	SN:B10001--
3	☆	· PLUG	2	SN:B10001--
4	☆	· VALVE	4	SN:B10001--
5	702-16-51140	· SHIM, T=0,30MM	6	SN:B10001--
6	702-16-59620	· SPRING	2	SN:B10001--
7	702-16-59630	· SPRING	1	SN:B10001--
8	☆	· SPRING	1	SN:B10001--
9	702-16-54960	· RETAINER	2	SN:B10001--
10	702-16-53530	· RETAINER	1	SN:B10001--
11	702-16-57310	· RETAINER	1	SN:B10001--
12	702-16-53160	· SPRING	1	SN:B10001--
13	702-16-55630	· SPRING	1	SN:B10001--
14	702-16-53150	· SPRING	2	SN:B10001--
15	702-16-51270	· SEAL	6	SN:B10001--
16	07000-12020	· O-RING	3	SN:B10001--
17	☆	· BOOT	1	SN:B10001--
18	07000-12070	· O-RING	1	SN:B10001--
19	☆	· PLATE	1	SN:B10001--
20	702-16-51240	· UNIVERSAL JOINT	1	SN:B10001--
21	☆	· PLUG	1	SN:B10001--
22	☆	· DISC	1	SN:B10001--
23	☆	· CAP	1	SN:B10001--
24	☆	· PISTON	4	SN:B10001--
25	702-16-55491	· SPRING	1	SN:B10001--
26	702-16-55520	· ORIFICE	1	SN:B10001--
27	702-16-55530	· COLLAR	1	SN:B10001--
28	702-16-55540	· SPRING	1	SN:B10001--
29	702-16-55550	· SHIM	4	SN:B10001--
30	702-16-55560	· RETAINER	1	SN:B10001--

Ref. H0390-10A1 Page H-113A

JY008978

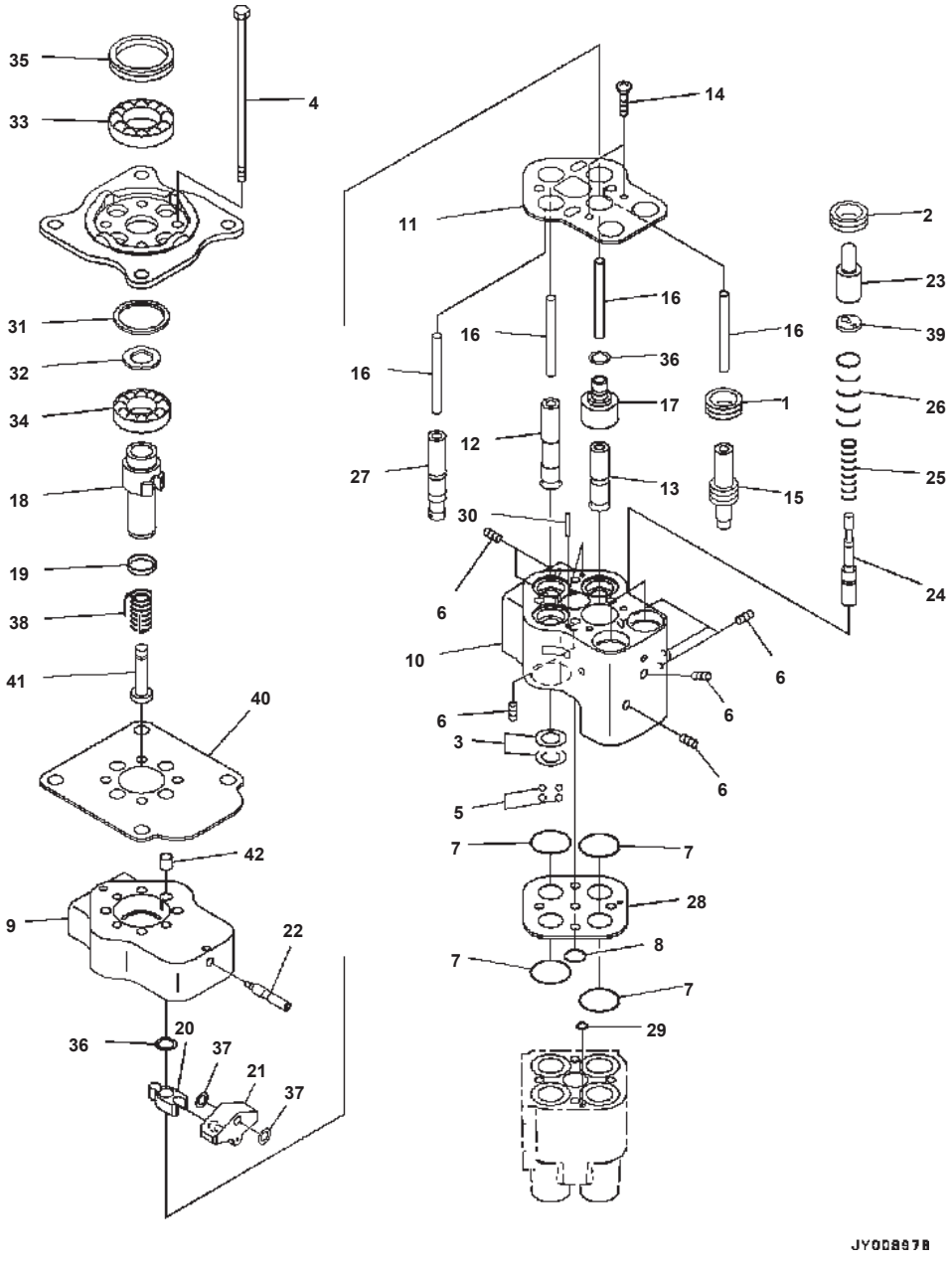

D51EX/PX-22 S/N B10001-UP

H0390-10A2 PPC VALVE INNER PARTS (2/2)

Item	Part No.	Description	Qty	Options
	702-16-01992	VALVE ASSEMBLY, PPC	1	SN:B10001--
1	702-16-55570	COLLAR	1	SN:B10001--
2	702-16-54170	COLLAR	2	SN:B10001--
3	702-16-55580	SPACER	4	SN:B10001--
4	702-16-59680	BOLT	4	SN:B10001--
5	702-16-55590	BALL	13	SN:B10001--
6	☆	SCREW	8	SN:B10001--
7	702-21-38460	O-RING	8	SN:B10001--
8	702-16-55610	O-RING	2	SN:B10001--
9	☆	BLOCK	1	SN:B10001--
10	☆	BLOCK	1	SN:B10001--
11	☆	PLATE	1	SN:B10001--
12	☆	ROD	1	SN:B10001--
13	☆	ROD	1	SN:B10001--
14	01252-60410	BOLT, HEXAGON SOCKET HEAD	2	SN:B10001--
15	☆	PISTON	1	SN:B10001--
16	☆	ROD	4	SN:B10001--
17	☆	SLEEVE	1	SN:B10001--
18	☆	SHAFT	1	SN:B10001--
19	☆	BUSHING	1	SN:B10001--
20	☆	LEVER	1	SN:B10001--
21	☆	LEVER	1	SN:B10001--
22	☆	SHAFT	1	SN:B10001--
23	☆	PISTON	2	SN:B10001--
24	☆	SPOOL	2	SN:B10001--
25	☆	SPRING	2	SN:B10001--
26	☆	SPRING	2	SN:B10001--
27	☆	PISTON	1	SN:B10001--
28	☆	PLATE	1	SN:B10001--
29	700-80-62380	O-RING	2	SN:B10001--
30	708-7R-13540	PIN	2	SN:B10001--
31	☆	WASHER	1	SN:B10001--
32	☆	WASHER	1	SN:B10001--
33	☆	BEARING	1	SN:B10001--
34	☆	BEARING	1	SN:B10001--
35	☆	SEAL	1	SN:B10001--
36	☆	SHIM	2	SN:B10001--
37	☆	SHIM	2	SN:B10001--
38	☆	SPRING	1	SN:B10001--
39	702-16-54960	RETAINER	2	SN:B10001--
40	☆	PLATE	1	SN:B10001--

Ref. H0390-10A2 Page H-113B

H0390-10A2 PPC VALVE INNER PARTS (2/2)

Item	Part No.	Description	Qty	Options
41	☆	BOSS	1	SN:B10001--
42	☆	BUSHING	1	SN:B10001--

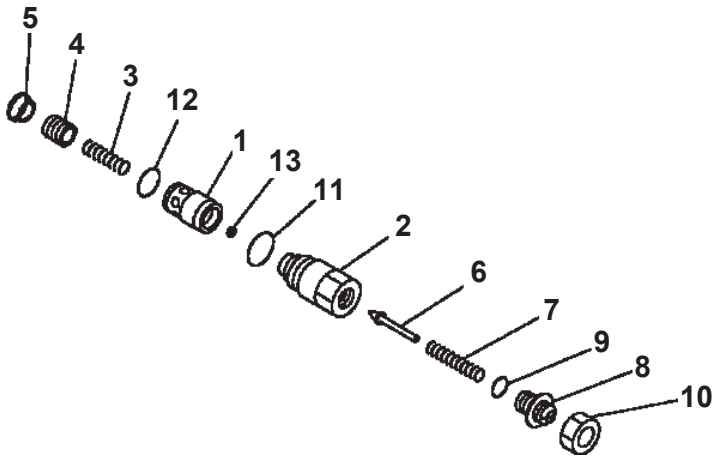

D51EX/PX-22 S/N B10001-UP

H0390-11A0 RELIEF VALVE

Item	Part No.	Description	Qty	Wt.	Options
	720-2M-03535	VALVE ASSEMBLY, RELIEF	1		SN:B10001--
1	706-86-53511	· SLEEVE	1	F1	SN:B10001--
2	706-86-53520	· SLEEVE	1	F1	SN:B10001--
3	708-1H-24640	· SPRING	1	F1	SN:B10001--
4	720-2M-16310	· VALVE	1	F1	SN:B10001--
5	708-1H-24620	· RETAINER	1	F1	SN:B10001--
6	700-80-61190	· POPPET	1	F1	SN:B10001--
7	708-1H-24650	· SPRING	1	F1	SN:B10001--
8	709-10-51560	· SCREW	1	F1	SN:B10001--
9	07000-B2011	· O-RING	1		SN:B10001--
10	01582-11411	· NUT	1		SN:B10001--
11	07002-62434	· O-RING	1		SN:B10001--
12	706-86-53530	· O-RING	1		SN:B10001--
13	702-21-55760	· FILTER	1		SN:B10001--
		F1 - ONLY SUPPLIED TO AUTHORIZED DISTRIBUTORS.			

Ref. H0390-11A0 Page H-115

CMZ00150

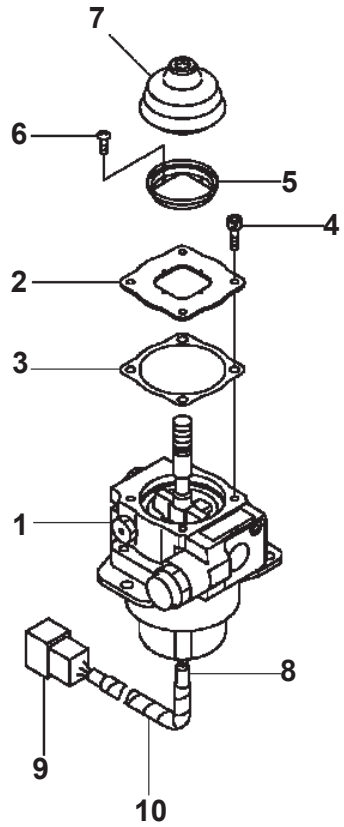

CMZ00150

D51EX/PX-22 S/N B10001-UP

H0390-12A0 ELECTRIC LEVER ASSEMBLY

Item	Part No.	Description	Qty	Options
1	702-16-02223	LEVER ASSEMBLY, ELECTRIC	1	SN:B10789--
	□702-16-02222	LEVER ASSEMBLY, ELECTRIC	1	SN:B10316--B10788
	□702-16-02221	LEVER ASSEMBLY, ELECTRIC	1	SN:B10001--B10315
2	702-16-62730	· PLATE	1	SN:B10316--
	□702-16-62550	· PLATE	1	SN:B10001--B10315
3	702-16-62740	· GASKET	1	SN:B10316--
	□702-16-62510	· GASKET	1	SN:B10001--B10315
4	01252-60512	· BOLT	4	SN:B10001--
5	702-16-59560	· BRACKET	1	SN:B10001--
6	702-16-61980	· SCREW	4	SN:B10001--
7	702-16-59330	· BOOT	1	SN:B10001--
8	702-16-62690	· TUBE	1	SN:B10001--
9	08192-28812	· CONNECTOR	1	SN:B10001--
10	08017-30702	· CONDUIT	1	SN:B10001--

Ref. H0390-12A0 Page H-117

JY008975

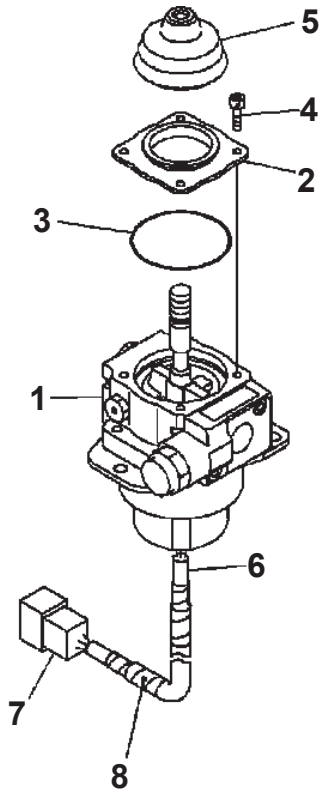

D51EX/PX-22 S/N B10001-UP

H0390-12A0A ELECTRIC LEVER ASSEMBLY (#B10316-)

Item	Part No.	Description	Qty	Options
1	702-16-02320	LEVER ASSEMBLY, ELECTRIC	1	SN:B12474--
	☒702-16-02224	LEVER ASSEMBLY, ELECTRIC	1	SN:B11838--B12473
	☐702-16-02223	LEVER ASSEMBLY, ELECTRIC	1	SN:B10789--B11837
	☐702-16-02222	LEVER ASSEMBLY, ELECTRIC	1	SN:B10316--B10788
2	702-16-62730	· PLATE	1	SN:B10316--
3	702-16-62740	· GASKET	1	SN:B10316--
4	01252-60512	· BOLT	4	SN:B10001--
5	702-16-59330	· BOOT	1	SN:B10001--
6	702-16-62690	· TUBE	1	SN:B10001--
7	08192-28812	· CONNECTOR	1	SN:B10001--
8	08017-30702	· CONDUIT	1	SN:B10001--

Ref. H0390-12A0A Page H-118

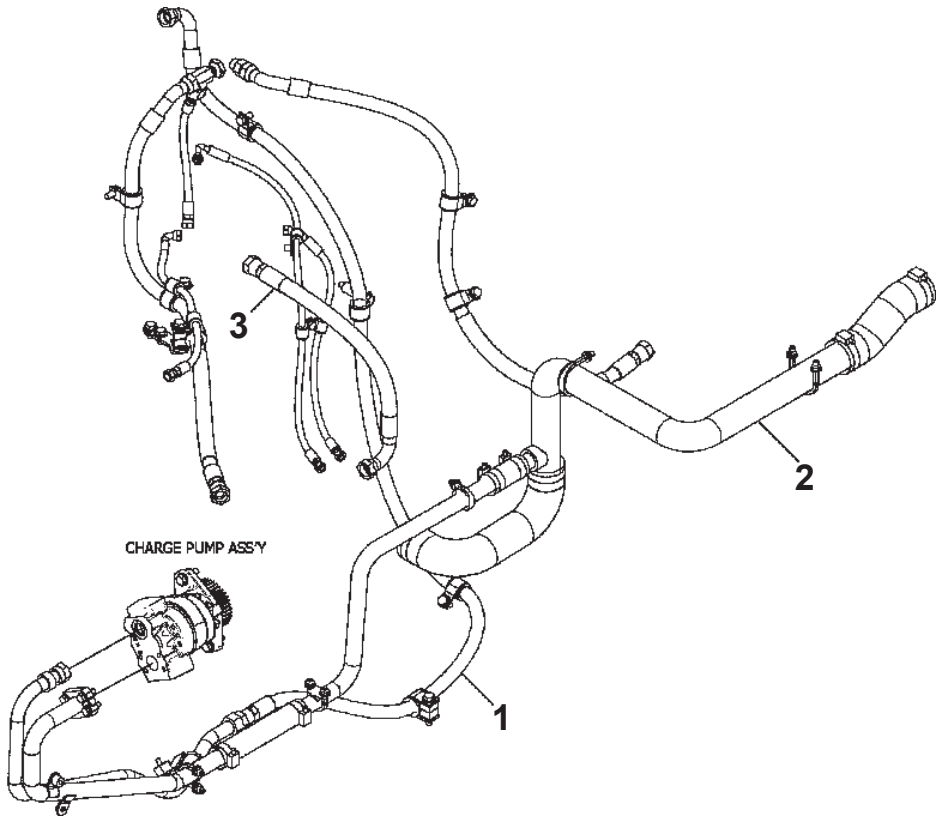

H0400-01A0 HYDRAULIC PIPING HYDRAULIC PUMP LINES

Item	Description	Options
1	CHARGE LINE (SEE FIG. H0400-01A1)	SN:B10001--
2	SUCTION LINE (SEE FIG. H0400-01A2)	SN:B10001--
3	WORK EQUIP. LINE (SEE FIG. H0400-01A3)	SN:B10001--

CVPB00230

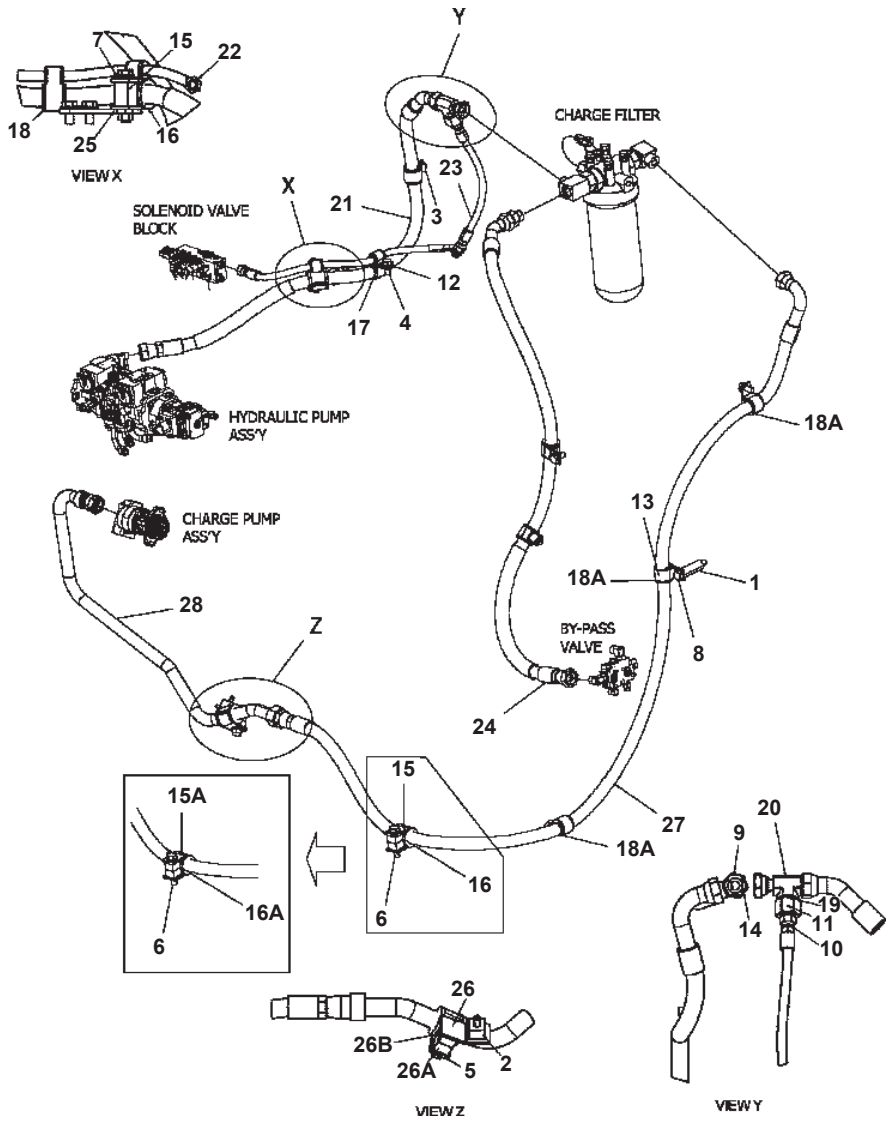

D51EX/PX-22 S/N B10001-UP

H0400-01A1 HYDRAULIC PIPING PUMP CHARGE LINE

Item	Part No.	Description	Qty	Options
1	175-61-17240	COLLAR	1	SN:B10001--
2	01010-80840	BOLT	1	SN:B10001--
	01643-30823	WASHER	1	SN:B10001--
3	01010-81220	BOLT	1	SN:B10001--
	01643-31232	WASHER	1	SN:B10001--
4	01010-81225	BOLT	7	SN:B10001--
	01643-31232	WASHER	7	SN:B10001--
5	01010-81240	BOLT	1	SN:B10001--
	01643-31232	WASHER	1	SN:B10001--
6	01010-81270	BOLT	1	SN:B11547--
	□01010-81265	BOLT	1	SN:B10001--B11546
	01643-31232	WASHER	1	SN:B10001--
7	01010-81270	BOLT	1	SN:B10001--
	01643-31232	WASHER	1	SN:B10001--
8	01010-81280	BOLT	1	SN:B10001--
	01643-31232	WASHER	1	SN:B10001--
9	02781-00628	UNION	1	SN:B10001--
10	02896-11009	O-RING	1	SN:B10001--
11	02896-11018	O-RING	4	SN:B10001--
12	04434-52112	CLIP	2	SN:B10001--
13	04434-53412	CLIP	7	SN:B10001--
14	07002-12434	O-RING	1	SN:B10001--
15	07094-10518	CLAMP	2	SN:B11547--
	□07094-10518	CLAMP	4	SN:B10001--B11546
15A	07094-10620	CLAMP	2	SN:B11547--
16	07095-00524	CUSHION	1	SN:B11547--
	□07095-00524	CUSHION	2	SN:B10001--B11546
16A	07095-00628	CUSHION	1	SN:B11547--
17	07095-20314	CUSHION	2	SN:B10001--
18	07095-20625	CUSHION	4	SN:B11547--
	□07095-20625	CUSHION	7	SN:B10001--B11546
18A	07095-20627	CUSHION	3	SN:B11547--
19	12Y-62-11321	UNION, REDUCER	1	SN:B10001--
20	12Y-62-11331	TEE	1	SN:B10001--
21	12Y-62-13732	HOSE ASSEMBLY	1	SN:B10001--
22	12Y-62-13742	HOSE ASSEMBLY	1	SN:B10001--
23	12Y-62-13750	HOSE ASSEMBLY	1	SN:B10001--
24	12Y-62-13761	HOSE ASSEMBLY	1	SN:B10001--
25	12Y-62-13890	BRACKET	1	SN:B10001--
26	12Y-62-14010	BRACKET	1	SN:B10001--
26A	07094-10518	BRACKET	1	SN:B14582--

Ref. H0400-01A1 Page H-121

H0400-01A1 HYDRAULIC PIPING PUMP CHARGE LINE

Item	Part No.	Description	Qty	Options
26B	07095-00526	CUSHION	1	SN:B14582--
27	12Y-62-14023	HOSE ASSEMBLY	1	SN:B11547--
	□12Y-62-14022	HOSE ASSEMBLY	1	SN:B10001--B11546
28	12Y-62-14030	TUBE ASSEMBLY	1	SN:B10001--

CVPB00075

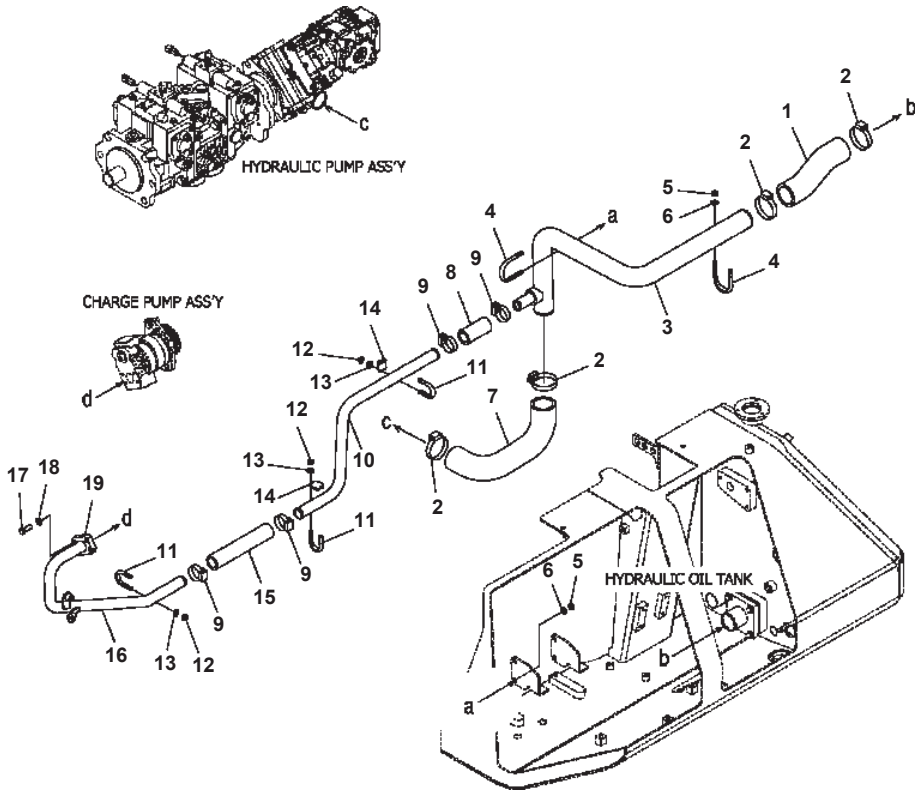

D51EX/PX-22 S/N B10001-UP

H0400-01A2 HYDRAULIC PIPING PUMP SUCTION LINE

Item	Part No.	Description	Qty	Options
1	12Y-62-12421	HOSE, FORMED	1	SN:B10001--
2	07289-00070	CLAMP, HOSE	4	SN:B10001--
3	12Y-62-11414	TUBE	1	SN:B10001--
4	07283-36155	U-BOLT	2	SN:B10001--
5	01597-01009	NUT	4	SN:B10001--
6	01643-31032	WASHER	4	SN:B10001--
7	12Y-62-11442	HOSE, FORMED	1	SN:B10001--
8	07260-03210	HOSE	1	SN:B10001--
9	07289-00045	CLAMP, HOSE	4	SN:B10001--
10	12Y-62-11472	TUBE	1	SN:B10001--
11	07283-33442	U-BOLT	3	SN:B10001--
12	01597-01009	NUT	6	SN:B10001--
13	01643-31032	WASHER	6	SN:B10001--
14	07283-53444	SEAT	2	SN:B10001--
15	12Y-62-11421	HOSE	1	SN:B10001--
16	12Y-62-11754	TUBE ASSEMBLY W/FLANGE	1	SN:B10115--
	□12Y-62-11753	TUBE ASSEMBLY W/FLANGE	1	SN:B10001--B10114
	07000-13032	O-RING, FLANGE	1	SN:B10001--
17	01010-81035	BOLT, FLANGE	4	SN:B10001--
18	01643-31032	WASHER	4	SN:B10001--
19	07040-10807	PLUG	1	SN:B10001--B10114
	07002-10803	O-RING, PLUG	1	SN:B10001--B10114

Ref. H0400-01A2 Page H-123

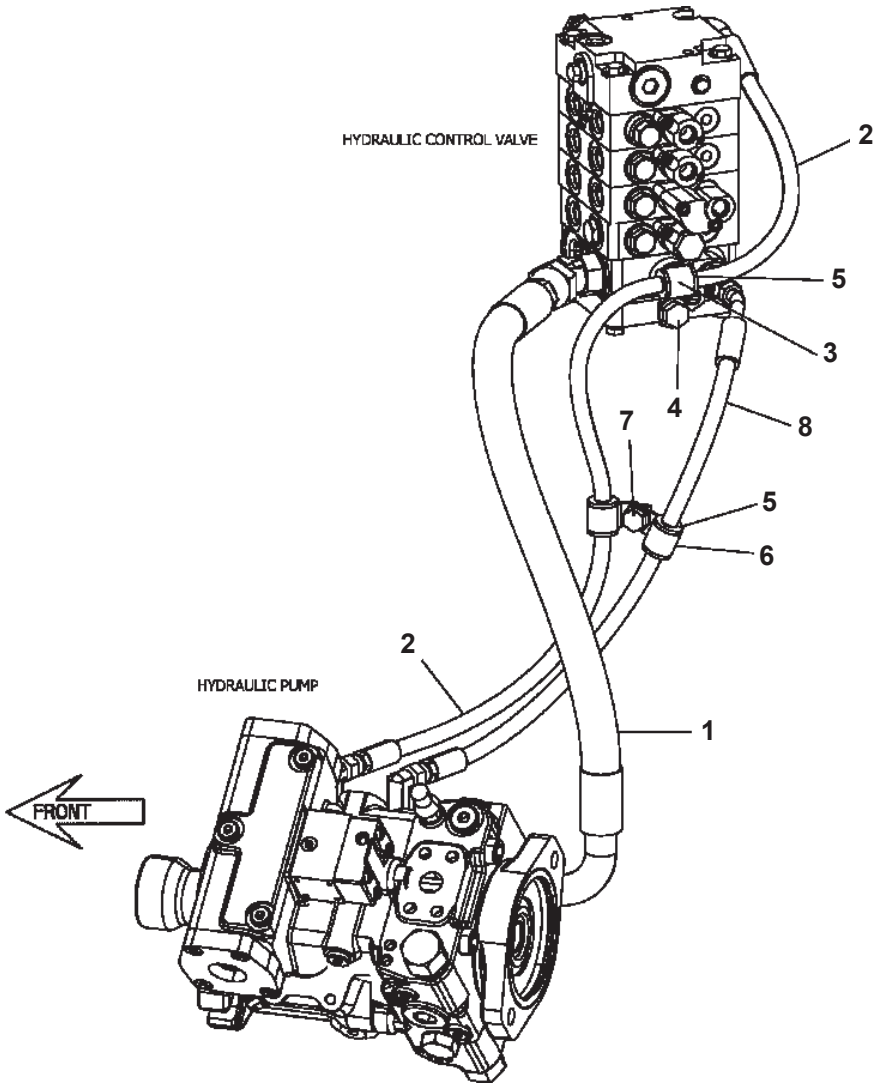

H0400-01A3 HYDRAULIC PIPING PUMP WORK EQUIPMENT LINE

Item	Part No.	Description	Qty	Options
1	12Y-62-13791	HOSE ASSEMBLY	1	SN:B10001--
2	12Y-62-13772	HOSE ASSEMBLY	1	SN:B10001--
3	04434-51912	CLAMP, HOSE	1	SN:B10001--
4	01010-81220	BOLT	1	SN:B10001--
	01643-31232	WASHER	1	SN:B10001--
5	07095-20213	CUSHION	3	SN:B10001--
6	04434-51910	CLAMP, HOSE	2	SN:B10001--
7	01010-81020	BOLT	1	SN:B10001--
	01643-31032	WASHER	1	SN:B10001--
8	12Y-62-13782	HOSE ASSEMBLY	1	SN:B10001--

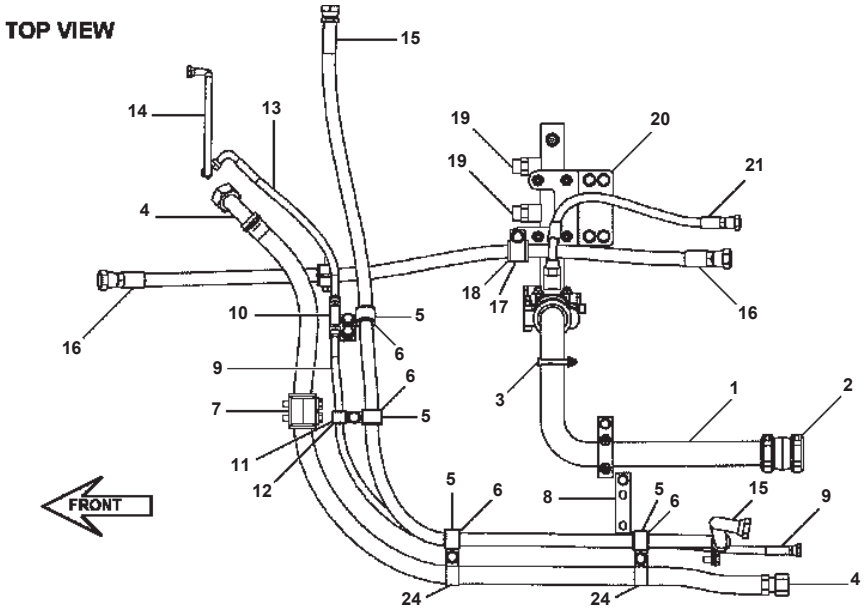

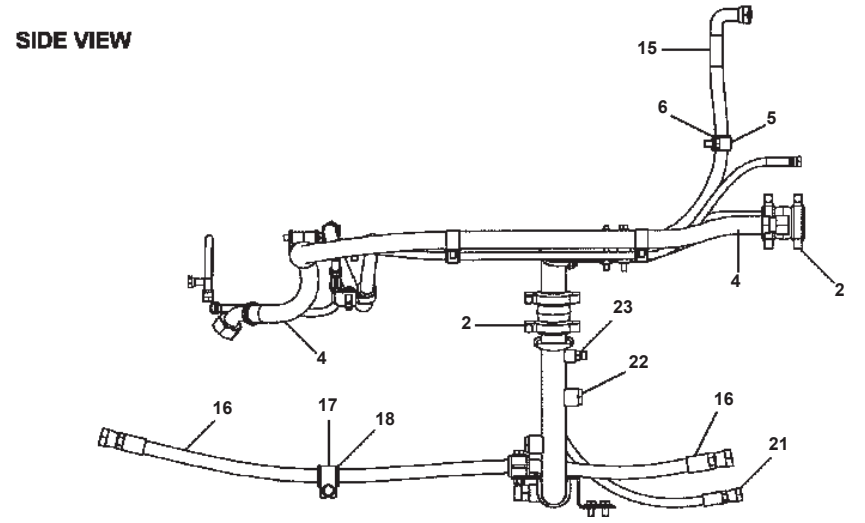

H0410-01A0 HYDRAULIC PIPING DRAIN LINE (1/3)

Item	Part No.	Description	Qty	Options
1	12Y-62-12442	TUBE	1	SN:B10001--
2	12Y-62-12770	COUPLING	2	SN:B10001--
3	07283-35150	U-BOLT	3	SN:B10001--
	01643-31032	WASHER	6	SN:B10001--
	01597-01009	NUT	6	SN:B10001--
4	12Y-62-12780	HOSE ASSEMBLY	1	SN:B10001--
5	04434-53412	CLAMP, HOSE	5	SN:B10001--
	01010-81225	BOLT	4	SN:B10001--
	01643-31232	WASHER	4	SN:B10001--
6	07095-20627	CUSHION	5	SN:B10001--
7	07094-11024	CLAMP	2	SN:B10001--
	01010-81275	BOLT, MOUNT CLAMP	2	SN:B10001--
	01643-31232	WASHER	2	SN:B10001--
8	12Y-62-12860	BRACKET	1	SN:B10001--
	01010-81225	BOLT, MOUNT BRACKET	1	SN:B10001--
	01643-31232	WASHER	1	SN:B10001--
9	12Y-62-13611	HOSE ASSEMBLY	1	SN:B10001--
10	12Y-62-12690	BRACKET	1	SN:B10001--
	01010-81225	BOLT, MOUNT BRACKET	1	SN:B10001--
	01643-31232	WASHER	1	SN:B10001--
11	04434-52112	CLAMP, HOSE	3	SN:B10001--
12	07095-20314	CUSHION	3	SN:B10001--
13	12Y-62-13530	HOSE ASSEMBLY	1	SN:B10001--
14	12Y-62-13811	HOSE ASSEMBLY	1	SN:B10001--
15	12Y-62-13571	HOSE ASSEMBLY	1	SN:B10001--
16	12Y-62-13831	HOSE ASSEMBLY	1	SN:B10001--
17	07094-10518	CLAMP, HOSE	4	SN:B10001--
	01010-81265	BOLT, MOUNT CLAMP	2	SN:B10001--
	01643-31232	WASHER	2	SN:B10001--
18	07095-00526	CUSHION	2	SN:B10001--
19	02781-00628	UNION	2	SN:B10001--
	02896-11018	O-RING	2	SN:B10001--
	07002-12434	O-RING	2	SN:B10001--
20	12Y-62-12791	BRACKET	1	SN:B10001--
	01010-81225	BOLT, MOUNT BRACKET	4	SN:B10001--
	01643-31232	WASHER	4	SN:B10001--
21	12Y-62-13840	HOSE ASSEMBLY	1	SN:B10001--
22	07040-12412	PLUG	2	SN:B10001--
	07002-12434	O-RING	2	SN:B10001--
23	07002-11423	O-RING	2	SN:B10001--
24	04434-53212	CLAMP, HOSE	2	SN:B10001--

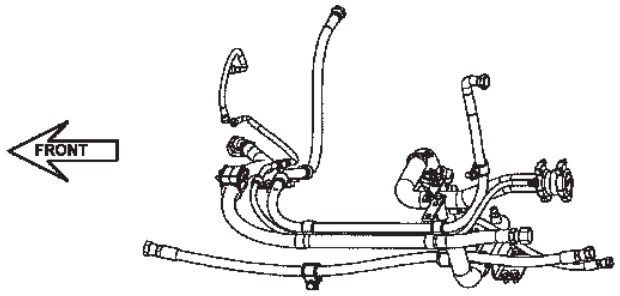

FRONT VIEW

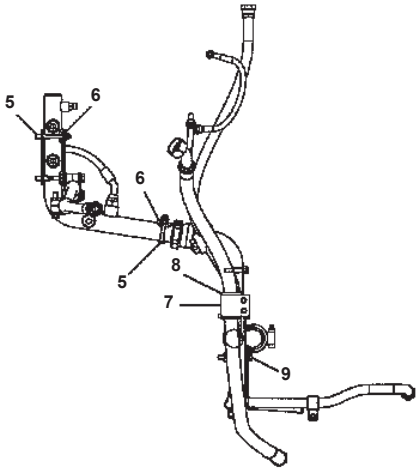

REAR VIEW

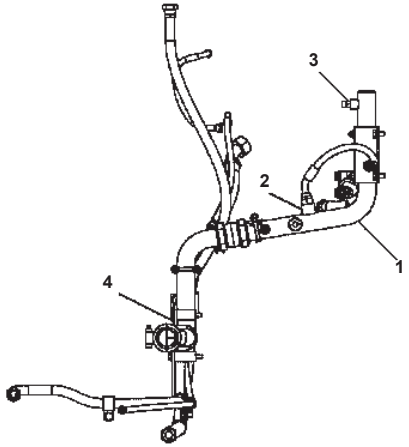

H0410-01A1 HYDRAULIC PIPING DRAIN LINE (2/3)

Item	Part No.	Description	Qty	Options
1	12Y-62-12451	TUBE	1	SN:B10001--
2	02781-0042A	UNION	1	SN:B10001--
	02896-11012	O-RING	1	SN:B10001--
	07002-12434	O-RING	1	SN:B10001--
3	02781-0031D	UNION	2	SN:B10001--
	02896-11009	O-RING	4	SN:B10001--
4	12Y-62-12960	BRACKET	1	SN:B10001--
	01010-81080	BOLT	1	SN:B10001--
	01643-31032	WASHER	1	SN:B10001--
5	07283-35150	U-BOLT	2	SN:B10001--
	01643-31032	WASHER	4	SN:B10001--
	01597-01009	NUT	4	SN:B10001--
6	07283-55161	SEAT	3	SN:B10001--
7	07094-11024	CLAMP	2	SN:B10001--
	01010-81275	BOLT, MOUNT CLAMP	2	SN:B10001--
	01643-31232	WASHER	2	SN:B10001--
8	07095-01033	CUSHION	1	SN:B10001--
9	01010-81090	BOLT	1	SN:B10001--
	01643-31032	WASHER	1	SN:B10001--

CVPB00079

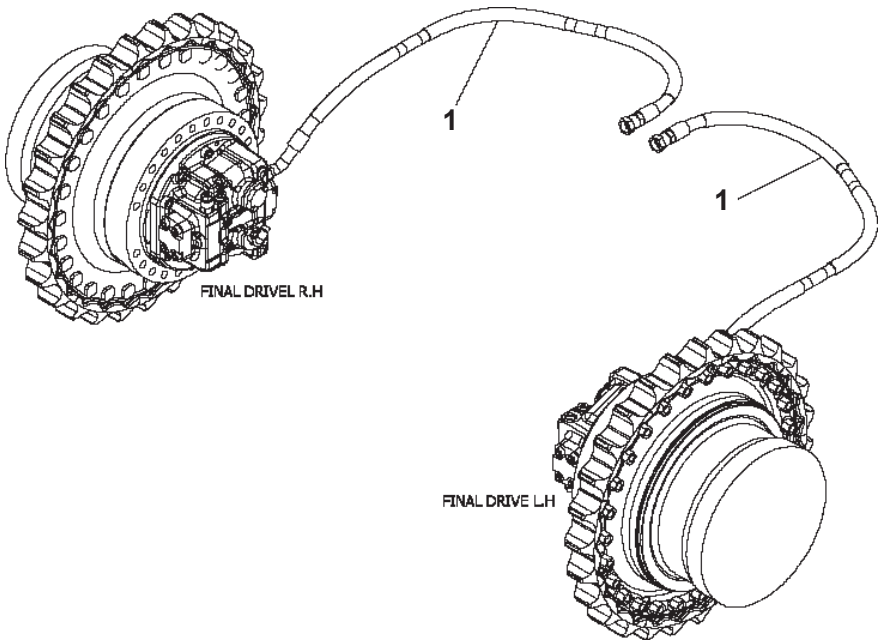

D51EX/PX-22 S/N B10001-UP

H0410-01A2 HYDRAULIC PIPING DRAIN LINE (3/3)

Item	Part No.	Description	Qty	Options
1	12Y-49-11521	HOSE ASSEMBLY	2	SN:B10001--

Ref. H0410-01A2 Page H-131

CVPB00080

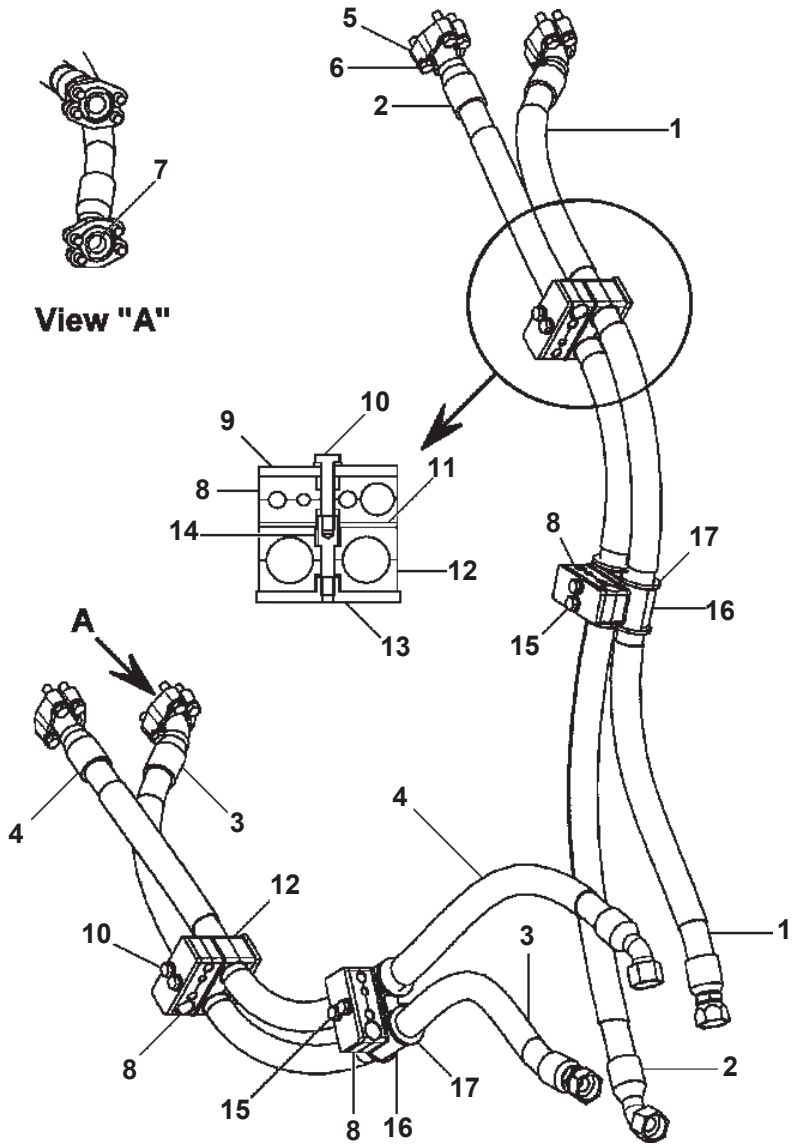

D51EX/PX-22 S/N B10001-UP

H0420-01A0 HYDRAULIC PIPING HST TRAVEL LINE

Item	Part No.	Description	Qty	Options
1	12Y-49-11262	HOSE ASSEMBLY W.COVER	1	SN:B10001--
2	12Y-49-11242	HOSE ASSEMBLY W.COVER	1	SN:B10001--
3	12Y-49-11272	HOSE ASSEMBLY W.COVER	1	SN:B10001--
4	12Y-49-11252	HOSE ASSEMBLY W.COVER	1	SN:B10001--
5	12Y-49-11480	FLANGE, SPLIT	8	SN:B10001--
6	07372-21245	BOLT, SPLIT FLANGE	16	SN:B10001--
	01643-51232	WASHER	16	SN:B10001--
7	12Y-62-13870	O-RING	4	SN:B10001--
8	12Y-49-11442	CLAMP, HOSE	8	SN:B10001--
9	12Y-49-11450	PLATE	4	SN:B10001--
10	01010-81055	BOLT, HOSE CLAMP	4	SN:B10001--
	01643-31032	WASHER	4	SN:B10001--
11	12Y-49-11551	PLATE	4	SN:B10001--
12	12Y-49-11432	CLAMP, HOSE	4	SN:B10001--
13	12Y-49-11421	SEAT, HOSE CLAMP	2	SN:B10001--
14	12Y-49-11491	BOLT, STACKING	8	SN:B10001--
15	01010-81050	BOLT, HOSE CLAMP	4	SN:B10001--
	01643-31032	WASHER	4	SN:B10001--
16	12Y-49-11540	CLAMP, HOSE	2	SN:B10001--
17	07095-01037	CUSHION	4	SN:B10001--

Ref. H0420-01A0 Page H-133

CVPB00081

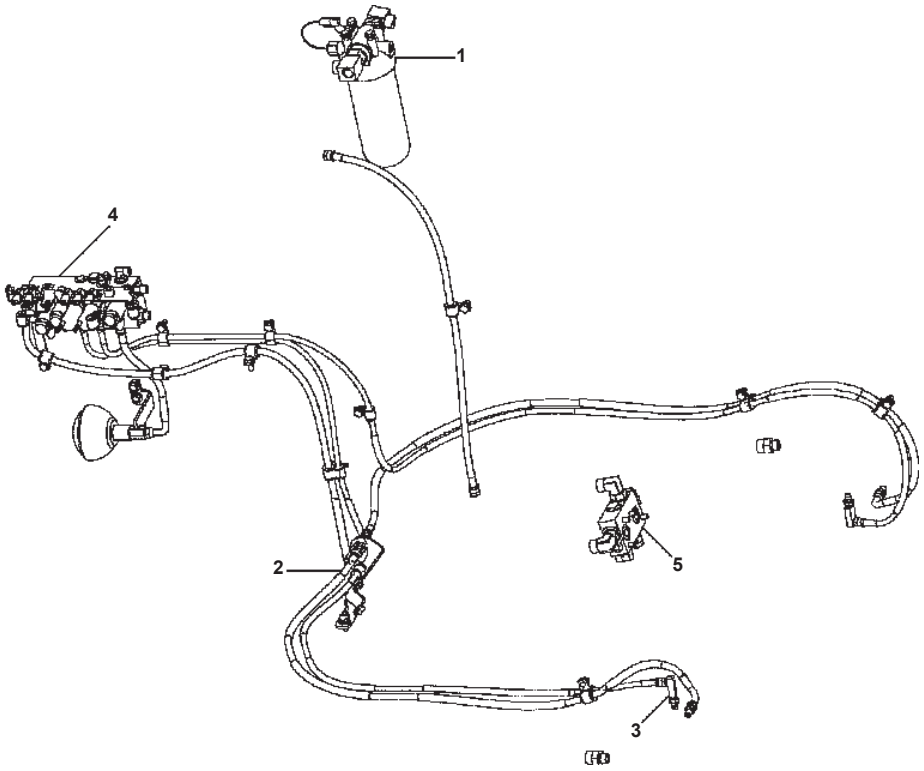

D51EX/PX-22 S/N B10001-UP

H0430-01A0 HYDRAULIC PIPING PPC LINES

Item	Description	Qty	Options
1	CHARGE FILTER (SEE FIG. H0430-01A1)	1	SN:B10001--
2	MOTOR HOSES (SEE FIG. H0430-01A2)	1	SN:B10001--
3	MOTOR ELBOWS (SEE FIG. H0430-01A3)	1	SN:B10001--
4	SOLENOID VALVE (SEE FIG. H0430-01A4)	1	SN:B10001--
5	BY-PASS VALVE (SEE FIG. H0430-01A5)	1	SN:B10001--

Ref. H0430-01A0 Page H-135

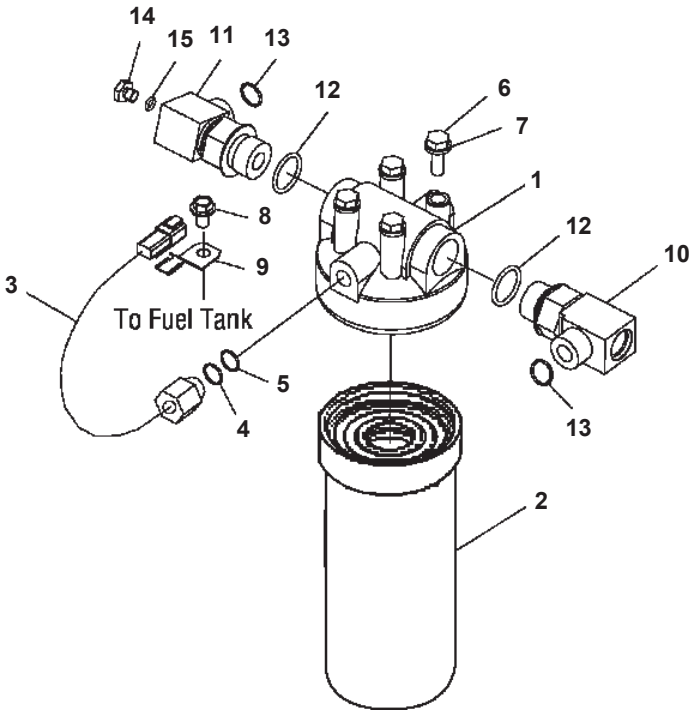

H0430-01A1 HYDRAULIC PIPING CHARGE FILTER (#B10001-B14636)

Item	Part No.	Description	Qty	Options
1	11Y-60-28700	FILTER ASSEMBLY, CHARGE	1	SN:B10001--B14636
2	11Y-60-28710	・ CARTRIDGE	1	SN:B10001--@
3	11Y-06-21340	・ SWITCH	1	SN:B10001--@
4	11Y-06-21360	・・ O-RING	1	SN:B10001--@
5	11Y-06-21350	・・ O-RING	1	SN:B10001--@
6	01010-81030	BOLT	4	SN:B10001--@
7	01643-31032	WASHER	4	SN:B10001--@
8	01435-01016	BOLT	1	SN:B10001--B14636
9	08193-20010	CLIP	1	SN:B10001--B14636
10	418-T90-3680	TEE	1	SN:B10001--@
11	11Y-62-12830	ELBOW	1	SN:B10001--@
12	07002-13334	O-RING	2	SN:B10001--@
13	02896-11018	O-RING	2	SN:B10001--@
14	07040-11007	PLUG	1	SN:B10001--@
15	07002-11023	O-RING	1	SN:B10001--@

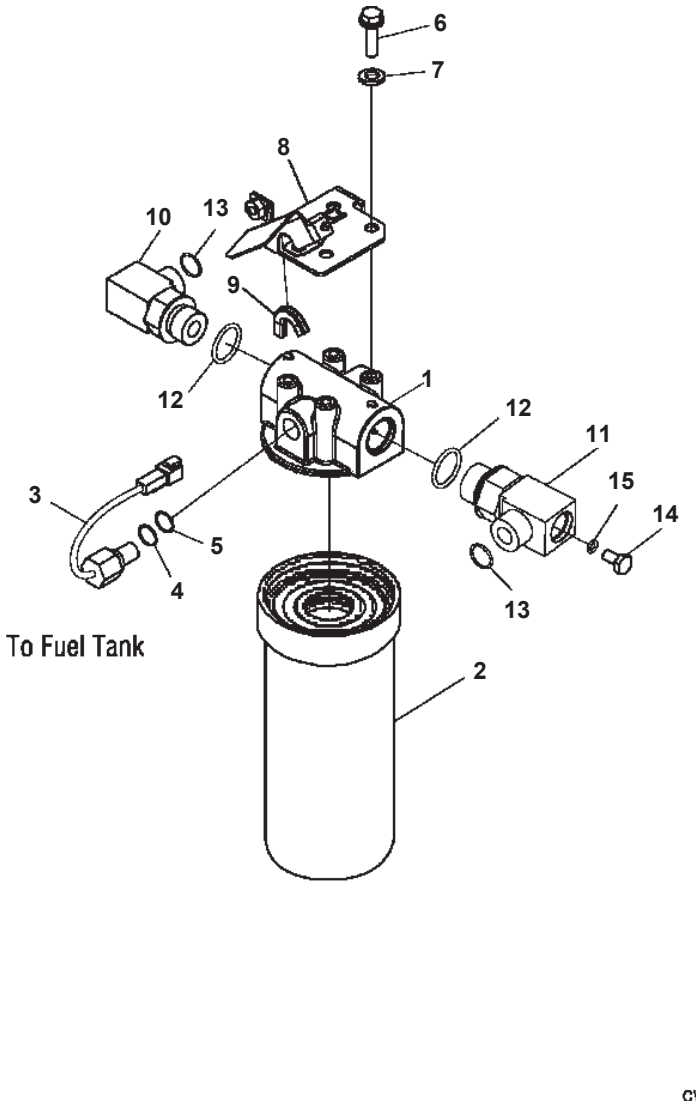

H0430-01A1 HYDRAULIC PIPING CHARGE FILTER (#B14637-)

Item	Part No.	Description	Qty	Options
1	11Y-60-38701	FILTER ASSEMBLY, CHARGE	1	SN:B14637--
2	11Y-60-28710	・ CARTRIDGE	1	SN:B10001--
3	11Y-06-21340	・ SWITCH	1	SN:B10001--
4	11Y-06-21360	・・ O-RING	1	SN:B10001--
5	11Y-06-21350	・・ O-RING	1	SN:B10001--
6	01010-81030	BOLT	4	SN:B10001--
7	01643-31032	WASHER	4	SN:B10001--
8	12Y-06-18142	BRACKET	1	SN:B14637--
9	12Y-06-18370	SEAL	1	SN:B14637--
10	418-T90-3680	TEE	1	SN:B10001--
11	11Y-62-12830	ELBOW	1	SN:B10001--
12	07002-13334	O-RING	2	SN:B10001--
13	02896-11018	O-RING	2	SN:B10001--
14	07040-11007	PLUG	1	SN:B10001--
15	07002-11023	O-RING	1	SN:B10001--

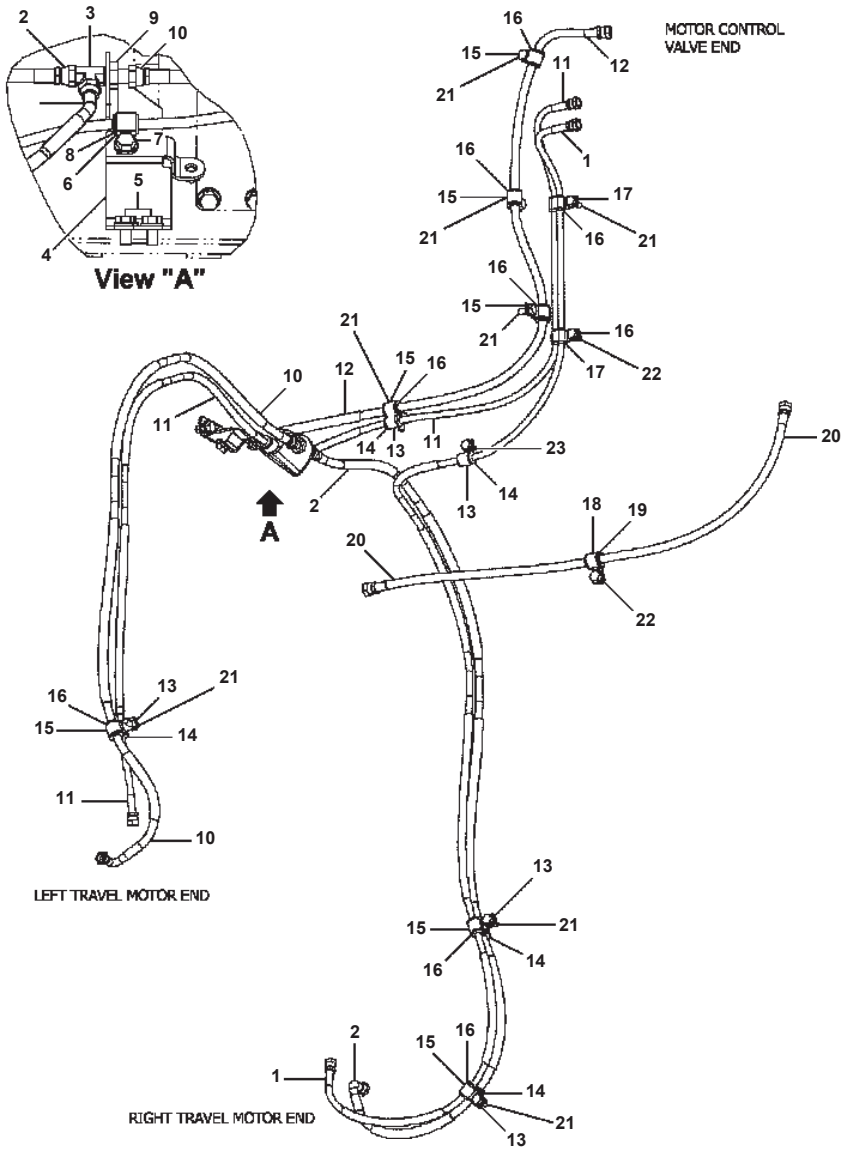

H0430-01A2 HYDRAULIC PIPING MOTOR CONTROL HOSES

Item	Part No.	Description	Qty	Options
1	12Y-62-13722	HOSE ASSEMBLY	1	SN:B10001--
2	12Y-62-12833	HOSE ASSEMBLY	1	SN:B10001--
3	12Y-62-12660	TEE	1	SN:B10001--
	02896-11009	O-RING	3	SN:B10001--
4	12Y-62-12521	BRACKET WELDMENT, BRAKE	1	SN:B10001--
5	01010-81225	BOLT, MOUNT BRACKET	2	SN:B10001--
	01643-31232	WASHER	2	SN:B10001--
6	04434-51712	CLAMP, HOSE	1	SN:B10001--
7	01010-81225	BOLT, MOUNT CLAMP	1	SN:B10001--
	01643-31232	WASHER	1	SN:B10001--
8	07095-20211	CUSHION	1	SN:B10001--
9	12Y-62-12510	NUT	1	SN:B10001--
10	12Y-62-12823	HOSE ASSEMBLY	1	SN:B10001--
11	12Y-62-13712	HOSE ASSEMBLY	1	SN:B10001--
12	12Y-62-13682	HOSE ASSEMBLY	1	SN:B10001--
13	04434-51710	CLAMP, HOSE	5	SN:B10001--
14	07095-20211	CUSHION	5	SN:B10001--
15	04434-52110	CLAMP, HOSE	8	SN:B10001--
16	07095-20314	CUSHION	7	SN:B10001--
17	04435-51210	CLAMP, HOSE	2	SN:B10001--
18	04434-52112	CLAMP, HOSE	1	SN:B10001--
19	07095-20314	CUSHION	1	SN:B10001--
20	12Y-62-13691	HOSE ASSEMBLY	1	SN:B10001--
21	01010-81025	BOLT, MOUNT CLAMP	8	SN:B10001--
	01643-31032	WASHER	8	SN:B10001--
22	01010-81020	BOLT, MOUNT CLAMP	2	SN:B10001--
	01643-31032	WASHER	2	SN:B10001--
23	01010-81220	BOLT, MOUNT CLAMP	1	SN:B10001--
	01643-31232	WASHER	1	SN:B10001--

CVPB00084

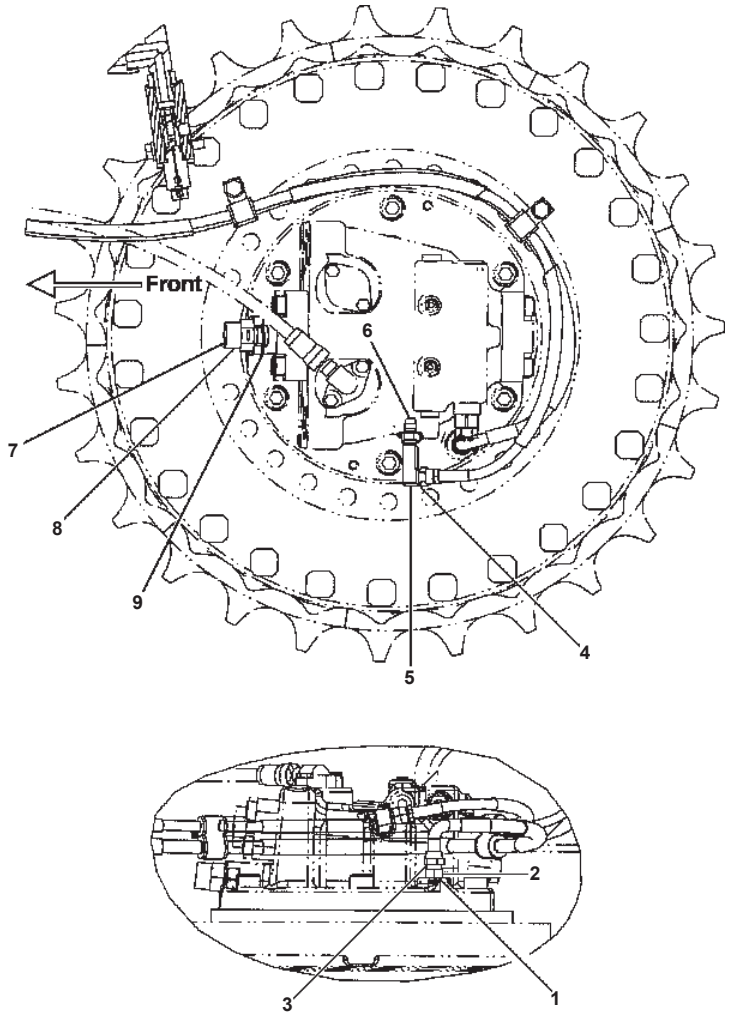

RIGHT SIDE SHOWN

D51EX/PX-22 S/N B10001-UP

H0430-01A3 HYDRAULIC PIPING MOTOR ELBOW GROUP

Item	Part No.	Description	Qty	Options
		-TO PORT ""B"" OF TRACK MOTOR-		
1	07002-11423	O-RING	2	SN:B10001--
2	02781-0031D	UNION	2	SN:B10001--
3	02896-11009	O-RING	2	SN:B10001--
		-TO PORT ""P"" OF TRACK MOTOR-		
4	02896-11008	O-RING	2	SN:B10001--
5	11Y-62-12270	ELBOW	2	SN:B10001--
6	07002-11423	O-RING	2	SN:B10001--
		-TO PORT ""T"" OF TRACK MOTOR-		
7	02896-11018	O-RING	2	SN:B10001--
8	02781-00628	UNION	2	SN:B10001--
9	07002-12434	O-RING	2	SN:B10001--

Ref. H0430-01A3 Page H-141

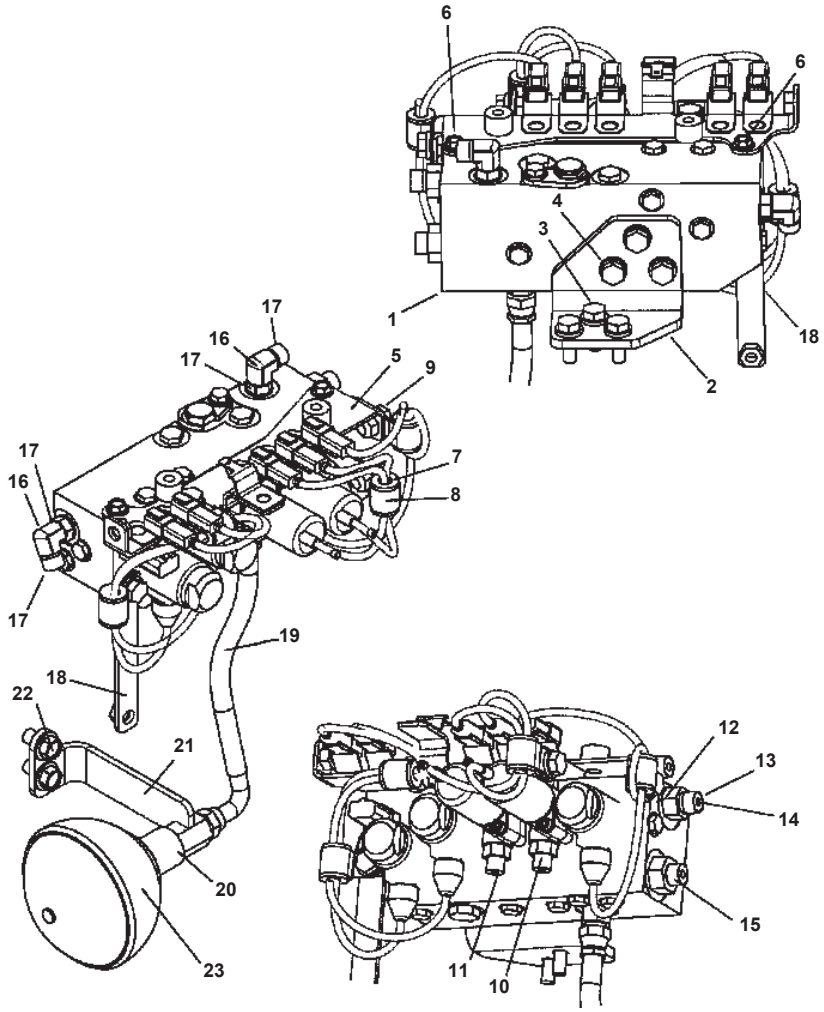

H0430-01A4 HYDRAULIC PIPING SOLENOID VALVE AND ACCUMLATOR

Item	Part No.	Description	Qty	Options
1		VALVE BLOCK (SEE FIG. H0440-01A0)	1	SN:B10001--
2	12Y-62-11131	BRACKET, MOUNT VALVE	1	SN:B10001--
3	01010-81030	BOLT, MOUNT BRACKET	3	SN:B10001--
	01643-31032	WASHER	3	SN:B10001--
4	01010-81025	BOLT, MOUNT VALVE TO BRACKET	3	SN:B10001--
	01643-31032	WASHER	3	SN:B10001--
5	12Y-06-11951	BRACKET	1	SN:B10001--
6	01435-00812	BOLT, MOUNT BRACKET TO VALVE	2	SN:B10001--
7	04434-51710	CLAMP, WIRE	4	SN:B10001--
8	07095-20211	CUSHION	4	SN:B10001--
9	01010-81020	BOLT, MOUNT CLAMP	4	SN:B10001--
	01643-31032	WASHER	4	SN:B10001--
10	21W-62-43930	NIPPLE	2	SN:B10001--
11	02896-11008	O-RING	2	SN:B10001--
12	07002-11823	O-RING	1	SN:B10001--
13	20U-62-42660	NIPPLE	1	SN:B10001--
14	02896-11009	O-RING	1	SN:B10001--
15	02781-00315	UNION	1	SN:B10001--
16	02782-10311	ELBOW	2	SN:B10001--
17	07002-11823	O-RING	4	SN:B10001--
18	12Y-62-12531	BRACKET, MOUNT VALVE	1	SN:B10001--
19	12Y-62-13820	HOSE ASSEMBLY	1	SN:B10001--
20	07002-12034	O-RING	2	SN:B10001--
21	12Y-62-12561	BRACKET, MOUNT ACCUMLATOR	1	SN:B10001--
22	01435-01220	BOLT, MOUNT BRACKET	2	SN:B10001--
23	425-62-23750	ACCUMLATOR	1	SN:B10001--

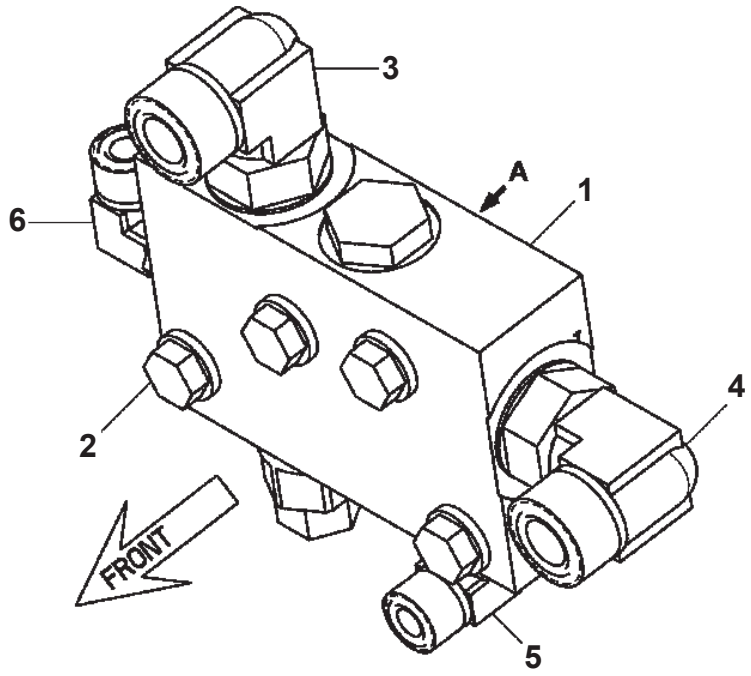

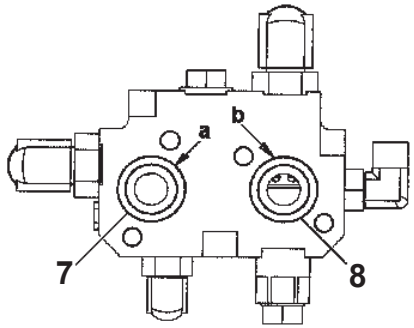

View "A"

H0430-01A5 HYDRAULIC PIPING OIL COOLER BY-PASS VALVE CONNECTIONS

Item	Part No.	Description	Qty	Options
1	11Y-62-31831	VALVE, BY-PASS (SEE FIG. H0430-01A6)	1	SN:B10001--
2	01010-81060	BOLT, MOUNT VALVE	4	SN:B10001--
	01643-31032	WASHER	4	SN:B10001--
3	02782-10628	ELBOW, LINE FROM CHARGE PUMP	1	SN:B10001--
	02896-11018	O-RING	1	SN:B10001--
	07002-12434	O-RING	1	SN:B10001--
4	02782-10628	ELBOW, LINE TO HST PUMP CASE	1	SN:B10001--
	02896-11018	O-RING	1	SN:B10001--
	07002-12434	O-RING	1	SN:B10001--
5	02782-10420	ELBOW, LINE TO RETURN MANIFOLD	1	SN:B10001--
	02896-11012	O-RING	1	SN:B10001--
	07002-11823	O-RING	1	SN:B10001--
6	02782-10420	ELBOW, LINE FAN MOTOR "T" PORT	1	SN:B10001--
	02896-11012	O-RING	1	SN:B10001--
	07002-11823	O-RING	1	SN:B10001--
7	07000-13032	O-RING, OIL COOLER RETURN PORT	1	SN:B10001--
8	07000-13032	O-RING, OUT TO OIL COOLER PORT	1	SN:B10001--

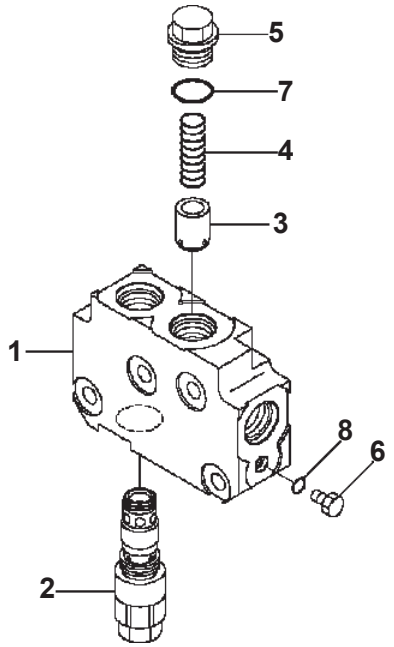

D51EX/PX-22 S/N B10001-UP

H0430-01A6 HYDRAULIC PIPING OIL COOLER BY-PASS VALVE ASSEMBLY

Item	Part No.	Description	Qty	Options
	11Y-62-31831	VALVE, BY-PASS (OIL COOLER)	1	SN:B10001--
1	11Y-62-31841	· BLOCK, VALVE BODY	1	SN:B10001--
2	720-2M-03535	· VALVE ASSEMBLY	1	SN:B10001--
3	723-11-18280	· VALVE	1	SN:B10001--
4	723-11-28330	· SPRING	1	SN:B10001--
5	723-56-41850	· PLUG	1	SN:B10001--
6	07040-10807	· PLUG	1	SN:B10001--
7	07002-12434	· O-RING	1	SN:B10001--
8	07002-10823	· O-RING	1	SN:B10001--

Ref. H0430-01A6 Page H-147

CVPB00092

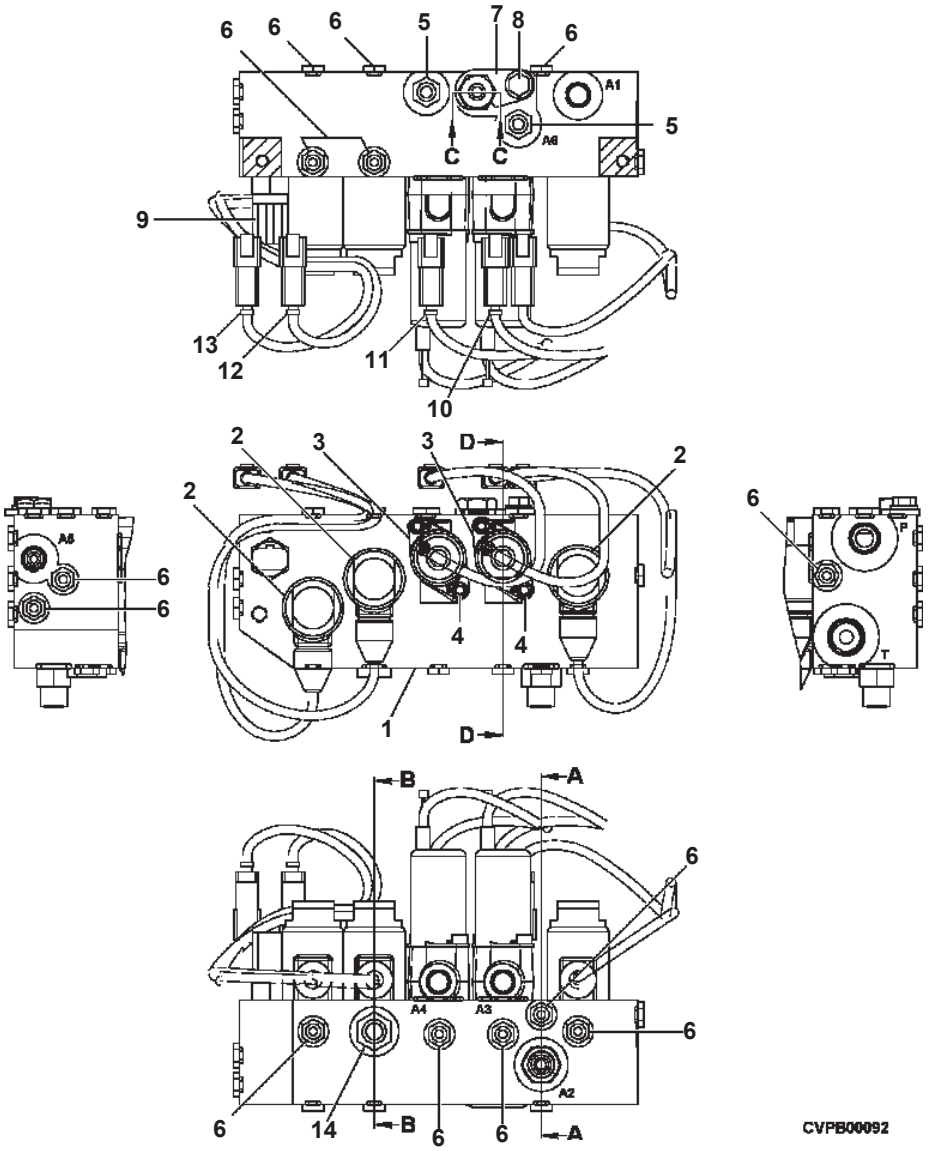

H0440-01A0 SOLENOID VALVE BLOCK (1/2)

Item	Part No.	Description	Qty	Options
	12Y-62-13701	VALVE BLOCK ASSEMBLY, SOLENOID	1	SN:B10001--
1	11Y-62-31112	· BLOCK	1	SN:B10001--
2	11Y-60-11530	· VALVE, SOLENOID	3	SN:B10001--
3	702-21-07311	· VALVE, SOLENOID	2	SN:B10001--
N/I	702-21-53301	· · SOLENOID	1	SN:B10001--
	702-21-53110	· · BODY	1	SN:B10001--
	702-21-53210	· · SPOOL	1	SN:B10001--
	702-21-53311	· · SPRING	1	SN:B10001--
	706-86-51180	· · PLUG	1	SN:B10001--
	702-21-53330	· · SCREW	2	SN:B10001--
	702-21-53340	· · SPRING	1	SN:B10001--
	702-21-53350	· · SPRING	1	SN:B10001--
4	203-60-62220	· BOLT, MOUNT SOLENOID VALVE	4	SN:B10001--
5	07040-11007	· PLUG	2	SN:B10001--
	07002-11023	· O-RING	2	SN:B10001--
6	07040-10807	· PLUG	13	SN:B10001--
	07002-10823	· O-RING	13	SN:B10001--
7	11Y-62-31170	· PLATE	1	SN:B10001--
8	01010-80816	· BOLT, MOUNT PLATE	1	SN:B10001--
	01643-30823	· WASHER	1	SN:B10001--
9	7861-93-1840	· SENSOR, VALVE BLOCK	1	SN:B10001--
10	21U-62-34710	· BAND, YELLOW	1	SN:B10001--
11	21U-62-34730	· BAND, GREEN	1	SN:B10001--
12	21U-62-34750	· BAND, BLUE	1	SN:B10001--
13	21U-62-34780	· BAND, BROWN	1	SN:B10001--
14	07040-11409	· PLUG	1	SN:B10001--
	07002-11423	· O-RING	1	SN:B10001--

CVPB00093

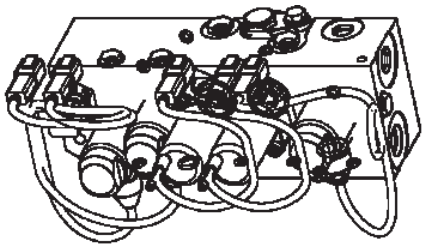

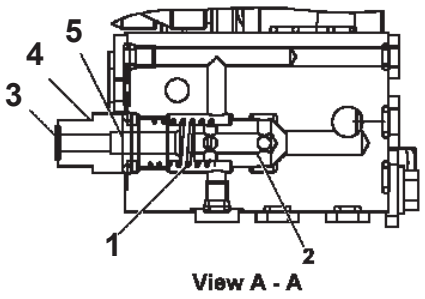

View A - A

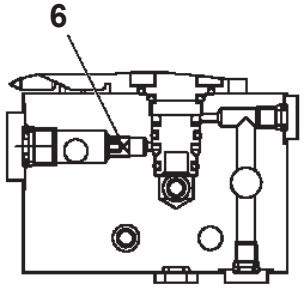

View B - B

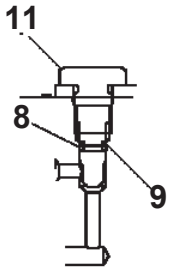

View C - C

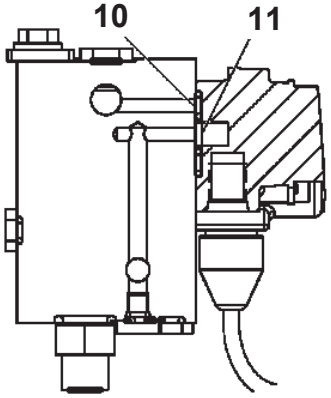

View D - D

CVPB00093

D51EX/PX-22 S/N B10001-UP

H0440-02A0 SOLENOID VALVE BLOCK (2/2)

Item	Part No.	Description	Qty	Options
		VALVE BLOCK (SEE FIG. H0440-01A0)	1	SN:B10001--
1	203-60-21260	· SPRING	1	SN:B10001--
2	11Y-62-31180	· VALVE	1	SN:B10001--
3	02896-11009	· O-RING	1	SN:B10001--
4	11Y-62-18420	· UNION	1	SN:B10001--
5	07002-12034	· O-RING	1	SN:B10001--
6	14X-15-16461	· PLUG	1	SN:B10001--
7	11Y-62-31130	· BOLT, SPECIAL	1	SN:B10001--
8	07000-11007	· O-RING	1	SN:B10001--
9	07001-01007	· RING	1	SN:B10001--
10	700-93-11320	· O-RING	2	SN:B10001--
11	07000-12011	· O-RING	2	SN:B10001--

Ref. H0440-02A0 Page H-151

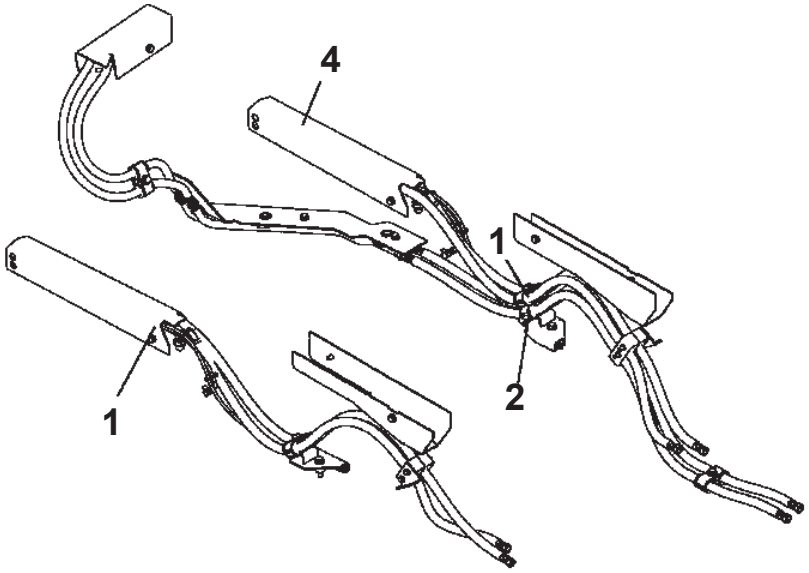

H0490-01A0 HYDRAULIC PIPING DOZER LINES

Item	Description	Qty	Options
1	ANGLE LINES (SEE FIG. H0510-01A1)	1	SN:B10001--
2	TILT LINES (SEE FIG. H0520-01A1)	1	SN:B10001--
3	LUBRICATION LINES (SEE FIG. T0630-01A0)	1	SN:B10001--
4	COVERS (SEE FIG. T0640-01A0)	1	SN:B10001--

CVPB00087

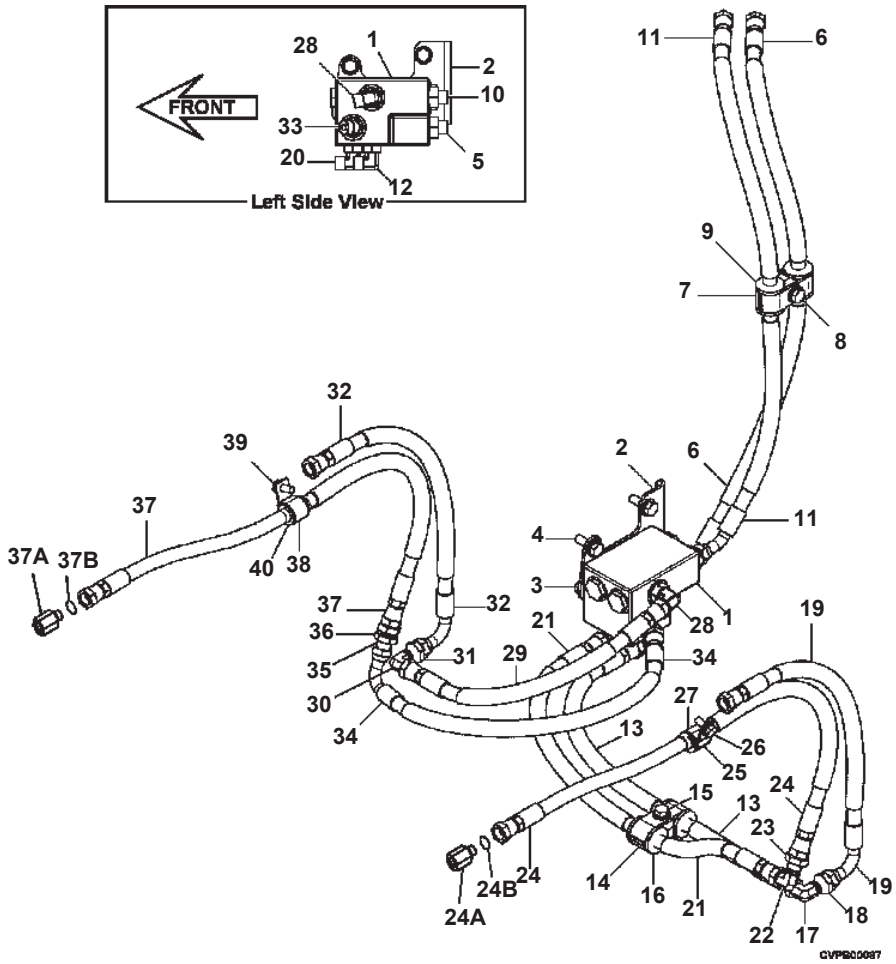

D51EX/PX-22 S/N B10001-UP

H0500-01A0 HYDRAULIC PIPING LIFT CYLINDER LINES

Item	Part No.	Description	Qty	Options
1	702-21-11900	VALVE ASSEMBLY, QUICK DROP	1	SN:B10001--
2	12Y-62-13980	BRACKET, MOUNT VALVE	1	SN:B10001--
3	01010-81225	BOLT, MOUNT VALVE TO BRACKET	2	SN:B10001--
	01643-31232	WASHER	2	SN:B10001--
4	01010-81235	BOLT, MOUNT BRACKET	2	SN:B10001--
	01643-31232	WASHER	2	SN:B10001--
		-VALVE TO UNION AT ""A2"" PORT OF CONTROL VALVE-		
5	02781-0042A	UNION, AT VALVE	1	SN:B10001--
	07002-12434	O-RING	1	SN:B10001--
	02896-11012	O-RING	1	SN:B10001--
6	12Y-62-13181	HOSE ASSEMBLY	1	SN:B10001--
7	07094-30417	CLAMP, HOSE	2	SN:B10001--
8	01010-81265	BOLT, MOUNT CLAMP	1	SN:B10001--
	01643-31232	WASHER	1	SN:B10001--
9	07095-00420	CUSHION	2	SN:B10001--
		-VALVE TO UNION AT ""B2"" PORT OF CONTROL VALVE-		
10	02781-0042A	UNION, AT VALVE	1	SN:B10001--
	07002-12434	O-RING	1	SN:B10001--
	02896-11012	O-RING	1	SN:B10001--
11	12Y-62-13191	HOSE ASSEMBLY	1	SN:B10001--
		-VALVE TO BARREL END OF L.H. LIFT CYLINDER-		
12	02782-10422	ELBOW, AT VALVE	1	SN:B10001--
	07002-12034	O-RING	1	SN:B10001--
	02896-11012	O-RING	1	SN:B10001--
13	12Y-62-13251	HOSE ASSEMBLY	1	SN:B10001--
14	07094-30417	CLAMP, HOSE	2	SN:B10001--
15	01010-81265	BOLT, MOUNT CLAMP	1	SN:B10001--
	01643-31232	WASHER	1	SN:B10001--
16	07095-00420	CUSHION	2	SN:B10001--
17	12Y-62-12361	ELBOW, BULKHEAD	1	SN:B10001--
	02896-11012	O-RING	2	SN:B10001--
18	12Y-62-13970	NUT	1	SN:B10001--
19	12Y-62-12712	HOSE ASSEMBLY	1	SN:B10001--
		-VALVE TO ROD END OF L.H. LIFT CYLINDER-		
20	02782-10422	ELBOW, AT VALVE	1	SN:B10001--
	07002-12034	O-RING	1	SN:B10001--

Ref. H0500-01A0 Page H-155

H0500-01A0 HYDRAULIC PIPING LIFT CYLINDER LINES

Item	Part No.	Description	Qty	Options
	02896-11012	O-RING	1	SN:B10001--
21	12Y-62-13261	HOSE ASSEMBLY	1	SN:B10001--
22	12Y-62-12361	ELBOW, BULKHEAD	1	SN:B10001--
	02896-11012	O-RING	2	SN:B10001--
23	12Y-62-13970	NUT	1	SN:B10001--
24	12Y-62-12733	HOSE ASSEMBLY	1	SN:B10293--
	□12Y-62-12732	HOSE ASSEMBLY	1	SN:B10001--B10292
24A	12Y-62-13390	UNION	1	SN:B10001--B10292
24B	02896-11012	O-RING	1	SN:B10001--B10292
25	04434-52711	CLAMP, HOSE	1	SN:B10001--
26	01010-81025	BOLT, MOUNT CLAMP	1	SN:B10001--
	01643-31032	WASHER		SN:B10001--
27	07095-20420	CUSHION	1	SN:B10001--
		-VALVE TO BARREL END OF L.H. LIFT CYLINDER-		
28	02782-10422	ELBOW, AT VALVE	1	SN:B10001--
	07002-12034	O-RING	1	SN:B10001--
	02896-11012	O-RING	1	SN:B10001--
29	12Y-62-13910	HOSE ASSEMBLY	1	SN:B10001--
30	12Y-62-12361	ELBOW, BULKHEAD	1	SN:B10001--
	02896-11012	O-RING	2	SN:B10001--
31	12Y-62-13970	NUT	1	SN:B10001--
32	12Y-62-12712	HOSE ASSEMBLY	1	SN:B10001--
		-VALVE TO ROD END OF L.H. LIFT CYLINDER-		
33	02783-10422	ELBOW, AT VALVE	1	SN:B10001--
	07002-12034	O-RING	1	SN:B10001--
	02896-11012	O-RING	1	SN:B10001--
34	12Y-62-13921	HOSE ASSEMBLY	1	SN:B10001--
35	12Y-62-13930	UNION, BULKHEAD	1	SN:B10001--
	02896-11012	O-RING	2	SN:B10001--
36	12Y-62-13970	NUT	1	SN:B10001--
37	12Y-62-12733	HOSE ASSEMBLY	1	SN:B10293--
	□12Y-62-12732	HOSE ASSEMBLY	1	SN:B10001--B10292
37A	12Y-62-13390	UNION	1	SN:B10001--B10292
37B	02896-11012	O-RING	1	SN:B10001--B10292
38	04434-52711	CLAMP, HOSE	1	SN:B10001--
39	01010-81025	BOLT, MOUNT CLAMP	1	SN:B10001--
	01643-31032	WASHER	1	SN:B10001--

D51EX/PX-22 S/N B10001-UP

H0500-01A0 HYDRAULIC PIPING LIFT CYLINDER LINES

Item	Part No.	Description	Qty	Options
40	07095-20420	CUSHION	1	SN:B10001--

Ref. H0500-01A0 Page H-155

CVPB00088

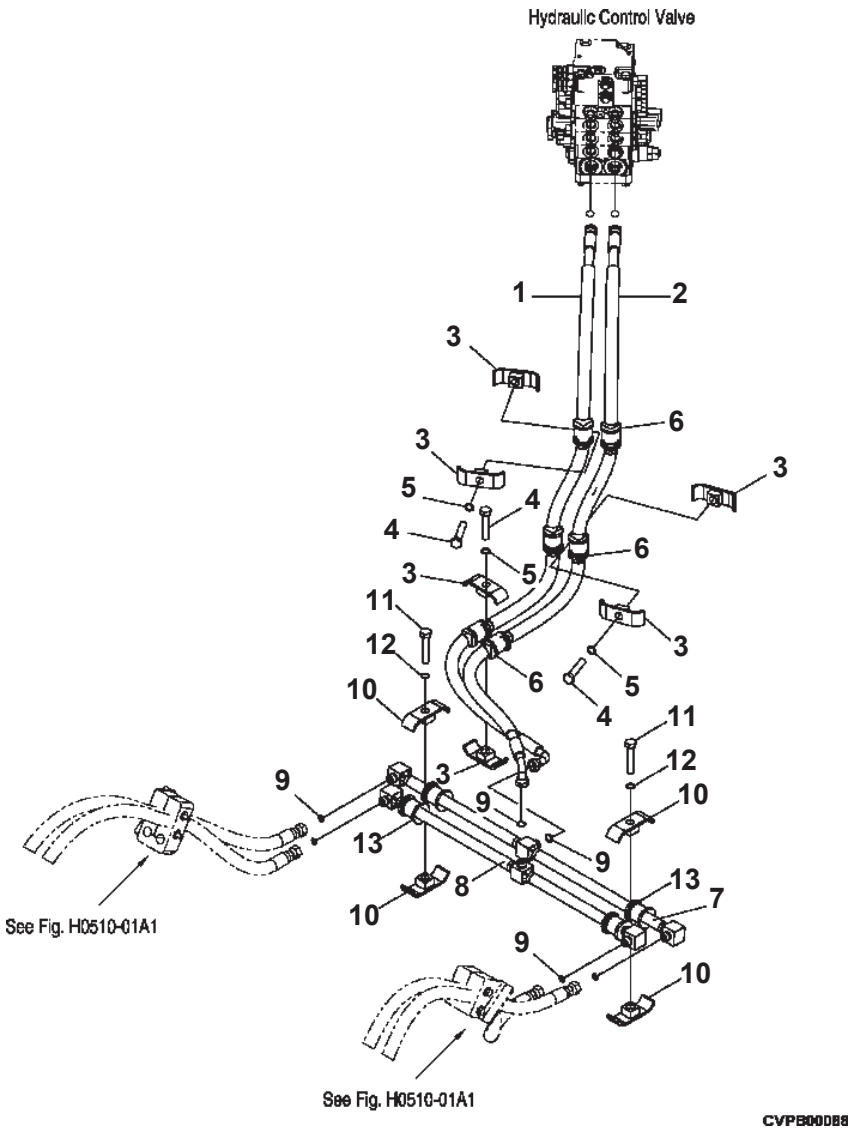

H0510-01A0 HYDRAULIC PIPING ANGLE CYLINDER LINE (1/2)

Item	Part No.	Description	Qty	Options
1	12Y-62-13151	HOSE, AT CONTROL VALVE "B4" PORT	1	SN:B10001--
2	12Y-62-13141	HOSE, AT CONTROL VALVE "A4" PORT	1	SN:B10001--
3	07094-30315	CLAMP, HOSE	6	SN:B10001--
4	01010-81260	BOLT, MOUNT CLAMP	3	SN:B10001--
5	01643-31232	WASHER	3	SN:B10001--
6	07095-00317	CUSHION	6	SN:B10001--
7	12Y-62-11352	TUBE	1	SN:B10001--
8	12Y-62-11362	TUBE	1	SN:B10001--
9	02896-11009	O-RING	6	SN:B10001--
10	07094-30417	CLAMP, HOSE	4	SN:B10001--
11	01010-81265	BOLT, MOUNT CLAMP	2	SN:B10001--
12	01643-31232	WASHER	2	SN:B10001--
13	07095-00421	CUSHION	4	SN:B11429--
	□07095-0042B	CUSHION	4	SN:B10001--B11428

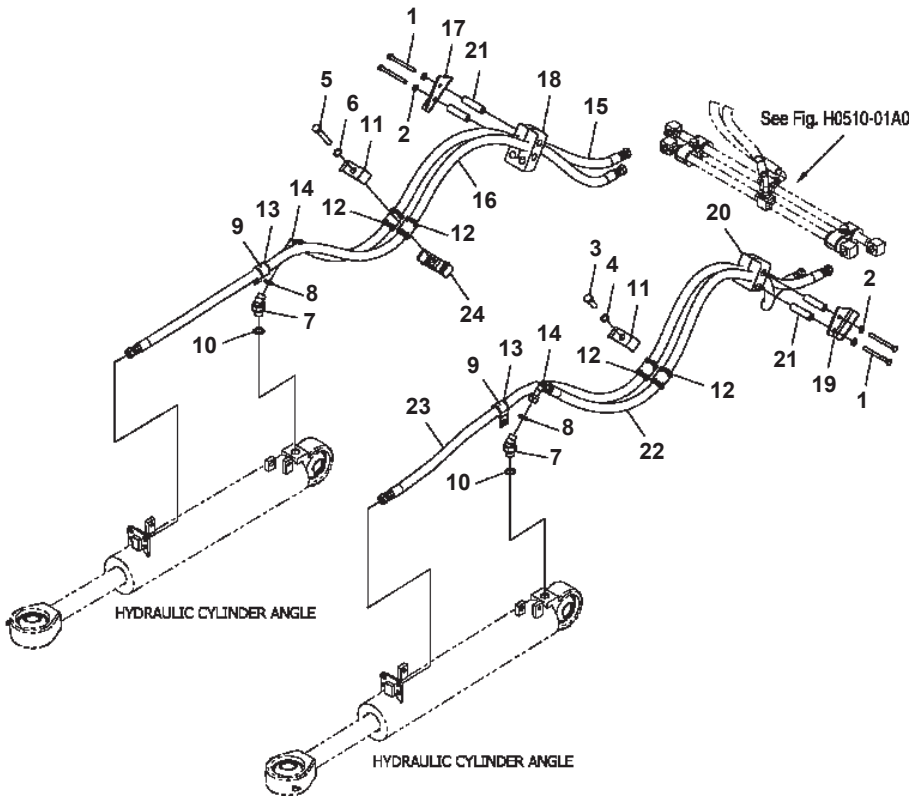

H0510-01A1 HYDRAULIC PIPING ANGLE CYLINDER LINE (2/2)

Item	Part No.	Description	Qty	Options
1	01010-80890	BOLT	4	SN:B10013--
	□01010-80895	BOLT	4	SN:B10001--B10012
2	01643-30823	WASHER	4	SN:B10001--
3	01010-81240	BOLT	1	SN:B10001--
4	01643-31232	WASHER	1	SN:B10001--
5	01010-81280	BOLT, SEMS	1	SN:B10001--
6	01643-31232	WASHER	1	SN:B10001--
7	02783-10315	ELBOW	2	SN:B10001--
8	02896-11009	O-RING	2	SN:B10001--
9	04434-52711	CLIP	2	SN:B10001--
10	07002-12034	O-RING	2	SN:B10001--
11	07094-30315	CLAMP	2	SN:B10001--
12	07095-00318	CUSHION	4	SN:B10001--
13	07095-20418	CUSHION	2	SN:B10001--
14	08034-40521	BAND	2	SN:B10001--
15	12Y-62-11583	HOSE ASSEMBLY	1	SN:B10001--
16	12Y-62-11593	HOSE ASSEMBLY	1	SN:B10001--
17	12Y-62-12920	PLATE	1	SN:B10001--
18	12Y-62-12941	RUBBER	1	SN:B10001--
19	12Y-62-12950	PLATE	1	SN:B10001--
20	12Y-62-12971	RUBBER	1	SN:B10001--
21	12Y-62-12990	SPACER	4	SN:B10001--
22	12Y-62-13951	HOSE ASSEMBLY	1	SN:B10001--
23	12Y-62-13961	HOSE ASSEMBLY	1	SN:B10001--
24	12Y-72-11730	CLAMP	1	SN:B10001--

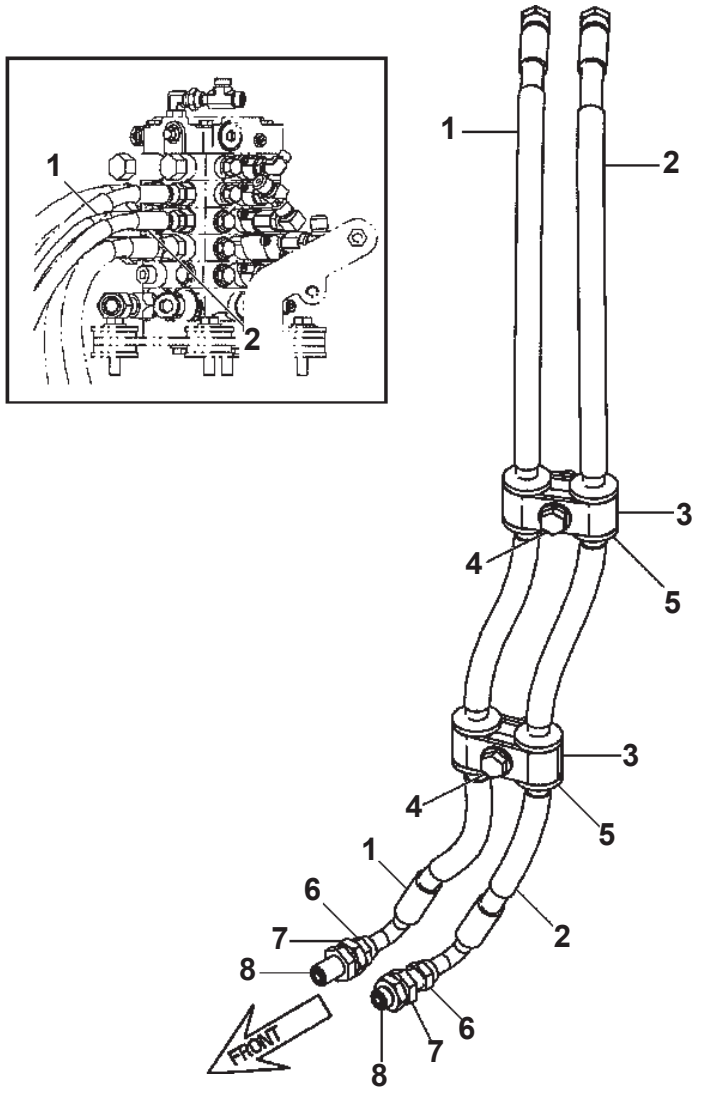

H0520-01A0 HYDRAULIC PIPING TILT CYLINDER LINE (1/2)

Item	Part No.	Description	Qty	Options
1	12Y-62-13171	HOSE, AT CONTROL VALVE "B3" PORT	1	SN:B10001--
2	12Y-62-13171	HOSE, AT CONTROL VALVE "A3" PORT	1	SN:B10001--
3	07094-30315	CLAMP, HOSE	4	SN:B10001--
4	01010-81260	BOLT, MOUNT CLAMP	2	SN:B10001--
	01643-31232	WASHER	2	SN:B10001--
5	07095-00317	CUSHION	4	SN:B10001--
6	12Y-62-13291	UNION, BULKHEAD	2	SN:B10001--
7	12Y-62-12510	NUT	1	SN:B10001--
8	02896-11009	O-RING	4	SN:B10001--

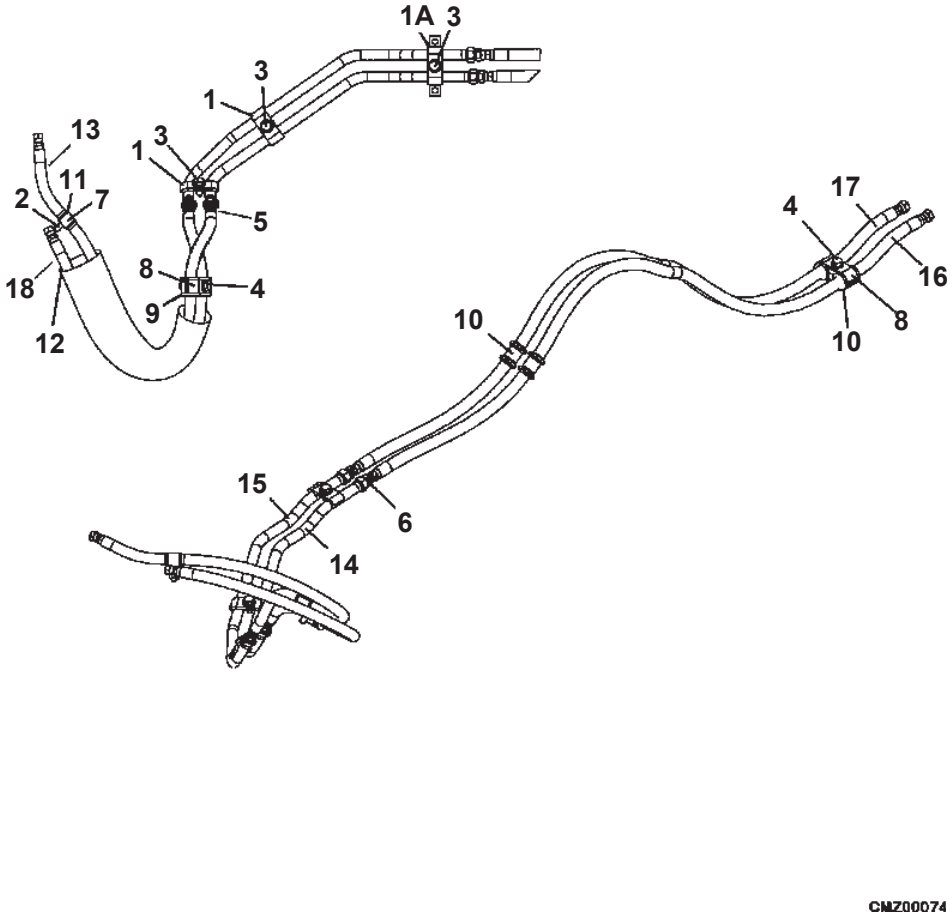

H0520-01A1 HYDRAULIC PIPING TILT CYLINDER LINE (2/2)

Item	Part No.	Description	Qty	Options
1	201-62-27740	CLAMP	2	SN:B10869--
	□201-62-27740	CLAMP	3	SN:B10001--B10868
1A	12Y-62-13480	CLAMP	1	SN:B10869--
2	01010-81025	BOLT	1	SN:B10001--
	01643-31032	WASHER	1	SN:B10001--
3	01010-81225	BOLT	3	SN:B10001--
	01643-31232	WASHER	3	SN:B10001--
4	01010-81260	BOLT	2	SN:B10001--
	01643-31232	WASHER	2	SN:B10001--
5	02896-11008	O-RING	2	SN:B10001--
6	02896-11009	O-RING	2	SN:B10001--
7	04434-52511	CLIP	1	SN:B11541--
	□04434-52110	CLIP	1	SN:B10001--B11540
8	07094-30315	CLAMP	4	SN:B10001--
9	07095-00317	CUSHION	2	SN:B10001--
10	07095-00318	CUSHION	4	SN:B10001--
11	07095-20318	CUSHION	1	SN:B11541--
	□07095-20314	CUSHION	1	SN:B10001--B11540
12	08210-02906	SPIRAL TUBE	1	SN:B10001--
13	12Y-62-11572	HOSE	1	SN:B10001--
14	12Y-62-11812	PIPE	1	SN:B10001--
15	12Y-62-11821	PIPE	1	SN:B10001--
16	12Y-62-13632	HOSE ASSEMBLY	1	SN:B10001--
17	12Y-62-13632	HOSE ASSEMBLY	1	SN:B10001--
18	12Y-62-13671	HOSE ASSEMBLY	1	SN:B10001--

CVPB00090

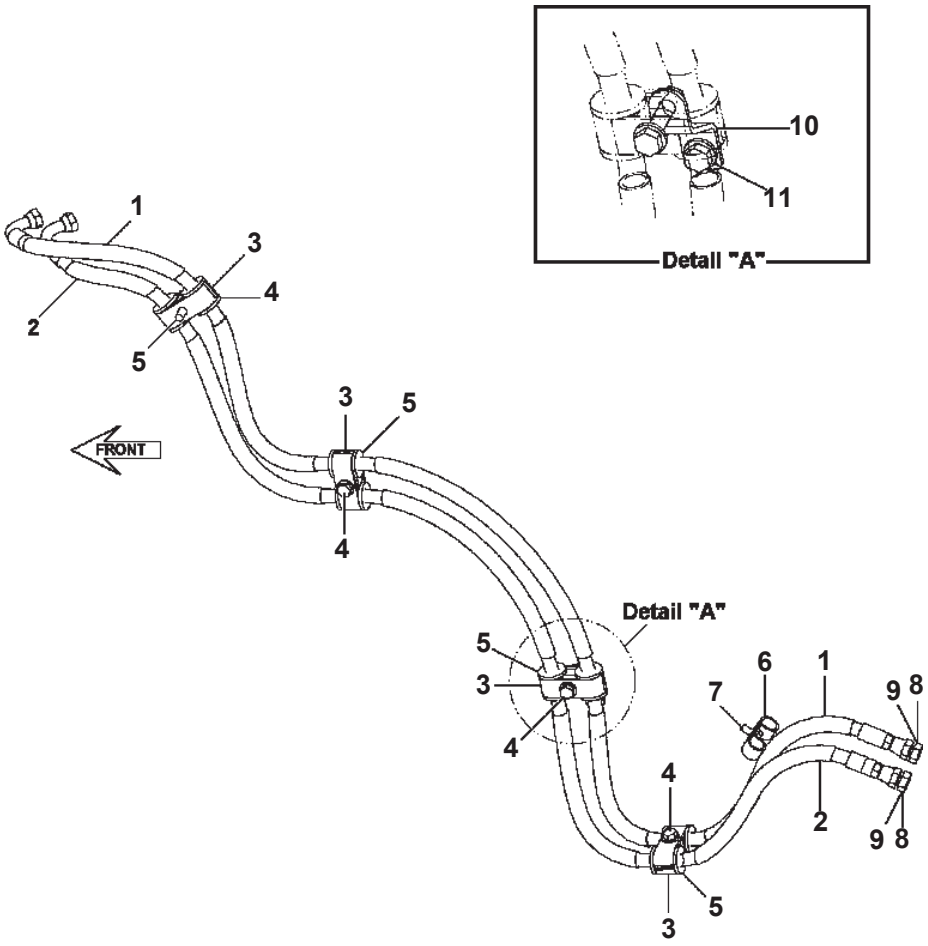

D51EX/PX-22 S/N B10001-UP

H0550-01A0 HYDRAULIC PIPING RIPPER LINES

Item	Part No.	Description	Qty	Wt.	Options
1	12Y-62-14121	HOSE, AT CONTROL VALVE "B5" PORT	1		SN:B10001--
2	12Y-62-14111	HOSE, AT CONTROL VALVE "A5" PORT	1		SN:B10001--
3	07094-30417	CLAMP, HOSE	8		SN:B10001--
4	01010-81260	BOLT, MOUNT CLAMP	4		SN:B10001--
	01643-31232	WASHER	4		SN:B10001--
5	07095-00420	CUSHION	8		SN:B10001--
6	04434-52310	CLIP, P	2	F1	SN:B10001--
7	01010-81025	BOLT, MOUNT P-CLIPS	1	F1	SN:B10001--
	01643-31032	WASHER	1	F1	SN:B10001--
8	07376-70422	PLUG	2	F1	SN:B10001--
9	02896-11012	O-RING	2	F1	SN:B10001--
10	12Y-62-14130	BRACKET	1		SN:B10001--
11	01010-81230	BOLT, MOUNT BRACKET	1		SN:B10001--
	01643-31232	WASHER	1		SN:B10001--
		F1 - USED WHEN SHIPPING MACHINE WITHOUT RIPPER			

Ref. H0550-01A0 Page H-167

CMZ00078

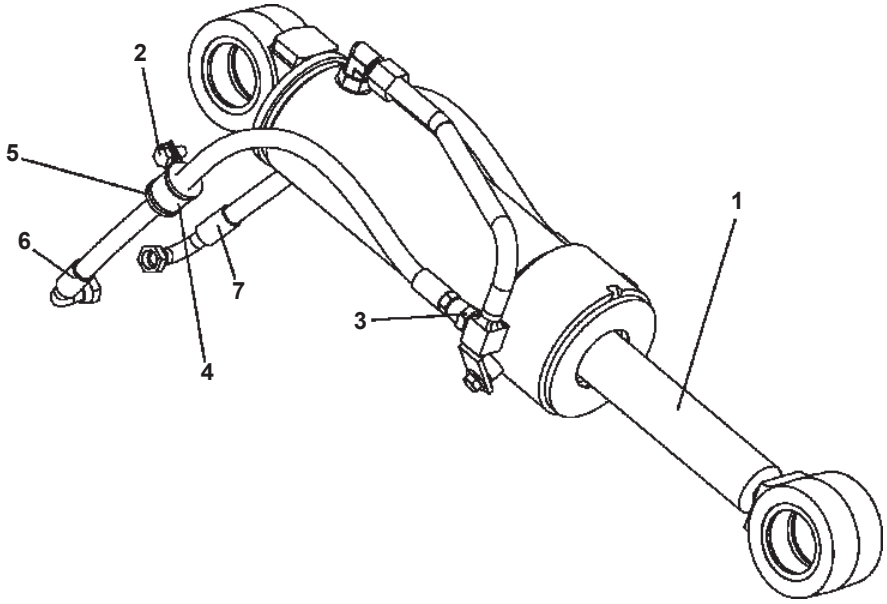

D51EX/PX-22 S/N B10001-UP

H0550-01A1 HYDRAULIC PIPING RIPPER CYLINDER AND HOSES

Item	Part No.	Description	Qty	Options
1		CYLINDER, RIPPER (SEE FIG. H0700-01A3)	1	SN:B10001--
2	01010-81225	BOLT	2	SN:B10001--
	01643-31232	WASHER	2	SN:B10001--
3	02896-11012	O-RING	2	SN:B10001--
4	04434-53412	CLIP	2	SN:B10001--
5	07095-00420	CUSHON	2	SN:B10001--
6	12Y-78-11251	HOSE ASSEMBLY	1	SN:B10001--
7	12Y-78-11261	HOSE ASSEMBLY	1	SN:B10001--

Ref. H0550-01A1 Page H-169

CMZ00127

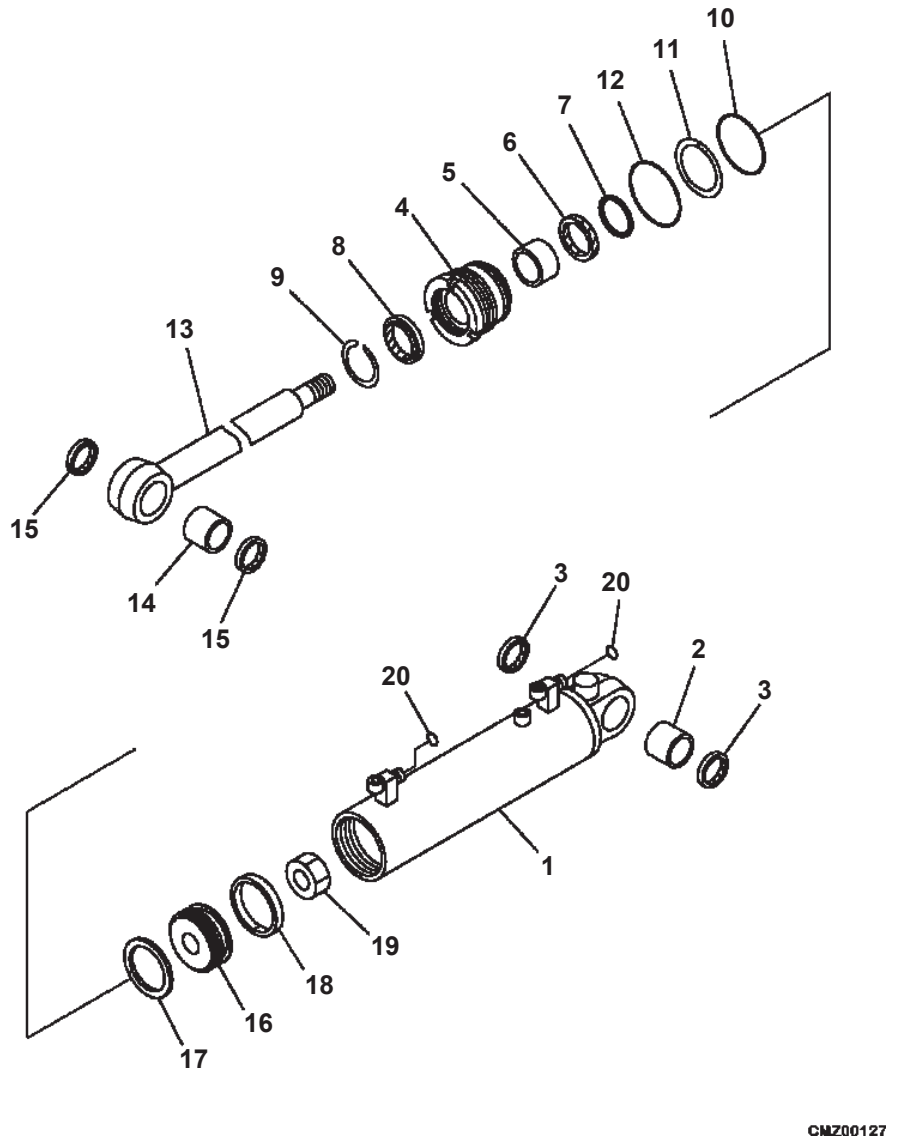

D51EX/PX-22 S/N B10001-UP

H0700-01A0 HYDRAULIC CYLINDER LIFT

Item	Part No.	Description	Qty	Wt.	Options
	707-00-0G820	CYLINDER ASSEMBLY, LIFT (L.H.)	1		SN:B10001--
	707-00-0G830	CYLINDER ASSEMBLY, LIFT (R.H.)	1		SN:B10001--
1	721-11-90810	· CYLINDER, L.H.	1		SN:B10001--
	721-11-90820	· CYLINDER, R.H.	1		SN:B10001--
2	07143-10505	· BUSHING	1		SN:B10001--
3	07145-00050	· SEAL, DUST	2	F1	SN:B10001--
4	707-29-90760	· HEAD, CYLINDER	1		SN:B10001--
5	707-52-90250	· BUSHING	1		SN:B10001--
6	707-51-50030	· PACKING, ROD	1	F1	SN:B10001--
7	707-51-50640	· RING, BUFFER	1	F1	SN:B10001--
8	707-56-50540	· SEAL, DUST	1	F1	SN:B10001--
9	07179-12062	· RING, SNAP	1		SN:B10001--
10	07000-12085	· O-RING	1	F1	SN:B10001--
11	07146-02086	· RING, BACK-UP	1	F1	SN:B10001--
12	07000-12090	· O-RING	1	F1	SN:B10001--
13	707-58-50J60	· ROD, PISTON	1		SN:B10001--
14	07143-10505	· BUSHING	1		SN:B10001--
15	07145-00050	· SEAL, DUST	2	F1	SN:B10001--
16	707-36-90260	· PISTON	1	F1	SN:B10001--
17	707-44-90180	· RING, PISTON	1	F1	SN:B10001--
18	07156-00912	· RING, WEAR	1	F1	SN:B10001--
19	707-67-36010	· NUT	1		SN:B10001--
20	02896-11012	· O-RING	2	F1	SN:B10001--
N/I	707-99-25720	SERVICE KIT	1		SN:B10001--
		F1 - PART OF SERVICE KIT 707-99-25720.			

Ref. H0700-01A0 Page H-171

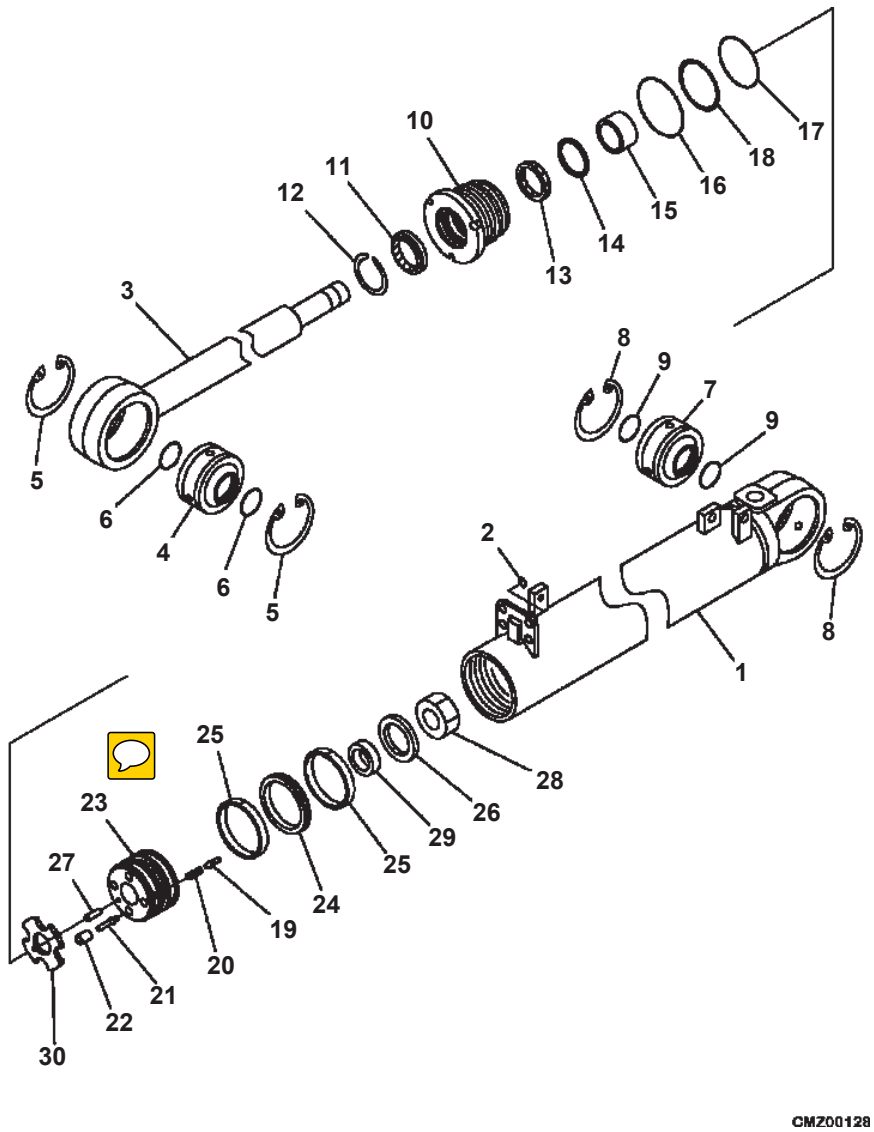

H0700-01A1 HYDRAULIC CYLINDER ANGLE (#B10001-B13057)

Item	Part No.	Description	Qty	Wt.	Options
	707-00-0G851	CYLINDER ASSEMBLY	2		SN:B10001--@
1	721-11-90800	· CYLINDER	1		SN:B10001--@
2	02896-11009	· O-RING	1	F1	SN:B10001--@
3	707-58-50J71	· ROD, PISTON	1		SN:B10001--@
4	707-46-04070	· BUSHING	1		SN:B10001--@
5	04065-09030	· RING, SNAP	2		SN:B10001--@
6	07000-13040	· O-RING	2	F1	SN:B10001--@
7	707-46-04070	· BUSHING	1		SN:B10001--@
8	04065-09030	· RING, SNAP	2		SN:B10001--@
9	07000-13040	· O-RING	2	F1	SN:B10001--@
10	707-29-90780	· HEAD, CYLINDER	1		SN:B10001--@
11	707-56-50540	· SEAL, DUST	1	F1	SN:B10001--@
12	07179-12062	· RING, SNAP	1		SN:B10001--@
13	707-51-50030	· PACKING, ROD	1	F1	SN:B10001--@
14	707-51-50640	· RING, BUFFER	1	F1	SN:B10001--@
15	707-52-90260	· BUSHING	1		SN:B10001--@
16	07000-12090	· O-RING	1	F1	SN:B10001--@
17	07000-12085	· O-RING	1	F1	SN:B10001--@
18	07146-02086	· RING, BACK-UP	1	F1	SN:B10001--@
	707-91-91060	· PISTON SUB ASSEMBLY	1		SN:B10001--@
19	707-83-90010	· · VALVE	4		SN:B10001--@
20	707-80-16020	· · SPRING	4		SN:B10001--@
21	707-83-90020	· · VALVE	4		SN:B10001--@
22	707-84-10250	· · SEAT	4		SN:B10001--@
23	707-37-90140	· · PISTON	1		SN:B10001--@
24	707-44-90180	· · RING, PISTON	1	F1	SN:B10001--@
25	707-39-90110	· RING, WEAR	2	F1	SN:B10001--@
26	707-69-90010	· SLIDER	1		SN:B10001--@
27	130-63-12761	· PIN	1		SN:B10001--@
28	707-67-33020	· NUT	1		SN:B10001--@
29	707-81-33011	· COLLAR	1		SN:B10001--@
30	707-40-90150	· RETAINER	1		SN:B10001--@
N/I	707-99-25730	SERVICE KIT	1		SN:B10001--@
		F1 - PART OF SERVICE KIT 707-99-25730.			

CMZ00128

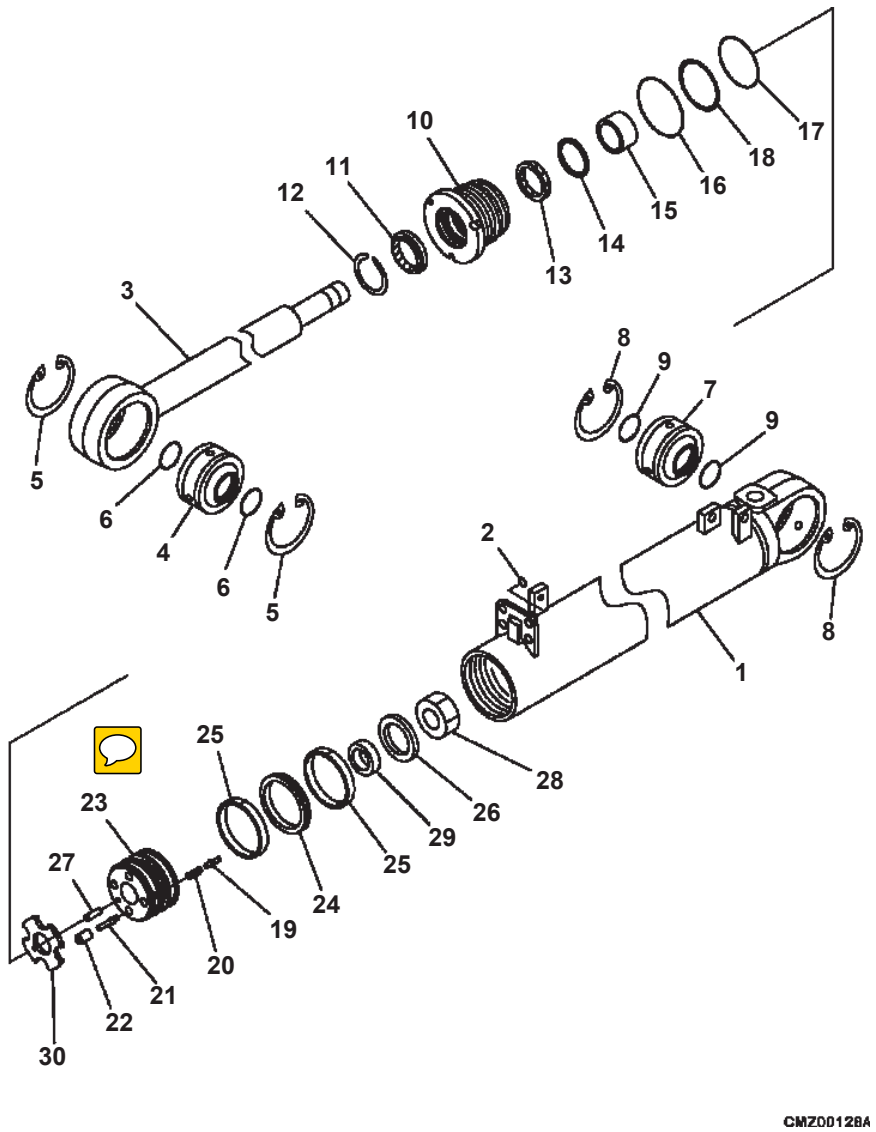

D51EX/PX-22 S/N B10001-UP

H0700-01A1 HYDRAULIC CYLINDER ANGLE (#B13058-)

Item	Part No.	Description	Qty	Wt.	Options
	707-00-0G852	CYLINDER ASSEMBLY	2		SN:B13058--
1	721-11-90801	· CYLINDER	1		SN:B13058--
2	02896-11009	· O-RING	1	F1	SN:B13058--
3	707-58-50J72	· ROD, PISTON	1		SN:B13058--
4	707-46-04070	· BUSHING	1		SN:B13058--
5	04065-09030	· RING, SNAP	2		SN:B13058--
6	07000-13040	· O-RING	2	F1	SN:B13058--
7	707-46-04070	· BUSHING	1		SN:B13058--
8	04065-09030	· RING, SNAP	2		SN:B13058--
9	07000-13040	· O-RING	2	F1	SN:B13058--
10	707-29-90780	· HEAD, CYLINDER	1		SN:B13058--
11	707-56-50540	· SEAL, DUST	1	F1	SN:B13058--
12	07179-12062	· RING, SNAP	1		SN:B13058--
13	707-51-50030	· PACKING, ROD	1	F1	SN:B13058--
14	707-51-50640	· RING, BUFFER	1	F1	SN:B13058--
15	707-52-90261	· BUSHING	1		SN:B13058--
16	07000-12090	· O-RING	1	F1	SN:B13058--
17	07000-12085	· O-RING	1	F1	SN:B13058--
18	07146-02086	· RING, BACK-UP	1	F1	SN:B13058--
	707-91-91061	· PISTON SUB ASSEMBLY	1		SN:B13058--
19	707-83-90010	· · VALVE	4		SN:B13058--
20	707-80-16020	· · SPRING	4		SN:B13058--
21	707-83-90020	· · VALVE	4		SN:B13058--
22	707-84-10250	· · SEAT	4		SN:B13058--
23	707-37-90141	· · PISTON	1		SN:B13058--
24	707-44-90180	· · RING, PISTON	1	F1	SN:B13058--
25	707-39-90110	· RING, WEAR	2	F1	SN:B13058--
26	707-69-90011	· SLIDER	1		SN:B13058--
27	130-63-12761	· PIN	1		SN:B13058--
28	707-67-36020	· NUT	1		SN:B13058--
29	707-81-33012	· COLLAR	1		SN:B13058--
30	707-40-90151	· RETAINER	1		SN:B13058--
N/I	707-99-25730	SERVICE KIT	1		SN:B13058--
		F1 - PART OF SERVICE KIT 707-99-25730.			

Ref. H0700-01A1A Page H-173A

CMZ00129

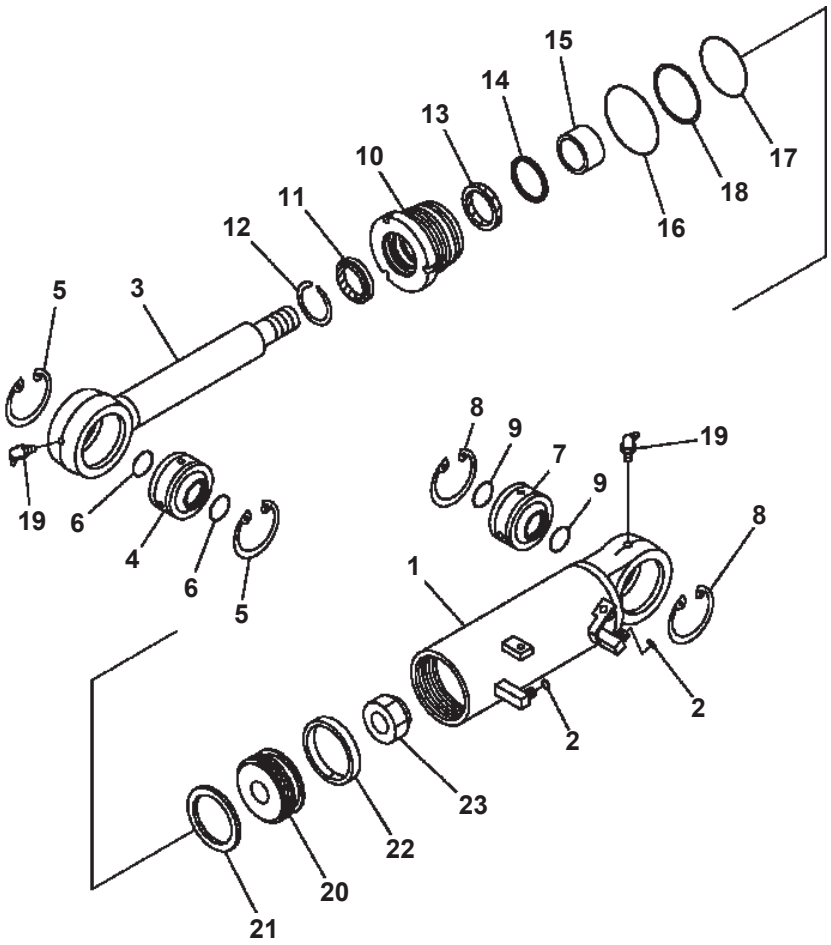

D51EX/PX-22 S/N B10001-UP

H0700-01A2 HYDRAULIC CYLINDER TILT

Item	Part No.	Description	Qty	Wt.	Options
	707-00-0G840	CYLINDER ASSEMBLY	1		SN:B10001--
1	721-11-10H10	· CYLINDER	1		SN:B10001--
2	02896-11008	· O-RING	2	F1	SN:B10001--
3	721-58-55570	· ROD, PISTON	1		SN:B10001--
4	707-46-04070	· BUSHING	1		SN:B10001--
5	04065-09030	· RING, SNAP	2		SN:B10001--
6	07000-13040	· O-RING	2	F1	SN:B10001--
7	707-46-04070	· BUSHING	1		SN:B10001--
8	04065-09030	· RING, SNAP	2		SN:B10001--
9	07000-13040	· O-RING	2	F1	SN:B10001--
10	707-29-10990	· HEAD, CYLINDER	1		SN:B10001--
11	707-56-55540	· SEAL, DUST	1	F1	SN:B10001--
12	07179-12069	· RING, SNAP	1		SN:B10001--
13	707-51-55030	· PACKING, ROD	1	F1	SN:B10001--
14	707-51-55640	· RING, BUFFER	1	F1	SN:B10001--
15	707-52-90300	· BUSHING	1		SN:B10001--
16	07000-12100	· O-RING	1	F1	SN:B10001--
17	07000-12095	· O-RING	1	F1	SN:B10001--
18	07146-02096	· RING, BACK-UP	1	F1	SN:B10001--
19	07020-00900	· FITTING, GREASE	2		SN:B10001--
20	707-36-10340	· PISTON	1		SN:B10001--
21	707-44-10180	· RING, PISTON	1	F1	SN:B10001--
22	07156-01012	· RING, WEAR	1	F1	SN:B10001--
23	707-67-36010	· NUT	1		SN:B10001--
N/I	707-99-34300	SERVICE KIT	1		SN:B10001--
		F1 - PART OF SERVICE KIT 707-99-34300.			

Ref. H0700-01A2 Page H-175

CMZ00130

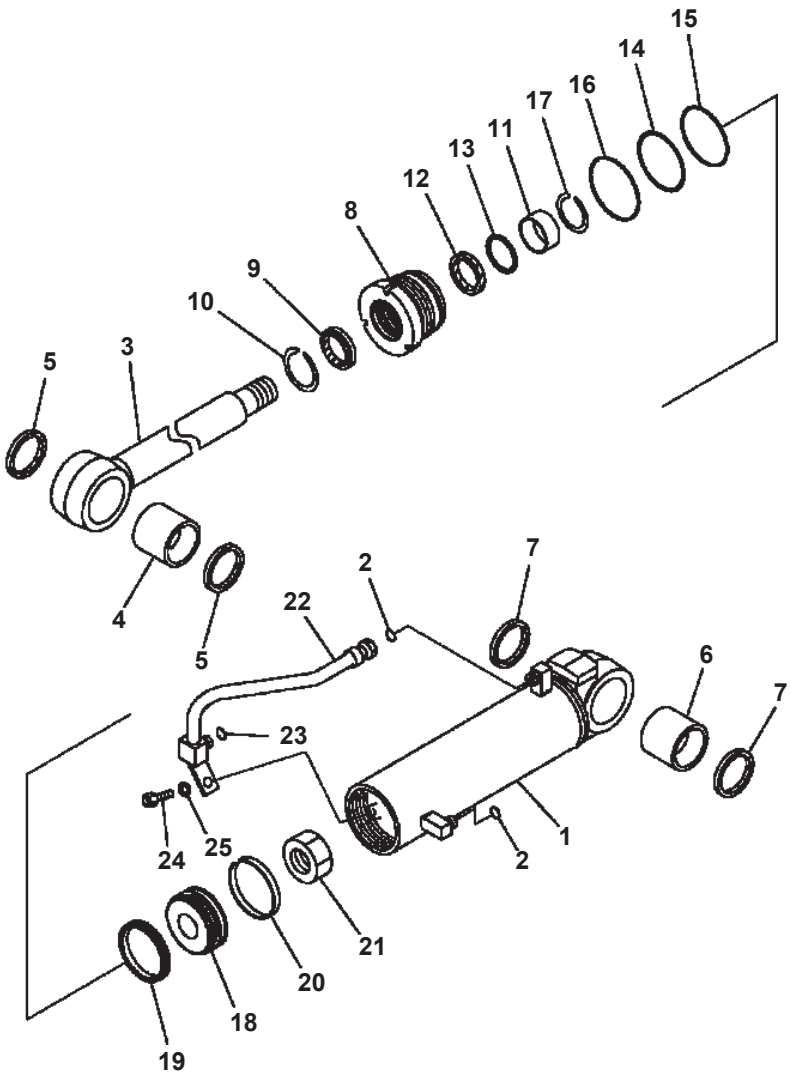

D51EX/PX-22 S/N B10001-UP

H0700-01A3 HYDRAULIC CYLINDER RIPPER

Item	Part No.	Description	Qty	Wt.	Options
	707-00-XG860	CYLINDER GROUP	1		SN:B10001--
1	707-11-11E60	· CYLINDER	1		SN:B10001--
2	02896-11012	· O-RING	2	F1	SN:B10001--
3	721-58-60690	· ROD	1		SN:B10001--
4	07143-10706	· BUSHING	1		SN:B10001--
5	07145-00070	· SEAL, DUST	2	F1	SN:B10001--
6	07143-10706	· BUSHING	1		SN:B10001--
7	07145-00070	· SEAL, DUST	2	F1	SN:B10001--
8	707-29-11420	· HEAD, CYLINDER	1		SN:B10001--
9	707-56-60540	· SEAL, DUST	1	F1	SN:B10001--
10	07179-12074	· RING, SNAP	1		SN:B10001--
11	707-52-90350	· BUSHING	1		SN:B10001--
12	707-51-60030	· PACKING, ROD	1	F1	SN:B10001--
13	707-51-60640	· RING, BUFFER	1	F1	SN:B10001--
14	07146-02106	· RING, BACK-UP	1	F1	SN:B10001--
15	07000-12105	· O-RING	1	F1	SN:B10001--
16	07000-12110	· O-RING	1	F1	SN:B10001--
17	707-75-60110	· RING, SNAP	1		SN:B10001--
18	707-36-11050	· PISTON	1		SN:B10001--
19	707-44-11180	· RING, PISTON	1	F1	SN:B10001--
20	07156-01112	· RING, WEAR	1	F1	SN:B10001--
21	707-67-45010	· NUT	1		SN:B10001--
22	707-86-48310	· TUBE	1		SN:B10001--
23	02896-11012	· O-RING	1	F1	SN:B10001--
24	01010-81225	· BOLT	1		SN:B10001--
25	01643-31232	· WASHER	1		SN:B10001--
N/I	707-99-35720	SERVICE KIT	1		SN:B10001--
		F1 - PART OF SERVICE KIT 707-99-35720.			

Ref. H0700-01A3 Page H-177

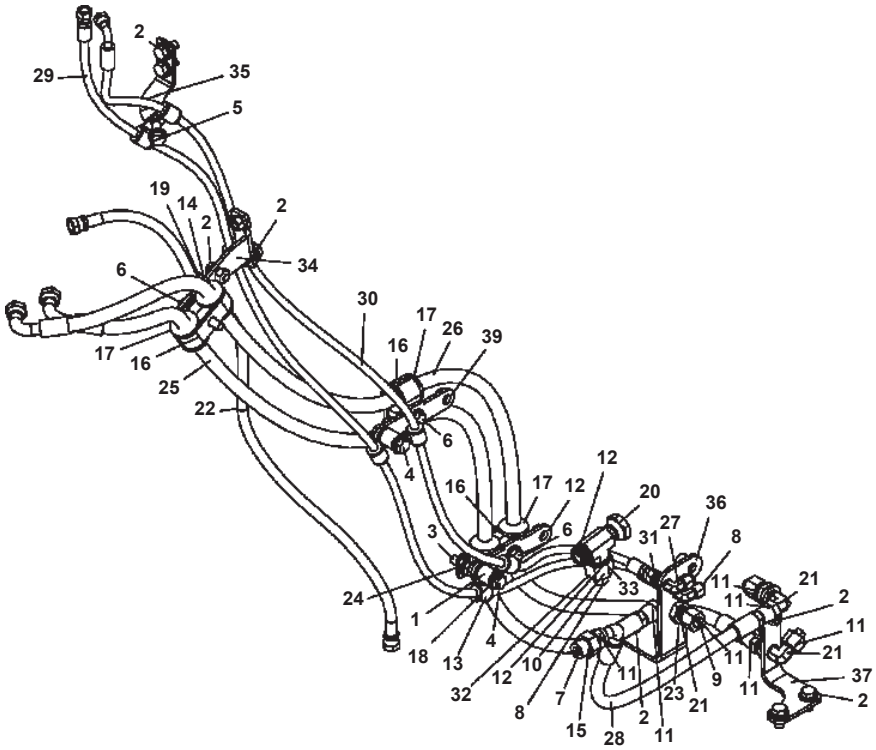

H2250-01A0 REAR HYDRAULIC LINES (RESCUE WINCH) (1/2)

Item	Part No.	Description	Qty	Options
1	195-33-11220	SPACER	2	SN:B10001--
2	01010-81225	BOLT	9	SN:B10001--
	01643-31232	WASHER	9	SN:B10001--
3	01010-81230	BOLT	1	SN:B10001--
	01643-31232	WASHER	1	SN:B10001--
4	01010-81250	BOLT	2	SN:B10001--
	01643-31232	WASHER	2	SN:B10001--
5	01010-81255	BOLT	1	SN:B10001--
	01643-31232	WASHER	1	SN:B10001--
6	01010-81270	BOLT	3	SN:B10001--
	01643-31232	WASHER	3	SN:B10001--
7	02781-0042A	UNION	1	SN:B10001--
8	02789-10210	PLUG	3	SN:B10001--
9	02789-10422	PLUG	3	SN:B10001--
10	02896-11008	O-RING	5	SN:B10001--
11	02896-11012	O-RING	7	SN:B10001--
12	02896-11018	O-RING	2	SN:B10001--
13	04434-51712	CLIP	9	SN:B10001--
14	04434-52112	CLIP	1	SN:B10001--
15	07002-12434	O-RING	1	SN:B10001--
16	07094-30417	CLAMP	3	SN:B10001--
17	07095-00420	CUSHION	6	SN:B10001--
18	07095-20211	CUSHION	9	SN:B10001--
19	07095-20314	CUSHION	1	SN:B10001--
20	12Y-62-11331	TEE	1	SN:B10001--
21	12Y-62-12361	ELBOW	3	SN:B10001--
22	12Y-62-13691	HOSE ASS'Y	1	SN:B10001--
23	12Y-62-13970	NUT	3	SN:B10001--
24	12Y-62-14130	BRACKET	1	SN:B10001--
25	12Y-62-14170	HOSE ASS'Y	1	SN:B10001--
26	12Y-62-14180	HOSE ASS'Y	1	SN:B10001--
27	12Y-62-14210	ELBOW	2	SN:B10001--
28	12Y-62-14220	HOSE ASS'Y	1	SN:B10001--
29	12Y-62-14231	HOSE ASS'Y	1	SN:B10001--
30	12Y-62-14241	HOSE ASS'Y	1	SN:B10001--
31	12Y-62-14270	NUT	2	SN:B10001--
32	12Y-62-14280	NUT	1	SN:B10001--
33	12Y-62-14310	SLEEVE	1	SN:B10001--
34	12Y-960-1111	CLAMP	1	SN:B10001--
35	12Y-960-1120	BRACKET	1	SN:B10001--

D51EX/PX-22 S/N B10001-UP

H2250-01A0 REAR HYDRAULIC LINES (RESCUE WINCH) (1/2)

Item	Part No.	Description	Qty	Options
36	12Y-960-1131	BRACKET	1	SN:B10001--
37	12Y-960-1161	BRACKET	1	SN:B10001--
38	12Y-960-1340	BRACKET	1	SN:B10001--
39	12Y-960-1350	BRACKET	1	SN:B10001--

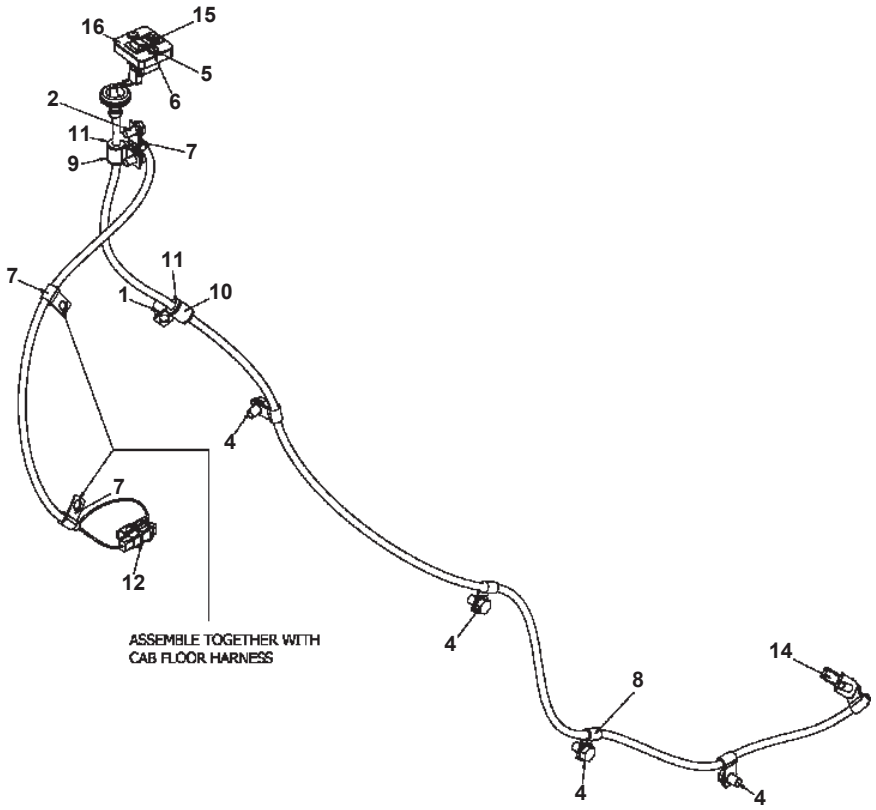

H2250-01A1 REAR HYDRAULIC LINE (RESCUE WINCH) (2/2)

Item	Part No.	Description	Qty	Options
1	195-33-11220	SPACER	1	SN:B10001--
2	01010-81020	BOLT	2	SN:B10001--
	01643-31032	WASHER	2	SN:B10001--
3	01010-81025	BOLT	1	SN:B10001--
	01643-31032	WASHER	1	SN:B10001--
4	01010-81220	BOLT	4	SN:B10001--
	01643-31232	WASHER	4	SN:B10001--
5	01245-00616	SCREW	2	SN:B10001--
6	01643-70623	WASHER	2	SN:B10001--
7	04434-51010	CLIP	4	SN:B10001--
8	04432-51012	CLIP	4	SN:B10001--
9	04434-51710	CLIP	1	SN:B10001--
10	04434-51712	CLIP	1	SN:B10001--
11	07095-20211	CUSHION	2	SN:B10001--
12	08034-00414	BAND	2	SN:B10001--
13	08193-20010	CLIP	1	SN:B10001--
14	12Y-06-13610	HARNES, WINCH	1	SN:B10001--
15	12Y-06-13620	SWITCH	1	SN:B10001--
16	12Y-960-1260	BRACKET	1	SN:B10001--

MAIN FRAME AND RELATED PARTS

CVPB00209

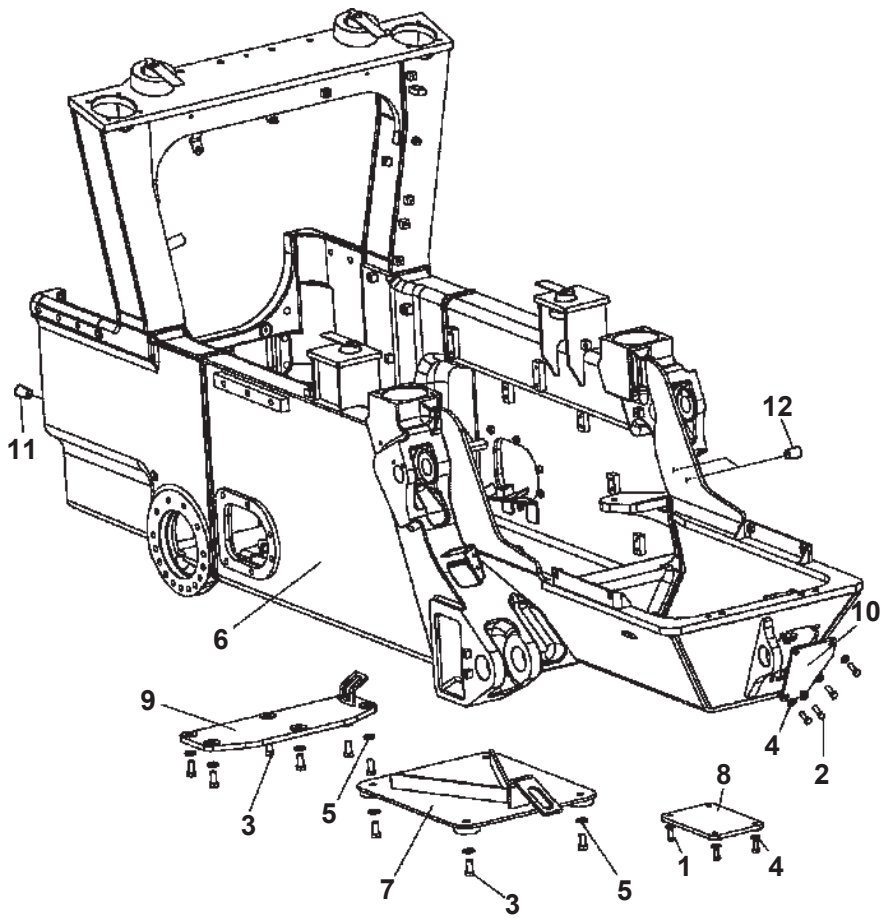

D51EX/PX-22 S/N B10001-UP

J2100-01A0 MAIN FRAME

Item	Part No.	Description	Qty	Options
1	01010-81225	BOLT	4	SN:B10001--
2	01010-81235	BOLT	4	SN:B10001--
3	01010-81635	BOLT	10	SN:B10001--
4	01643-31232	WASHER	8	SN:B10001--
5	01643-31645	WASHER	10	SN:B10001--
6	12Y-21-11104	FRAME ASSEMBLY	1	SN:B13706--
	□12Y-21-11103	FRAME ASSEMBLY	1	SN:B10546--B13705
	□12Y-21-11102	FRAME ASSEMBLY	1	SN:B10001--B10545
7	12Y-21-11140	COVER	1	SN:B10001--
8	12Y-21-11150	COVER	1	SN:B10001--
9	12Y-21-11161	COVER	1	SN:B10001--
10	12Y-21-11210	PLATE	1	SN:B10001--
11	07049-02430	PLUG	16	SN:B13706--
	□07049-02430	PLUG	12	SN:B10091--B13705
12	07049-01012	PLUG	2	SN:B13706--

Ref. J2100-01A0 Page J-001

CVPB00240

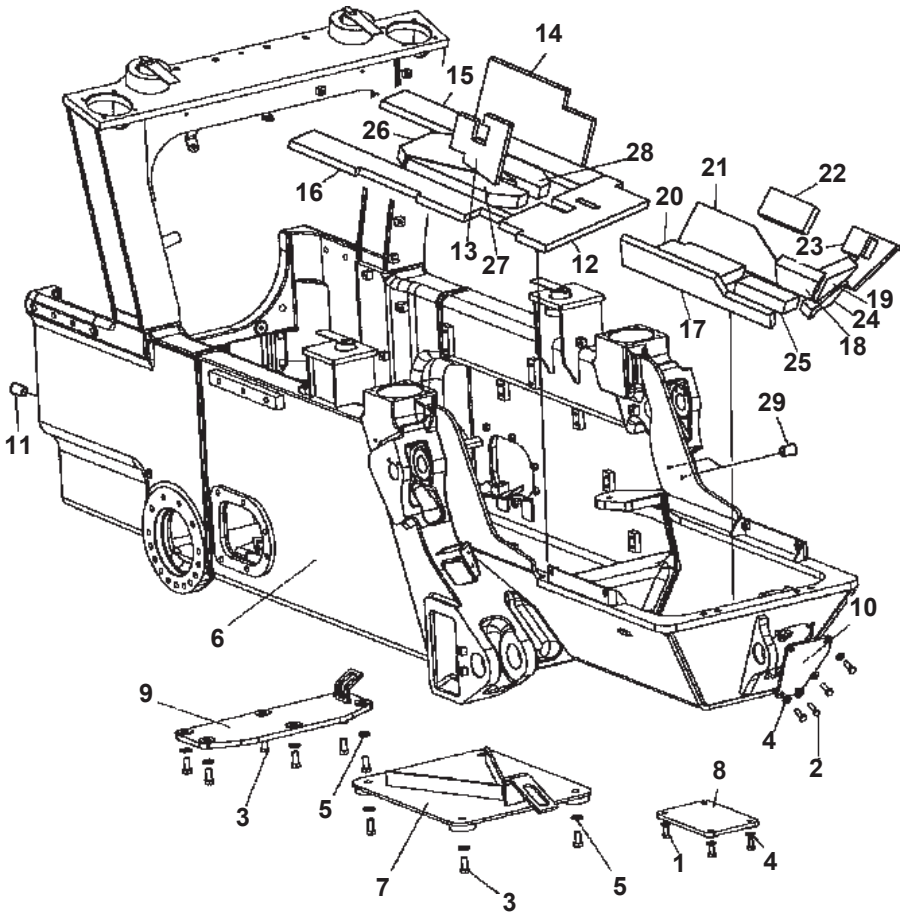

D51EX/PX-22 S/N B10001-UP

J2100-01A1 MAIN FRAME (EU NOISE REDUATION)

Item	Part No.	Description	Qty	Options
1	01010-81225	BOLT	4	SN:B10001--
2	01010-81235	BOLT	4	SN:B10001--
3	01010-81635	BOLT	10	SN:B10001--
4	01643-31232	WASHER	8	SN:B10001--
5	01643-31645	WASHER	10	SN:B10001--
	12Y-21-11104	FRAME ASSEMBLY	1	SN:B13706--
	□12Y-21-11103	FRAME ASSEMBLY	1	SN:B10546--
	□12Y-21-11102	FRAME ASSEMBLY	1	SN:B10001--B10545
7	12Y-21-11140	COVER	1	SN:B10001--B13705
8	12Y-21-11150	COVER	1	SN:B10001--
9	12Y-21-11161	COVER	1	SN:B10001--
10	12Y-21-11210	PLATE	1	SN:B10001--
11	07049-02430	PLUG	16	SN:B13706--
	□07049-02430	PLUG	12	SN:B10091--B13705
12	12Y-862-1250	ABSORBER	1	SN:B10001--
13	12Y-862-1270	ABSORBER	1	SN:B10001--
14	12Y-862-1280	ABSORBER	1	SN:B10001--
15	12Y-862-1290	ABSORBER	1	SN:B10001--
16	12Y-862-1310	ABSORBER	1	SN:B10001--
17	12Y-862-1320	ABSORBER	1	SN:B10001--
18	12Y-862-1330	ABSORBER	1	SN:B10001--
19	12Y-862-1340	ABSORBER	1	SN:B10001--
20	12Y-862-1350	ABSORBER	1	SN:B10001--
21	12Y-862-1360	ABSORBER	1	SN:B10001--
22	12Y-862-1370	ABSORBER	1	SN:B10001--
23	12Y-862-1380	ABSORBER	1	SN:B10001--
24	12Y-862-1390	ABSORBER	1	SN:B10001--
25	12Y-862-1510	ABSORBER	1	SN:B10001--
26	12Y-862-1520	ABSORBER	1	SN:B10001--
27	12Y-862-1530	ABSORBER	1	SN:B10001--
28	12Y-862-1540	ABSORBER	1	SN:B10001--
29	07049-01012	PLUG	2	SN:B13706--

Ref. J2100-01A1 Page J-003

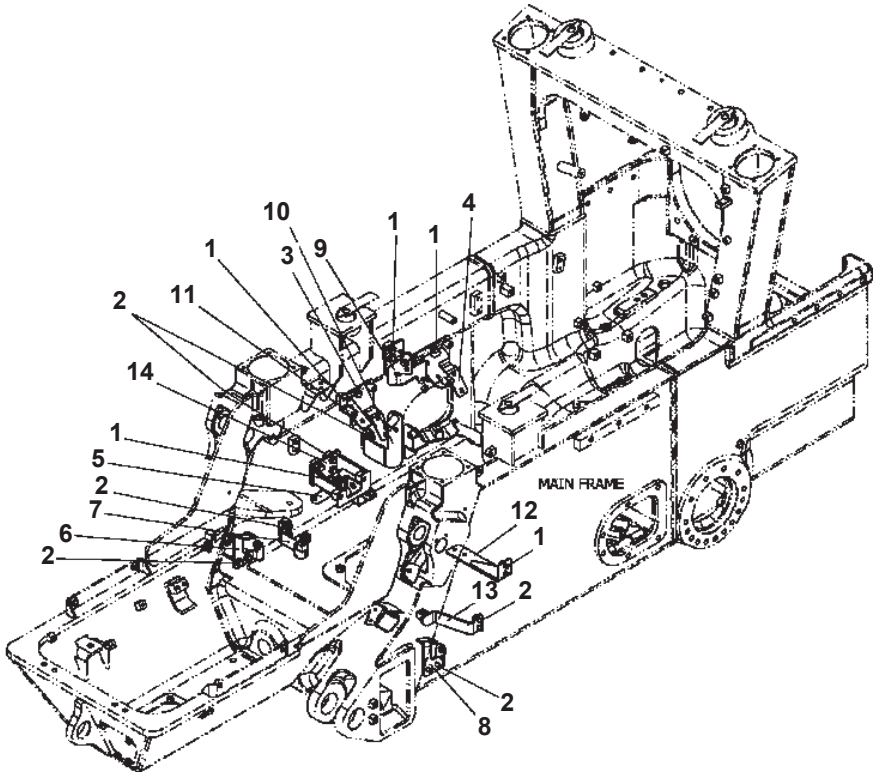

J2110-01A0 MAIN FRAME MOUNTING

Item	Part No.	Description	Qty	Options
1	01010-81220	BOLT	11	SN:B10001--
	01643-31232	WASHER	11	SN:B10001--
2	01010-81225	BOLT	14	SN:B10001--
	01643-31232	WASHER	14	SN:B10001--
3	12Y-03-13582	BRACKET	1	SN:B10001--
4	12Y-03-13592	BRACKET	1	SN:B10001--
5	12Y-60-11421	BRACKET	1	SN:B10001--
6	12Y-60-11433	PLATE	1	SN:B12033--
	□12Y-60-11432	PLATE	1	SN:B10230--B12032
	□12Y-60-11431	PLATE	1	SN:B10001--B10229
7	12Y-60-11442	BRACKET	1	SN:B10001--
8	12Y-60-11461	PLATE	1	SN:B10001--
9	12Y-60-11472	BRACKET	1	SN:B10001--
10	12Y-60-11482	BRACKET	1	SN:B10001--
11	12Y-60-11491	BRACKET	1	SN:B10001--
12	12Y-60-11512	BRACKET	1	SN:B10001--
13	12Y-60-11561	BRACKET	1	SN:B10001--
14	12Y-60-11570	BRACKET	1	SN:B10001--

CVPB00211

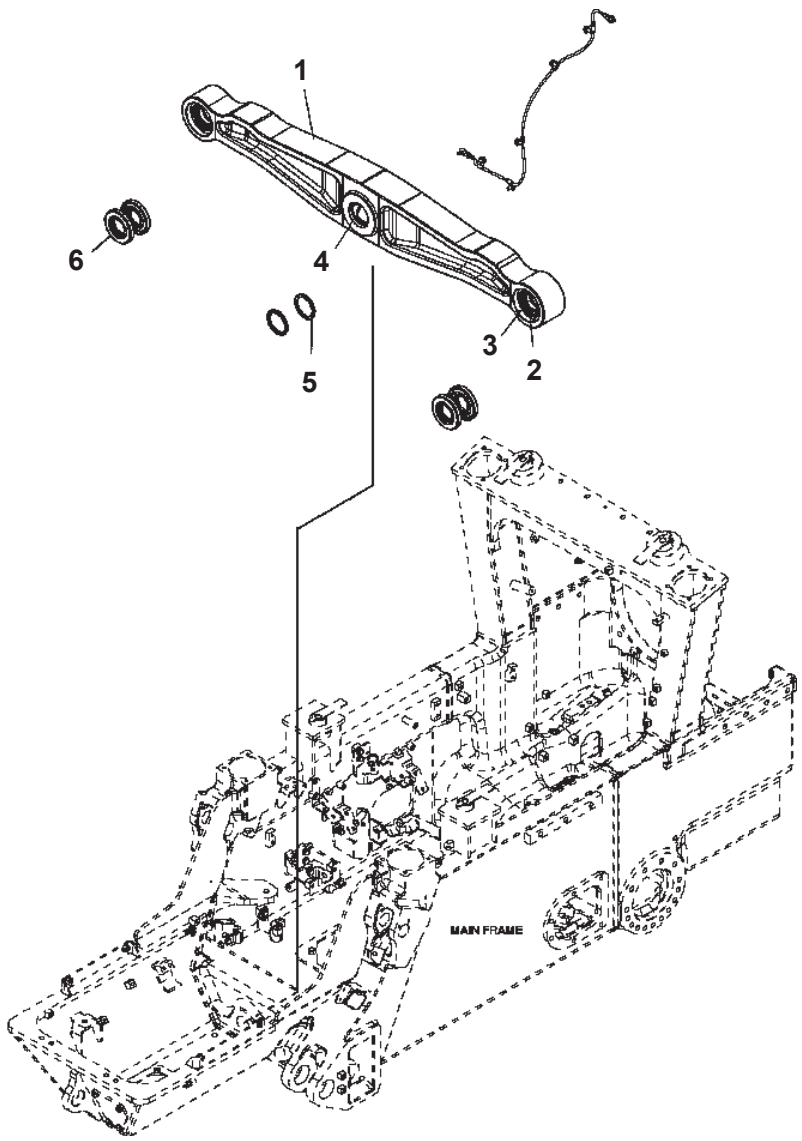

D51EX/PX-22 S/N B10001-UP

J2700-01A0 EQUALIZER BAR

Item	Part No.	Description	Qty	Wt.	Options
1	12Y-50-12121	EQUALIZER BAR (EX)	1		SN:B10001--
		OR			SN:B10001--
1	12Y-50-11121	EQUALIZER BAR (PX)	1	F1	SN:B10001--
2	04065-08025	RING	4		SN:B10001--
3	12Y-50-11150	BUSHING	2		SN:B10001--
4	12Y-50-11160	BUSHING	1		SN:B10001--
5	12Y-50-11130	SEAL	2		SN:B10001--
6	12Y-50-11140	SEAL	4		SN:B10001--
		F1 - REFERENCE AND PART FOR PX MODEL.			

Ref. J2700-01A0 Page J-007

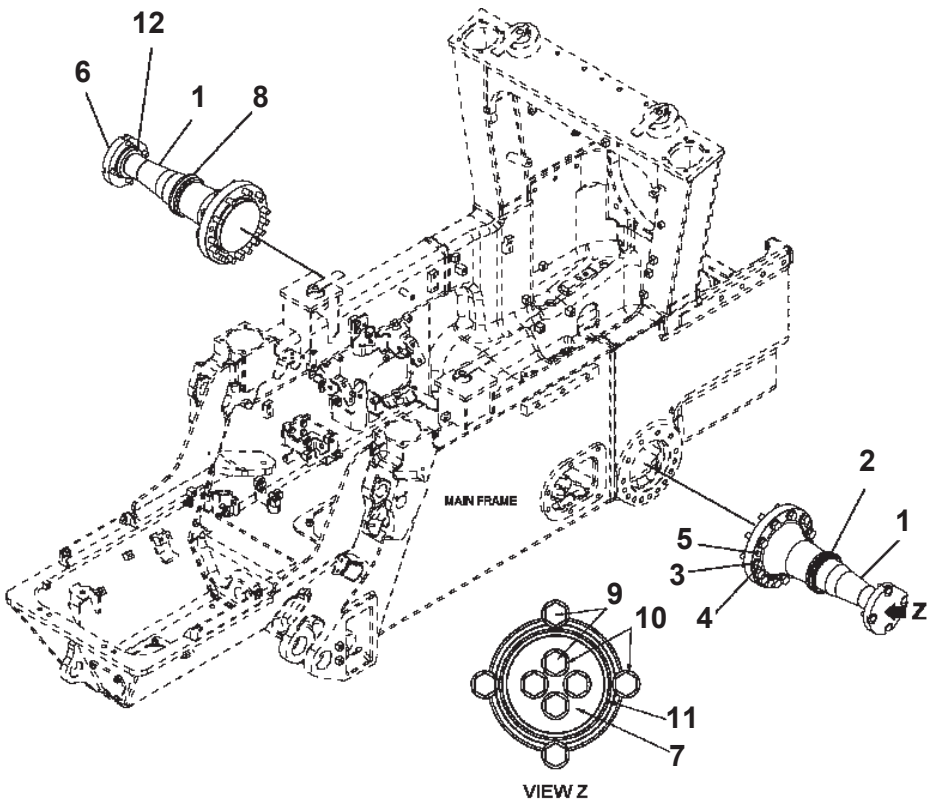

D51EX/PX-22 S/N B10001-UP

J2710-01A0 PIVOT SHAFT

Item	Part No.	Description	Qty	Wt.	Options
1	12Y-50-12111	SHAFT (EX)	2		SN:B10001--
		OR			
1	12Y-50-11111	SHAFT (PX)	2	F1	SN:B10001--
2	134-50-61171	RING	2		SN:B10001--
3	01010-82075	BOLT	30		SN:B10001--
4	01643-32060	WASHER	30		SN:B10001--
5	07049-02025	PLUG	4		SN:B10001--
6	12Y-50-11290	CAP	2		SN:B12177--
	□134-50-61121	CAP	2		SN:B10001--B12176
7	12Y-50-11270	SPACER	2		SN:B12177--
	□134-50-61131	PLATE	2		SN:B10001--B12176
8	134-50-61160	SEAL	2		SN:B10001--
9	01010-81640	BOLT	16		SN:B10001--
10	01643-31645	WASHER	16		SN:B10001--
11	07000-12135	O-RING	2		SN:B12177--
	□07000-12125	O-RING	2		SN:B10001--B12176
12	12Y-50-11280	PLATE	2		SN:B12177--
		F1 - REFERENCE AND PART FOR PX MODEL.			

Ref. J2710-01A0 Page J-009

CVPB00210

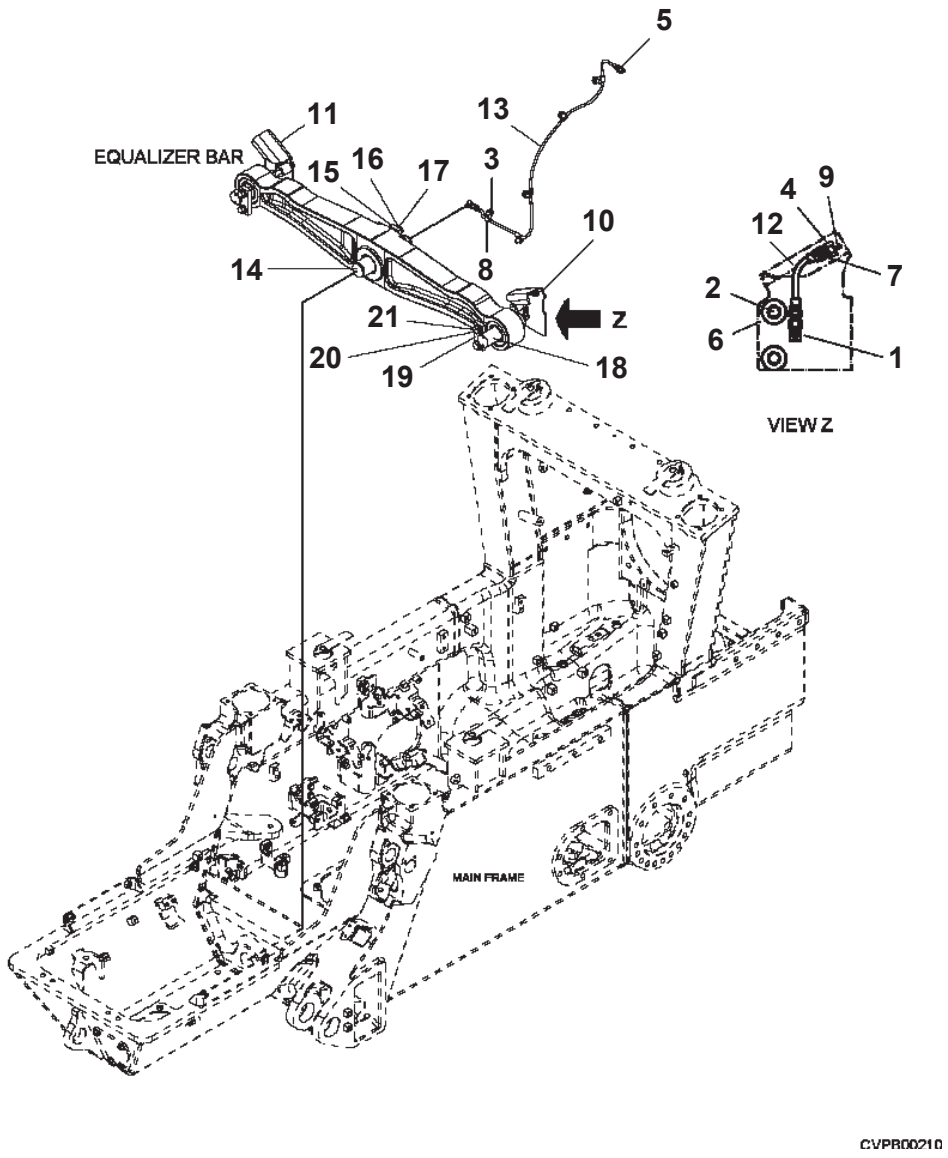

D51EX/PX-22 S/N B10001-UP

J2750-01A0 SUSPENSION LUBRICATION AND PINS

Item	Part No.	Description	Qty	Options
1	202-62-21430	ELBOW	3	SN:B10001--
2	01010-81680	BOLT	4	SN:B10001--
3	01010-81220	BOLT	5	SN:B10001--
	01643-31232	WASHER	5	SN:B10001--
4	01580-11210	NUT	3	SN:B10001--
5	01643-31232	WASHER	1	SN:B10001--
6	01643-31645	WASHER	4	SN:B10001--
7	01643-51232	WASHER	2	SN:B10001--
8	04434-50812	CLIP	5	SN:B10001--
9	07020-00001	FITTING	3	SN:B10001--
10	12Y-50-11212	COVER	1	SN:B10001--
11	12Y-50-11222	COVER	1	SN:B10001--
12	12Y-50-11230	HOSE	2	SN:B10001--
13	12Y-50-11240	HOSE	1	SN:B10001--
14	12Y-50-11170	PIN	1	SN:B10001--
15	14Y-50-11390	PLATE	1	SN:B10001--
16	01643-31645	WASHER	2	SN:B10001--
17	01010-81640	BOLT	2	SN:B10001--
18	12Y-50-11190	PIN	2	SN:B10001--
19	14Y-50-11390	PLATE	2	SN:B10001--
20	01643-31645	WASHER	4	SN:B10001--
21	01010-81640	BOLT	4	SN:B10001--

Ref. J2750-01A0 Page J-011

OPERATOR'S COMPARTMENT AND CONTROL SYSTEM

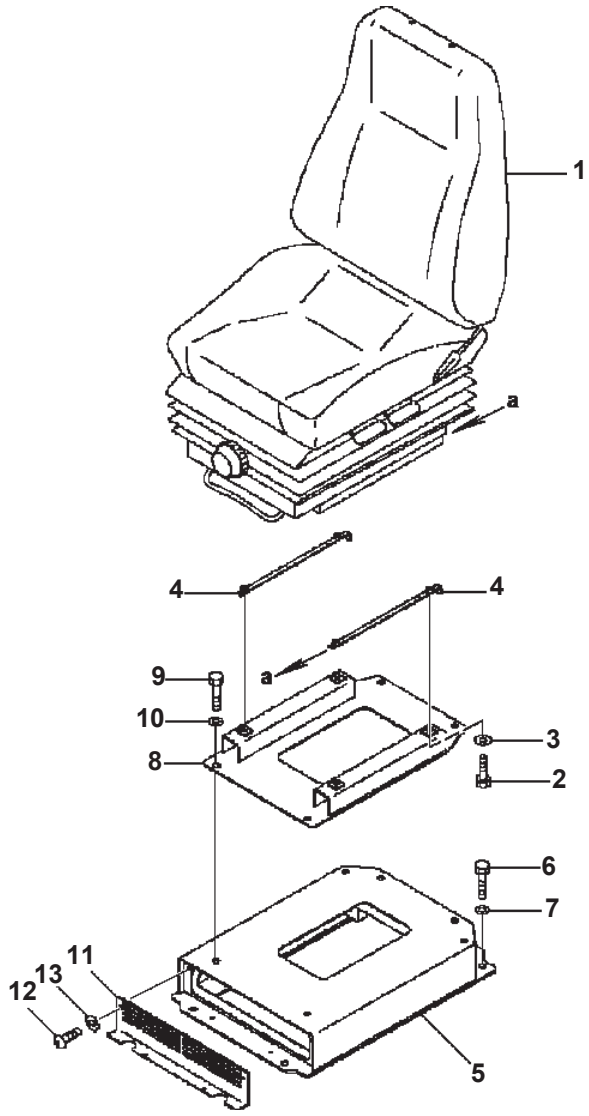

K0110-01A0 OPERATOR SEAT RECLINING TYPE - FABRIC SEAT (HI-BACK)

Item	Part No.	Description	Qty	Options
1	12Y-57-11500	SEAT ASSEMBLY, RECLINING TYPE	1	SN:B10001--
2	01010-B0820	BOLT	4	SN:B10001--
3	01643-30823	WASHER	4	SN:B10001--
4	134-57-61150	BRACKET	2	SN:B10001--
5	12Y-57-11113	BRACKET	1	SN:B10001--B10048
6	01010-81230	BOLT	4	SN:B10001--B10048
7	01643-31232	WASHER	4	SN:B10001--B10048
8	12Y-57-11123	BRACKET	1	SN:B10001--
9	01010-81230	BOLT	4	SN:B10001--
10	01643-31232	WASHER	4	SN:B10001--
11	12Y-57-11161	COVER	1	SN:B10001--B10048
12	01245-00620	BOLT	4	SN:B10001--B10048
13	01643-70623	WASHER	4	SN:B10001--B10048

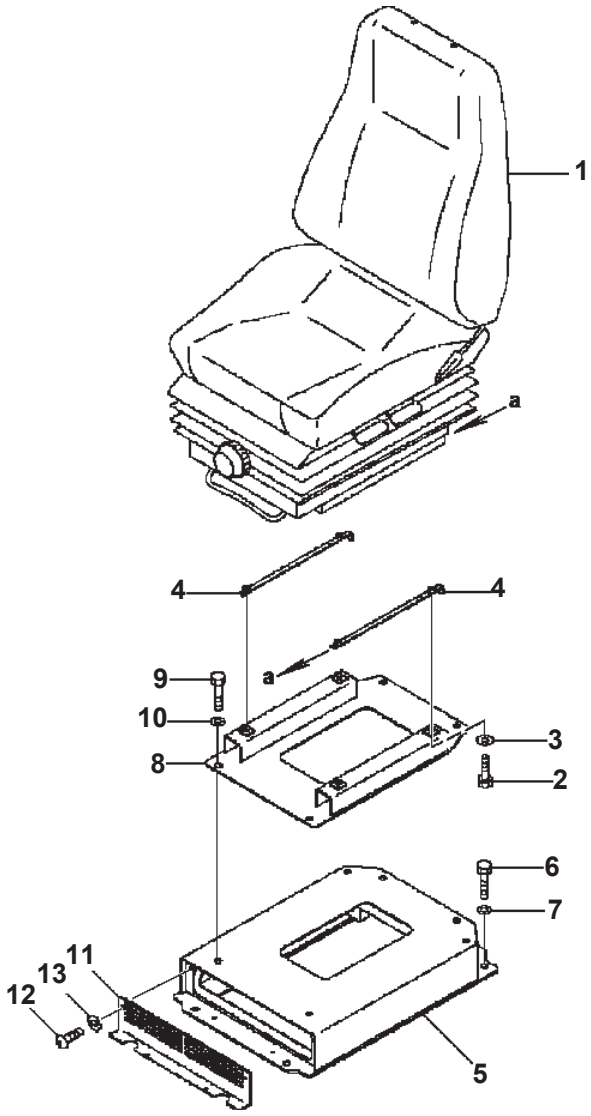

K0110-01A1 OPERATOR SEAT RECLINING TYPE - LEATHER SEAT (HI-BACK)

Item	Part No.	Description	Qty	Options
1	12Y-57-11700	SEAT ASSEMBLY, RECLINING TYPE	1	SN:B12026--
	□12Y-57-11600	SEAT ASSEMBLY, RECLINING TYPE	1	SN:B10001--B12025
2	01010-B0820	BOLT	4	SN:B10001--
3	01643-30823	WASHER	4	SN:B10001--
4	134-57-61150	BRACKET	2	SN:B10001--
5	12Y-57-11113	BRACKET	1	SN:B10001--B10048
6	01010-81230	BOLT	4	SN:B10001--B10048
7	01643-31232	WASHER	4	SN:B10001--B10048
8	12Y-57-11123	BRACKET	1	SN:B10001--
9	01010-81230	BOLT	4	SN:B10001--
10	01643-31232	WASHER	4	SN:B10001--
11	12Y-57-11161	COVER	1	SN:B10001--B10048
12	01245-00620	BOLT	4	SN:B10001--B10048
13	01643-70623	WASHER	4	SN:B10001--B10048

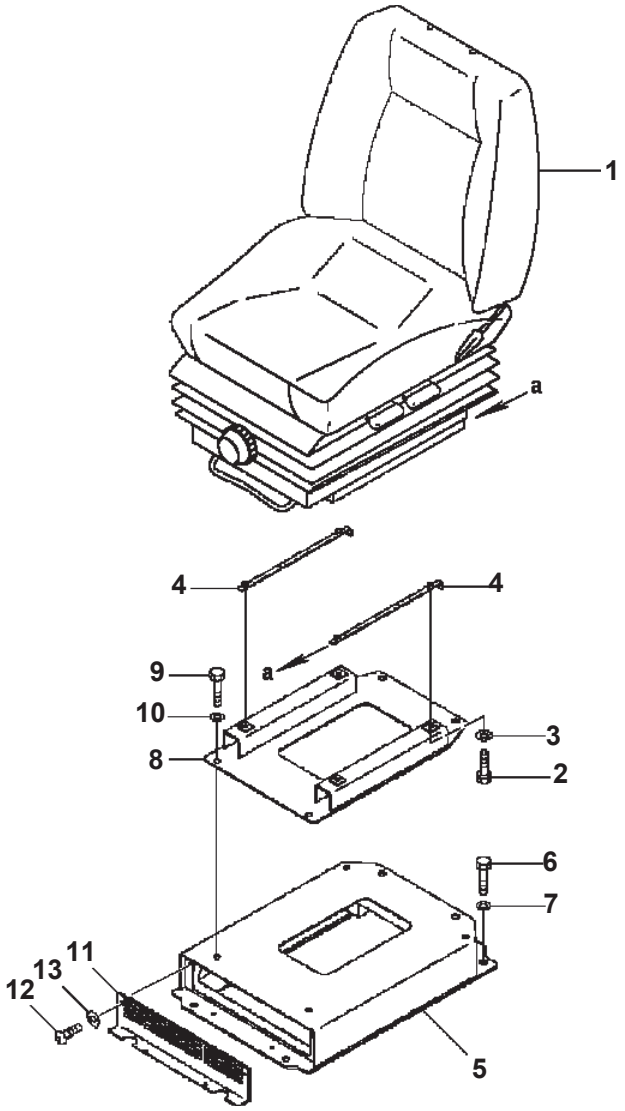

K0110-01A2 OPERATOR SEAT RECLINING TYPE - LEATHER SEAT

Item	Part No.	Description	Qty	Options
1	12Y-57-11190	SEAT ASSEMBLY, RECLINING TYPE	1	SN:B12097--
	□12Y-57-11400	SEAT ASSEMBLY, RECLINING TYPE	1	SN:B10001--B12096
2	01010-B0820	BOLT	4	SN:B10001--
3	01643-30823	WASHER	4	SN:B10001--
4	134-57-61150	BRACKET	2	SN:B10001--
5	12Y-57-11113	BRACKET	1	SN:B10001--B10048
6	01010-81230	BOLT	4	SN:B10001--B10048
7	01643-31232	WASHER	4	SN:B10001--B10048
8	12Y-57-11123	BRACKET	1	SN:B10001--
9	01010-81230	BOLT	4	SN:B10001--
10	01643-31232	WASHER	4	SN:B10001--
11	12Y-57-11161	COVER	1	SN:B10001--B10048
12	01245-00620	BOLT	4	SN:B10001--B10048
13	01643-70623	WASHER	4	SN:B10001--B10048

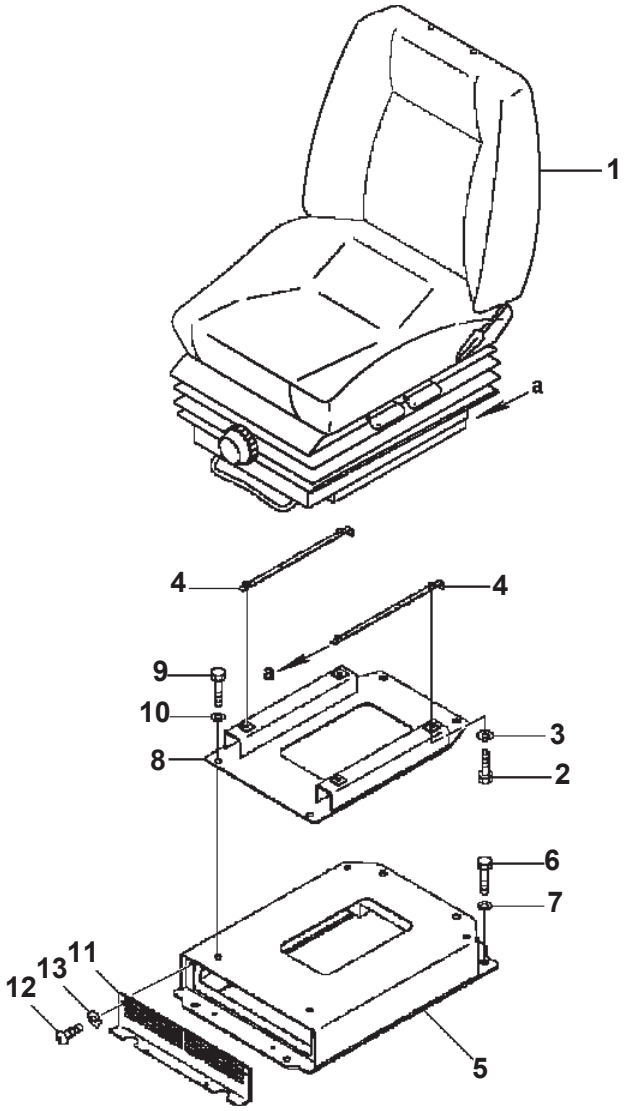

K0110-01A3 OPERATOR SEAT RECLINING TYPE - FABRIC SEAT

Item	Part No.	Description	Qty	Options
1	12Y-57-11300	SEAT ASSEMBLY, RECLINING TYPE	1	SN:B10001--
2	01010-B0820	BOLT	4	SN:B10001--
3	01643-30823	WASHER	4	SN:B10001--
4	134-57-61150	BRACKET	2	SN:B10001--
5	12Y-57-11113	BRACKET	1	SN:B10001--B10048
6	01010-81230	BOLT	4	SN:B10001--B10048
7	01643-31232	WASHER	4	SN:B10001--B10048
8	12Y-57-11123	BRACKET	1	SN:B10001--
9	01010-81230	BOLT	4	SN:B10001--
10	01643-31232	WASHER	4	SN:B10001--
11	12Y-57-11161	COVER	1	SN:B10001--B10048
12	01245-00620	BOLT	4	SN:B10001--B10048
13	01643-70623	WASHER	4	SN:B10001--B10048

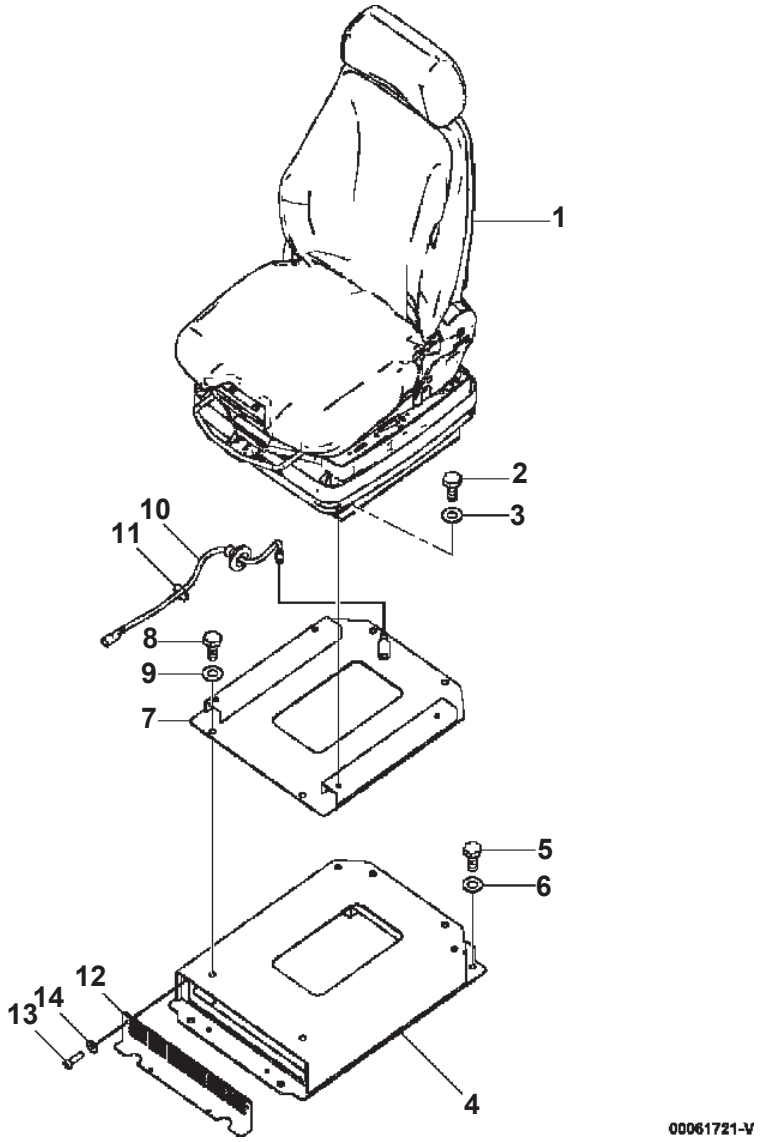

K0110-01A4 OPERATOR SEAT AIR SUSPENSION TYPE - FABRIC SEAT (HI-BACK)

Item	Part No.	Description	Qty	Options
1		SEAT (SEE FIG. K0110-01A5)		SN:B10001--
2	01010-80820	BOLT	4	SN:B10001--
3	01643-30823	WASHER	4	SN:B10001--
4	12Y-57-11113	BRACKET	1	SN:B10001--B10048
5	01010-81230	BOLT	4	SN:B10001--B10048
6	01643-31232	WASHER	4	SN:B10001--B10048
7	12Y-57-11143	BRACKET	1	SN:B10914--
	□12Y-57-11142	BRACKET	1	SN:B10001--B10913
8	01010-81230	BOLT	4	SN:B10001--
9	01643-31232	WASHER	4	SN:B10001--
10	12Y-57-11150	HARNESS, WIRE	1	SN:B10001--
11	08034-20519	STRAP, TIE	1	SN:B10001--
12	12Y-57-11161	COVER	1	SN:B10001--B10048
13	01245-00620	BOLT	4	SN:B10001--B10048
14	01643-70623	WASHER	4	SN:B10001--B10048

CMZ00110

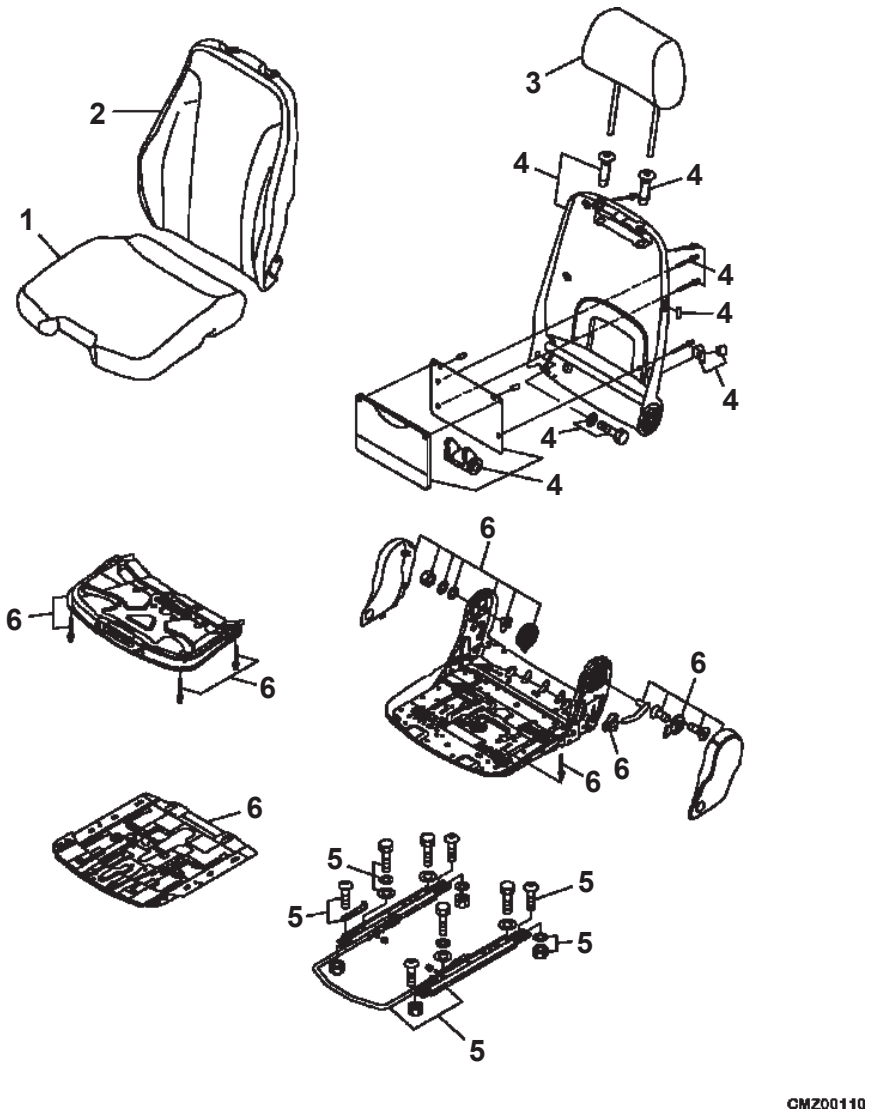

D51EX/PX-22 S/N B10001-UP

K0110-01A5 SEAT (AIR SUSPENSION) INNER PARTS 1/2

Item	Part No.	Description	Qty	Options
	134-57-71201	SEAT ASSEMBLY	1	SN:B10001--
1	GJ140907	· SEAT, FABRIC	1	SN:B10001--
2	GJ2048193	· BACK REST, CUSHION	1	SN:B10001--
3	GJ140912	· REST	1	SN:B10001--
4	GJ2048660	· BACK REST, FRAME	1	SN:B10001--
5	GJ2048661	· SLIDE RAIL	1	SN:B10001--
6	GJ2048662	· SEAT	1	SN:B10001--

Ref. K0110-01A5 Page K-011

CMZ00111

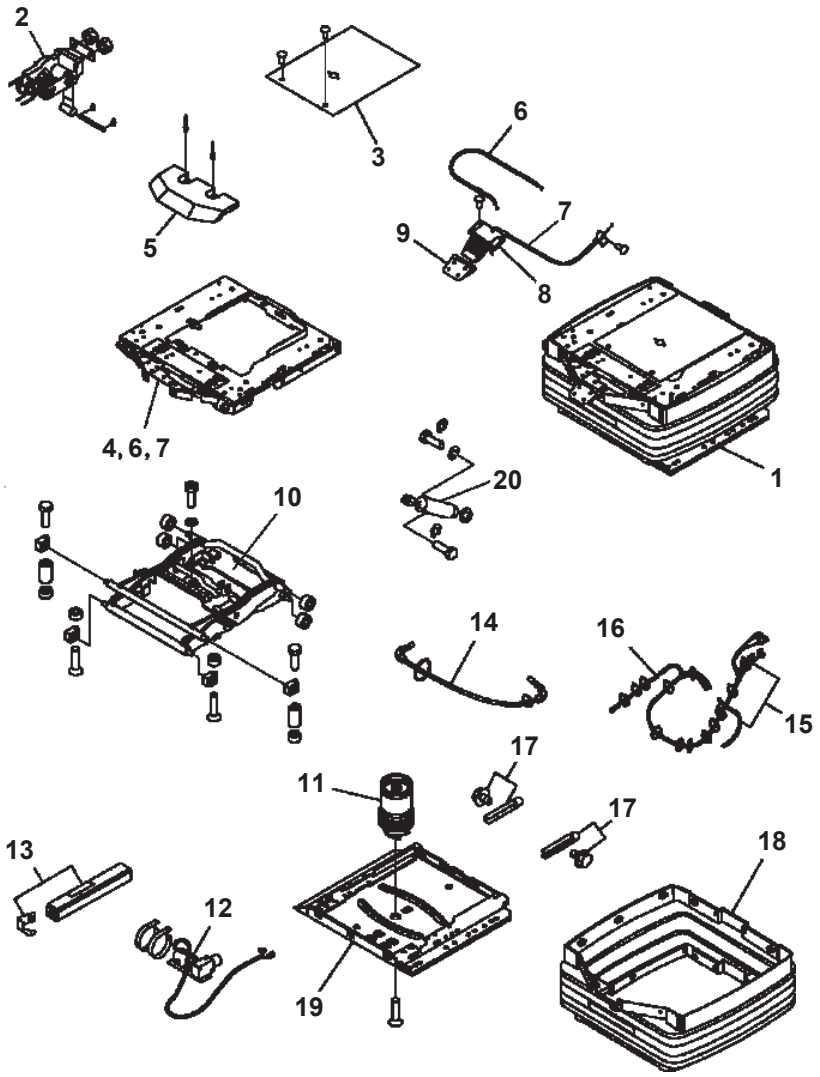

D51EX/PX-22 S/N B10001-UP

K0110-01A6 SEAT (AIR SUSPENSION) INNER PARTS 2/2

Item	Part No.	Description	Qty	Options
		SEAT ASSEMBLY (SEE FIG. K0110-01A5)		SN:B10001--
1	GJ1097995	· SUSPENSION	1	SN:B10001--
2	GJ1081312	· CONTROL, LEVEL	1	SN:B10001--
3	GJ1076975	· COVER	1	SN:B10001--
4	GJ1104018	· SUSPENSION, UPPER	1	SN:B10001--
5	GJ1078590	· COVER	1	SN:B10001--
6	GJ1077152	· CABLE \xd4	1	SN:B10001--
7	GJ1077153	· CABLE	1	SN:B10001--
8	GJ131834	· CONTROL	1	SN:B10001--
9	GJ138628	· HANDLE	1	SN:B10001--
10	GJ1076979	· WEAR PLATE	1	SN:B10001--
11	GJ1081315	· SPRING	1	SN:B10001--
12	GJ1096687	· COMPRESSOR	1	SN:B10001--
13	GJ1090447	· RESERVOIR	1	SN:B10001--
14	GJ1090779	· HOSE, AIR	1	SN:B10001--
15	GJ1096565	· HOSE, AIR	1	SN:B10001--
16	GJ1089165	· CABLE	1	SN:B10001--
17	GJ1090446	· STOP	1	SN:B10001--
18	GJ1104066	· MOUNT	1	SN:B10001--
19	GJ1078594	· SUSPENSION, LOWER	1	SN:B10001--
20	GJ1104025	· SHOCK ABSORBER	1	SN:B10001--

Ref. K0110-01A6 Page K-013

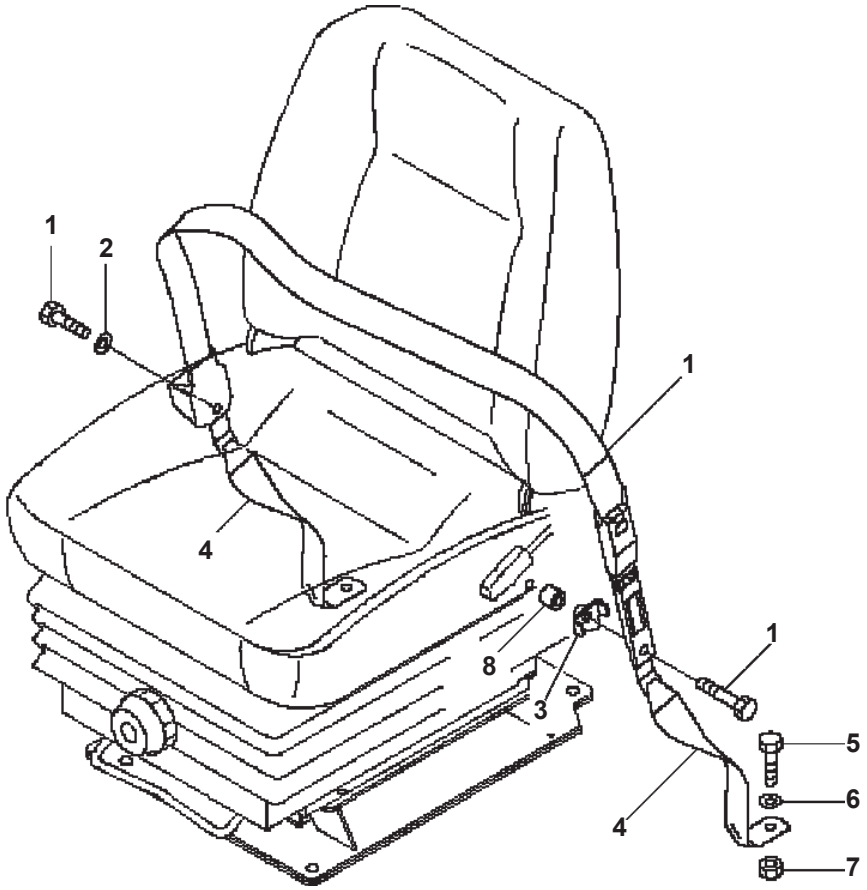

K0160-01A0 SEAT BELT FOR SUSPENSION SEAT - FOR RETRACTION

Item	Part No.	Description	Qty	Options
1	12Y-57-11213	SEAT BELT ASSEMBLY	1	SN:B12548--
	□12Y-57-11212	SEAT BELT ASSEMBLY	1	SN:B11700--B12547
	□12Y-57-11211	SEAT BELT ASSEMBLY	1	SN:B10001--B11699
2	01643-51232	· WASHER	1	SN:B10001--
3	12Y-57-11220	· BRACKET	1	SN:B10001--
4	09409-20000	BELT, TETHER	2	SN:B10001--
5	09409-00001	· BOLT	4	SN:B10001--
6	09409-00002	· WASHER	4	SN:B10001--
7	09409-00002	· NUT	2	SN:B10001--
8	104-890-5610	COLLAR	1	SN:B10001--

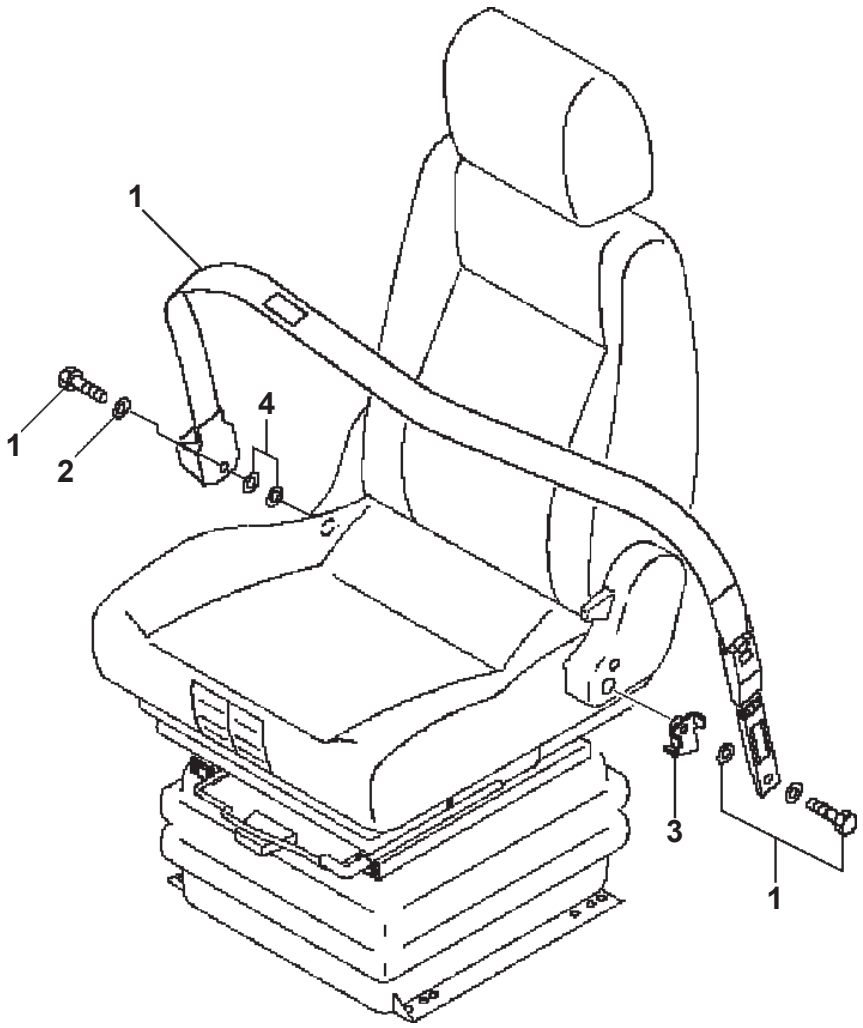

K0160-01A1 SEAT BELT FOR AIR SUSPENSION SEAT - FOR RETRACTION

Item	Part No.	Description	Qty	Options
1	12Y-57-11232	SEAT BELT ASSEMBLY	1	SN:B12518--
	□12Y-57-11231	SEAT BELT ASSEMBLY	1	SN:B11834--B12517
	□12Y-57-11230	SEAT BELT ASSEMBLY	1	SN:B10001--B11833
2	01643-51232	· WASHER	1	SN:B10001--
3	12Y-57-11240	· BRACKET	1	SN:B10001--
4	01643-51232	WASHER	2	SN:B10001--

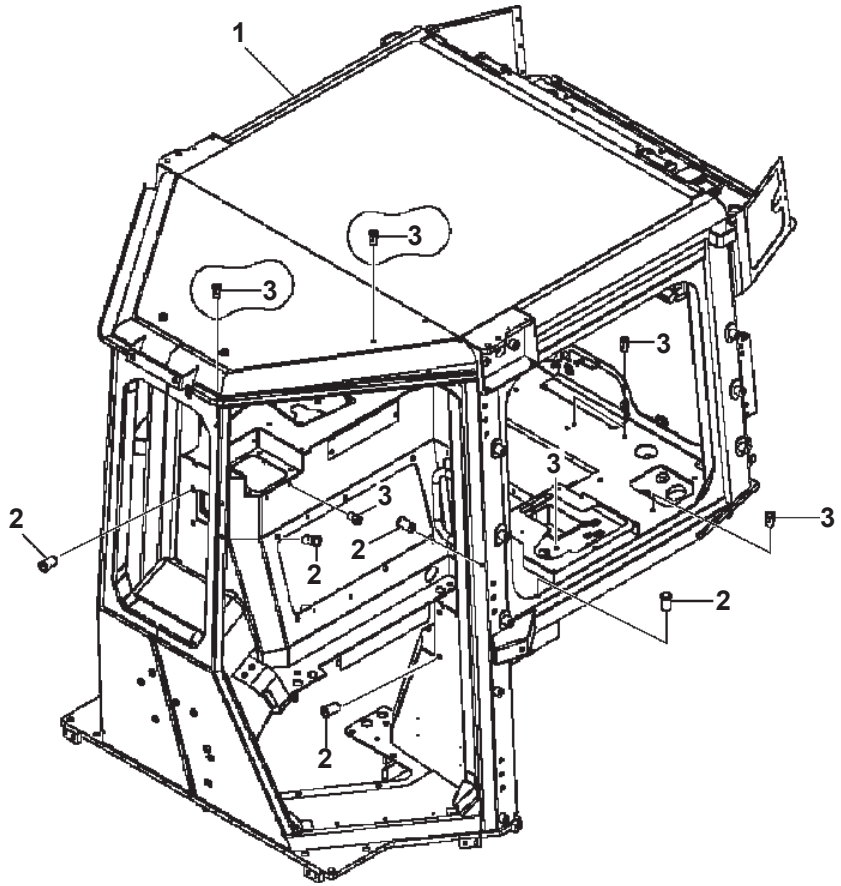

K0210-01A0 CAB COMPLETE ASSEMBLY (BODY)

Item	Part No.	Description	Qty	Options
	(12Y-978-0191)	CAB ASSEMBLY	1	SN:B11916--
	(12Y-978-0190)	CAB ASSEMBLY	1	SN:B10001--B11915
		THESE ASSEMBLIES CONSIST OF ALL PARTS SHOWN IN FIGS. K0210-01A0 TO K0210-18A0.		
1	12Y-978-1119	· CAB ASSEMBLY	1	SN:B11916--
	□12Y-978-1117	· CAB ASSEMBLY	1	SN:B11449--B11915
	□12Y-978-1116	· CAB ASSEMBLY	1	SN:B10552--B11448
	□12Y-978-1115	· CAB ASSEMBLY	1	SN:B10001--B10551
2	12Y-978-1880	· NUT	19	SN:B13364--
	□12Y-978-1890	· NUT	19	SN:B11449--B13363
	◆12Y-978-1890	· NUT	15	SN:B10552--B11448
3	12Y-978-1870	· NUT	15	SN:B13364--
	□20Y-53-12260	· NUT	15	SN:B11449--B13363
	◆20Y-53-12260	· NUT	21	SN:B10552--B11448

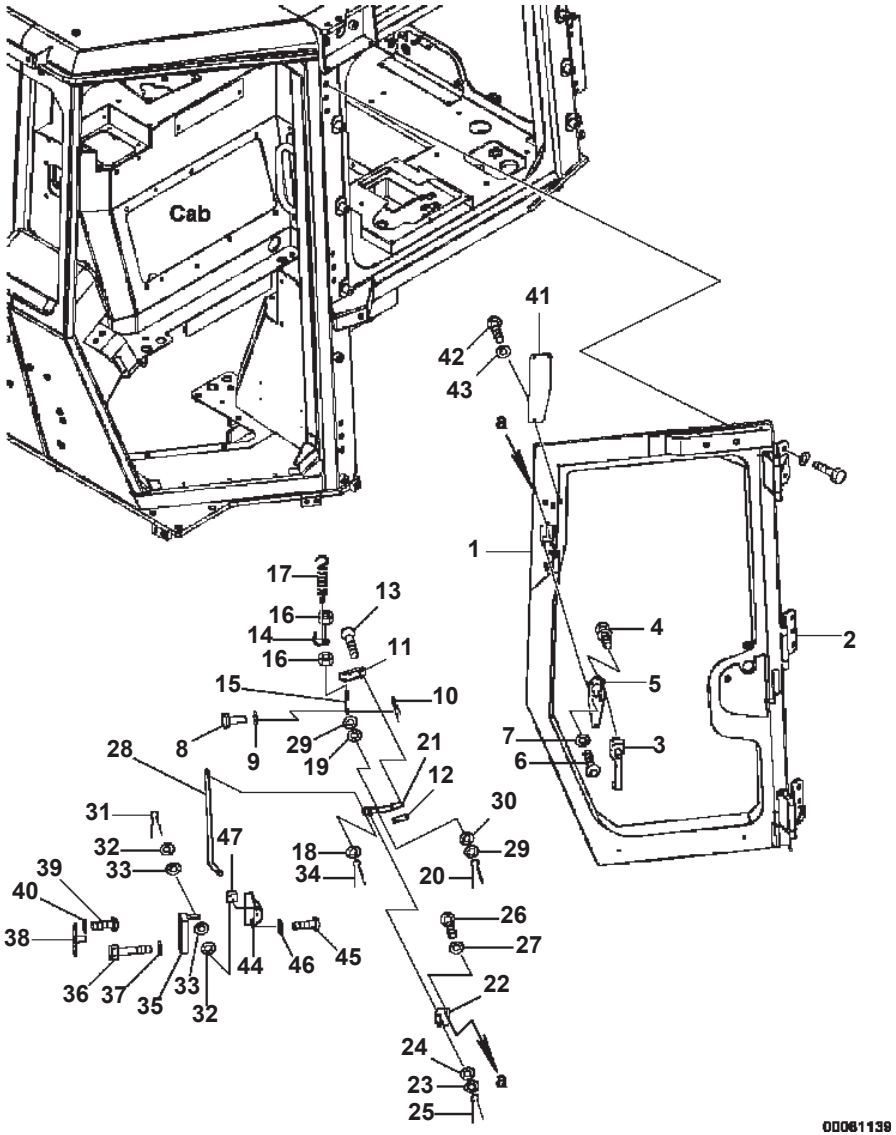

K0210-02A0 CAB DOOR AND LATCH (L.H.)

Item	Part No.	Description	Qty	Options
	(12Y-978-0191)	CAB ASSEMBLY	1	SN:B11916--
	(□12Y-978-0190)	CAB ASSEMBLY	1	SN:B10001--B11915
		THESE ASSEMBLIES CONSIST OF ALL PARTS SHOWN IN FIGS. K0210-01A0 TO K0210-18A0.		
	(12Y-978-0380)	· DOOR ASSEMBLY, L.H.	1	SN:B10001--
		THESE ASSEMBLIES CONSIST OF ALL PARTS SHOWN IN FIGS. K0210-02A0 AND K0210-03A0.		
1	12Y-978-3115	· · DOOR ASSEMBLY, L.H.	1	SN:B10001--
2	(NSS)	· · · HINGE L.H. (WELDED)	1	SN:B10001--
3	198-Z11-3710	· · HANDLE ASSEMBLY	1	SN:B10001--
4	01023-10520	· · SCREW	5	SN:B10001--
5	12Y-978-3210	· · PLATE	1	SN:B10001--
6	01245-00620	· · SCREW	3	SN:B10001--
7	01643-70623	· · WASHER	3	SN:B10001--
8	04205-10622	· · PIN	1	SN:B10001--
9	01643-70623	· · WASHER	1	SN:B10001--
10	04050-11612	· · PIN, COTTER	1	SN:B10001--
11	12Y-978-3281	· · KNOB	1	SN:B10001--
12	12Y-978-3290	· · PLATE	1	SN:B10001--
13	01023-20410	· · SCREW	2	SN:B10001--
14	12Y-978-3221	· · PLATE	1	SN:B10001--
15	12Y-978-3241	· · ROD	1	SN:B10001--
16	01580-10605	· · NUT	2	SN:B10001--
17	17A-Z11-3332	· · SPRING	2	SN:B10061--
	□176-06-42170	· · SPRING		SN:B10001--B10060
18	01643-70623	· · WASHER	1	SN:B10001--
19	12Y-978-3310	· · WASHER	1	SN:B10001--
20	04050-11612	· · PIN, COTTER	1	SN:B10001--
21	12Y-978-3251	· · PLATE	1	SN:B10001--
22	12Y-978-3261	· · PLATE	1	SN:B10001--
23	01643-70823	· · WASHER	1	SN:B10001--
24	12Y-978-3360	· · WASHER	1	SN:B10001--
25	04050-12012	· · PIN, COTTER	1	SN:B10001--
26	01245-00620	· · SCREW	2	SN:B10001--
27	01643-70623	· · WASHER	2	SN:B10001--
28	17A-979-3320	· · PLATE	1	SN:B10001--
29	01643-70623	· · WASHER	1	SN:B10001--

K0210-02A0 CAB DOOR AND LATCH (L.H.)

Item	Part No.	Description	Qty	Options
30	12Y-978-3310	・・ WASHER	1	SN:B10001--
31	04050-11612	・・ PIN, COTTER	1	SN:B10001--
32	01643-70623	・・ WASHER	2	SN:B10001--
33	12Y-978-3310	・・ WASHER	2	SN:B10001--
34	04050-11612	・・ PIN, COTTER	1	SN:B10001--
35	195-Z11-4520	・・ LOCK	1	SN:B10001--
36	01010-D0635	・・ BOLT	4	SN:B10001--
37	01643-70623	・・ WASHER	4	SN:B10001--
38	12Y-978-3480	・・ STRIKER	1	SN:B10001--
39	01245-00825	・・ SCREW	4	SN:B10001--
40	01643-70823	・・ WASHER	4	SN:B10001--
41	12Y-978-3340	・・ PLATE	1	SN:B10001--
42	01245-00620	・・ SCREW	3	SN:B10001--
43	01643-70623	・・ WASHER	3	SN:B10001--
44	12Y-978-3350	・・ BRACKET	1	SN:B10001--
45	01245-00620	・・ SCREW	2	SN:B10001--
46	01643-70623	・・ WASHER	2	SN:B10001--
47	12Y-978-3650	・・ SHEET	1	SN:B10001--

00061178

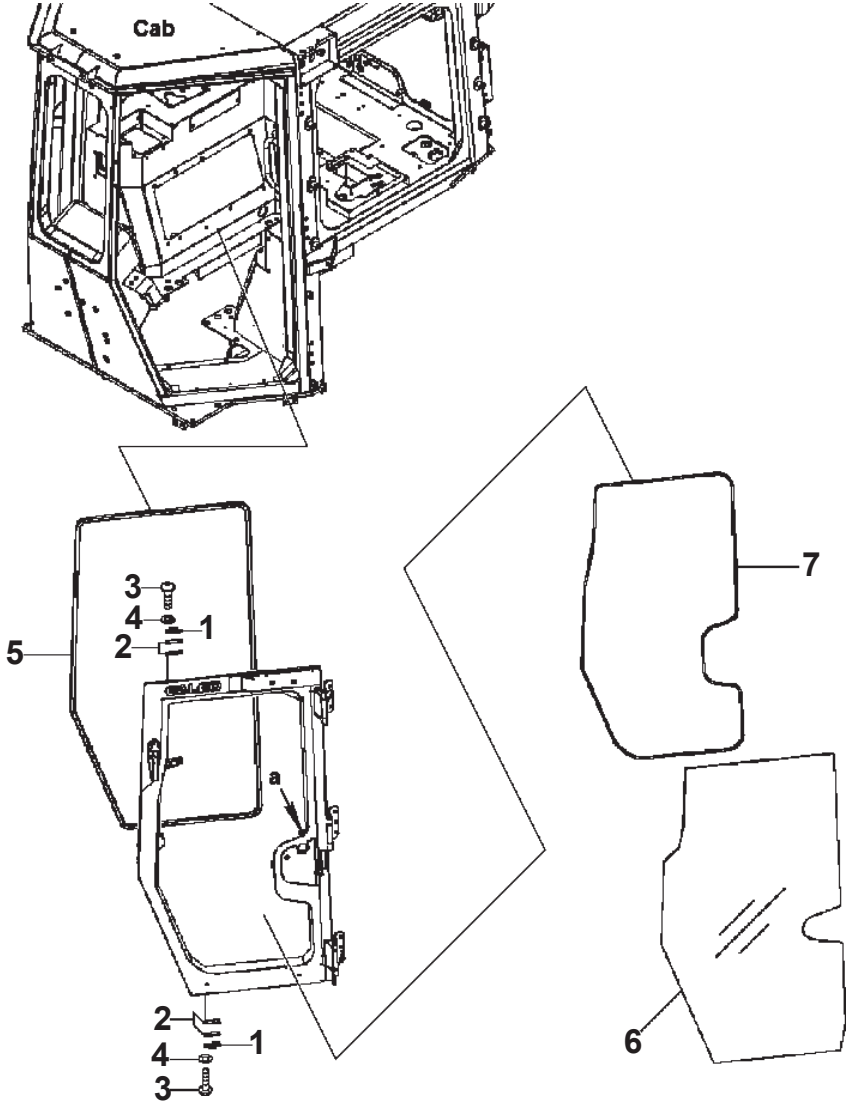

D51EX/PX-22 S/N B10001-UP

K0210-03A0 CAB DOOR BUMPER AND WINDOW

Item	Part No.	Description	Qty	Options
	(12Y-978-0191)	CAB ASSEMBLY	1	SN:B11916--
	(□12Y-978-0190)	CAB ASSEMBLY THESE ASSEMBLIES CONSIST OF ALL PARTS SHOWN IN FIGS. K0210-01A0 TO K0210-18A0.	1	SN:B10001--B11915
	(12Y-978-0380)	· DOOR ASSEMBLY, L.H. THESE ASSEMBLIES CONSIST OF ALL PARTS SHOWN IN FIGS. K0210-02A0 AND K0210-03A0.	1	SN:B10001--
1	14X-911-1690	· · BUMPER	2	SN:B10001--
2	14X-911-1761	· · SHIM	8	SN:B13604--
	14X-911-1761	· · SHIM	4	SN:B10001--B13603
3	01245-00620	· · SCREW	4	SN:B10001--
4	01643-70623	· · WASHER	4	SN:B10001--
5	12Y-978-3370	· · SEAL	1	SN:B10001--
6	12Y-978-1362	· · GLASS, LH CAB DOOR	1	SN:B10001--
7	12Y-978-1380	· · SEAL	1	SN:B10001--

Ref. K0210-03A0 Page K-023

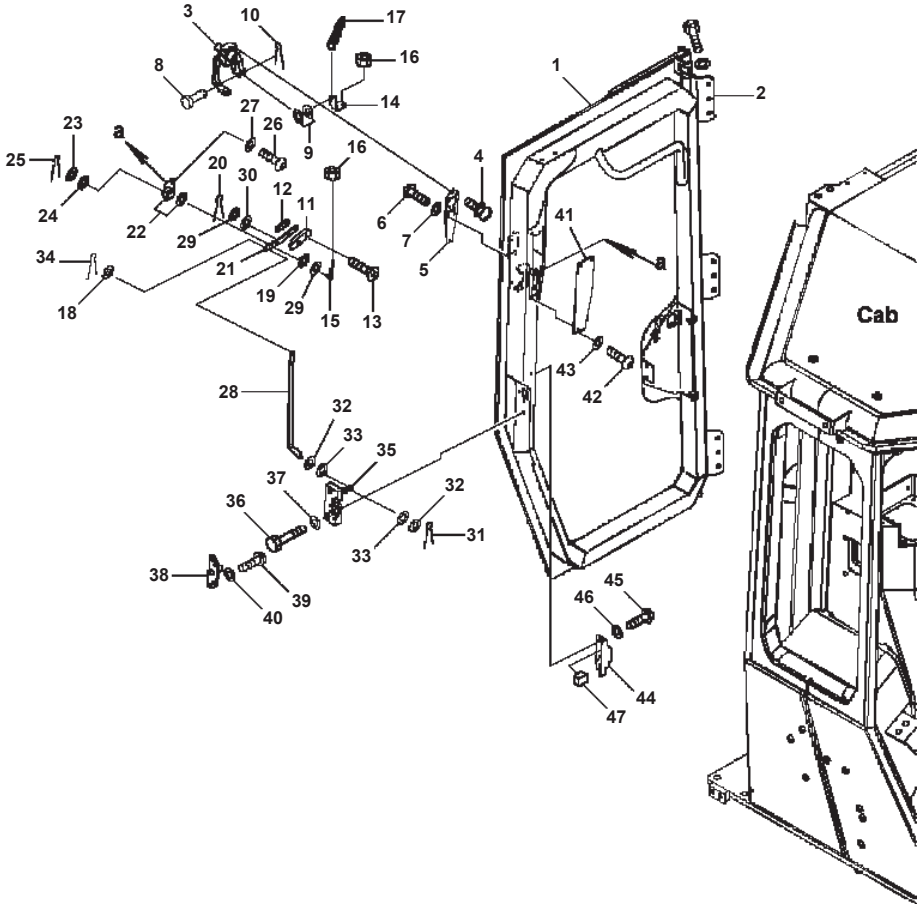

K0210-04A0 CAB DOOR AND LATCH (R.H.)

Item	Part No.	Description	Qty	Options
	(12Y-978-0191)	CAB ASSEMBLY	1	SN:B11916--
	(□12Y-978-0190)	CAB ASSEMBLY	1	SN:B10001--B11915
		THESE ASSEMBLIES CONSIST OF ALL PARTS SHOWN IN FIGS. K0210-01A0 TO K0210-18A0.		
	(12Y-978-0390)	· DOOR ASSEMBLY, R.H.	1	SN:B10001--
		THESE ASSEMBLIES CONSIST OF ALL PARTS SHOWN IN FIGS. K0210-04A0 AND K0210-05A0.		
1	12Y-978-3125	· · DOOR ASSEMBLY, R.H.	1	SN:B10001--
2	(NSS)	· · · HINGE R.H. (WELDED)	1	SN:B10001--
3	198-Z11-3710	· · HANDLE ASSEMBLY	1	SN:B10001--
4	01023-10520	· · SCREW	5	SN:B10001--
5	12Y-978-3210	· · PLATE	1	SN:B10001--
6	01245-00620	· · SCREW	3	SN:B10001--
7	01643-70623	· · WASHER	3	SN:B10001--
8	04205-10622	· · PIN	1	SN:B10001--
9	01643-70623	· · WASHER	4	SN:B10001--
10	04050-11612	· · PIN	1	SN:B10001--
11	12Y-978-3281	· · KNOB	1	SN:B10001--
12	12Y-978-3290	· · PLATE	1	SN:B10001--
13	01023-20410	· · SCREW	2	SN:B10001--
14	12Y-978-3231	· · PLATE	1	SN:B10001--
15	12Y-978-3241	· · ROD	1	SN:B10001--
16	01580-10605	· · NUT	2	SN:B10001--
17	17A-Z11-3332	· · SPRING	1	SN:B10061--
	□176-06-42170	· · SPRING	1	SN:B10001--B10060
18	01643-70623	· · WASHER	1	SN:B10001--
19	12Y-978-3310	· · RUBBER	1	SN:B10001--
20	04050-11612	· · PIN	1	SN:B10001--
21	12Y-978-3470	· · PLATE	1	SN:B10001--
22	12Y-978-3271	· · PLATE	1	SN:B10001--
23	01643-70823	· · WASHER	1	SN:B10001--
24	12Y-978-3360	· · RUBBER	1	SN:B10001--
25	04050-12012	· · PIN	1	SN:B10001--
26	01245-00620	· · SCREW	2	SN:B10001--
27	01643-70623	· · WASHER	2	SN:B10001--
28	17A-979-3330	· · PLATE	1	SN:B10001--
29	01643-70623	· · WASHER	1	SN:B10001--

K0210-04A0 CAB DOOR AND LATCH (R.H.)

Item	Part No.	Description	Qty	Options
30	12Y-978-3310	・・ RUBBER	1	SN:B10001--
31	04050-11612	・・ PIN	1	SN:B10001--
32	01643-70623	・・ WASHER	2	SN:B10001--
33	12Y-978-3310	・・ RUBBER	2	SN:B10001--
34	04050-11612	・・ PIN	1	SN:B10001--
35	195-Z11-4510	・・ LOCK	1	SN:B10001--
36	01010-D0635	・・ BOLT	4	SN:B10001--
37	01643-70623	・・ WASHER	4	SN:B10001--
38	12Y-978-3480	・・ STRIKER	1	SN:B10001--
39	01245-00825	・・ SCREW	4	SN:B10001--
40	01643-70823	・・ WASHER	4	SN:B10001--
41	12Y-978-3340	・・ PLATE	1	SN:B10001--
42	01245-00620	・・ SCREW	3	SN:B10001--
43	01643-70623	・・ WASHER	3	SN:B10001--
44	12Y-978-3350	・・ BRACKET	1	SN:B10001--
45	01245-00620	・・ SCREW	2	SN:B10001--
46	01643-70623	・・ WASHER	2	SN:B10001--
47	12Y-978-3650	・・ SHEET	1	SN:B10001--

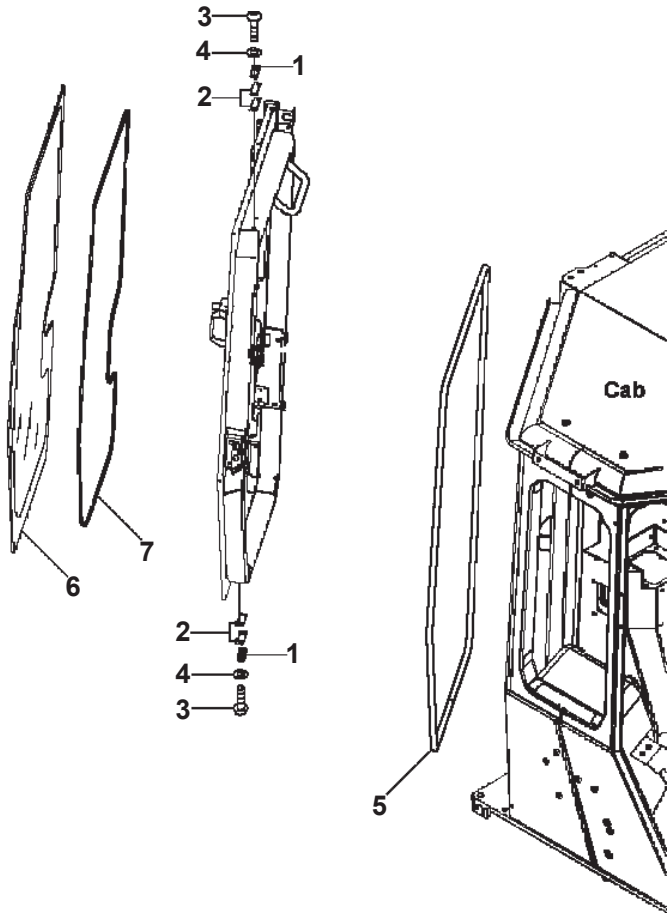

K0210-05A0 CAB DOOR BUMPER AND WINDOW

Item	Part No.	Description	Qty	Options
	(12Y-978-0191)	CAB ASSEMBLY	1	SN:B11916--
	(□12Y-978-0190)	CAB ASSEMBLY	1	SN:B10001--B11915
		THESE ASSEMBLIES CONSIST OF ALL PARTS SHOWN IN FIGS. K0210-01A0 TO K0210-18A0.		
	(12Y-978-0390)	・ DOOR ASSEMBLY, L.H.	1	SN:B10001--
		THESE ASSEMBLIES CONSIST OF ALL PARTS SHOWN IN FIGS. K0210-04A0 AND K0210-05A0.		
1	14X-911-1690	・・ BUMPER	2	SN:B10001--
2	14X-911-1761	・・ SHIM, 1.2 MM	8	SN:B13604--
	□14X-911-1761	・・ SHIM, 1.2 MM	4	SN:B10001--B13603
3	01245-00620	・・ SCREW	4	SN:B10001--
4	01643-70623	・・ WASHER	4	SN:B10001--
5	12Y-978-3370	・・ SEAL	1	SN:B10001--
6	12Y-978-1372	・・ GLASS, RH CAB DOOR	1	SN:B10001--
7	12Y-978-1380	・・ SEAL	1	SN:B10001--

00061194-V

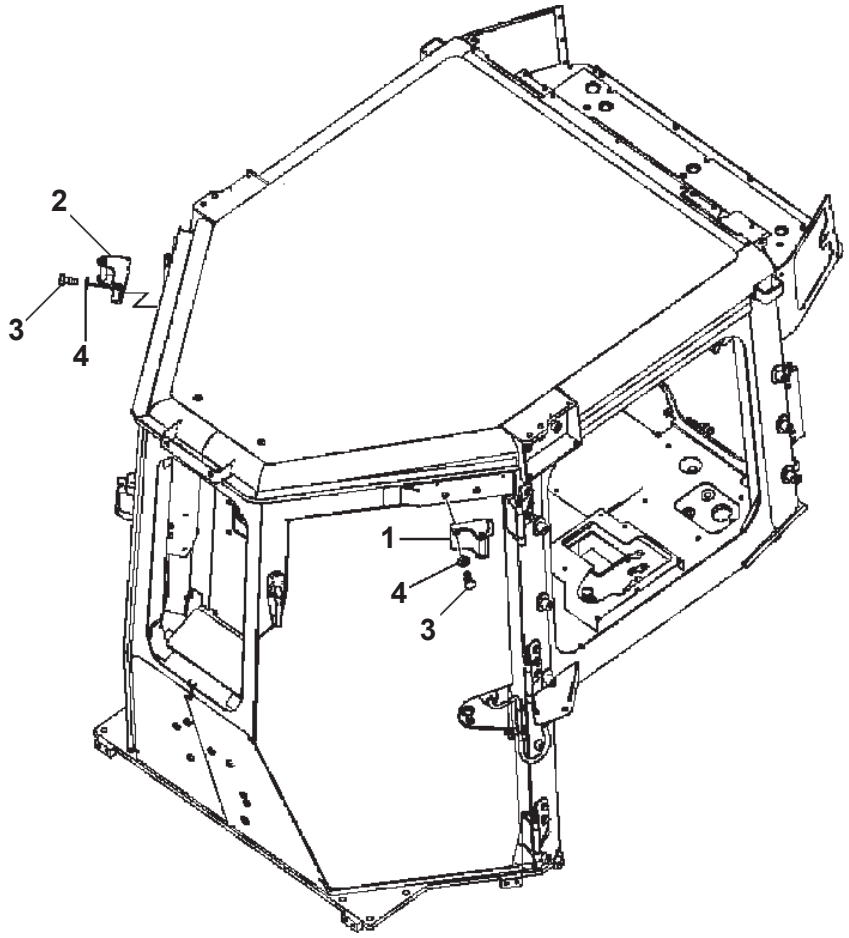

D51EX/PX-22 S/N B10001-UP

K0210-06A0 CAB DOOR OPEN LOCK BRACKET

Item	Part No.	Description	Qty	Options
	(12Y-978-0191)	CAB ASSEMBLY	1	SN:B11916--
	(□12Y-978-0190)	CAB ASSEMBLY	1	SN:B10001--B11915
		THESE ASSEMBLIES CONSIST OF ALL PARTS SHOWN IN FIGS. K0210-01A0 TO K0210-18A0.		
1	12Y-978-3411	· STRIKER	1	SN:B10001--
2	12Y-978-3421	· STRIKER	1	SN:B10001--
3	01010-D1230	· BOLT	4	SN:B10001--
4	01643-71032	· WASHER	4	SN:B10001--

Ref. K0210-06A0 Page K-029

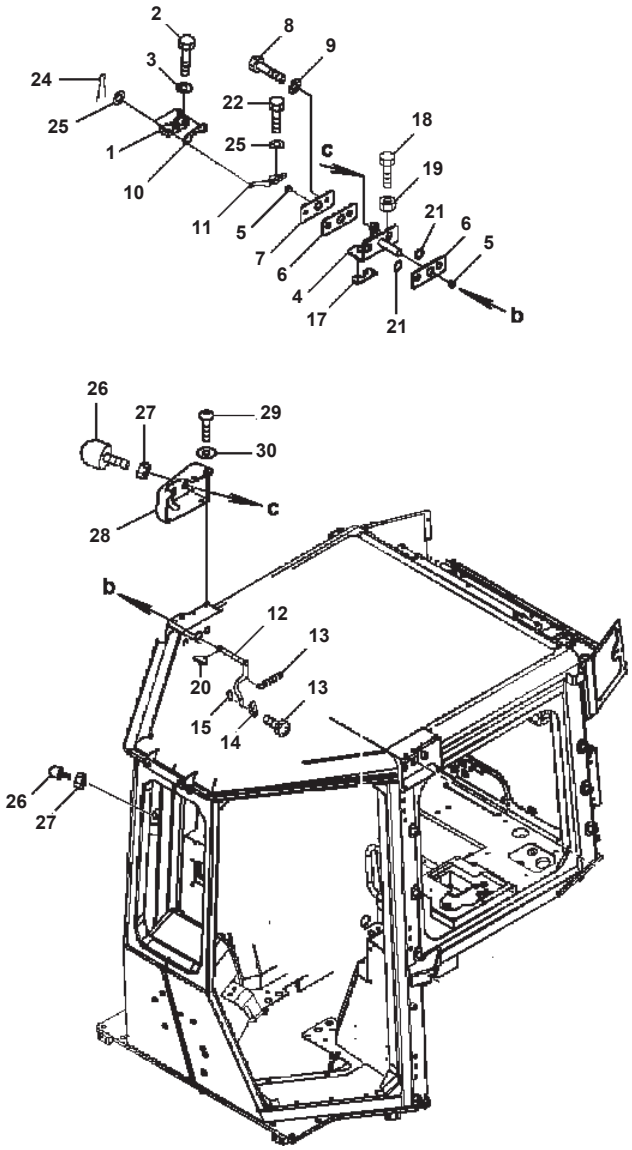

K0210-07A0 CAB DOOR OPEN LOCK LATCH (R.H.)

Item	Part No.	Description	Qty	Options
	(12Y-978-0191)	CAB ASSEMBLY	1	SN:B11916--
	(□12Y-978-0190)	CAB ASSEMBLY	1	SN:B10001--B11915
		THESE ASSEMBLIES CONSIST OF ALL PARTS SHOWN IN FIGS. K0210-01A0 TO K0210-18A0.		
1	195-Z11-4510	· LOCK	1	SN:B10001--
2	01010-D0635	· BOLT	4	SN:B10001--
3	01643-70623	· WASHER	4	SN:B10001--
4	12Y-978-3522	· BRACKET	1	SN:B10001--
5	17A-Z11-1810	· BUSHING	2	SN:B10001--
6	12Y-978-3541	· RUBBER	2	SN:B10001--
7	12Y-978-3551	· PLATE	1	SN:B10001--
8	01010-D1230	· BOLT	2	SN:B10001--
9	01643-71232	· WASHER	2	SN:B10001--
10	12Y-978-3571	· PLATE	1	SN:B10001--
11	12Y-978-3590	· LEVER	1	SN:B10001--
12	12Y-978-3623	· LEVER	1	SN:B11916--
	□12Y-978-3622	· LEVER	1	SN:B10001--B11915
13	176-06-42170	· SPRING	1	SN:B10001--
14	12Y-978-3281	· KNOB	1	SN:B10001--
15	12Y-978-3290	· PLATE	1	SN:B10001--
16	01023-20410	· SCREW	2	SN:B10001--
17	17A-Z11-3680	· PLATE	1	SN:B10001--
18	01010-80620	· BOLT	1	SN:B10001--
19	01580-10605	· NUT	1	SN:B10001--
20	04010-00516	· KEY	1	SN:B10001--
21	07000-13025	· O-RING	2	SN:B10001--
22	01010-80825	· BOLT	1	SN:B10001--
23	01643-70823	· WASHER	1	SN:B10001--
24	04050-11612	· PIN, COTTER	2	SN:B10001--
25	01640-20610	· WASHER	2	SN:B10001--
26	17A-Z11-3592	· STOPPER	2	SN:B10001--
27	01580-11210	· NUT	2	SN:B10001--
28	12Y-978-3443	· COVER	1	SN:B10001--
29	01245-00620	· SCREW	4	SN:B10001--
30	12Y-978-2660	· COLLAR	4	SN:B10001--

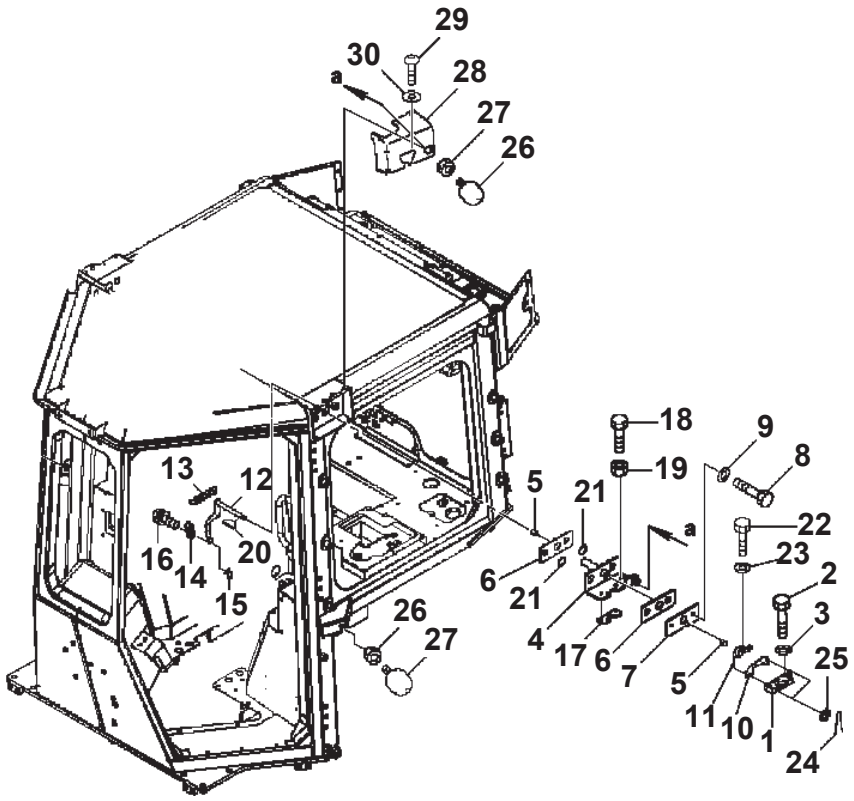

K0210-08A0 CAB DOOR OPEN LOCK LATCH (L.H.)

Item	Part No.	Description	Qty	Options
	(12Y-978-0191)	CAB ASSEMBLY	1	SN:B11916--
	(□12Y-978-0190)	CAB ASSEMBLY	1	SN:B10001--B11915
		THESE ASSEMBLIES CONSIST OF ALL PARTS SHOWN IN FIGS. K0210-01A0 TO K0210-18A0.		
1	195-Z11-4520	· LOCK	1	SN:B10001--
2	01010-D0635	· BOLT	4	SN:B10001--
3	01643-70623	· WASHER	4	SN:B10001--
4	12Y-978-3512	· BRACKET	1	SN:B10001--
5	17A-Z11-1810	· BUSHING	2	SN:B10001--
6	12Y-978-3541	· RUBBER	2	SN:B10001--
7	12Y-978-3551	· PLATE	1	SN:B10001--
8	01010-D1230	· BOLT	2	SN:B10001--
9	01643-71232	· WASHER	2	SN:B10001--
10	12Y-978-3561	· PLATE	1	SN:B10001--
11	12Y-978-3580	· LEVER	1	SN:B10001--
12	12Y-978-3613	· LEVER	1	SN:B11916--
	□12Y-978-3612	· LEVER	1	SN:B10001--B11915
13	176-06-42170	· SPRING	1	SN:B10001--
14	12Y-978-3281	· KNOB	1	SN:B10001--
15	12Y-978-3290	· PLATE	1	SN:B10001--
16	01023-20410	· SCREW	2	SN:B10001--
17	17A-Z11-3680	· PLATE	1	SN:B10001--
18	01010-80620	· BOLT	1	SN:B10001--
19	01580-10605	· NUT	1	SN:B10001--
20	04010-00516	· KEY	1	SN:B10001--
21	07000-13025	· O-RING	2	SN:B10001--
22	01010-80825	· BOLT	1	SN:B10001--
23	01643-70823	· WASHER	1	SN:B10001--
24	04050-11612	· PIN, COTTER	2	SN:B10001--
25	01640-20610	· WASHER	2	SN:B10001--
26	17A-Z11-3592	· STOPPER	2	SN:B10001--
27	01580-11210	· NUT	2	SN:B10001--
28	12Y-978-3433	· COVER	1	SN:B10001--
29	01245-00620	· SCREW	4	SN:B10001--
30	12Y-978-2660	· COLLAR	4	SN:B10001--

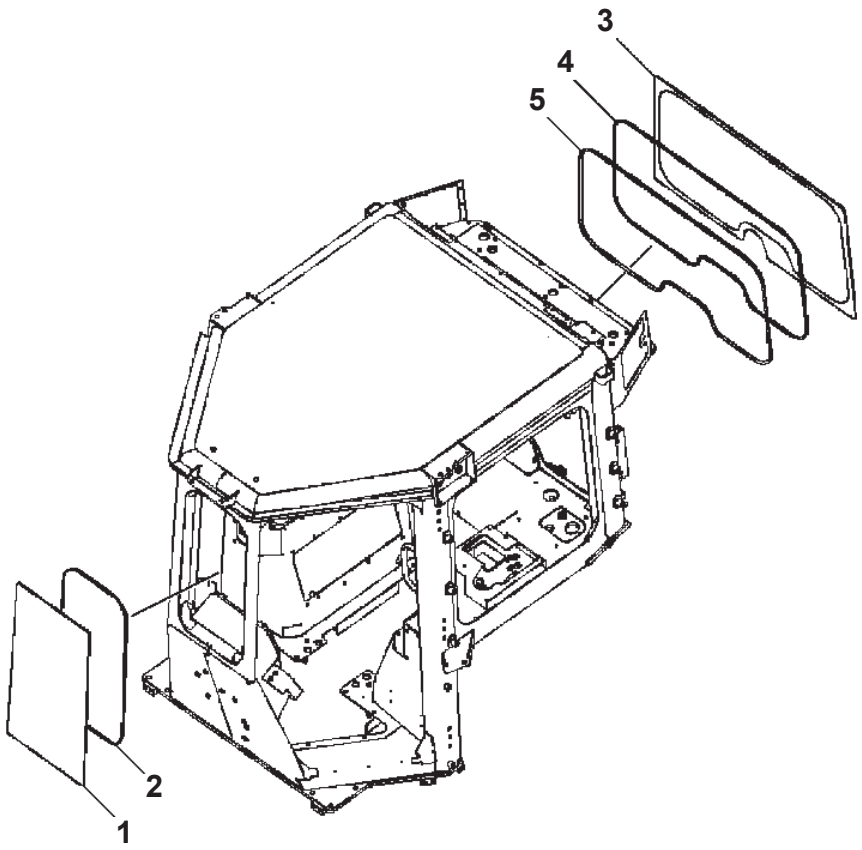

K0210-09A0 CAB FRONT AND REAR WINDOW GLASS AND SEALS

Item	Part No.	Description	Qty	Options
	(12Y-978-0191)	CAB ASSEMBLY	1	SN:B11916--
	(□12Y-978-0190)	CAB ASSEMBLY	1	SN:B10001--B11915
		THESE ASSEMBLIES CONSIST OF ALL PARTS SHOWN IN FIGS. K0210-01A0 TO K0210-18A0.		
1	12Y-978-1310	· GLASS, FRONT WINDOW	1	SN:B10001--
2	12Y-978-1320	· SEAL, FRONT GLASS	1	SN:B10001--
3	12Y-978-1331	· GLASS, REAR WINDOW	1	SN:B10001--
4	12Y-978-1341	· SEAL, REAR GLASS	1	SN:B10001--
5	12Y-978-1350	· TRIM, REAR WINDOW	1	SN:B10001--

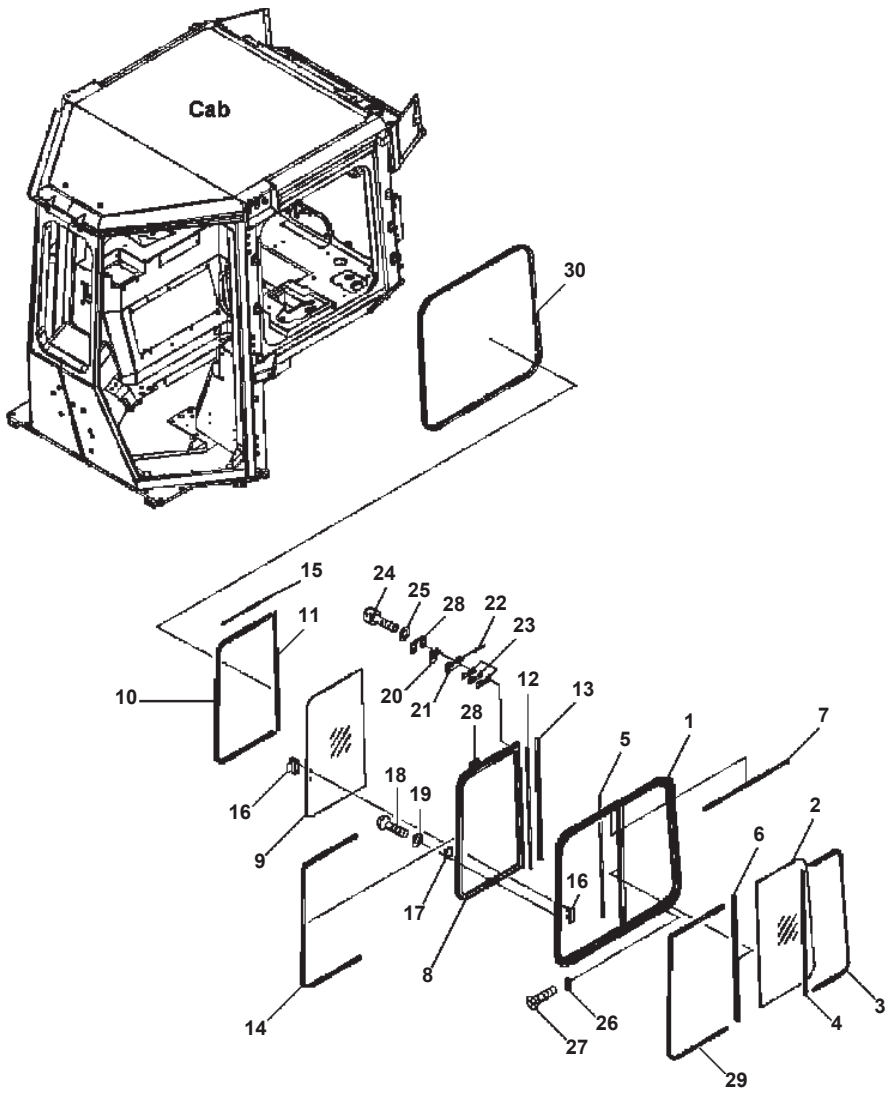

K0210-10A0 CAB WINDOW GLASS AND SASH (LH)

Item	Part No.	Description	Qty	Options
	(12Y-978-0191)	CAB ASSEMBLY	1	SN:B11916--
	(□12Y-978-0190)	CAB ASSEMBLY	1	SN:B10001--B11915
		THESE ASSEMBLIES CONSIST OF ALL PARTS SHOWN IN FIGS. K0210-01A0 TO K0210-18A0.		
	12Y-978-1401	· SASH AND WINDOW ASSEMBLY, LH	1	SN:B11916--
	□12Y-978-1400	· SASH AND WINDOW ASSEMBLY, LH	1	SN:B10001--B11915
	12Y-978-1410	· · SASH ASSEMBLY	1	SN:B10001--
1	12Y-978-1420	· · · FRAME	1	SN:B10001--
2	12Y-978-1450	· · · GLASS	1	SN:B10001--
3	12Y-978-1460	· · · SEAL	1	SN:B10001--
4	12Y-978-1470	· · · SEAL	1	SN:B10001--
5	12Y-978-1480	· · · SEAL	1	SN:B10001--
6	12Y-978-1490	· · · SEAL	1	SN:B10001--
7	12Y-978-1550	· · · SEAL	1	SN:B10001--
	12Y-978-1431	· · SASH ASSEMBLY	1	SN:B11916--
	□12Y-978-1430	· · SASH ASSEMBLY	1	SN:B10001--B11915
8	12Y-978-1441	· · · FRAME	1	SN:B11916--
	□12Y-978-1440	· · · FRAME	1	SN:B10001--B11915
9	12Y-978-1560	· · · GLASS	1	SN:B10001--
10	12Y-978-1570	· · · SEAL	1	SN:B10001--
11	12Y-978-1580	· · · SEAL	1	SN:B10001--
12	12Y-978-1590	· · · SEAL	1	SN:B10001--
13	12Y-978-1610	· · · SEAL	1	SN:B10001--
14	12Y-978-1620	· · · CHANNEL	1	SN:B10001--
15	12Y-978-1630	· · · SEAL	1	SN:B10001--
16	17A-Z11-1610	· · LOCK ASSEMBLY	1	SN:B10001--
17	17A-Z11-1620	· · STRIKER	1	SN:B10001--
18	01252-80514	· · BOLT	2	SN:B10001--
19	01641-50508	· · WASHER	2	SN:B10001--
	195-Z11-1371	· · LOCK ASSEMBLY	2	SN:B10001--
20	195-Z11-3630	· · · LEVER	1	SN:B10001--
21	195-Z11-3640	· · · PLATE	1	SN:B10001--
22	195-Z11-3860	· · · PIN	1	SN:B10001--
23	195-Z11-3670	· · SHIM, 0.5mm	6	SN:B10001--
24	01252-80514	· · BOLT	4	SN:B10001--
25	01641-50508	· · WASHER	4	SN:B10001--
26	195-Z11-1381	· · STOPPER	1	SN:B10001--

K0210-10A0 CAB WINDOW GLASS AND SASH (LH)

Item	Part No.	Description	Qty	Options
27	01224-70316	・・ SCREW	2	SN:B11449--
	□01224-40316	・・ SCREW	2	SN:B10001--B11448
28	17A-Z11-1660	・・ PLATE	2	SN:B10001--
29	12Y-978-1640	・・ SEAL	1	SN:B10001--
30	12Y-978-1390	・ STRIP, WEATHER	1	SN:B10001--

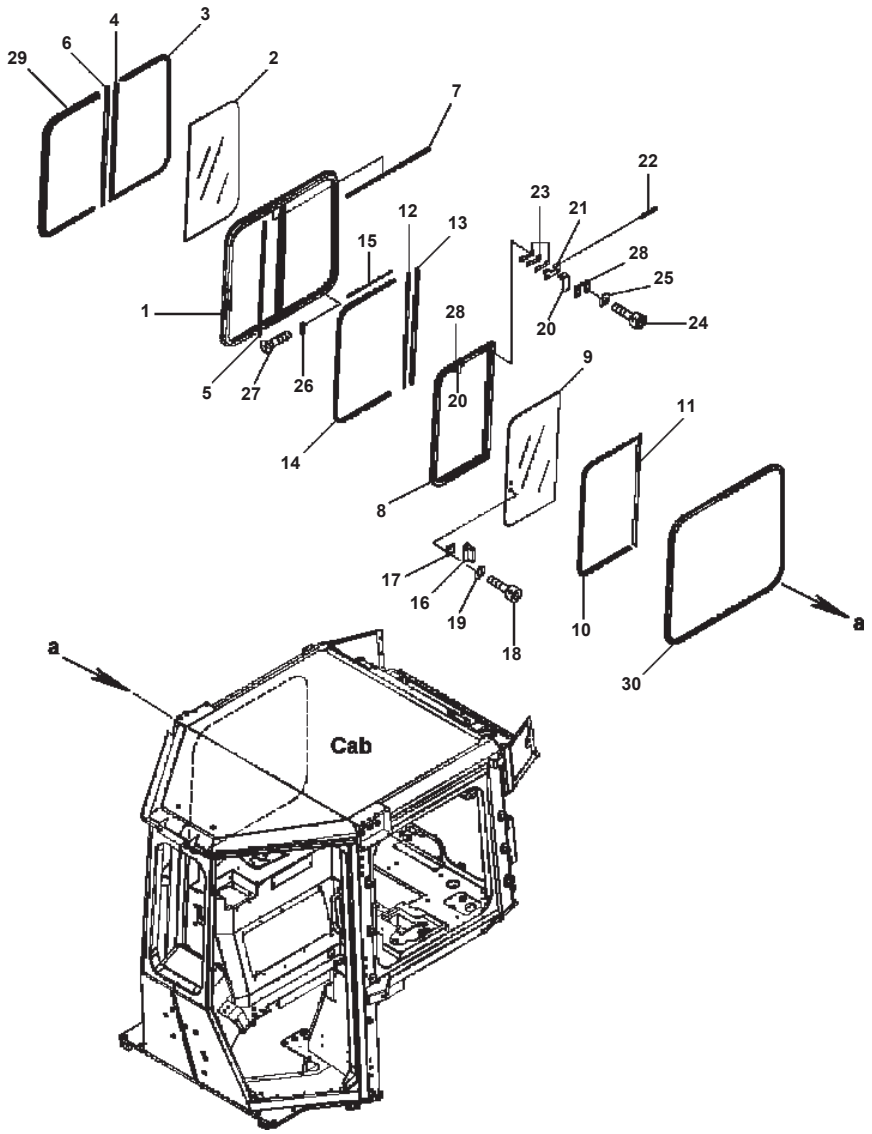

K0210-11A0 CAB WINDOW GLASS AND SASH (RH)

Item	Part No.	Description	Qty	Options
	(12Y-978-0191)	CAB ASSEMBLY	1	SN:B11916--
	(□12Y-978-0190)	CAB ASSEMBLY	1	SN:B10001--B11915
		THESE ASSEMBLIES CONSIST OF ALL PARTS SHOWN IN FIGS. K0210-01A0 TO K0210-18A0.		
	12Y-978-1501	· SASH AND WINDOW ASSEMBLY, RH	1	SN:B11916--
	□12Y-978-1500	· SASH AND WINDOW ASSEMBLY, RH	1	SN:B10001--B11915
	12Y-978-1510	· · SASH ASSEMBLY	1	SN:B10001--
1	12Y-978-1520	· · · FRAME	1	SN:B10001--
2	12Y-978-1450	· · · GLASS	1	SN:B10001--
3	12Y-978-1460	· · · SEAL	1	SN:B10001--
4	12Y-978-1470	· · · SEAL	1	SN:B10001--
5	12Y-978-1480	· · · SEAL	1	SN:B10001--
6	12Y-978-1490	· · · SEAL	1	SN:B10001--
7	12Y-978-1550	· · · SEAL	1	SN:B10001--
	12Y-978-1531	· · SASH ASSEMBLY	1	SN:B11916--
	□12Y-978-1530	· · SASH ASSEMBLY	1	SN:B10001--B11915
8	12Y-978-1541	· · · FRAME	1	SN:B11916--
	□12Y-978-1540	· · · FRAME	1	SN:B10001--B11915
9	12Y-978-1560	· · · GLASS	1	SN:B10001--
10	12Y-978-1570	· · · SEAL	1	SN:B10001--
11	12Y-978-1580	· · · SEAL	1	SN:B10001--
12	12Y-978-1590	· · · SEAL	1	SN:B10001--
13	12Y-978-1610	· · · SEAL	1	SN:B10001--
14	12Y-978-1620	· · · CHANNEL	1	SN:B10001--
15	12Y-978-1630	· · · SEAL	1	SN:B10001--
16	17A-Z11-1610	· · LOCK ASSEMBLY	1	SN:B10001--
17	17A-Z11-1620	· · STRIKER	1	SN:B10001--
18	01252-80514	· · BOLT	2	SN:B10001--
19	01641-50508	· · WASHER	2	SN:B10001--
	195-Z11-1371	· · LOCK ASSEMBLY	2	SN:B10001--
20	195-Z11-3630	· · · LEVER	1	SN:B10001--
21	195-Z11-3640	· · · PLATE	1	SN:B10001--
22	195-Z11-3860	· · · PIN	1	SN:B10001--
23	195-Z11-3670	· · SHIM, 0.5mm	6	SN:B10001--
24	01252-80514	· · BOLT	4	SN:B10001--
25	01641-50508	· · WASHER	4	SN:B10001--
26	195-Z11-1381	· · STOPPER	1	SN:B10001--

K0210-11A0 CAB WINDOW GLASS AND SASH (RH)

Item	Part No.	Description	Qty	Options
27	01224-70316	・・ SCREW	2	SN:B11449--
	□01224-40316	・・ SCREW	2	SN:B10001--B11448
28	17A-Z11-1660	・・ PLATE	2	SN:B10001--
29	12Y-978-1640	・・ SEAL	1	SN:B10001--
30	12Y-978-1390	・ STRIP, WEATHER	1	SN:B10001--

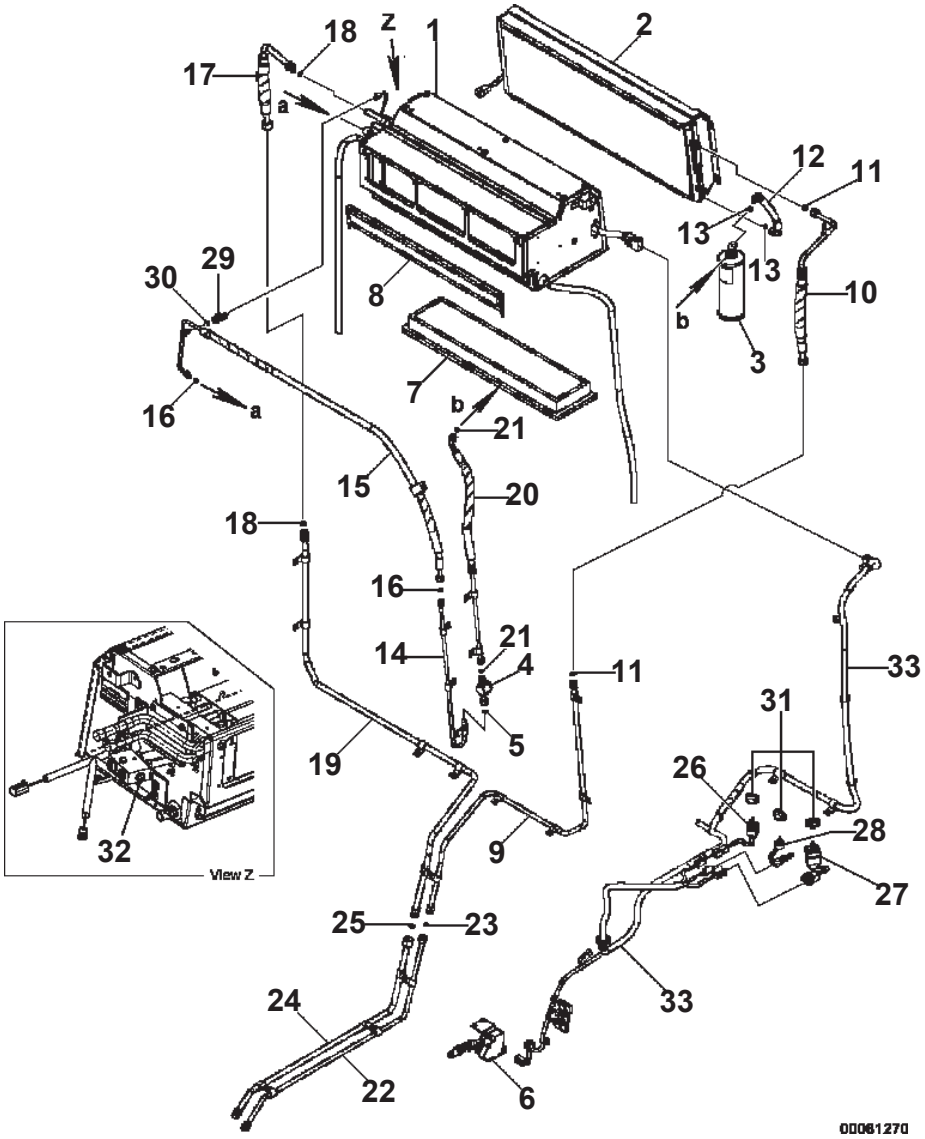

K0210-12A0 CAB ROOF MOUNTED AIR CONDITIONER UNIT

Item	Part No.	Description	Qty	Options
	(12Y-978-0191)	CAB ASSEMBLY	1	SN:B11916--
	(□12Y-978-0190)	CAB ASSEMBLY	1	SN:B10001--B11915
		THESE ASSEMBLIES CONSIST OF ALL PARTS SHOWN IN FIGS. K0210-01A0 TO K0210-18A0.		
1	12Y-979-2611	· AIR CONDITIONER ASSEMBLY (SEE FIGURE K0210-13A0)	1	SN:B13001--
	□12Y-979-2610	· AIR CONDITIONER ASSEMBLY (SEE FIGURE K0210-13A0)	1	SN:B11916--B13000
	□12Y-979-1113	· AIR CONDITIONER ASSEMBLY (SEE FIGURE K0210-13A0)	1	SN:B11449--B11915
	□12Y-979-1112	· AIR CONDITIONER ASSEMBLY (SEE FIGURE K0210-13A0)	1	SN:B10001--B11448
2	12Y-979-1133	· CONDENSER ASSEMBLY (SEE FIGURE K0210-13A0)	1	SN:B11558--
	□12Y-979-1132	· CONDENSER ASSEMBLY (SEE FIGURE K0210-13A0)	1	SN:B10001--B11557
3	12Y-979-1140	· RECEIVER, A/C	1	SN:B10001--
4	12Y-979-1150	· INDICATOR, A/C	1	SN:B10001--
5	12Y-979-2230	· · O-RING	1	SN:B10001--
6	12Y-979-1160	· VALVE, WATER (A/C)	1	SN:B10001--
7	12Y-979-1173	· FILTER, A/C	1	SN:B11449--
	□12Y-979-1172	· FILTER, A/C	1	SN:B10663--B11448
	□12Y-979-1171	· FILTER, A/C	1	SN:B10001--B10662
8	12Y-979-1181	· FILTER, A/C	1	SN:B10001--
9	12Y-979-1212	· TUBE	1	SN:B10001--
10	12Y-979-1222	· HOSE	1	SN:B10001--
11	12Y-979-2150	· · O-RING	2	SN:B10001--
12	12Y-979-1230	· HOSE	1	SN:B10001--
13	12Y-979-2230	· · O-RING	2	SN:B10001--
14	12Y-979-1250	· TUBE	1	SN:B10001--
15	12Y-979-1262	· HOSE	1	SN:B11916--
	□12Y-979-1261	· HOSE	1	SN:B10001--B11915
16	12Y-979-2230	· · O-RING	2	SN:B10001--
17	12Y-979-1271	· HOSE	1	SN:B10001--

K0210-12A0 CAB ROOF MOUNTED AIR CONDITIONER UNIT

Item	Part No.	Description	Qty	Options
18	12Y-979-2160	・・ O-RING	2	SN:B10001--
19	12Y-979-1283	・ TUBE	1	SN:B10001--
20	12Y-979-1292	・ HOSE	1	SN:B10001--
21	12Y-979-2230	・・ O-RING	2	SN:B10001--
22	12Y-979-1472	・ TUBE	1	SN:B10001--
23	12Y-979-2150	・・ O-RING	1	SN:B10001--
24	12Y-979-1482	・ TUBE	1	SN:B10001--
25	12Y-979-2160	・・ O-RING	1	SN:B10001--
26	12Y-979-1412	・ SWITCH, A/C	1	SN:B10001--
27	12Y-979-1423	・ SWITCH, A/C	1	SN:B10001--
28	12Y-979-1433	・ SWITCH, A/C	1	SN:B10001--
29	12Y-979-1441	・ SENSOR, PRESSURE - A/C	1	SN:B10001--
30	12Y-979-2230	・・ O-RING	1	SN:B10001--
31	12Y-979-1460	・ KNOB, A/C	3	SN:B10001--
32	12Y-979-1570	・ SWITCH A/C	1	SN:B10001--
33		・ WIRING (SEE FIG. K0210-22A0)		SN:B10001--

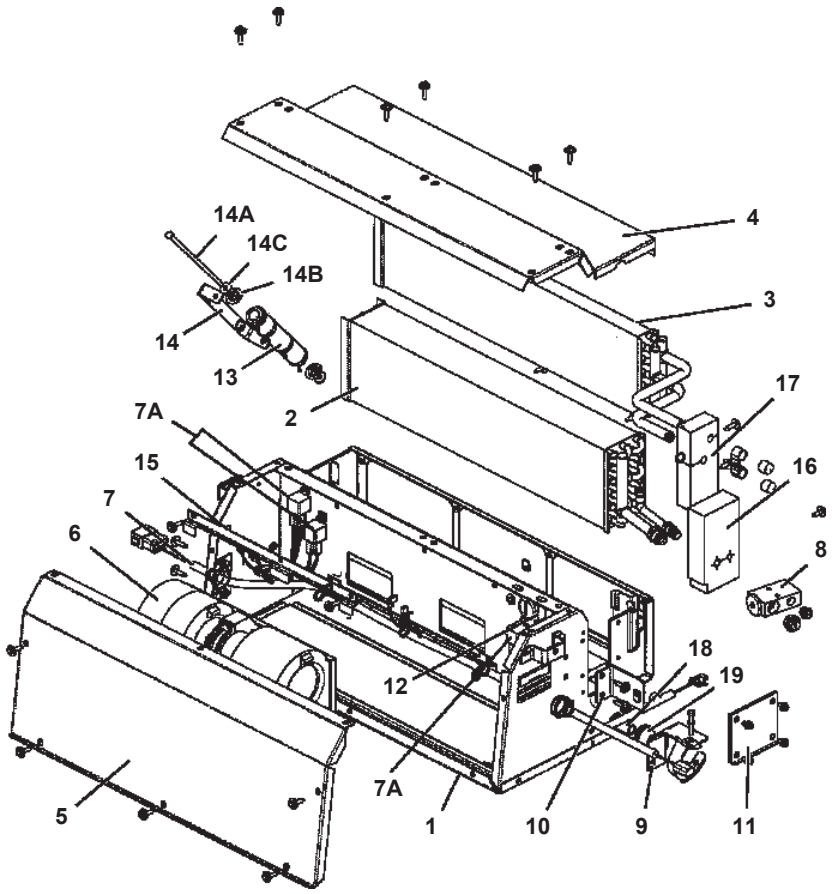

K0210-13A0 AIR CONDITIONER UNIT ASSEMBLY (#B10001-B11915)

Item	Part No.	Description	Qty	Options
	(12Y-978-0190)	CAB ASSEMBLY THESE ASSEMBLIES CONSIST OF ALL PARTS SHOWN IN FIGS. K0210-01A0 TO K0210-18A0.	1	SN:B10001--B11915
	12Y-979-1113	· AIR CONDITIONER ASSEMBLY	1	SN:B11449--B11915
	12Y-979-1112	· AIR CONDITIONER ASSEMBLY	1	SN:B10001--B11448
1	RD-3-11499-0	· · HOUSING ASSEMBLY	1	SN:B10001--B11915
2	RD-2-4087-0	· · EVAPORATOR ASSEMBLY	1	SN:B10001--B11915
3	RD-1-2567-0	· · HEATER CORE ASSEMBLY	1	SN:B10001--B11915
4	RD-3-11518-0	· · FRONT HOUSING COVER	1	SN:B10001--B11915
5	RD-3-11519-0	· · REAR COVER	1	SN:B10001--B11915
6	RD-5-9204-3	· · MOTOR BLOWER ASSEMBLY, 24V	1	SN:B10001--B11915
7	RD-3-11586-0	· · WIRING HARNESS	1	SN:B10001--B11915
7A	RD-5-4417-0	· · · RELAY	3	SN:B10001--B11915
8	RD-5-9513-0	· · EXPANSION VALVE	1	SN:B10001--B11915
9	RD-3-11536-0	· · 45º BOLT ON TXV BRACKET	1	SN:B10001--B11915
10	RD-3-11753-0	· · PLUMBING BRACKET ASSEMBLY	1	SN:B10001--B11915
11	RD-3-11485-0	· · PLUMBING SEAL	1	SN:B10001--B11915
12	RD-5-4531-24	· · THERMOSTAT, SIDE AND BOTTOM MTG	1	SN:B10001--B11915
13	RD-5-9062-0	· · CERAMIC RESISTOR, 24V	1	SN:B10001--B11915
14	RD-3-12262-0	· · RESISTOR BRACKET ASSEMBLY	1	SN:B10001--B11915
14A	RD-5-4061-0-7.500	· · SCREW - 1/4-20 UNC-2A HEX HEAD	1	SN:B10001--B11915
14B	RD-5-8666-0	· · WASHER - CERAMIC RESISTOR	2	SN:B10001--B11915
14C	RD-5-8351-0	· · WASHER - RUBBER	2	SN:B10001--B11915
15	RD-3-11762-0	· · BLOWER SUPPORT	1	SN:B10001--B11915
16	RD-3-11763-0	· · EVAPORATOR SEAL GASKET	1	SN:B10001--B11915
17	RD-3-11764-0	· · HEATER SEAL GASKET	1	SN:B10001--B11915

K0210-13A0 AIR CONDITIONER UNIT ASSEMBLY (#B10001-B11915)

Item	Part No.	Description	Qty	Options
18	RD-5-11988-78.74	・・EPDM DRAIN TUBING	2	SN:B10001--B11915
19	RD-5-7710-0	・・DRAIN HOSE GROMMET	2	SN:B10001--B11915

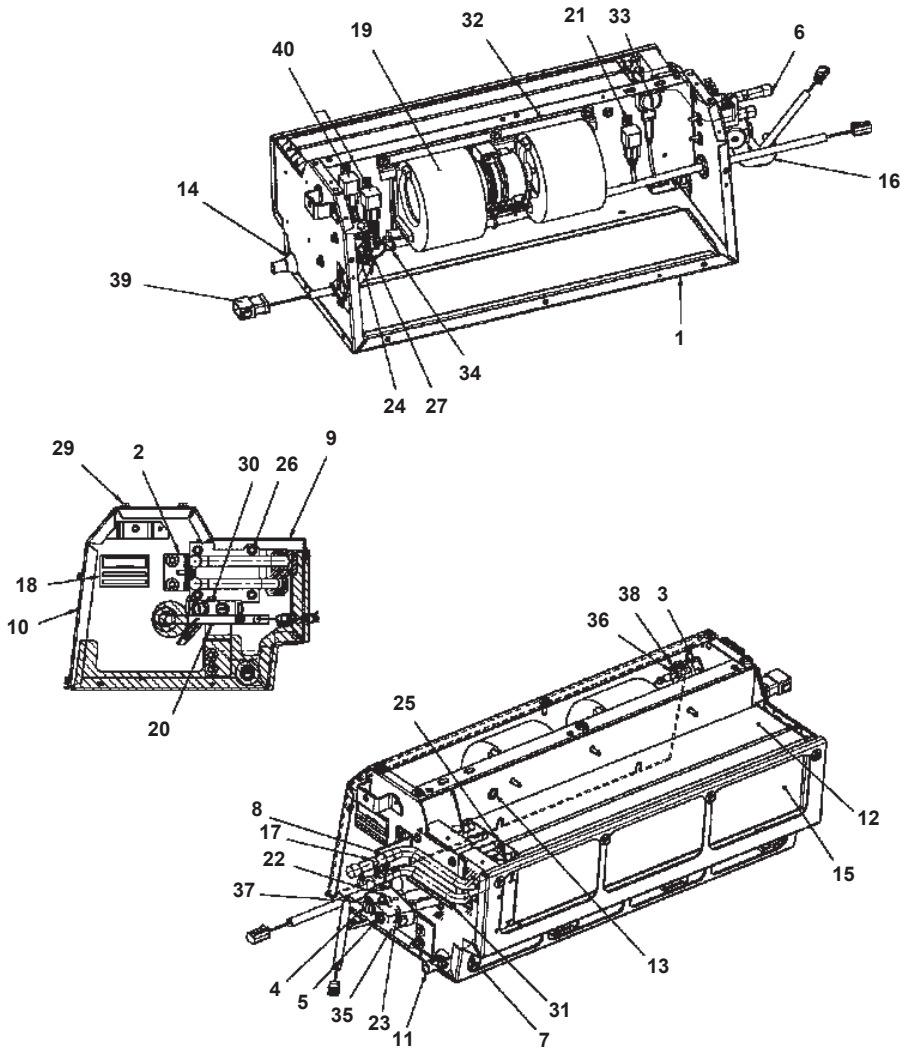

K0210-13A0A AIR CONDITIONER UNIT ASSEMBLY (#B11916-)

Item	Part No.	Description	Qty	Options
	(12Y-978-0191)	CAB ASSEMBLY THESE ASSEMBLIES CONSIST OF ALL PARTS SHOWN IN FIGS. K0210-01A0 TO K0210-18A0.	1	SN:B11916--
	12Y-979-2611	· AIR CONDITIONER ASSEMBLY	1	SN:B13001--
	□12Y-979-2610	· AIR CONDITIONER ASSEMBLY	1	SN:B11916--B13000
1	RD-3-14901-0	· · HOUSING ASSEMBLY	1	SN:B11916--
2	RD-3-11753-0	· · BRACKET ASS'Y, PLUMBING SUPPORT	1	SN:B11916--
3	RD-3-12262-0	· · BRACKET ASS'Y, RESISTOR	1	SN:B11916--
4	RD-5-7176-0	· · CAP	1	SN:B11916--
5	RD-5-6564-0	· · CAP	1	SN:B11916--
6	RD-5-4582-0	· · CAP	2	SN:B11916--
7	RD-5-6666-0	· · CLAMP, HOSE	2	SN:B11916--
8	RD-5-6912-0	· · CLAMP, TUBE	2	SN:B11916--
9	RD-3-11518-0	· · COVER, HOUSNG, FRONT	1	SN:B11916--
10	RD-3-11519-0	· · COVER, REAR	1	SN:B11916--
11	RD-5-11988-78.74	· · EPDM, DRAIN, TUBING	2	SN:B11916--
12	RD-2-4087-0	· · EVAPORATOR ASS'Y	1	SN:B11916--
13	RD-5-8250-0	· · GROMMET	1	SN:B11916--
14	RD-5-7710-0	· · GROMMET, HOSE, DRAIN	2	SN:B11916--
15	RD-1-2567-0	· · HEATER CORE ASS'Y	1	SN:B11916--
16	RD-3-11536-0	· · BRACKET	1	SN:B11916--
17	RD-5-3880-0	· · LABEL, INLET	1	SN:B11916--
18	RD-5-4606-0	· · LABEL, QUALITY AUDITED	1	SN:B11916--
19	RD-5-9204-3	· · MOTOR BLOWER ASS'Y	1	SN:B11916--
20	RD-5-5679-0	· · NUT, CLIP	1	SN:B11916--
21	RD-5-7633-0	· · NUT, CONICAL WASHER	5	SN:B11916--
22	RD-5-4017-015	· · O-RING, GREEN HNBRM No 10	1	SN:B11916--
23	RD-5-4017-013	· · O-RING, GREEN HNBR, No 8	1	SN:B11916--
24	RD-5-9062-0	· · RESISTOR, CERAMIC	1	SN:B11916--
25	RD-5-4089-0	· · RETAINER, CLIP	1	SN:B11916--
26	RD-5-7212-1-.375	· · SCREW	4	SN:B11916--

K0210-13A0A AIR CONDITIONER UNIT ASSEMBLY (#B11916-)

Item	Part No.	Description	Qty	Options
27	RD-5-4061-0-7.500	· · SCREW	1	SN:B11916--
28	RD-5-8222-1-16	· · SCREW - NOT SHOWN ON ILLUSTRATION	6	SN:B11916--
29	RD-5-8222-1-22	· · SCREW	21	SN:B11916--
30	RD-5-5743-0-40	· · SCREW	1	SN:B11916--
31	RD-3-11485-0	· · SEAL, PLUMBING	1	SN:B11916--
32	RD-3-11762-0	· · SUPPORT, BLOWER	1	SN:B11916--
33	RD-5-4531-24	· · THERMOSTAT, SIDE & BTM MOUNTED	1	SN:B11916--
34	RD-4520-0	· · TIE, NYLON CABLE, PUSHING	3	SN:B11916--
35	RD-5-9513-0	· · VALVE, EXPANSION, ANTI-TRUMPETING (2TON)	1	SN:B11916--
36	RD-5-8666-0	· · WASHER, CERAMIC RESISTOR	2	SN:B11916--
37	RD-5-6622-0	· · WASHER, FLAT	1	SN:B11916--
38	RD-5-8351-0	· · WASHER, RUBBER	2	SN:B11916--
39	RD-3-14894-0	· · WIRING, HARNESS	1	SN:B11916--
40	RD-5-4417-0	· · · RELAY	3	SN:B11916--

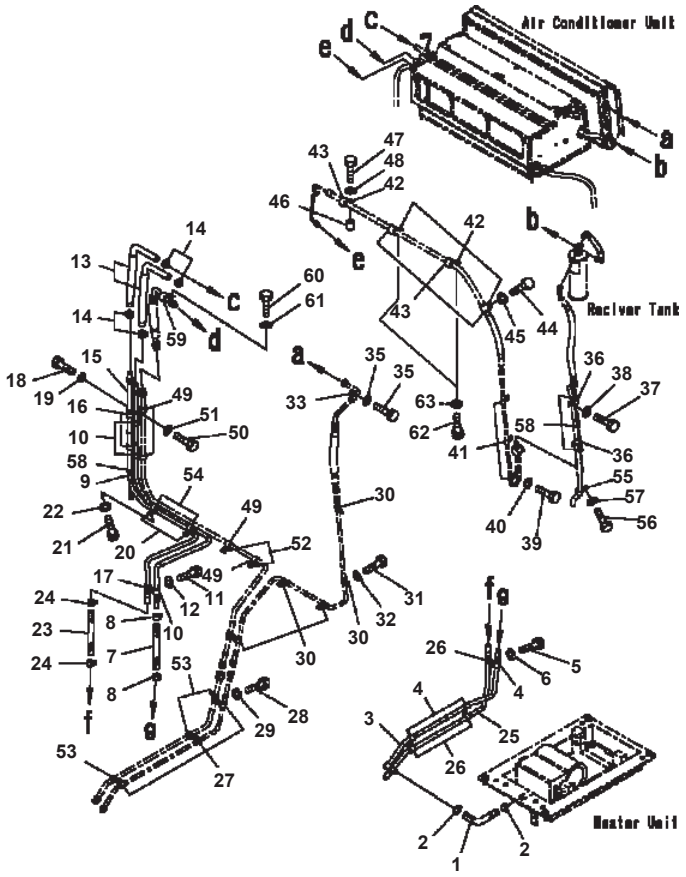

K0210-14A0 CAB AIR CONDITIONER - HEATER PIPING

Item	Part No.	Description	Qty	Options
	(12Y-978-0191)	CAB ASSEMBLY	1	SN:B11916--
	(12Y-978-0190)	CAB ASSEMBLY	1	SN:B10001--B11915
		THESE ASSEMBLIES CONSIST OF ALL PARTS SHOWN IN FIGS. K0210-01A0 TO K0210-18A0.		
1	12Y-979-1552	· HOSE	1	SN:B10001--
2	09479-02400	· CLAMP, HOSE	2	SN:B10001--
3	12Y-979-1543	· TUBE	1	SN:B10001--
4	04434-51610	· CLAMP	3	SN:B10001--
5	01010-81020	· BOLT	3	SN:B10001--
6	01643-31032	· WASHER	3	SN:B10001--
7	09483-10502	· HOSE	1	SN:B10001--
8	09479-02400	· CLAMP, HOSE	2	SN:B10001--
9	12Y-979-1512	· TUBE	1	SN:B10001--
10	04434-51610	· CLAMP	3	SN:B10001--
11	01010-81020	· BOLT	3	SN:B10001--
12	01643-31032	· WASHER	3	SN:B10001--
13	12Y-979-1563	· HOSE	2	SN:B10001--
14	09479-02400	· CLAMP, HOSE	4	SN:B10001--
15	12Y-979-1522	· TUBE	1	SN:B10001--
16	04434-51610	· CLAMP	2	SN:B10001--
17	04434-51610	· CLAMP	1	SN:B10001--
18	01010-81020	· BOLT	2	SN:B10001--
19	01643-31032	· WASHER	2	SN:B10001--
20	04435-51610	· CLAMP	2	SN:B10001--
21	01010-81020	· BOLT	2	SN:B10001--
22	01643-31032	· WASHER	2	SN:B10001--
23	09483-10502	· HOSE	1	SN:B10001--
24	09479-02400	· CLAMP, HOSE	2	SN:B10001--
25	12Y-979-1533	· TUBE	1	SN:B10001--
26	04434-51610	· CLAMP	3	SN:B10001--
27	04434-51310	· CLAMP	3	SN:B10001--
28	01010-81020	· BOLT	3	SN:B10001--
29	01643-31032	· WASHER	3	SN:B10001--
30	04434-51310	· CLAMP	5	SN:B10001--
31	01010-81020	· BOLT	5	SN:B10001--
32	01643-31032	· WASHER	5	SN:B10001--
33	04434-51308	· CLAMP	1	SN:B10001--
34	01010-80816	· BOLT	1	SN:B10001--
35	01643-30823	· WASHER	1	SN:B10001--

K0210-14A0 CAB AIR CONDITIONER - HEATER PIPING

Item	Part No.	Description	Qty	Options
36	04434-51010	· CLAMP	2	SN:B10001--
37	01010-81020	· BOLT	2	SN:B10001--
38	01643-31032	· WASHER	2	SN:B10001--
39	01010-81020	· BOLT	3	SN:B10001--
40	01643-31032	· WASHER	3	SN:B10001--
41	04434-51010	· CLAMP	3	SN:B10001--
42	04434-52711	· CLAMP	4	SN:B10001--
43	07095-20418	· CUSHION	4	SN:B10001--
44	01010-80816	· BOLT	1	SN:B10001--
45	01643-30823	· WASHER	1	SN:B10001--
46	175-79-83760	· SPACER	3	SN:B10001--
47	01010-80835	· BOLT	3	SN:B10001--
48	01643-30823	· WASHER	3	SN:B10001--
49	04434-51610	· CLAMP	5	SN:B10001--
50	01010-81020	· BOLT	4	SN:B10001--
51	01643-31032	· WASHER	4	SN:B10001--
52	04434-51410	· CLAMP	2	SN:B10001--
53	04434-51610	· CLAMP	3	SN:B10001--
54	04434-51910	· CLIP	2	SN:B10001--B11448
55	04434-51808	· CLIP	1	SN:B10001--
56	01010-D0820	· BOLT	1	SN:B10001--
57	01643-70823	· WASHER	1	SN:B10001--
58	08034-40521	· BAND	6	SN:B10001--
59	04434-51608	· CLIP	1	SN:B11449--
60	01010-80816	· BOLT	1	SN:B11449--
61	01643-30823	· WASHER	1	SN:B11449--
62	01010-81020	BOLT	2	SN:B11916--
63	01643-31032	WASHER	2	SN:B11916--

RD-5-12668-0

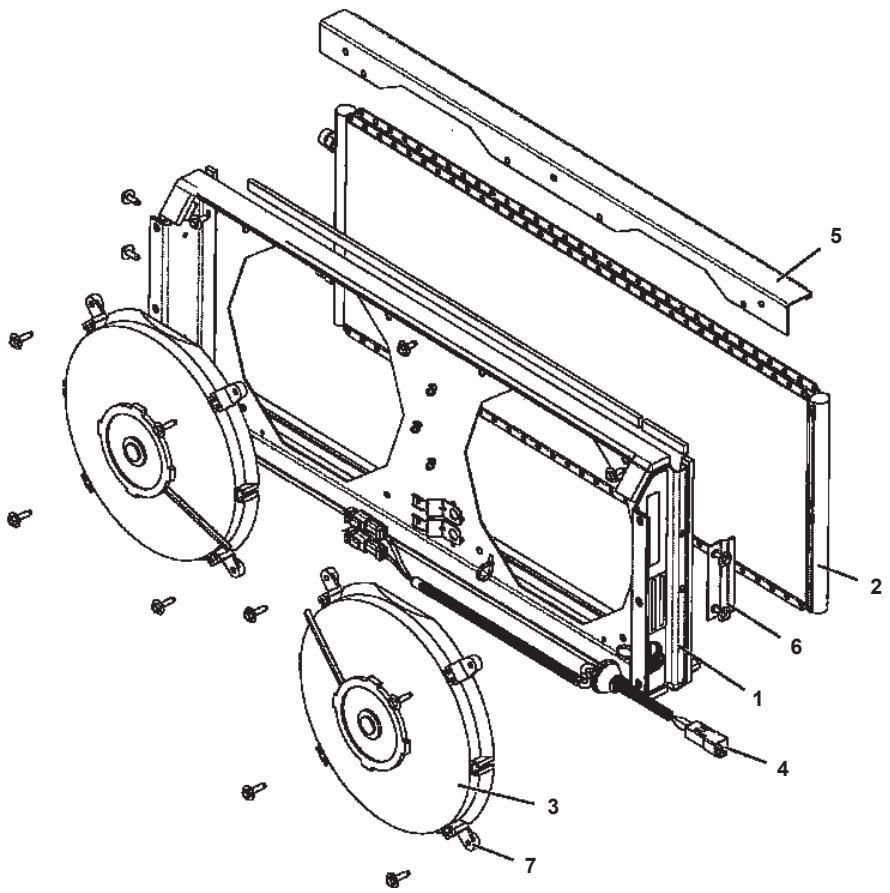

D51EX/PX-22 S/N B10001-UP

K0210-15A0 CONDENSER ASSEMBLY (#B10001-B11915)

Item	Part No.	Description	Qty	Options
	(12Y-978-0190)	CAB ASSEMBLY THESE ASSEMBLIES CONSIST OF ALL PARTS SHOWN IN FIGS. K0210-01A0 TO K0210-18A0.	1	SN:B10001--B11915
	12Y-979-1133	· CONDENSER ASSEMBLY	1	SN:B11558--B11915
	□12Y-979-1132	· CONDENSER ASSEMBLY	1	SN:B10001--B11557
1	RD-4-5976-0	· · PLENUM ASSEMBLY	1	SN:B10001--B11915
2	RD-4-5452-0	· · CONDENSER - PARALLEL FLOW	1	SN:B10001--B11915
3	RD-5-12218-1	· · FAN/MOTOR ASSEMBLY	2	SN:B10001--B11915
4	RD-3-11476-0	· · WIRE HARNESS ASSEMBLY	1	SN:B10001--B11915
5	RD-4-5437-0	· · BRACKET ASSEMBLY - MOTOR SUPPORT	1	SN:B10001--B11915
6	RD-4-5614-0	· · BRACKET - SUPPORT	2	SN:B10001--B11915
7	RD-5-8636-0	· · BRACKET - MOUNTING, 90º	8	SN:B10001--B11915

Ref. K0210-15A0 Page K-047

RD-5-12668-0A

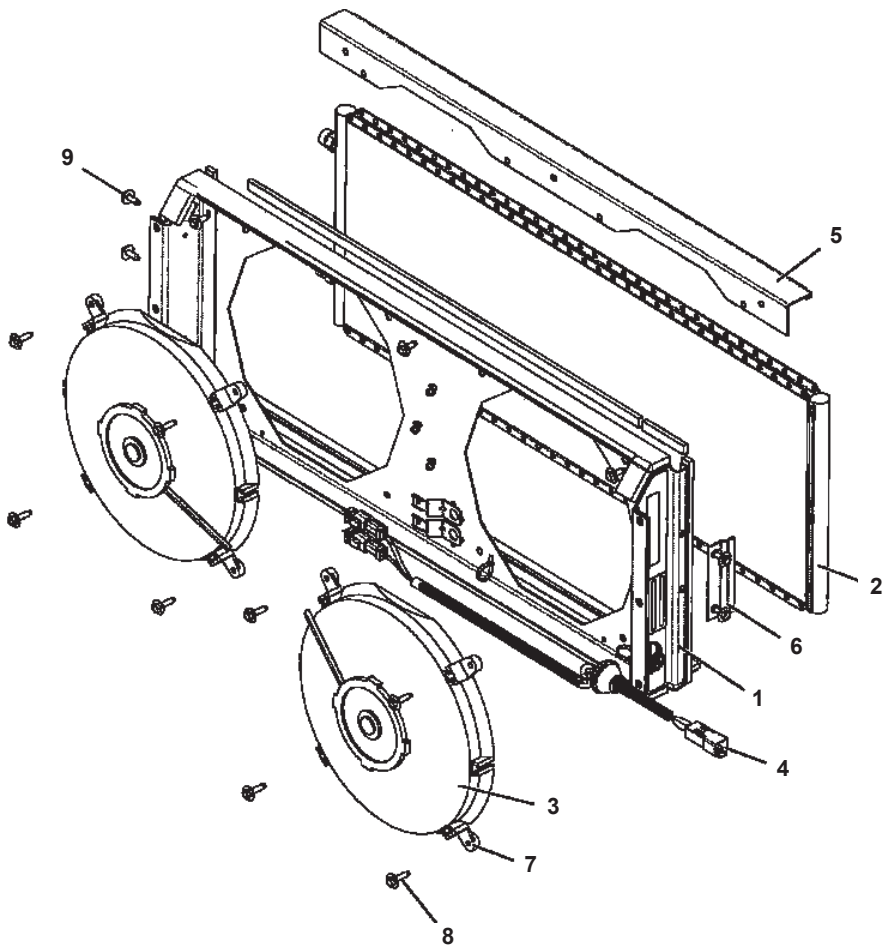

D51EX/PX-22 S/N B10001-UP

K0210-15A0A CONDENSER ASSEMBLY (#B11916-)

Item	Part No.	Description	Qty	Options
	(12Y-978-0191)	CAB ASSEMBLY THESE ASSEMBLIES CONSIST OF ALL PARTS SHOWN IN FIGS. K0210-01A0 TO K0210-18A0.	1	SN:B11916--
	12Y-979-1133	· CONDENSER ASSEMBLY	1	SN:B11916--
1	RD-4-6597-0	· · PLENUM ASSEMBLY	1	SN:B11916--
2	RD-4-5452-0	· · CONDENSER - PARALLEL FLOW	1	SN:B11916--
3	RD-5-12218-1	· · FAN/MOTOR ASSEMBLY	2	SN:B11916--
4	RD-3-11476-0	· · WIRE HARNESS ASSEMBLY	1	SN:B11916--
5	RD-4-5437-0	· · BRACKET ASSEMBLY - MOTOR SUPPORT	1	SN:B11916--
6	RD-4-5614-0	· · BRACKET - SUPPORT	2	SN:B11916--
7	RD-5-8636-0	· · BRACKET - MOUNTING, 90º	8	SN:B11916--
8	RD-5-8222-1-22	· · SCREW - M6	8	SN:B11916--
9	RD-5-8222-1-16	· · SCREW - M6	7	SN:B11916--

Ref. K0210-15A0A Page K-047A

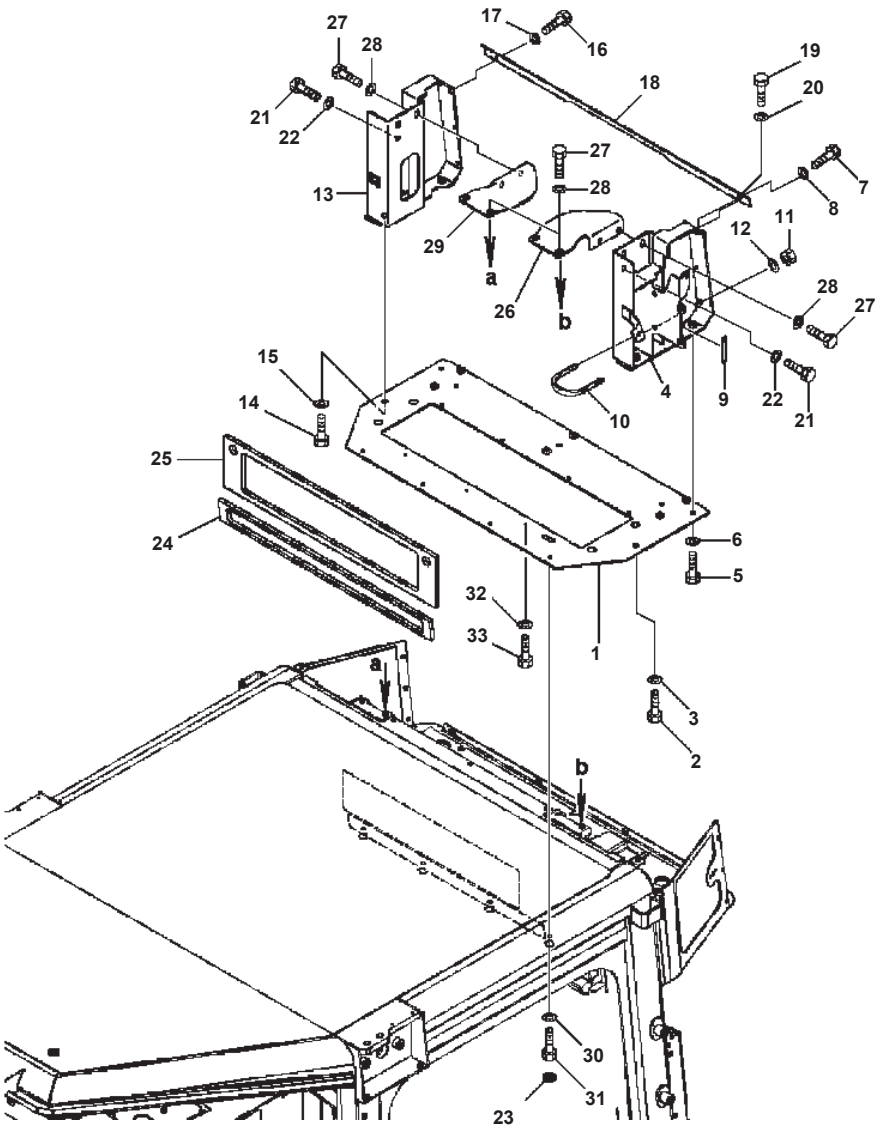

K0210-16A0 CAB AIR CONDITIONER - MOUNTING BRACKETS

Item	Part No.	Description	Qty	Options
	(12Y-978-0191)	CAB ASSEMBLY	1	SN:B11916--
	(12Y-978-0190)	CAB ASSEMBLY	1	SN:B10001--B11915
		THESE ASSEMBLIES CONSIST OF ALL PARTS SHOWN IN FIGS. K0210-01A0 TO K0210-18A0.		
1	12Y-979-1311	· PLATE	1	SN:B10001--B11448
2	01010-D0830	· BOLT	8	SN:B11449--
	01010-D0825	· BOLT	13	SN:B11060--B11448
	01010-D0825	· BOLT	17	SN:B10001--B11059
3	01643-70823	· WASHER	8	SN:B11449--
	01643-70823	· WASHER	13	SN:B11060--B11448
	01643-70823	· WASHER	17	SN:B10001--B11059
4	12Y-979-1324	· BRACKET	1	SN:B10001--
5	01010-D1025	· BOLT	2	SN:B10001--
6	01643-71032	· WASHER	2	SN:B10001--
7	01010-D0820	· BOLT	3	SN:B11449--
	□01010-D0825	· BOLT	3	SN:B10001--B11448
8	01643-70823	· WASHER	3	SN:B10001--
9	12Y-979-1850	· TRIM	1	SN:B10001--
10	07283-37663	· U-BOLT	2	SN:B10001--
11	01597-01009	· NUT	4	SN:B10001--
12	01643-31032	· WASHER	4	SN:B10001--
13	12Y-979-1333	· BRACKET	1	SN:B11449--
	□12Y-979-1332	· BRACKET	1	SN:B10001--B11448
14	01010-D0820	· BOLT	2	SN:B11449--
	□01010-D1025	· BOLT	2	SN:B10001--B11448
15	01643-70823	· WASHER	2	SN:B11449--
	01643-71032	· WASHER	2	SN:B10001--B11448
16	01010-D0820	· BOLT	3	SN:B11449--
	□01010-D0825	· BOLT	3	SN:B10001--B11448
17	01643-70823	· WASHER	3	SN:B10001--
18	12Y-979-1590	· PLATE	1	SN:B10001--
19	01010-D0820	· BOLT	2	SN:B11449--
	□01010-D0825	· BOLT	2	SN:B10001--B11448
20	01643-70823	· WASHER	2	SN:B10001--
21	01010-D0820	· BOLT	2	SN:B11449--
	□01010-D1025	· BOLT	2	SN:B10001--B11448
22	01643-70823	· WASHER	2	SN:B11449--
	□01643-71032	· WASHER	2	SN:B10001--B11448

K0210-16A0 CAB AIR CONDITIONER - MOUNTING BRACKETS

Item	Part No.	Description	Qty	Options
23	09415-01610	· CAP	4	SN:B10001--
24	12Y-979-1342	· SEAL	1	SN:B11449--
	□12Y-979-1341	· SEAL	1	SN:B10747--B11448
	12Y-979-1340	· SEAL	1	SN:B10001-B10746--
25	12Y-979-1392	· SEAL	1	SN:B10747--
	□12Y-979-1391	· SEAL	1	SN:B10001--B10746
26	12Y-979-1661	· PLATE	1	SN:B10001--
27	01010-D1025	· BOLT	8	SN:B10001--
28	01643-71032	· WASHER	8	SN:B10001--
29	12Y-979-1760	· BRACKET	1	SN:B10001--
30	01643-30823	· WASHER	4	SN:B10001--
31	01010-80830	· BOLT	4	SN:B10001--
32	01643-70823	· WASHER	3	SN:B11449--
33	01010-D0820	· BOLT	3	SN:B11449--

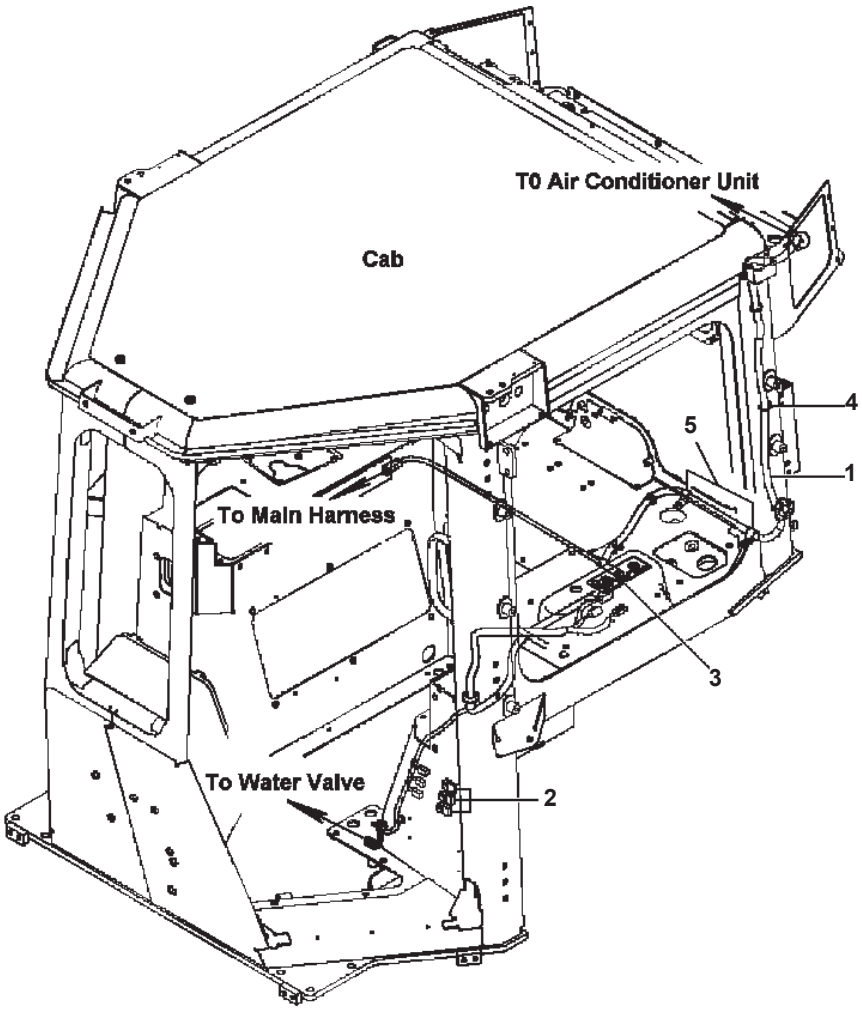

K0210-17A0 CAB AIR CONDITIONER WIRING HARNESS

Item	Part No.	Description	Qty	Options
	(12Y-978-0191)	CAB ASSEMBLY	1	SN:B11916--
	(12Y-978-0190)	CAB ASSEMBLY	1	SN:B10001--B11915
		THESE ASSEMBLIES CONSIST OF ALL PARTS SHOWN IN FIGS. K0210-01A0 TO K0210-18A0.		
1	12Y-979-1454	· HARNESS, WIRING - A/C	1	SN:B10001--
2	21J-06-13661	· · DIODE	1	SN:B10001--
3	12Y-979-1490	· PLATE	1	SN:B10001--
4	08034-20519	· STRAP, TIE	22	SN:B10001--
5	04434-51710	· CLIP, WIRING	2	SN:B10001--

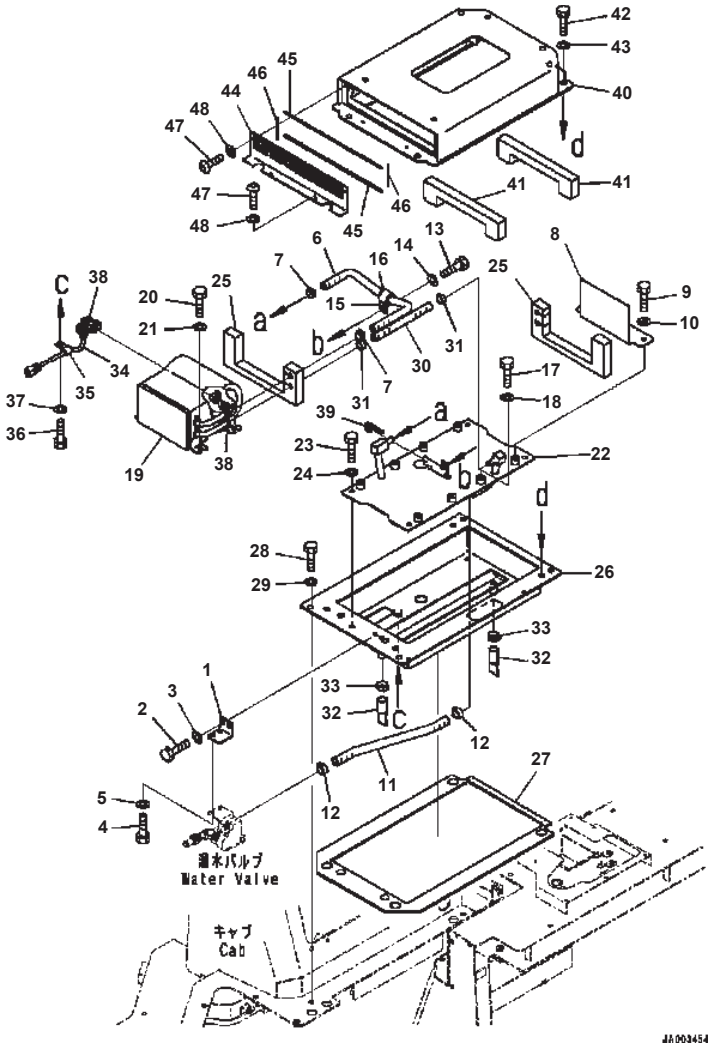

K0210-18A0 CAB UNDER SEAT HEATER PARTS AND SUB HEATER

Item	Part No.	Description	Qty	Options
	(12Y-978-0191)	CAB ASSEMBLY	1	SN:B11916--
	(12Y-978-0190)	CAB ASSEMBLY	1	SN:B10001--B11915
		THESE ASSEMBLIES CONSIST OF ALL PARTS SHOWN IN FIGS. K0210-01A0 TO K0210-18A0.		
1	12Y-979-1350	· BRACKET	1	SN:B10001--
2	01010-81020	· BOLT	2	SN:B10001--
3	01643-31032	· WASHER	2	SN:B10001--
4	01010-80616	· BOLT	2	SN:B10001--
5	01643-30623	· WASHER	2	SN:B10001--
6	12Y-979-1361	· HOSE	1	SN:B10001--
7	11Y-09-11160	· CLAMP, HOSE	2	SN:B10001--
8	12Y-979-1370	· PLATE	1	SN:B10001--
9	01010-81020	· BOLT	2	SN:B10001--
10	01643-31032	· WASHER	2	SN:B10001--
11	09483-10504	· HOSE	1	SN:B10001--
12	09479-02400	· CLAMP, HOSE	2	SN:B10001--
13	01010-81020	· BOLT	1	SN:B10001--
14	01643-31032	· WASHER	1	SN:B10001--
15	04434-52711	· CLAMP, HOSE	1	SN:B10001--
16	07095-20420	· CUSHION	1	SN:B10001--
17	01010-81020	· BOLT	1	SN:B11449--
18	01643-31032	· WASHER	1	SN:B11449--
19	208-987-3680	· HEATER ASS'Y	1	SN:B10001--
20	01010-81020	· BOLT	4	SN:B10001--
21	01643-31032	· WASHER	4	SN:B10001--
22	12Y-977-1112	· BRACKET	1	SN:B10001--
23	01010-81020	· BOLT	4	SN:B10001--
24	01643-31032	· WASHER	4	SN:B10001--
25	12Y-977-1121	· SEAL	2	SN:B10001--
26	12Y-977-1143	· BRACKET	1	SN:B10001--
27	12Y-977-1211	· SEAL	1	SN:B10001--
28	01010-81230	· BOLT	4	SN:B10001--
29	01643-31232	· WASHER	4	SN:B10001--
30	12Y-979-1380	· HOSE	1	SN:B10001--
31	11Y-09-11160	· CLIP	2	SN:B10001--
32	22B-979-1880	· CONNECTOR	2	SN:B10001--
33	07285-00230	· CLIP, HOSE	2	SN:B10001--
34	12Y-977-1193	· WIRE HARNESS	1	SN:B10001--

K0210-18A0 CAB UNDER SEAT HEATER PARTS AND SUB HEATER

Item	Part No.	Description	Qty	Options
35	04434-51410	· CLIP	1	SN:B10001--
36	01010-81230	· STRAP, TIE	1	SN:B10001--
37	01643-31032	· WASHER	1	SN:B10001--
38	08034-20519	· BAND	2	SN:B10001--
39	12Y-06-13380	· SEAL	1	SN:B10001--
40	12Y-57-11113	· BRACKET	1	SN:B10049--
41	12Y-57-11131	· · SEAL, BONDED	2	SN:B10049--
42	01010-81230	· BOLT	4	SN:B10049--
43	01643-31232	· WASHER	4	SN:B10049--
44	12Y-57-11161	· COVER	1	SN:B10049--
45	12Y-57-11170	· · SEAL, BONDED	2	SN:B10049--
46	12Y-57-11181	· · SEAL, BONDED	2	SN:B10049--
47	01245-00620	· SCREW	4	SN:B10049--
48	01643-70623	· WASHER	4	SN:B10049--

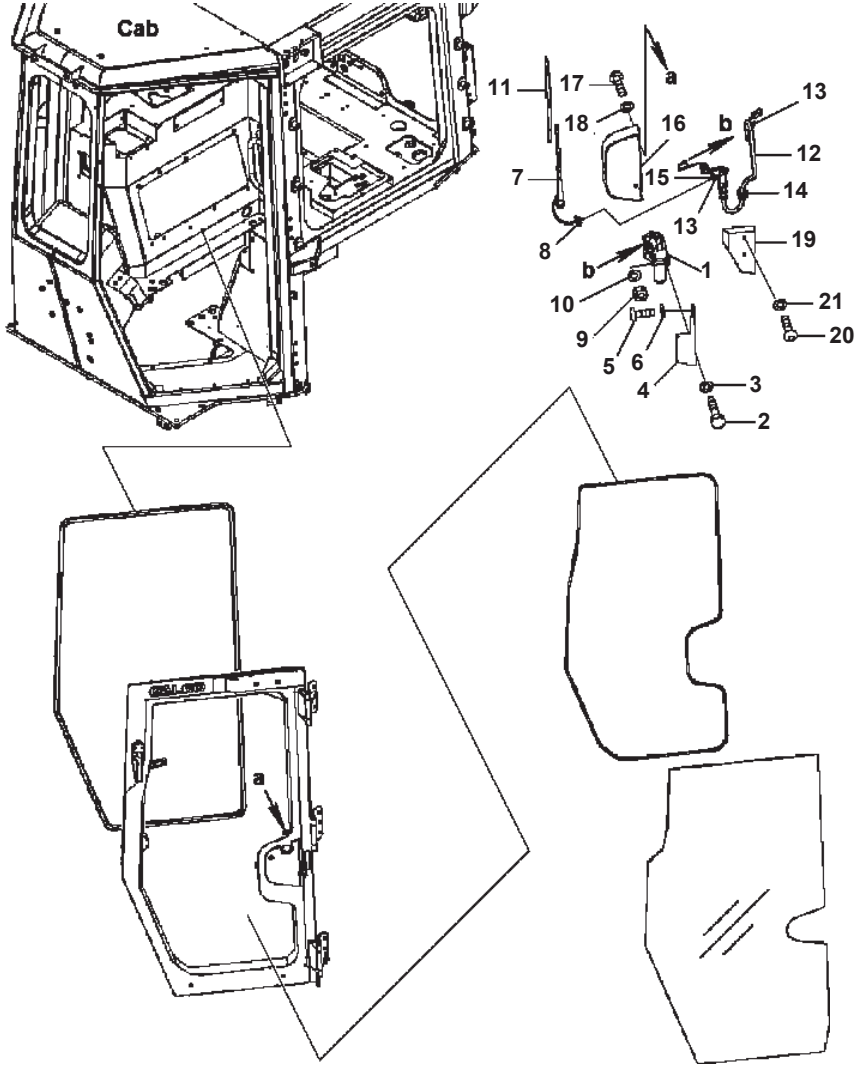

K0210-19A0 CAB DOOR WIPER (L.H.)

Item	Part No.	Description	Qty	Options
1	12Y-978-2431	MOTOR, WIPER	1	SN:B11088--
	☐12Y-978-2430	MOTOR, WIPER	1	SN:B10001--B11087
2	01010-80616	BOLT	2	SN:B10001--
3	01643-70623	WASHER	2	SN:B10001--
4	12Y-978-2551	BRACKET	2	SN:B10001--
5	01245-00825	SCREW	2	SN:B10001--
6	01643-70823	WASHER	2	SN:B10001--
7	12Y-978-2490	ARM, WIPER - LH CAB DOOR	1	SN:B10001--
8	08037-01008	GROMMET	1	SN:B10001--
9	01580-10806	NUT	1	SN:B10001--
10	01640-20816	WASHER	1	SN:B10001--
11	17A-Z11-2581	BLADE, WIPER - LH CAB DOOR	1	SN:B10001--
12	12Y-978-2126	HARNESS, WIRING - WIPER MOTOR	1	SN:B11916--
	☐12Y-978-2124	HARNESS, WIRING - WIPER MOTOR	1	SN:B10001--B11915
13	195-979-8561	· HOSE, WINDOW WASHER	1	SN:B11916--
	☐195-979-8560	· HOSE, WINDOW WASHER	1	SN:B10001--B11915
14	08034-20519	STRAP, TIE	5	SN:B10001--
15	17A-Z11-4610	NOZZLE, WINDOW WASHER	1	SN:B10001--
16	12Y-978-3381	COVER	1	SN:B10001--
17	01245-00620	SCREW	4	SN:B10001--
18	12Y-978-2660	COLLAR	4	SN:B10001--
19	12Y-978-3631	COVER	1	SN:B10001--
20	01245-00620	SCREW	4	SN:B10001--
21	01643-70623	WASHER	4	SN:B10001--

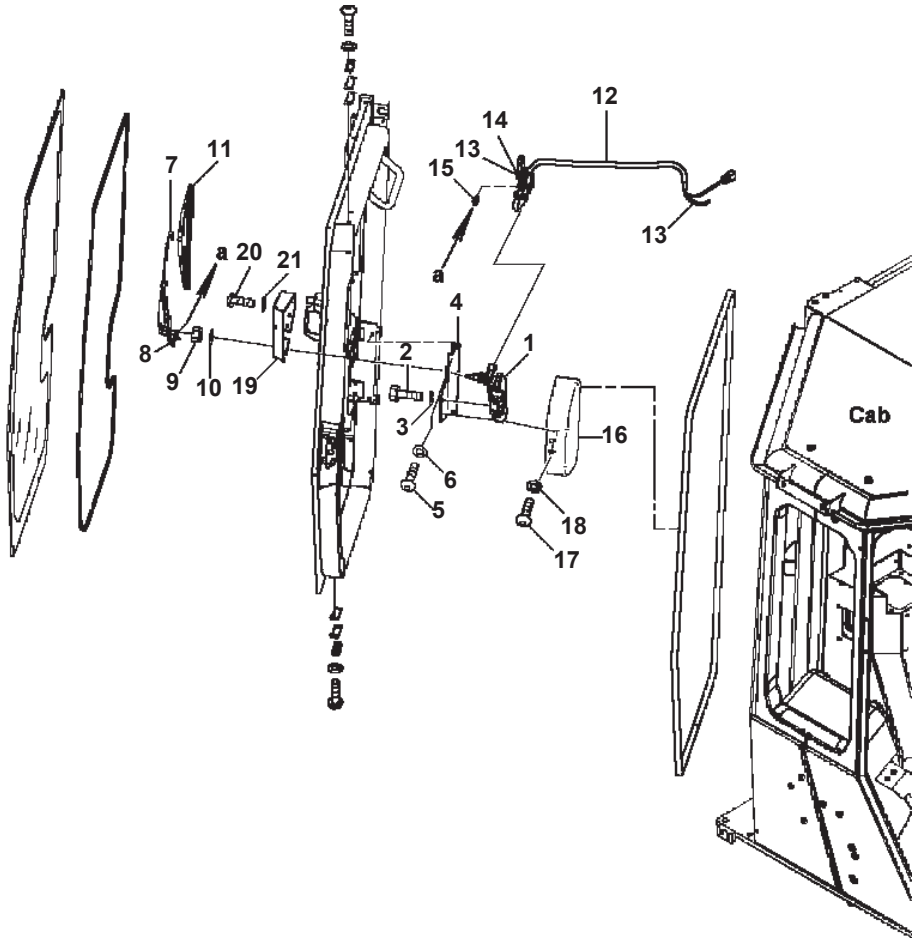

K0210-20A0 CAB DOOR WIPER (R.H.)

Item	Part No.	Description	Qty	Options
1	12Y-978-2441	MOTOR, WIPER	1	SN:B11088--
	□12Y-978-2440	MOTOR, WIPER	1	SN:B10001--B11087
2	01010-80616	BOLT	2	SN:B10001--
3	01643-70623	WASHER	2	SN:B10001--
4	12Y-978-2561	BRACKET	2	SN:B10001--
5	01245-00825	SCREW	2	SN:B10001--
6	01643-70823	WASHER	2	SN:B10001--
7	12Y-978-2490	ARM, WIPER - RH CAB DOOR	1	SN:B10001--
8	08037-01008	GROMMET	1	SN:B10001--
9	01580-10806	NUT	1	SN:B10001--
10	01640-20816	WASHER	1	SN:B10001--
11	17A-Z11-2581	BLADE, WIPER - RH CAB DOOR	1	SN:B10001--
12	12Y-978-2126	HARNESS, WIRING - WIPER MOTOR	1	SN:B11916--
	□12Y-978-2124	HARNESS, WIRING - WIPER MOTOR	1	SN:B10001--B11915
13	195-979-8561	· HOSE, WINDOW WASHER	1	SN:B11916--
	□195-979-8560	· HOSE, WINDOW WASHER	1	SN:B10001--B11915
14	08034-20519	STRAP, TIE	5	SN:B10001--
15	17A-Z11-4610	NOZZLE, WINDOW WASHER	1	SN:B10001--
16	12Y-978-3381	COVER	1	SN:B10001--
17	01245-00620	SCREW	4	SN:B10001--
18	12Y-978-2660	COLLAR	4	SN:B10001--
19	12Y-978-3641	COVER	1	SN:B10001--
20	01245-00620	SCREW	4	SN:B10001--
21	01643-70623	WASHER	4	SN:B10001--

00061191-V

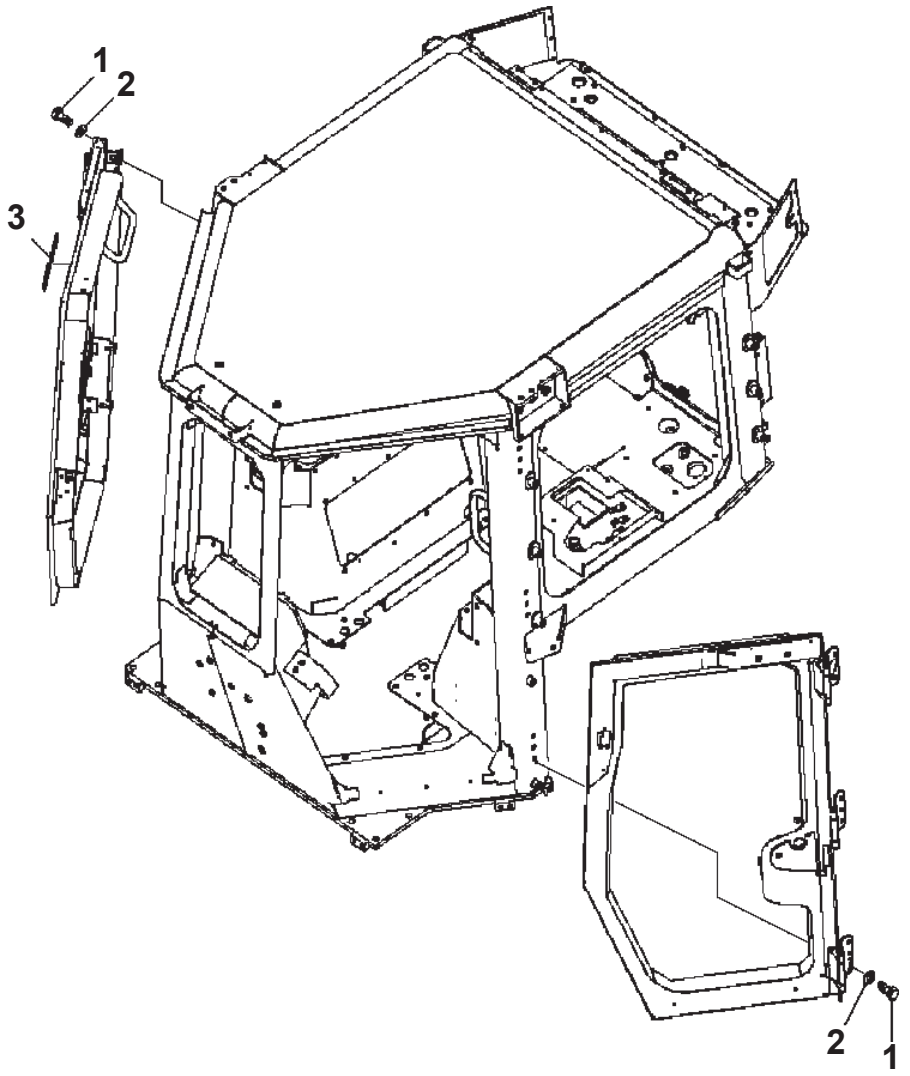

D51EX/PX-22 S/N B10001-UP

K0210-21A0 CAB DOOR MOUNTING HARDWARE

Item	Part No.	Description	Qty	Options
1	01010-D1035	BOLT	18	SN:B10001--
2	01643-71032	WASHER	18	SN:B10001--

Ref. K0210-21A0 Page K-059

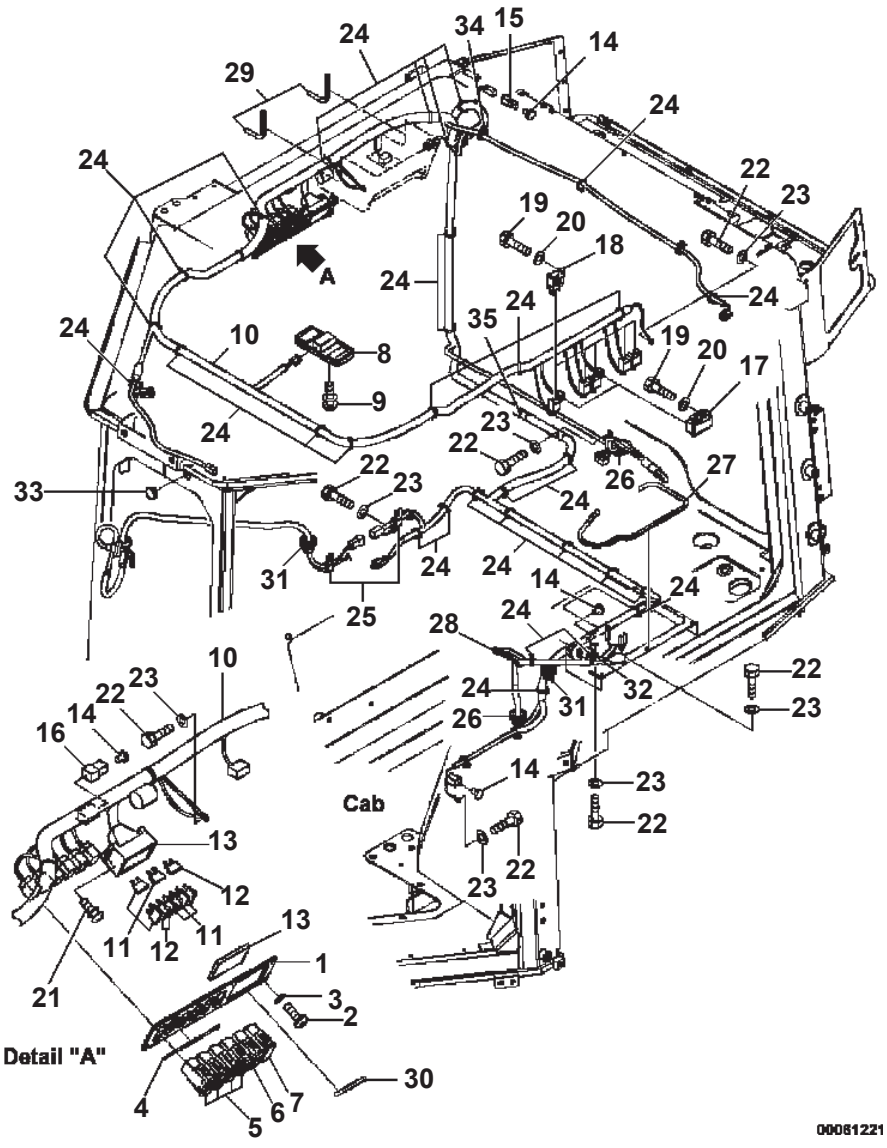

K0210-22A0 CAB ELECTRICAL (SWITCHES, ROOM LAMP, WIRING HARNESS)

Item	Part No.	Description	Qty	Options
1	12Y-978-2271	PANEL, SWITCH	1	SN:B10001--
2	01245-00620	SCREW	4	SN:B10001--
3	01643-70623	WASHER	4	SN:B10001--
4	17A-Z11-2350	PANEL	1	SN:B10001--
5	20Y-06-42140	SWITCH	4	SN:B10001--
6	17A-06-42220	SWITCH	1	SN:B10001--
7	20Y-06-42190	COVER	1	SN:B11449--
	◆20Y-06-42190	COVER	2	SN:B10001--B11448
8	421-06-26210	LAMP, DOME	1	SN:B10001--
9	01023-10520	SCREW	2	SN:B10001--
10	12Y-978-2115	HARNESS, WIRING - CAB	1	SN:B11449--
	□12Y-978-2114	HARNESS, WIRING - CAB	1	SN:B10001--B11448
11	08041-01000	· FUSE, 10A	6	SN:B10001--
12	08041-02000	· FUSE, 20A	3	SN:B10001--
13	08044-00600	· BOX, FUSE	1	SN:B10001--
14	08191-00770	· PLUG	7	SN:B10001--
15	08192-12100	· CONNECTOR	1	SN:B10001--
16	08192-22100	· CONNECTOR	1	SN:B10001--
17	17A-Z11-2420	RELAY, 6 TERMINAL	2	SN:B10001--
18	7861-74-5100	RELAY	5	SN:B10001--
19	01010-80616	BOLT	7	SN:B10001--
20	01643-70623	WASHER	7	SN:B10001--
21	01023-10520	SCREW	2	SN:B10001--
22	01010-80616	BOLT	6	SN:B10001--
23	01643-70623	WASHER	6	SN:B10001--
24	08034-20519	STRAP, TIE	30	SN:B10001--
25	04435-51010	CLIP	2	SN:B10001--
26	08037-11025	GROMMET	2	SN:B10001--
27	12Y-978-2184	SEAL	1	SN:B11449--
	□12Y-978-2183	SEAL	1	SN:B10001--B11448
28	12Y-978-2192	SEAL	1	SN:B10001--
29	12Y-06-13151	SEAL	2	SN:B11449--
	12Y-06-13151	SEAL	3	SN:B10001--B11448
30	12Y-978-2160	SEAL	1	SN:B11449--
31	08037-11425	GROMMET	2	SN:B10001--
32	08037-02512	GROMMET	1	SN:B10001--
33	09415-01610	CAP	1	SN:B10001--
34	08059-00310	CLIP	2	SN:B10382--
35	04434-51910	CLIP	2	SN:B10382--

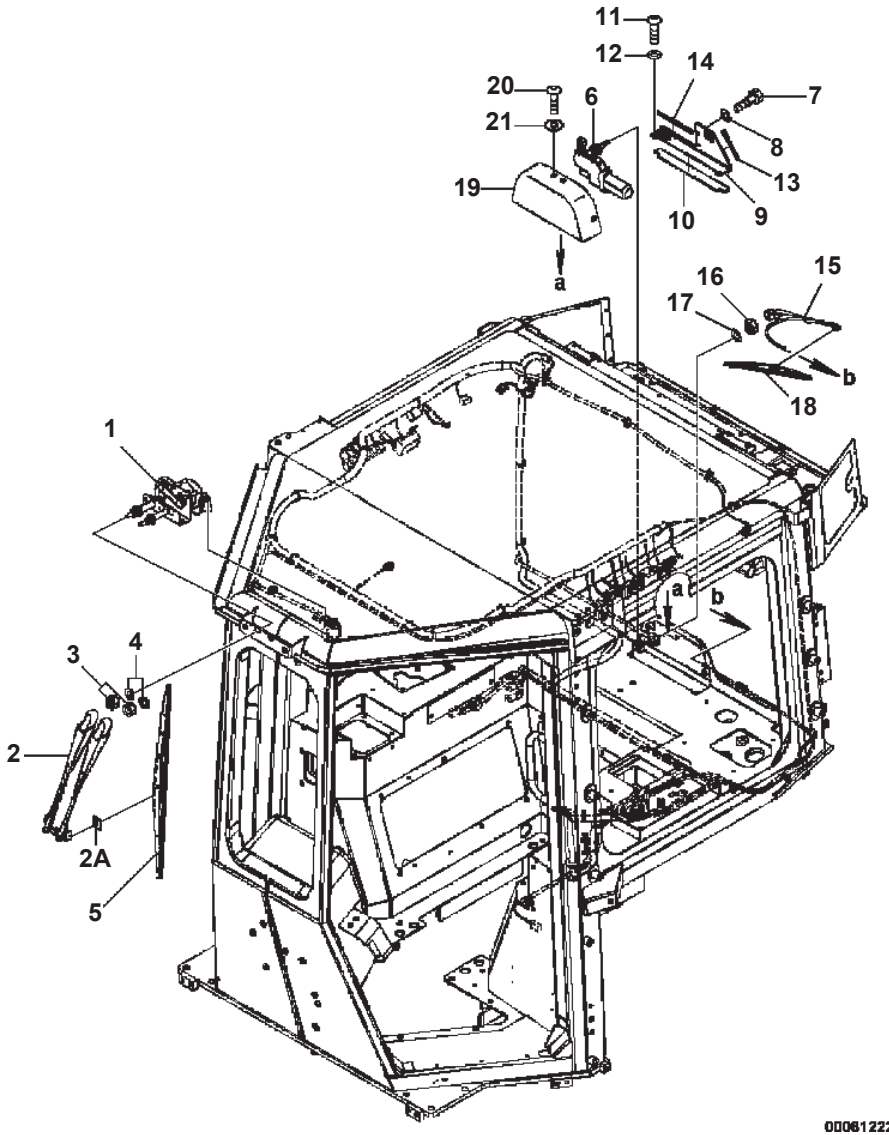

K0210-23A0 CAB ELECTRICAL (FRONT AND REAR WIPERS)

Item	Part No.	Description	Qty	Options
1	12Y-978-2411	MOTOR, FRONT WIPER	1	SN:B10001--
2	12Y-978-2470	ARM, FRONT WIPER	1	SN:B10001--
2A	12Y-978-2460	SHIM	2	SN:B10382--
3	01580-10806	NUT	2	SN:B10001--
4	01640-20816	WASHER	2	SN:B10001--
5	12Y-978-2450	BLADE, FRONT WIPER	1	SN:B10001--
6	12Y-978-2441	MOTOR, REAR WIPER	1	SN:B11060--
	□12Y-978-2440	MOTOR, REAR WIPER	1	SN:B10001--B11059
7	01010-80616	BOLT	2	SN:B10001--
8	01643-70623	WASHER	2	SN:B10001--
9	12Y-978-2572	BRACKET	1	SN:B10001--
10	12Y-978-2580	· SHEET	1	SN:B10001--
11	01245-00825	SCREW	2	SN:B10001--
12	01643-70823	WASHER	2	SN:B10001--
13	12Y-06-13380	SEAL	1	SN:B10001--
14	12Y-43-12861	SEAL	1	SN:B10001--
15	17A-Z11-2570	ARM, REAR WIPER	1	SN:B10001--
16	01580-10806	NUT	1	SN:B10001--
17	01640-20816	WASHER	1	SN:B10001--
18	17A-Z11-2581	BLADE, REAR WIPER	1	SN:B10001--
19	12Y-978-3391	COVER	1	SN:B10001--
20	01245-00620	SCREW	4	SN:B10001--
21	12Y-978-2660	COLLAR	4	SN:B10001--

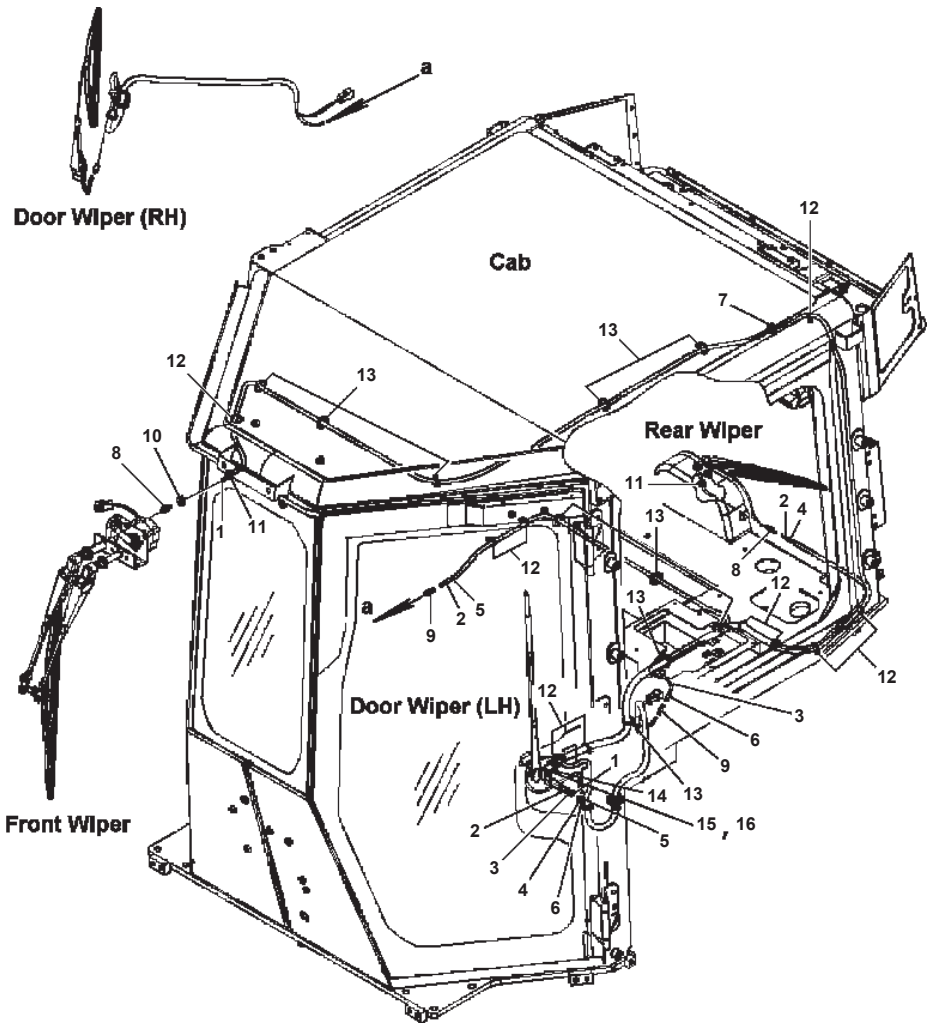

K0210-24A0 CAB WINDOW WASHER HOSES

Item	Part No.	Description	Qty	Options
1	12Y-978-2511	HOSE	1	SN:B10001--
2	12Y-978-2520	HOSE	2	SN:B10001--
3	196-911-1341	HOSE	1	SN:B10001--
4	14X-911-1130	TUBE	2	SN:B10001--
5	14X-911-1140	TUBE	2	SN:B10001--
6	14X-911-1150	TUBE	2	SN:B10001--
7	17A-Z11-2660	CAP	1	SN:B10001--
8	17A-Z11-4610	VALVE	2	SN:B10001--
9	22L-54-22990	JOINT	2	SN:B10001--
10	17A-Z11-2660	CAP	1	SN:B10001--
11	08037-01008	GROMMET	2	SN:B10001--
12	08034-20519	STRAP, TIE	11	SN:B11558--
	08034-20519	STRAP, TIE	10	SN:B10001--B11557
13	08034-40521	STRAP, TIE	10	SN:B10001--
14	04434-51710	CLIP	2	SN:B10382--
15	01010-80820	BOLT	1	SN:B10382--
16	01643-30823	WASHER	1	SN:B10382--

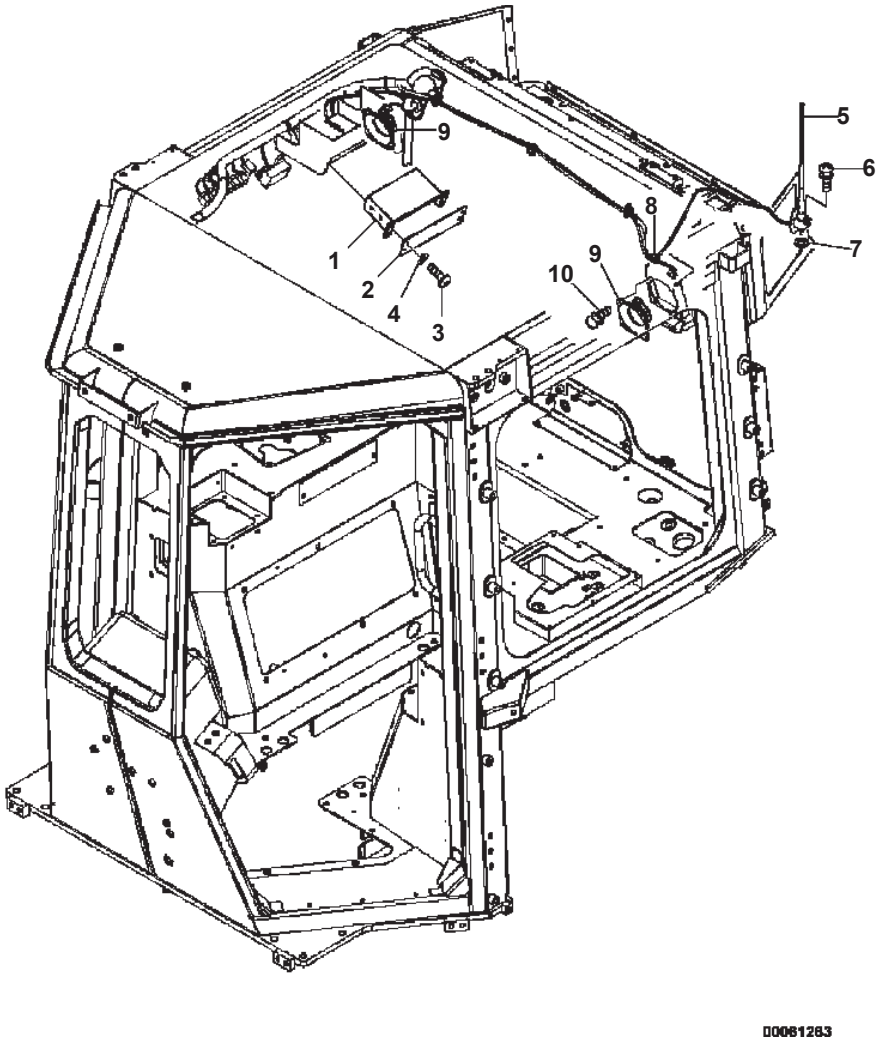

K0210-25A0 CAB RADIO ADD-ON

Item	Part No.	Description	Qty	Options
1	12Y-978-2210	BRACKET	1	SN:B10001--
2	17A-Z11-2240	PLATE	1	SN:B10001--
3	01245-00620	SCREW	4	SN:B10001--
4	01643-70623	WASHER	4	SN:B10001--
5	198-Z11-4610	ANTENNA, RUBBER	1	SN:B10001--
6	01023-20416	SCREW	2	SN:B10001--
7	01643-70823	WASHER	1	SN:B10001--
8	17A-Z11-2660	CAP	1	SN:B10001--
9	08910-10000	SPEAKER, RADIO	2	SN:B10001--
10	01023-20416	SCREW	8	SN:B10001--

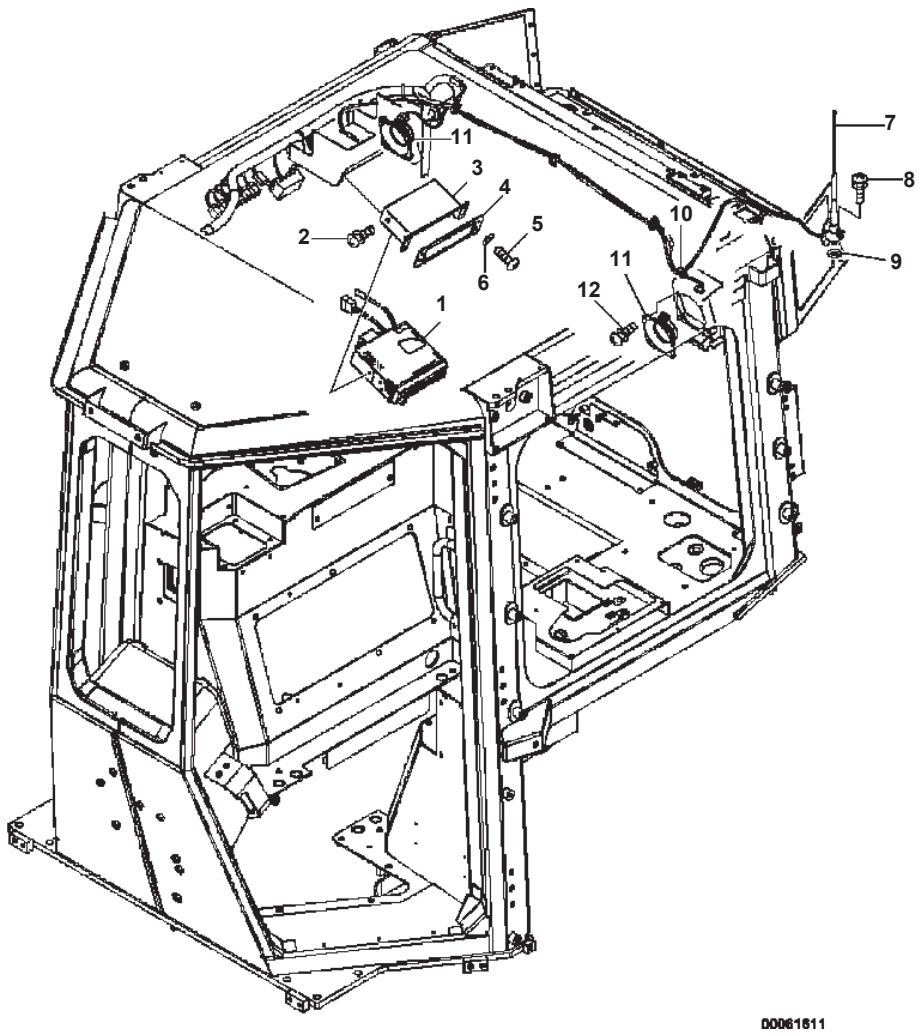

K0210-26A0 CAB CASSETTE (FOR JAPAN)

Item	Part No.	Description	Qty	Options
1	207-06-71712	STEREO	1	SN:B11484--
	□207-06-71711	STEREO	1	SN:B10001--B11483
2	01023-20510	SCREW	4	SN:B10001--
3	12Y-978-2210	BRACKET	1	SN:B10001--
4	12Y-978-2280	PLATE	1	SN:B10001--
5	01245-00620	SCREW	4	SN:B10001--
6	01643-70623	WASHER	4	SN:B10001--
7	198-Z11-4610	ANTENNA, RUBBER	1	SN:B10001--
8	01023-20416	SCREW	2	SN:B10001--
9	01643-70823	WASHER	1	SN:B10001--
10	17A-Z11-2660	CAP	1	SN:B10001--
11	08910-10000	SPEAKER, RADIO	2	SN:B10001--
12	01023-20416	SCREW	8	SN:B10001--

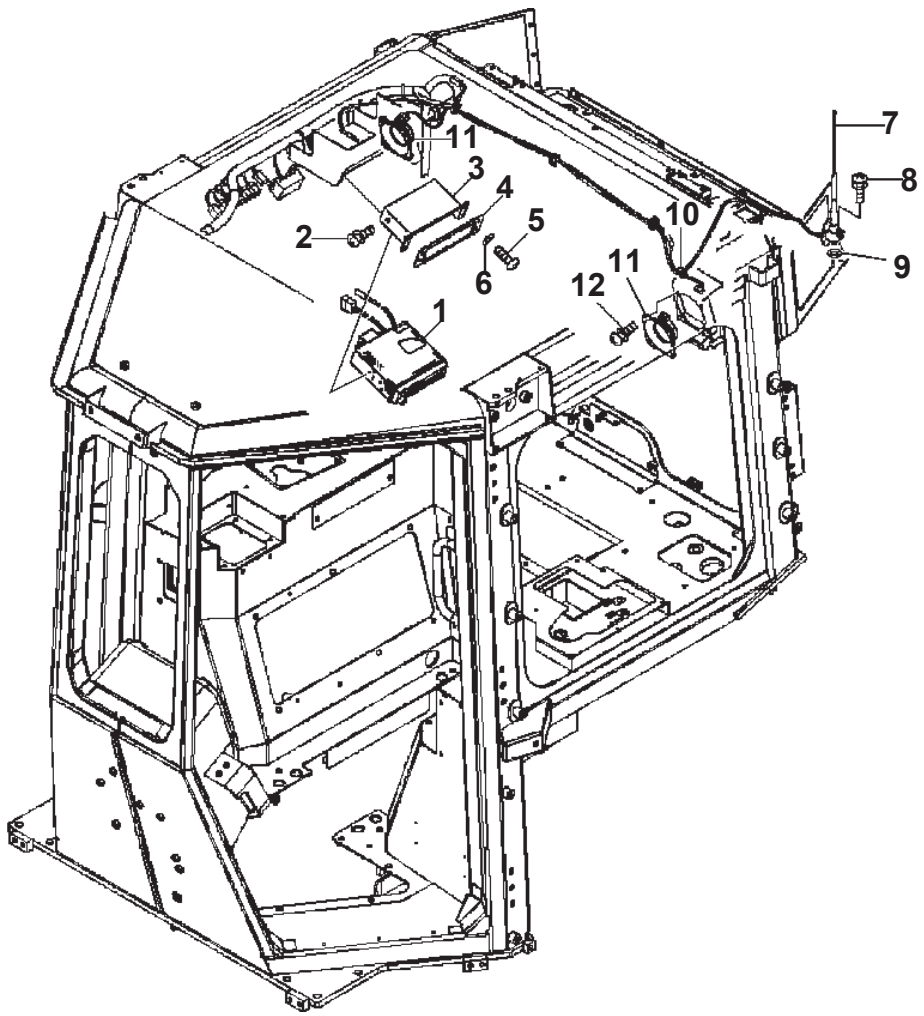

K0210-27A0 CAB CASSETTE (FOR NORTH AMERICA)

Item	Part No.	Description	Qty	Options
1	195-Z11-8942	STEREO	1	SN:B11916--
	□195-Z11-8942	STEREO	1	SN:B10712--B10915
	□195-Z11-8941	STEREO	1	SN:B10001--B10711
2	01023-20510	SCREW	4	SN:B10001--
3	12Y-978-2210	BRACKET	1	SN:B10001--
4	12Y-978-2280	PLATE	1	SN:B10001--
5	01245-00620	SCREW	4	SN:B10001--
6	01643-70623	WASHER	4	SN:B10001--
7	198-Z11-4610	ANTENNA, RUBBER	1	SN:B10001--
8	01023-20416	SCREW	2	SN:B10001--
9	01643-70823	WASHER	1	SN:B10001--
10	17A-Z11-2660	CAP	1	SN:B10001--
11	08910-10000	SPEAKER, RADIO	2	SN:B10001--
12	01023-20416	SCREW	8	SN:B10001--

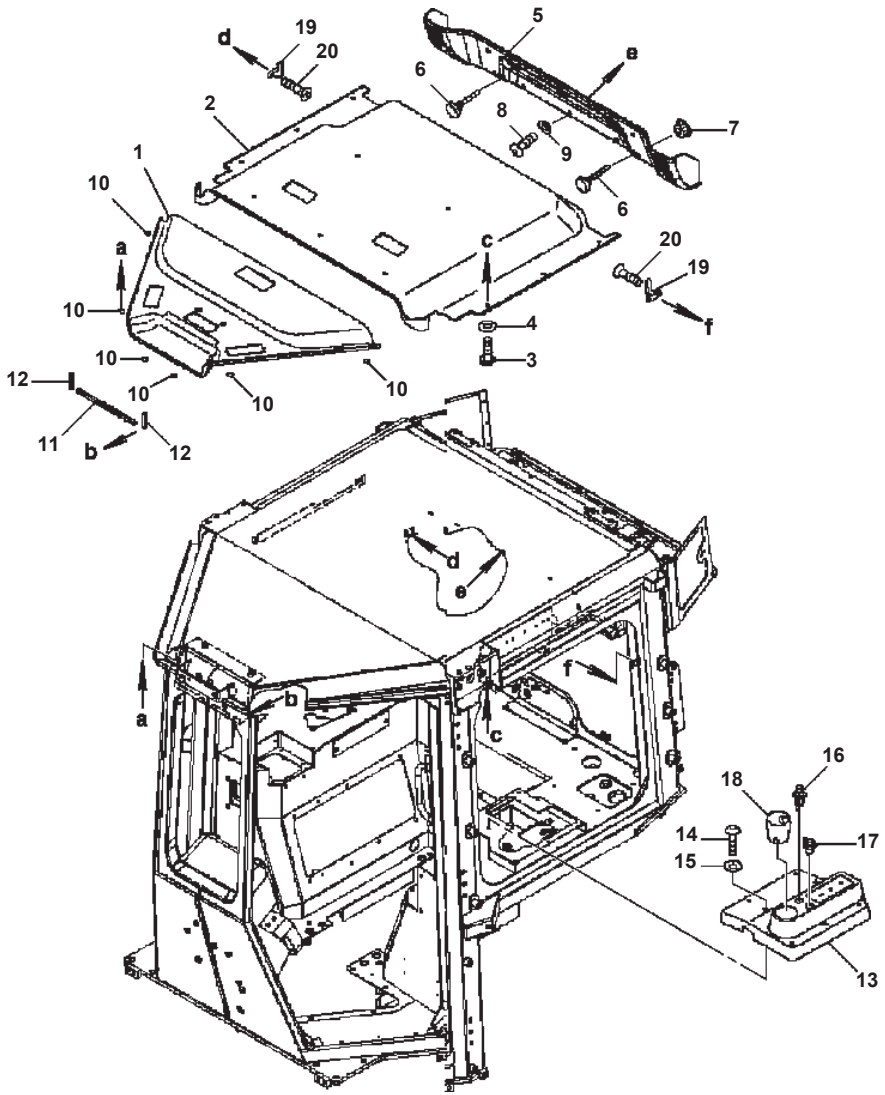

K0210-28A0 CAB INSIDE COVER

Item	Part No.	Description	Qty	Options
1	12Y-978-2611	COVER	1	SN:B10001--
2	12Y-978-2622	COVER	1	SN:B10001--
3	01245-00620	SCREW	11	SN:B10001--
4	17A-Z11-2813	WASHER	11	SN:B10001--
	12Y-978-2644	COVER ASSEMBLY	1	SN:B11449--
	□12Y-978-2643	COVER ASSEMBLY	1	SN:B10001--B11448
5	12Y-978-2653	· COVER	1	SN:B10001--
6	12Y-978-2340	· KNOB	2	SN:B10001--
7	01598-00608	· NUT	4	SN:B10001--
8	01245-00620	SCREW	12	SN:B10001--
9	12Y-978-2660	COLLAR	12	SN:B10001--
10	12Y-978-2870	PLATE	6	SN:B10001--
11	12Y-978-1830	SEAL	1	SN:B10001--
12	12Y-978-1840	SEAL	2	SN:B10001--
13	12Y-978-2632	COVER	1	SN:B10001--
14	01245-00630	SCREW	7	SN:B10001--
15	17A-Z11-2813	WASHER	7	SN:B10001--
16	20Y-06-23472	LIGHTER, CIGAR	1	SN:B10001--
17	12Y-06-11640	SOCKET ASSEMBLY	1	SN:B10001--
18	20Y-43-41491	ASHTRAY	1	SN:B10001--
19	205-54-51250	HANGER	2	SN:B10001--
20	01224-70410	SCREW	4	SN:B10001--

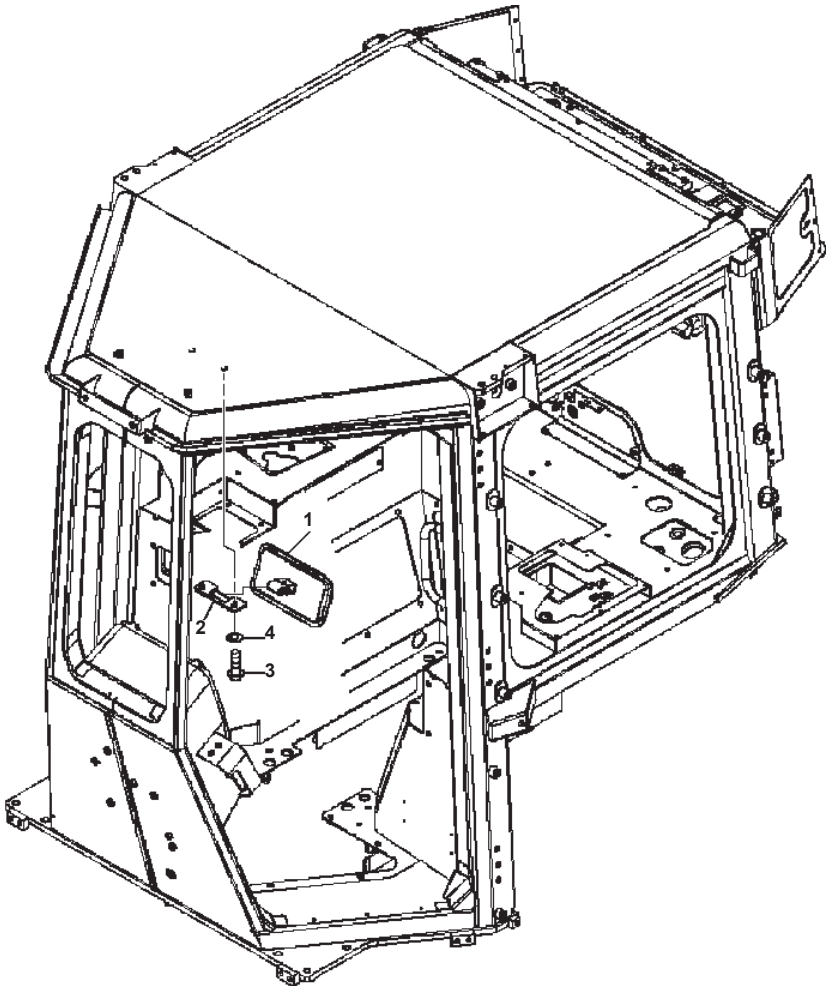

K0210-29A0 CAB REAR VIEW MIRROR

Item	Part No.	Description	Qty	Options
1	195-Z11-2180	MIRROR, REAR VIEW	1	SN:B10001--
2	12Y-978-2220	BRACKET	1	SN:B10001--
3	01245-00825	SCREW	2	SN:B10001--
4	01643-70823	WASHER	2	SN:B10001--

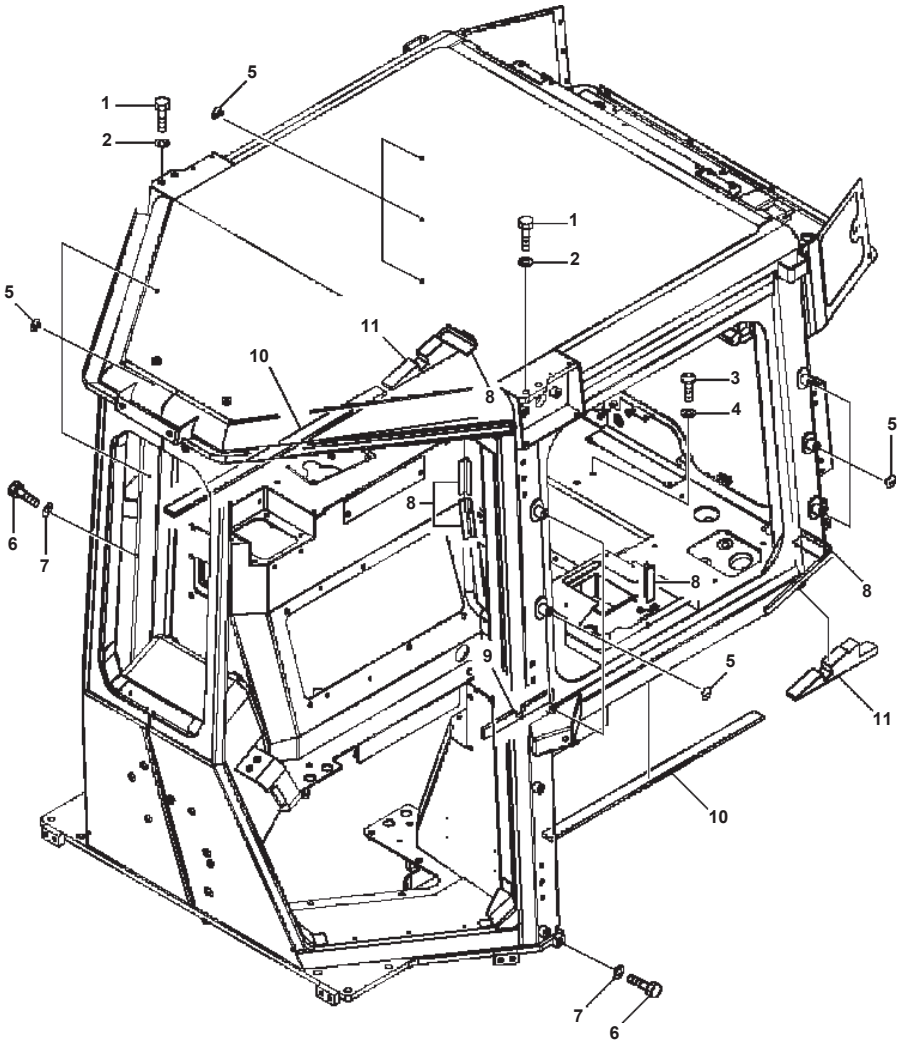

K0210-30A0 CAB PLUGS AND OUTSIDE SEALS

Item	Part No.	Description	Qty	Options
1	01010-81625	BOLT	4	SN:B10001--
2	01643-31645	WASHER	4	SN:B10001--
3	01245-00820	SCREW	4	SN:B10001--
4	01643-70823	WASHER	4	SN:B10001--
5	20Y-53-11380	CAP	10	SN:B10747--
	◆20Y-53-11380	CAP	12	SN:B10001--B10746
6	01010-D1225	BOLT	4	SN:B10001--
7	01643-71232	WASHER	4	SN:B10001--
8	12Y-978-3791	SHEET	5	SN:B10001--
9	12Y-978-1790	SHEET	1	SN:B10001--
10	12Y-54-11860	SHEET	2	SN:B10001--
11	12Y-54-11880	SHEET	2	SN:B10001--

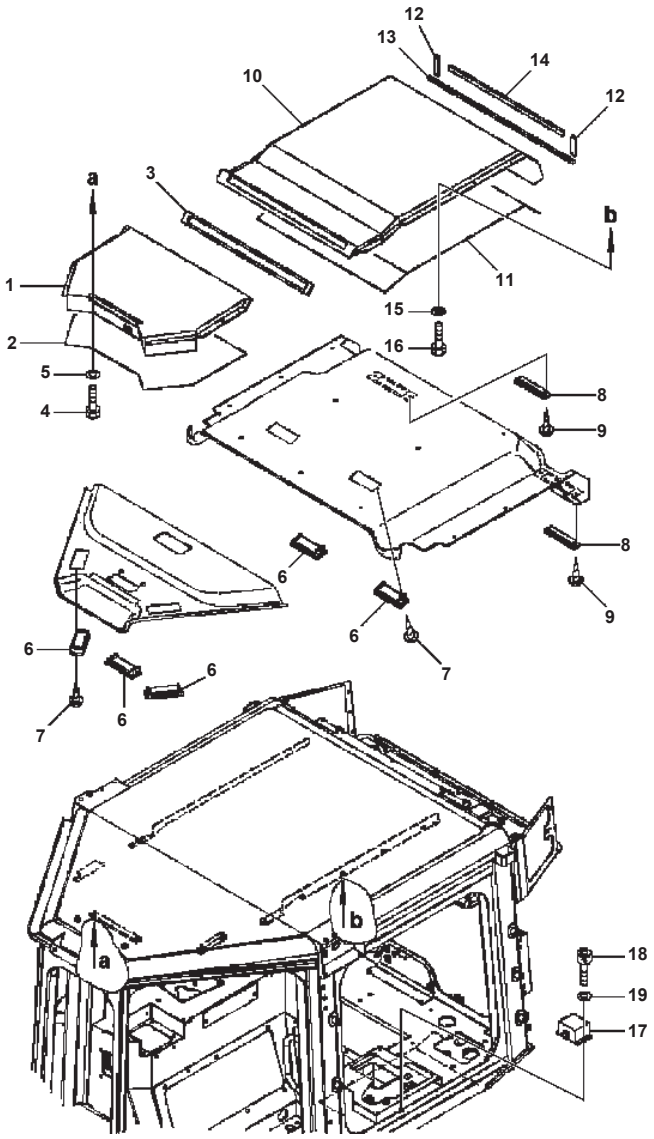

K0210-31A0 CAB ROOF MOUNTED AIR CONDITIONER DUCT

Item	Part No.	Description	Qty	Options
1	12Y-978-2315	DUCT, A/C	1	SN:B10001--
2	12Y-978-1810	· SHEET	1	SN:B10001--
3	12Y-978-1751	· SEAL	1	SN:B10001--
4	01010-80616	BOLT	6	SN:B10001--
5	01643-70623	WASHER	6	SN:B10001--
6	17A-Z11-7161	LOUVER	5	SN:B10001--
7	01370-40412	SCREW	10	SN:B10001--
8	12Y-978-2320	LOUVER	2	SN:B10001--
9	01370-40412	SCREW	4	SN:B10001--
10	12Y-978-1743	DUCT	1	SN:B10001--
11	12Y-978-1820	· SHEET	1	SN:B10001--
12	12Y-978-1781	· SEAL	2	SN:B10001--
13	12Y-978-1771	· SEAL	1	SN:B10001--
14	12Y-978-1761	· SEAL	1	SN:B10001--
15	01643-70623	WASHER	12	SN:B10001--
16	01010-80616	BOLT	12	SN:B10001--
17	2A5-06-11881	CONVERTER	1	SN:B13214--
	□12Y-06-11650	CONVERTER	1	SN:B10001--B13213
18	01252-B0520	BOLT	2	SN:B13214--
	01252-80514	BOLT	2	SN:B10001--B13213
19	01641-50508	WASHER	2	SN:B10001--

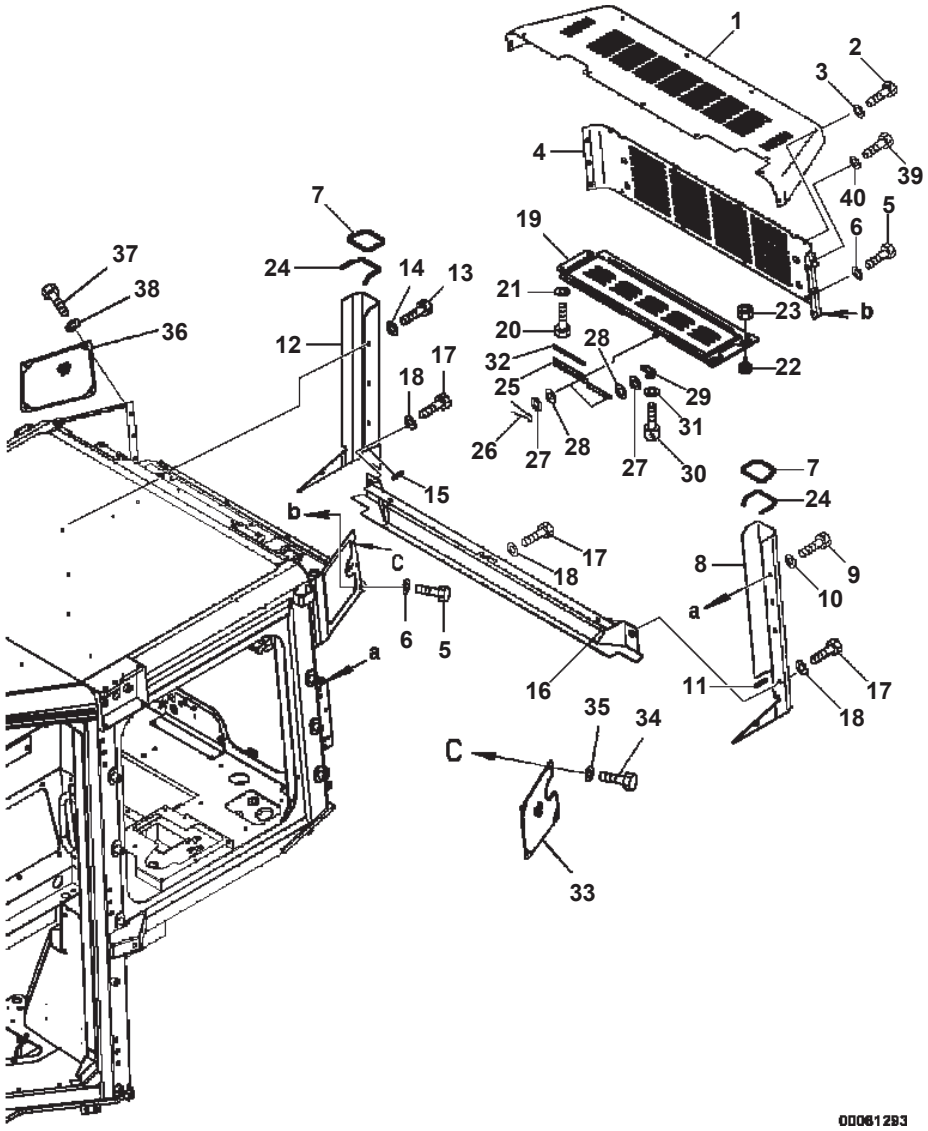

K0210-32A0 CAB AIR CONDITIONER COVER

Item	Part No.	Description	Qty	Options
1	12Y-979-1634	COVER, TOP	1	SN:B10001--
2	01010-D0820	BOLT	11	SN:B10001--
3	01643-70823	WASHER	11	SN:B10001--
4	12Y-979-1792	COVER, END	1	SN:B11558--
	□12Y-979-1791	COVER, END	1	SN:B10001--B11557
5	01010-D0820	BOLT	10	SN:B11449--
	□01010-D0820	BOLT	11	SN:B10001--B11448
6	01643-70823	WASHER	10	SN:B11449--
	□01643-70823	WASHER	11	SN:B10001--B11448
7	12Y-979-1690	TRIM	2	SN:B10001--
8	12Y-979-1642	COVER, LH SIDE	1	SN:B10001--
9	01010-D0820	BOLT	4	SN:B11449--
	□01010-D0820	BOLT	11	SN:B10001--B11448
10	01643-70823	WASHER	4	SN:B11449--
	◆01643-70823	WASHER	11	SN:B10001--B11448
11	12Y-979-1860	SEAL	1	SN:B10001--
12	12Y-979-1652	COVER, RH SIDE	1	SN:B10001--
13	01010-D0820	BOLT	4	SN:B11449--
	□01010-D0820	BOLT	11	SN:B10001--B11448
14	01643-70823	WASHER	4	SN:B11449--
	□01643-70823	WASHER	11	SN:B10001--B11448
15	12Y-979-1860	SEAL	1	SN:B10001--
16	12Y-979-1612	COVER, LOWER	1	SN:B10001--
17	01010-D0820	BOLT	5	SN:B10001--
18	01643-70823	WASHER	5	SN:B10001--
19	12Y-979-1685	COVER, BOTTOM	1	SN:B11449--
	□12Y-979-1684	COVER, BOTTOM	1	SN:B10001--B11448
20	01010-D0830	BOLT	2	SN:B11449--
	□01010-D0825	BOLT	2	SN:B10001--B11448
21	01643-70823	WASHER	2	SN:B10001--
22	12Y-979-1781	KNOB	2	SN:B11449--
	□12Y-979-1780	KNOB	2	SN:B10001--B11448
23	01598-00809	NUT	2	SN:B10001--
24	12Y-978-3492	TRIM	2	SN:B10001--
25	12Y-979-1711	PLATE	1	SN:B10001--
26	04050-11612	PIN, COTTER	2	SN:B10001--
27	01643-30623	WASHER	2	SN:B10001--
28	12Y-978-3310	RUBBER	3	SN:B10001--
29	12Y-979-1751	PLATE	1	SN:B10001--
30	01252-80514	BOLT	2	SN:B10001--
31	01641-50508	WASHER	2	SN:B10001--

K0210-32A0 CAB AIR CONDITIONER COVER

Item	Part No.	Description	Qty	Options
32	12Y-43-12861	SEAL	1	SN:B10001--
33	12Y-979-2322	COVER	1	SN:B11916--
	□12Y-979-2321	COVER	1	SN:B11449--B11915
34	01010-D0820	BOLT	4	SN:B11449--
35	01643-70823	WASHER	4	SN:B11449--
36	12Y-979-2332	COVER	1	SN:B11916--
	□12Y-979-2331	COVER	1	SN:B11449--B11915
37	01010-D0820	BOLT	4	SN:B11449--
38	01643-70823	WASHER	4	SN:B11449--
39	01010-D0820	BOLT	2	SN:B10001--
40	01643-70823	WASHER	2	SN:B10001--

00061303-V

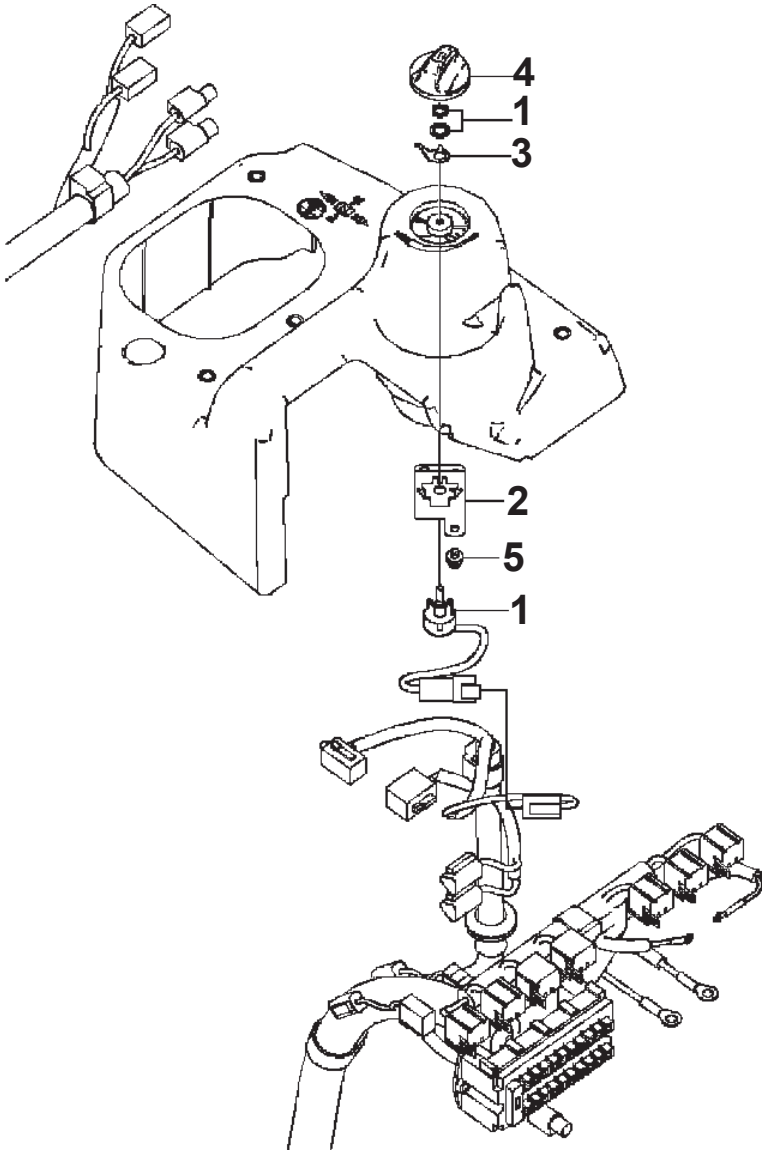

D51EX/PX-22 S/N B10001-UP

K0210-33A0 CAB FUEL CONTROL

Item	Part No.	Description	Qty	Options
	12Y-06-11611	POTENTIOMETER	1	SN:B10001--
1	12Y-06-11621	· POTENTIOMETER	1	SN:B10001--
2	12Y-06-11631	· BRACKET	1	SN:B10001--
3	22U-06-22460	· SPRING	1	SN:B10001--
4	20Y-43-41781	KNOB	1	SN:B13095--
	□20Y-43-41780	KNOB	1	SN:B10001--B13094
5	01023-60512	SCREW	2	SN:B10001--

Ref. K0210-33A0 Page K-081

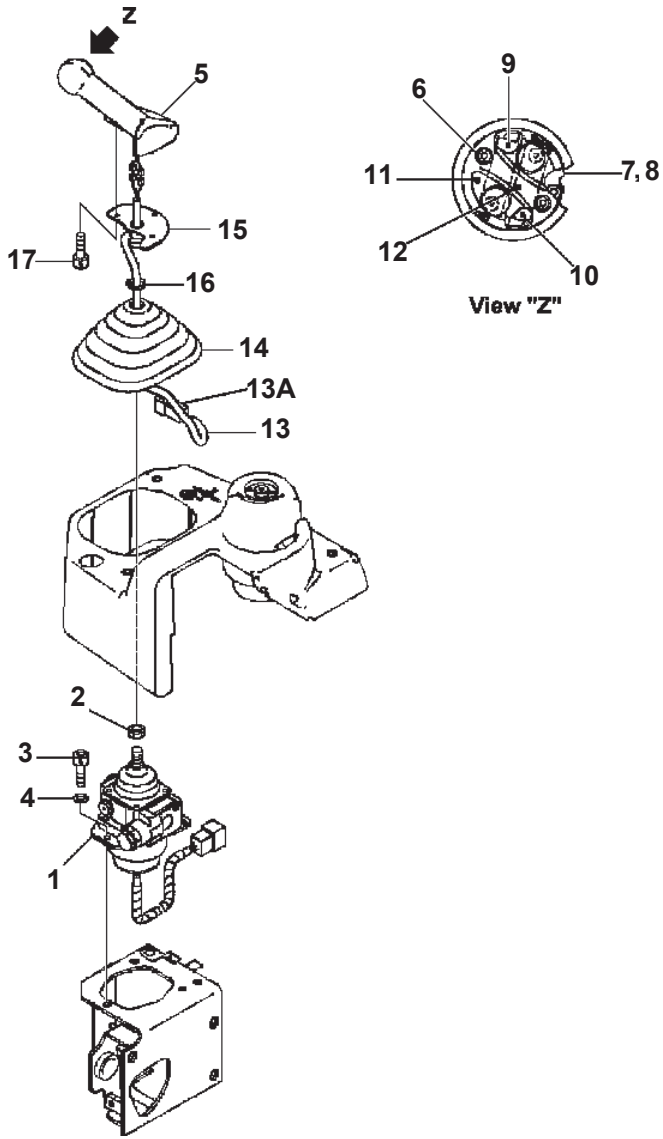

K0210-34A0 CAB TRAVEL CONTROL

Item	Part No.	Description	Qty	Options
1	702-16-02320	LEVER ASSEMBLY	1	SN:B12474--
	☒702-16-02224	LEVER ASSEMBLY	1	SN:B11838--B12473
	☐702-16-02223	LEVER ASSEMBLY	1	SN:B10789--B11837
	☐702-16-02222	LEVER ASSEMBLY	1	SN:B10316--B10788
	☐702-16-02221	LEVER ASSEMBLY	1	SN:B10001--B10315
2	20T-43-71190	NUT	1	SN:B10001--
3	01252-70825	BOLT	3	SN:B10001--
4	01643-30823	WASHER	3	SN:B10001--
	11Y-43-11174	KNOB ASSEMBLY	1	SN:B10316--
	☐11Y-43-11173	KNOB ASSEMBLY	1	SN:B10001--B10315
5	19M-43-33111	· KNOB ASSEMBLY	1	SN:B10316--
	☐19M-43-33110	· KNOB ASSEMBLY	1	SN:B10001--B10315
6	19M-09-11510	· · BOLT	2	SN:B10001--
7	19M-43-33141	· · SWITCH ASSEMBLY	1	SN:B10316--
	☐19M-43-33140	· · SWITCH ASSEMBLY	1	SN:B10001--B10315
8	19M-43-33170	· · · PLATE	1	SN:B10001--
9	19M-43-33460	· · · SWITCH	1	SN:B10001--
10	19M-43-33470	· · · SWITCH	1	SN:B10001--
11	19M-43-33151	· · RUBBER	1	SN:B10316--
	☐19M-43-33150	· · RUBBER	1	SN:B10001--B10315
12	19M-43-33161	· · COVER	1	SN:B10316--
	☐19M-43-33160	· · COVER	1	SN:B10001--B10315
13	11Y-43-11114	· HARNESS, WIRING - TRAVEL CONTROL	1	SN:B10001--
13A	08192-13300	· CONNECTOR	1	SN:B13706--
14	11Y-43-11181	· · BOOT	1	SN:B10001--
15	11Y-43-11124	· · BRACKET	1	SN:B10001--
16	08034-30414	· · STRAP, TIE	3	SN:B10001--
17	01252-80510	· BOLT	3	SN:B10001--

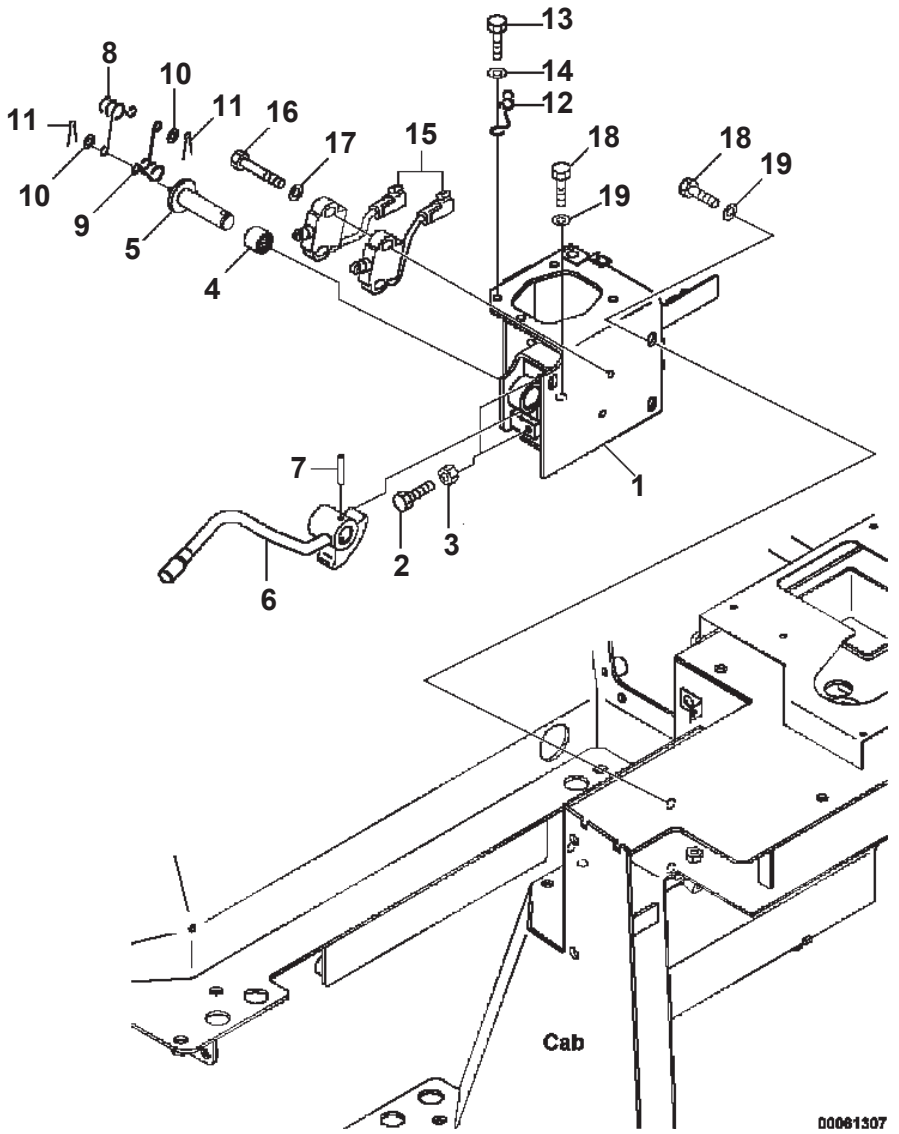

K0210-35A0 CAB TRAVEL LOCK LEVER

Item	Part No.	Description	Qty	Options
	12Y-43-12102	LOCK ASSEMBLY	1	SN:B10001--
1	12Y-43-12414	· BRACKET	1	SN:B10001--
2	01016-50825	· BOLT	2	SN:B10001--
3	01580-10806	· NUT	2	SN:B10001--
4	06124-02020	· BEARING	1	SN:B10001--
5	12Y-43-12422	· LEVER	1	SN:B10001--
6	12Y-43-12432	· LEVER	1	SN:B10001--
7	14X-43-14520	· PIN	1	SN:B10001--
8	09463-00006	· SPRING	1	SN:B10001--
9	09463-00002	· SPRING	1	SN:B10001--
10	01641-20608	· WASHER	2	SN:B10001--
11	04050-11612	· PIN, COTTER	2	SN:B10001--
12	12Y-43-12491	· HOOK	1	SN:B10001--
13	01010-80820	· BOLT	1	SN:B10001--
14	01643-30823	· WASHER	1	SN:B10001--
15	11Y-06-11470	· SWITCH	2	SN:B10001--
16	01010-81050	· BOLT	2	SN:B10001--
17	01643-31032	· WASHER	2	SN:B10001--
18	01010-81020	BOLT	5	SN:B10001--
19	01643-31032	WASHER	5	SN:B10001--

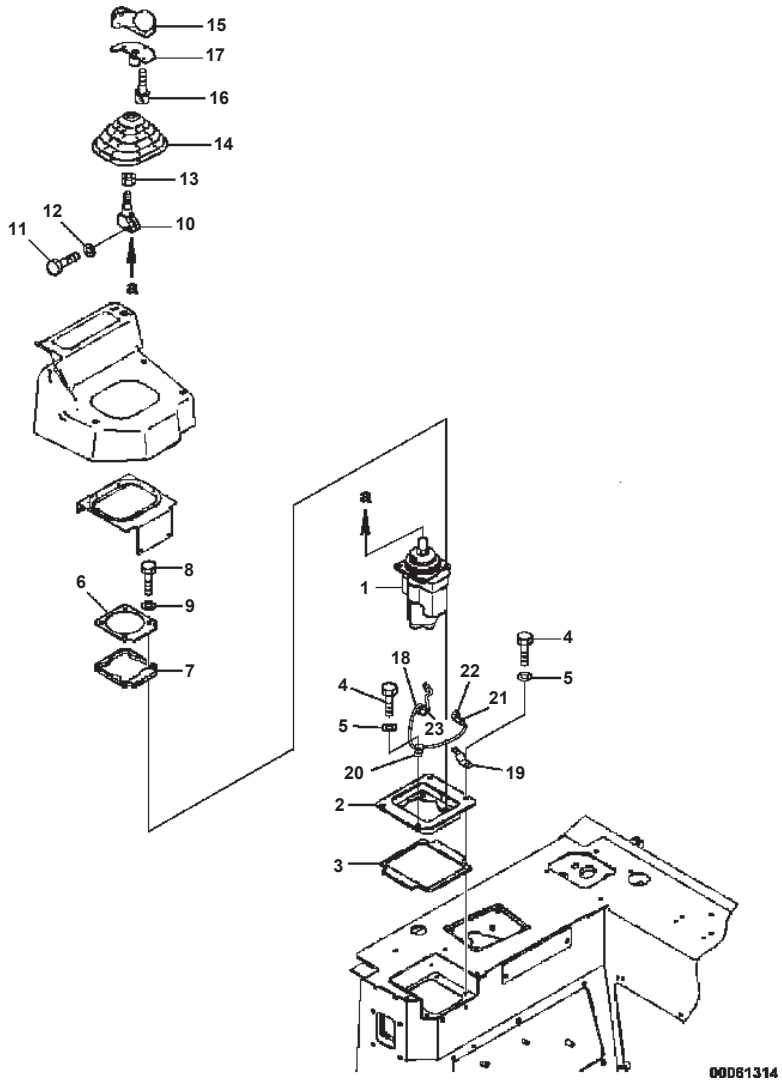

K0210-36A0 CAB BLADE CONTROL

Item	Part No.	Description	Qty	Options
1	702-16-01992	VALVE, PILOT	1	SN:B10001--
	12Y-43-12452	BRACKET	1	SN:B10001--
2	(NSS)	· BRACKET	1	SN:B10001--
3	12Y-43-12470	· SHEET	1	SN:B10001--
4	01010-80825	BOLT	4	SN:B10001--
5	01643-30823	WASHER	4	SN:B10001--
6	12Y-43-12440	PLATE	1	SN:B10001--
7	12Y-43-12480	· SHEET	1	SN:B10001--
8	01010-80825	BOLT	4	SN:B10001--
9	01643-30823	WASHER	4	SN:B10001--
10	12Y-06-12560	LEVER, BLADE CONTROL	1	SN:B13937--
	11Y-43-12710	LEVER, BLADE CONTROL	1	SN:B10001--B13936
11	07372-21030	BOLT	1	SN:B10001--
12	01641-21016	WASHER	1	SN:B10001--
13	20T-43-71190	NUT	1	SN:B10001--
14	11Y-43-11181	BOOT	1	SN:B10001--
15	195-43-64321	KNOB ASSEMBLY, BLADE CONTROL	1	SN:B13937--
	□195-43-64411	KNOB ASSEMBLY, BLADE CONTROL	1	SN:B10148--B13936
	□195-43-64410	KNOB ASSEMBLY, BLADE CONTROL	1	SN:B10001--B10147
16	01252-80510	BOLT	3	SN:B10001--
17	11Y-43-12720	BRACKET	1	SN:B10001--
18	195-06-73270	WIRING HARNESS	1	SN:B13937--
19	08193-20010	CLIP	1	SN:B13937--
20	04434-50808	CLAMP	1	SN:B13937--
21	08192-23100	CONNECTOR	1	SN:B13937--
22	08191-00770	PLUG	1	SN:B13937--
23	08034-20310	BAND	1	SN:B13937--

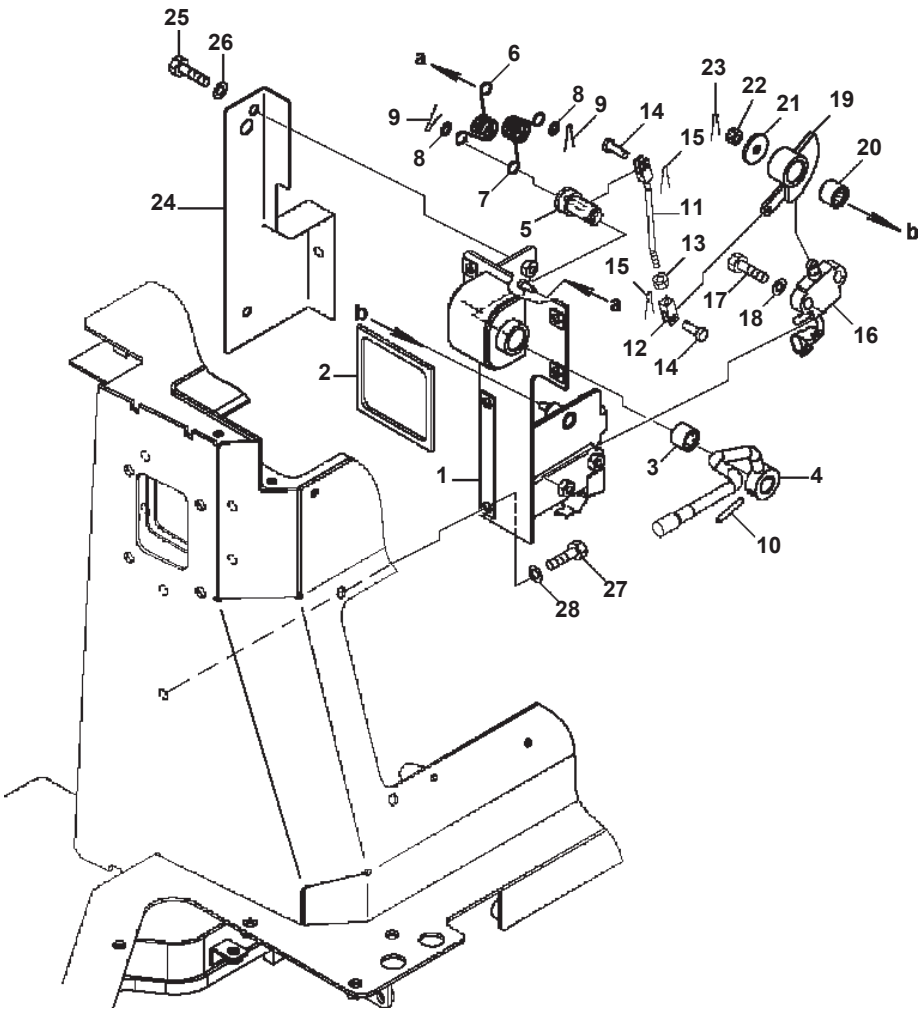

K0210-37A0 CAB BLADE LOCK LEVER

Item	Part No.	Description	Qty	Options
	12Y-43-12202	LOCK ASSEMBLY, BLADE LEVER	1	SN:B10001--
1	12Y-43-12514	· BRACKET	1	SN:B10001--
2	12Y-43-12520	· · SHEET	1	SN:B10001--
3	06124-02020	· BEARING	1	SN:B10001--
4	12Y-43-12532	· LEVER	1	SN:B10001--
5	12Y-43-12542	· LEVER	1	SN:B10001--
6	09463-00002	· SPRING	1	SN:B10001--
7	09463-00006	· SPRING	1	SN:B10001--
8	01641-20608	· WASHER	2	SN:B10001--
9	04050-11612	· PIN, COTTER	2	SN:B10001--
10	14X-43-14520	· PIN	1	SN:B10001--
11	12Y-43-12552	· ROD	1	SN:B10001--
12	04210-20624	· YOKE	1	SN:B10001--
13	01580-10605	· NUT	1	SN:B10001--
14	04205-10618	· PIN	2	SN:B10001--
15	04050-11612	· PIN, COTTER	2	SN:B10001--
16	11Y-06-11470	· SWITCH, BLADE LOCK LEVER	1	SN:B10001--
17	01010-81035	· BOLT	2	SN:B13430--
	01010-81025	· BOLT	2	SN:B10001--B13429
18	01643-31032	· WASHER	2	SN:B10001--
19	12Y-43-12561	· LEVER	1	SN:B10001--
20	06124-02020	· BEARING	1	SN:B10001--
21	154-54-22830	· WASHER	1	SN:B10001--
22	01590-30809	· NUT	1	SN:B10001--
23	04050-11612	· PIN, COTTER	1	SN:B10001--
24	12Y-43-12570	· COVER	1	SN:B10001--
25	01010-81025	· BOLT	3	SN:B10001--
26	01643-31032	· WASHER	3	SN:B10001--
27	01010-81025	BOLT	6	SN:B10001--
28	01643-31032	WASHER	6	SN:B10001--

00061378-V

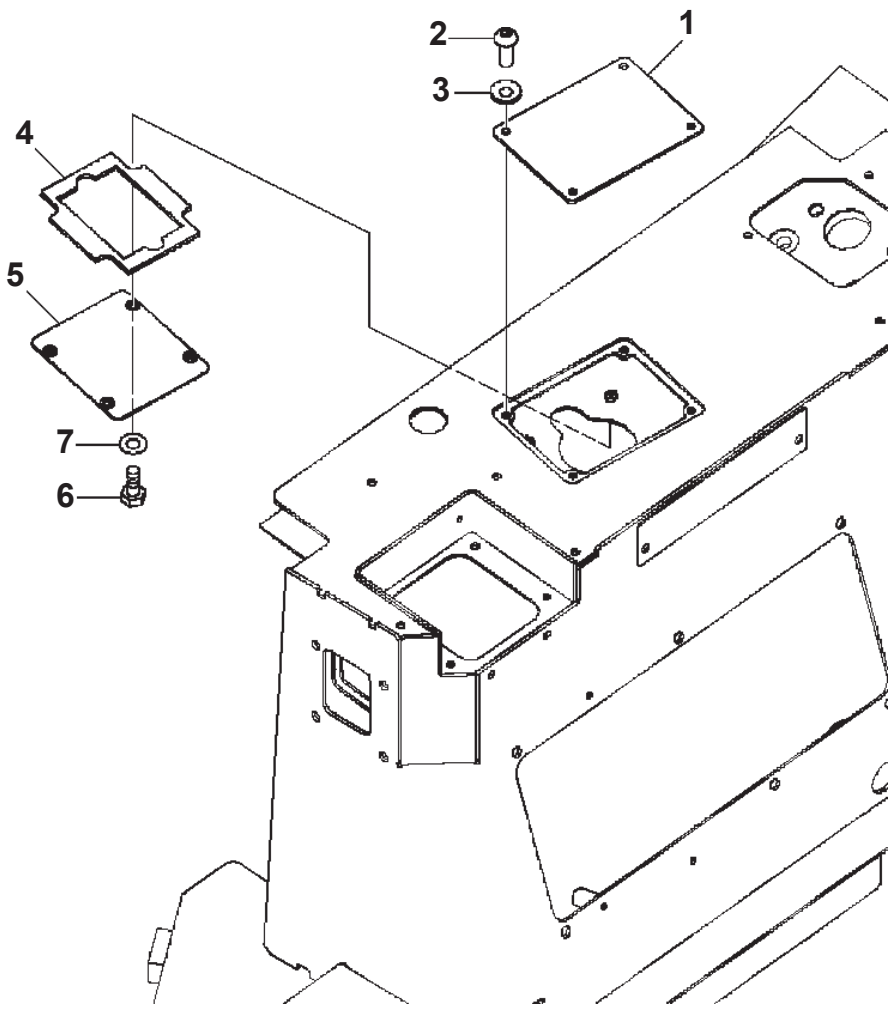

D51EX/PX-22 S/N B10001-UP

K0210-38A0 CAB REAR ATTACHMENT COVER

Item	Part No.	Description	Qty	Options
1	12Y-78-11150	COVER	1	SN:B10001--
2	01245-00820	SCREW	4	SN:B10001--
3	01643-70823	WASHER	4	SN:B10001--
	12Y-78-11180	COVER	1	SN:B10001--
4	(NSS)	・PLATE	1	SN:B10001--
5	12Y-78-11130	・SHEET	1	SN:B10001--
6	01010-80825	BOLT	4	SN:B10001--
7	01643-30823	WASHER	4	SN:B10001--

Ref. K0210-38A0 Page K-091

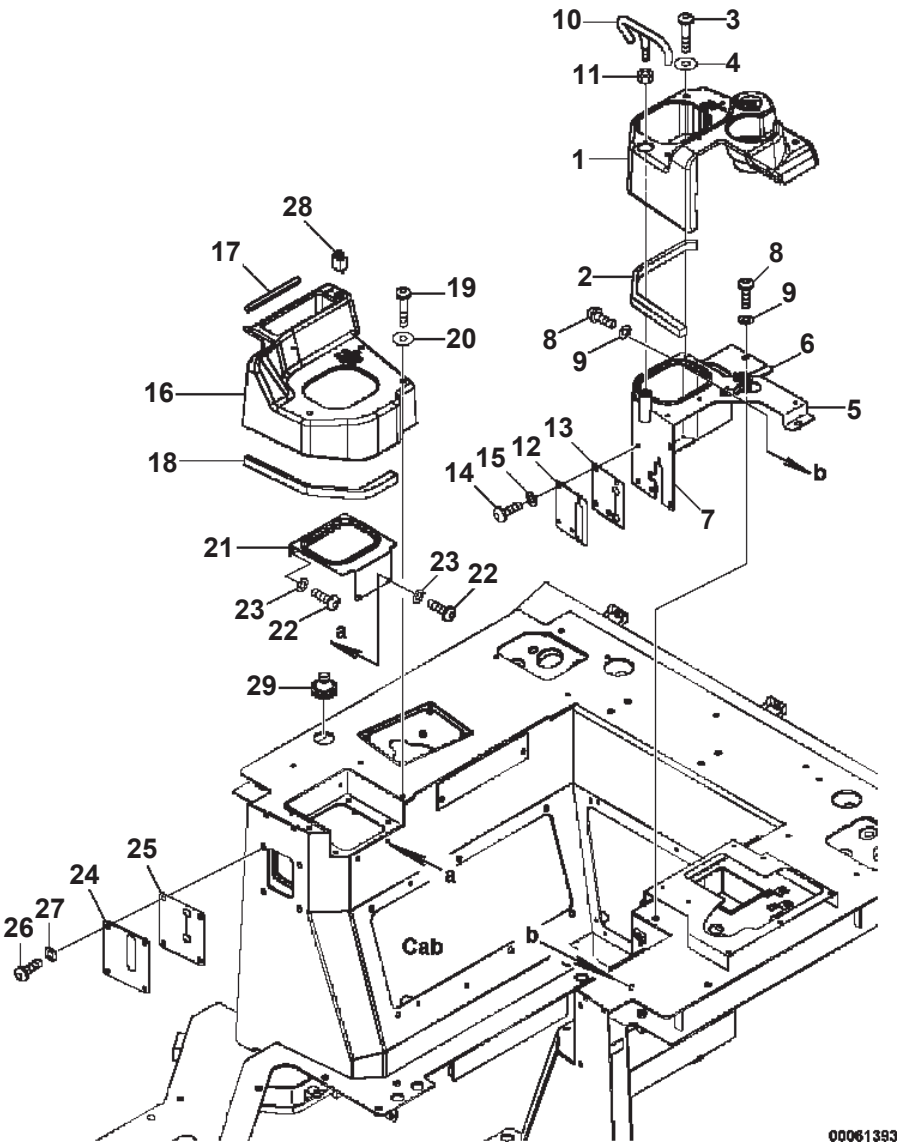

K0210-39A0 CAB CONSOLE

Item	Part No.	Description	Qty	Options
1	12Y-43-12713	COVER	1	SN:B10001--
2	12Y-43-12841	SEAL	1	SN:B10001--
3	01245-00630	SCREW	4	SN:B10001--
4	17A-Z11-2813	PLATE	4	SN:B10001--
5	12Y-43-12754	BRACKET	1	SN:B10001--
6	17A-Z11-1S90	· BAR	1	SN:B10001--
7	14X-54-16490	· PLATE	1	SN:B10001--
8	01245-00825	SCREW	5	SN:B10001--
9	01643-70823	WASHER	5	SN:B10001--
10	12Y-43-12770	HANDLE	1	SN:B10001--
11	12Y-43-12790	NUT	1	SN:B10001--
12	12Y-43-12880	COVER	1	SN:B10001--
13	12Y-43-12732	· SHEET	1	SN:B10001--
14	01245-00825	SCREW	4	SN:B10001--
15	01643-70823	WASHER	4	SN:B10001--
16	12Y-43-12724	COVER	1	SN:B10001--
17	12Y-43-12830	SEAL	1	SN:B10001--
18	12Y-43-12852	SEAL	1	SN:B10001--
19	01245-00630	SCREW	4	SN:B10001--
20	17A-Z11-2813	PLATE	4	SN:B10001--
21	12Y-43-12762	BRACKET	1	SN:B10001--
22	01245-00620	SCREW	4	SN:B10001--
23	01643-70623	WASHER	4	SN:B10001--
24	12Y-43-12781	COVER	1	SN:B10001--
25	12Y-43-12741	· SHEET	1	SN:B10001--
26	01245-00825	SCREW	4	SN:B10001--
27	01643-70823	WASHER	4	SN:B10001--
28	134-06-72200	SWITCH ASSEMBLY, CONSOLE	1	SN:B10001--
29	08037-12036	GROMMET	1	SN:B10001--

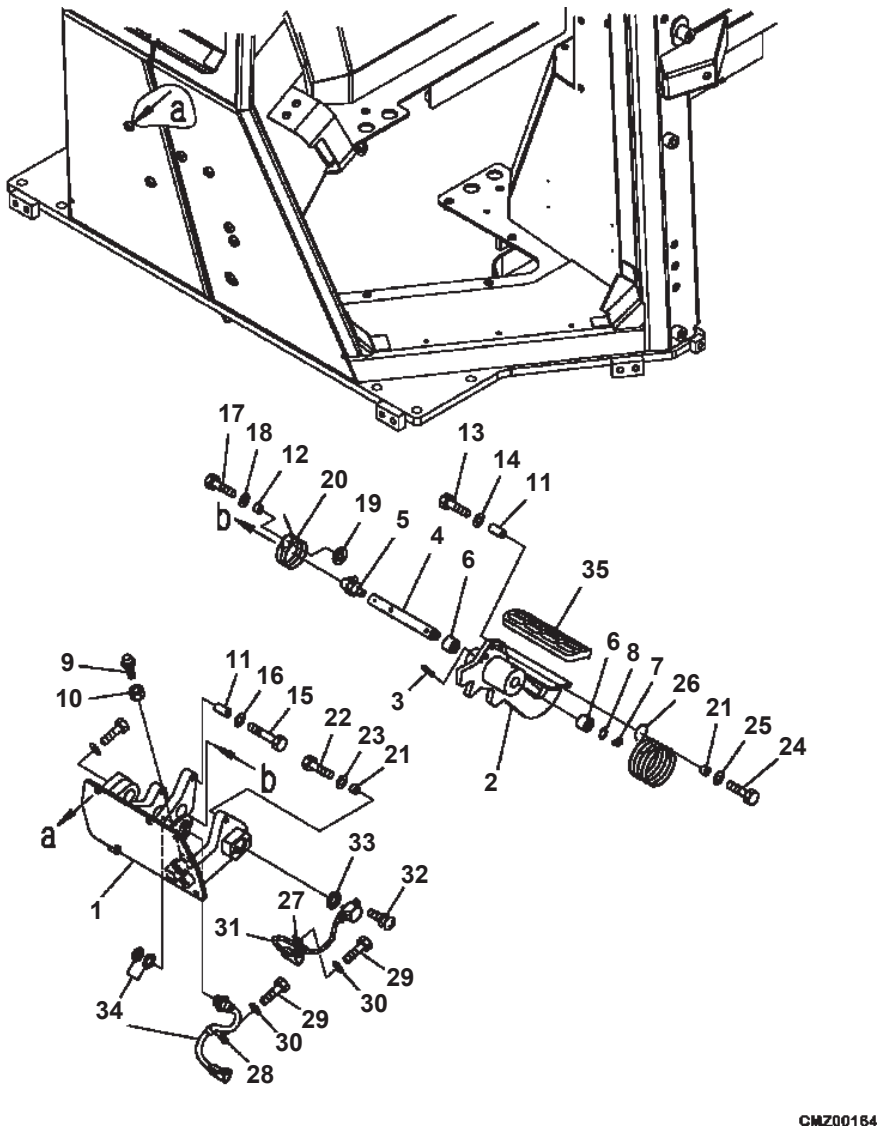

K0210-40A0 CAB BRAKE PEDAL

Item	Part No.	Description	Qty	Options
	12Y-43-12303	PEDAL ASSEMBLY	1	SN:B10001--
1	12Y-43-12114	· BRACKET	1	SN:B10001--
2	12Y-43-12243	· PEDAL	1	SN:B10001--
3	14X-43-14520	· PIN	1	SN:B10001--
4	12Y-43-12143	· SHAFT	1	SN:B10001--
5	07020-00900	· FITTING	1	SN:B10001--
6	06124-02020	· BEARING	2	SN:B10001--
7	142-43-13180	· SPRING	1	SN:B10001--
8	04064-01610	· RING	1	SN:B10001--
9	09311-41237	· BUMPER	1	SN:B10001--
10	01580-11210	· NUT	1	SN:B10001--
11	12Y-43-12273	· SPACER	2	SN:B10001--
12	12Y-43-12172	· SPACER	1	SN:B10001--
13	01010-81050	· BOLT	1	SN:B10001--
14	01643-31032	· WASHER	1	SN:B10001--
15	01010-81050	· BOLT	1	SN:B10001--
16	203-54-56970	· WASHER	1	SN:B10001--
17	01010-81030	· BOLT	1	SN:B10001--
18	01643-31032	· WASHER	1	SN:B10001--
19	01640-21426	· WASHER	1	SN:B10001--
20	12Y-43-12290	· SPRING	1	SN:B10001--
21	12Y-43-12172	· SPACER	2	SN:B10001--
22	01010-81030	· BOLT	1	SN:B10001--
23	01643-31032	· WASHER	1	SN:B10001--
24	01010-81025	· BOLT	1	SN:B10001--
25	01643-31032	· WASHER	1	SN:B10001--
26	12Y-43-12130	· SPRING	1	SN:B10001--
27	04434-50610	· CLIP	1	SN:B10001--
28	04434-51010	· CLIP	1	SN:B10001--
29	01010-81020	· BOLT	2	SN:B10001--
30	01643-31032	· WASHER	2	SN:B10001--
31	12Y-06-11132	· SENSOR	1	SN:B10001--
32	01023-10416	· SCREW	2	SN:B10001--
33	12Y-43-12160	· PLATE	1	SN:B10001--
34	11Y-06-11870	· SWITCH	1	SN:B10001--
35	14X-43-12110	· PEDAL CAP	1	SN:B10001--

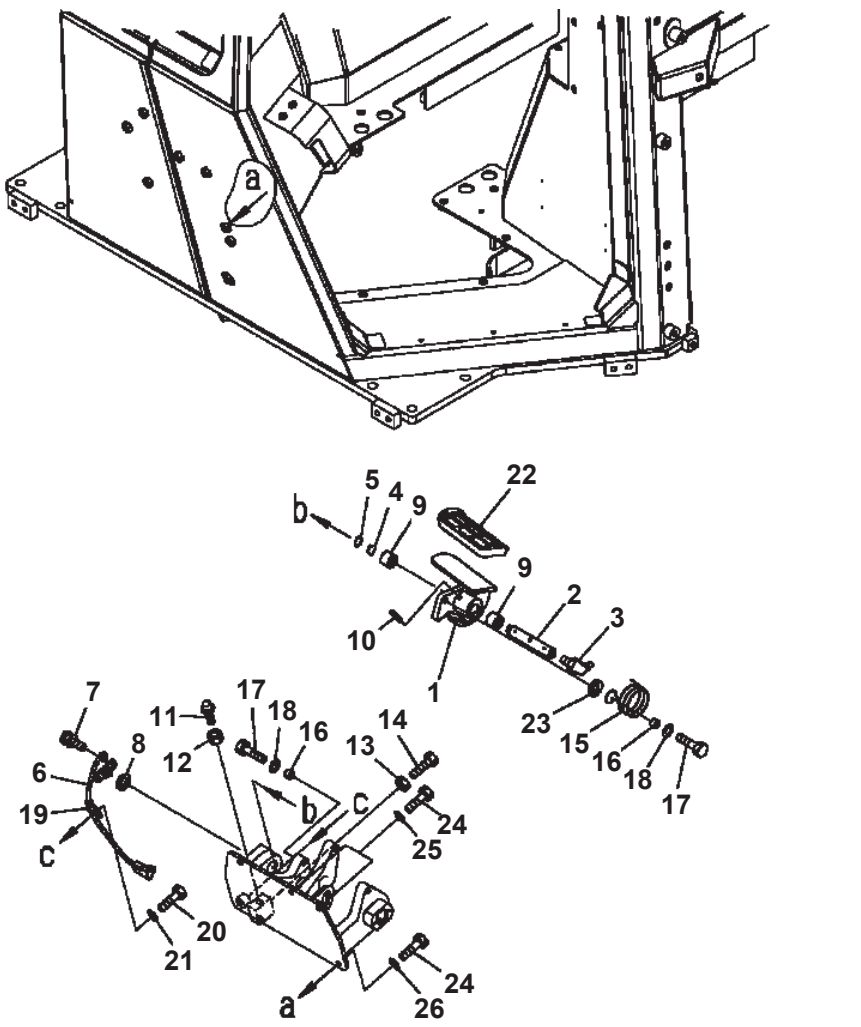

K0210-41A0 CAB DECELERATOR PEDAL

Item	Part No.	Description	Qty	Options
	12Y-43-12303	PEDAL ASSEMBLY, DECELERATOR	1	SN:B10001--
1	12Y-43-12253	· PEDAL	1	SN:B10001--
2	12Y-43-12213	· SHAFT	1	SN:B10001--
3	07020-00900	· FITTING	1	SN:B10001--
4	142-43-13180	· SPRING	1	SN:B10001--
5	04064-01610	· RING	1	SN:B10001--
6	12Y-06-11132	· SENSOR	1	SN:B10001--
7	01023-10416	· SCREW	2	SN:B10001--
8	12Y-43-12160	· PLATE	1	SN:B10001--
9	06124-02020	· BEARING	2	SN:B10001--
10	14X-43-14520	· PIN	1	SN:B10001--
11	09311-41237	· BUMPER	1	SN:B10001--
12	01580-11210	· NUT	1	SN:B10001--
13	01580-11008	· NUT	1	SN:B10001--
14	01010-81030	· BOLT	1	SN:B10001--
15	12Y-43-12190	· SPRING	1	SN:B10001--
16	12Y-43-12172	· SPACER	2	SN:B10001--
17	01010-81030	· BOLT	2	SN:B10001--
18	01643-31032	· WASHER	2	SN:B10001--
19	04434-50610	· CLIP	1	SN:B10001--
20	01010-81020	· BOLT	1	SN:B10001--
21	01643-31032	· WASHER	1	SN:B10001--
22	14X-43-13760	· CAP	1	SN:B10001--
23	01640-21426	· WASHER	1	SN:B10001--
24	01010-81030	BOLT	5	SN:B10001--
25	201-54-72910	WASHER	2	SN:B10001--
26	01643-31032	WASHER	3	SN:B10001--

CMZ00166

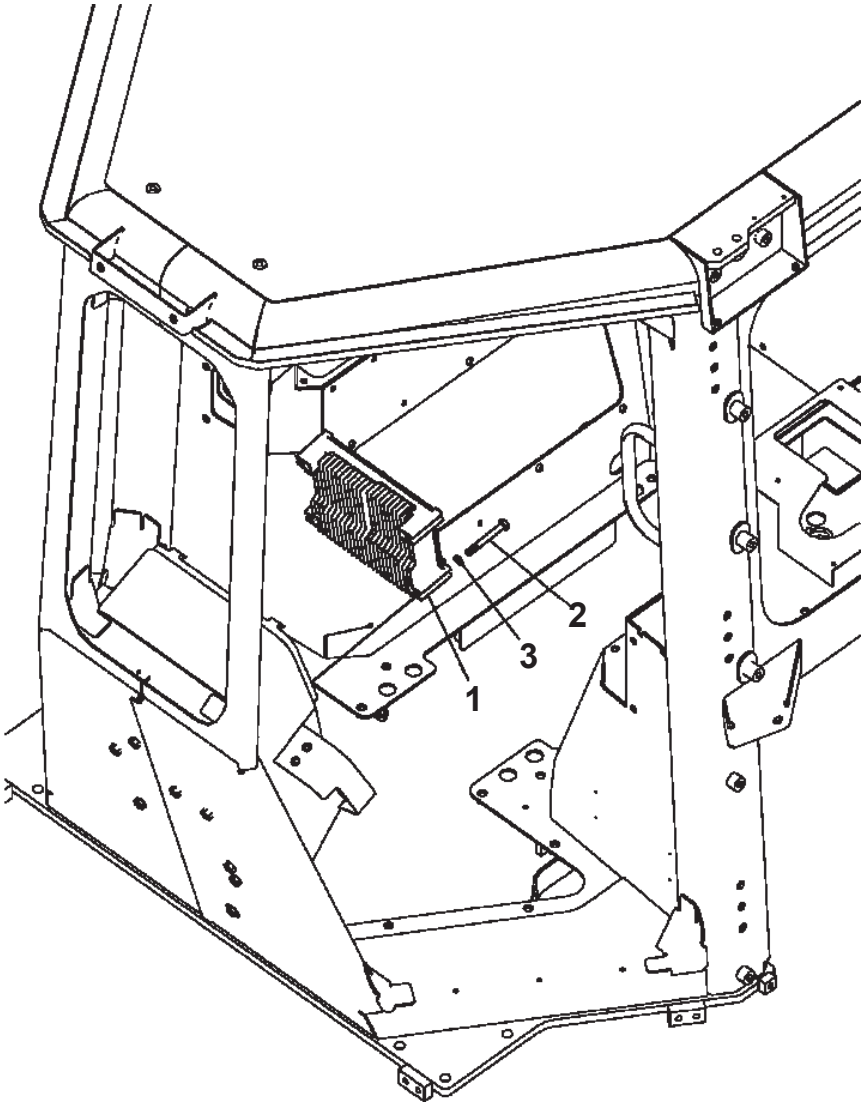

D51EX/PX-22 S/N B10001-UP

K0210-42A0 CAB CONTROLLER

Item	Part No.	Description	Qty	Options
1	7830-84-1002	CONTROLLER	1	SN:B11916--
	□7830-84-1001	CONTROLLER	1	SN:B10810--B11915
	□7830-84-1000	CONTROLLER	1	SN:B10001--B10809
2	01010-80885	BOLT	4	SN:B10001--
3	01643-30823	WASHER	4	SN:B10001--

Ref. K0210-42A0 Page K-099

CMZ00167

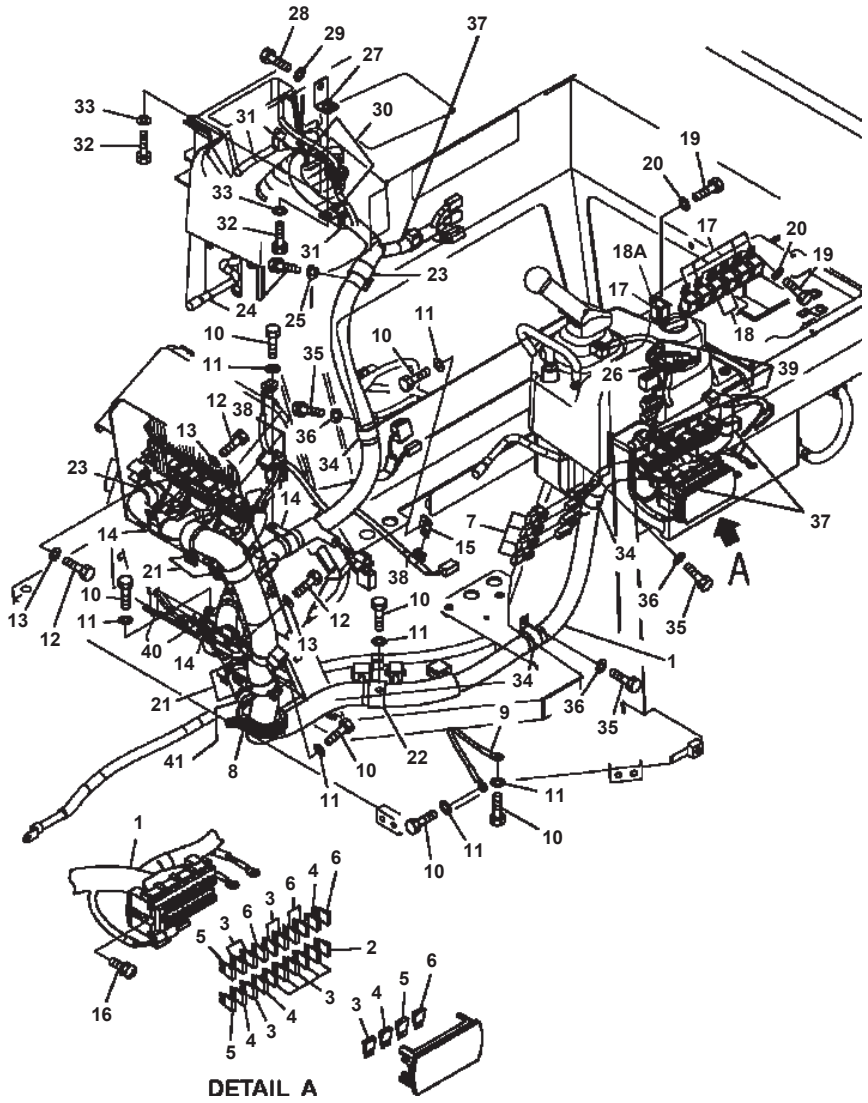

D51EX/PX-22 S/N B10001-UP

K0210-43A0 CAB WIRING HARNESS - CONTROLS

Item	Part No.	Description	Qty	Options
1	11Y-06-31511	HARNESS, WIRING - CONTROLS	1	SN:B11449--
	□11Y-06-31510	HARNESS, WIRING - CONTROLS	1	SN:B11424--B11448
	11Y-06-31111	HARNESS, WIRING - CONTROLS	1	SN:B10001--B11423
2	08041-00500	· FUSE, 5A	1	SN:B10001--
3	08041-01000	· FUSE, 10A	11	SN:B10001--
4	08041-01500	· FUSE, 15A	4	SN:B10001--
5	08041-02000	· FUSE, 20A	3	SN:B10001--
6	08041-03000	· FUSE, 30A	5	SN:B10001--
7	21J-06-13661	· DIODE	4	SN:B10001--
8	12Y-06-11140	GROMMET	1	SN:B10001--
9	14X-06-31171	CABLE	1	SN:B10001--
10	01010-81020	BOLT	8	SN:B10001--
11	01643-31032	WASHER	8	SN:B10001--
12	01010-81025	BOLT	4	SN:B10001--
13	01643-31032	WASHER	4	SN:B10001--
14	155-61-15350	CLIP	3	SN:B13872--
	□155-61-15350	CLIP	4	SN:B10001--B13871
15	08057-00810	CLIP	1	SN:B10001--
16	01023-10620	SCREW	2	SN:B10001--
17	569-06-61960	RELAY	5	SN:B10001--
18	569-06-61970	RELAY	2	SN:B10001--
18A	287-06-16420	BRACKET	7	SN:B10001--
19	01010-80612	BOLT	7	SN:B10001--
20	01643-30623	WASHER	7	SN:B10001--
21	419-09-11150	CLIP	4	SN:B10001--
22	23S-62-25850	CLIP	1	SN:B10001--
23	04434-53411	CLIP	2	SN:B10001--
24	01010-81020	BOLT	1	SN:B10001--
25	01643-31032	WASHER	1	SN:B10001--
26	12Y-43-12861	SEAL	1	SN:B10001--
27	22T-35-14870	PLATE	1	SN:B10001--
28	01010-80820	BOLT	1	SN:B13518--
	□01010-81020	BOLT	1	SN:B10001--B13517
29	01643-31032	WASHER	1	SN:B10001--
30	04434-53212	CLIP	2	SN:B10001--
31	07095-20523	CUSHION	2	SN:B10001--
32	01010-81020	BOLT	2	SN:B10001--
33	01643-31032	WASHER	2	SN:B10001--
34	04434-53411	CLIP	4	SN:B10001--
35	01010-81020	BOLT	4	SN:B10001--
36	01643-31032	WASHER	4	SN:B10001--

Ref. K0210-43A0 Page K-101

K0210-43A0 CAB WIRING HARNESS - CONTROLS

Item	Part No.	Description	Qty	Options
37	08211-01920	CLAMP	3	SN:B10001--
38	08211-00720	CLAMP	2	SN:B10001--
39	08211-01520	CLAMP	3	SN:B10001--
40	08034-20519	BAND	1	SN:B11449--
41	23S-62-25850	CLIP	1	SN:B13872--

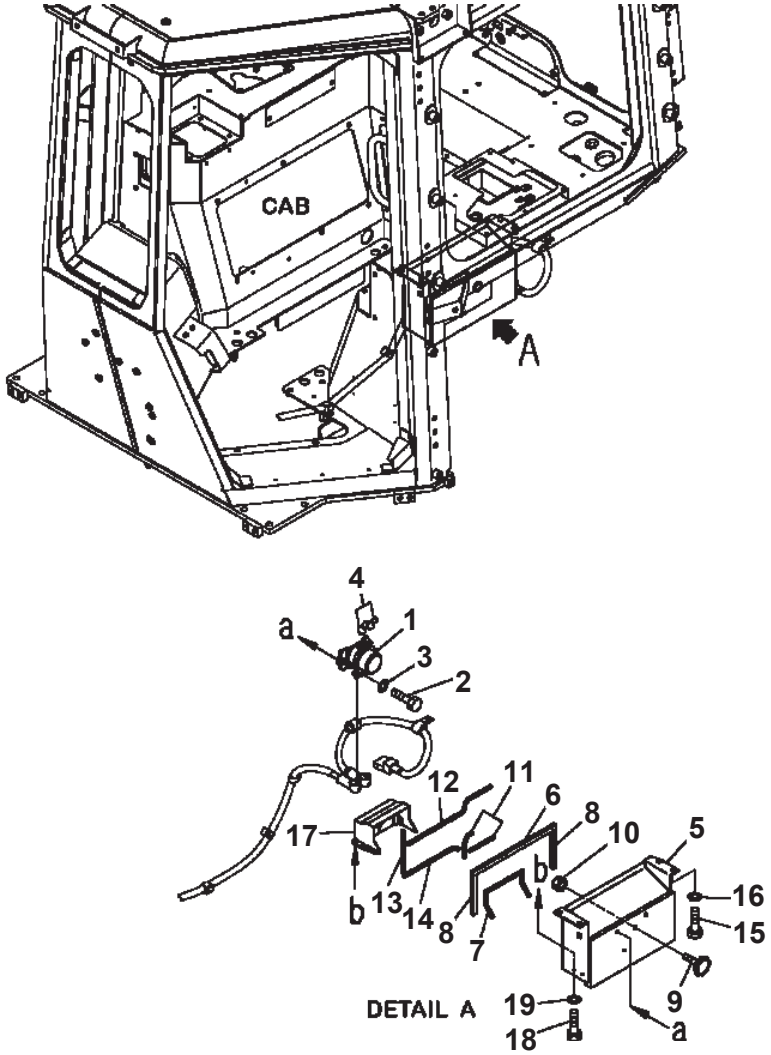

K0210-44A0 CAB BATTERY RELAY AND RELAY BOX

Item	Part No.	Description	Qty	Options
1	08088-30000	RELAY, BATTERY	1	SN:B10001--
2	01010-80830	BOLT	2	SN:B10001--
3	01643-30823	WASHER	2	SN:B10001--
4	08038-00519	CAP	2	SN:B10001--
	12Y-06-13312	BRACKET ASSEMBLY	1	SN:B10001--
5	11Y-06-31212	· BRACKET	1	SN:B10001--
6	12Y-06-13280	· SEAL	1	SN:B10001--
7	12Y-06-13560	· SEAL	1	SN:B10001--
8	12Y-06-13291	· SEAL	2	SN:B10001--
9	134-X78-7450	· KNOB	1	SN:B10001--
10	01598-00809	· NUT	1	SN:B11060--
	◆01596-00807	· NUT	1	SN:B10001--B11059
11	12Y-06-13380	· SEAL	2	SN:B10001--
12	12Y-06-13261	· SEAL	1	SN:B10001--
13	12Y-43-12861	· SEAL	1	SN:B10001--
14	12Y-978-2192	· SEAL	1	SN:B10001--
15	01010-81020	BOLT	4	SN:B10001--
16	01643-31032	WASHER	4	SN:B10001--
17	12Y-06-13530	BRACKET	1	SN:B10001--
18	01010-80616	BOLT	3	SN:B10001--
19	01643-30623	WASHER	3	SN:B10001--

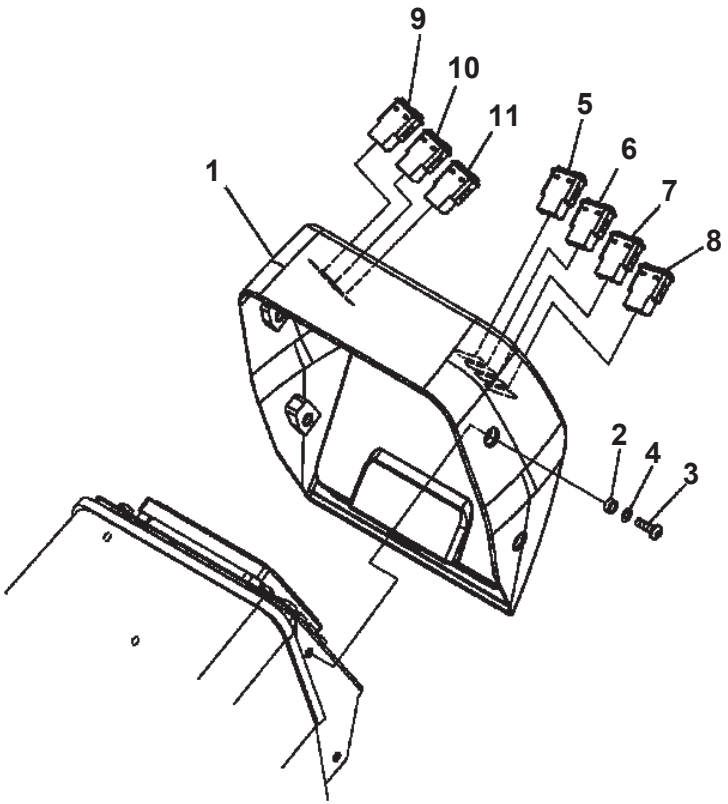

K0210-45A0 CAB DASHBOARD, DASH PANEL, AND SWITCHES

Item	Part No.	Description	Qty	Options
1	12Y-978-2692	COVER	1	SN:B10001--
2	14X-54-18230	COLLAR	4	SN:B10001--
3	01245-00820	SCREW	4	SN:B10001--
4	01643-70823	WASHER	4	SN:B10001--
5	12Y-06-11711	SWITCH, WORK LAMP	1	SN:B10001--
6	12Y-06-11722	SWITCH, FAN REVERSE	1	SN:B10001--
7	12Y-06-11731	SWITCH, BUZZER CANCEL	1	SN:B10001--
8	12Y-06-11741	SWITCH, CURSOR	1	SN:B10001--
9	12Y-06-11751	SWITCH, REVERSE SPEED ADJUST	1	SN:B10001--
10	12Y-06-11761	SWITCH, SHIFT MODE	1	SN:B10001--
11	12Y-06-11771	SWITCH, HEATER	1	SN:B10001--

CMZ00170

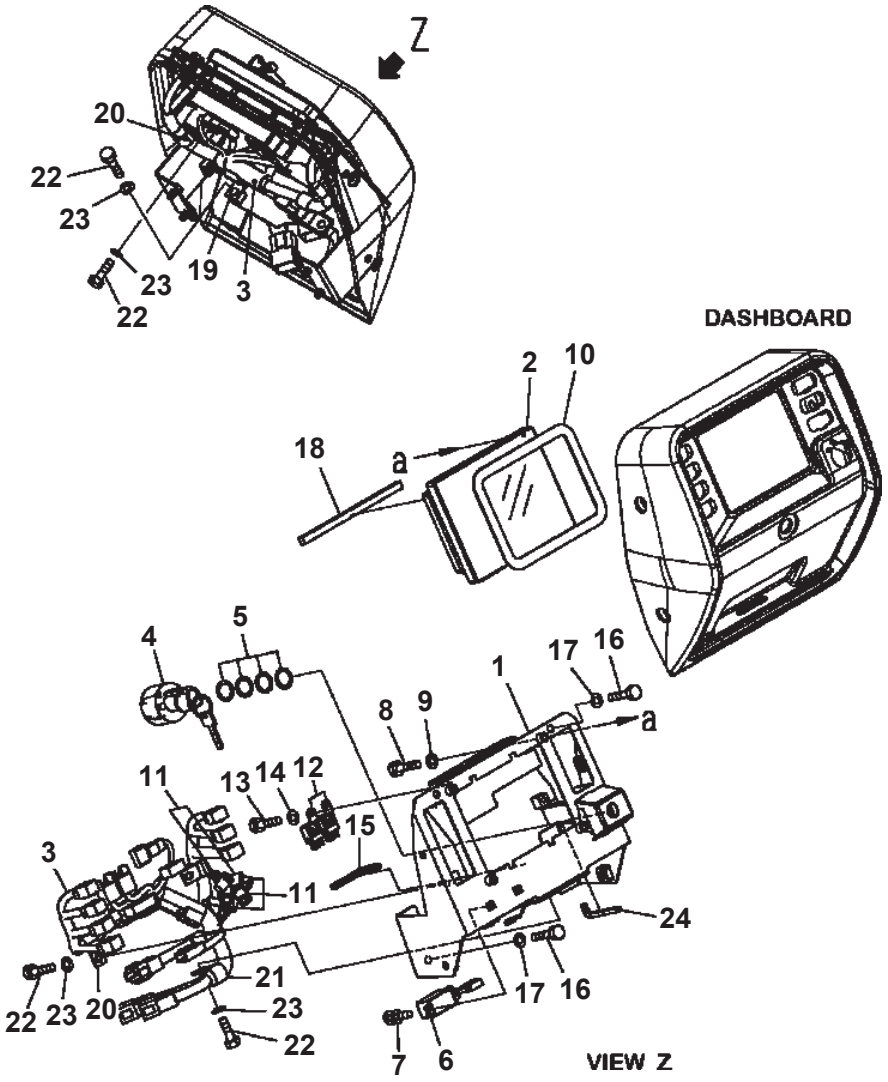

D51EX/PX-22 S/N B10001-UP

K0210-46A0 CAB DASHBOARD WIRING

Item	Part No.	Description	Qty	Options
1	12Y-978-2714	BRACKET	1	SN:B10001--
2	7831-69-2002	MONITOR	1	SN:B11916--
	☐7831-69-2001	MONITOR	1	SN:B10764--B11915
	☐7831-69-2000	MONITOR	1	SN:B10001--B10763
3	11Y-06-31520	HARNESS, DASHBOARD WIRING	1	SN:B11424--
	☐11Y-06-31123	HARNESS, DASHBOARD WIRING	1	SN:B10001--B11423
4	08086-20000	SWITCH (EX,PX - EXCEPT JAPAN)	1	SN:B10001--
	22B-06-11910	SWITCH (PX - FOR JAPAN)	1	SN:B10001--
5	20Y-43-41750	WASHER	4	SN:B10001--
6	20Y-957-3170	BUZZER	1	SN:B10001--
7	01023-10416	SCREW	2	SN:B10001--
8	01010-80625	BOLT	4	SN:B10001--
9	01643-30623	WASHER	4	SN:B10001--
10	12Y-978-2780	PACKING	1	SN:B10001--
11	08038-00518	CAP	5	SN:B10001--
12	7861-74-5100	RELAY	2	SN:B10001--
13	01010-80616	BOLT	2	SN:B10001--
14	01643-70623	WASHER	2	SN:B10001--
15	12Y-978-2172	SEAL	1	SN:B10001--
16	01010-80816	BOLT	6	SN:B10001--
17	01643-30823	WASHER	6	SN:B10001--
18	12Y-978-2720	SEAL	1	SN:B10001--
19	04434-51408	CLIP	1	SN:B10001--
20	04434-51708	CLIP	2	SN:B10001--
21	04434-51908	CLIP	1	SN:B10001--
22	01010-80816	BOLT	4	SN:B10001--
23	01643-30823	WASHER	4	SN:B10001--
24	12Y-979-1860	SEAL Q	1	SN:B10001--

Ref. K0210-46A0 Page K-107

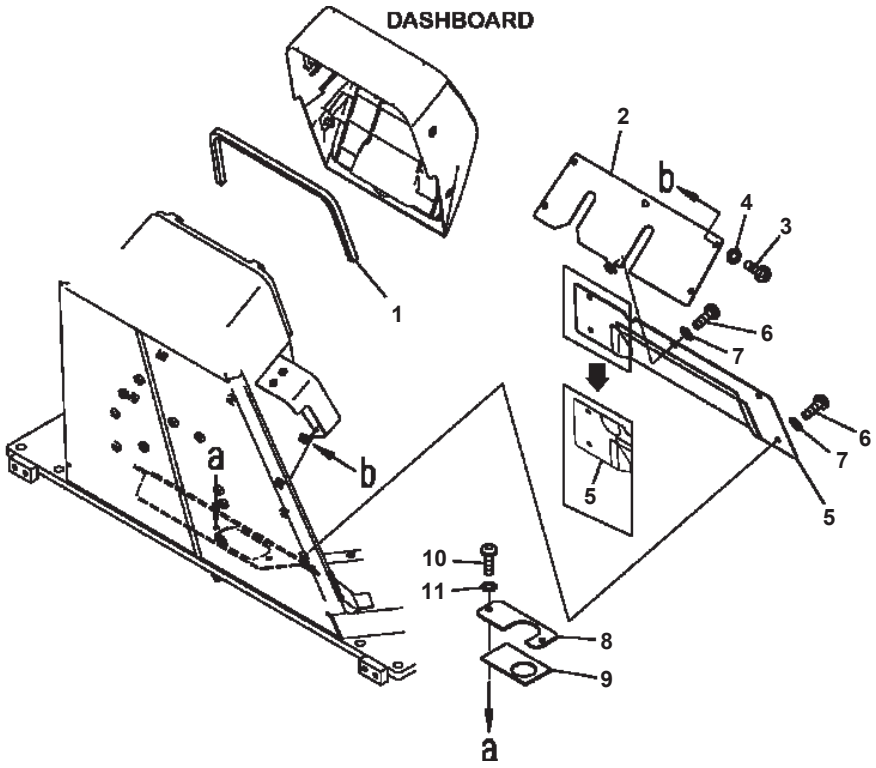

K0210-47A0 CAB DASHBOARD, PANEL MOUNT, AND COVER

Item	Part No.	Description	Qty	Options
1	12Y-978-2732	SEAL	1	SN:B10001--
2	12Y-978-2742	COVER	1	SN:B10001--
3	01245-00825	SCREW	5	SN:B10001--
4	01643-70823	WASHER	5	SN:B10001--
5	12Y-978-2753	COVER	1	SN:B10552--
	□12Y-978-2752	COVER	1	SN:B10001--B10551
6	01245-00825	SCREW	5	SN:B10001--
7	01643-70823	WASHER	5	SN:B10001--
8	12Y-978-2253	COVER	1	SN:B10001--
9	12Y-978-2263	· SHEET	1	SN:B10001--
10	01245-00825	SCREW	2	SN:B10001--
11	01643-70823	WASHER	2	SN:B10001--

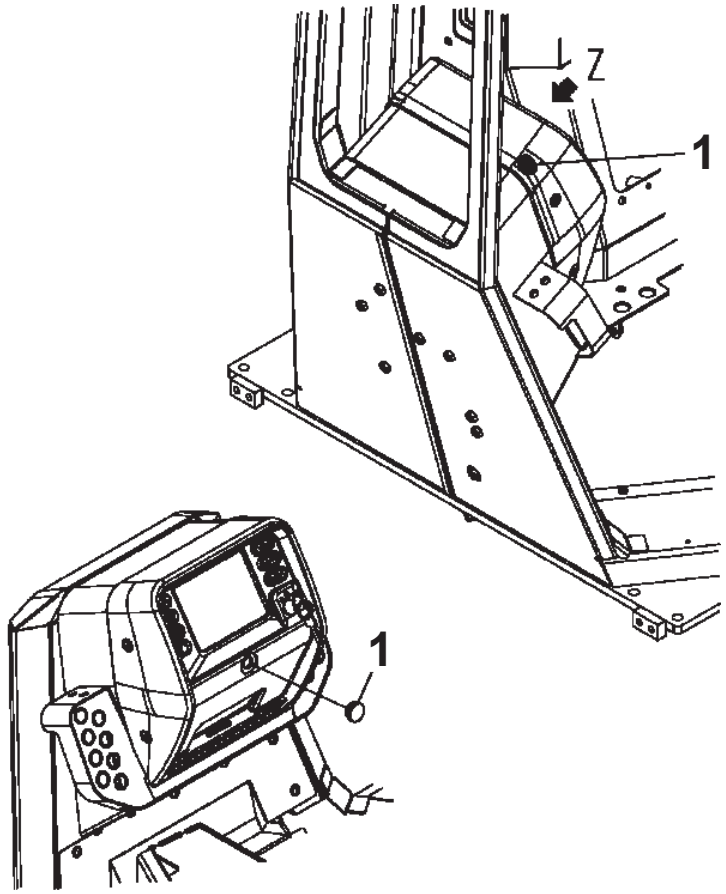

VIEW Z

K0210-48A0 CAB DASHBOARD, LESS VANDALISM PROTECTION

Item	Part No.	Description	Qty	Options
1	134-54-78370	CAP	1	SN:B10001--

CMZ00173

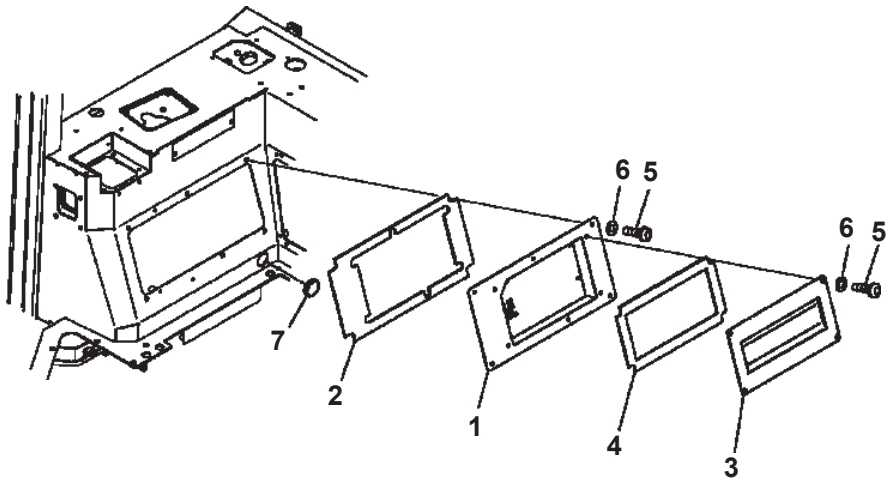

D51EX/PX-22 S/N B10001-UP

K0210-49A0 CAB FLOOR COVER, FRAME SIDE COVER

Item	Part No.	Description	Qty	Options
1	12Y-978-2952	COVER	1	SN:B10001--
2	12Y-978-2961	· SHEET	1	SN:B10001--
3	12Y-978-2972	COVER	1	SN:B10001--
4	12Y-978-2981	· SHEET	1	SN:B10001--
	12Y-978-1850	· SHEET	1	SN:B10001--
5	01245-00825	SCREW	10	SN:B10001--
6	01643-70823	WASHER	10	SN:B10001--
7	09415-03614	CAP	1	SN:B10001--

Ref. K0210-49A0 Page K-113

CMZ00174

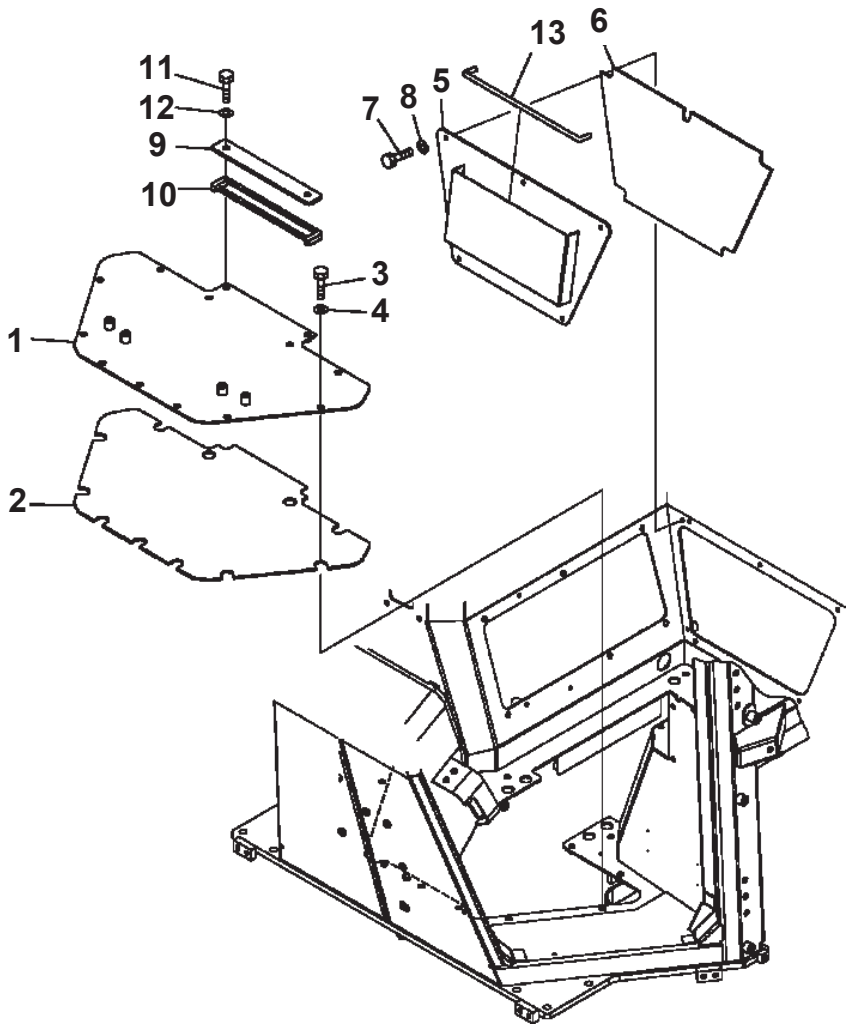

D51EX/PX-22 S/N B10001-UP

K0210-50A0 CAB FLOOR COVER (#B10001-B10551)

Item	Part No.	Description	Qty	Options
1	12Y-978-2911	COVER	1	SN:B10001--B10551
2	12Y-978-2920	· SHEET	1	SN:B10001--@
3	01010-81230	BOLT	11	SN:B10001--@
4	01643-31232	WASHER	11	SN:B10001--@
5	12Y-978-2932	COVER	1	SN:B10001--B10551
6	12Y-978-2940	· SHEET	1	SN:B10001--@
7	01010-D0825	BOLT	5	SN:B10001--@
8	01643-70823	WASHER	5	SN:B10001--@
9	17A-54-25560	COVER	1	SN:B10001--@
10	17A-54-25570	· SHEET	1	SN:B10001--@
11	01010-81230	BOLT	2	SN:B10001--@
12	01643-31232	WASHER	2	SN:B10001--@
13	12Y-978-2990	TRIM	1	SN:B10001--@

Ref. K0210-50A0 Page K-115

CMZ00174A

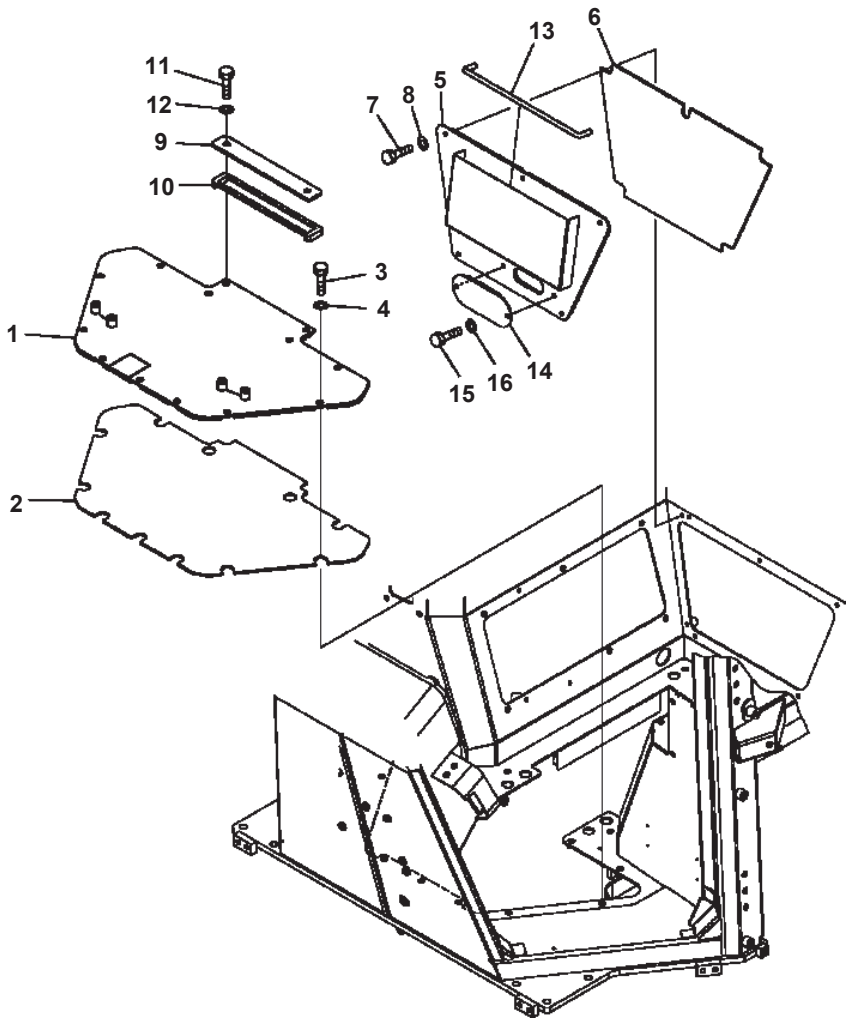

D51EX/PX-22 S/N B10001-UP

K0210-51A0 CAB FLOOR COVER (#B10552-)

Item	Part No.	Description	Qty	Options
1	12Y-978-2150	COVER	1	SN:B13937--
	□12Y-978-2912	COVER	1	SN:B10552--B13936
2	12Y-978-2920	· SHEET	1	SN:B10001--
3	01010-81230	BOLT	11	SN:B10001--
4	01643-31232	WASHER	11	SN:B10001--
5	12Y-978-2933	COVER	1	SN:B10552--
6	12Y-978-2940	· SHEET	1	SN:B10001--
7	01010-D0825	BOLT	5	SN:B10001--
8	01643-70823	WASHER	5	SN:B10001--
9	17A-54-25560	COVER	1	SN:B10001--
10	17A-54-25570	· SHEET	1	SN:B10001--
11	01010-81230	BOLT	2	SN:B10001--
12	01643-31232	WASHER	2	SN:B10001--
13	12Y-978-2990	TRIM	1	SN:B10001--
14	12Y-978-1980	COVER	1	SN:B10552--
15	01010-81230	BOLT	2	SN:B13937--
	□01010-D0825	BOLT	2	SN:B10552--B13936
16	01643-70823	WASHER	2	SN:B10552--

Ref. K0210-51A0 Page K-115A

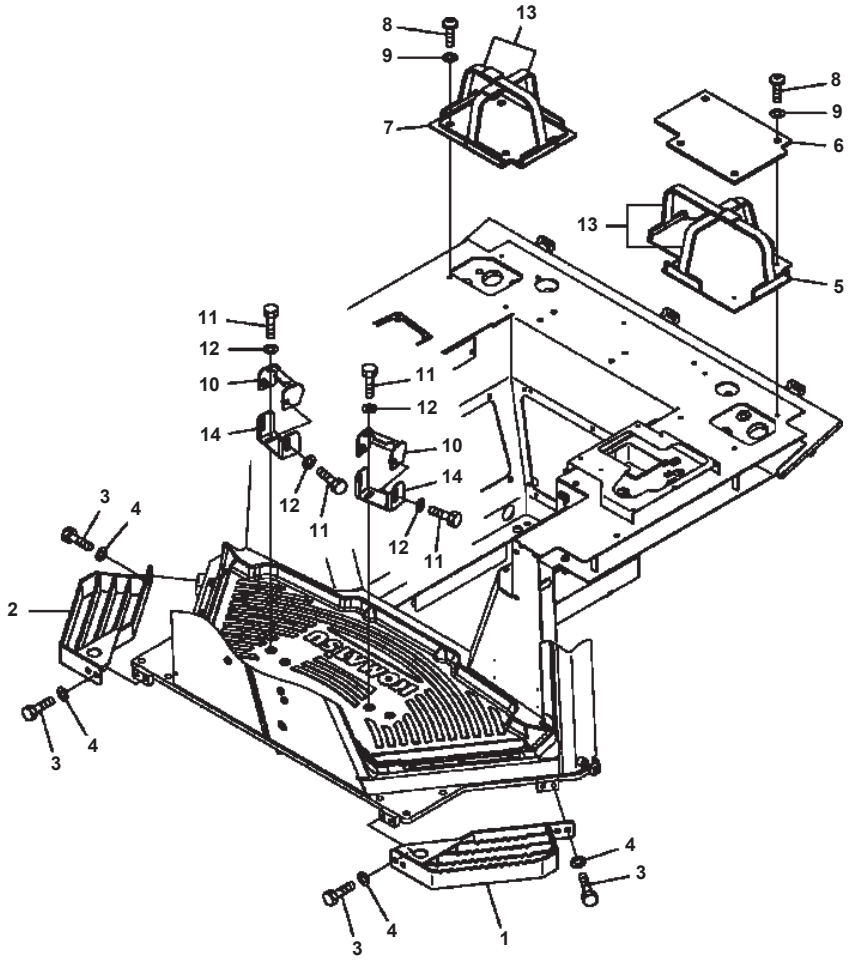

K0210-52A0 CAB FLOOR COVER , CAB ADD ON PART (#B10001-B10551)

Item	Part No.	Description	Qty	Options
1	12Y-978-1912	BRACKET	1	SN:B10001--@
2	12Y-978-1922	BRACKET	1	SN:B10001--@
3	01010-81225	BOLT	8	SN:B10001--@
4	01643-31232	WASHER	8	SN:B10001--@
5	12Y-978-2350	BRACKET	1	SN:B10001--B10551
6	12Y-978-2370	· SHEET	1	SN:B10001--@
7	12Y-978-2360	BRACKET	1	SN:B10001--@
8	01245-00620	SCREW	8	SN:B10001--@
9	01643-70623	WASHER	8	SN:B10001--@
10	12Y-43-12221	PLATE	2	SN:B10001--@
11	01010-D1020	BOLT	8	SN:B10001--@
12	01643-71032	WASHER	8	SN:B10001--@
13	423-54-42790	BAND	4	SN:B10001--@
14	12Y-43-12280	PLATE	2	SN:B10001--@

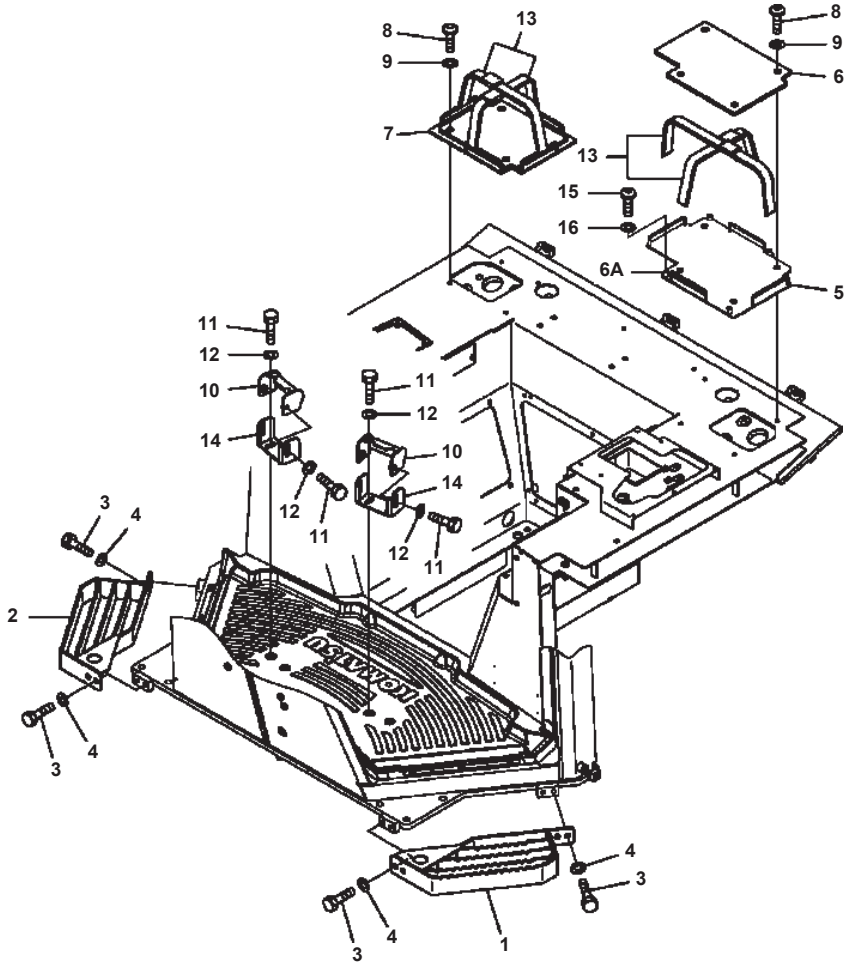

K0210-53A0 CAB FLOOR COVER , CAB ADD ON PART (#B10552-)

Item	Part No.	Description	Qty	Options
1	12Y-978-1912	BRACKET	1	SN:B10001--
2	12Y-978-1922	BRACKET	1	SN:B10001--
3	01010-D1225	BOLT	8	SN:B11449--
	◆01010-81225	BOLT	8	SN:B10001--B11448
4	01643-71232	WASHER	8	SN:B11449--
	◆01643-31232	WASHER	8	SN:B10001--B11448
5	12Y-978-2351	BRACKET	1	SN:B10552--
6	12Y-978-2370	· SHEET	1	SN:B10001--
6A	12Y-978-2390	· SEAT {WELDED}	4	SN:B10552--
7	12Y-978-2360	BRACKET	1	SN:B10001--
8	01245-00620	SCREW	8	SN:B10001--
9	01643-70623	WASHER	8	SN:B10001--
10	12Y-43-12221	PLATE	2	SN:B10001--
11	01010-D1020	BOLT	8	SN:B10001--
12	01643-71032	WASHER	8	SN:B10001--
13	423-54-42790	BAND	4	SN:B10001--
14	12Y-43-12280	PLATE	2	SN:B10001--
15	01245-00620	BOLT	4	SN:B10552--
16	01643-70623	WASHER	4	SN:B10552--

CMZ00176

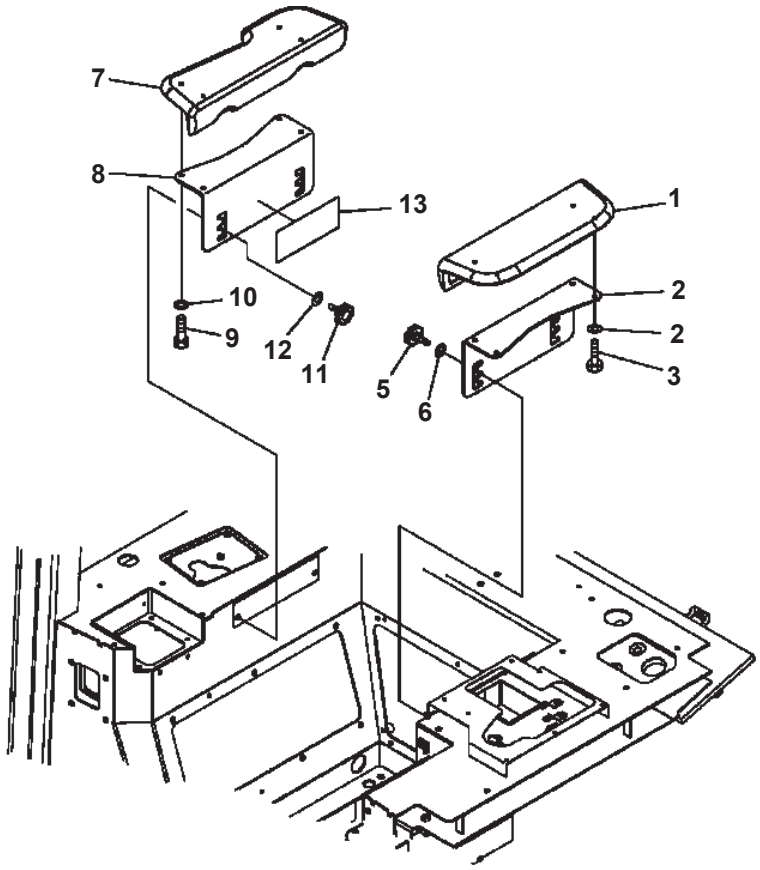

D51EX/PX-22 S/N B10001-UP

K0210-54A0 CAB ARM REST

Item	Part No.	Description	Qty	Options
1	12Y-978-2822	ARM REST	1	SN:B10001--
2	12Y-978-2831	PLATE	1	SN:B10001--
3	01010-80820	BOLT	4	SN:B10001--
4	01643-30823	WASHER	4	SN:B10001--
5	195-54-68760	KNOB	2	SN:B10001--
6	01643-71032	WASHER	2	SN:B10001--
7	12Y-978-1962	ARM REST	1	SN:B10001--
8	12Y-978-2831	PLATE	1	SN:B10001--
9	01010-80820	BOLT	4	SN:B10001--
10	01643-30823	WASHER	4	SN:B10001--
11	195-54-68760	KNOB	2	SN:B10001--
12	01643-71032	WASHER	2	SN:B10001--
13	12Y-978-2840	PLATE	1	SN:B10001--

Ref. K0210-54A0 Page K-119

CMZ00177

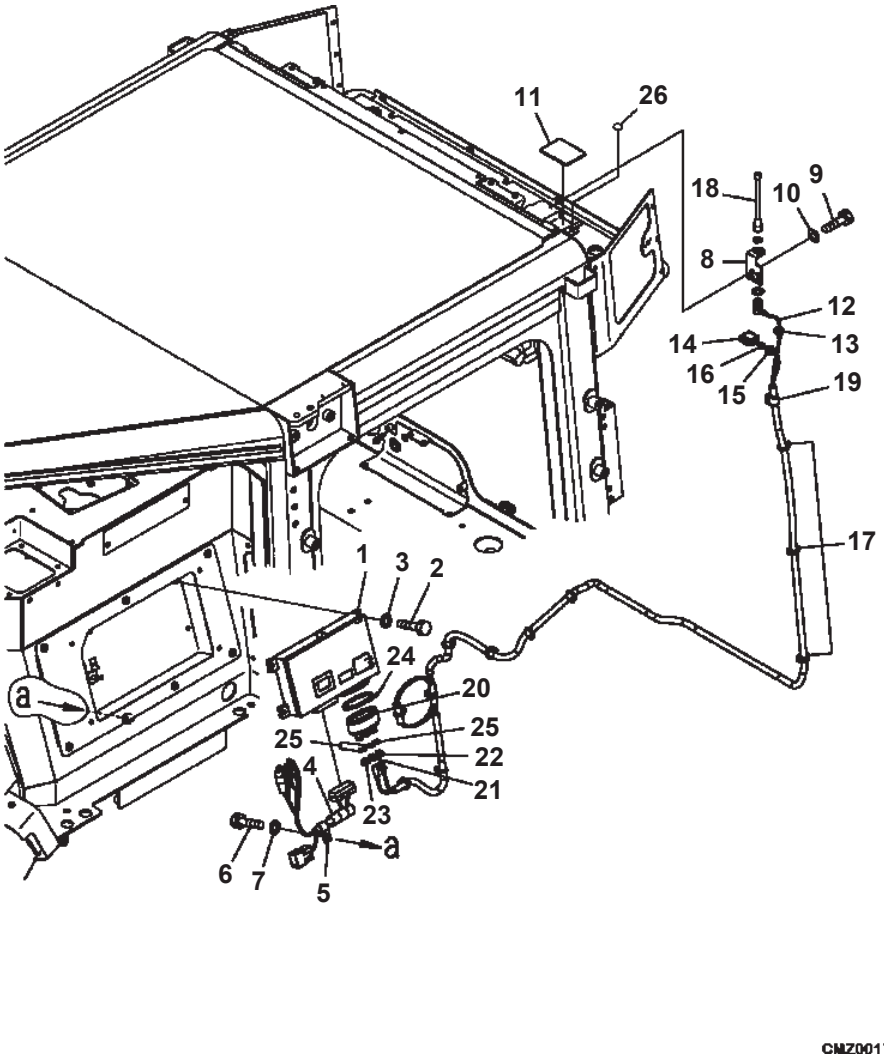

D51EX/PX-22 S/N B10001-UP

K0210-55A0 CAB KOMTRAX

Item	Part No.	Description	Qty	Options
1	7826-20-7038	CONTROLLER, KOMTRAX	1	SN:B12992--
	□7826-20-7037	CONTROLLER, KOMTRAX	1	SN:B11711--B12991
	□7826-20-7036	CONTROLLER, KOMTRAX	1	SN:B11916--B11710
	□7826-20-7035	CONTROLLER, KOMTRAX	1	SN:B11325--B11915
	□7826-20-7034	CONTROLLER, KOMTRAX	1	SN:B10789--B11324
	□7826-20-7033	CONTROLLER, KOMTRAX	1	SN:B10364--B10788
	□7826-20-7032	CONTROLLER, KOMTRAX	1	SN:B10001--B10363
2	01010-80825	BOLT	4	SN:B10001--
3	01643-30823	WASHER	4	SN:B10001--
4	11Y-06-33130	HARNESS, WIRING - KOMTRAX	1	SN:B11424--
	□12Y-06-13131	HARNESS, WIRING - KOMTRAX	1	SN:B10001--B11423
5	04434-51410	CLIP	1	SN:B10001--
6	01010-81020	BOLT	1	SN:B10001--
7	01643-31032	WASHER	1	SN:B10001--
8	12Y-06-13161	PLATE	1	SN:B10001--
9	01010-D0820	BOLT	2	SN:B10001--
10	01643-70823	WASHER	2	SN:B10001--
11	12Y-06-13170	COVER	1	SN:B10001--
	□12Y-06-13113	CABLE	1	SN:B11916--
	□12Y-06-13112	CABLE	1	SN:B11470--B11915
	12Y-06-13111	CABLE	1	SN:B10001--B11469
12	8A13-10-2200	· CABLE	1	SN:B10001--
13	08037-10610	· · GROMMET	1	SN:B10001--
14	8A13-10-1310	· ANTENNA	1	SN:B10001--
15	08037-10610	· · GROMMET	1	SN:B10001--
16	08055-00060	· · GROMMET	1	SN:B10001--
17	08034-20519	BAND	6	SN:B10001--
18	8A13-10-2100	ANTENNA	1	SN:B10001--
19	08211-01020	CLIP	1	SN:B10001--
20	8A13-80-1110	COVER	1	SN:B10001--
21	8A13-80-1120	CAP	1	SN:B10001--
22	8A13-80-1130	CAP	1	SN:B10001--
23	8A13-80-1140	CAP	1	SN:B10001--
24	08034-00536	BAND	1	SN:B10001--
25	08034-00414	BAND	3	SN:B10001--
26	09415-02512	CAP	1	SN:B11916--

Ref. K0210-55A0 Page K-121

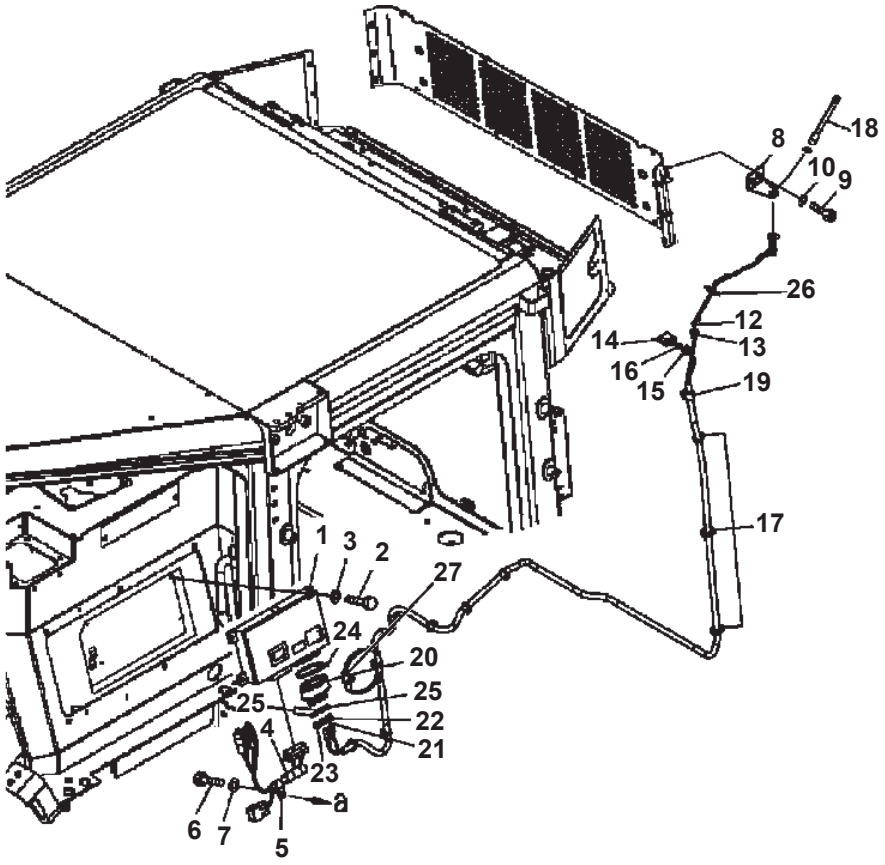

K0210-56A0 CAB KOMTRAX (FOR JAPAN)

Item	Part No.	Description	Qty	Options
1	7826-20-4040	CONTROLLER, KOMTRAX	1	SN:B14272--
	☐7826-20-4038	CONTROLLER, KOMTRAX	1	SN:B14071--B14271
	☐7826-20-4037	CONTROLLER, KOMTRAX	1	SN:B13001--B14071
	☐7826-20-4036	CONTROLLER, KOMTRAX	1	SN:B11912--B13000
	☐7826-20-4034	CONTROLLER, KOMTRAX	1	SN:B11484--B11911
	☐7826-20-4033	CONTROLLER, KOMTRAX	1	SN:B10001--B11483
2	01010-80825	BOLT	4	SN:B10001--
3	01643-30823	WASHER	4	SN:B10001--
4	11Y-06-33130	HARNESS, WIRING - KOMTRAX	1	SN:B11424--
	☐12Y-06-13131	HARNESS, WIRING - KOMTRAX	1	SN:B10001--B11423
5	04434-51410	CLIP	1	SN:B10001--
6	01010-81020	BOLT	1	SN:B10001--
7	01643-31032	WASHER	1	SN:B10001--
8	12Y-06-13411	PLATE	1	SN:B10001--
9	01010-D0820	BOLT	2	SN:B10001--
10	01643-70823	WASHER	2	SN:B10001--
11	12Y-06-13170	COVER	1	SN:B10001--
	12Y-06-13433	CABLE	1	SN:B11916--
	☐12Y-06-13432	CABLE	1	SN:B11558--B11915
	☐12Y-06-13431	CABLE	1	SN:B10001--B11557
12	8A13-10-2200	・CABLE	1	SN:B10001--
13	08037-10610	・・GROMMET	1	SN:B10001--
14	8A13-10-1310	・ANTENNA	1	SN:B10001--
15	08037-10610	・・GROMMET	1	SN:B10001--
16	08055-00060	・・GROMMET	1	SN:B10001--
17	08034-20519	BAND	6	SN:B10001--
18	8A13-10-2100	ANTENNA	1	SN:B10001--
19	08211-01020	CLIP	1	SN:B10001--
20	8A13-80-1110	COVER	1	SN:B10001--
21	8A13-80-1120	CAP	1	SN:B10001--
22	8A13-80-1130	CAP	1	SN:B10001--
23	8A13-80-1140	CAP	1	SN:B10001--
24	08034-00536	BAND	1	SN:B10001--
25	08034-00414	BAND	3	SN:B10001--
26	08037-02512	GROMMET	1	SN:B10001--
27	08034-40521	BAND	2	SN:B11558--

CMZ00178

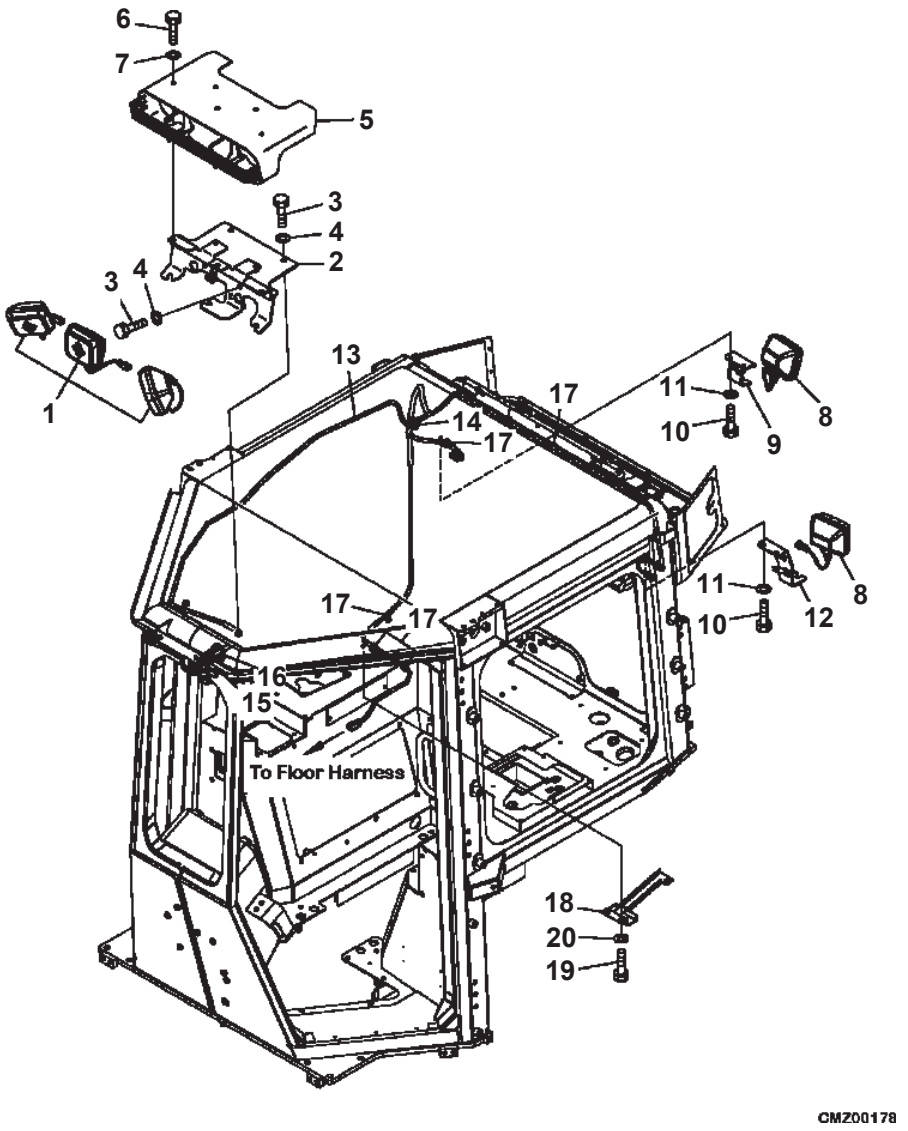

K0210-57A0 CAB WORK LAMPS

Item	Part No.	Description	Qty	Options
1	11Y-06-11372	LAMP	3	SN:B10001--
	421-06-23330	· BULB, 70 W	1	SN:B10001--
2	12Y-06-12122	BRACKET	1	SN:B10001--
3	01010-81225	BOLT	4	SN:B10001--
4	01643-31232	WASHER	4	SN:B10001--
5	12Y-06-12133	COVER	1	SN:B10001--
6	01010-81025	BOLT	5	SN:B10001--
7	01643-31032	WASHER	5	SN:B10001--
8	11Y-06-11372	LAMP	2	SN:B10001--
	421-06-23330	· BULB, 70 W	1	SN:B10001--
9	12Y-06-12171	PLATE	1	SN:B10001--
10	01010-80830	BOLT	4	SN:B11060--
	◆01010-D0825	BOLT	4	SN:B10001--B11059
11	01643-30823	WASHER	4	SN:B11060--
	◆01643-70823	WASHER	4	SN:B10001--B11059
12	12Y-06-12271	PLATE	1	SN:B10001--
13	12Y-06-12185	HARNESS, WIRING - WORK LAMPS	1	SN:B13406--
	□12Y-06-12184	HARNESS, WIRING - WORK LAMPS	1	SN:B10001--B13405
14	08037-11425	· GROMMET	1	SN:B11449--
	□08037-11025	· GROMMET	1	SN:B10001--B11448
15	08037-11425	· GROMMET	1	SN:B10001--
16	12Y-06-13151	SEAL	1	SN:B10001--
17	08034-20519	BAND	12	SN:B10001--
18	12Y-06-12191	COVER	1	SN:B10001--
19	01010-81016	BOLT	3	SN:B10001--
20	01643-31032	WASHER	3	SN:B10001--

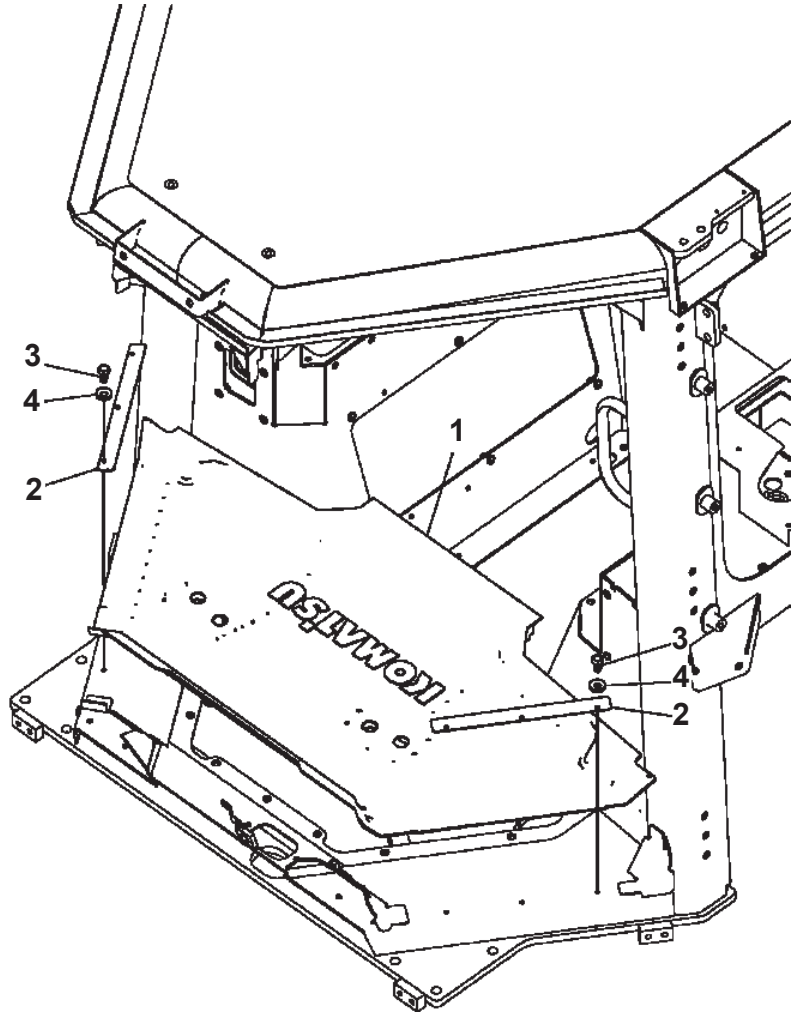

K0310-01A0 FLOOR MAT

Item	Part No.	Description	Qty	Options
1	12Y-978-2881	MAT, FLOOR	1	SN:B10001--
2	12Y-978-2890	PLATE	2	SN:B10001--
3	01245-00620	SCREW	6	SN:B10001--
4	01643-70623	WASHER	6	SN:B10001--

CMZ00180

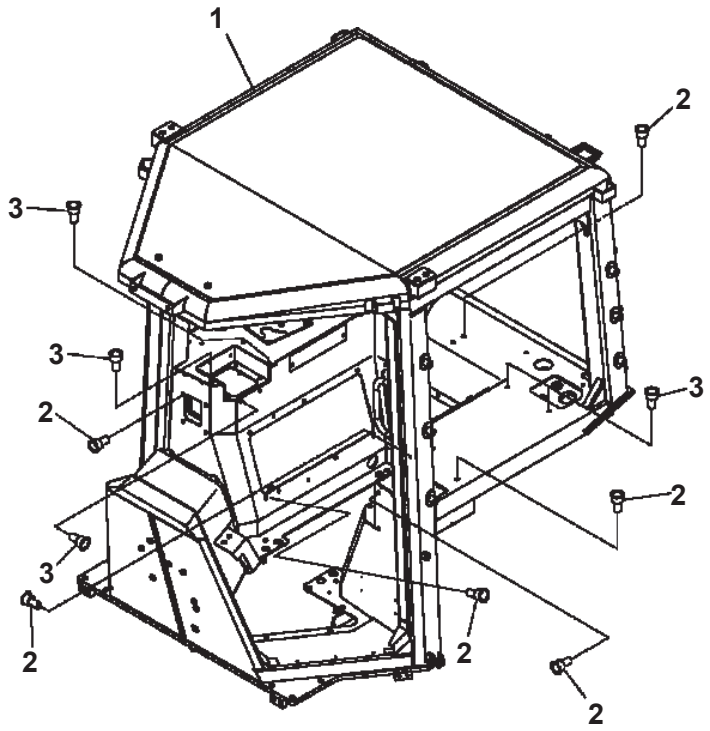

D51EX/PX-22 S/N B10001-UP

K0410-01A0 ROPS COMPLETE ASSEMBLY

Item	Part No.	Description	Qty	Options
1	12Y-978-4115	ROPS	1	SN:B11916--
	◆12Y-978-4114	ROPS	1	SN:B10552--B11915
	◆12Y-978-4113	ROPS	1	SN:B10001--B10551
2	12Y-978-1890	NUT	19	SN:B11449--
3	20Y-53-12260	NUT	14	SN:B11449--

CMZ00181

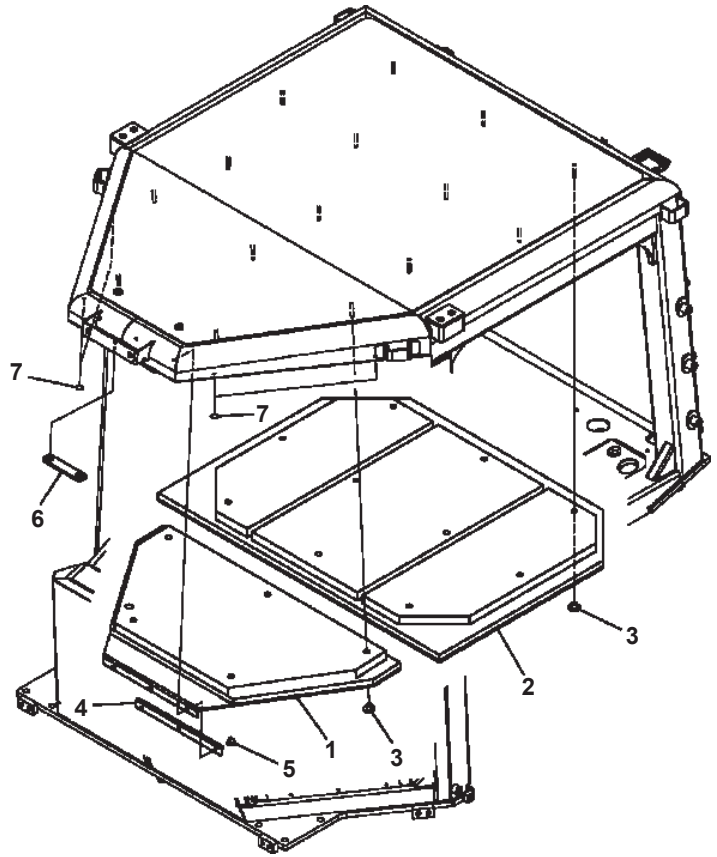

D51EX/PX-22 S/N B10001-UP

K0410-02A0 ROPS INSIDE COVER

Item	Part No.	Description	Qty	Options
1	12Y-978-4610	ROOF	1	SN:B10001--
2	12Y-978-4622	ROOF	1	SN:B10001--
3	14X-978-1660	BUTTON	15	SN:B10001--
4	12Y-978-4660	PLATE	1	SN:B10001--
5	20Y-54-18690	RIVET	3	SN:B10001--
6	12Y-978-4670	SHEET	1	SN:B10001--
7	12Y-978-2870	PLATE	4	SN:B10001--

Ref. K0410-02A0 Page K-131

CMZ00182

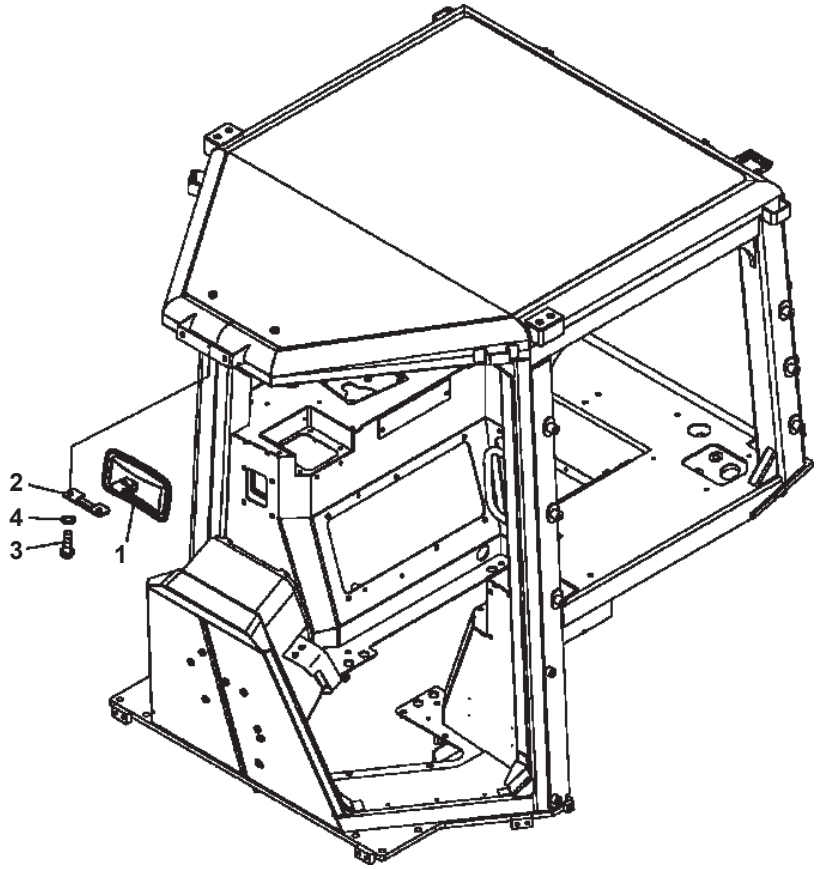

D51EX/PX-22 S/N B10001-UP

K0410-03A0 ROPS MIRROR

Item	Part No.	Description	Qty	Options
1	195-Z11-2180	MIRROR	1	SN:B10001--
2	12Y-978-2220	BRACKET	1	SN:B10001--
3	01245-00825	SCREW	2	SN:B10001--
4	01643-70823	WASHER	2	SN:B10001--

Ref. K0410-03A0 Page K-133

CMZ00183

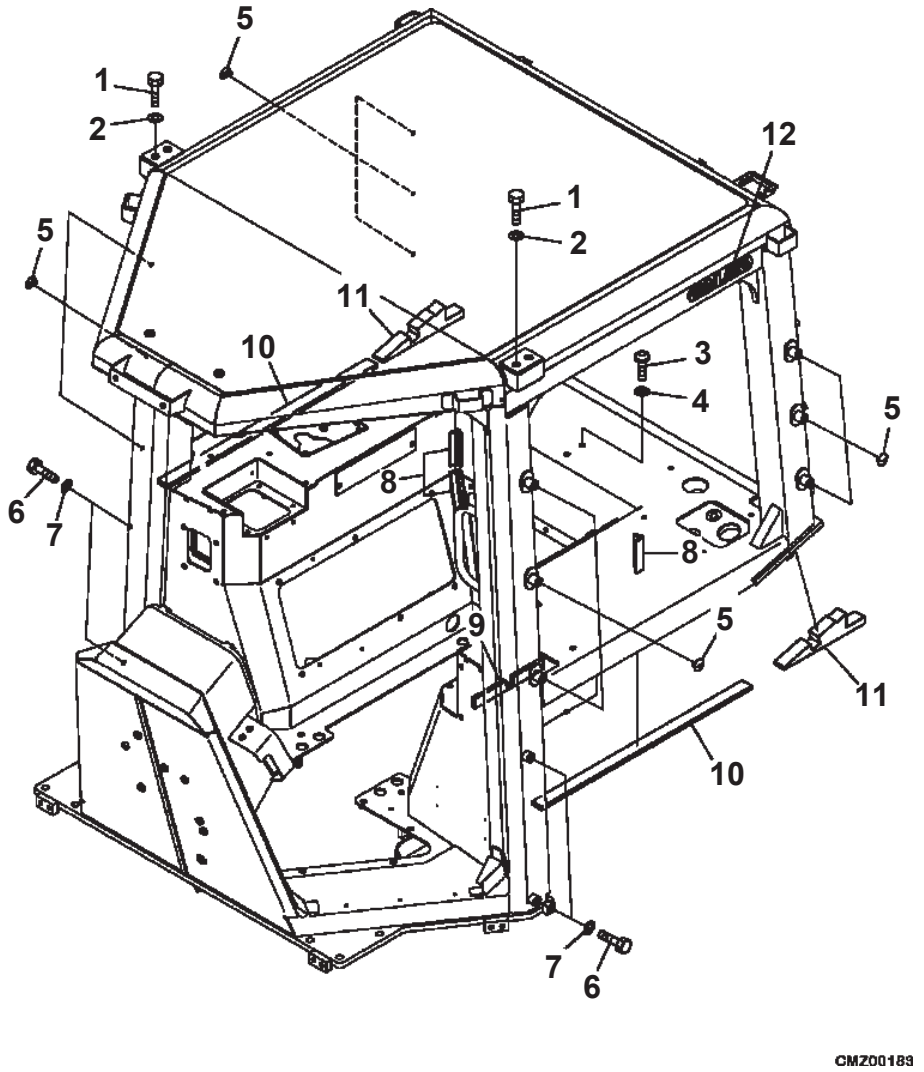

D51EX/PX-22 S/N B10001-UP

K0410-04A0 ROPS PLUG, OUTSIDE SEAL, PLATE

Item	Part No.	Description	Qty	Options
1	01010-81625	BOLT	4	SN:B10001--
2	01643-31645	WASHER	4	SN:B10001--
3	01245-00820	SCREW	4	SN:B10001--
4	01643-70823	WASHER	4	SN:B10001--
5	20Y-53-11380	CAP	10	SN:B10747--
	◆20Y-53-11380	CAP	12	SN:B10001--B10746
6	01010-D1225	BOLT	4	SN:B10001--
7	01643-71232	WASHER	4	SN:B10001--
8	12Y-978-3791	SHEET	3	SN:B10001--
9	12Y-978-1790	SEAL	1	SN:B10001--
10	12Y-54-11860	SEAL	2	SN:B10001--
11	12Y-978-4680	SEAL	2	SN:B10001--
12		PLATE (SEE FIG. U0100-01A1)	2	SN:B10001--

Ref. K0410-04A0 Page K-135

CMZ00184

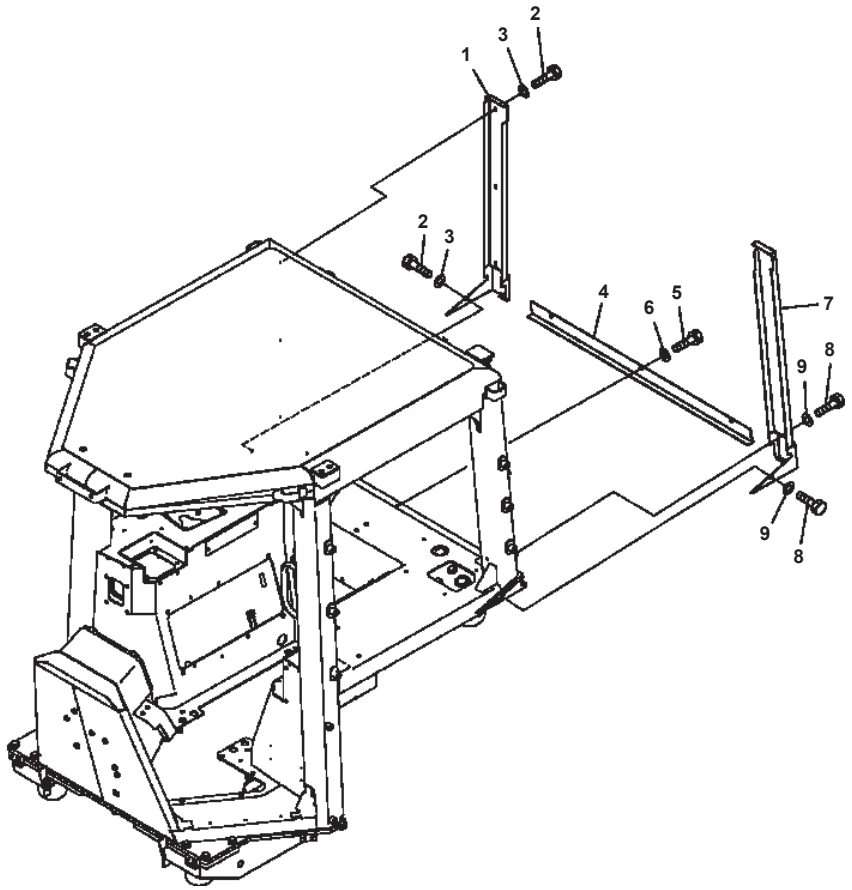

D51EX/PX-22 S/N B10001-UP

K0410-05A0 ROPS REAR COVER

Item	Part No.	Description	Qty	Options
1	12Y-06-12152	COVER	1	SN:B10001--
2	01010-D0820	BOLT	4	SN:B10210--
	□01010-D0825	BOLT	4	SN:B10001--B10209
3	01643-70823	WASHER	4	SN:B10001--
4	12Y-06-12162	COVER	1	SN:B10001--
5	01010-D0820	BOLT	3	SN:B10210--
	□01010-D0825	BOLT	3	SN:B10001--B10209
6	01643-70823	WASHER	3	SN:B10001--
7	12Y-06-13141	COVER	1	SN:B10001--
8	01010-D0820	BOLT	4	SN:B10210--
	□01010-D0825	BOLT	4	SN:B10001--B10209
9	01643-70823	WASHER	4	SN:B10001--

Ref. K0410-05A0 Page K-137

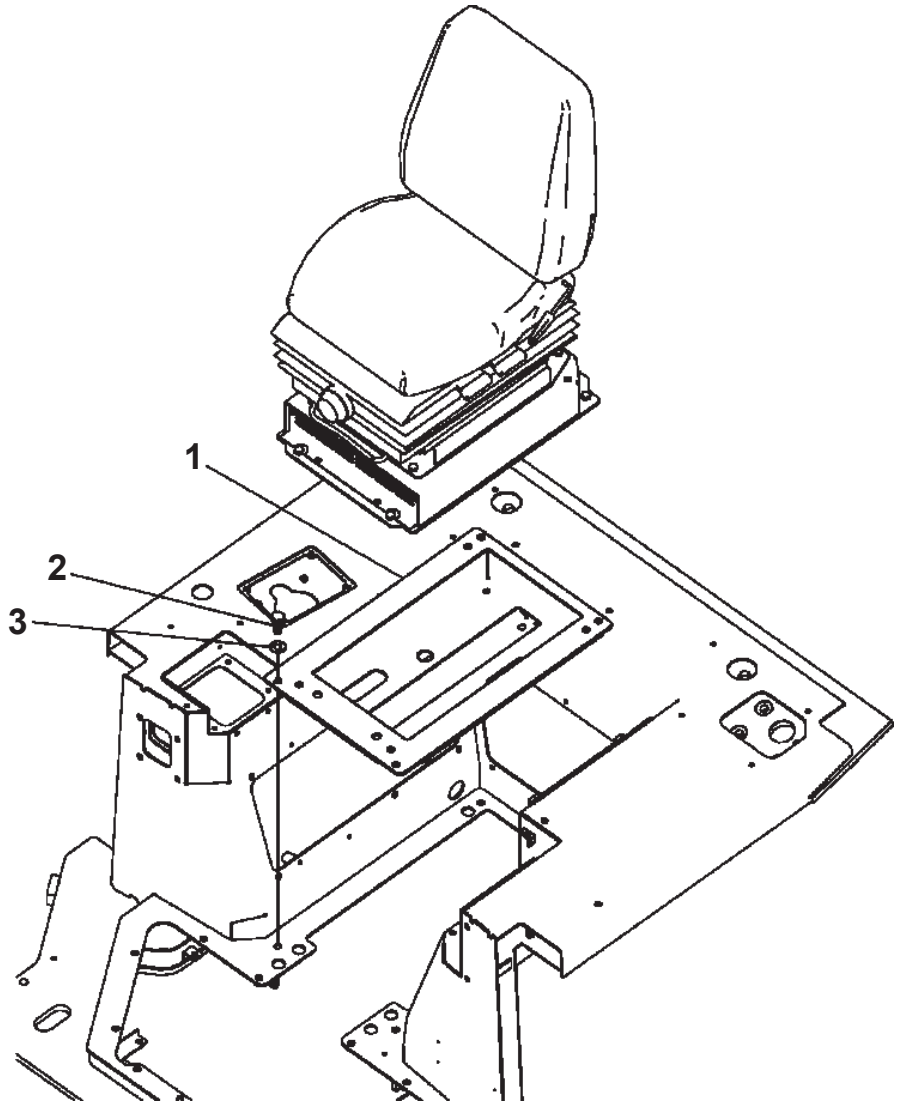

K0410-06A0 ROPS LESS AIR CONDITIONER

Item	Part No.	Description	Qty	Options
1	12Y-977-1143	BRACKET	1	SN:B10001--
2	01010-81230	BOLT	4	SN:B10001--
3	01643-31232	WASHER	4	SN:B10001--

CMZ00186

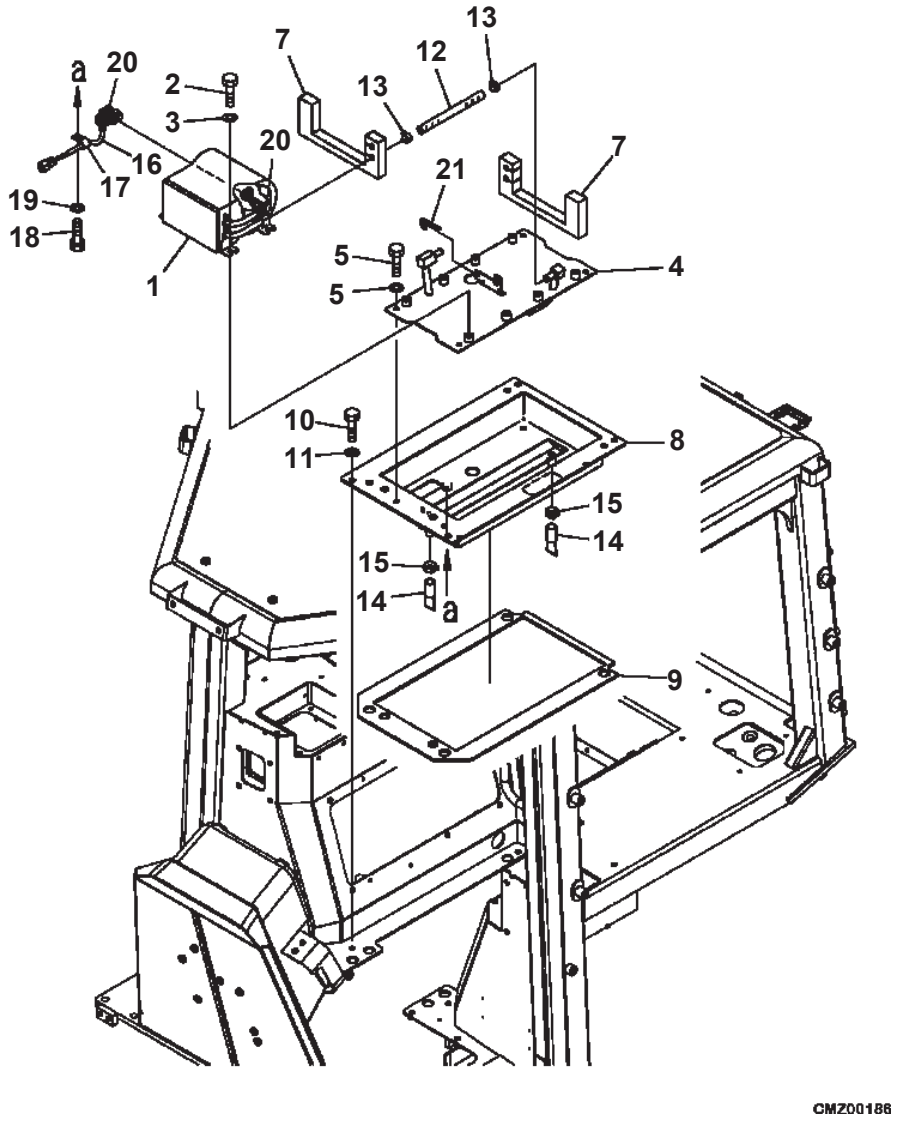

D51EX/PX-22 S/N B10001-UP

K0410-06A1 ROPS WITH SUB HEATER

Item	Part No.	Description	Qty	Options
1	208-987-3680	HEATER	1	SN:B10001--
2	01010-81020	BOLT	4	SN:B10001--
3	01643-31032	WASHER	4	SN:B10001--
4	12Y-977-1112	BRACKET	1	SN:B10001--
5	01010-81020	BOLT	4	SN:B10001--
6	01643-31032	WASHER	4	SN:B10001--
7	12Y-977-1121	SEAL	2	SN:B10001--
8	12Y-977-1143	BRACKET	1	SN:B10001--
9	12Y-977-1211	· SEAL	1	SN:B10001--
10	01010-81230	BOLT	4	SN:B10001--
11	01643-31232	WASHER	4	SN:B10001--
12	12Y-979-1380	HOSE	1	SN:B10001--
13	11Y-09-11160	CLIP	2	SN:B10001--
14	22B-979-1880	CONNECTOR	2	SN:B10001--
15	07285-00230	CLIP	2	SN:B10001--
16	12Y-977-1193	HARNESS, WIRING	1	SN:B10001--
17	04434-51410	CLIP	1	SN:B10001--
18	01010-81020	BOLT	1	SN:B10001--
19	01643-31032	WASHER	1	SN:B10001--
20	08034-20519	BAND	2	SN:B10001--
21	12Y-06-13380	SEAL	1	SN:B10001--

Ref. K0410-06A1 Page K-141

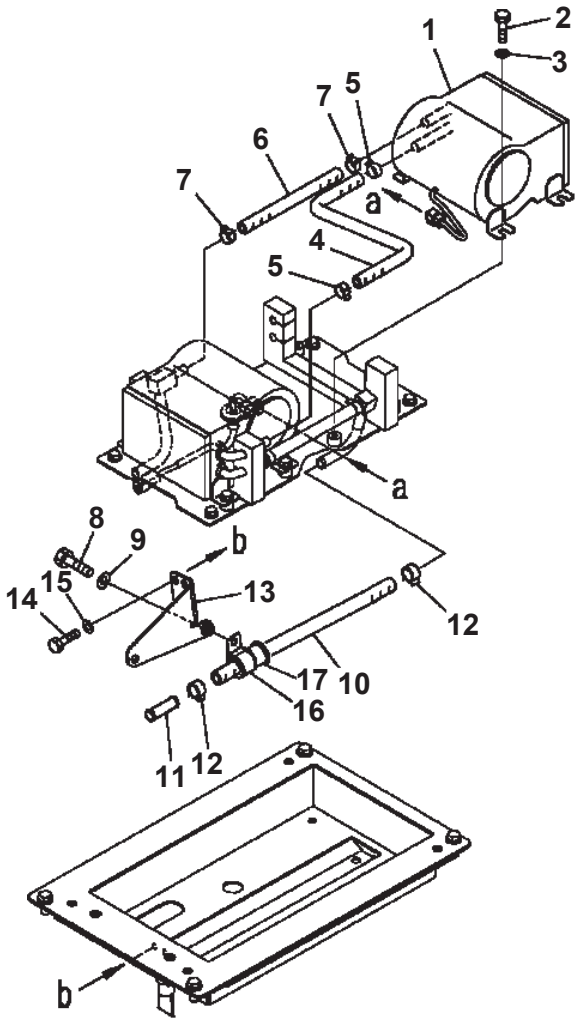

CMZ00187

K0410-07A1 ROPS WITH SUB HEATER FOR OPEN ROPS

Item	Part No.	Description	Qty	Options
1	208-987-3680	HEATER ASSEMBLY	1	SN:B10001--
2	01010-81020	BOLT	4	SN:B10001--
3	01643-31032	WASHER	4	SN:B10001--
4	12Y-977-1150	HOSE	1	SN:B10001--
5	11Y-09-11160	CLIP	2	SN:B10001--
6	12Y-979-1380	HOSE	1	SN:B10001--
7	11Y-09-11160	CLIP	2	SN:B10001--
8	01010-81020	BOLT	1	SN:B10001--
9	01643-31032	WASHER	1	SN:B10001--
10	09483-10504	HOSE	1	SN:B10001--
11	09484-00560	CONNECTOR	1	SN:B10001--
12	09479-02400	CLAMP	2	SN:B10001--
13	12Y-978-5110	BRACKET	1	SN:B10001--
14	01010-81020	BOLT	2	SN:B10001--
15	01643-31032	WASHER	2	SN:B10001--
16	04434-53211	CLIP	1	SN:B10001--
17	07095-20523	CUSHION	1	SN:B10001--

CMZ00188

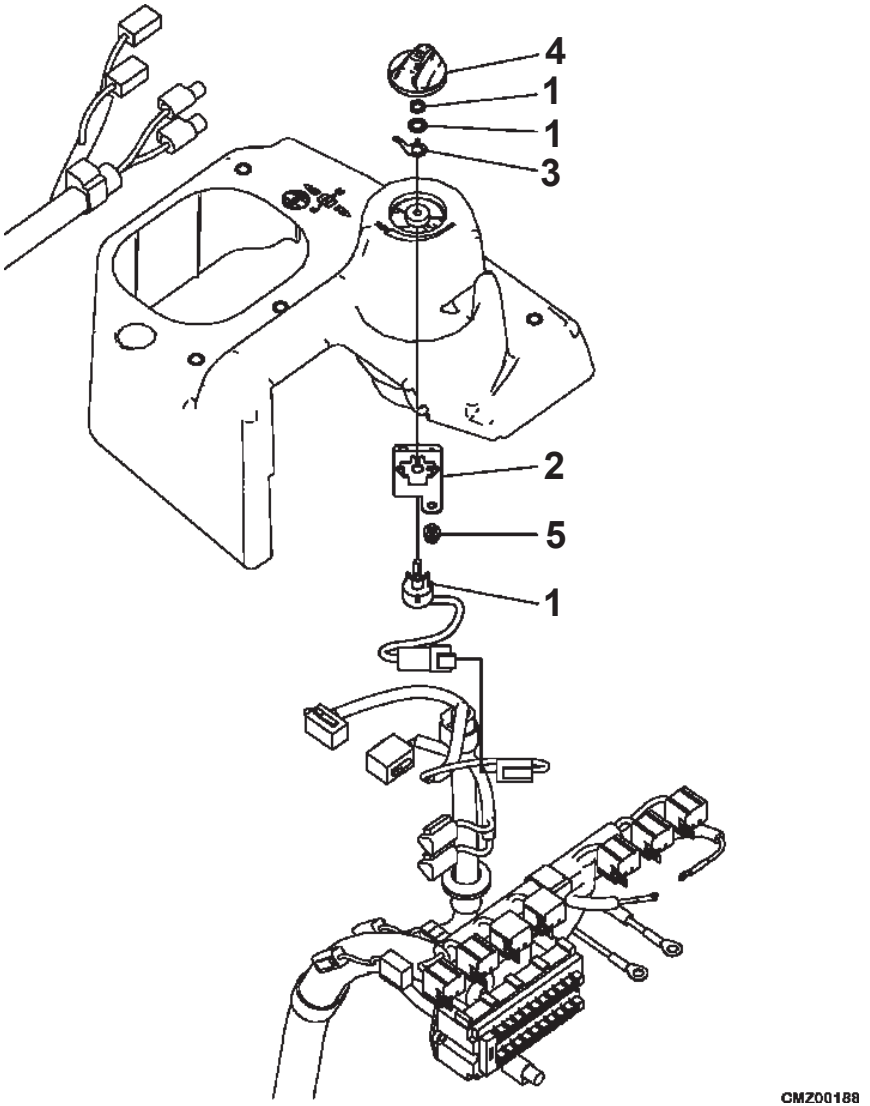

D51EX/PX-22 S/N B10001-UP

K0410-08A0 ROPS FUEL CONTROL

Item	Part No.	Description	Qty	Options
	12Y-06-11611	POTENTIOMETER	1	SN:B10001--
1	12Y-06-11621	· POTENTIOMETER	1	SN:B10001--
2	12Y-06-11631	· BRACKET	1	SN:B10001--
3	22U-06-22460	· SPRING	1	SN:B10001--
4	20Y-43-41781	KNOB	1	SN:B13095--
	□20Y-43-41780	KNOB	1	SN:B10001--B13094
5	01023-60512	SCREW	2	SN:B10001--

Ref. K0410-08A0 Page K-145

CMZ00189

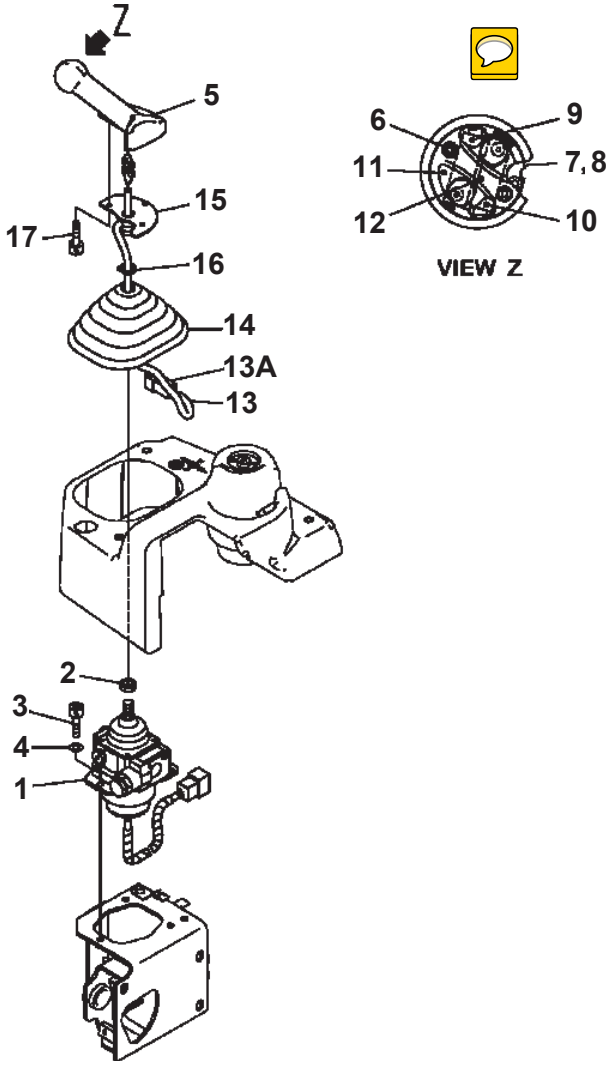

D51EX/PX-22 S/N B10001-UP

K0410-09A0 ROPS TRAVEL CONTROL

Item	Part No.	Description	Qty	Options
1	702-16-02320	LEVER ASSEMBLY	1	SN:B12474--
	☒702-16-02224	LEVER ASSEMBLY	1	SN:B11838--B12473
	☐702-16-02223	LEVER ASSEMBLY	1	SN:B10789--B11837
	☐702-16-02222	LEVER ASSEMBLY	1	SN:B10316--B10788
	☐702-16-02221	LEVER ASSEMBLY	1	SN:B10001--B10315
2	20T-43-71190	NUT	1	SN:B10001--
3	01252-70825	BOLT	3	SN:B10001--
4	01643-30823	WASHER	3	SN:B10001--
	11Y-43-11174	KNOB ASSEMBLY	1	SN:B10316--
	☐11Y-43-11173	KNOB ASSEMBLY	1	SN:B10001--B10315
5	19M-43-33111	· KNOB ASSEMBLY	1	SN:B10316--
	☐19M-43-33110	· KNOB ASSEMBLY	1	SN:B10001--B10315
6	19M-09-11510	· · BOLT	2	SN:B10001--
7	19M-43-33141	· · SWITCH ASSEMBLY	1	SN:B10316--
	☐19M-43-33140	· · SWITCH ASSEMBLY	1	SN:B10001--B10315
8	19M-43-33170	· · · PLATE	1	SN:B10001--
9	19M-43-33460	· · · SWITCH	1	SN:B10001--
10	19M-43-33470	· · · SWITCH	1	SN:B10001--
11	19M-43-33151	· · RUBBER	1	SN:B10316--
	☐19M-43-33150	· · RUBBER	1	SN:B10001--B10315
12	19M-43-33161	· · COVER	1	SN:B10316--
	☐19M-43-33160	· · COVER	1	SN:B10001--B10315
13	11Y-43-11114	· HARNESS, WIRING - TRAVEL CONTROL	1	SN:B10001--
13A	08192-13300	· CONNECTOR	1	SN:B13706--
14	11Y-43-11181	· · BOOT	1	SN:B10001--
15	11Y-43-11124	· · BRACKET	1	SN:B10001--
16	08034-30414	· · STRAP, TIE	3	SN:B10001--
17	01252-80510	· BOLT	3	SN:B10001--

Ref. K0410-09A0 Page K-147

CMZ00190

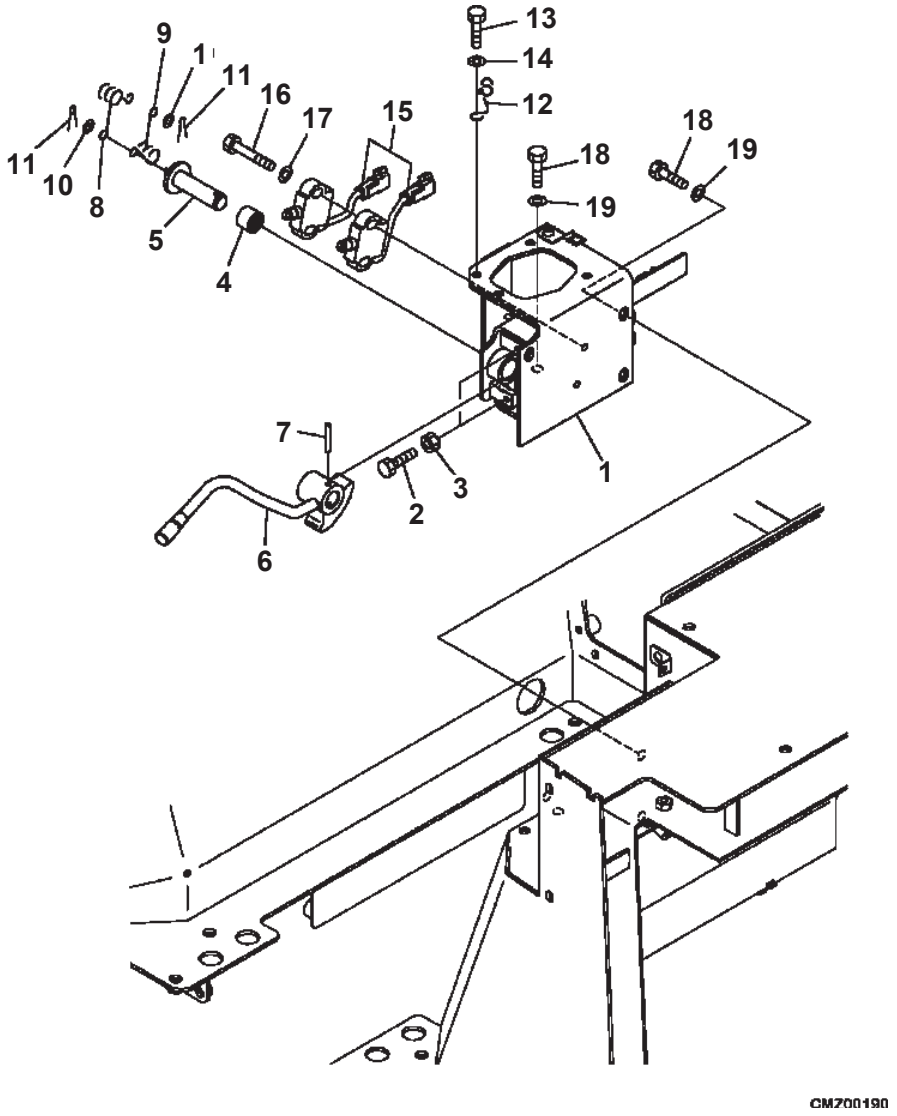

D51EX/PX-22 S/N B10001-UP

K0410-10A0 ROPS TRAVEL LOCK LEVER

Item	Part No.	Description	Qty	Options
	12Y-43-12102	LOCK ASSEMBLY	1	SN:B10001--
1	12Y-43-12414	· BRACKET	1	SN:B10001--
2	01016-50825	· BOLT	2	SN:B10001--
3	01580-10806	· NUT	2	SN:B10001--
4	06124-02020	· BEARING	1	SN:B10001--
5	12Y-43-12422	· LEVER	1	SN:B10001--
6	12Y-43-12432	· LEVER	1	SN:B10001--
7	14X-43-14520	· PIN	1	SN:B10001--
8	09463-00006	· SPRING	1	SN:B10001--
9	09463-00002	· SPRING	1	SN:B10001--
10	01641-20608	· WASHER	2	SN:B10001--
11	04050-11612	· PIN	2	SN:B10001--
12	12Y-43-12491	· HOOK	1	SN:B10001--
13	01010-80820	· BOLT	1	SN:B10001--
14	01643-30823	· WASHER	1	SN:B10001--
15	11Y-06-11470	· SWITCH	2	SN:B10001--
16	01010-81050	· BOLT	2	SN:B10001--
17	01643-31032	· WASHER	2	SN:B10001--
18	01010-81020	· BOLT	5	SN:B10001--
19	01643-31032	· WASHER	5	SN:B10001--

Ref. K0410-10A0 Page K-149

CMZ00191

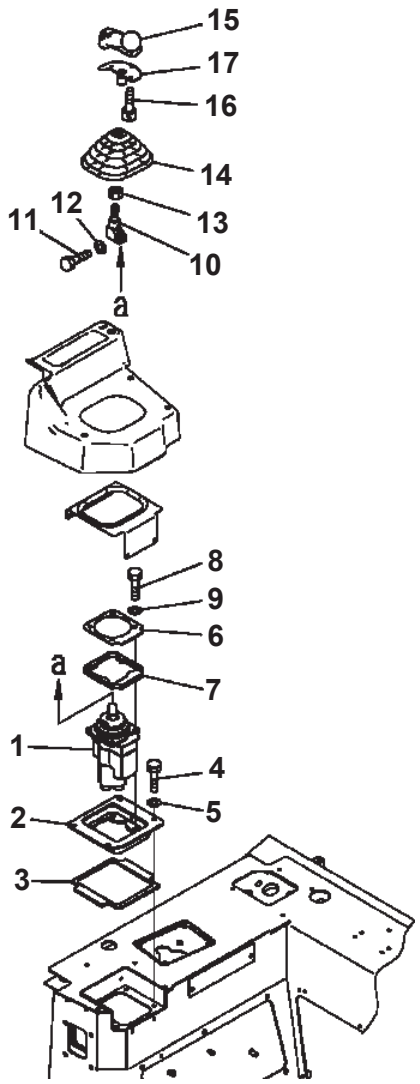

D51EX/PX-22 S/N B10001-UP

K0410-11A0 ROPS BLADE CONTROL

Item	Part No.	Description	Qty	Options
1	702-16-01992	PILOT VALVE	1	SN:B10001--
	12Y-43-12452	BRACKET	1	SN:B10001--
2	(NSS)	・ BRACKET	1	SN:B10001--
3	12Y-43-12470	SHEET	1	SN:B10001--
4	01010-80825	BOLT	4	SN:B10001--
5	01643-30823	WASHER	4	SN:B10001--
6	12Y-43-12440	PLATE	1	SN:B10001--
7	12Y-43-12480	SHEET	1	SN:B10001--
8	01010-80825	BOLT	4	SN:B10001--
9	01643-30823	WASHER	4	SN:B10001--
10	11Y-43-12710	LEVER	1	SN:B10001--
11	07372-21030	BOLT	1	SN:B10001--
12	01641-21016	WASHER	1	SN:B10001--
13	20T-43-71190	NUT	1	SN:B10001--
14	11Y-43-11181	BOOT	1	SN:B10001--
15	195-43-64411	KNOB ASSEMBLY	1	SN:B10148--
	□195-43-64410	KNOB ASSEMBLY	1	SN:B10001--B10147
16	01252-80510	BOLT	3	SN:B10001--
17	11Y-43-12720	BRACKET	1	SN:B10001--

Ref. K0410-11A0 Page K-151

CMZ00192

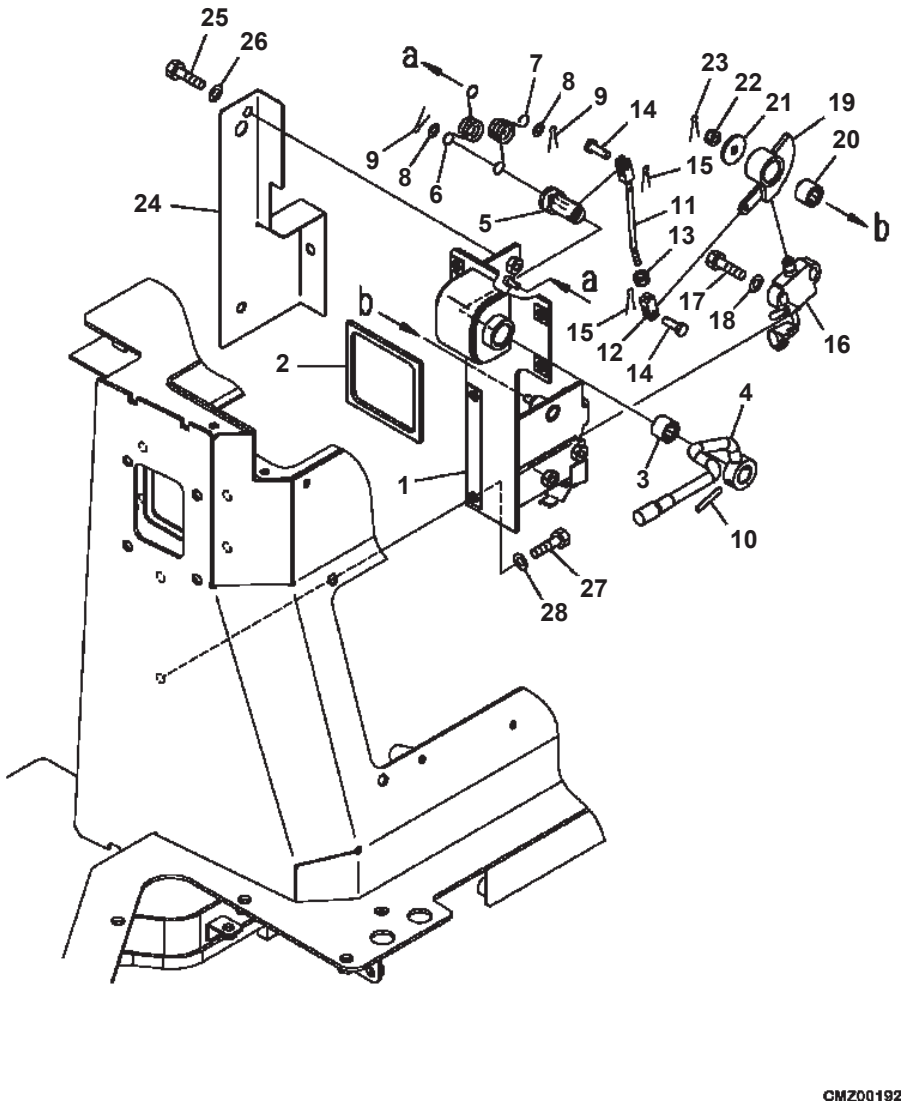

D51EX/PX-22 S/N B10001-UP

K0410-12A0 ROPS BLADE LOCK LEVER

Item	Part No.	Description	Qty	Options
	12Y-43-12202	LOCK ASSEMBLY	1	SN:B10001--
1	12Y-43-12514	· BRACKET	1	SN:B10001--
2	12Y-43-12520	· · SHEET	1	SN:B10001--
3	06124-02020	· BEARING	1	SN:B10001--
4	12Y-43-12532	· LEVER	1	SN:B10001--
5	12Y-43-12542	· LEVER	1	SN:B10001--
6	09463-00002	· SPRING	1	SN:B10001--
7	09463-00006	· SPRING	1	SN:B10001--
8	01641-20608	· WASHER	2	SN:B10001--
9	04050-11612	· PIN	2	SN:B10001--
10	14X-43-14520	· PIN	1	SN:B10001--
11	12Y-43-12552	· ROD	1	SN:B10001--
12	04210-20624	· YOKE	1	SN:B10001--
13	01580-10605	· NUT	1	SN:B10001--
14	04205-10618	· PIN	2	SN:B10001--
15	04050-11612	· PIN	2	SN:B10001--
16	11Y-06-11470	· SWITCH	1	SN:B10001--
17	01010-81035	· BOLT	2	SN:B10001--
18	01643-31032	· WASHER	2	SN:B10001--
19	12Y-43-12561	· LEVER	1	SN:B10001--
20	06124-02020	· BEARING	1	SN:B10001--
21	154-54-22830	· WASHER	1	SN:B10001--
22	01590-30809	· NUT	1	SN:B10001--
23	04050-11612	· PIN	1	SN:B10001--
24	12Y-43-12570	· COVER	1	SN:B10001--
25	01010-81025	· BOLT	3	SN:B10001--
26	01643-31032	· WASHER	3	SN:B10001--
27	01010-81025	BOLT	6	SN:B10001--
28	01643-31032	WASHER	6	SN:B10001--

Ref. K0410-12A0 Page K-153

CMZ00193

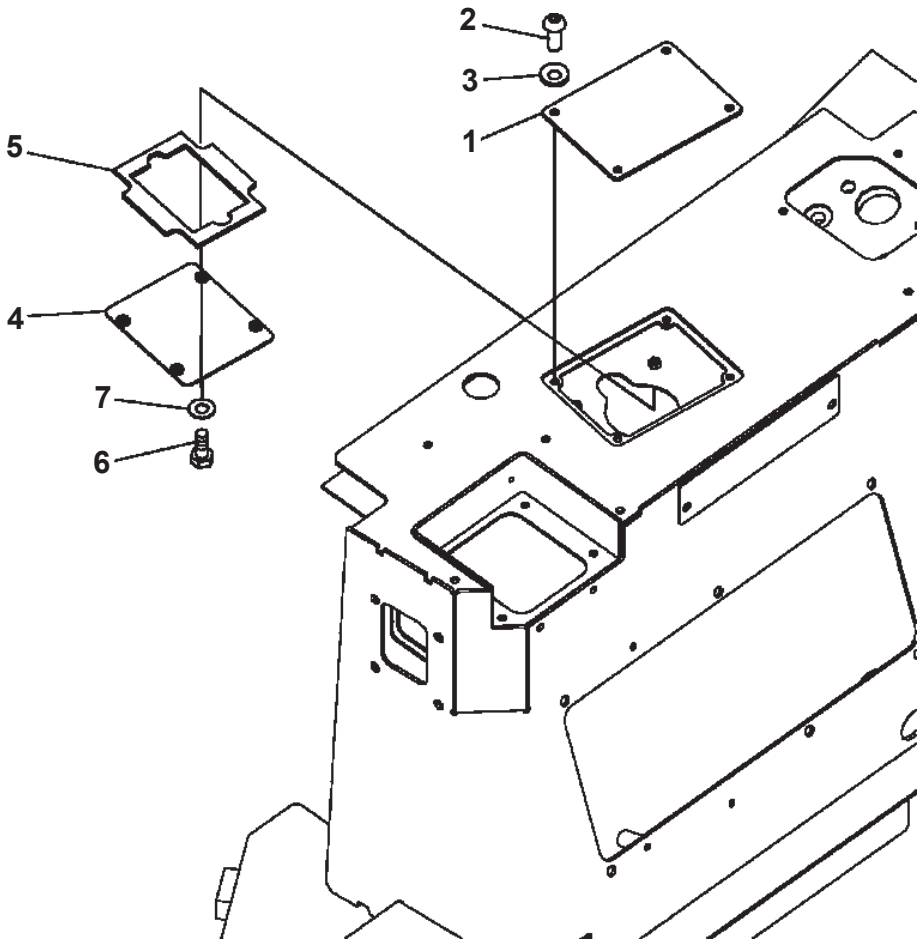

D51EX/PX-22 S/N B10001-UP

K0410-13A0 ROPS REAR ATTACHMENT COVER

Item	Part No.	Description	Qty	Options
1	12Y-78-11150	COVER	1	SN:B10001--
2	01245-00820	SCREW	4	SN:B10001--
3	01643-70823	WASHER	4	SN:B10001--
	12Y-78-11180	COVER	1	SN:B10001--
4	(NSS)	・PLATE	1	SN:B10001--
5	12Y-78-11130	・SHEET	1	SN:B10001--
6	01010-80825	BOLT	4	SN:B10001--
7	01643-30823	WASHER	4	SN:B10001--

Ref. K0410-13A0 Page K-155

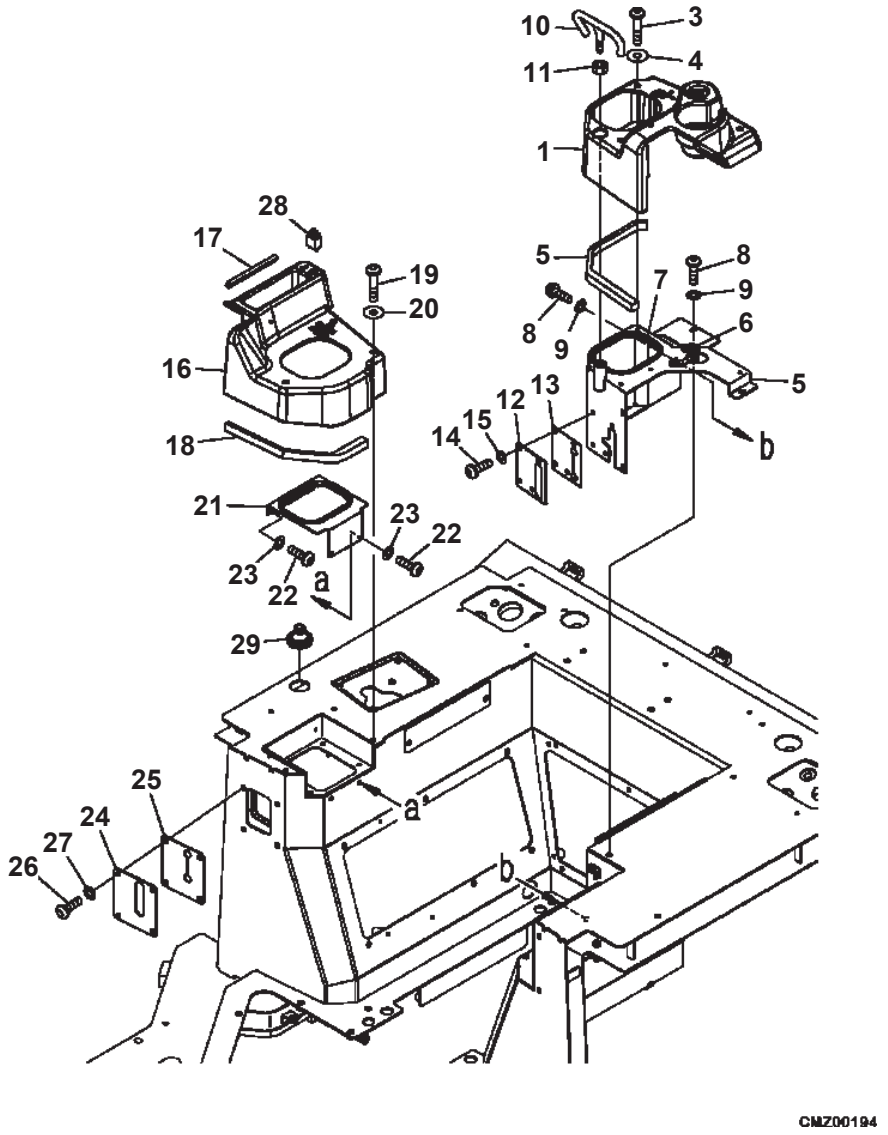

K0410-14A0 ROPS CONSOLE

Item	Part No.	Description	Qty	Options
1	12Y-43-12713	COVER	1	SN:B10001--
2	12Y-43-12841	SEAL	1	SN:B10001--
3	01245-00630	SCREW	4	SN:B10001--
4	17A-Z11-2813	PLATE	4	SN:B10001--
5	12Y-43-12754	BRACKET	1	SN:B10001--
6	17A-Z11-1S90	· BAR	1	SN:B10001--
7	14X-54-16490	· PLATE	1	SN:B10001--
8	01245-00825	SCREW	5	SN:B10001--
9	01643-70823	WASHER	5	SN:B10001--
10	12Y-43-12770	HANDLE	1	SN:B10001--
11	12Y-43-12790	NUT	1	SN:B10001--
12	12Y-43-12880	COVER	1	SN:B10001--
13	12Y-43-12732	· SHEET	1	SN:B10001--
14	01245-00825	SCREW	4	SN:B10001--
15	01643-70823	WASHER	4	SN:B10001--
16	12Y-43-12724	COVER	1	SN:B10001--
17	12Y-43-12830	SEAL	1	SN:B10001--
18	12Y-43-12852	SEAL	1	SN:B10001--
19	01245-00630	SCREW	4	SN:B10001--
20	17A-Z11-2813	PLATE	4	SN:B10001--
21	12Y-43-12762	BRACKET	1	SN:B10001--
22	01245-00620	SCREW	4	SN:B10001--
23	01643-70623	WASHER	4	SN:B10001--
24	12Y-43-12781	COVER	1	SN:B10001--
25	12Y-43-12741	· SHEET	1	SN:B10001--
26	01245-00825	SCREW	4	SN:B10001--
27	01643-70823	WASHER	4	SN:B10001--
28	134-06-72200	SWITCH ASSEMBLY	1	SN:B10001--
29	08037-12036	GROMMET	1	SN:B10001--

CMZ00195

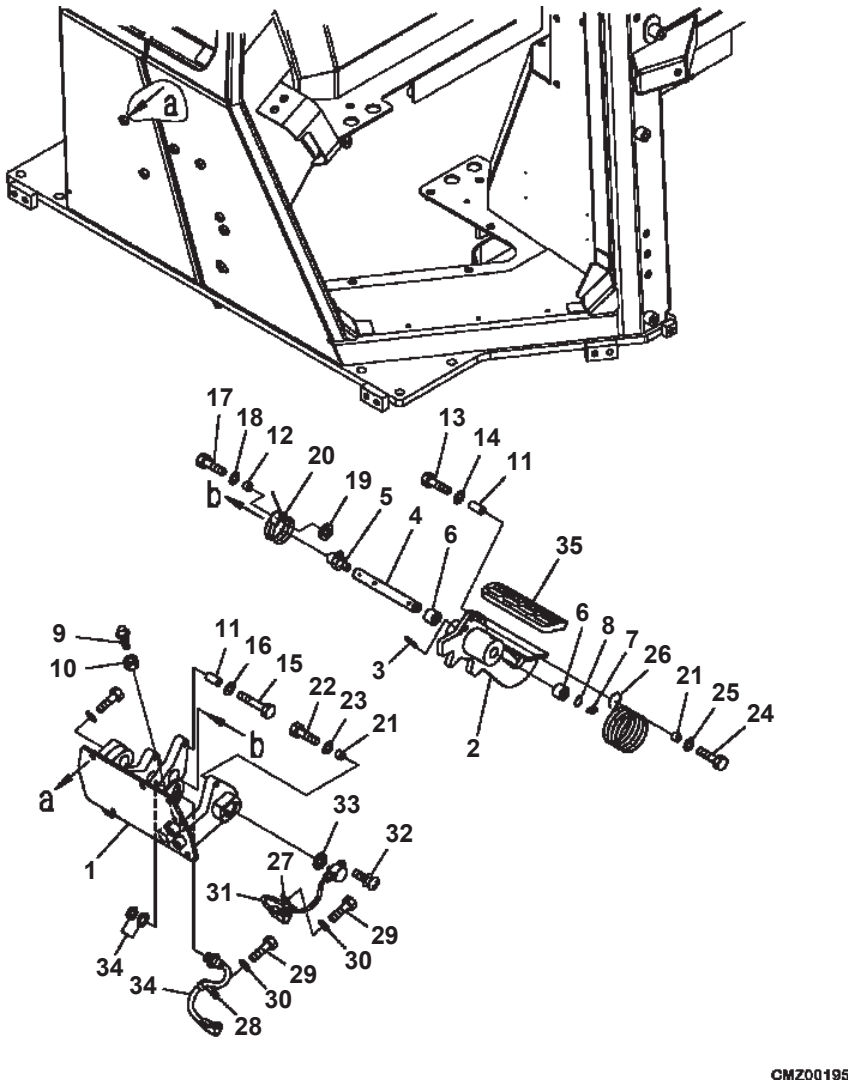

D51EX/PX-22 S/N B10001-UP

K0410-15A0 ROPS BRAKE PEDAL

Item	Part No.	Description	Qty	Options
	12Y-43-12303	PEDAL ASSEMBLY	1	SN:B10001--
1	12Y-43-12114	· BRACKET	1	SN:B10001--
2	12Y-43-12243	· PEDAL	1	SN:B10001--
3	14X-43-14520	· PIN	1	SN:B10001--
4	12Y-43-12143	· SHAFT	1	SN:B10001--
5	07020-00900	· FITTING	1	SN:B10001--
6	06124-02020	· BEARING	2	SN:B10001--
7	142-43-13180	· SPRING	1	SN:B10001--
8	04064-01610	· RING	1	SN:B10001--
9	09311-41237	· BUMPER	1	SN:B10001--
10	01580-11210	· NUT	1	SN:B10001--
11	12Y-43-12273	· SPACER	2	SN:B10001--
12	12Y-43-12172	· SPACER	1	SN:B10001--
13	01010-81050	· BOLT	1	SN:B10001--
14	01643-31032	· WASHER	1	SN:B10001--
15	01010-81050	· BOLT	1	SN:B10001--
16	203-54-56970	· WASHER	1	SN:B10001--
17	01010-81030	· BOLT	1	SN:B10001--
18	01643-31032	· WASHER	1	SN:B10001--
19	01640-21426	· WASHER	1	SN:B10001--
20	12Y-43-12290	· SPRING	1	SN:B10001--
21	12Y-43-12172	· SPACER	2	SN:B10001--
22	01010-81030	· BOLT	1	SN:B10001--
23	01643-31032	· WASHER	1	SN:B10001--
24	01010-81025	· BOLT	1	SN:B10001--
25	01643-31032	· WASHER	1	SN:B10001--
26	12Y-43-12130	· SPRING	1	SN:B10001--
27	04434-50610	· CLIP	1	SN:B10001--
28	04434-51010	· CLIP	1	SN:B10001--
29	01010-81020	· BOLT	2	SN:B10001--
30	01643-31032	· WASHER	2	SN:B10001--
31	12Y-06-11132	· SENSOR	1	SN:B10001--
32	01023-10416	· SCREW	2	SN:B10001--
33	12Y-43-12160	· PLATE	1	SN:B10001--
34	11Y-06-11870	· SWITCH	1	SN:B10001--
35	14X-43-12110	· PEDAL CAP	1	SN:B10001--

Ref. K0410-15A0 Page K-159

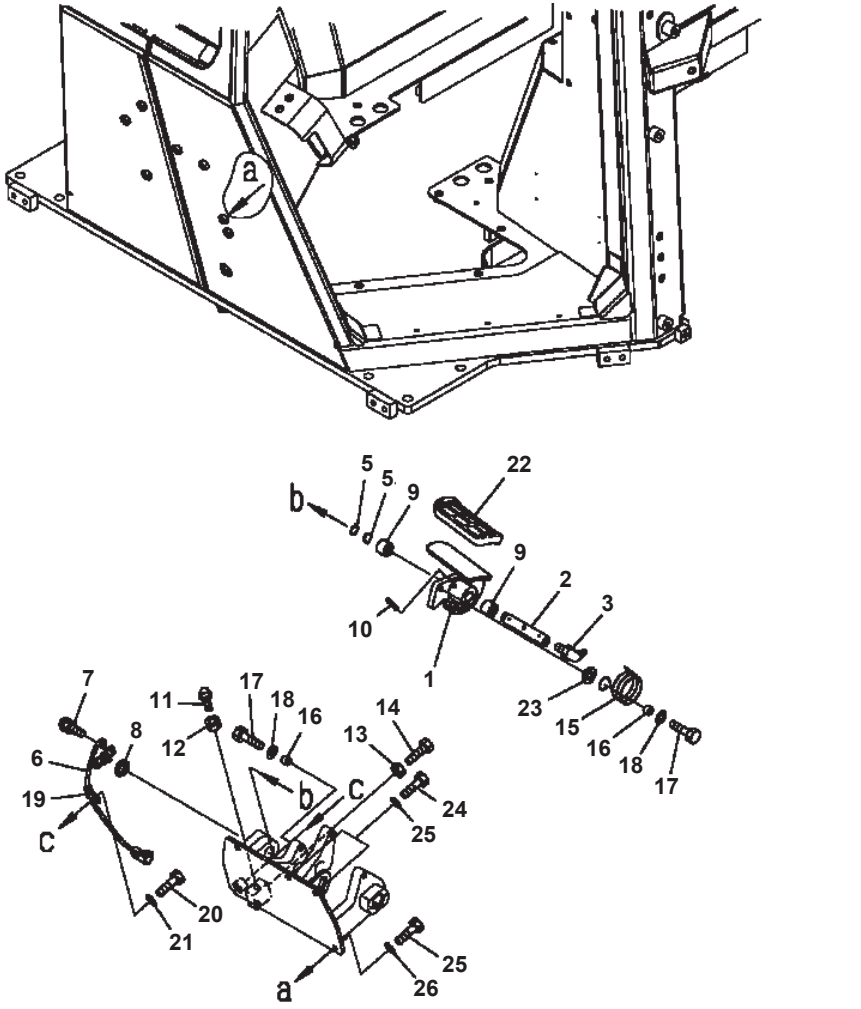

K0410-16A0 ROPS DECELERATOR PEDAL

Item	Part No.	Description	Qty	Options
	12Y-43-12303	PEDAL ASSEMBLY	1	SN:B10001--
1	12Y-43-12253	· PEDAL	1	SN:B10001--
2	12Y-43-12213	· SHAFT	1	SN:B10001--
3	07020-00900	· FITTING	1	SN:B10001--
4	142-43-13180	· SPRING	1	SN:B10001--
5	04064-01610	· RING	1	SN:B10001--
6	12Y-06-11132	· SENSOR	1	SN:B10001--
7	01023-10416	· SCREW	2	SN:B10001--
8	12Y-43-12160	· PLATE	1	SN:B10001--
9	06124-02020	· BEARING	2	SN:B10001--
10	14X-43-14520	· PIN	1	SN:B10001--
11	09311-41237	· BUMPER	1	SN:B10001--
12	01580-11210	· NUT	1	SN:B10001--
13	01580-11008	· NUT	1	SN:B10001--
14	01010-81030	· BOLT	1	SN:B10001--
15	12Y-43-12190	· SPRING	1	SN:B10001--
16	12Y-43-12172	· SPACER	2	SN:B10001--
17	01010-81030	· BOLT	2	SN:B10001--
18	01643-31032	· WASHER	2	SN:B10001--
19	04434-50610	· CLIP	1	SN:B10001--
20	01010-81020	· BOLT	1	SN:B10001--
21	01643-31032	· WASHER	1	SN:B10001--
22	14X-43-13760	· CAP	1	SN:B10001--
23	01640-21426	· WASHER	1	SN:B10001--
24	01010-81030	· BOLT	5	SN:B10001--
25	201-54-72910	· WASHER	2	SN:B10001--
26	01643-31032	· WASHER	3	SN:B10001--

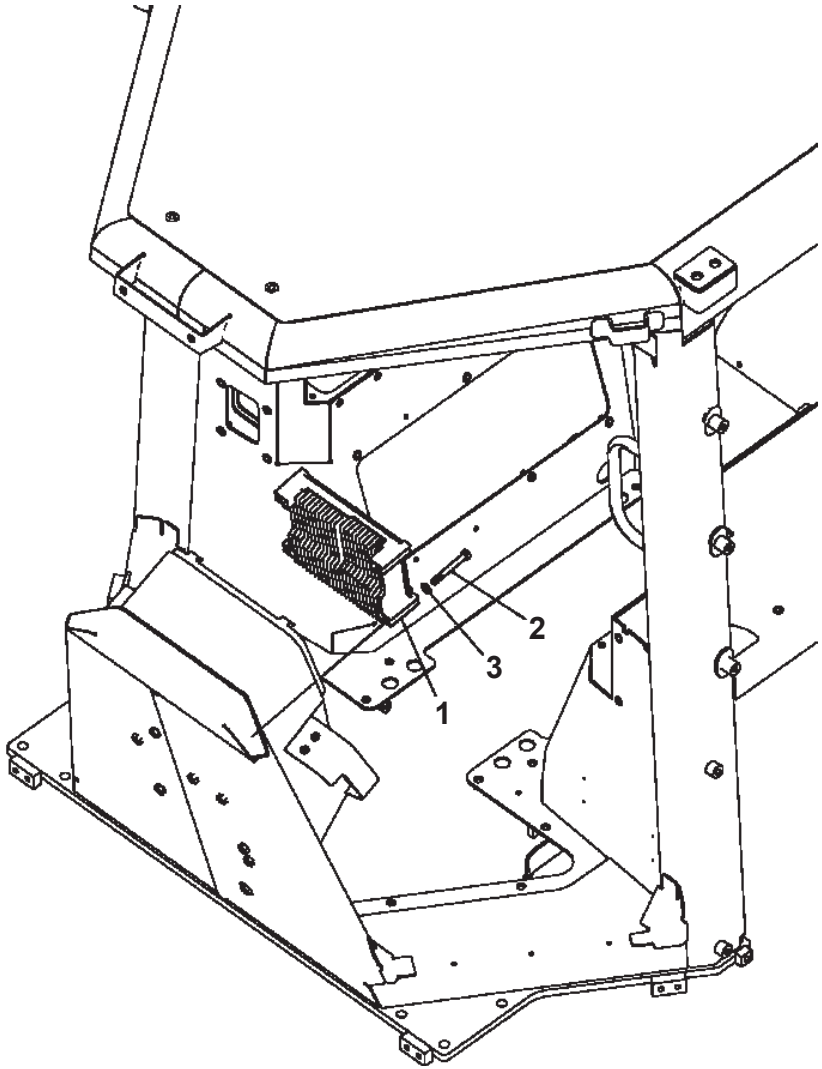

K0410-17A0 ROPS CONTROLLER

Item	Part No.	Description	Qty	Options
1	7830-84-1001	CONTROLLER	1	SN:B10810--
	□7830-84-1000	CONTROLLER	1	SN:B10001--B10809
2	01010-80885	BOLT	4	SN:B10001--
3	01643-30823	WASHER	4	SN:B10001--

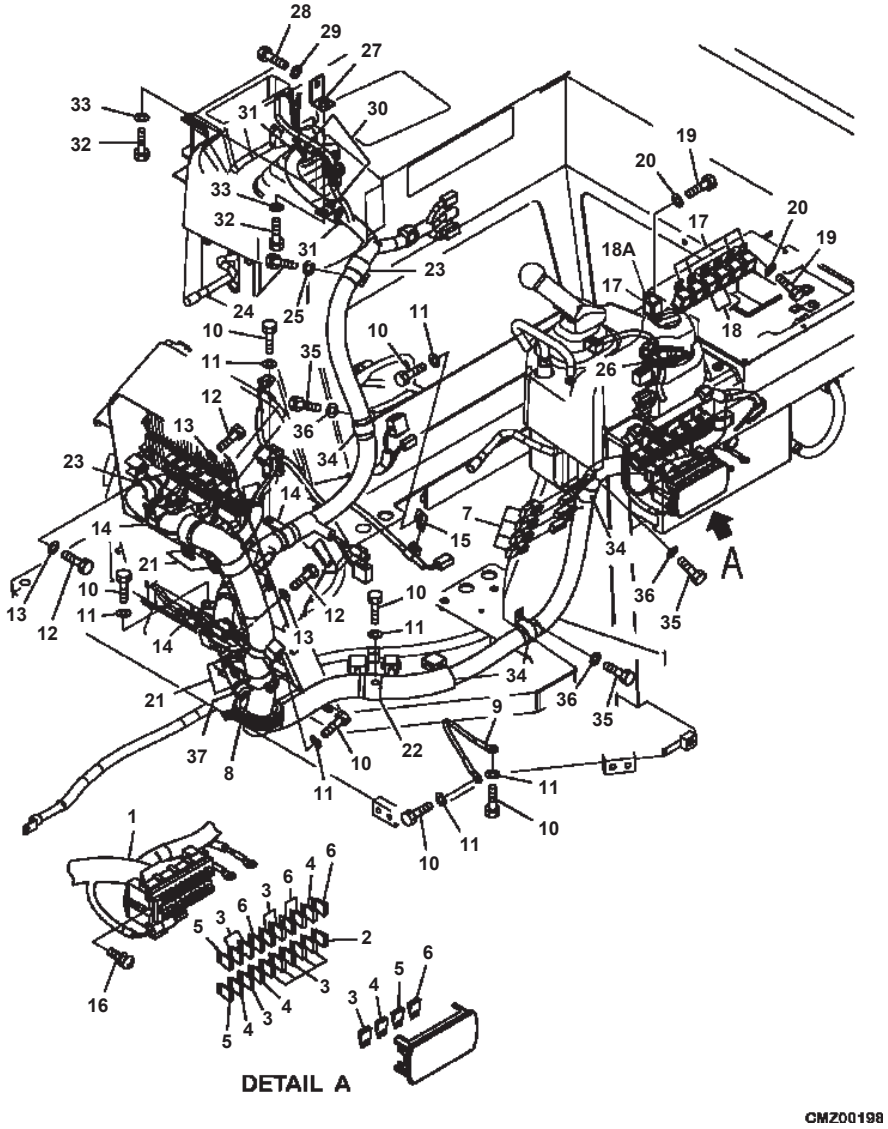

K0410-18A0 ROPS WIRING HARNESS - CONTROLS

Item	Part No.	Description	Qty	Options
1	11Y-06-31511	HARNESS, WIRING - CONTROLS	1	SN:B11449--
	□11Y-06-31510	HARNESS, WIRING - CONTROLS	1	SN:B11424--B11448
	□11Y-06-31111	HARNESS, WIRING - CONTROLS	1	SN:B10001--B11423
2	08041-00500	· FUSE, 5A	1	SN:B10001--
3	08041-01000	· FUSE, 10A	11	SN:B10001--
4	08041-01500	· FUSE, 15A	4	SN:B10001--
5	08041-02000	· FUSE, 20A	3	SN:B10001--
6	08041-03000	· FUSE, 30A	5	SN:B10001--
7	21J-06-13661	· DIODE	4	SN:B10001--
8	12Y-06-11140	GROMMET	1	SN:B10001--
9	14X-06-31171	CABLE	1	SN:B10001--
10	01010-81020	BOLT	8	SN:B10001--
11	01643-31032	WASHER	8	SN:B10001--
12	01010-81025	BOLT	4	SN:B10001--
13	01643-31032	WASHER	4	SN:B10001--
14	155-61-15350	CLIP	3	SN:B13872--
	□155-61-15350	CLIP	4	SN:B10001--B13871
15	04434-51010	CLIP	1	SN:B10001--
16	01023-10620	SCREW	2	SN:B10001--
17	569-06-61960	RELAY	5	SN:B10001--
18	569-06-61970	RELAY	2	SN:B10001--
18A	287-06-16420	BRACKET	7	SN:B10001--
19	01010-80612	BOLT	7	SN:B10001--
20	01643-30623	WASHER	7	SN:B10001--
21	419-09-11150	CLIP	4	SN:B10001--
22	23S-62-25850	CLIP	1	SN:B10001--
23	04434-53411	CLIP	2	SN:B10001--
24	01010-81020	BOLT	1	SN:B10001--
25	01643-31032	WASHER	1	SN:B10001--
26	12Y-43-12861	SEAL	1	SN:B10001--
27	22T-35-14870	PLATE	1	SN:B10001--
28	01010-81020	BOLT	1	SN:B10001--
29	01643-31032	WASHER	1	SN:B10001--
30	04434-53212	CLIP	2	SN:B10001--
31	07095-20523	CUSHION	2	SN:B10001--
32	01010-81020	BOLT	2	SN:B10001--
33	01643-31032	WASHER	2	SN:B10001--
34	04434-53411	CLIP	3	SN:B10001--
35	01010-81020	BOLT	3	SN:B10001--
36	01643-31032	WASHER	3	SN:B10001--
37	23S-62-25850	CLIP	1	SN:B13872--

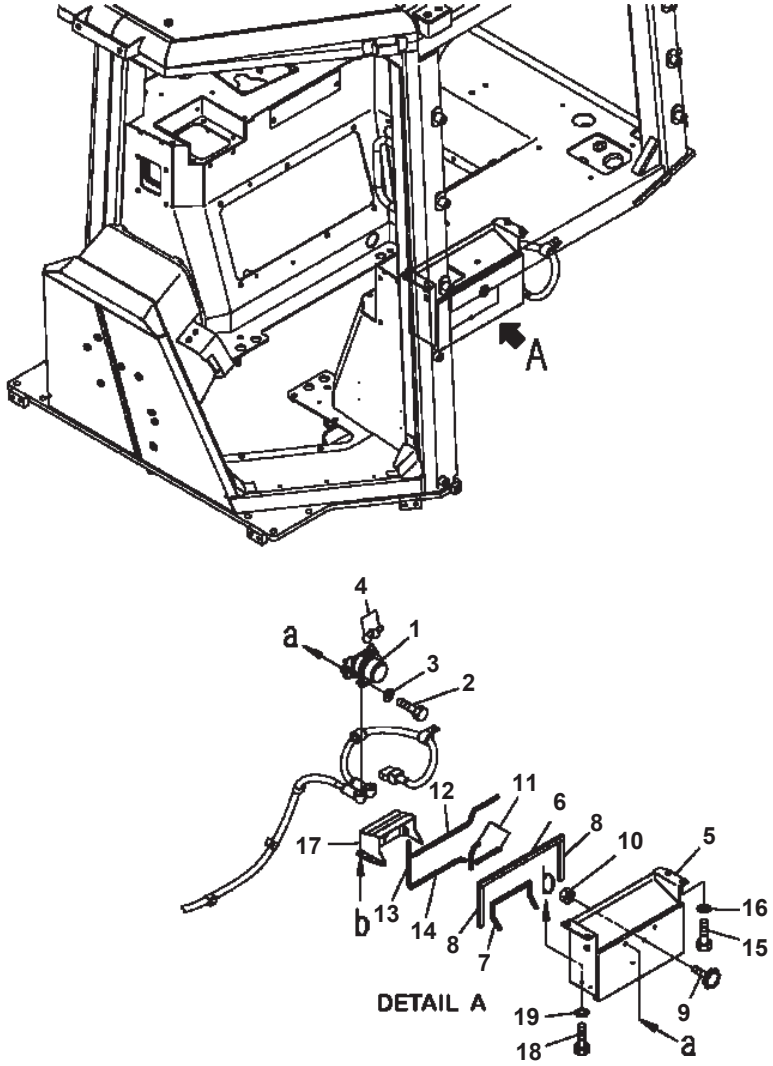

K0410-19A0 ROPS BATTERY RELAY AND RELAY BOX

Item	Part No.	Description	Qty	Options
1	08088-30000	RELAY, BATTERY	1	SN:B10001--
2	01010-80830	BOLT	2	SN:B10001--
3	01643-30823	WASHER	2	SN:B10001--
4	08038-00519	CAP	2	SN:B10001--
	12Y-06-13312	BRACKET ASSEMBLY	1	SN:B10001--
5	11Y-06-31212	· BRACKET	1	SN:B10001--
6	12Y-06-13280	· SEAL	1	SN:B10001--
7	12Y-06-13560	· SEAL	1	SN:B10001--
8	12Y-06-13291	· SEAL	2	SN:B10001--
9	134-X78-7450	· KNOB	1	SN:B10001--
10	01598-00809	· NUT	1	SN:B10060--
	◆01596-00807	· NUT	1	SN:B10001--B11059
11	12Y-06-13380	· SEAL	2	SN:B10001--
12	12Y-06-13261	· SEAL	1	SN:B10001--
13	12Y-43-12861	· SEAL	1	SN:B10001--
14	12Y-978-2192	· SEAL	1	SN:B10001--
15	01010-81020	BOLT	4	SN:B10001--
16	01643-31032	WASHER	4	SN:B10001--
17	12Y-06-13530	BRACKET	1	SN:B10001--
18	01010-80616	BOLT	3	SN:B10001--
19	01643-30623	WASHER	3	SN:B10001--

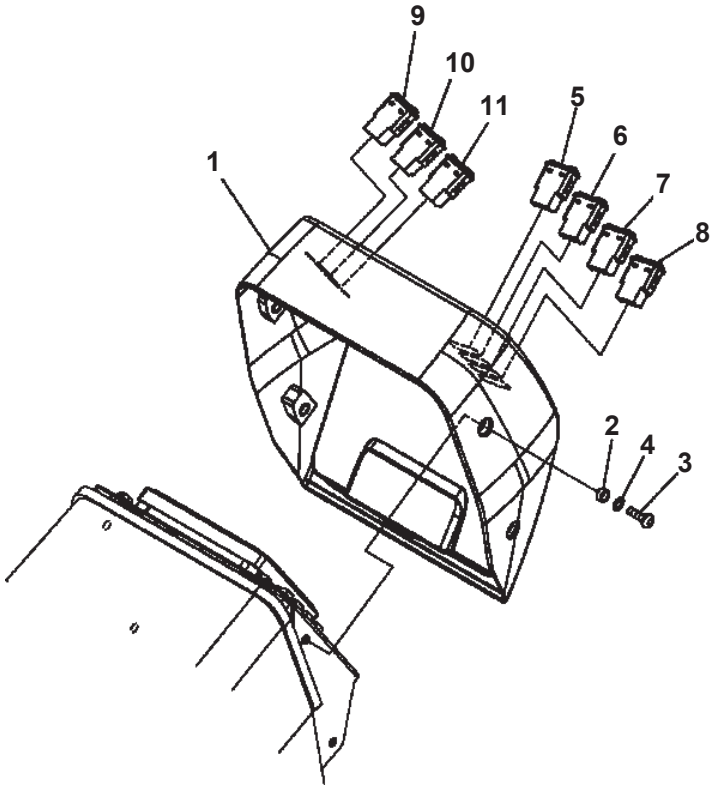

K0410-20A0 ROPS DASHBOARD, PANEL AND SWITCHES

Item	Part No.	Description	Qty	Wt.	Options
1	12Y-978-2692	COVER	1		SN:B10001--
2	14X-54-18230	COLLAR	4		SN:B10001--
3	01245-00820	SCREW	4		SN:B10001--
4	01643-70823	WASHER	4		SN:B10001--
5	12Y-06-11711	SWITCH, WORK LAMP	1		SN:B10001--
6	12Y-06-11722	SWITCH, FAN REVERSE	1		SN:B10001--
7	12Y-06-11731	SWITCH, BUZZER CANCEL	1		SN:B10001--
8	12Y-06-11741	SWITCH, CURSOR	1		SN:B10001--
9	12Y-06-11751	SWITCH, REVERSE SPEED ADJUST	1		SN:B10001--
10	12Y-06-11761	SWITCH, SHIFT MODE	1		SN:B10001--
11	12Y-06-11771	SWITCH, HEATER	1		SN:B10001--
		OR			
11	20Y-06-42190	SWITCH, HEATER	1	F1	SN:B10001--
		F1 - FOR OPEN ROPS WITHOUT SUB HEATER			

CMZ00201

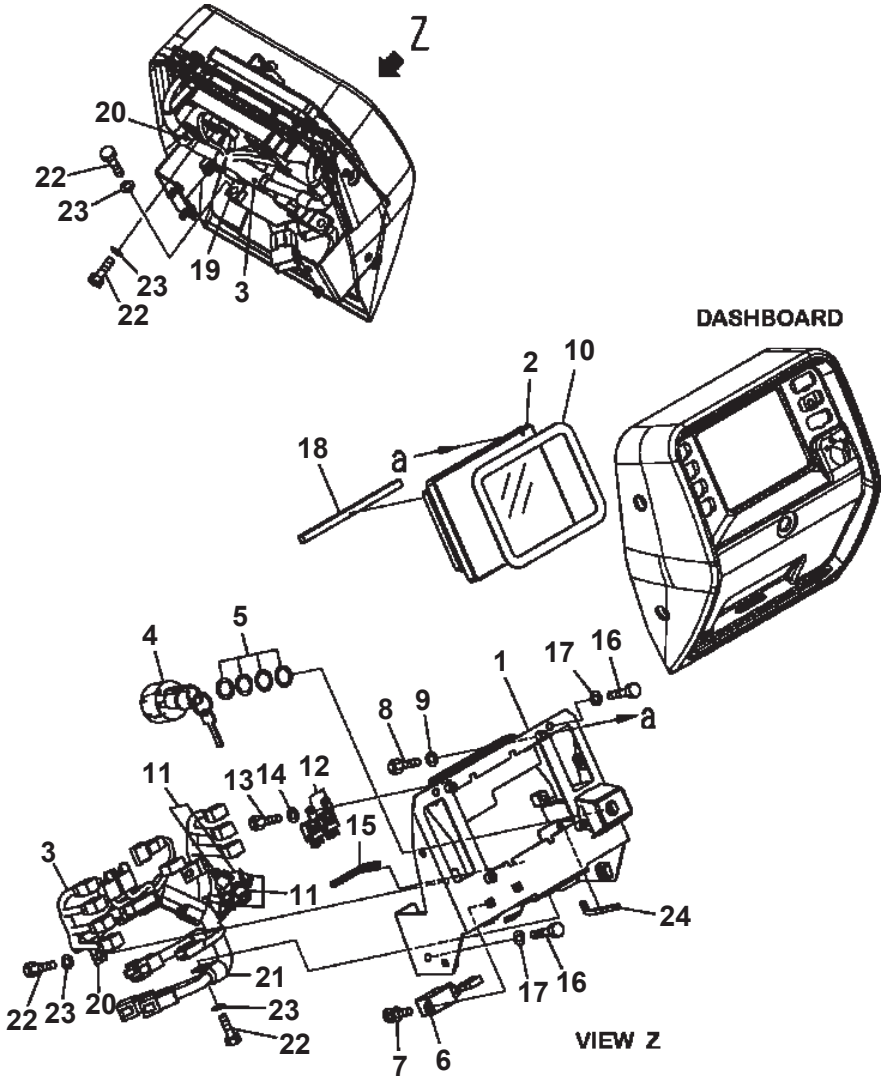

D51EX/PX-22 S/N B10001-UP

K0410-21A0 ROPS DASHBOARD WIRING

Item	Part No.	Description	Qty	Options
1	12Y-978-2714	BRACKET	1	SN:B10001--
2	7831-69-2000	MONITOR	1	SN:B10001--
3	11Y-06-31520	HARNESS, DASHBOARD WIRING	1	SN:B11424--
	□11Y-06-31123	HARNESS, DASHBOARD WIRING	1	SN:B10001--B11423
4	08086-20000	SWITCH	1	SN:B10001--
5	20Y-43-41750	WASHER	4	SN:B10001--
6	20Y-957-3170	BUZZER	1	SN:B10001--
7	01023-10416	SCREW	2	SN:B10001--
8	01010-80625	BOLT	4	SN:B10001--
9	01643-30623	WASHER	4	SN:B10001--
10	12Y-978-2780	PACKING	1	SN:B10001--
11	08038-00518	CAP	5	SN:B10001--
12	7861-74-5100	RELAY	2	SN:B10001--
13	01010-80616	BOLT	2	SN:B10001--
14	01643-70623	WASHER	2	SN:B10001--
15	12Y-978-2172	SEAL	1	SN:B10001--
16	01010-80816	BOLT	6	SN:B10001--
17	01643-30823	WASHER	6	SN:B10001--
18	12Y-978-2720	SEAL	1	SN:B10001--
19	04434-51408	CLIP	1	SN:B10001--
20	04434-51708	CLIP	2	SN:B10001--
21	04434-51908	CLIP	1	SN:B10001--
22	01010-80816	BOLT	4	SN:B10001--
23	01643-30823	WASHER	4	SN:B10001--
24	12Y-979-1860	SEAL	1	SN:B10001--

Ref. K0410-21A0 Page K-171

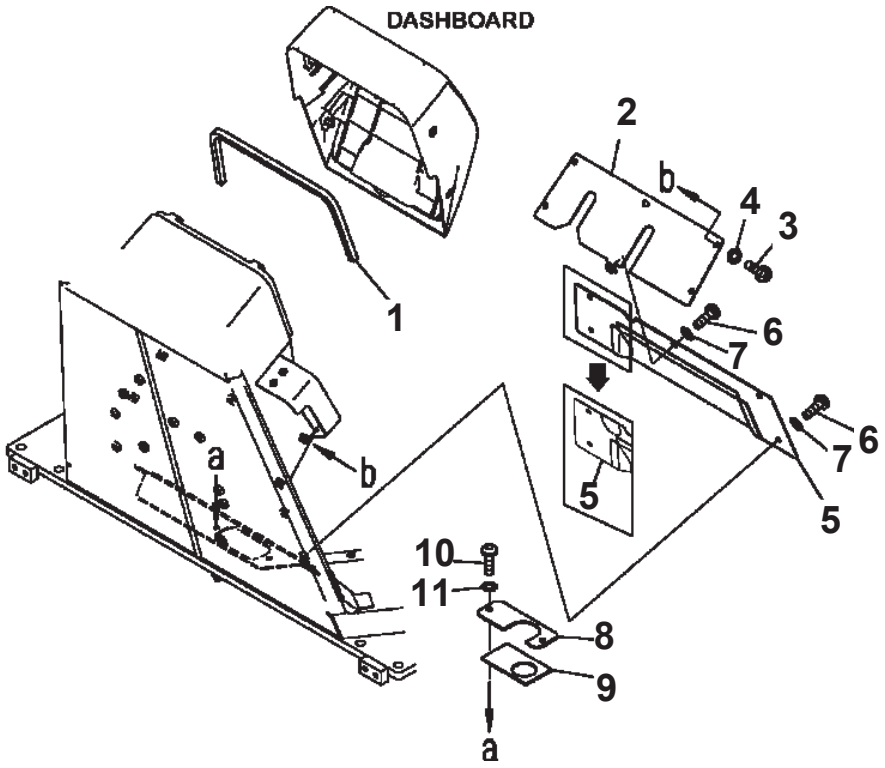

K0410-22A0 ROPS DASHBOARD, PANEL MOUNT, AND COVER

Item	Part No.	Description	Qty	Options
1	12Y-978-2732	SEAL	1	SN:B10001--
2	12Y-978-2742	COVER	1	SN:B10001--
3	01245-00825	SCREW	5	SN:B10001--
4	01643-70823	WASHER	5	SN:B10001--
5	12Y-978-2753	COVER	1	SN:B10552--
	□12Y-978-2752	COVER	1	SN:B10001--B10551
6	01245-00825	SCREW	5	SN:B10001--
7	01643-70823	WASHER	5	SN:B10001--
8	12Y-978-2253	COVER	1	SN:B10001--
9	12Y-978-2263	· SHEET	1	SN:B10001--
10	01245-00825	SCREW	2	SN:B10001--
11	01643-70823	WASHER	2	SN:B10001--

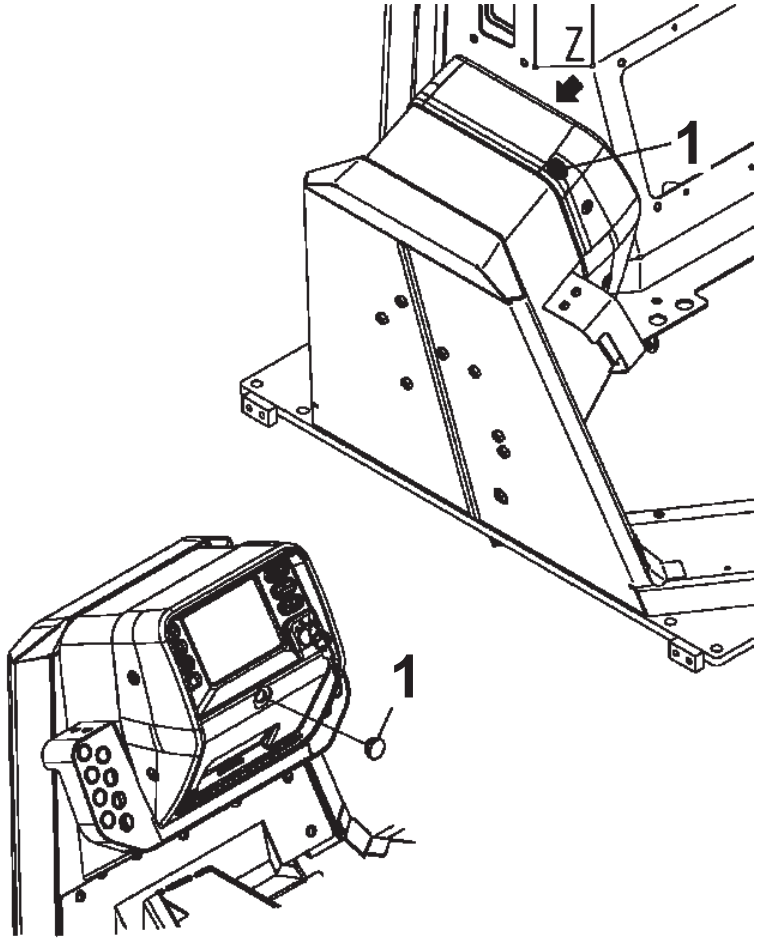

VIEW Z

K0410-23A0 ROPS DASHBOARD, LESS VANDALISM

Item	Part No.	Description	Qty	Options
1	134-54-78370	CAP	1	SN:B10001--

CMZ00204

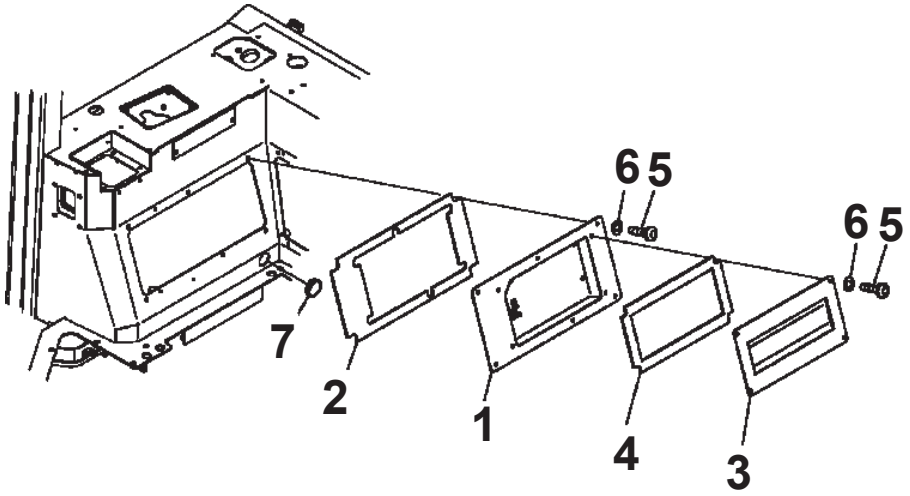

CMZ00204

D51EX/PX-22 S/N B10001-UP

K0410-24A0 ROPS FLOOR COVER, FRAME SIDE COVER

Item	Part No.	Description	Qty	Options
1	12Y-978-2952	COVER	1	SN:B10001--
2	12Y-978-2961	· SHEET	1	SN:B10001--
3	12Y-978-2972	COVER	1	SN:B10001--
4	12Y-978-2981	· SHEET	1	SN:B10001--
5	01245-00825	SCREW	10	SN:B10001--
6	01643-70823	WASHER	10	SN:B10001--
7	09415-03614	CAP	1	SN:B10001--

Ref. K0410-24A0 Page K-177

CMZ00205

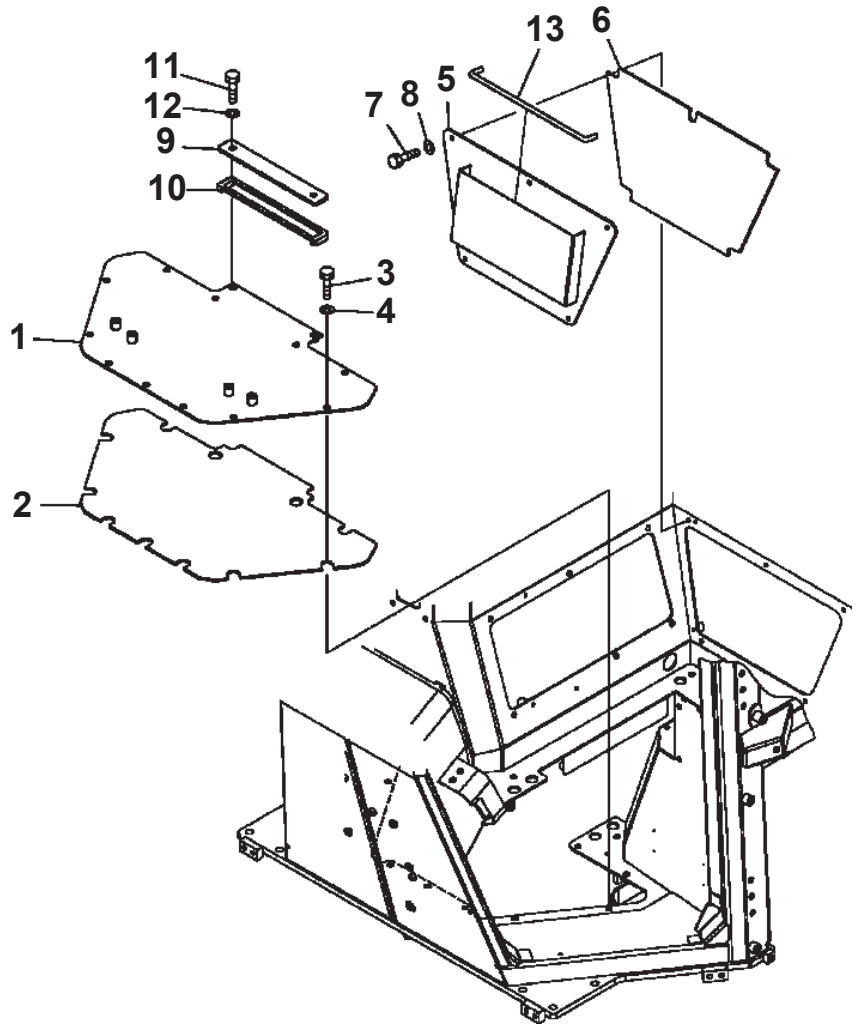

D51EX/PX-22 S/N B10001-UP

K0410-25A0 ROPS FLOOR COVER (#B10001-B10551)

Item	Part No.	Description	Qty	Options
1	12Y-978-2911	COVER	1	SN:B10001--B10551
2	12Y-978-2920	· SHEET	1	SN:B10001--@
3	01010-81230	BOLT	11	SN:B10001--@
4	01643-31232	WASHER	11	SN:B10001--@
5	12Y-978-2932	COVER	1	SN:B10001--B10551
6	12Y-978-2940	· SHEET	1	SN:B10001--@
7	01010-D0825	BOLT	5	SN:B10001--@
8	01643-70823	WASHER	5	SN:B10001--@
9	17A-54-25560	COVER	1	SN:B10001--@
10	17A-54-25570	· SHEET	1	SN:B10001--@
11	01010-81230	BOLT	2	SN:B10001--@
12	01643-31232	WASHER	2	SN:B10001--@
13	12Y-978-2990	TRIM	1	SN:B10001--@

Ref. K0410-25A0 Page K-179

CMZ00205A

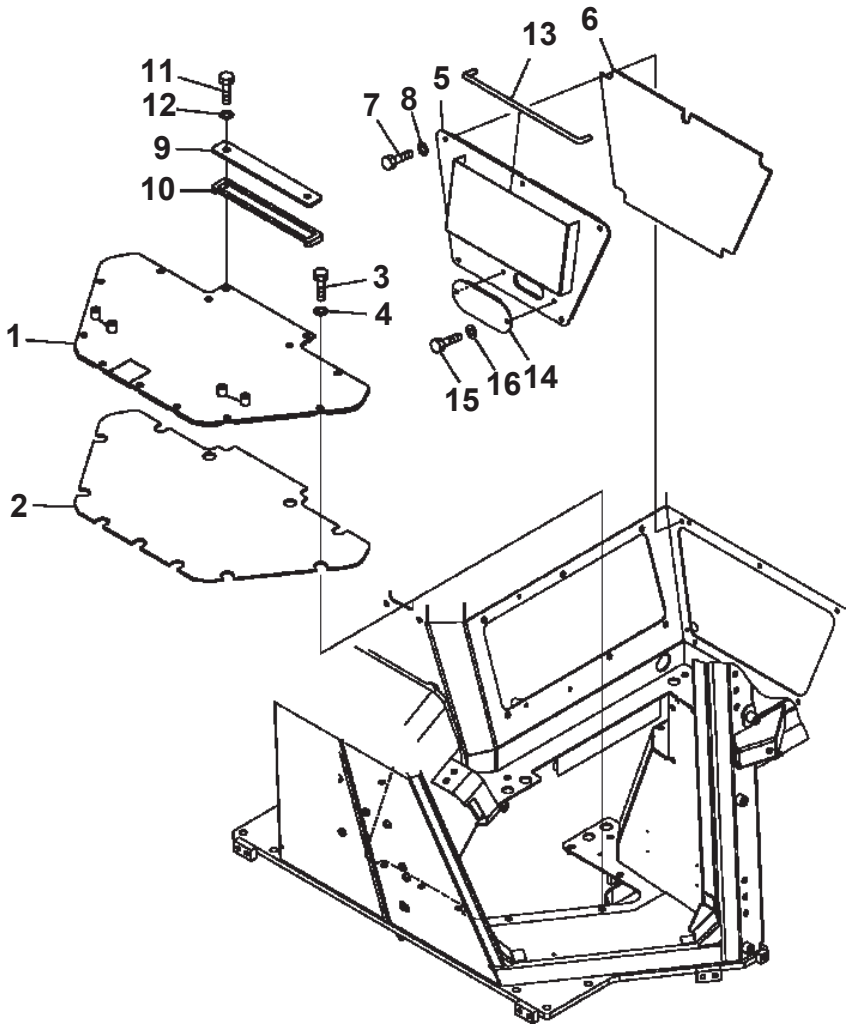

D51EX/PX-22 S/N B10001-UP

K0410-25A0A ROPS FLOOR COVER (#B10552-)

Item	Part No.	Description	Qty	Options
1	12Y-978-2912	COVER	1	SN:B10552--
2	12Y-978-2920	· SHEET	1	SN:B10001--
3	01010-81230	BOLT	11	SN:B10001--
4	01643-31232	WASHER	11	SN:B10001--
5	12Y-978-2933	COVER	1	SN:B10552--
6	12Y-978-2940	· SHEET	1	SN:B10001--
7	01010-D0825	BOLT	5	SN:B10001--
8	01643-70823	WASHER	5	SN:B10001--
9	17A-54-25560	COVER	1	SN:B10001--
10	17A-54-25570	· SHEET	1	SN:B10001--
11	01010-81230	BOLT	2	SN:B10001--
12	01643-31232	WASHER	2	SN:B10001--
13	12Y-978-2990	TRIM	1	SN:B10001--
14	12Y-978-1980	COVER	1	SN:B10552--
15	01010-D0825	BOLT	2	SN:B10552--
16	01643-70823	WASHER	2	SN:B10552--

Ref. K0410-25A0A Page K-179A

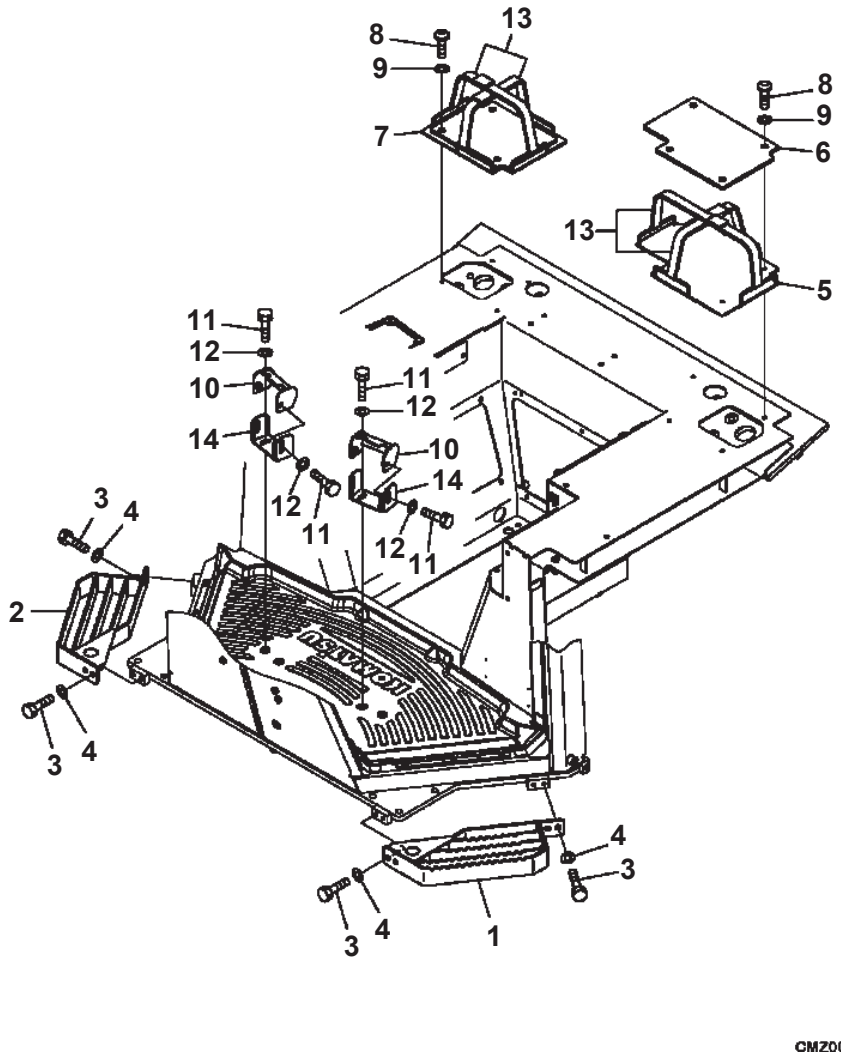

K0410-26A0 ROPS FLOOR COVER, CAB ADD ON PART (#B10001-B10551)

Item	Part No.	Description	Qty	Options
1	12Y-978-1912	BRACKET	1	SN:B10001--@
2	12Y-978-1922	BRACKET	1	SN:B10001--@
3	01010-81225	BOLT	8	SN:B10001--@
4	01643-31232	WASHER	8	SN:B10001--@
5	12Y-978-2350	BRACKET	1	SN:B10001--B10551
6	12Y-978-2370	· SHEET	1	SN:B10001--@
7	12Y-978-2360	BRACKET	1	SN:B10001--@
8	01245-00620	SCREW	8	SN:B10001--@
9	01643-70623	WASHER	8	SN:B10001--@
10	12Y-43-12221	PLATE	2	SN:B10001--@
11	01010-D1020	BOLT	8	SN:B10001--@
12	01643-71032	WASHER	8	SN:B10001--@
13	423-54-42790	BAND	4	SN:B10001--@
14	12Y-43-12280	PLATE	2	SN:B10001--@

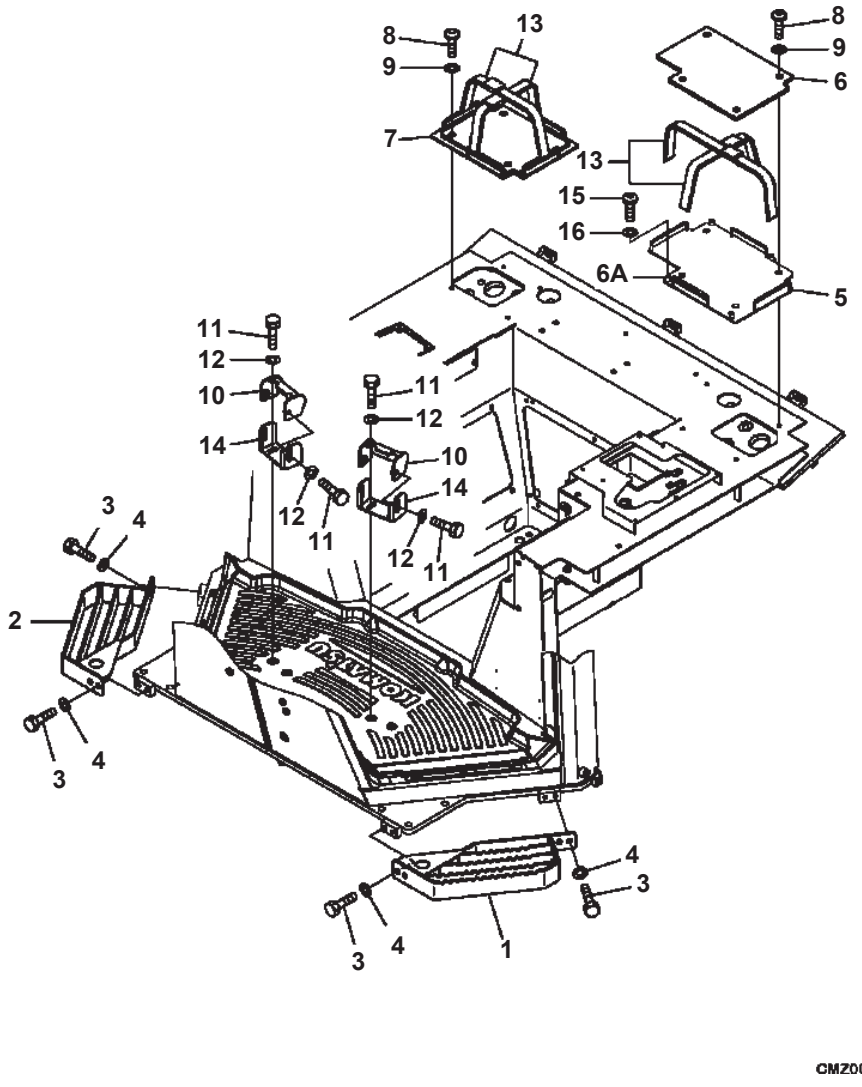

K0410-26A0A ROPS FLOOR COVER, CAB ADD ON PART (#B10552-)

Item	Part No.	Description	Qty	Options
1	12Y-978-1912	BRACKET	1	SN:B10001--
2	12Y-978-1922	BRACKET	1	SN:B10001--
3	01010-D1225	BOLT	8	SN:B11449--
	□01010-81225	BOLT	8	SN:B10001--B11448
4	01643-71232	WASHER	8	SN:B11449--
	□01643-31232	WASHER	8	SN:B10001--B11448
5	12Y-978-2351	BRACKET	1	SN:B10552--
6	12Y-978-2370	· SHEET	1	SN:B10001--
6A	12Y-978-2390	· SEAT {WELDED}	4	SN:B10552--
7	12Y-978-2360	BRACKET	1	SN:B10001--
8	01245-00620	SCREW	8	SN:B10001--
9	01643-70623	WASHER	8	SN:B10001--
10	12Y-43-12221	PLATE	2	SN:B10001--
11	01010-D1020	BOLT	8	SN:B10001--
12	01643-71032	WASHER	8	SN:B10001--
13	423-54-42790	BAND	4	SN:B10001--
14	12Y-43-12280	PLATE	2	SN:B10001--
15	01245-00620	BOLT	4	SN:B10552--
16	01643-70623	WASHER	4	SN:B10552--

CMZ00207

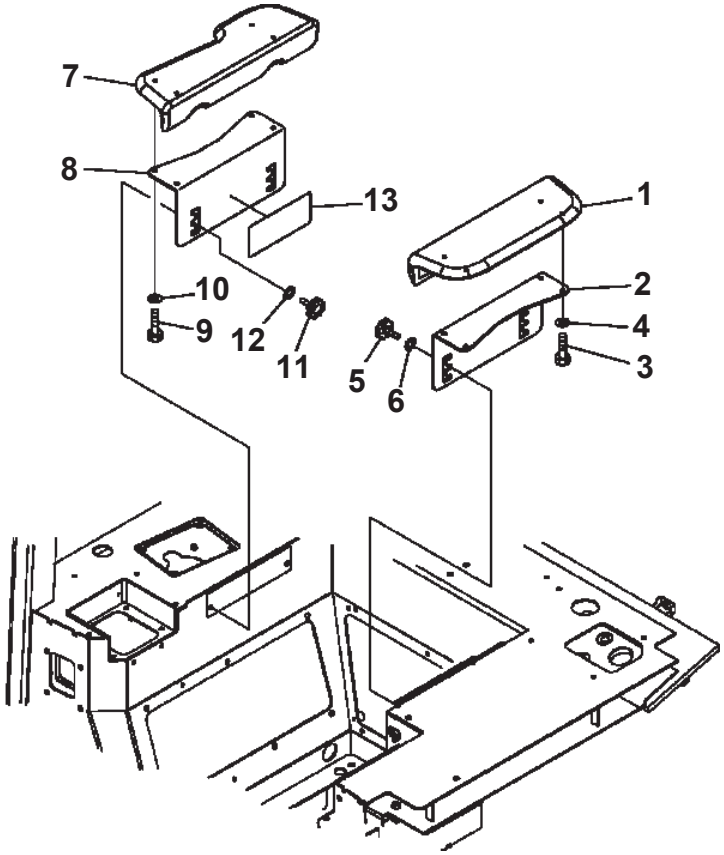

D51EX/PX-22 S/N B10001-UP

K0410-27A0 ROPS ARM REST

Item	Part No.	Description	Qty	Options
1	12Y-978-2822	ARM REST	1	SN:B10001--
2	12Y-978-2831	PLATE	1	SN:B10001--
3	01010-80820	BOLT	4	SN:B10001--
4	01643-30823	WASHER	4	SN:B10001--
5	195-54-68760	KNOB	2	SN:B10001--
6	01643-71032	WASHER	2	SN:B10001--
7	12Y-978-1962	ARM REST	1	SN:B10001--
8	12Y-978-2831	PLATE	1	SN:B10001--
9	01010-80820	BOLT	4	SN:B10001--
10	01643-30823	WASHER	4	SN:B10001--
11	195-54-68760	KNOB	2	SN:B10001--
12	01643-71032	WASHER	2	SN:B10001--
13	12Y-978-2840	PLATE	1	SN:B10001--

Ref. K0410-27A0 Page K-183

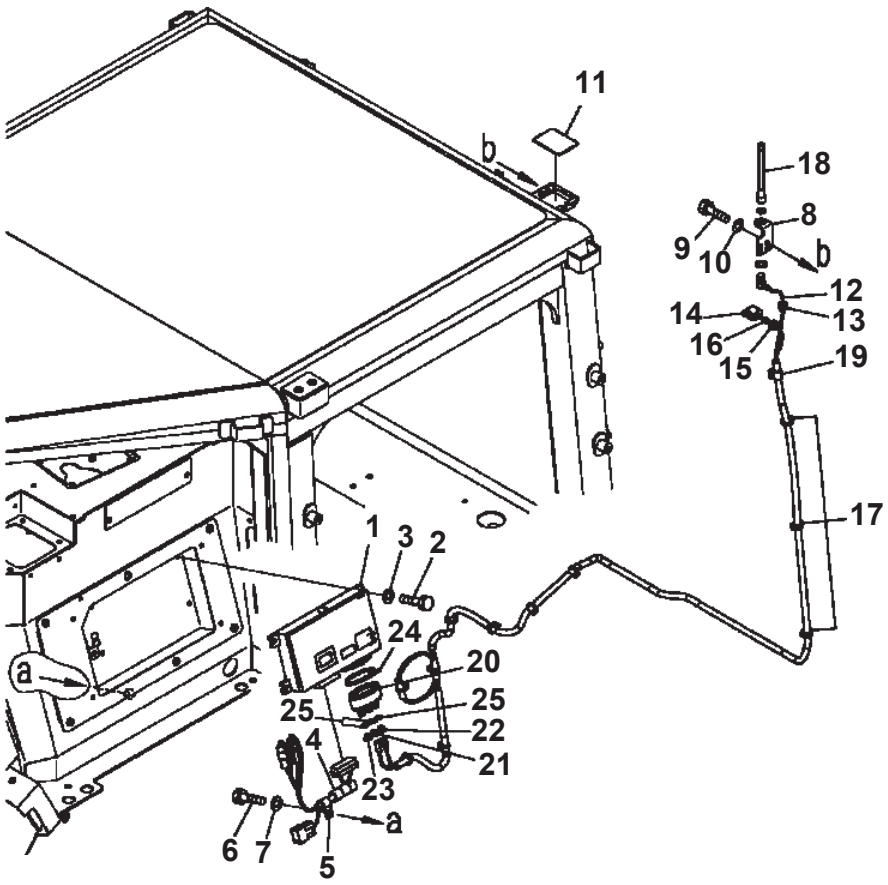

K0410-28A2 ROPS KOMTRAX

Item	Part No.	Description	Qty	Options
1	7826-20-7038	CONTROLLER, KOMTRAX	1	SN:B12992--
	□7826-20-7037	CONTROLLER, KOMTRAX	1	SN:B11711--B12991
	□7826-20-7036	CONTROLLER, KOMTRAX	1	SN:B11916--B11710
	□7826-20-7035	CONTROLLER, KOMTRAX	1	SN:B11325--B11915
	□7826-20-7034	CONTROLLER, KOMTRAX	1	SN:B10789--B11324
	□7826-20-7033	CONTROLLER, KOMTRAX	1	SN:B10364--B10788
	□7826-20-7032	CONTROLLER, KOMTRAX	1	SN:B10001--B10363
2	01010-80825	BOLT	4	SN:B10001--
3	01643-30823	WASHER	4	SN:B10001--
4	11Y-06-33130	HARNESS, WIRING - KOMTRAX	1	SN:B11424--
	□12Y-06-13131	HARNESS, WIRING - KOMTRAX	1	SN:B10001--B11423
5	04434-51410	CLIP	1	SN:B10001--
6	01010-81020	BOLT	1	SN:B10001--
7	01643-31032	WASHER	1	SN:B10001--
8	12Y-06-13161	PLATE	1	SN:B10001--
9	01010-D0820	BOLT	2	SN:B10001--
10	01643-70823	WASHER	2	SN:B10001--
11	12Y-06-13170	COVER	1	SN:B10001--
	12Y-06-13113	CABLE	1	SN:B11916--
	□12Y-06-13112	CABLE	1	SN:B11470--B11915
	□12Y-06-13111	CABLE	1	SN:B10001--B11469
12	8A13-10-2200	· CABLE	1	SN:B10001--
13	08037-10610	· · GROMMET	1	SN:B10001--
14	8A13-10-1310	· ANTENNA	1	SN:B10001--
15	08037-10610	· · GROMMET	1	SN:B10001--
16	08055-00060	· · GROMMET	1	SN:B10001--
17	08034-20519	BAND	6	SN:B10001--
18	8A13-10-2100	ANTENNA	1	SN:B10001--
19	08211-01020	CLIP	1	SN:B10001--
20	8A13-80-1110	COVER	1	SN:B10001--
21	8A13-80-1120	CAP	1	SN:B10001--
22	8A13-80-1130	CAP	1	SN:B10001--
23	8A13-80-1140	CAP	1	SN:B10001--
24	08034-00536	BAND	1	SN:B10001--
25	08034-00414	BAND	3	SN:B10001--

CMZ00209

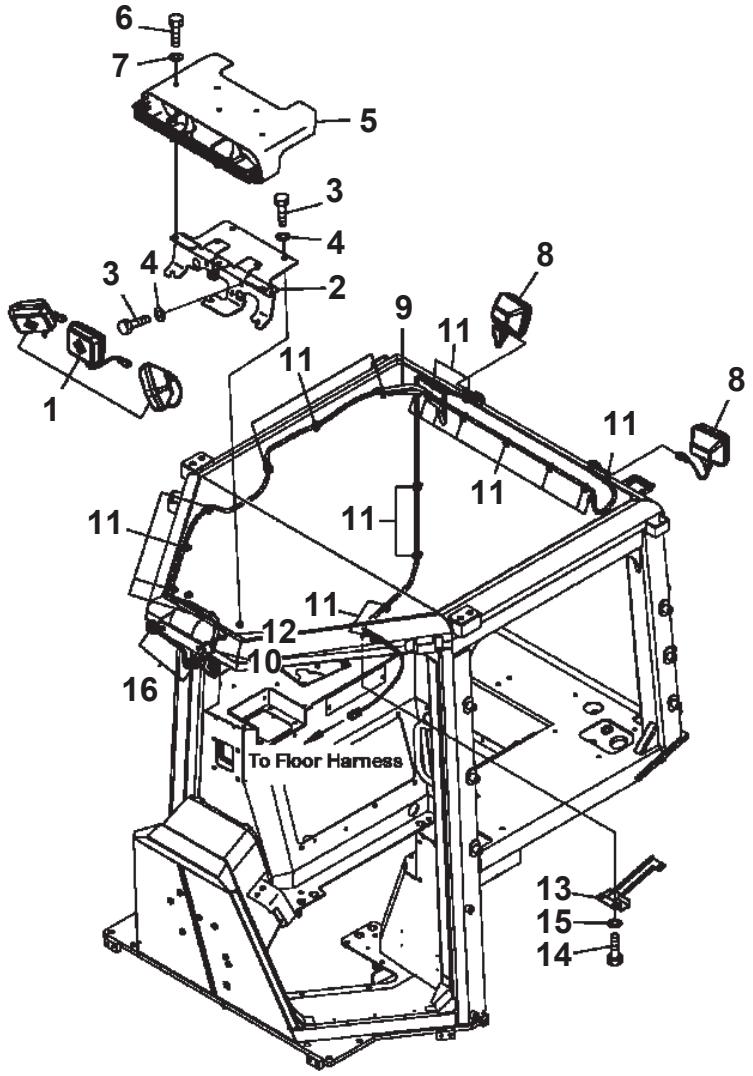

D51EX/PX-22 S/N B10001-UP

K0410-29A0 ROPS WORK LAMPS

Item	Part No.	Description	Qty	Options
1	11Y-06-11372	LAMP	3	SN:B10001--
	421-06-23330	· BULB, 70 W	1	SN:B10001--
2	12Y-06-12122	BRACKET	1	SN:B10001--
3	01010-81225	BOLT	4	SN:B10001--
4	01643-31232	WASHER	4	SN:B10001--
5	12Y-06-12133	COVER	1	SN:B10001--
6	01010-81025	BOLT	5	SN:B10001--
7	01643-31032	WASHER	5	SN:B10001--
8	11Y-06-11372	LAMP	2	SN:B10001--
	421-06-23330	· BULB, 70	1	SN:B10001--
9	12Y-06-12112	HARNESS, WIRING - WORK LAMPS	1	SN:B10001--
10	08037-11425	· GROMMET	1	SN:B10001--
11	08034-20519	BAND	33	SN:B10001--
12	12Y-06-13151	SEAL	1	SN:B10001--
13	12Y-06-12191	COVER	1	SN:B10001--
14	01010-81016	BOLT	3	SN:B10001--
15	01643-31032	WASHER	3	SN:B10001--
16	08037-02512	GROMMET	2	SN:B10001--

Ref. K0410-29A0 Page K-187

CMZ00162

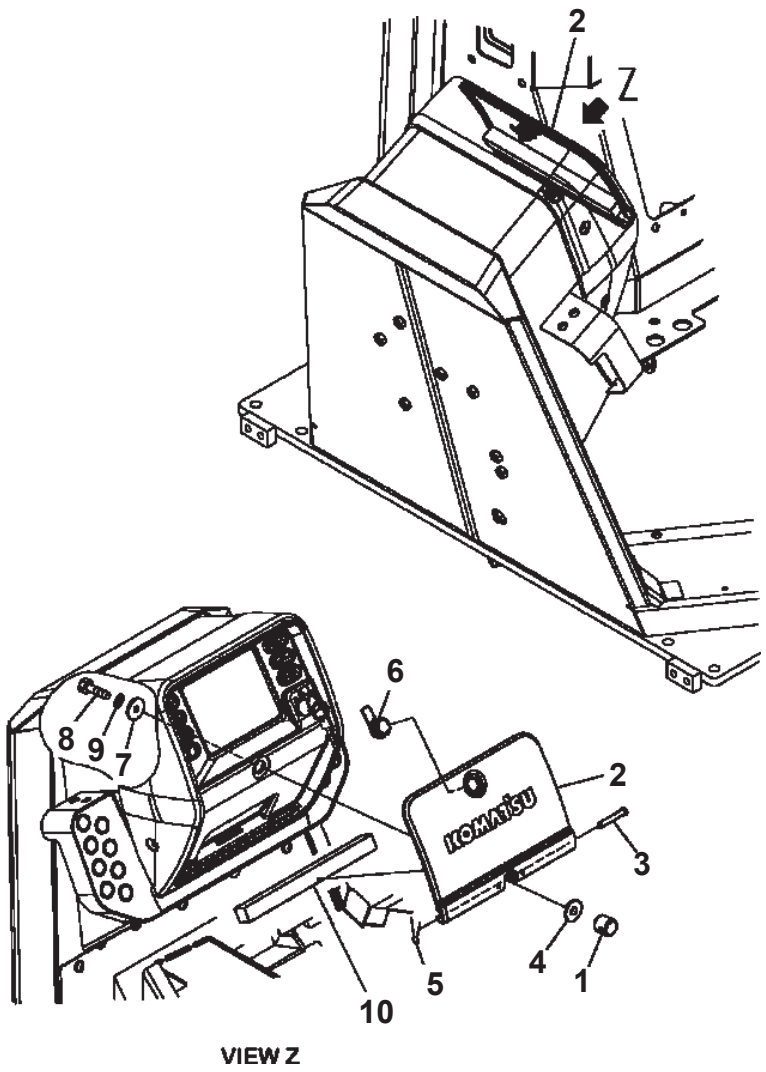

VIEW Z

D51EX/PX-22 S/N B10001-UP

K0500-01A0 VANDALISM PROTECTION INSTRUMENT PANEL

Item	Part No.	Description	Qty	Options
1	12Y-978-2762	BOSS	1	SN:B10001--
2	12Y-978-2770	COVER	1	SN:B10001--
3	12Y-978-2790	PIN	1	SN:B10001--
4	12Y-978-2681	COLLAR	1	SN:B10001--
5	04050-12015	PIN	1	SN:B10001--
6	205-60-71220	LOCK ASSEMBLY	1	SN:B10001--
7	11Y-54-18190	WASHER	1	SN:B10001--
8	01010-80816	BOLT	1	SN:B10001--
9	01643-30823	WASHER	1	SN:B10001--
10	12Y-978-2670	SEAL	1	SN:B10001--

Ref. K0500-01A0 Page K-189

CMZ00084

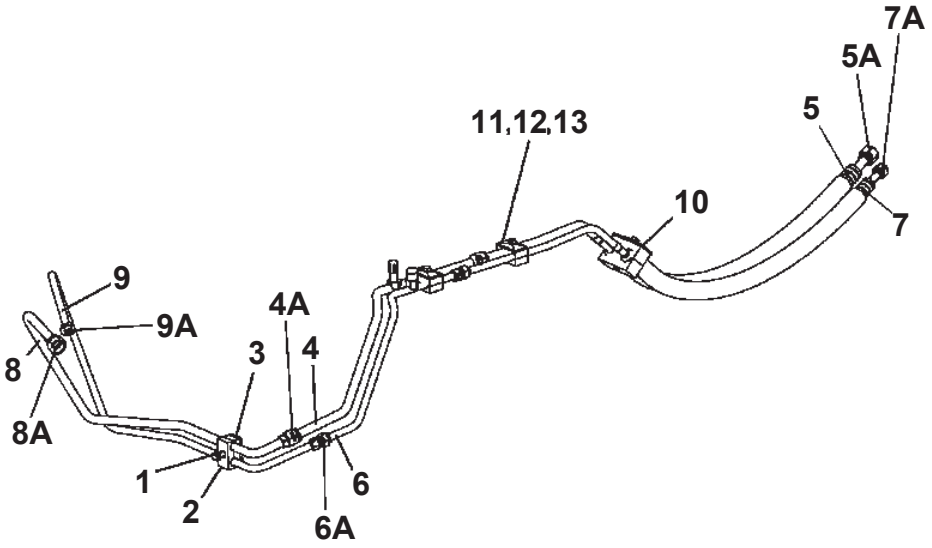

D51EX/PX-22 S/N B10001-UP

K0700-01A0 AIR CONDITIONER LINES (#B10001-B11592)

Item	Part No.	Description	Qty	Options
1	01010-80845	BOLT	1	SN:B10001--B11592
	01643-30823	WASHER	1	SN:B10001--B11592
2	12Y-62-12330	CLAMP	2	SN:B10001--@
3	12Y-62-12350	SEAT	1	SN:B10001--B11592
4	12Y-979-1811	TUBE	1	SN:B10001--@
4A	12Y-979-2160	· O-RING	1	SN:B10001--@
5	12Y-979-1822	HOSE	1	SN:B10001--@
5A	12Y-979-2160	· O-RING	2	SN:B10001--@
6	12Y-979-1831	TUBE	1	SN:B10001--@
6A	12Y-979-2150	· O-RING	1	SN:B10001--@
7	12Y-979-1842	HOSE	1	SN:B10001--@
7A	12Y-979-2150	· O-RING	2	SN:B10001--@
8	12Y-979-1911	TUBE	1	SN:B10001--B11592
8A	12Y-979-2160	· O-RING	1	SN:B10001--@
9	12Y-979-1931	TUBE	1	SN:B10001--B11592
9A	12Y-979-2150	· O-RING	1	SN:B10001--@
10	12Y-979-1960	CLAMP	2	SN:B10001--@
	12Y-979-1970	PLATE	1	SN:B10001--@
	01010-80850	BOLT	1	SN:B10001--@
11	12Y-62-12330	CLAMP	2	SN:B10001--@
12	12Y-62-12340	PLATE	1	SN:B10001--@
13	01010-80835	BOLT	1	SN:B10001--@

Ref. K0700-01A0 Page K-191

CMZ00084B

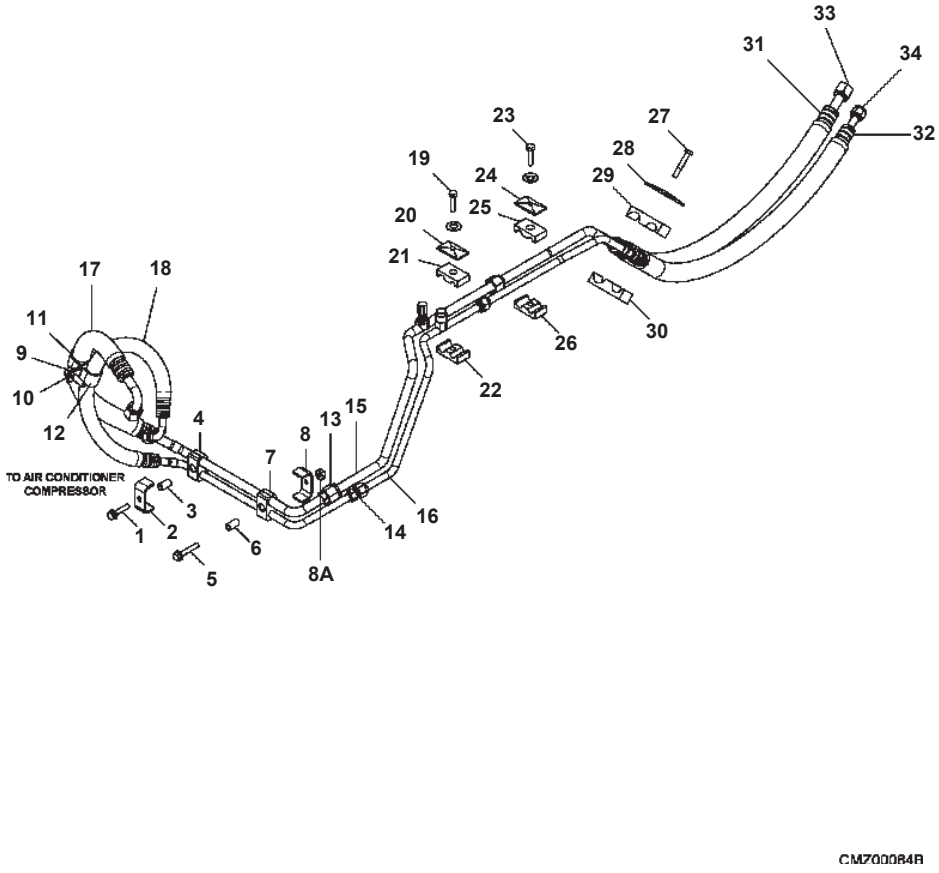

D51EX/PX-22 S/N B10001-UP

K0700-01A0A - AIR CONDITIONER LINE (#B11593-)

Item	Part No.	Description	Qty	Options
1	01010-80840	BOLT	1	SN:B11593--
	01643-30823	WASHER	1	SN:B11593--
2	12Y-62-11K90	BRACKET	1	SN:B11593--
3	12Y-62-15280	SPACER	1	SN:B11593--
4	12Y-62-15261	CUSHION	1	SN:B11593--
5	01010-80850	BOLT	1	SN:B11593--
	01646-30823	WASHER	1	SN:B11593--
6	12Y-62-15280	SPACER	1	SN:B11593--
7	12Y-62-15261	CUSHION	1	SN:B11593--
8	12Y-62-15250	BRACKET	1	SN:B11593--
8A	01580-10806	NUT	1	SN:B11593--
9	01010-81035	BOLT	1	SN:B11593--
10	01643-31032	WASHER	1	SN:B11593--
11	04434-53411	CLIP	1	SN:B11593--
12	04434-52711	CLIP	1	SN:B11593--
13	12Y-979-2160	O-RING	1	SN:B10001--
14	12Y-979-2150	O-RING	1	SN:B10001--
15	12Y-979-1811	TUBE	1	SN:B10001--
16	12Y-979-1831	TUBE	1	SN:B10001--
17	12Y-979-1914	TUBE	1	SN:B11940--
	□12Y-979-1913	TUBE	1	SN:B11593--B11939
18	12Y-979-1933	TUBE	1	SN:B11940--
	□12Y-979-1932	TUBE	1	SN:B11593--B11939
19	01010-80835	BOLT	1	SN:B10001--
	01643-30823	WASHER	1	SN:B14013--
20	12Y-62-13340	PLATE	1	SN:B10001--
21	12Y-62-12330	CLAMP	1	SN:B10001--
22	12Y-62-12330	CLAMP	1	SN:B10001--
23	01010-80835	BOLT	1	SN:B10001--
24	12Y-62-12340	PLATE	1	SN:B10001--
25	12Y-62-12330	CLAMP	1	SN:B10001--
26	12Y-62-12330	CLAMP	1	SN:B10001--
27	01010-80850	BOLT	1	SN:B10001--
	01646-30823	WASHER	1	SN:B10001--
28	12Y-979-1970	PLATE	1	SN:B10001--
29	12Y-979-1960	CLAMP	1	SN:B10001--
30	12Y-979-1960	CLAMP	1	SN:B10001--
31	12Y-979-1822	HOSE	1	SN:B10001--
32	12Y-979-1842	HOSE	1	SN:B10001--
33	12Y-979-2160	O-RING	1	SN:B10001--
34	12Y-979-2150	O-RING	1	SN:B10001--

Ref. K0700-01A0A Page K-191A

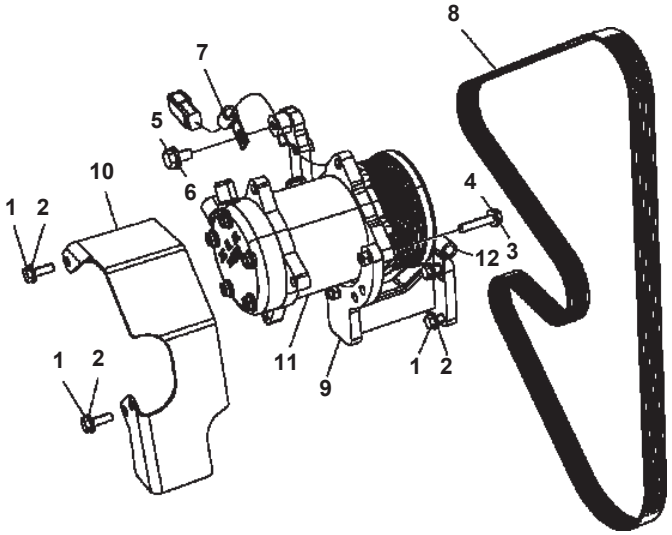

K0700-01A1 DRIVE BELT AND MOUNTING (#B10001-B11592)

Item	Part No.	Description	Qty	Options
1	01010-80825	BOLT	7	SN:B10001--B11592
2	01643-30823	WASHER	7	SN:B10001--B11592
3	01010-80840	BOLT	3	SN:B10001--@
4	01643-30823	WASHER	3	SN:B10001--@
5	01010-81020	BOLT	1	SN:B10001--B11592
6	01643-31032	WASHER	1	SN:B10001--B11592
7	04434-51010	CLIP	1	SN:B10001--B11592
8	6732-82-3430	BELT, COMPRESSOR	1	SN:B10001--@
9	12Y-01-12111	BRACKET	1	SN:B11724--@
	12Y-01-12110	BRACKET	1	SN:B10782--B11723
	11Y-01-31692	BRACKET	1	SN:B10001--B10781
10	12Y-01-12611	PLATE	1	SN:B10001--B11592
11	12Y-979-1121	COMPRESSOR, AIR CONDITIONER	1	SN:B10001--@
12	04434-51210	CLIP	1	SN:B10006--@

CMZ00085B

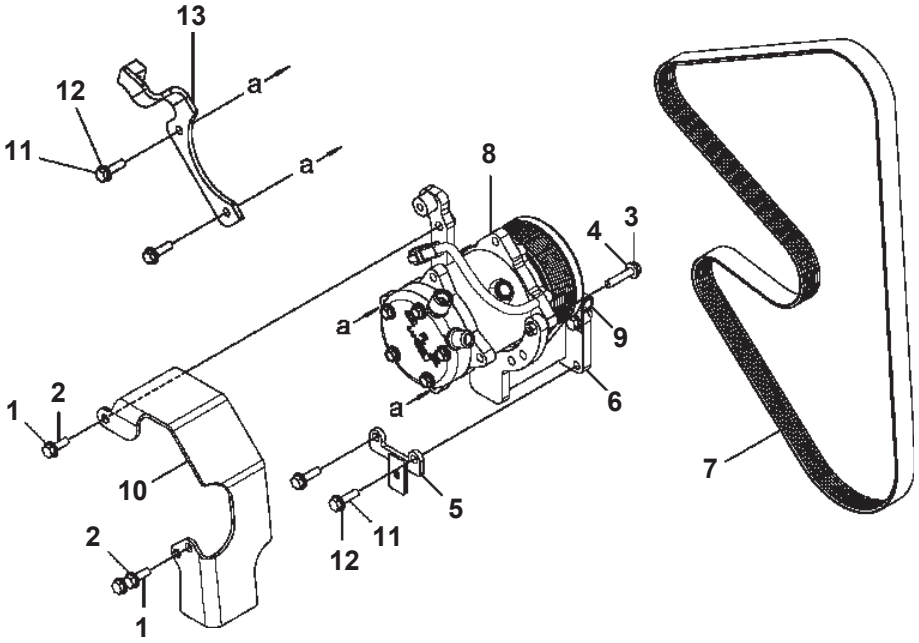

D51EX/PX-22 S/N B10001-UP

K0700-01A1A DRIVE BELT AND MOUNTING (#B11593-)

Item	Part No.	Description	Qty	Options
1	01010-80825	BOLT	5	SN:B11593--
2	01643-30823	WASHER	5	SN:B11593--
3	01010-80840	BOLT	3	SN:B10001--
4	01643-30823	WASHER	3	SN:B10001--
5	12Y-62-15270	BRACKET	1	SN:B11593--
6	12Y-01-12111	BRACKET	1	SN:B11724--
7	6732-82-3430	BELT, COMPRESSOR	1	SN:B11593--
8	12Y-979-1121	COMPRESSOR	1	SN:B10001--
9	04434-51210	CLIP	1	SN:B10006--
10	12Y-01-12612	COVER	1	SN:B11593--
11	01010-80830	BOLT	4	SN:B11593--
12	01643-80823	WASHER	4	SN:B11593--
13	12Y-62-15311	BRACKET	1	SN:B11593--

Ref. K0700-01A1A Page K-193A



K0700-01A2 HEATER JOINT GROUP

Item	Part No.	Description	Qty	Options
1	12Y-01-12620	NIPPLE	1	SN:B10001--
2	12Y-03-13751	NIPPLE	2	SN:B10001--

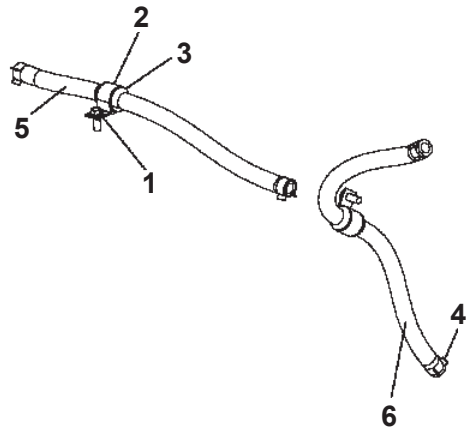

D51EX/PX-22 S/N B10001-UP

K0700-01A3 HEATER HOSE PIPING

Item	Part No.	Description	Qty	Options
1	01435-01025	BOLT	2	SN:B10001--
2	04434-53211	CLIP	2	SN:B10001--
3	07095-20523	CUSHION	2	SN:B10001--
4	09479-02400	CLIP	4	SN:B10001--
5	12Y-979-1991	HOSE	1	SN:B14636--
	□12Y-979-1990	HOSE	1	SN:B10001--B14635
6	12Y-979-2121	HOSE	1	SN:B13106--
	□12Y-979-2120	HOSE	1	SN:B10001--B13105

Ref. K0700-01A3 Page K-197

CMZ00093

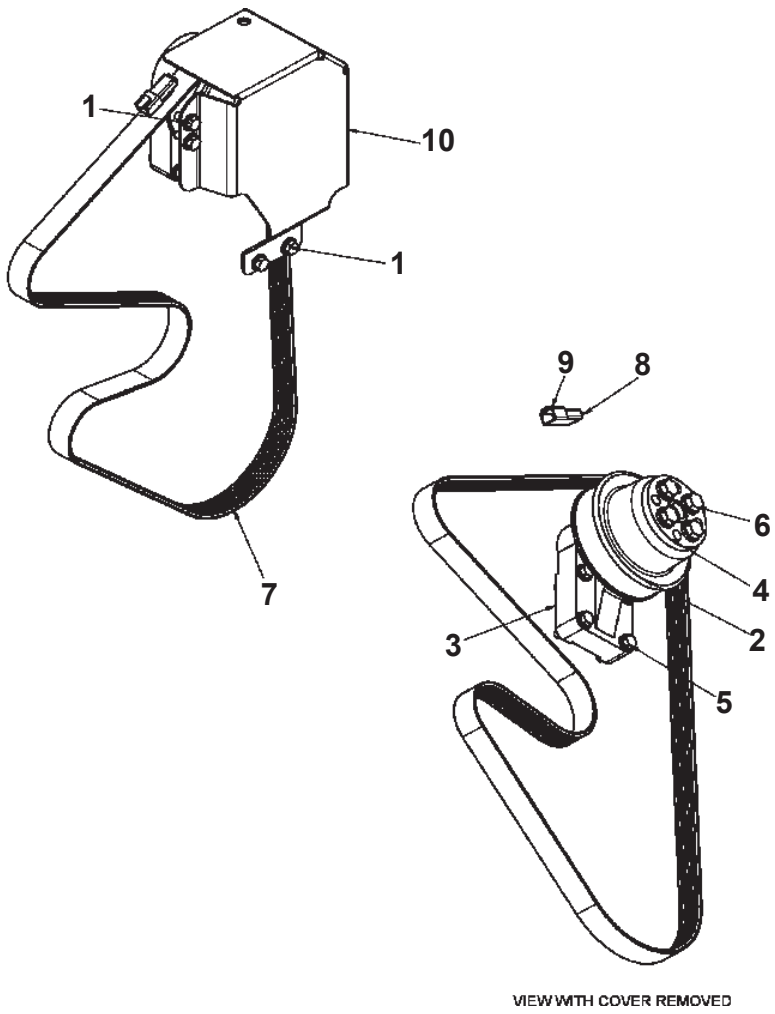

VIEW WITH COVER REMOVED

D51EX/PX-22 S/N B10001-UP

K0710-01A0 DRIVE BELT AND MOUNTING WITH CANOPY

Item	Part No.	Description	Qty	Options
1	01010-80820	BOLT	4	SN:B10001--
	01643-30823	WASHER	4	SN:B10001--
2	6090-04-2450	PULLEY, FAN	1	SN:B10001--
3	6732-61-3120	SUPPORT, FAN	1	SN:B10001--
4	6732-61-3160	FAN MOUNT	1	SN:B10001--
5	6732-61-3170	BOLT	4	SN:B10001--
6	6735-71-3220	BOLT	4	SN:B10001--
7	6754-62-3410	BELT, PULLEY	1	SN:B10001--
8	08191-00770	PLUG	2	SN:B10001--
9	08192-22100	CONNECTOR	1	SN:B10001--
10	12Y-01-12591	COVER	1	SN:B10900--
	□12Y-01-12590	COVER	1	SN:B10001--B10899

Ref. K0710-01A0 Page K-199



K0710-01A1 HEATER JOINT GROUP WITH CANOPY

Item	Part No.	Description	Qty	Options
1	02720-20810	PLUG PLUG INSTALLS INTO HEATER PORT OF LOWER WATER TUBE.	1	SN:B10001--

CVPB00228

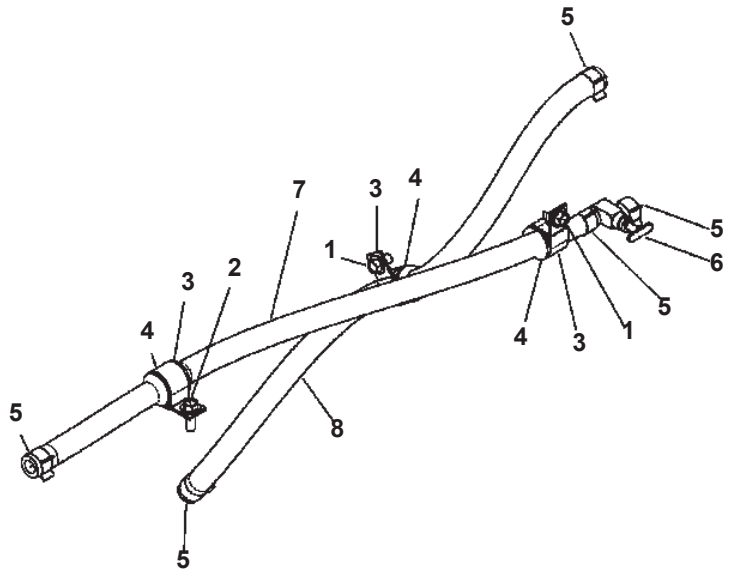

D51EX/PX-22 S/N B10001-UP

K0720-01A0 HEATER HOSE PIPING WITH CANOPY

Item	Part No.	Description	Qty	Options
1	01435-01016	BOLT	2	SN:B10001--
2	01435-01025	BOLT	1	SN:B10001--
3	04434-53211	CLIP	3	SN:B10001--
4	07095-20523	CUSHION	3	SN:B10001--
5	09479-02400	CLIP	4	SN:B10001--
6	12Y-978-5120	VALVE	1	SN:B10001--
7	12Y-979-1991	HOSE	1	SN:B14636--
	□12Y-979-1990	HOSE	1	SN:B10001--B14635
8	12Y-979-2110	HOSE	1	SN:B10001--

Ref. K0720-01A0 Page K-203

CMZ00210

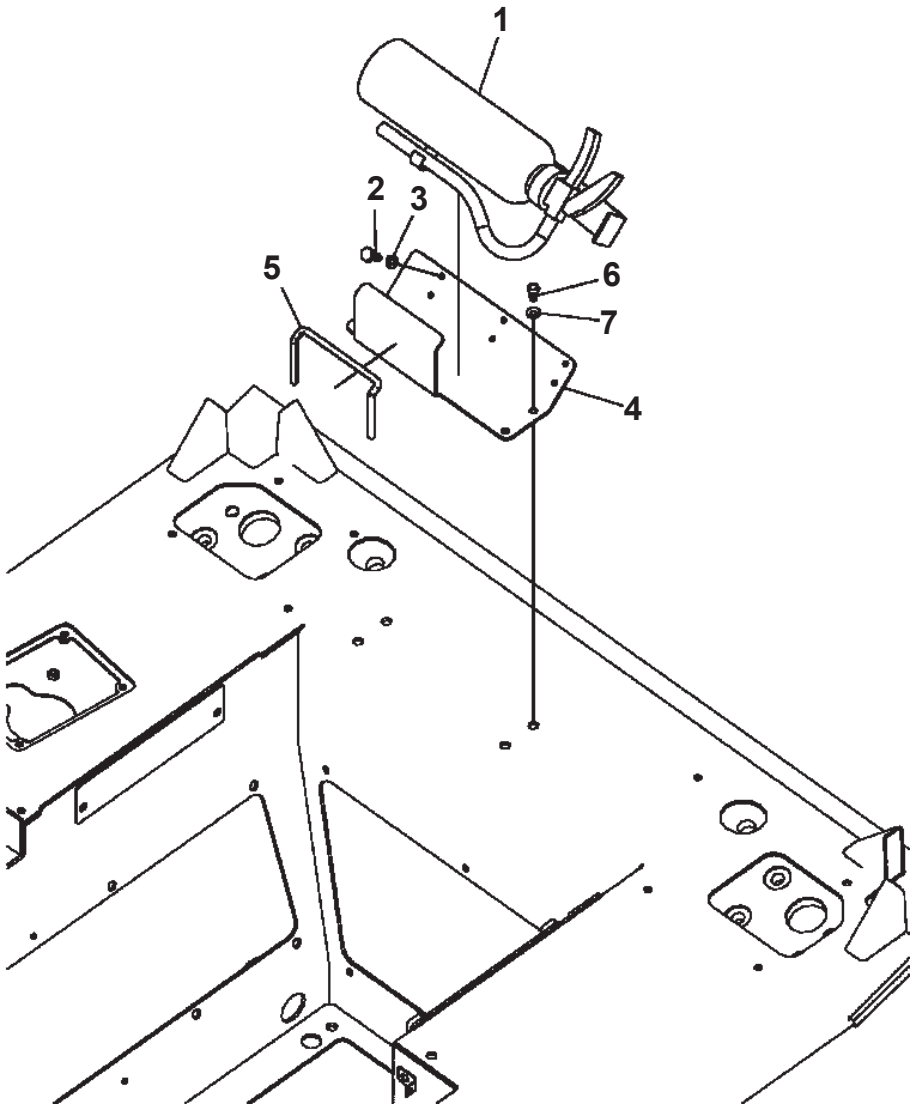

D51EX/PX-22 S/N B10001-UP

K0830-01A0 EXTINGUISHER

Item	Part No.	Description	Qty	Options
1	09495-40010	EXTINGUISHER	1	SN:B10001--
2	01010-80620	BOLT	6	SN:B10001--
3	01602-20619	WASHER	6	SN:B10001--
4	12Y-978-3811	BRACKET	1	SN:B10001--
5	12Y-978-3820	TRIM	1	SN:B10001--
6	01245-00825	SCREW	4	SN:B10001--
7	01643-70823	WASHER	4	SN:B10001--

Ref. K0830-01A0 Page K-205

CMZ00099

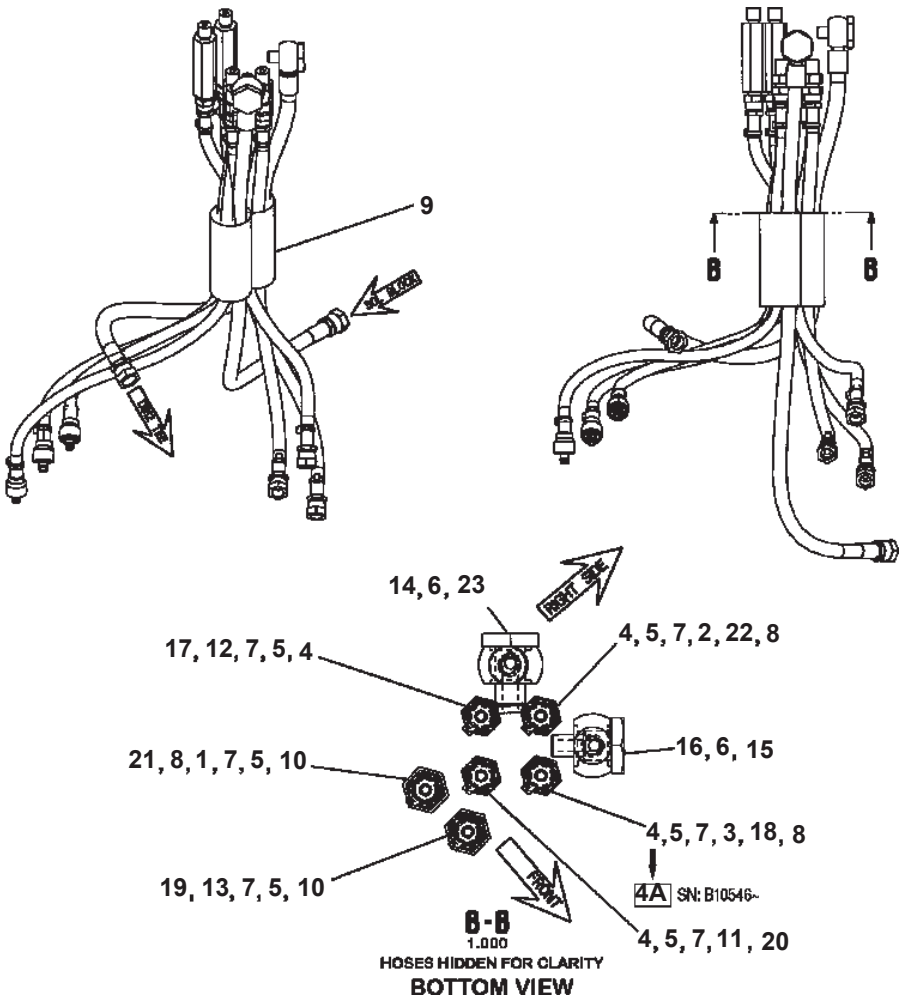

D51EX/PX-22 S/N B10001-UP

K2110-01A0 BLAND PPC PIPING GROUP

Item	Part No.	Description	Qty	Options
1	02760-00205	HOSE	1	SN:B10001--
2	02760-00205	HOSE	1	SN:B10001--
3	02760-002A5	HOSE	1	SN:B10001--
4	02781-0021D	UNION	3	SN:B10546--
	◆02781-0021D	UNION	4	SN:B10001--B10545
4A	12Y-62-14340	UNION	1	SN:B10546--
5	02896-11008	O-RING	6	SN:B10001--
6	07000-12018	O-RING	4	SN:B10001--
7	07002-11423	O-RING	6	SN:B10001--
8	08210-01206	SPIRAL TUBE	3	SN:B10001--
9	08210-02903	SPIRAL TUBE	2	SN:B10001--
10	12Y-62-14630	UNION	2	SN:B10999--
	□11Y-62-12390	UNION	2	SN:B10001--B10998
11	12Y-62-13351	HOSE	1	SN:B10001--
12	12Y-62-13361	HOSE	1	SN:B10001--
13	12Y-62-13370	HOSE	1	SN:B10001--
14	12Y-62-13121	HOSE	1	SN:B10001--
15	12Y-62-13131	HOSE	1	SN:B10001--
16	203-62-57730	EYE BOLT	1	SN:B10001--
17	20Y-62-22790	BAND	2	SN:B10001--
18	20Y-62-22810	BAND	2	SN:B10001--
19	20Y-62-22820	BAND	2	SN:B10001--
20	20Y-62-22830	BAND	2	SN:B10001--
21	20Y-62-22850	BAND	2	SN:B10001--
22	20Y-62-22860	BAND	2	SN:B10001--
23	702-16-53240	PLUG	1	SN:B10001--

Ref. K2110-01A0 Page K-207

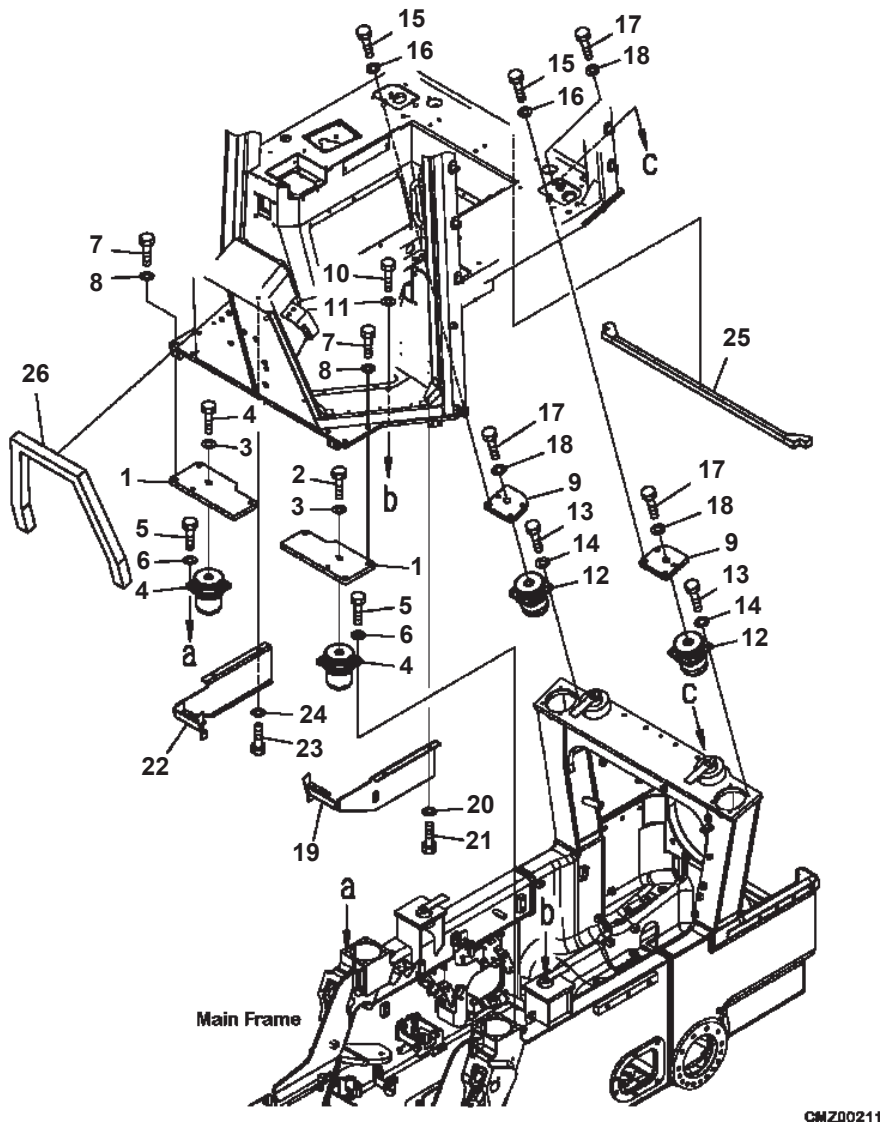

K2120-01A0 FLOOR MOUNT SUSPENSION

Item	Part No.	Description	Qty	Options
1	12Y-54-11350	PLATE	2	SN:B10001--
2	154-54-73130	BOLT	2	SN:B10001--
3	01643-32060	WASHER	2	SN:B10001--
4	8A31-54-1110	CUSHION	2	SN:B10001--
5	01010-81235	BOLT	8	SN:B10001--
6	01643-31232	WASHER	8	SN:B10001--
7	01010-81645	BOLT	8	SN:B10001--
8	01643-31645	WASHER	8	SN:B10001--
9	12Y-54-11361	PLATE	2	SN:B10001--
10	01010-82460	BOLT	2	SN:B10001--
11	01643-32460	WASHER	2	SN:B10001--
12	17A-54-46120	CUSHION	2	SN:B10001--
13	01010-81435	BOLT	8	SN:B10001--
14	01643-31445	WASHER	8	SN:B10001--
15	01010-81645	BOLT	8	SN:B10001--
16	01643-31645	WASHER	8	SN:B10001--
17	01010-82460	BOLT	4	SN:B10001--
18	01643-32460	WASHER	4	SN:B10001--
19	12Y-54-11922	COVER	1	SN:B10001--
	□12Y-54-11921	COVER	1	SN:B10001--B10001
20	01010-81225	BOLT	2	SN:B10001--
21	01643-31232	WASHER	2	SN:B10001--
22	12Y-54-11931	COVER	1	SN:B10001--
23	01010-81225	BOLT	2	SN:B10001--
24	01643-31232	WASHER	2	SN:B10001--
25	12Y-978-4691	SEAL	1	SN:B10747--
	□12Y-54-12190	SEAL	1	SN:B10001--B10746
26	12Y-54-11910	SEAL	1	SN:B10001--

CMZ00097

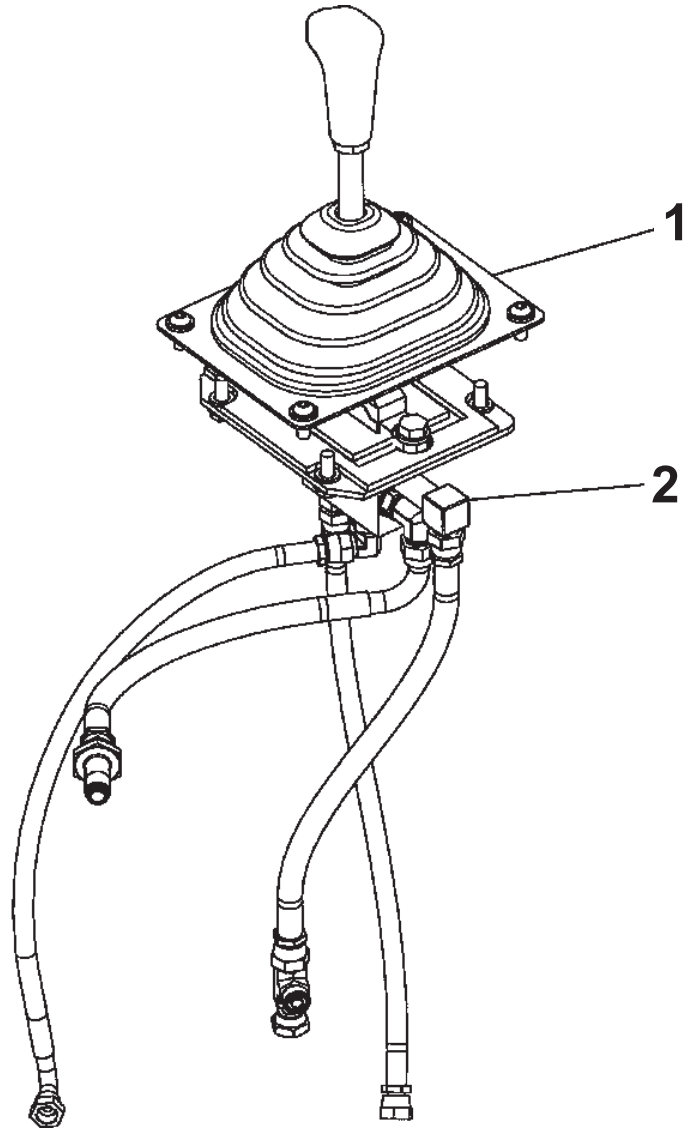

D51EX/PX-22 S/N B10001-UP

K2520-01A0 RIPPER CONTROL UNIT

Item	Description	Options
1	RIPPER CONTROL GROUP (SEE FIG. K2520-01A1)	SN:B10001--
2	PPC PIPING (SEE FIG. K2520-01A2)	SN:B10001--

Ref. K2520-01A0 Page K-211

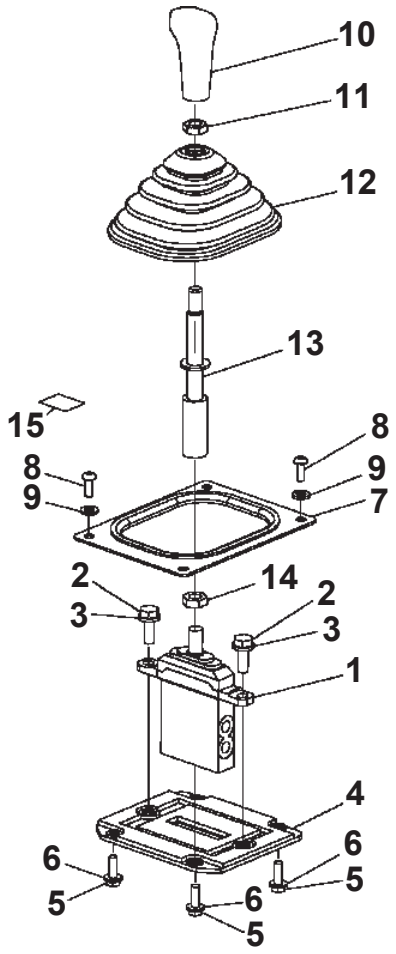

K2520-01A1 RIPPER CONTROL GROUP

Item	Part No.	Description	Qty	Options
1	702-16-03390	PILOT VALVE	1	SN:B10001--
2	01010-81030	BOLT	2	SN:B10001--
3	01643-31032	WASHER	2	SN:B10001--
4	12Y-78-11110	BRACKET	1	SN:B10001--
5	01010-80825	BOLT	4	SN:B10001--
6	01643-30823	WASHER	4	SN:B10001--
7	12Y-78-11140	COVER	1	SN:B10001--
8	01245-00820	BOLT	4	SN:B10001--
9	01643-70823	WASHER	4	SN:B10001--
10	17A-43-42240	KNOB	1	SN:B10001--
11	20T-43-71190	NUT	1	SN:B10001--
12	11Y-43-11181	BOOT	1	SN:B10001--
13	12Y-78-11160	LEVER	1	SN:B10001--
14	01583-11408	NUT	1	SN:B10001--
15	14X-78-11180	PLATE	1	SN:B10001--

CMZ00098

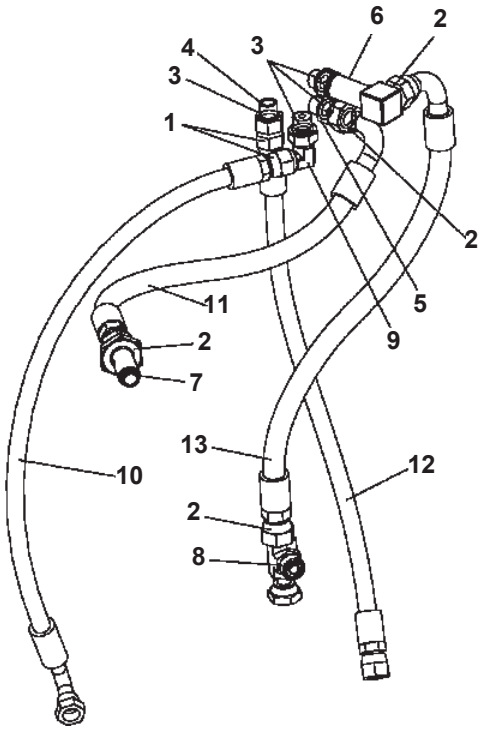

D51EX/PX-22 S/N B10001-UP

K2520-01A2 RIPPER PPC PIPING GROUP

Item	Part No.	Description	Qty	Options
1	02896-11008	O-RING	2	SN:B10001--
2	02896-11009	O-RING	5	SN:B10001--
3	07000-12011	O-RING	4	SN:B10001--
4	11Y-62-12140	NIPPLE	1	SN:B10001--
5	11Y-62-12850	UNION	1	SN:B10006--
	☐12Y-62-13320	ELBOW	1	SN:B10001--B10005
6	12Y-62-13332	ELBOW	1	SN:B11422--
	☐12Y-62-13331	ELBOW	1	SN:B10571--B11421
	☐12Y-62-13330	ELBOW	1	SN:B10001--B10570
7	12Y-62-13340	PLUG	1	SN:B10001--
8	12Y-62-11661	TEE	1	SN:B10001--
9	21W-62-43980	ELBOW	1	SN:B10001--
10	02761-002A5	HOSE	1	SN:B10006--
	☐02761-00205	HOSE	1	SN:B10001--B10005
11	02761-003A3	HOSE	1	SN:B10006--
	☐02761-00303	HOSE	1	SN:B10001--B10005
12	02760-002A4	HOSE	1	SN:B10001--
13	02761-00304	HOSE	1	SN:B10006--
	☐02760-003A3	HOSE	1	SN:B10001--B10005

Ref. K2520-01A2 Page K-215

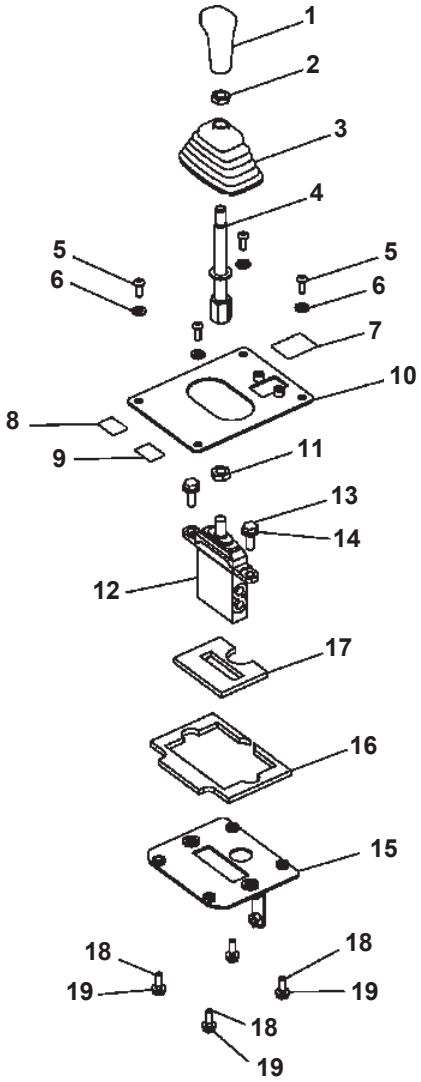

K2520-02A0 WINCH CONTROL (FOR RESCUE) (1/2)

Item	Part No.	Description	Qty	Options
1	17A-43-42240	KNOB	1	SN:B10001--
2	20T-43-71190	NUT	1	SN:B10001--
3	421-43-28431	BOOT	1	SN:B10001--
4	12Y-960-1330	LEVER	1	SN:B10001--
5	01245-00820	BOLT	4	SN:B10001--
6	01643-70823	WASHER	4	SN:B10001--
7	12Y-960-1250	PLATE	1	SN:B10001--
8	12Y-960-1240	PLATE	1	SN:B10001--
9	12Y-960-1230	PLATE	1	SN:B10001--
10	12Y-960-1140	COVER	1	SN:B10001--
11	01583-11408	NUT	1	SN:B10001--
12	702-16-03390	PILOT VALVE	1	SN:B10001--
13	01010-81030	BOLT	2	SN:B10001--
14	01643-31032	WASHER	2	SN:B10001--
15	12Y-960-1171	BRACKET	1	SN:B10001--
16	12Y-960-1190	· SEAL	1	SN:B10001--
17	12Y-960-1181	· SEAL	1	SN:B10001--
18	01010-80825	BOLT	4	SN:B10001--
19	01643-30823	WASHER	4	SN:B10001--

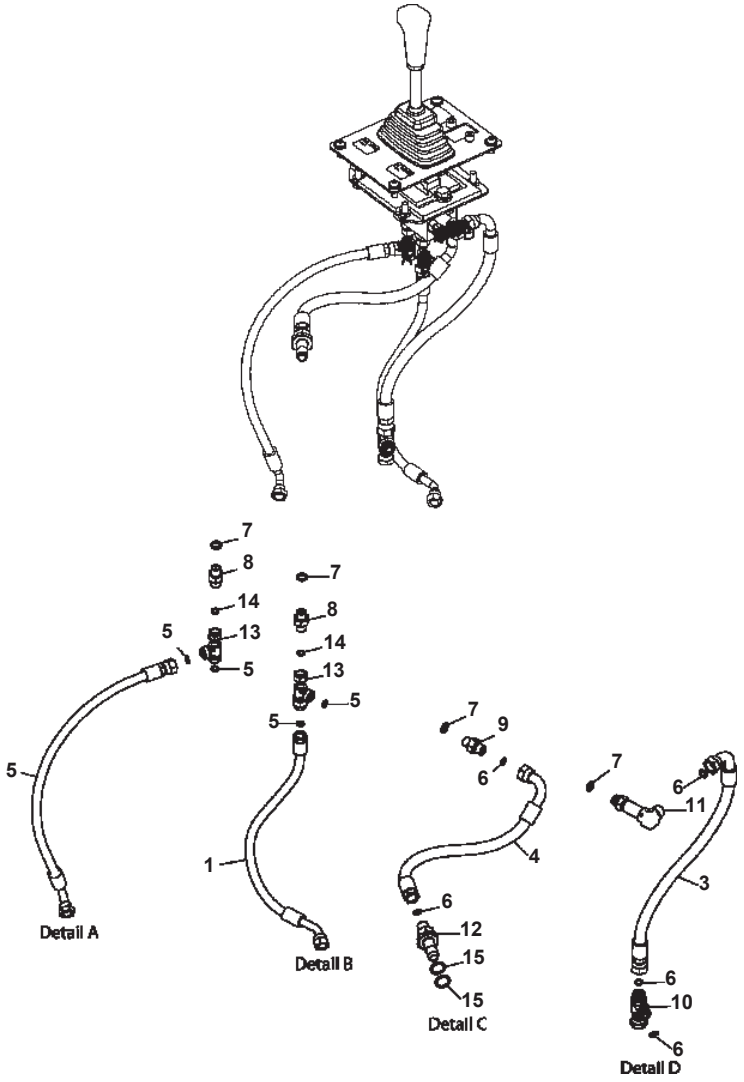

D51EX/PX-22 S/N B10001-UP

K2520-02A1 WINCH CONTROL (FOR RESCUE) (2/2)

Item	Part No.	Description	Qty	Options
1	02764-002A4	HOSE	1	SN:B10001--
2	02761-002A5	HOSE	1	SN:B10001--
3	02761-00304	HOSE	1	SN:B10001--
4	02761-003A3	HOSE	1	SN:B10001--
5	02896-11008	O-RING	4	SN:B10001--
6	02896-11009	O-RING	5	SN:B10001--
7	07000-12011	O-RING	4	SN:B10001--
8	11Y-62-12140	JOINT	2	SN:B10001--
9	11Y-62-12850	JOINT	1	SN:B10001--
10	12Y-62-11661	TEE	1	SN:B10001--
11	142Y-62-13332	ELBOW	1	SN:B10001--
12	12Y-62-13340	JOINT	1	SN:B10001--
13	3A1-62-11641	TEE	2	SN:B10001--
14	02896-11008	· O-RING	2	SN:B10001--
15	07000-12018	O-RING	2	SN:B10001--

Ref. K2520-02A1 Page K-216A

CMZ00096

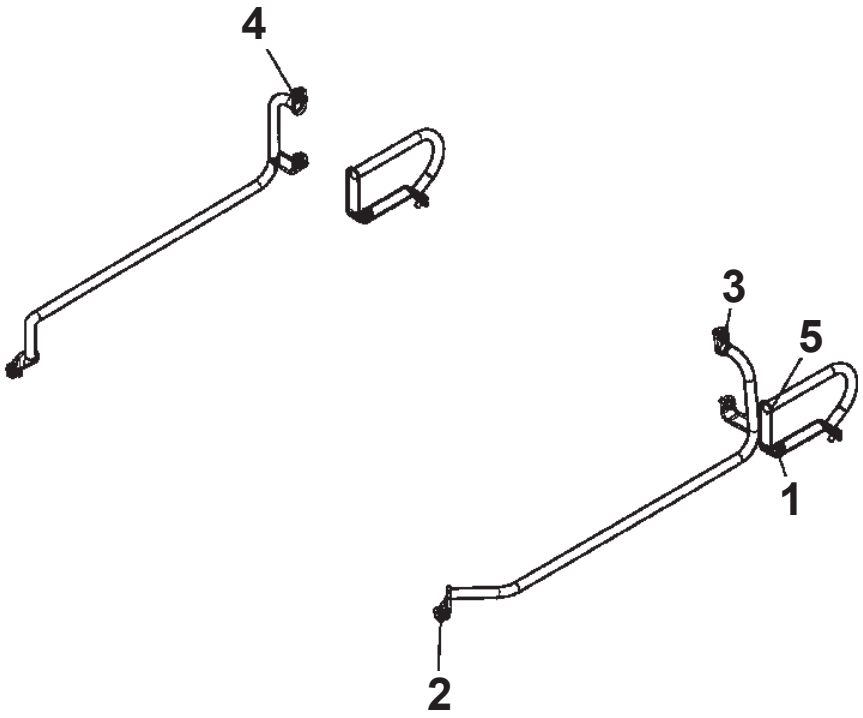

D51EX/PX-22 S/N B10001-UP

K2800-01A0 HANDRAIL GROUP

Item	Part No.	Description	Qty	Options
1	01010-81225	BOLT	4	SN:B10001--
	01643-31232	WASHER	4	SN:B10001--
2	01010-81230	BOLT	6	SN:B10001--
	01643-31232	WASHER	6	SN:B10001--
3	12Y-54-12711	HANDRAIL, LEFT	1	SN:B10001--
4	12Y-54-12721	HANDRAIL, RIGHT	1	SN:B10001--
5	12Y-54-12730	HANDRAIL	2	SN:B10001--

Ref. K2800-01A0 Page K-217

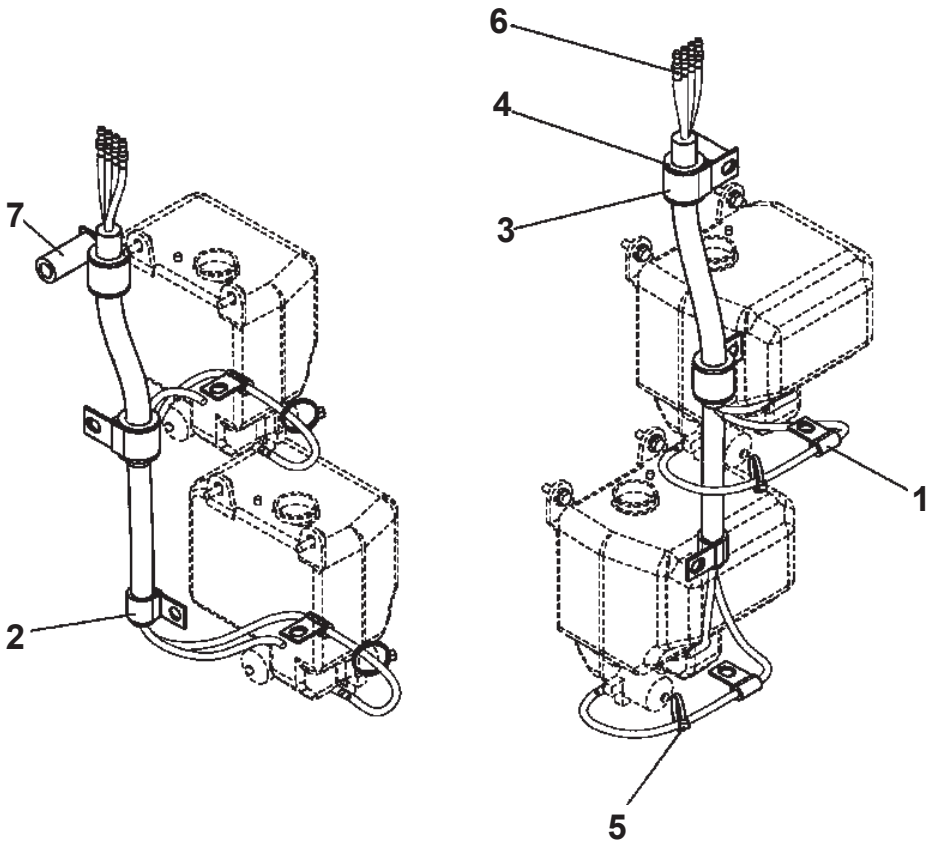

K2900-01A0 WINDOW WASHER HOSE GROUP (#B10001-B12391)

Item	Part No.	Description	Qty	Options
1	04434-50610	CLIP	2	SN:B10001--B12391
2	04434-51710	CLIP	1	SN:B10001--B12391
3	04434-52711	CLIP	2	SN:B10001--B12391
	07095-20418	CUSHION	2	SN:B11429--B12391
4	07095-20419	CUSHION	2	SN:B10001--B11428
5	08034-20414	BAND	2	SN:B10001--B12391
6	12Y-911-1131	TUBES	1	SN:B10001--B12391
7	14X-54-26640	COLLAR	1	SN:B10001--B12391

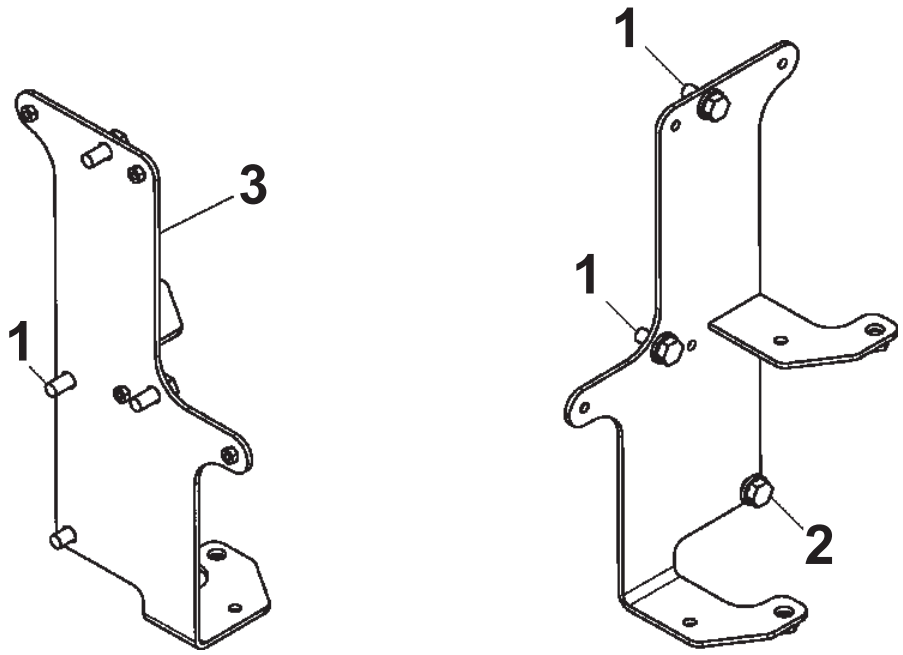

K2900-01A2 WINDOW WASHER TANK MOUNTING (#B10001-B12391)

Item	Part No.	Description	Qty	Wt.	Options
1	01435-01020	BOLT	3		SN:B10001--B12391
2	01435-01025	BOLT	1	F1	SN:B10001--B12391
3	12Y-911-1111	BRACKET	1		SN:B10001--B12391
		F1 - BOLT HOLDS CLIP FOR WASHER TANK.			

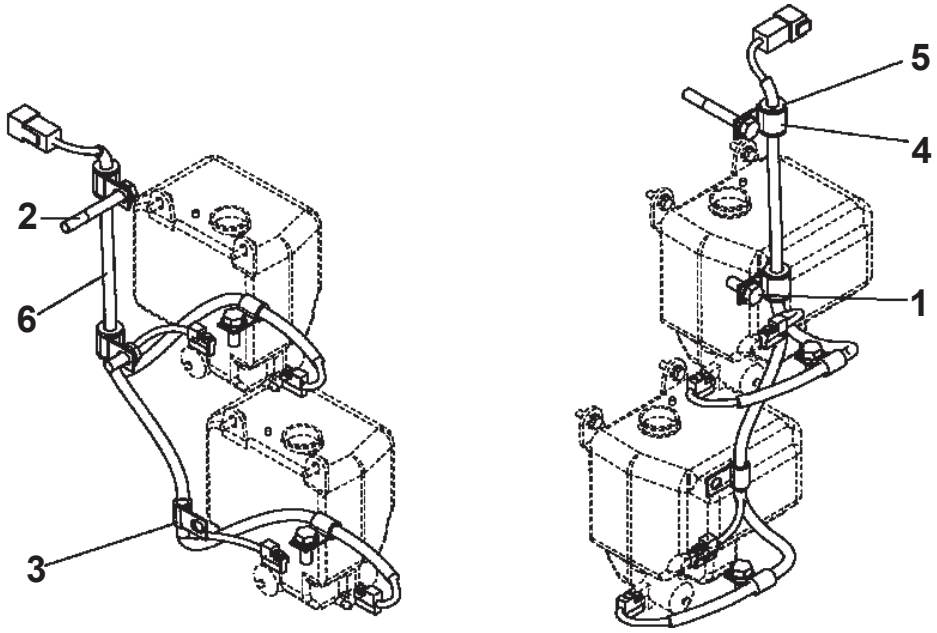

K2900-01A3 WINDOW WASHER WIRING (#B10001-B12391)

Item	Part No.	Description	Qty	Options
1	01010-81025	BOLT	3	SN:B10001--B12391
	01643-31032	WASHER	3	SN:B10001--B12391
2	01010-81075	BOLT, SEMS	1	SN:B10001--B12391
	01643-31032	WASHER	1	SN:B10001--B12391
3	04434-51010	CLIP	3	SN:B10001--B12391
4	04434-51710	CLIP	2	SN:B10001--B12391
5	07095-20418	CUSHION	2	SN:B11429--B12391
	07095-20211	CUSHION	2	SN:B10001--B11428
6	12Y-06-12871	HARNESS, WINDOW WASHER	1	SN:B10001--B12391

CMZ00091

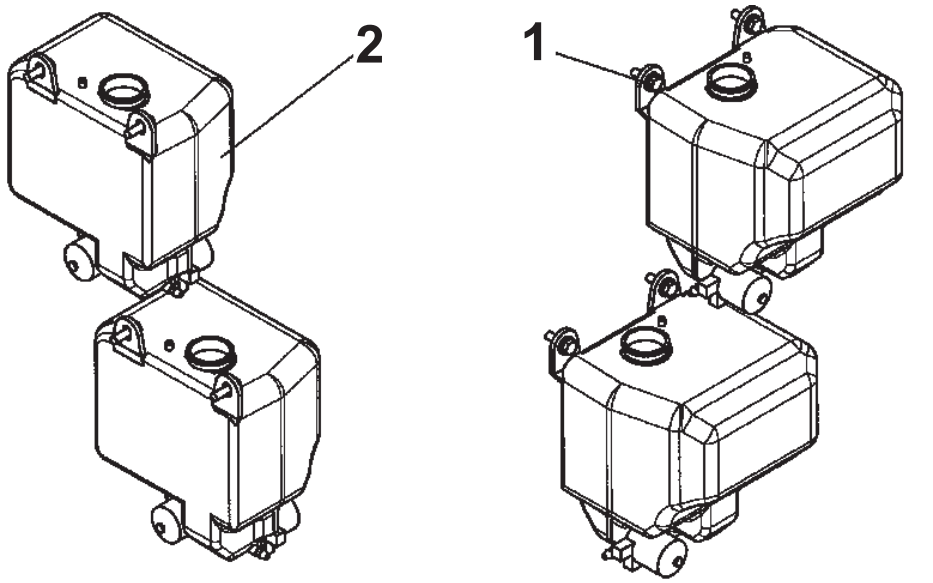

D51EX/PX-22 S/N B10001-UP

K2900-01A4 WINDOW WASHER TANK (#B10001-B12391)

Item	Part No.	Description	Qty	Options
1	01010-80620	BOLT	4	SN:B10001--B12391
	17A-Z11-2813	WASHER	4	SN:B10364--B12391
	□01643-30623	WASHER	4	SN:B10001--B10363
2	14X-911-1161	TANK, WINDOW WASHER	2	SN:B10001--B12391

Ref. K2900-01A4 Page K-225

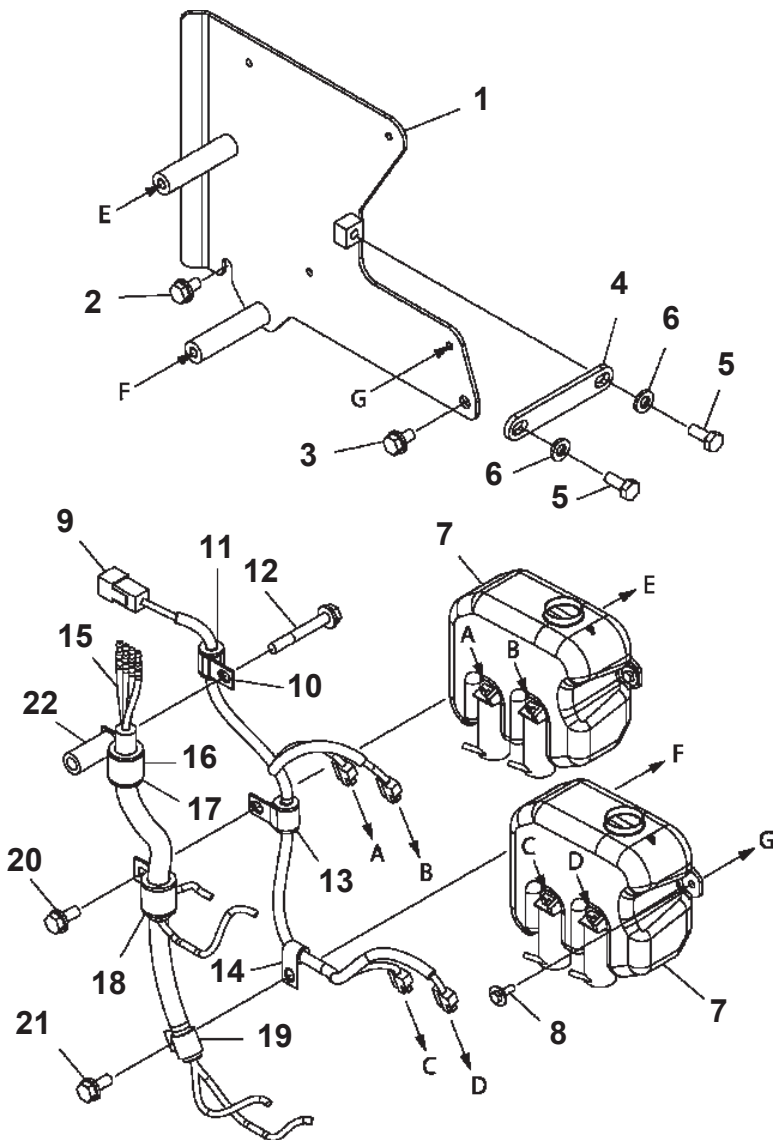

K2900-01A4A WINDOW WASHER TANK AND RELATED PARTS (#B12392-)

Item	Part No.	Description	Qty	Options
1	12Y-911-1113	BRACKET	1	SN:B12392--
2	01010-81020	BOLT	1	SN:B12392--
	01643-31032	WASHER	1	SN:B12392--
3	01010-81020	BOLT	1	SN:B12392--
	01643-31032	WASHER	1	SN:B12392--
4	12Y-911-1120	PLATE	1	SN:B12392--
5	01010-81025	BOLT	2	SN:B12392--
6	01643-31032	WASHER	2	SN:B12392--
7	11Y-911-3160	WASHER TANK	2	SN:B12392--
8	01010-80620	BOLT	4	SN:B12392--
	01643-30623	WASHER	4	SN:B12392--
9	12Y-06-12872	WIRING HARNESS	1	SN:B12392--
10	04434-51710	CLIP	1	SN:B12392--
11	07095-20211	CUSHION	1	SN:B12392--
12	01010-81075	BOLT	1	SN:B12392--
	01643-31032	WASHER	1	SN:B12392--
13	04434-51710	CLIP	1	SN:B12392--
	07095-20211	CUSHION	1	SN:B12392--
14	04434-51010	CLIP	1	SN:B12392--
15	12Y-911-1132	HOSE ASS'Y	1	SN:B12392--
16	04434-52711	CLIP	1	SN:B12392--
17	07095-20418	CUSHION	1	SN:B12392--
18	04434-52711	CLIP	1	SN:B12392--
	07095-20418	CUSHION	1	SN:B12392--
19	04434-51710	CLIP	1	SN:B12392--
20	01010-81025	BOLT	1	SN:B12392--
	01643-31032	WASHER	1	SN:B12392--
21	01010-81025	BOLT	1	SN:B12392--
	01643-31032	WASHER	1	SN:B12392--
22	14X-54-26640	COLLAR	1	SN:B12392--

GUARD AND RELATED PARTS

CVPB00207

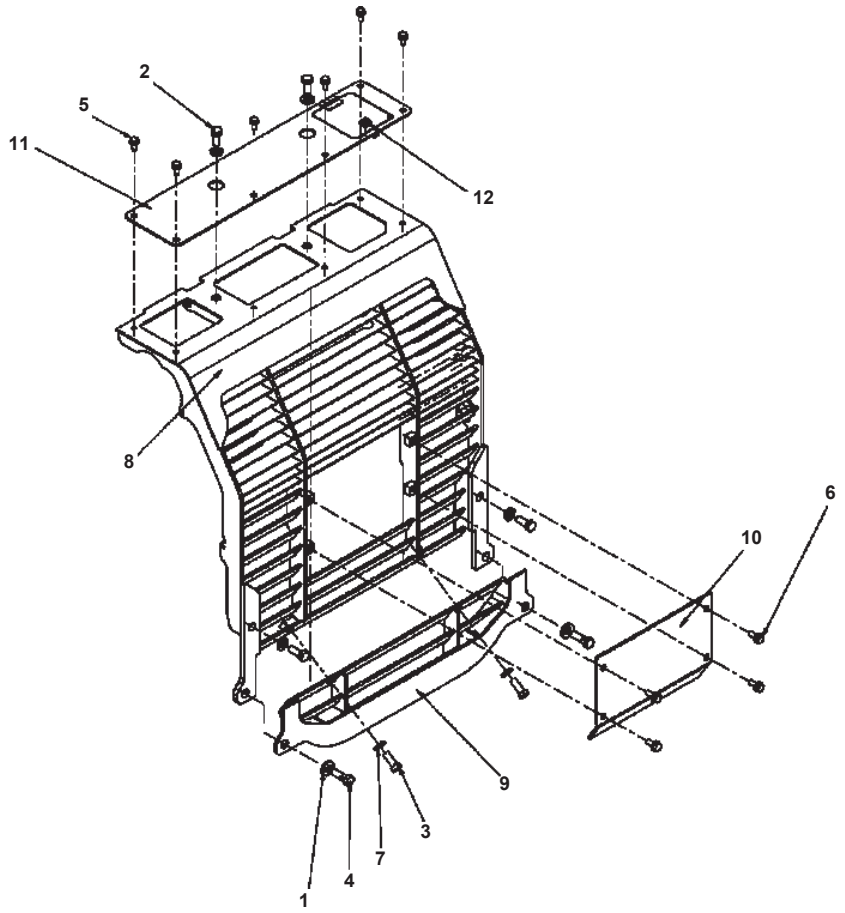

D51EX/PX-22 S/N B10001-UP

M2110-01A0 RADIATOR GUARD AND GRILLE

Item	Part No.	Description	Qty	Options
1	418-18-31160	WASHER	2	SN:B10001--
2	01010-81635	BOLT	2	SN:B10001--
3	01010-81640	BOLT	4	SN:B10001--
4	01010-81650	BOLT	2	SN:B10001--
5	01010-81025	BOLT	6	SN:B10001--
	01643-31032	WASHER	6	SN:B10001--
6	01010-81230	BOLT	4	SN:B10001--
	01643-31232	WASHER	4	SN:B10001--
7	01643-31645	WASHER	6	SN:B10001--
8	12Y-03-11324	GRILL, UPPER	1	SN:B10001--
9	12Y-03-11331	GRILL, LOWER	1	SN:B10001--
10	12Y-03-11341	PLATE	1	SN:B10001--
11	12Y-03-11383	PLATE	1	SN:B10571--
	□12Y-03-11381	PLATE	1	SN:B10200--B10570
	◆12Y-03-11380	PLATE	1	SN:B10001--B10199
12	205-60-71220	・ LOCK ASS'Y	1	SN:B10001--

Ref. M2110-01A0 Page M-001

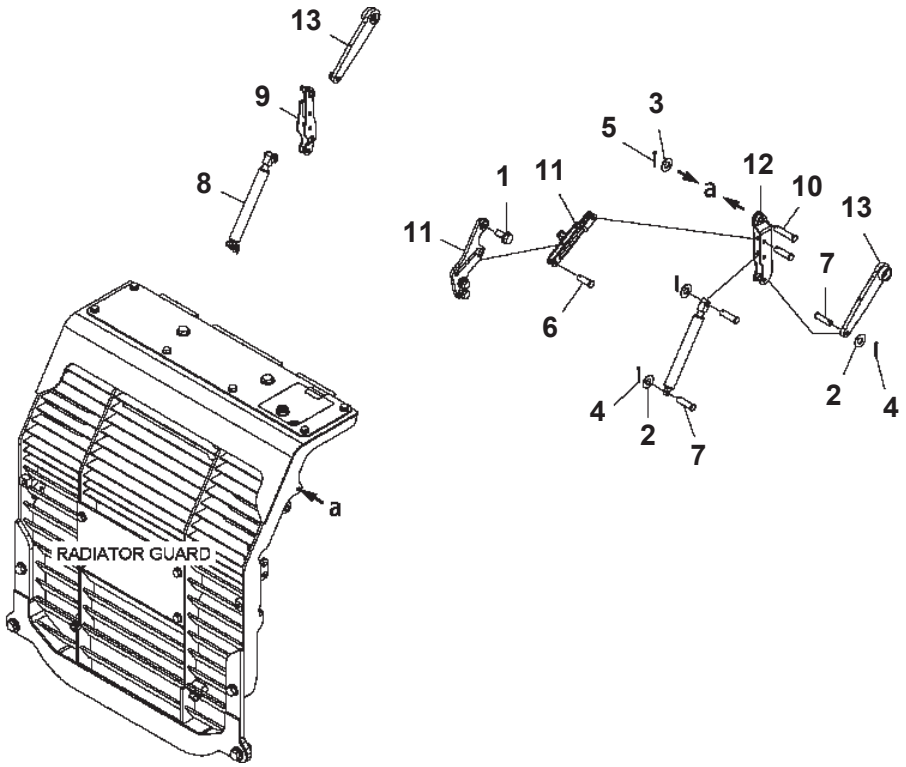

M2120-01A0 RADIATOR GUARD GAS SPRING

Item	Part No.	Description	Qty	Options
1	01010-81230	BOLT	3	SN:B10001--
	01643-31232	WASHER	3	SN:B10001--
2	01640-21016	WASHER	9	SN:B10001--
3	01640-21426	WASHER	2	SN:B10001--
4	04050-13020	PIN, COTTER	9	SN:B10001--
5	04050-14025	PIN, COTTER	2	SN:B10001--
6	04205-11030	PIN	1	SN:B10001--
7	04205-11038	PIN	6	SN:B10001--
8	11Y-03-31841	SPRING, GAS	2	SN:B11368--
	□11Y-03-31840	SPRING, GAS	2	SN:B10001--B11367
9	12Y-03-12441	LINK	1	SN:B10001--
10	12Y-03-12450	PIN	2	SN:B10001--
11	12Y-03-13311	LINK	1	SN:B10001--
12	12Y-03-13300	BRACKET	1	SN:B10001--
13	12Y-03-13380	LINK	2	SN:B10001--

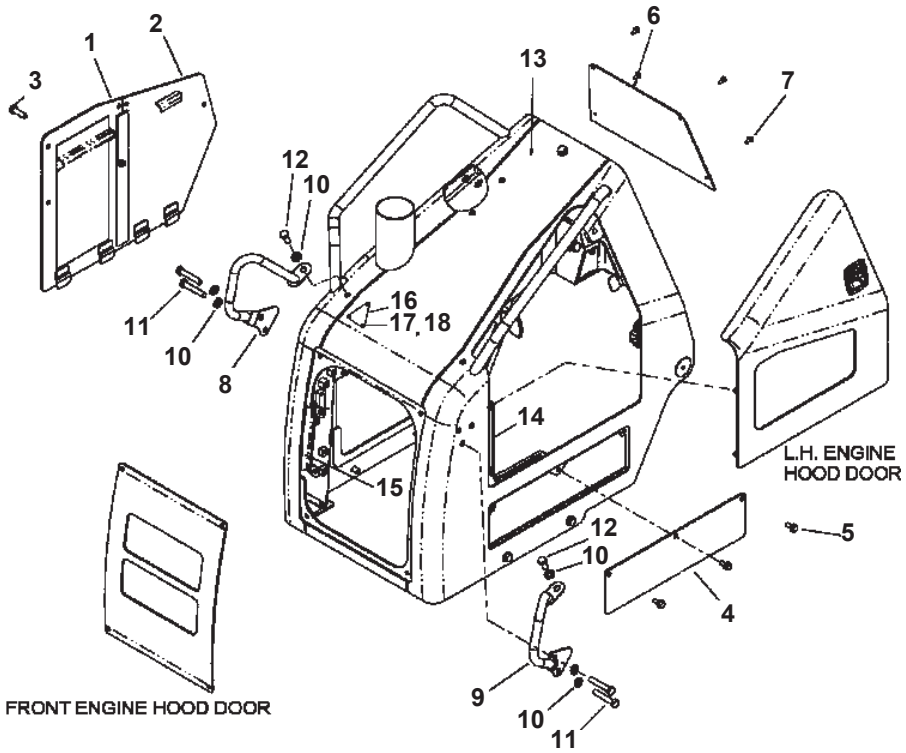

M2140-01A0 ENGINE HOOD

Item	Part No.	Description	Qty	Options
1	12Y-54-11143	COVER	1	SN:B10001--
2	12Y-54-12152	COVER	1	SN:B10001--
3	01010-81230	BOLT	6	SN:B10001--
	01643-31232	WASHER	6	SN:B10001--
4	12Y-54-11173	COVER	1	SN:B10001--
5	01010-81230	BOLT	3	SN:B10001--
	01643-31232	WASHER	3	SN:B10001--
6	12Y-54-11160	PLATE	1	SN:B10001--
7	01010-80820	BOLT	4	SN:B10001--
	01643-30823	WASHER	4	SN:B10001--
8	12Y-54-11823	HANDLE	1	SN:B10001--
9	12Y-54-11813	HANDLE	1	SN:B10001--
10	01643-31645	WASHER	6	SN:B10001--
11	01010-81690	BOLT	4	SN:B10001--
12	01010-81635	BOLT	2	SN:B10001--
13	12Y-54-11119	HOOD, ENGINE	1	SN:B11641--
	□12Y-54-11117	HOOD, ENGINE	1	SN:B11241--B11640
	□12Y-54-11116	HOOD, ENGINE	1	SN:B10860--B11240
	□12Y-54-11115	HOOD, ENGINE	1	SN:B10514--B10859
	□12Y-54-11114	HOOD, ENGINE	1	SN:B10001--B10513
14	12Y-54-11973	· HINGE	1	SN:B10001--
15	12Y-54-11991	· HINGE	1	SN:B10001--
16	12Y-54-11630	PLATE	1	SN:B10514--
17	01435-00820	BOLT	3	SN:B10514--
18	01584-00806	NUT	3	SN:B10514--

CVPB00215

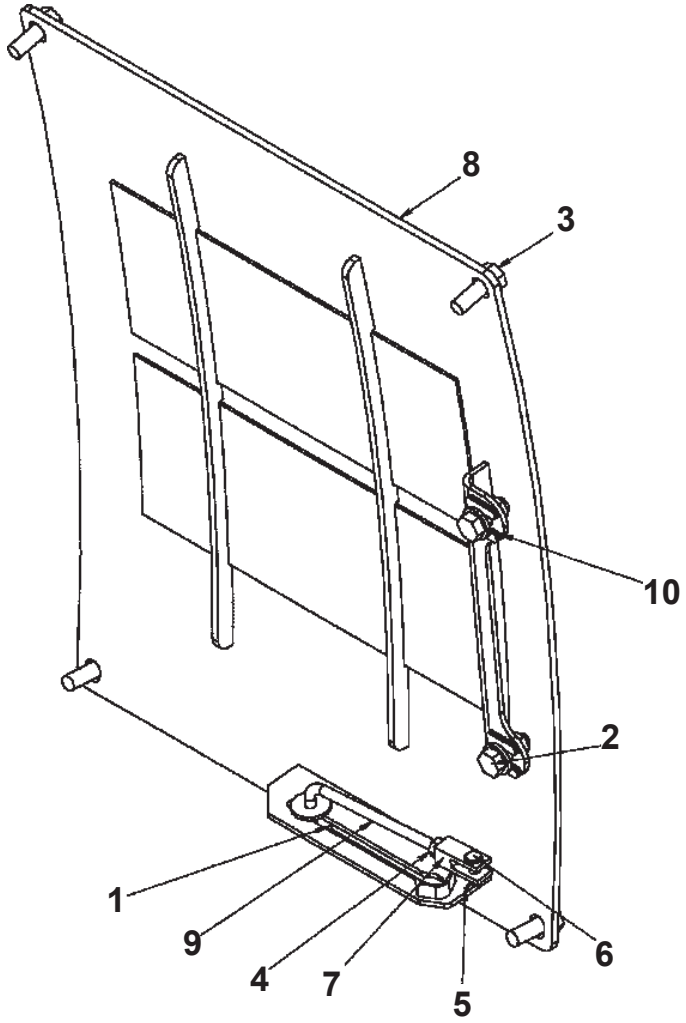

D51EX/PX-22 S/N B10001-UP

M2140-01A1 FRONT ENGINE HOOD DOOR

Item	Part No.	Description	Qty	Options
1	207-57-11260	SPACER	1	SN:B10001--
2	01010-81230	BOLT	2	SN:B10001--
	01643-31232	WASHER	2	SN:B10001--
3	01010-81235	BOLT	4	SN:B10001--
	01643-31232	WASHER	4	SN:B10001--
4	01580-10806	NUT	1	SN:B10001--
5	04050-12015	PIN, COTTER	2	SN:B10001--
6	04205-10825	PIN	1	SN:B10001--
7	04210-20832	YOKE	1	SN:B10001--
8	12Y-54-11275	DOOR, FRONT ENGINE HOOD	1	SN:B10001--
9	12Y-54-12112	BAR	1	SN:B10013--
	□12Y-54-12111	BAR	1	SN:B10001--B10012
10	12Y-54-12160	SHIM	1	SN:B10001--

Ref. M2140-01A1 Page M-007

CVPB00216

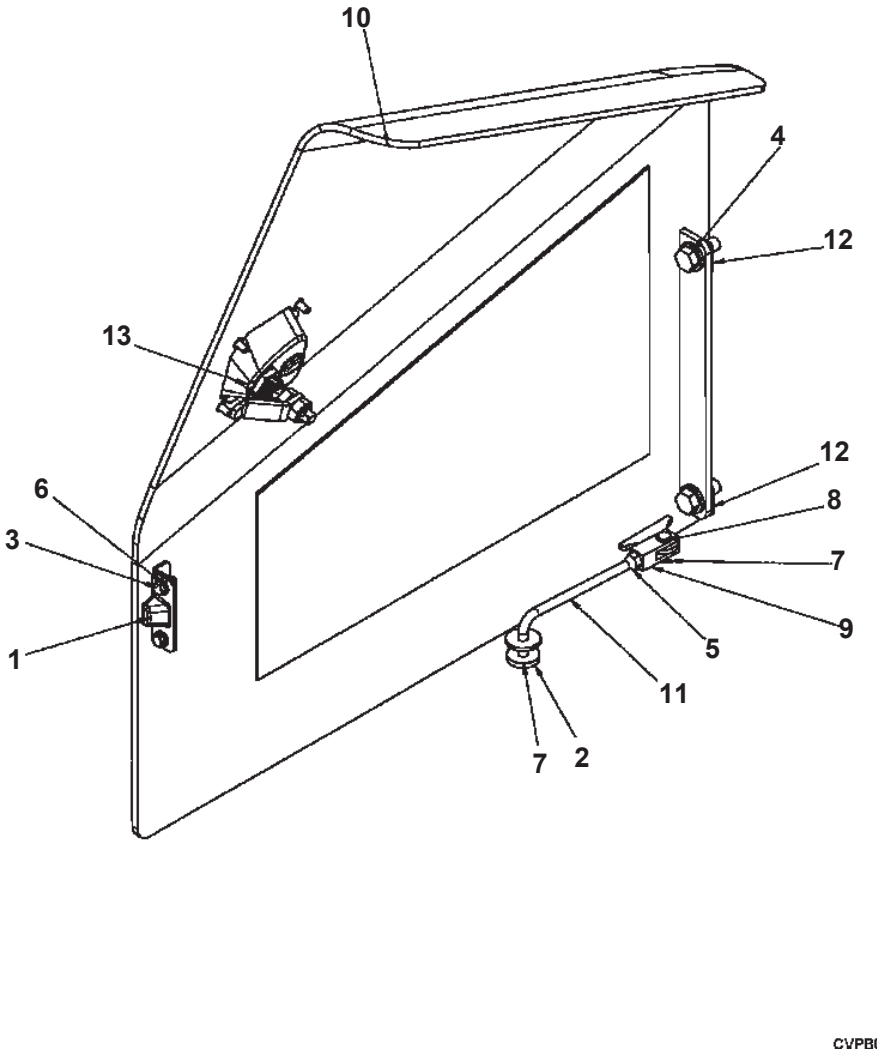

D51EX/PX-22 S/N B10001-UP

M2140-01A2 L.H. SIDE ENGINE HOOD DOOR

Item	Part No.	Description	Qty	Options
1	205-54-53550	DOVE TAIL	1	SN:B10001--
2	207-57-11260	SPACER	1	SN:B10001--
3	01010-80616	BOLT	2	SN:B10001--
4	01010-81230	BOLT	2	SN:B10001--
	01643-31232	WASHER	2	SN:B10001--
5	01580-10806	NUT	1	SN:B10001--
6	01643-30623	WASHER	2	SN:B10001--
7	04050-12015	PIN, COTTER	2	SN:B10001--
8	04205-10825	PIN	1	SN:B10001--
9	04210-20832	YOKE	1	SN:B10001--
10	12Y-54-11132	DOOR, L.H. SIDE - ENGINE HOOD	1	SN:B10001--
11	12Y-54-12112	BAR	1	SN:B10013--
	☐12Y-54-12111	BAR	1	SN:B10001--B10012
12	12Y-54-12160	SHIM	8	SN:B10001--
13	11Y-54-31961	LEVER	1	SN:B11630--
	☐11Y-54-31960	LEVER	1	SN:B11140--B11629
	☐17A-54-45181	LEVER	1	SN:B10013--B11139
	☐17A-54-45180	LEVER	1	SN:B10001--B10012

Ref. M2140-01A2 Page M-009

CVPB00217

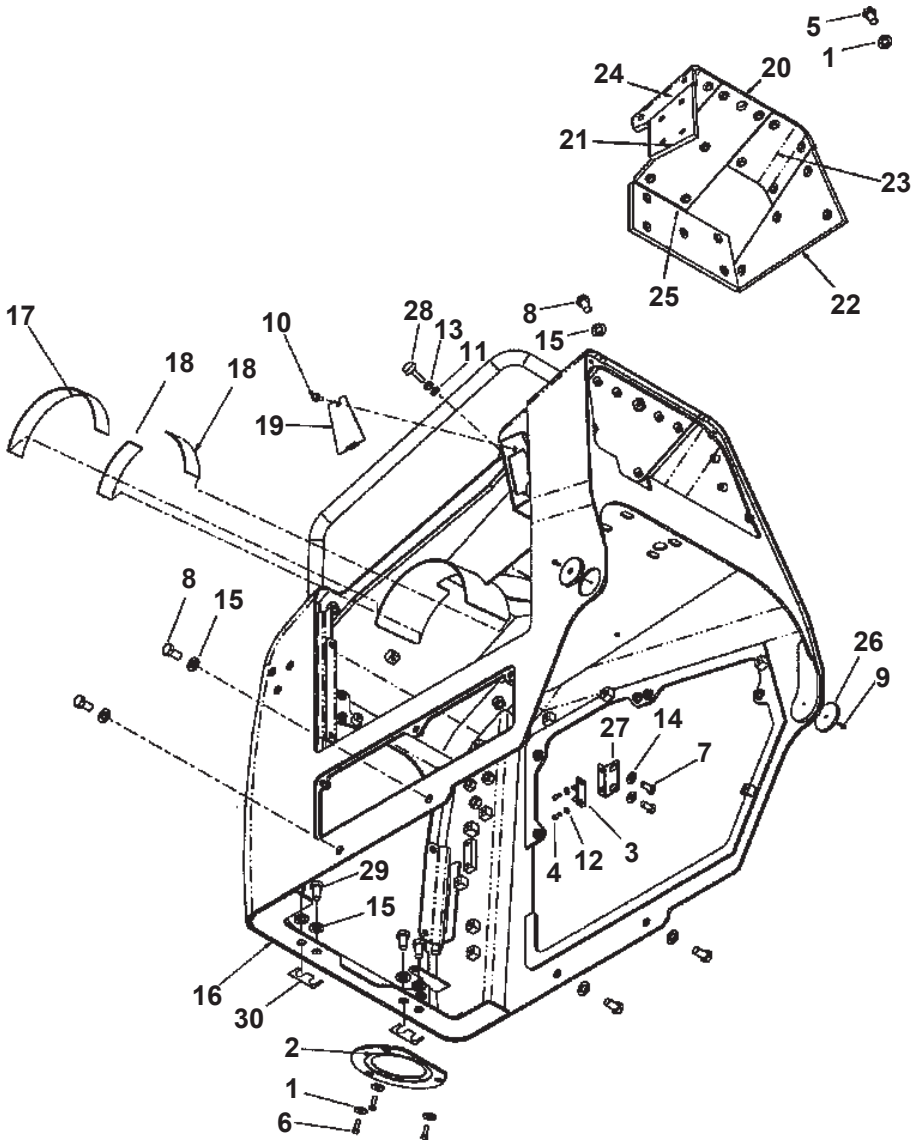

M2140-01A3 ENGINE HOOD MOUNTING

Item	Part No.	Description	Qty	Wt.	Options
1	113-43-23230	WASHER	29		SN:B10001--
2	□12Y-54-14220	COVER	1		SN:B11641--
	134-54-61320	COVER	1		SN:B10001--B11640
3	205-54-51971	DOVE TAIL, FEMALE	1		SN:B13430--
	□205-54-51970	DOVE TAIL, FEMALE	1		SN:B10001--B13429
4	01010-80616	BOLT	2		SN:B10001--
5	01010-80816	BOLT	26		SN:B10001--
6	01010-80825	BOLT	3		SN:B10001--
7	01010-81225	BOLT	2		SN:B10001--
8	01010-81630	BOLT	5		SN:B13430--
	□01010-81630	BOLT	9		SN:B10001--B13429
9	01023-10516	SCREW	2		SN:B10001--
10	01010-80820	BOLT	1		SN:B10001--
	01643-30823	WASHER	1		SN:B10001--
11	01580-11008	NUT	1		SN:B10001--
12	01643-30623	WASHER	2		SN:B10001--
13	01643-31032	WASHER	1		SN:B10001--
14	01643-31232	WASHER	2		SN:B10001--
15	01643-31645	WASHER	9		SN:B10001--
16		HOOD (SEE FIG. M2140-01A0) OR			SN:B10001--
16		HOOD (SEE FIG. M2140-02A0)		F1	SN:B10001--
17	12Y-54-11440	SHEET	1		SN:B10001--
18	12Y-54-11450	SHEET	2		SN:B10001--
19	12Y-54-11770	PLATE	1		SN:B10001--
20	12Y-54-12211	SHEET	1		SN:B10001--
21	12Y-54-12220	SHEET	1		SN:B10001--
22	12Y-54-12230	SHEET	1		SN:B10001--
23	12Y-54-12240	SHEET	1		SN:B10001--
24	12Y-54-12250	SHEET	1		SN:B10001--
25	12Y-54-12260	SHEET	1		SN:B10001--
26	12Y-54-12831	GUIDE	2		SN:B10001--
27	12Y-54-13120	BRACKET	1		SN:B10001--
28	20Y-54-11611	STOPPER	1		SN:B10001--
29	01010-81635	BOLT	4		SN:B13430--
30	12Y-99-B1710	SHIM	6		SN:B13481--
		F1 - REFERENCE NUMBER IS WITH NOISE PANELS.			

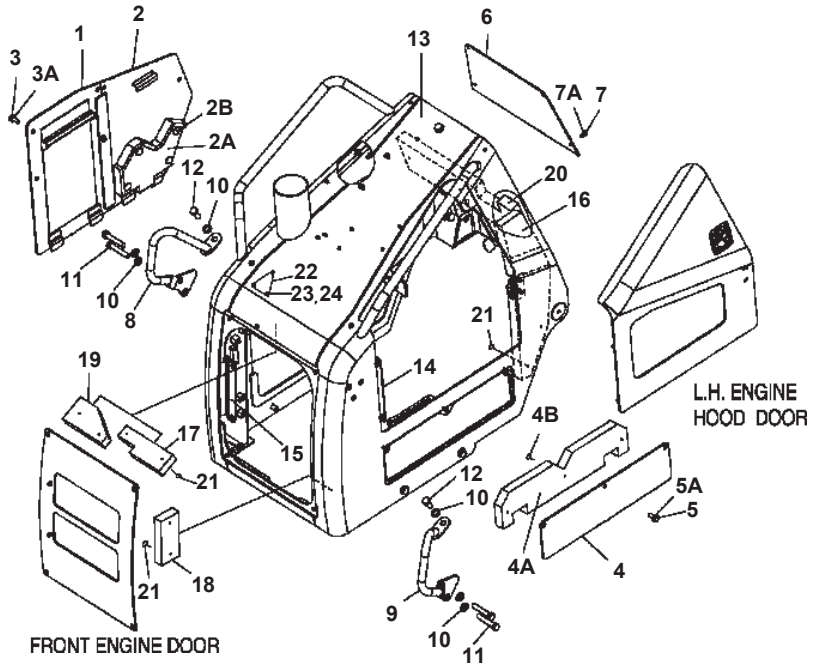

M2140-02A0 ENGINE HOOD W/NOISE PANELS

Item	Part No.	Description	Qty	Options
1	12Y-54-11143	COVER	1	SN:B10001--
	12Y-862-1571	COVER ASSEMBLY	1	SN:B10001--
2	12Y-862-1580	· COVER	1	SN:B10001--
2A	12Y-862-1230	· ABSORBER	1	SN:B10001--
2B	124-A62-1920	· CAP	4	SN:B10001--
3	01010-81230	BOLT	6	SN:B10001--
3A	01643-31232	WASHER	6	SN:B10001--
	12Y-54-11173	COVER ASSEMBLY	1	SN:B10860--
	□12Y-862-1400	COVER ASSEMBLY	1	SN:B10001--B10859
4	12Y-862-1560	· COVER	1	SN:B10001--
4A	□12Y-862-1190	· ABSORBER	1	SN:B10001--B10859
4B	124-A62-1920	· CAP	3	SN:B10001--
5	01010-81230	BOLT	3	SN:B10001--
5A	01643-31232	WASHER	3	SN:B10001--
6	12Y-54-11160	PLATE	1	SN:B10001--
7	01010-80820	BOLT	4	SN:B10001--
7A	01643-30823	WASHER	4	SN:B10001--
8	12Y-54-11822	HANDLE	1	SN:B10001--
9	12Y-54-11812	HANDLE	1	SN:B10001--
10	01643-31645	WASHER	6	SN:B10001--
11	01010-81690	BOLT	4	SN:B10001--
12	01010-81635	BOLT	2	SN:B10001--
	12Y-862-1305	HOOD, ENGINE ASSEMBLY	1	SN:B11677--
	□12Y-862-1304	HOOD, ENGINE ASSEMBLY	1	SN:B11241--B11676
	□12Y-862-1303	HOOD, ENGINE ASSEMBLY	1	SN:B10860--B11240
	□12Y-862-1302	HOOD, ENGINE ASSEMBLY	1	SN:B10514--B10859
	12Y-862-1301	HOOD, ENGINE ASSEMBLY	1	SN:B10001--B10513
13	12Y-862-1554	· HOOD, ENGINE	1	SN:B11241--
	□12Y-862-1553	· HOOD, ENGINE		SN:B10860--B11240
	□12Y-862-1552	· HOOD, ENGINE	1	SN:B10514--B10859
	12Y-862-1551	· HOOD, ENGINE	1	SN:B10001--B10513
14	12Y-54-11973	· · HINGE	1	SN:B10001--
15	12Y-54-11991	· · HINGE	1	SN:B10860--
16	□12Y-862-1110	· ABSORBER	1	SN:B10001--B10859
17	12Y-862-1130	· ABSORBER	1	SN:B10001--
18	12Y-862-1140	· ABSORBER	1	SN:B10860--
19	□12Y-862-1150	· ABSORBER	1	SN:B10001--B10859
20	12Y-862-1161	· ABSORBER	1	SN:B11241--
	□12Y-862-1160	· ABSORBER	1	SN:B10001--B11240
21	124-A62-1920	CAP	13	SN:B10001--
22	12Y-54-11630	PLATE	1	SN:B10484--

M2140-02A0 ENGINE HOOD W/NOISE PANELS

Item	Part No.	Description	Qty	Options
23	01435-00820	BOLT	3	SN:B10484--
24	01584-00806	NUT	3	SN:B10484--

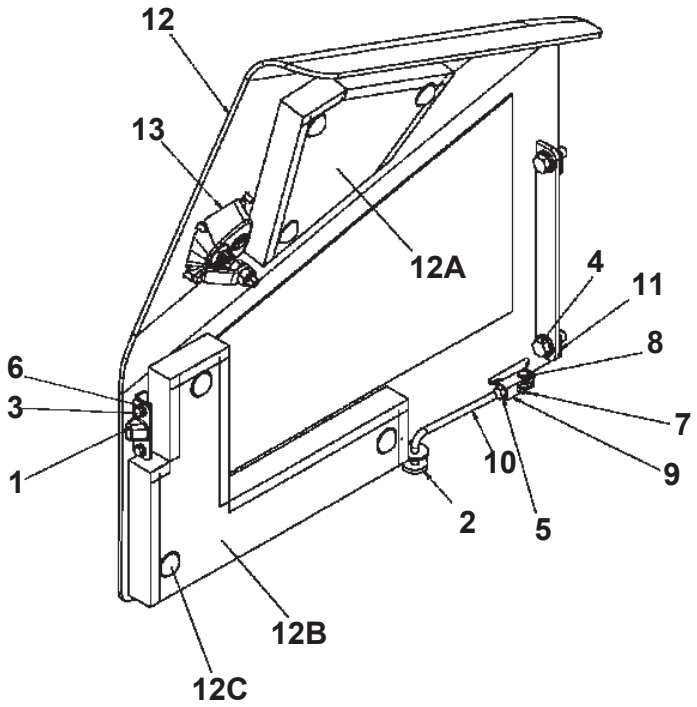

M2140-02A2 L.H. SIDE ENGINE HOOD DOOR W/NOISE PANEL

Item	Part No.	Description	Qty	Options
1	205-54-53550	DOVE TAIL	1	SN:B10001--
2	207-57-11260	SPACER	1	SN:B10001--
3	01010-80616	BOLT	2	SN:B10001--
4	01010-81230	BOLT	2	SN:B10001--
	01643-31232	WASHER	2	SN:B10001--
5	01580-10806	NUT	1	SN:B10001--
6	01643-30623	WASHER	2	SN:B10001--
7	04050-12015	PIN, COTTER	2	SN:B10001--
8	04205-10825	PIN	1	SN:B10001--
9	04210-20832	YOKE	1	SN:B10001--
10	12Y-54-12111	BAR	1	SN:B10001--
11	12Y-54-12160	SHIM	8	SN:B10001--
	12Y-862-1591	DOOR, L.H. SIDE - ENGINE HOOD	1	SN:B10860--
	□12Y-862-1590	DOOR, L.H. SIDE - ENGINE HOOD	1	SN:B10001--B10859
12	12Y-862-1651	· COVER	1	SN:B10860--
	□12Y-862-1650	· COVER	1	SN:B10001--B10859
12A	12Y-862-1210	· ABSORBER	1	SN:B10001--B10859
12B	12Y-862-1220	· ABSORBER	1	SN:B10001--
12C	124-A62-1920	· CAP	6	SN:B10001--
13	11Y-54-31961	LEVER	1	SN:B11630--
	□11Y-54-31960	LEVER	1	SN:B11140--B11629
	□17A-54-45181	LEVER	1	SN:B10013--B11139
	□17A-54-45180	LEVER	1	SN:B10001--B10012

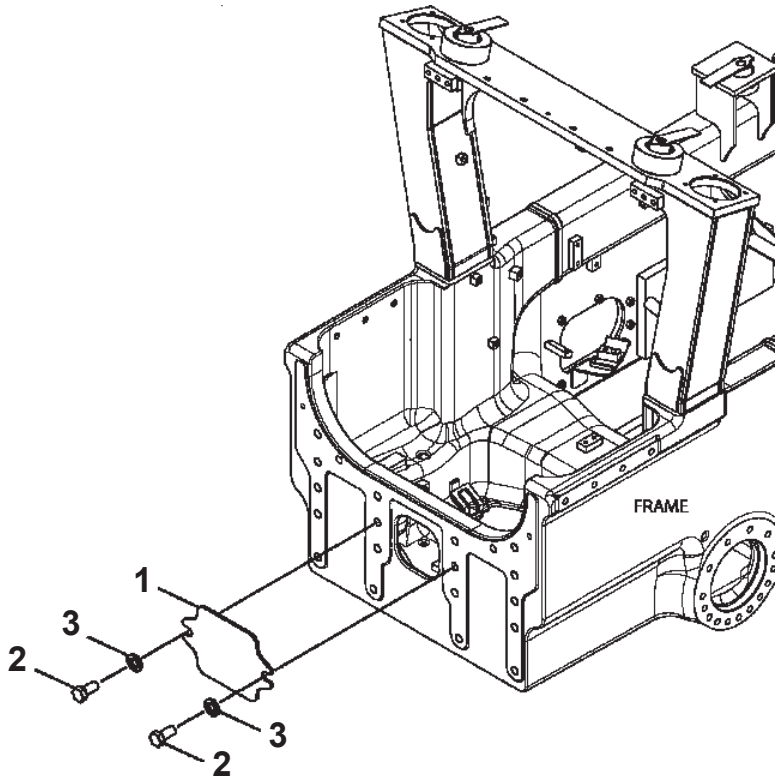

D51EX/PX-22 S/N B10001-UP

M2200-01A0 REAR COVER

Item	Part No.	Description	Qty	Options
1	12Y-54-11521	COVER, REAR	1	SN:B10001--
2	01010-82450	BOLT	2	SN:B10001--
3	01010-82450	WASHER	2	SN:B10001--

Ref. M2200-01A0 Page M-017

UNDER CARRIAGE

CVPB00219

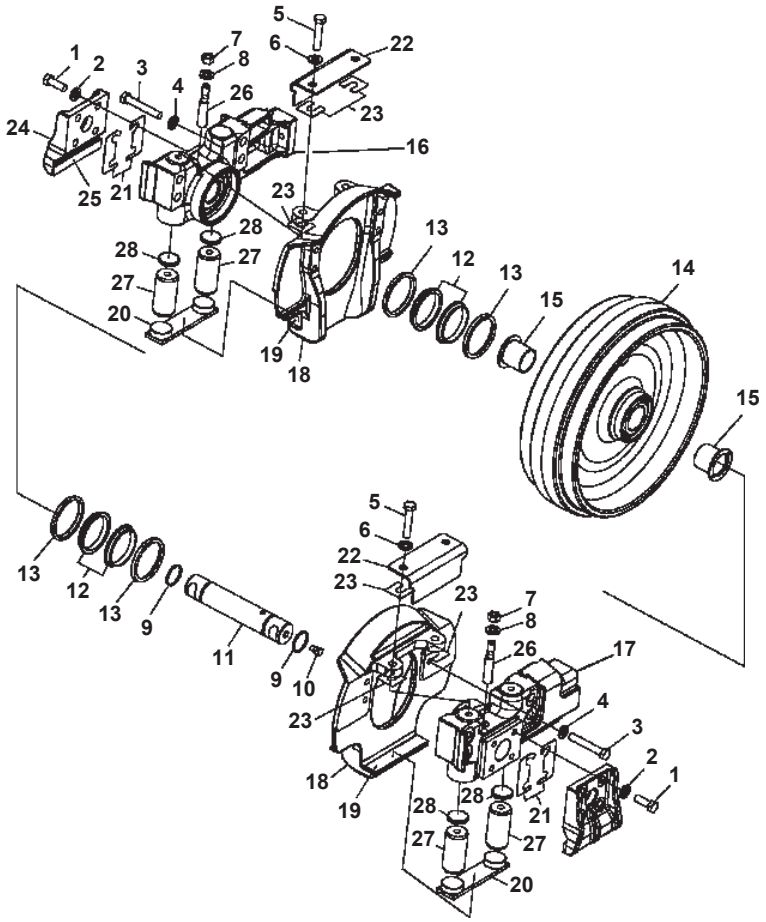

D51EX/PX-22 S/N B10001-UP

R0110-01A0 IDLER ASSEMBLY

Item	Part No.	Description	Qty	Options
	12Y-30-00011	IDLER ASSEMBLY	2	SN:B10001--
1	01010-81645	· BOLT	8	SN:B10001--
2	01643-31645	· WASHER	8	SN:B10001--
3	01011-81600	· BOLT	8	SN:B10001--
4	01643-31645	· WASHER	8	SN:B10001--
5	01016-51680	· BOLT	4	SN:B10001--
6	01643-31645	· WASHER	4	SN:B10001--
7	01582-11613	· NUT	2	SN:B10001--
8	01643-31645	· WASHER	2	SN:B10001--
9	07000-13048	· O-RING	2	SN:B10001--
10	07052-31217	· PLUG	1	SN:B10001--
11	124-30-51181	· SHAFT	1	SN:B10001--
	12Y-30-00100	· FLOATING SEAL ASSEMBLY	2	SN:B10001--
12	12Y-30-11510	· · SEAL	2	SN:B10001--
13	154-32-61170	· · O-RING	2	SN:B10001--
14	12Y-30-11111	· IDLER	1	SN:B10001--
15	12Y-30-11130	· BUSHING	2	SN:B10001--
16	12Y-30-11312	· SUPPORT R.H.	1	SN:B10001--
17	12Y-30-11322	· SUPPORT L.H.	1	SN:B10001--
18	12Y-30-11331	· GUIDE	2	SN:B10001--
19	12Y-30-11350	· · PLATE (WELDED)	1	SN:B10001--
20	12Y-30-11380	· WEAR PLATE	2	SN:B10001--
21	12Y-30-11370	· SHIM	16	SN:B10001--
22	12Y-30-11410	· PLATE	2	SN:B10001--
23	12Y-30-11420	· SHIM	24	SN:B10001--
24	12Y-30-11441	· GUIDE	2	SN:B10001--
25	12Y-30-11360	· · PLATE (WELDED)	1	SN:B10001--
26	130-30-13170	· BOLT	2	SN:B10001--
27	155-30-13230	· SPRING	4	SN:B10001--
28	195-30-17960	· PLATE	4	SN:B10001--

Ref. R0110-01A0 Page R-001

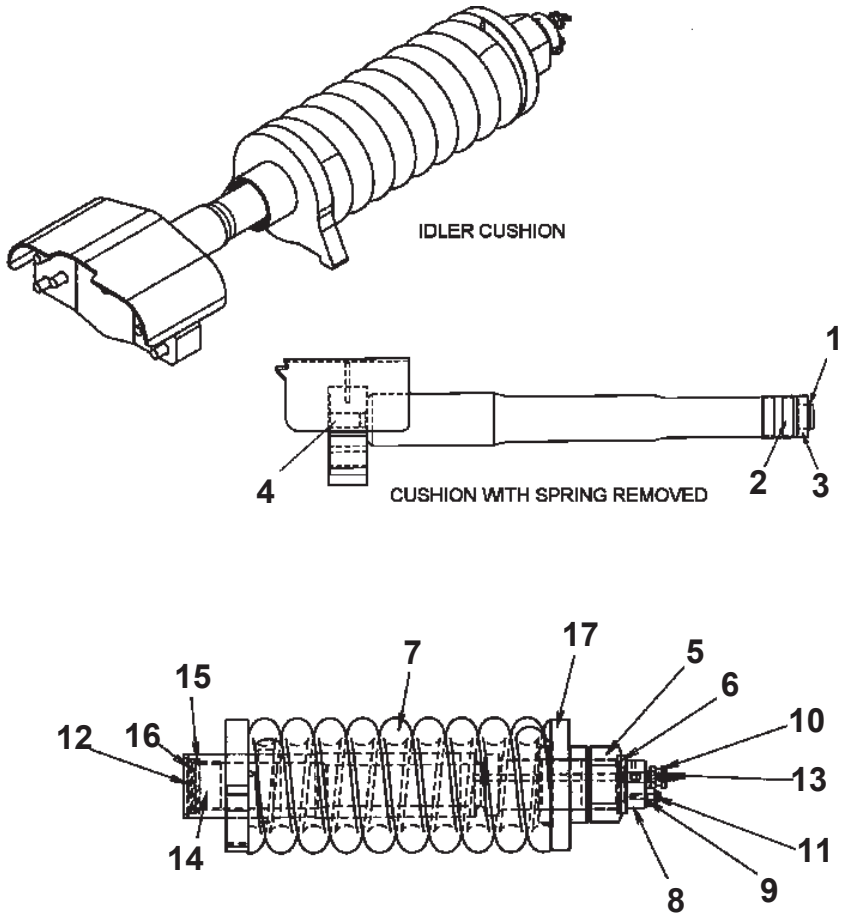

R0120-01A0 IDLER CUSHION

Item	Part No.	Description	Qty	Options
1	04064-03515	RING	1	SN:B10001--
2	07155-00615	RING	2	SN:B10001--
3	09370-00060	U-PACKING	1	SN:B10001--
4	12Y-30-11271	ROD	1	SN:B10001--
5	124-30-54160	NUT	1	SN:B10001--
6	124-30-54170	SPACER	2	SN:B10001--
7	124-30-64110	SPRING	1	SN:B10001--
8	124-30-64221	CYLINDER	1	SN:B10001--
9	201-30-52280	SEAT	1	SN:B10001--
10	203-30-42260	VALVE	1	SN:B10001--
11	01010-80830	BOLT	2	SN:B10001--
	01643-30823	WASHER	2	SN:B10001--
12	04065-08025	RING	1	SN:B10001--
13	07020-00900	FITTING	1	SN:B10091--
	◆07020-00675	FITTING	1	SN:B10001--B10090
14	07177-06530	BUSHING	1	SN:B10001--
15	12G-30-64340	SEAL	1	SN:B10001--
16	12G-30-64350	SPACER	1	SN:B10001--
17	12Y-30-11260	PILOT	1	SN:B10001--
NI	124-30-54130	LOCK	1	SN:B10001--
	01010-81680	BOLT, IDLER CUSHION MOUNTING	12	SN:B10001--
	01643-31645	WASHER, IDLER CUSHION MOUNTING	12	SN:B10001--

CMZ00151

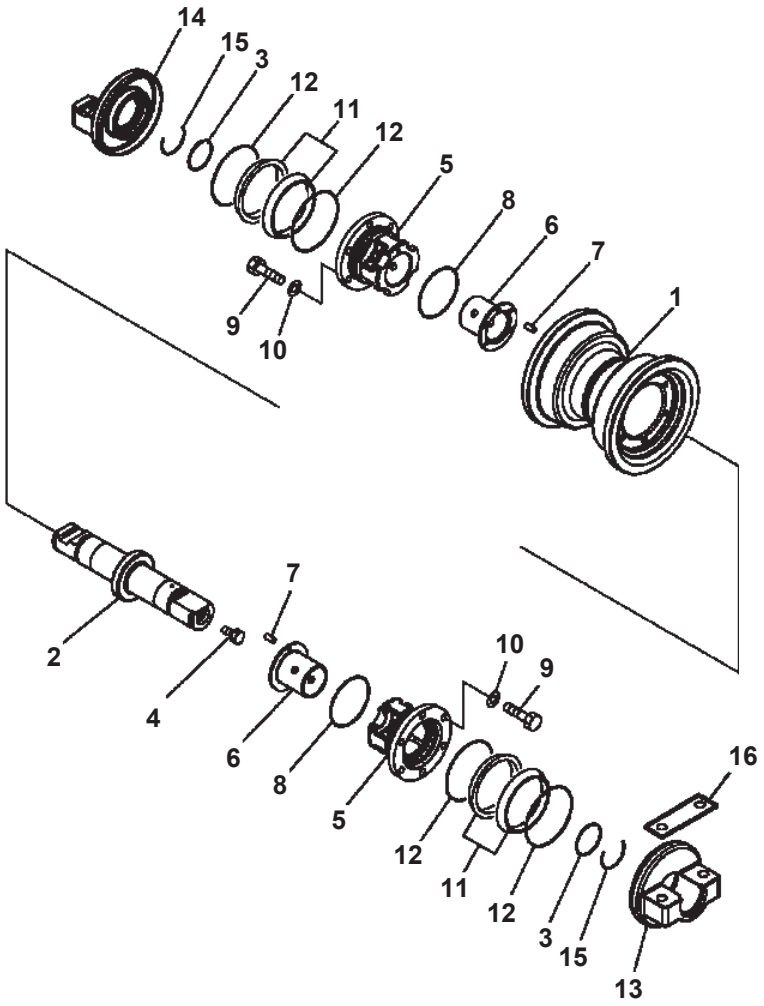

D51EX/PX-22 S/N B10001-UP

R0200-01A0 TRACK ROLLER, (SINGLE)

Item	Part No.	Description	Qty	Options
	12Y-30-00021	TRACK ROLLER ASSEMBLY	8	SN:B10001--
1	12Y-30-17110	· ROLLER	1	SN:B10001--
2	12Y-30-17130	· SHAFT	1	SN:B10001--
3	07000-13048	· O-RING	2	SN:B10001--
4	07052-31217	· PLUG	1	SN:B10001--
	12Y-30-17200	· BUSHING ASSEMBLY	2	SN:B10001--
5	12Y-30-17160	· · BUSHING	1	SN:B10001--
6	12Y-30-17170	· · BUSHING	1	SN:B10001--
7	170-30-91130	· · PIN	1	SN:B10001--
8	07000-12095	· O-RING	2	SN:B10001--
9	01010-81030	· BOLT	12	SN:B10001--
10	01643-51032	· WASHER	12	SN:B10001--
	12Y-30-00111	· FLOATING SEAL ASSEMBLY	2	SN:B10001--
11	(NSS)	· · SEAL	2	SN:B10001--
12	(NSS)	· · O-RING	2	SN:B10001--
13	12Y-30-17140	· COLLAR	1	SN:B10001--
14	12Y-30-17150	· COLLAR	1	SN:B10001--
15	12Y-30-17210	· RING	2	SN:B10001--
16	111-30-11370	· THRUST	1	SN:B10001--

Ref. R0200-01A0 Page R-005

CMZ00251

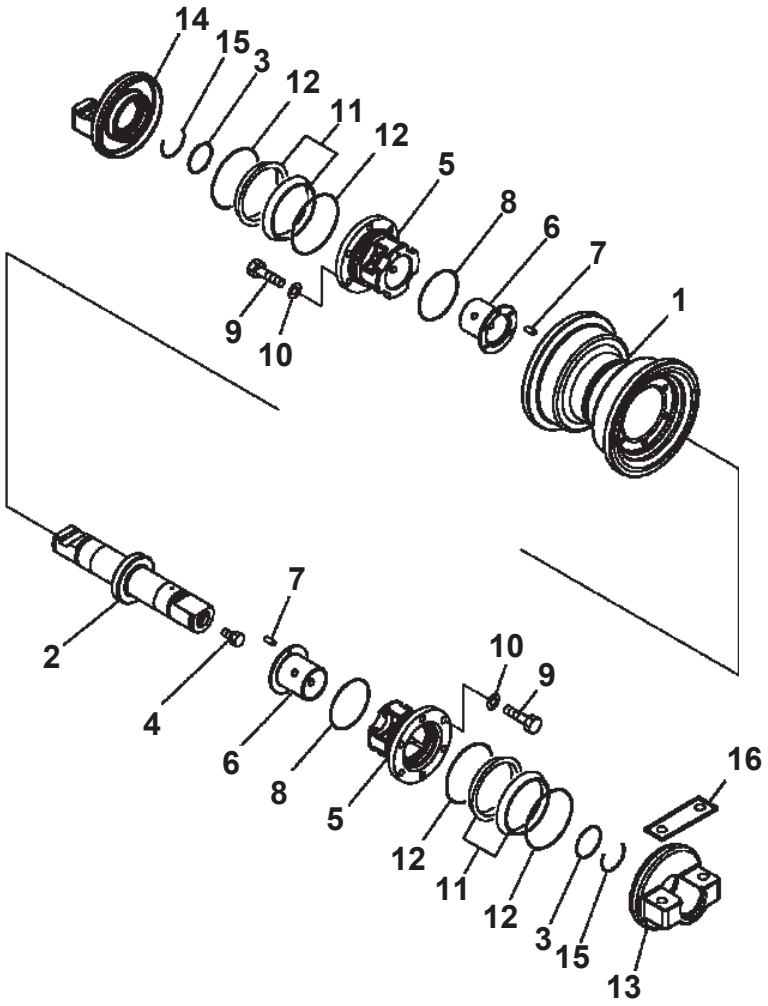

D51EX/PX-22 S/N B10001-UP

R0200-01A1 TRACK ROLLER, (SINGLE) (PLUS TYPE)

Item	Part No.	Description	Qty	Options
	12Y-30-01020	TRACK ROLLER ASSEMBLY	8	SN:B10001--
1	12Y-30-17310	· ROLLER	1	SN:B10001--
2	12Y-30-17130	· SHAFT	1	SN:B10001--
3	07000-13048	· O-RING	2	SN:B10001--
4	07052-31217	· PLUG	1	SN:B10001--
	12Y-30-17200	· BUSHING ASSEMBLY	2	SN:B10001--
5	12Y-30-17160	· · BUSHING	1	SN:B10001--
6	12Y-30-17170	· · BUSHING	1	SN:B10001--
7	170-30-91130	· · PIN	1	SN:B10001--
8	07000-12095	· O-RING	2	SN:B10001--
9	01010-81030	· BOLT	12	SN:B10001--
10	01643-51032	· WASHER	12	SN:B10001--
	12Y-30-00111	· FLOATING SEAL ASSEMBLY	2	SN:B10001--
11	(NSS)	· · SEAL	2	SN:B10001--
12	(NSS)	· · O-RING	2	SN:B10001--
13	12Y-30-17140	· COLLAR	1	SN:B10001--
14	12Y-30-17150	· COLLAR	1	SN:B10001--
15	12Y-30-17210	· RING	2	SN:B10001--
16	111-30-11370	· THRUST	1	SN:B10001--

Ref. R0200-01A1 Page R-005A

CMZ00152

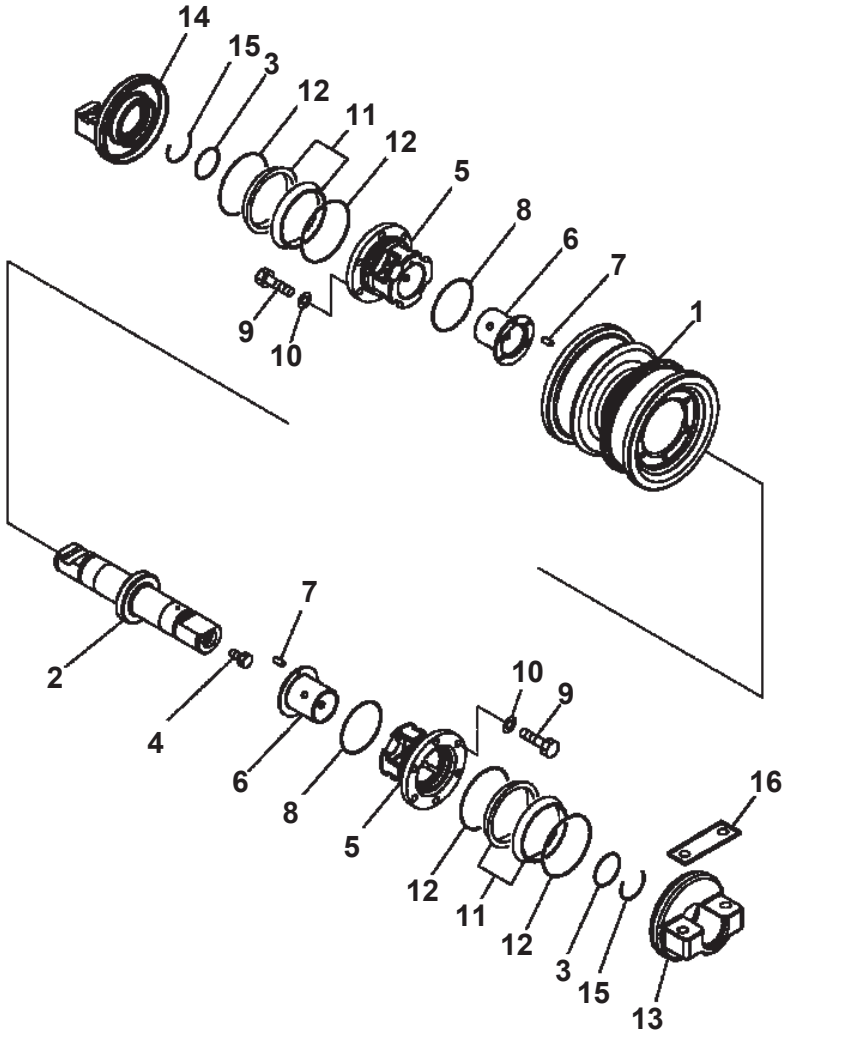

D51EX/PX-22 S/N B10001-UP

R0200-02A0 TRACK ROLLER, (DOUBLE)

Item	Part No.	Description	Qty	Options
	12Y-30-00031	TRACK ROLLER ASSEMBLY	6	SN:B10001--
1	12Y-30-17120	· ROLLER	1	SN:B10001--
2	12Y-30-17130	· SHAFT	1	SN:B10001--
3	07000-13048	· O-RING	2	SN:B10001--
4	07052-31217	· PLUG	1	SN:B10001--
	12Y-30-17200	· BUSHING ASSEMBLY	2	SN:B10001--
5	12Y-30-17160	· · BUSHING	1	SN:B10001--
6	12Y-30-17170	· · BUSHING	1	SN:B10001--
7	170-30-91130	· · PIN	1	SN:B10001--
8	07000-12095	· O-RING	2	SN:B10001--
9	01010-81030	· BOLT	12	SN:B10001--
10	01643-51032	· WASHER	12	SN:B10001--
	12Y-30-00111	· FLOATING SEAL ASSEMBLY	2	SN:B10001--
11	(NSS)	· · SEAL	2	SN:B10001--
12	(NSS)	· · O-RING	2	SN:B10001--
13	12Y-30-17140	· COLLAR	1	SN:B10001--
14	12Y-30-17150	· COLLAR	1	SN:B10001--
15	12Y-30-17210	· RING	2	SN:B10001--
16	111-30-11370	· THRUST	1	SN:B10001--

Ref. R0200-02A0 Page R-007

CMZ00252

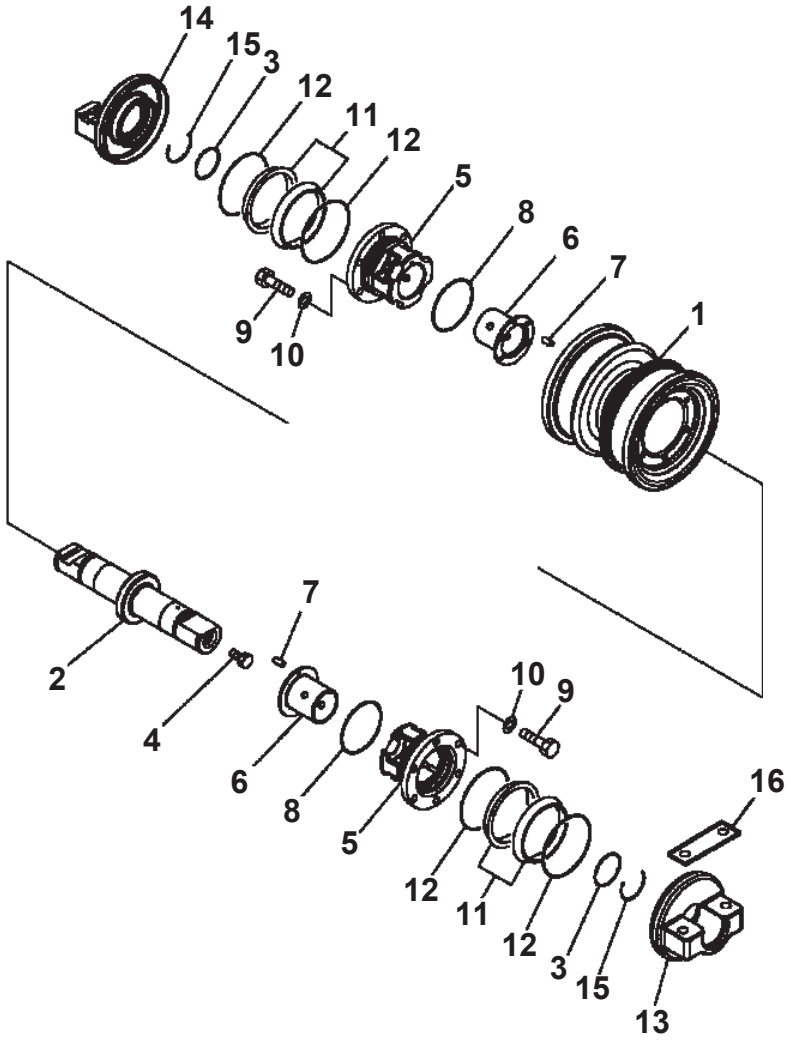

D51EX/PX-22 S/N B10001-UP

R0200-02A1 TRACK ROLLER, (DOUBLE) (PLUS TYPE)

Item	Part No.	Description	Qty	Options
	12Y-30-01030	TRACK ROLLER ASSEMBLY	6	SN:B10001--
1	12Y-30-17320	· ROLLER	1	SN:B10001--
2	12Y-30-17130	· SHAFT	1	SN:B10001--
3	07000-13048	· O-RING	2	SN:B10001--
4	07052-31217	· PLUG	1	SN:B10001--
	12Y-30-17200	· BUSHING ASSEMBLY	2	SN:B10001--
5	12Y-30-17160	· · BUSHING	1	SN:B10001--
6	12Y-30-17170	· · BUSHING	1	SN:B10001--
7	170-30-91130	· · PIN	1	SN:B10001--
8	07000-12095	· O-RING	2	SN:B10001--
9	01010-81030	· BOLT	12	SN:B10001--
10	01643-51032	· WASHER	12	SN:B10001--
	12Y-30-00111	· FLOATING SEAL ASSEMBLY	2	SN:B10001--
11	(NSS)	· · SEAL	2	SN:B10001--
12	(NSS)	· · O-RING	2	SN:B10001--
13	12Y-30-17140	· COLLAR	1	SN:B10001--
14	12Y-30-17150	· COLLAR	1	SN:B10001--
15	12Y-30-17210	· RING	2	SN:B10001--
16	111-30-11370	· THRUST	1	SN:B10001--

Ref. R0200-02A1 Page R-007A

CMZ00153

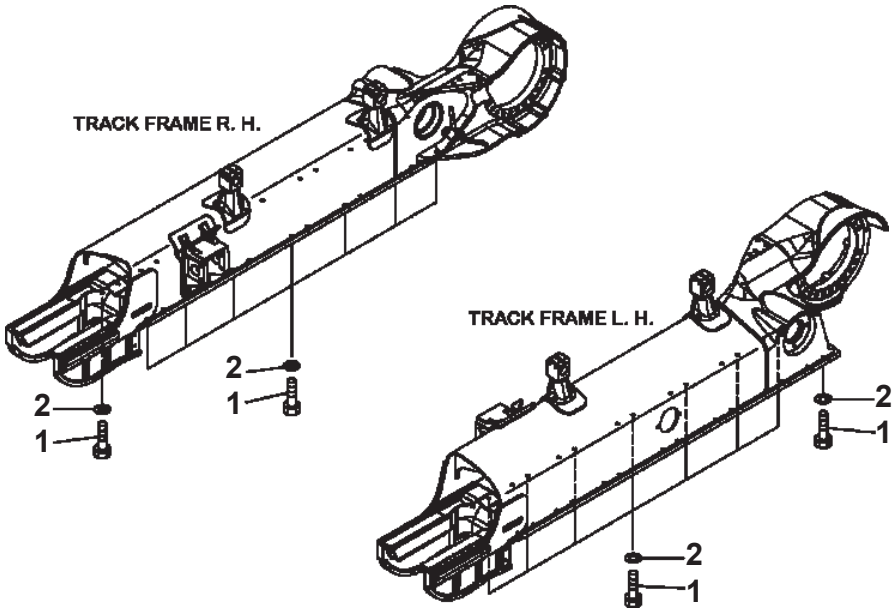

D51EX/PX-22 S/N B10001-UP

R0200-03A0 TRACK ROLLER PLATE

Item	Part No.	Description	Qty	Options
1	01010-81670	BOLT	56	SN:B10001--
2	01643-31645	WASHER	56	SN:B10001--

Ref. R0200-03A0 Page R-009

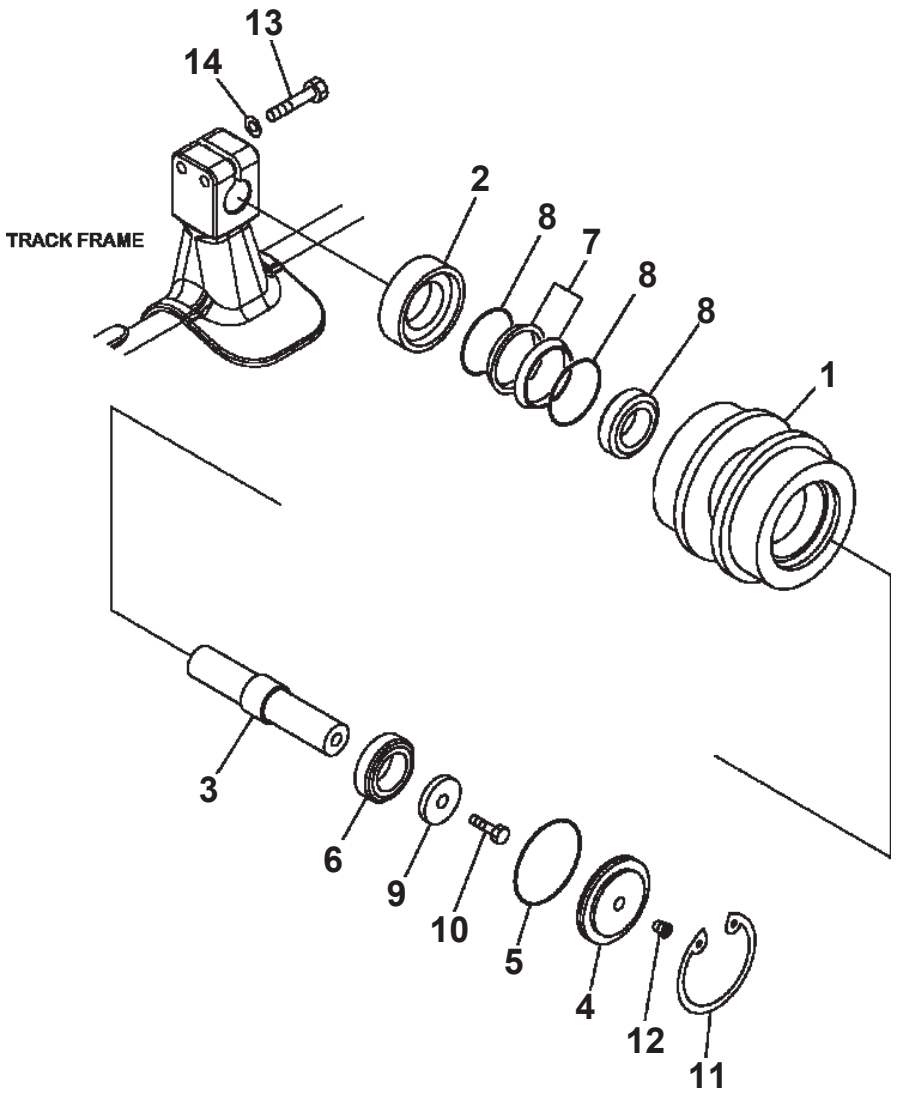

R0300-01A0 CARRIER ROLLER

Item	Part No.	Description	Qty	Options
	12Y-30-00041	ROLLER ASSEMBLY, CARRIER	4	SN:B10001--
1	12Y-30-18110	· ROLLER	1	SN:B10001--
2	12Y-30-18130	· RING	1	SN:B10001--
3	12Y-30-18121	· SHAFT	1	SN:B10001--
4	14X-30-15131	· COVER	1	SN:B10001--
5	07000-12105	· O-RING	1	SN:B10001--
6	06002-32008	· BEARING	2	SN:B10001--
	140-30-00141	· FLOATING SEAL ASSEMBLY	1	SN:B10001--
7	(NSS)	· · RING	2	SN:B10001--
8	(NSS)	· · O-RING	2	SN:B10001--
9	14X-30-15251	· HOLDER	1	SN:B10001--
10	01010-81630	· BOLT	1	SN:B10001--
11	04065-01154	· RING	1	SN:B10001--
12	20Y-30-16330	· PLUG	1	SN:B10001--
13	01010-81670	BOLT	8	SN:B10001--
14	01643-31645	WASHER	8	SN:B10001--

CMZ00258

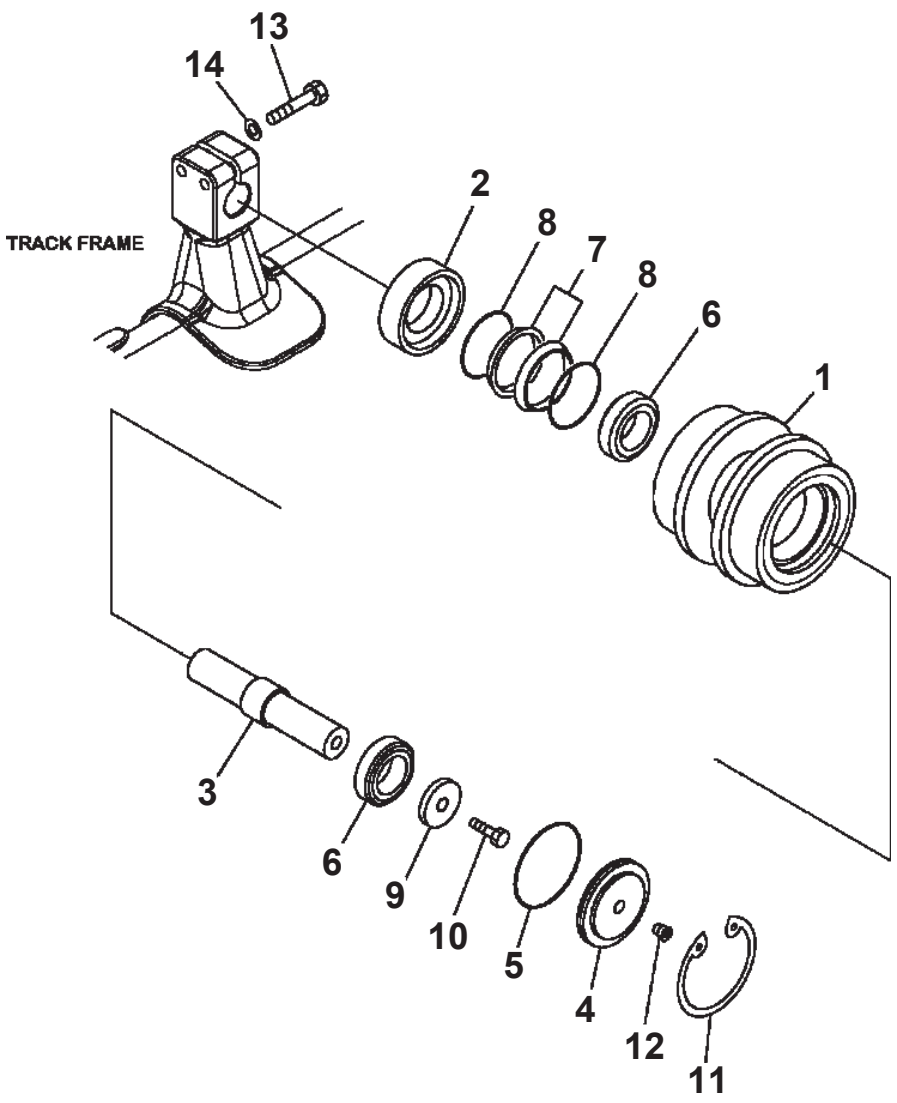

D51EX/PX-22 S/N B10001-UP

R0300-01A1 CARRIER ROLLER (PLUS TYPE)

Item	Part No.	Description	Qty	Options
	12Y-30-01040	ROLLER ASSEMBLY, CARRIER	4	SN:B10001--
1	12Y-30-18210	· ROLLER	1	SN:B10001--
2	12Y-30-18130	· RING	1	SN:B10001--
3	12Y-30-18121	· SHAFT	1	SN:B10001--
4	14X-30-15131	· COVER	1	SN:B10001--
5	07000-12105	· O-RING	1	SN:B10001--
6	06002-32008	· BEARING	2	SN:B10001--
	140-30-00141	· FLOATING SEAL ASSEMBLY	1	SN:B10001--
7	(NSS)	· · RING	2	SN:B10001--
8	(NSS)	· · O-RING	2	SN:B10001--
9	14X-30-15251	· HOLDER	1	SN:B10001--
10	01010-81630	· BOLT	1	SN:B10001--
11	04065-01154	· RING	1	SN:B10001--
12	20Y-30-16330	· PLUG	1	SN:B10001--
13	01010-81670	BOLT	8	SN:B10001--
14	01643-31645	WASHER	8	SN:B10001--

Ref. R0300-01A1 Page R-011A

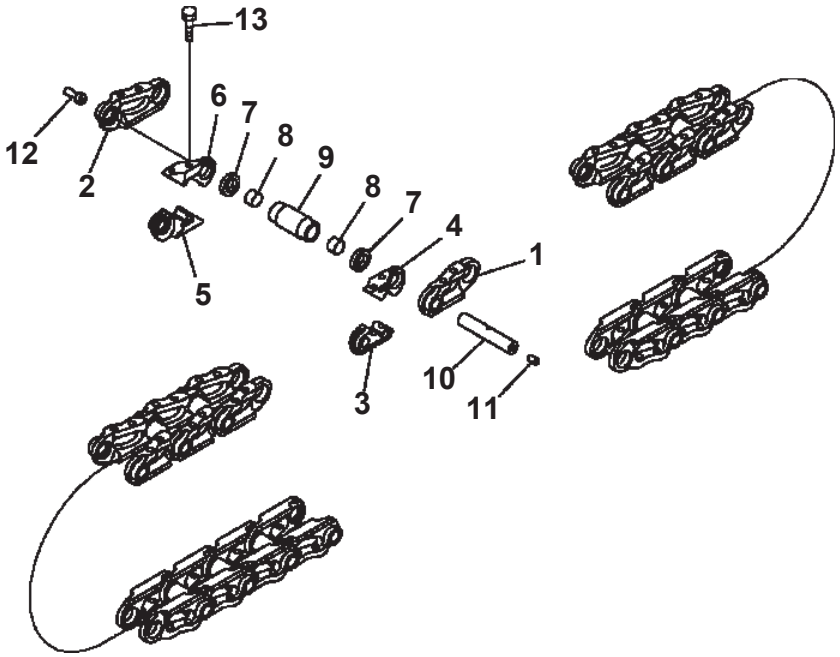

R0322-01A0 TRACK LINK ASSEMBLY SINGLE GROUSER, LUBRICATE TYPE

Item	Part No.	Description	Qty	Options
	12Y-32-00010	TRACK LINK ASSEMBLY	1	SN:B10001--
1	12Y-32-11120	· LINK	86	SN:B10001--
2	12Y-32-11130	· LINK	86	SN:B10001--
	12Y-32-08011	· MASTER LINK K. L.H.	2	SN:B10001--
3	(NSS)	· · LINK	1	SN:B10001--
4	(NSS)	· · LINK	1	SN:B10001--
	12Y-32-08021	· MASTER LINK K. R.H.	2	SN:B10001--
5	(NSS)	· · LINK	1	SN:B10001--
6	(NSS)	· · LINK	1	SN:B10001--
7	134-32-63200	· SEAL	176	SN:B10001--
8	12Y-32-11190	· SPACER	176	SN:B10001--
9	12Y-32-11140	· BUSHING	88	SN:B10001--
10	12Y-32-11150	· PIN	88	SN:B10001--
11	07059-11830	· PLUG	88	SN:B10001--
12	07059-20721	· PLUG	88	SN:B10001--
13	12Y-32-11310	· BOLT	8	SN:B10001--

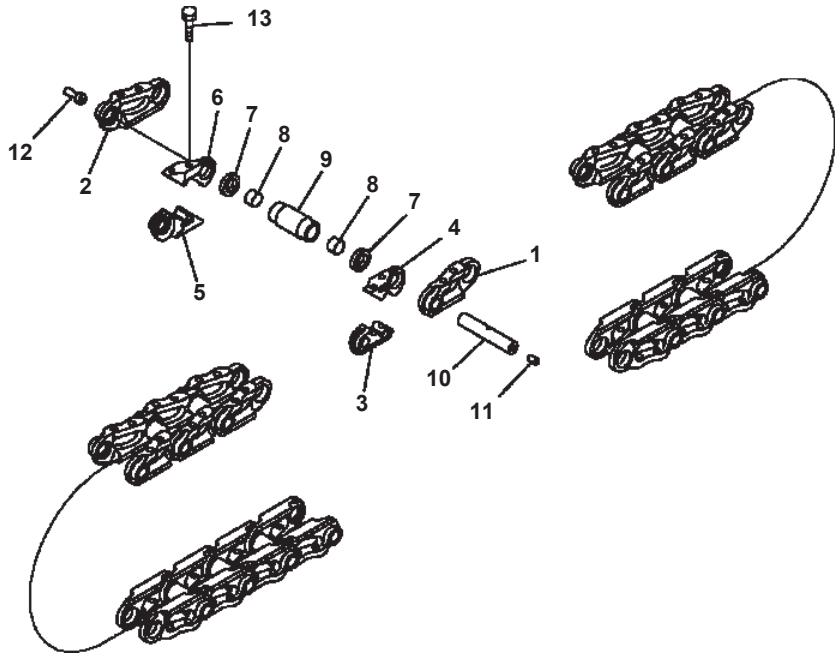

D51EX/PX-22 S/N B10001-UP

R0322-01A1 TRACK LINK ASSEMBLY SINGLE GROUSER, LUBRICATE TYPE, ABRASION RESISTANT

Item	Part No.	Description	Qty	Options
	12Y-32-00030	TRACK LINK ASSEMBLY	1	SN:B10001--
1	12Y-32-11120	· LINK	86	SN:B10001--
2	12Y-32-11130	· LINK	86	SN:B10001--
	12Y-32-08011	· MASTER LINK K. L.H.	2	SN:B10001--
3	(NSS)	· · LINK	1	SN:B10001--
4	(NSS)	· · LINK	1	SN:B10001--
	12Y-32-08021	· MASTER LINK K. R.H.	2	SN:B10001--
5	(NSS)	· · LINK	1	SN:B10001--
6	(NSS)	· · LINK	1	SN:B10001--
7	134-32-63200	· SEAL	176	SN:B10001--
8	12Y-32-11190	· SPACER	176	SN:B10001--
9	12Y-32-11140	· BUSHING	88	SN:B10001--
10	12Y-32-11150	· PIN	88	SN:B10001--
11	07059-11830	· PLUG	88	SN:B10001--
12	07059-20721	· PLUG	88	SN:B10001--
13	12Y-32-11310	· BOLT	8	SN:B10001--

Ref. R0322-01A1 Page R-015

CMZ00109

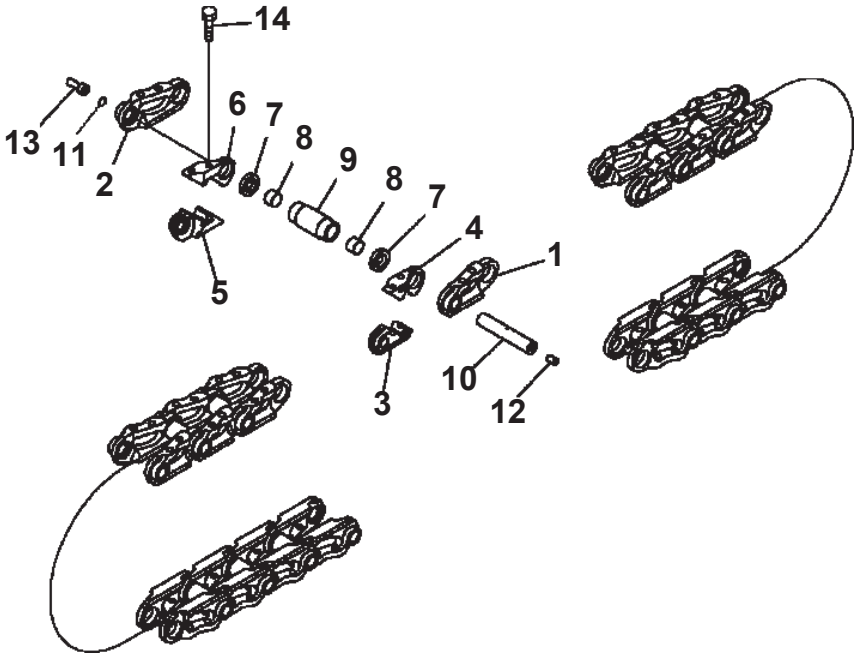

D51EX/PX-22 S/N B10001-UP

R0322-01A3 TRACK LINK ASSEMBLY SINGLE GROUSER, LUBRICATE TYPE (PLUS TYPE)

Item	Part No.	Description	Qty	Options
	12Y-32-00300	TRACK LINK ASSEMBLY	1	SN:B10869--
1	12Y-32-15610	· LINK	88	SN:B10869--
2	12Y-32-15630	· LINK	84	SN:B10869--
	12Y-32-08210	· MASTER LINK K. L.H.	2	SN:B10869--
3	(NSS)	· · LINK	1	SN:B10869--
4	(NSS)	· · LINK	1	SN:B10869--
	12Y-32-08220	· MASTER LINK K. R.H.	2	SN:B10869--
5	(NSS)	· · LINK	1	SN:B10869--
6	(NSS)	· · LINK	1	SN:B10869--
7	134-32-63200	· SEAL	352	SN:B10869--
8	12Y-32-11190	· SPACER	352	SN:B10869--
9	12Y-32-15640	· BUSHING	88	SN:B10869--
10	12Y-32-15650	· PIN	88	SN:B10869--
11	12Y-32-15730	· RING	176	SN:B10869--
12	07059-11830	· PLUG	88	SN:B10869--
13	07059-20721	· PLUG	88	SN:B10869--
14	12Y-32-15310	· BOLT	8	SN:B10869--

Ref. R0322-01A3 Page R-015A

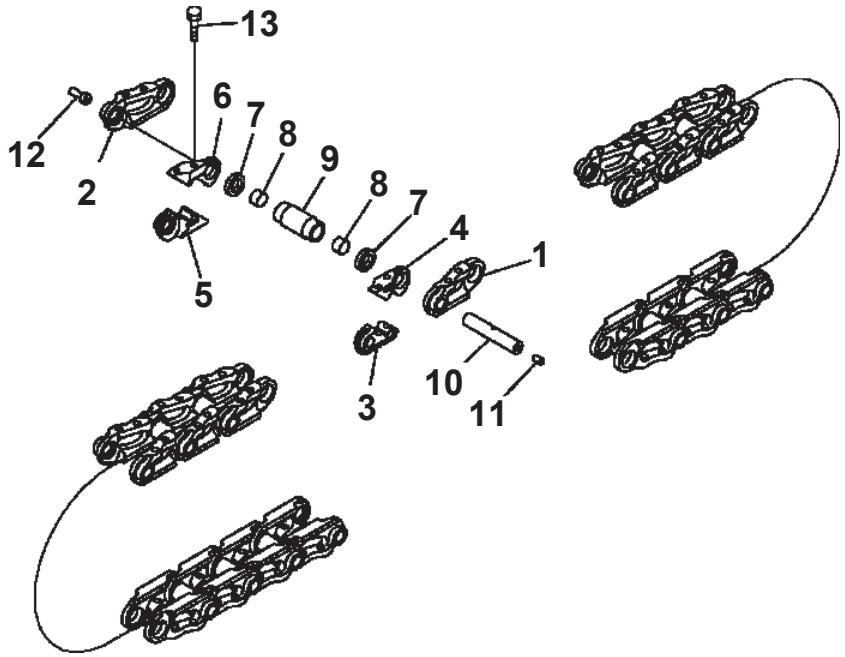

D51EX/PX-22 S/N B10001-UP

R0322-01A5 TRACK LINK ASSEMBLY D51PX - LUBRICATE TYPE, SWAMP TYPE

Item	Part No.	Description	Qty	Options
	12Y-32-00020	TRACK LINK ASSEMBLY	1	SN:B10001--
1	12Y-32-11120	· LINK	86	SN:B10001--
2	12Y-32-11130	· LINK	86	SN:B10001--
	12Y-32-08011	· MASTER LINK K. L.H.	2	SN:B10001--
3	(NSS)	· · LINK	1	SN:B10001--
4	(NSS)	· · LINK	1	SN:B10001--
	12Y-32-08021	· MASTER LINK K. R.H.	2	SN:B10001--
5	(NSS)	· · LINK	1	SN:B10001--
6	(NSS)	· · LINK	1	SN:B10001--
7	134-32-63200	· SEAL	176	SN:B10001--
8	12Y-32-11190	· SPACER	176	SN:B10001--
9	12Y-32-11140	· BUSHING	88	SN:B10001--
10	12Y-32-11150	· PIN	88	SN:B10001--
11	07059-11830	· PLUG	88	SN:B10001--
12	07059-20721	· PLUG	88	SN:B10001--
13	12Y-32-11410	· BOLT	8	SN:B10001--

Ref. R0322-01A5 Page R-015B

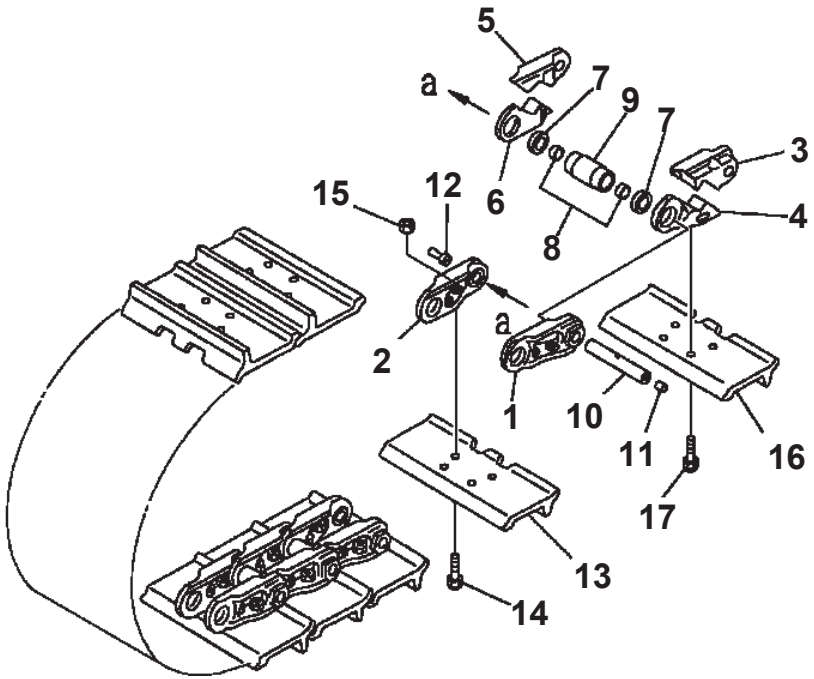

D51EX/PX-22 S/N B10001-UP

R0500-01A0 TRACK SHOE - D51EX LUBRICATE TYPE, SINGLE GROUSER, 510 MM WIDE

Item	Part No.	Description	Qty	Options
	12Y-32-01031	TRACK SHOE ASSEMBLY	1	SN:B10001--
1	12Y-32-11120	· LINK, L.H.	86	SN:B10001--
2	12Y-32-11130	· LINK, R.H.	86	SN:B10001--
	12Y-32-08011	· MASTER LINK K. L.H., L.H.	2	SN:B10001--
3	(NSS)	· · LINK	1	SN:B10001--
4	(NSS)	· · LINK	1	SN:B10001--
	12Y-32-08021	· MASTER LINK K. R.H., R.H.	2	SN:B10001--
5	(NSS)	· · LINK	1	SN:B10001--
6	(NSS)	· · LINK	1	SN:B10001--
7	134-32-63200	· SEAL	176	SN:B10001--
8	12Y-32-11190	· SPACER	176	SN:B10001--
9	12Y-32-11140	· BUSHING	88	SN:B10001--
10	12Y-32-11150	· PIN	88	SN:B10001--
11	07059-11830	· PLUG, SMALL	88	SN:B10001--
12	07059-20721	· PLUG, LARGE	88	SN:B10001--
13	12Y-32-11110	· SHOE	86	SN:B10001--
14	205-32-51121	· BOLT, SHOE (R2300-K1)	344	SN:B10001--
15	203-32-61220	· NUT (R2300-K1)	344	SN:B10001--
16	12Y-32-11110	· SHOE	2	SN:B10001--
17	12Y-32-11310	· BOLT	8	SN:B10001--

Ref. R0500-01A0 Page R-017

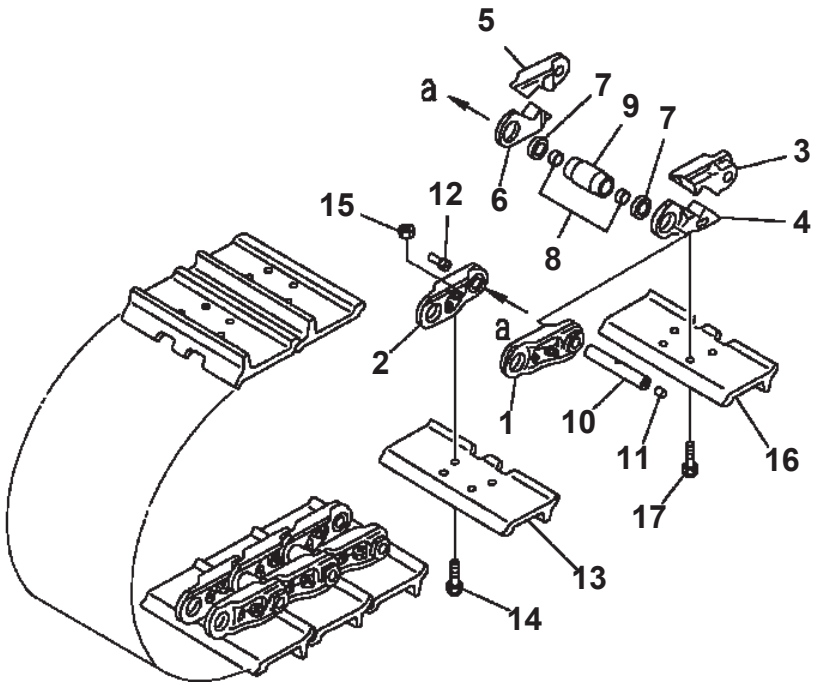

R0500-01A1 TRACK SHOE - D51EX LUBRICATE TYPE, SINGLE GROUSER, 560 MM WIDE

Item	Part No.	Description	Qty	Options
	12Y-32-01041	TRACK SHOE ASSEMBLY	1	SN:B10001--
1	12Y-32-11120	· LINK, L.H.	86	SN:B10001--
2	12Y-32-11130	· LINK, R.H.	86	SN:B10001--
	12Y-32-08011	· MASTER LINK K. L.H., L.H.	2	SN:B10001--
3	(NSS)	· · LINK	1	SN:B10001--
4	(NSS)	· · LINK	1	SN:B10001--
	12Y-32-08021	· MASTER LINK K. R.H., R.H.	2	SN:B10001--
5	(NSS)	· · LINK	1	SN:B10001--
6	(NSS)	· · LINK	1	SN:B10001--
7	134-32-63200	· SEAL	176	SN:B10001--
8	12Y-32-11190	· SPACER	176	SN:B10001--
9	12Y-32-11140	· BUSHING	88	SN:B10001--
10	12Y-32-11150	· PIN	88	SN:B10001--
11	07059-11830	· PLUG, SMALL	88	SN:B10001--
12	07059-20721	· PLUG, LARGE	88	SN:B10001--
13	12Y-32-11340	· SHOE	86	SN:B10001--
14	205-32-51121	· BOLT, SHOE (R2300-K1)	344	SN:B10001--
15	203-32-61220	· NUT (R2300-K1)	344	SN:B10001--
16	12Y-32-11340	· SHOE	2	SN:B10001--
17	12Y-32-11310	· BOLT	8	SN:B10001--

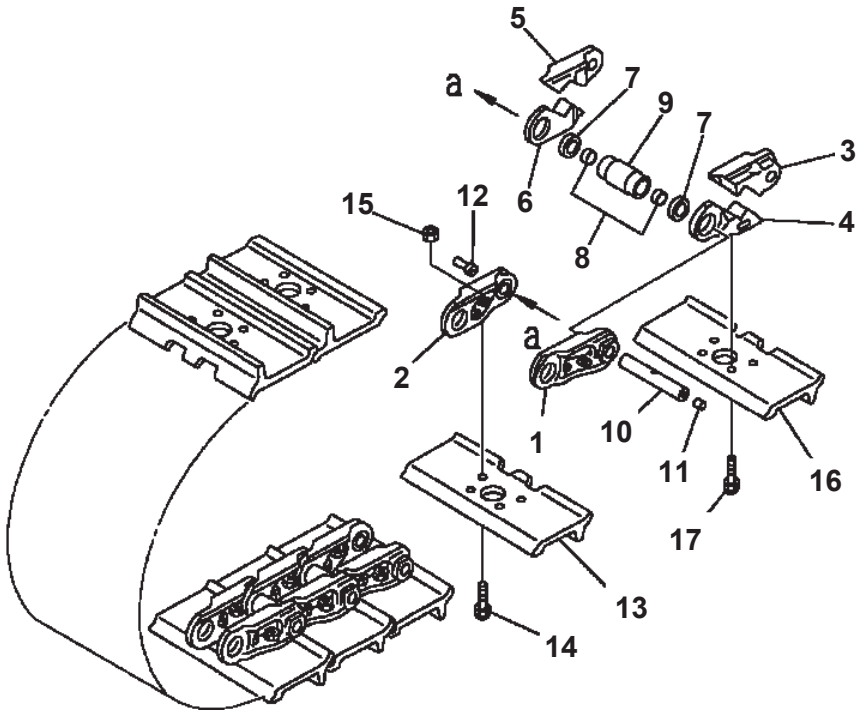

D51EX/PX-22 S/N B10001-UP

R0500-01A2 TRACK SHOE - D51EX LUBRICATE TYPE, SINGLE GROUSER WITH HOLE, 510 MM WIDE

Item	Part No.	Description	Qty	Options
	12Y-32-01050	TRACK SHOE ASSEMBLY	1	SN:B10001--
1	12Y-32-11120	· LINK, L.H.	86	SN:B10001--
2	12Y-32-11130	· LINK, R.H.	86	SN:B10001--
	12Y-32-08011	· MASTER LINK K. L.H., L.H.	2	SN:B10001--
3	(NSS)	· · LINK	1	SN:B10001--
4	(NSS)	· · LINK	1	SN:B10001--
	12Y-32-08021	· MASTER LINK K. R.H., R.H.	2	SN:B10001--
5	(NSS)	· · LINK	1	SN:B10001--
6	(NSS)	· · LINK	1	SN:B10001--
7	134-32-63200	· SEAL	176	SN:B10001--
8	12Y-32-11190	· SPACER	176	SN:B10001--
9	12Y-32-11140	· BUSHING	88	SN:B10001--
10	12Y-32-11150	· PIN	88	SN:B10001--
11	07059-11830	· PLUG, SMALL	88	SN:B10001--
12	07059-20721	· PLUG, LARGE	88	SN:B10001--
13	12Y-32-11360	· SHOE	86	SN:B10001--
14	205-32-51121	· BOLT, SHOE (R2300-K1)	344	SN:B10001--
15	203-32-61220	· NUT (R2300-K1)	344	SN:B10001--
16	12Y-32-11360	· SHOE	2	SN:B10001--
17	12Y-32-11310	· BOLT	8	SN:B10001--

Ref. R0500-01A2 Page R-021

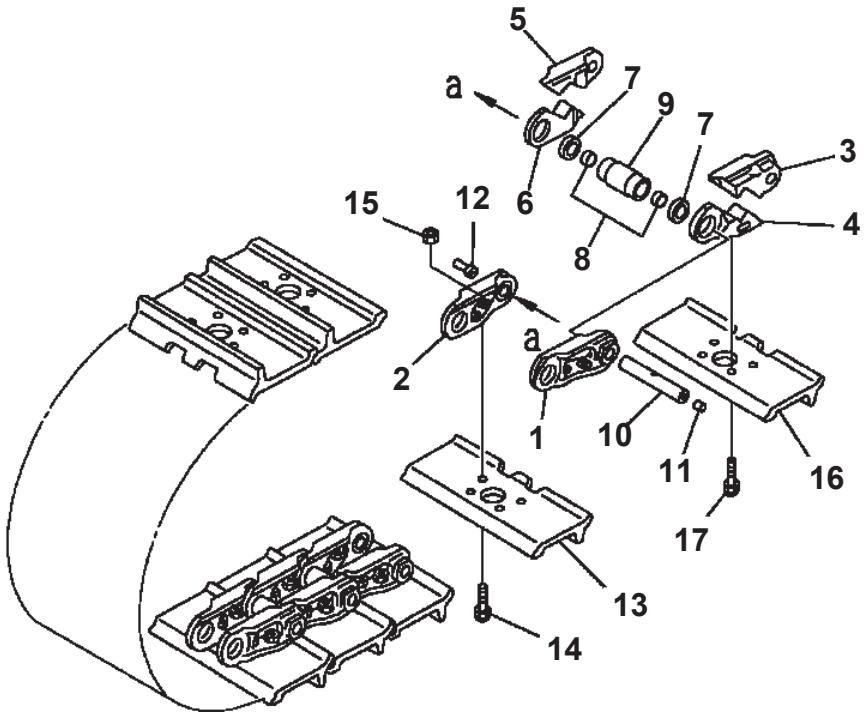

R0500-01A3 TRACK SHOE - D51EX LUBRICATE TYPE, SINGLE GROUSER WITH HOLE, 560 MM WIDE

Item	Part No.	Description	Qty	Options
	12Y-32-01060	TRACK SHOE ASSEMBLY	1	SN:B10001--
1	12Y-32-11120	· LINK, L.H.	86	SN:B10001--
2	12Y-32-11130	· LINK, R.H.	86	SN:B10001--
	12Y-32-08011	· MASTER LINK K. L.H., L.H.	2	SN:B10001--
3	(NSS)	· · LINK	1	SN:B10001--
4	(NSS)	· · LINK	1	SN:B10001--
	12Y-32-08021	· MASTER LINK K. R.H., R.H.	2	SN:B10001--
5	(NSS)	· · LINK	1	SN:B10001--
6	(NSS)	· · LINK	1	SN:B10001--
7	134-32-63200	· SEAL	176	SN:B10001--
8	12Y-32-11190	· SPACER	176	SN:B10001--
9	12Y-32-11140	· BUSHING	88	SN:B10001--
10	12Y-32-11150	· PIN	88	SN:B10001--
11	07059-11830	· PLUG, SMALL	88	SN:B10001--
12	07059-20721	· PLUG, LARGE	88	SN:B10001--
13	12Y-32-11370	· SHOE	86	SN:B10001--
14	205-32-51121	· BOLT, SHOE (R2300-K1)	344	SN:B10001--
15	203-32-61220	· NUT (R2300-K1)	344	SN:B10001--
16	12Y-32-11370	· SHOE	2	SN:B10001--
17	12Y-32-11310	· BOLT	8	SN:B10001--

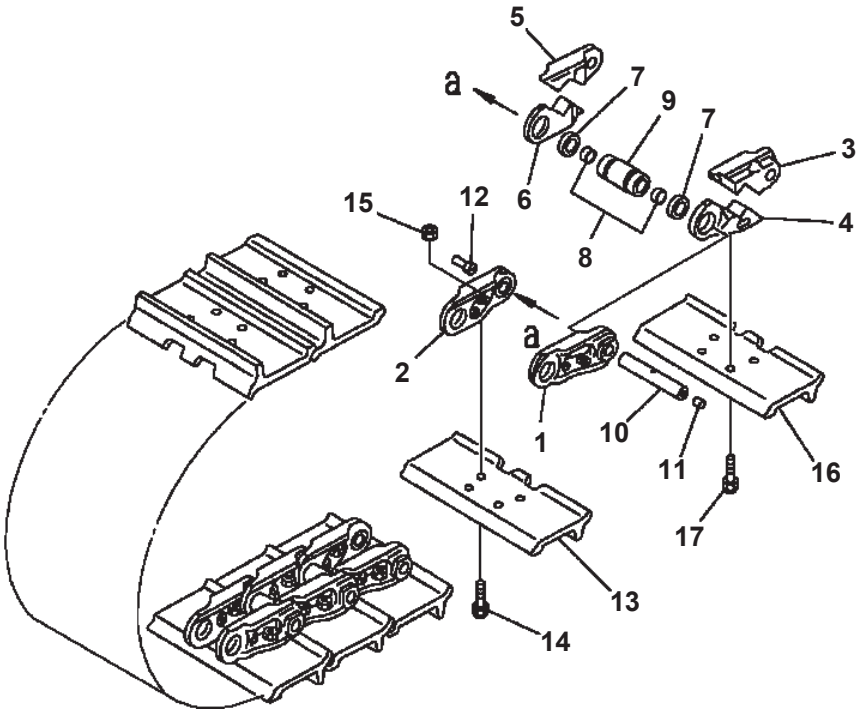

R0500-01A4 TRACK SHOE - D51EX LUBRICATE TYPE, SINGLE GROUSER, 510 MM WIDE, ABRASION RESISTANT

Item	Part No.	Description	Qty	Options
	12Y-32-01070	TRACK SHOE ASSEMBLY	1	SN:B10001--
1	12Y-32-11120	· LINK, L.H.	86	SN:B10001--
2	12Y-32-11130	· LINK, R.H.	86	SN:B10001--
	12Y-32-08011	· MASTER LINK K. L.H., L.H.	2	SN:B10001--
3	(NSS)	· · LINK	1	SN:B10001--
4	(NSS)	· · LINK	1	SN:B10001--
	12Y-32-08021	· MASTER LINK K. R.H., R.H.	2	SN:B10001--
5	(NSS)	· · LINK	1	SN:B10001--
6	(NSS)	· · LINK	1	SN:B10001--
7	134-32-63200	· SEAL	176	SN:B10001--
8	12Y-32-11190	· SPACER	176	SN:B10001--
9	12Y-32-11240	· BUSHING	88	SN:B10001--
10	12Y-32-11150	· PIN	88	SN:B10001--
11	07059-11830	· PLUG, SMALL	88	SN:B10001--
12	07059-20721	· PLUG, LARGE	88	SN:B10001--
13	12Y-32-11110	· SHOE	86	SN:B10001--
14	205-32-51121	· BOLT, SHOE (R2300-K1)	344	SN:B10001--
15	203-32-61220	· NUT (R2300-K1)	344	SN:B10001--
16	12Y-32-11110	· SHOE	2	SN:B10001--
17	12Y-32-11310	· BOLT	8	SN:B10001--

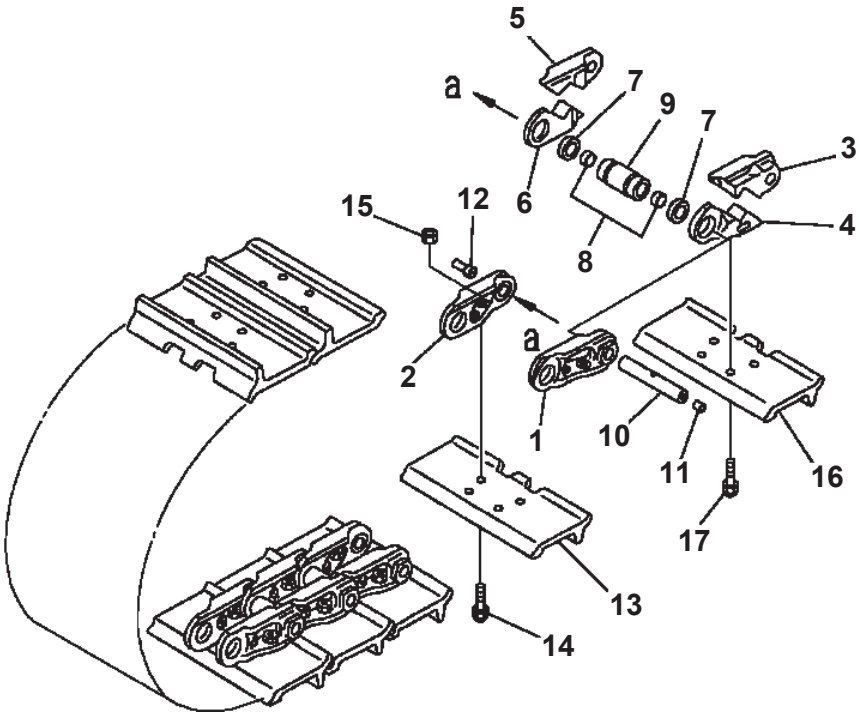

R0500-01A5 TRACK SHOE - D51EX LUBRICATE TYPE, SINGLE GROUSER, 560 MM WIDE, ABRASION RESISTANT

Item	Part No.	Description	Qty	Options
	12Y-32-01080	TRACK SHOE ASSEMBLY	1	SN:B10001--
1	12Y-32-11120	· LINK, L.H.	86	SN:B10001--
2	12Y-32-11130	· LINK, R.H.	86	SN:B10001--
	12Y-32-08011	· MASTER LINK K. L.H.	2	SN:B10001--
3	(NSS)	· · LINK	1	SN:B10001--
4	(NSS)	· · LINK	1	SN:B10001--
	12Y-32-08021	· MASTER LINK K. R.H.	2	SN:B10001--
5	(NSS)	· · LINK	1	SN:B10001--
6	(NSS)	· · LINK	1	SN:B10001--
7	134-32-63200	· SEAL	176	SN:B10001--
8	12Y-32-11190	· SPACER	176	SN:B10001--
9	12Y-32-11240	· BUSHING	88	SN:B10001--
10	12Y-32-11150	· PIN	88	SN:B10001--
11	07059-11830	· PLUG, SMALL	88	SN:B10001--
12	07059-20721	· PLUG, LARGE	88	SN:B10001--
13	12Y-32-11340	· SHOE	86	SN:B10001--
14	205-32-51121	· BOLT, SHOE (R2300-K1)	344	SN:B10001--
15	203-32-61220	· NUT (R2300-K1)	344	SN:B10001--
16	12Y-32-11340	· SHOE	2	SN:B10001--
17	12Y-32-11310	· BOLT	8	SN:B10001--

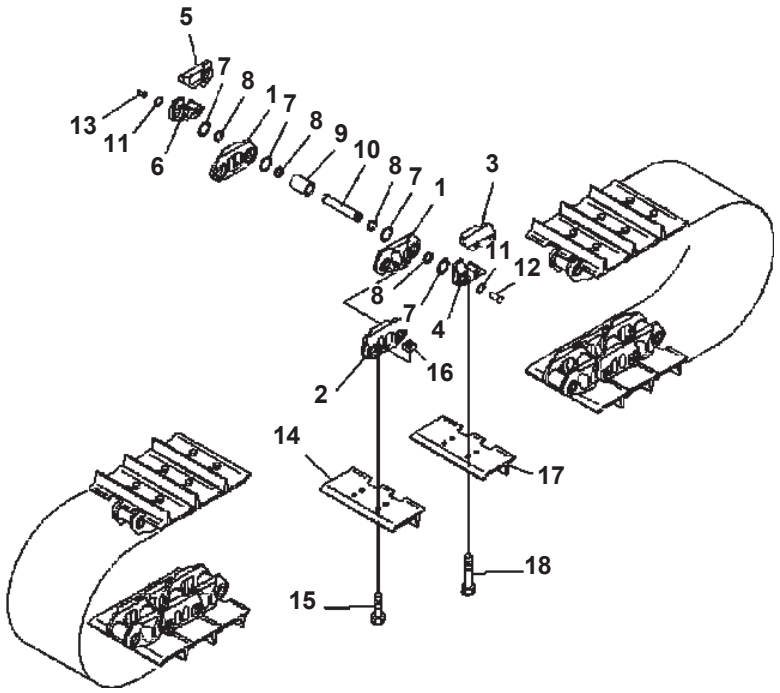

R0500-01A6 TRACK SHOE (LUBRICATE TYPE) (SINGLE GROUSER) (510MM WIDE) (PLUS TYPE)

Item	Part No.	Description	Qty	Options
	12Y-32-03000	TRACK SHOE ASS'Y	1	SN:B10869--
1	12Y-32-15610	· LINK	88	SN:B10869--
2	12Y-32-15630	· LINK	84	SN:B10869--
	12Y-32-08210	· MASTER LINK K. L.H	2	SN:B10869--
3	☆	· · MASTER LINK L.H. ROLLER SIDE	1	SN:B10869--
4	☆	· · MASTER LINK L.H. SHOE SIDE	1	SN:B10869--
	12Y-32-08220	· MASTER LINK K. R.H	2	SN:B10869--
5	☆	· · MASTER LINK R.H. ROLLER SIDE	1	SN:B10869--
6	☆	· · MASTER LINK R.H. SHOE SIDE	1	SN:B10869--
7	134-32-63200	· SEAL ASS'Y	352	SN:B10869--
8	12Y-32-11190	· SPACER	352	SN:B10869--
9	12Y-32-15640	· BUSHING	88	SN:B10869--
10	12Y-32-15650	· PIN	88	SN:B10869--
11	12Y-32-15730	· RING	176	SN:B10869--
12	07059-11830	· PLUG, LARGE	88	SN:B10869--
13	07059-20721	· PLUG, SMALL	88	SN:B10869--
14	12Y-32-15110	· SHOE, TRACK	86	SN:B10869--
15	205-32-51211	· BOLT	344	SN:B10869--
16	12Y-32-15220	· NUT	344	SN:B10869--
17	12Y-32-15110	· SHOE, TRACK	2	SN:B10869--
18	12Y-32-15310	· BOLT	8	SN:B10869--

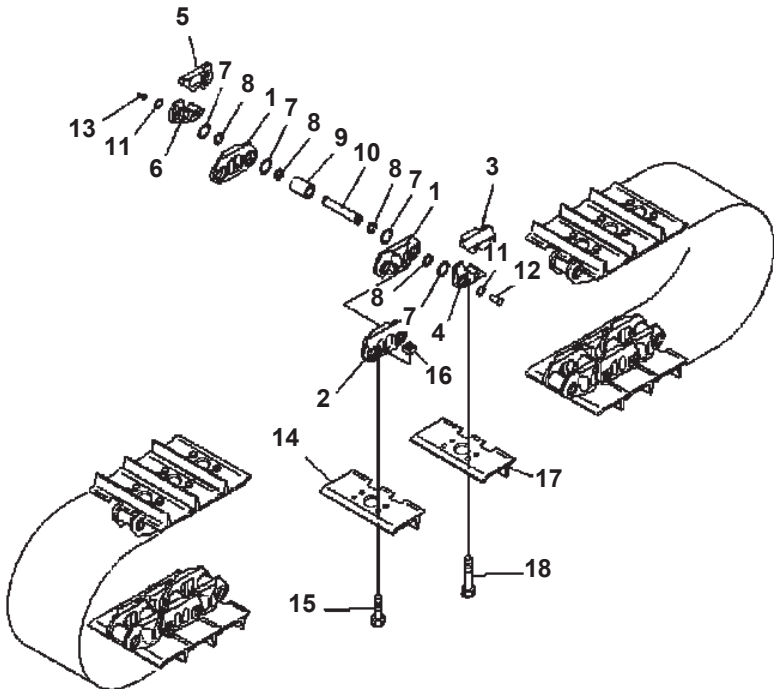

R0500-01A7 TRACK SHOE (LUBRICATE TYPE) (SINGLE GROUSER) (WITH HOLE) (510MM WIDE) (PLUS TYPE)

Item	Part No.	Description	Qty	Options
	12Y-32-03030	TRACK SHOE ASS'Y	1	SN:B10869--
1	12Y-32-15610	· LINK	88	SN:B10869--
2	12Y-32-15630	· LINK	84	SN:B10869--
	12Y-32-08210	· MASTER LINK K. L.H	2	SN:B10869--
3	☆	· · MASTER LINK L.H. ROLLER SIDE	1	SN:B10869--
4	☆	· · MASTER LINK L.H. SHOE SIDE	1	SN:B10869--
	12Y-32-08220	· MASTER LINK K. R.H	2	SN:B10869--
5	☆	· · MASTER LINK R.H. ROLLER SIDE	1	SN:B10869--
6	☆	· · MASTER LINK R.H. SHOE SIDE	1	SN:B10869--
7	134-32-63200	· SEAL ASS'Y	352	SN:B10869--
8	12Y-32-11190	· SPACER	352	SN:B10869--
9	12Y-32-15640	· BUSHING	88	SN:B10869--
10	12Y-32-15650	· PIN	88	SN:B10869--
11	12Y-32-15730	· RING	176	SN:B10869--
12	07059-11830	· PLUG, LARGE	88	SN:B10869--
13	07059-20721	· PLUG, SMALL	88	SN:B10869--
14	12Y-32-15360	· SHOE, TRACK	86	SN:B10869--
15	205-32-51211	· BOLT	344	SN:B10869--
16	12Y-32-15220	· NUT	344	SN:B10869--
17	12Y-32-15360	· SHOE, TRACK	2	SN:B10869--
18	12Y-32-15310	· BOLT	8	SN:B10869--

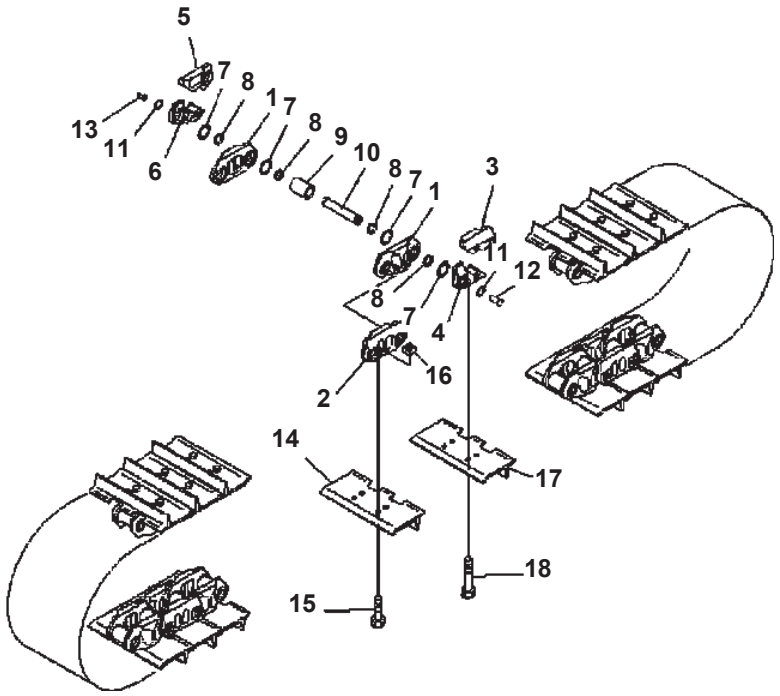

R0500-01A8 TRACK SHOE (LUBRICATE TYPE) (SINGLE GROUSER) (560MM WIDE) (PLUS TYPE)

Item	Part No.	Description	Qty	Options
	12Y-32-03010	TRACK SHOE ASS'Y	1	SN:B10869--
1	12Y-32-15610	・ LINK	88	SN:B10869--
2	12Y-32-15630	・ LINK	84	SN:B10869--
	12Y-32-08210	・ MASTER LINK K. L.H	2	SN:B10869--
3	☆	・・ MASTER LINK L.H. ROLLER SIDE	1	SN:B10869--
4	☆	・・ MASTER LINK L.H. SHOE SIDE	1	SN:B10869--
	12Y-32-08220	・ MASTER LINK K. R.H	2	SN:B10869--
5	☆	・・ MASTER LINK R.H. ROLLER SIDE	1	SN:B10869--
6	☆	・・ MASTER LINK R.H. SHOE SIDE	1	SN:B10869--
7	134-32-63200	・ SEAL ASS'Y	352	SN:B10869--
8	12Y-32-11190	・ SPACER	352	SN:B10869--
9	12Y-32-15640	・ BUSHING	88	SN:B10869--
10	12Y-32-15650	・ PIN	88	SN:B10869--
11	12Y-32-15730	・ RING	176	SN:B10869--
12	07059-11830	・ PLUG, LARGE	88	SN:B10869--
13	07059-20721	・ PLUG, SMALL	88	SN:B10869--
14	12Y-32-15340	・ SHOE, TRACK	86	SN:B10869--
15	205-32-51211	・ BOLT	344	SN:B10869--
16	12Y-32-15220	・ NUT	344	SN:B10869--
17	12Y-32-15340	・ SHOE, TRACK	2	SN:B10869--
18	12Y-32-15310	・ BOLT	8	SN:B10869--

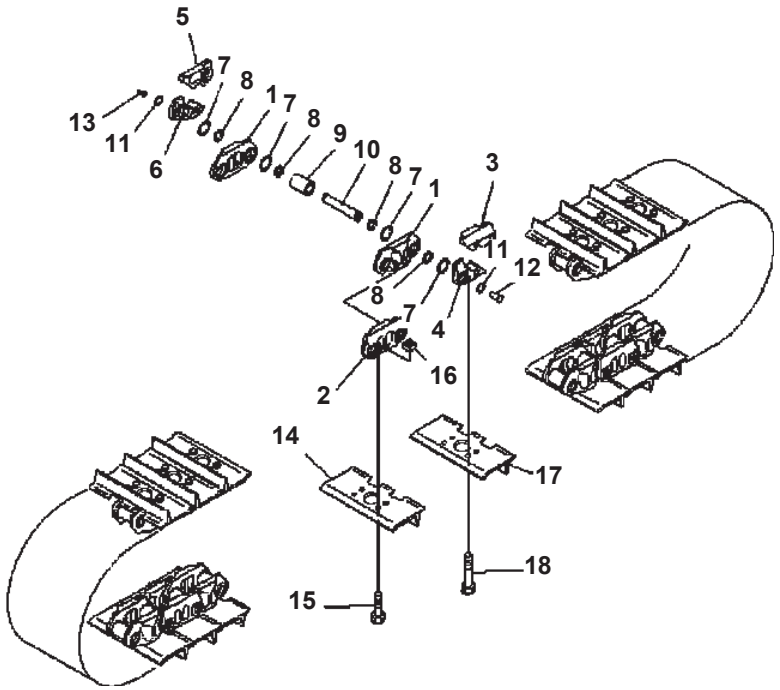

R0500-01A9 TRACK SHOE (LUBRICATE TYPE) (SINGLE GROUSER) (WITH HOLE) (560MM WIDE) (PLUS TYPE)

Item	Part No.	Description	Qty	Options
	12Y-32-03040	TRACK SHOE ASS'Y	1	SN:B10869--
1	12Y-32-15610	・ LINK	88	SN:B10869--
2	12Y-32-15630	・ LINK	84	SN:B10869--
	12Y-32-08210	・ MASTER LINK K. L.H	2	SN:B10869--
3	☆	・・ MASTER LINK L.H. ROLLER SIDE	1	SN:B10869--
4	☆	・・ MASTER LINK L.H. SHOE SIDE	1	SN:B10869--
	12Y-32-08220	・ MASTER LINK K. R.H	2	SN:B10869--
5	☆	・・ MASTER LINK R.H. ROLLER SIDE	1	SN:B10869--
6	☆	・・ MASTER LINK R.H. SHOE SIDE	1	SN:B10869--
7	134-32-63200	・ SEAL ASS'Y	352	SN:B10869--
8	12Y-32-11190	・ SPACER	352	SN:B10869--
9	12Y-32-15640	・ BUSHING	88	SN:B10869--
10	12Y-32-15650	・ PIN	88	SN:B10869--
11	12Y-32-15730	・ RING	176	SN:B10869--
12	07059-11830	・ PLUG, LARGE	88	SN:B10869--
13	07059-20721	・ PLUG, SMALL	88	SN:B10869--
14	12Y-32-15370	・ SHOE, TRACK	86	SN:B10869--
15	205-32-51211	・ BOLT	344	SN:B10869--
16	12Y-32-15220	・ NUT	344	SN:B10869--
17	12Y-32-15370	・ SHOE, TRACK	2	SN:B10869--
18	12Y-32-15310	・ BOLT	8	SN:B10869--

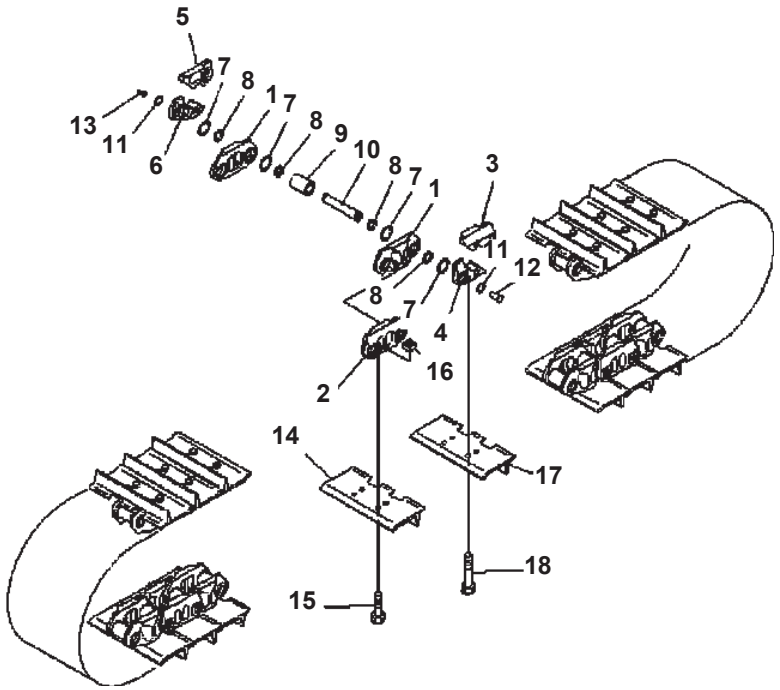

R0500-01B0 TRACK SHOE (LUBRICATE TYPE) (SINGLE GROUSER) (710MM WIDE) (PLUS TYPE)

Item	Part No.	Description	Qty	Options
	12Y-32-03020	TRACK SHOE ASS'Y	1	SN:B10869--
1	12Y-32-15610	· LINK	88	SN:B10869--
2	12Y-32-15630	· LINK	84	SN:B10869--
	12Y-32-08210	· MASTER LINK K. L.H	2	SN:B10869--
3	☆	· · MASTER LINK L.H. ROLLER SIDE	1	SN:B10869--
4	☆	· · MASTER LINK L.H. SHOE SIDE	1	SN:B10869--
	12Y-32-08220	· MASTER LINK K. R.H	2	SN:B10869--
5	☆	· · MASTER LINK R.H. ROLLER SIDE	1	SN:B10869--
6	☆	· · MASTER LINK R.H. SHOE SIDE	1	SN:B10869--
7	134-32-63200	· SEAL ASS'Y	352	SN:B10869--
8	12Y-32-11190	· SPACER	352	SN:B10869--
9	12Y-32-15640	· BUSHING	88	SN:B10869--
10	12Y-32-15650	· PIN	88	SN:B10869--
11	12Y-32-15730	· RING	176	SN:B10869--
12	07059-11830	· PLUG, LARGE	88	SN:B10869--
13	07059-20721	· PLUG, SMALL	88	SN:B10869--
14	12Y-32-15350	· SHOE, TRACK	86	SN:B10869--
15	205-32-51211	· BOLT	344	SN:B10869--
16	12Y-32-15220	· NUT	344	SN:B10869--
17	12Y-32-15350	· SHOE, TRACK	2	SN:B10869--
18	12Y-32-15310	· BOLT	8	SN:B10869--

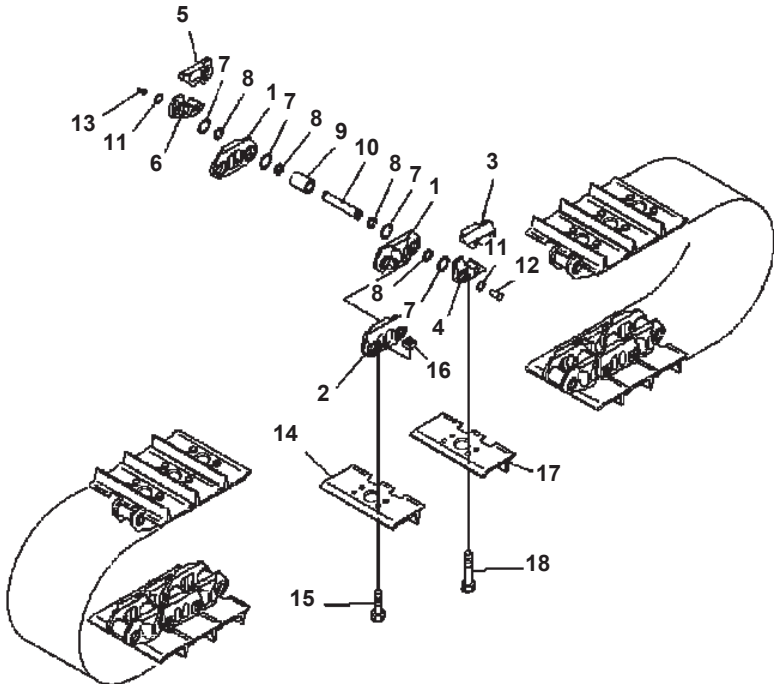

R0500-01B1 TRACK SHOE (LUBRICATE TYPE) (SINGLE GROUSER) (WITH HOLE) (710MM WIDE) (PLUS TYPE)

Item	Part No.	Description	Qty	Options
	12Y-32-03050	TRACK SHOE ASS'Y	1	SN:B10869--
1	12Y-32-15610	· LINK	88	SN:B10869--
2	12Y-32-15630	· LINK	84	SN:B10869--
	12Y-32-08210	· MASTER LINK K. L.H	2	SN:B10869--
3	☆	· · MASTER LINK L.H. ROLLER SIDE	1	SN:B10869--
4	☆	· · MASTER LINK L.H. SHOE SIDE	1	SN:B10869--
	12Y-32-08220	· MASTER LINK K. R.H	2	SN:B10869--
5	☆	· · MASTER LINK R.H. ROLLER SIDE	1	SN:B10869--
6	☆	· · MASTER LINK R.H. SHOE SIDE	1	SN:B10869--
7	134-32-63200	· SEAL ASS'Y	352	SN:B10869--
8	12Y-32-11190	· SPACER	352	SN:B10869--
9	12Y-32-15640	· BUSHING	88	SN:B10869--
10	12Y-32-15650	· PIN	88	SN:B10869--
11	12Y-32-15730	· RING	176	SN:B10869--
12	07059-11830	· PLUG, LARGE	88	SN:B10869--
13	07059-20721	· PLUG, SMALL	88	SN:B10869--
14	12Y-32-15380	· SHOE, TRACK	86	SN:B10869--
15	205-32-51211	· BOLT	344	SN:B10869--
16	12Y-32-15220	· NUT	344	SN:B10869--
17	12Y-32-15380	· SHOE, TRACK	2	SN:B10869--
18	12Y-32-15310	· BOLT	8	SN:B10869--

CMZ00158

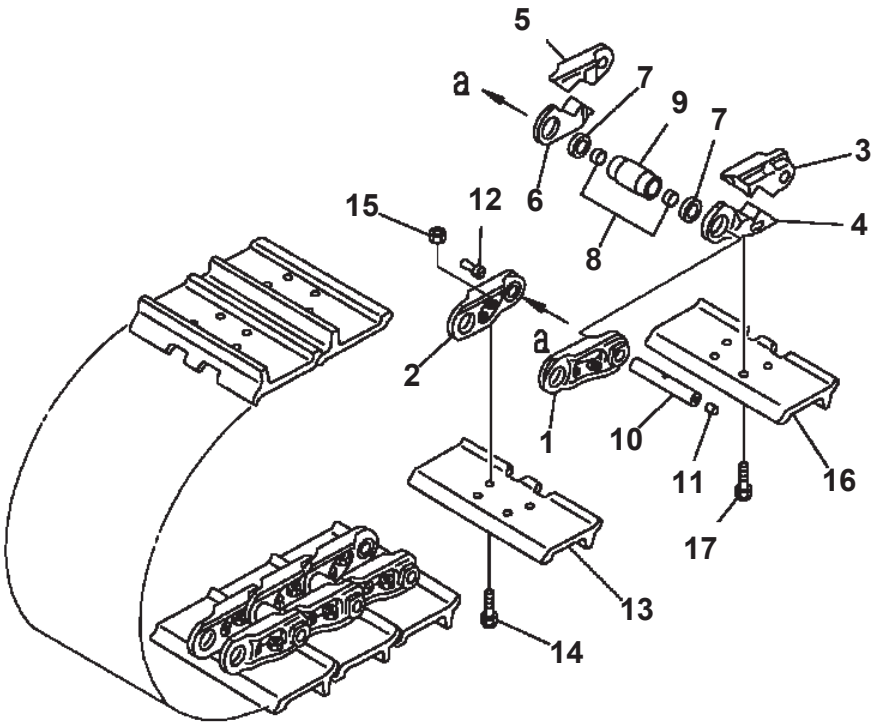

D51EX/PX-22 S/N B10001-UP

R0510-01A0 TRACK SHOE - D51PX LUBRICATE TYPE, SINGLE GROUSER, 710 MM WIDE

Item	Part No.	Description	Qty	Options
	12Y-32-01011	TRACK SHOE ASSEMBLY	1	SN:B10001--
1	12Y-32-11120	· LINK, L.H.	86	SN:B10001--
2	12Y-32-11130	· LINK, R.H.	86	SN:B10001--
	12Y-32-08011	· MASTER LINK K. L.H.	2	SN:B10001--
3	(NSS)	· · LINK	1	SN:B10001--
4	(NSS)	· · LINK	1	SN:B10001--
	12Y-32-08021	· MASTER LINK K. R.H.	2	SN:B10001--
5	(NSS)	· · LINK	1	SN:B10001--
6	(NSS)	· · LINK	1	SN:B10001--
7	134-32-63200	· SEAL	176	SN:B10001--
8	12Y-32-11190	· SPACER	176	SN:B10001--
9	12Y-32-11140	· BUSHING	88	SN:B10001--
10	12Y-32-11150	· PIN	88	SN:B10001--
11	07059-11830	· PLUG, SMALL	88	SN:B10001--
12	07059-20721	· PLUG, LARGE	88	SN:B10001--
13	12Y-32-11350	· SHOE	86	SN:B10001--
14	205-32-51121	· BOLT, SHOE (R2300-K1)	344	SN:B10001--
15	203-32-61220	· NUT (R2300-K1)	344	SN:B10001--
16	12Y-32-11350	· SHOE	2	SN:B10001--
17	12Y-32-11310	· BOLT	8	SN:B10001--

Ref. R0510-01A0 Page R-029

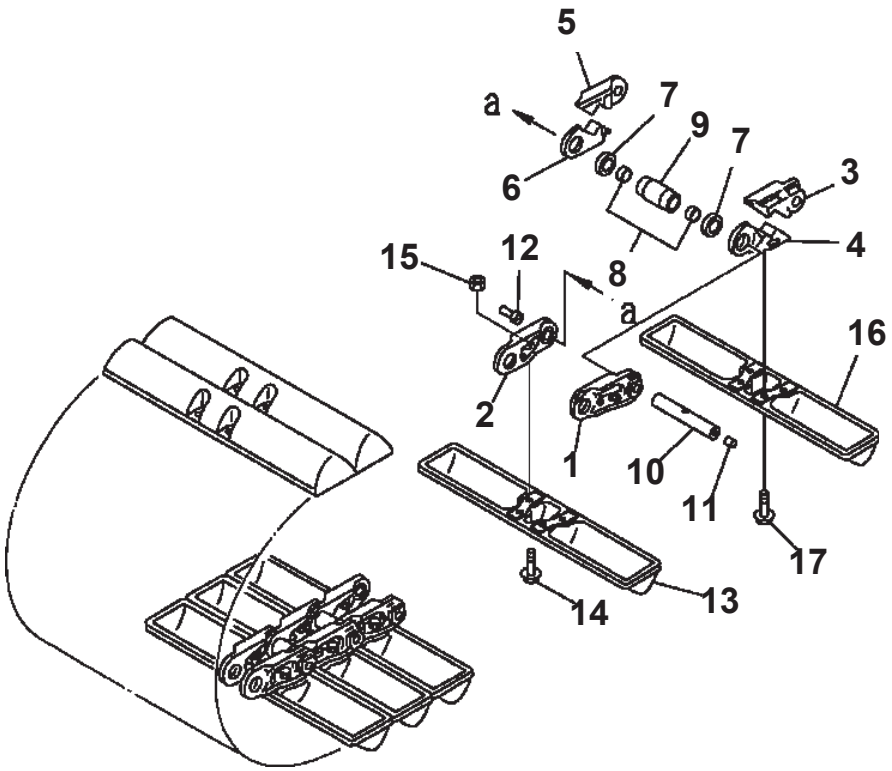

D51EX/PX-22 S/N B10001-UP

R0510-01A1 TRACK SHOE - D51PX LUBRICATE TYPE, SWAMP TYPE, 720 MM WIDE

Item	Part No.	Description	Qty	Options
	12Y-32-01021	TRACK SHOE ASSEMBLY	1	SN:B10001--
1	12Y-32-11120	· LINK, L.H.	86	SN:B10001--
2	12Y-32-11130	· LINK, R.H.	86	SN:B10001--
	12Y-32-08011	· MASTER LINK K. L.H.	2	SN:B10001--
3	(NSS)	· · LINK	1	SN:B10001--
4	(NSS)	· · LINK	1	SN:B10001--
	12Y-32-08021	· MASTER LINK K. R.H.	2	SN:B10001--
5	(NSS)	· · LINK	1	SN:B10001--
6	(NSS)	· · LINK	1	SN:B10001--
7	134-32-63200	· SEAL	176	SN:B10001--
8	12Y-32-11190	· SPACER	176	SN:B10001--
9	12Y-32-11140	· BUSHING	88	SN:B10001--
10	12Y-32-11150	· PIN	88	SN:B10001--
11	07059-11830	· PLUG, SMALL	88	SN:B10001--
12	07059-20721	· PLUG, LARGE	88	SN:B10001--
13	12F-32-11113	· SHOE	86	SN:B10001--
14	13F-32-21221	· BOLT, SHOE (R2300-K2)	344	SN:B10001--
15	203-32-61220	· NUT (R2300-K2)	344	SN:B10001--
16	12F-32-11113	· SHOE	2	SN:B10001--
17	12Y-32-11410	· BOLT	8	SN:B10001--

Ref. R0510-01A1 Page R-031

CMZ00156

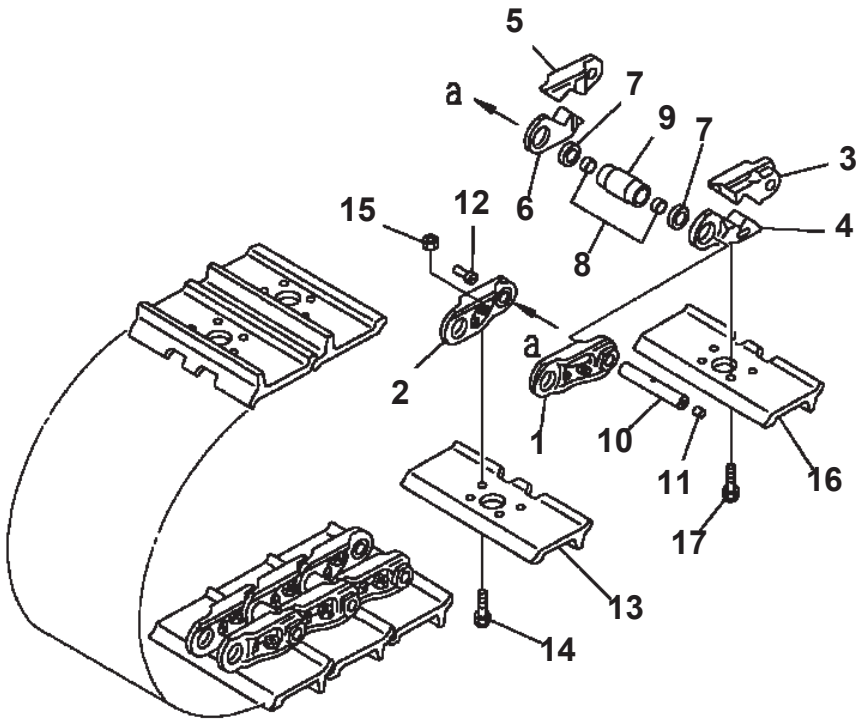

D51EX/PX-22 S/N B10001-UP

R0510-01A2 TRACK SHOE - D51PX LUBRICATE TYPE, SINGLE GROUSER WITH HOLE, 710 MM WIDE

Item	Part No.	Description	Qty	Options
	12Y-32-01090	TRACK SHOE ASSEMBLY	1	SN:B10001--
1	12Y-32-11120	· LINK, L.H.	86	SN:B10001--
2	12Y-32-11130	· LINK, R.H.	86	SN:B10001--
	12Y-32-08011	· MASTER LINK K. L.H.	2	SN:B10001--
3	(NSS)	· · LINK	1	SN:B10001--
4	(NSS)	· · LINK	1	SN:B10001--
	12Y-32-08021	· MASTER LINK K. R.H.	2	SN:B10001--
5	(NSS)	· · LINK	1	SN:B10001--
6	(NSS)	· · LINK	1	SN:B10001--
7	134-32-63200	· SEAL	176	SN:B10001--
8	12Y-32-11190	· SPACER	176	SN:B10001--
9	12Y-32-11140	· BUSHING	88	SN:B10001--
10	12Y-32-11150	· PIN	88	SN:B10001--
11	07059-11830	· PLUG, SMALL	88	SN:B10001--
12	07059-20721	· PLUG, LARGE	88	SN:B10001--
13	12Y-32-11380	· SHOE	86	SN:B10001--
14	205-32-51121	· BOLT, SHOE (R2300-K1)	344	SN:B10001--
15	203-32-61220	· NUT (R2300-K1)	344	SN:B10001--
16	12Y-32-11380	· SHOE	2	SN:B10001--
17	12Y-32-11310	· BOLT	8	SN:B10001--

Ref. R0510-01A2 Page R-033

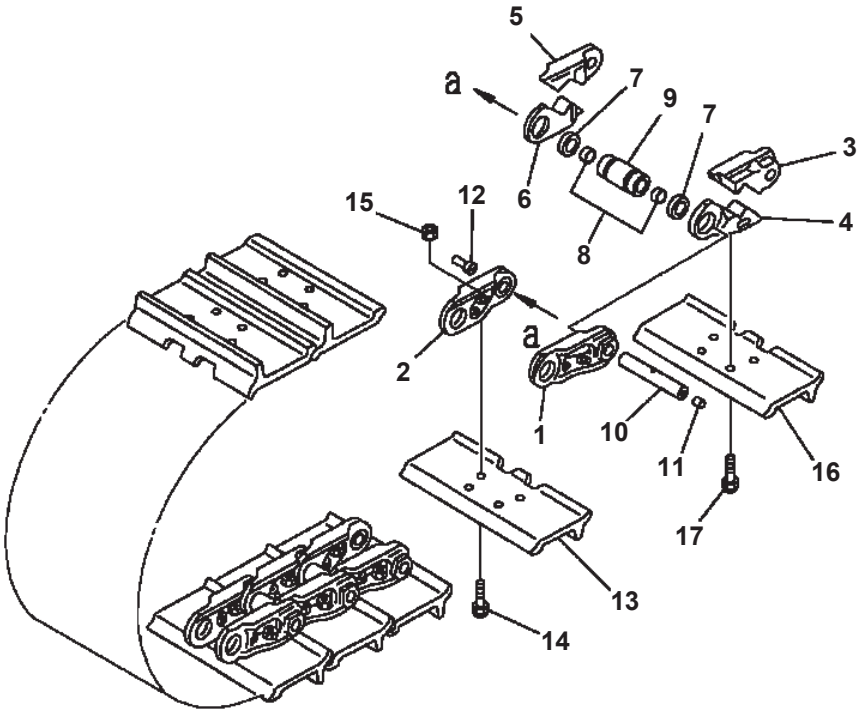

R0510-01A3 TRACK SHOE - D51PX LUBRICATE TYPE, SINGLE GROUSER, 710 MM WIDE, ABRASION RESISTANT

Item	Part No.	Description	Qty	Options
	12Y-32-01110	TRACK SHOE ASSEMBLY	1	SN:B10001--
1	12Y-32-11120	· LINK, L.H.	86	SN:B10001--
2	12Y-32-11130	· LINK, R.H.	86	SN:B10001--
	12Y-32-08011	· MASTER LINK K. L.H.	2	SN:B10001--
3	(NSS)	· · LINK	1	SN:B10001--
4	(NSS)	· · LINK	1	SN:B10001--
	12Y-32-08021	· MASTER LINK K. R.H.	2	SN:B10001--
5	(NSS)	· · LINK	1	SN:B10001--
6	(NSS)	· · LINK	1	SN:B10001--
7	134-32-63200	· SEAL	176	SN:B10001--
8	12Y-32-11190	· SPACER	176	SN:B10001--
9	12Y-32-11240	· BUSHING	88	SN:B10001--
10	12Y-32-11150	· PIN	88	SN:B10001--
11	07059-11830	· PLUG, SMALL	88	SN:B10001--
12	07059-20721	· PLUG, LARGE	88	SN:B10001--
13	12Y-32-11350	· SHOE	86	SN:B10001--
14	205-32-51121	· BOLT, SHOE (R2300-K1)	344	SN:B10001--
15	203-32-61220	· NUT (R2300-K1)	344	SN:B10001--
16	12Y-32-11350	· SHOE	2	SN:B10001--
17	12Y-32-11310	· BOLT	8	SN:B10001--

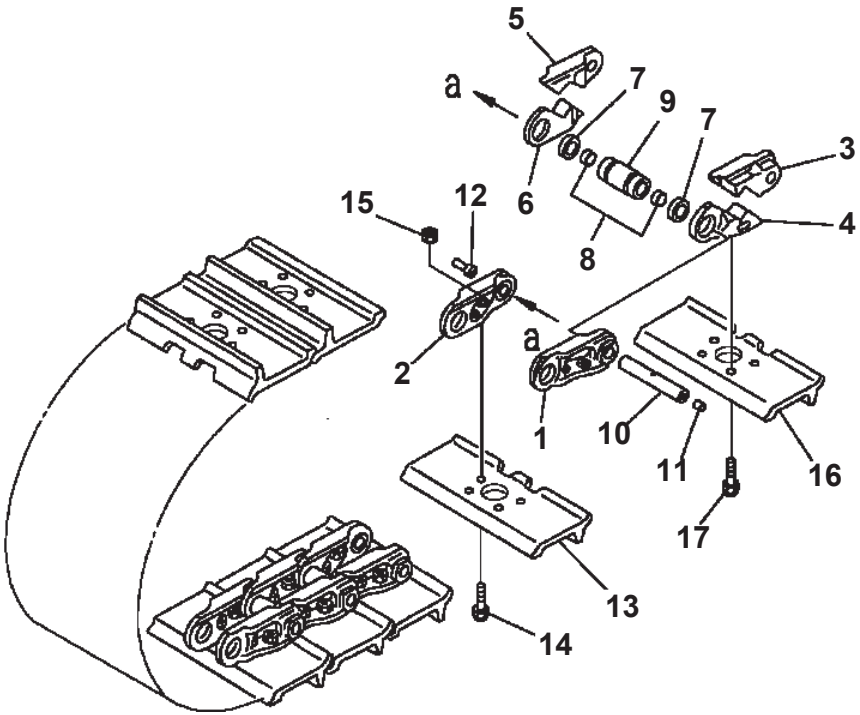

D51EX/PX-22 S/N B10001-UP

R0510-01A4 TRACK SHOE - D51PX LUBRICATE TYPE, SINGLE GROUSER, 710 MM WIDE WITH HOLE , ABRASION RESISTANT

Item	Part No.	Description	Qty	Options
	12Y-32-01120	TRACK SHOE ASSEMBLY	1	SN:B10001--
1	12Y-32-11120	· LINK, L.H.	86	SN:B10001--
2	12Y-32-11130	· LINK, R.H.	86	SN:B10001--
	12Y-32-08011	· MASTER LINK K. L.H.	2	SN:B10001--
3	(NSS)	· · LINK	1	SN:B10001--
4	(NSS)	· · LINK	1	SN:B10001--
	12Y-32-08021	· MASTER LINK K. R.H.	2	SN:B10001--
5	(NSS)	· · LINK	1	SN:B10001--
6	(NSS)	· · LINK	1	SN:B10001--
7	134-32-63200	· SEAL	176	SN:B10001--
8	12Y-32-11190	· SPACER	176	SN:B10001--
9	12Y-32-11240	· BUSHING	88	SN:B10001--
10	12Y-32-11150	· PIN	88	SN:B10001--
11	07059-11830	· PLUG, SMALL	88	SN:B10001--
12	07059-20721	· PLUG, LARGE	88	SN:B10001--
13	12Y-32-11380	· SHOE	86	SN:B10001--
14	205-32-51121	· BOLT, SHOE (R2300-K1)	344	SN:B10001--
15	203-32-61220	· NUT (R2300-K1)	344	SN:B10001--
16	12Y-32-11380	· SHOE	2	SN:B10001--
17	12Y-32-11310	· BOLT	8	SN:B10001--

Ref. R0510-01A4 Page R-035A

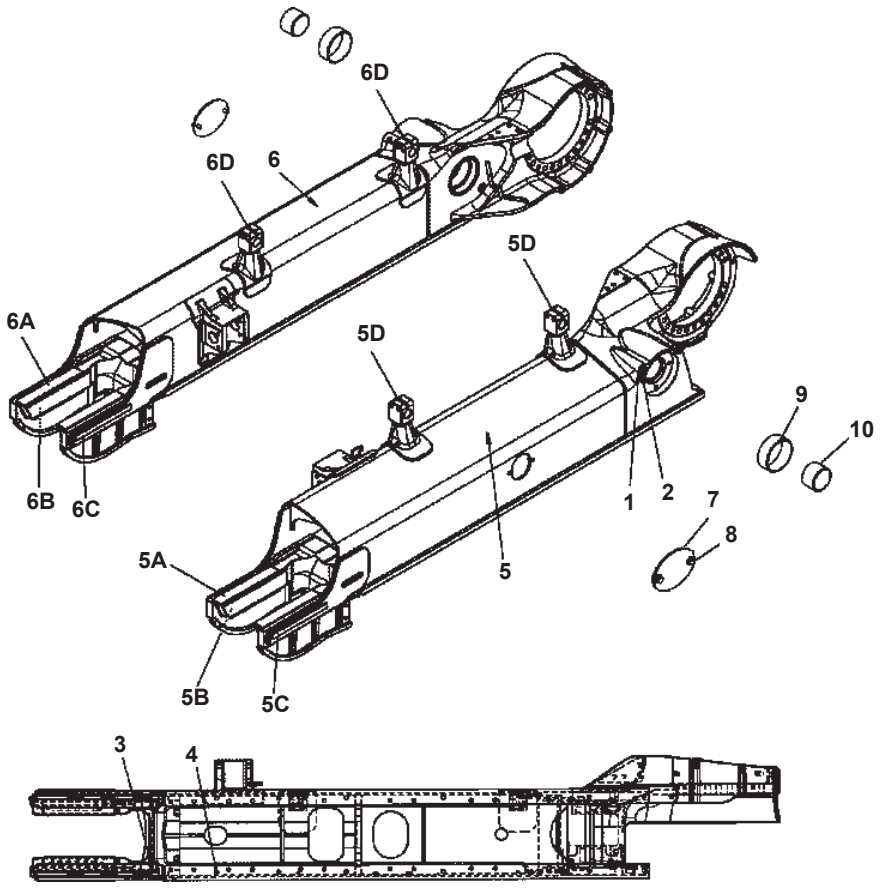

R2100-01A0 TRACK FRAME

Item	Part No.	Description	Qty	Options
1	07002-12434	O-RING	2	SN:B10001--
2	07040-12414	PLUG	2	SN:B10001--
3	07049-01215	PLUG	8	SN:B10001--
4	07049-01620	PLUG	8	SN:B10001--
5	12Y-30-12113	FRAME, L.H. TRACK	1	SN:B12177--
	□12Y-30-12112	FRAME, L.H. TRACK	1	SN:B10001--B12176
5A	12Y-30-12220	· PLATE (WELDED)	2	SN:B10001--
5B	12Y-30-12241	· PLATE (WELDED)	2	SN:B10001--
5C	12Y-30-12230	· PLATE (WELDED)	2	SN:B10001--
5D	12Y-30-12181	BRACKET (WELDED)	2	SN:B10001--
6	12Y-30-12123	FRAME, R.H. TRACK	1	SN:B12177--
	□12Y-30-12122	FRAME, R.H. TRACK	1	SN:B10001--B12176
6A	12Y-30-12220	· PLATE (WELDED)	2	SN:B10001--
6B	12Y-30-12241	· PLATE (WELDED)	2	SN:B10001--
6C	12Y-30-12230	· PLATE (WELDED)	2	SN:B10001--
6D	12Y-30-12181	BRACKET (WELDED)	2	SN:B10001--
7	14Y-30-11277	COVER	2	SN:B10001--
8	01010-81225	BOLT	4	SN:B10001--
	01643-31232	WASHER	4	SN:B10001--
9	134-50-61140	BUSHING	2	SN:B10001--
10	134-50-61150	BUSHING	2	SN:B10001--

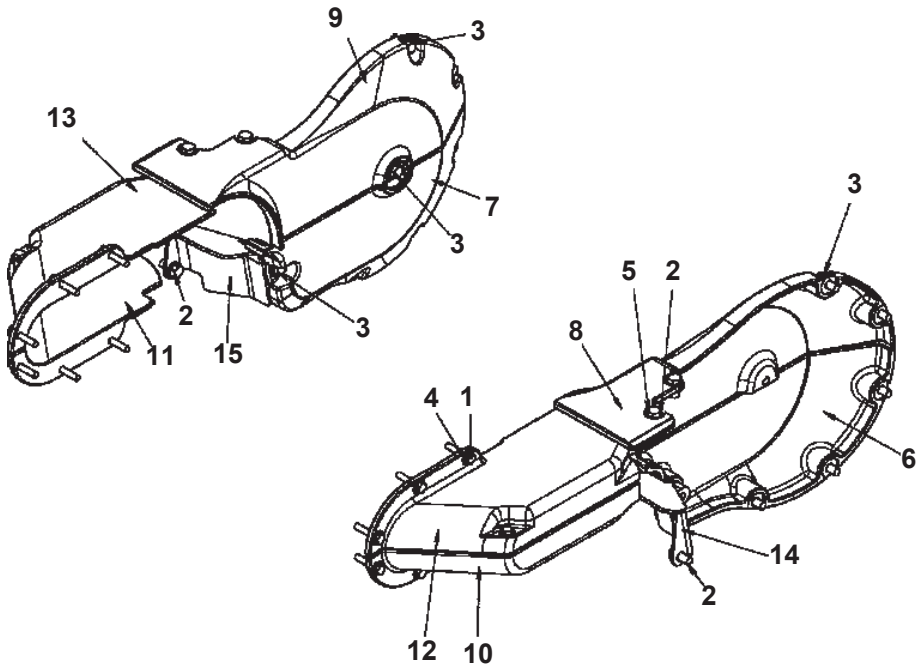

R2140-01A0 TRACK FRAME COVER EX MODEL

Item	Part No.	Description	Qty	Options
1	01010-81260	BOLT	14	SN:B10001--
2	01010-81635	BOLT	6	SN:B10001--
3	01010-81640	BOLT	14	SN:B10001--
4	01643-31232	WASHER	14	SN:B10001--
5	01643-31645	WASHER	20	SN:B10001--
6	12Y-30-14110	COVER, L.H. MOTOR	1	SN:B10001--
7	12Y-30-14120	COVER, R.H. MOTOR	1	SN:B10001--
8	12Y-30-14231	COVER, L.H. MOTOR	1	SN:B10001--
9	12Y-30-14241	COVER, R.H. MOTOR	1	SN:B10001--
10	12Y-30-14251	COVER, L.H. HOSE	1	SN:B10001--
11	12Y-30-14261	COVER, R.H. HOSE	1	SN:B10001--
12	12Y-30-14271	COVER, L.H. HOSE	1	SN:B10001--
13	12Y-30-14281	COVER, R.H. HOSE	1	SN:B10001--
14	12Y-30-16330	GUARD, L.H.	1	SN:B10001--
15	12Y-30-16340	GUARD, R.H.	1	SN:B10001--

CVPB00222

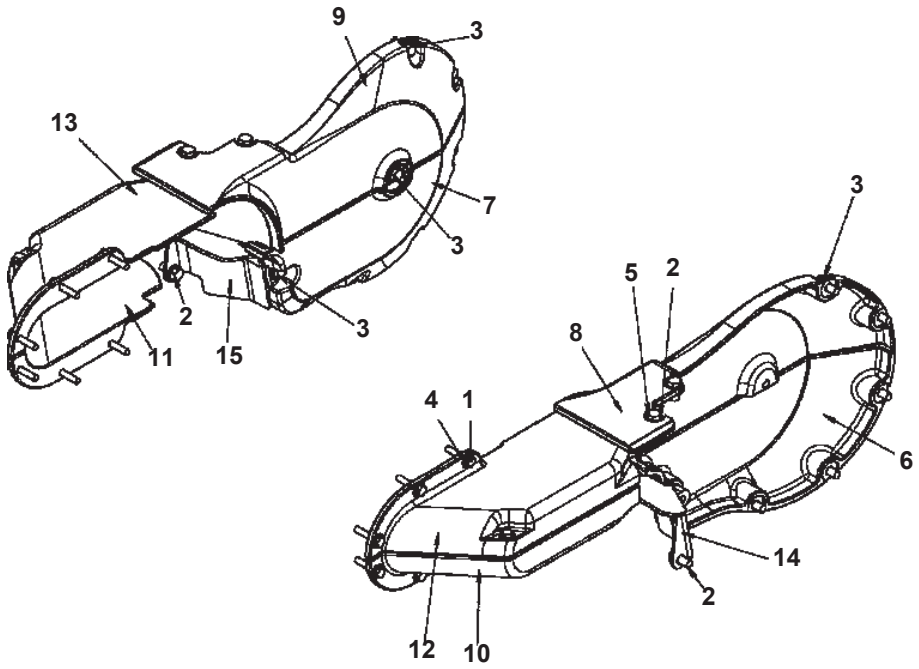

D51EX/PX-22 S/N B10001-UP

R2140-02A0 TRACK FRAME COVER PX MODEL

Item	Part No.	Description	Qty	Options
1	01010-81260	BOLT	14	SN:B10001--
2	01010-81635	BOLT	6	SN:B10001--
3	01010-81640	BOLT	14	SN:B10001--
4	01643-31232	WASHER	14	SN:B10001--
5	01643-31645	WASHER	20	SN:B10001--
6	12Y-30-14110	COVER, L.H. MOTOR	1	SN:B10001--
7	12Y-30-14120	COVER, R.H. MOTOR	1	SN:B10001--
8	12Y-30-14131	COVER, L.H. MOTOR	1	SN:B10001--
9	12Y-30-14141	COVER, R.H. MOTOR	1	SN:B10001--
10	12Y-30-14151	COVER, L.H. HOSE	1	SN:B10001--
11	12Y-30-14161	COVER, R.H. HOSE	1	SN:B10001--
12	12Y-30-14171	COVER, L.H. HOSE	1	SN:B10001--
13	12Y-30-14181	COVER, R.H. HOSE	1	SN:B10001--
14	12Y-30-12330	GUARD, L.H.	1	SN:B10001--
15	12Y-30-12340	GUARD, R.H.	1	SN:B10001--

Ref. R2140-02A0 Page R-041

CVPB00223

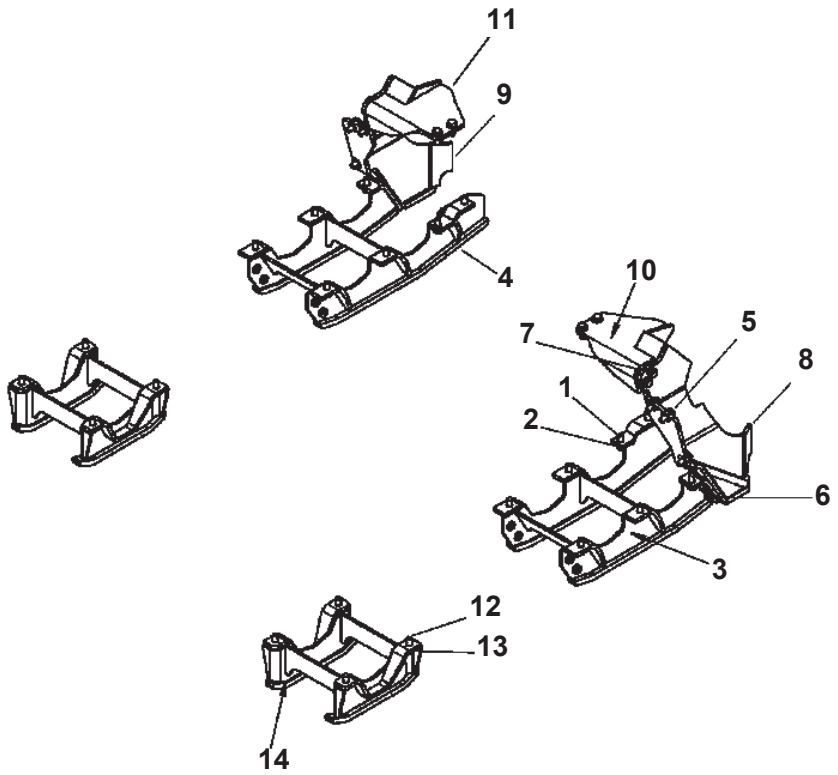

D51EX/PX-22 S/N B10001-UP

R2200-01A0 TRACK FRAME ROLLER GUARDS

Item	Part No.	Description	Qty	Options
1	01010-81640	BOLT	14	SN:B10001--
2	01643-31645	WASHER	14	SN:B10001--
3	12Y-30-15111	GUARD, L.H. REAR	1	SN:B10001--
4	12Y-30-15121	GUARD, R.H. REAR	1	SN:B10001--
5	01010-81640	BOLT	14	SN:B10001--
6	01010-81650	WASHER	4	SN:B10001--
7	01643-31645	WASHER	18	SN:B10001--
8	12Y-30-15133	GUARD, L.H. SPROCKET	1	SN:B10688--
	□12Y-30-15132	GUARD, L.H. SPROCKET	1	SN:B10001--B10687
9	12Y-30-15143	GUARD, R.H. SPROCKET	1	SN:B10688--
	□12Y-30-15142	GUARD, R.H. SPROCKET	1	SN:B10001--B10687
10	12Y-30-15260	BRACKET, L.H. SPROCKET	1	SN:B10001--
11	12Y-30-15270	BRACKET, R.H. SPROCKET	1	SN:B10001--
12	01010-81640	BOLT	8	SN:B10001--
13	01643-31645	WASHER	8	SN:B10001--
14	12Y-30-15171	GUARD, CENTER	2	SN:B10001--

Ref. R2200-01A0 Page R-043

R2200-01A1

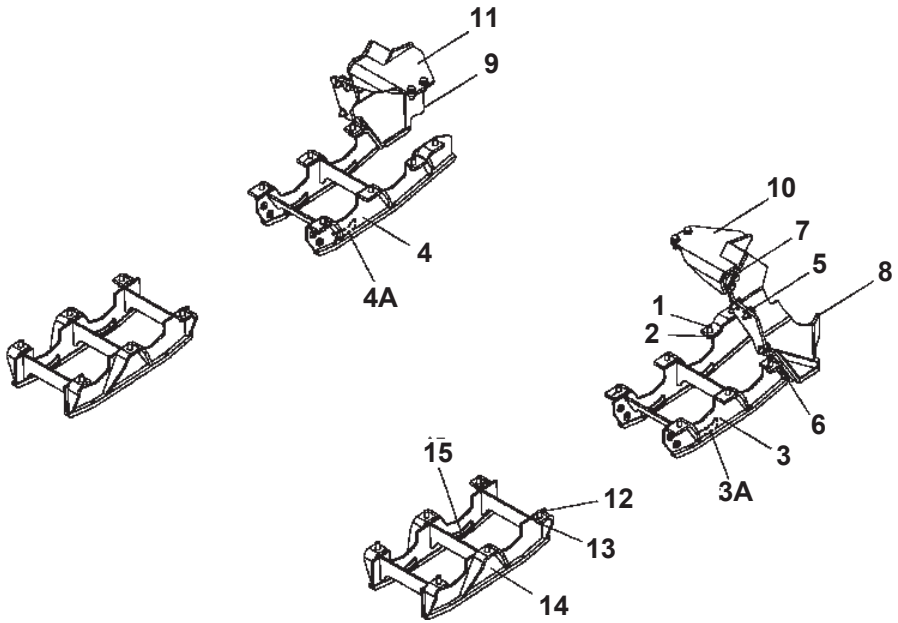

D51EX/PX-22 S/N B10001-UP

R2200-01A1 TRACK FRAME ROLLER GUARDS (PLUS)

Item	Part No.	Description	Qty	Options
1	01010-81640	BOLT	14	SN:B10869--
2	01643-31645	WASHER	14	SN:B10869--
3	12Y-30-15412	GUARD L.H REAR	1	SN:B10869--
3A	12Y-30-15440	· GUIDE (WELDED)	4	SN:B10869--
4	12Y-30-15422	GUARD R.H REAR	1	SN:B10869--
4A	12Y-30-15440	· GUIDE (WELDED)	4	SN:B10869--
5	01010-81640	BOLT	14	SN:B10869--
6	01643-31650	WASHER	4	SN:B10869--
7	01643-31645	WASHER	18	SN:B10869--
8	12Y-30-15133	GUARD L.H SPROCKET	1	SN:B10869--
9	12Y-30-15143	GUARD R.H SPROCKET	1	SN:B10869--
10	12Y-30-15260	BRACKET L.H	1	SN:B10869--
11	12Y-30-15270	BRACKET R.H	1	SN:B10869--
12	01010-81640	BOLT	12	SN:B10869--
13	01643-31645	WASHER	12	SN:B10869--
14	12Y-30-15431	GUARD CENTER	2	SN:B10869--
15	12Y-30-15440	· GUIDE (WELDED)	8	SN:B10869--

Ref. R2200-01A1 Page R-043A

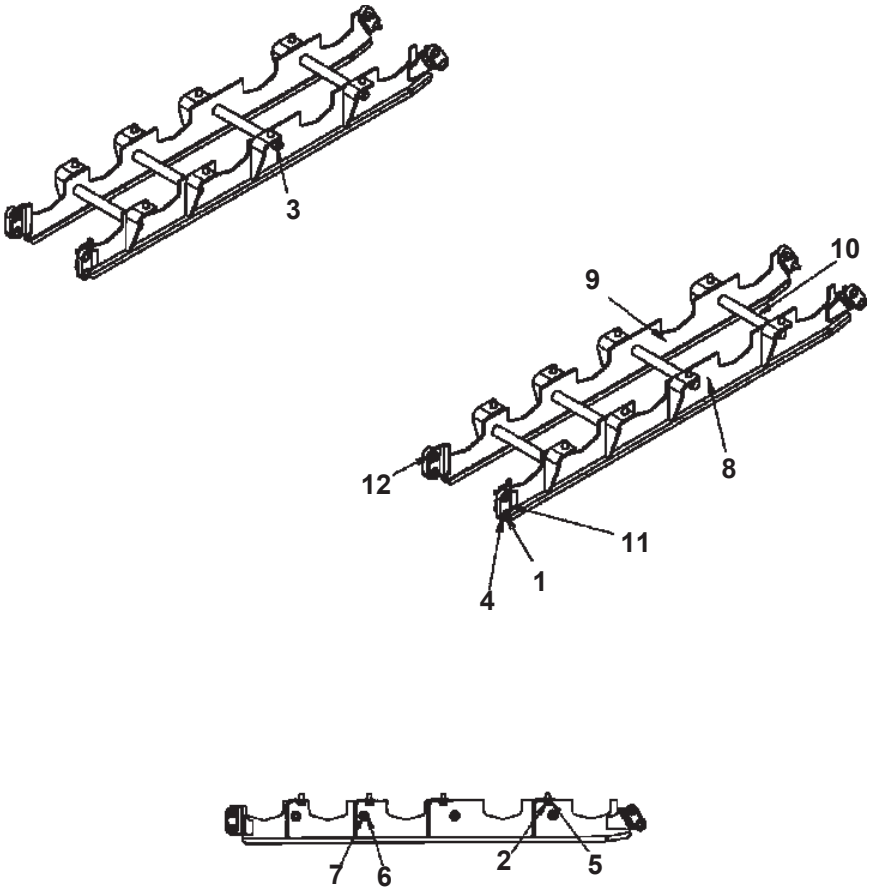

R2210-01A0 TRACK FRAME FULL ROLLER GUARD MODEL

Item	Part No.	Description	Qty	Options
1	01010-81235	BOLT	16	SN:B10001--
2	01010-81635	BOLT	16	SN:B10001--
3	01580-11815	NUT	8	SN:B10001--
4	01643-31232	WASHER	16	SN:B10001--
5	01643-31645	WASHER	16	SN:B10001--
6	01643-31845	WASHER	16	SN:B10001--
7	09205-18295	BOLT	8	SN:B10001--
8	12Y-30-15213	GUARD	2	SN:B12386--
	☐12Y-30-15212	GUARD	2	SN:B11307--B12385
	☐12Y-30-15211	GUARD	2	SN:B10001--B11306
9	12Y-30-15223	GUARD	2	SN:B12386--
	☐12Y-30-15222	GUARD	2	SN:B11307--B12385
	☐12Y-30-15221	GUARD	2	SN:B10001--B11306
10	12Y-30-15230	PIPE	8	SN:B10001--
11	12Y-30-15240	PLATE	8	SN:B10001--
12	12Y-30-15250	COLLAR	8	SN:B10001--

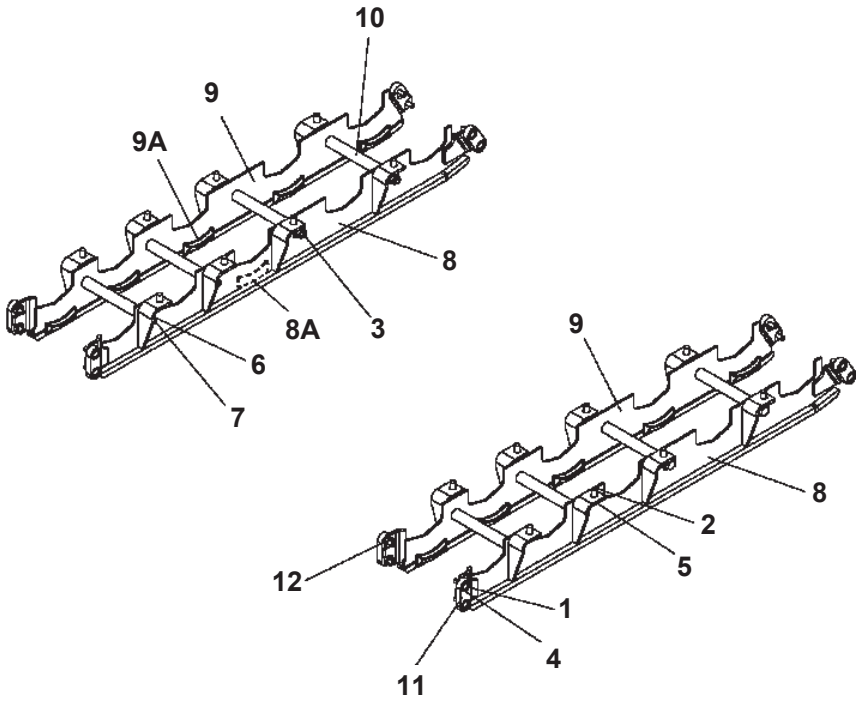

D51EX/PX-22 S/N B10001-UP

R2210-01A1 TRACK FRAME FULL ROLLER GUARD (PLUS)

Item	Part No.	Description	Qty	Options
1	01010-81235	BOLT	16	SN:B10869--
2	01010-81635	BOLT	16	SN:B10869--
3	01580-11815	NUT	8	SN:B10869--
4	01643-31232	WASHER	16	SN:B10869--
5	01643-31645	WASHER	16	SN:B10869--
6	01643-31845	WASHER	16	SN:B10869--
7	09205-18295	BOLT	8	SN:B10869--
8	12Y-30-15511	GUARD	2	SN:B11407--
	□12Y-30-15510	GUARD	2	SN:B10869--B12406
8A	12Y-30-15440	· GUIDE (WELDED)	10	SN:B10869--
9	12Y-30-15522	GUARD	2	SN:B11407--
	□12Y-30-15521	GUARD	2	SN:B10869--B12406
9A	12Y-30-15440	· GUIDE (WELDED)	10	SN:B10869--
10	12Y-30-15230	PIPE	8	SN:B10869--
11	12Y-30-15240	PLATE	8	SN:B10869--
12	12Y-30-15250	COLLAR	8	SN:B10869--

Ref. R2210-01A1 Page R-045A

KIT See subsequent pages for details.

K1 124-32-05010 SHOE BOLT AND NUT SERVICE KIT,FOR SINGLE GROUSER

K2 13F-32-05010 SHOE BOLT AND NUT SERVICE KIT,FOR SWAMP SHOE

R2300-01A0 SHOE BOLT AND NUT SERVICE KIT

Item	Part No.	Description	Qty	Options
K1	124-32-05010	SHOE BOLT AND NUT K. (FOR SINGLE GROUSER)	1	SN:B10001--
	205-32-51121	・ BOLT¤ SHOE	50	SN:B10001--
	203-32-61220	・ NUT	50	SN:B10001--
K2	13F-32-05010	SHOE BOLT AND NUT K. (FOR SWAMP SHOE)	1	SN:B10001--
	13F-32-21221	・ BOLT¤ SHOE	50	SN:B10001--
	203-32-61220	・ NUT	50	SN:B10001--

WORK EQUIPMENT

CMZ00058

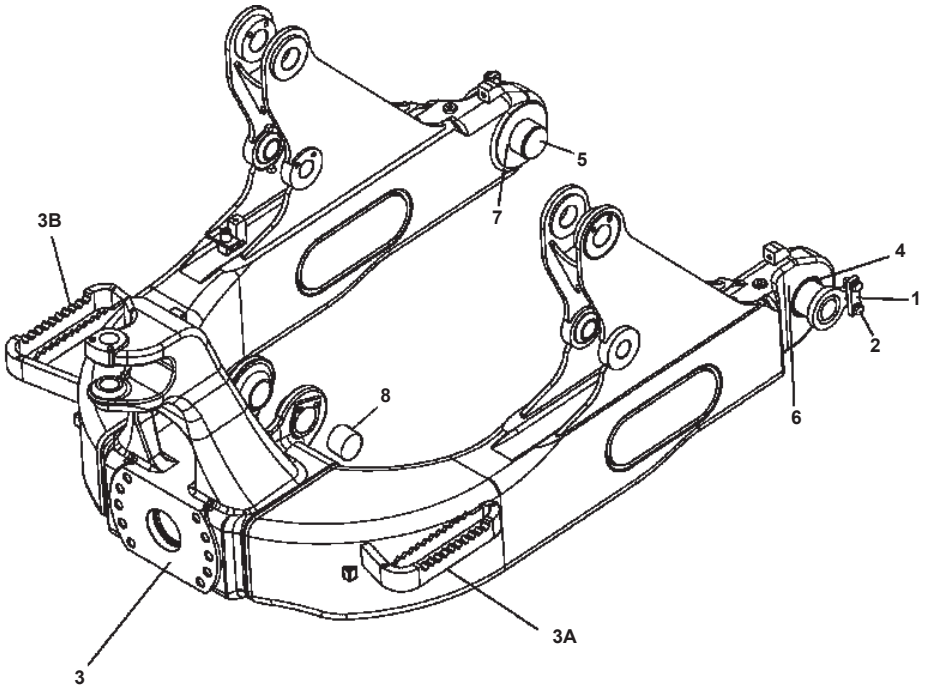

D51EX/PX-22 S/N B10001-UP

T0100-01A0 DOZER FRAME

Item	Part No.	Description	Qty	Options
1	205-70-66580	PLATE	2	SN:B10001--
2	01010-81230	BOLT	4	SN:B10001--
	01643-31232	WASHER	4	SN:B10001--
3	12Y-72-11405	FRAME ASSEMBLY	1	SN:B10869--
	□12Y-72-11404	FRAME ASSEMBLY	1	SN:B10200--B10868
	□12Y-72-11403	FRAME ASSEMBLY	1	SN:B10001--B10199
3A	12Y-72-12442	· STEP, L.H.	1	SN:B10001--
3B	12Y-72-12432	· STEP, R.H.	1	SN:B10001--
4	12Y-72-11680	SEAL	4	SN:B10001--
5	12Y-72-12251	PIN	2	SN:B10001--
6	12Y-72-12281	BUSHING	2	SN:B10001--
7	12Y-72-12350	SHIM	12	SN:B11503--
	□12Y-72-12350	SHIM	6	SN:B10001--B11502
8	07143-10505	BUSHING	2	SN:B10001--

Ref. T0100-01A0 Page T-001

CMZ00059

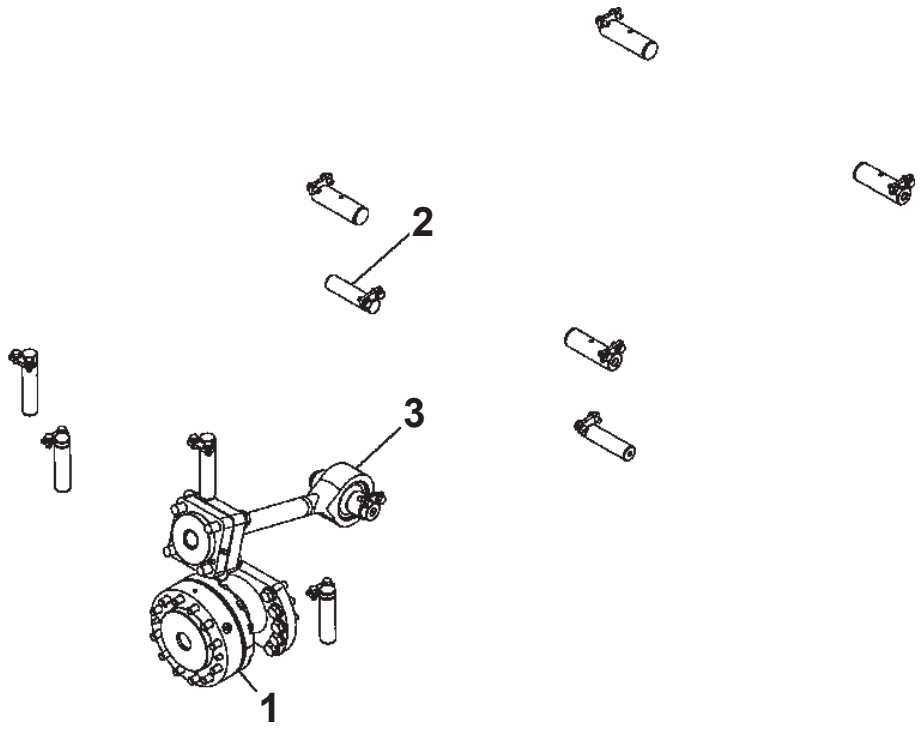

D51EX/PX-22 S/N B10001-UP

T0200-01A0 BLADE LINK GROUP

Item	Description	Qty	Options
1	CENTER BALL (SEE FIG. T0200-01A1)	1	SN:B10001--
2	CYLINDER PINS (SEE FIG. T0200-01A2)	1	SN:B10001--
3	PITCH ROD GROUP (SEE FIG. T0300-01A0)	1	SN:B10001--

Ref. T0200-01A0 Page T-003

CMZ00060

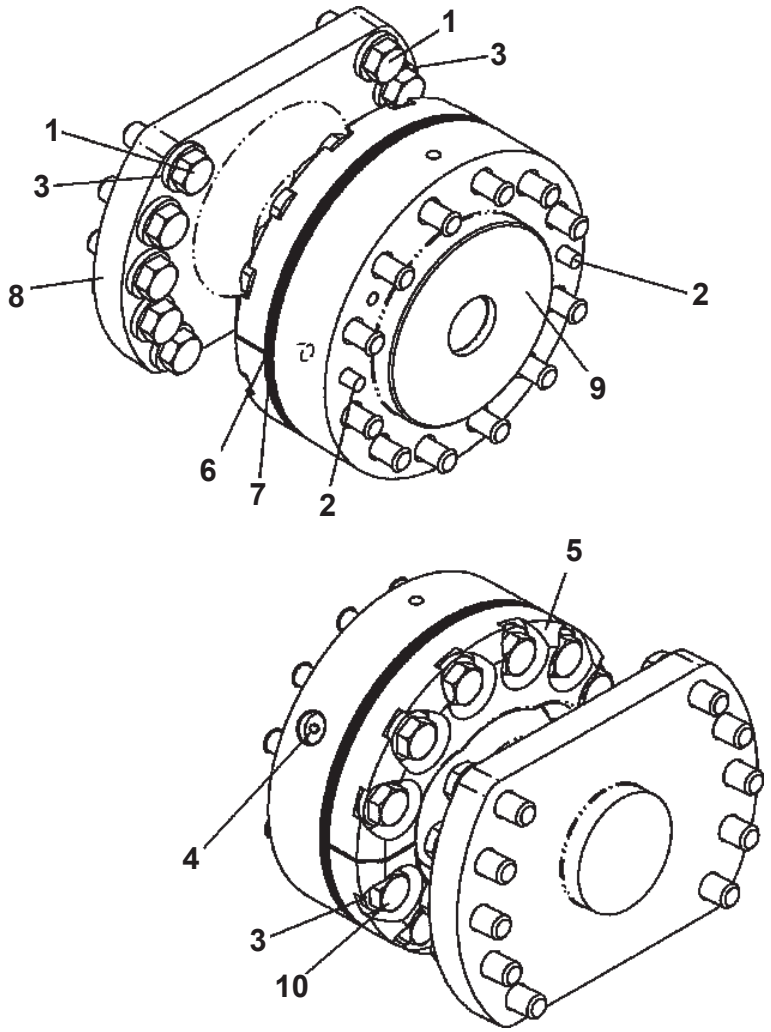

D51EX/PX-22 S/N B10001-UP

T0200-01A1 CENTER BALL

Item	Part No.	Description	Qty	Options
1	154-54-73130	BOLT	10	SN:B10001--
2	01010-81260	BOLT	2	SN:B10001--
	01643-31232	WASHER	2	SN:B10001--
3	01643-32060	WASHER	22	SN:B10001--
4	07020-00000	FITTING	1	SN:B10001--
5	12Y-72-11640	CAP	2	SN:B10001--
6	12Y-72-11651	SHIM	4	SN:B10936--
	□12Y-72-11650	SHIM	4	SN:B10001--B10935
7	12Y-72-11661	SHIM	16	SN:B10896--
	□12Y-72-11660	SHIM	16	SN:B10001--B10895
8	12Y-72-12151	TRUNNION	1	SN:B10001--
9	12Y-72-12161	BEARING	1	SN:B10001--
10	12Y-72-12360	BOLT	12	SN:B10001--

Ref. T0200-01A1 Page T-005

CMZ00061

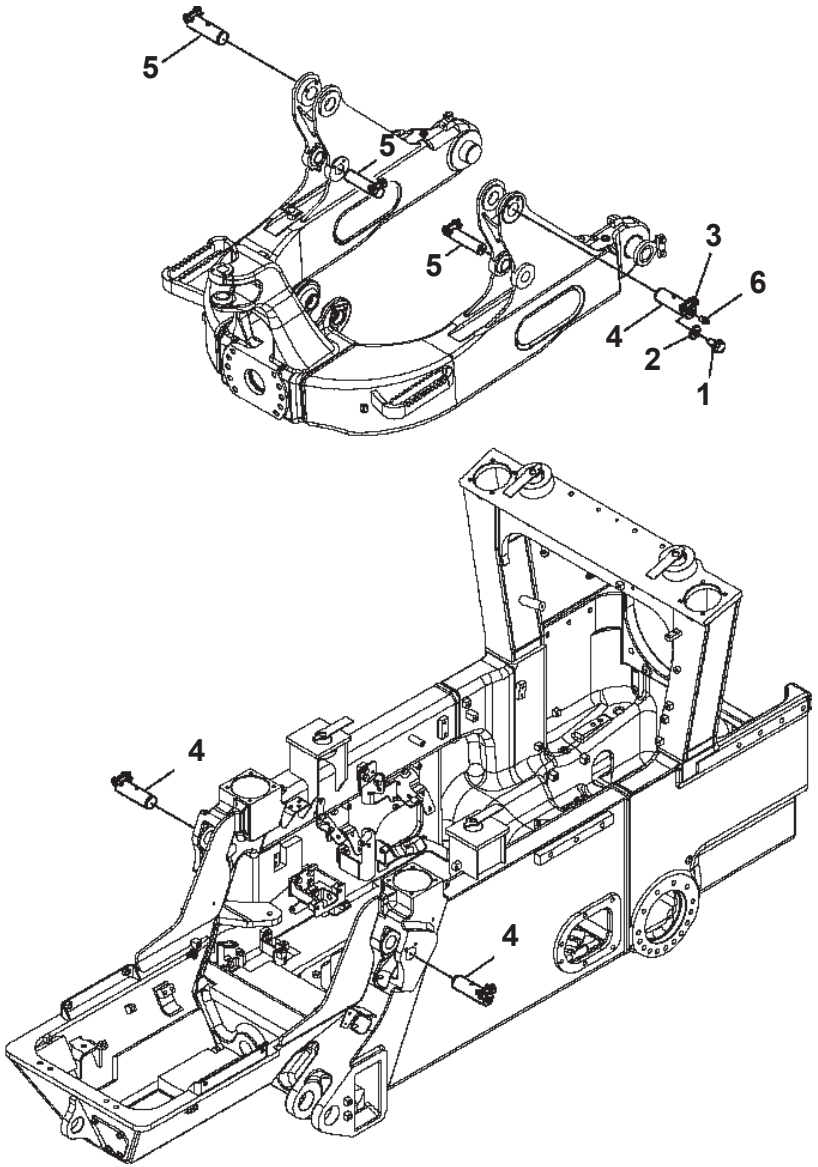

D51EX/PX-22 S/N B10001-UP

T0200-01A2 CYLINDER PINS 1/2

Item	Part No.	Description	Qty	Options
1	01010-81225	BOLT	12	SN:B10001--
2	01643-31232	WASHER	12	SN:B10001--
3	04082-00212	LOCK	6	SN:B10001--
4	09241-5A160	PIN	4	SN:B10001--
5	12Y-72-12231	PIN	2	SN:B10001--
6	07049-01012	PLUG	2	SN:B10001--

Ref. T0200-01A2 Page T-007

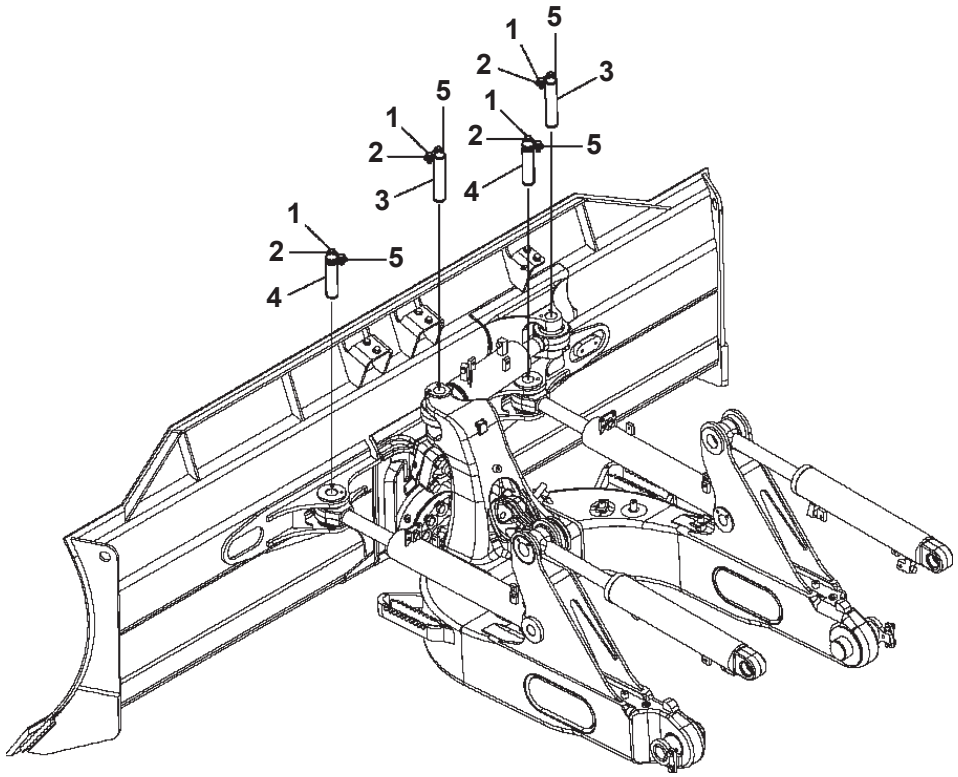

T0200-01A3 CYLINDER PINS 2/2

Item	Part No.	Description	Qty	Options
1	01010-81225	BOLT	8	SN:B10001--
2	01643-31232	WASHER	8	SN:B10001--
3	12Y-72-12240	PIN	2	SN:B10001--
4	12Y-72-12231	PIN	2	SN:B10001--
5	04082-00212	LOCK	4	SN:B10001--

CMZ00062

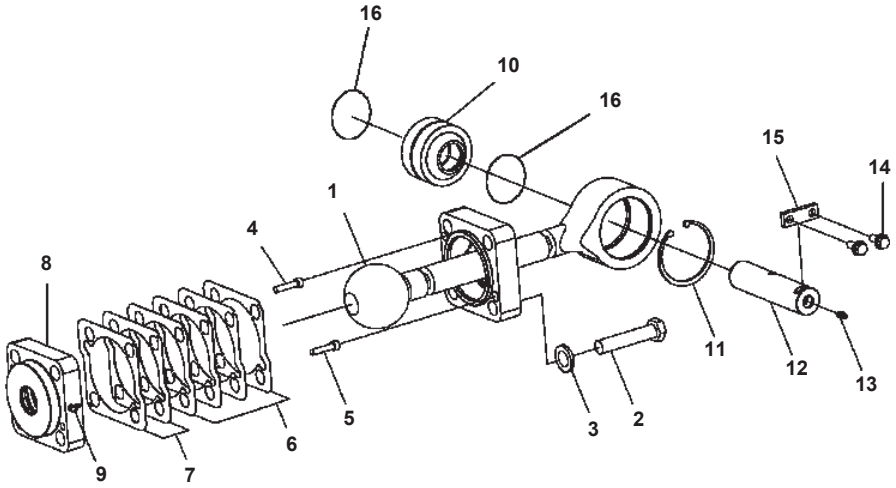

D51EX/PX-22 S/N B10001-UP

T0300-01A0 PITCH ROD, FIXED

Item	Part No.	Description	Qty	Options
1	12Y-72-11743	ROD, PITCH	1	SN:B11731--
	□12Y-72-11742	ROD, PITCH	1	SN:B10442--B11730
	□12Y-72-11741	ROD, PITCH	1	SN:B10001--B10441
2	01011-82420	BOLT	4	SN:B10001--
3	01643-32460	WASHER	4	SN:B10001--
4	01252-71035	BOLT	1	SN:B11731--
	◆01252-71035	BOLT	2	SN:B10001--B11730
5	01252-71045	BOLT	2	SN:B11731--
6	12Y-72-11572	SHIM	8	SN:B11731--
	□12Y-72-11571	SHIM	4	SN:B10001--B11730
7	12Y-72-11562	SHIM	4	SN:B11731--
	□12Y-72-11561	SHIM	4	SN:B10001--B11730
8	12Y-72-11541	BEARING	1	SN:B11731--
	□12Y-72-11540	BEARING	1	SN:B10001--B11730
9	07020-00675	FITTING	1	SN:B10001--
10	07137-05008	BUSHING	1	SN:B10001--
11	04065-01104	RING	1	SN:B10001--
12	09241-5A210	PIN	1	SN:B10001--
13	07020-00000	FITTING	1	SN:B10001--
14	01010-81230	BOLT	2	SN:B10001--
	01643-31232	WASHER	2	SN:B10001--
15	04082-00212	LOCK	1	SN:B10001--
16	07000-13050	O-RING	2	SN:B11731--

Ref. T0300-01A0 Page T-009

CMZ00062

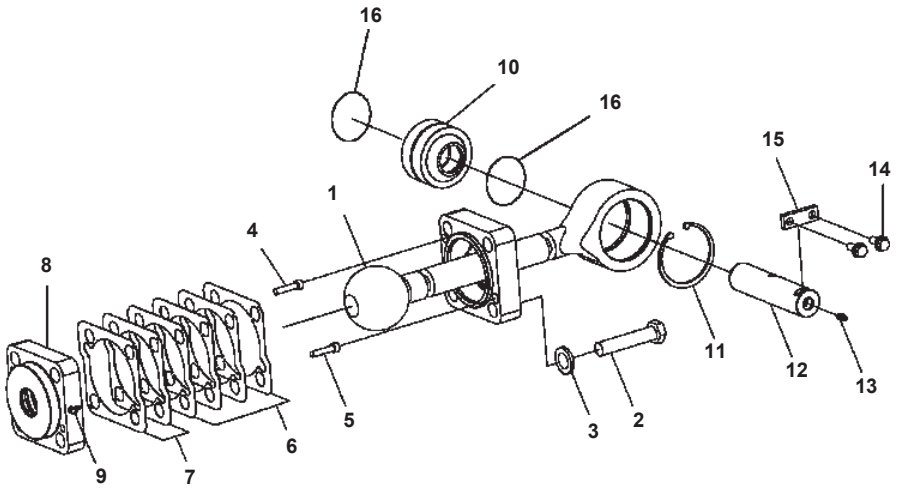

D51EX/PX-22 S/N B10001-UP

T0300-01A0A PITCH ROD, FIXED

Item	Part No.	Description	Qty	Options
1	12Y-72-11752	ROD, PITCH	1	SN:B11731--
	□12Y-72-11751	ROD, PITCH	1	SN:B10001--B11730
2	01011-82420	BOLT	4	SN:B10001--
3	01643-32460	WASHER	4	SN:B10001--
4	01252-71035	BOLT	1	SN:B11731--
	◆01252-71035	BOLT	2	SN:B10001--B11730
5	01252-71045	BOLT	1	SN:B11731--
6	12Y-72-11572	SHIM	8	SN:B11731--
	□12Y-72-11571	SHIM	4	SN:B10001--B11730
7	12Y-72-11562	SHIM	4	SN:B11731--
	□12Y-72-11561	SHIM	4	SN:B10001--B11730
8	12Y-72-11541	BEARING	1	SN:B11731--
	□12Y-72-11540	BEARING	1	SN:B10001--B11730
9	07020-00675	FITTING	1	SN:B10001--
10	07137-05008	BUSHING	1	SN:B10001--
11	04065-01104	RING	1	SN:B10001--
12	09241-5A210	PIN	1	SN:B10001--
13	07020-00000	FITTING	1	SN:B10001--
14	01010-81230	BOLT	2	SN:B10001--
	01643-31232	WASHER	2	SN:B10001--
15	04082-00212	LOCK	1	SN:B10001--
16	07000-13050	O-RING	2	SN:B10001--

Ref. T0300-01A0A Page T-009A

CMZ00062

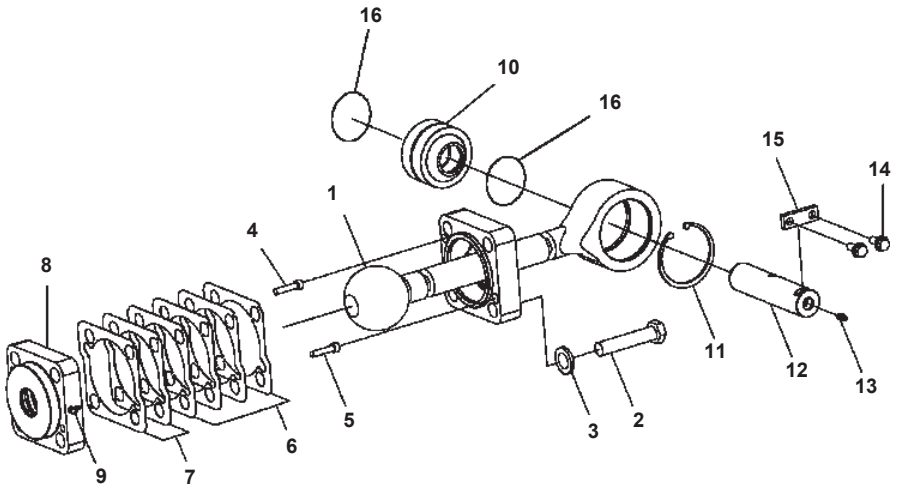

D51EX/PX-22 S/N B10001-UP

T0300-01A0 PITCH ROD, FIXED (LONG)

Item	Part No.	Description	Qty	Options
1	12Y-72-11762	ROD, PITCH	1	SN:B11731--
	□12Y-72-11761	ROD, PITCH	1	SN:B10001--B11730
2	01011-82420	BOLT	4	SN:B10001--
3	01643-32460	WASHER	4	SN:B10001--
4	01252-71035	BOLT	1	SN:B11731--
	◆01252-71035	BOLT	2	SN:B10001--B11730
5	01252-71045	BOLT	1	SN:B11731--
6	12Y-72-11572	SHIM	8	SN:B11731--
	□12Y-72-11571	SHIM	4	SN:B10001--B11730
7	12Y-72-11562	SHIM	4	SN:B11731--
	□12Y-72-11561	SHIM	4	SN:B10001--B11730
8	12Y-72-11541	BEARING	1	SN:B11731--
	□12Y-72-11540	BEARING	1	SN:B10001--B11730
9	07020-00675	FITTING	1	SN:B10001--
10	07137-05008	BUSHING	1	SN:B10001--
11	04065-01104	RING	1	SN:B10001--
12	09241-5A210	PIN	1	SN:B10001--
13	07020-00000	FITTING	1	SN:B10001--
14	01010-81230	BOLT	2	SN:B10001--
	01643-31232	WASHER	2	SN:B10001--
15	04082-00212	LOCK	1	SN:B10001--
16	07000-13050	O-RING	2	SN:B10001--

Ref. T0300-01A0B Page T-009B

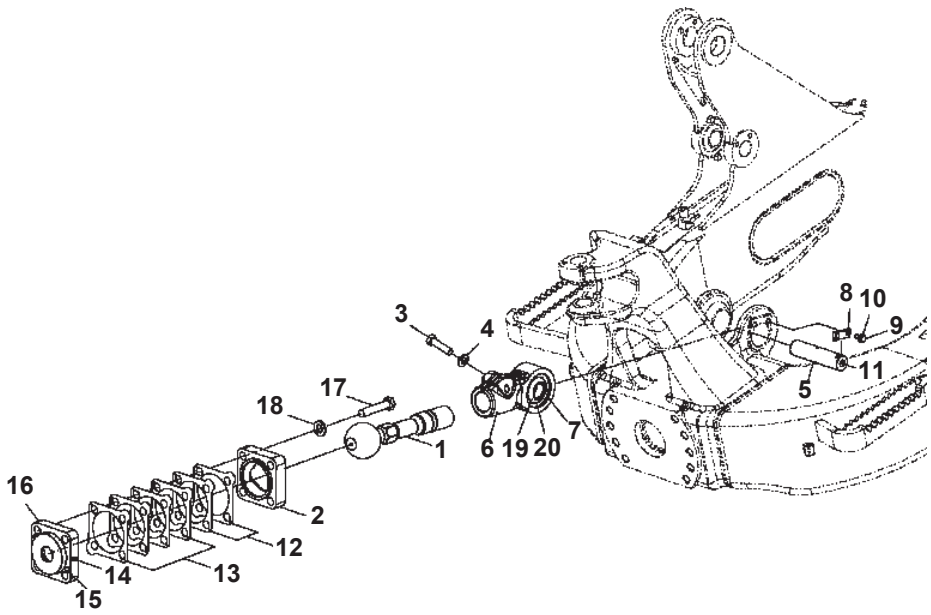

D51EX/PX-22 S/N B10001-UP

T0300-01B0 ADJUSTABLE PITCH ROD

Item	Part No.	Description	Qty	Options
1	12Y-72-11611	ROD	1	SN:B10001--
2	12Y-72-11521	COVER	1	SN:B10001--
3	01010-82080	BOLT	1	SN:B10001--
4	01643-32060	WASHER	1	SN:B10001--
5	09241-5A210	PIN	1	SN:B10001--
6	12Y-72-11623	HEAD	1	SN:B10001--
7	04065-01104	RING	1	SN:B10001--
8	04082-00212	LOCK	1	SN:B10001--
9	01010-81230	BOLT	2	SN:B10001--
10	01643-31232	WASHER	2	SN:B10001--
11	07020-00000	FITTING	1	SN:B10001--
12	12Y-72-11562	SHIM	4	SN:B11731--
	□12Y-72-11561	SHIM	4	SN:B10001--B11730
13	12Y-72-11572	SHIM	8	SN:B11731--
	□12Y-72-11571	SHIM	8	SN:B10001--B11730
14	07020-00675	FITTING	1	SN:B10001--
15	01252-71035	BOLT	1	SN:B11731--
	□01252-71035	BOLT	2	SN:B10001--B11730
16	12Y-72-11541	BEARING	1	SN:B11731--
	□12Y-72-11540	BEARING	1	SN:B10001--B11730
17	01011-82420	BOLT	4	SN:B10001--
18	01643-32460	WASHER	4	SN:B10001--
19	07000-13050	O-RING	2	SN:B10001--
20	07137-05008	BUSHING	1	SN:B10001--

Ref. T0300-01B0 Page T-010

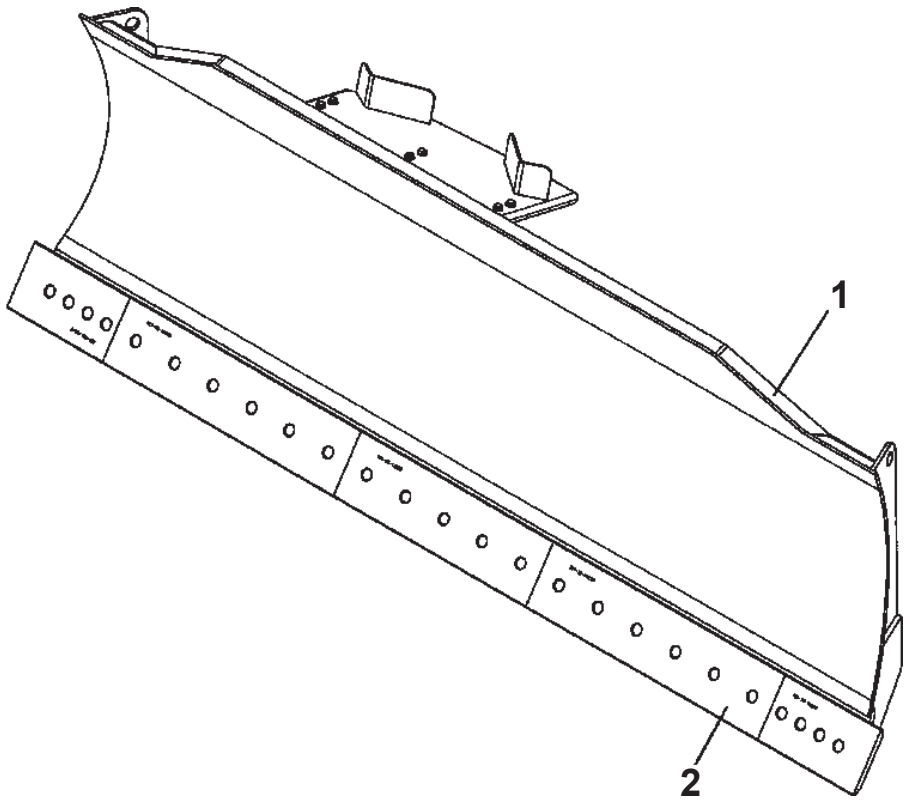

T0400-01A0 BLADE UNIT, WIDE

Item	Description	Options
1	BLADE (SEE FIG. T0400-01A1)	SN:B10001--
2	CUTTING EDGE (SEE FIG. T0400-01A2)	SN:B10001--

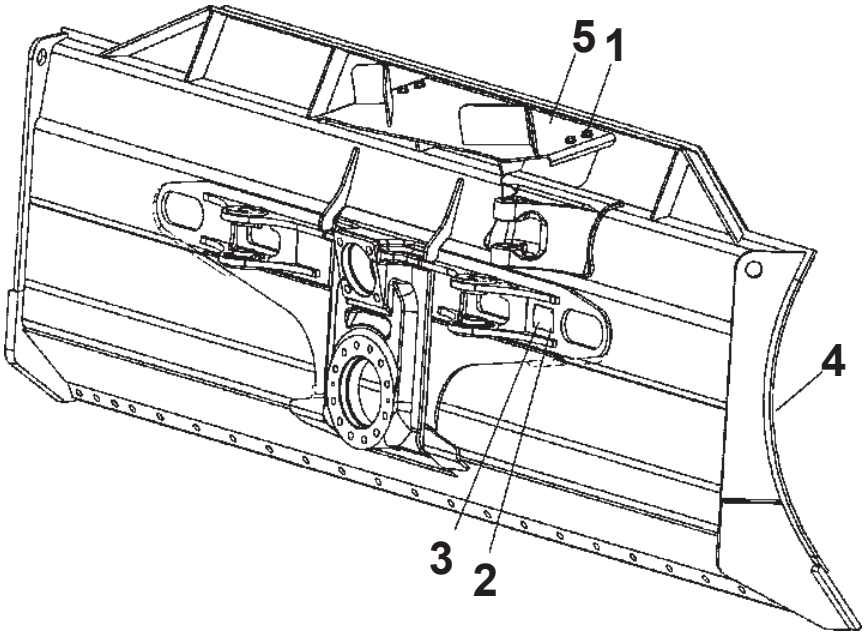

T0400-01A1 BLADE GROUP WIDE

Item	Part No.	Description	Qty	Options
1	01010-81235	BOLT	6	SN:B10001--
	01643-31232	WASHER	6	SN:B10001--
2	04418-13060	SCREW	4	SN:B10001--
3	09601-50050	PLATE, NAME	1	SN:B10001--
4	12Y-72-11103	BLADE ASSEMBLY, WIDE.	1	SN:B10546--
	□12Y-72-11102	BLADE ASSEMBLY, WIDE.	1	SN:B10001--B10545
5	12Y-72-11324	COVER	1	SN:B10546--
	□12Y-72-11323	COVER	1	SN:B10442--B10545
	□12Y-72-11322	COVER	1	SN:B10001--B10441

CMZ00065

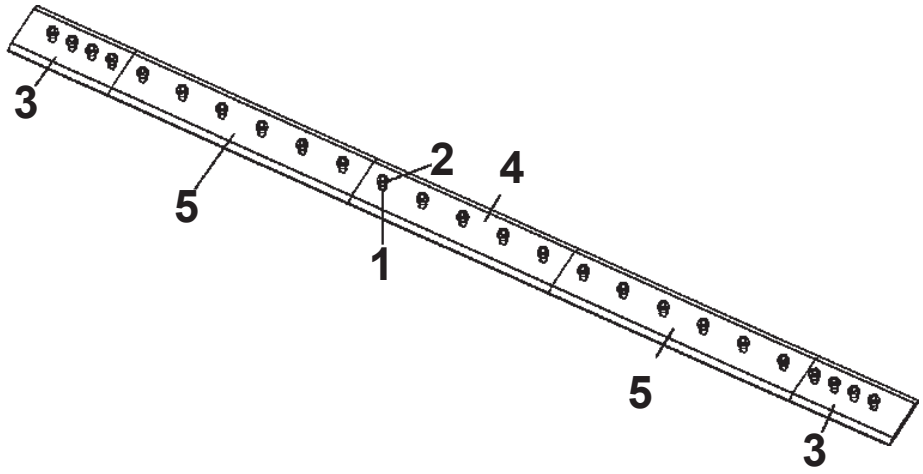

D51EX/PX-22 S/N B10001-UP

T0400-01A2 CUTTING EDGE GROUP, WIDE

Item	Part No.	Description	Qty	Options
1	02090-11270	BOLT	25	SN:B10001--
2	02290-11219	NUT	25	SN:B10001--
3	12Y-72-11210	CUTTING EDGE, END BIT	2	SN:B10001--
4	12Y-72-11220	CUTTING EDGE, CENTER	1	SN:B10001--
5	12Y-72-11230	CUTTING EDGE, RIGHT AND LEFT	2	SN:B10001--

Ref. T0400-01A2 Page T-015

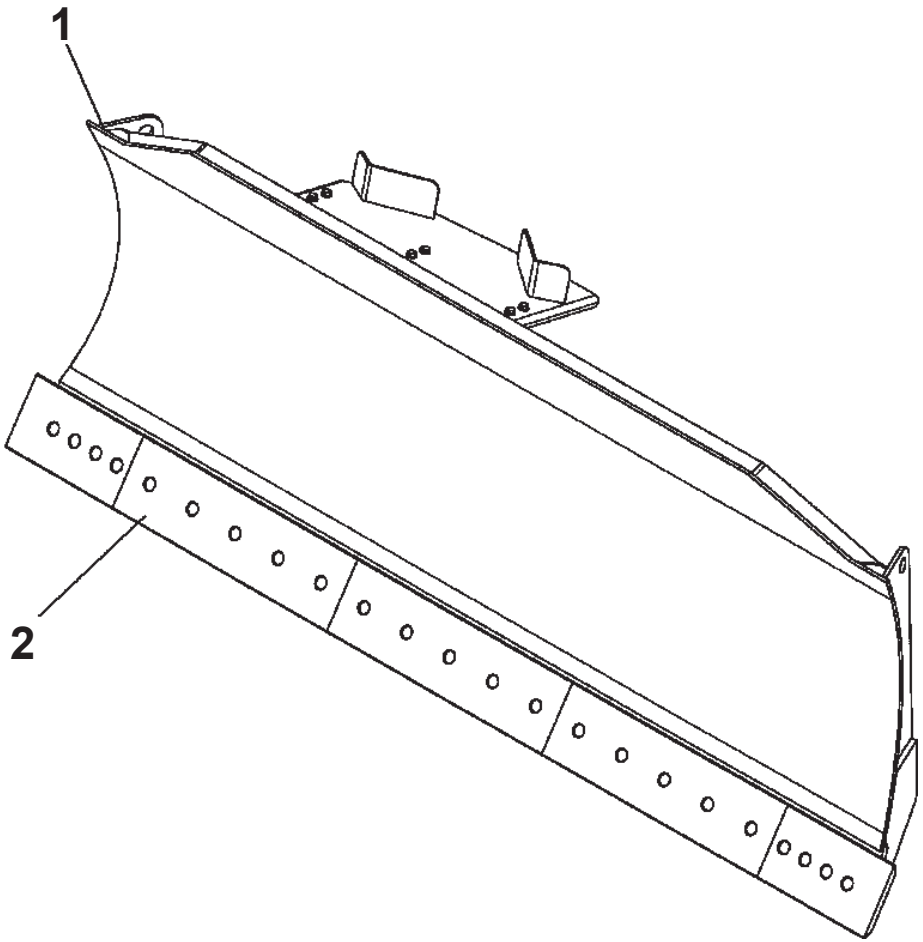

T0450-01A0 BLADE UNIT, NARROW

Item	Description	Qty	Options
1	BLADE GROUP (SEE FIG. T0450-01A1)	1	SN:B10001--
2	CUTTING EDGE (SEE FIG. T0450-01A2)	1	SN:B10001--

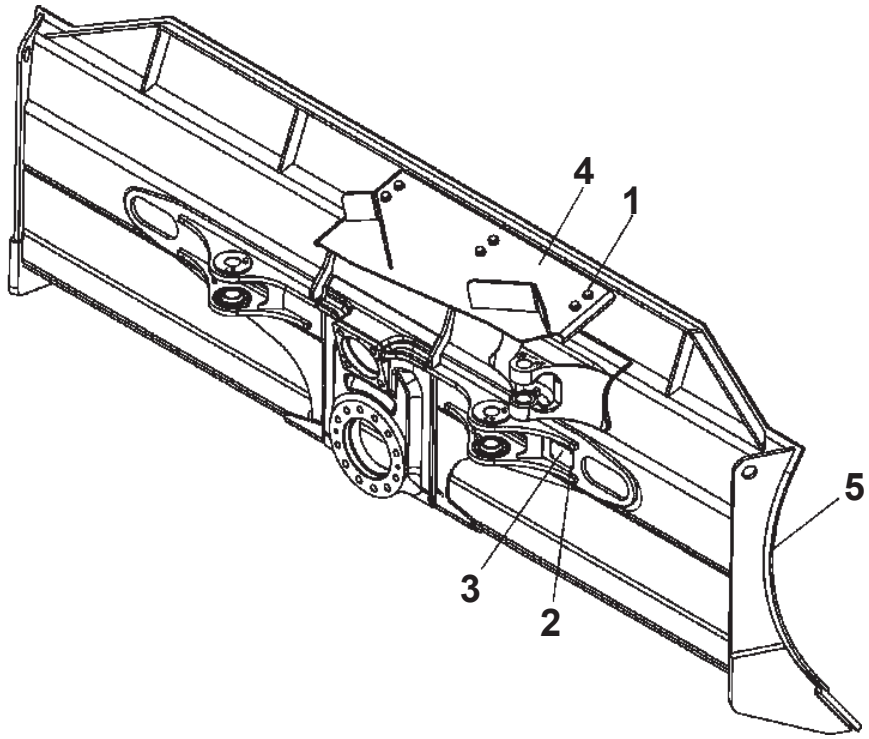

T0450-01A1 BLADE GROUP, NARROW

Item	Part No.	Description	Qty	Options
1	01010-81235	BOLT	6	SN:B10001--
	01643-31232	WASHER	6	SN:B10001--
2	04418-13060	SCREW	4	SN:B10001--
3	09601-50050	PLATE, NAME	1	SN:B10001--
4	12Y-72-11324	COVER	1	SN:B10546--
	□12Y-72-11323	COVER	1	SN:B10442--B10545
	□12Y-72-11322	COVER	1	SN:B10001--B10441
5	12Y-72-13103	BLADE ASSEMBLY, NARROW	1	SN:B10546--
	□12Y-72-13102	BLADE ASSEMBLY, NARROW	1	SN:B10001--B10545

CMZ00068

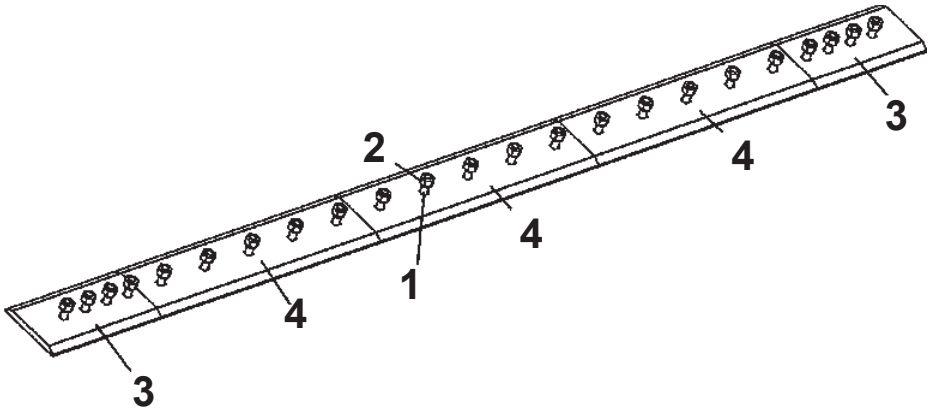

D51EX/PX-22 S/N B10001-UP

T0450-01A2 CUTTING EDGE GROUP, NARROW

Item	Part No.	Description	Qty	Options
1	02090-11270	BOLT	23	SN:B10001--
2	02290-11219	NUT	23	SN:B10001--
3	12Y-72-11210	END BIT	2	SN:B10001--
4	12Y-72-11220	EDGE, CUTTING	3	SN:B10001--

Ref. T0450-01A2 Page T-021

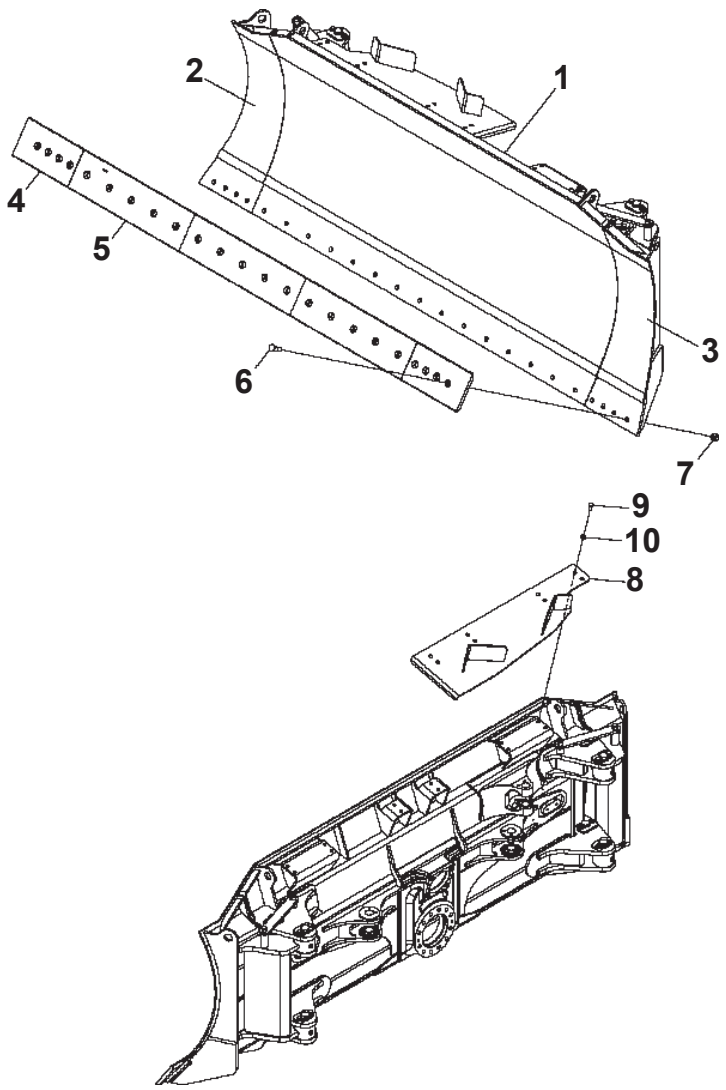

D51EX/PX-22 S/N B10001-UP

T0450-01B0 BLADE (POWER ANGLE POWER TILT DOZER)

Item	Part No.	Description	Qty	Options
1	12Y-72-14103	BLADE ASS'Y	1	SN:B10001--
2	12Y-72-14303	BLADE ASS'Y R.H.	1	SN:B10001--
3	12Y-72-14203	BLADE ASS'Y L.H.	1	SN:B10001--
4	12Y-72-11210	CUTTING EDGE	2	SN:B10001--
5	12Y-72-11220	CUTTING EDGE	3	SN:B10001--
6	02090-11270	BOLT	23	SN:B10001--
7	02290-11219	NUT	23	SN:B10001--
8	12Y-72-14351	COVER	1	SN:B10001--
9	01010-81235	BOLT	8	SN:B10001--
10	01643-31232	WASHER	8	SN:B10001--

Ref. T0450-01B0 Page T-021A

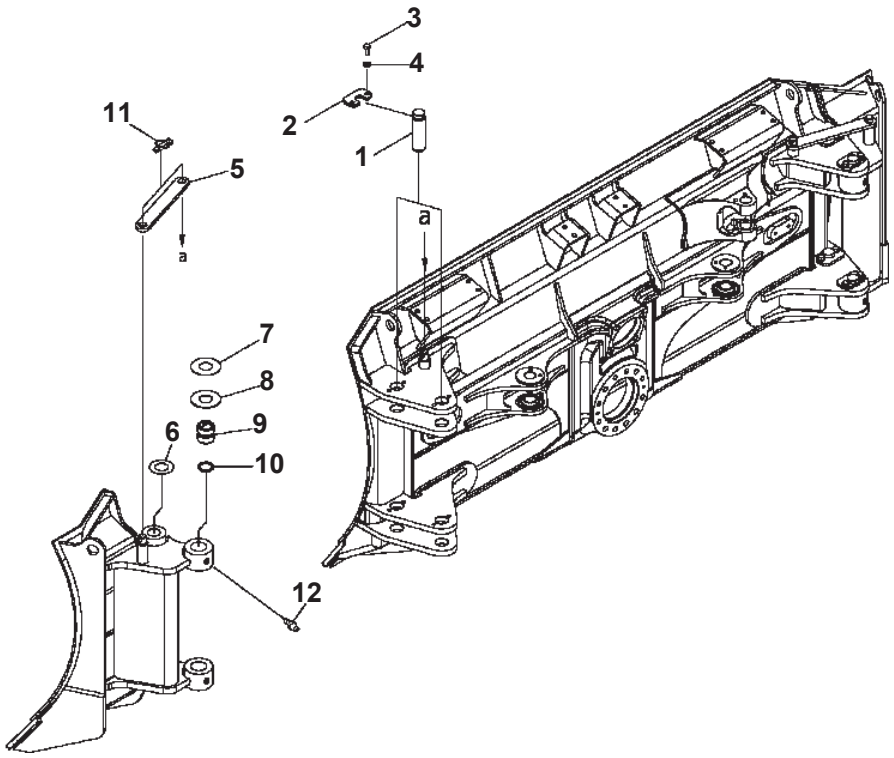

D51EX/PX-22 S/N B10001-UP

T0450-01B1 BLADE (POWER ANGLE POWER TILT DOZER) (PIN AND LOCK GROUP)

Item	Part No.	Description	Qty	Options
1	12Y-72-14230	PIN	8	SN:B10001--
2	12Y-72-14240	LOCK	8	SN:B10001--
3	01010-81230	BOLT	16	SN:B10001--
4	01643-31232	WASHER	16	SN:B10001--
5	12Y-72-14220	PLATE	2	SN:B10001--
6	12Y-72-14280	SHIM	6	SN:B10001--
7	12Y-72-14260	SHIM	2	SN:B10001--
8	12Y-72-14260	SHIM	2	SN:B10001--
9	12Y-72-14251	BUSHING	4	SN:B10001--
10	07145-00045	SEAL	2	SN:B10001--
11	421-46-12740	PIN	4	SN:B10001--
12	07020-00000	FITTING	4	SN:B10001--

Ref. T0450-01B1 Page T-021B

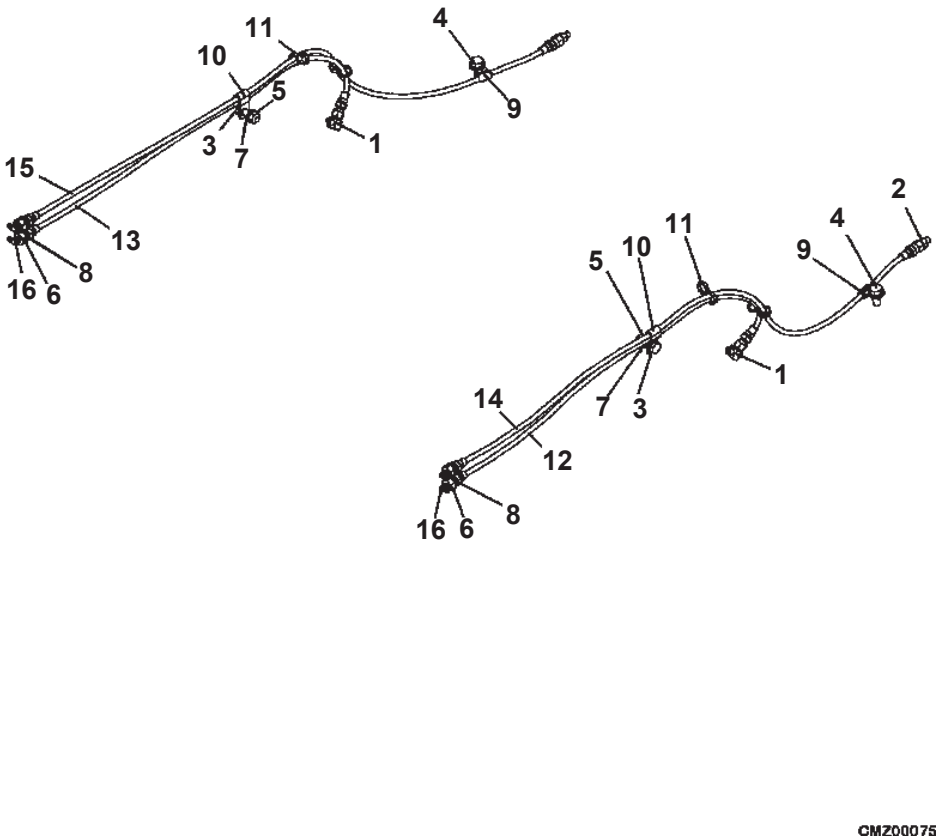

T0630-01A0 LUBRICATION GROUP

Item	Part No.	Description	Qty	Options
1	202-62-21430	ELBOW	2	SN:B10001--
2	203-62-21740	NIPPLE	2	SN:B10001--
3	01010-81035	BOLT	2	SN:B10001--
	01643-31032	WASHER	2	SN:B10001--
4	01010-81225	BOLT	2	SN:B10001--
	01643-31232	WASHER	2	SN:B10001--
5	01580-11008	NUT	2	SN:B10001--
6	01580-11210	NUT	4	SN:B10001--
7	01643-31032	WASHER	2	SN:B10001--
8	01643-51232	WASHER	4	SN:B10001--
9	04434-50812	CLIP	2	SN:B10001--
10	04435-50810	CLIP	2	SN:B10001--
11	08034-40521	BAND	4	SN:B10001--
12	12Y-72-11242	HOSE	1	SN:B10001--
13	12Y-72-11242	HOSE	1	SN:B10001--
14	12Y-72-11252	HOSE	1	SN:B10001--
15	12Y-72-11252	HOSE	1	SN:B10001--
16	12Y-72-11720	FITTING	4	SN:B10001--

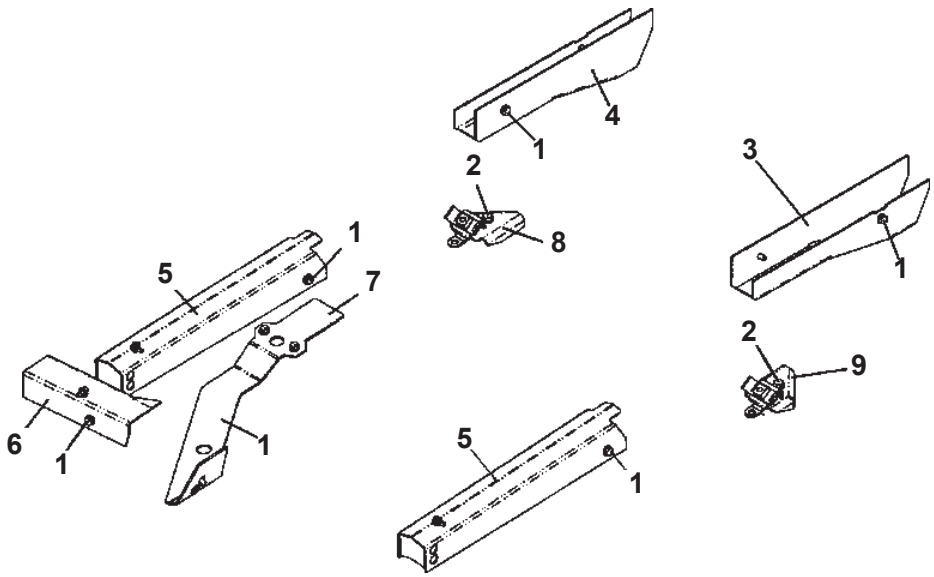

T0640-01A0 DOZER LINE GUARDS

Item	Part No.	Description	Qty	Options
1	01010-81020	BOLT	13	SN:B10001--
	01643-31032	WASHER	13	SN:B10001--
2	01010-81250	BOLT	2	SN:B10001--
	01643-31232	WASHER	2	SN:B10001--
3	12Y-62-11511	COVER, L. H.	1	SN:B10001--
4	12Y-62-11521	COVER, R. H.	1	SN:B10001--
5	12Y-62-11534	COVER	2	SN:B10599--
	□12Y-62-11533	COVER	2	SN:B10001--B10598
6	12Y-62-11540	COVER	1	SN:B10869--
	12Y-62-11540	COVER	1	SN:B10001--
7	12Y-62-11555	COVER	1	SN:B10869--
	□12Y-62-11554	COVER	1	SN:B10001--B10868
8	12Y-72-11262	BRACKET	1	SN:B10001--
9	12Y-72-11273	BRACKET	1	SN:B10001--

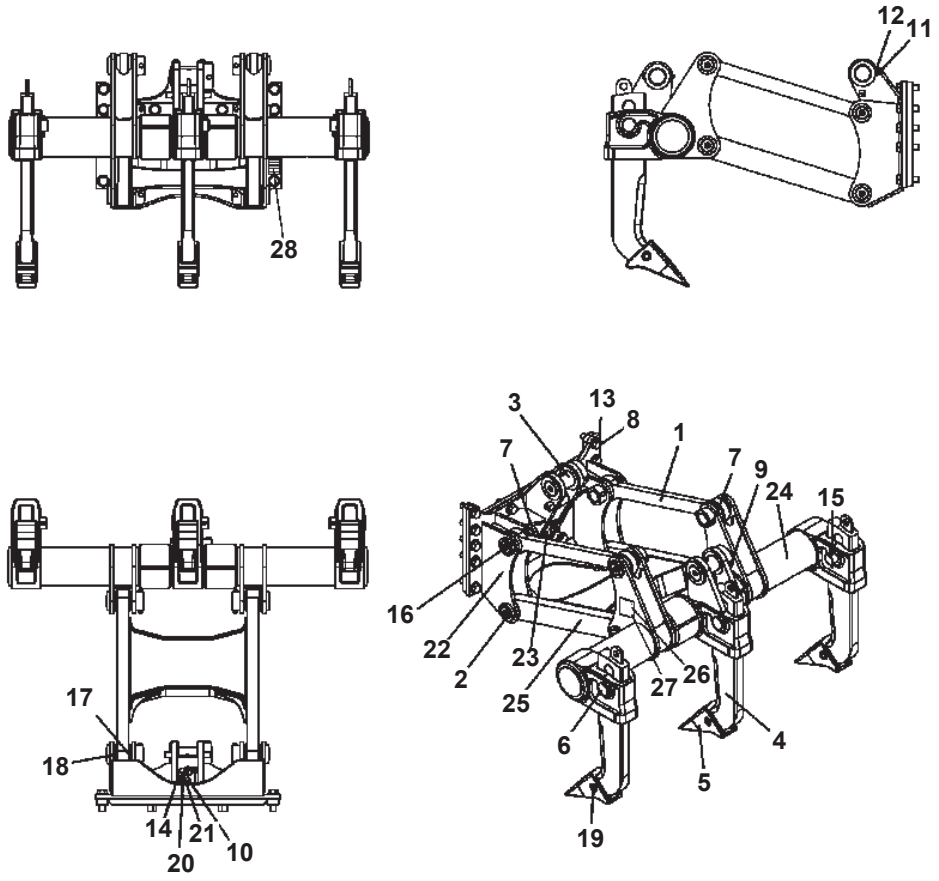

T0700-01A0 RIPPER GROUP

Item	Part No.	Description	Qty	Options
1	125-78-22130	LINK	2	SN:B10001--
2	125-78-22180	PIN	8	SN:B10001--
3	125-78-22190	PIN	2	SN:B10001--
4	125-78-22210	SHANK	3	SN:B10001--
5	131-78-31190	POINT	3	SN:B10001--
6	144-817-3161	PIN	3	SN:B10001--
7	01010-81095	BOLT	8	SN:B10001--
8	01010-82480	BOLT	18	SN:B10001--
9	01011-81030	BOLT	2	SN:B10001--
10	01010-81235	BOLT	2	SN:B11096--
	□01010-81230	BOLT	2	SN:B10001--B11095
	01643-31232	WASHER	2	SN:B10001--
11	01580-11008	NUT	10	SN:B10001--
12	01602-31032	WASHER	10	SN:B10001--
13	01643-32460	WASHER	18	SN:B10001--
14	02896-11012	O-RING	4	SN:B10001--
15	04050-10070	PIN, COTTER	3	SN:B10001--
16	07020-00000	FITTING	10	SN:B10001--
17	07143-10506	BUSHING	8	SN:B10001--
18	07145-00055	SEAL	16	SN:B10001--
19	09244-02489	PIN	3	SN:B10001--
20	12Y-62-12361	ELBOW, BULKHEAD	2	SN:B10001--
21	12Y-62-13970	NUT	2	SN:B10001--
22	12Y-78-11232	SUPPORT	1	SN:B12958--
	12Y-78-11231	SUPPORT	1	SN:B10001--B12957
23	12Y-78-11242	PLATE	1	SN:B11096--
	□12Y-78-11241	PLATE	1	SN:B10001--B11095
24	12Y-78-11320	BEAM	1	SN:B10001--
25	12Y-78-11330	LINK	1	SN:B10001--
26	09601-50050	PLATE, NAME	1	SN:B10001--
27	04418-13060	SCREW	4	SN:B10001--
28	09960-00802	MARK	1	SN:B12958--

CMZ00079

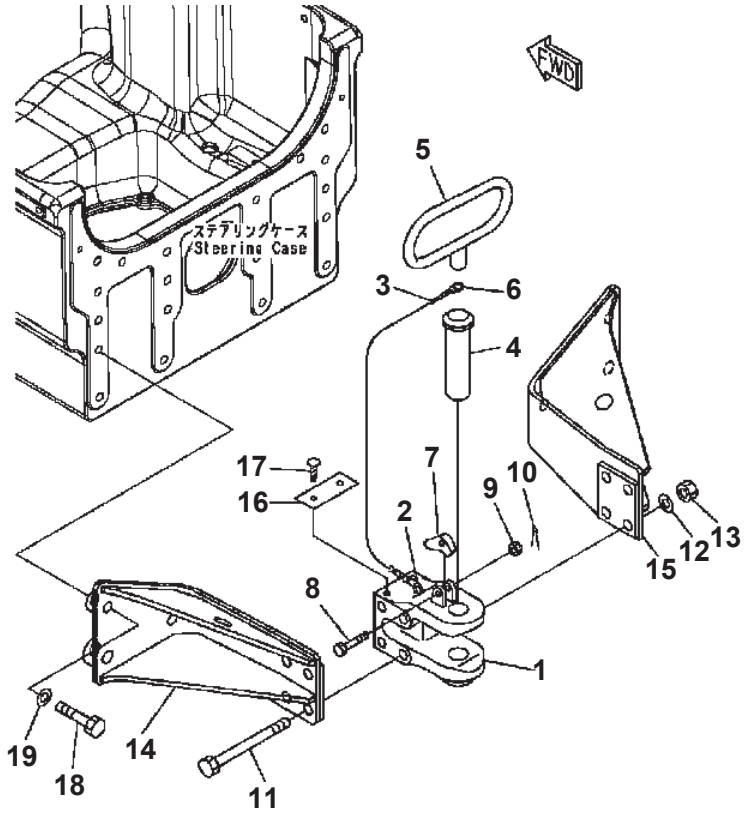

D51EX/PX-22 S/N B10001-UP

T0800-01A0 LONG DRAWBAR GROUP

Item	Part No.	Description	Qty	Options
1	144-69-11170	DRAWBAR ASSEMBLY	1	SN:B10001--
2	09245-50060	· HOOK (WELDED)	1	SN:B10001--
3	09245-04830	· CHAIN	1	SN:B10001--
4	09247-45180	· PIN (WELDED)	1	SN:B10001--
5	144-69-11210	· HANDLE	1	SN:B10001--
6	144-69-11230	· PLATE (WELDED)	1	SN:B10001--
7	134-69-61130	LATCH	1	SN:B10001--
8	01052-51260	BOLT	1	SN:B10001--
9	01593-31210	NUT	1	SN:B13530--
	□01592-31215	NUT	1	SN:B10001--B13529
10	04050-13025	PIN	1	SN:B10001--
11	144-69-11161	BOLT	4	SN:B10001--
12	01643-32460	WASHER	4	SN:B10001--
13	01582-12419	NUT	4	SN:B10001--
14	134-69-13110	BRACKET, L.H.	1	SN:B10001--
15	134-69-13120	BRACKET, R.H.	1	SN:B10001--
16	09823-00000	PLATE, NAME	1	SN:B10001--
17	04418-13060	SCREW	2	SN:B10001--
18	12Y-69-12110	BOLT	6	SN:B10001--
19	01643-32460	WASHER	6	SN:B10001--

Ref. T0800-01A0 Page T-029

CMZ00160

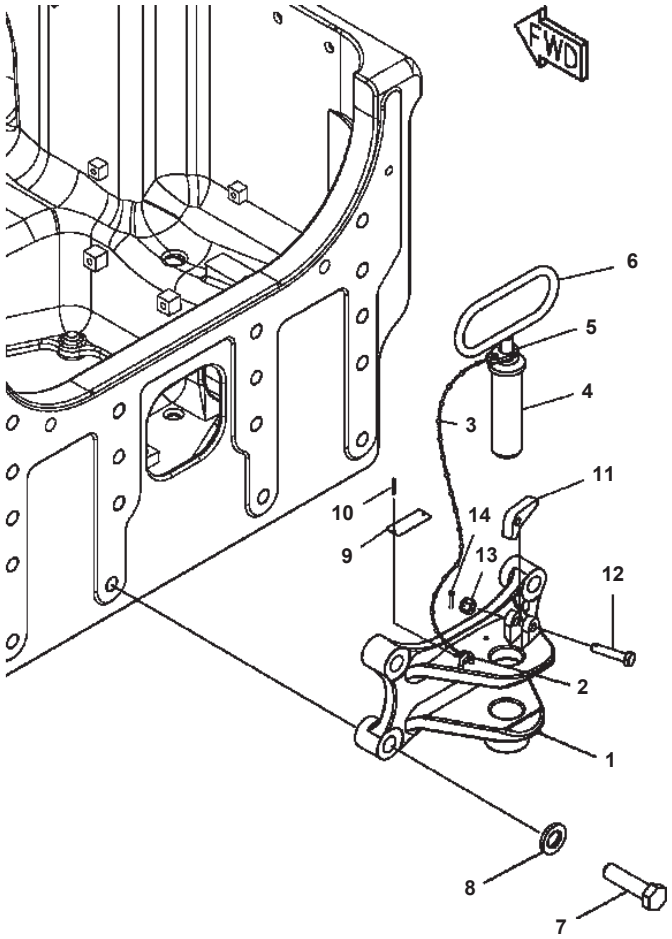

D51EX/PX-22 S/N B10001-UP

T2810-01A0 HITCH

Item	Part No.	Description	Qty	Options
	134-69-13130	HITCH ASSEMBLY	1	SN:B10001--
1	131-69-41120	· BRACKET	1	SN:B10001--
2	09245-50060	· HOOK	1	SN:B10001--
3	09245-04830	· CHAIN	1	SN:B10001--
4	130-69-11190	· PIN	1	SN:B10001--
5	144-69-11230	· PLATE	1	SN:B10001--
6	144-69-11210	· HANDLE	1	SN:B10001--
7	01010-82490	BOLT	4	SN:B10001--
8	01643-32460	WASHER	4	SN:B10001--
9	09823-00000	PLATE, NAME	1	SN:B10001--
10	04418-13060	SCREW	2	SN:B10001--
11	134-69-61130	LATCH	1	SN:B12165--
12	01052-51260	BOLT	1	SN:B12165--
13	01593-31210	NUT	1	SN:B13530--
	□01592-11215	NUT	1	SN:B12165--B13529
14	04050-03025	PIN	1	SN:B12165--

Ref. T2810-01A0 Page T-031

MARKS AND PLATES

CVPB00235

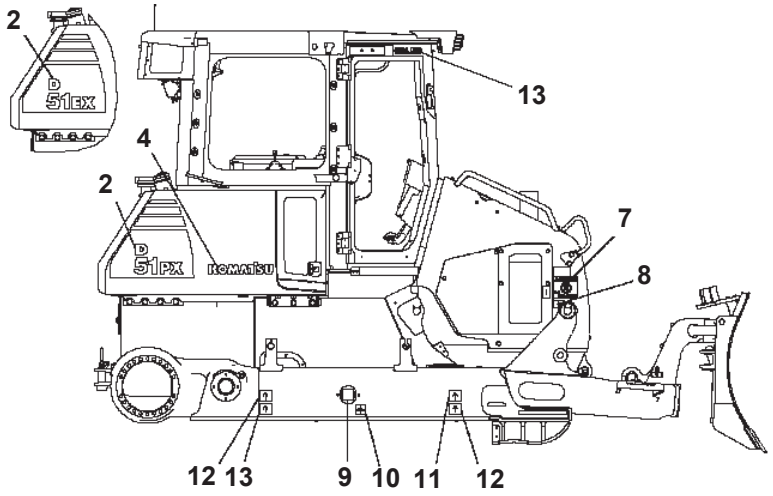

RIGHT SIDE

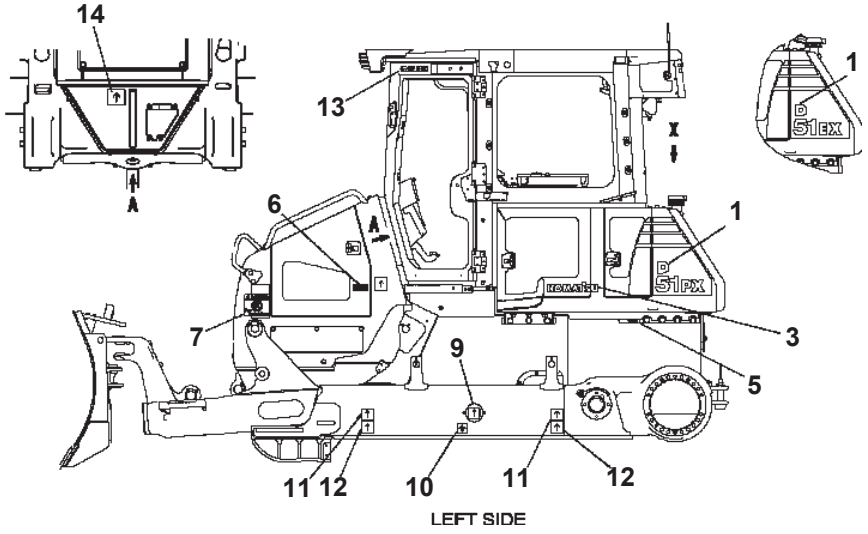

LEFT SIDE

D51EX/PX-22 S/N B10001-UP

U0100-01A1 MARKS AND PLATES 1 OF 5

Item	Part No.	Description	Qty	Wt.	Options
1	12Y-98-11131	MARK, LH MODEL TYPE	1		SN:B10001--
		OR			
1	12Y-98-11111	MARK, LH MODEL TYPE	1	F1	SN:B10001--
2	12Y-98-11141	MARK, RH MODEL TYPE	1		SN:B10001--
		OR			
2	12Y-98-11121	MARK, RH MODEL TYPE	1	F1	SN:B10001--
3	09690-P0355	MARK, LH KOMATSU	1		SN:B10001--
4	09690-P0450	MARK, RH KOMATSU	1		SN:B10001--
5	09690-M0063	MARK, KOMATSU	1		SN:B10001--
		(ANTI-RESTAMP)			
6	11Y-98-31130	MARK, ECOT3	1		SN:B10001--
7	11Y-98-31150	MARK, APPROACH CAUTION	2		SN:B10001--
		OR			
7	09806-B1201	MARK, APPROACH CAUTION	2	F2	SN:B10001--
8	09667-43000	MARK, ENGINE AND FAN	1		SN:B10001--
		OR			
8	09667-A0481	MARK, ENGINE AND FAN	1	F2	SN:B10001--
9	09657-03003	MARK, TRACK TENSION	2		SN:B10001--
		ADJUSTMENT CAUTION			
		OR			
9	09657-A0881	MARK, TRACK TENSION	2	F2	SN:B10001--
		ADJUSTMENT CAUTION			
10	09960-00611	MARK, CENTER OF GRAVITY	2		SN:B10001--
11	09960-00801	MARK, LIFTING POINT	4		SN:B10001--
12	09960-00802	MARK, TIE POINT	4		SN:B10001--
13	☒09970-00230	EMBLEM, GALEO	2		SN:B10001--B11024
14	09960-00802	MARK	2		SN:B13004--
		F1 - REFERENCE AND/OR PART FOR PX MODEL.			
		F2 - REFERENCE AND/OR PART FOR EUROPEAN MODEL.			

Ref. U0100-01A1 Page U-001

CVPB00235B

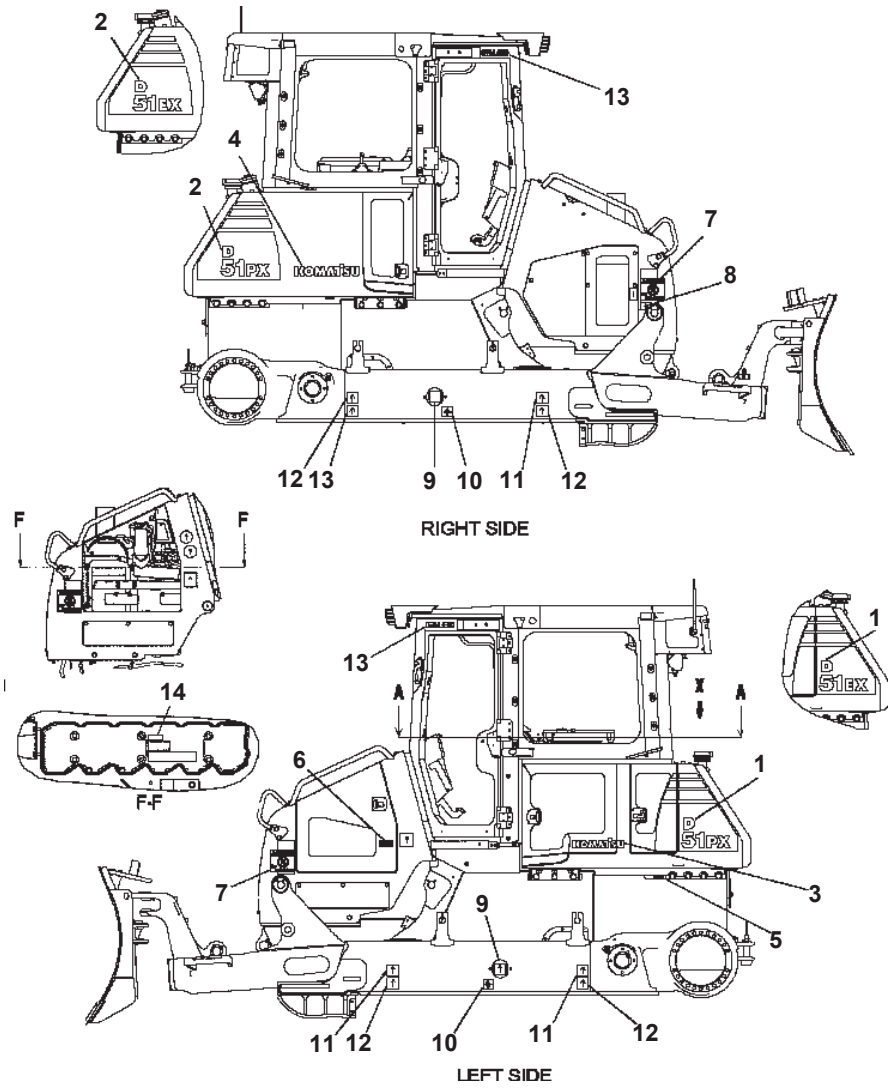

D51EX/PX-22 S/N B10001-UP

U0100-01A2 MARKS AND PLATES 1 OF 5 (JAPANESE)

Item	Part No.	Description	Qty	Options
1	12Y-98-11111	MARK, LH MODEL TYPE	1	SN:B10001--
2	12Y-98-11121	MARK, RH MODEL TYPE	1	SN:B10001--
3	09690-P0355	MARK, LH KOMATSU	1	SN:B10001--
4	09690-P0450	MARK, RH KOMATSU	1	SN:B10001--
5	09690-M0063	MARK, KOMATSU (ANTI-RESTAMP)	1	SN:B10001--
6	11Y-98-31130	MARK, ECOT3	1	SN:B10001--
7	09806-B1200	MARK, APPROACH CAUTION	2	SN:B10001--
8	09667-A0480	MARK, ENGINE AND FAN	1	SN:B10001--
9	09657-A0880	MARK, TRACK TENSION ADJUSTMENT CAUTION	2	SN:B10001--
10	09960-00611	MARK, CENTER OF GRAVITY	2	SN:B10001--
11	09960-00801	MARK, LIFTING POINT	4	SN:B10001--
12	09960-00802	MARK, TIE POINT	4	SN:B10001--
13	☒09970-00230	EMBLEM, GALEO	2	SN:B10001--B11024
14	134-01-73190	PLATE	1	SN:B10001--

Ref. U0100-01A2 Page U-003

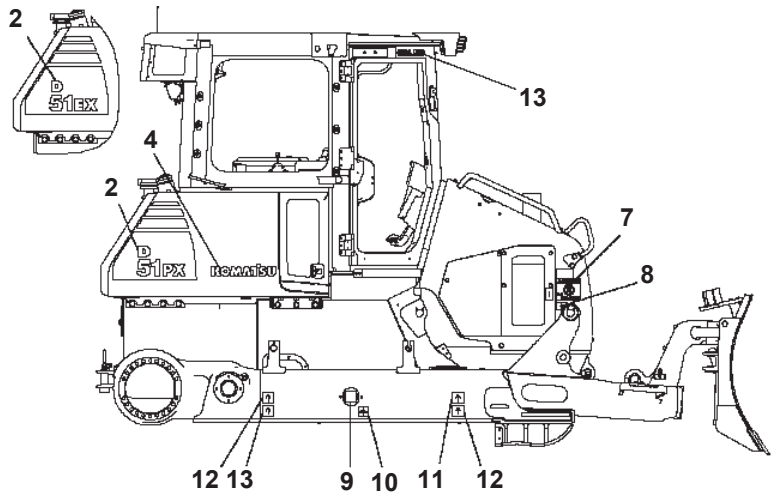

RIGHT SIDE

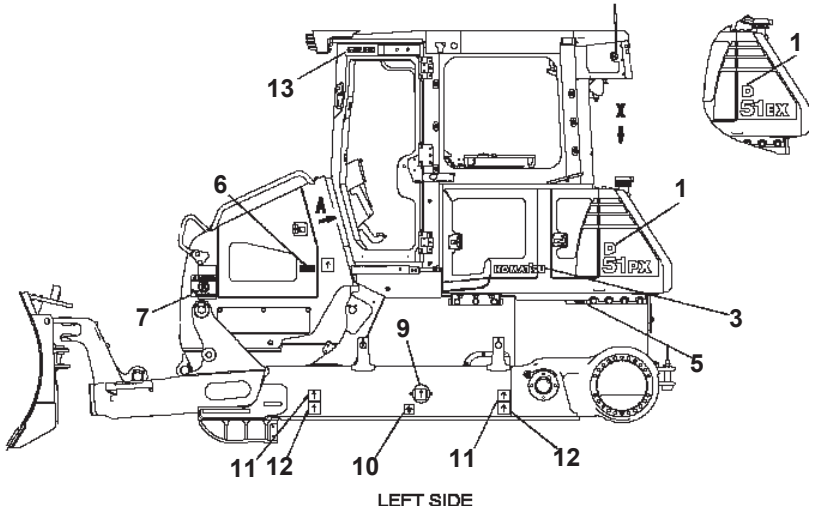

LEFT SIDE

U0100-01A3 MARKS AND PLATES 1 OF 5 (PORTUGUESE)

Item	Part No.	Description	Qty	Wt.	Options
1	12Y-98-11131	MARK, LH MODEL TYPE	1		SN:B10001--
		OR			
1	12Y-98-11111	MARK, LH MODEL TYPE	1	F1	SN:B10001--
2	12Y-98-11141	MARK, RH MODEL TYPE	1		SN:B10001--
		OR			
2	12Y-98-11121	MARK, RH MODEL TYPE	1	F1	SN:B10001--
3	09690-P0355	MARK, LH KOMATSU	1		SN:B10001--
4	09690-P0450	MARK, RH KOMATSU	1		SN:B10001--
5	09690-M0063	MARK, KOMATSU	1		SN:B10001--
		(ANTI-RESTAMP)			
6	11Y-98-31130	MARK, ECOT3	1		SN:B10001--
7	09812-17000	MARK, APPROACH CAUTION	2		SN:B10001--
8	09667-47000	MARK, ENGINE AND FAN	1		SN:B10001--
9	09657-07002	MARK, TRACK TENSION	2	F2	SN:B10001--
		ADJUSTMENT CAUTION			
10	09960-00611	MARK, CENTER OF GRAVITY	2		SN:B10001--
11	09960-00801	MARK, LIFTING POINT	4		SN:B10001--
12	09960-00802	MARK, TIE POINT	4		SN:B10001--
13	☒09970-00230	EMBLEM, GALEO	2		SN:B10001--B11024
		F1 - REFERENCE AND/OR PART FOR PX MODEL.			

CVPB00235

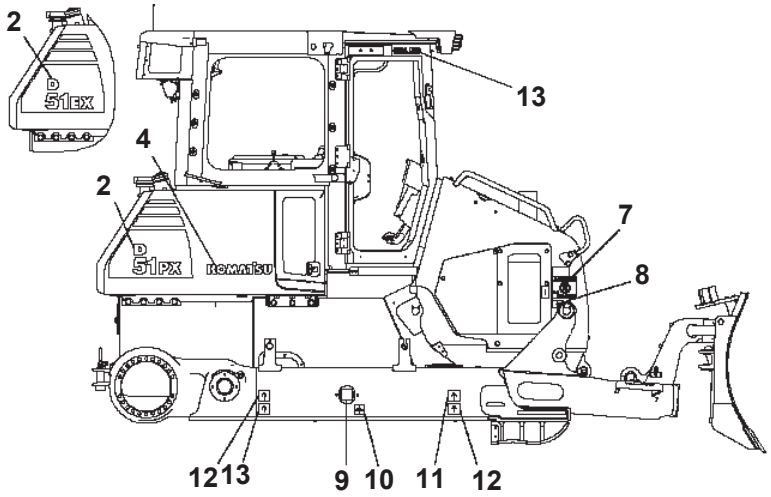

RIGHT SIDE

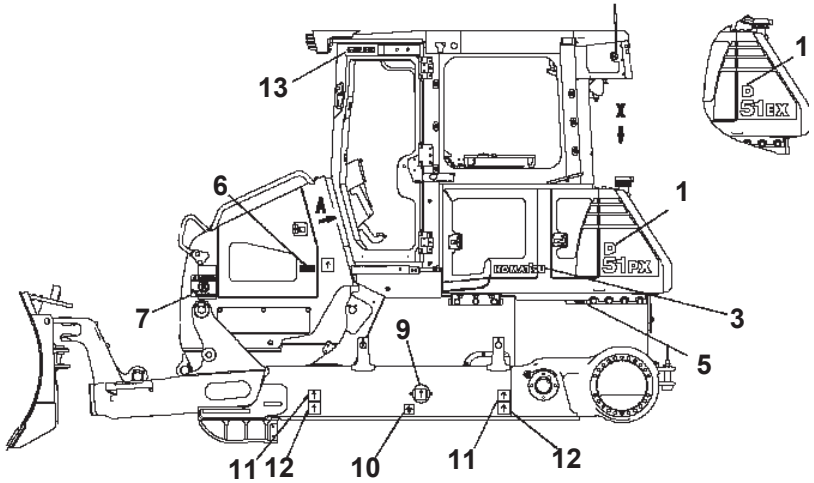

LEFT SIDE

D51EX/PX-22 S/N B10001-UP

U0100-01A3 MARKS AND PLATES 1 OF 5 (SPANISH)

Item	Part No.	Description	Qty	Wt.	Options
1	12Y-98-11131	MARK, LH MODEL TYPE	1		SN:B10868--
		OR			
1	12Y-98-11111	MARK, LH MODEL TYPE	1	F1	SN:B10868--
2	12Y-98-11141	MARK, RH MODEL TYPE	1		SN:B10868--
		OR			
2	12Y-98-11121	MARK, RH MODEL TYPE	1	F1	SN:B10868--
3	09690-P0355	MARK, LH KOMATSU	1		SN:B10868--
4	09690-P0450	MARK, RH KOMATSU	1		SN:B10868--
5	09690-M0063	MARK, KOMATSU	1		SN:B10868--
		(ANTI-RESTAMP)			
6	11Y-98-31130	MARK, ECOT3	1		SN:B10868--
7	09812-11000	MARK, APPROACH CAUTION	2		SN:B10868--
8	09667-41000	MARK, ENGINE AND FAN	1		SN:B10868--
9	09657-07002	MARK, TRACK TENSION	2	F2	SN:B10868--
		ADJUSTMENT CAUTION			
10	09960-00611	MARK, CENTER OF GRAVITY	2		SN:B10868--
11	09960-00801	MARK, LIFTING POINT	4		SN:B10868--
12	09960-00802	MARK, TIE POINT	4		SN:B10868--
13	☒09970-00230	EMBLEM, GALEO	2		SN:B10868--B11024
		F1 - REFERENCE AND/OR PART FOR PX MODEL.			

Ref. U0100-01A4 Page U-006

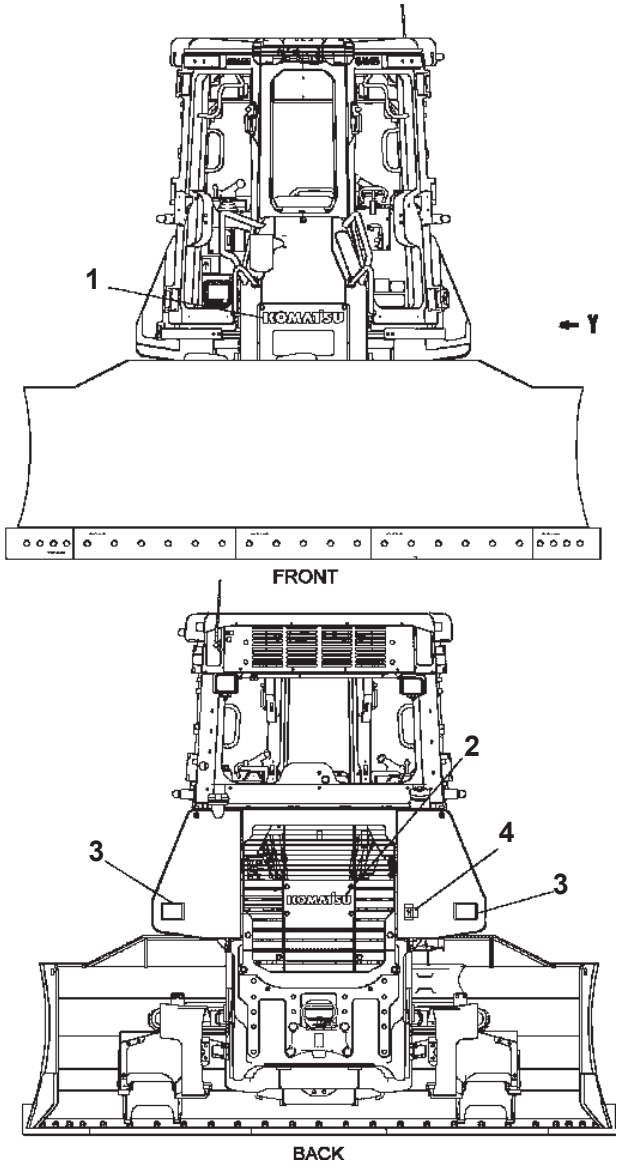

U0100-02A1 MARKS AND PLATES 2 OF 5

Item	Part No.	Description	Qty	Options
1	09690-P0450	MARK, KOMATSU FRONT	1	SN:B10001--
2	09690-F0355	MARK, KOMATSU REAR	1	SN:B10001--
3	14X-98-35181	REFLECTOR, REAR	2	SN:B10001--
4	09667-43000	MARK, ENGINE AND FAN CAUTION	1	SN:B10001--

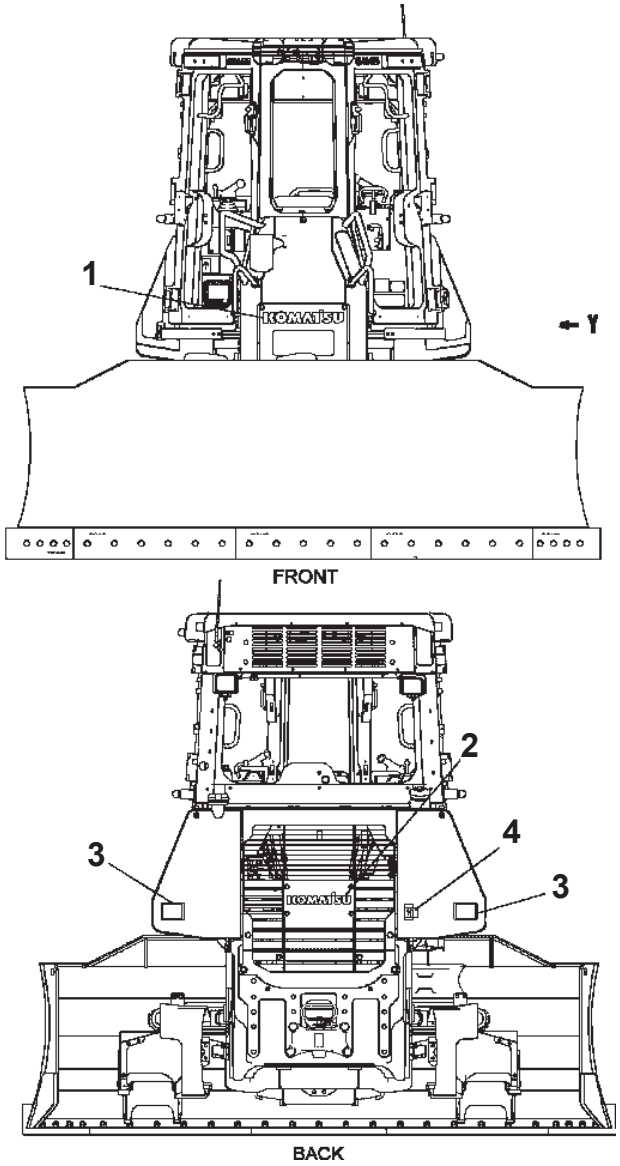

U0100-02A2 MARKS AND PLATES 2 OF 5 (JAPANESE)

Item	Part No.	Description	Qty	Options
1	09690-P0450	MARK, KOMATSU FRONT	1	SN:B10001--
2	09690-F0355	MARK, KOMATSU REAR	1	SN:B10001--
3	14X-98-35181	REFLECTOR, REAR	2	SN:B10001--
4	09667-A0480	MARK, ENGINE AND FAN CAUTION	1	SN:B10001--

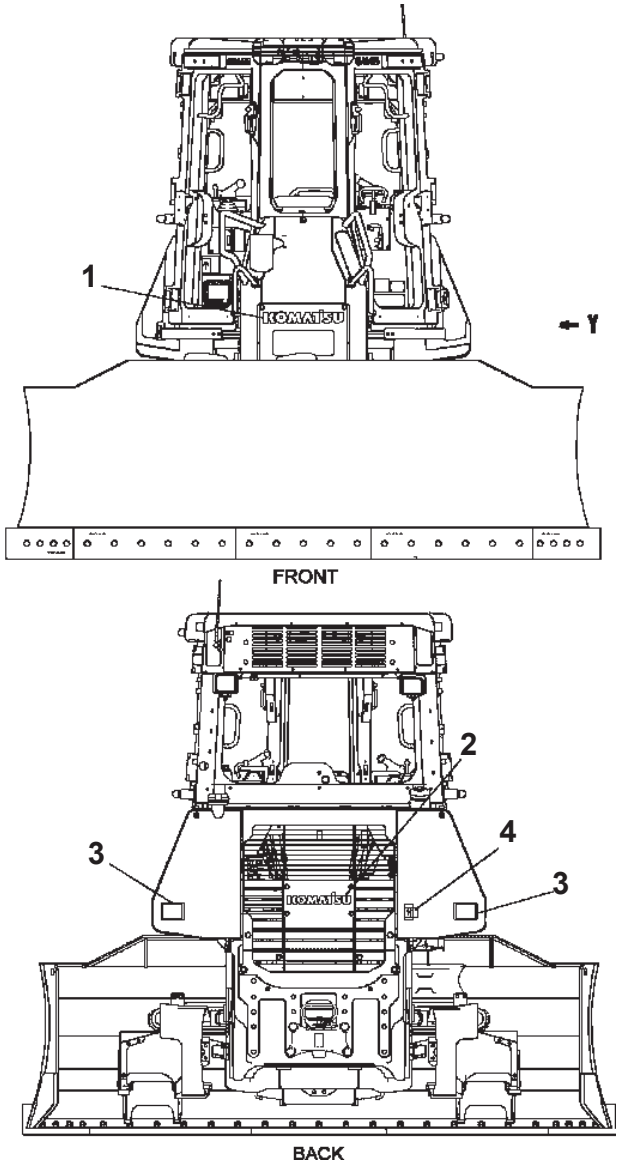

U0100-02A3 MARKS AND PLATES 2 OF 5 (PORTUGUESE)

Item	Part No.	Description	Qty	Options
1	09690-P0450	MARK, KOMATSU FRONT	1	SN:B10001--
2	09690-F0355	MARK, KOMATSU REAR	1	SN:B10001--
3	14X-98-35181	REFLECTOR, REAR	2	SN:B10001--
4	09667-47100	MARK, ENGINE AND FAN CAUTION	1	SN:B11904--
	□09667-47000	MARK, ENGINE AND FAN CAUTION	1	SN:B10001--B11903

CVPB00236

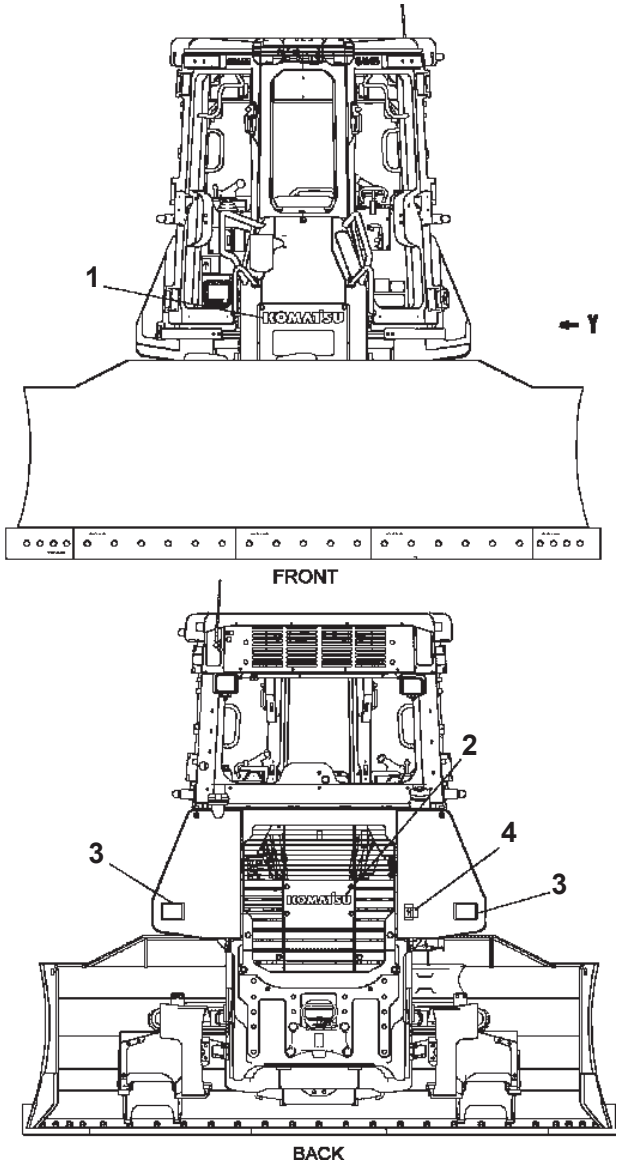

D51EX/PX-22 S/N B10001-UP

U0100-02A3 MARKS AND PLATES 2 OF 5 (SPANISH)

Item	Part No.	Description	Qty	Options
1	09690-P0450	MARK, KOMATSU FRONT	1	SN:B10868--
2	09690-F0355	MARK, KOMATSU REAR	1	SN:B10868--
3	14X-98-35181	REFLECTOR, REAR	2	SN:B10868--
4	09667-41000	MARK, ENGINE AND FAN CAUTION	1	SN:B10868--

Ref. U0100-02A4 Page U-012

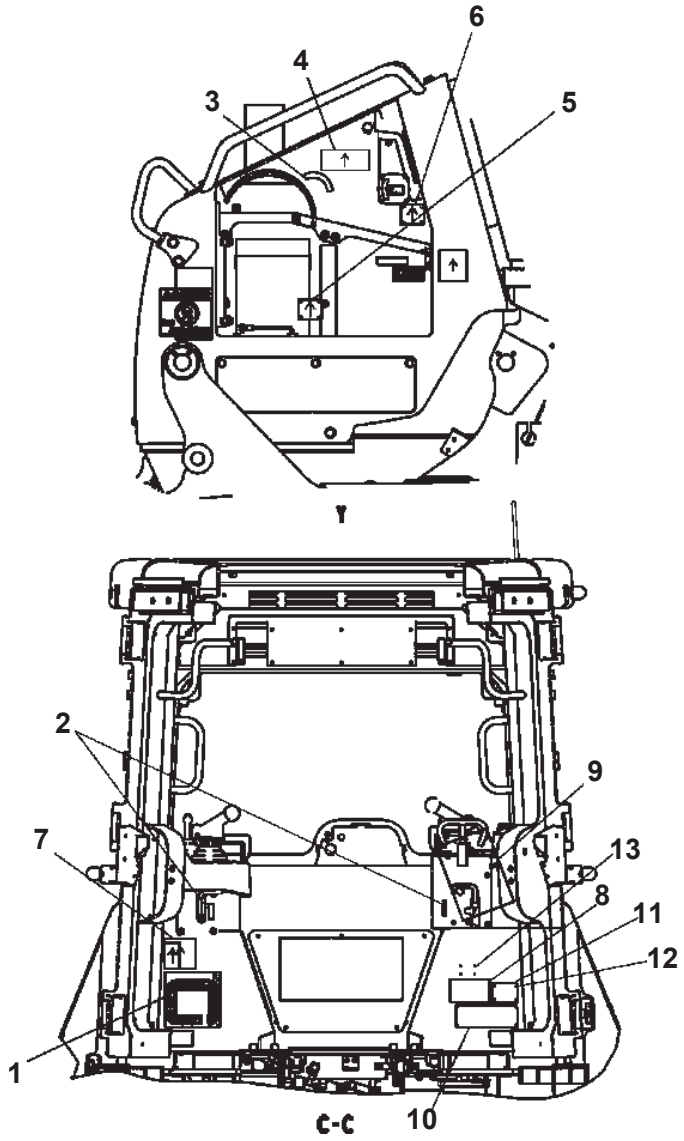

U0100-03A1 MARKS AND PLATES 3 OF 5 (ENGLISH)

Item	Part No.	Description	Qty	Wt.	Options
1	12Y-98-62122	CHART, OIL	1		SN:B10001--
2	14X-98-11170	DECAL, SAFETY LOCK LEVER INSTRUCTION	2		SN:B10001--
3	600-181-1930	GAUGE, AIR CLEANER MAINTENANCE	1		SN:B10001--
4	09637-30163	MARK, AIR CLEANER CAUTION	1		SN:B10001--
5	09817-A0753	PLATE, HEAT CAUTION (TURBOCHARGER)	1		SN:B10001--
	09817-A0005	BOLT	4		SN:B10001--
6	09817-A0753	PLATE, HEAT CAUTION (MUFFLER)	1		SN:B10001--
	09817-A0005	BOLT	4		SN:B10001--
7	09651-03001	MARK, PRE-OPERATION CAUTION	1		SN:B10001--
		OR			SN:B10001--
7	09651-A0481	MARK, PRE-OPERATION CAUTION	1	F2	SN:B10001--
8	17A-98-41510	MARK, TIE POSITION CAUTION	1		SN:B10001--
	17X-98-61510	MARK, TIE POSITION CAUTION	1	F2	SN:B13004--
9	126-98-51180	TAG, LIFTING POSITION CAUTION	1		SN:B10001--
10	09620-A2000	PLATE, ROPS/FOPS	1		SN:B10001--
	04418-13060	BOLT	4		SN:B10001--
11	09601-12051	PLATE	1		SN:B10001--
12	04418-13060	BOLT			SN:B10001--
		OR			
11	09601-02053	PLATE	1	F2	SN:B13928--
	□09601-02051	PLATE	1	F2	SN:B10001--B13927
		F2 - REFERENCE AND/OR PART FOR EUROPEAN MODEL.			
13	04418-13060	BOLT	4		SN:B13937--

CVPB00237J

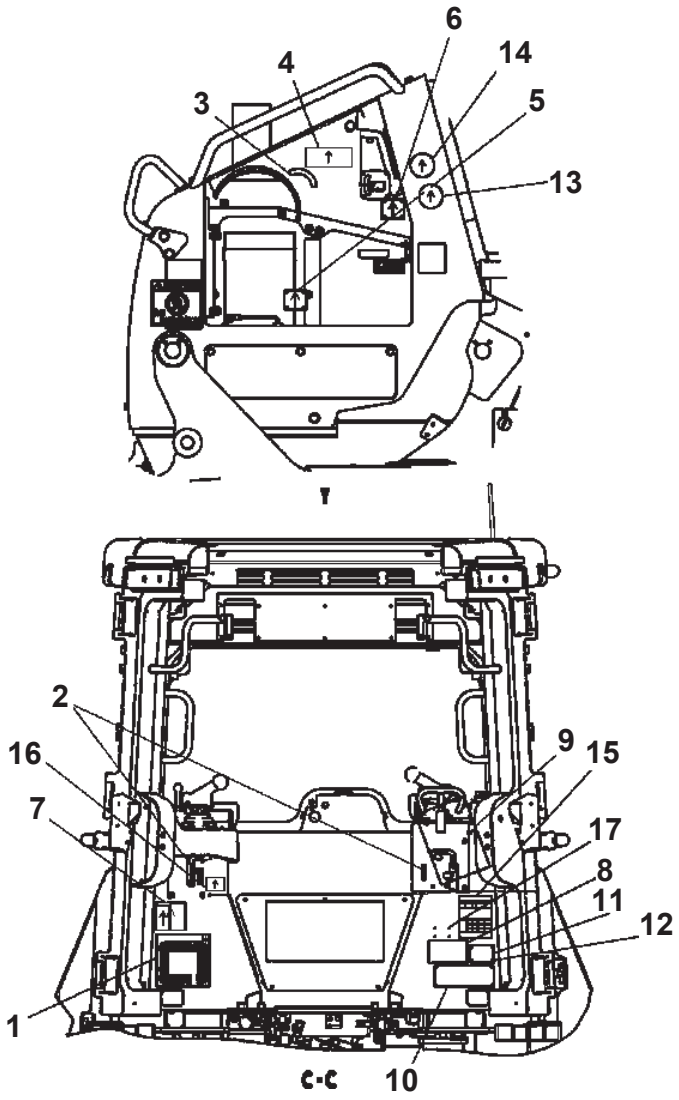

D51EX/PX-22 S/N B10001-UP

U0100-03A2 MARKS AND PLATES 3 OF 5 (JAPANESE)

Item	Part No.	Description	Qty	Options
1	12Y-98-62122	CHART, OIL	1	SN:B10001--
2	14X-98-11170	DECAL, SAFETY LOCK LEVER INSTRUCTION	2	SN:B10001--
3	600-181-1930	GAUGE, AIR CLEANER MAINTENANCE	1	SN:B10001--
4	09637-01163	MARK, AIR CLEANER CAUTION	1	SN:B10001--
5	09817-A0752	PLATE, HEAT CAUTION (TURBOCHARGER)	1	SN:B10001--
	09817-A0005	BOLT	4	SN:B10001--
6	09817-A0752	PLATE, HEAT CAUTION (MUFFLER)	1	SN:B10001--
	09817-A0005	BOLT	4	SN:B10001--
7	09651-A0480	MARK, PRE-OPERATION CAUTION	1	SN:B10001--
8	17A-98-41510	MARK, TIE POSITION CAUTION	1	SN:B10001--
9	126-98-51180	TAG, LIFTING POSITION CAUTION	1	SN:B10001--
10	09620-A2000	PLATE, ROPS/FOPS	1	SN:B10001--
	04418-13060	BOLT	4	SN:B10001--
11	09601-12051	PLATE	1	SN:B10001--
12	04418-13060	BOLT	4	SN:B10001--
13	09968-00090	MARK	1	SN:B10001--
14	09967-B0090	MARK	1	SN:B13654--
	□09967-70090	MARK	1	SN:B10001--B13653
15	12Y-98-61130	PLATE	1	SN:B10001--
16	09971-00130	MARK	1	SN:B10001--
17	04418-13060	BOLT	4	SN:B13937--

Ref. U0100-03A2 Page U-015

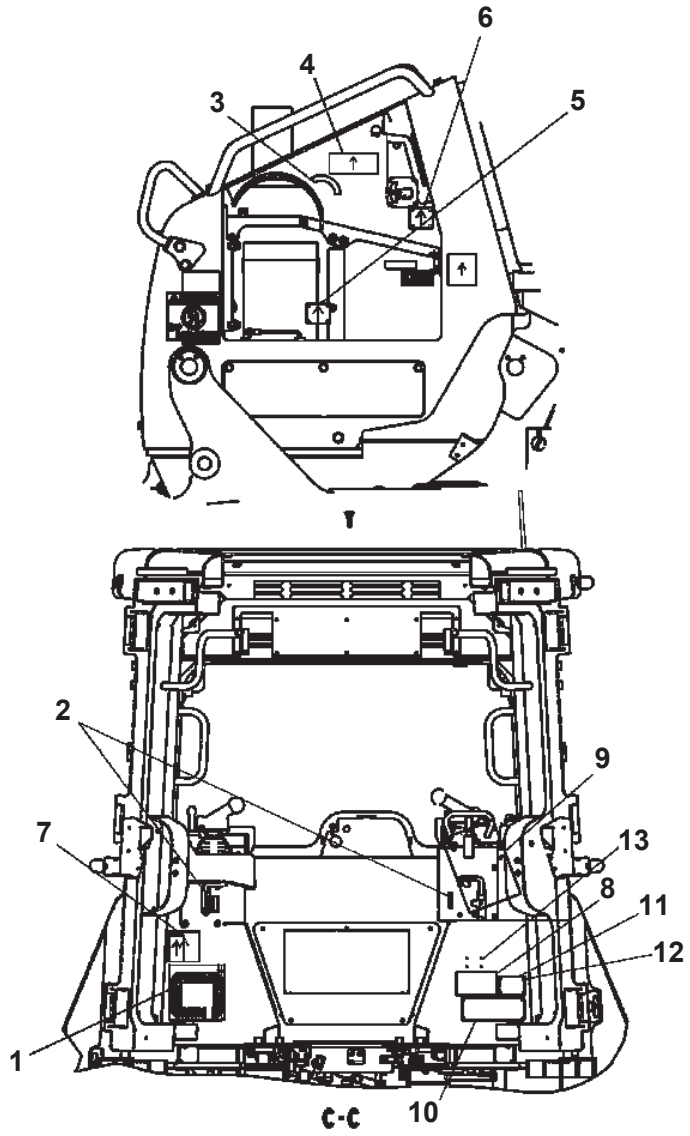

U0100-03A3 MARKS AND PLATES 3 OF 5 (PORTUGUESE)

Item	Part No.	Description	Qty	Options
1	12Y-98-62122	CHART, OIL	1	SN:B10001--
2	14X-98-11170	DECAL, SAFETY LOCK LEVER INSTRUCTION	2	SN:B10001--
3	600-181-1930	GAUGE, AIR CLEANER MAINTENANCE	1	SN:B10001--
4	09637-50263	MARK, AIR CLEANER CAUTION	1	SN:B10001--
5	09817-A0753	PLATE, HEAT CAUTION (TURBOCHARGER)	1	SN:B10001--
	09817-A0005	BOLT	4	SN:B10001--
6	09817-A0753	PLATE, HEAT CAUTION (MUFFLER)	1	SN:B10001--
	09817-A0005	BOLT	4	SN:B10001--
7	09651-07001	MARK, PRE-OPERATION CAUTION	1	SN:B10001--
8	17A-98-41510	MARK, TIE POSITION CAUTION	1	SN:B10001--
9	126-98-51180	TAG, LIFTING POSITION CAUTION	1	SN:B10001--
10	09620-A2000	PLATE, ROPS/FOPS	1	SN:B10001--
	04418-13060	BOLT	4	SN:B10001--
11	09601-12051	PLATE	1	SN:B10001--
12	04418-13060	BOLT	4	SN:B10001--
13	04418-13060	BOLT	4	SN:B13937--

CVPB00237S

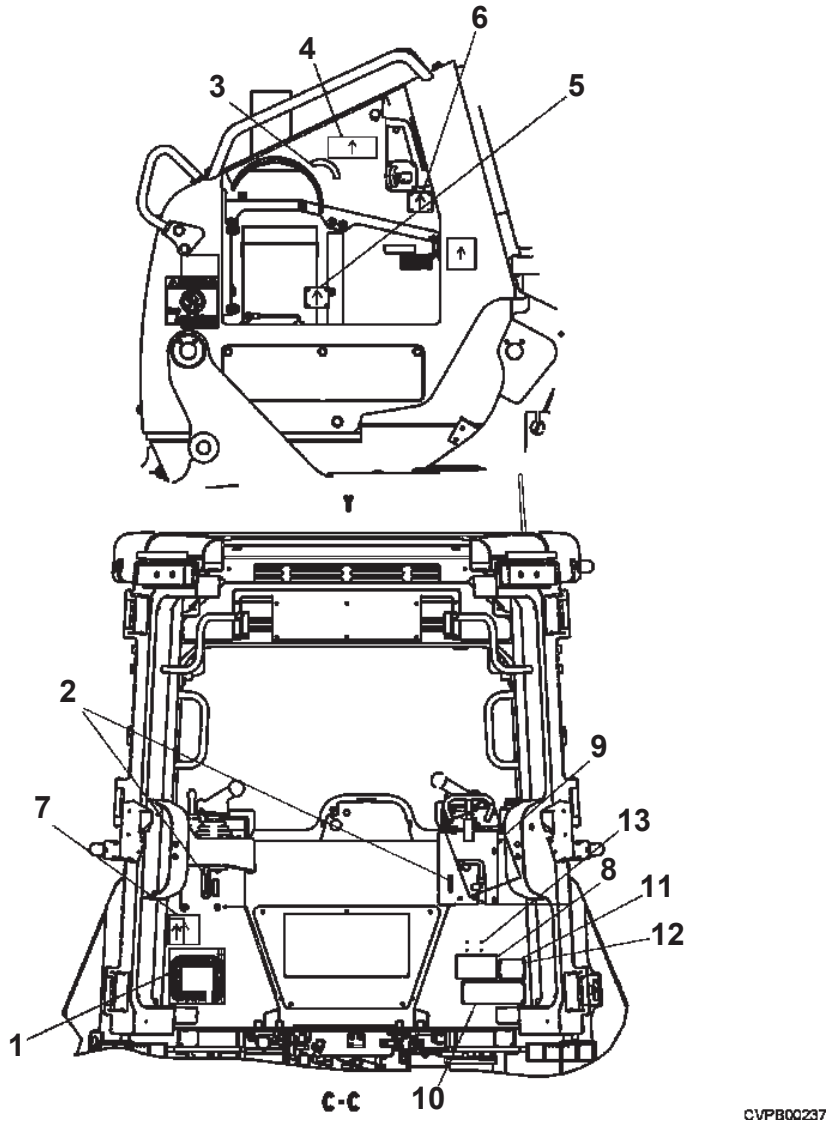

D51EX/PX-22 S/N B10001-UP

U0100-03A3 MARKS AND PLATES 3 OF 5 (SPANISH)

Item	Part No.	Description	Qty	Options
1	12Y-98-62122	CHART, OIL	1	SN:B10868--
2	14X-98-11170	DECAL, SAFETY LOCK LEVER INSTRUCTION	2	SN:B10868--
3	600-181-1930	GAUGE, AIR CLEANER MAINTENANCE	1	SN:B10868--
4	09637-70163	MARK, AIR CLEANER CAUTION	1	SN:B10868--
5	09817-A0753	PLATE, HEAT CAUTION (TURBOCHARGER)	1	SN:B10868--
	09817-A0005	BOLT	4	SN:B10868--
6	09817-A0753	PLATE, HEAT CAUTION (MUFFLER)	1	SN:B10868--
	09817-A0005	BOLT	4	SN:B10868--
7	09651-01001	MARK, PRE-OPERATION CAUTION	1	SN:B10868--
8	17A-98-41510	MARK, TIE POSITION CAUTION	1	SN:B10868--
9	126-98-51180	TAG, LIFTING POSITION CAUTION	1	SN:B10868--
10	09620-A2000	PLATE, ROPS/FOPS	1	SN:B10868--
	04418-13060	BOLT	4	SN:B10868--
11	09601-12051	PLATE	1	SN:B10868--
12	04418-13060	BOLT	4	SN:B10868--
13	04418-13060	BOLT	4	SN:B13937--

Ref. U0100-03A4 Page U-018

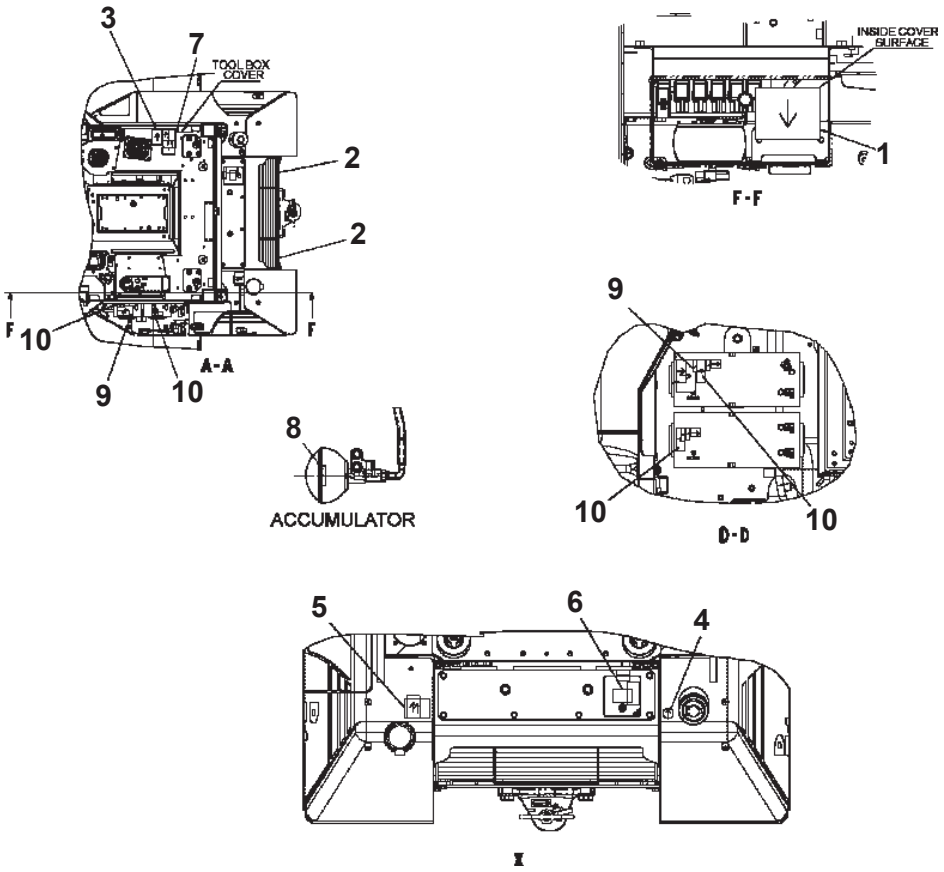

U0100-04A1 MARKS AND PLATES 4 OF 5

Item	Part No.	Description	Qty	Wt.	Options
1	11Y-98-31230	MARK, FUSE AND RELAY	1		SN:B11423--
	□12Y-98-11210	MARK, FUSE AND RELAY	1		SN:B10001--B11422
2	11Y-98-31210	MARK, BOTTOM OF DOOR CAUTION	2		SN:B10001--
3	09802-13000	MARK, REAR CONFIRMATION SAFETY CAUTION	1		SN:B10001--
4	09669-0000E	MARK, FUEL INSTRUCTION	1		SN:B10001--
5	09653-03001	MARK, HYDRAULIC TANK CAP CAUTION	1		SN:B10001--
		OR			SN:B10001--
5	09653-A0481	MARK, HYDRAULIC TANK CAP CAUTION	1	F2	SN:B10001--
6	09668-03001	MARK, RADIATOR CAP CAUTION	1		SN:B10001--
		OR			SN:B10001--
6	09653-A0481	MARK, RADIATOR CAP CAUTION	1	F2	SN:B10001--
7	09654-33001	MARK, LEAVING OPERATOR SEAT CAUTION	1		SN:B10001--
		OR			SN:B10001--
7	09654-B0481	MARK, LEAVING OPERATOR SEAT CAUTION	1	F2	SN:B10001--
8	09659-53000	MARK, ACCUMULATOR CAUTION	1		SN:B10001--
		OR			SN:B10001--
8	09659-A057B	MARK, ACCUMULATOR CAUTION	1	F2	SN:B10001--
9	09808-03000	MARK, BATTERY CABLE CAUTION	1		SN:B10001--
		OR			SN:B10001--
9	09808-A0881	MARK, BATTERY CABLE CAUTION	1	F2	SN:B10001--
10	09664-30011	MARK, BATTERY CAUTION	2		SN:B11834--
	□09664-30010	MARK, BATTERY CAUTION	2		SN:B10001--B11833
		OR			SN:B10001--
10	09664-60000	MARK, BATTERY CAUTION	2	F2	SN:B10001--B13075
		F2 - REFERENCE AND/OR PART FOR EUROPEAN MODEL.			

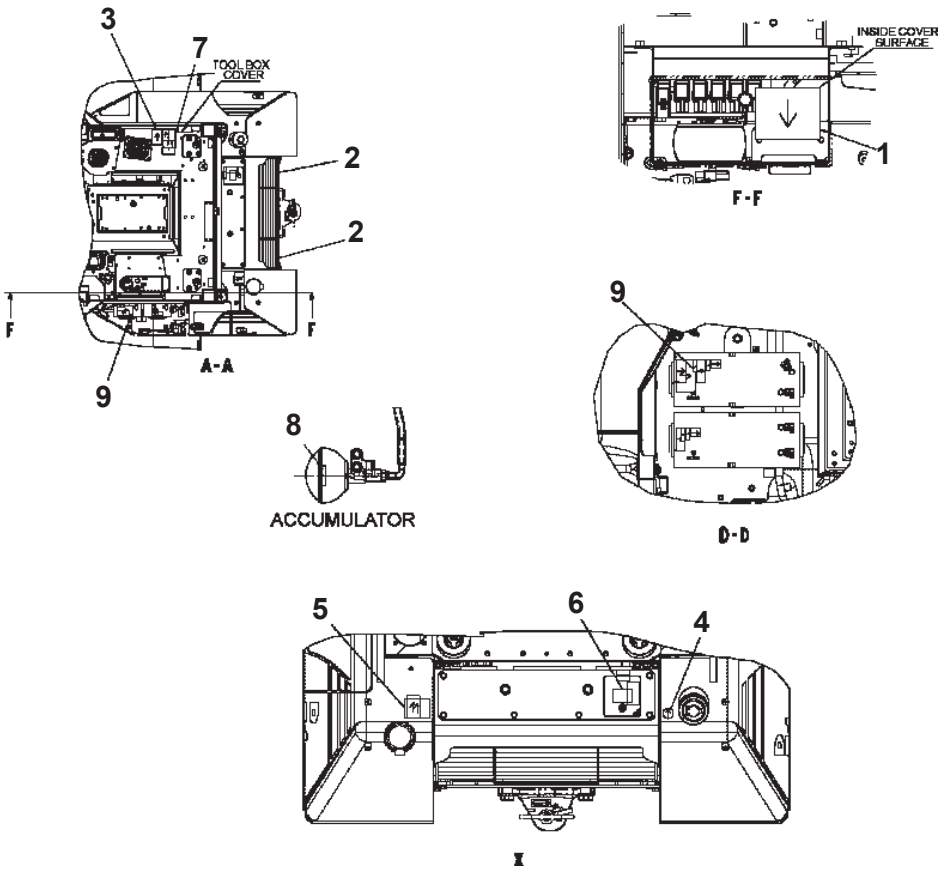

U0100-04A2 MARKS AND PLATES 4 OF 5 (JAPANESE)

Item	Part No.	Description	Qty	Options
1	12Y-98-31230	MARK, FUSE AND RELAY	1	SN:B11605--
	□12Y-98-11181	MARK, FUSE AND RELAY	1	SN:B10001--B11604
2	11Y-98-31210	MARK, BOTTOM OF DOOR CAUTION	2	SN:B10001--
3	09802-10100	MARK, REAR CONFIRMATION SAFETY CAUTION	1	SN:B10001--
4	09652-01202	MARK, FUEL INSTRUCTION	1	SN:B13225--
	□09652-01201	MARK, FUEL INSTRUCTION	1	SN:B10001--B13224
5	09653-A0480	MARK, HYDRAULIC TANK CAP CAUTION	1	SN:B10001--
6	09653-A0480	MARK, RADIATOR CAP CAUTION	1	SN:B10001--
7	09654-B0480	MARK, LEAVING OPERATOR SEAT CAUTION	1	SN:B10001--
8	09659-A057A	MARK, ACCUMULATOR CAUTION	1	SN:B10001--
9	09808-A0880	MARK, BATTERY CABLE CAUTION	1	SN:B10001--

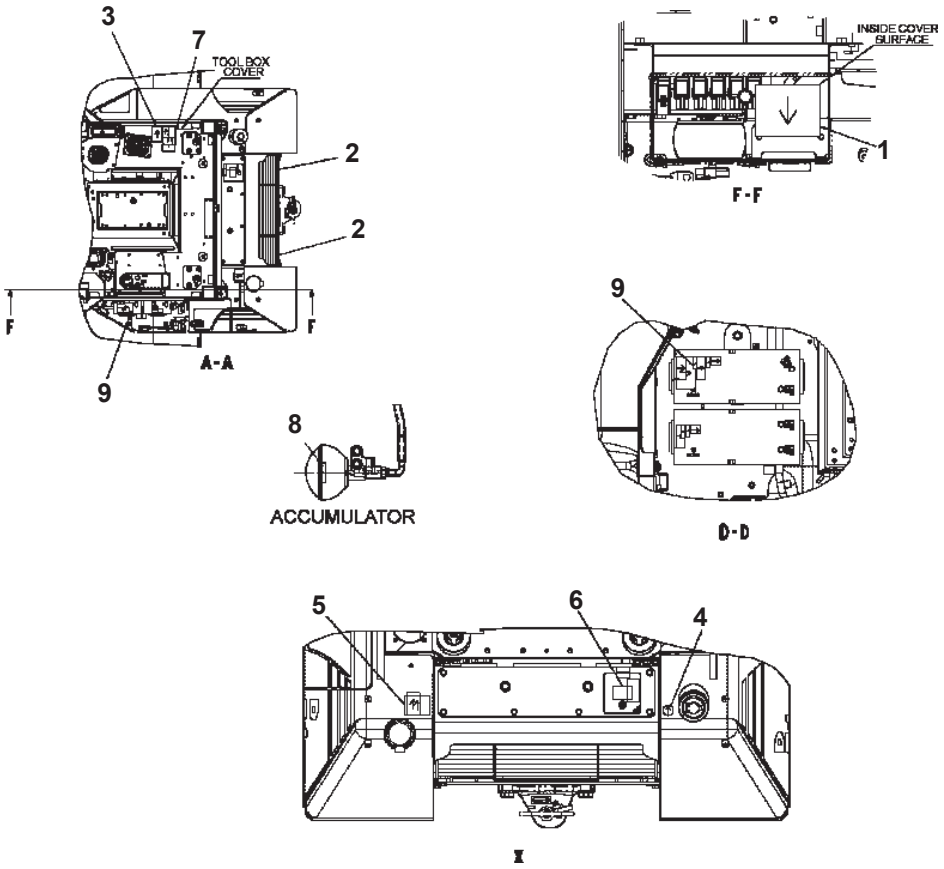

U0100-04A3 MARKS AND PLATES 4 OF 5 (PORTUGUESE)

Item	Part No.	Description	Qty	Options
1	11Y-98-31230	MARK, FUSE AND RELAY	1	SN:B11424--
	□12Y-98-11210	MARK, FUSE AND RELAY	1	SN:B10001--B11423
2	11Y-98-31210	MARK, BOTTOM OF DOOR CAUTION	2	SN:B10001--
3	09802-17000	MARK, REAR CONFIRMATION SAFETY CAUTION	1	SN:B10001--
4	09669-0000E	MARK, FUEL INSTRUCTION	1	SN:B10001--
5	09653-07001	MARK, HYDRAULIC TANK CAP CAUTION	1	SN:B10001--
6	09668-07001	MARK, RADIATOR CAP CAUTION	1	SN:B10001--
7	09654-37001	MARK, LEAVING OPERATOR SEAT CAUTION	1	SN:B10001--
8	09659-57000	MARK, ACCUMULATOR CAUTION	1	SN:B10001--
9	09808-07000	MARK, BATTERY CABLE CAUTION	1	SN:B10001--

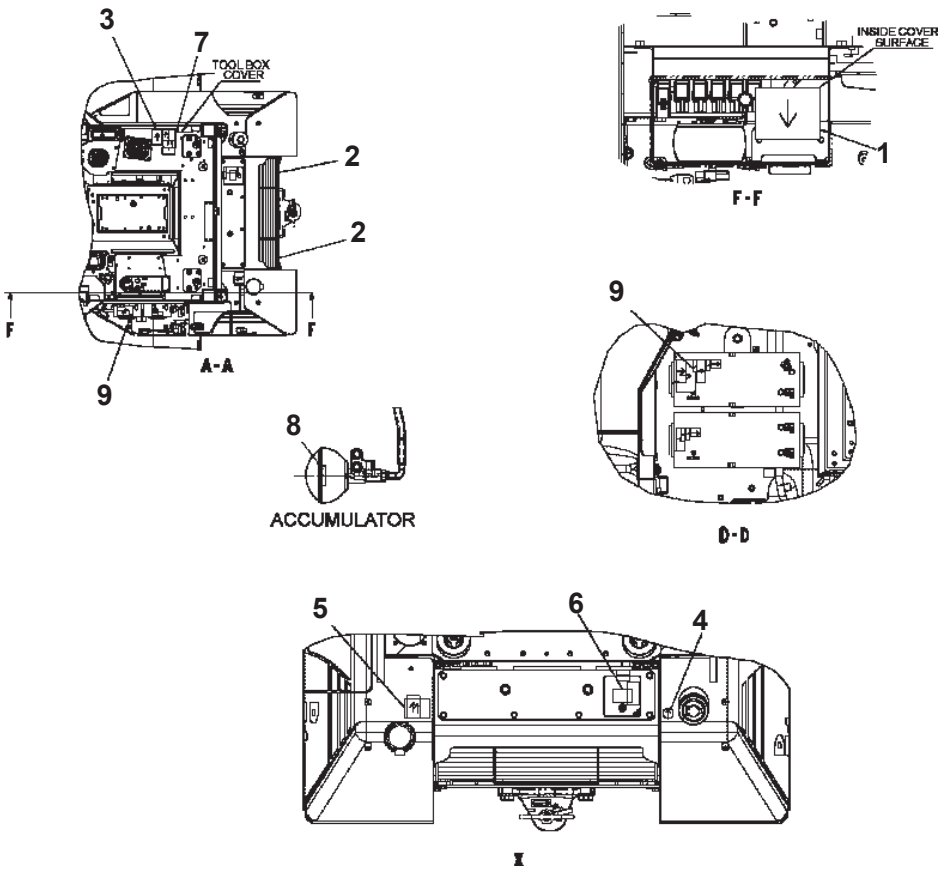

U0100-04A3 MARKS AND PLATES 4 OF 5 (SPANISH)

Item	Part No.	Description	Qty	Options
1	12Y-98-11210	MARK, FUSE AND RELAY	1	SN:B11424--
	□12Y-98-11210	MARK, FUSE AND RELAY	1	SN:B10868--B11423
2	11Y-98-31210	MARK, BOTTOM OF DOOR CAUTION	2	SN:B10868--
3	09802-11000	MARK, REAR CONFIRMATION SAFETY CAUTION	1	SN:B10868--
4	09669-0000E	MARK, FUEL INSTRUCTION	1	SN:B10868--
5	09653-01001	MARK, HYDRAULIC TANK CAP CAUTION	1	SN:B10868--
6	09668-01001	MARK, RADIATOR CAP CAUTION	1	SN:B10868--
7	09654-31001	MARK, LEAVING OPERATOR SEAT CAUTION	1	SN:B10868--
8	09659-51000	MARK, ACCUMULATOR CAUTION	1	SN:B10868--
9	09808-01000	MARK, BATTERY CABLE CAUTION	1	SN:B10868--

REAR GRILL SHOWN FULLY OPENED
(HYDRAULIC TANK NOT SHOWN)

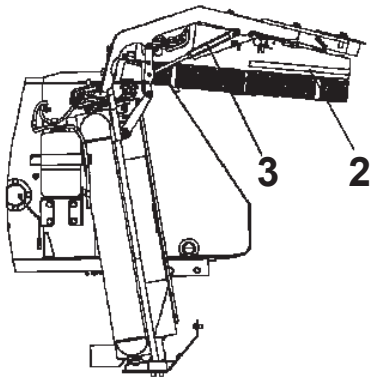

FRONT COVER DOOR REMOVED

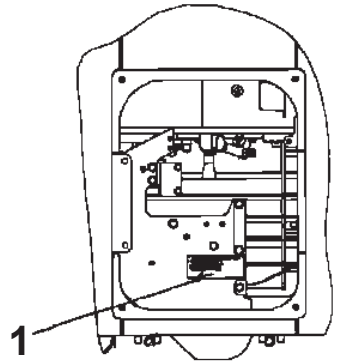

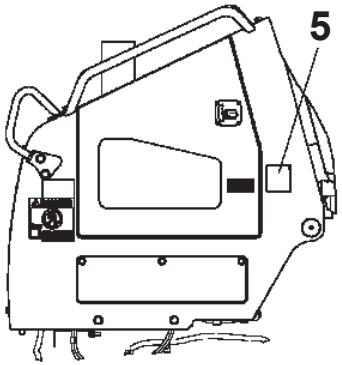

MARK OF NOISE AT OPERATOR

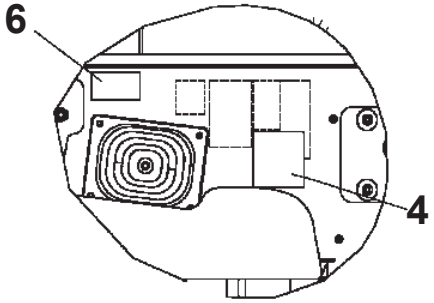

MARK OF AMBIENT NOISE

U0100-05A1 MARKS AND PLATES 5 OF 5

Item	Part No.	Description	Qty	Wt.	Options
1	12Y-98-11220	MARK, HOOD REMOVAL CAUTION	1		SN:B10001--
2	11Y-98-31210	MARK, DOOR CAUTION	2		SN:B10001--
3	09659-A057B	MARK, CAUTION	3		SN:B11677--
NI	09963-03001	TAG, MAINTENANCE	1		SN:B10001--
		OR			SN:B10001--
NI	09963-A1640	TAG, MAINTENANCE	1	F2	SN:B10001--
4	09696-50080	MARK, NOISE LEVEL (CABIN)	1	F2	SN:B10001--
5	09696-40106	MARK, NOISE LEVEL (GROUND)	1	F2	SN:B10001--
6	09845-00480	PLATE	1	F2	SN:B11834--
		F2 - REFERENCE AND/OR PART FOR EUROPEAN MODEL.			

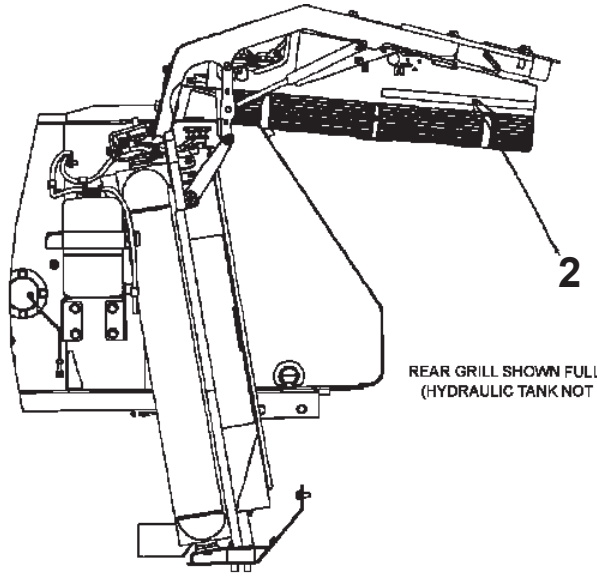

REAR GRILL SHOWN FULLY OPENED
(HYDRAULIC TANK NOT SHOWN)

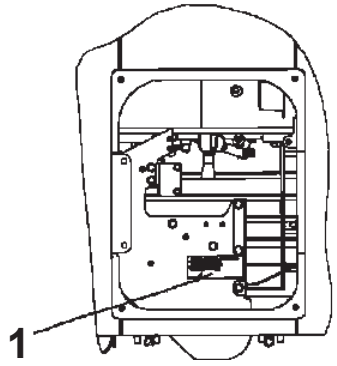

FRONT COVER DOOR REMOVED

U0100-05A2 MARKS AND PLATES 5 OF 5 (JAPANESE)

Item	Part No.	Description	Qty	Options
1	12Y-98-11260	MARK, HOOD REMOVAL CAUTION	1	SN:B10001--
2	11Y-98-31210	MARK, DOOR CAUTION	2	SN:B10001--
NI	09963-00101	TAG, MAINTENANCE	1	SN:B10001--

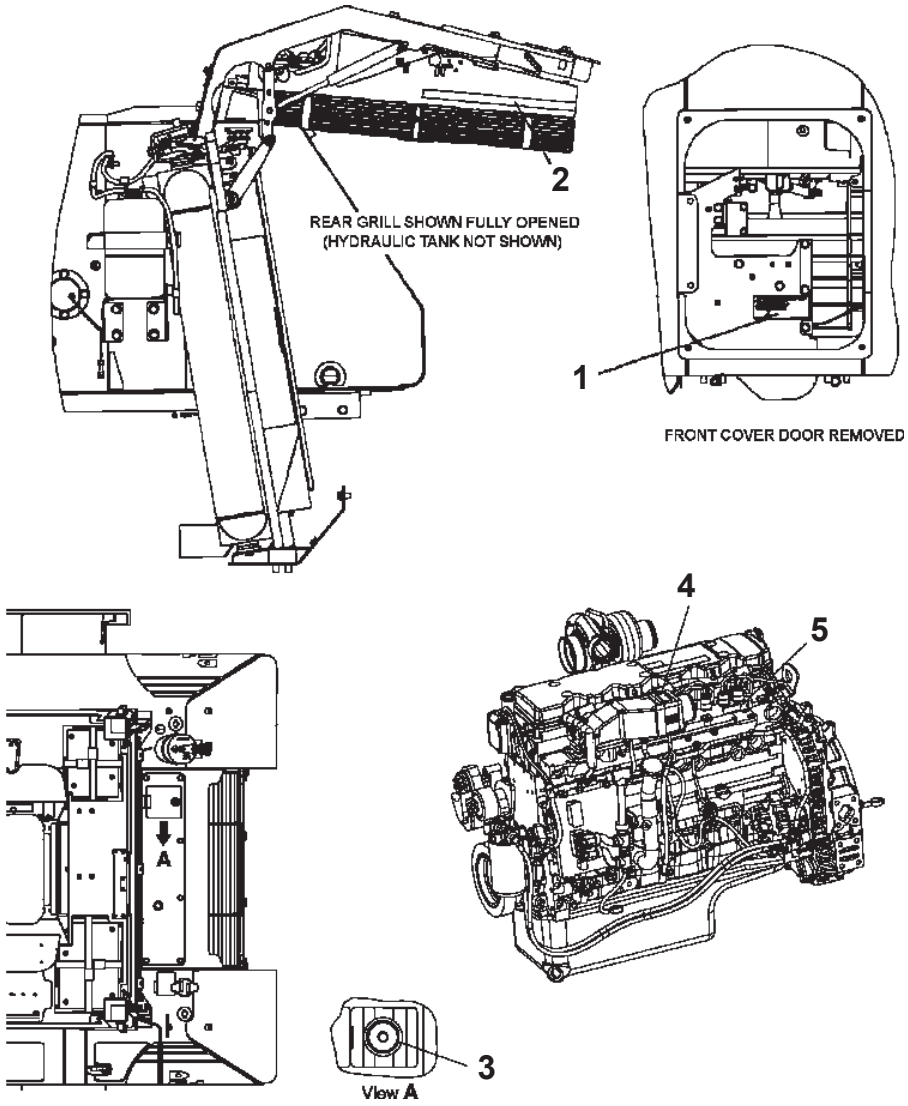

U0100-05A3 MARKS AND PLATES 5 OF 5 (PORTUGUESE)

Item	Part No.	Description	Qty	Options
1	12Y-98-11250	MARK, HOOD REMOVAL CAUTION	1	SN:B10001--
2	11Y-98-31210	MARK, DOOR CAUTION	2	SN:B10001--
3	23B-53-71190	PLATE	1	SN:B13648--
4	12Y-98-11340	PLATE	1	SN:B13648--
5	12Y-98-11350	PLATE	1	SN:B13648--
NI	09963-03001	TAG, MAINTENANCE	1	SN:B10001--

CVPB00239

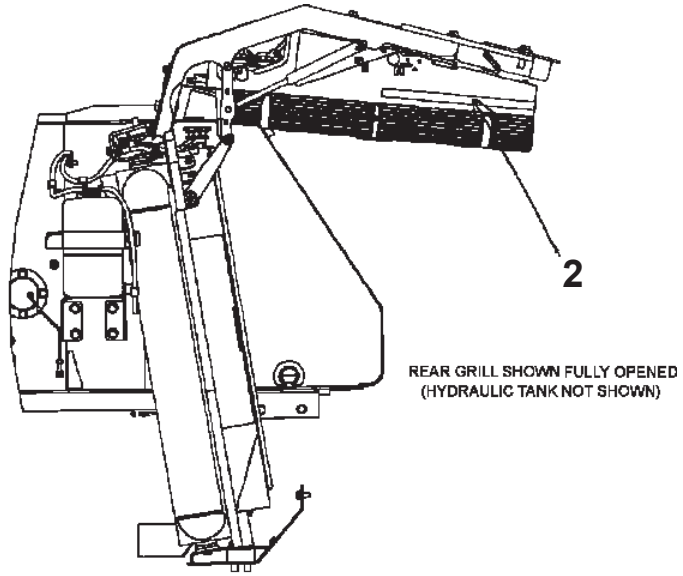

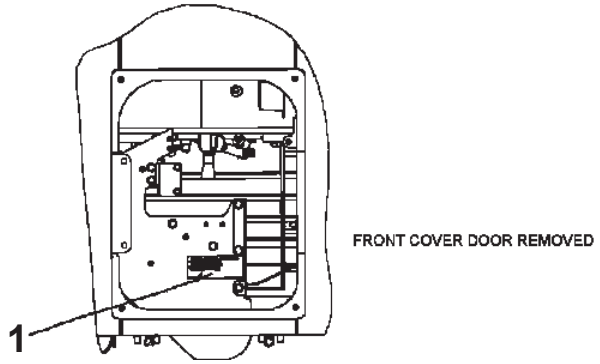

D51EX/PX-22 S/N B10001-UP

U0100-05A3 MARKS AND PLATES 5 OF 5 (SPANISH)

Item	Part No.	Description	Qty	Options
1	12Y-98-11270	MARK, HOOD REMOVAL CAUTION	1	SN:B10868--
2	11Y-98-31210	MARK, DOOR CAUTION	2	SN:B10868--
NI	09963-01001	TAG, MAINTENANCE	1	SN:B10868--

Ref. U0100-05A4 Page U-030

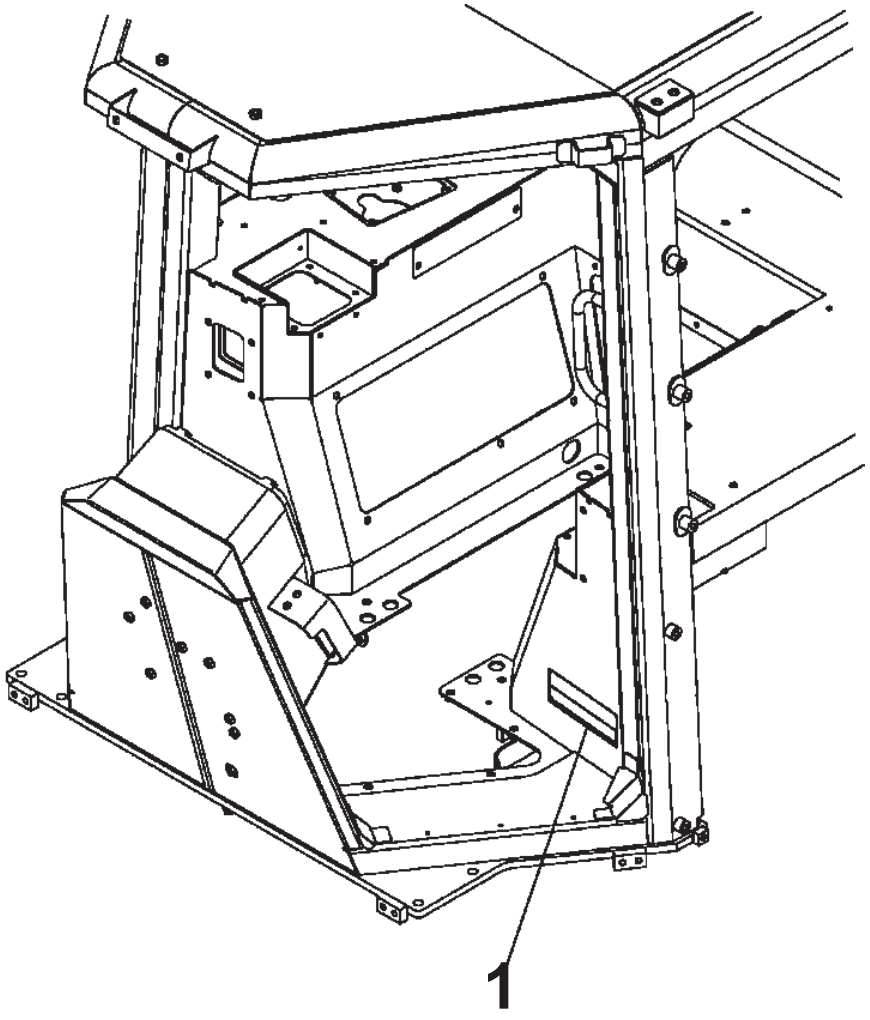

U0520-01A0 ROPS PLATE GERMANY

Item	Part No.	Description	Qty	Options
1	09620-A2080	PLATE	1	SN:B10001--

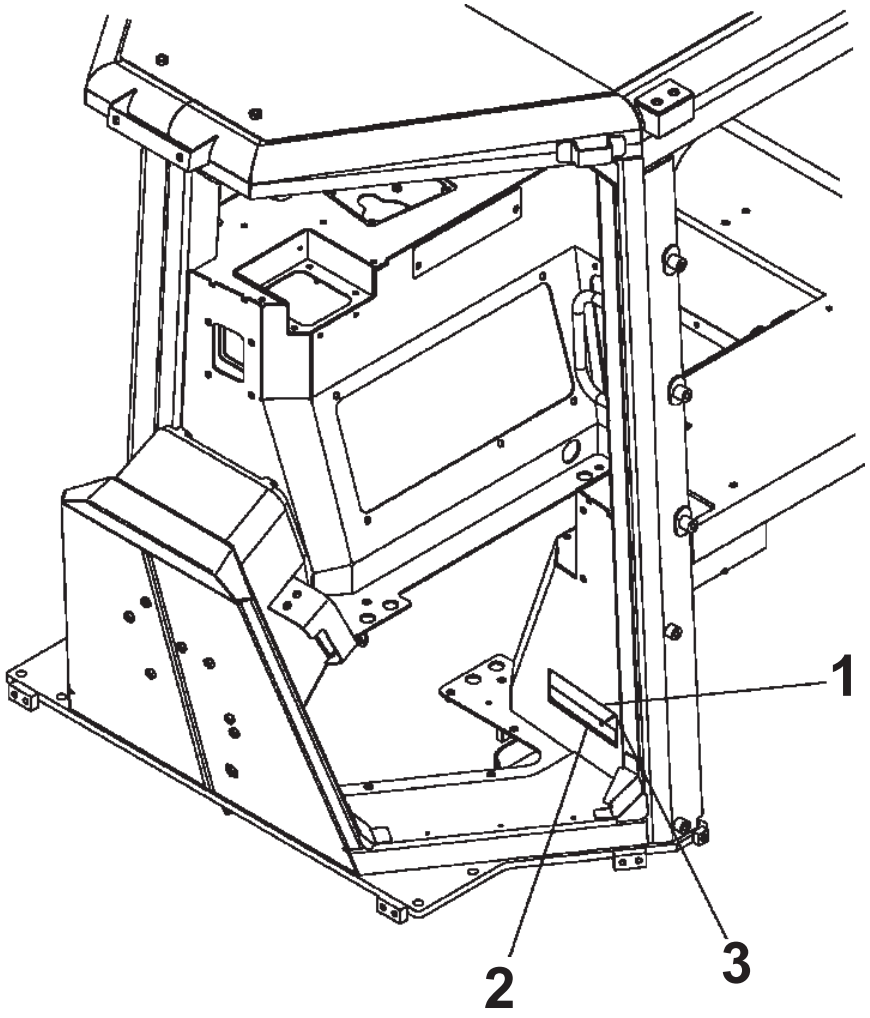

U0520-01A0 ROPS PLATE SPAIN

Item	Part No.	Description	Qty	Options
1	09620-A2000	PLATE	1	SN:B10001--
2	09620-A2070	PLATE	1	SN:B10001--
3	04418-13060	REBITE	2	SN:B10001--

ACCESSORY

CVPB00226

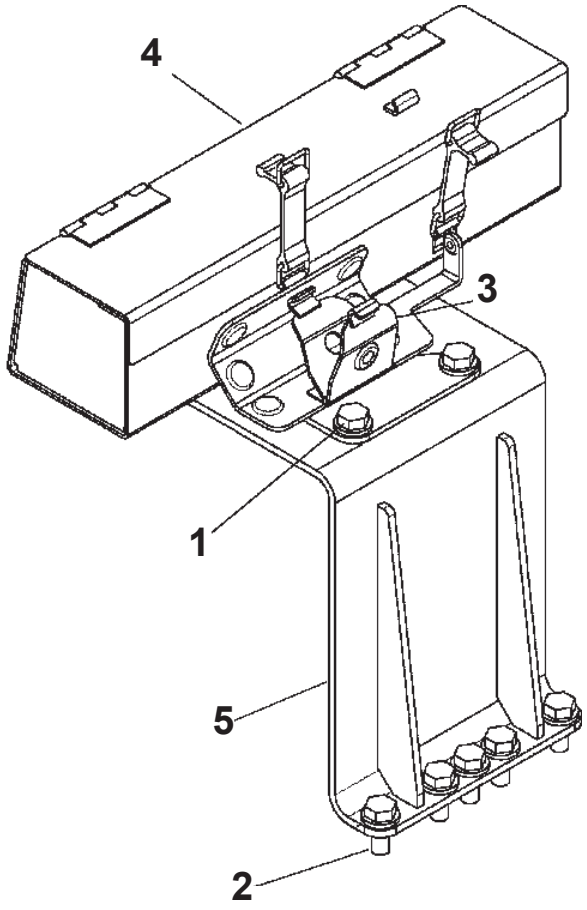

D51EX/PX-22 S/N B10001-UP

V0300-01A0 TOOL BOX

Item	Part No.	Description	Qty	Options
1	01010-81225	BOLT	4	SN:B10001--
	01643-31232	WASHER	4	SN:B10001--
2	01010-81230	BOLT	5	SN:B10001--
	01643-31232	WASHER	5	SN:B10001--
3	12Y-54-13113	HOLDER	1	SN:B11499--
	□12Y-54-13112	HOLDER	1	SN:B10802--B11498
	□12Y-54-13111	HOLDER	1	SN:B10001--B10801
4	12Y-54-14111	BOX, TOOL	1	SN:B10001--
5	12Y-54-14121	BRACKET	1	SN:B10001--

Ref. V0300-01A0 Page V-001

NUMERICAL INDEX

PARTS Nº	FIG. Nº	INDEX	PAGE
01010-61650	F2380-01A0	18	F-001
01010-61650	F2380-04A0	18	F-007
01010-80612	K0210-43A0	19	K-101
01010-80612	K0410-18A0	19	K-165
01010-80616	K0210-18A0	4	K-053
01010-80616	K0210-19A0	2	K-055
01010-80616	K0210-20A0	2	K-057
01010-80616	K0210-22A0	19	K-061
01010-80616	K0210-22A0	22	K-061
01010-80616	K0210-23A0	7	K-063
01010-80616	K0210-31A0	16	K-079
01010-80616	K0210-31A0	4	K-079
01010-80616	K0210-44A0	18	K-103
01010-80616	K0210-46A0	13	K-107
01010-80616	K0410-19A0	18	K-167
01010-80616	K0410-21A0	13	K-171
01010-80616	M2140-01A2	3	M-009
01010-80616	M2140-01A3	4	M-011
01010-80616	M2140-02A2	3	M-015
01010-80620	E0100-01A0	14	E-001
01010-80620	K0210-07A0	18	K-031
01010-80620	K0210-08A0	18	K-033
01010-80620	K0830-01A0	2	K-205
01010-80620	K2900-01A4	1	K-225
01010-80620	K2900-01A4A	8	K-225A
01010-80625	K0210-46A0	8	K-107
01010-80625	K0410-21A0	8	K-171
01010-80816	C0170-01A0	17	C-015
01010-80816	C0180-01A0	1	C-017
01010-80816	E0220-01A0	6	E-013
01010-80816	H0440-01A0	8	H-149
01010-80816	K0210-14A0	34	K-045
01010-80816	K0210-14A0	44	K-045
01010-80816	K0210-14A0	60	K-045
01010-80816	K0210-46A0	16	K-107
01010-80816	K0210-46A0	22	K-107
01010-80816	K0410-21A0	16	K-171
01010-80816	K0410-21A0	22	K-171
01010-80816	K0500-01A0	8	K-189
01010-80816	M2140-01A3	5	M-011
01010-80820	B0600-01A1	1	B-039
01010-80820	B0720-01A0	1	B-049
01010-80820	C0180-01A0	2	C-017
01010-80820	E0200-01A0	45	E-007
01010-80820	E0200-01A1	45	E-007A
01010-80820	K0110-01A4	2	K-009
01010-80820	K0210-24A0	15	K-065
01010-80820	K0210-35A0	13	K-085
01010-80820	K0210-43A0	28	K-101
01010-80820	K0210-54A0	3	K-119
01010-80820	K0210-54A0	9	K-119
01010-80820	K0410-10A0	13	K-149
01010-80820	K0410-27A0	3	K-183
01010-80820	K0410-27A0	9	K-183
01010-80820	K0710-01A0	1	K-199
01010-80820	M2140-01A0	7	M-005
01010-80820	M2140-01A3	10	M-011
01010-80820	M2140-02A0	7	M-013
01010-80825	B0800-01A0	2	B-053
01010-80825	D0220-02A0	26	D-015
01010-80825	H0360-02A0	13	H-081
01010-80825	K0210-07A0	22	K-031
01010-80825	K0210-08A0	22	K-033
01010-80825	K0210-36A0	4	K-087
01010-80825	K0210-36A0	8	K-087
01010-80825	K0210-38A0	6	K-091
01010-80825	K0210-55A0	2	K-121
01010-80825	K0210-56A0	2	K-123
01010-80825	K0410-11A0	4	K-151
01010-80825	K0410-11A0	8	K-151
01010-80825	K0410-13A0	6	K-155
01010-80825	K0410-28A2	2	K-185
01010-80825	K0700-01A1	1	K-193
01010-80825	K0700-01A1A	1	K-193A
01010-80825	K2520-01A1	5	K-213
01010-80825	K2520-02A0	18	K-216
01010-80825	M2140-01A3	6	M-011
01010-80830	B0000-52A0	24	B-059
01010-80830	B0700-01A0	1	B-045
01010-80830	B0800-01A0	3	B-053
01010-80830	K0210-16A0	31	K-049
01010-80830	K0210-44A0	2	K-103
01010-80830	K0210-57A0	10	K-125
01010-80830	K0410-19A0	2	K-167
01010-80830	K0700-01A1A	11	K-193A
01010-80830	R0120-01A0	11	R-003
01010-80835	K0210-14A0	47	K-045
01010-80835	K0700-01A0	13	K-191
01010-80835	K0700-01A0A	19	K-191A
01010-80835	K0700-01A0A	23	K-191A
01010-80840	H0400-01A1	2	H-121
01010-80840	K0700-01A0A	1	K-191A
01010-80840	K0700-01A1	3	K-193
01010-80840	K0700-01A1A	3	K-193A
01010-80845	C0160-01A0	9	C-013
01010-80845	H0370-01A0	19	H-085
01010-80845	K0700-01A0	1	K-191
01010-80850	K0700-01A0	10	K-191
01010-80850	K0700-01A0A	27	K-191A
01010-80850	K0700-01A0A	5	K-191A
01010-80870	D0210-01A0	2	D-011
01010-80880	H0380-01A0	19	H-097
01010-80885	K0210-42A0	2	K-099
01010-80885	K0410-17A0	2	K-163
01010-80890	H0510-01A1	1	H-161
01010-80895	H0510-01A1	1	H-161
01010-81016	B0300-01A1	2	B-009
01010-81016	B0440-01A0	1	B-033
01010-81016	B0720-01A1	2	B-051
01010-81016	E0210-01A2	35	E-011B
01010-81016	K0210-57A0	19	K-125
01010-81016	K0410-29A0	14	K-187
01010-81020	B0300-01A1	3	B-009
01010-81020	B0600-01A1	2	B-039
01010-81020	B0720-01A0	2	B-049
01010-81020	B0720-01A1	1A	B-051
01010-81020	C0150-01A0	9	C-011
01010-81020	C0160-01A0	5	C-013
01010-81020	C0170-01A0	14	C-015
01010-81020	C0210-01A2	7	C-027
01010-81020	D0120-01A0	1	D-005
01010-81020	D0210-01A0	3	D-011
01010-81020	D0220-01A0	1	D-013
01010-81020	D0220-02A0	28	D-015
01010-81020	E0100-01A0	17	E-001
01010-81020	E0100-01A0	8	E-001
01010-81020	E0120-01B0	10	E-006
01010-81020	E0210-01A0	4	E-011
01010-81020	E0210-01A1	15	E-011A
01010-81020	E0210-01A2	22	E-011B
01010-81020	E0300-01A0	2	E-015
01010-81020	H0400-01A3	7	H-125
01010-81020	H0430-01A2	22	H-139
01010-81020	H0430-01A4	9	H-143
01010-81020	H2250-01A1	2	H-181
01010-81020	K0210-14A0	11	K-045
01010-81020	K0210-14A0	18	K-045
01010-81020	K0210-14A0	21	K-045
01010-81020	K0210-14A0	28	K-045
01010-81020	K0210-14A0	31	K-045
01010-81020	K0210-14A0	37	K-045
01010-81020	K0210-14A0	39	K-045
01010-81020	K0210-14A0	5	K-045
01010-81020	K0210-14A0	50	K-045
01010-81020	K0210-14A0	62	K-045
01010-81020	K0210-18A0	13	K-053
01010-81020	K0210-18A0	17	K-053
01010-81020	K0210-18A0	2	K-053
01010-81020	K0210-18A0	20	K-053
01010-81020	K0210-18A0	23	K-053

PARTS Nº	FIG. Nº	INDEX	PAGE
01010-81020	K0210-18A0	9	K-053
01010-81020	K0210-35A0	18	K-085
01010-81020	K0210-40A0	29	K-095
01010-81020	K0210-41A0	20	K-097
01010-81020	K0210-43A0	28	K-101
01010-81020	K0210-43A0	10	K-101
01010-81020	K0210-43A0	24	K-101
01010-81020	K0210-43A0	32	K-101
01010-81020	K0210-43A0	35	K-101
01010-81020	K0210-44A0	15	K-103
01010-81020	K0210-55A0	6	K-121
01010-81020	K0210-56A0	6	K-123
01010-81020	K0410-06A1	18	K-141
01010-81020	K0410-06A1	2	K-141
01010-81020	K0410-06A1	5	K-141
01010-81020	K0410-07A1	14	K-143
01010-81020	K0410-07A1	2	K-143
01010-81020	K0410-07A1	8	K-143
01010-81020	K0410-10A0	18	K-149
01010-81020	K0410-15A0	29	K-159
01010-81020	K0410-16A0	20	K-161
01010-81020	K0410-18A0	10	K-165
01010-81020	K0410-18A0	24	K-165
01010-81020	K0410-18A0	28	K-165
01010-81020	K0410-18A0	32	K-165
01010-81020	K0410-18A0	35	K-165
01010-81020	K0410-19A0	15	K-167
01010-81020	K0410-28A2	6	K-185
01010-81020	K0700-01A1	5	K-193
01010-81020	K2900-01A4A	2	K-225A
01010-81020	K2900-01A4A	3	K-225A
01010-81020	T0640-01A0	1	T-025
01010-81025	B0000-58A0	22	B-068
01010-81025	C0200-01A0	3	C-019
01010-81025	C0300-01A1	10	C-031
01010-81025	C0300-01A1	16	C-031
01010-81025	E0200-01A0	45	E-007
01010-81025	E0210-01A0	9	E-011
01010-81025	E0210-01A1	23	E-011A
01010-81025	E0210-01A2	7	E-011B
01010-81025	F2380-01A0	7	F-001
01010-81025	F2380-04A0	7	F-007
01010-81025	H0200-01A5	2	H-019
01010-81025	H0310-01A0	8	H-023
01010-81025	H0310-06A0	8	H-033
01010-81025	H0430-01A2	21	H-139
01010-81025	H0430-01A4	4	H-143
01010-81025	H0500-01A0	26	H-155
01010-81025	H0500-01A0	39	H-155
01010-81025	H0520-01A1	2	H-165
01010-81025	H0550-01A0	7	H-167
01010-81025	H2250-01A1	3	H-181
01010-81025	K0210-37A0	\17	K-089
01010-81025	K0210-37A0	25	K-089
01010-81025	K0210-37A0	27	K-089
01010-81025	K0210-40A0	24	K-095
01010-81025	K0210-43A0	12	K-101
01010-81025	K0210-57A0	6	K-125
01010-81025	K0410-12A0	25	K-153
01010-81025	K0410-12A0	27	K-153
01010-81025	K0410-15A0	24	K-159
01010-81025	K0410-18A0	12	K-165
01010-81025	K0410-29A0	6	K-187
01010-81025	K2900-01A3	1	K-223
01010-81025	K2900-01A4A	20	K-225A
01010-81025	K2900-01A4A	21	K-225A
01010-81025	K2900-01A4A	5	K-225A
01010-81025	M2110-01A0	5	M-001
01010-81030	B0000-55A0	20	B-065
01010-81030	B0000-55A0	33	B-065
01010-81030	B0000-58A0	20	B-068
01010-81030	B0000-58A0	33	B-068
01010-81030	B0000-58A1	17	B-068A
01010-81030	B0700-01A0	2	B-045
01010-81030	C0160-01A0	7	C-013
01010-81030	C0200-01A0	4	C-019
01010-81030	D0220-01A0	3	D-013
01010-81030	D0220-02A0	30	D-015
01010-81030	H0100-01A1	2	H-003
01010-81030	H0100-01B1	2	H-004
01010-81030	H0100-01B2	2	H-004A
01010-81030	H0100-01B3	2	H-004B
01010-81030	H0430-01A1	6	H-137
01010-81030	H0430-01A1A	6	H-138
01010-81030	H0430-01A4	3	H-143
01010-81030	K0210-40A0	17	K-095
01010-81030	K0210-40A0	22	K-095
01010-81030	K0210-41A0	14	K-097
01010-81030	K0210-41A0	17	K-097
01010-81030	K0210-41A0	24	K-097
01010-81030	K0410-15A0	17	K-159
01010-81030	K0410-15A0	22	K-159
01010-81030	K0410-16A0	14	K-161
01010-81030	K0410-16A0	17	K-161
01010-81030	K0410-16A0	24	K-161
01010-81030	K2520-01A1	2	K-213
01010-81030	K2520-02A0	13	K-216
01010-81030	R0200-01A0	9	R-005
01010-81030	R0200-01A1	9	R-005A
01010-81030	R0200-02A0	9	R-007
01010-81030	R0200-02A1	9	R-007A
01010-81035	H0400-01A2	17	H-123
01010-81035	K0210-37A0	17	K-089
01010-81035	K0410-12A0	17	K-153
01010-81035	K0700-01A0A	9	K-191A
01010-81035	T0630-01A0	3	T-023
01010-81040	B0000-54A0	3	B-063
01010-81040	B0000-57A0	3	B-067
01010-81040	B0000-60A0	3	B-070
01010-81045	B0300-01A1	4	B-009
01010-81045	B0900-01A0	1	B-055
01010-81045	H0100-01A1	11	H-003
01010-81045	H0100-01B1	17	H-004
01010-81045	H0100-01B2	12	H-004A
01010-81045	H0100-01B3	12	H-004B
01010-81050	B0000-58A0	28	B-068
01010-81050	B0000-58A1	21	B-068A
01010-81050	H0420-01A0	15	H-133
01010-81050	K0210-35A0	16	K-085
01010-81050	K0210-40A0	13	K-095
01010-81050	K0210-40A0	15	K-095
01010-81050	K0410-10A0	16	K-149
01010-81050	K0410-15A0	13	K-159
01010-81050	K0410-15A0	15	K-159
01010-81055	B0000-55A0	28	B-065
01010-81055	B0000-58A0	28	B-068
01010-81055	D0220-02A0	34	D-015
01010-81055	H0420-01A0	10	H-133
01010-81060	C0200-01A0	10	C-019
01010-81060	H0200-01A5	4	H-019
01010-81060	H0430-01A5	2	H-145
01010-81070	H0360-03A0	3	H-083
01010-81075	K2900-01A3	2	K-223
01010-81075	K2900-01A4A	12	K-225A
01010-81080	H0410-01A1	4	H-129
01010-81090	H0410-01A1	9	H-129
01010-81095	T0700-01A0	7	T-027
01010-81220	F2380-20A0	3	F-013
01010-81220	H0400-01A1	3	H-121
01010-81220	H0400-01A3	4	H-125
01010-81220	H0430-01A2	23	H-139
01010-81220	H2250-01A1	4	H-181
01010-81220	J2110-01A0	1	J-005
01010-81220	J2750-01A0	3	J-011
01010-81225	C0140-01A0	9	C-009
01010-81225	C0150-01A0	4	C-011
01010-81225	C0200-01A0	20	C-019
01010-81225	C0200-01A0	22	C-019
01010-81225	C0210-01A1	15	C-025
01010-81225	C0210-01A1	5	C-025

PARTS Nº	FIG. Nº	INDEX	PAGE
01010-81225	C0210-01A2	5	C-027
01010-81225	C0300-01A0	9	C-029
01010-81225	C0300-01A1	13	C-031
01010-81225	D0110-01A0	1	D-003
01010-81225	D0210-01A0	4	D-011
01010-81225	E0100-01A0	6	E-001
01010-81225	E0200-01A0	38	E-007
01010-81225	E0200-01A0	40	E-007
01010-81225	E0200-01A1	38	E-007A
01010-81225	E0200-01A1	40	E-007A
01010-81225	H0100-01A2	11	H-005
01010-81225	H0100-01A2	2	H-005
01010-81225	H0400-01A1	4	H-121
01010-81225	H0410-01A0	5	H-127
01010-81225	H0410-01A0	8	H-127
01010-81225	H0410-01A0	10	H-127
01010-81225	H0410-01A0	20	H-127
01010-81225	H0430-01A2	5	H-139
01010-81225	H0430-01A2	7	H-139
01010-81225	H0500-01A0	3	H-155
01010-81225	H0520-01A1	3	H-165
01010-81225	H0550-01A1	2	H-169
01010-81225	H0700-01A3	24	H-177
01010-81225	H2250-01A0	2	H-179
01010-81225	J2100-01A0	1	J-001
01010-81225	J2100-01A1	1	J-003
01010-81225	J2110-01A0	2	J-005
01010-81225	K0210-52A0	3	K-117
01010-81225	K0210-53A0	3	K-117A
01010-81225	K0210-57A0	3	K-125
01010-81225	K0410-26A0	3	K-181
01010-81225	K0410-26A0A	3	K-181A
01010-81225	K0410-29A0	3	K-187
01010-81225	K2120-01A0	20	K-209
01010-81225	K2120-01A0	23	K-209
01010-81225	K2800-01A0	1	K-217
01010-81225	M2140-01A3	7	M-011
01010-81225	R2100-01A0	8	R-037
01010-81225	T0200-01A2	1	T-007
01010-81225	T0200-01A3	1	T-007A
01010-81225	T0630-01A0	4	T-023
01010-81225	V0300-01A0	1	V-001
01010-81230	B0410-01A0	1	B-025
01010-81230	B0410-01A1	1	B-026
01010-81230	B0430-01A0	2	B-031
01010-81230	C0140-01A0	3	C-009
01010-81230	E0210-01A2	4	E-011B
01010-81230	H0550-01A0	11	H-167
01010-81230	H2250-01A0	3	H-179
01010-81230	K0110-01A0	6	K-001
01010-81230	K0110-01A0	9	K-001
01010-81230	K0110-01A1	6	K-003
01010-81230	K0110-01A1	9	K-003
01010-81230	K0110-01A2	6	K-005
01010-81230	K0110-01A2	9	K-005
01010-81230	K0110-01A3	6	K-007
01010-81230	K0110-01A3	9	K-007
01010-81230	K0110-01A4	5	K-009
01010-81230	K0110-01A4	8	K-009
01010-81230	K0210-18A0	28	K-053
01010-81230	K0210-18A0	36	K-053
01010-81230	K0210-18A0	42	K-053
01010-81230	K0210-50A0	11	K-115
01010-81230	K0210-50A0	3	K-115
01010-81230	K0210-51A0	11	K-115A
01010-81230	K0210-51A0	15	K-115A
01010-81230	K0210-51A0	3	K-115A
01010-81230	K0410-06A0	2	K-139
01010-81230	K0410-06A1	10	K-141
01010-81230	K0410-25A0	11	K-179
01010-81230	K0410-25A0	3	K-179
01010-81230	K0410-25A0A	11	K-179A
01010-81230	K0410-25A0A	3	K-179A
01010-81230	K2800-01A0	2	K-217
01010-81230	M2110-01A0	6	M-001
01010-81230	M2120-01A0	1	M-003
01010-81230	M2140-01A0	3	M-005
01010-81230	M2140-01A0	5	M-005
01010-81230	M2140-01A1	2	M-007
01010-81230	M2140-01A2	4	M-009
01010-81230	M2140-02A0	3	M-013
01010-81230	M2140-02A0	5	M-013
01010-81230	M2140-02A2	4	M-015
01010-81230	T0100-01A0	2	T-001
01010-81230	T0300-01A0	14	T-009
01010-81230	T0300-01A0A	14	T-009A
01010-81230	T0300-01A0B	14	T-009B
01010-81230	T0300-01B0	9	T-010
01010-81230	T0450-01B1	3	T-021B
01010-81230	T0700-01A0	10	T-027
01010-81230	V0300-01A0	2	V-001
01010-81235	B0000-52A0	3	B-059
01010-81235	B0720-01A0	3	B-049
01010-81235	F2380-02A0	11	F-003
01010-81235	F2380-05A0	11	F-009
01010-81235	H0500-01A0	4	H-155
01010-81235	J2100-01A0	2	J-001
01010-81235	J2100-01A1	2	J-003
01010-81235	K2120-01A0	5	K-209
01010-81235	M2140-01A1	3	M-007
01010-81235	R2210-01A0	1	R-045
01010-81235	R2210-01A1	1	R-045A
01010-81235	T0400-01A1	1	T-013
01010-81235	T0450-01A1	1	T-019
01010-81235	T0450-01B0	9	T-021A
01010-81235	T0700-01A0	10	T-027
01010-81240	B0600-01A2	1	B-041
01010-81240	D0210-01A0	5	D-011
01010-81240	H0330-01A0	2	H-057
01010-81240	H0340-01A0	4	H-061
01010-81240	H0400-01A1	5	H-121
01010-81240	H0510-01A1	3	H-161
01010-81250	B0000-55A0	17	B-065
01010-81250	B0000-58A0	17	B-068
01010-81250	B0000-58A1	14	B-068A
01010-81250	D0210-01A0	6	D-011
01010-81250	H2250-01A0	4	H-179
01010-81250	T0640-01A0	2	T-025
01010-81255	H2250-01A0	5	H-179
01010-81260	C0210-01A0	24	C-023
01010-81260	H0510-01A0	4	H-159
01010-81260	H0520-01A0	4	H-163
01010-81260	H0520-01A1	4	H-165
01010-81260	H0550-01A0	4	H-167
01010-81260	R2140-01A0	1	R-039
01010-81260	R2140-02A0	1	R-041
01010-81260	T0200-01A1	2	T-005
01010-81265	C0300-01A0	6	C-029
01010-81265	H0400-01A1	6	H-121
01010-81265	H0410-01A0	17	H-127
01010-81265	H0500-01A0	15	H-155
01010-81265	H0500-01A0	8	H-155
01010-81265	H0510-01A0	11	H-159
01010-81270	H0400-01A1	6	H-121
01010-81270	H0400-01A1	7	H-121
01010-81270	H2250-01A0	6	H-179
01010-81275	H0410-01A0	7	H-127
01010-81275	H0410-01A1	7	H-129
01010-81280	H0400-01A1	8	H-121
01010-81280	H0510-01A1	5	H-161
01010-81290	E0100-01A0	5	E-001
01010-81435	K2120-01A0	13	K-209
01010-81625	K0210-30A0	1	K-077
01010-81625	K0410-04A0	1	K-135
01010-81630	M2140-01A3	8	M-011
01010-81630	M2140-01A3	8	M-011
01010-81630	R0300-01A0	10	R-011
01010-81630	R0300-01A1	10	R-011A
01010-81635	J2100-01A0	3	J-001
01010-81635	J2100-01A1	3	J-003
01010-81635	M2110-01A0	2	M-001
01010-81635	M2140-01A0	12	M-005
01010-81635	M2140-01A3	29	M-011
01010-81635	M2140-02A0	12	M-013
01010-81635	R2140-01A0	2	R-039
01010-81635	R2140-02A0	2	R-041
01010-81635	R2210-01A0	2	R-045
01010-81635	R2210-01A1	2	R-045A
01010-81640	J2710-01A0	9	J-009
01010-81640	J2750-01A0	17	J-011
01010-81640	J2750-01A0	21	J-011
01010-81640	M2110-01A0	3	M-001
01010-81640	R2140-01A0	3	R-039
01010-81640	R2140-02A0	3	R-041
01010-81640	R2200-01A0	1	R-043
01010-81640	R2200-01A0	12	R-043
01010-81640	R2200-01A0	5	R-043
01010-81640	R2200-01A1	1	R-043A
01010-81640	R2200-01A1	12	R-043A
01010-81640	R2200-01A1	5	R-043A
01010-81645	K2120-01A0	15	K-209
01010-81645	K2120-01A0	7	K-209
01010-81645	R0110-01A0	1	R-001
01010-81650	C0170-01A0	1	C-015
01010-81650	M2110-01A0	4	M-001
01010-81650	R2200-01A0	6	R-043
01010-81660	H0310-02A0	6	H-025
01010-81670	C0140-01A0	11	C-009
01010-81670	R0200-03A0	1	R-009
01010-81670	R0300-01A0	13	R-011
01010-81670	R0300-01A1	13	R-011A
01010-81680	J2750-01A0	2	J-011
01010-81680	R0120-01A0	NI	R-003
01010-81690	M2140-01A0	11	M-005
01010-81690	M2140-02A0	11	M-013
01010-82040	D0130-01A0	2	D-007
01010-82040	H0100-01A3	2	H-007
01010-82040	H0100-01A3	4	H-007
01010-82045	D0130-01A0	3	D-007
01010-82045	H0100-01A3	3	H-007
01010-82050	H0340-01A0	6	H-061
01010-82075	J2710-01A0	3	J-009
01010-82080	F2380-20A0	1	F-013
01010-82080	T0300-01B0	3	T-010
01010-82450	M2200-01A0	2	M-017
01010-82450	M2200-01A0	3	M-017
01010-82460	K2120-01A0	10	K-209
01010-82460	K2120-01A0	17	K-209
01010-82480	T0700-01A0	8	T-027
01010-82490	T2810-01A0	7	T-031
01010-B0820	K0110-01A0	2	K-001
01010-B0820	K0110-01A1	2	K-003
01010-B0820	K0110-01A2	2	K-005
01010-B0820	K0110-01A3	2	K-007
01010-D0635	K0210-02A0	36	K-021
01010-D0635	K0210-04A0	36	K-025
01010-D0635	K0210-07A0	2	K-031
01010-D0635	K0210-08A0	2	K-033
01010-D0820	K0210-14A0	56	K-045
01010-D0820	K0210-16A0	14	K-049
01010-D0820	K0210-16A0	16	K-049
01010-D0820	K0210-16A0	19	K-049
01010-D0820	K0210-16A0	21	K-049
01010-D0820	K0210-16A0	33	K-049
01010-D0820	K0210-16A0	7	K-049
01010-D0820	K0210-32A0	5	K-080
01010-D0820	K0210-32A0	9	K-080
01010-D0820	K0210-32A0	13	K-080
01010-D0820	K0210-32A0	13	K-080
01010-D0820	K0210-32A0	17	K-080
01010-D0820	K0210-32A0	2	K-080
01010-D0820	K0210-32A0	34	K-080
01010-D0820	K0210-32A0	37	K-080
01010-D0820	K0210-32A0	39	K-080
01010-D0820	K0210-32A0	5	K-080
01010-D0820	K0210-32A0	9	K-080
01010-D0820	K0210-55A0	9	K-121
01010-D0820	K0210-56A0	9	K-123
01010-D0820	K0410-05A0	2	K-137
01010-D0820	K0410-05A0	5	K-137
01010-D0820	K0410-05A0	8	K-137
01010-D0820	K0410-28A2	9	K-185
01010-D0825	K0210-16A0	2	K-049
01010-D0825	K0210-16A0	2	K-049
01010-D0825	K0210-16A0	7	K-049
01010-D0825	K0210-16A0	16	K-049
01010-D0825	K0210-16A0	19	K-049
01010-D0825	K0210-32A0	20	K-080
01010-D0825	K0210-50A0	7	K-115
01010-D0825	K0210-51A0	15	K-115A
01010-D0825	K0210-51A0	7	K-115A
01010-D0825	K0210-57A0	10	K-125
01010-D0825	K0410-05A0	2	K-137
01010-D0825	K0410-05A0	5	K-137
01010-D0825	K0410-05A0	8	K-137
01010-D0825	K0410-25A0	7	K-179
01010-D0825	K0410-25A0A	15	K-179A
01010-D0825	K0410-25A0A	7	K-179A
01010-D0830	K0210-16A0	2	K-049
01010-D0830	K0210-32A0	20	K-080
01010-D1020	B0420-01A0	1	B-027
01010-D1020	K0210-52A0	11	K-117
01010-D1020	K0210-53A0	11	K-117A
01010-D1020	K0410-26A0	11	K-181
01010-D1020	K0410-26A0A	11	K-181A
01010-D1025	K0210-16A0	14	K-049
01010-D1025	K0210-16A0	21	K-049
01010-D1025	K0210-16A0	27	K-049
01010-D1025	K0210-16A0	5	K-049
01010-D1030	B0000-52A0	33	B-059
01010-D1035	K0210-21A0	1	K-059
01010-D1220	B0430-01A0	3	B-031
01010-D1225	K0210-30A0	6	K-077
01010-D1225	K0210-53A0	3	K-117A
01010-D1225	K0410-04A0	6	K-135
01010-D1225	K0410-26A0A	3	K-181A
01010-D1230	B0430-01A0	2	B-031
01010-D1230	K0210-06A0	3	K-029
01010-D1230	K0210-07A0	8	K-031
01010-D1230	K0210-08A0	8	K-033
01010-E1020	B0720-01A1	1	B-051
01010-E1020	B0720-01A1	1	B-051
01011-81015	H0100-01A1	3	H-003
01011-81015	H0100-01B1	3	H-004
01011-81015	H0100-01B2	3	H-004A
01011-81015	H0100-01B3	3	H-004B
01011-81030	T0700-01A0	9	T-027
01011-81600	R0110-01A0	3	R-001
01011-82030	B0600-01A3	3	B-043
01011-82420	T0300-01A0	2	T-009
01011-82420	T0300-01A0A	2	T-009A
01011-82420	T0300-01A0B	2	T-009B
01011-82420	T0300-01B0	17	T-010
01016-50825	K0210-35A0	2	K-085
01016-50825	K0410-10A0	2	K-149
01016-51035	E0210-01A2	21	E-011B
01016-51680	R0110-01A0	5	R-001
01023-10416	K0210-40A0	32	K-095
01023-10416	K0210-41A0	7	K-097
01023-10416	K0210-46A0	7	K-107
01023-10416	K0410-15A0	32	K-159
01023-10416	K0410-16A0	7	K-161
01023-10416	K0410-21A0	7	K-171
01023-10516	M2140-01A3	9	M-011
01023-10520	K0210-02A0	4	K-021
01023-10520	K0210-04A0	4	K-025
01023-10520	K0210-22A0	21	K-061
01023-10520	K0210-22A0	9	K-061
01023-10620	K0210-43A0	16	K-101
01023-10620	K0410-18A0	16	K-165

PARTS Nº	FIG. Nº	INDEX	PAGE
01023-20410	K0210-02A0	13	K-021
01023-20410	K0210-04A0	13	K-025
01023-20410	K0210-07A0	16	K-031
01023-20410	K0210-08A0	16	K-033
01023-20416	K0210-25A0	10	K-067
01023-20416	K0210-25A0	6	K-067
01023-20416	K0210-26A0	12	K-069
01023-20416	K0210-26A0	8	K-069
01023-20416	K0210-27A0	12	K-071
01023-20416	K0210-27A0	8	K-071
01023-20510	K0210-26A0	2	K-069
01023-20510	K0210-27A0	2	K-071
01023-60512	K0210-33A0	5	K-081
01023-60512	K0410-08A0	5	K-145
01050-81230	B0800-01A0	4	B-053
01052-51260	T0800-01A0	8	T-029
01052-51260	T2810-01A0	12	T-031
01224-40316	K0210-10A0	27	K-037
01224-40316	K0210-11A0	27	K-039
01224-40616	H0100-01A1	19	H-003
01224-40616	H0100-01B1	25	H-004
01224-40616	H0100-01B2	20	H-004A
01224-40616	H0100-01B3	20	H-004B
01224-70316	K0210-10A0	27	K-037
01224-70316	K0210-11A0	27	K-039
01224-70410	K0210-28A0	20	K-073
01245-00616	H2250-01A1	5	H-181
01245-00620	D0220-02A0	24	D-015
01245-00620	K0110-01A0	12	K-001
01245-00620	K0110-01A1	12	K-003
01245-00620	K0110-01A2	12	K-005
01245-00620	K0110-01A3	12	K-007
01245-00620	K0110-01A4	13	K-009
01245-00620	K0210-02A0	26	K-021
01245-00620	K0210-02A0	42	K-021
01245-00620	K0210-02A0	45	K-021
01245-00620	K0210-02A0	6	K-021
01245-00620	K0210-03A0	3	K-023
01245-00620	K0210-04A0	26	K-025
01245-00620	K0210-04A0	42	K-025
01245-00620	K0210-04A0	45	K-025
01245-00620	K0210-04A0	6	K-025
01245-00620	K0210-05A0	3	K-027
01245-00620	K0210-07A0	29	K-031
01245-00620	K0210-08A0	29	K-033
01245-00620	K0210-18A0	47	K-053
01245-00620	K0210-19A0	17	K-055
01245-00620	K0210-19A0	20	K-055
01245-00620	K0210-20A0	17	K-057
01245-00620	K0210-20A0	20	K-057
01245-00620	K0210-22A0	2	K-061
01245-00620	K0210-23A0	20	K-063
01245-00620	K0210-25A0	3	K-067
01245-00620	K0210-26A0	5	K-069
01245-00620	K0210-27A0	5	K-071
01245-00620	K0210-28A0	3	K-073
01245-00620	K0210-28A0	8	K-073
01245-00620	K0210-39A0	22	K-093
01245-00620	K0210-52A0	8	K-117
01245-00620	K0210-53A0	15	K-117A
01245-00620	K0210-53A0	8	K-117A
01245-00620	K0310-01A0	3	K-127
01245-00620	K0410-14A0	22	K-157
01245-00620	K0410-26A0	8	K-181
01245-00620	K0410-26A0A	15	K-181A
01245-00620	K0410-26A0A	8	K-181A
01245-00630	K0210-28A0	14	K-073
01245-00630	K0210-39A0	19	K-093
01245-00630	K0210-39A0	3	K-093
01245-00630	K0410-14A0	19	K-157
01245-00630	K0410-14A0	3	K-157
01245-00820	K0210-30A0	3	K-077
01245-00820	K0210-38A0	2	K-091
01245-00820	K0210-45A0	3	K-105
01245-00820	K0410-04A0	3	K-135
01245-00820	K0410-13A0	2	K-155
01245-00820	K0410-20A0	3	K-169
01245-00820	K2520-01A1	8	K-213
01245-00820	K2520-02A0	5	K-216
01245-00825	K0210-02A0	39	K-021
01245-00825	K0210-04A0	39	K-025
01245-00825	K0210-19A0	5	K-055
01245-00825	K0210-20A0	5	K-057
01245-00825	K0210-23A0	11	K-063
01245-00825	K0210-29A0	3	K-075
01245-00825	K0210-39A0	14	K-093
01245-00825	K0210-39A0	26	K-093
01245-00825	K0210-39A0	8	K-093
01245-00825	K0210-47A0	10	K-109
01245-00825	K0210-47A0	3	K-109
01245-00825	K0210-47A0	6	K-109
01245-00825	K0210-49A0	5	K-113
01245-00825	K0410-03A0	3	K-133
01245-00825	K0410-14A0	14	K-157
01245-00825	K0410-14A0	26	K-157
01245-00825	K0410-14A0	8	K-157
01245-00825	K0410-22A0	10	K-173
01245-00825	K0410-22A0	3	K-173
01245-00825	K0410-22A0	6	K-173
01245-00825	K0410-24A0	5	K-177
01245-00825	K0830-01A0	6	K-205
01252-40410	H0100-01A1	14	H-003
01252-40410	H0100-01B1	20	H-004
01252-40410	H0100-01B2	15	H-004A
01252-40410	H0100-01B3	15	H-004B
01252-60410	H0390-10A2	14	H-113B
01252-60512	H0390-12A0	4	H-117
01252-60512	H0390-12A0A	4	H-118
01252-60612	H0310-04A0	8	H-029
01252-60612	H0310-08A0	8	H-037
01252-60616	H0310-21A0	8	H-045
01252-60616	H0310-21A1	8	H-045A
01252-60616	H0360-02A0	2	H-081
01252-60620	H0370-02A0	38	H-087
01252-60620	H0380-02A0	38	H-099
01252-60620	H0380-06A0	14	H-109
01252-60630	H0310-24A0	4	H-051
01252-60630	H0310-24A1	4	H-051A
01252-60630	H0370-02A0	39	H-087
01252-60630	H0380-02A0	39	H-099
01252-60640	H0370-02A0	35	H-087
01252-60640	H0380-02A0	35	H-099
01252-60640	H0380-06A0	13	H-109
01252-60645	H0310-24A0	5	H-051
01252-60645	H0310-24A1	5	H-051A
01252-60650	H0370-02A0	36	H-087
01252-60650	H0380-02A0	36	H-099
01252-60835	H0360-02A0	9	H-081
01252-60875	H0310-11A0	22	H-043
01252-61016	B0000-55A0	29	B-065
01252-61016	B0000-58A0	29	B-068
01252-61030	H0310-05A0	7	H-031
01252-61030	H0310-09A0	7	H-039
01252-61235	H0310-09A0	12	H-039
01252-61235	H0310-21A0	9	H-045
01252-61235	H0310-21A1	9	H-045A
01252-61445	H0350-02A0	2	H-067
01252-61445	H0350-02A0	5	H-067
01252-61445	H0350-04A0	2	H-075
01252-61445	H0350-04A0	5	H-075
01252-61850	H0350-02A0	14	H-067
01252-61850	H0350-04A0	14	H-075
01252-70825	E0120-01B0	17	E-006
01252-70825	K0210-34A0	3	K-083
01252-70825	K0410-09A0	3	K-147
01252-70840	H0100-01B1	14	H-004
01252-71035	T0300-01A0	4	T-009
01252-71035	T0300-01A0	4	T-009
01252-71035	T0300-01A0A	4	T-009A
01252-71035	T0300-01A0A	4	T-009A

PARTS Nº	FIG. Nº	INDEX	PAGE
01252-71035	T0300-01A0B	4	T-009B
01252-71035	T0300-01A0B	4	T-009B
01252-71035	T0300-01B0	15	T-010
01252-71035	T0300-01B0	15	T-010
01252-71045	T0300-01A0	5	T-009
01252-71045	T0300-01A0A	5	T-009A
01252-71045	T0300-01A0B	5	T-009B
01252-80510	K0210-34A0	17	K-083
01252-80510	K0210-36A0	16	K-087
01252-80510	K0410-09A0	17	K-147
01252-80510	K0410-11A0	16	K-151
01252-80514	K0210-10A0	18	K-037
01252-80514	K0210-10A0	24	K-037
01252-80514	K0210-11A0	18	K-039
01252-80514	K0210-11A0	24	K-039
01252-80514	K0210-31A0	18	K-079
01252-80514	K0210-32A0	30	K-080
01252-A0620	E0210-01A2	3	E-011B
01252-B0520	K0210-31A0	18	K-079
01253-61645	F2380-01A0	15	F-001
01253-61645	F2380-04A0	15	F-007
01370-40412	K0210-31A0	7	K-079
01370-40412	K0210-31A0	9	K-079
01435-00812	H0430-01A4	6	H-143
01435-00816	E0200-01A0	34	E-007
01435-00816	E0200-01A0	9	E-007
01435-00816	E0200-01A1	34	E-007A
01435-00816	E0200-01A1	9	E-007A
01435-00816	E0210-01A0	13	E-011
01435-00816	E0210-01A2	8	E-011B
01435-00820	E0200-01A0	6A	E-007
01435-00820	E0200-01A1	6A	E-007A
01435-00820	M2140-01A0	17	M-005
01435-00820	M2140-02A0	23	M-013
01435-00825	A2203-A2A3	6	A-059
01435-00825	A5103-A2A1	3	A-083
01435-00825	H0350-02A0	36	H-067
01435-00825	H0350-04A0	36	H-075
01435-00840	E0200-01A0	8	E-007
01435-00840	E0200-01A1	8	E-007A
01435-01016	B0000-52A0	20	B-059
01435-01016	B0000-55A0	24	B-065
01435-01016	B0000-58A0	24	B-068
01435-01016	B0000-58A0	55	B-068
01435-01016	B0000-58A1	18	B-068A
01435-01016	C0160-01A0	16	C-013
01435-01016	E0120-01A0	9	E-005
01435-01016	E0120-01A0	13	E-005
01435-01016	E0120-01A0	15	E-005
01435-01016	E0120-01B0	5	E-006
01435-01016	E0200-01A0	2	E-007
01435-01016	E0200-01A0	2	E-007
01435-01016	E0200-01A0	4	E-007
01435-01016	E0200-01A0	6	E-007
01435-01016	E0200-01A0	6	E-007
01435-01016	E0200-01A0	13	E-007
01435-01016	E0200-01A0	16	E-007
01435-01016	E0200-01A0	17	E-007
01435-01016	E0200-01A0	18	E-007
01435-01016	E0200-01A0	19	E-007
01435-01016	E0200-01A0	22	E-007
01435-01016	E0200-01A0	25	E-007
01435-01016	E0200-01A0	30	E-007
01435-01016	E0200-01A0	31	E-007
01435-01016	E0200-01A0	42	E-007
01435-01016	E0200-01A0	36	E-007
01435-01016	E0200-01A1	4	E-007A
01435-01016	E0200-01A1	13	E-007A
01435-01016	E0200-01A1	16	E-007A
01435-01016	E0200-01A1	17	E-007A
01435-01016	E0200-01A1	18	E-007A
01435-01016	E0200-01A1	19	E-007A
01435-01016	E0200-01A1	22	E-007A
01435-01016	E0200-01A1	25	E-007A
01435-01016	E0200-01A1	30	E-007A
01435-01016	E0200-01A1	31	E-007A
01435-01016	E0200-01A1	42	E-007A
01435-01016	E0200-01A1	2A	E-007A
01435-01016	E0200-01A1	36	E-007A
01435-01016	E0200-01A1	6B	E-007A
01435-01016	E0210-01A0	2	E-011
01435-01016	E0210-01A0	11	E-011
01435-01016	E0210-01A0	19	E-011
01435-01016	E0210-01A0	20	E-011
01435-01016	E0210-01A0	22	E-011
01435-01016	E0210-01A0	18	E-011
01435-01016	E0210-01A1	10	E-011A
01435-01016	E0220-01A0	2	E-013
01435-01016	E0220-01A0	4	E-013
01435-01016	E0220-01A0	5	E-013
01435-01016	E0220-01A0	7	E-013
01435-01016	E0220-01A0	10	E-013
01435-01016	E0220-01A0	11	E-013
01435-01016	E0220-01A0	8	E-013
01435-01016	E0300-01A0	5	E-015
01435-01016	F2380-20A0	5	F-013
01435-01016	H0320-01A0	6	H-053
01435-01016	H0430-01A1	8	H-137
01435-01016	K0720-01A0	1	K-203
01435-01020	B0000-52A0	13	B-059
01435-01020	B0000-52A0	18	B-059
01435-01020	B0000-52A0	7	B-059
01435-01020	B0000-55A0	10	B-065
01435-01020	B0000-55A0	21	B-065
01435-01020	B0000-55A0	4	B-065
01435-01020	B0000-58A0	10	B-068
01435-01020	B0000-58A0	21	B-068
01435-01020	B0000-58A0	4	B-068
01435-01020	B0000-58A1	4	B-068A
01435-01020	C0170-01A0	9	C-015
01435-01020	C0170-01A0	10	C-015
01435-01020	C0170-01A0	11	C-015
01435-01020	C0170-01A0	12	C-015
01435-01020	C0170-01A0	13	C-015
01435-01020	D0220-02A0	48	D-015
01435-01020	E0200-01A0	13	E-007
01435-01020	E0200-01A0	14	E-007
01435-01020	E0200-01A0	22	E-007
01435-01020	E0200-01A0	2A	E-007
01435-01020	E0200-01A1	13	E-007A
01435-01020	E0200-01A1	14	E-007A
01435-01020	E0200-01A1	22	E-007A
01435-01020	E0200-01A1	2A	E-007A
01435-01020	E0210-01A0	6	E-011
01435-01020	E0210-01A2	9	E-011B
01435-01020	K2900-01A2	1	K-221
01435-01025	C0140-01A0	6	C-009
01435-01025	E0200-01A0	24	E-007
01435-01025	E0200-01A1	24	E-007A
01435-01025	K0700-01A3	1	K-197
01435-01025	K0720-01A0	2	K-203
01435-01025	K2900-01A2	2	K-221
01435-01030	B0000-58A0	48	B-068
01435-01030	B0000-58A1	26	B-068A
01435-01045	E0200-01A0	29	E-007
01435-01045	E0200-01A1	29	E-007A
01435-01050	H0320-01A0	2	H-053
01435-01055	E0210-01A1	9	E-011A
01435-01220	A4103-A2B3	6	A-075
01435-01220	C0200-01A0	31	C-019
01435-01220	H0430-01A4	22	H-143
01435-01225	E0200-01A0	38	E-007
01435-01225	E0200-01A0	40	E-007
01435-01225	E0200-01A0	45	E-007
01580-10605	K0210-02A0	16	K-021
01580-10605	K0210-04A0	16	K-025
01580-10605	K0210-07A0	19	K-031
01580-10605	K0210-08A0	19	K-033
01580-10605	K0210-37A0	13	K-089
01580-10605	K0410-12A0	13	K-153

PARTS Nº	FIG. Nº	INDEX	PAGE
01580-10806	B0720-01A0	7	B-049
01580-10806	D0110-01A0	2	D-003
01580-10806	H0100-01A2	14	H-005
01580-10806	H0100-01A2	5	H-005
01580-10806	K0210-19A0	9	K-055
01580-10806	K0210-20A0	9	K-057
01580-10806	K0210-23A0	16	K-063
01580-10806	K0210-23A0	3	K-063
01580-10806	K0210-35A0	3	K-085
01580-10806	K0410-10A0	3	K-149
01580-10806	K0700-01A0A	8A	K-191A
01580-10806	M2140-01A1	4	M-007
01580-10806	M2140-01A2	5	M-009
01580-10806	M2140-02A2	5	M-015
01580-11008	C0300-01A1	17	C-031
01580-11008	E0100-01A0	12	E-001
01580-11008	K0210-41A0	13	K-097
01580-11008	K0410-16A0	13	K-161
01580-11008	M2140-01A3	11	M-011
01580-11008	T0630-01A0	5	T-023
01580-11008	T0700-01A0	11	T-027
01580-11210	B0800-01A0	5	B-053
01580-11210	J2750-01A0	4	J-011
01580-11210	K0210-07A0	27	K-031
01580-11210	K0210-08A0	27	K-033
01580-11210	K0210-40A0	10	K-095
01580-11210	K0210-41A0	12	K-097
01580-11210	K0410-15A0	10	K-159
01580-11210	K0410-16A0	12	K-161
01580-11210	T0630-01A0	6	T-023
01580-11815	R2210-01A0	3	R-045
01580-11815	R2210-01A1	3	R-045A
01582-11210	H0310-04A0	16	H-029
01582-11210	H0310-04A0	25	H-029
01582-11210	H0310-05A0	4	H-031
01582-11210	H0310-05A0	6	H-031
01582-11210	H0310-08A0	16	H-037
01582-11210	H0310-08A0	25	H-037
01582-11210	H0310-09A0	4	H-039
01582-11210	H0310-09A0	6	H-039
01582-11210	H0310-23A0	14	H-049
01582-11210	H0310-23A1	14	H-049A
01582-11210	H0350-01A0	31	H-063
01582-11210	H0350-03A0	31	H-071
01582-11411	H0390-11A0	10	H-115
01582-11613	H0330-01A0	6	H-057
01582-11613	R0110-01A0	7	R-001
01582-12419	T0800-01A0	13	T-029
01583-11408	K2520-01A1	14	K-213
01583-11408	K2520-02A0	11	K-216
01583-11811	C0160-01A0	3	C-013
01583-12716	H0350-01A0	29	H-063
01583-12716	H0350-03A0	29	H-071
01584-00605	A6203-A2A3	12	A-103A
01584-00806	M2140-01A0	18	M-005
01584-00806	M2140-02A0	24	M-013
01590-30809	K0210-37A0	22	K-089
01590-30809	K0410-12A0	22	K-153
01592-11215	T2810-01A0	13	T-031
01592-31215	T0800-01A0	9	T-029
01593-31210	T0800-01A0	9	T-029
01593-31210	T2810-01A0	13	T-031
01596-00807	K0210-44A0	10	K-103
01596-00807	K0410-19A0	10	K-167
01596-01009	D0220-02A0	32	D-015
01597-01009	C0210-01A0	10	C-023
01597-01009	C0210-01A0	21	C-023
01597-01009	C0210-01A0	7	C-023
01597-01009	C0210-01A1	18	C-025
01597-01009	C0210-01A1	8	C-025
01597-01009	H0400-01A2	12	H-123
01597-01009	H0400-01A2	5	H-123
01597-01009	H0410-01A0	3	H-127
01597-01009	H0410-01A1	5	H-129
01597-01009	K0210-16A0	11	K-049
01597-01211	C0200-01A0	14	C-019
01597-01211	C0200-01A0	25	C-019
01597-01211	C0200-01A0	7	C-019
01598-00608	K0210-28A0	7	K-073
01598-00809	K0210-32A0	23	K-080
01598-00809	K0210-44A0	10	K-103
01598-00809	K0410-19A0	10	K-167
01602-20619	K0830-01A0	3	K-205
01602-31032	T0700-01A0	12	T-027
01640-20408	H0100-01A1	14	H-003
01640-20408	H0100-01B1	20	H-004
01640-20408	H0100-01B2	15	H-004A
01640-20408	H0100-01B3	15	H-004B
01640-20610	K0210-07A0	25	K-031
01640-20610	K0210-08A0	25	K-033
01640-20816	K0210-19A0	10	K-055
01640-20816	K0210-20A0	10	K-057
01640-20816	K0210-23A0	17	K-063
01640-20816	K0210-23A0	4	K-063
01640-21016	M2120-01A0	2	M-003
01640-21426	K0210-40A0	19	K-095
01640-21426	K0210-41A0	23	K-097
01640-21426	K0410-15A0	19	K-159
01640-21426	K0410-16A0	23	K-161
01640-21426	M2120-01A0	3	M-003
01641-20608	K0210-35A0	10	K-085
01641-20608	K0210-37A0	8	K-089
01641-20608	K0410-10A0	10	K-149
01641-20608	K0410-12A0	8	K-153
01641-21016	K0210-36A0	12	K-087
01641-21016	K0410-11A0	12	K-151
01641-50508	K0210-10A0	19	K-037
01641-50508	K0210-10A0	25	K-037
01641-50508	K0210-11A0	19	K-039
01641-50508	K0210-11A0	25	K-039
01641-50508	K0210-31A0	19	K-079
01641-50508	K0210-32A0	31	K-080
01643-30623	E0100-01A0	14	E-001
01643-30623	E0210-01A2	3	E-011B
01643-30623	K0210-18A0	5	K-053
01643-30623	K0210-32A0	27	K-080
01643-30623	K0210-43A0	20	K-101
01643-30623	K0210-44A0	19	K-103
01643-30623	K0210-46A0	9	K-107
01643-30623	K0410-18A0	20	K-165
01643-30623	K0410-19A0	19	K-167
01643-30623	K0410-21A0	9	K-171
01643-30623	K2900-01A4	1	K-225
01643-30623	K2900-01A4A	8	K-225A
01643-30623	M2140-01A2	6	M-009
01643-30623	M2140-01A3	12	M-011
01643-30623	M2140-02A2	6	M-015
01643-30823	B0000-52A0	25	B-059
01643-30823	B0000-55A0	20	B-065
01643-30823	B0000-55A0	22	B-065
01643-30823	B0000-55A0	33	B-065
01643-30823	B0000-58A0	20	B-068
01643-30823	B0000-58A0	22	B-068
01643-30823	B0000-58A0	33	B-068
01643-30823	B0000-58A1	20	B-068A
01643-30823	B0600-01A1	1	B-039
01643-30823	B0600-01A2	1	B-041
01643-30823	B0700-01A0	1	B-045
01643-30823	B0720-01A0	1	B-049
01643-30823	B0800-01A0	2	B-053
01643-30823	B0800-01A0	3	B-053
01643-30823	C0160-01A0	10	C-013
01643-30823	C0170-01A0	17	C-015
01643-30823	C0180-01A0	1	C-017
01643-30823	C0180-01A0	2	C-017
01643-30823	D0210-01A0	2	D-011
01643-30823	D0220-02A0	27	D-015
01643-30823	E0120-01B0	18	E-006
01643-30823	E0200-01A0	45	E-007
01643-30823	E0200-01A1	45	E-007A

PARTS Nº	FIG. Nº	INDEX	PAGE
01643-30823	E0220-01A0	6	E-013
01643-30823	H0400-01A1	2	H-121
01643-30823	H0440-01A0	8	H-149
01643-30823	H0510-01A1	2	H-161
01643-30823	K0110-01A0	3	K-001
01643-30823	K0110-01A1	3	K-003
01643-30823	K0110-01A2	3	K-005
01643-30823	K0110-01A3	3	K-007
01643-30823	K0110-01A4	3	K-009
01643-30823	K0210-14A0	35	K-045
01643-30823	K0210-14A0	45	K-045
01643-30823	K0210-14A0	48	K-045
01643-30823	K0210-14A0	61	K-045
01643-30823	K0210-16A0	30	K-049
01643-30823	K0210-24A0	16	K-065
01643-30823	K0210-34A0	4	K-083
01643-30823	K0210-35A0	14	K-085
01643-30823	K0210-36A0	5	K-087
01643-30823	K0210-36A0	9	K-087
01643-30823	K0210-38A0	7	K-091
01643-30823	K0210-42A0	3	K-099
01643-30823	K0210-44A0	3	K-103
01643-30823	K0210-46A0	17	K-107
01643-30823	K0210-46A0	23	K-107
01643-30823	K0210-54A0	10	K-119
01643-30823	K0210-54A0	4	K-119
01643-30823	K0210-55A0	3	K-121
01643-30823	K0210-56A0	3	K-123
01643-30823	K0210-57A0	11	K-125
01643-30823	K0410-09A0	4	K-147
01643-30823	K0410-10A0	14	K-149
01643-30823	K0410-11A0	5	K-151
01643-30823	K0410-11A0	9	K-151
01643-30823	K0410-13A0	7	K-155
01643-30823	K0410-17A0	3	K-163
01643-30823	K0410-19A0	3	K-167
01643-30823	K0410-21A0	17	K-171
01643-30823	K0410-21A0	23	K-171
01643-30823	K0410-27A0	10	K-183
01643-30823	K0410-27A0	4	K-183
01643-30823	K0410-28A2	3	K-185
01643-30823	K0500-01A0	9	K-189
01643-30823	K0700-01A0	1	K-191
01643-30823	K0700-01A0A	1	K-191A
01643-30823	K0700-01A0A	19	K-191A
01643-30823	K0700-01A1	2	K-193
01643-30823	K0700-01A1	4	K-193
01643-30823	K0700-01A1A	2	K-193A
01643-30823	K0700-01A1A	4	K-193A
01643-30823	K0710-01A0	1	K-199
01643-30823	K2520-01A1	6	K-213
01643-30823	K2520-02A0	19	K-216
01643-30823	M2140-01A0	7	M-005
01643-30823	M2140-01A3	10	M-011
01643-30823	M2140-02A0	7A	M-013
01643-30823	R0120-01A0	11	R-003
01643-31032	B0000-54A0	4	B-063
01643-31032	B0000-55A0	26	B-065
01643-31032	B0000-55A0	37	B-065
01643-31032	B0000-55A0	39	B-065
01643-31032	B0000-57A0	4	B-067
01643-31032	B0000-58A0	26	B-068
01643-31032	B0000-58A0	37	B-068
01643-31032	B0000-58A0	39	B-068
01643-31032	B0000-60A0	4	B-070
01643-31032	B0300-01A1	2	B-009
01643-31032	B0300-01A1	3	B-009
01643-31032	B0300-01A1	4	B-009
01643-31032	B0440-01A0	1	B-033
01643-31032	B0600-01A1	2	B-039
01643-31032	B0700-01A0	2	B-045
01643-31032	B0720-01A0	2	B-049
01643-31032	B0720-01A1	2	B-051
01643-31032	B0720-01A1	3	B-051
01643-31032	B0900-01A0	2	B-055
01643-31032	C0150-01A0	9	C-011
01643-31032	C0160-01A0	6	C-013
01643-31032	C0160-01A0	8	C-013
01643-31032	C0170-01A0	14	C-015
01643-31032	C0200-01A0	3	C-019
01643-31032	C0200-01A0	4	C-019
01643-31032	C0200-01A0	10	C-019
01643-31032	C0210-01A0	20	C-023
01643-31032	C0210-01A0	6	C-023
01643-31032	C0210-01A0	9	C-023
01643-31032	C0210-01A1	17	C-025
01643-31032	C0210-01A1	7	C-025
01643-31032	C0210-01A2	7	C-027
01643-31032	C0300-01A1	10	C-031
01643-31032	C0300-01A1	16	C-031
01643-31032	D0120-01A0	2	D-005
01643-31032	D0210-01A0	3	D-011
01643-31032	D0220-01A0	2	D-013
01643-31032	D0220-01A0	4	D-013
01643-31032	D0220-02A0	29	D-015
01643-31032	D0220-02A0	31	D-015
01643-31032	D0220-02A0	33	D-015
01643-31032	D0220-02A0	35	D-015
01643-31032	E0100-01A0	8	E-001
01643-31032	E0100-01A0	17	E-001
01643-31032	E0100-01A0	13	E-001
01643-31032	E0120-01B0	10	E-006
01643-31032	E0210-01A0	4	E-011
01643-31032	E0210-01A0	9	E-011
01643-31032	E0210-01A1	15	E-011A
01643-31032	E0210-01A1	23	E-011A
01643-31032	E0210-01A2	7	E-011B
01643-31032	E0210-01A2	22	E-011B
01643-31032	E0210-01A2	34	E-011B
01643-31032	E0300-01A0	3	E-015
01643-31032	F2380-01A0	8	F-001
01643-31032	F2380-04A0	8	F-007
01643-31032	H0100-01A1	2	H-003
01643-31032	H0100-01A1	11	H-003
01643-31032	H0100-01A1	4	H-003
01643-31032	H0100-01B1	2	H-004
01643-31032	H0100-01B1	17	H-004
01643-31032	H0100-01B1	4	H-004
01643-31032	H0100-01B2	2	H-004A
01643-31032	H0100-01B2	12	H-004A
01643-31032	H0100-01B2	4	H-004A
01643-31032	H0100-01B3	2	H-004B
01643-31032	H0100-01B3	12	H-004B
01643-31032	H0100-01B3	4	H-004B
01643-31032	H0200-01A5	3	H-019
01643-31032	H0310-01A0	9	H-023
01643-31032	H0310-06A0	9	H-033
01643-31032	H0400-01A2	13	H-123
01643-31032	H0400-01A2	18	H-123
01643-31032	H0400-01A2	6	H-123
01643-31032	H0400-01A3	7	H-125
01643-31032	H0410-01A0	3	H-127
01643-31032	H0410-01A1	4	H-129
01643-31032	H0410-01A1	5	H-129
01643-31032	H0410-01A1	9	H-129
01643-31032	H0420-01A0	10	H-133
01643-31032	H0420-01A0	15	H-133
01643-31032	H0430-01A1	7	H-137
01643-31032	H0430-01A1A	7	H-138
01643-31032	H0430-01A2	2	H-139
01643-31032	H0430-01A2	21	H-139
01643-31032	H0430-01A4	3	H-143
01643-31032	H0430-01A4	4	H-143
01643-31032	H0430-01A4	9	H-143
01643-31032	H0430-01A5	2	H-145
01643-31032	H0500-01A0	26	H-155
01643-31032	H0500-01A0	39	H-155
01643-31032	H0520-01A1	2	H-165
01643-31032	H0550-01A0	7	H-167
01643-31032	H2250-01A1	2	H-181

PARTS Nº	FIG. Nº	INDEX	PAGE
01643-31032	H2250-01A1	3	H-181
01643-31032	K0210-14A0	12	K-045
01643-31032	K0210-14A0	19	K-045
01643-31032	K0210-14A0	22	K-045
01643-31032	K0210-14A0	29	K-045
01643-31032	K0210-14A0	32	K-045
01643-31032	K0210-14A0	38	K-045
01643-31032	K0210-14A0	40	K-045
01643-31032	K0210-14A0	51	K-045
01643-31032	K0210-14A0	6	K-045
01643-31032	K0210-14A0	63	K-045
01643-31032	K0210-16A0	12	K-049
01643-31032	K0210-18A0	10	K-053
01643-31032	K0210-18A0	14	K-053
01643-31032	K0210-18A0	18	K-053
01643-31032	K0210-18A0	21	K-053
01643-31032	K0210-18A0	24	K-053
01643-31032	K0210-18A0	3	K-053
01643-31032	K0210-18A0	37	K-053
01643-31032	K0210-35A0	17	K-085
01643-31032	K0210-35A0	19	K-085
01643-31032	K0210-37A0	18	K-089
01643-31032	K0210-37A0	26	K-089
01643-31032	K0210-37A0	28	K-089
01643-31032	K0210-40A0	14	K-095
01643-31032	K0210-40A0	18	K-095
01643-31032	K0210-40A0	23	K-095
01643-31032	K0210-40A0	25	K-095
01643-31032	K0210-40A0	30	K-095
01643-31032	K0210-41A0	18	K-097
01643-31032	K0210-41A0	21	K-097
01643-31032	K0210-41A0	26	K-097
01643-31032	K0210-43A0	11	K-101
01643-31032	K0210-43A0	13	K-101
01643-31032	K0210-43A0	25	K-101
01643-31032	K0210-43A0	29	K-101
01643-31032	K0210-43A0	33	K-101
01643-31032	K0210-43A0	36	K-101
01643-31032	K0210-44A0	16	K-103
01643-31032	K0210-55A0	7	K-121
01643-31032	K0210-56A0	7	K-123
01643-31032	K0210-57A0	20	K-125
01643-31032	K0210-57A0	7	K-125
01643-31032	K0410-06A1	19	K-141
01643-31032	K0410-06A1	3	K-141
01643-31032	K0410-06A1	6	K-141
01643-31032	K0410-07A1	15	K-143
01643-31032	K0410-07A1	3	K-143
01643-31032	K0410-07A1	9	K-143
01643-31032	K0410-10A0	17	K-149
01643-31032	K0410-10A0	19	K-149
01643-31032	K0410-12A0	18	K-153
01643-31032	K0410-12A0	26	K-153
01643-31032	K0410-12A0	28	K-153
01643-31032	K0410-15A0	14	K-159
01643-31032	K0410-15A0	18	K-159
01643-31032	K0410-15A0	23	K-159
01643-31032	K0410-15A0	25	K-159
01643-31032	K0410-15A0	30	K-159
01643-31032	K0410-16A0	18	K-161
01643-31032	K0410-16A0	21	K-161
01643-31032	K0410-16A0	26	K-161
01643-31032	K0410-18A0	11	K-165
01643-31032	K0410-18A0	13	K-165
01643-31032	K0410-18A0	25	K-165
01643-31032	K0410-18A0	29	K-165
01643-31032	K0410-18A0	33	K-165
01643-31032	K0410-18A0	36	K-165
01643-31032	K0410-19A0	16	K-167
01643-31032	K0410-28A2	7	K-185
01643-31032	K0410-29A0	15	K-187
01643-31032	K0410-29A0	7	K-187
01643-31032	K0700-01A0A	10	K-191A
01643-31032	K0700-01A1	6	K-193
01643-31032	K2520-01A1	3	K-213
01643-31032	K2520-02A0	14	K-216
01643-31032	K2900-01A3	1	K-223
01643-31032	K2900-01A3	2	K-223
01643-31032	K2900-01A4A	2	K-225A
01643-31032	K2900-01A4A	3	K-225A
01643-31032	K2900-01A4A	12	K-225A
01643-31032	K2900-01A4A	20	K-225A
01643-31032	K2900-01A4A	21	K-225A
01643-31032	K2900-01A4A	6	K-225A
01643-31032	M2110-01A0	5	M-001
01643-31032	M2140-01A3	13	M-011
01643-31032	T0630-01A0	3	T-023
01643-31032	T0630-01A0	7	T-023
01643-31032	T0640-01A0	1	T-025
01643-31232	B0000-52A0	4	B-059
01643-31232	B0000-55A0	17	B-065
01643-31232	B0000-55A0	28	B-065
01643-31232	B0000-58A0	17	B-068
01643-31232	B0000-58A0	28	B-068
01643-31232	B0000-58A1	17	B-068A
01643-31232	B0000-58A1	21	B-068A
01643-31232	B0410-01A0	2	B-025
01643-31232	B0600-01A2	2	B-041
01643-31232	B0720-01A0	3	B-049
01643-31232	B0800-01A0	6	B-053
01643-31232	C0140-01A0	10	C-009
01643-31232	C0140-01A0	4	C-009
01643-31232	C0140-01A0	7	C-009
01643-31232	C0150-01A0	4	C-011
01643-31232	C0200-01A0	20	C-019
01643-31232	C0200-01A0	22	C-019
01643-31232	C0200-01A0	13	C-019
01643-31232	C0200-01A0	24	C-019
01643-31232	C0200-01A0	6	C-019
01643-31232	C0210-01A0	24	C-023
01643-31232	C0210-01A1	5	C-025
01643-31232	C0210-01A1	15	C-025
01643-31232	C0210-01A2	5	C-027
01643-31232	C0300-01A0	6	C-029
01643-31232	C0300-01A0	9	C-029
01643-31232	C0300-01A1	13	C-031
01643-31232	D0110-01A0	4	D-003
01643-31232	D0210-01A0	4	D-011
01643-31232	D0210-01A0	5	D-011
01643-31232	D0210-01A0	6	D-011
01643-31232	E0100-01A0	5	E-001
01643-31232	E0200-01A0	38	E-007
01643-31232	E0200-01A0	40	E-007
01643-31232	E0200-01A0	45	E-007
01643-31232	E0200-01A1	38	E-007A
01643-31232	E0200-01A1	40	E-007A
01643-31232	E0210-01A2	4	E-011B
01643-31232	F2380-02A0	12	F-003
01643-31232	F2380-05A0	12	F-009
01643-31232	F2380-20A0	4	F-013
01643-31232	H0100-01A2	2	H-005
01643-31232	H0100-01A2	11	H-005
01643-31232	H0200-01A5	5	H-019
01643-31232	H0330-01A0	2	H-057
01643-31232	H0340-01A0	5	H-061
01643-31232	H0400-01A1	3	H-121
01643-31232	H0400-01A1	4	H-121
01643-31232	H0400-01A1	5	H-121
01643-31232	H0400-01A1	6	H-121
01643-31232	H0400-01A1	7	H-121
01643-31232	H0400-01A1	8	H-121
01643-31232	H0400-01A3	4	H-125
01643-31232	H0410-01A0	5	H-127
01643-31232	H0410-01A0	7	H-127
01643-31232	H0410-01A0	8	H-127
01643-31232	H0410-01A0	10	H-127
01643-31232	H0410-01A0	17	H-127
01643-31232	H0410-01A0	20	H-127
01643-31232	H0410-01A1	7	H-129
01643-31232	H0430-01A2	5	H-139

PARTS Nº	FIG. Nº	INDEX	PAGE
01643-31232	H0430-01A2	7	H-139
01643-31232	H0430-01A2	23	H-139
01643-31232	H0500-01A0	3	H-155
01643-31232	H0500-01A0	4	H-155
01643-31232	H0500-01A0	8	H-155
01643-31232	H0500-01A0	15	H-155
01643-31232	H0510-01A0	12	H-159
01643-31232	H0510-01A0	5	H-159
01643-31232	H0510-01A1	4	H-161
01643-31232	H0510-01A1	6	H-161
01643-31232	H0520-01A0	4	H-163
01643-31232	H0520-01A1	3	H-165
01643-31232	H0520-01A1	4	H-165
01643-31232	H0550-01A0	4	H-167
01643-31232	H0550-01A0	11	H-167
01643-31232	H0550-01A1	2	H-169
01643-31232	H0700-01A3	25	H-177
01643-31232	H2250-01A0	2	H-179
01643-31232	H2250-01A0	3	H-179
01643-31232	H2250-01A0	4	H-179
01643-31232	H2250-01A0	5	H-179
01643-31232	H2250-01A0	6	H-179
01643-31232	H2250-01A1	4	H-181
01643-31232	J2100-01A0	4	J-001
01643-31232	J2100-01A1	4	J-003
01643-31232	J2110-01A0	1	J-005
01643-31232	J2110-01A0	2	J-005
01643-31232	J2750-01A0	3	J-011
01643-31232	J2750-01A0	5	J-011
01643-31232	K0110-01A0	10	K-001
01643-31232	K0110-01A0	7	K-001
01643-31232	K0110-01A1	10	K-003
01643-31232	K0110-01A1	7	K-003
01643-31232	K0110-01A2	10	K-005
01643-31232	K0110-01A2	7	K-005
01643-31232	K0110-01A3	10	K-007
01643-31232	K0110-01A3	7	K-007
01643-31232	K0110-01A4	6	K-009
01643-31232	K0110-01A4	9	K-009
01643-31232	K0210-18A0	29	K-053
01643-31232	K0210-18A0	43	K-053
01643-31232	K0210-50A0	12	K-115
01643-31232	K0210-50A0	4	K-115
01643-31232	K0210-51A0	12	K-115A
01643-31232	K0210-51A0	4	K-115A
01643-31232	K0210-52A0	4	K-117
01643-31232	K0210-53A0	4	K-117A
01643-31232	K0210-57A0	4	K-125
01643-31232	K0410-06A0	3	K-139
01643-31232	K0410-06A1	11	K-141
01643-31232	K0410-25A0	12	K-179
01643-31232	K0410-25A0	4	K-179
01643-31232	K0410-25A0A	12	K-179A
01643-31232	K0410-25A0A	4	K-179A
01643-31232	K0410-26A0	4	K-181
01643-31232	K0410-26A0A	4	K-181A
01643-31232	K0410-29A0	4	K-187
01643-31232	K2120-01A0	21	K-209
01643-31232	K2120-01A0	24	K-209
01643-31232	K2120-01A0	6	K-209
01643-31232	K2800-01A0	1	K-217
01643-31232	K2800-01A0	2	K-217
01643-31232	M2110-01A0	6	M-001
01643-31232	M2120-01A0	1	M-003
01643-31232	M2140-01A0	3	M-005
01643-31232	M2140-01A0	5	M-005
01643-31232	M2140-01A1	2	M-007
01643-31232	M2140-01A1	3	M-007
01643-31232	M2140-01A2	4	M-009
01643-31232	M2140-01A3	14	M-011
01643-31232	M2140-02A0	3A	M-013
01643-31232	M2140-02A0	5A	M-013
01643-31232	M2140-02A2	4	M-015
01643-31232	R2100-01A0	8	R-037
01643-31232	R2140-01A0	4	R-039
01643-31232	R2140-02A0	4	R-041
01643-31232	R2210-01A0	4	R-045
01643-31232	R2210-01A1	4	R-045A
01643-31232	T0100-01A0	2	T-001
01643-31232	T0200-01A1	2	T-005
01643-31232	T0200-01A2	2	T-007
01643-31232	T0200-01A3	2	T-007A
01643-31232	T0300-01A0	14	T-009
01643-31232	T0300-01A0A	14	T-009A
01643-31232	T0300-01A0B	14	T-009B
01643-31232	T0300-01B0	10	T-010
01643-31232	T0400-01A1	1	T-013
01643-31232	T0450-01A1	1	T-019
01643-31232	T0450-01B0	10	T-021A
01643-31232	T0450-01B1	4	T-021B
01643-31232	T0630-01A0	4	T-023
01643-31232	T0640-01A0	2	T-025
01643-31232	T0700-01A0	10	T-027
01643-31232	V0300-01A0	1	V-001
01643-31232	V0300-01A0	2	V-001
01643-31445	K2120-01A0	14	K-209
01643-31645	C0140-01A0	12	C-009
01643-31645	C0170-01A0	1	C-015
01643-31645	D0130-01A0	4	D-007
01643-31645	F2380-01A0	19	F-001
01643-31645	F2380-04A0	19	F-007
01643-31645	H0100-01A3	6	H-007
01643-31645	H0330-01A0	5	H-057
01643-31645	J2100-01A0	5	J-001
01643-31645	J2100-01A1	5	J-003
01643-31645	J2710-01A0	10	J-009
01643-31645	J2750-01A0	16	J-011
01643-31645	J2750-01A0	20	J-011
01643-31645	J2750-01A0	6	J-011
01643-31645	K0210-30A0	2	K-077
01643-31645	K0410-04A0	2	K-135
01643-31645	K2120-01A0	16	K-209
01643-31645	K2120-01A0	8	K-209
01643-31645	M2110-01A0	7	M-001
01643-31645	M2140-01A0	10	M-005
01643-31645	M2140-01A3	15	M-011
01643-31645	M2140-02A0	10	M-013
01643-31645	R0110-01A0	2	R-001
01643-31645	R0110-01A0	4	R-001
01643-31645	R0110-01A0	6	R-001
01643-31645	R0110-01A0	8	R-001
01643-31645	R0120-01A0	NI	R-003
01643-31645	R0200-03A0	2	R-009
01643-31645	R0300-01A0	14	R-011
01643-31645	R0300-01A1	14	R-011A
01643-31645	R2140-01A0	5	R-039
01643-31645	R2140-02A0	5	R-041
01643-31645	R2200-01A0	13	R-043
01643-31645	R2200-01A0	2	R-043
01643-31645	R2200-01A0	7	R-043
01643-31645	R2200-01A1	13	R-043A
01643-31645	R2200-01A1	2	R-043A
01643-31645	R2200-01A1	7	R-043A
01643-31645	R2210-01A0	5	R-045
01643-31645	R2210-01A1	5	R-045A
01643-31650	R2200-01A1	6	R-043A
01643-31845	R2210-01A0	6	R-045
01643-31845	R2210-01A1	6	R-045A
01643-32060	D0130-01A0	5	D-007
01643-32060	F2380-20A0	2	F-013
01643-32060	H0100-01A3	2	H-007
01643-32060	H0100-01A3	3	H-007
01643-32060	H0100-01A3	4	H-007
01643-32060	H0340-01A0	7	H-061
01643-32060	J2710-01A0	4	J-009
01643-32060	K2120-01A0	3	K-209
01643-32060	T0200-01A1	3	T-005
01643-32060	T0300-01B0	4	T-010
01643-32232	E0100-01A0	6	E-001
01643-32460	K2120-01A0	11	K-209

PARTS Nº	FIG. Nº	INDEX	PAGE
01643-32460	K2120-01A0	18	K-209
01643-32460	T0300-01A0	3	T-009
01643-32460	T0300-01A0A	3	T-009A
01643-32460	T0300-01A0B	3	T-009B
01643-32460	T0300-01B0	18	T-010
01643-32460	T0700-01A0	13	T-027
01643-32460	T0800-01A0	12	T-029
01643-32460	T0800-01A0	19	T-029
01643-32460	T2810-01A0	8	T-031
01643-50823	H0370-01A0	18	H-085
01643-50823	H0380-01A0	18	H-097
01643-51032	R0200-01A0	10	R-005
01643-51032	R0200-01A1	10	R-005A
01643-51032	R0200-02A0	10	R-007
01643-51032	R0200-02A1	10	R-007A
01643-51232	H0320-01A0	16	H-053
01643-51232	H0420-01A0	6	H-133
01643-51232	J2750-01A0	7	J-011
01643-51232	K0160-01A0	2	K-015
01643-51232	K0160-01A1	2	K-017
01643-51232	K0160-01A1	4	K-017
01643-51232	T0630-01A0	8	T-023
01643-51645	F2380-01A0	16	F-001
01643-51645	F2380-04A0	16	F-007
01643-51645	H0310-02A0	7	H-025
01643-70623	D0220-02A0	25	D-015
01643-70623	H2250-01A1	6	H-181
01643-70623	K0110-01A0	13	K-001
01643-70623	K0110-01A1	13	K-003
01643-70623	K0110-01A2	13	K-005
01643-70623	K0110-01A3	13	K-007
01643-70623	K0110-01A4	14	K-009
01643-70623	K0210-02A0	18	K-021
01643-70623	K0210-02A0	27	K-021
01643-70623	K0210-02A0	29	K-021
01643-70623	K0210-02A0	32	K-021
01643-70623	K0210-02A0	37	K-021
01643-70623	K0210-02A0	43	K-021
01643-70623	K0210-02A0	46	K-021
01643-70623	K0210-02A0	7	K-021
01643-70623	K0210-02A0	9	K-021
01643-70623	K0210-03A0	4	K-023
01643-70623	K0210-04A0	18	K-025
01643-70623	K0210-04A0	27	K-025
01643-70623	K0210-04A0	29	K-025
01643-70623	K0210-04A0	32	K-025
01643-70623	K0210-04A0	37	K-025
01643-70623	K0210-04A0	43	K-025
01643-70623	K0210-04A0	46	K-025
01643-70623	K0210-04A0	7	K-025
01643-70623	K0210-04A0	9	K-025
01643-70623	K0210-05A0	4	K-027
01643-70623	K0210-07A0	3	K-031
01643-70623	K0210-08A0	3	K-033
01643-70623	K0210-18A0	48	K-053
01643-70623	K0210-19A0	21	K-055
01643-70623	K0210-19A0	3	K-055
01643-70623	K0210-20A0	21	K-057
01643-70623	K0210-20A0	3	K-057
01643-70623	K0210-22A0	20	K-061
01643-70623	K0210-22A0	23	K-061
01643-70623	K0210-22A0	3	K-061
01643-70623	K0210-23A0	8	K-063
01643-70623	K0210-25A0	4	K-067
01643-70623	K0210-26A0	6	K-069
01643-70623	K0210-27A0	6	K-071
01643-70623	K0210-31A0	15	K-079
01643-70623	K0210-31A0	5	K-079
01643-70623	K0210-39A0	23	K-093
01643-70623	K0210-46A0	14	K-107
01643-70623	K0210-52A0	9	K-117
01643-70623	K0210-53A0	16	K-117A
01643-70623	K0210-53A0	9	K-117A
01643-70623	K0310-01A0	4	K-127
01643-70623	K0410-14A0	23	K-157
01643-70623	K0410-21A0	14	K-171
01643-70623	K0410-26A0	9	K-181
01643-70623	K0410-26A0A	16	K-181A
01643-70623	K0410-26A0A	9	K-181A
01643-70823	H0100-01B1	15	H-004
01643-70823	K0210-02A0	23	K-021
01643-70823	K0210-02A0	40	K-021
01643-70823	K0210-04A0	23	K-025
01643-70823	K0210-04A0	40	K-025
01643-70823	K0210-07A0	23	K-031
01643-70823	K0210-08A0	23	K-033
01643-70823	K0210-14A0	57	K-045
01643-70823	K0210-16A0	3	K-049
01643-70823	K0210-16A0	3	K-049
01643-70823	K0210-16A0	15	K-049
01643-70823	K0210-16A0	17	K-049
01643-70823	K0210-16A0	20	K-049
01643-70823	K0210-16A0	22	K-049
01643-70823	K0210-16A0	3	K-049
01643-70823	K0210-16A0	32	K-049
01643-70823	K0210-16A0	8	K-049
01643-70823	K0210-19A0	6	K-055
01643-70823	K0210-20A0	6	K-057
01643-70823	K0210-23A0	12	K-063
01643-70823	K0210-25A0	7	K-067
01643-70823	K0210-26A0	9	K-069
01643-70823	K0210-27A0	9	K-071
01643-70823	K0210-29A0	4	K-075
01643-70823	K0210-30A0	4	K-077
01643-70823	K0210-32A0	6	K-080
01643-70823	K0210-32A0	10	K-080
01643-70823	K0210-32A0	14	K-080
01643-70823	K0210-32A0	10	K-080
01643-70823	K0210-32A0	14	K-080
01643-70823	K0210-32A0	18	K-080
01643-70823	K0210-32A0	21	K-080
01643-70823	K0210-32A0	3	K-080
01643-70823	K0210-32A0	35	K-080
01643-70823	K0210-32A0	38	K-080
01643-70823	K0210-32A0	40	K-080
01643-70823	K0210-32A0	6	K-080
01643-70823	K0210-38A0	3	K-091
01643-70823	K0210-39A0	15	K-093
01643-70823	K0210-39A0	27	K-093
01643-70823	K0210-39A0	9	K-093
01643-70823	K0210-45A0	4	K-105
01643-70823	K0210-47A0	11	K-109
01643-70823	K0210-47A0	4	K-109
01643-70823	K0210-47A0	7	K-109
01643-70823	K0210-49A0	6	K-113
01643-70823	K0210-50A0	8	K-115
01643-70823	K0210-51A0	16	K-115A
01643-70823	K0210-51A0	8	K-115A
01643-70823	K0210-55A0	10	K-121
01643-70823	K0210-56A0	10	K-123
01643-70823	K0210-57A0	11	K-125
01643-70823	K0410-03A0	4	K-133
01643-70823	K0410-04A0	4	K-135
01643-70823	K0410-05A0	3	K-137
01643-70823	K0410-05A0	6	K-137
01643-70823	K0410-05A0	9	K-137
01643-70823	K0410-13A0	3	K-155
01643-70823	K0410-14A0	15	K-157
01643-70823	K0410-14A0	27	K-157
01643-70823	K0410-14A0	9	K-157
01643-70823	K0410-20A0	4	K-169
01643-70823	K0410-22A0	11	K-173
01643-70823	K0410-22A0	4	K-173
01643-70823	K0410-22A0	7	K-173
01643-70823	K0410-24A0	6	K-177
01643-70823	K0410-25A0	8	K-179
01643-70823	K0410-25A0A	16	K-179A
01643-70823	K0410-25A0A	8	K-179A
01643-70823	K0410-28A2	10	K-185
01643-70823	K0830-01A0	7	K-205
01643-70823	K2520-01A1	9	K-213
01643-70823	K2520-02A0	6	K-216
01643-71032	B0000-52A0	34	B-059
01643-71032	B0420-01A0	1	B-027
01643-71032	K0210-06A0	4	K-029
01643-71032	K0210-16A0	15	K-049
01643-71032	K0210-16A0	22	K-049
01643-71032	K0210-16A0	28	K-049
01643-71032	K0210-16A0	6	K-049
01643-71032	K0210-21A0	2	K-059
01643-71032	K0210-52A0	12	K-117
01643-71032	K0210-53A0	12	K-117A
01643-71032	K0210-54A0	12	K-119
01643-71032	K0210-54A0	6	K-119
01643-71032	K0410-26A0	12	K-181
01643-71032	K0410-26A0A	12	K-181A
01643-71032	K0410-27A0	12	K-183
01643-71032	K0410-27A0	6	K-183
01643-71232	B0430-01A0	2	B-031
01643-71232	B0430-01A0	3	B-031
01643-71232	K0210-07A0	9	K-031
01643-71232	K0210-08A0	9	K-033
01643-71232	K0210-30A0	7	K-077
01643-71232	K0210-53A0	4	K-117A
01643-71232	K0410-04A0	7	K-135
01643-71232	K0410-26A0A	4	K-181A
01643-80823	K0700-01A1A	12	K-193A
01643-81025	B0000-55A0	22	B-065
01646-30823	K0700-01A0A	5	K-191A
01646-30823	K0700-01A0A	27	K-191A
01803-01824	F2380-03A0	4	F-005
01803-01824	F2380-06A0	4	F-011
02010-80613	B0000-55A0	25	B-065
02010-80613	B0000-55A0	36	B-065
02010-80613	B0000-55A0	38	B-065
02010-80613	B0000-58A0	25	B-068
02010-80613	B0000-58A0	36	B-068
02010-80613	B0000-58A0	38	B-068
02090-11270	T0400-01A2	1	T-015
02090-11270	T0450-01A2	1	T-021
02090-11270	T0450-01B0	6	T-021A
02290-11219	T0400-01A2	2	T-015
02290-11219	T0450-01A2	2	T-021
02290-11219	T0450-01B0	7	T-021A
02720-10104	H0390-01A0	11	H-111
02720-20406	H0100-01B1	11	H-004
02720-20810	K0710-01A1	1	K-201
02760-00205	K2110-01A0	1	K-207
02760-00205	K2110-01A0	2	K-207
02760-002A4	K2520-01A2	12	K-215
02760-002A5	K2110-01A0	3	K-207
02760-00303	H0320-01A0	28	H-053
02760-003A3	K2520-01A2	13	K-215
02761-00205	K2520-01A2	10	K-215
02761-002A5	K2520-01A2	10	K-215
02761-002A5	K2520-02A1	2	K-216A
02761-00303	K2520-01A2	11	K-215
02761-00304	B0000-57A0	13	B-067
02761-00304	B0000-60A0	13	B-070
02761-00304	K2520-01A2	13	K-215
02761-00304	K2520-02A1	3	K-216A
02761-003A3	K2520-01A2	11	K-215
02761-003A3	K2520-02A1	4	K-216A
02764-002A4	K2520-02A1	1	K-216A
02781-0021D	H0200-01A3	3	H-011
02781-0021D	H0200-01A4	3	H-015
02781-0021D	K2110-01A0	4	K-207
02781-0021D	K2110-01A0	4	K-207
02781-00311	C0300-01A1	7	C-031
02781-00313	D0210-01A0	7	D-011
02781-00313	H0100-01A1	16	H-003
02781-00313	H0100-01B1	22	H-004
02781-00313	H0100-01B2	17	H-004A
02781-00313	H0100-01B3	17	H-004B
02781-00313	H0200-01A3	6	H-011
02781-00313	H0200-01A4	6	H-015
02781-00315	H0430-01A4	15	H-143
02781-0031D	D0220-01A0	5	D-013
02781-0031D	H0410-01A1	3	H-129
02781-0031D	H0430-01A3	2	H-141
02781-00420	H0200-01A3	7	H-011
02781-00420	H0200-01A4	7	H-015
02781-00422	C0300-01A0	3	C-029
02781-00422	C0300-01A1	3	C-031
02781-0042A	H0410-01A1	2	H-129
02781-0042A	H0500-01A0	10	H-155
02781-0042A	H0500-01A0	5	H-155
02781-0042A	H2250-01A0	7	H-179
02781-00628	H0200-01A3	10	H-011
02781-00628	H0200-01A4	10	H-015
02781-00628	H0330-01A0	7	H-057
02781-00628	H0400-01A1	9	H-121
02781-00628	H0410-01A0	19	H-127
02781-00628	H0430-01A3	8	H-141
02782-10210	D0220-01A0	6	D-013
02782-10210	H0200-01A3	13	H-011
02782-10210	H0200-01A4	13	H-015
02782-1021A	H0320-01A0	35	H-053
02782-10311	H0200-01A3	4	H-011
02782-10311	H0200-01A4	4	H-015
02782-10311	H0430-01A4	16	H-143
02782-10313	D0210-01A0	8	D-011
02782-10313	D0220-02A0	36	D-015
02782-1031B	D0220-02A0	37	D-015
02782-10420	H0430-01A5	5	H-145
02782-10420	H0430-01A5	6	H-145
02782-10422	H0500-01A0	12	H-155
02782-10422	H0500-01A0	20	H-155
02782-10422	H0500-01A0	28	H-155
02782-10628	H0320-01A0	22	H-053
02782-10628	H0430-01A5	3	H-145
02782-10628	H0430-01A5	4	H-145
02782-10630	H0320-01A0	19	H-053
02782-10630	H0320-01A0	9	H-053
02782-50210	H0200-01A3	15	H-011
02782-50210	H0200-01A4	15	H-015
02783-10315	H0510-01A1	7	H-161
02783-10422	H0500-01A0	33	H-155
02783-10628	H0200-01A3	8	H-011
02783-10628	H0200-01A4	8	H-015
02789-10210	H2250-01A0	8	H-179
02789-10422	H2250-01A0	9	H-179
02896-11008	B0000-57A0	8	B-067
02896-11008	B0000-60A0	8	B-070
02896-11008	D0220-01A0	7	D-013
02896-11008	H0200-01A3	3	H-011
02896-11008	H0200-01A3	12	H-011
02896-11008	H0200-01A3	13	H-011
02896-11008	H0200-01A3	15	H-011
02896-11008	H0200-01A4	3	H-015
02896-11008	H0200-01A4	12	H-015
02896-11008	H0200-01A4	13	H-015
02896-11008	H0200-01A4	15	H-015
02896-11008	H0200-01A4	16	H-015
02896-11008	H0320-01A0	36	H-053
02896-11008	H0430-01A3	4	H-141
02896-11008	H0430-01A4	11	H-143
02896-11008	H0520-01A1	5	H-165
02896-11008	H0700-01A2	2	H-175
02896-11008	H2250-01A0	10	H-179
02896-11008	K2110-01A0	5	K-207
02896-11008	K2520-01A2	1	K-215
02896-11008	K2520-02A1	14	K-216A
02896-11008	K2520-02A1	5	K-216A
02896-11009	C0300-01A1	6	C-031
02896-11009	D0210-01A0	9	D-011
02896-11009	D0220-01A0	8	D-013
02896-11009	D0220-02A0	10B	D-015
02896-11009	D0220-02A0	38	D-015
02896-11009	H0100-01A1	16	H-003

PARTS Nº	FIG. Nº	INDEX	PAGE
02896-11009	H0100-01B1	22	H-004
02896-11009	H0100-01B2	17	H-004A
02896-11009	H0100-01B3	17	H-004B
02896-11009	H0200-01A3	5	H-011
02896-11009	H0200-01A3	6	H-011
02896-11009	H0200-01A3	11	H-011
02896-11009	H0200-01A4	5	H-015
02896-11009	H0200-01A4	6	H-015
02896-11009	H0200-01A4	11	H-015
02896-11009	H0320-01A0	29	H-053
02896-11009	H0320-01A0	30	H-053
02896-11009	H0320-01A0	28A	H-053
02896-11009	H0400-01A1	10	H-121
02896-11009	H0410-01A1	3	H-129
02896-11009	H0430-01A2	3	H-139
02896-11009	H0430-01A3	3	H-141
02896-11009	H0430-01A4	14	H-143
02896-11009	H0440-02A0	3	H-151
02896-11009	H0510-01A0	9	H-159
02896-11009	H0510-01A1	8	H-161
02896-11009	H0520-01A0	8	H-163
02896-11009	H0520-01A1	6	H-165
02896-11009	H0700-01A1	2	H-173
02896-11009	H0700-01A1A	2	H-173A
02896-11009	K2520-01A2	2	K-215
02896-11009	K2520-02A1	6	K-216A
02896-11012	C0300-01A0	4	C-029
02896-11012	C0300-01A1	2	C-031
02896-11012	H0200-01A3	7	H-011
02896-11012	H0200-01A4	7	H-015
02896-11012	H0200-01A4	17	H-015
02896-11012	H0410-01A1	2	H-129
02896-11012	H0430-01A5	5	H-145
02896-11012	H0430-01A5	6	H-145
02896-11012	H0500-01A0	5	H-155
02896-11012	H0500-01A0	10	H-155
02896-11012	H0500-01A0	12	H-155
02896-11012	H0500-01A0	17	H-155
02896-11012	H0500-01A0	20	H-155
02896-11012	H0500-01A0	22	H-155
02896-11012	H0500-01A0	28	H-155
02896-11012	H0500-01A0	30	H-155
02896-11012	H0500-01A0	33	H-155
02896-11012	H0500-01A0	35	H-155
02896-11012	H0500-01A0	24B	H-155
02896-11012	H0500-01A0	37B	H-155
02896-11012	H0550-01A0	9	H-167
02896-11012	H0550-01A1	3	H-169
02896-11012	H0700-01A0	20	H-171
02896-11012	H0700-01A3	2	H-177
02896-11012	H0700-01A3	23	H-177
02896-11012	H2250-01A0	11	H-179
02896-11012	T0700-01A0	14	T-027
02896-11018	H0100-01A1	7	H-003
02896-11018	H0100-01B1	7	H-004
02896-11018	H0100-01B2	7	H-004A
02896-11018	H0100-01B3	7	H-004B
02896-11018	H0200-01A3	8	H-011
02896-11018	H0200-01A3	9	H-011
02896-11018	H0200-01A4	8	H-015
02896-11018	H0200-01A4	9	H-015
02896-11018	H0320-01A0	11	H-053
02896-11018	H0320-01A0	20	H-053
02896-11018	H0320-01A0	23	H-053
02896-11018	H0330-01A0	9	H-057
02896-11018	H0400-01A1	11	H-121
02896-11018	H0410-01A0	19	H-127
02896-11018	H0430-01A1	13	H-137
02896-11018	H0430-01A1A	13	H-138
02896-11018	H0430-01A3	7	H-141
02896-11018	H0430-01A5	3	H-145
02896-11018	H0430-01A5	4	H-145
02896-11018	H2250-01A0	12	H-179
04010-00516	K0210-07A0	20	K-031
04010-00516	K0210-08A0	20	K-033
04020-00616	H0310-24A0	7	H-051
04020-00616	H0310-24A1	7	H-051A
04020-01024	H0310-21A0	10	H-045
04020-01024	H0310-21A1	10	H-045A
04020-01228	H0310-02A0	4	H-025
04050-03025	T2810-01A0	14	T-031
04050-10070	T0700-01A0	15	T-027
04050-11612	K0210-02A0	10	K-021
04050-11612	K0210-02A0	20	K-021
04050-11612	K0210-02A0	31	K-021
04050-11612	K0210-02A0	34	K-021
04050-11612	K0210-04A0	10	K-025
04050-11612	K0210-04A0	20	K-025
04050-11612	K0210-04A0	31	K-025
04050-11612	K0210-04A0	34	K-025
04050-11612	K0210-07A0	24	K-031
04050-11612	K0210-08A0	24	K-033
04050-11612	K0210-32A0	26	K-080
04050-11612	K0210-35A0	11	K-085
04050-11612	K0210-37A0	15	K-089
04050-11612	K0210-37A0	23	K-089
04050-11612	K0210-37A0	9	K-089
04050-11612	K0410-10A0	11	K-149
04050-11612	K0410-12A0	15	K-153
04050-11612	K0410-12A0	23	K-153
04050-11612	K0410-12A0	9	K-153
04050-12012	K0210-02A0	25	K-021
04050-12012	K0210-04A0	25	K-025
04050-12015	D0110-01A0	5	D-003
04050-12015	H0100-01A2	16	H-005
04050-12015	H0100-01A2	7	H-005
04050-12015	K0500-01A0	5	K-189
04050-12015	M2140-01A1	5	M-007
04050-12015	M2140-01A2	7	M-009
04050-12015	M2140-02A2	7	M-015
04050-13020	M2120-01A0	4	M-003
04050-13025	T0800-01A0	10	T-029
04050-14025	M2120-01A0	5	M-003
04050-14030	C0170-01A0	5	C-015
04064-01610	K0210-40A0	8	K-095
04064-01610	K0210-41A0	5	K-097
04064-01610	K0410-15A0	8	K-159
04064-01610	K0410-16A0	5	K-161
04064-03515	R0120-01A0	1	R-003
04064-06020	H0350-02A0	20	H-067
04064-06020	H0350-04A0	20	H-075
04065-01104	T0300-01A0	11	T-009
04065-01104	T0300-01A0A	11	T-009A
04065-01104	T0300-01A0B	11	T-009B
04065-01104	T0300-01B0	7	T-010
04065-01154	R0300-01A0	11	R-011
04065-01154	R0300-01A1	11	R-011A
04065-02012	H0390-01A0	20	H-111
04065-03012	H0360-03A0	16	H-083
04065-03515	H0310-22A0	5	H-047
04065-03515	H0310-22A1	5	H-047A
04065-04218	H0360-03A0	9	H-083
04065-04818	H0310-03A0	12	H-027
04065-04818	H0310-07A0	10	H-035
04065-06220	H0310-21A0	26	H-045
04065-06220	H0310-21A1	26	H-045A
04065-08025	J2700-01A0	2	J-007
04065-08025	R0120-01A0	12	R-003
04065-09030	H0310-03A0	7	H-027
04065-09030	H0310-07A0	6	H-035
04065-09030	H0700-01A1	5	H-173
04065-09030	H0700-01A1	8	H-173
04065-09030	H0700-01A1A	5	H-173A
04065-09030	H0700-01A1A	8	H-173A
04065-09030	H0700-01A2	5	H-175
04065-09030	H0700-01A2	8	H-175
04082-00212	T0200-01A2	3	T-007
04082-00212	T0200-01A3	5	T-007A
04082-00212	T0300-01A0	15	T-009
04082-00212	T0300-01A0A	15	T-009A
04082-00212	T0300-01A0B	15	T-009B
04082-00212	T0300-01B0	8	T-010
04205-10618	K0210-37A0	14	K-089
04205-10618	K0410-12A0	14	K-153
04205-10622	K0210-02A0	8	K-021
04205-10622	K0210-04A0	8	K-025
04205-10825	D0110-01A0	6	D-003
04205-10825	H0100-01A2	17	H-005
04205-10825	H0100-01A2	8	H-005
04205-10825	M2140-01A1	6	M-007
04205-10825	M2140-01A2	8	M-009
04205-10825	M2140-02A2	8	M-015
04205-11030	M2120-01A0	6	M-003
04205-11038	M2120-01A0	7	M-003
04210-20624	K0210-37A0	12	K-089
04210-20624	K0410-12A0	12	K-153
04210-20832	D0110-01A0	7	D-003
04210-20832	H0100-01A2	15	H-005
04210-20832	H0100-01A2	6	H-005
04210-20832	M2140-01A1	7	M-007
04210-20832	M2140-01A2	9	M-009
04210-20832	M2140-02A2	9	M-015
04260-00635	F2380-01A0	14	F-001
04260-00635	F2380-04A0	14	F-007
04260-01270	H0310-21A0	5	H-045
04260-01270	H0310-21A1	5	H-045A
04418-13060	T0400-01A1	2	T-013
04418-13060	T0450-01A1	2	T-019
04418-13060	T0700-01A0	27	T-027
04418-13060	T0800-01A0	17	T-029
04418-13060	T2810-01A0	10	T-031
04418-13060	U0100-03A1	10	U-013
04418-13060	U0100-03A1	12	U-013
04418-13060	U0100-03A1	13	U-013
04418-13060	U0100-03A2	10	U-015
04418-13060	U0100-03A2	12	U-015
04418-13060	U0100-03A2	17	U-015
04418-13060	U0100-03A3	10	U-017
04418-13060	U0100-03A3	12	U-017
04418-13060	U0100-03A3	13	U-017
04418-13060	U0100-03A4	10	U-018
04418-13060	U0100-03A4	12	U-018
04418-13060	U0100-03A4	13	U-018
04418-13060	U0520-01A1	3	U-033
04432-51012	H2250-01A1	8	H-181
04434-50510	B0000-52A0	35	B-059
04434-50510	B0000-55A0	34	B-065
04434-50510	B0000-58A0	34	B-068
04434-50510	B0000-58A1	24	B-068A
04434-50510	E0210-01A0	12	E-011
04434-50510	E0210-01A1	18	E-011A
04434-50610	B0300-01A1	5	B-009
04434-50610	C0160-01A0	15	C-013
04434-50610	K0210-40A0	27	K-095
04434-50610	K0210-41A0	19	K-097
04434-50610	K0410-15A0	27	K-159
04434-50610	K0410-16A0	19	K-161
04434-50610	K2900-01A0	1	K-219
04434-50808	B0000-52A0	30	B-059
04434-50808	B0000-55A0	40	B-065
04434-50808	B0000-58A0	40	B-068
04434-50808	K0210-36A0	20	K-087
04434-50812	J2750-01A0	8	J-011
04434-50812	T0630-01A0	9	T-023
04434-51010	B0300-01A1	6	B-009
04434-51010	E0200-01A0	25	E-007
04434-51010	E0200-01A0	28	E-007
04434-51010	E0200-01A1	25	E-007A
04434-51010	E0200-01A1	28	E-007A
04434-51010	E0210-01A0	17	E-011
04434-51010	E0210-01A0	21	E-011
04434-51010	E0210-01A1	13	E-011A
04434-51010	E0220-01A0	11	E-013
04434-51010	H2250-01A1	7	H-181
04434-51010	K0210-14A0	36	K-045
04434-51010	K0210-14A0	41	K-045
04434-51010	K0210-40A0	28	K-095
04434-51010	K0410-15A0	28	K-159
04434-51010	K0410-18A0	15	K-165
04434-51010	K0700-01A1	7	K-193
04434-51010	K2900-01A3	3	K-223
04434-51010	K2900-01A4A	14	K-225A
04434-51208	A2212-A2A1	8	A-060
04434-51210	C0150-01A0	8	C-011
04434-51210	K0700-01A1	12	K-193
04434-51210	K0700-01A1A	9	K-193A
04434-51212	A4103-A2B3	10	A-075
04434-51212	C0150-01A0	6	C-011
04434-51308	K0210-14A0	33	K-045
04434-51310	E0210-01A0	19	E-011
04434-51310	K0210-14A0	27	K-045
04434-51310	K0210-14A0	30	K-045
04434-51408	K0210-46A0	19	K-107
04434-51408	K0410-21A0	19	K-171
04434-51410	B0300-01A1	7	B-009
04434-51410	E0200-01A0	42	E-007
04434-51410	E0200-01A1	42	E-007A
04434-51410	E0210-01A1	11	E-011A
04434-51410	E0210-01A2	10	E-011B
04434-51410	E0220-01A0	2	E-013
04434-51410	K0210-14A0	52	K-045
04434-51410	K0210-18A0	35	K-053
04434-51410	K0210-55A0	5	K-121
04434-51410	K0210-56A0	5	K-123
04434-51410	K0410-06A1	17	K-141
04434-51410	K0410-28A2	5	K-185
04434-51412	E0200-01A0	49	E-007
04434-51510	D0220-02A0	39	D-015
04434-51510	E0210-01A2	33	E-011B
04434-51512	F2380-20A0	6	F-013
04434-51608	K0210-14A0	59	K-045
04434-51610	E0220-01A0	4	E-013
04434-51610	K0210-14A0	10	K-045
04434-51610	K0210-14A0	16	K-045
04434-51610	K0210-14A0	17	K-045
04434-51610	K0210-14A0	26	K-045
04434-51610	K0210-14A0	4	K-045
04434-51610	K0210-14A0	49	K-045
04434-51610	K0210-14A0	53	K-045
04434-51708	K0210-46A0	20	K-107
04434-51708	K0410-21A0	20	K-171
04434-51710	B0000-52A0	22	B-059
04434-51710	B0000-55A0	41	B-065
04434-51710	B0000-55A0	43	B-065
04434-51710	B0000-58A0	41	B-068
04434-51710	B0000-58A0	43	B-068
04434-51710	D0210-01A0	10	D-011
04434-51710	D0220-01A0	9	D-013
04434-51710	E0200-01A0	2	E-007
04434-51710	E0200-01A0	2	E-007
04434-51710	E0200-01A0	4	E-007
04434-51710	E0200-01A1	2	E-007A
04434-51710	E0200-01A1	4	E-007A
04434-51710	E0210-01A0	2	E-011
04434-51710	E0210-01A2	11	E-011B
04434-51710	F2380-20A0	7	F-013
04434-51710	H0430-01A2	13	H-139
04434-51710	H0430-01A4	7	H-143
04434-51710	H2250-01A1	9	H-181
04434-51710	K0210-17A0	5	K-051
04434-51710	K0210-24A0	14	K-065
04434-51710	K2900-01A0	2	K-219
04434-51710	K2900-01A3	4	K-223
04434-51710	K2900-01A4A	10	K-225A
04434-51710	K2900-01A4A	13	K-225A
04434-51710	K2900-01A4A	19	K-225A
04434-51712	B0000-52A0	1	B-059
04434-51712	B0000-55A0	1	B-065
04434-51712	B0000-58A0	1	B-068
04434-51712	B0000-58A1	1	B-068A

PARTS Nº	FIG. Nº	INDEX	PAGE
04434-51712	H0430-01A2	6	H-139
04434-51712	H2250-01A0	13	H-179
04434-51712	H2250-01A1	10	H-181
04434-51808	K0210-14A0	55	K-045
04434-51908	K0210-46A0	21	K-107
04434-51908	K0410-21A0	21	K-171
04434-51910	B0000-55A0	19	B-065
04434-51910	B0000-55A0	23	B-065
04434-51910	B0000-58A0	19	B-068
04434-51910	B0000-58A0	23	B-068
04434-51910	B0000-58A1	16	B-068A
04434-51910	B0000-58A1	19	B-068A
04434-51910	C0210-01A2	6	C-027
04434-51910	D0210-01A0	11	D-011
04434-51910	D0220-02A0	40	D-015
04434-51910	E0200-01A0	27	E-007
04434-51910	E0200-01A0	30	E-007
04434-51910	E0200-01A1	27	E-007A
04434-51910	E0200-01A1	30	E-007A
04434-51910	E0210-01A0	20	E-011
04434-51910	E0210-01A1	6	E-011A
04434-51910	H0400-01A3	6	H-125
04434-51910	K0210-14A0	54	K-045
04434-51910	K0210-22A0	35	K-061
04434-51912	C0210-01A2	4	C-027
04434-51912	D0210-01A0	12	D-011
04434-51912	H0400-01A3	3	H-125
04434-52110	C0300-01A1	14	C-031
04434-52110	E0200-01A0	48	E-007
04434-52110	E0200-01A1	48	E-007A
04434-52110	E0210-01A2	23	E-011B
04434-52110	E0220-01A0	10	E-013
04434-52110	H0430-01A2	15	H-139
04434-52110	H0520-01A1	7	H-165
04434-52112	C0300-01A1	11	C-031
04434-52112	H0400-01A1	12	H-121
04434-52112	H0410-01A0	11	H-127
04434-52112	H0430-01A2	18	H-139
04434-52112	H2250-01A0	14	H-179
04434-52211	E0210-01A1	4	E-011A
04434-52310	B0600-01A1	3	B-039
04434-52310	C0300-01A1	15	C-031
04434-52310	E0120-01A0	13	E-005
04434-52310	E0120-01B0	6	E-006
04434-52310	E0200-01A0	13	E-007
04434-52310	E0200-01A1	13	E-007A
04434-52310	E0210-01A1	8	E-011A
04434-52310	E0210-01A2	12	E-011B
04434-52310	H0550-01A0	6	H-167
04434-52312	C0300-01A1	12	C-031
04434-52511	B0000-52A0	11	B-059
04434-52511	B0000-52A0	16	B-059
04434-52511	B0000-52A0	5	B-059
04434-52511	D0210-01A0	13	D-011
04434-52511	H0520-01A1	7	H-165
04434-52512	B0000-55A0	16	B-065
04434-52512	B0000-55A0	45	B-065
04434-52512	B0000-58A0	16	B-068
04434-52512	B0000-58A0	45	B-068
04434-52512	B0000-58A1	13	B-068A
04434-52711	B0000-52A0	19	B-059
04434-52711	D0210-01A0	14	D-011
04434-52711	D0220-02A0	41	D-015
04434-52711	E0210-01A0	4	E-011
04434-52711	E0210-01A1	20	E-011A
04434-52711	H0500-01A0	25	H-155
04434-52711	H0500-01A0	38	H-155
04434-52711	H0510-01A1	9	H-161
04434-52711	K0210-14A0	42	K-045
04434-52711	K0210-18A0	15	K-053
04434-52711	K0700-01A0A	12	K-191A
04434-52711	K2900-01A0	3	K-219
04434-52711	K2900-01A4A	16	K-225A
04434-52711	K2900-01A4A	18	K-225A
04434-53211	B0000-52A0	10	B-059
04434-53211	B0000-52A0	17	B-059
04434-53211	B0000-55A0	15	B-065
04434-53211	B0000-55A0	3	B-065
04434-53211	B0000-55A0	30	B-065
04434-53211	B0000-55A0	35	B-065
04434-53211	B0000-55A0	7	B-065
04434-53211	B0000-58A0	30	B-068
04434-53211	B0000-58A0	35	B-068
04434-53211	B0000-58A0	15	B-068
04434-53211	B0000-58A0	3	B-068
04434-53211	B0000-58A0	56	B-068
04434-53211	B0000-58A0	7	B-068
04434-53211	B0000-58A1	3	B-068A
04434-53211	E0120-01A0	15	E-005
04434-53211	E0120-01A0	9	E-005
04434-53211	E0120-01B0	4	E-006
04434-53211	E0200-01A0	19	E-007
04434-53211	E0200-01A1	19	E-007A
04434-53211	E0210-01A0	22	E-011
04434-53211	E0210-01A2	13	E-011B
04434-53211	K0410-07A1	16	K-143
04434-53211	K0700-01A3	2	K-197
04434-53211	K0720-01A0	3	K-203
04434-53212	H0410-01A0	24	H-127
04434-53212	K0210-43A0	30	K-101
04434-53212	K0410-18A0	30	K-165
04434-53411	B0000-52A0	8	B-059
04434-53411	B0000-55A0	27	B-065
04434-53411	B0000-58A0	27	B-068
04434-53411	B0000-58A0	30	B-068
04434-53411	B0000-58A0	35	B-068
04434-53411	B0000-58A0	48	B-068
04434-53411	B0000-58A1	20	B-068A
04434-53411	B0000-58A1	26	B-068A
04434-53411	E0210-01A2	14	E-011B
04434-53411	K0210-43A0	23	K-101
04434-53411	K0210-43A0	34	K-101
04434-53411	K0410-18A0	23	K-165
04434-53411	K0410-18A0	34	K-165
04434-53411	K0700-01A0A	11	K-191A
04434-53412	H0400-01A1	13	H-121
04434-53412	H0410-01A0	5	H-127
04434-53412	H0550-01A1	4	H-169
04435-50810	T0630-01A0	10	T-023
04435-51010	K0210-22A0	25	K-061
04435-51210	H0430-01A2	17	H-139
04435-51510	D0210-01A0	15	D-011
04435-51610	K0210-14A0	20	K-045
04435-51710	E0100-01A0	16	E-001
04435-51910	D0210-01A0	16	D-011
04435-51910	D0220-02A0	42	D-015
04435-51912	D0220-02A0	43	D-015
06002-32008	R0300-01A0	6	R-011
06002-32008	R0300-01A1	6	R-011A
06124-02020	K0210-35A0	4	K-085
06124-02020	K0210-37A0	20	K-089
06124-02020	K0210-37A0	3	K-089
06124-02020	K0210-40A0	6	K-095
06124-02020	K0210-41A0	9	K-097
06124-02020	K0410-10A0	4	K-149
06124-02020	K0410-12A0	20	K-153
06124-02020	K0410-12A0	3	K-153
06124-02020	K0410-15A0	6	K-159
06124-02020	K0410-16A0	9	K-161
07000-11004	H0370-04A0	11	H-093
07000-11004	H0380-04A0	11	H-105
07000-11006	H0310-21A0	11	H-045
07000-11006	H0310-21A1	11	H-045A
07000-11006	H0310-23A0	12	H-049
07000-11006	H0310-23A1	12	H-049A
07000-11007	H0370-01A0	14	H-085
07000-11007	H0380-01A0	14	H-097
07000-11007	H0380-06A0	29	H-109
07000-11007	H0440-02A0	8	H-151
07000-11008	H0360-02A0	4	H-081

PARTS Nº	FIG. Nº	INDEX	PAGE
07000-11008	H0370-01A0	15	H-085
07000-11008	H0380-01A0	15	H-097
07000-11009	H0310-11A0	18	H-043
07000-11010	H0360-02A0	11	H-081
07000-12011	H0440-02A0	11	H-151
07000-12011	K2520-01A2	3	K-215
07000-12011	K2520-02A1	7	K-216A
07000-12012	D0220-02A0	51	D-015
07000-12018	D0220-02A0	44	D-015
07000-12018	K2110-01A0	6	K-207
07000-12018	K2520-02A1	15	K-216A
07000-12020	H0390-10A1	16	H-113A
07000-12070	H0100-01B1	13	H-004
07000-12070	H0390-10A0	3	H-113
07000-12070	H0390-10A1	18	H-113A
07000-12075	H0320-01A0	3	H-053
07000-12085	D0120-01A0	3	D-005
07000-12085	H0700-01A0	10	H-171
07000-12085	H0700-01A1	17	H-173
07000-12085	H0700-01A1A	17	H-173A
07000-12090	H0100-01A1	10	H-003
07000-12090	H0100-01A1	11	H-003
07000-12090	H0100-01B1	16	H-004
07000-12090	H0100-01B1	17	H-004
07000-12090	H0100-01B2	11	H-004A
07000-12090	H0100-01B2	12	H-004A
07000-12090	H0100-01B3	11	H-004B
07000-12090	H0100-01B3	12	H-004B
07000-12090	H0700-01A0	12	H-171
07000-12090	H0700-01A1	16	H-173
07000-12090	H0700-01A1A	16	H-173A
07000-12095	H0360-03A0	1	H-083
07000-12095	H0700-01A2	17	H-175
07000-12095	R0200-01A0	8	R-005
07000-12095	R0200-01A1	8	R-005A
07000-12095	R0200-02A0	8	R-007
07000-12095	R0200-02A1	8	R-007A
07000-12100	H0370-01A0	11	H-085
07000-12100	H0380-01A0	11	H-097
07000-12100	H0380-06A0	26	H-109
07000-12100	H0700-01A2	16	H-175
07000-12105	H0700-01A3	15	H-177
07000-12105	R0300-01A0	5	R-011
07000-12105	R0300-01A1	5	R-011A
07000-12110	H0700-01A3	16	H-177
07000-12125	H0310-21A0	12	H-045
07000-12125	J2710-01A0	11	J-009
07000-12130	H0310-21A1	12	H-045A
07000-12135	J2710-01A0	11	J-009
07000-13024	H0370-04A0	18	H-093
07000-13024	H0370-05A0	4	H-095
07000-13024	H0380-04A0	18	H-105
07000-13024	H0380-05A0	4	H-107
07000-13025	H0200-01A5	6	H-019
07000-13025	K0210-07A0	21	K-031
07000-13025	K0210-08A0	21	K-033
07000-13031	H0100-01A1	6	H-003
07000-13031	H0100-01B1	6	H-004
07000-13031	H0100-01B2	6	H-004A
07000-13031	H0100-01B3	6	H-004B
07000-13032	H0390-01A0	4	H-111
07000-13032	H0400-01A2	16	H-123
07000-13032	H0430-01A5	7	H-145
07000-13032	H0430-01A5	8	H-145
07000-13040	H0310-24A0	6	H-051
07000-13040	H0700-01A1	6	H-173
07000-13040	H0700-01A1	9	H-173
07000-13040	H0700-01A1A	6	H-173A
07000-13040	H0700-01A1A	9	H-173A
07000-13040	H0700-01A2	6	H-175
07000-13040	H0700-01A2	9	H-175
07000-13048	R0110-01A0	9	R-001
07000-13048	R0200-01A0	3	R-005
07000-13048	R0200-01A1	3	R-005A
07000-13048	R0200-02A0	3	R-007
07000-13048	R0200-02A1	3	R-007A
07000-13050	T0300-01A0	16	T-009
07000-13050	T0300-01A0A	16	T-009A
07000-13050	T0300-01A0B	16	T-009B
07000-13050	T0300-01B0	19	T-010
07000-75390	F2380-01A0	9	F-001
07000-75390	F2380-04A0	9	F-007
07000-A2080	H0310-03A0	8	H-027
07000-A2100	H0340-01A0	3	H-061
07000-A2105	H0310-01A0	6	H-023
07000-A2105	H0310-06A0	6	H-033
07000-A2145	H0310-09A0	11	H-039
07000-A5170	H0310-02A0	5	H-025
07000-A5260	H0350-02A0	12	H-067
07000-A5260	H0350-04A0	12	H-075
07000-B1004	H0350-02A0	8	H-067
07000-B1004	H0350-04A0	8	H-075
07000-B1010	H0310-04A0	28	H-029
07000-B1010	H0310-05A0	3	H-031
07000-B1010	H0310-08A0	28	H-037
07000-B1010	H0310-09A0	3	H-039
07000-B1010	H0310-11A0	21	H-043
07000-B2010	H0310-04A0	20	H-029
07000-B2010	H0310-08A0	20	H-037
07000-B2011	H0390-11A0	9	H-115
07000-B2012	H0310-02A0	14	H-025
07000-B2012	H0310-04A0	14	H-029
07000-B2012	H0310-08A0	14	H-037
07000-B2012	H0350-01A0	33	H-063
07000-B2012	H0350-03A0	33	H-071
07000-B2014	H0350-01A0	25	H-063
07000-B2014	H0350-02A0	13	H-067
07000-B2014	H0350-03A0	25	H-071
07000-B2014	H0350-04A0	13	H-075
07000-B2030	H0350-01A0	27	H-063
07000-B2030	H0350-03A0	27	H-071
07000-B2040	H0350-02A0	37	H-067
07000-B2040	H0350-04A0	37	H-075
07000-B2055	H0350-01A0	32	H-063
07000-B2055	H0350-02A0	4	H-067
07000-B2055	H0350-03A0	32	H-071
07000-B2055	H0350-04A0	4	H-075
07000-B2080	H0310-05A0	5	H-031
07000-B2080	H0310-09A0	5	H-039
07000-B3024	H0310-04A0	12	H-029
07000-B3024	H0310-08A0	12	H-037
07000-B3028	H0310-01A0	7	H-023
07000-B3028	H0310-06A0	7	H-033
07000-B3032	H0310-04A0	10	H-029
07000-B3032	H0310-08A0	10	H-037
07000-B3040	H0310-24A1	6	H-051A
07000-B5240	H0350-02A0	32	H-067
07000-B5240	H0350-04A0	32	H-075
07001-01004	H0350-02A0	9	H-067
07001-01004	H0350-04A0	9	H-075
07001-01004	H0370-04A0	12	H-093
07001-01004	H0380-04A0	12	H-105
07001-01007	H0440-02A0	9	H-151
07001-02030	H0350-01A0	28	H-063
07001-02030	H0350-03A0	28	H-071
07002-10803	H0400-01A2	19	H-123
07002-10823	H0370-04A0	14	H-093
07002-10823	H0370-04A0	7	H-093
07002-10823	H0380-04A0	14	H-105
07002-10823	H0380-04A0	7	H-105
07002-10823	H0380-06A0	4	H-109
07002-10823	H0430-01A6	8	H-147
07002-10823	H0440-01A0	6	H-149
07002-11023	H0200-01A3	14	H-011
07002-11023	H0200-01A4	14	H-015
07002-11023	H0320-01A0	25	H-053
07002-11023	H0360-01A0	3	H-079
07002-11023	H0360-02A0	7	H-081
07002-11023	H0370-02A0	14	H-087
07002-11023	H0370-04A0	10	H-093

PARTS Nº	FIG. Nº	INDEX	PAGE
07002-11023	H0370-04A0	2	H-093
07002-11023	H0380-02A0	14	H-099
07002-11023	H0380-04A0	10	H-105
07002-11023	H0380-04A0	2	H-105
07002-11023	H0380-06A0	23	H-109
07002-11023	H0390-01A0	18	H-111
07002-11023	H0430-01A1	15	H-137
07002-11023	H0430-01A1A	15	H-138
07002-11023	H0440-01A0	5	H-149
07002-11223	D0220-02A0	10A	D-015
07002-11223	H0310-22A0	12	H-047
07002-11223	H0310-22A1	12	H-047A
07002-11223	H0310-23A0	25	H-049
07002-11223	H0310-23A1	25	H-049A
07002-11223	H0360-01A0	6	H-079
07002-11423	C0300-01A1	8	C-031
07002-11423	D0220-01A0	10	D-013
07002-11423	H0200-01A3	1	H-011
07002-11423	H0200-01A3	2	H-011
07002-11423	H0200-01A3	3	H-011
07002-11423	H0200-01A3	4	H-011
07002-11423	H0200-01A3	11	H-011
07002-11423	H0200-01A3	12	H-011
07002-11423	H0200-01A3	13	H-011
07002-11423	H0200-01A3	15	H-011
07002-11423	H0200-01A4	1	H-015
07002-11423	H0200-01A4	2	H-015
07002-11423	H0200-01A4	3	H-015
07002-11423	H0200-01A4	4	H-015
07002-11423	H0200-01A4	11	H-015
07002-11423	H0200-01A4	12	H-015
07002-11423	H0200-01A4	13	H-015
07002-11423	H0200-01A4	15	H-015
07002-11423	H0200-01A4	16	H-015
07002-11423	H0320-01A0	29	H-053
07002-11423	H0320-01A0	27A	H-053
07002-11423	H0320-01A0	37	H-053
07002-11423	H0360-01A0	8	H-079
07002-11423	H0370-05A0	14	H-095
07002-11423	H0380-05A0	14	H-107
07002-11423	H0410-01A0	23	H-127
07002-11423	H0430-01A3	1	H-141
07002-11423	H0430-01A3	6	H-141
07002-11423	H0440-01A0	14	H-149
07002-11423	K2110-01A0	7	K-207
07002-11623	H0310-23A0	17	H-049
07002-11623	H0310-23A1	17	H-049A
07002-11623	H0370-03A0	15	H-091
07002-11623	H0380-03A0	15	H-103
07002-11623	H0380-06A0	19	H-109
07002-11823	D0210-01A0	17	D-011
07002-11823	D0220-02A0	45	D-015
07002-11823	H0100-01A1	16	H-003
07002-11823	H0100-01B1	22	H-004
07002-11823	H0100-01B2	17	H-004A
07002-11823	H0100-01B3	17	H-004B
07002-11823	H0200-01A3	6	H-011
07002-11823	H0200-01A3	7	H-011
07002-11823	H0200-01A4	6	H-015
07002-11823	H0200-01A4	7	H-015
07002-11823	H0200-01A4	17	H-015
07002-11823	H0320-01A0	8	H-053
07002-11823	H0370-05A0	12	H-095
07002-11823	H0380-05A0	12	H-107
07002-11823	H0430-01A4	12	H-143
07002-11823	H0430-01A4	17	H-143
07002-11823	H0430-01A5	5	H-145
07002-11823	H0430-01A5	6	H-145
07002-12034	C0300-01A0	2	C-029
07002-12034	C0300-01A1	4	C-031
07002-12034	H0320-01A0	39	H-053
07002-12034	H0370-05A0	10	H-095
07002-12034	H0370-05A0	16	H-095
07002-12034	H0380-05A0	10	H-107
07002-12034	H0380-05A0	16	H-107
07002-12034	H0380-06A0	32	H-109
07002-12034	H0390-01A0	15	H-111
07002-12034	H0430-01A4	20	H-143
07002-12034	H0440-02A0	5	H-151
07002-12034	H0500-01A0	12	H-155
07002-12034	H0500-01A0	20	H-155
07002-12034	H0500-01A0	28	H-155
07002-12034	H0500-01A0	33	H-155
07002-12034	H0510-01A1	10	H-161
07002-12434	F2380-02A0	14	F-003
07002-12434	F2380-05A0	14	F-009
07002-12434	H0200-01A3	8	H-011
07002-12434	H0200-01A3	10	H-011
07002-12434	H0200-01A4	8	H-015
07002-12434	H0200-01A4	10	H-015
07002-12434	H0310-21A0	19	H-045
07002-12434	H0320-01A0	10	H-053
07002-12434	H0320-01A0	21	H-053
07002-12434	H0320-01A0	24	H-053
07002-12434	H0330-01A0	8	H-057
07002-12434	H0370-05A0	8	H-095
07002-12434	H0380-05A0	8	H-107
07002-12434	H0400-01A1	14	H-121
07002-12434	H0410-01A0	9	H-127
07002-12434	H0410-01A0	22	H-127
07002-12434	H0410-01A1	2	H-129
07002-12434	H0430-01A3	9	H-141
07002-12434	H0430-01A5	3	H-145
07002-12434	H0430-01A5	4	H-145
07002-12434	H0430-01A6	7	H-147
07002-12434	H0500-01A0	5	H-155
07002-12434	H0500-01A0	10	H-155
07002-12434	H2250-01A0	15	H-179
07002-12434	R2100-01A0	1	R-037
07002-13334	H0100-01A1	7	H-003
07002-13334	H0100-01A1	15	H-003
07002-13334	H0100-01B1	7	H-004
07002-13334	H0100-01B1	21	H-004
07002-13334	H0100-01B2	7	H-004A
07002-13334	H0100-01B2	16	H-004A
07002-13334	H0100-01B3	7	H-004B
07002-13334	H0100-01B3	16	H-004B
07002-13334	H0360-01A0	16	H-079
07002-13334	H0430-01A1	12	H-137
07002-13334	H0430-01A1A	12	H-138
07002-14234	H0390-01A0	3	H-111
07002-22434	B0500-01A0	2	B-035
07002-61023	H0310-11A0	20	H-043
07002-61023	H0350-01A0	15	H-063
07002-61023	H0350-03A0	15	H-071
07002-61223	H0310-02A0	11	H-025
07002-61423	H0310-11A0	1	H-043
07002-61423	H0310-11A0	17	H-043
07002-61423	H0350-01A0	17	H-063
07002-61423	H0350-03A0	17	H-071
07002-61623	H0310-02A0	13	H-025
07002-62034	H0310-02A0	9	H-025
07002-62434	H0310-01A0	4	H-023
07002-62434	H0310-02A0	16	H-025
07002-62434	H0310-06A0	4	H-033
07002-62434	H0310-10A0	9	H-041
07002-62434	H0310-11A0	8	H-043
07002-62434	H0310-21A1	19	H-045A
07002-62434	H0350-01A0	11	H-063
07002-62434	H0350-01A0	19	H-063
07002-62434	H0350-02A0	40	H-067
07002-62434	H0350-03A0	11	H-071
07002-62434	H0350-03A0	19	H-071
07002-62434	H0350-04A0	40	H-075
07002-62434	H0390-11A0	11	H-115
07005-01212	D0210-01A0	18	D-011
07020-00000	T0200-01A1	4	T-005
07020-00000	T0300-01A0	13	T-009
07020-00000	T0300-01A0A	13	T-009A
07020-00000	T0300-01A0B	13	T-009B
07020-00000	T0300-01B0	11	T-010
07020-00000	T0450-01B1	12	T-021B
07020-00000	T0700-01A0	16	T-027
07020-00001	J2750-01A0	9	J-011
07020-00675	R0120-01A0	13	R-003
07020-00675	T0300-01A0	9	T-009
07020-00675	T0300-01A0A	9	T-009A
07020-00675	T0300-01A0B	9	T-009B
07020-00675	T0300-01B0	14	T-010
07020-00900	H0700-01A2	19	H-175
07020-00900	K0210-40A0	5	K-095
07020-00900	K0210-41A0	3	K-097
07020-00900	K0410-15A0	5	K-159
07020-00900	K0410-16A0	3	K-161
07020-00900	R0120-01A0	13	R-003
07040-10807	H0400-01A2	19	H-123
07040-10807	H0430-01A6	6	H-147
07040-10807	H0440-01A0	6	H-149
07040-11007	H0320-01A0	32	H-053
07040-11007	H0360-01A0	2	H-079
07040-11007	H0360-02A0	6	H-081
07040-11007	H0430-01A1	14	H-137
07040-11007	H0430-01A1A	14	H-138
07040-11007	H0440-01A0	5	H-149
07040-11409	D0220-01A0	11	D-013
07040-11409	H0360-01A0	7	H-079
07040-11409	H0370-05A0	13	H-095
07040-11409	H0380-05A0	13	H-107
07040-11409	H0440-01A0	14	H-149
07040-12412	H0310-21A0	18	H-045
07040-12412	H0310-21A1	18	H-045A
07040-12412	H0410-01A0	22	H-127
07040-12414	H0310-01A0	3	H-023
07040-12414	H0310-06A0	3	H-033
07040-12414	R2100-01A0	2	R-037
07042-70108	C0200-01A0	15	C-019
07044-12412	F2380-02A0	13	F-003
07044-12412	F2380-05A0	13	F-009
07049-01012	J2100-01A0	12	J-001
07049-01012	J2100-01A1	29	J-003
07049-01012	T0200-01A2	6	T-007
07049-01215	F2380-02A0	16	F-003
07049-01215	F2380-02A0	16	F-003
07049-01215	F2380-05A0	16	F-009
07049-01215	F2380-05A0	16	F-009
07049-01215	R2100-01A0	3	R-037
07049-01620	R2100-01A0	4	R-037
07049-02025	J2710-01A0	5	J-009
07049-02430	J2100-01A0	11	J-001
07049-02430	J2100-01A0	11	J-001
07049-02430	J2100-01A1	11	J-003
07049-02430	J2100-01A1	11	J-003
07052-31217	R0110-01A0	10	R-001
07052-31217	R0200-01A0	4	R-005
07052-31217	R0200-01A1	4	R-005A
07052-31217	R0200-02A0	4	R-007
07052-31217	R0200-02A1	4	R-007A
07056-18422	D0100-01A0A	4	D-001A
07059-11830	R0322-01A0	11	R-013
07059-11830	R0322-01A1	11	R-015
07059-11830	R0322-01A3	12	R-015A
07059-11830	R0322-01A5	11	R-015B
07059-11830	R0500-01A0	11	R-017
07059-11830	R0500-01A1	11	R-019
07059-11830	R0500-01A2	11	R-021
07059-11830	R0500-01A3	11	R-023
07059-11830	R0500-01A4	11	R-025
07059-11830	R0500-01A5	11	R-027
07059-11830	R0500-01A6	12	R-027A
07059-11830	R0500-01A7	12	R-027B
07059-11830	R0500-01A8	12	R-027C
07059-11830	R0500-01A9	12	R-027D
07059-11830	R0500-01B0	12	R-027E
07059-11830	R0500-01B1	12	R-027F
07059-11830	R0510-01A0	11	R-029
07059-11830	R0510-01A1	11	R-031
07059-11830	R0510-01A2	11	R-033
07059-11830	R0510-01A3	11	R-035
07059-11830	R0510-01A4	11	R-035A
07059-20721	R0322-01A0	12	R-013
07059-20721	R0322-01A1	12	R-015
07059-20721	R0322-01A3	13	R-015A
07059-20721	R0322-01A5	12	R-015B
07059-20721	R0500-01A0	12	R-017
07059-20721	R0500-01A1	12	R-019
07059-20721	R0500-01A2	12	R-021
07059-20721	R0500-01A3	12	R-023
07059-20721	R0500-01A4	12	R-025
07059-20721	R0500-01A5	12	R-027
07059-20721	R0500-01A6	13	R-027A
07059-20721	R0500-01A7	13	R-027B
07059-20721	R0500-01A8	13	R-027C
07059-20721	R0500-01A9	13	R-027D
07059-20721	R0500-01B0	13	R-027E
07059-20721	R0500-01B1	13	R-027F
07059-20721	R0510-01A0	12	R-029
07059-20721	R0510-01A1	12	R-031
07059-20721	R0510-01A2	12	R-033
07059-20721	R0510-01A3	12	R-035
07059-20721	R0510-01A4	12	R-035A
07062-00000	C0210-01A0	12	C-023
07062-00000	C0210-01A1	10	C-025
07092-01000	H0100-01B1	9	H-004
07092-01000	H0100-01B2	9	H-004A
07092-01000	H0100-01B3	9	H-004B
07094-10417	C0300-01A0	5	C-029
07094-10518	H0400-01A1	15	H-121
07094-10518	H0400-01A1	15	H-121
07094-10518	H0410-01A0	17	H-127
07094-10620	H0400-01A1	15A	H-121
07094-11024	H0410-01A0	7	H-127
07094-11024	H0410-01A1	7	H-129
07094-11432	C0210-01A0	23	C-023
07094-30315	H0510-01A0	3	H-159
07094-30315	H0510-01A1	11	H-161
07094-30315	H0520-01A0	3	H-163
07094-30315	H0520-01A1	8	H-165
07094-30417	H0500-01A0	14	H-155
07094-30417	H0500-01A0	7	H-155
07094-30417	H0510-01A0	10	H-159
07094-30417	H0550-01A0	3	H-167
07094-30417	H2250-01A0	16	H-179
07095-00317	H0510-01A0	6	H-159
07095-00317	H0520-01A0	5	H-163
07095-00317	H0520-01A1	9	H-165
07095-00318	H0510-01A1	12	H-161
07095-00318	H0520-01A1	10	H-165
07095-00419	C0300-01A0	7	C-029
07095-00420	H0500-01A0	16	H-155
07095-00420	H0500-01A0	9	H-155
07095-00420	H0550-01A0	5	H-167
07095-00420	H0550-01A1	5	H-169
07095-00420	H2250-01A0	17	H-179
07095-00421	H0510-01A0	13	H-159
07095-00423	B0000-55A0	5	B-065
07095-00423	B0000-58A0	5	B-068
07095-00423	B0000-58A1	5	B-068A
07095-0042B	H0510-01A0	13	H-159
07095-00524	H0400-01A1	16	H-121
07095-00524	H0400-01A1	16	H-121
07095-00526	H0410-01A0	18	H-127
07095-00628	H0400-01A1	16A	H-121
07095-01033	H0410-01A1	8	H-129
07095-01037	H0420-01A0	17	H-133
07095-01449	C0210-01A0	25	C-023
07095-20211	B0000-52A0	2	B-059
07095-20211	B0000-52A0	23	B-059
07095-20211	B0000-55A0	43	B-065
07095-20211	B0000-55A0	2	B-065
07095-20211	B0000-58A0	43	B-068

PARTS Nº	FIG. Nº	INDEX	PAGE
07095-20211	B0000-58A0	2	B-068
07095-20211	B0000-58A1	2	B-068A
07095-20211	D0220-01A0	12	D-013
07095-20211	E0200-01A0	3	E-007
07095-20211	E0200-01A0	5	E-007
07095-20211	E0200-01A1	3	E-007A
07095-20211	E0200-01A1	5	E-007A
07095-20211	E0220-01A0	3	E-013
07095-20211	H0430-01A2	14	H-139
07095-20211	H0430-01A2	8	H-139
07095-20211	H0430-01A4	8	H-143
07095-20211	H2250-01A0	18	H-179
07095-20211	H2250-01A1	11	H-181
07095-20211	K2900-01A3	5	K-223
07095-20211	K2900-01A4A	13	K-225A
07095-20211	K2900-01A4A	11	K-225A
07095-20213	H0400-01A3	5	H-125
07095-20314	E0210-01A2	24	E-011B
07095-20314	E0220-01A0	9	E-013
07095-20314	H0400-01A1	17	H-121
07095-20314	H0410-01A0	12	H-127
07095-20314	H0430-01A2	16	H-139
07095-20314	H0430-01A2	19	H-139
07095-20314	H0520-01A1	11	H-165
07095-20314	H2250-01A0	19	H-179
07095-20318	B0000-52A0	12	B-059
07095-20318	B0000-52A0	6	B-059
07095-20318	B0000-55A0	45	B-065
07095-20318	B0000-58A0	45	B-068
07095-20318	D0210-01A0	19	D-011
07095-20318	H0520-01A1	11	H-165
07095-20418	D0210-01A0	20	D-011
07095-20418	D0220-02A0	46	D-015
07095-20418	E0210-01A0	3	E-011
07095-20418	E0210-01A0	5	E-011
07095-20418	E0210-01A1	21	E-011A
07095-20418	H0510-01A1	13	H-161
07095-20418	K0210-14A0	43	K-045
07095-20418	K2900-01A0	4	K-219
07095-20418	K2900-01A3	5	K-223
07095-20418	K2900-01A4A	18	K-225A
07095-20418	K2900-01A4A	17	K-225A
07095-20419	D0210-01A0	20	D-011
07095-20419	E0210-01A0	5	E-011
07095-20419	K2900-01A0	4	K-219
07095-20420	H0500-01A0	27	H-155
07095-20420	H0500-01A0	40	H-155
07095-20420	K0210-18A0	16	K-053
07095-20511	B0000-55A0	41	B-065
07095-20511	B0000-58A0	41	B-068
07095-20523	E0120-01A0	14	E-005
07095-20523	E0120-01A0	8	E-005
07095-20523	E0120-01B0	3	E-006
07095-20523	E0120-01B0	7	E-006
07095-20523	E0120-01B0	9	E-006
07095-20523	E0200-01A0	20	E-007
07095-20523	E0200-01A1	20	E-007A
07095-20523	E0210-01A0	23	E-011
07095-20523	E0210-01A1	5	E-011A
07095-20523	E0210-01A2	15	E-011B
07095-20523	K0210-43A0	31	K-101
07095-20523	K0410-07A1	17	K-143
07095-20523	K0410-18A0	31	K-165
07095-20523	K0700-01A3	3	K-197
07095-20523	K0720-01A0	4	K-203
07095-20625	E0210-01A2	16	E-011B
07095-20625	H0400-01A1	18	H-121
07095-20625	H0400-01A1	18	H-121
07095-20627	B0000-52A0	9	B-059
07095-20627	H0400-01A1	18A	H-121
07095-20627	H0410-01A0	6	H-127
07137-05008	T0300-01A0	10	T-009
07137-05008	T0300-01A0A	10	T-009A
07137-05008	T0300-01A0B	10	T-009B
07137-05008	T0300-01B0	20	T-010
07143-10505	H0700-01A0	14	H-171
07143-10505	H0700-01A0	2	H-171
07143-10505	T0100-01A0	8	T-001
07143-10506	T0700-01A0	17	T-027
07143-10706	H0700-01A3	4	H-177
07143-10706	H0700-01A3	6	H-177
07145-00045	T0450-01B1	10	T-021B
07145-00050	H0700-01A0	15	H-171
07145-00050	H0700-01A0	3	H-171
07145-00055	T0700-01A0	18	T-027
07145-00070	H0700-01A3	5	H-177
07145-00070	H0700-01A3	7	H-177
07146-02086	H0700-01A0	11	H-171
07146-02086	H0700-01A1	18	H-173
07146-02086	H0700-01A1A	18	H-173A
07146-02096	H0700-01A2	18	H-175
07146-02106	H0700-01A3	14	H-177
07155-00615	R0120-01A0	2	R-003
07156-00912	H0700-01A0	18	H-171
07156-01012	H0700-01A2	22	H-175
07156-01112	H0700-01A3	20	H-177
07177-06530	R0120-01A0	14	R-003
07179-12062	H0700-01A0	9	H-171
07179-12062	H0700-01A1	12	H-173
07179-12062	H0700-01A1A	12	H-173A
07179-12069	H0700-01A2	12	H-175
07179-12074	H0700-01A3	10	H-177
07206-30812	D0210-01A0	21	D-011
07260-01428	C0210-01A0	29	C-023
07260-03210	H0400-01A2	8	H-123
07270-00840	B0440-01A0	2	B-033
07270-00855	D0220-01A0	13	D-013
07270-01035	D0100-01A0	3	D-001
07270-01035	D0100-01A0A	12	D-001A
07270-20805	D0220-02A0	47	D-015
07270-20855	D0220-01A0	13	D-013
07270-21550	B0500-01A0	3	B-035
07281-00197	B0500-01A0	4	B-035
07281-00259	C0210-01A0	30	C-023
07281-00259	C0210-01A2	2	C-027
07281-00489	B0300-01A1	19	B-009
07281-10289	C0210-01A2	2	C-027
07283-33442	H0400-01A2	11	H-123
07283-35150	C0210-01A0	19	C-023
07283-35150	C0210-01A0	8	C-023
07283-35150	C0210-01A1	16	C-025
07283-35150	C0210-01A1	6	C-025
07283-35150	H0410-01A0	3	H-127
07283-35150	H0410-01A1	5	H-129
07283-35158	C0210-01A0	5	C-023
07283-36155	H0400-01A2	4	H-123
07283-37663	K0210-16A0	10	K-049
07283-38378	C0200-01A0	5	C-019
07283-38981	C0200-01A0	12	C-019
07283-38981	C0200-01A0	23	C-019
07283-53444	H0400-01A2	14	H-123
07283-55161	C0210-01A0	22	C-023
07283-55161	C0210-01A1	19	C-025
07283-55161	C0210-01A1	9	C-025
07283-55161	H0410-01A1	6	H-129
07285-00095	B0440-01A0	3	B-033
07285-00110	C0150-01A0	10	C-011
07285-00115	D0100-01A0	4	D-001
07285-00115	D0100-01A0A	11	D-001A
07285-00115	D0220-02A0	50	D-015
07285-00150	C0210-01A0	15	C-023
07285-00220	B0600-01A1	4	B-039
07285-00230	K0210-18A0	33	K-053
07285-00230	K0410-06A1	15	K-141
07287-01024	C0210-01A0	14	C-023
07289-00045	H0400-01A2	9	H-123
07289-00055	C0210-01A0	2	C-023
07289-00070	C0210-01A0	17	C-023
07289-00070	C0210-01A0	3	C-023
07289-00070	C0210-01A0	32	C-023

PARTS Nº	FIG. Nº	INDEX	PAGE
07289-00070	C0210-01A1	13	C-025
07289-00070	C0210-01A1	3	C-025
07289-00070	H0400-01A2	2	H-123
07289-00130	B0310-01A0	1	B-015
07299-00120	B0300-01A2	1	B-011
07299-00145	B0300-01A2	2	B-011
07325-10200	D0100-01A0	5	D-001
07325-10200	D0100-01A0A	8	D-001A
07372-21030	K0210-36A0	11	K-087
07372-21030	K0410-11A0	11	K-151
07372-21245	H0320-01A0	15	H-053
07372-21245	H0420-01A0	6	H-133
07376-70422	H0550-01A0	8	H-167
07700-40240	D0100-01A0	6	D-001
07700-40240	D0100-01A0A	9	D-001A
07730-50004	C0210-01A0	28	C-023
08000-00000	E0100-01A0	2	E-001
08000-00001	E0100-01A0	3	E-001
08000-00020	E0100-01A0	2	E-001
08000-00021	E0100-01A0	3	E-001
08017-30702	H0390-12A0	10	H-117
08017-30702	H0390-12A0A	8	H-118
08028-ED040	E0120-01B0	12	E-006
08028-ED040	E0120-01B0	20	E-006
08028-ED045	E0120-01A0	1	E-005
08028-ED055	E0120-01A0	1	E-005
08028-GD055	E0120-01A0	3	E-005
08028-GD055	E0120-01B0	21	E-006
08034-00414	H2250-01A1	12	H-181
08034-00414	K0210-55A0	25	K-121
08034-00414	K0210-56A0	25	K-123
08034-00414	K0410-28A2	25	K-185
08034-00536	K0210-55A0	24	K-121
08034-00536	K0210-56A0	24	K-123
08034-00536	K0410-28A2	24	K-185
08034-20310	B0000-52A0	32	B-059
08034-20310	B0000-55A0	31	B-065
08034-20310	B0000-55A0	32	B-065
08034-20310	B0000-58A0	31	B-068
08034-20310	B0000-58A0	32	B-068
08034-20310	B0000-58A1	23	B-068A
08034-20310	K0210-36A0	23	K-087
08034-20414	K2900-01A0	5	K-219
08034-20519	B0000-52A0	21	B-059
08034-20519	B0000-55A0	5	B-065
08034-20519	B0000-55A0	42	B-065
08034-20519	B0000-55A0	44	B-065
08034-20519	B0000-58A0	5	B-068
08034-20519	B0000-58A0	42	B-068
08034-20519	B0000-58A0	44	B-068
08034-20519	B0000-58A0	50	B-068
08034-20519	B0000-58A1	6	B-068A
08034-20519	K0110-01A4	11	K-009
08034-20519	K0210-17A0	4	K-051
08034-20519	K0210-18A0	38	K-053
08034-20519	K0210-19A0	14	K-055
08034-20519	K0210-20A0	14	K-057
08034-20519	K0210-22A0	24	K-061
08034-20519	K0210-24A0	12	K-065
08034-20519	K0210-43A0	40	K-101
08034-20519	K0210-55A0	17	K-121
08034-20519	K0210-56A0	17	K-123
08034-20519	K0210-57A0	17	K-125
08034-20519	K0410-06A1	20	K-141
08034-20519	K0410-28A2	17	K-185
08034-20519	K0410-29A0	11	K-187
08034-20536	B0000-52A0	14	B-059
08034-20536	B0000-55A0	13	B-065
08034-20536	B0000-58A0	13	B-068
08034-20536	B0000-58A0	52	B-068
08034-20536	B0000-58A1	12	B-068A
08034-30414	K0210-34A0	16	K-083
08034-30414	K0410-09A0	16	K-147
08034-40521	E0210-01A2	36	E-011B
08034-40521	H0510-01A1	14	H-161
08034-40521	K0210-14A0	58	K-045
08034-40521	K0210-24A0	13	K-065
08034-40521	K0210-56A0	27	K-123
08034-40521	T0630-01A0	11	T-023
08037-01008	K0210-19A0	8	K-055
08037-01008	K0210-20A0	8	K-057
08037-01008	K0210-24A0	11	K-065
08037-02512	K0210-22A0	32	K-061
08037-02512	K0210-56A0	26	K-123
08037-02512	K0410-29A0	16	K-187
08037-10610	K0210-55A0	13	K-121
08037-10610	K0210-55A0	15	K-121
08037-10610	K0210-56A0	13	K-123
08037-10610	K0210-56A0	15	K-123
08037-10610	K0410-28A2	13	K-185
08037-10610	K0410-28A2	15	K-185
08037-11025	K0210-22A0	26	K-061
08037-11025	K0210-57A0	14	K-125
08037-11425	B0000-55A0	47	B-065
08037-11425	B0000-58A0	47	B-068
08037-11425	B0000-58A1	25	B-068A
08037-11425	K0210-22A0	31	K-061
08037-11425	K0210-57A0	14	K-125
08037-11425	K0210-57A0	15	K-125
08037-11425	K0410-29A0	10	K-187
08037-12036	K0210-39A0	29	K-093
08037-12036	K0410-14A0	29	K-157
08038-00035	E0120-01A0	11	E-005
08038-00035	E0120-01A0	12	E-005
08038-00035	E0120-01A0	7	E-005
08038-00035	E0120-01B0	2	E-006
08038-00518	K0210-46A0	11	K-107
08038-00518	K0210-21A0	11	K-171
08038-00519	E0200-01A0	11	E-007
08038-00519	E0200-01A1	11	E-007A
08038-00519	K0210-44A0	4	K-103
08038-00519	K0410-19A0	4	K-167
08038-00525	E0200-01A0	12	E-007
08038-00525	E0200-01A1	12	E-007A
08038-22511	E0120-01A0	2	E-005
08038-22511	E0120-01B0	19	E-006
08038-42511	E0120-01A0	4	E-005
08038-42511	E0120-01A0	6	E-005
08038-42511	E0120-01B0	22	E-006
08041-00500	K0210-43A0	2	K-101
08041-00500	K0410-18A0	2	K-165
08041-01000	K0210-22A0	11	K-061
08041-01000	K0210-43A0	3	K-101
08041-01000	K0410-18A0	3	K-165
08041-01500	K0210-43A0	4	K-101
08041-01500	K0410-18A0	4	K-165
08041-02000	K0210-22A0	12	K-061
08041-02000	K0210-43A0	5	K-101
08041-02000	K0410-18A0	5	K-165
08041-03000	K0210-43A0	6	K-101
08041-03000	K0410-18A0	6	K-165
08044-00600	K0210-22A0	13	K-061
08055-00060	K0210-55A0	16	K-121
08055-00060	K0210-56A0	16	K-123
08055-00060	K0410-28A2	16	K-185
08057-00810	K0210-43A0	15	K-101
08057-12010	E0210-01A2	17	E-011B
08057-12070	B0000-60A0	21	B-070
08059-00310	K0210-22A0	34	K-061
08068-00001	E0120-01B0	15	E-006
08086-20000	K0210-46A0	4	K-107
08086-20000	K0410-21A0	4	K-171
08088-30000	K0210-44A0	1	K-103
08088-30000	K0410-19A0	1	K-167
08191-00770	K0210-22A0	14	K-061
08191-00770	K0210-36A0	22	K-087
08191-00770	K0710-01A0	8	K-199
08192-12100	K0210-22A0	15	K-061
08192-13300	K0210-34A0	13A	K-083
08192-13300	K0410-09A0	13A	K-147

PARTS Nº	FIG. Nº	INDEX	PAGE
08192-22100	K0210-22A0	16	K-061
08192-22100	K0710-01A0	9	K-199
08192-23100	B0000-52A0	27	B-059
08192-23100	K0210-36A0	21	K-087
08192-28812	H0390-12A0	9	H-117
08192-28812	H0390-12A0A	7	H-118
08193-20010	B0000-52A0	26	B-059
08193-20010	B0300-01A1	10	B-009
08193-20010	E0200-01A0	6	E-007
08193-20010	E0200-01A1	6	E-007A
08193-20010	E0210-01A0	11	E-011
08193-20010	E0210-01A0	16	E-011
08193-20010	E0210-01A1	16	E-011A
08193-20010	E0220-01A0	5	E-013
08193-20010	E0300-01A0	4	E-015
08193-20010	F2380-20A0	8	F-013
08193-20010	H0320-01A0	5	H-053
08193-20010	H0430-01A1	9	H-137
08193-20010	H2250-01A1	13	H-181
08193-20010	K0210-36A0	19	K-087
08210-01206	K2110-01A0	8	K-207
08210-02903	K2110-01A0	9	K-207
08210-02904	B0000-58A0	53	B-068
08210-02904	B0000-58A1	28	B-068A
08210-02906	H0520-01A1	12	H-165
08211-00720	B0000-60A0	23	B-070
08211-00720	E0210-01A1	14	E-011A
08211-00720	K0210-43A0	38	K-101
08211-01020	K0210-55A0	19	K-121
08211-01020	K0210-56A0	19	K-123
08211-01020	K0410-28A2	19	K-185
08211-01520	B0000-60A0	20	B-070
08211-01520	K0210-43A0	39	K-101
08211-01920	E0210-01A1	12	E-011A
08211-01920	K0210-43A0	37	K-101
08211-02220	E0210-01A2	18	E-011B
08671-80080	B0300-01A1	11	B-009
08910-10000	K0210-25A0	9	K-067
08910-10000	K0210-26A0	11	K-069
08910-10000	K0210-27A0	11	K-071
09203-21860	F2380-03A0	3	F-005
09203-21860	F2380-06A0	3	F-011
09205-18295	R2210-01A0	7	R-045
09205-18295	R2210-01A1	7	R-045A
09241-5A160	T0200-01A2	4	T-007
09241-5A210	T0300-01A0	12	T-009
09241-5A210	T0300-01A0A	12	T-009A
09241-5A210	T0300-01A0B	12	T-009B
09241-5A210	T0300-01B0	5	T-010
09244-02489	T0700-01A0	19	T-027
09245-04830	T0800-01A0	3	T-029
09245-04830	T2810-01A0	3	T-031
09245-50060	T0800-01A0	2	T-029
09245-50060	T2810-01A0	2	T-031
09247-45180	T0800-01A0	4	T-029
09311-41237	K0210-40A0	9	K-095
09311-41237	K0210-41A0	11	K-097
09311-41237	K0410-15A0	9	K-159
09311-41237	K0410-16A0	11	K-161
09370-00060	R0120-01A0	3	R-003
09409-00001	K0160-01A0	5	K-015
09409-00002	K0160-01A0	6	K-015
09409-00002	K0160-01A0	7	K-015
09409-20000	K0160-01A0	4	K-015
09415-01610	K0210-16A0	23	K-049
09415-01610	K0210-22A0	33	K-061
09415-02512	K0210-55A0	26	K-121
09415-03614	K0210-49A0	7	K-113
09415-03614	K0410-24A0	7	K-177
09415-05016	H0100-01A1	18	H-003
09415-05016	H0100-01B1	24	H-004
09415-05016	H0100-01B2	19	H-004A
09415-05016	H0100-01B3	19	H-004B
09463-00002	K0210-35A0	9	K-085
09463-00002	K0210-37A0	6	K-089
09463-00002	K0410-10A0	9	K-149
09463-00002	K0410-12A0	6	K-153
09463-00006	K0210-35A0	8	K-085
09463-00006	K0210-37A0	7	K-089
09463-00006	K0410-10A0	8	K-149
09463-00006	K0410-12A0	7	K-153
09479-02400	K0210-14A0	14	K-045
09479-02400	K0210-14A0	2	K-045
09479-02400	K0210-14A0	24	K-045
09479-02400	K0210-14A0	8	K-045
09479-02400	K0210-18A0	12	K-053
09479-02400	K0410-07A1	12	K-143
09479-02400	K0700-01A3	4	K-197
09479-02400	K0720-01A0	5	K-203
09483-10502	K0210-14A0	23	K-045
09483-10502	K0210-14A0	7	K-045
09483-10504	K0210-18A0	11	K-053
09483-10504	K0410-07A1	10	K-143
09484-00560	K0410-07A1	11	K-143
09495-40010	K0830-01A0	1	K-205
09601-02051	U0100-03A1	11	U-013
09601-02053	U0100-03A1	11	U-013
09601-12051	U0100-03A1	11	U-013
09601-12051	U0100-03A2	11	U-015
09601-12051	U0100-03A3	11	U-017
09601-12051	U0100-03A4	11	U-018
09601-50050	T0400-01A1	3	T-013
09601-50050	T0450-01A1	3	T-019
09601-50050	T0700-01A0	26	T-027
09620-A2000	U0100-03A1	10	U-013
09620-A2000	U0100-03A2	10	U-015
09620-A2000	U0100-03A3	10	U-017
09620-A2000	U0100-03A4	10	U-018
09620-A2000	U0520-01A1	1	U-033
09620-A2070	U0520-01A1	2	U-033
09620-A2080	U0520-01A0	1	U-031
09637-01163	U0100-03A2	4	U-015
09637-30163	U0100-03A1	4	U-013
09637-50263	U0100-03A3	4	U-017
09637-70163	U0100-03A4	4	U-018
09651-01001	U0100-03A4	7	U-018
09651-03001	U0100-03A1	7	U-013
09651-07001	U0100-03A3	7	U-017
09651-A0480	U0100-03A2	7	U-015
09651-A0481	U0100-03A1	7	U-013
09652-01201	U0100-04A2	4	U-021
09652-01202	U0100-04A2	4	U-021
09653-01001	U0100-04A4	5	U-024
09653-03001	U0100-04A1	5	U-019
09653-07001	U0100-04A3	5	U-023
09653-A0480	U0100-04A2	5	U-021
09653-A0481	U0100-04A1	5	U-019
09653-A0481	U0100-04A1	6	U-019
09654-31001	U0100-04A4	7	U-024
09654-33001	U0100-04A1	7	U-019
09654-37001	U0100-04A3	7	U-023
09654-B0480	U0100-04A2	7	U-021
09654-B0481	U0100-04A1	7	U-019
09657-03003	U0100-01A1	9	U-001
09657-07002	U0100-01A3	9	U-005
09657-07002	U0100-01A4	9	U-006
09657-A0880	U0100-01A2	9	U-003
09657-A0881	U0100-01A1	9	U-001
09659-51000	U0100-04A4	8	U-024
09659-53000	U0100-04A1	8	U-019
09659-57000	U0100-04A3	8	U-023
09659-A057A	U0100-04A2	8	U-021
09659-A057B	U0100-04A1	8	U-019
09659-A057B	U0100-05A1	3	U-025
09664-30010	U0100-04A1	10	U-019
09664-30011	U0100-04A1	10	U-019
09664-60000	U0100-04A1	10	U-019
09667-41000	U0100-01A4	8	U-006
09667-41000	U0100-02A4	4	U-012

PARTS Nº	FIG. Nº	INDEX	PAGE
09667-43000	U0100-01A1	8	U-001
09667-43000	U0100-02A1	4	U-007
09667-47000	U0100-01A3	8	U-005
09667-47000	U0100-02A3	4	U-011
09667-A0480	U0100-01A2	8	U-003
09667-A0480	U0100-02A2	4	U-009
09667-A0481	U0100-01A1	8	U-001
09668-01001	U0100-04A4	6	U-024
09668-03001	U0100-04A1	6	U-019
09668-07001	U0100-04A3	6	U-023
09669-0000E	U0100-04A1	4	U-019
09669-0000E	U0100-04A3	4	U-023
09669-0000E	U0100-04A4	4	U-024
09690-F0355	U0100-02A1	2	U-007
09690-F0355	U0100-02A2	2	U-009
09690-F0355	U0100-02A3	2	U-011
09690-F0355	U0100-02A4	2	U-012
09690-M0063	U0100-01A1	5	U-001
09690-M0063	U0100-01A2	5	U-003
09690-M0063	U0100-01A3	5	U-005
09690-M0063	U0100-01A4	5	U-006
09690-P0355	U0100-01A1	3	U-001
09690-P0355	U0100-01A2	3	U-003
09690-P0355	U0100-01A3	3	U-005
09690-P0355	U0100-01A4	3	U-006
09690-P0450	U0100-01A1	4	U-001
09690-P0450	U0100-01A2	4	U-003
09690-P0450	U0100-01A3	4	U-005
09690-P0450	U0100-01A4	4	U-006
09690-P0450	U0100-02A1	1	U-007
09690-P0450	U0100-02A2	1	U-009
09690-P0450	U0100-02A3	1	U-011
09690-P0450	U0100-02A4	1	U-012
09696-40106	U0100-05A1	5	U-025
09696-50080	U0100-05A1	4	U-025
09697-00001	E0120-01B0	14	E-006
09802-10100	U0100-04A2	3	U-021
09802-11000	U0100-04A4	3	U-024
09802-13000	U0100-04A1	3	U-019
09802-17000	U0100-04A3	3	U-023
09806-B1200	U0100-01A2	7	U-003
09806-B1201	U0100-01A1	7	U-001
09808-01000	U0100-04A4	9	U-024
09808-03000	U0100-04A1	9	U-019
09808-07000	U0100-04A3	9	U-023
09808-A0880	U0100-04A2	9	U-021
09808-A0881	U0100-04A1	9	U-019
09812-11000	U0100-01A4	7	U-006
09812-17000	U0100-01A3	7	U-005
09817-A0005	U0100-03A1	5	U-013
09817-A0005	U0100-03A2	5	U-015
09817-A0005	U0100-03A2	6	U-015
09817-A0005	U0100-03A3	5	U-017
09817-A0005	U0100-03A3	6	U-017
09817-A0005	U0100-03A4	5	U-018
09817-A0005	U0100-03A4	6	U-018
09817-A0752	U0100-03A2	5	U-015
09817-A0752	U0100-03A2	6	U-015
09817-A0753	U0100-03A1	5	U-013
09817-A0753	U0100-03A1	6	U-013
09817-A0753	U0100-03A3	5	U-017
09817-A0753	U0100-03A3	6	U-017
09817-A0753	U0100-03A4	5	U-018
09817-A0753	U0100-03A4	6	U-018
09823-00000	T0800-01A0	16	T-029
09823-00000	T2810-01A0	9	T-031
09845-00480	U0100-05A1	6	U-025
09960-00611	U0100-01A1	10	U-001
09960-00611	U0100-01A2	10	U-003
09960-00611	U0100-01A3	10	U-005
09960-00611	U0100-01A4	10	U-006
09960-00801	U0100-01A1	11	U-001
09960-00801	U0100-01A2	11	U-003
09960-00801	U0100-01A3	11	U-005
09960-00801	U0100-01A4	11	U-006
09960-00802	T0700-01A0	28	T-027
09960-00802	U0100-01A1	12	U-001
09960-00802	U0100-01A1	14	U-001
09960-00802	U0100-01A2	12	U-003
09960-00802	U0100-01A3	12	U-005
09960-00802	U0100-01A4	12	U-006
09963-00101	U0100-05A2	NI	U-027
09963-01001	U0100-05A4	NI	U-030
09963-03001	U0100-05A1	NI	U-025
09963-03001	U0100-05A3	NI	U-029
09963-A1640	U0100-05A1	NI	U-025
09967-70090	U0100-03A2	14	U-015
09967-B0090	U0100-03A2	14	U-015
09968-00090	U0100-03A2	13	U-015
09970-00230	U0100-01A1	13	U-001
09970-00230	U0100-01A2	13	U-003
09970-00230	U0100-01A3	13	U-005
09970-00230	U0100-01A4	13	U-006
09971-00130	U0100-03A2	16	U-015
103-21-21260	E0200-01A0	6B	E-007
103-21-21260	E0200-01A1	6B	E-007A
104-890-5610	K0160-01A0	8	K-015
111-30-11370	R0200-01A0	16	R-005
111-30-11370	R0200-01A1	16	R-005A
111-30-11370	R0200-02A0	16	R-007
111-30-11370	R0200-02A1	16	R-007A
113-03-21170	B0000-55A0	30	B-065
113-03-21170	B0000-58A0	30	B-068
113-43-23230	M2140-01A3	1	M-011
113-60-43310	H0100-01A1	2	H-003
113-60-43310	H0100-01B1	2	H-004
113-60-43310	H0100-01B2	2	H-004A
113-60-43310	H0100-01B3	2	H-004B
113-60-43321	H0100-01A1	8	H-003
113-60-43321	H0100-01B1	8	H-004
113-60-43321	H0100-01B2	8	H-004A
113-60-43321	H0100-01B3	8	H-004B
113-60-43330	H0100-01A1	6	H-003
113-60-43330	H0100-01B1	6	H-004
113-60-43330	H0100-01B2	6	H-004A
113-60-43330	H0100-01B3	6	H-004B
11Y-01-31692	K0700-01A1	9	K-193
11Y-01-32260	B0720-01A0	4	B-049
11Y-01-32380	B0720-01A0	5	B-049
11Y-03-31840	M2120-01A0	8	M-003
11Y-03-31841	M2120-01A0	8	M-003
11Y-03-32211	C0160-01A0	2	C-013
11Y-06-11372	K0210-57A0	1	K-125
11Y-06-11372	K0210-57A0	8	K-125
11Y-06-11372	K0410-29A0	1	K-187
11Y-06-11372	K0410-29A0	8	K-187
11Y-06-11470	K0210-35A0	15	K-085
11Y-06-11470	K0210-37A0	16	K-089
11Y-06-11470	K0410-10A0	15	K-149
11Y-06-11470	K0410-12A0	16	K-153
11Y-06-11870	K0210-40A0	34	K-095
11Y-06-11870	K0410-15A0	34	K-159
11Y-06-21340	H0430-01A1	3	H-137
11Y-06-21340	H0430-01A1A	3	H-138
11Y-06-21350	H0430-01A1	5	H-137
11Y-06-21350	H0430-01A1A	5	H-138
11Y-06-21360	H0430-01A1	4	H-137
11Y-06-21360	H0430-01A1A	4	H-138
11Y-06-31111	K0210-43A0	1	K-101
11Y-06-31111	K0410-18A0	1	K-165
11Y-06-31123	K0210-46A0	3	K-107
11Y-06-31123	K0410-21A0	3	K-171
11Y-06-31212	K0210-44A0	5	K-103
11Y-06-31212	K0410-19A0	5	K-167
11Y-06-31510	K0210-43A0	1	K-101
11Y-06-31510	K0410-18A0	1	K-165
11Y-06-31511	K0210-43A0	1	K-101
11Y-06-31511	K0410-18A0	1	K-165
11Y-06-31520	K0210-46A0	3	K-107

PARTS Nº	FIG. Nº	INDEX	PAGE
11Y-06-31520	K0410-21A0	3	K-171
11Y-06-33130	K0210-55A0	4	K-121
11Y-06-33130	K0210-56A0	4	K-123
11Y-06-33130	K0410-28A2	4	K-185
11Y-09-11160	K0210-18A0	31	K-053
11Y-09-11160	K0210-18A0	7	K-053
11Y-09-11160	K0410-06A1	13	K-141
11Y-09-11160	K0410-07A1	5	K-143
11Y-09-11160	K0410-07A1	7	K-143
11Y-12-11130	B0900-01A0	3	B-055
11Y-27-11440	F2380-01A0	6	F-001
11Y-27-11440	F2380-04A0	6	F-007
11Y-27-11450	F2380-02A0	15	F-003
11Y-27-11450	F2380-05A0	15	F-009
11Y-43-11114	K0210-34A0	13	K-083
11Y-43-11114	K0410-09A0	13	K-147
11Y-43-11124	K0210-34A0	15	K-083
11Y-43-11124	K0410-09A0	15	K-147
11Y-43-11173	K0210-34A0	5	K-083
11Y-43-11173	K0410-09A0	5	K-147
11Y-43-11174	K0210-34A0	5	K-083
11Y-43-11174	K0410-09A0	5	K-147
11Y-43-11181	K0210-34A0	14	K-083
11Y-43-11181	K0210-36A0	14	K-087
11Y-43-11181	K0410-09A0	14	K-147
11Y-43-11181	K0410-11A0	14	K-151
11Y-43-11181	K2520-01A1	12	K-213
11Y-43-12710	K0210-36A0	10	K-087
11Y-43-12710	K0410-11A0	10	K-151
11Y-43-12720	K0210-36A0	17	K-087
11Y-43-12720	K0410-11A0	17	K-151
11Y-54-18190	K0500-01A0	7	K-189
11Y-54-31960	D0110-01A0	10	D-003
11Y-54-31960	H0100-01A2	3	H-005
11Y-54-31960	H0100-01A2	12	H-005
11Y-54-31960	M2140-01A2	13	M-009
11Y-54-31960	M2140-02A2	13	M-015
11Y-54-31961	D0110-01A0	10	D-003
11Y-54-31961	H0100-01A2	12	H-005
11Y-54-31961	H0100-01A2	3	H-005
11Y-54-31961	M2140-01A2	13	M-009
11Y-54-31961	M2140-02A2	13	M-015
11Y-60-11530	H0440-01A0	2	H-149
11Y-60-28700	H0430-01A1	1	H-137
11Y-60-28710	H0430-01A1	2	H-137
11Y-60-28710	H0430-01A1A	2	H-138
11Y-60-38701	H0430-01A1A	1	H-138
11Y-62-12140	K2520-01A2	4	K-215
11Y-62-12140	K2520-02A1	8	K-216A
11Y-62-12160	H0200-01A4	16	H-015
11Y-62-12270	H0430-01A3	5	H-141
11Y-62-12340	H0100-01A1	7	H-003
11Y-62-12340	H0100-01B1	7	H-004
11Y-62-12340	H0100-01B2	7	H-004A
11Y-62-12340	H0100-01B3	7	H-004B
11Y-62-12370	H0200-01A3	12	H-011
11Y-62-12370	H0200-01A4	12	H-015
11Y-62-12390	K2110-01A0	10	K-207
11Y-62-12830	H0430-01A1	11	H-137
11Y-62-12830	H0430-01A1A	11	H-138
11Y-62-12850	K2520-01A2	5	K-215
11Y-62-12850	K2520-02A1	9	K-216A
11Y-62-18420	H0440-02A0	4	H-151
11Y-62-31112	H0440-01A0	1	H-149
11Y-62-31130	H0440-02A0	7	H-151
11Y-62-31170	H0440-01A0	7	H-149
11Y-62-31180	H0440-02A0	2	H-151
11Y-62-31331	H0320-01A0	1	H-053
11Y-62-31831	H0430-01A5	1	H-145
11Y-62-31831	H0430-01A6	1	H-147
11Y-62-31841	H0430-01A6	1	H-147
11Y-62-36180	H0200-01A3	8	H-011
11Y-62-36180	H0200-01A4	8	H-015
11Y-911-3160	K2900-01A4A	7	K-225A
11Y-98-31130	U0100-01A1	6	U-001
11Y-98-31130	U0100-01A2	6	U-003
11Y-98-31130	U0100-01A3	6	U-005
11Y-98-31130	U0100-01A4	6	U-006
11Y-98-31150	U0100-01A1	7	U-001
11Y-98-31210	U0100-04A1	2	U-019
11Y-98-31210	U0100-04A2	2	U-021
11Y-98-31210	U0100-04A3	2	U-023
11Y-98-31210	U0100-04A4	2	U-024
11Y-98-31210	U0100-05A1	2	U-025
11Y-98-31210	U0100-05A2	2	U-027
11Y-98-31210	U0100-05A3	2	U-029
11Y-98-31210	U0100-05A4	2	U-030
11Y-98-31230	U0100-04A1	1	U-019
11Y-98-31230	U0100-04A3	1	U-023
120-04-41130	D0100-01A0	1	D-001
120-04-41130	D0100-01A0A	10	D-001A
1239 144 H1	A1103-A2A6	12	A-001
124-01-51450	B0600-01A3	1	B-043
124-01-61130	B0300-01A1	1	B-009
124-03-63250	C0160-01A0	4	C-013
124-06-54340	E0100-01A0	10	E-001
124-06-64321	E0200-01A0	32	E-007
124-06-64321	E0200-01A1	32	E-007A
1241 155 H1	A1115-A2B3	7	A-005
124-30-51181	R0110-01A0	11	R-001
124-30-54130	R0120-01A0	NI	R-003
124-30-54160	R0120-01A0	5	R-003
124-30-54170	R0120-01A0	6	R-003
124-30-64110	R0120-01A0	7	R-003
124-30-64221	R0120-01A0	8	R-003
124-32-05010	R2300-01A0	K1	R-047
124-54-26540	B0410-01A0	2	B-025
124-54-26540	B0410-01A1	2	B-026
124-54-52480	B0430-01A0	1	B-031
124-60-51150	H0100-01A1	13	H-003
124-62-61110	H0320-01A0	31	H-053
124-62-61980	H0320-01A0	27	H-053
124-A62-1920	M2140-02A0	21	M-013
124-A62-1920	M2140-02A0	2B	M-013
124-A62-1920	M2140-02A0	4B	M-013
124-A62-1920	M2140-02A2	12C	M-015
125-78-22130	T0700-01A0	1	T-027
125-78-22180	T0700-01A0	2	T-027
125-78-22190	T0700-01A0	3	T-027
125-78-22210	T0700-01A0	4	T-027
126-98-51180	U0100-03A1	9	U-013
126-98-51180	U0100-03A2	9	U-015
126-98-51180	U0100-03A3	9	U-017
126-98-51180	U0100-03A4	9	U-018
12F-32-11113	R0510-01A1	13	R-031
12F-32-11113	R0510-01A1	16	R-031
12G-30-64340	R0120-01A0	15	R-003
12G-30-64350	R0120-01A0	16	R-003
12Y-01-11122	B0600-01A2	3	B-041
12Y-01-11410	B0440-01A0	4	B-033
12Y-01-11581	B0600-01A2	4	B-041
12Y-01-11591	B0600-01A2	5	B-041
12Y-01-11631	B0800-01A0	10	B-053
12Y-01-11641	B0800-01A0	11	B-053
12Y-01-11660	B0600-01A3	4	B-043
12Y-01-11672	B0600-01A2	6	B-041
12Y-01-11723	B0700-01A0	3	B-045
12Y-01-11760	B0420-01A1	1	B-029
12Y-01-11771	B0430-01A0	4	B-031
12Y-01-11780	B0430-01A0	5	B-031
12Y-01-11790	B0420-01A0	2	B-027
12Y-01-11853	E0200-01A0	33	E-007
12Y-01-11853	E0200-01A1	33	E-007A
12Y-01-11893	D0210-01A0	22	D-011
12Y-01-11921	B0720-01A1	4	B-051
12Y-01-11950	B0600-01A3	5	B-043
12Y-01-11971	B0720-01A0	6	B-049
12Y-01-11980	B0800-01A0	7	B-053
12Y-01-11990	B0800-01A0	9	B-053
12Y-01-12110	K0700-01A1	9	K-193

PARTS Nº	FIG. Nº	INDEX	PAGE
12Y-01-12111	K0700-01A1	9	K-193
12Y-01-12111	K0700-01A1A	6	K-193A
12Y-01-12273	B0720-01A0	7	B-049
12Y-01-12280	B0720-01A0	8	B-049
12Y-01-12323	B0720-01A1	5	B-051
12Y-01-12324	B0720-01A1	5	B-051
12Y-01-12370	B0420-01A0	3	B-027
12Y-01-12391	B0720-01A1	7	B-051
12Y-01-12411	B0720-01A1	6	B-051
12Y-01-12430	B0600-01A2	7	B-041
12Y-01-12470	B0600-01A3	6	B-043
12Y-01-12481	B0500-01A0	5	B-035
12Y-01-12492	B0800-01A0	12	B-053
12Y-01-12530	B0600-01A1	6	B-039
12Y-01-12590	K0710-01A0	10	K-199
12Y-01-12591	K0710-01A0	10	K-199
12Y-01-12611	K0700-01A1	10	K-193
12Y-01-12612	K0700-01A1A	10	K-193A
12Y-01-12620	K0700-01A2	1	K-195
12Y-01-12630	B0600-01A1	5	B-039
12Y-01-12640	A6203-A2A2	22	A-103
12Y-01-12641	A6203-A2A2	22	A-103
12Y-01-12B22	B0720-01A0	7	B-049
12Y-02-11131	B0300-01A2	3	B-011
12Y-02-11141	B0410-01A0	3	B-025
12Y-02-11142	B0410-01A0	3	B-025
12Y-02-11143	B0410-01A0	3	B-025
12Y-02-11143	B0410-01A1	3	B-026
12Y-02-11173	B0300-01A1	12	B-009
12Y-02-11174	B0300-01A1	12	B-009
12Y-02-11180	B0300-01A1	17	B-009
12Y-02-11190	B0300-01A1	18	B-009
12Y-02-11231	B0410-01A0	8	B-025
12Y-02-11232	B0410-01A1	4	B-026
12Y-02-11291	B0310-01A0	2	B-015
12Y-02-11292	B0310-01A0	2	B-015
12Y-02-11293	B0310-01A0	2	B-015
12Y-02-11310	B0300-01A3	4	B-013
12Y-02-11311	B0300-01A3	3	B-013
12Y-02-11320	B0300-01A1	12	B-009
12Y-02-11321	B0300-01A1	12	B-009
12Y-02-11330	B0300-01A1	14	B-009
12Y-02-11331	B0300-01A1	14	B-009
12Y-02-11341	B0300-01A1	15	B-009
12Y-02-11350	B0300-01A1	13	B-009
12Y-02-11350	B0300-01A1	16	B-009
12Y-02-11351	B0300-01A1	13	B-009
12Y-02-11351	B0300-01A1	16	B-009
12Y-02-11360	B0300-01A1	17	B-009
12Y-02-11370	B0310-01A0	2	B-015
12Y-02-11401	B0410-01A0	4	B-025
12Y-03-11211	C0200-01A0	1	C-019
12Y-03-11241	C0210-01A0	1	C-023
12Y-03-11310	C0160-01A0	1	C-013
12Y-03-11324	M2110-01A0	8	M-001
12Y-03-11331	M2110-01A0	9	M-001
12Y-03-11341	M2110-01A0	10	M-001
12Y-03-11380	M2110-01A0	11	M-001
12Y-03-11381	M2110-01A0	11	M-001
12Y-03-11383	M2110-01A0	11	M-001
12Y-03-11510	C0160-01A0	11	C-013
12Y-03-11520	C0160-01A0	12	C-013
12Y-03-11532	C0170-01A0	9	C-015
12Y-03-11551	C0200-01A0	18	C-019
12Y-03-11571	C0200-01A0	30	C-019
12Y-03-11591	C0200-01A0	28	C-019
12Y-03-11641	C0210-01A1	1	C-025
12Y-03-11711	C0210-01A0	31	C-023
12Y-03-11711	C0210-01A1	12	C-025
12Y-03-11711	C0210-01A1	2	C-025
12Y-03-11840	C0120-01A0	1	C-005
12Y-03-11972	C0170-01A0	14	C-015
12Y-03-12110	C0170-01A0	3	C-015
12Y-03-12340	C0120-01A0	2	C-005
12Y-03-12360	C0180-01A0	3	C-017
12Y-03-12373	C0180-01A0	4	C-017
12Y-03-12441	M2120-01A0	9	M-003
12Y-03-12450	M2120-01A0	10	M-003
12Y-03-12482	C0210-01A1	4	C-025
12Y-03-12490	C0210-01A1	14	C-025
12Y-03-12521	C0200-01A0	16	C-019
12Y-03-12531	C0200-01A0	32	C-019
12Y-03-12543	C0200-01A0	2	C-019
12Y-03-12554	C0200-01A0	9	C-019
12Y-03-12564	C0200-01A0	8	C-019
12Y-03-12641	C0210-01A0	4	C-023
12Y-03-12650	C0210-01A0	16	C-023
12Y-03-12670	C0110-01A0	2	C-003
12Y-03-12680	C0110-01A0	5	C-003
12Y-03-12690	C0110-01A0	6	C-003
12Y-03-12711	C0210-01A1	11	C-025
12Y-03-12721	C0210-01A0	18	C-023
12Y-03-12731	C0140-01A0	5	C-009
12Y-03-12741	C0140-01A0	8	C-009
12Y-03-12742	C0140-01A0	8	C-009
12Y-03-12751	C0140-01A0	1	C-009
12Y-03-12772	C0200-01A0	19	C-019
12Y-03-12781	C0200-01A0	21	C-019
12Y-03-12862	C0170-01A0	1	C-015
12Y-03-12921	C0200-01A0	26	C-019
12Y-03-12971	C0170-01A0	10	C-015
12Y-03-12981	C0170-01A0	12	C-015
12Y-03-12982	C0170-01A0	12	C-015
12Y-03-12992	C0170-01A0	13	C-015
12Y-03-13111	C0170-01A0	11	C-015
12Y-03-13112	C0170-01A0	11	C-015
12Y-03-13161	C0150-01A0	2	C-011
12Y-03-13242	C0180-01A0	5	C-017
12Y-03-13252	C0180-01A0	6	C-017
12Y-03-13260	C0180-01A0	7	C-017
12Y-03-13300	M2120-01A0	12	M-003
12Y-03-13311	M2120-01A0	11	M-003
12Y-03-13341	C0170-01A0	15	C-015
12Y-03-13351	C0170-01A0	17	C-015
12Y-03-13361	C0170-01A0	16	C-015
12Y-03-13380	M2120-01A0	13	M-003
12Y-03-13463	C0300-01A0	1	C-029
12Y-03-13471	C0300-01A1	1	C-031
12Y-03-13481	C0300-01A1	5	C-031
12Y-03-13482	C0300-01A1	5	C-031
12Y-03-13514	C0140-01A0	2	C-009
12Y-03-13541	C0300-01A0	8	C-029
12Y-03-13551	C0210-01A0	26	C-023
12Y-03-13570	C0210-01A0	27	C-023
12Y-03-13582	J2110-01A0	3	J-005
12Y-03-13592	J2110-01A0	4	J-005
12Y-03-13640	C0170-01A0	6	C-015
12Y-03-13650	C0170-01A0	7	C-015
12Y-03-13660	B0000-55A0	12	B-065
12Y-03-13660	B0000-58A0	12	B-068
12Y-03-13660	B0000-58A1	11	B-068A
12Y-03-13660	C0170-01A0	8	C-015
12Y-03-13672	C0210-01A2	3	C-027
12Y-03-13681	C0210-01A2	1	C-027
12Y-03-13751	K0700-01A2	2	K-195
12Y-03-13762	C0180-01A0	8	C-017
12Y-03-13811	C0180-01A0	9	C-017
12Y-03-13820	C0300-01A1	9	C-031
12Y-03-13830	C0150-01A0	3	C-011
12Y-03-13860	C0180-01A0	10	C-017
12Y-03-13880	C0110-01A0	3	C-003
12Y-03-13890	C0110-01A0	4	C-003
12Y-03-13910	C0210-01A0	11	C-023
12Y-03-13911	C0210-01A0	11	C-023
12Y-03-13920	C0180-01A0	11	C-017
12Y-03-13930	C0210-01A0	13	C-023
12Y-03-14111	C0170-01A0	2	C-015
12Y-03-14120	C0150-01A0	7	C-011
12Y-03-14130	C0180-01A0	12	C-017
12Y-03-14140	C0180-01A0	13	C-017

PARTS Nº	FIG. Nº	INDEX	PAGE
12Y-03-14A10	C0170-01A0	2	C-015
12Y-03-14A20	C0170-01A0	2	C-015
12Y-04-11113	D0100-01A0	7	D-001
12Y-04-11114	D0100-01A0	7	D-001
12Y-04-11115	D0100-01A0	7	D-001
12Y-04-11116	D0100-01A0	7	D-001
12Y-04-11117	D0100-01A0A	1	D-001A
12Y-04-11122	D0110-01A0	8	D-003
12Y-04-11123	D0110-01A0	8	D-003
12Y-04-11411	D0210-01A0	23	D-011
12Y-04-11420	D0210-01A0	24	D-011
12Y-04-11420	D0220-01A0	14	D-013
12Y-04-11430	D0210-01A0	25	D-011
12Y-04-11430	D0220-01A0	15	D-013
12Y-04-11461	D0210-01A0	26	D-011
12Y-04-11461	D0220-01A0	16	D-013
12Y-04-11521	D0130-01A0	6	D-007
12Y-04-11521	H0100-01A3	5	H-007
12Y-04-11541	D0110-01A0	9	D-003
12Y-04-11542	D0110-01A0	9	D-003
12Y-04-11553	D0210-01A0	27	D-011
12Y-04-11584	D0210-01A0	28	D-011
12Y-04-11593	D0210-01A0	29	D-011
12Y-04-11612	D0210-01A0	30	D-011
12Y-04-11622	D0210-01A0	31	D-011
12Y-04-11630	D0130-01A0	7	D-007
12Y-04-11630	H0100-01A3	1	H-007
12Y-04-11782	D0220-01A0	17	D-013
12Y-04-11783	D0220-01A0	17	D-013
12Y-04-11790	D0210-01A0	32	D-011
12Y-04-11811	D0220-01A0	18	D-013
12Y-04-11840	D0220-02A0	1	D-015
12Y-04-11850	D0220-02A0	2	D-015
12Y-04-11862	D0220-02A0	3	D-015
12Y-04-11863	D0220-02A0	3	D-015
12Y-04-11871	D0220-02A0	4	D-015
12Y-04-11880	D0220-02A0	5	D-015
12Y-04-11891	D0220-02A0	6	D-015
12Y-04-11910	D0220-02A0	7	D-015
12Y-04-11920	D0220-02A0	8	D-015
12Y-04-11930	D0220-02A0	9	D-015
12Y-04-11940	D0220-02A0	10	D-015
12Y-04-11940	D0220-02A0	19	D-015
12Y-04-11950	D0220-02A0	11	D-015
12Y-04-11961	D0220-02A0	12	D-015
12Y-04-11971	D0220-02A0	13	D-015
12Y-04-11981	D0220-02A0	14	D-015
12Y-04-11990	D0220-02A0	15	D-015
12Y-06-11132	K0210-40A0	31	K-095
12Y-06-11132	K0210-41A0	6	K-097
12Y-06-11132	K0410-15A0	31	K-159
12Y-06-11132	K0410-16A0	6	K-161
12Y-06-11140	K0210-43A0	8	K-101
12Y-06-11140	K0410-18A0	8	K-165
12Y-06-11453	E0120-01A0	10	E-005
12Y-06-11453	E0120-01B0	1	E-006
12Y-06-11454	E0120-01A0	10	E-005
12Y-06-11454	E0120-01B0	1	E-006
12Y-06-11593	E0100-01A0	4	E-001
12Y-06-11594	E0100-01A0	4	E-001
12Y-06-11611	K0210-33A0	1	K-081
12Y-06-11611	K0410-08A0	1	K-145
12Y-06-11621	K0210-33A0	1	K-081
12Y-06-11621	K0410-08A0	1	K-145
12Y-06-11631	K0210-33A0	2	K-081
12Y-06-11631	K0410-08A0	2	K-145
12Y-06-11640	K0210-28A0	17	K-073
12Y-06-11650	K0210-31A0	17	K-079
12Y-06-11711	K0210-45A0	5	K-105
12Y-06-11711	K0410-20A0	5	K-169
12Y-06-11722	K0210-45A0	6	K-105
12Y-06-11722	K0410-20A0	6	K-169
12Y-06-11731	K0210-45A0	7	K-105
12Y-06-11731	K0410-20A0	7	K-169
12Y-06-11741	K0210-45A0	8	K-105
12Y-06-11741	K0410-20A0	8	K-169
12Y-06-11751	K0210-45A0	9	K-105
12Y-06-11751	K0410-20A0	9	K-169
12Y-06-11761	K0210-45A0	10	K-105
12Y-06-11761	K0410-20A0	10	K-169
12Y-06-11771	K0210-45A0	11	K-105
12Y-06-11771	K0410-20A0	11	K-169
12Y-06-11811	E0210-01A0	14	E-011
12Y-06-11812	E0210-01A0	14	E-011
12Y-06-11813	E0210-01A0	14	E-011
12Y-06-11821	E0210-01A0	10	E-011
12Y-06-11821	E0210-01A1	3	E-011A
12Y-06-11831	E0210-01A0	1	E-011
12Y-06-11832	E0210-01A0	1	E-011
12Y-06-11852	E0200-01A0	1	E-007
12Y-06-11853	E0200-01A0	1	E-007
12Y-06-11855	E0200-01A0	1	E-007
12Y-06-11856	E0200-01A0	1	E-007
12Y-06-11857	E0200-01A0	1	E-007
12Y-06-11858	E0200-01A1	1	E-007A
12Y-06-1185D	E0200-01A0	1	E-007
12Y-06-11861	E0200-01A0	43	E-007
12Y-06-11861	E0200-01A1	43	E-007A
12Y-06-11872	E0220-01A0	1	E-013
12Y-06-11890	E0210-01A0	6	E-011
12Y-06-11890	E0210-01A1	19	E-011A
12Y-06-11911	E0200-01A0	7	E-007
12Y-06-11911	E0200-01A1	7	E-007A
12Y-06-11920	E0100-01A0	15	E-001
12Y-06-11931	E0210-01A0	7	E-011
12Y-06-11931	E0210-01A1	17	E-011A
12Y-06-11942	E0210-01A0	8	E-011
12Y-06-11943	E0210-01A0	8	E-011
12Y-06-11945	E0210-01A1	22	E-011A
12Y-06-11951	H0430-01A4	5	H-143
12Y-06-11961	E0200-01A0	44	E-007
12Y-06-11961	E0200-01A1	44	E-007A
12Y-06-11981	E0200-01A0	41	E-007
12Y-06-11981	E0200-01A1	41	E-007A
12Y-06-11990	E0100-01A0	9	E-001
12Y-06-12112	K0410-29A0	9	K-187
12Y-06-12122	K0210-57A0	2	K-125
12Y-06-12122	K0410-29A0	2	K-187
12Y-06-12133	K0210-57A0	5	K-125
12Y-06-12133	K0410-29A0	5	K-187
12Y-06-12152	K0410-05A0	1	K-137
12Y-06-12162	K0410-05A0	4	K-137
12Y-06-12171	K0210-57A0	9	K-125
12Y-06-12184	K0210-57A0	13	K-125
12Y-06-12185	K0210-57A0	13	K-125
12Y-06-12191	K0210-57A0	18	K-125
12Y-06-12191	K0410-29A0	13	K-187
12Y-06-12250	E0200-01A0	15	E-007
12Y-06-12250	E0200-01A1	15	E-007A
12Y-06-12271	K0210-57A0	12	K-125
12Y-06-12362	E0200-01A0	16	E-007
12Y-06-12363	E0200-01A1	16	E-007A
12Y-06-12370	E0200-01A0	31	E-007
12Y-06-12370	E0200-01A1	31	E-007A
12Y-06-12380	E0200-01A0	18	E-007
12Y-06-12380	E0200-01A1	18	E-007A
12Y-06-12390	E0200-01A0	17	E-007
12Y-06-12390	E0200-01A1	17	E-007A
12Y-06-12410	E0200-01A0	39	E-007
12Y-06-12410	E0200-01A1	39	E-007A
12Y-06-12530	E0100-01A0	11	E-001
12Y-06-12560	K0210-36A0	10	K-087
12Y-06-12570	B0000-53A0	4	B-061
12Y-06-12570	B0000-56A0	5	B-066
12Y-06-12570	B0000-59A0	5	B-069
12Y-06-12571	B0000-59A0	5	B-069
12Y-06-12680	B0000-53A0	2	B-061
12Y-06-12681	B0000-56A0	7	B-066
12Y-06-12682	B0000-59A0	7	B-069
12Y-06-12810	E0100-01A0	7	E-001

PARTS Nº	FIG. Nº	INDEX	PAGE
12Y-06-12811	E0100-01A0	7	E-001
12Y-06-12871	K2900-01A3	6	K-223
12Y-06-12872	K2900-01A4A	9	K-225A
12Y-06-12910	B0000-53A0	1	B-061
12Y-06-12912	B0000-56A0	1	B-066
12Y-06-13111	K0210-55A0	12	K-121
12Y-06-13111	K0410-28A2	12	K-185
12Y-06-13112	K0210-55A0	12	K-121
12Y-06-13112	K0410-28A2	12	K-185
12Y-06-13113	K0210-55A0	12	K-121
12Y-06-13113	K0410-28A2	12	K-185
12Y-06-13131	K0210-55A0	4	K-121
12Y-06-13131	K0210-56A0	4	K-123
12Y-06-13131	K0410-28A2	4	K-185
12Y-06-13141	K0410-05A0	7	K-137
12Y-06-13151	K0210-22A0	29	K-061
12Y-06-13151	K0210-22A0	29	K-061
12Y-06-13151	K0210-57A0	16	K-125
12Y-06-13151	K0410-29A0	12	K-187
12Y-06-13161	K0210-55A0	8	K-121
12Y-06-13161	K0410-28A2	8	K-185
12Y-06-13170	K0210-55A0	11	K-121
12Y-06-13170	K0210-56A0	11	K-123
12Y-06-13170	K0410-28A2	11	K-185
12Y-06-13181	E0120-01A0	5	E-005
12Y-06-13181	E0120-01B0	8	E-006
12Y-06-13261	K0210-44A0	12	K-103
12Y-06-13261	K0410-19A0	12	K-167
12Y-06-13280	K0210-44A0	6	K-103
12Y-06-13280	K0410-19A0	6	K-167
12Y-06-13291	K0210-44A0	8	K-103
12Y-06-13291	K0410-19A0	8	K-167
12Y-06-13312	K0210-44A0	5	K-103
12Y-06-13312	K0410-19A0	5	K-167
12Y-06-13320	E0200-01A0	21	E-007
12Y-06-13320	E0200-01A1	21	E-007A
12Y-06-13331	E0200-01A0	23	E-007
12Y-06-13331	E0200-01A1	23	E-007A
12Y-06-13341	E0200-01A0	26	E-007
12Y-06-13341	E0200-01A1	26	E-007A
12Y-06-13361	E0220-01A0	7	E-013
12Y-06-13380	K0210-18A0	39	K-053
12Y-06-13380	K0210-23A0	13	K-063
12Y-06-13380	K0210-44A0	11	K-103
12Y-06-13380	K0410-06A1	21	K-141
12Y-06-13380	K0410-19A0	11	K-167
12Y-06-13411	K0210-56A0	8	K-123
12Y-06-13431	K0210-56A0	12	K-123
12Y-06-13432	K0210-56A0	12	K-123
12Y-06-13433	K0210-56A0	12	K-123
12Y-06-13442	E0200-01A0	22	E-007
12Y-06-13443	E0200-01A0	22	E-007
12Y-06-13443	E0200-01A1	22	E-007A
12Y-06-13530	K0210-44A0	17	K-103
12Y-06-13530	K0410-19A0	17	K-167
12Y-06-13560	K0210-44A0	7	K-103
12Y-06-13560	K0410-19A0	7	K-167
12Y-06-13570	B0000-53A0	11	B-061
12Y-06-13570	B0000-56A0	11	B-066
12Y-06-13570	B0000-56A0	13	B-066
12Y-06-13570	B0000-59A0	11	B-069
12Y-06-13570	B0000-59A0	13	B-069
12Y-06-13610	H2250-01A1	14	H-181
12Y-06-13620	H2250-01A1	15	H-181
12Y-06-13650	B0000-54A0	1	B-063
12Y-06-13650	B0000-57A0	1	B-067
12Y-06-13650	B0000-60A0	1	B-070
12Y-06-13660	B0000-54A0	2	B-063
12Y-06-13660	B0000-57A0	19	B-067
12Y-06-13660	B0000-57A0	2	B-067
12Y-06-13660	B0000-60A0	2	B-070
12Y-06-13660	B0000-60A0	19	B-070
12Y-06-13661	B0000-60A0	2	B-070
12Y-06-13670	B0000-52A0	15	B-059
12Y-06-13670	B0000-52A0	31	B-059
12Y-06-13680	B0000-53A0	8	B-061
12Y-06-13710	B0000-53A0	6	B-061
12Y-06-13710	B0000-53A0	9	B-061
12Y-06-13711	B0000-56A0	3	B-066
12Y-06-13711	B0000-59A0	3	B-069
12Y-06-13720	B0000-53A0	5	B-061
12Y-06-13721	B0000-56A0	10	B-066
12Y-06-13721	B0000-59A0	10	B-069
12Y-06-13730	B0000-53A0	10	B-061
12Y-06-13740	B0000-56A0	2	B-066
12Y-06-13740	B0000-59A0	2	B-069
12Y-06-13750	B0000-53A0	3	B-061
12Y-06-13751	B0000-56A0	8	B-066
12Y-06-13751	B0000-59A0	8	B-069
12Y-06-13760	B0000-53A0	7	B-061
12Y-06-13770	B0000-53A0	12	B-061
12Y-06-13770	B0000-56A0	15	B-066
12Y-06-13770	B0000-59A0	15	B-069
12Y-06-13851	B0000-56A0	12	B-066
12Y-06-13851	B0000-59A0	12	B-069
12Y-06-13861	B0000-56A0	6	B-066
12Y-06-13862	B0000-59A0	6	B-069
12Y-06-13871	B0000-56A0	4	B-066
12Y-06-13970	B0000-56A0	14	B-066
12Y-06-13970	B0000-59A0	14	B-069
12Y-06-14280	B0000-59A0	4	B-069
12Y-06-14290	B0000-59A0	1	B-069
12Y-06-14330	E0100-01A0	1	E-001
12Y-06-14350	E0200-01A1	16A	E-007A
12Y-06-18111	E0210-01A1	1	E-011A
12Y-06-18122	E0210-01A2	5	E-011B
12Y-06-18130	E0210-01A1	2	E-011A
12Y-06-18142	H0430-01A1A	8	H-138
12Y-06-18151	E0210-01A2	25	E-011B
12Y-06-18161	E0210-01A2	31	E-011B
12Y-06-18172	E0210-01A2	29	E-011B
12Y-06-18210	E0210-01A2	27	E-011B
12Y-06-18221	E0210-01A2	28	E-011B
12Y-06-18271	E0210-01A2	6	E-011B
12Y-06-18282	E0210-01A2	2	E-011B
12Y-06-18360	E0210-01A2	19	E-011B
12Y-06-18370	B0000-60A0	22	B-070
12Y-06-18370	H0430-01A1A	9	H-138
12Y-06-18420	E0220-01A0	6	E-013
12Y-12-11111	B0900-01A0	4	B-055
12Y-12-11130	B0900-01A0	5	B-055
12Y-21-11102	J2100-01A0	6	J-001
12Y-21-11102	J2100-01A1	6	J-003
12Y-21-11103	J2100-01A0	6	J-001
12Y-21-11103	J2100-01A1	6	J-003
12Y-21-11104	J2100-01A0	6	J-001
12Y-21-11104	J2100-01A1	5	J-003
12Y-21-11140	J2100-01A0	7	J-001
12Y-21-11140	J2100-01A1	7	J-003
12Y-21-11150	J2100-01A0	8	J-001
12Y-21-11150	J2100-01A1	8	J-003
12Y-21-11161	J2100-01A0	9	J-001
12Y-21-11161	J2100-01A1	9	J-003
12Y-21-11210	J2100-01A0	10	J-001
12Y-21-11210	J2100-01A1	10	J-003
12Y-27-10100	F2380-01A0	1	F-001
12Y-27-10100	F2380-02A0	1	F-003
12Y-27-10100	F2380-03A0	1	F-005
12Y-27-10101	F2380-01A0	1	F-001
12Y-27-10101	F2380-02A0	1	F-003
12Y-27-10101	F2380-03A0	1	F-005
12Y-27-10200	F2380-04A0	1	F-007
12Y-27-10200	F2380-05A0	1	F-009
12Y-27-10200	F2380-06A0	1	F-011
12Y-27-10201	F2380-04A0	1	F-007
12Y-27-10201	F2380-05A0	1	F-009
12Y-27-10201	F2380-06A0	1	F-011
12Y-27-10300	F2380-01A0	1	F-001
12Y-27-10300	F2380-02A0	1	F-003
12Y-27-10300	F2380-03A0	1	F-005

PARTS Nº	FIG. Nº	INDEX	PAGE
12Y-27-10301	F2380-01A0	1	F-001
12Y-27-10301	F2380-02A0	1	F-003
12Y-27-10301	F2380-03A0	1	F-005
12Y-27-10400	F2380-04A0	1	F-007
12Y-27-10400	F2380-05A0	1	F-009
12Y-27-10400	F2380-06A0	1	F-011
12Y-27-10401	F2380-04A0	1	F-007
12Y-27-10401	F2380-05A0	1	F-009
12Y-27-10401	F2380-06A0	1	F-011
12Y-27-11120	F2380-02A0	7	F-003
12Y-27-11120	F2380-05A0	7	F-009
12Y-27-11130	F2380-02A0	2	F-003
12Y-27-11130	F2380-05A0	2	F-009
12Y-27-11140	F2380-01A0	20	F-001
12Y-27-11140	F2380-04A0	20	F-007
12Y-27-11150	F2380-01A0	11	F-001
12Y-27-11150	F2380-04A0	11	F-007
12Y-27-11160	F2380-01A0	17	F-001
12Y-27-11160	F2380-04A0	17	F-007
12Y-27-11210	F2380-02A0	1	F-003
12Y-27-11210	F2380-05A0	1	F-009
12Y-27-11220	F2380-01A0	13	F-001
12Y-27-11220	F2380-04A0	13	F-007
12Y-27-11230	F2380-01A0	10	F-001
12Y-27-11230	F2380-04A0	10	F-007
12Y-27-11240	F2380-01A0	21	F-001
12Y-27-11240	F2380-04A0	21	F-007
12Y-27-11250	F2380-02A0	5	F-003
12Y-27-11250	F2380-05A0	5	F-009
12Y-27-11260	F2380-02A0	4	F-003
12Y-27-11260	F2380-05A0	4	F-009
12Y-27-11300	F2380-01A0	1	F-001
12Y-27-11300	F2380-04A0	1	F-007
12Y-27-11310	F2380-01A0	2	F-001
12Y-27-11310	F2380-04A0	2	F-007
12Y-27-11320	F2380-01A0	12	F-001
12Y-27-11320	F2380-04A0	12	F-007
12Y-27-11400	F2380-01A0	11	F-001
12Y-27-11400	F2380-04A0	11	F-007
12Y-27-11410	F2380-01A0	1	F-001
12Y-27-11410	F2380-04A0	1	F-007
12Y-27-11420	F2380-02A0	9	F-003
12Y-27-11420	F2380-05A0	9	F-009
12Y-27-11430	F2380-01A0	5	F-001
12Y-27-11430	F2380-04A0	5	F-007
12Y-27-11500	F2380-02A0	1	F-003
12Y-27-11500	F2380-05A0	1	F-009
12Y-27-11510	F2380-03A0	2	F-005
12Y-27-11510	F2380-06A0	2	F-011
12Y-27-11600	F2380-01A0	3	F-001
12Y-27-11600	F2380-04A0	3	F-007
12Y-27-15210	F2380-03A0	2	F-005
12Y-27-15210	F2380-06A0	2	F-011
12Y-30-00011	R0110-01A0	1	R-001
12Y-30-00021	R0200-01A0	1	R-005
12Y-30-00031	R0200-02A0	1	R-007
12Y-30-00041	R0300-01A0	1	R-011
12Y-30-00100	R0110-01A0	12	R-001
12Y-30-00111	R0200-01A0	11	R-005
12Y-30-00111	R0200-01A1	11	R-005A
12Y-30-00111	R0200-02A0	11	R-007
12Y-30-00111	R0200-02A1	11	R-007A
12Y-30-01020	R0200-01A1	1	R-005A
12Y-30-01030	R0200-02A1	1	R-007A
12Y-30-01040	R0300-01A1	1	R-011A
12Y-30-11111	R0110-01A0	14	R-001
12Y-30-11130	R0110-01A0	15	R-001
12Y-30-11260	R0120-01A0	17	R-003
12Y-30-11271	R0120-01A0	4	R-003
12Y-30-11312	R0110-01A0	16	R-001
12Y-30-11322	R0110-01A0	17	R-001
12Y-30-11331	R0110-01A0	18	R-001
12Y-30-11350	R0110-01A0	19	R-001
12Y-30-11360	R0110-01A0	25	R-001
12Y-30-11370	R0110-01A0	21	R-001
12Y-30-11380	R0110-01A0	20	R-001
12Y-30-11410	R0110-01A0	22	R-001
12Y-30-11420	R0110-01A0	23	R-001
12Y-30-11441	R0110-01A0	24	R-001
12Y-30-11510	R0110-01A0	12	R-001
12Y-30-12112	R2100-01A0	5	R-037
12Y-30-12113	R2100-01A0	5	R-037
12Y-30-12122	R2100-01A0	6	R-037
12Y-30-12123	R2100-01A0	6	R-037
12Y-30-12181	R2100-01A0	5D	R-037
12Y-30-12181	R2100-01A0	6D	R-037
12Y-30-12220	R2100-01A0	5A	R-037
12Y-30-12220	R2100-01A0	6A	R-037
12Y-30-12230	R2100-01A0	5C	R-037
12Y-30-12230	R2100-01A0	6C	R-037
12Y-30-12241	R2100-01A0	5B	R-037
12Y-30-12241	R2100-01A0	6B	R-037
12Y-30-12330	R2140-02A0	14	R-041
12Y-30-12340	R2140-02A0	15	R-041
12Y-30-14110	R2140-01A0	6	R-039
12Y-30-14110	R2140-02A0	6	R-041
12Y-30-14120	R2140-01A0	7	R-039
12Y-30-14120	R2140-02A0	7	R-041
12Y-30-14131	R2140-02A0	8	R-041
12Y-30-14141	R2140-02A0	9	R-041
12Y-30-14151	R2140-02A0	10	R-041
12Y-30-14161	R2140-02A0	11	R-041
12Y-30-14171	R2140-02A0	12	R-041
12Y-30-14181	R2140-02A0	13	R-041
12Y-30-14231	R2140-01A0	8	R-039
12Y-30-14241	R2140-01A0	9	R-039
12Y-30-14251	R2140-01A0	10	R-039
12Y-30-14261	R2140-01A0	11	R-039
12Y-30-14271	R2140-01A0	12	R-039
12Y-30-14281	R2140-01A0	13	R-039
12Y-30-15111	R2200-01A0	3	R-043
12Y-30-15121	R2200-01A0	4	R-043
12Y-30-15132	R2200-01A0	8	R-043
12Y-30-15133	R2200-01A0	8	R-043
12Y-30-15133	R2200-01A1	8	R-043A
12Y-30-15142	R2200-01A0	9	R-043
12Y-30-15143	R2200-01A0	9	R-043
12Y-30-15143	R2200-01A1	9	R-043A
12Y-30-15171	R2200-01A0	14	R-043
12Y-30-15211	R2210-01A0	8	R-045
12Y-30-15212	R2210-01A0	8	R-045
12Y-30-15213	R2210-01A0	8	R-045
12Y-30-15221	R2210-01A0	9	R-045
12Y-30-15222	R2210-01A0	9	R-045
12Y-30-15223	R2210-01A0	9	R-045
12Y-30-15230	R2210-01A0	10	R-045
12Y-30-15230	R2210-01A1	10	R-045A
12Y-30-15240	R2210-01A0	11	R-045
12Y-30-15240	R2210-01A1	11	R-045A
12Y-30-15250	R2210-01A0	12	R-045
12Y-30-15250	R2210-01A1	12	R-045A
12Y-30-15260	R2200-01A0	10	R-043
12Y-30-15260	R2200-01A1	10	R-043A
12Y-30-15270	R2200-01A0	11	R-043
12Y-30-15270	R2200-01A1	11	R-043A
12Y-30-15412	R2200-01A1	3	R-043A
12Y-30-15422	R2200-01A1	4	R-043A
12Y-30-15431	R2200-01A1	14	R-043A
12Y-30-15440	R2200-01A1	15	R-043A
12Y-30-15440	R2200-01A1	3A	R-043A
12Y-30-15440	R2200-01A1	4A	R-043A
12Y-30-15440	R2210-01A1	8A	R-045A
12Y-30-15440	R2210-01A1	9A	R-045A
12Y-30-15510	R2210-01A1	8	R-045A
12Y-30-15511	R2210-01A1	8	R-045A
12Y-30-15521	R2210-01A1	9	R-045A
12Y-30-15522	R2210-01A1	9	R-045A
12Y-30-16330	R2140-01A0	14	R-039
12Y-30-16340	R2140-01A0	15	R-039
12Y-30-17110	R0200-01A0	1	R-005

PARTS Nº	FIG. Nº	INDEX	PAGE
12Y-30-17120	R0200-02A0	1	R-007
12Y-30-17130	R0200-01A0	2	R-005
12Y-30-17130	R0200-01A1	2	R-005A
12Y-30-17130	R0200-02A0	2	R-007
12Y-30-17130	R0200-02A1	2	R-007A
12Y-30-17140	R0200-01A0	13	R-005
12Y-30-17140	R0200-01A1	13	R-005A
12Y-30-17140	R0200-02A0	13	R-007
12Y-30-17140	R0200-02A1	13	R-007A
12Y-30-17150	R0200-01A0	14	R-005
12Y-30-17150	R0200-01A1	14	R-005A
12Y-30-17150	R0200-02A0	14	R-007
12Y-30-17150	R0200-02A1	14	R-007A
12Y-30-17160	R0200-01A0	5	R-005
12Y-30-17160	R0200-01A1	5	R-005A
12Y-30-17160	R0200-02A0	5	R-007
12Y-30-17160	R0200-02A1	5	R-007A
12Y-30-17170	R0200-01A0	6	R-005
12Y-30-17170	R0200-01A1	6	R-005A
12Y-30-17170	R0200-02A0	6	R-007
12Y-30-17170	R0200-02A1	6	R-007A
12Y-30-17200	R0200-01A0	5	R-005
12Y-30-17200	R0200-01A1	5	R-005A
12Y-30-17200	R0200-02A0	5	R-007
12Y-30-17200	R0200-02A1	5	R-007A
12Y-30-17210	R0200-01A0	15	R-005
12Y-30-17210	R0200-01A1	15	R-005A
12Y-30-17210	R0200-02A0	15	R-007
12Y-30-17210	R0200-02A1	15	R-007A
12Y-30-17310	R0200-01A1	1	R-005A
12Y-30-17320	R0200-02A1	1	R-007A
12Y-30-18110	R0300-01A0	1	R-011
12Y-30-18121	R0300-01A0	3	R-011
12Y-30-18121	R0300-01A1	3	R-011A
12Y-30-18130	R0300-01A0	2	R-011
12Y-30-18130	R0300-01A1	2	R-011A
12Y-30-18210	R0300-01A1	1	R-011A
12Y-32-00010	R0322-01A0	1	R-013
12Y-32-00020	R0322-01A5	1	R-015B
12Y-32-00030	R0322-01A1	1	R-015
12Y-32-00300	R0322-01A3	1	R-015A
12Y-32-01011	R0510-01A0	1	R-029
12Y-32-01021	R0510-01A1	1	R-031
12Y-32-01031	R0500-01A0	1	R-017
12Y-32-01041	R0500-01A1	1	R-019
12Y-32-01050	R0500-01A2	1	R-021
12Y-32-01060	R0500-01A3	1	R-023
12Y-32-01070	R0500-01A4	1	R-025
12Y-32-01080	R0500-01A5	1	R-027
12Y-32-01090	R0510-01A2	1	R-033
12Y-32-01110	R0510-01A3	1	R-035
12Y-32-01120	R0510-01A4	1	R-035A
12Y-32-03000	R0500-01A6	1	R-027A
12Y-32-03010	R0500-01A8	1	R-027C
12Y-32-03020	R0500-01B0	1	R-027E
12Y-32-03030	R0500-01A7	1	R-027B
12Y-32-03040	R0500-01A9	1	R-027D
12Y-32-03050	R0500-01B1	1	R-027F
12Y-32-08011	R0322-01A0	3	R-013
12Y-32-08011	R0322-01A1	3	R-015
12Y-32-08011	R0322-01A5	3	R-015B
12Y-32-08011	R0500-01A0	3	R-017
12Y-32-08011	R0500-01A1	3	R-019
12Y-32-08011	R0500-01A2	3	R-021
12Y-32-08011	R0500-01A3	3	R-023
12Y-32-08011	R0500-01A4	3	R-025
12Y-32-08011	R0500-01A5	3	R-027
12Y-32-08011	R0510-01A0	3	R-029
12Y-32-08011	R0510-01A1	3	R-031
12Y-32-08011	R0510-01A2	3	R-033
12Y-32-08011	R0510-01A3	3	R-035
12Y-32-08011	R0510-01A4	3	R-035A
12Y-32-08021	R0322-01A0	5	R-013
12Y-32-08021	R0322-01A1	5	R-015
12Y-32-08021	R0322-01A5	5	R-015B
12Y-32-08021	R0500-01A0	5	R-017
12Y-32-08021	R0500-01A1	5	R-019
12Y-32-08021	R0500-01A2	5	R-021
12Y-32-08021	R0500-01A3	5	R-023
12Y-32-08021	R0500-01A4	5	R-025
12Y-32-08021	R0500-01A5	5	R-027
12Y-32-08021	R0510-01A0	5	R-029
12Y-32-08021	R0510-01A1	5	R-031
12Y-32-08021	R0510-01A2	5	R-033
12Y-32-08021	R0510-01A3	5	R-035
12Y-32-08021	R0510-01A4	5	R-035A
12Y-32-08210	R0322-01A3	3	R-015A
12Y-32-08210	R0500-01A6	3	R-027A
12Y-32-08210	R0500-01A7	3	R-027B
12Y-32-08210	R0500-01A8	3	R-027C
12Y-32-08210	R0500-01A9	3	R-027D
12Y-32-08210	R0500-01B0	3	R-027E
12Y-32-08210	R0500-01B1	3	R-027F
12Y-32-08220	R0322-01A3	5	R-015A
12Y-32-08220	R0500-01A6	5	R-027A
12Y-32-08220	R0500-01A7	5	R-027B
12Y-32-08220	R0500-01A8	5	R-027C
12Y-32-08220	R0500-01A9	5	R-027D
12Y-32-08220	R0500-01B0	5	R-027E
12Y-32-08220	R0500-01B1	5	R-027F
12Y-32-11110	R0500-01A0	13	R-017
12Y-32-11110	R0500-01A0	16	R-017
12Y-32-11110	R0500-01A4	13	R-025
12Y-32-11110	R0500-01A4	16	R-025
12Y-32-11120	R0322-01A0	1	R-013
12Y-32-11120	R0322-01A1	1	R-015
12Y-32-11120	R0322-01A5	1	R-015B
12Y-32-11120	R0500-01A0	1	R-017
12Y-32-11120	R0500-01A1	1	R-019
12Y-32-11120	R0500-01A2	1	R-021
12Y-32-11120	R0500-01A3	1	R-023
12Y-32-11120	R0500-01A4	1	R-025
12Y-32-11120	R0500-01A5	1	R-027
12Y-32-11120	R0510-01A0	1	R-029
12Y-32-11120	R0510-01A1	1	R-031
12Y-32-11120	R0510-01A2	1	R-033
12Y-32-11120	R0510-01A3	1	R-035
12Y-32-11120	R0510-01A4	1	R-035A
12Y-32-11130	R0322-01A0	2	R-013
12Y-32-11130	R0322-01A1	2	R-015
12Y-32-11130	R0322-01A5	2	R-015B
12Y-32-11130	R0500-01A0	2	R-017
12Y-32-11130	R0500-01A1	2	R-019
12Y-32-11130	R0500-01A2	2	R-021
12Y-32-11130	R0500-01A3	2	R-023
12Y-32-11130	R0500-01A4	2	R-025
12Y-32-11130	R0500-01A5	2	R-027
12Y-32-11130	R0510-01A0	2	R-029
12Y-32-11130	R0510-01A1	2	R-031
12Y-32-11130	R0510-01A2	2	R-033
12Y-32-11130	R0510-01A3	2	R-035
12Y-32-11130	R0510-01A4	2	R-035A
12Y-32-11140	R0322-01A0	9	R-013
12Y-32-11140	R0322-01A1	9	R-015
12Y-32-11140	R0322-01A5	9	R-015B
12Y-32-11140	R0500-01A0	9	R-017
12Y-32-11140	R0500-01A1	9	R-019
12Y-32-11140	R0500-01A2	9	R-021
12Y-32-11140	R0500-01A3	9	R-023
12Y-32-11140	R0510-01A0	9	R-029
12Y-32-11140	R0510-01A1	9	R-031
12Y-32-11140	R0510-01A2	9	R-033
12Y-32-11150	R0322-01A0	10	R-013
12Y-32-11150	R0322-01A1	10	R-015
12Y-32-11150	R0322-01A5	10	R-015B
12Y-32-11150	R0500-01A0	10	R-017
12Y-32-11150	R0500-01A1	10	R-019
12Y-32-11150	R0500-01A2	10	R-021
12Y-32-11150	R0500-01A3	10	R-023
12Y-32-11150	R0500-01A4	10	R-025

PARTS Nº	FIG. Nº	INDEX	PAGE
12Y-32-11150	R0500-01A5	10	R-027
12Y-32-11150	R0510-01A0	10	R-029
12Y-32-11150	R0510-01A1	10	R-031
12Y-32-11150	R0510-01A2	10	R-033
12Y-32-11150	R0510-01A3	10	R-035
12Y-32-11150	R0510-01A4	10	R-035A
12Y-32-11190	R0322-01A0	8	R-013
12Y-32-11190	R0322-01A1	8	R-015
12Y-32-11190	R0322-01A3	8	R-015A
12Y-32-11190	R0322-01A5	8	R-015B
12Y-32-11190	R0500-01A0	8	R-017
12Y-32-11190	R0500-01A1	8	R-019
12Y-32-11190	R0500-01A2	8	R-021
12Y-32-11190	R0500-01A3	8	R-023
12Y-32-11190	R0500-01A4	8	R-025
12Y-32-11190	R0500-01A5	8	R-027
12Y-32-11190	R0500-01A6	8	R-027A
12Y-32-11190	R0500-01A7	8	R-027B
12Y-32-11190	R0500-01A8	8	R-027C
12Y-32-11190	R0500-01A9	8	R-027D
12Y-32-11190	R0500-01B0	8	R-027E
12Y-32-11190	R0500-01B1	8	R-027F
12Y-32-11190	R0510-01A0	8	R-029
12Y-32-11190	R0510-01A1	8	R-031
12Y-32-11190	R0510-01A2	8	R-033
12Y-32-11190	R0510-01A3	8	R-035
12Y-32-11190	R0510-01A4	8	R-035A
12Y-32-11240	R0500-01A4	9	R-025
12Y-32-11240	R0500-01A5	9	R-027
12Y-32-11240	R0510-01A3	9	R-035
12Y-32-11240	R0510-01A4	9	R-035A
12Y-32-11310	R0322-01A0	13	R-013
12Y-32-11310	R0322-01A1	13	R-015
12Y-32-11310	R0500-01A0	17	R-017
12Y-32-11310	R0500-01A1	17	R-019
12Y-32-11310	R0500-01A2	17	R-021
12Y-32-11310	R0500-01A3	17	R-023
12Y-32-11310	R0500-01A4	17	R-025
12Y-32-11310	R0500-01A5	17	R-027
12Y-32-11310	R0510-01A0	17	R-029
12Y-32-11310	R0510-01A2	17	R-033
12Y-32-11310	R0510-01A3	17	R-035
12Y-32-11310	R0510-01A4	17	R-035A
12Y-32-11340	R0500-01A1	13	R-019
12Y-32-11340	R0500-01A1	16	R-019
12Y-32-11340	R0500-01A5	13	R-027
12Y-32-11340	R0500-01A5	16	R-027
12Y-32-11350	R0510-01A0	13	R-029
12Y-32-11350	R0510-01A0	16	R-029
12Y-32-11350	R0510-01A3	13	R-035
12Y-32-11350	R0510-01A3	16	R-035
12Y-32-11360	R0500-01A2	13	R-021
12Y-32-11360	R0500-01A2	16	R-021
12Y-32-11370	R0500-01A3	13	R-023
12Y-32-11370	R0500-01A3	16	R-023
12Y-32-11380	R0510-01A2	13	R-033
12Y-32-11380	R0510-01A2	16	R-033
12Y-32-11380	R0510-01A4	13	R-035A
12Y-32-11380	R0510-01A4	16	R-035A
12Y-32-11410	R0322-01A5	13	R-015B
12Y-32-11410	R0510-01A1	17	R-031
12Y-32-15110	R0500-01A6	14	R-027A
12Y-32-15110	R0500-01A6	17	R-027A
12Y-32-15220	R0500-01A6	16	R-027A
12Y-32-15220	R0500-01A7	16	R-027B
12Y-32-15220	R0500-01A8	16	R-027C
12Y-32-15220	R0500-01A9	16	R-027D
12Y-32-15220	R0500-01B0	16	R-027E
12Y-32-15220	R0500-01B1	16	R-027F
12Y-32-15310	R0322-01A3	14	R-015A
12Y-32-15310	R0500-01A6	18	R-027A
12Y-32-15310	R0500-01A7	18	R-027B
12Y-32-15310	R0500-01A8	18	R-027C
12Y-32-15310	R0500-01A9	18	R-027D
12Y-32-15310	R0500-01B0	18	R-027E
12Y-32-15310	R0500-01B1	18	R-027F
12Y-32-15340	R0500-01A8	14	R-027C
12Y-32-15340	R0500-01A8	17	R-027C
12Y-32-15350	R0500-01B0	14	R-027E
12Y-32-15350	R0500-01B0	17	R-027E
12Y-32-15360	R0500-01A7	14	R-027B
12Y-32-15360	R0500-01A7	17	R-027B
12Y-32-15370	R0500-01A9	14	R-027D
12Y-32-15370	R0500-01A9	17	R-027D
12Y-32-15380	R0500-01B1	14	R-027F
12Y-32-15380	R0500-01B1	17	R-027F
12Y-32-15610	R0322-01A3	1	R-015A
12Y-32-15610	R0500-01A6	1	R-027A
12Y-32-15610	R0500-01A7	1	R-027B
12Y-32-15610	R0500-01A8	1	R-027C
12Y-32-15610	R0500-01A9	1	R-027D
12Y-32-15610	R0500-01B0	1	R-027E
12Y-32-15610	R0500-01B1	1	R-027F
12Y-32-15630	R0322-01A3	2	R-015A
12Y-32-15630	R0500-01A6	2	R-027A
12Y-32-15630	R0500-01A7	2	R-027B
12Y-32-15630	R0500-01A8	2	R-027C
12Y-32-15630	R0500-01A9	2	R-027D
12Y-32-15630	R0500-01B0	2	R-027E
12Y-32-15630	R0500-01B1	2	R-027F
12Y-32-15640	R0322-01A3	9	R-015A
12Y-32-15640	R0500-01A6	9	R-027A
12Y-32-15640	R0500-01A7	9	R-027B
12Y-32-15640	R0500-01A8	9	R-027C
12Y-32-15640	R0500-01A9	9	R-027D
12Y-32-15640	R0500-01B0	9	R-027E
12Y-32-15640	R0500-01B1	9	R-027F
12Y-32-15650	R0322-01A3	10	R-015A
12Y-32-15650	R0500-01A6	10	R-027A
12Y-32-15650	R0500-01A7	10	R-027B
12Y-32-15650	R0500-01A8	10	R-027C
12Y-32-15650	R0500-01A9	10	R-027D
12Y-32-15650	R0500-01B0	10	R-027E
12Y-32-15650	R0500-01B1	10	R-027F
12Y-32-15730	R0322-01A3	11	R-015A
12Y-32-15730	R0500-01A6	11	R-027A
12Y-32-15730	R0500-01A7	11	R-027B
12Y-32-15730	R0500-01A8	11	R-027C
12Y-32-15730	R0500-01A9	11	R-027D
12Y-32-15730	R0500-01B0	11	R-027E
12Y-32-15730	R0500-01B1	11	R-027F
12Y-43-12102	K0210-35A0	1	K-085
12Y-43-12102	K0410-10A0	1	K-149
12Y-43-12114	K0210-40A0	1	K-095
12Y-43-12114	K0410-15A0	1	K-159
12Y-43-12130	K0210-40A0	26	K-095
12Y-43-12130	K0410-15A0	26	K-159
12Y-43-12143	K0210-40A0	4	K-095
12Y-43-12143	K0410-15A0	4	K-159
12Y-43-12160	K0210-40A0	33	K-095
12Y-43-12160	K0210-41A0	8	K-097
12Y-43-12160	K0410-15A0	33	K-159
12Y-43-12160	K0410-16A0	8	K-161
12Y-43-12172	K0210-40A0	12	K-095
12Y-43-12172	K0210-40A0	21	K-095
12Y-43-12172	K0210-41A0	16	K-097
12Y-43-12172	K0410-15A0	12	K-159
12Y-43-12172	K0410-15A0	21	K-159
12Y-43-12172	K0410-16A0	16	K-161
12Y-43-12190	K0210-41A0	15	K-097
12Y-43-12190	K0410-16A0	15	K-161
12Y-43-12202	K0210-37A0	1	K-089
12Y-43-12202	K0410-12A0	1	K-153
12Y-43-12213	K0210-41A0	2	K-097
12Y-43-12213	K0410-16A0	2	K-161
12Y-43-12221	K0210-52A0	10	K-117
12Y-43-12221	K0210-53A0	10	K-117A
12Y-43-12221	K0410-26A0	10	K-181
12Y-43-12221	K0410-26A0A	10	K-181A
12Y-43-12243	K0210-40A0	2	K-095

PARTS Nº	FIG. Nº	INDEX	PAGE
12Y-43-12243	K0410-15A0	2	K-159
12Y-43-12253	K0210-41A0	1	K-097
12Y-43-12253	K0410-16A0	1	K-161
12Y-43-12273	K0210-40A0	11	K-095
12Y-43-12273	K0410-15A0	11	K-159
12Y-43-12280	K0210-52A0	14	K-117
12Y-43-12280	K0210-53A0	14	K-117A
12Y-43-12280	K0410-26A0	14	K-181
12Y-43-12280	K0410-26A0A	14	K-181A
12Y-43-12290	K0210-40A0	20	K-095
12Y-43-12290	K0410-15A0	20	K-159
12Y-43-12303	K0210-40A0	1	K-095
12Y-43-12303	K0210-41A0	1	K-097
12Y-43-12303	K0410-15A0	1	K-159
12Y-43-12303	K0410-16A0	1	K-161
12Y-43-12414	K0210-35A0	1	K-085
12Y-43-12414	K0410-10A0	1	K-149
12Y-43-12422	K0210-35A0	5	K-085
12Y-43-12422	K0410-10A0	5	K-149
12Y-43-12432	K0210-35A0	6	K-085
12Y-43-12432	K0410-10A0	6	K-149
12Y-43-12440	K0210-36A0	6	K-087
12Y-43-12440	K0410-11A0	6	K-151
12Y-43-12452	K0210-36A0	2	K-087
12Y-43-12452	K0410-11A0	2	K-151
12Y-43-12470	K0210-36A0	3	K-087
12Y-43-12470	K0410-11A0	3	K-151
12Y-43-12480	K0210-36A0	7	K-087
12Y-43-12480	K0410-11A0	7	K-151
12Y-43-12491	K0210-35A0	12	K-085
12Y-43-12491	K0410-10A0	12	K-149
12Y-43-12514	K0210-37A0	1	K-089
12Y-43-12514	K0410-12A0	1	K-153
12Y-43-12520	K0210-37A0	2	K-089
12Y-43-12520	K0410-12A0	2	K-153
12Y-43-12532	K0210-37A0	4	K-089
12Y-43-12532	K0410-12A0	4	K-153
12Y-43-12542	K0210-37A0	5	K-089
12Y-43-12542	K0410-12A0	5	K-153
12Y-43-12552	K0210-37A0	11	K-089
12Y-43-12552	K0410-12A0	11	K-153
12Y-43-12561	K0210-37A0	19	K-089
12Y-43-12561	K0410-12A0	19	K-153
12Y-43-12570	K0210-37A0	24	K-089
12Y-43-12570	K0410-12A0	24	K-153
12Y-43-12713	K0210-39A0	1	K-093
12Y-43-12713	K0410-14A0	1	K-157
12Y-43-12724	K0210-39A0	16	K-093
12Y-43-12724	K0410-14A0	16	K-157
12Y-43-12732	K0210-39A0	13	K-093
12Y-43-12732	K0410-14A0	13	K-157
12Y-43-12741	K0210-39A0	25	K-093
12Y-43-12741	K0410-14A0	25	K-157
12Y-43-12754	K0210-39A0	5	K-093
12Y-43-12754	K0410-14A0	5	K-157
12Y-43-12762	K0210-39A0	21	K-093
12Y-43-12762	K0410-14A0	21	K-157
12Y-43-12770	K0210-39A0	10	K-093
12Y-43-12770	K0410-14A0	10	K-157
12Y-43-12781	K0210-39A0	24	K-093
12Y-43-12781	K0410-14A0	24	K-157
12Y-43-12790	K0210-39A0	11	K-093
12Y-43-12790	K0410-14A0	11	K-157
12Y-43-12830	K0210-39A0	17	K-093
12Y-43-12830	K0410-14A0	17	K-157
12Y-43-12841	K0210-39A0	2	K-093
12Y-43-12841	K0410-14A0	2	K-157
12Y-43-12852	K0210-39A0	18	K-093
12Y-43-12852	K0410-14A0	18	K-157
12Y-43-12861	K0210-23A0	14	K-063
12Y-43-12861	K0210-32A0	32	K-080
12Y-43-12861	K0210-43A0	26	K-101
12Y-43-12861	K0210-44A0	13	K-103
12Y-43-12861	K0410-18A0	26	K-165
12Y-43-12861	K0410-19A0	13	K-167
12Y-43-12880	K0210-39A0	12	K-093
12Y-43-12880	K0410-14A0	12	K-157
12Y-49-11242	H0420-01A0	2	H-133
12Y-49-11252	H0420-01A0	4	H-133
12Y-49-11262	H0420-01A0	1	H-133
12Y-49-11272	H0420-01A0	3	H-133
12Y-49-11421	H0420-01A0	13	H-133
12Y-49-11432	H0420-01A0	12	H-133
12Y-49-11442	H0420-01A0	8	H-133
12Y-49-11450	H0420-01A0	9	H-133
12Y-49-11461	H0320-01A0	12	H-053
12Y-49-11471	H0320-01A0	13	H-053
12Y-49-11480	H0320-01A0	14	H-053
12Y-49-11480	H0420-01A0	5	H-133
12Y-49-11491	H0420-01A0	14	H-133
12Y-49-11521	H0410-01A2	1	H-131
12Y-49-11540	H0420-01A0	16	H-133
12Y-49-11551	H0420-01A0	11	H-133
12Y-50-11111	J2710-01A0	1	J-009
12Y-50-11121	J2700-01A0	1	J-007
12Y-50-11130	J2700-01A0	5	J-007
12Y-50-11140	J2700-01A0	6	J-007
12Y-50-11150	J2700-01A0	3	J-007
12Y-50-11160	J2700-01A0	4	J-007
12Y-50-11170	J2750-01A0	14	J-011
12Y-50-11190	J2750-01A0	18	J-011
12Y-50-11212	J2750-01A0	10	J-011
12Y-50-11222	J2750-01A0	11	J-011
12Y-50-11230	J2750-01A0	12	J-011
12Y-50-11240	J2750-01A0	13	J-011
12Y-50-11270	J2710-01A0	7	J-009
12Y-50-11280	J2710-01A0	12	J-009
12Y-50-11290	J2710-01A0	6	J-009
12Y-50-12111	J2710-01A0	1	J-009
12Y-50-12121	J2700-01A0	1	J-007
12Y-54-11114	M2140-01A0	13	M-005
12Y-54-11115	M2140-01A0	13	M-005
12Y-54-11116	M2140-01A0	13	M-005
12Y-54-11117	M2140-01A0	13	M-005
12Y-54-11119	M2140-01A0	13	M-005
12Y-54-11132	M2140-01A2	10	M-009
12Y-54-11143	M2140-01A0	1	M-005
12Y-54-11143	M2140-02A0	1	M-013
12Y-54-11160	M2140-01A0	6	M-005
12Y-54-11160	M2140-02A0	6	M-013
12Y-54-11173	M2140-01A0	4	M-005
12Y-54-11173	M2140-02A0	4	M-013
12Y-54-11181	B0000-55A0	11	B-065
12Y-54-11181	B0000-58A0	11	B-068
12Y-54-11181	B0000-58A1	10	B-068A
12Y-54-11275	M2140-01A1	8	M-007
12Y-54-11350	K2120-01A0	1	K-209
12Y-54-11361	K2120-01A0	9	K-209
12Y-54-11440	M2140-01A3	17	M-011
12Y-54-11450	M2140-01A3	18	M-011
12Y-54-11521	M2200-01A0	1	M-017
12Y-54-11630	M2140-01A0	16	M-005
12Y-54-11630	M2140-02A0	22	M-013
12Y-54-11770	M2140-01A3	19	M-011
12Y-54-11812	M2140-02A0	9	M-013
12Y-54-11813	M2140-01A0	9	M-005
12Y-54-11822	M2140-02A0	8	M-013
12Y-54-11823	M2140-01A0	8	M-005
12Y-54-11860	K0210-30A0	10	K-077
12Y-54-11860	K0410-04A0	10	K-135
12Y-54-11870	D0100-01A0	8	D-001
12Y-54-11870	D0100-01A0A	6	D-001A
12Y-54-11880	K0210-30A0	11	K-077
12Y-54-11910	K2120-01A0	26	K-209
12Y-54-11921	K2120-01A0	19	K-209
12Y-54-11922	K2120-01A0	19	K-209
12Y-54-11931	K2120-01A0	22	K-209
12Y-54-11941	H0100-01A1	20	H-003
12Y-54-11941	H0100-01B1	26	H-004
12Y-54-11941	H0100-01B2	21	H-004A

PARTS N°	FIG. N°	INDEX	PAGE
12Y-54-11941	H0100-01B3	21	H-004B
12Y-54-11951	D0100-01A0	9	D-001
12Y-54-11951	D0100-01A0A	7	D-001A
12Y-54-11951	H0100-01A1	21	H-003
12Y-54-11951	H0100-01B1	27	H-004
12Y-54-11951	H0100-01B2	22	H-004A
12Y-54-11951	H0100-01B3	22	H-004B
12Y-54-11973	M2140-01A0	14	M-005
12Y-54-11973	M2140-02A0	14	M-013
12Y-54-11991	M2140-01A0	15	M-005
12Y-54-11991	M2140-02A0	15	M-013
12Y-54-12111	M2140-01A1	9	M-007
12Y-54-12111	M2140-01A2	11	M-009
12Y-54-12111	M2140-02A2	10	M-015
12Y-54-12112	M2140-01A1	9	M-007
12Y-54-12112	M2140-01A2	11	M-009
12Y-54-12152	M2140-01A0	2	M-005
12Y-54-12160	M2140-01A1	10	M-007
12Y-54-12160	M2140-01A2	12	M-009
12Y-54-12160	M2140-02A2	11	M-015
12Y-54-12190	K2120-01A0	25	K-209
12Y-54-12211	M2140-01A3	20	M-011
12Y-54-12220	M2140-01A3	21	M-011
12Y-54-12230	M2140-01A3	22	M-011
12Y-54-12240	M2140-01A3	23	M-011
12Y-54-12250	M2140-01A3	24	M-011
12Y-54-12260	M2140-01A3	25	M-011
12Y-54-12711	K2800-01A0	3	K-217
12Y-54-12721	K2800-01A0	4	K-217
12Y-54-12730	K2800-01A0	5	K-217
12Y-54-12831	M2140-01A3	26	M-011
12Y-54-13111	V0300-01A0	3	V-001
12Y-54-13112	V0300-01A0	3	V-001
12Y-54-13113	V0300-01A0	3	V-001
12Y-54-13120	M2140-01A3	27	M-011
12Y-54-14111	V0300-01A0	4	V-001
12Y-54-14121	V0300-01A0	5	V-001
12Y-54-14220	M2140-01A3	2	M-011
12Y-57-11113	K0110-01A0	5	K-001
12Y-57-11113	K0110-01A1	5	K-003
12Y-57-11113	K0110-01A2	5	K-005
12Y-57-11113	K0110-01A3	5	K-007
12Y-57-11113	K0110-01A4	4	K-009
12Y-57-11113	K0210-18A0	40	K-053
12Y-57-11123	K0110-01A0	8	K-001
12Y-57-11123	K0110-01A1	8	K-003
12Y-57-11123	K0110-01A2	8	K-005
12Y-57-11123	K0110-01A3	8	K-007
12Y-57-11131	K0210-18A0	41	K-053
12Y-57-11142	K0110-01A4	7	K-009
12Y-57-11143	K0110-01A4	7	K-009
12Y-57-11150	K0110-01A4	10	K-009
12Y-57-11161	K0110-01A0	11	K-001
12Y-57-11161	K0110-01A1	11	K-003
12Y-57-11161	K0110-01A2	11	K-005
12Y-57-11161	K0110-01A3	11	K-007
12Y-57-11161	K0110-01A4	12	K-009
12Y-57-11161	K0210-18A0	44	K-053
12Y-57-11170	K0210-18A0	45	K-053
12Y-57-11181	K0210-18A0	46	K-053
12Y-57-11211	K0160-01A0	1	K-015
12Y-57-11212	K0160-01A0	1	K-015
12Y-57-11213	K0160-01A0	1	K-015
12Y-57-11220	K0160-01A0	3	K-015
12Y-57-11230	K0160-01A1	1	K-017
12Y-57-11231	K0160-01A1	1	K-017
12Y-57-11232	K0160-01A1	1	K-017
12Y-57-11240	K0160-01A1	3	K-017
12Y-57-11300	K0110-01A3	1	K-007
12Y-57-11400	K0110-01A2	1	K-005
12Y-57-11500	K0110-01A0	1	K-001
12Y-57-11600	K0110-01A1	1	K-003
12Y-57-11700	K0110-01A1	1	K-003
12Y-60-11115	H0100-01A1	1	H-003
12Y-60-11116	H0100-01A1	1	H-003
12Y-60-11117	H0100-01A1	1	H-003
12Y-60-11123	H0100-01A2	10	H-005
12Y-60-11124	H0100-01A2	10	H-005
12Y-60-11125	H0100-01A2	10	H-005
12Y-60-11133	H0100-01A2	1	H-005
12Y-60-11171	H0330-01A0	1	H-057
12Y-60-11171	H0330-02A0	1	H-059
12Y-60-11281	H0100-01A2	13	H-005
12Y-60-11282	H0100-01A2	13	H-005
12Y-60-11291	H0100-01A2	4	H-005
12Y-60-11292	H0100-01A2	4	H-005
12Y-60-11421	J2110-01A0	5	J-005
12Y-60-11431	J2110-01A0	6	J-005
12Y-60-11432	J2110-01A0	6	J-005
12Y-60-11433	J2110-01A0	6	J-005
12Y-60-11442	J2110-01A0	7	J-005
12Y-60-11461	J2110-01A0	8	J-005
12Y-60-11472	J2110-01A0	9	J-005
12Y-60-11482	J2110-01A0	10	J-005
12Y-60-11491	J2110-01A0	11	J-005
12Y-60-11512	J2110-01A0	12	J-005
12Y-60-11550	B0000-58A0	54	B-068
12Y-60-11550	B0000-58A1	29	B-068A
12Y-60-11550	E0210-01A0	15	E-011
12Y-60-11561	J2110-01A0	13	J-005
12Y-60-11570	J2110-01A0	14	J-005
12Y-60-11720	H0330-02A0	10	H-059
12Y-60-11740	H0330-02A0	10	H-059
12Y-60-11770	H0330-02A0	8	H-059
12Y-60-11780	H0330-02A0	9	H-059
12Y-60-11790	H0330-02A0	10	H-059
12Y-60-11820	H0100-01A1	1	H-003
12Y-60-11820	H0100-01B1	1	H-004
12Y-60-11823	H0100-01B2	1	H-004A
12Y-60-11824	H0100-01B3	1	H-004B
12Y-62-11131	H0430-01A4	2	H-143
12Y-62-11151	H0200-01A5	1	H-019
12Y-62-11152	H0200-01A5	1	H-019
12Y-62-11321	H0400-01A1	19	H-121
12Y-62-11331	H0400-01A1	20	H-121
12Y-62-11331	H2250-01A0	20	H-179
12Y-62-11352	H0510-01A0	7	H-159
12Y-62-11362	H0510-01A0	8	H-159
12Y-62-11414	H0400-01A2	3	H-123
12Y-62-11421	H0400-01A2	15	H-123
12Y-62-11442	H0400-01A2	7	H-123
12Y-62-11472	H0400-01A2	10	H-123
12Y-62-11480	H0100-01A1	11	H-003
12Y-62-11480	H0100-01B1	17	H-004
12Y-62-11480	H0100-01B2	12	H-004A
12Y-62-11480	H0100-01B3	12	H-004B
12Y-62-11511	T0640-01A0	3	T-025
12Y-62-11521	T0640-01A0	4	T-025
12Y-62-11533	T0640-01A0	5	T-025
12Y-62-11534	T0640-01A0	5	T-025
12Y-62-11540	T0640-01A0	6	T-025
12Y-62-11540	T0640-01A0	6	T-025
12Y-62-11554	T0640-01A0	7	T-025
12Y-62-11555	T0640-01A0	7	T-025
12Y-62-11572	H0520-01A1	13	H-165
12Y-62-11583	H0510-01A1	15	H-161
12Y-62-11593	H0510-01A1	16	H-161
12Y-62-11661	B0000-54A0	18	B-063
12Y-62-11661	H0200-01A3	5	H-011
12Y-62-11661	H0200-01A4	5	H-015
12Y-62-11661	H0320-01A0	30	H-053
12Y-62-11661	K2520-01A2	8	K-215
12Y-62-11661	K2520-02A1	10	K-216A
12Y-62-11721	D0210-01A0	33	D-011
12Y-62-11721	D0220-02A0	16	D-015
12Y-62-11753	H0400-01A2	16	H-123
12Y-62-11754	H0400-01A2	16	H-123
12Y-62-11790	H0100-01A1	5	H-003
12Y-62-11790	H0100-01B1	5	H-004
12Y-62-11790	H0100-01B2	5	H-004A

PARTS N°	FIG. N°	INDEX	PAGE
12Y-62-11790	H0100-01B3	5	H-004B
12Y-62-11812	H0520-01A1	14	H-165
12Y-62-11821	H0520-01A1	15	H-165
12Y-62-11K90	K0700-01A0A	2	K-191A
12Y-62-12190	B0000-54A0	6	B-063
12Y-62-12330	K0700-01A0	11	K-191
12Y-62-12330	K0700-01A0	2	K-191
12Y-62-12330	K0700-01A0A	21	K-191A
12Y-62-12330	K0700-01A0A	22	K-191A
12Y-62-12330	K0700-01A0A	25	K-191A
12Y-62-12330	K0700-01A0A	26	K-191A
12Y-62-12340	K0700-01A0	12	K-191
12Y-62-12340	K0700-01A0A	24	K-191A
12Y-62-12350	K0700-01A0	3	K-191
12Y-62-12361	H0500-01A0	17	H-155
12Y-62-12361	H0500-01A0	22	H-155
12Y-62-12361	H0500-01A0	30	H-155
12Y-62-12361	H2250-01A0	21	H-179
12Y-62-12361	T0700-01A0	20	T-027
12Y-62-12421	H0400-01A2	1	H-123
12Y-62-12442	H0410-01A0	1	H-127
12Y-62-12451	H0410-01A1	1	H-129
12Y-62-12490	D0210-01A0	34	D-011
12Y-62-12510	D0210-01A0	35	D-011
12Y-62-12510	H0430-01A2	9	H-139
12Y-62-12510	H0520-01A0	7	H-163
12Y-62-12521	H0430-01A2	4	H-139
12Y-62-12531	H0430-01A4	18	H-143
12Y-62-12561	H0430-01A4	21	H-143
12Y-62-12660	H0430-01A2	3	H-139
12Y-62-12690	H0410-01A0	10	H-127
12Y-62-12712	H0500-01A0	19	H-155
12Y-62-12712	H0500-01A0	32	H-155
12Y-62-12732	H0500-01A0	24	H-155
12Y-62-12732	H0500-01A0	37	H-155
12Y-62-12733	H0500-01A0	24	H-155
12Y-62-12733	H0500-01A0	37	H-155
12Y-62-12770	H0410-01A0	2	H-127
12Y-62-12780	H0410-01A0	4	H-127
12Y-62-12791	H0410-01A0	20	H-127
12Y-62-12823	H0430-01A2	10	H-139
12Y-62-12833	H0430-01A2	2	H-139
12Y-62-12850	H0200-01A3	9	H-011
12Y-62-12850	H0200-01A4	9	H-015
12Y-62-12860	H0410-01A0	8	H-127
12Y-62-12920	H0510-01A1	17	H-161
12Y-62-12941	H0510-01A1	18	H-161
12Y-62-12950	H0510-01A1	19	H-161
12Y-62-12960	H0410-01A1	4	H-129
12Y-62-12971	H0510-01A1	20	H-161
12Y-62-12990	H0510-01A1	21	H-161
12Y-62-13121	K2110-01A0	14	K-207
12Y-62-13131	K2110-01A0	15	K-207
12Y-62-13141	H0510-01A0	2	H-159
12Y-62-13151	H0510-01A0	1	H-159
12Y-62-13171	H0520-01A0	1	H-163
12Y-62-13171	H0520-01A0	2	H-163
12Y-62-13181	H0500-01A0	6	H-155
12Y-62-13191	H0500-01A0	11	H-155
12Y-62-13251	H0500-01A0	13	H-155
12Y-62-13261	H0500-01A0	21	H-155
12Y-62-13291	D0220-02A0	17	D-015
12Y-62-13291	H0520-01A0	6	H-163
12Y-62-13320	K2520-01A2	5	K-215
12Y-62-13330	K2520-01A2	6	K-215
12Y-62-13331	K2520-01A2	6	K-215
12Y-62-13332	K2520-01A2	6	K-215
12Y-62-13340	B0000-54A0	19	B-063
12Y-62-13340	K0700-01A0A	20	K-191A
12Y-62-13340	K2520-01A2	7	K-215
12Y-62-13340	K2520-02A1	12	K-216A
12Y-62-13351	K2110-01A0	11	K-207
12Y-62-13361	K2110-01A0	12	K-207
12Y-62-13370	K2110-01A0	13	K-207
12Y-62-13390	H0500-01A0	24A	H-155
12Y-62-13390	H0500-01A0	37A	H-155
12Y-62-13480	H0520-01A1	1A	H-165
12Y-62-13490	B0000-54A0	7	B-063
12Y-62-13491	B0000-57A0	11	B-067
12Y-62-13491	B0000-60A0	11	B-070
12Y-62-13510	B0000-54A0	8	B-063
12Y-62-13520	B0000-54A0	5	B-063
12Y-62-13520	B0000-57A0	16	B-067
12Y-62-13520	B0000-57A0	5	B-067
12Y-62-13520	B0000-60A0	16	B-070
12Y-62-13520	B0000-60A0	5	B-070
12Y-62-13530	H0410-01A0	13	H-127
12Y-62-13540	B0000-54A0	13	B-063
12Y-62-13550	B0000-54A0	9	B-063
12Y-62-13550	B0000-57A0	15	B-067
12Y-62-13550	B0000-60A0	15	B-070
12Y-62-13560	B0000-54A0	11	B-063
12Y-62-13561	B0000-57A0	9	B-067
12Y-62-13561	B0000-60A0	9	B-070
12Y-62-13571	H0410-01A0	15	H-127
12Y-62-13580	B0000-54A0	16	B-063
12Y-62-13590	B0000-54A0	15	B-063
12Y-62-13590	B0000-57A0	18	B-067
12Y-62-13590	B0000-60A0	18	B-070
12Y-62-13611	H0410-01A0	9	H-127
12Y-62-13632	H0520-01A1	16	H-165
12Y-62-13632	H0520-01A1	17	H-165
12Y-62-13671	H0520-01A1	18	H-165
12Y-62-13682	H0430-01A2	12	H-139
12Y-62-13691	H0430-01A2	20	H-139
12Y-62-13691	H2250-01A0	22	H-179
12Y-62-13701	H0440-01A0	1	H-149
12Y-62-13712	H0430-01A2	11	H-139
12Y-62-13722	H0430-01A2	1	H-139
12Y-62-13732	H0400-01A1	21	H-121
12Y-62-13742	H0400-01A1	22	H-121
12Y-62-13750	H0400-01A1	23	H-121
12Y-62-13761	H0400-01A1	24	H-121
12Y-62-13772	H0400-01A3	2	H-125
12Y-62-13782	H0400-01A3	8	H-125
12Y-62-13791	H0400-01A3	1	H-125
12Y-62-13811	H0410-01A0	14	H-127
12Y-62-13820	H0430-01A4	19	H-143
12Y-62-13831	H0410-01A0	16	H-127
12Y-62-13840	H0410-01A0	21	H-127
12Y-62-13870	H0320-01A0	17	H-053
12Y-62-13870	H0420-01A0	7	H-133
12Y-62-13890	H0400-01A1	25	H-121
12Y-62-13910	H0500-01A0	29	H-155
12Y-62-13921	H0500-01A0	34	H-155
12Y-62-13930	H0500-01A0	35	H-155
12Y-62-13951	H0510-01A1	22	H-161
12Y-62-13961	H0510-01A1	23	H-161
12Y-62-13970	H0500-01A0	18	H-155
12Y-62-13970	H0500-01A0	23	H-155
12Y-62-13970	H0500-01A0	31	H-155
12Y-62-13970	H0500-01A0	36	H-155
12Y-62-13970	H2250-01A0	23	H-179
12Y-62-13970	T0700-01A0	21	T-027
12Y-62-13980	H0500-01A0	2	H-155
12Y-62-13990	H0320-01A0	25	H-053
12Y-62-14010	H0400-01A1	26	H-121
12Y-62-14022	H0400-01A1	27	H-121
12Y-62-14023	H0400-01A1	27	H-121
12Y-62-14030	H0400-01A1	28	H-121
12Y-62-14111	H0550-01A0	2	H-167
12Y-62-14121	H0550-01A0	1	H-167
12Y-62-14130	H0550-01A0	10	H-167
12Y-62-14130	H2250-01A0	24	H-179
12Y-62-14150	H0200-01A4	17	H-015
12Y-62-14170	H2250-01A0	25	H-179
12Y-62-14180	H2250-01A0	26	H-179
12Y-62-14210	H2250-01A0	27	H-179
12Y-62-14220	H2250-01A0	28	H-179
12Y-62-14231	H2250-01A0	29	H-179

PARTS Nº	FIG. Nº	INDEX	PAGE
12Y-62-14241	H2250-01A0	30	H-179
12Y-62-14270	H2250-01A0	31	H-179
12Y-62-14280	H2250-01A0	32	H-179
12Y-62-14310	H2250-01A0	33	H-179
12Y-62-14340	K2110-01A0	4A	K-207
12Y-62-14350	B0000-54A0	17	B-063
12Y-62-14360	B0000-54A0	20	B-063
12Y-62-14371	H0100-01B1	12	H-004
12Y-62-14610	D0220-02A0	49	D-015
12Y-62-14630	K2110-01A0	10	K-207
12Y-62-14940	B0000-57A0	17	B-067
12Y-62-14940	B0000-57A0	6	B-067
12Y-62-14940	B0000-60A0	17	B-070
12Y-62-14940	B0000-60A0	6	B-070
12Y-62-14970	B0000-54A0	10	B-063
12Y-62-14970	B0000-54A0	12	B-063
12Y-62-14970	B0000-54A0	14	B-063
12Y-62-14970	B0000-57A0	10	B-067
12Y-62-14970	B0000-57A0	12	B-067
12Y-62-14970	B0000-57A0	14	B-067
12Y-62-14970	B0000-60A0	10	B-070
12Y-62-14970	B0000-60A0	12	B-070
12Y-62-14970	B0000-60A0	14	B-070
12Y-62-15230	B0000-57A0	7	B-067
12Y-62-15230	B0000-60A0	7	B-070
12Y-62-15250	K0700-01A0A	8	K-191A
12Y-62-15261	K0700-01A0A	4	K-191A
12Y-62-15261	K0700-01A0A	7	K-191A
12Y-62-15270	K0700-01A1A	5	K-193A
12Y-62-15280	K0700-01A0A	3	K-191A
12Y-62-15280	K0700-01A0A	6	K-191A
12Y-62-15311	K0700-01A1A	13	K-193A
12Y-62-18280	E0210-01A2	34	E-011B
12Y-69-12110	T0800-01A0	18	T-029
12Y-72-11102	T0400-01A1	4	T-013
12Y-72-11103	T0400-01A1	4	T-013
12Y-72-11210	T0400-01A2	3	T-015
12Y-72-11210	T0450-01A2	3	T-021
12Y-72-11210	T0450-01B0	4	T-021A
12Y-72-11220	T0400-01A2	4	T-015
12Y-72-11220	T0450-01A2	4	T-021
12Y-72-11220	T0450-01B0	5	T-021A
12Y-72-11230	T0400-01A2	5	T-015
12Y-72-11242	T0630-01A0	12	T-023
12Y-72-11242	T0630-01A0	13	T-023
12Y-72-11252	T0630-01A0	14	T-023
12Y-72-11252	T0630-01A0	15	T-023
12Y-72-11262	T0640-01A0	8	T-025
12Y-72-11273	T0640-01A0	9	T-025
12Y-72-11322	T0400-01A1	5	T-013
12Y-72-11322	T0450-01A1	4	T-019
12Y-72-11323	T0400-01A1	5	T-013
12Y-72-11323	T0450-01A1	4	T-019
12Y-72-11324	T0400-01A1	5	T-013
12Y-72-11324	T0450-01A1	4	T-019
12Y-72-11403	T0100-01A0	3	T-001
12Y-72-11404	T0100-01A0	3	T-001
12Y-72-11405	T0100-01A0	3	T-001
12Y-72-11521	T0300-01B0	2	T-010
12Y-72-11540	T0300-01A0	8	T-009
12Y-72-11540	T0300-01A0A	8	T-009A
12Y-72-11540	T0300-01A0B	8	T-009B
12Y-72-11540	T0300-01B0	16	T-010
12Y-72-11541	T0300-01A0	8	T-009
12Y-72-11541	T0300-01A0A	8	T-009A
12Y-72-11541	T0300-01A0B	8	T-009B
12Y-72-11541	T0300-01B0	16	T-010
12Y-72-11561	T0300-01A0	7	T-009
12Y-72-11561	T0300-01A0A	7	T-009A
12Y-72-11561	T0300-01A0B	7	T-009B
12Y-72-11561	T0300-01B0	12	T-010
12Y-72-11562	T0300-01A0	7	T-009
12Y-72-11562	T0300-01A0A	7	T-009A
12Y-72-11562	T0300-01A0B	7	T-009B
12Y-72-11562	T0300-01B0	12	T-010
12Y-72-11571	T0300-01A0	6	T-009
12Y-72-11571	T0300-01A0A	6	T-009A
12Y-72-11571	T0300-01A0B	6	T-009B
12Y-72-11571	T0300-01B0	13	T-010
12Y-72-11572	T0300-01A0	6	T-009
12Y-72-11572	T0300-01A0A	6	T-009A
12Y-72-11572	T0300-01A0B	6	T-009B
12Y-72-11572	T0300-01B0	13	T-010
12Y-72-11611	T0300-01B0	1	T-010
12Y-72-11623	T0300-01B0	6	T-010
12Y-72-11640	T0200-01A1	5	T-005
12Y-72-11650	T0200-01A1	6	T-005
12Y-72-11651	T0200-01A1	6	T-005
12Y-72-11660	T0200-01A1	7	T-005
12Y-72-11661	T0200-01A1	7	T-005
12Y-72-11680	T0100-01A0	4	T-001
12Y-72-11720	T0630-01A0	16	T-023
12Y-72-11730	H0510-01A1	24	H-161
12Y-72-11741	T0300-01A0	1	T-009
12Y-72-11742	T0300-01A0	1	T-009
12Y-72-11743	T0300-01A0	1	T-009
12Y-72-11751	T0300-01A0A	1	T-009A
12Y-72-11752	T0300-01A0A	1	T-009A
12Y-72-11761	T0300-01A0B	1	T-009B
12Y-72-11762	T0300-01A0B	1	T-009B
12Y-72-12151	T0200-01A1	8	T-005
12Y-72-12161	T0200-01A1	9	T-005
12Y-72-12231	T0200-01A2	5	T-007
12Y-72-12231	T0200-01A3	4	T-007A
12Y-72-12240	T0200-01A3	3	T-007A
12Y-72-12251	T0100-01A0	5	T-001
12Y-72-12281	T0100-01A0	6	T-001
12Y-72-12350	T0100-01A0	7	T-001
12Y-72-12350	T0100-01A0	7	T-001
12Y-72-12360	T0200-01A1	10	T-005
12Y-72-12432	T0100-01A0	3B	T-001
12Y-72-12442	T0100-01A0	3A	T-001
12Y-72-13102	T0450-01A1	5	T-019
12Y-72-13103	T0450-01A1	5	T-019
12Y-72-14103	T0450-01B0	1	T-021A
12Y-72-14203	T0450-01B0	3	T-021A
12Y-72-14220	T0450-01B1	5	T-021B
12Y-72-14230	T0450-01B1	1	T-021B
12Y-72-14240	T0450-01B1	2	T-021B
12Y-72-14251	T0450-01B1	9	T-021B
12Y-72-14260	T0450-01B1	7	T-021B
12Y-72-14260	T0450-01B1	8	T-021B
12Y-72-14280	T0450-01B1	6	T-021B
12Y-72-14303	T0450-01B0	2	T-021A
12Y-72-14351	T0450-01B0	8	T-021A
12Y-78-11110	K2520-01A1	4	K-213
12Y-78-11130	K0210-38A0	5	K-091
12Y-78-11130	K0410-13A0	5	K-155
12Y-78-11140	K2520-01A1	7	K-213
12Y-78-11150	K0210-38A0	1	K-091
12Y-78-11150	K0410-13A0	1	K-155
12Y-78-11160	K2520-01A1	13	K-213
12Y-78-11180	K0210-38A0	4	K-091
12Y-78-11180	K0410-13A0	4	K-155
12Y-78-11231	T0700-01A0	22	T-027
12Y-78-11232	T0700-01A0	22	T-027
12Y-78-11241	T0700-01A0	23	T-027
12Y-78-11242	T0700-01A0	23	T-027
12Y-78-11251	H0550-01A1	6	H-169
12Y-78-11261	H0550-01A1	7	H-169
12Y-78-11320	T0700-01A0	24	T-027
12Y-78-11330	T0700-01A0	25	T-027
12Y-862-1110	M2140-02A0	16	M-013
12Y-862-1130	M2140-02A0	17	M-013
12Y-862-1140	M2140-02A0	18	M-013
12Y-862-1150	M2140-02A0	19	M-013
12Y-862-1160	M2140-02A0	20	M-013
12Y-862-1161	M2140-02A0	20	M-013
12Y-862-1190	M2140-02A0	4A	M-013
12Y-862-1210	M2140-02A2	12A	M-015

PARTS Nº	FIG. Nº	INDEX	PAGE
12Y-862-1220	M2140-02A2	12B	M-015
12Y-862-1230	M2140-02A0	2A	M-013
12Y-862-1250	J2100-01A1	12	J-003
12Y-862-1270	J2100-01A1	13	J-003
12Y-862-1280	J2100-01A1	14	J-003
12Y-862-1290	J2100-01A1	15	J-003
12Y-862-1301	M2140-02A0	13	M-013
12Y-862-1302	M2140-02A0	13	M-013
12Y-862-1303	M2140-02A0	13	M-013
12Y-862-1304	M2140-02A0	13	M-013
12Y-862-1305	M2140-02A0	13	M-013
12Y-862-1310	J2100-01A1	16	J-003
12Y-862-1320	J2100-01A1	17	J-003
12Y-862-1330	J2100-01A1	18	J-003
12Y-862-1340	J2100-01A1	19	J-003
12Y-862-1350	J2100-01A1	20	J-003
12Y-862-1360	J2100-01A1	21	J-003
12Y-862-1370	J2100-01A1	22	J-003
12Y-862-1380	J2100-01A1	23	J-003
12Y-862-1390	J2100-01A1	24	J-003
12Y-862-1400	M2140-02A0	4	M-013
12Y-862-1510	J2100-01A1	25	J-003
12Y-862-1520	J2100-01A1	26	J-003
12Y-862-1530	J2100-01A1	27	J-003
12Y-862-1540	J2100-01A1	28	J-003
12Y-862-1551	M2140-02A0	13	M-013
12Y-862-1552	M2140-02A0	13	M-013
12Y-862-1553	M2140-02A0	13	M-013
12Y-862-1554	M2140-02A0	13	M-013
12Y-862-1560	M2140-02A0	4	M-013
12Y-862-1571	M2140-02A0	2	M-013
12Y-862-1580	M2140-02A0	2	M-013
12Y-862-1590	M2140-02A2	12	M-015
12Y-862-1591	M2140-02A2	12	M-015
12Y-862-1650	M2140-02A2	12	M-015
12Y-862-1651	M2140-02A2	12	M-015
12Y-911-1111	K2900-01A2	3	K-221
12Y-911-1113	K2900-01A4A	1	K-225A
12Y-911-1120	K2900-01A4A	4	K-225A
12Y-911-1131	K2900-01A0	6	K-219
12Y-911-1132	K2900-01A4A	15	K-225A
12Y-960-1111	H2250-01A0	34	H-179
12Y-960-1120	H2250-01A0	35	H-179
12Y-960-1131	H2250-01A0	36	H-179
12Y-960-1140	K2520-02A0	10	K-216
12Y-960-1161	H2250-01A0	37	H-179
12Y-960-1171	K2520-02A0	15	K-216
12Y-960-1181	K2520-02A0	17	K-216
12Y-960-1190	K2520-02A0	16	K-216
12Y-960-1230	K2520-02A0	9	K-216
12Y-960-1240	K2520-02A0	8	K-216
12Y-960-1250	K2520-02A0	7	K-216
12Y-960-1260	H2250-01A1	16	H-181
12Y-960-1330	K2520-02A0	4	K-216
12Y-960-1340	H2250-01A0	38	H-179
12Y-960-1350	H2250-01A0	39	H-179
12Y-977-1112	K0210-18A0	22	K-053
12Y-977-1112	K0410-06A1	4	K-141
12Y-977-1121	K0210-18A0	25	K-053
12Y-977-1121	K0410-06A1	7	K-141
12Y-977-1143	K0210-18A0	26	K-053
12Y-977-1143	K0410-06A0	1	K-139
12Y-977-1143	K0410-06A1	8	K-141
12Y-977-1150	K0410-07A1	4	K-143
12Y-977-1193	K0210-18A0	34	K-053
12Y-977-1193	K0410-06A1	16	K-141
12Y-977-1211	K0210-18A0	27	K-053
12Y-977-1211	K0410-06A1	9	K-141
12Y-978-0190	K0210-01A0	1	K-019
12Y-978-0190	K0210-02A0	1	K-021
12Y-978-0190	K0210-03A0	1	K-023
12Y-978-0190	K0210-04A0	1	K-025
12Y-978-0190	K0210-05A0	1	K-027
12Y-978-0190	K0210-06A0	1	K-029
12Y-978-0190	K0210-07A0	1	K-031
12Y-978-0190	K0210-08A0	1	K-033
12Y-978-0190	K0210-09A0	1	K-035
12Y-978-0190	K0210-10A0	1	K-037
12Y-978-0190	K0210-11A0	1	K-039
12Y-978-0190	K0210-12A0	1	K-041
12Y-978-0190	K0210-13A0	1	K-043
12Y-978-0190	K0210-14A0	1	K-045
12Y-978-0190	K0210-15A0	1	K-047
12Y-978-0190	K0210-16A0	1	K-049
12Y-978-0190	K0210-17A0	1	K-051
12Y-978-0190	K0210-18A0	1	K-053
12Y-978-0191	K0210-01A0	1	K-019
12Y-978-0191	K0210-02A0	1	K-021
12Y-978-0191	K0210-03A0	1	K-023
12Y-978-0191	K0210-04A0	1	K-025
12Y-978-0191	K0210-05A0	1	K-027
12Y-978-0191	K0210-06A0	1	K-029
12Y-978-0191	K0210-07A0	1	K-031
12Y-978-0191	K0210-08A0	1	K-033
12Y-978-0191	K0210-09A0	1	K-035
12Y-978-0191	K0210-10A0	1	K-037
12Y-978-0191	K0210-11A0	1	K-039
12Y-978-0191	K0210-12A0	1	K-041
12Y-978-0191	K0210-13A0A	1	K-043A
12Y-978-0191	K0210-14A0	1	K-045
12Y-978-0191	K0210-15A0A	1	K-047A
12Y-978-0191	K0210-16A0	1	K-049
12Y-978-0191	K0210-17A0	1	K-051
12Y-978-0191	K0210-18A0	1	K-053
12Y-978-0380	K0210-02A0	1	K-021
12Y-978-0380	K0210-03A0	1	K-023
12Y-978-0390	K0210-04A0	1	K-025
12Y-978-0390	K0210-05A0	1	K-027
12Y-978-1115	K0210-01A0	1	K-019
12Y-978-1116	K0210-01A0	1	K-019
12Y-978-1117	K0210-01A0	1	K-019
12Y-978-1119	K0210-01A0	1	K-019
12Y-978-1310	K0210-09A0	1	K-035
12Y-978-1320	K0210-09A0	2	K-035
12Y-978-1331	K0210-09A0	3	K-035
12Y-978-1341	K0210-09A0	4	K-035
12Y-978-1350	K0210-09A0	5	K-035
12Y-978-1362	K0210-03A0	6	K-023
12Y-978-1372	K0210-05A0	6	K-027
12Y-978-1380	K0210-03A0	7	K-023
12Y-978-1380	K0210-05A0	7	K-027
12Y-978-1390	K0210-10A0	30	K-037
12Y-978-1390	K0210-11A0	30	K-039
12Y-978-1400	K0210-10A0	1	K-037
12Y-978-1401	K0210-10A0	1	K-037
12Y-978-1410	K0210-10A0	1	K-037
12Y-978-1420	K0210-10A0	1	K-037
12Y-978-1430	K0210-10A0	8	K-037
12Y-978-1431	K0210-10A0	8	K-037
12Y-978-1440	K0210-10A0	8	K-037
12Y-978-1441	K0210-10A0	8	K-037
12Y-978-1450	K0210-10A0	2	K-037
12Y-978-1450	K0210-11A0	2	K-039
12Y-978-1460	K0210-10A0	3	K-037
12Y-978-1460	K0210-11A0	3	K-039
12Y-978-1470	K0210-10A0	4	K-037
12Y-978-1470	K0210-11A0	4	K-039
12Y-978-1480	K0210-10A0	5	K-037
12Y-978-1480	K0210-11A0	5	K-039
12Y-978-1490	K0210-10A0	6	K-037
12Y-978-1490	K0210-11A0	6	K-039
12Y-978-1500	K0210-11A0	1	K-039
12Y-978-1501	K0210-11A0	1	K-039
12Y-978-1510	K0210-11A0	1	K-039
12Y-978-1520	K0210-11A0	1	K-039
12Y-978-1530	K0210-11A0	8	K-039
12Y-978-1531	K0210-11A0	8	K-039
12Y-978-1540	K0210-11A0	8	K-039
12Y-978-1541	K0210-11A0	8	K-039
12Y-978-1550	K0210-10A0	7	K-037

PARTS Nº	FIG. Nº	INDEX	PAGE
12Y-978-1550	K0210-11A0	7	K-039
12Y-978-1560	K0210-10A0	9	K-037
12Y-978-1560	K0210-11A0	9	K-039
12Y-978-1570	K0210-10A0	10	K-037
12Y-978-1570	K0210-11A0	10	K-039
12Y-978-1580	K0210-10A0	11	K-037
12Y-978-1580	K0210-11A0	11	K-039
12Y-978-1590	K0210-10A0	12	K-037
12Y-978-1590	K0210-11A0	12	K-039
12Y-978-1610	K0210-10A0	13	K-037
12Y-978-1610	K0210-11A0	13	K-039
12Y-978-1620	K0210-10A0	14	K-037
12Y-978-1620	K0210-11A0	14	K-039
12Y-978-1630	K0210-10A0	15	K-037
12Y-978-1630	K0210-11A0	15	K-039
12Y-978-1640	K0210-10A0	29	K-037
12Y-978-1640	K0210-11A0	29	K-039
12Y-978-1743	K0210-31A0	10	K-079
12Y-978-1751	K0210-31A0	3	K-079
12Y-978-1761	K0210-31A0	14	K-079
12Y-978-1771	K0210-31A0	13	K-079
12Y-978-1781	K0210-31A0	12	K-079
12Y-978-1790	K0210-30A0	9	K-077
12Y-978-1790	K0410-04A0	9	K-135
12Y-978-1810	K0210-31A0	2	K-079
12Y-978-1820	K0210-31A0	11	K-079
12Y-978-1830	K0210-28A0	11	K-073
12Y-978-1840	K0210-28A0	12	K-073
12Y-978-1850	K0210-49A0	4	K-113
12Y-978-1870	K0210-01A0	3	K-019
12Y-978-1880	K0210-01A0	2	K-019
12Y-978-1890	K0210-01A0	2	K-019
12Y-978-1890	K0210-01A0	2	K-019
12Y-978-1890	K0410-01A0	2	K-129
12Y-978-1912	K0210-52A0	1	K-117
12Y-978-1912	K0210-53A0	1	K-117A
12Y-978-1912	K0410-26A0	1	K-181
12Y-978-1912	K0410-26A0A	1	K-181A
12Y-978-1922	K0210-52A0	2	K-117
12Y-978-1922	K0210-53A0	2	K-117A
12Y-978-1922	K0410-26A0	2	K-181
12Y-978-1922	K0410-26A0A	2	K-181A
12Y-978-1962	K0210-54A0	7	K-119
12Y-978-1962	K0410-27A0	7	K-183
12Y-978-1980	K0210-51A0	14	K-115A
12Y-978-1980	K0410-25A0A	14	K-179A
12Y-978-2114	K0210-22A0	10	K-061
12Y-978-2115	K0210-22A0	10	K-061
12Y-978-2124	K0210-19A0	12	K-055
12Y-978-2124	K0210-20A0	12	K-057
12Y-978-2126	K0210-19A0	12	K-055
12Y-978-2126	K0210-20A0	12	K-057
12Y-978-2150	K0210-51A0	1	K-115A
12Y-978-2160	K0210-22A0	30	K-061
12Y-978-2172	K0210-46A0	15	K-107
12Y-978-2172	K0410-21A0	15	K-171
12Y-978-2183	K0210-22A0	27	K-061
12Y-978-2184	K0210-22A0	27	K-061
12Y-978-2192	K0210-22A0	28	K-061
12Y-978-2192	K0210-44A0	14	K-103
12Y-978-2192	K0410-19A0	14	K-167
12Y-978-2210	K0210-25A0	1	K-067
12Y-978-2210	K0210-26A0	3	K-069
12Y-978-2210	K0210-27A0	3	K-071
12Y-978-2220	K0210-29A0	2	K-075
12Y-978-2220	K0410-03A0	2	K-133
12Y-978-2253	K0210-47A0	8	K-109
12Y-978-2253	K0410-22A0	8	K-173
12Y-978-2263	K0210-47A0	9	K-109
12Y-978-2263	K0410-22A0	9	K-173
12Y-978-2271	K0210-22A0	1	K-061
12Y-978-2280	K0210-26A0	4	K-069
12Y-978-2280	K0210-27A0	4	K-071
12Y-978-2315	K0210-31A0	1	K-079
12Y-978-2320	K0210-31A0	8	K-079
12Y-978-2340	K0210-28A0	6	K-073
12Y-978-2350	K0210-52A0	5	K-117
12Y-978-2350	K0410-26A0	5	K-181
12Y-978-2351	K0210-53A0	5	K-117A
12Y-978-2351	K0410-26A0A	5	K-181A
12Y-978-2360	K0210-52A0	7	K-117
12Y-978-2360	K0210-53A0	7	K-117A
12Y-978-2360	K0410-26A0	7	K-181
12Y-978-2360	K0410-26A0A	7	K-181A
12Y-978-2370	K0210-52A0	6	K-117
12Y-978-2370	K0210-53A0	6	K-117A
12Y-978-2370	K0410-26A0	6	K-181
12Y-978-2370	K0410-26A0A	6	K-181A
12Y-978-2390	K0210-53A0	6A	K-117A
12Y-978-2390	K0410-26A0A	6A	K-181A
12Y-978-2411	K0210-23A0	1	K-063
12Y-978-2430	K0210-19A0	1	K-055
12Y-978-2431	K0210-19A0	1	K-055
12Y-978-2440	K0210-20A0	1	K-057
12Y-978-2440	K0210-23A0	6	K-063
12Y-978-2441	K0210-20A0	1	K-057
12Y-978-2441	K0210-23A0	6	K-063
12Y-978-2450	K0210-23A0	5	K-063
12Y-978-2460	K0210-23A0	2A	K-063
12Y-978-2470	K0210-23A0	2	K-063
12Y-978-2490	K0210-19A0	7	K-055
12Y-978-2490	K0210-20A0	7	K-057
12Y-978-2511	K0210-24A0	1	K-065
12Y-978-2520	K0210-24A0	2	K-065
12Y-978-2551	K0210-19A0	4	K-055
12Y-978-2561	K0210-20A0	4	K-057
12Y-978-2572	K0210-23A0	9	K-063
12Y-978-2580	K0210-23A0	10	K-063
12Y-978-2611	K0210-28A0	1	K-073
12Y-978-2622	K0210-28A0	2	K-073
12Y-978-2632	K0210-28A0	13	K-073
12Y-978-2643	K0210-28A0	5	K-073
12Y-978-2644	K0210-28A0	5	K-073
12Y-978-2653	K0210-28A0	5	K-073
12Y-978-2660	K0210-07A0	30	K-031
12Y-978-2660	K0210-08A0	30	K-033
12Y-978-2660	K0210-19A0	18	K-055
12Y-978-2660	K0210-20A0	18	K-057
12Y-978-2660	K0210-23A0	21	K-063
12Y-978-2660	K0210-28A0	9	K-073
12Y-978-2670	K0500-01A0	10	K-189
12Y-978-2681	K0500-01A0	4	K-189
12Y-978-2692	K0210-45A0	1	K-105
12Y-978-2692	K0410-20A0	1	K-169
12Y-978-2714	K0210-46A0	1	K-107
12Y-978-2714	K0410-21A0	1	K-171
12Y-978-2720	K0210-46A0	18	K-107
12Y-978-2720	K0410-21A0	18	K-171
12Y-978-2732	K0210-47A0	1	K-109
12Y-978-2732	K0410-22A0	1	K-173
12Y-978-2742	K0210-47A0	2	K-109
12Y-978-2742	K0410-22A0	2	K-173
12Y-978-2752	K0210-47A0	5	K-109
12Y-978-2752	K0410-22A0	5	K-173
12Y-978-2753	K0210-47A0	5	K-109
12Y-978-2753	K0410-22A0	5	K-173
12Y-978-2762	K0500-01A0	1	K-189
12Y-978-2770	K0500-01A0	2	K-189
12Y-978-2780	K0210-46A0	10	K-107
12Y-978-2780	K0410-21A0	10	K-171
12Y-978-2790	K0500-01A0	3	K-189
12Y-978-2822	K0210-54A0	1	K-119
12Y-978-2822	K0410-27A0	1	K-183
12Y-978-2831	K0210-54A0	2	K-119
12Y-978-2831	K0210-54A0	8	K-119
12Y-978-2831	K0410-27A0	2	K-183
12Y-978-2831	K0410-27A0	8	K-183
12Y-978-2840	K0210-54A0	13	K-119
12Y-978-2840	K0410-27A0	13	K-183
12Y-978-2870	K0210-28A0	10	K-073

PARTS Nº	FIG. Nº	INDEX	PAGE
12Y-978-2870	K0410-02A0	7	K-131
12Y-978-2881	K0310-01A0	1	K-127
12Y-978-2890	K0310-01A0	2	K-127
12Y-978-2911	K0210-50A0	1	K-115
12Y-978-2911	K0410-25A0	1	K-179
12Y-978-2912	K0210-51A0	1	K-115A
12Y-978-2912	K0410-25A0A	1	K-179A
12Y-978-2920	K0210-50A0	2	K-115
12Y-978-2920	K0210-51A0	2	K-115A
12Y-978-2920	K0410-25A0	2	K-179
12Y-978-2920	K0410-25A0A	2	K-179A
12Y-978-2932	K0210-50A0	5	K-115
12Y-978-2932	K0410-25A0	5	K-179
12Y-978-2933	K0210-51A0	5	K-115A
12Y-978-2933	K0410-25A0A	5	K-179A
12Y-978-2940	K0210-50A0	6	K-115
12Y-978-2940	K0210-51A0	6	K-115A
12Y-978-2940	K0410-25A0	6	K-179
12Y-978-2940	K0410-25A0A	6	K-179A
12Y-978-2952	K0210-49A0	1	K-113
12Y-978-2952	K0410-24A0	1	K-177
12Y-978-2961	K0210-49A0	2	K-113
12Y-978-2961	K0410-24A0	2	K-177
12Y-978-2972	K0210-49A0	3	K-113
12Y-978-2972	K0410-24A0	3	K-177
12Y-978-2981	K0210-49A0	4	K-113
12Y-978-2981	K0410-24A0	4	K-177
12Y-978-2990	K0210-50A0	13	K-115
12Y-978-2990	K0210-51A0	13	K-115A
12Y-978-2990	K0410-25A0	13	K-179
12Y-978-2990	K0410-25A0A	13	K-179A
12Y-978-3115	K0210-02A0	1	K-021
12Y-978-3125	K0210-04A0	1	K-025
12Y-978-3210	K0210-02A0	5	K-021
12Y-978-3210	K0210-04A0	5	K-025
12Y-978-3221	K0210-02A0	14	K-021
12Y-978-3231	K0210-04A0	14	K-025
12Y-978-3241	K0210-02A0	15	K-021
12Y-978-3241	K0210-04A0	15	K-025
12Y-978-3251	K0210-02A0	21	K-021
12Y-978-3261	K0210-02A0	22	K-021
12Y-978-3271	K0210-04A0	22	K-025
12Y-978-3281	K0210-02A0	11	K-021
12Y-978-3281	K0210-04A0	11	K-025
12Y-978-3281	K0210-07A0	14	K-031
12Y-978-3281	K0210-08A0	14	K-033
12Y-978-3290	K0210-02A0	12	K-021
12Y-978-3290	K0210-04A0	12	K-025
12Y-978-3290	K0210-07A0	15	K-031
12Y-978-3290	K0210-08A0	15	K-033
12Y-978-3310	K0210-02A0	19	K-021
12Y-978-3310	K0210-02A0	30	K-021
12Y-978-3310	K0210-02A0	33	K-021
12Y-978-3310	K0210-04A0	19	K-025
12Y-978-3310	K0210-04A0	30	K-025
12Y-978-3310	K0210-04A0	33	K-025
12Y-978-3310	K0210-32A0	28	K-080
12Y-978-3340	K0210-02A0	41	K-021
12Y-978-3340	K0210-04A0	41	K-025
12Y-978-3350	K0210-02A0	44	K-021
12Y-978-3350	K0210-04A0	44	K-025
12Y-978-3360	K0210-02A0	24	K-021
12Y-978-3360	K0210-04A0	24	K-025
12Y-978-3370	K0210-03A0	5	K-023
12Y-978-3370	K0210-05A0	5	K-027
12Y-978-3381	K0210-19A0	16	K-055
12Y-978-3381	K0210-20A0	16	K-057
12Y-978-3391	K0210-23A0	19	K-063
12Y-978-3411	K0210-06A0	1	K-029
12Y-978-3421	K0210-06A0	2	K-029
12Y-978-3433	K0210-08A0	28	K-033
12Y-978-3443	K0210-07A0	28	K-031
12Y-978-3470	K0210-04A0	21	K-025
12Y-978-3480	K0210-02A0	38	K-021
12Y-978-3480	K0210-04A0	38	K-025
12Y-978-3492	K0210-32A0	24	K-080
12Y-978-3512	K0210-08A0	4	K-033
12Y-978-3522	K0210-07A0	4	K-031
12Y-978-3541	K0210-07A0	6	K-031
12Y-978-3541	K0210-08A0	6	K-033
12Y-978-3551	K0210-07A0	7	K-031
12Y-978-3551	K0210-08A0	7	K-033
12Y-978-3561	K0210-08A0	10	K-033
12Y-978-3571	K0210-07A0	10	K-031
12Y-978-3580	K0210-08A0	11	K-033
12Y-978-3590	K0210-07A0	11	K-031
12Y-978-3612	K0210-08A0	12	K-033
12Y-978-3613	K0210-08A0	12	K-033
12Y-978-3622	K0210-07A0	12	K-031
12Y-978-3623	K0210-07A0	12	K-031
12Y-978-3631	K0210-19A0	19	K-055
12Y-978-3641	K0210-20A0	19	K-057
12Y-978-3650	K0210-02A0	47	K-021
12Y-978-3650	K0210-04A0	47	K-025
12Y-978-3791	K0210-30A0	8	K-077
12Y-978-3791	K0410-04A0	8	K-135
12Y-978-3811	K0830-01A0	4	K-205
12Y-978-3820	K0830-01A0	5	K-205
12Y-978-4113	K0410-01A0	1	K-129
12Y-978-4114	K0410-01A0	1	K-129
12Y-978-4115	K0410-01A0	1	K-129
12Y-978-4610	K0410-02A0	1	K-131
12Y-978-4622	K0410-02A0	2	K-131
12Y-978-4660	K0410-02A0	4	K-131
12Y-978-4670	K0410-02A0	6	K-131
12Y-978-4680	K0410-04A0	11	K-135
12Y-978-4691	K2120-01A0	25	K-209
12Y-978-5110	K0410-07A1	13	K-143
12Y-978-5120	K0720-01A0	6	K-203
12Y-979-1112	K0210-12A0	1	K-041
12Y-979-1112	K0210-13A0	1	K-043
12Y-979-1113	K0210-12A0	1	K-041
12Y-979-1113	K0210-13A0	1	K-043
12Y-979-1121	K0700-01A1	11	K-193
12Y-979-1121	K0700-01A1A	8	K-193A
12Y-979-1132	K0210-12A0	2	K-041
12Y-979-1132	K0210-15A0	1	K-047
12Y-979-1133	K0210-12A0	2	K-041
12Y-979-1133	K0210-15A0	1	K-047
12Y-979-1133	K0210-15A0A	1	K-047A
12Y-979-1140	K0210-12A0	3	K-041
12Y-979-1150	K0210-12A0	4	K-041
12Y-979-1160	K0210-12A0	6	K-041
12Y-979-1171	K0210-12A0	7	K-041
12Y-979-1172	K0210-12A0	7	K-041
12Y-979-1173	K0210-12A0	7	K-041
12Y-979-1181	K0210-12A0	8	K-041
12Y-979-1212	K0210-12A0	9	K-041
12Y-979-1222	K0210-12A0	10	K-041
12Y-979-1230	K0210-12A0	12	K-041
12Y-979-1250	K0210-12A0	14	K-041
12Y-979-1261	K0210-12A0	15	K-041
12Y-979-1262	K0210-12A0	15	K-041
12Y-979-1271	K0210-12A0	17	K-041
12Y-979-1283	K0210-12A0	19	K-041
12Y-979-1292	K0210-12A0	20	K-041
12Y-979-1311	K0210-16A0	1	K-049
12Y-979-1324	K0210-16A0	4	K-049
12Y-979-1332	K0210-16A0	13	K-049
12Y-979-1333	K0210-16A0	13	K-049
12Y-979-1340	K0210-16A0	24	K-049
12Y-979-1341	K0210-16A0	24	K-049
12Y-979-1342	K0210-16A0	24	K-049
12Y-979-1350	K0210-18A0	1	K-053
12Y-979-1361	K0210-18A0	6	K-053
12Y-979-1370	K0210-18A0	8	K-053
12Y-979-1380	K0210-18A0	30	K-053
12Y-979-1380	K0410-06A1	12	K-141
12Y-979-1380	K0410-07A1	6	K-143
12Y-979-1391	K0210-16A0	25	K-049

PARTS Nº	FIG. Nº	INDEX	PAGE
12Y-979-1392	K0210-16A0	25	K-049
12Y-979-1412	K0210-12A0	26	K-041
12Y-979-1423	K0210-12A0	27	K-041
12Y-979-1433	K0210-12A0	28	K-041
12Y-979-1441	K0210-12A0	29	K-041
12Y-979-1454	K0210-17A0	1	K-051
12Y-979-1460	K0210-12A0	31	K-041
12Y-979-1472	K0210-12A0	22	K-041
12Y-979-1482	K0210-12A0	24	K-041
12Y-979-1490	K0210-17A0	3	K-051
12Y-979-1512	K0210-14A0	9	K-045
12Y-979-1522	K0210-14A0	15	K-045
12Y-979-1533	K0210-14A0	25	K-045
12Y-979-1543	K0210-14A0	3	K-045
12Y-979-1552	K0210-14A0	1	K-045
12Y-979-1563	K0210-14A0	13	K-045
12Y-979-1570	K0210-12A0	32	K-041
12Y-979-1590	K0210-16A0	18	K-049
12Y-979-1612	K0210-32A0	16	K-080
12Y-979-1634	K0210-32A0	1	K-080
12Y-979-1642	K0210-32A0	8	K-080
12Y-979-1652	K0210-32A0	12	K-080
12Y-979-1661	K0210-16A0	26	K-049
12Y-979-1684	K0210-32A0	19	K-080
12Y-979-1685	K0210-32A0	19	K-080
12Y-979-1690	K0210-32A0	7	K-080
12Y-979-1711	K0210-32A0	25	K-080
12Y-979-1751	K0210-32A0	29	K-080
12Y-979-1760	K0210-16A0	29	K-049
12Y-979-1780	K0210-32A0	22	K-080
12Y-979-1781	K0210-32A0	22	K-080
12Y-979-1791	K0210-32A0	4	K-080
12Y-979-1792	K0210-32A0	4	K-080
12Y-979-1811	K0700-01A0	4	K-191
12Y-979-1811	K0700-01A0A	15	K-191A
12Y-979-1822	K0700-01A0	5	K-191
12Y-979-1822	K0700-01A0A	31	K-191A
12Y-979-1831	K0700-01A0	6	K-191
12Y-979-1831	K0700-01A0A	16	K-191A
12Y-979-1842	K0700-01A0	7	K-191
12Y-979-1842	K0700-01A0A	32	K-191A
12Y-979-1850	K0210-16A0	9	K-049
12Y-979-1860	K0210-32A0	11	K-080
12Y-979-1860	K0210-32A0	15	K-080
12Y-979-1860	K0210-46A0	24	K-107
12Y-979-1860	K0410-21A0	24	K-171
12Y-979-1911	K0700-01A0	8	K-191
12Y-979-1913	K0700-01A0A	17	K-191A
12Y-979-1914	K0700-01A0A	17	K-191A
12Y-979-1931	K0700-01A0	9	K-191
12Y-979-1932	K0700-01A0A	18	K-191A
12Y-979-1933	K0700-01A0A	18	K-191A
12Y-979-1960	K0700-01A0	10	K-191
12Y-979-1960	K0700-01A0A	29	K-191A
12Y-979-1960	K0700-01A0A	30	K-191A
12Y-979-1970	K0700-01A0	10	K-191
12Y-979-1970	K0700-01A0A	28	K-191A
12Y-979-1990	K0700-01A3	5	K-197
12Y-979-1990	K0720-01A0	7	K-203
12Y-979-1991	K0700-01A3	5	K-197
12Y-979-1991	K0720-01A0	7	K-203
12Y-979-2110	K0720-01A0	8	K-203
12Y-979-2120	K0700-01A3	6	K-197
12Y-979-2121	K0700-01A3	6	K-197
12Y-979-2150	K0210-12A0	11	K-041
12Y-979-2150	K0210-12A0	23	K-041
12Y-979-2150	K0700-01A0	6A	K-191
12Y-979-2150	K0700-01A0	7A	K-191
12Y-979-2150	K0700-01A0	9A	K-191
12Y-979-2150	K0700-01A0A	14	K-191A
12Y-979-2150	K0700-01A0A	34	K-191A
12Y-979-2160	K0210-12A0	18	K-041
12Y-979-2160	K0210-12A0	25	K-041
12Y-979-2160	K0700-01A0	4A	K-191
12Y-979-2160	K0700-01A0	5A	K-191
12Y-979-2160	K0700-01A0	8A	K-191
12Y-979-2160	K0700-01A0A	13	K-191A
12Y-979-2160	K0700-01A0A	33	K-191A
12Y-979-2230	K0210-12A0	13	K-041
12Y-979-2230	K0210-12A0	16	K-041
12Y-979-2230	K0210-12A0	21	K-041
12Y-979-2230	K0210-12A0	30	K-041
12Y-979-2230	K0210-12A0	5	K-041
12Y-979-2321	K0210-32A0	33	K-080
12Y-979-2322	K0210-32A0	33	K-080
12Y-979-2331	K0210-32A0	36	K-080
12Y-979-2332	K0210-32A0	36	K-080
12Y-979-2610	K0210-12A0	1	K-041
12Y-979-2610	K0210-13A0A	1	K-043A
12Y-979-2611	K0210-12A0	1	K-041
12Y-979-2611	K0210-13A0A	1	K-043A
12Y-98-11111	U0100-01A1	1	U-001
12Y-98-11111	U0100-01A2	1	U-003
12Y-98-11111	U0100-01A3	1	U-005
12Y-98-11111	U0100-01A4	1	U-006
12Y-98-11121	U0100-01A1	2	U-001
12Y-98-11121	U0100-01A2	2	U-003
12Y-98-11121	U0100-01A3	2	U-005
12Y-98-11121	U0100-01A4	2	U-006
12Y-98-11131	U0100-01A1	1	U-001
12Y-98-11131	U0100-01A3	1	U-005
12Y-98-11131	U0100-01A4	1	U-006
12Y-98-11141	U0100-01A1	2	U-001
12Y-98-11141	U0100-01A3	2	U-005
12Y-98-11141	U0100-01A4	2	U-006
12Y-98-11181	U0100-04A2	1	U-021
12Y-98-11210	U0100-04A1	1	U-019
12Y-98-11210	U0100-04A3	1	U-023
12Y-98-11210	U0100-04A4	1	U-024
12Y-98-11210	U0100-04A4	1	U-024
12Y-98-11220	U0100-05A1	1	U-025
12Y-98-11250	U0100-05A3	1	U-029
12Y-98-11260	U0100-05A2	1	U-027
12Y-98-11270	U0100-05A4	1	U-030
12Y-98-11340	U0100-05A3	4	U-029
12Y-98-11350	U0100-05A3	5	U-029
12Y-98-31230	U0100-04A2	1	U-021
12Y-98-61130	U0100-03A2	15	U-015
12Y-98-62122	U0100-03A1	1	U-013
12Y-98-62122	U0100-03A2	1	U-015
12Y-98-62122	U0100-03A3	1	U-017
12Y-98-62122	U0100-03A4	1	U-018
12Y-99-B1710	M2140-01A3	30	M-011
130-30-13170	R0110-01A0	26	R-001
1304 920 H1	A1203-A2B4	2	A-015
130-63-12761	H0700-01A1	27	H-173
130-63-12761	H0700-01A1A	27	H-173A
130-69-11190	T2810-01A0	4	T-031
131-69-41120	T2810-01A0	1	T-031
131-78-31190	T0700-01A0	5	T-027
134-01-61461	B0600-01A3	2	B-043
134-01-61840	B0500-01A0	1	B-035
134-01-73190	U0100-01A2	14	U-003
134-04-61180	D0100-01A0	2	D-001
134-04-71180	D0100-01A0	2	D-001
134-06-61540	E0100-01A0	1	E-001
134-06-72200	K0210-39A0	28	K-093
134-06-72200	K0410-14A0	28	K-157
134-32-63200	R0322-01A0	7	R-013
134-32-63200	R0322-01A1	7	R-015
134-32-63200	R0322-01A3	7	R-015A
134-32-63200	R0322-01A5	7	R-015B
134-32-63200	R0500-01A0	7	R-017
134-32-63200	R0500-01A1	7	R-019
134-32-63200	R0500-01A2	7	R-021
134-32-63200	R0500-01A3	7	R-023
134-32-63200	R0500-01A4	7	R-025
134-32-63200	R0500-01A5	7	R-027
134-32-63200	R0500-01A6	7	R-027A
134-32-63200	R0500-01A7	7	R-027B

PARTS Nº	FIG. Nº	INDEX	PAGE
134-32-63200	R0500-01A8	7	R-027C
134-32-63200	R0500-01A9	7	R-027D
134-32-63200	R0500-01B0	7	R-027E
134-32-63200	R0500-01B1	7	R-027F
134-32-63200	R0510-01A0	7	R-029
134-32-63200	R0510-01A1	7	R-031
134-32-63200	R0510-01A2	7	R-033
134-32-63200	R0510-01A3	7	R-035
134-32-63200	R0510-01A4	7	R-035A
134-50-61121	J2710-01A0	6	J-009
134-50-61131	J2710-01A0	7	J-009
134-50-61140	R2100-01A0	9	R-037
134-50-61150	R2100-01A0	10	R-037
134-50-61160	J2710-01A0	8	J-009
134-50-61171	J2710-01A0	2	J-009
134-54-61320	M2140-01A3	2	M-011
134-54-78370	K0210-48A0	1	K-111
134-54-78370	K0410-23A0	1	K-175
134-57-61150	K0110-01A0	4	K-001
134-57-61150	K0110-01A1	4	K-003
134-57-61150	K0110-01A2	4	K-005
134-57-61150	K0110-01A3	4	K-007
134-57-71201	K0110-01A5	1	K-011
134-69-13110	T0800-01A0	14	T-029
134-69-13120	T0800-01A0	15	T-029
134-69-13130	T2810-01A0	1	T-031
134-69-61130	T0800-01A0	7	T-029
134-69-61130	T2810-01A0	11	T-031
134-X78-7450	K0210-44A0	9	K-103
134-X78-7450	K0410-19A0	9	K-167
13F-32-05010	R2300-01A0	K2	R-047
13F-32-21221	R0510-01A1	14	R-031
13F-32-21221	R2300-01A0	K2	R-047
140-30-00141	R0300-01A0	7	R-011
140-30-00141	R0300-01A1	7	R-011A
142-43-13180	K0210-40A0	7	K-095
142-43-13180	K0210-41A0	4	K-097
142-43-13180	K0410-15A0	7	K-159
142-43-13180	K0410-16A0	4	K-161
142Y-62-13332	K2520-02A1	11	K-216A
144-69-11161	T0800-01A0	11	T-029
144-69-11170	T0800-01A0	1	T-029
144-69-11210	T0800-01A0	5	T-029
144-69-11210	T2810-01A0	6	T-031
144-69-11230	T0800-01A0	6	T-029
144-69-11230	T2810-01A0	5	T-031
144-817-3161	T0700-01A0	6	T-027
14X-06-31171	K0210-43A0	9	K-101
14X-06-31171	K0410-18A0	9	K-165
14X-15-16461	H0440-02A0	6	H-151
14X-30-15131	R0300-01A0	4	R-011
14X-30-15131	R0300-01A1	4	R-011A
14X-30-15251	R0300-01A0	9	R-011
14X-30-15251	R0300-01A1	9	R-011A
14X-43-12110	K0210-40A0	35	K-095
14X-43-12110	K0410-15A0	35	K-159
14X-43-13760	K0210-41A0	22	K-097
14X-43-13760	K0410-16A0	22	K-161
14X-43-14520	K0210-35A0	7	K-085
14X-43-14520	K0210-37A0	10	K-089
14X-43-14520	K0210-40A0	3	K-095
14X-43-14520	K0210-41A0	10	K-097
14X-43-14520	K0410-10A0	7	K-149
14X-43-14520	K0410-12A0	10	K-153
14X-43-14520	K0410-15A0	3	K-159
14X-43-14520	K0410-16A0	10	K-161
14X-54-16490	K0210-39A0	7	K-093
14X-54-16490	K0410-14A0	7	K-157
14X-54-18230	K0210-45A0	2	K-105
14X-54-18230	K0410-20A0	2	K-169
14X-54-26640	K2900-01A0	7	K-219
14X-54-26640	K2900-01A4A	22	K-225A
14X-60-11120	H0100-01A1	10	H-003
14X-60-11120	H0100-01B1	16	H-004
14X-60-11120	H0100-01B2	11	H-004A
14X-60-11120	H0100-01B3	11	H-004B
14X-60-12120	H0200-01A5	8	H-019
14X-78-11180	K2520-01A1	15	K-213
14X-911-1130	K0210-24A0	4	K-065
14X-911-1140	K0210-24A0	5	K-065
14X-911-1150	K0210-24A0	6	K-065
14X-911-1161	K2900-01A4	2	K-225
14X-911-1690	K0210-03A0	1	K-023
14X-911-1690	K0210-05A0	1	K-027
14X-911-1761	K0210-03A0	2	K-023
14X-911-1761	K0210-03A0	2	K-023
14X-911-1761	K0210-05A0	2	K-027
14X-911-1761	K0210-05A0	2	K-027
14X-978-1660	K0410-02A0	3	K-131
14X-98-11170	U0100-03A1	2	U-013
14X-98-11170	U0100-03A2	2	U-015
14X-98-11170	U0100-03A3	2	U-017
14X-98-11170	U0100-03A4	2	U-018
14X-98-35181	U0100-02A1	3	U-007
14X-98-35181	U0100-02A2	3	U-009
14X-98-35181	U0100-02A3	3	U-011
14X-98-35181	U0100-02A4	3	U-012
14Y-30-11277	R2100-01A0	7	R-037
14Y-50-11390	J2750-01A0	15	J-011
14Y-50-11390	J2750-01A0	19	J-011
154-06-74480	E0120-01B0	11	E-006
154-06-74490	E0120-01B0	16	E-006
154-32-61170	R0110-01A0	13	R-001
154-54-22830	K0210-37A0	21	K-089
154-54-22830	K0410-12A0	21	K-153
154-54-73130	K2120-01A0	2	K-209
154-54-73130	T0200-01A1	1	T-005
155-30-13230	R0110-01A0	27	R-001
155-61-15350	K0210-43A0	14	K-101
155-61-15350	K0210-43A0	14	K-101
155-61-15350	K0410-18A0	14	K-165
155-61-15350	K0410-18A0	14	K-165
170-30-91130	R0200-01A0	7	R-005
170-30-91130	R0200-01A1	7	R-005A
170-30-91130	R0200-02A0	7	R-007
170-30-91130	R0200-02A1	7	R-007A
175-06-41110	E0220-01A0	6	E-013
175-61-17240	H0400-01A1	1	H-121
175-79-83760	K0210-14A0	46	K-045
175-803-3250	C0200-01A0	17	C-019
175-803-3250	C0200-01A0	27	C-019
175-803-3250	C0200-01A0	29	C-019
175-803-3250	C0200-01A0	33	C-019
176-06-42170	K0210-02A0	17	K-021
176-06-42170	K0210-04A0	17	K-025
176-06-42170	K0210-07A0	13	K-031
176-06-42170	K0210-08A0	13	K-033
17A-03-14111	C0150-01A0	1	C-011
17A-04-41411	D0100-01A0A	2	D-001A
17A-04-41440	D0100-01A0A	3	D-001A
17A-06-42220	K0210-22A0	6	K-061
17A-43-42240	K2520-01A1	10	K-213
17A-43-42240	K2520-02A0	1	K-216
17A-54-25560	K0210-50A0	9	K-115
17A-54-25560	K0210-51A0	9	K-115A
17A-54-25560	K0410-25A0	9	K-179
17A-54-25560	K0410-25A0A	9	K-179A
17A-54-25570	K0210-50A0	10	K-115
17A-54-25570	K0210-51A0	10	K-115A
17A-54-25570	K0410-25A0	10	K-179
17A-54-25570	K0410-25A0A	10	K-179A
17A-54-45180	D0110-01A0	10	D-003
17A-54-45180	H0100-01A2	3	H-005
17A-54-45180	H0100-01A2	12	H-005
17A-54-45180	M2140-01A2	13	M-009
17A-54-45180	M2140-02A2	13	M-015
17A-54-45181	D0110-01A0	10	D-003
17A-54-45181	H0100-01A2	3	H-005
17A-54-45181	H0100-01A2	12	H-005
17A-54-45181	M2140-01A2	13	M-009

PARTS Nº	FIG. Nº	INDEX	PAGE
17A-54-45181	M2140-02A2	13	M-015
17A-54-46120	K2120-01A0	12	K-209
17A-979-3320	K0210-02A0	28	K-021
17A-979-3330	K0210-04A0	28	K-025
17A-98-41510	U0100-03A1	8	U-013
17A-98-41510	U0100-03A2	8	U-015
17A-98-41510	U0100-03A3	8	U-017
17A-98-41510	U0100-03A4	8	U-018
17A-Z11-1610	K0210-10A0	16	K-037
17A-Z11-1610	K0210-11A0	16	K-039
17A-Z11-1620	K0210-10A0	17	K-037
17A-Z11-1620	K0210-11A0	17	K-039
17A-Z11-1660	K0210-10A0	28	K-037
17A-Z11-1660	K0210-11A0	28	K-039
17A-Z11-1810	K0210-07A0	5	K-031
17A-Z11-1810	K0210-08A0	5	K-033
17A-Z11-1S90	K0210-39A0	6	K-093
17A-Z11-1S90	K0410-14A0	6	K-157
17A-Z11-2240	K0210-25A0	2	K-067
17A-Z11-2350	K0210-22A0	4	K-061
17A-Z11-2420	K0210-22A0	17	K-061
17A-Z11-2570	K0210-23A0	15	K-063
17A-Z11-2581	K0210-19A0	11	K-055
17A-Z11-2581	K0210-20A0	11	K-057
17A-Z11-2581	K0210-23A0	18	K-063
17A-Z11-2660	K0210-24A0	10	K-065
17A-Z11-2660	K0210-24A0	7	K-065
17A-Z11-2660	K0210-25A0	8	K-067
17A-Z11-2660	K0210-26A0	10	K-069
17A-Z11-2660	K0210-27A0	10	K-071
17A-Z11-2813	K0210-28A0	15	K-073
17A-Z11-2813	K0210-28A0	4	K-073
17A-Z11-2813	K0210-39A0	20	K-093
17A-Z11-2813	K0210-39A0	4	K-093
17A-Z11-2813	K0410-14A0	20	K-157
17A-Z11-2813	K0410-14A0	4	K-157
17A-Z11-2813	K2900-01A4	1	K-225
17A-Z11-3332	K0210-02A0	17	K-021
17A-Z11-3332	K0210-04A0	17	K-025
17A-Z11-3592	K0210-07A0	26	K-031
17A-Z11-3592	K0210-08A0	26	K-033
17A-Z11-3680	K0210-07A0	17	K-031
17A-Z11-3680	K0210-08A0	17	K-033
17A-Z11-4610	K0210-19A0	15	K-055
17A-Z11-4610	K0210-20A0	15	K-057
17A-Z11-4610	K0210-24A0	8	K-065
17A-Z11-7161	K0210-31A0	6	K-079
17X-98-61510	U0100-03A1	8	U-013
195-06-73270	B0000-52A0	28	B-059
195-06-73270	B0000-56A0	9	B-066
195-06-73270	B0000-59A0	9	B-069
195-06-73270	K0210-36A0	18	K-087
195-30-17960	R0110-01A0	28	R-001
195-33-1120	D0220-02A0	18	D-015
195-33-11220	B0000-55A0	18	B-065
195-33-11220	B0000-58A0	18	B-068
195-33-11220	B0000-58A1	15	B-068A
195-33-11220	E0200-01A0	10	E-007
195-33-11220	E0200-01A1	10	E-007A
195-33-11220	H2250-01A0	1	H-179
195-33-11220	H2250-01A1	1	H-181
195-43-64321	B0000-52A0	29	B-059
195-43-64321	B0000-55A0	46	B-065
195-43-64321	B0000-58A0	46	B-068
195-43-64321	K0210-36A0	15	K-087
195-43-64410	K0210-36A0	15	K-087
195-43-64410	K0410-11A0	15	K-151
195-43-64411	K0210-36A0	15	K-087
195-43-64411	K0410-11A0	15	K-151
195-54-68760	K0210-54A0	11	K-119
195-54-68760	K0210-54A0	5	K-119
195-54-68760	K0410-27A0	11	K-183
195-54-68760	K0410-27A0	5	K-183
195-979-8560	K0210-19A0	13	K-055
195-979-8560	K0210-20A0	13	K-057
195-979-8561	K0210-19A0	13	K-055
195-979-8561	K0210-20A0	13	K-057
195-Z11-1371	K0210-10A0	20	K-037
195-Z11-1371	K0210-11A0	20	K-039
195-Z11-1381	K0210-10A0	26	K-037
195-Z11-1381	K0210-11A0	26	K-039
195-Z11-2180	K0210-29A0	1	K-075
195-Z11-2180	K0410-03A0	1	K-133
195-Z11-3630	K0210-10A0	20	K-037
195-Z11-3630	K0210-11A0	20	K-039
195-Z11-3640	K0210-10A0	21	K-037
195-Z11-3640	K0210-11A0	21	K-039
195-Z11-3670	K0210-10A0	23	K-037
195-Z11-3670	K0210-11A0	23	K-039
195-Z11-3860	K0210-10A0	22	K-037
195-Z11-3860	K0210-11A0	22	K-039
195-Z11-4510	K0210-04A0	35	K-025
195-Z11-4510	K0210-07A0	1	K-031
195-Z11-4520	K0210-02A0	35	K-021
195-Z11-4520	K0210-08A0	1	K-033
195-Z11-8941	K0210-27A0	1	K-071
195-Z11-8942	K0210-27A0	1	K-071
195-Z11-8942	K0210-27A0	1	K-071
196-911-1341	K0210-24A0	3	K-065
196-916-1590	B0000-55A0	14	B-065
196-916-1590	B0000-55A0	9	B-065
196-916-1590	B0000-58A0	14	B-068
196-916-1590	B0000-58A0	9	B-068
196-916-1590	B0000-58A1	9	B-068A
198-04-41210	B0000-55A0	9	B-065
198-04-41210	B0000-55A0	14	B-065
198-04-41210	B0000-58A0	9	B-068
198-04-41210	B0000-58A0	14	B-068
198-04-41210	B0000-58A1	9	B-068A
198-Z11-3710	K0210-02A0	3	K-021
198-Z11-3710	K0210-04A0	3	K-025
198-Z11-4610	K0210-25A0	5	K-067
198-Z11-4610	K0210-26A0	7	K-069
198-Z11-4610	K0210-27A0	7	K-071
19M-09-11510	K0210-34A0	6	K-083
19M-09-11510	K0410-09A0	6	K-147
19M-43-33110	K0210-34A0	5	K-083
19M-43-33110	K0410-09A0	5	K-147
19M-43-33111	K0210-34A0	5	K-083
19M-43-33111	K0410-09A0	5	K-147
19M-43-33140	K0210-34A0	7	K-083
19M-43-33140	K0410-09A0	7	K-147
19M-43-33141	K0210-34A0	7	K-083
19M-43-33141	K0410-09A0	7	K-147
19M-43-33150	K0210-34A0	11	K-083
19M-43-33150	K0410-09A0	11	K-147
19M-43-33151	K0210-34A0	11	K-083
19M-43-33151	K0410-09A0	11	K-147
19M-43-33160	K0210-34A0	12	K-083
19M-43-33160	K0410-09A0	12	K-147
19M-43-33161	K0210-34A0	12	K-083
19M-43-33161	K0410-09A0	12	K-147
19M-43-33170	K0210-34A0	8	K-083
19M-43-33170	K0410-09A0	8	K-147
19M-43-33460	K0210-34A0	9	K-083
19M-43-33460	K0410-09A0	9	K-147
19M-43-33470	K0210-34A0	10	K-083
19M-43-33470	K0410-09A0	10	K-147
201-30-52280	R0120-01A0	9	R-003
201-54-72910	K0210-41A0	25	K-097
201-54-72910	K0410-16A0	25	K-161
201-62-27740	H0520-01A1	1	H-165
201-62-27740	H0520-01A1	1	H-165
201-62-75420	H0200-01A3	1	H-011
201-62-75420	H0200-01A4	1	H-015
202-62-21430	J2750-01A0	1	J-011
202-62-21430	T0630-01A0	1	T-023
203-30-42260	R0120-01A0	10	R-003
203-32-61220	R0500-01A0	15	R-017
203-32-61220	R0500-01A1	15	R-019
203-32-61220	R0500-01A2	15	R-021
203-32-61220	R0500-01A3	15	R-023
203-32-61220	R0500-01A4	15	R-025
203-32-61220	R0500-01A5	15	R-027
203-32-61220	R0510-01A0	15	R-029
203-32-61220	R0510-01A1	15	R-031
203-32-61220	R0510-01A2	15	R-033
203-32-61220	R0510-01A3	15	R-035
203-32-61220	R0510-01A4	15	R-035A
203-32-61220	R2300-01A0	K1	R-047
203-32-61220	R2300-01A0	K2	R-047
203-54-56970	K0210-40A0	16	K-095
203-54-56970	K0410-15A0	16	K-159
203-60-21260	H0440-02A0	1	H-151
203-60-62220	H0310-11A0	15	H-043
203-60-62220	H0440-01A0	4	H-149
203-62-21740	T0630-01A0	2	T-023
203-62-57730	D0220-02A0	19	D-015
203-62-57730	K2110-01A0	16	K-207
203-62-58880	H0200-01A3	2	H-011
203-62-58880	H0200-01A4	2	H-015
205-27-71670	D0130-01A0	1	D-007
205-27-71670	H0100-01A3	6	H-007
205-32-51121	R0500-01A0	14	R-017
205-32-51121	R0500-01A1	14	R-019
205-32-51121	R0500-01A2	14	R-021
205-32-51121	R0500-01A3	14	R-023
205-32-51121	R0500-01A4	14	R-025
205-32-51121	R0500-01A5	14	R-027
205-32-51121	R0510-01A0	14	R-029
205-32-51121	R0510-01A2	14	R-033
205-32-51121	R0510-01A3	14	R-035
205-32-51121	R0510-01A4	14	R-035A
205-32-51121	R2300-01A0	K1	R-047
205-32-51211	R0500-01A6	15	R-027A
205-32-51211	R0500-01A7	15	R-027B
205-32-51211	R0500-01A8	15	R-027C
205-32-51211	R0500-01A9	15	R-027D
205-32-51211	R0500-01B0	15	R-027E
205-32-51211	R0500-01B1	15	R-027F
205-54-51250	K0210-28A0	19	K-073
205-54-51970	M2140-01A3	3	M-011
205-54-51971	M2140-01A3	3	M-011
205-54-53550	M2140-01A2	1	M-009
205-54-53550	M2140-02A2	1	M-015
205-60-71220	K0500-01A0	6	K-189
205-60-71220	M2110-01A0	12	M-001
205-70-66580	T0100-01A0	1	T-001
206-03-43330	C0150-01A0	5	C-011
207-06-71711	K0210-26A0	1	K-069
207-06-71712	K0210-26A0	1	K-069
207-09-11140	H0310-21A0	24	H-045
207-57-11260	D0110-01A0	3	D-003
207-57-11260	H0100-01A2	18	H-005
207-57-11260	H0100-01A2	9	H-005
207-57-11260	M2140-01A1	1	M-007
207-57-11260	M2140-01A2	2	M-009
207-57-11260	M2140-02A2	2	M-015
207-62-64740	H0100-01A1	15	H-003
207-62-64740	H0100-01B1	21	H-004
207-62-64740	H0100-01B2	16	H-004A
207-62-64740	H0100-01B3	16	H-004B
207-62-64740	H0320-01A0	18	H-053
207-62-64740	H0320-01A0	33	H-053
207-62-72110	H0100-01A1	15	H-003
207-62-72110	H0100-01B1	21	H-004
207-62-72110	H0100-01B2	16	H-004A
207-62-72110	H0100-01B3	16	H-004B
207-62-72160	H0320-01A0	29	H-053
208-60-51700	H0100-01A1	9	H-003
208-987-3680	K0210-18A0	19	K-053
208-987-3680	K0410-07A1	1	K-143
208-Z7-11210	H0310-24A0	8	H-051
20B-27-11210	H0310-24A1	8	H-051A
20B-27-11210	H0320-01A0	26	H-053
20N-60-11143	H0100-01A1	17	H-003
20N-60-11143	H0100-01B1	23	H-004
20N-60-11143	H0100-01B2	18	H-004A
20N-60-11143	H0100-01B3	18	H-004B
20T-43-71190	K0210-34A0	2	K-083
20T-43-71190	K0210-36A0	13	K-087
20T-43-71190	K0410-09A0	2	K-147
20T-43-71190	K0410-11A0	13	K-151
20T-43-71190	K2520-01A1	11	K-213
20T-43-71190	K2520-02A0	2	K-216
20T-54-74510	E0120-01B0	13	E-006
20U-54-46520	B0000-58A0	49	B-068
20U-54-46520	B0000-58A1	27	B-068A
20U-62-42660	H0430-01A4	13	H-143
20X-62-21550	H0200-01A5	9	H-019
20Y-06-23472	K0210-28A0	16	K-073
20Y-06-41812	E0300-01A0	1	E-015
20Y-06-42140	K0210-22A0	5	K-061
20Y-06-42190	K0210-22A0	7	K-061
20Y-06-42190	K0210-22A0	7	K-061
20Y-06-42190	K0410-20A0	11	K-169
20Y-27-21280	F2380-02A0	6	F-003
20Y-27-21280	F2380-05A0	6	F-009
20Y-27-21310	F2380-02A0	8	F-003
20Y-27-21310	F2380-05A0	8	F-009
20Y-27-22250	F2380-02A0	10	F-003
20Y-27-22250	F2380-05A0	10	F-009
20Y-30-16330	R0300-01A0	12	R-011
20Y-30-16330	R0300-01A1	12	R-011A
20Y-43-41491	K0210-28A0	18	K-073
20Y-43-41750	K0210-46A0	5	K-107
20Y-43-41750	K0410-21A0	5	K-171
20Y-43-41780	K0210-33A0	4	K-081
20Y-43-41780	K0410-08A0	4	K-145
20Y-43-41781	K0210-33A0	4	K-081
20Y-43-41781	K0410-08A0	4	K-145
20Y-53-11380	K0210-30A0	5	K-077
20Y-53-11380	K0210-30A0	5	K-077
20Y-53-11380	K0410-04A0	5	K-135
20Y-53-11380	K0410-04A0	5	K-135
20Y-53-12260	K0210-01A0	3	K-019
20Y-53-12260	K0210-01A0	3	K-019
20Y-53-12260	K0410-01A0	3	K-129
20Y-54-11611	M2140-01A3	28	M-011
20Y-54-18690	K0410-02A0	5	K-131
20Y-62-22790	H0200-01A3	NI	H-011
20Y-62-22790	H0200-01A4	NI	H-015
20Y-62-22790	H0310-11A0	23	H-043
20Y-62-22790	K2110-01A0	17	K-207
20Y-62-22810	H0200-01A3	NI	H-011
20Y-62-22810	H0200-01A4	NI	H-015
20Y-62-22810	H0310-11A0	24	H-043
20Y-62-22810	K2110-01A0	18	K-207
20Y-62-22820	H0200-01A3	NI	H-011
20Y-62-22820	H0200-01A4	NI	H-015
20Y-62-22820	H0310-11A0	25	H-043
20Y-62-22820	K2110-01A0	19	K-207
20Y-62-22830	H0200-01A3	NI	H-011
20Y-62-22830	H0200-01A4	NI	H-015
20Y-62-22830	K2110-01A0	20	K-207
20Y-62-22850	H0200-01A3	NI	H-011
20Y-62-22850	H0200-01A4	NI	H-015
20Y-62-22850	H0310-11A0	26	H-043
20Y-62-22850	K2110-01A0	21	K-207
20Y-62-22860	H0200-01A3	NI	H-011
20Y-62-22860	H0200-01A4	NI	H-015
20Y-62-22860	K2110-01A0	22	K-207
20Y-62-41970	H0200-01A3	3	H-011
20Y-62-41970	H0200-01A4	3	H-015
20Y-957-3170	K0210-46A0	6	K-107
20Y-957-3170	K0410-21A0	6	K-171
21J-06-13661	K0210-17A0	2	K-051
21J-06-13661	K0210-43A0	7	K-101
21J-06-13661	K0410-18A0	7	K-165
21N-64-36680	H0200-01A3	11	H-011

PARTS Nº	FIG. Nº	INDEX	PAGE
21N-64-36680	H0200-01A4	11	H-015
21U-62-34710	H0440-01A0	10	H-149
21U-62-34730	E0210-01A2	30	E-011B
21U-62-34730	H0440-01A0	11	H-149
21U-62-34750	E0210-01A2	26	E-011B
21U-62-34750	H0440-01A0	12	H-149
21U-62-34780	E0210-01A2	32	E-011B
21U-62-34780	H0440-01A0	13	H-149
21W-62-43930	H0430-01A4	10	H-143
21W-62-43980	K2520-01A2	9	K-215
21W-914-3390	C0170-01A0	4	C-015
22B-06-11910	K0210-46A0	4	K-107
22B-979-1880	K0210-18A0	32	K-053
22B-979-1880	K0410-06A1	14	K-141
22L-54-22990	K0210-24A0	9	K-065
22T-35-14870	K0210-43A0	27	K-101
22T-35-14870	K0410-18A0	27	K-165
22U-04-21231	D0100-01A0	10	D-001
22U-06-22460	K0210-33A0	3	K-081
22U-06-22460	K0410-08A0	3	K-145
22U-60-21520	D0100-01A0A	5	D-001A
22U-60-21520	H0100-01B1	10	H-004
22U-60-21520	H0100-01B2	10	H-004A
22U-60-21520	H0100-01B3	10	H-004B
23B-53-71190	U0100-05A3	3	U-029
23S-62-25850	K0210-43A0	22	K-101
23S-62-25850	K0210-43A0	41	K-101
23S-62-25850	K0410-18A0	22	K-165
23S-62-25850	K0410-18A0	37	K-165
281-01-13180	B0000-55A0	8	B-065
281-01-13180	B0000-58A0	8	B-068
281-01-13180	B0000-58A1	8	B-068A
283-62-18110	H0200-01A5	7	H-019
287-06-16420	K0210-43A0	18A	K-101
287-06-16420	K0410-18A0	18A	K-165
2A5-06-11881	K0210-31A0	17	K-079
3A1-62-11641	K2520-02A1	13	K-216A
415-62-13710	B0000-58A0	51	B-068
416-62-34471	H0320-01A0	38	H-053
418-03-11390	C0110-01A0	1	C-003
418-18-31160	M2110-01A0	1	M-001
418-62-23790	B0000-58A0	30	B-068
418-62-23790	B0000-58A1	22	B-068A
418-T90-3680	H0430-01A1	10	H-137
418-T90-3680	H0430-01A1A	10	H-138
419-09-11150	K0210-43A0	21	K-101
419-09-11150	K0410-18A0	21	K-165
419-60-35220	H0100-01A1	13	H-003
419-60-35220	H0100-01B1	19	H-004
419-60-35220	H0100-01B2	14	H-004A
419-60-35220	H0100-01B3	14	H-004B
41E-15-19410	F2380-02A0	3	F-003
41E-15-19410	F2380-05A0	3	F-009
421-06-22830	E0200-01A0	47	E-007
421-06-22830	E0200-01A1	47	E-007A
421-06-22880	E0200-01A0	46	E-007
421-06-22880	E0200-01A1	46	E-007A
421-06-22910	E0200-01A0	35	E-007
421-06-22910	E0200-01A1	35	E-007A
421-06-22920	E0200-01A0	37	E-007
421-06-22920	E0200-01A1	37	E-007A
421-06-23330	K0210-57A0	1	K-125
421-06-23330	K0210-57A0	8	K-125
421-06-23330	K0410-29A0	1	K-187
421-06-23330	K0410-29A0	8	K-187
421-06-26210	K0210-22A0	8	K-061
421-43-28431	K2520-02A0	3	K-216
421-46-12740	T0450-01B1	11	T-021B
421-60-35170	D0100-01A0A	5A	D-001A
421-60-35170	H0100-01B1	10	H-004
421-60-35170	H0100-01B2	10	H-004A
421-60-35170	H0100-01B3	10A	H-004B
421-60-35180	D0100-01A0A	5B	D-001A
421-60-35180	H0100-01B1	10	H-004
421-60-35180	H0100-01B2	10	H-004A
421-60-35180	H0100-01B3	10B	H-004B
421-60-35190	D0100-01A0A	5C	D-001A
421-60-35190	H0100-01B1	10	H-004
421-60-35190	H0100-01B2	10	H-004A
421-60-35190	H0100-01B3	10C	H-004B
423-06-42430	E0210-01A2	20	E-011B
423-54-42790	K0210-52A0	13	K-117
423-54-42790	K0210-53A0	13	K-117A
423-54-42790	K0410-26A0	13	K-181
423-54-42790	K0410-26A0A	13	K-181A
425-62-23750	H0430-01A4	23	H-143
427-54-21740	D0210-01A0	1	D-011
566-03-12620	B0000-55A0	6	B-065
566-03-12620	B0000-58A0	6	B-068
566-03-12620	B0000-58A1	7	B-068A
566-61-49810	B0000-55A0	6	B-065
566-61-49810	B0000-58A0	6	B-068
566-61-49810	B0000-58A1	7	B-068A
569-06-61960	K0210-43A0	17	K-101
569-06-61960	K0410-18A0	17	K-165
569-06-61970	K0210-43A0	18	K-101
569-06-61970	K0410-18A0	18	K-165
56D-61-13460	E0210-01A1	7	E-011A
600-181-1930	U0100-03A1	3	U-013
600-181-1930	U0100-03A2	3	U-015
600-181-1930	U0100-03A3	3	U-017
600-181-1930	U0100-03A4	3	U-018
600-181-3860	B0320-01A0	1	B-019
600-311-3601	D0220-01A0	19	D-013
600-311-3602	D0220-01A0	19	D-013
600-311-3610	D0220-01A0	20	D-013
600-311-3630	D0220-01A0	21	D-013
600-311-3640	D0220-01A0	22	D-013
600-311-3660	D0220-01A0	23	D-013
600-311-3670	D0220-01A0	24	D-013
600-311-3690	D0220-01A0	27	D-013
600-311-3710	D0220-01A0	23	D-013
600-311-3721	D0220-01A0	24	D-013
600-311-3722	D0220-01A0	24	D-013
600-311-7610	D0220-02A0	20	D-015
600-311-7611	D0220-02A0	20	D-015
600-815-2170	E0200-01A0	14	E-007
600-815-2170	E0200-01A1	14	E-007A
600-861-6110	B0000-51A0	1	B-057
600-861-6111	B0000-51A1	1	B-057A
600-863-5111	A6112-A2A9	1	A-099
6090-04-2450	K0710-01A0	2	K-199
6131-12-4570	B0000-58A0	48	B-068
6131-12-4570	B0000-58A0	57	B-068
6131-12-4570	B0000-58A1	26	B-068A
6136-21-7120	A2212-A2A1	1	A-060
6206-81-6840	B0800-01A0	7	B-053
6207-81-6980	B0800-01A0	8	B-053
6215-71-4480	C0200-01A0	11	C-019
6215-81-9710	A4109-A2A7	4	A-079
6216-14-6820	A2102-A2A5	1	A-031
6216-14-6860	A2102-A2A5	3	A-031
6216-74-6180	A6203-A2A2	1	A-103
6216-74-6180	A6203-A2A3	4	A-103A
6216-84-9220	A6203-A2A2	6	A-103
6216-84-9740	A6203-A2A2	16	A-103
6216-84-9740	A6203-A2A2	17	A-103
6217-11-4590	B0300-01A1	8	B-009
6217-71-5770	A4103-A2B1	2	A-069
6261-81-1900	A6203-A2A2	14	A-103
6261-81-2920	A6203-A2A2	4	A-103
6261-81-6900	A6203-A2A2	17	A-103
6261-81-6901	A6203-A2A2	17	A-103
6261-81-6910	A6203-A2A2	18	A-103
6643-11-4620	B0300-01A3	1	B-013
6643-11-4641	B0300-01A3	2	B-013
6685-81-7503	B0310-01A1	1	B-017
6731-21-6220	A6102-A2A9	1	A-093
6731-21-6220	A8106-A2A9	2	A-107
6731-22-1310	A8106-A2A9	5	A-107
6731-22-1310	A8106-A2A9	5	A-107
6731-22-1610	A2103-A2A9	7	A-037
6731-22-7140	A2102-A2A4	2	A-033
6731-61-1370	A1120-A2C7	6	A-011
6731-61-1370	A6203-A2A3	2	A-103A
6731-61-2151	A3112-A2A6	8	A-065
6731-74-5910	A4103-A2B3	4	A-075
6731-82-6810	A6106-A2A8	2	A-095
6731-82-8210	A1203-A2B4	4	A-015
6732-11-1720	A2109-A2A9	4	A-041
6732-11-1720	A2212-A2A1	4	A-060
6732-11-1910	A2102-A2A6	1	A-035
6732-11-1910	A5106-A2A2	5	A-085
6732-11-1920	A1120-A2C7	1	A-011
6732-11-1920	A1206-A2A5	1	A-023
6732-11-1920	A2102-A2A4	1	A-033
6732-11-1920	A2102-A2A5	1	A-031
6732-11-1920	A2109-A2B0	1	A-043
6732-11-1920	A8106-A2A9	6	A-107
6732-11-1930	A3112-A2A6	2	A-065
6732-11-4160	A1206-A2A5	3	A-023
6732-11-5860	A1118-A2A6	1	A-009
6732-21-1411	A2103-A2A9	12	A-037
6732-21-1611	A2103-A2A9	4	A-037
6732-21-1810	A2103-A2A9	3	A-037
6732-21-1910	A2103-A2A9	11	A-037
6732-21-1910	A2103-A2A9	21	A-037
6732-21-1910	A2103-A2A9	9	A-037
6732-21-1960	A4109-A2A7	3	A-079
6732-21-3120	A2212-A2A1	7	A-060
6732-21-3120	A4103-A2B3	1	A-075
6732-21-3120	A6203-A2A3	10	A-103A
6732-21-3120	A8106-A2A9	12	A-107
6732-21-4130	A8106-A2A9	14	A-107
6732-21-4150	A8106-A2A9	15	A-107
6732-21-4161	A8106-A2A9	11	A-107
6732-21-4180	A6203-A2A3	13	A-103A
6732-21-5160	A2115-A2A4	3	A-047
6732-21-5160	A4109-A2A7	7	A-079
6732-21-5190	A2115-A2A4	6	A-047
6732-21-5210	A2115-A2A4	7	A-047
6732-21-5530	A2215-A2A6	1	A-061
6732-21-6140	A2103-A2A9	14	A-037
6732-21-6150	A2120-A2A4	1	A-051
6732-21-6150	A2203-A2A3	3	A-059
6732-21-6150	A2203-A2A3	NI	A-059
6732-21-6630	A2109-A2A7	4	A-039
6732-21-6630	A2115-A2A4	4	A-047
6732-21-6630	A8106-A2A9	13	A-107
6732-21-7520	A1115-A2B3	3	A-005
6732-21-8180	A2120-A2A4	6	A-051
6732-29-8100	A2120-A2A4	6	A-051
6732-31-2420	A2126-A2A8	9	A-055
6732-31-3132	A2126-A2A8	3	A-055
6732-31-3320	A2126-A2A8	2	A-055
6732-31-3420	A2126-A2A8	5	A-055
6732-31-4120	A2118-A2A2	3	A-045
6732-31-4130	A2118-A2A2	4	A-045
6732-31-4180	A2118-A2A2	1	A-045
6732-51-4420	A3112-A2A6	9	A-065
6732-51-8330	A1120-A2C7	8	A-011
6732-61-2240	A2102-A2A6	2	A-035
6732-61-3120	A5112-A2B3	1	A-091
6732-61-3120	K0710-01A0	3	K-199
6732-61-3140	A8109-A2A4	4	A-109
6732-61-3160	A5112-A2A8	1	A-089
6732-61-3160	K0710-01A0	4	K-199
6732-61-3170	A5112-A2B3	8	A-091
6732-61-3170	K0710-01A0	5	K-199
6732-61-3410	A5112-A2B3	4	A-091
6732-61-3420	A5112-A2B3	3	A-091
6732-61-3430	A5112-A2B3	6	A-091
6732-61-3440	A5112-A2B3	2	A-091
6732-61-3450	A5112-A2B3	1	A-091
6732-61-3750	A5112-A2B3	7	A-091
6732-61-6130	A5106-A2A2	4	A-085
6732-61-6140	A6203-A2A3	11	A-103A
6732-61-6150	A1109-A2A1	2	A-003
6732-61-6150	A1204-A2A7	1	A-019
6732-71-3210	A4115-A2B2	3	A-081
6732-71-3220	A2212-A2A1	2	A-060
6732-71-3220	A4115-A2B2	4	A-081
6732-71-6510	A4103-A2B3	2	A-075
6732-71-6510	A4106-A2B3	1	A-077
6732-81-8220	A1209-A2B1	1	A-027
6732-81-8810	A1120-A2C8	1	A-013
6732-81-8820	A1120-A2C8	2	A-013
6732-81-8860	A1120-A2C7	5	A-011
6732-81-8860	A1120-A2C8	5	A-013
6732-82-3430	K0700-01A1	8	K-193
6732-82-3430	K0700-01A1A	7	K-193A
6733-11-4150	A1204-A2A7	2	A-019
6733-11-4150	A4103-A2B2	1	A-071
6733-71-5680	A6203-A2A3	8	A-103A
6733-81-8260	A1203-A2B4	13	A-015
6733-81-8270	A1203-A2B4	12	A-015
6733-81-8330	A1203-A2B4	10	A-015
6733-81-8360	A1203-A2B4	8	A-015
6733-81-8460	A1203-A2B4	11	A-015
6733-81-8480	A1203-A2B4	16	A-015
6734-71-5520	A6203-A2A2	7	A-103
6735-21-1910	A1206-A2A5	8	A-023
6735-21-1930	A1206-A2A5	9	A-023
6735-21-4150	A8106-A2A9	7	A-107
6735-21-4160	A8106-A2A9	8	A-107
6735-21-5530	A1103-A2A6	10	A-001
6735-21-5530	A1120-A2C7	2	A-011
6735-21-5670	A2115-A2A4	2	A-047
6735-21-5680	A2115-A2A4	1	A-047
6735-21-8110	A2120-A2A4	7	A-051
6735-21-8210	A2120-A2A4	8	A-051
6735-26-8210	A2120-A2A4	8	A-051
6735-27-8210	A2120-A2A4	8	A-051
6735-28-8210	A2120-A2A4	8	A-051
6735-29-8210	A2120-A2A4	8	A-051
6735-41-5550	A1109-A2A1	10	A-003
6735-41-5550	A1109-A2A1	16	A-003
6735-61-2120	A2109-A2A7	3	A-039
6735-61-2120	A2109-A2A9	2	A-041
6735-61-2120	A3112-A2A6	1	A-065
6735-61-2120	A6203-A2A2	5	A-103
6735-61-2190	A3112-A2A6	7	A-065
6735-61-3810	A2109-A2A9	3	A-041
6735-61-5110	A1999-A2A1	1	A-029
6735-61-5120	A1999-A2A1	2	A-029
6735-71-3220	A2103-A2A9	1	A-037
6735-71-3220	A2115-A2A4	5	A-047
6735-71-3220	A5106-A2A2	1	A-085
6735-71-3220	A5112-A2A8	2	A-089
6735-71-3220	A8109-A2A4	3	A-109
6735-71-3220	K0710-01A0	6	K-199
6735-71-5190	A5109-A2A4	4	A-087
6735-71-6610	A4115-A2B2	5	A-081
6735-81-6140	A2109-A2B0	2	A-043
6735-81-6170	A6106-A2A8	3	A-095
6735-81-6460	B0800-01A0	9	B-053
6735-81-8310	A1203-A2B4	18	A-015
6735-81-8620	A1203-A2B4	15	A-015
6735-82-8220	A1203-A2B4	26	A-015
6735-K2-3010	A8106-A2A9	5	A-107
6736-21-1820	A1103-A2A6	9	A-001
6736-21-1820	A2103-A2A9	6	A-037
6736-21-3210	A1109-A2A1	1	A-003
6736-21-3360	A2212-A2A1	3	A-060
6736-21-5310	A2203-A2A3	8	A-059
6736-21-5350	A8106-A2A9	4	A-107
6736-26-8100	A2120-A2A4	6	A-051
6736-27-8100	A2120-A2A4	6	A-051
6736-28-8100	A2120-A2A4	6	A-051
6736-39-1140	A2120-A2A5	10	A-051A

PARTS Nº	FIG. Nº	INDEX	PAGE
6736-39-1221	A2120-A2A5	9	A-051A
6736-51-5142	A3109-A2A5	1	A-067
6736-61-1520	A5103-A2A1	2	A-083
6736-61-5180	A3112-A2A6	6	A-065
6736-71-5830	A4115-A2B2	6	A-081
6736-81-5110	A6203-A2A3	9	A-103A
6736-81-6170	A6106-A2A8	4	A-095
6736-81-8280	A1203-A2B4	7	A-015
6736-81-8320	A1203-A2B4	23	A-015
6736-81-8360	A1203-A2B4	25	A-015
6736-81-8370	A1203-A2B4	3	A-015
6736-81-8380	A1203-A2B4	24	A-015
6736-81-8430	A1203-A2B4	6	A-015
6736-81-8440	A1203-A2B4	22	A-015
6736-81-8480	A1203-A2B4	5	A-015
6737-31-4100	A2118-A2A2	1	A-045
6737-32-2110	A5106-A2A2	3	A-085
6737-32-3120	A2126-A2A8	1	A-055
6737-51-8770	A1120-A2C7	3	A-011
6737-51-8770	A1120-A2C8	3	A-013
6737-62-6210	A5106-A2A2	2	A-085
6738-11-4370	A1205-A2A4	1	A-021
6738-12-4310	A1205-A2A4	2	A-021
6738-22-5110	A8106-A2A9	9	A-107
6738-36-3400	A2126-A2A8	5	A-055
6738-37-3400	A2126-A2A8	5	A-055
6738-38-3400	A2126-A2A8	5	A-055
6738-39-3400	A2126-A2A8	5	A-055
6741-82-3810	A2109-A2B0	4	A-043
6742-01-1420	A2103-A2A9	5	A-037
6742-01-2630	A4112-A2A8	5	A-073
6742-01-3620	B0410-01A0	5	B-025
6742-01-3620	B0410-01A1	5	B-026
6742-01-5158	A8106-A2A9	16	A-107
6742-01-5504	A2103-A2A9	20	A-037
6742-01-5504	A8106-A2A9	3	A-107
6742-01-5558	H0330-01A0	3	H-057
6743-12-4110	A1206-A2A5	4	A-023
6743-82-8140	A1203-A2B4	14	A-015
6744-11-1020	A1103-A2A6	1	A-001
6744-11-1020	A1103-A2A6	3	A-001
6744-11-1070	A1103-A2A6	13	A-001
6744-81-4010	A6203-A2A2	15	A-103
6744-81-4020	A6203-A2A2	15	A-103
6745-61-8160	A1120-A2C7	3	A-011
6745-71-1130	A4106-A2B3	2	A-077
6745-71-5550	A4103-A2B2	10	A-071
6745-71-5820	A2103-A2A9	18	A-037
6745-81-9660	A6203-A2A3	1	A-103A
6754-11-1011	A1103-A2A6	1	A-001
6754-11-1101	A1103-A2A6	8	A-001
6754-11-1160	A1103-A2A6	14	A-001
6754-11-1170	A1103-A2A6	15	A-001
6754-11-1180	A1103-A2A6	16	A-001
6754-11-1610	A1103-A2A6	18	A-001
6754-11-1710	A8109-A2A4	1	A-109
6754-11-1811	A1103-A2A6	17	A-001
6754-11-1940	A8109-A2A4	2	A-109
6754-11-3010	A4112-A2A8	1	A-073
6754-11-3100	A4112-A2A8	3	A-073
6754-11-3101	A4112-A2A8	2	A-073
6754-11-3110	A4112-A2A8	1	A-073
6754-11-3130	A4112-A2A8	3	A-073
6754-11-3140	A4112-A2A8	4	A-073
6754-11-4120	A1204-A2A6	1	A-017
6754-11-4210	A1206-A2A5	2	A-023
6754-11-4221	A1206-A2A5	7	A-023
6754-11-4280	A1206-A2A5	5	A-023
6754-11-4290	A1206-A2A5	6	A-023
6754-11-5110	A1118-A2A6	4	A-009
6754-11-5140	A1118-A2A6	3	A-009
6754-11-5150	A1118-A2A6	2	A-009
6754-11-7110	A1109-A2A1	6	A-003
6754-11-7120	A1109-A2A1	5	A-003
6754-11-8150	A1112-A2A5	1	A-007
6754-11-8160	A1112-A2A5	6	A-007
6754-11-8180	A1112-A2A5	4	A-007
6754-11-8210	A1112-A2A5	5	A-007
6754-12-4110	A1204-A2A6	2	A-017
6754-12-4120	A1204-A2A6	3	A-017
6754-12-4130	A1204-A2A7	3	A-019
6754-21-1011	A2103-A2A9	1	A-037
6754-21-1180	A2126-A2A8	11	A-055
6754-21-1190	A2126-A2A8	10	A-055
6754-21-1220	A2103-A2A9	9	A-037
6754-21-1240	A2103-A2A9	7	A-037
6754-21-1920	A2103-A2A9	17	A-037
6754-21-3120	A2109-A2A9	5	A-041
6754-21-3140	A2109-A2A9	1	A-041
6754-21-3150	A2109-A2A9	7	A-041
6754-21-4120	A8106-A2A9	17	A-107
6754-21-4210	A8106-A2A9	1	A-107
6754-21-5150	A2103-A2A9	13	A-037
6754-21-5170	A2103-A2A9	19	A-037
6754-21-5530	A2115-A2A4	8	A-047
6754-21-6100	A1115-A2B3	8	A-005
6754-21-6140	A1115-A2B3	1	A-005
6754-21-6150	A1115-A2B3	4	A-005
6754-21-6180	A1115-A2B3	2	A-005
6754-21-6190	A1115-A2B3	6	A-005
6754-21-6211	A2109-A2A7	1	A-039
6754-21-6220	A2109-A2A7	2	A-039
6754-21-6230	A2109-A2A7	5	A-039
6754-21-6240	A1115-A2B3	10	A-005
6754-21-6250	A1115-A2B3	9	A-005
6754-21-6280	A1115-A2B3	5	A-005
6754-21-9120	A2109-A2B0	7	A-043
6754-22-3110	A2109-A2B0	6	A-043
6754-22-3110	H0330-01A0	4	H-057
6754-22-3120	A2109-A2A9	5	A-041
6754-22-3130	A2109-A2B0	3	A-043
6754-22-3140	A2109-A2B0	5	A-043
6754-22-4110	A8106-A2A9	6	A-107
6754-22-5120	A2115-A2A4	10	A-047
6754-22-5470	A2215-A2A6	2	A-061
6754-22-5480	A2215-A2A6	3	A-061
6754-22-5510	A2115-A2A4	9	A-047
6754-22-5610	A8106-A2A9	10	A-107
6754-22-6220	A1112-A2A5	1	A-007
6754-22-6310	A2103-A2A9	15	A-037
6754-22-6320	A2109-A2B0	8	A-043
6754-22-6330	A2103-A2A9	16	A-037
6754-22-8120	A2120-A2A5	8	A-051A
6754-22-8130	A2120-A2A5	6	A-051A
6754-22-8200	A2120-A2A4	6	A-051
6754-22-8200	A2120-A2A5	6	A-051A
6754-26-8100	A2120-A2A5	8	A-051A
6754-26-8120	A2120-A2A5	8	A-051A
6754-27-8100	A2120-A2A5	8	A-051A
6754-27-8110	A2120-A2A5	8	A-051A
6754-28-8100	A2120-A2A5	8	A-051A
6754-28-8120	A2120-A2A5	8	A-051A
6754-29-8100	A2120-A2A5	8	A-051A
6754-29-8120	A2120-A2A5	8	A-051A
6754-31-1110	A2120-A2A4	3	A-051
6754-31-1210	A2120-A2A5	3	A-051A
6754-31-1220	A2120-A2A5	4	A-051A
6754-31-1330	A2120-A2A4	5	A-051
6754-31-1340	A2120-A2A4	4	A-051
6754-31-2010	A2126-A2A8	8	A-055
6754-31-2231	A2126-A2A8	8	A-055
6754-31-2410	A2126-A2A8	7	A-055
6754-31-8110	A2123-A2A3	2	A-049
6754-31-8120	A2123-A2A3	1	A-049
6754-31-8130	A2120-A2A5	5	A-051A
6754-31-8130	A2123-A2A3	3	A-049
6754-32-1340	A2120-A2A5	1	A-051A
6754-32-1910	A2120-A2A5	7	A-051A
6754-32-2110	A2126-A2A8	6	A-055
6754-32-3410	A2126-A2A8	4	A-055

PARTS Nº	FIG. Nº	INDEX	PAGE
6754-32-3420	A2126-A2A8	4	A-055
6754-32-3430	A2126-A2A8	4	A-055
6754-32-3440	A2126-A2A8	4	A-055
6754-32-3450	A2126-A2A8	4	A-055
6754-36-1710	A2120-A2A5	7	A-051A
6754-38-1710	A2120-A2A5	7	A-051A
6754-41-1110	A2203-A2A3	4	A-059
6754-41-1120	A2203-A2A3	1	A-059
6754-41-1130	A2203-A2A3	5	A-059
6754-41-1140	A2203-A2A3	2	A-059
6754-41-1150	A2203-A2A3	9	A-059
6754-41-1160	A2203-A2A3	7	A-059
6754-41-1170	A2203-A2A3	3	A-059
6754-41-2110	A2206-A2A1	1	A-057
6754-41-3110	A1109-A2A1	3	A-003
6754-41-4100	A1103-A2A6	2	A-001
6754-41-4200	A1103-A2A6	1	A-001
6754-41-4430	A1103-A2A6	7	A-001
6754-41-4510	A1103-A2A6	8	A-001
6754-41-4540	A1103-A2A6	5	A-001
6754-41-4540	A1103-A2A6	6	A-001
6754-41-5100	A1109-A2A1	8	A-003
6754-41-5110	A1109-A2A1	8	A-003
6754-41-5130	A1109-A2A1	12	A-003
6754-41-5130	A1109-A2A1	17	A-003
6754-41-5140	A1109-A2A1	13	A-003
6754-41-5140	A1109-A2A1	18	A-003
6754-41-5150	A1109-A2A1	11	A-003
6754-41-5160	A1109-A2A1	15	A-003
6754-41-5160	A1109-A2A1	9	A-003
6754-41-5170	A1109-A2A1	14	A-003
6754-41-5170	A1109-A2A1	8	A-003
6754-41-5180	A1109-A2A1	21	A-003
6754-41-5190	A1109-A2A1	22	A-003
6754-41-5210	A1109-A2A1	14	A-003
6754-41-5250	A1109-A2A1	19	A-003
6754-41-5260	A1109-A2A1	20	A-003
6754-41-5310	A1109-A2A1	4	A-003
6754-51-8100	A1120-A2C7	7	A-011
6754-51-8121	A1120-A2C7	7	A-011
6754-51-8121	A1120-A2C8	6	A-013
6754-51-8220	A1120-A2C7	10	A-011
6754-52-5510	A2115-A2A4	11	A-047
6754-52-8130	A2212-A2A1	5	A-060
6754-52-8140	A2212-A2A1	6	A-060
6754-61-1010	A5103-A2A1	1	A-083
6754-61-2110	A3112-A2A6	10	A-065
6754-61-2230	A3112-A2A6	5	A-065
6754-61-2250	A3112-A2A6	4	A-065
6754-61-2260	A3112-A2A6	3	A-065
6754-61-4110	A6102-A2A9	2	A-093
6754-61-6211	A5109-A2A4	1	A-087
6754-61-6230	A5109-A2A4	2	A-087
6754-61-6320	A5109-A2A4	3	A-087
6754-62-2310	A3112-A2A6	11	A-065
6754-62-3410	K0710-01A0	7	K-199
6754-71-1110	A4115-A2B2	7	A-081
6754-71-1130	A4103-A2B3	5	A-075
6754-71-1210	A4103-A2B2	7	A-071
6754-71-1320	A4115-A2B2	9	A-081
6754-71-1330	A4115-A2B2	7	A-081
6754-71-1340	A4115-A2B2	10	A-081
6754-71-1350	A4115-A2B2	11	A-081
6754-71-3110	A4115-A2B2	2	A-081
6754-71-3130	A4115-A2B2	1	A-081
6754-71-5210	A4103-A2B2	3	A-071
6754-71-5220	A4103-A2B2	4	A-071
6754-71-5230	A4103-A2B2	5	A-071
6754-71-5240	A4103-A2B2	6	A-071
6754-71-5350	A4115-A2B2	12	A-081
6754-71-5510	A4103-A2B2	10	A-071
6754-71-5540	A4103-A2B2	2	A-071
6754-71-6130	A4109-A2A7	1	A-079
6754-71-6320	D0220-02A0	22	D-015
6754-71-6330	A4109-A2A7	2	A-079
6754-71-6330	D0220-02A0	23	D-015
6754-71-7200	D0220-01A0	19	D-013
6754-71-7401	D0220-01A0	19	D-013
6754-71-7402	D0220-01A0	19	D-013
6754-71-9710	A4103-A2B1	1	A-069
6754-71-9930	A4109-A2A7	6	A-079
6754-72-1210	A4103-A2B2	7	A-071
6754-72-1220	A4103-A2B2	8	A-071
6754-72-5330	A4103-A2B3	7	A-075
6754-72-5350	A4103-A2B3	9	A-075
6754-72-5410	A4103-A2B3	8	A-075
6754-72-6110	A4109-A2A7	5	A-079
6754-72-6110	D0220-02A0	22	D-015
6754-72-6330	A4109-A2A7	1	A-079
6754-72-9930	A4106-A2B3	3	A-077
6754-72-9940	A4106-A2B3	4	A-077
6754-79-6140	D0220-02A0	21	D-015
6754-81-2701	A6203-A2A2	20	A-103
6754-81-2710	A6203-A2A2	21	A-103
6754-81-5110	A1204-A2A6	4	A-017
6754-81-6810	A6106-A2A8	1	A-095
6754-81-8710	A1120-A2C8	4	A-013
6754-81-9110	A6203-A2A2	9	A-103
6754-81-9120	A6203-A2A2	12	A-103
6754-81-9130	A6203-A2A2	10	A-103
6754-81-9140	A6203-A2A2	23	A-103
6754-81-9150	A6203-A2A2	2	A-103
6754-81-9160	A6203-A2A2	8	A-103
6754-81-9170	A6203-A2A2	13	A-103
6754-81-9180	A6203-A2A2	11	A-103
6754-81-9200	A6203-A2A2	3	A-103
6754-81-9210	A6203-A2A3	5	A-103A
6754-81-9220	A6203-A2A3	16	A-103A
6754-81-9230	A6203-A2A3	6	A-103A
6754-81-9270	A6203-A2A3	19	A-103A
6754-81-9280	A6203-A2A3	18	A-103A
6754-81-9310	A6203-A2A3	15	A-103A
6754-81-9330	A4103-A2B3	3	A-075
6754-81-9330	A6203-A2A3	14	A-103A
6754-81-9340	A6203-A2A3	17	A-103A
6754-81-9390	A6203-A2A3	3	A-103A
6754-82-2110	A6203-A2A2	19	A-103
6754-82-8010	A1120-A2C8	3	A-013
6754-82-9410	A6203-A2A3	7	A-103A
6934-11-4190	H0370-01A0	17	H-085
6934-11-4190	H0380-01A0	17	H-097
700-22-11410	H0310-11A0	14	H-043
700-22-11410	H0370-04A0	20	H-093
700-22-11410	H0370-05A0	2	H-095
700-22-11410	H0370-05A0	6	H-095
700-22-11410	H0380-04A0	20	H-105
700-22-11410	H0380-05A0	2	H-107
700-22-11410	H0380-05A0	6	H-107
700-22-11910	H0370-02A0	37	H-087
700-22-11910	H0380-02A0	37	H-099
700-80-61190	H0390-11A0	6	H-115
700-80-61260	H0370-02A0	16	H-087
700-80-61260	H0380-02A0	16	H-099
700-80-62380	H0390-10A2	29	H-113B
700-80-64220	H0370-04A0	19	H-093
700-80-64220	H0370-05A0	3	H-095
700-80-64220	H0370-05A0	7	H-095
700-80-64220	H0380-04A0	19	H-105
700-80-64220	H0380-05A0	3	H-107
700-80-64220	H0380-05A0	7	H-107
700-84-11730	H0310-11A0	5	H-043
700-93-11320	H0440-02A0	10	H-151
702-16-01992	H0390-10A0	1	H-113
702-16-01992	H0390-10A1	1	H-113A
702-16-01992	H0390-10A2	1	H-113B
702-16-01992	K0210-36A0	1	K-087
702-16-01992	K0410-11A0	1	K-151
702-16-02221	H0390-12A0	1	H-117
702-16-02221	K0210-34A0	1	K-083
702-16-02221	K0410-09A0	1	K-147

PARTS Nº	FIG. Nº	INDEX	PAGE
702-16-02222	H0390-12A0	1	H-117
702-16-02222	H0390-12A0A	1	H-118
702-16-02222	K0210-34A0	1	K-083
702-16-02222	K0410-09A0	1	K-147
702-16-02223	H0390-12A0	1	H-117
702-16-02223	H0390-12A0A	1	H-118
702-16-02223	K0210-34A0	1	K-083
702-16-02223	K0410-09A0	1	K-147
702-16-02224	H0390-12A0A	1	H-118
702-16-02224	K0210-34A0	1	K-083
702-16-02224	K0410-09A0	1	K-147
702-16-02320	H0390-12A0A	1	H-118
702-16-02320	K0210-34A0	1	K-083
702-16-02320	K0410-09A0	1	K-147
702-16-03390	K2520-01A1	1	K-213
702-16-03390	K2520-02A0	12	K-216
702-16-51140	H0390-10A1	5	H-113A
702-16-51240	H0390-10A1	20	H-113A
702-16-51270	H0390-10A1	15	H-113A
702-16-53150	H0390-10A1	14	H-113A
702-16-53160	H0390-10A1	12	H-113A
702-16-53240	K2110-01A0	23	K-207
702-16-53530	H0390-10A1	10	H-113A
702-16-54170	H0390-10A2	2	H-113B
702-16-54490	H0310-04A0	2	H-029
702-16-54490	H0310-08A0	2	H-037
702-16-54960	H0390-10A1	9	H-113A
702-16-54960	H0390-10A2	39	H-113B
702-16-55491	H0390-10A1	25	H-113A
702-16-55520	H0390-10A1	26	H-113A
702-16-55530	H0390-10A1	27	H-113A
702-16-55540	H0390-10A1	28	H-113A
702-16-55550	H0390-10A1	29	H-113A
702-16-55560	H0390-10A1	30	H-113A
702-16-55570	H0390-10A2	1	H-113B
702-16-55580	H0390-10A2	3	H-113B
702-16-55590	H0390-10A2	5	H-113B
702-16-55610	H0390-10A2	8	H-113B
702-16-55630	H0390-10A1	13	H-113A
702-16-57310	H0390-10A1	11	H-113A
702-16-58820	H0390-10A0	2	H-113
702-16-59330	H0390-12A0	7	H-117
702-16-59330	H0390-12A0A	5	H-118
702-16-59560	H0390-12A0	5	H-117
702-16-59620	H0390-10A1	6	H-113A
702-16-59630	H0390-10A1	7	H-113A
702-16-59680	H0390-10A2	4	H-113B
702-16-61980	H0390-12A0	6	H-117
702-16-62510	H0390-12A0	3	H-117
702-16-62550	H0390-12A0	2	H-117
702-16-62690	H0390-12A0	8	H-117
702-16-62690	H0390-12A0A	6	H-118
702-16-62730	H0390-12A0	2	H-117
702-16-62730	H0390-12A0A	2	H-118
702-16-62740	H0390-12A0	3	H-117
702-16-62740	H0390-12A0A	3	H-118
702-21-07311	H0440-01A0	3	H-149
702-21-07620	H0310-11A0	12	H-043
702-21-11900	H0390-01A0	1	H-111
702-21-11900	H0500-01A0	1	H-155
702-21-35130	H0390-01A0	8	H-111
702-21-38460	H0390-10A2	7	H-113B
702-21-39450	H0310-11A0	13	H-043
702-21-53110	H0440-01A0	N/I	H-149
702-21-53210	H0440-01A0	N/I	H-149
702-21-53301	H0440-01A0	N/I	H-149
702-21-53311	H0440-01A0	N/I	H-149
702-21-53330	H0440-01A0	N/I	H-149
702-21-53340	H0440-01A0	N/I	H-149
702-21-53350	H0440-01A0	N/I	H-149
702-21-54190	H0370-02A0	15	H-087
702-21-54190	H0380-02A0	15	H-099
702-21-54260	H0370-04A0	16	H-093
702-21-54260	H0380-04A0	16	H-105
702-21-55440	H0360-02A0	12	H-081
702-21-55760	H0390-11A0	13	H-115
702-21-57410	H0370-02A0	11	H-087
702-21-57410	H0380-02A0	11	H-099
702-21-58140	H0370-02A0	11	H-087
702-21-58140	H0380-02A0	11	H-099
702-21-58700	H0370-02A0	7	H-087
702-21-58700	H0380-02A0	7	H-099
702-21-60800	H0370-02A0	7	H-087
702-21-60800	H0380-02A0	7	H-099
702-21-81540	H0390-01A0	2	H-111
702-21-81560	H0390-01A0	9	H-111
702-21-81570	H0390-01A0	12	H-111
702-21-81580	H0390-01A0	13	H-111
702-21-81590	H0390-01A0	19	H-111
702-21-81610	H0390-01A0	5	H-111
702-72-11170	H0310-10A0	6	H-041
702-77-03500	H0350-01A0	18	H-063
702-77-03500	H0350-03A0	18	H-071
706-77-72170	H0350-01A0	10	H-063
706-77-72170	H0350-02A0	39	H-067
706-77-72170	H0350-03A0	10	H-071
706-77-72170	H0350-04A0	39	H-075
706-7H-05910	H0350-02A0	19	H-067
706-7H-05910	H0350-04A0	19	H-075
706-7H-05911	H0350-02A0	19	H-067
706-7H-05911	H0350-04A0	19	H-075
706-7H-41120	H0350-02A0	17	H-067
706-7H-41120	H0350-04A0	17	H-075
706-7H-41740	H0350-02A0	24	H-067
706-7H-41740	H0350-04A0	24	H-075
706-7K-91340	H0350-02A0	29	H-067
706-7K-91340	H0350-04A0	29	H-075
706-86-51180	H0440-01A0	N/I	H-149
706-86-53230	H0350-01A0	30	H-063
706-86-53230	H0350-03A0	30	H-071
706-86-53511	H0390-11A0	1	H-115
706-86-53520	H0390-11A0	2	H-115
706-86-53530	H0310-11A0	9	H-043
706-86-53530	H0350-01A0	20	H-063
706-86-53530	H0350-03A0	20	H-071
706-86-53530	H0390-11A0	12	H-115
706-86-71310	H0350-01A0	12	H-063
706-86-71310	H0350-03A0	12	H-071
706-86-90290	H0350-02A0	33	H-067
706-86-90290	H0350-04A0	33	H-075
706-8H-01110	F2380-03A0	1	F-005
706-8H-01110	H0350-01A0	1	H-063
706-8H-01111	F2380-03A0	1	F-005
706-8H-01111	H0350-01A0	1	H-063
706-8H-01120	F2380-06A0	1	F-011
706-8H-01120	H0350-03A0	1	H-071
706-8H-01121	F2380-06A0	1	F-011
706-8H-01121	H0350-03A0	1	H-071
706-8H-04110	H0350-01A0	22	H-063
706-8H-04110	H0350-03A0	22	H-071
706-8H-04131	H0350-02A0	1	H-067
706-8H-04131	H0350-04A0	1	H-075
706-8H-04141	H0350-01A0	2	H-063
706-8H-04141	H0350-03A0	2	H-071
706-8H-41120	H0350-02A0	22	H-067
706-8H-41120	H0350-04A0	22	H-075
706-8H-41160	H0350-02A0	27	H-067
706-8H-41160	H0350-04A0	27	H-075
706-8H-41260	H0350-02A0	25	H-067
706-8H-41260	H0350-04A0	25	H-075
706-8H-41310	H0350-01A0	1	H-063
706-8H-41310	H0350-03A0	1	H-071
706-8H-41311	H0350-01A0	1	H-063
706-8H-41311	H0350-03A0	1	H-071
706-8H-41340	H0350-02A0	15	H-067
706-8H-41340	H0350-04A0	15	H-075
706-8H-41350	H0350-02A0	16	H-067
706-8H-41350	H0350-04A0	16	H-075
706-8H-41370	H0350-02A0	18	H-067
706-8H-41370	H0350-04A0	18	H-075

PARTS Nº	FIG. Nº	INDEX	PAGE
706-8H-41371	H0350-02A0	18	H-067
706-8H-41371	H0350-04A0	18	H-075
706-8H-41380	H0350-02A0	23	H-067
706-8H-41380	H0350-04A0	23	H-075
706-8H-41810	H0350-02A0	19B	H-067
706-8H-41810	H0350-04A0	19B	H-075
706-8H-41870	H0350-02A0	19A	H-067
706-8H-41870	H0350-04A0	19A	H-075
706-8H-41880	H0350-02A0	21	H-067
706-8H-41880	H0350-04A0	21	H-075
706-8H-51110	H0350-02A0	3	H-067
706-8H-51110	H0350-04A0	3	H-075
706-8H-51120	H0350-01A0	24	H-063
706-8H-51120	H0350-03A0	24	H-071
706-8H-51130	H0350-01A0	22	H-063
706-8H-51130	H0350-03A0	22	H-071
706-8H-51140	H0350-01A0	26	H-063
706-8H-51140	H0350-03A0	26	H-071
706-8H-51150	H0350-01A0	23	H-063
706-8H-51150	H0350-03A0	23	H-071
706-8H-53120	H0350-01A0	8	H-063
706-8H-53120	H0350-03A0	8	H-071
706-8H-53130	H0350-01A0	9	H-063
706-8H-53130	H0350-03A0	9	H-071
706-8H-53170	H0350-02A0	6	H-067
706-8H-53170	H0350-04A0	6	H-075
706-8H-53180	H0350-02A0	7	H-067
706-8H-53180	H0350-04A0	7	H-075
706-8H-53190	H0350-02A0	10	H-067
706-8H-53190	H0350-04A0	10	H-075
706-8H-53210	H0350-02A0	11	H-067
706-8H-53210	H0350-04A0	11	H-075
706-8H-53220	H0350-02A0	35	H-067
706-8H-53220	H0350-04A0	35	H-075
706-8H-53230	H0350-01A0	21	H-063
706-8H-53230	H0350-03A0	21	H-071
706-8H-91110	H0350-02A0	31	H-067
706-8H-91110	H0350-04A0	31	H-075
706-8H-91120	H0350-02A0	30	H-067
706-8H-91120	H0350-04A0	30	H-075
706-8H-91130	H0350-02A0	28	H-067
706-8H-91130	H0350-04A0	28	H-075
706-8H-91140	H0350-02A0	34	H-067
706-8H-91140	H0350-04A0	34	H-075
707-00-0G820	H0700-01A0	1	H-171
707-00-0G830	H0700-01A0	1	H-171
707-00-0G840	H0700-01A2	1	H-175
707-00-0G851	H0700-01A1	1	H-173
707-00-0G852	H0700-01A1A	1	H-173A
707-00-XG860	H0700-01A3	1	H-177
707-11-11E60	H0700-01A3	1	H-177
707-29-10990	H0700-01A2	10	H-175
707-29-11420	H0700-01A3	8	H-177
707-29-90760	H0700-01A0	4	H-171
707-29-90780	H0700-01A1	10	H-173
707-29-90780	H0700-01A1A	10	H-173A
707-36-10340	H0700-01A2	20	H-175
707-36-11050	H0700-01A3	18	H-177
707-36-90260	H0700-01A0	16	H-171
707-37-90140	H0700-01A1	23	H-173
707-37-90141	H0700-01A1A	23	H-173A
707-39-90110	H0700-01A1	25	H-173
707-39-90110	H0700-01A1A	25	H-173A
707-40-90150	H0700-01A1	30	H-173
707-40-90151	H0700-01A1A	30	H-173A
707-44-10180	H0700-01A2	21	H-175
707-44-11180	H0700-01A3	19	H-177
707-44-90180	H0700-01A0	17	H-171
707-44-90180	H0700-01A1	24	H-173
707-44-90180	H0700-01A1A	24	H-173A
707-46-04070	H0700-01A1	4	H-173
707-46-04070	H0700-01A1	7	H-173
707-46-04070	H0700-01A1A	4	H-173A
707-46-04070	H0700-01A1A	7	H-173A
707-46-04070	H0700-01A2	4	H-175
707-46-04070	H0700-01A2	7	H-175
707-51-50030	H0700-01A0	6	H-171
707-51-50030	H0700-01A1	13	H-173
707-51-50030	H0700-01A1A	13	H-173A
707-51-50640	H0700-01A0	7	H-171
707-51-50640	H0700-01A1	14	H-173
707-51-50640	H0700-01A1A	14	H-173A
707-51-55030	H0700-01A2	13	H-175
707-51-55640	H0700-01A2	14	H-175
707-51-60030	H0700-01A3	12	H-177
707-51-60640	H0700-01A3	13	H-177
707-52-90250	H0700-01A0	5	H-171
707-52-90260	H0700-01A1	15	H-173
707-52-90261	H0700-01A1A	15	H-173A
707-52-90300	H0700-01A2	15	H-175
707-52-90350	H0700-01A3	11	H-177
707-56-50540	H0700-01A0	8	H-171
707-56-50540	H0700-01A1	11	H-173
707-56-50540	H0700-01A1A	11	H-173A
707-56-55540	H0700-01A2	11	H-175
707-56-60540	H0700-01A3	9	H-177
707-58-50J60	H0700-01A0	13	H-171
707-58-50J71	H0700-01A1	3	H-173
707-58-50J72	H0700-01A1A	3	H-173A
707-67-33020	H0700-01A1	28	H-173
707-67-36010	H0700-01A0	19	H-171
707-67-36010	H0700-01A2	23	H-175
707-67-36020	H0700-01A1A	28	H-173A
707-67-45010	H0700-01A3	21	H-177
707-69-90010	H0700-01A1	26	H-173
707-69-90011	H0700-01A1A	26	H-173A
707-75-60110	H0700-01A3	17	H-177
707-80-16020	H0700-01A1	20	H-173
707-80-16020	H0700-01A1A	20	H-173A
707-81-33011	H0700-01A1	29	H-173
707-81-33012	H0700-01A1A	29	H-173A
707-83-90010	H0700-01A1	19	H-173
707-83-90010	H0700-01A1A	19	H-173A
707-83-90020	H0700-01A1	21	H-173
707-83-90020	H0700-01A1A	21	H-173A
707-84-10250	H0700-01A1	22	H-173
707-84-10250	H0700-01A1A	22	H-173A
707-86-48310	H0700-01A3	22	H-177
707-91-91060	H0700-01A1	19	H-173
707-91-91061	H0700-01A1A	19	H-173A
707-99-25720	H0700-01A0	N/I	H-171
707-99-25730	H0700-01A1	N/I	H-173
707-99-25730	H0700-01A1A	N/I	H-173A
707-99-34300	H0700-01A2	N/I	H-175
707-99-35720	H0700-01A3	N/I	H-177
708-18-12570	H0390-10A1	2	H-113A
708-1H-24620	H0390-11A0	5	H-115
708-1H-24640	H0390-11A0	3	H-115
708-1H-24650	H0390-11A0	7	H-115
708-1S-12350	H0310-21A1	24	H-045A
708-1S-13370	H0310-22A1	6	H-047A
708-1S-13380	H0310-22A0	7	H-047
708-1S-13380	H0310-22A1	7	H-047A
708-1S-13411	H0310-21A0	4	H-045
708-1S-13420	H0310-21A0	7	H-045
708-1S-13420	H0310-21A1	7	H-045A
708-1S-13430	H0310-21A0	17	H-045
708-1S-13520	H0310-22A0	9	H-047
708-1S-13520	H0310-22A1	9	H-047A
708-1S-14241	H0310-22A0	14	H-047
708-1S-14241	H0310-22A1	14	H-047A
708-1S-15270	H0310-23A0	15	H-049
708-1S-15270	H0310-23A1	15	H-049A
708-1S-15280	H0310-23A0	16	H-049
708-1S-15280	H0310-23A1	16	H-049A
708-1S-15340	H0310-23A0	26	H-049
708-1S-15340	H0310-23A1	26	H-049A
708-1S-15470	H0310-23A0	8	H-049
708-1S-15470	H0310-23A1	8	H-049A
708-1S-15480	H0310-23A0	11	H-049

PARTS Nº	FIG. Nº	INDEX	PAGE
708-1S-15480	H0310-23A1	11	H-049A
708-1S-15490	H0310-23A0	13	H-049
708-1S-15490	H0310-23A1	13	H-049A
708-1S-15930	H0310-23A0	28	H-049
708-1S-15930	H0310-23A1	28	H-049A
708-1S-18180	H0360-02A0	8	H-081
708-1S-19710	H0310-24A0	3	H-051
708-1S-19710	H0310-24A1	3	H-051A
708-1T-00540	H0310-21A0	1	H-045
708-1T-00541	H0310-21A1	1	H-045A
708-1T-01540	H0310-21A0	1	H-045
708-1T-01542	H0310-21A1	1	H-045A
708-1T-03770	H0310-23A0	1	H-049
708-1T-03770	H0310-23A1	1	H-049A
708-1T-04150	H0310-21A0	1	H-045
708-1T-04151	H0310-21A1	1	H-045A
708-1T-04550	H0310-21A0	13	H-045
708-1T-04551	H0310-21A1	13	H-045A
708-1T-12160	H0310-21A0	20	H-045
708-1T-12460	H0310-21A1	20	H-045A
708-1T-13440	H0310-22A1	1	H-047A
708-1T-13450	H0310-22A1	2	H-047A
708-1T-13610	H0310-22A0	1	H-047
708-1T-13620	H0310-22A0	2	H-047
708-1T-13670	H0310-22A1	8	H-047A
708-1T-13710	H0310-22A1	3	H-047A
708-1T-15560	H0310-23A0	21	H-049
708-1T-15561	H0310-23A1	21	H-049A
708-1T-15570	H0310-23A0	22	H-049
708-1T-15570	H0310-23A1	22	H-049A
708-1T-15580	H0310-23A0	23	H-049
708-1T-15580	H0310-23A1	23	H-049A
708-1T-15670	H0310-23A0	10	H-049
708-1T-15670	H0310-23A1	10	H-049A
708-1T-33470	H0310-21A1	17	H-045A
708-1U-03530	H0310-23A0	1	H-049
708-1U-03530	H0310-23A1	1	H-049A
708-1U-04320	H0310-23A0	3	H-049
708-1U-04320	H0310-23A1	3	H-049A
708-1U-15630	H0310-23A0	27	H-049
708-1U-15630	H0310-23A1	27	H-049A
708-1U-15640	H0310-23A0	24	H-049
708-1U-15640	H0310-23A1	24	H-049A
708-1W-03510	H0310-23A0	20	H-049
708-1W-03511	H0310-23A1	20	H-049A
708-1W-28930	H0320-01A0	34	H-053
708-1W-45391	H0310-23A0	9	H-049
708-1W-45391	H0310-23A1	9	H-049A
708-1W-45610	H0310-23A0	20	H-049
708-1W-45610	H0310-23A1	20	H-049A

PARTS Nº	FIG. Nº	INDEX	PAGE
708-1W-48110	H0310-11A0	16	H-043
708-21-12760	H0310-21A0	15	H-045
708-21-12760	H0310-21A1	15	H-045A
708-21-12840	H0310-21A0	22	H-045
708-21-12840	H0310-21A1	22	H-045A
708-23-12350	H0350-02A0	26	H-067
708-23-12350	H0350-04A0	26	H-075
708-23-12740	H0340-01A0	2	H-061
708-25-12790	H0310-03A0	4	H-027
708-25-12790	H0310-07A0	4	H-035
708-25-52861	H0310-03A0	6	H-027
708-27-22811	H0350-02A0	21	H-067
708-27-22811	H0350-04A0	21	H-075
708-2E-05040	H0310-03A0	3	H-027
708-2E-05040	H0310-07A0	3	H-035
708-2F-12420	H0310-09A0	9	H-039
708-2L-23131	H0310-03A0	13	H-027
708-2L-23131	H0310-07A0	11	H-035
708-2L-23351	H0310-03A0	16	H-027
708-2L-23351	H0310-07A0	14	H-035
708-2L-23360	H0310-03A0	17	H-027
708-2L-23360	H0310-07A0	15	H-035
708-2L-25480	H0310-24A0	1	H-051
708-2L-25480	H0310-24A1	1	H-051A
708-2L-25490	H0310-24A0	2	H-051
708-2L-25490	H0310-24A1	2	H-051A
708-2L-25490	H0360-02A0	3	H-081
708-2L-32150	H0310-03A0	2	H-027
708-2L-32150	H0310-07A0	2	H-035
708-2L-33160	H0310-03A0	14	H-027
708-2L-33160	H0310-07A0	12	H-035
708-2L-33190	H0310-03A0	9	H-027
708-2L-33190	H0310-07A0	7	H-035
708-2L-33350	H0310-03A0	18	H-027
708-2L-33350	H0310-07A0	16	H-035
708-3D-15110	H0350-01A0	13	H-063
708-3D-15110	H0350-03A0	13	H-071
708-3S-12140	H0310-21A0	23	H-045
708-3S-12140	H0310-21A1	23	H-045A
708-3S-12150	H0310-21A0	25	H-045
708-3S-12210	H0310-21A0	21	H-045
708-3S-12210	H0310-21A1	21	H-045A
708-3S-13160	H0310-22A0	3	H-047
708-3S-13370	H0310-22A0	6	H-047
708-3S-13410	H0310-22A0	8	H-047
708-3S-13430	H0310-22A0	4	H-047
708-3S-13430	H0310-22A1	4	H-047A
708-3S-13480	H0310-21A1	4	H-045A
708-3S-14140	H0310-21A0	6	H-045
708-3S-14141	H0310-21A1	6	H-045A

PARTS Nº	FIG. Nº	INDEX	PAGE
708-3S-14240	H0310-22A0	10	H-047
708-3S-14240	H0310-22A1	10	H-047A
708-3S-14250	H0310-22A0	13	H-047
708-3S-14261	H0310-22A0	11	H-047
708-3S-14261	H0310-22A1	11	H-047A
708-3S-14290	H0310-22A1	13	H-047A
708-3S-15860	H0310-23A0	19	H-049
708-3S-15860	H0310-23A1	19	H-049A
708-7L-13140	H0310-03A0	15	H-027
708-7L-13140	H0310-07A0	13	H-035
708-7R-00690	C0160-01A0	14	C-013
708-7R-00690	H0360-01A0	1	H-079
708-7R-01631	H0360-02A0	1	H-081
708-7R-01670	H0360-01A0	4	H-079
708-7R-01670	H0360-02A0	1	H-081
708-7R-03130	H0360-01A0	11	H-079
708-7R-11220	H0360-01A0	5	H-079
708-7R-11960	H0360-01A0	1	H-079
708-7R-12210	H0360-03A0	4	H-083
708-7R-12220	H0360-03A0	5	H-083
708-7R-12240	H0360-03A0	8	H-083
708-7R-13130	H0360-03A0	10	H-083
708-7R-13320	H0360-03A0	19	H-083
708-7R-13370	H0360-03A0	18	H-083
708-7R-13530	H0360-03A0	14	H-083
708-7R-13540	H0360-03A0	13	H-083
708-7R-13540	H0390-10A2	30	H-113B
708-7R-13560	H0360-03A0	15	H-083
708-7R-13590	H0360-03A0	17	H-083
708-7R-13610	H0360-03A0	11	H-083
708-7R-13620	H0360-03A0	20	H-083
708-7R-18230	H0310-11A0	16	H-043
708-7R-18430	H0360-02A0	10	H-081
708-7R-21110	H0360-01A0	15	H-079
708-7R-21120	H0360-01A0	17	H-079
708-7S-05110	H0360-03A0	7	H-083
708-7S-12220	H0360-03A0	6	H-083
708-7S-18120	H0360-01A0	13	H-079
708-7S-18130	H0360-01A0	14	H-079
708-7T-12330	H0310-21A1	25	H-045A
708-8E-16150	H0310-11A0	19	H-043
708-8E-16160	H0350-01A0	14	H-063
708-8E-16160	H0350-03A0	14	H-071
708-8E-16160	H0370-02A0	13	H-087
708-8E-16160	H0380-02A0	13	H-099
708-8H-11530	H0350-01A0	16	H-063
708-8H-11530	H0350-03A0	16	H-071
709-10-51560	H0390-11A0	8	H-115
709-32-11930	H0370-05A0	11	H-095
709-32-11930	H0380-05A0	11	H-107

PARTS Nº	FIG. Nº	INDEX	PAGE
720-1L-11131	H0310-01A0	5	H-023
720-1L-11131	H0310-06A0	5	H-033
720-1L-12220	H0310-03A0	5	H-027
720-1L-13310	H0310-03A0	19	H-027
720-1L-13310	H0310-07A0	17	H-035
720-1L-13420	H0310-01A0	10	H-023
720-1L-13420	H0310-06A0	10	H-033
720-1L-13631	H0310-01A0	12	H-023
720-1L-13631	H0310-06A0	12	H-033
720-1L-14180	H0310-01A0	15	H-023
720-1L-14180	H0310-06A0	15	H-033
720-2L-00020	H0310-01A0	1	H-023
720-2L-01020	H0310-01A0	1	H-023
720-2L-03110	H0310-04A0	1	H-029
720-2L-03120	H0310-05A0	1	H-031
720-2L-03130	H0310-04A0	1	H-029
720-2L-04140	H0310-01A0	1	H-023
720-2L-04150	H0310-06A0	1	H-033
720-2L-04160	H0310-02A0	1	H-025
720-2L-04330	H0310-03A0	9	H-027
720-2L-04340	H0310-07A0	7	H-035
720-2L-11610	H0310-09A0	10	H-039
720-2L-12140	H0310-03A0	1	H-027
720-2L-12150	H0310-07A0	1	H-035
720-2L-12530	H0340-01A0	1	H-061
720-2L-13230	H0310-03A0	10	H-027
720-2L-13240	H0310-07A0	8	H-035
720-2L-13510	H0310-02A0	3	H-025
720-2L-13530	H0310-01A0	11	H-023
720-2L-13530	H0310-06A0	11	H-033
720-2L-14110	H0310-04A0	1	H-029
720-2L-14120	H0310-04A0	3	H-029
720-2L-14120	H0310-08A0	3	H-037
720-2L-14130	H0310-04A0	21	H-029
720-2L-14130	H0310-08A0	21	H-037
720-2L-14140	H0310-04A0	23	H-029
720-2L-14140	H0310-08A0	23	H-037
720-2L-14150	H0310-04A0	19	H-029
720-2L-14150	H0310-08A0	19	H-037
720-2L-14160	H0310-04A0	24	H-029
720-2L-14160	H0310-08A0	24	H-037
720-2L-14170	H0310-04A0	22	H-029
720-2L-14170	H0310-08A0	22	H-037
720-2L-14180	H0310-04A0	6	H-029
720-2L-14180	H0310-08A0	6	H-037
720-2L-14190	H0310-11A0	7	H-043
720-2L-14210	H0310-04A0	26	H-029
720-2L-14210	H0310-08A0	26	H-037
720-2L-14220	H0310-05A0	1	H-031
720-2L-14220	H0310-09A0	1	H-039

PARTS Nº	FIG. Nº	INDEX	PAGE
720-2L-14230	H0310-07A0	5	H-035
720-2L-14240	H0310-09A0	8	H-039
720-2M-03535	H0390-11A0	1	H-115
720-2M-03535	H0430-01A6	2	H-147
720-2M-03551	H0310-11A0	1	H-043
720-2M-03591	H0310-10A0	1	H-041
720-2M-03752	H0310-11A0	9	H-043
720-2M-03761	H0310-11A0	10	H-043
720-2M-11531	H0310-02A0	10	H-025
720-2M-11550	H0310-02A0	8	H-025
720-2M-11550	H0390-01A0	14	H-111
720-2M-13630	H0310-01A0	13	H-023
720-2M-13630	H0310-06A0	13	H-033
720-2M-13640	H0310-01A0	14	H-023
720-2M-13640	H0310-06A0	14	H-033
720-2M-14170	H0310-04A0	27	H-029
720-2M-14170	H0310-05A0	2	H-031
720-2M-14170	H0310-08A0	27	H-037
720-2M-14170	H0310-09A0	2	H-039
720-2M-14550	H0310-04A0	4	H-029
720-2M-14550	H0310-08A0	4	H-037
720-2M-14560	H0310-04A0	5	H-029
720-2M-14560	H0310-08A0	5	H-037
720-2M-14581	H0310-04A0	9	H-029
720-2M-14581	H0310-08A0	9	H-037
720-2M-14590	H0310-04A0	11	H-029
720-2M-14590	H0310-08A0	11	H-037
720-2M-14610	H0310-04A0	13	H-029
720-2M-14610	H0310-08A0	13	H-037
720-2M-14620	H0310-04A0	15	H-029
720-2M-14620	H0310-08A0	15	H-037
720-2M-14630	H0310-04A0	17	H-029
720-2M-14630	H0310-08A0	17	H-037
720-2M-14640	H0310-04A0	18	H-029
720-2M-14640	H0310-08A0	18	H-037
720-2M-15211	H0310-10A0	1	H-041
720-2M-15220	H0310-10A0	2	H-041
720-2M-15230	H0310-10A0	3	H-041
720-2M-15240	H0310-10A0	5	H-041
720-2M-15250	H0310-10A0	7	H-041
720-2M-15270	H0310-02A0	15	H-025
720-2M-15270	H0310-10A0	8	H-041
720-2M-15412	H0310-11A0	2	H-043
720-2M-15421	H0310-11A0	3	H-043
720-2M-15430	H0310-11A0	4	H-043
720-2M-15440	H0310-11A0	6	H-043
720-2M-16310	H0390-11A0	4	H-115
720-68-19610	H0310-03A0	11	H-027
720-68-19610	H0310-07A0	9	H-035
720-68-19610	H0310-21A0	16	H-045

PARTS Nº	FIG. Nº	INDEX	PAGE
720-68-19610	H0310-21A1	16	H-045A
720-68-19610	H0360-01A0	9	H-079
720-68-19610	H0360-03A0	12	H-083
720-68-19610	H0360-03A0	2	H-083
720-68-19760	H0370-03A0	10	H-091
720-68-19760	H0380-03A0	10	H-103
721-11-10H10	H0700-01A2	1	H-175
721-11-90800	H0700-01A1	1	H-173
721-11-90801	H0700-01A1A	1	H-173A
721-11-90810	H0700-01A0	1	H-171
721-11-90820	H0700-01A0	1	H-171
721-58-55570	H0700-01A2	3	H-175
721-58-60690	H0700-01A3	3	H-177
722-12-19120	H0370-02A0	34	H-087
722-12-19120	H0380-02A0	34	H-099
722-12-19120	H0380-06A0	12	H-109
723-10-21100	H0370-05A0	15	H-095
723-10-21100	H0380-05A0	15	H-107
723-10-41100	H0370-05A0	5	H-095
723-10-41100	H0380-05A0	5	H-107
723-10-51100	H0370-05A0	1	H-095
723-10-51100	H0380-05A0	1	H-107
723-10-80200	H0370-05A0	9	H-095
723-10-80200	H0380-05A0	9	H-107
723-11-01890	H0380-06A0	1	H-109
723-11-14390	H0370-01A0	8	H-085
723-11-14390	H0380-01A0	8	H-097
723-11-15110	H0370-03A0	14	H-091
723-11-15110	H0380-03A0	14	H-103
723-11-15110	H0380-06A0	18	H-109
723-11-15130	H0370-03A0	17	H-091
723-11-15130	H0380-03A0	17	H-103
723-11-15130	H0380-06A0	21	H-109
723-11-16130	H0370-03A0	16	H-091
723-11-16130	H0380-03A0	16	H-103
723-11-16130	H0380-06A0	20	H-109
723-11-17150	H0310-04A0	7	H-029
723-11-17150	H0310-08A0	7	H-037
723-11-17330	H0370-02A0	19	H-087
723-11-17330	H0380-02A0	19	H-099
723-11-17330	H0380-06A0	8	H-109
723-11-17353	H0370-02A0	18	H-087
723-11-17353	H0380-02A0	18	H-099
723-11-17353	H0380-06A0	7	H-109
723-11-17361	H0370-02A0	21	H-087
723-11-17361	H0380-02A0	21	H-099
723-11-17361	H0380-06A0	10	H-109
723-11-17370	H0370-02A0	5	H-087
723-11-17370	H0380-02A0	5	H-099
723-11-17370	H0380-06A0	5	H-109

PARTS Nº	FIG. Nº	INDEX	PAGE
723-11-17410	H0370-02A0	6	H-087
723-11-17410	H0380-02A0	6	H-099
723-11-17410	H0380-06A0	6	H-109
723-11-17431	H0370-04A0	5	H-093
723-11-17431	H0380-04A0	5	H-105
723-11-17431	H0380-06A0	11	H-109
723-11-17450	H0370-04A0	6	H-093
723-11-17450	H0380-04A0	6	H-105
723-11-17450	H0380-06A0	3	H-109
723-11-18150	H0370-03A0	11	H-091
723-11-18150	H0380-03A0	11	H-103
723-11-18160	H0370-03A0	12	H-091
723-11-18160	H0380-03A0	12	H-103
723-11-18170	H0370-04A0	3	H-093
723-11-18170	H0380-04A0	3	H-105
723-11-18170	H0380-06A0	24	H-109
723-11-18180	H0370-04A0	4	H-093
723-11-18180	H0380-04A0	4	H-105
723-11-18180	H0380-06A0	25	H-109
723-11-18190	H0370-04A0	1	H-093
723-11-18190	H0380-04A0	1	H-105
723-11-18190	H0380-06A0	22	H-109
723-11-18190	H0390-01A0	17	H-111
723-11-18280	H0430-01A6	3	H-147
723-11-18430	H0360-02A0	5	H-081
723-11-18850	H0370-04A0	9	H-093
723-11-18850	H0380-04A0	9	H-105
723-11-19110	H0370-01A0	12	H-085
723-11-19110	H0380-01A0	12	H-097
723-11-19110	H0380-06A0	27	H-109
723-11-19130	H0370-01A0	10	H-085
723-11-19130	H0370-01A0	13	H-085
723-11-19130	H0380-01A0	10	H-097
723-11-19130	H0380-01A0	13	H-097
723-11-19130	H0380-06A0	28	H-109
723-11-19150	H0370-01A0	16	H-085
723-11-19150	H0380-01A0	16	H-097
723-11-19150	H0380-06A0	30	H-109
723-11-21820	H0370-01A0	7	H-085
723-11-21820	H0380-01A0	7	H-097
723-11-25380	H0370-03A0	9	H-091
723-11-25380	H0380-03A0	9	H-103
723-11-27370	H0370-02A0	26	H-087
723-11-27370	H0380-02A0	26	H-099
723-11-27380	H0370-02A0	22	H-087
723-11-27380	H0380-02A0	22	H-099
723-11-27390	H0370-02A0	31	H-087
723-11-27390	H0380-02A0	31	H-099
723-11-27510	H0370-02A0	32	H-087
723-11-27510	H0380-02A0	32	H-099

PARTS Nº	FIG. Nº	INDEX	PAGE
723-11-27520	H0370-02A0	33	H-087
723-11-27520	H0380-02A0	33	H-099
723-11-27540	H0370-04A0	8	H-093
723-11-27540	H0380-04A0	8	H-105
723-11-27551	H0370-02A0	24	H-087
723-11-27551	H0380-02A0	24	H-099
723-11-28330	H0430-01A6	4	H-147
723-11-28361	H0370-02A0	23	H-087
723-11-28361	H0380-02A0	23	H-099
723-11-28730	H0370-02A0	27	H-087
723-11-28730	H0380-02A0	27	H-099
723-11-28740	H0380-06A0	9	H-109
723-11-28750	H0370-02A0	25	H-087
723-11-28750	H0380-02A0	25	H-099
723-11-29361	H0370-04A0	17	H-093
723-11-29361	H0380-04A0	17	H-105
723-11-37570	H0370-02A0	29	H-087
723-11-37570	H0380-02A0	29	H-099
723-11-37580	H0370-02A0	28	H-087
723-11-37580	H0380-02A0	28	H-099
723-11-37590	H0370-02A0	20	H-087
723-11-37590	H0380-02A0	20	H-099
723-11-37610	H0370-03A0	8	H-091
723-11-37610	H0380-03A0	8	H-103
723-11-37820	H0370-02A0	29	H-087
723-11-37820	H0380-02A0	29	H-099
723-14-13200	H0370-01A0	1	H-085
723-14-13201	H0370-01A0	1	H-085
723-15-13100	H0380-01A0	1	H-097
723-15-13101	H0380-01A0	1	H-097
723-20-80100	H0380-06A0	31	H-109
723-36-41930	H0390-01A0	6	H-111
723-46-48910	H0310-10A0	4	H-041
723-56-31630	H0310-02A0	12	H-025
723-56-31630	H0310-23A0	18	H-049
723-56-31630	H0310-23A1	18	H-049A
723-56-41850	H0430-01A6	5	H-147
729-11-21000	H0350-02A0	38	H-067
729-11-21000	H0350-04A0	38	H-075
7826-20-4033	K0210-56A0	1	K-123
7826-20-4034	K0210-56A0	1	K-123
7826-20-4036	K0210-56A0	1	K-123
7826-20-4037	K0210-56A0	1	K-123
7826-20-4038	K0210-56A0	1	K-123
7826-20-4040	K0210-56A0	1	K-123
7826-20-7032	K0210-55A0	1	K-121
7826-20-7032	K0410-28A2	1	K-185
7826-20-7033	K0210-55A0	1	K-121
7826-20-7033	K0410-28A2	1	K-185
7826-20-7034	K0210-55A0	1	K-121

PARTS Nº	FIG. Nº	INDEX	PAGE
7826-20-7034	K0410-28A2	1	K-185
7826-20-7035	K0210-55A0	1	K-121
7826-20-7035	K0410-28A2	1	K-185
7826-20-7036	K0210-55A0	1	K-121
7826-20-7036	K0410-28A2	1	K-185
7826-20-7037	K0210-55A0	1	K-121
7826-20-7037	K0410-28A2	\1	K-185
7826-20-7038	K0210-55A0	1	K-121
7826-20-7038	K0410-28A2	1	K-185
7830-84-1000	K0210-42A0	1	K-099
7830-84-1000	K0410-17A0	1	K-163
7830-84-1001	K0210-42A0	1	K-099
7830-84-1001	K0410-17A0	1	K-163
7830-84-1002	K0210-42A0	1	K-099
7831-69-2000	K0210-46A0	2	K-107
7831-69-2000	K0410-21A0	2	K-171
7831-69-2001	K0210-46A0	2	K-107
7831-69-2002	K0210-46A0	2	K-107
7835-70-3110	E0210-01A2	1	E-011B
7861-74-5100	K0210-22A0	18	K-061
7861-74-5100	K0210-46A0	12	K-107
7861-74-5100	K0410-21A0	12	K-171
7861-93-1420	B0300-01A1	9	B-009
7861-93-1421	B0300-01A1	9	B-009
7861-93-1422	B0300-01A1	9	B-009
7861-93-1811	H0320-01A0	7	H-053
7861-93-1812	H0320-01A0	7	H-053
7861-93-1840	H0440-01A0	9	H-149
7861-93-2330	C0160-01A0	13	C-013
7861-93-3320	H0320-01A0	4	H-053
7861-93-4940	D0120-01A0	4	D-005
799-101-5220	H0200-01A3	14	H-011
799-101-5220	H0200-01A4	14	H-015
8A13-10-1310	K0210-55A0	14	K-121
8A13-10-1310	K0210-56A0	14	K-123
8A13-10-1310	K0410-28A2	14	K-185
8A13-10-2100	K0210-55A0	18	K-121
8A13-10-2100	K0210-56A0	18	K-123
8A13-10-2100	K0410-28A2	18	K-185
8A13-10-2200	K0210-55A0	12	K-121
8A13-10-2200	K0210-56A0	12	K-123
8A13-10-2200	K0410-28A2	12	K-185
8A13-80-1110	K0210-55A0	20	K-121
8A13-80-1110	K0210-56A0	20	K-123
8A13-80-1110	K0410-28A2	20	K-185
8A13-80-1120	K0210-55A0	21	K-121
8A13-80-1120	K0210-56A0	21	K-123
8A13-80-1120	K0410-28A2	21	K-185
8A13-80-1130	K0210-55A0	22	K-121
8A13-80-1130	K0210-56A0	22	K-123

PARTS Nº	FIG. Nº	INDEX	PAGE
8A13-80-1130	K0410-28A2	22	K-185
8A13-80-1140	K0210-55A0	23	K-121
8A13-80-1140	K0210-56A0	23	K-123
8A13-80-1140	K0410-28A2	23	K-185
8A31-54-1110	K2120-01A0	4	K-209
GJ1076975	K0110-01A6	3	K-013
GJ1076979	K0110-01A6	10	K-013
GJ1077152	K0110-01A6	6	K-013
GJ1077153	K0110-01A6	7	K-013
GJ1078590	K0110-01A6	5	K-013
GJ1078594	K0110-01A6	19	K-013
GJ1081312	K0110-01A6	2	K-013
GJ1081315	K0110-01A6	11	K-013
GJ1089165	K0110-01A6	16	K-013
GJ1090446	K0110-01A6	17	K-013
GJ1090447	K0110-01A6	13	K-013
GJ1090779	K0110-01A6	14	K-013
GJ1096565	K0110-01A6	15	K-013
GJ1096687	K0110-01A6	12	K-013
GJ1097995	K0110-01A6	1	K-013
GJ1104018	K0110-01A6	4	K-013
GJ1104025	K0110-01A6	20	K-013
GJ1104066	K0110-01A6	18	K-013
GJ131834	K0110-01A6	8	K-013
GJ138628	K0110-01A6	9	K-013
GJ140907	K0110-01A5	1	K-011
GJ140912	K0110-01A5	3	K-011
GJ2048193	K0110-01A5	2	K-011
GJ2048660	K0110-01A5	4	K-011
GJ2048661	K0110-01A5	5	K-011
GJ2048662	K0110-01A5	6	K-011
KD0-0055-05122	B0000-51A1	29	B-057A
KD0-0055-05202	B0000-51A1	28	B-057A
KD0-0056-05302	B0000-51A1	35	B-057A
KD0-0056-05302	B0000-51A1	37	B-057A
KD0-0275-06802	B0000-51A0	12	B-057
KD0-0275-06802	B0000-51A1	12	B-057A
KD0-0280-16022	B0000-51A0	17	B-057
KD0-09006-0370	B0000-51A1	32	B-057A
KD0-09006-0730	B0000-51A1	15	B-057A
KD0-09011-3540	B0000-51A1	30	B-057A
KD0-09011-3540	B0000-51A1	36	B-057A
KD0-09057-0220	B0000-51A0	29	B-057
KD0-09057-0220	B0000-51A1	27	B-057A
KD0-09170-2501	B0000-51A0	21	B-057
KD0-09170-2501	B0000-51A1	19	B-057A
KD0-09201-0980	B0000-51A0	4	B-057
KD0-09201-0980	B0000-51A1	4	B-057A
KD0-09201-1140	B0000-51A0	7	B-057
KD0-09201-1450	B0000-51A1	7	B-057A

PARTS Nº	FIG. Nº	INDEX	PAGE
KD0-33902-0080	B0000-51A1	33	B-057A
KD0-33902-0090	B0000-51A1	34	B-057A
KD0-35100-0300	B0000-51A0	1	B-057
KD0-35100-0418	B0000-51A1	1	B-057A
KD0-35120-0290	B0000-51A0	18	B-057
KD0-35120-0528	B0000-51A1	16	B-057A
KD0-35200-0460	B0000-51A0	5	B-057
KD0-35200-0528	B0000-51A1	5	B-057A
KD0-35300-0350	B0000-51A0	6	B-057
KD0-35300-0450	B0000-51A1	6	B-057A
KD0-35411-0640	B0000-51A0	13	B-057
KD0-35411-0648	B0000-51A1	13	B-057A
KD0-35421-0240	B0000-51A0	14	B-057
KD0-35421-0240	B0000-51A1	14	B-057A
KD0-35700-0950	B0000-51A0	18	B-057
KD0-35700-1140	B0000-51A1	19	B-057A
KD0-35710-1150	B0000-51A0	19	B-057
KD0-35710-1330	B0000-51A1	17	B-057A
KD0-35719-0201	B0000-51A1	38	B-057A
KD0-35719-0210	B0000-51A0	30	B-057
KD0-35730-0700	B0000-51A0	20	B-057
KD0-35730-0700	B0000-51A1	18	B-057A
KD0-35761-0250	B0000-51A0	31	B-057
KD0-35761-0308	B0000-51A1	39	B-057A
KD0-35784-0210	B0000-51A0	27	B-057
KD0-35784-0210	B0000-51A1	25	B-057A
KD0-35784-0290	B0000-51A0	28	B-057
KD0-35784-0290	B0000-51A1	26	B-057A
KD0-35902-0010	B0000-51A1	31	B-057A
KD0-35923-0130	B0000-51A0	23	B-057
KD0-35923-0134	B0000-51A1	22	B-057A
KD0-35923-0160	B0000-51A1	3	B-057A
KD0-35926-0070	B0000-51A0	8	B-057
KD0-35926-0070	B0000-51A1	8	B-057A
KD0-35926-0090	B0000-51A0	10	B-057
KD0-35926-0090	B0000-51A1	10	B-057A
KD0-35943-0140	B0000-51A0	25	B-057
KD0-35943-0140	B0000-51A1	24	B-057A
KD0-35943-0150	B0000-51A0	22	B-057
KD0-35943-0154	B0000-51A1	21	B-057A
KD0-35943-0160	B0000-51A0	24	B-057
KD0-35943-0160	B0000-51A1	23	B-057A
KD0-35943-0170	B0000-51A0	26	B-057
KD0-35943-0170	B0000-51A1	20	B-057A
KD0-35943-0240	B0000-51A1	2	B-057A
KD0-35951-0060	B0000-51A0	9	B-057
KD0-35951-0060	B0000-51A1	9	B-057A
KD1-0330-16012	B0000-51A0	15	B-057
KD1-0335-16002	B0000-51A0	16	B-057
KD1-33923-0790	B0000-51A0	2	B-057

PARTS Nº	FIG. Nº	INDEX	PAGE
KD1-33926-0730	B0000-51A0	11	B-057
KD1-33926-0730	B0000-51A1	11	B-057A
KD1-35923-0160	B0000-51A0	3	B-057
ND028062-0130	A6112-A2A9	29	A-099
ND028062-5790	A6112-A2A9	43	A-099
ND028063-0030	A6112-A2A9	28	A-099
ND028065-0250	A6112-A2A9	20	A-099
ND028099-3270	A6112-A2A9	5	A-099
ND028099-5100	A6112-A2A9	14	A-099
ND028100-5410	A6112-A2A9	1	A-099
ND028200-5250	A6112-A2A9	2	A-099
ND028300-6551	A6112-A2A9	5	A-099
ND028300-6751	A6112-A2A9	6	A-099
ND028306-0070	A6112-A2A9	27	A-099
ND028327-0171	A6112-A2A9	35	A-099
ND028371-3200	A6112-A2A9	38	A-099
ND028371-3210	A6112-A2A9	26	A-099
ND028381-0071	A6112-A2A9	10	A-099
ND028501-7711	A6112-A2A9	23	A-099
ND028510-0880	A6112-A2A9	21	A-099
ND028520-0011	A6112-A2A9	22	A-099
ND028530-1090	A6112-A2A9	40	A-099
ND028530-1100	A6112-A2A9	41	A-099
ND028901-0361	A6112-A2A9	37	A-099
ND028901-5190	A6112-A2A9	45	A-099
ND053404-0240	A6112-A2A9	16	A-099
ND053480-7560	A6112-A2A9	18	A-099
ND053505-0290	A6112-A2A9	17	A-099
ND053660-0443	A6112-A2A9	15	A-099
ND128099-5770	A6112-A2A9	13	A-099
ND128401-5621	A6112-A2A9	11	A-099
ND128961-0010	A6112-A2A9	24	A-099
ND153400-6740	A6112-A2A9	12	A-099
ND90170-10061	A6112-A2A9	44	A-099
ND90200-06241	A6112-A2A9	46	A-099
ND90258-10001	A6112-A2A9	36	A-099
ND90801-10050	A6112-A2A9	31	A-099
ND949006-4720	A6112-A2A9	33	A-099
ND949007-6530	A6112-A2A9	39	A-099
ND949007-6850	A6112-A2A9	42	A-099
ND949042-3680	A6112-A2A9	30	A-099
ND949042-3690	A6112-A2A9	32	A-099
ND949047-4440	A6112-A2A9	19	A-099
ND949056-4480	A6112-A2A9	34	A-099
ND949100-1920	A6112-A2A9	8	A-099
ND949100-3161	A6112-A2A9	3	A-099
ND949100-3540	A6112-A2A9	4	A-099
ND949100-4501	A6112-A2A9	7	A-099
ND949170-4040	A6112-A2A9	9	A-099
ND949170-4070	A6112-A2A9	25	A-099

PARTS N°	FIG. N°	INDEX	PAGE
ND989100-5290	A6112-A2A9	3	A-099

PARTS N°	FIG. N°	INDEX	PAGE

PARTS N°	FIG. N°	INDEX	PAGE